

Parts Book

NL70981B 2019/07/24

1104D-44T

- Catalague des pièces de rechange
- Ersatzteilliste
- Catalogo parti di ricambio
- Catálogo de repuestos

Perkins®

THE HEART OF EVERY GREAT MACHINE






The information given within this parts book was correct at the time of printing and is subject to change without notice. Always refer to your local Perkins outlet for the latest information. Only fully trained personnel should carry out servicing of engines. Before working on any engine always refer to the correct user service and maintenance manual.

Always refer to your local Perkins outlet before purchasing any parts.

Subject to any existing rights of third parties, the information given in this document is the property of Perkins Engines Limited and should not be copied, in whole or part, without the prior written consent of the Company.

Perkins®

THE HEART OF EVERY GREAT MACHINE

Contents

Perkins Platinum Protection 4
Introduction 5
How to use your Parts Book 5
Engine Breakdown 6
Symbols and Notes 10

Perkins®
THE HEART OF EVERY GREAT MACHINE

Perkins Platinum Protection

Perkins Platinum Protection is the best value cover for Perkins engines. Available to purchase in flexible packages.

What benefits will I receive?

- Unbeatable value for money, with absolutely no excess to pay
- Our global network of fully trained professional Perkins technicians will ensure that you always receive a trustworthy and reliable service
- The same cover as your standard warranty - we won't charge for parts, labour, or travel when we repair your engine (subject to Terms and Conditions)

Upgrade to Perkins Platinum Protection before your standard warranty expires:

- Comprehensive cover for up to 100 percent of components*
- Flexible packages from two to five years
- Support from Perkins global network of fully trained technicians
- We will provide electrical updates at the same time as your engine repairs should you need this, in the event of a claim
- No unexpected charges in getting your engine back up and running
- Talk to your local Perkins distributor today, or visit www.perkins.com/platinumprotection for more information.

* Terms and Conditions apply

Introduction

The build list of your engine, found on the front page of this parts book, provides a unique reference to the components fitted to your engine; therefore this parts book is only applicable to this particular engine

Always quote your build list and engine serial number when contacting your Perkins outlet.

How to use your Parts Book

This parts book has been designed to provide you with all the information you need to identify parts to service your engine. There are several features within the book to make it easy to find the parts you require

Front Page

This lists your build list number and the date of publication of this book.

Symbol Descriptions

Provides a quick reference guide to the symbols used within the book.

Engine Breakdown

Use this to identify all the major sections of your engine and the relevant pages within the book.

Parts Lists & Illustrations

This section shows each major section of your engine broken down into individual part numbers along with an associated illustration for identifying the parts you require.

The illustrations used in this parts book are representational only and should only be used for identification purposes.

For fitting instructions please refer to your engine Service Manual.

Parts Index

Using either the part number or description of the part you require this section will help you locate the page within the **Parts Lists & Illustrations** section where the part appears.

Engine Breakdown

Section	Page
Engine Overhaul Kit ACK403233	12
Short Engine ACE40020	18
Cylinder Block & Liners ACHN0145	22
Rear End Oil Seal ACHN0145	24
Crankshaft, Main & Big End Bearings ACHN0145	26
Crankshaft, Main & Big End Bearings ACHN0145	28
Pistons & Rings ACHN0145	30
Connecting Rods ACHN0145	32
Connecting Rods ACHN0145	34
Cylinder Head Assembly ACHN0145	36
Rocker Shaft Assembly ACHN0145	40
Timing Gear & Camshaft ACHN0145	42
Fuel Injection Pump AFH04863	44
High Pressure Fuel Pipes AFH04863	46
Atomisers AFH04863	48
Throttle & Stop Controls AFH04863	50
Pick-Up Sensor AFH04863	52
Sensors AFH04863	54
Fuel Leak-Off Pipe AFH04863	56
Flywheel Housing	

CDH01097 58

Flywheel & Starter Ring
DDH02080 60

Starter Motor
EDH00947 62

Fan Drive
FBH01146 64

Sump
GBH02927 66

Dipstick & Filler Tube
GBH02927 68

Oil Strainer
GBH02927 70

Oil Strainer
GBH02927 72

Cylinder Head Cover
HBH03467 74

Breather
HBH03467 76

Filler
HDH00046 78

Blanking Plates
HDH00046 80

Oil Cooler
JBH02638 82

Oil Filter
JBH02638 84

Blanking Plates
JBH02638 86

Oil Filter
JDH00044 88

Front End Drive Input
KBH00770 90

Water Pump
LBH02290 92

Pipes
LBH02290 94

Water Outlet Housing
LDH00718 96

Fan
MDH01420 98

Alternator
NDH02864 100

Pulleys
NDH02864 102

Alternator Bracket & Fixings
NDH02864 104

Timing Case
QCH00060 106

Timing Case
QCH00060 108

Timing Cover
QCH00060 110

Blanking Plugs
QDH01434 112

Lubricating Oil Pump & Delivery Housing
RBH00034 114

Turbocharger
SBH02043 116

Feed Pipes
SBH02043 118

Leak-Off Pipes
SBH02043 120

Pipework & Connections
SBH02043 122

Exhaust Manifold
SBH02043 124

Pipework & Connections
SBH02043 126

Air Filters
SBH02043 128

Air Filters
SBH02043 130

Pipework
SDH00418 132

Induction Manifold
TBH01107 134

Induction Manifold
TBH01107 136

Induction Manifold
TBH01107 138

Lift Pump
VBH02540 140

Fuel Filter
VBH02540 142

Blanking Plugs

VBH02540 144

Fuel Filter
VBH02540 146

Fuel Filter
VBH02540 148

Filter to Injection Pump Pipe
VBH02540 150

Injection Pump to Filter Pipe
VBH02540 152

Heater Plugs
WDH0398 154

Engine Lifting Eyes
XBH00474 156

Engine Mounts
ZCH01252 158

Engine Mounts - Blanking Plugs
ZCH01252 160

Lubricating Oil Pressure Switch/Gauge
ZJH00586 162

Lubricating Oil Pressure Switch/Gauge
ZJH00586 164

Temperature Gauge & Sender
ZLH00381 166

Radiator & Cowling
ZMH01407 168

Radiator Bracket & Fixings
ZMH01407 170

Radiator Bracket & Fixings
ZMH01407 172

Radiator & Hoses
ZMH01407 174

Guards
ZMH01407 176

Fuel Pre-Lift Pump
ZVH01121 178

Fuel Pre-Lift Pump
ZVH01121 180

Miscellaneous & Auxiliaries
ZZH01065 182

Top Service Kit
SAC02948 184

Bottom Service Kit
SGB03046 188

Symbols and Notes

Symbol	Description
	From Engine Number
	Upto Engine Number
	Repairs and Replaces
	See Appropriate Section - Reference Number
	Alternative
	Order
	Remanufactured Part
	New for Old Part
	Number of Teeth
	Thickness
	Bottom
	Top
	Left Hand
	Right Hand
	Reference for Detailed Breakdown
	Other Service Options Available
	Cylinder Number
	See History Section

Engine Overhaul Kit	Plate A
	ACK403233

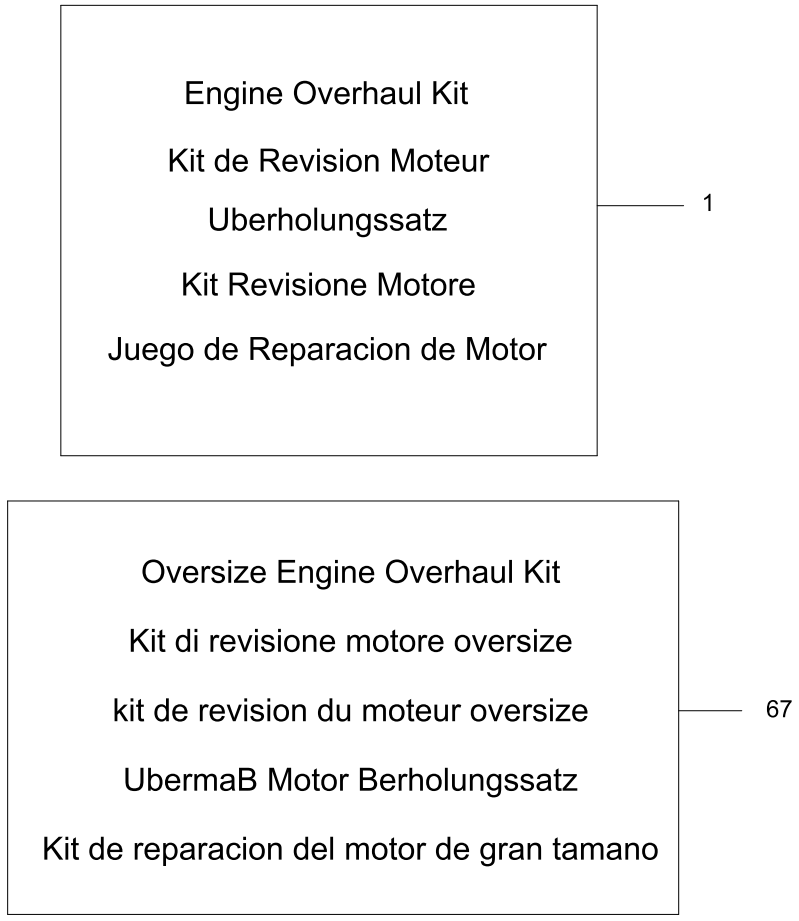

Item	Part No.	References	Qty.	Description	Notes
1	T403233		1	ENGINE OVERHAUL KIT	
2	T402948		1	GASKET KIT - TOP	
3	3681E051	S	1	GASKET - CYLINDER HEAD	
4	2418M519		4	SEAL - VALVE STEM	
5	2418M517		4	SEAL - VALVE STEM	
6	2415H003		2	SEAL - O RING	
7	26460064		4	SEAL - INJECTOR	
8	L311FF02		10	INJECTOR WASHER	
9	2415H701		1	SEAL - O RING	
10	2415A068		1	SEAL - O RING	
11	3681A055		1	GASKET - CYL. HEAD COVER	
12	3789A004		1	SEAL - O RING	
13	2415A131		1	SEAL - O RING	
14	2418F002		1	SEAL - O RING	
15	2418F001		1	SEAL - O RING	
16	2415H219		1	SEAL - THERMOSTAT HOUSING	
17	29990016		1	SEAL - O RING	
18	3681V512		1	GASKET - EXHAUST MANIFOLD	
19	2131A506		4	WASHER	
20	3688A053		1	GASKET	
21	3688A054		1	GASKET	
22	3688A029		1	GASKET - TURBOCHARGER	
23	3688A034		1	GASKET - TURBOCHARGER	
24	3688A037	✂	1	GASKET - IND MANIFOLD	
25	3688C018		1	GASKET - EXHAUST OUTLET	
26	3684N503		3	GASKET	
27	3682A013		1	GASKET - IND MANIFOLD	
28	T403046		1	GASKET KIT - BOTTOM	
29	2418F704		1	SEAL - REOS HOUSING	
30	26420318		1	SEAL - O RING	
31	33812116		1	OLIVE	
32	36832137		1	GASKET	
33	T420777		1	GASKET - SUMP	
34	2415715		10	SEAL - O RING	
35	2415H540		1	SEAL - O RING	
36	2415H651		1	SEAL - O RING	
37	2415633		1	SEALING RING	
38	3688A039		2	GASKET - OIL FILTER HEAD	
39	3688A041		1	GASKET - OIL FILTER HEAD	

Engine Overhaul Kit	Plate A
	ACK403233

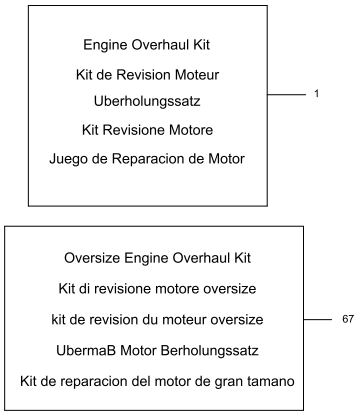

Item	Part No.	References	Qty.	Description	Notes
40	T414650		1	SEAL KIT	
41	3685A033		1	GASKET - OIL COOLER	
42	3685A025		2	GASKET - OIL COOLER	
43	T419064		2	SEALING RING	
44			1	LEAFLET	
45	24880239		1	GASKET	
46	3682A011		1	GASKET - WATER PUMP	
47	3681P053		1	GASKET - TIMING CASE	
48	2418F437		1	SEAL - FRONT END OIL	
49	3681P046		1	GASKET - TIMING CASE COVER	
50	2415H516		1	SEAL - O RING	
51	2415H515		1	SEAL - O RING	
52	2411D010		2	WASHER	
53	2415H002		1	SEAL - O RING	
54	2415H009		2	SEAL - O RING	
55	2415H003		1	SEAL - O RING	
56	U5PR0062	(S)	4	PISTON AND RING KIT	
57		⇨ U5PR0062	1	PISTON AND RING KIT	
58		⇨ U5PR0062	1	PISTON	

Item	Part No.	References	Qty.	Description	Notes
59		⇨ U5PR0062	1	GUDGEON PIN	
60	UPRK0005	Ⓢ	1	PISTON RING KIT	
61		⇨ UPRK0005	1	PISTON RING	
62		⇨ UPRK0005	1	PISTON RING	
63		⇨ UPRK0005	1	PISTON RING	
64	2721332		2	CIRCLIP	
65	T400001		8	CON ROD BOLT	
66	3212V003		8	CON ROD BOLT	
67	T403232		1	ENGINE OVERHAUL KIT	
68	T403222		1	GASKET KIT - TOP	
69	T409652	⧺ (+)0.25MM	1	GASKET - CYLINDER HEAD	
70	2418M519		4	SEAL - VALVE STEM	
71	2418M517		4	SEAL - VALVE STEM	
72	2415H003		2	SEAL - O RING	
73	26460064		4	SEAL - INJECTOR	
74	L311FF02		10	INJECTOR WASHER	
75	2415H701		1	SEAL - O RING	
76	2415A068		1	SEAL - O RING	
77	3681A055		1	GASKET - CYL. HEAD COVER	
78	3789A004		1	SEAL - O RING	
79	2415A131		1	SEAL - O RING	
80	2418F002		1	SEAL - O RING	
81	2418F001		1	SEAL - O RING	
82	2415H219		1	SEAL - THERMOSTAT HOUSING	
83	29990016		1	SEAL - O RING	
84	3681V512		1	GASKET - EXHAUST MANIFOLD	
85	2131A506		4	WASHER	
86	3688A053		1	GASKET	
87	3688A054		1	GASKET	
88	3688A029		1	GASKET - TURBOCHARGER	
89	3688A034		1	GASKET - TURBOCHARGER	
90	3688A037	⇙	1	GASKET - IND MANIFOLD	
91	3688C018		1	GASKET - EXHAUST OUTLET	
92	3684N503		3	GASKET	
93	3682A013		1	GASKET - IND MANIFOLD	
94	T403046		1	GASKET KIT - BOTTOM	
95	2418F704		1	SEAL - REOS HOUSING	
96	26420318		1	SEAL - O RING	
97	33812116		1	OLIVE	

Engine Overhaul Kit	Plate A
	ACK403233

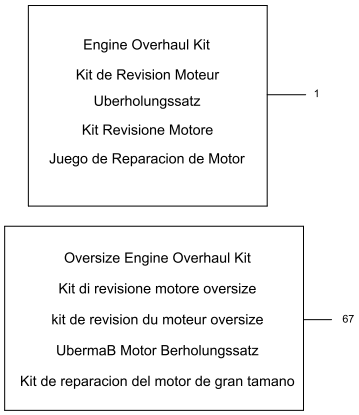

Item	Part No.	References	Qty.	Description	Notes
98	36832137		1	GASKET	
99	T420777		1	GASKET - SUMP	
100	2415715		10	SEAL - O RING	
101	2415H540		1	SEAL - O RING	
102	2415H651		1	SEAL - O RING	
103	2415633		1	SEALING RING	
104	3688A039		2	GASKET - OIL FILTER HEAD	
105	3688A041		1	GASKET - OIL FILTER HEAD	
106	T414650		1	SEAL KIT	
107	3685A033		1	GASKET - OIL COOLER	
108	3685A025		2	GASKET - OIL COOLER	
109	T419064		2	SEALING RING	
110			1	LEAFLET	
111	24880239		1	GASKET	
112	3682A011		1	GASKET - WATER PUMP	
113	3681P053		1	GASKET - TIMING CASE	
114	2418F437		1	SEAL - FRONT END OIL	
115	3681P046		1	GASKET - TIMING CASE COVER	
116	2415H516		1	SEAL - O RING	

Item	Part No.	References	Qty.	Description	Notes
117	2415H515		1	SEAL - O RING	
118	2411D010		2	WASHER	
119	2415H002		1	SEAL - O RING	
120	2415H009		2	SEAL - O RING	
121	2415H003		1	SEAL - O RING	
122	U5PR0062B	(+)0.50MM	4	PISTON AND RING KIT - O/S	
123			1	PISTON AND RING KIT - O/S	
124		U5PR0062B	1	PISTON	
125		U5PR0062B	1	GUDGEON PIN	
126	UPRK0005B	(+)0.50MM	1	PISTON RING KIT - OVERSIZE	
127		UPRK0005B	1	PISTON RING	
128		UPRK0005B	1	PISTON RING	
129		UPRK0005B	1	PISTON RING	
130	2721332		2	CIRCLIP	
131	T400001		8	CON ROD BOLT	
132	3212V003		8	CON ROD BOLT	
133	3112D075		1	CAMSHAFT BUSH	
Service Options					
3	T409652	(+)0.25MM	1	GASKET - CYLINDER HEAD	
56	U5PR0062B	(+)0.50MM	4	PISTON AND RING KIT - O/S	
56	U5PR0062D	(+)1.00MM	4	PISTON AND RING KIT - O/S	
60	UPRK0005B	(+)0.50MM	1	PISTON RING KIT - OVERSIZE	
60	UPRK0005D	(+)1.00MM	1	PISTON RING KIT - OVERSIZE	

Footnotes

Short Engine	Plate A
	ACE40020

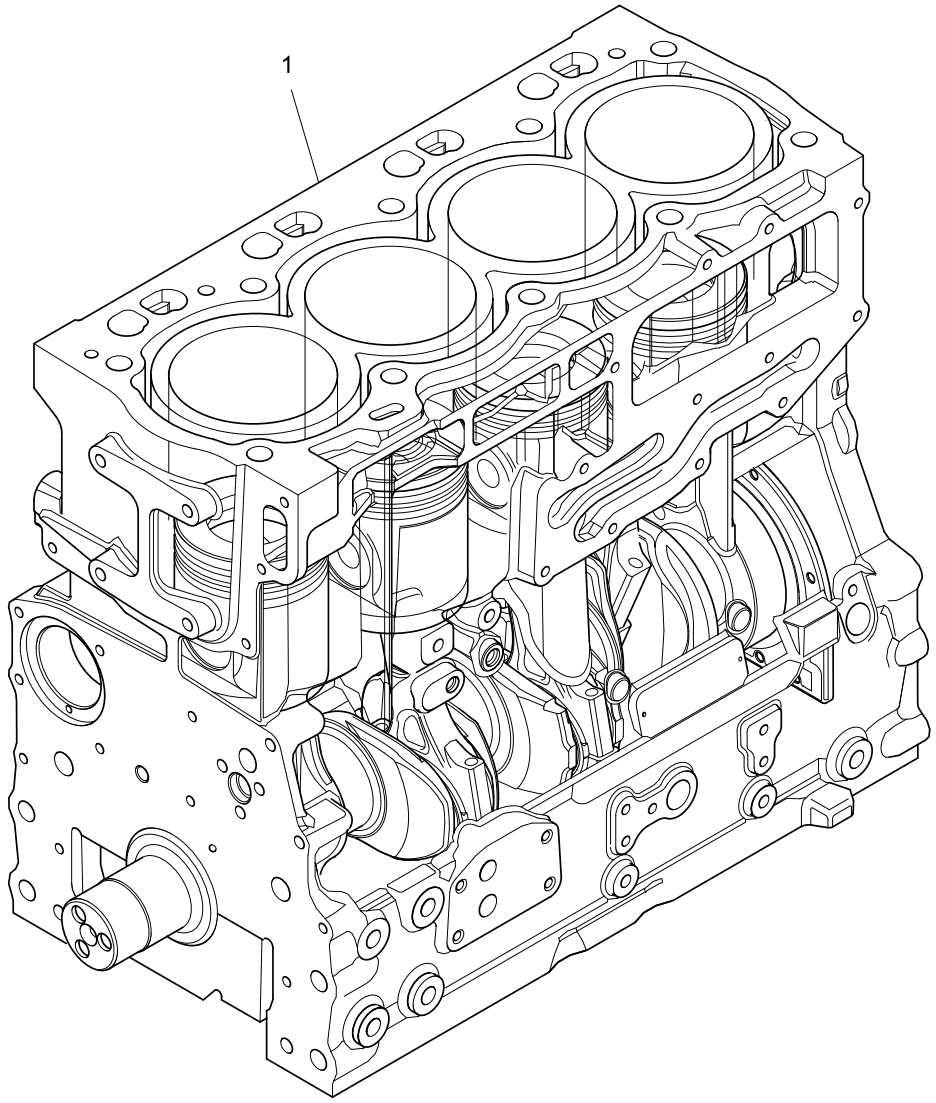

Item	Part No.	References	Qty.	Description	Notes
1	NM40020	Ⓢ	1	SHORT ENGINE - ASSEMBLY	(1)
2	ZZ50324		1	CYLINDER BLOCK ASSEMBLY	
3	2418F704		1	SEAL - REOS HOUSING	
4	3211C002		10	BOLT	
5	3627P041		1	BRIDGE PIECE	
6	2311D039		2	SCREW	
7	ZZ90237		1	CRANKSHAFT KIT	
8		a. ⇨ ZZ90237	1	CRANKSHAFT	
9		⇨ ZZ90237	1	CRANKSHAFT	
10			1	CRANKSHAFT	
11		⇨ UPRK0005	1	PISTON RING	
12		⇨ UPRK0005	1	PISTON RING	
13		⇨ UPRK0005	1	PISTON RING	
14		Ⓢ	4	CON ROD	
15	2485A109		1	PLUG	
16	2314C049		1	SCREW	
17	2415D053		1	WASHER	
18	0650594		1	PLUG	
Service Options					
1	NM40020R		1	SHORT ENGINE - EXCHANGE	
14	4115C361		4	CON ROD	(2) GRADE:R - RED
14	4115C362		4	CON ROD	(3) GRADE:O - ORANGE
14	4115C363		4	CON ROD	(4) GRADE:W - WHITE
14	4115C364		4	CON ROD	(5) GRADE:G - GREEN
14	4115C365		4	CON ROD	(6) GRADE:P - PURPLE
14	4115C366		4	CON ROD	(7) GRADE:B - BLUE

History					
a.					
8		⇨	1	CRANKSHAFT	
b.					
40	T400002		1	BIG END BEARING KIT	

Footnotes	
(1)	CONTAINS SGI PLAIN-NOSED CRANKSHAFT. REFER TO ENGINE NEWS 1100 SERIES BULLETIN NUMBER 91
(2)	GRADE:R - RED
(3)	GRADE:O - ORANGE

Short Engine	Plate A
	ACE40020

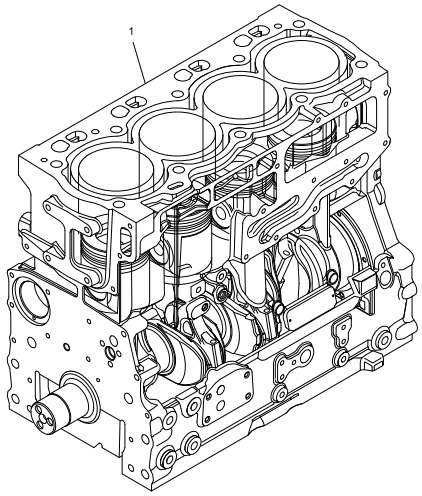

Footnotes	
(4)	GRADE:W - WHITE
(5)	GRADE:G - GREEN
(6)	GRADE:P - PURPLE
(7)	GRADE:B - BLUE

Cylinder Block & Liners	Plate A
	ACHN0145

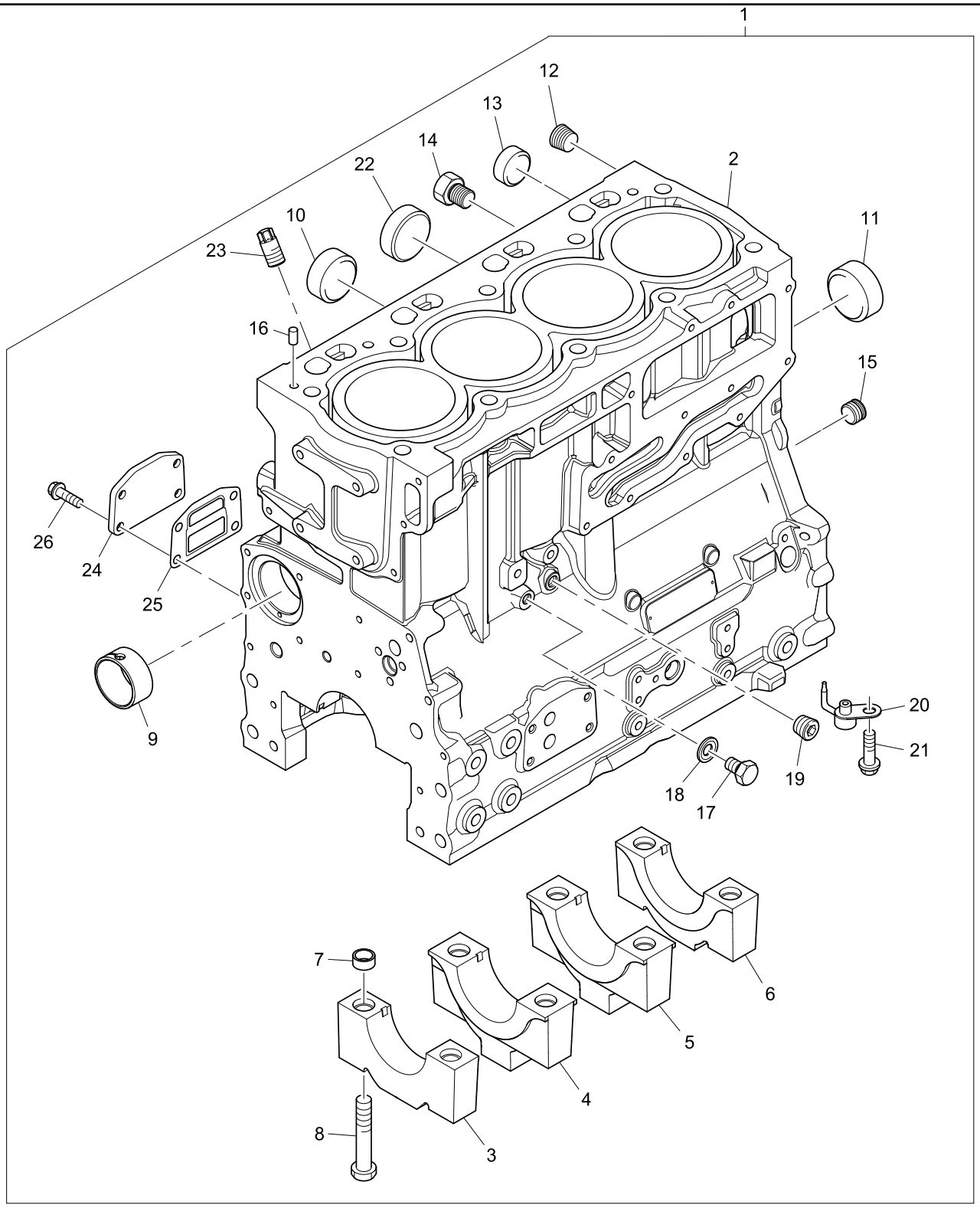

Item	Part No.	References	Qty.	Description	Notes
1	ZZ50324		1	CYLINDER BLOCK ASSEMBLY	
2		⇨ ZZ50324	1	CYLINDER BLOCK	
3		⇨ ZZ50324	1	BEARING CAP	
4		⇨ ZZ50324	2	BEARING CAP	
5		⇨ ZZ50324	1	BEARING CAP	
6		⇨ ZZ50324	1	BEARING CAP	
7	33142111		10	DOWEL	
8	32166329		10	SCREW	
9	3112D075	a.	1	CAMSHAFT BUSH	
10	3241A011		2	PLUG	
11	3241A012		1	PLUG	
12	0650588		1	PLUG	
13	0650710		1	PLUG	
14	32141316		2	PLUG	
15	3212P008		1	PLUG	
16	3244A009		1	DOWEL	
17	2314C049		1	SCREW	
18	2415D053		1	WASHER	
19	0650594		1	PLUG	
20	2113A003		4	PISTON COOLING JET	
21	2314F001		4	SCREW	
22	2485A108		1	PLUG	
23	3212V006		1	PLUG	
24	3623A009		1	PLATE	
25	3688A039		1	GASKET - OIL FILTER HEAD	
26	2314H033		4	SCREW	

History					
a.					
9	3112D071		1	CAMSHAFT BUSH	

Perkins®
THE HEART OF EVERY GREAT MACHINE

Rear End Oil Seal	Plate A
	ACHN0145

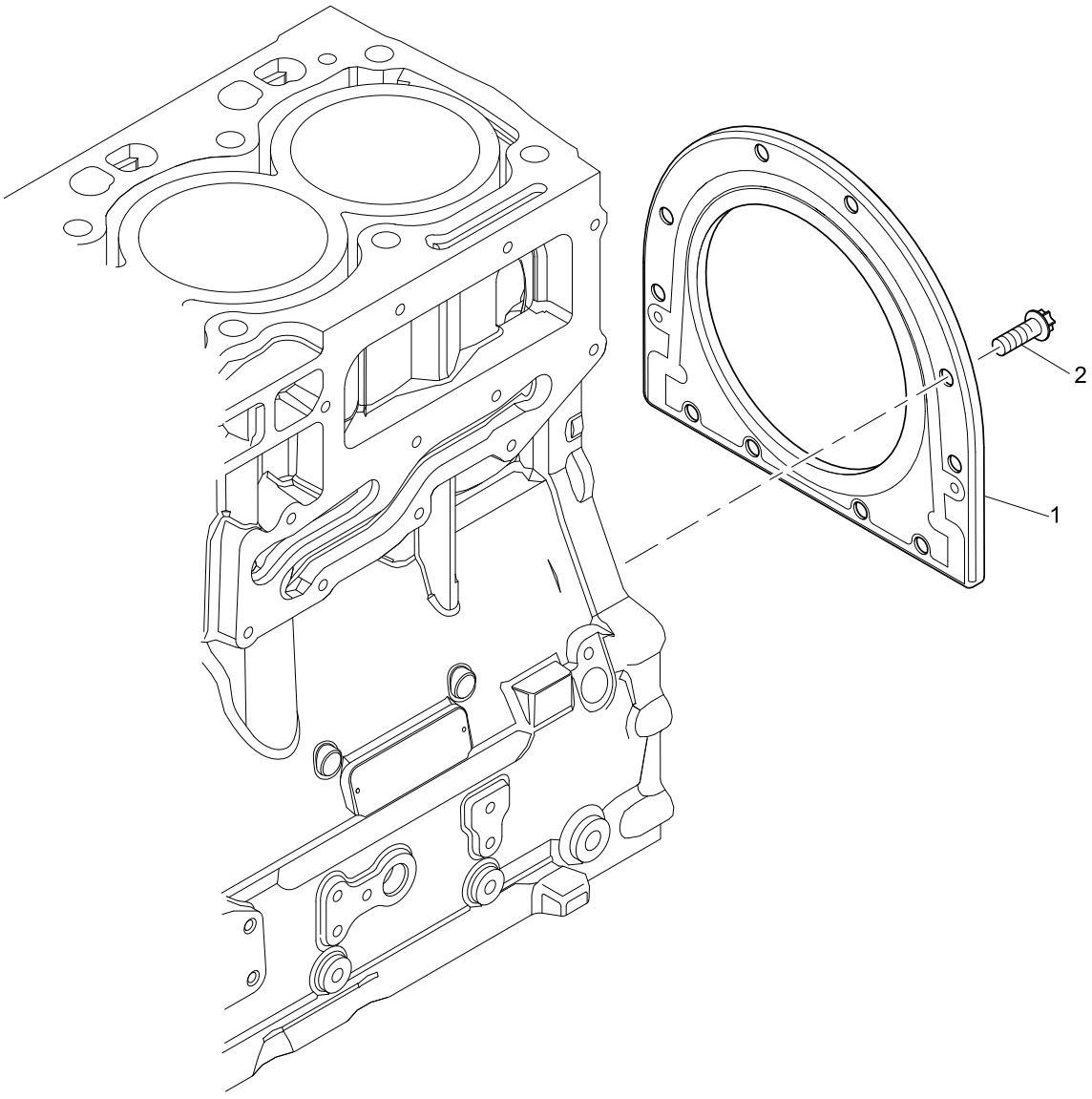

Rear End Oil Seal	Plate A
	ACHN0145

Item	Part No.	References	Qty.	Description	Notes
1	2418F704		1	SEAL - REOS HOUSING	
2	3211C002		10	BOLT	

Perkins®
THE HEART OF EVERY GREAT MACHINE

Crankshaft, Main & Big End Bearings	Plate A
→I B999998X →I T.B.A.	ACHN0145

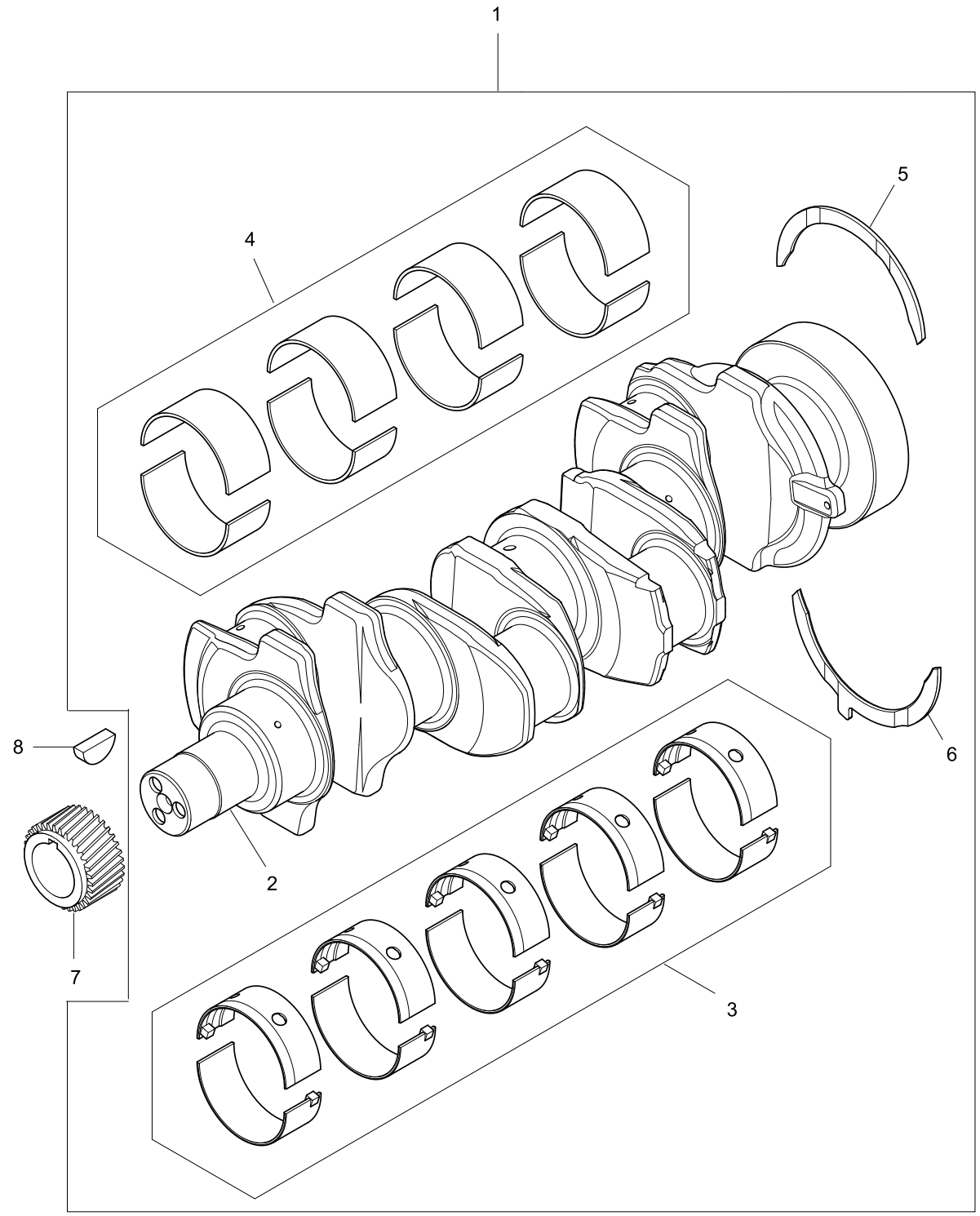

Crankshaft, Main & Big End Bearings	Plate A
→I B999998X →I T.B.A.	ACHN0145

Item	Part No.	References	Qty.	Description	Notes
1	ZZ90239	⇙	1	CRANKSHAFT KIT	
2		⇨ ZZ90239	1	CRANKSHAFT	
3	U5MB0033	Ⓢ	1	MAIN BEARING KIT	
4	U5ME0034	Ⓢ	1	BIG END BEARING KIT	
5	31137551	Ⓢ	2	THRUST WASHER	
6	31137561	Ⓢ	2	THRUST WASHER	
7	3117C221		1	CRANKSHAFT GEAR	
8	0500012		1	WOODRUFF KEY	
Service Options					
1	ZZ90239R		1	CRANKSHAFT KIT - EXCHANGE	
3	U5MB0033B	⧗ (-)0.50MM	1	MAIN BEARING KIT - U/S	
3	U5MB0033C	⧗ (-)0.75MM	1	MAIN BEARING KIT - U/S	
3	U5MB0033A	⧗ (-)0.25MM	1	MAIN BEARING KIT - U/S	
4	U5ME0034A	⧗ (-)0.25MM	1	BIG END BRG KIT - U/S	(1)
4	U5ME0034B	⧗ (-)0.50MM	1	BIG END BRG KIT - U/S	(1)
4	U5ME0034C	⧗ (-)0.75MM	1	BIG END BRG KIT - U/S	(1)
5	31137312	⧗ (+)0.007"	2	THRUST WASHER	
6	31137322	⧗ (+)0.007"	2	THRUST WASHER	

Footnotes	
(1)	BEARING FITTING TOOL 27610233 IS NOT INCLUDED

Perkins®
THE HEART OF EVERY GREAT MACHINE

Crankshaft, Main & Big End Bearings	Plate B
	ACHN0145

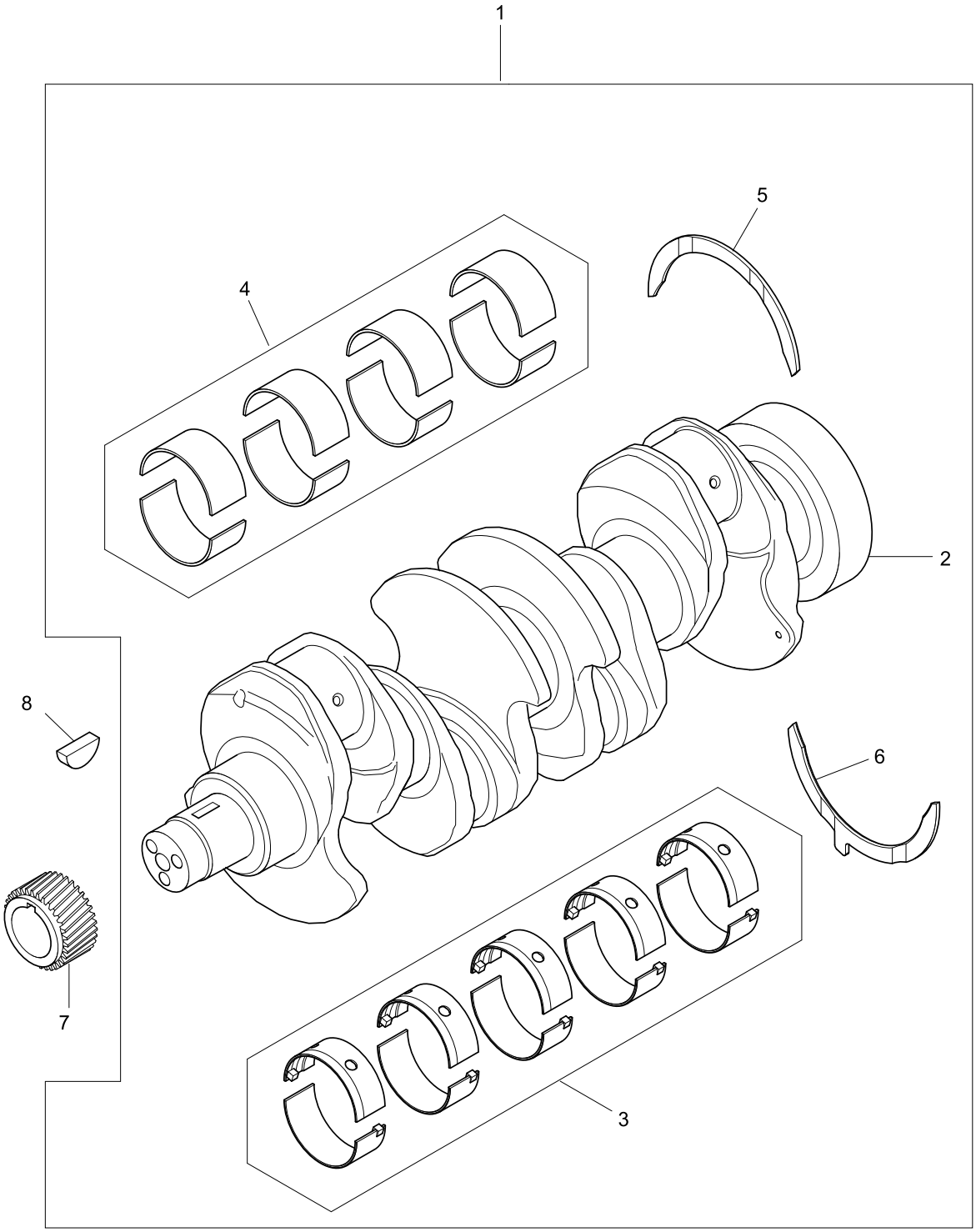

Item	Part No.	References	Qty.	Description	Notes
1	ZZ90237		1	CRANKSHAFT KIT	
2		✏ ZZ90237	1	CRANKSHAFT	
3	U5MB0033	Ⓢ	1	MAIN BEARING KIT	
4	T410927	Ⓢ 🔍 a.	1	BIG END BEARING KIT	
5	31137551	Ⓢ	2	THRUST WASHER	
6	31137561	Ⓢ	2	THRUST WASHER	
7	3117C221		1	CRANKSHAFT GEAR	
8	0500012		1	WOODRUFF KEY	
Service Options					
3	U5MB0033B	≚ (-)0.50MM	1	MAIN BEARING KIT - U/S	
3	U5MB0033C	≚ (-)0.75MM	1	MAIN BEARING KIT - U/S	
3	U5MB0033A	≚ (-)0.25MM	1	MAIN BEARING KIT - U/S	
4	T420153	≚ (+) 0.75MM	1	BIG END BRG KIT - U/S	
4	T420155	≚ (+) 0.25MM	1	BIG END BRG KIT - U/S	
4	T420154	≚ (+) 0.50MM	1	BIG END BRG KIT - U/S	
5	31137312	≚ (+)0.007"	2	THRUST WASHER	
6	31137322	≚ (+)0.007"	2	THRUST WASHER	

History				
a.				
4	T400002		1	BIG END BEARING KIT

Perkins®
THE HEART OF EVERY GREAT MACHINE

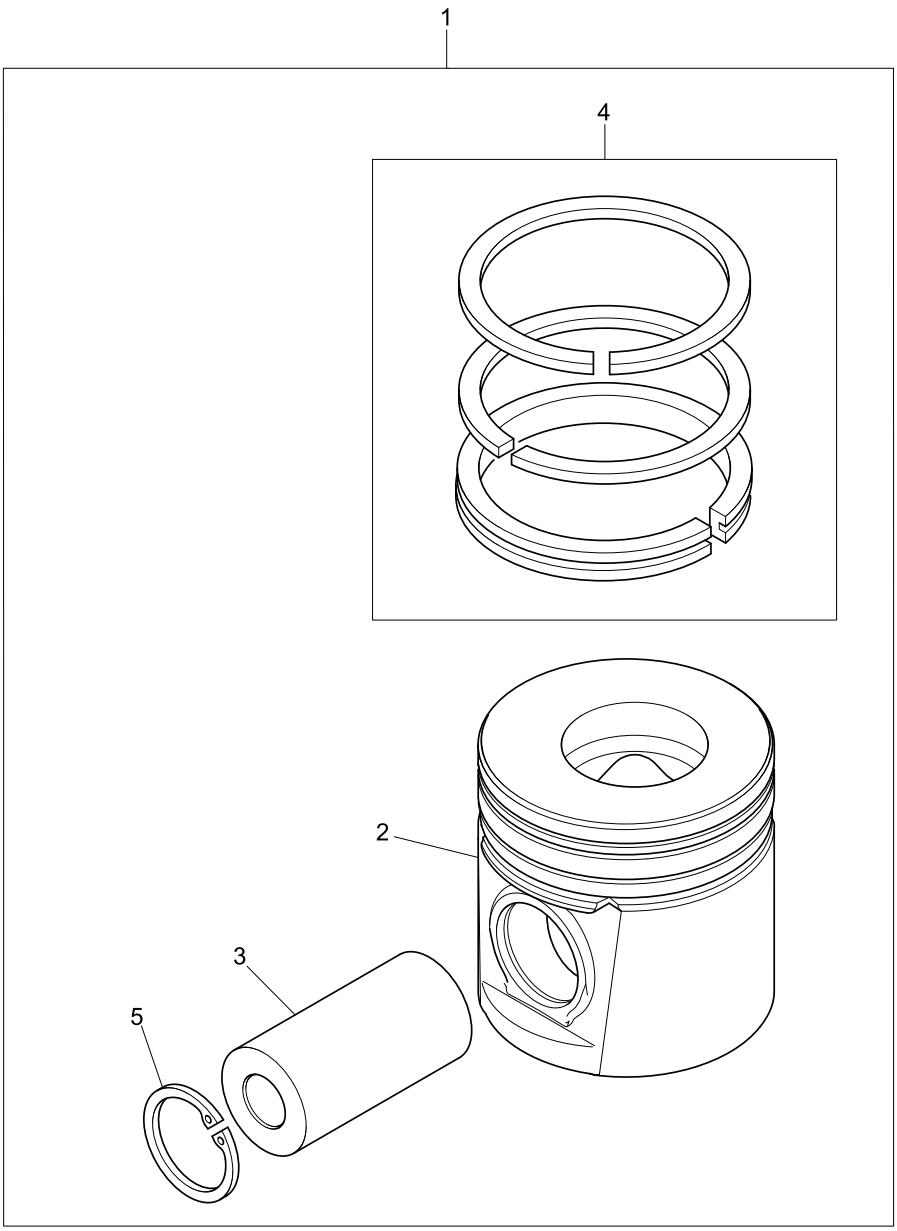
1
4
2
3
5

Item	Part No.	References	Qty.	Description	Notes
1	T426417	Ⓢ	4	PISTON AND RING KIT	
2		⇨ T426417	1	PISTON	
3		⇨ T426417	1	GUDGEON PIN	
4	UPRK0005	Ⓢ	1	PISTON RING KIT	
5	2721332		2	CIRCLIP	
Service Options					
1	U5PR0062B	⇳ (+)0.50MM	4	PISTON AND RING KIT - O/S	
1	U5PR0062D	⇳ (+)1.00MM	4	PISTON AND RING KIT - O/S	
4	UPRK0005B	⇳ (+)0.50MM	1	PISTON RING KIT - OVERSIZE	
4	UPRK0005D	⇳ (+)1.00MM	1	PISTON RING KIT - OVERSIZE	
1	T426415	⇳ (+)0.50MM	4	PISTON AND RING KIT - O/S	
1	T426416	⇳ (+)1.00MM	4	PISTON AND RING KIT - O/S	

Footnotes

Perkins®
THE HEART OF EVERY GREAT MACHINE

Connecting Rods	Plate A
	ACHN0145

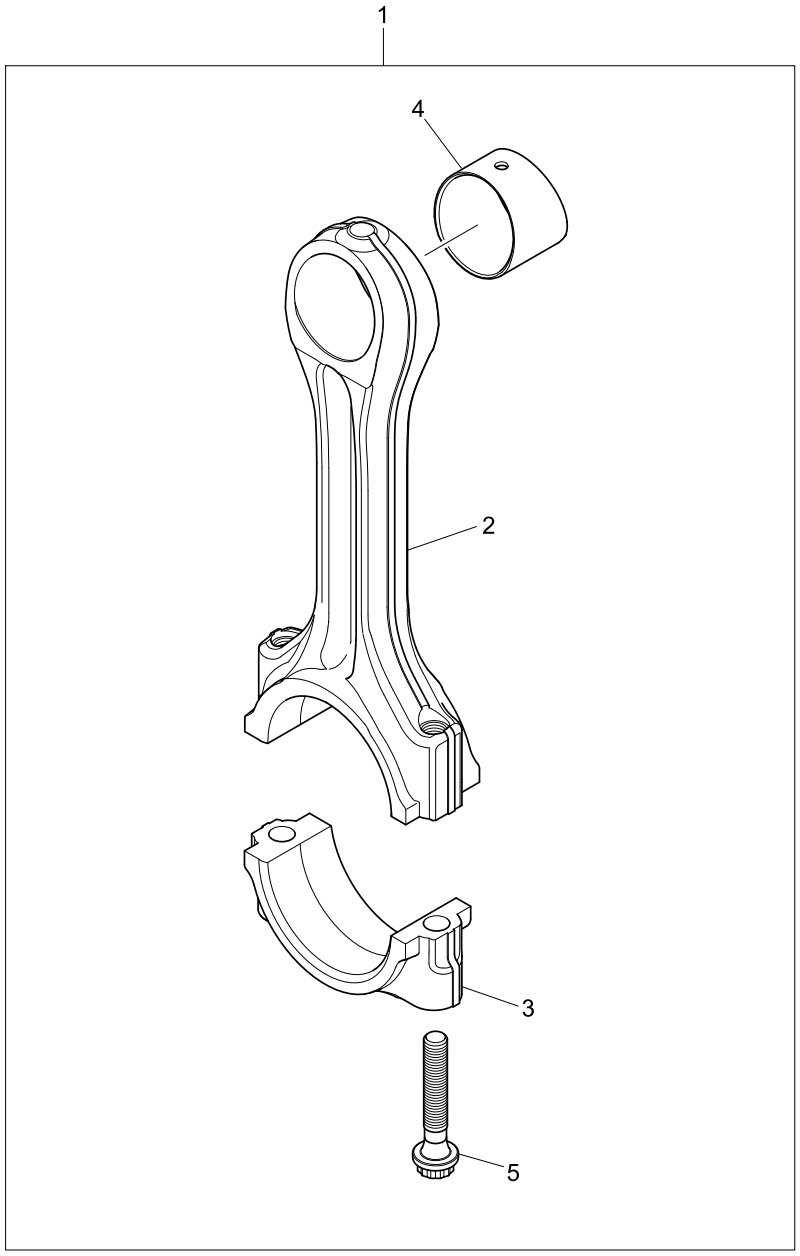

Item	Part No.	References	Qty.	Description	Notes
1		Ⓢ	4	CON ROD ASSEMBLY	
2		⇨ SERVICE OPTION	1	CON ROD	
3		⇨ SERVICE OPTION	1	CAP	
4	3112A005	⊀	1	SMALL END BUSH	
5	3212V003		2	CON ROD BOLT	(1)
Service Options					
1	4115C316		4	CON ROD ASSEMBLY	GRADE L BLUE
1	4115C315		4	CON ROD ASSEMBLY	PURPLE GRADE K
1	4115C314		4	CON ROD ASSEMBLY	GREEN GRADE J
1	4115C313		4	CON ROD ASSEMBLY	GRADE H WHITE
1	4115C312		4	CON ROD ASSEMBLY	ORANGE GRADE G
1	4115C311		4	CON ROD ASSEMBLY	RED GRADE F

Footnotes	
(1)	DO NOT RE-USE ONCE REMOVED

Perkins®
THE HEART OF EVERY GREAT MACHINE

Connecting Rods	Plate B
	ACHN0145

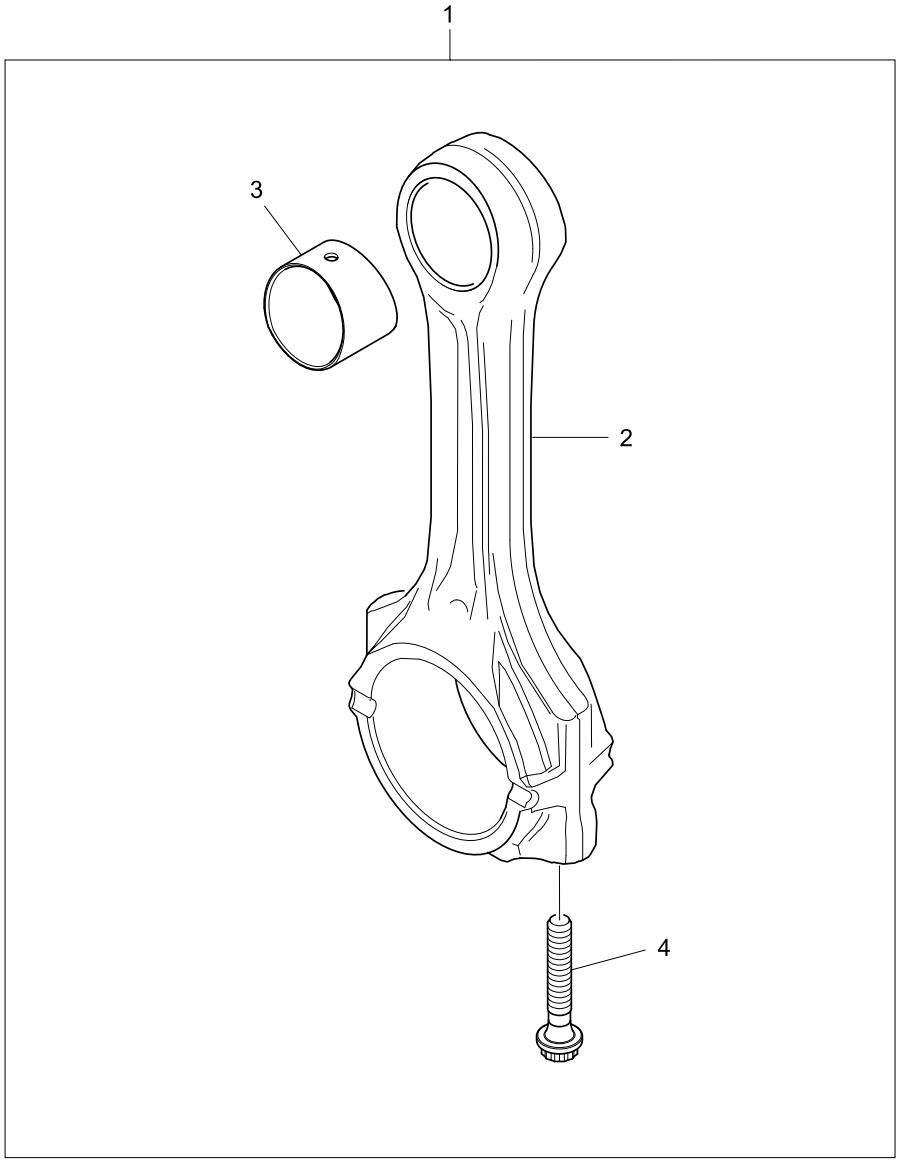

Item	Part No.	References	Qty.	Description	Notes
1		Ⓢ	4	CON ROD	
2		⇨ SERVICE OPTION	1	CON ROD	
3	3112A005	⊀	1	SMALL END BUSH	
4	T400001		2	CON ROD BOLT	(1)
Service Options					
1	4115C361		4	CON ROD	(2) GRADE:R - RED
1	4115C362		4	CON ROD	(3) GRADE:O - ORANGE
1	4115C363		4	CON ROD	(4) GRADE:W - WHITE
1	4115C364		4	CON ROD	(5) GRADE:G - GREEN
1	4115C365		4	CON ROD	(6) GRADE:P - PURPLE
1	4115C366		4	CON ROD	(7) GRADE:B - BLUE

Footnotes	
(1)	DO NOT RE-USE ONCE REMOVED
(2)	GRADE:R - RED
(3)	GRADE:O - ORANGE
(4)	GRADE:W - WHITE
(5)	GRADE:G - GREEN
(6)	GRADE:P - PURPLE
(7)	GRADE:B - BLUE

Cylinder Head Assembly	Plate A
	ACHN0145

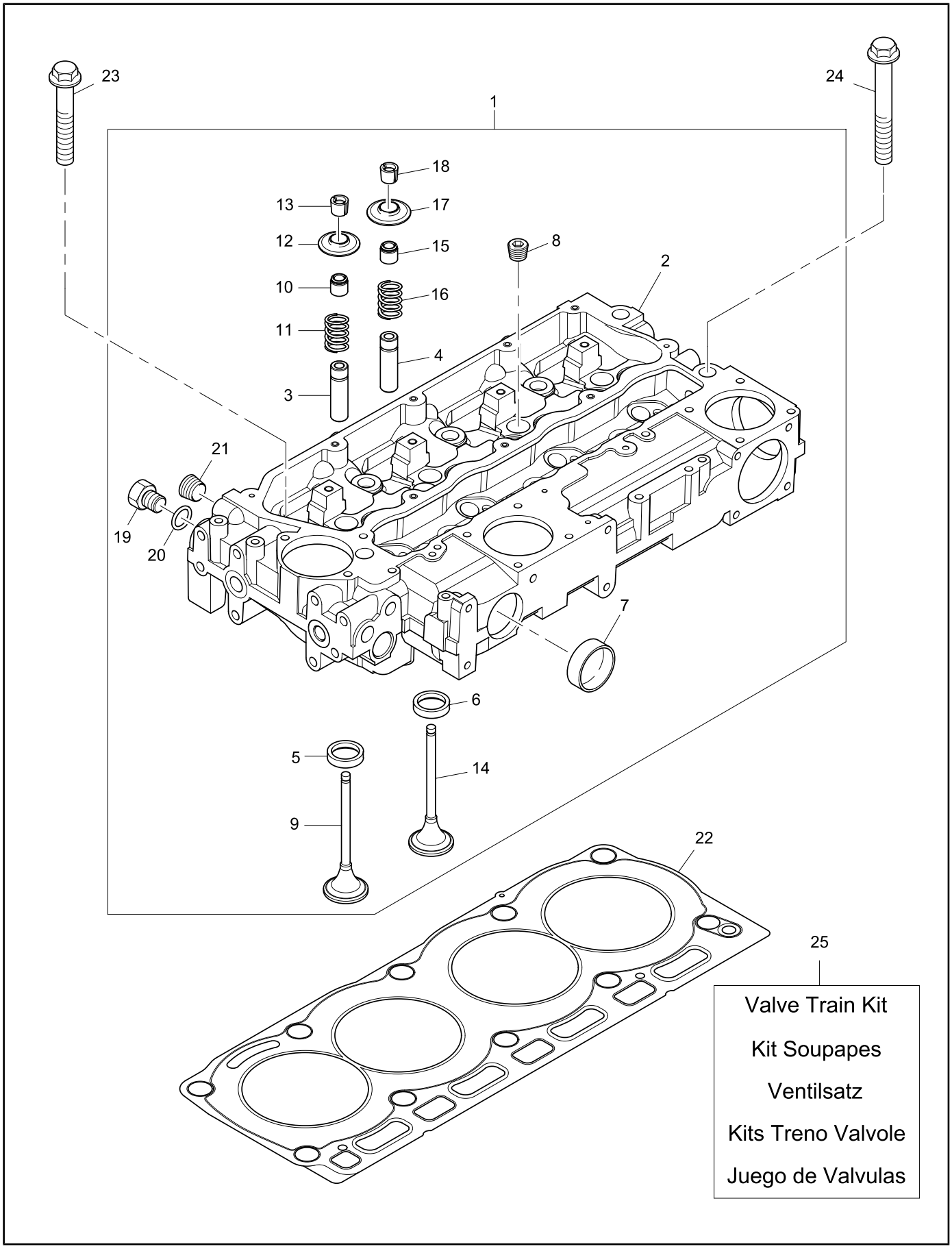

Item	Part No.	References	Qty.	Description	Notes
1	ZZ80279		1	CYLINDER HEAD ASSEMBLY	
2		⇨ ZZ80279	1	CYLINDER HEAD	
3	3313A012		4	VALVE GUIDE	
4	3313A012		4	VALVE GUIDE	
5	3314A221		4	VALVE SEAT INSERT	
6	3314A231		4	VALVE SEAT INSERT	
7	32416117		2	PLUG	
8	0650588		4	PLUG	
9	3142H101		4	INTAKE VALVE	
10	2418M519		4	SEAL - VALVE STEM	
11	T417479	a. b.	4	VALVE SPRING	
12	3342A021		4	CAP	
13	2714A002		8	VALVE COLLET	
14	3142A171		4	EXHAUST VALVE	
15	2418M517		4	SEAL - VALVE STEM	
16	T417479	a. b.	4	VALVE SPRING	
17	3342A021		4	CAP	
18	2714A002		8	VALVE COLLET	
19	3278A006		1	PLUG	
20	2415H003		1	SEAL - O RING	
21	2431154		2	PLUG	
22	3681E051	Ⓢ	1	GASKET - CYLINDER HEAD	
23	3218A011		7	CYLINDER HEAD BOLT	
24	3218A012		3	CYLINDER HEAD BOLT	
25	T403217		1	VALVETRAIN KIT	
26	3142H101		4	INTAKE VALVE	
27	3142A171		4	EXHAUST VALVE	
28	T417479		8	VALVE SPRING	
29	2714A002		16	VALVE COLLET	
30	3313A012		8	VALVE GUIDE	
31	2418M519		4	SEAL - VALVE STEM	
32	2418M517		4	SEAL - VALVE STEM	
Service Options					
22	T409652	⧗ (+)0.25MM	1	GASKET - CYLINDER HEAD	

History				
a.				
11	T408677		4	VALVE SPRING
16	T408677		4	VALVE SPRING
b.				

Cylinder Head Assembly	Plate A
	ACHN0145

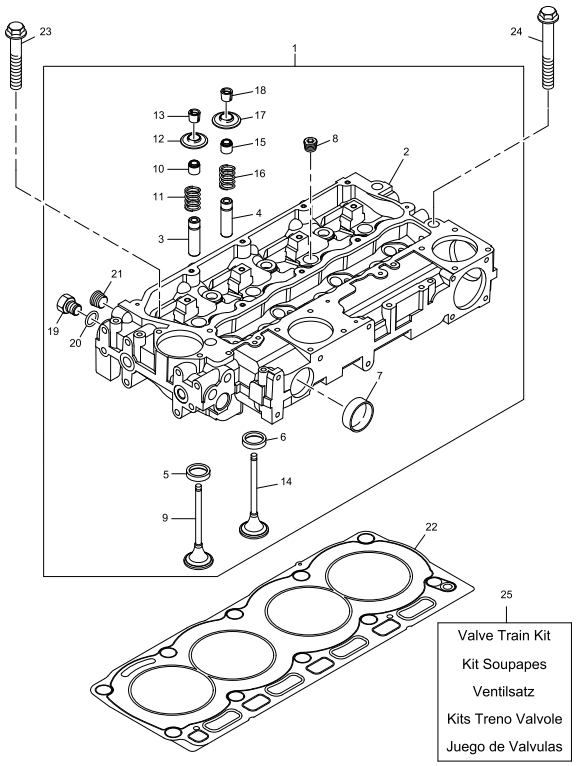

History			
11	3174A031	4	VALVE SPRING
16	3174A031	4	VALVE SPRING

Footnotes

Rocker Shaft Assembly	Plate A
	ACHN0145

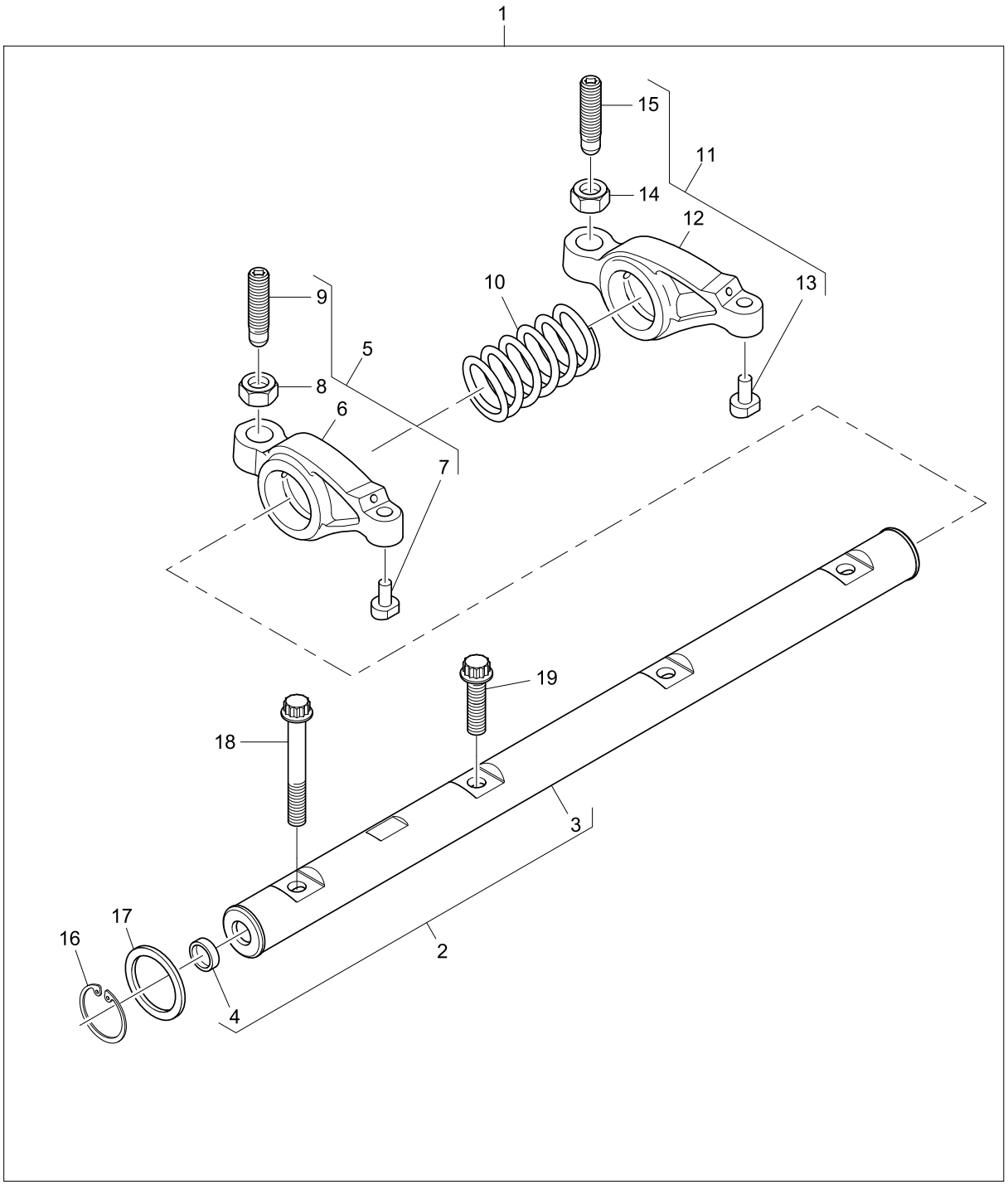

Rocker Shaft Assembly	Plate A
	ACHN0145

Item	Part No.	References	Qty.	Description	Notes
1	4115R613		1	ROCKER SHAFT ASSEMBLY	
2	4115R703		1	ROCKER SHAFT ASSY - MINOR	
3		⇨ 4115R703	1	ROCKER ARM SHAFT	
4	2485A104		2	PLUG	
5	4115R319		4	ROCKER LEVER	
6		⇨ 4115R319	1	ROCKER LEVER	
7		⇨ 4115R319	1	PAD	
8	3331A006		1	NUT	
9	3211C004		1	SCREW	
10	3174A015		3	ROCKER SHAFT SPRING	
11	4115R318		4	ROCKER LEVER	
12		⇨ 4115R318	1	ROCKER LEVER	
13		⇨ 4115R318	1	PAD	
14	3331A006		1	NUT	
15	3211C004		1	SCREW	
16	2722A022		2	CIRCLIP	
17	2134A502		2	WASHER	
18	2316A901		1	SCREW	
19	2316A902		3	SCREW	

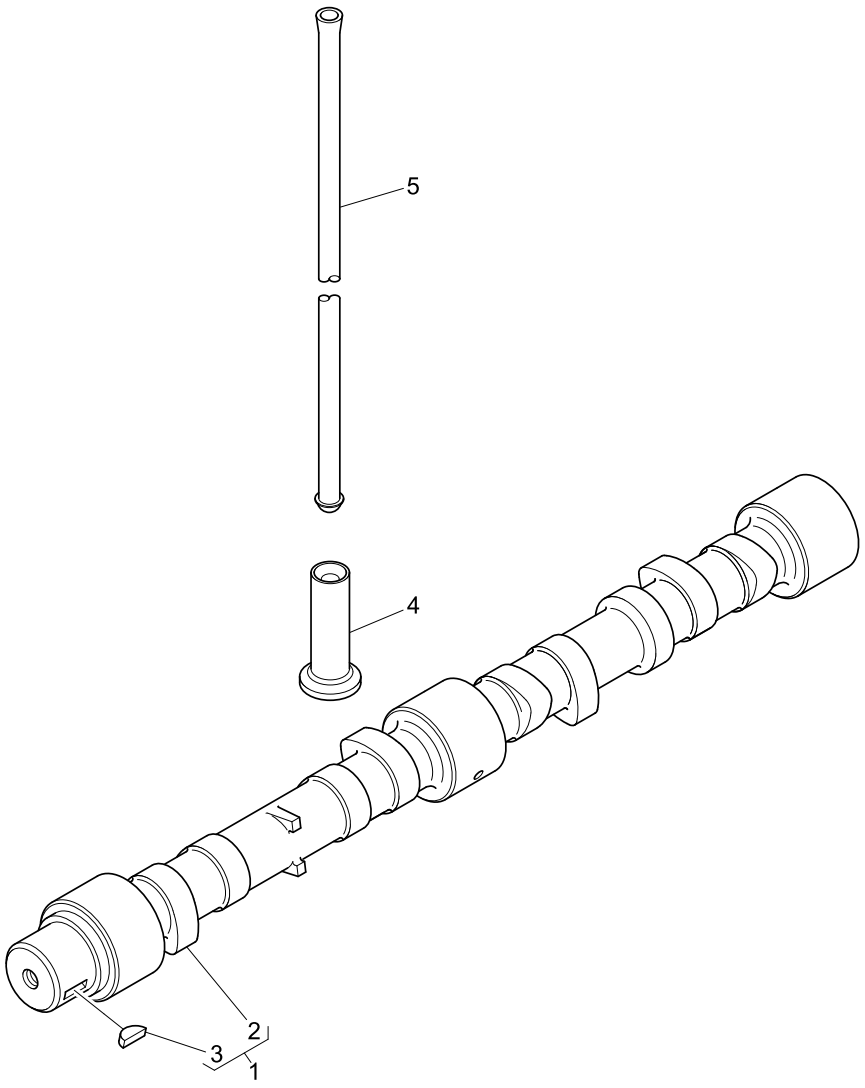
5
4
2
3
1

Item	Part No.	References	Qty.	Description	Notes
1	4112K072	b.	1	CAMSHAFT	
2		b. ⇨ 4112K072	1	CAMSHAFT	
3	0500012		1	WOODRUFF KEY	
4	3142U061		8	TAPPET	
5	3142V011	a.	8	PUSHROD	

History					
a.					
5	T405746		8	PUSHROD	
b.					
1	4112K027		1	CAMSHAFT	
2		⇨	1	CAMSHAFT	

Fuel Injection Pump	Plate A
	AFH04863

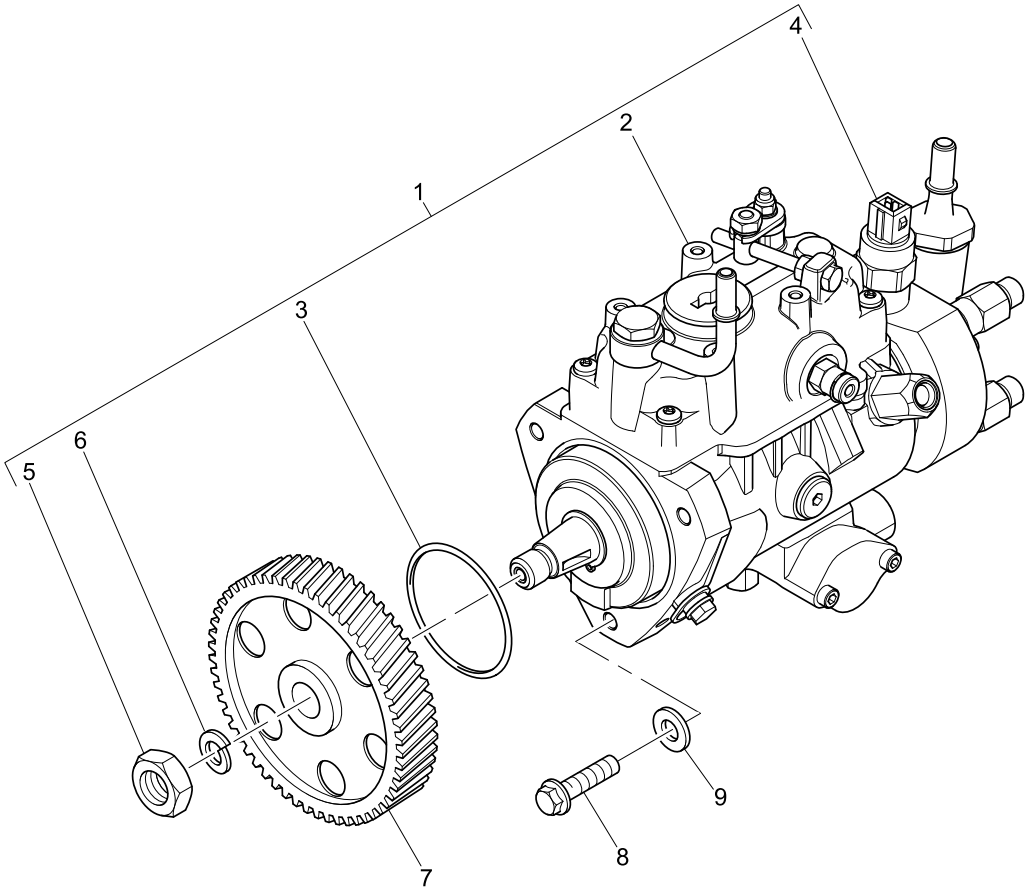

Fuel Injection Pump	Plate A
	AFH04863

Item	Part No.	References	Qty.	Description	Notes
1	2644C337/18	S	1	FUEL INJECTION PUMP	
2		⇨ 2644C337/18	1	FUEL INJECTION PUMP	
3	26420318		1	SEAL - O RING	
4	26420469		1	SOLENOID	
5	2318A108		1	NUT	
6	K134AF01		1	WASHER	
7	T420897	a.	1	FUEL INJECTION PUMP GEAR	
8	2314H004		3	SCREW	
9	2411D008		3	WASHER	
Service Options					
1	44C337/18P		1	FUEL INJ PUMP - EXCH	

History					
a.					
7	3117L261		1	FUEL INJECTION PUMP GEAR	

Footnotes

Perkins®
THE HEART OF EVERY GREAT MACHINE

High Pressure Fuel Pipes	Plate A
	AFH04863

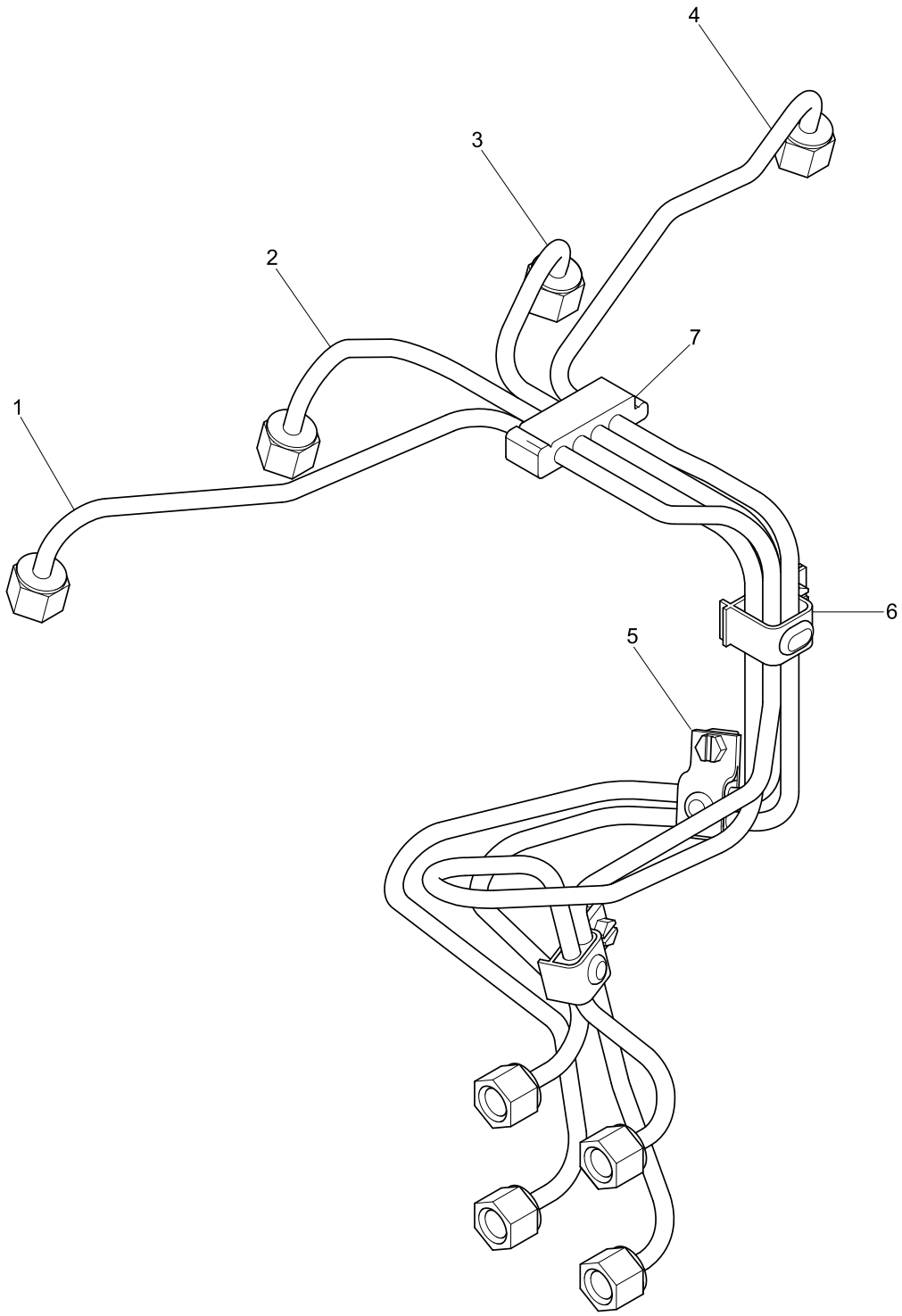

High Pressure Fuel Pipes	Plate A
	AFH04863

Item	Part No.	References	Qty.	Description	Notes
1	3525A101		1	PIPE - FUEL INJ NO 1 CYL	
2	3525A102		1	PIPE - FUEL INJ NO 2 CYL	
3	3525A103		1	PIPE - FUEL INJ NO 3 CYL	
4	3525A104		1	PIPE - FUEL INJ NO 4 CYL	
5	2481Y011		2	CLIP	
6	2481Y012		1	CLIP	
7	2646E019		1	CLIP	

Perkins®
THE HEART OF EVERY GREAT MACHINE

Atomisers	Plate A
	AFH04863

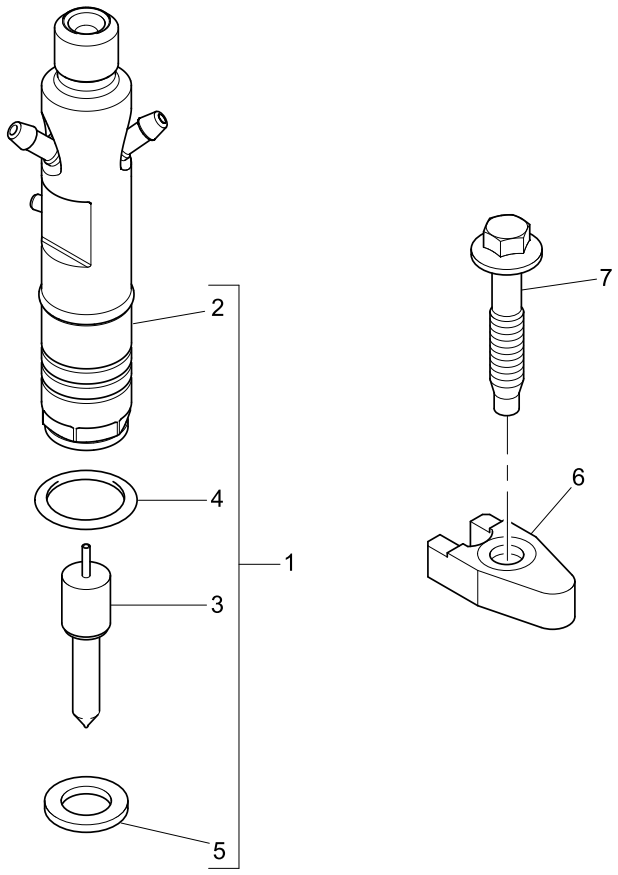

Atomisers	Plate A
	AFH04863

Item	Part No.	References	Qty.	Description	Notes
1	2645K028		4	INJECTOR	
2		⇨ 2645K028	1	INJECTOR NOZZLE HOLDER	
3		⇨ 2645K028	1	INJECTOR NOZZLE	
4	26460064		1	SEAL - INJECTOR	
5	L311FF02		1	INJECTOR WASHER	
6	3751A241		4	INJECTOR CLAMP	
7	2314W009		4	SCREW	

Perkins®
THE HEART OF EVERY GREAT MACHINE

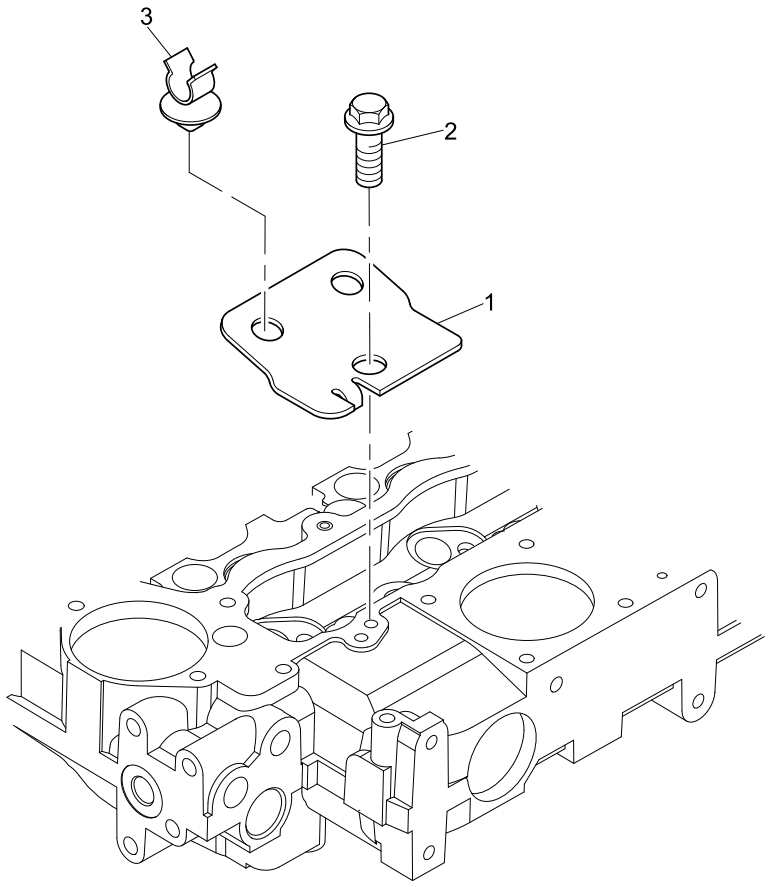
3
2
1

Item	Part No.	References	Qty.	Description	Notes
1	3653A017		1	BRACKET	
2	2314H002		1	SCREW	
3	2481D558		1	PIPE CLIP	

Pick-Up Sensor	Plate A
	AFH04863

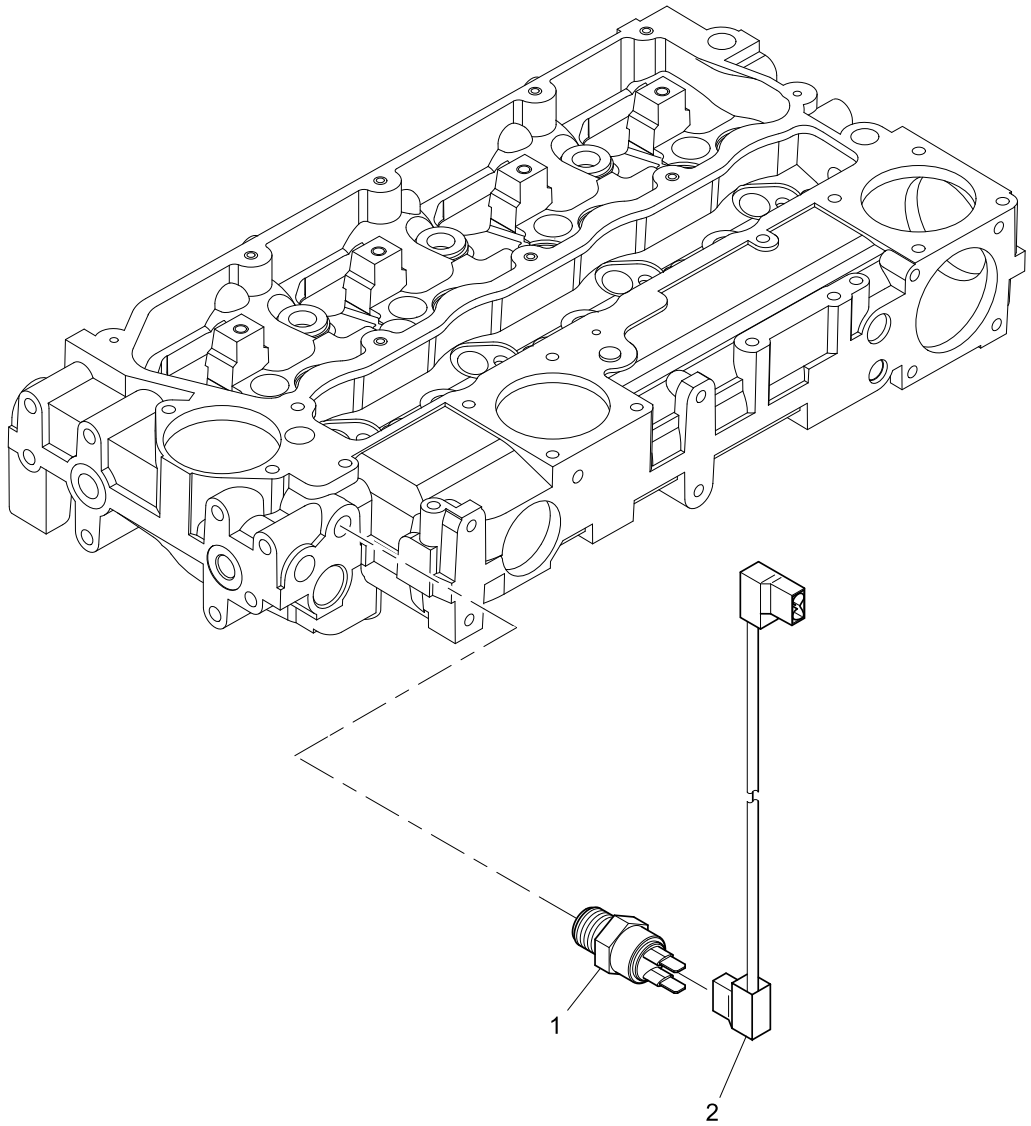

Pick-Up Sensor	Plate A
	AFH04863

Item	Part No.	References	Qty.	Description	Notes
1	2848A123	a.	1	WATER TEMPERATURE SWITCH	
2	3161C017		1	CABLE	

History					
a.					
1	2848A127		1	WATER TEMPERATURE SENSOR	

Perkins®
THE HEART OF EVERY GREAT MACHINE

Sensors	Plate A
	AFH04863

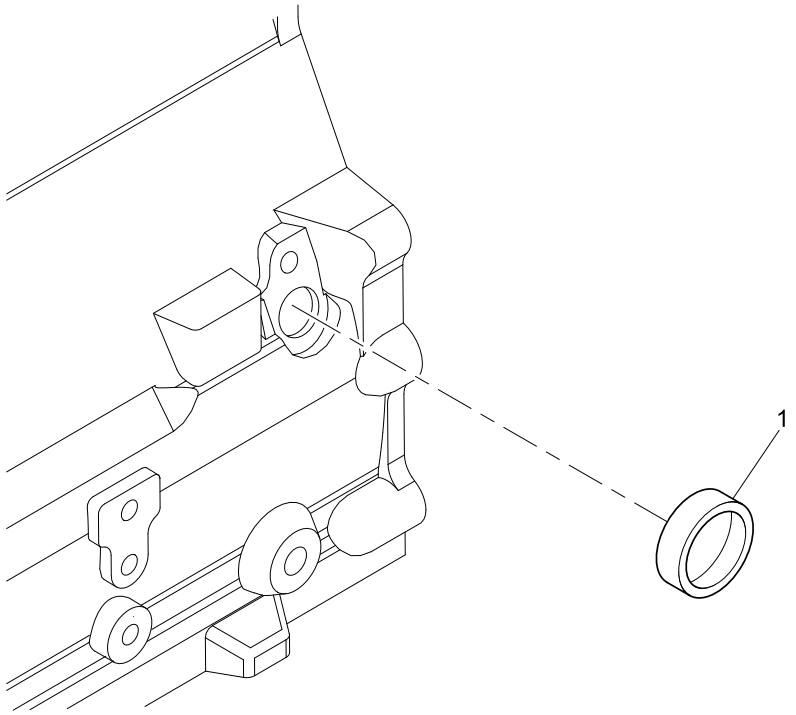

Sensors	Plate A
	AFH04863

Item	Part No.	References	Qty.	Description	Notes
1	2485A109		1	PLUG	(1)

Footnotes	
(1)	NOT REQUIRED ON ALL CONDITIONS

Perkins®
THE HEART OF EVERY GREAT MACHINE

Fuel Leak-Off Pipe	Plate A
	AFH04863

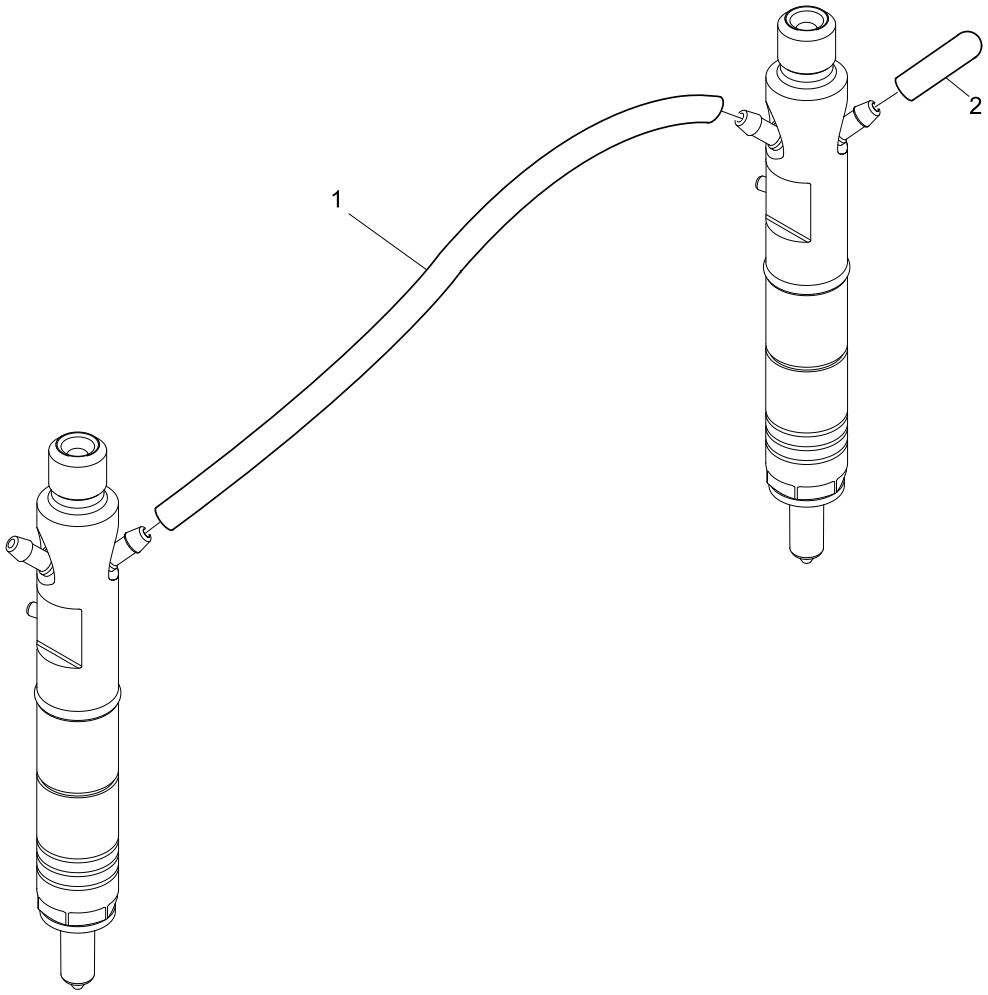

Fuel Leak-Off Pipe	Plate A
	AFH04863

Item	Part No.	References	Qty.	Description	Notes
1	2646F501		3	HOSE	
2	2646E501		1	CAP	

Perkins®
THE HEART OF EVERY GREAT MACHINE

Flywheel Housing	Plate A
	CDH01097

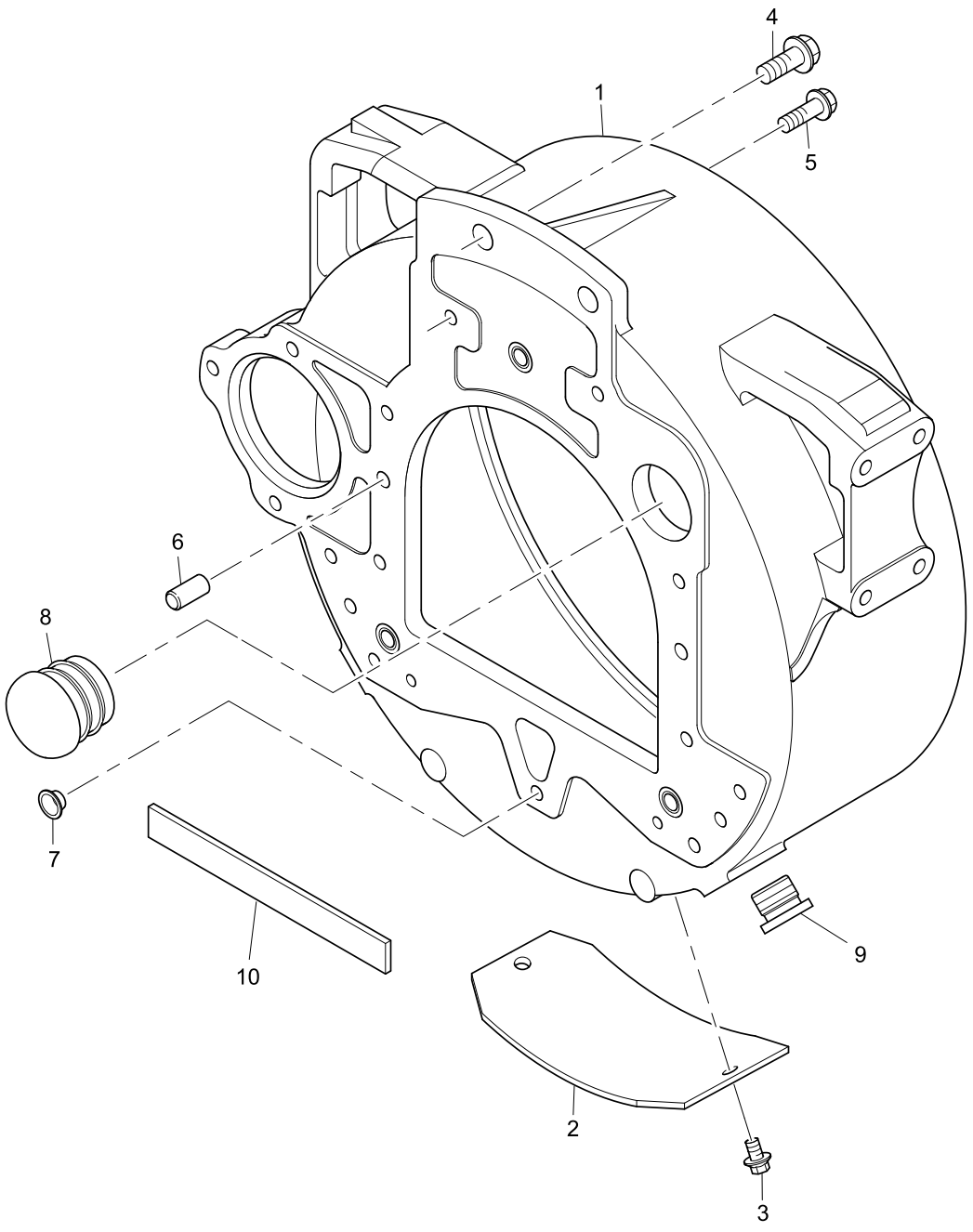

Flywheel Housing	Plate A
	CDH01097

Item	Part No.	References	Qty.	Description	Notes
1	3713M049		1	FLYWHEEL HOUSING	
2	36212132		1	PLATE	
3	2314H102		2	SCREW	
4	2314J603		2	SCREW	
5	2314J204		6	SCREW	
6	3245A011		2	DOWEL	
7	2487204		3	PLUG	
8	2487A452		1	PLUG	
9	T410815	b.	2	PLUG	
10	T413928	a.	1	SEAL	

History					
a.					
10	36843154		1	SEAL	
b.					
9	2487Y005		2	PLUG	

Perkins®
THE HEART OF EVERY GREAT MACHINE

Flywheel & Starter Ring	Plate A
	DDH02080

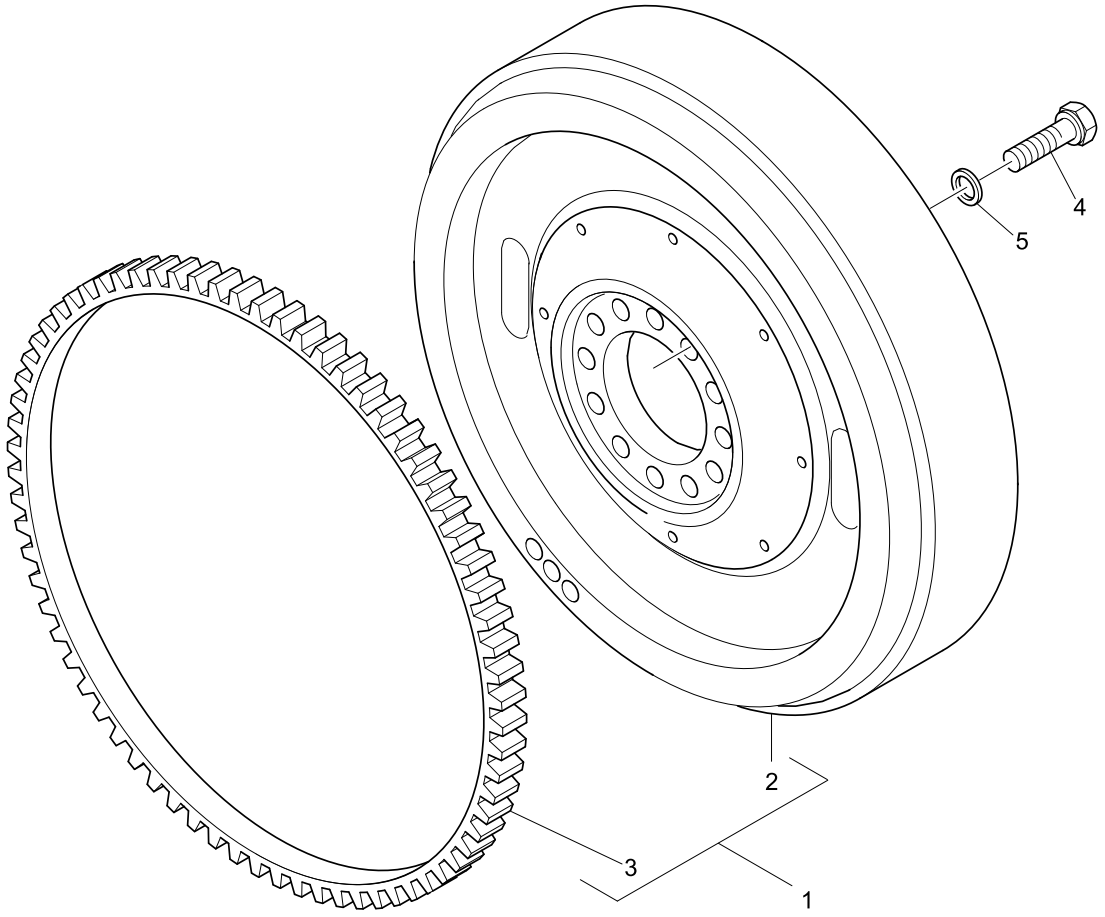

Item	Part No.	References	Qty.	Description	Notes
1	T419862	a.	1	FLYWHEEL ASSEMBLY	
2		a. ⇨ T419862	1	FLYWHEEL	
3	31162121		1	STARTER RING	
4	0096803		6	SCREW	
5	33117127		6	WASHER	

History					
a.					
1	4111D128		1	FLYWHEEL ASSEMBLY	
2		⇨	1	FLYWHEEL	

Starter Motor	Plate A
	EDH00947

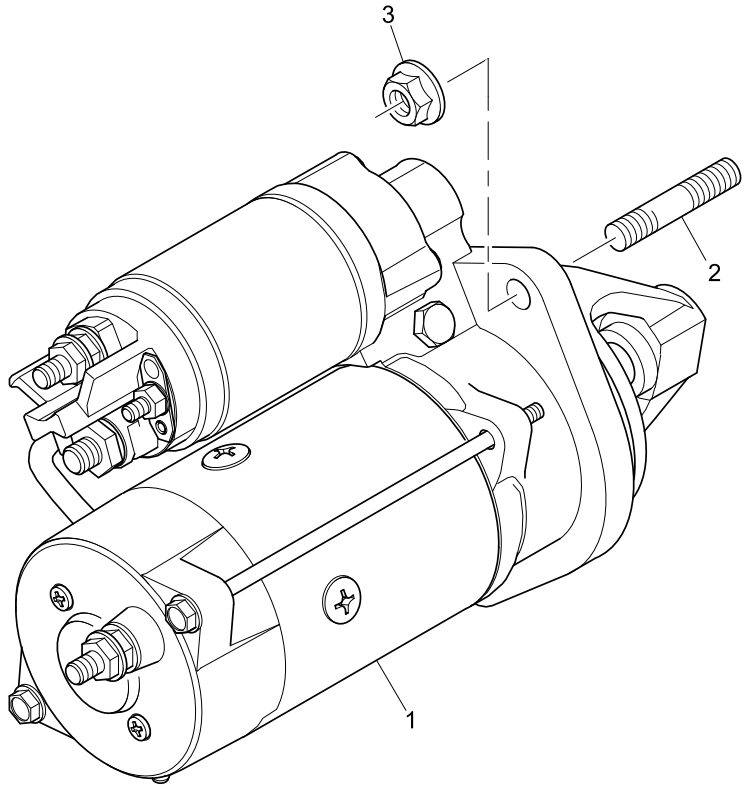

Starter Motor	Plate A
	EDH00947

Item	Part No.	References	Qty.	Description	Notes
2	2313C078		3	STUD	
3	2318A604		3	NUT	
4	T400268		1	STARTER MOTOR	

History					
a.					
1	2873K632		1	STARTER MOTOR	
b.					
1	2873K621		1	STARTER MOTOR	

Perkins®
THE HEART OF EVERY GREAT MACHINE

Fan Drive	Plate A
	FBH01146

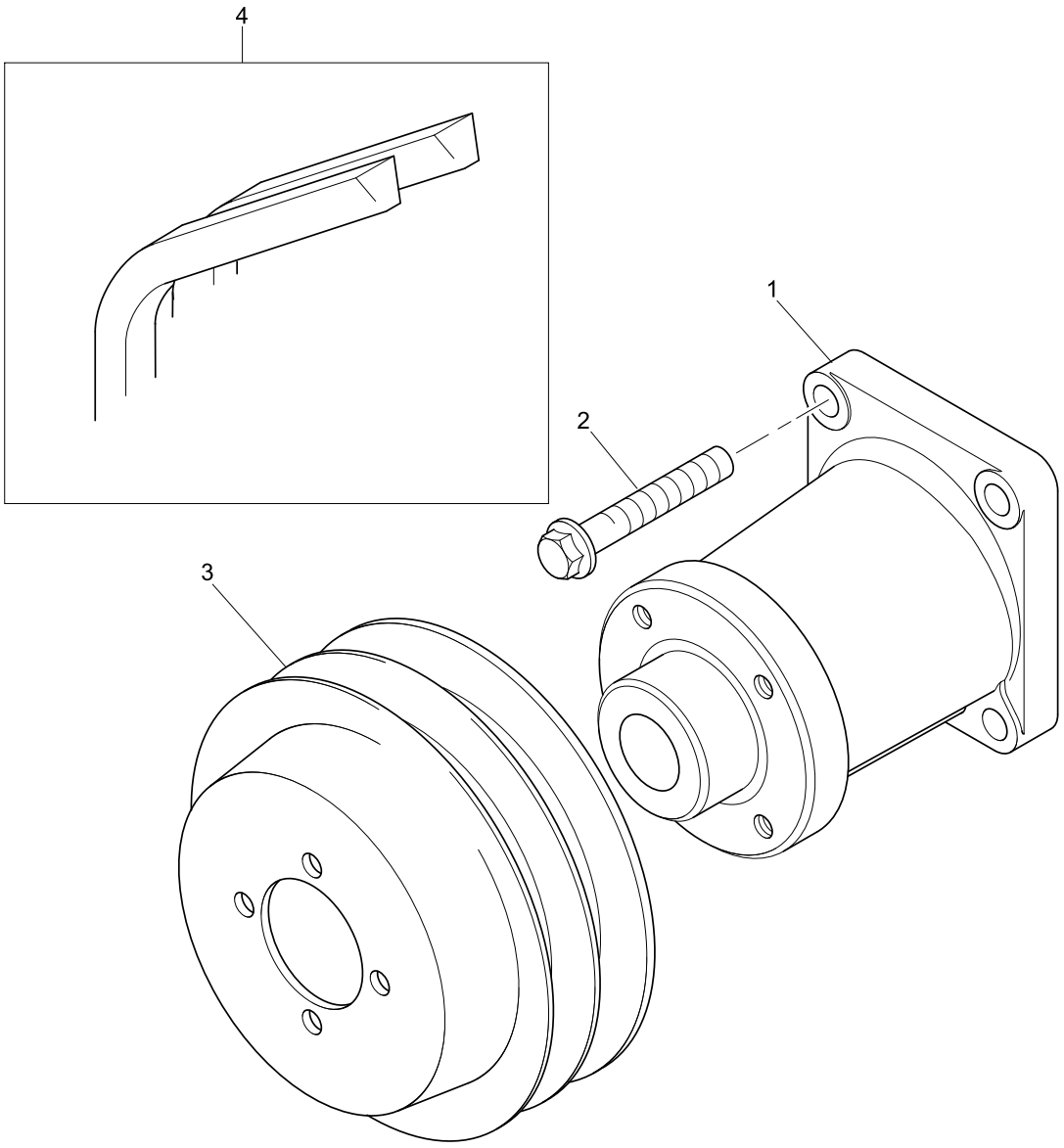

Fan Drive	Plate A
	FBH01146

Item	Part No.	References	Qty.	Description	Notes
1	4113K005		1	FAN DRIVE HOUSING	
2	2314J005		4	SCREW	
3	3115C113		1	FAN DRIVE PULLEY	
4	2614B655		1	BELT	

Footnotes

Sump	Plate A
	GBH02927

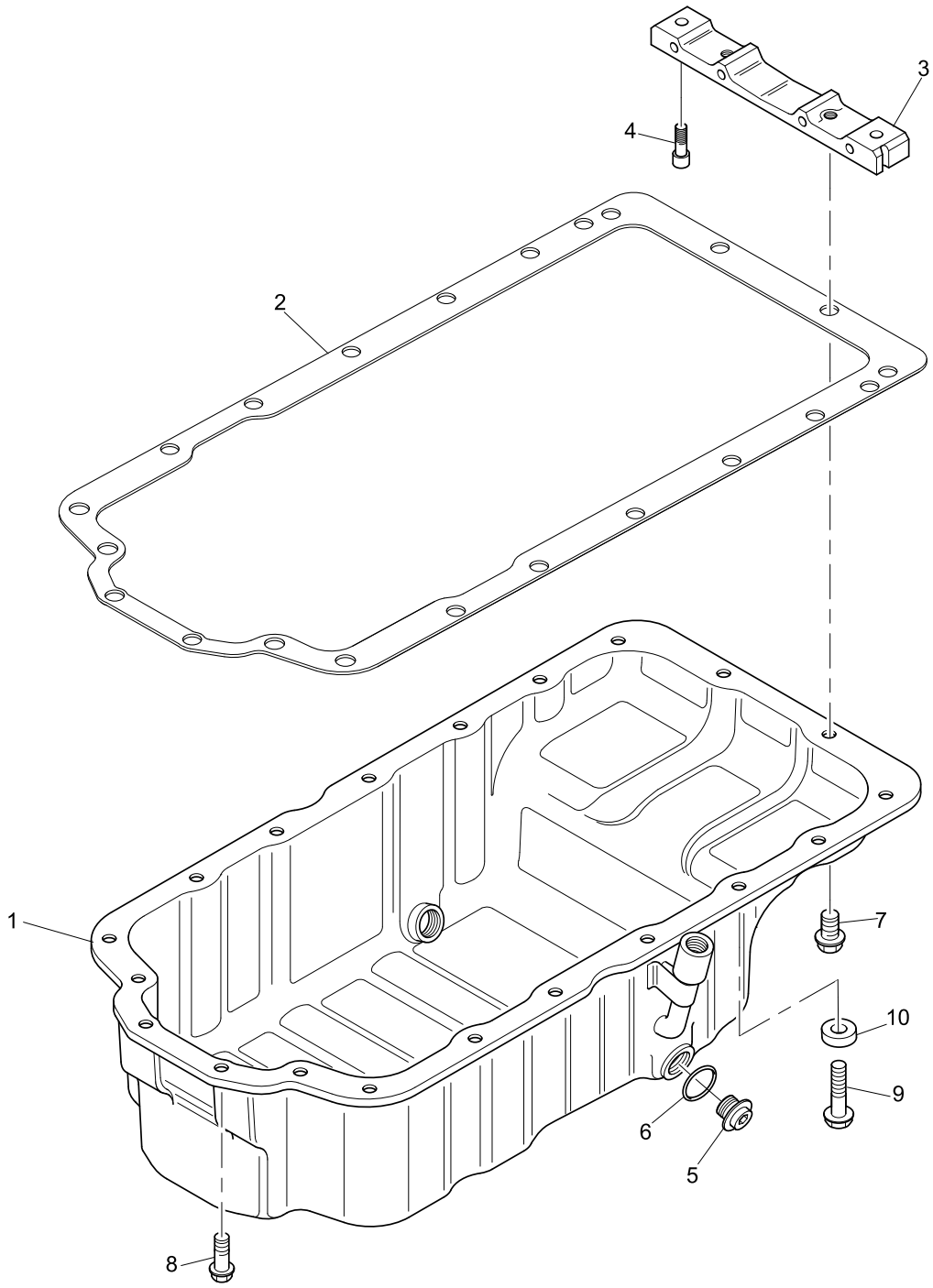

Sump	Plate A
	GBH02927

Item	Part No.	References	Qty.	Description	Notes
1	3717Y061		1	SUMP	
2	T420777	a.	1	GASKET - SUMP	
3	3627P041		1	BRIDGE PIECE	
4	2311D039		2	SCREW	
5	32186405		2	PLUG	
6	2415715		2	SEAL - O RING	
7	2314H031		2	SCREW	
8	2314H002		17	SCREW	
9	2314H003		1	SCREW	
10	33134418		1	SPACER	

History					
a.					
2	3681K037		1	GASKET - SUMP	

Perkins®
THE HEART OF EVERY GREAT MACHINE

Dipstick & Filler Tube	Plate A
	GBH02927

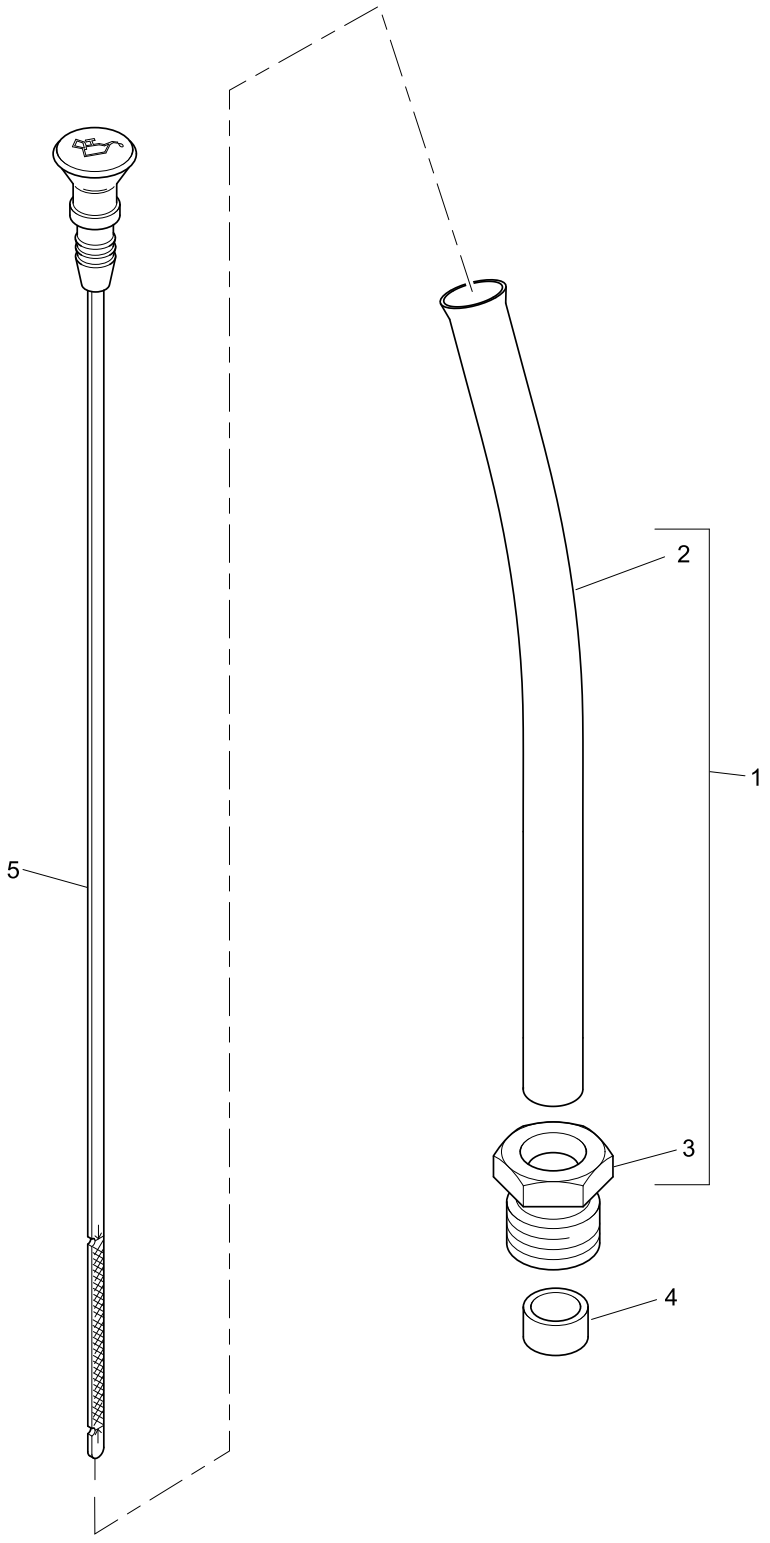

Dipstick & Filler Tube	Plate A
	GBH02927

Item	Part No.	References	Qty.	Description	Notes
1	3577A125		1	TUBE ASSEMBLY	
2		✏ 3577A125	1	TUBE	
3	3353D005		1	NUT	
4	33812116		1	OLIVE	
5	3178C077		1	DIPSTICK	

Perkins®
THE HEART OF EVERY GREAT MACHINE

Oil Strainer	Plate A
	GBH02927

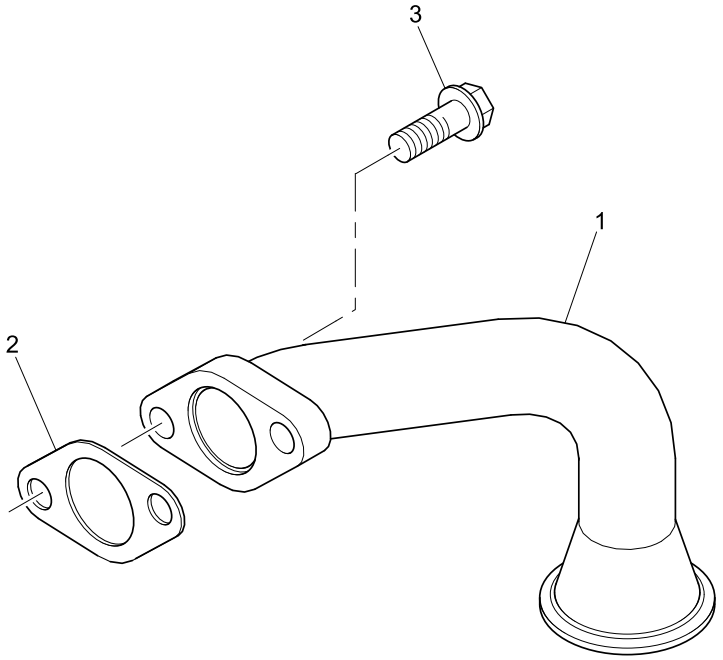

Oil Strainer	Plate A
	GBH02927

Item	Part No.	References	Qty.	Description	Notes
1	3575A059		1	PIPE - OIL SUCTION	
2	36832137		1	GASKET	
3	2314H004		2	SCREW	

Perkins®
THE HEART OF EVERY GREAT MACHINE

Oil Strainer	Plate B
	GBH02927

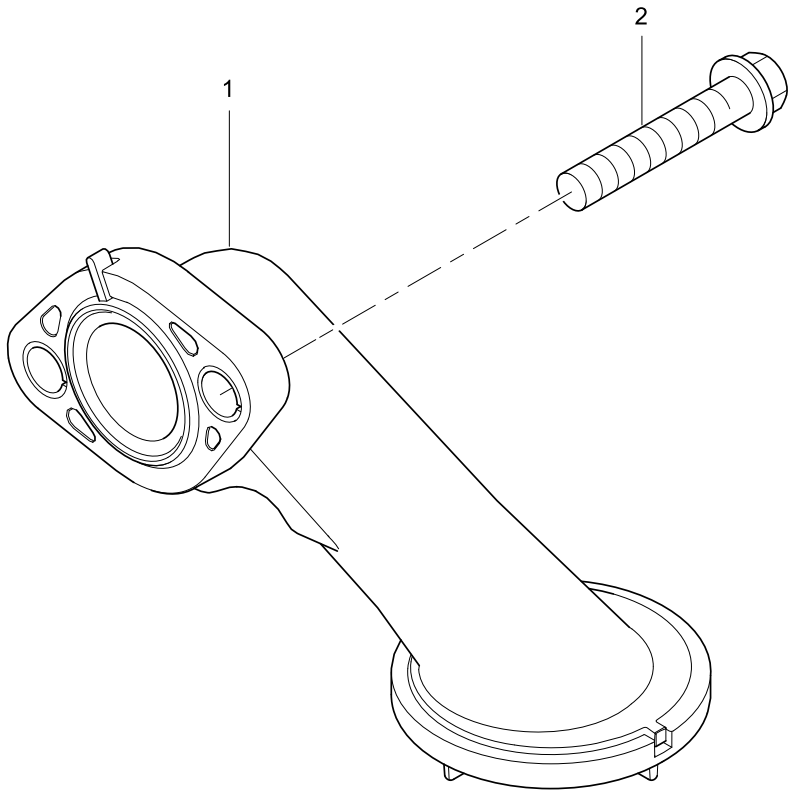

Oil Strainer	Plate B
	GBH02927

Item	Part No.	References	Qty.	Description	Notes
1	T410748		1	PIPE - OIL SUCTION	
2	2314H004		2	SCREW	

Perkins®
THE HEART OF EVERY GREAT MACHINE

Cylinder Head Cover	Plate A
	HBH03467

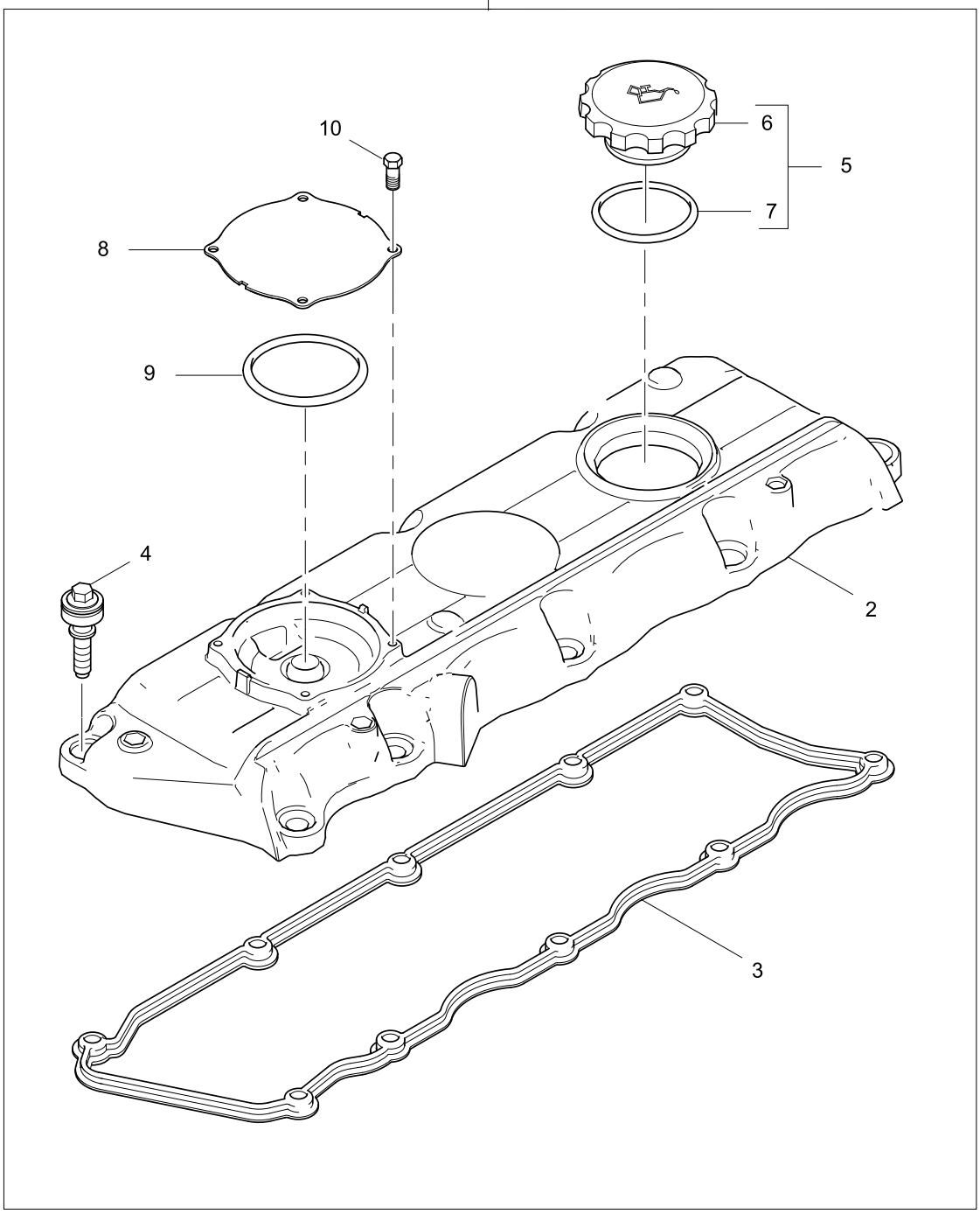

Cylinder Head Cover	Plate A
	HBH03467

Item	Part No.	References	Qty.	Description	Notes
1	T426692		1	CYL HEAD COVER ASSY	
2		✏ T426692	1	CYLINDER HEAD COVER	
3	3681A055		1	GASKET - CYL. HEAD COVER	
4	2161A013		10	SCREW	
5	4142X099	Ⓢ	1	OIL FILLER CAP	
6		✏ 4142X099	1	OIL FILLER CAP	
7	2415A131		1	SEAL - O RING	
8	T414958		1	PLATE	
9	3789A004		1	SEAL - O RING	
10	2151A001		4	SCREW	
Service Options					
5	T403272		1	OIL FILLER CAP BLUETOOTH®	

Perkins®
THE HEART OF EVERY GREAT MACHINE

Breather	Plate A
	HBH03467

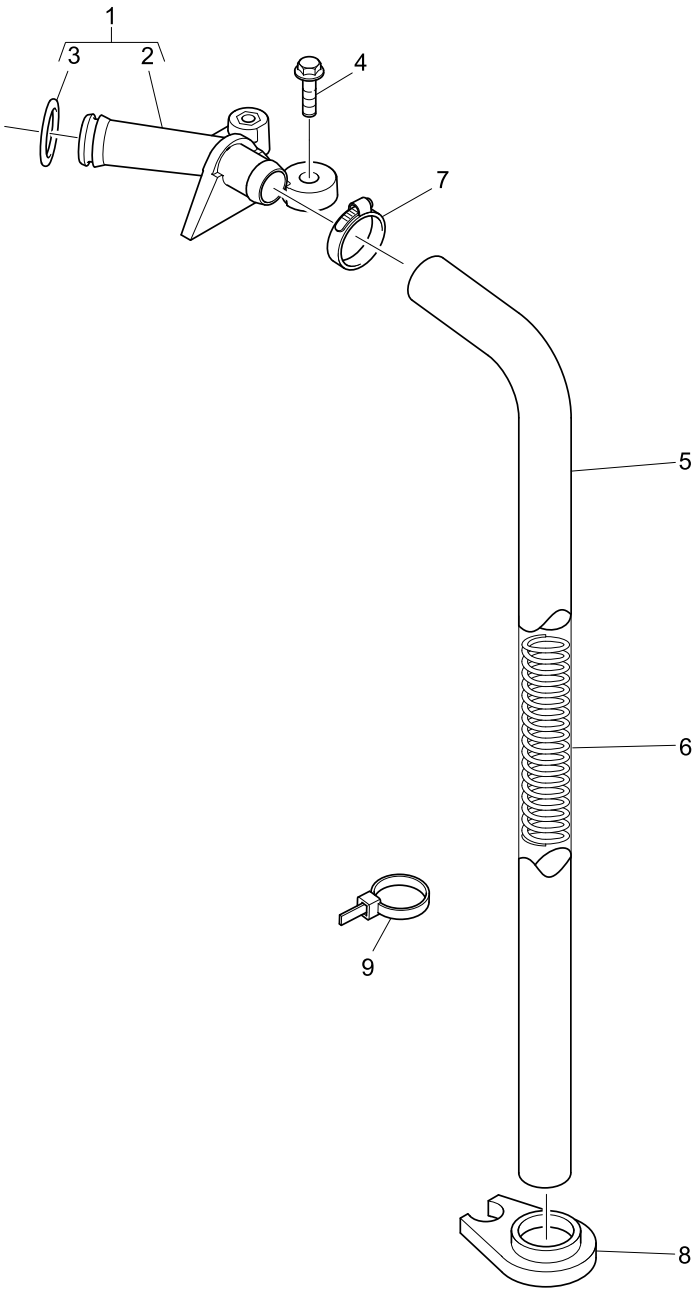

Breather	Plate A
	HBH03467

Item	Part No.	References	Qty.	Description	Notes
1	4133J011		1	PIPE - BREATHER	
2		✏ 4133J011	1	PIPE - BREATHER	
3	2415A068		1	SEAL - O RING	
4	2314F005		1	SCREW	
5	33872639		1	HOSE	
6	3175P003		1	SPRING	
7	2481863	a.	1	HOSE CLIP	
8	36241123		1	BRACKET	
9	2817152		1	CABLE TIE	

History					
a.					
7	2481877		1	HOSE CLIP	

Perkins®
THE HEART OF EVERY GREAT MACHINE

Filler	Plate A
	HDH00046

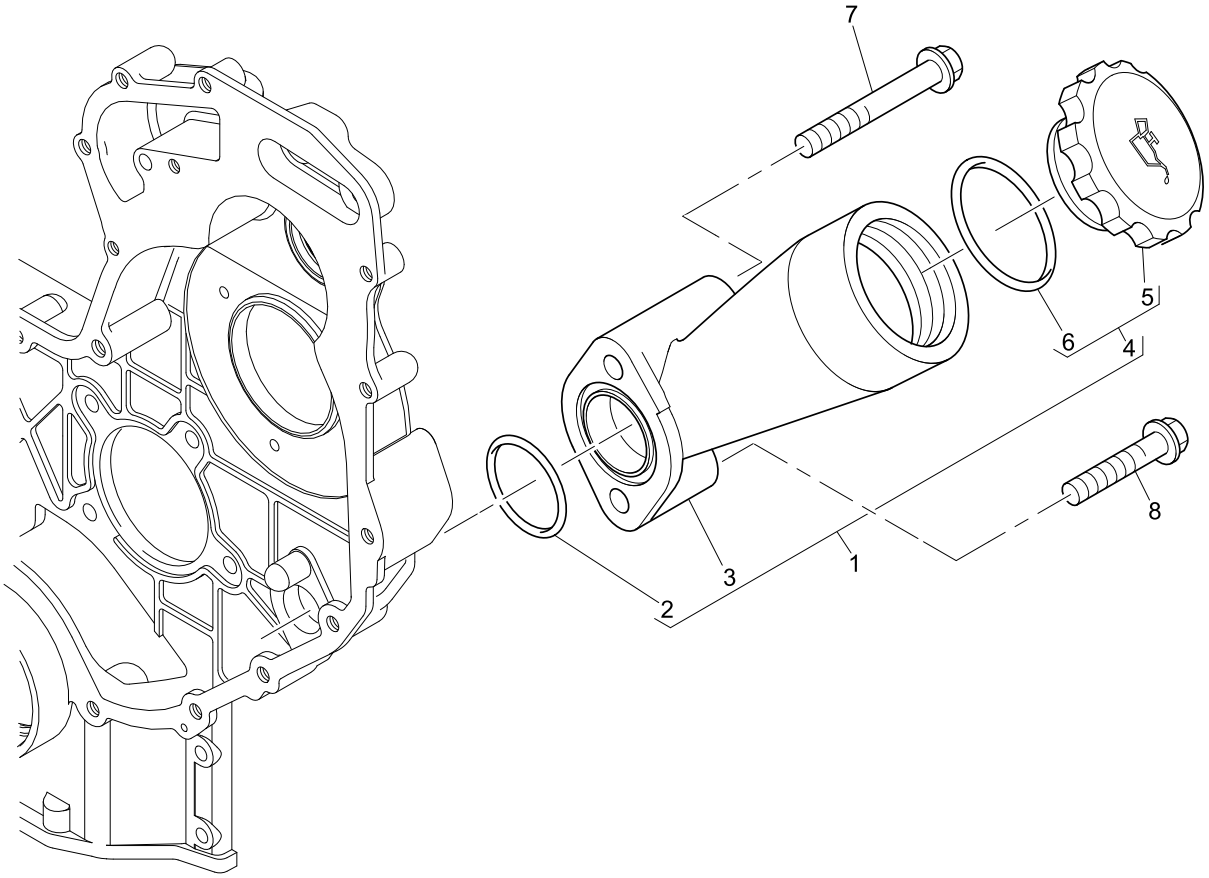

Filler	Plate A
	HDH00046

Item	Part No.	References	Qty.	Description	Notes
1	4134C073	a.	1	OIL FILLER	
2	2415H651	a.	1	SEAL - O RING	
3		⇨ 4134C073	1	OIL FILLER	
4	4142X098	Ⓢ	1	OIL FILLER CAP	
5		⇨ 4142X098	1	OIL FILLER CAP	
6	2415633		1	SEALING RING	
7	2314K161		1	SCREW	
8	2314H008		1	SCREW	
Service Options					
	T403270		1	OIL FILLER CAP BLUETOOTH®	
4	T403270		1	OIL FILLER CAP BLUETOOTH®	

History					
a.					
		⇨	1	OIL FILLER CAP	
	4142X098	Ⓢ	1	OIL FILLER CAP	
	2415633		1	SEALING RING	
	2415B121		1	SEAL - O RING	
1	4134C019		1	FILLER	
2		⇨	1	OIL FILLER	

Perkins®
THE HEART OF EVERY GREAT MACHINE

Blanking Plates	Plate A
	HDH00046

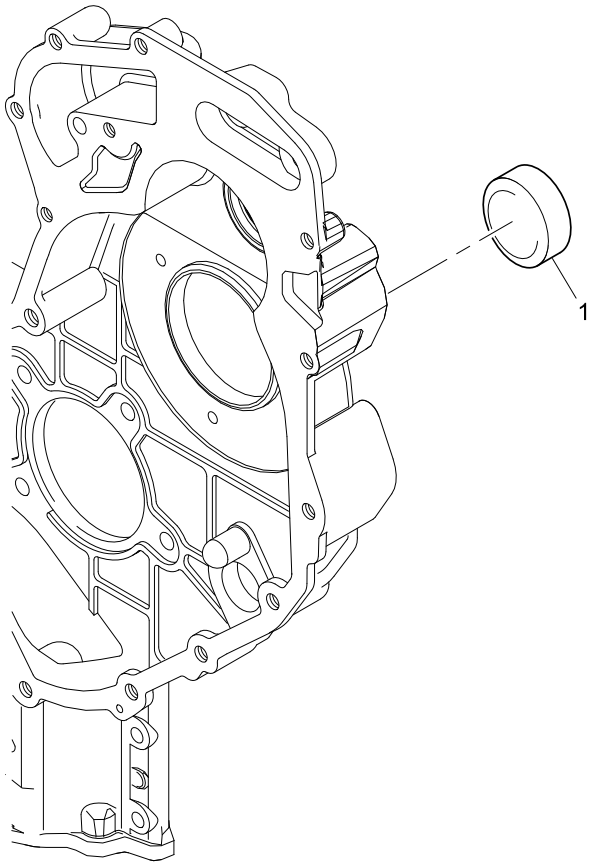

Blanking Plates	Plate A
	HDH00046

Item	Part No.	References	Qty.	Description	Notes
1	2485A124		1	PLUG	

Perkins®
THE HEART OF EVERY GREAT MACHINE

Oil Cooler	Plate A
	JBH02638

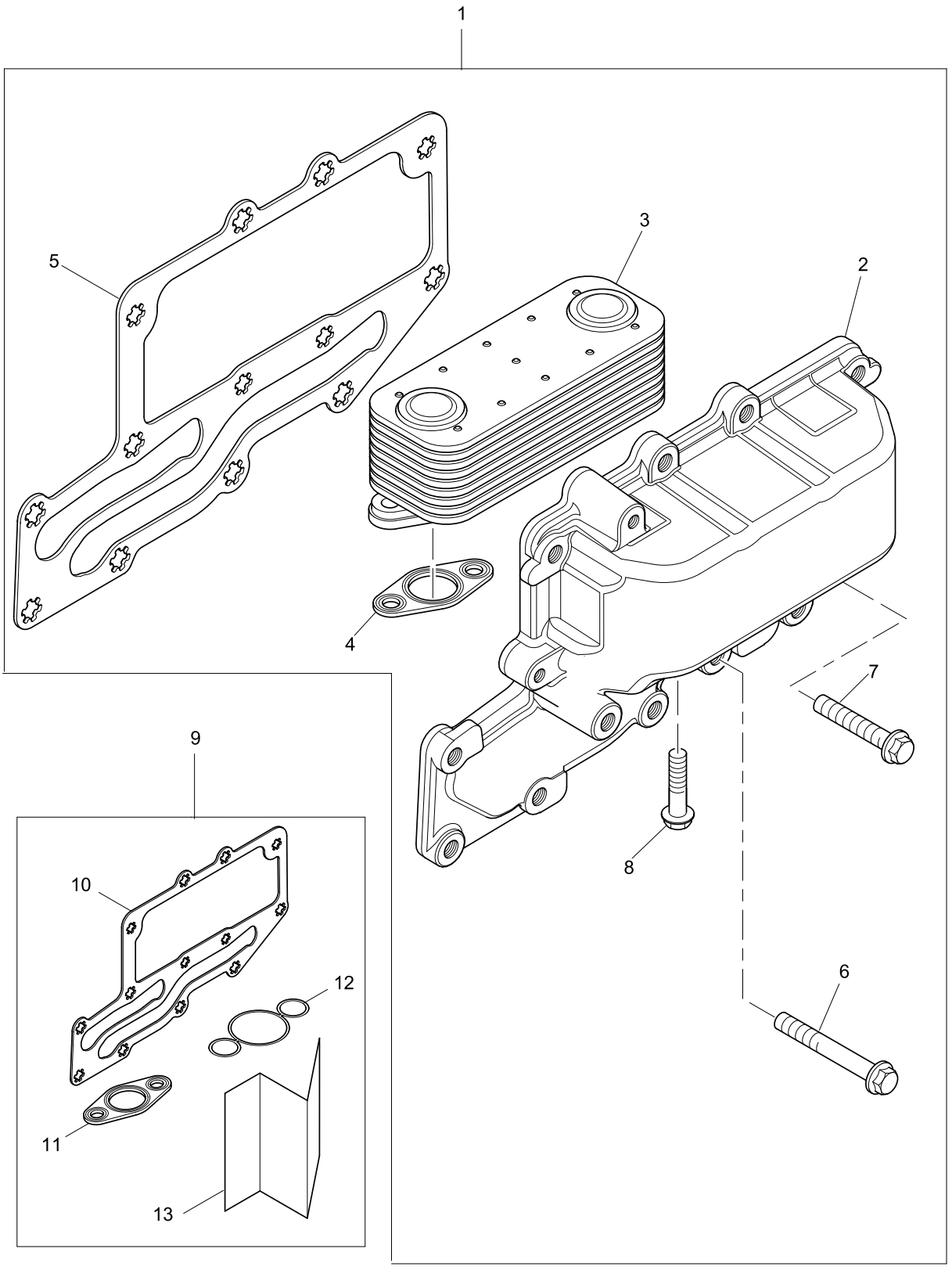

Oil Cooler	Plate A
	JBH02638

Item	Part No.	References	Qty.	Description	Notes
1	4134W025	a.	1	OIL COOLER	
2		a. ⇨ 4134W025	1	HOUSING	
3	2486A217	a.	1	OIL COOLER	
4	3685A025	a.	2	GASKET - OIL COOLER	
5	3685A033		1	GASKET - OIL COOLER	
6	2314K161		3	SCREW	
7	2314H004	a.	10	SCREW	
8	2314H006	a.	4	BOLT	
9	T414650		1	SEAL KIT	
10	3685A033		1	GASKET - OIL COOLER	
11	3685A025		2	GASKET - OIL COOLER	
12	T419064		2	SEALING RING	
13			1	LEAFLET	

History					
a.					
	2314H006		4	BOLT	
1	4134W021		1	OIL COOLER	
2	2486A217		1	OIL COOLER	
3	3685A025		2	GASKET - OIL COOLER	
4		⇨	1	HOUSING	
7	2314H004		8	SCREW	
8	2311D060		2	SCREW	

Perkins®
THE HEART OF EVERY GREAT MACHINE

Oil Filter	Plate A
	JBH02638

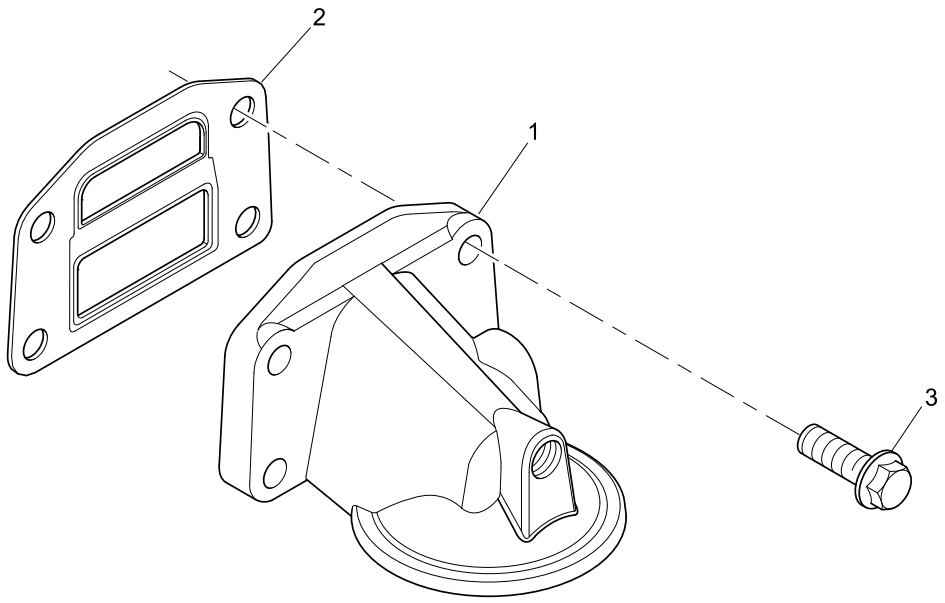

Oil Filter	Plate A
	JBH02638

Item	Part No.	References	Qty.	Description	Notes
1	3773A061		1	OIL FILTER HEAD	
2	3688A039		1	GASKET - OIL FILTER HEAD	
3	2314H034		4	SCREW	

Perkins®
THE HEART OF EVERY GREAT MACHINE

Blanking Plates	Plate A
	JBH02638

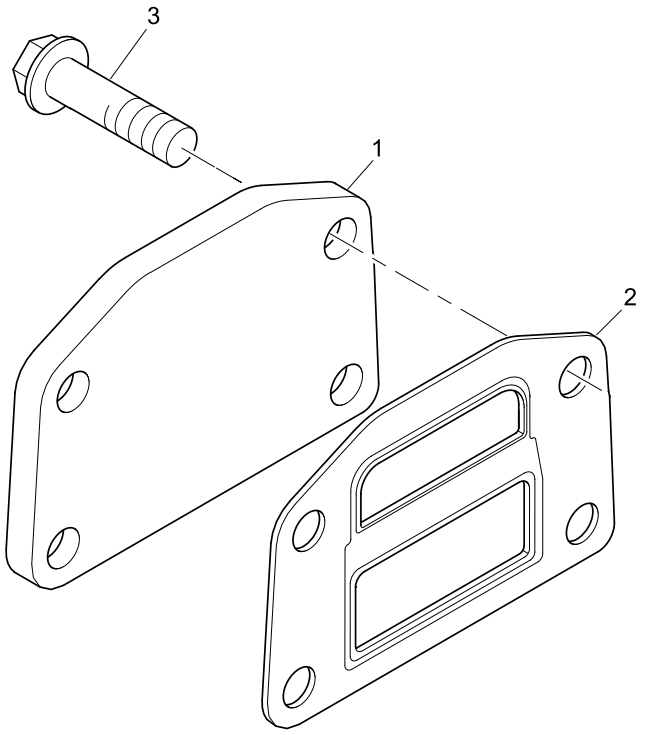

Blanking Plates	Plate A
	JBH02638

Item	Part No.	References	Qty.	Description	Notes
1	3623A009		1	PLATE	
2	3688A039		1	GASKET - OIL FILTER HEAD	
3	2314H033		4	SCREW	

Perkins®
THE HEART OF EVERY GREAT MACHINE

Oil Filter	Plate A
	JDH00044

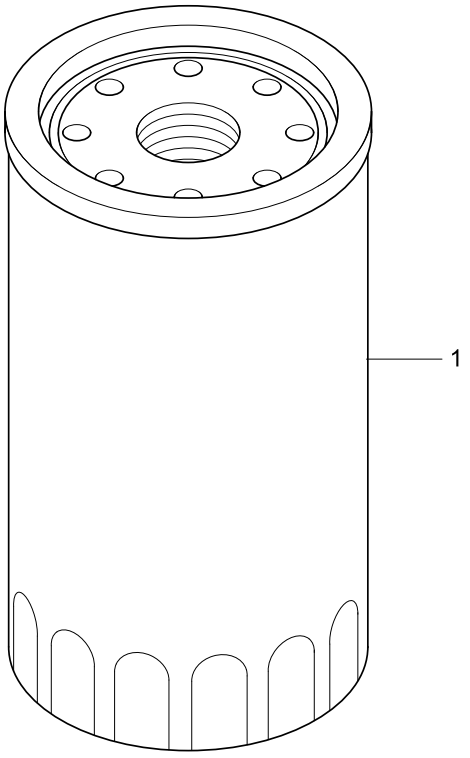

Oil Filter	Plate A
	JDH00044

Item	Part No.	References	Qty.	Description	Notes
1	2654407		1	OIL FILTER	

Perkins®
THE HEART OF EVERY GREAT MACHINE

Front End Drive Input	Plate A
	KBH00770

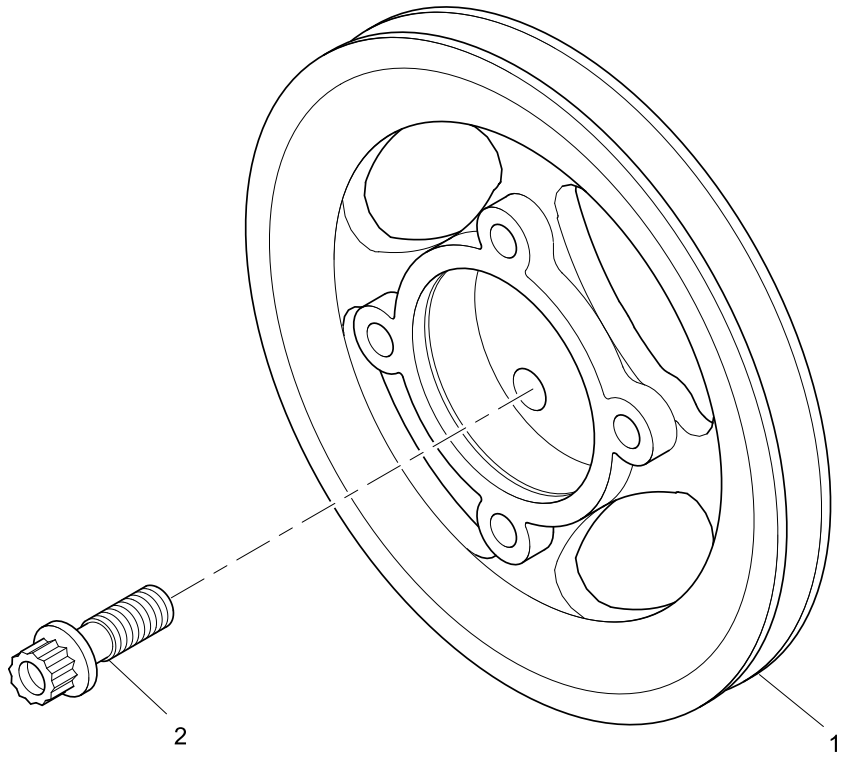

Front End Drive Input	Plate A
	KBH00770

Item	Part No.	References	Qty.	Description	Notes
1	3114C111		1	CRANKSHAFT PULLEY	(1)
2	32186146		3	BOLT	

Footnotes	
(1)	USED ONLY WITH SGI PLAIN-NOSED CRANKS. REFER TO ENGINE NEWS 1100 SERIES BULLETIN NUMBER 91

Perkins®
THE HEART OF EVERY GREAT MACHINE

Water Pump	Plate A
	LBH02290

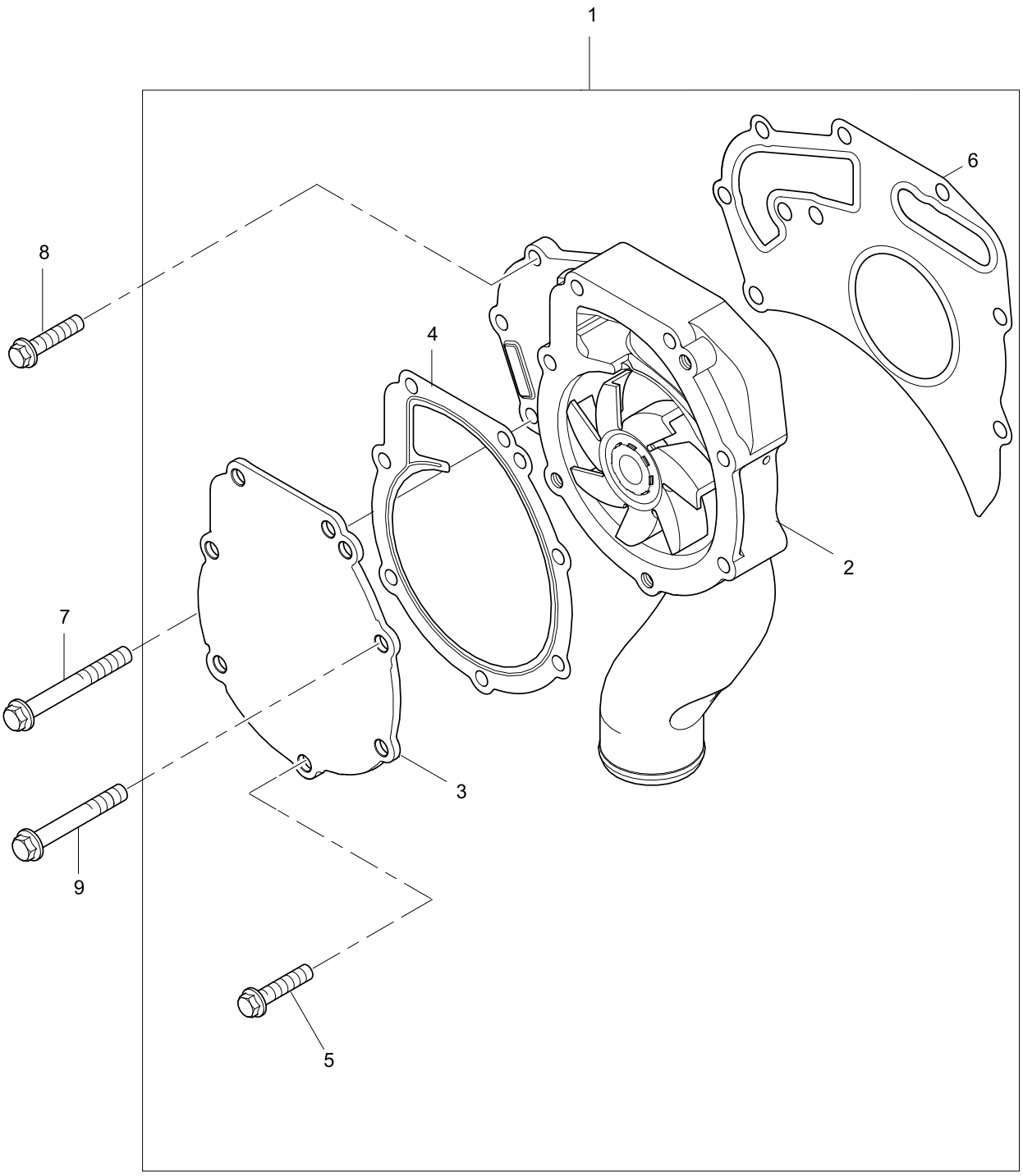

Water Pump	Plate A
	LBH02290

Item	Part No.	References	Qty.	Description	Notes
1	U5MW0208	a.	1	WATER PUMP KIT	
2		a. ⇨ U5MW0208	1	WATER PUMP	
3		a. ⇨ U5MW0208	1	COVER	
4	24880239	a.	1	GASKET	
5	2314H743	a.	3	SCREW	
6	3682A011		1	GASKET - WATER PUMP	
7	2314K164		2	SCREW	
8	2314H005		2	SCREW	
9	2314H012		5	SCREW	

History					
a.					
1	U5MW0201		1	WATER PUMP KIT	
2		⇨	1	WATER PUMP	
3		⇨	1	COVER	
4	24880234		1	GASKET - WATER PUMP	
5	2314H743		2	SCREW	

Perkins®
THE HEART OF EVERY GREAT MACHINE

Pipes	Plate A
	LBH02290

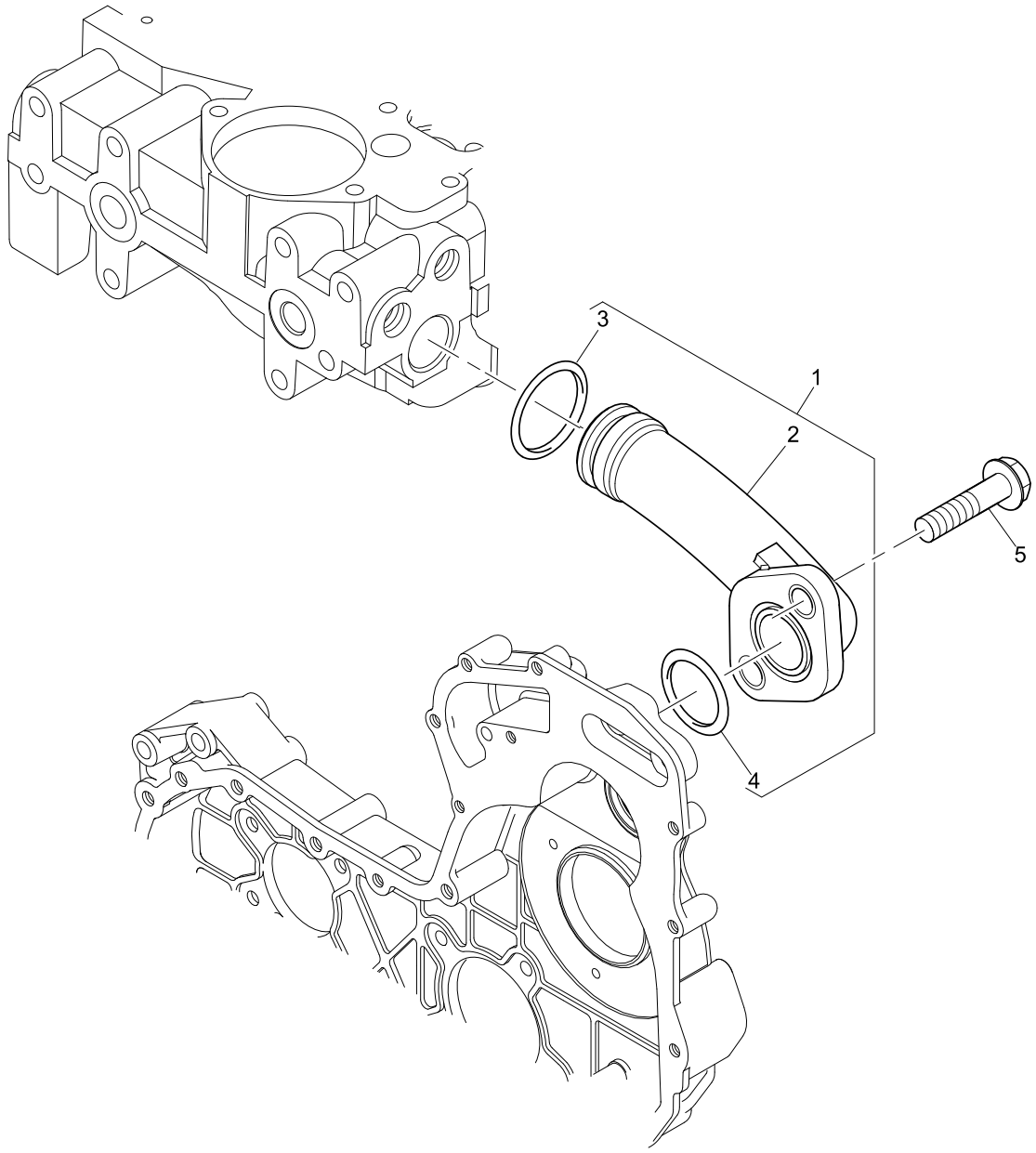

Pipes	Plate A
	LBH02290

Item	Part No.	References	Qty.	Description	Notes
1	4133L048		1	CONNECTION	
2		✏ 4133L048	1	CONNECTION	
3	2418F002		1	SEAL - O RING	
4	2418F001		1	SEAL - O RING	
5	2314H003		2	SCREW	

Perkins®
THE HEART OF EVERY GREAT MACHINE

Water Outlet Housing	Plate A
	LDH00718

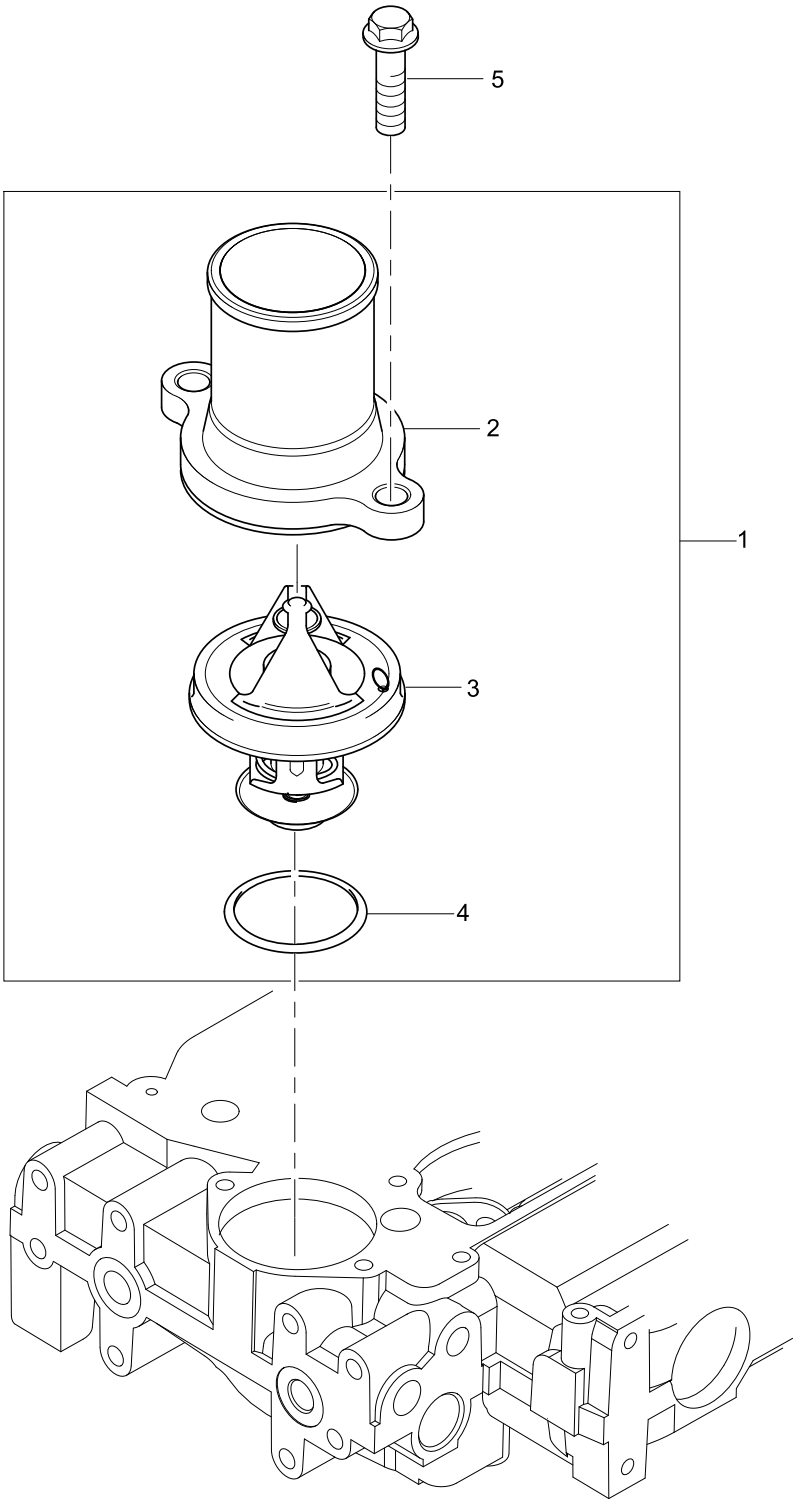

Water Outlet Housing	Plate A
	LDH00718

Item	Part No.	References	Qty.	Description	Notes
1	4133L507		1	THERMOSTAT ASSEMBLY	
2		✏ 4133L507	1	CONNECTION	
3		✏ 4133L507	1	THERMOSTAT	
4	2415H219		1	SEAL - THERMOSTAT HOUSING	
5	2314H004		2	SCREW	

Perkins®
THE HEART OF EVERY GREAT MACHINE

Fan	Plate A
	MDH01420

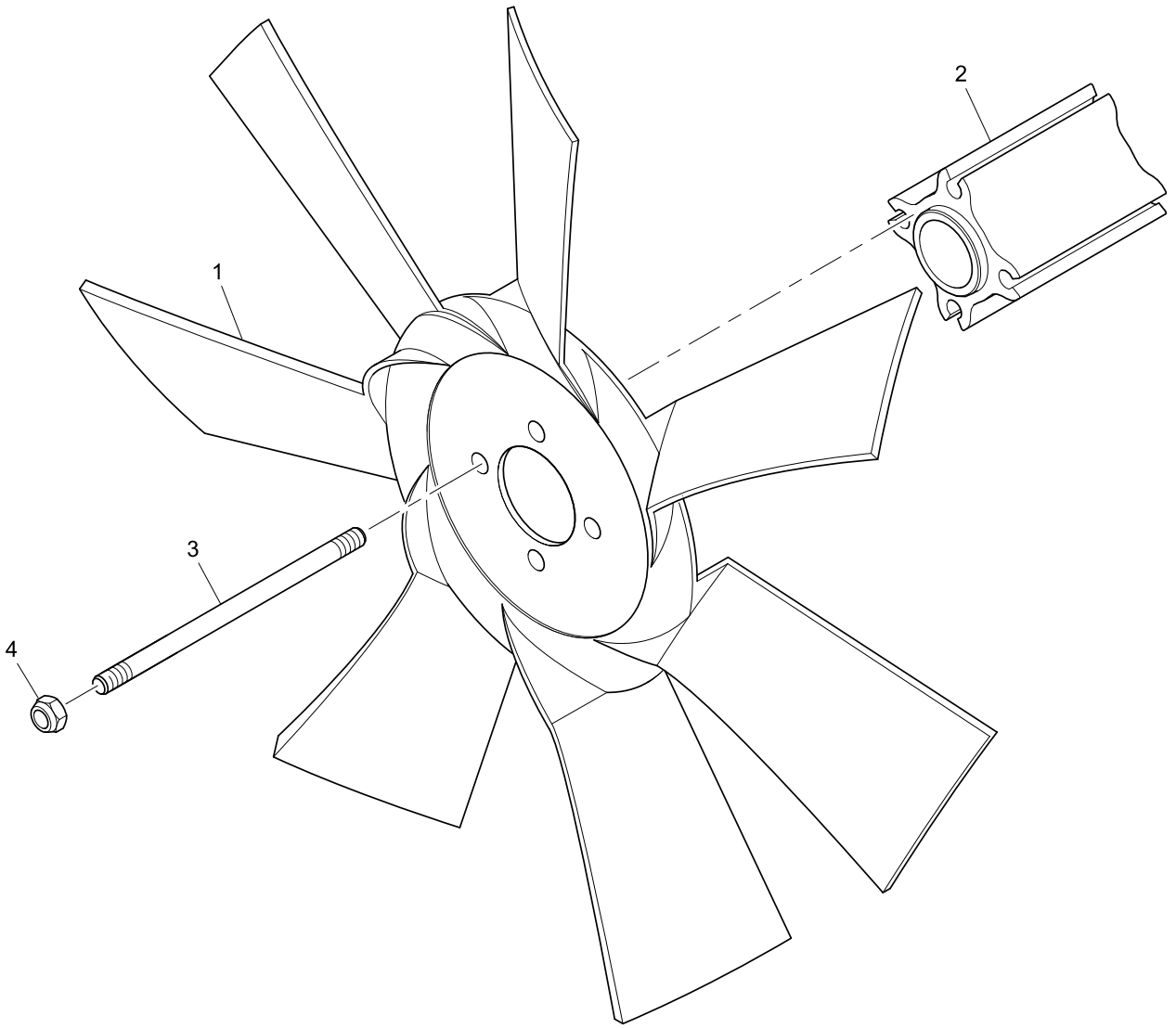

Fan	Plate A
	MDH01420

Item	Part No.	References	Qty.	Description	Notes
1	2485C546		1	FAN	
2	T418649	a.	1	EXTENSION	
3	2313H238		4	STUD	
4	2318D208		4	NUT	

History					
a.					
2	3748W243		1	EXTENSION	

Perkins®
THE HEART OF EVERY GREAT MACHINE

Alternator	Plate A
	NDH02864

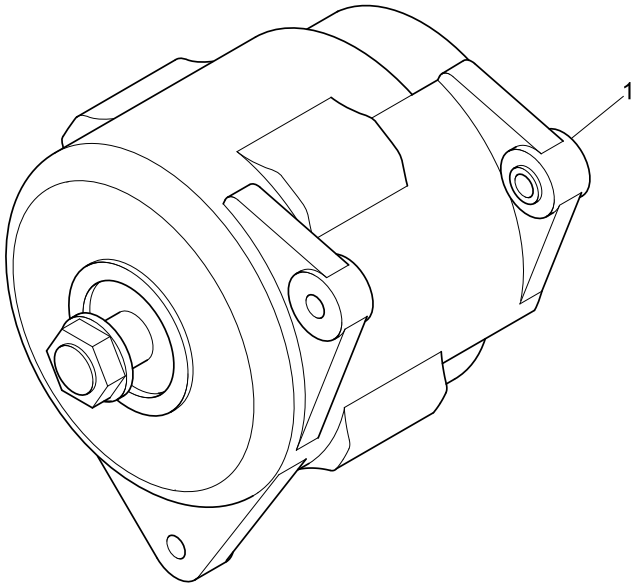

Alternator	Plate A
	NDH02864

Item	Part No.	References	Qty.	Description	Notes
1	2871A306	a.	1	ALTERNATOR	(1)

History					
a.					
1	2871A301		1	ALTERNATOR	(1)

Footnotes	
(1)	BREAKDOWN OF 2871A301 NOT AVAILABLE.

Pulleys	Plate A
	NDH02864

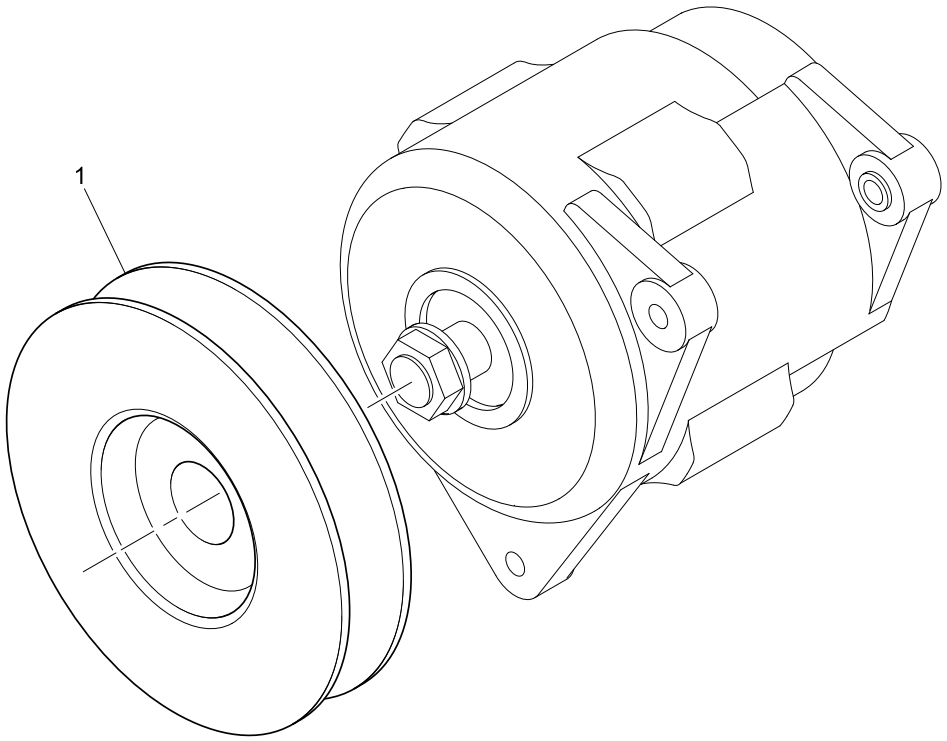

Pulleys	Plate A
	NDH02864

Item	Part No.	References	Qty.	Description	Notes
1	3115H003		1	ALTERNATOR PULLEY	

Perkins®
THE HEART OF EVERY GREAT MACHINE

Alternator Bracket & Fixings	Plate A
	NDH02864

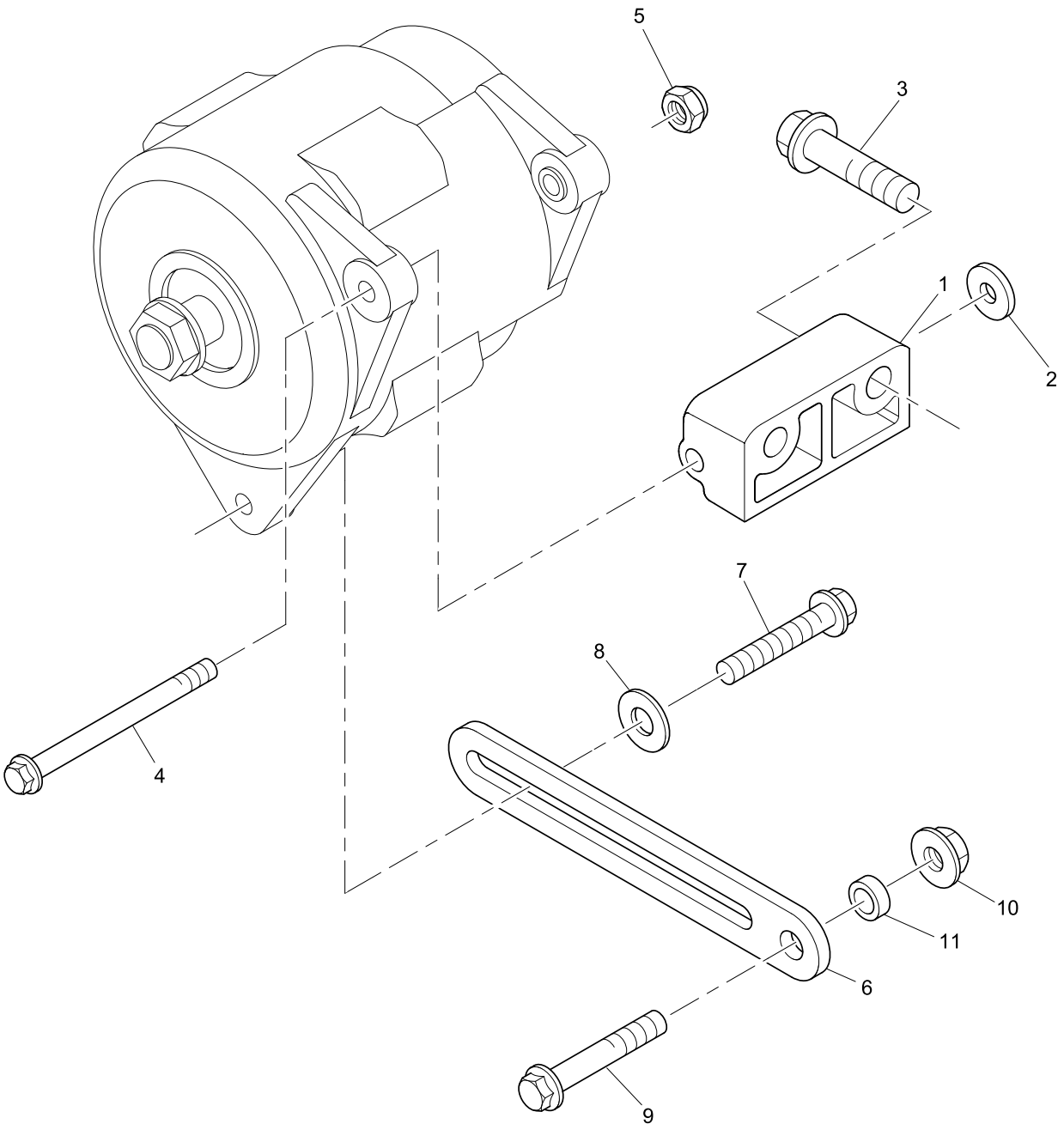

Alternator Bracket & Fixings	Plate A
	NDH02864

Item	Part No.	References	Qty.	Description	Notes
1	T418352	b.	1	ALTERNATOR BRACKET	
2	0920433	a.	1	WASHER	
3	2314J007		2	SCREW	
4	2314H022		1	SCREW	
5	2318D208		1	NUT	
6	36155429		1	LEVER	
7	2314H004		1	SCREW	
8	0920497		1	WASHER	
9	2314J012		1	SCREW	
10	2318A604		1	NUT	
11	0920465		1	SPACER	

History			
a.			
2	0920497	1	WASHER
b.			
1	3824A071	1	ALTERNATOR BRACKET
c.			
	2131A008	1	WASHER

Perkins®
THE HEART OF EVERY GREAT MACHINE

Timing Case	Plate A
	QCH00060

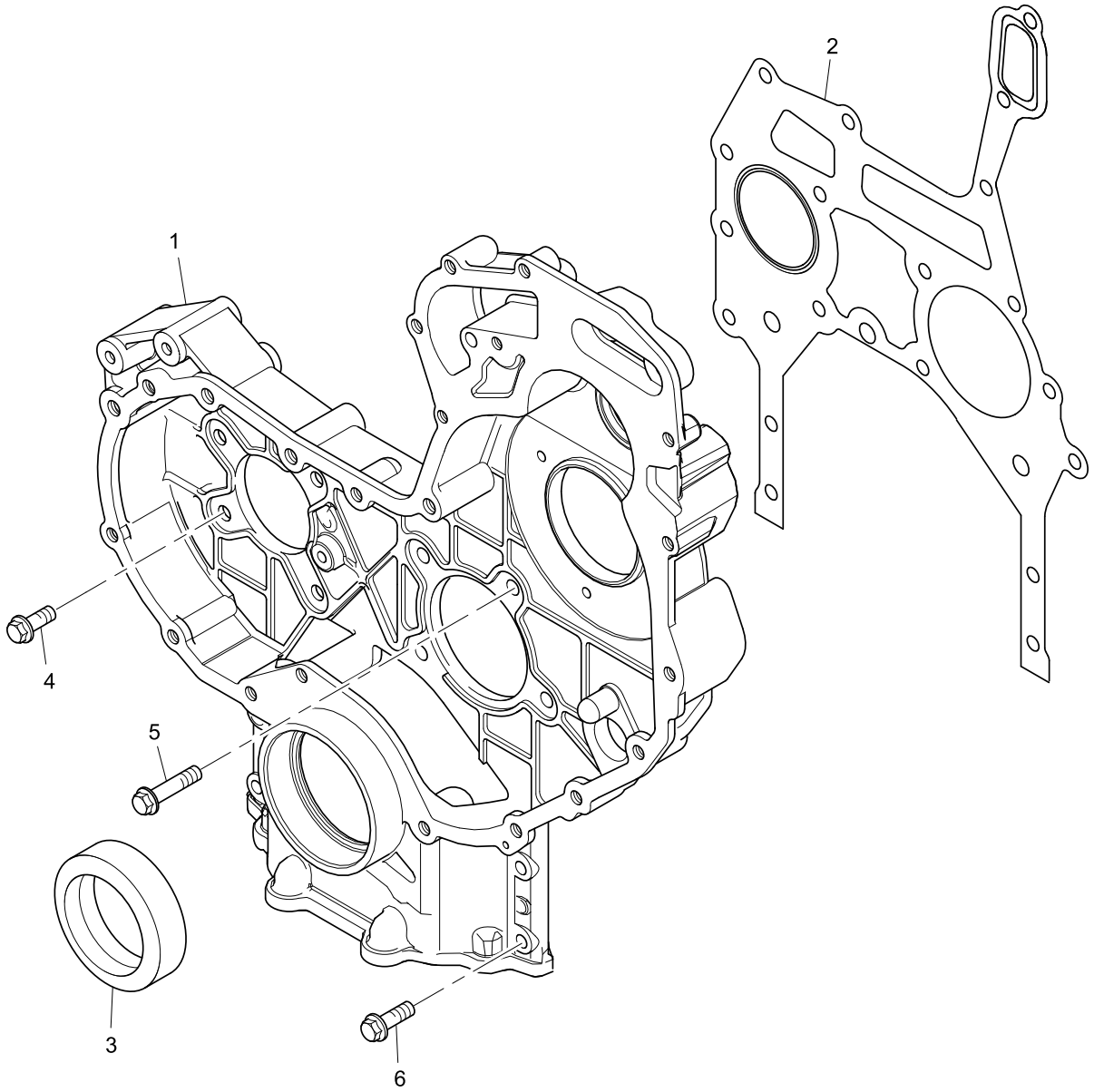

Timing Case	Plate A
	QCH00060

Item	Part No.	References	Qty.	Description	Notes
1	3716C561		1	TIMING CASE	
2	3681P053		1	GASKET - TIMING CASE	
3	2418F437		1	SEAL - FRONT END OIL	
4	2314H003		6	SCREW	
5	2314H006		2	BOLT	
6	2314H034		4	SCREW	

Timing Case	Plate B
	QCH00060

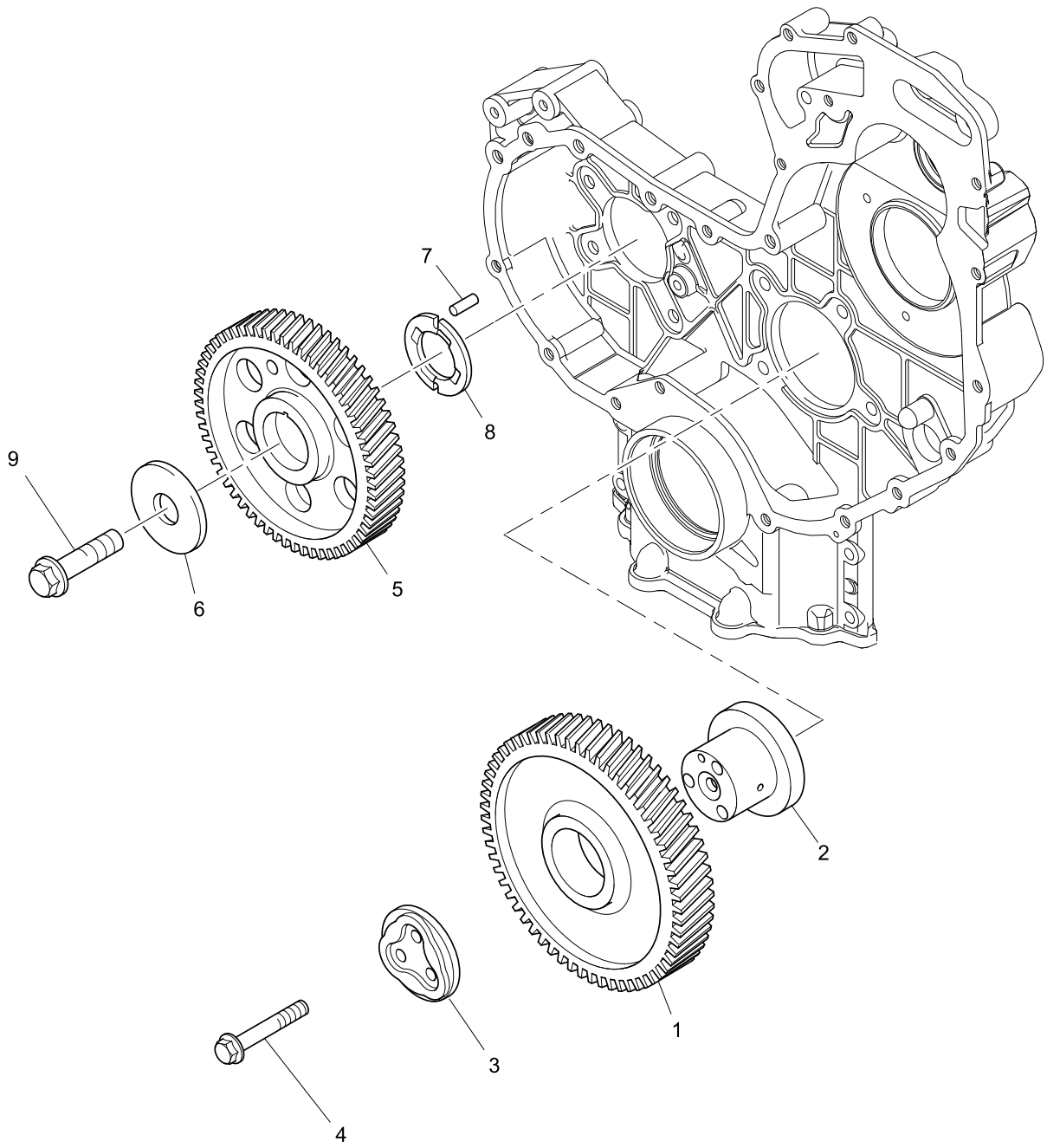

Timing Case	Plate B
	QCH00060

Item	Part No.	References	Qty.	Description	Notes
1	3117N061	b.	1	IDLER GEAR	
2	3311A054	c.	1	HUB	
3	3272A033	b.	1	PLATE	
4	2314J011		3	SCREW	
5	T418682	a.	1	CAMSHAFT GEAR	
6	3321A003		1	WASHER	
7	2116053		1	DOWEL	
8	3112X011		1	THRUST WASHER	
9	2314J606		1	SCREW	

History					
a.					
5	3117N001		1	CAMSHAFT GEAR	
b.					
		⇨	1	BUSH	
		⇨	1	IDLER GEAR	
1	4111A034		1	IDLER GEAR	
3	3241A025		1	PLATE	
c.					
2	3272A041		1	HUB	

Footnotes

Perkins®
THE HEART OF EVERY GREAT MACHINE

Timing Cover	Plate A
	QCH00060

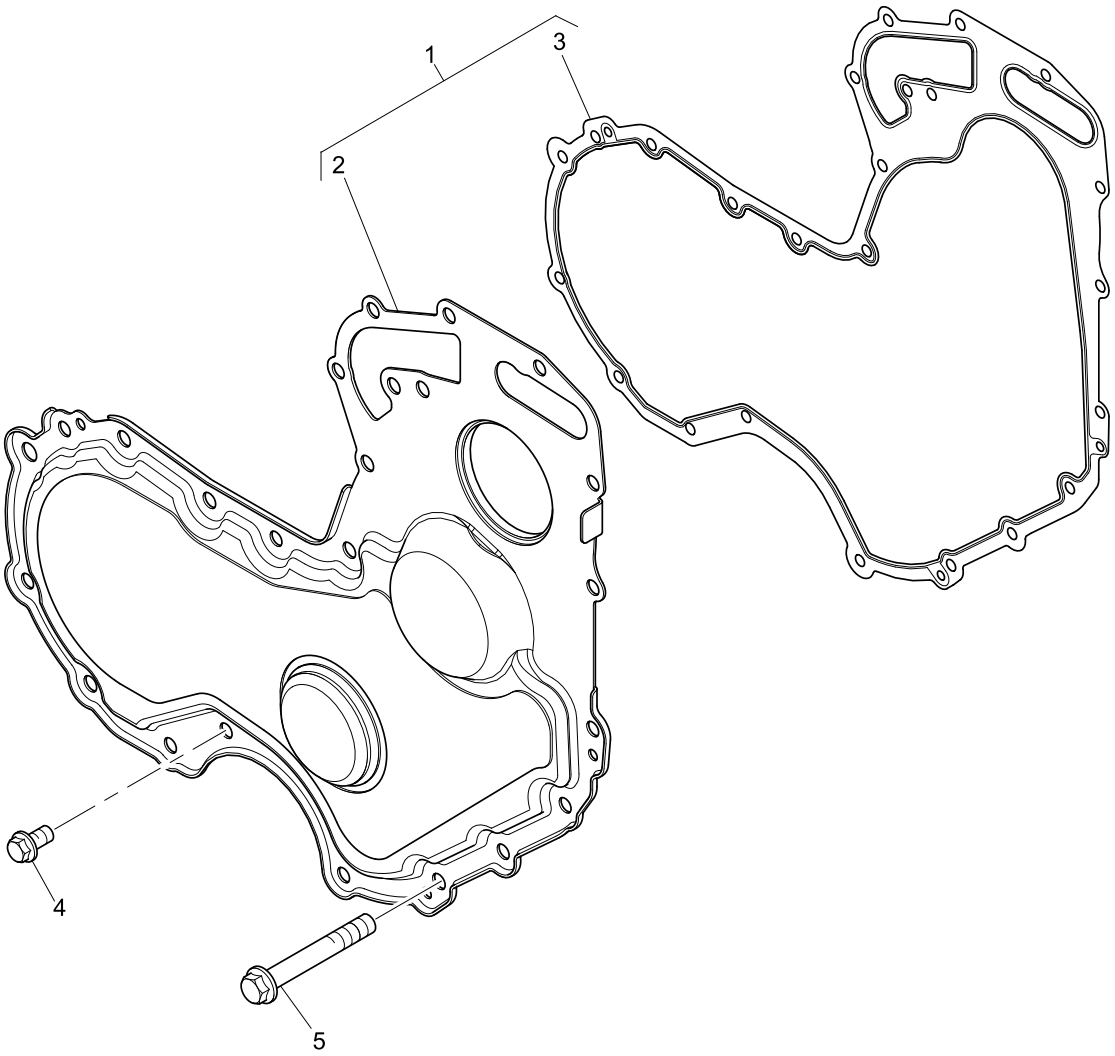

Timing Cover	Plate A
	QCH00060

Item	Part No.	References	Qty.	Description	Notes
1	4142A503		1	FRONT COVER KIT	
2		⇒ 4142A503	1	TIMING COVER	
3	3681P046		1	GASKET - TIMING CASE COVER	
4	2314H002		10	SCREW	
5	2314H012		5	SCREW	

Perkins®
THE HEART OF EVERY GREAT MACHINE

Blanking Plugs	Plate A
	QDH01434

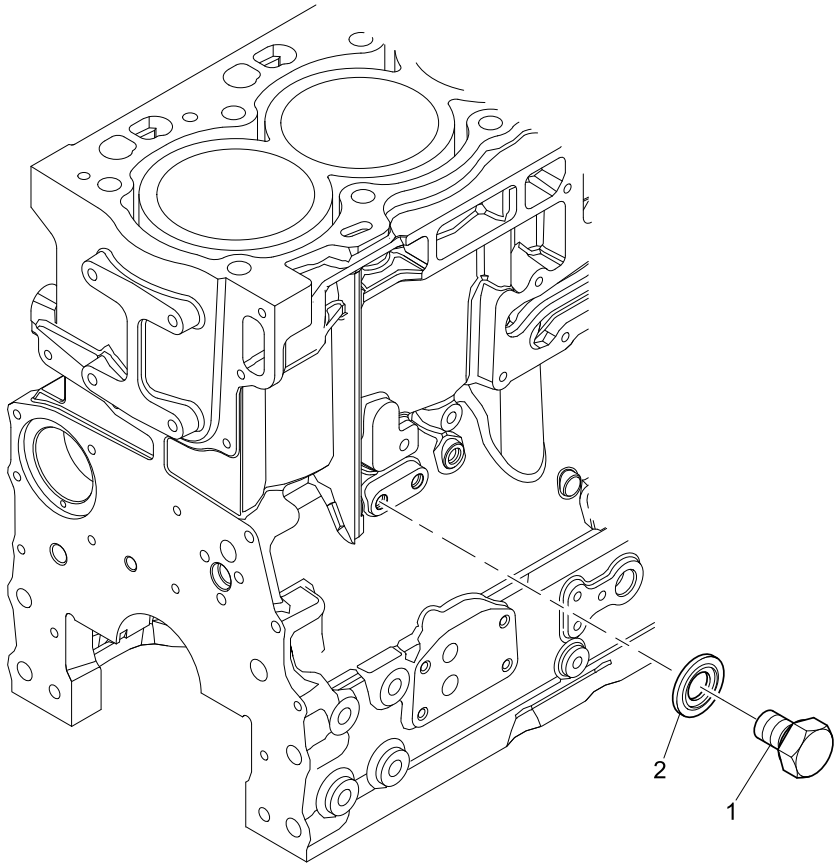

Blanking Plugs	Plate A
	QDH01434

Item	Part No.	References	Qty.	Description	Notes
1	2314C049		1	SCREW	
2	2415D053		1	WASHER	

Perkins®
THE HEART OF EVERY GREAT MACHINE

Lubricating Oil Pump & Delivery Housing	Plate A
	RBH00034

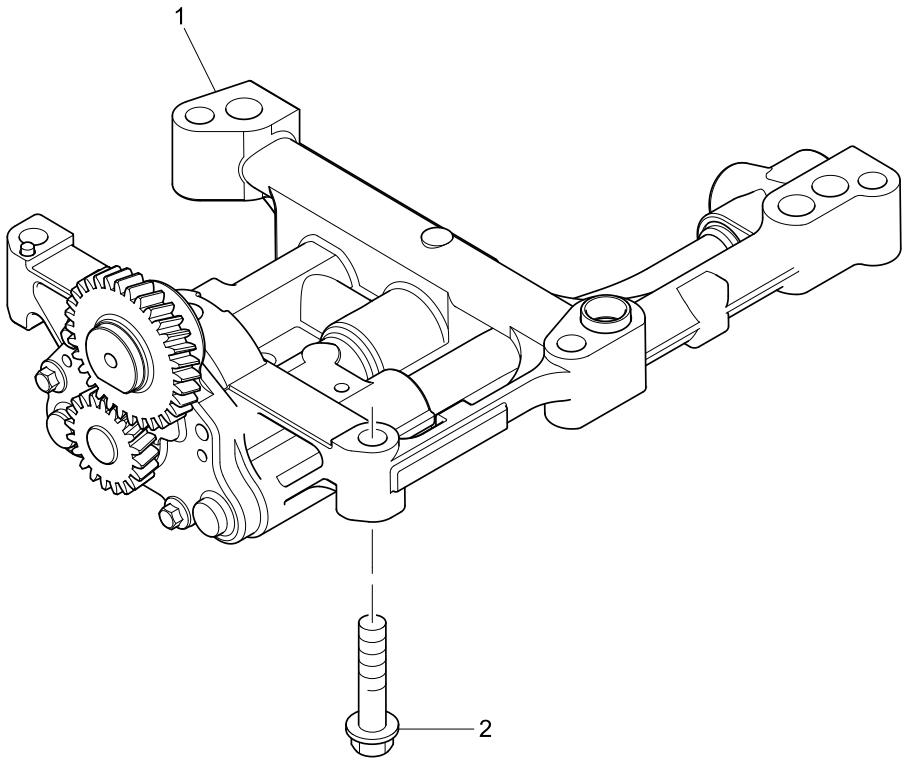

Lubricating Oil Pump & Delivery Housing	Plate A
	RBH00034

Item	Part No.	References	Qty.	Description	Notes
1	T418992	a.	1	OIL PUMP	
2	2314J008		5	SCREW	

History					
a.					
1	4132F071		1	OIL PUMP	

Perkins®
THE HEART OF EVERY GREAT MACHINE

Turbocharger	Plate A
	SBH02043

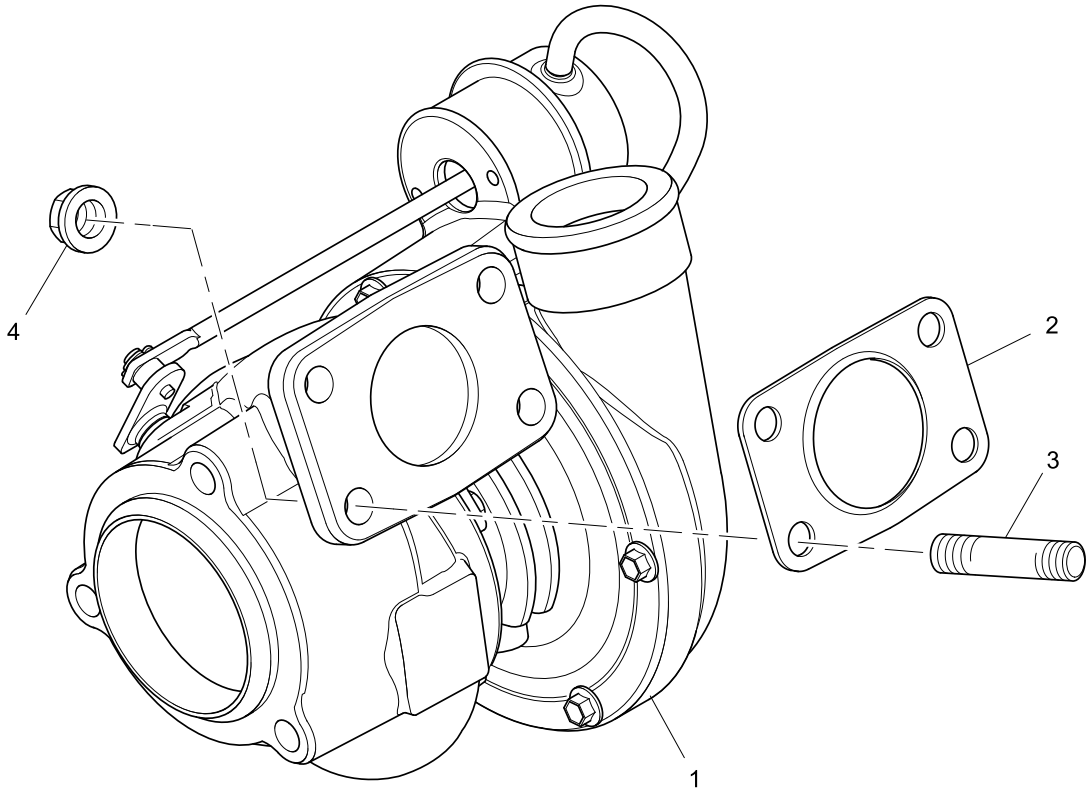

Turbocharger	Plate A
	SBH02043

Item	Part No.	References	Qty.	Description	Notes
1	T432669	Ⓢ	1	Turbocharger	
2	3688A029		1	GASKET - TURBOCHARGER	
3	T409161	a.	4	STUD	
4	2318A634		4	NUT	
Service Options					
1	T432669R	↻	1	TURBOCHARGER - EXCHANGE	

History					
a.					
3	2313M377		4	STUD	

Perkins®
THE HEART OF EVERY GREAT MACHINE

Feed Pipes	Plate A
	SBH02043

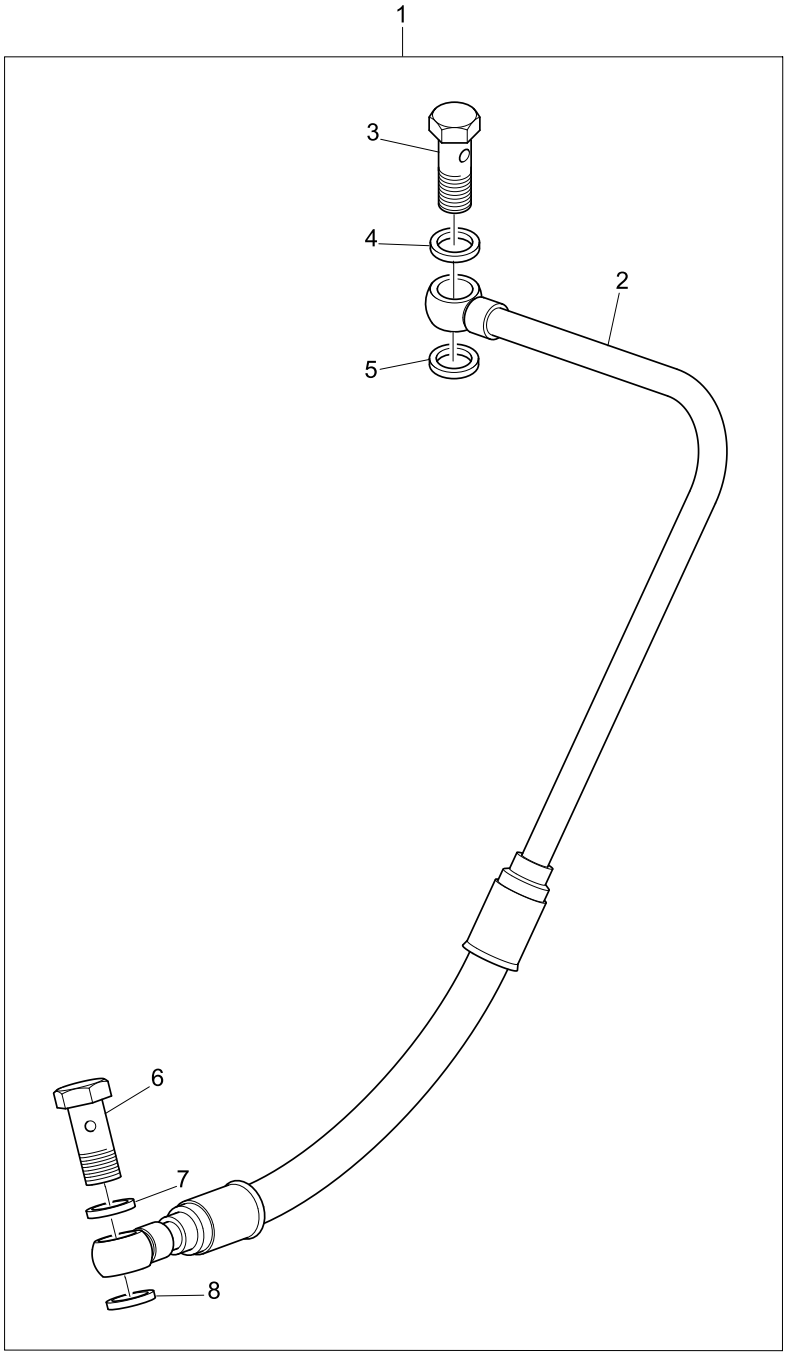

Feed Pipes	Plate A
	SBH02043

Item	Part No.	References	Qty.	Description	Notes
1	4128A027		1	PIPE - TURBO OIL FEED	
2		✏ 4128A027	1	PIPE - TURBO OIL FEED	
3	3218R036		1	BANJO BOLT	
4	2131A506		1	WASHER	
5	2131A506		1	WASHER	
6	3218R036		1	BANJO BOLT	
7	2131A506		1	WASHER	
8	2131A506		1	WASHER	

Leak-Off Pipes	Plate A
	SBH02043

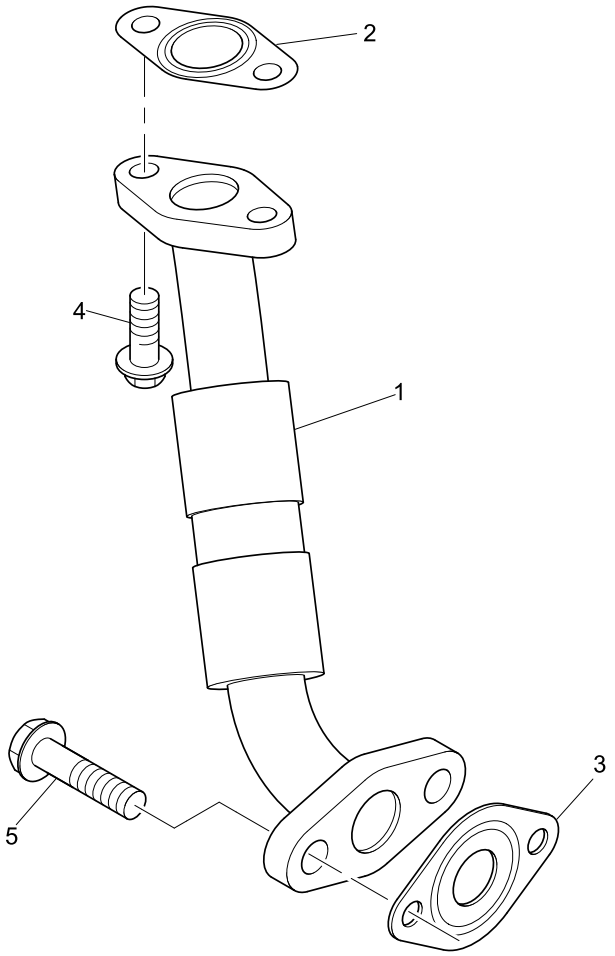

Leak-Off Pipes	Plate A
	SBH02043

Item	Part No.	References	Qty.	Description	Notes
1	3584A001		1	PIPE - TURBO OIL DRAIN	
2	3688A053	a.	1	GASKET	
3	3688A054	b.	1	GASKET	
4	2314F004		2	SCREW	
5	2314H003		2	SCREW	

History				
a.				
2	3688A035		1	GASKET
b.				
3	3688A036		1	GASKET

Perkins®
THE HEART OF EVERY GREAT MACHINE

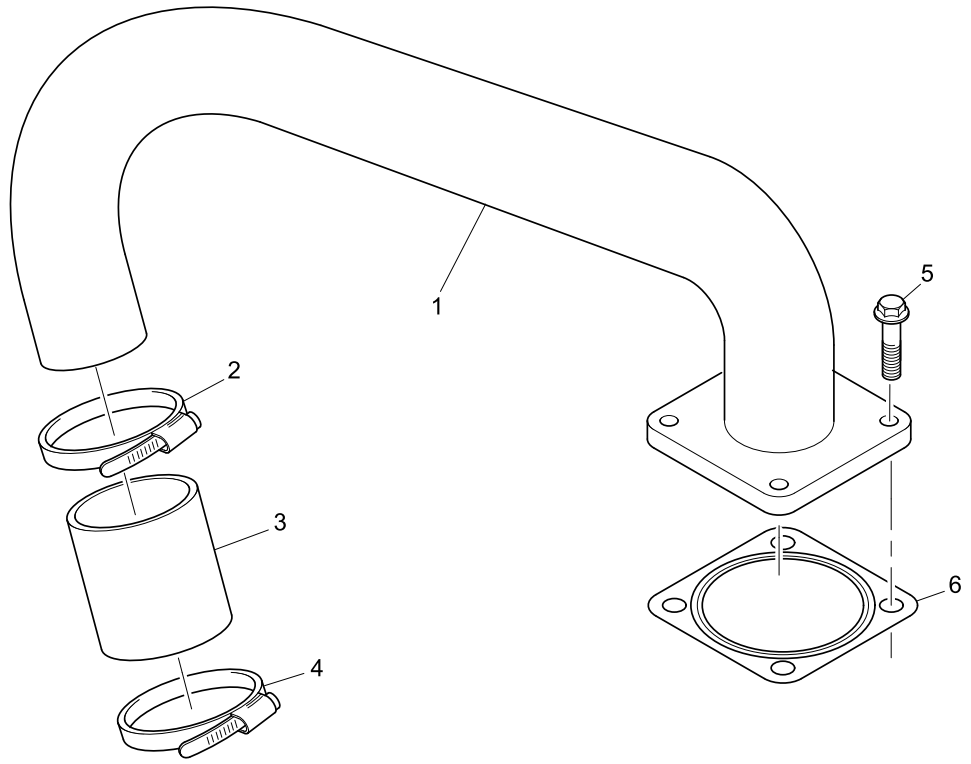
1
2
3
4
5
6

Item	Part No.	References	Qty.	Description	Notes
1	3571C099	b.	1	PIPE - AIR	
2	2481D073		1	HOSE CLIP	
3	3383A027		1	HOSE	
4	2481D073		1	HOSE CLIP	
5	2314H033		4	SCREW	
6	T424422	a.	1	GASKET - IND MANIFOLD	

History					
a.					
6	3688A037		1	GASKET - IND MANIFOLD	
b.					
1	3571C068		1	PIPE - AIR	

Exhaust Manifold	Plate A
	SBH02043

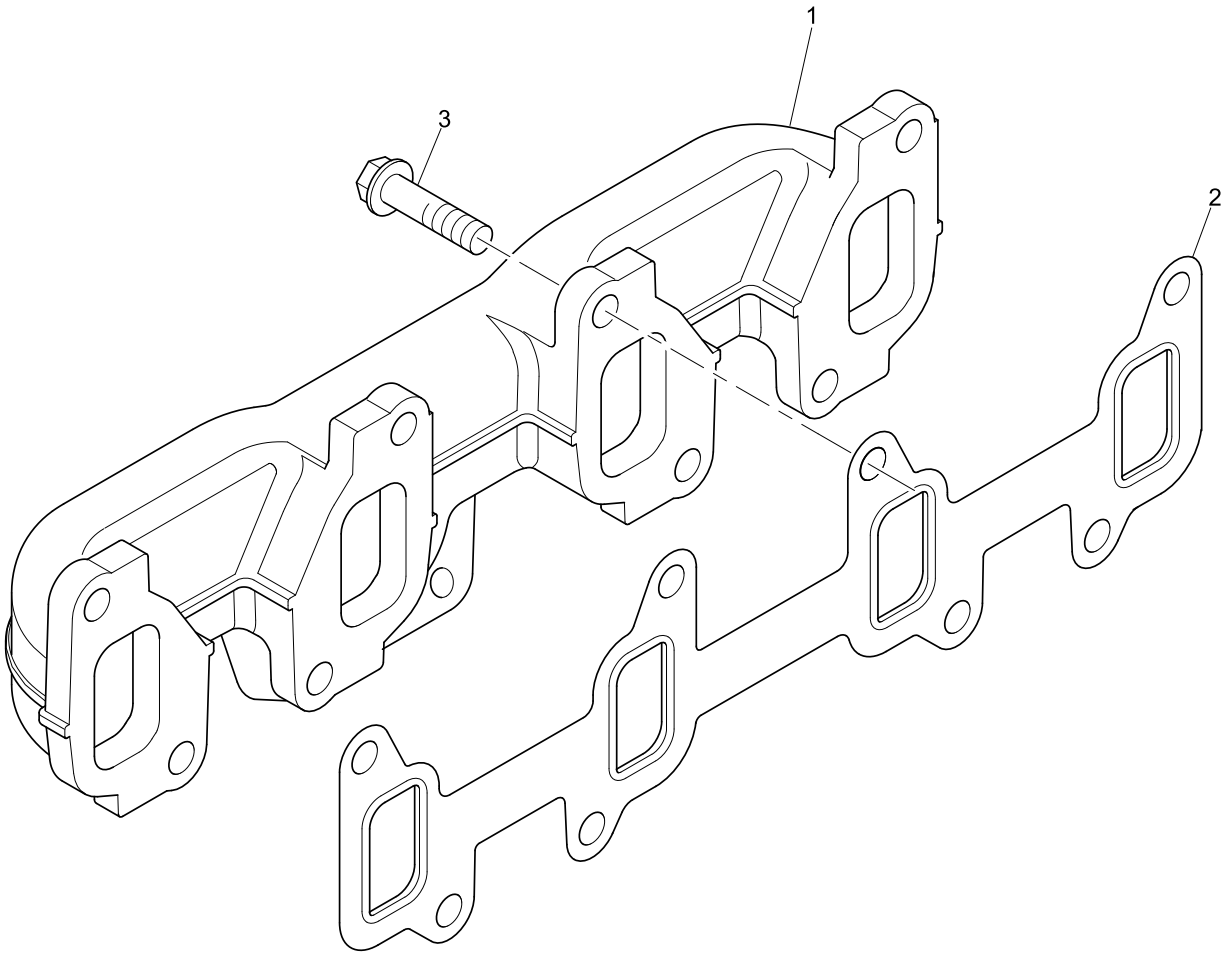

Exhaust Manifold	Plate A
	SBH02043

Item	Part No.	References	Qty.	Description	Notes
1	3778E401	a.	1	EXHAUST MANIFOLD	
2	3681V512		1	GASKET - EXHAUST MANIFOLD	
3	3218J013		8	SCREW	

History					
a.					
1	3778E203		1	EXHAUST MANIFOLD	

Perkins®
THE HEART OF EVERY GREAT MACHINE

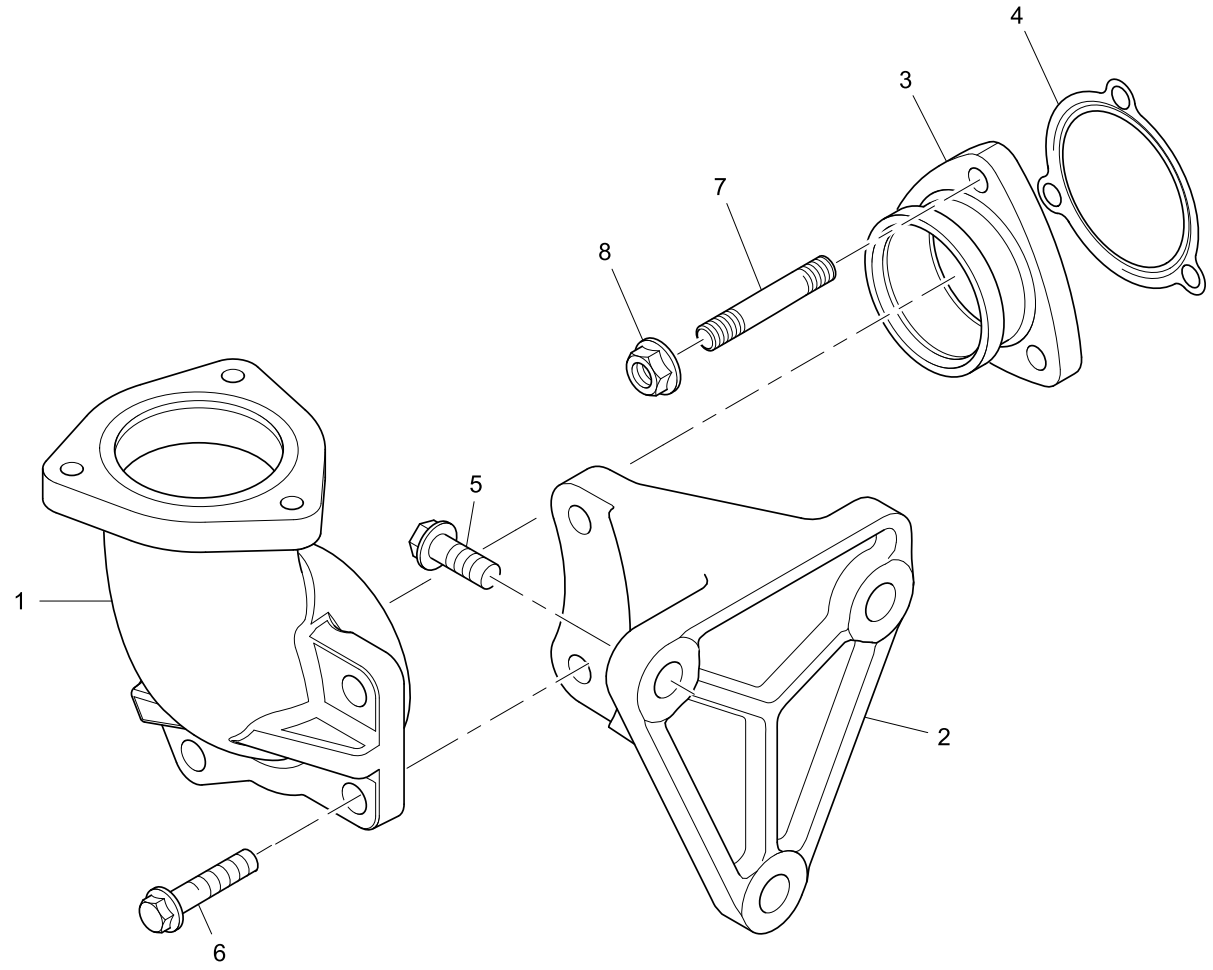
4
3
7
8
5
1
2
6

Item	Part No.	References	Qty.	Description	Notes
1	3766A131		1	EXHAUST ELBOW	
2	3824A261		1	BRACKET	
3	3347A091		1	ADAPTOR	
4	3688A034		1	GASKET - TURBOCHARGER	
5	2314J003		3	SCREW	
6	2314J004		2	SCREW	
7	T409161	a.	3	STUD	
8	2318A634		3	NUT	

History					
a.					
7	2313M377		3	STUD	

Air Filters	Plate A
	SBH02043

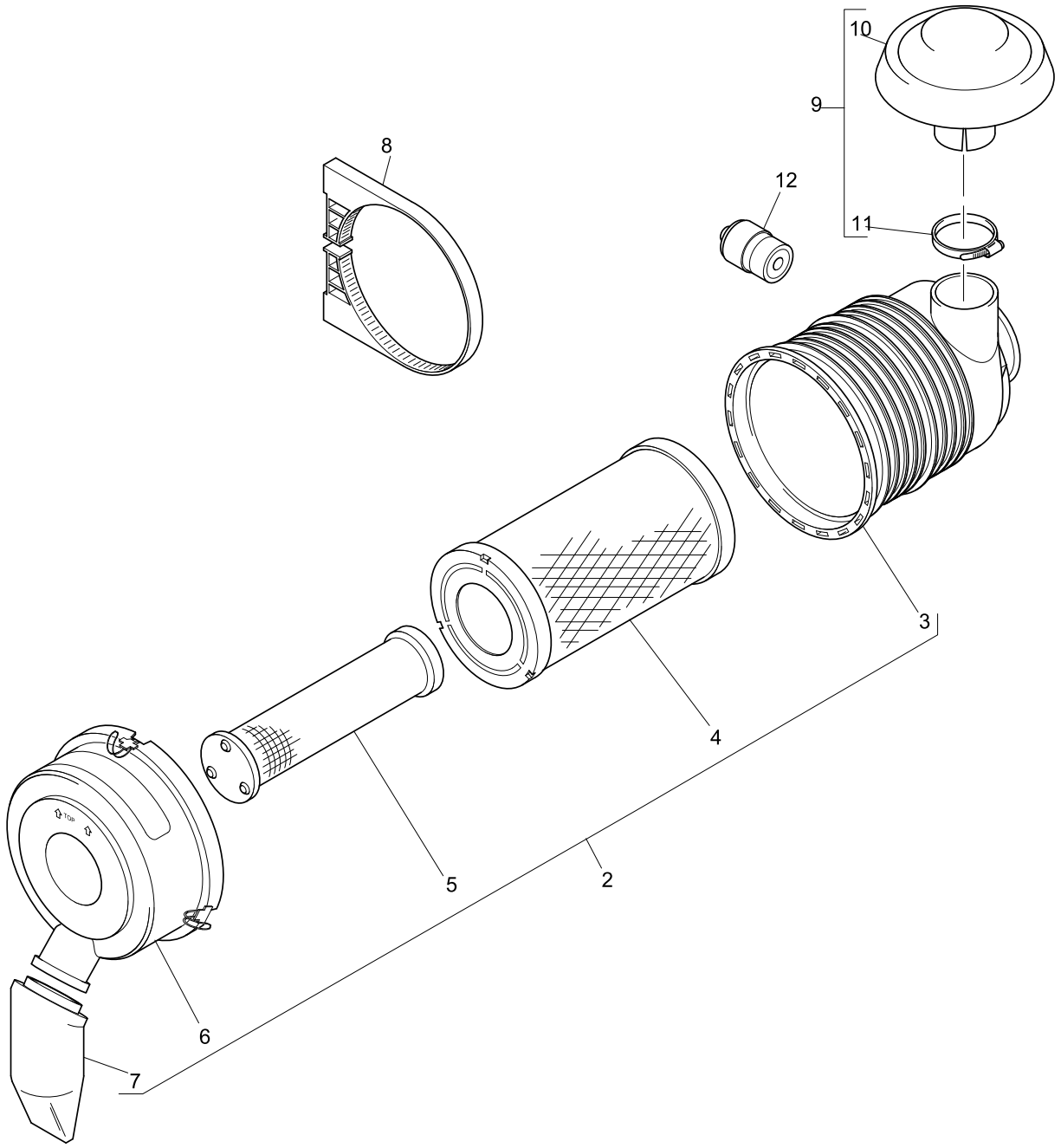

Item	Part No.	References	Qty.	Description	Notes
1		a.	1	AIR FILTER ASSEMBLY	
2	2652C110		1	AIR FILTER ASSEMBLY	
3		⇨ 2652C110	1	HOUSING	
4	26510342		1	MAIN AIR FILTER	
5	26510343		1	SAFETY AIR FILTER	
6	26510326		1	COVER	
7	26510327		1	VALVE	
8	2652C827		1	BRACKET	
9	2652C809		1	CAP	
10		⇨ 2652C809	1	CAP	
11	0180073		1	CLIP	
12	2652C806		1	INDICATOR	

History				
a.				
		⇨	1	HOUSING
	2652C809		1	CAP
	0180073		1	CLIP
	26510342		1	MAIN AIR FILTER
	26510343		1	SAFETY AIR FILTER
	26510327		1	VALVE
		⇨	1	CAP
	2652C827		1	BRACKET
	2652C805		1	INDICATOR
	26510326		1	COVER
1	2652C110		1	AIR FILTER ASSEMBLY

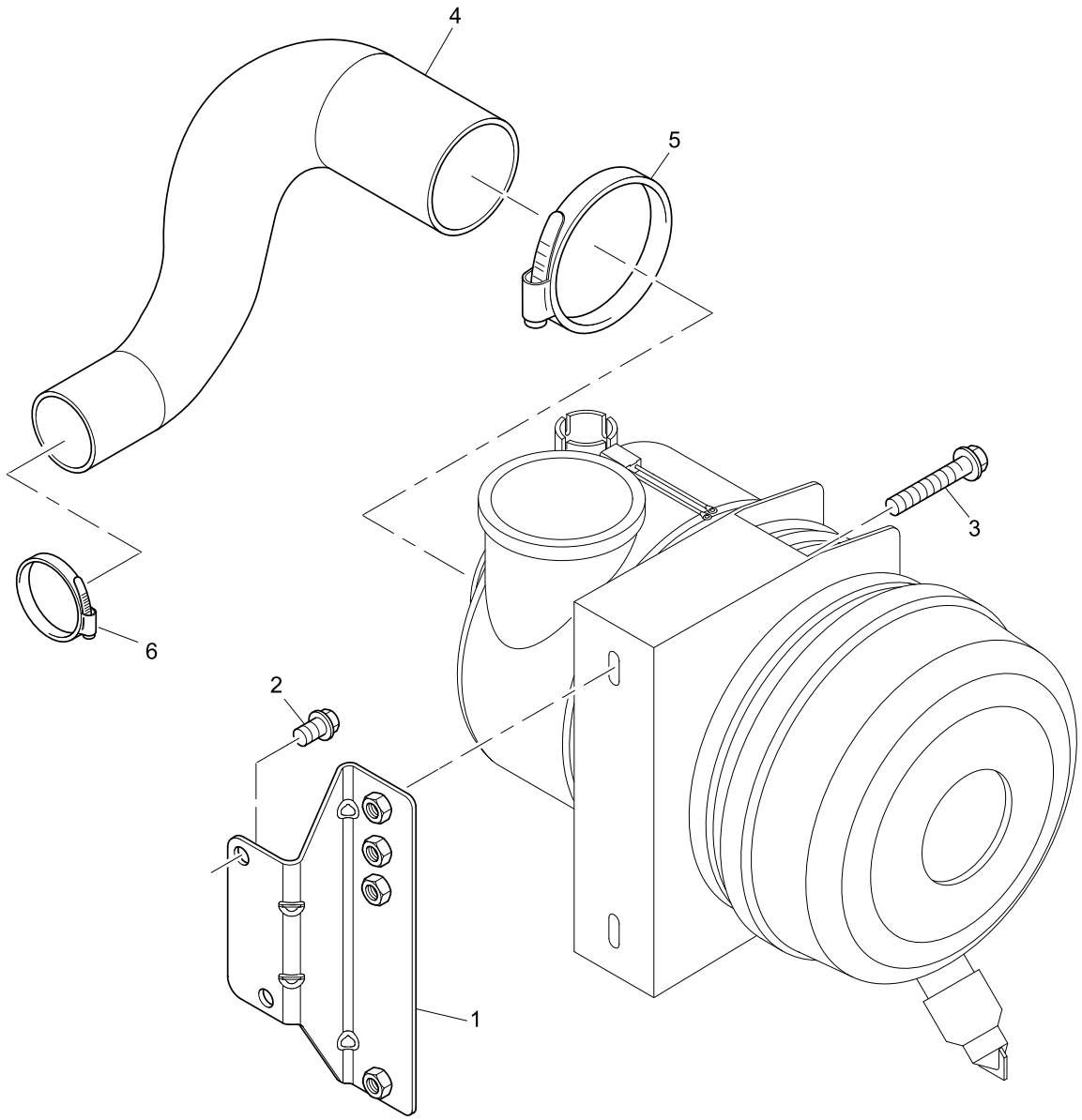
4
5
3
6
2
1

Item	Part No.	References	Qty.	Description	Notes
1	3653A034		1	BRACKET	
2	2314J002		2	SCREW	
3	2314H004		2	SCREW	
4	3783R007		1	HOSE	
5	0180074	a.	1	CLIP	
6	21825194	a.	1	HOSE CLIP	

History					
a.					
5	2481D088		1	HOSE CLIP	
6	2481D075		1	HOSE CLIP	

Pipework	Plate A
	SDH00418

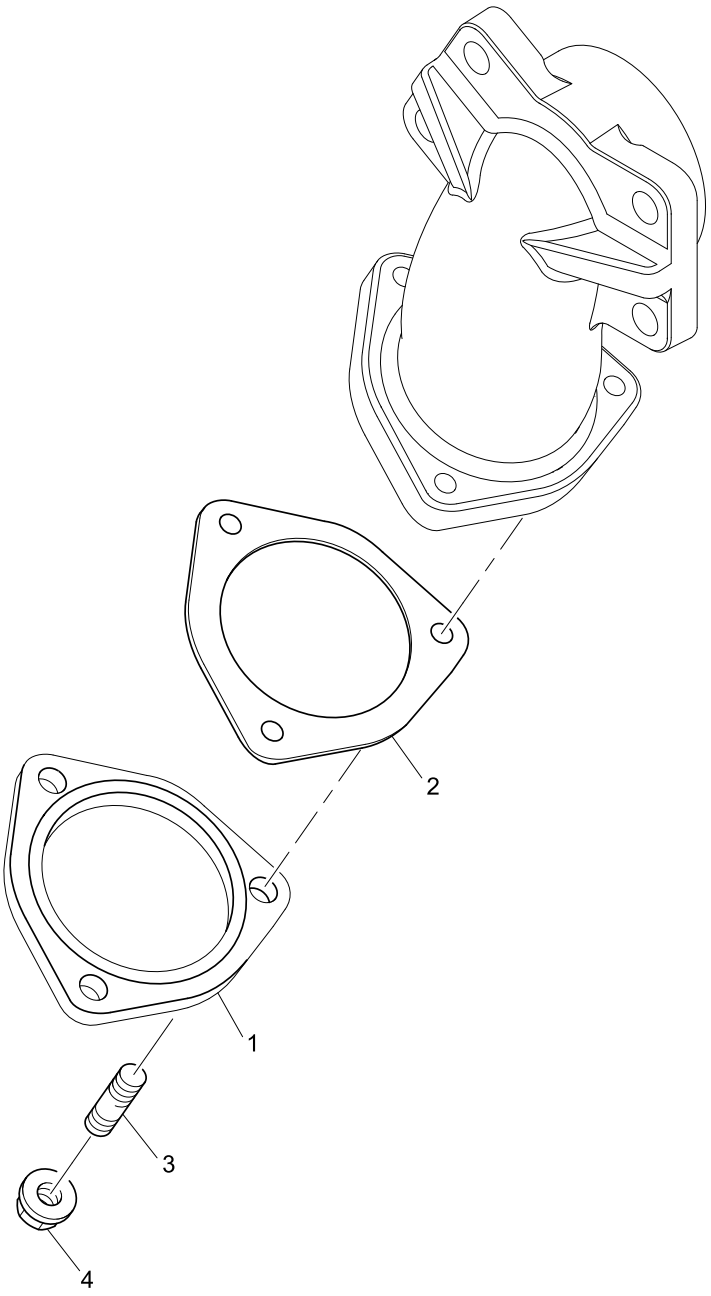

Pipework	Plate A
	SDH00418

Item	Part No.	References	Qty.	Description	Notes
1	3623E006		1	FLANGE	
2	3688C018		1	GASKET - EXHAUST OUTLET	
3	2313C077		3	STUD	
4	2318A634		3	NUT	

Perkins®
THE HEART OF EVERY GREAT MACHINE

Induction Manifold	Plate A
	TBH01107

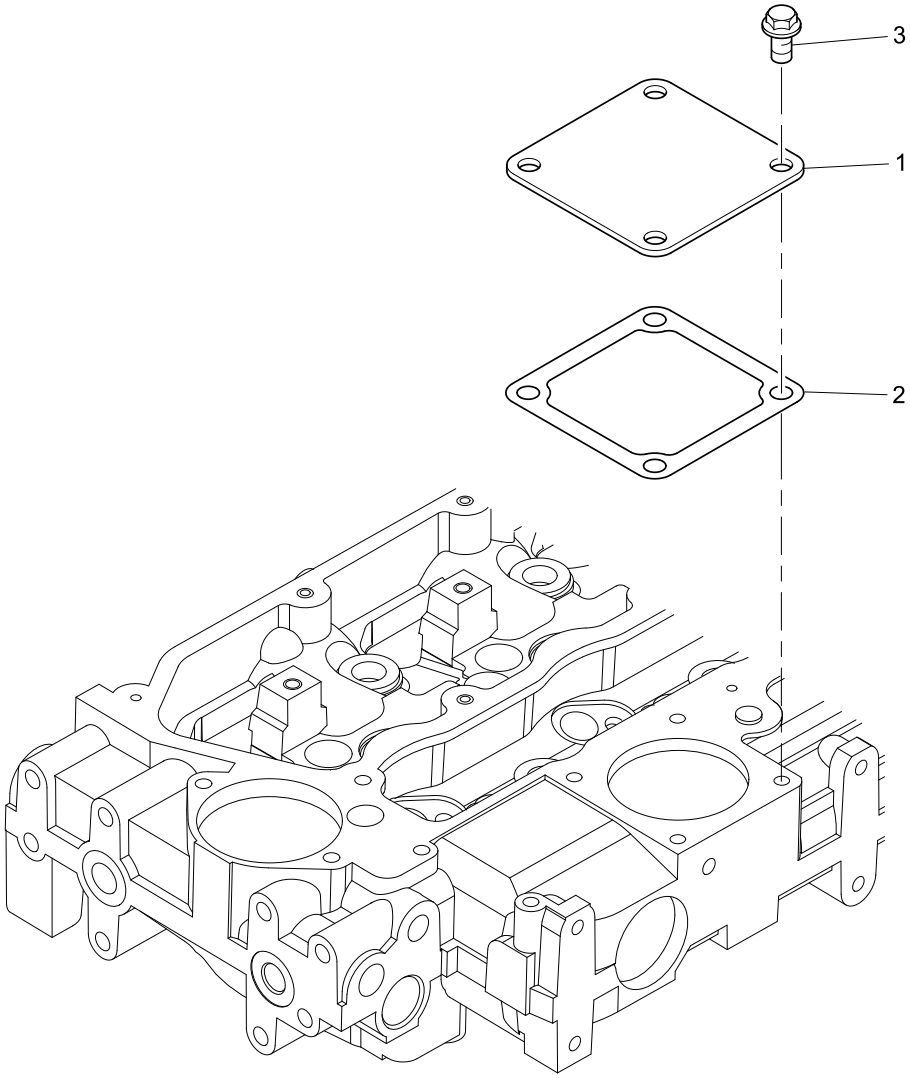

Induction Manifold	Plate A
	TBH01107

Item	Part No.	References	Qty.	Description	Notes
1	3611M009		1	PLATE	
2	3684N503		1	GASKET	
3	2314H002		4	SCREW	

Perkins®
THE HEART OF EVERY GREAT MACHINE

Induction Manifold	Plate B
	TBH01107

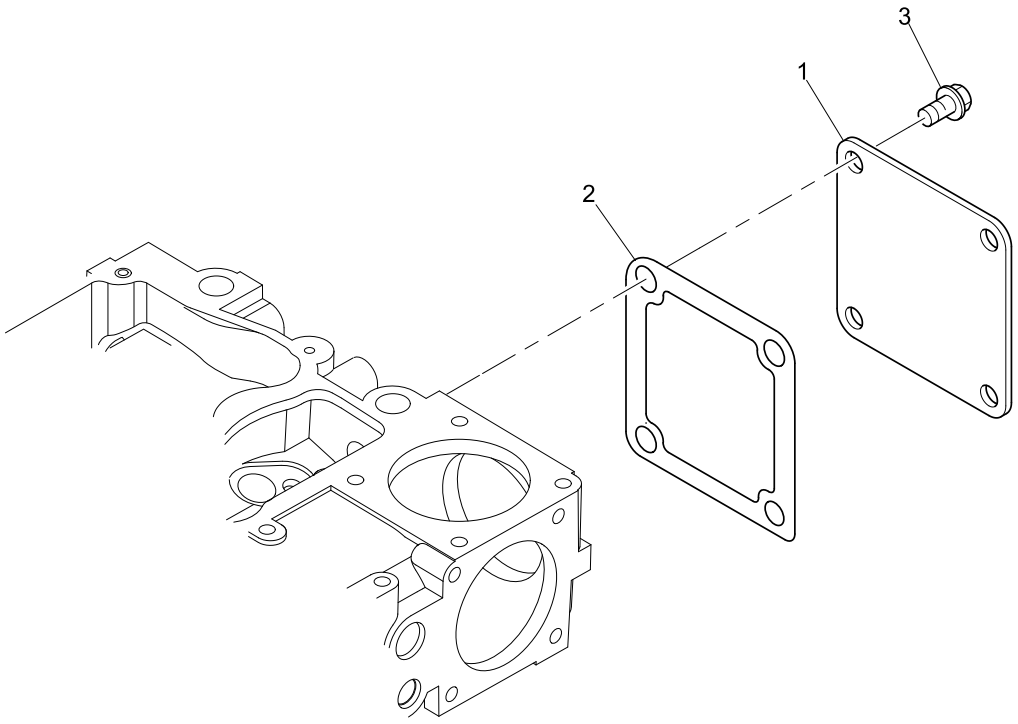

Induction Manifold	Plate B
	TBH01107

Item	Part No.	References	Qty.	Description	Notes
1	3611M009		1	PLATE	
2	3684N503		1	GASKET	
3	2314H032		4	SCREW	

Perkins®
THE HEART OF EVERY GREAT MACHINE

Induction Manifold	Plate C
	TBH01107

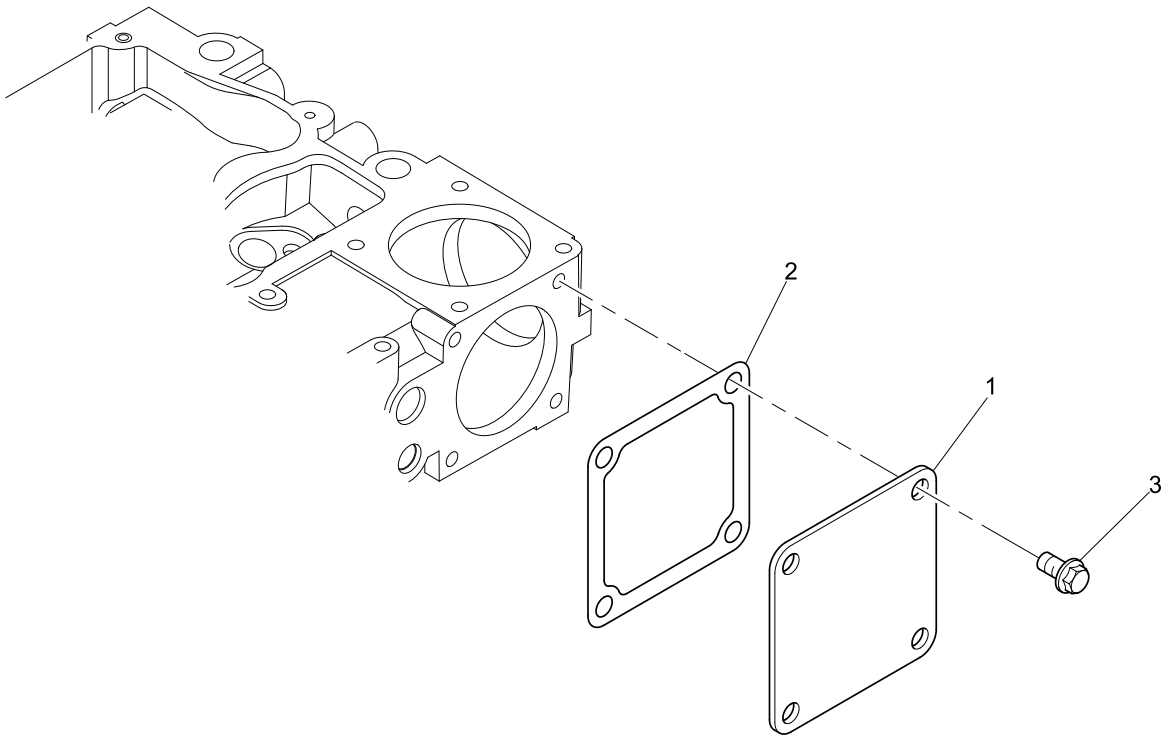

Induction Manifold	Plate C
	TBH01107

Item	Part No.	References	Qty.	Description	Notes
1	3611M009		1	PLATE	
2	3684N503		1	GASKET	
3	2314H032		4	SCREW	

Perkins®
THE HEART OF EVERY GREAT MACHINE

Lift Pump	Plate A
	VBH02540

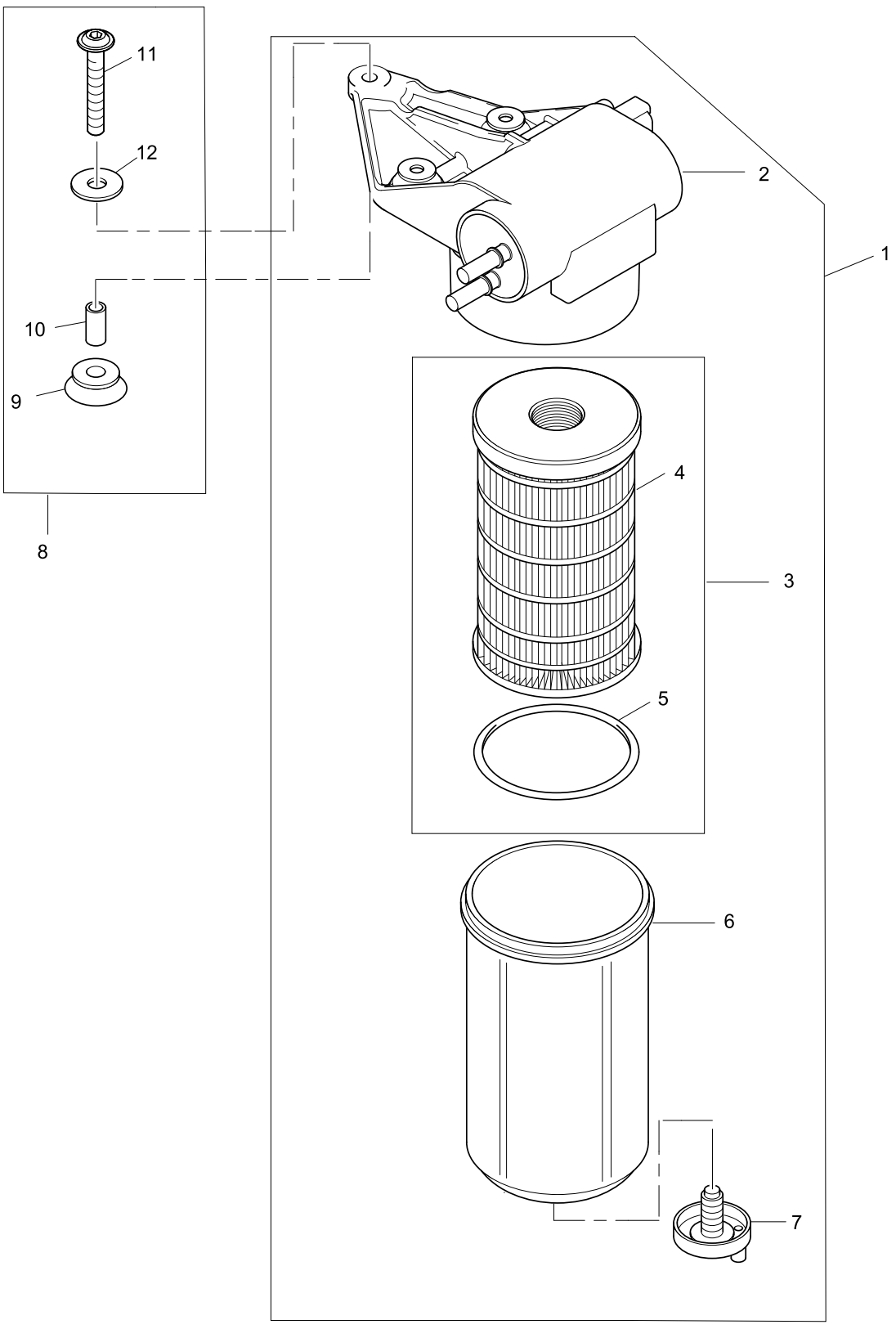

Lift Pump	Plate A
	VBH02540

Item	Part No.	References	Qty.	Description	Notes
1	4132A021		1	FUEL FILTER ASSEMBLY	
2		⇨ 4132A021	1	FUEL FILTER ASSEMBLY	
3	4816636	a.	1	FUEL FILTER	
4		a. ⇨ 4816636	1	FUEL FILTER	
5		a. ⇨ 4816636	1	SEAL - O RING	
6	2656F837		1	BOWL	
7	2656F836		1	DRAIN PLUG	
8	U5MK1239		1	MOUNTING	
9		⇨ U5MK1239	6	MOUNTING	
10		⇨ U5MK1239	3	SPACER	
11	2316T135		3	SCREW	
12	2131A507		3	WASHER	

History					
a.					
3	26560201		1	FUEL FILTER	
4		⇨	1	FUEL FILTER	
5		⇨	1	O RING	

Perkins®
THE HEART OF EVERY GREAT MACHINE

Fuel Filter	Plate B
	VBH02540

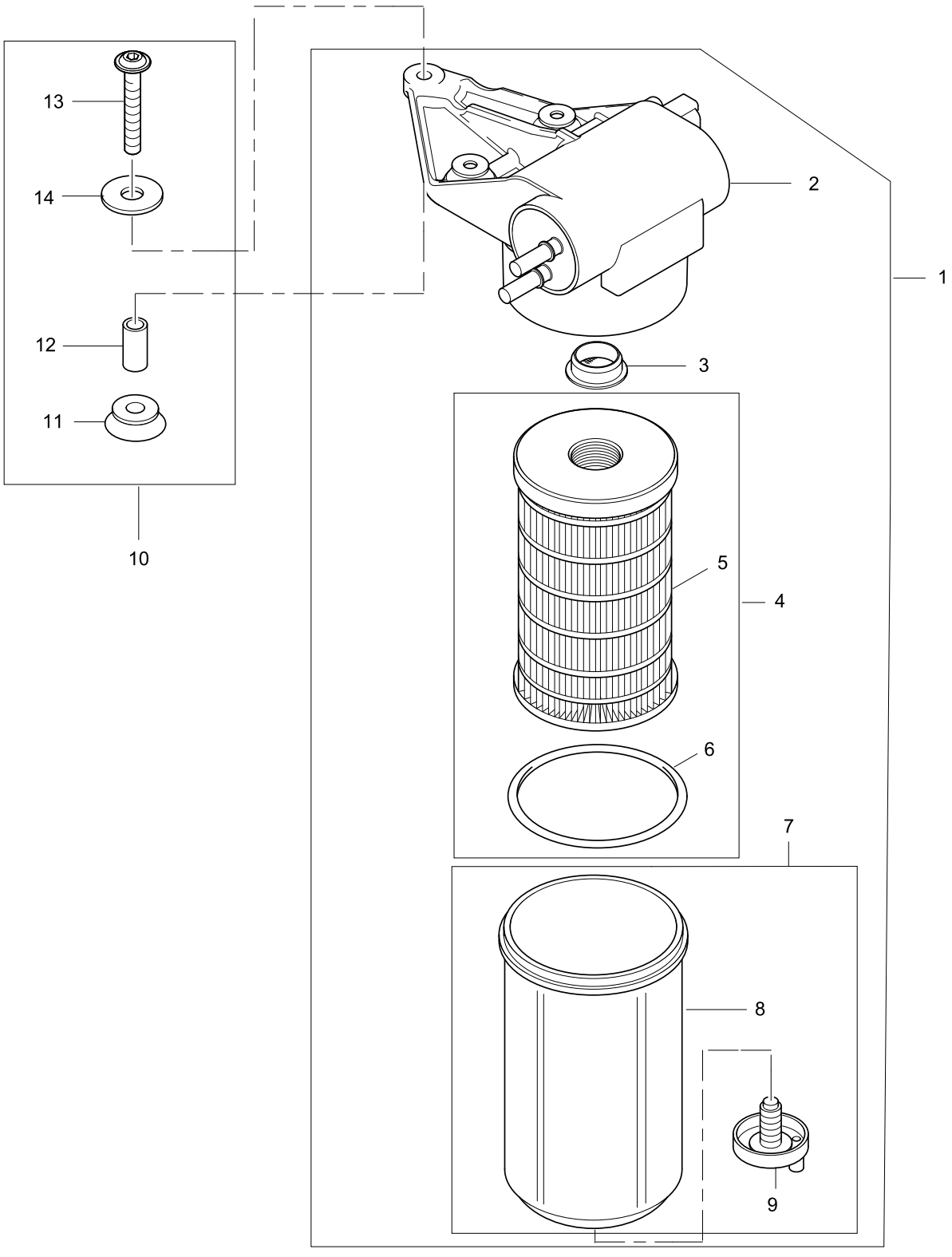

Fuel Filter	Plate B
	VBH02540

Item	Part No.	References	Qty.	Description	Notes
1	T414444		1	LIFT PUMP	
2		⇨ T414444	1	LIFT PUMP	
3	T414308		1	STRAINER	
4	4816636	a.	1	FUEL FILTER	
5		a. ⇨ 4816636	1	FUEL FILTER	
6		a. ⇨ 4816636	1	SEAL - O RING	
7	T414361		1	FUEL FILTER BOWL	
8		⇨ T414361	1	FUEL FILTER BOWL	
9	T414298		1	DRAIN PLUG	
10	U5MK1239		1	MOUNTING	
11		⇨ U5MK1239	6	MOUNTING	
12		⇨ U5MK1239	3	SPACER	
13	2316T135		3	SCREW	
14	2131A507		3	WASHER	

History					
a.					
4	26560201		1	FUEL FILTER	
5		⇨	1	FUEL FILTER	
6		⇨	1	O RING	

Perkins®
THE HEART OF EVERY GREAT MACHINE

Blanking Plugs	Plate A
	VBH02540

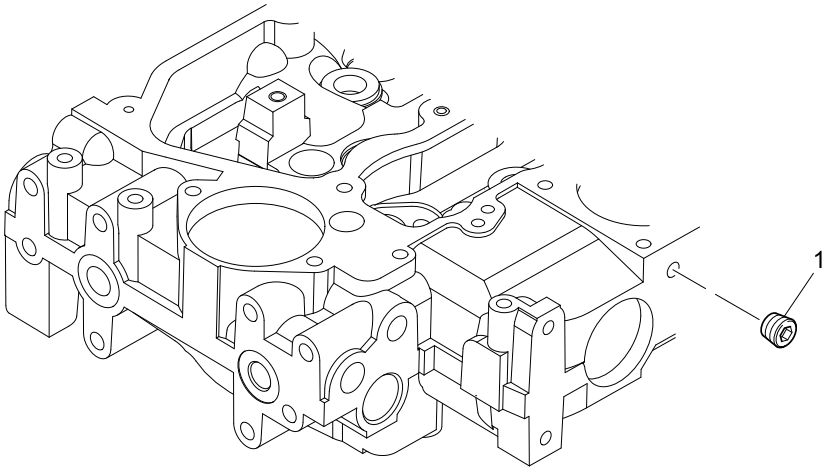

Blanking Plugs	Plate A
	VBH02540

Item	Part No.	References	Qty.	Description	Notes
1	2431131		1	PLUG	

Perkins®
THE HEART OF EVERY GREAT MACHINE

Fuel Filter	Plate A
	VBH02540

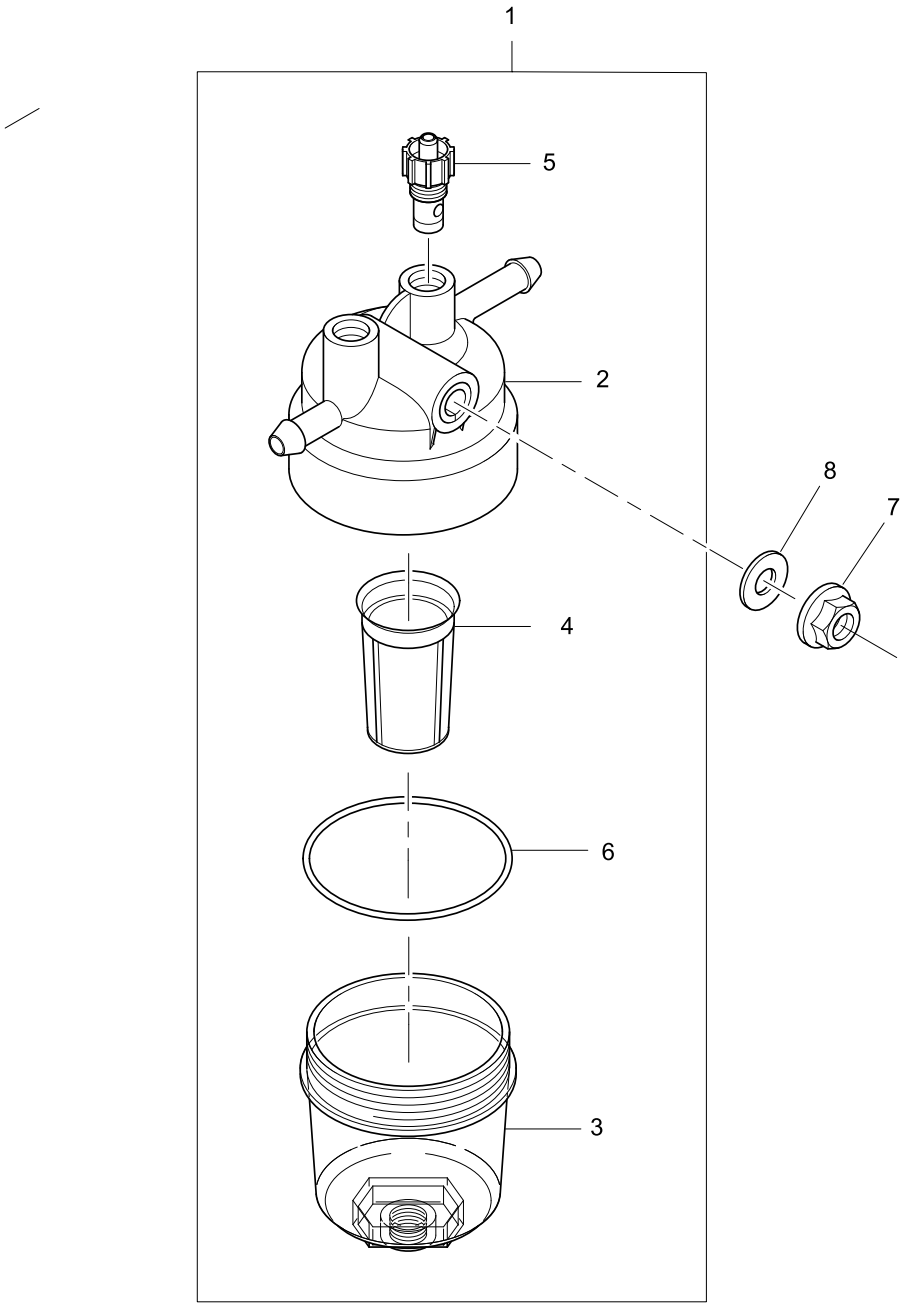

Fuel Filter	Plate A
	VBH02540

Item	Part No.	References	Qty.	Description	Notes
1	130306380		1	PRE-FUEL FILTER ASSY	
2		✏ 130306380	1	FUEL FILTER HEAD	
3	26560182		1	FUEL FILTER BOWL	
4	130306360		1	PRE-FUEL FILTER	
5	26560183		3	DRAIN PLUG	
6	26560184		1	SEAL - O RING	
7	2318A603		1	NUT	
8	0920497		2	WASHER	

History					
a.					
	3241A032		1	STUD	

Perkins®
THE HEART OF EVERY GREAT MACHINE

Fuel Filter	Plate A
	VBH02540

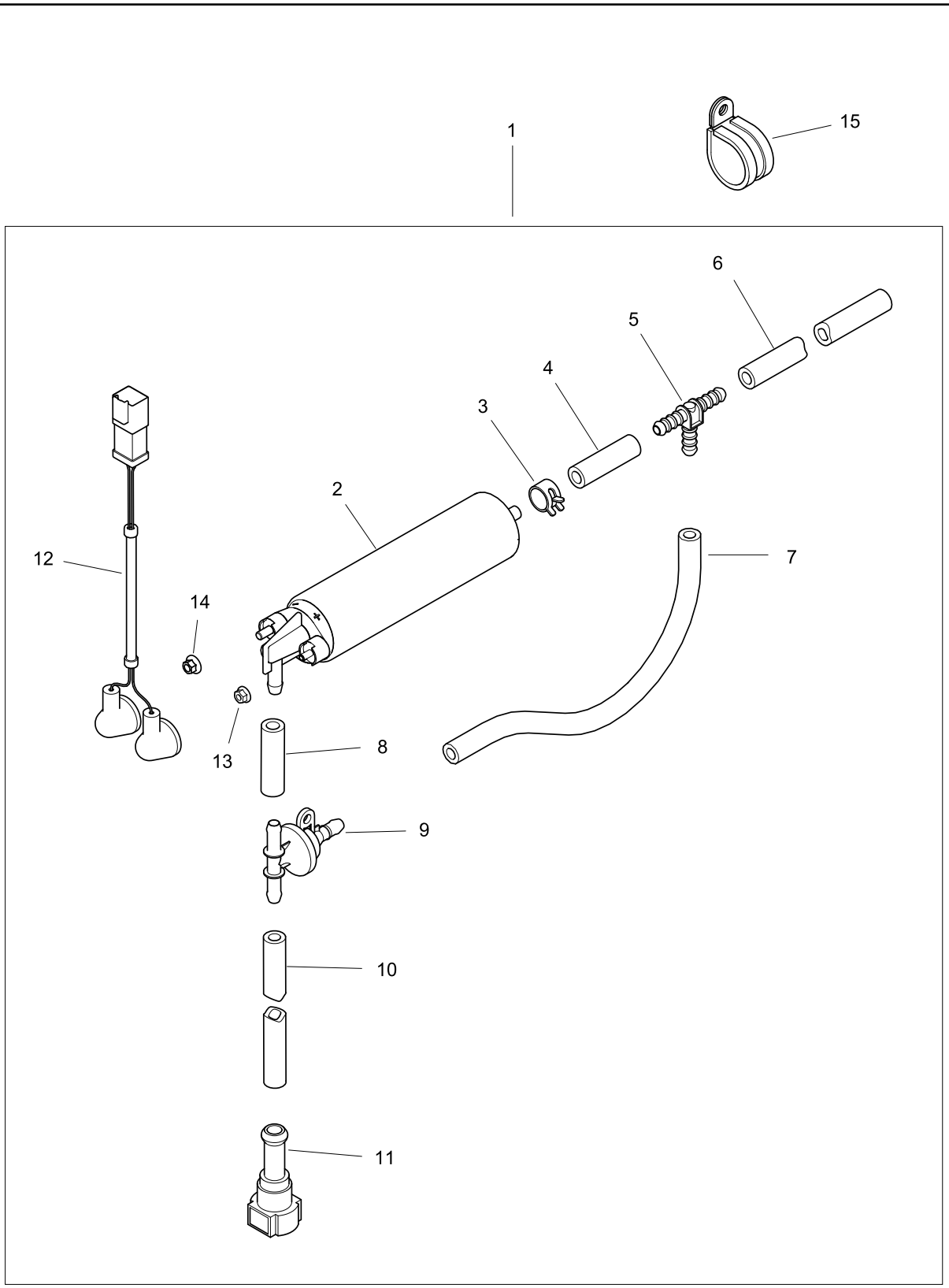

Fuel Filter	Plate A
	VBH02540

Item	Part No.	References	Qty.	Description	Notes
1	3583A053	⇙	1	LIFT PUMP	
2	2641A203		1	LIFT PUMP	
3	2481C006		9	PIPE CLIP	
4	3583A055		1	PIPE - LOW PRESSURE FUEL	
5	2442A128		1	CONNECTION	
6	3583A054		1	PIPE - LOW PRESSURE FUEL	
7	3583A056		1	PIPE - LOW PRESSURE FUEL	
8	3583A055		1	PIPE - LOW PRESSURE FUEL	
9	T408360		1	RELIEF VALVE	
10	3583A059		1	PIPE - LOW PRESSURE FUEL	
11	3763A046		1	CONNECTION	
12	3161C102		1	ELECTRICAL CONNECTOR	
13	2318A205		1	NUT	
14	2318A206		1	NUT	
15	2481D162		2	PIPE CLIP	

Filter to Injection Pump Pipe	Plate A
	VBH02540

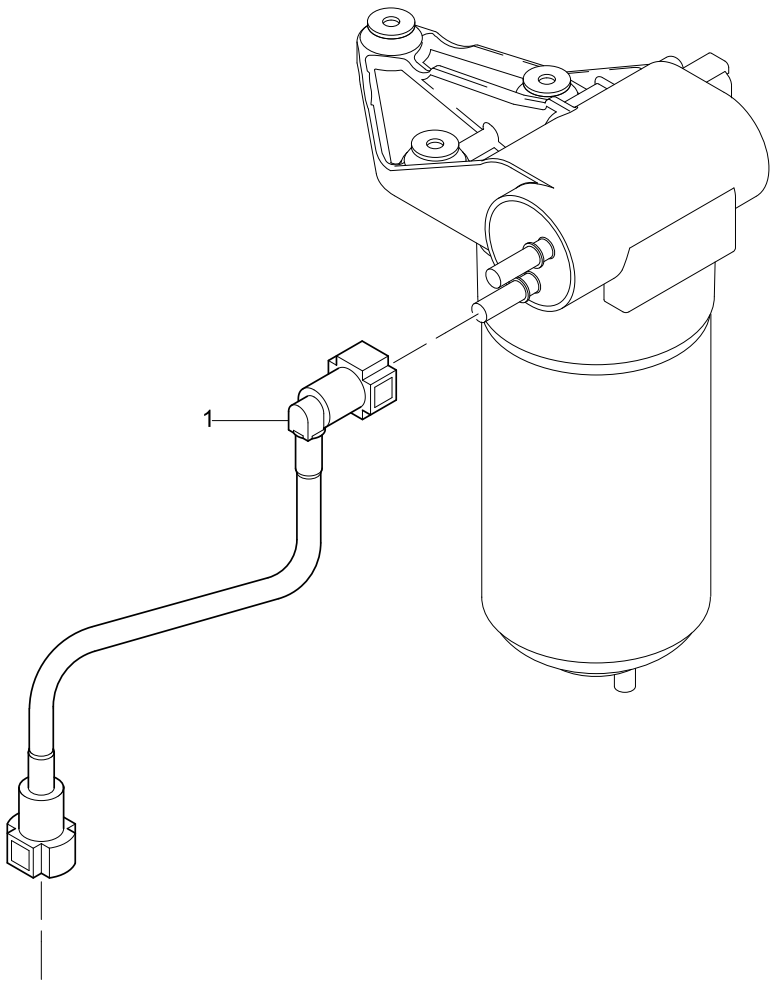

Filter to Injection Pump Pipe	Plate A
	VBH02540

Item	Part No.	References	Qty.	Description	Notes
1	2646F001		1	PIPE - FILTER TO INJ PUMP	

Injection Pump to Filter Pipe	Plate A
	VBH02540

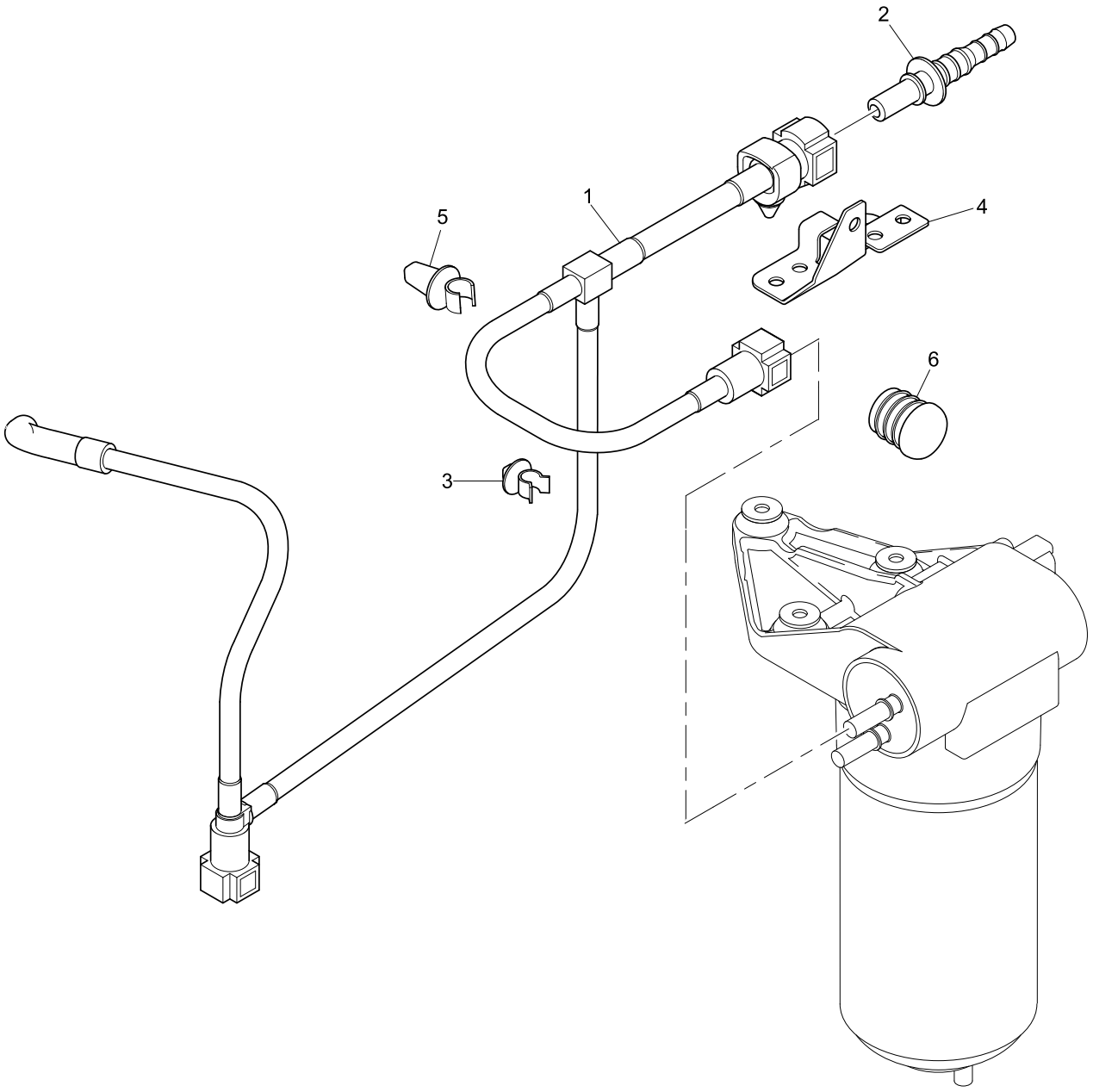

Injection Pump to Filter Pipe	Plate A
	VBH02540

Item	Part No.	References	Qty.	Description	Notes
1	2646F009		1	PIPE - INJ PUMP TO FILTER	
2	3763A045		1	CONNECTION	
3	2481D456		1	CLIP	
4	3661A091		1	BRACKET	
5	2481D559		1	PIPE CLIP	
6	2487A401		1	PLUG	

Heater Plugs	Plate A
	WDH0398

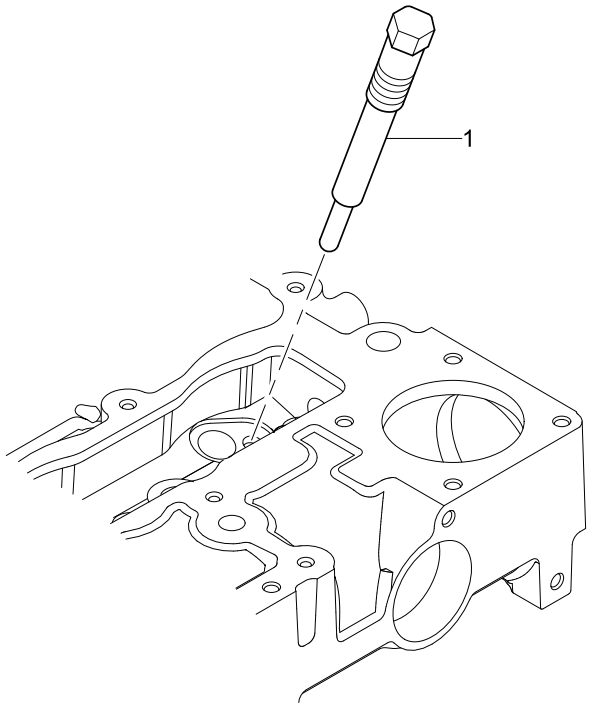

Heater Plugs	Plate A
	WDH0398

Item	Part No.	References	Qty.	Description	Notes
1	3278A101		4	PLUG	

Perkins®
THE HEART OF EVERY GREAT MACHINE

Engine Lifting Eyes	Plate A
	XBH00474

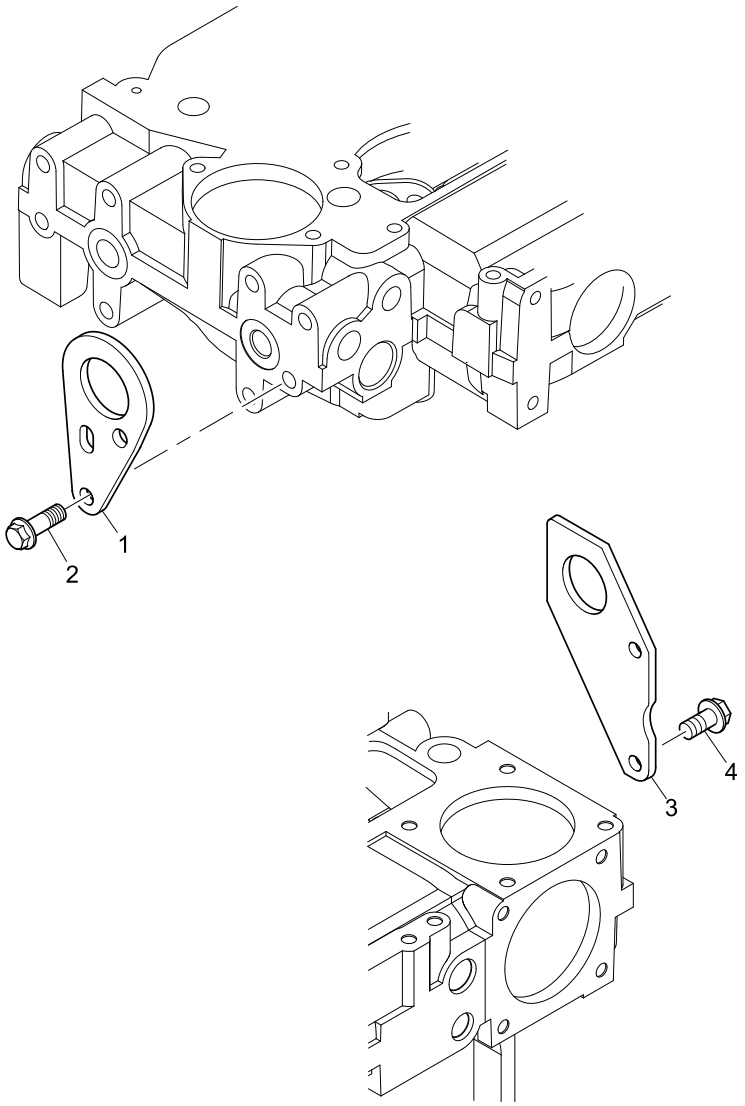

Engine Lifting Eyes	Plate A
	XBH00474

Item	Part No.	References	Qty.	Description	Notes
1	3617A015		1	LIFTING BRACKET	
2	2314J002		2	SCREW	
3	3624A016		1	LIFTING BRACKET	
4	2314J002		2	SCREW	

Perkins®
THE HEART OF EVERY GREAT MACHINE

Engine Mounts	Plate A
	ZCH01252

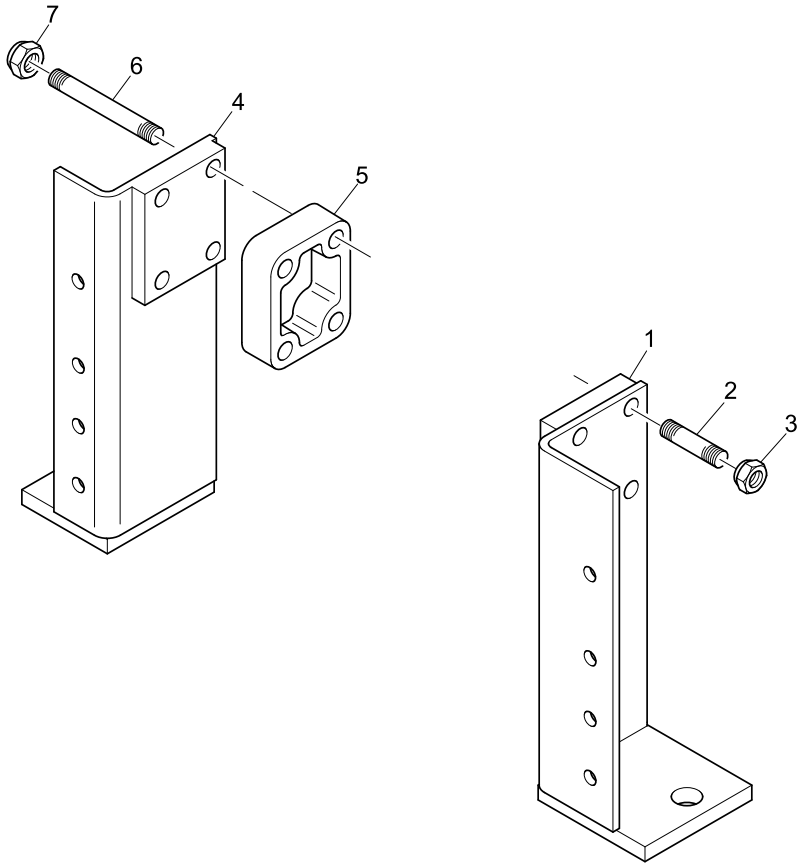

Engine Mounts	Plate A
	ZCH01252

Item	Part No.	References	Qty.	Description	Notes
1	T411170	a.	1	BRACKET	
2	2313M101		4	STUD	
3	2318F605		4	NUT	
4	T411166	b.	1	BRACKET	
5	36271052		1	SPACER	
6	2313M105		4	STUD	
7	2318F605		4	NUT	

History				
a.				
1	3825T017		1	BRACKET
b.				
4	3825T018		1	BRACKET

Perkins®
THE HEART OF EVERY GREAT MACHINE

Engine Mounts - Blanking Plugs	Plate A
	ZCH01252

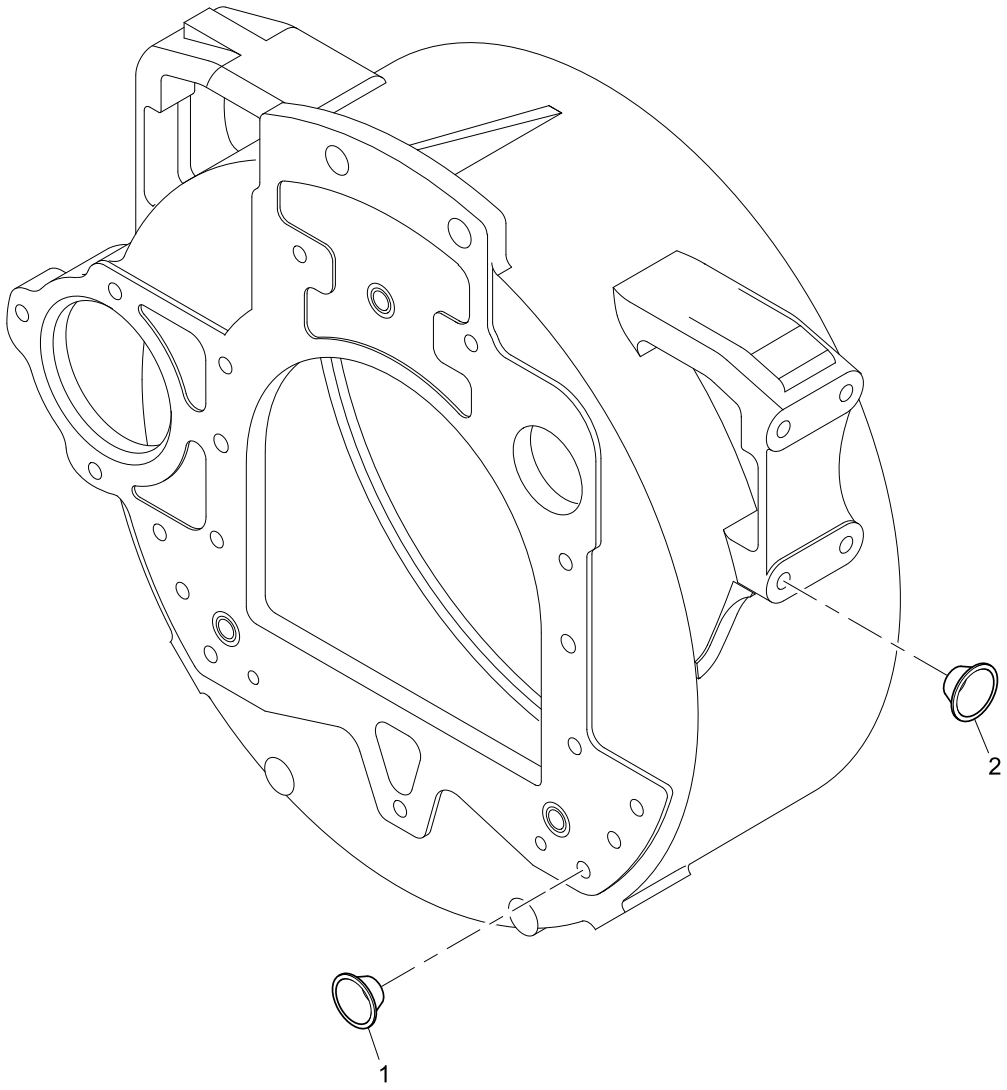

Engine Mounts - Blanking Plugs	Plate A
	ZCH01252

Item	Part No.	References	Qty.	Description	Notes
1	2487207		6	PLUG	
2	2487207		4	PLUG	

Perkins®
THE HEART OF EVERY GREAT MACHINE

Lubricating Oil Pressure Switch/Gauge	Plate A
	ZJH00586

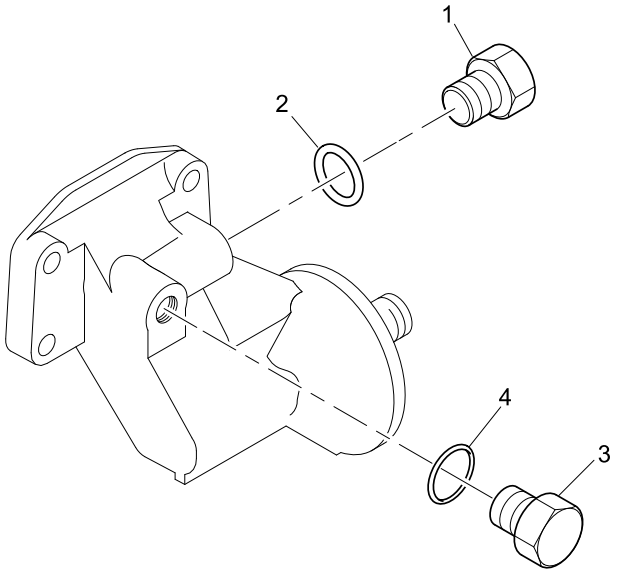

Lubricating Oil Pressure Switch/Gauge	Plate A
	ZJH00586

Item	Part No.	References	Qty.	Description	Notes
1	3278A004		1	PLUG	
2	2415H002		1	SEAL - O RING	
3	3278A007		1	PLUG	
4	2415H009		1	SEAL - O RING	

Perkins®
THE HEART OF EVERY GREAT MACHINE

Lubricating Oil Pressure Switch/Gauge	Plate B
	ZJH00586

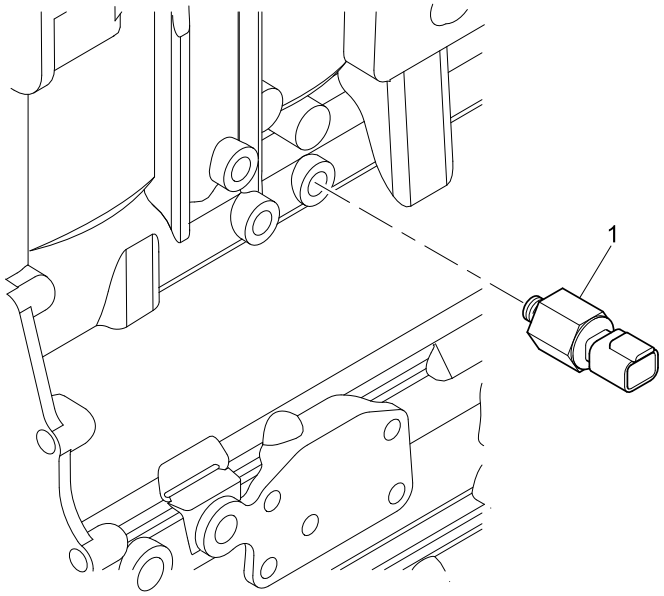

Lubricating Oil Pressure Switch/Gauge	Plate B
	ZJH00586

Item	Part No.	References	Qty.	Description	Notes
1	2848A051		1	OIL PRESSURE SWITCH	

Temperature Gauge & Sender	Plate A
	ZLH00381

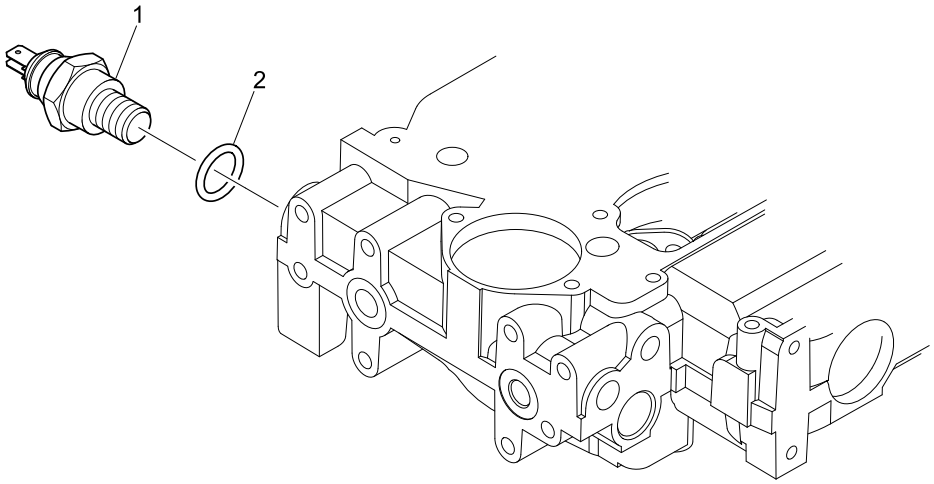

Temperature Gauge & Sender	Plate A
	ZLH00381

Item	Part No.	References	Qty.	Description	Notes
1	2848A129		1	WATER TEMPERATURE SWITCH	
2	2415H003		1	SEAL - O RING	

Perkins®
THE HEART OF EVERY GREAT MACHINE

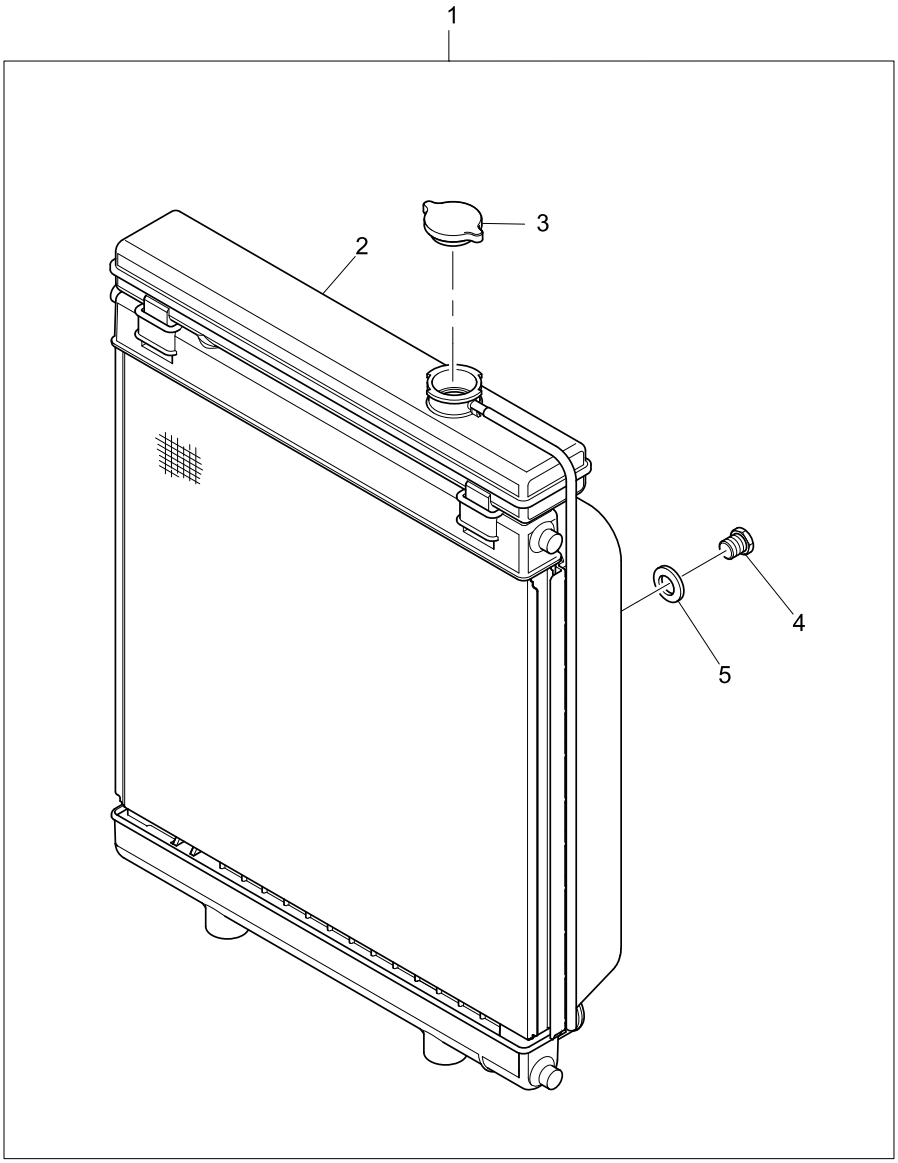
1
2
3
4
5

Item	Part No.	References	Qty.	Description	Notes
1	2485B281		1	RADIATOR	
2		⇨ 2485B281	1	RADIATOR	
3	24850073	a.	1	RADIATOR CAP	
4	24850079		1	DRAIN PLUG	
5	24850081		1	WASHER	

History					
a.					
3	24850078		1	RADIATOR CAP	

Radiator Bracket & Fixings	Plate A
	ZMH01407

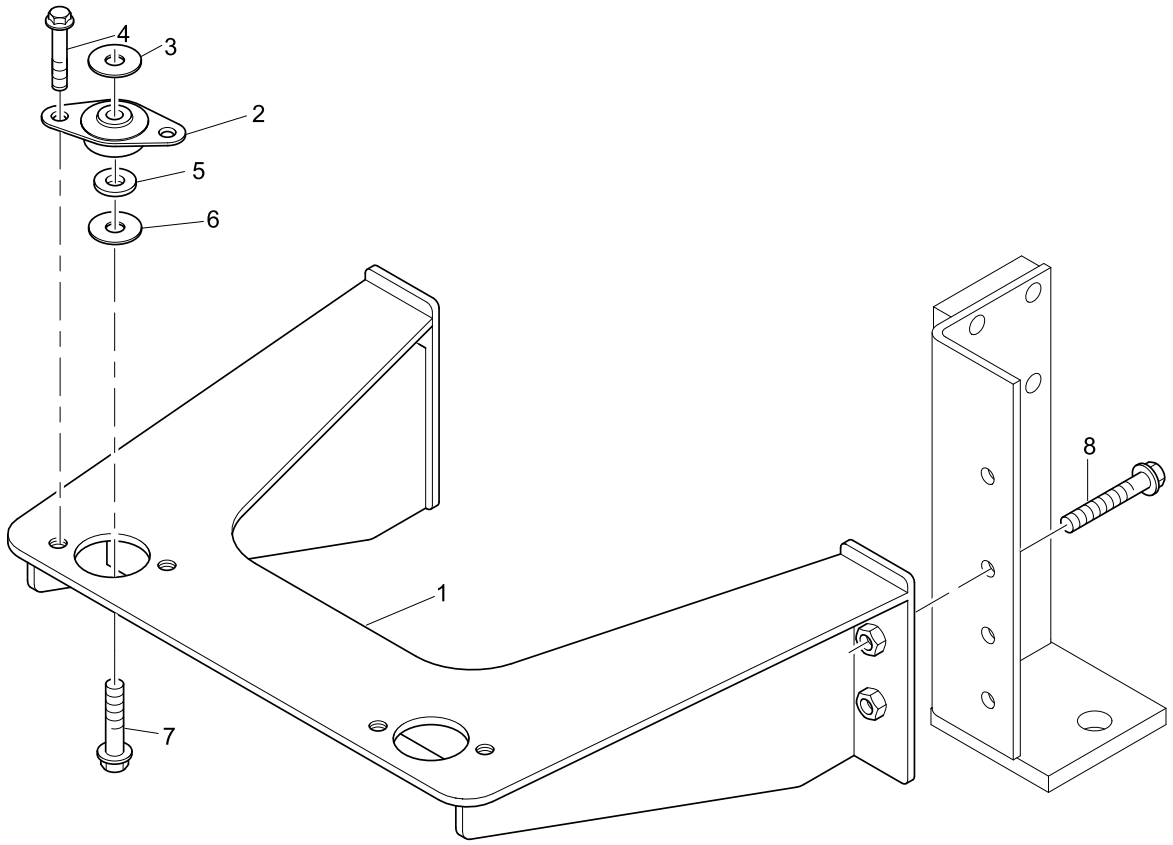

Radiator Bracket & Fixings	Plate A
	ZMH01407

Item	Part No.	References	Qty.	Description	Notes
1	T414701	a.	1	BRACKET	
2	2635A052		2	MOUNTING	
3	33124118		2	WASHER	
4	2311F055		4	SCREW	
5	33115117		2	SPACER	
6	0920471		2	WASHER	
7	2314J008		2	SCREW	
8	2314J004		6	SCREW	

History					
a.					
1	3812A131		1	BRACKET	

Perkins®
THE HEART OF EVERY GREAT MACHINE

Radiator Bracket & Fixings	Plate B
	ZMH01407

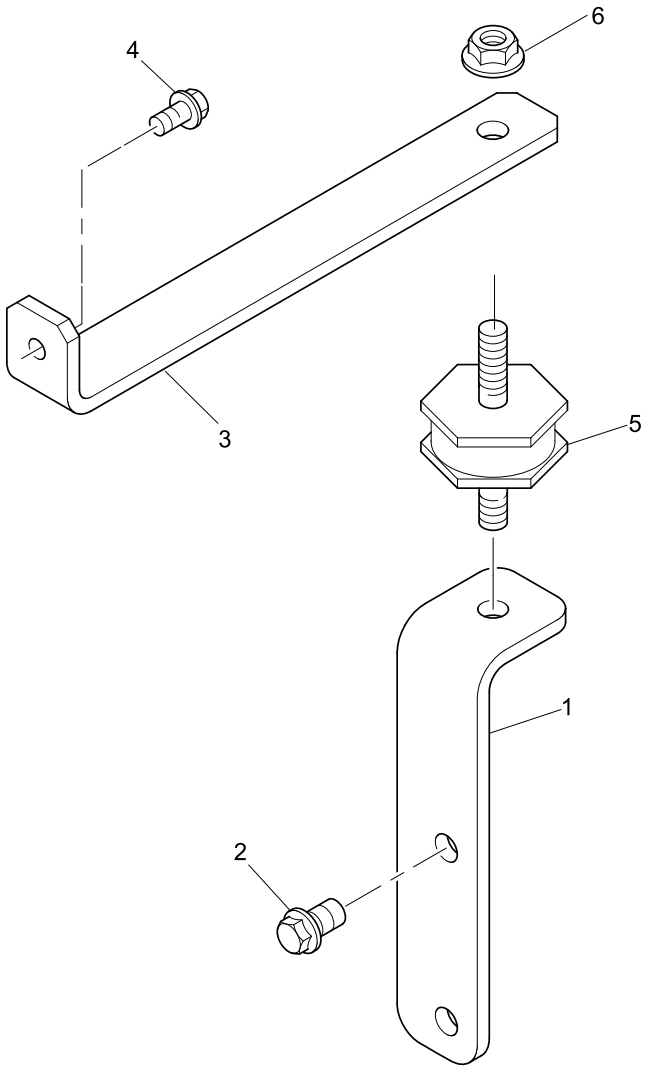

Radiator Bracket & Fixings	Plate B
	ZMH01407

Item	Part No.	References	Qty.	Description	Notes
1	3641A013		1	BRACKET	
2	2314J002		2	SCREW	
3	3641A012		1	STAY	
4	2314H002		1	SCREW	
5	2634A115		1	MOUNTING	
6	2318A604		2	NUT	

Radiator & Hoses	Plate A
	ZMH01407

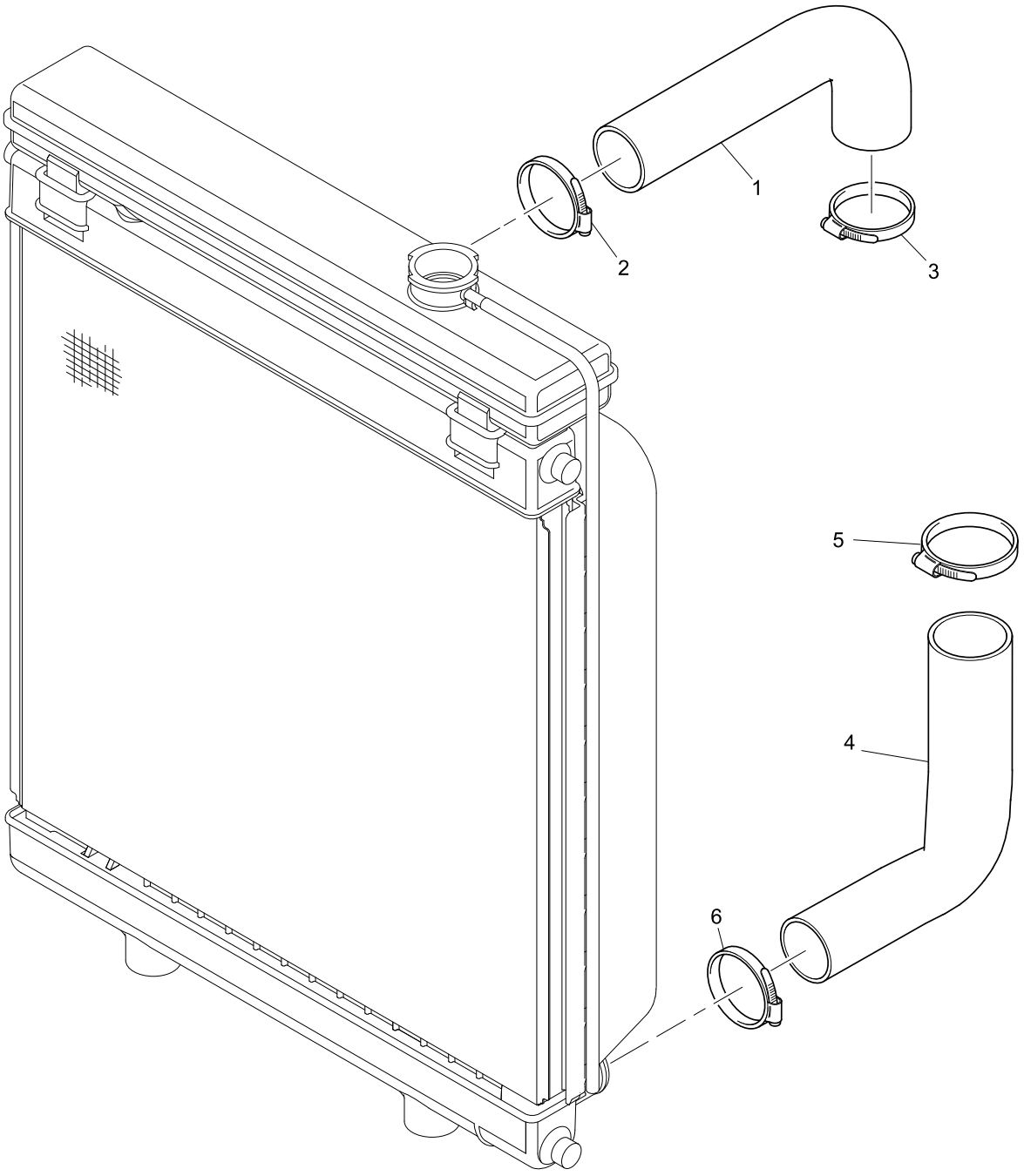

Item	Part No.	References	Qty.	Description	Notes
1	3482T046		1	HOSE - COOLANT	
2	21825194		1	HOSE CLIP	
3	21825199		1	HOSE CLIP	
4	3482T045		1	HOSE - COOLANT	
5	21825194		1	HOSE CLIP	
6	21825199		1	HOSE CLIP	

Guards	Plate A
	ZMH01407

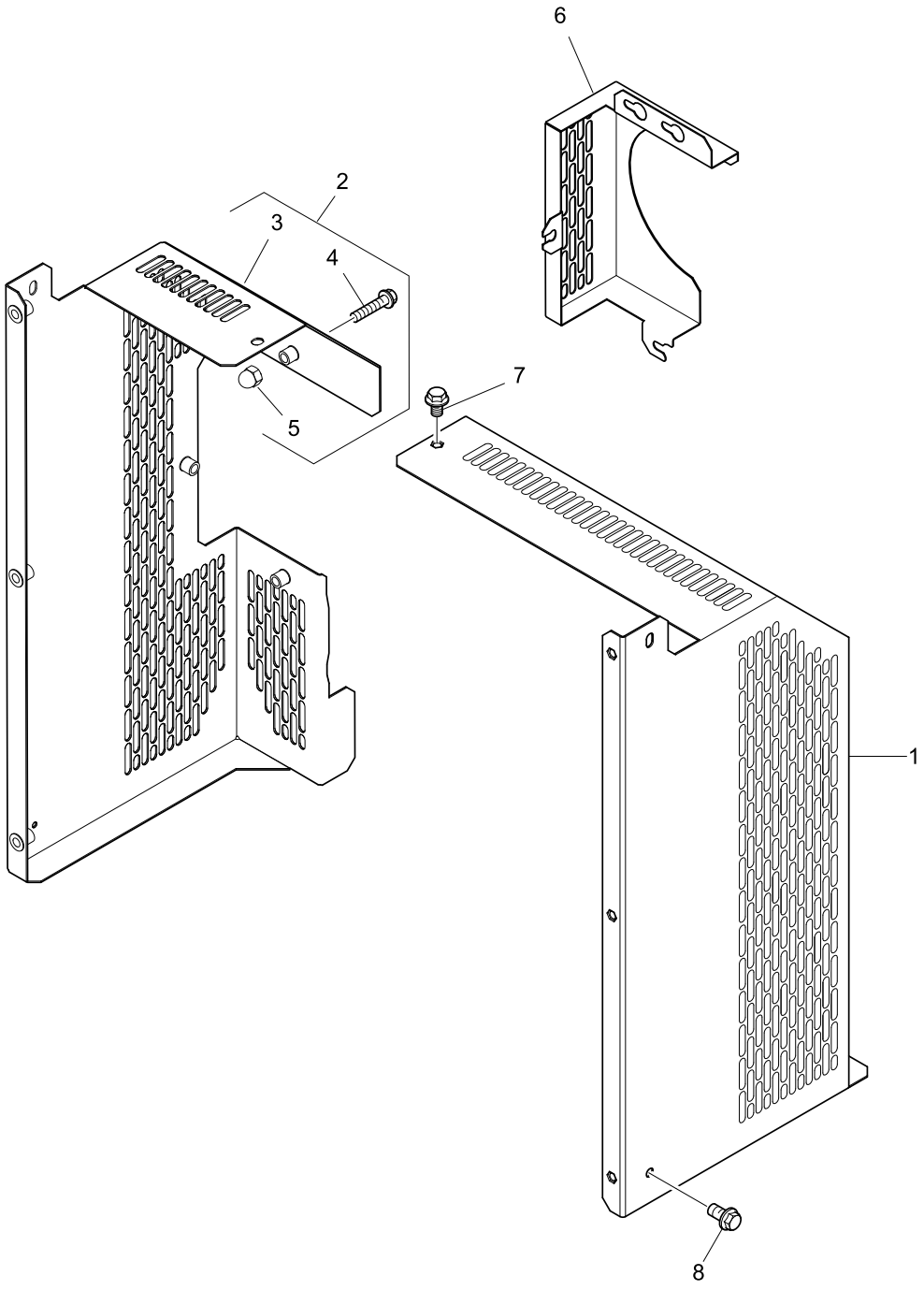

Item	Part No.	References	Qty.	Description	Notes
1	T425974	a.	1	FAN GUARD	
2	T425955	a. d.	1	FAN GUARD	
3		a. ⇒ T425955	1	FAN GUARD	
4	2314H005	a.	3	SCREW	
5	2318A401	a.	3	NUT	
6	T425972	a. c. e.	1	FAN GUARD	
7	2314H102	b.	4	SCREW	
8	2314H002		3	SCREW	

History					
a.					
1	3756V115		1	FAN GUARD	
2	4113A202		1	FAN GUARD	
3		⇒	1	FAN GUARD	
4	2314H005		4	SCREW	
5	2318A401		4	NUT	
6	T411471		1	FAN GUARD	
b.					
7	2314H002		4	SCREW	
c.					
6	3756V155		1	FAN GUARD	
d.					
	2314H002		4	SCREW	
2	3756V116		1	FAN GUARD	
e.					
6	3756V117		1	FAN GUARD	

Perkins®
THE HEART OF EVERY GREAT MACHINE

Fuel Pre-Lift Pump	Plate A
	ZVH01121

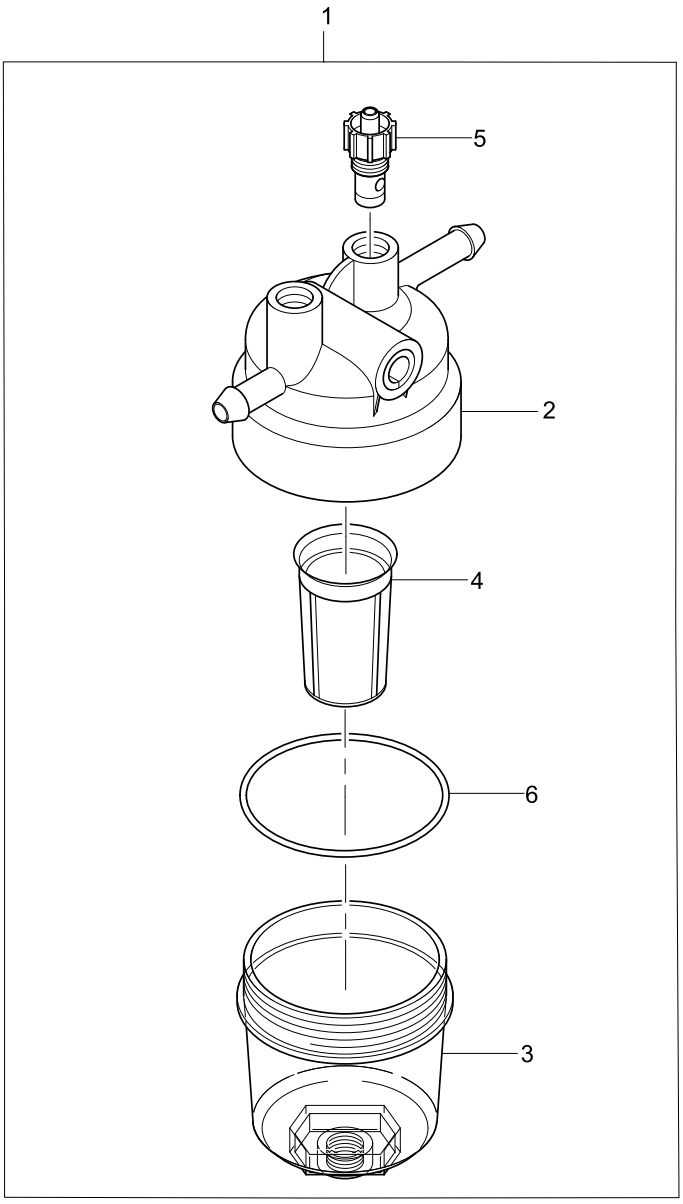

Fuel Pre-Lift Pump	Plate A
	ZVH01121

Item	Part No.	References	Qty.	Description	Notes
1	130306380		1	PRE-FUEL FILTER ASSY	
2		✏ 130306380	1	FUEL FILTER HEAD	
3	26560182		1	FUEL FILTER BOWL	
4	130306360		1	PRE-FUEL FILTER	
5	26560183		3	DRAIN PLUG	
6	26560184		1	SEAL - O RING	

Perkins®
THE HEART OF EVERY GREAT MACHINE

Fuel Pre-Lift Pump	Plate B
	ZVH01121

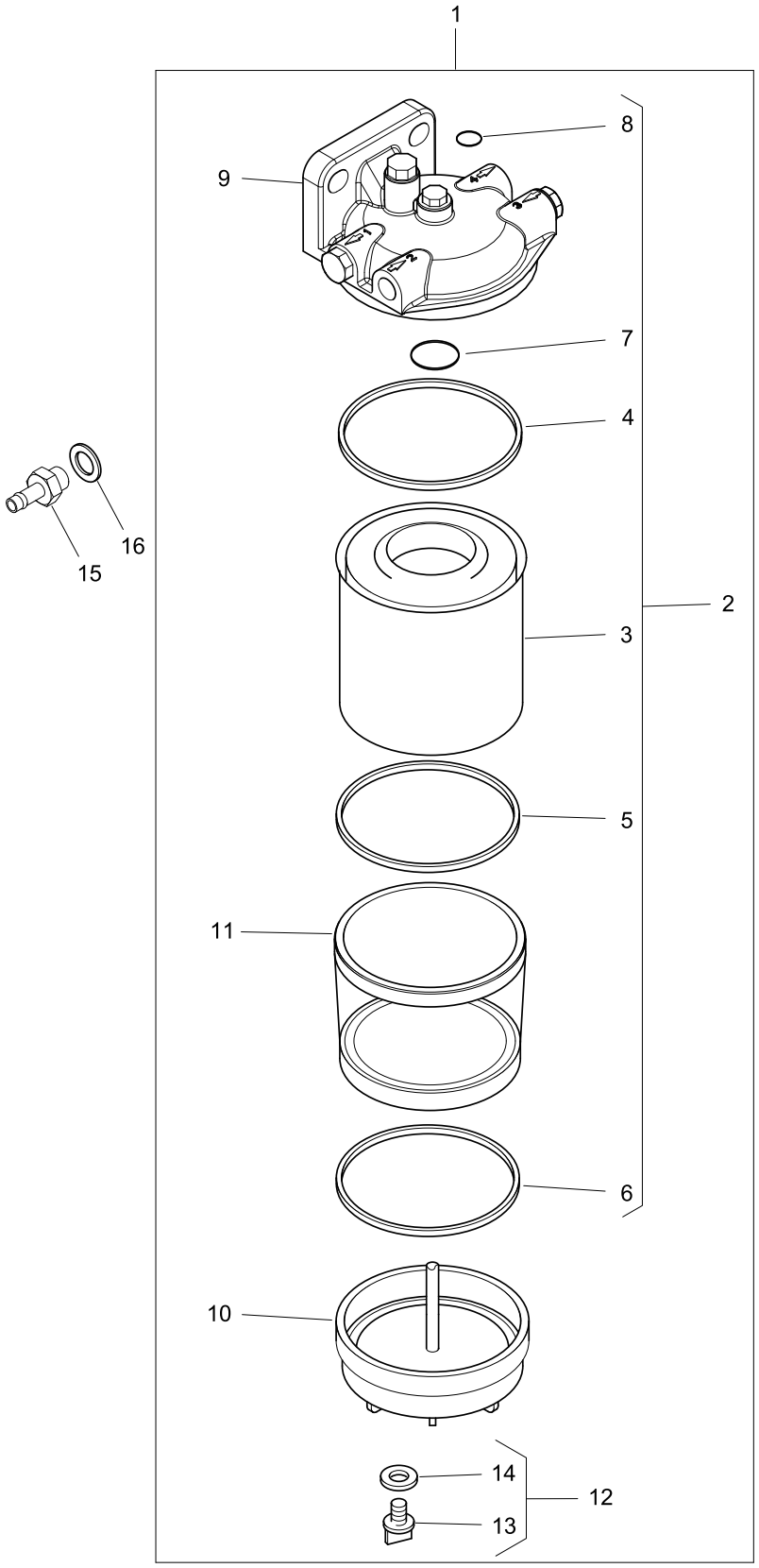

Item	Part No.	References	Qty.	Description	Notes
1	4415105		1	PRE-FUEL FILTER ASSY	
2	4415122		1	PRE-FUEL FILTER	
3		⇨ 4415122	1	PRE-FUEL FILTER	
4		⇨ 4415122	1	SEAL - O RING	
5			1	SEAL - O RING	
6			1	SEAL - O RING	
7		⇨ 4415122	1	SEAL - O RING	
8		⇨ 4415122	1	SEAL - O RING	
9		⇨ 4415105	1	FUEL FILTER HEAD	
10		⇨ 4415105	1	FUEL FILTER HOUSING	
11	26560181		1	FUEL FILTER BOWL	
12	26560614		1	PLUG	
13		⇨ 26560614	1	PLUG	
14	26431192		1	WASHER	
15	T419055		2	CONNECTOR	
16	2411D013		2	WASHER	

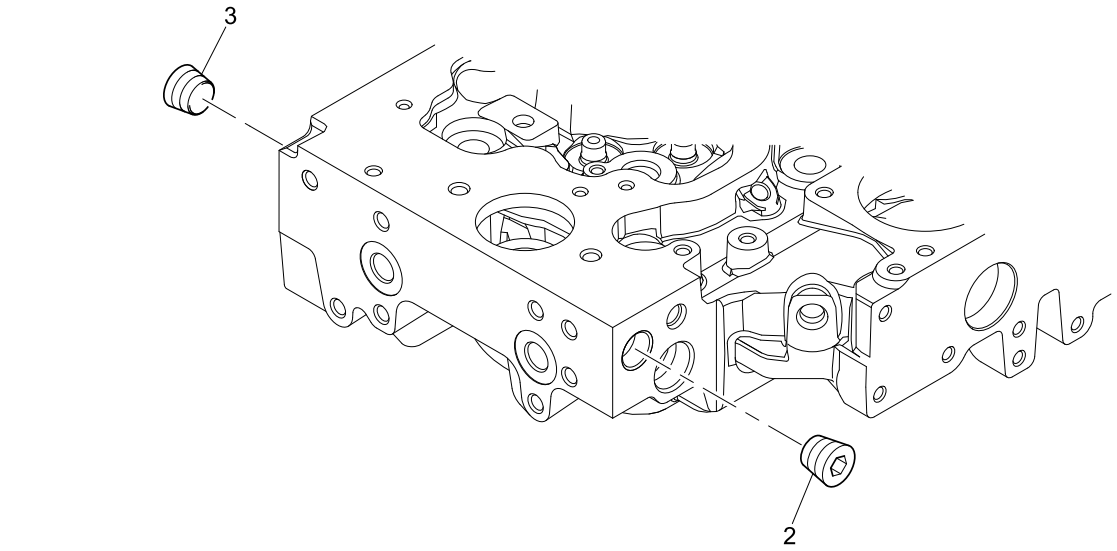
3
2

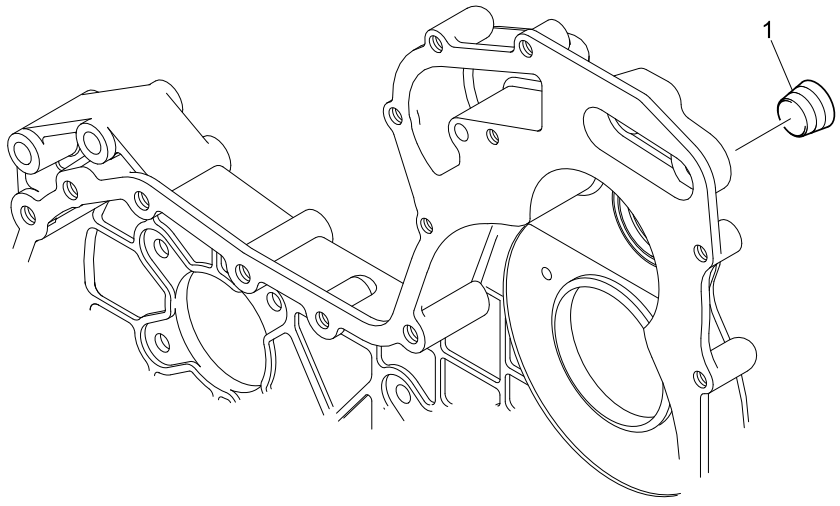
1

Item	Part No.	References	Qty.	Description	Notes
1	2431154		1	PLUG	
2	2431154		1	PLUG	
3	2431154		1	PLUG	

Top Service Kit	Plate A
	SAC02948

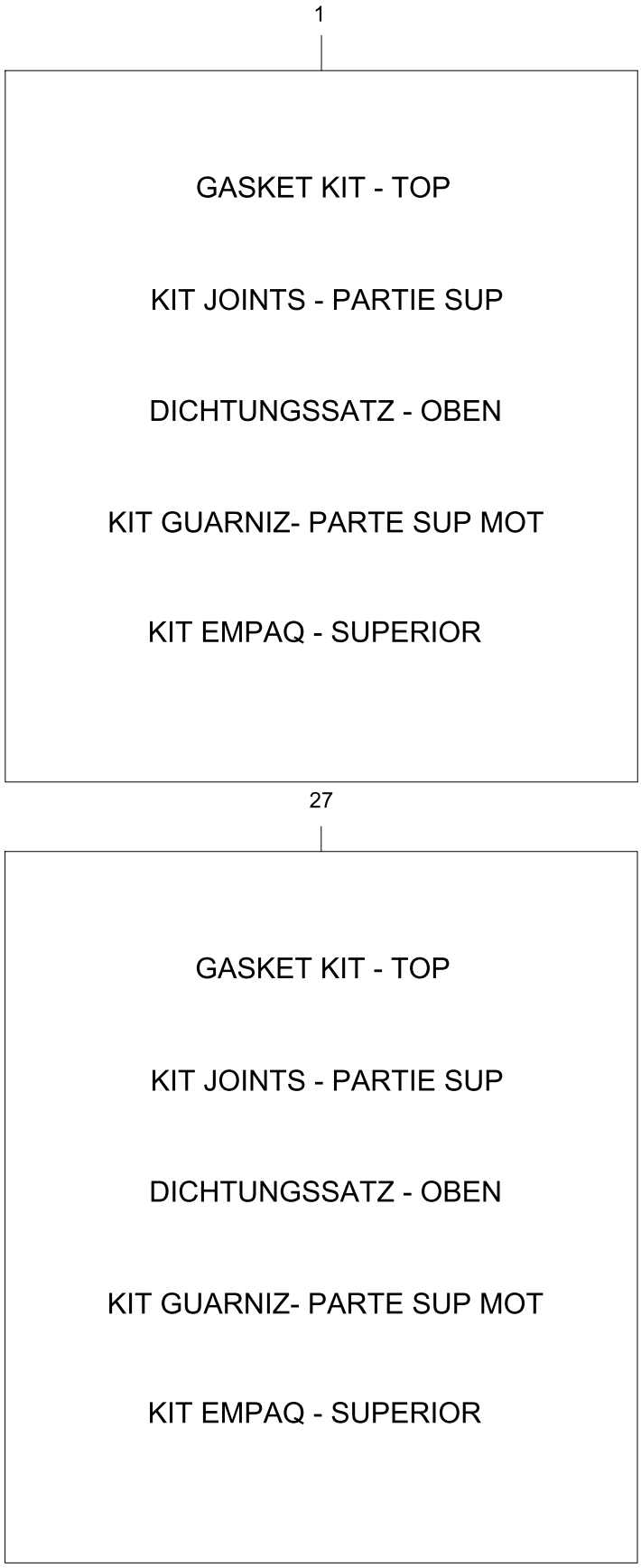

Item	Part No.	References	Qty.	Description	Notes
1	T402948		1	GASKET KIT - TOP	
2	3681E051	Ⓢ	1	GASKET - CYLINDER HEAD	
3	2418M519		4	SEAL - VALVE STEM	
4	2418M517		4	SEAL - VALVE STEM	
5	2415H003		2	SEAL - O RING	
6	26460064		4	SEAL - INJECTOR	
7	L311FF02		10	INJECTOR WASHER	
8	2415H701		1	SEAL - O RING	
9	2415A068		1	SEAL - O RING	
10	3681A055		1	GASKET - CYL. HEAD COVER	
11	3789A004		1	SEAL - O RING	
12	2415A131		1	SEAL - O RING	
13	2418F002		1	SEAL - O RING	
14	2418F001		1	SEAL - O RING	
15	2415H219		1	SEAL - THERMOSTAT HOUSING	
16	29990016		1	SEAL - O RING	
17	3681V512		1	GASKET - EXHAUST MANIFOLD	
18	2131A506		4	WASHER	
19	3688A053		1	GASKET	
20	3688A054		1	GASKET	
21	3688A029		1	GASKET - TURBOCHARGER	
22	3688A034		1	GASKET - TURBOCHARGER	
23	3688A037	⊀	1	GASKET - IND MANIFOLD	
24	3688C018		1	GASKET - EXHAUST OUTLET	
25	3684N503		3	GASKET	
26	3682A013		1	GASKET - IND MANIFOLD	
27	T403222		1	GASKET KIT - TOP	
28	T409652	≒ (+)0.25MM	1	GASKET - CYLINDER HEAD	
29	2418M519		4	SEAL - VALVE STEM	
30	2418M517		4	SEAL - VALVE STEM	
31	2415H003		2	SEAL - O RING	
32	26460064		4	SEAL - INJECTOR	
33	L311FF02		10	INJECTOR WASHER	
34	2415H701		1	SEAL - O RING	
35	2415A068		1	SEAL - O RING	
36	3681A055		1	GASKET - CYL. HEAD COVER	
37	3789A004		1	SEAL - O RING	
38	2415A131		1	SEAL - O RING	
39	2418F002		1	SEAL - O RING	

Top Service Kit	Plate A
	SAC02948

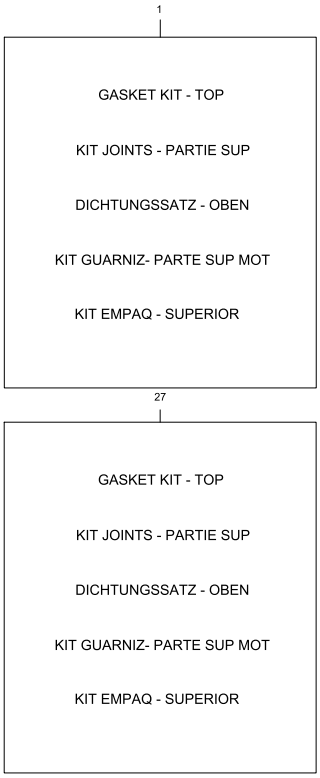

Item	Part No.	References	Qty.	Description	Notes
40	2418F001		1	SEAL - O RING	
41	2415H219		1	SEAL - THERMOSTAT HOUSING	
42	29990016		1	SEAL - O RING	
43	3681V512		1	GASKET - EXHAUST MANIFOLD	
44	2131A506		4	WASHER	
45	3688A053		1	GASKET	
46	3688A054		1	GASKET	
47	3688A029		1	GASKET - TURBOCHARGER	
48	3688A034		1	GASKET - TURBOCHARGER	
49	3688A037	⊣	1	GASKET - IND MANIFOLD	
50	3688C018		1	GASKET - EXHAUST OUTLET	
51	3684N503		3	GASKET	
52	3682A013		1	GASKET - IND MANIFOLD	
Service Options					
2	T409652	⩲ (+)0.25MM	1	GASKET - CYLINDER HEAD	

Footnotes

Bottom Service Kit	Plate A
	SGB03046

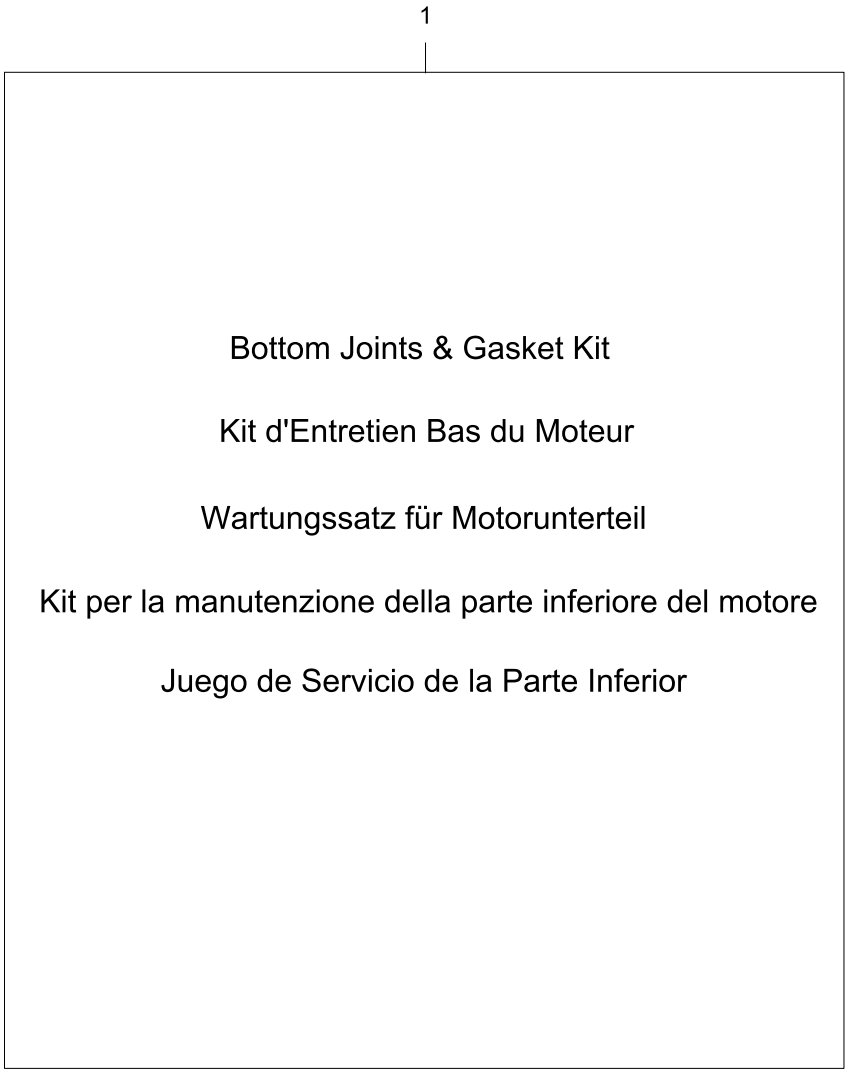

Bottom Service Kit	Plate A
	SGB03046

Item	Part No.	References	Qty.	Description	Notes
1	T403046		1	GASKET KIT - BOTTOM	
2	2418F704		1	SEAL - REOS HOUSING	
3	26420318		1	SEAL - O RING	
4	33812116		1	OLIVE	
5	36832137		1	GASKET	
6	T420777		1	GASKET - SUMP	
7	2415715		10	SEAL - O RING	
8	2415H540		1	SEAL - O RING	
9	2415H651		1	SEAL - O RING	
10	2415633		1	SEALING RING	
11	3688A039		2	GASKET - OIL FILTER HEAD	
12	3688A041		1	GASKET - OIL FILTER HEAD	
13	T414650		1	SEAL KIT	
14	3685A033		1	GASKET - OIL COOLER	
15	3685A025		2	GASKET - OIL COOLER	
16	T419064		2	SEALING RING	
17			1	LEAFLET	
18	24880239		1	GASKET	
19	3682A011		1	GASKET - WATER PUMP	
20	3681P053		1	GASKET - TIMING CASE	
21	2418F437		1	SEAL - FRONT END OIL	
22	3681P046		1	GASKET - TIMING CASE COVER	
23	2415H516		1	SEAL - O RING	
24	2415H515		1	SEAL - O RING	
25	2411D010		2	WASHER	
26	2415H002		1	SEAL - O RING	
27	2415H009		2	SEAL - O RING	
28	2415H003		1	SEAL - O RING	

ADAPTOR
3347A091 127
AIR FILTER ASSEMBLY
2652C110 129
ALTERNATOR
2871A301 101
2871A306 101
ALTERNATOR BRACKET
3824A071 105
T418352 105
ALTERNATOR PULLEY
3115H003 103

BANJO BOLT
3218R036 119
BELT
2614B655 65
BIG END BEARING KIT
T400002 ..... 19, 29
T410927 29
U5ME0034 27
BIG END BRG KIT - U/S
T420153 29
T420154 29
T420155 29
U5ME0034A 27
U5ME0034B 27
U5ME0034C 27
BOLT
2314H006 ..... 83, 107
3211C002 ..... 19, 25
32186146 91
BOWL
2656F837 141
BRACKET
2652C827 129
36241123 77
3641A013 173
3653A017 51
3653A034 131
3661A091 153
3812A131 171
3824A261 127
3825T017 159
3825T018 159
T411166 159
T411170 159
T414701 171
BRIDGE PIECE
3627P041 ..... 19, 67

CABLE
3161C017 53
CABLE TIE
2817152 77
CAMSHAFT
4112K027 43
4112K072 43
CAMSHAFT BUSH
3112D071 23
3112D075 ..... 17, 23
CAMSHAFT GEAR
3117N001 109
T418682 109
CAP
2646E501 57
2652C809 129
3342A021 37
CIRCLIP
2721332 ..... 15, 17, 31
2722A022 41
CLIP
0180073 129
0180074 131
2481D456 153
2481Y011 47
2481Y012 47
2646E019 47
CON ROD
4115C361 ..... 19, 35
4115C362 ..... 19, 35
4115C363 ..... 19, 35
4115C364 ..... 19, 35
4115C365 ..... 19, 35
4115C366 ..... 19, 35
CON ROD ASSEMBLY
4115C311 33
4115C312 33
4115C313 33
4115C314 33
4115C315 33
4115C316 33
CON ROD BOLT
3212V003 ..... 15, 17, 33
T400001 ..... 15, 17, 35
CONNECTION
2442A128 149
3763A045 153
3763A046 149
4133L048 95
CONNECTOR
T419055 181
COVER
26510326 129
CRANKSHAFT GEAR
3117C221 ..... 27, 29
CRANKSHAFT KIT
ZZ90237 ..... 19, 29
ZZ90239 27
CRANKSHAFT KIT - EXCHANGE
ZZ90239R 27
CRANKSHAFT PULLEY
3114C111 91

CYL HEAD COVER ASSY
T426692 75
CYLINDER BLOCK ASSEMBLY
ZZ50324 ..... 19, 23
CYLINDER HEAD ASSEMBLY
ZZ80279 37
CYLINDER HEAD BOLT
3218A011 37
3218A012 37

DIPSTICK
3178C077 69
DOWEL
2116053 109
3244A009 23
3245A011 59
33142111 23
DRAIN PLUG
24850079 169
26560183 ..... 147, 179
2656F836 141
T414298 143

ELECTRICAL CONNECTOR
3161C102 149
ENGINE OVERHAUL KIT
T403232 15
T403233 13
EXHAUST ELBOW
3766A131 127
EXHAUST MANIFOLD
3778E203 125
3778E401 125
EXHAUST VALVE
3142A171 37
EXTENSION
3748W243 99
T418649 99

FAN
2485C546 99
FAN DRIVE HOUSING
4113K005 65
FAN DRIVE PULLEY
3115C113 65
FAN GUARD
3756V115 177
3756V116 177
3756V117 177
3756V155 177
4113A202 177
T411471 177
T425955 177
T425972 177
T425974 177

FILLER
4134C019 79
FLANGE
3623E006 133
FLYWHEEL ASSEMBLY
4111D128 61
T419862 61
FLYWHEEL HOUSING
3713M049 59
FRONT COVER KIT
4142A503 111
FUEL FILTER
26560201 ..... 141, 143
4816636 ..... 141, 143
FUEL FILTER ASSEMBLY
4132A021 141
FUEL FILTER BOWL
26560181 181
26560182 ..... 147, 179
T414361 143
FUEL INJ PUMP - EXCH
44C337/18P 45
FUEL INJECTION PUMP
2644C337/18 45
FUEL INJECTION PUMP GEAR
3117L261 45
T420897 45

GASKET
24880239 ..... 14, 16, 93, 189
36832137 ..... 13, 16, 71, 189
3684N503 ..... 13, 15, 135, 137, 139, 185–186
3688A035 121
3688A036 121
3688A053 ..... 13, 15, 121, 185–186
3688A054 ..... 13, 15, 121, 185–186
GASKET - CYL. HEAD COVER
3681A055 ..... 13, 15, 75, 185
GASKET - CYLINDER HEAD
3681E051 ..... 13, 37, 185
T409652 ..... 15, 17, 37, 185–186
GASKET - EXHAUST MANIFOLD
3681V512 ..... 13, 15, 125, 185–186
GASKET - EXHAUST OUTLET
3688C018 ..... 13, 15, 133, 185–186
GASKET - IND MANIFOLD
3682A013 ..... 13, 15, 185–186
3688A037 ..... 13, 15, 123, 185–186
T424422 123
GASKET - OIL COOLER
3685A025 ..... 14, 16, 83, 189
3685A033 ..... 14, 16, 83, 189
GASKET - OIL FILTER HEAD
3688A039 ..... 13, 16, 23, 85, 87, 189
3688A041 ..... 13, 16, 189
GASKET - SUMP

3681K037 67
T420777 ..... 13, 16, 67, 189
GASKET - TIMING CASE
3681P053 ..... 14, 16, 107, 189
GASKET - TIMING CASE COVER
3681P046 ..... 14, 16, 111, 189
GASKET - TURBOCHARGER
3688A029 ..... 13, 15, 117, 185–186
3688A034 ..... 13, 15, 127, 185–186
GASKET - WATER PUMP
24880234 93
3682A011 ..... 14, 16, 93, 189
GASKET KIT - BOTTOM
T403046 ..... 13, 15, 189
GASKET KIT - TOP
T402948 ..... 13, 185
T403222 ..... 15, 185

HOSE
2646F501 57
3383A027 123
33872639 77
3783R007 131
HOSE - COOLANT
3482T045 175
3482T046 175
HOSE CLIP
21825194 ..... 131, 175
21825199 175
2481863 77
2481877 77
2481D073 123
2481D075 131
2481D088 131
HUB
3272A041 109
3311A054 109

IDLER GEAR
3117N061 109
4111A034 109
INDICATOR
2652C805 129
2652C806 129
INJECTOR
2645K028 49
INJECTOR CLAMP
3751A241 49
INJECTOR WASHER
L311FF02 ..... 13, 15, 49, 185
INTAKE VALVE
3142H101 37

LEVER
36155429 105
LIFT PUMP
2641A203 149
3583A053 149
T414444 143
LIFTING BRACKET
3617A015 157
3624A016 157

MAIN AIR FILTER
26510342 129
MAIN BEARING KIT
U5MB0033 ..... 27, 29
MAIN BEARING KIT - U/S
U5MB0033A 27, 29
U5MB0033B 27, 29
U5MB0033C 27, 29
MOUNTING
2634A115 173
2635A052 171
U5MK1239 ..... 141, 143

NUT
2318A108 45
2318A205 149
2318A206 149
2318A401 177
2318A603 147
2318A604 ..... 63, 105, 173
2318A634 ..... 117, 127, 133
2318D208 ..... 99, 105
2318F605 159
3331A006 41
3353D005 69

OIL COOLER
2486A217 83
4134W021 83
4134W025 83
OIL FILLER
4134C073 79
OIL FILLER CAP
4142X098 79
4142X099 75
OIL FILLER CAP BLUETOOTH®
T403270 79
T403272 75
OIL FILTER
2654407 89
OIL FILTER HEAD
3773A061 85
OIL PRESSURE SWITCH
2848A051 165
OIL PUMP
4132F071 115
T418992 115

OLIVE
33812116 ..... 13, 15, 69, 189

PIPE - AIR
3571C068 123
3571C099 123
PIPE - BREATHER
4133J011 77
PIPE - FILTER TO INJ PUMP
2646F001 151
PIPE - FUEL INJ NO 1 CYL
3525A101 47
PIPE - FUEL INJ NO 2 CYL
3525A102 47
PIPE - FUEL INJ NO 3 CYL
3525A103 47
PIPE - FUEL INJ NO 4 CYL
3525A104 47
PIPE - INJ PUMP TO FILTER
2646F009 153
PIPE - LOW PRESSURE FUEL
3583A054 149
3583A055 149
3583A056 149
3583A059 149
PIPE - OIL SUCTION
3575A059 71
T410748 73
PIPE - TURBO OIL DRAIN
3584A001 121
PIPE - TURBO OIL FEED
4128A027 119
PIPE CLIP
2481C006 149
2481D162 149
2481D558 51
2481D559 153
PISTON AND RING KIT
T426417 31
U5PR0062 14
PISTON AND RING KIT - O/S
T426415 31
T426416 31
U5PR0062B 17, 31
U5PR0062D 17, 31
PISTON COOLING JET
2113A003 23
PISTON RING KIT
UPRK0005 ..... 15, 31
PISTON RING KIT - OVERSIZE
UPRK0005B 17, 31
UPRK0005D 17, 31
PLATE
3241A025 109
3272A033 109
3611M009 ..... 135, 137, 139
36212132 59
3623A009 ..... 23, 87
T414958 75
PLUG
0650588 ..... 23, 37
0650594 ..... 19, 23
0650710 23
2431131 145
2431154 ..... 37, 183
2485A104 41
2485A108 23
2485A109 ..... 19, 55
2485A124 81
2487204 59
2487207 161
2487A401 153
2487A452 59
2487Y005 59
26560614 181
3212P008 23
3212V006 23
32141316 23
32186405 67
32416117 37
3241A011 23
3241A012 23
3278A004 163
3278A006 37
3278A007 163
3278A101 155
T410815 59
PRE-FUEL FILTER
130306360 ..... 147, 179
4415122 181
PRE-FUEL FILTER ASSY
130306380 ..... 147, 179
4415105 181
PUSHROD
3142V011 43
T405746 43

RADIATOR
2485B281 169
RADIATOR CAP
24850073 169
24850078 169
RELIEF VALVE
T408360 149
ROCKER LEVER
4115R318 41
4115R319 41
ROCKER SHAFT ASSEMBLY
4115R613 41
ROCKER SHAFT ASSY - MINOR
4115R703 41
ROCKER SHAFT SPRING

3174A015 41

SAFETY AIR FILTER
26510343 129
SCREW
0096803 61
2151A001 75
2161A013 75
2311D039 ..... 19, 67
2311D060 83
2311F055 171
2314C049 ..... 19, 23, 113
2314F001 23
2314F004 121
2314F005 77
2314H002 ..... 51, 67, 111, 135, 173, 177
2314H003 ..... 67, 95, 107, 121
2314H004 ..... 45, 71, 73, 83, 97, 105, 131
2314H005 ..... 93, 177
2314H008 79
2314H012 ..... 93, 111
2314H022 105
2314H031 67
2314H032 ..... 137, 139
2314H033 ..... 23, 87, 123
2314H034 ..... 85, 107
2314H102 ..... 59, 177
2314H743 93
2314J002 ..... 131, 157, 173
2314J003 127
2314J004 ..... 127, 171
2314J005 65
2314J007 105
2314J008 ..... 115, 171
2314J011 109
2314J012 105
2314J204 59
2314J603 59
2314J606 109
2314K161 ..... 79, 83
2314K164 93
2314W009 49
2316A901 41
2316A902 41
2316T135 ..... 141, 143
3211C004 41
32166329 23
3218J013 125
SEAL
36843154 59
T413928 59
SEAL - FRONT END OIL
2418F437 ..... 14, 16, 107, 189
SEAL - INJECTOR
26460064 ..... 13, 15, 49, 185
SEAL - O RING
2415715 ..... 13, 16, 67, 189
2415A068 ..... 13, 15, 77, 185
2415A131 ..... 13, 15, 75, 185
2415B121 79
2415H002 ..... 14, 17, 163, 189
2415H003 ..... 13–15, 17, 37, 167, 185, 189
2415H009 ..... 14, 17, 163, 189
2415H515 ..... 14, 17, 189
2415H516 ..... 14, 16, 189
2415H540 ..... 13, 16, 189
2415H651 ..... 13, 16, 79, 189
2415H701 ..... 13, 15, 185
2418F001 ..... 13, 15, 95, 185–186
2418F002 ..... 13, 15, 95, 185
26420318 ..... 13, 15, 45, 189
26560184 ..... 147, 179
29990016 ..... 13, 15, 185–186
3789A004 ..... 13, 15, 75, 185
SEAL - REOS HOUSING
2418F704 ..... 13, 15, 19, 25, 189
SEAL - THERMOSTAT HOUSING
2415H219 ..... 13, 15, 97, 185–186
SEAL - VALVE STEM
2418M517 ..... 13, 15, 37, 185
2418M519 ..... 13, 15, 37, 185
SEAL KIT
T414650 ..... 14, 16, 83, 189
SEALING RING
2415633 ..... 13, 16, 79, 189
T419064 ..... 14, 16, 83, 189
SHORT ENGINE - ASSEMBLY
NM40020 19
SHORT ENGINE - EXCHANGE
NM40020R 19
SMALL END BUSH
3112A005 ..... 33, 35
SOLENOID
26420469 45
SPACER
0920465 105
33115117 171
33134418 67
36271052 159
SPRING
3175P003 77
STARTER MOTOR
2873K621 63
2873K632 63
T400268 63
STARTER RING
31162121 61
STAY
3641A012 173
STRAINER
T414308 143
STUD
2313C077 133

2313C078 63
2313H238 99
2313M101 159
2313M105 159
2313M377 ..... 117, 127
3241A032 147
T409161 ..... 117, 127
SUMP
3717Y061 67

TAPPET
3142U061 43
THERMOSTAT ASSEMBLY
4133L507 97
THRUST WASHER
3112X011 109
31137312 ..... 27, 29
31137322 ..... 27, 29
31137551 ..... 27, 29
31137561 ..... 27, 29
TIMING CASE
3716C561 107
TUBE ASSEMBLY
3577A125 69
Turbocharger
T432669 117
TURBOCHARGER - EXCHANGE
T432669R 117

VALVE
26510327 129
VALVE COLLET
2714A002 37
VALVE GUIDE
3313A012 37
VALVE SEAT INSERT
3314A221 37
3314A231 37
VALVE SPRING
3174A031 38
T408677 37
T417479 37
VALVETRAIN KIT
T403217 37

WASHER
0920433 105
0920471 171
0920497 ..... 105, 147
2131A008 105
2131A506 ..... 13, 15, 119, 185–186
2131A507 ..... 141, 143
2134A502 41
2411D008 45
2411D010 ..... 14, 17, 189
2411D013 181
2415D053 ..... 19, 23, 113
24850081 169
26431192 181
33117127 61
33124118 171
3321A003 109
K134AF01 45
WATER PUMP KIT
U5MW0201 93
U5MW0208 93
WATER TEMPERATURE SENSOR
2848A127 53
WATER TEMPERATURE SWITCH
2848A123 53
2848A129 167
WOODRUFF KEY
0500012 ..... 27, 29, 43

Perkins Sales

Americas

North America
1600 W Kingsbury St
Seguin
Texas 78155
United States
Toll free number: 1-888-PERK-ENG

South America
Rua Dr. Chucri Zaidan, 1240
Golden Tower – 17th Floor
São Paulo – SP CEP 04711-130
Brazil
Tel: +55 11 2109 2038

Asia

China
20/F Lei Shing International Plaza
1319 West Yan'an Road
Shanghai 200050
China
Tel: +86 21 22160774
Fax: +86 21 52136624

India
Floor 6, Tower 'B' Prestige Shantiniketan
The Business Precinct, Whitefield Main Road
Bangalore 560048
India
Email: IPSD_India@perkins.com

Japan
Ocean Gate Minato Mirai 12F
3-7-1 Minatomirai, Nishi-ku, Yokohama city
Kanagawa, 220-0012
Japan
Tel: +81 45 682 3579
Fax: +81 45 682 3690

Asahi Seimei Matsumoto Fukashi building 3F
1-1-15 Fukashi, Matsumoto city
Nagano, 390-0815
Japan
Tel: +81 263 87 2003
Fax: +81 263 39 1682

Korea
11F, Songchon Building, 503
Nonhyeon-ro, Gangnam-gu
Seoul 06132
Korea
Tel: +82 10 8669 8358

Singapore
14 Tractor Road
Singapore 627973
Tel: +65 6828 7469
Fax: +65 6828 7414

Europe, Middle East and Africa

Peterborough, PE1 5FQ
United Kingdom
Tel: +44 1733 583000

www.perkins.com

Copyright © 2019 Perkins Engines Company Limited, all rights reserved. No part of this document may be reproduced in any form or by any means, without prior written permission of Perkins Engines Company Limited. The information in this document is substantially correct at the time of printing and may be altered subsequently.

Perkins®

THE HEART OF EVERY GREAT MACHINE