RUTHZIL TRATOR COMERCIAL DE PEÇAS LTDA 11 97083-6812 ROLANDO CITRANGULO

QUICK REFERENCE CHARTS

USE THESE CHARTS TO RECORD FREQUENTLY USED MAINTENANCE INFORMATION

MACHINE SERIAL NO.	
EQUIPMENT NO.	

FREQUENTLY REPLACED ITEMS

PART NO.	PART NAME

FLUIDS & LUBRICANTS

WHERE USED	TYPE	AMOUNT

OTHER MAINTENANCE ITEMS

FORM ZEBP1394

AGOSTO 1982

ONTENTS

ALPHABETICAL INDEX OF GROUPS ... 3
CONVERSION EQUIVALENT TABLES ... INSIDE BACK COVER
ORDERING PARTS ... 2
QUICK REFERENCE CHART ... INSIDE FRONT COVER
USING THE PARTS BOOK ... 2

PARTS BOOK 120B

MOTOR GRADER
POWERED BY
3306 ENGINE

SERIAL NUMBERS
C100-Up (VEHICLE)
Z1-Up (ENGINE)

BLISHED AUGUST 1982
TERPILLAR BRASIL S.A.
BLICATIONS DIV.–SERVICE DEPT.
O PAULO–BRAZIL

QUICK REFERENCE GUIDE TO MAJOR SECTIONS

BASIC ENGINE
LUBRICATION SYSTEM
COOLING SYSTEM
INTAKE AND EXHAUST SYSTEM
FUEL SYSTEM AND GOVERNOR
STARTING AND ELECTRICAL SYSTEM
POWER TRAIN-POWER TRANSMISSION UNIT
BRAKES
CHASSIS
BLADE CONTROLS AND STEERING SYSTEM
IMPLEMENTS
CAB, GAUGES AND ACCESSORIES
SERVICE EQUIPMENT AND SUPPLIES

MACHINE IDENTIFICATION Caterpillar machines are identified with SERIAL NUMBERS. Serial numbers are assigned to the chassis and to the engine. The chassis and the engine also carry ARRANGEMENT NUMBERS and in some cases MODIFICATION NUMBERS. These numbers are shown on the serial number plates and on the master plate in the operator's compartment. For the location of the serial number plates, refer to the Specification Section at the back of this Parts Book.

Caterpillar dealers need these numbers to determine which components were included on the machine when it was assembled at the factory. This permits accurate identification of replacement part numbers.

ORDERING PARTS Quality Caterpillar Replacement parts are available from Caterpillar dealers throughout the world. Their parts stocks are up to date and include all parts normally required to protect your investment in Caterpillar machines. Wh ordering parts, your order should specify the quantity, part number, part name and the se number, arrangement number and any modification numbers of the machine for which parts are needed. If in doubt about the part number, please provide your dealer wit complete description of the needed item.

HOW TO USE THE PARTS BOOK Caterpillar Parts Books include illustrations of the groups or assemblies which make up the machine. These illustrations show the standard components plus many of the attachments available for the machine.

The alphabetical index located in the front part of the book should be used to determine the page number on which specific illustrations are shown. Reference to those pages will identify each of the individual serviceable parts.

Captions The caption under each illustration identifies the part number and name of the group or assembly shown. If more than one illustration is included for any group, the caption identifies the specific machine serial numbers to which each illustration applies. In some cases it is not possible to determine the specific machine serial numbers to which different illustrations are applicable. In those cases the caption identifies the illustration as "First Type", "Second Type", etc. Reference to the actual group or assembly is necessary in those cases to determine which illustration should be used.

Captions provide additional information such as page numbers where illustrations of sub assemblies are shown, information reguarding quantities used and other information intended to assist the user in determining parts needs.

Indented Part Names Within each illustration i parts list identifying each viceable part in the illustrat When a part name is indented in this lis means that serviceable item is a part of serviceable item under which it is inden

Abbreviations and Symbols

▲ ●	Used to call attention to additi information shown elsewhere w in the illustration.	
R.H.	Right Hand	Refers to the sid
L.H.	Left Hand	the machine as v ed from the op tor's compartm
C	Indicates changes from the prev illustration of the same group assembly.	
O.D.	Outside Diameter	
I.D.	Inside Diameter	
N/S	Not Serviced	
Assem.	Assembly	
in.	Inch	
ft	Foot	
cm	Centimetre	
dm	Decimetre	

Note: Continuing improvement and advancement of product design may cause changes to your machine which may not be included in this publication. Each publication is reviewed and revised, as required, to update and include these changes in later editions.

Whenever a question arises regarding your Caterpillar product, or this publication, please consult your Caterpillar dealer for the latest available information.

COMO PEDIR PEÇAS Peças de Reposição de Qualidade Caterpillar são obtidas através dos revendedores Caterpillar em todo o mundo. Seu estoque de peças é atualizado e inclui todas as peças normalmente requeridas para garantir o seu investimento em máquinas Caterpillar. Quando pedir peças, use sempre o catálogo de peças que cubra o número de série de sua máquina. O seu pedido deverá especificar a quantidade, o número da peça, o seu nome e ainda indicar o número de série da máquina para a qual a peça é requerida. Quando estiver em dúvida quanto ao número da peça, forneça ao seu revendedor uma descrição completa do item requerido.

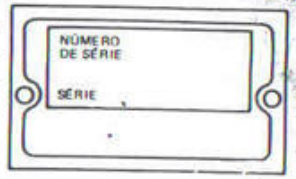

COMO USAR O CATÁLOGO DE PEÇAS Os catálogos de peças Caterpillar incluem ilustrações dos grupos ou conjuntos de que se compoem as máquinas. Estas ilustrações mostram os componentes standard e também alguns dos acessórios disponíveis para as máquinas. O índice alfabético localizado no início do catálogo deve ser usado para determinar o número da página na qual uma determinada ilustração será encontrada. Uma pesquisa nestas páginas servirá para identificar cada uma das peças individuais vendáveis.

Títulos das ilustrações

O título de cada ilustração identifica o número e o nome do grupo ou conjunto mostrado. Se mais de uma ilustração for necessária para um determinado grupo, o título da ilustração mostrará o número de série do qual cada ilustração se aplica. Em alguns casos não é possível determinar especificamente o número de série para o qual as diferentes ilustrações são usadas. Neste caso, o título identificará a ilustração como, "Primeiro Tipo", "Segundo Tipo", etc. Uma pesquisa junto ao grupo em questão se torna então necessária para determinar qual a ilustração a ser usada.

Os títulos fornecem ainda informações adicionais, tais como: números de páginas onde ilustrações de sub conjuntos são encontrados, informações sobre quantidades usadas e outras informações que possam ajudar a determinar os requisitos sobre peças.

Nomes de Peças Fora do Alinhamento

Em cada ilustração existe uma lista de peças identificando cada peça vendável do conjunto. Quando o nome de uma peça é colocado fora de alinhamento nesta lista, isto significa que este item vendável é componente do item vendável que o precede.

Abreviações e Símbolos

▲ ●	Usados para chamar a atenção para informações adicionais que aparecem em outro lugar na ilustração.
L.D.	Lado Direito
L.E.	Lado Esquerdo
	se referem ao lado da máquina como vista do compartimento do operador.
C.	Indica modificação da ilustração anterior do mesmo grupo ou conjunto.
D.E.	Diâmetro externo
D.I.	Diâmetro interno
N/V	Não vendida separadamente.
Conj.	Cj. Conjunto
Pol	Polegada
m	Metro
cm	Centímetro
dm	Decímetro

Nota:

O contínuo processo de desenvolvimento e melhoria dos projetos dos produtos, pode ocasionar mudanças em seu equipamento que não estejam ainda incluídas neste catálogo. Cada edição é revista e revisada, quando necessário, para atualizar e incluir estas modificações em edições futuras.

Quando em dúvida sobre o seu produto Caterpillar, ou esta publicação, consulte o seu revendedor Caterpillar para obter a última informação disponível.

NOMENCLATURA DE PEÇAS INGLÊS - PORTUGUÊS

INGLÊS	PORTUGUÊS
DM = DECIMETER	dm = decímetro
DOME LIGHT	Lâmpada do teto
DOOR	Porta
DOWEL	Pino-guia, cavilha
DOWNSHIFT	Mudança para marcha mais baixa
DOZER	Bulldozer (lâmina)
DRAIN	Dreno
DRAWBAR	Barra de tração
DRILL	Broca
DRILLED	Broqueado, perturado
DRIVE	Comando, acionamento, propulsão
DRIVER	Acionador, mecanismo propulsor
DRIVESHAFT	Eixo acionador, eixo de transmissão
DRUM	Tambor
DUCT	Conduto, canal
EACH	Cada
EDGE	Borda, canto
EFFECTIVE WITH	Efetivo a partir de
EJECTOR	Ejetor
ELBOW	Cotovelo
ELEMENT	Elemento
ENCLOSURE	Cobertura
END	Extremidade
END BIT	Canto de lâmina
END VIEW	Vista traseira
ENGINE	Motor
ENGINE ARRANGEMENT	Arranjo do motor
EXCEPT	Exceto
EXHAUST	Escape
EXHAUST PIPE	Cano de escape
EXPANDER	Expansor
EXPANSION PLUG	Bujão de expansão
EXTENSION	Extensão
EXTINGUISHER	Extintor
EXTRACTOR	Extrator
EYE	Olhal
EYEBOLT	Parafuso de olhal
FABRIC	Tecido, tela textura
FACING	Revestimento, forro
FAN	Ventilador
FASTENED	Fixo, preso
FASTENER	Fixador, prendedor
FENDER	Pára-lamas
FERRULE	Virola
FIELD COIL	Bobina indutora, ou de campo
FIELD REPLACEMENT	Reposição ou substituição no campo
FILLER	Bocal de enchimento
FILM	Película
FILTER	Filtro
FINAL DRIVE	Comando final
FINGER	Dedo
FIREWALL	Parede contra fogo
FITTING	Graxeira, conexão
FIXTURE	Dispositivo, Aparelho
FLANGE	Flange
FLASHER	Luz intermitente
FLOAT	Flutuar, livre
FLOOD-LAMP	Farol
FLOOR	Piso
FLOORMAT	Tapete
FLOORPLATE	Chapa do piso
FLYWEIGHT	Peso volante
FLYWHEEL	Volante
FOLLOWER	Seguidor
FOOT	Pé
FORK	Garfo
FOR USE WITH	Para usar com
FOUNDATION	Assentamento, alicerce
FRAME	Armação, chassi
FRONT	Frente, dianteiro
FT = FOOT	Pé
FUEL INJECTION	Injeção de combustível
FUEL PUMP	Bomba de combustível
FUEL RATIO	Limitador de combustível
FUEL SYSTEM	Sistema do combustível
FUEL TANK	Tanque do combustível
FUMES DISPOSAL	Eliminação de vapores do cárter
FUSE	Fusível
G = GROUP	Grupo
GAGE	Indicador, manômetro
GAP	Folga, lacuna, intervalo
GASKET	Junta
GASKET KIT	Jogo de junta
GATE	Entrada, trava
GAUGE	Indicador, manômetro
GEAR	Engrenagem, marcha
GEAR BOX	Caixa de engrenagem
GEAR PUMP	Bomba de engrenagem
GENERATOR	Gerador
GLAND	Junta, gaxeta, vedação sobreposta
GLASS	Vidro
GLOW PLUG	Vela incandescente
GOVERNOR	Governador
GRAB IRON	Balaústre corrimão
GRATE	Grade, grelha
GRAY	Cinza
GRID	Grade, grelha
GRILL	Grade, grelha
GRIP	Pega, garra, cabo
GROMMET	Ilhós
GROUND BRUSH	Escova-terra

NOMENCLATURA DE PEÇAS INGLÊS - PORTUGUÊS

INGLÊS	PORTUGUÊS
GROUND (ELECTRIC)	Terra (eletricidade)
GROUSER	Garra (de sapata)
GUARD	Protetor
GUIDE	Guia
GUSSET	Cantoneira
HACKSAW	Serra para metais
HALF	Metade, meio (a)
HALF LINK	Semi-elo
HAMMER	Martelo
HAND CONTROL	Controle manual
HANDLE	Cabo, alça
HANDRAIL	Córrimão,balaústre
HANGER	Suporte, dispositivo de suspensão
HARDWARE	Ferragem
HARDWARE KIT	Jogo de ferragem
HARNESS	Chicote
HEAD = HD	Cabeça
HEADER	Coletor
HEADLAMP	Farol dianteiro
HEADLIGHT	Farol dianteiro
HEAT SINK	Difusor de calor
HEATER	Aquecedor
HIGH-IDLE	Marcha acelerada em vazio
HINGE	Dobradiça,articulação
HITCH	Engate
HOIST	Guincho, talha
HOLD	Suporte, fixador
HOLD DOWN	Fixar, reter, manter abaixado
HOLDER	Fixador, suporte
HOLE	Furo, buraco
HOOD	Capô
HOOD & DASH	Capô e painel
HOOK	Gancho
HORN	Buzina
HOSE	Mangueira
HOUSING	Alojamento
HUB	Cubo
HYDRAULIC	Hidráulico
ID = INSIDE DIAMETER	Diâmetro interno
IDLER	Roda-guia
IDLER & SHAFT	Roda-guia e eixo
IDLER GEAR	Engrenagem intermediária
IDLER PULLEY	Polia intermediária
IMPELLER	Impulsor, rotor
IN = INCH	Polegada
INCLUDES	Inclui
INDICATE	Indicam
INDICATOR	Indicador
INLAY	Incrustação
INLET	Admissão, entrada
INPUT	Entrada
INSERT	Inserção
INSTALLATION	Instalação
INSTALLED ON MODEL	Instalação no modelo
INSTRUCTION	Instrução
INSTRUMENT	Instrumento
INSULATED BRUSH	Escova isolada
INSULATION	Isolação,isolamento
INSULATOR	Isolante, isolador
INTAKE	Admissão
INTERLOCK	Trava interna
INTERMEDIATE	Intermediário
INTERNAL	Interno
INVERTER	Inversor
IRON	Ferro
JACK	Macaco
JAW	Mandíbula, garra
JET	Jato, vaporizador
JOINT	Junta, articulação
JUNCTION	Junção
KEY	Chaveta
KINGBOLT	Pino de engate
KNIFE	Faca, lâmina
KNOB	Maçaneta, botão
LADDER	Escada
LAMP	Lâmpada
LARGE	Grande
LATCH	Trinco, lingüeta
LEAD	Condutor, cabo
LEG	Perna
LENS	Lente
LEVEL	Nível
LEVER	Alavanca
L.H. = LEFT HAND	Lado esquerdo
LID	Placa, tampa
LIFT	Levantar
LIFT CYLINDER	Cilindro de levantamento
LIFTER	Tucho
LIFTING EYE	Olhal de levantamento
LIGHT GREEN	Verde claro
LIGHTING	Sistema de iluminação
LINE	Tubulação
LINER	Camisa
LINES & PUMP	Tubulação e bomba
LINES & VALVE	Tubulação e válvula
LINING	Revestimento, lona
LINK	Elo
LINKAGE	Articulação
LIP	Lábio, borda
LISTED	Relacionamento
LITERATURE	Literatura
LOCATED	Localizado

NOMENCLATURA DE PEÇAS INGLÊS - PORTUGUÊS

INGLÊS	PORTUGUÊS
LOCATOR	Localizador
LOCK	Trava
LOCKNUT	Contraporca
LOCKWASHER	Arruela de pressão
LOCKWIRE	Arame de trava
LONG	Longo
LOOM	Tubo isolador
LOW IDLE	Marcha lenta
LOUVER	Persiana
LOWER	Abaixar, inferior
LUBRICANT	Lubrificante
LUG	Ressalto, orelha
MACHINE SCREW	Parafuso de fenda
MAGNET	Imã magneto
MAIN	Principal
MAINTENANCE	Manutenção
MANIFOLD	Coletor
MARKED	Marcado (a)
MARKER	Marcador
MASTER PIN	Pino mestre
MAT	Capacho, esteira
METER	Medidor, contador
MINOR	Menor
MIRROR	Espelho
MISCELLANEOUS	Miscelânea
MODIFICATION	Modificação
MOLDBOARD	Armação da lâmina
MOTOR	Motor
MOULDING	Moldura
MOUNT	Montar
MOUNTED	Montado (a)
MOUNTING	Montagem
MUFFLER	Silenciador
NAMEPLATE	Plaqueta de identificação
N.C. (THREAD)	Rosca grossa
NEEDLE	Agulha
N.F. (THREAD)	Rosca fina
NIB	Ponta, bico
NIPPLE	Conexão
NONE	Nenhum (a)
NORMALIZING	Normalização
NOT PART OF	Não faz parte de
NOZZLE	Bocal, bico injetor
N/S = NOT SERVICED	Não vendável
NUMBER (Nº)	Número (Nº)
NUT	Porca
NUT-WING	Porca borboleta
NUT-CASTLE	Porca acastelada
NUT-WELD	Porca-soldada
NUT-CAP	Porca cega
NUT-HEX	Porca sextavada
NUT-LOCK	Contraporca
NUT-IMPERIAL	Porca imperial
NUT-JAM	Porca de trava, contraporca
NUT-LOW CROWN	Porca de meia coroa
NUT-RETAINING	Porca de retenção
NUT-SELF LOCK	Porca de autotravamento
NUT-SLOTTED	Porca fendada
NUT-SPANNER	Porca para chaves
O.D. = OUTSIDE DIAMETER	Diâmetro externo
O-RING	Anel "O"
OIL	Óleo
OIL PAN	Cárter
OIL PUMP	Bomba de óleo
OIL SYSTEM	Sistema de lubrificação
OILER	Almotolia, lubrificador
ORANGE	Laranja
TO ORDER	Para pedir
ORIFICE	Orifício
OUTER	Externo
OUTER RACE	Anel externo
OUTPUT	Saída
OVERRALL	Geral, total
OVERHAUL	Revisão
OVER SIZE	Sobremedida
PACKING	Embalagem, gaxeta
PAD	Coxim, calço
PADLOCK	Cadeado
PAINT	Pintura
PAN	Cárter
PANEL	Painel
PARKING BRAKE	Freio de estacionamento
PARTITION	Separacão
PARTS G.	Grupo de peças
PARTS OF	Peça de
PARTS OF ALL ENGINE ARRANGEMENTS	Peças de todos os arranjos do motor
PARTS OF ALL ENGINE ARRANGEMENTS EXCEPT	Peças de todos os arranjos do motor exceto
PAWL	Garra
PEDAL	Pedal
PEDESTRAL	Pedestral
PERFORMANCE	Desempenho
PILOT	Piloto
PIN	Pino
PIN & BUSHING	Pino e bucha
PIN-COTTER	Contrapino
PINCH BAR	Pé de cabra
PINION	Pinhão

NOMENCLATURA DE PEÇAS INGLÊS - PORTUGUÊS

INGLÊS	PORTUGUÊS
PIPE	Tubo
PISTON	Pistão
PIVOT	Articulação, pivô
PLANETARY	Planetário
PLATE	Placa
PLATFORM	Plataforma
PLUG	Bujão
PLUNGER	Pistão, êmbolo
POINT	Ponta, ponto
POINTER	Ponteiro
POLE & COIL	Polo e bobina
POLE	Polo, lança, vara
POPPET	Gatilho
POST	Poste, coluna
POTENTIOMETER	Potenciômetro
POWER TAKE OFF	Tomada de força
POWER TRAIN	Trem de força
PRE-SCREENER	Tela protetora
PRECHAMBER	Câmara de pré-combustão
PRECLEANER	Pré-purificador
PRECOMBUSTION	Pré-combustão
PRESS	Prensa
PRESS = PRESSURE	Pressão
PREVIOUS	Prévio, anterior
PRIMARY	Primário, principal
PROBE	Prova
PROJECTOR	Projetor
PROTECTION	Proteção
PROTECTOR	Protetor
PULLER	Extrator, sacador
PULLEY	Polia
PUMP	Bomba
PURPLE	Roxo
PUSHROD	Haste de empuxo
QTY = QUANTITY	Quantidade
RACE	Pista
RACE & ROLLER	Pista e rolete
RACK	Cremalheira
RADIATOR	Radiador
RAIL	Trilho, guia
RADIATOR	Radiador
RAIL	Trilho, guia
RANGE TRANSM.	Transmissão manual
RATCHET	Catraca
REAR	Traseiro (a)
REBORED	Escareado, alargado
REBUILD KIT	Jogo de recondicionamento
RECEPTACLE	Recipiente
RECTIFIER	Retificador
RED	Vermelho
REDUCER	Redutor
REFER	Referir
REGULATOR	Regulador
RELATED REPAIR ITEMS	Itens de reparos relacionados
RELAY	Relé
RELIEF VALVE	Válvula de alívio
REPAIR G.	Grupo de reparo
REPAIR KIT	Jogo de reparo
REPAIR ITEMS	Itens de reparo
REPLACEMENT	Reposição, substituição
REQUIRED	Necessário
RESERVOIR A.	Reservatório
RESIN	Resina
RESISTOR	Resistência
RETAINER	Fixador
RETARDER	Retardador
REVERSIBLE	Reversível
R.H. = RIGHT HAND	Lado direito
RIM	Aro
RIM & TIRE	Aro e pneu
RING	Anel
RIVET	Rebite
ROCKET	Balancim
ROD	Haste
ROD END	Extremidade da haste
ROLLER	Rolete
ROPE-STARTING	Partida à corda
ROTATOR	Girador
ROTOCHAMBER	Câmara pneumática
ROTOCOIL	Girador de válvula
ROTOR	Rotor
RUST INHIBITOR	Antioxidante
SADDLE	Sela, assento
SAFETY	Segurança
SAFETY TREAD	Tiras antiderrapante
SCRAPER	Tampa
SCREEN	Tela
SCREW	Parafuso
SCREW-HEX HD.	Parafuso de cabeça hexagonal
SCREW-KIT	Jogos de parafuso
SCREW-MACHINE	Parafuso de fenda
SCREW-ROUND HD.	Parafuso de cabeça redonda
SCREW-FLANGED	Parafuso com flange
SCREW-LOCKING	Parafuso de trava
SCREW-THUMB	Parafuso de orelhas
SCREWDRIVER	Chave de fenda
SEAL	Retentor
SEALED UNIT	Unidade vedada
SEALER	Vedador isolante
SEAT	Assento
SECONDARY	Secundário
SECTION	Seção

NOMENCLATURA DE PEÇAS INGLÊS - PORTUGUÊS

INGLÊS	PORTUGUÊS
SEGMENT	Segmento
SENDER	Emissor
SENSOR	Sensor
SEPARATE	Separar separado
SEPARATOR	Separador
SERIAL NUMBER PLATE	Placa de número de série
SERVICE	Serviço, manutenção
SERVICE KIT	Jogo de manutenção
SERVICE METER	Horômetro
SETSCREW	Parafuso de fixação
SHACKLE	Grilheto, anel, manilha
SHAFT	Eixo
SHANK	Porta-ponta do escarificador
SHEAVE	Polia, roldana
SHEET	Folha, lâmina
SHELL	Invólucro, cápsula, casquilho
SHIELD	Blindagem, protetor
SHIFT	Mudança
SHIM	Calço
SHIPPING	Embarque
SHOCK ABSORBER	Amortecedor de choques
SHOCKMOUNT	Montagem a prova de choques
SHOE	Sapata
SHORT	Curto
SHOWN	Ilustrado, mostrado
SHROUD	Tampa de proteção
SHUNT	Derivação
SHUT OFF	Desligar, parada
SHUTTLE	Pistão de vaivém
SIDE	Lateral
SIDE VIEW	Vista lateral
SILICONE	Silicone
SINK	Absorvente de calor
SKIVING	Desbaste
SLACK ADJUSTER	Ajustador de folga
SLEEVE	Luva, manga, camisa
SLIDER	Cursor, deslizador
SLIDE RAIL	Trilho deslizante
SLING	Cabos, amarras, linga
SLINGER	Defletor
SLUG	Pistão de reação, pistãozinho
SMALL	Pequeno
SNAP RING	Anel de retenção, anel de pressão
SNUBBER	Amortecedor
SOCKET	Soquete, tomada
SOLENOID	Solenóide
SPACER	Espaçador
SPARE	Sobressalente
SPARK PLUG	Vela de ignição
SPECIAL	Especial
SPEEDOMETER	Velocimetro
SPIDER	Cruzeta
SPINDLE	Ponta de eixo
SPLINE	Estria
SPOOL	Carretel
SPOUT	Calha, tubo
SPRING	Mola
SPROCKET	Roda motriz, roda dentada
STABILIZER	Estabilizador
STACK	Chaminé, cano de escapamento
STAND	Suporte, cavalete
STANDPIPE	Suporte vertical de sucção
STAPLE	Grampo
STARTER	Arranque motor de partida
STATOR	Estator
STEERING	Direção
STEM	Haste
STEP	Degrau
STICK	Vareta
STOP	Parar
STORAGE	Armazenagem
STRAINER	Tela filtrante
STRAP	Tira, cinta, suporte de fixação
STREET ELL	Conexão cotovelo
STRIP	Tira, fita, listra
STROKE	Curso do pistão
STUD	Prisioneiro
SUMP	Tanque, reservatório
SUPPLY VALVE	Válvula de suprimento
SUPPORT	Suporte
SUSPENSION	Suspensão
SWITCH	Interruptor
SWIVEL	Articulação giratória
TAB	Tira, aba, lingüeta
TABLE	Mesa
TACHOGRAPH	Tacógrafo
TACHOMETER	Tacômetro
TAG	Etiqueta
TAIL LAMP	Farol traseiro
TAN	Castanho
TANG	Lingüeta
TANK	Tanque
TAP	Macho
TAPE	Fita
TAPPET	Tucho
TEE	Conexão em "T"
TEMP. = TEMPERATURE	Temperatura

NOMENCLATURA DE PEÇAS INGLÊS - PORTUGUÊS

INGLÊS	PORTUGUÊS
TERMINAL	Terminal
TEST UNIT	Unidade de teste
TESTER	Aparelho de teste
THERMISTOR	Termistor
THERMOCOUPLE	Termopar
THERMOMETER	Termômetro
THERMOSTAT	Termostato
THERMOSWITCH	Interruptor térmico
THICK	Grosso (a) espesso (a)
TIE	Ligação, tirante
THREAD (OF NUT)	Rosca (de porca)
THROTTLE	Acelerador de
THROWER	Defletor
THRU = THROUGH	Através de
TIGHTENER	Tensor
TILT CYLINDER	Cilindro de inclinação
TIMING	Sincronização, Distribuição
TIP	Ponta
TIRE	Pneu
TIRE & RIM	Pneu e aro
TONGUE	Língua, lingueta
TOOL	Ferramenta
TOOLCABINET	Armário para ferramenta
TOOTH/TEETH	Dente/dentes
TOP	Topo, parte superior
TORQUE	Torque
TORQ. CONV.	Conversor de torque
TORQ. DIVIDER	Divisor de torque
TOWER	Torre
TRACK	Esteira
TRACK PIN	Pino de esteira
TRACK ROLLER	Rolete de esteira
TRACTOR	Trator
TRAILING UNIT	Unidade rebocada
TRANSFER	Decalcomania
TRANSFOMER	Transformador
TRANSISTOR	Transistor
TRANSMISSION	Transmissão
TRANSMISSION OVERHAUL	Revisão da transmissão
TREAD	Piso, banda de rodagem
TREADLE	Pedal
TROLLY	Carrinho
TRUCK	Caminhão
TRUNNION	Munhão
TUBE	Tubo, cano
TUBING	Tubulagem canalização
TURBINE	Turbina
TURBOCHARGER	Turboalimentador
U-BOLT	Parafuso em "U"
U-JOINT	Junta universal
UNDERSIZE	Submedida
UNION	União
UPPER	Superior
USE AS REQUIRED	Usar conforme necessitar
VALUE	Valor
VALVE	Válvula
VALVE GRINDING	Retificação das válvulas
VEE BELT	Correia "V"
VEE BELT SET	Jogo de correia em "V"
VENT	Respiro
VIEW	Vista
VISE	Morsa, torno
VISOR	Pára-sol
WALKWAY	Passadiço, corredor
WARNING G.	Grupo de alarma
WASHER	Arruela
WATER PUMP	Bomba d'água
WEARPLATE	Placa de desgaste
WEDGE	Cunha
WEIGHT	Peso
WELD	Solda
WELDNUT	Porca soldada
WHEEL	Roda
WHITE	Branco
WICK	Mecha, pavio
WINCH	Guincho
WINDOW	Janela
WINDSHIELD	Pára-brisa
WIPER	Limpador
WIRE	Fio
WIRING	Sistema elétrico
WIRING DIAGRAM	Diagrama do sistema elétrico
WITH	Com
WRAPPER	Invólucro, envoltório
WRENCH	Chave
YELLOW	Amarelo
YOKE	Garfo

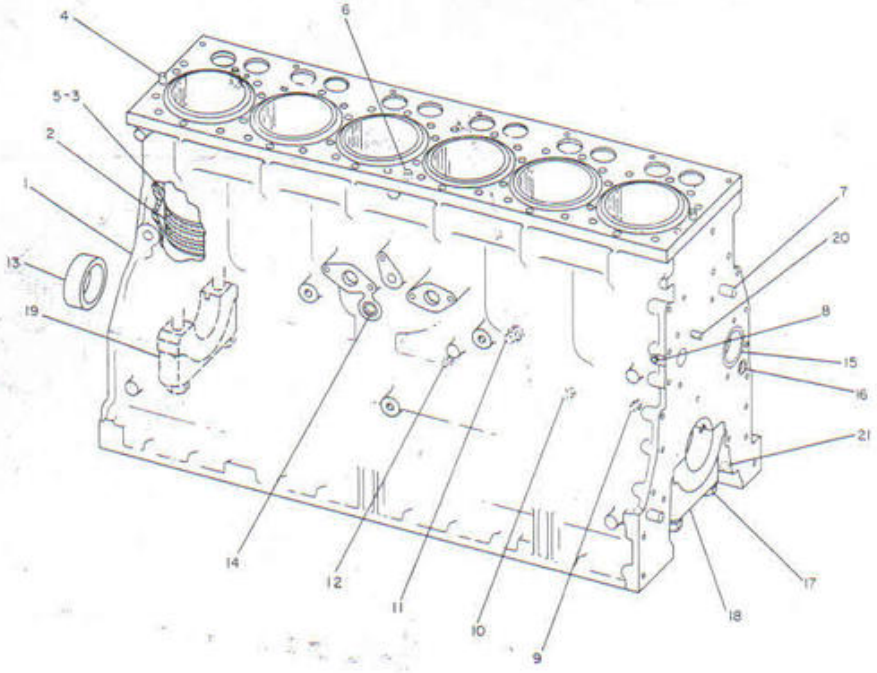

	REF. NO.	PART NUMBER	DESCRIPTION	QTY.
C	1	2Y5235	BLOCK ASSEM. (Separate Illustration)	1
	2	5S6670	SEAL	18
	3	2P8889	LINER	6
	4	8B1312	DOWEL	2
	5	9L5854	BAND	6
	6	5B7652	DOWEL	2
	7	8B6349	DOWEL	2
	8	5M6214	PLUG	1
	9	7H3171	PLUG	1
	10	5M6213	PLUG	6
	11	8M9307	PLUG	1
		6F7062	GASKET	1
	12	3J5389	PLUG	1
	13	7M4046	BEARING	4
	14	4B5387	PLUG	1
C	15	8N4110	BEARING	1
C	16	4B5387	PLUG	1
	17	7S3224	BOLT	14
		2S5658	WASHER	14
	18	7S3225	CAP	6
	19	1P4399	CAP	1
	20	5S8462	STUD	1
	21	4B9782	BALL	1

C INDICATES CHANGE

237533

8N3021 CYLINDER BLOCK GROUP
2Y5235 Block parts are shown on Page 7

2Y5235 CYLINDER BLOCK ASSEMBLY
Part of 8N3021 Cylinder Block Group shown on Page 6

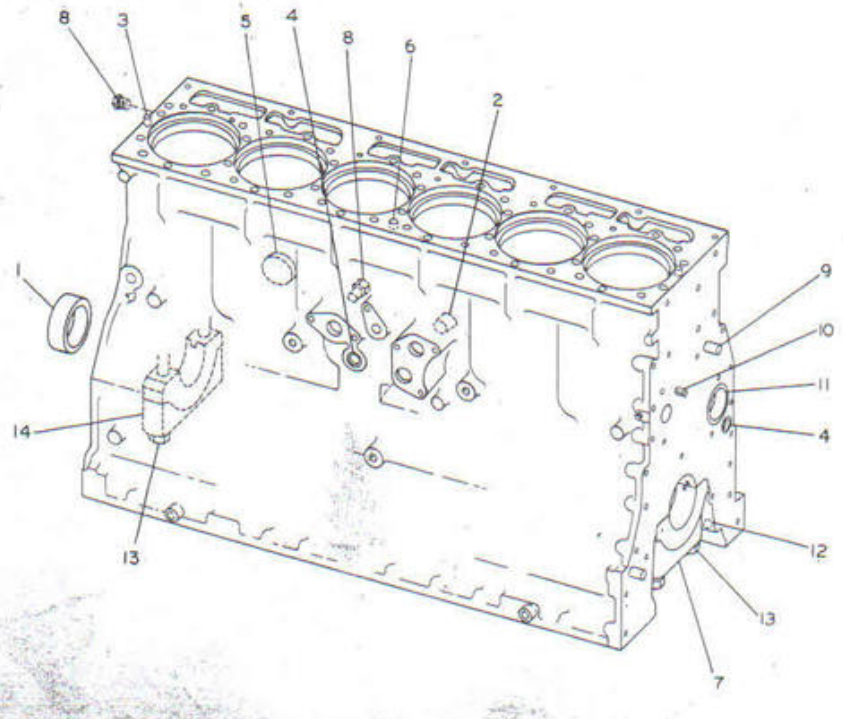

REF. NO.	PART NUMBER	DESCRIPTION	QTY.
1	7M4046	BEARING	4
2	2B858	PLUG	1
3	8B1312	DOWEL	2
4	4B5387	PLUG	2
5	3S8313	PLUG	2
6	5B7652	DOWEL	2
7	7S3225	BEARING CAP	6
8	5M6213	PLUG	2
9	8B6349	DOWEL	2
10	5S8462	STUD	1
11	8N4110	BEARING	1
12	4B9782	BALL	1
13	7S3224	BOLT	14
	2S5658	WASHER	14
14	1P4399	CAP	1

237534

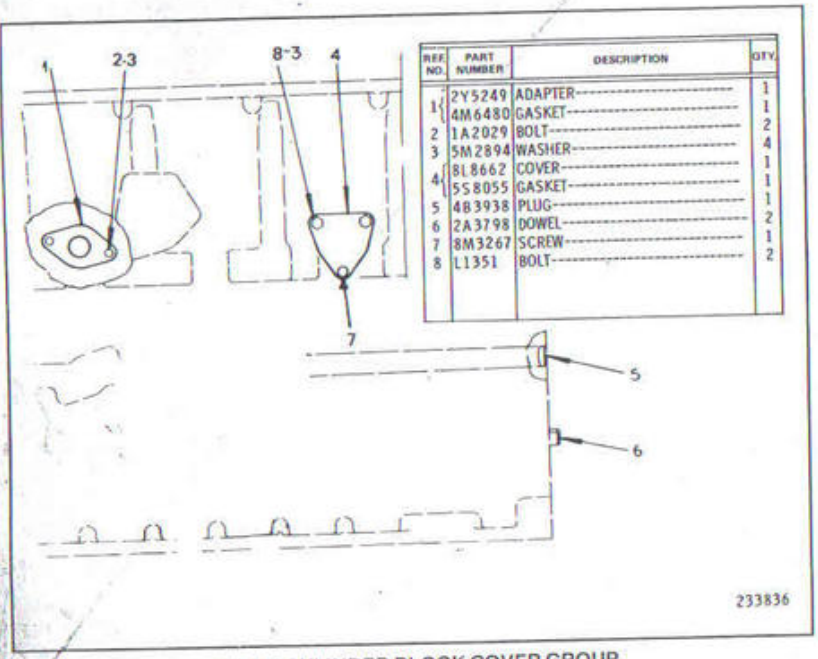

REF. NO.	PART NUMBER	DESCRIPTION	QTY.
1	2Y5249	ADAPTER	1
	4M6480	GASKET	1
2	1A2029	BOLT	2
3	5M2894	WASHER	4
4	8L8662	COVER	1
	5S8055	GASKET	1
5	4B3938	PLUG	1
6	2A3798	DOWEL	2
7	8M3267	SCREW	1
8	L1351	BOLT	2

2Y5174 CYLINDER BLOCK COVER GROUP

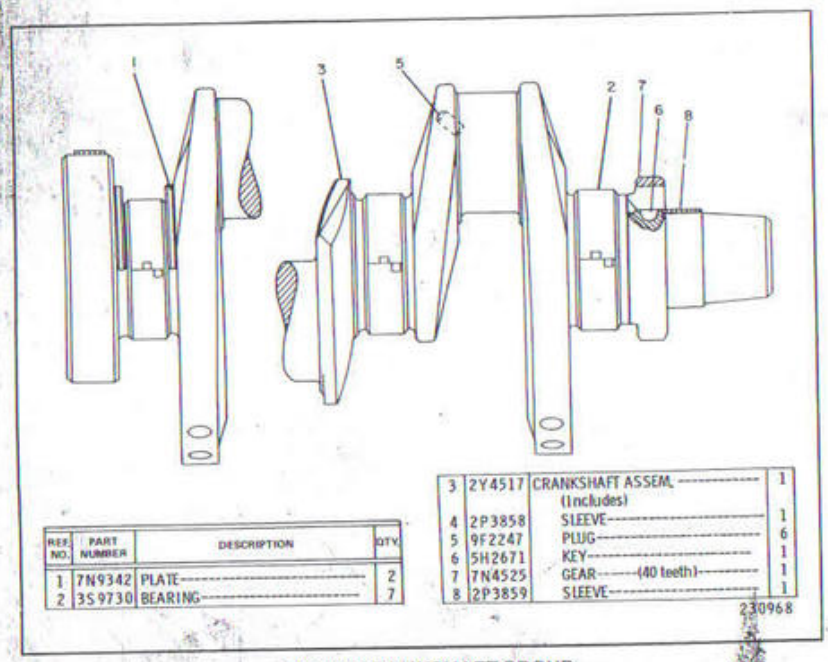

REF. NO.	PART NUMBER	DESCRIPTION	QTY.
1	7N9342	PLATE	2
2	3S9730	BEARING	7
3	2Y4517	CRANKSHAFT ASSEM. (Includes)	1
4	2P3858	SLEEVE	1
5	9F2247	PLUG	6
6	5H2671	KEY	1
7	7N4525	GEAR-----(40 teeth)	1
8	2P3859	SLEEVE	1

2Y5206 CRANKSHAFT GROUP

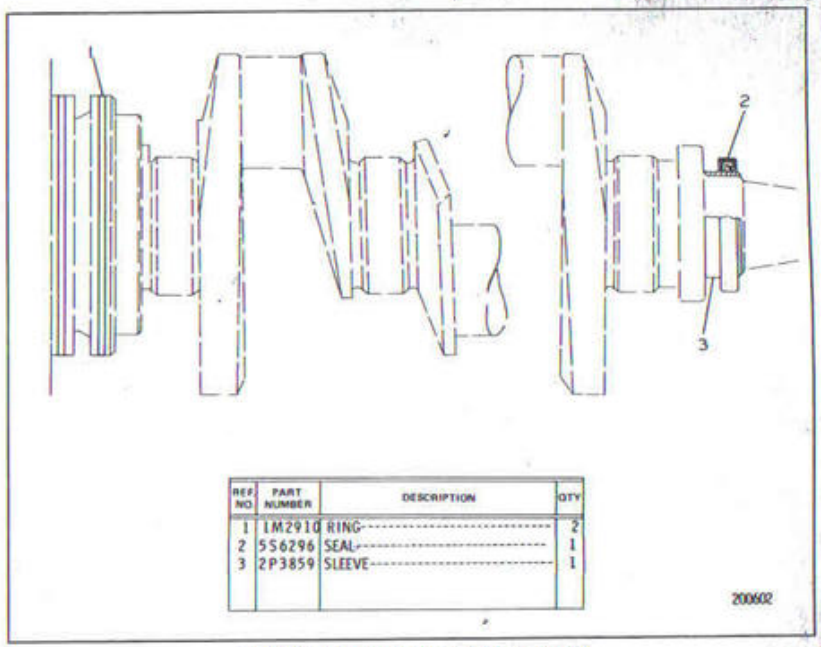

REF. NO.	PART NUMBER	DESCRIPTION	QTY.
1	1M2910	RING	2
2	5S6296	SEAL	1
3	2P3859	SLEEVE	1

6N220 CRANKSHAFT SEAL GROUP

CYLINDER BLOCK NOT REBORED			
CRANKSHAFT GROUND FOR UNDERSIZE BEARING I.D. OF		.25 MM	.51 MM	.76 MM
MAIN	QTY. 7	8N8225	8N8226	8N8227
CYLINDER BLOCK REBORED (.51 MM) (BEARING OVERSIZE O.D.)				
CRANKSHAFT GROUND FOR UNDERSIZE BEARING I.D. OF		0 (STANDARD)	.25 MM	
MAIN	QTY. 7	8N8228	8N8229	
O.D. --OUTSIDE DIAMETER I.D. --INSIDE DIAMETER				

CRANKSHAFT BEARING REPLACEMENTS

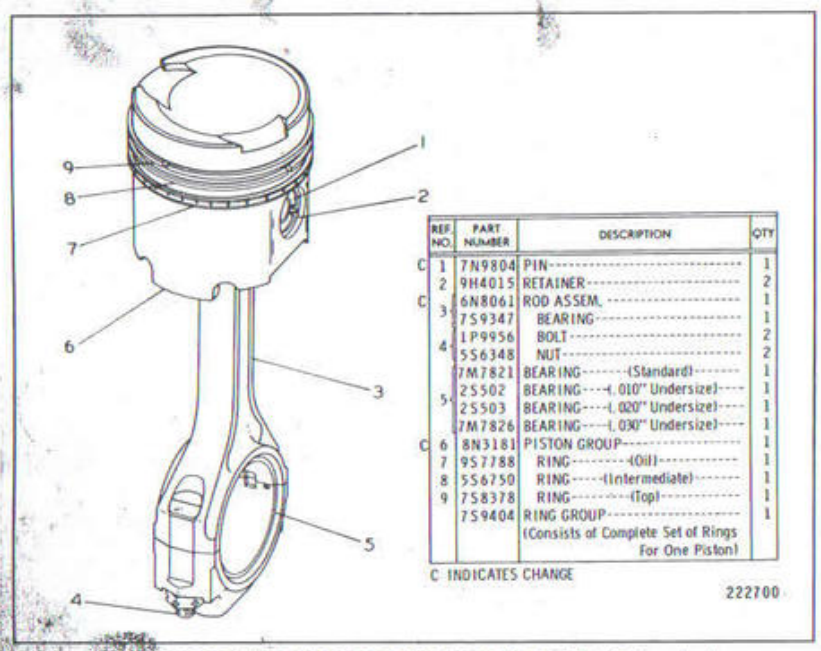

	REF. NO.	PART NUMBER	DESCRIPTION	QTY
	1	7N9804	PIN	1
	2	9H4015	RETAINER	2
C	3	6N8061	ROD ASSEM.	1
		7S9347	BEARING	1
	4	1P9956	BOLT	2
		5S6348	NUT	2
	5	7M7821	BEARING (Standard)	1
		2S502	BEARING (.010" Undersize)	1
		2S503	BEARING (.020" Undersize)	1
		7M7826	BEARING (.030" Undersize)	1
C	6	8N3181	PISTON GROUP	1
	7	9S7788	RING (Oil)	1
	8	5S6750	RING (Intermediate)	1
	9	7S8378	RING (Top)	1
		7S9404	RING GROUP (Consists of Complete Set of Rings For One Piston)	1

C INDICATES CHANGE

222700

4N4028 CONNECTING ROD AND PISTON GROUP—6 Required

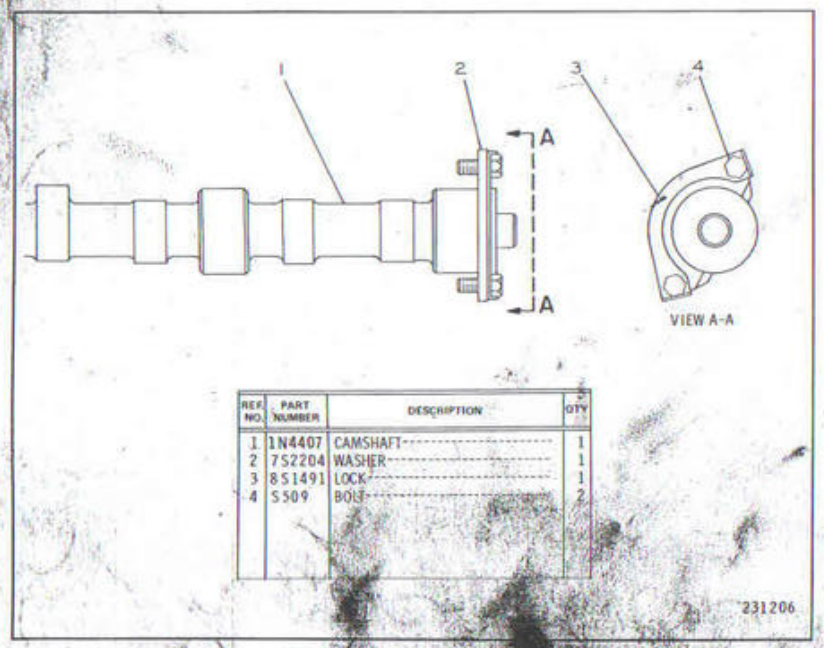

REF. NO.	PART NUMBER	DESCRIPTION	QTY
1	1N4407	CAMSHAFT	1
2	7S2204	WASHER	1
3	8S1491	LOCK	1
4	S509	BOLT	2

231206

1N4406 CAMSHAFT GR

	REF. NO.	PART NUMBER	DESCRIPTION	QTY
	1	7S7144	SPRING	12
	2	5S5874	ROTOCOIL ASSEM.	12
	3	2A4429	LOCK	24
C	4	6N8120	HEAD ASSEM. (Includes)	1
	5	S1594	BOLT	4
	6	5M2894	WASHER	4
	7	1P6367	COVER	1
	8	5S6735	GASKET	1
	9	3B623	PLUG	6
	10	3S8313	PLUG	7
	11	1S3062	DIRECTOR	18
	12	2B858	PLUG (Intake)	3
	13	7N4448	INSERT (Intake)	6
	14	5S7221	INSERT (Exhaust)	6
	15	2P1262	GUIDE	12
	16	2H3855	BOLT	1
		7N2597	SPACER	1
	17	7S3206	SEAL	6
	18	5S6795	CHAMBER ASSEM.	6
C	19	6N7263	GASKET (Intake)	1
	20	5S6452	VALVE (Intake)	6
	21	5S6449	VALVE (Exhaust)	6
	22	5M2667	GASKET—4.93 mm (.194 in.) thick	6
		2S8959	GASKET—5.66 mm (.223 in.) thick	6
		2S8960	GASKET—6.3 mm (.248 in.) thick	6

C INDICATES CHANGE

218772

2P6476 CYLINDER HEAD GROUP

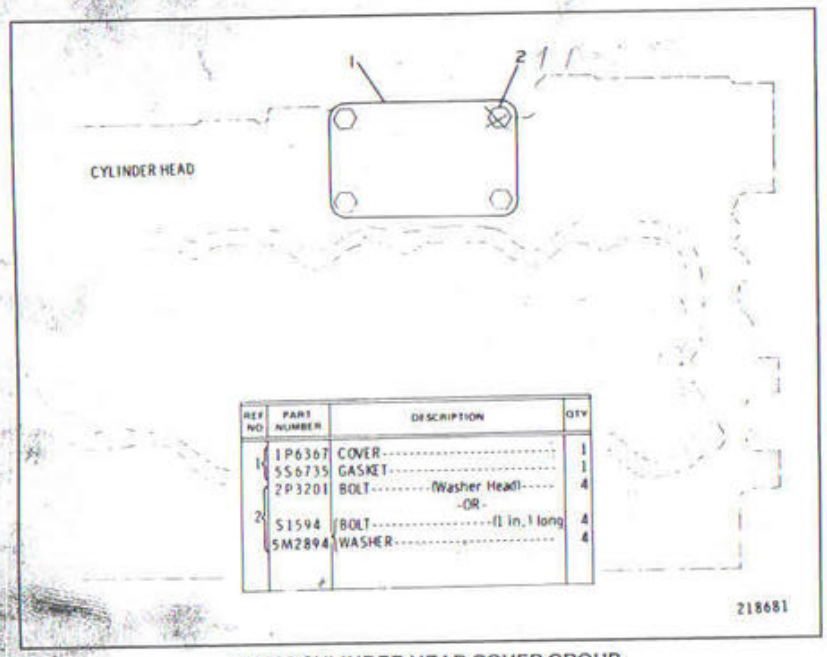

REF NO.	PART NUMBER	DESCRIPTION	QTY
1	1P6367	COVER	1
	5S6735	GASKET	1
2	2P3201	BOLT (Washer Head)	4
		-OR-	
2	S1594	BOLT (1 in. long)	4
	5M2894	WASHER	4

2P6530 CYLINDER HEAD COVER GROUP

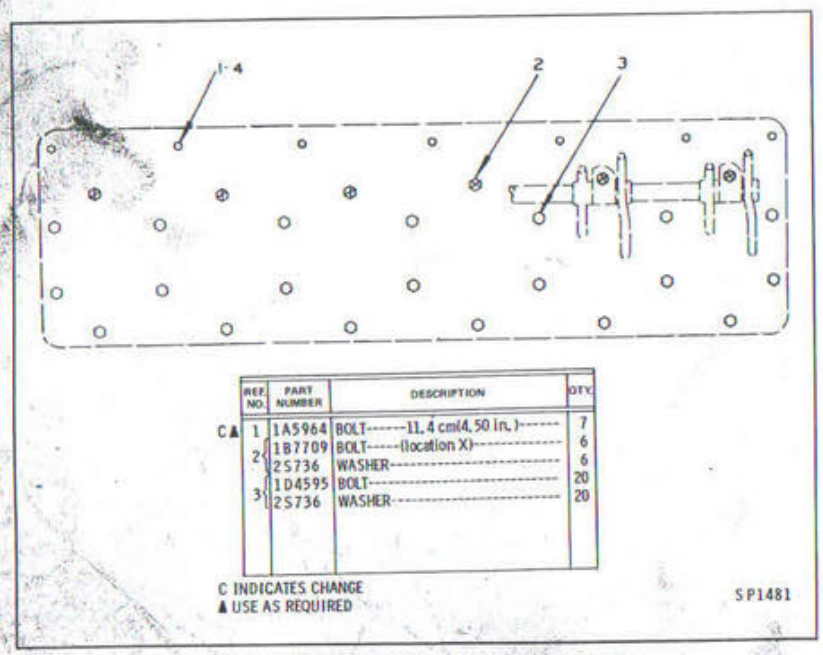

REF NO.	PART NUMBER	DESCRIPTION	QTY
C▲ 1	1A5964	BOLT (11.4 cm (4.50 in.))	7
2	1B7709	BOLT (location X)	6
	2S736	WASHER	6
3	1D4595	BOLT	20
	2S736	WASHER	20

C INDICATES CHANGE
▲ USE AS REQUIRED

2P6546 CYLINDER HEAD FASTENER GROUP

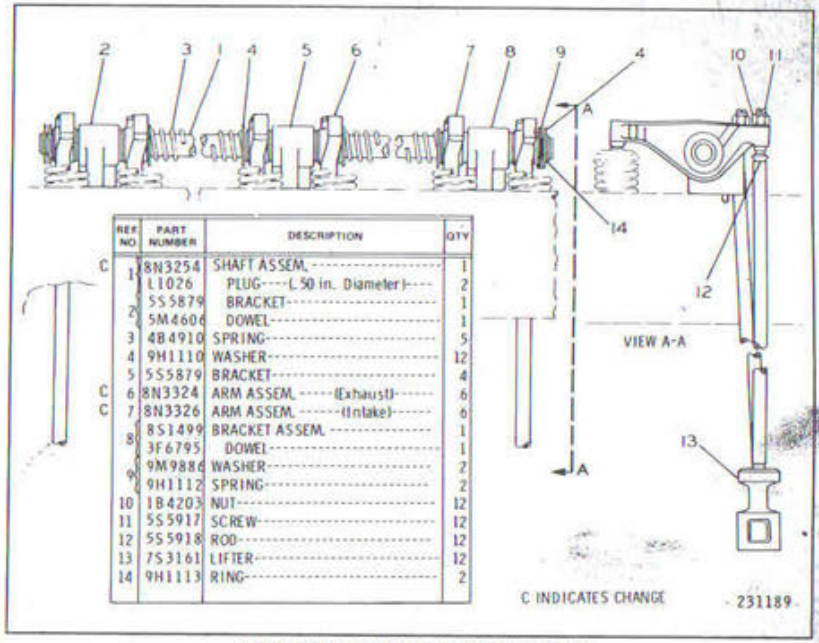

REF NO.	PART NUMBER	DESCRIPTION	QTY
C 1	8N3254	SHAFT ASSEM.	1
	L1026	PLUG (1.50 in. Diameter)	2
2	5S5879	BRACKET	1
	5M4606	DOWEL	1
3	4B4910	SPRING	5
4	9H1110	WASHER	12
5	5S5879	BRACKET	4
C 6	8N3324	ARM ASSEM. (Exhaust)	6
C 7	8N3326	ARM ASSEM. (Intake)	6
8	8S1499	BRACKET ASSEM.	1
	3F6795	DOWEL	1
9	9M9886	WASHER	7
	9H1112	SPRING	2
10	1B4203	NUT	12
11	5S5917	SCREW	12
12	5S5918	ROD	12
13	7S3161	LIFTER	12
14	9H1113	RING	2

2P6526 VALVE MECHANISM GROUP

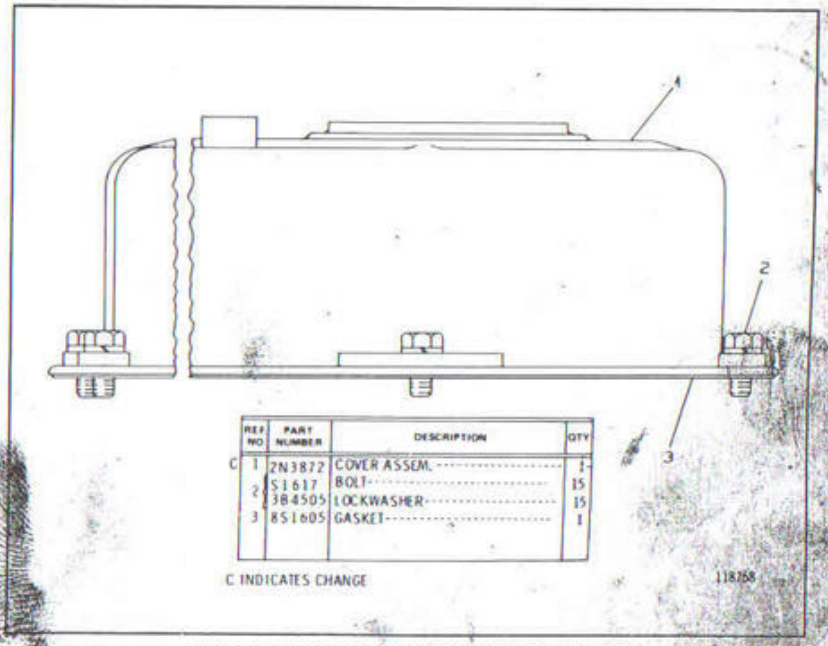

REF NO.	PART NUMBER	DESCRIPTION	QTY
C 1	2N3872	COVER ASSEM.	1
2	S1617	BOLT	15
	3B4505	LOCKWASHER	15
3	8S1605	GASKET	1

C INDICATES CHANGE

2P6516 VALVE MECHANISM COVER GROUP

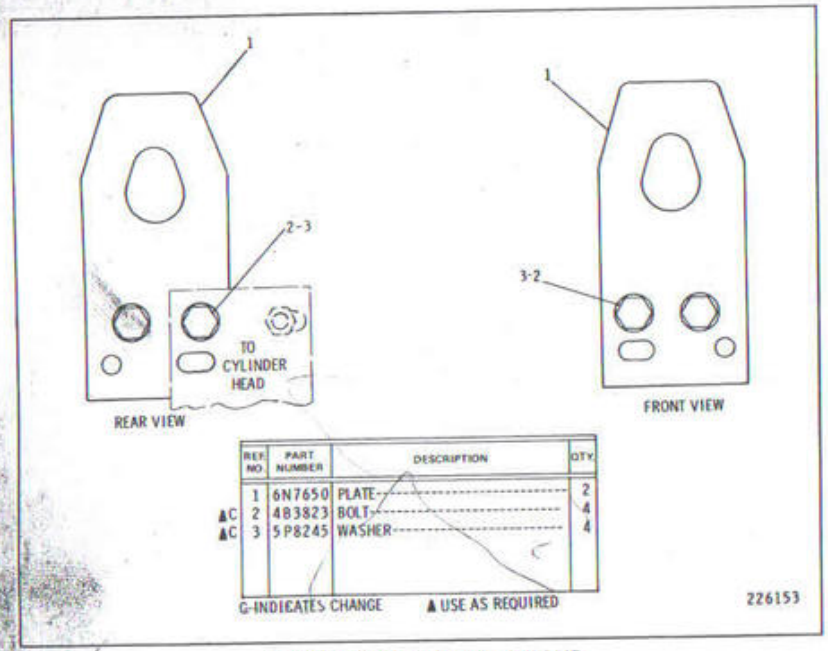

REF NO.	PART NUMBER	DESCRIPTION	QTY.
1	6N7650	PLATE	2
▲C 2	4B3823	BOLT	4
▲C 3	5P8245	WASHER	4

C-INDICATES CHANGE ▲ USE AS REQUIRED

226153

6N8326 ENGINE LIFTING GROUP

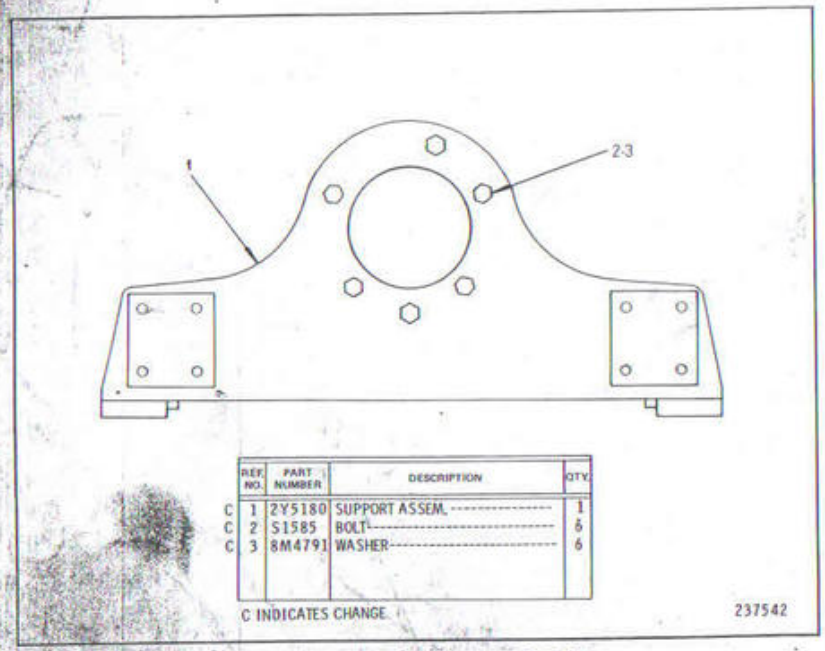

REF NO.	PART NUMBER	DESCRIPTION	QTY.
C 1	2Y5180	SUPPORT ASSEM.	1
C 2	S1585	BOLT	6
C 3	8M4791	WASHER	6

C INDICATES CHANGE.

237542

2P7751 ENGINE SUPPORT GROUP

4	1A8537	BOLT – SUPPORT TO FRAME ASSEMBLY
1	3B4506	LOCKWASHER–BRACKET TO CLAMP
4	3B4510	LOCKWASHER – SUPPORT TO FRAME ASSEMBLY
1	1D4717	NUT – BRACKET TO CLAMP
4	1D4720	NUT – BOLT TO FRAME ASSEMBLY
1	1L3661	CLAMP – PIPE TO BRACKET
1	7M7388	PIPE – FLYWHEEL HOUSING OIL DRAIN TO COVER ASSEMBLY
1	7M7602	BRACKET – CLIP TO PLATE
1	S509	BOLT – BRACKET TO CLAMP
▲ 4	1S5761	SHIM – SUPPORT TO FRAME
▲ 8	1S5762	SHIM – SUPPORT TO FRAME
▲ 4	1S5763	SHIM – SUPPORT TO FRAME

▲ USE AS REQUIRED

2S6981 ENGINE MOUNTING HARDWARE

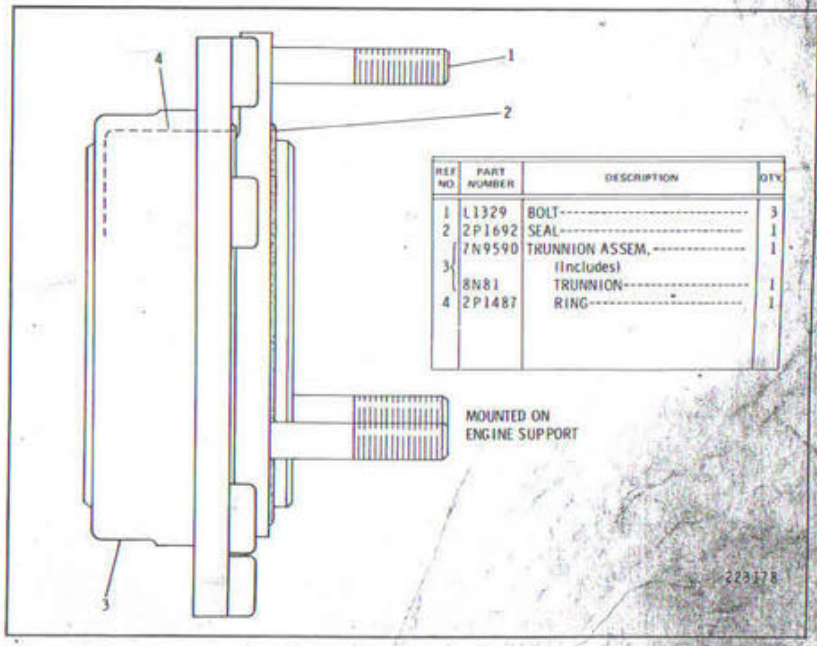

REF NO.	PART NUMBER	DESCRIPTION	QTY.
1	L1329	BOLT	3
2	2P1692	SEAL	1
3	7N9590	TRUNNION ASSEM. (Includes)	1
	8N81	TRUNNION	1
4	2P1487	RING	1

223178

7N9589 TRUNNION GROUP

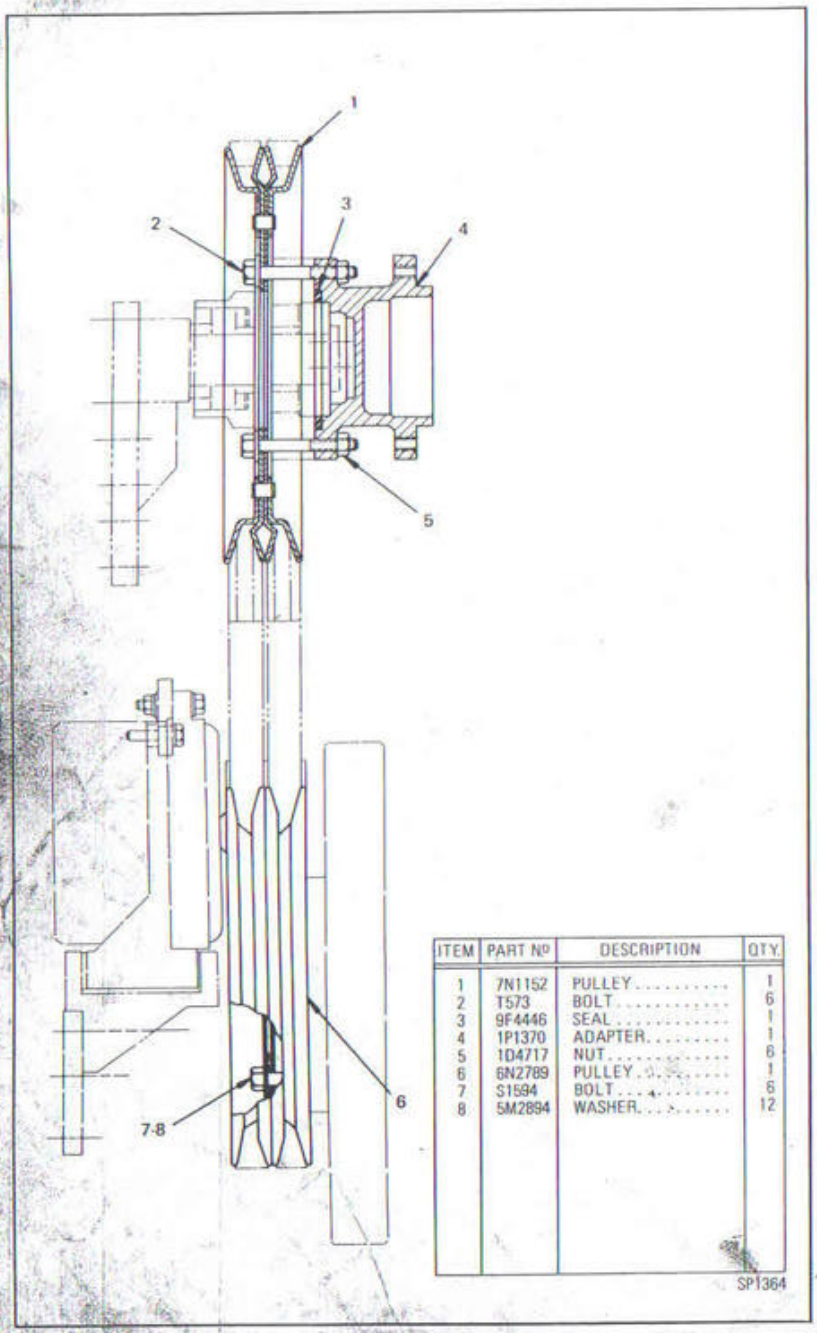

ITEM	PART Nº	DESCRIPTION	QTY.
1	7N1152	PULLEY	1
2	T573	BOLT	6
3	9F4446	SEAL	1
4	1P1370	ADAPTER	1
5	1D4717	NUT	6
6	6N2789	PULLEY	1
7	S1594	BOLT	6
8	5M2894	WASHER	12

SP1364

2Y2943 PULLEY GROUP
Note: 2Y4123 Vee Belt Set is used 7M185

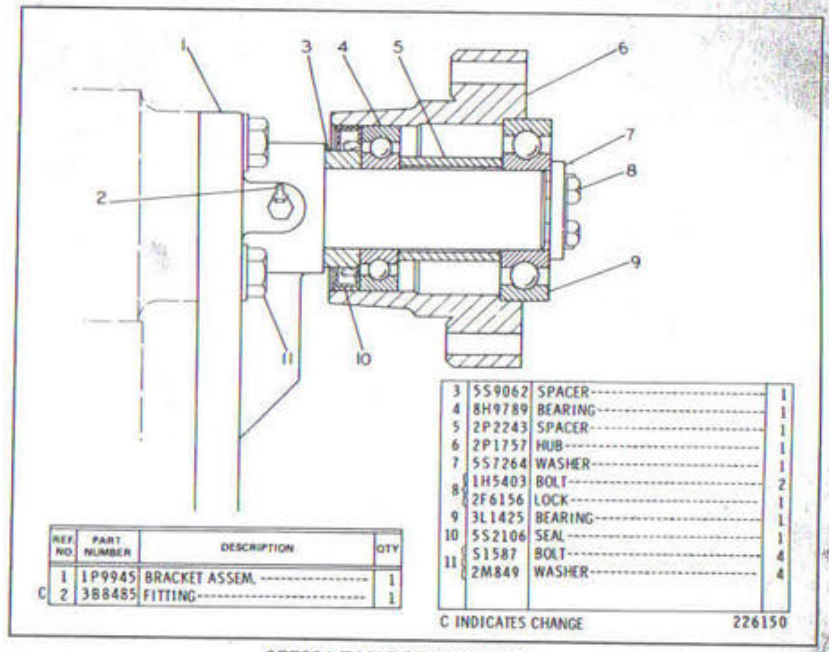

REF NO.	PART NUMBER	DESCRIPTION	QTY
1	1P9945	BRACKET ASSEM.	1
C 2	3B8485	FITTING	1
3	5S9062	SPACER	1
4	8H9789	BEARING	1
5	2P2243	SPACER	1
6	2P1757	HUB	1
7	5S7264	WASHER	1
8	1H5403	BOLT	2
	2F6156	LOCK	1
9	3L1425	BEARING	1
10	5S2106	SEAL	1
11	S1587	BOLT	4
	2M849	WASHER	4

C INDICATES CHANGE 226150

2P7831 FAN DRIVE GROUP

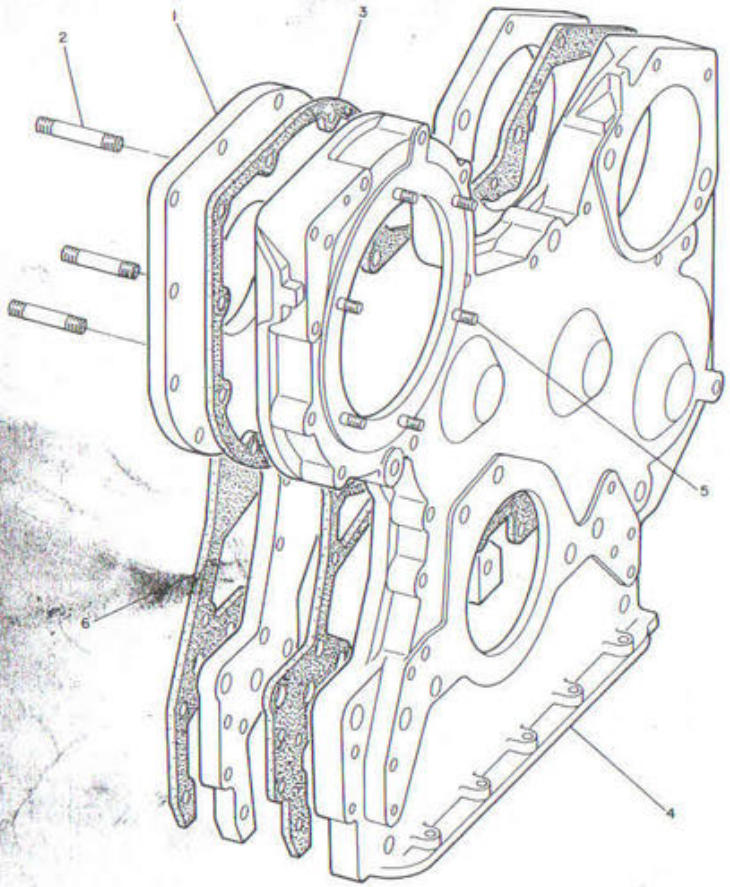

REF. NO.	PART NUMBER	DESCRIPTION	QTY.
	2Y5703	PLATE ASSEM.	1
1		(Includes)	
	6N9061	PLATE	1
2	2M7732	STUD	3
C 3	1W3900	GASKET	1
4	8N109	HOUSING ASSEM.	1
		(Includes)	
5	2S42	STUD	6
6	8N110	GASKET	1

C INDICATES CHANGE 234861

2Y5250 FRONT HOUSING GROUP—Timing Gear

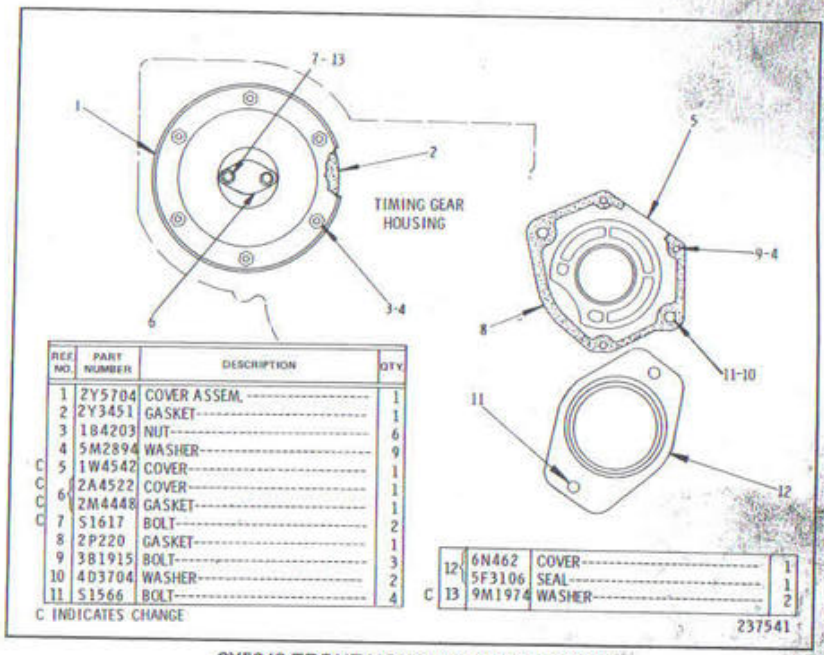

REF. NO.	PART NUMBER	DESCRIPTION	QTY.
1	2Y5704	COVER ASSEM.	1
2	2Y3451	GASKET	1
3	184203	NUT	6
4	5M2894	WASHER	9
C 5	1W4542	COVER	1
C	2A4522	COVER	1
C 6	2M4448	GASKET	1
C 7	S1617	BOLT	2
8	2P220	GASKET	1
9	3B1915	BOLT	3
10	4D3704	WASHER	2
11	S1566	BOLT	4
12	6N462	COVER	1
	5F3106	SEAL	1
C 13	9M1974	WASHER	2

C INDICATES CHANGE 237541

2Y5248 FRONT HOUSING COVER GROUP

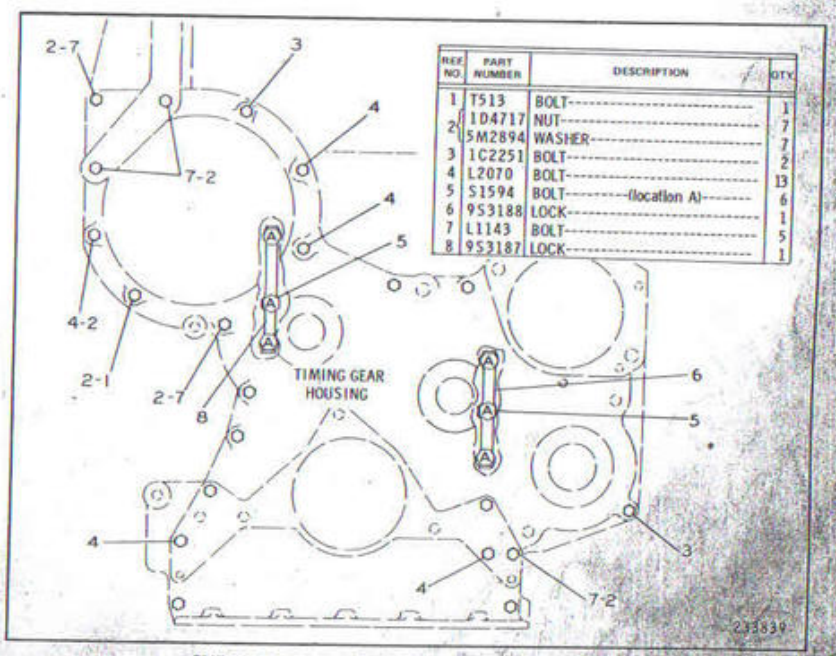

REF. NO.	PART NUMBER	DESCRIPTION	QTY.
1	T513	BOLT	1
2	1D4717	NUT	7
	5M2894	WASHER	7
3	1C2251	BOLT	2
4	L2070	BOLT	13
5	S1594	BOLT (location A)	6
6	9S3188	LOCK	1
7	L1143	BOLT	5
8	9S3187	LOCK	1

233839

2Y5717 FRONT HOUSING FASTENER GROUP

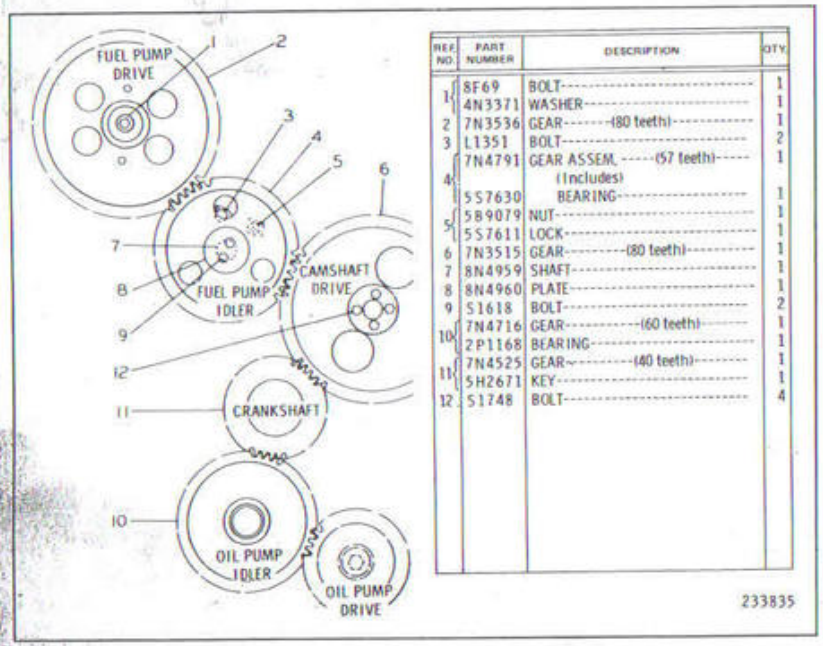

REF NO.	PART NUMBER	DESCRIPTION	QTY
1	8F69	BOLT	1
	4N3371	WASHER	1
2	7N3536	GEAR (80 teeth)	1
3	L1351	BOLT	2
4	7N4791	GEAR ASSEM. (57 teeth) (Includes)	1
	5S7630	BEARING	1
5	5B9079	NUT	1
	5S7611	LOCK	1
6	7N3515	GEAR (80 teeth)	1
7	8N4959	SHAFT	1
8	8N4960	PLATE	1
9	S1618	BOLT	2
10	7N4716	GEAR (60 teeth)	1
	2P1168	BEARING	1
11	7N4525	GEAR (40 teeth)	1
	5H2671	KEY	1
12	S1748	BOLT	4

2Y5707 FRONT TIMING GEAR GROUP

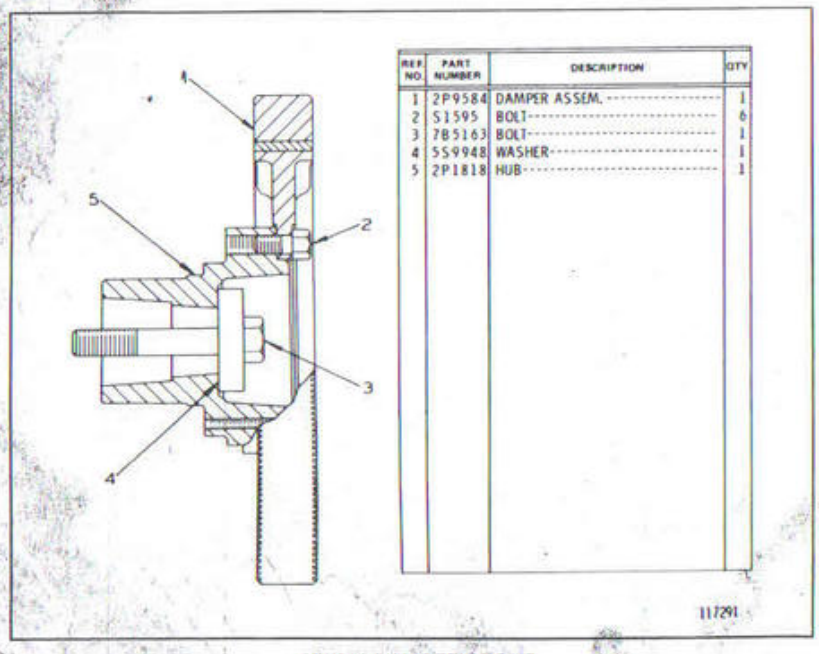

REF NO.	PART NUMBER	DESCRIPTION	QTY
1	2P9584	DAMPER ASSEM.	1
2	S1595	BOLT	6
3	7B5163	BOLT	1
4	5S9948	WASHER	1
5	2P1818	HUB	1

2P7838 DAMPER GROUP

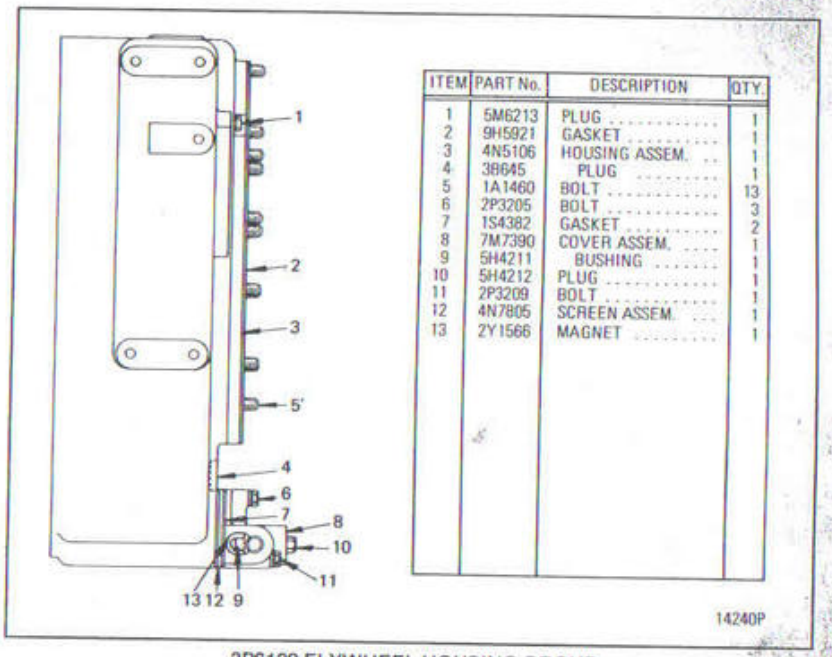

ITEM	PART No.	DESCRIPTION	QTY.
1	5M6213	PLUG	1
2	9H5921	GASKET	1
3	4N5106	HOUSING ASSEM.	1
4	3B645	PLUG	1
5	1A1460	BOLT	13
6	2P3205	BOLT	3
7	1S4382	GASKET	2
8	7M7390	COVER ASSEM.	1
9	5H4211	BUSHING	1
10	5H4212	PLUG	1
11	2P3209	BOLT	1
12	4N7805	SCREEN ASSEM.	1
13	2Y1566	MAGNET	1

2P6129 FLYWHEEL HOUSING GROUP

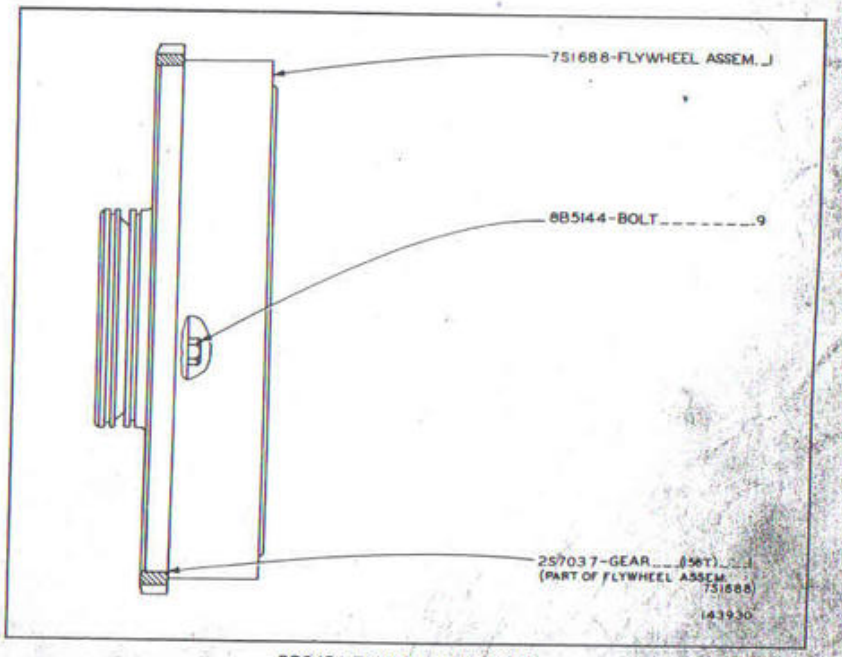

5S3451 FLYWHEEL GROUP

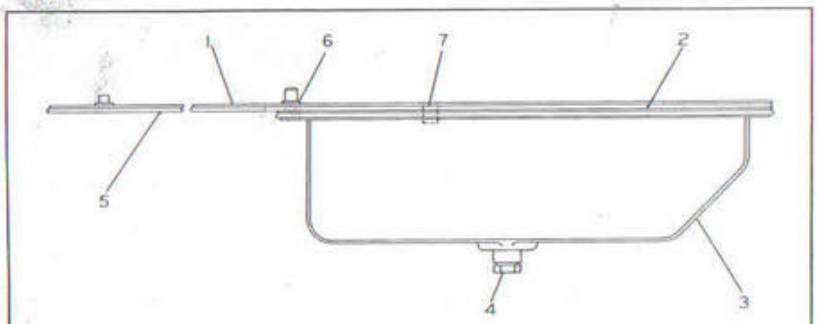

REF. NO.	PART NUMBER	DESCRIPTION	QTY
1	4M2969	GASKET	1
2	8S1965	GASKET	1
3	2Y3985	PAN ASSEM.	1
4	9M4202	PLUG	1
	4B8407	GASKET	1
5	2P1738	PLATE ASSEM. (Includes)	1
6	6J2237	BOSS	7
7	1S5304	LUG	1

234212

2Y5231 OIL PAN GROUP

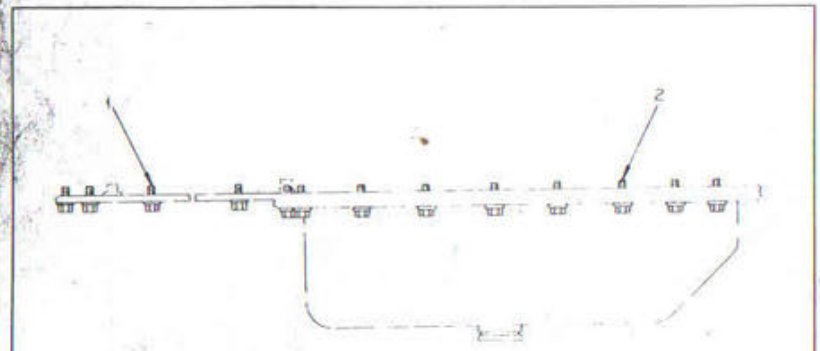

REF. NO.	PART NUMBER	DESCRIPTION	QTY
1	2P3200	BOLT	18
2	2P3201	BOLT	28

117235

2P6199 OIL PAN FASTENER GROUP

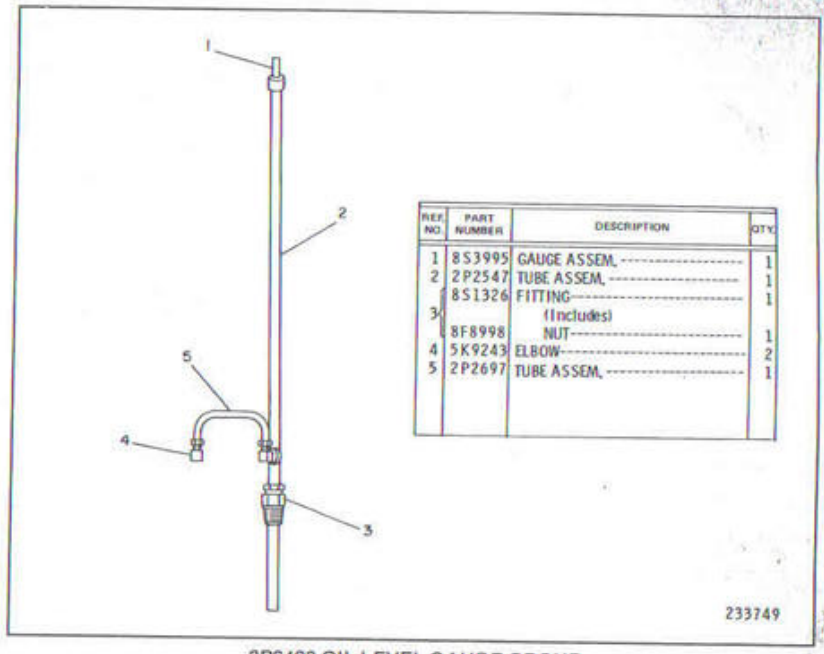

REF. NO.	PART NUMBER	DESCRIPTION	QTY
1	8S3995	GAUGE ASSEM.	1
2	2P2547	TUBE ASSEM.	1
3	8S1326	FITTING (Includes)	1
	8F8998	NUT	1
4	5K9243	ELBOW	2
5	2P2697	TUBE ASSEM.	1

233749

2P6493 OIL LEVEL GAUGE GROUP

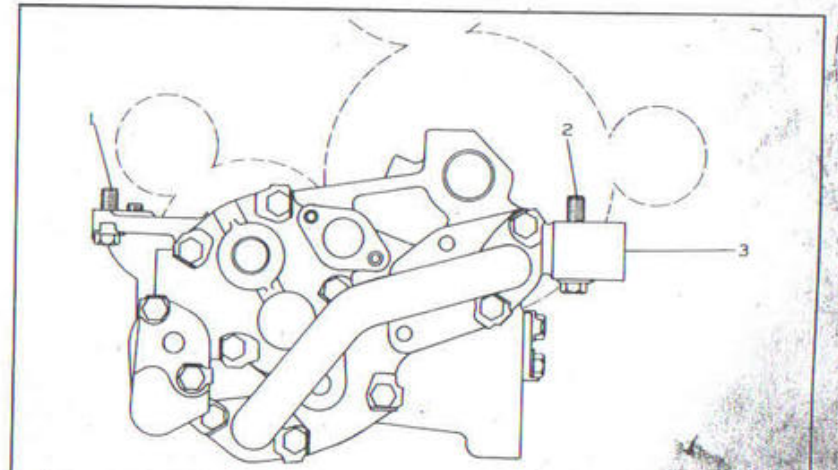

REF. NO.	PART NUMBER	DESCRIPTION	QTY
1	1A2029	BOLT	2
	8M7587	LOCKNUT	2
2	2P3206	BOLT	2
3	2P7830	PUMP GROUP (Separate Illustration)	1

117278

2P6537 ENGINE OIL PUMP GROUP
2P7830 Pump parts are shown on Page 24

	7	7S9725	GEAR------(18 Teeth-Drive)--------	1
	8	5S3347	SPACER----------	1
	9	9S3114	SHAFT ASSEM.----------	1
		(5S8518	BODY ASSEM.----------	1
	10	1F1006	DOWEL----------	1
		(4B9880	BALL----------	1
C	11	2P1170	SHAFT ASSEM.----------	1
	13	8S6513	BEARING----------	1
	14	1M2432	SHAFT----------	1
	15	1S702	SHAFT----------	1
	16	L2061	DOWEL----------	1
	17	7S9478	COVER----------	1
	18	7S9442	GEAR ASSEM.-----(18 teeth-Idler)---	1
	19	8S6515	BEARING----------	2
	20	4B479	PLUNGER----------	1
		4J4790	SPRING----------	1
	21	2M3755	BOLT----------	2
	22	S1617	BOLT----------	2
	23	4M6946	FLANGE----------	1
	24	7S9726	GEAR ASSEM.---(18 teeth-Idler)----	1
	25	8S6508	BEARING----------	1
	26	S509	BOLT----------	4
	27	1A2029	BOLT----------	4
	28	7S9728	GEAR ASSEM.-----(18 teeth-Idler)---	1
	29	8S6515	BEARING----------	2
	30	2S9529	PLUNGER----------	1
	31	1S3921	SPRING----------	1
	32	5S3383	TUBE ASSEM.----------	1
		5S3383	GASKET----------	2
		T225		

C INDICATES CHANGE

160754

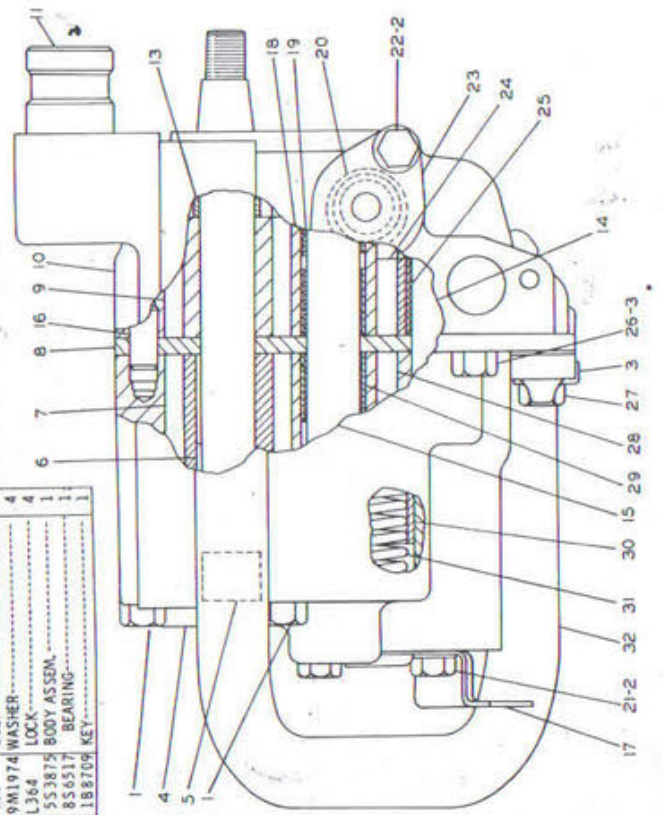

REF NO	PART NUMBER	DESCRIPTION	QTY
1	T55	BOLT----------	4
C 2	9M1974	WASHER----------	4
C 3	L364	LOCK----------	4
4	5S3875	BODY ASSEM.----------	1
5	8S6517	BEARING----------	1
6	1B8709	KEY----------	1

2P7830 GEAR PUMP GROUP
Part of 2P6537 Oil Pump Group shown on Page 23

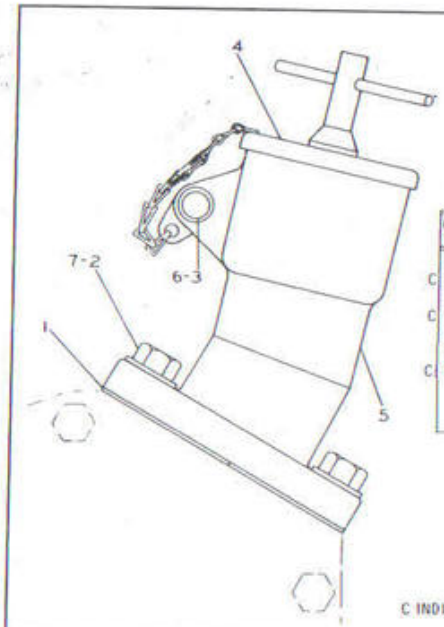

REF NO	PART NUMBER	DESCRIPTION	QTY
1	2P2720	GASKET----------	1
C 2	1A2029	BOLT----------	2
3	9M5732	RIVET----------	1
C 4	6N2985	CAP ASSEM.----------	1
5	2P2719	PIPE----------	1
6	2A3211	WASHER----------	1
C 7	5M2894	WASHER----------	2

C INDICATES CHANGE

167624

2P6855 OIL FILLER GROUP

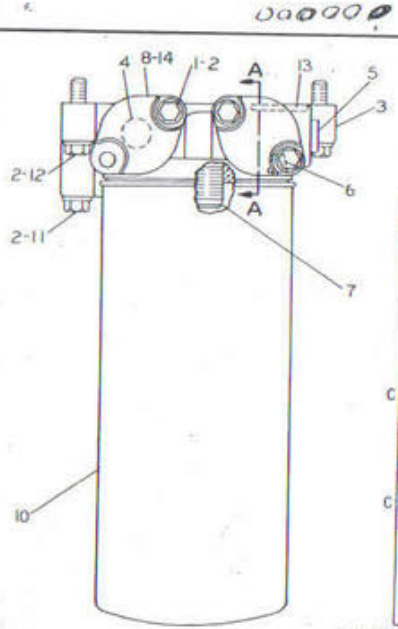

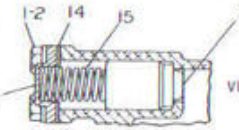

REF NO	PART NUMBER	DESCRIPTION	QTY
1	S1618	BOLT----------	3
2	9M1974	WASHER----------	8
3	8N6212	BASE ASSEM.---------- (Includes)	1
4	2R5657	PLUG-2,54 cm(1 in.)thread	3
5	2B858	PLUG-1,27 cm(.5 in.) thread	1
6	7H3171	PLUG----------	1
7	2P2537	STUD----------	1
C 8	8N6986	COVER----------	2
9	1P1367	PLUNGER----------	2
10	2P4004	FILTER ASSEM.----------	1
11	1D4540	BOLT------6,99 cm(2,75 in.) long	1
12	1B9575	BOLT------4,44 cm(1,75 in.)long-	3
13	8M4432	SEAL----------	2
C 14	8N6989	GASKET----------	2
15	8M3182	SPRING----------	2

C INDICATES CHANGE

227300

2P6475 OIL FILTER GROUP

REF. NO.	PART NUMBER	DESCRIPTION	QTY.
1	2S1541	ORIFICE	6
2	L2070	BOLT	1
C 3	S1590	BOLT	2
4	2M5407	GASKET	1
C 5	8M2769	CLIP	1
6	L1351	BOLT	1
7	1D4717	NUT	1
C 8	5M2894	WASHER	2
C 9	8N7318	TUBE ASSEM. (Includes)	1
10	5M6213	PLUG	1
C 11	8N7315	TUBE ASSEM.	1
12	7F7590	GASKET	1
13	5S3949	TUBE ASSEM.	1
14	5S3951	TUBE ASSEM.	1
15	2B2694	BOLT	2
16	2A5328	LOCK	2
17	1A9579	BOLT	1
18	8S9300	BELL ASSEM.	1
19	1S7107	GASKET	3
20	1A2029	BOLT	1
21	8S8874	LOCK	2
1D4538	BOLT	1	
22	5M6560	LOCK	1
9H2713	GASKET	1	
23	8M904	GASKET	1
C 24	8N5739	BRACKET	4
C 25	8D5898	SPACER	1
C 26	9L9132	WASHER	4
C 27	9M4849	SEAL	1

233859

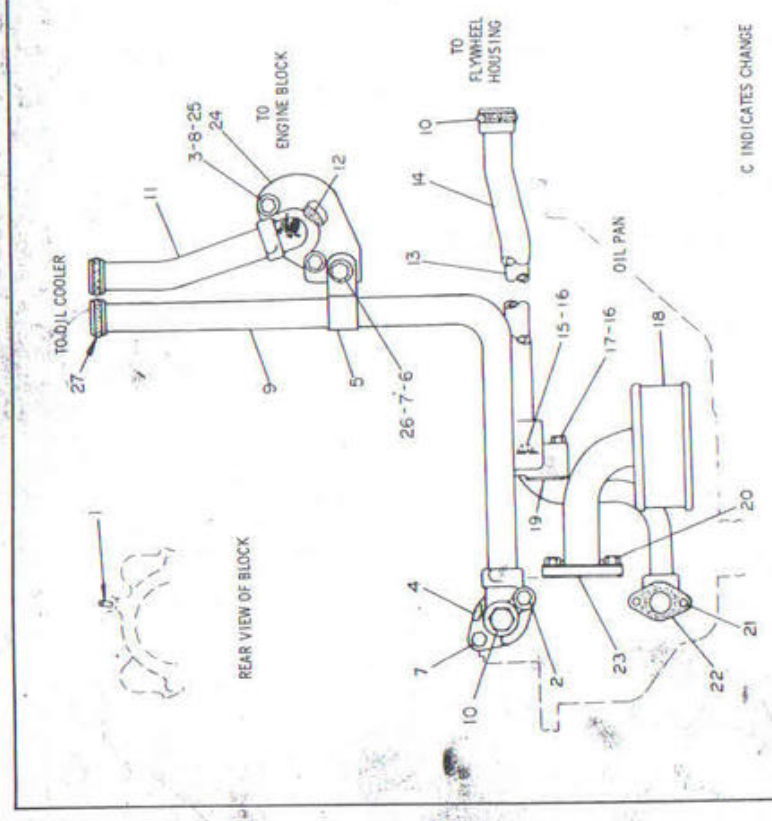

C INDICATES CHANGE

2P6861 OIL LINES GROUP

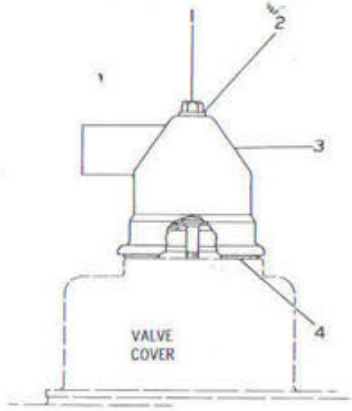

REF. NO.	PART NUMBER	DESCRIPTION	QTY.
1	3H3243	BOLT	1
2	4K9890	WASHER	1
3	8S248	BREATHER ASSEM.	1
C 4	4L9564	SEAL	1

C INDICATES CHANGE

227531

1P4244 BREATHER GROUP

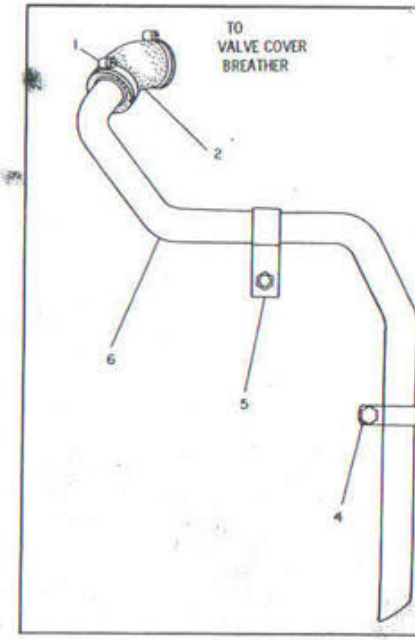

REF. NO.	PART NUMBER	DESCRIPTION	QTY.
1	9M2904	CLAMP	2
2	8S780	HOSE	1
3	8M8788	CLIP	1
4	T102	BOLT	1
	5M2894	WASHER	1
5	4N3327	CLIP	1
6	2Y6330	TUBE	1

234860

2Y6278 FUMES DISPOSAL GROUP

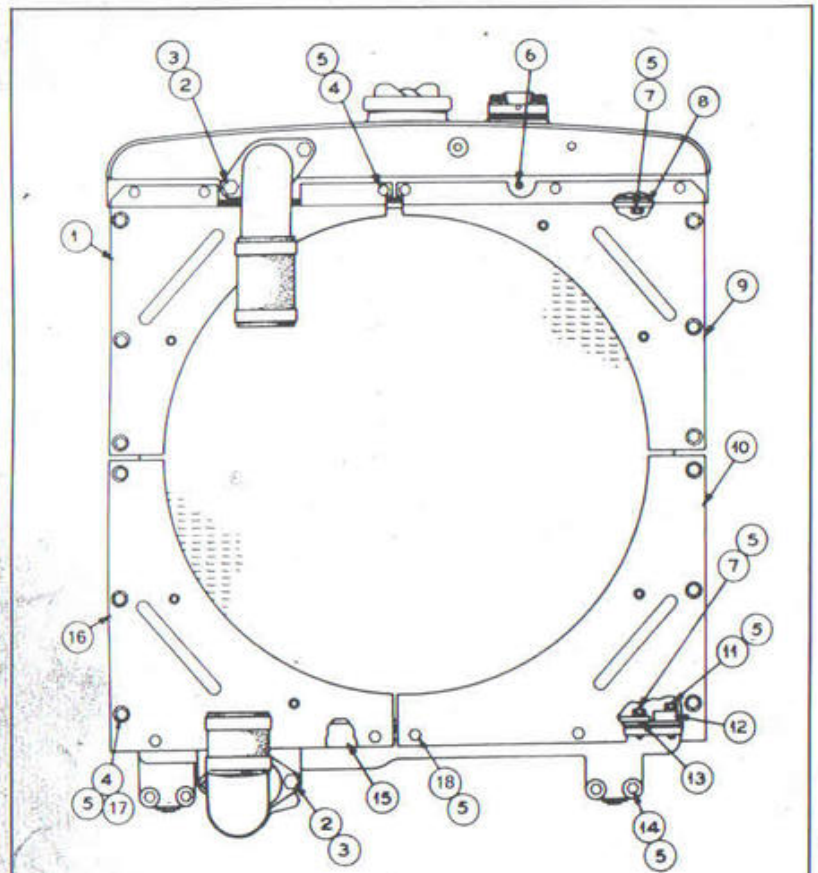

ITEM	PART Nº	DESCRIPTION	QTY.
1	7S4254	SHIELD ASSEM. (Upper L.H.)	1
	9F2978	NUT	2
2	S1585	BOLT	4
3	3B4508	LOCKWASHER	4
4	S509	BOLT	18
5	3B4506	LOCKWASHER	79
6	8B2540	CORK	1
7	S1588	BOLT	48
8	3S8289	STRIP	2
9	7S4253	SHIELD ASSEM. (Upper R.H.)	1
	9F2978	NUT	2

ITEM	PART Nº	DESCRIPTION	QTY.
10	7S4257	SHIELD ASSEM. (Lower R.H.)	1
	9F2978	NUT	1
11	S1591	BOLT	4
12	1M7827	STRIP	2
13	1M7838	STRIP	2
14	S1619	BOLT	4
15	7S3628	ANGLE	1
16	7S4258	SHIELD ASSEM. (Lower L.H.)	1
	9F2978	NUT	2
17	4B4278	WASHER	12
18	L1351	BOLT	5

11177P

2P8195 RADIATOR GROUP—Rear View

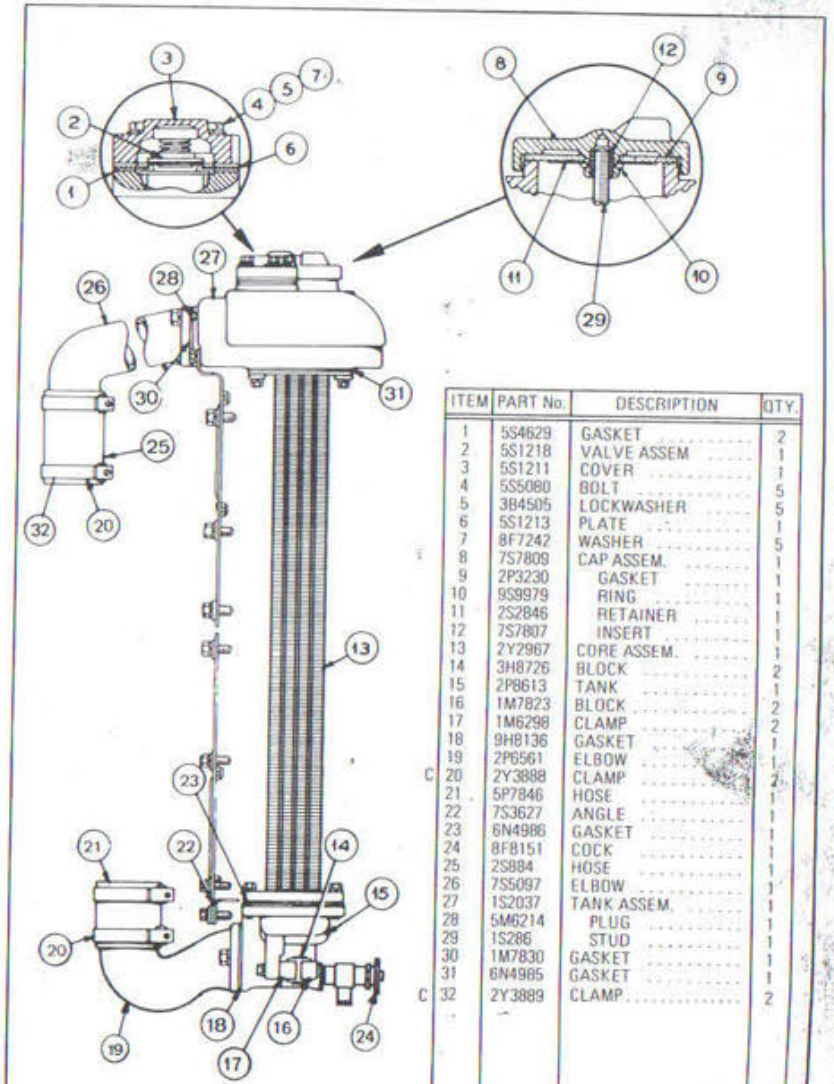

ITEM	PART No.	DESCRIPTION	QTY.
1	5S4629	GASKET	2
2	5S1218	VALVE ASSEM	1
3	5S1211	COVER	1
4	5S5080	BOLT	5
5	3B4505	LOCKWASHER	5
6	5S1213	PLATE	1
7	8F7242	WASHER	5
8	7S7809	CAP ASSEM.	1
9	2P3230	GASKET	1
10	9S9979	RING	1
11	2S2846	RETAINER	1
12	7S7807	INSERT	1
13	2Y2967	CORE ASSEM.	1
14	3H8726	BLOCK	2
15	2P8613	TANK	1
16	1M7823	BLOCK	2
17	1M6298	CLAMP	2
18	9H8136	GASKET	2
19	2P6561	ELBOW	1
C 20	2Y3888	CLAMP	2
21	5P7846	HOSE	1
22	7S3627	ANGLE	1
23	6N4986	GASKET	1
24	8F8151	COCK	1
25	2S884	HOSE	1
26	7S5097	ELBOW	1
27	1S2037	TANK ASSEM.	1
28	5M6214	PLUG	1
29	1S286	STUD	1
30	1M7830	GASKET	1
31	6N4985	GASKET	1
C 32	2Y3889	CLAMP	2

C INDICATES CHANGE

SP1218

2P8195 RADIATOR GROUP—Side View

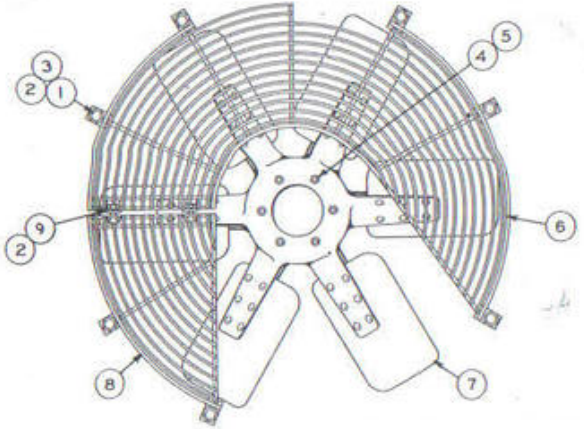

REF NO.	PART NUMBER	DESCRIPTION	QTY
1	L 1351	BOLT	7
2	3B4506	LOCKWASHER	9
3	4B4278	WASHER	7
4	1A2029	BOLT	6
5	3B4506	LOCKWASHER	6

REF NO.	PART NUMBER	DESCRIPTION	QTY
6	5S5133	GUARD ASSEM. -------(Upper)------	1
7	7S542	SPIDER ASSEM.	1
8	5S5237	GUARD ASSEM. -------(Lower)------	1
9	5S09	BOLT	2

109679

7S3739 BLOWER FAN AND GUARD GROUP

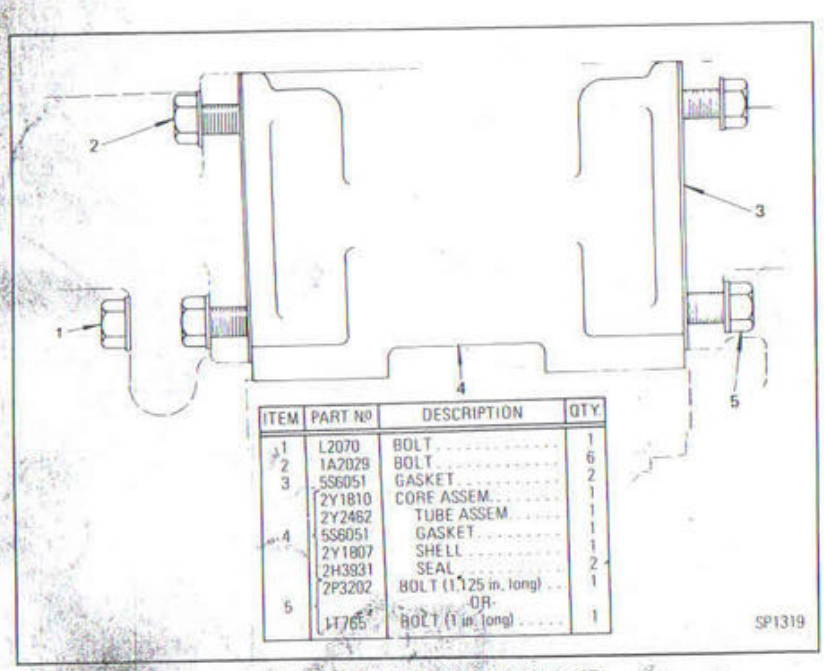

ITEM	PART Nº	DESCRIPTION	QTY
1	L2070	BOLT	1
2	1A2029	BOLT	6
3	5S6051	GASKET	2
	2Y1810	CORE ASSEM.	1
	2Y2462	TUBE ASSEM.	1
4	5S6051	GASKET	1
	2Y1807	SHELL	1
	2H3931	SEAL	2
	2P3202	BOLT (1.125 in. long)	1
5		OR	
	1T765	BOLT (1 in. long)	1

SP1319

2P6215 ENGINE OIL COOLER GROUP

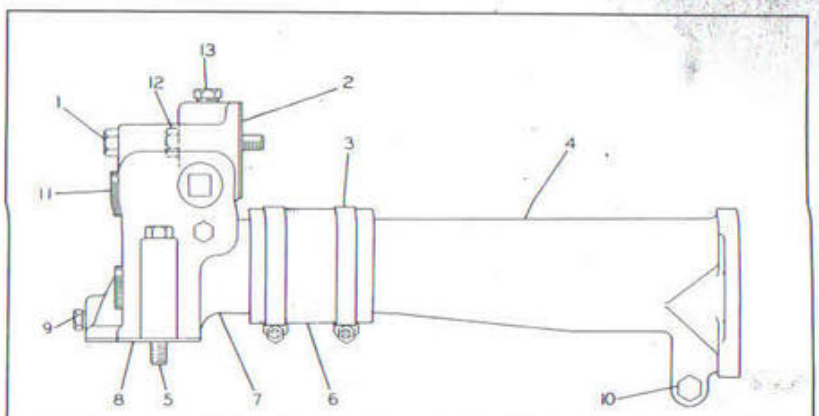

REF NO.	PART NUMBER	DESCRIPTION	QTY
1	T65	BOLT	1
2	2P6132	GASKET	1
3	2Y4151	CLAMP	2
4	2P2511	PIPE	1
5	S1619	BOLT	2
▲ 6	5P1260	HOSE-------7,62 cm(3 in.)	
7	7N172	ELBOW	1
8	7N200	GASKET	1
9	5M6213	PLUG	2
10	S1588	BOLT	1
11	1B5174	PLUG	3
12	S1590	BOLT	1
13	3J5390	PLUG	1

▲ ORDER BY THE CENTIMETER 233858

7N7211 WATER LINES GROUP

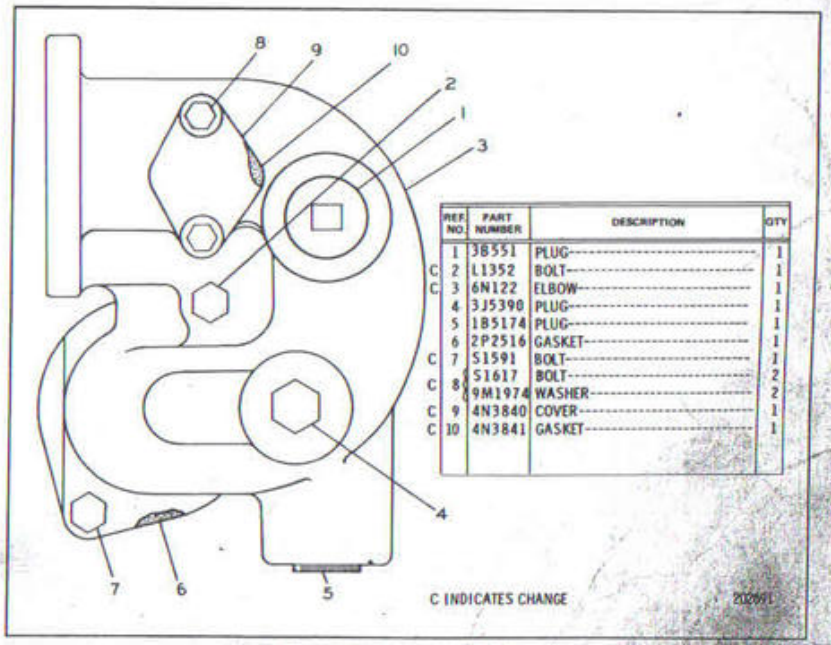

	REF NO.	PART NUMBER	DESCRIPTION	QTY
	1	3B551	PLUG	1
C	2	L1352	BOLT	1
C	3	6N122	ELBOW	1
	4	3J5390	PLUG	1
	5	1B5174	PLUG	1
	6	2P2516	GASKET	1
C	7	S1591	BOLT	1
C	8	S1617	BOLT	2
		9M1974	WASHER	2
C	9	4N3840	COVER	1
C	10	4N3841	GASKET	1

C INDICATES CHANGE 202691

2P7740 WATER LINES GROUP—Elbow

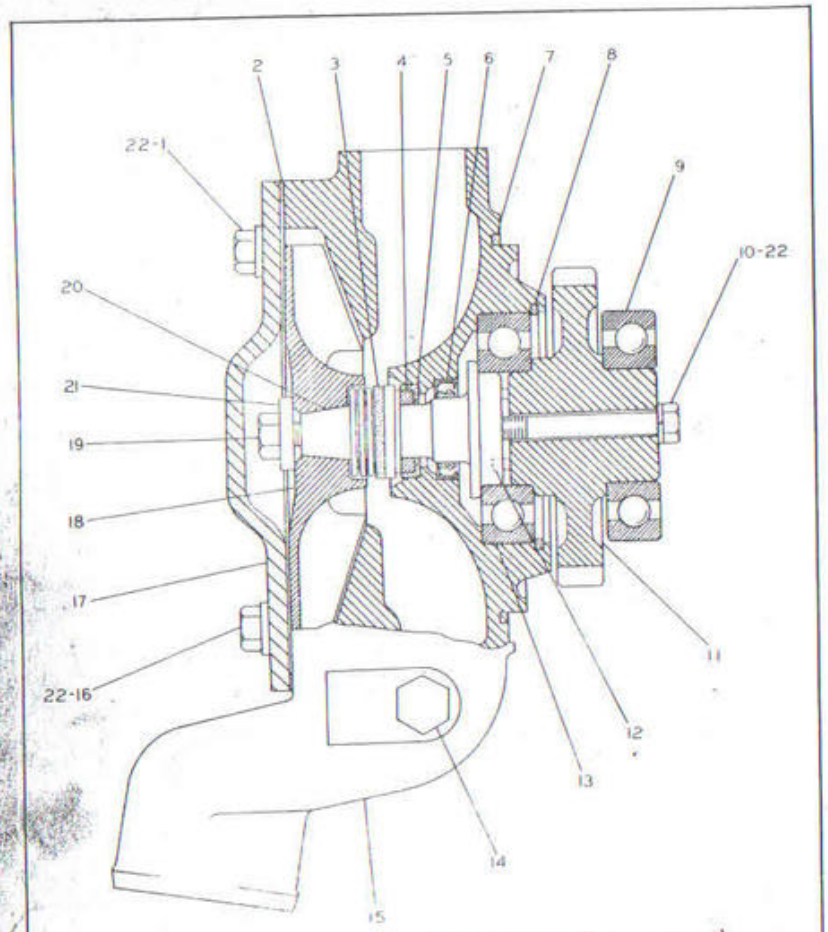

C 1W7053-REBUILD KIT----------1
(Includes parts marked ▲)

	REF NO	PART NUMBER	DESCRIPTION	QTY
	1	L1351	BOLT	2
C	2	8N5928	GASKET	1
	3	4N6556	SEAL ASSEM.	1
	4	8S7762	RING	1
	5	8S8821	SEAL	1
	6	8H9530	SEAL	1
	7	5E3196	SEAL	1
▲	8	1X6985	RING	1
▲	9	8H9769	BEARING	1
▲	10	5L619	BOLT	1
C	11	7N5193	GEAR----------(40 teeth)	1
	12	2L5893	PIN	2
▲	13	6H3957	BEARING	1
	14	5M6213	PLUG	1
	15	7N196	HOUSING	1
	16	T55	BOLT	2
C	17	8N5929	COVER	1
	18	7N5910	IMPELLER	1
▲	19	4L6454	BOLT	1
▲	20	7N5899	SHAFT	1
▲	21	9M6527	WASHER	1
▲	22	5M2894	WASHER	5

C INDICATES CHANGE 237143

7N5909 WATER PUMP GROUP

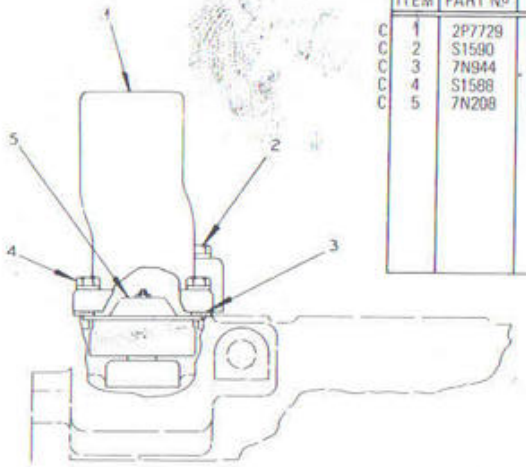

	ITEM	PART Nº	DESCRIPTION	QTY.
C	1	2P7729	ELBOW	1
C	2	S1590	BOLT	1
C	3	7N944	GASKET	1
C	4	S1588	BOLT	3
C	5	7N208	REGULATOR	1

C INDICATES CHANGE SP846

2P8172 HOUSING AND REGULATOR GROUP

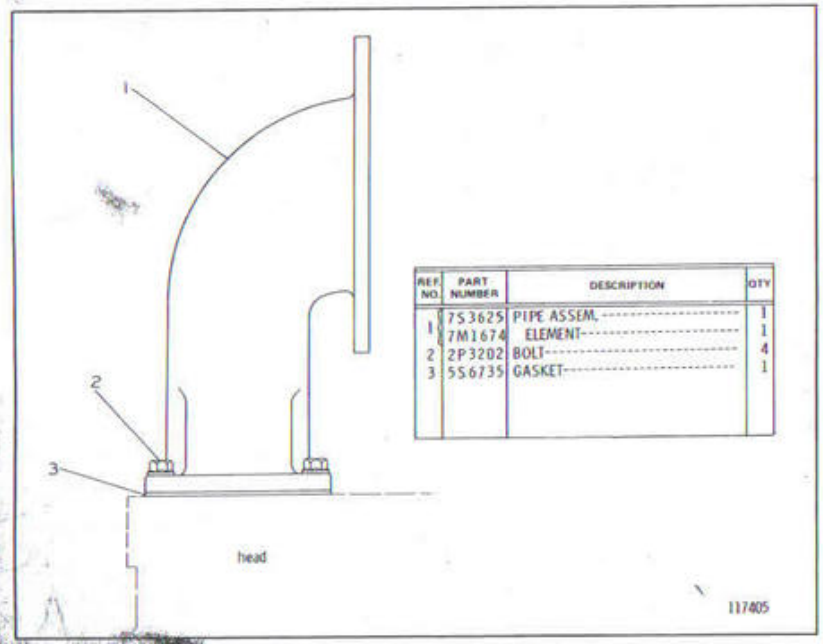

REF. NO.	PART NUMBER	DESCRIPTION	QTY
1	7S3625	PIPE ASSEM.	1
	7M1674	ELEMENT	1
2	2P3202	BOLT	4
3	5S6735	GASKET	1

2P6838 AIR LINES GROUP

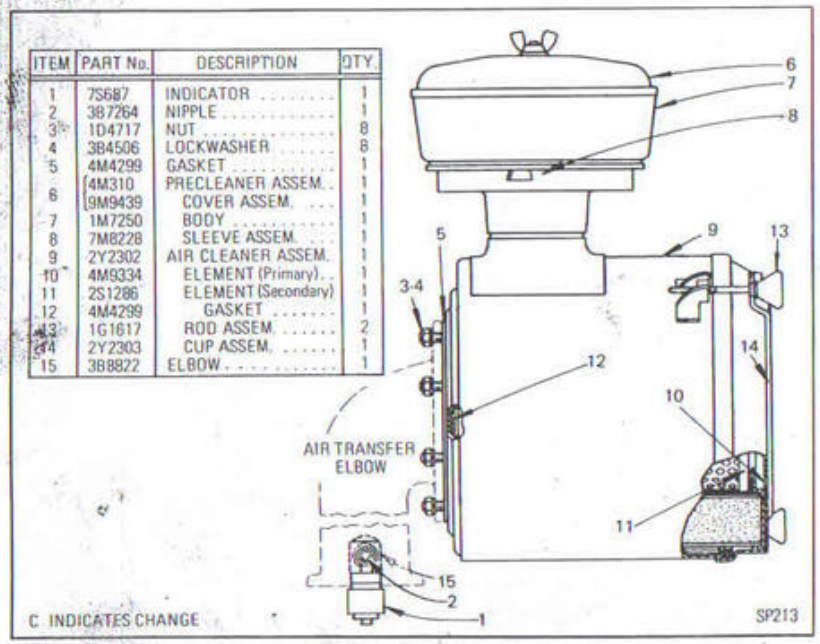

ITEM	PART No.	DESCRIPTION	QTY.
1	7S687	INDICATOR	1
2	3B7264	NIPPLE	1
3	1D4717	NUT	8
4	3B4506	LOCKWASHER	8
5	4M4299	GASKET	1
6	4M310	PRECLEANER ASSEM.	1
	9M9439	COVER ASSEM.	1
7	1M7250	BODY	1
8	7M8228	SLEEVE ASSEM.	1
9	2Y2302	AIR CLEANER ASSEM.	1
10	4M9334	ELEMENT (Primary)	1
11	2S1286	ELEMENT (Secondary)	1
12	4M4299	GASKET	1
13	1G1617	ROD ASSEM.	2
14	2Y2303	CUP ASSEM.	1
15	3B8822	ELBOW	1

7S6748 AIR CLEANER GROUP

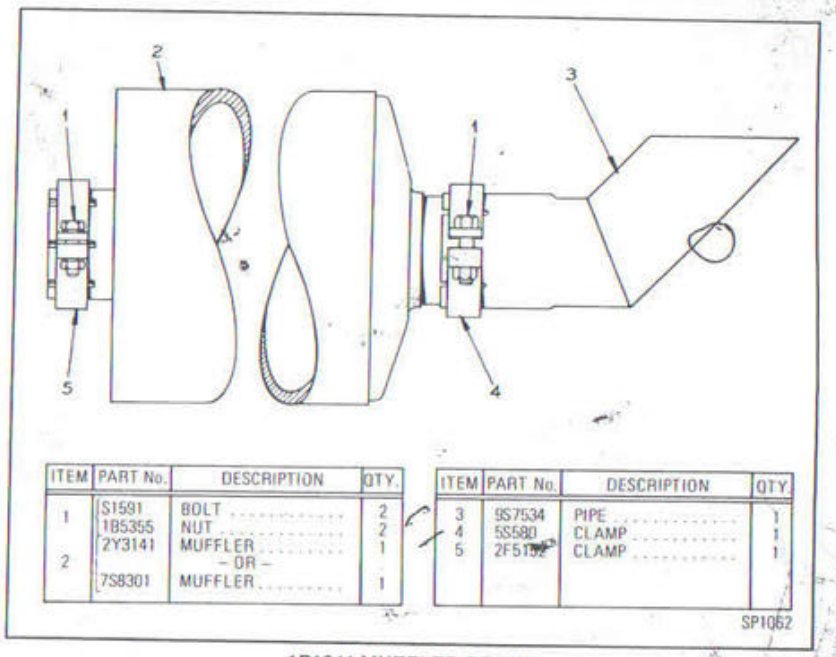

ITEM	PART No.	DESCRIPTION	QTY.
1	S1591	BOLT	2
	1B5355	NUT	2
2	2Y3141	MUFFLER	1
		– OR –	
	7S8301	MUFFLER	1

ITEM	PART No.	DESCRIPTION	QTY.
3	9S7534	PIPE	1
4	5S580	CLAMP	1
5	2F5102	CLAMP	1

1P1241 MUFFLER GROUP

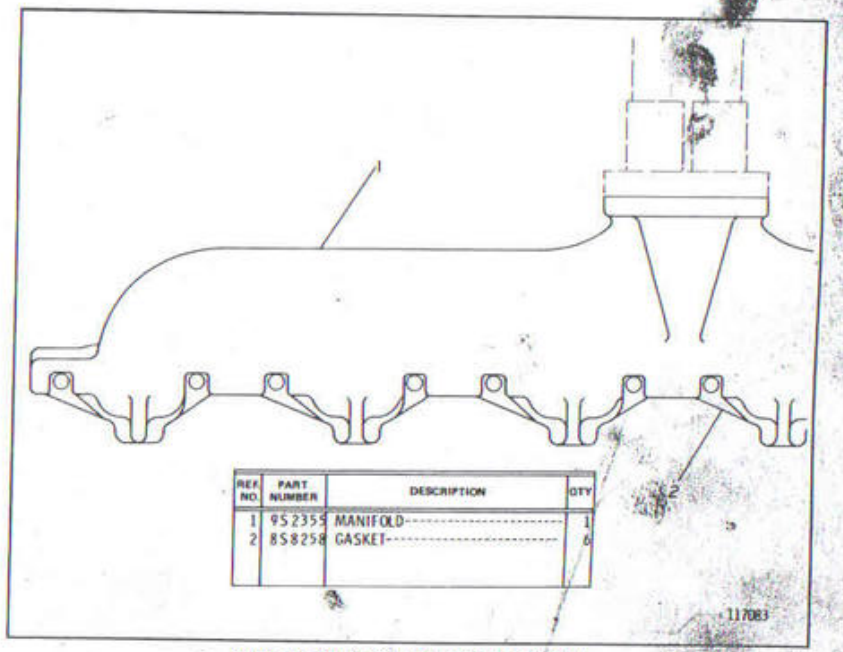

REF. NO.	PART NUMBER	DESCRIPTION	QTY
1	9S2355	MANIFOLD	1
2	8S8258	GASKET	6

2P6572 EXHAUST MANIFOLD GROUP

	REF NO	PART NUMBER	DESCRIPTION	QTY
C	1	2Y3959	SHIELD	1
C	2	7S6719	STUD	8
	3	2M2488	STUD	2
	4	1B4971	SPACER	1
	5	5M2894	WASHER ..... 1094 in. 12.778 mm	2
C	6	9M6527	WASHER	1
	7	1B5355	NUT	12
C	8	8M7145	WASHER ..... 1875 in. 14.768 mm	11
	9	1M7643	SPACER	1
C	10	3M496	STUD	2

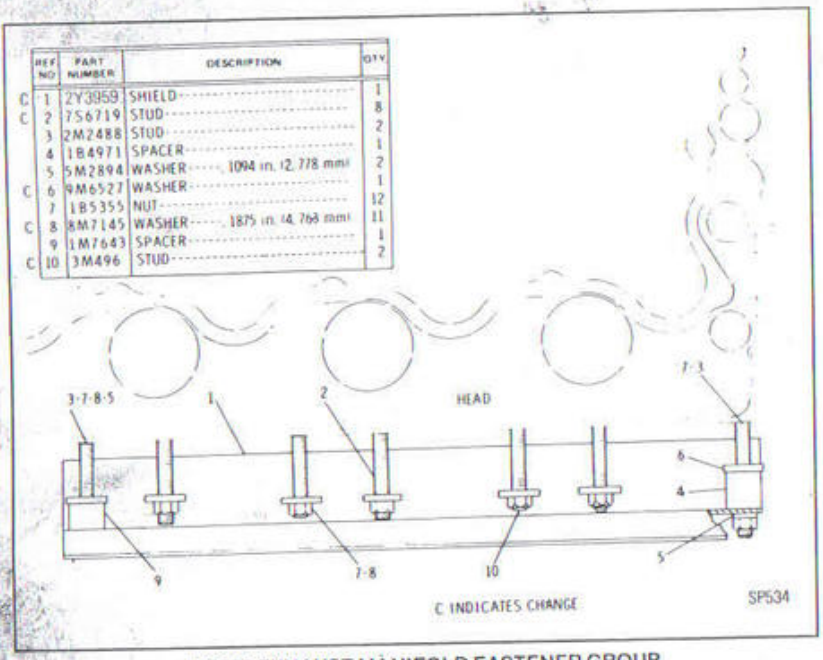

4N9586 EXHAUST MANIFOLD FASTENER GROUP

REF NO.	PART NUMBER	DESCRIPTION	QTY
1	7S6427	PIPE ASSEM.	1
2	2P3205	BOLT	4
3	1B5355	NUT	4

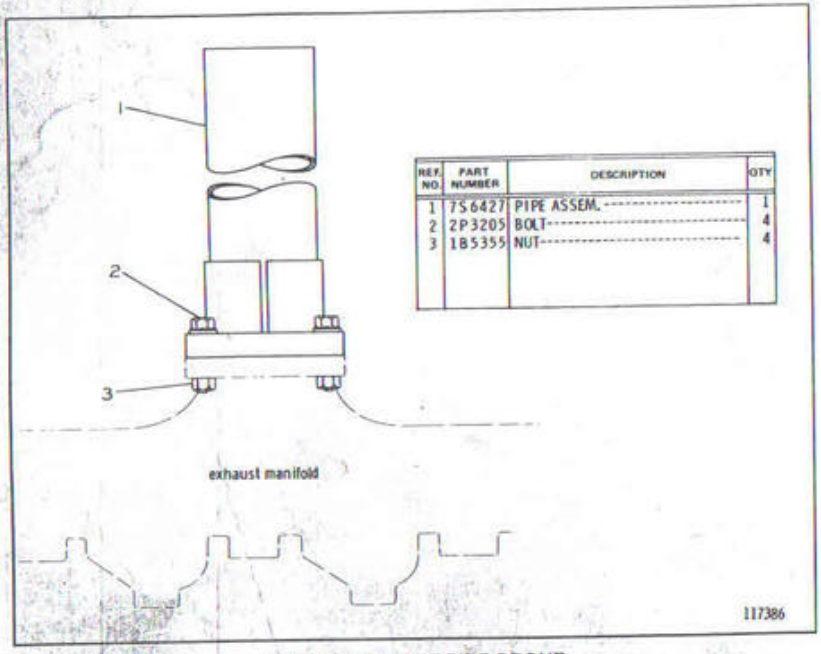

2P7351 EXHAUST PIPE GROUP

2Y5716 GOVERNOR AND FUEL INJECTION PUMP GROUP
2Y6160 Governor and 2Y5800 and 2Y5787 Pump parts are shown on Pages 40, 41, 46, 47 and 51

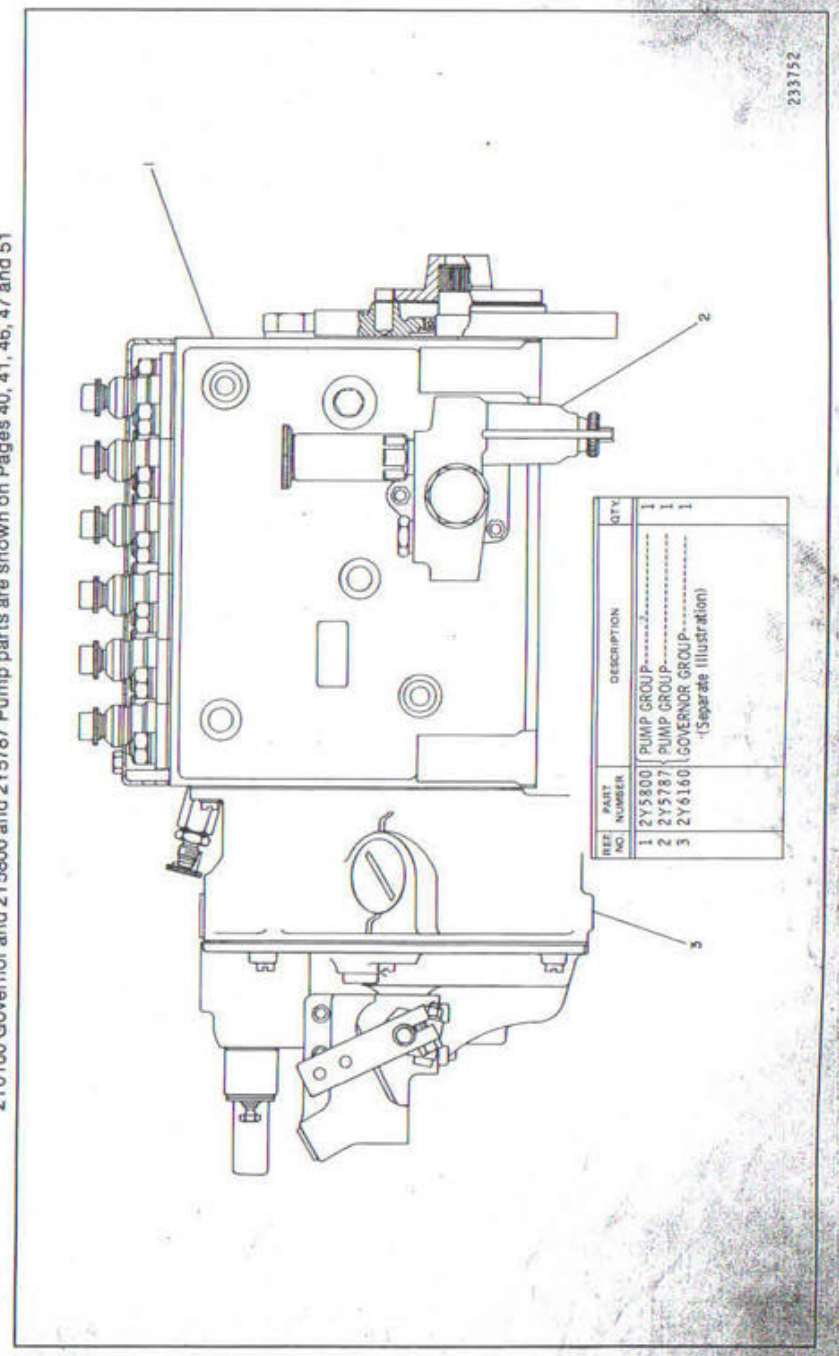

REF NO.	PART NUMBER	DESCRIPTION	QTY
1	2Y5800	PUMP GROUP	1
2	2Y5787	PUMP GROUP	1
3	2Y6160	GOVERNOR GROUP (Separate Illustration)	1

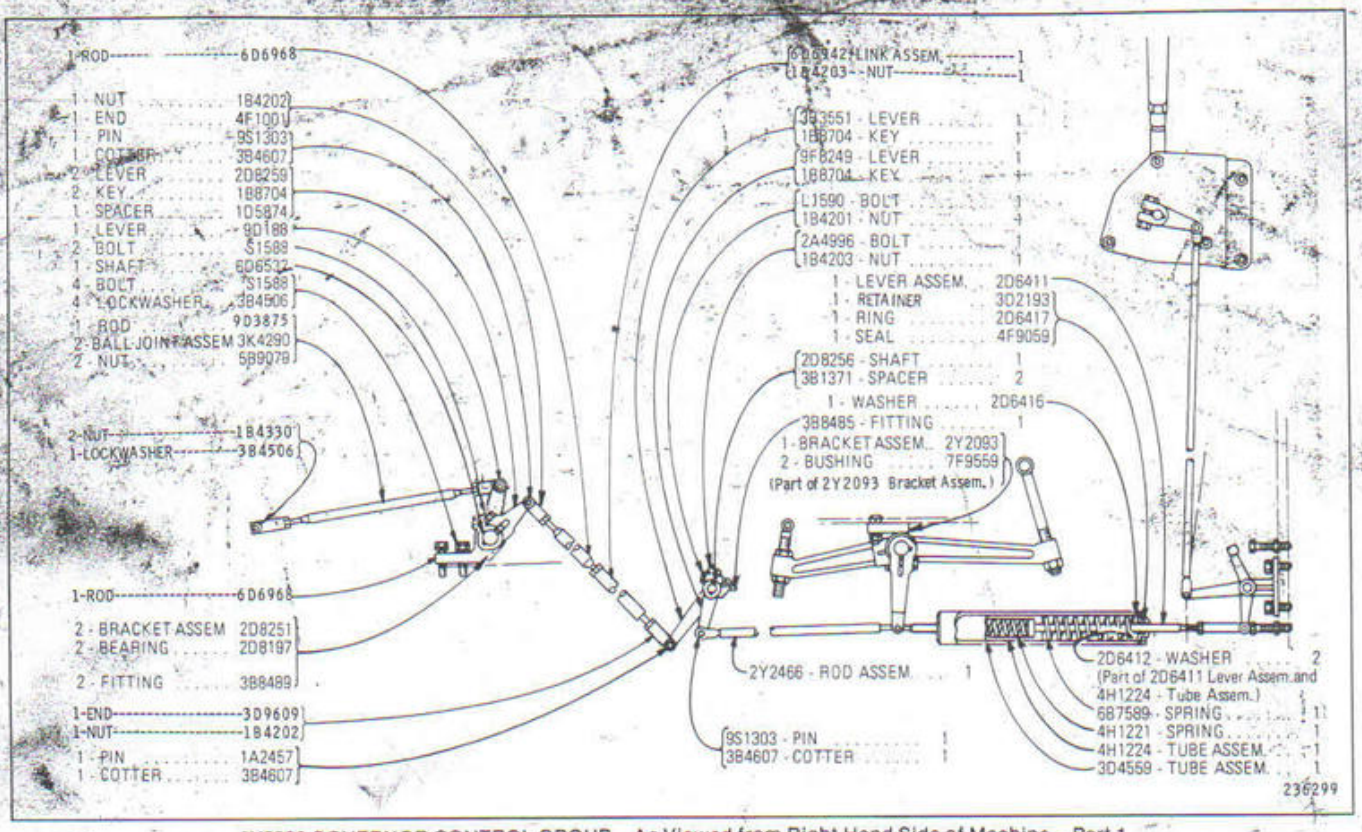

2Y5993 GOVERNOR CONTROL GROUP—As Viewed from Right Hand Side of Machine—Part 1

2Y6993 GOVERNOR CONTROL GROUP—As Viewed from Right Hand of Machine—Part 2

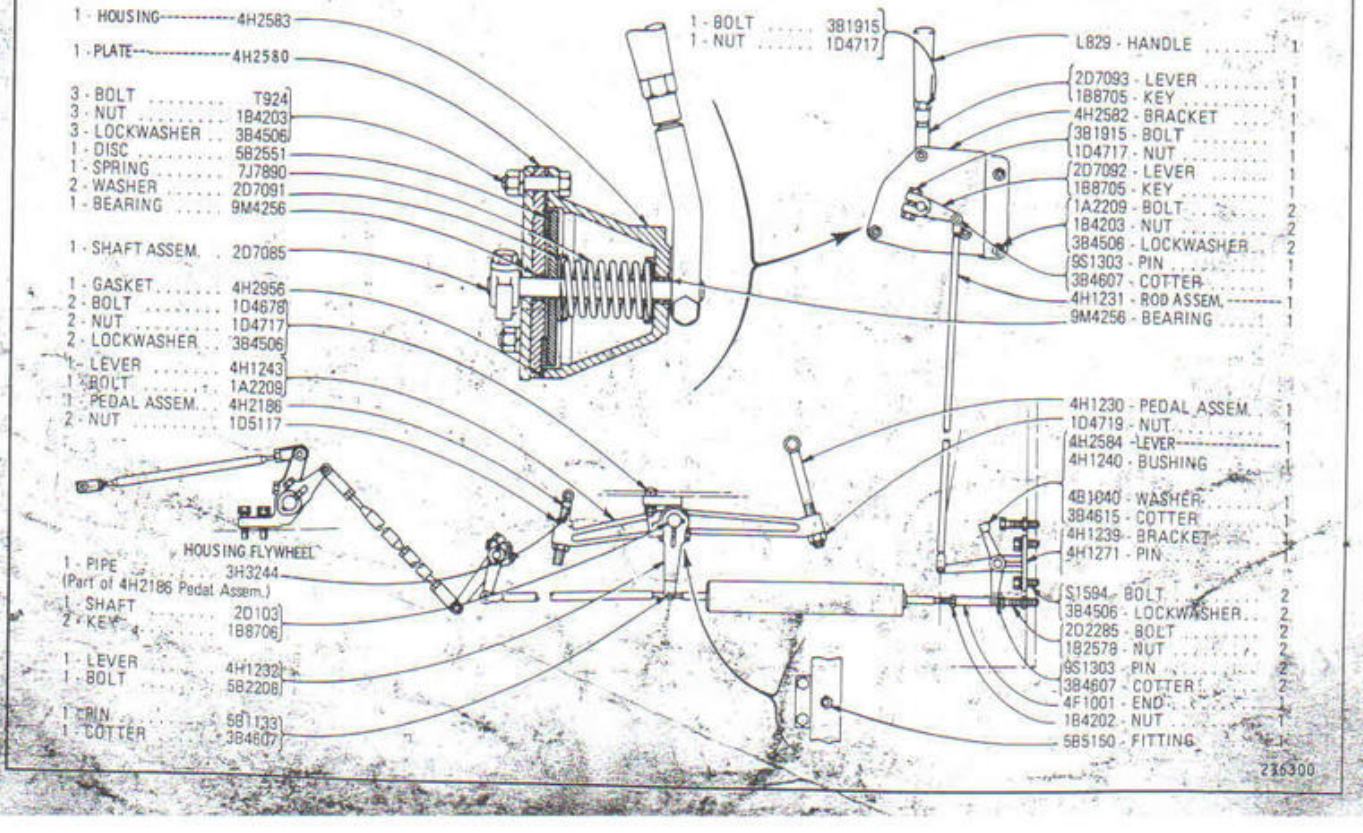

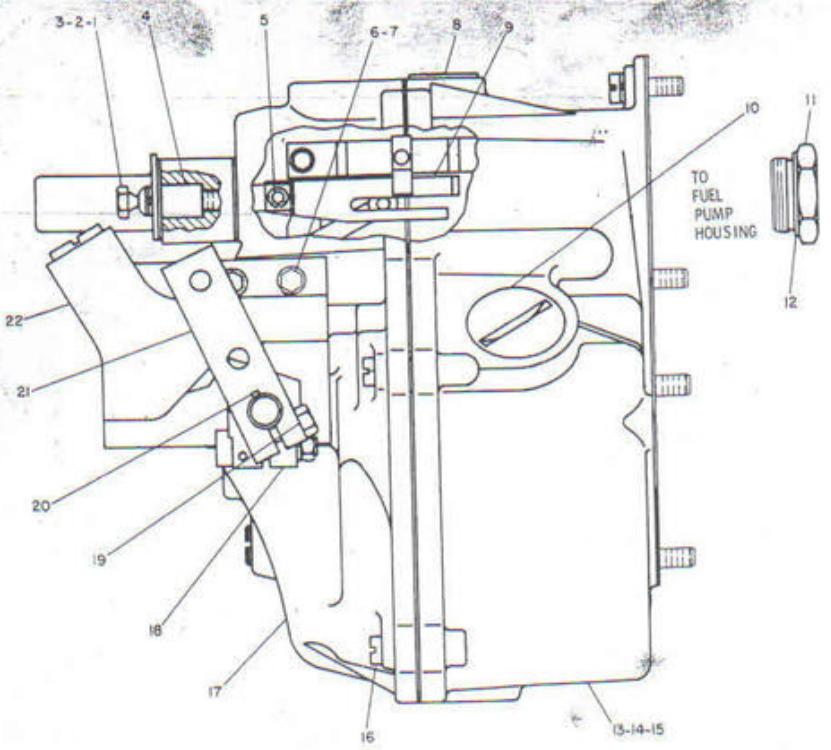

REF. NO.	PART NUMBER	DESCRIPTION	QTY.
1	2Y6137	BOLT	1
2	2Y6135	WASHER	2
3	2Y6136	SCREW	1
4	2Y6150	NUT	2
5	2Y6149	PIN	1
	2Y6148	WASHER	1
6	2Y6154	BOLT	2
7	2Y6153	WASHER	2
8	2Y6140	PLUG	1
▲ 9	2Y6144	STRIP--6.9mm(27.17 in.)thick	1
▲	2Y6145	STRIP--6.4mm(25.20 in.)thick	1
▲	2Y6146	STRIP--5.9mm(23.23 in.)thick	1
▲	2Y6147	STRIP--5.4mm(21.26 in.)thick	1
10	2Y6125	PLUG	1
11	2Y6126	PLUG	1
12	2Y5872	GASKET	1
13	2Y6102	HOUSING	1
14	2Y6121	SCREW------(drilled)	1
	2Y6122	NUT	1
15	2Y6123	SCREW	1
16	2Y6124	SCREW	5
17	2Y6115	COVER GROUP (Separate Illustration)	1
18	2Y6155	LEVER	1
19	2Y6262	BOLT	1
20	2Y6247	KEY	2
21	2Y6156	LEVER	1
22	2Y6152	DETENT	1

▲ USE AS REQUIRED

233756

2Y6160 GOVERNOR GROUP—Part 1
Part of 2Y5716 Governor and Fuel Injection Pump Group shown on Page 37
2Y6115 Cover Group parts are shown on Page 42

2Y6160 GOVERNOR GROUP—Part 2
Part of 2Y5716 Governor and Fuel Injection Pump Group shown on Page 37
2Y6105 Flyweight and 2Y6133 Rack Groups are shown on Pages 43 and 45

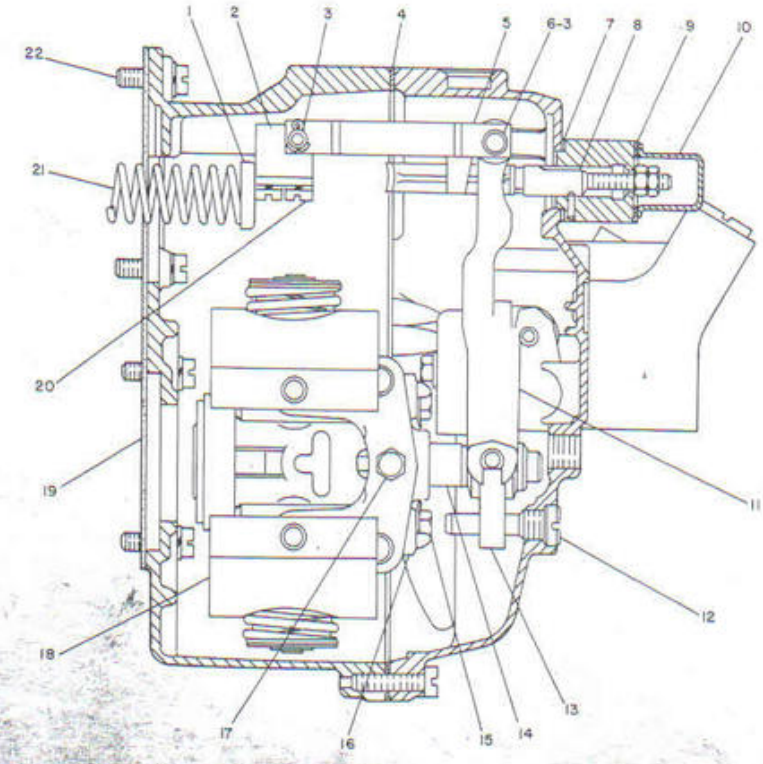

REF. NO.	PART NUMBER	DESCRIPTION	QTY.
1	2Y6138	SEAT	1
2	2Y6110	BLOCK	1
3	2Y6108	COTTER PIN	2
4	2Y6116	GASKET	1
5	2Y6109	LINK	1
6	2Y6113	PIN	1
7	2Y6132	GASKET	1
8	2Y6133	RACK GROUP (Separate Illustration)	1
9	2Y6131	GASKET	1
10	2Y6134	COVER	1
11	2Y6130	LEVER	1
12	2Y6114	SCREW	1
13	2Y6129	FORK	1
14	2Y6128	SHAFT	1
15	2Y6107	BOLT	2
	2Y6106	LOCK	2
16	2Y6104	BUSHING	2
17	2Y5874	NUT	2
	2Y6119	LOCK	1
	2Y6120	WASHER	1
18	2Y6105	FLYWEIGHT GROUP (Separate Illustration)	1
19	2Y6117	GASKET	1
20	2Y6111	SCREW	2
	2Y6112	LOCKWASHER	2
21	2Y6139	SPRING	2
22	2Y6103	SCREW	8
	2Y5852	LOCKWASHER	8

THE FOLLOWING REPAIR KIT IS AVAILABLE:

	2Y6157	KIT------(governor)	1

233757

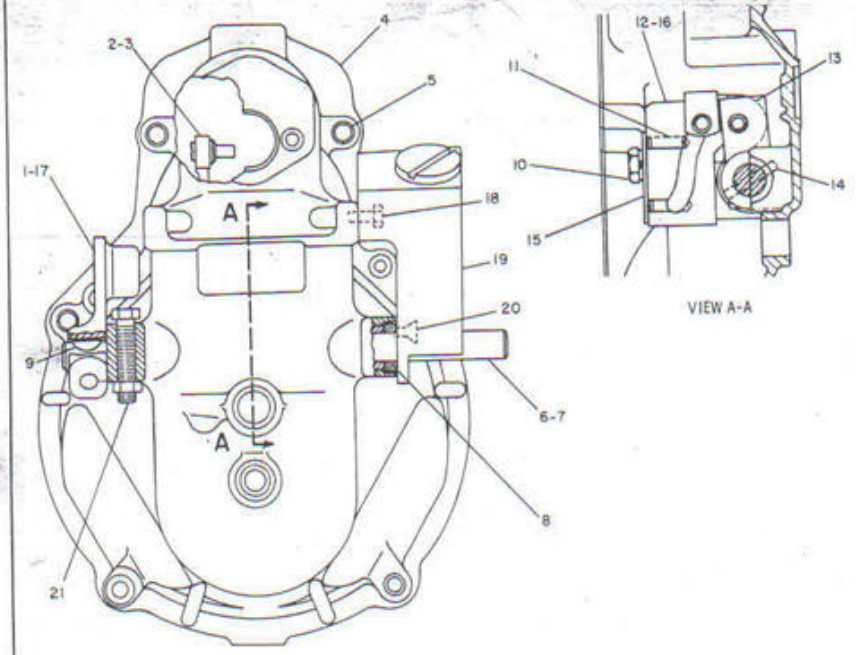

	REF NO.	PART NUMBER	DESCRIPTION	QTY.
	1	2Y6248	LEVER	1
	2	2Y6258	LEVER	1
	3	2Y6259	SPRING	1
	4	2Y6242	COVER	1
	5	2Y6260	STUD	2
	6	2Y6245	SHAFT	1
	7	2Y6257	WASHER	2
	8	2Y6249	SEAL	2
	9	2Y6247	KEY	1
	10	2Y6251	BOLT	1
		2Y5852	LOCKWASHER	1
	11	2Y6252	DOWEL	2
	12	2Y6243	BRACKET	1
	13	2Y6244	LEVER	1
	14	2Y6246	PIN	2
	15	2Y6261	PLATE	1
▲	16	2Y6253	SHIM--.2mm(.007 in.)thick	2
▲		2Y6254	SHIM---.3mm(.011 in.)thick	2
▲		2Y6255	SHIM---.5mm(.019 in.)thick	2
▲		2Y6256	SHIM---.8 mm(.031 in.)thick	2
	17	2Y6262	BOLT	1
C	18	2Y5851	BOLT	2
C		2Y6153	WASHER	2
C	19	2Y6152	DETENT	1
C	20	2Y6338	SCREW	1
C	21	2Y6339	BOLT	1
C		2Y5874	NUT	1

C INDICATES CHANGE

THE FOLLOWING REPAIR KIT IS AVAILABLE:
2Y6263 KIT----(Governor Cover)---------- 1

▲ USE AS REQUIRED

236761

2Y6115 GOVERNOR COVER GROUP
Part of 2Y6160 Governor Group shown on Page 40

2Y6105 GOVERNOR GROUP
Part of 2Y6160 Governor Group shown on Page 41

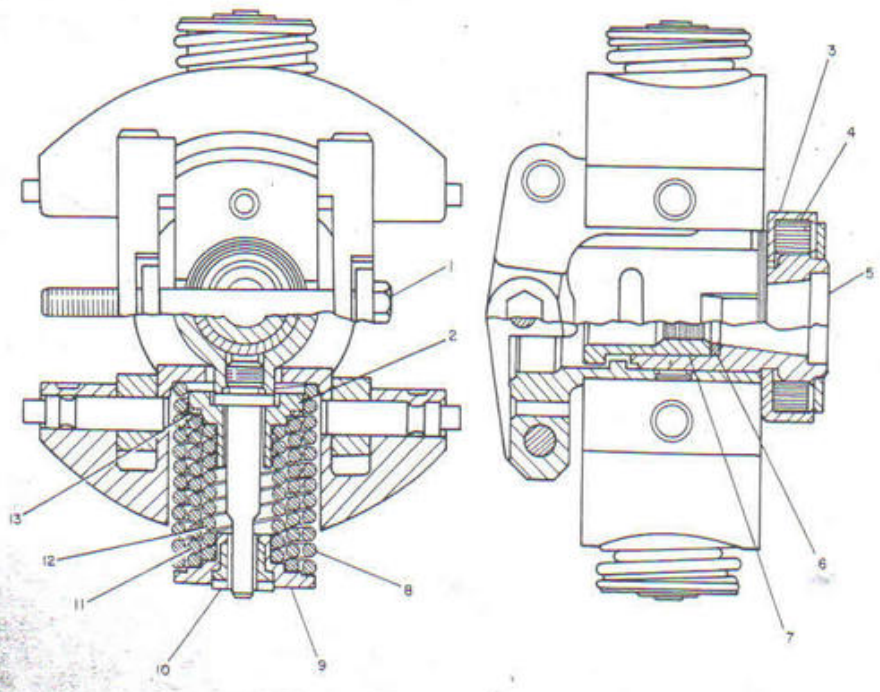

	REF NO.	PART NUMBER	DESCRIPTION	QTY.
	1	2Y6217	BOLT	1
▲	2	2Y6233	SEAT-----17.45 mm(.687 in.)long--	2
▲		2Y6234	SEAT---17.60 mm(.692 in.)long---	2
▲		2Y6235	SEAT--17.75 mm(.698 in.)long----	2
	3	2Y6232	RING	1
	4	2Y6219	DAMPER	4
	5	2Y6218	PULLER	1
▲	6	2Y6221	SHIM-----1.60mm(.062 in.)thick-	1
▲		2Y6222	SHIM-----1.65mm(.064 in.)thick-	1
▲		2Y6223	SHIM-----1.70mm(.066 in.)thick-	1
▲		2Y6224	SHIM-----1.75mm(.068 in.)thick-	1
▲		2Y6225	SHIM-----1.80mm(.070 in.)thick-	1
▲		2Y6226	SHIM-----1.85 mm(.072 in.)thick-	1
▲		2Y6227	SHIM-----1.90 mm(.074 in.)thick-	1
▲		2Y6228	SHIM-----1.95mm(.076 in.)thick-	1
▲		2Y6229	SHIM-----2.00mm(.078 in.)thick-	1
▲		2Y6230	SHIM-----2.05mm(.080 in.)thick-	1
▲		2Y6231	SHIM-----2.10mm(.082 in.)thick-	1
	7	2Y6220	NUT	1
	8	2Y6238	SPRING	2
	9	2Y6239	SEAT	2
	10	2Y6240	NUT	2
	11	2Y6237	SPRING	2
	12	2Y6236	SPRING	2
	13	2Y6241	WASHER	2

▲ USE AS REQUIRED

233758

CONSISTS OF:

6	2Y5883	SHIM--11 MM	(0.40 IN. THICK)
6	2Y5884	SHIM--11 MM	(0.45 IN. THICK)
6	2Y5885	SHIM--13 MM	(0.50 IN. THICK)
6	2Y5886	SHIM--14 MM	(0.55 IN. THICK)
6	2Y5887	SHIM--15 MM	(0.60 IN. THICK)
6	2Y5888	SHIM--17 MM	(0.65 IN. THICK)
6	2Y5889	SHIM--18 MM	(0.70 IN. THICK)
6	2Y5890	SHIM--19 MM	(0.75 IN. THICK)
6	2Y5891	SHIM--20 MM	(0.80 IN. THICK)
6	2Y5892	SHIM--22 MM	(0.85 IN. THICK)
6	2Y5893	SHIM--23 MM	(0.90 IN. THICK)
6	2Y5894	SHIM--24 MM	(0.95 IN. THICK)
6	2Y5895	SHIM--25 MM	(1.00 IN. THICK)
6	2Y5896	SHIM--27 MM	(1.05 IN. THICK)
6	2Y5897	SHIM--28 MM	(1.10 IN. THICK)
6	2Y5898	SHIM--29 MM	(1.15 IN. THICK)
6	2Y5899	SHIM--30 MM	(1.20 IN. THICK)
6	2Y6161	SHIM--32 MM	(1.25 IN. THICK)
6	2Y6162	SHIM--33 MM	(1.30 IN. THICK)
6	2Y6163	SHIM--34 MM	(1.35 IN. THICK)
6	2Y6164	SHIM--36 MM	(1.40 IN. THICK)
6	2Y6165	SHIM--37 MM	(1.45 IN. THICK)
6	2Y6166	SHIM--38 MM	(1.50 IN. THICK)
6	2Y6167	SHIM--39 MM	(1.55 IN. THICK)
6	2Y6168	SHIM--41 MM	(1.60 IN. THICK)
6	2Y6169	SHIM--42 MM	(1.65 IN. THICK)
6	2Y6170	SHIM--43 MM	(1.70 IN. THICK)
6	2Y6171	SHIM--44 MM	(1.75 IN. THICK)
6	2Y6172	SHIM--46 MM	(1.80 IN. THICK)
6	2Y6173	SHIM--47 MM	(1.85 IN. THICK)
6	2Y6174	SHIM--48 MM	(1.90 IN. THICK)
6	2Y6175	SHIM--50 MM	(1.95 IN. THICK)
6	2Y6176	SHIM--51 MM	(2.00 IN. THICK)
6	2Y6177	SHIM--52 MM	(2.05 IN. THICK)
6	2Y6178	SHIM--53 MM	(2.10 IN. THICK)
6	2Y6179	SHIM--55 MM	(2.15 IN. THICK)
6	2Y6180	SHIM--56 MM	(2.20 IN. THICK)
6	2Y6181	SHIM--57 MM	(2.25 IN. THICK)
6	2Y6182	SHIM--58 MM	(2.30 IN. THICK)
6	2Y6183	SHIM--60 MM	(2.35 IN. THICK)
6	2Y6184	SHIM--61 MM	(2.40 IN. THICK)
6	2Y6185	SHIM--62 MM	(2.45 IN. THICK)
6	2Y6186	SHIM--64 MM	(2.50 IN. THICK)

2Y6158 SHIM GROUP—Calibration Set
Part of 2Y5800 Governor and Fuel Injection Pump Group shown on Page 47

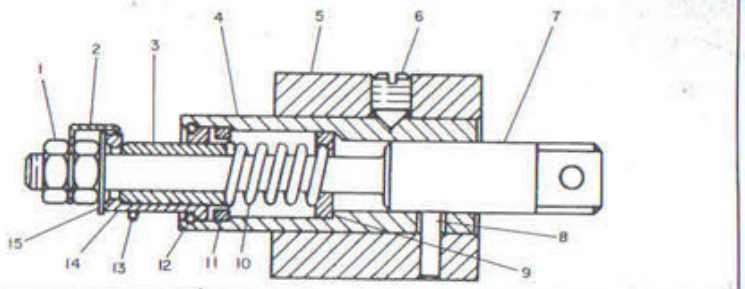

REF NO.	PART NUMBER	DESCRIPTION	QTY.
1	2Y6192	NUT	2
2	2Y6212	LOCK	1
3	2Y6208	BUSHING	1
4	2Y6190	BUSHING	1
5	2Y6189	ADAPTER	1
6	2Y6210	SCREW	1
7	2Y6191	ROD	1
8	2Y6207	PIN	1
9	2Y6206	SEAT	1
10	2Y6209	SPRING	1
11	2Y6205	RING	1
12	2Y6204	RING	1
13	2Y6203	RING	1
14	2Y6193	SLEEVE---1.80 mm (.070 in.) thick	1
	2Y6194	SLEEVE---1.85 mm (.072 in.) thick	1
	2Y6195	SLEEVE---1.90 mm (.074 in.) thick	1
	2Y6196	SLEEVE---1.95 mm (.076 in.) thick	1
	2Y6197	SLEEVE---2.00 mm (.078 in.) thick	1
	2Y6198	SLEEVE---2.05 mm (.080 in.) thick	1
	2Y6199	SLEEVE---2.10 mm (.082 in.) thick	1
	2Y6201	SLEEVE---2.15 mm (.084 in.) thick	1
15	2Y6211	WASHER	1

233760

2Y6133 RACK GROUP
Part of 2Y6160 Governor Group shown on Page 41

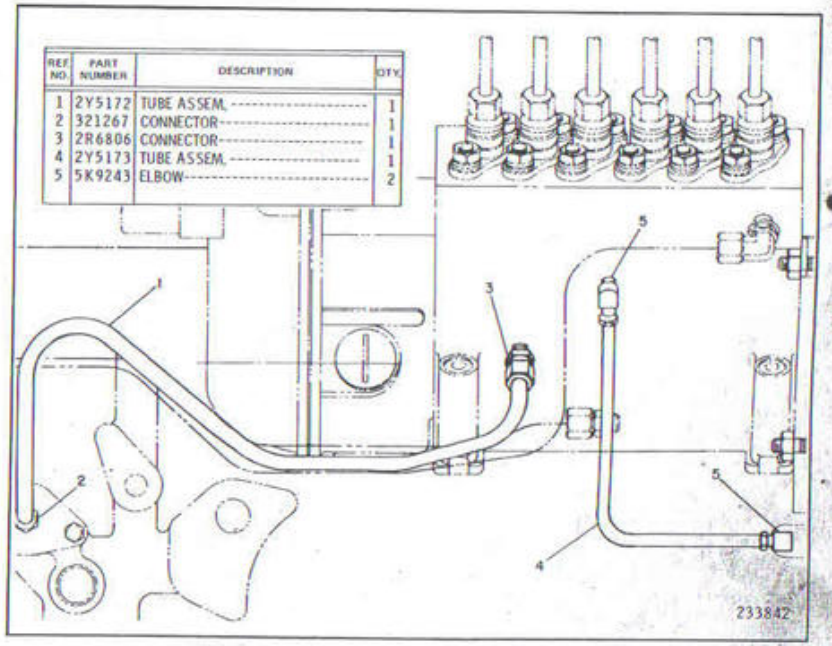

REF NO.	PART NUMBER	DESCRIPTION	QTY.
1	2Y5172	TUBE ASSEM.	1
2	321267	CONNECTOR	1
3	2R6806	CONNECTOR	1
4	2Y5173	TUBE ASSEM.	1
5	5K9243	ELBOW	2

233842

2Y5712 FUEL INJECTION PUMP LINES GROUP

REF. NO.	PART NUMBER	DESCRIPTION	QTY.
1	2Y5880	BOLT	2
	2Y5881	LOCKWASHER	2
	2Y5861	SHIM-----, 10mml, 003 in, /thick	3
	2Y5862	SHIM---, 12mml, 004 in, /thick	3
	2Y5863	SHIM---, 14mml, 005 in, /thick	3
2	2Y5864	SHIM---, 16mml, 006 in, /thick	3
	2Y5865	SHIM---, 18 mml, 007 in, /thick	3
	2Y5866	SHIM---, 30mml, 011 in, /thick	3
	2Y5867	SHIM---, 50mml, 019 in, /thick	3
3	2Y5810	HOUSING	1
4	2Y5843	BOLT	1
	2Y5844	GASKET	1
5	2Y5841	ADAPTER	1
	2Y5842	GASKET	1
6	2Y5840	VALVE	1
7	2Y5882	ELBOW	1
8	2Y5830	GUIDE	2
	2Y5832	PIN	1
9	2Y5833	RING	1
10	2Y5847	SHIM---1, 2mml, 047 in, /thick	3
	2Y5848	SHIM---1, 5mml, 059 in, /thick	3
	2Y5849	SHIM---1, 8mml, 070 in, /thick	3
	2Y5850	SHIM---2, 0mml, 078 in, /thick	3
11	2Y5845	BUSHING	1
12	2Y5857	BEARING	2
13	2Y5854	BEARING	1
14	2Y5855	BOLT	2
15	2Y5852	LOCKWASHER	9
16	2Y5851	BOLT	4
17	2Y5879	SLEEVE	1
18	2Y5859	SEAL	1
19	2Y5860	SEAL	1
20	2Y5858	ADAPTER	1
	2Y5873	STUD	3
21	2Y5874	NUT	3
	2Y5876	GASKET	1

▲ USE AS REQUIRED

233754

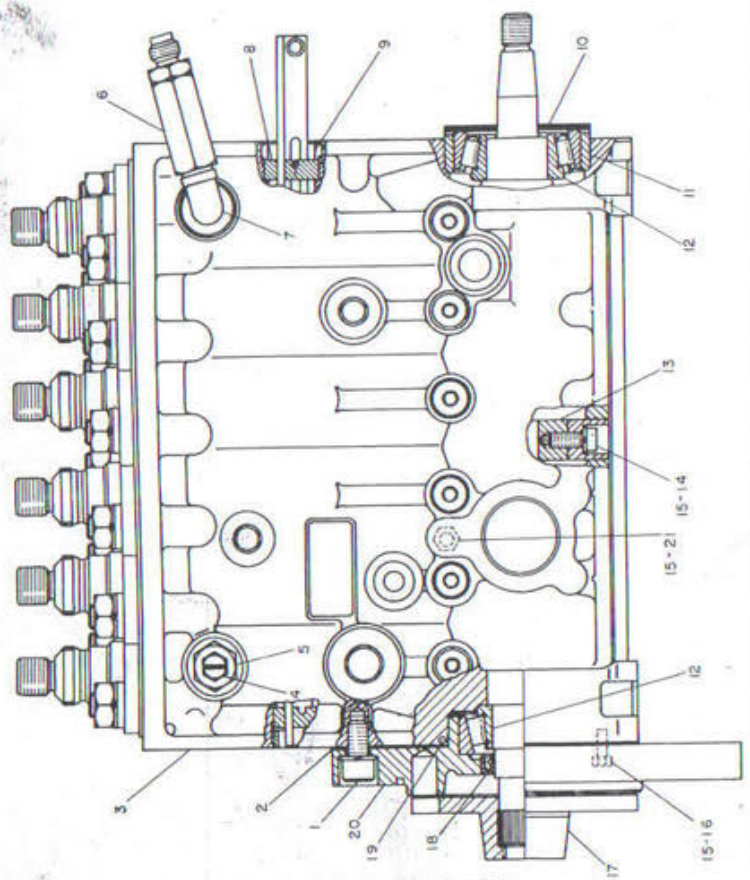

2Y5800 GOVERNOR AND FUEL INJECTION PUMP GROUP—Part 1
Part of 2Y5716 Governor and Fuel Injection Pump Group shown on Page 37

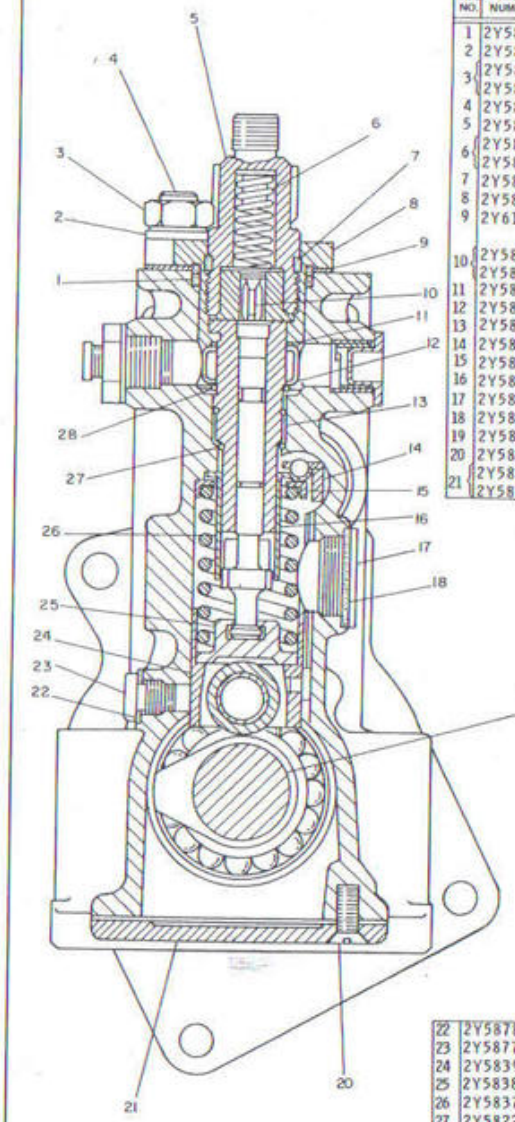

REF. NO.	PART NUMBER	DESCRIPTION	QTY.
1	2Y5823	SEAL	6
2	2Y5827	WASHER	12
3	2Y5829	NUT	12
	2Y5828	LOCKWASHER	12
4	2Y5826	STUD	12
5	2Y5813	BONNET	6
6	2Y5815	SPRING	6
	2Y5814	GUIDE SPRING	6
7	2Y5818	SEAL	6
8	2Y5811	BUSHING	6
9	2Y6158	SHIM GROUP (Separate Illustration)	1
10	2Y5817	VALVE	6
	2Y5816	GASKET	6
11	2Y5819	WASHER	6
12	2Y5820	BAFFLE	6
13	2Y5812	PUMP	6
14	2Y5831	BAR	1
15	2Y5836	SEAT-SPRING	6
16	2Y5834	SLEEVE	6
17	2Y5871	PLUG	1
18	2Y5872	GASKET	1
19	2Y5853	CAMSHAFT	1
20	2Y5870	SCREW	12
21	2Y5868	COVER	1
	2Y5869	GASKET	1
22	2Y5878	GASKET	6
23	2Y5877	PLUG	6
24	2Y5839	LIFTER	6
25	2Y5838	SEAT-SPRING	6
26	2Y5837	SPRING	6
27	2Y5822	SEAL	12
28	2Y5821	RING	6

THE FOLLOWING REPAIR KIT IS AVAILABLE:

2Y6159	KIT—(Fuel injection pump repair)	1

233755

2Y5800 GOVERNOR AND FUEL INJECTION PUMP GROUP—Part 2
Part of 2Y5716 Governor and Fuel Injection Pump Group shown on Page 37
2Y6158 Shim Group is listed on Page 44

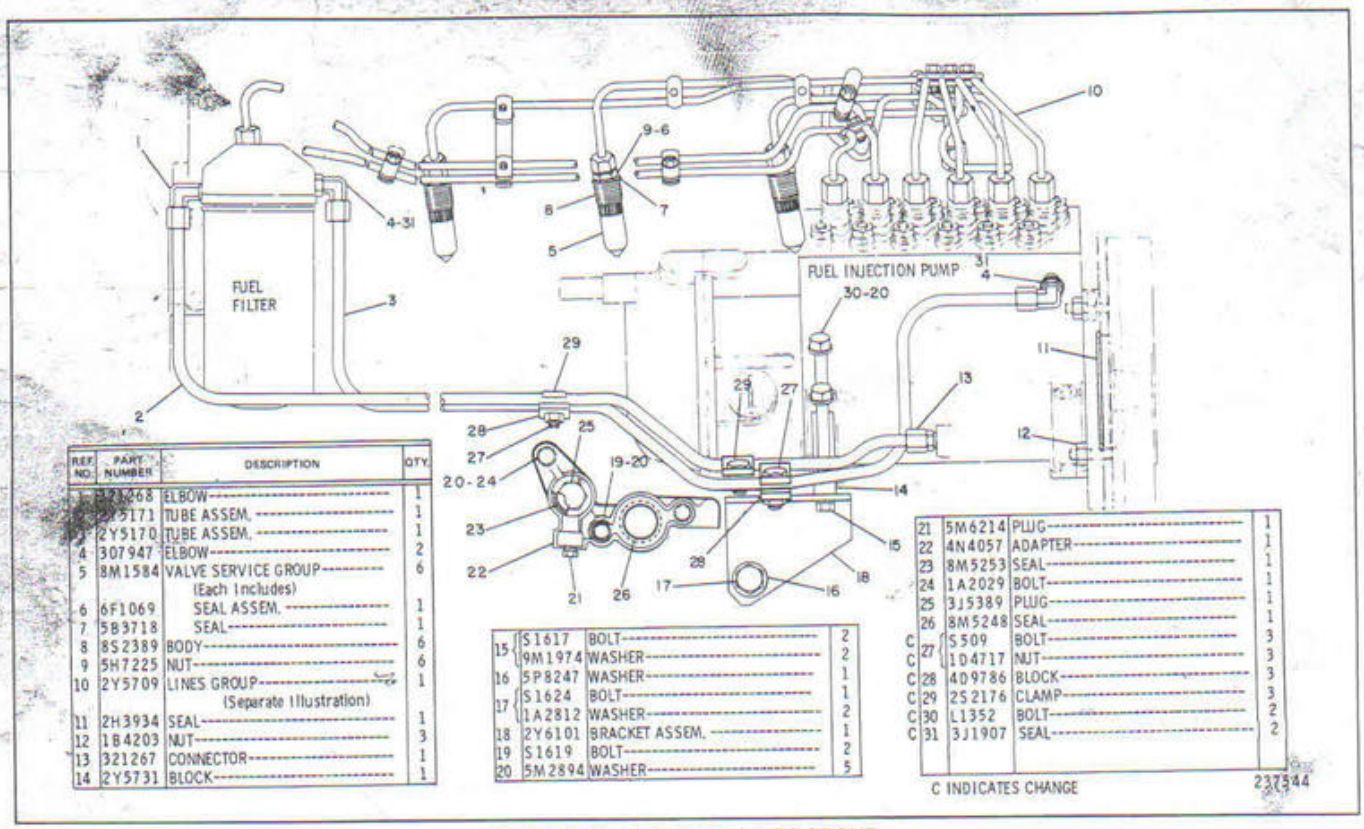

REF. NO.	PART NUMBER	DESCRIPTION	QTY.
1	2Y5268	ELBOW	1
	2Y5171	TUBE ASSEM.	1
	2Y5170	TUBE ASSEM.	1
4	307947	ELBOW	2
5	8M1584	VALVE SERVICE GROUP (Each Includes)	6
6	6F1069	SEAL ASSEM.	1
7	5B3718	SEAL	1
8	8S2389	BODY	6
9	5H7225	NUT	6
10	2Y5709	LINES GROUP (Separate Illustration)	1
11	2H3934	SEAL	1
12	1B4203	NUT	3
13	321267	CONNECTOR	1
14	2Y5731	BLOCK	1

REF. NO.	PART NUMBER	DESCRIPTION	QTY.
15	1S1617	BOLT	2
	9M1974	WASHER	2
16	5P8247	WASHER	1
17	1S1624	BOLT	1
	1A2812	WASHER	2
18	2Y6101	BRACKET ASSEM.	1
19	1S1619	BOLT	2
20	5M2894	WASHER	5

REF. NO.	PART NUMBER	DESCRIPTION	QTY.
21	5M6214	PLUG	1
22	4N4057	ADAPTER	1
23	8M5253	SEAL	1
24	1A2029	BOLT	1
25	3J5389	PLUG	1
26	8M5248	SEAL	1
C 27	1S509	BOLT	3
C	1D4717	NUT	3
C 28	4D9786	BLOCK	3
C 29	2S2176	CLAMP	3
C 30	L1352	BOLT	2
C 31	3J1907	SEAL	2

2Y5708 FUEL INJECTION LINES GROUP
2Y5709 Fuel Injection Lines parts are shown on Page 49

2Y5709 FUEL INJECTION LINES GROUP
Part of 2Y5708 Fuel Injection Lines Group shown on Page 48

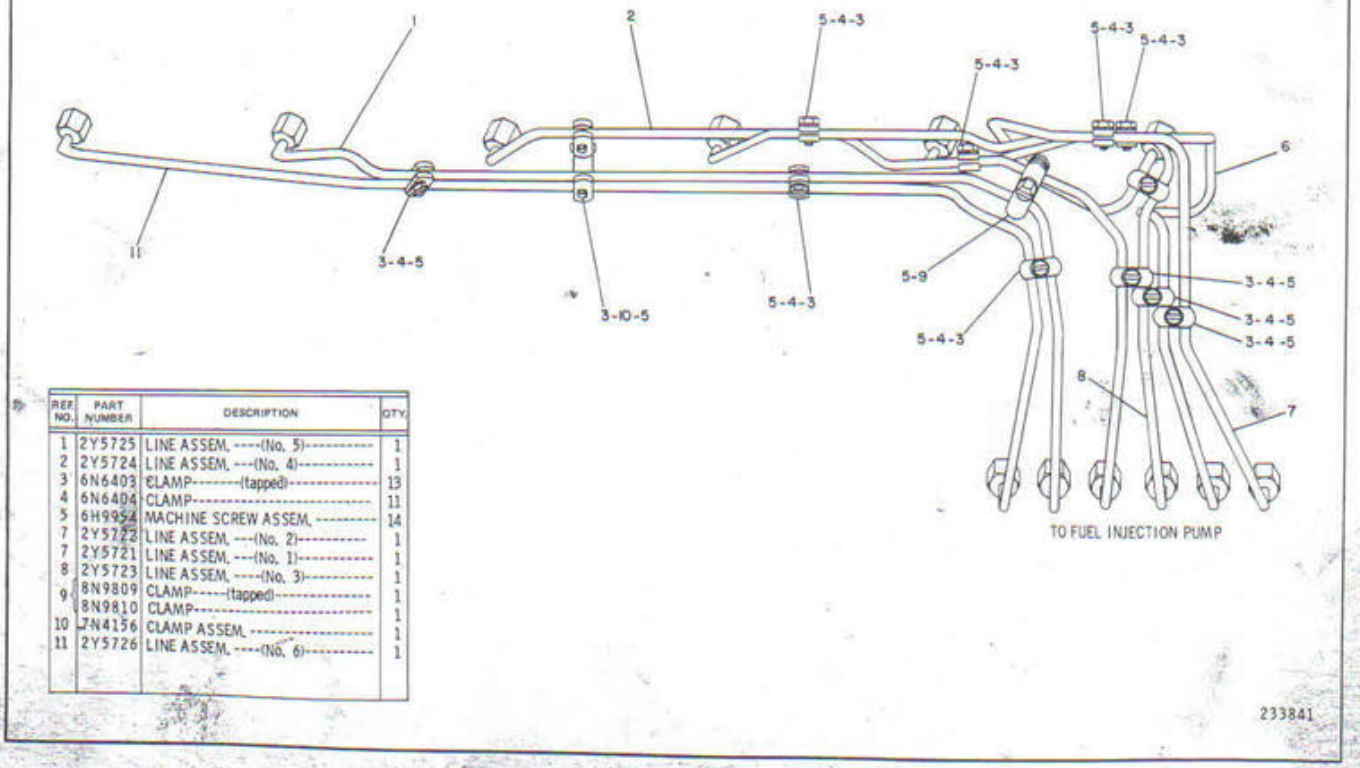

REF. NO.	PART NUMBER	DESCRIPTION	QTY.
1	2Y5725	LINE ASSEM. (No. 5)	1
2	2Y5724	LINE ASSEM. (No. 4)	1
3	6N6403	CLAMP (tapped)	13
4	6N6404	CLAMP	11
5	6H9954	MACHINE SCREW ASSEM.	14
7	2Y5722	LINE ASSEM. (No. 2)	1
7	2Y5721	LINE ASSEM. (No. 1)	1
8	2Y5723	LINE ASSEM. (No. 3)	1
9	8N9809	CLAMP (tapped)	1
	8N9810	CLAMP	1
10	7N4156	CLAMP ASSEM.	1
11	2Y5726	LINE ASSEM. (No. 6)	1

REF. NO.	PART NUMBER	DESCRIPTION	QTY.
1	5K9246	CONNECTOR	2
2	1V3546	COUPLING	6
3	321268	ELBOW	1
4	2Y5975	COUPLING	2
▲ 5	5P1520	HOSE---105 cm(41.4 in.)	
▲ 6	5P1520	HOSE---115 cm(45.3 in.)	
▲ 7	5P1520	HOSE---140 cm(55.2 in.)	
▲ 8	5P1520	HOSE------160 cm(63 in.)	
9	7K4129	UNION	1
10	2S2176	CLAMP	1
11	S509	BOLT	1
12	4D9786	BLOCK	1
13	3B4506	LOCKWASHER	1
14	1D4717	NUT	1
15	2Y6612	TUBE ASSEM.	1
16	5K9235	ELBOW	1
17	3S2093	STRAP	9
18	4D3631	CLIP	2
19	9M8406	CLIP	3
20	5K9988	TEE	1

▲ ORDER BY THE CENTIMETER

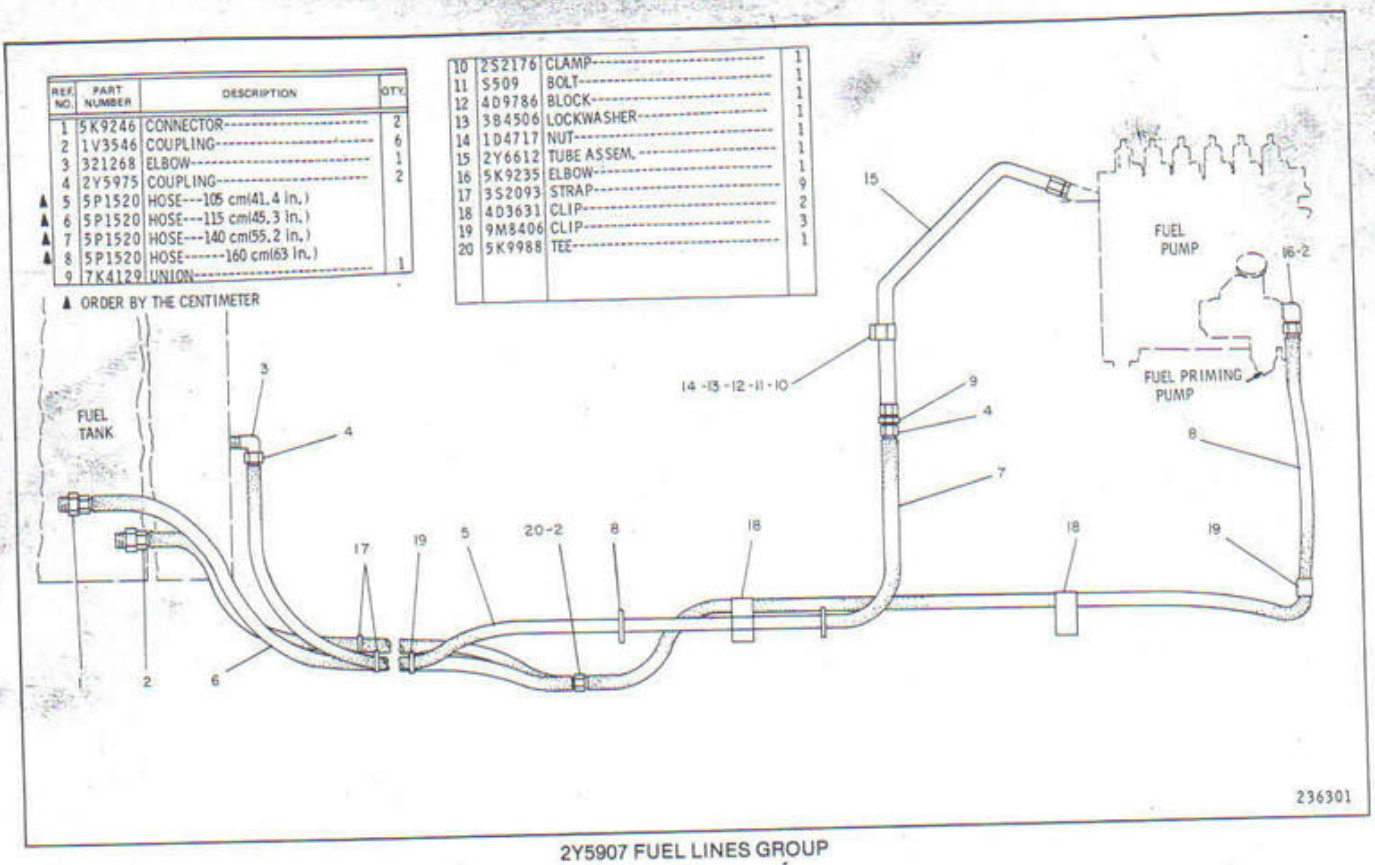

236301

2Y5907 FUEL LINES GROUP

2Y5787 FUEL TRANSFER PUMP
Part of 2Y5716 Governor and Fuel Injection Pump Group shown on Page 37

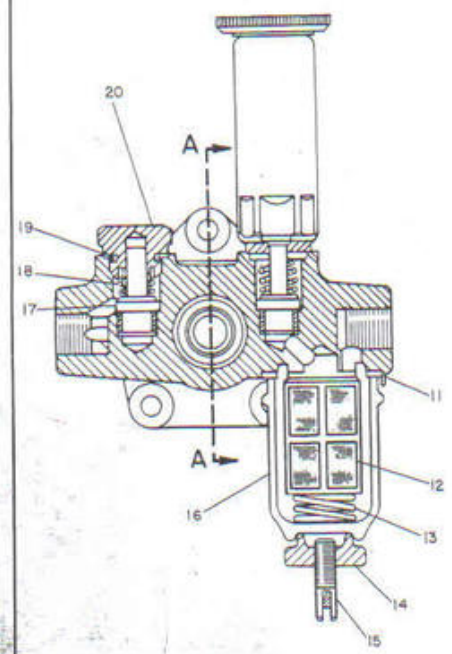

REF. NO.	PART NUMBER	DESCRIPTION	QTY.
1	2Y5781	RING	1
2	2Y5789	PISTON	1
3	2Y5797	PUMP	1
4	2Y5792	GASKET	1
5	2Y5790	SPRING	1
6	2Y5791	PLUG	1
7	2Y5807	BAIL	1
8	2Y5809	SEAL	1
9	2Y5788	ROD	1
10	2Y5804	LIFTER	1
11	2Y5805	SEAL	1
12	2Y5801	ELEMENT	1
13	2Y5803	SPRING	1
14	2Y5808	NUT	1
15	2Y5806	BOLT	1
16	2Y5798	BOWL	1
17	2Y5793	VALVE	2
18	2Y5794	SPRING	2
19	2Y5796	GASKET	2
20	2Y5795	PLUG	1

THE FOLLOWING REPAIR KITS ARE AVAILABLE:

C	2Y6410	KIT--(Transfer Pump Ball) (Includes hardware & ball)	1
C	2Y6412	KIT--(Transfer Pump Bowl) (Includes bowl, element, spring, and seal)	1

C INDICATES CHANGE

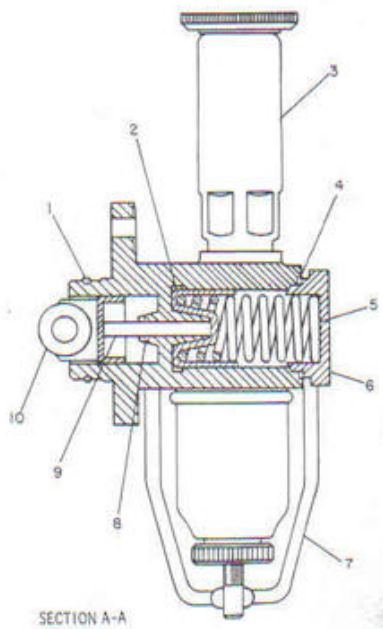

SECTION A-A

182813

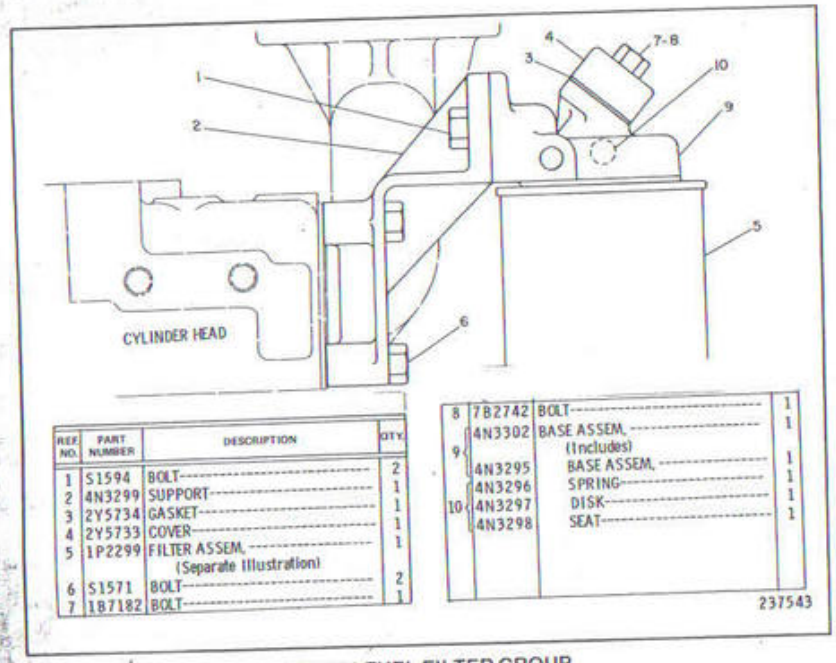

REF NO.	PART NUMBER	DESCRIPTION	QTY.
1	S1594	BOLT	2
2	4N3299	SUPPORT	1
3	2Y5734	GASKET	1
4	2Y5733	COVER	1
5	1P2299	FILTER ASSEM. (Separate Illustration)	1
6	S1571	BOLT	2
7	1B7182	BOLT	1
8	7B2742	BOLT	1
9	4N3302	BASE ASSEM. (Includes)	1
	4N3295	BASE ASSEM.	1
	4N3296	SPRING	1
10	4N3297	DISK	1
	4N3298	SEAT	1

2Y5711 FUEL FILTER GROUP
1P2299 Fuel Filter parts are shown on Page 52

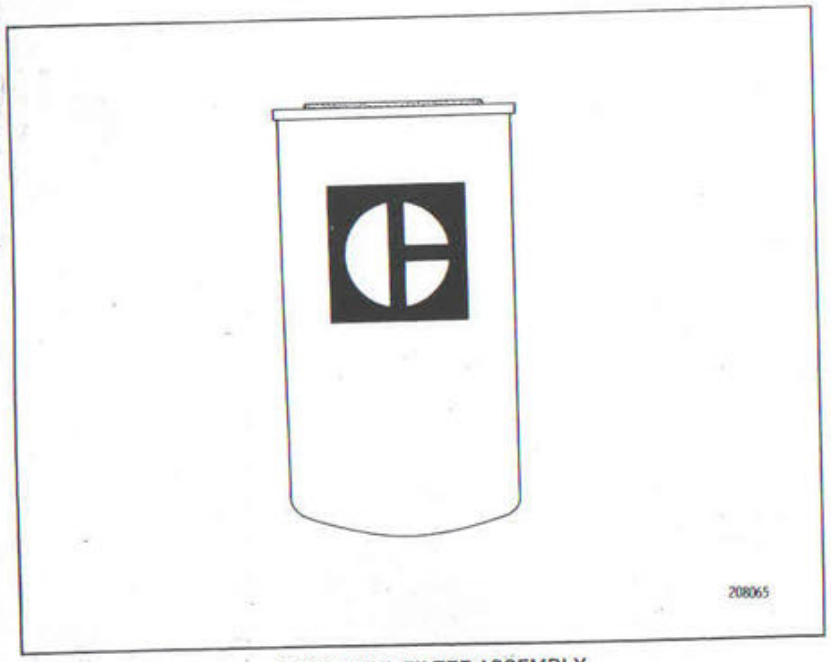

1P2299 FUEL FILTER ASSEMBLY
Part of 2Y5711 Fuel Filter Group shown on Page 52

ITEM	PART Nº	DESCRIPTION	QTY.
1	4H7869	GASKET	1
2	2Y1920	MOTOR ASSEM. (Separate Illustration)	1
3	3B4510	LOCKWASHER	3
4	8S2332	BOLT	3
5	2Y2238	WIRE ASSEMBLY	1
▲	2L8052	TERMINAL	2
▲	4S8784	WIRE	4

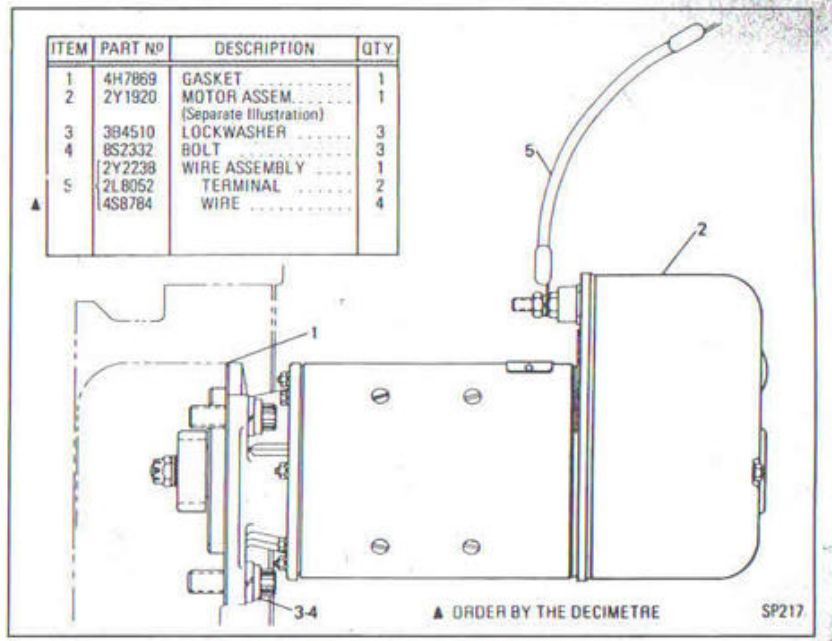

2Y1921 STARTING ELECTRIC MOTOR GROUP
2Y1920 Motor parts are shown on Page 54

2Y5024 REPAIR KIT
2Y5025 FASTENER KIT

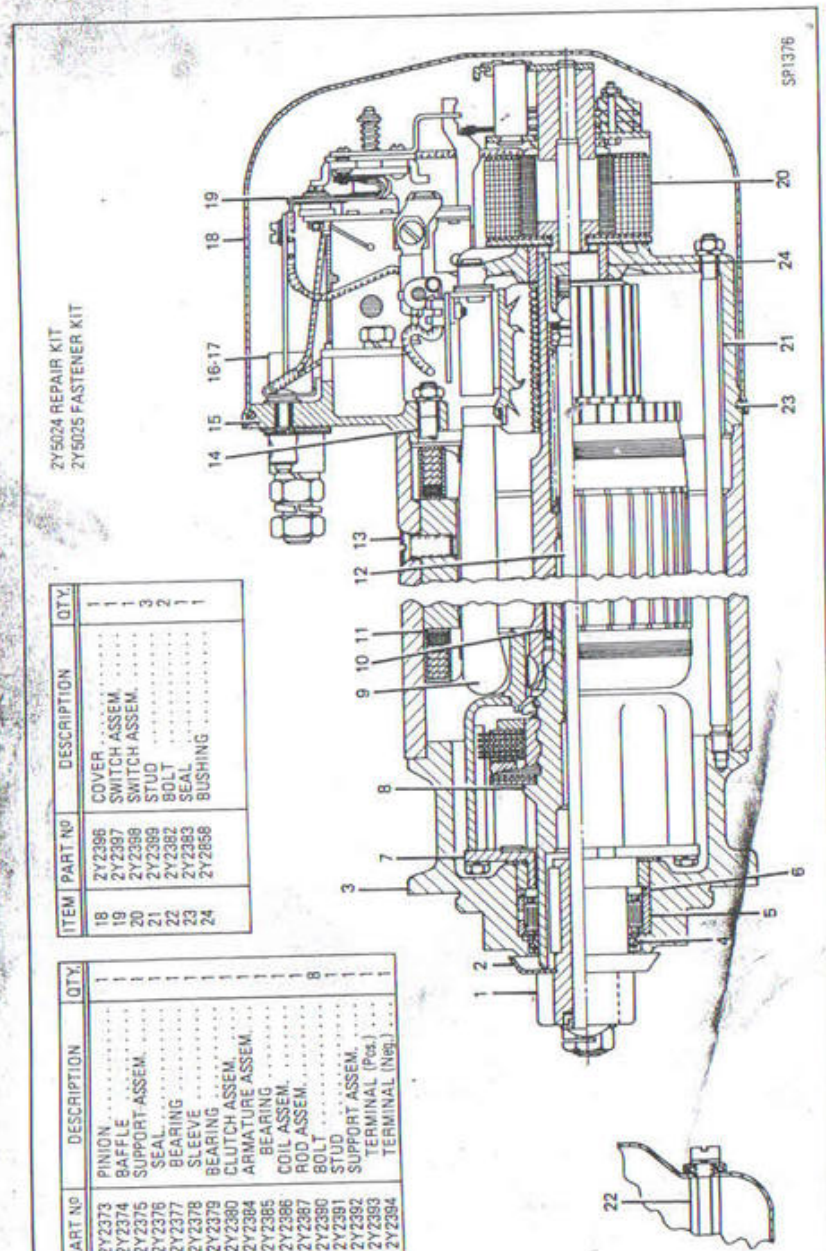

ITEM	PART Nº	DESCRIPTION	QTY.
1	2Y2373	PINION	1
2	2Y2374	BAFFLE	1
3	2Y2375	SUPPORT ASSEM.	1
4	2Y2376	SEAL	1
5	2Y2377	BEARING	1
6	2Y2378	SLEEVE	1
7	2Y2379	BEARING	1
8	2Y2380	CLUTCH ASSEM.	1
9	2Y2384	ARMATURE ASSEM.	1
10	2Y2385	BEARING	1
11	2Y2386	COIL ASSEM.	1
12	2Y2387	ROD ASSEM.	1
13	2Y2390	BOLT	8
14	2Y2391	STUD	1
15	2Y2392	SUPPORT ASSEM.	1
16	2Y2393	TERMINAL (Pos.)	1
17	2Y2394	TERMINAL (Neg.)	1

ITEM	PART Nº	DESCRIPTION	QTY.
18	2Y2396	COVER	1
19	2Y2397	SWITCH ASSEM.	1
20	2Y2398	SWITCH ASSEM.	1
21	2Y2399	STUD	3
22	2Y2382	BOLT	2
23	2Y2383	SEAL	1
24	2Y2858	BUSHING	1

2Y1920 STARTING MOTOR GROUP
Part of 2Y1921 Starting Electric Motor Group shown on Page 53

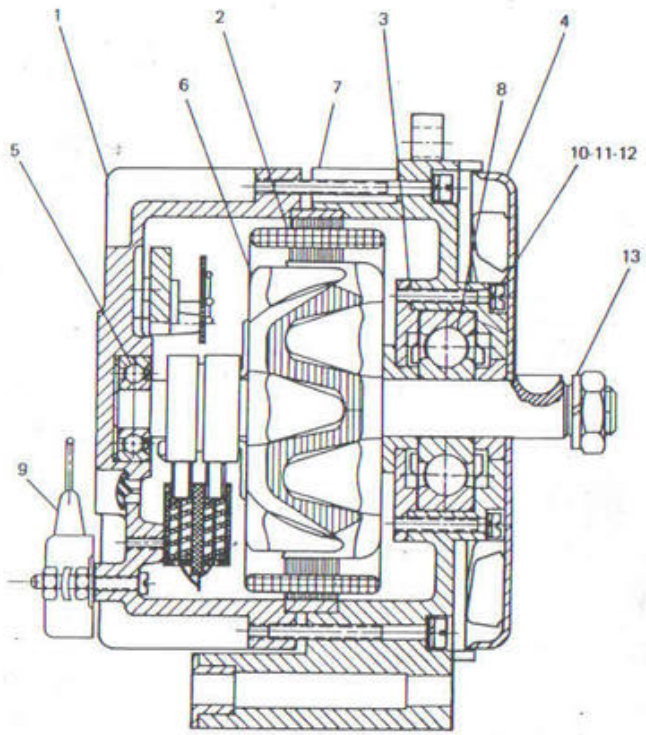

THE FOLLOWING SERVICE REPAIR KITS ARE AVAILABLE:

1 - 2Y3327 - ROTOR KIT
1 - 2Y3328 - BRUSH AND SPRING KIT
1 - 2Y3436 - SCREW KIT (D+)
1 - 2Y3333 - SCREW KIT (B+)
1 - 2Y3334 - SCREW KIT (D–)
1 - 2Y3437 - SCREW KIT (DF)
1 - 2Y3438 - SCREW KIT RECTIFIER MTG

ITEM	PART Nº	DESCRIPTION	QTY.
1	2Y3316	COVER ASSEM.	1
2	2Y3317	STATOR	1
3	2Y3318	DISC	1
4	2Y3319	FAN	1
5	2Y3321	BEARING	1
6	2Y3322	ROTOR	1
7	2Y3323	COVER ASSEM.	1
8	2Y3324	BEARING	1
9	2Y3392	CAPACITOR ASSEM.	1
10	2Y3325	SCREW	4
11	3B4502	LOCKWASHER	4
12	2Y3326	WASHER	4
13	2Y3344	LOCKWASHER	1

SP1197

2Y4212 ALTERNATOR GROUP
Part of 2Y2935 Alternator Group shown on Page 56

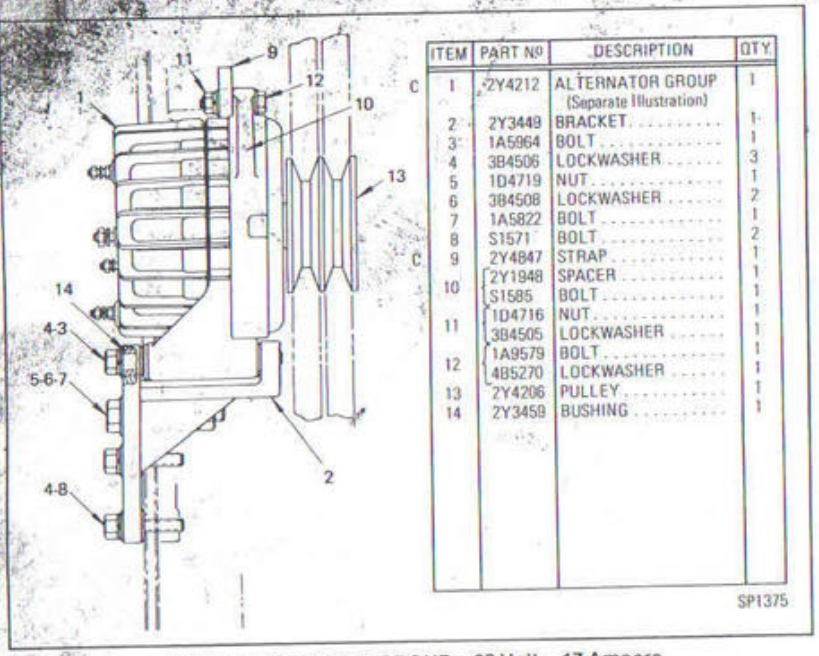

	ITEM	PART Nº	DESCRIPTION	QTY.
C	1	2Y4212	ALTERNATOR GROUP (Separate Illustration)	1
	2	2Y3449	BRACKET	1
	3	1A5964	BOLT	1
	4	3B4506	LOCKWASHER	3
	5	1D4719	NUT	1
	6	3B4508	LOCKWASHER	2
	7	1A5822	BOLT	1
	8	S1571	BOLT	2
C	9	2Y4847	STRAP	1
	10	2Y1948	SPACER	1
		S1585	BOLT	1
	11	1D4716	NUT	1
		3B4505	LOCKWASHER	1
	12	1A9579	BOLT	1
		4B5270	LOCKWASHER	1
	13	2Y4206	PULLEY	1
	14	2Y3459	BUSHING	1

2Y2935 ALTERNATOR GROUP—28 Volt—17 Ampere
2Y4212 Alternator parts are shown on Page 55

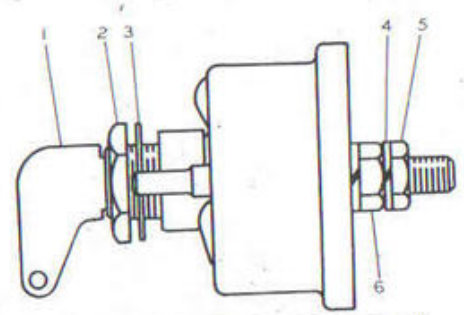

	REF. NO.	PART NUMBER	DESCRIPTION	QTY.
	1	8H5306	KEY	1
	2	8H5303	NUT	1
	3	2H3922	WASHER	1
	4	7F7259	LOCKWASHER	4
C	5	6F7045	NUT	2
C	6	6L1962	NUT	2

C INDICATES CHANGE

7N718 DISCONNECT SWITCH ASSEMBLY
Part of 2Y1955 Battery and Wiring Group shown on Page 59

2Y1955 BATTERY AND WIRING GROUP—24 Volt—Part 1 of 5
2Y2930 Regulator, 7M7147 Lamp and 2Y2074 Harness parts are shown on Pages 62 and 65

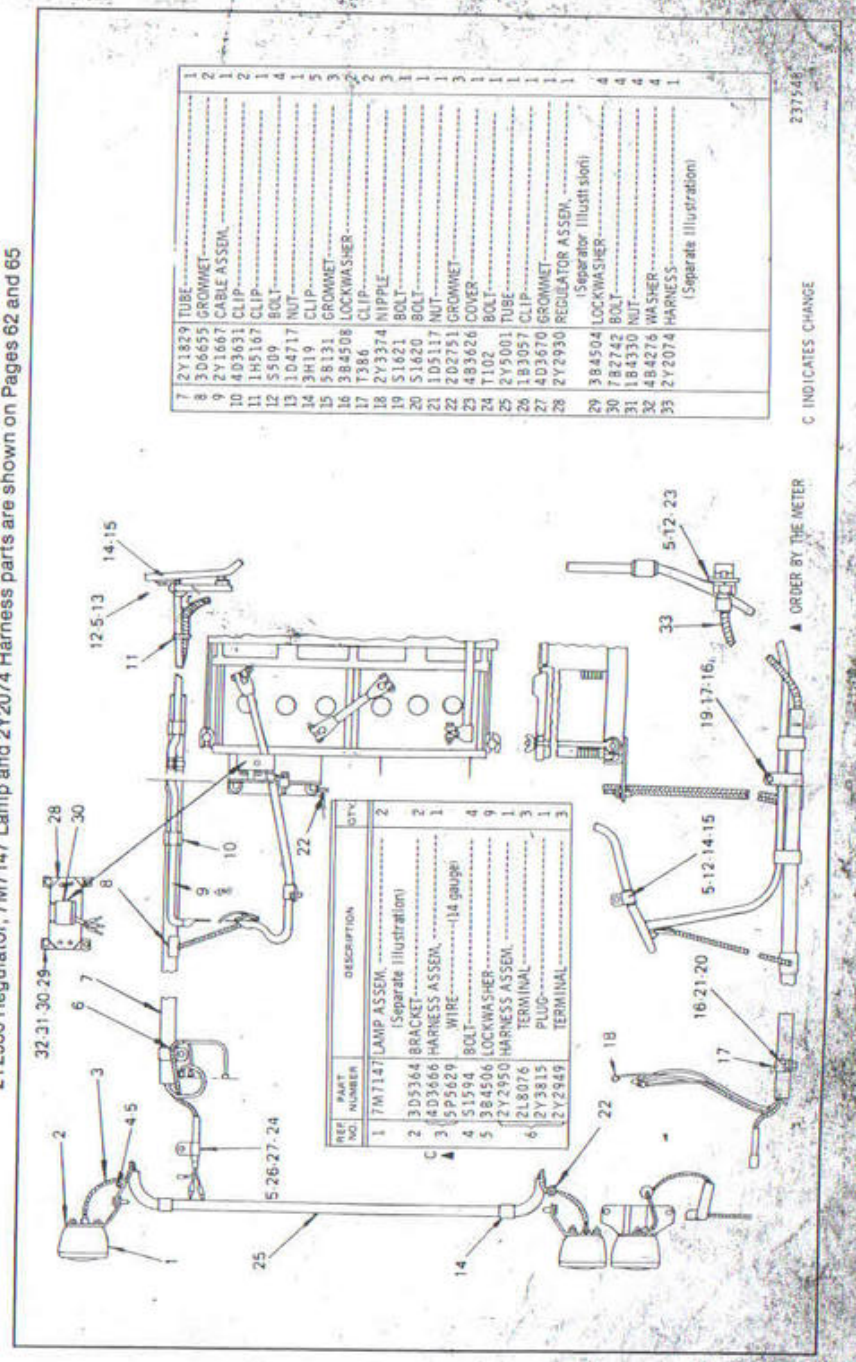

REF. NO.	PART NUMBER	DESCRIPTION	QTY.
1	7M7147	LAMP ASSEM. (Separate Illustration)	2
2	3D5364	BRACKET	2
3	4D3666	HARNESS ASSEM.	1
	5P5629	WIRE--14 gauge	
4	51594	BOLT	4
5	3B4506	LOCKWASHER	9
	2Y2950	HARNESS ASSEM.	1
	2L8076	TERMINAL	3
6	2Y3815	PLUG	1
	2Y2949	TERMINAL	3

7	2Y1829	TUBE	1
8	3D6655	GROMMET	2
9	2Y1667	CABLE ASSEM.	1
10	4D3631	CLIP	2
11	1H5167	CLIP	1
12	S509	BOLT	4
13	1D4717	NUT	1
14	3H19	CLIP	1
15	5B131	GROMMET	5
16	3B4508	LOCKWASHER	2
17	7S86	CLIP	2
18	2Y3374	NIPPLE	3
19	S1621	BOLT	1
20	S1620	BOLT	1
21	1D5117	NUT	1
22	2D2751	GROMMET	1
23	4B3626	COVER	1
24	T102	BOLT	1
25	2Y5001	TUBE	1
26	1B3057	CLIP	1
27	4D3670	GROMMET	1
28	2Y2930	REGULATOR ASSEM. (Separate Illustration)	1
29	3B4504	LOCKWASHER	4
30	7B2742	BOLT	4
31	1B4330	NUT	4
32	4B4276	WASHER	4
33	2Y2074	HARNESS (Separate Illustration)	1

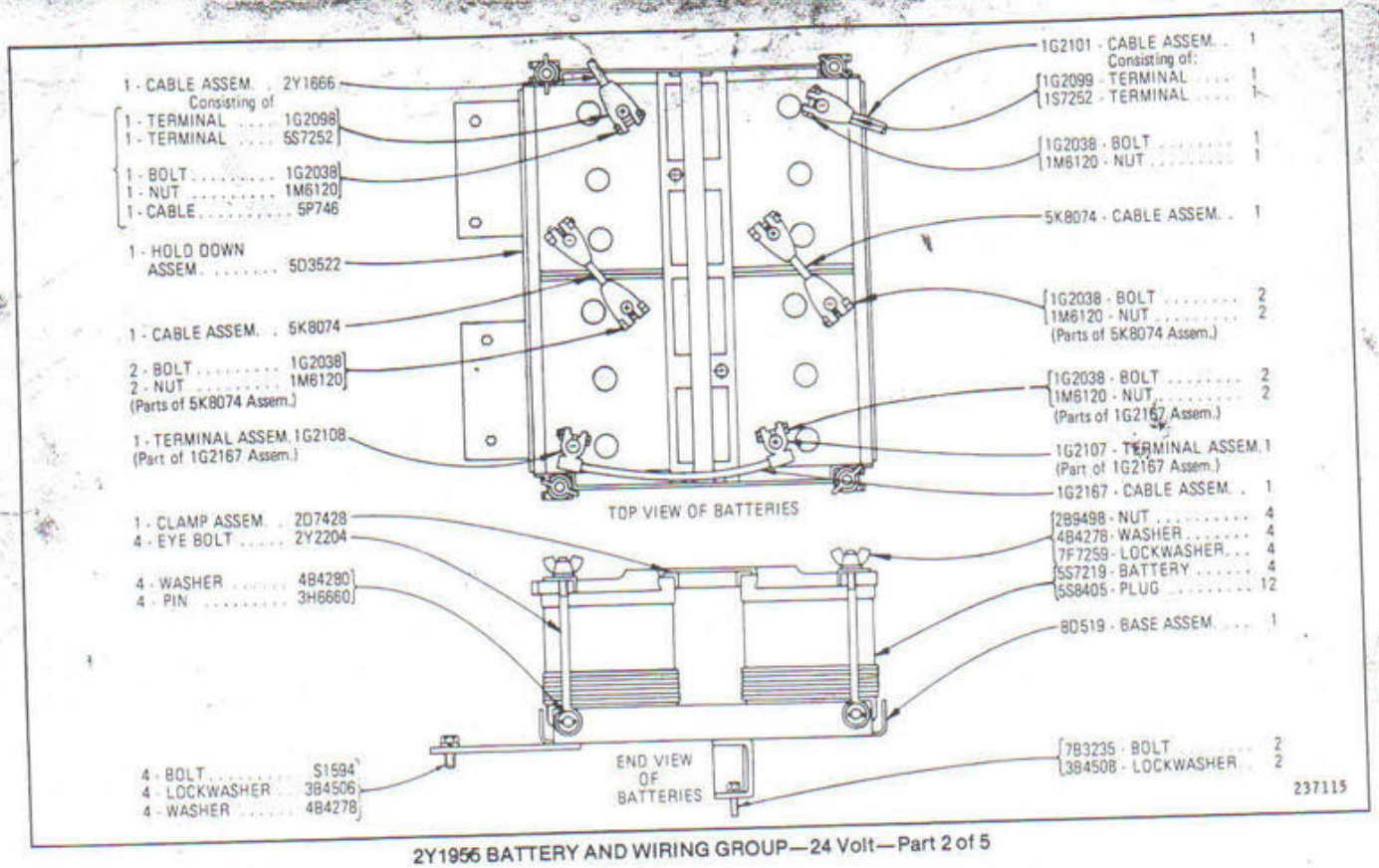

2Y1956 BATTERY AND WIRING GROUP—24 Volt—Part 2 of 5

2Y1955 BATTERY AND WIRING GROUP—24 Volt—Part 3 of 5
7N718 Switch parts are shown on Page 56

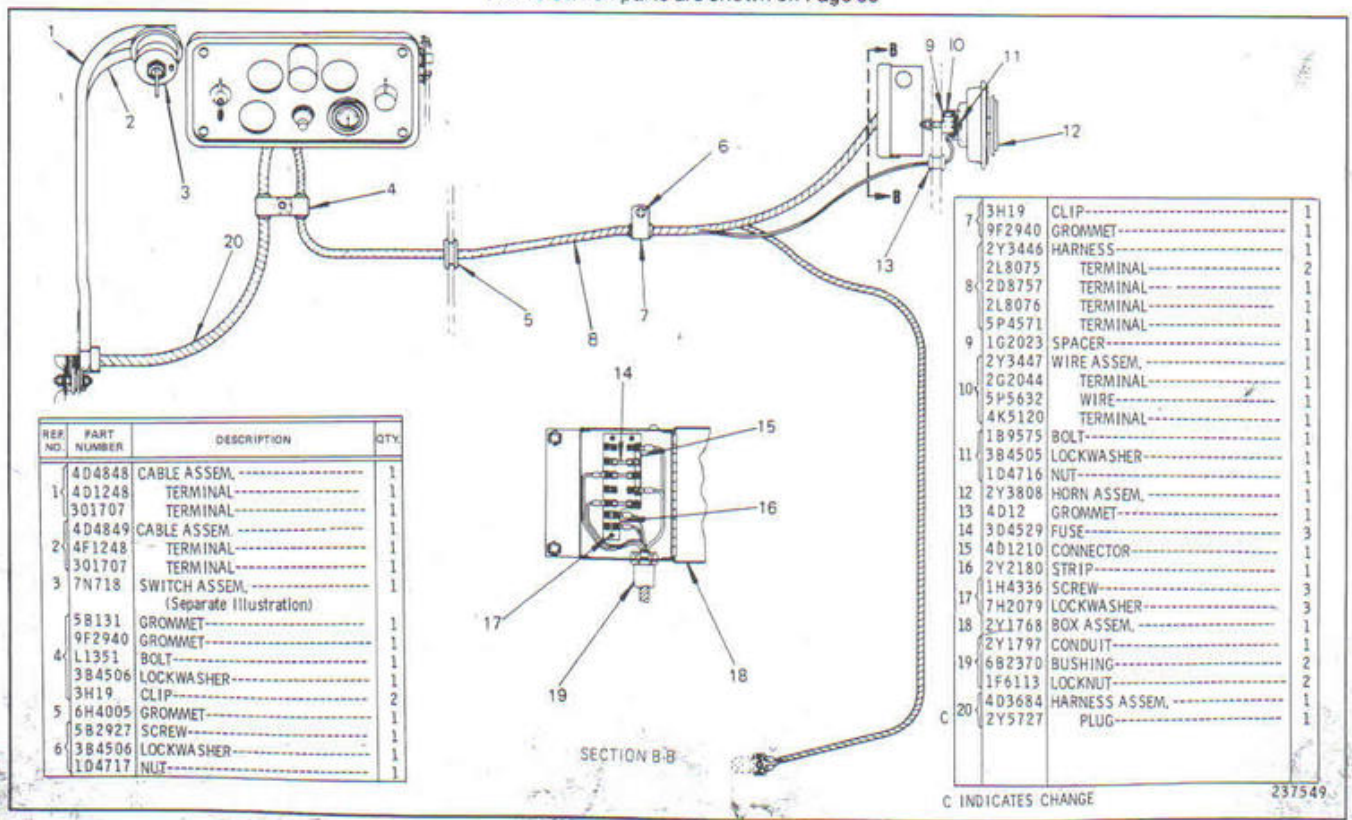

REF NO.	PART NUMBER	DESCRIPTION	QTY.
	4D4848	CABLE ASSEM.	1
1	4D1248	TERMINAL	1
	301707	TERMINAL	1
	4D4849	CABLE ASSEM.	1
2	4F1248	TERMINAL	1
	301707	TERMINAL	1
3	7N718	SWITCH ASSEM. (Separate Illustration)	1
	5B131	GROMMET	1
	9F2940	GROMMET	1
4	L1351	BOLT	1
	3B4506	LOCKWASHER	1
	3H19	CLIP	2
5	6H4005	GROMMET	1
	5B2927	SCREW	1
6	3B4506	LOCKWASHER	1
	1D4717	NUT	1
7	3H19	CLIP	1
	9F2940	GROMMET	1
	2Y3446	HARNESS	1
	2L8075	TERMINAL	2
8	2D8757	TERMINAL	1
	2L8076	TERMINAL	1
	5P4571	TERMINAL	1
9	1G2023	SPACER	1
	2Y3447	WIRE ASSEM.	1
10	2G2044	TERMINAL	1
	5P5632	WIRE	1
	4K5120	TERMINAL	1
	1B9575	BOLT	1
11	3B4505	LOCKWASHER	1
	1D4716	NUT	1
12	2Y3808	HORN ASSEM.	1
13	4D12	GROMMET	1
14	3D4529	FUSE	3
15	4D1210	CONNECTOR	1
16	2Y2180	STRIP	1
	1H4336	SCREW	3
17	7H2079	LOCKWASHER	3
18	2Y1768	BOX ASSEM.	1
	2Y1797	CONDUIT	1
19	6B2370	BUSHING	2
	1F6113	LOCKNUT	2
C 20	4D3684	HARNESS ASSEM.	1
	2Y5727	PLUG	1

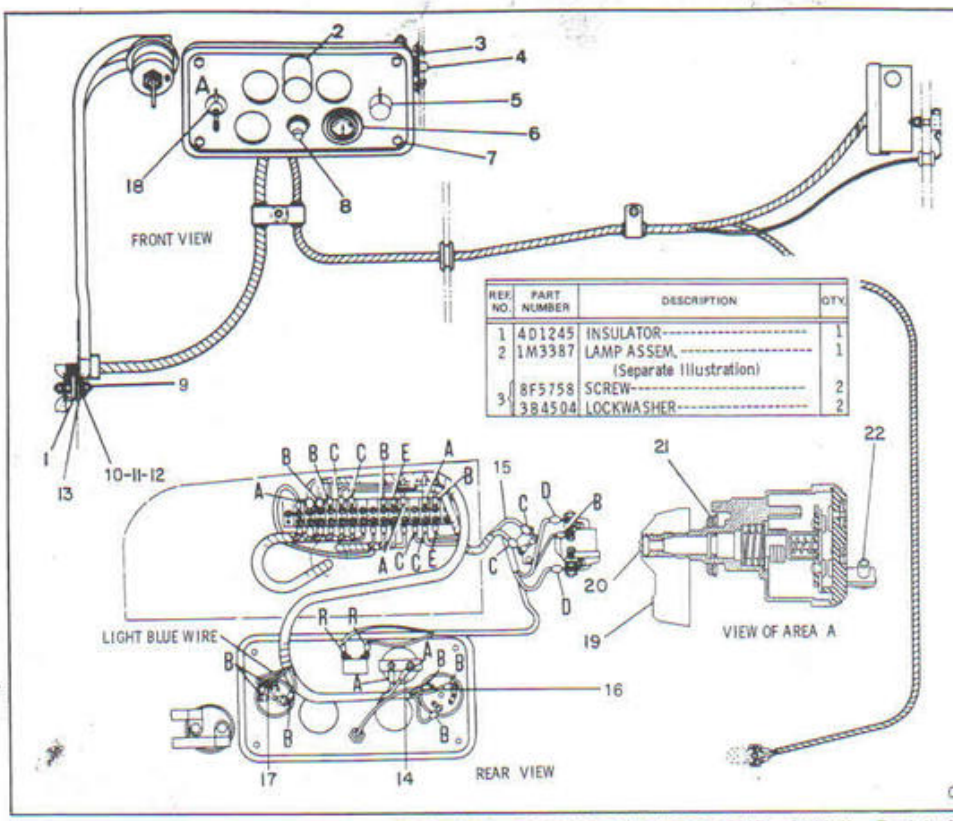

REF. NO.	PART NUMBER	DESCRIPTION	QTY.
1	4D1245	INSULATOR	1
2	1M3387	LAMP ASSEM. (Separate Illustration)	1
3	8F5758	SCREW	2
	3B4504	LOCKWASHER	2

4	5M2555	CIRCUIT BREAKER	1
	3D9799	SCREW	2
5	7S6402	SWITCH ASSEM.	1
	7S5432	KNOB	1
6	8M7892	AMMETER	1
7	4D3397	STRAP	1
	3D5074	NUT	4
	1H3337	BOLT	4
8	3F1006	SWITCH	1
9	4D1250	STUD	2
10	3L7314	WASHER	6
11	6H5431	NUT	6
12	6H8351	LOCKWASHER	4
13	4D1246	INSULATOR	1
14	2D8757	TERMINAL (Light Green Wire)	1
15	2K8757	TERMINAL (Red Wire)	1
16	2D8781	TERMINAL (Light Blue/White Wire)	1
17	2D8781	TERMINAL (White Wire) (Part of 4D3684 Harness)	1
18	7N4160	SWITCH ASSEM.	1
19	8F3437	LEVER	1
20	5L7200	SCREW	1
	3B4501	LOCKWASHER	1
21	7H27	NUT	1
	6F253	LOCKWASHER	1
22	9F9327	SCREW	3
	9F8125	LOCKWASHER	3

C INDICATES CHANGE

2Y1955 BATTERY AND WIRING GROUP—24 Volt—Part 4 of 5
1M3387 Lamp parts are shown on Page 64

2Y1955 BATTERY AND WIRING GROUP—24 Volt—Part 5 of 5

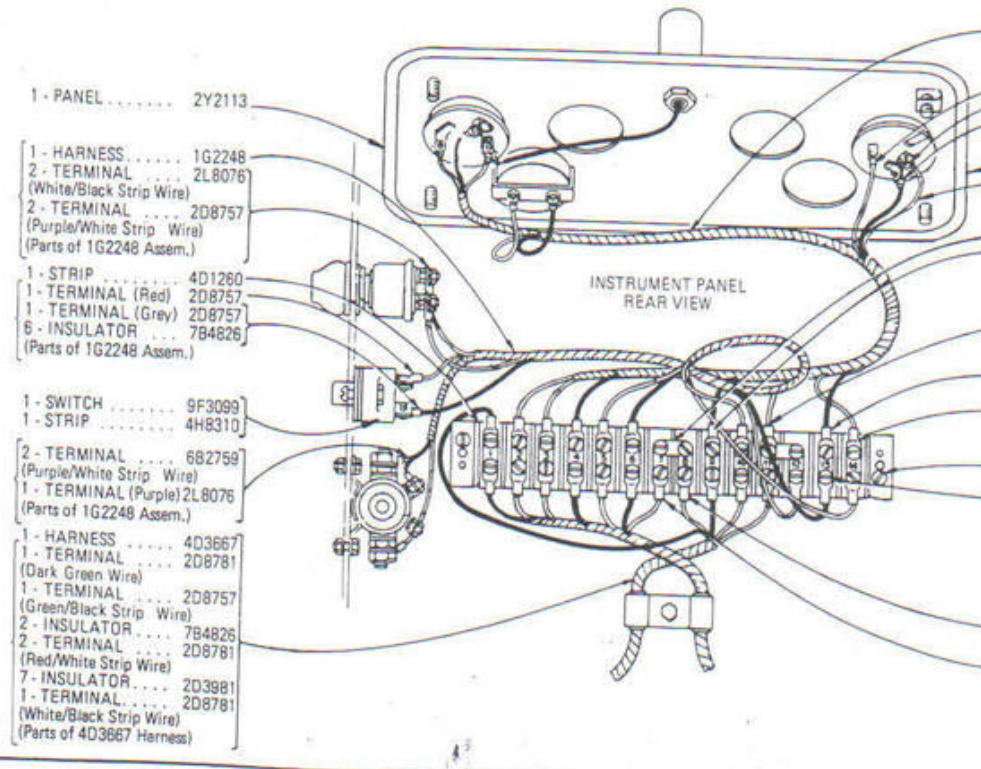

1 - PANEL 2Y2113

1 - HARNESS 1G2248
2 - TERMINAL 2L8076
(White/Black Strip Wire)
2 - TERMINAL 2D8757
(Purple/White Strip Wire)
(Parts of 1G2248 Assem.)

1 - STRIP 4D1260
1 - TERMINAL (Red) 2D8757
1 - TERMINAL (Grey) 2D8757
6 - INSULATOR ... 7B4826
(Parts of 1G2248 Assem.)

1 - SWITCH 9F3099
1 - STRIP 4H8310

2 - TERMINAL 6B2759
(Purple/White Strip Wire)
1 - TERMINAL (Purple) 2L8076
(Parts of 1G2248 Assem.)

1 - HARNESS 4D3667
1 - TERMINAL 2D8781
(Dark Green Wire)
1 - TERMINAL 2D8757
(Green/Black Strip Wire)
2 - INSULATOR 7B4826
2 - TERMINAL 2D8781
(Red/White Strip Wire)
7 - INSULATOR 2D3981
1 - TERMINAL 2D8781
(White/Black Strip Wire)
(Parts of 4D3667 Harness)

4D3772-HARNESS 1

2L8076 - TERMINAL (Purple) 1
2L8076 - TERMINAL (White) 1
2L8076 - TERMINAL 1
(Dark Blue/White Strip Wire)
(Parts of 4D3772 Harness)
4D1288 - SEAL 1
2L8066 - TERMINAL 1
(LT Green Wire)
(Part of 4D3774 Harness)
4D1227 - STRIP 2
2L8076 - TERMINAL 1
(Dark Green Wire)
(Part of 4D3772 Harness)
2L8066 - TERMINAL 1
(LT Green/White Strip Wire)
(Part of 4D3772)
2L8066 - TERMINAL (Grey) 1
(Part of 4D3772 Harness)
2L8076 - TERMINAL (Orange) 1
(Part of 4D3772 Harness)
4B1232 - SCREW 2
3B4502 - LOCKWASHER .. 2
2D8781 - TERMINAL
(Purple Wire) 1
(Part of 1G2248 Harness)

2D8781 - TERMINAL 1
(Red/White Strip Wire)
2D8757 - TERMINAL 1
(Purple/White Wire)
(Parts of 4D3684 Harness)

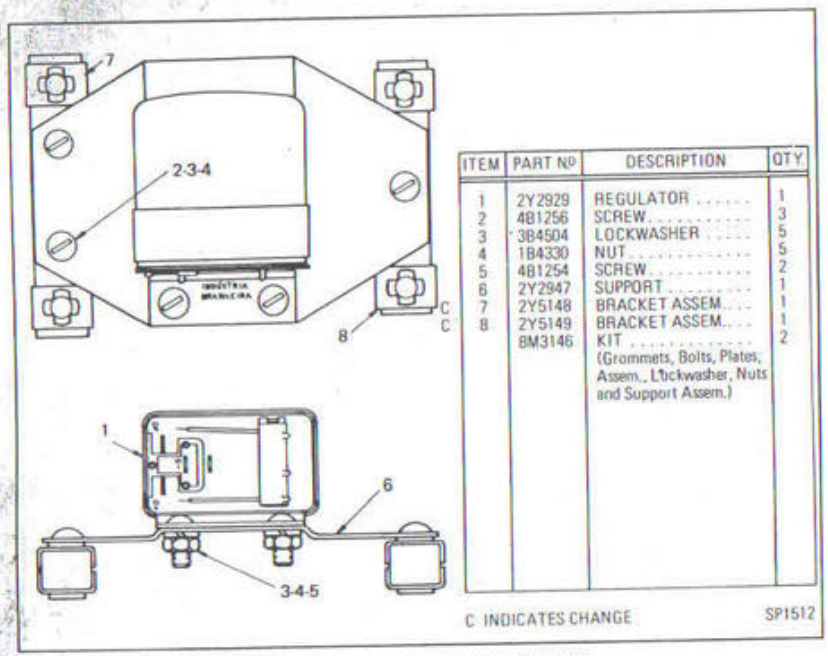

ITEM	PART Nº	DESCRIPTION	QTY.
1	2Y2929	REGULATOR	1
2	4B1256	SCREW	3
3	3B4504	LOCKWASHER	5
4	1B4330	NUT	5
5	4B1254	SCREW	2
6	2Y2947	SUPPORT	1
7	2Y5148	BRACKET ASSEM.	1
8	2Y5149	BRACKET ASSEM.	1
	8M3146	KIT (Grommets, Bolts, Plates, Assem., Lockwasher, Nuts and Support Assem.)	2

C INDICATES CHANGE SP1512

2Y2930 REGULATOR ASSEMBLY
Part of 2Y1955 Battery and Wiring Group shown on Page 57

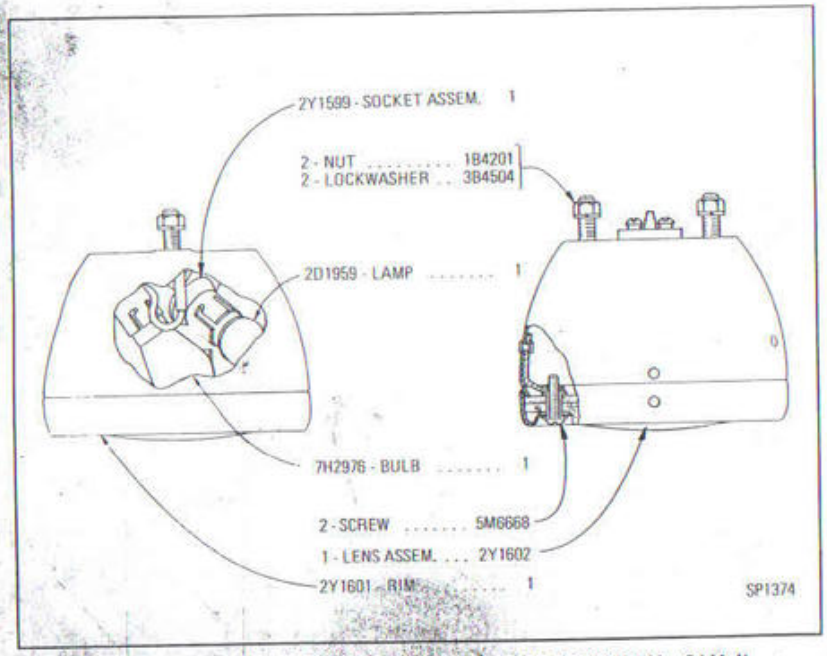

7M7147 COMBINATIONS STOP AND TAIL LAMP ASSEMBLY—24 Volt
Part of 2Y1955 Battery and Wiring Group shown on Page 57

2Y1780 HEAD LAMP GROUP
1M6052 Head Lamp parts are shown on Page 64

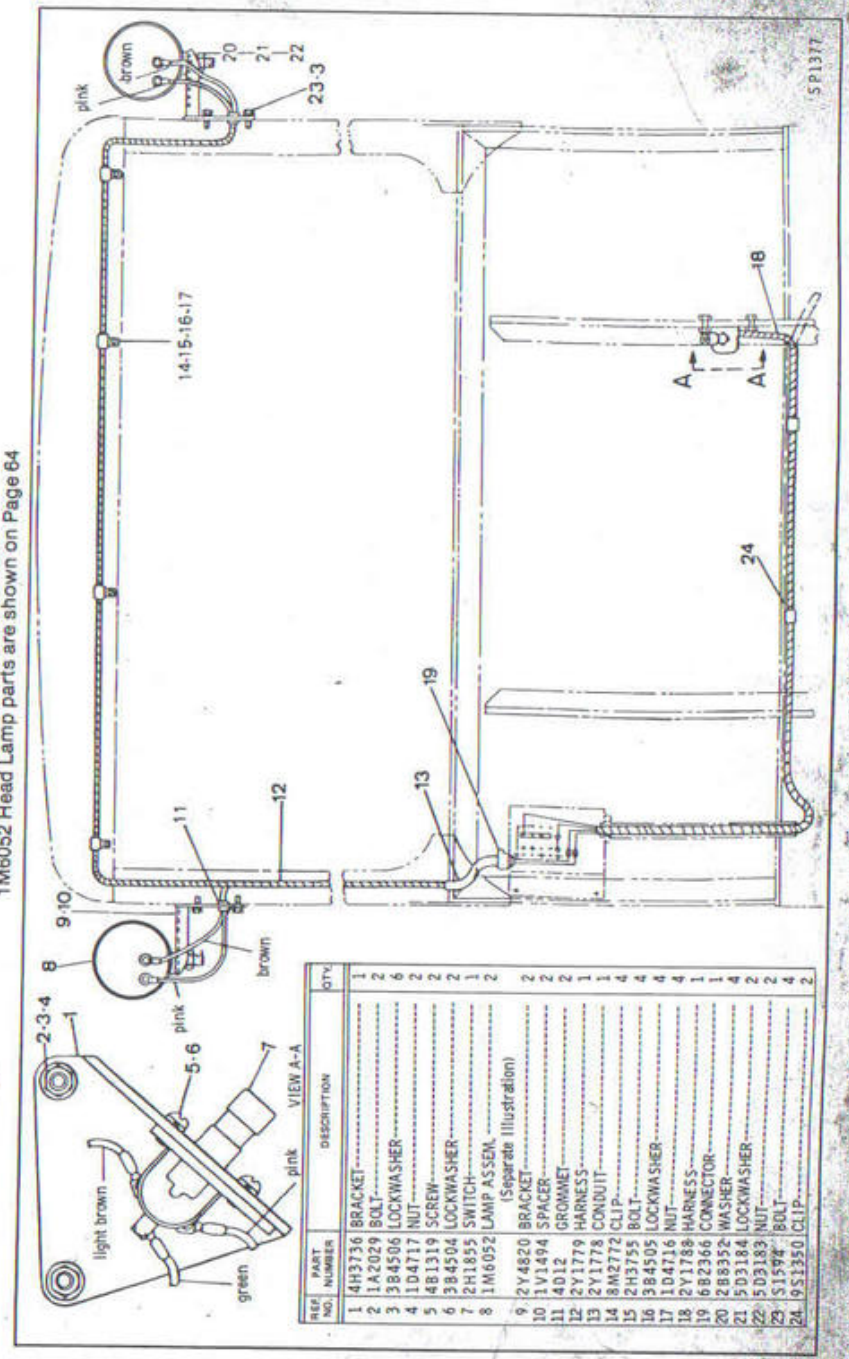

REF NO.	PART NUMBER	DESCRIPTION	QTY.
1	4H3736	BRACKET	1
2	1A2029	BOLT	2
3	3B4506	LOCKWASHER	6
4	1D4717	NUT	6
5	4B1319	SCREW	2
6	3B4504	LOCKWASHER	2
7	2H1855	SWITCH	1
8	1M6052	LAMP ASSEM. (Separate Illustration)	2
9	2Y4820	BRACKET	2
10	1V1494	SPACER	2
11	4D12	GROMMET	2
12	2Y1779	HARNESS	1
13	2Y1778	CONDUIT	1
14	8M2772	CLIP	4
15	2H3755	BOLT	4
16	3B4505	LOCKWASHER	4
17	1D4716	NUT	4
18	2Y1788	HARNESS	1
19	6B2366	CONNECTOR	1
20	2B3352	WASHER	4
21	5D3184	LOCKWASHER	2
22	5D3183	NUT	2
23	S1594	BOLT	4
24	9S1350	CLIP	2

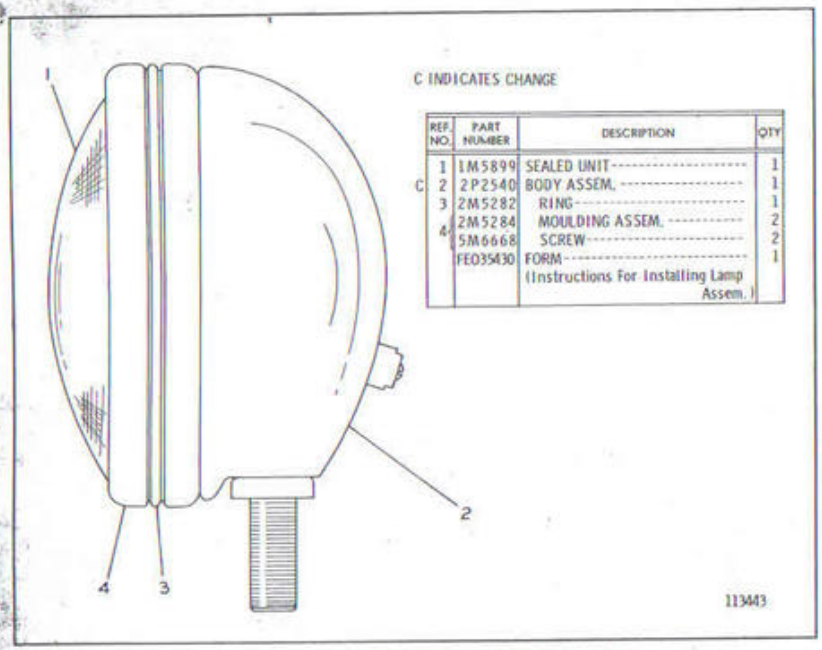

C INDICATES CHANGE

REF. NO.		PART NUMBER	DESCRIPTION	QTY
1		1M5899	SEALED UNIT	1
C 2		2P2540	BODY ASSEM.	1
3		2M5282	RING	1
4		2M5284	MOULDING ASSEM.	2
		5M6668	SCREW	2
		FE035430	FORM (Instructions For Installing Lamp Assem.)	1

1M6052 HEAD LAMP ASSEMBLY—24 Volt
Part of 2Y1780 Head Lamp Group shown on Page 63

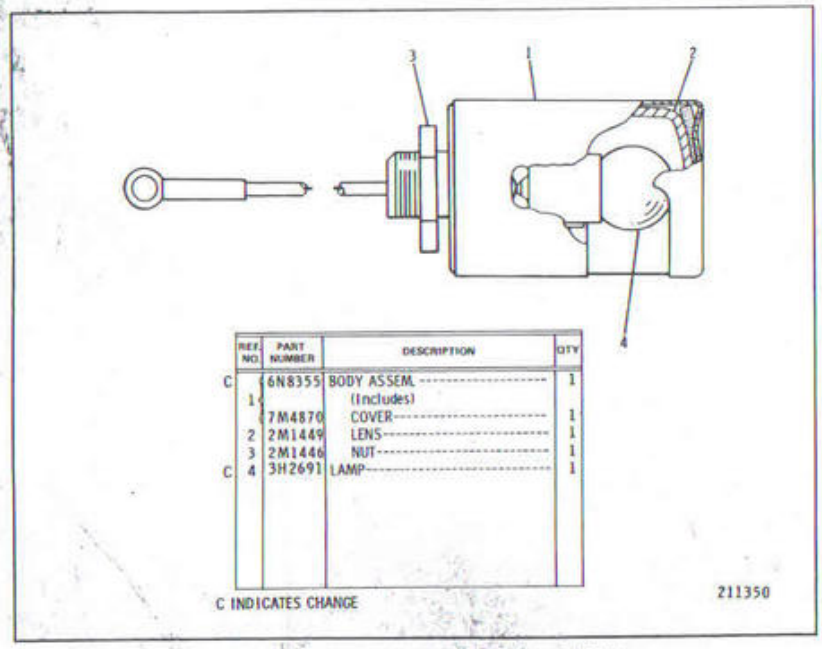

REF. NO.		PART NUMBER	DESCRIPTION	QTY
C	1	6N8355	BODY ASSEM. (Includes)	1
		7M4870	COVER	1
	2	2M1449	LENS	1
	3	2M1446	NUT	1
C	4	3H2691	LAMP	1

C INDICATES CHANGE

1M3387 DASH LAMP ASSEMBLY—24 Volt
Part of 2Y1955 Battery and Wiring Group shown on Page 60

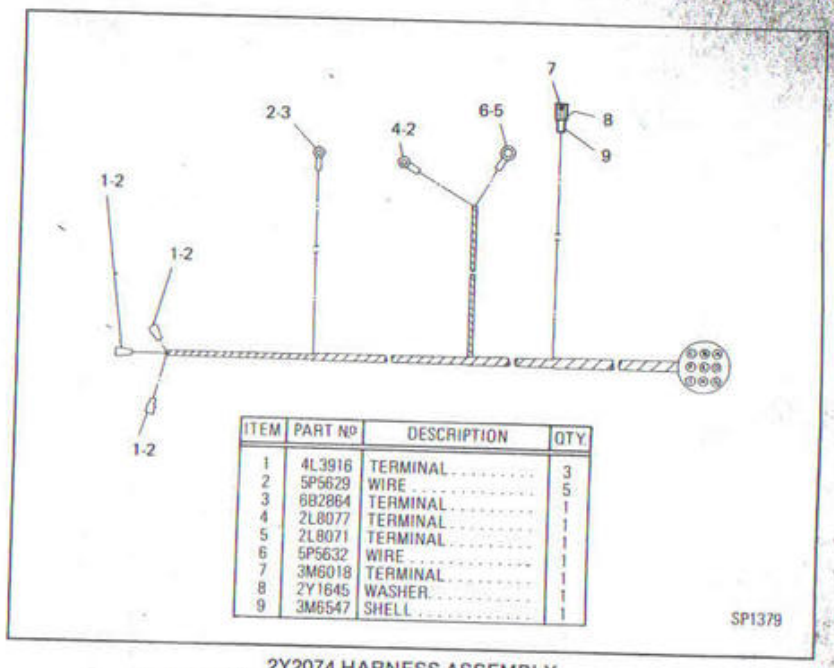

ITEM	PART No.	DESCRIPTION	QTY.
1	4L3916	TERMINAL	3
2	5P5629	WIRE	5
3	6B2864	TERMINAL	1
4	2L8077	TERMINAL	1
5	2L8071	TERMINAL	1
6	5P5632	WIRE	1
7	3M6018	TERMINAL	1
8	2Y1645	WASHER	1
9	3M6547	SHELL	1

2Y2074 HARNESS ASSEMBLY
Part of 2Y1955 Battery and Wiring Group shown on Page 57

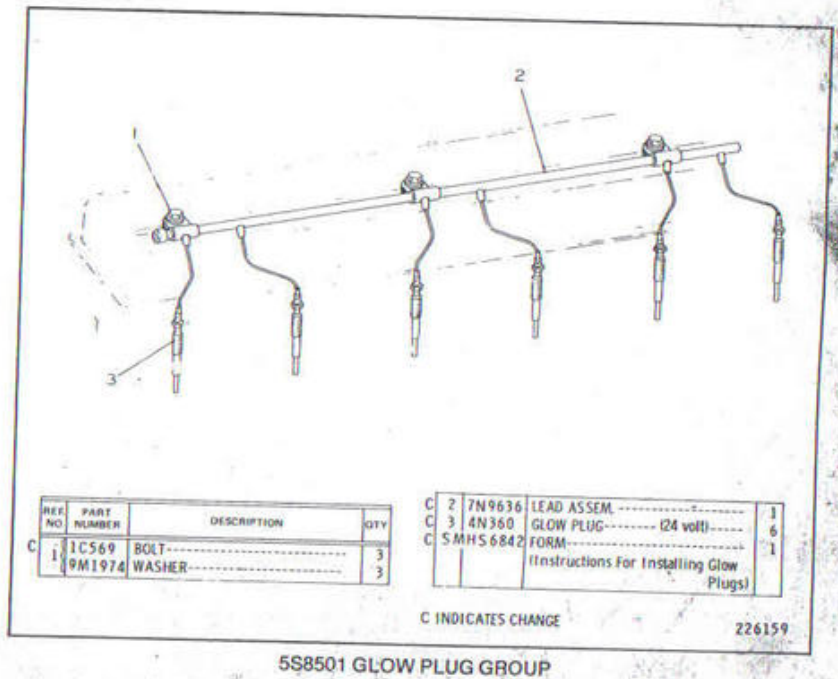

REF. NO.		PART NUMBER	DESCRIPTION	QTY
C	1	1C569	BOLT	3
		9M1974	WASHER	3

C	2	7N9636	LEAD ASSEM.	1
C	3	4N360	GLOW PLUG (24 volt)	6
C	S.M.	HS6842	FORM (Instructions For Installing Glow Plugs)	1

C INDICATES CHANGE

5S8501 GLOW PLUG GROUP

6D1590 FLYWHEEL CLUTCH GROUP

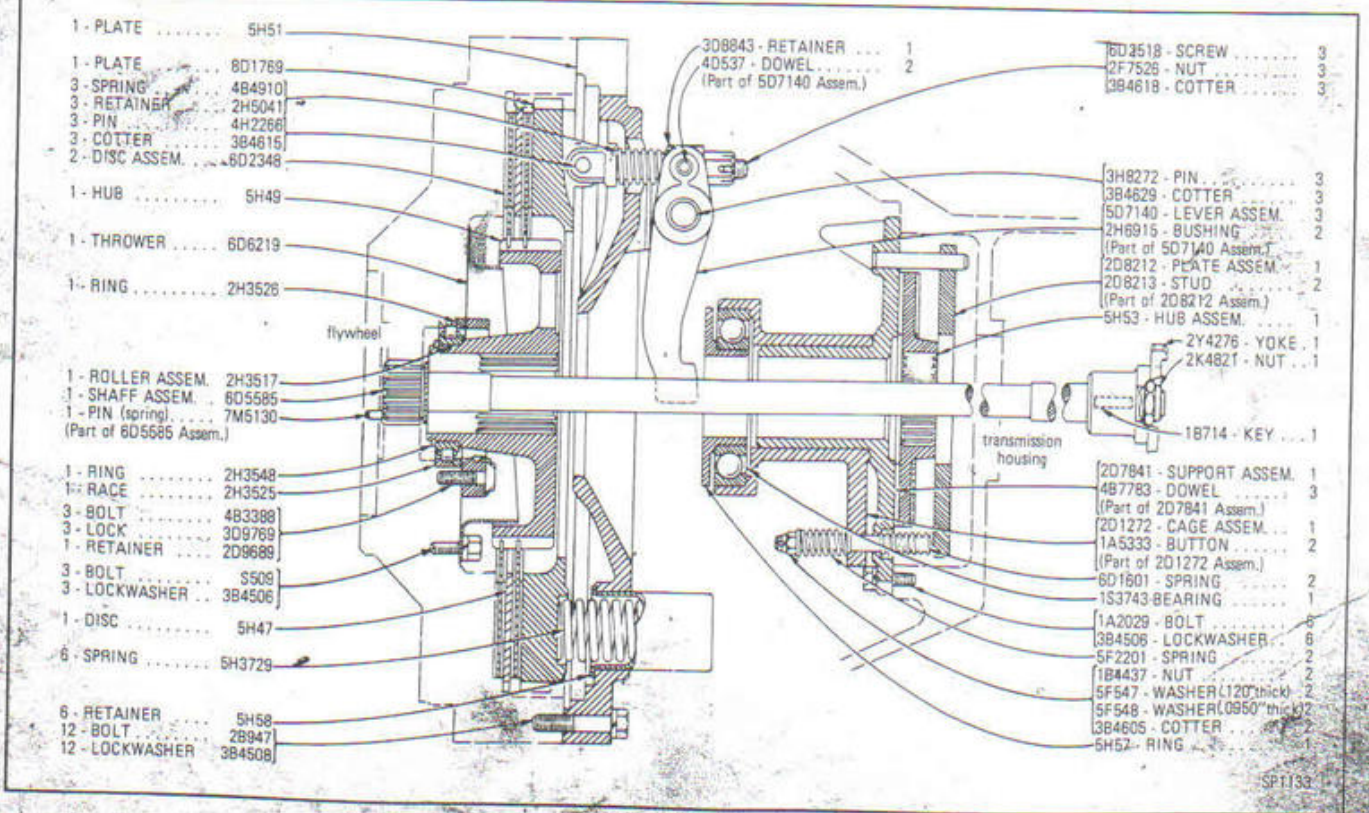

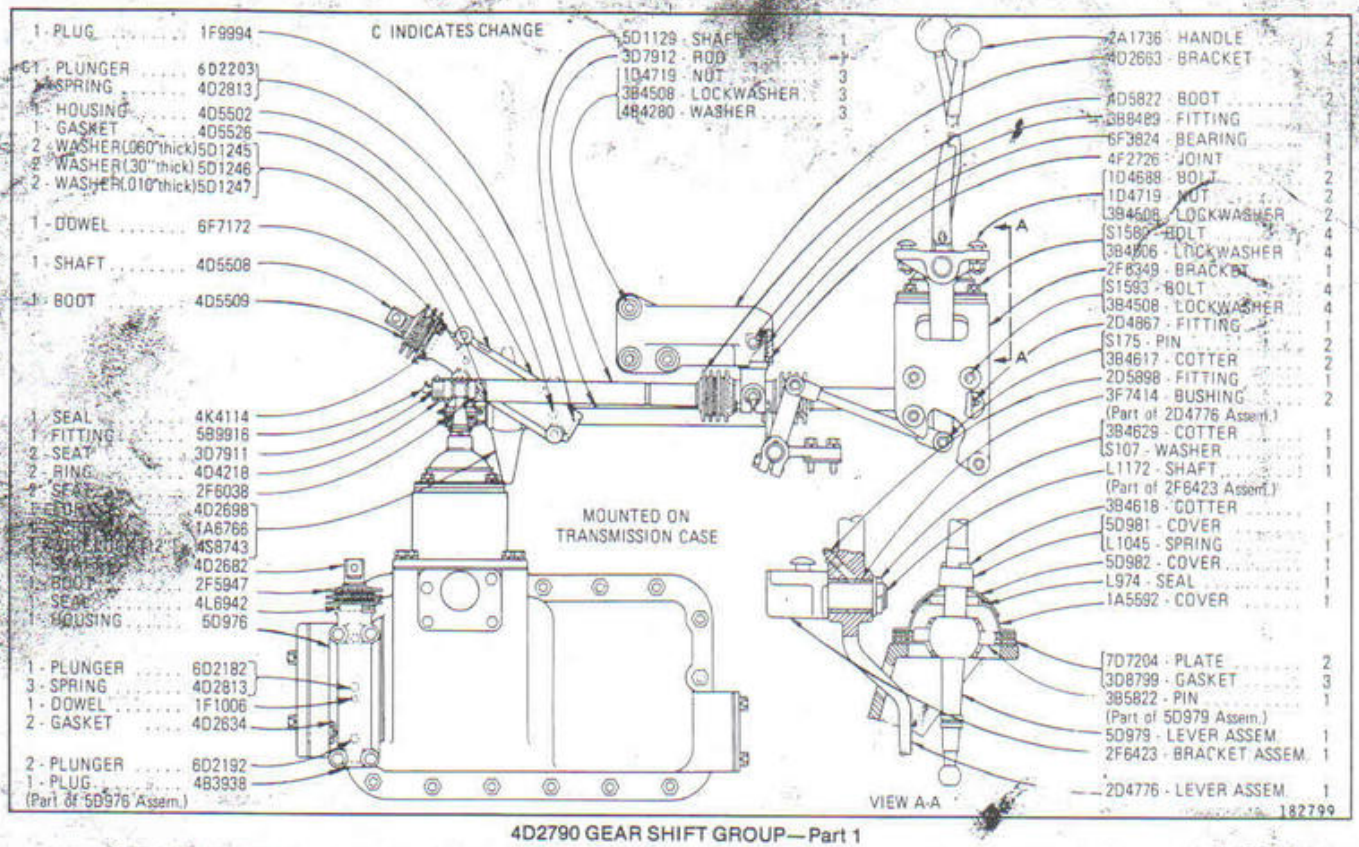

4D2790 GEAR SHIFT GROUP—Part 1

4D2790 GEAR SHIFT GROUP—Part 2

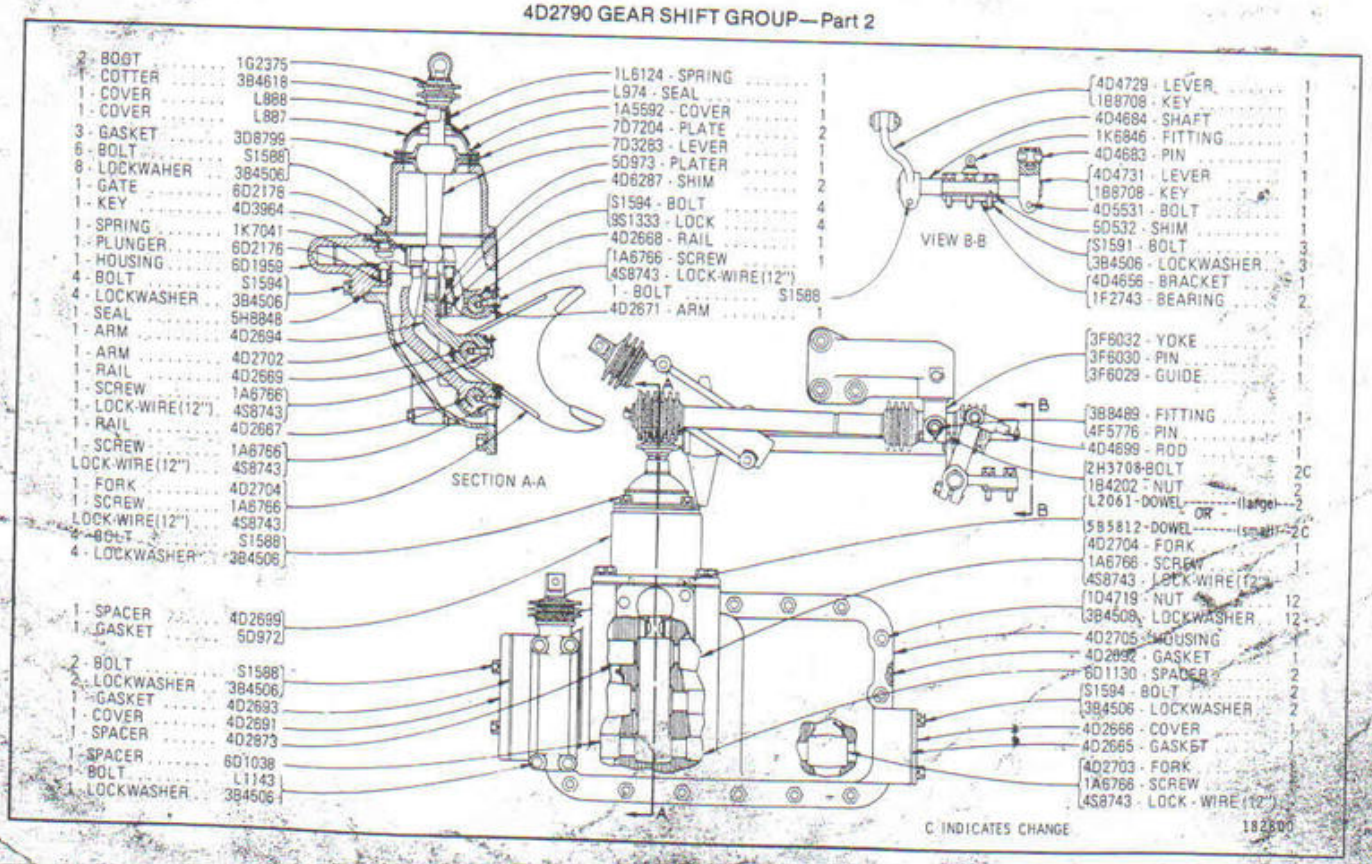

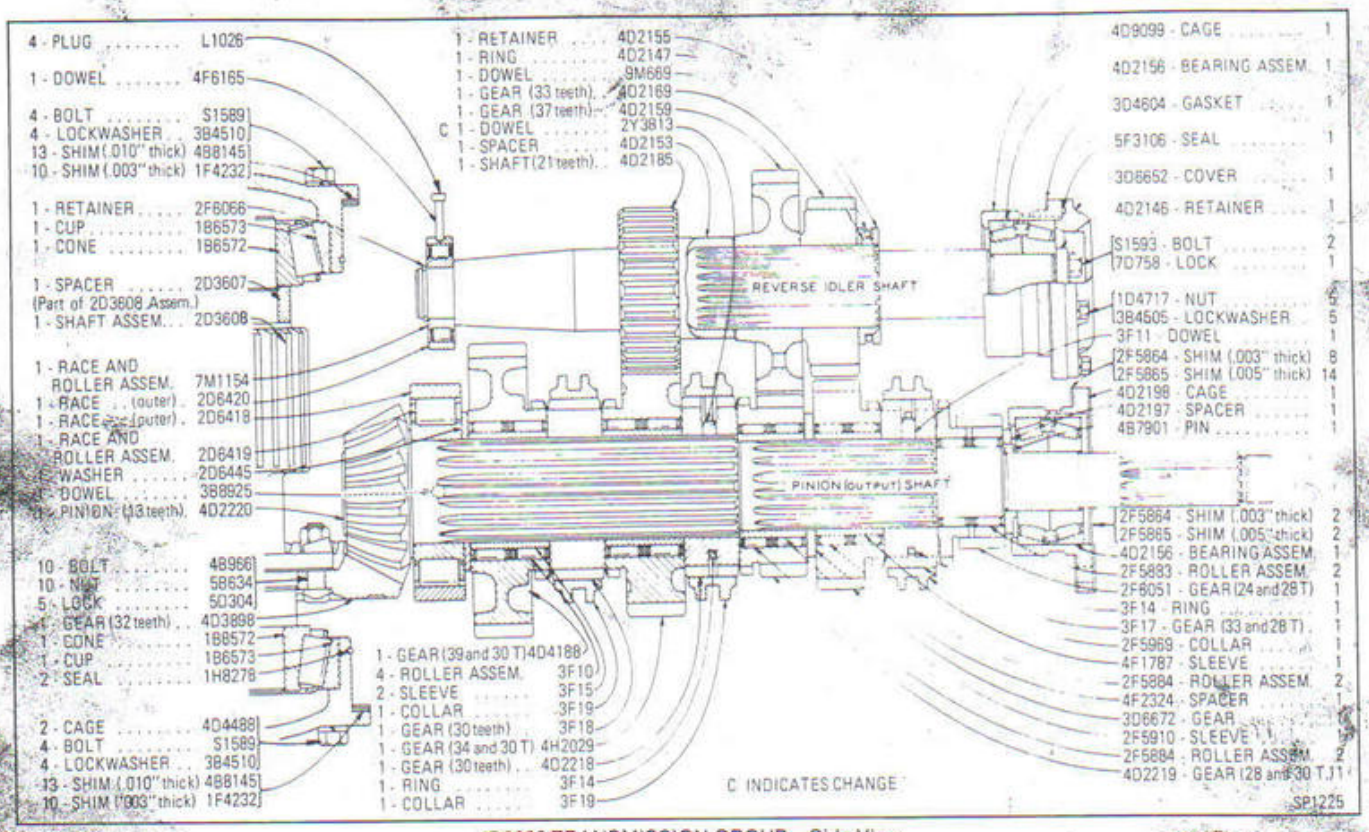

4D3300 TRANSMISSION GROUP—Side View

4D3300 TRANSMISSION GROUP—Top View

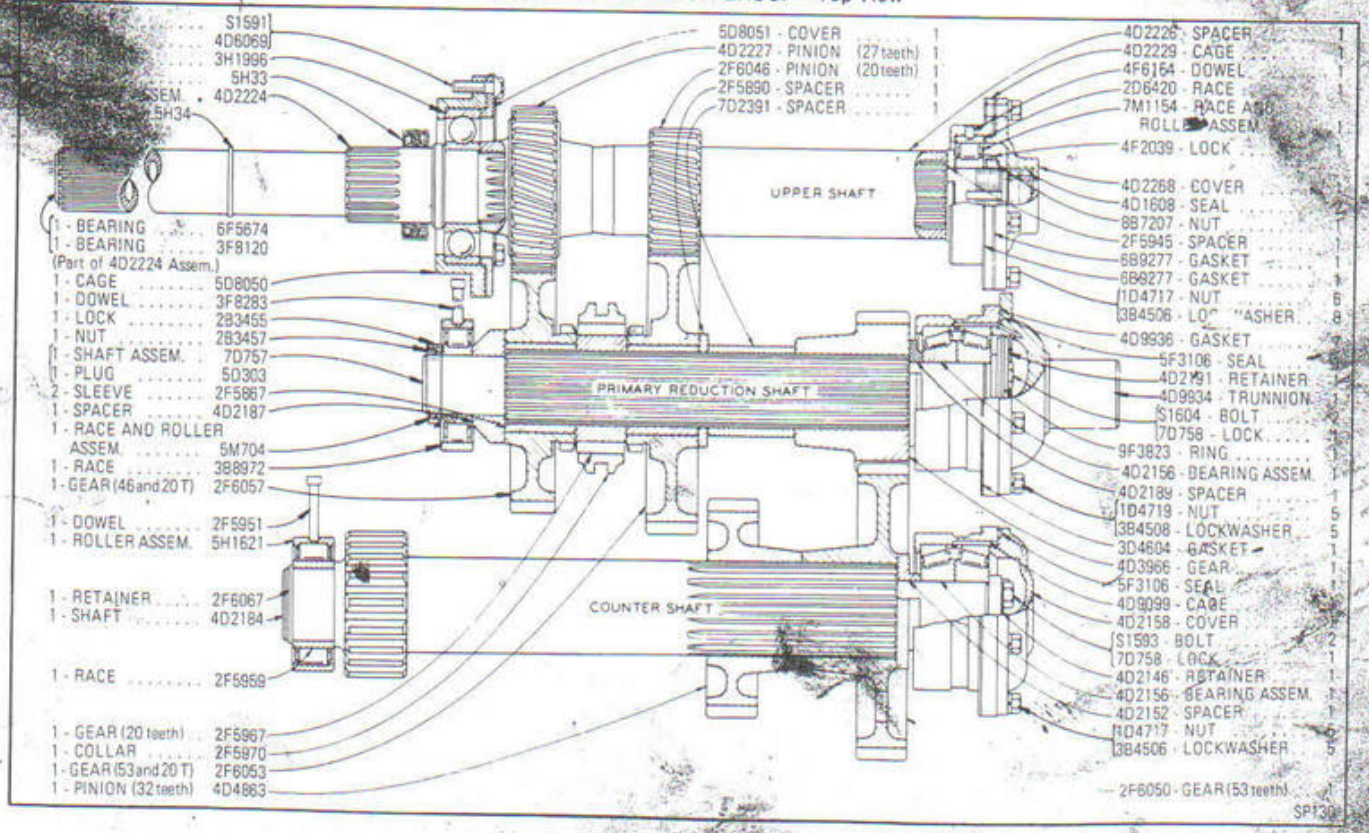

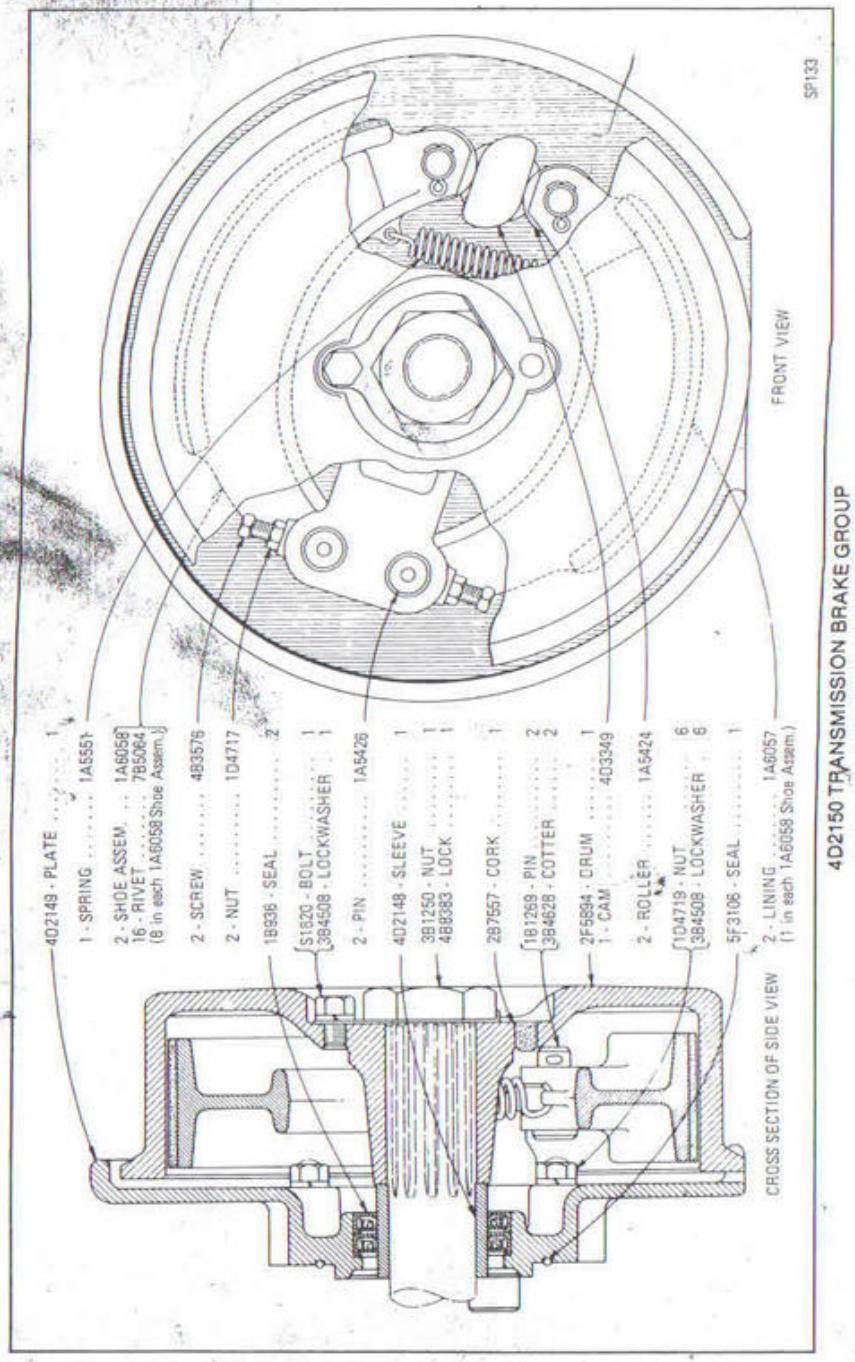

4D2150 TRANSMISSION BRAKE GROUP

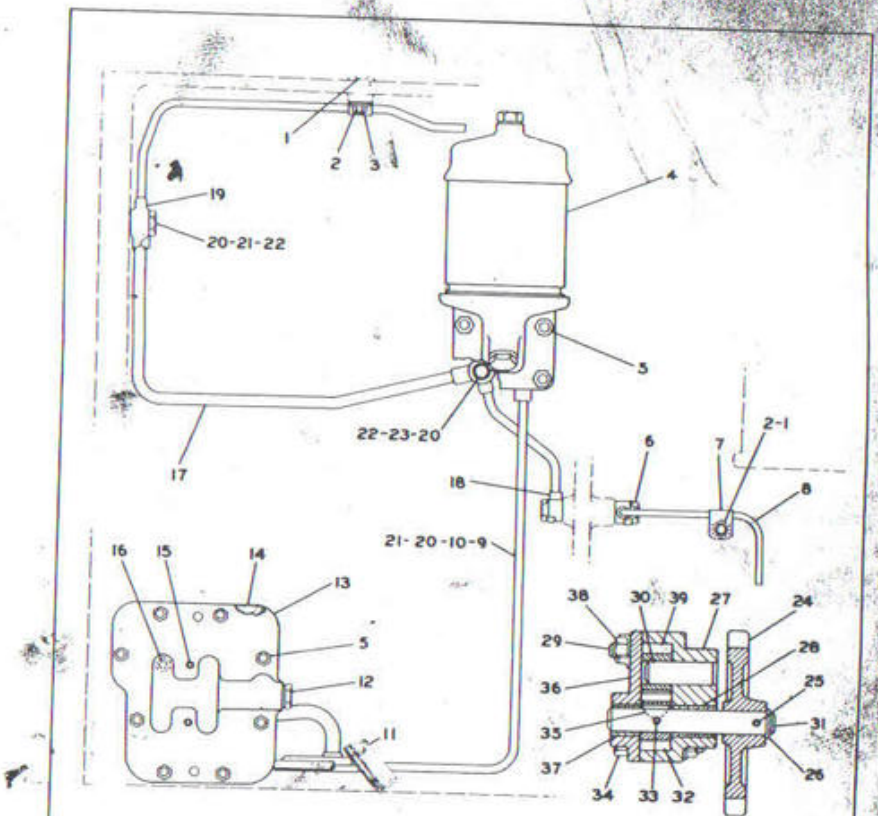

REF. NO.	PART NUMBER	DESCRIPTION	QTY
1	1L1026	PLUG	3
2	1102	BOLT	3
3	8B6127	CLIP	1
4	7D5460	FILTER GROUP (See Separate Illustration)	1
	7D5441	GASKET	1
5	1D4717	NUT	12
	3B4506	LOCKWASHER	12
6	1Y16	SCREW	2
	3S2362	LOCK	2
7	2B2404	CLIP	2
8	7D5758	TUBE ASSEM.	1
9	7D5761	TUBE ASSEM.	1
10	1A1503	FERRULE	2
	3D6356	BELL ASSEM.	1
11	4F2627	GASKET	2
	S1617	BOLT	2
	2A5328	LOCK	2
12	5F304	PLUG	1
	2A1162	GASKET	1
13	7D5428	BASE	1
14	6D3356	GASKET	1
15	2A3630	PIN	2
16	1A2029	BOLT	4
	L364	LOCK	4

SECTIONAL VIEW OF PUMP

17	7D5754	TUBE ASSEM.	1
18	2F3889	FERRULE	1
19	4D3337	FERRULE	1
20	1A1496	SCREW	4
21	4F2464	LOCK	2
22	3B9363	WASHER	3
23	7D7771	LOCK	1
24	3D6676	GEAR (19 Teeth)	1
25	1A530	PIN	1
26	2L8509	RING	1
27	3D6351	PUMP GROUP	1
	3D6352	BODY ASSEM.	1
28	4F1113	BEARING	1
29	5M6687	STUD	2
30	3F4598	SHAFT	1
31	2D8764	SHAFT	1
32	3F4594	GEAR (10 Teeth-Drive)	1
33	5B9505	PIN	1
	6F9878	BOLT	2
34	1B4204	NUT	2
	T541	LOCK	2
35	1B8705	KEY	1
36	4F327	COVER ASSEM.	1
37	1H3135	BEARING	1
38	1D4717	NUT	2
	L364	LOCK	2
39	4F2611	GEAR (10 Teeth-Idler)	1

136655

7D9550 TRANSMISSION LUBRICATION SYSTEM GROUP
7D5460 Oil Filter parts are shown on Page 76

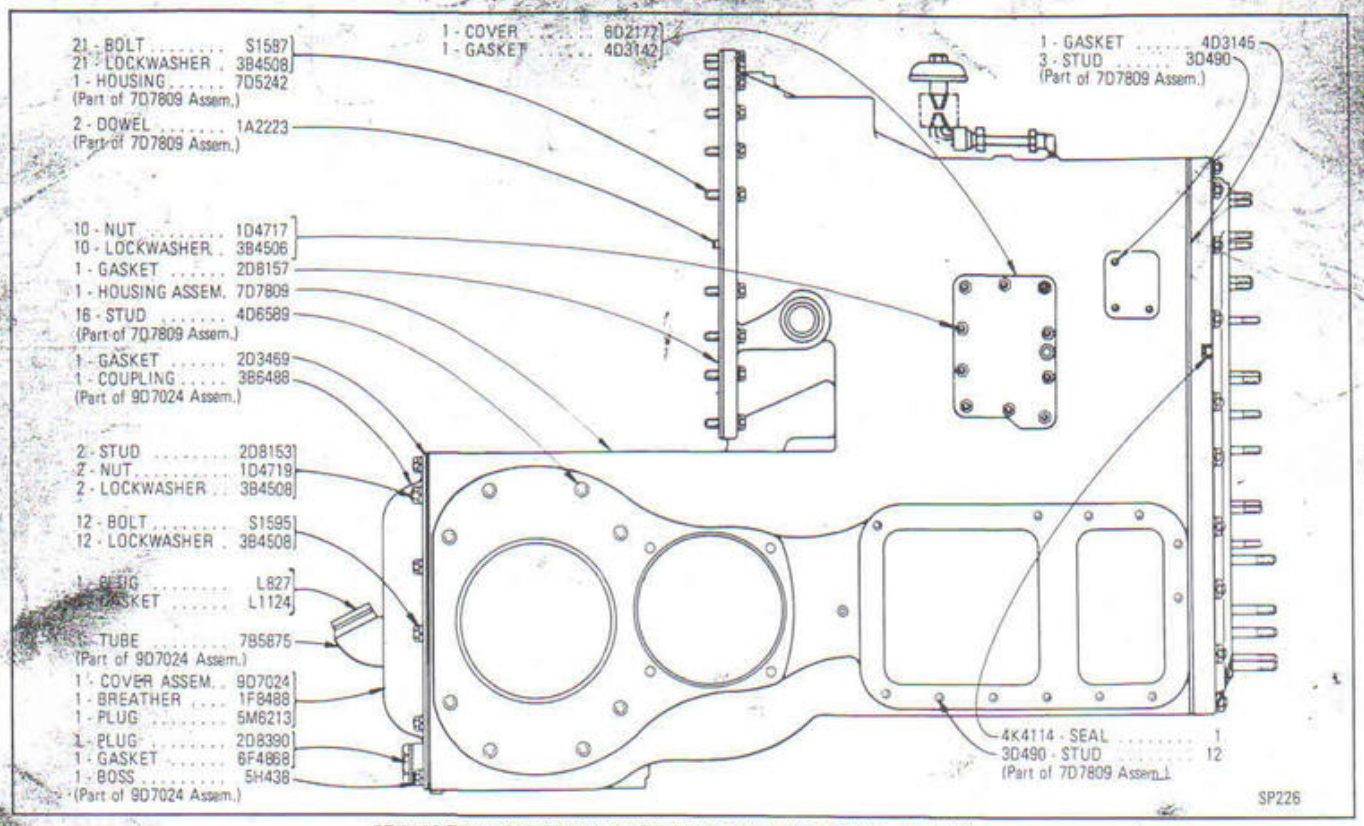

5D3400 TRANSMISSION CASE AND COVERS GROUP—Side View

5D3400 TRANSMISSION CASE AND COVERS GROUP—End View

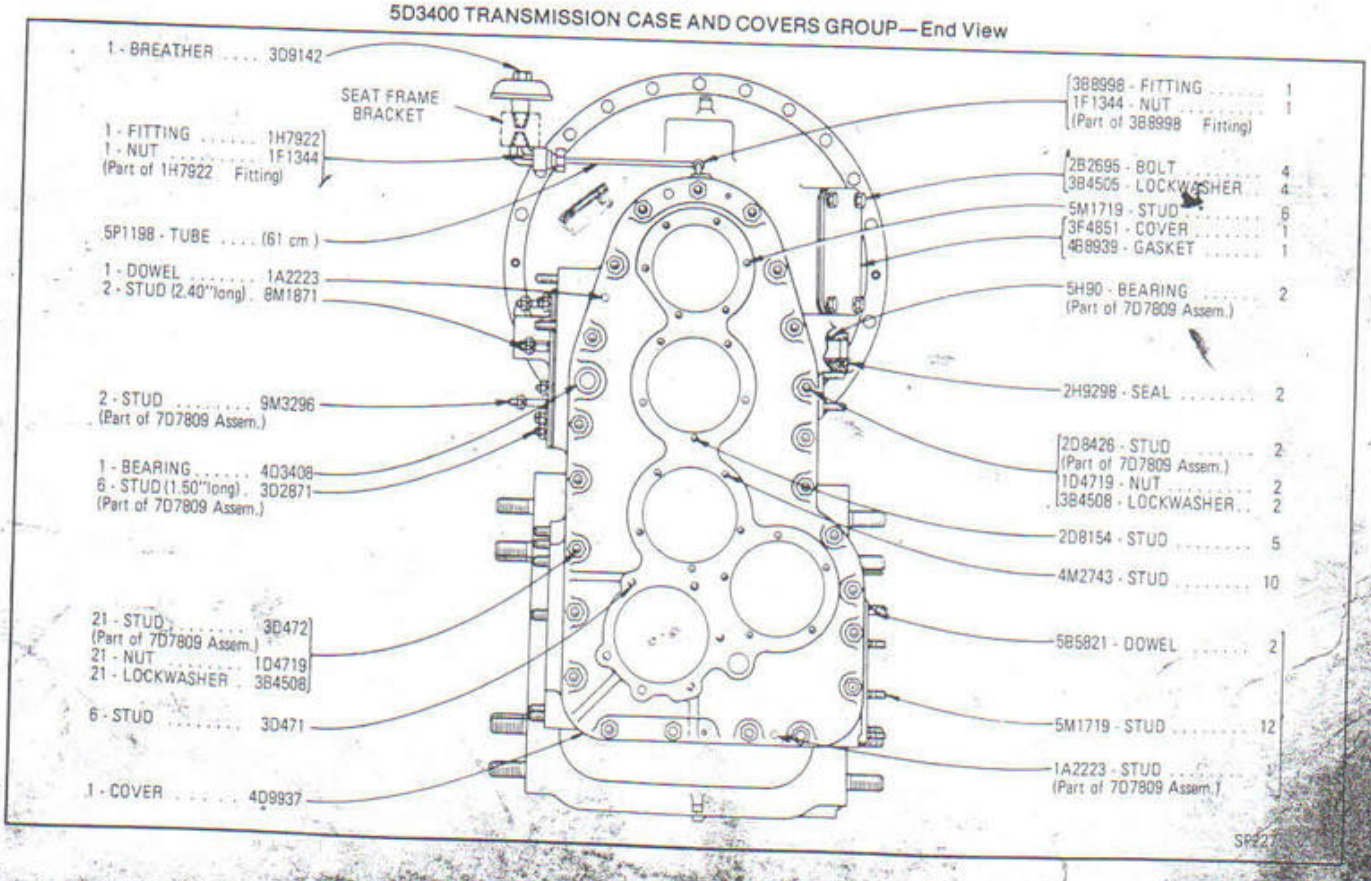

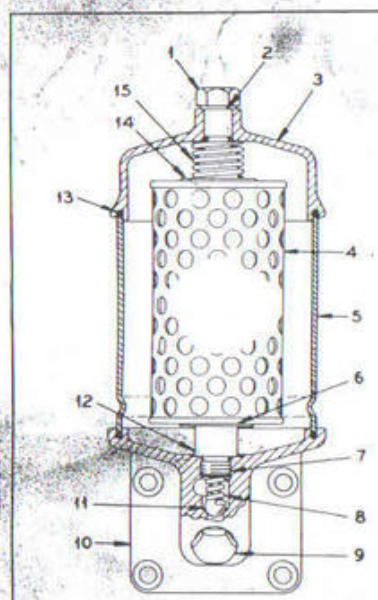

ITEM	PART No	DESCRIPTION	QTY
1	6D3547	NUT	1
2	5B5977	GASKET	1
3	5B5974	COVER	1
4	8B5935	ELEMENT	1
5	1G1722	CASE	1
6	2D1929	PILOT	1
7	6B1263	BAR	1
8	1F2874	SPRING	1
9	5F304	PLUG	1
	2A1162	GASKET	1
10	7D5349	BASE	1
11	5B9419	BALL	1
12	2D1930	SLEEVE	1
13	5B5973	GASKET	2
14	2D1928	PILOT	1
15	4H1790	SPRING	1

SP229

7D5460 OIL FILTER GROUP
Part of 7D9550 Transmission Lubrication System Group shown on Page 73

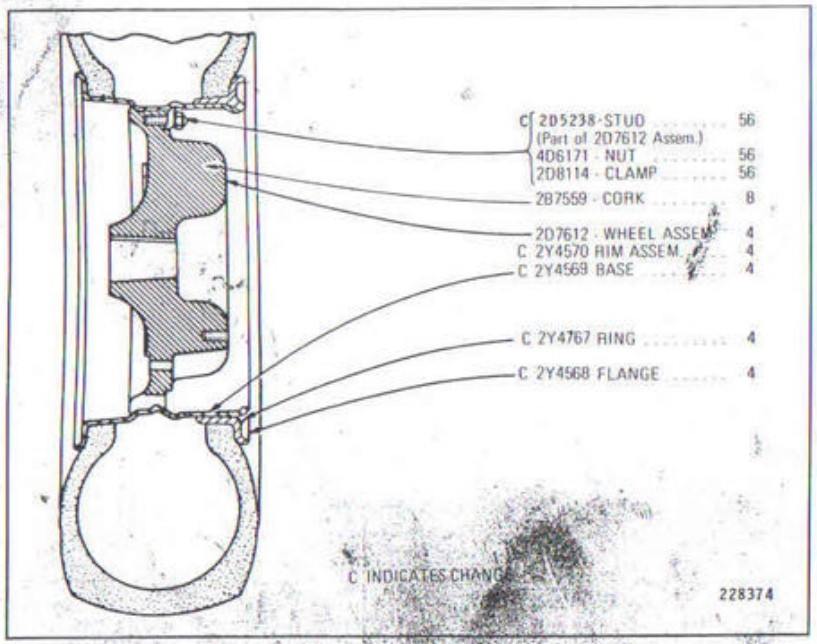

1G1660 REAR WHEELS AND TIRES GROUP—13.00 x 24 Tubeless Tires

7D7630 REAR AXLE GROUP

NOTE: QUANTITIES SHOWN ARE THOSE REQUIRED FOR R.H. AND L.H. SIDES

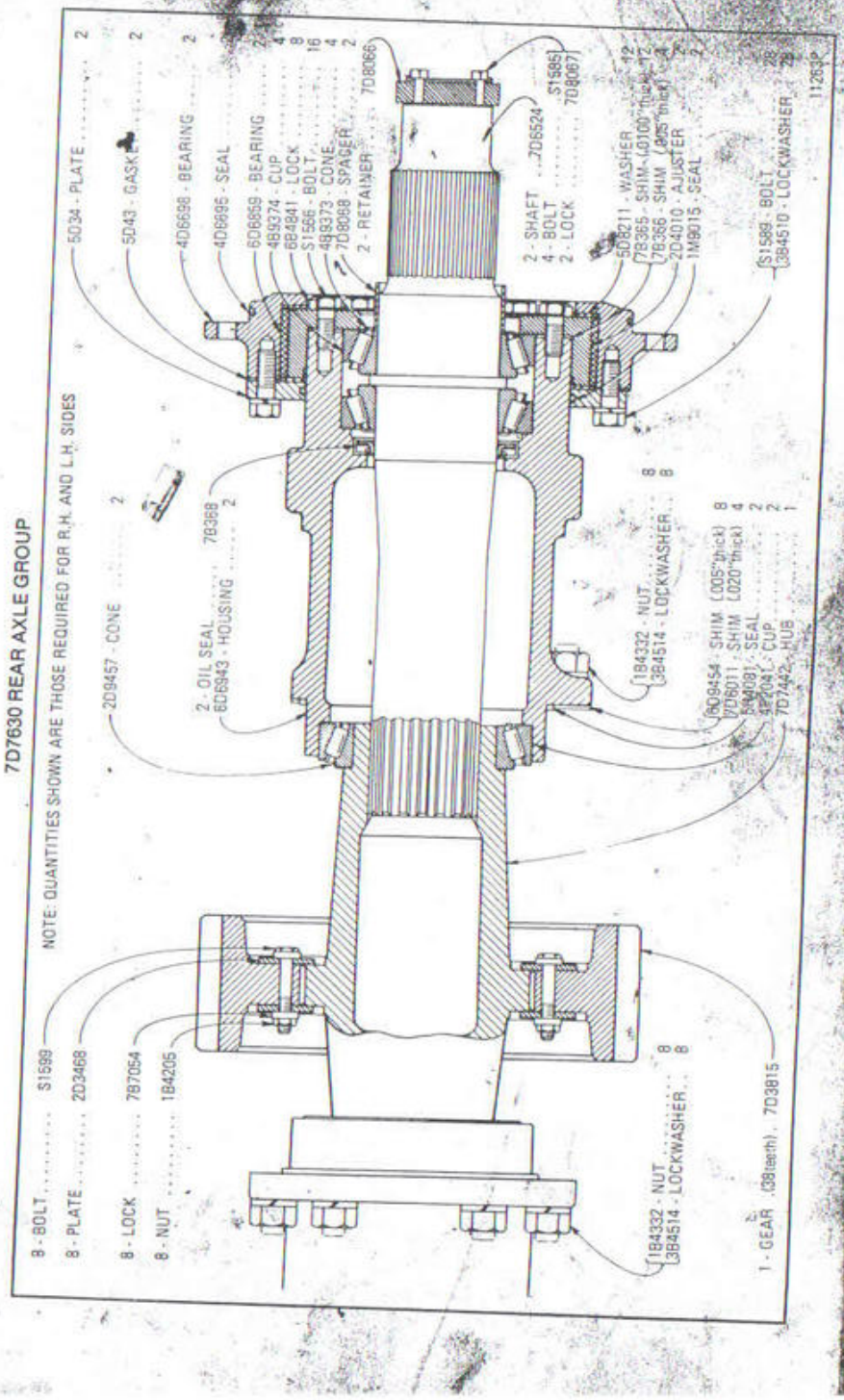

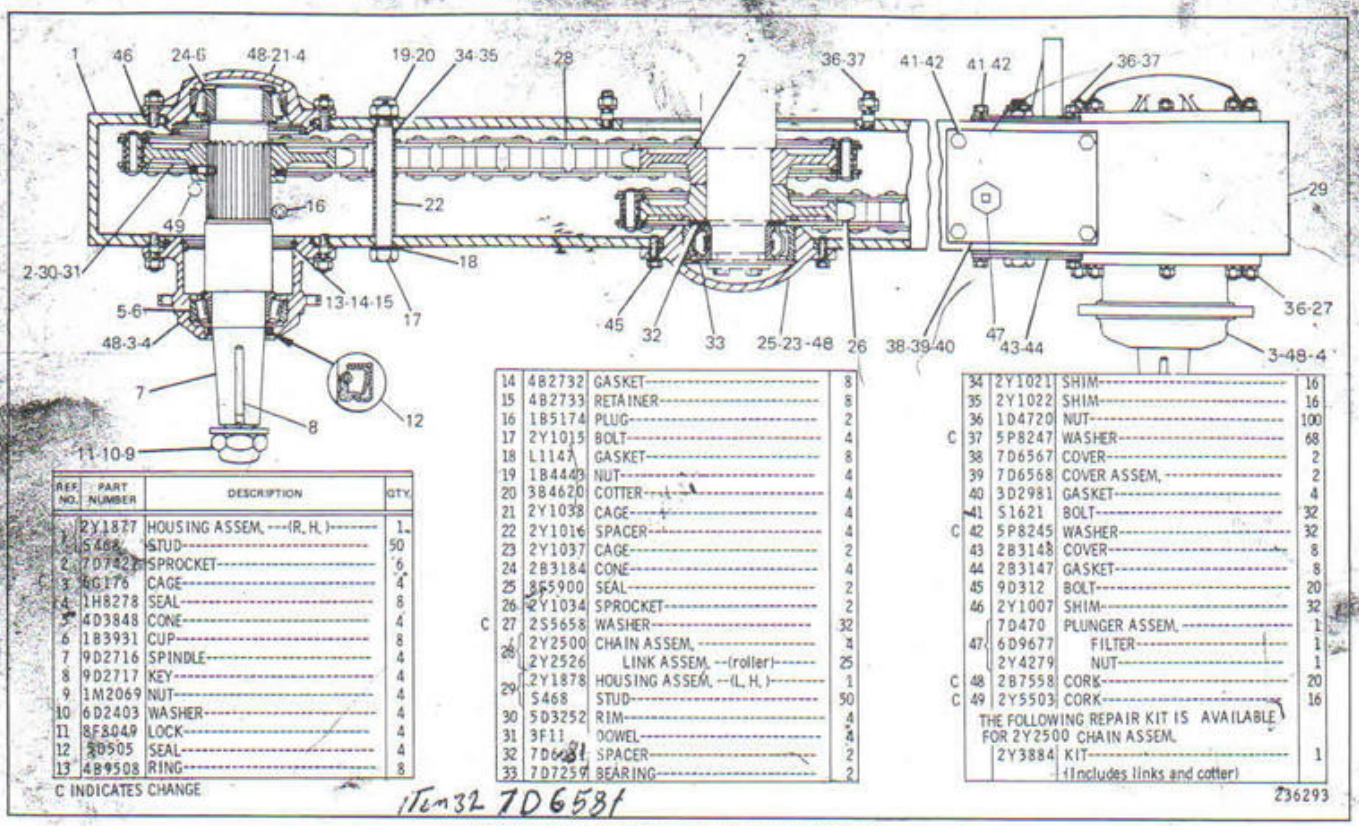

REF. NO.	PART NUMBER	DESCRIPTION	QTY.
	2Y1827	HOUSING ASSEM. ---(R. H.)----------	1
1	S468	STUD----------	50
2	7D7421	SPROCKET----------	6
C 3	6G176	CAGE----------	4
4	1H8278	SEAL----------	8
5	4D3848	CONE----------	4
6	1B3931	CUP----------	8
7	9D2716	SPINDLE----------	4
8	9D2717	KEY----------	4
9	1M2069	NUT----------	4
10	6D2403	WASHER----------	4
11	8F8049	LOCK----------	4
12	5D505	SEAL----------	4
13	4B9508	RING----------	8
14	4B2732	GASKET----------	8
15	4B2733	RETAINER----------	8
16	1B5174	PLUG----------	2
17	2Y1015	BOLT----------	4
18	L1147	GASKET----------	8
19	1B4449	NUT----------	4
20	3B4620	COTTER----------	4
21	2Y1038	CAGE----------	4
22	2Y1016	SPACER----------	4
23	2Y1037	CAGE----------	2
24	2B3184	CONE----------	4
25	8S5900	SEAL----------	2
26	2Y1034	SPROCKET----------	2
C 27	2S5658	WASHER----------	32
28	2Y2500	CHAIN ASSEM. ----------	1
	2Y2526	LINK ASSEM. --(roller)------	25
29	2Y1878	HOUSING ASSEM. --(L. H.)------	1
	S468	STUD----------	50
30	5D3252	RIM----------	4
31	3F11	DOWEL----------	4
32	7D6581	SPACER----------	2
33	7D7257	BEARING----------	2
34	2Y1021	SHIM----------	16
35	2Y1022	SHIM----------	16
36	1D4720	NUT----------	100
C 37	5P8247	WASHER----------	68
38	7D6567	COVER----------	2
39	7D6568	COVER ASSEM. ----------	2
40	3D2981	GASKET----------	4
41	S1621	BOLT----------	32
C 42	5P8245	WASHER----------	32
43	2B3148	COVER----------	8
44	2B3147	GASKET----------	8
45	9D312	BOLT----------	20
46	2Y1007	SHIM----------	32
	7D470	PLUNGER ASSEM. ----------	1
47	6D9677	FILTER----------	1
	2Y4279	NUT----------	1
C 48	2B7558	CORK----------	20
C 49	2Y5503	CORK----------	16
		THE FOLLOWING REPAIR KIT IS AVAILABLE FOR 2Y2500 CHAIN ASSEM.	
	2Y3884	KIT---------- (Includes links and cotter)	1

C INDICATES CHANGE

Item 32 7D6581

236293

2Y1040 TANDEM DRIVE HOUSING GROUP

2Y4902 HYDRAULIC BRAKE CONTROL GROUP
4B8759 Brake and 3D2219 Cylinder parts are shown on Page 80

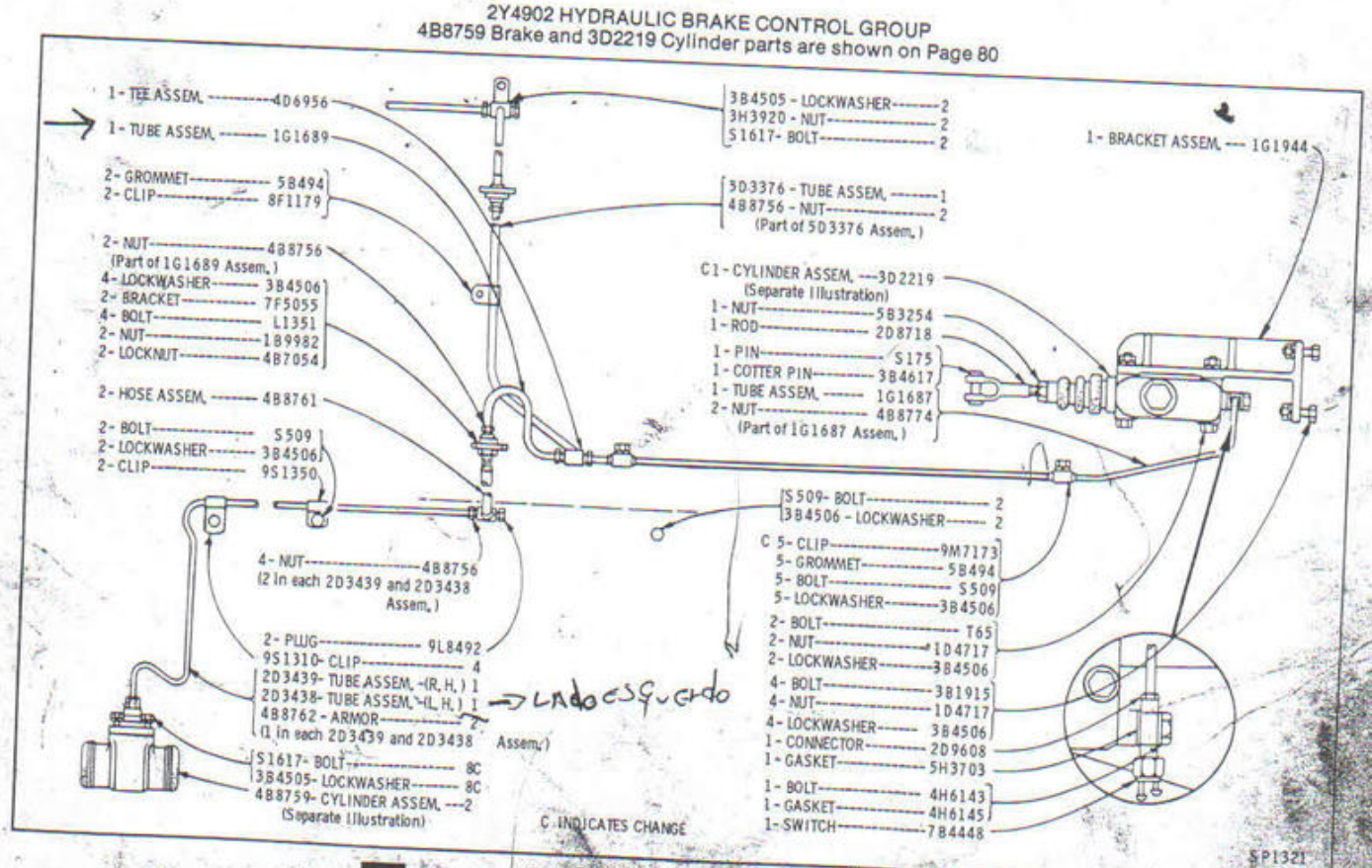

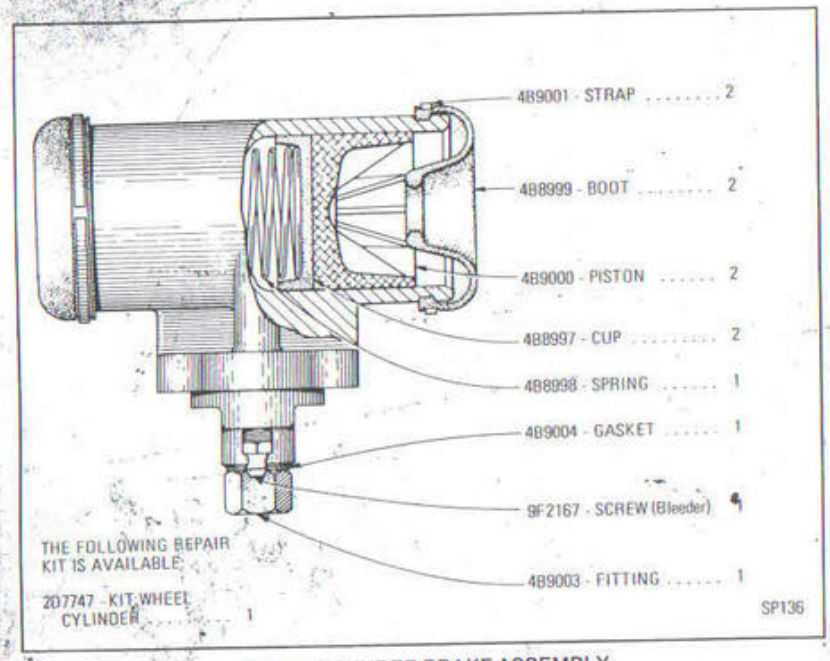

4B8759 CYLINDER BRAKE ASSEMBLY
Part of 2Y4902 Hydraulic Brake Control Group shown on Page 79

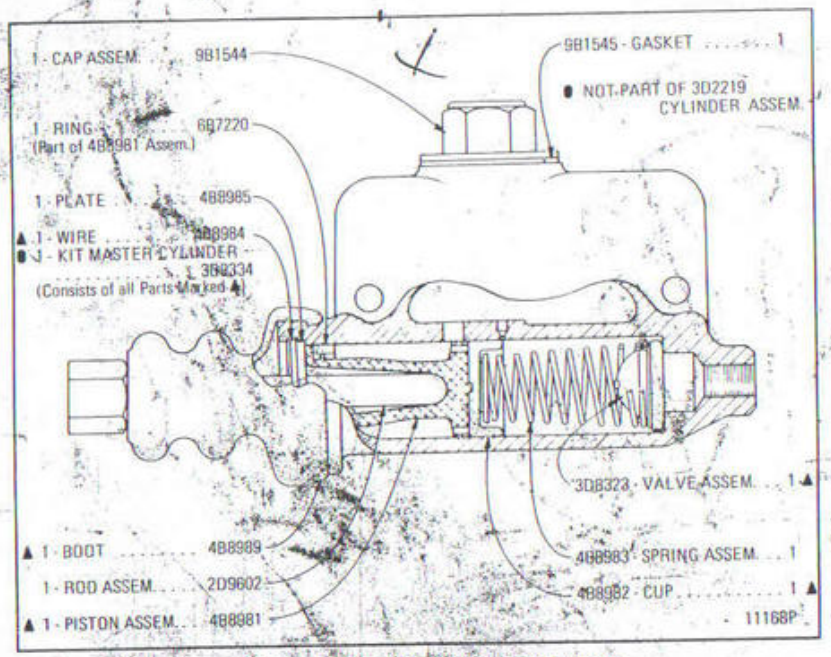

3D2219 MASTER CYLINDER ASSEMBLY
Part of 2Y4902 Hydraulic Brake Control Group shown on Page 79

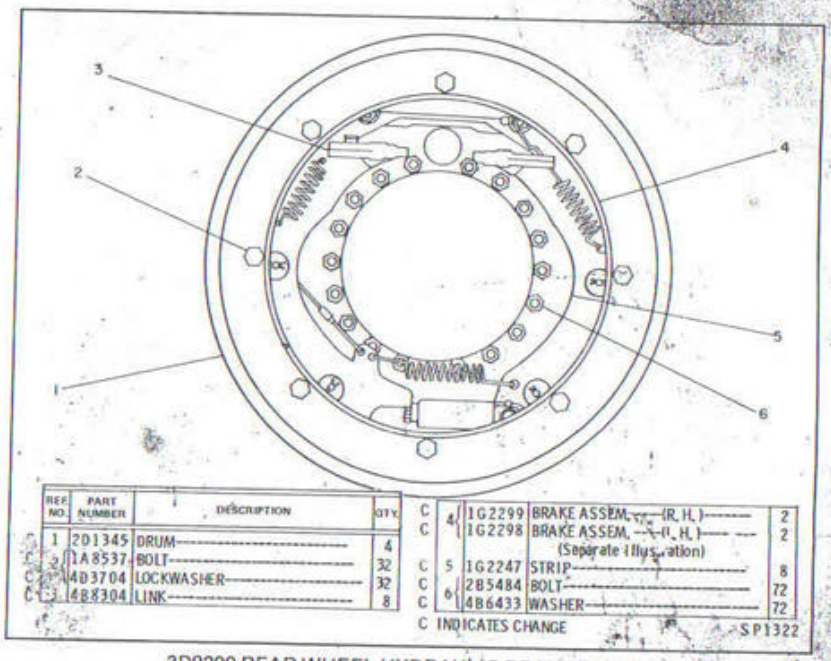

REF. NO.	PART NUMBER	DESCRIPTION	QTY.
1	2D1345	DRUM	4
C 2	1A8537	BOLT	32
C 3	4D3704	LOCKWASHER	32
C 3	4B8304	LINK	8
C 4	1G2299	BRAKE ASSEM. (R. H.)	2
C 4	1G2298	BRAKE ASSEM. (L. H.) (Separate Illustration)	2
C 5	1G2247	STRIP	8
C 6	2B5484	BOLT	72
C 6	4B6433	WASHER	72

C INDICATES CHANGE SP1322

3D9200 REAR WHEEL HYDRAULIC BRAKE GROUP
1G2298 and 1G2299 Brake parts are shown on Pages 82 and 83

flexível freio que fixa no Tandem

4B 8761

REF NO.	PART NUMBER	DESCRIPTION	QTY.
1	4B8317	PLATE	1
2	4B8305	SPRING	1
3	5D7987	WASHER	1
4	4B8312	SPRING	2
5	4D3273	SHOE AND LINING	1
6	1G2300	PLATE ASSEM.	1
7	4B8309	PIN	1
	3B4624	COTTER PIN	2
8	2Y3772	SCREW KIT-----(R.H.)	1
9	4D3271	PIN	1
10	4D3269	LEVER	1
11	4D3270	CABLE ASSEM.	1
	8D2365	CUP	8
12	2Y3796	RETAINER	4
	8D2369	SPRING	4
13	4D3266	GUIDE	1
14	4D3274	SHOE AND LINING	1
	4D3265	PIN	2
15	3B5753	NUT	2
	3B4518	LOCKWASHER	2
16	5D7988	WASHER	1
17	5D709	PLUG	2
18	4D3267	SPRING	1
		THE FOLLOWING REPAIR KIT IS AVAILABLE	
	4D4021	BRAKE LINING-----(kit)----- (Includes linings and rivets)	1

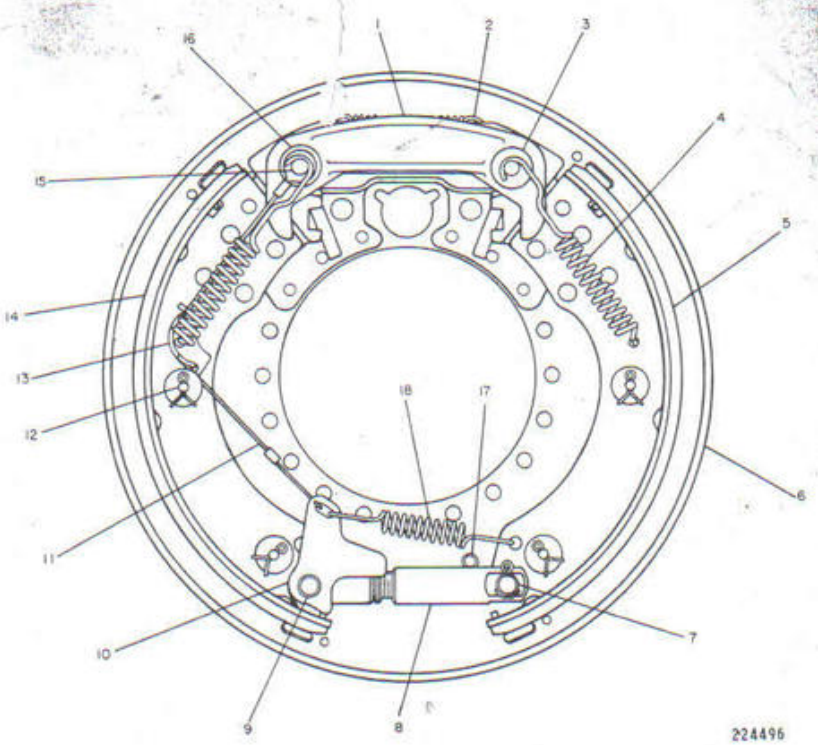

1G2298 BRAKE ASSEMBLY—L.H.
Part of 3D9200 Hydraulic Brake Group shown on Page 81

1G2299 BRAKE ASSEMBLY—R.H.
Part of 3D9200 Hydraulic Brake Group shown on Page 81

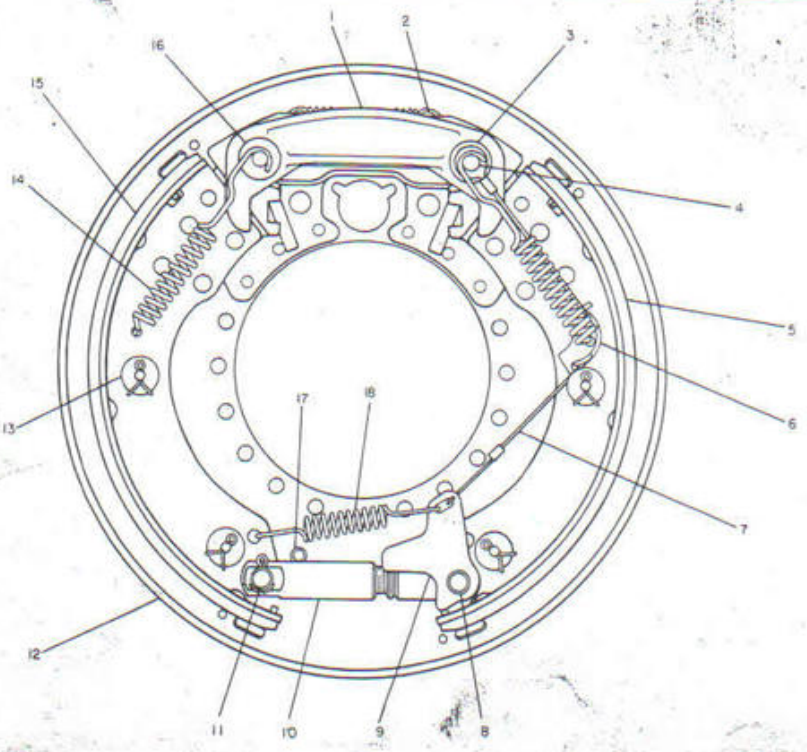

REF NO.	PART NUMBER	DESCRIPTION	QTY.
1	4B8317	PLATE	1
2	4B8305	SPRING	1
3	5D7988	WASHER	1
	4D3265	PIN	2
4	3B5753	NUT	2
	3B4518	LOCKWASHER	2
5	4D3273	SHOE AND LINING ASSEM.	1
6	4D3266	GUIDE	1
7	4D3270	CABLE ASSEM.	1
8	4D3271	PIN	1
9	4D3269	LEVER	1
10	2Y3773	SCREW KIT-----(L.H.)	1
	4B8309	PIN	1
11	3B4624	COTTER PIN	2
12	1G2300	PLATE ASSEM.	1
	8D2365	CUP	8
13	2Y3796	RETAINER	4
	8D2369	SPRING	4
14	4B8312	SPRING	2
15	4D3274	SHOE AND LINING ASSEM.	1
16	5D7987	WASHER	1
17	5D709	PLUG	2
18	4D3267	SPRING	1
		THE FOLLOWING REPAIR KIT IS AVAILABLE:	
	4D4021	BRAKE LINING-----(kit)----- (Includes linings and rivets)	1

224495

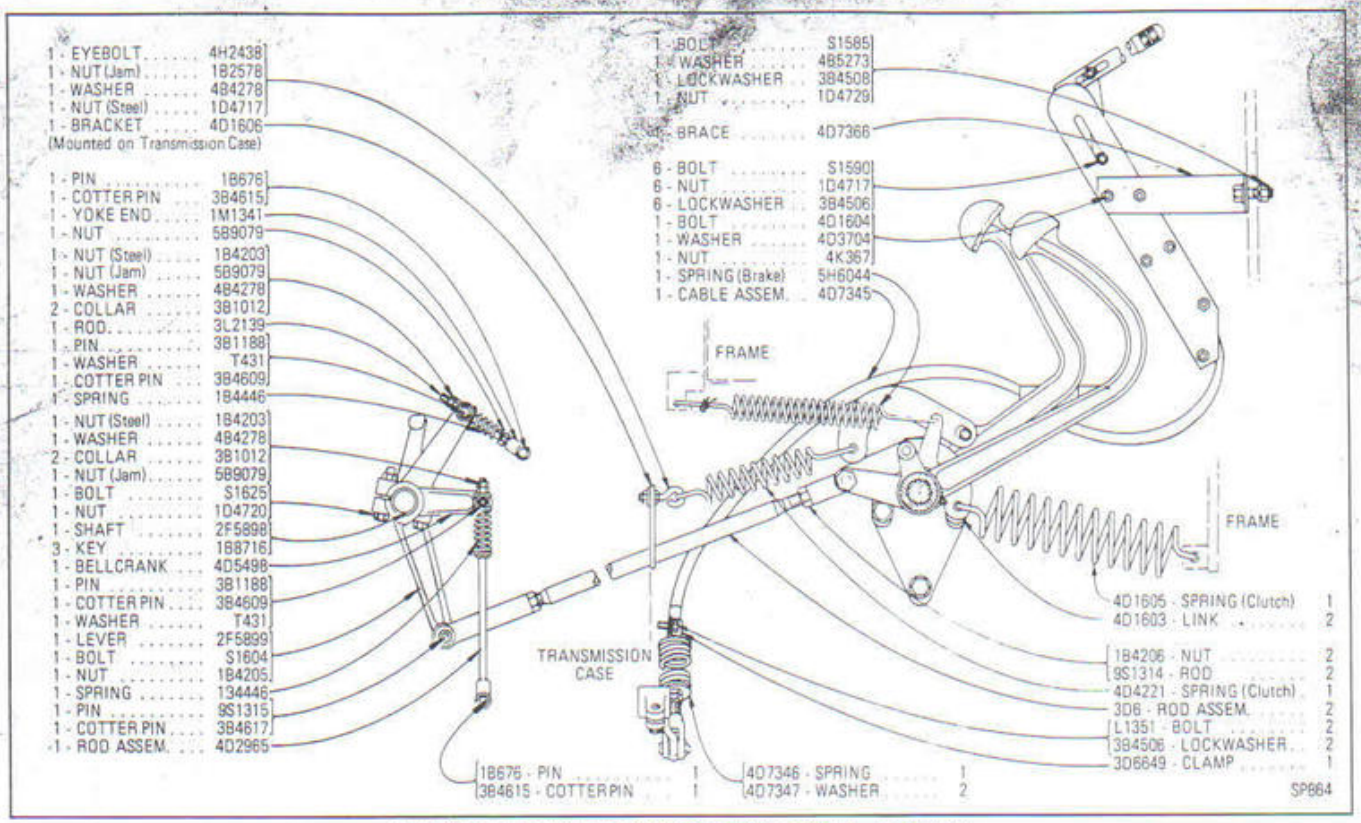

4D4170 CLUTCH AND BRAKE CONTROL GROUP—Side View

4D4170 CLUTCH AND BRAKE CONTROL GROUP—Front View

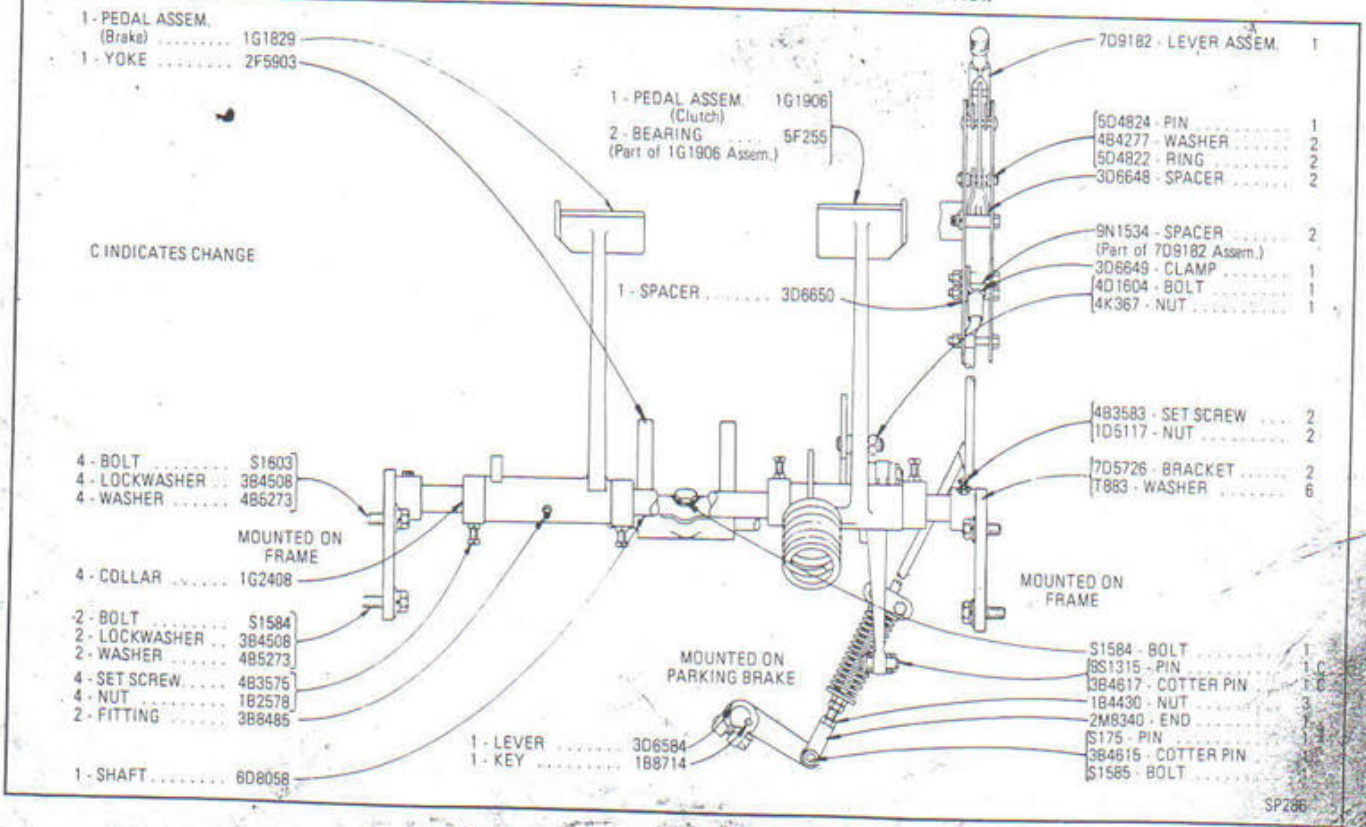

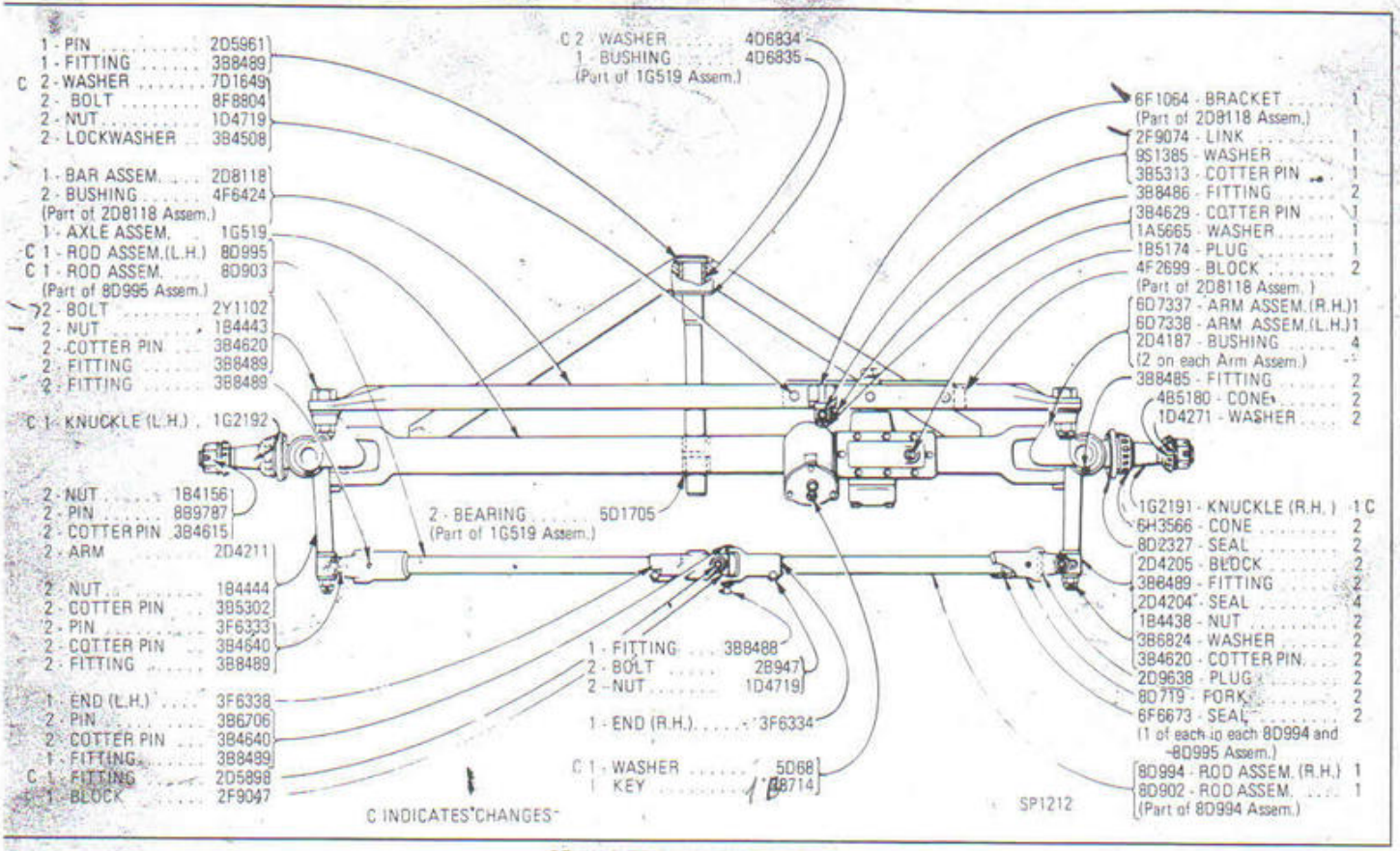

2D4140 FRONT AXLE GROUP

2D4140 FRONT AXLE GROUP—Sectional Views

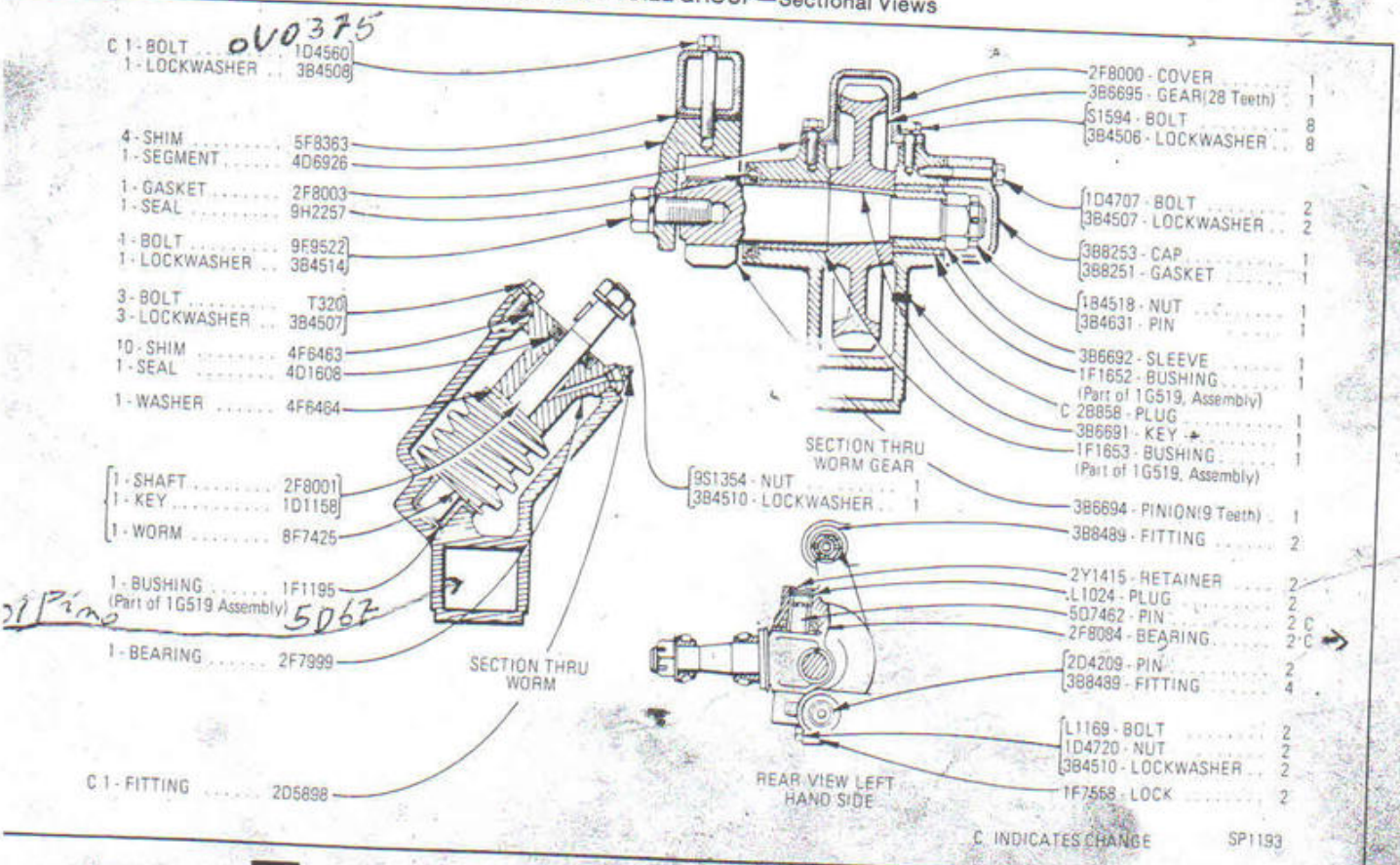

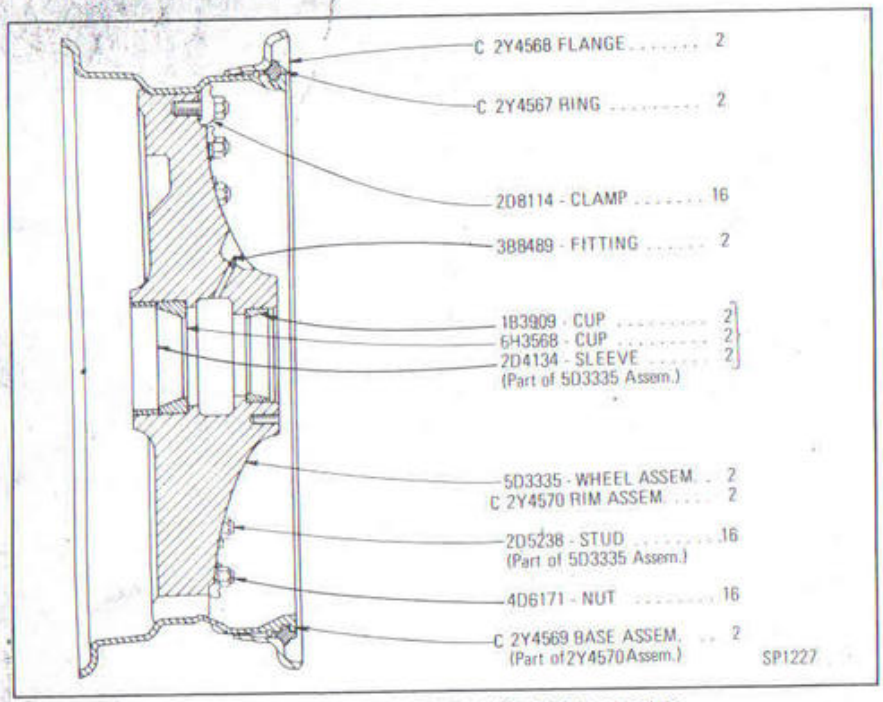

1G1655 FRONT WHEELS AND TIRES GROUP

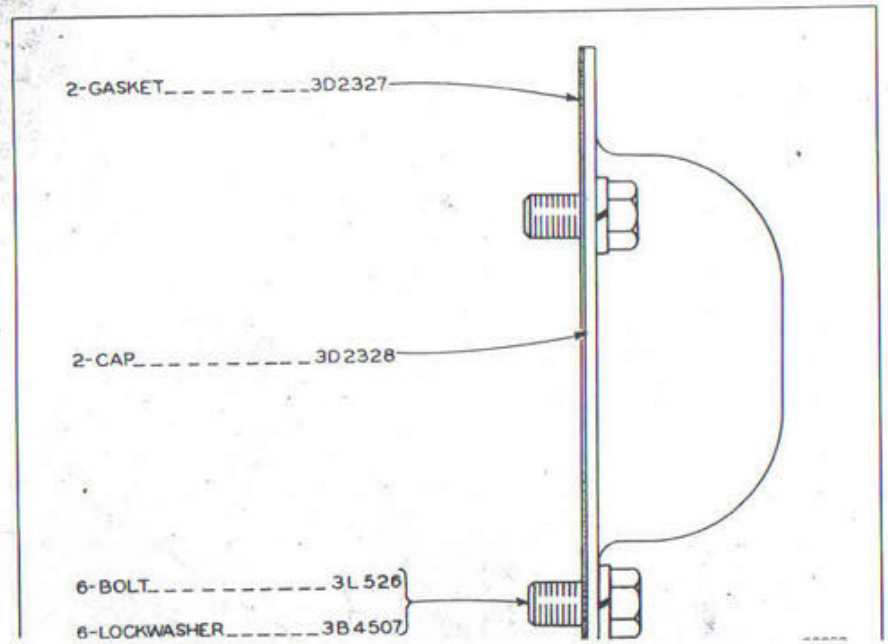

6D4430 RADIATOR SUPPORT GROUP

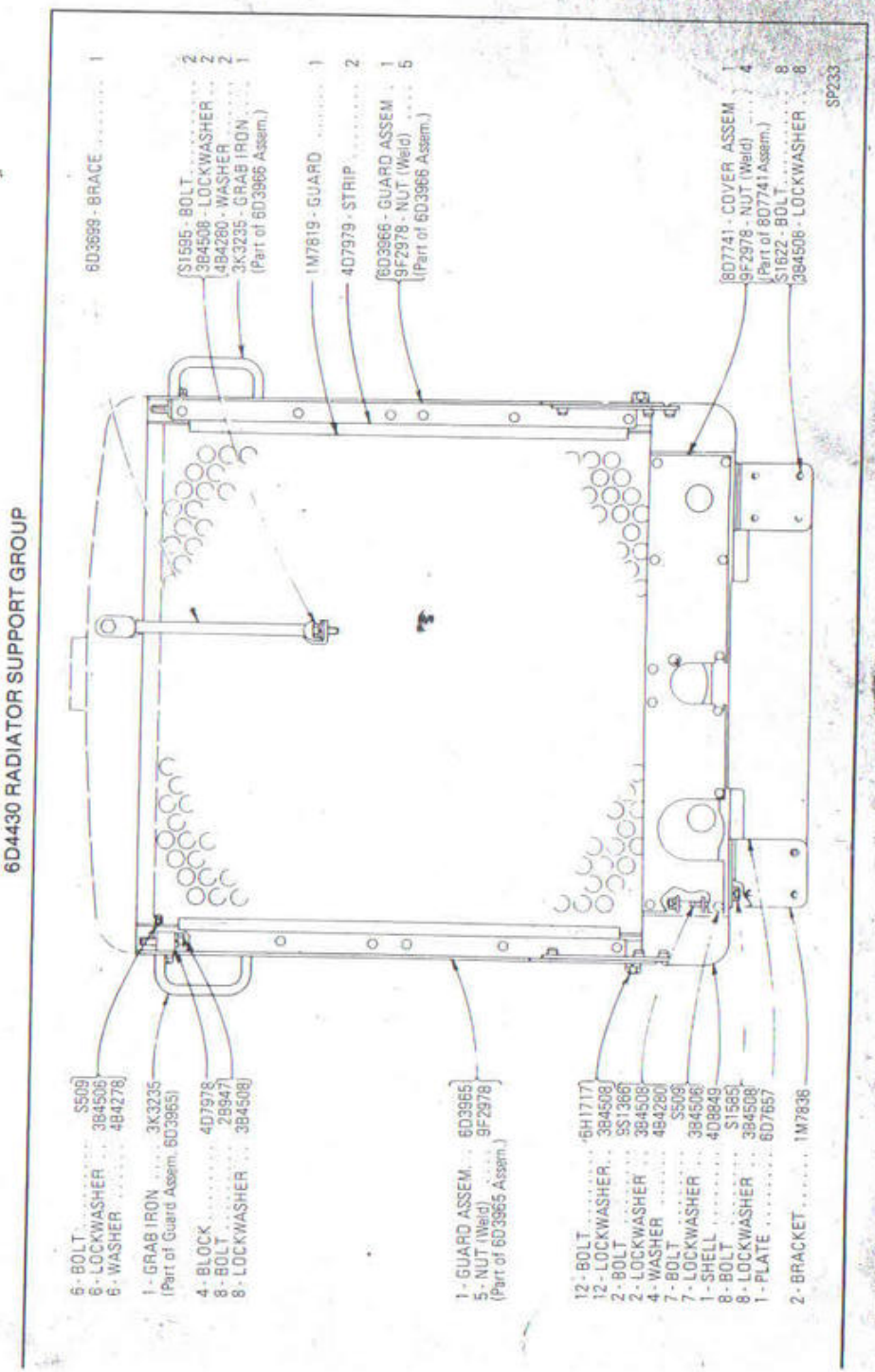

2D7900 CIRCLE GROUP

Circle Reversing Mechanism parts are shown on Page 91

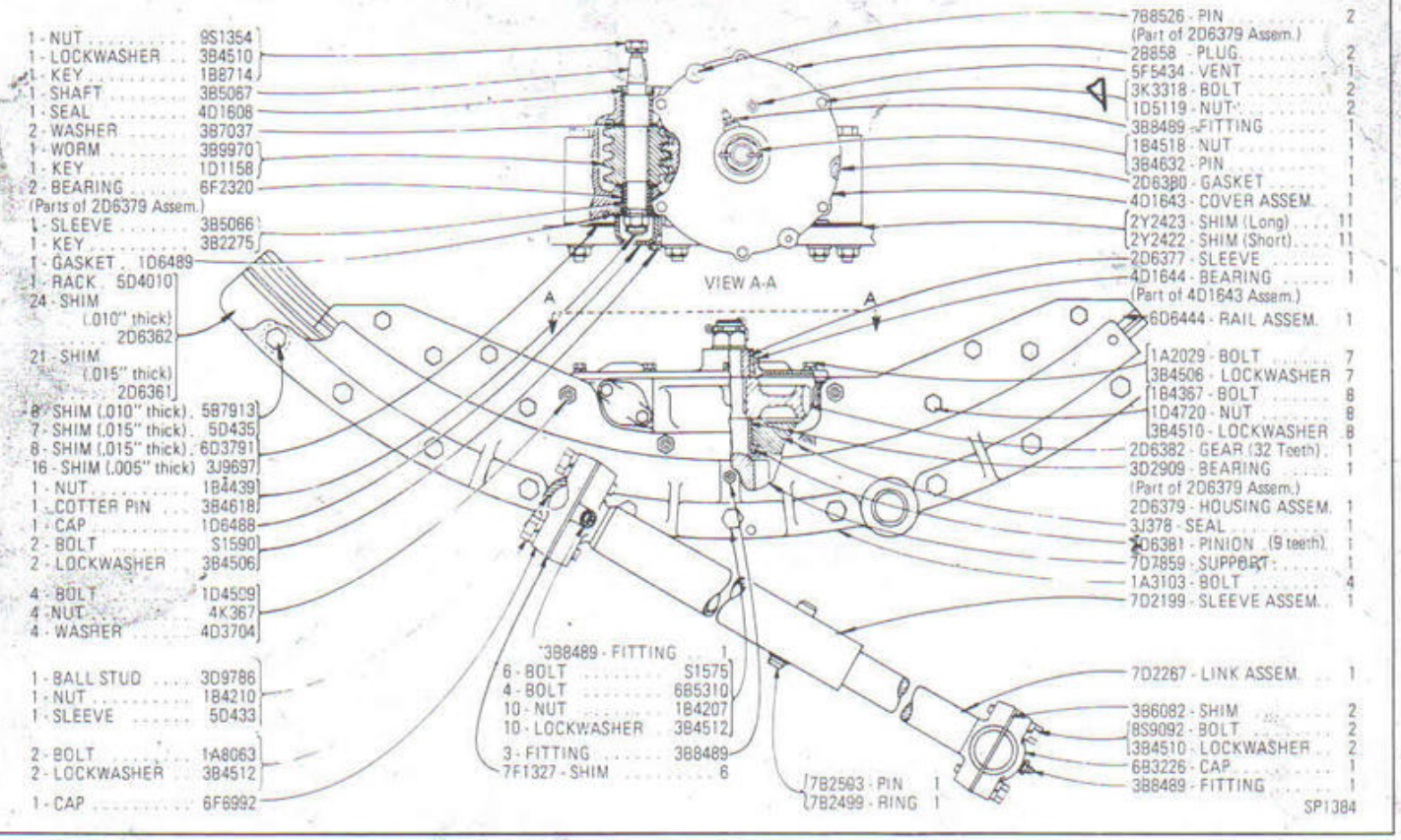

2D6400 CENTERSHIFT GROUP

2Y2280 FRAME GROUP

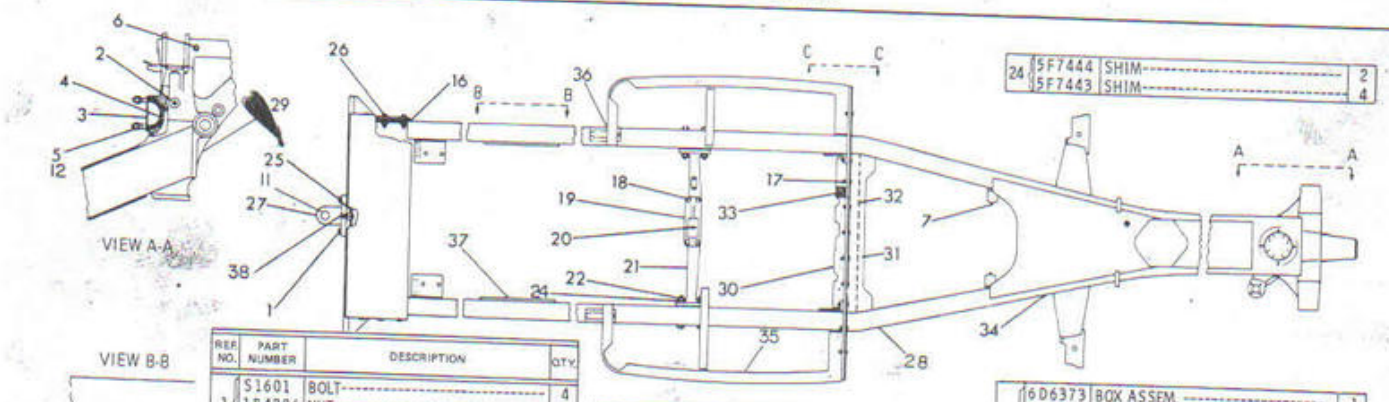

REF. NO.	PART NUMBER	DESCRIPTION	QTY.
1	S1601	BOLT	4
	1B4206	NUT	4
	3B4510	LOCKWASHER	4
2	2D4867	FITTING	1
3	4D9774	SHIM	2
	7F8987	SHIM	2
4	4B8478	SOCKET	1
5	1B4332	NUT	4
	3B4514	LOCKWASHER	4
6	6F7033	BOLT	1
	1B4205	NUT	1
	3B4508	LOCKWASHER	1
7	3B8485	FITTING	2
C 8	2Y4819	PLATE	1
C	S1584	BOLT	2
C 9	1B4205	NUT	2
C	3B4508	LOCKWASHER	2
	2A3223	BOLT	2
10	1B4205	NUT	2
	3B4508	LOCKWASHER	2
C 11	1M4980	PIN	1
C	3B5319	COTTER PIN	1
C 12	4D7259	STUD	4
13	1D4643	BOLT	4
	2Y3791	LOCK	4
14	4B8471	CAP	4
	4B8459	SHIM	4
15	3B8487	FITTING	2
16	5D727	SHIM	2
17	2B5484	BOLT	8
	1B4204	NUT	9
	3B4507	LOCKWASHER	9
18	S1587	BOLT	4
	3B4508	LOCKWASHER	4
19	3D5309	BRACKET	1
	3D5314	SHIM	2
	3D5313	SHIM	4
20	3B8488	FITTING	4
21	5D1963	SUPPORT	1
22	1D4634	BOLT	4
	1B4332	NUT	4
	3B4514	LOCKWASHER	4
C 23	S1571	BOLT	4
C	1D4717	NUT	4
C	3B4506	LOCKWASHER	4
24	5F7444	SHIM	2
	5F7443	SHIM	4
25	6D6373	BOX ASSEM.	1
	2Y3744	COVER ASSEM.	1
	2Y1286	COVER ASSEM.	1
	2Y1279	COVER	1
	2Y1284	LUG	1
26	8S9092	BOLT	12
	1D4720	NUT	12
	3B4510	LOCKWASHER	12
27	4D6999	LUG ASSEM.	1
28	2Y2270	FRAME ASSEM.	1
29	2Y2230	BOLSTER ASSEM.	1
	4D5279	STUD	4
	7F7278	BEARING	1
30	4B9679	ANGLE	1
31	5H3044	PLATE	1
32	6F4673	PLATE	1
33	4D1607	LUG	1
34	4B8467	BEARING	2
35	1G1694	BRACKET ASSEM. (R. H.)	1
	1G1800	BEARING	2
36	2Y2656	BRACKET ASSEM. (L. H.)	1
37	1G904	BRACKET	2
38	2Y4071	PADLOCK	1

C INDICATES CHANGE

237554

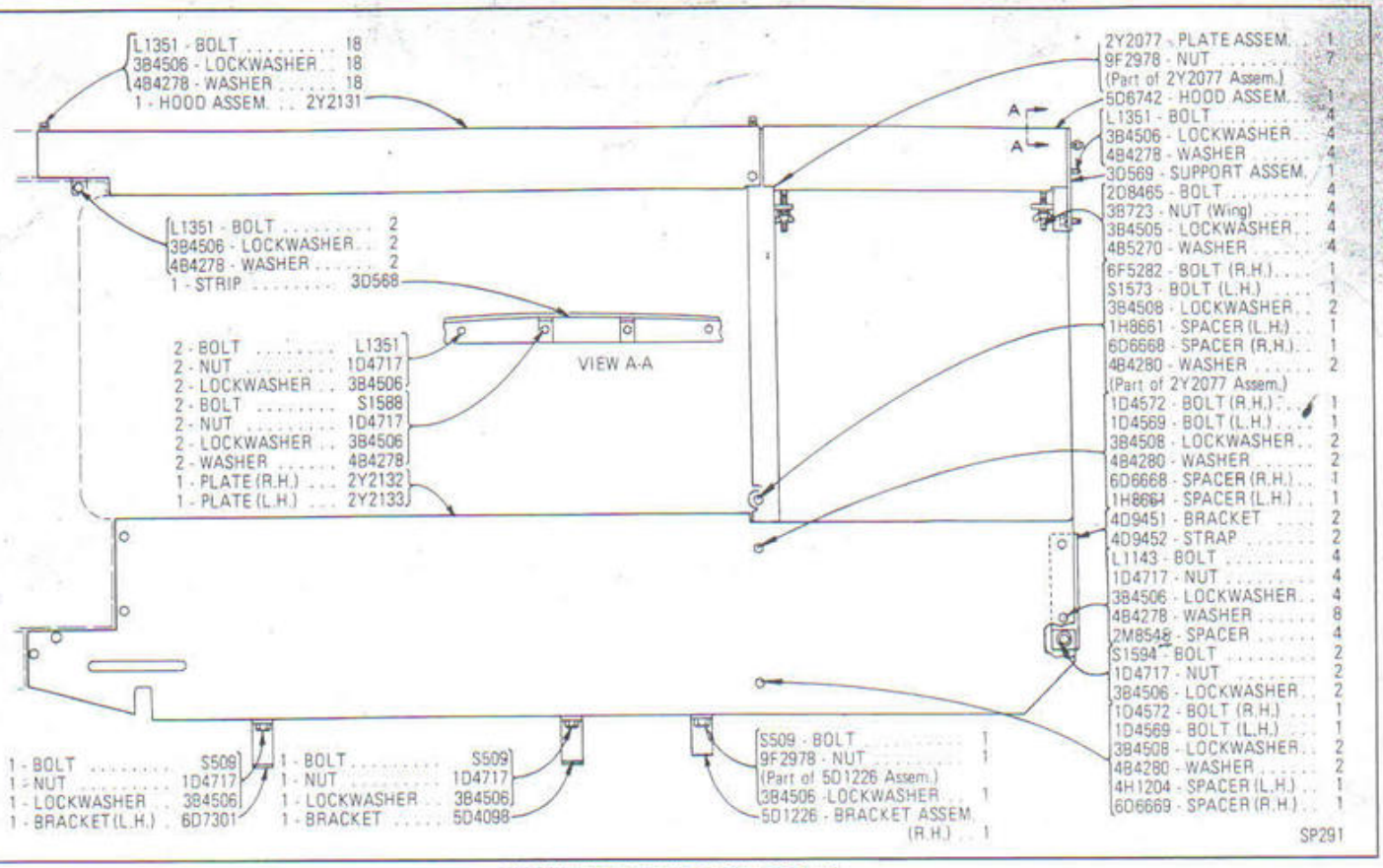

2Y2875 HOOD AND DASH GROUP

1G643 TANK AND PUMP GROUP

Part of 2Y2160 Hydrostatic Steering Group shown on Page 96. 1G642 Steering Gear Tank, 2Y2175 Valve and 2Y3734 Hydraulic Pump parts are shown on Pages 98 and 99

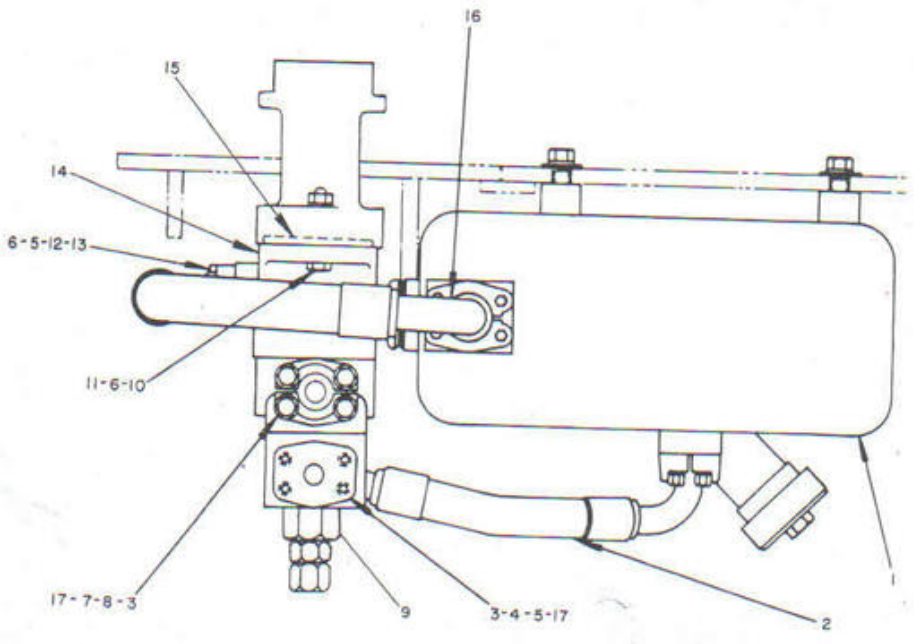

	REF. NO.	PART NUMBER	DESCRIPTION	QTY.
	1	1G642	TANK GROUP (Separate Illustration)	1
		2Y1315	HOSE ASSEM. --(not serviced)--- For Service Furnish:	1
		8M2716	STEM	2
	2	8M1631	CLAMP	4
		S1571	BOLT	4
		1D4717	NUT	4
▲		9S247	HOSE . . 9.06in. (23 cm)	
C	3	2K190	FLANGE	4
	4	5F1678	SEAL	1
	5	S1588	BOLT	8
C	6	3B4506	LOCKWASHER	2
	7	8S9191	BOLT	4
	8	5F1678	SEAL (Between Valve & Pump)	1
	9	2Y2175	VALVE GROUP (Separate Illustration)	1
	10	L2070	BOLT	2
	11	1D4717	NUT	2
	12	4F7391	SEAL	1
	13	2Y1349	FLANGE	2
	14	2Y3734	PUMP ASSEM. (Separate Illustration)	1
	15	2H3931	SEAL (Between Support and Pump)	1
	16	2Y1314	HOSE ASSEM. . 43.48cm (17.12in.)	1
C	17	5M2894	WASHER	12

▲ ORDER BY THE INCH

C INDICATES CHANGE

179421

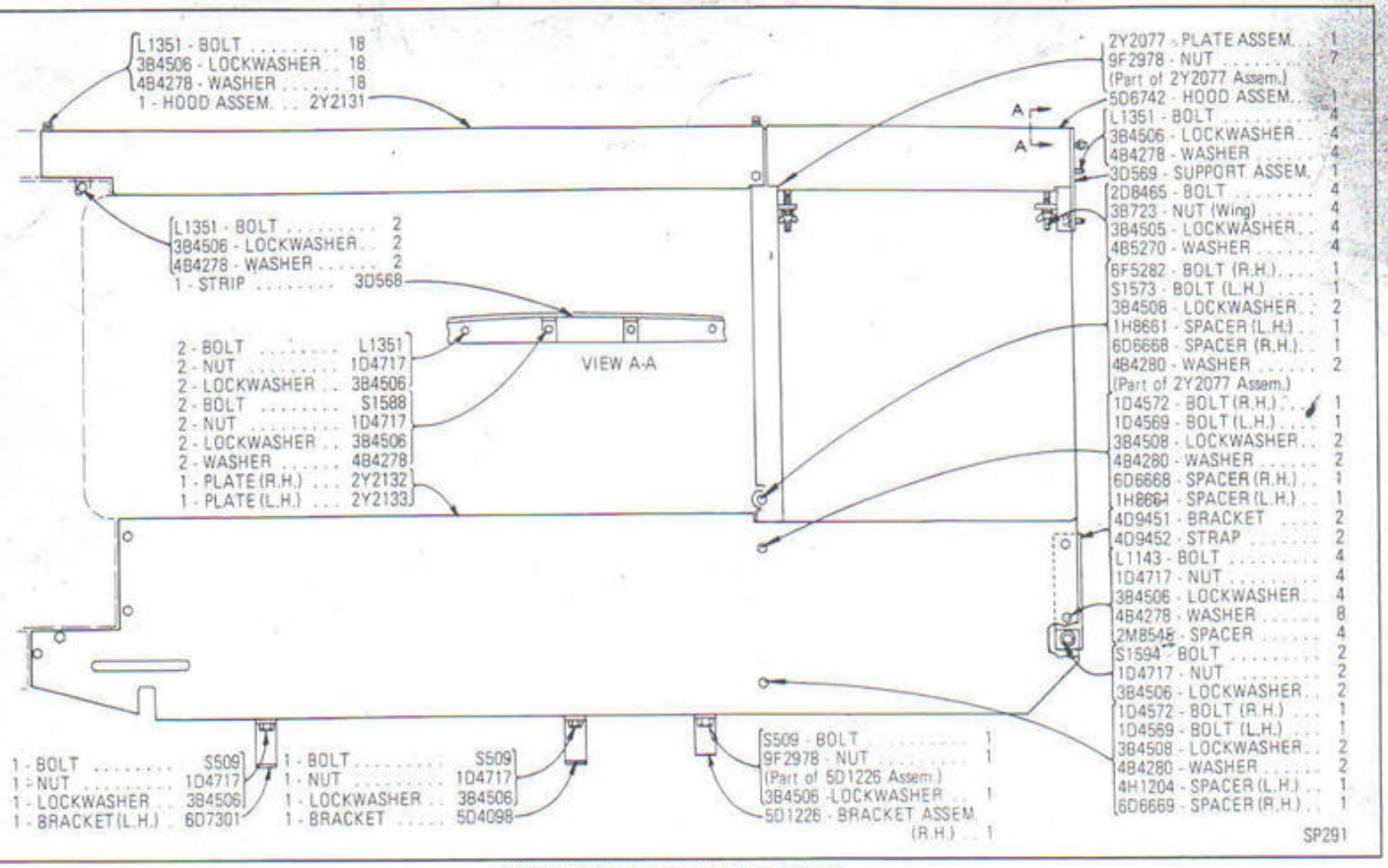

2Y2875 HOOD AND DASH GROUP

1G643 TANK AND PUMP GROUP

Part of 2Y2160 Hydrostatic Steering Group shown on Page 96. 1G642 Steering Gear Tank, 2Y2175 Valve and 2Y3734 Hydraulic Pump parts are shown on Pages 98 and 99

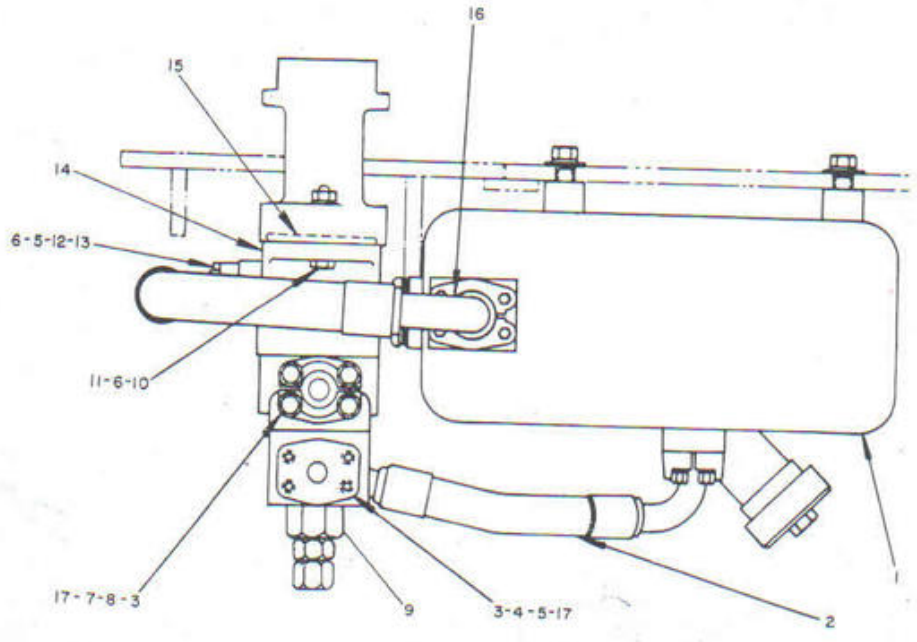

	REF. NO.	PART NUMBER	DESCRIPTION	QTY.
	1	1G642	TANK GROUP (Separate Illustration)	1
		2Y1315	HOSE ASSEM. --(not serviced)--- For Service Furnish:	1
		8M2716	STEM	2
	2	8M1631	CLAMP	4
		S1571	BOLT	4
		1D4717	NUT	4
▲		9S247	HOSE . . 9.06in. (23 cm)	
C	3	2K190	FLANGE	4
	4	5F1678	SEAL	1
	5	S1588	BOLT	8
C	6	3B4506	LOCKWASHER	2
	7	8S9191	BOLT	4
	8	5F1678	SEAL (Between Valve & Pump)	1
	9	2Y2175	VALVE GROUP (Separate Illustration)	1
	10	L2070	BOLT	2
	11	1D4717	NUT	2
	12	4F7391	SEAL	1
	13	2Y1349	FLANGE	2
	14	2Y3734	PUMP ASSEM. (Separate Illustration)	1
	15	2H3931	SEAL (Between Support and Pump)	1
	16	2Y1314	HOSE ASSEM. . 43.48cm (17.12in.)	1
C	17	5M2894	WASHER	12

▲ ORDER BY THE INCH

C INDICATES CHANGE

179421

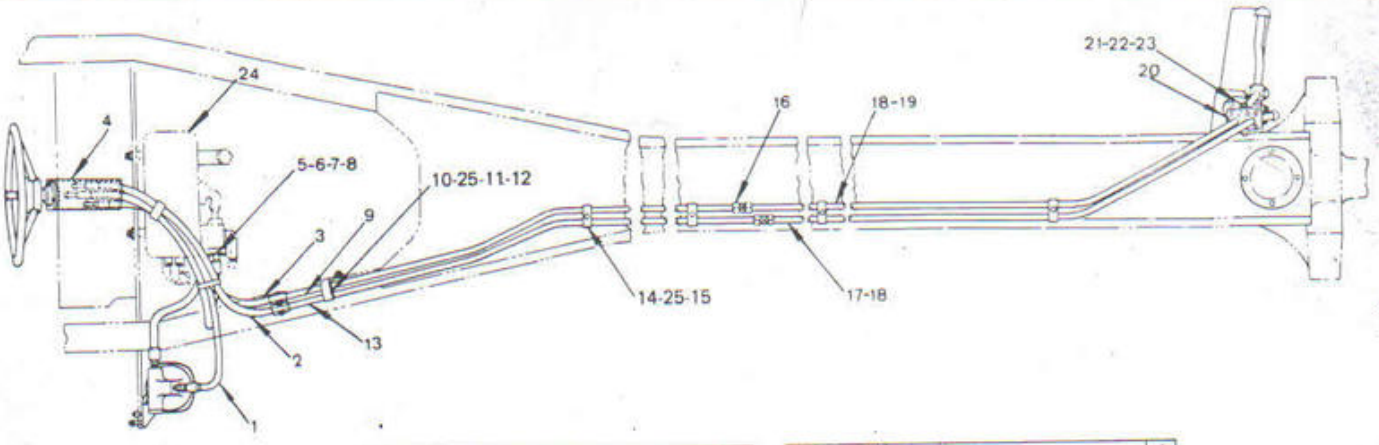

REF. NO.	PART NUMBER	DESCRIPTION	QTY.
1	2Y3661	HOSE ASSEM.	1
2	2Y3662	HOSE ASSEM.	1
3	2Y3659	HOSE ASSEM.	1
4	2Y3679	COVER ASSEM.	1
5	5F1678	SEAL	1
C 6	2K190	FLANGE	2
C 7	5M2894	WASHER	4
8	S1588	BOLT	4
9	2Y2151	TUBE ASSEM.	1
10	T431	WASHER	1
11	L1351	BOLT	1
12	2D1076	CLAMP	1
13	2Y2152	TUBE ASSEM.	1
14	5H3125	CLAMP	4
15	S509	BOLT	4
16	7F6696	FITTING	2
17	2Y2148	TUBE ASSEM.	1
18	5F7054	SEAL	2
19	2Y2147	TUBE ASSEM.	1
20	3F6731	BLOCK	1
21	1A1952	BOLT	1
22	9B1006	WASHER	1
23	3B4508	LOCKWASHER	1
24	1G643	TANK AND PUMP GROUP (Separate Illustration)	1
25	3B4506	LOCKWASHER	4

C INDICATES CHANGE

236295

2Y2160 HYDROSTATIC STEERING GROUP—Part 1
1G643 Tank and Pump parts are shown on Page 95

2Y2160 HYDROSTATIC STEERING GROUP—Part 2
3G9801 Metering Pump, 4J4115 Cylinder and 2D2150 Filter parts are shown on Pages 100, 101 and 102

ITEM	PART NO.	DESCRIPTION	QTY.
1	2Y2157	SUPPORT	1
2	2Y2231	STEERING WHEEL	1
3	S1594	BOLT	3
4	4J7002	STRAP	3
5	2B2695	BOLT	4
6	2Y2159	ADAPTER	4
7	2Y3656	HOSE ASSEM.	1
8	5F1678	SEAL	1
9	3B4506	LOCKWASHER	8
10	5F7054	SEAL	4
C 11	4B4508	LOCKWASHER	13
C 12	9M1974	WASHER	16
C 13	4B3388	BOLT	24
C 14	2Y1346	FLANGE	8
15	4J4115	CYLINDER GROUP (Separate Illustration)	1
16	7B3235	BOLT	8
17	3B8489	FITTING	3
18	3D444	PIN	2
19	3D404	WASHER	1
20	3B4520	LOCKWASHER	1
21	1A4168	NUT	1
22	5M5016	NUT	2
23	3D6711	LOCK	1
24	3D403	WASHER	1
25	2Y2158	SHAFT	1
26	3D410	ARM ASSEM.	1
27	3D4505	BEARING	2
28	V375	BOLT	1
29	1D4719	NUT	1
30	4D7358	PIN	1
31	6D1599	BLOCK	1
32	2Y1993	SHAFT	1
33	1G1672	NUT	1
34	3B4620	COTTER	2
35	1B4438	NUT	1
36	1F1470	CAP	1
37	3B8488	FITTING	1
38	1G591	COVER	1
39	2Y2166	HOSE ASSEM.	1
40	2Y2165	HOSE ASSEM.	1
C 41	S1603	BOLT	2
C 42	1B4205	NUT	3
43	S1595	BOLT	1
44	2A3223	BOLT	1
45	8M1630	FLANGE	4
46	1A9579	BOLT	4
47	1D4716	NUT	4
48	2Y1344	HOSE ASSEM.	1
49	2D2150	FILTER GROUP (Separeate Illustration)	1
50	T102	BOLT	4
51	2Y2221	COVER	1
52	3B4505	LOCKWASHER	12
C 53	3G9801	STEERING GEAR GP. (Separate Illustration)	1
54	T431	WASHER	2

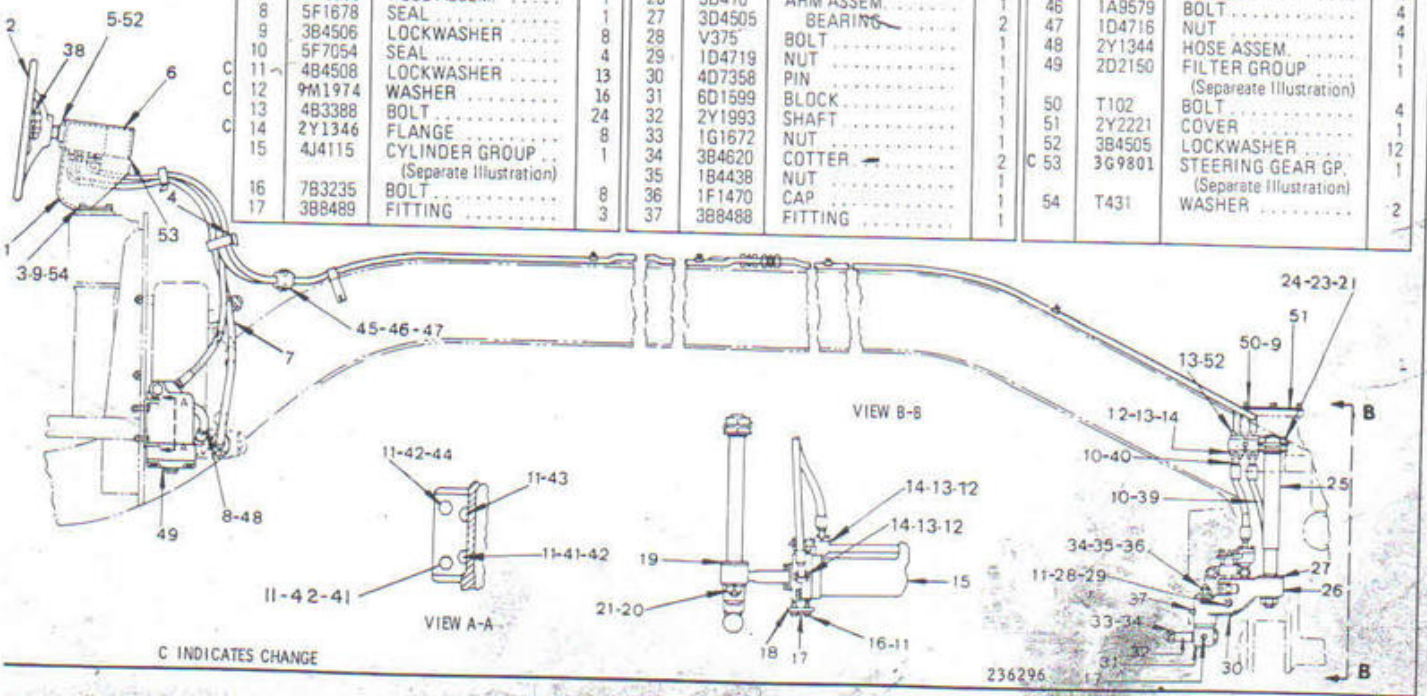

C INDICATES CHANGE

236296

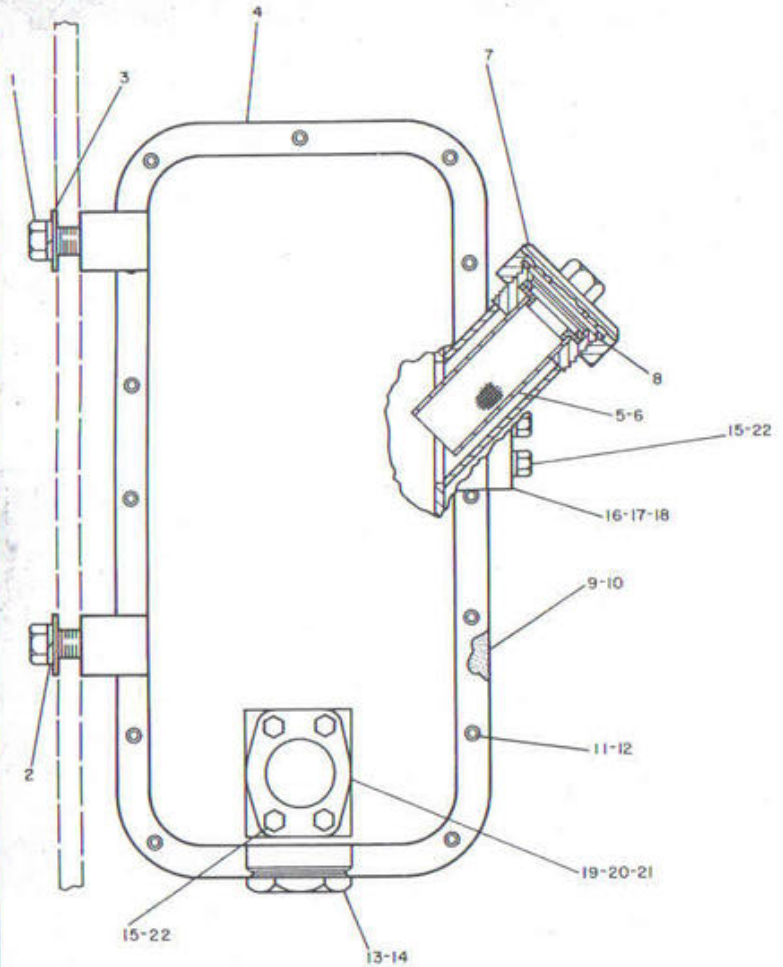

REF. NO.	PART NUMBER	DESCRIPTION	QTY.
1	S1585	BOLT	4
2	3B4508	LOCKWASHER	4
3	4B5273	WASHER	4
4	1G623	TANK ASSEM.	1
5	1G629	STRAINER ASSEM.	1
6	1G634	RING	1
7	4D307	CAP ASSEM.	1
8	4D306	GASKET	1
9	1G1354	GASKET	1
10	1G1353	COVER	1
11	3B1915	BOLT	16
12	3B4506	LOCKWASHER	16
13	2D8390	PLUG	1
14	6F4868	GASKET	1
15	S1588	BOLT	8
C 16	2K190	FLANGE	2
17	5H4018	COVER	1
18	5F1678	SEAL	1
C 19	2Y1349	FLANGE	2
20	5H4019	COVER	1
21	4F7391	SEAL	1
C 22	5M2894	WASHER	8

C INDICATES CHANGE

179695

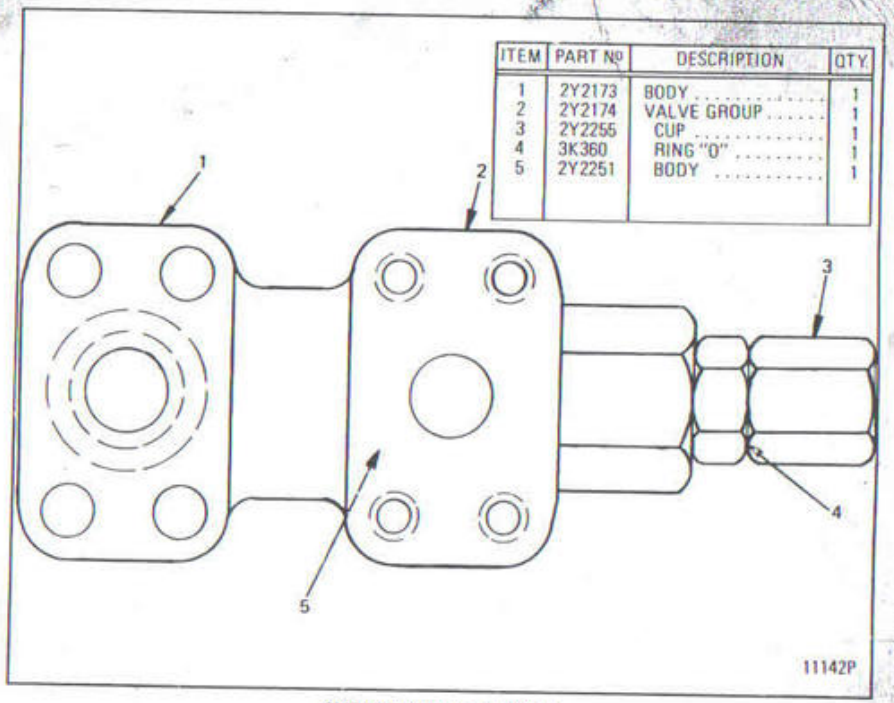

ITEM	PART No	DESCRIPTION	QTY.
1	2Y2173	BODY	1
2	2Y2174	VALVE GROUP	1
3	2Y2255	CUP	1
4	3K360	RING "O"	1
5	2Y2251	BODY	1

2Y2175 VALVE GROUP

Part of 1G643 Tank and Pump Group shown on Page 95

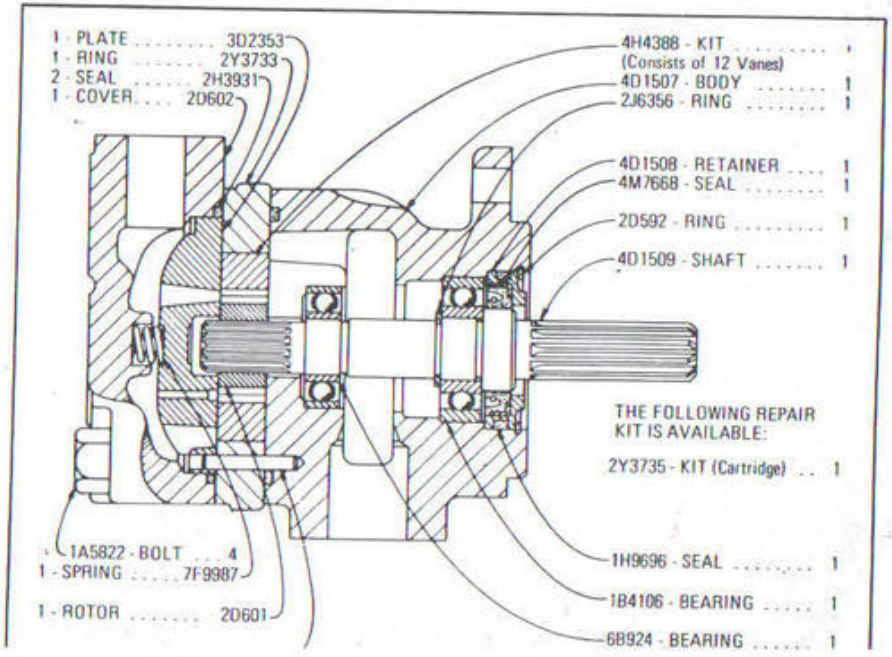

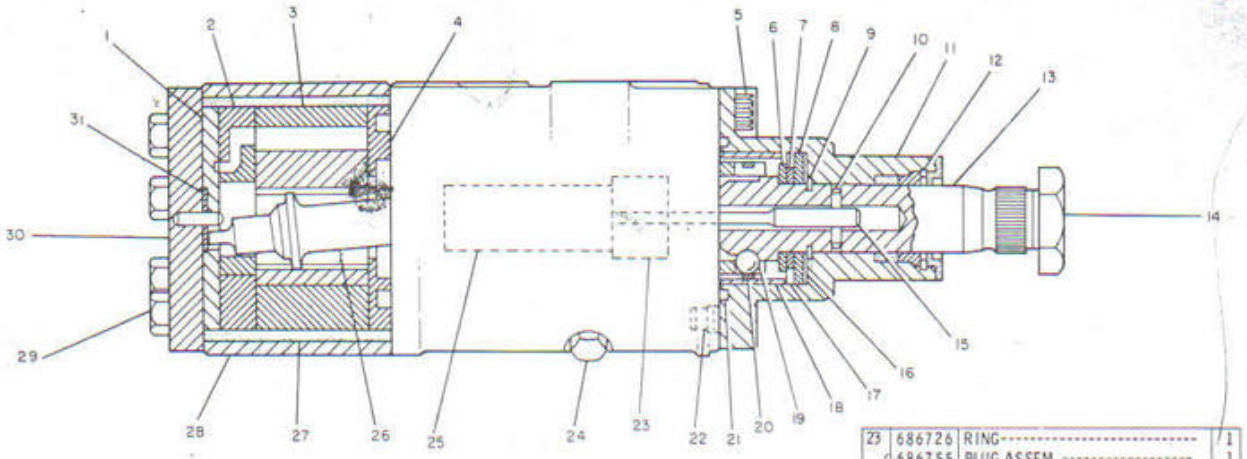

REF NO.	PART NUMBER	DESCRIPTION	QTY
1	686750	COMMUTATOR ASSEM.	1
2	686749	MANIFOLD	1
3	2Y2705	ROTOR	1
4	686747	SPACER	1
5	1T416	BOLT	4
6	687652	BEARING	1
7	686733	BEARING	1
8	686732	WASHER	1
9	686728	RING	1
10	6L6035	ROLLER	1
11	694257	COVER	1
12	2D6398	RING	1
13	358038	SHAFT	1
14	6321	NUT	1
15	354297	BAR	1
16	686729	SHIM-----.25 mm(.010 in.) thick	4
	686730	SHIM-----.13 mm(.005 in.) thick	4
	686731	SHIM-----.064 mm(.003 in.) thick	1
	687651	SHIM-----.76 mm(.030 in.) thick	1
17	354296	SPRING	1
18	686735	SPACER	1
19	4B9880	BALL	1
20	686734	SPRING	1
21	686739	SEAL	1
22	686737	PLUG ASSEM. (Includes)	1
	3G1209	SEAL	1
	8F9538	RING	1
23	686726	RING	1
24	686755	PLUG ASSEM. (Includes)	1
	4J5477	RING	1
	2D6642	BALL	1
25	2Y2733	SPACER	1
26	2Y2734	LINK	1
27	2Y3737	SEAL	1
28	2Y2955	RETAINER	1
29	1F4111	BOLT	7
30	686754	COVER ASSEM.	1
31	686753	WASHER	1

THE FOLLOWING REPAIR KIT IS AVAILABLE:

379562	KIT-------(seal-hydraguide)-----	1

224867

3G9801 METERING PUMP GROUP
Part of 2Y2160 Hydrostatic Steering Group shown on Page 96

4J4115 STEERING CYLINDER GROUP
Part of 2Y2160 Hydrostatic Steering Group shown on Page 97

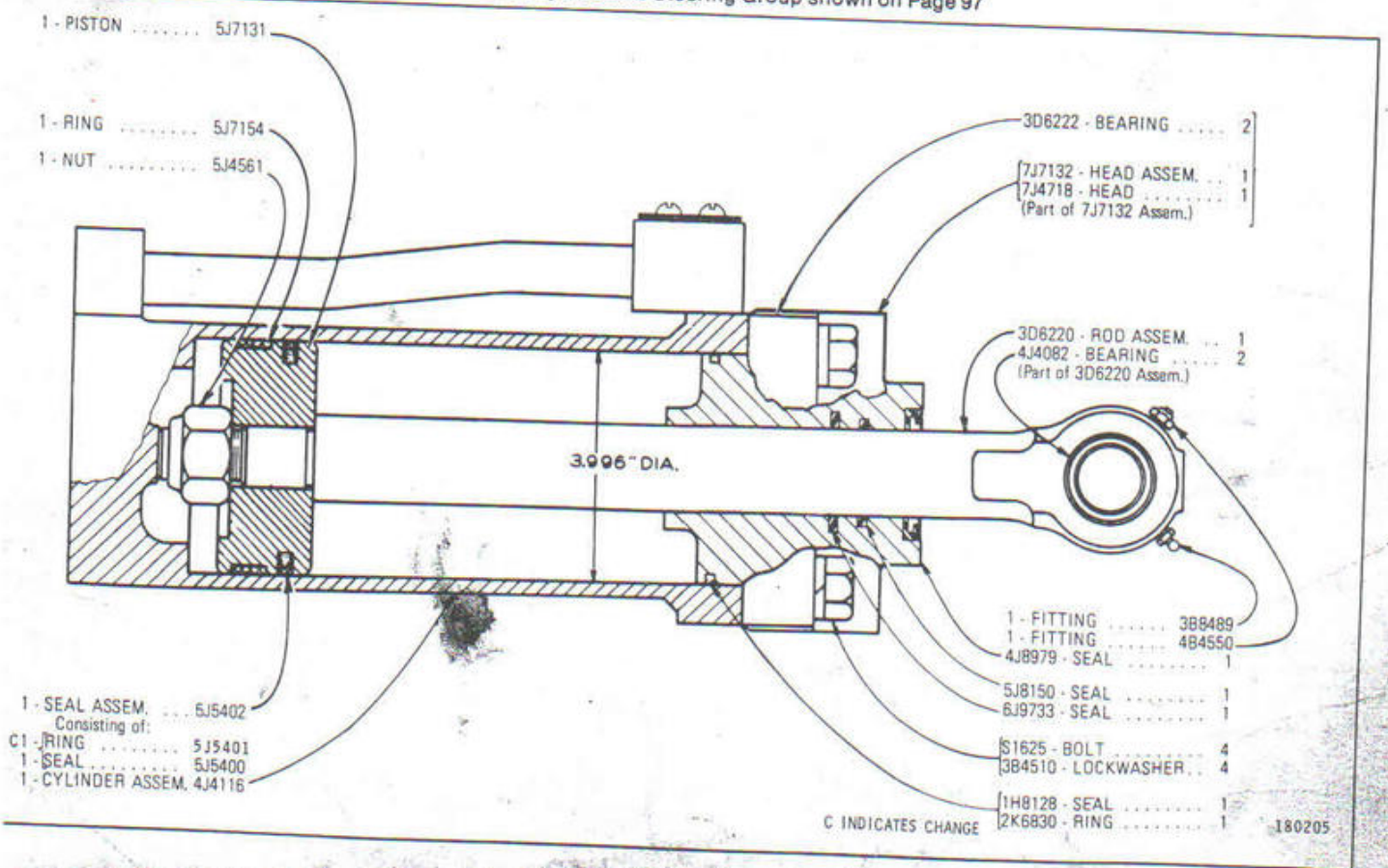

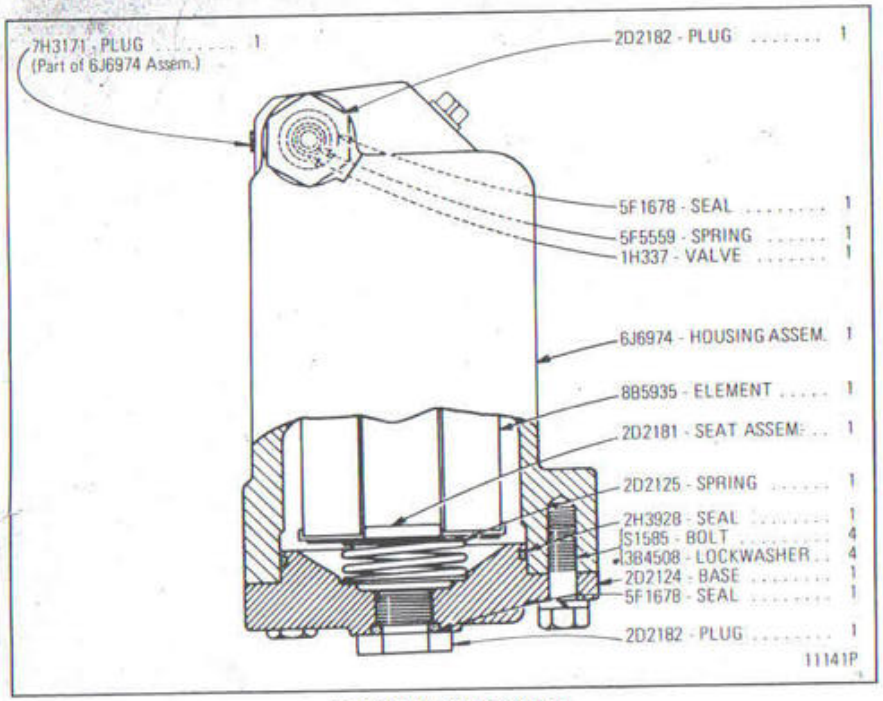

2D2150 FILTER GROUP
Part of 2Y2160 Hydrostatic Steering Group shown on Page 97

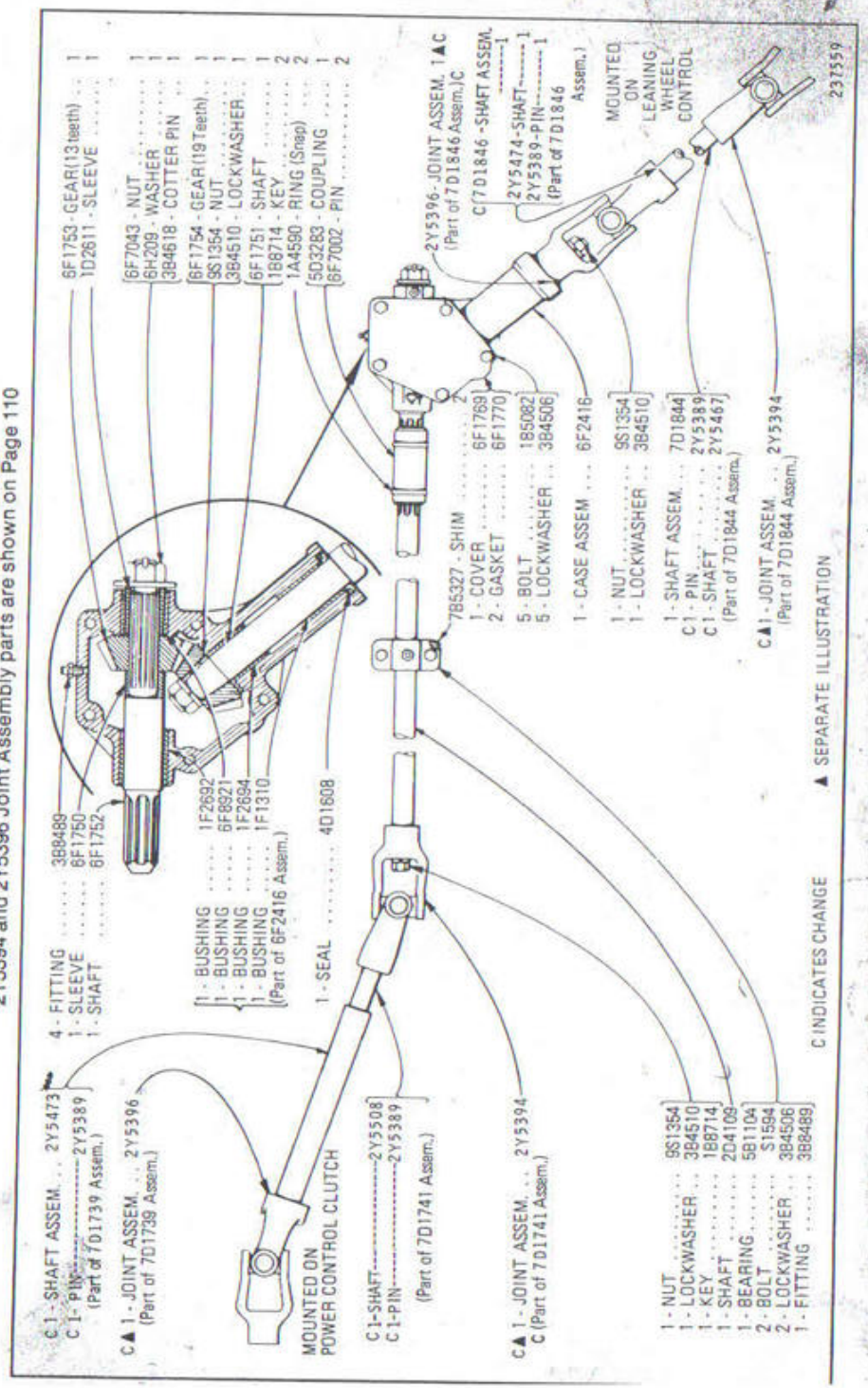

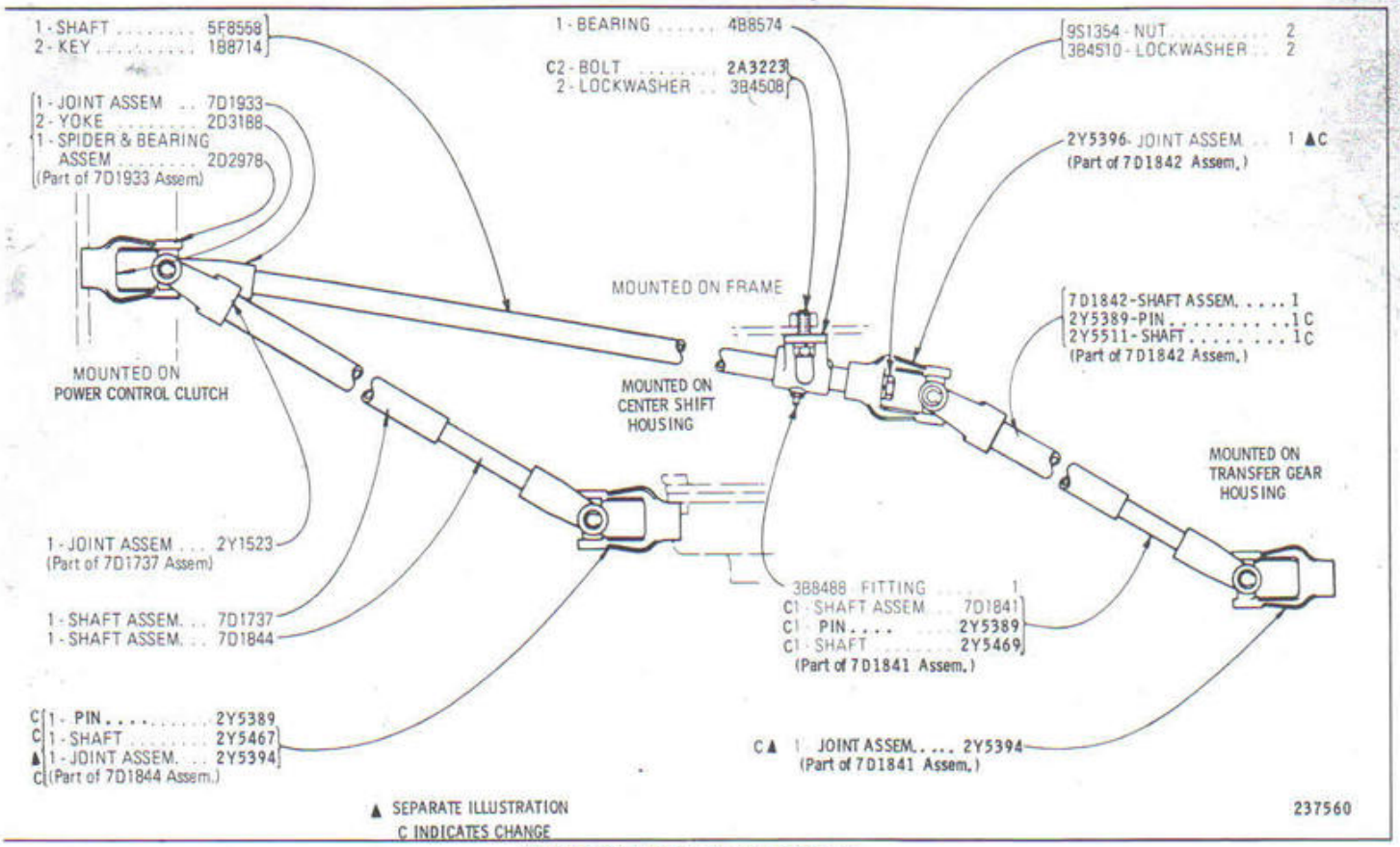

4B8580 CONTROL SHAFT GROUP

2Y5394 and 2Y5396 Joint Assembly parts are shown on Page 110

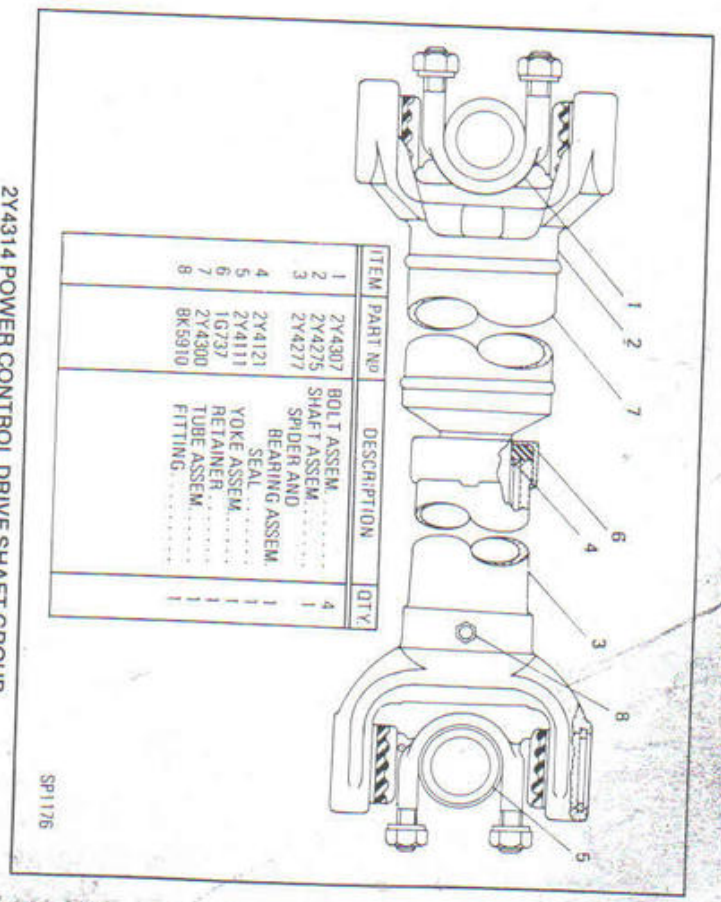

2Y4314 POWER CONTROL DRIVE SHAFT GROUP

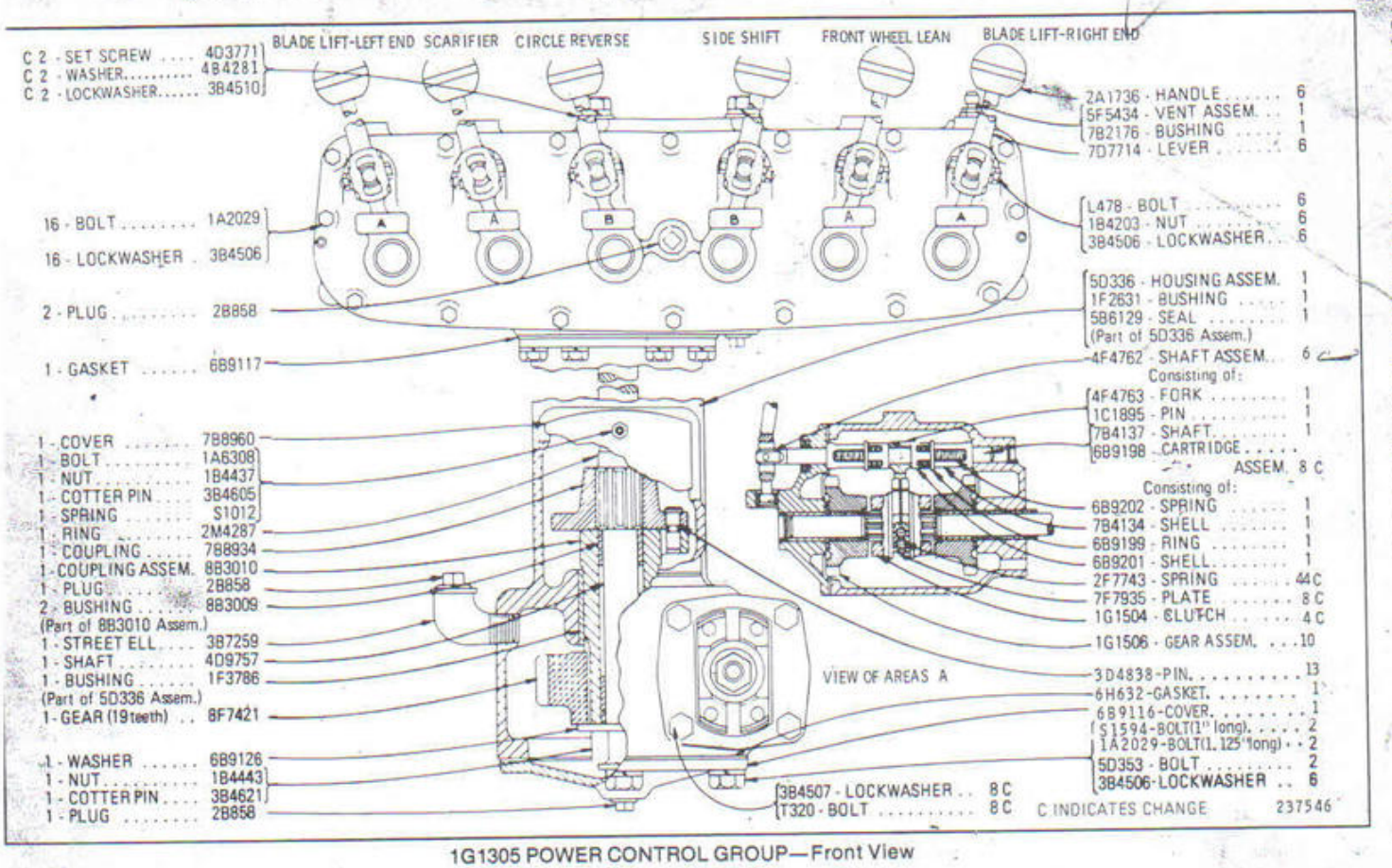

1G1305 POWER CONTROL GROUP—Front View

1G1305 POWER CONTROL GROUP—Side View

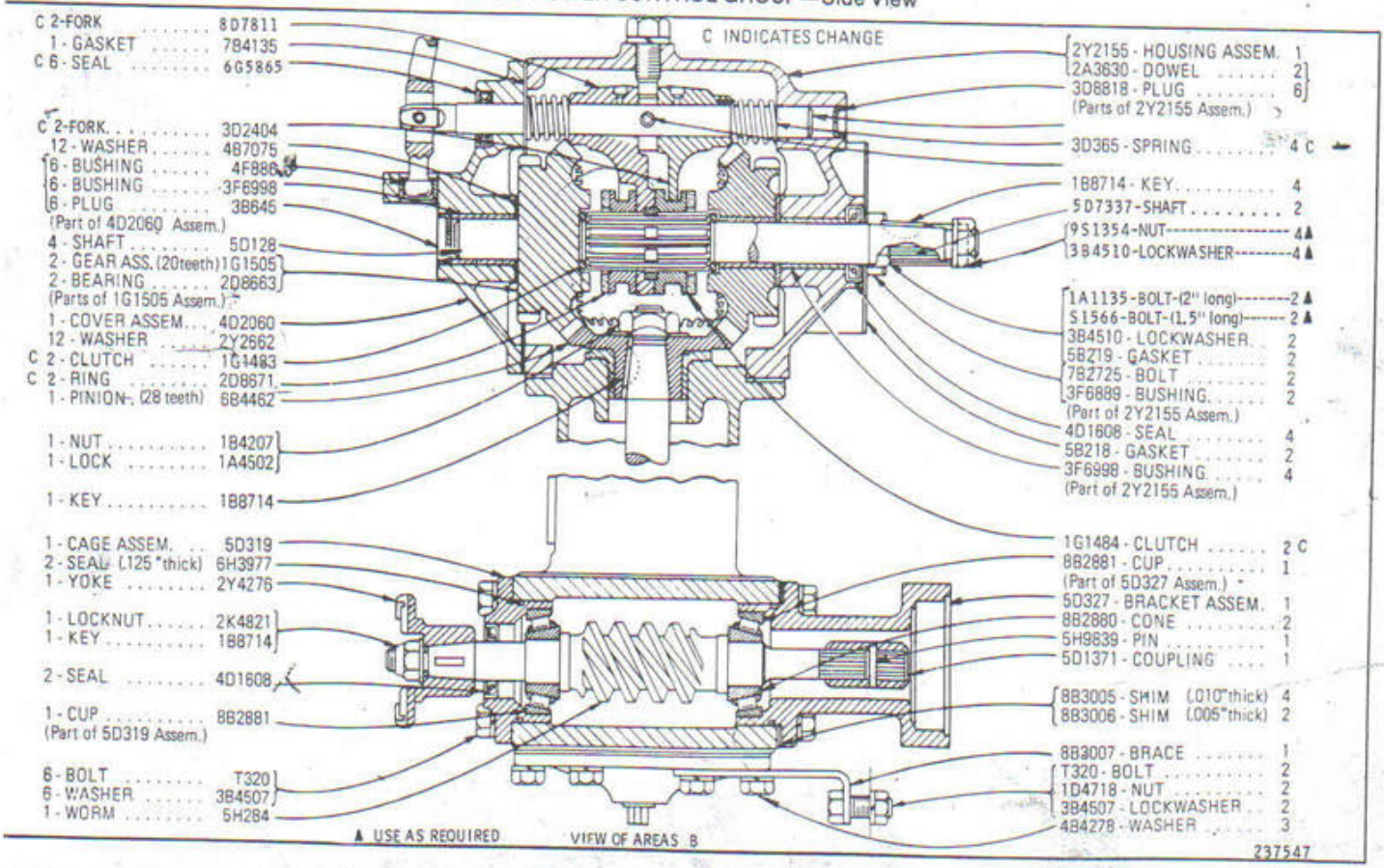

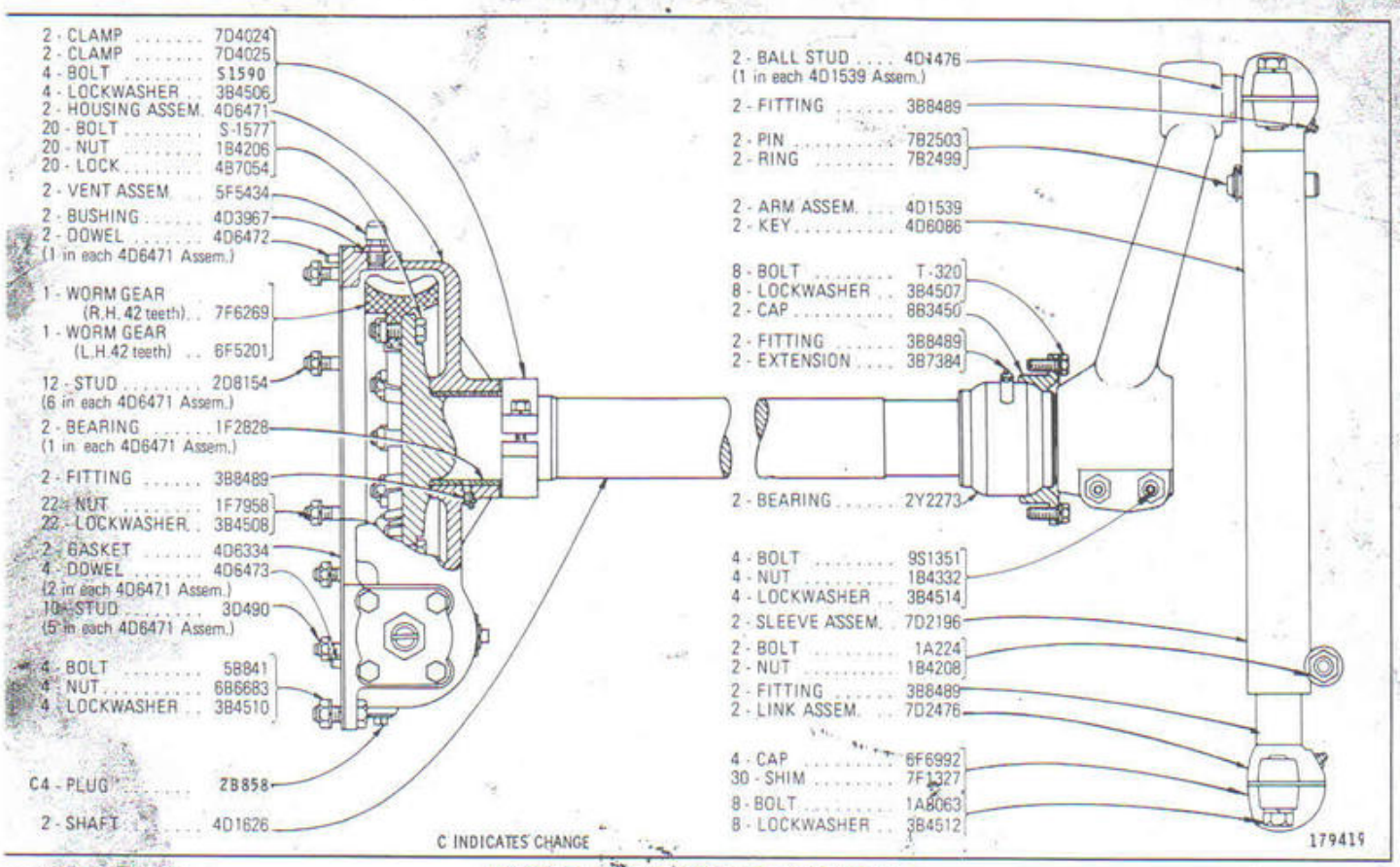

2D7836 BLADE LIFT GROUP—Side View

5312?

2D7836 BLADE LIFT GROUP—Sectional View of Gear Housing

5D7339

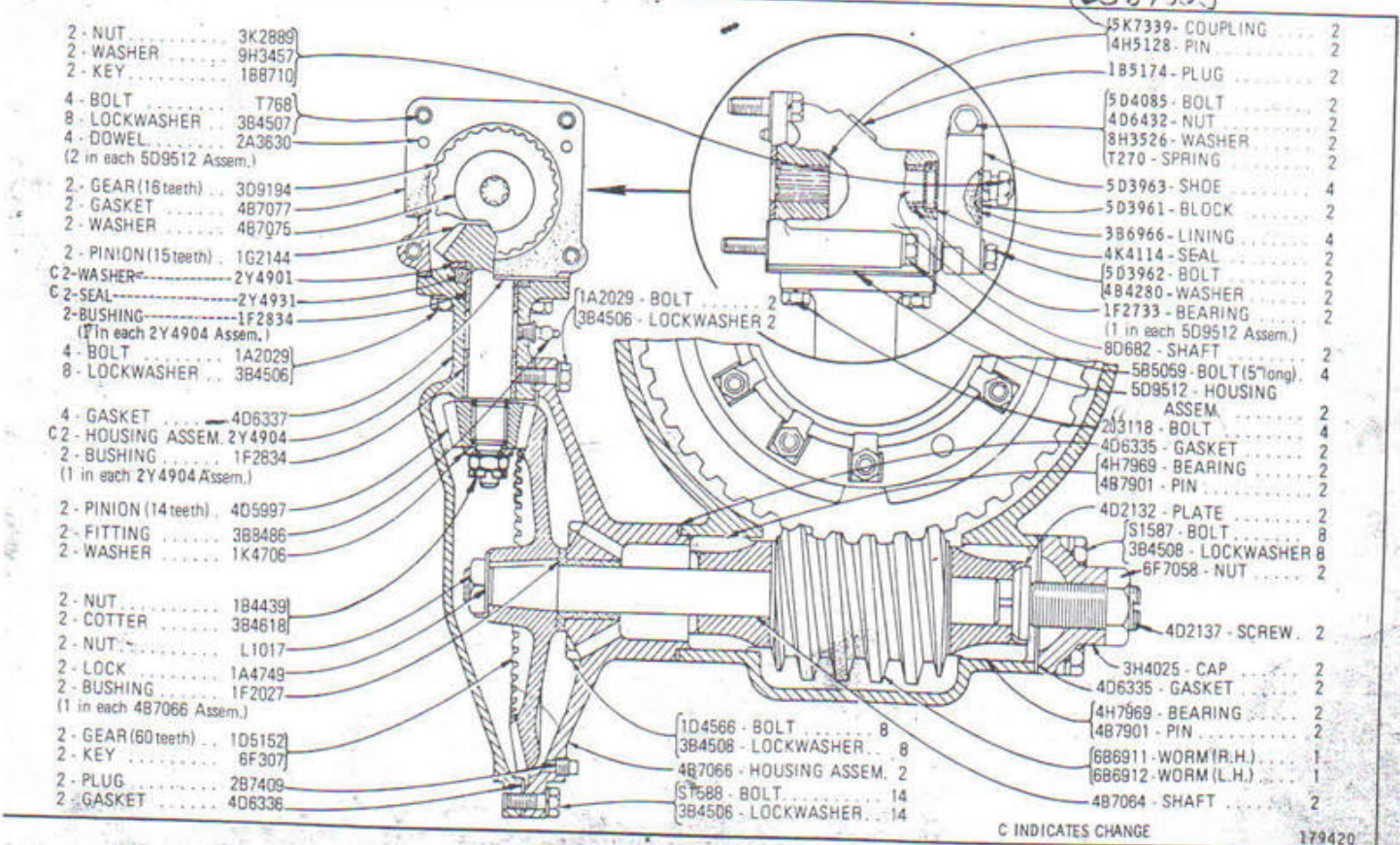

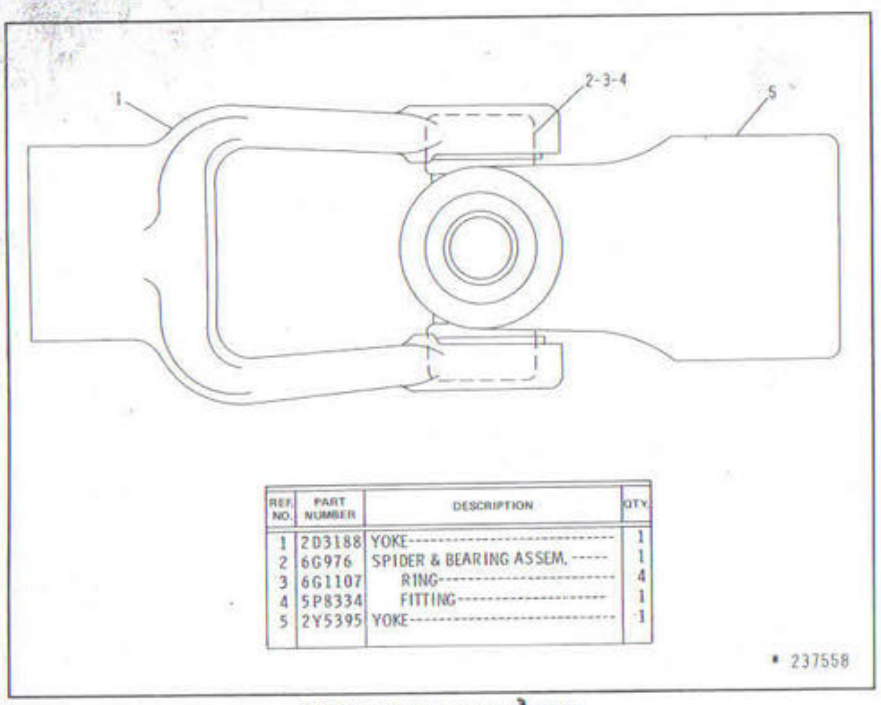

REF. NO.	PART NUMBER	DESCRIPTION	QTY.
1	2D3188	YOKE	1
2	6G976	SPIDER & BEARING ASSEM.	1
3	6G1107	RING	4
4	5P8334	FITTING	1
5	2Y5395	YOKE	1

2Y5394 JOINT ASSEMBLY
Part of 2D4125 Leaning Wheel Control Shaft, 4B8580 Control Shaft and 6D3300 Scarifier Groups shown on Pages 103, 104 and 112

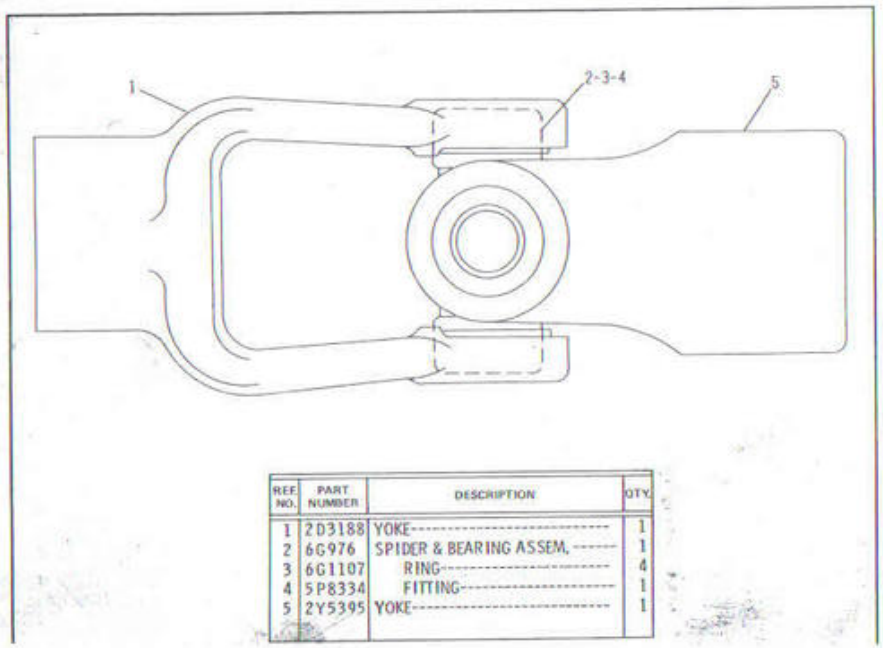

REF. NO.	PART NUMBER	DESCRIPTION	QTY.
1	2D3188	YOKE	1
2	6G976	SPIDER & BEARING ASSEM.	1
3	6G1107	RING	4
4	5P8334	FITTING	1
5	2Y5395	YOKE	1

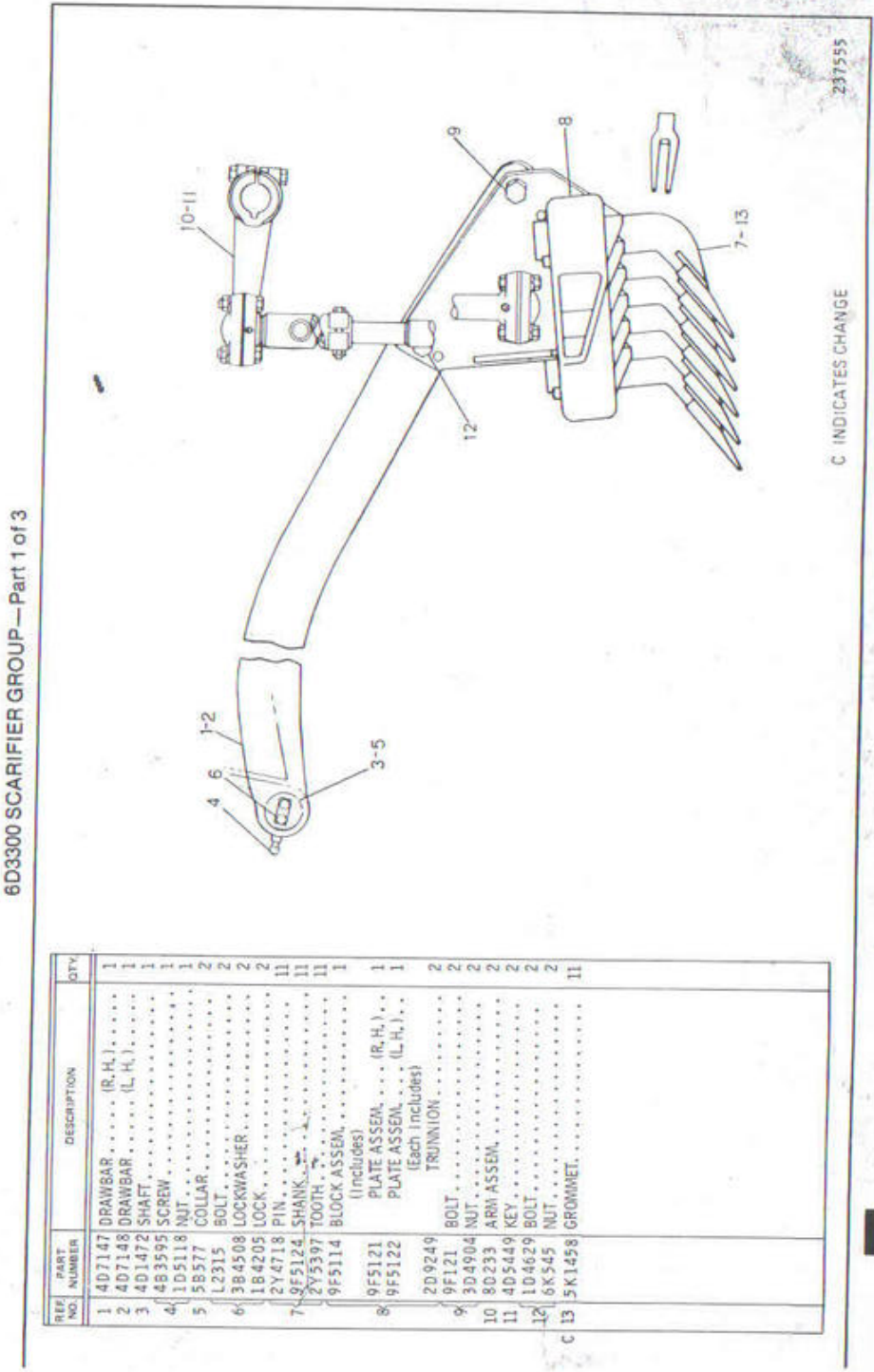

6D3300 SCARIFIER GROUP—Part 1 of 3

REF. NO.	PART NUMBER	DESCRIPTION	QTY.
1	4D7147	DRAWBAR (R.H.)	1
2	4D7148	DRAWBAR (L.H.)	1
3	4D1472	SHAFT	1
4	4B3595	SCREW	1
	1D5118	NUT	1
5	5B577	COLLAR	2
	L2315	BOLT	2
6	3B4508	LOCKWASHER	2
	1B4205	LOCK	2
	2Y4718	PIN	11
7	9F5124	SHANK	11
	2Y5397	TOOTH	11
	9F5114	BLOCK ASSEM. (Includes)	1
8	9F5121	PLATE ASSEM. (R.H.)	1
	9F5122	PLATE ASSEM. (L.H.) (Each Includes)	1
	2D9249	TRUNNION	2
	9F121	BOLT	2
9	3D4904	NUT	2
10	8D233	ARM ASSEM.	2
11	4D5449	KEY	2
	1D4629	BOLT	2
12	6K545	NUT	2
C 13	5K1458	GROMMET	11

REF. NO.	PART NUMBER	DESCRIPTION	QTY.
1	5F5434	VENT ASSEM.	1
	7B2176	BUSHING	1
2	9S1376	BOLT	4
	1B4207	NUT	4
3	3B4212	BOLT	12
4	5B1356	SCREW	1
	6F7058	NUT	1
5	2B6304	GASKET	1
6	5B1357	FOLLOWER	1
7	3B5790	CUP	1
	3B7389	CONE	1
8	3B5350	WORM----(gear)	1
9	4D1638	SHAFT	1
10	5B1363	BEARING	1
11	5B1355	GASKET	1
12	S1585	BOLT	3
	3B4508	LOCKWASHER	3
13	2H6947	GEAR	1
	T197	KEY	1
14	5B1359	COVER	1
15	L1017	NUT	1
	3B4516	LOCKWASHER	1
16	2B858	PLUG	2
17	5B1358	GASKET	1
18	S1594	BOLT	9
	3B4506	LOCKWASHER	9
C 19	7D1739	SHAFT ASSEM. (Includes)	1
	2Y5396	JOINT ASSEM. (Separate Illustration)	1
C	2Y5473	SHAFT	1
C 20	2Y5389	PIN	1
	7D1741	SHAFT ASSEM. (Includes)	1
C 21	2Y5394	JOINT ASSEM. (Separate Illustration)	1
C	2Y5508	SHAFT	1
C 22	2Y5389	PIN	1
23	1A8063	BOLT	8
24	7F1327	SHIM	16
25	7D2196	SLEEVE ASSEM.	2
26	3B8489	FITTING	4
27	7B2503	PIN	2
	7B2499	RING	2
28	1A224	BOLT	2
	1B4208	NUT	2
29	7D2276	LINK ASSEM.	2
30	1B5174	PLUG	1
31	6F6992	CAP	4
C 32	2B7557	CORK	2
33	1B8714	KEY	1
	9S1354	NUT	1
	3B4510	LOCKWASHER	1
34	2A3630	PIN	1

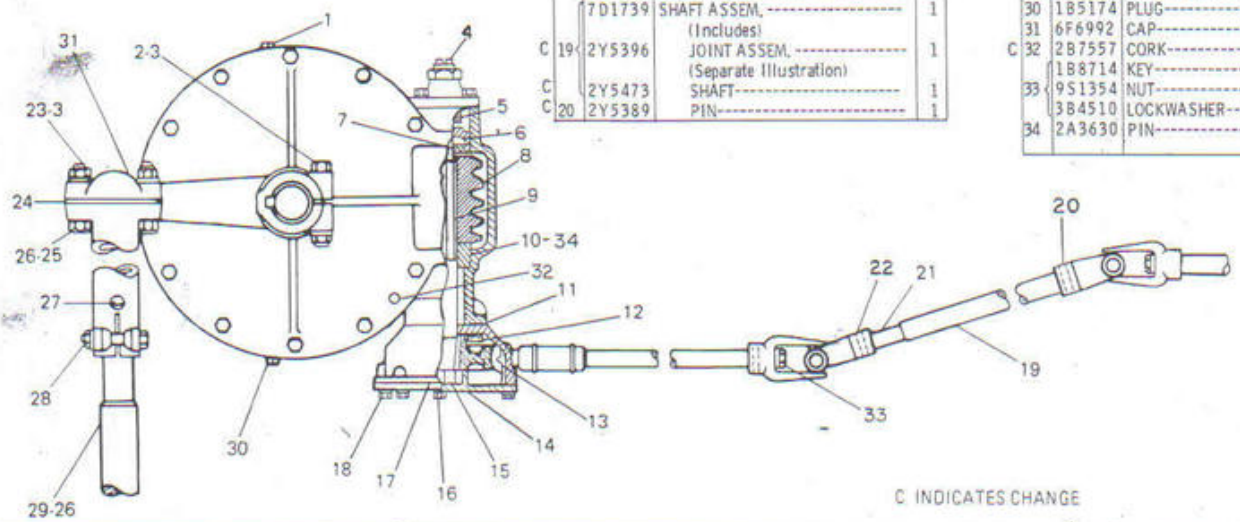

C INDICATES CHANGE

237556

6D3300 SCARIFIER GROUP—Part 2 of 3

2Y5394 and 2Y5396 Joint Assembly parts are shown on Page 110

6D3300 SCARIFIER GROUP—Part 3 of 3

REF. NO.	PART NUMBER	DESCRIPTION	QTY.
1	3B8490	FITTING	2
2	7B1022	CLAMP	1
3	3B5752	BOLT	3
	3B5753	NUT	3
4	3B4518	LOCKWASHER	4
5	9S1351	BOLT	1
	1B4332	NUT	1
	3B4514	LOCKWASHER	1
6	1A2029	BOLT	3
	3B4506	LOCKWASHER	3
7	1A4590	RING	2
8	6F7002	PIN	2
9	5D3283	COUPLING	1
10	2D4253	SHAFT	1
11	5B1367	HOUSING ASSEM. (Includes)	1
	3B5673	BUSHING	1
12	3B5683	GASKET	1
13	S1585	BOLT	18
	3B4508	LOCKWASHER	18
14	6D973	COVER ASSEM. (Includes)	1
	6D941	BEARING	1
15	2B858	PLUG	1
16	6D3269	CUP	1
17	7F8268	SEAL	1
18	1B4008	CONE	2
19	6D3261	HOUSING ASSEM. (Includes)	1
	1F1288	BUSHING	1
20	4D9641	SEAL	1
21	1B4009	CUP	2
22	2D3424	BOLT	1
	L702	NUT	1
23	1B936	SEAL	2
24	2H6945	GEAR	1
25	S1576	BOLT	6
	1B4206	NUT	6
	3B4510	LOCKWASHER	6
26	4D5448	SHAFT ASSEM. (Includes)	1
	3B5664	HUB	1
	2D7926	KEY	1
27	3B5703	SHIM	1
	3B5704	SHIM	2
28	6D3257	WORM	1
C 29	3B5107	CAP	1

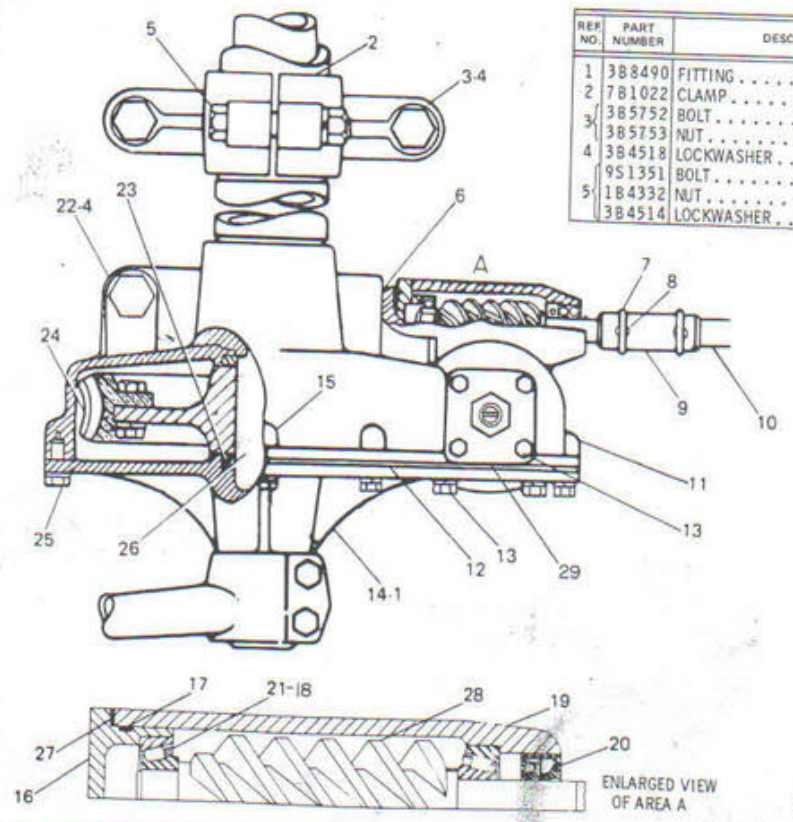

ENLARGED VIEW OF AREA A

C INDICATES CHANGE

178698

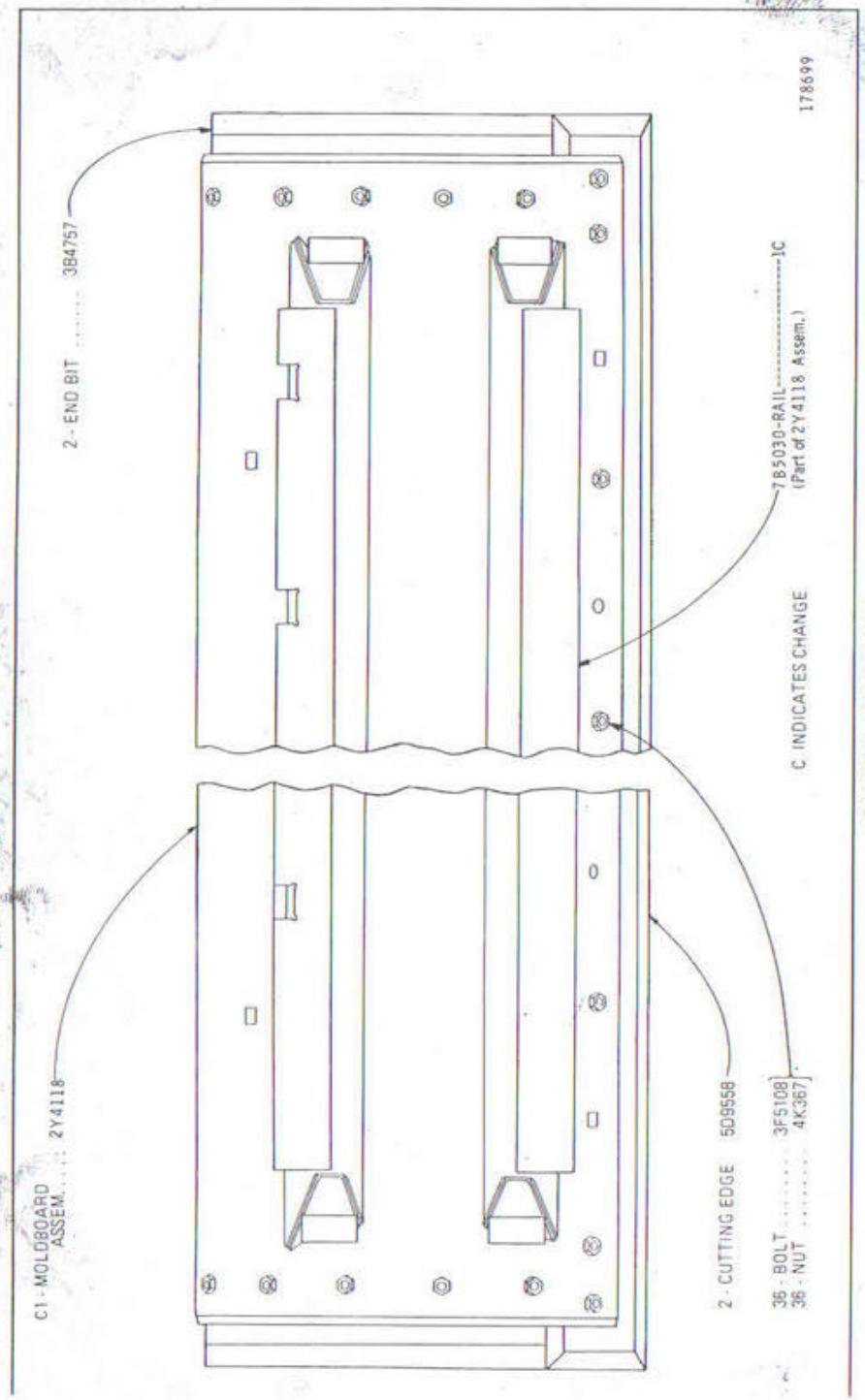

1G2227 BLADE GROUP

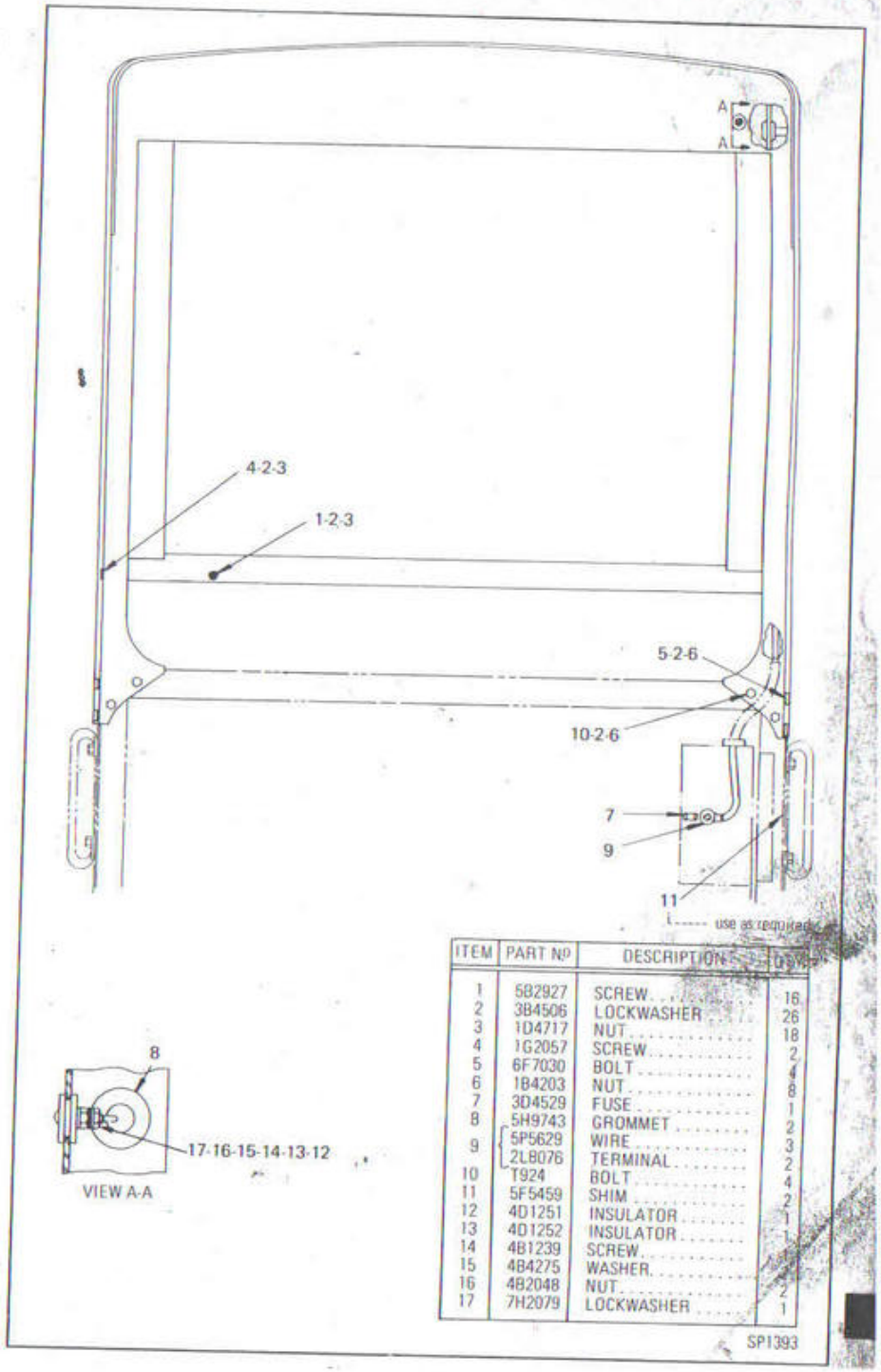

ITEM	PART Nº	DESCRIPTION	USED
1	5B2927	SCREW	16
2	3B4506	LOCKWASHER	26
3	1D4717	NUT	18
4	1G2057	SCREW	2
5	6F7030	BOLT	4
6	1B4203	NUT	8
7	3D4529	FUSE	1
8	5H9743	GROMMET	2
9	5P5629	WIRE	3
	2L8076	TERMINAL	2
10	T924	BOLT	4
11	5F5459	SHIM	2
12	4D1251	INSULATOR	1
13	4D1252	INSULATOR	1
14	4B1239	SCREW	2
15	4B4275	WASHER	2
16	4B2048	NUT	2
17	7H2079	LOCKWASHER	1

SP1393

REF NO.	PART NUMBER	DESCRIPTION	QTY.
1	6H6699	ADAPTER	1
2	2Y5097	INDICATOR-(fuel)	1
	3B6493	ELBOW	1
	3B7733	NIPPLE	1
3	1B8102	CLIP	7
4	5P6313	NUT	1
	5P6314	SLEEVE	1
	5P6315	ELBOW	1
	3B6768	BUSHING	1
▲ 13	6G513	WIRE ASSEM.	1
	5P5623	WIRE-.08m(3.15 in.)	
	2L8076	TERMINAL-(ring)	1
14	2Y1085	TERMINAL	1
▲ 15	6G512	WIRE ASSEM.	1
	5P5623	WIRE-.08m(3.15 in.)	
	2L8075	TERMINAL-(ring)	1
	4S1988	TERMINAL-(blade)	1
▲ 16	6G511	WIRE ASSEM.	1
	5P5623	WIRE-.2m(7.88 in.)	
	2L8075	TERMINAL-(small)	1
	2L8077	TERMINAL-(large)	1
17	1S4325	INDICATOR-(water temperature)	1
18	9G8010	SWITCH-(pressure)	1
19	2Y5095	GAUGE-(oil)	1
	1F9369	TEE	1
	3B6552	ELBOW	1
	5P2949	UNION	1
5	5P5630	TUBE	1
6	2Y5223	STRAP	8
7	5509	BOLT	4
	3B4506	LOCKWASHER	4
8	8M2772	CLIP	4
9	2Y5736	METER GROUP	1
	2Y5139	METER	1
	2Y5735	WIRE ASSEM.	1
▲ 10	5P5629	WIRE-.28m(11.03 in.)	
	2Y5710	CONNECTOR	1
11	2Y1085	TERMINAL	1
12	2Y1086	TERMINAL	1

▲ ORDER BY THE METER

237540

2Y6835 GAUGES GROUP

2Y2232 SEAT FRAME ASSEMBLY
Part of 1G1553 Seat Frame, Fuel Tank and Platform Group shown on Page 119

VIEW A-A

REF NO.	PART NUMBER	DESCRIPTION	QTY.
1	4D1287	BRACKET	1
2	8F9836	LUG	2
C 3	6B9807	BOSS	2
4	3D9169	BLOCK	1
5	4D1295	PLATE	1
6	2D3794	BRACKET	1
7	6D7609	ANGLE-(R. H.)	1
8	6D7610	ANGLE-(L. H.)	1
9	4D1253	CHANNEL	1
10	9F2978	NUT	6
11	2D8433	BRACKET	1
12	6F1473	BOSS	6
13	2D8432	PIPE	1
14	4D1275	PLATE	1
15	2D8435	ANGLE	1
16	7F5632	PLATE	2
17	1H8306	SCREW	2
18	2D3799	ANGLE	1
19	2D8428	SUPPORT	1
20	2D3801	ANGLE	3
21	1G1518	PLATE	1
22	4D1599	LUG	1
23	2D7408	ANGLE	1
24	4D2072	TUBE ASSEM.	1
	4D1999	FITTING	1
25	8B6540	CAP	1
26	2Y2187	FITTING	2
C 27	6K2198	BOSS	4
C 28	1F748	NUT	2

C INDICATES CHANGE

180106

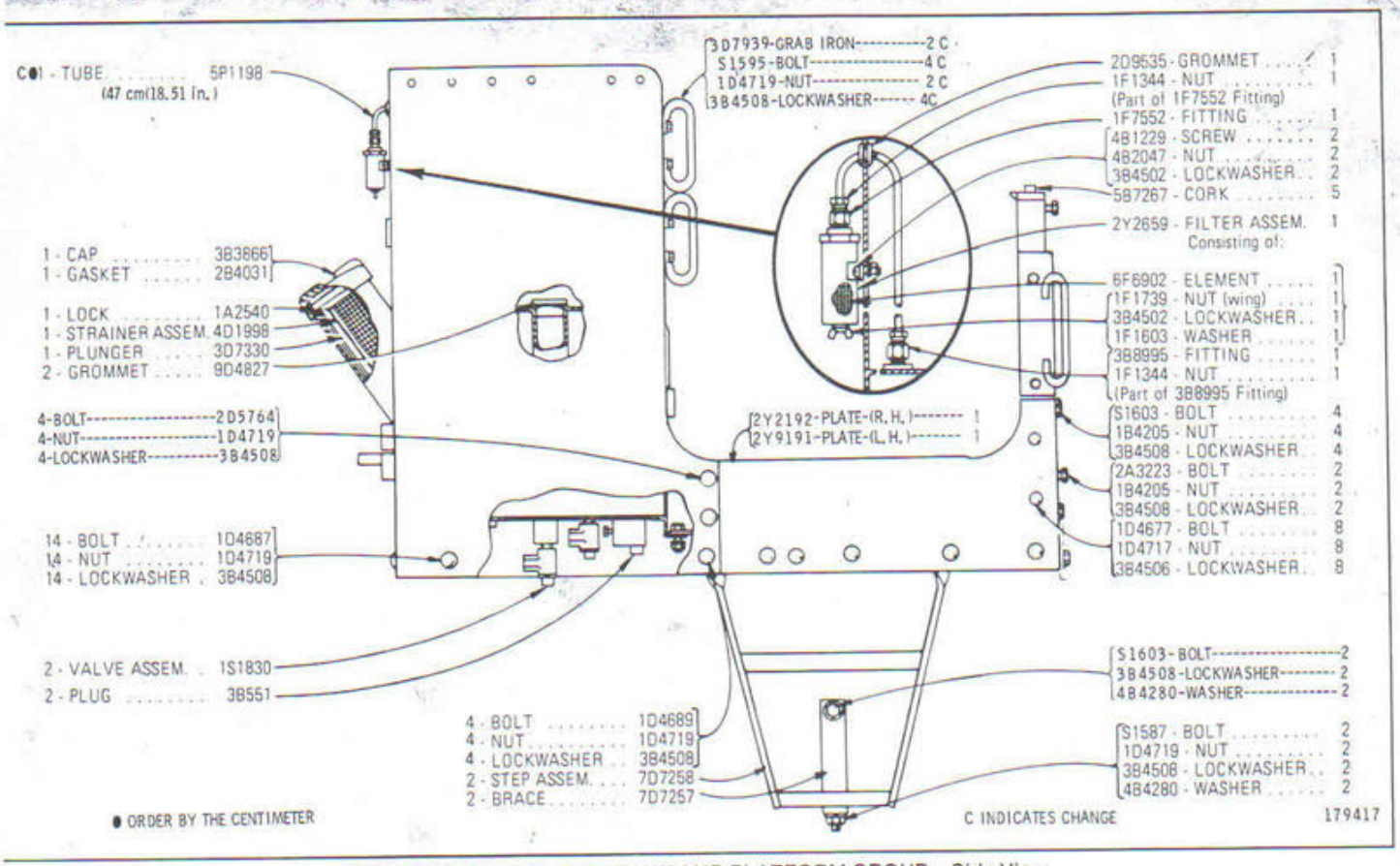

1G1553 SEAT FRAME, FUEL TANK AND PLATFORM GROUP—Side View

1G1553 SEAT FRAME, FUEL TANK AND PLATFORM GROUP
2Y2232 Seat Frame parts are shown on Page 117

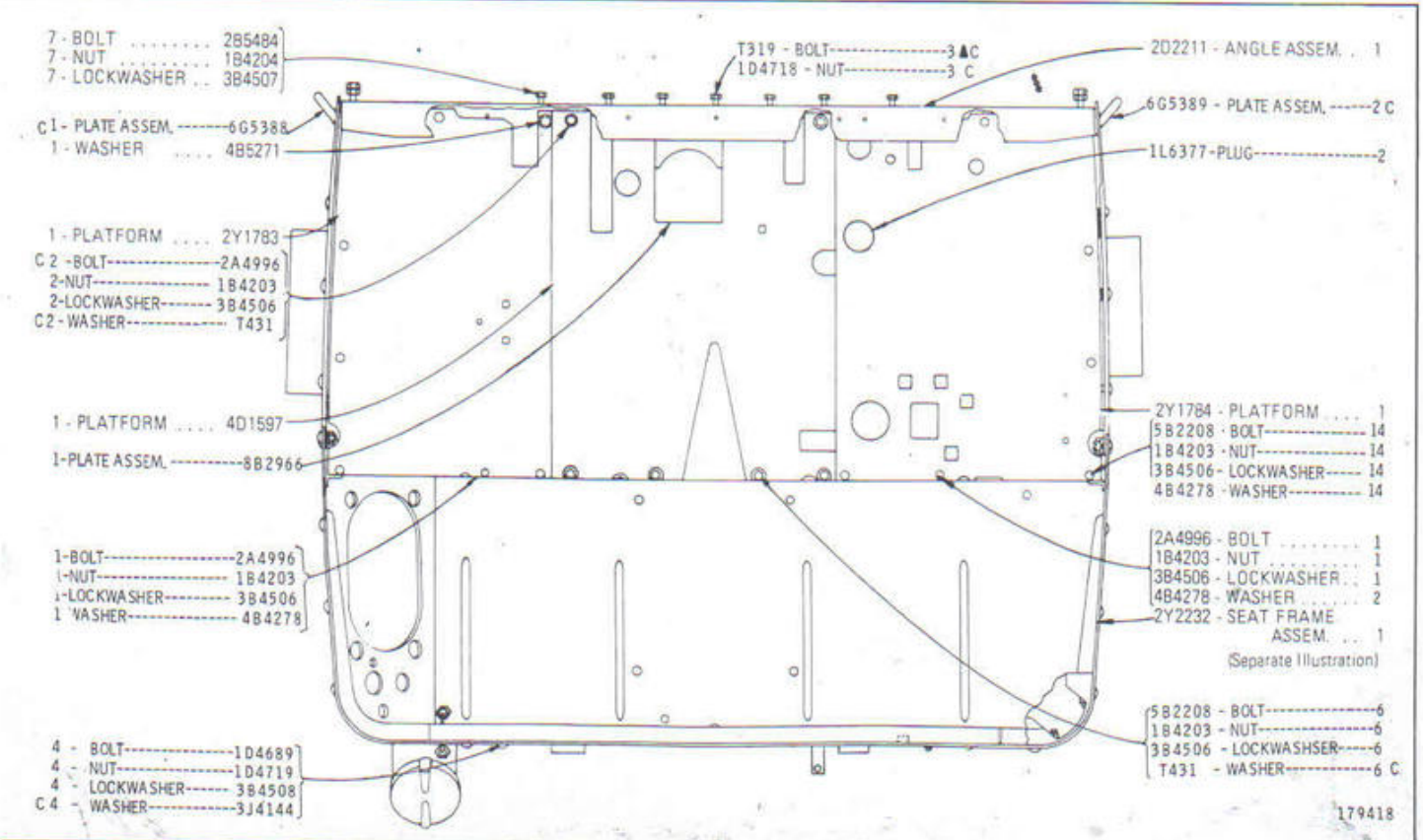

REF. NO.	PART NUMBER	DESCRIPTION	QTY.
C 1	1G2324	ADJUSTABLE SEAT ASSEM.	1
	2Y5421	SPACER	2
	1G2326	SEAT CUSHION ASSEM.	1
2	1G2327	BACK CUSHION ASSEM.	1
3	1G2325	FRAME ASSEM.	1
4	S509	BOLT	4
	3B4506	LOCKWASHER	4
	4B5271	WASHER	4
5	8S933	EYEBOLT	2
	8S934	LOCKNUT	2

C INDICATES CHANGE

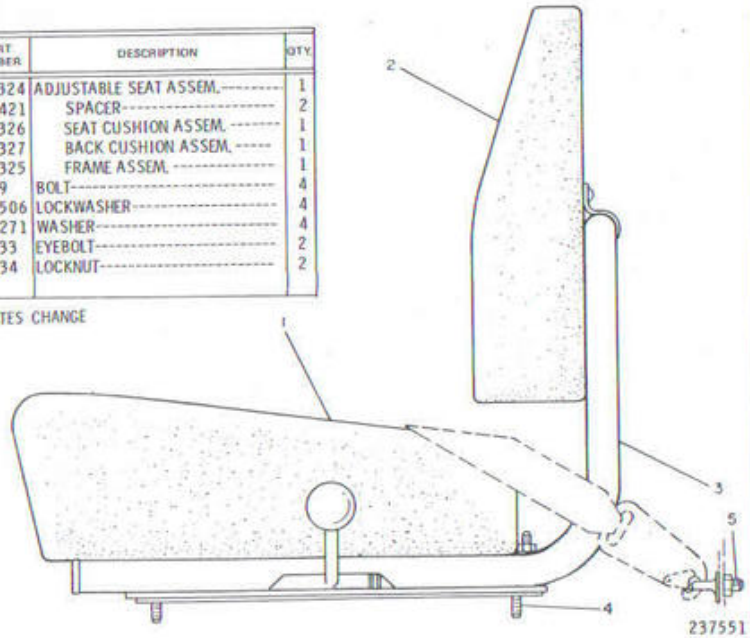

6G2090 SEAT GROUP

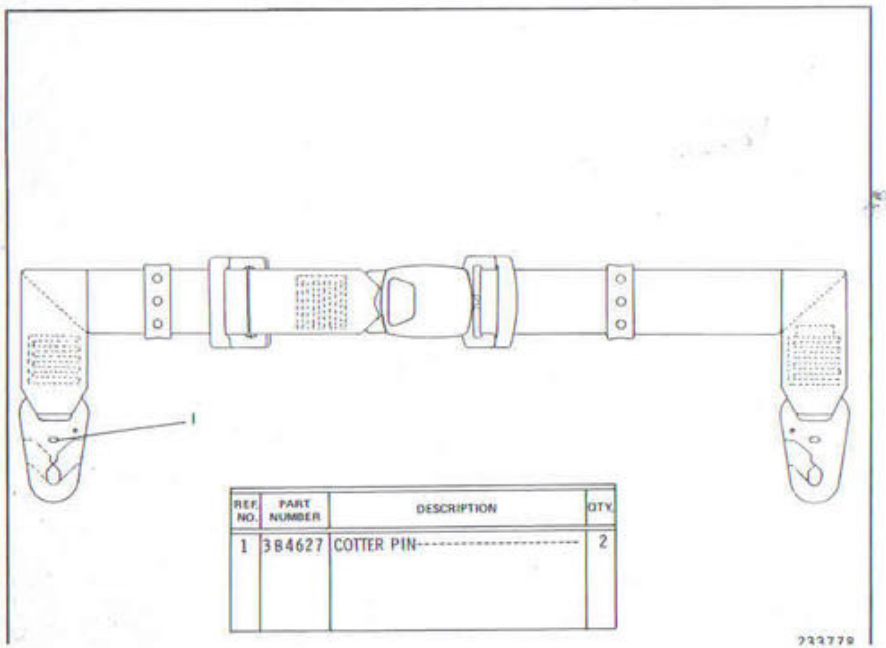

REF. NO.	PART NUMBER	DESCRIPTION	QTY.
1	3B4627	COTTER PIN	2

ENGINE GASKET KITS

5P9098	VALVE GRINDING
6V2512	CENTRAL AND LOWER STRUCTURE
5P8768	SINGLE CYLINDER LINER
6V1549	FRONT STRUCTURE
6V2511	REAR STRUCTURE
5P9898	WATER PUMP
5P9102	OIL COOLER LINES

OTHER GASKET KITS

6V2915	PARTS AND CASE
6V2916	TRANSMISSION DIRECT DRIVE
6V2917	GEAR SHIFT
6V2918	TRANSMISSION OIL SYSTEM

GASKET KITS

ESPECIFICAÇÕES

(SUJEITAS A ALTERAÇÕES SEM AVISO PRÉVIO)

Peso de embarque (aproximado)	11750 kg
Sôbre as rodas dianteiras	3588 kg
Sôbre as rodas traseiras	8162 kg

DIMENSÕES

Distância entre eixos	5 840 mm
Bitola (centro a centro dos pneus):	
Nas rodas dianteiras	2 030 mm
Nas rodas traseiras	2 010 mm
Dimensões gerais:	
Comprimento	7 950 mm
Largura	2 360 mm
Altura (com cabine)	3 180 mm
Altura (sem cabine)	2 280 mm

LÂMINA

Comprimento	3 660 mm
Levantamento acima do solo	470 mm
Deslocamento lateral:	
Para a direita	900 mm
Para a esquerda	900 mm
Ângulo máximo para corte de taludes	90°
Alcance lateral máximo (por fora das rodas traseiras)	2 240 mm

QUANTIDAES CONTIDAS

Tanque de combustível	227 litros
Sistema de lubrificação:	
Cárter do motor diesel (inclui a embreagem)	29 litros
Caixa de mudanças	65 litros
Caixas das correntes (cada)	22 litros
Sistema de arrefecimento	41 litros
Sistema hidráulico	17 litros

MÉTODO DE PARTIDA

Sistema de arranque elétrico direto de 24 volts. Todos os contrôles de partida estão na plataforma de operação, próximos ao assento.

ACESSÓRIOS

Existem disponíveis equipamentos extras tais como extensões da lâmina, cabine, faróis, odômetro, etc. Consulte o revendedor Caterpillar.

SITUAÇÃO DO NÚMERO DE SÉRIE

Existem placas com o número de série situadas no lado direito do bloco do motor, atrás, e na frente do chassi, no lado esquerdo.

PRINTED IN BRAZIL ZEBP1394

CONVERSION EQUIVALENT TABLES

VOLUME AND CAPACITY EQUIVALENTS

Unit	Cu. In.	Cu. Ft.	Cu. Yd.	Cu. Cm.	Cu. M.	U.S. Liquid Gallons	Imperial Gallons	Liters
1 Cu. In.	1	.000579	.0000214	16.39	.0000164	.004329	.00359	.0164
1 Cu. Ft.	1728	1	.03704	28317	.0283	7.481	6.23	28.32
1 Cu. Yd.	46656	27	1	764600	.765	202	167.9	764.6
1 Cu. Cm.	.061	.0000353	.00000131	1	.000001	.000264	.000220	.001
1 Cu. M.	61020	35.31	1.308	1,000,000	1	264.2	220.2	1000
1 U.S. Liquid Gal.	231	.1337	.00495	3785	.003785	1	.833	3.785
1 Imperial Gallon	277.42	.16	.00594	4545.6	.004546	1.2	1	4.546
1 Liter	61.02	.03531	.001308	1000	.001	.2642	.22	1

LENGTH EQUIVALENTS

Unit	Centimeters	Inches	Feet	Yards	Meters	Kilometers
1 Centimeter	1	0.3937	0.03281	0.01094	0.01	
1 Inch	2.540	1	0.08333	0.02778	0.0254	
1 Foot	30.48	12	1	0.3333	0.3048	
1 Yard	91.44	36	3	1	0.9144	
1 Meter	100	39.37	3.281	1.0936	1	
1 Kilometer	100000	39370	3281	1093.6	1000	1

AREA EQUIVALENTS

Unit	Sq. Cm.	Sq. In.	Sq. M.	Sq. Ft.
1 Sq. Cm.	1	0.155		
1 Sq. In.	6.4516	1	.00064516	.006944
1 Sq. M.	10,000	1550	1	10.764
1 Sq. Ft.	929	144	0.0929	1

WEIGHT EQUIVALENTS

Unit	Kilograms	Ounces Avoirdupois	Pounds Avoirdupois
1 Kilogram	1	35.27	2.205
1 Ounce	0.02835	1	0.0625
1 Pound	0.4536	16	1

Inches to Centimeters and Centimeters to Inches

Inches or Centi-meters	Inches	Centi-meters	Inches or Centi-meters	Inches	Centi-meters
1	0.39	2.54	26	10.24	66.04
2	0.79	5.08	27	10.63	68.58
3	1.18	7.62	28	11.02	71.12
4	1.57	10.16	29	11.42	73.66
5	1.97	12.70	30	11.81	76.20
6	2.36	15.24	31	12.20	78.74
7	2.76	17.78	32	12.60	81.28
8	3.15	20.32	33	12.99	83.82
9	3.54	22.86	34	13.39	86.36
10	3.94	25.40	35	13.78	88.90
11	4.33	27.94	36	14.17	91.44
12	4.72	30.48	37	14.57	93.98
13	5.12	33.02	38	14.96	96.52
14	5.51	35.56	39	15.35	99.06
15	5.91	38.10	40	15.75	101.60
16	6.30	40.64	41	16.14	104.14
17	6.69	43.18	42	16.54	106.68
18	7.09	45.72	43	16.93	109.22
19	7.48	48.26	44	17.32	111.76
20	7.87	50.80	45	17.72	114.30
21	8.27	53.34	46	18.11	116.84
22	8.66	55.88	47	18.50	119.38
23	9.06	58.42	48	18.90	121.92
24	9.45	60.96	49	19.29	124.46
25	9.84	63.50	50	19.69	127.00

How to use:
11 inches = 27.94 centimeters
11 centimeters = 4.33 inches