RUTHZIL TRATOR COMERCIAL DE PECAS LTDA 11 97083-6812 ROLANDO CITRANGULO

REPLACES
FORM ZPBP0516

JULHO 1977

QUICK REFERENCE CHARTS

USE THESE CHARTS TO RECORD FREQUENTLY USED MAINTENANCE INFORMATION

MACHINE SERIAL NO.	
EQUIPMENT NO.	

FREQUENTLY REPLACED ITEMS

PART NO.	PART NAME

FLUIDS & LUBRICANTS

WHERE USED	TYPE	AMOUNT

OTHER MAINTENANCE ITEMS

CONTENTS

ALPHABETICAL INDEX OF GROUPS__ 3
CONVERSION EQUIVALENT TABLES INSIDE BACK COVER
ORDERING PARTS_____ 2
QUICK REFERENCE CHART INSIDE FRONT COVER
USING THE PARTS BOOK_____2

PARTS BOOK

120B OPERA

MOTOR GRADER

SERIAL NUMBERS
64U1050 TO 64U2060 (VEHICLE)
47V1 - UP (ENGINE)

PUBLISHED JULY 1977
CATERPILLAR BRASIL S.A.
PUBLICATIONS DIV. – SERVICE DEPT.
SÃO PAULO – BRAZIL
COMPILED BY NILZA A. CHAVES

QUICK REFERENCE GUIDE TO MAJOR SECTIONS

DIESEL ENGINE
POWER TRAIN – POWER TRANSMISSION UNIT
BRAKES
CHASSIS
BLADE CONTROLS & STEERING SYSTEM
IMPLEMENTS
CAB, GAUGES & ACCESSORIES
SERVICE EQUIPMENT & SUPPLIES

O PEDIR ... AS

... Peças de Reposição de Qualidade Caterpillar são obtidas através dos revendedores Caterpillar em todo o mundo. Seu estoque de ... atualizado e inclui todas as peças normalmente requeridas para garantir o seu investimento em máquinas Caterpillar. ... do pedir peças, use sempre o catálogo de peças que cubra ... mero de série de sua máquina. O seu pedido deverá especificar a quantidade, o número da peça, o seu nome e ainda indicar o número de série da máquina para a qual a peça é requerida. Quando estiver em dúvida quanto ao número da peça, forneça ao seu revendedor uma descrição completa do item requerido.

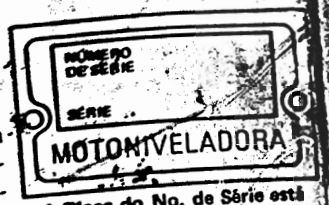

A Placa do No. de Série está localizada na parte Dianteira no lado direito do Chassi.

MO USAR O TÁLOGO DE PEÇAS

Os catálogos de peças Caterpillar incluem ilustrações dos grupos ou conjuntos de que se compõem as máquinas. Estas ilustrações mostram componentes standard e também alguns acessórios disponíveis para as máquinas. Um índice alfabético localizado no início do catálogo deve ser usado para determinar o número da página na qual uma determinada ... será encontrada. Uma pesquisa ... páginas servirá para identificar cada ... peças individuais vendáveis.

... das Ilustrações

... de cada ilustração identifica o número ... nome do grupo ou conjunto mostrado. ... mais de uma ilustração for necessária para ... terminado grupo, o título da ilustração ... rá o número de série do qual cada ilus... se aplica. Em alguns casos não é possível determinar especificamente o número de ... para o qual as diferentes ilustrações são ... Neste caso, o título identificará a ilustração como, "Primeiro Tipo", "Segundo Tipo", etc. Uma pesquisa junto ao grupo em questão se torna então necessária para determinar qual a ilustração a ser usada.

Os títulos fornecem ainda informações adicionais, tais como: números de páginas onde ilustrações de sub conjuntos são encontrados, informações sobre quantidades usadas e outras informações que possam ajudar a determinar os requisitos sobre peças.

Nomes de Peças Fora do Alinhamento

Em cada ilustração existe uma lista de peças ... identificando cada peça vendável do conjunto. Quando o nome de uma peça é colocado fora de alinhamento nesta lista, isto significa que este item vendável é componente do item vendável que o precede.

Abreviações e Símbolos

▲ Usados para chamar a atenção para informações adicionais que aparecem em outro lugar na ilustração.
●

L.D. Lado Direito
L.E. Lado Esquerdo — se referem ao lado da máquina como visto do compartimento do operador.

C. Indica modificação da ilustração anterior do mesmo grupo ou conjunto.
D.E. Diâmetro externo
D.I. Diâmetro interno
N/V Não vendida separadamente.
Conj. Cj. Conjunto
Pol Polegada
m Metro
cm Centímetro
dm Decímetro

Nota:

O contínuo processo de desenvolvimento ... melhoria dos projetos dos produtos, pode ... ocasionar mudanças em seu equipamento que ... não estejam ainda incluídas neste catálogo. Cada edição é revista e revisada, quando necessário, para atualizar e incluir estas modificações em edições futuras.

Quando em dúvida sobre o seu produto ... Caterpillar, ou esta publicação, consulte ... seu revendedor Caterpillar para obter a última informação disponível.

NOMENCLATURA DE PEÇAS INGLÊS - PORTUGUÊS

INGLÊS	PORTUGUÊS	INGLÊS	PORTUGUÊS
ABOVE	Acima	BEARING BALL	Rolamento de esferas
ABSORBER	Amortecedor	BEARING-SLEEVE	Mancal tipo luva
ACCESSORY	Acessório	BEARING-NEEDLE	Rolamento de agulha
ACCUMULATOR	Acumulador	BEARING-ROLLER	Rolamento tipo roletes
ACTUATOR	Acionador	BELL	Campânula
ADAPTER	Adaptador	BELLCRANK	Alavanca angular
ADHESIVE	Adesivo	BELLOWS	Fole
ADJUSTER	Ajustador	BELOW	Abaixo
AFTERCOOLER	Pós-resfriador	BELT	Correia, cinto
AIR	Ar	BELT TIGHTENER	Ajustador de correia
AIR CLEANER	Purificador de ar	BEVEL GEAR	Coroa
AIR SYSTEM	Sistema de ar	BIT-CUTTER	Broca, fresa
ALARM	Alarme	BLACK	Preto
ALTERNATOR	Alternador	BLADE	Lâmina
AMMETER	Amperímetro	BLEEDER	Sangrador
ANCHOR	Âncora, fixador	BLOCK	Bloco, calço
ANGLE	Ângulo, canto	BLOWER	Ventilador
ANVIL A.	Bigorna conj.	BLUE	Azul
ARBOR	Mandril; eixo	BOARD	Prancha, tábua
ARM	Braço	BODY	Corpo
ARMATURE	Armadura, Induzida	BOLT	Parafuso
ARM REST	Apoio para braço	BONNET	Tampa
ARRESTER	Detentor	BOOM	Lança
ASSEM. = ASSEMBLY	Conjunto	BOOSTER	Reforçador
ATTACHMENT	Acessório	BOOT	Protetor contra poeira
AVAILABLE	Disponível	BORE	Furo
AXLE	Eixo	BOSS	Ressalto
AXLE SHAFT	Semi-eixo, ponta	BOTH	Ambos (as)
BACK-UP ALARM	Alarme da marcha à ré	BOTTOM	Fundo
BACK-UP LIGHT	Luz da marcha à ré	BOWL	Caçamba
BACK-UP SWITCH	Interruptor de marcha à ré	BOX	Caixa
BACKBOARD	Prancha traseira	BRACE	Tirante
BACK CUSHION	Encosto	BRACKET	Suporte
BACKHOE	Retroescavadeira	BRAKE	Freio
BAFFLE	Defletor	BREAKER	Interruptor
BAG	Saco, sacola	BREATHER	Respiro
BAIL	Alça	BRIDGE	Braço
BALANCER	Balanceador	BROWN	Marrom
BALL	Esfera	BRUSH	Escova
BALLCHECK ASSEMBLY	Conjunto de (válvula) de esfera de retenção	BUCKET	Caçamba
BALL JOINT	Junta esférica	BULB	Bulbo
BALLSTUD	Munhão esférica	BULLDOZER	Bulldozer
BAND	Bánda, cinta, tira	BUMPER	Pára-choque
BAND & LINING	Banda e revestimento	BUSHING	Bucha
BAR	Barra	BUTTON	Botão
BARREL	Cilindro	BUZZER WARNING	Alarme sonoro
BARRIER	Barreira	C = CHANGE	Alteração
BASE	Base	CAB	Cabina
BASIN	Bacia, coletor	CABINET	Gabinete
BATTERY	Bateria	CABLE	Cabo
BEAM	Barra, viga, trave	CAGE	Alojamento
BEARING	Mancal, rolamento	CALIPER	Calibrador
		CAM	Excêntrico, ressalto
		CAMSHAFT	Eixo-comando-de-válvulas

INGLÊS	PORTUGUÊS	INGLÊS	PORTUGUÊS
CANOPY	Coberta, toldo	CONTROL	Controle
CAP	Tampa	CONVERSION	Conversão
CAPACITOR	Capacitor,condensador	CONVERTER	Conversor
CARBURETOR	Carburador	COOLER	Arrefecedor
CARCASS	Carcaça	COOLING	Arrefecimento
CARRIER	Suporte	CORK	Cortiça
CARTON	Caixa de papelão	CORE	Núcleo
CARTRIDGE	Cartucho	CORNER	Canto
CASE	Caixa, alojamento	COTTER PIN	Contrapino
CASING	Invólucro, revestimento	COUNTER	Contador, tacômetro
		COUNTERWEIGHT	Contrapeso
CASTER	Rolete, roldana	COUPLER	Acoplador, engate
CAST IRON	Ferro fundido	COUPLING	Acoplamento, conexão
CATWALK	Passadiço	COVER	Tampa
CENTER	Centro	COWL	Capota
CHAIN	Corrente	COWLING	Capota
CHAMBER	Câmara	CRADLE	Armação, suporte
CHANGEOVER	Modificação	CRANK	Manivela
CHANNEL	Canal	CRANKCASE	Cárter
CHASSIS	Chassi, armação	CRANKSHAFT	Virabrequim
CHECK-VALVE	Válvula de retenção	CROSS UNION	Junta transversal
CIRCUIT	Circuito	CROSSBAR	Barra transversal
CIRCUIT BREAKER	Interruptor de circuito	CUP	Capa, anel externo
CLAMP	Braçadeira	CURTAIN	Cortina
CLASP	Fecho, grampo	CUSHION	Almofada, amortecedor
CLEANER	Purificador		
CLEVIS	Forquilha, garfo	CUTTER	Fresa, cortador
CLIP	Clipe, presilha, grampo	CUTTING EDGE	Borda cortante
CLOSURE	Fecho	CYLINDER	Cilindro
CLUTCH	Embreagem	CYLINDER BLOCK	Bloco do motor
COARSE	Grosso, áspero	CYLINDER HEAD	Cabeçote
COATING	Capa, revestimento	DAMPER	Amortecedor
COCK	Torneira	DARK GREN	Verde escuro
COIL	Bobina, serpentina	DASH	Painel
COLLAR	Colar	DASH PANEL	Painel de Instrumento
COLLECTOR	Coletor	DECELERATOR	Desacelerador
COLLET	Mandril	DEFLECTOR	Defletor
COLUMN	Coluna	DETENT	Retém, pino de trava
COMPACTOR	Compactador	DIAGRAM-WIRING	Diagrama dos circuitos elétricos
COMPARTMENT	Compartimento		
COMPLETE	Completo	DIAL	Medidor de dial
COMPOUND	Composto	DIAPHRAGM	Diafragma
COMPRESSOR	Compressor	DIESEL ENGINE COMPLETE	Motor diesel completo
CONCAVE	Côncavo	DIFERENTIAL	Diferencial
CONDITIONER	Condicionador	DIFFUSER	Difusor
CONDUIT	Conduite, eletroduto	DIMMER	Redutor de luminosidade
CONE	Cone		
CONNECTING	Ligação	DIODE	Diodo
CONNECTED ROD	Biela	DIRECTOR	Diretor
CONNECTION	Conexão	DISC	Disco
CONNECTOR	Conetor	DISCONNECT	Desligar
CONSISTS OF	Consiste de	DISPOSABLE	Disponível, substituível
CONSOLE	Consolo		
CONTACT	Contato, platinado	DISSIPATOR	Dissipador de calor
CONTACTOR	Contactador	DISTRIBUTOR	Distribuidor
CONTINUED FROM	Continuação de		

NOMENCLATURA DE PEÇAS INGLÊS - PORTUGUÊS

INGLÊS	PORTUGUÊS	INGLÊS	PORTUGUÊS
DM = DECIMETER	dm = decímetro	FILTER	Filtro
DOME LIGHT	Lâmpada do teto	FINAL DRIVE	Comando final
DOOR	Porta	FINGER	Dedo
DOWEL	Pino-guia, cavilha	FIREWALL	Parede contra fogo
DOWNSHIFT	Mudança para marcha mais baixa	FITTING	Graxeira, conexão
		FIXTURE	Dispositivo, Aparelho
DOZER	Bulldozer (lâmina)	FLANGE	Flange
DRAIN	Dreno	FLASHER	Luz intermitente
DRAWBAR	Barra de tração	FLOAT	Flutuar, livre
DRILL	Broca	FLOOD-LAMP	Farol
DRILLED	Broqueado, perfurado	FLOOR	Piso
DRIVE	Comando, acionamento, propulsão	FLOORMAT	Tapete
		FLOORPLATE	Chapa do piso
DRIVER	Acionador, mecanismo propulsor	FLYWEIGHT	Peso volante
		FLYWHEEL	Volante
DRIVESHAFT	Eixo acionador, eixo de transmissão	FOLLOWER	Seguidor
		FOOT	Pé
DRUM	Tambor	FORK	Garfo
DUCT	Conduto, canal	FOR USE WITH	Para usar com
EACH	Cada	FOUNDATION	Assentamento, alicerce
EDGE	Borda, canto	FRAME	Armação, chassi
EFFECTIVE WITH	Efetivo a partir de	FRONT	Frente, dianteiro
EJECTOR	Ejetor	FT = FOOT	Pé
ELBOW	Cotovelo	FUEL INJECTION	Injeção de combustível
ELEMENT	Elemento	FUEL PUMP	Bomba de combustível
ENCLOSURE	Cobertura	FUEL RATIO	Limitador de combustível
END	Extremidade		
END BIT	Canto de lâmina	FUEL SYSTEM	Sistema do combustível
END VIEW	Vista traseira	FUEL TANK	Tanque do combustível
ENGINE	Motor	FUMES DISPOSAL	Eliminação de vapores do cárter
ENGINE ARRANGEMENT	Arranjo do motor	FUSE	Fusível
EXCEPT	Exceto	G = GROUP	Grupo
EXHAUST	Escape	GAGE	Indicador, manômetro
EXHAUST PIPE	Cano de escape	GAP	Folga, lacuna, intervalo
EXPANDER	Expansor	GASKET	Junta
EXPANSION PLUG	Bujão de expansão	GASKET KIT	Jogo de junta
EXTENSION	Extensão	GATE	Entrada, trava
EXTINGUISHER	Extintor	GAUGE	Indicador, manômetro
EXTRACTOR	Extrator	GEAR	Engrenagem, marcha
EYE	Olhal	GEAR BOX	Caixa de engrenagem
EYEBOLT	Parafuso de olhal	GEAR PUMP	Bomba de engrenagem
FABRIC	Tecido, tela textura	GENERATOR	Gerador
FACING	Revestimento, forro	GLAND	Junta, gaxeta, vedação sobreposta
FAN	Ventilador		
FASTENED	Fixo, preso	GLASS	Vidro
FASTENER	Fixador, prendedor	GLOW PLUG	Vela incandescente
FENDER	Pára-lamas	GOVERNOR	Governador
FERRULE	Virola	GRAB IRON	Balaústre corrimão
FIELD COIL	Bobina indutora, ou de campo	GRATE	Grade, grelha
		GRAY	Cinza
FIELD REPLACEMENT	Reposição ou substituição no campo	GRID	Grade, grelha
		GRILL	Grade, grelha
		GRIP	Pega, garra, cabo
FILLER	Bocal de enchimento	GROMMET	Ilhós
FILM	Película	GROUND BRUSH	Escova-terra

NOMENCLATURA DE PEÇAS INGLÊS - PORTUGUÊS

INGLÊS	PORTUGUÊS
GROUND (ELECTRIC)	Terra (eletricidade)
GROUSER	Garra (de sapata)
GUARD	Protetor
GUIDE	Guia
GUSSET	Cantoneira
HACKSAW	Serra para metais
HALF	Metade, meio (a)
HALF LINK	Semi-elo
HAMMER	Martelo
HAND CONTROL	Controle manual
HANDLE	Cabo, alça
HANDRAIL	Corrimão, balaústre
HANGER	Suporte, dispositivo de suspensão
HARDWARE	Ferragem
HARDWARE KIT	Jogo de ferragem
HARNESS	Chicote
HEAD = HD	Cabeça
HEADER	Coletor
HEADLAMP	Farol dianteiro
HEADLIGHT	Farol dianteiro
HEAT SINK	Difusor de calor
HEATER	Aquecedor
HIGH-IDLE	Marcha acelerada em vazio
HINGE	Dobradiça, articulação
HITCH	Engate
HOIST	Guincho, talha
HOLD	Suporte, fixador
HOLD DOWN	Fixar, reter, manter abaixado
HOLDER	Fixador, suporte
HOLE	Furo, buraco
HOOD	Capô
HOOD & DASH	Capô e painel
HOOK	Gancho
HORN	Buzina
HOSE	Mangueira
HOUSING	Alojamento
HUB	Cubo
HYDRAULIC	Hidráulico
ID = INSIDE DIAMETER	Diâmetro interno
IDLER	Roda-guia
IDLER & SHAFT	Roda-guia e eixo
IDLER GEAR	Engrenagem intermediária
IDLER PULLEY	Polia intermediária
IMPELLER	Impulsor, rotor
IN = INCH	Polegada
INCLUDES	Inclui
INDICATE	Indicam
INDICATOR	Indicador
INLAY	Incrustação
INLET	Admissão, entrada
INPUT	Entrada
INSERT	Inserção
INSTALLATION	Instalação
INSTALLED ON MODEL	Instalação no modelo
INSTRUCTION	Instrução
INSTRUMENT	Instrumento
INSULATED BRUSH	Escova isolada
INSULATION	Isolação, isolamento
INSULATOR	Isolante, isolador
INTAKE	Admissão
INTERLOCK	Trava interna
INTERMEDIATE	Intermediário
INTERNAL	Interno
INVERTER	Inversor
IRON	Ferro
JACK	Macaco
JAW	Mandíbula, garra
JET	Jato, vaporizador
JOINT	Junta, articulação
JUNCTION	Junção
KEY	Chaveta
KINGBOLT	Pino de engate
KNIFE	Faca, lâmina
KNOB	Maçaneta, botão
LADDER	Escada
LAMP	Lâmpada
LARGE	Grande
LATCH	Trinco, lingüeta
LEAD	Condutor, cabo
LEG	Perna
LENS	Lente
LEVEL	Nível
LEVER	Alavanca
L.H. = LEFT HAND	Lado esquerdo
LID	Placa, tampa
LIFT	Levantar
LIFT CYLINDER	Cilindro de levantamento
LIFTER	Tucho
LIFTING EYE	Olhal de levantamento
LIGHT GREEN	Verde claro
LIGHTING	Sistema de iluminação
LINE	Tubulação
LINER	Camisa
LINES & PUMP	Tubulação e bomba
LINES & VALVE	Tubulação e válvula
LINING	Revestimento, lona
LINK	Elo
LINKAGE	Articulação
LIP	Lábio, borda
LISTED	Relacionamento
LITERATURE	Literatura
LOCATED	Localizado

NOMENCLATURA DE PEÇAS INGLÊS - PORTUGUÊS

INGLÊS	PORTUGUÊS
LOCATOR	Localizador
LOCK	Trava
LOCKNUT	Contraporca
LOCKWASHER	Arruela de pressão
LOCKWIRE	Arame de trava
LONG	Longo
LOOM	Tubo isolador
LOW IDLE	Marcha lenta
LOUVER	Persiana
LOWER	Abaixar, inferior
LUBRICANT	Lubrificante
LUG	Ressalto, orelha
MACHINE SCREW	Parafuso de fenda
MAGNET	Imã magneto
MAIN	Principal
MAINTENANCE	Manutenção
MANIFOLD	Coletor
MARKED	Marcado (a)
MARKER	Marcador
MASTER PIN	Pino mestre
MAT	Capacho, esteira
METER	Medidor, contador
MINOR	Menor
MIRROR	Espelho
MISCELLANEOUS	Miscelânea
MODIFICATION	Modificação
MOLDBOARD	Armação da lâmina
MOTOR	Motor
MOULDING	Moldura
MOUNT	Montar
MOUNTED	Montado (a)
MOUNTING	Montagem
MUFFLER	Silenciador
NAMEPLATE	Plaqueta de identificação
N.C. (THREAD)	Rosca grossa
NEEDLE	Agulha
N.F. (THREAD)	Rosca fina
NIB	Ponta, bico
NIPPLE	Conexão
NONE	Nenhum (a)
NORMALIZING	Normalização
NOT PART OF	Não faz parte de
NOZZLE	Bocal, bico injetor
N/S = NOT SERVICED	Não vendável
NUMBER (Nº)	Número (Nº)
NUT	Porca
NUT-WING	Porca borboleta
NUT-CASTLE	Porca acastelada
NUT-WELD	Porca-soldada
NUT-CAP	Porca cega
NUT-HEX	Porca sextavada
NUT-LOCK	Contraporca
NUT-IMPERIAL	Porca imperial
NUT-JAM	Porca de trava, contraporca
NUT-LOW CROWN	Porca de meia coroa
NUT-RETAINING	Porca de retenção
NUT-SELF LOCK	Porca de autotravamento
NUT-SLOTTED	Porca fendada
NUT-SPANNER	Porca para chaves
O.D. = OUTSIDE DIAMETER	Diâmetro externo
O-RING	Anel "O"
OIL	Óleo
OIL PAN	Cárter
OIL PUMP	Bomba de óleo
OIL SYSTEM	Sistema de lubrificação
OILER	Almotolia, lubrificador
ORANGE	Laranja
TO ORDER	Para pedir
ORIFICE	Orifício
OUTER	Externo
OUTER RACE	Anel externo
OUTPUT	Saída
OVERRALL	Geral, total
OVERHAUL	Revisão
OVER SIZE	Sobremedida
PACKING	Embalagem, gaxeta
PAD	Coxim, calço
PADLOCK	Cadeado
PAINT	Pintura
PAN	Cárter
PANEL	Painel
PARKING BRAKE	Freio de estacionamento
PARTITION	Separação
PARTS G.	Grupo de peças
PARTS OF	Peça de
PARTS OF ALL ENGINE ARRANGEMENTS	Peças de todos os arranjos do motor
PARTS OF ALL ENGINE ARRANGEMENTS EXCEPT	Peças de todos os arranjos do motor exceto
PAWL	Garra
PEDAL	Pedal
PEDESTRAL	Pedestral
PERFORMANCE	Desempenho
PILOT	Piloto
PIN	Pino
PIN & BUSHING	Pino e bucha
PIN-COTTER	Contrapino
PINCH BAR	Pé de cabra
PINION	Pinhão

NOMENCLATURA DE PEÇAS INGLÊS - PORTUGUÊS

INGLÊS	PORTUGUÊS	INGLÊS	PORTUGUÊS
PIPE	Tubo	RELATED REPAIR ITEMS	Itens de reparos relacionados
PISTON	Pistão	RELAY	Relé
PIVOT	Articulação, pivô	RELIEF VALVE	Válvula de alívio
PLANETARY	Planetário	REPAIR G.	Grupo de reparo
PLATE	Placa	REPAIR KIT	Jogo de reparo
PLATFORM	Plataforma	REPAIR ITEMS	Itens de reparo
PLUG	Bujão	REPLACEMENT	Reposição, substituição
PLUNGER	Pistão, êmbolo	REQUIRED	Necessário
POINT	Ponta, ponto	RESERVOIR A.	Reservatório
POINTER	Ponteiro	RESIN	Resina
POLE & COIL	Polo e bobina	RESISTOR	Resistência
POLE	Polo, lança, vara	RETAINER	Fixador
POPPET	Gatilho	RETARDER	Retardador
POST	Poste, coluna	REVERSIBLE	Reversível
POTENTIOMETER.	Potenciômetro	R.H. = RIGHT HAND	Lado direito
POWER TAKE OFF.	Tomada de força	RIM	Aro
POWER TRAIN	Trem de força	RIM & TIRE	Aro e pneu
PRE-SCREENER	Tela protetora	RING	Anel
PRECHAMBER	Câmara de pré-combustão	RIVET	Rebite
PRECLEANER	Pré-purificador	ROCKET	Balancim
PRECOMBUSTION	Pré-combustão	ROD	Haste
PRESS	Prensa	ROD END	Extremidade da haste
PRESS = PRESSURE	Pressão	ROLLER	Rolete
PREVIOUS	Prévio, anterior	ROPE-STARTING	Partida à corda
PRIMARY	Primário, principal	ROTATOR	Girador
PROBE	Prova	ROTOCHAMBER	Câmara pneumática
PROJECTOR	Projetor	ROTOCOIL	Girador de válvula
PROTECTION	Proteção	ROTOR	Rotor
PROTECTOR	Protetor	RUST INHIBITOR	Antioxidante
PULLER	Extrator, sacador	SADDLE	Sela, assento
PULLEY	Polia	SAFETY	Segurança
PUMP	Bomba	SAFETY TREAD	Tiras antiderrapante
PURPLE	Roxo	SCRAPER	Tampa
PUSHROD	Haste de empuxo	SCREEN	Tela
QTY = QUANTITY.	Quantidade	SCREW	Parafuso
RACE	Pista	SCREW-HEX HD.	Parafuso de cabeça hexagonal
RACE & ROLLER	Pista e rolete	SCREW-KIT	Jogos de parafuso
RACK	Cremalheira	SCREW-MACHINE	Parafuso de fenda
RADIATOR	Radiador	SCREW-ROUND HD.	Parafuso de cabeça redonda
RAIL	Trilho, guia	SCREW-FLANGED.	Parafuso com flange
RADIATOR	Radiador	SCREW-LOCKING	Parafuso de trava
RAIL	Trilho, guia	SCREW-THUMB.	Parafuso de orelhas
RANGE TRANSM.	Transmissão manual	SCREWDRIVER	Chave de fenda
RATCHET	Catraca	SEAL	Retentor
REAR	Traseiro (a)	SEALED UNIT	Unidade vedada
REBORED	Escareado, alargado	SEALER	Vedador isolante
REBUILD KIT	Jogo de recondicionamento	SEAT	Assento
RECEPTACLE	Recipiente	SECONDARY	Secundário
RECTIFIER	Retificador	SECTION	Seção
RED	Vermelho		
REDUCER	Redutor		
REFER	Referir		
REGULATOR	Regulador		

NOMENCLATURA DE PEÇAS INGLÊS - PORTUGUÊS

INGLÊS	PORTUGUÊS	INGLÊS	PORTUGUÊS
SEGMENT	Segmento	SPARE	Sobressalente
SENDER	Emissor	SPARK PLUG	Vela de ignição
SENSOR	Sensor	SPECIAL	Especial
SEPARATE	Separar separado	SPEEDOMETER	Velocimetro
SEPARATOR	Separador	SPIDER	Cruzeta
SERIAL NUMBER PLATE	Placa de número de série	SPINDLE	Ponta de eixo
SERVICE	Serviço, manutenção	SPLINE	Estria
SERVICE KIT	Jogo de manutenção	SPOOL	Carretel
SERVICE METER	Horômetro	SPOUT	Calha, tubo
SETSCREW	Parafuso de fixação	SPRING	Mola
SHACKLE	Grilheto, anel, manilha	SPROCKET	Roda motriz, roda dentada
SHAFT	Eixo	STABILIZER	Estabilizador
SHANK	Porta-ponta do escarificador	STACK	Chaminé, cano de escapamento
SHEAVE	Polia, roldana	STAND	Suporte, cavalete
SHEET	Folha, lâmina	STANDPIPE	Suporte vertical de sucção
SHELL	Invólucro, cápsula, casquilho	STAPLE	Grampo
SHIELD	Blindagem, protetor	STARTER	Arranque motor de partida
SHIFT	Mudança	STATOR	Estator
SHIM	Calço	STEERING	Direção
SHIPPING	Embarque	STEM	Haste
SHOCK ABSORBER	Amortecedor de choques	STEP	Degrau
SHOCKMOUNT	Montagem a prova de choques	STICK	Vareta
SHOE	Sapata	STOP	Parar
SHORT	Curto	STORAGE	Armazenagem
SHOWN	Ilustrado, mostrado	STRAINER	Tela filtrante
SHROUD	Tampa de proteção	STRAP	Tira, cinta, suporte de fixação
SHUNT	Derivação	STREET ELL	Conexão cotovelo
SHUT OFF	Desligar, parada	STRIP	Tira, fita, listra
SHUTTLE	Pistão de vaivém	STROKE	Curso do pistão
SIDE	Lateral	STUD	Prisioneiro
SIDE VIEW	Vista lateral	SUMP	Tanque, reservatório
SILICONE	Silicone	SUPPLY VALVE	Válvula de suprimento
SINK	Absorvente de calor	SUPPORT	Suporte
SKIVING	Desbaste	SUSPENSION	Suspensão
SLACK ADJUSTER.	Ajustador de folga	SWITCH	Interruptor
SLEEVE	Luva, manga, camisa	SWIVEL	Articulação giratória
SLIDER	Cursor, deslizador	TAB	Tira, aba, lingüeta
SLIDE RAIL	Trilho deslizante	TABLE	Mesa
SLING	Cabos, amarras, linga	TACHOGRAPH	Tacógrafo
SLINGER	Defletor	TACHOMETER	Tacômetro
SLUG	Pistão de reação, pistãozinho	TAG	Etiqueta
SMALL	Pequeno	TAIL LAMP	Farol traseiro
SNAP RING	Anel de retenção, anel de pressão	TAN	Castanho
SNUBBER	Amortecedor	TANG	Lingüeta
SOCKET	Soquete, tomada	TANK	Tanque
SOLENOID	Solenóide	TAP	Macho
SPACER	Espaçador	TAPE	Fita
		TAPPET	Tucho
		TEE	Conexão em "T"
		TEMP. = TEMPERATURE	Temperatura

NOMENCLATURA DE PEÇAS INGLÊS - PORTUGUÊS

INGLÊS	PORTUGUÊS
TERMINAL	Terminal
TEST UNIT	Unidade de teste
TESTER	Aparelho de teste
THERMISTOR . . .	Termistor
THERMOCOUPLE .	Termopar
THERMOMETER .	Termômetro
THERMOSTAT . . .	Termostato
THERMOSWITCH .	Interruptor térmico
THICK	Grosso (a) espesso (a)
TIE	Ligação, tirante
THREAD (OF NUT)	Rosca (de porca)
THROTTLE	Acelerador de
THROWER	Defletor
THRU = THROUGH	Através de
TIGHTENER	Tensor
TILT CYLINDER .	Cilindro de inclinação
TIMING.	Sincronização, Distribuição
TIP	Ponta
TIRE	Pneu
TIRE & RIM . . .	Pneu e aro
TONGUE	Língua, lingueta
TOOL	Ferramenta
TOOLCABINET . .	Armário para ferramenta
TOOTH/TEETH . .	Dente/dentes
TOP	Topo, parte superior
TORQUE	Torque
TORQ. CONV. . . .	Conversor de torque
TORQ. DIVIDER .	Divisor de torque
TOWER	Torre
TRACK	Esteira
TRACK PIN	Pino de esteira
TRACK ROLLER .	Rolete de esteira
TRACTOR	Trator
TRAILING UNIT .	Unidade rebocada
TRANSFER	Decalcomania
TRANSFOMER . .	Transformador
TRANSISTOR . . .	Transistor
TRANSMISSION .	Transmissão
TRANSMISSION OVERHAUL . .	Revisão da transmissão
TREAD	Piso, banda de rodagem
TREADLE	Pedal
TROLLY	Carrinho
TRUCK	Caminhão
TRUNNION	Munhão
TUBE	Tubo, cano
TUBING	Tubulagem canalização
TURBINE	Turbina
TURBOCHARGER .	Turboalimentador
U-BOLT	Parafuso em "U"
U-JOINT	Junta universal
UNDERSIZE	Submedida
UNION	União
UPPER	Superior
USE AS REQUIRED	Usar conforme necessitar
VALUE	Valor
VALVE	Válvula
VALVE GRINDING.	Retificação das válvulas
VEE BELT	Correia "V"
VEE BELT SET . . .	Jogo de correia em "V"
VENT	Respiro
VIEW	Vista
VISE	Morsa, torno
VISOR	Pára-sol
WALKWAY	Passadiço, corredor
WARNING G. . . .	Grupo de alarma
WASHER	Arruela
WATER PUMP . . .	Bomba d'água
WEARPLATE . . .	Placa de desgaste
WEDGE	Cunha
WEIGHT	Peso
WELD	Solda
WELDNUT	Porca soldada
WHEEL	Roda
WHITE	Branco
WICK	Mecha, pavio
WINCH	Guincho
WINDOW	Janela
WINDSHIELD . . .	Pára-brisa
WIPER	Limpador
WIRE.	Fio
WIRING	Sistema elétrico
WIRING DIAGRAM	Diagrama do sistema elétrico
WITH	Com
WRAPPER	Invólucro, envoltório
WRENCH	Chave
YELLOW.	Amarelo
YOKE.	Garfo

CATERPILLAR

Caterpillar, Cat e ⊞ são marcas da Caterpillar Tractor Co.

INDEX

Diesel Engine (Page 19)

Name	Page	Name	Page
Accessory Drive	35	Fuel Lines	47
Air Cleaner	21	Fuel Transfer Pump	63
Air Lines	51	Fumes Disposal	50
Alternator	69	Gasket Kits	28
Battery and Wiring	72	Glow Plug	68
Breather	46	Governor	54
Camshaft	25	Governor Control	66
Connecting Rod	27	Head Lamp	88
Crankshaft	26	Head Lamp Front	89
Crankshaft Bearing	28	Lifting Eye	22
Crankshaft Seal	26	Muffler	21
Cylinder Block	23	Oil Cooler—Engine	51
Cylinder Block Cover	25	Oil Filler	48
Cylinder Head	29	Oil Filter	45
Cylinder Head Cover	30	Oil Level Gauge	42
Cylinder Head Fastener	31	Oil Lines	44
Damper	37	Oil Pan	41
Engine Mounting Hardware	31	Oil Pan Fastener	41
Exhaust Manifold	53	Piston	27
Exhaust Manifold Fastener	53	Pulley	36
Exhaust Pipe	52	Pump—Fuel Priming	65
Fan and Guard—Blower	22	Pump—Oil	42
Fan Drive	38	Pump—Water	49
Flywheel	39	Radiator	19
Flywheel Housing	39	Regulator—Housing	46
Flywheel Housing Cover	40	Service Meter	40
Front Gear—Timing	35	Starting Motor	86
Front Housing	34	Support—Engine	38
Front Housing Cover	34	Torque Control	68
Front Housing Fastener	33	Trunnion	37
Fuel Filter	52	Valve Mechanism	32
Fuel Filter—Primary	45	Valve Mechanism Cover	32
Fuel Injection Lines	62	Water Lines	48
Fuel Injection Pump	54	Water Lines—Elbow	50

Power Train - Power Transmission Unit (Page 91)

Axle—Rear	106	Transmission	96
Flywheel Clutch	92	Transmission Brake	95
Gear Shift	93	Transmission Case and Covers	98
Power Train	91	Transmission Lubrication System	102
Tandem Drive Housing	107	Wheels and Tires—Rear	105

Brakes
(Page 110)

Name	Page	Name	Page
Hydraulic Brake Control	110	Tandem Front Brake	111
Rear Wheel Hydraulic Brake	113		

Chassis
(Page 115)

Axle—Front	124	Hood and Dash	130
Centershift	123	Hub Cap	116
Circle	117	Radiator Support	115
Frame	128	Wheels and Tires—Front	116

Blade Controls and Steering System
(Page 131)

Blade Lift	159	Hydrostatic Steering	138
Control Shafts	144	Leaning Wheel Control Shaft	143
Cover	150	Power Control	153
Hydraulic Steering Gear	133	Power Control Drive Shaft	151
Hydraulic Steering to Hydrostatic Steering	140		

Implements
(Page 162)

Blade	162	Scarifier	164
Power Blade Arrangement	164		

Cab, Gauges and Accessories
(Page 169)

Cab	169	Platform	171
Clutch and Brake Control	174	Seat	170
Fuel Tank	171	Seat Frame	171
Gauge	173	Windshield Wiper	170

Service Equipment and Supplies
(Page 176)

Specifications	188	Tools	178
Tire Pump	176	Transfers	180

5/0299 **ÍNDICE**

Motor Diesel
(Página 19)

Nome	Página	Nome	Página
Alojamento Dianteiro	34	Governador	54
Alojamento do Volante	39	Jogo de Juntas	28
Alojamento e Termostato	46	Mancais do Virabrequim	28
Alternador	69	Marcador de Horas de Serviço	40
Amortecedor	37	Mecanismo das Válvulas	32
Arrefecedor de Óleo do Motor	51	Medidor do Nível de Óleo	42
Bateria e Fios	72	Motor de Partida	86
Biela	27	Munhão	37
Bloco do Cilindro	23	Olhal de Levantamento	22
Bocal de Enchimento	48	Peças Montadas no Motor	31
Bomba de Água	49	Pistão	27
Bomba de Escorva de Combustível	65	Polia	36
Bomba de Óleo	42	Purificador de Ar	21
Bomba de Transferência do Combustível	63	Radiador	19
Bomba Injetora do Combustível	54	Respiro	46
Cabeçote	29	Retentores do Virabrequim	26
Cárter	41	Silencioso	21
Coletor de Escape	53	Suporte do Motor	38
Comando de Acessórios	35	Tampa do Alojamento Dianteiro	34
Comando do Ventilador	38	Tampa do Alojamento do Volante	40
Controle de Torque	68	Tampa do Cabeçote	30
Controle do Governador	66	Tampa do Mecanismo das Válvulas	32
Cotovelo—Tubulações de Água	50	Tampas do Bloco do Cilindro	25
Eixo Comando de Válvulas	25	Tubo de Escape	52
Engrenagem Dianteira	35	Tubo de Ventilação	50
Farol	88	Tubulações de Água	48
Farol Dianteiro	90	Tubulações de Ar	51
Filtro de Combustível	52	Tubulações de Combustível	47
Filtro de Óleo	45	Tubulações de Injeção do Combustível	62
Filtro Primário do Combustível	45	Tubulações de Óleo	44
Fixador do Alojamento Dianteiro	33	Velas Incandescentes	68
Fixador do Cabeçote	31	Ventilador de Sopro com Protetor	22
Fixador do Cárter	41	Virabrequim	26
Fixador do Coletor de Escape	53	Volante	39

Sistema de Transmissão
(Página 91)

Alojamento—Comando do Tandem	107	Eixo Traseiro	106
Alojamento—Transmissão e Tampas	98	Embreagem do Volante	92
Arranjo do Trem de Força	91	Freio da Transmissão	95
		Mecanismo de Mudança de Marchas	93

Nome	Página
Lubrificação da Transmissão	102
Pneus e Rodas Traseiros	105
Transmissão	96

Freios (Página 110)

Nome	Página
Controle do Freio Hidráulico	110
Freio Dianteiro do Tandem	111
Freio Hidráulico das Rodas Traseiras	113

Chassi (Página 115)

Nome	Página
Capô e Painel	130
Chassi	128
Círculo	117
Eixo Dianteiro	124
Mecanismo de Deslocamento Lateral	123
Pneus e Rodas Dianteiras	116
Suporte do Radiador	115
Tampa do Cubo da Roda	116

Controles da Lâmina e Sistema de Direção (Página 131)

Nome	Página
Controle de Força	153
Controle de Inclinação das Rodas	143
Controle do Eixo	144
Direção Hidráulica p/Hidrostática	140
Direção Hidrostática	138
Eixo Motriz do Controle de Força	151
Levantamento da Lâmina	159

Implementos (Página 162)

Nome	Página
Arranjo da Lâmina	164
Escarificador	164
Lâmina	162

Cabina, Indicadores e Acessórios (Página 169)

Nome	Página
Armação do Assento	171
Assento	170
Cabina	169
Controle da Embreagem do Freio	174
Limpador do Pára-brisa	170
Medidores	173
Plataforma	171
Tanque de Combustível	171

Diversos (Página 176)

Nome	Página
Bomba de Pneus	176
Decalcomanias	180
Especificações	187
Ferramentas	178

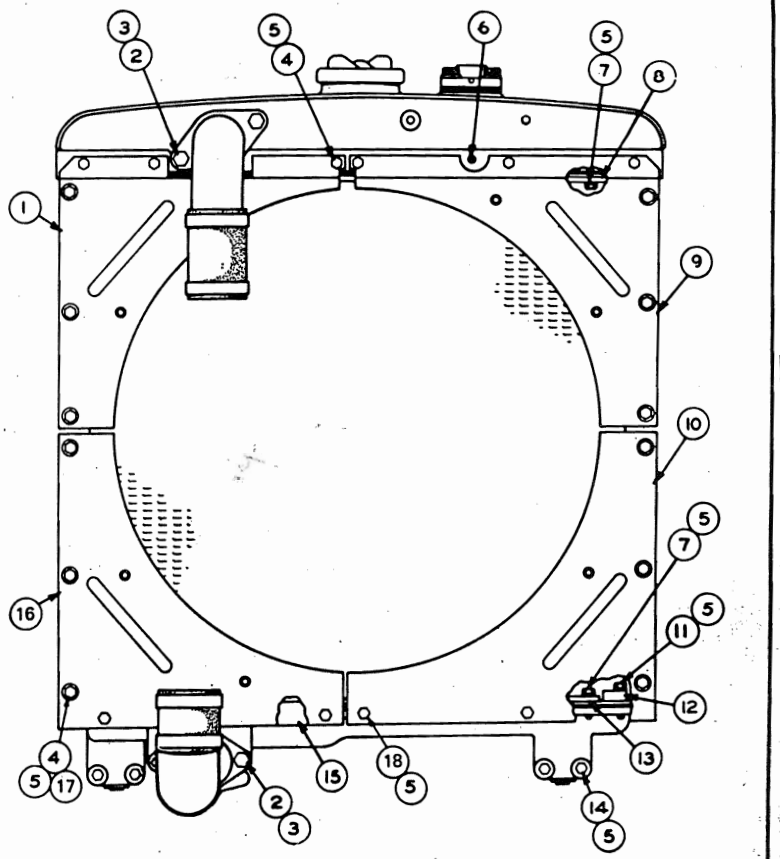

ITEM	PART Nº	DESCRIPTION	QTY.
1	7S4254	SHIELD ASSEM. (Upper L.H.)	1
	9F2978	NUT	2
2	S1585	BOLT	4
3	3B4508	LOCKWASHER	4
4	S509	BOLT	18
5	3B4506	LOCKWASHER	79
6	8B2540	CORK	1
7	S1588	BOLT	48
8	3S8289	STRIP	2
9	7S4253	SHIELD ASSEM. (Upper R.H.)	1
	9F2978	NUT	2

ITEM	PART Nº	DESCRIPTION	QTY.
10	7S4257	SHIELD ASSEM. (Lower R.H.)	1
	9F2978	NUT	1
11	S1591	BOLT	4
12	1M7827	STRIP	2
13	1M7838	STRIP	2
14	S1619	BOLT	4
15	7S3628	ANGLE	1
16	7S4258	SHIELD ASSEM. (Lower L.H.)	1
	9F2978	NUT	2
17	4B4278	WASHER	12
18	L1351	BOLT	5

2P8195 RADIATOR GROUP - Rear View

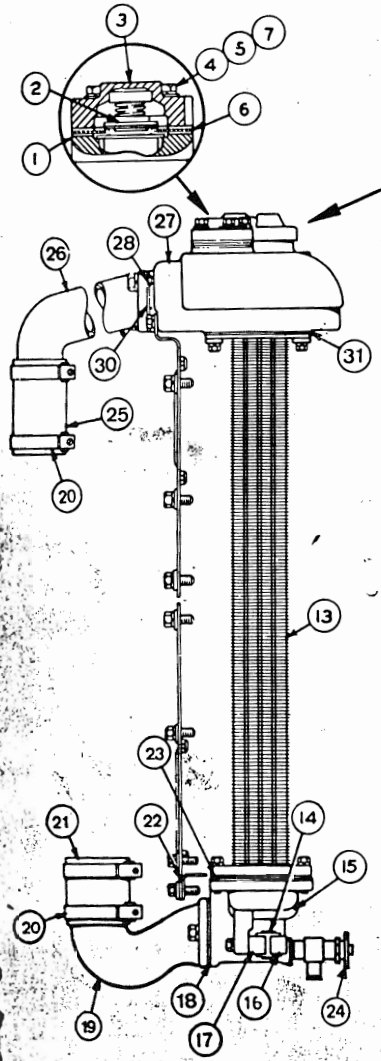

ITEM	PART No.	DESCRIPTION	QTY.
1	5S4629	GASKET	2
2	5S1218	VALVE ASSEM	1
3	5S1211	COVER	1
4	5S5080	BOLT	5
5	3B4505	LOCKWASHER	5
6	5S1213	PLATE	1
7	8F7242	WASHER	5
8	7S7809	CAP ASSEM.	1
9	2P3230	GASKET	1
10	9S9979	RING	1
11	2S2846	RETAINER	1
12	7S7807	INSERT	1
13	2Y2967	CORE ASSEM.	1
14	3H8726	BLOCK	2
15	2P8613	TANK	1
16	1M7823	BLOCK	2
17	1M6298	CLAMP	2
18	9H8136	GASKET	1
19	2P6561	ELBOW	1
20	5P598	CLAMP	4
21	~~5P7046~~	HOSE 2P7046	1
22	7S3627	ANGLE	1
23	6N4986	GASKET	1
24	8F8151	COCK	1
25	2S884	HOSE	1
26	7S5097	ELBOW	1
27	1S2037	TANK ASSEM.	1
28	5M6214	PLUG	1
29	1S286	STUD	1
30	1M7830	GASKET	1
31	6N4985	GASKET	1

SP902

1S2036D

2P8195 RADIATOR GROUP - Side View

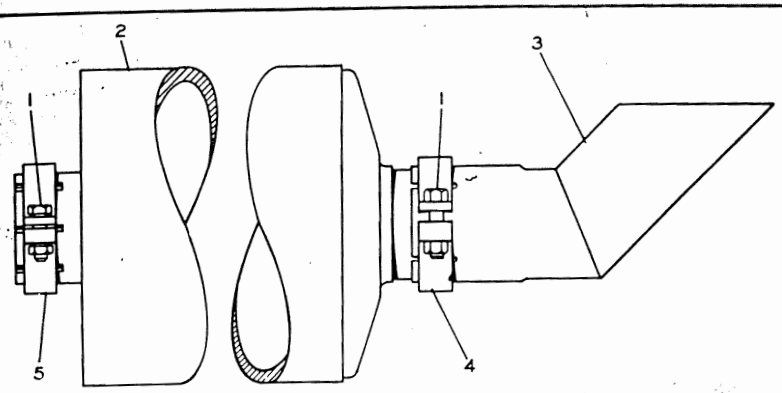

ITEM	PART No.	DESCRIPTION	QTY.
1	1S1591	BOLT	2
	1B5355	NUT	2
2	2Y1341	MUFFLER	1
		– OU –	
	7S8301	MUFFLER	1

ITEM	PART No.	DESCRIPTION	QTY.
3	9S7534	PIPE	1
4	5S580	CLAMP	1
5	2F5152	CLAMP	1

SP100

1P1241 MUFFLER GROUP

ITEM	PART No.	DESCRIPTION	QTY.
1	7S687	INDICATOR	1
2	3B7264	NIPPLE	1
3	1D4717	NUT	8
4	3B4506	LOCKWASHER	8
5	4M4299	GASKET	1
6	4M310	PRECLEANER ASSEM.	1
	9M9439	COVER ASSEM.	1
7	1M7250	BODY	1
8	7M8228	SLEEVE ASSEM.	1
C 9	2Y2302	AIR CLEANER ASSEM.	1
10	4M9334	ELEMENT (Primary)	1
11	2S1286	ELEMENT (Secondary)	1
12	4M4299	GASKET	1
13	1G1617	ROD ASSEM.	2
14	2Y2303	CUP ASSEM.	1
15	3B6822	ELBOW	1

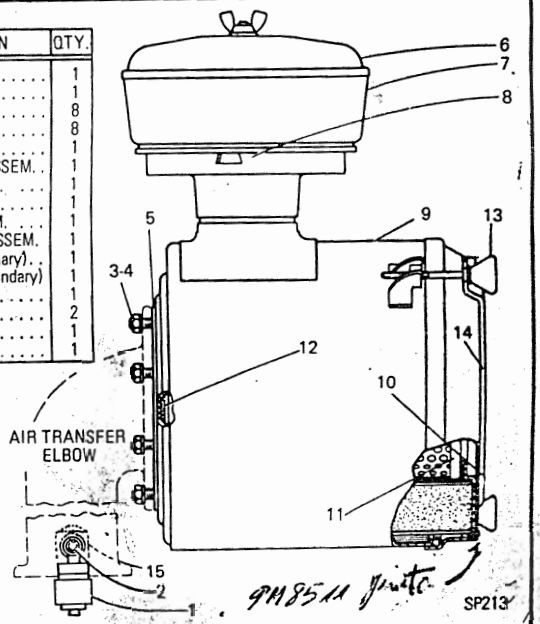

C INDICATES CHANGE

SP213

9M8511 Joint

7S6748 AIR CLEANER GROUP

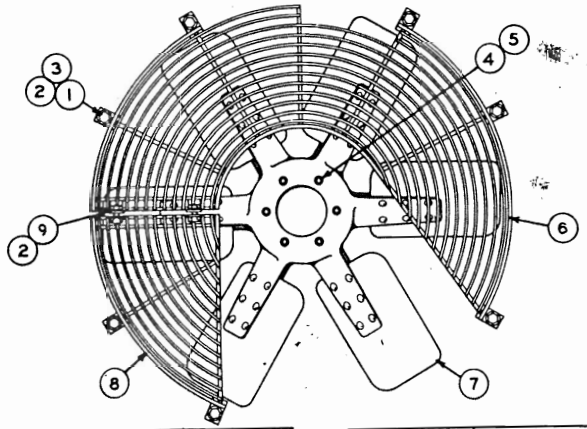

ITEM	PART Nº	DESCRIPTION	QTY.
1	L1351	BOLT	7
2	3B4506	LOCKWASHER	9
3	4B4278	WASHER	7
4	1A2029	BOLT	6
5	3B4506	LOCKWASHER	6
6	5S5133	GUARD ASSEM. (Upper)	1
7	7S542	SPIDER ASSEM.	1
8	5S5237	GUARD ASSEM. (Lower)	1
9	S509	BOLT	2

109679

7S3739 BLOWER FAN AND GUARD GROUP

REF. NO.	PART NUMBER	DESCRIPTION	QTY
1	5L4544	EYE	2

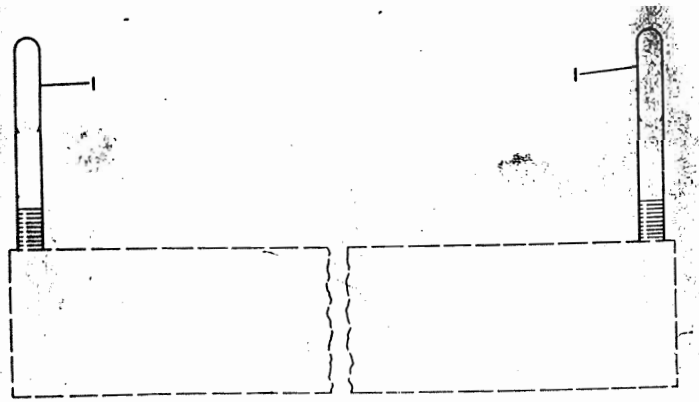

112542

1P3840 LIFTING EYE GROUP

2P6560 CYLINDER BLOCK GROUP
2P8776 Cylinder Block parts are shown on Page 24

ITEM	PART No.	DESCRIPTION	QTY.
1	5M6213	PLUG	6
2	8B1312	DOWEL	2
3	2P8889	LINER	6
4	5B7652	DOWEL	2
5	8B6349	DOWEL	2
6	5S8462	STUD	1
7	4B5387	PLUG	2
8	5M6214	PLUG	1
9	9M5477	BEARING	1
10	4B9782	BALL	1
11	8B858	PLUG	2
12	2P8776	BLOCK ASSEM. (Separate Illustration)	1
13	[8M9307 [6F7062	PLUG GASKET	1 1
14	7H3171	PLUG	2
15	5S6670	SEAL	18
16	7M4046	BEARING	4

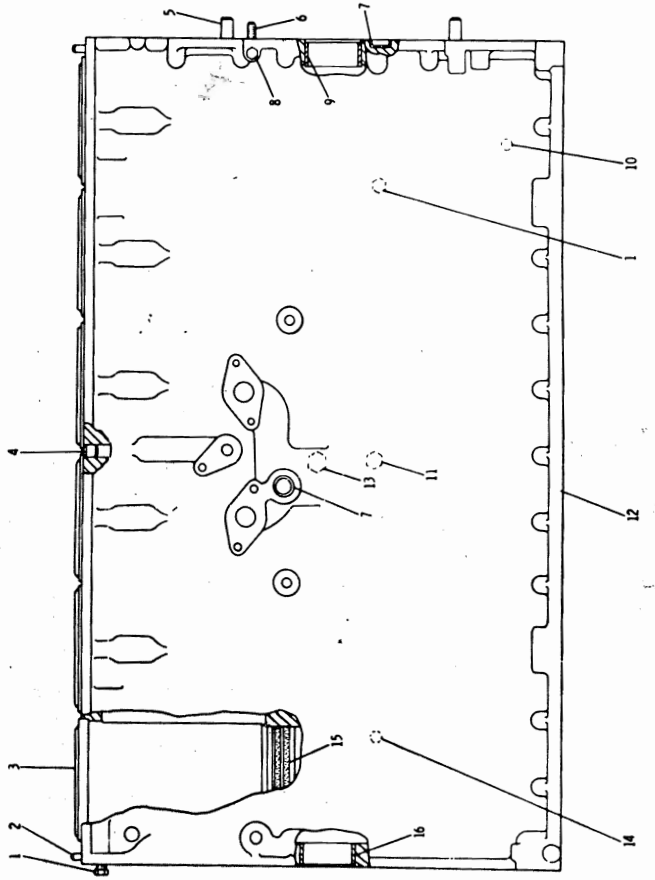

SP265

ITEM	PART No	DESCRIPTION	QTY.
1	7M4046	BEARING	4
2	5M6213	PLUG	1
3	8B1312	DOWEL	2
4	4B5387	PLUG	2
5	5M6213	PLUG	1
6	5B7652	DOWEL	2
7	2B858	PLUG	1
8	3S8313	PLUG	2
9	8B6349	DOWEL	2
10	5S8462	STUD	1
11	9M5477	BEARING	1
12	4B9782	BALL	1
13	7S3224	BOLT	14
	2S5658	WASHER	14
14	1P2717	BEARING CAP	7

14171P

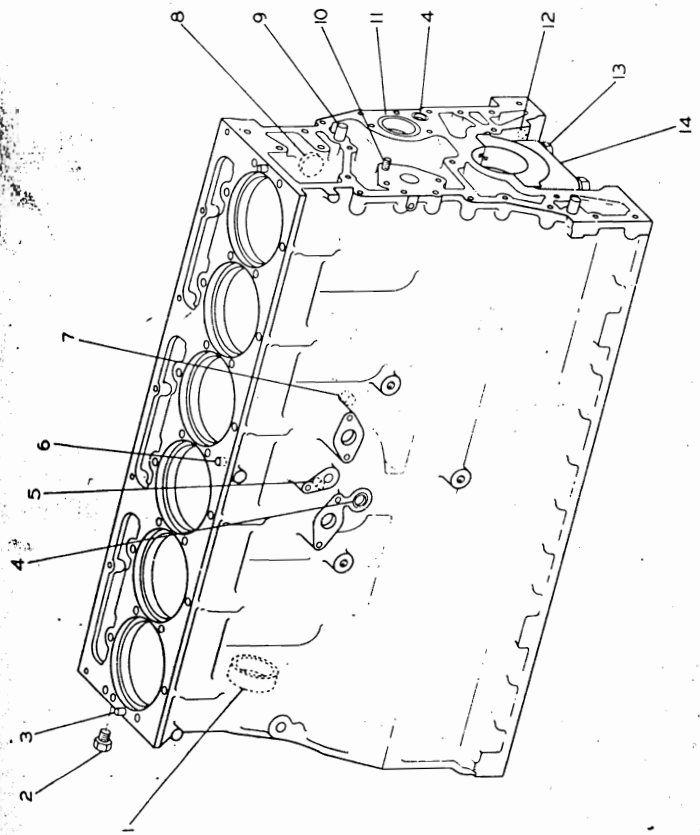

2P8776 CYLINDER BLOCK ASSEMBLY
Part of Cylinder Block shown on Page 23

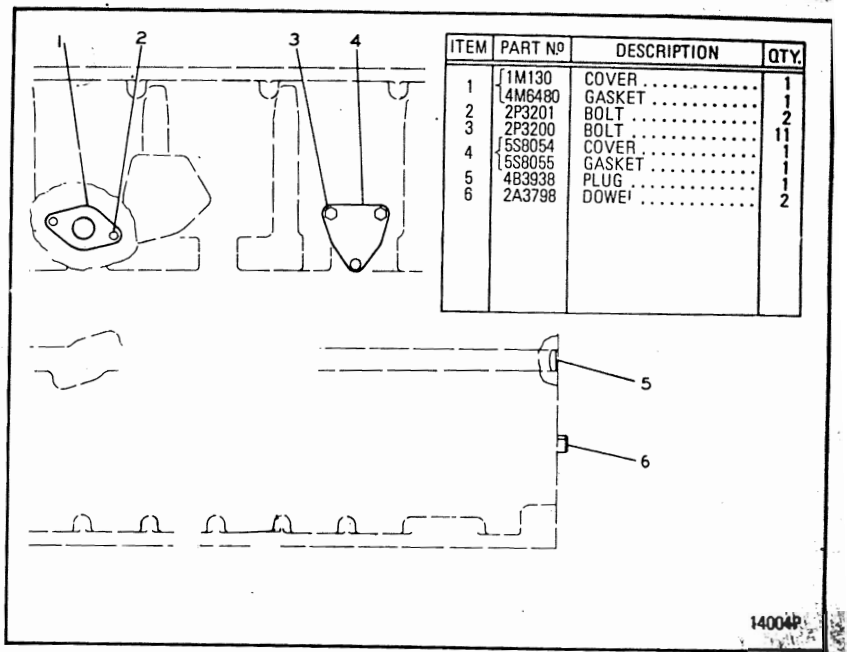

ITEM	PART No	DESCRIPTION	QTY.
1	1M130	COVER	1
	4M6480	GASKET	1
2	2P3201	BOLT	2
3	2P3200	BOLT	11
4	5S8054	COVER	1
	5S8055	GASKET	1
5	4B3938	PLUG	1
6	2A3798	DOWEL	2

14004P

2Y1958 CYLINDER BLOCK COVER GROUP

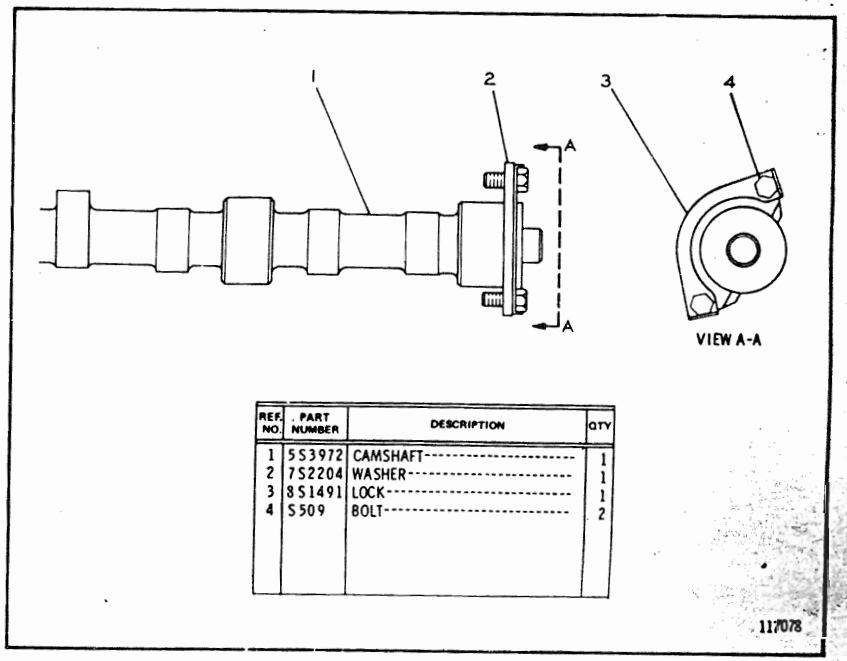

REF. NO.	PART NUMBER	DESCRIPTION	QTY
1	5S3972	CAMSHAFT	1
2	7S2204	WASHER	1
3	8S1491	LOCK	1
4	S509	BOLT	2

117078

2P6202 CAMSHAFT GROUP

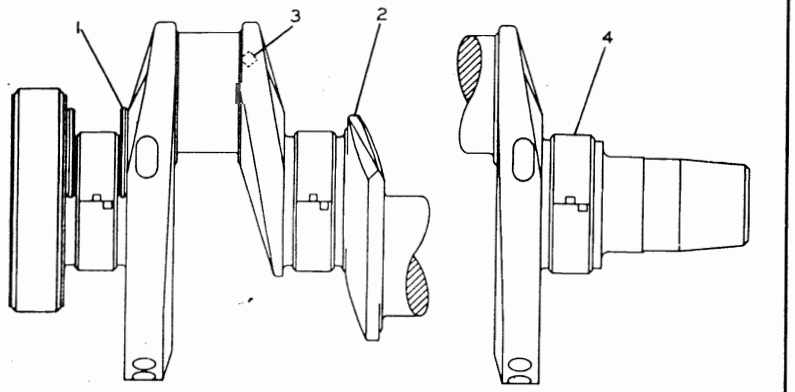

REF. NO.	PART NUMBER	DESCRIPTION	QTY
1	2P716	PLATE	2
2	2P6219	CRANKSHAFT ASSEM.	1
3	9F2247	PLUG	6
4	3S9730	BEARING	7

117642

2P6220 CRANKSHAFT GROUP
Note: For Field Replacement of 2P6219 Crankshaft Assembly order 4N7693 shown on Page 27

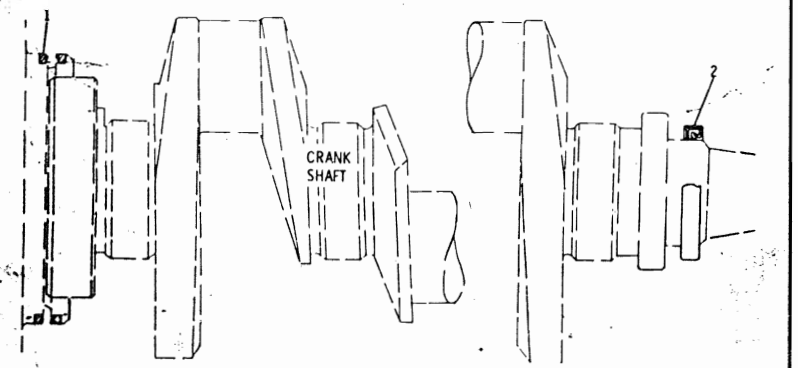

REF. NO	PART NUMBER	DESCRIPTION	QTY
1	1M2910	RING	2
2	5S9021	SEAL	1

206950

2P6483 CRANKSHAFT SEAL GROUP

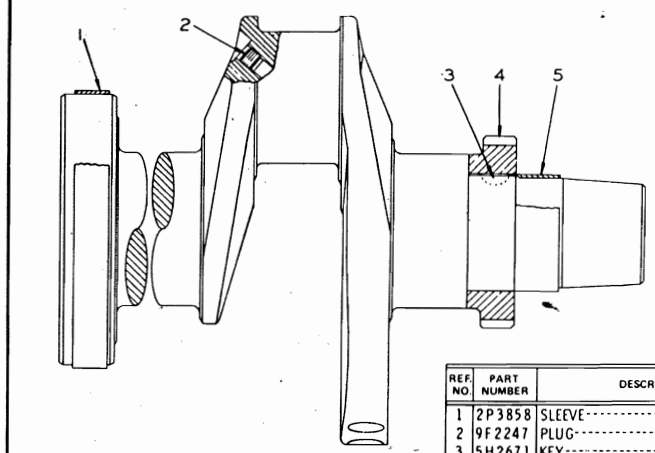

REF. NO.	PART NUMBER	DESCRIPTION	QTY
1	2P3858	SLEEVE	1
2	9F2247	PLUG	6
3	5H2671	KEY	1
4	4M9933	GEAR (40 teeth)	1
5	2P3859	SLEEVE	1
	GMG0Z327	FORM (Installing Crankshaft)	1

202604

4N7693 CRANKSHAFT ASSEMBLY — Field Replacement

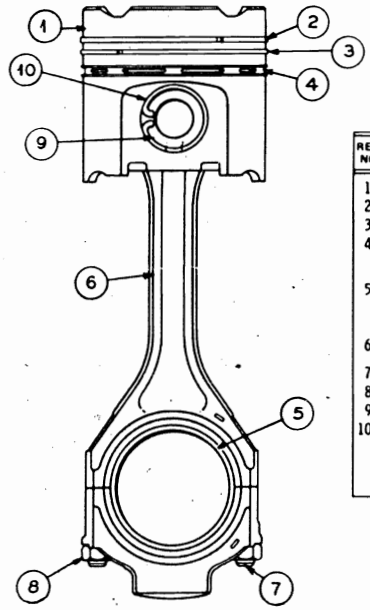

REF. NO.	PART NUMBER	DESCRIPTION	QTY
1	4N4029	PISTON GROUP	1
2	7S8378	RING (Top)	1
3	5S6750	RING (Intermediate)	1
4	9S7788	RING (Oil)	1
5	7M7821	BEARING (Standard)	1
	2S502	BEARING (.010" Undersize)	1
	2S503	BEARING (.020" Undersize)	1
	7M7826	BEARING (.030" Undersize)	1
6	5S6360	ROD ASSEM.	1
	7S9347	BEARING	1
7	1P9956	BOLT	2
8	5S6348	NUT	2
9	9H4016	PIN	1
10	9H4015	RETAINER	2
	7S9404	RING GROUP (Consists of complete set of Rings for one Piston)	1

141606

4N4028 CONNECTING ROD AND PISTON GROUP - 6 Required

7	4S8881	BEARING	(.010 UNDERSIZE)
7	4S8883	BEARING	(.020 UNDERSIZE)
7	4S8885	BEARING	(.030 UNDERSIZE)
1	6N4129	THRUST PLATE GROUP	

(INCLUDES BOTH WIDE AND NARROW THRUST PLATES AND FORM GMG02570)

SP267

CRANKSHAFT BEARING AND THRUST PLATE REPLACEMENT GROUPS

4N4994	DIESEL ENGINE BASIC
5P2649	DIESEL ENGINE REVISED
5P2648	DIESEL ENGINE SUPLEMENTARY
5P1988	VALVE GRINDING
5P1937	WATER PUMP
1P4767	TRANSMISSION

11182P

GASKET KITS

2P6476 CYLINDER HEAD GROUP
4N7446 Cylinder Head parts are shown on Page 30

REF NO	PART NUMBER	DESCRIPTION	QTY
C 1	5S6449	VALVE----------(Exhaust)	6
2	2A4429	LOCK----------	24
3	5S5912	RETAINER----------	12
4	7S7144	SPRING----------	12
	5S6795	CHAMBER ASSEM.----------	6
	7S3206	SEAL----------	6
C 5	5M2667	GASKET--4.93 mm(.194 in.)thick	6
C	2S8959	GASKET--5.66 mm(.223 in.)thick	6
C	2S8960	GASKET--6.3 mm(.248 in.)thick	6
C 6	5S6452	VALVE----------(Intake)	6
7	4N7446	HEAD ASSEM.---------- (Separate Illustration)	1
8	5S6281	GASKET----------	1

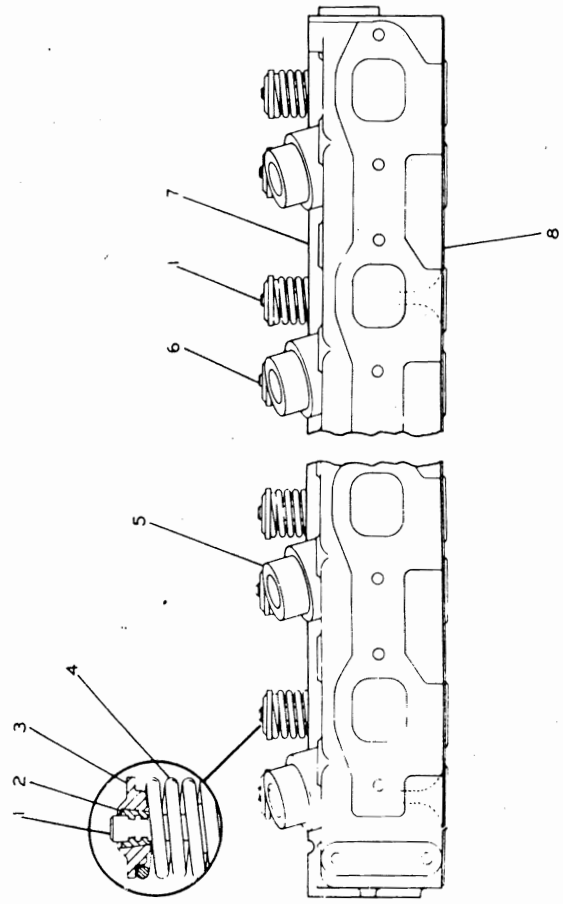

C INDICATES CHANGE

209100

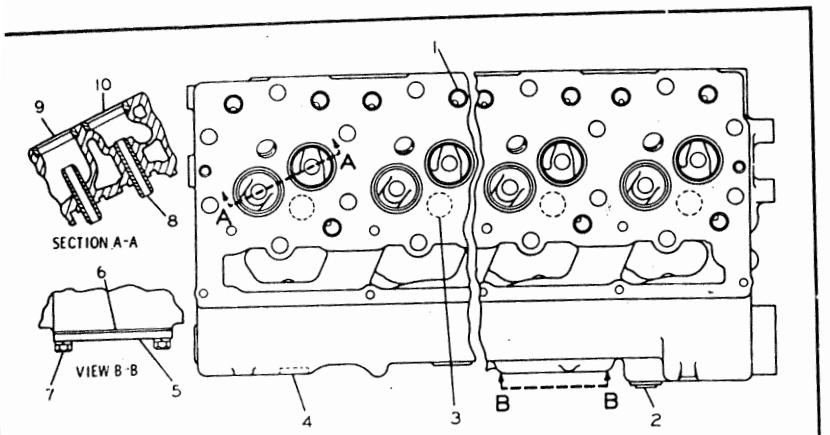

REF. NO.	PART NUMBER	DESCRIPTION	QTY
1	1S3062	DIRECTOR	18
2	2B858	PLUG	3
3	3B623	PLUG	6
4	3S8313	PLUG	7
5	1P6367	COVER	1
6	5S6735	GASKET	1
7	1S1594	BOLT	4
	3B4506	LOCKWASHER	4
8	2P1262	GUIDE	12
9	5S7218	INSERT (intake)	6
10	5S7221	INSERT (exhaust)	6

205775

4N7446 CYLINDER HEAD ASSEMBLY
Part of 2P6476 Cylinder Head shown on Page 29

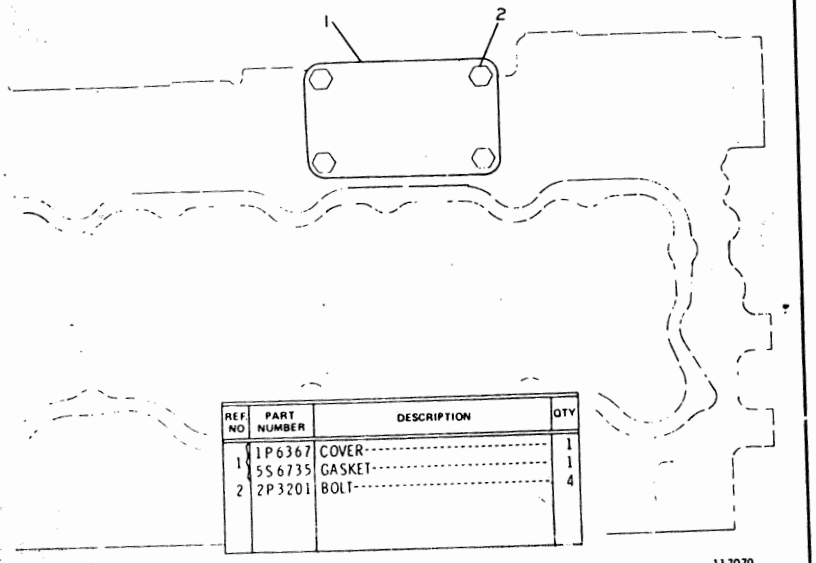

REF. NO.	PART NUMBER	DESCRIPTION	QTY
1	1P6367	COVER	1
	5S6735	GASKET	1
2	2P3201	BOLT	4

117079

2P6530 CYLINDER HEAD COVER GROUP

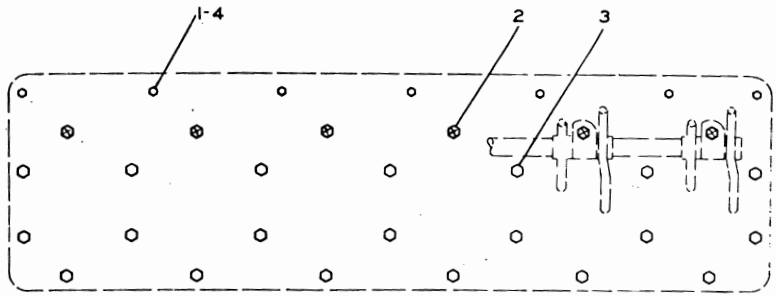

REF. NO.	PART NUMBER	DESCRIPTION	QTY
▲ 1	1A5183	BOLT (4.75 in. long)	7
	5B3850	WASHER	7
2	1B7709	BOLT (Location X)	6
	2S736	WASHER	6
3	1D4595	BOLT	20
	2S736	WASHER	20
▲ 4	5B2638	BOLT (5.25 in. long)	1

▲ USE AS REQUIRED

201638

2P6546 CYLINDER HEAD FASTENER GROUP

	4	1A8537	BOLT – SUPPORT TO FRAME ASSEMBLY
	1	3B4506	LOCKWASHER–BRACKET TO CLAMP
	4	3B4510	LOCKWASHER – SUPPORT TO FRAME ASSEMBLY
	1	1D4717	NUT – BRACKET TO CLAMP
	4	1D4720	NUT – BOLT TO FRAME ASSEMBLY
	1	1L3661	CLAMP – PIPE TO BRACKET
	1	7M7388	PIPE – FLYWHEEL HOUSING OIL DRAIN TO COVER ASSEMBLY
	1	7M7602	BRACKET – CLIP TO PLATE
	1	S509	BOLT – BRACKET TO CLAMP
▲	4	1S5761	SHIM – SUPPORT TO FRAME
▲	8	1S5762	SHIM – SUPPORT TO FRAME
▲	4	1S5763	SHIM – SUPPORT TO FRAME

▲ USE AS REQUIRED

11183P

2S6981 ENGINE MOUNTING HARDWARE

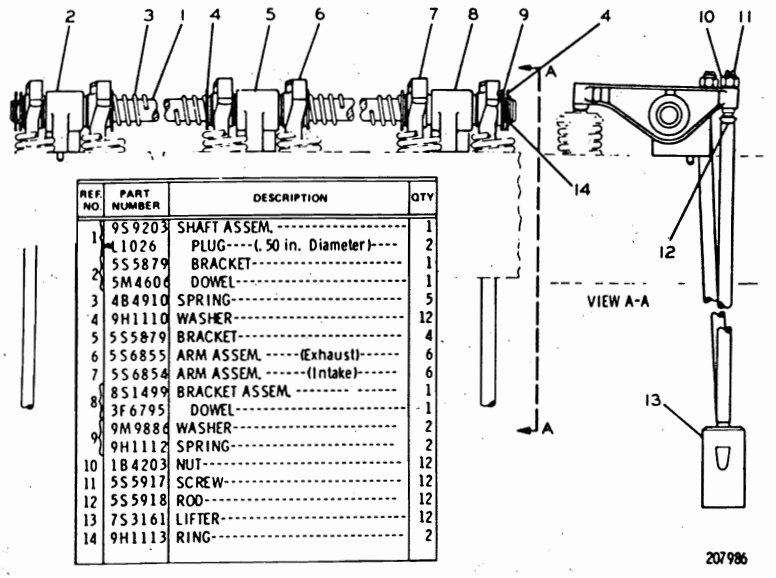

REF. NO.	PART NUMBER	DESCRIPTION	QTY
1	9S9203	SHAFT ASSEM.	1
	L1026	PLUG----(.50 in. Diameter)	2
2	5S5879	BRACKET	1
	5M4606	DOWEL	1
3	4B4910	SPRING	5
4	9H1110	WASHER	12
5	5S5879	BRACKET	4
6	5S6855	ARM ASSEM. -----(Exhaust)-----	6
7	5S6854	ARM ASSEM. -----(Intake)-----	6
8	8S1499	BRACKET ASSEM.	1
	3F6795	DOWEL	1
9	9M9886	WASHER	2
	9H1112	SPRING	2
10	1B4203	NUT	12
11	5S5917	SCREW	12
12	5S5918	ROD	12
13	7S3161	LIFTER	12
14	9H1113	RING	2

2P6526 VALVE MECHANISM GROUP

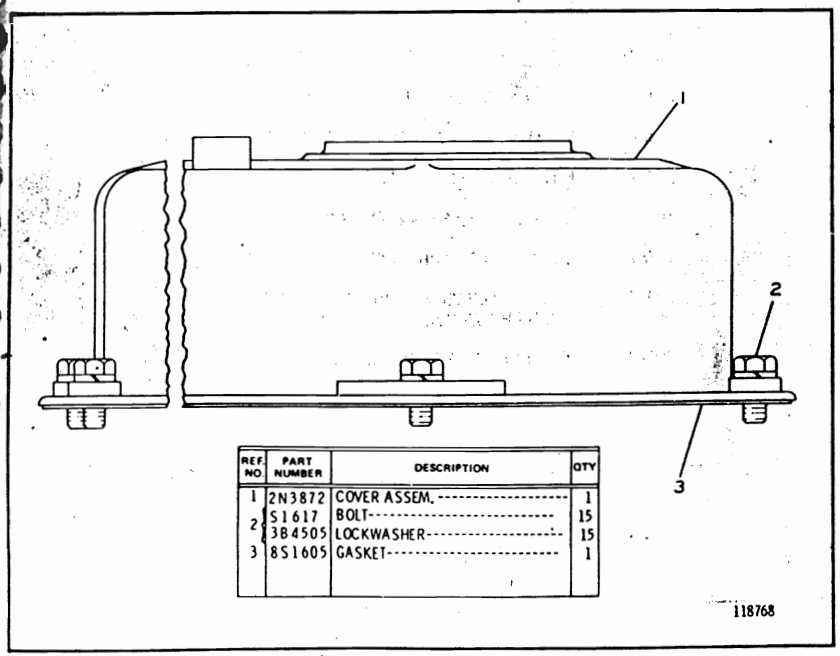

REF. NO.	PART NUMBER	DESCRIPTION	QTY
1	2N3872	COVER ASSEM.	1
2	S1617	BOLT	15
	3B4505	LOCKWASHER	15
3	8S1605	GASKET	1

2P6516 VALVE MECHANISM COVER GROUP

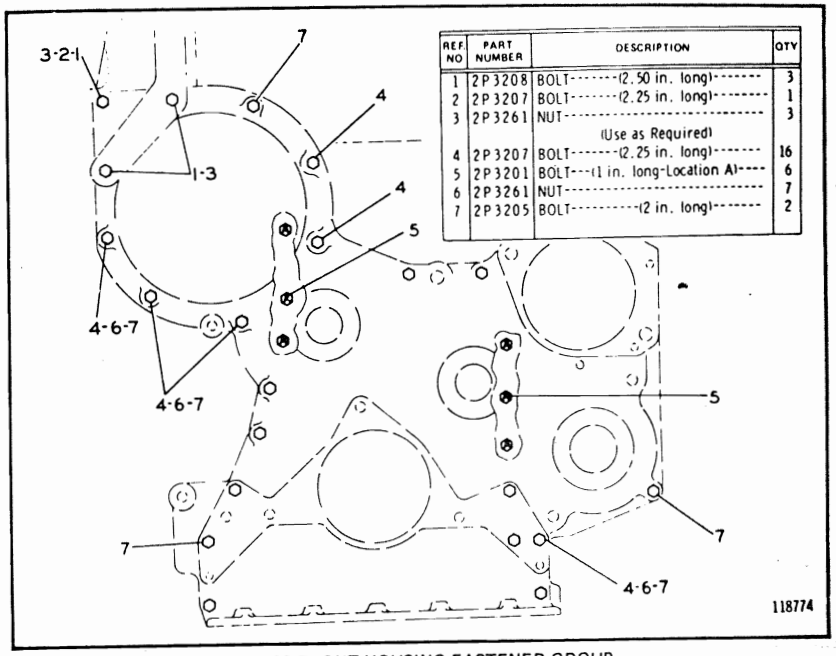

REF. NO.	PART NUMBER	DESCRIPTION	QTY
1	2P3208	BOLT-------(2.50 in. long)-------	3
2	2P3207	BOLT-------(2.25 in. long)-------	1
3	2P3261	NUT	3
		(Use as Required)	
4	2P3207	BOLT-------(2.25 in. long)-------	16
5	2P3201	BOLT---(1 in. long-Location A)----	6
6	2P3261	NUT	7
7	2P3205	BOLT---------(2 in. long)-------	2

2P6498 FRONT HOUSING FASTENER GROUP
Serial No. 64U1050 to 64U1148

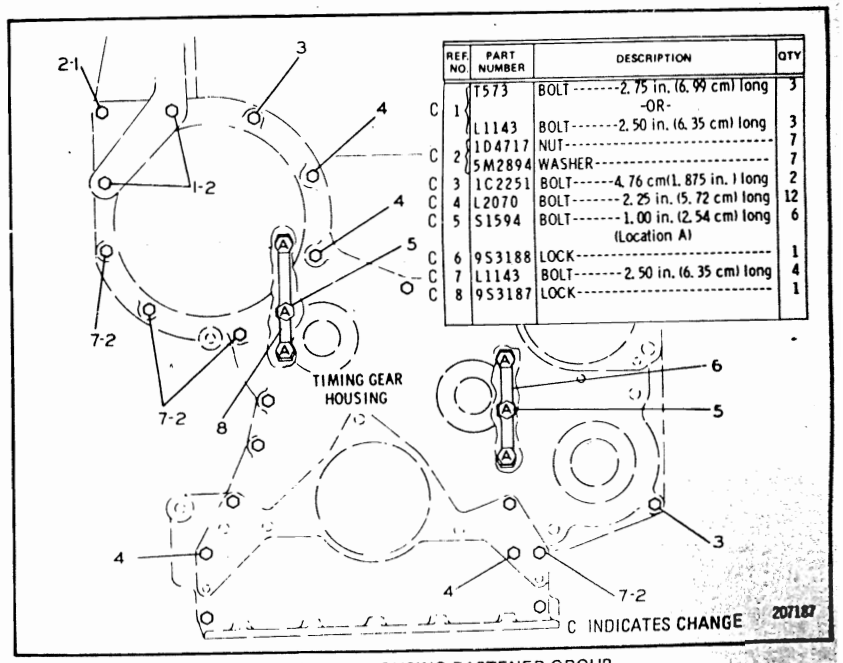

	REF. NO.	PART NUMBER	DESCRIPTION	QTY
C	1	T573	BOLT -------2.75 in. (6.99 cm) long -OR-	3
		L1143	BOLT-------2.50 in. (6.35 cm) long	3
C	2	1D4717	NUT	7
		5M2894	WASHER	7
C	3	1C2251	BOLT-------4.76 cm(1.875 in.) long	2
C	4	L2070	BOLT-------2.25 in. (5.72 cm) long	12
C	5	S1594	BOLT-------1.00 in. (2.54 cm) long (Location A)	6
C	6	9S3188	LOCK	1
C	7	L1143	BOLT-------2.50 in. (6.35 cm) long	4
C	8	9S3187	LOCK	1

2P6498 FRONT HOUSING FASTENER GROUP
Serial No. 64U1149-Up

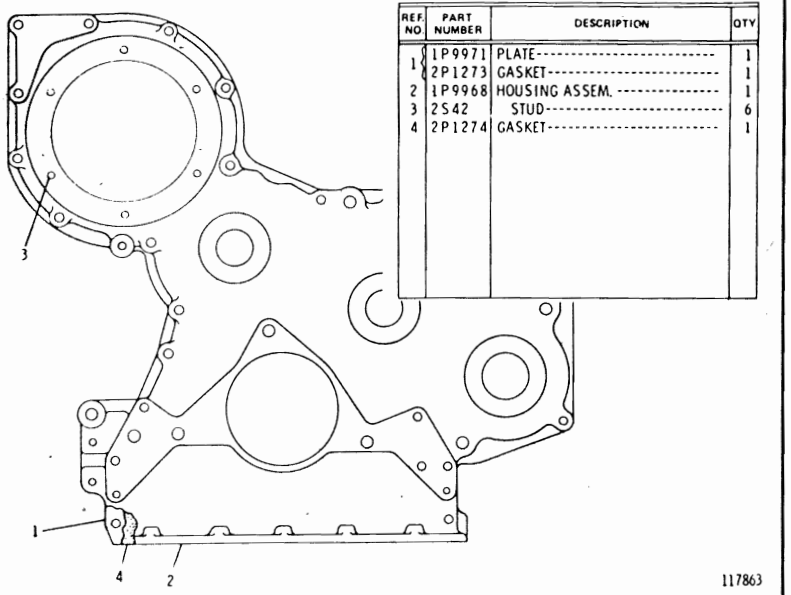

REF. NO.	PART NUMBER	DESCRIPTION	QTY
1	1P9971	PLATE	1
	2P1273	GASKET	1
2	1P9968	HOUSING ASSEM.	1
3	2S42	STUD	6
4	2P1274	GASKET	1

2P6153 FRONT HOUSING GROUP

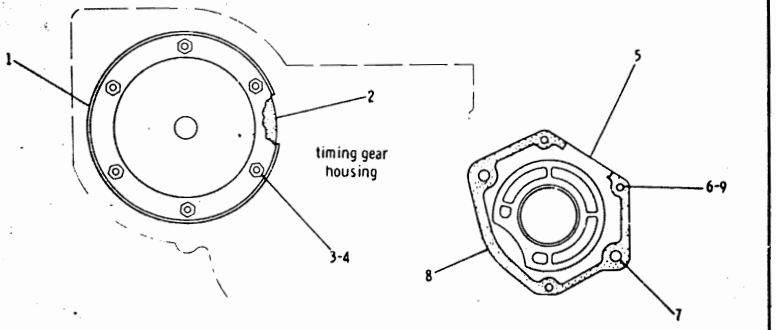

	REF. NO.	PART NUMBER	DESCRIPTION	QTY
C	1	2P8701	COVER	1
C	2	2Y3451	GASKET	1
	3	1B4203	NUT	6
	4	5M2894	WASHER	9
	5	2P218	COVER	1
C	6	3B1915	BOLT	3
	7	S1566	BOLT	2
	8	2P220	GASKET	1
	9	4D3704	WASHER	2

C INDICATES CHANGE

2P6528 FRONT HOUSING COVER GROUP

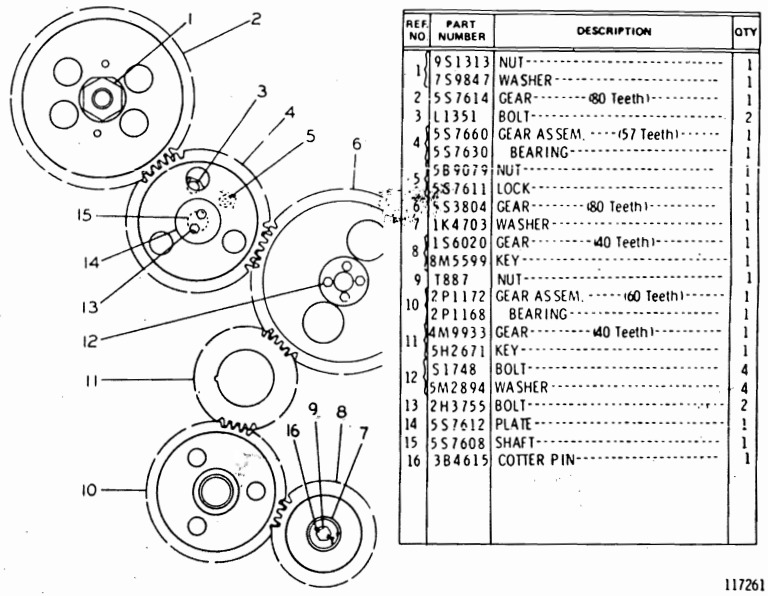

REF. NO.	PART NUMBER	DESCRIPTION	QTY
1	9S1313	NUT	1
	7S9847	WASHER	1
2	5S7614	GEAR (80 Teeth)	1
3	L1351	BOLT	2
4	5S7660	GEAR ASSEM. (57 Teeth)	1
	5S7630	BEARING	1
5	5B9G79	NUT	1
	5S7611	LOCK	1
6	5S3804	GEAR (80 Teeth)	1
7	1K4703	WASHER	1
8	1S6020	GEAR (40 Teeth)	1
	8M5599	KEY	1
9	T887	NUT	1
10	2P1172	GEAR ASSEM. (60 Teeth)	1
	2P1168	BEARING	1
11	4M9933	GEAR (40 Teeth)	1
	5H2671	KEY	1
12	S1748	BOLT	4
	5M2894	WASHER	4
13	2H3755	BOLT	2
14	5S7612	PLATE	1
15	5S7608	SHAFT	1
16	3B4615	COTTER PIN	1

2P7782 FRONT GEAR GROUP — Timing

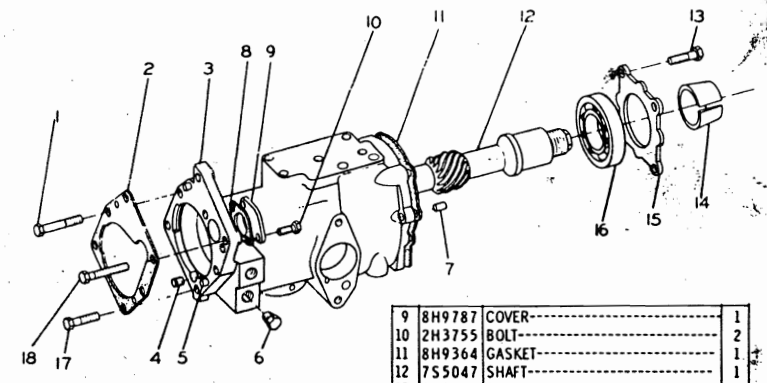

REF. NO.	PART NUMBER	DESCRIPTION	QTY
1	1B9575	BOLT	2
2	8H9220	GASKET	1
3	2P7711	HOUSING ASSEM.	1
4	9F2247	PLUG	1
5	2H1190	DOWEL	2
6	5M6214	PLUG	2
7	2A3348	DOWEL	1
8	8H9788	GASKET	1
9	8H9787	COVER	1
10	2H3755	BOLT	2
11	8H9364	GASKET	1
12	7S5047	SHAFT	1
13	2P3201	BOLT	4
14	5S3828	SLEEVE	1
15	8H9718	RETAINER	1
16	8H9789	BEARING	1
17	S1618	BOLT	3
18	9L2796	BOLT	1

2P7712 ACCESSORY DRIVE GROUP

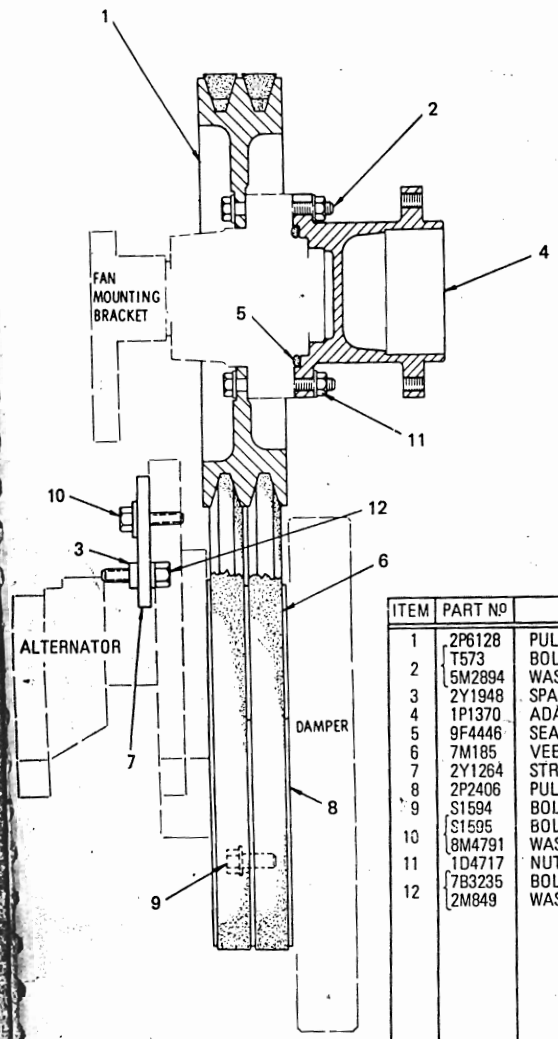

ITEM	PART Nº	DESCRIPTION	QTY.
1	2P6128	PULLEY	1
2	T573	BOLT	6
	5M2894	WASHER	6
3	2Y1948	SPACER	1
4	1P1370	ADAPTER	1
5	9F4446	SEAL	1
6	7M185	VEE BELT SET	1
7	2Y1264	STRAP	1
8	2P2406	PULLEY	1
9	S1594	BOLT	6
10	S1595	BOLT	1
	8M4791	WASHER	1
11	1D4717	NUT	6
12	7B3235	BOLT	1
	2M849	WASHER	1

14142P

2Y2102 PULLEY

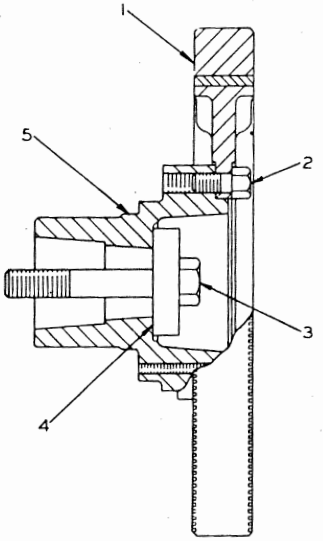

REF. NO.	PART NUMBER	DESCRIPTION	QTY
1	2P9584	DAMPER ASSEM.	1
2	S1595	BOLT	6
3	7B5163	BOLT	1
4	5S9948	WASHER	1
5	2P1818	HUB	1

117291

2P7838 DAMPER GROUP

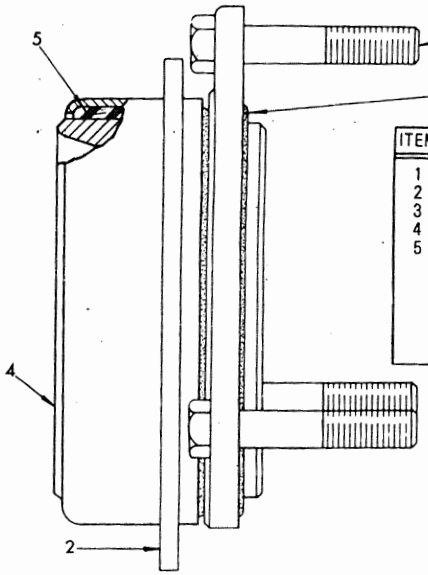

ITEM	PART Nº	DESCRIPTION	QTY.
1	L1329	BOLT	3
2	2P1488	ADAPTER ASSEM.	1
3	2P1692	SEAL	1
4	4N7004	TRUNNION	1
5	2P1487	RING	1

14162P

2P6246 TRUNNION

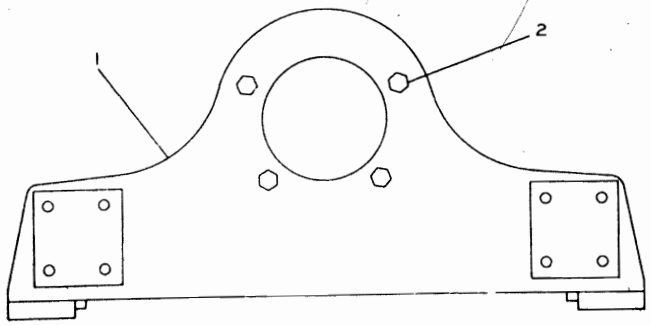

REF NO	PART NUMBER	DESCRIPTION	QTY
1	2P1474	SUPPORT ASSEM.	1
2	S1595	BOLT	4

117183

2P7751 SUPPORT GROUP

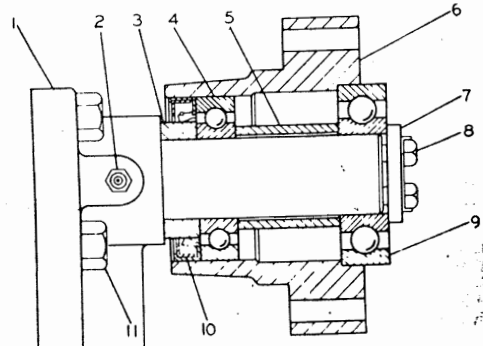

REF NO	PART NUMBER	DESCRIPTION	QTY
1	1P9945	BRACKET ASSEM.	1
2	3B8489	FITTING	1
3	5S9062	SPACER	1
4	8H9789	BEARING	1
5	2P2243	SPACER	1
6	2P1757	HUB	1
7	5S7264	WASHER	2
8	1H5403	BOLT	1
	2F6156	LOCK	1
9	3L1425	BEARING	1
10	5S2106	SEAL	1
11	S1585	BOLT	4

117211

2P7831 FAN DRIVE GROUP

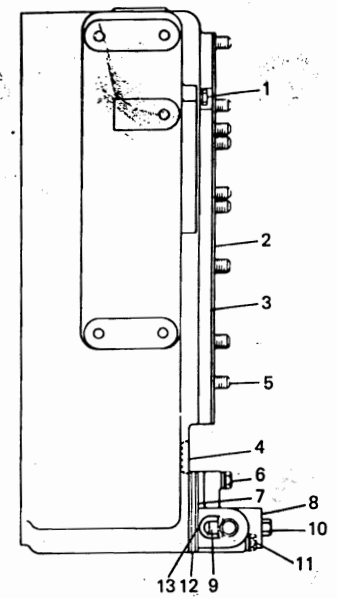

ITEM	PART No.	DESCRIPTION	QTY.
1	5M6213	PLUG	1
2	9H5921	GASKET	1
3	4N5106	HOUSING ASSEM.	1
4	3B645	PLUG	1
5	1A1460	BOLT	13
6	2P3205	BOLT	3
7	1S4382	GASKET	2
8	7M7390	COVER ASSEM.	1
9	5H4211	BUSHING	1
10	5H4212	PLUG	1
11	2P3209	BOLT	1
12	4N7805	SCREEN ASSEM.	1
13	2Y1566	MAGNET	1

14240P

2P6129 FLYWHEEL HOUSING GROUP

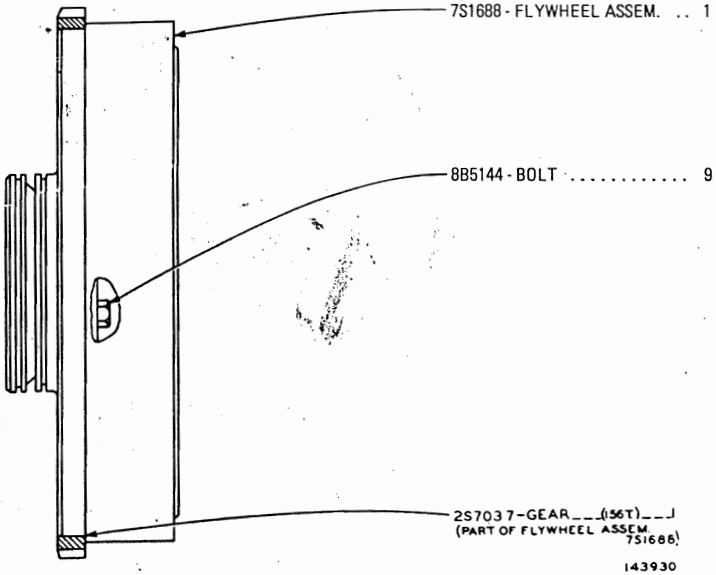

5S3451 FLYWHEEL GROUP

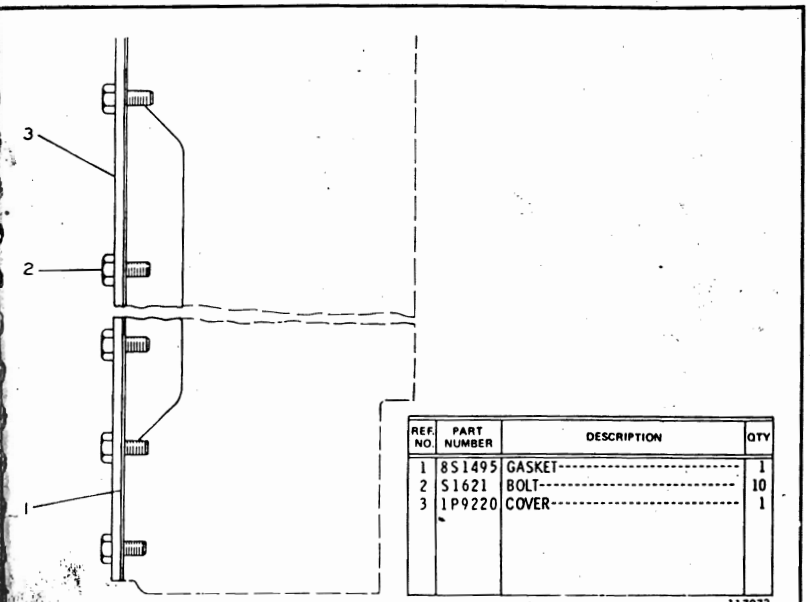

REF. NO.	PART NUMBER	DESCRIPTION	QTY
1	8S1495	GASKET	1
2	S1621	BOLT	10
3	1P9220	COVER	1

117273

2P6130 FLYWHEEL HOUSING COVER GROUP

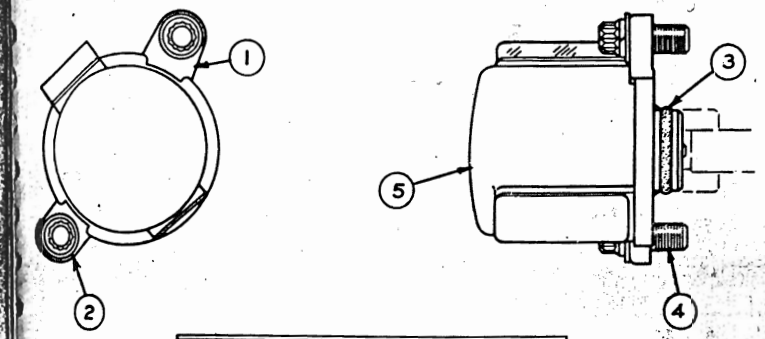

REF. NO.	PART NUMBER	DESCRIPTION	QTY
1	9S3033	CLAMP	1
2	9S3032	CLAMP	1
3	4M8303	SEAL	1
4	1T416	BOLT	2
	3F9556	LOCKWASHER	2
5	9S8920	SERVICE METER ASSEM.	1
	9S4131	KIT----(Service Meter Window) (Includes Window, Gasket and Screws)	1

128355

9S8921 SERVICE METER GROUP

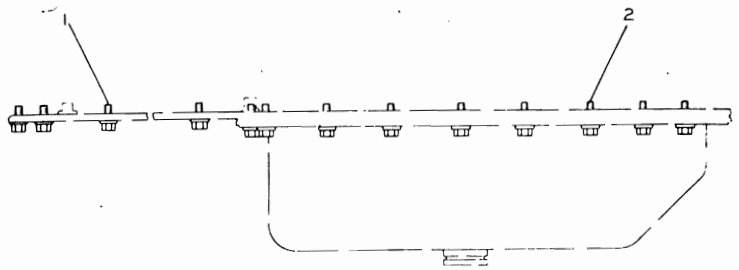

REF. NO.	PART NUMBER	DESCRIPTION	QTY
1	2P3200	BOLT	18
2	2P3201	BOLT	28

117235

2P6199 OIL PAN FASTENER GROUP

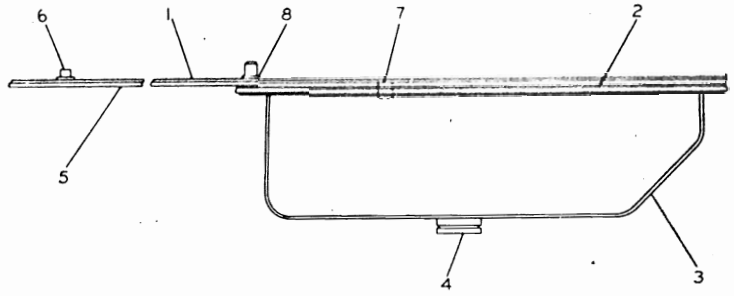

ITEM	PART No.	DESCRIPTION	QTY.
1	[illegible]	GASKET	1
2	[illegible]	GASKET	1
3	8S8206	PAN ASSEM.	1
4	4B2363	PLUG	1
	6F4868	GASKET	1
5	2P1738	PLATE ASSEM.	1
6	[illegible]	NUT	1
7	1S5304	LUG	1
8	6J2237	BOSS	1

117234

2P6174 OIL PAN GROUP

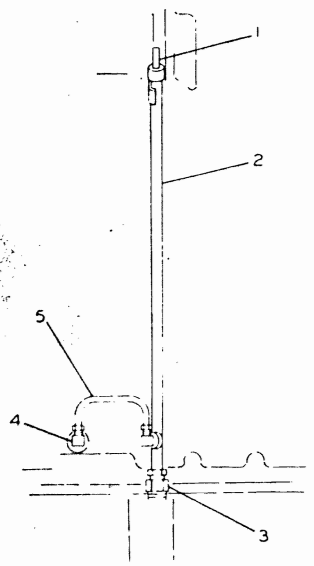

REF NO	PART NUMBER	DESCRIPTION	QTY
1	8S3995	GAGE ASSEM.	1
2	2P2547	TUBE ASSEM.	1
3	8S1326	FITTING	1
	8F8998	NUT	1
4	5K9243	ELBOW	2
5	2P2697	TUBE ASSEM.	1

117215

2P6493 OIL LEVEL GAUGE GROUR

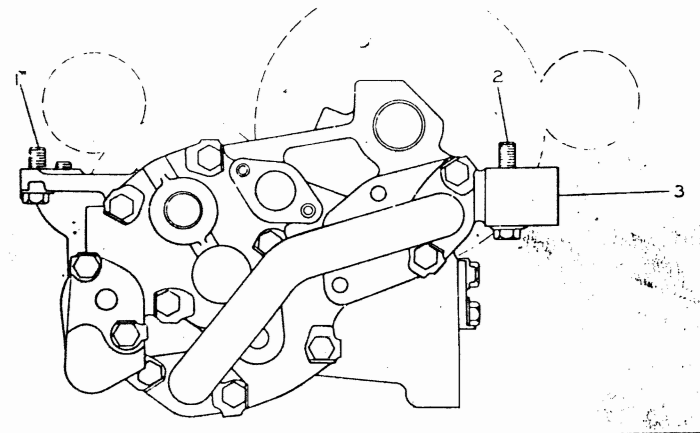

REF NO	PART NUMBER	DESCRIPTION	QTY
1	1A2029	BOLT	2
	8M7587	LOCKNUT	2
2	2P3206	BOLT	2
3	2P7830	PUMP GROUP (Separate Illustration)	1

117278

2P6537 OIL PUMP GROUP
2P7830 Gear Pump parts are shown on Page 43

	REF NO	PART NUMBER	DESCRIPTION	QTY
	7	7S9725	GEAR (8 Teeth-Drive)	1
	8	5S3347	SPACER	1
	9	9S3114	SHAFT ASSEM.	1
		5S8518	BODY ASSEM.	1
	10	1F1006	DOWEL	1
		4B9880	BALL	1
C	11	2P1170	SHAFT ASSEM.	1
	13	8S6513	BEARING	1
	14	1M2432	SHAFT	1
	15	1S702	SHAFT	1
	16	L2061	DOWEL	1
	17	7S9478	COVER	1
	18	7S9442	GEAR ASSEM. (8 teeth-Idler)	2
	19	8S6515	BEARING	2
	20	4B479	PLUNGER	1
		4J4790	SPRING	1
	21	2H3755	BOLT	2
	22	S1617	BOLT	2
	23	4M6946	FLANGE	1
	24	7S9726	GEAR ASSEM. (8 teeth-Idler)	1
	25	8S6508	BEARING	1
	26	S509	BOLT	1
	27	1A2029	BOLT	4
	28	7S9728	GEAR ASSEM. (8 teeth-Idler)	1
	29	8S6515	BEARING	2
	30	2S9529	PLUNGER	1
	31	1S3921	SPRING	1
	32	5S3383	TUBE ASSEM.	1
		T225	GASKET	2

C INDICATES CHANGE

160754

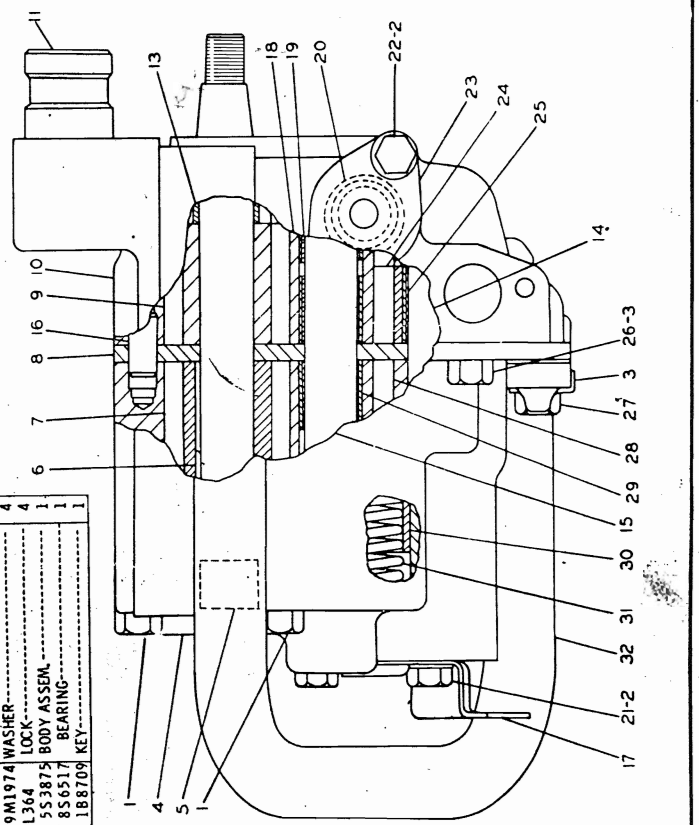

REF NO	PART NUMBER	DESCRIPTION	QTY
1	T55	BOLT	4
C 2	9M1974	WASHER	4
C 3	L364	LOCK	4
4	5S3875	BODY ASSEM.	1
5	8S6517	BEARING	1
6	1B8709	KEY	1

2P7830 GEAR PUMP GROUP
Part of 2P6537 Oil Pump shown on Page 42

REF	PART NUMBER	DESCRIPTION	QTY

REF NO	PART NUMBER	DESCRIPTION	QTY
1	2S1541	ORIFICE	6
2	2P3207	BOLT	1
3	2P3202	BOLT	1
4	2M5407	GASKET	1
5	7S3919	CLIP (slotted)	1
	7S3916	CLIP (tab)	
6	5B8030	WASHER	1
7	2P3201	BOLT	3
8	4B4278	WASHER	1
9	2P2519	TUBE ASSEM.	1
C 10	9M4849	SEAL	4
11	2P2460	TUBE ASSEM.	1
12	7F7590	GASKET	1
13	5S3949	TUBE ASSEM.	1
14	5S3951	TUBE ASSEM.	1
15	2B2694	BOLT	1
16	2A5328	LOCK	2
17	1A9579	BOLT	1
18	8S9300	BELL ASSEM.	1
19	1S7107	GASKET	1
20	1A2029	BOLT	2
	8S8874	LOCK	1
21	1D4538	BOLT	2
	5M6560	LOCK	1
22	9H2713	GASKET	1
23	8M904	GASKET	1

C INDICATES CHANGE 201658

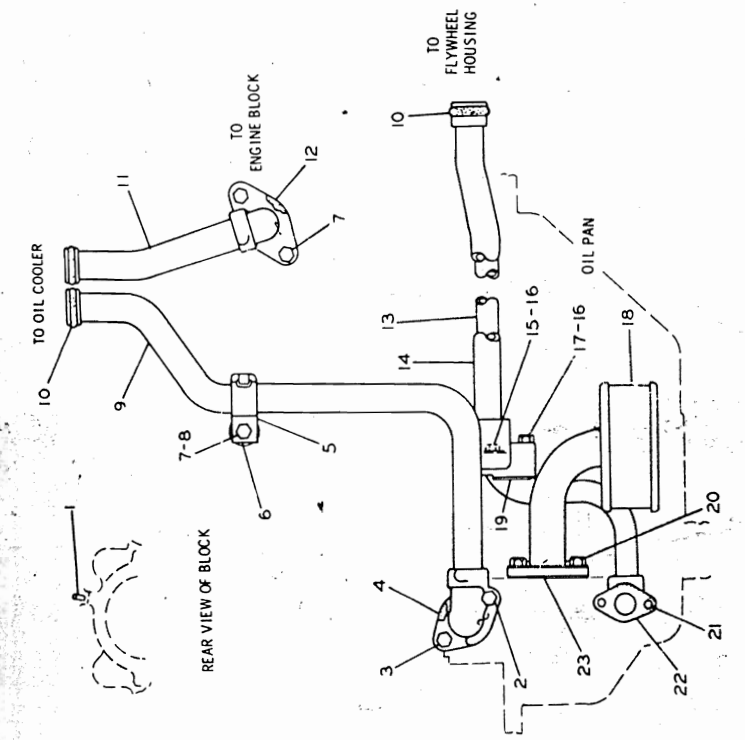

2P6861 OIL LINES GROUP

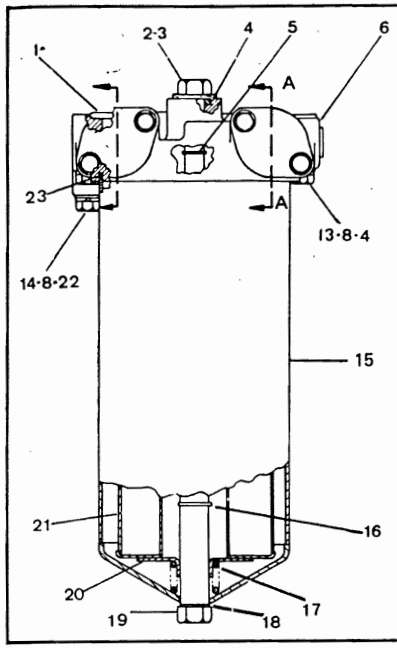

ITEM	PART No	DESCRIPTION	QTY.
1	8M4988	SEAL	2
2	7S6636	BOLT	1
3	1K505	WASHER	1
4	3H4970	SEAL	1
5	5H9899	RING	1
6	7S6397	BASE ASSEM.	1
7	S1618	BOLT	4
8	3B4505	LOCKWASHER	8
9	6B830	COVER	2
10	7S6744	GASKET	2
11	8M3182	SPRING	2
12	1P1367	PLUGER	2
13	2B2694	BOLT	3
14	4B4277	WASHER	4
15	5S7128	HOUSING ASSEM.	1
16	2J6356	RING	1
17	7S6746	SPRING	1
18	6F7062	WASHER	1
19	2H8829	PLUG	1
20	7S6745	RETAINER	1
21	5S484	ELEMENT	1
22	1D4540	BOLT	1
23	2M8691	GASKET	1

2Y1399 OIL FILTER GROUP

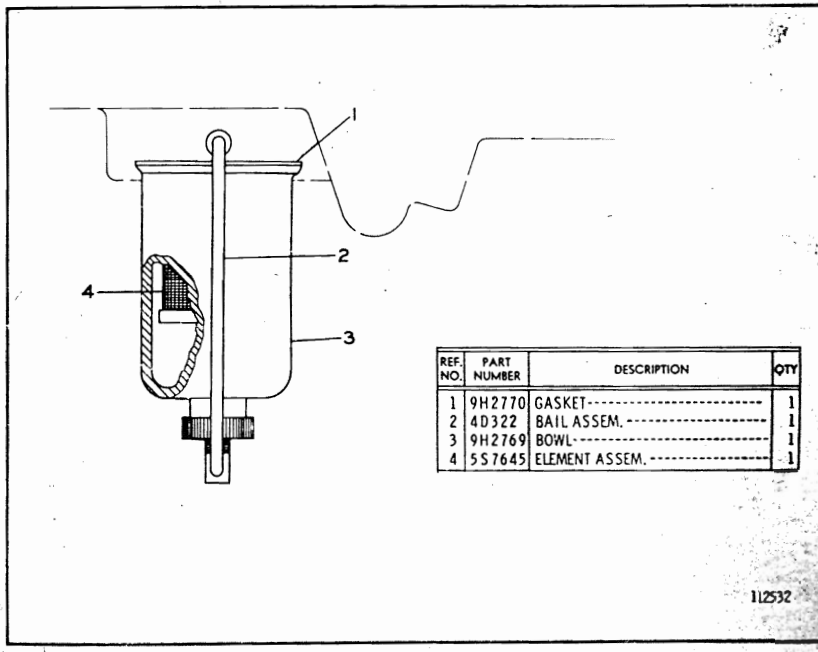

REF. NO.	PART NUMBER	DESCRIPTION	QTY
1	9H2770	GASKET	1
2	4D322	BAIL ASSEM.	1
3	9H2769	BOWL	1
4	5S7645	ELEMENT ASSEM.	1

1P6835 PRIMARY FUEL FILTER GROUP

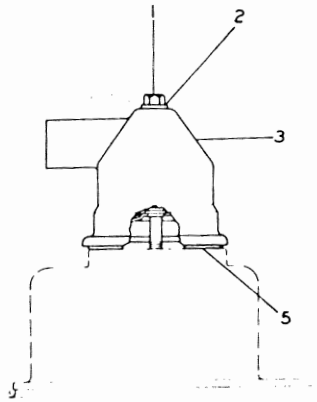

REF. NO.	PART NUMBER	DESCRIPTION	QTY
1	3H3243	BOLT	1
2	4K9890	WASHER	1
3	8S248	BREATHER ASSEM.	1
5	6L5359	SEAL	1

204118

1P4244 BREATHER GROUP

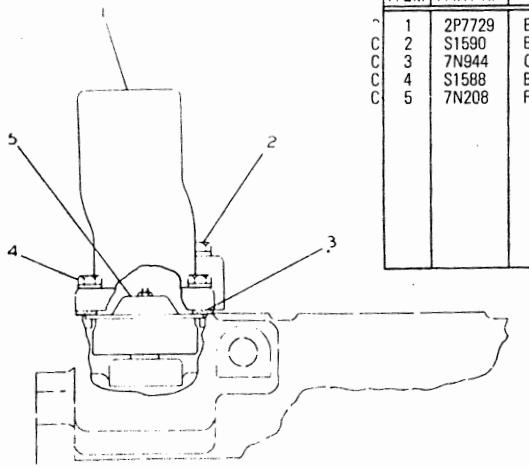

	ITEM	PART Nº	DESCRIPTION	QTY.
	1	2P7729	ELBOW	1
C	2	S1590	BOLT	1
C	3	7N944	GASKET	1
C	4	S1588	BOLT	3
C	5	7N208	REGULATOR	1

C INDICATES CHANGE

SP846

2P8172 HOUSING AND REGULATOR GROUP

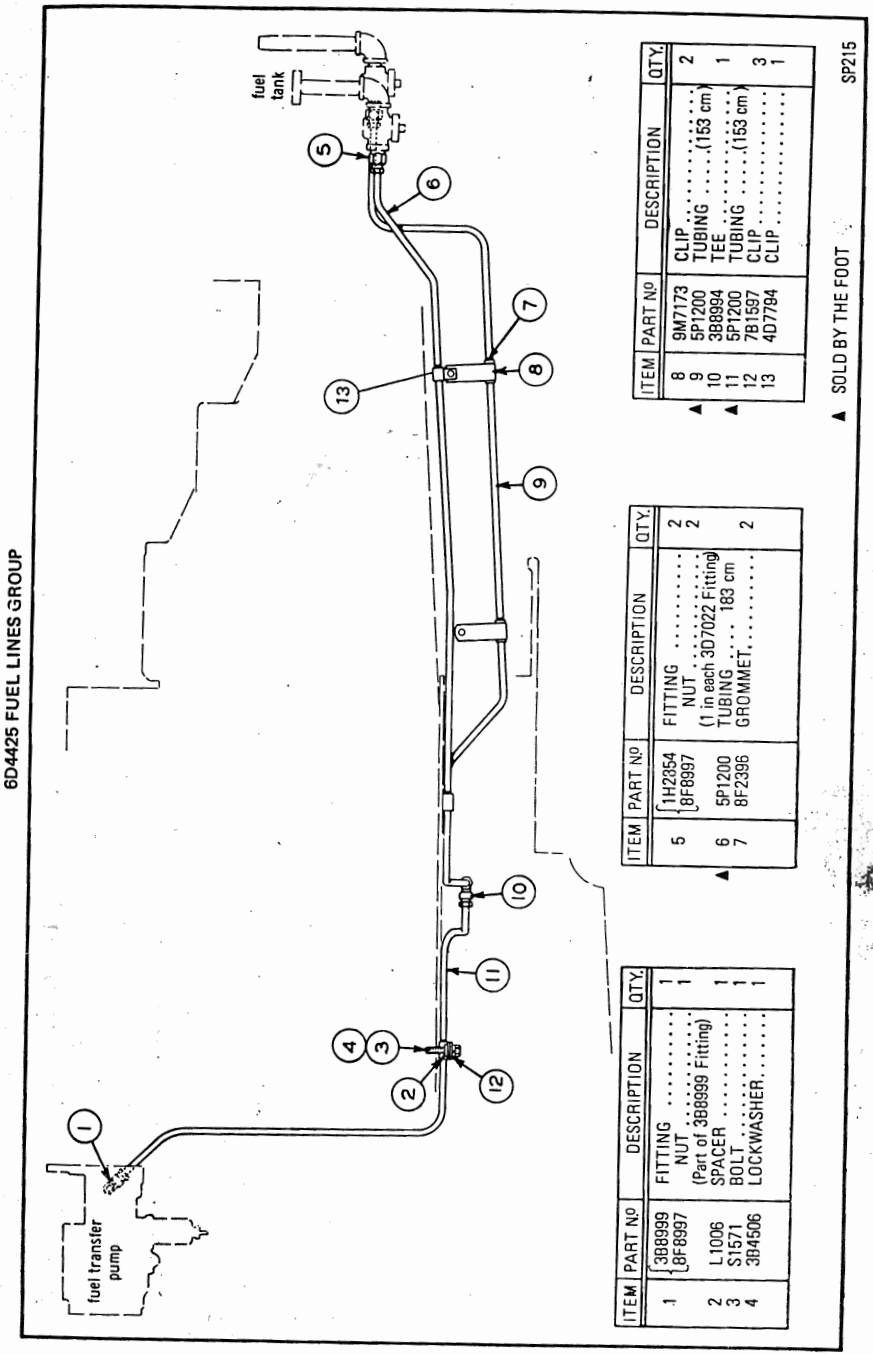

6D4425 FUEL LINES GROUP

ITEM	PART Nº	DESCRIPTION	QTY.
1	3B8999	FITTING	1
	8F8997	NUT	1
		(Part of 3B8999 Fitting)	
2	L1006	SPACER	1
3	S1571	BOLT	1
4	3B4506	LOCKWASHER	1

ITEM	PART Nº	DESCRIPTION	QTY.
5	1H2854	FITTING	2
	8F8997	NUT	2
		(1 in each 3D7022 Fitting)	
	5P1200	TUBING ..... 183 cm	2
6	8F2396	GROMMET	
7			

ITEM	PART Nº	DESCRIPTION	QTY.
8	9M7173	CLIP	2
▲ 9	5P1200	TUBING .....(153 cm)	1
10	3B8994	TEE	
▲ 11	5P1200	TUBING .....(153 cm)	3
12	7B1597	CLIP	1
13	4D7794	CLIP	

▲ SOLD BY THE FOOT

SP215

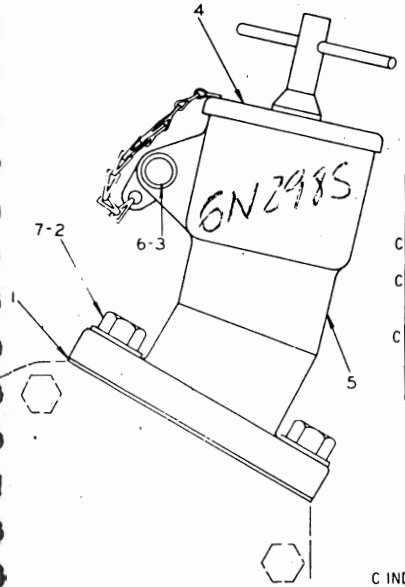

REF. NO	PART NUMBER	DESCRIPTION	QTY
1	2P2720	GASKET	1
C 2	1A2029	BOLT	2
3	9M5732	RIVET	1
C 4	6N2958	CAP ASSEM. 6N-2985	1
5	2P2719	PIPE	1
6	2A3211	WASHER	1
C 7	5M2894	WASHER	2

C INDICATES CHANGE 213213

2P6855 OIL FILLER GROUP

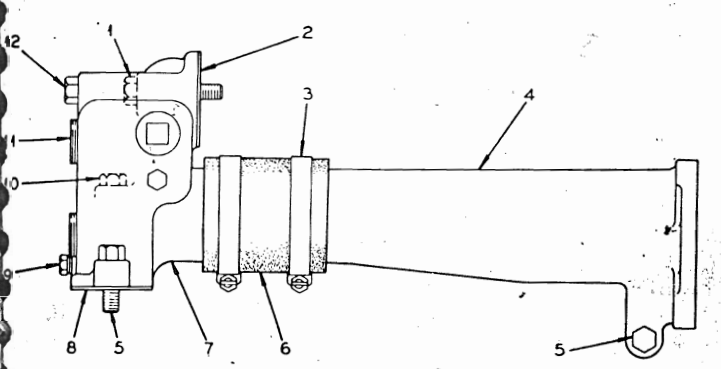

REF. NO.	PART NUMBER	DESCRIPTION	QTY
1	2P3211	BOLT	1
2	2P6132	GASKET	1
3	2Y3029	CLAMP	2
4	2P2511	PIPE	1
5	2P3203	BOLT	2
6	5P1260	HOSE---7.62 cm (3 in.)	
7	2P6117	ELBOW	1

8	2P406	GASKET	1
9	5M6213	PLUG	2
10	2P3210	BOLT	1
11	1B5174	PLUG	3
12	2P3206	BOLT	1

▲ INDICATES CHANGE

▲ ORDER BY THE CENTIMETRE SP627

2P6188 WATER LINES GROUP

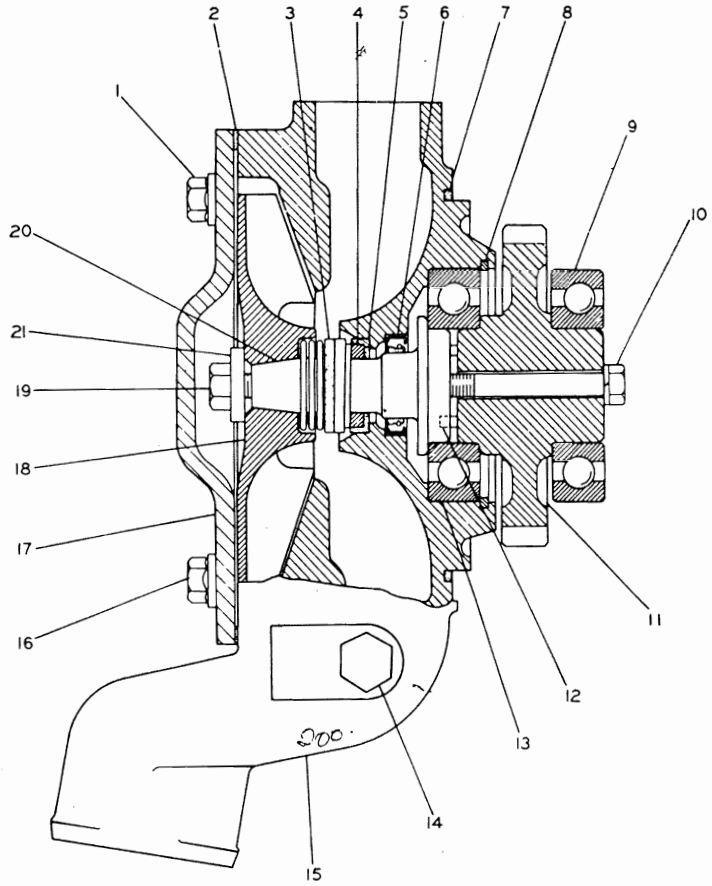

C6N9608-REBUILD KIT---1
(Consists of parts marked ▲)

REF. NO.	PART NUMBER	DESCRIPTION	QTY
1	2P3200	BOLT	2
2	2P405	GASKET	1
C 3	6N9312	SEAL ASSEM.	1
4	8S7762	RING	1
5	8S8821	SEAL	1
6	8H9520	SEAL	1
7	5F3106	SEAL	1
▲ 8	1K6985	RETAINER	1
▲ 9	8H9789	BEARING	1
▲ 10	8S1619	BOLT	1
▲	3B4506	LOCKWASHER	1
11	2P660	GEAR ASSEM. ---(40 teeth)	1
12	2L5893	PIN	2

▲ 13	6H3957	BEARING	1
▲ 14	5M6213	PLUG	1
15	2P671	HOUSING	1
C 16	8S9191	BOLT	2
	5M2894	WASHER	2
17	2P404	COVER	1
▲ 18	1P9952	IMPELLER	1
▲ 19	4L6454	BOLT	1
▲ 20	1P9929	SHAFT	1
▲ 21	9M6527	WASHER	1

C INDICATES CHANGE SP968

2P668 WATER PUMP GROUP

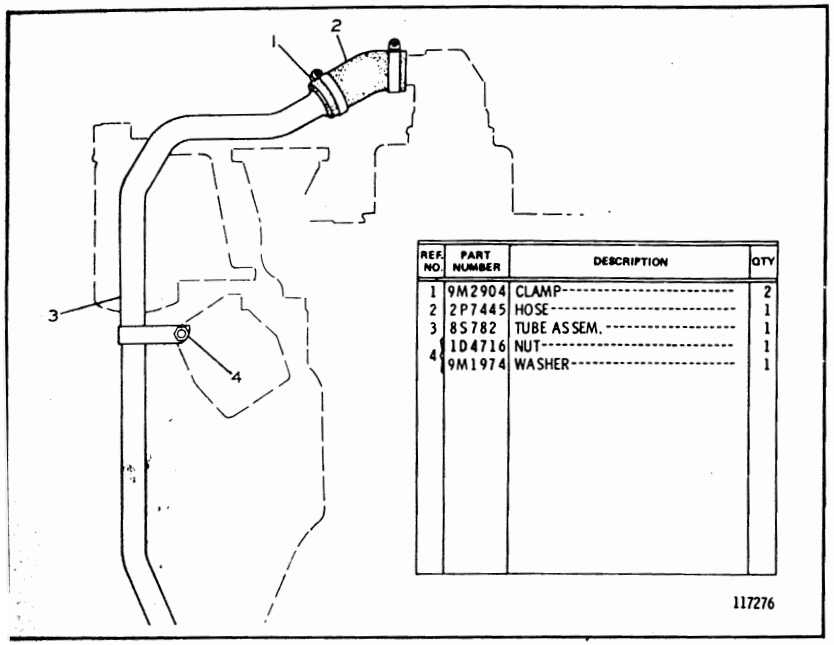

REF. NO.	PART NUMBER	DESCRIPTION	QTY
1	9M2904	CLAMP	2
2	2P7445	HOSE	1
3	8S782	TUBE ASSEM.	1
4	1D4716	NUT	1
	9M1974	WASHER	1

2P7447 FUMES DISPOSAL GROUP

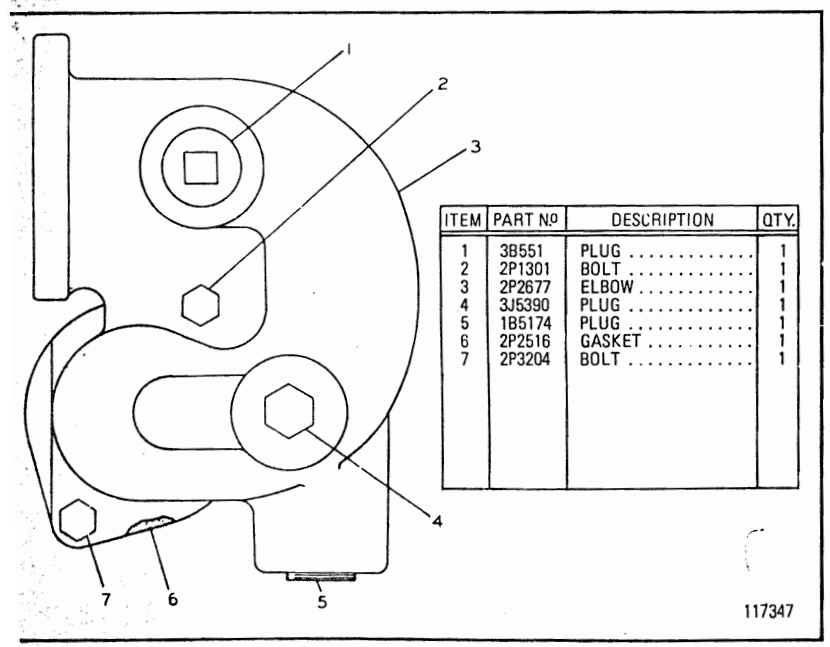

ITEM	PART Nº	DESCRIPTION	QTY.
1	3B551	PLUG	1
2	2P1301	BOLT	1
3	2P2677	ELBOW	1
4	3J5390	PLUG	1
5	1B5174	PLUG	1
6	2P2516	GASKET	1
7	2P3204	BOLT	1

2P7740 WATER LINES GROUP - Elbow

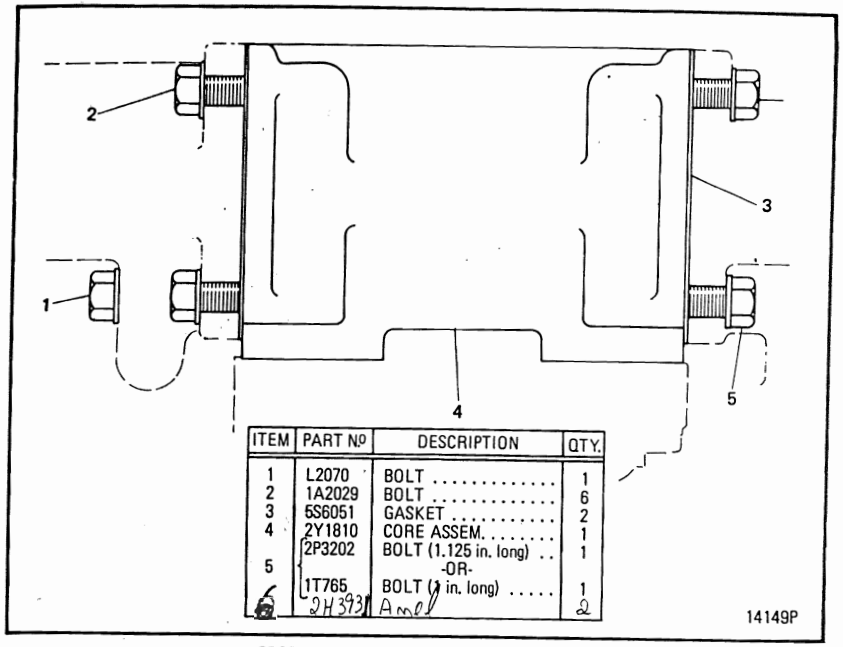

ITEM	PART Nº	DESCRIPTION	QTY.
1	L2070	BOLT	1
2	1A2029	BOLT	6
3	5S6051	GASKET	2
4	2Y1810	CORE ASSEM.	1
5	2P3202	BOLT (1.125 in. long)	1
		-OR-	
	1T765	BOLT (1 in. long)	1
	2H393	Amal	2

2P6215 ENGINE OIL COOLER GROUP

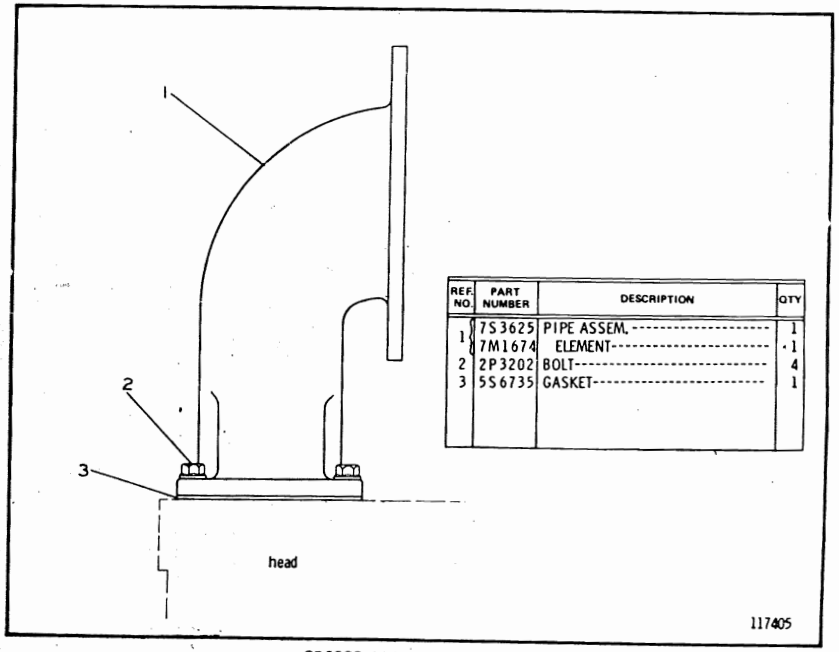

REF. NO.	PART NUMBER	DESCRIPTION	QTY
1	7S3625	PIPE ASSEM.	1
	7M1674	ELEMENT	1
2	2P3202	BOLT	4
3	5S6735	GASKET	1

2P6838 AIR LINES GROUP

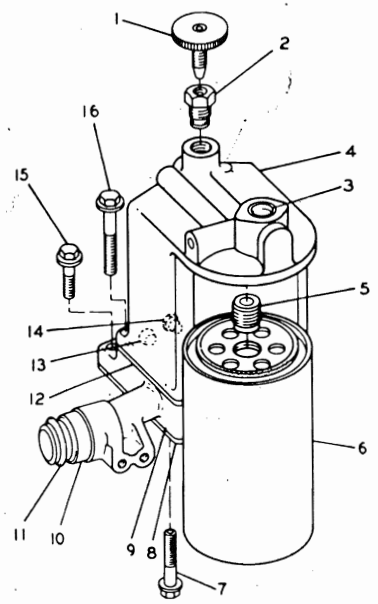

REF. NO.	PART NUMBER	DESCRIPTION	QTY
1	2A1927	NEEDLE ASSEM.	1
2	7F3901	SEAT	1
3	1H9722	PLUG	1
4	5S9580	BASE	1
5	9S4167	STUD	1
6	1P2299	FILTER ASSEM.	1
7	1B9575	BOLT	3
	8F7242	WASHER	8
8	5S9020	GASKET	1
9	5S6333	ADAPTER	1
10	8H9402	ADAPTER	1
11	9H4557	SEAL	2
12	5S9060	GASKET	1
13	9F2247	PLUG	1
14	5M6214	PLUG	3
15	4B3388	BOLT-----1.25 in. (28.58 mm) long	2
16	1D4538	BOLT-----2.25 in. (57.15 mm) long	3

▲ SEPARATE ILLUSTRATION

155237

5S9666 FUEL FILTER GROUP
See Page 85 for Fuel Filter

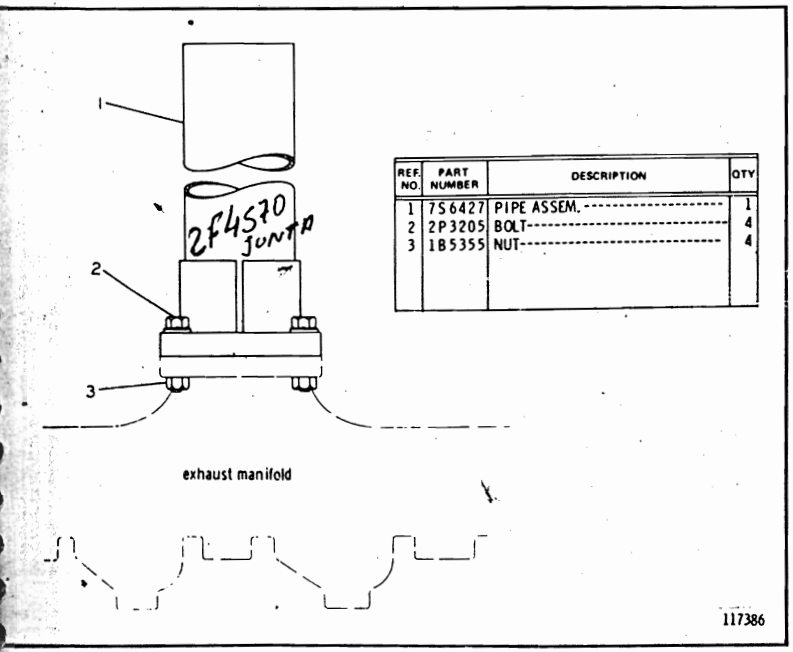

REF. NO.	PART NUMBER	DESCRIPTION	QTY
1	7S6427	PIPE ASSEM.	1
2	2P3205	BOLT	4
3	1B5355	NUT	4

117386

2P7351 EXHAUST PIPE GROUP

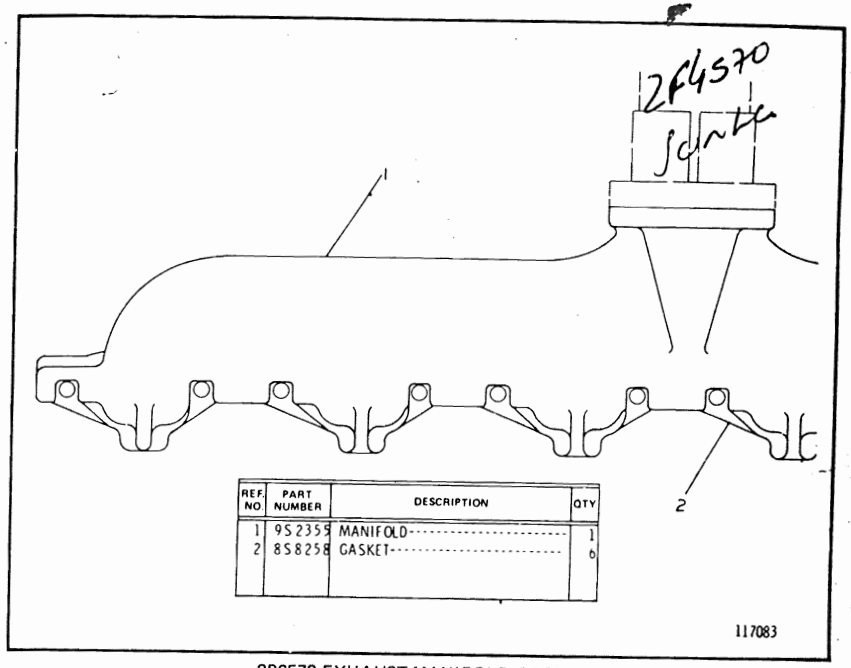

REF. NO.	PART NUMBER	DESCRIPTION	QTY
1	9S2355	MANIFOLD	1
2	8S8258	GASKET	6

117083

2P6572 EXHAUST MANIFOLD GROUP

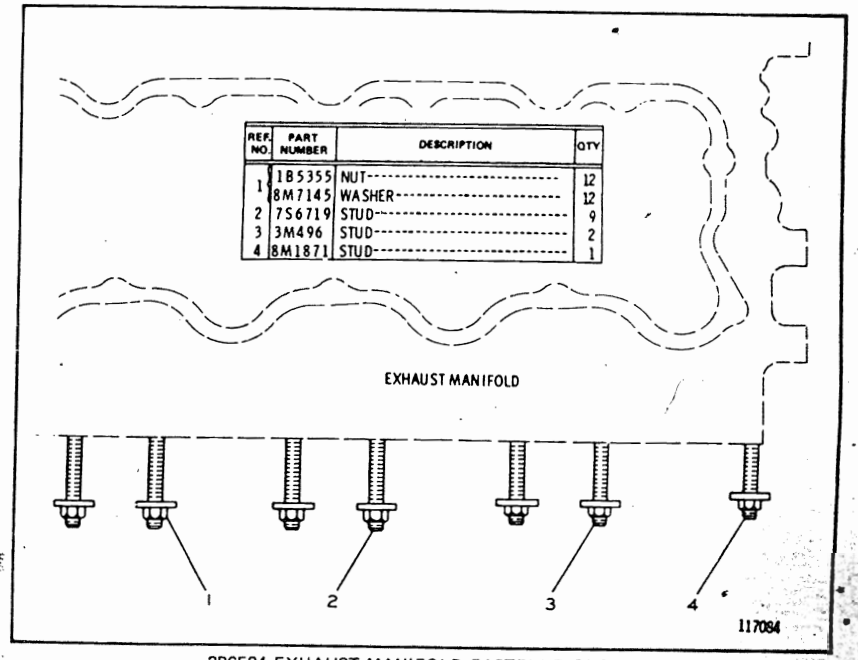

REF. NO.	PART NUMBER	DESCRIPTION	QTY
1	1B5355	NUT	12
	8M7145	WASHER	12
2	7S6719	STUD	9
3	3M496	STUD	2
4	8M1871	STUD	1

117084

2P6534 EXHAUST MANIFOLD FASTENER GROUP

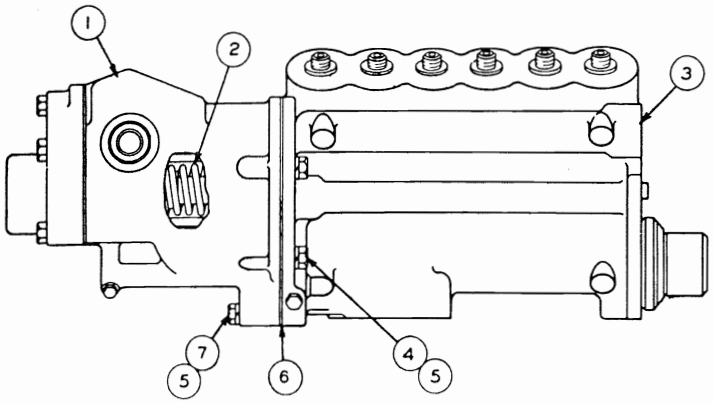

REF NO	PART NUMBER	DESCRIPTION	QTY
1	7S9333	GOVERNOR GROUP (See Separate Illustration)	1
2	9M3160	SPRING	1
3	5S9076	FUEL PUMP HOUSING GROUP (See Separate Illustration)	1

REF NO	PART NUMBER	DESCRIPTION	QTY
4	S-1618	BOLT	3
5	3B4505	LOCKWASHER	5
6	7L552	GASKET	1
7	1B9575	BOLT	2

101504

7S6740 GOVERNOR AND FUEL INJECTION PUMP GROUP

7S9333 Governor and 5S9076 Fuel Pump Housing parts are shown on Pages 55 through 61

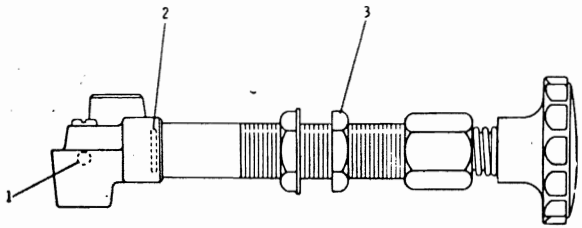

REF NO	PART NUMBER	DESCRIPTION	QTY
1	1M6718	BALL	2
2	1H1023	SEAL	2
3	1M6781	NUT	2

147588

9H2256 PUMP ASSEMBLY

Part of 7S1251 Pump Group and Fuel Priming Pump shown on Page 65

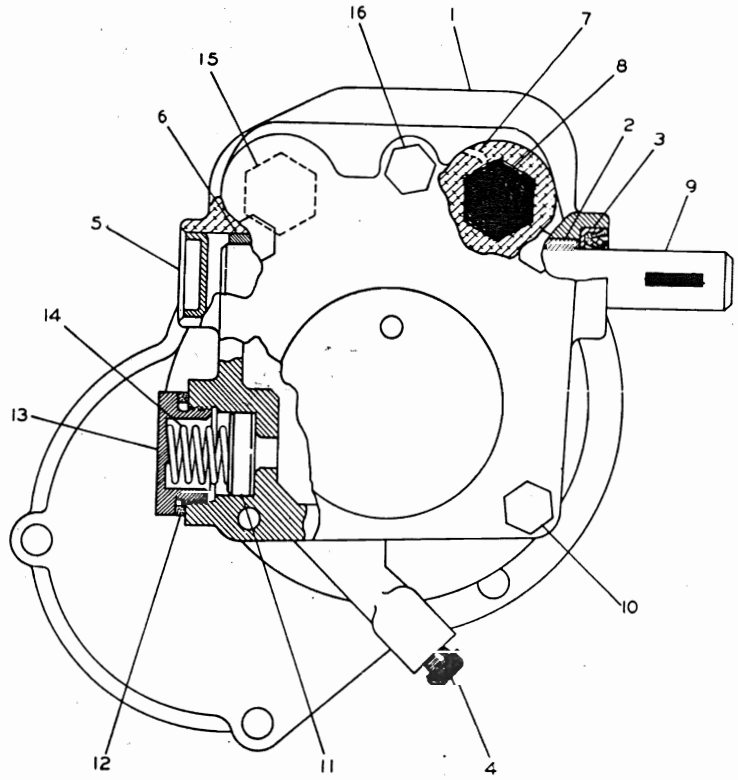

REF. NO.	PART NUMBER	DESCRIPTION	QTY
1	9S1735	HOUSING ASSEM.	1
	8M8403	GUIDE	1
2	9S798	BEARING	4
3	9S4671	SEAL	1
4	2S7905	PLUG	1
5	4F4585	PLUG	1
6	8S134	BEARING	1
7	5S1221	SPRING	1
8	7S9331	SCREW (High Idle)	1
9	9M4789	SHAFT	1
10	6H5636	BOLT (Drilled)	2
11	9M1216	PLUNGER	1
12	2P8763	GASKET	1
13	9M4690	PLUG	1
14	1S9312	SPRING	1
15	8S8950	SCREW (Low Idle)	1
16	1B2790	BOLT (Plain)	3

115478

7S9333 GOVERNOR GROUP — Part 1 — Type 1

Part of 7S6740 Governor and Fuel Injection Pump shown on Page 54

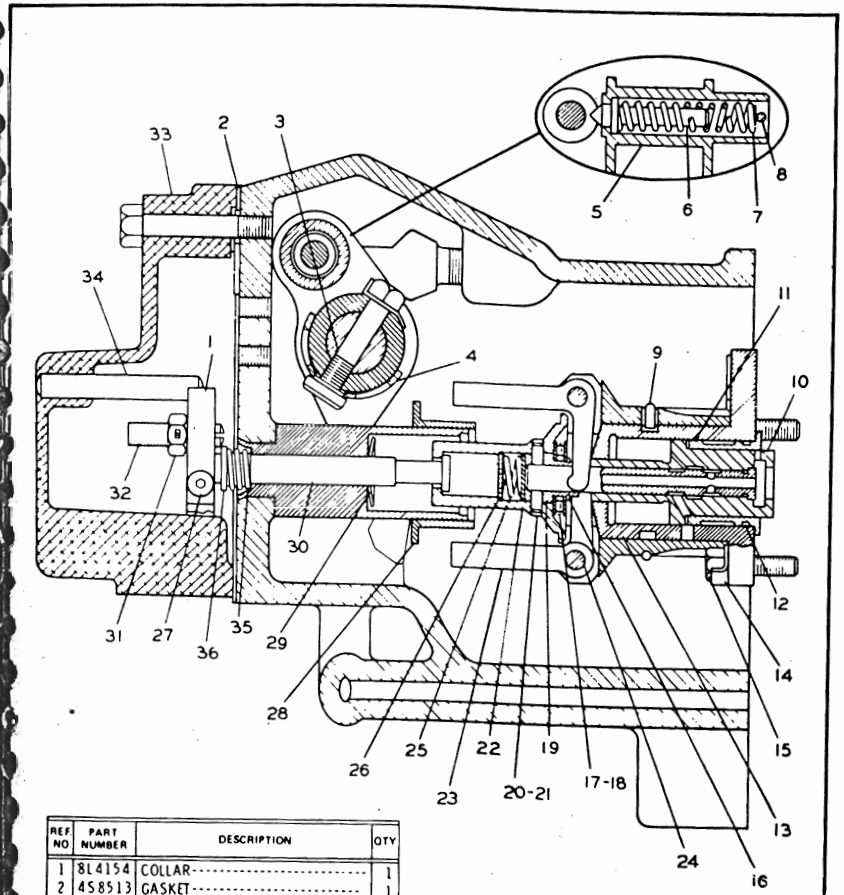

REF NO	PART NUMBER	DESCRIPTION	QTY
1	8L4154	COLLAR	1
2	4S8513	GASKET	1
3	9S4468	BOLT	1
	2F4159	LOCK	1
4	9S4673	BAND ASSEM.	1
C	2P8686	LEVER ASSEM.	1
5		(Includes)	
	9S4466	LEVER ASSEM.	1
6	9M9788	PLUNGER	1
7	7M7316	SPRING	1
8	5H1351	PIN	1
9	7B8105	LOCK	1
C	2P8725	PISTON ASSEM.	1
10		(Includes)	
	7S8447	PISTON ASSEM.	1
11	7L8777	SLEEVE	1
12	8M8997	SEAL	1
13	1S4741	CYLINDER	1
14	9M6293	LOCK	1
15	S1615	BOLT	3
16	3K810	RING	1
17	7M7219	BEARING	1
18	7M7193	RACE	2
19	2S7	SLEEVE	1

20	8M8726	DOWEL	1
21	8M8993	RING	1
22	2S8	SEAT	1
23	5S5060	WEIGHT ASSEM.	1
	2S101	WEIGHT	2
24	1S5440	DOWEL	2
25	9M6303	SPRING	1
26	9M6302	WASHER	2
27	9M4704	SCREW	1
C 28	6N3504	SEAT	1
29	8H9181	SPRING	1
30	8M8739	BOLT	1
31	5S9607	NUT	1
32	8L4155	SCREW	1
33	7S8828	COVER ASSEM.	1
34	2S7316	DOWEL	1
35	2S7285	SPRING	1
36	2S7289	COLLAR	1

C INDICATES CHANGE 205726

7S9333 GOVERNOR GROUP – Part 2 – Type 1
Part of 7S6740 Governor and Fuel Injection Pump shown on Page 54

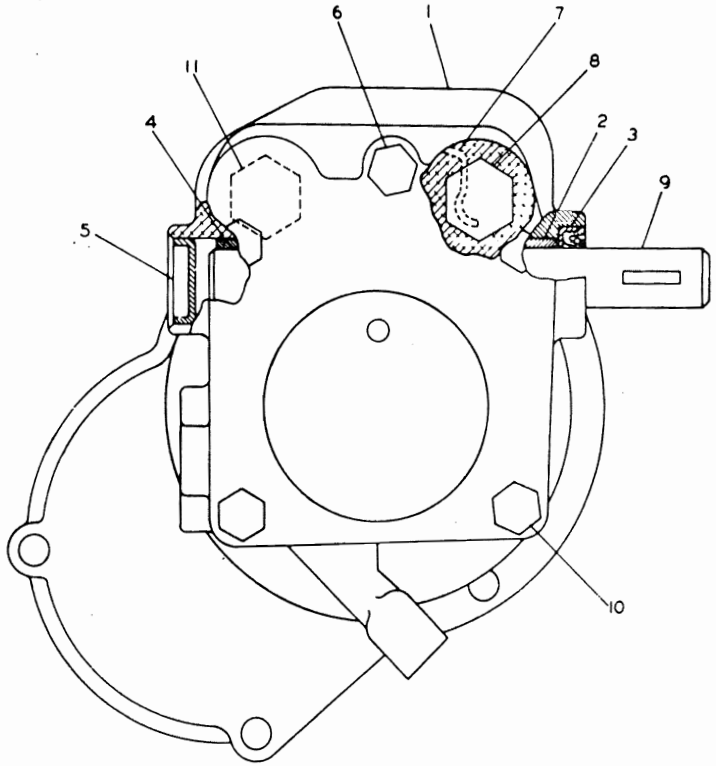

REF NO	PART NUMBER	DESCRIPTION	QTY
	9S1735	HOUSING ASSEM.	1
1		(Includes)	
	8M8403	GUIDE	1
2	9S798	BEARING	4
3	9S4671	SEAL	1
4	8S134	BEARING	1
5	4F4585	PLUG	1
6	1B2790	BOLT	3

7	5S1221	SPRING	1
8	7S9331	SCREW-(high idle)	1
9	9M4789	SHAFT	1
10	6H5636	BOLT-(drilled)	2
11	8S8950	SCREW-(low idle)	1

205651

7S9333 GOVERNOR GROUP – Part 1 – Type 2
Part of 7S6740 Governor and Fuel Injection Pump shown on Page 54

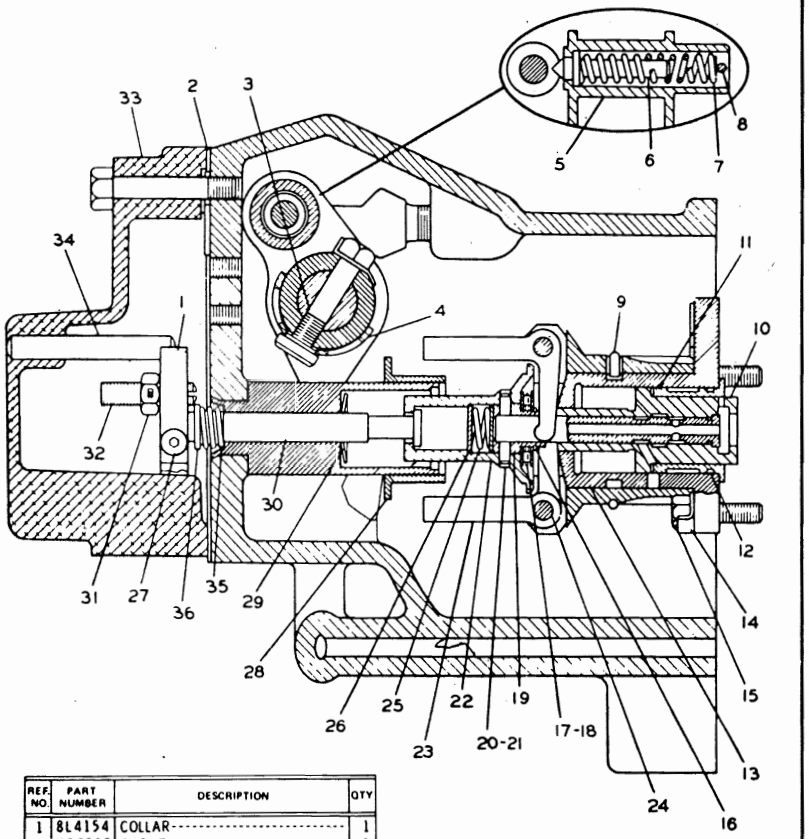

REF. NO.	PART NUMBER	DESCRIPTION	QTY
1	8L4154	COLLAR	1
2	4S8513	GASKET	1
3	9S4468	BOLT	1
	2F4159	LOCK	1
4	9S4673	BAND ASSEM.	1
5	2P8686	LEVER ASSEM. (Includes)	1
	9S4466	LEVER ASSEM.	1
6	9M9788	PLUNGER	1
7	7M7316	SPRING	1
8	5H1351	PIN	1
9	7B8105	LOCK	1
10	2P8725	PISTON ASSEM. (Includes)	1
	7S8447	PISTON ASSEM.	1
11	7L8777	SLEEVE	1
12	8M8997	SEAL	1
13	1S4741	CYLINDER	1
14	9M6293	LOCK	1
15	51615	BOLT	3
16	3K810	RING	1
17	7M7219	BEARING	1
18	7M7193	RACE	2
19	2S7	SLEEVE	1
20	8M8726	DOWEL	1
21	8M8993	RING	1
22	2S8	SEAT	1
23	5S5060	WEIGHT ASSEM.	1
	2S101	WEIGHT	2
24	1S5440	DOWEL	2
25	9M6303	SPRING	1
26	9M6302	WASHER	2
27	9M4704	SCREW	1
28	6N3504	SEAT	1
29	8H9181	SPRING	1
30	8M8739	BOLT	1
31	5S9607	NUT	1
32	8L4155	SCREW	1
33	7S8828	COVER ASSEM.	1
34	2S7316	DOWEL	1
35	2S7235	SPRING	1
36	2S7289	COLLAR	1

205726

7S9333 GOVERNOR GROUP — Part 2 — Type 2
Part of 7S6740 Governor and Fuel Injection Pump shown on Page 54

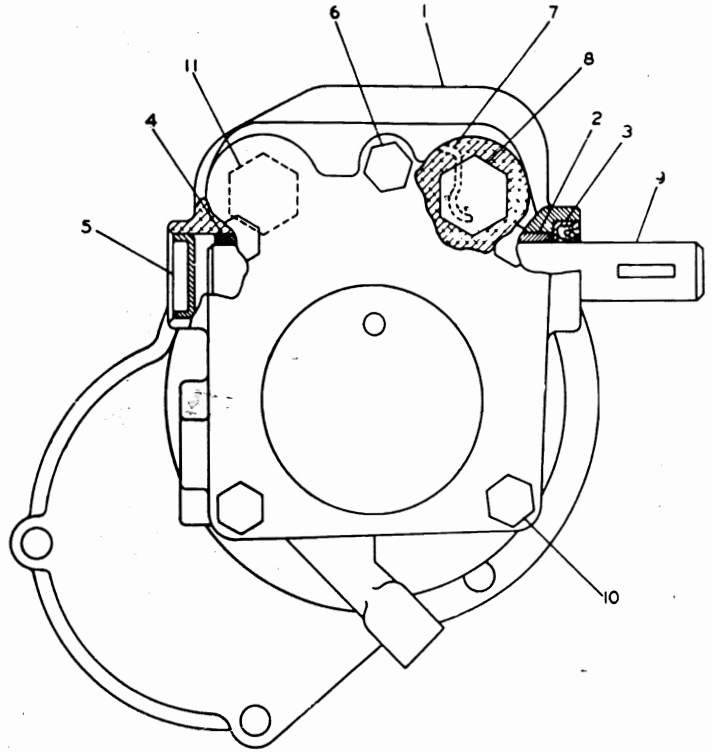

REF. NO.	PART NUMBER	DESCRIPTION	QTY
1	9S1735	HOUSING ASSEM. (Includes)	1
	8M8403	GUIDE	1
2	9S798	BEARING	4
3	9S4671	SEAL	1
4	8S134	BEARING	1
5	4F4585	PLUG	1
6	1B2790	BOLT	3
7	5S1221	SPRING	1
8	7S9331	SCREW-----(high idle)-----	1
9	9M4789	SHAFT	1
10	6H5636	BOLT-----(drilled)-----	2
11	8S8950	SCREW-----(low idle)-----	1

205651

7S9333 GOVERNOR GROUP — Part 1 — Type 3
Part of 7S6740 Governor and Fuel Injection Pump shown on Page 54

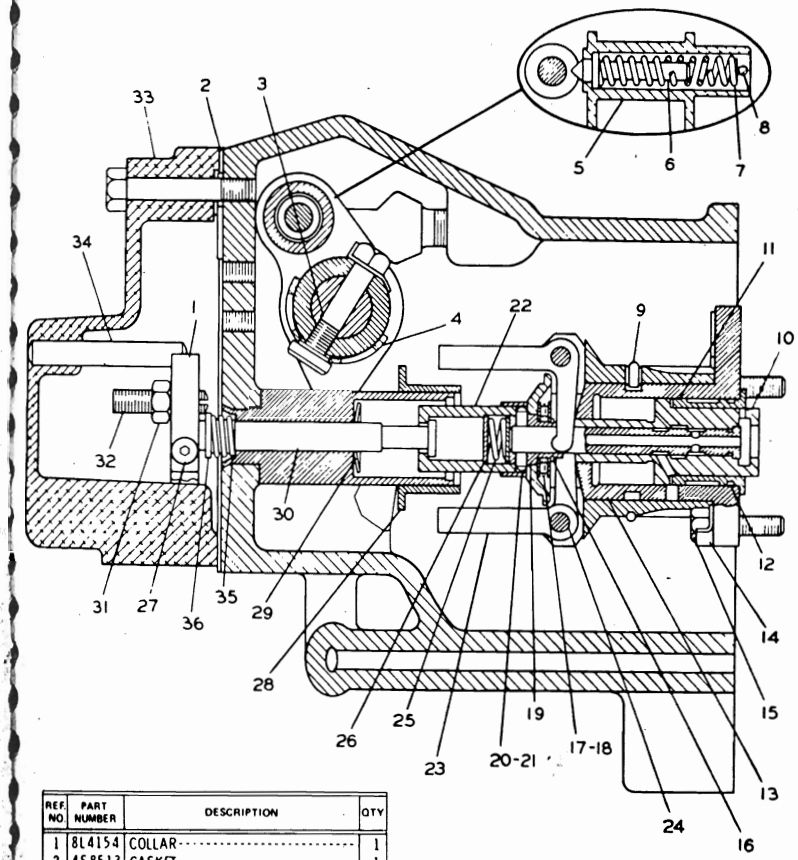

REF. NO.	PART NUMBER	DESCRIPTION	QTY
1	8L4154	COLLAR	1
2	4S8513	GASKET	1
3	9S4468	BOLT	1
	2F4159	LOCK	1
4	9S4673	BAND ASSEM.	1
5	2P8686	LEVER ASSEM. (Includes)	1
	9S4466	LEVER ASSEM.	1
6	9M9788	PLUNGER	1
7	7M7316	SPRING	1
8	5H1351	PIN	1
9	7B8105	LOCK	1
10	2P8725	PISTON ASSEM. (Includes)	1
	7S8447	PISTON ASSEM.	1
11	7L8777	SLEEVE	1
12	8M8997	SEAL	1
13	1S4741	CYLINDER	1
14	9M6293	LOCK	1
15	51615	BOLT	3
16	3K810	RING	1
17	7M7219	BEARING	1
18	7M7193	RACE	2
19	2S7	SLEEVE	1
C 20	2P8630	DOWEL	1
C 21	4N3887	RING	1
C 22	6N8629	SEAT	1
23	5S5060	WEIGHT ASSEM.	1
	2S101	WEIGHT	2
24	1S5440	DOWEL	2
25	9M6303	SPRING	1
26	9M6302	WASHER	2
27	9M4704	SCREW	1
28	6N3504	SEAT	1
29	8H9181	SPRING	1
30	8M8739	BOLT	1
C 31	1B4201	NUT	1
32	8L4155	SCREW	1
33	7S8828	COVER ASSEM.	1
34	2S7316	DOWEL	1
35	2S7235	SPRING	1
36	2S7289	COLLAR	1

C INDICATES CHANGE

163537

7S9333 GOVERNOR GROUP — Part 2 — Type 3
Part of 7S6740 Governor and Fuel Injection Pump shown on Page 54

5S9076 FUEL PUMP HOUSING GROUP
Part of 7S6740 Governor and Fuel Injection Pump shown on Page 54

REF. NO.	PART NUMBER	DESCRIPTION	QTY
1	3S9735	LIFTER ASSEM.	6
2	9H5797	PLUNGER AND BARREL ASSEM.	6
3	9H5729	WASHER	6
4	1M3506	RING	6
5	4M411	BONNET	6
6	1M1077	SEAL	6
7	8H9204	WASHER	6
8	2M4314	BUSHING	6
9	9B1363	SPRING	6
10	9H5746	CHECK	6
11	2M4208	SPACER (.174" Thick)	6
	2M4209	SPACER (.178" Thick)	6
	2M4210	SPACER (.182" Thick)	6
	2M4211	SPACER (.186" Thick)	6
	2M4212	SPACER (.190" Thick)	6
12	1S206	SPRING	6
13	5S9051	HOUSING ASSEM.	1
14	4M1474	PIN	3
15	1P232	BALL	6
16	1P234	DOWEL	6
17	1P231	BALL	6
18	1P233	DOWEL	6
19	9H1296	BEARING	1
20	9H1284	BEARING	1
21	1M1226	BEARING	1
22	2S7905	PLUG	1
23	3D4603	PLUG	1
24	2A3746	PLUG	1
25	1S1953	BEARING	1
26	2M8604	BEARING	1
27	4F6024	DOWEL	2
28	1M101	CAMSHAFT ASSEM.	1
29	1M690	SLEEVE	1
30	8H9208	DOWEL	1
31	5S5058	GEAR ASSEM. (66 Teeth)	1
32	8H9208	DOWEL	1
33	1S7436	RACK	1
34	1S214	SPRING	1
35	7M5940	PLATE	1
36	2H3504	LOCK	1
37	L472	BOLT	1

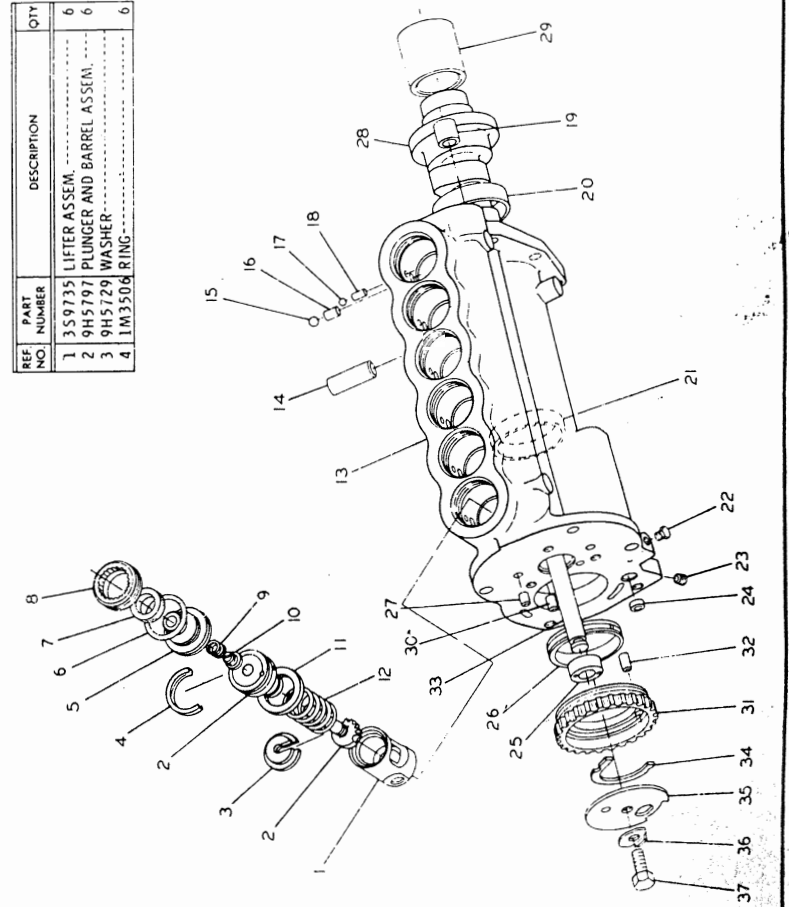

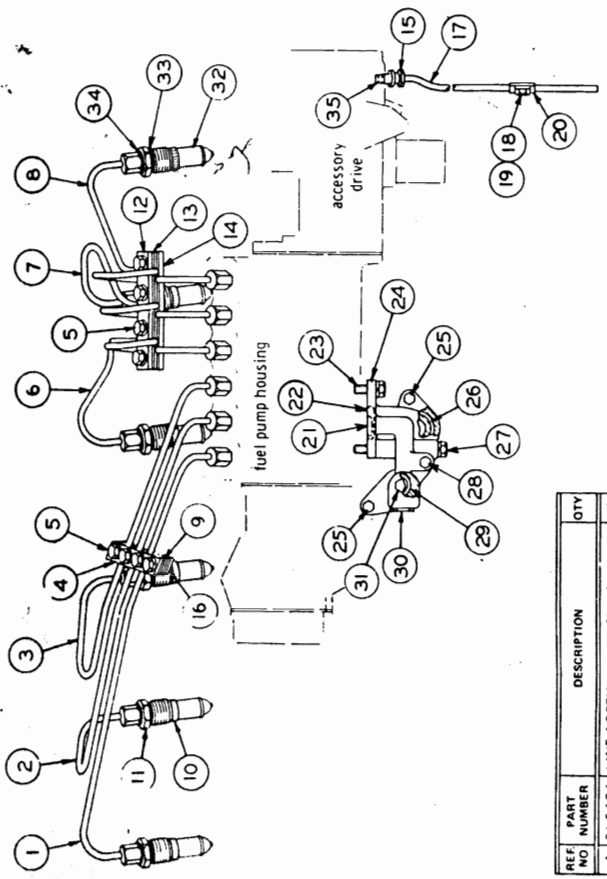

REF NO	PART NUMBER	DESCRIPTION	QTY
1	8L5696	LINE ASSEM.------No. 6	1
2	2P8890	LINE ASSEM.------No. 5	1
3	8L5694	LINE ASSEM.------No. 4	1
4	8S3999	CLAMP	1
5	1B2190	BOLT	8
	9M1974	WASHER	8
6	8L5693	LINE ASSEM.------No. 3	1
7	8L5692	LINE ASSEM.------No. 2	1
8	8L5691	LINE ASSEM.------No. 1	1
9	8S4000	DAMPER	2
10	8S2389	BODY	6
11	5H7225	NUT	6
12	8S4004	CLAMP	1
13	8S4005	DAMPER	2
14	8S4003	CLAMP	1
15	1P9328	FITTING	1
16	8S3998	CLAMP	1
17	5S7223	TUBE	1
18	S509	BOLT	1
19	5M2894	WASHER	1
20	9S1350	CLIP	1
21	8F3469	SEAL-----(Small)	1
22	2H3932	SEAL-----(Large)	1
23	2P3201	BOLT	1
24	3N3696	BRACKET	1
25	2P3202	BOLT	2
26	4F7391	SEAL	1
27	2P7557	BOLT	1
C 28	2P3210	BOLT	1
29	7F8607	SEAL	1
30	3L1850	PLUG-----(Large)	1
	7H3171	PLUG-----(Small)	1
31	3J5389	PLUG	1
32	8M1584	VALVE SERVICE GROUP	6
33	5B3718	SEAL	1
34	6F1069	SEAL ASSEM.	1
C 35	3B7730	ELBOW	1

C INDICATES CHANGE

201668

2P7457 FUEL INJECTION LINES GROUP

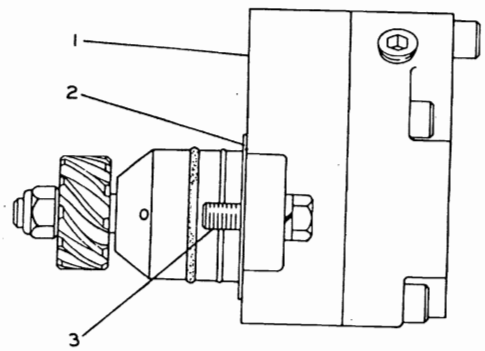

REF. NO.	PART NUMBER	DESCRIPTION	QTY
1	7S4430	PUMP GROUP	1
		(Separate Illustration)	
2	7S2374	GASKET	1
3	4B3388	BOLT	2
	3B4505	LOCKWASHER	2

117421

7S4429 FUEL TRANSFER PUMP GROUP
7S4430 Pump parts are shown on Page 64
Serial No. 64U1050 to 64U1270

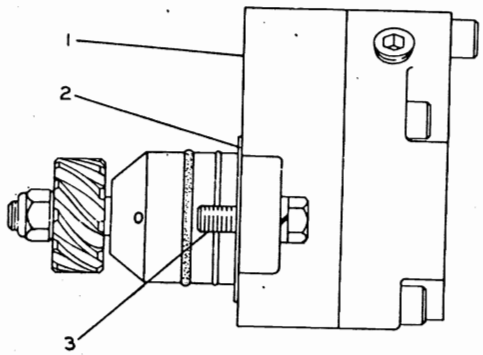

REF. NO.	PART NUMBER	DESCRIPTION	QTY
C 1	4N4864	PUMP GROUP	1
		(Separate Illustration)	
2	7S2374	GASKET	1
3	4B3388	BOLT	2
	3B4505	LOCKWASHER	2

C INDICATES CHANGE

145714

7S4429 FUEL TRANSFER PUMP GROUP
4N4864 Pump parts are shown on Page 64
Serial No. 64U1271 - Up

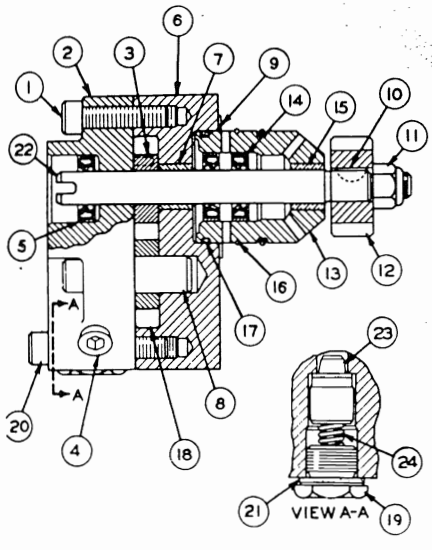

REF. NO.	PART NUMBER	DESCRIPTION	QTY
1	9F6641	SCREW	4
2	8S5581	COVER ASSEM.	1
3	7S4433	FERRULE	2
4	7H3171	PLUG	1
5	8S5575	SEAL	1
6	7S4434	BODY ASSEM.	1
7	8F6058	BUSHING	1
8	2S6838	SHAFT	1
9	7S2374	GASKET	1
10	3H1489	KEY	1
11	2F8616	NUT	1
12	8H9806	GEAR-(11 Teeth-Drive)	1
13	8S4375	CAGE ASSEM.	1
14	4S7756	SEAL	2
15	8F6058	BUSHING	1
16	7S4439	RING	1
17	6J2419	SEAL	2
18	8S4368	GEAR-(10 Teeth-Idler)	1
19	7S4440	BOLT	1
20	7S6701	SCREW	2
21	2A1913	GASKET	1
22	8S4373	SHAFT ASSEM.-(10 Teeth-Drive)	1
23	8M874	PLUNGER ASSEM.	1
24	8M3210	SPRING	1

136600

7S4430 FUEL TRANSFER PUMP GROUP
Part of 7S4429 Fuel Transfer Pump shown on Page 63
Serial No. 64U1050 to 64U1270

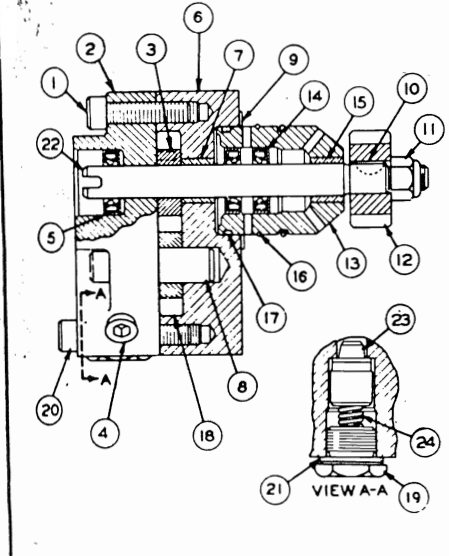

REF. NO.	PART NUMBER	DESCRIPTION	QTY
1	9F6641	SCREW	4
2	4N4863	COVER ASSEM.	1
3	7S4433	FERRULE	2
4	7H3171	PLUG	1
5	4N4249	SEAL	1
6	7S4434	BODY ASSEM.	1
7	8F6058	BUSHING	1
8	4N3944	SHAFT	1
9	7S2374	GASKET	1
10	3H1489	KEY	1
11	2F8616	NUT	1
12	8H9806	GEAR-(11 Teeth-Drive)	1
13	4N4865	CAGE ASSEM.	1
14	4N4248	SEAL	2
15	8F6058	BUSHING	1
16	7S4439	RING	1
17	6J2419	SEAL	2
18	8S4368	GEAR-(10 Teeth-Idler)	1
19	7S4440	BOLT	1
20	7S6701	SCREW	2
21	4N7465	GASKET	1
22	4N4870	SHAFT ASSEM.-(10 Teeth-Drive)	1
23	8M874	PLUNGER ASSEM.	1
24	8M3210	SPRING	1

149959

4N4864 FUEL TRANSFER PUMP GROUP
Part of 7S4429 Fuel Transfer Pump shown on Page 63

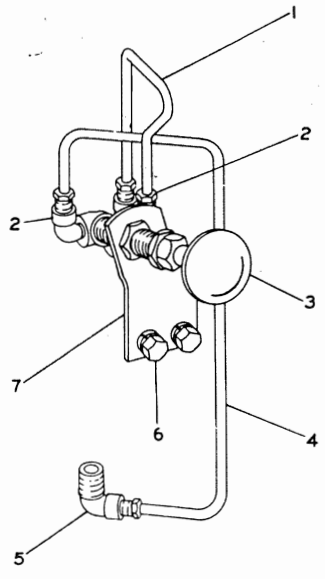

ITEM	PART No.	DESCRIPTION	QTY.
1	8S210	TUBE (Outlet)	1
2	3B8998	FITTING	3
	1F1344	NUT	1
▲ 3	9H2256	PUMP GROUP (Fuel Priming)	1
4	8S211	TUBE (Inlet)	1
5	1H7922	FITTING	1
	1F1344	NUT	1
6	2B2695	BOLT	2
	3B4505	LOCKWASHER	2
7	7S1129	BRACKET	1

▲ SEPARATE ILLUSTRATION 145935

7S1251 FUEL PRIMING PUMP GROUP – Type 1
9H2256 Pump parts are shown on Page 54

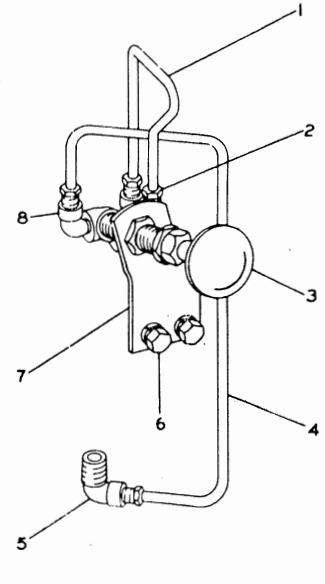

REF. NO.	PART NUMBER	DESCRIPTION	QTY
C 1	6N1005	TUBE ASSEM.-(outlet)	1
C 2	5K9243	FITTING	2
3	9H2256	PUMP GROUP-(fuel priming) (Separate Illustration)	1
4	8S211	TUBE-(inlet)	1
5	1H7922	FITTING (Includes)	1
	1F1344	NUT	1
6	2B2695	BOLT	2
	3B4505	LOCKWASHER	2
7	7S1129	BRACKET	1
C 8	3B8998	FITTING (Includes)	1
	1F1344	NUT	1

C INDICATES CHANGE 202576

7S1251 FUEL PRIMING PUMP GROUP – Type 2
9H2256 Pump parts are shown on Page 54

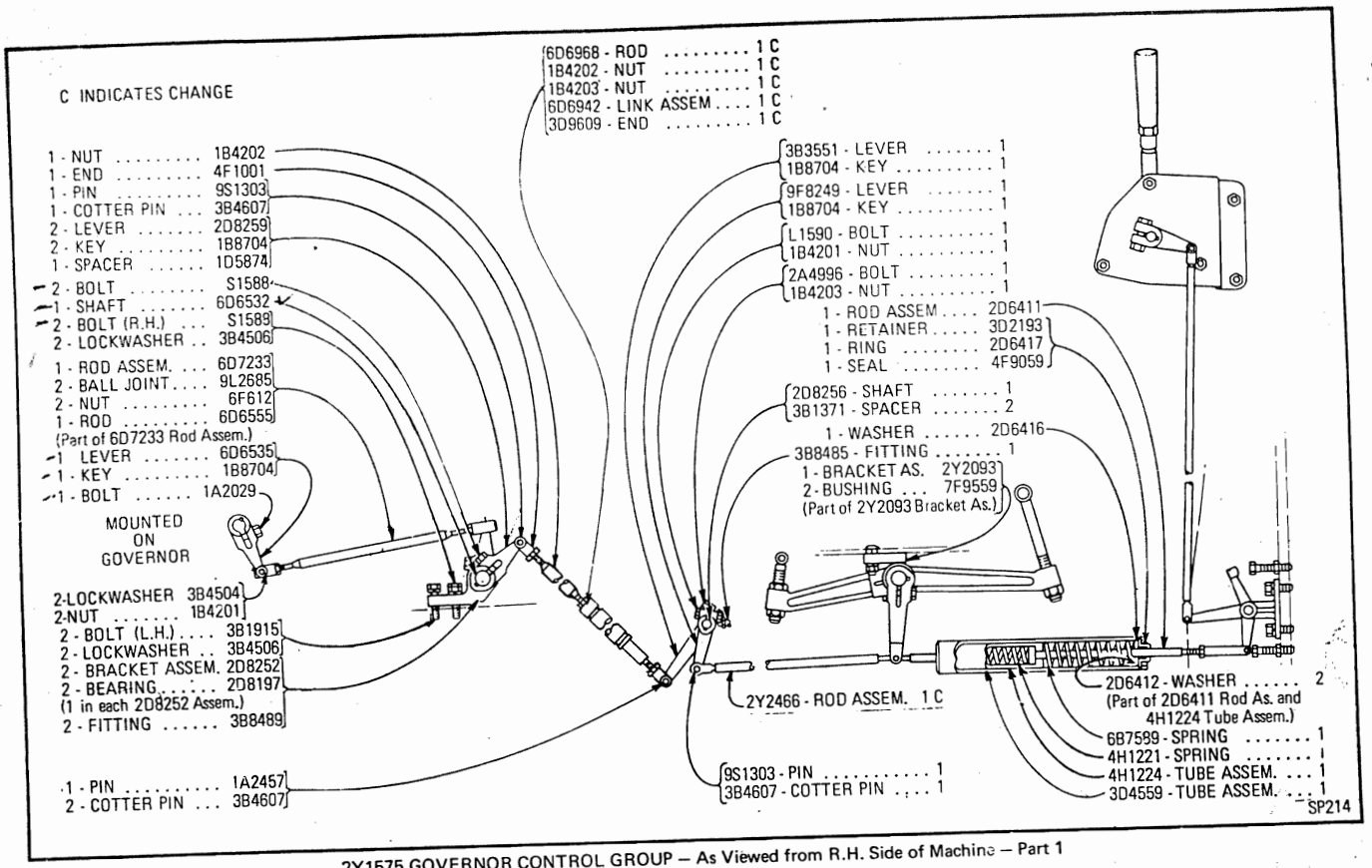

2Y1575 GOVERNOR CONTROL GROUP — As Viewed from R.H. Side of Machine — Part 1

2Y1575 GOVERNOR CONTROL GROUP — As Viewed from R.H. Side of Machine — Part 2

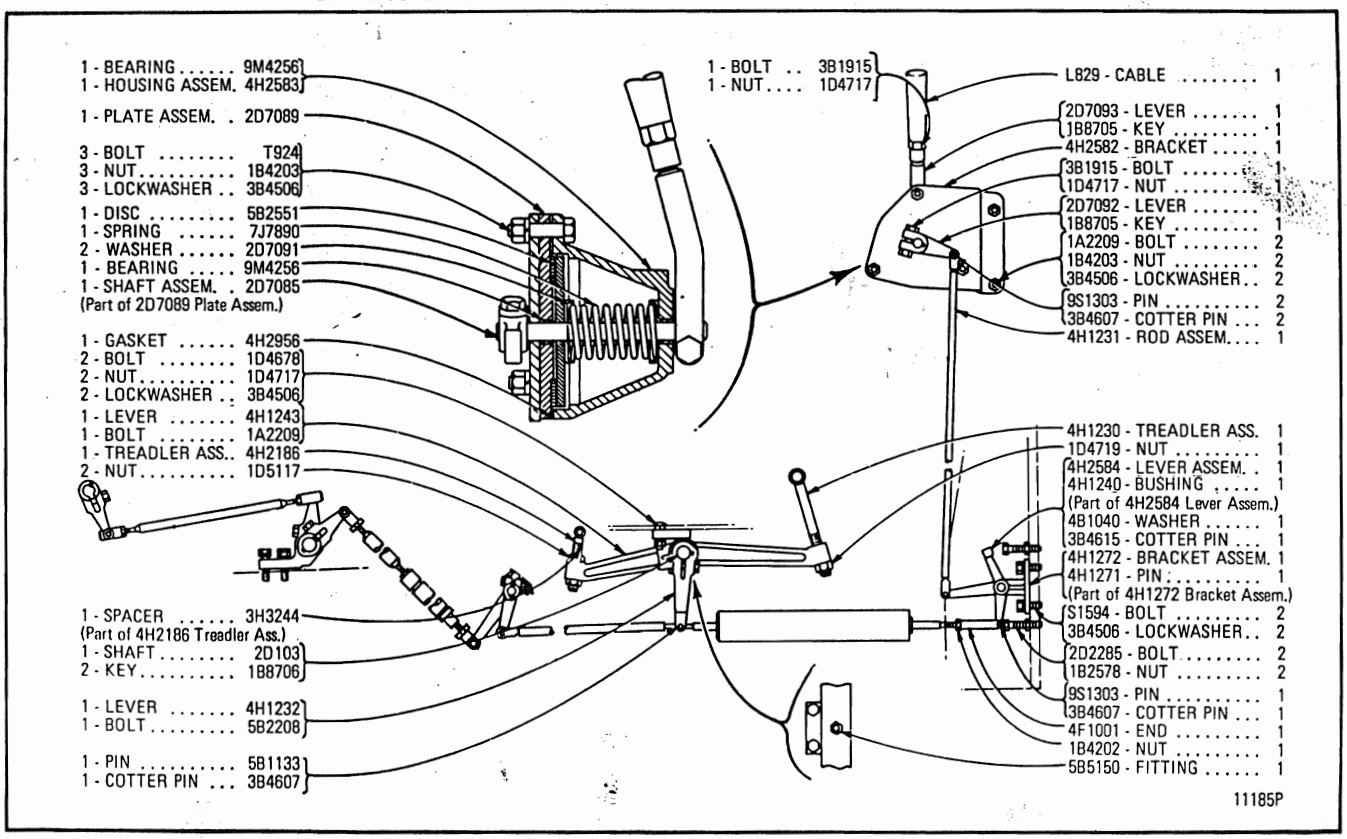

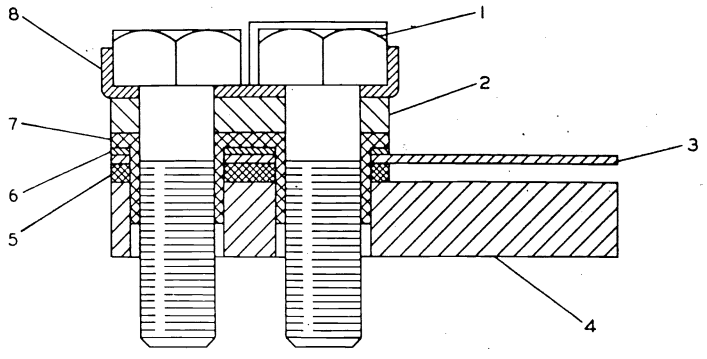

REF. NO.	PART NUMBER	DESCRIPTION	QTY
1	4F7957	BOLT	2
2	8M9062	RETAINER	1
3	2P941	SPRING	1
4	1P6453	BAR	1
5	2S9524	SPACER	1
6	8S4317	CONTACT	1
7	1P6452	INSULATOR	1
8	9M6292	LOCK	1

137214

8S6099 TORQUE CONTROL GROUP

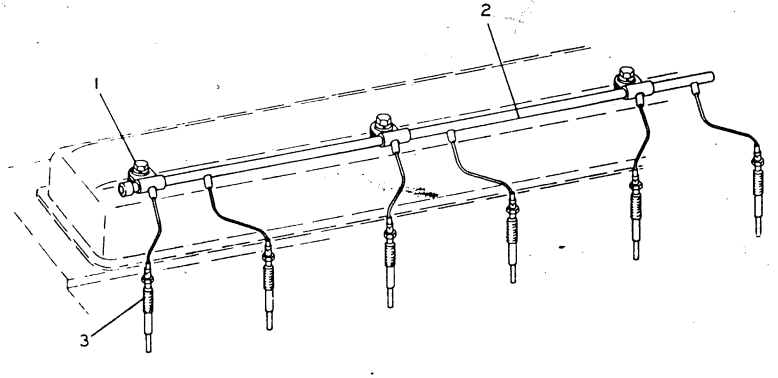

REF. NO.	PART NUMBER	DESCRIPTION	QTY
1	2H3755	BOLT	3
	3B4505	LOCKWASHER	3
	4B4277	WASHER	3
2	5S8479	LEAD ASSEM.	1
3	1P7324	GLOW PLUG	6
	GMG00510	FORM (Instructions For Installing Glow Plugs)	1

113565

5S8501 GLOW PLUG GROUP

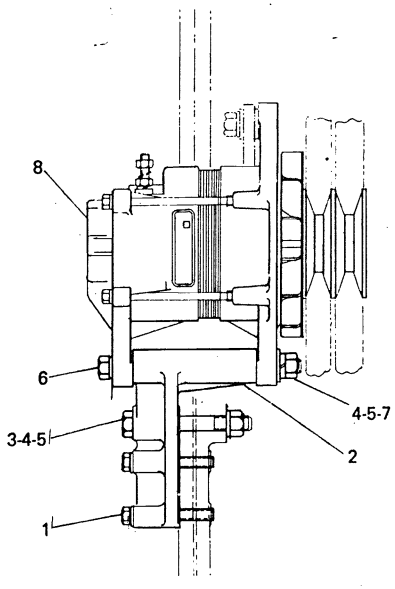

ITEM	PART No.	DESCRIPTION	QTY.
1	2P3208	BOLT	2
2	2Y1951	BRACKET	1
3	1B2886	BOLT	1
4	3B4508	LOCKWASHER	2
5	1D4719	NUT	2
6	2A1531	BOLT	1
7	8M4791	WASHER	2
8	2Y2094	ALTERNATOR GROUP (Separate Illustration)	1

SP216

2Y2095 ALTERNATOR GROUP – 24 Volt – 15 Ampere
2Y2094 Alternator parts are shown on Page 70

1	2Y2941	ALTERNATOR GROUP BASIC Separate Illustration
1	2Y2931	BRACKET
1	1A5964	BOLT
3	3B4506	LOCKWASHER
1	1D4719	NUT
2	3B4508	LOCKWASHER
1	1A5822	BOLT
2	S1571	BOLT
1	2Y2934	STRAP
1	S1585	BOLT
1	8M4791	WASHER
1	1A9579	BOLT
2	4B4277	WASHER
1	1D4716	NUT
1	3B4505	LOCKWASHER
1	2Y2950	HARNESS ASSEM.
1	2Y2930	REGULATOR ASSEM. Separate Illustration
6	3S2093	STRAP
3	2Y3374	NIPPLE FORM ZPHS00506

SP926

2Y2961 ALTERNATOR GROUP – Field Conversion

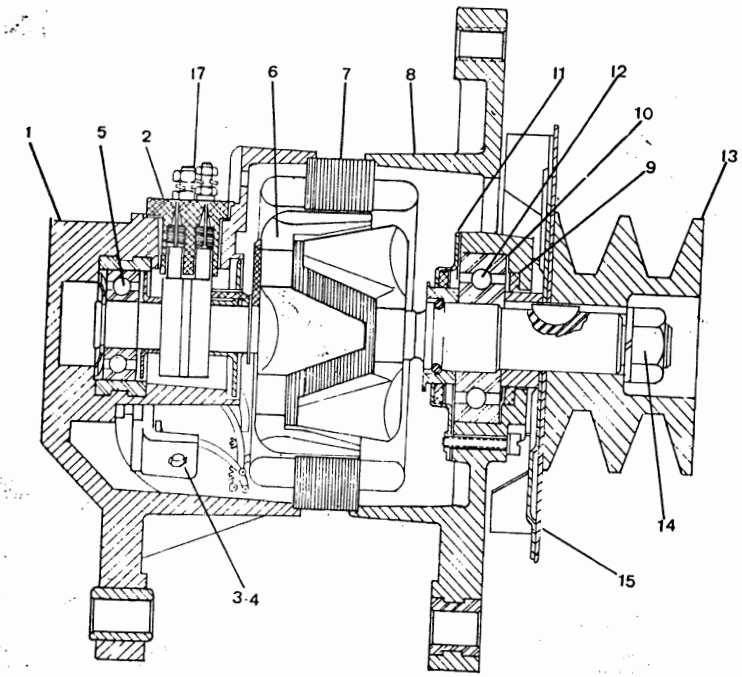

ITEM	PART Nº	DESCRIPTION	QTY.
1	2Y1681	COVER ASSEM.	1
2	2Y1683	BRUSHES SUPPORT ASSEM.	1
	2Y3328	BRUSH & SPRING KIT	1
3	2Y1686	DISSIPATOR ASSEM. (Pos.)	1
4	2Y1688	DISSIPATOR ASSEM. (Neg.)	1
5	3B4128	BEARING	1
6	2Y1690	ROTOR ASSEM.	1
7	2Y1691	STATOR ASSEM.	1
8	2Y1692	COVER ASSEM.	1
9	2Y1694	SEAL	1
10	2Y1695	SEAL-GUIDE	2
11	2Y1696	GASKET	1
12	2Y1687	BEARING	1

ITEM	PART Nº	DESCRIPTION	QTY.
13	~~2Y1917~~ 2Y1697	PULLEY	1
14	2Y1698	NUT	1
15	2Y1699	FAN ASSEM.	1
16	2Y1700	SCREW	4
17	2Y2018	DIODE	1
	2Y1701	KIT (Washers, Lockwasher, Key Insulator, Gasket, Plate Nut, Screws, Ring and Rivet).	

SP1025

2Y2094 ALTERNATOR GROUP
Part of 2Y2095 Alternator shown on Page 69

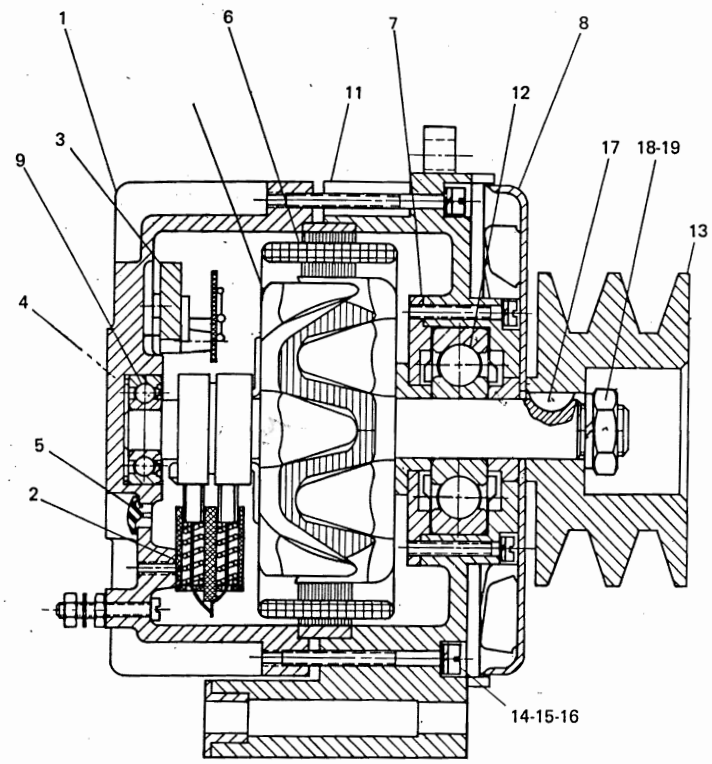

ITEM	PART Nº	DESCRIPTION	QTY.
1	2Y3316	COVER ASSEM.	1
	2Y3338	COVER	1
2	2Y3330	BRUSHES SUPPORT ASSEM.	1
3	2Y3336	RECTIFIER ASSEM.	1
4	2Y3331	DIODE (Neg.)	3
5	2Y3335	BREATHER	1
6	2Y3317	STATOR	1
7	2Y3318	DISC	1
8	2Y3319	FAN	1
9	2Y3321	BEARING	1
10	2Y3322	ROTOR	1
11	2Y3323	COVER ASSEM.	1
12	2Y3324	BEARING	1
13	2Y3315	PULLEY	1
14	2Y3325	SCREW	4
15	3B4502	LOCKWASHER	4
16	2Y3326	WASHER	4
17	2Y3329	KEY	1
18	2Y3344	LOCKWASHER	1
19	2Y3362	NUT	1

THE FOLLOWING SERVICE REPAIR KITS ARE AVAILABLE:

1 - 2Y3327 - Rotor Kit
1 - 2Y3328 - Brush and Spring Kit
1 - 2Y3332 - Screw Kit (D + and DF)
1 - 2Y3333 - Screw Kit (B^+)
1 - 2Y3334 - Screw Kit (D^-)

14439P

2Y2941 ALTERNATOR GROUP
Part of 2Y2961 Alternator shown on Page 69

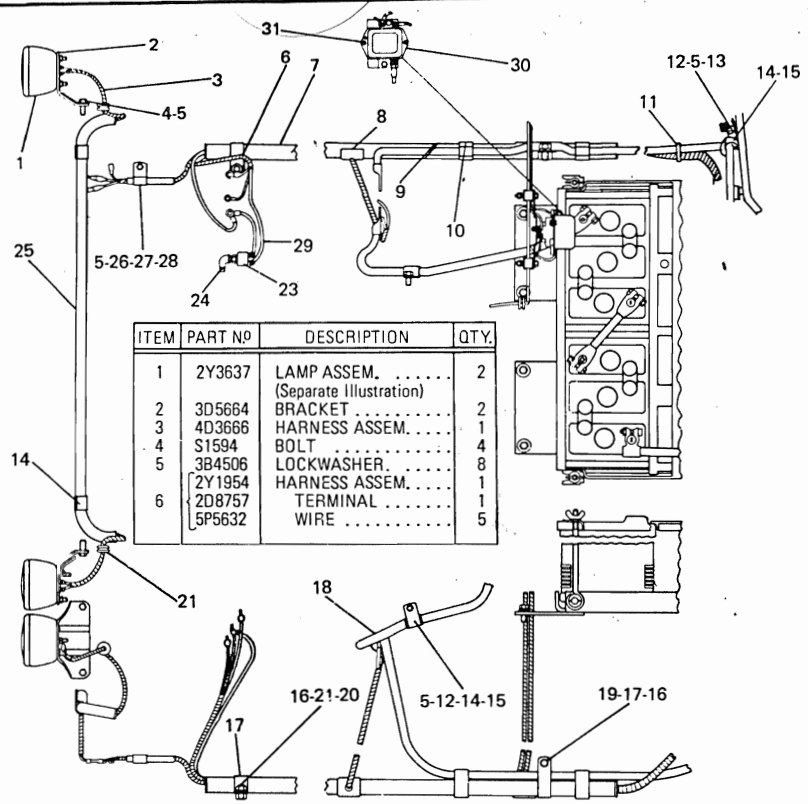

ITEM	PART No	DESCRIPTION	QTY.
1	2Y3637	LAMP ASSEM. (Separate Illustration)	2
2	3D5664	BRACKET	2
3	4D3666	HARNESS ASSEM.	1
4	S1594	BOLT	4
5	3B4506	LOCKWASHER	8
6	2Y1954	HARNESS ASSEM.	1
	2D8757	TERMINAL	1
	5P5632	WIRE	5

ITEM	PART No	DESCRIPTION	QTY.
7	2Y1829	TUBE	1
8	3D6655	GROMMET	2
9	2Y1667	CABLE ASSEM.	1
10	4D3631	CLIP	2
11	1H5167	CLIP	1
12	S509	BOLT	2
13	1B4717	NUT	1
14	3H19	CLIP	5
15	5D131	GROMMET	3
16	3B4508	LOCKWASHER	2
17	T386	CLIP	2
18	2Y1666	CABLE ASSEM.	1
19	S1621	BOLT	1
20	S1620	BOLT	1
21	1D5117	NUT	1
22	2D2751	GROMMET	2
23	2N7744	SWITCH	1
24	3B8822	ELBOW	1
25	5D1189	TUBE	1
26	1B3057	CLIP	1
27	4D3670	GROMMET	1
28	T102	BOLT	1
29	2Y1999	WIRE ASSEM.	1
30	2Y1262	REGULATOR ASSEM. (Separate Illustration)	1
31	7B2742	BOLT	4
	3B4504	LOCKWASHER	2
	1B4330	NUT	4
	4B4276	WASHER	4

SP847

2Y1955 BATTERY AND WIRING GROUP – 24 Volt – Part 1 of 5
2Y3637 Lamp and 2Y1262 Regulator parts are shown on Pages 83 and 84
Serial No. 64U1050 to 64U1398

2Y1955 BATTERY AND WIRING GROUP – 24 Volt – Part 2 of 5
Serial No. 64U1050 to 64U1398

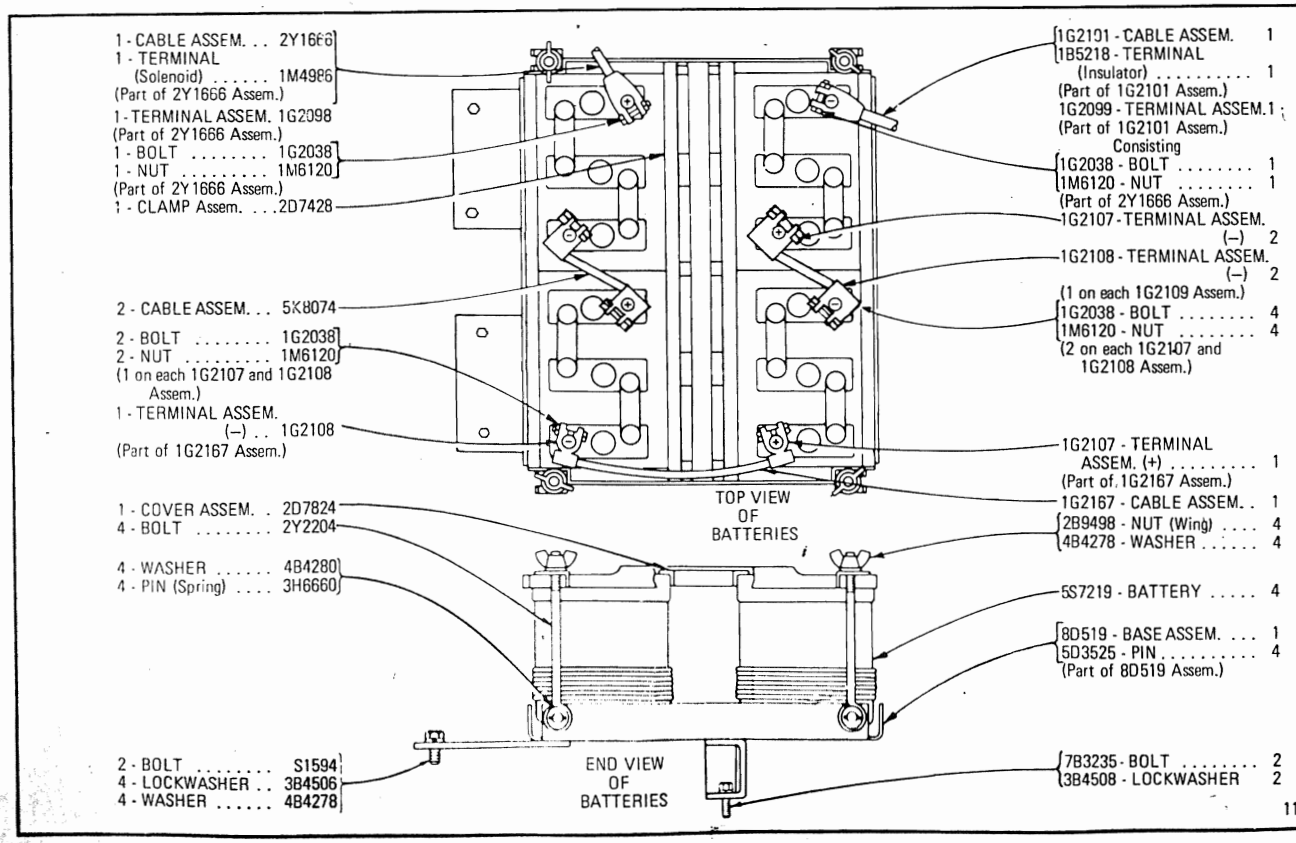

11192P

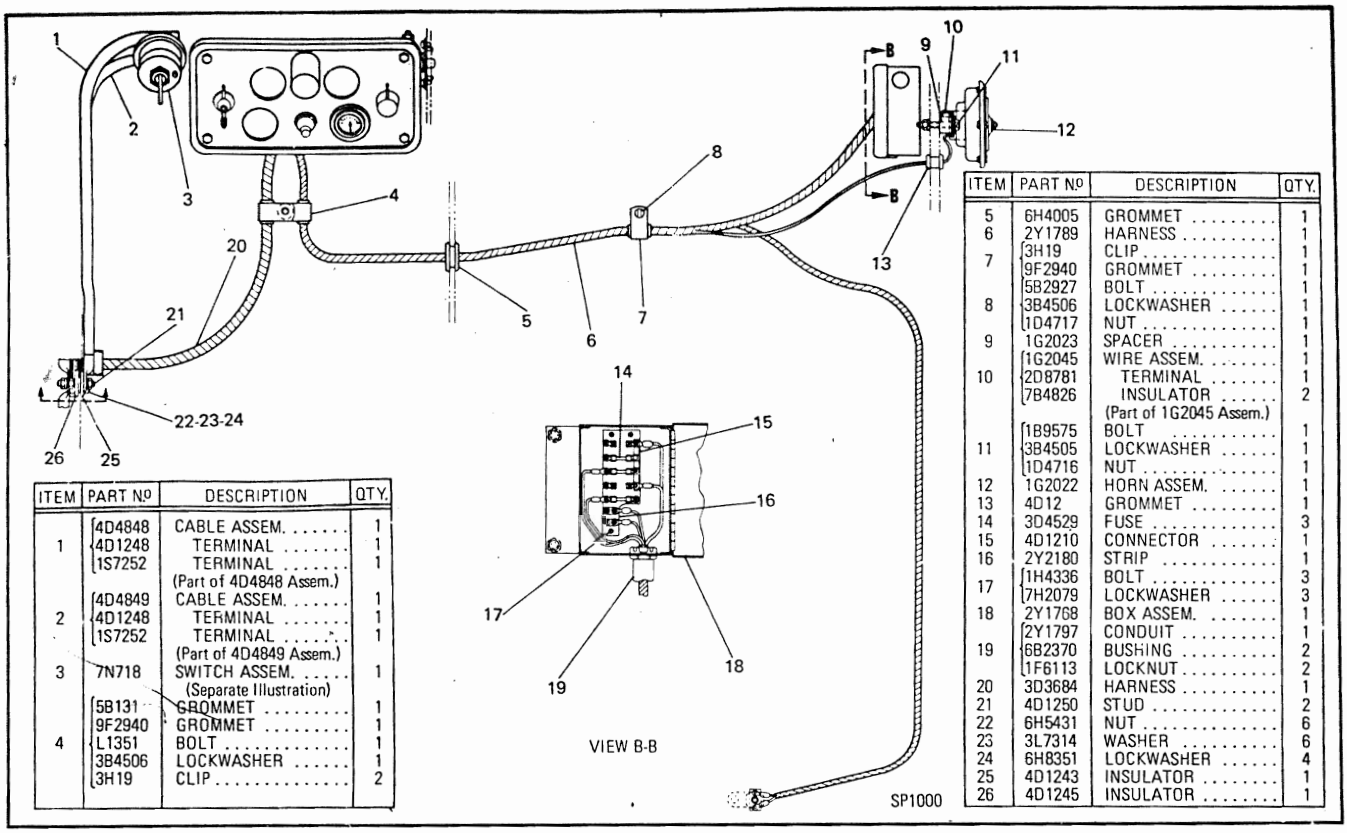

ITEM	PART Nº	DESCRIPTION	QTY.
1	4D4848	CABLE ASSEM.	1
	4D1248	TERMINAL	1
	1S7252	TERMINAL (Part of 4D4848 Assem.)	1
2	4D4849	CABLE ASSEM.	1
	4D1248	TERMINAL	1
	1S7252	TERMINAL (Part of 4D4849 Assem.)	1
3	7N718	SWITCH ASSEM. (Separate Illustration)	1
4	5B131	GROMMET	1
	9F2940	GROMMET	1
	L1351	BOLT	1
	3B4506	LOCKWASHER	1
	3H19	CLIP	2
5	6H4005	GROMMET	1
6	2Y1789	HARNESS	1
7	3H19	CLIP	1
	9F2940	GROMMET	1
	5B2927	BOLT	1
8	3B4506	LOCKWASHER	1
	1D4717	NUT	1
9	1G2023	SPACER	1
10	1G2045	WIRE ASSEM.	1
	2D8781	TERMINAL	1
	7B4826	INSULATOR (Part of 1G2045 Assem.)	2
11	1B9575	BOLT	1
	3B4505	LOCKWASHER	1
	1D4716	NUT	1
12	1G2022	HORN ASSEM.	1
13	4D12	GROMMET	1
14	3D4529	FUSE	3
15	4D1210	CONNECTOR	1
16	2Y2180	STRIP	1
17	1H4336	BOLT	3
	7H2079	LOCKWASHER	3
18	2Y1768	BOX ASSEM.	1
19	2Y1797	CONDUIT	1
	6B2370	BUSHING	2
	1F6113	LOCKNUT	2
20	3D3684	HARNESS	1
21	4D1250	STUD	2
22	6H5431	NUT	6
23	3L7314	WASHER	6
24	6H8351	LOCKWASHER	4
25	4D1243	INSULATOR	1
26	4D1245	INSULATOR	1

2Y1955 BATTERY AND WIRING GROUP – 24 Volt – Part 3 of 5
7N718 Switch parts are shown on Page 84
Serial No. 64U1050 to 64U1398

2Y1955 BATTERY AND WIRING GROUP – 24 Volt – Part 4 of 5
1M3387 Lamp parts are shown on Page 86
Serial No. 64U1050 to 64U1398

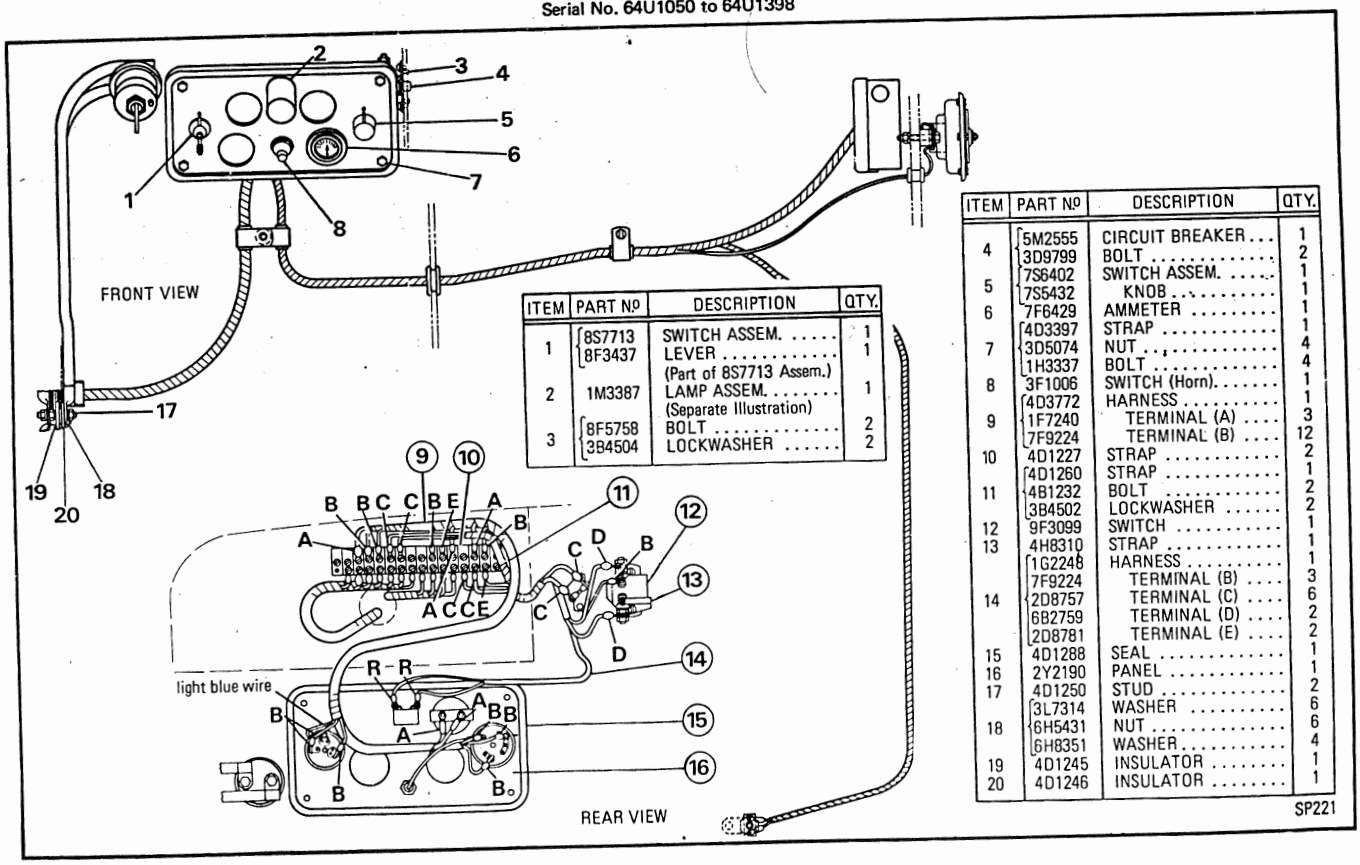

ITEM	PART Nº	DESCRIPTION	QTY.
1	8S7713	SWITCH ASSEM.	1
	8F3437	LEVER (Part of 8S7713 Assem.)	1
2	1M3387	LAMP ASSEM. (Separate Illustration)	1
3	8F5758	BOLT	2
	3B4504	LOCKWASHER	2
4	5M2555	CIRCUIT BREAKER	1
	3D9799	BOLT	2
	7S6402	SWITCH ASSEM.	1
5	7S5432	KNOB	1
6	7F6429	AMMETER	1
7	4D3397	STRAP	1
	3D5074	NUT	4
	1H3337	BOLT	4
8	3F1006	SWITCH (Horn)	1
9	4D3772	HARNESS	1
	1F7240	TERMINAL (A)	3
	7F9224	TERMINAL (B)	12
10	4D1227	STRAP	2
	4D1260	STRAP	1
11	4B1232	BOLT	2
	3B4502	LOCKWASHER	2
12	9F3099	SWITCH	1
13	4H8310	STRAP	1
14	1G2248	HARNESS	1
	7F9224	TERMINAL (B)	3
	2D8757	TERMINAL (C)	6
	6B2759	TERMINAL (D)	2
	2D8781	TERMINAL (E)	2
15	4D1288	SEAL	1
16	2Y2190	PANEL	1
17	4D1250	STUD	2
18	3L7314	WASHER	6
	6H5431	NUT	6
	6H8351	WASHER	4
19	4D1245	INSULATOR	1
20	4D1246	INSULATOR	1

4D3772 - HARNESS 1

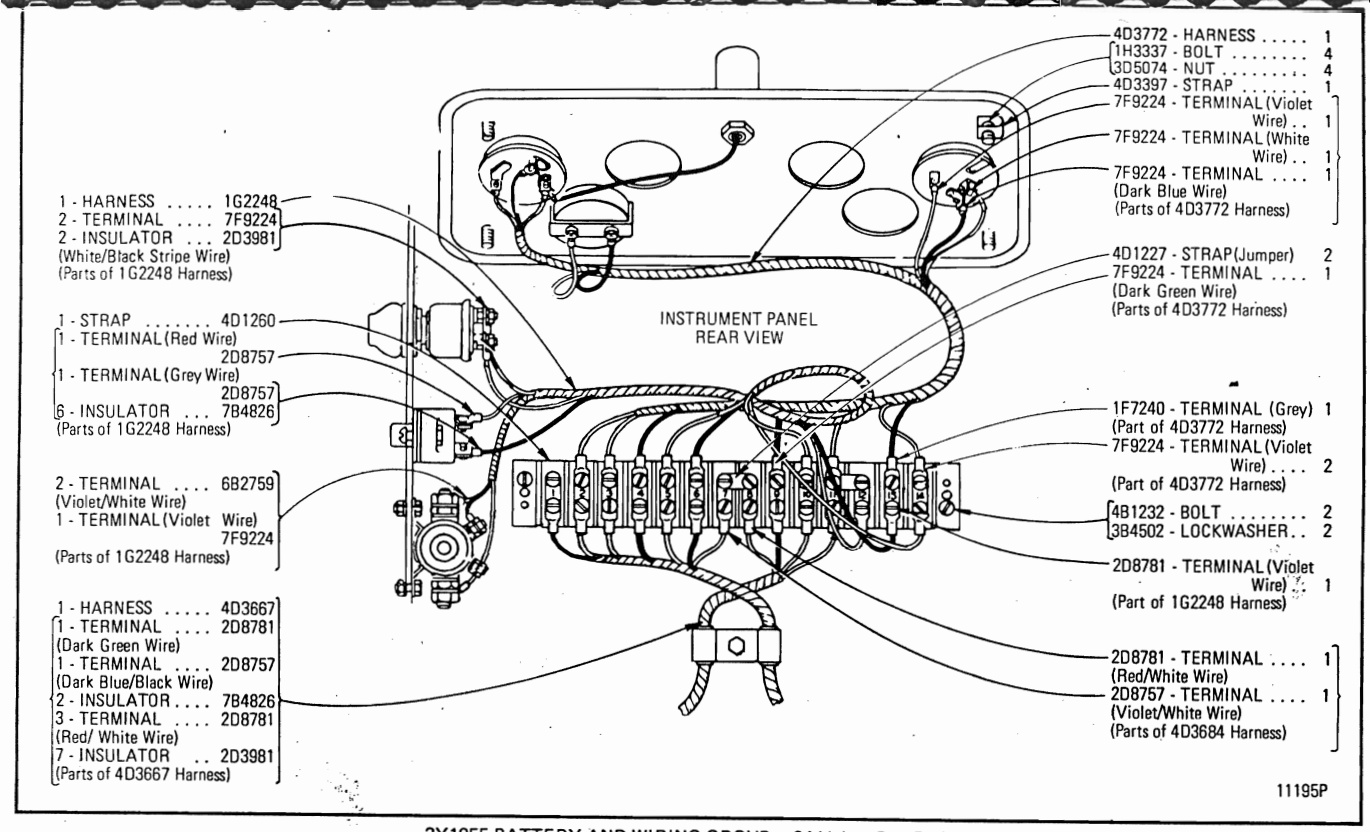

2Y1955 BATTERY AND WIRING GROUP – 24 Volt – Part 5 of 5
Serial No. 64U1050 to 64U1398

2Y1955 BATTERY AND WIRING GROUP – 24 Volt – Part 1 of 5
2Y1262 Regulator and 2Y3637 Lamp Parts are shown on Pages 83 and 84
Serial No. 64U1399–Up

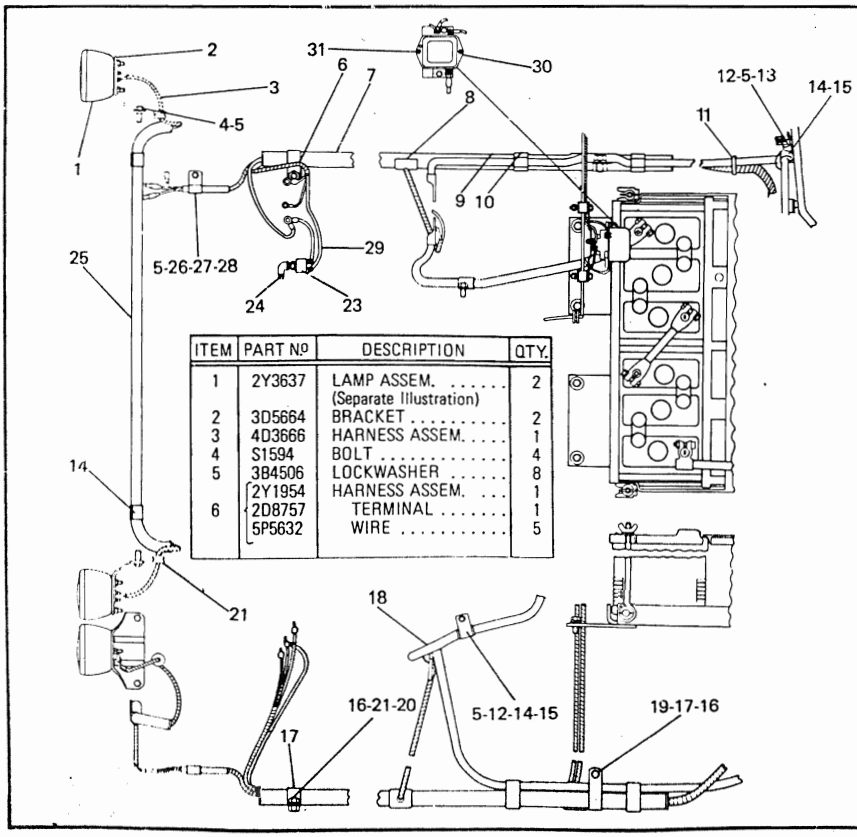

ITEM	PART Nº	DESCRIPTION	QTY.
1	2Y3637	LAMP ASSEM. (Separate Illustration)	2
2	3D5664	BRACKET	2
3	4D3666	HARNESS ASSEM.	1
4	S1594	BOLT	4
5	3B4506	LOCKWASHER	8
6	2Y1954	HARNESS ASSEM.	1
	2D8757	TERMINAL	1
	5P5632	WIRE	5

ITEM	PART Nº	DESCRIPTION	QTY.
7	2Y1829	TUBE	1
8	3D6655	GROMMET	2
9	2Y1667	CABLE ASSEM.	1
10	4D3631	CLIP	2
11	1H5167	CLIP	1
12	S509	BOLT	2
13	1B4717	NUT	1
14	3H19	CLIP	5
15	5D131	GROMMET	3
16	3B4508	LOCKWASHER	2
17	T386	CLIP	2
18	2Y1666	CABLE ASSEM.	1
19	S1621	BOLT	1
20	S1620	BOLT	1
21	1D5117	NUT	1
22	2D2751	GROMMET	2
23	2N7744	SWITCH	1
24	3B8822	ELBOW	1
25	5D1189	TUBE	1
26	1B3057	CLIP	1
27	4D3670	GROMMET	1
28	T102	BOLT	1
29	2Y1999	WIRE ASSEM.	1
30	2Y1262	REGULATOR ASSEM. (Separate Illustration)	1
31	7B2742	BOLT	4
	3B4504	LOCKWASHER	2
	1B4330	NUT	4
	4B4276	WASHER	4

SP847

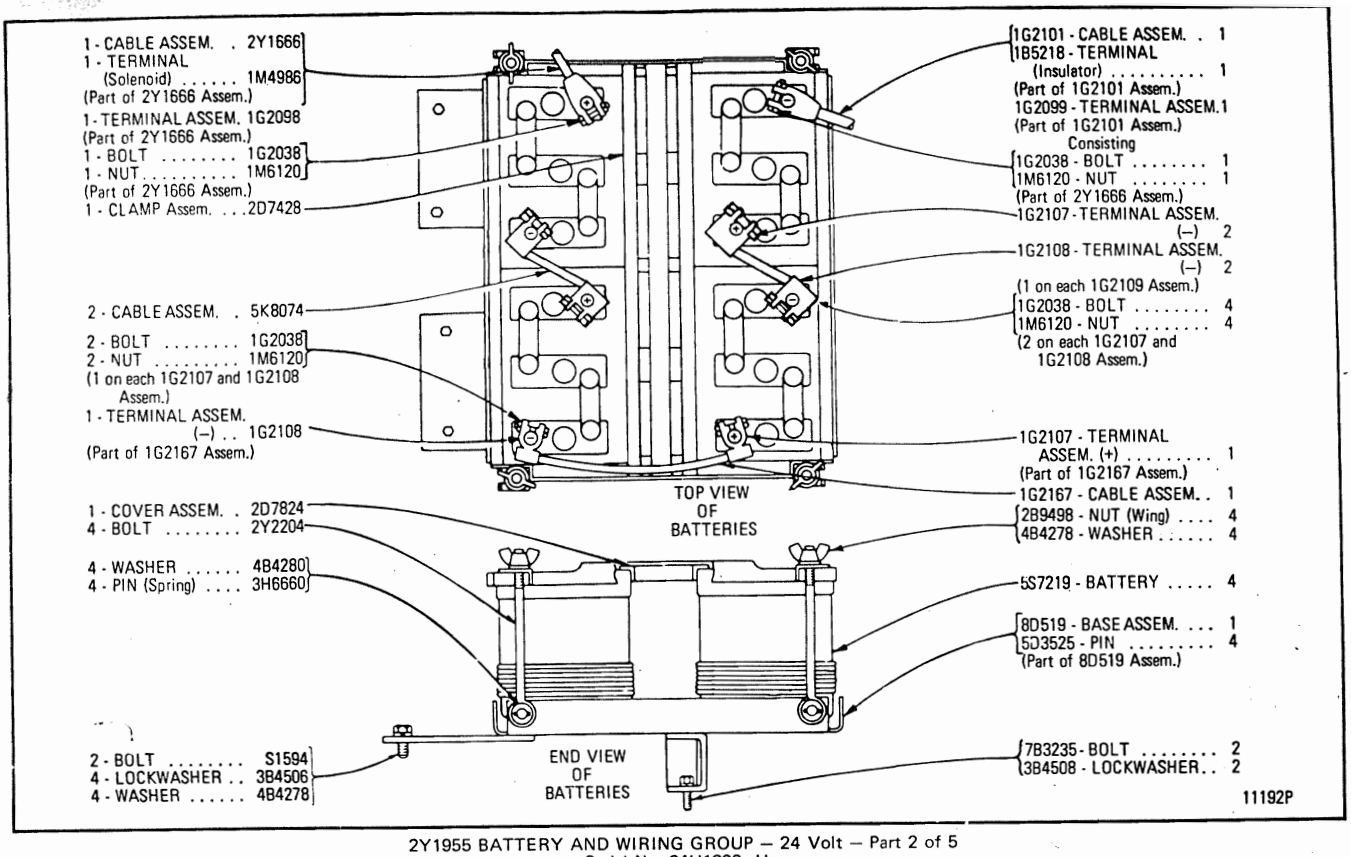

2Y1955 BATTERY AND WIRING GROUP – 24 Volt – Part 2 of 5
Serial No. 64U1399–Up

2Y1955 BATTERY AND WIRING GROUP – 24 Volt – Part 3 of 5
7N718 Disconnect Switch parts are shown on Page 84
Serial No. 64U1399–Up

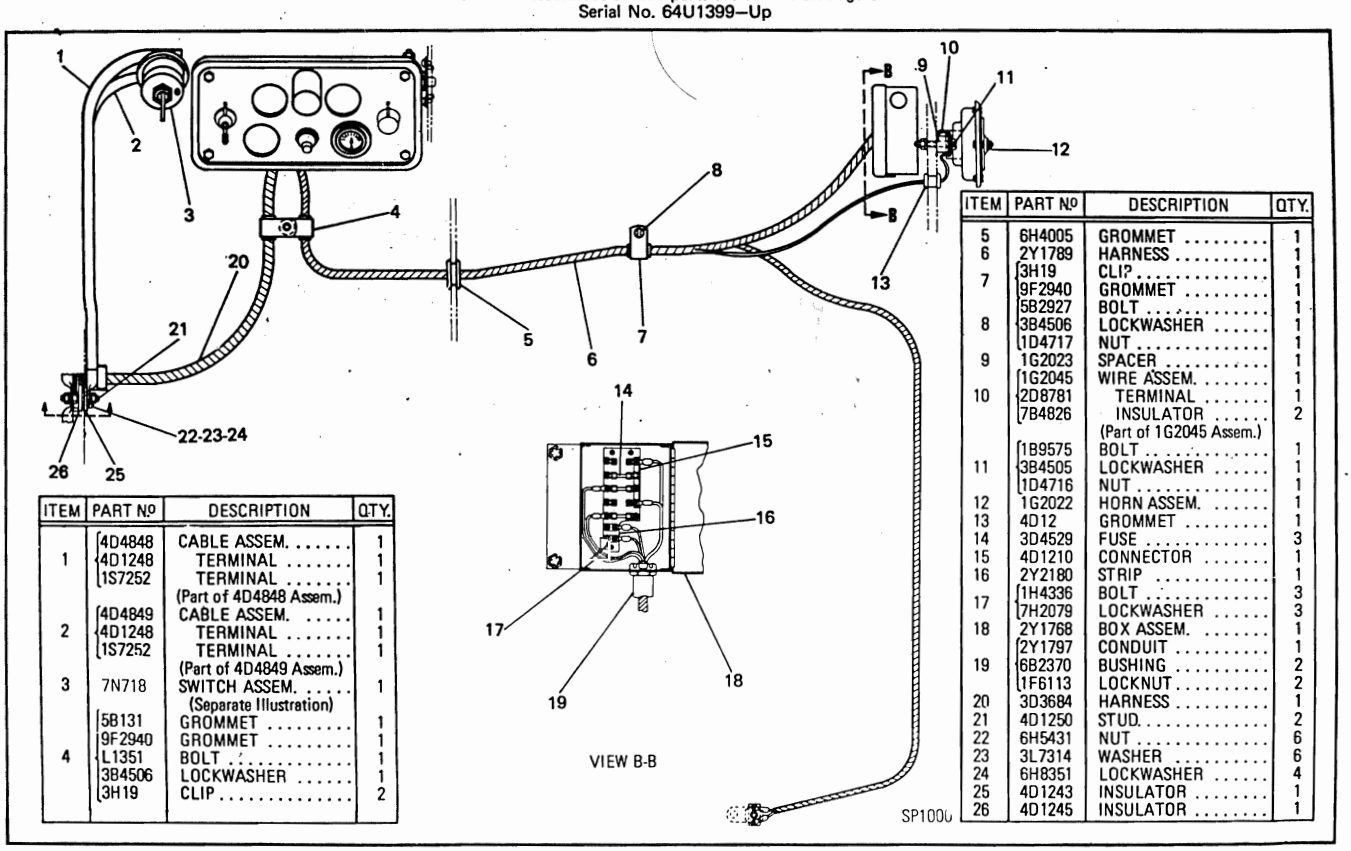

ITEM	PART Nº	DESCRIPTION	QTY.
1	4D4848	CABLE ASSEM.	1
	4D1248	TERMINAL	1
	1S7252	TERMINAL	1
		(Part of 4D4848 Assem.)	
2	4D4849	CABLE ASSEM.	1
	4D1248	TERMINAL	1
	1S7252	TERMINAL	1
		(Part of 4D4849 Assem.)	
3	7N718	SWITCH ASSEM.	1
		(Separate Illustration)	
4	5B131	GROMMET	1
	9F2940	GROMMET	1
	L1351	BOLT	1
	3B4506	LOCKWASHER	1
	3H19	CLIP	2

ITEM	PART Nº	DESCRIPTION	QTY.
5	6H4005	GROMMET	1
6	2Y1789	HARNESS	1
7	3H19	CLIP	1
	9F2940	GROMMET	1
	5B2927	BOLT	1
8	3B4506	LOCKWASHER	1
	1D4717	NUT	1
9	1G2023	SPACER	1
10	1G2045	WIRE ASSEM.	1
	2D8781	TERMINAL	1
	7B4826	INSULATOR	2
		(Part of 1G2045 Assem.)	
11	1B9575	BOLT	1
	3B4505	LOCKWASHER	1
	1D4716	NUT	1
12	1G2022	HORN ASSEM.	1
13	4D12	GROMMET	1
14	3D4529	FUSE	3
15	4D1210	CONNECTOR	1
16	2Y2180	STRIP	1
17	1H4336	BOLT	3
	7H2079	LOCKWASHER	3
18	2Y1768	BOX ASSEM.	1
19	2Y1797	CONDUIT	1
	6B2370	BUSHING	2
	1F6113	LOCKNUT	2
20	3D3684	HARNESS	1
21	4D1250	STUD	2
22	6H5431	NUT	6
23	3L7314	WASHER	6
24	6H8351	LOCKWASHER	4
25	4D1243	INSULATOR	1
26	4D1245	INSULATOR	1

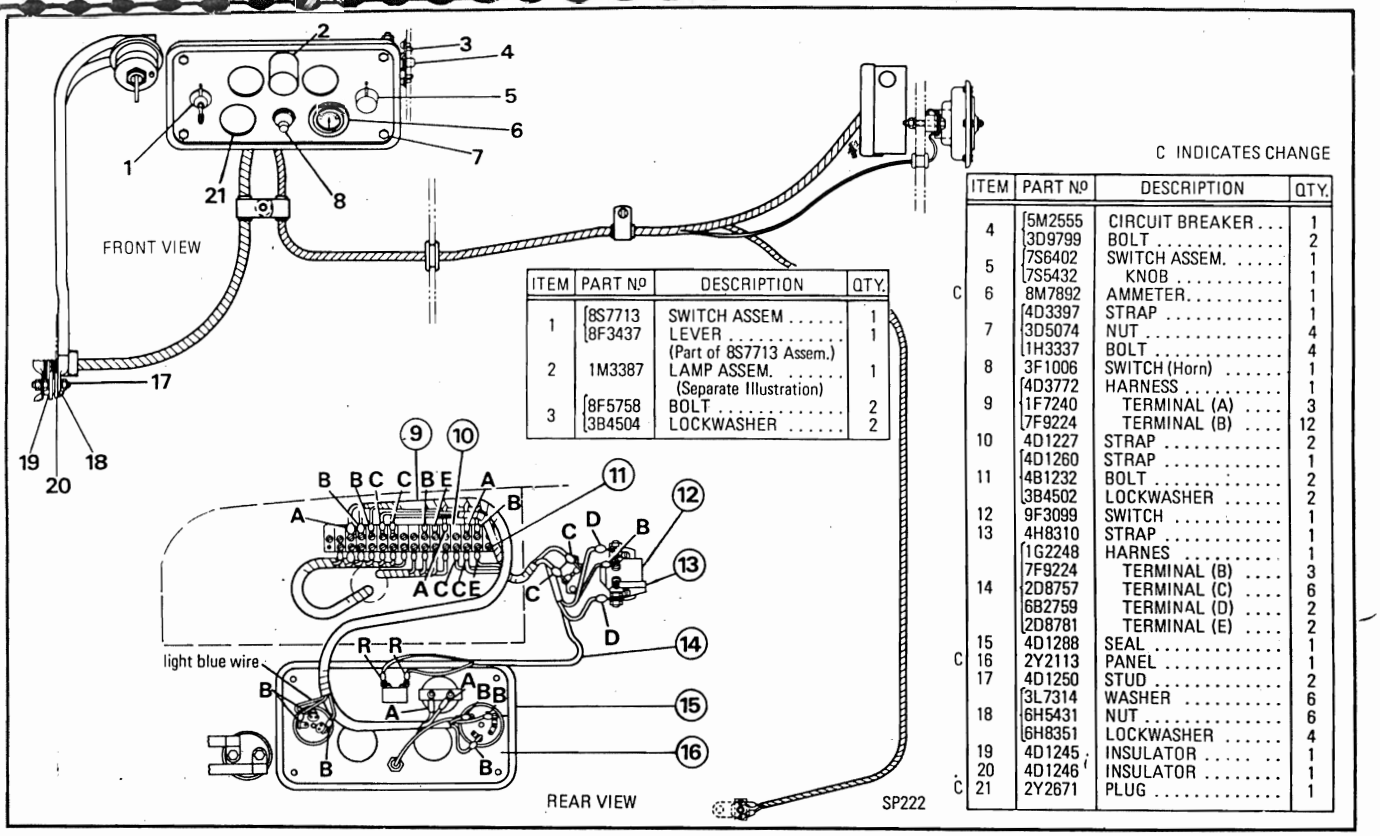

ITEM	PART Nº	DESCRIPTION	QTY.
1	8S7713	SWITCH ASSEM	1
	8F3437	LEVER . . . . . (Part of 8S7713 Assem.)	1
2	1M3387	LAMP ASSEM. . . . . (Separate Illustration)	1
3	8F5758	BOLT	2
	3B4504	LOCKWASHER	2

C INDICATES CHANGE

ITEM	PART Nº	DESCRIPTION	QTY.
4	5M2555	CIRCUIT BREAKER . . .	1
	3D9799	BOLT	2
5	7S6402	SWITCH ASSEM.	1
	7S5432	KNOB	1
C 6	8M7892	AMMETER.	1
	4D3397	STRAP	1
7	3D5074	NUT	4
	1H3337	BOLT	4
8	3F1006	SWITCH (Horn)	1
	4D3772	HARNESS	1
9	1F7240	TERMINAL (A)	3
	7F9224	TERMINAL (B)	12
10	4D1227	STRAP	2
	4D1260	STRAP	1
11	4B1232	BOLT	2
	3B4502	LOCKWASHER	2
12	9F3099	SWITCH	1
13	4H8310	STRAP	1
	1G2248	HARNES	1
	7F9224	TERMINAL (B)	3
14	2D8757	TERMINAL (C)	6
	6B2759	TERMINAL (D)	2
	2D8781	TERMINAL (E)	2
15	4D1288	SEAL	1
C 16	2Y2113	PANEL	1
17	4D1250	STUD	2
	3L7314	WASHER	6
18	6H5431	NUT	6
	6H8351	LOCKWASHER	4
19	4D1245	INSULATOR	1
C 20	4D1246	INSULATOR	1
C 21	2Y2671	PLUG	1

2Y1955 BATTERY AND WIRING GROUP – 24 Volt – Part 4 of 5
1M3387 Lamp parts are shown on Page 86
Serial No. 64U1399–Up

2Y1955 BATTERY AND WIRING GROUP – 24 Volt – Part 5 of 5
Serial No. 64U1399–Up

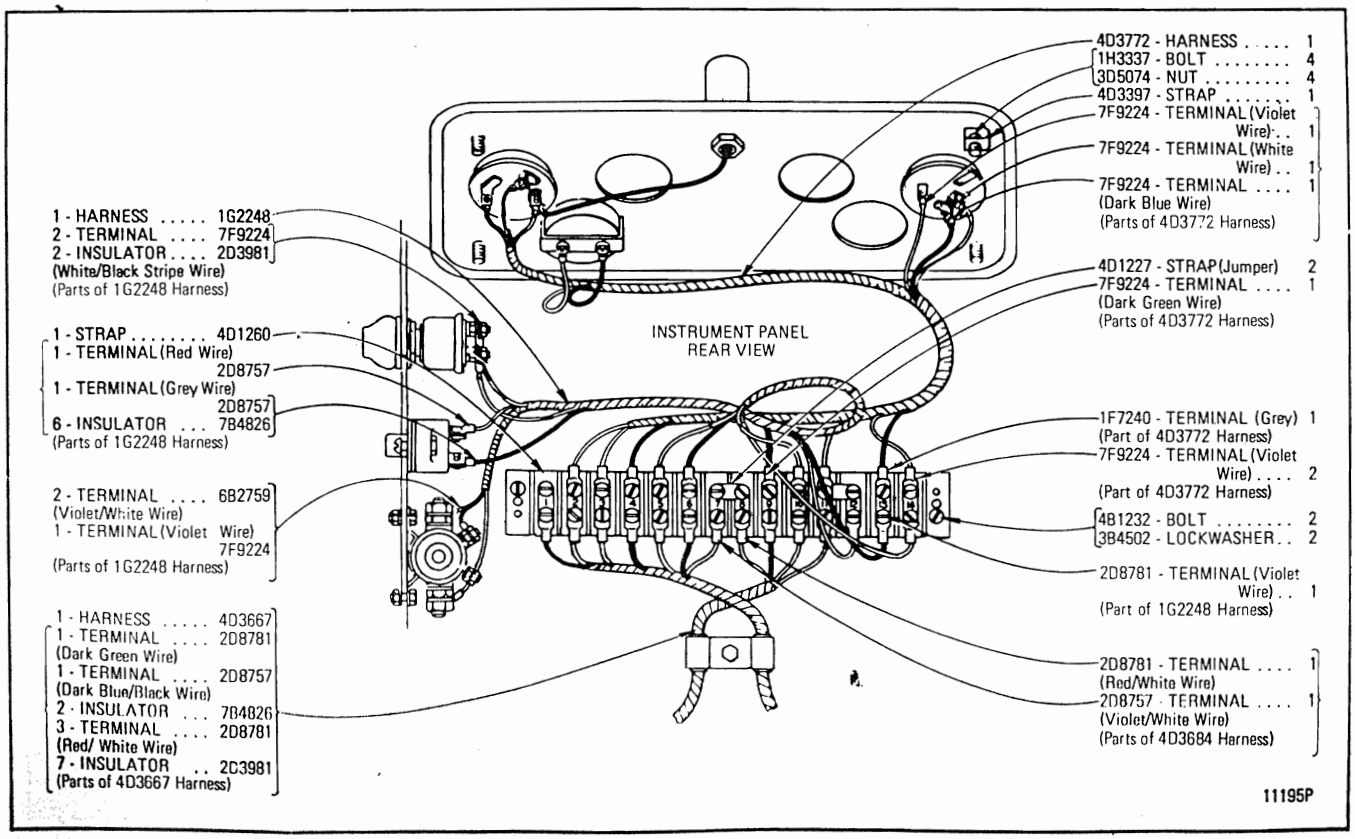

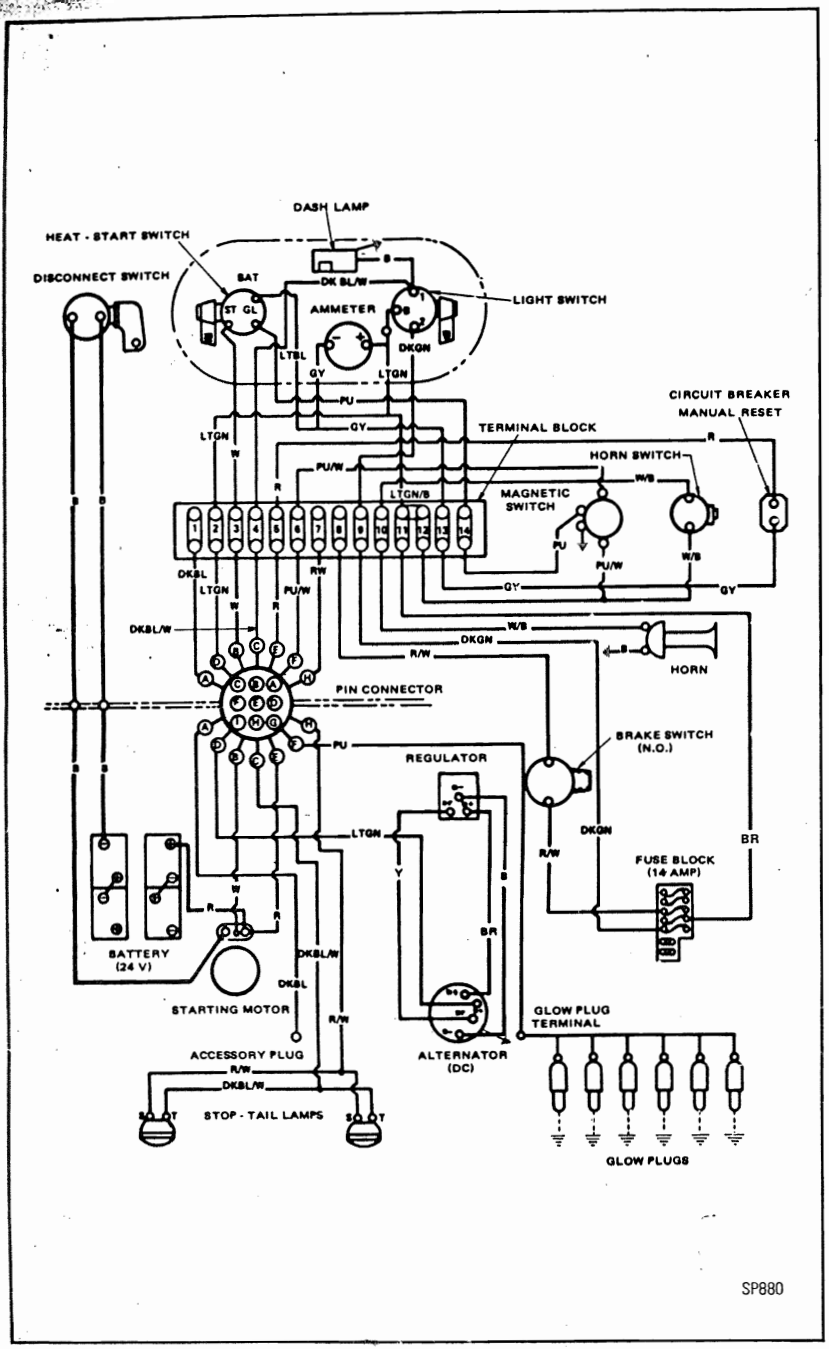

WIRING DIAGRAM – 24 Volt

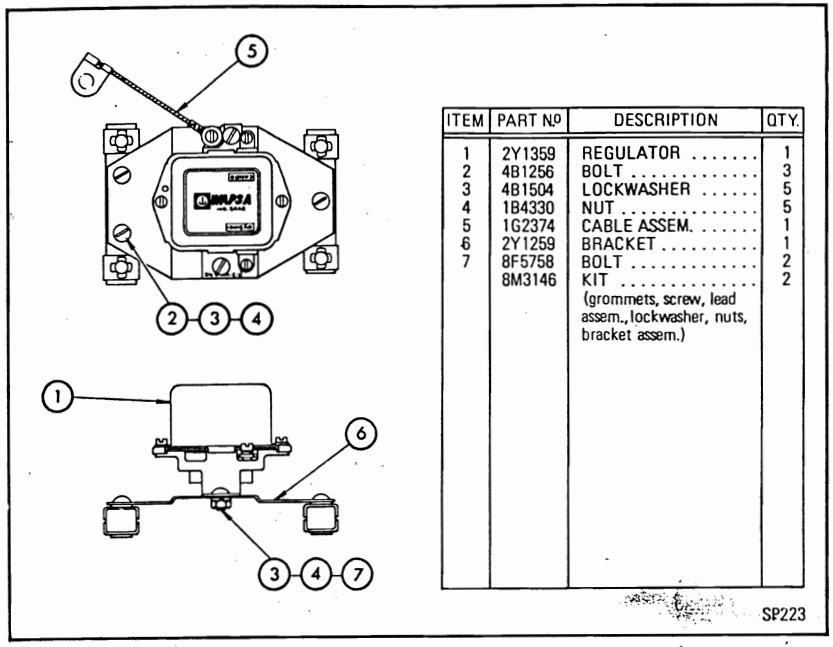

ITEM	PART Nº	DESCRIPTION	QTY.
1	2Y1359	REGULATOR	1
2	4B1256	BOLT	3
3	4B1504	LOCKWASHER	5
4	1B4330	NUT	5
5	1G2374	CABLE ASSEM.	1
6	2Y1259	BRACKET	1
7	8F5758	BOLT	2
	8M3146	KIT (grommets, screw, lead assem., lockwasher, nuts, bracket assem.)	2

2Y1262 REGULATOR ASSEMBLY
Part of 2Y1955 Battery and Wiring shown on Pages 72 and 77

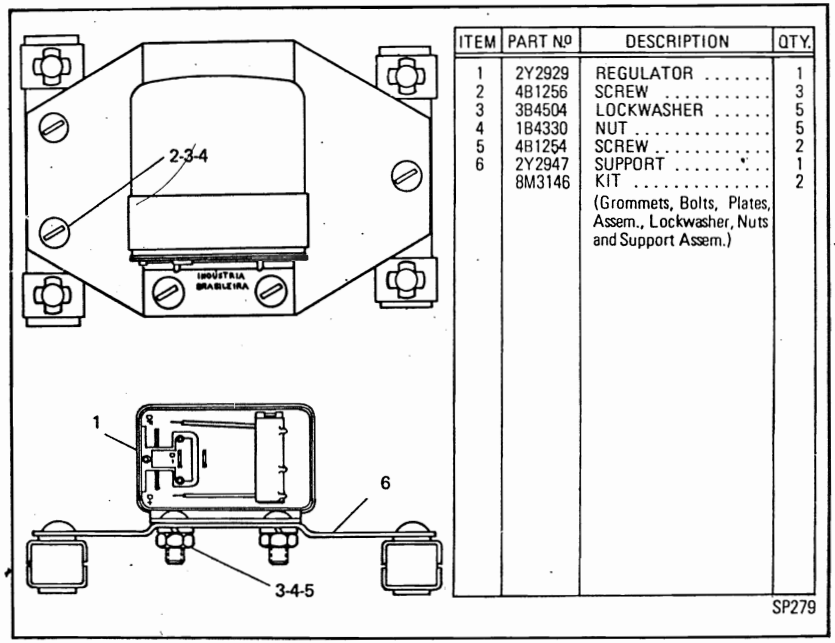

ITEM	PART Nº	DESCRIPTION	QTY.
1	2Y2929	REGULATOR	1
2	4B1256	SCREW	3
3	3B4504	LOCKWASHER	5
4	1B4330	NUT	5
5	4B1254	SCREW	2
6	2Y2947	SUPPORT	1
	8M3146	KIT (Grommets, Bolts, Plates, Assem., Lockwasher, Nuts and Support Assem.)	2

2Y2930 REGULATOR ASSEMBLY
Part of 2Y2961 Alternator shown on Page 69

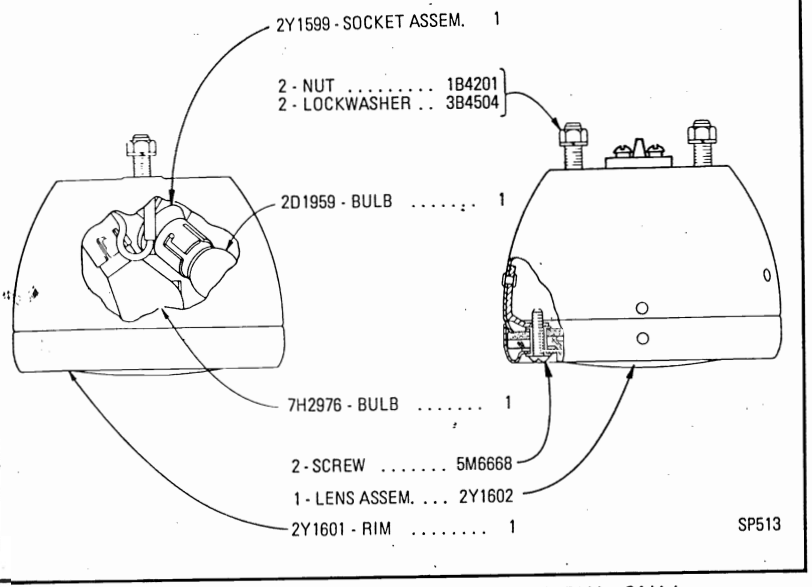

2Y3637 COMBINATION STOP AND TAIL LAMP ASSEMBLY – 24 Volt
Part of 2Y1955 Battery and Wiring shown on Pages 72 and 77

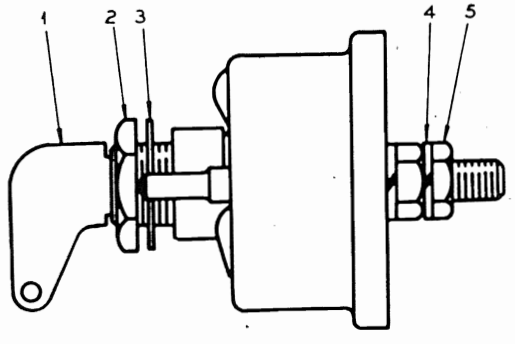

REF. NO.	PART NUMBER	DESCRIPTION	QTY
1	8H5306	KEY	1
2	8H5303	NUT	1
3	2H3922	LOCKWASHER	1
4	7F7259	LOCKWASHER	4
5	6F7045	NUT	4

211499

7N718 DISCONNECT SWITCH ASSEMBLY
Part of 2Y1955 Battery and Wiring shown on Pages 74 and 79

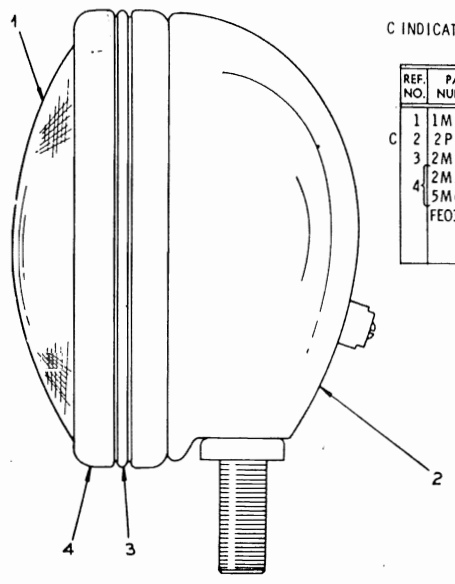

C INDICATES CHANGE

REF. NO.	PART NUMBER	DESCRIPTION	QTY
1	1M5899	SEALED UNIT	1
C 2	2P2540	BODY ASSEM.	1
3	2M5282	RING	1
4	2M5284	MOULDING ASSEM.	2
	5M6668	SCREW	2
	FE035430	FORM (Instructions For Installing Lamp Assem.)	1

113443

1M6052 HEAD LAMP ASSEMBLY – 24 Volt
Part of 2Y1780 Head Lamp shown on Page 88

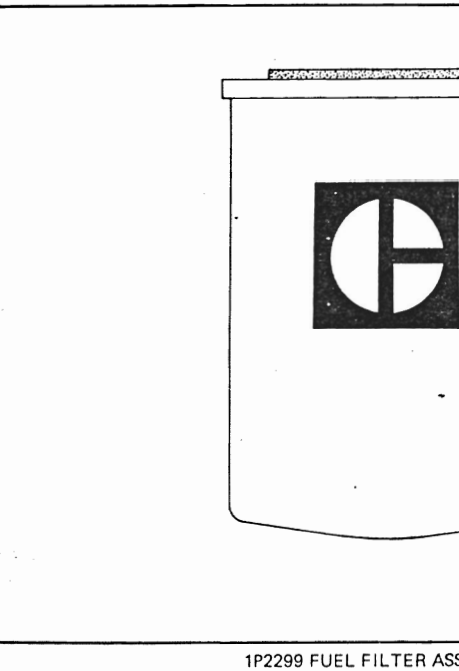

208065

1P2299 FUEL FILTER ASSEMBLY
Part of 5S9666 Fuel Filter shown on Page 52

ITEM	PART Nº	DESCRIPTION	QTY.
1	4H7869	GASKET	1
2	2Y1920	MOTOR ASSEM. (Separate Illustration)	1
3	3B4510	LOCKWASHER	3
4	8S2332	BOLT	3
5	2Y2238	WIRE ASSEMBLY	1
	2L8052	TERMINAL	2
	4S8784	WIRE	4

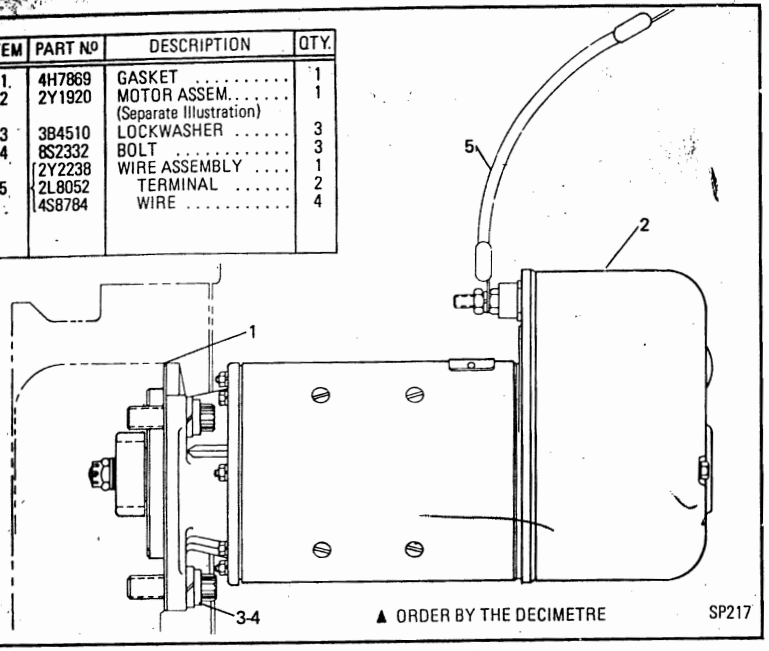

▲ ORDER BY THE DECIMETRE SP217

2Y1921 STARTING MOTOR GROUP
2Y1920 Starting Motor parts are shown on Page 87

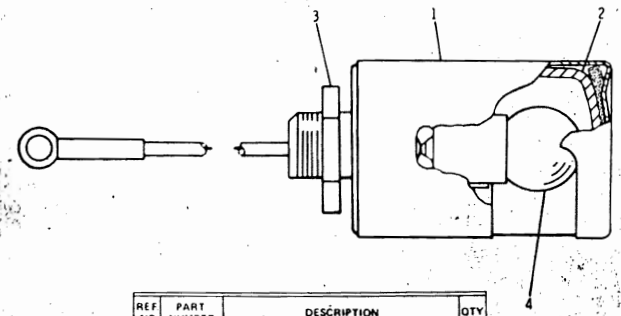

REF NO	PART NUMBER	DESCRIPTION	QTY
C	6N8355	BODY ASSEM. (Includes)	1
1	7M4870	COVER	1
2	2M1449	LENS	1
3	2M1446	NUT	1
C 4	3H2691	LAMP	1

C INDICATES CHANGE 211350

1M3387 DASH LAMP ASSEMBLY
Part of 2Y1955 Battery and Wiring shown on Pages 75 and 80

THE FOLLOWING REPAIR KITS ARE AVAILABLE:
- 2Y2400 Kit (Includes: Nuts, Bushings, Insulators, Loock and Washers)
- 2Y1799 Kit (4 Brushes)
- 2Y2402 - (for Cover) - Includes: Bolt, Washer, Seal and "O" Ring).

2Y1920 STARTING MOTOR GROUP – 24 Volt
Part of 2Y1921 Starting Motor shown on Page 86

ITEM	PART Nº	DESCRIPTION	QTY.
18	2Y2396	COVER	1
19	2Y2397	SWITCH ASSEM.	1
20	2Y2398	SWITCH ASSEM.	1
21	2Y2399	STUD	3
22	2Y2382	BOLT	2
23	2Y2383	SEAL	1
24	2Y2858	BUSHING	1

ITEM	PART Nº	DESCRIPTION	QTY.
1	2Y2373	PINION	1
2	2Y2374	BAFFLER	1
3	2Y2375	SUPPORT ASSEM.	1
4	2Y2376	SEAL	1
5	2Y2377	BEARING	1
6	2Y2378	SLEEVE	1
7	2Y2379	BEARING	1
8	2Y2380	CLUCTH ASSEM.	1
9	2Y2384	ARMATURE ASSEM.	1
10	2Y2385	BEARING	1
11	2Y2386	COIL ASSEM.	1
12	2Y2387	ROD ASSEM.	1
13	2Y2390	BOLT	8
14	2Y2391	STUD	1
15	2Y2392	SUPPORT ASSEM.	1
16	2Y2393	TERMINAL (Positive)	1
17	2Y2394	TERMINAL (Negative)	1

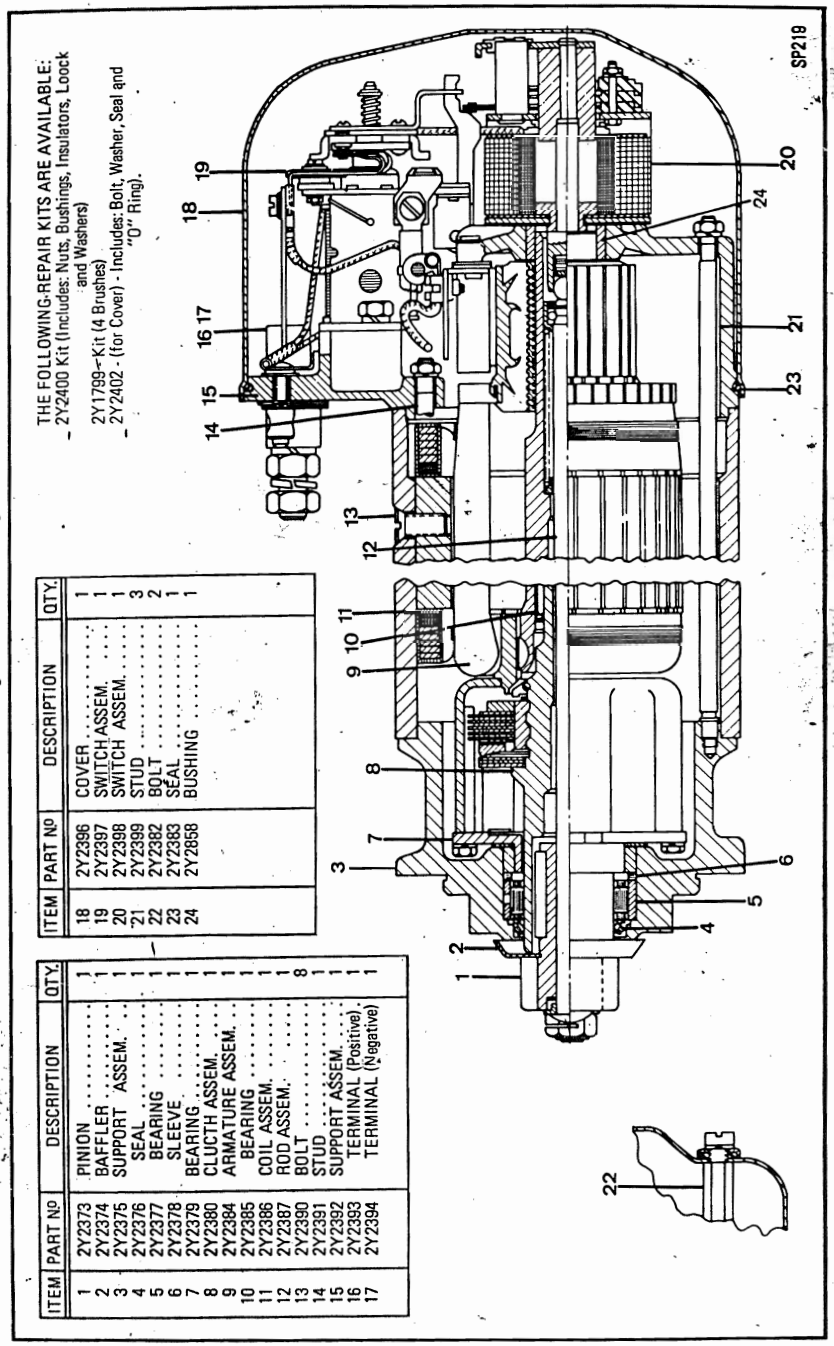

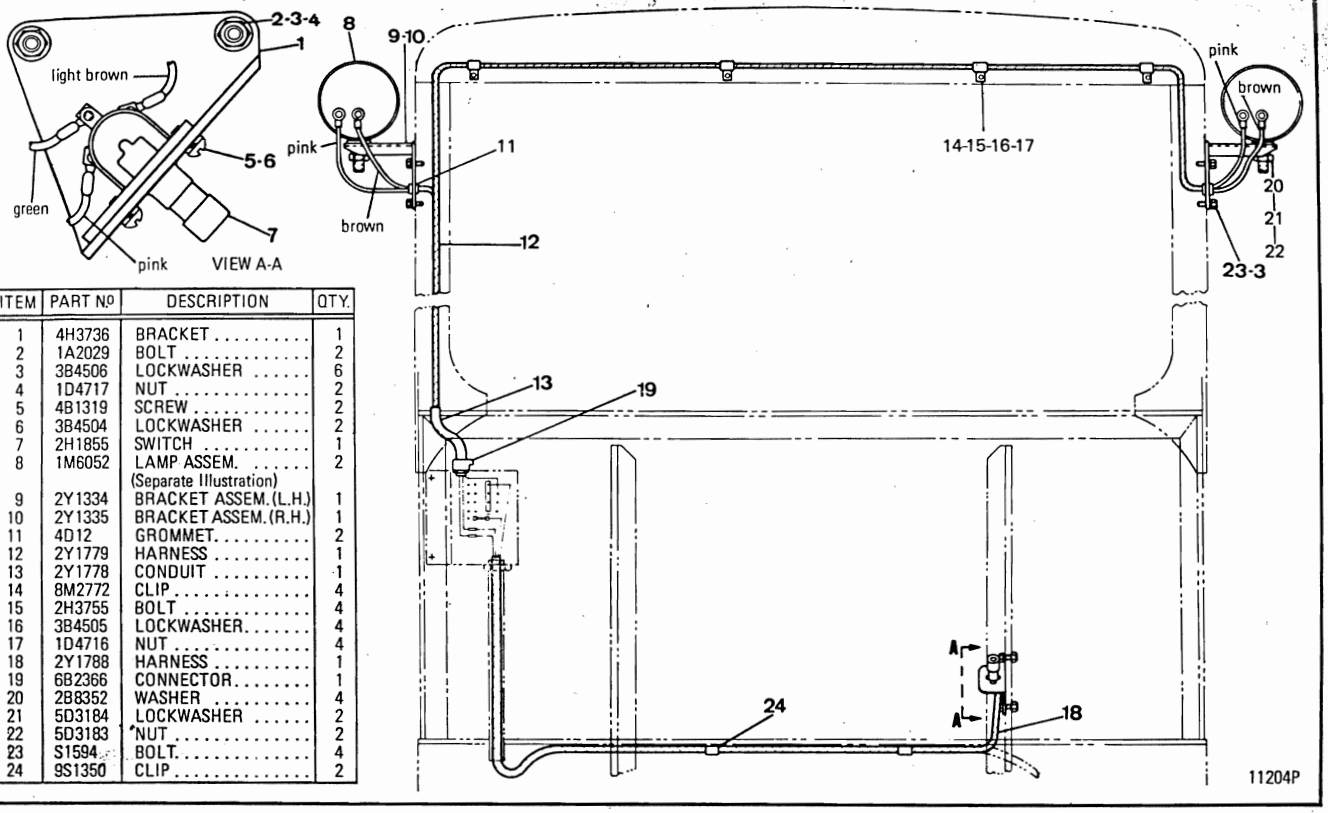

ITEM	PART Nº	DESCRIPTION	QTY.
1	4H3736	BRACKET	1
2	1A2029	BOLT	2
3	3B4506	LOCKWASHER	6
4	1D4717	NUT	2
5	4B1319	SCREW	2
6	3B4504	LOCKWASHER	2
7	2H1855	SWITCH	1
8	1M6052	LAMP ASSEM. (Separate Illustration)	2
9	2Y1334	BRACKET ASSEM. (L.H.)	1
10	2Y1335	BRACKET ASSEM. (R.H.)	1
11	4D12	GROMMET	2
12	2Y1779	HARNESS	1
13	2Y1778	CONDUIT	1
14	8M2772	CLIP	4
15	2H3755	BOLT	4
16	3B4505	LOCKWASHER	4
17	1D4716	NUT	4
18	2Y1788	HARNESS	1
19	6B2366	CONNECTOR	1
20	2B8352	WASHER	4
21	5D3184	LOCKWASHER	2
22	5D3183	NUT	2
23	S1594	BOLT	4
24	9S1350	CLIP	2

2Y1780 HEAD LAMP GROUP – 24 Volt – With Cab
1M6052 Head Lamp parts are shown on Page 85

2Y1790 HEAD LAMP GROUP – 24 Volt – Without Cab

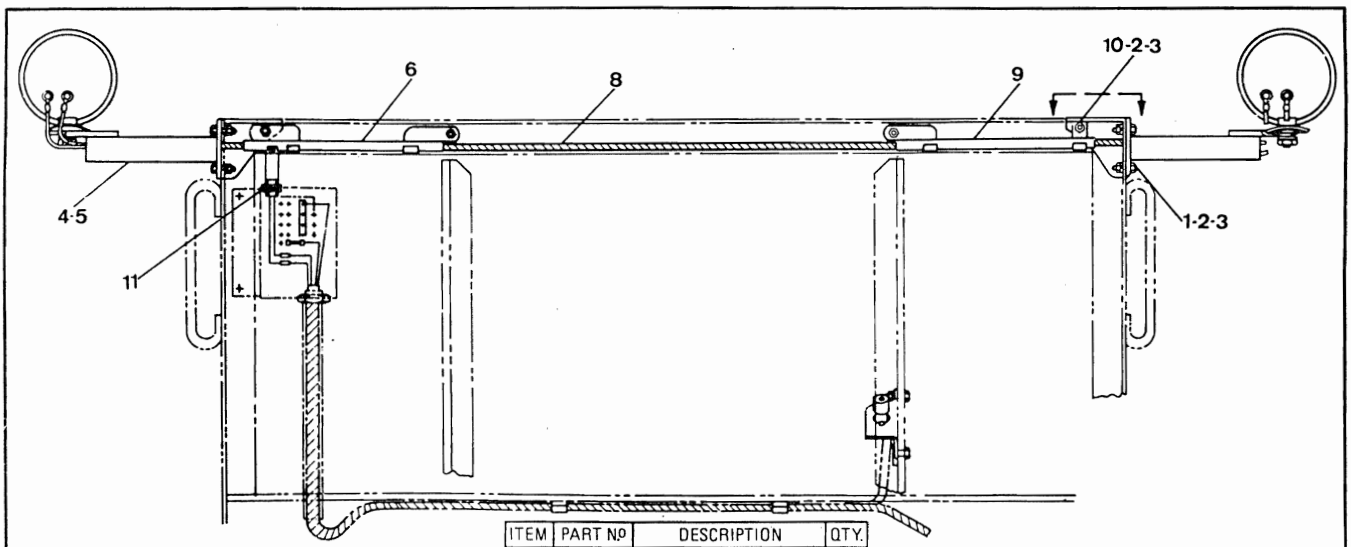

ITEM	PART Nº	DESCRIPTION	QTY.
1	L478	BOLT	4
2	3B4506	LOCKWASHER	4
3	1B4203	NUT	8
4	3D5302	BRACKET ASSEM. (L.H.)	1
5	3D5301	BRACKET ASSEM. (R.H.)	1
6	2Y1781	TUBE ASSEM. (L.H.)	1
7	2Y1782	CONDUIT	1
8	2Y1776	HARNESS ASSEM.	1
	2D8781	TERMINAL (pink wire)	2
	2L8076	TERMINAL (brown wire)	2
9	4D3725	TUBE ASSEM. (R.H.)	1
10	2A4996	BOLT	4
11	3F2065	LOCKNUT	2

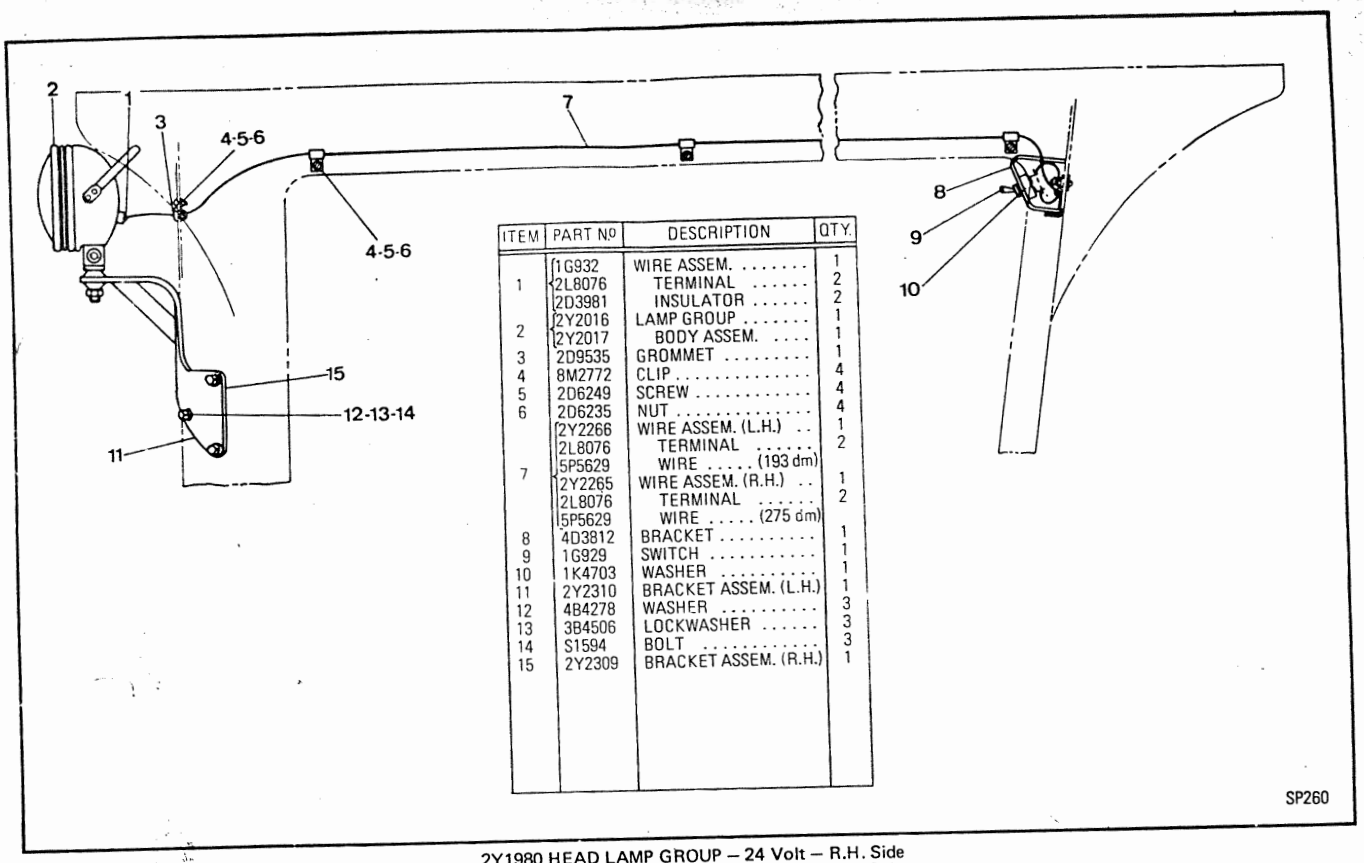

ITEM	PART No.	DESCRIPTION	QTY.
	1G932	WIRE ASSEM.	1
1	2L8076	TERMINAL	2
	2D3981	INSULATOR	2
	2Y2016	LAMP GROUP	1
2	2Y2017	BODY ASSEM.	1
3	2D9535	GROMMET	1
4	8M2772	CLIP	4
5	2D6249	SCREW	4
6	2D6235	NUT	4
	2Y2266	WIRE ASSEM. (L.H.)	1
	2L8076	TERMINAL	2
7	5P5629	WIRE (193 dm)	
	2Y2265	WIRE ASSEM. (R.H.)	1
	2L8076	TERMINAL	2
	5P5629	WIRE (275 dm)	
8	4D3812	BRACKET	1
9	1G929	SWITCH	1
10	1K4703	WASHER	1
11	2Y2310	BRACKET ASSEM. (L.H.)	1
12	4B4278	WASHER	3
13	3B4506	LOCKWASHER	3
14	S1594	BOLT	3
15	2Y2309	BRACKET ASSEM. (R.H.)	1

2Y1980 HEAD LAMP GROUP – 24 Volt – R.H. Side
2Y1990 HEAD LAMP GROUP – 24 Volt – L.H. Side

POWER TRAIN ARRANGEMENT

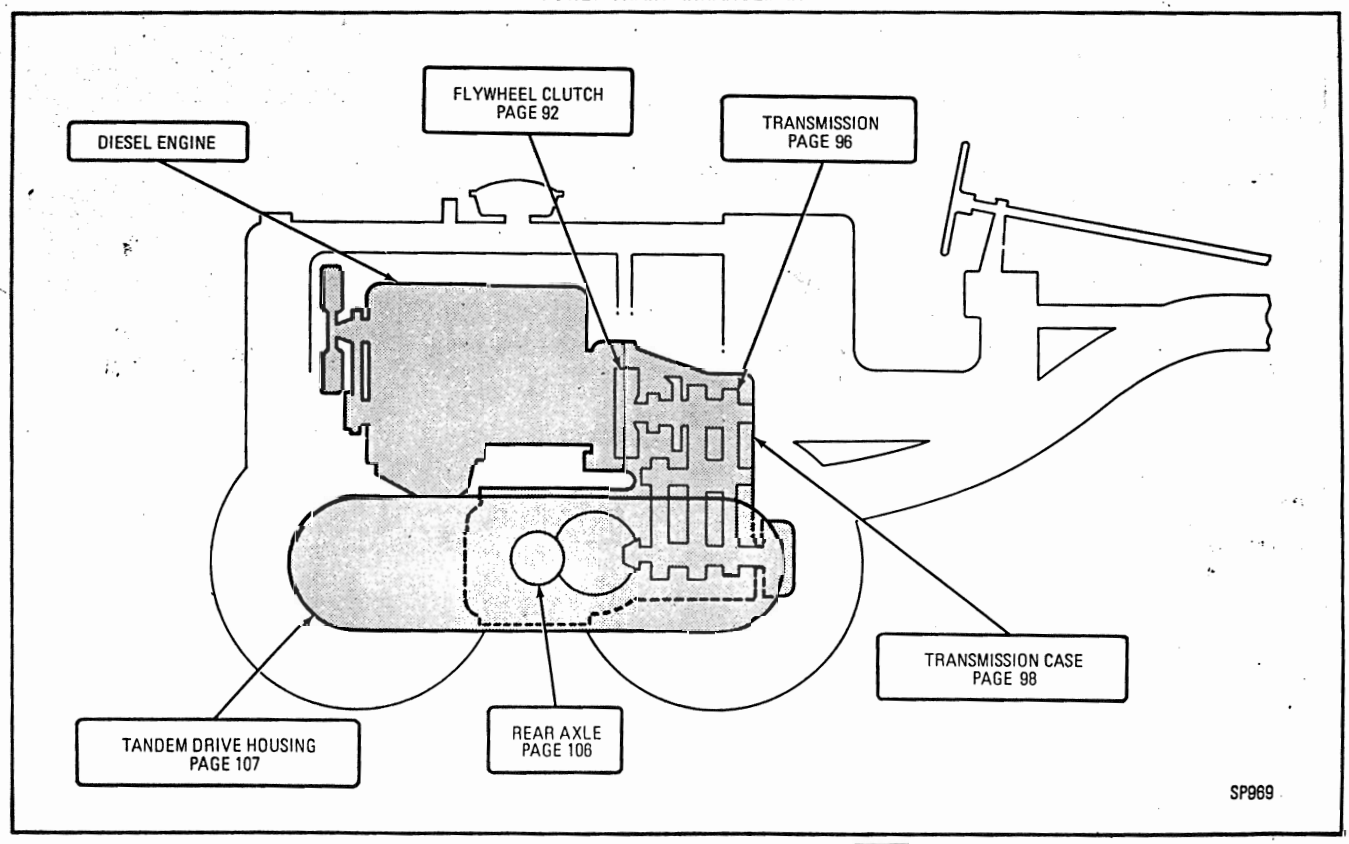

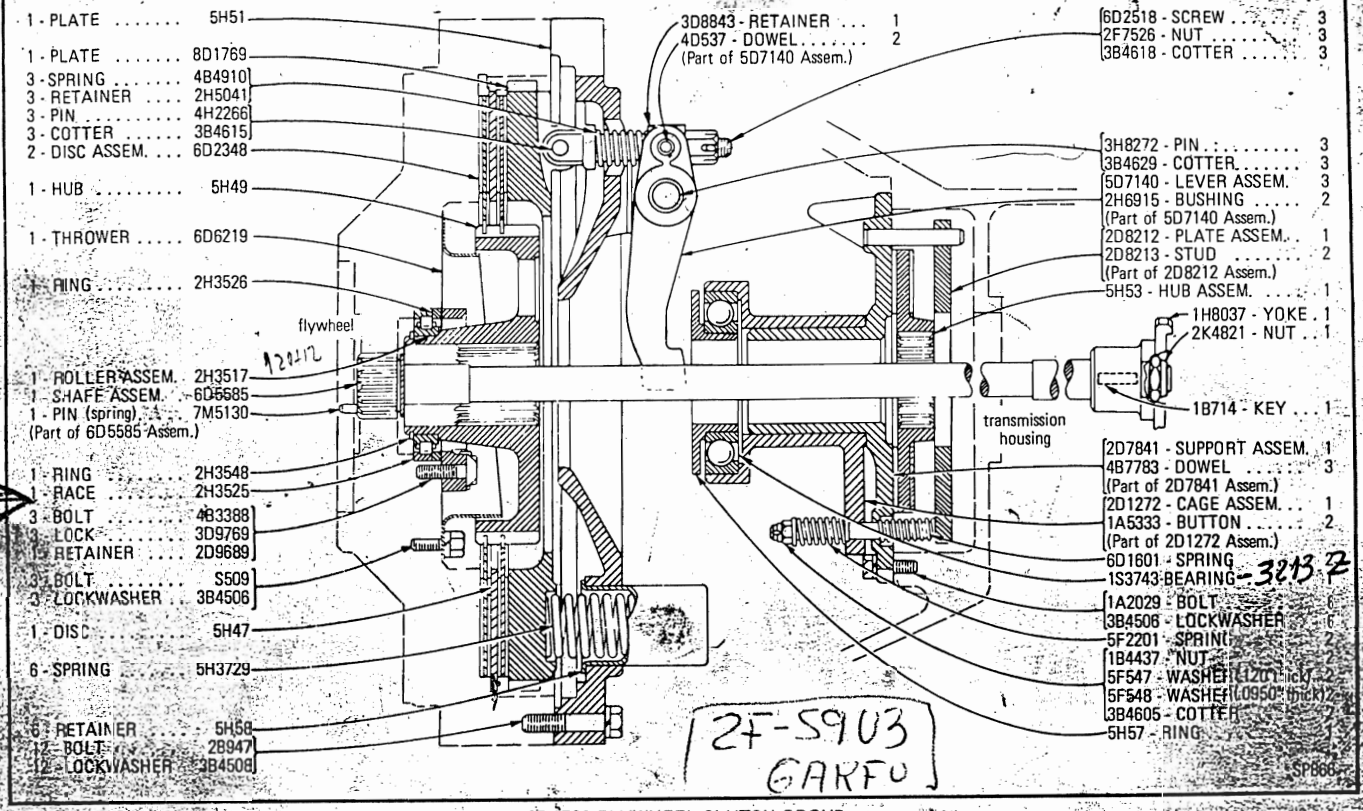

6D1590 FLYWHEEL CLUTCH GROUP

4D2790 GEAR SHIFT GROUP — Part 1

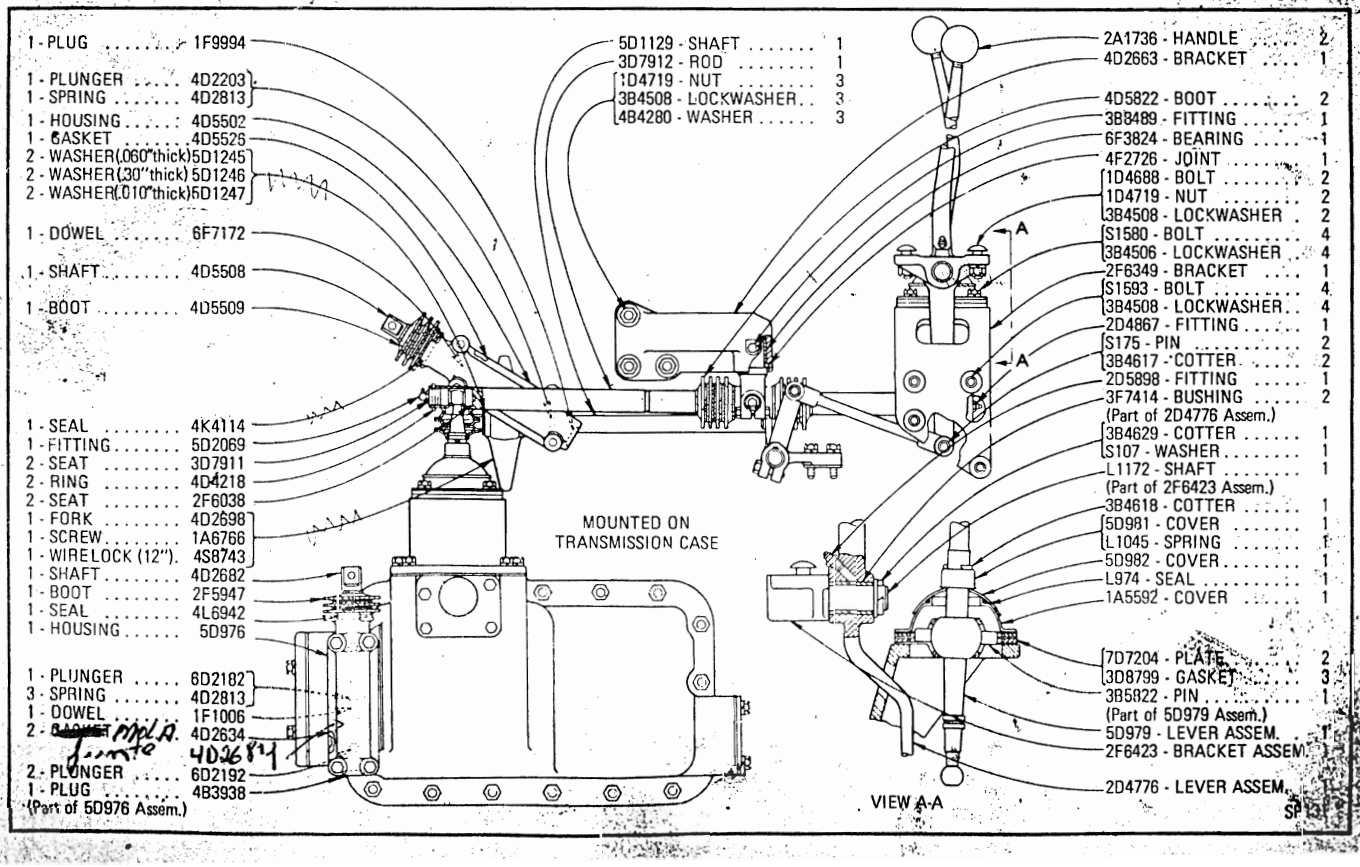

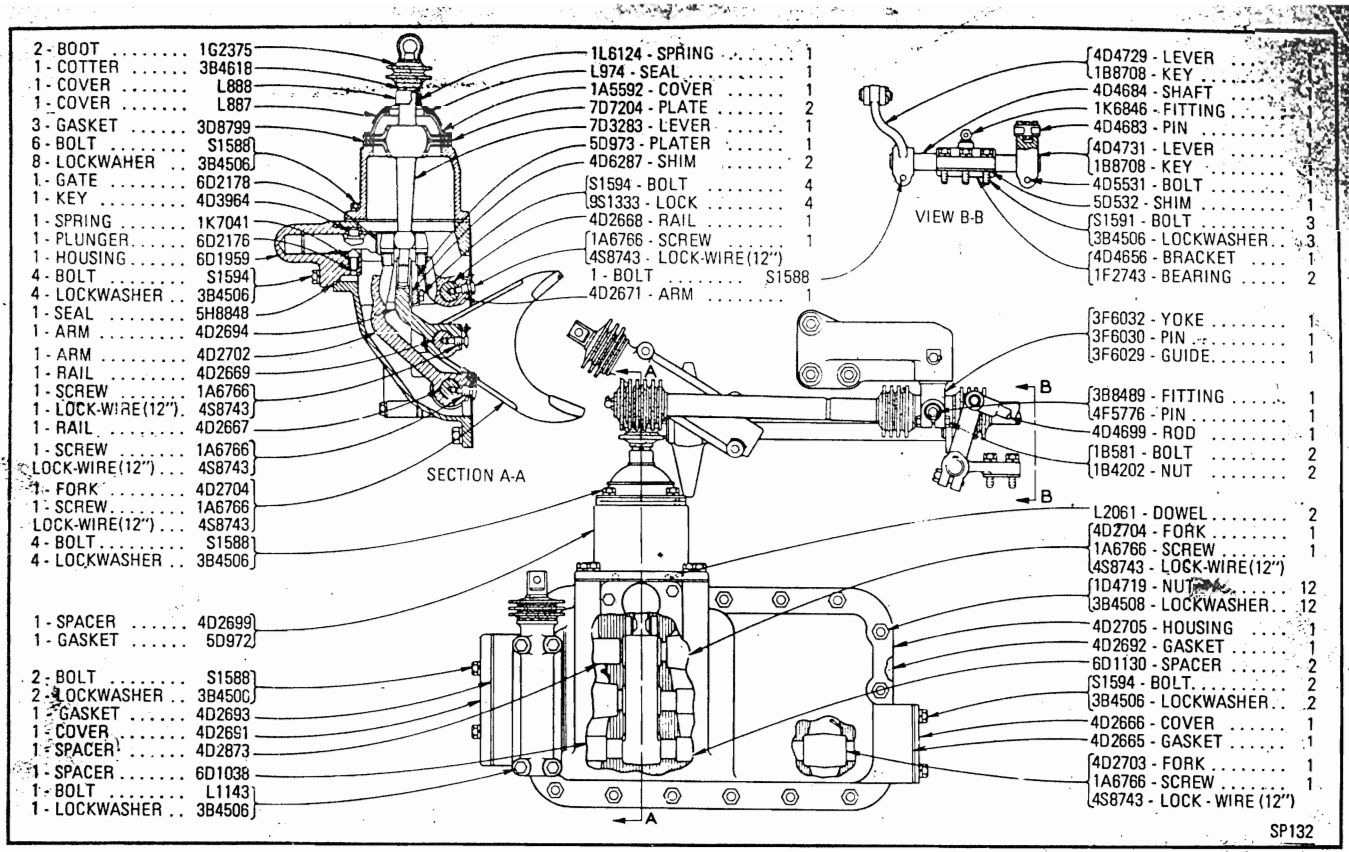

4D2790 GEAR SHIFT GROUP — Part 2



4D2150 TRANSMISSION BRAKE GROUP

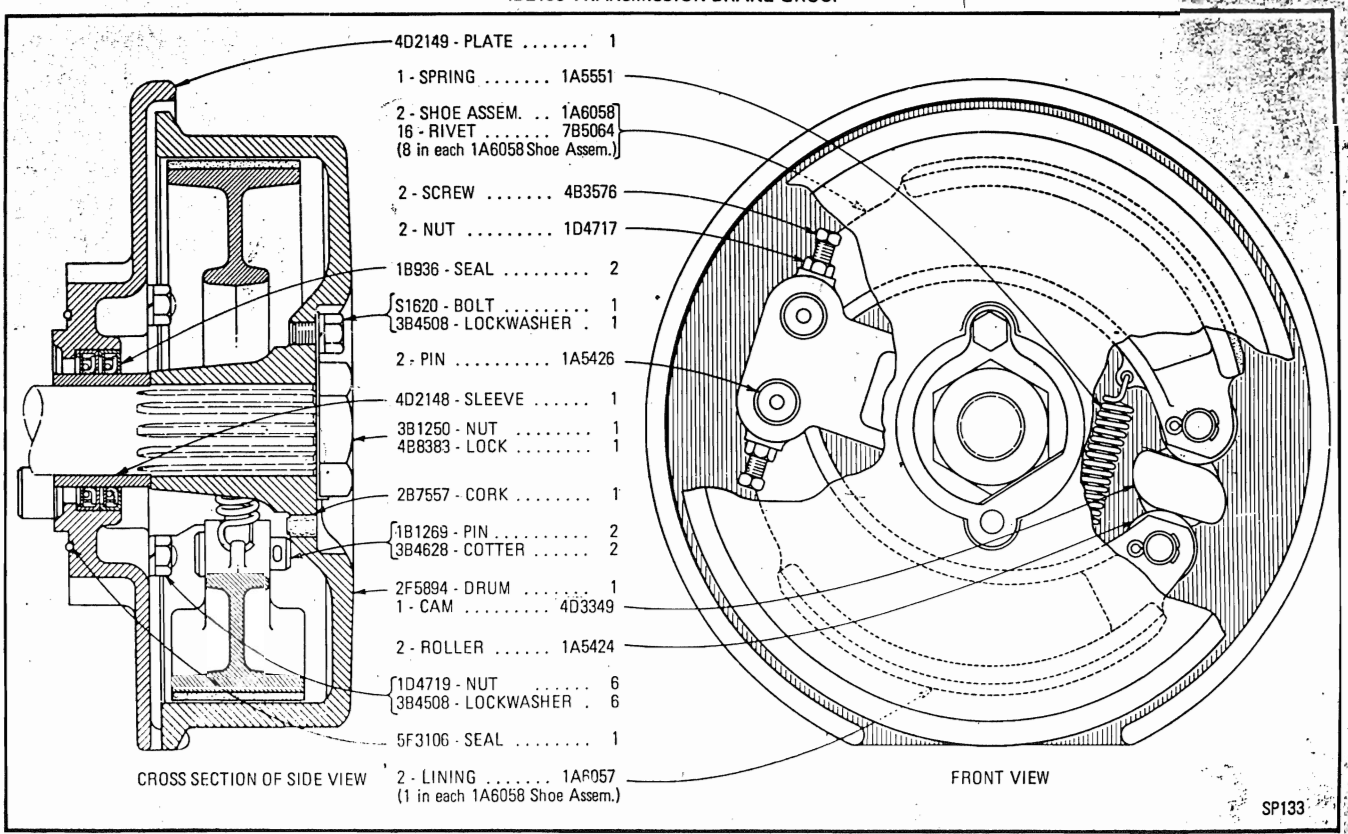

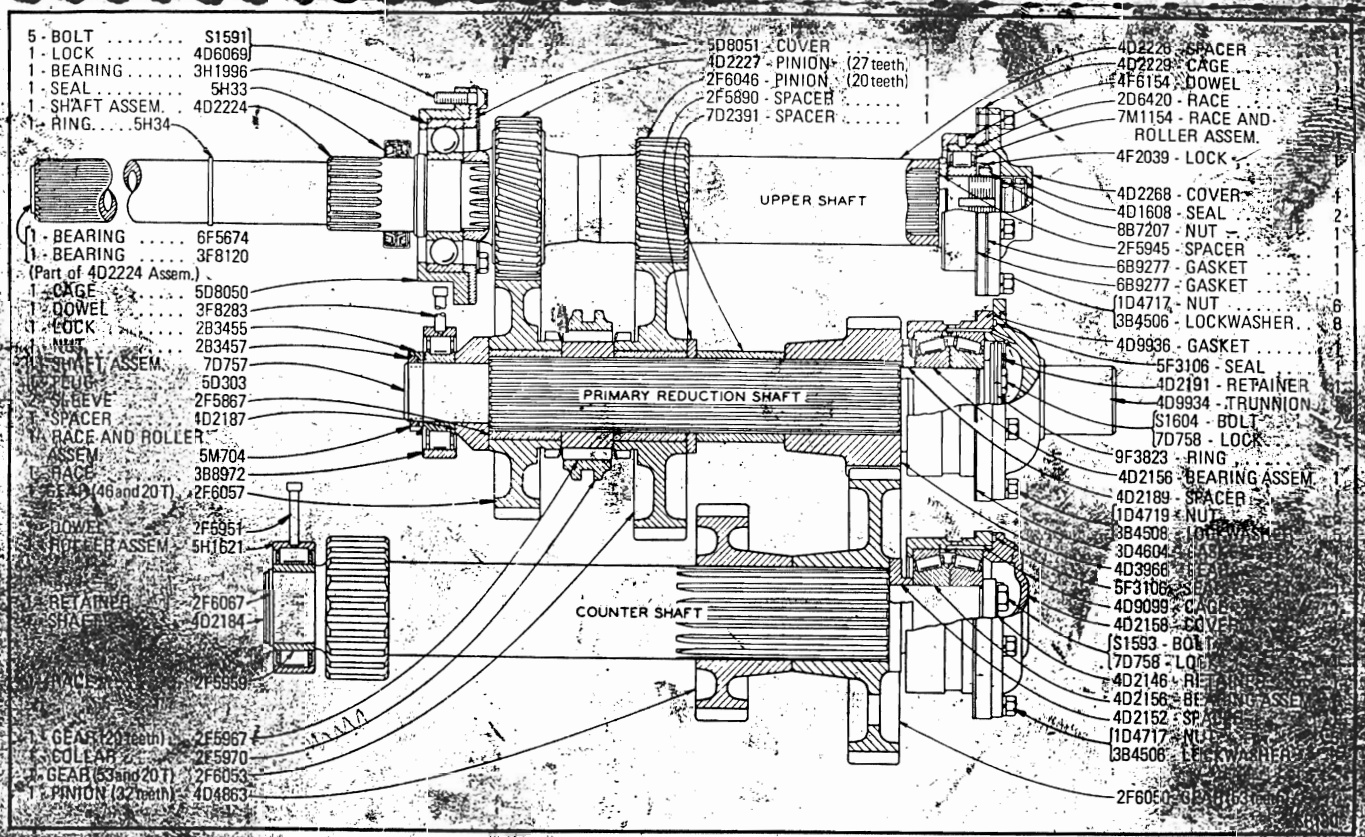

4D3300 TRANSMISSION GROUP – Side View



4D3300 TRANSMISSION GROUP – Top View

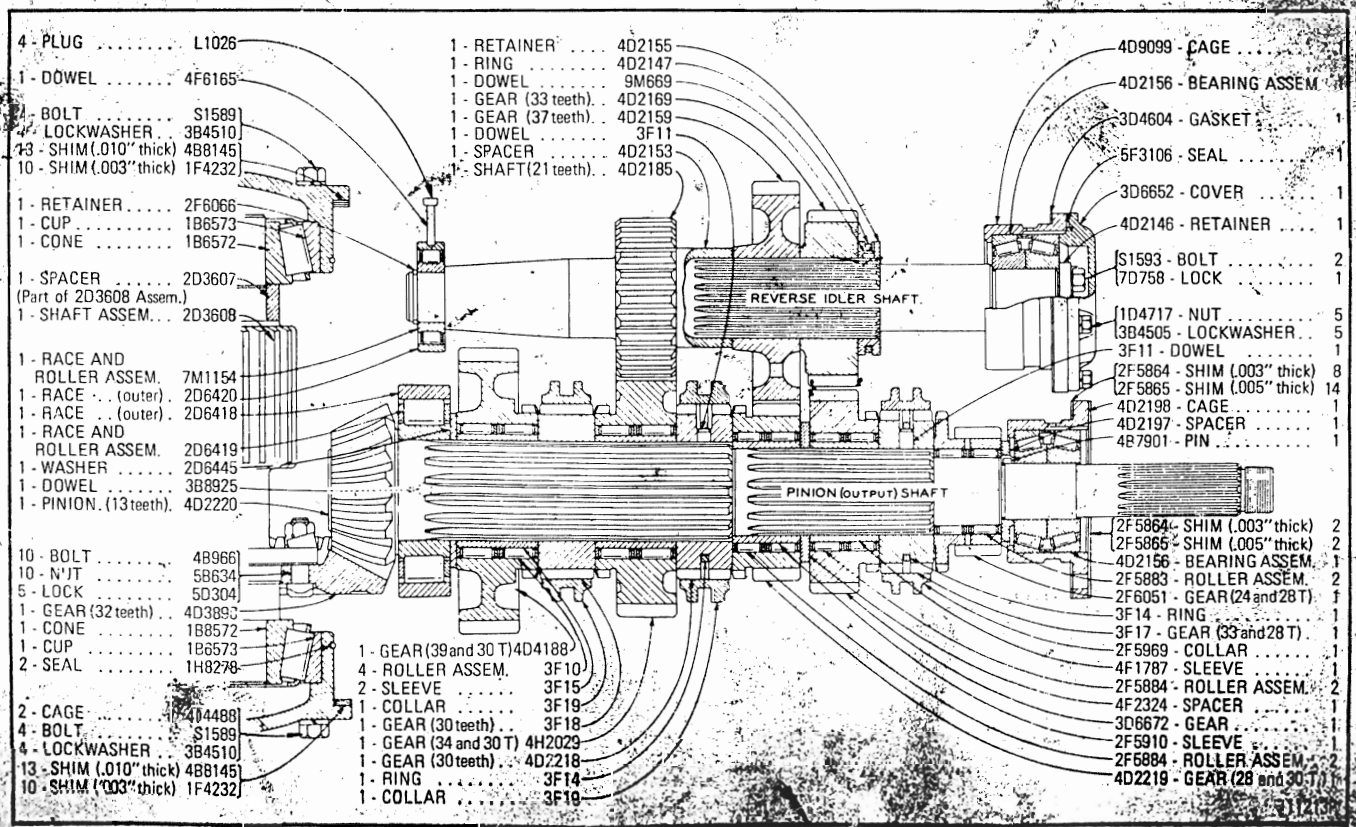

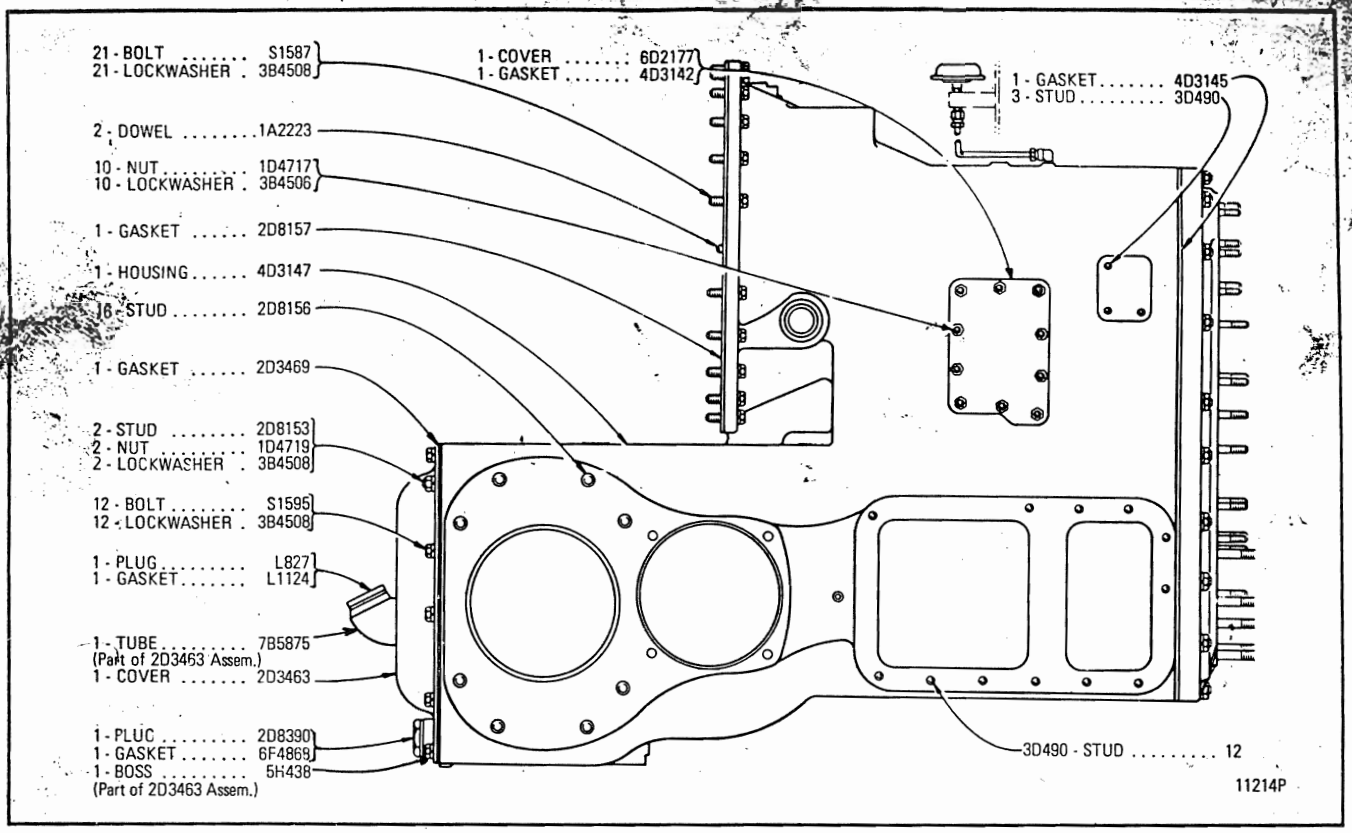

4D3150 TRANSMISSION CASE AND COVERS GROUP – Front View
Serial No. 64U1050 to 64U1870

4D3150 TRANSMISSION CASE AND COVERS GROUP – Side View
Serial No. 64U1050 to 64U1870

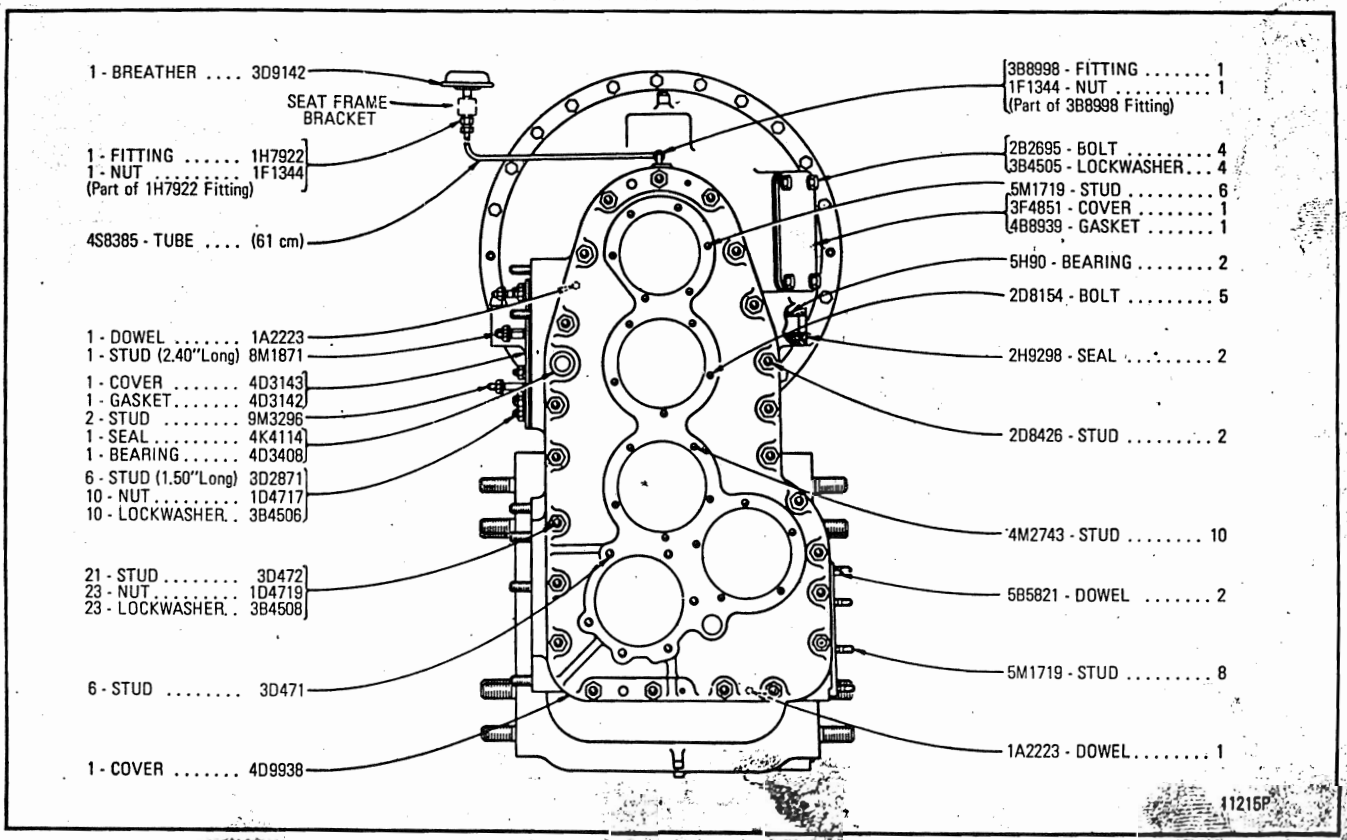

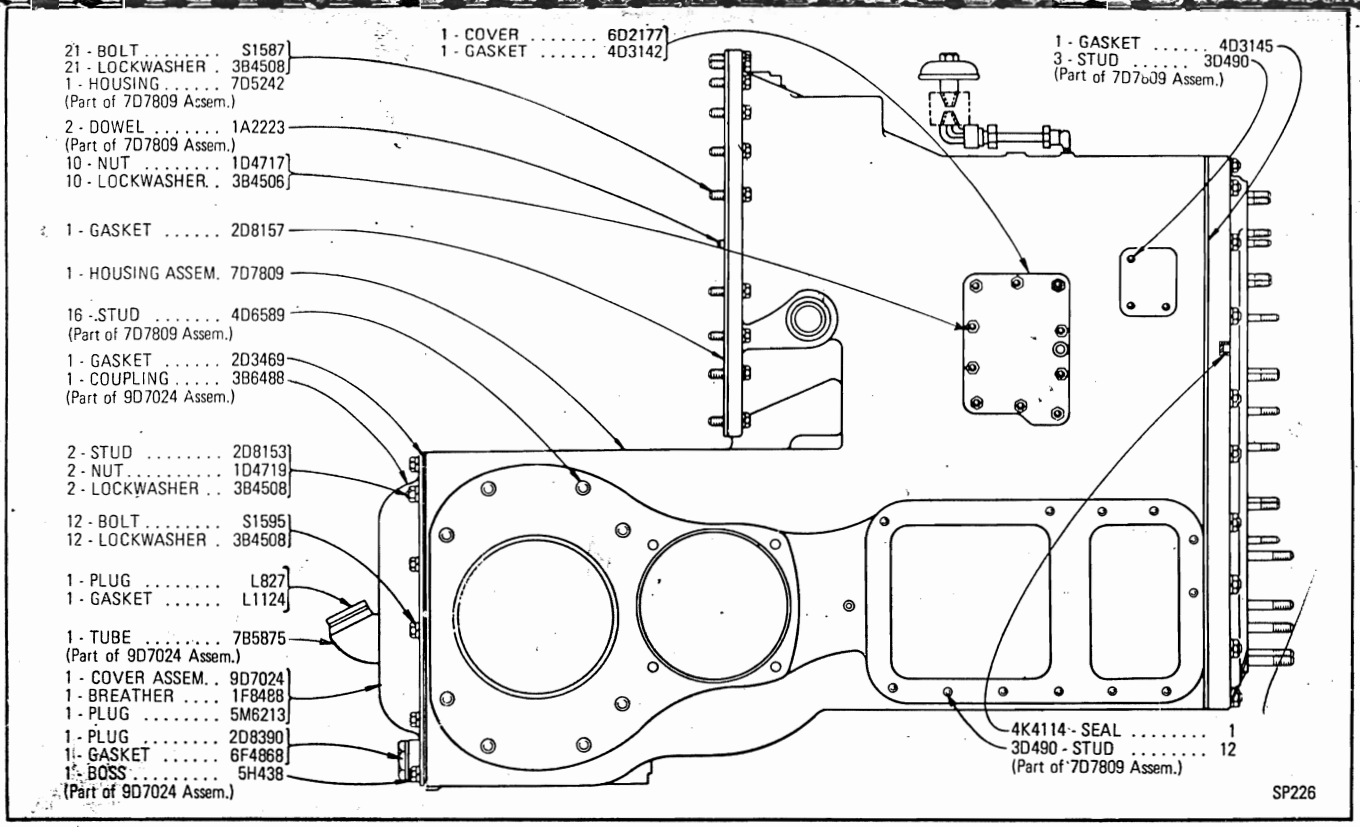

5D3400 TRANSMISSION CASE AND COVERS GROUP – Side View
Serial No. 64U1871–Up

5D3400 TRANSMISSION CASE AND COVERS GROUP – Front View
Serial No. 64U1871–Up

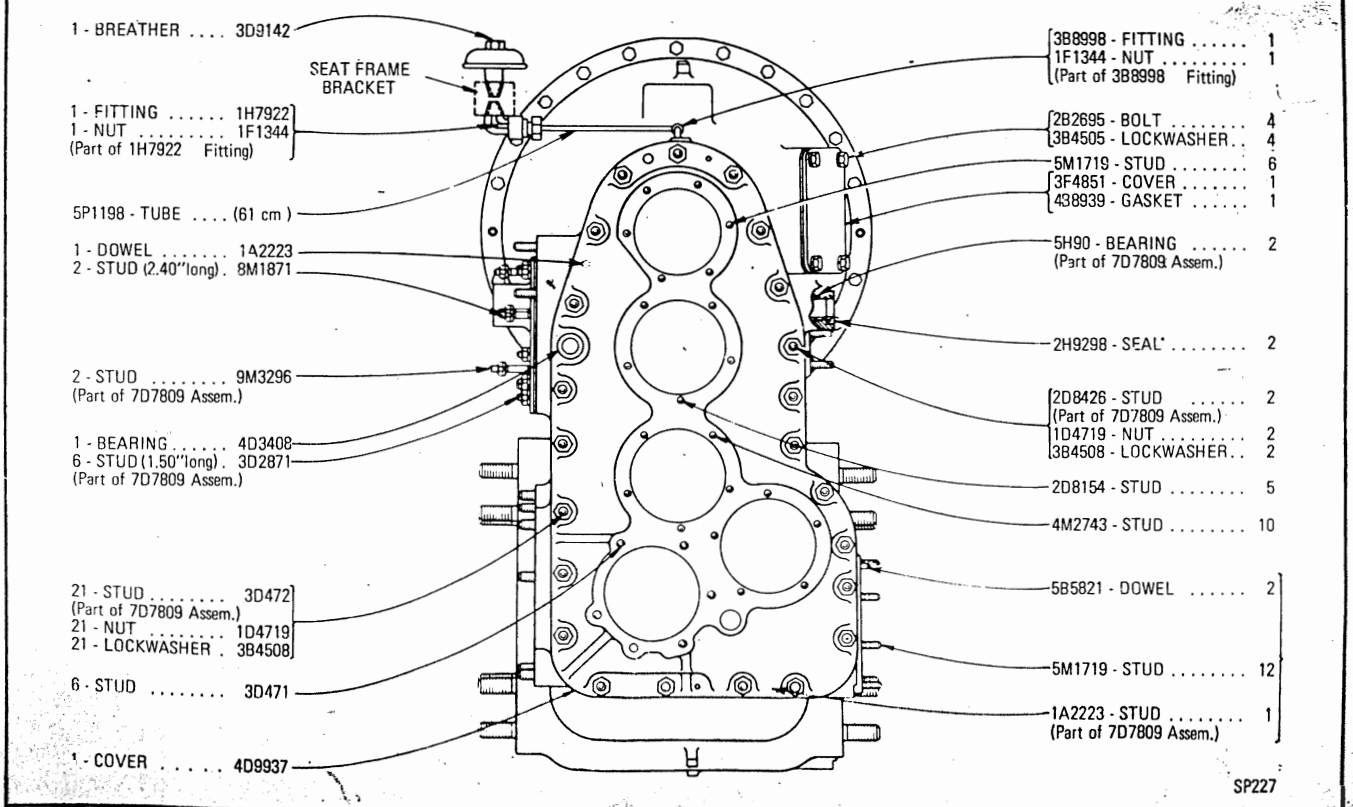

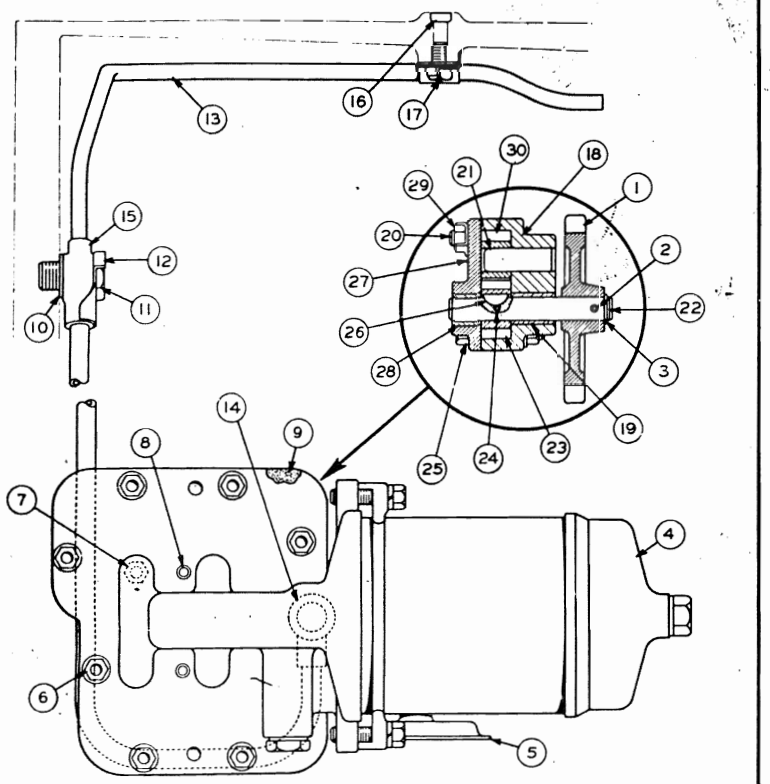

REF NO	PART NUMBER	DESCRIPTION	QTY
1	3D6676	GEAR----------(19 Teeth)----------	1
2	1A530	PIN----------	1
3	2L8509	RING----------	1
4	6D3390	FILTER GROUP----------	1
		(See Separate Illustration)	
5	3D6356	BELL ASSEM.----------	1
	4F2627	GASKET----------	1
	S 1617	BOLT----------	2
	2A5328	LOCK----------	2
6	1D4717	NUT----------	8
	3B4506	LOCKWASHER----------	8
7	1A2029	BOLT----------	4
	L 364	LOCK----------	4
8	2A3630	PIN----------	2
9	6D3356	GASKET----------	1
10	3B9363	WASHER----------	1
11	1A1496	SCREW----------	2
12	4F2464	LOCK----------	2
13	6D3434	TUBE ASSEM.----(31.23" Long)----	1
14	1A1503	FERRULE----------	1
15	4D3337	FERRULE----------	1
		(Parts of 6D3434 Tube Assem.)	
16	L 1026	PLUG----------	1

REF NO	PART NUMBER	DESCRIPTION	QTY
	8B6127	CLIP----------	1
17	T 102	BOLT----------	1
	9S1333	LOCK----------	1
18	3D6351	PUMP GROUP----------	1
	3D6352	BODY ASSEM.----------	1
19	4F1113	BEARING----------	1
20	5M6687	STUD----------	2
21	3F4598	SHAFT----------	1
		(Parts of 3D6352 Body Assem.)	
22	2D8764	SHAFT----------	1
23	3F4594	GEAR------(10 Teeth-Drive)------	1
24	5B9505	PIN----------	1
	6F9878	BOLT----------	2
25	1B4204	NUT----------	2
	T 541	LOCK----------	2
26	1B8705	KEY----------	1
27	4F327	COVER ASSEM.----------	1
28	1H3135	BEARING----------	1
		(Part of 4F327 Cover Assem.)	
29	1D4717	NUT----------	2
	L 364	LOCK----------	2
30	4F2611	GEAR------(10 Teeth-Idler)------	1
		(Parts of 3D6351 Pump Group)	

109498

6D3560 TRANSMISSION LUBRICATION SYSTEM GROUP
6D3390 Filter parts are shown on Page 104

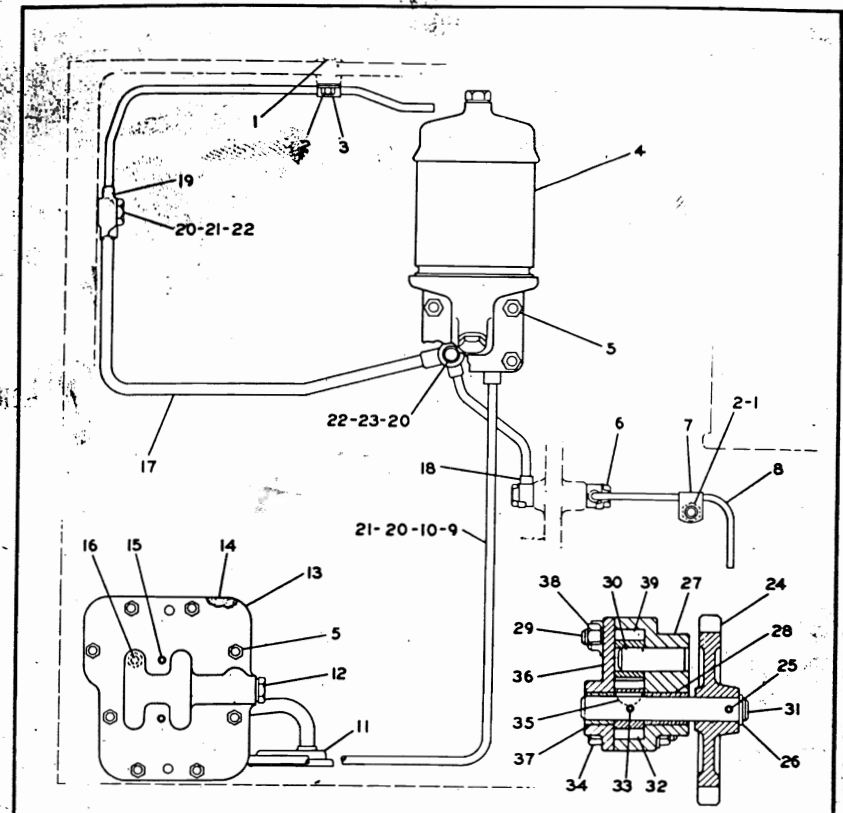

REF. NO.	PART NUMBER	DESCRIPTION	QTY
1	L1026	PLUG----------	3
2	T102	BOLT----------	3
3	8B6127	CLIP----------	1
4	7D5460	FILTER GROUP----------	1
		(See Separate Illustration)	
	7D5441	GASKET----------	1
5	1D4717	NUT----------	12
	3B4506	LOCKWASHER----------	12
6	1Y16	SCREW----------	2
	3S2362	LOCK----------	2
7	2B2404	CLIP----------	2
8	7D5758	TUBE ASSEM.----------	1
9	7D5761	TUBE ASSEM.----------	1
10	1A1503	FERRULE----------	2
	3D6356	BELL ASSEM.----------	1
11	4F2627	GASKET----------	1
	S1617	BOLT----------	2
	2A5328	LOCK----------	2
12	5F304	PLUG----------	1
	2A3162	GASKET----------	1
13	7D5428	BASE----------	1
14	6D3356	GASKET----------	1
15	2A3630	PIN----------	2
16	1A2029	BOLT----------	4
	L364	LOCK----------	4

SECTIONAL VIEW OF PUMP

17	7D5754	TUBE ASSEM.----------	1
18	2F3889	FERRULE----------	1
19	4D3337	FERRULE----------	1
20	1A1496	SCREW----------	4
21	4F2464	LOCK----------	2
22	3B9363	WASHER----------	3
23	7D7771	LOCK----------	1
24	3D6676	GEAR----------(19 Teeth)--------	1
25	1A530	PIN----------	1
26	2L8509	RING----------	1
27	3D6351	PUMP GROUP----------	1
	3D6352	BODY ASSEM.----------	1
28	4F1113	BEARING----------	1
29	5M6687	STUD----------	2
30	3F4598	SHAFT----------	1
31	2D8764	SHAFT----------	1
32	3F4594	GEAR------(10 Teeth-Drive)----	1
33	5B9505	PIN----------	1
	6F9878	BOLT----------	2
34	1B4204	NUT----------	2
	T541	LOCK----------	2
35	1B8705	KEY----------	1
36	4F327	COVER ASSEM.----------	1
37	1H3135	BEARING----------	1
38	1D4717	NUT----------	2
	L364	LOCK----------	2
39	4F2611	GEAR------(10 Teeth-Idler)----	1

136655

7D9550 TRANSMISSION LUBRICATION SYSTEM GROUP
7D5460 Oil Filter parts are shown on Page 104

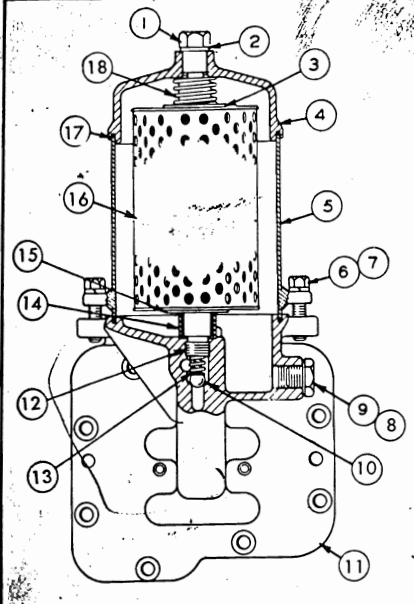

ITEM	PART Nº	DESCRIPTION	QTY.
1	6D3547	NUT	1
2	5B5977	GASKET	1
3	2D1928	PILOT	1
4	5B5974	COVER	1
5	5B5976	CASE	1
6	S1591	BOLT	2
7	4B4278	WASHER	2
8	5F304	PLUG	1
9	2A1162	GASKET	1
10	5B9419	BALL	1
11	7D4622	BASE	1
12	6B1263	BAR	1
13	1F2874	SPRING	1
14	2D1930	SLEEVE	1
15	2D1929	PILOT	1
16	8B5935	ELEMENT	1
17	5B5973	GASKET	2
18	4H1790	SPRING	1

SP129

6D3390 OIL FILTER GROUP
Part of 6D3560 Transmission Lubrication System shown on Page 102
Serial No. 64U1050 to 64U1870

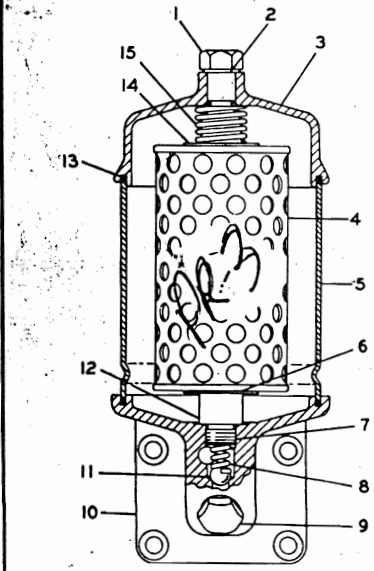

ITEM	PART Nº	DESCRIPTION	QTY.
1	6D3547	NUT	1
2	5B5977	GASKET	1
3	5B5974	COVER	1
4	8B5935	ELEMENT	1
5	1G1722	CASE	1
6	2D1929	PILOT	1
7	6B1263	BAR	1
8	1F2874	SPRING	1
9	5F304	PLUG	1
	2A1162	GASKET	1
10	7D5349	BASE	1
11	5B9419	BALL	1
12	2D1930	SLEEVE	1
13	5B5973	GASKET	2
14	2D1928	PILOT	1
15	4H1790	SPRING	1

SP229

7D5460 OIL FILTER GROUP

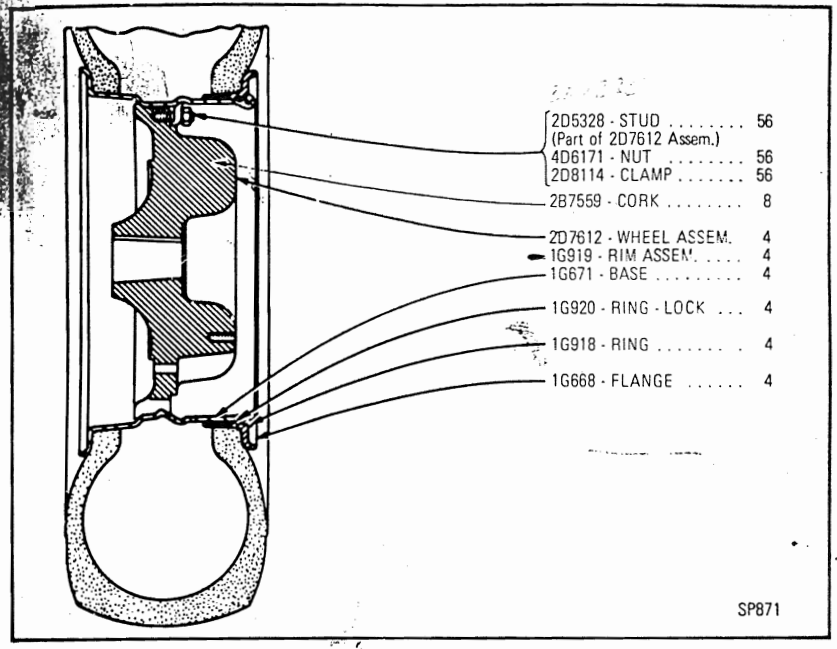

1G1660 REAR WHEELS AND TIRES GROUP — 13.00 x 24 Tubeless Tires

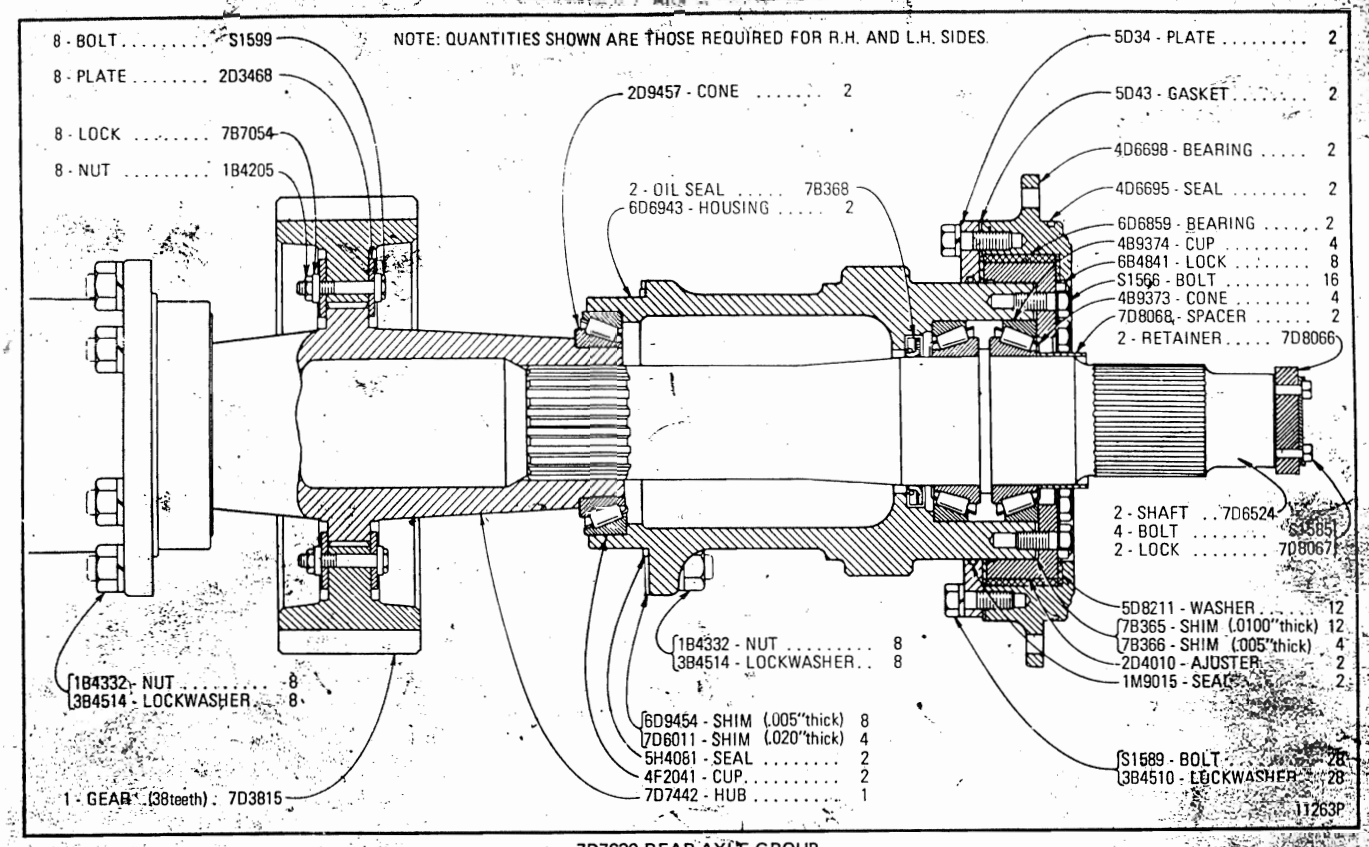

7D7630 REAR AXLE GROUP

2Y1040 TANDEM DRIVE HOUSING GROUP
Serial No. 64U1050 to 64U1161

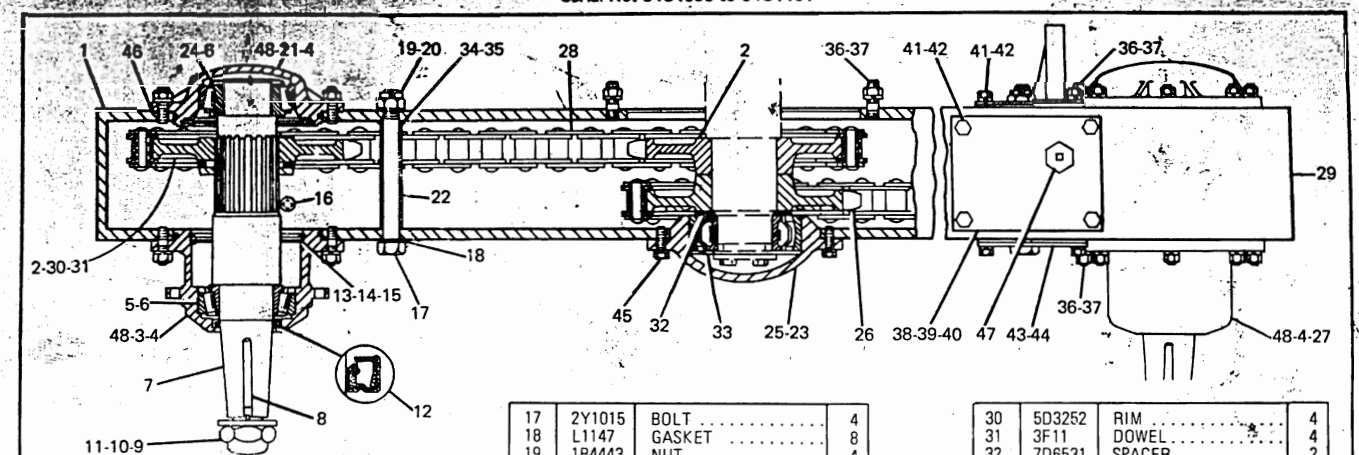

ITEM	PART No	DESCRIPTION	QTY.
1	2Y1877	HOUSING ASSEM.(R.H.)	1
	S468	STUD	50
2	7D7427	SPROCKET	6
3	2Y1035	CAGE	2
4	1H8278	SEAL	8
5	4D3848	CONE	4
6	1B3931	CUP	8
7	7D6546	SPINDLE	4
8	T217	KEY	4
9	1M2069	NUT	4
10	6D2403	WASHER	4
11	8F8049	LOCK	4
12	5D505	SEAL	4
13	4B9508	RING	8
14	4B2732	GASKET	8
15	4B2733	RETAINER	8
16	1B5174	PLUG	2
17	2Y1015	BOLT	4
18	L1147	GASKET	8
19	1B4443	NUT	4
20	3B4620	COTTER	4
21	2Y1038	CAGE	4
22	2Y1016	SPACER	4
23	2Y1037	CAGE	2
24	2B3184	CONE	4
25	8F5900	SEAL	2
26	2Y1034	SPROCKET	2
27	2Y1036	CAGE	2
	1G395	CHAIN	2
	1G392	LINK ASSEM. (Roller)	23
	1G391	LINK ASSEM. (Master)	1
28	1G386	LINK	1
	2H3767	COTTER	2
	2Y1146	LINK ASSEM.(Outer)	23
	2Y1147	LINK	23
29	2Y1878	HOUSING ASSEM.(L.H.)	1
	S468	STUD	50
30	5D3252	RIM	4
31	3F11	DOWEL	4
32	7D6531	SPACER	2
33	7D7259	BEARING	2
34	2Y1021	SHIM	16
35	2Y1022	SHIM	16
36	1D4720	NUT	100
37	3B4510	LOCKWASHER	100
38	7D6567	COVER	2
39	7D6568	COVER ASSEM	2
40	3D2981	GASKET	4
41	S1621	BOLT	32
42	3B4508	LOCKWASHER	52
43	2B3148	COVER	8
44	2B3147	GASKET	8
45	S1603	BOLT	20
46	2Y1007	SHIM	32
	7D470	PLUNGER ASSEM.	1
47	6D9677	FILTER	1
	6D9679	NUT	1
48	2B7558	CORK	16

SP971

15	4B2733	RETAINER	8
16	1B5174	PLUG	2

SP971

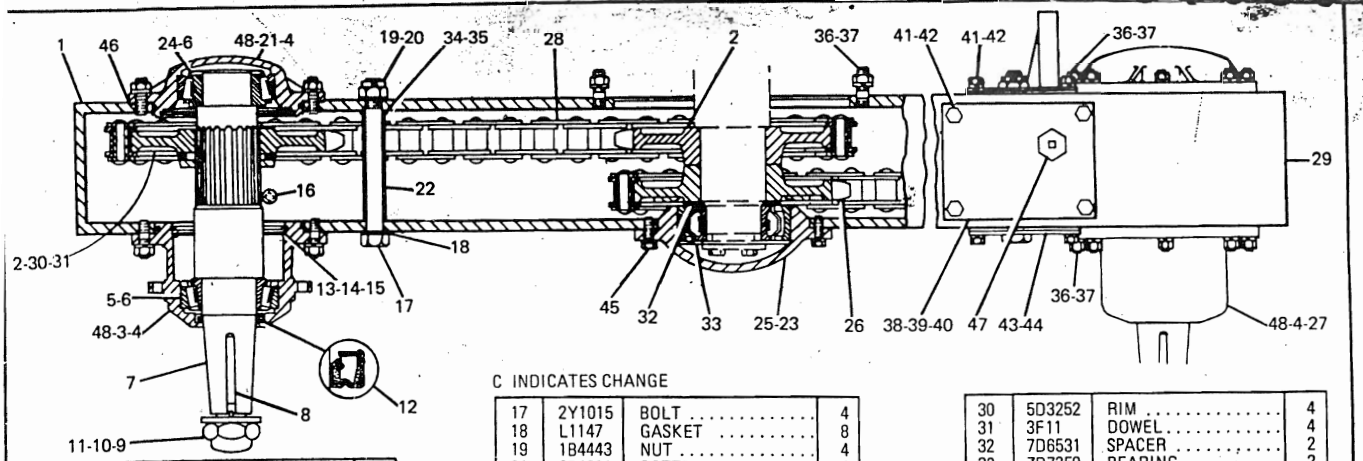

ITEM	PART Nº	DESCRIPTION	QTY.
1	2Y1877	HOUSING ASSEM.(R.H.)	1
	S468	STUD	50
2	7D7427	SPROCKET	6
3	2Y1035	CAGE	2
4	1H8278	SEAL	8
5	4D3848	CONE	4
6	1B3931	CUP	8
7	7D6546	SPINDLE	4
8	T217	KEY	4
9	1M2069	NUT	4
10	6D2403	WASHER	4
11	8F8049	LOCK	4
12	5D505	SEAL	4
13	4B9508	RING	8
14	4B2732	GASKET	8
15	4B2733	RETAINER	8
16	1B5174	PLUG	2

C INDICATES CHANGE

17	2Y1015	BOLT	4
18	L1147	GASKET	8
19	1B4443	NUT	4
20	3B4620	COTTER	4
21	2Y1038	CAGE	4
22	2Y1016	SPACER	4
23	2Y1037	CAGE	2
24	2B3184	CONE	4
25	8F5900	SEAL	2
26	2Y1034	SPROCKET	2
27	2Y1036	CAGE	2
	1G395	CHAIN	2
	1G392	LINK ASSEM. (Roller).	23
	1G391	LINK ASSEM. (Master)	1
28	1G386	LINK	1
	2H3767	COTTER	2
	2Y1146	LINK ASSEM.(Outer).	23
	2Y1147	LINK	23
29	2Y1878	HOUSING ASSEM.(L.H.)	1
	S468	STUD	50

SP972

30	5D3252	RIM	4	
31	3F11	DOWEL	4	
32	7D6531	SPACER	2	
33	7D7259	BEARING	2	
34	2Y1021	SHIM	16	
35	2Y1022	SHIM	16	
36	1D4720	NUT	100	
37	3B4510	LOCKWASHER	100	
38	7D6567	COVER	2	
39	7D6568	COVER ASSEM	2	
40	3D2981	GASKET	4	
41	S1621	BOLT	32	
C 42	3B4508	LOCKWASHER	32	
43	2B3148	COVER	8	
44	2B3147	GASKET	8	
C 45	9D312	BOLT	20	
46	2Y1007	SHIM	32	
	7D470	PLUNGER ASSEM.	1	
47	6D9677	FILTER	1	
	6D9679	NUT	1	
48	2B7558	CORK	16	

2Y1040 TANDEM DRIVE HOUSING GROUP
Serial No. 64U1162 to 64U1600



2Y1040 TANDEM DRIVE HOUSING GROUP
Serial No. 64U1601—Up

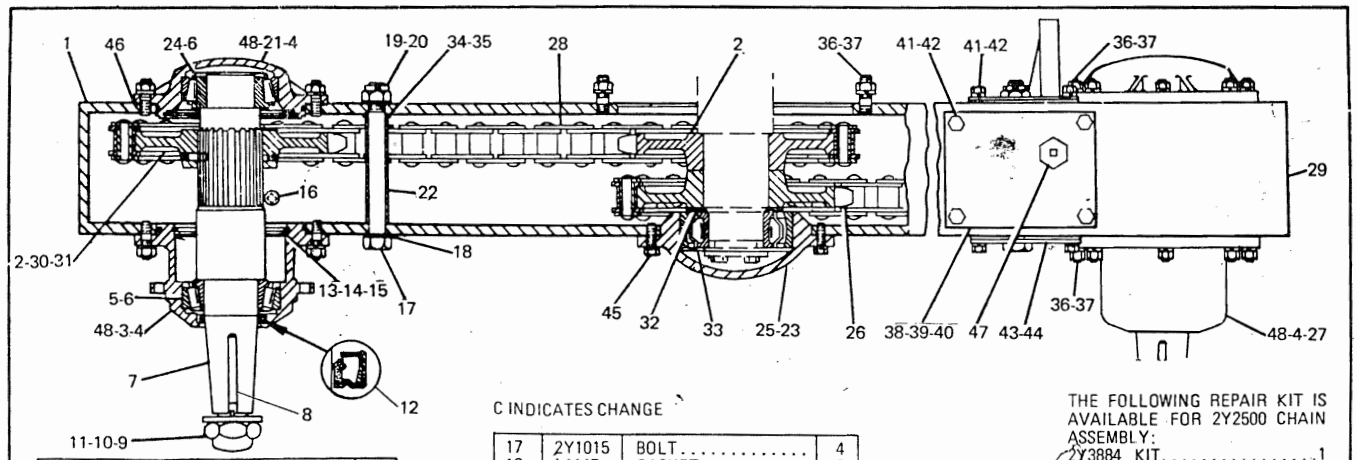

ITEM	PART Nº	DESCRIPTION	QTY.
1	2Y1877	HOUSING ASSEM.(R.H.)	1
	S468	STUD	50
2	7D7427	SPROCKET	6
3	2Y1035	CAGE	2
4	1H8278	SEAL	8
5	4D3848	CONE	4
6	1B3931	CUP	8
7	9D2716	SPINDLE	4
8	9D2717	KEY	4
9	1M2069	NUT	4
10	6D2403	WASHER	4
11	8F8049	LOCK	4
12	5D505	SEAL	4
13	4B9508	RING	8
14	4B2732	GASKET	8
15	4B2733	RETAINER	8
16	1B5174	PLUG	2

C INDICATES CHANGE

17	2Y1015	BOLT	4
18	L1147	GASKET	8
19	1B4443	NUT	4
20	3B4620	COTTER	4
21	2Y1038	CAGE	4
22	2Y1016	SPACER	4
23	2Y1037	CAGE	2
24	2B3184	CONE	4
25	8F5900	SEAL	2
26	2Y1034	SPROCKET	2
27	2Y1036	CAGE	2
C 28	2Y2500	CHAIN ASSEM.	4
	2Y2526	LINK ASSEM. (Roller)	25
29	2Y1878	HOUSING ASSEM. (L.H.)	1
	S468	STUD	50
30	5D3252	RIM	4
31	3F11	DOWEL	4
32	7D6531	SPACER	2
33	7D7259	BEARING	2
34	2Y1021	SHIM	16

SP935

THE FOLLOWING REPAIR KIT IS AVAILABLE FOR 2Y2500 CHAIN ASSEMBLY:
2Y3884 KIT.....1
(Includes Links and Cotter)

35	2Y1022	SHIM	16
36	1D4720	NUT	100
37	3B4510	LOCKWASHER	100
38	7D6567	COVER	2
39	7D6568	COVER ASSEM.	2
40	3D2981	GASKET	4
41	S1621	BOLT	32
42	3B4508	LOCKWASHER	32
43	2B3148	COVER	8
44	2B3147	GASKET	8
45	9D312	BOLT	20
46	2Y1007	SHIM	32
	7D470	PLUNGER ASSEM.	1
47	6D9677	FILTER	1
	6D9679	NUT	1
48	2B7558	CORK	16

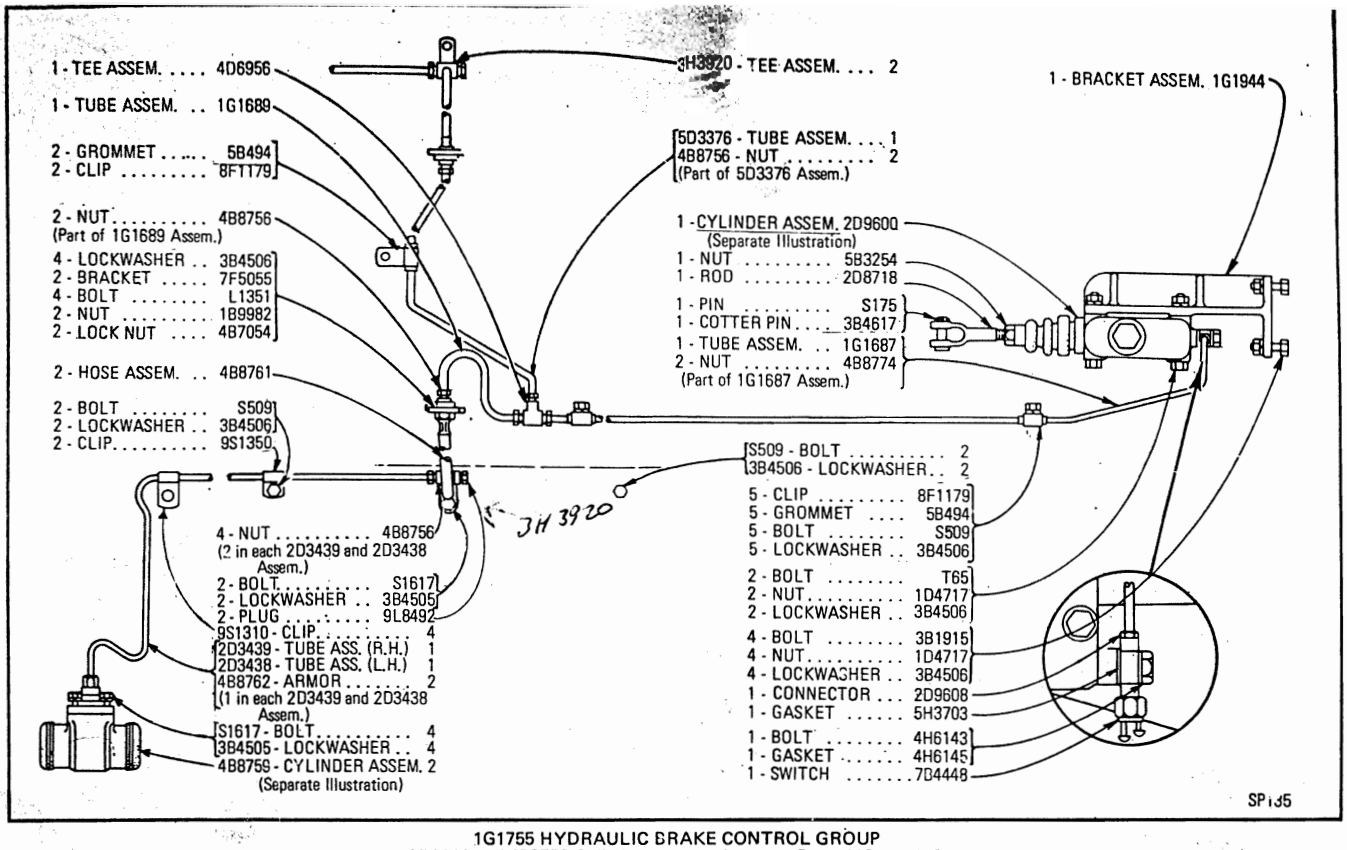

1G1755 HYDRAULIC BRAKE CONTROL GROUP
2D9600 and 4B8759 Cylinder parts are shown on Pages 112 and 113

2Y1680 TANDEM FRONT BRAKE GROUP
1G2299 Brake R.H., 1G2298 Brake L.H., 3D2219 Master Cylinder and 4B8759 Brake Cylinder parts are shown on Pages 112, 113 and 114

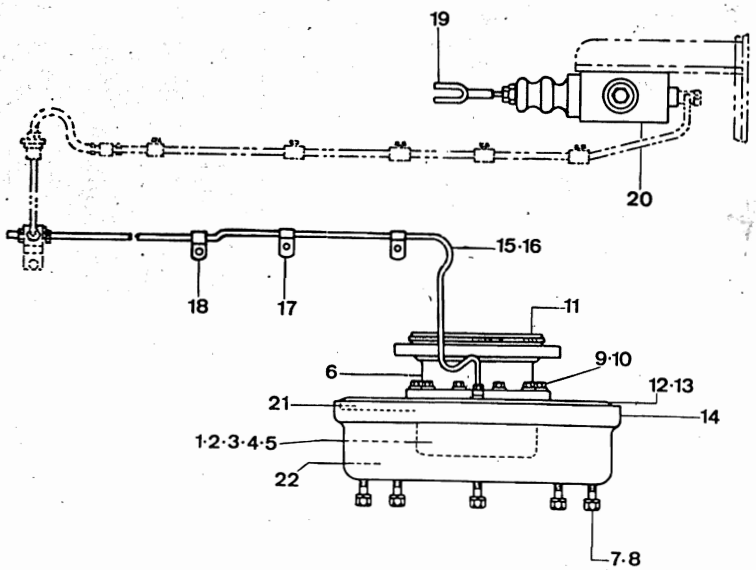

ITEM	PART Nº	DESCRIPTION	QTY.
▲ 1	4B8759	WHEEL CYLINDER ASSEM.	2
2	S1617	BOLT	4
3	3B4505	LOCKWASHER	4
4	4B8304	LINK	4
5	1G2247	STRIP	4
6	2Y1035	CAGE	2
7	1A8537	BOLT	16
8	4D3704	WASHER	16
9	2B5484	BOLT	36
10	4D6433	WASHER	36
11	1H8278	SEAL	2
▲ 12	1G2299	BRAKE ASSEM. (R.H.)	1
▲ 13	1G2298	BRAKE ASSEM. (L.H.)	1
14	2D1345	DRUM	2
15	2D3439	TUBE ASSEM. (R.H.)	1
16	2D3438	TUBE ASSEM. (L.H.)	1
17	9S1310	CLIP	4
18	9S1350	CLIP	2
19	2Y1972	ROD ASSEM.	A-185255
▲ 20	3D2219	MASTER CYLINDER ASSEM.	1
21	4B2732	GASKET	2
22	5D505	SEAL	2

▲ SEPARATE ILLUSTRATION

11264P

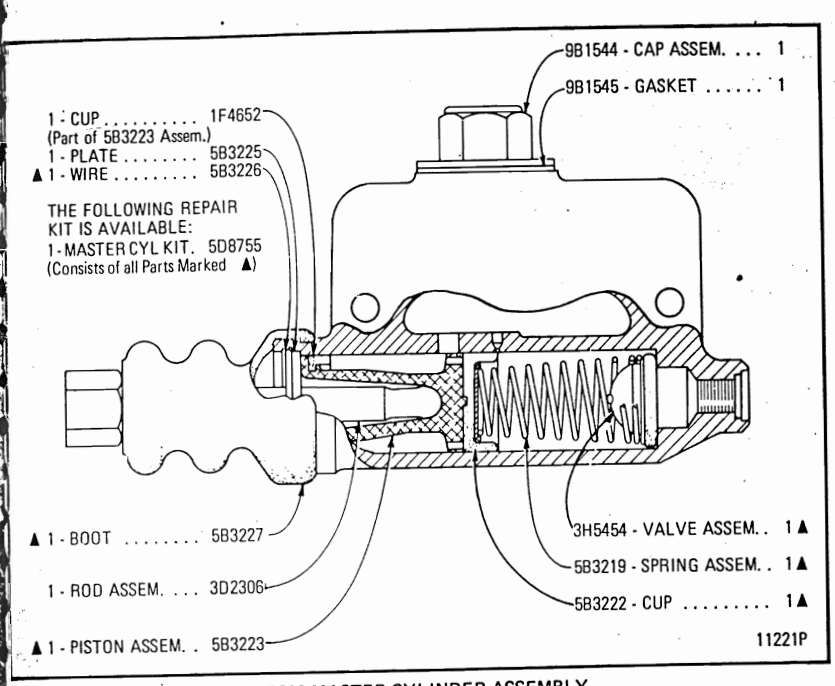

2D9600 MASTER CYLINDER ASSEMBLY
Part of 1G1755 Hydraulic Brake Control shown on Page 110

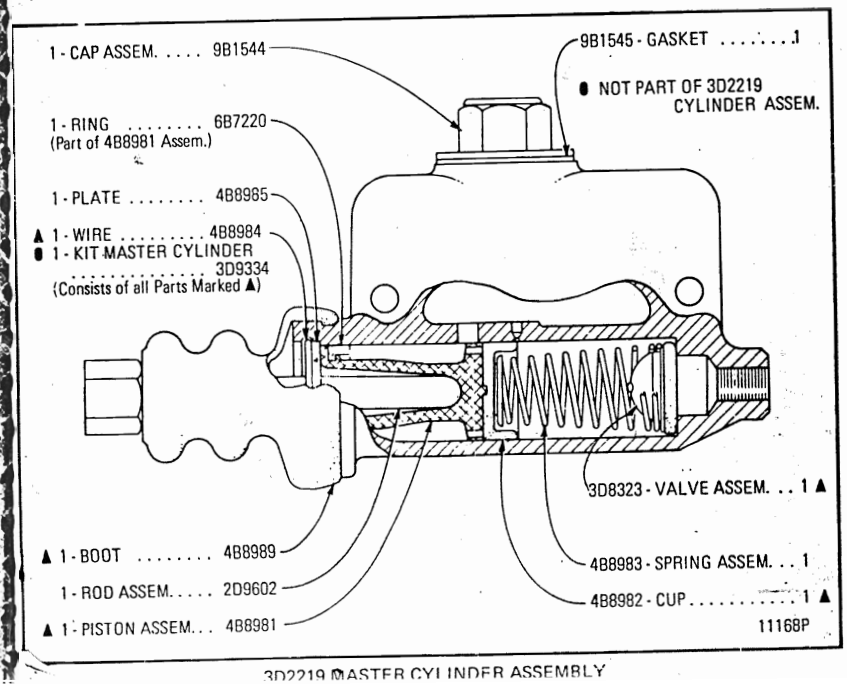

3D2219 MASTER CYLINDER ASSEMBLY

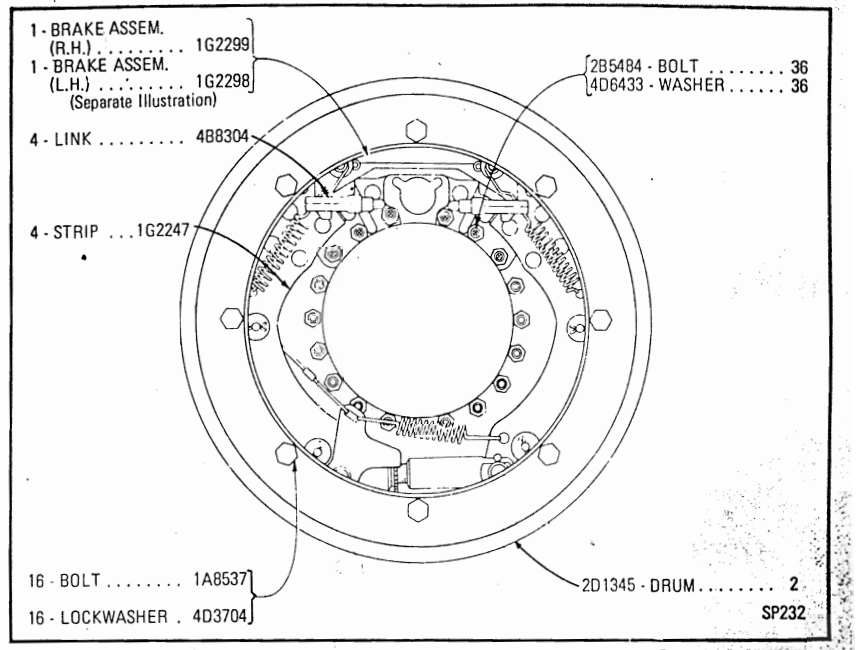

3D9200 REAR WHEEL HYDRAULIC BRAKE GROUP
1G2299 and 1G2298 Brake parts are shown on Page 114

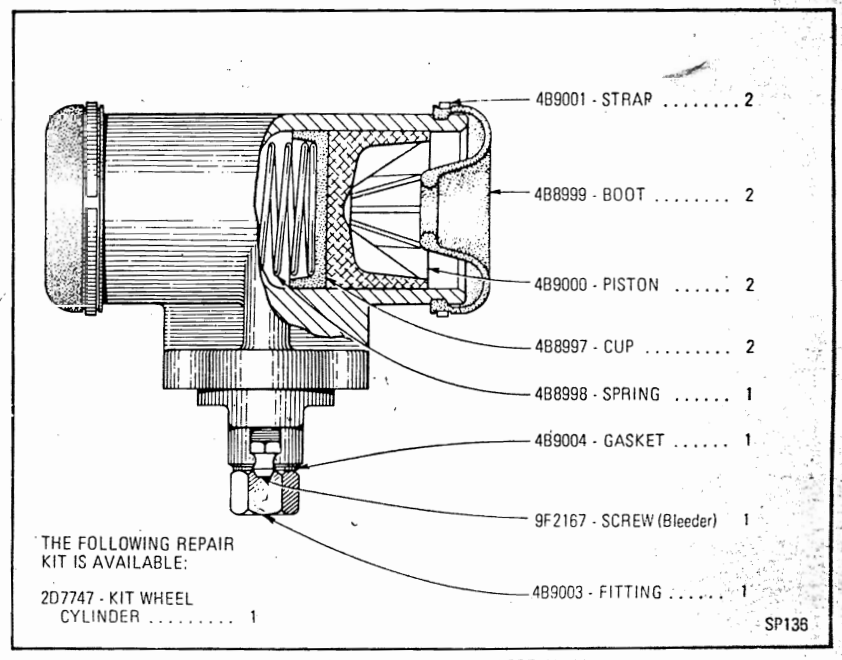

4B8759 CYLINDER BRAKE ASSEMBLY

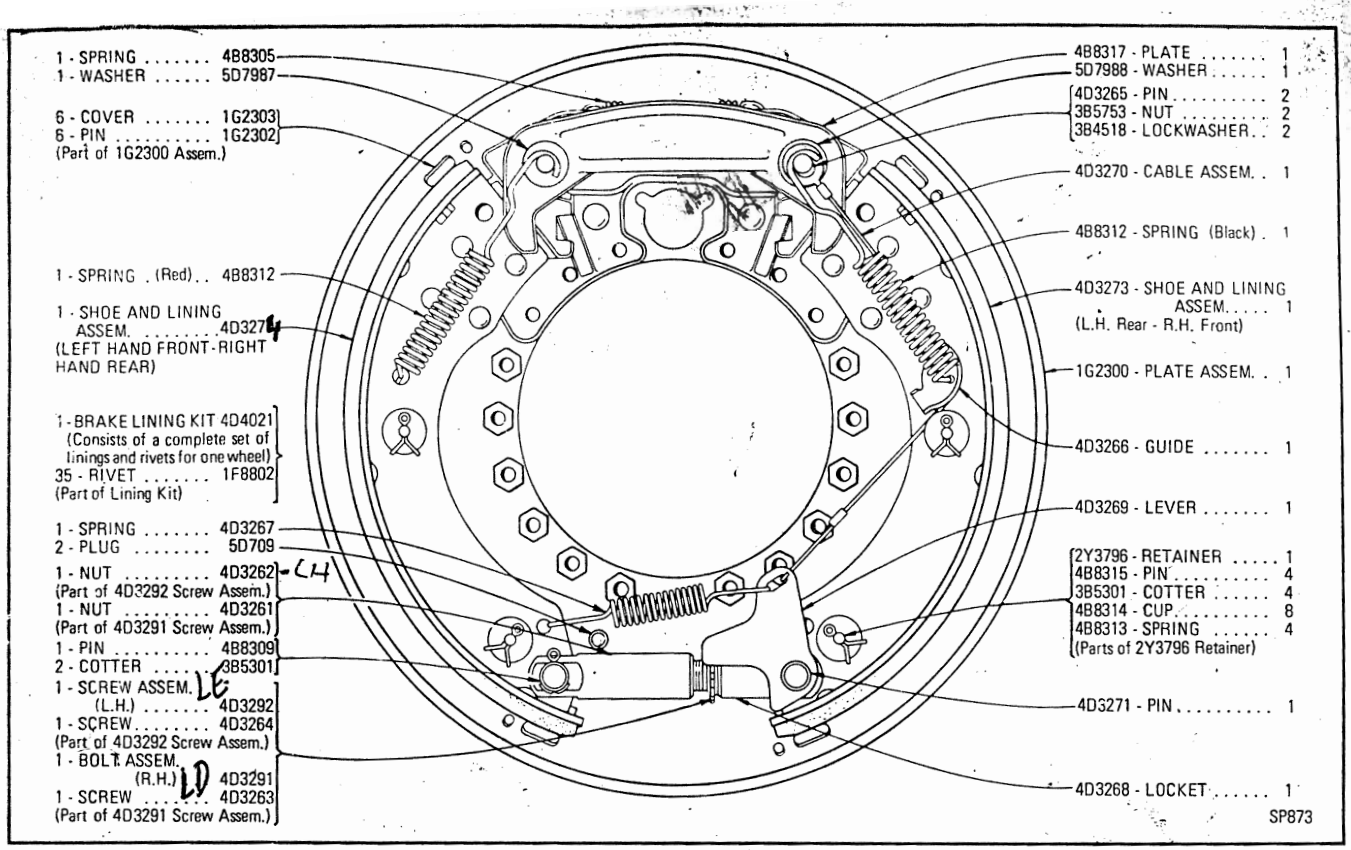

1G2299 BRAKE ASSEMBLY R.H.
1G2298 BRAKE ASSEMBLY L.H.
Part of 3D9200 Rear Wheel Hydraulic Brake and 2Y1680 Tandem Front Brake shown on Pages 111 and 113

6D4430 RADIATOR SUPPORT GROUP

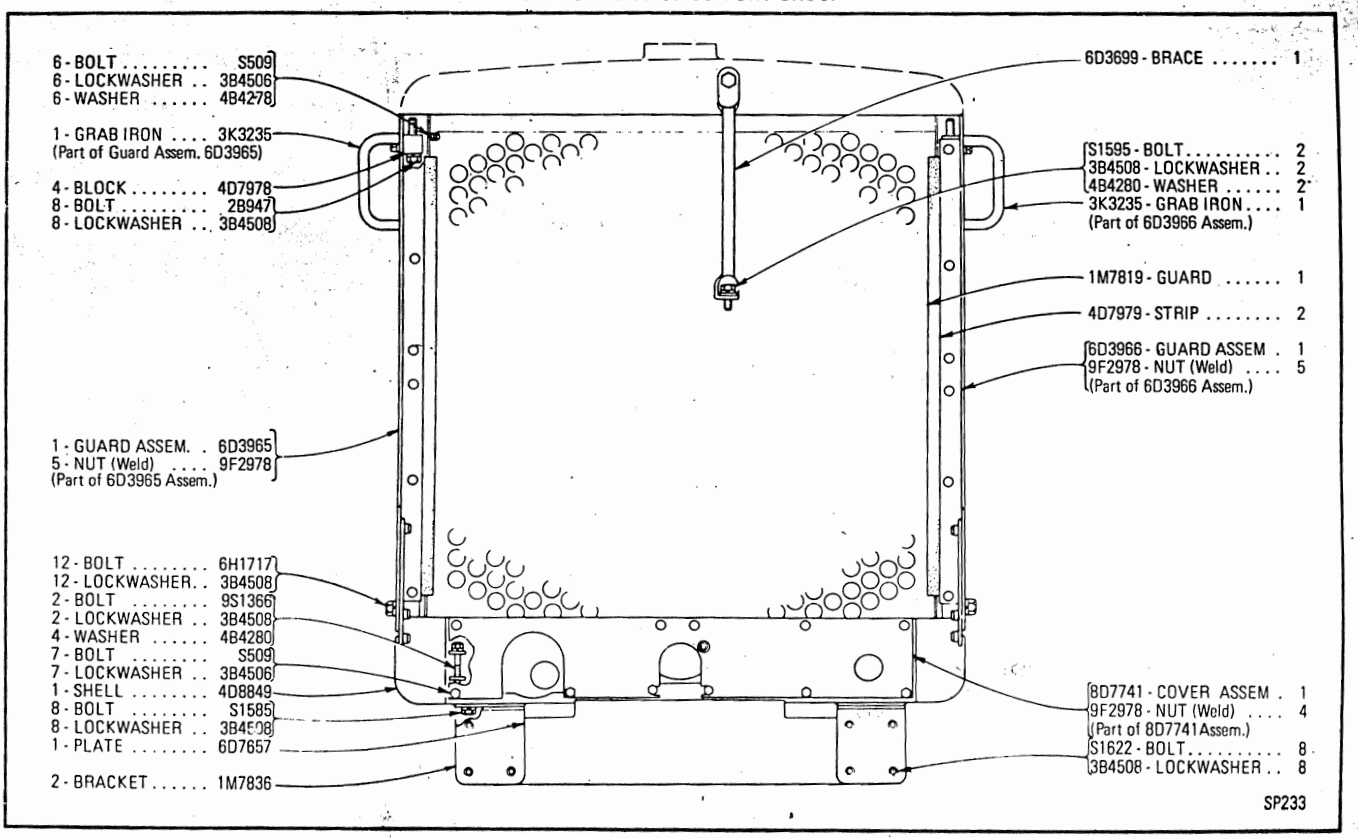

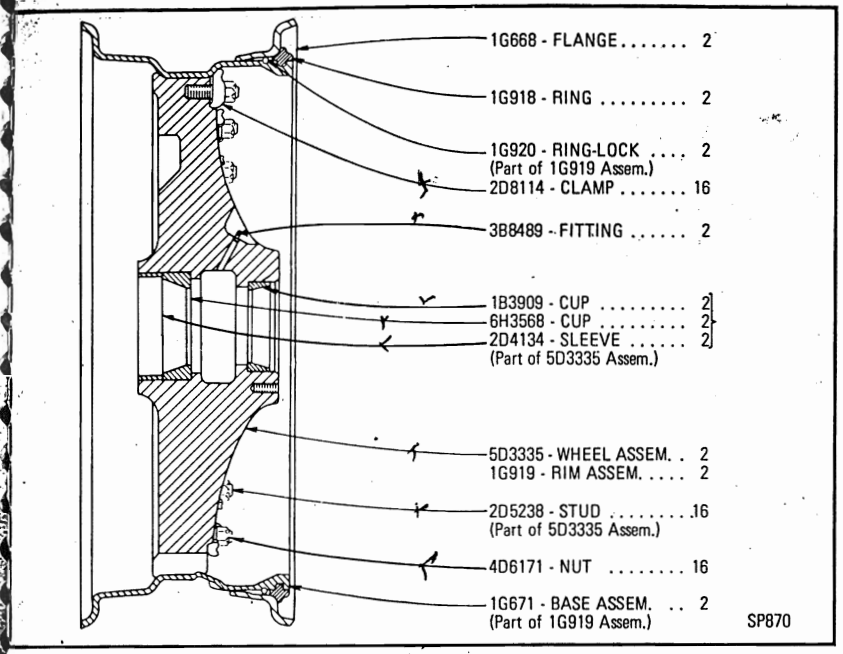

1G1655 FRONT WHEELS AND TIRES GROUP

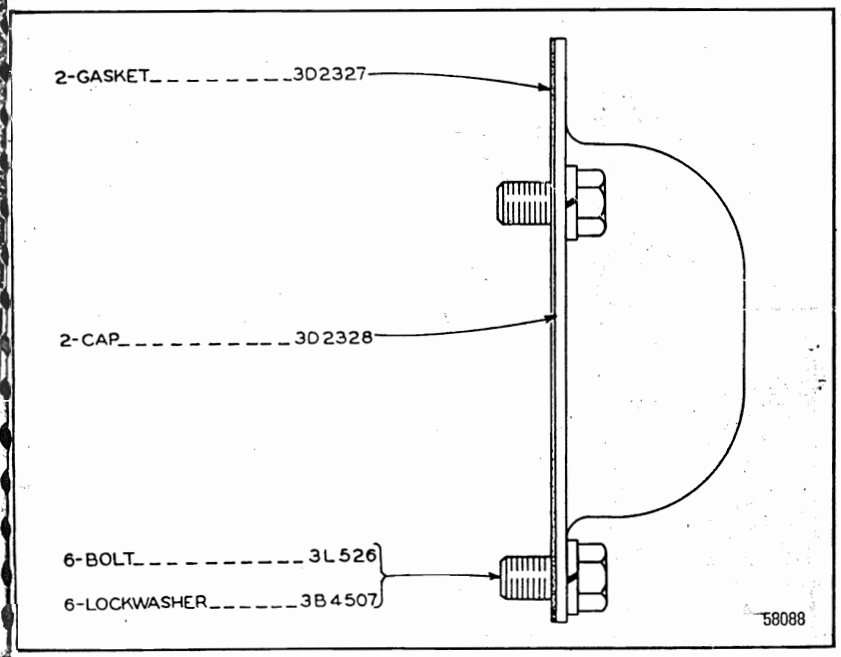

3D2329 HUB CAP ASSEMBLY

2D7900 CIRCLE GROUP
Circle Reversing Mechanism parts are shown on Page 118
Serial No. 64U1050 to 64U1179

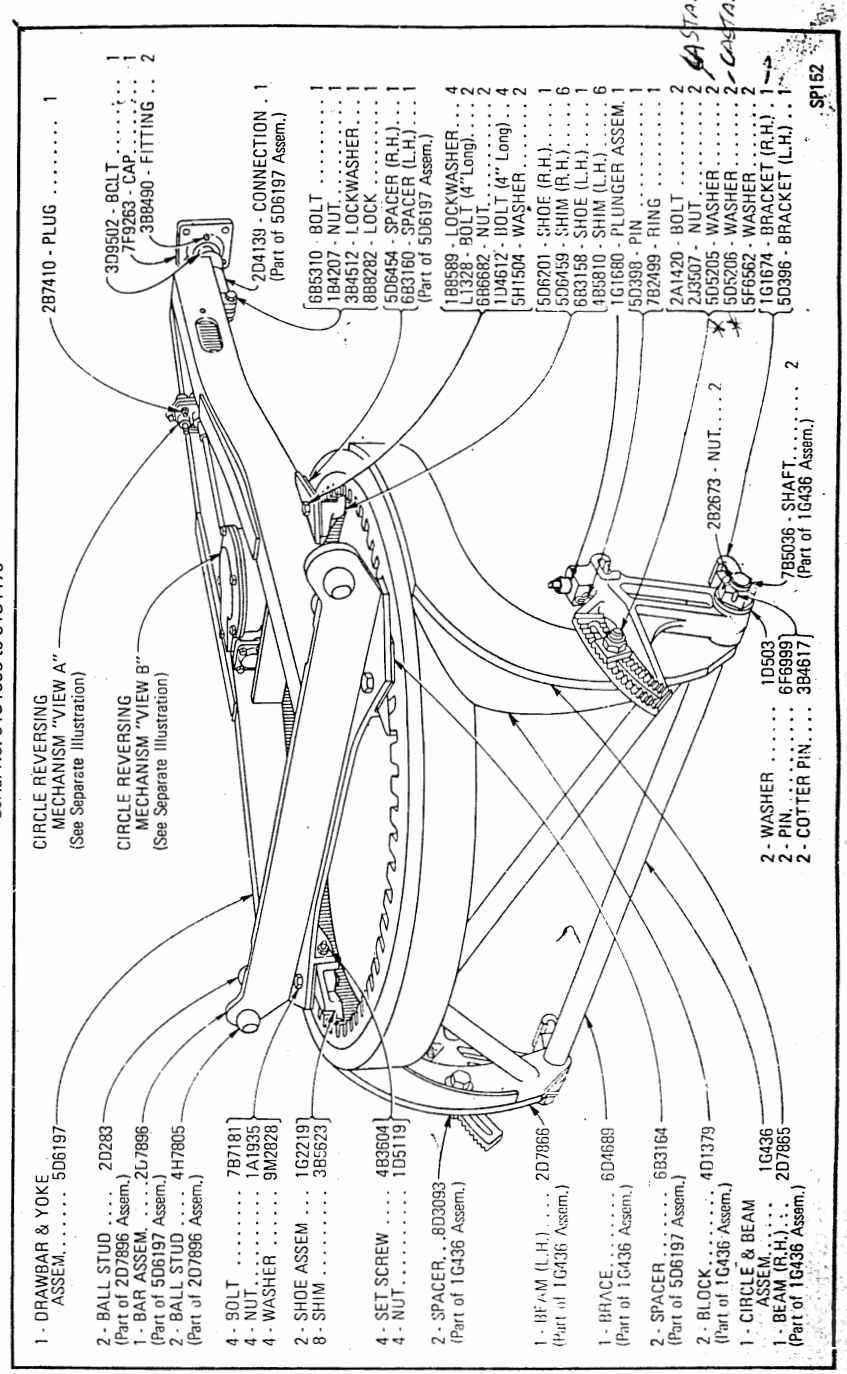

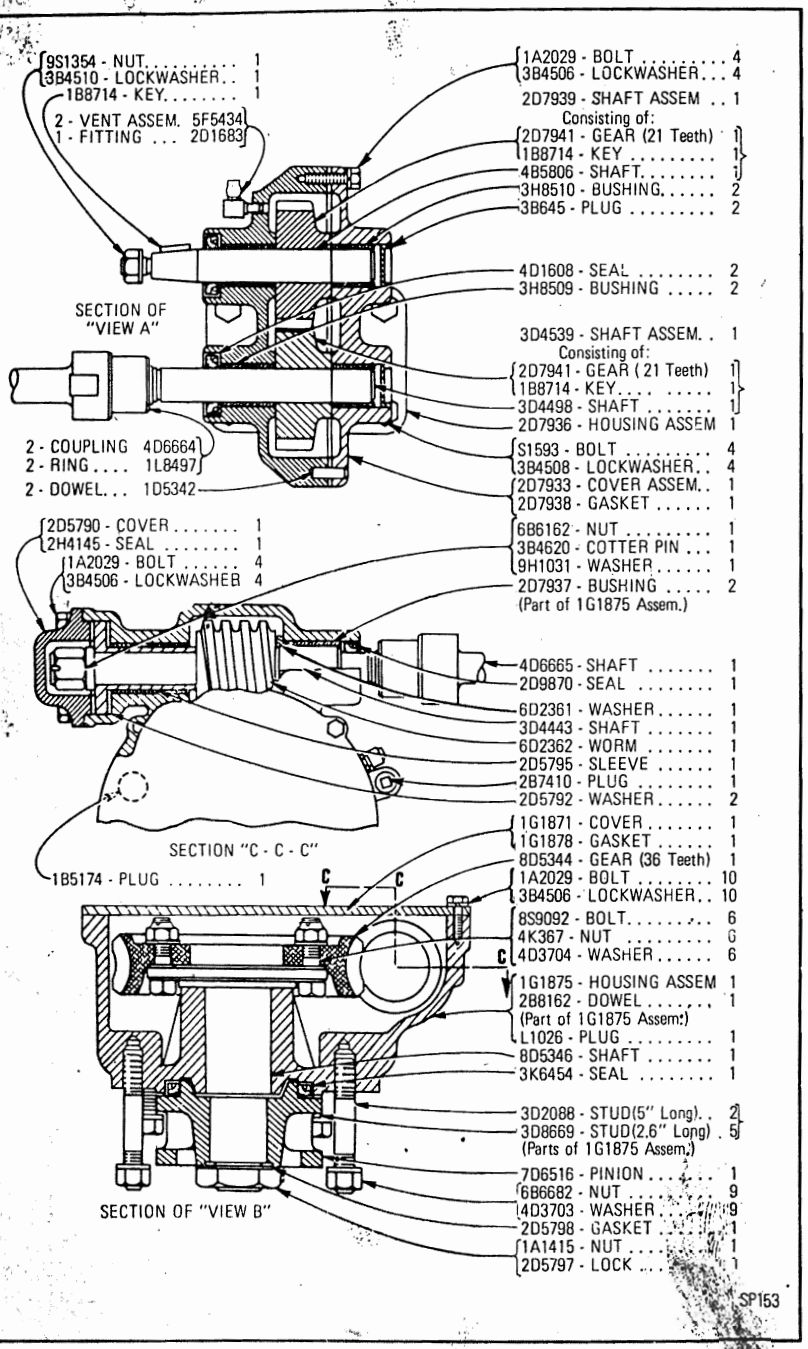

CIRCLE REVERSING MECHANISM
Part of 2D7900 Circle shown on Page 117
Serial No. 64U1050 to 64U1179

2D7900 CIRCLE GROUP
Circle Reversing Mechanism parts are shown on Page 120
Serial No. 64U1180—Up

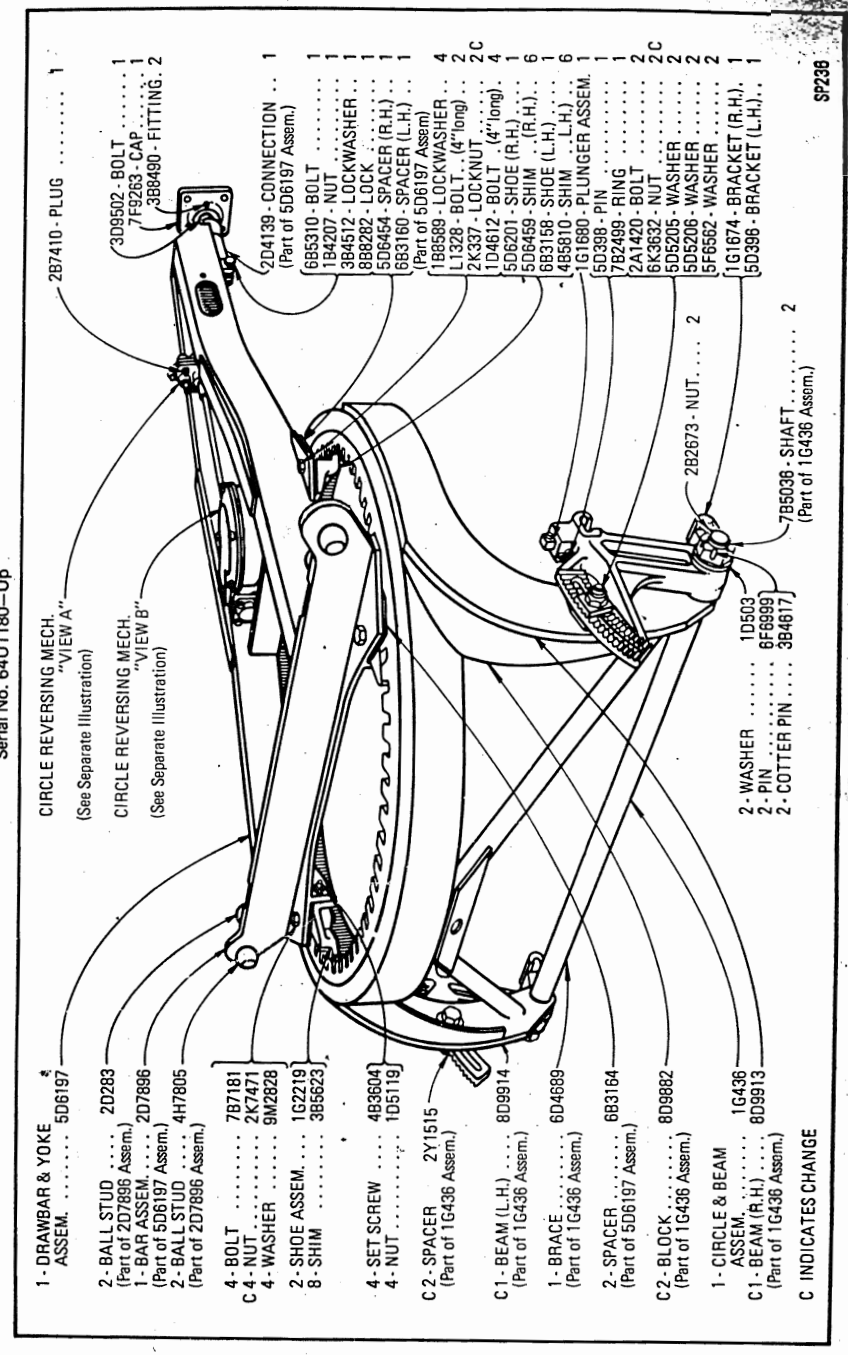

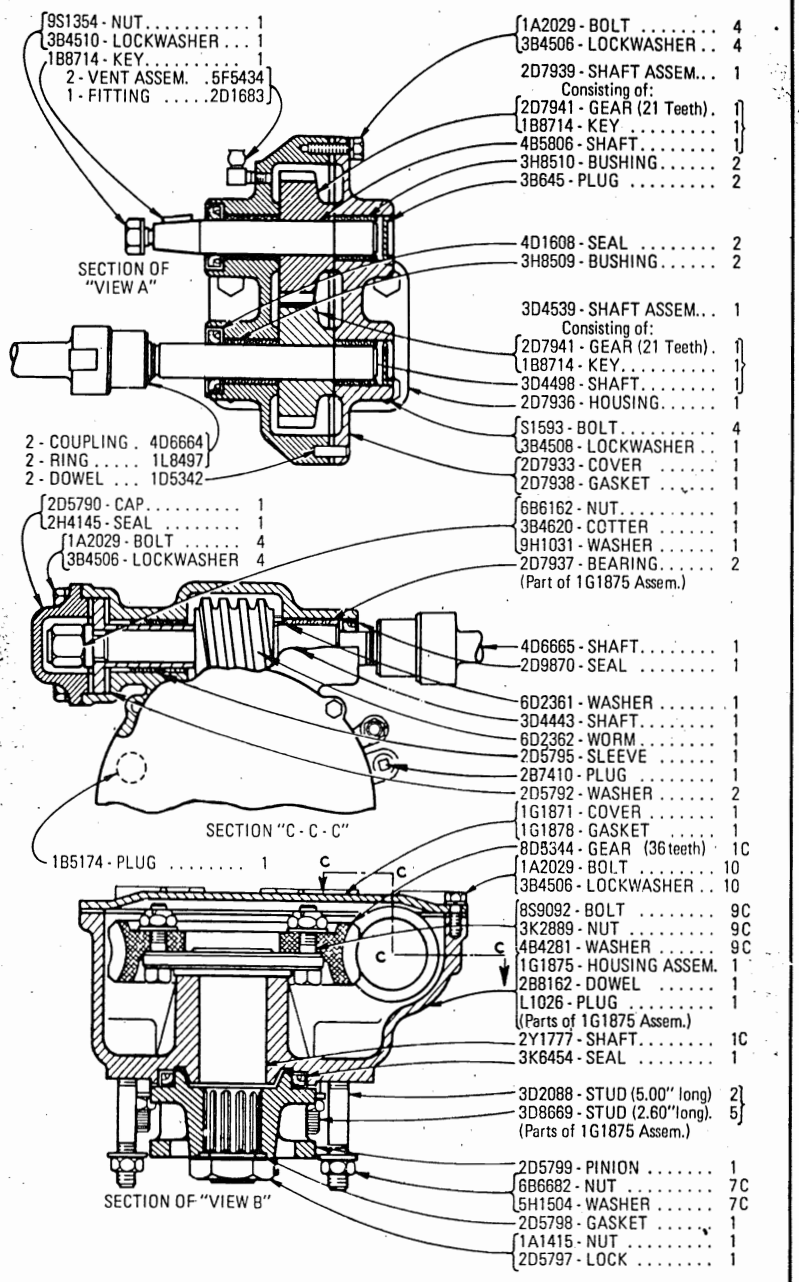

2Y1760 CIRCLE GROUP
Part of 2Y2260 Power Blade Arrangement listed on Page 164
Circle Reversing Mechanism parts are shown on Page 122
AN ATTACHMENT

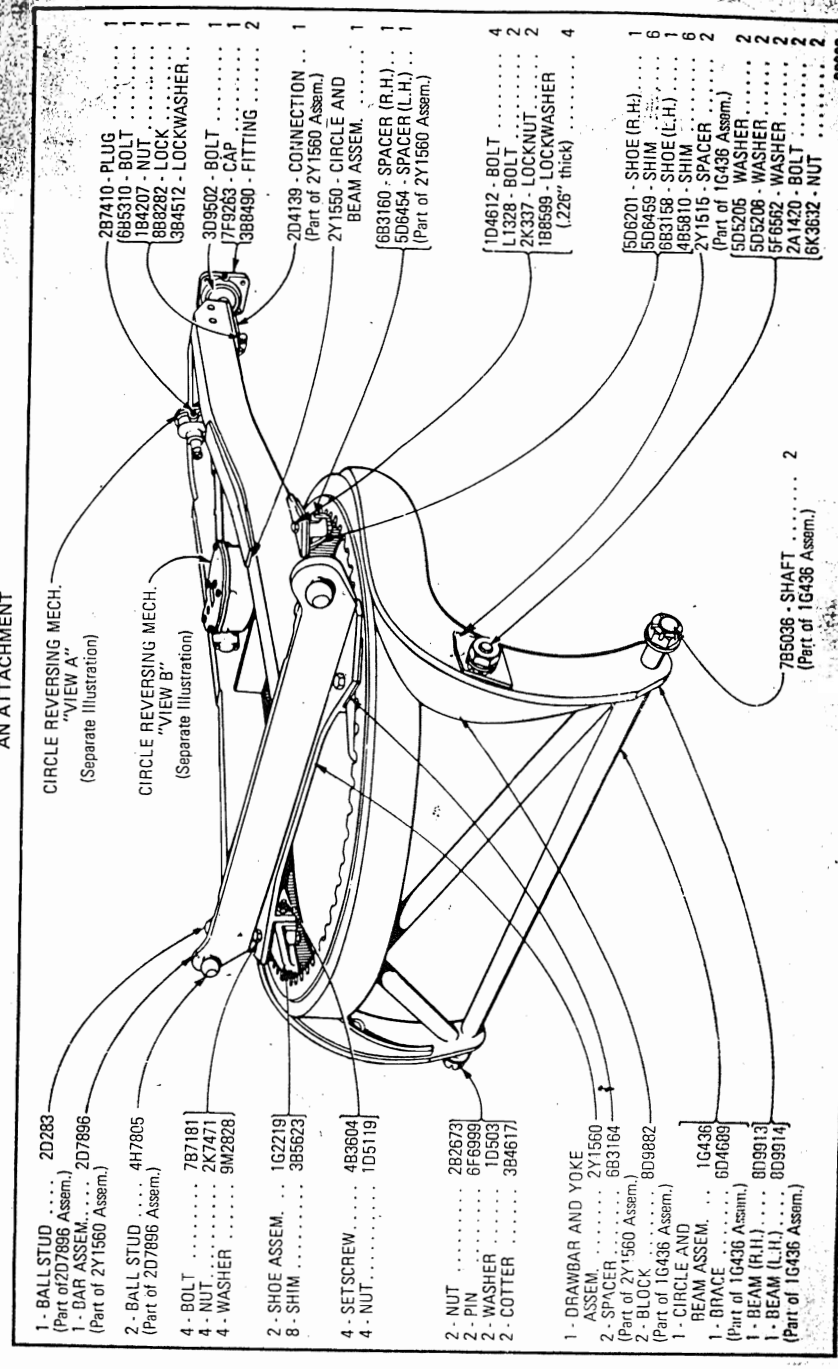

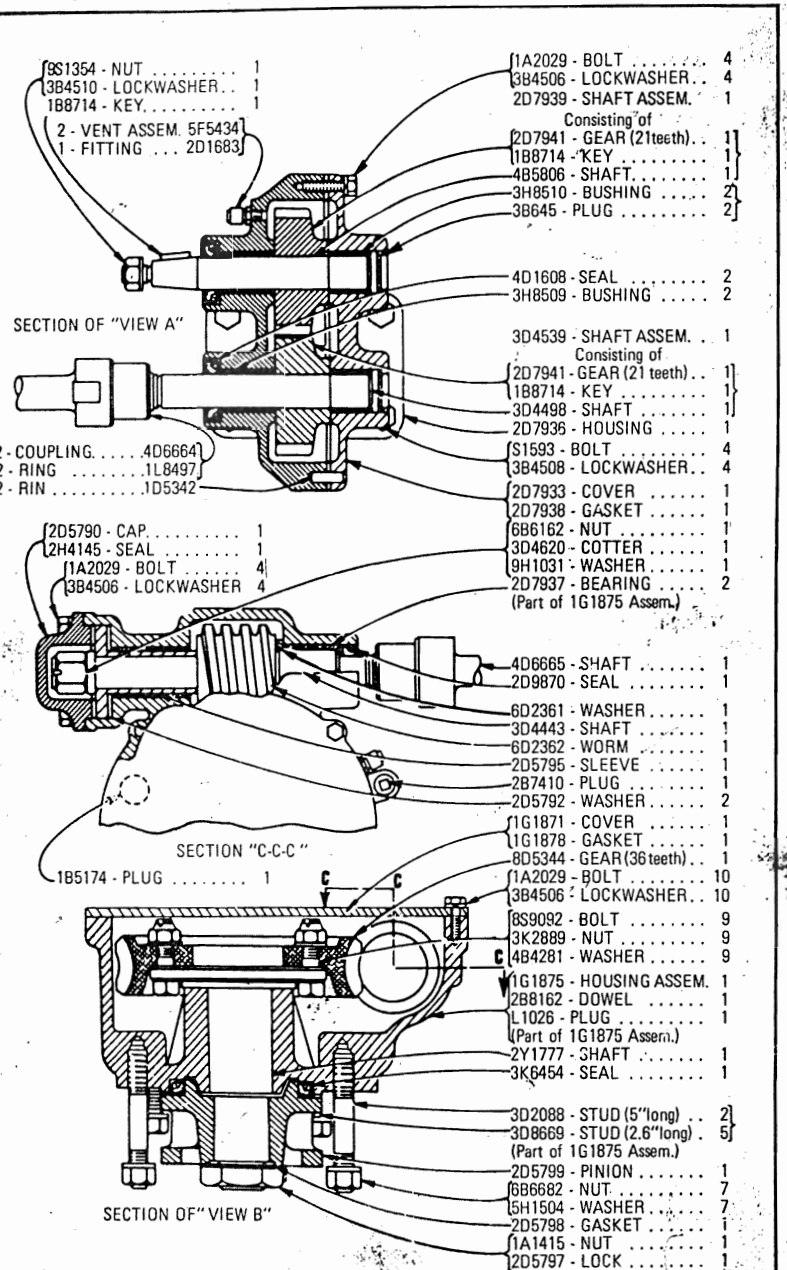

CIRCLE REVERSING MECHANISM
Part of 2Y1760 Circle shown on Page 121
AN ATTACHMENT

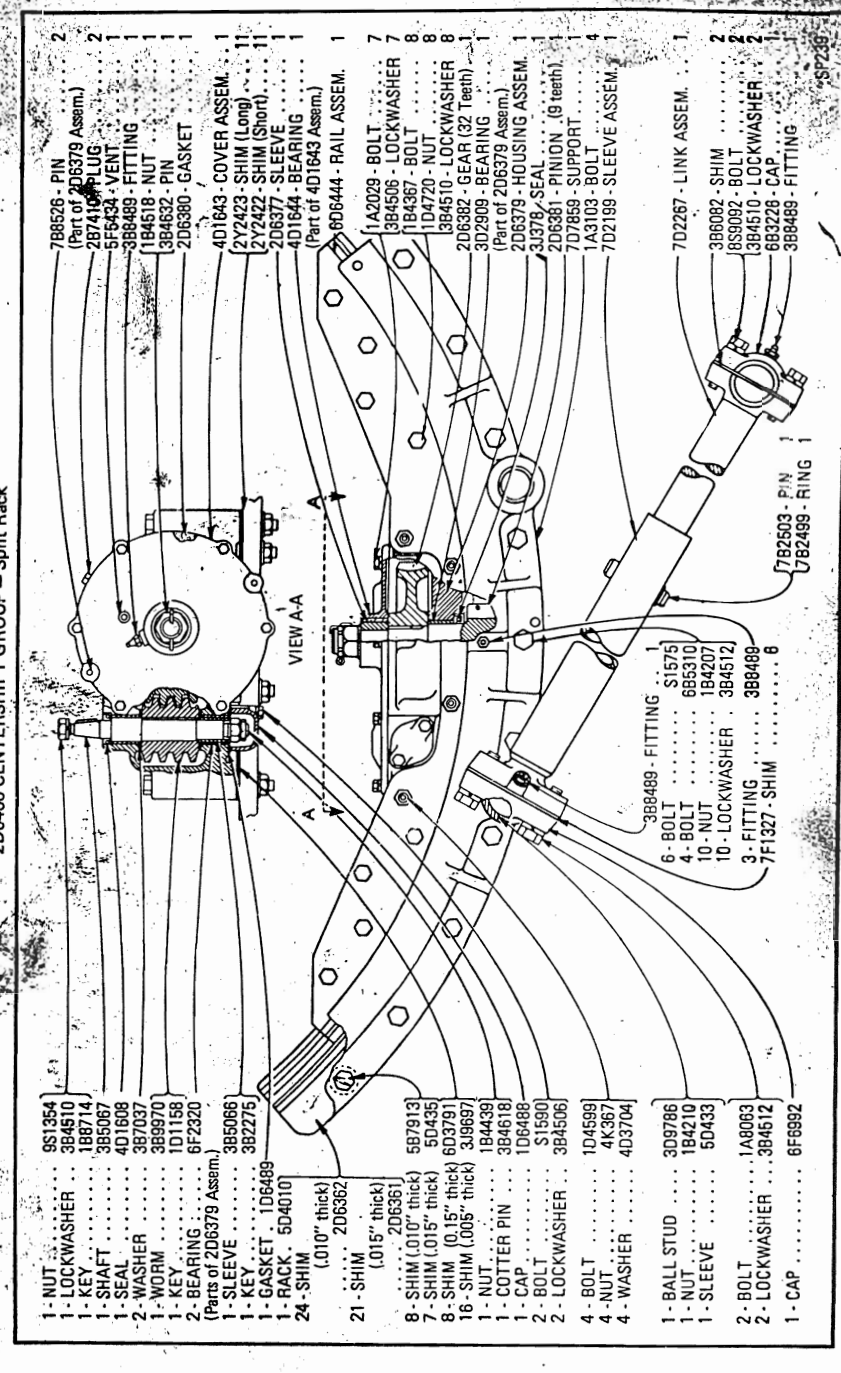

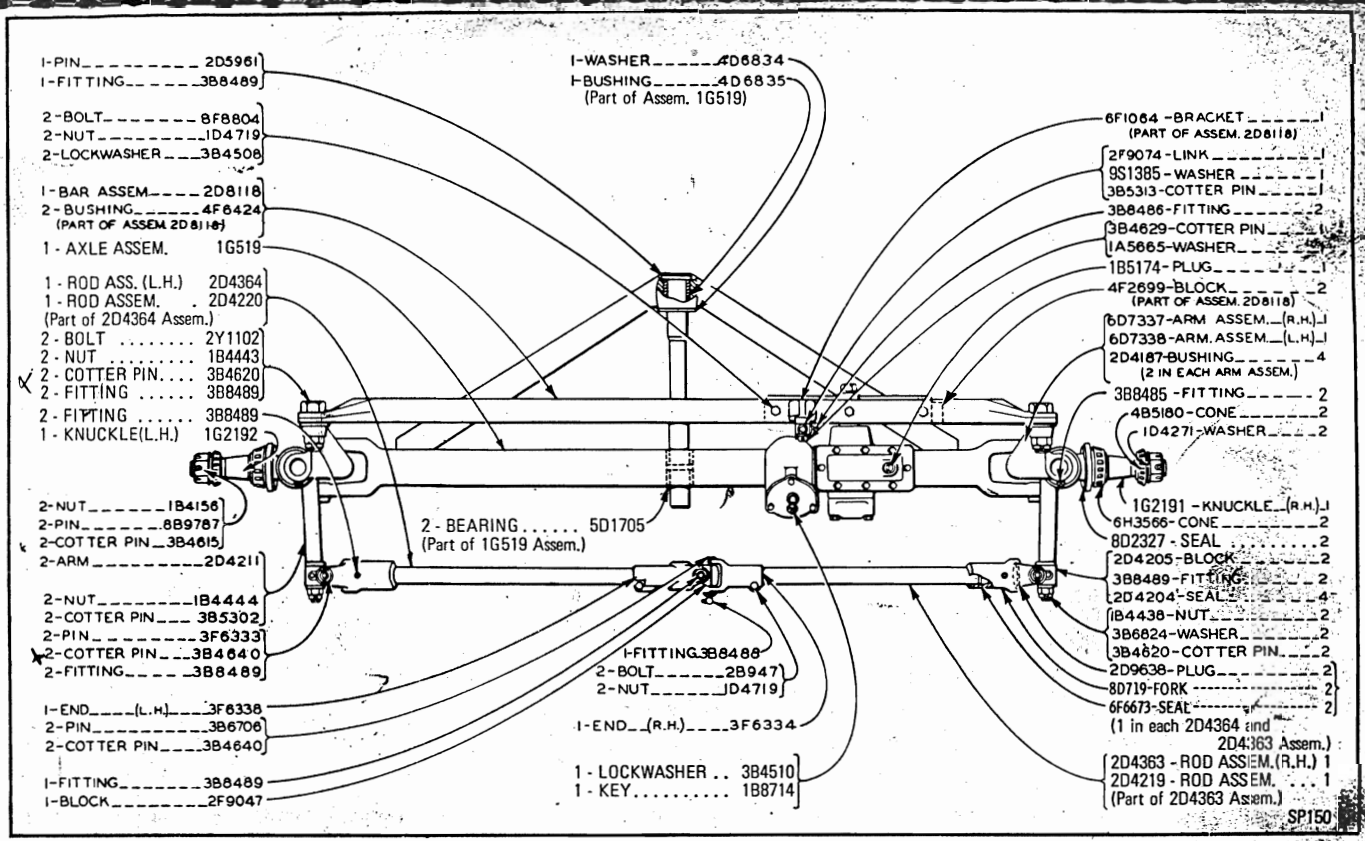

2D4140 FRONT AXLE GROUP
Serial No. 64U1050 to 64U1135

2D4140 FRONT AXLE GROUP – Sectional Veiws
Serial No. 64U1050 to 64U1135

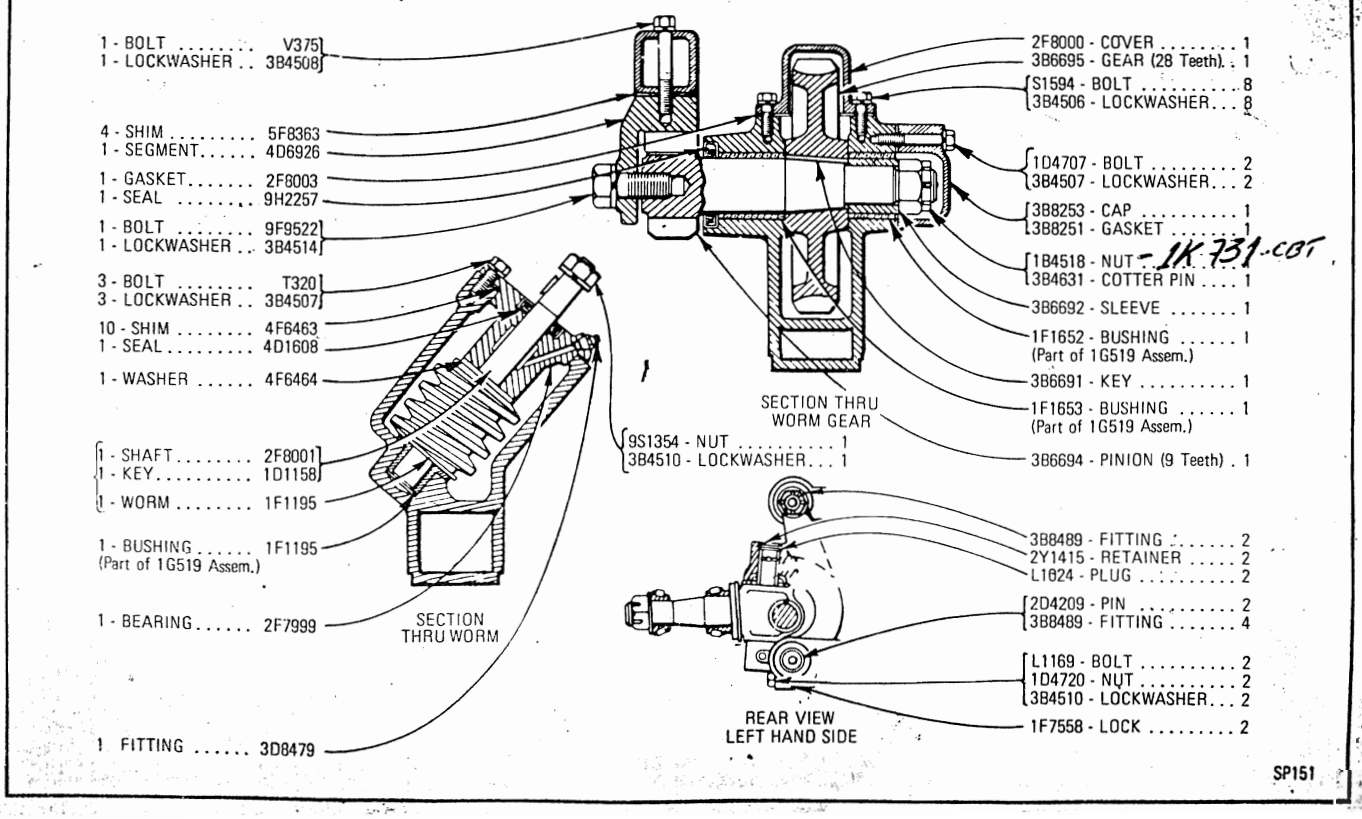

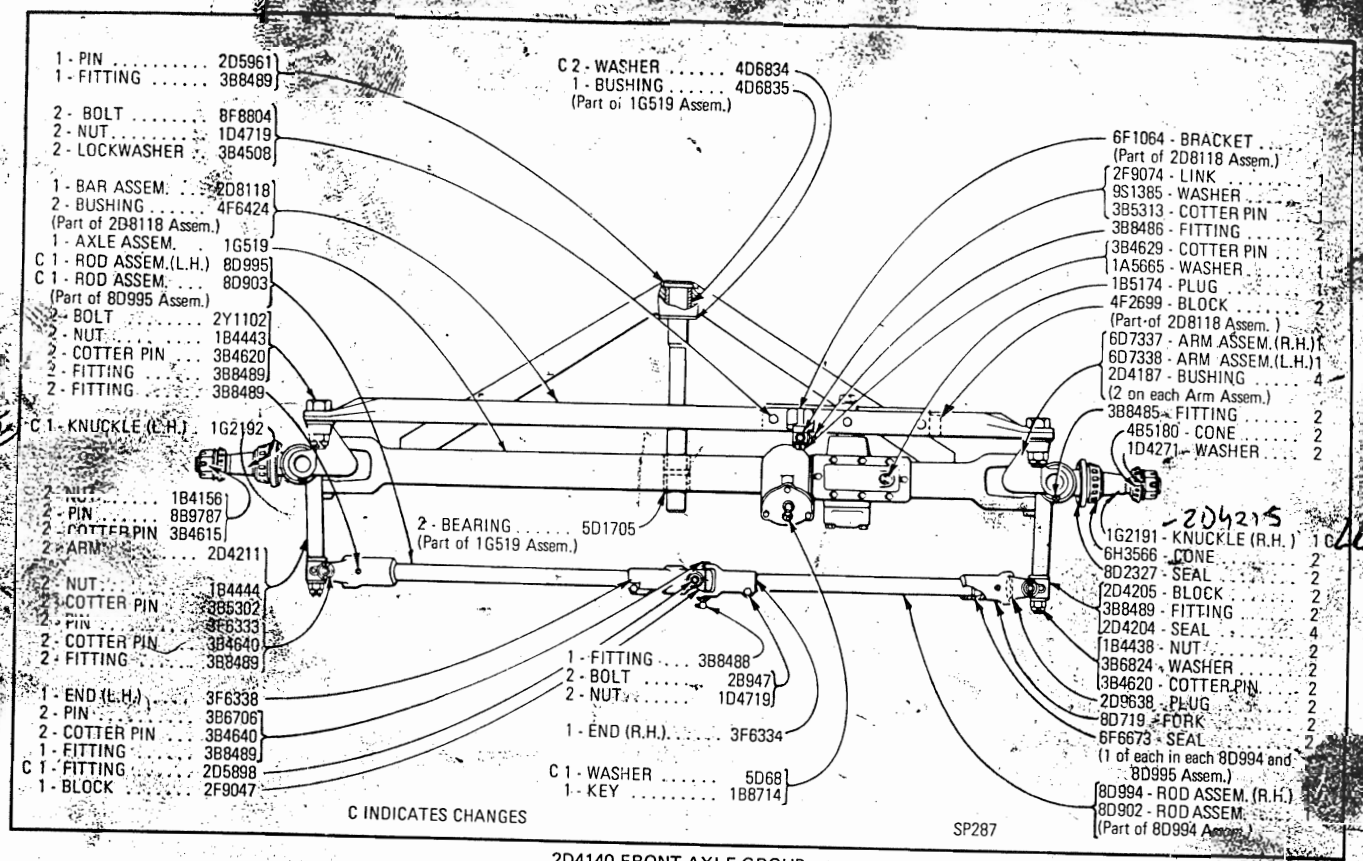

2D4140 FRONT AXLE GROUP
Serial No. 64U1136 – Up

2D4140 FRONT AXLE GROUP – Sectional Views
Serial No. 64U1136 – Up

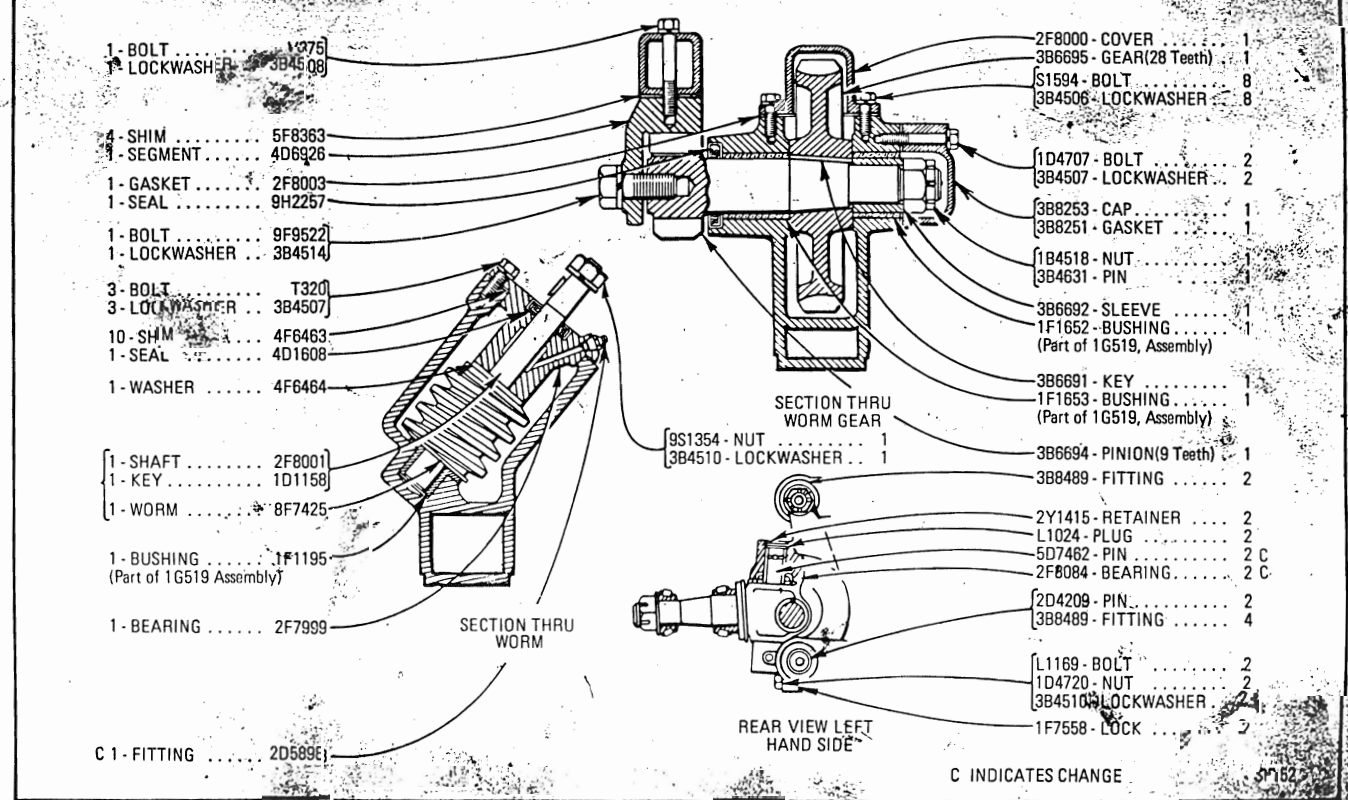

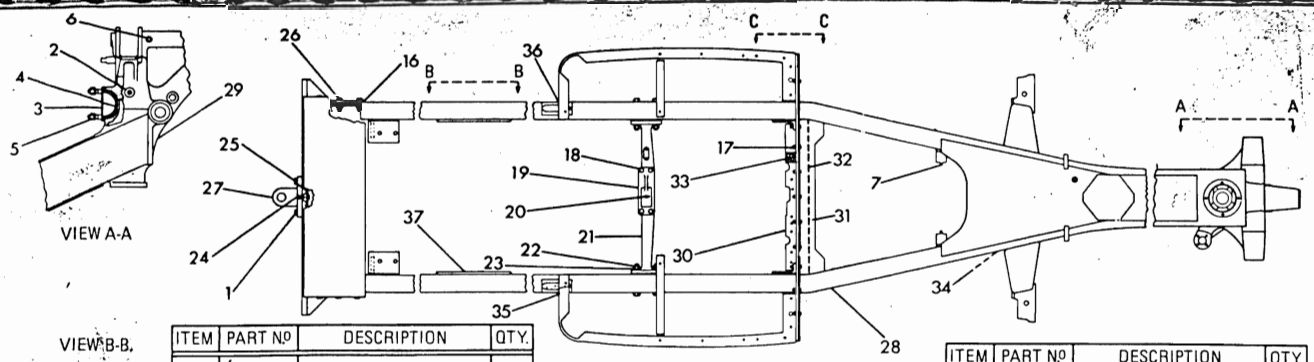

ITEM	PART Nº	DESCRIPTION	QTY.
1	S1601	BOLT	4
	1B4206	NUT	4
	3B4510	LOCKWASHER	4
2	2D4867	FITTING	1
3	4D9774	SHIM	2
	7F8987	SHIM	2
4	4B8478	SOCKET	1
5	1B4332	NUT	4
	3B4514	LOCKWASHER	4
	6F7033	BOLT	1
6	1B4205	NUT	1
	3B4508	LOCKWASHER	1
7	3B8485	FITTING	2
8	1G1558	PLATE	1
9	S1584	BOLT	6
	1B4205	NUT	6
	3B4508	LOCKWASHER	6
	2A3223	BOLT	2
10	1B4205	NUT	2
	3B4508	LOCKWASHER	2
11	4B8459	SHIM	4
12	6K4319	SHIM	4
13	1D4643	BOLT	4

ITEM	PART Nº	DESCRIPTION	QTY.
14	4B8471	CAP	2
15	3B8487	FITTING	2
16	5D727	SHIM	8
17	2B5484	BOLT	9
	1B4204	NUT	9
	3B4507	LOCKWASHER	9
18	S1587	BOLT	4
	3B4508	LOCKWASHER	4
	3D5309	BRACKET	1
19	3D5314	SHIM	2
	3D5313	SHIM	4
20	3B8488	FITTING	1
21	5D1963	SUPPORT	1
22	1D4634	BOLT	4
	1B4332	NUT	4
	3B4514	LOCKWASHER	4
23	5F7444	SHIM	2
	5F7443	SHIM	4
24	1G901	PADLOCK	1

ITEM	PART Nº	DESCRIPTION	QTY.
25	6D6373	BOX ASSEM.	1
	2Y1286	COVER ASSEM.	1
	2Y1284	LUG	1
	2Y2268	HINGE	2
26	8S9092	BOLT	12
	1D4720	NUT	12
	3B4510	LOCKWASHER	12
27	4D6999	LUG ASSEM.	1
28	2Y1940	ARM ASSEM.	1
29	2Y2230	BOLSTER ASSEM.	1
	4D5279	STUD	4
	7F7278	BEARING	1
30	4B9679	ANGLE	1
31	5H3044	PLATE	1
32	6F4673	PLATE	1
33	4D1607	LUG	1
34	4B8467	BEARING	2
35	1G1754	BRACKET ASSEM.(R.H.)	1
	1G1800	BEARING	2
36	2Y2656	BRACKET ASS. (L.H.)	1
37	1G904	BRACKET	2

SP973

2Y1579 FRAME GROUP
Serial No. 64U1050 to 64U1501

2Y2280 FRAME GROUP
Serial No. 64U1502 — Up

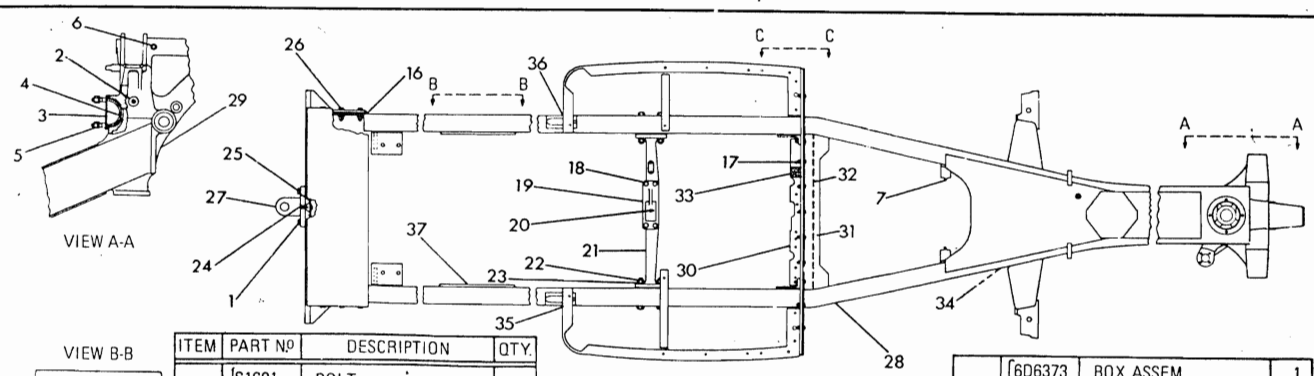

ITEM	PART Nº	DESCRIPTION	QTY.
1	S1601	BOLT	4
	1B4206	NUT	4
	3B4510	LOCKWASHER	4
2	2D4867	FITTING	1
3	4D9774	SHIM	2
	7F8987	SHIM	2
4	4B8478	SOCKET	1
5	1B4332	NUT	4
	3B4514	LOCKWASHER	4
	6F7033	BOLT	1
6	1B4205	NUT	1
	3B4508	LOCKWASHER	1
7	3B8485	FITTING	2
8	1G1558	PLATE	1
9	S1584	BOLT	6
	1B4205	NUT	6
	3B4508	LOCKWASHER	6
	2A3223	BOLT	2
10	1B4205	NUT	2
	3B4508	LOCKWASHER	2
11	4B8459	SHIM	4
12	2Y3791	LOCK	4
13	1D4643	BOLT	4

ITEM	PART Nº	DESCRIPTION	QTY.
14	4B8471	CAP	2
15	3B8487	FITTING	2
16	5D727	SHIM	8
17	2B5484	BOLT	9
	1B4204	NUT	9
	3B4507	LOCKWASHER	9
18	S1587	BOLT	4
	3B4508	LOCKWASHER	4
	3D5309	BRACKET	1
19	3D5314	SHIM	2
	3D5313	SHIM	4
20	3B8488	FITTING	1
21	5D1963	SUPPORT	1
22	1D4634	BOLT	4
	1B4332	NUT	4
	3B4514	LOCKWASHER	4
23	5F7444	SHIM	2
	5F7443	SHIM	4
24	1G901	PADLOCK	1

25	6D6373	BOX ASSEM.	1
	2Y3744	COVER ASSEM	1
	2Y1286	COVER ASSEM.	1
	2Y1279	COVER	1
	2Y1284	LUG	1
26	8S9092	BOLT	12
	1D4720	NUT	12
	3B4510	LOCKWASHER	12
27	4D6999	LUG ASSEM.	1
28	2Y2270	FRAME ASSEM.	1
29	2Y2230	BOLSTER ASSEM.	1
	4D5279	STUD	4
	7F7278	BEARING	1
30	4B9679	ANGLE	1
31	5H3044	PLATE	1
32	6F4673	PLATE	1
33	4D1607	LUG	1
34	4B8467	BEARING	2
35	1G1694	BRACKET ASSEM. (R.H.)	1
	1G1800	BEARING	2
36	2Y2656	BRACKET ASSEM. (L.H.)	1
37	1G904	BRACKET	2

SP1384

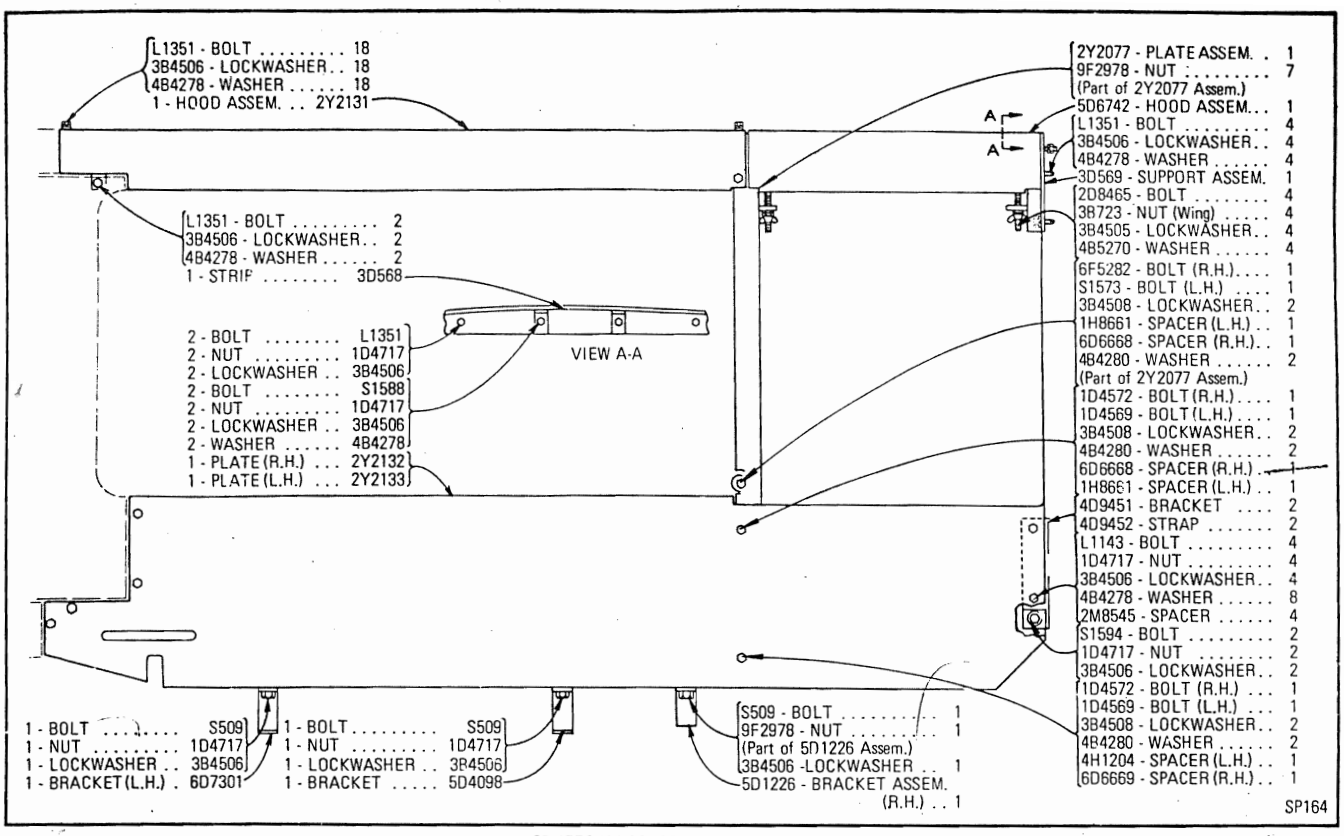

6D4550 HOOD AND DASH GROUP

2Y2250 VALVE AND LINES GROUP
Part of 2Y2260 Power Blade Arrangements listed on Page 164. 2Y3697 Valve parts are shown on Page 132

ITEM	PART No	DESCRIPTION	QTY.
1	3R2704	UNION	1
2	3B4506	LOCKWASHER	14
C 3	2Y3697	VALVE GROUP (Separate Illustration)	1
4	2Y1912	CLAMP ASSEM.	1
5	1G974	FITTING	1
6	2Y2243	HOSE ASSEM.	1
C 7	2Y3712	TUBE	1
C 8	2Y3711	TUBE	1
9	2D1076	CLAMP	2
10	T431	WASHER	4
11	L1351	BOLT	2
12	1G973	FITTING	2
13	2Y1703	TUBE ASSEM.	1

ITEM	PART No	DESCRIPTION	QTY.
14	2Y1702	TUBE ASSEM.	1
15	S1571	BOLT	1
16	1H3481	CLAMP	1
17	1B5964	SPACER	1
18	S1585	BOLT	2
19	3B4508	LOCKWASHER	4
20	1D4719	NUT	2
21	5H1625	CLAMP	2
22	5B546	SPACER	2
23	8M1630	CLAMP	4
24	1B9575	BOLT	4
25	1D4716	NUT	6
26	2Y1684	HOSE ASSEM.	2
27	S1591	BOLT	2
28	2Y1555	SUPPORT ASSEM.	1
29	1A2029	BOLT	5
C 30	2Y3710	TUBE	1
31	S1587	BOLT	2
32	5H3125	CLAMP	4
33	S509	BOLT	4
34	4D3734	UNION	2
35	2Y2011	FITTING	3
36	1D4717	NUT	3

C INDICATES CHANGE

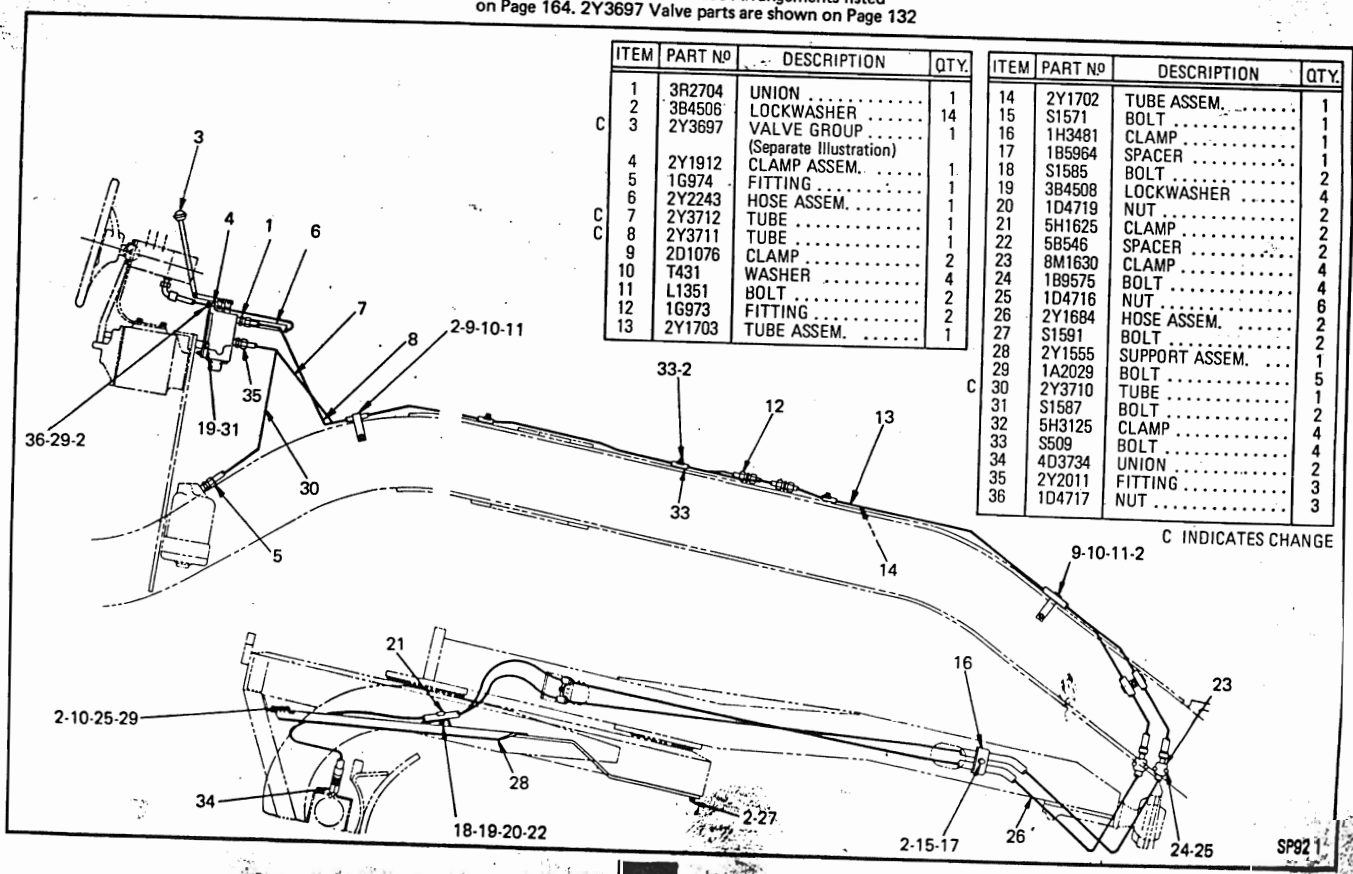

ITEM	PART No	DESCRIPTION	QTY.
1	7F8092	KNOB	1
2	2Y3696	LEVER	1
3	2Y1947	VALVE ASSEM. (Separate Illustration)	1

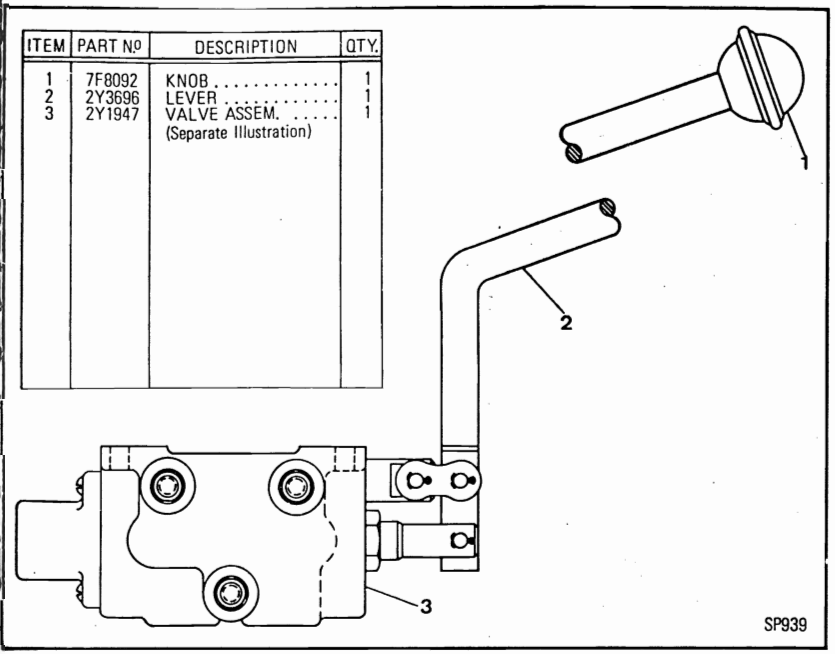

2Y3697 VALVE GROUP
Part of 2Y2250 Valve and Lines shown on Page 131
2Y1947 Valve parts are shown below

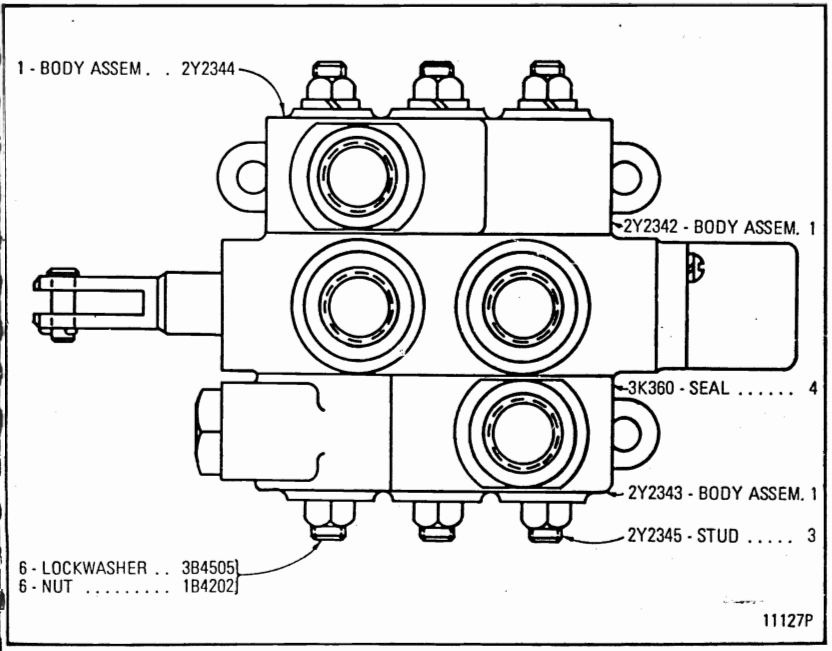

2Y1947 VALVE ASSEMBLY

1G802 STEERING HYDRAULIC BOOSTER GROUP — Part 1 of 3
2D2150 Filter, 4J4115 Steering Cylinder and 1G643 Tank and Pump parts are shown on Pages 142, 146, 147 and 148
Serial No. 64U1050 to 64U1501

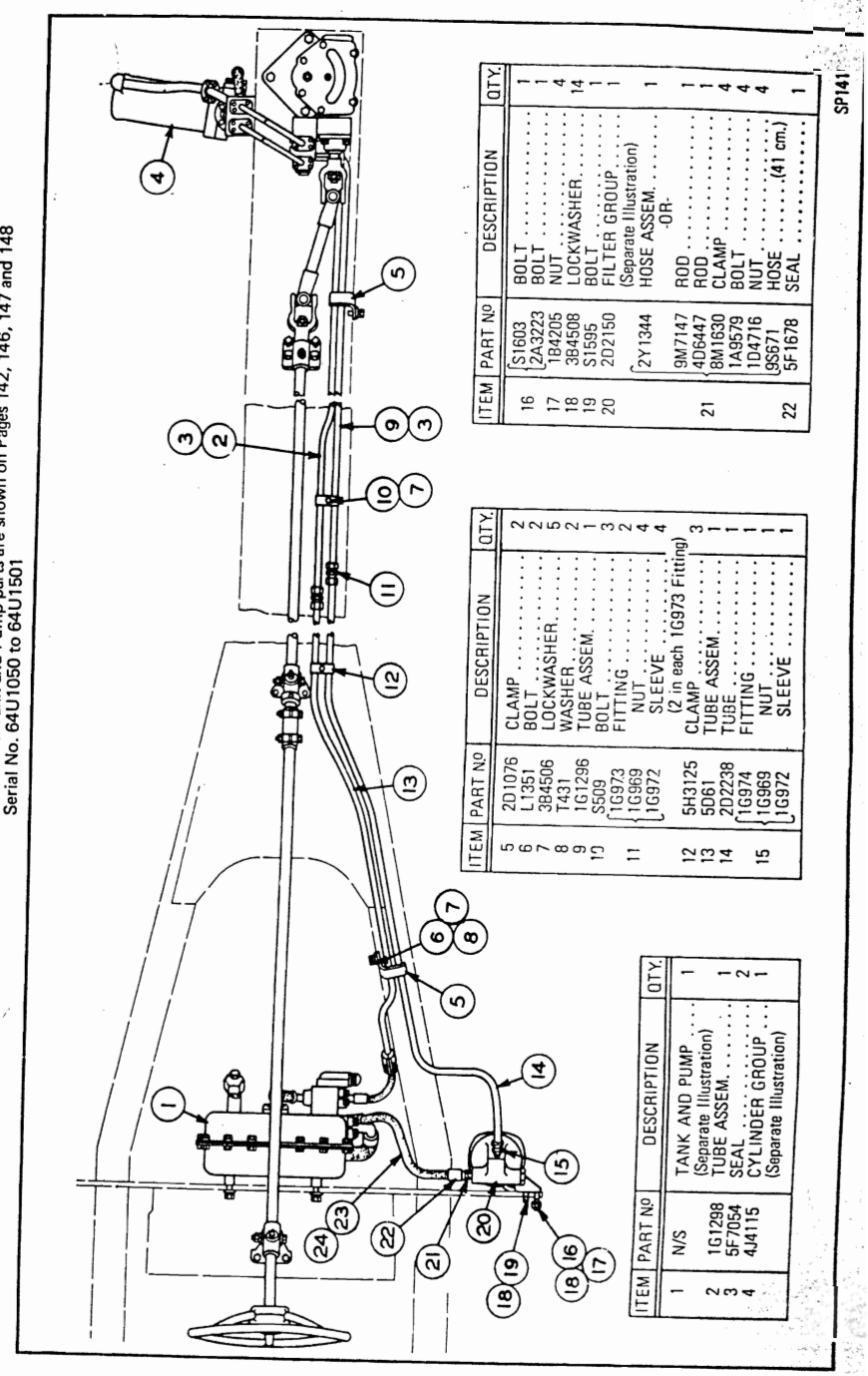

ITEM	PART No	DESCRIPTION	QTY.
5	2D1076	CLAMP	2
6	L1351	BOLT	2
7	3B4506	LOCKWASHER	5
8	T431	WASHER	2
9	1G1296	TUBE ASSEM.	1
10	S509	BOLT	3
11	1G973	FITTING	2
	1G969	NUT	4
	1G972	SLEEVE (2 in each 1G973 Fitting)	4
12	5H3125	CLAMP	3
13	5D61	TUBE ASSEM.	1
14	2D2238	TUBE	1
15	1G974	FITTING	1
	1G969	NUT	1
	1G972	SLEEVE	1

ITEM	PART No	DESCRIPTION	QTY.
16	S1603	BOLT	1
	2A3223	BOLT	1
17	1B4205	NUT	4
18	3B4508	LOCKWASHER	14
19	S1595	BOLT	1
20	2D2150	FILTER GROUP (Separate Illustration)	1
	2Y1344	HOSE ASSEM. -OR-	1
	9M7147	ROD	1
	4D6447	ROD	1
21	8M1630	CLAMP	4
	1A9579	BOLT	4
	1D4716	NUT	4
	9S671	HOSE .....(41 cm.)	1
22	5F1678	SEAL	1

ITEM	PART No	DESCRIPTION	QTY.
1	N/S	TANK AND PUMP (Separate Illustration)	1
2	1G1298	TUBE ASSEM.	1
3	5F7054	SEAL	2
4	4J4115	CYLINDER GROUP (Separate Illustration)	1

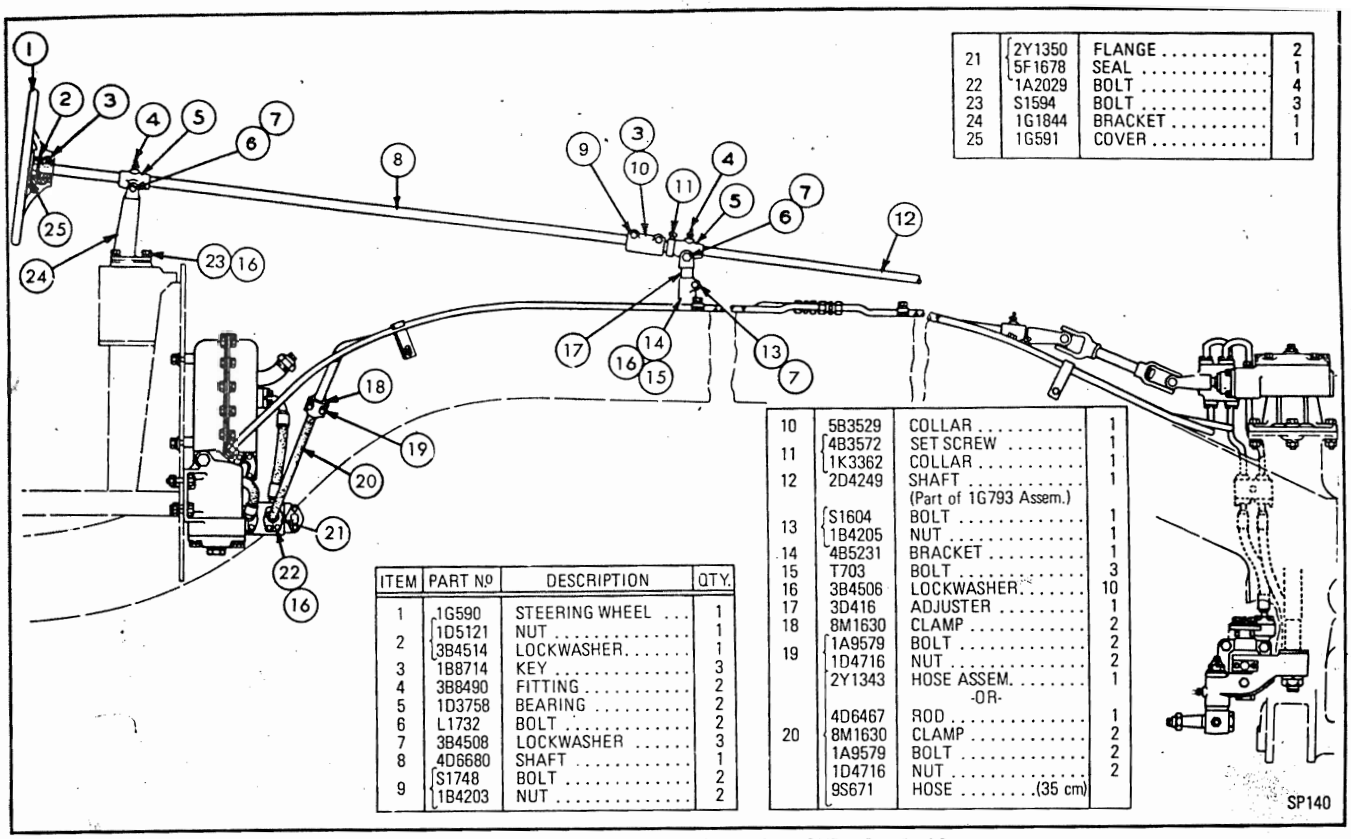

ITEM	PART NO	DESCRIPTION	QTY.
1	1G590	STEERING WHEEL	1
2	1D5121	NUT	1
	3B4514	LOCKWASHER	1
3	1B8714	KEY	3
4	3B8490	FITTING	2
5	1D3758	BEARING	2
6	L1732	BOLT	2
7	3B4508	LOCKWASHER	3
8	4D6680	SHAFT	1
9	S1748	BOLT	2
	1B4203	NUT	2
10	5B3529	COLLAR	1
11	4B3572	SET SCREW	1
	1K3362	COLLAR	1
12	2D4249	SHAFT (Part of 1G793 Assem.)	1
13	S1604	BOLT	1
	1B4205	NUT	1
14	4B5231	BRACKET	1
15	T703	BOLT	3
16	3B4506	LOCKWASHER	10
17	3D416	ADJUSTER	1
18	8M1630	CLAMP	2
19	1A9579	BOLT	2
	1D4716	NUT	2
	2Y1343	HOSE ASSEM.	1
		-OR-	
	4D6467	ROD	1
20	8M1630	CLAMP	2
	1A9579	BOLT	2
	1D4716	NUT	2
	9S671	HOSE (35 cm)	
21	2Y1350	FLANGE	2
	5F1678	SEAL	1
22	1A2029	BOLT	4
23	S1594	BOLT	3
24	1G1844	BRACKET	1
25	1G591	COVER	1

1G802 STEERING HYDRAULIC BOOSTER GROUP — Part 2 of 3
Serial No. 64U1050 to 64U1501



1G802 STEERING HYDRAULIC BOOSTER GROUP — Part 3 of 3
1G753 Steering Gear parts are shown on Pages 136 and 137
Serial No. 64U1050 to 64U1501

12F

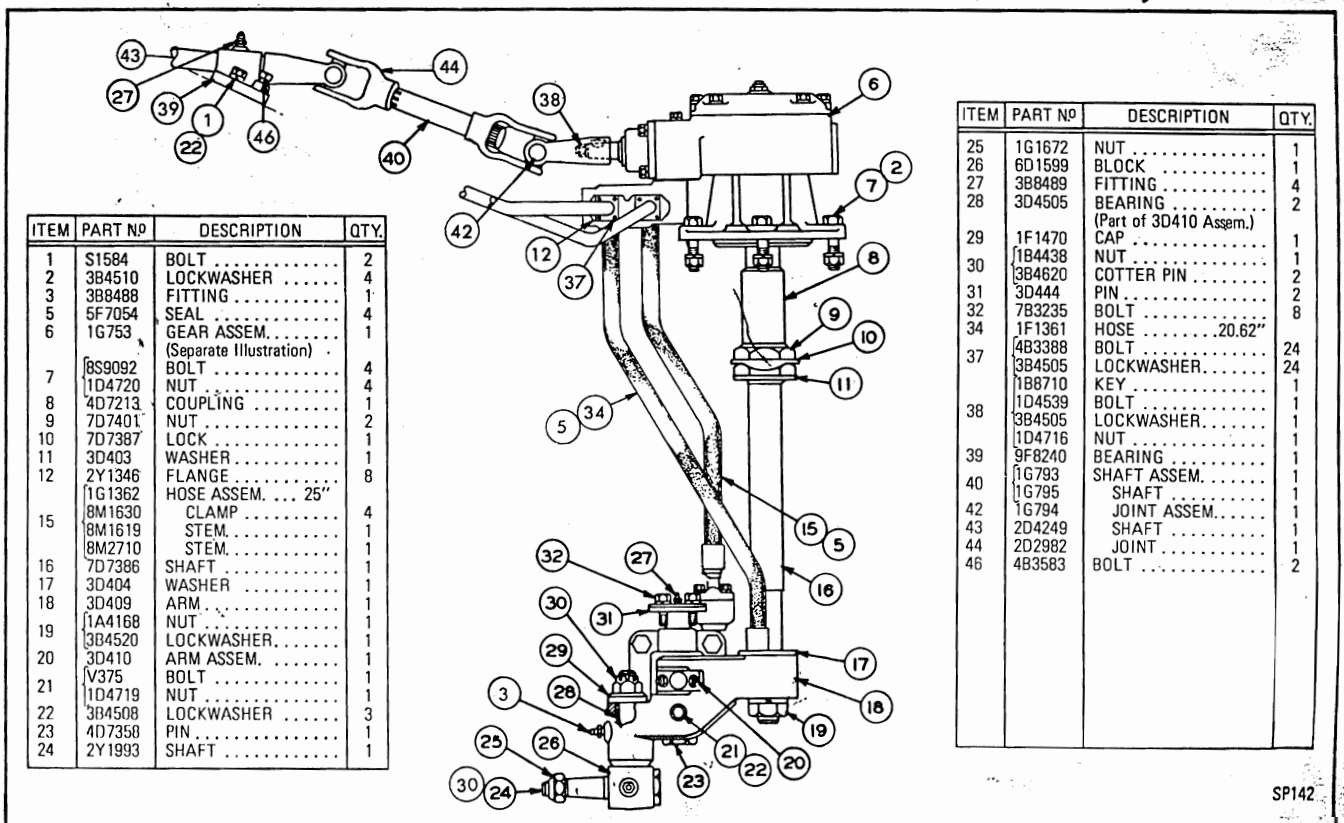

ITEM	PART NO	DESCRIPTION	QTY.
1	S1584	BOLT	2
2	3B4510	LOCKWASHER	4
3	3B8488	FITTING	1
5	5F7054	SEAL	4
6	1G753	GEAR ASSEM. (Separate Illustration)	1
7	8S9092	BOLT	4
	1D4720	NUT	4
8	4D7213	COUPLING	1
9	7D7401	NUT	2
10	7D7387	LOCK	1
11	3D403	WASHER	1
12	2Y1346	FLANGE	8
15	1G1362	HOSE ASSEM. ... 25"	
	8M1630	CLAMP	4
	8M1619	STEM.	1
	8M2710	STEM.	1
16	7D7386	SHAFT	1
17	3D404	WASHER	1
18	3D409	ARM	1
19	1A4168	NUT	1
	3B4520	LOCKWASHER	1
20	3D410	ARM ASSEM.	1
21	V375	BOLT	1
	1D4719	NUT	1
22	3B4508	LOCKWASHER	3
23	4D7358	PIN	1
24	2Y1993	SHAFT	1
25	1G1672	NUT	1
26	6D1599	BLOCK	1
27	3B8489	FITTING	4
28	3D4505	BEARING (Part of 3D410 Assem.)	2
29	1F1470	CAP	1
30	1B4438	NUT	1
	3B4620	COTTER PIN	2
31	3D444	PIN	2
32	7B3235	BOLT	8
34	1F1361	HOSE .....20.62"	
37	4B3388	BOLT	24
	3B4505	LOCKWASHER	24
	1B8710	KEY	1
38	1D4539	BOLT	1
	3B4505	LOCKWASHER	1
	1D4716	NUT	1
39	9F8240	BEARING	1
40	1G793	SHAFT ASSEM.	1
	1G795	SHAFT	1
42	1G794	JOINT ASSEM.	1
43	2D4249	SHAFT	1
44	2D2982	JOINT	1
46	4B3583	BOLT	2

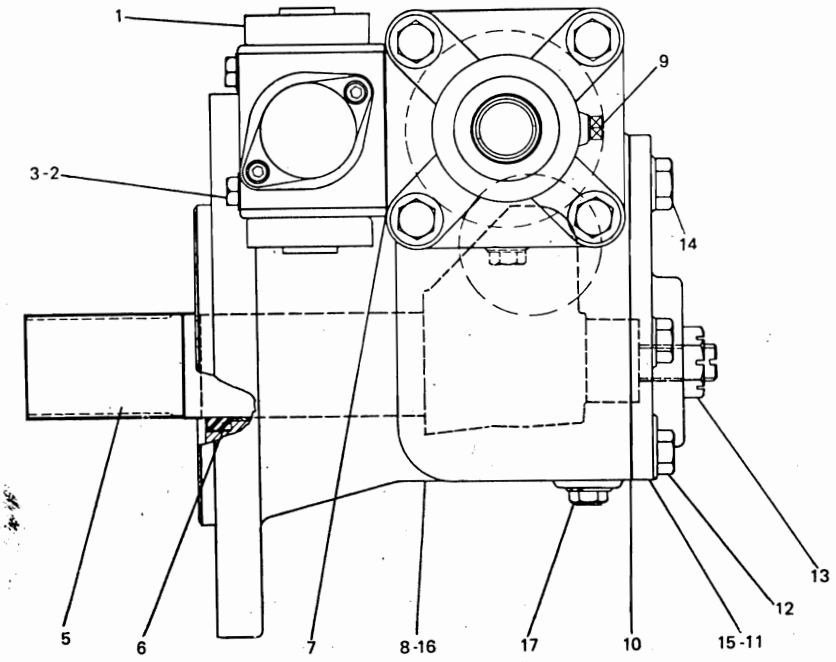

ITEM	PART Nº	DESCRIPTION	QTY.
1	4D7850	VALVE ASSEM.	1
2	1M976	WASHER	4
3	1G1334	BOLT	4
5	1G754	SHAFT ASSEM.	1
6	1G755	SEAL	1
7	4D7856	GASKET	1
8	5D9501	HOUSING ASSEM.	1
9	2B7408	PLUG	1
10	4D9276	GASKET	1
11	2D9530	COVER ASSEM.	1
12	5H1935	BOLT	10
13	2D9526	NUT	1
14	2D9525	PLUG	1
15	2D9528	BEARING (Parts of 2D9530 Assem.)	1
16	1G756	BUSHING	2
17	1G799	PLUG (Parts of 5D9501 Assem.)	1

SP1020

1G753 STEERING GEAR ASSEMBLY – Part 1
Part of 1G802 Steering Hydraulic Booster shown on Page 135
Serial No. 64U1050 to 64U1501

1G753 STEERING GEAR ASSEMBLY – Part 2
Part of 1G802 Steering Hydraulic Booster shown on Page 135
Serial No. 64U1050 to 64U1501

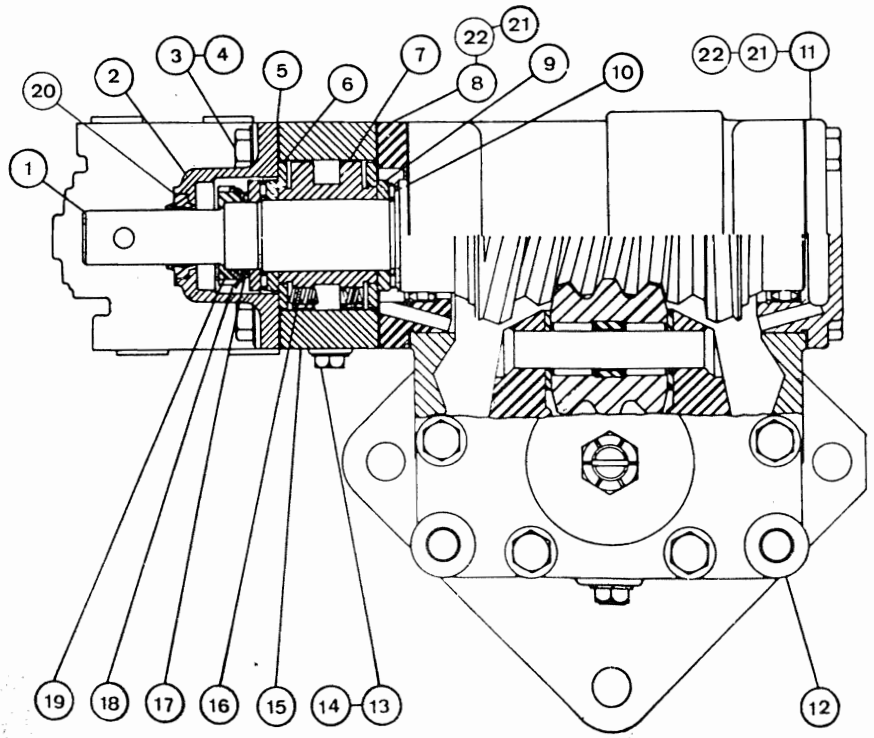

ITEM	PART Nº	DESCRIPTION	QTY.
1	1G763	SHAFT	1
2	4D7870	COVER ASSEM.	1
3	1G1335	BOLT	4
4	1G1336	WASHER	4
5	5B744	SHIM	4
6	4D7865	WASHER	2
7	3K8895	ACTUATOR	1
8	1G1340	CAGE ASSEM.	1
9	3K6712	WASHER	3
10	8H9585	BEARING	2
11	1G1339	COVER ASSEM.	1
12	5B758	DOWEL	2
13	1G784	BOLT	1
14	3K8899	LOCK	1
15	1G767	HOUSING	1
16	4D7859	SPRING	3
17	3K6710	WASHER	1
18	4D7860	LOCK	1
19	1G761	NUT	1
20	4D7869	SEAL (Part of 4D7870 Assem.)	1
21	3K6701	RING	2
22	3K6711	BEARING (1 in each 1G1339 and 1G1340 Assem.)	2

11139P

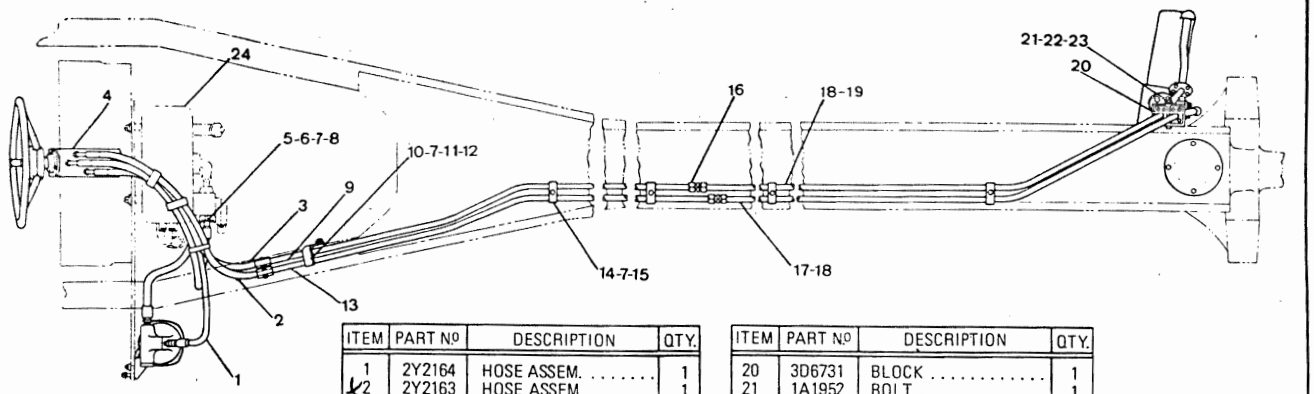

ITEM	PART No	DESCRIPTION	QTY.
1	2Y2164	HOSE ASSEM.	1
2	2Y2163	HOSE ASSEM.	1
3	2Y2161	HOSE ASSEM.	1
4	9D3860	STEERING GEAR GROUP (Separate Illustration)	1
5	5F1678	SEAL	1
6	2Y1350	FLANGE	2
7	3B4506	LOCKWASHER	8
8	1A2029	BOLT	4
9	2Y2151	TUBE ASSEM.	1
10	T431	WASHER	1
11	L1351	BOLT	1
12	2D1076	CLAMP	1
13	2Y2152	TUBE ASSEM.	1
14	5H3125	CLAMP	4
15	S509	BOLT	4
16	7F6696	FITTING	2
17	2Y2148	TUBE ASSEM.	1
18	5F7054	SEAL	2
19	2Y2147	TUBE ASSEM.	1
20	3D6731	BLOCK	1
21	1A1952	BOLT	1
22	9B1006	WASHER	1
23	3B4508	LOCKWASHER	1
24	N/S	TANK AND PUMP GROUP (Separate Illustration)	1

SP244

2Y2160 HYDROSTATIC STEERING GROUP – Part 1
9D3860 Steering Gear and 1G643 Tank and Pump parts are shown on Pages 145, 147 and 148
Serial No. 64U1502 – Up

2Y2160 HYDROSTATIC STEERING GROUP – Part 2
2D2150 Filter and 4J4115 Cylinder parts are shown on Pages 142 and 146
Serial No. 64U1502 – Up

ITEM	PART No	DESCRIPTION	QTY.
1	2Y2157	SUPPORT	1
2	2Y2231	STEERING WHEEL	1
3	S1594	BOLT	3
4	4J7002	STRAP	3
5	2B2695	BOLT	4
6	2Y2159	ADAPTER	4
7	2Y2162	HOSE ASSEM.	1
8	5F1678	SEAL	1
9	3B4506	LOCKWASHER	8
10	5F7054	SEAL	4
11	3B4508	LOCKWASHER	12
12	3B4505	LOCKWASHER	28
13	4B3388	BOLT	24
14	2Y1346	FLANGE	8
15	4J4115	CYLINDER GROUP (Separate Illustration)	1
16	7B3235	BOLT	8
17	2B8489	FITTING	3
18	3D444	PIN	2
19	3D404	WASHER	1
20	3B4520	LOCKWASHER	1
21	1A4168	NUT	1
22	5M5016	NUT	2
23	3D6711	LOCK	1
24	3D403	WASHER	1
25	2Y2158	SHAFT	1
26	3D410	ARM ASSEM.	1
27	3D4505	BEARING	2
28	V375	BOLT	1
29	1D4719	NUT	1
30	4D7358	PIN	1
31	6D1599	BLOCK	1
32	2Y1993	SHAFT	1
33	1G1672	NUT	1
34	3B4620	COTTER PIN	2
35	1B4438	NUT	1
36	1F1470	CAP	1
37	3B8488	FITTING	1
38	1G591	COVER	1
39	2Y2166	HOSE ASSEM.	1
40	2Y2165	HOSE ASSEM.	1
41	S1603	BOLT	1
42	1B4205	NUT	2
43	S1595	BOLT	1
44	2A3223	BOLT	4
45	8M1630	FLANGE	4
46	1A9579	BOLT	4
47	1D4716	NUT	4
48	2Y1344	HOSE ASSEM.	1
49	2D2150	FILTER GROUP (Separate Illustration)	1
50	T102	BOLT	4
51	2Y2221	COVER	1

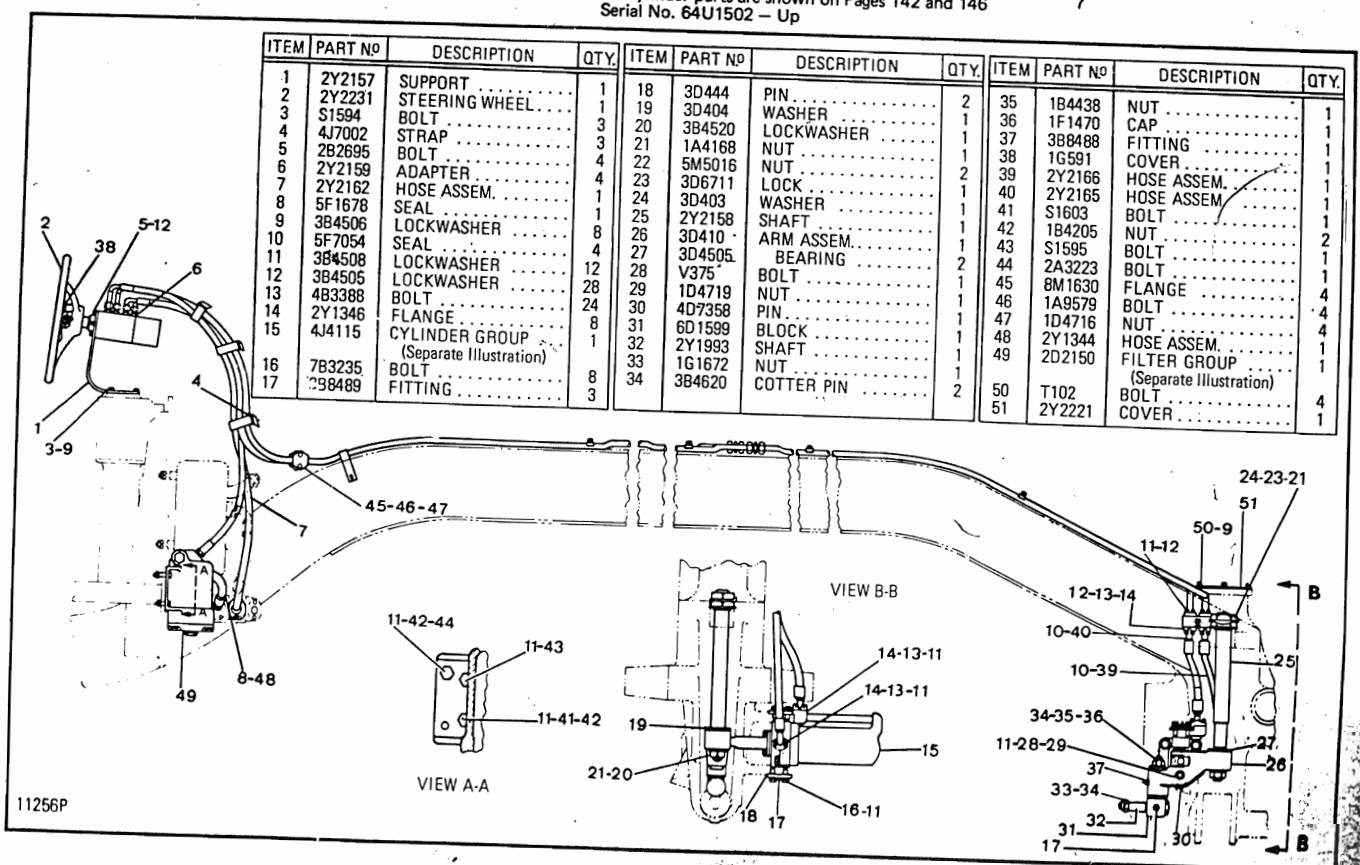

ITEM	PART Nº	DESCRIPTION	QTY.
1	2Y2157	SUPPORT	1
2	2Y2231	STEERING WHEEL	1
3	1G591	COVER	1
4	4J7002	STRAP	3
5	2B2695	BOLT	4
6	2Y2159	ADAPTER	4
7	2Y2162	HOSE ASSEM.	1
8	5F1678	SEAL	1
9	8M1630	FLANGE	4
10	3B4506	LOCKWASHER	1
11	1A9579	BOLT	4
12	1D4716	NUT	4
13	5B1983	LUG	1
14	2Y2482	COVER	1
15	5H3125	CLAMP	1
16	S509	BOLT	1

ITEM	PART Nº	DESCRIPTION	QTY.
17	5F7054	SEAL	4
18	3B4505	LOCKWASHER	4
19	S1566	BOLT	4
20	3B4510	LOCKWASHER	4
21	2Y2166	HOSE ASSEM.	1
	2Y2165	HOSE ASSEM.	1
		- OR -	
	8M2706	STEM	1
	8M1691	STEM	1
22	8M1630	CLAMP	4
	1A9579	BOLT	4
	1D4716	NUT	4
	9S671	HOSE 127 cm	
23	1D4720	NUT	4
24	2Y2236	SEAL	1
	GPP00872	FORM	1

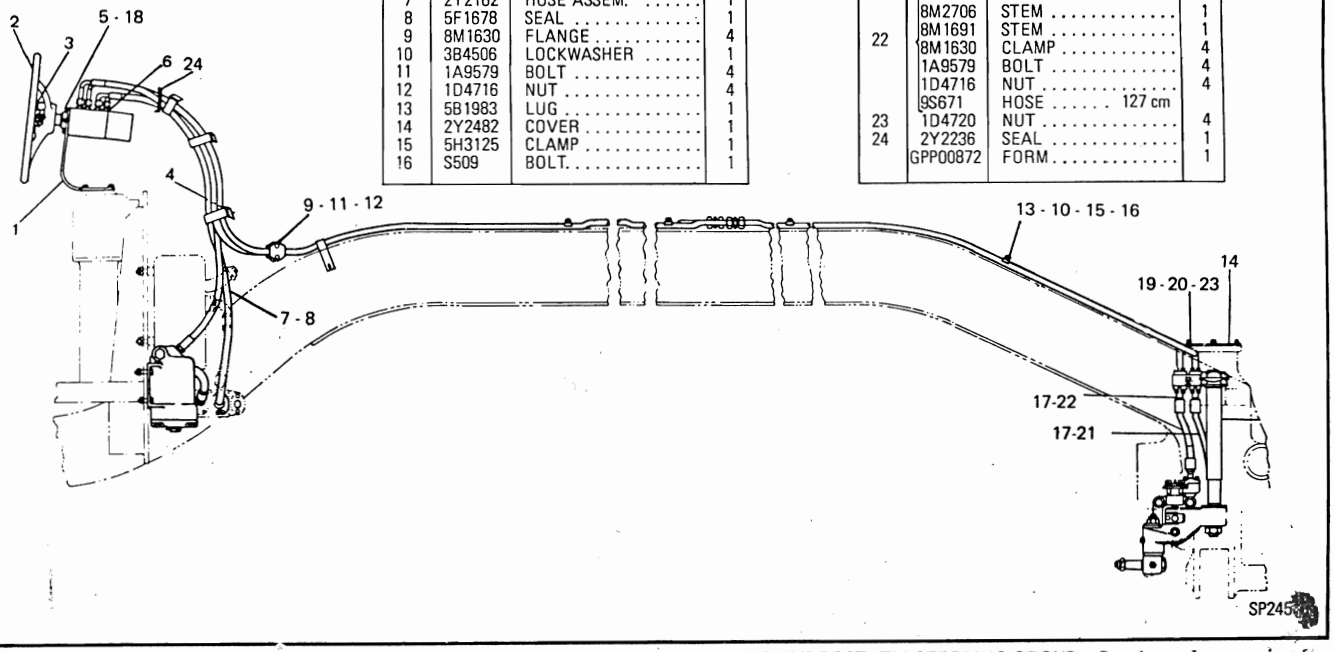

2Y2911 FIELD CONVERSION ARR. FROM HYDRAULIC STEERING TO HYDROSTATIC STEERING GROUP — Part 1
Serial No. 64U1502 — Up

2Y2911 FIELD CONVERSION ARR. FROM HYDRAULIC STEERING TO HYDROSTATIC STEERING GROUP — Part 2
9D3860 Steering Gear parts are shown on Page 145
Serial No. 64U1502 — Up

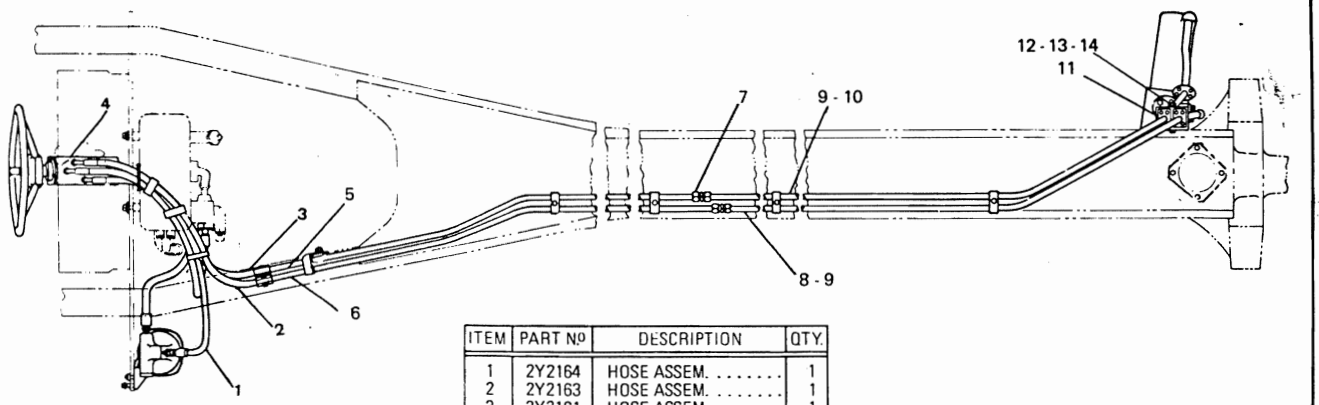

ITEM	PART Nº	DESCRIPTION	QTY.
1	2Y2164	HOSE ASSEM.	1
2	2Y2163	HOSE ASSEM.	1
3	2Y2161	HOSE ASSEM.	1
4	9D3860	STEERING GEAR GP. (Separate Illustration)	1
5	2Y2151	TUBE ASSEM.	1
6	2Y2152	TUBE ASSEM.	1
7	7F6696	FITTING	2
8	2Y2148	TUBE ASSEM.	1
9	5F7054	SEAL	2
10	2Y2147	TUBE ASSEM.	1
11	3D6731	BLOCK	1
12	1A1952	BOLT	1
13	9B1006	WASHER	1
14	3B4508	LOCKWASHER	1

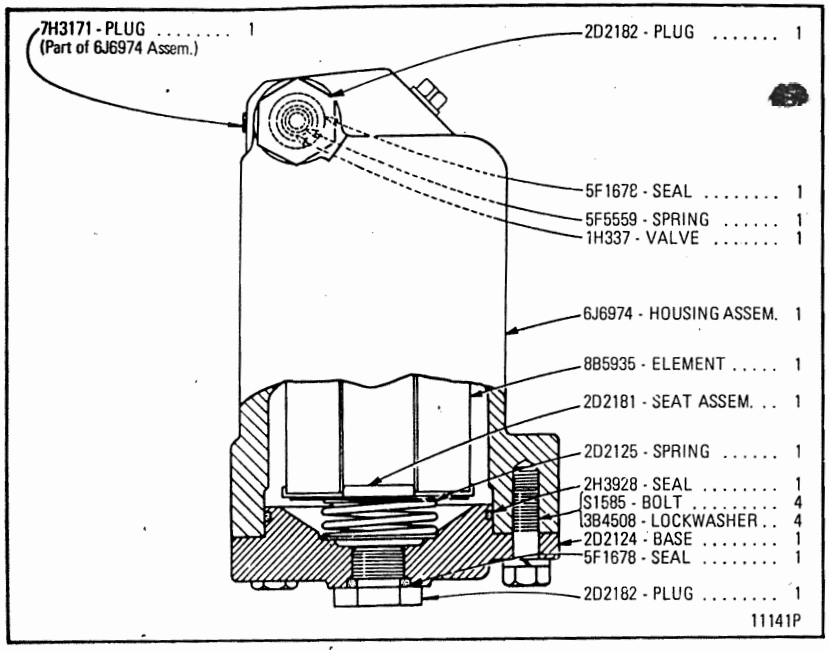

2D2150 FILTER GROUP
Part of 1G802 Steering Hydraulic Booster and 2Y2160 Hydrostatic Steering shown on Pages 133 and 139

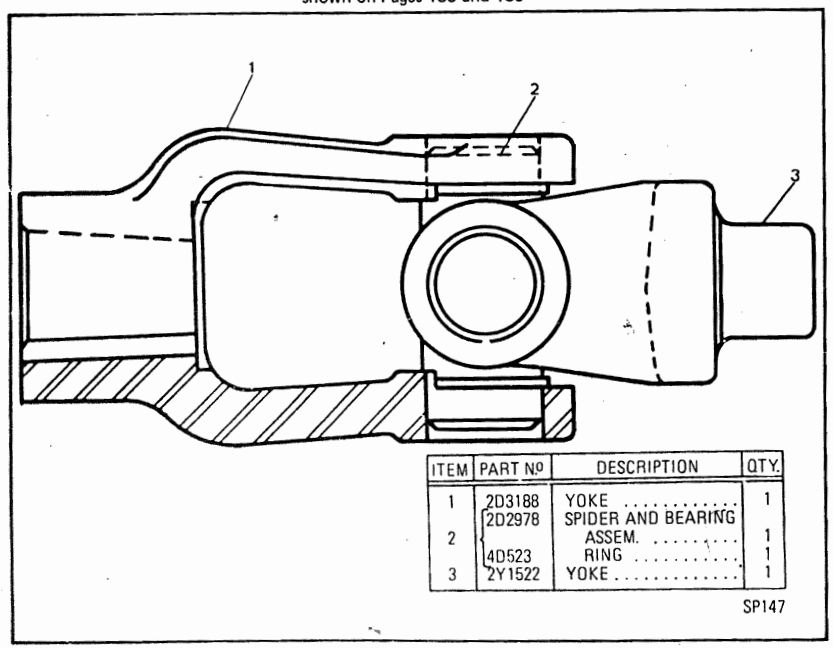

2Y1523 JOINT ASSEMBLY
Part of 2D4125 Leaning Wheel Control Shaft, 4B8580 Control Shaft and

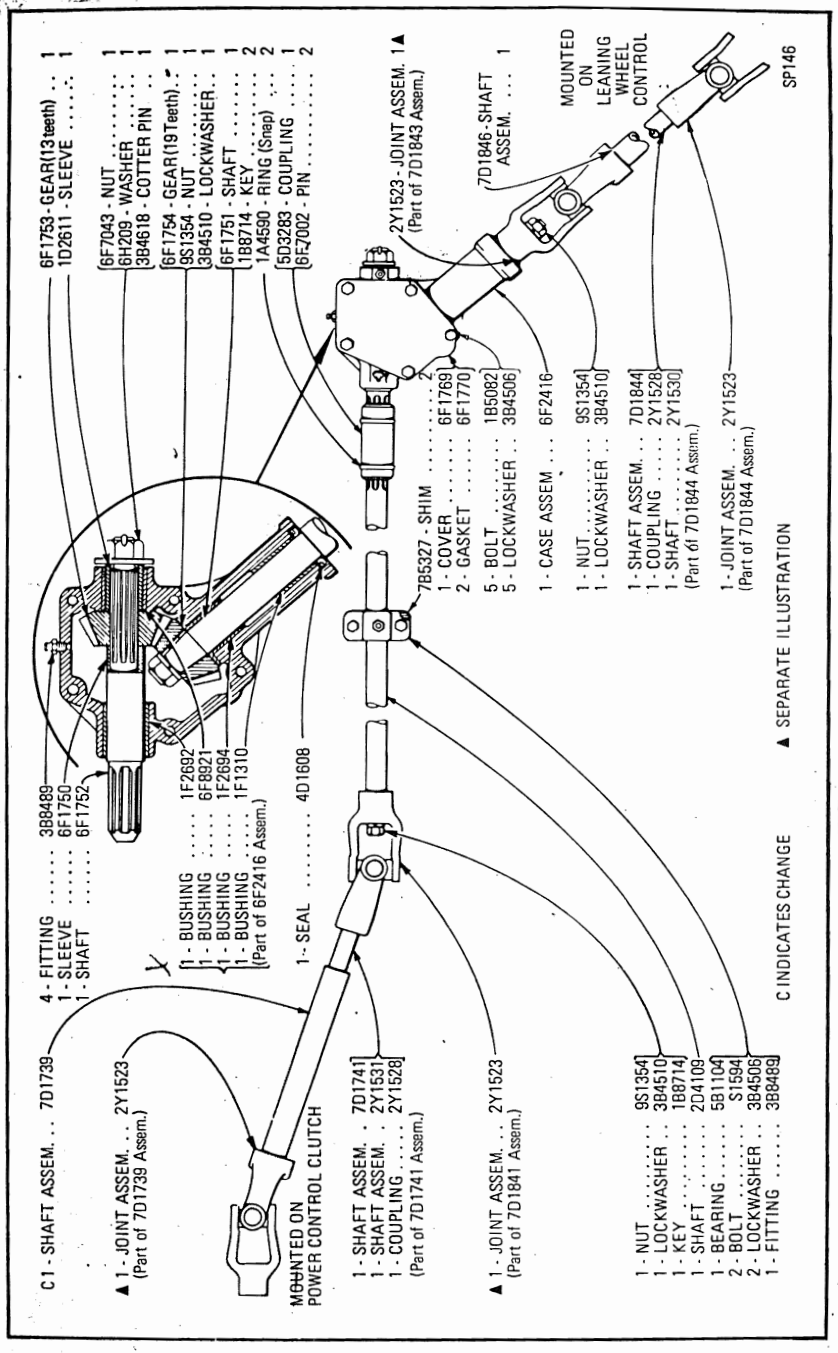

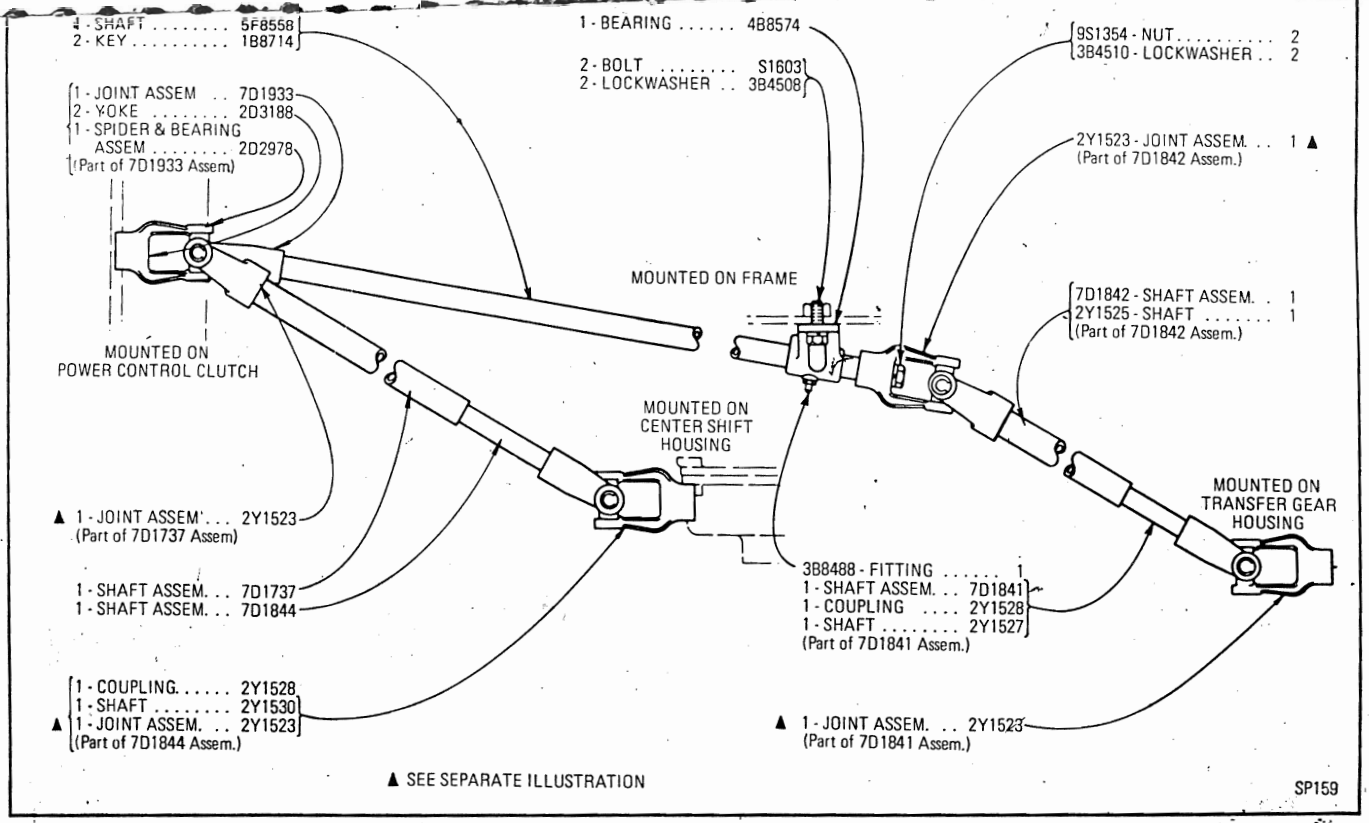

4B8580 CONTROL SHAFT GROUP
2Y1523 Joint Assembly parts are shown on Page 142

9D3860 STEERING GEAR GROUP
Part of 2Y2160 Hydrostatic Steering and 2Y2911 Field Conversion Arr. from Hydraulic Steering to Hydrostatic Steering shown on Pages 138 and 141. Serial No. 64U1502 – Up

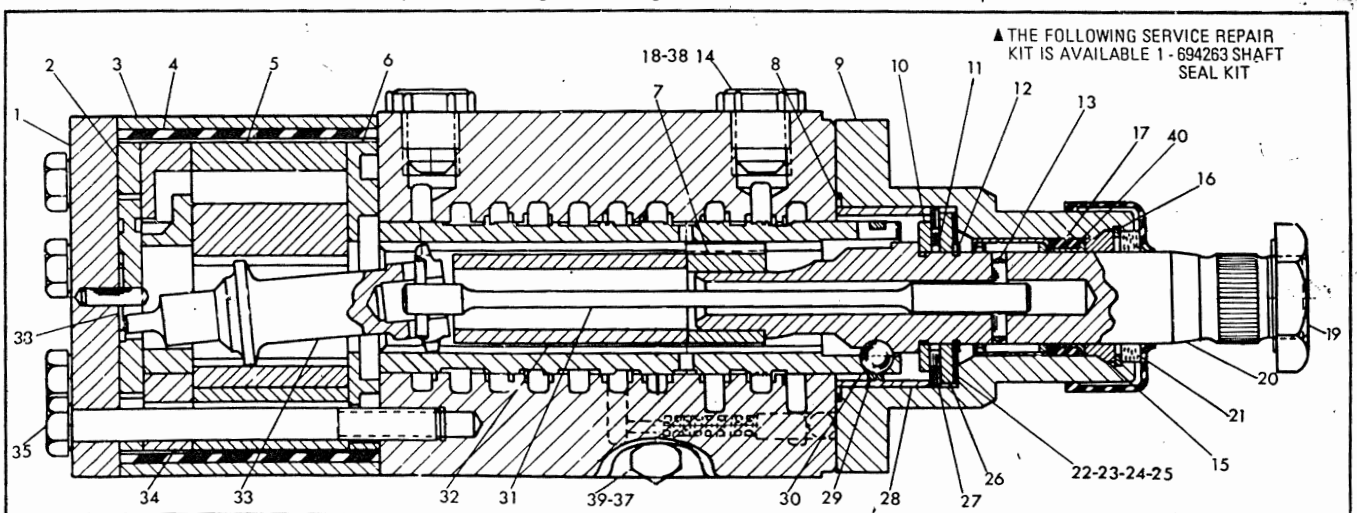

ITEM	PART Nº	DESCRIPTION	QTY.
1	2Y2701	COVER ASSEM.	1
2	2Y2702	COMMUTATOR ASSEM.	1
3	2Y2703	RETAINER	1
4	2Y3737	SEAL	1
5	2Y2705	ROTOR	1
6	686747	SPACER	1
7	2Y1707	RING	1
8	686739	SEAL	1
9	694257	COVER	1
10	2Y2711	BEARING	1
11	686733	BEARING	1
12	686728	RING	1
13	6L6035	ROLLER	1

ITEM	PART Nº	DESCRIPTION	QTY.
14	8F9538	SEAL	1
▲ 15	2Y2718	SEAL SPACER	1
16	2D6398	RING	1
▲ 17	2Y2719	SEAL SHAFT	1
18	1T416	BOLT	4
19	6321	NUT	1
20	2Y2721	SHAFT	1
21	365754	SEAL	1
22	686729	SHIM	4
23	686730	SHIM	4
24	686731	SHIM	1
25	687651	SHIM	1
26	2Y2727	WASHER	1

ITEM	PART Nº	DESCRIPTION	QTY.
27	354296	SPRING	1
28	686735	SPACER	1
29	686734	SPRING	1
30	4B9880	BALL	1
31	2Y2732	BAR ASSEM.	1
32	354280	SPACER	1
33	2Y2734	LINK	1
34	686749	MANIFOLD	1
35	1F4111	BOLT	7
36	2Y2737	WASHER	1
37	2D6642	BALL	1
38	2Y2739	PLUG	1
39	2Y2742	PLUG	1
▲ 40	2Y2717	SEAL	1

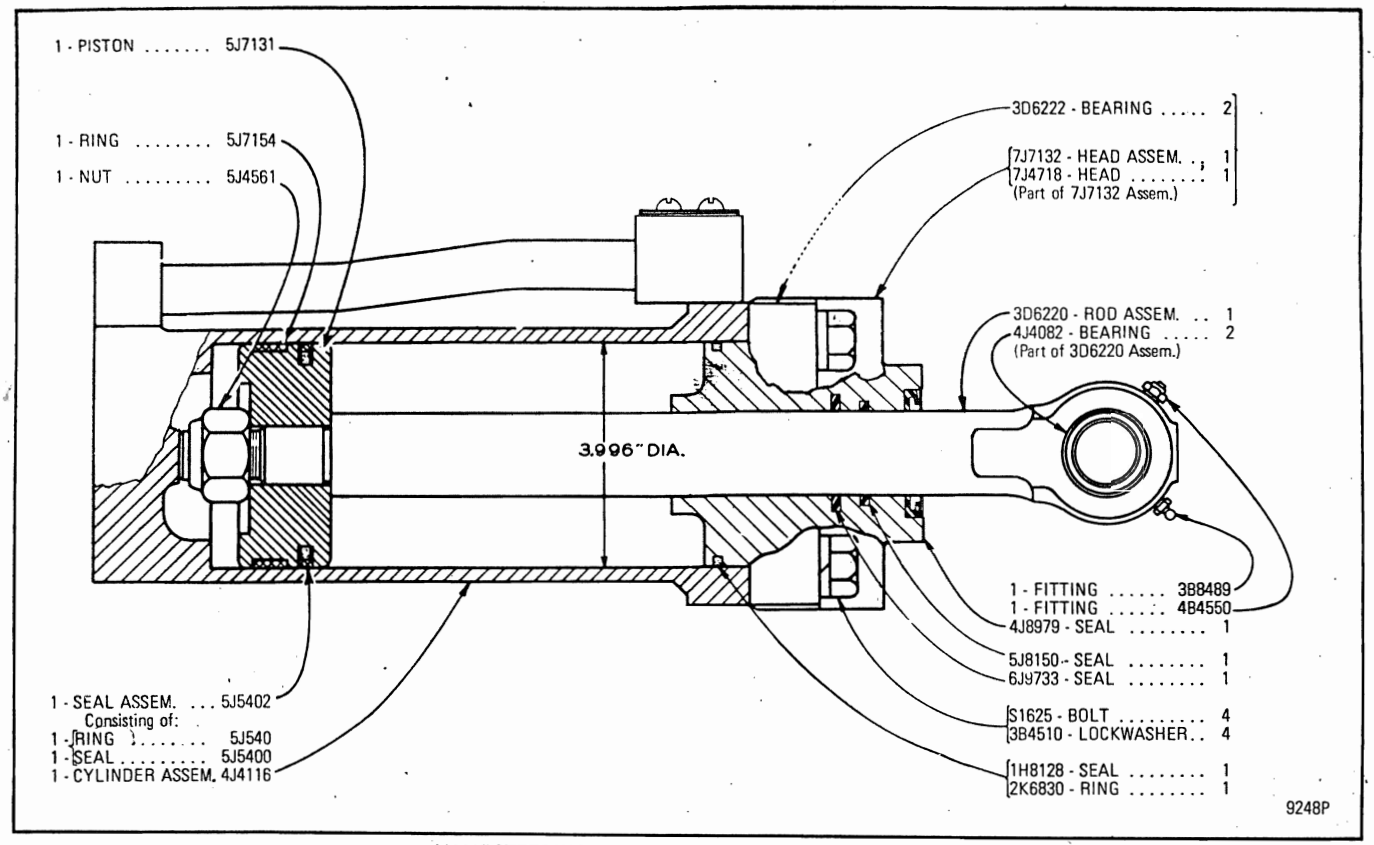

4J4115 STEERING CYLINDER GROUP – 4" Bore x 6" Stroke
Part of 1G802 Steering Hydraulic Booster and 2Y2160 Hydrostatic Steering shown on Pages 133 and 139

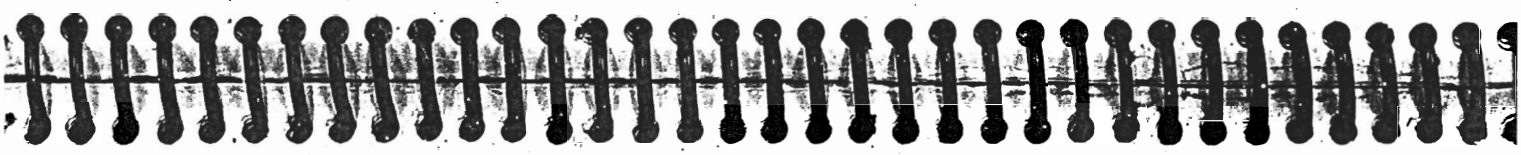

1G643 TANK AND PUMP GROUP
Part of 1G802 Steering Hydraulic Booster and 2Y2160 Hydrostatic Steering shown on Pages 133 and 138. 4H442 Valve, 4D4661 Hydraulic Pump and 1G642 Steering Gear Tank parts are shown on Pages 149, 150 and 152. Serial No. 64U1050 to 64U1739

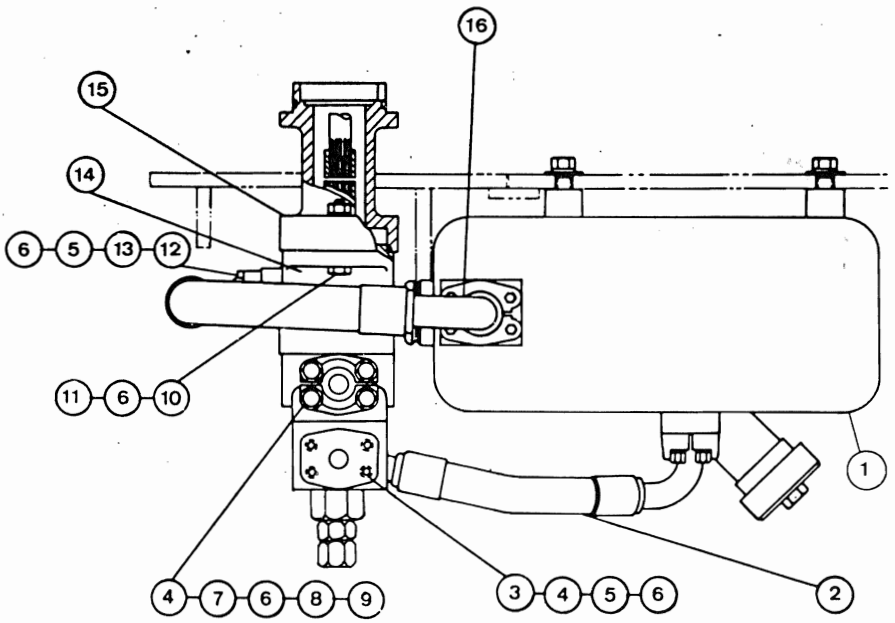

ITEM	PART Nº	DESCRIPTION	QTY.
1	1G642	TANK GROUP ..... (Separate Illustration)	1
	2Y1315	HOSE ASSEM.	1
		- OR -	
	8M2716	STEM	2
2	8M1631	CLAMP	4
	S1571	BOLT	4
	1D4717	NUT	4
	9S247	HOSE ..... 23 cm	
3	5F1678	SEAL	1
4	2Y1350	FLANGE	4
5	S1588	BOLT	8
6	3B4506	LOCKWASHER	14
7	8S9191	BOLT	4
8	5F1678	SEAL (Between Valve and Pump).	1
C 9	4H442	VALVE GROUP ..... (Separate Illustration)	1
10	L2070	BOLT	2
11	1D4717	NUT	2
12	4F7391	SEAL	1
13	2Y1349	FLANGE	2
14	4D4661	PUMP ASSEM. ..... (Separate Illustration)	1
15	2H3931	SEAL (Between Support and Pump)	1
16	2Y1314	HOSE ASSEM.	1

C INDICATES CHANGE SP143

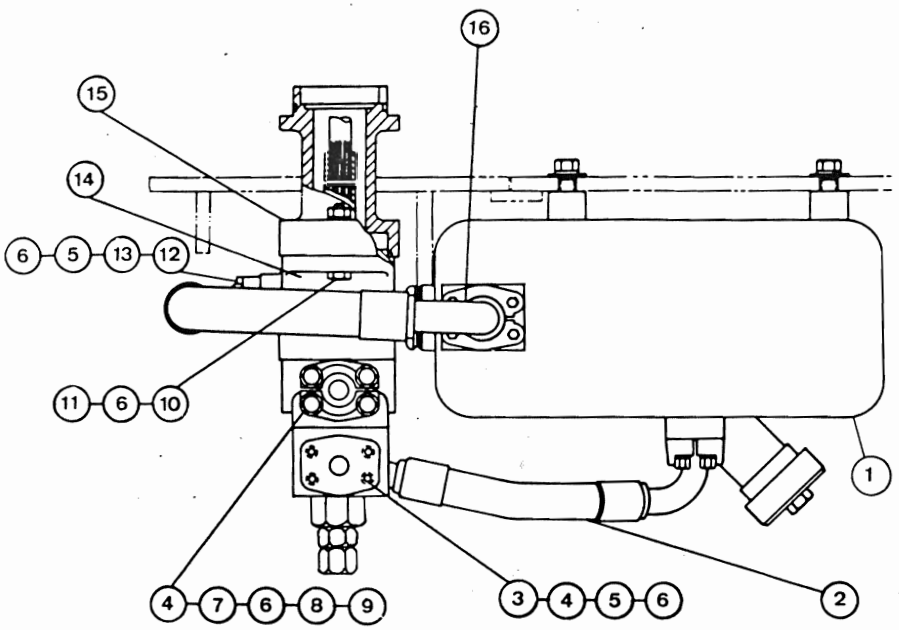

ITEM	PART No	DESCRIPTION	QTY.
1	1G642	TANK GROUP (Separate Illustration)	1
	2Y1315	HOSE ASSEM.	1
		- OR -	
	8M2716	STEM	2
2	8M1631	CLAMP	4
	S1571	BOLT	4
	1D4717	NUT	4
	9S247	HOSE 23 cm	
3	5F1678	SEAL	1
4	2Y1350	FLANGE	4
5	S1588	BOLT	8
6	3B4506	LOCKWASHER	14
7	8S9191	BOLT	4
8	5F1678	SEAL (Between Valve and Pump)	1
C 9	2Y2175	VALVE GROUP (Separate Illustration)	1
10	L2070	BOLT	2
11	1D4717	NUT	2
12	4F7391	SEAL	1
13	2Y1349	FLANGE	2
14	4D4661	PUMP ASSEM. (Separate Illustration)	1
15	2H3931	SEAL (Between Support and Pump)	1
16	2Y1314	HOSE ASSEM.	1

C INDICATES CHANGE SP288

1G643 TANK AND PUMP GROUP
Part of 2Y2160 Hydrostatic Steering and 1G802 Steering Hydraulic Booster shown on Pages 133 and 138. 2Y2175 Valve, 4D4661 Hydraulic Pump and 1G642 Steering Gear Tank parts are shown on Pages 149, 150 and 152. Serial No. 64U1740 — Up

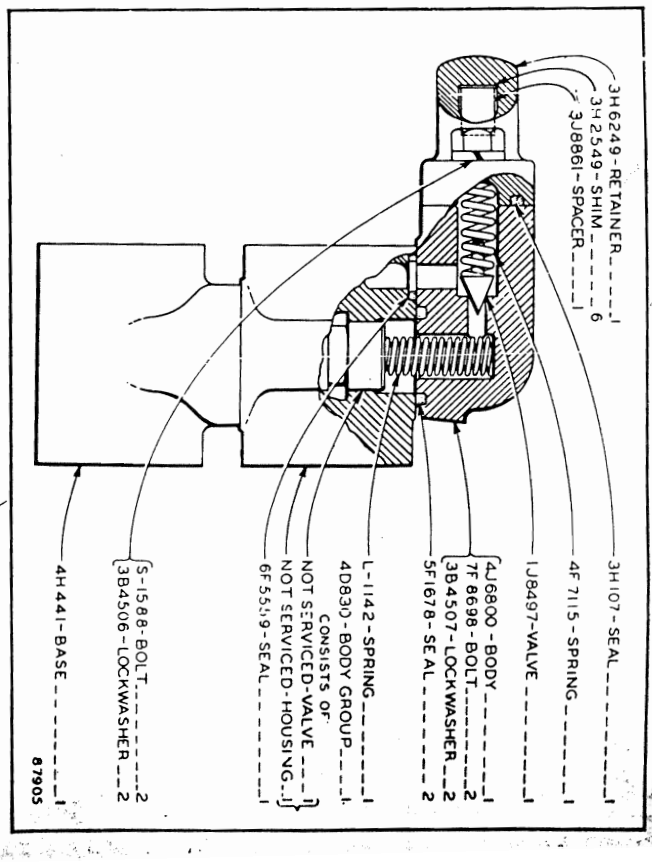

4H442 VALVE ASSEMBLY
Part of 1G643 Tank and Pump shown on Page 147
Serial No. 64U1050 to 64U1739

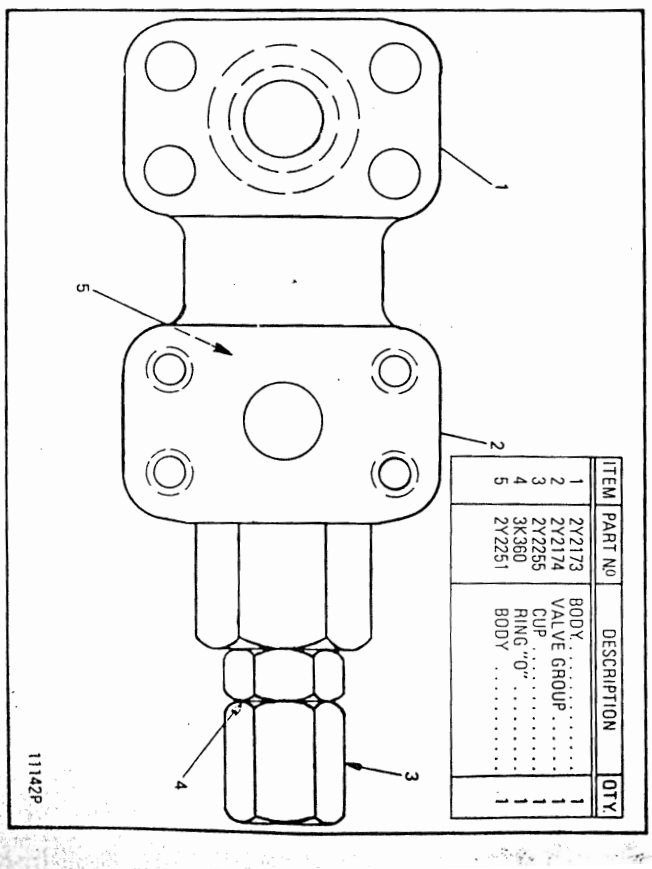

ITEM	PART No	DESCRIPTION	QTY.
1	2Y2173	BODY	1
2	2Y2174	VALVE GROUP	1
3	2Y2255	CUP	1
4	3K360	RING "O"	1
5	2Y2251	BODY	1

2Y2175 VALVE GROUP

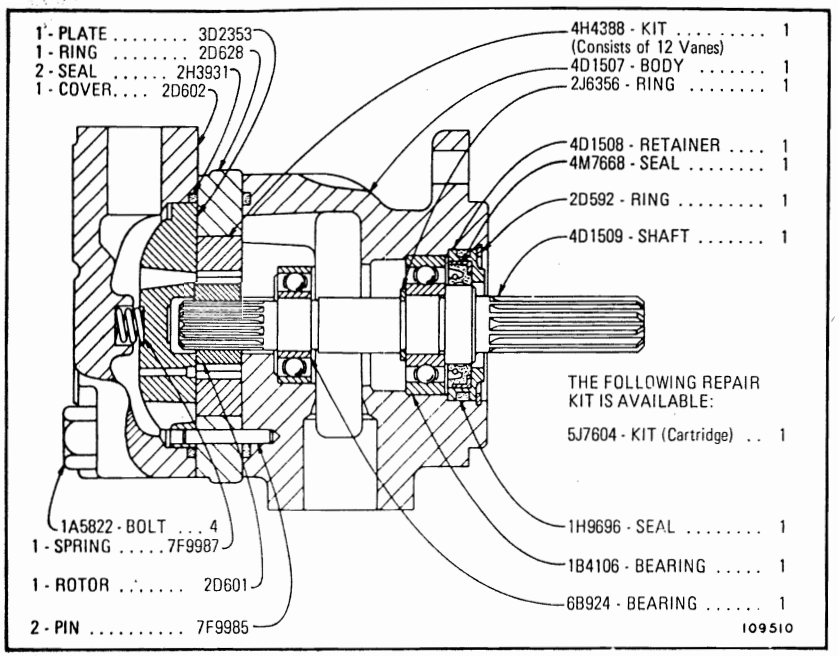

4D4661 HYDRAULIC PUMP ASSEMBLY
Part of 1G643 Tank and Pump shown on Pages 147 and 148

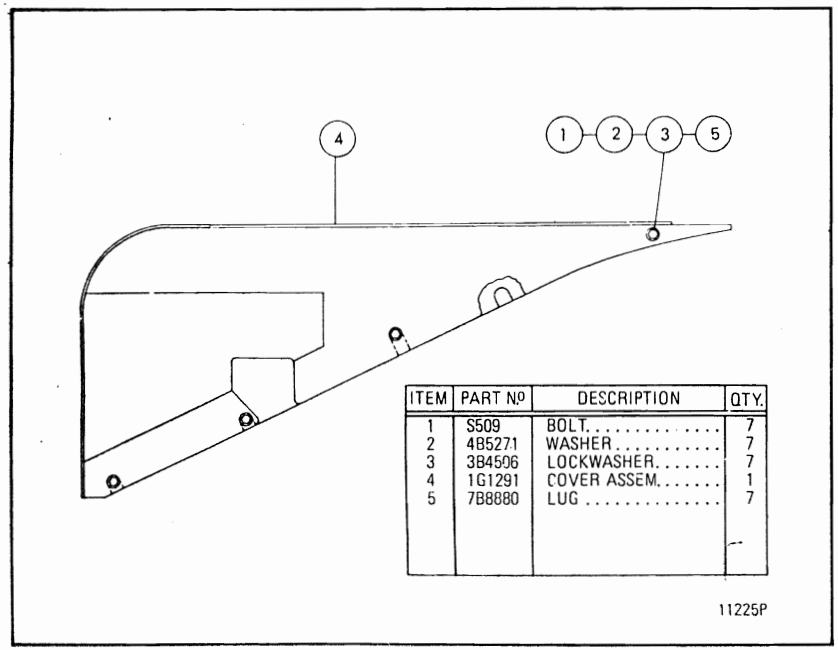

ITEM	PART No	DESCRIPTION	QTY.
1	S509	BOLT.....	7
2	4B5271	WASHER.....	7
3	3B4506	LOCKWASHER.....	7
4	1G1291	COVER ASSEM.....	1
5	7B8880	LUG	7

1G1300 COVER GROUP
Serial No. 64U1050 to 64U1501

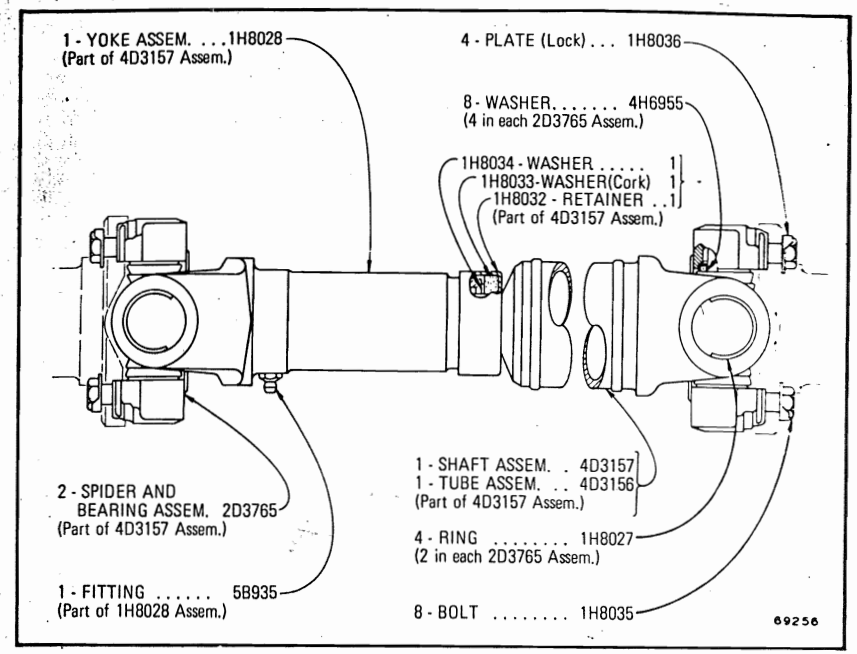

4D3160 POWER CONTROL DRIVE SHAFT GROUP

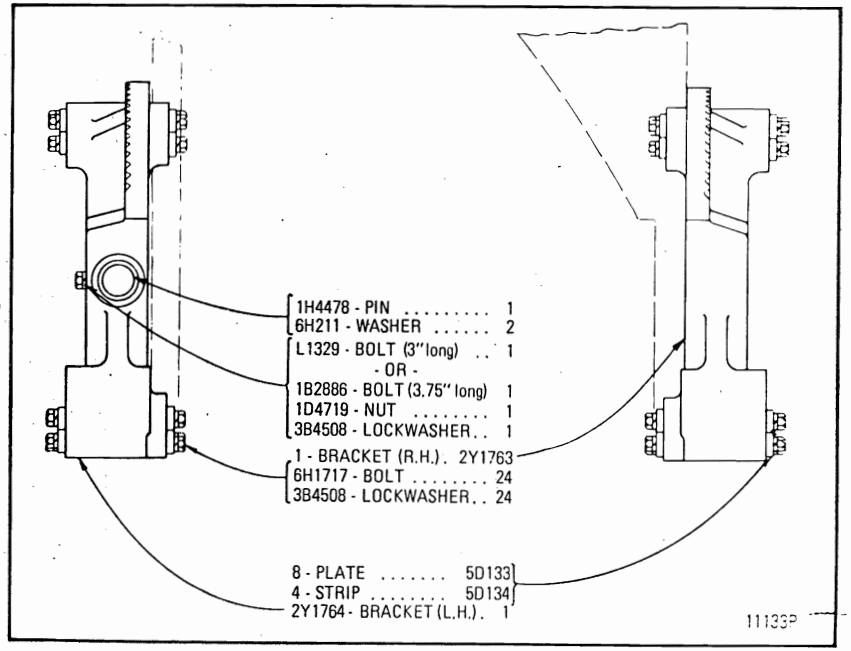

4D8510 BLADE BRACKET SUPPORT GROUP
Part of 2Y2260 Power Blade Arrangement shown on Page 164
AN ATTACHMENT

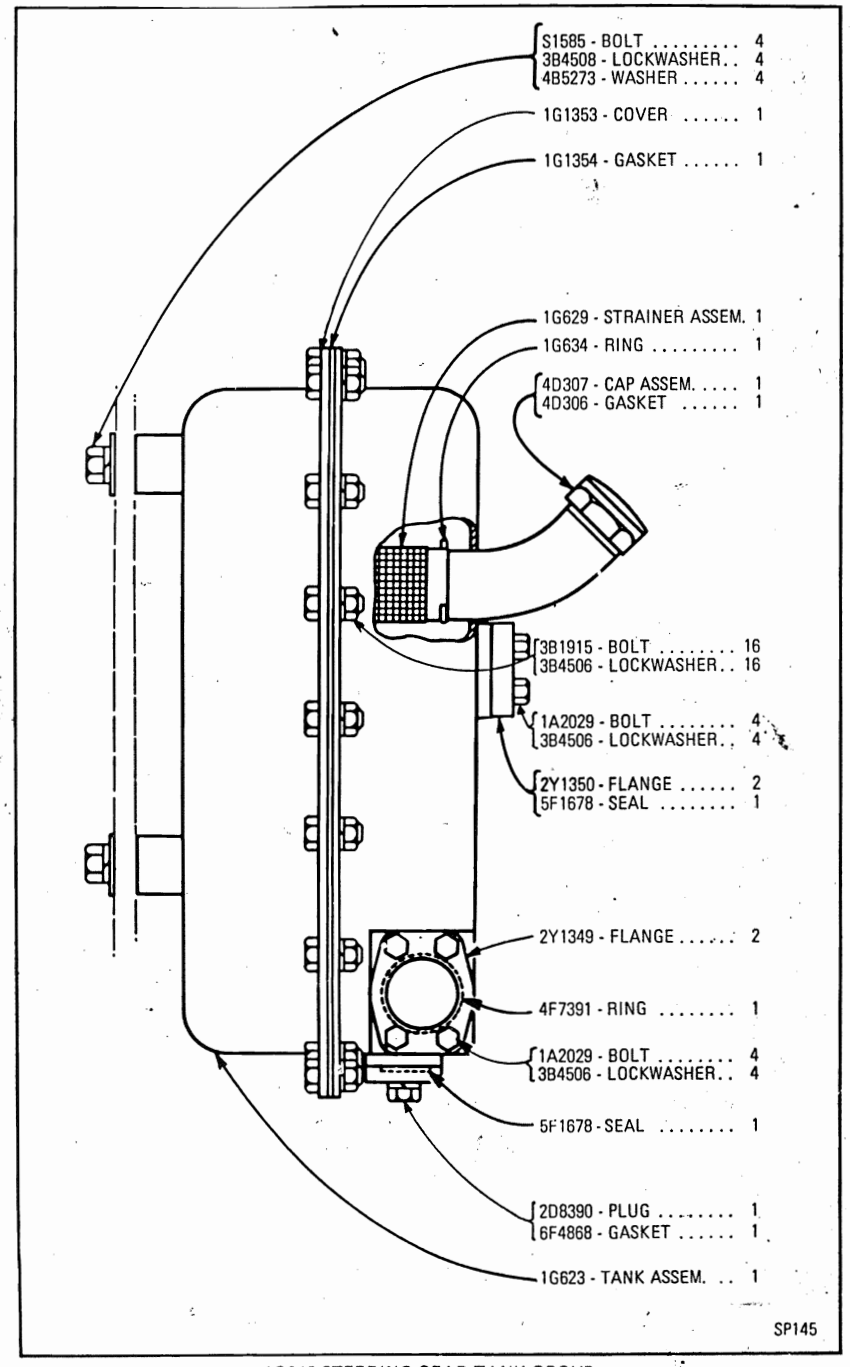

1G642 STEERING GEAR TANK GROUP

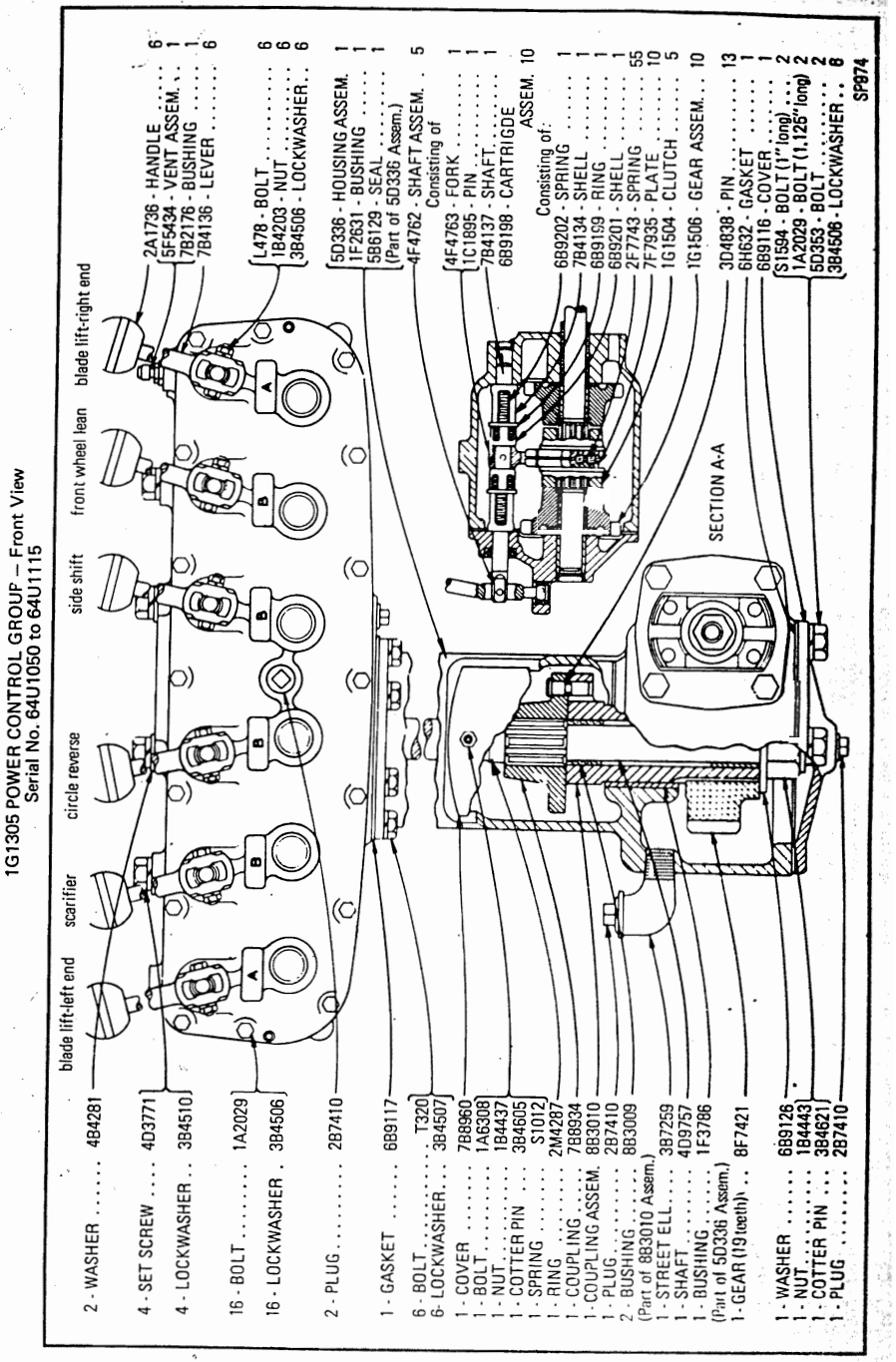

1G1305 POWER CONTROL GROUP — Front View
Serial No. 64U1050 to 64U1115

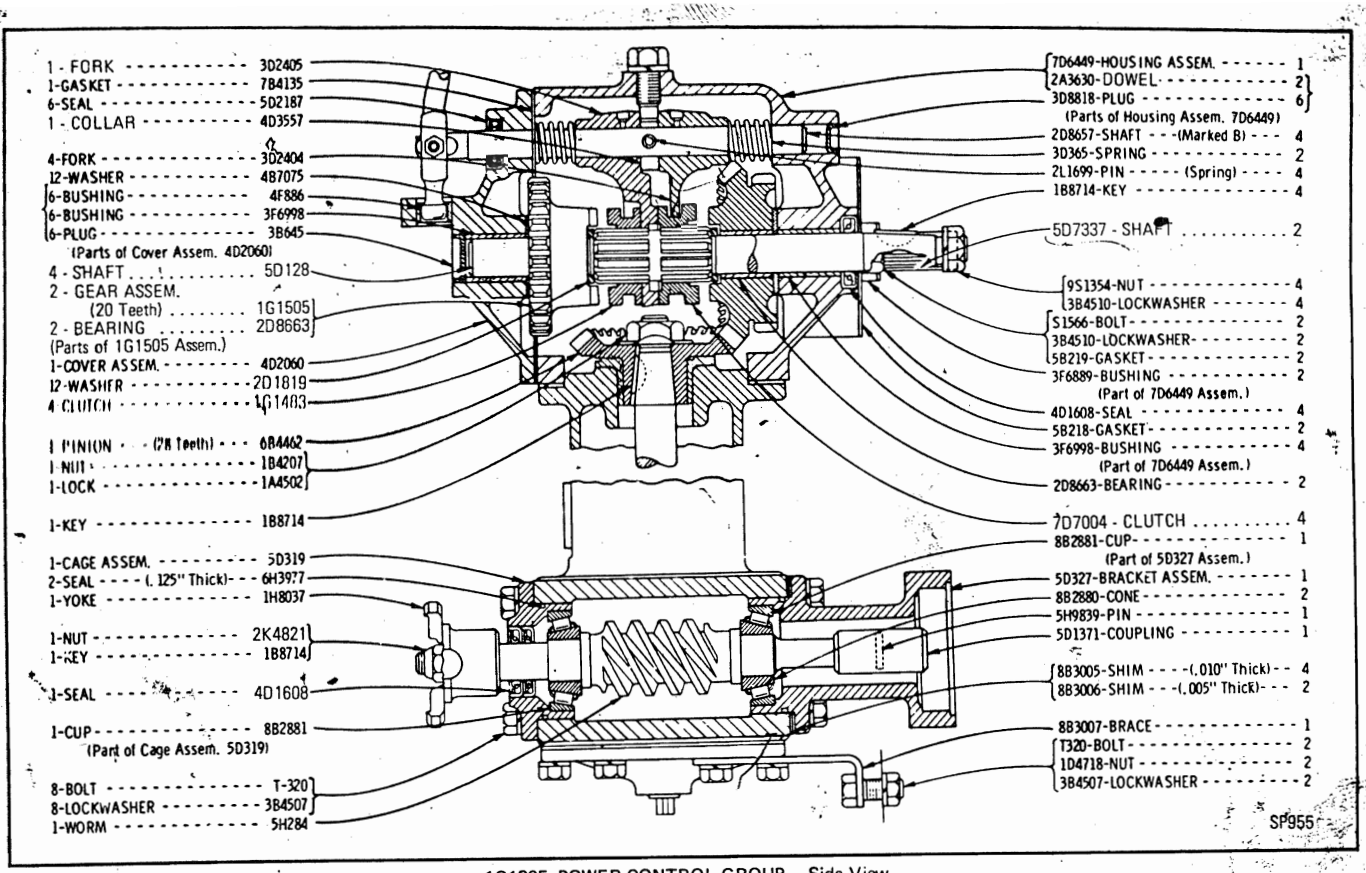

1G1305 POWER CONTROL GROUP – Side View
Serial No. 64U1050 to 64U1115

1G1305 POWER CONTROL GROUP – Front View
Serial No. 64U1116 to 64U1219

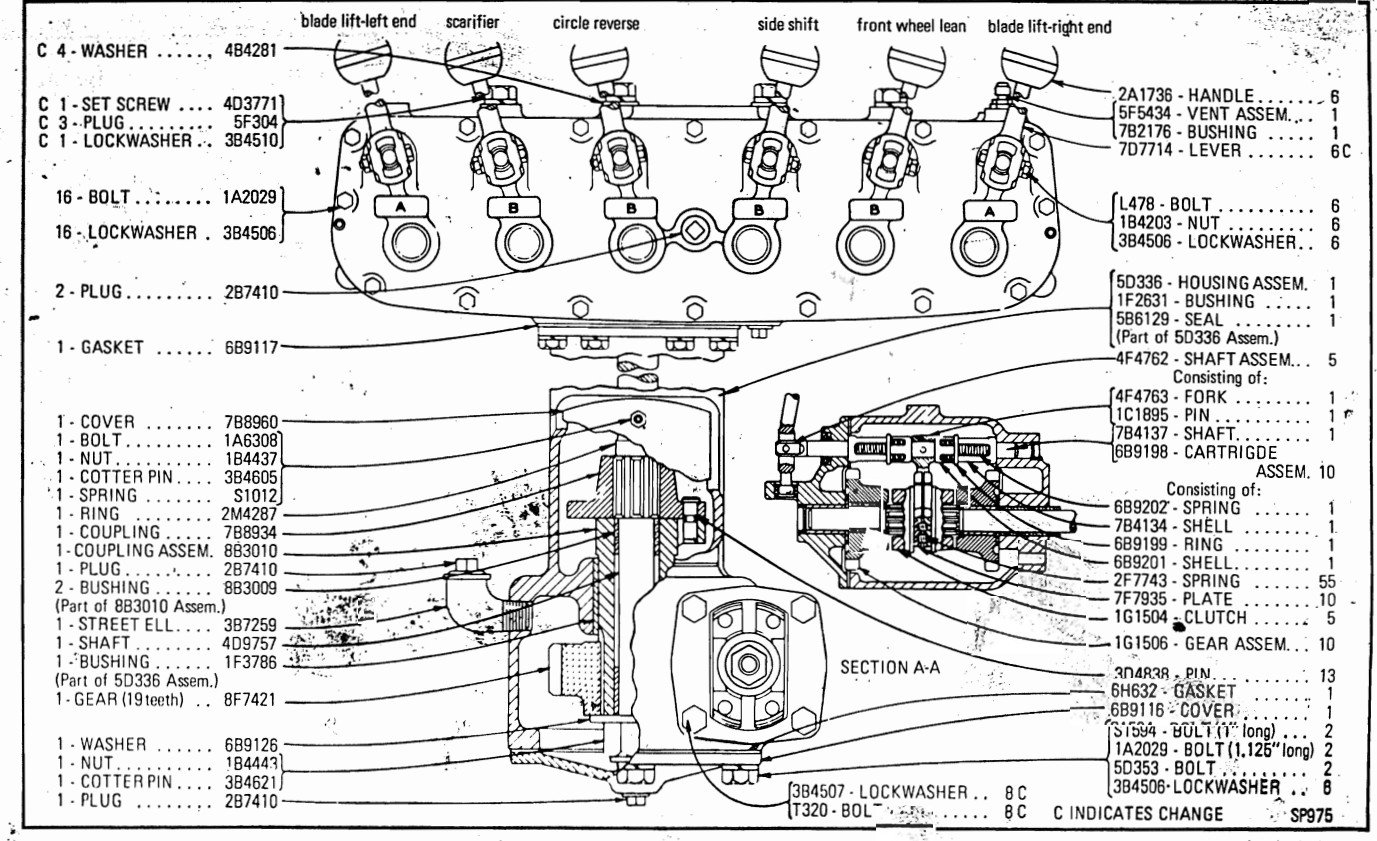

1G1305 POWER CONTROL GROUP – Side View
Serial No. 64U1116 to 64U1219

1G1305 POWER CONTROL GROUP – Front View
Serial No. 64U1220 – Up

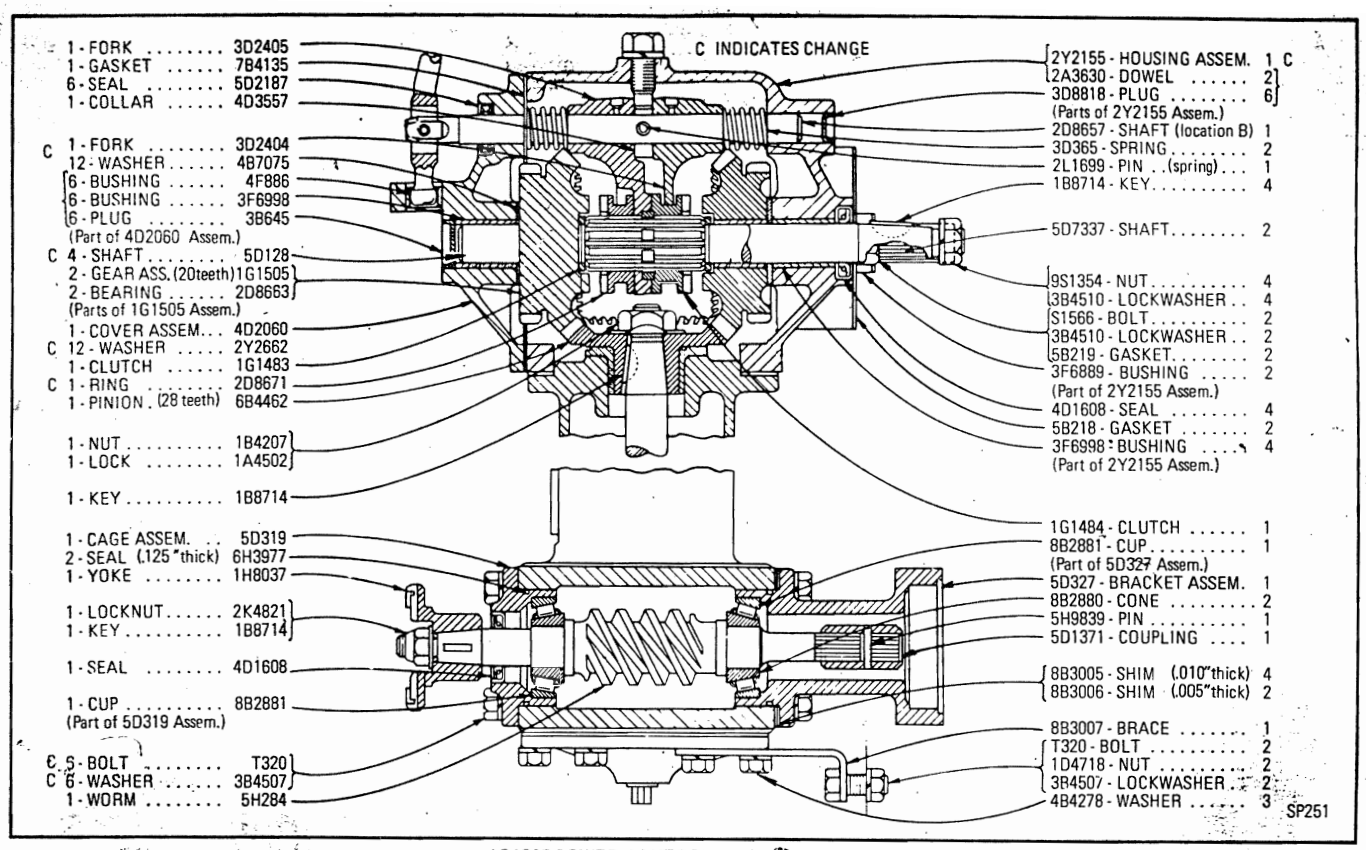

1G1305 POWER CONTROL GROUP — Side View
Serial No. 64U1220 — Up



2D7836 BLADE LIFT GROUP — Side View

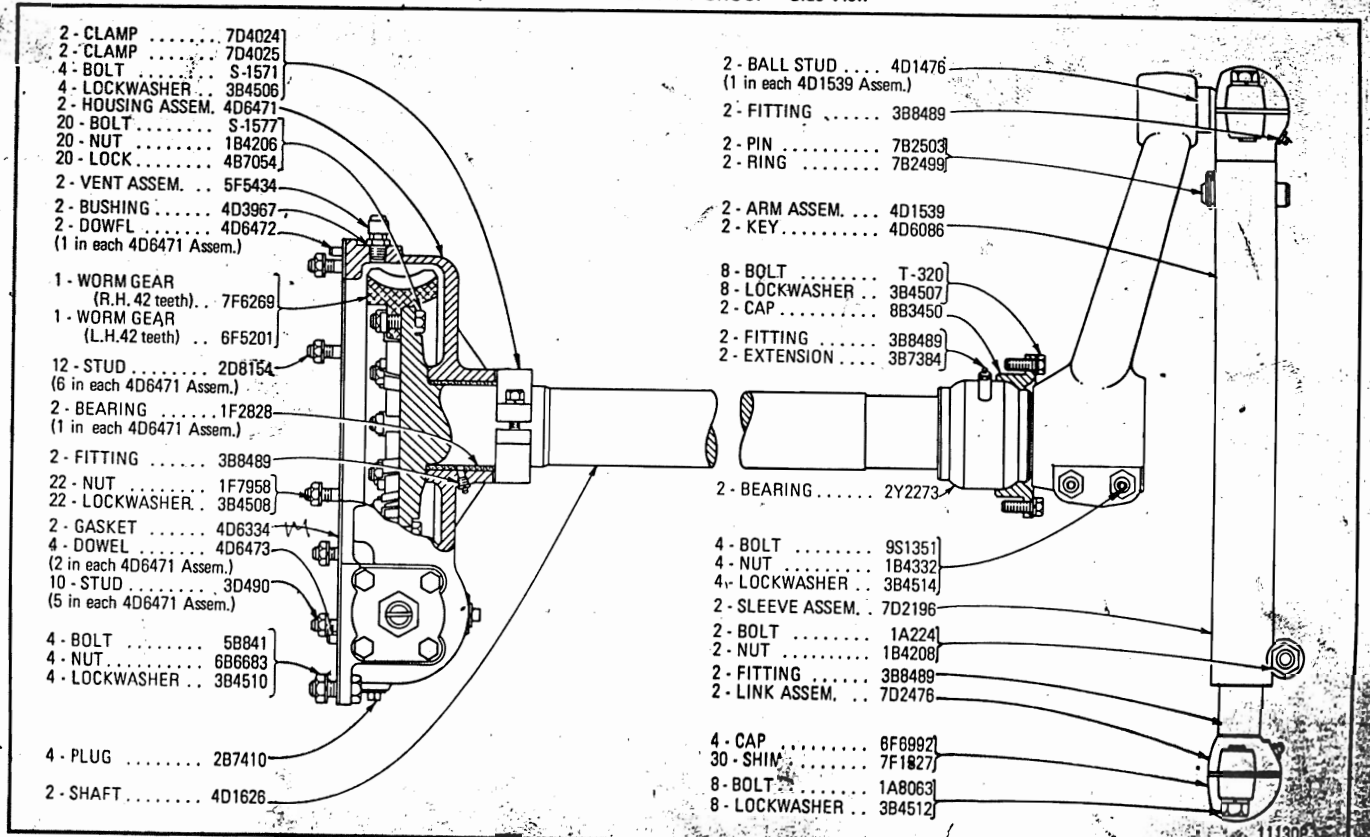

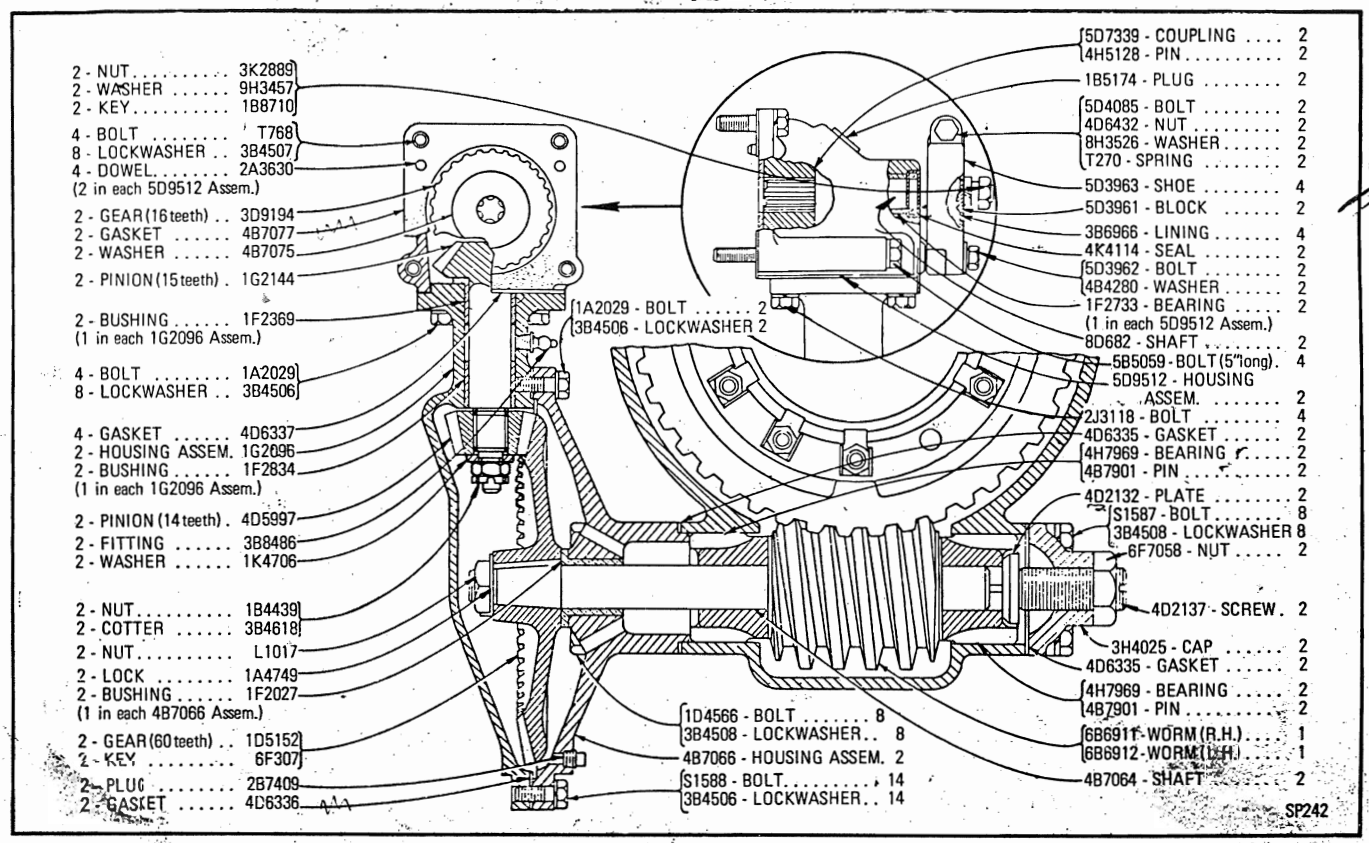

2D7836 BLADE LIFT GROUP — Sectional View of Gear Housing

2Y1590 BLADE CYLINDER ASSEMBLY — 4" Bore x 48" Stroke
Part of 2Y2260 Power Blade Arrangement listed on Page 164
AN ATTACHMENT

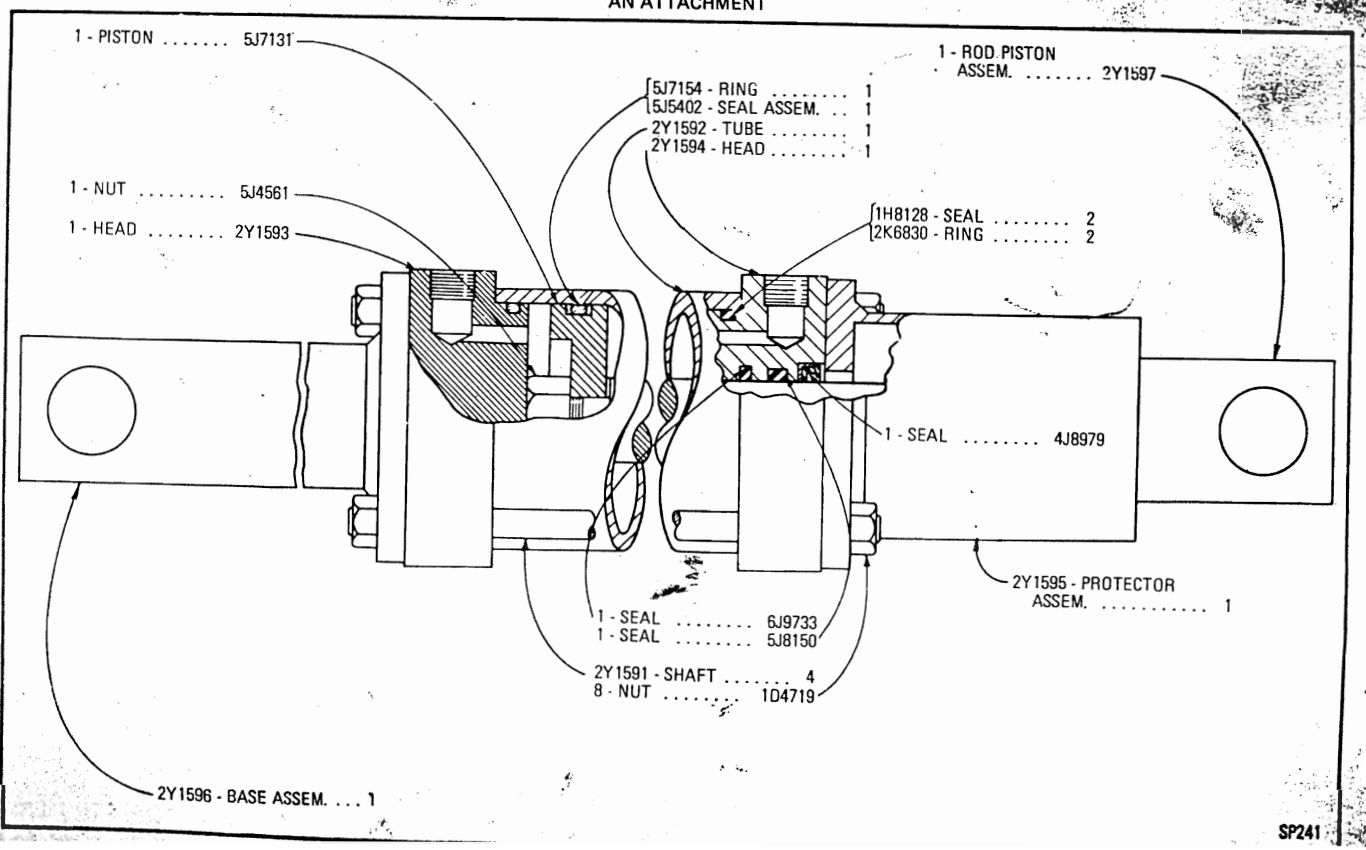

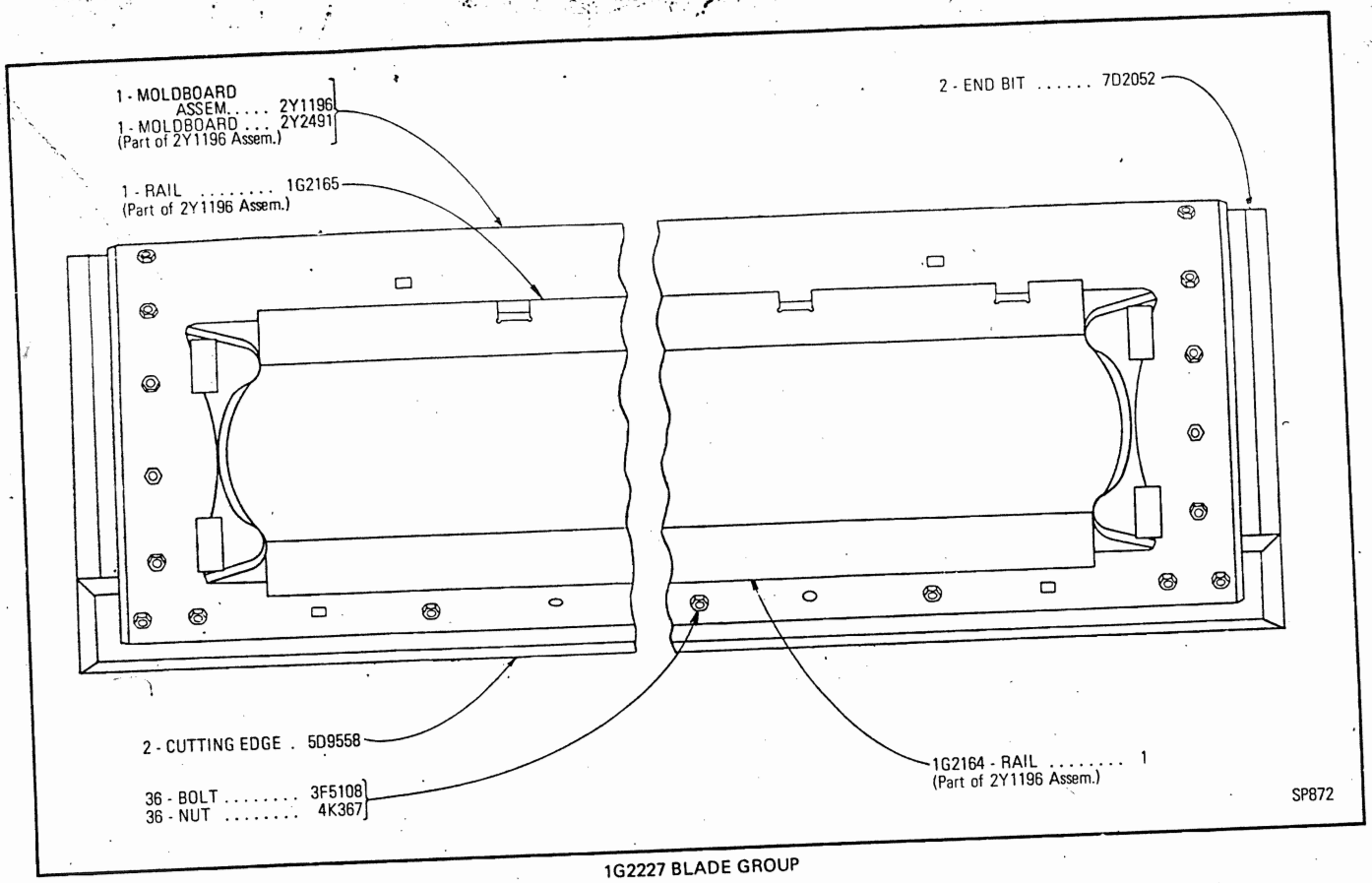

1G2227 BLADE GROUP

5D4790 BLADE GROUP — 12 Feet
Part of 2Y2260 Power Blade Arrangement listed on Page 164
AN ATTACHMENT

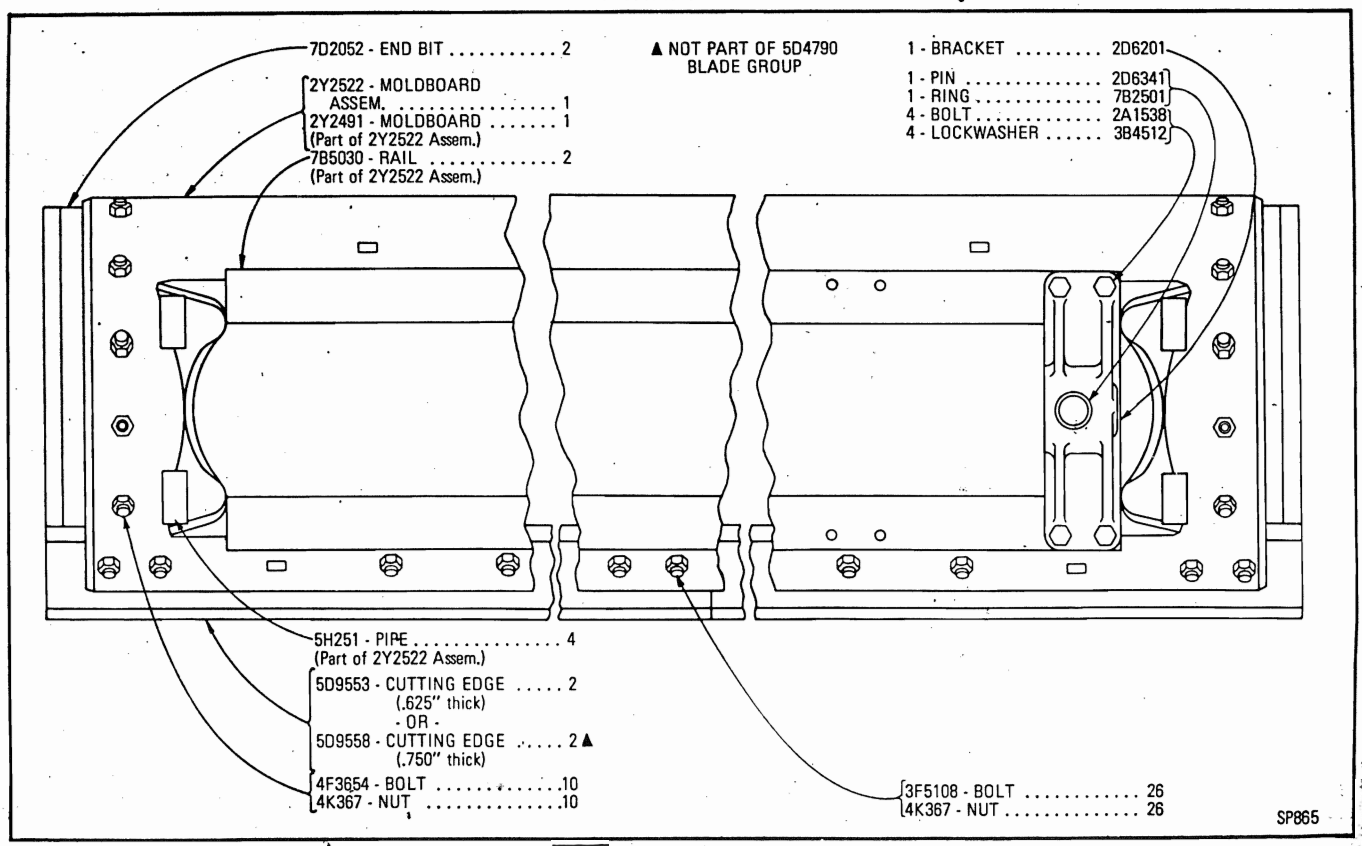

2Y2260 BLADE ARRANGEMENT – 12 Feet

Consists of:

1	2Y1760	CIRCLE GROUP	121
1	2Y1590	BLADE CYLINDER ASSEMBLY	161
1	4D8510	BLADE BRACKET GROUP	151
1	5D4790	BLADE GROUP	163
1	2Y2250	VALVE AND LINES GROUP	131
1	2Y1756	BOSS GROUP	

SP883

POWER BLADE ARRANGEMENT
AN ATTACHMENT

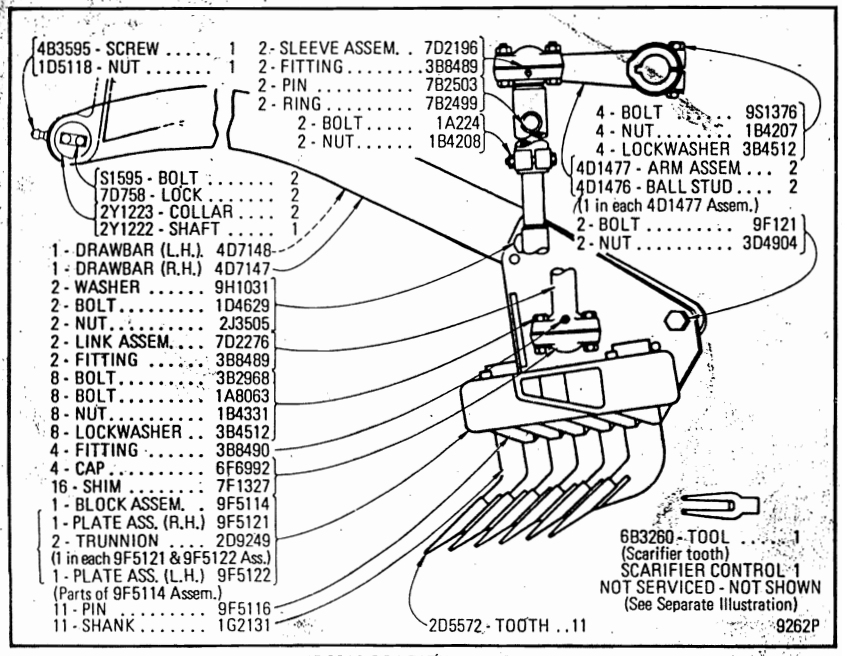

6D3300 SCARIFIER GROUP
Includes Scarifier Controls shown on Page 165
Serial No. 64U1050 to 64U1070

SCARIFIER CONTROLS GROUP
See Page 164 for Scarifier, 2Y1523 Joint parts are shown on Page 142
Serial No. 64U1050 to 64U1070

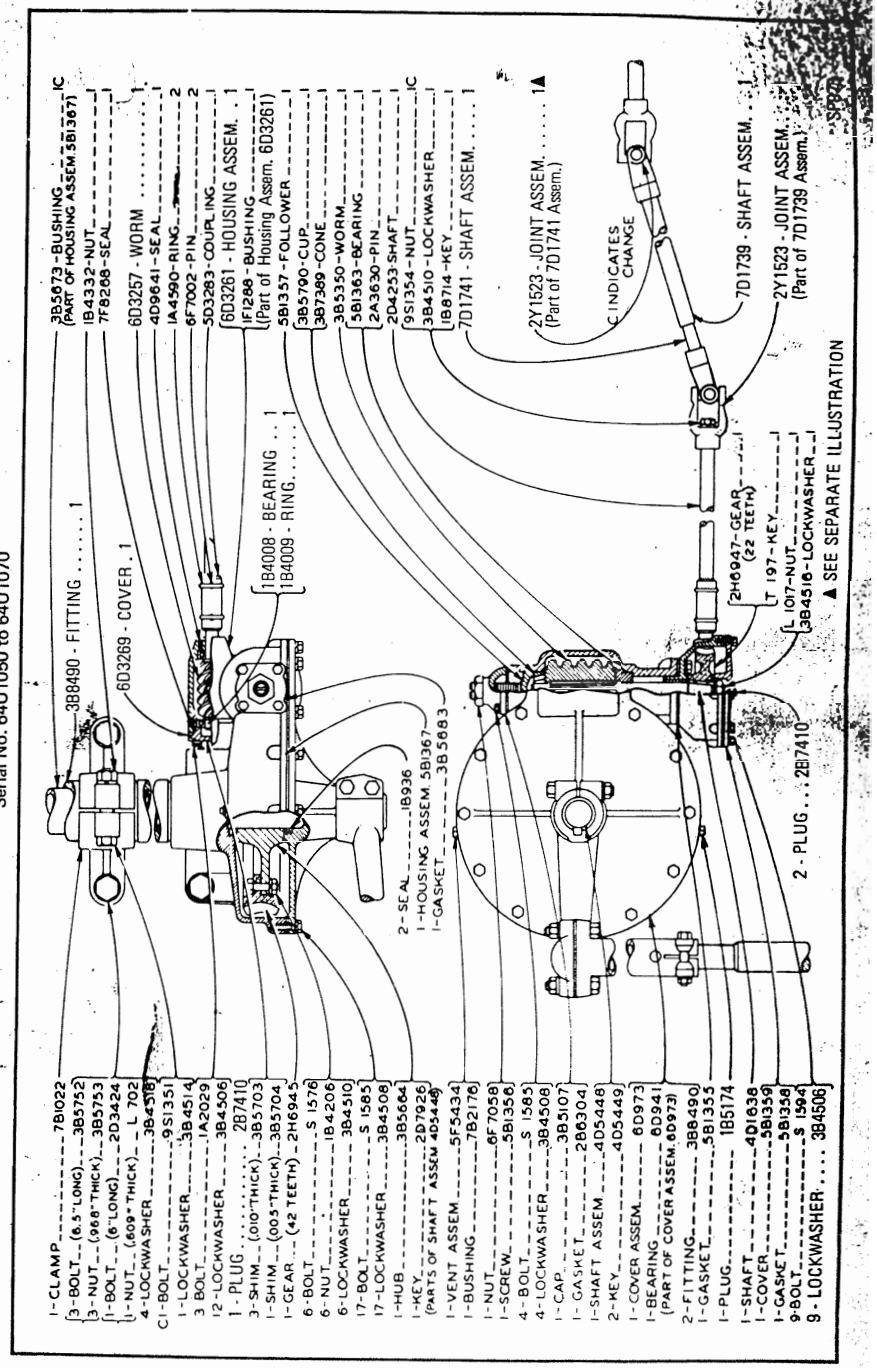

ITEM	PART No	DESCRIPTION	QTY.
1	4D7147	DRAWBAR (R.H.)	1
2	4D7148	DRAWBAR (L.H.)	1
3	2Y1222	SHAFT	1
4	4B3595	SCREW	1
	1D5118	NUT	1
5	2Y1223	RETAINER	2
6	S1595	BOLT	4
	7D758	LOCK	2
	9F5116	PIN	11
7	1G2131	SHANK	11
	2D5572	TOOTH	11
	9F5114	BLOCK ASSEM.	1
	9F2151	PLATE ASSEM.(R.H.)	1
	9F2152	PLATE ASSEM.(L.H.)	1
8	2D9249	TRUNNION (1 in each 9F5121 and 9F5122 Assem.)	2
9	9F121	BOLT	2
	3D4904	NUT	2
10	4D1477	ARM ASSEM.	2
11	4D5449	KEY	2
12	1D4629	BOLT	2
	6K545	NUT	2

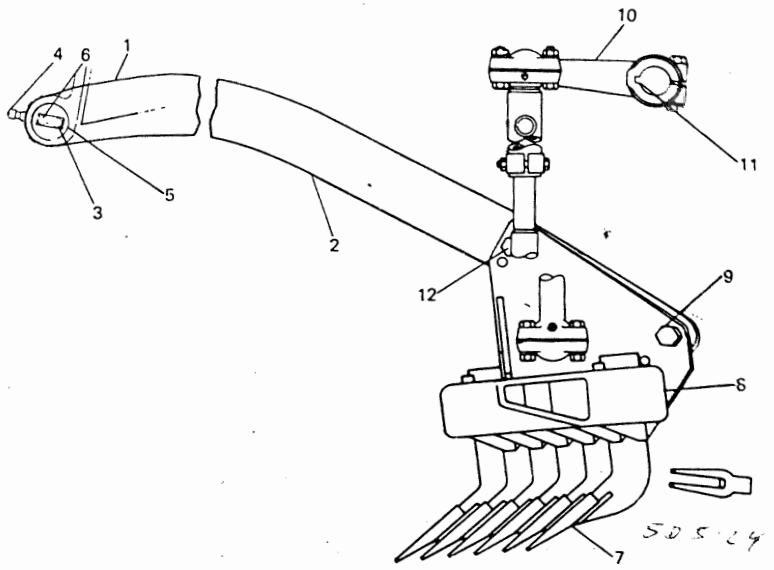

SP253

6D3300 SCARIFIER GROUP – Part 1 of 3
Serial No. 64U1071 – Up



6D3300 SCARIFIER GROUP – Part 2 of 3
2Y1523 Joint parts are shown on Page 142
Serial No. 64U1071 – Up

ITEM	PART No	DESCRIPTION	QTY.
1	5F5434	VENT ASSEM.	1
	7B2176	BUSHING	1
2	9S1376	BOLT	4
	1B4207	NUT	4
3	3B4212	BOLT	12
4	2Y1183	PLATE	1
5	2Y1184	SHIM	8
	2Y1185	SHIM	4

ITEM	PART No	DESCRIPTION	QTY.
6	2Y1186	SPACER	1
7	3B5790	CUP	1
	3B7389	CONE	1
8	3B5350	WORM	1
9	4D1638	SHAFT	1
10	5B1363	BEARING	1
11	5B1355	GASKET	1
12	S1585	BOLT	3
	3B4508	LOCKWASHER	3
13	2H6947	GEAR	1
	T197	KEY	1
14	5B1359	COVER	1
15	L1017	NUT	1
	3B4516	LOCKWASHER	1
16	2B7410	PLUG	2
17	5B1358	GASKET	1
18	S1594	BOLT	9
	3B4506	LOCKWASHER	9
19	7D1739	SHAFT ASSEM	1
	2Y1523	JOINT ASSEM. (Separate Illustration)	1

ITEM	PART No	DESCRIPTION	QTY.
20	1B8714	KEY	1
	9S1354	NUT	1
	3B4510	LOCKWASHER	1
21	7D1741	SHAFT ASSEM.	1
	2Y1523	JOINT ASSEM. (Separate Illustration)	1
22	2A3630	PIN	1
23	1A8063	BOLT	8
24	7F1327	SHIM	16
25	7D2196	SLEEVE ASSEM.	2
26	3B8489	FITTING	4
27	7B2503	PIN	2
	7B2499	RING	2
28	1A224	BOLT	2
	1B4208	NUT	2
29	7D2276	LINK ASSEM.	2
30	1B5174	PLUG	1
31	6F6992	CAP	4

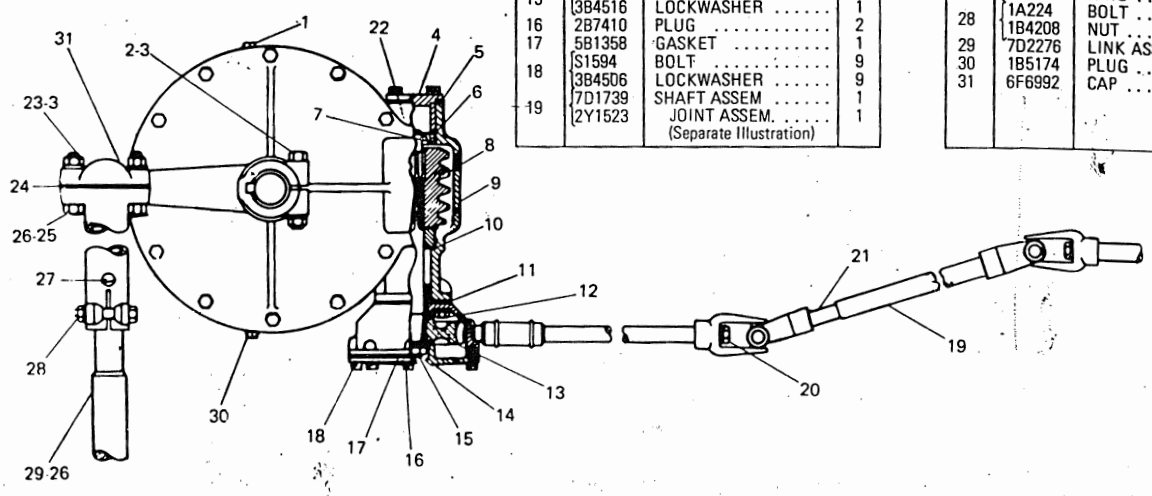

SP936

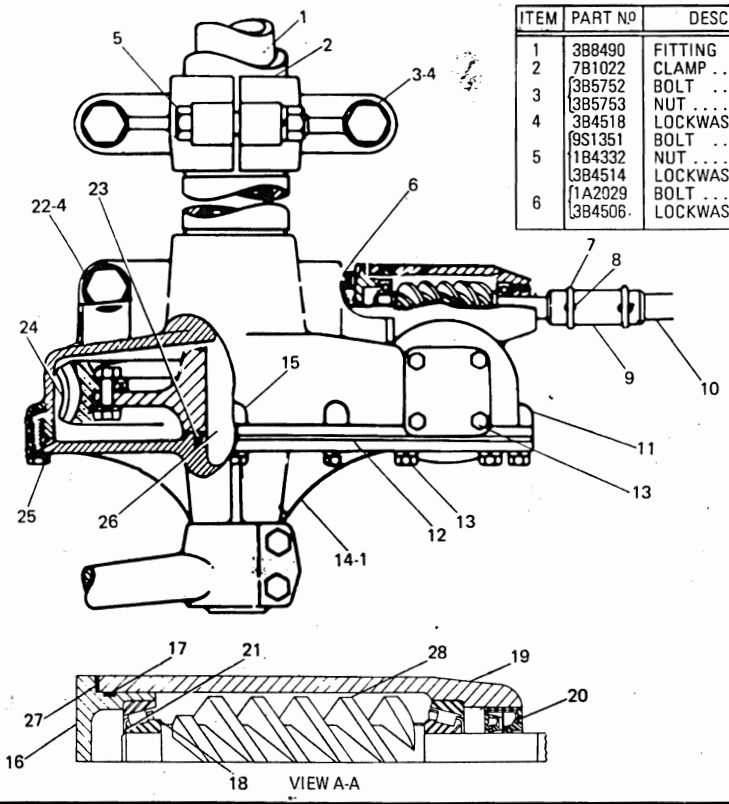

ITEM	PART Nº	DESCRIPTION	QTY.
1	3B8490	FITTING	2
2	7B1022	CLAMP	1
3	3B5752	BOLT	3
	3B5753	NUT	3
4	3B4518	LOCKWASHER	4
5	9S1351	BOLT	1
	1B4332	NUT	1
	3B4514	LOCKWASHER	1
6	1A2029	BOLT	3
	3B4506	LOCKWASHER	3
7	1A4590	RING	2
8	6F7002	PIN	2
9	5D3283	COUPLING	1
10	2D4253	SHAFT	1
11	5B1367	HOUSING ASSEM.	1
	3B5673	BUSHING	1
12	3B5683	GASKET	1
13	S1585	BOLT	18
	3B4508	LOCKWASHER	18
14	6D973	COVER ASSEM.	1
	6D941	BEARING	1
15	2B7410	PLUG	1
16	6D3269	CUP	1
17	7F8268	SEAL	1
18	1B4008	CONE	2
19	6D3261	HOUSING ASSEM.	1
	1F1288	BUSHING	1
20	4D9641	SEAL	1
21	1B4009	CUP	2
22	2D3424	BOLT	1
	L702	NUT	1
23	1B936	SEAL	2
24	2H6945	GEAR	1
25	S1576	BOLT	6
	1B4206	NUT	6
	3B4510	LOCKWASHER	6
	4D5448	SHAFT ASSEM.	1
26	3B5664	HUB	1
	2D7926	KEY	1
27	3B5703	SHIM	1
	3B5704	SHIM	2
28	6D3257	WORM	1

SP938

6D3300 SCARIFIER GROUP — Part 3 of 3
Serial No. 64U1071 — Up

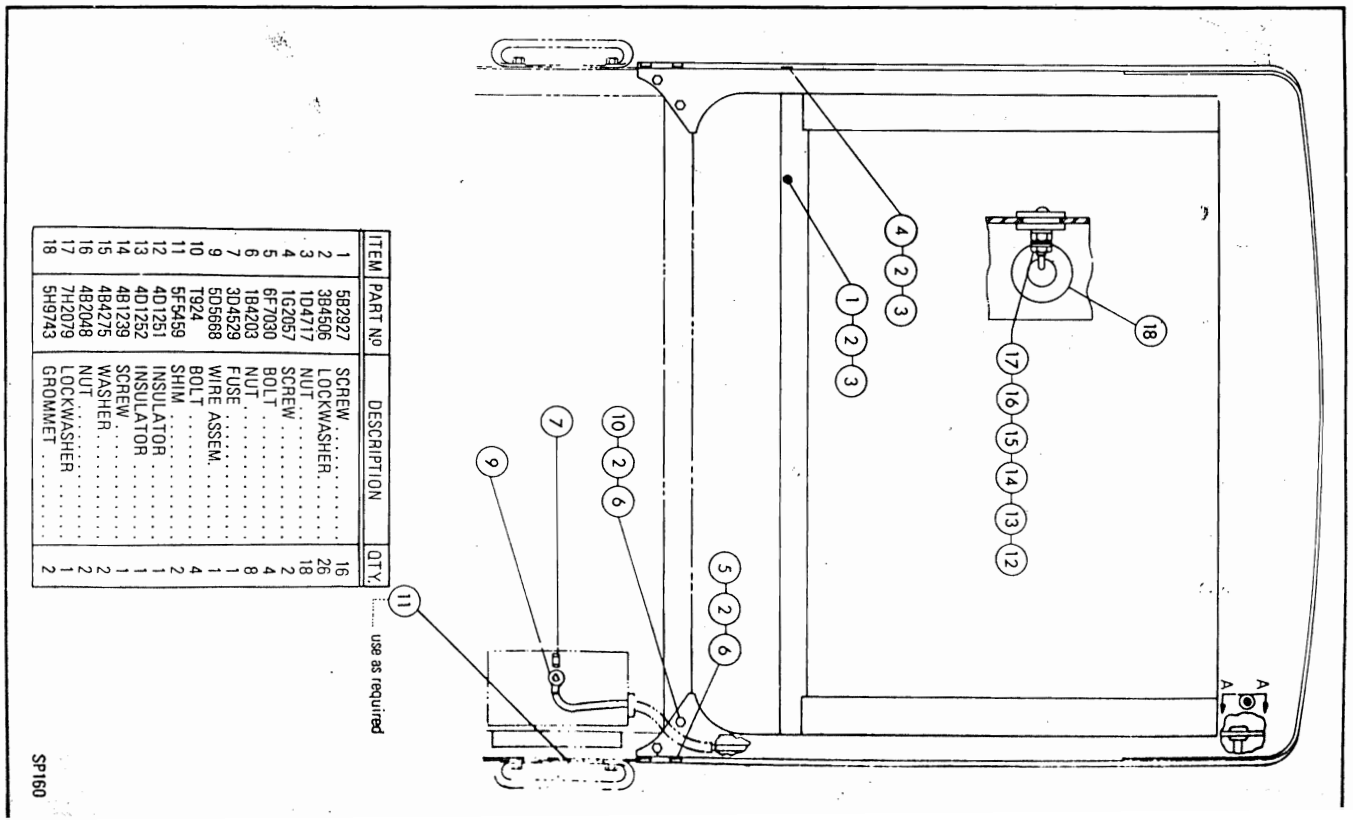

ITEM	PART NO	DESCRIPTION	QTY.
1	5B2927	SCREW	16
2	3B4506	LOCKWASHER	26
3	1D4717	NUT	18
4	1G2057	SCREW	2
5	6F7030	BOLT	4
6	1B4203	NUT	8
7	3D4529	FUSE	1
9	5D5668	WIRE ASSEM.	1
10	T924	BOLT	4
11	5F5459	SHIM	2
12	4D1251	INSULATOR	1
13	4D1252	INSULATOR	1
14	4B1239	SCREW	1
15	4B4275	WASHER	2
16	4B2048	NUT	2
17	7H2079	LOCKWASHER	1
18	5H9743	GROMMET	2

..... use as required

2Y1270 CAB GROUP

SP160

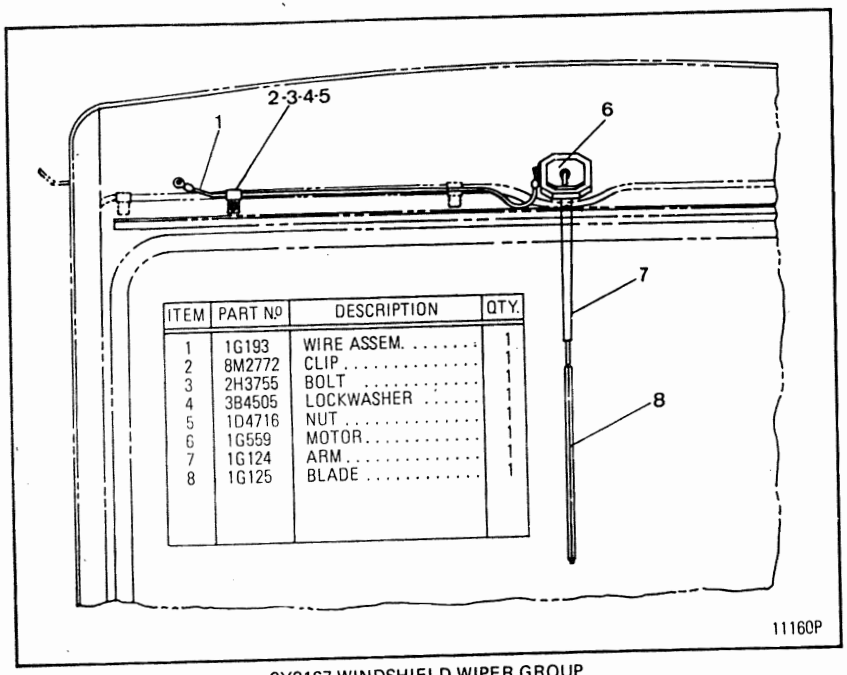

ITEM	PART Nº	DESCRIPTION	QTY.
1	1G193	WIRE ASSEM.	1
2	8M2772	CLIP	1
3	2H3755	BOLT	1
4	3B4505	LOCKWASHER	1
5	1D4716	NUT	1
6	1G559	MOTOR	1
7	1G124	ARM	1
8	1G125	BLADE	1

2Y2167 WINDSHIELD WIPER GROUP
AN ATTACHMENT

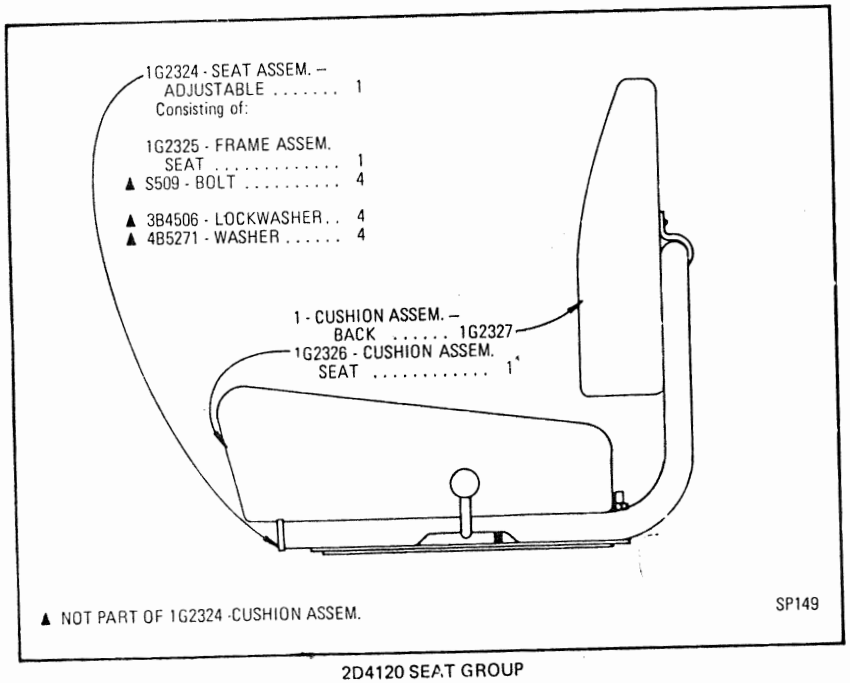

2D4120 SEAT GROUP

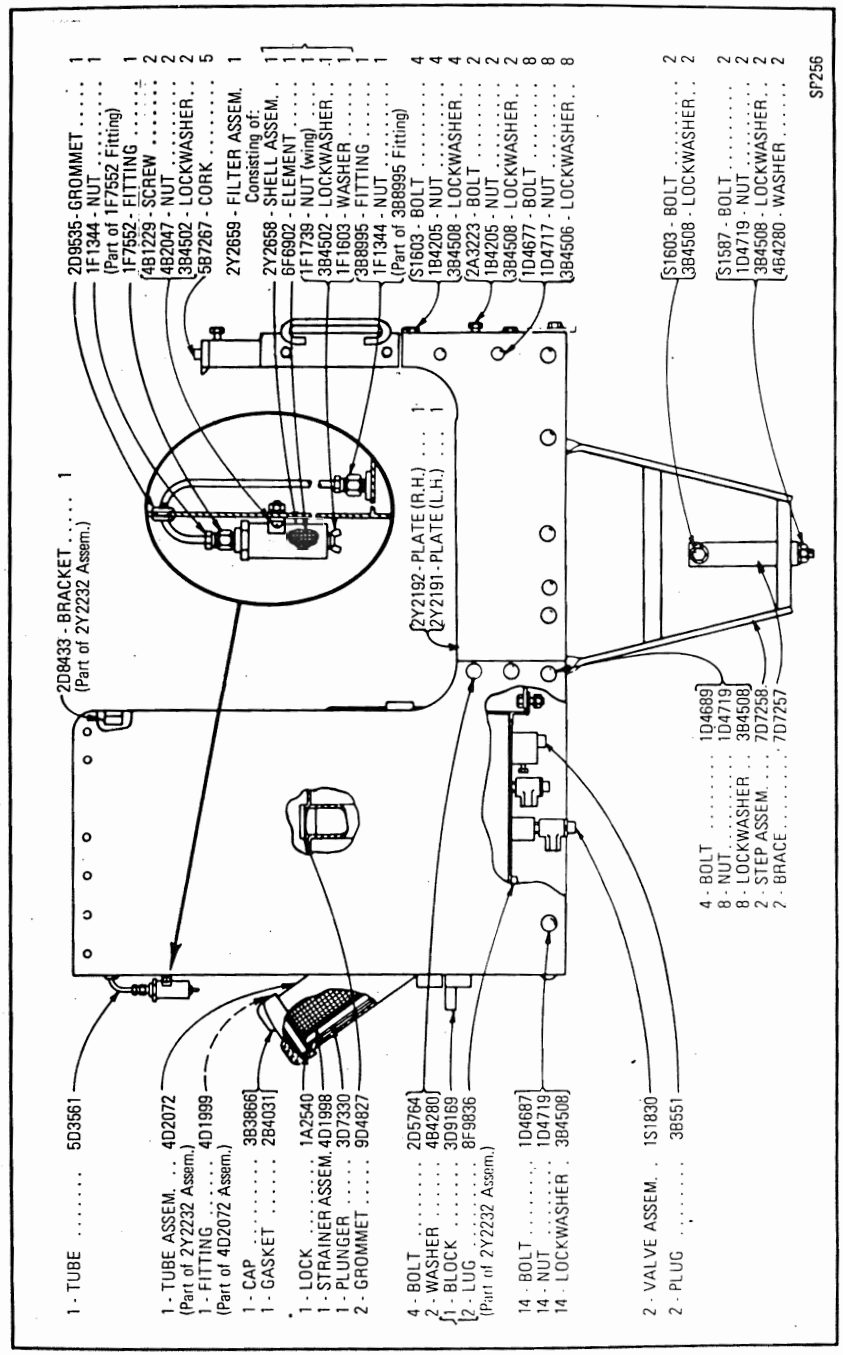

2 - BRACE 7D7257

SP256

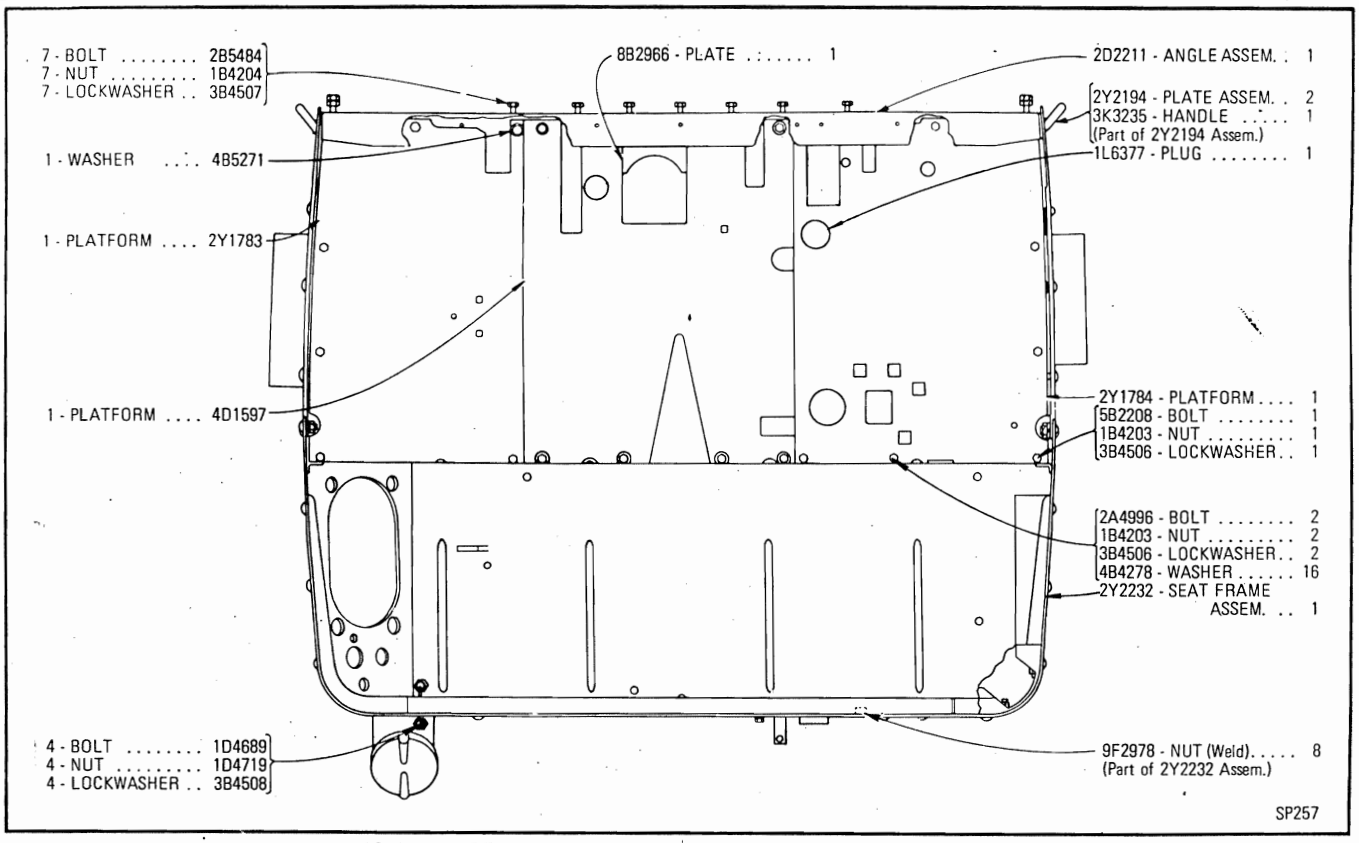

1G1553 SEAT FRAME, FUEL TANK AND PLATAFORM GROUP – Top View

6D4320 GAUGES GROUP

ITEM	PART Nº	DESCRIPTION	QTY.
1	3B8989	FITTING	1
2	1F1344	NUT	1
3	3B8990	FITTING	1
4	1F1344	NUT	1
5	6H6699	ADAPTER	1
6	5S9068	GAUGE (Fuel)	1
7	3K6675	FITTING	1
8	1H7922	FITTING	1
9	1F1344	NUT	1
10	6D3314	TUBE	1
11	4D8948	CLIP	1
12	1S4325	INDICATOR (Heat)	1
13	5M1065	GAUGE (Oil)	1

ITEM	PART Nº	DESCRIPTION	QTY.
14	5H3320	HOSE ASSEM.	1
15	1B8102	CLIP	3
16	4B6029	GROMMET	8
17	5B494	GROMMET	4
18	5P1198	TUBE (153 cm)	1
19	3H2137	LUG	4
20	4D621	CLAMP	4
21	3B1915	BOLT	4
22	3B4506	LOCKWASHER	4
23	4D622	PLATE	1
24	4K8569	UNION	1
25	4K5803	TIE	1
26	5P5630	TUBE . . . . . (125 cm)	

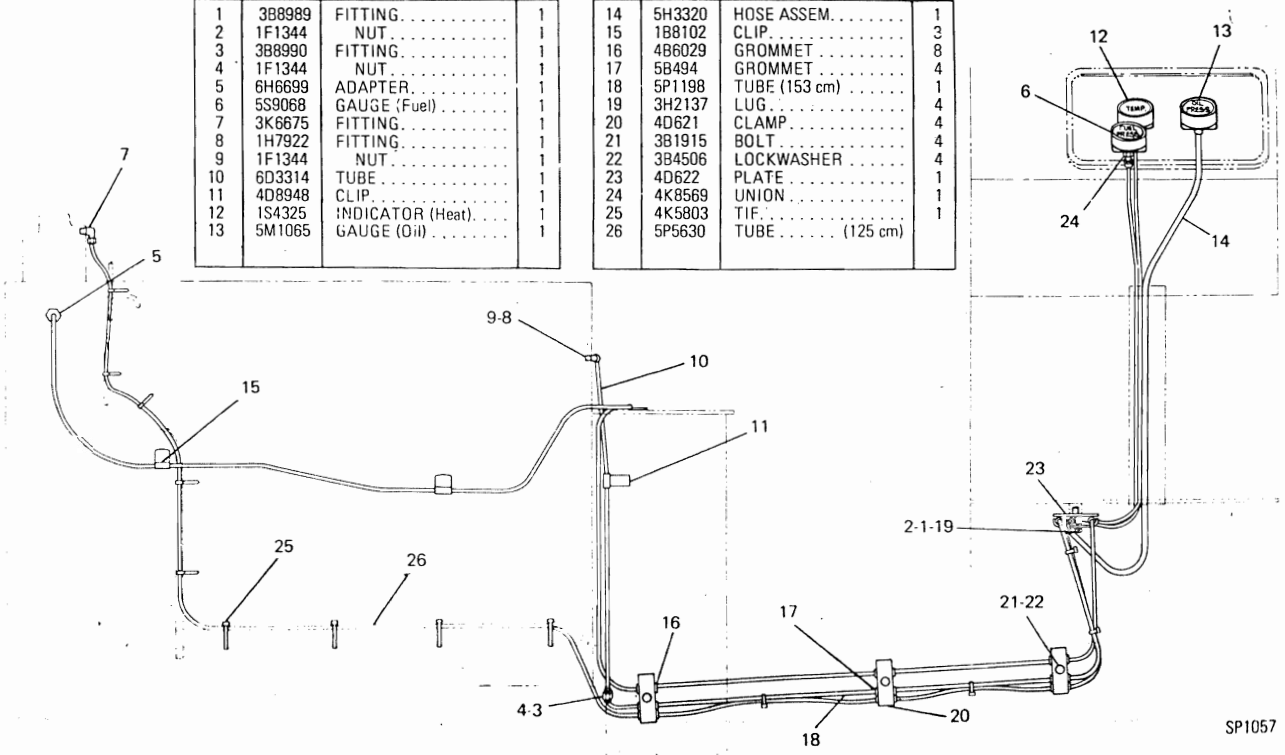

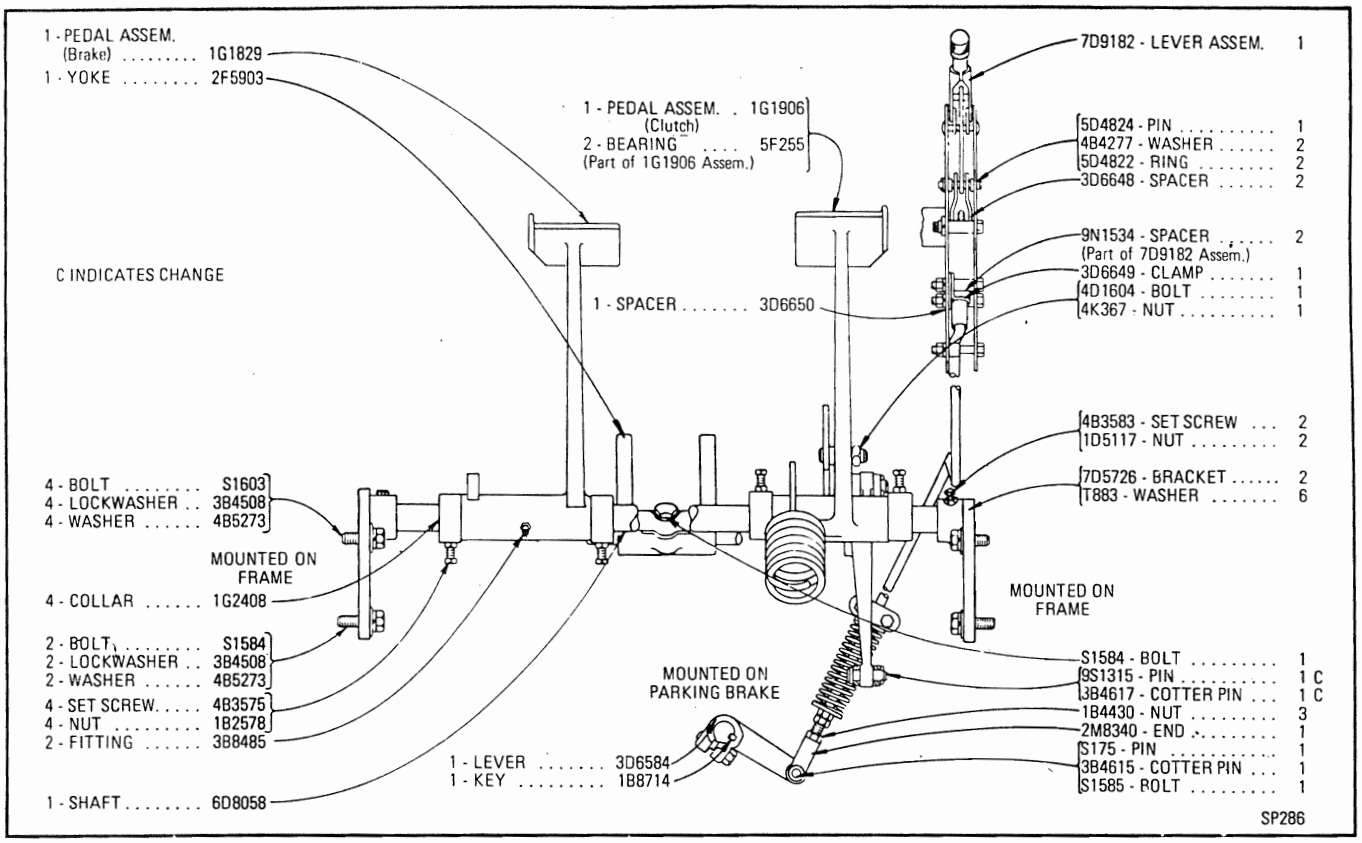

4D4170 CLUTCH AND BRAKE CONTROL GROUP – Front View

4D4170 CLUTCH AND BRAKE CONTROL GROUP – Side View

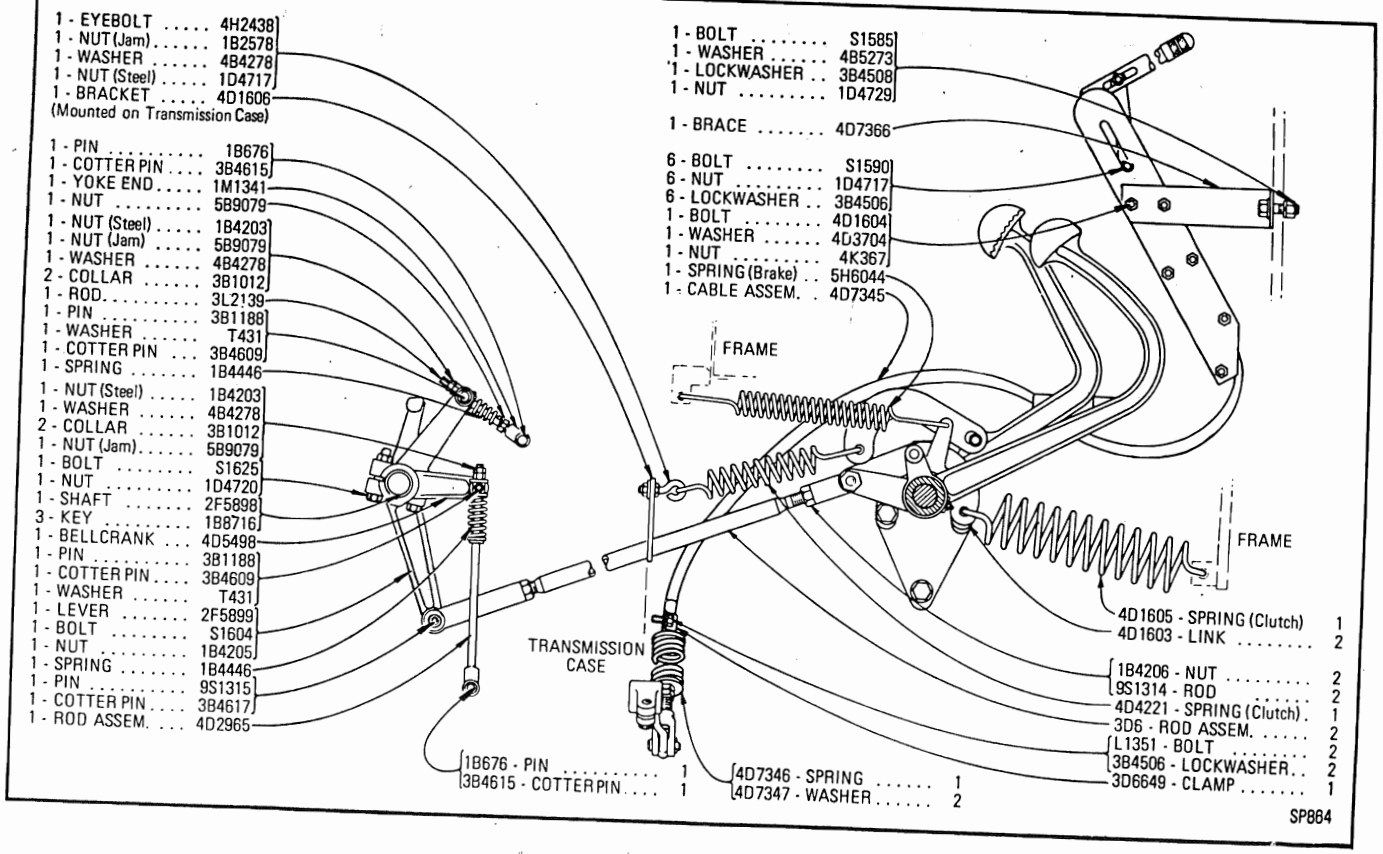

SP864

ITEM	PART No	DESCRIPTION	QTY.
1	2Y2282	COMPRESSOR GROUP	1
2	3D4763	BASE ASSEM.	1
	2Y1100	SPACER	2
3	1A9579	BOLT	2
4	3B4505	LOCKWASHER	4
5	1A6240	WASHER	4
6	7B8361	SPACER	2
7	2H5330	BOLT (2.87" long)	1
8	3B4506	LOCKWASHER	4
9	S1590	BOLT	3
10	2Y2279	LINK	2
11	2D5715	BAR	1
12	2D5717	SHAFT	1
13	4D2367	KNOB	1
14	1G496	PIN	1
15	4B9880	BALL	1
16	1A8096	SPRING	1
17	5B3850	WASHER	1
18	2Y2234	BRACKET	1
19	2B2695	BOLT	2
20	6F2101	SPACER	2
21	2P2715	GASKET	2
22	5F2802	PIN	1
23	T883	WASHER	13
24	3B4617	COTTER PIN	1
25	S1588	BOLT	4
26	2K4973	LOCKNUT	4

▲ SEPARATE ILLUSTRATION

SP262

2Y2235 TIRE PUMP GROUP
2Y2282 Compressor parts are shown on Page 177
AN ATTACHMENT

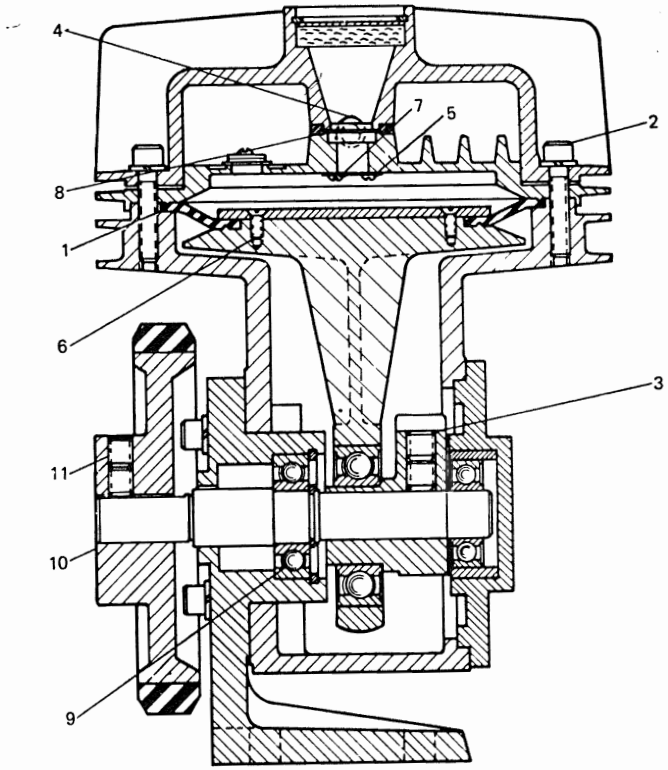

ITEM	PART No	DESCRIPTION	QTY.
1	2Y1051	DIAFRAGM	1
2	4L7124	BOLT	12
	3B4504	LOCKWASHER	16
3	2P5326	BOLT	2
4	2Y1059	GASKET	1
5	2Y1061	VALVE	1
6	9B4483	BOLT	2
7	9B7235	BOLT	2
8	2Y1066	VALVE	1
9	8H707	BOLT	4
10	2Y1076	SHAFT	1
11	8B7179	BOLT	4

SP263

2Y2282 COMPRESSOR GROUP
Part of 2Y2235 Tire Pump shown on Page 176

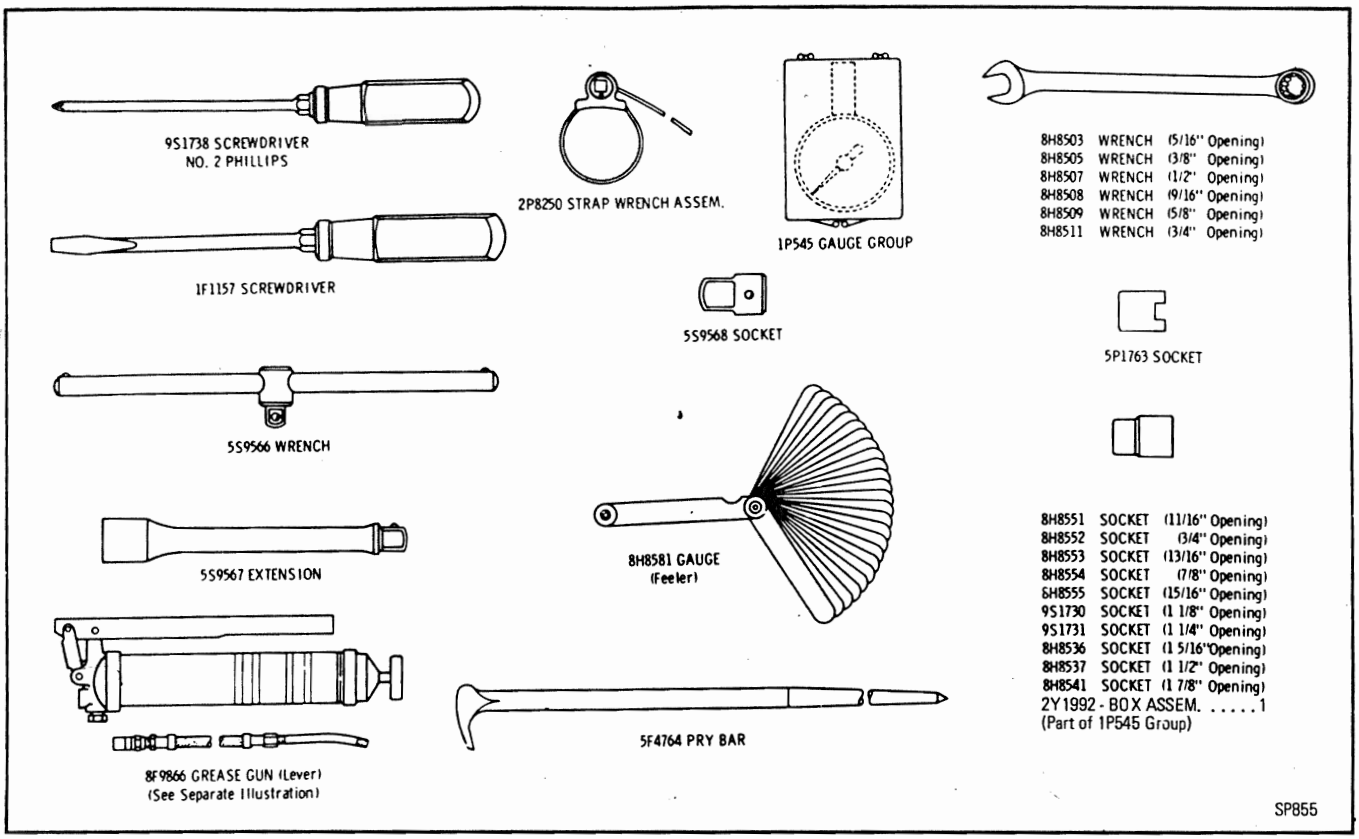

2Y2576 TOOL GROUP
8F9866 Grease Gun parts are shown on Page 179
AN ATTACHMENT

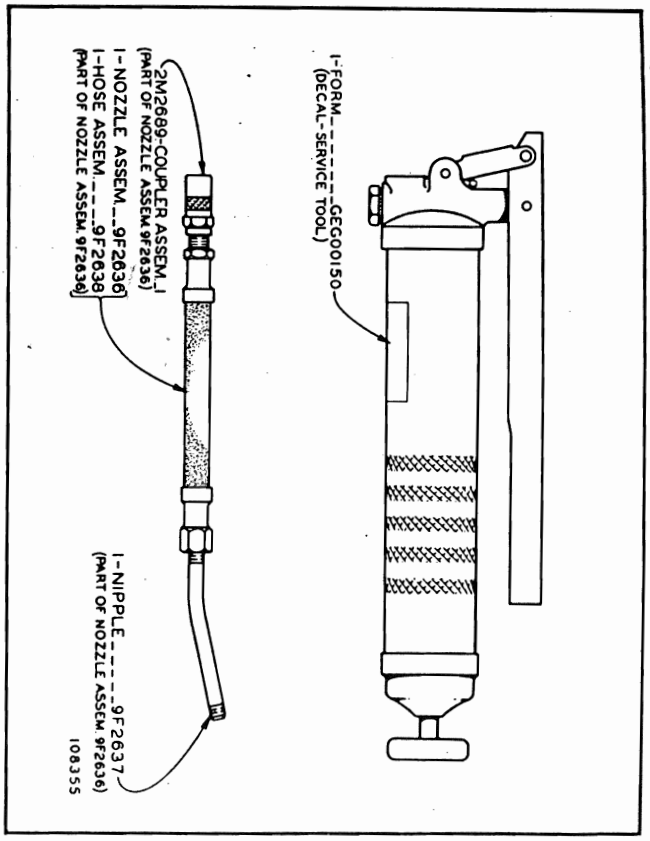

8F9866 GREASE GUN
Part of 2Y2576 Tool shown on Page 178

QUANTITY USED	PART NUMBER	DESCRIPTION
1	2Y1281	TAG – Antirust
1	2Y1151	TRANSFER – Adress on Panel Below Seat
1	7H1875	TRANFER – Safety on Dash
1	7H1881	TRANSFER – Safety on Dash
1	5M6451	TRANSFER – Air Cleaner on Diesel Air Cleaner
1	7M2022	TRANSFER – Capacity on Fuel Tank Above Cap Filler
1	8M8389	TRANSFER – Wiring Diagram Inside of Fuse Box Door
1	1G742	TRANSFER – Wiring Diagram Below Instrument Panel
1	9M16	TRANSFER – Engine Patent on Oil Filter Can Below Filter Instructions
2	8S8959	TRANSFER – Caterpillar
2	2Y1679	FILM – 120B
2	8S3926	FILM – Corporate Symbol
1	2P3182	FILM – Corporate Symbol
1	2Y2171	FILM – Warning Near Radiator Filler Cap on Top of Radiator Guard
1	8S3694	FILM – Direct Elec Starting Below Instrument Panel
1	9H5995	PLATE – Disconnect Switch to Left of Instrument Panel
1	1G308	PLATE – Lamp Switch on Instrument Panel (RH Side)
1	5M6103	PLATE – Heat – Start Switch on Instrument Panel – (LH Side)
1	9H5986	PLATE – Control Box on Top of Power Control Box – (LH Side)
1	9H5989	PLATE – Control Box on Top of Power Control Box – (RH Side)
1	1G347	PLATE – Gearshift Below Instrument Panel
1	2Y2233	PLATE – Lubrication Instructions on Main Frame – (RH Side Near Dash)
1	2Y3125	PLATE – Serial Number on Main Frame – (RH Side – Near Front)
16	4B4158	SCREW DRIVE
74	1G1883	CAP – On Grease Fitting

SP932

NAME PLATES AND TRANSFERS

QUANTITY USED	PART NUMBER	DESCRIPTION
1	2D1451	Plate – Control Box Instructions – L.H.
1	2D1452	Plate – Control Box Instructions – R.H.
1	8H8648	Plate – Disconnect Switch
1	1M3363	Plate – Heat Start Switch
1	1P1179	Plate – Lubrication Instructions
1	8S3691	Plate – Starting Instructions
1	4D4630	Plate – Gear Shift Below Instrument Panel
1	4D1208	Plate – Lamp Switch on Instrument Panel – R.H.
1	2Y4023	Film – Warning Near Radiator Filler Cap On
1	6H6000	Film – Warning on Dash

SP886

NAME PLATES AND TRANSFERS (ENGLISH)

QUANTITY USED	PART NUMBER	DESCRIPTION
1	7H1874	Film – Warning
1	7S5130	Film – Air Cleaner
1	5P1117	Film – Filter (Fuel)
1	8S3693	Film – Starting
1	5P1121	Film – Filter
1	9H5985	Plate – Control Box
1	9H5988	Plate – Control Box
1	9H5994	Plate – Disconnect Switch
1	5M6102	Plate – Heat Start Switch
1	1P1181	Plate – Lubrication
1	9M7151	Plate – Head and Tail Lamp

11268P

NAME PLATES AND TRANSFERS (SPANISH)



1P2305 ELECTRIC TERMINAL KIT

(Insulated)
(Includes terminals, wire joints and crimping tool)

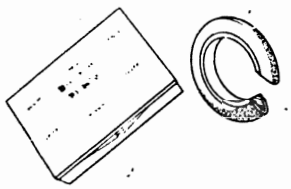

9S3138 SEAL KIT

(Includes 28 metal - backed seals)

Qty.	Nominal Size	Part No.
2	1/2 inch (1,27 cm)	5J1583
6	3/4 inch (1,905 cm)	6J3575
6	1 inch (2,54 cm)	6J3600
6	1 1/4 inch (3,175 cm)	6J3625
4	1 1/2 inch (3,81 cm)	6J3650
4	2 inches (5,08 cm)	6J3800

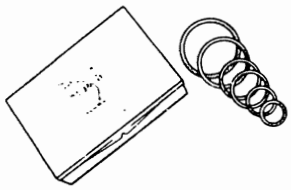

9S3135 SEAL KIT

(Includes 60 rubber O-ring seals)

Qty.	Nominal Size	Part No.
10	1/2 inch (1,27 cm)	4J5140
10	3/4 inch (1,905 cm)	4J5267
10	1 inch (2,54 cm)	4J0520
10	1 1/4 inch (3,175 cm)	4J0522
10	1 1/2 inch (3,81 cm)	4J0524
10	2 inches (5,08 cm)	4J0527

THREADED INSERTS KITS

Master (Includes inserts and tools)

Coarse	Fine	Size
9S3700	9S3500	Assorted

Repair (Includes inserts and tools)

9S3510	9S3509	#10
9S3512	9S3511	1/4
9S3514	9S3513	5/16
9S3618	9S3515	3/8
9S3620	9S3619	7/16
9S3622	9S3621	1/2
9S3624	9S3623	9/16
9S3626	9S3625	5/8
9S3628	9S3627	3/4
9S3630	9S3629	7/8
9S3632	9S3631	1
9S3633		1 1/8
9S3635		1 1/4
9S3637		1 1/2

Refill (Includes inserts)

9S3674	9S3673	#10
9S3649	9S3639	1/4
9S3650	9S3640	5/16
9S3651	9S3641	3/8
9S3652	9S3642	7/16
9S3653	9S3643	1/2
9S3654	9S3644	9/16
9S3655	9S3645	5/8
9S3656	9S3646	3/4
9S3657	9S3647	7/8
9S3658	9S3648	1
9S3675		1 1/8
9S3677		1 1/4
9S3679		1 1/2

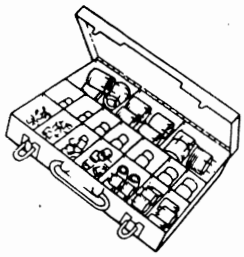

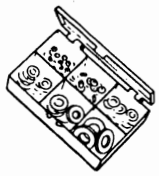

HARDWARE ASSORTMENT KITS

8S7198 Course Thread Hex Nut
8S7197 Fine Thread Hex Nut
8S7196 Lockwasher Assortment
8S7195 Flatwasher Assortment
8S7193 Woodruff Key Assortment

139338

RELATED REPAIR ITEMS



RELATED REPAIR ITEMS



GASKET CEMENT
5H2471 8 oz. (227 g)

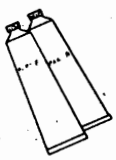

EPOXY CEMENT
5M2941 2 - 2 oz. (57g) Tube



BEARING LUBRICANT
2S3230 14 1/2 oz. (411 g)

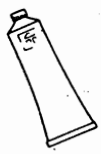

GASKET SEALER
4H5363 11 oz. (312 g) (fast drying-hard setting)
8H5137 11 oz. (312 g) (non-hardening)



ANTI-SEIZURE COMPOUND
4S9416 16 oz. (454 g) Aerosol
9M3710 16 oz. (454 g) Paste



GLASS OR PLASTIC CEMENT
3S1831 1 pint (0.473 L)



LIQUID GASKET
7M7260 8 oz. (227 g)



SEALING COMPOUND
5S1454 1 pint (0.473 L)



GREASE - SILICONE
4L7464 8 oz. (227 g)



CHAIN & CABLE LUBRICANT
9S6106 16 oz. (454 g) Aerosol
2P2737 Case of 12

BELT DRESSING
9S6107 16 oz. (454 g) Aerosol
2P2738 Case of 12

ELECTRO-INSULATION SPRAY
9S6108 16 oz. (454 g) Aerosol
2P2739 Case of 12

PENETRATING OIL
9S6109 16 oz. (454 g) Aerosol
2P2740 Case of 12

BATTERY SAVER & CLEANER
9S6110 16 oz. (454 g) Aerosol
2P2741 Case of 12

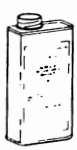

SILICONE FLUID
8M553 145 cc.
9M5165 150 cc.



GREASE GUN CARTRIDGE
1P808 14 1/2 oz. (411 gms)



COOLING SYSTEM INHIBITOR
3P2043 1 pint (0.473 L)
P0001 1 case of 12
3P2044 1 quart (0.946 L)
P0002 1 case of 12



9S3262 SEALANT REPAIR KIT

contains:

Bearing Mount	7M7456	1 2/3 fl. oz. (50 cc)
Thread Lock	9S3263	1 2/3 fl. oz. (50 cc)
Pipe Sealant	9S3264	1 2/3 fl. oz. (50 cc)
Retaining Compound	9S3265	1 2/3 fl. oz. (50 cc)
Quick Cure Primer	8M8060	6 oz. (170 g) Aerosol

139339

9M5165 150 cc.	1P808 14 1/2 oz. (411 gms)	P0002 1 case of 12	Retaining Compound Quick Cure Primer	9S3265 8M8060	1 2/3 fl. oz. (50 cc) 6 oz. (170 g) Aerosol	9S6110 16 oz. (454 g) Aerosol 2P2741 Case of 12

139339



ELECTRICAL TAPE

1P810 (plastic) 2/3" (20mm) width 66 ft. (20m) length
9B4287 (cloth) 3/4" (20mm) width 30 ft. (9M) length
(Plastic tape comes in dispenser. Cloth tape does not.)

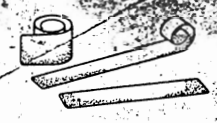

9S8703 ANTI-SKID TREADS

(May be ordered by foot lengths up to 60 feet (18,30m), width 4" (100mm)

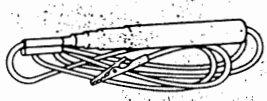

8S4627 CIRCUIT TESTER

(Maximum Capacity: 10 oms)



BUTTON PLUGS

Hole Diameter Inches	mm	Part Number
.219	5,6	4L0820
.310	7,9	7L6479
.380	9,7	5L6688
.438	11,1	4L0821
.469	11,9	3D9871
.484	12,3	8M3839
.500	12,7	3D9872
.625	15,9	2M4009
.687	17,5	6K2660
.750	19,0	5K3546
.875	22,2	5H4871
1.000	25,4	2D3406
1.250	31,8	4S6336
1.375	34,9	4F8711
1.500	38,1	3L1979
2.000	50,8	1L6377
2.250	57,2	7M3248
2.500	63,5	3L8852
3.000	76,2	1L6366



MAGNETIC DRAIN PLUGS

Type	Thread Size-Threads Per Inch	Head Inches	A Inches	A mm	Part No.
I	5/8 - 11	7/8 Hex	1 3/16	26,9	5K1555
I	5/8 - 18	7/8 Hex	3/4	19,1	2R166
I	7/8 - 14	1 1/8 Hex	1 3/16	30,2	3H4190
I	1 1/8 - 12	1 1/2 Hex	1 1/2	38,1	8M3837
I	1 1/8 - 12	1 1/2 Hex	1 7/8	47,8	2J1559
I	1 1/2 - 12	1 Hex	1 1/2	38,1	8M5576
I	1 1/2 - 12	1 7/8 Hex	1 7/8	47,8	2D8390
II	1/2 - 14	9/16 Sq.	1 1/8	28,5	2F3628
II	3/4	5/8 Sq.	1 1/4	31,8	2H3865
II	7/8 - 14	7/8 Hex	1 5/8	41,3	2R1491
II	1 Std. Pipe Thd.	13/16 Sq.	1 7/16	36,6	2H3864
II	1 1/4 Std. Pipe Thd.	15/16 Sq.	1 11/16	42,9	2H3863
II	1 1/4 Std. Pipe Thd.	15/16 Sq.	1 3/8	35,0	7H3664
III	3/4 - 14 Pipe Thd., Fine	1/2 Sq.	1 3/16	30,2	5D1894
III	1 - 11 1/2 Pipe Thd., Fine	1/2 Sq.	1 5/16	33,4	2K744
III	1 1/4 - 11 1/2 Pipe Thd., Fine	3/4 Sq.	13/16	20,6	5S4017
III	2 - 12	3/4 Sq.	1 11/16	42,9	8B6599

139340

RELATED REPAIR ITEMS

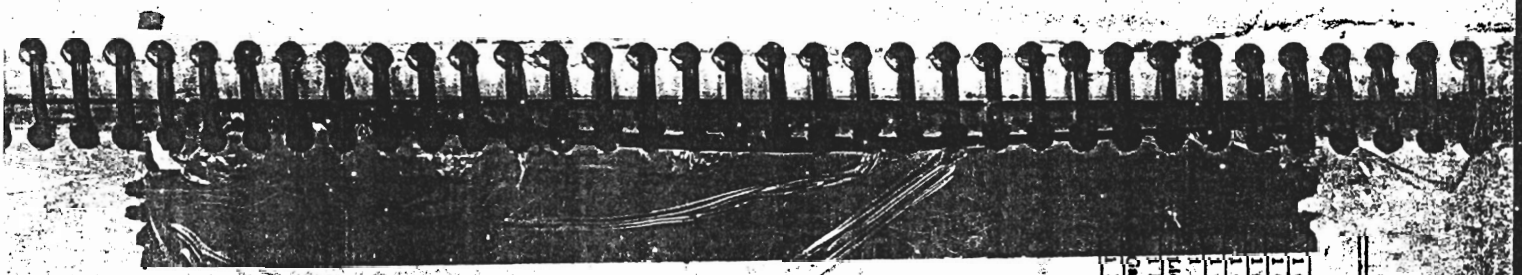

CONVERSION EQUIVALENT TABLES

VOLUME AND CAPACITY EQUIVALENTS

Unit	Cu. In.	Cu. Ft.	Cu. Yd.	Cu. Cm.	Cu. M.	U.S. Liquid Gallons	Imperial Gallons	Liters
1 Cu. In.	1	.000579	.0000214	16.39	.0000164	.004329	.0036	.016
1 Cu. Ft.	1728	1	.03704	28317	.0283	7.481	6.23	28.3
1 Cu. Yd.	46656	27	1	764600	.765	202	167.5	764.
1 Cu. Cm.	.061	.0000353	.00000131	1	.000001	.000264	.00022	.001
1 Cu. M.	61020	35.31	1.308	1,000,000	1	264.2	220.2	1000
1 U.S. Liquid Gal.	231	.1337	.00495	3785	.003785	1	.833	3.785
1 Imperial Gallon	277.42	.16	.00594	4545.6	.004546	1.2	1	4.546
1 Liter	61.02	.03531	.001308	1000	.001	.2642	.22	1

LENGTH EQUIVALENTS

Unit	Centimeters	Inches	Feet	Yards	Meters	Kilometers
1 Centimeter	1	0.3937	0.03281	0.01094	0.01	
1 Inch	2.540	1	0.08333	0.02778	0.0254	
1 Foot	30.48	12	1	0.3333	0.3048	
1 Yard	91.44	36	3	1	0.9144	
1 Meter	100	39.37	3.281	1.0936	1	
1 Kilometer	100000	39370	3281	1093.6	1000	1

AREA EQUIVALENTS

Unit	Sq. Cm.	Sq. In.	Sq. M.	Sq. Ft.
1 Sq. Cm.	1	0.155		
1 Sq. In.	6.4516	1	.0006416	.006944
1 Sq. M.	10,000	1550	1	10.764
1 Sq. Ft.	929	144	0.0929	1

WEIGHT EQUIVALENTS

Unit	Kilograms	Ounces Avoirdupois	Pounds Avoirdupois
1 Kilogram	1	35.27	2.205
1 Ounce	0.02835	1	0.0625
1 Pound	0.4536	16	1

Inches to Centimeters and Centimeters to Inches

Inches or Centimeters	Inches	Centimeters
1	0.39	2.54
2	0.79	5.08
3	1.18	7.62
4	1.57	10.16
5	1.97	12.70
6	2.36	15.24
7	2.76	17.78
8	3.15	20.32
9	3.54	22.86
10	3.94	25.40
11	4.33	27.94
12	4.72	30.48
13	5.12	33.02
14	5.51	35.56
15	5.91	38.10
16	6.30	40.64
17	6.69	43.18
18	7.09	45.72
19	7.48	48.26
20	7.87	50.80
21	8.27	53.34
22	8.66	55.88
23	9.06	58.42
24	9.45	60.96

Inches or Centimeters	Inches	Centimeters
26	10.24	66.04
27	10.63	68.58
28	11.02	71.12
29	11.42	73.66
30	11.81	76.20
31	12.20	78.74
32	12.60	81.28
33	12.99	83.82
34	13.39	86.36
35	13.78	88.90
36	14.17	91.44
37	14.57	93.98
38	14.96	96.52
39	15.35	99.06
40	15.75	101.60
41	16.14	104.14
42	16.54	106.68
43	16.93	109.22
44	17.32	111.76
45	17.72	114.30
46	18.11	116.84
47	18.50	119.38
48	18.90	121.92
49	19.29	124.46
50	19.68	127.00