INTRODUCTION AND CUSTOMER INFORMATION

T190482A -UN-21MAY03

RUTHZIL TRATOR COMERCIAL DE PEÇAS LTDA 11 97083-6812 ROLANDO



LEFT HAND SIDE VIEW OF JOHN DEERE 120C EXCAVATOR
(MANUFACTURED 2002-)

TO THE CUSTOMER

THE PART NUMBERS IN THIS PARTS CATALOG WERE CORRECT AT THE TIME YOUR CATALOG WAS PUBLISHED. IT IS OUR POLICY TO CONSTANTLY IMPROVE OUR MACHINES AND, THEREFORE, PART NUMBERS MAY CHANGE. WHEN ORDERING PARTS, VERIFY PART NUMBERS THROUGH YOUR DEALER'S

(SPECIFICATIONS AND DESIGN SUBJECT TO CHANGE WITHOUT NOTICE.)

COPYRIGHT © 2005 DEERE & COMPANY Moline, Illinois All rights reserved

SERIAL NUMBER LOCATIONS

EACH 120C EXCAVATOR HAS FOUR SERIAL NUMBER PLATES:

A PRODUCT IDENTIFICATION NUMBER PLATE, AN ENGINE SERIAL NUMBER PLATE, A HYDRAULIC PUMP SERIAL NUMBER PLATE AND A SWING MOTOR SERIAL NUMBER PLATE.

THE PRODUCT IDENTIFICATION PLATE IS LOCATED ON THE FORWARD RIGHT-HAND SIDE OF THE CAB.

THE ENGINE SERIAL NUMBER PLATE IS LOCATED ON THE RIGHT SIDE OF THE CYLINDER BLOCK NEAR THE FUEL PUMP AND THE ENGINE OIL FILTER.

THE HYDRAULIC PUMP SERIAL NUMBER PLATE IS LOCATED NEAR THE FRONT OF THE HYDRAULIC PUMP.

THE SWING MOTOR SERIAL NUMBER PLATE IS LOCATED ON THE TOP OF THE SWING MOTOR.

IF PRODUCT IDENTIFICATION NUMBERS OR SERIAL NUMBERS ARE REQUIRED FOR WARRANTY CLAIMS OR CORRESPONDENCE PERTAINING TO THIS PRODUCT. IT IS EXTREMELY IMPORTANT THAT ALL CHARACTERS BE FURNISHED. THIS POINT CANNOT BE OVEREMPHASIZED.

PRODUCT IDENTIFICATION NUMBER

TP48883 -UN-15MAR96

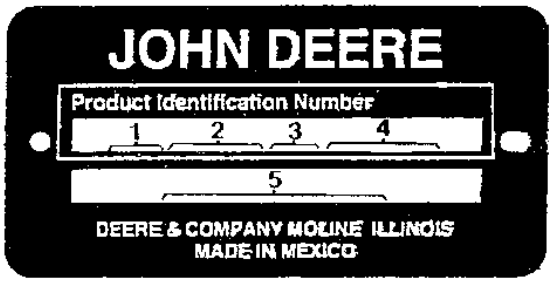

TP48883

1. DESIGNATES EXCAVATOR MANUFACTURER	PO - INDUSTRIAS JOHN DEERE, S.A. DE C.V.
2. DESIGNATES EXCAVATOR MODEL	120
3. DESIGNATES EXCAVATOR CONFIGURATION	X
4. DESIGNATES EXCAVATOR SERIAL NUMBER	000000
5. DESIGNATES UNIT TYPE	EXCAVATOR

ENGINE SERIAL NUMBER

T137422 -UN-16JAN01



T137422

1. DESIGNATES ENGINE MANUFACTURER — T-JOHN DEERE DUBUQUE WORKS
2. DESIGNATES NUMBER OF CYLINDERS/LITERS — 4045 (4.5 LITER)
3. DESIGNATES FUEL TYPE/SPECIAL CONDITION — HP TURBOCHARGED AND AFTERCOOLED AIR TO AIR DIESEL
4. DESIGNATES ENGINE SERIAL NUMBER — 123456
5. DESIGNATES THE ENGINE APPLICATION AND FACTORY USER. — 4045HP 050

PE4045HP050 TORREON ENGINE

CENTRAL FABRICATORS PARTS

CERTAIN SERVICE PARTS LISTED IN THIS CATALOG INDICATE THAT THEY BE ORDERED DIRECTLY FROM CENTRAL FABRICATORS BY DEALER. THE CENTRAL FABRICATORS ADDRESS IS: 351 ALDERSON STREET, P.O. BOX 376, SCHOFIELD, WI 54476-0376. TELEPHONE 1-800-782-5454 OR 1-715-359-4455. FAX: 1-715-359-9537.

SERIAL NUMBER LISTING INFORMATION

SERIAL NUMBER INFORMATION IS LISTED TO SHOW ON WHICH MACHINES EACH PART CAN BE USED; FOR EXAMPLE:

-	THE PART CAN BE USED ON ALL MACHINES.
000000-	THE PART CAN BE USED ON ALL MACHINES BEGINNING WITH THE SERIAL NUMBER LISTED.
-000000	THE PART CAN BE USED ON ALL MACHINES UP TO AND INCLUDING THE SERIAL NUMBER LISTED.
000000-000000	THE PART CAN BE USED ON ALL MACHINES BETWEEN AND INCLUDING THE SERIAL NUMBERS LISTED.

WHEN XXXXXX'S ARE LISTED IN PLACE OF A SERIAL NUMBER, A SERIAL NUMBER CHANGE WAS MADE BUT THE EXACT SERIAL NUMBER WAS NOT AVAILABLE WHEN THE CATALOG WAS PRODUCED.

DIRECTION ARROW

ARROWS ARE USED WITH ILLUSTRATIONS TO INDICATE THE FRONT OF THE UNIT. "RIGHT-HAND" AND "LEFT-HAND" SIDES ARE DETERMINED BY FACING IN THE DIRECTION OF MACHINE FORWARD TRAVEL.

BOX-ENCLOSED ILLUSTRATIONS

A KEY NUMBER, SHOWN IN THE PARTS LIST, IS ASSIGNED TO A BOX ENCLOSING ALL PARTS SOLD AS A SERVICE ASSEMBLY.

COMPLETE GOODS LISTINGS

COMPLETE GOODS ARE LISTED IN BOLD FACE TYPE. ORDER SEPARATELY. DO NOT INCLUDE ON REPLACEMENT PARTS ORDER.

SI UNITS OF MEASURE

METRIC DIMENSIONS ARE GIVEN, WHERE APPLICABLE, THROUGHOUT THIS PARTS CATALOG.

CHANGE INDICATOR LINE

CHANGES AFFECTING THE ORDERING OF PARTS ARE IDENTIFIED BY VERTICAL LINES MARKED IN THE LEFT-HAND MARGIN OF REVISED PARTS LISTING IMAGES. A LINE IS ALSO AT THE LEFT-HAND EDGE OF THE SAME PART NUMBER IN THE NUMERICAL INDEX TO SHOW THE LOCATION OF REVISED INFORMATION.

ALPHABETICAL INDEX

GRID		PAGE
	A	
2D5	A/C COMPRESSOR DRIVE BELT	1830 - 8
2D5	A/C COMPRESSOR DRIVE BELT TENSION PULLEY	1830 - 8
1E9	ADAPTER, ENGINE OIL COOLER	0419 - 2
1B6	ADJUSTER, TRACK CHAIN TENSION	0130 - 6
1B8	ADJUSTER, TRACK CHAIN TENSION (FOR EXCEPTIONS LISTED ONLY)	0130 - 7A
1E18	ADJUSTING STRAP,ALTERNATOR	0423 - 2
1F20	AIR CLEANER	0520 - 2
1F20	AIR CLEANER TO TURBOCHARGER HOSE	0520 - 2
1F20	AIR CLEANER TO TURBOCHARGER LINE	0520 - 2
2C23	AIR CONDITIONER	1830 - 2
2D7	AIR CONDITIONER COMPRESSOR	1830 - 10
2D7	AIR CONDITIONER CONDENSER	1830 - 10
2D1	AIR CONDITIONER EVAPORATOR	1830 - 4
2D1	AIR CONDITIONER EVAPORATOR HOSE	1830 - 4
2D1	AIR CONDITIONER PRESSURE SWITCH	1830 - 4
2D7	AIR CONDITIONER RECEIVER/DRYER	1830 - 10
2D7	AIR CONDITIONER SENSOR	1830 - 10
2D1	AIR CONDITIONER UNIT COMPONENTS	1830 - 4
2D3	AIR CONDITIONER UNIT COMPONENTS	1830 - 6
1F16	AIR COOLER	0510 - 4
2D11	AIR DIFFUSER, CAB REAR	1830 - 14
2E1	AIR DIFFUSER, CAB REAR	1830 - 28
2D9	AIR DISCHARGE DUCT, CAB HEATER AND A/C	1830 - 12
2D9	AIR DUCT, CAB LOWER RIGHT	1830 - 12
2D19	AIR DUCT, HEATER UNIT (HEAT ONLY)	1830 - 22
2C23	AIR DUCT, HVAC UNIT	1830 - 2
1F20	AIR FILTER RESTRICTION INDICATOR	0520 - 2
1D24	AIR INTAKE	0414 - 2
2D9	AIR INTAKE DUCT, CAB HEATER AND A/C	1830 - 12
1D24	AIR INTAKE GASKET	0414 - 2
1D24	AIR INTAKE TEMPERATURE SENSOR	0414 - 2
1F22	AIR PRE-CLEANER	0520 - 4
2F3	ALARM, PROPEL MOTION	2004 - 4
1G22	ALTERNATOR	1672 - 2
1E18	ALTERNATOR ADJUSTING STRAP	0423 - 2
1G22	ALTERNATOR FAN	1672 - 2
1E18	ALTERNATOR MOUNTING BRACKETS	0423 - 2
1G22	ALTERNATOR PULLEY	1672 - 2
1G22	ALTERNATOR WIRING HARNESS	1672 - 2
2B15	ANTENNA, RADIO	1810 - 12
3E7	ANTI-DRIFT KIT, ARM	3360 - 14
3E9	ANTI-DRIFT KIT, BOOM	3360 - 16
3E7	ANTI-DRIFT VALVE	3360 - 14
3E9	ANTI-DRIFT VALVE (BOOM)	3360 - 16
3E7	ARM ANTI-DRIFT KIT	3360 - 14
3D5	ARM ASSEMBLY KIT (2.52M ARM)	3340 - 2
3D7	ARM ASSEMBLY KIT (3.01M ARM)	3340 - 4
3J9	ARM AUXILIARY LINE (FACTORY INSTALLED)	3363 - 86
3J9	ARM AUXILIARY PLUMBING SHUT-OFF VALVE (FACTORY INSTALLED)	3363 - 86
3J19	ARM CYLINDER BARREL	3365 - 14
3J19	ARM CYLINDER COMPONENTS	3365 - 14
3J19	ARM CYLINDER OIL LINE	3365 - 14
3J19	ARM CYLINDER ROD	3365 - 14
3J19	ARM CYLINDER SEAL KIT	3365 - 14
3D5	ARM CYLINDER TO ARM PIN (2.52M ARM)	3340 - 2
3D7	ARM CYLINDER TO ARM PIN (3.01M ARM)	3340 - 4
3I11	ARM CYLINDER TO BOOM LINE HOSE	3363 - 54
3D13	ARM CYLINDER TO BOOM PIN	3344 - 2
3D19	ARM LINE (FIELD AUXILIARY LINE KIT)	3360 - 6
3J9	ARM LINE TO BOOM LINE HOSE (FACTORY INSTALLED AUXILIARY PLUMBING)	3363 - 86
3D19	ARM LINE TO BOOM LINE HOSE (FIELD AUXILIARY LINE KIT)	3360 - 6
3I9	ARM LINE TO BOOM LINE HOSE (LONG ARM LUBRICATION)	3363 - 52
3I9	ARM LUBRICATION LINE, LONG	3363 - 52
3D5	ARM TO ARM CYLINDER PIN (2.52M ARM)	3340 - 2
3D7	ARM TO ARM CYLINDER PIN (3.01M ARM)	3340 - 4
3D13	ARM TO BOOM PIN	3344 - 2
3D5	ARM TO BUCKET CYLINDER PIN (2.52M ARM)	3340 - 2
3D7	ARM TO BUCKET CYLINDER PIN (3.01M ARM)	3340 - 4
3D5	ARM TO BUCKET LINKAGE PIN (2.52M ARM)	3340 - 2
3D7	ARM TO BUCKET LINKAGE PIN (3.01M ARM)	3340 - 4
3D5	ARM TO BUCKET PIN (2.52M ARM)	3340 - 2
3D7	ARM TO BUCKET PIN (3.01M ARM)	3340 - 4
3D5	ARM, LONG (2.52M ARM)	3340 - 2
3D7	ARM, LONG (3.01M ARM)	3340 - 4
2B15	ARM, WINDSHIELD WIPER	1810 - 12
2C15	ARMREST	1821 - 2
1C25	ARMS, ROCKER	0402 - 3
2B7	ASHTRAY	1810 - 4
3H5	ATTENUATOR HOSE	3363 - 24
3J9	AUXILIARY ARM PLUMBING (FACTORY INSTALLED)	3363 - 86
3D17	AUXILIARY CONTROL HANDLE SWITCH	3360 - 4
1E21	AUXILIARY CRANKSHAFT DRIVE PULLEY	0429 - 3
2F6	AUXILIARY DRIVE ADAPTER COVER (SAE "A" MOUNT, 9 TOOTH)	2160 - 2
2F8	AUXILIARY DRIVE ADAPTER COVER (SAE "B" MOUNT, 13 TOOTH)	2160 - 4
2F6	AUXILIARY DRIVE ADAPTER KIT (SAE "A" MOUNT, 9 TOOTH)	2160 - 2
2F8	AUXILIARY DRIVE ADAPTER KIT (SAE "B" MOUNT, 13 TOOTH)	2160 - 4
2F6	AUXILIARY DRIVE ADAPTER OIL LINE (SAE "A" MOUNT, 9 TOOTH)	2160 - 2
2F8	AUXILIARY DRIVE ADAPTER OIL LINE (SAE "B" MOUNT, 13 TOOTH)	2160 - 4
3D15	AUXILIARY ELECTRIC FOOT SWITCH (ONE SOLENOID)	3360 - 2
3D15	AUXILIARY ELECTRIC FOOT SWITCH WIRING HARNESS (ONE SOLENOID)	3360 - 2
3D17	AUXILIARY ELECTRIC HAND CONTROLLER (2 SOLENOIDS)	3360 - 4
1H21	AUXILIARY EXTERIOR CAB LIGHTING	1674 - 26
3D1	AUXILIARY FOOT CONTROL VALVE COMPONENTS	3315 - 14
3D1	AUXILIARY FOOT CONTROL VALVE SEAL KIT	3315 - 14
3C24	AUXILIARY FOOT PEDAL CONTROL	3315 - 10
3D19	AUXILIARY HYDRAULIC PLUMBING KIT (FIELD KIT)	3360 - 6
3J7	AUXILIARY PLUMBING BOOM LINES (FACTORY INSTALLED)	3363 - 84
3J3	AUXILIARY PLUMBING OIL LINE TO CONTROL VALVE (FACTORY INSTALL)	3363 - 80
3E1	AUXILIARY SOLENOID AND FLOW CONTROL VALVE KIT (1-WAY)	3360 - 10
1D5	AUXILLARY DRIVE COVER	0404 - 1

ALPHABETICAL INDEX - CONTINUED

GRID		PAGE
	B	
1E1	BALANCER SHAFT, ENGINE	0415 - 2
3B22	BAR, DITCH CLEANING BUCKET WEAR	3302 - 8
3B18	BAR, GENERAL PURPOSE BUCKET WEAR	3302 - 4
3B24	BAR, ROADBUILDER WEAR	3302 - 10
3J19	BARREL, ARM CYLINDER	3365 - 14
3K3	BARREL, BLADE CYLINDER (LEFT)(FACTORY INSTALLED)	3365 - 20
3K5	BARREL, BLADE CYLINDER (LEFT)(REPLACEMENT CYLINDER)	3365 - 22
3J23	BARREL, BLADE CYLINDER (RIGHT)(FACTORY INSTALLED)	3365 - 18
3K1	BARREL, BLADE CYLINDER (RIGHT)(REPLACEMENT CYLINDER)	3365 - 19A
3J21	BARREL, BUCKET CYLINDER	3365 - 16
3J15	BARREL, RIGHT BOOM CYLINDER	3365 - 4
2C19	BASE, SEAT	1821 - 6
1G20	BATTERY	1671 - 2
1G20	BATTERY CABLE	1671 - 2
1G20	BATTERY COVER	1671 - 2
1G20	BATTERY RELAY	1671 - 2
1I8	BEARING COMPONENTS, SWING	1740 - 8
1B22	BEARING, PROPEL GEARBOX	0260 - 2
1C1	BEARING, PROPEL MOTOR	0260 - 6
3K11	BEARING, SWING GEARBOX	4360 - 2
3K17	BEARING, SWING MOTOR	4367 - 2
1B4	BEARING, TRACK FRONT IDLER	0130 - 4
1D4	BEARINGS,C0NNECTING ROD	0403 - 2
1E22	BELT IDLER TENSIONER, FAN	0429 - 4
2D5	BELT, A/C COMPRESSOR DRIVE	1830 - 8
1E20	BELT, ENGINE ACCESSORY DRIVE	0429 - 2
2C21	BELT, SEAT	1821 - 8
2C17	BELT, SEAT (3.00 INCH)	1821 - 4
1E24	BELT,FAN DRIVE	0429 - 6
3K8	BLADE	3401 - 2
3K8	BLADE COMPONENTS	3401 - 2
3F16	BLADE CONTROL VALVE	3362 - 24
3F16	BLADE CONTROL VALVE COMPONENTS	3362 - 24
3I17	BLADE CONTROL VALVE SUPPORT BRACKET	3363 - 64
3I19	BLADE CONTROL VALVE TO CONTROL VALVE	3363 - 66
3I17	BLADE CONTROL VALVE TO PRESSURE RELIEF VALVE HOSE	3363 - 64
3I19	BLADE CONTROL VALVE TO ROTARY MANIFOLD HOSES	3363 - 66
3K8	BLADE CUTTING EDGE	3401 - 2
3K3	BLADE CYLINDER BARREL (LEFT)(FACTORY INSTALLED)	3365 - 20
3K5	BLADE CYLINDER BARREL (LEFT)(REPLACEMENT CYLINDER)	3365 - 22
3J23	BLADE CYLINDER BARREL (RIGHT)(FACTORY INSTALLED)	3365 - 18
3K1	BLADE CYLINDER BARREL (RIGHT)(REPLACEMENT CYLINDER)	3365 - 19A
3K3	BLADE CYLINDER COMPONENTS (LEFT)(FACTORY INSTALLED)	3365 - 20
3K5	BLADE CYLINDER COMPONENTS (LEFT)(REPLACEMENT CYLINDER)	3365 - 22
3J23	BLADE CYLINDER COMPONENTS (RIGHT)(FACTORY INSTALLED)	3365 - 18
3K1	BLADE CYLINDER COMPONENTS (RIGHT)(REPLACEMENT CYLINDER)	3365 - 19A
3K8	BLADE CYLINDER COVER	3401 - 2
3K3	BLADE CYLINDER OIL LINE (LEFT)(FACTORY INSTALLED)	3365 - 20
3K5	BLADE CYLINDER OIL LINE (LEFT)(REPLACEMENT CYLINDER)	3365 - 22
3J23	BLADE CYLINDER OIL LINE (RIGHT)(FACTORY INSTALLED)	3365 - 18
3K1	BLADE CYLINDER OIL LINE (RIGHT)(REPLACEMENT CYLINDER)	3365 - 19A
3K3	BLADE CYLINDER ROD (LEFT)(FACTORY INSTALLED)	3365 - 20
3K5	BLADE CYLINDER ROD (LEFT)(REPLACEMENT CYLINDER)	3365 - 22
3J23	BLADE CYLINDER ROD (RIGHT)(FACTORY INSTALLED)	3365 - 18
3K1	BLADE CYLINDER ROD (RIGHT)(REPLACEMENT CYLINDER)	3365 - 19A
3K3	BLADE CYLINDER SEAL KIT (LEFT)(FACTORY INSTALLED)	3365 - 20
3K5	BLADE CYLINDER SEAL KIT (LEFT)(REPLACEMENT CYLINDER)	3365 - 22
3J23	BLADE CYLINDER SEAL KIT (RIGHT)(FACTORY INSTALLED)	3365 - 18
3K1	BLADE CYLINDER SEAL KIT (RIGHT)(REPLACEMENT CYLINDER)	3365 - 19A
3K8	BLADE CYLINDER TO BLADE PIN	3401 - 2
3I21	BLADE CYLINDER TO ROTARY MANIFOLD HOSE	3363 - 68
3K8	BLADE CYLINDER TO TRACK FRAME PIN	3401 - 2
3I15	BLADE HOSES, PILOT	3363 - 62
3I15	BLADE HOSES, PRESSURE	3363 - 62
3C20	BLADE PILOT CONTROL CABLE	3315 - 8
3C20	BLADE PILOT CONTROL CABLE BRACKET	3315 - 8
3C20	BLADE PILOT CONTROL LEVER	3315 - 8
3C20	BLADE PILOT CONTROL LEVER BRACKET	3315 - 8
3C22	BLADE PILOT CONTROLLER VALVE COMPONENTS	3315 - 9A
3C22	BLADE PILOT CONTROLLER VALVE SEAL KIT	3315 - 9A
3J1	BLADE PILOT HOSES	3363 - 72
3J1	BLADE PILOT VALVE	3363 - 72
3I17	BLADE PUMP	3363 - 64
3F20	BLADE PUMP PRESSURE RELIEF VALVE COMPONENTS	3362 - 40
3I17	BLADE PUMP SUCTION LINES	3363 - 64
3I17	BLADE PUMP TO HYDRAULIC RESERVOIR HOSE	3363 - 64
3I17	BLADE PUMP TO PRESSURE RELIEF VALVE HOSE	3363 - 64
3I15	BLADE RETURN HOSES	3363 - 62
3J1	BLADE SHUTTLE VALVES	3363 - 72
3K8	BLADE TO BLADE CYLINDER PIN	3401 - 2
3K8	BLADE TO TRACK FRAME PIN	3401 - 2
3J1	BLADE VALVE HOSES	3363 - 72
3I23	BLADE VALVE HOSES, PILOT	3363 - 70
3I23	BLADE VALVE, PILOT	3363 - 70
1F13	BLADE, FAN	0510 - 1
3J1	BLADE, PILOT VALVE	3363 - 72
2B15	BLADE, WINDSHIELD WIPER	1810 - 12
1D6	BLOCK, CYLINDER	0404 - 2
2D3	BLOWER FAN, HVAC UNIT	1830 - 6
3D13	BOOM	3344 - 2
3E9	BOOM ANTI-DRIFT KIT	3360 - 16
3J17	BOOM CYLINDER BARREL, LEFT	3365 - 10
3J17	BOOM CYLINDER COMPONENTS, LEFT	3365 - 10
3J15	BOOM CYLINDER COMPONENTS, RIGHT	3365 - 4
3G21	BOOM CYLINDER HOSE TO CONTROL VALVE LINE	3363 - 12
3G21	BOOM CYLINDER OIL LINE SUPPORT BRACKET	3363 - 12
3J17	BOOM CYLINDER ROD, LEFT	3365 - 10
3J15	BOOM CYLINDER ROD, RIGHT	3365 - 4
3D13	BOOM CYLINDER TO BOOM PIN	3344 - 2
1I2	BOOM CYLINDER TO MAIN FRAME PIN	1740 - 2
3G21	BOOM CYLINDER TO OIL LINE HOSE	3363 - 12
1H7	BOOM LIGHT	1674 - 8
1H11	BOOM LIGHT (OPTIONAL, ON TOP OF BOOM)	1674 - 12
3D13	BOOM LIGHT MOUNTING BRACKET	3344 - 2

ALPHABETICAL INDEX - CONTINUED

GRID		PAGE
1H11	BOOM LIGHT WIRING HARNESS (OPTIONAL, ON TOP OF BOOM)	1674 - 12
3J7	BOOM LINE (FACTORY INSTALLED AUXILIARY PLUMBING)	3363 - 84
3D19	BOOM LINE (FIELD AUXILIARY LINE KIT)	3360 - 6
3I11	BOOM LINE (TO ARM AND BUCKET CYLINDER)	3363 - 54
3I11	BOOM LINE TO ARM CYLINDER HOSE	3363 - 54
3J9	BOOM LINE TO ARM LINE HOSE (FACTORY INSTALLED AUXILIARY PLUMBING)	3363 - 86
3D19	BOOM LINE TO ARM LINE HOSE (FIELD AUXILIARY LINE KIT)	3360 - 6
3I9	BOOM LINE TO ARM LINE HOSE (LONG ARM LUBRICATION)	3363 - 52
3J7	BOOM LINE TO BOOM LINE HOSE (FACTORY INSTALLED AUXILIARY PLUMBING)	3363 - 84
3D5	BOOM LINE TO BUCKET CYLINDER HOSE (2.52M ARM)	3340 - 2
3D7	BOOM LINE TO BUCKET CYLINDER HOSE (3.01M ARM)	3340 - 4
3G23	BOOM LINE TO CONTROL VALVE HOSE (ARM AND BUCKET CYLINDER)	3363 - 14
3J5	BOOM LINE TO CONTROL VALVE HOSE (FACTORY INSTALLED AUXILIARY PLUMBING)	3363 - 82
3D19	BOOM LINE TO CONTROL VALVE HOSE (FIELD AUXILIARY LINE KIT)	3360 - 6
3J5	BOOM LINE TO SELECTOR VALVE HOSE (FACTORY INSTALLED AUXILIARY PLUMBING)	3363 - 82
3I13	BOOM MOUNTING LUBRICATION HOSE	3363 - 56
3D13	BOOM TO ARM CYLINDER PIN	3344 - 2
3D13	BOOM TO ARM PIN	3344 - 2
3D13	BOOM TO BOOM CYLINDER PIN	3344 - 2
3I13	BOOM TO FRAME PIN LUBRICATION LINE	3363 - 56
1I4	BOOM TO MAIN FRAME PIN	1740 - 4
2E15	BOTTOM GUARDS	1910 - 12
2E15	BOTTOM PROTECTION COVER	1910 - 12
1H5	BOX, CAB REAR CIRCUIT	1674 - 6
2E13	BOX, TOOL	1910 - 10
2E5	BRACE, INSIDE RADIATOR	1910 - 2
1F22	BRACKET, AIR PRE-CLEANER	0520 - 4
3I17	BRACKET, BLADE CONTROL VALVE SUPPORT	3363 - 64
3C20	BRACKET, BLADE PILOT CONTROL CABLE	3315 - 8
3C20	BRACKET, BLADE PILOT CONTROL LEVER	3315 - 8
3G21	BRACKET, BOOM CYLINDER OIL LINE SUPPORT	3363 - 12
3D13	BRACKET, BOOM LIGHT MOUNTING	3344 - 2
2C9	BRACKET, CAB REAR CONSOLE SUPPORT	1810 - 30
3F1	BRACKET, CONTROL VALVE MOUNTING	3362 - 4
3G13	BRACKET, CONTROL VALVE TO OIL COOLER LINE SUPPORT	3363 - 4
1F16	BRACKET, ENGINE AIR INTAKE LINE	0510 - 4
1F14	BRACKET, ENGINE COOLANT RECOVERY TANK	0510 - 2
1G1	BRACKET, ENGINE MOUNTING	0540 - 2
2E11	BRACKET, FRONT MIDDLE PANEL SUPPORT	1910 - 8
2E9	BRACKET, HYDRAULIC PUMP COMPARTMENT COVER SUPPORT	1910 - 6
2E5	BRACKET, INSIDE RADIATOR	1910 - 2
1F24	BRACKET, MUFFLER	0530 - 2
3C18	BRACKET, PILOT SHUT-OFF LEVER	3315 - 6
3H23	BRACKET, PILOT SIGNAL MANIFOLD SUPPORT	3363 - 42
3H15	BRACKET, PROPEL PILOT CONTROLLER TO SIGNAL MANIFOLD HOSE SUPPORT	3363 - 34
1F18	BRACKET, RADIATOR SUPPORT	0510 - 6
2E22	BRACKET, RADIO MOUNTING	2001 - 2
1C13	BRACKET, ROTARY MANIFOLD TOP MOUNTING	0260 - 14
2C19	BRACKET, SEAT BASE	1821 - 6
2C21	BRACKET, SEAT BELT	1821 - 8
3J5	BRACKET, SELECTOR VALVE SUPPORT (AUXILIARY PLUMBING)	3363 - 82
2C7	BRACKET, WINDSHIELD WASHER RESERVOIR MOUNTING	1810 - 28
1E18	BRACKETS,ALTERNATOR MOUNTING	0423 - 2
1C5	BRAKE RELIEF VALVE COMPONENTS, PROPEL MOTOR	0260 - 7C
1C3	BRAKE VALVE COMPONENTS, PROPEL MOTOR	0260 - 7A
3K15	BRAKE VALVE COMPONENTS, SWING MOTOR	4360 - 6
1C3	BRAKE VALVE, PROPEL MOTOR	0260 - 7A
3K15	BRAKE VALVE, SWING MOTOR	4360 - 6
3B22	BUCKET ASSEMBLY, DITCH CLEANING	3302 - 8
3B18	BUCKET ASSEMBLY, GENERAL PURPOSE	3302 - 4
3B20	BUCKET ASSEMBLY, HEAVY DUTY	3302 - 6
3J21	BUCKET CYLINDER BARREL	3365 - 16
3J21	BUCKET CYLINDER COMPONENTS	3365 - 16
3J21	BUCKET CYLINDER OIL LINE	3365 - 16
3J21	BUCKET CYLINDER ROD	3365 - 16
3J21	BUCKET CYLINDER SEAL KIT	3365 - 16
3D5	BUCKET CYLINDER TO ARM PIN (2.52M ARM)	3340 - 2
3D7	BUCKET CYLINDER TO ARM PIN (3.01M ARM)	3340 - 4
3D5	BUCKET CYLINDER TO BOOM LINE HOSE (2.52M ARM)	3340 - 2
3D7	BUCKET CYLINDER TO BOOM LINE HOSE (3.01M ARM)	3340 - 4
3D5	BUCKET CYLINDER TO LINKAGE PIN (2.52M ARM)	3340 - 2
3D7	BUCKET CYLINDER TO LINKAGE PIN (3.01M ARM)	3340 - 4
3D9	BUCKET DRIVE LINK COMPONENTS	3340 - 6
3D9	BUCKET DRIVE LINK SPACER	3340 - 6
3D11	BUCKET GUIDE LINK	3340 - 8
3D5	BUCKET LINKAGE TO ARM PIN (2.52M ARM)	3340 - 2
3D7	BUCKET LINKAGE TO ARM PIN (3.01M ARM)	3340 - 4
3D5	BUCKET LINKAGE TO BUCKET PIN (2.52M ARM)	3340 - 2
3D7	BUCKET LINKAGE TO BUCKET PIN (3.01M ARM)	3340 - 4
3D5	BUCKET LINKAGE TO CYLINDER PIN (2.52M ARM)	3340 - 2
3D7	BUCKET LINKAGE TO CYLINDER PIN (3.01M ARM)	3340 - 4
3C7	BUCKET PIN-UP DATA (GENERAL PURPOSE AND HEAVY DUTY)	3302 - 16
3D5	BUCKET TO ARM PIN (2.52M ARM)	3340 - 2
3D7	BUCKET TO ARM PIN (3.01M ARM)	3340 - 4
3D5	BUCKET TO LINKAGE PIN (2.52M ARM)	3340 - 2
3D7	BUCKET TO LINKAGE PIN (3.01M ARM)	3340 - 4
3C3	BUCKET, TOOTH ASSEMBLY	3302 - 14
3C5	BUCKET, TOOTH ASSEMBLY	3302 - 15A
1H21	BULB, FRONT WORK LIGHT	1674 - 26

C

2B7	CAB CONSOLE STORAGE COMPARTMENT	1810 - 4
1H3	CAB DISPLAY MONITOR	1674 - 4
1H3	CAB DISPLAY MONITOR WIRING HARNESS	1674 - 4
2B19	CAB DOOR COMPONENTS	1810 - 16

ALPHABETICAL INDEX - CONTINUED

GRID		PAGE
2C5	CAB DOOR HOLD OPEN LATCH COMPONENTS	1810 - 26
2C5	CAB DOOR HOLD OPEN LATCH HANDLE	1810 - 26
2B19	CAB DOOR INSIDE HANDRAIL	1810 - 16
2B19	CAB DOOR LATCH	1810 - 16
2B19	CAB DOOR LOCK	1810 - 16
2B19	CAB DOOR WINDOW	1810 - 16
2C9	CAB FLOOR MAT	1810 - 30
2C11	CAB FLOOR PLATE	1810 - 32
2B21	CAB FRONT WINDOW	1810 - 18
2B21	CAB FRONT WINDOW HANDLE	1810 - 18
2B21	CAB FRONT WINDOW TRACK	1810 - 18
2D19	CAB HEAT CONTROLLER (HEAT ONLY)	1830 - 22
2D19	CAB HEAT CONTROLLER WIRING HARNESS (HEAT ONLY)	1830 - 22
2D9	CAB HEATER AND A/C AIR DISCHARGE DUCT	1830 - 12
2D9	CAB HEATER AND A/C AIR INTAKE FILTER	1830 - 12
2D21	CAB HEATER UNIT BLOWER FAN(HEAT ONLY)	1830 - 24
2D21	CAB HEATER UNIT COMPONENTS (HEAT ONLY)	1830 - 24
2D23	CAB HEATER UNIT COMPONENTS (HEAT ONLY)	1830 - 26
2D21	CAB HEATER UNIT SENSOR(HEAT ONLY)	1830 - 24
2D21	CAB HEATER UNIT THERMOSTAT (HEAT ONLY)	1830 - 24
2D23	CAB HEATER UNIT WIRING HARNESS (HEAT ONLY)	1830 - 26
2D9	CAB HEATER/AIR CONDITIONER AIR INTAKE DUCT	1830 - 12
2B9	CAB INSIDE LOWER RIGHT FRONT COVER	1810 - 6
2B5	CAB LEFT CONSOLE	1810 - 2
2B7	CAB LEFT CONSOLE COVER	1810 - 4
2B17	CAB LEFT HANDRAIL	1810 - 14
2B17	CAB LEFT WINDOW	1810 - 14
2D9	CAB LOWER RIGHT AIR DUCT	1830 - 12
1H5	CAB MAIN WIRING HARNESS	1674 - 6
2B11	CAB MOUNT ISOLATOR (TO MAIN FRAME)	1810 - 8
2B11	CAB MOUNTING (TO MAIN FRAME)	1810 - 8
2C11	CAB PLATFORM	1810 - 32
2D11	CAB REAR AIR DIFFUSER	1830 - 14
2E1	CAB REAR AIR DIFFUSER	1830 - 28
1H5	CAB REAR CIRCUIT BOX	1674 - 6
2D11	CAB REAR CONSOLE COVER	1830 - 14
2E1	CAB REAR CONSOLE COVER	1830 - 28
2C9	CAB REAR CONSOLE PLATFORM	1810 - 30
2C9	CAB REAR CONSOLE SUPPORT BRACKET	1810 - 30
1H5	CAB REAR FUSE	1674 - 6
1H5	CAB REAR FUSE BOX	1674 - 6
2D11	CAB REAR POWER SUPPLY	1830 - 14
2E1	CAB REAR POWER SUPPLY	1830 - 28
2D11	CAB REAR POWER SUPPLY WIRING HARNESS	1830 - 14
2E1	CAB REAR POWER SUPPLY WIRING HARNESS	1830 - 28
2B17	CAB REAR WINDOW	1810 - 14
1H5	CAB RELAY	1674 - 6
2B5	CAB RIGHT CONSOLE	1810 - 2
2B7	CAB RIGHT CONSOLE COVER	1810 - 4
2B23	CAB RIGHT WINDOW	1810 - 20
2B23	CAB RIGHT WINDOW GUARD	1810 - 20
2B17	CAB ROOF	1810 - 14
2C1	CAB TOP HATCH	1810 - 22
2C1	CAB TOP HATCH CYLINDER	1810 - 22
2C1	CAB TOP SUN SHADE	1810 - 22
2C1	CAB TOP WINDOW	1810 - 22
2B17	CAB TOP, HEADLINER	1810 - 14
2B13	CAB,COMPLETE	1810 - 10
1G20	CABLE, BATTERY	1671 - 2
3C20	CABLE, BLADE PILOT CONTROL	3315 - 8
1H1	CABLE, MIC (WITH MIC CONTROLLER)	1674 - 3A
1E16	CABLE, STARTER GROUND	0422 - 2
1C24	CAMSHAFT	0402 - 2
1C24	CAMSHAFT GEAR	0402 - 2
1G3	CAP, FUEL FILLER	0560 - 2
3J11	CAP, HYDRAULIC RESERVOIR FILLER	3364 - 2
1D6	CAP, MAIN BEARING	0404 - 2
1F16	CAP, RADIATOR	0510 - 4
1D1	CAP,ENGINE OIL FILL	0402 - 4
1C11	CENTER JOINT SUPPORT	0260 - 12
1B12	CHAIN ASSEMBLY, TRACK	0130 - 12
1F16	CHARGE AIR COOLER	0510 - 4
1F16	CHARGE AIR COOLER TO AIR INTAKE HOSE	0510 - 4
1F16	CHARGE AIR COOLER TO TURBOCHARGER HOSE	0510 - 4
2D11	CIGARETTE LIGHTER	1830 - 14
2E1	CIGARETTE LIGHTER	1830 - 28
1H5	CIRCUIT BOX, CAB REAR	1674 - 6
1F20	CLEANER, AIR	0520 - 2
1F8	COLD WEATHER STARTING AID	0505 - 2
2E5	COMPARTMENT, RADIATOR, PANELS	1910 - 2
2B13	COMPLETE CAB	1810 - 10
3C16	COMPONENTS, DIG AND SWING PILOT CONTROLLER (SN 065713-)	3315 - 5C
3C14	COMPONENTS, DIG AND SWING PILOT CONTROLLER(SN -065712)	3315 - 5A
2D5	COMPRESSOR TO CONDENSER REFRIDGERANT HOSE	1830 - 8
2D13	COMPRESSOR TO HVAC UNIT HOSE (REFRIDGERANT)	1830 - 16
2D7	COMPRESSOR, AIR CONDITIONER	1830 - 10
2D5	CONDENSER TO COMPRESSOR REFRIDGERANT HOSE	1830 - 8
2D5	CONDENSER TO RECEIVER/DRYER REFRIDGERANT HOSE	1830 - 8
2D7	CONDENSER, AIR CONDITIONER	1830 - 10
1D4	CONNECTING ROD	0403 - 2
1D4	CONNECTING ROD BEARINGS	0403 - 2
2B7	CONSOLE COVER, CAB LEFT	1810 - 4
2D11	CONSOLE COVER, CAB REAR	1830 - 14
2E1	CONSOLE COVER, CAB REAR	1830 - 28
2B5	CONSOLE, CAB LEFT	1810 - 2
2B5	CONSOLE, CAB RIGHT	1810 - 2
3C20	CONTROL CABLE, BLADE PILOT	3315 - 8
3C12	CONTROL LEVER COMPONENTS, PILOT (DIG AND SWING)	3315 - 4
3C20	CONTROL LEVER, BLADE PILOT	3315 - 8
3C8	CONTROL LEVER, PROPEL PILOT	3315 - 2
3E3	CONTROL PATTERN SELECTOR KIT	3360 - 12
3C8	CONTROL PEDAL, PROPEL PILOT	3315 - 2
1H17	CONTROL UNIT,ENGINE	1674 - 22
3E23	CONTROL VALVE	3362 - 2
3F13	CONTROL VALVE COMPONENTS (MANIFOLD ASSEMBLY AND SEALS)	3362 - 16
3F7	CONTROL VALVE COMPONENTS (BOTTOM)	3362 - 10
3F11	CONTROL VALVE COMPONENTS (TOP SPOOLS, 4-SPOOL SIDE)	3362 - 14
3F9	CONTROL VALVE COMPONENTS (TOP SPOOLS, 5-SPOOL SIDE)	3362 - 12
3F3	CONTROL VALVE COMPONENTS (4-SPOOL SIDE) (RIGHT SIDE)	3362 - 6
3F5	CONTROL VALVE COMPONENTS (5-SPOOL SIDE) (LEFT SIDE)	3362 - 8
3D1	CONTROL VALVE COMPONENTS, AUXILIARY FOOT	3315 - 14
3F16	CONTROL VALVE COMPONENTS, BLADE	3362 - 24
3C24	CONTROL VALVE FITTINGS TO PILOT SIGNAL MANIFOLD (FOOT CONTROL, PILOT SYSTEM)	3315 - 10
3C24	CONTROL VALVE HOSE TO PILOT SIGNAL MANIFOLD (FOOT CONTROL,PILOT SYSTEM)	3315 - 10
3D23	CONTROL VALVE HOSE TO PILOT SIGNAL MANIFOLD (1 WAY/2 WAY ELECTRIC VALVE)	3360 - 8

ALPHABETICAL INDEX - CONTINUED

GRID		PAGE
3G13	CONTROL VALVE LINE TO OIL TANK (RETURN LINE)	3363 - 4
3J5	CONTROL VALVE LINE TO SELECTOR VALVE HOSE(FACTORY INSTALLED AUX. PLUMBING)	3363 - 82
3F1	CONTROL VALVE MOUNTING BRACKET	3362 - 4
3H23	CONTROL VALVE PRESSURE SENSOR	3363 - 42
3I17	CONTROL VALVE SUPPORT BRACKET, BLADE	3363 - 64
3I19	CONTROL VALVE TO BLADE CONTROL VALVE	3363 - 66
3G21	CONTROL VALVE TO BOOM CYLINDER HOSE LINE	3363 - 12
3G23	CONTROL VALVE TO BOOM LINE HOSE (ARM AND BUCKET CYLINDER)	3363 - 14
3J5	CONTROL VALVE TO BOOM LINE HOSE (FACTORY INSTALLED AUXILIARY PLUMBING)	3363 - 82
3D19	CONTROL VALVE TO BOOM LINE HOSE (FIELD AUXILIARY LINE KIT)	3360 - 6
3J3	CONTROL VALVE TO HOSE LINE (AUXILIARY PLUMBING, FACTORY INSTALL)	3363 - 80
3G17	CONTROL VALVE TO HYDRAULIC PUMP HOSE (HIGH PRESSURE, DELIVERY)	3363 - 8
3E1	CONTROL VALVE TO HYDRAULIC RESERVOIR HOSE (AUXILIARY SOLENOID/FLOW CONTROL)	3360 - 10
3I3	CONTROL VALVE TO HYDRAULIC RESERVOIR HOSE (PILOT HOSE)	3363 - 46
3I5	CONTROL VALVE TO HYDRAULIC RESERVOIR HOSE (PILOT HOSE)	3363 - 48
3G15	CONTROL VALVE TO OIL COOLER LINE	3363 - 6
3G13	CONTROL VALVE TO OIL COOLER LINE SUPPORT BRACKET	3363 - 4
3I15	CONTROL VALVE TO OIL TANK RETURN HOSES	3363 - 62
3I15	CONTROL VALVE TO OIL TANK RETURN LINES	3363 - 62
3H23	CONTROL VALVE TO PILOT SIGNAL MANIFOLD LINE (BOTTOM OF CONTROL VALVE)	3363 - 42
3I1	CONTROL VALVE TO PILOT SIGNAL MANIFOLD LINE (TOP OF CONTROL VALVE)	3363 - 44
3G13	CONTROL VALVE TO RESERVOIR LINE (RETURN LINE)	3363 - 4
3G13	CONTROL VALVE TO RESERVOIR LINE VALVE (RETURN LINE)	3363 - 4
3H3	CONTROL VALVE TO ROTARY MANIFOLD HOSE	3363 - 18
3H11	CONTROL VALVE TO ROTARY MANIFOLD LINES	3363 - 30
3E1	CONTROL VALVE TO SIGNAL MANIFOLD HOSE (AUXILIARY SOLENOID/FLOW CONTROL)	3360 - 10
3I5	CONTROL VALVE TO SOLENOID VALVE LINE (PILOT LINE)	3363 - 48
3H1	CONTROL VALVE TO SWING MOTOR HOSE	3363 - 16
3G19	CONTROL VALVE TO SWING MOTOR HOSE (DRAIN HOSE)	3363 - 10
3F16	CONTROL VALVE, BLADE	3362 - 24
3C10	CONTROLLER COMPONENTS, PROPEL PILOT	3315 - 3A
3C22	CONTROLLER VALVE COMPONENTS, BLADE PILOT	3315 - 9A
2C23	CONTROLLER, AIR CONDITIONER	1830 - 2
2D19	CONTROLLER, CAB HEAT (HEAT ONLY)	1830 - 22
2C23	CONTROLLER, HEATER	1830 - 2
1G24	CONTROLLER, MIC	1674 - 2
3C14	CONTROLLER, PILOT (COMPONENTS) (DIG AND SWING)(SN -065712)	3315 - 5A
3C16	CONTROLLER, PILOT (COMPONENTS) (DIG AND SWING)(SN 065713-)	3315 - 5C
1H5	CONTROLLER, VEHICLE	1674 - 6
1D22	CONTROLLER,FUEL INJECTION PUMP	0413 - 2
1G23	CONVERTER (24-VOLT TO 12-VOLT)	1674 - 1
1F10	COOLANT HEATER	0505 - 4
1F10	COOLANT HEATER KIT, FUEL FIRED	0505 - 4
1F16	COOLER, CHARGE AIR	0510 - 4
1F16	COOLER, FUEL	0510 - 4
1F16	COOLER, HYDRAULIC OIL	0510 - 4
2E19	COOLING PACKAGE AND HYDRAULIC PUMP COMPARTMENT DOORS (VENTED)	1910 - 16
2E19	COOLING PACKAGE COMPARTMENT DOOR (VENTED)	1910 - 16
2E19	COOLING PACKAGE COMPARTMENT DOOR LATCH (VENTED)	1910 - 16
1G16	COOLSCAN PLUS TEST KIT, FLUID ANALYSIS PRODUCTS	1369 - 6
2D1	CORE, HEATER	1830 - 4
1I6	COUNTERWEIGHT	1740 - 6
1I6	COUNTERWEIGHT ISOLATOR	1740 - 6
3E13	COUPLER, ENGINE TO HYDRAULIC PUMP	3361 - 4
3E13	COUPLER, HYDRAULIC PUMP TO ENGINE	3361 - 4
1F22	COVER, AIR PRE-CLEANER	0520 - 4
2F6	COVER, AUXILIARY DRIVE ADAPTER (SAE "A" MOUNT, 9 TOOTH)	2160 - 2
2F8	COVER, AUXILIARY DRIVE ADAPTER (SAE "B" MOUNT, 13 TOOTH)	2160 - 4
1G20	COVER, BATTERY	1671 - 2
3K8	COVER, BLADE CYLINDER	3401 - 2
2E15	COVER, BOTTOM PROTECTION	1910 - 12
2B9	COVER, CAB INSIDE LOWER RIGHT FRONT	1810 - 6
2B7	COVER, CAB LEFT CONSOLE	1810 - 4
2D11	COVER, CAB REAR CONSOLE	1830 - 14
2E1	COVER, CAB REAR CONSOLE	1830 - 28
2B7	COVER, CAB RIGHT CONSOLE	1810 - 4
2E17	COVER, ENGINE	1910 - 14
1H17	COVER, ENGINE CONTROL UNIT	1674 - 22
1D11	COVER, ENGINE OIL FILLER OPENING	0407 - 2
1E7	COVER, ENGINE THERMOSTAT HOUSING	0418 - 2
2E11	COVER, FRONT MIDDLE DECK	1910 - 8
2E9	COVER, HYDRAULIC PUMP COMPARTMENT	1910 - 6
1D11	COVER, OIL FILLER OPENING	0407 - 2
1C17	COVER, PROPEL MOTOR	0260 - 16
2E5	COVER, RADIATOR	1910 - 2
2E11	COVER, RADIATOR COMPARTMENT	1910 - 8
1D1	COVER, ROCKER ARM	0402 - 4
1C7	COVER, ROTARY MANIFOLD BOTTOM	0260 - 8
1C9	COVER, ROTARY MANIFOLD BOTTOM (WITH BLADE)	0260 - 10
1C13	COVER, ROTARY MANIFOLD TOP	0260 - 14
1I10	COVER, SWING BEARING GREASE BATH	1740 - 10
2E13	COVER, TOOL BOX	1910 - 10
1B2	COVER, TRACK CHAIN TENSION ADJUSTER	0130 - 2
1B14	COVER, TRACK TENSION ADJUSTER (WITH BLADE)	0130 - 14
2E19	COVER, TROPICAL	1910 - 16
2E15	COVER, UPPERSTRUCTURE BOTTOM	1910 - 12
2C13	COVER, WINDOW	1810 - 34
1D5	COVER,AUXILLARY DRIVE	0404 - 1
1D2	COVER,TIMING GEAR COVER	0402 - 6
1C22	CRANKSHAFT	0401 - 2
1E21	CRANKSHAFT AUXILIARY DRIVE PULLEY	0429 - 3
1C22	CRANKSHAFT GEAR	0401 - 2
1C22	CRANKSHAFT MAIN BEARINGS	0401 - 2
1E20	CRANKSHAFT PULLEY	0429 - 2
1F2	CRANKSHAFT REAR OIL SEAL	0433 - 3
1D2	CRANKSHAFT SPEED SENSOR	0402 - 6
1C22	CRANKSHAFT TIMING WHEEL	0401 - 2
2B9	CUP HOLDER	1810 - 6
3K8	CUTTING EDGE, BLADE	3401 - 2
3B22	CUTTING EDGE, DITCH CLEANING BUCKET	3302 - 8
3B16	CUTTING EDGE, GENERAL PURPOSE BUCKET	3302 - 2
3B20	CUTTING EDGE, HEAVY DUTY BUCKET	3302 - 6
3C1	CUTTING EDGES, ESCO	3302 - 12
3J19	CYLINDER BARREL, ARM	3365 - 14

ALPHABETICAL INDEX - CONTINUED

GRID		PAGE
3K3	CYLINDER BARREL, BLADE (LEFT)(FACTORY INSTALLED)	3365 - 20
3K5	CYLINDER BARREL, BLADE (LEFT)(REPLACEMENT CYLINDER)	3365 - 22
3J23	CYLINDER BARREL, BLADE (RIGHT)(FACTORY INSTALLED)	3365 - 18
3K1	CYLINDER BARREL, BLADE (RIGHT)(REPLACEMENT CYLINDER)	3365 - 19A
3J21	CYLINDER BARREL, BUCKET	3365 - 16
3J17	CYLINDER BARREL, LEFT BOOM	3365 - 10
3J15	CYLINDER BARREL, RIGHT BOOM	3365 - 4
1D6	CYLINDER BLOCK	0404 - 2
3J19	CYLINDER COMPONENTS, ARM	3365 - 14
3K3	CYLINDER COMPONENTS, BLADE (LEFT)(FACTORY INSTALLED)	3365 - 20
3K5	CYLINDER COMPONENTS, BLADE (LEFT)(REPLACEMENT CYLINDER)	3365 - 22
3J23	CYLINDER COMPONENTS, BLADE (RIGHT)(FACTORY INSTALLED)	3365 - 18
3K1	CYLINDER COMPONENTS, BLADE (RIGHT)(REPLACEMENT CYLINDER)	3365 - 19A
3J21	CYLINDER COMPONENTS, BUCKET	3365 - 16
3J17	CYLINDER COMPONENTS, LEFT BOOM	3365 - 10
3J15	CYLINDER COMPONENTS, RIGHT BOOM	3365 - 4
3K8	CYLINDER COVER, BLADE	3401 - 2
1D18	CYLINDER HEAD	0409 - 2
1D18	CYLINDER HEAD GASKET	0409 - 2
1F3	CYLINDER HEAD REMOVAL GASKET SET	0452 - 1
1D4	CYLINDER LINER	0403 - 2
1D4	CYLINDER LINER AND PISTON KIT	0403 - 2
1D4	CYLINDER LINER O-RING KIT	0403 - 2
3J19	CYLINDER ROD, ARM	3365 - 14
3K3	CYLINDER ROD, BLADE (LEFT)(FACTORY INSTALLED)	3365 - 20
3K5	CYLINDER ROD, BLADE (LEFT)(REPLACEMENT CYLINDER)	3365 - 22
3J23	CYLINDER ROD, BLADE (RIGHT)(FACTORY INSTALLED)	3365 - 18
3K1	CYLINDER ROD, BLADE (RIGHT)(REPLACEMENT CYLINDER)	3365 - 19A
3J21	CYLINDER ROD, BUCKET	3365 - 16
3J17	CYLINDER ROD, LEFT BOOM	3365 - 10
3J15	CYLINDER SEAL KIT, RIGHT BOOM	3365 - 4
3J19	CYLINDER, ARM, SEAL KIT	3365 - 14
2C1	CYLINDER, CAB TOP HATCH	1810 - 22
1F8	CYLINDER, ETHER START FLUID	0505 - 2

D

3D15	DECAL, AUXILIARY CONTROL (ONE SOLENOID)	3360 - 2
2B7	DECAL, IGNITION	1810 - 4
1G10	DECAL, PATTERN CHANGER	1322 - 2
2B7	DECAL, PILOT SHUTOFF	1810 - 4
1G10	DECALS	1322 - 2
2E11	DECK COVER, FRONT MIDDLE	1910 - 8
2D17	DEFROSTER/AIR CIRCULATION FAN	1830 - 20
2D17	DEFROSTER/AIR CIRCULATION FAN WIRING HARNESS	1830 - 20
3G17	DELIVERY HOSE (HYDRAULIC PUMP TO CONTROL VALVE)	3363 - 8
1F10	DIESEL FIRED COOLANT HEATER KIT	0505 - 4
1G17	DIESELSCAN TEST KIT, FLUID ANALYSIS PRODUCTS	1369 - 7
2D11	DIFFUSER, CAB REAR AIR	1830 - 14
2E1	DIFFUSER, CAB REAR AIR	1830 - 28
3C16	DIG AND SWING PILOT CONTROLLER COMPONENTS (SN 065713-)	3315 - 5C
3C14	DIG AND SWING PILOT CONTROLLER COMPONENTS(SN -065712)	3315 - 5A
1D10	DIPSTICK, ENGINE OIL	0407 - 1
3K11	DIPSTICK, SWING GEARBOX	4360 - 2
1H3	DISPLAY MONITOR, CAB	1674 - 4
3B22	DITCH CLEANING BUCKET ASSEMBLY	3302 - 8
3B22	DITCH CLEANING BUCKET CUTTING EDGE	3302 - 8
3B22	DITCH CLEANING BUCKET WEAR BAR	3302 - 8
2B15	DOME LIGHT WIRING HARNESS	1810 - 12
2B15	DOME LIGHT, CAB	1810 - 12
2B19	DOOR COMPONENTS, CAB	1810 - 16
2B19	DOOR LATCH, CAB	1810 - 16
2E19	DOOR LATCH, COOLING PACKAGE AND HYDRAULIC PUMP COMPARTMENT (VENTED)	1910 - 16
2E19	DOOR LATCH, RADIATOR COMPARTMENT (VENTED)	1910 - 16
2B19	DOOR LOCK, CAB	1810 - 16
2B19	DOOR WINDOW, CAB	1810 - 16
2E19	DOOR, COOLING PACKAGE COMPARTMENT (VENTED)	1910 - 16
2E19	DOOR, HYDRAULIC PUMP COMPARTMENT (VENTED)	1910 - 16
2E7	DOOR, PUMP COMPARTMENT ACCESS	1910 - 4
2E19	DOOR, RADIATOR COMPARTMENT (VENTED)	1910 - 16
2E7	DOOR, RADIATOR COMPARTMENT ACCESS	1910 - 4
3G19	DRAIN HOSE (SWING MOTOR TO CONTROL VALVE AND RETURN LINE)	3363 - 10
2F8	DRIVE ADAPTER KIT, AUXILIARY (SAE "B" MOUNT, 13 TOOTH)	2160 - 4
1E16	DRIVE, STARTER MOTOR CLUTCH	0422 - 2
3D17	DUAL CONTROL HANDLE WITH WIRING (2 SOLENOIDS)	3360 - 4
2D9	DUCT, CAB HEATER AND A/C AIR DISCHARGE	1830 - 12
2D9	DUCT, CAB HEATER AND A/C AIR INTAKE	1830 - 12
2D9	DUCT, CAB LOWER RIGHT AIR	1830 - 12
2D19	DUCT, HEATER UNIT AIR (HEAT ONLY)	1830 - 22
2C23	DUCT, HVAC UNIT	1830 - 2
2D11	DUCT, REAR TRAY	1830 - 14
2E1	DUCT, REAR TRAY	1830 - 28

E

3B20	EAR ASSEMBLY, HEAVY DUTY BUCKET	3302 - 6
3B16	EDGE PROTECTOR KIT, GENERAL PURPOSE BUCKET	3302 - 2
3B20	EDGE PROTECTOR KIT, HEAVY DUTY BUCKET	3302 - 6
3K8	EDGE, BLADE CUTTING	3401 - 2
1F20	ELEMENT, AIR CLEANER	0520 - 2
1E13	ELEMENT,FUEL FILTER	0420 - 4
1D15	ELEMENT,OIL FILTER	0407 - 6
1E20	ENGINE ACCESSORY DRIVE BELT	0429 - 2
1F16	ENGINE AIR INTAKE LINE BRACKET	0510 - 4
1F16	ENGINE AIR INTAKE TO AIR COOLER HOSE	0510 - 4
1E1	ENGINE BALANCER SHAFT	0415 - 2
2E17	ENGINE COMPARTMENT HOOD	1910 - 14
1H17	ENGINE CONTROL UNIT	1674 - 22
1H17	ENGINE CONTROL UNIT COVER	1674 - 22
1H15	ENGINE CONTROL UNIT WIRING HARNESS	1674 - 20
1H17	ENGINE CONTROL UNIT WIRING HARNESS FUSE	1674 - 22
1H19	ENGINE CONTROL, SWITCH BOX	1674 - 24
1F14	ENGINE COOLANT RECOVERY HOSE	0510 - 2
1F14	ENGINE COOLANT RECOVERY TANK	0510 - 2
1F14	ENGINE COOLANT RECOVERY TANK BRACKET	0510 - 2

ALPHABETICAL INDEX - CONTINUED

GRID		PAGE
1E7	ENGINE COOLANT TEMPERATURE SENSOR	0418 - 2
1D18	ENGINE COOLANT TEMPERATURE SWITCH	0409 - 2
1F12	ENGINE COOLANT, HEATER	0505 - 6
2E17	ENGINE COVER	1910 - 14
1F1	ENGINE FLYWHEEL	0433 - 2
2E11	ENGINE FRONT FIREWALL PANEL	1910 - 8
1D5	ENGINE FRONT PLATE	0404 - 1
1F4	ENGINE MAJOR OVERHAUL GASKET SET	0452 - 2
1G1	ENGINE MOUNTING BRACKET	0540 - 2
1G1	ENGINE MOUNTING ISOLATOR	0540 - 2
1D6	ENGINE OIL BY-PASS VALVE	0404 - 2
1E9	ENGINE OIL COOLER	0419 - 2
1E9	ENGINE OIL COOLER ADAPTER	0419 - 2
1D10	ENGINE OIL DIPSTICK	0407 - 1
1D10	ENGINE OIL DIPSTICK TUBE	0407 - 1
1D1	ENGINE OIL FILL CAP	0402 - 4
1D11	ENGINE OIL FILLER OPENING COVER	0407 - 2
1D13	ENGINE OIL LEVEL SENSOR	0407 - 4
1D13	ENGINE OIL PAN	0407 - 4
1D13	ENGINE OIL PAN GASKET	0407 - 4
1D6	ENGINE OIL PRESSURE REGULATING VALVE	0404 - 2
1D6	ENGINE OIL PRESSURE SWITCH	0404 - 2
1D12	ENGINE OIL PUMP	0407 - 3
1D12	ENGINE OIL PUMP GEAR	0407 - 3
1D12	ENGINE OIL PUMP INTAKE	0407 - 3
1D4	ENGINE PISTON	0403 - 2
1D8	ENGINE SHORT BLOCK	0404 - 4
1E7	ENGINE THERMOSTAT	0418 - 2
1E7	ENGINE THERMOSTAT HOUSING	0418 - 2
1E7	ENGINE THERMOSTAT HOUSING COVER	0418 - 2
2D15	ENGINE TO HEATER CORE HOSE (CAB HEATER)	1830 - 18
3E13	ENGINE TO HYDRAULIC PUMP COUPLER	3361 - 4
3E11	ENGINE TO HYDRAULIC PUMP SPACER	3361 - 2
1F16	ENGINE TO RADIATOR HOSE	0510 - 4
1D16	ENGINE VENTILATING HOSE	0408 - 2
1H13	ENGINE WIRING HARNESS	1674 - 18
2B15	ESCAPE HAMMER	1810 - 12
3C1	ESCO BUCKET CUTTING EDGES	3302 - 12
1F8	ETHER START FLUID CYLINDER	0505 - 2
1F8	ETHER VALVE	0505 - 2
2D1	EVAPORATOR, AIR CONDITIONER	1830 - 4
1D20	EXHAUST MANIFOLD	0410 - 2
1F24	EXHAUST PIPE	0530 - 2
1D18	EXHAUST VALVE	0409 - 2
1H21	EXTERIOR CAB LIGHTING	1674 - 26

F

1E22	FAN BELT IDLER TENSIONER	0429 - 4
1F13	FAN BLADE	0510 - 1
1F13	FAN BLADE SPACER	0510 - 1
1E22	FAN DRIVE	0429 - 4
1E24	FAN DRIVE BELT	0429 - 6
1E22	FAN DRIVE HOUSING	0429 - 4
1E22	FAN DRIVE HUB	0429 - 4
1E22	FAN DRIVE PULLEY	0429 - 4
1E22	FAN DRIVE SUPPORT	0429 - 4
1F16	FAN SHROUD	0510 - 4
1G22	FAN, ALTERNATOR	1672 - 2
2D21	FAN, CAB HEATER UNIT BLOWER (HEAT ONLY)	1830 - 24
2D17	FAN, DEFROSTER AIR/CIRCULATION	1830 - 20
2D3	FAN, HVAC UNIT BLOWER	1830 - 6
1G3	FILLER CAP, FUEL	0560 - 2
1G3	FILLER STRAINER, FUEL	0560 - 2
3J11	FILTER ELEMENT, HYDRAULIC RESERVOIR	3364 - 2
3J13	FILTER RESTRICTION INDICATOR, HYDRAULIC	3364 - 4
1F20	FILTER, AIR CLEANER	0520 - 2
2D9	FILTER, CAB HEATER AND A/C AIR INTAKE	1830 - 12
3H19	FILTER, LEFT PILOT CONTROLLER TO SHUT-OFF VALVE	3363 - 38
3H7	FILTER, PILOT	3363 - 26
3H17	FILTER, PROPEL PILOT CONTROLLER VALVE TO PILOT SHUTOFF VALVE	3363 - 36
3H21	FILTER, RIGHT PILOT CONTROLLER TO SHUT-OFF VALVE	3363 - 40
1E11	FINAL FUEL FILTER FUEL LINES	0420 - 2
1G7	FINAL FUEL FILTER TO FUEL COOLER HOSE	0560 - 6
3G3	FITTING, PILOT SIGNAL MANIFOLD (PILOT CONTROLLER SIDE)	3362 - 48
3G5	FITTING, PILOT SIGNAL MANIFOLD (CONTROL VALVE SIDE)	3362 - 50
1B24	FITTING, PROPEL MOTOR TO ROTARY MANIFOLD	0260 - 4
1B24	FITTING, ROTARY MANIFOLD TO PROPEL MOTOR	0260 - 4
3E3	FITTINGS, CONTROL PATTERN SELECTOR KIT	3360 - 12
3C24	FITTINGS, FROM CONTROL VALVE TO PILOT SIGNAL MANIFOLD (FOOT CONTROL, PILOT)	3315 - 10
3C24	FITTINGS, FROM FOOT PEDAL CONTROL TO PILOT SHUTOFF VALVE (PILOT SYSTEM)	3315 - 10
3C24	FITTINGS, FROM FOOT PEDAL CONTROL TO PILOT SIGNAL MANIFOLD (PILOT SYSTEM)	3315 - 10
3C24	FITTINGS, FROM PILOT SHUTOFF VALVE TO FOOT PEDAL CONTROL (PILOT SYSTEM)	3315 - 10
3C24	FITTINGS, FROM PILOT SIGNAL MANIFOLD TO CONTROL VALVE (FOOT CONTROL,PILOT SYS)	3315 - 10
3C24	FITTINGS, FROM PILOT SIGNAL MANIFOLD TO FOOT PEDAL CONTROL (PILOT SYSTEM)	3315 - 10
3E5	FITTINGS, MECHANICAL PATTERN CHANGER VALVE	3360 - 13A
1G3	FLOAT, FUEL LEVEL	0560 - 2
2C9	FLOOR MAT	1810 - 30
2C11	FLOOR PLATE	1810 - 32
3F22	FLOW COMBINER SHUTTLE VALVE COMPONENTS	3362 - 42
3E1	FLOW REGULATOR TO SIGNAL MANIFOLD HOSE (AUXILIARY SOLENOID/FLOW CONTROL)	3360 - 10
1G16	FLUID ANALYSIS PRODUCTS (COOLSCAN PLUS TEST KIT)	1369 - 6
1G17	FLUID ANALYSIS PRODUCTS (DIESELSCAN TEST KIT)	1369 - 7
1G14	FLUID ANALYSIS PRODUCTS (OILSCAN PLUS TEST KIT)	1369 - 4
1F2	FLYWHEEL HOUSING	0433 - 3
1F1	FLYWHEEL RING GEAR	0433 - 2
1F1	FLYWHEEL, ENGINE	0433 - 2
3D1	FOOT CONTROL COMPONENTS, AUXILIARY VALVE	3315 - 14
3C24	FOOT PEDAL CONTROL, HYDRAULIC (2-WAY) (AUXILIARY)	3315 - 10
3D15	FOOT SWITCH, AUXILIARY ELECTRIC (ONE SOLENOID)	3360 - 2
3D3	FOOT VALVE, SINGLE PEDAL KIT	3315 - 16
3C8	FOOTREST	3315 - 2
1I2	FRAME, MAIN	1740 - 2
1B2	FRAME, TRACK	0130 - 2
1B14	FRAME, TRACK (WITH BLADE)	0130 - 14
2E13	FRONT HANDRAIL, RIGHT	1910 - 10
1B4	FRONT IDLER, TRACK	0130 - 4
2E11	FRONT MIDDLE DECK COVER	1910 - 8
2E11	FRONT MIDDLE PANEL SUPPORT BRACKET	1910 - 8
2E19	FRONT PANEL, COOLING PACKAGE COMPARTMENT (VENTED)	1910 - 16
2E19	FRONT PANEL, HYDRAULIC PUMP COMPARTMENT (VENTED)	1910 - 16
1D5	FRONT PLATE, ENGINE	0404 - 1

ALPHABETICAL INDEX - CONTINUED

GRID		PAGE
1I2	FRONT STEP, RIGHT	1740 - 2
2B21	FRONT WINDOW, CAB	1810 - 18
1H7	FRONT WORK LIGHT (ON BOOM)	1674 - 8
1F16	FUEL COOLER	0510 - 4
1G7	FUEL COOLER TO FINAL FUEL FILTER HOSE	0560 - 6
1G7	FUEL COOLER TO PRIMARY FUEL FILTER HOSE	0560 - 6
1G3	FUEL FILLER CAP	0560 - 2
1G3	FUEL FILLER STRAINER	0560 - 2
1E13	FUEL FILTER ELEMENT	0420 - 4
1E13	FUEL FILTER SERVICE KIT	0420 - 4
1F10	FUEL FIRED COOLANT HEATER KIT	0505 - 4
1D22	FUEL INJECTION LINES	0413 - 2
1D21	FUEL INJECTION NOZZLE	0413 - 1
1D22	FUEL INJECTION PUMP	0413 - 2
1D22	FUEL INJECTION PUMP CONTROLLER	0413 - 2
1D22	FUEL INJECTION PUMP GEAR	0413 - 2
1D22	FUEL INJECTION SYSTEM	0413 - 2
1G7	FUEL INJECTOR LEAKOFF LINE TO FUEL TANK HOSE	0560 - 6
1G3	FUEL LEVEL FLOAT	0560 - 2
1G3	FUEL LEVEL SENSOR	0560 - 2
1E11	FUEL LINES,FINAL FUEL FILTER	0420 - 2
1G3	FUEL TANK	0560 - 2
1G5	FUEL TANK MOUNTING	0560 - 4
1G7	FUEL TANK TO FUEL INJECTOR LEAKOFF LINE HOSE	0560 - 6
1G7	FUEL TANK TO PRIMARY FUEL FILTER HOSE	0560 - 6
1E15	FUEL TRANSFER PUMP	0421 - 2
1E15	FUEL TRANSFER PUMP PUSH ROD	0421 - 2
1H5	FUSE BOX, CAB REAR	1674 - 6
1H5	FUSE, CAB REAR	1674 - 6
1H17	FUSE, ENGINE CONTROL UNIT WIRING HARNESS	1674 - 22

G

1F3	GASKET SET, CYLINDER HEAD REMOVAL	0452 - 1
1F4	GASKET SET, ENGINE MAJOR OVERHAUL	0452 - 2
1F3	GASKET SET, IN CHASSIS OVERHAUL	0452 - 1
1D24	GASKET, AIR INTAKE	0414 - 2
1D18	GASKET, CYLINDER HEAD	0409 - 2
1D13	GASKET, ENGINE OIL PAN	0407 - 4
1D1	GASKET,ROCKER ARM COVER	0402 - 4
1D2	GASKET,TIMING GEAR COVER	0402 - 6
3J11	GAUGE, HYDRAULIC RESERVOIR LEVEL	3364 - 2
1C24	GEAR, CAMSHAFT	0402 - 2
1C22	GEAR, CRANKSHAFT	0401 - 2
1D12	GEAR, ENGINE OIL PUMP	0407 - 3
1D22	GEAR,FUEL INJECTION PUMP	0413 - 2
1B22	GEARBOX COMPONENTS, PROPEL	0260 - 2
3K11	GEARBOX COMPONENTS, SWING	4360 - 2
3K13	GEARBOX MOUNTING, SWING	4360 - 4
3B18	GENERAL PURPOSE BUCKET ASSEMBLY	3302 - 4
3B16	GENERAL PURPOSE BUCKET CUTTING EDGE	3302 - 2
3B16	GENERAL PURPOSE BUCKET EDGE PROTECTOR KIT	3302 - 2
3B16	GENERAL PURPOSE BUCKET MOLDBOARD	3302 - 2
3B16	GENERAL PURPOSE BUCKET SIDE CUTTER	3302 - 2
3B18	GENERAL PURPOSE BUCKET WEAR BAR	3302 - 4
1E16	GROUND CABLE, STARTER	0422 - 2
2C13	GUARD KIT, VANDAL	1810 - 34
2B23	GUARD, CAB RIGHT WINDOW	1810 - 20
2E15	GUARDS, BOTTOM	1910 - 12
2C13	GUARDS, WINDOW	1810 - 34

GRID		PAGE

H

2B15	HAMMER, ESCAPE	1810 - 12
2C5	HANDLE, CAB DOOR HOLD OPEN LATCH	1810 - 26
2B21	HANDLE, CAB FRONT WINDOW	1810 - 18
3D17	HANDLE, PILOT DUAL CONTROL (2 SOLENOIDS)	3360 - 4
2C3	HANDLE, SECONDARY EXIT	1810 - 24
2B17	HANDRAIL, CAB LEFT	1810 - 14
2B17	HANDRAIL, CAB LEFT SIDE	1810 - 14
2B19	HANDRAIL, INSIDE DOOR	1810 - 16
2E13	HANDRAIL, RIGHT FRONT	1910 - 10
1G22	HARNESS, ALTERNATOR WIRING	1672 - 2
3D15	HARNESS, AUXILIARY ELECTRIC FOOT SWITCH WIRING (ONE SOLENOID)	3360 - 2
1H11	HARNESS, BOOM LIGHT WIRING (OPTIONAL, ON TOP OF BOOM)	1674 - 12
1H3	HARNESS, CAB DISPLAY MONITOR WIRING	1674 - 4
2D19	HARNESS, CAB HEAT CONTROLLER WIRING (HEAT ONLY)	1830 - 22
2D23	HARNESS, CAB HEATER UNIT WIRING (HEAT ONLY)	1830 - 26
1H5	HARNESS, CAB MAIN WIRING	1674 - 6
2D11	HARNESS, CAB REAR POWER SUPPLY WIRING	1830 - 14
2E1	HARNESS, CAB REAR POWER SUPPLY WIRING	1830 - 28
2B15	HARNESS, DOME LIGHT WIRING	1810 - 12
1H15	HARNESS, ENGINE CONTROL UNIT WIRING	1674 - 20
1H13	HARNESS, ENGINE WIRING	1674 - 18
1H21	HARNESS, FRONT WORK LIGHT	1674 - 26
2F1	HARNESS, HORN WIRING	2004 - 2
3J13	HARNESS, HYDRAULIC FILTER RESTRICTION INDICATOR WIRING	3364 - 4
2F3	HARNESS, PROPEL MOTION ALARM WIRING	2004 - 4
2B15	HARNESS, RADIO ANTENNA WIRING	1810 - 12
2B15	HARNESS, RADIO SPEAKER WIRING	1810 - 12
2E22	HARNESS, RADIO WIRING	2001 - 2
3D17	HARNESS, SOLENOID VALVE DUAL CONTROL (2 SOLENOIDS)	3360 - 4
1G20	HARNESS, STARTER RELAY WIRING	1671 - 2
1E16	HARNESS, STARTER WIRING	0422 - 2
1H9	HARNESS, VEHICLE MAIN WIRING	1674 - 10
1H7	HARNESS, WIRING, BOOM LIGHT	1674 - 8
2C1	HATCH, CAB TOP	1810 - 22
1D18	HEAD, CYLINDER	0409 - 2
1D15	HEADER,OIL FILTER	0407 - 6
1H7	HEADLIGHT ON BOOM	1674 - 8
2B17	HEADLINER, CAB TOP	1810 - 14
2C15	HEADREST	1821 - 2
2D19	HEAT CONTROLLER, CAB (HEAT ONLY)	1830 - 22
2C23	HEATER AND A/C CONTROLLER TO HVAC UNIT WIRING HARNESS	1830 - 2
2C23	HEATER CONTROLLER, CAB	1830 - 2
2D1	HEATER CORE	1830 - 4
2D15	HEATER CORE TO ENGINE HOSE (CAB HEATER)	1830 - 18
1F10	HEATER KIT, FUEL FIRED COOLANT	0505 - 4
2C23	HEATER UNIT	1830 - 2
2D19	HEATER UNIT AIR DUCT (HEAT ONLY)	1830 - 22
2D1	HEATER UNIT COMPONENTS	1830 - 4
2D3	HEATER UNIT COMPONENTS	1830 - 6
2D21	HEATER UNIT COMPONENTS, CAB (HEAT ONLY)	1830 - 24
2D23	HEATER UNIT COMPONENTS, CAB (HEAT ONLY)	1830 - 26
2D21	HEATER UNIT ELECTRIC MOTOR (HEAT ONLY)	1830 - 24
2D19	HEATER UNIT HOSE (HEAT ONLY)	1830 - 22
1F12	HEATER, ENGINE COOLANT	0505 - 6
3B20	HEAVY DUTY BUCKET ASSEMBLY	3302 - 6

ALPHABETICAL INDEX - CONTINUED

GRID		PAGE
3B20	HEAVY DUTY BUCKET CUTTING EDGE	3302 - 6
3B20	HEAVY DUTY BUCKET EAR ASSEMBLY	3302 - 6
3B20	HEAVY DUTY BUCKET EDGE PROTECTOR KIT	3302 - 6
3B20	HEAVY DUTY BUCKET MOLDBOARD	3302 - 6
3B20	HEAVY DUTY BUCKET SIDE CUTTER	3302 - 6
3B20	HEAVY DUTY BUCKET WEAR BAR	3302 - 6
2C5	HOLD OPEN LATCH COMPONENTS, CAB DOOR	1810 - 26
2B9	HOLDER, BEVERAGE	1810 - 6
2E17	HOOD, ENGINE COMPARTMENT	1910 - 14
2F1	HORN	2004 - 2
2F1	HORN WIRING HARNESS	2004 - 2
3J3	HOSE TO CONTROL VALVE LINE (AUXILIARY PLUMBING, FACTORY INSTALL)	3363 - 80
1F20	HOSE, AIR CLEANER TO TURBOCHARGER	0520 - 2
2D1	HOSE, AIR CONDITIONER EVAPORATOR	1830 - 4
3I11	HOSE, ARM CYLINDER TO BOOM LINE	3363 - 54
3J9	HOSE, ARM LINE TO BOOM LINE (FACTORY INSTALLED AUXILIARY PLUMBING)	3363 - 86
3D19	HOSE, ARM LINE TO BOOM LINE (FIELD AUXILIARY LINE KIT)	3360 - 6
3I9	HOSE, ARM LINE TO BOOM LINE (LONG ARM LUBRICATION)	3363 - 52
3H5	HOSE, ATTENUATOR	3363 - 24
3I17	HOSE, BLADE CONTROL VALVE TO PRESSURE RELIEF VALVE	3363 - 64
3I21	HOSE, BLADE CYLINDER TO ROTARY MANIFOLD	3363 - 68
3I17	HOSE, BLADE PUMP TO HYDRAULIC RESERVOIR	3363 - 64
3I17	HOSE, BLADE PUMP TO PRESSURE RELIEF VALVE	3363 - 64
3D21	HOSE, BOOM AUXILIARY LINE TO RETURN LINE (AUXILIARY HYDRAULIC OPTIONAL RETURN)	3360 - 7A
3G21	HOSE, BOOM CYLINDER TO OIL LINE	3363 - 12
3I11	HOSE, BOOM LINE TO ARM CYLINDER	3363 - 54
3J9	HOSE, BOOM LINE TO ARM LINE (FACTORY INSTALLED AUXILIARY PLUMBING)	3363 - 86
3D19	HOSE, BOOM LINE TO ARM LINE (FIELD AUXILIARY LINE KIT)	3360 - 6
3I9	HOSE, BOOM LINE TO ARM LINE (LONG ARM LUBRICATION)	3363 - 52
3J7	HOSE, BOOM LINE TO BOOM LINE (FACTORY INSTALLED AUXILIARY PLUMBING)	3363 - 84
3D5	HOSE, BOOM LINE TO BUCKET CYLINDER (2.52M ARM)	3340 - 2
3D7	HOSE, BOOM LINE TO BUCKET CYLINDER (3.01M ARM)	3340 - 4
3G23	HOSE, BOOM LINE TO CONTROL VALVE (ARM AND BUCKET CYLINDER)	3363 - 14
3J5	HOSE, BOOM LINE TO CONTROL VALVE (FACTORY INSTALLED AUXILIARY PLUMBING)	3363 - 82
3D19	HOSE, BOOM LINE TO CONTROL VALVE (FIELD AUXILIARY LINE KIT)	3360 - 6
3J5	HOSE, BOOM LINE TO SELECTOR VALVE (FACTORY INSTALLED AUXILIARY PLUMBING)	3363 - 82
3I13	HOSE, BOOM MOUNTED LUBRICTAION	3363 - 56
3D5	HOSE, BUCKET CYLINDER TO BOOM LINE (2.52M ARM)	3340 - 2
3D7	HOSE, BUCKET CYLINDER TO BOOM LINE (3.01M ARM)	3340 - 4
1F16	HOSE, CHARGE AIR COOLER TO AIR INTAKE	0510 - 4
1F16	HOSE, CHARGE AIR COOLER TO TURBOCHARGER	0510 - 4
2D5	HOSE, COMPRESSOR TO CONDENSER (REFRIDGERANT)	1830 - 8
2D13	HOSE, COMPRESSOR TO HVAC UNIT (REFRIDGERANT)	1830 - 16
2D5	HOSE, CONDENSER TO COMPRESSOR (REFRIDGERANT)	1830 - 8
2D5	HOSE, CONDENSER TO RECEIVER/DRYER (REFRIDGERANT)	1830 - 8
3E3	HOSE, CONTROL PATTERN SELECTOR KIT	3360 - 12
3J5	HOSE, CONTROL VALVE LINE TO SELECTOR VALVE(FACTORY INSTALLED AUX. PLUMBING)	3363 - 82
3I19	HOSE, CONTROL VALVE TO BLADE CONTROL VALVE	3363 - 66
3G23	HOSE, CONTROL VALVE TO BOOM LINE (ARM AND BUCKET CYLINDER)	3363 - 14
3J5	HOSE, CONTROL VALVE TO BOOM LINE (FACTORY INSTALLED AUXILIARY PLUMBING)	3363 - 82
3D19	HOSE, CONTROL VALVE TO BOOM LINE (FIELD AUXILIARY LINE KIT)	3360 - 6
3I3	HOSE, CONTROL VALVE TO HYDRAULIC RESERVOIR (PILOT HOSE)	3363 - 46
3I5	HOSE, CONTROL VALVE TO HYDRAULIC RESERVOIR (PILOT HOSE)	3363 - 48
3G17	HOSE, CONTROL VALVE TO HYDRAULIC PUMP (HIGH PRESSURE, DELIVERY)	3363 - 8
3D23	HOSE, CONTROL VALVE TO PILOT SIGNAL MANIFOLD (1 WAY/2 WAY ELECTRIC VALVE)	3360 - 8
3E1	HOSE, CONTROL VALVE TO RESERVOIR (AUX SOLENOID AND FLOW CONTROL)(1-WAY)	3360 - 10
3H3	HOSE, CONTROL VALVE TO ROTARY MANIFOLD	3363 - 18
3E1	HOSE, CONTROL VALVE TO SIGNAL MANIFOLD (AUXILIARY SOLENOID/FLOW CONTROL)	3360 - 10
3H1	HOSE, CONTROL VALVE TO SWING MOTOR	3363 - 16
3G19	HOSE, CONTROL VALVE TO SWING MOTOR (DRAIN HOSE)	3363 - 10
3G17	HOSE, DELIVERY (HYDRAULIC PUMP TO CONTROL VALVE)	3363 - 8
3G19	HOSE, DRAIN (SWING MOTOR TO CONTROL VALVE AND RETURN LINE)	3363 - 10
1F16	HOSE, ENGINE AIR INTAKE TO AIR COOLER	0510 - 4
1F14	HOSE, ENGINE COOLANT RECOVERY	0510 - 2
2D15	HOSE, ENGINE TO HEATER CORE (CAB HEATER)	1830 - 18
1F16	HOSE, ENGINE TO RADIATOR	0510 - 4
1G7	HOSE, FINAL FUEL FILTER TO FUEL COOLER	0560 - 6
3E1	HOSE, FLOW REGULATOR TO SIGNAL MANIFOLD (AUXILIARY SOLENOID/FLOW CONTROL)	3360 - 10
3C24	HOSE, FROM CONTROL VALVE TO PILOT SIGNAL MANIFOLD (FOOT CONTROL,PILOT SYSTEM)	3315 - 10
3C24	HOSE, FROM FOOT PEDAL CONTROL TO PILOT SHUTOFF VALVE (PILOT SYSTEM)	3315 - 10
3C24	HOSE, FROM FOOT PEDAL CONTROL TO PILOT SIGNAL MANIFOLD (PILOT SYSTEM)	3315 - 10
2C23	HOSE, FROM HVAC UNIT	1830 - 2
3H5	HOSE, FROM HYDRAULIC PUMP (ATTENUATOR)	3363 - 24
3D23	HOSE, FROM PILOT SHUT-OFF VALVE TO SOLENOID VALVE (PILOT SYSTEM)	3360 - 8
3C24	HOSE, FROM PILOT SHUTOFF VALVE TO FOOT PEDAL CONTROL (PILOT SYSTEM)	3315 - 10
3C24	HOSE, FROM PILOT SIGNAL MANIFOLD TO CONTROL VALVE (FOOT CONTROL,PILOT SYS)	3315 - 10
3C24	HOSE, FROM PILOT SIGNAL MANIFOLD TO FOOT PEDAL CONTROL (PILOT SYSTEM)	3315 - 10
3E3	HOSE, FROM PILOT SIGNAL MANIFOLDTO SOLENOID VALVE	3360 - 12
3D23	HOSE, FROM SOLENOID TO PILOT SHUT-OFF VALVE (PILOT SYSTEM)	3360 - 8
3E3	HOSE, FROM SOLENOID VALVE TO PILOT SIGNAL MANIFOLD	3360 - 12
1G7	HOSE, FUEL COOLER TO FINAL FUEL FILTER	0560 - 6
1G7	HOSE, FUEL COOLER TO PRIMARY FUEL FILTER	0560 - 6

ALPHABETICAL INDEX - CONTINUED

GRID		PAGE
1G7	HOSE, FUEL INJECTOR LEAKOFF LINE TO FUEL TANK	0560 - 6
1G7	HOSE, FUEL TANK TO FUEL INJECTOR LEAKOFF LINE	0560 - 6
1G7	HOSE, FUEL TANK TO PRIMARY FUEL FILTER	0560 - 6
2D15	HOSE, HEATER CORE TO ENGINE (CAB HEATER)	1830 - 18
2D19	HOSE, HEATER UNIT (HEAT ONLY)	1830 - 22
2D13	HOSE, HVAC UNIT TO COMPRESSOR (REFRIDGERANT)	1830 - 16
2D13	HOSE, HVAC UNIT TO RECEIVER/DRYER (REFRIDGERANT)	1830 - 16
3J13	HOSE, HYDRAULIC FILTER RESTRICTION INDICATOR	3364 - 4
3H9	HOSE, HYDRAULIC PUMP REGULATOR TO RESERVOIR (PILOT HOSES)	3363 - 28
3H9	HOSE, HYDRAULIC PUMP REGULATOR TO PILOT SIGNAL MANIFOLD (PILOT HOSES)	3363 - 28
3G17	HOSE, HYDRAULIC PUMP TO CONTROL VALVE (HIGH PRESSURE, DELIVERY)	3363 - 8
3G11	HOSE, HYDRAULIC PUMP TO RESERVOIR (LOW PRESSURE)	3363 - 2
3I17	HOSE, HYDRAULIC RESERVOIR TO BLADE PUMP	3363 - 64
3I3	HOSE, HYDRAULIC RESERVOIR TO CONTROL VALVE (PILOT HOSE)	3363 - 46
3I5	HOSE, HYDRAULIC RESERVOIR TO CONTROL VALVE (PILOT HOSE)	3363 - 48
3I3	HOSE, HYDRAULIC RESERVOIR TO PILOT SIGNAL MANIFOLD (PILOT HOSE)	3363 - 46
3I5	HOSE, HYDRAULIC RESERVOIR TO PILOT SIGNAL MANIFOLD (PILOT HOSE)	3363 - 48
3I7	HOSE, HYDRAULIC RESERVOIR TO PILOT SHUT-OFF VALVE	3363 - 50
3G11	HOSE, HYDRAULIC RESERVOIR TO PUMP (LOW PRESSURE)	3363 - 2
3H9	HOSE, HYDRAULIC RESERVOIR TO PUMP REGULATOR (PILOT HOSES)	3363 - 28
3D23	HOSE, HYDRAULIC RESERVOIR TO SOLENOID VALVE (PILOT SYSTEM)	3360 - 8
3H19	HOSE, LEFT PILOT CONTROLLER TO SHUT-OFF VALVE	3363 - 38
3H19	HOSE, LEFT PILOT CONTROLLER TO SIGNAL MANIFOLD	3363 - 38
3G21	HOSE, OIL LINE TO BOOM CYLINDER	3363 - 12
3I3	HOSE, PILOT FILTER TO RETURN LINE	3363 - 46
3G11	HOSE, PILOT PUMP TO SUCTION LINE	3363 - 2
3H19	HOSE, PILOT SHUT-OFF VALVE TO LEFT PILOT CONTROLLER	3363 - 38
3I7	HOSE, PILOT SHUT-OFF VALVE TO RESERVOIR	3363 - 50
3H21	HOSE, PILOT SHUT-OFF VALVE TO RIGHT PILOT CONTROLLER	3363 - 40
3I7	HOSE, PILOT SHUT-OFF VALVE TO SIGNAL MANIFOLD	3363 - 50
3I7	HOSE, PILOT SHUT-OFF VALVE TO SOLENOID VALVE	3363 - 50
3E1	HOSE, PILOT SIG. MAN. TO CONTROL VALVE (AUXILIARY SOLENOID/FLOW CONTROL)	3360 - 10
3E1	HOSE, PILOT SIG. MAN. TO SOLENOID VALVE (AUXILIARY SOLENOID/FLOW CONTROL)	3360 - 10
3I3	HOSE, PILOT SIGNAL MANIFOLD TO HYDRAULIC RESERVOIR (PILOT HOSE)	3363 - 46
3I5	HOSE, PILOT SIGNAL MANIFOLD TO HYDRAULIC RESERVOIR (PILOT HOSE)	3363 - 48
3D23	HOSE, PILOT SIGNAL MANIFOLD TO CONTROL VALVE (1 WAY/2 WAY ELECTRIC VALVE)	3360 - 8
3H19	HOSE, PILOT SIGNAL MANIFOLD TO LEFT PILOT CONTROLLER	3363 - 38
3H15	HOSE, PILOT SIGNAL MANIFOLD TO PROPEL PILOT CONTROLLER	3363 - 34
3H9	HOSE, PILOT SIGNAL MANIFOLD TO PUMP REGULATOR (PILOT HOSES)	3363 - 28
3H21	HOSE, PILOT SIGNAL MANIFOLD TO RIGHT PILOT CONTROLLER	3363 - 40
3I7	HOSE, PILOT SIGNAL MANIFOLD TO SHUT-OFF VALVE	3363 - 50
3D23	HOSE, PILOT SIGNAL MANIFOLD TO SOLENOID VALVE (PILOT SYSTEM)	3360 - 8
3I17	HOSE, PRESSURE RELIEF VALVE TO BLADE CONTROL VALVE	3363 - 64
3I17	HOSE, PRESSURE RELIEF VALVE TO BLADE PUMP	3363 - 64
1G7	HOSE, PRIMARY FUEL FILTER TO FUEL COOLER	0560 - 6
1G7	HOSE, PRIMARY FUEL FILTER TO FUEL TANK	0560 - 6
1B24	HOSE, PROPEL MOTOR TO ROTARY MANIFOLD	0260 - 4
3H15	HOSE, PROPEL PILOT CONTROLLER TO PILOT SIGNAL MANIFOLD	3363 - 34
1F16	HOSE, RADIATOR TO ENGINE	0510 - 4
2D5	HOSE, RECEIVER/DRYER TO CONDENSER (REFRIDGERANT)	1830 - 8
2D13	HOSE, RECEIVER/DRYER TO HVAC UNIT (REFRIDGERANT)	1830 - 16
3E1	HOSE, RESERVOIR TO CONTROL VALVE (AUX SOLENOID AND FLOW CONTROL)(1-WAY)	3360 - 10
3E1	HOSE, RESERVOIR TO SOLENOID VALVE (AUXILIARY SOLENOID/FLOW CONTROL)	3360 - 10
3D21	HOSE, RETURN LINE TO BOOM AUXILIARY LINE (AUXILIARY HYDRAULIC OPTIONAL RETURN)	3360 - 7A
3I3	HOSE, RETURN LINE TO PILOT FILTER	3363 - 46
3G19	HOSE, RETURN LINE TO ROTARY MANIFOLD (DRAIN HOSE)	3363 - 10
3J5	HOSE, RETURN LINE TO SELECTOR VALVE (FACTORY INSTALLED AUXILIARY PLUMBING)	3363 - 82
3D21	HOSE, RETURN LINE TO SHUTOFF VALVE (AUXILIARY HYDRAULIC OPTIONAL RETURN)	3360 - 7A
3G19	HOSE, RETURN LINE TO SWING MOTOR (DRAIN HOSE)	3363 - 10
3H21	HOSE, RIGHT PILOT CONTROLLER TO SHUT-OFF VALVE	3363 - 40
3H21	HOSE, RIGHT PILOT CONTROLLER TO SIGNAL MANIFOLD	3363 - 40
3I21	HOSE, ROTARY MANIFOLD TO BLADE CYLINDER	3363 - 68
3H3	HOSE, ROTARY MANIFOLD TO CONTROL VALVE	3363 - 18
1B24	HOSE, ROTARY MANIFOLD TO PROPEL MOTOR	0260 - 4
3G19	HOSE, ROTARY MANIFOLD TO RETURN LINE (DRAIN HOSE)	3363 - 10
3J5	HOSE, SELECTOR VALVE TO BOOM LINE (FACTORY INSTALLED AUXILIARY PLUMBING)	3363 - 82
3J5	HOSE, SELECTOR VALVE TO CONTROL VALVE LINE (FACTORY INSTALLED AUX. PLUMBING)	3363 - 82
3J5	HOSE, SELECTOR VALVE TO RETURN LINE (FACTORY INSTALLED AUXILIARY PLUMBING)	3363 - 82
3E1	HOSE, SHUT-OFF VALVE TO SOLENOID VALVE (AUXILIARY SOLENOID/FLOW CONTROL)	3360 - 10
3D21	HOSE, SHUTOFF VALVE TO RETURN LINE (AUXILIARY HYDRAULIC OPTIONAL RETURN)	3360 - 7A
3E1	HOSE, SIGNAL MANIFOLD TO FLOW REGULATOR (AUXILIARY SOLENOID/FLOW CONTROL)	3360 - 10
3D23	HOSE, SOLENOID VALVE TO HYDRAULIC RESERVOIR (PILOT SYSTEM)	3360 - 8
3I7	HOSE, SOLENOID VALVE TO PILOT SHUT-OFF VALVE	3363 - 50
3D23	HOSE, SOLENOID VALVE TO PILOT SIGNAL MANIFOLD (PILOT SYSTEM)	3360 - 8

ALPHABETICAL INDEX - CONTINUED

GRID		PAGE
3E1	HOSE, SOLENOID VALVE TO RESERVOIR (AUXILIARY SOLENOID/FLOW CONTROL)	3360 - 10
3E1	HOSE, SOLENOID VALVE TO SHUT-OFF VALVE (AUXILIARY SOLENOID/FLOW CONTROL)	3360 - 10
3E1	HOSE, SOLENOID VALVE TO SIGNAL MANIFOLD (AUXILIARY SOLENOID/FLOW CONTROL)	3360 - 10
3G11	HOSE, SUCTION LINE TO PILOT PUMP	3363 - 2
3H1	HOSE, SWING MOTOR TO CONTROL VALVE	3363 - 16
3G19	HOSE, SWING MOTOR TO CONTROL VALVE (DRAIN HOSE)	3363 - 10
3G19	HOSE, SWING MOTOR TO RETURN LINE (DRAIN HOSE)	3363 - 10
1F20	HOSE, TURBOCHARGER TO AIR CLEANER	0520 - 2
1F16	HOSE, TURBOCHARGER TO CHARGE AIR COOLER	0510 - 4
2B15	HOSE, WINDSHIELD WASHER	1810 - 12
3I19	HOSE,BLADE CONTROL VALVE TO CONTROL VALVE	3363 - 66
1F22	HOSES, AIR PRE-CLEANER	0520 - 4
3I19	HOSES, BLADE CONTROL VALVE TO ROTARY MANIFOLD	3363 - 66
3J1	HOSES, BLADE PILOT	3363 - 72
3I23	HOSES, BLADE PILOT VALVE	3363 - 70
3I15	HOSES, BLADE RETURN	3363 - 62
3J1	HOSES, BLADE VALVE	3363 - 72
3H11	HOSES, CONTROL VALVE TO PILOT SIGNAL MANIFOLD	3363 - 30
3H11	HOSES, CONTROL VALVE TO ROTARY MANIFOLD	3363 - 30
3H7	HOSES, HYDRAULIC PUMP TO OIL FILTER	3363 - 26
3E5	HOSES, MECHANICAL PATTERN CHANGER	3360 - 13A
3H7	HOSES, OIL FILTER TO HYDRAULIC PUMP	3363 - 26
3H7	HOSES, OIL FILTER TO SOLENOID VALVE	3363 - 26
3H7	HOSES, OIL TANK TO SOLENOID VALVE	3363 - 26
3H11	HOSES, PILOT SIGNAL MANIFOLD TO CONTROL VALVE	3363 - 30
3H13	HOSES, PILOT SIGNAL MANIFOLD-TO-SWING DEVICE	3363 - 32
3I19	HOSES, ROTARY MANIFOLD TO BLADE CONTROL VALVE	3363 - 66
3H11	HOSES, ROTARY MANIFOLD TO CONTROL VALVE	3363 - 30
3H13	HOSES, SWING DEVICE-TO-PILOT SIGNAL MANIFOLD	3363 - 32
1E7	HOUSING, ENGINE THERMOSTAT	0418 - 2
1E22	HOUSING, FAN DRIVE	0429 - 4
1F2	HOUSING, FLYWHEEL	0433 - 3
3F24	HOUSING, PILOT SIGNAL MANIFOLD	3362 - 44
3G1	HOUSING, PILOT SIGNAL MANIFOLD (CONTINUED)	3362 - 46
1C1	HOUSING, PROPEL MOTOR	0260 - 6
1E22	HUB,FAN DRIVE	0429 - 4
2D3	HVAC UNIT BLOWER FAN	1830 - 6
2D3	HVAC UNIT BLOWER MOTOR	1830 - 6
2C23	HVAC UNIT DUCT	1830 - 2
2D1	HVAC UNIT MOTOR	1830 - 4
2D13	HVAC UNIT TO COMPRESSOR HOSE (REFRIDGERANT)	1830 - 16
2D13	HVAC UNIT TO RECEIVER/DRYER HOSE (REFRIDGERANT)	1830 - 16
3J13	HYDRAULIC FILTER RESTRICTION INDICATOR HOSE	3364 - 4
3J13	HYDRAULIC FILTER RESTRICTION INDICATOR KIT	3364 - 4
3J13	HYDRAULIC FILTER RESTRICTION INDICTATOR SWITCH	3364 - 4
3J13	HYDRAULIC FILTER RESTRICTION INDICTATOR WIRING HARNESS	3364 - 4
3C24	HYDRAULIC FOOT PEDAL CONTROL (2-WAY)	3315 - 10
2B7	HYDRAULIC LOCKOUT DECAL	1810 - 4
2E9	HYDRAULIC PUMP COMPARTMENT COVER	1910 - 6
2E9	HYDRAULIC PUMP COMPARTMENT COVER SUPPORT BRACKET	1910 - 6
2E19	HYDRAULIC PUMP COMPARTMENT DOOR (VENTED)	1910 - 16
2E19	HYDRAULIC PUMP COMPARTMENT DOOR LATCH (VENTED)	1910 - 16
3E15	HYDRAULIC PUMP COMPONENTS	3361 - 6
3E19	HYDRAULIC PUMP LEFT REGULATOR	3361 - 10
3E19	HYDRAULIC PUMP LEFT REGULATOR SEAL KIT	3361 - 10
3E19	HYDRAULIC PUMP LEFT REGULATOR SENSOR	3361 - 10
3E11	HYDRAULIC PUMP MOUNTING	3361 - 2
3H9	HYDRAULIC PUMP REGULATOR TO RESERVOIR HOSE (PILOT HOSES)	3363 - 28
3H9	HYDRAULIC PUMP REGULATOR TO SIGNAL MANIFOLD HOSE (PILOT HOSES)	3363 - 28
3E17	HYDRAULIC PUMP RIGHT REGULATOR	3361 - 8
3E17	HYDRAULIC PUMP RIGHT REGULATOR SEAL KIT	3361 - 8
3E17	HYDRAULIC PUMP RIGHT REGULATOR SENSOR	3361 - 8
3E15	HYDRAULIC PUMP SEAL KIT	3361 - 6
3E15	HYDRAULIC PUMP SENSOR	3361 - 6
3E15	HYDRAULIC PUMP SHAFT	3361 - 6
3G17	HYDRAULIC PUMP TO CONTROL VALVE HOSE (HIGH PRESSURE, DELIVERY)	3363 - 8
3E13	HYDRAULIC PUMP TO ENGINE COUPLER	3361 - 4
3E11	HYDRAULIC PUMP TO ENGINE SPACER	3361 - 2
3G11	HYDRAULIC PUMP TO RESERVOIR HOSE (LOW PRESSURE)	3363 - 2
3G11	HYDRAULIC PUMP TO RESERVOIR LINE (LOW PRESSURE)	3363 - 2
3E13	HYDRAULIC PUMP, PILOT PUMP, AND REGULATOR ASSEMBLY	3361 - 4
3J11	HYDRAULIC RESERVOIR	3364 - 2
3J11	HYDRAULIC RESERVOIR FILLER CAP	3364 - 2
3J11	HYDRAULIC RESERVOIR FILTER ELEMENT	3364 - 2
3D23	HYDRAULIC RESERVOIR HOSE TO SOLENOID VALVE (PILOT SYSTEM)	3360 - 8
3J11	HYDRAULIC RESERVOIR LEVEL GAUGE	3364 - 2
3J11	HYDRAULIC RESERVOIR SENSOR	3364 - 2
3I17	HYDRAULIC RESERVOIR TO BLADE PUMP HOSE	3363 - 64
3E1	HYDRAULIC RESERVOIR TO CONTROL VALVE HOSE (AUXILIARY SOLENOID/FLOW CONTROL)	3360 - 10
3I3	HYDRAULIC RESERVOIR TO CONTROL VALVE HOSE (PILOT HOSE)	3363 - 46
3I5	HYDRAULIC RESERVOIR TO CONTROL VALVE HOSE (PILOT HOSE)	3363 - 48
3G13	HYDRAULIC RESERVOIR TO CONTROL VALVE LINE (RETURN LINE)	3363 - 4
3G13	HYDRAULIC RESERVOIR TO OIL COOLER LINE	3363 - 4
3I7	HYDRAULIC RESERVOIR TO PILOT SHUT-OFF VALVE HOSE	3363 - 50
3I3	HYDRAULIC RESERVOIR TO PILOT SIGNAL MANIFOLD HOSE (PILOT HOSE)	3363 - 46
3I5	HYDRAULIC RESERVOIR TO PILOT SIGNAL MANIFOLD HOSE (PILOT HOSE)	3363 - 48
3G11	HYDRAULIC RESERVOIR TO PUMP HOSE (LOW PRESSURE)	3363 - 2
3G11	HYDRAULIC RESERVOIR TO PUMP LINE (LOW PRESSURE)	3363 - 2
3H9	HYDRAULIC RESERVOIR TO PUMP REGULATOR HOSE (PILOT HOSES)	3363 - 28
3E1	HYDRAULIC RESERVOIR TO SOLENOID VALVE HOSE (AUXILIARY SOLENOID/FLOW CONTROL)	3360 - 10

ALPHABETICAL INDEX - CONTINUED

GRID		PAGE
	I	
1E24	IDLER PULLEY	0429 - 6
1B4	IDLER, TRACK FRONT	0130 - 4
2B7	IGNITION SWITCH DECAL	1810 - 4
1F3	IN CHASSIS OVERHAUL GASKET SET	0452 - 1
1F20	INDICATOR, AIR FILTER RESTRICTION	0520 - 2
3J13	INDICATOR, HYDRAULIC FILTER	3364 - 4
1D21	INJECTION NOZZLE, FUEL	0413 - 1
1E5	INLET, WATER PUMP	0417 - 1
1D18	INTAKE VALVE	0409 - 2
1D12	INTAKE, ENGINE OIL PUMP	0407 - 3
1D24	INTAKE,AIR	0414 - 2
1F18	ISOLATOR, BETWEEN MAINFRAME AND RADIATOR	0510 - 6
1F18	ISOLATOR, BETWEEN RADIATOR AND MAINFRAME	0510 - 6
2B11	ISOLATOR, CAB MOUNT (TO MAIN FRAME)	1810 - 8
1I6	ISOLATOR, COUNTERWEIGHT	1740 - 6
1G1	ISOLATOR, ENGINE MOUNTING	0540 - 2
1F18	ISOLATOR, RADIATOR BOTTOM	0510 - 6
	K	
1H5	KEY (IGNITION)	1674 - 6
1H5	KEY SWITCH (IGNITION)	1674 - 6
3E7	KIT, ANTI-DRIFT ARM	3360 - 14
3E9	KIT, ANTI-DRIFT BOOM	3360 - 16
3D5	KIT, ARM ASSEMBLY (2.52M ARM)	3340 - 2
3D7	KIT, ARM ASSEMBLY (3.01M ARM)	3340 - 4
2F6	KIT, AUXILIARY DRIVE ADAPTER (SAE "A" MOUNT, 9 TOOTH)	2160 - 2
2F8	KIT, AUXILIARY DRIVE ADAPTER (SAE "B" MOUNT, 13 TOOTH)	2160 - 4
3D1	KIT, AUXILIARY FOOT CONTROL VALVE SEAL	3315 - 14
3D19	KIT, AUXILIARY HYDRAULIC HOSES (FIELD KIT)	3360 - 6
3K3	KIT, BLADE CYLINDER SEAL (LEFT)(FACTORY INSTALLED)	3365 - 20
3K5	KIT, BLADE CYLINDER SEAL (LEFT)(REPLACEMENT CYLINDER)	3365 - 22
3J23	KIT, BLADE CYLINDER SEAL (RIGHT)(FACTORY INSTALLED)	3365 - 18
3K1	KIT, BLADE CYLINDER SEAL (RIGHT)(REPLACEMENT CYLINDER)	3365 - 19A
3C22	KIT, BLADE PILOT CONTROLLER VALVE SEAL	3315 - 9A
3E3	KIT, CONTROL PATTERN SELECTOR	3360 - 12
1D4	KIT, CYLINDER LINER O-RING	0403 - 2
1F4	KIT, ENGINE MAJOR OVERHAUL GASKET	0452 - 2
1F10	KIT, FUEL FIRED COOLANT HEATER	0505 - 4
3B16	KIT, GENERAL PURPOSE BUCKET EDGE PROTECTOR	3302 - 2
3B20	KIT, HEAVY DUTY BUCKET EDGE PROTECTOR	3302 - 6
3J13	KIT, HYDRAULIC FILTER RESTRICTION INDICATOR	3364 - 4
3E19	KIT, HYDRAULIC PUMP LEFT REGULATOR SEAL	3361 - 10
3E17	KIT, HYDRAULIC PUMP RIGHT REGULATOR SEAL	3361 - 8
3E15	KIT, HYDRAULIC PUMP SEAL	3361 - 6
3J17	KIT, LEFT BOOM CYLINDER SEAL	3365 - 10
3E5	KIT, MECHANICAL PATTERN CHANGER	3360 - 13A
1H1	KIT, MIC CUSTOMER (WITH MIC CONTROLLER)	1674 - 3A
1G12	KIT, O-RING, METRIC	1369 - 2
3E21	KIT, PILOT PUMP SEAL	3361 - 12
3J15	KIT, RIGHT BOOM CYLINDER SEAL	3365 - 4
3B24	KIT, ROADBUILDER	3302 - 10
3J19	KIT, SEAL, ARM CYLINDER	3365 - 14
3J21	KIT, SEAL, BUCKET CYLINDER	3365 - 16
2C15	KIT, SEAT FOAM	1821 - 2
2C15	KIT, SEAT LUMBAR	1821 - 2
2C19	KIT, SEAT SLIDE TRACK	1821 - 6
2C3	KIT, SECONDARY EXIT	1810 - 24
3D3	KIT, SINGLE PEDAL CONTROL	3315 - 16
3E1	KIT, SOLENOID CONTROL AND FLOW CONTROL (1-WAY)	3360 - 10
2C13	KIT, VANDAL PROTECTION	1810 - 34
2C13	KIT, WINDOW GUARDS	1810 - 34
2C17	KIT, 3.00 INCH SEAT BELT ,	1821 - 4
1D4	KIT,CYLINDER LINER AND PISTON	0403 - 2
1E13	KIT,FUEL FILTER SERVICE	0420 - 4
3D23	KIT,SOLENOID VALVE, 1WAY/2WAY, WITHOUT PRESSURE SWITCH	3360 - 8
	L	
3D15	LABEL, AUXILIARY CONTROL (ONE SOLENOID)	3360 - 2
2B7	LABEL, IGNITION	1810 - 4
3E3	LABEL, PILOT CONTROL LEVER	3360 - 12
2B7	LABEL, PILOT SHUTOFF	1810 - 4
2C3	LABEL, SECONDARY EXIT	1810 - 24
3D3	LABEL, SINGLE PEDAL CONTROL	3315 - 16
1G10	LABELS	1322 - 2
1H21	LAMP, FRONT CAB	1674 - 26
2C5	LATCH COMPONENTS, CAB DOOR HOLD OPEN	1810 - 26
2B19	LATCH, CAB DOOR	1810 - 16
2E19	LATCH, COOLING PACKAGE COMPARTMENT DOOR (VENTED)	1910 - 16
2E19	LATCH, HYDRAULIC PUMP COMPARTMENT DOOR (VENTED)	1910 - 16
2E7	LATCH, PUMP COMPARTMENT ACCESS DOOR	1910 - 4
2E7	LATCH, RADIATOR COMPARTMENT ACCESS DOOR	1910 - 4
2E19	LATCH, RADIATOR COMPARTMENT DOOR (VENTED)	1910 - 16
3J17	LEFT BOOM CYLINDER BARREL	3365 - 10
3J17	LEFT BOOM CYLINDER OIL LINE	3365 - 10
3J17	LEFT BOOM CYLINDER ROD	3365 - 10
3J17	LEFT BOOM CYLINDER SEAL KIT	3365 - 10
2B7	LEFT CONSOLE COVER, CAB	1810 - 4
2B5	LEFT CONSOLE, CAB	1810 - 2
3H19	LEFT PILOT CONTROLLER TO SHUT-OFF VALVE FILTER	3363 - 38
3H19	LEFT PILOT CONTROLLER TO SHUT-OFF VALVE HOSE	3363 - 38
3H19	LEFT PILOT CONTROLLER TO SIGNAL MANIFOLD HOSE	3363 - 38
2E24	LEFT REAR VIEW MIRROR	2002 - 2
3E19	LEFT REGULATOR, HYDRAULIC PUMP	3361 - 10
2B17	LEFT WINDOW, CAB	1810 - 14
1H21	LENS, FRONT WORK LIGHT	1674 - 26
3J11	LEVEL GAUGE, HYDRAULIC RESERVOIR	3364 - 2
1G3	LEVEL SENSOR, FUEL	0560 - 2
3C20	LEVER, BLADE PILOT CONTROL	3315 - 8
3C12	LEVER, PILOT CONTROL (DIG AND SWING)	3315 - 4
3C18	LEVER, PILOT SHUT-OFF	3315 - 6
3C8	LEVER, PROPEL PILOT CONTROL	3315 - 2
1H7	LIGHT, BOOM	1674 - 8
1H11	LIGHT, BOOM (OPTIONAL, ON TOP OF BOOM)	1674 - 12
2B15	LIGHT, DOME, CAB	1810 - 12
1H21	LIGHT, FRONT CAB	1674 - 26
1H7	LIGHT, FRONT WORK (ON BOOM)	1674 - 8
2E13	LIGHT, RIGHT FRONT WORK	1910 - 10

ALPHABETICAL INDEX - CONTINUED

GRID		PAGE
2D11	LIGHTER, REAR TRAY	1830 - 14
2E1	LIGHTER, REAR TRAY	1830 - 28
1F20	LINE, AIR CLEANER TO TURBOCHARGER	0520 - 2
3D19	LINE, ARM (FIELD AUXILIARY LINE KIT)	3360 - 6
3J9	LINE, ARM AUXILIARY (FACTORY INSTALLED)	3363 - 86
3J19	LINE, ARM CYLINDER OIL	3365 - 14
2F6	LINE, AUXILIARY DRIVE ADAPTER OIL (SAE "A" MOUNT, 9 TOOTH)	2160 - 2
2F8	LINE, AUXILIARY DRIVE ADAPTER OIL (SAE "B" MOUNT, 13 TOOTH)	2160 - 4
3K3	LINE, BLADE CYLINDER OIL (LEFT)(FACTORY INSTALLED)	3365 - 20
3K5	LINE, BLADE CYLINDER OIL (LEFT)(REPLACEMENT CYLINDER)	3365 - 22
3J23	LINE, BLADE CYLINDER OIL (RIGHT)(FACTORY INSTALLED)	3365 - 18
3K1	LINE, BLADE CYLINDER OIL (RIGHT)(REPLACEMENT CYLINDER)	3365 - 19A
3J7	LINE, BOOM (FACTORY INSTALLED AUXILIARY PLUMBING)	3363 - 84
3D19	LINE, BOOM (FIELD AUXILIARY LINE KIT)	3360 - 6
3I11	LINE, BOOM (TO ARM AND BUCKET CYLINDER)	3363 - 54
3G21	LINE, BOOM CYLINDER HOSE TO CONTROL VALVE	3363 - 12
3I13	LINE, BOOM MOUNTED LUBRICATION	3363 - 56
3I13	LINE, BOOM TO FRAME PIN LUBRICATION	3363 - 56
3J21	LINE, BUCKET CYLINDER OIL	3365 - 16
3E3	LINE, CONTROL PATTERN SELECTOR KIT	3360 - 12
3G21	LINE, CONTROL VALVE TO BOOM CYLINDER HOSE	3363 - 12
3J3	LINE, CONTROL VALVE TO HOSE (AUXILIARY PLUMBING, FACTORY INSTALL)	3363 - 80
3G15	LINE, CONTROL VALVE TO OIL COOLER	3363 - 6
3I1	LINE, CONTROL VALVE TO PILOT SIGNAL MANIFOLD (TOP OF CONTROL VALVE)	3363 - 44
3G13	LINE, CONTROL VALVE TO RESERVOIR (RETURN LINE)	3363 - 4
3H23	LINE, CONTROL VALVE TO SIGNAL MANIFOLD (BOTTOM OF CONTROL VALVE)	3363 - 42
3I5	LINE, CONTROL VALVE TO SOLENOID VALVE (PILOT LINE)	3363 - 48
3E3	LINE, FROM PILOT SIGNAL MANIFOLD TO SOLENOID VALVE	3360 - 12
3J3	LINE, HOSE TO CONTROL VALVE (AUXILIARY PLUMBING, FACTORY INSTALL)	3363 - 80
3G11	LINE, HYDRAULIC PUMP TO RESERVOIR (LOW PRESSURE)	3363 - 2
3G13	LINE, HYDRAULIC RESERVOIR TO CONTROL VALVE (RETURN LINE)	3363 - 4
3G13	LINE, HYDRAULIC RESERVOIR TO OIL COOLER (RETURN LINE)	3363 - 4
3G11	LINE, HYDRAULIC RESERVOIR TO PUMP (LOW PRESSURE)	3363 - 2
3J17	LINE, LEFT BOOM CYLINDER OIL	3365 - 10
3I9	LINE, LONG ARM LUBRICATION	3363 - 52
3G15	LINE, OIL COOLER TO CONTROL VALVE	3363 - 6
3G13	LINE, OIL COOLER TO RESERVOIR	3363 - 4
3H17	LINE, PILOT SHUT-OFF VALVE TO PROPEL PILOT CONTROLLER VALVE	3363 - 36
3H23	LINE, PILOT SIGNAL MANIFOLD TO CONTROL VALVE (BOTTOM OF CONTROL VALVE)	3363 - 42
3I1	LINE, PILOT SIGNAL MANIFOLD TO CONTROL VALVE (TOP OF CONTROL VALVE)	3363 - 44
3H17	LINE, PROPEL PILOT CONTROLLER VALVE TO SHUT-OFF VALVE	3363 - 36
3J15	LINE, RIGHT BOOM CYLINDER OIL	3365 - 4
3I5	LINE, SOLENOID VALVE TO CONTROL VALVE (PILOT LINE)	3363 - 48
1F20	LINE, TURBOCHARGER TO AIR CLEANER	0520 - 2
1D4	LINER, CYLINDER	0403 - 2
3H11	LINES, CONTROL VALVE TO PILOT SIGNAL MANIFOLD	3363 - 30
3H11	LINES, CONTROL VALVE TO ROTARY MANIFOLD	3363 - 30
1D22	LINES, FUEL INJECTION	0413 - 2
3H7	LINES, HYDRAULIC PUMP TO OIL FILTER	3363 - 26
3H7	LINES, OIL FILTER TO SOLENOID VALVE	3363 - 26
3H7	LINES, OIL TANK TO SOLENOID VALVE	3363 - 26
3H11	LINES, PILOT SIGNAL MANIFOLD TO CONTROL VALVE	3363 - 30
3H13	LINES, PILOT SIGNAL MANIFOLD-TO-SWING DEVICE	3363 - 32
3G13	LINES, RETURN (CONTROL VALVE AND OIL COOLER TO OIL TANK)	3363 - 4
3H11	LINES, ROTARY MANIFOLD TO CONTROL VALVE	3363 - 30
3H7	LINES, SOLENOID VALVE TO OIL FILTER	3363 - 26
3H7	LINES, SOLENOID VALVE TO OIL TANK	3363 - 26
3H13	LINES, SWING DEVICE-TO-PILOT SIGNAL MANIFOLD	3363 - 32
3D11	LINK, ARM TO BUCKET CYLINDER	3340 - 8
3D9	LINK, BUCKET DRIVE	3340 - 6
3D11	LINK, BUCKET GUIDE	3340 - 8
1B12	LINK, TRACK	0130 - 12
2B19	LOCK, CAB DOOR	1810 - 16
2C1	LOCK, CAB TOP HATCH	1810 - 22
3D5	LONG ARM (2.52M ARM)	3340 - 2
3D7	LONG ARM (3.01M ARM)	3340 - 4
3I9	LONG ARM LUBRICATION LINE	3363 - 52
2B9	LOWER RIGHT FRONT COVER, CAB INSIDE	1810 - 6
1B16	LOWER ROLLER COMPONENTS, TRACK	0130 - 16
3I9	LUBRICATION HOSE, ARM LINE TO BOOM LINE (LONG ARM)	3363 - 52
3I13	LUBRICATION HOSE, BOOM MOUNTED	3363 - 56
3I13	LUBRICATION LINE, BOOM TO FRAME PIN	3363 - 56
3I9	LUBRICATION LINE, LONG ARM	3363 - 52
2C15	LUMBAR KIT, SEAT	1821 - 2

M

1D6	MAIN BEARING CAP	0404 - 2
1C22	MAIN BEARINGS,CRANKSHAFT	0401 - 2
1I2	MAIN FRAME	1740 - 2
1I2	MAIN FRAME TO BOOM CYLINDER PIN	1740 - 2
1I4	MAIN FRAME TO BOOM PIN	1740 - 4
1C7	MANIFOLD COMPONENTS, ROTARY	0260 - 8
1C9	MANIFOLD COMPONENTS, ROTARY (WITH BLADE)	0260 - 10
1C7	MANIFOLD MOUNTING, ROTARY	0260 - 8
1C11	MANIFOLD, ROTARY, SUPPORT	0260 - 12
1D20	MANIFOLD,EXHAUST	0410 - 2
1H19	MANUAL ENGINE CONTROL SWITCH BOX	1674 - 24
2C9	MAT, CAB FLOOR	1810 - 30
3E5	MECHANICAL PATTERN CHANGER KIT	3360 - 13A
3E5	MECHANICAL PATTERN CHANGER VALVE	3360 - 13A
1D1	MEDALLION, ROCKER ARM COVER	0402 - 4
1G12	METRIC O-RING KIT	1369 - 2
1H1	MIC CABLE (WITH MIC CONTROLLER)	1674 - 3A
1G24	MIC CONTROLLER	1674 - 2
1H1	MIC CUSTOMER KIT (WITH MIC CONTROLLER)	1674 - 3A
2E24	MIRROR, CAB MOUNT REAR VIEW	2002 - 2
2E24	MIRROR, LEFT REAR VIEW	2002 - 2
2E13	MIRROR, REAR VIEW, RIGHT FRONT	1910 - 10

ALPHABETICAL INDEX - CONTINUED

GRID		PAGE
3D17	MODUAL RELAY FOR DUAL AUXILIARY CONTROL (2 SOLENOIDS)	3360 - 4
3B16	MOLDBOARD, GENERAL PURPOSE BUCKET	3302 - 2
3B20	MOLDBOARD, HEAVY DUTY BUCKET	3302 - 6
3B24	MOLDBOARD, ROADBUILDER KIT	3302 - 10
1H3	MONITOR, CAB DISPLAY	1674 - 4
2F3	MOTION ALARM, PROPEL	2004 - 4
1C1	MOTOR BEARING, PROPEL	0260 - 6
1C1	MOTOR COMPONENTS, PROPEL	0260 - 6
3K17	MOTOR COMPONENTS, SWING	4367 - 2
1C1	MOTOR HOUSING, PROPEL	0260 - 6
1C1	MOTOR SHAFT, PROPEL	0260 - 6
2D21	MOTOR, CAB HEATER UNIT ELECTRIC (HEAT ONLY)	1830 - 24
2D1	MOTOR, HVAC UNIT	1830 - 4
2D3	MOTOR, HVAC UNIT BLOWER	1830 - 6
1E16	MOTOR, STARTER	0422 - 2
2B15	MOTOR, WINDSHIELD WIPER	1810 - 12
1G1	MOUNTING BRACKET, ENGINE	0540 - 2
1G5	MOUNTING, FUEL TANK	0560 - 4
3E11	MOUNTING, HYDRAULIC PUMP	3361 - 2
1B20	MOUNTING, PROPEL GEAR BOX	0260 - 1A
1F18	MOUNTING, RADIATOR	0510 - 6
1C7	MOUNTING, ROTARY MANIFOLD	0260 - 8
1C9	MOUNTING, ROTARY MANIFOLD (WITH BLADE)	0260 - 10
1I10	MOUNTING, SWING BEARING	1740 - 10
3K13	MOUNTING, SWING GEARBOX	4360 - 4
1H9	MOUNTING, VEHICLE MAIN WIRING HARNESS	1674 - 10
1F24	MUFFLER	0530 - 2
1F24	MUFFLER BRACKET	0530 - 2

N

1F8	NOZZLE, COLD WEATHER STARTING AID SPRAY	0505 - 2
1D21	NOZZLE, FUEL INJECTION	0413 - 1
2B15	NOZZLE, WINDSHIELD WASHER	1810 - 12
1D22	NOZZLE,FUEL INJECTION	0413 - 2

O

1G12	O-RING KIT, METRIC	1369 - 2
3G13	OIL COOLER LINE TO OIL TANK (RETURN LINE)	3363 - 4
3G15	OIL COOLER TO CONTROL VALVE LINE	3363 - 6
3G13	OIL COOLER TO RESERVOIR LINE (RETURN LINE)	3363 - 4
1E9	OIL COOLER, ENGINE	0419 - 2
1F16	OIL COOLER, HYDRAULIC	0510 - 4
1D11	OIL FILLER OPENING COVER	0407 - 2
1D15	OIL FILTER ELEMENT	0407 - 6
1D15	OIL FILTER HEADER	0407 - 6
3G21	OIL LINE TO BOOM CYLINDER HOSE	3363 - 12
3J19	OIL LINE, ARM CYLINDER	3365 - 14
2F6	OIL LINE, AUXILIARY DRIVE ADAPTER (SAE "A" MOUNT, 9 TOOTH)	2160 - 2
2F8	OIL LINE, AUXILIARY DRIVE ADAPTER (SAE "B" MOUNT, 13 TOOTH)	2160 - 4
3K3	OIL LINE, BLADE CYLINDER (LEFT)(FACTORY INSTALLED)	3365 - 20
3K5	OIL LINE, BLADE CYLINDER (LEFT)(REPLACEMENT CYLINDER)	3365 - 22
3J23	OIL LINE, BLADE CYLINDER (RIGHT)(FACTORY INSTALLED)	3365 - 18
3K1	OIL LINE, BLADE CYLINDER (RIGHT)(REPLACEMENT CYLINDER)	3365 - 19A
3J21	OIL LINE, BUCKET CYLINDER	3365 - 16
3J17	OIL LINE, LEFT BOOM CYLINDER	3365 - 10
3J15	OIL LINE, RIGHT BOOM CYLINDER	3365 - 4
1E4	OIL LINES,TURBOCHARGER	0416 - 2
1D13	OIL PAN, ENGINE	0407 - 4
1F2	OIL SEAL,CRANKSHAFT REAR	0433 - 3
3G13	OIL TANK LINE TO CONTROL VALVE (RETURN LINE)	3363 - 4
3G13	OIL TANK LINE TO OIL COOLER (RETURN LINE)	3363 - 4
1G14	OILSCAN PLUS TEST KIT, FLUID ANALYSIS	1369 - 4
3D23	ONEWAY/2WAY SOLENOID VALVE KIT, WITHOUT PRESSURE SWITCH	3360 - 8

P

1D13	PAN, ENGINE OIL	0407 - 4
2E11	PANEL, ENGINE FRONT FIREWALL	1910 - 8
2E19	PANEL, FRONT, COOLING PACKAGE COMPARTMENT (VENTED)	1910 - 16
2E5	PANEL, RADIATOR COMPARTMENT	1910 - 2
2E19	PANEL,FRONT, HYDRAULIC PUMP COMPARTMENT (VENTED)	1910 - 16
1G10	PATTERN CHANGER DECAL	1322 - 2
3E5	PATTERN CHANGER VALVE, MECHANICAL	3360 - 13A
3E3	PATTERN SELECTOR CONTROL KIT	3360 - 12
3D3	PEDAL CONTROL KIT	3315 - 16
3C24	PEDAL CONTROL, HYDRAULIC FOOT (2-WAY)	3315 - 10
3C8	PEDAL, PROPEL PILOT CONTROL	3315 - 2
3I23	PILOT BALDE VALVE HOSES	3363 - 70
3I15	PILOT BLADE HOSES	3363 - 62
3I23	PILOT BLADE VALVE	3363 - 70
3C20	PILOT CONTROL CABLE, BLADE	3315 - 8
3C12	PILOT CONTROL LEVER COMPONENTS (DIG AND SWING)	3315 - 4
3E3	PILOT CONTROL LEVER LABEL	3360 - 12
3C20	PILOT CONTROL LEVER, BLADE	3315 - 8
3C8	PILOT CONTROL LEVER, PROPEL	3315 - 2
3C8	PILOT CONTROL PEDAL, PROPEL	3315 - 2
3C12	PILOT CONTROLLER COMPONENTS (DIG AND SWING)	3315 - 4
3C10	PILOT CONTROLLER COMPONENTS, PROPEL	3315 - 3A
3C14	PILOT CONTROLLER VALVE COMPONENTS (DIG AND SWING)(SN -065712)	3315 - 5A
3C16	PILOT CONTROLLER VALVE COMPONENTS (DIG AND SWING)(SN 065713-)	3315 - 5C
3C22	PILOT CONTROLLER VALVE COMPONENTS, BLADE	3315 - 9A
3D17	PILOT DUAL CONTROL HANDLE (2 SOLENOIDS)	3360 - 4
3H7	PILOT FILTER	3363 - 26
3I3	PILOT FILTER TO RETURN LINE HOSE	3363 - 46
3J1	PILOT HOSES, BLADE	3363 - 72
3H13	PILOT PIPING (CONTROL VALVE, SWING DEVICE-TO-PILOT SIGNAL MANIFOLD)	3363 - 32
3H7	PILOT PIPING (HYDRAULIC PUMP, OIL FILTER AND SOLENOID VALVE)	3363 - 26
3H11	PILOT PIPING (PILOT SIGNAL MANIFOLD, CONTROL VALVE, ROTARY MANIFOLD)	3363 - 30
3E21	PILOT PUMP COMPONENTS	3361 - 12
3E21	PILOT PUMP SEAL KIT	3361 - 12
3G11	PILOT PUMP TO SUCTION LINE HOSE	3363 - 2
3C18	PILOT SHUT-OFF LEVER	3315 - 6
3C18	PILOT SHUT-OFF LEVER BRACKET	3315 - 6
3D23	PILOT SHUT-OFF VALVE HOSE TO SOLENOID (PILOT SYSTEM)	3360 - 8

ALPHABETICAL INDEX - CONTINUED

GRID		PAGE
3I7	PILOT SHUT-OFF VALVE TO HYDRAULIC RESERVOIR HOSE	3363 - 50
3H19	PILOT SHUT-OFF VALVE TO LEFT PILOT CONTROLLER HOSE	3363 - 38
3H17	PILOT SHUT-OFF VALVE TO PROPEL PILOT CONTROLLER VALVE LINE	3363 - 36
3H21	PILOT SHUT-OFF VALVE TO RIGHT PILOT CONTROLLER HOSE	3363 - 40
3I7	PILOT SHUT-OFF VALVE TO SIGNAL MANIFOLD HOSE	3363 - 50
3I7	PILOT SHUT-OFF VALVE TO SOLENOID VALVE HOSE	3363 - 50
3G9	PILOT SHUTOFF VALVE COMPONENTS	3362 - 54
3C24	PILOT SHUTOFF VALVE FITTINGS TO FOOT PEDAL CONTROL (PILOT SYSTEM)	3315 - 10
3C24	PILOT SHUTOFF VALVE HOSE TO FOOT PEDAL CONTROL (PILOT SYSTEM)	3315 - 10
3E1	PILOT SIG. MAN. TO CONTROL VALVE HOSE (AUXILIARY SOLENOID/FLOW CONTROL)	3360 - 10
3E1	PILOT SIG. MAN. TO FLOW REGULATOR HOSE (AUXILIARY SOLENOID/FLOW CONTROL)	3360 - 10
3E1	PILOT SIG. MAN. TO SOLENOID VALVE HOSE (AUXILIARY SOLENOID/FLOW CONTROL)	3360 - 10
3G5	PILOT SIGNAL MANIFOLD COMPONENTS (CONTROL VALVE SIDE)	3362 - 50
3G3	PILOT SIGNAL MANIFOLD COMPONENTS (PILOT CONTROLLER SIDE)	3362 - 48
3G7	PILOT SIGNAL MANIFOLD COMPONENTS (SPOOLS AND SPRINGS)	3362 - 52
3G3	PILOT SIGNAL MANIFOLD FITTING (PILOT CONTROLLER SIDE)	3362 - 48
3G5	PILOT SIGNAL MANIFOLD FITTING (CONTROL VALVE SIDE)	3362 - 50
3C24	PILOT SIGNAL MANIFOLD FITTINGS TO FOOT PEDAL CONTROL (PILOT SYSTEM)	3315 - 10
3D23	PILOT SIGNAL MANIFOLD HOSE TO CONTROL VALVE (1 WAY/2 WAY ELECTRIC VALVE)	3360 - 8
3C24	PILOT SIGNAL MANIFOLD HOSE TO FOOT PEDAL CONTROL (PILOT SYSTEM)	3315 - 10
3D23	PILOT SIGNAL MANIFOLD HOSE TO SOLENOID VALVE (PILOT SYSTEM)	3360 - 8
3F24	PILOT SIGNAL MANIFOLD HOUSING	3362 - 44
3G1	PILOT SIGNAL MANIFOLD HOUSING (CONTINUED)	3362 - 46
3F24	PILOT SIGNAL MANIFOLD MAIN SEAL	3362 - 44
3G1	PILOT SIGNAL MANIFOLD MAIN SEAL (CONTINUED)	3362 - 46
3G7	PILOT SIGNAL MANIFOLD SPOOL	3362 - 52
3G7	PILOT SIGNAL MANIFOLD SPRING	3362 - 52
3H23	PILOT SIGNAL MANIFOLD SUPPORT BRACKET	3363 - 42
3H11	PILOT SIGNAL MANIFOLD TO CONTROL VALVE HOSES	3363 - 30
3H23	PILOT SIGNAL MANIFOLD TO CONTROL VALVE LINE (BOTTOM OF CONTROL VALVE)	3363 - 42
3I1	PILOT SIGNAL MANIFOLD TO CONTROL VALVE LINE(TOP OF CONTROL VALVE)	3363 - 44
3H11	PILOT SIGNAL MANIFOLD TO CONTROL VALVE LINES	3363 - 30
3I3	PILOT SIGNAL MANIFOLD TO HYDRAULIC RESERVOIR HOSE (PILOT HOSE)	3363 - 46
3I5	PILOT SIGNAL MANIFOLD TO HYDRAULIC RESERVOIR HOSE (PILOT HOSE)	3363 - 48
3H19	PILOT SIGNAL MANIFOLD TO LEFT PILOT CONTROLLER HOSE	3363 - 38
3H15	PILOT SIGNAL MANIFOLD TO PROPEL PILOT CONTROLLER HOSE	3363 - 34
3H9	PILOT SIGNAL MANIFOLD TO PUMP REGULATOR HOSE (PILOT HOSES)	3363 - 28
3H21	PILOT SIGNAL MANIFOLD TO RIGHT PILOT CONTROLLER HOSE	3363 - 40
3I7	PILOT SIGNAL MANIFOLD TO SHUT-OFF VALVE HOSE	3363 - 50
3H13	PILOT SIGNAL MANIFOLD-TO-SWING DEVICE HOSES	3363 - 32
3H13	PILOT SIGNAL MANIFOLD-TO-SWING DEVICE LINES	3363 - 32
3C12	PILOT VALVE (DIG AND SWING)	3315 - 4
3J1	PILOT VALVE, BLADE	3363 - 72
3C7	PIN-UP DATA, BUCKET (GENERAL PURPOSE AND HEAVY DUTY)	3302 - 16
3D5	PIN, ARM CYLINDER TO ARM (2.52M ARM)	3340 - 2
3D7	PIN, ARM CYLINDER TO ARM (3.01M ARM)	3340 - 4
3D13	PIN, ARM CYLINDER TO BOOM	3344 - 2
3D5	PIN, ARM TO ARM CYLINDER (2.52M ARM)	3340 - 2
3D7	PIN, ARM TO ARM CYLINDER (3.01M ARM)	3340 - 4
3D13	PIN, ARM TO BOOM	3344 - 2
3D5	PIN, ARM TO BUCKET (2.52M ARM)	3340 - 2
3D7	PIN, ARM TO BUCKET (3.01M ARM)	3340 - 4
3D5	PIN, ARM TO BUCKET CYLINDER (2.52M ARM)	3340 - 2
3D7	PIN, ARM TO BUCKET CYLINDER (3.01M ARM)	3340 - 4
3D5	PIN, ARM TO BUCKET LINKAGE (2.52M ARM)	3340 - 2
3D7	PIN, ARM TO BUCKET LINKAGE (3.01M ARM)	3340 - 4
3K8	PIN, BLADE CYLINDER TO BLADE	3401 - 2
3K8	PIN, BLADE CYLINDER TO TRACK FRAME	3401 - 2
3K8	PIN, BLADE TO BLADE CYLINDER	3401 - 2
3K8	PIN, BLADE TO TRACK FRAME	3401 - 2
3D13	PIN, BOOM CYLINDER TO BOOM	3344 - 2
1I2	PIN, BOOM CYLINDER TO MAIN FRAME	1740 - 2
3D13	PIN, BOOM TO ARM	3344 - 2
3D13	PIN, BOOM TO ARM CYLINDER	3344 - 2
3D13	PIN, BOOM TO BOOM CYLINDER	3344 - 2
1I4	PIN, BOOM TO MAIN FRAME	1740 - 4
3D5	PIN, BUCKET CYLINDER TO ARM (2.52M ARM)	3340 - 2
3D7	PIN, BUCKET CYLINDER TO ARM (3.01M ARM)	3340 - 4
3D5	PIN, BUCKET CYLINDER TO LINKAGE (2.52M ARM)	3340 - 2
3D7	PIN, BUCKET CYLINDER TO LINKAGE (3.01M ARM)	3340 - 4
3D5	PIN, BUCKET LINKAGE TO ARM (2.52M ARM)	3340 - 2
3D7	PIN, BUCKET LINKAGE TO ARM (3.01M ARM)	3340 - 4
3D5	PIN, BUCKET LINKAGE TO CYLINDER (2.52M ARM)	3340 - 2
3D7	PIN, BUCKET LINKAGE TO CYLINDER (3.01M ARM)	3340 - 4
3D5	PIN, BUCKET TO ARM (2.52M ARM)	3340 - 2
3D7	PIN, BUCKET TO ARM (3.01M ARM)	3340 - 4

ALPHABETICAL INDEX - CONTINUED

GRID		PAGE
3D5	PIN, BUCKET TO LINKAGE (2.52M ARM)	3340 - 2
3D7	PIN, BUCKET TO LINKAGE (3.01M ARM)	3340 - 4
3D5	PIN, LINKAGE TO BUCKET (2.52M ARM)	3340 - 2
3D7	PIN, LINKAGE TO BUCKET (3.01M ARM)	3340 - 4
1I4	PIN, MAIN FRAME TO BOOM	1740 - 4
1I2	PIN, MAIN FRAME TO BOOM CYLINDER	1740 - 2
1B12	PIN, TRACK CHAIN	0130 - 12
3K8	PIN, TRACK FRAME TO BLADE	3401 - 2
3K8	PIN, TRACK FRAME TO BLADE CYLINDER	3401 - 2
3G13	PIPE FROM OIL TANK TO COOLER (RETURN LINE)	3363 - 4
1F24	PIPE, EXHAUST	0530 - 2
1D4	PISTON RINGS	0403 - 2
1D4	PISTON, ENGINE	0403 - 2
2E13	PLATE, ANTI-SLIP, ON TOOL BOX	1910 - 10
2C11	PLATE, CAB FLOOR	1810 - 32
2C11	PLATFORM	1810 - 32
2C9	PLATFORM, CAB REAR CONSOLE	1810 - 30
3J9	PLUMBING, AUXILIARY ARM (FACTORY INSTALLED)	3363 - 86
3D19	PLUMBING, AUXILIARY HYDRAULIC (FIELD KIT)	3360 - 6
2D11	POWER SUPPLY, CAB REAR	1830 - 14
2E1	POWER SUPPLY, CAB REAR	1830 - 28
1F22	PRE-CLEANER, AIR	0520 - 4
3I15	PRESSURE BLADE HOSES	3363 - 62
3J5	PRESSURE RELIEF VALVE (FACTORY INSTALLED AUXILIARY PLUMBING)	3363 - 82
3F20	PRESSURE RELIEF VALVE COMPONENTS, BLADE PUMP	3362 - 40
3I17	PRESSURE RELIEF VALVE TO BLADE CONTROL VALVE HOSE	3363 - 64
3I17	PRESSURE RELIEF VALVE TO BLADE PUMP HOSE	3363 - 64
3H23	PRESSURE SENSOR, CONTROL VALVE	3363 - 42
2D1	PRESSURE SWITCH, AIR CONDITIONER	1830 - 4
1G7	PRIMARY FUEL FILTER TO FUEL COOLER HOSE	0560 - 6
1G7	PRIMARY FUEL FILTER TO FUEL TANK HOSE	0560 - 6
1B20	PROPEL GEAR BOX MOUNTING	0260 - 1A
1B20	PROPEL GEAR BOX SUPPORT	0260 - 1A
1B22	PROPEL GEARBOX BEARING	0260 - 2
1B22	PROPEL GEARBOX COMPONENTS	0260 - 2
1B22	PROPEL GEARBOX SHAFT	0260 - 2
2F3	PROPEL MOTION ALARM	2004 - 4
2F3	PROPEL MOTION ALARM WIRING HARNESS	2004 - 4
1C1	PROPEL MOTOR BEARING	0260 - 6
1C5	PROPEL MOTOR BRAKE RELIEF VALVE	0260 - 7C
1C5	PROPEL MOTOR BRAKE RELIEF VALVE COMPONENTS	0260 - 7C
1C3	PROPEL MOTOR BRAKE VALVE	0260 - 7A
1C3	PROPEL MOTOR BRAKE VALVE COMPONENTS	0260 - 7A
1C1	PROPEL MOTOR COMPONENTS	0260 - 6
1C17	PROPEL MOTOR COVER	0260 - 16
1C1	PROPEL MOTOR HOUSING	0260 - 6
1C1	PROPEL MOTOR SHAFT	0260 - 6
1B24	PROPEL MOTOR TO ROTARY MANIFOLD HOSE	0260 - 4
3C8	PROPEL PILOT CONTROL LEVER	3315 - 2
3C8	PROPEL PILOT CONTROL PEDAL	3315 - 2
3C10	PROPEL PILOT CONTROLLER COMPONENTS	3315 - 3A
3H15	PROPEL PILOT CONTROLLER TO SIGNAL MANIFOLD HOSE	3363 - 34
3H15	PROPEL PILOT CONTROLLER TO SIGNAL MANIFOLD HOSE SUPPORT BRACKET	3363 - 34
3H17	PROPEL PILOT CONTROLLER VALVE TO SHUT-OFF VALVE FILTER	3363 - 36
3H17	PROPEL PILOT CONTROLLER VALVE TO SHUT-OFF VALVE LINE	3363 - 36
2D5	PULLEY, A/C COMPRESSOR DRIVE BELT TENSION	1830 - 8
1G22	PULLEY, ALTERNATOR	1672 - 2
1E20	PULLEY, CRANKSHAFT	0429 - 2
1E21	PULLEY, CRANKSHAFT AUXILIARY DRIVE	0429 - 3
1E22	PULLEY, FAN DRIVE	0429 - 4
1E24	PULLEY, IDLER	0429 - 6
1E5	PULLEY, WATER PUMP	0417 - 1
2E7	PUMP COMPARTMENT ACCESS DOOR	1910 - 4
2E7	PUMP COMPARTMENT ACCESS DOOR LATCH	1910 - 4
2E9	PUMP COMPARTMENT COVER	1910 - 6
3E15	PUMP COMPONENTS, HYDRAULIC	3361 - 6
3E21	PUMP COMPONENTS, PILOT	3361 - 12
3E19	PUMP LEFT REGULATOR, HYDRAULIC	3361 - 10
3E11	PUMP MOUNTING, HYDRAULIC	3361 - 2
3F20	PUMP PRESSURE RELIEF VALVE COMPONENTS, BLADE	3362 - 40
3E17	PUMP RIGHT REGULATOR, HYDRAULIC	3361 - 8
3I17	PUMP, BLADE	3363 - 64
1D12	PUMP, ENGINE OIL	0407 - 3
1D22	PUMP, FUEL INJECTION	0413 - 2
1E15	PUMP, FUEL TRANSFER	0421 - 2
2C7	PUMP, WINDSHIELD WASHER	1810 - 28
1E6	PUMP,WATER	0417 - 2
1E15	PUSH ROD, FUEL TRANSFER PUMP	0421 - 2
1C25	PUSH RODS	0402 - 3

R

1F16	RADIATOR	0510 - 4
1F18	RADIATOR BOTTOM ISOLATOR	0510 - 6
1F16	RADIATOR CAP	0510 - 4
2E7	RADIATOR COMPARTMENT ACCESS DOOR	1910 - 4
2E7	RADIATOR COMPARTMENT ACCESS DOOR LATCH	1910 - 4
2E11	RADIATOR COMPARTMENT COVER	1910 - 8
2E19	RADIATOR COMPARTMENT DOOR (VENTED)	1910 - 16
2E5	RADIATOR COMPARTMENT PANEL	1910 - 2
1F18	RADIATOR MOUNTING	0510 - 6
1F18	RADIATOR SUPPORT BRACKET	0510 - 6
1F16	RADIATOR TO ENGINE HOSE	0510 - 4
1F16	RADIATOR TRASHSCREEN	0510 - 4
2E22	RADIO (AM/FM)	2001 - 2
2B15	RADIO ANTENNA	1810 - 12
2E22	RADIO MOUNTING BRACKET	2001 - 2
2B15	RADIO SPEAKER	1810 - 12
2B15	RADIO SPEAKER WIRING HARNESS	1810 - 12
2E22	RADIO WIRING HARNESS	2001 - 2
2D11	REAR AIR DIFFUSER, CAB	1830 - 14
2E1	REAR AIR DIFFUSER, CAB	1830 - 28
2D11	REAR CONSOLE COVER, CAB	1830 - 14
2E1	REAR CONSOLE COVER, CAB	1830 - 28
2D11	REAR TRAY	1830 - 14
2E1	REAR TRAY	1830 - 28
2E24	REAR VIEW MIRROR, CAB MOUNT	2002 - 2
2E24	REAR VIEW MIRROR, LEFT	2002 - 2
2E13	REAR VIEW MIRROR, RIGHT FRONT	1910 - 10
2B17	REAR WINDOW, CAB	1810 - 14
2D5	RECEIVER/DRYER TO CONDENSER REFRIDGERANT HOSE	1830 - 8
2D13	RECEIVER/DRYER TO HVAC UNIT HOSE (REFRIDGERANT)	1830 - 16

ALPHABETICAL INDEX - CONTINUED

GRID		PAGE
2D7	RECEIVER/DRYER, AIR CONDITIONER	1830 - 10
1F14	RECOVERY TANK, ENGINE COOLANT	0510 - 2
3E19	REGULATOR, HYDRAULIC PUMP LEFT	3361 - 10
3E17	REGULATOR, HYDRAULIC PUMP RIGHT	3361 - 8
1G20	RELAY, BATTERY	1671 - 2
1H21	RELAY, FRONT WORK LIGHT AND HARNESS	1674 - 26
3D17	RELAY, MODUAL FOR DUAL AUXILIARY CONTROL (2 SOLENOIDS)	3360 - 4
1G20	RELAY, STARTER	1671 - 2
3D19	RELIEF VALVE (IN AUXILIARY HYDRAULIC LINE SPOOL OF CONTROL VALVE)(FIELD)	3360 - 6
3F20	RELIEF VALVE COMPONENTS, BLADE PUMP PRESSURE	3362 - 40
1C5	RELIEF VALVE COMPONENTS, PROPEL MOTOR BRAKE	0260 - 7C
3J5	RELIEF VALVE, PRESSURE (FACTORY INSTALLED AUXILIARY PLUMBING)	3363 - 82
1C5	RELIEF VALVE, PROPEL MOTOR BRAKE	0260 - 7C
1E6	REPAIR KIT,WATER PUMP	0417 - 2
3J11	RESERVOIR, HYDRAULIC	3364 - 2
2C7	RESERVOIR, WINDSHIELD WASHER	1810 - 28
1F20	RESTRICTION INDICATOR, AIR FILTER	0520 - 2
3I3	RETURN LINE TO PILOT FILTER HOSE	3363 - 46
3G19	RETURN LINE TO ROTARY MANIFOLD HOSE (DRAIN HOSE)	3363 - 10
3J5	RETURN LINE TO SELECTOR VALVE HOSE (FACTORY INSTALLED AUXILIARY PLUMBING)	3363 - 82
3D21	RETURN LINE TO SHUTOFF VALVE HOSE (AUXILIARY HYDRAULIC OPTIONAL RETURN)	3360 - 7A
3G19	RETURN LINE TO SWING MOTOR HOSE (DRAIN HOSE)	3363 - 10
3G13	RETURN LINES (CONTROL VALVE AND OIL COOLER TO OIL TANK)	3363 - 4
3G13	RETURN LINES FROM OIL TANK TO COOLER	3363 - 4
3J15	RIGHT BOOM CYLINDER BARREL	3365 - 4
3J15	RIGHT BOOM CYLINDER COMPONENTS	3365 - 4
3J15	RIGHT BOOM CYLINDER OIL LINE	3365 - 4
3J15	RIGHT BOOM CYLINDER ROD	3365 - 4
3J15	RIGHT BOOM CYLINDER SEAL KIT	3365 - 4
2B5	RIGHT CONSOLE, CAB	1810 - 2
2B9	RIGHT FRONT COVER, CAB INSIDE LOWER	1810 - 6
2E13	RIGHT FRONT HANDRAIL	1910 - 10
2E13	RIGHT FRONT REAR VIEW MIRROR	1910 - 10
1I2	RIGHT FRONT STEP	1740 - 2
2E13	RIGHT FRONT WORK LIGHT	1910 - 10
3H21	RIGHT PILOT CONTROLLER TO SHUT-OFF VALVE FILTER	3363 - 40
3H21	RIGHT PILOT CONTROLLER TO SHUT-OFF VALVE HOSE	3363 - 40
3H21	RIGHT PILOT CONTROLLER TO SIGNAL MANIFOLD HOSE	3363 - 40
3E17	RIGHT REGULATOR, HYDRAULIC PUMP	3361 - 8
2B23	RIGHT WINDOW GUARD, CAB	1810 - 20
2B23	RIGHT WINDOW, CAB	1810 - 20
1F1	RING GEAR, FLYWHEEL	0433 - 2
1D4	RINGS, PISTON	0403 - 2
3B24	ROADBUILDER KIT	3302 - 10
3B24	ROADBUILDER KIT MOLDBOARD	3302 - 10
3B24	ROADBUILDER WEAR BAR	3302 - 10
1D1	ROCKER ARM COVER	0402 - 4
1D1	ROCKER ARM COVER GASKET	0402 - 4
1C25	ROCKER ARM SHAFT	0402 - 3
1C25	ROCKER ARMS	0402 - 3
1D1	ROCKER COVER MEDALLION	0402 - 4
3J19	ROD, ARM CYLINDER	3365 - 14
3K3	ROD, BLADE CYLINDER (LEFT)(FACTORY INSTALLED)	3365 - 20
3K5	ROD, BLADE CYLINDER (LEFT)(REPLACEMENT CYLINDER)	3365 - 22
3J23	ROD, BLADE CYLINDER (RIGHT)(FACTORY INSTALLED)	3365 - 18
3K1	ROD, BLADE CYLINDER (RIGHT)(REPLACEMENT CYLINDER)	3365 - 19A
3J21	ROD, BUCKET CYLINDER	3365 - 16
1D4	ROD, CONNECTING	0403 - 2
3J17	ROD, LEFT BOOM CYLINDER	3365 - 10
3J15	ROD, RIGHT BOOM CYLINDER	3365 - 4
1C25	RODS, PUSH	0402 - 3
1B10	ROLLER COMPONENTS, TRACK CARRIER	0130 - 8
1B16	ROLLER COMPONENTS, TRACK LOWER	0130 - 16
1B10	ROLLER MOUNTING, TRACK CARRIER	0130 - 8
1B10	ROLLER, UPPPER	0130 - 8
2B17	ROOF, CAB	1810 - 14
1C7	ROTARY MANIFOLD BOTTOM COVER	0260 - 8
1C9	ROTARY MANIFOLD BOTTOM COVER (WITH BLADE)	0260 - 10
1C7	ROTARY MANIFOLD COMPONENTS	0260 - 8
1C9	ROTARY MANIFOLD COMPONENTS (WITH BLADE)	0260 - 10
1C7	ROTARY MANIFOLD MOUNTING	0260 - 8
1C9	ROTARY MANIFOLD MOUNTING (WITH BLADE)	0260 - 10
1C15	ROTARY MANIFOLD SEAL	0260 - 15A
1C11	ROTARY MANIFOLD SUPPORT	0260 - 12
3I19	ROTARY MANIFOLD TO BLADE CONTROL VALVE HOSES	3363 - 66
3I21	ROTARY MANIFOLD TO BLADE CYLINDER HOSE	3363 - 68
3H3	ROTARY MANIFOLD TO CONTROL VALVE HOSE	3363 - 18
3H11	ROTARY MANIFOLD TO CONTROL VALVE HOSES	3363 - 30
3H11	ROTARY MANIFOLD TO CONTROL VALVE LINES	3363 - 30
1B24	ROTARY MANIFOLD TO PROPEL MOTOR HOSE	0260 - 4
3G19	ROTARY MANIFOLD TO RETURN LINE HOSE (DRAIN HOSE)	3363 - 10
1C13	ROTARY MANIFOLD TOP COVER	0260 - 14
1C13	ROTARY MANIFOLD TOP MOUNTING BRACKET	0260 - 14

S

1F20	SCREEN, AIR CLEANER	0520 - 2
3J19	SEAL KIT, ARM CYLINDER	3365 - 14
3D1	SEAL KIT, AUXILIARY FOOT CONTROL VALVE	3315 - 14
3K3	SEAL KIT, BLADE CYLINDER (LEFT)(FACTORY INSTALLED)	3365 - 20
3K5	SEAL KIT, BLADE CYLINDER (LEFT)(REPLACEMENT CYLINDER)	3365 - 22
3J23	SEAL KIT, BLADE CYLINDER (RIGHT)(FACTORY INSTALLED)	3365 - 18
3K1	SEAL KIT, BLADE CYLINDER (RIGHT)(REPLACEMENT CYLINDER)	3365 - 19A
3C22	SEAL KIT, BLADE PILOT CONTROLLER VALVE	3315 - 9A
3J21	SEAL KIT, BUCKET CYLINDER	3365 - 16
3E15	SEAL KIT, HYDRAULIC PUMP	3361 - 6
3E19	SEAL KIT, HYDRAULIC PUMP LEFT REGULATOR	3361 - 10
3E17	SEAL KIT, HYDRAULIC PUMP RIGHT REGULATOR	3361 - 8
3J17	SEAL KIT, LEFT BOOM CYLINDER	3365 - 10
3E21	SEAL KIT, PILOT PUMP	3361 - 12
3J15	SEAL KIT, RIGHT BOOM CYLINDER	3365 - 4
2E5	SEAL, INSIDE RADIATOR COVER	1910 - 2
3F24	SEAL, PILOT SIGNAL MANIFOLD MAIN	3362 - 44
3G1	SEAL, PILOT SIGNAL MANIFOLD MAIN (CONTINUED)	3362 - 46
1C15	SEAL, ROTARY MANIFOLD	0260 - 15A
1C15	SEAL, TRACK FRAME	0260 - 15A
1C15	SEAL, UNDERCARRIAGE	0260 - 15A
2C15	SEAT	1821 - 2

ALPHABETICAL INDEX - CONTINUED

GRID		PAGE
2C19	SEAT BASE	1821 - 6
2C19	SEAT BASE BRACKET	1821 - 6
2C21	SEAT BELT	1821 - 8
2C17	SEAT BELT (3.00 INCH)	1821 - 4
2C21	SEAT BELT BRACKET	1821 - 8
2C17	SEAT BELT KIT, (3.00 INCH)	1821 - 4
2C15	SEAT FOAM KIT	1821 - 2
2C15	SEAT LUMBAR KIT	1821 - 2
2C19	SEAT SLIDE TRACK KIT	1821 - 6
2C15	SEAT SUSPENSION	1821 - 2
2C3	SECONDARY EXIT HANDLE	1810 - 24
2C3	SECONDARY EXIT KIT	1810 - 24
2C3	SECONDARY EXIT LABEL	1810 - 24
3J5	SELECTOR VALVE (AUXILIARY PLUMBING)	3363 - 82
3J5	SELECTOR VALVE SUPPORT BRACKET (AUXILIARY PLUMBING)	3363 - 82
3J5	SELECTOR VALVE TO BOOM LINE HOSE (FACTORY INSTALLED AUXILIARY PLUMBING)	3363 - 82
3J5	SELECTOR VALVE TO CONTROL VALVE LINE HOSE (FACTORY INSTALLED AUX. PLUMBING)	3363 - 82
3J5	SELECTOR VALVE TO RETURN LINE HOSE (FACTORY INSTALLED AUXILIARY PLUMBING)	3363 - 82
2D7	SENSOR, AIR CONDITIONER	1830 - 10
1D24	SENSOR, AIR INTAKE TEMPERATURE	0414 - 2
2D21	SENSOR, CAB HEATER UNIT (HEAT ONLY)	1830 - 24
3H23	SENSOR, CONTROL VALVE PRESSURE	3363 - 42
1D13	SENSOR, ENGINE OIL LEVEL	0407 - 4
1G3	SENSOR, FUEL LEVEL	0560 - 2
3E15	SENSOR, HYDRAULIC PUMP	3361 - 6
3E19	SENSOR, HYDRAULIC PUMP LEFT REGULATOR	3361 - 10
3E17	SENSOR, HYDRAULIC PUMP RIGHT REGULATOR	3361 - 8
3J11	SENSOR, HYDRAULIC RESERVOIR	3364 - 2
3K11	SENSOR, SWING MOTOR	4360 - 2
1D2	SENSOR,CRANKSHAFT SPEED	0402 - 6
1E7	SENSOR,ENGINE COOLANT TEMPERATURE	0418 - 2
2C1	SHADE, CAB TOP SUN	1810 - 22
3E15	SHAFT, HYDRAULIC PUMP	3361 - 6
1B22	SHAFT, PROPEL GEARBOX	0260 - 2
1C1	SHAFT, PROPEL MOTOR	0260 - 6
1C25	SHAFT, ROCKER ARM	0402 - 3
3K11	SHAFT, SWING GEARBOX	4360 - 2
3K17	SHAFT, SWING MOTOR	4367 - 2
1B4	SHAFT, TRACK FRONT IDLER	0130 - 4
3C3	SHANK, BUCKET TOOTH	3302 - 14
3C5	SHANK, BUCKET TOOTH	3302 - 15A
1B12	SHOE, TRACK	0130 - 12
1D8	SHORT BLOCK,ENGINE	0404 - 4
1F16	SHROUD, FAN	0510 - 4
3D21	SHUT-OFF VALVE (AUXILIARY HYDRAULIC OPTIONAL RETURN)	3360 - 7A
3E1	SHUT-OFF VALVE TO SOLENOID VALVE HOSE (AUXILIARY SOLENOID/FLOW CONTROL)	3360 - 10
3J9	SHUT-OFF VALVE, ARM AUXILIARY PLUMBING (FACTORY INSTALLED)	3363 - 86
3G9	SHUTOFF VALVE COMPONENTS, PILOT	3362 - 54
3D21	SHUTOFF VALVE TO RETURN LINE HOSE (AUXILIARY HYDRAULIC OPTIONAL RETURN)	3360 - 7A
3F22	SHUTTLE VALVE COMPONENTS, FLOW COMBINER	3362 - 42
3J1	SHUTTLE VALVES, BLADE	3363 - 72
3B16	SIDE CUTTER, GENERAL PURPOSE BUCKET	3302 - 2
3B20	SIDE CUTTER, HEAVY DUTY BUCKET	3302 - 6
3D3	SINGLE PEDAL CONTROL KIT	3315 - 16
2E16	SN FOR D CHANNEL FRAME	1910 - 13
3E1	SOLENOID CONTROL AND FLOW CONTROL KIT (1-WAY)	3360 - 10
3E1	SOLENOID CONTROL VALVE, AUXILIARY (1-WAY)	3360 - 10
3F18	SOLENOID VALVE COMPONENTS	3362 - 34
3D17	SOLENOID VALVE DUAL CONTROL HARNESS (2 SOLENOIDS)	3360 - 4
3D23	SOLENOID VALVE HOSE TO HYDRAULIC RESERVOIR (PILOT SYSTEM)	3360 - 8
3D23	SOLENOID VALVE HOSE TO PILOT SHUT-OFF VALVE (PILOT SYSTEM)	3360 - 8
3D23	SOLENOID VALVE HOSE TO PILOT SIGNAL MANIFOLD (PILOT SYSTEM)	3360 - 8
3D23	SOLENOID VALVE KIT, 1WAY/2WAY, WITHOUT PRESSURE SWITCH	3360 - 8
3I5	SOLENOID VALVE TO CONTROL VALVE LINE (PILOT LINE)	3363 - 48
3E1	SOLENOID VALVE TO HYDRAULIC RESERVOIR HOSE (AUXILIARY SOLENOID/FLOW CONTROL)	3360 - 10
3I7	SOLENOID VALVE TO PILOT SHUT-OFF VALVE HOSE	3363 - 50
3E1	SOLENOID VALVE TO SHUT-OFF VALVE HOSE (AUXILIARY SOLENOID/FLOW CONTROL)	3360 - 10
3E1	SOLENOID VALVE TO SIGNAL MANIFOLD HOSE (AUXILIARY SOLENOID/FLOW CONTROL)	3360 - 10
3E3	SOLENOID VALVE, CONTROL PATTERN SELECTOR KIT	3360 - 12
3D9	SPACER, BUCKET DRIVE LINK	3340 - 6
3E11	SPACER, ENGINE TO HYDRAULIC PUMP	3361 - 2
1F13	SPACER, FAN BLADE	0510 - 1
3E11	SPACER, HYDRAULIC PUMP TO ENGINE	3361 - 2
2B15	SPEAKER, RADIO	1810 - 12
3G7	SPOOL, PILOT SIGNAL MANIFOLD	3362 - 52
3G7	SPRING, PILOT SIGNAL MANIFOLD	3362 - 52
1B6	SPRING, TRACK CHAIN TENSION ADJUSTER	0130 - 6
1B22	SPROCKET, TRACK DRIVE	0260 - 2
1E16	STARTER GROUND CABLE	0422 - 2
1E16	STARTER MOTOR	0422 - 2
1E16	STARTER MOTOR CLUTCH DRIVE	0422 - 2
1E16	STARTER MOTOR SWITCH	0422 - 2
1G20	STARTER RELAY	1671 - 2
1G20	STARTER RELAY WIRING HARNESS	1671 - 2
1E16	STARTER WIRING HARNESS	0422 - 2
1F8	STARTING AID, COLD WEATHER	0505 - 2
1I2	STEP, RIGHT FRONT	1740 - 2
2B7	STORAGE COMPARTMENT, CAB CONSOLE	1810 - 4
1G3	STRAINER, FUEL FILLER	0560 - 2
3G11	SUCTION LINE TO PILOT PUMP HOSE	3363 - 2
3I17	SUCTION LINES, BLADE PUMP	3363 - 64
2C1	SUN SHADE, CAB TOP	1810 - 22
1F8	SUPPORT, COLD WEATHER STARTING AID	0505 - 2
1B20	SUPPORT, PROPEL GEAR BOX	0260 - 1A
1E22	SUPPORT,FAN DRIVE	0429 - 4
2C15	SUSPENSION, SEAT	1821 - 2
1I8	SWING BEARING COMPONENTS	1740 - 8
1I10	SWING BEARING GREASE BATH COVER	1740 - 10
1I10	SWING BEARING MOUNTING	1740 - 10
3H13	SWING DEVICE TO PILOT SIGNAL MANIFOLD HOSES	3363 - 32
3H13	SWING DEVICE-TO-PILOT SIGNAL MANIFOLD LINES	3363 - 32
3K11	SWING GEARBOX BEARING	4360 - 2
3K11	SWING GEARBOX COMPONENTS	4360 - 2
3K11	SWING GEARBOX DIPSTICK	4360 - 2
3K13	SWING GEARBOX MOUNTING	4360 - 4
3K11	SWING GEARBOX SHAFT	4360 - 2
3K17	SWING MOTOR BEARING	4367 - 2
3K15	SWING MOTOR BRAKE VALVE	4360 - 6
3K15	SWING MOTOR BRAKE VALVE COMPONENTS	4360 - 6
3K17	SWING MOTOR COMPONENTS	4367 - 2
3K11	SWING MOTOR SENSOR	4360 - 2

ALPHABETICAL INDEX - CONTINUED

GRID		PAGE
3K17	SWING MOTOR SHAFT	4367 - 2
3H1	SWING MOTOR TO CONTROL VALVE HOSE	3363 - 16
3G19	SWING MOTOR TO CONTROL VALVE HOSE (DRAIN HOSE)	3363 - 10
3G19	SWING MOTOR TO RETURN LINE HOSE (DRAIN HOSE)	3363 - 10
1H19	SWITCH BOX, MANUAL ENGINE CONTROL	1674 - 24
3D17	SWITCH, AUXILIARY CONTROL HANDLE	3360 - 4
2D17	SWITCH, DEFROSTER/AIR CIRCULATION FAN	1830 - 20
1D18	SWITCH, ENGINE COOLANT TEMPERATURE	0409 - 2
1D6	SWITCH, ENGINE OIL PRESSURE	0404 - 2
3D15	SWITCH, FOOT, AUXILIARY ELECTRIC (ONE SOLENOID)	3360 - 2
1H21	SWITCH, FRONT WORK LIGHT AND HARNESS	1674 - 26
3J13	SWITCH, HYDRAULIC FILTER RESTRICTION INDICATOR	3364 - 4
1H5	SWITCH, KEY (IGNITION)	1674 - 6
1E16	SWITCH, STARTER MOTOR	0422 - 2

T

1G5	TANK MOUNTING, FUEL	0560 - 4
1F14	TANK, ENGINE COOLANT RECOVERY	0510 - 2
1G3	TANK, FUEL	0560 - 2
2C7	TANK, WINDSHIELD WASHER	1810 - 28
3C3	TEETH, BUCKET	3302 - 14
3C5	TEETH, BUCKET	3302 - 15A
3C1	TEETH, ESCO	3302 - 12
1B6	TENSION ADJUSTER, TRACK CHAIN	0130 - 6
1E22	TENSIONER, FAN BELT IDLER	0429 - 4
1G16	TEST KIT, FLUID ANALYSIS PRODUCTS (COOLSCAN)	1369 - 6
1G17	TEST KIT, FLUID ANALYSIS PRODUCTS (DIESELSCAN)	1369 - 7
1G14	TEST KIT, FLUID ANALYSIS PRODUCTS (OILSCAN)	1369 - 4
2D3	THERMOSTAT, AIR CONDITIONER	1830 - 6
2D21	THERMOSTAT, CAB HEATER UNIT (HEAT ONLY)	1830 - 24
1E7	THERMOSTAT, ENGINE	0418 - 2
1D2	TIMING GEAR COVER	0402 - 6
1D2	TIMING GEAR COVER GASKET	0402 - 6
2E13	TOOL BOX	1910 - 10
2E13	TOOL BOX ANTI-SLIP PLATE	1910 - 10
2E13	TOOL BOX COVER	1910 - 10
3C3	TOOTH ASSEMBLY	3302 - 14
3C5	TOOTH ASSEMBLY	3302 - 15A
3C1	TOOTH, ESCO	3302 - 12
2C1	TOP HATCH, CAB	1810 - 22
1B8	TRACK ADJUSTER (FOR EXCEPTIONS LISTED ONLY)	0130 - 7A
1B10	TRACK CARRIER ROLLER COMPONENTS	0130 - 8
1B10	TRACK CARRIER ROLLER MOUNTING	0130 - 8
1B12	TRACK CHAIN ASSEMBLY	0130 - 12
1B12	TRACK CHAIN PIN	0130 - 12
1B6	TRACK CHAIN TENSION ADJUSTER	0130 - 6
1B8	TRACK CHAIN TENSION ADJUSTER (FOR EXCEPTIONS LISTED ONLY)	0130 - 7A
1B2	TRACK CHAIN TENSION ADJUSTER COVER	0130 - 2
1B6	TRACK CHAIN TENSION ADJUSTER SPRING	0130 - 6
1B22	TRACK DRIVE SPROCKET	0260 - 2
1B2	TRACK FRAME	0130 - 2
1B14	TRACK FRAME (WITH BLADE)	0130 - 14
1C15	TRACK FRAME SEAL	0260 - 15A
3K8	TRACK FRAME TO BLADE CYLINDER PIN	3401 - 2
3K8	TRACK FRAME TO BLADE PIN	3401 - 2
1B4	TRACK FRONT IDLER	0130 - 4
1B4	TRACK FRONT IDLER BEARING	0130 - 4
1B4	TRACK FRONT IDLER SHAFT	0130 - 4
1B4	TRACK FRONT IDLER YOKE	0130 - 4
1B12	TRACK LINK	0130 - 12
1B16	TRACK LOWER ROLLER COMPONENTS	0130 - 16
1B12	TRACK SHOE	0130 - 12
1B14	TRACK TENSION ADJUSTER COVER (WITH BLADE)	0130 - 14
2B21	TRACK, CAB FRONT WINDOW OPENING	1810 - 18
1F16	TRASHSCREEN, RADIATOR	0510 - 4
2D11	TRAY, REAR	1830 - 14
2E1	TRAY, REAR	1830 - 28
2E19	TROPICAL COVER	1910 - 16
2E19	TROPICAL DOOR	1910 - 16
1D10	TUBE,ENGINE OIL DIPSTICK	0407 - 1
1E3	TURBOCHARGER	0416 - 1
1E4	TURBOCHARGER OIL LINES	0416 - 2
1F20	TURBOCHARGER TO AIR CLEANER HOSE	0520 - 2
1F20	TURBOCHARGER TO AIR CLEANER LINE	0520 - 2
1F16	TURBOCHARGER TO CHARGE AIR COOLER HOSE	0510 - 4

U

1B2	UNDERCARRIAGE	0130 - 2
1B14	UNDERCARRIAGE (WITH BLADE)	0130 - 14
1C15	UNDERCARRIAGE SEAL	0260 - 15A
1B10	UPPER ROLLER	0130 - 8
2E15	UPPERSTRUCTURE BOTTOM COVER	1910 - 12

V

3F16	VALVE COMPONENTS, BLADE CONTROL	3362 - 24
3C22	VALVE COMPONENTS, BLADE PILOT CONTROLLER	3315 - 9A
3F20	VALVE COMPONENTS, BLADE PUMP PRESSURE RELIEF	3362 - 40
3K15	VALVE COMPONENTS, BRAKE SWING MOTOR	4360 - 6
3F13	VALVE COMPONENTS, CONTROL (MANIFOLD ASSEMBLY AND SEALS)	3362 - 16
3F7	VALVE COMPONENTS, CONTROL (BOTTOM)	3362 - 10
3F11	VALVE COMPONENTS, CONTROL (TOP SPOOLS, 4-SPOOL SIDE)	3362 - 14
3F9	VALVE COMPONENTS, CONTROL (TOP SPOOLS, 5-SPOOL SIDE)	3362 - 12
3F3	VALVE COMPONENTS, CONTROL (4-SPOOL SIDE) (RIGHT SIDE)	3362 - 6
3F5	VALVE COMPONENTS, CONTROL (5-SPOOL SIDE) (LEFT SIDE)	3362 - 8
3F22	VALVE COMPONENTS, FLOW COMBINER SHUTTLE	3362 - 42
3C16	VALVE COMPONENTS, PILOT CONTROLLER (DIG AND SWING) (SN 065713-)	3315 - 5C
3C14	VALVE COMPONENTS, PILOT CONTROLLER (DIG AND SWING)(SN -065712)	3315 - 5A
3G9	VALVE COMPONENTS, PILOT SHUTOFF	3362 - 54
1C3	VALVE COMPONENTS, PROPEL MOTOR BRAKE	0260 - 7A
1C5	VALVE COMPONENTS, PROPEL MOTOR BRAKE RELIEF	0260 - 7C
3F18	VALVE COMPONENTS, SOLENOID	3362 - 34
3J1	VALVE HOSES, BLADE	3363 - 72
3D23	VALVE KIT,SOLENOID, 1WAY/2WAY, WITHOUT PRESSURE SWITCH	3360 - 8
3E7	VALVE, ANTI-DRIFT	3360 - 14
3E9	VALVE, ANTI-DRIFT (BOOM)	3360 - 16
3J9	VALVE, ARM AUXILIARY PLUMBING SHUT-OFF (FACTORY INSTALLED)	3363 - 86
3D1	VALVE, AUXILIARY FOOT CONTROL	3315 - 14

ALPHABETICAL INDEX - CONTINUED

GRID		PAGE
3F16	VALVE, BLADE CONTROL	3362 - 24
3J1	VALVE, BLADE SHUTTLE	3363 - 72
3E23	VALVE, CONTROL	3362 - 2
3G13	VALVE, CONTROL VALVE TO RESERVOIR LINE (RETURN LINE)	3363 - 4
1D6	VALVE, ENGINE OIL BY-PASS	0404 - 2
1D6	VALVE, ENGINE OIL PRESSURE REGULATING	0404 - 2
1F8	VALVE, ETHER	0505 - 2
1D18	VALVE, EXHAUST	0409 - 2
1D18	VALVE, INTAKE	0409 - 2
3E5	VALVE, MECHANICAL PATTERN CHANGER	3360 - 13A
3C12	VALVE, PILOT (DIG AND SWING)	3315 - 4
3I23	VALVE, PILOT BLADE	3363 - 70
3J5	VALVE, PRESSURE RELIEF (FACTORY INSTALLED AUXILIARY PLUMBING)	3363 - 82
1C3	VALVE, PROPEL MOTOR BRAKE	0260 - 7A
1C5	VALVE, PROPEL MOTOR BRAKE RELIEF	0260 - 7C
3D19	VALVE, RELIEF (IN AUXILIARY HYDRAULIC LINE SPOOL OF CONTROL VALVE)(FIELD)	3360 - 6
3J5	VALVE, SELECTOR (AUXILIARY PLUMBING)	3363 - 82
3D21	VALVE, SHUT-OFF (AUXILIARY HYDRAULIC OPTIONAL RETURN)	3360 - 7A
3E3	VALVE, SOLENOID (CONTROL PATTERN SELECTOR KIT)	3360 - 12
3K15	VALVE, SWING MOTOR BRAKE	4360 - 6
2C13	VANDAL COVER KIT	1810 - 34
2C13	VANDAL GUARD KIT	1810 - 34
1H5	VEHICLE CONTROLLER	1674 - 6
1H9	VEHICLE MAIN WIRING HARNESS	1674 - 10
1H9	VEHICLE MAIN WIRING HARNESS MOUNTING	1674 - 10
2E19	VENTED MACHINE DOORS	1910 - 16
1D16	VENTILATING HOSE,ENGINE	0408 - 2

W

1E6	WATER PUMP	0417 - 2
1E5	WATER PUMP INLET	0417 - 1
1E5	WATER PUMP PULLEY	0417 - 1
1E6	WATER PUMP REPAIR KIT	0417 - 2
3B22	WEAR BAR, DITCH CLEANING BUCKET	3302 - 8
3B18	WEAR BAR, GENERAL PURPOSE BUCKET	3302 - 4
3B20	WEAR BAR, HEAVY DUTY BUCKET	3302 - 6
3B24	WEAR BAR, ROADBUILDER	3302 - 10
1I6	WEIGHT, COUNTER	1740 - 6
1C22	WHEEL,CRANKSHAFT TIMING	0401 - 2
2B23	WINDOW GUARD, CAB RIGHT	1810 - 20
2C13	WINDOW GUARDS	1810 - 34
2C7	WINDOW WASHER	1810 - 28
2B19	WINDOW, CAB DOOR	1810 - 16
2B21	WINDOW, CAB FRONT	1810 - 18
2B17	WINDOW, CAB LEFT	1810 - 14
2B17	WINDOW, CAB REAR	1810 - 14
2B23	WINDOW, CAB RIGHT	1810 - 20
2C1	WINDOW, CAB TOP	1810 - 22
2B21	WINDSHIELD	1810 - 18
2C7	WINDSHIELD WASHER	1810 - 28
2B15	WINDSHIELD WASHER HOSE	1810 - 12
2B15	WINDSHIELD WASHER NOZZLE	1810 - 12
2C7	WINDSHIELD WASHER PUMP	1810 - 28
2C7	WINDSHIELD WASHER RESERVOIR	1810 - 28
2C7	WINDSHIELD WASHER RESERVOIR MOUNTING BRACKET	1810 - 28
2B15	WINDSHIELD WIPER	1810 - 12
2B15	WINDSHIELD WIPER ARM	1810 - 12
2B15	WINDSHIELD WIPER BLADE	1810 - 12
2B15	WINDSHIELD WIPER MOTOR	1810 - 12
2B15	WINDSHIELD WIPER MOTOR WIRING HARNESS	1810 - 12
2B15	WIPER, WINDSHIELD	1810 - 12
1G22	WIRING HARNESS, ALTERNATOR	1672 - 2
3D15	WIRING HARNESS, AUXILIARY ELECTRIC FOOT SWITCH (ONE SOLENOID)	3360 - 2
1H7	WIRING HARNESS, BOOM LIGHT	1674 - 8
1H11	WIRING HARNESS, BOOM LIGHT (OPTIONAL, ON TOP OF BOOM)	1674 - 12
1H5	WIRING HARNESS, CAB	1674 - 6
1H3	WIRING HARNESS, CAB DISPLAY MONITOR	1674 - 4
2D19	WIRING HARNESS, CAB HEAT CONTROLLER (HEAT ONLY)	1830 - 22
2D23	WIRING HARNESS, CAB HEATER UNIT (HEAT ONLY)	1830 - 26
1H5	WIRING HARNESS, CAB MAIN	1674 - 6
2D11	WIRING HARNESS, CAB REAR POWER SUPPLY	1830 - 14
2E1	WIRING HARNESS, CAB REAR POWER SUPPLY	1830 - 28
2D17	WIRING HARNESS, DEFROSTER/AIR CIRCULATION FAN	1830 - 20
2B15	WIRING HARNESS, DOME LIGHT	1810 - 12
1H13	WIRING HARNESS, ENGINE	1674 - 18
1H15	WIRING HARNESS, ENGINE CONTROL UNIT	1674 - 20
2C23	WIRING HARNESS, FROM HEATER AND A/C CONTROLLER TO HVAC UNIT	1830 - 2
1H21	WIRING HARNESS, FRONT WORK LIGHT	1674 - 26
2F1	WIRING HARNESS, HORN	2004 - 2
3J13	WIRING HARNESS, HYDRAULIC FILTER RESTRICTION INDICATOR	3364 - 4
2F3	WIRING HARNESS, PROPEL MOTION ALARM	2004 - 4
2E22	WIRING HARNESS, RADIO	2001 - 2
2B15	WIRING HARNESS, RADIO SPEAKER	1810 - 12
1E16	WIRING HARNESS, STARTER	0422 - 2
1G20	WIRING HARNESS, STARTER RELAY	1671 - 2
1H9	WIRING HARNESS, VEHICLE MAIN	1674 - 10
2B15	WIRING HARNESS, WINDSHIELD WIPER MOTOR	1810 - 12
1H7	WORK LIGHT, FRONT (ON BOOM)	1674 - 8
2E13	WORK LIGHT, RIGHT FRONT	1910 - 10
1H21	WORK LIGHTS, CAB	1674 - 26

Y

1B4	YOKE, TRACK FRONT IDLER	0130 - 4

MEMORANDA

TRACK FRAME

T153294 -UN-05APR02

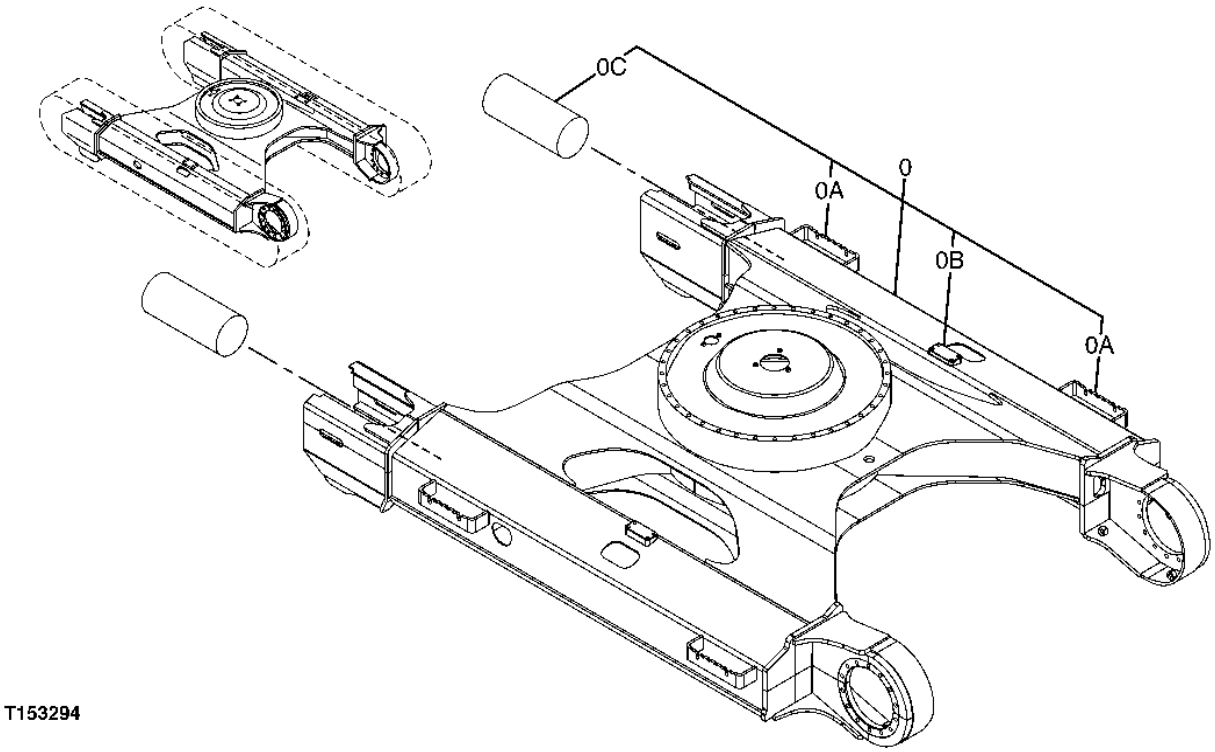

TRACK FRAME

KEY	PART NO.	PART NAME	QTY	SERIAL NO.	REMARKS
0	5006769	FRAME	1		
0A	4447431	STEP	4		
0B	3087511	BRACKET	2		
0C	4284441	PIPE	2		

TRACK FRONT IDLER ASSEMBLY AND YOKE

T188371 -UN-28MAR03

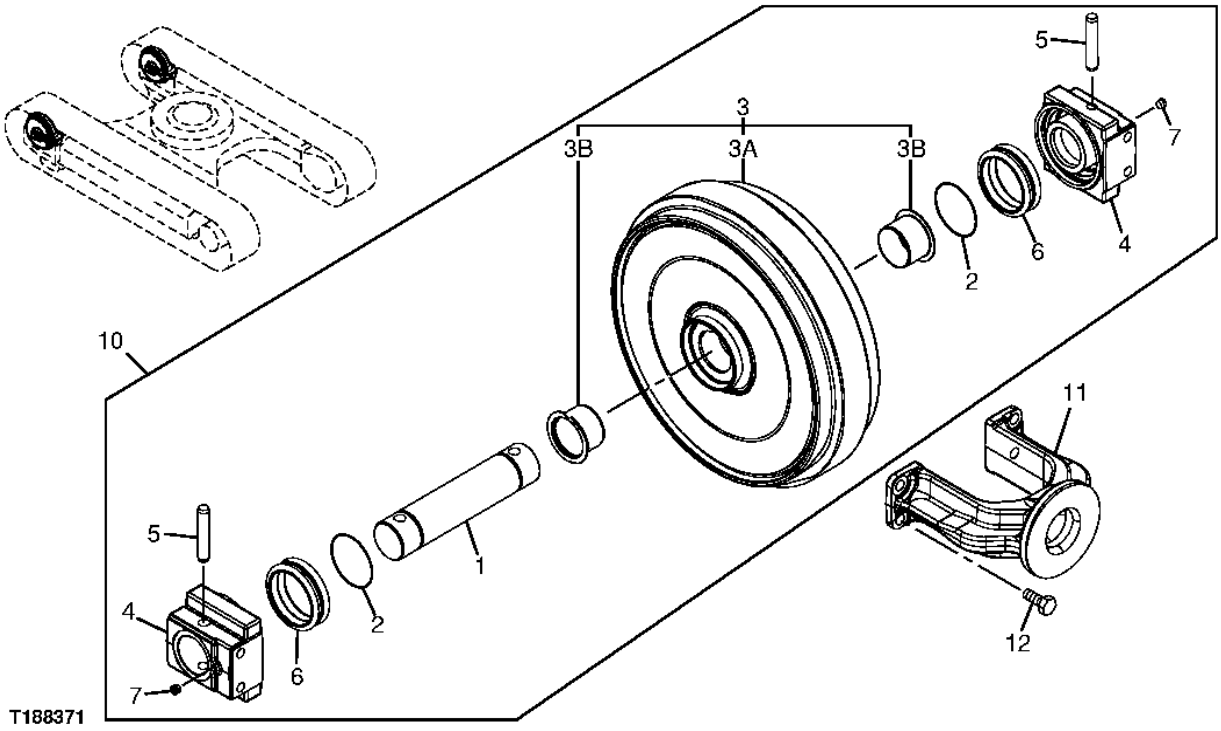

TRACK FRONT IDLER ASSEMBLY AND YOKE

KEY	PART NO.	PART NAME	QTY	SERIAL NO.	REMARKS
1	AT180424	SHAFT	1		
2	AT180425	O-RING	2		
3	AT180422	ROLLER SHELL	1		
3A	.....	IDLER SPROCKET	1		(AT172698 NOT AVAILABLE FOR SERVICE)
3B	AT180423	BUSHING	2		
4	AT180461	BRACKET	2		
5	AT180426	PIN	2		
6	AT180427	SEAL	2		
7	94-2011	FITTING PLUG	2		(SUB FOR TH100434)
10	AT180421	TRACK IDLER	2		
11	P68152	YOKE	1		
12	19M8035	CAP SCREW	4		M16 X 35

TRACK CHAIN TENSION ADJUSTER(SEE ADJUSTER PAGE FOR EXCEPTIONS)

T188372 -UN-28MAR03

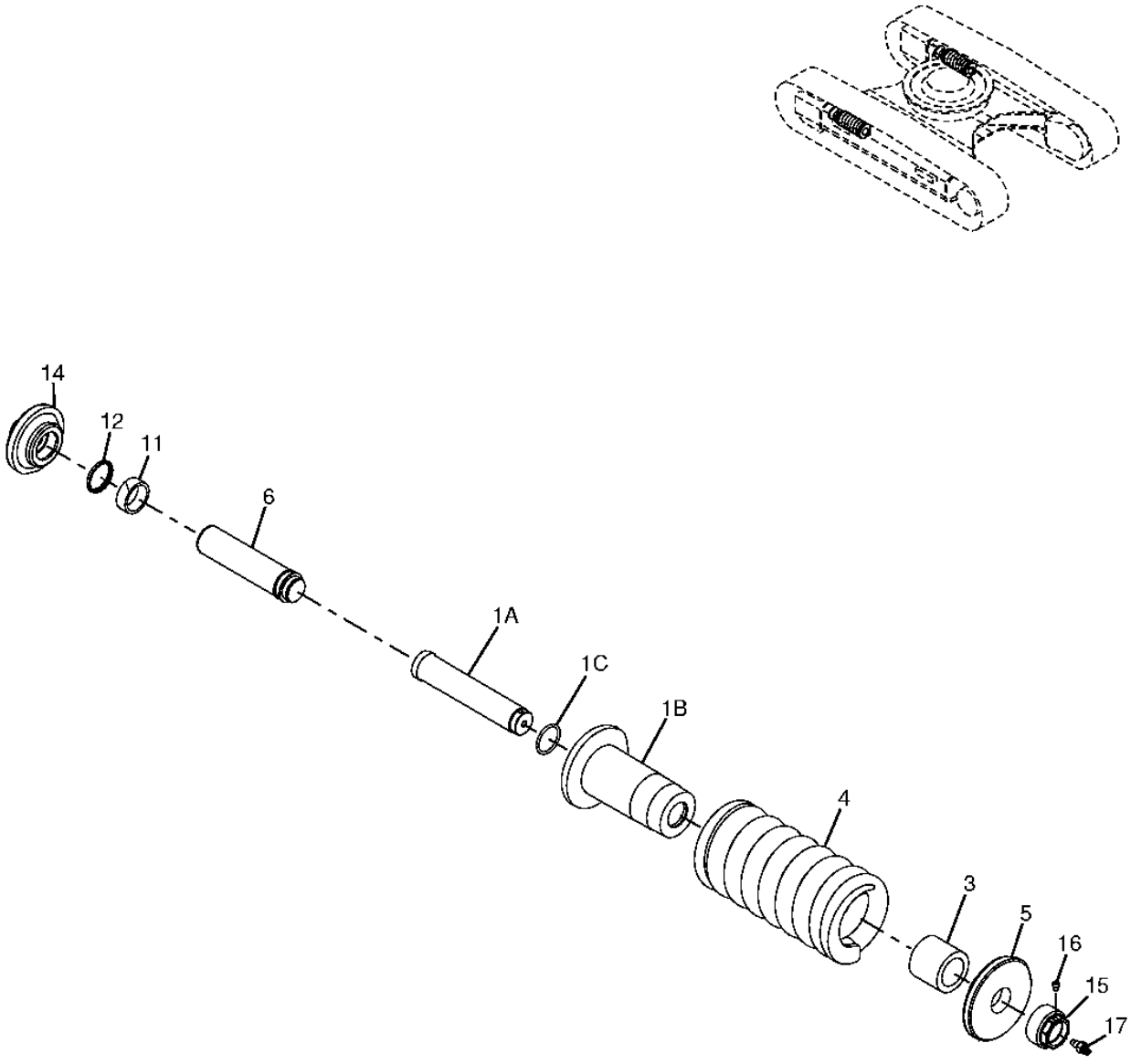

T188372

TRACK CHAIN TENSION ADJUSTER(SEE ADJUSTER PAGE FOR EXCEPTIONS)

KEY	PART NO.	PART NAME	QTY	SERIAL NO.	REMARKS
1A	T202388	ROD	1		
1B	T202384	CYLINDER	1		
1C	AT180387	O-RING	1		
3	T202387	SPACER	1		
4	T202386	SPRING	1		
5	AT180384	SPACER	1		
6	T202383	PISTON	1		
11	AT186636	PACKING	1		
12	AT180397	PACKING	1		
14	T202382	HOLDER	1		
15	AT180392	NUT	1		
16	AT180393	FITTING PLUG	1		
17	4255055	FLOW CONTROL HYD. VALVE	1		

TRACK CHAIN TENSION ADJUSTER(FOR EXCEPTIONS LISTED ONLY)
(S.N.034093,034114,034135,034140,0341349,034165,034166,034169,034170,034171-)(034184 THRU 034215-)

TP56834 -UN-11AUG99

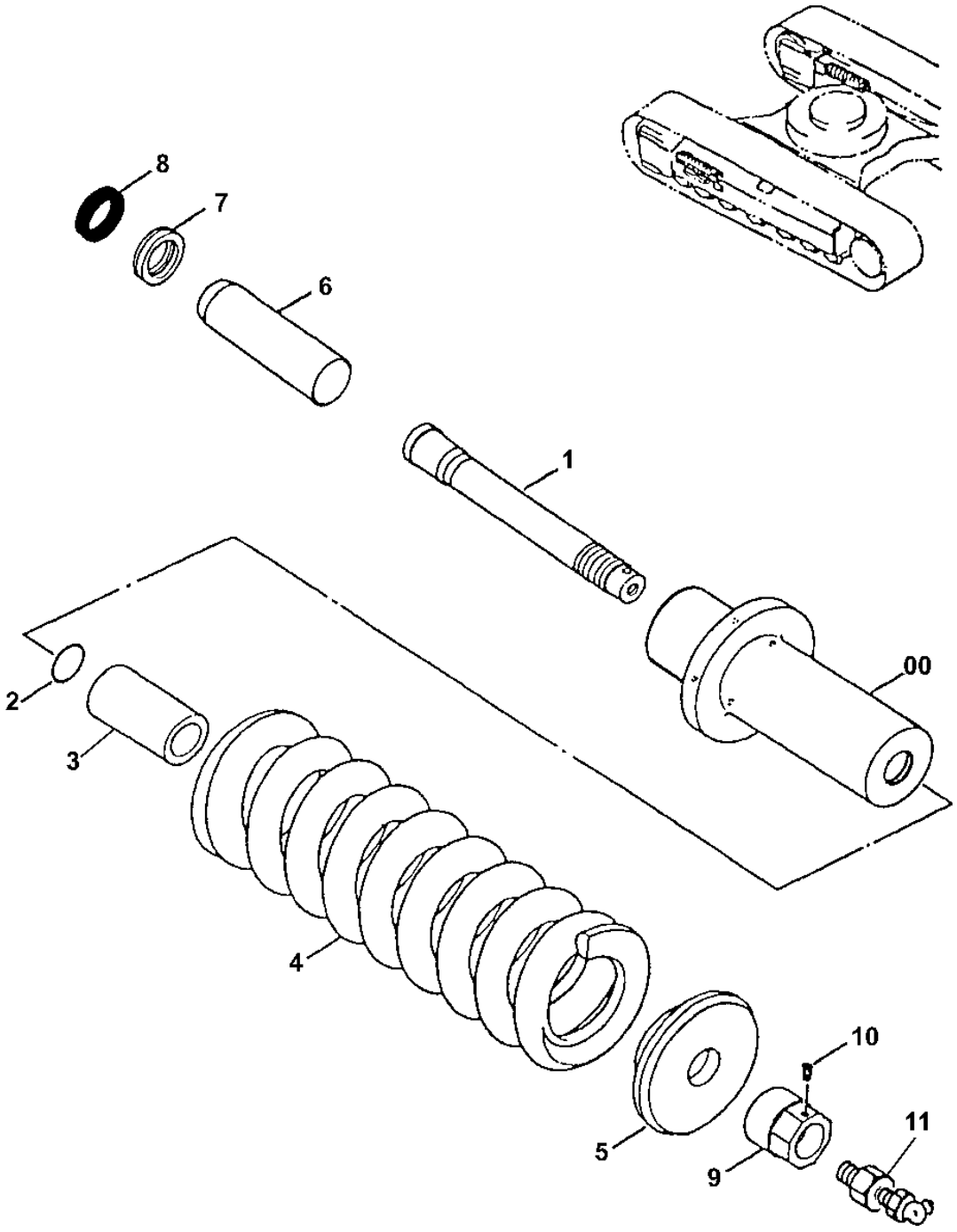

TP56834

TRACK CHAIN TENSION ADJUSTER(FOR EXCEPTIONS LISTED ONLY)
(S.N.034093,034114,034135,034140,0341349,034165,034166,034169,034170,034171-)(034184 THRU 034215-)

KEY	PART NO.	PART NAME	QTY	SERIAL NO.	REMARKS
0	AT186637	CYLINDER	1	031438-	
1	AT180385	ROD	1	031438-	
2	AT180387	O-RING	1	031438-	
3	AT180388	BUSHING	1	031438-	
4	AT180391	SPRING	1	031438-	
5	AT180389	BUSHING	1	031438-	
6	AT186635	ROD	1	031438-	
7	AT186636	PACKING	1	031438-	
8	AT180397	PACKING	1	031438-	
9	AT180392	NUT	1	031438-	
10	AT180393	FITTING PLUG	1	031438-	
11	4255055	FLOW CONTROL HYD. VALVE	1	031438-	(SUB FOR AT154223)

TRACK CARRIER ROLLER MOUNTING AND COMPONENTS

T188373 -UN-27MAR03

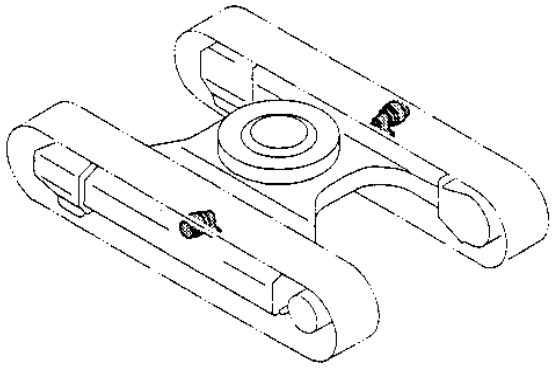

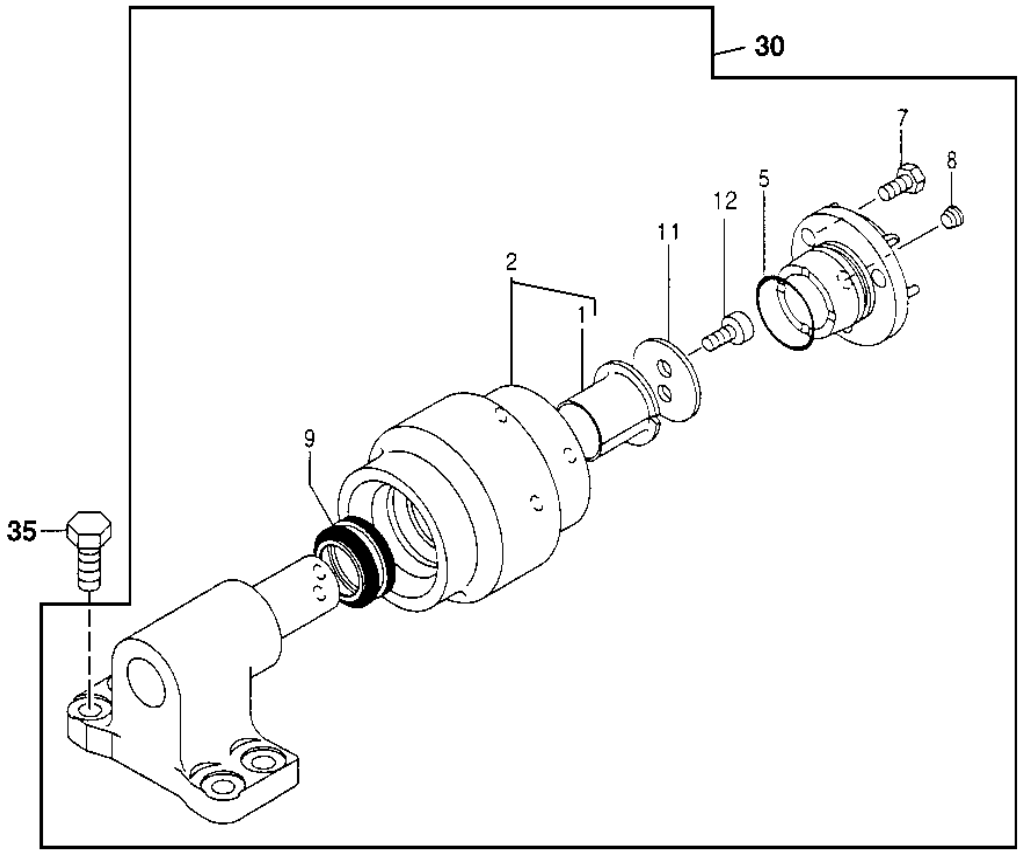

T188373

TRACK CARRIER ROLLER MOUNTING AND COMPONENTS

KEY	PART NO.	PART NAME	QTY	SERIAL NO.	REMARKS
1	AT180380	BUSHING	1		
2	9092402	ROLLER	1		(ROLLER SHELL WITH BUSHING)
5	AT180381	O-RING	1		
7	19M7938	CAP SCREW	3		M10 X 20
8	94-2011	FITTING PLUG	1		(SUB FOR TH100434)
9	AT180383	SEAL	1		
11	AT180449	WASHER	1		
12	M351018	BOLT	2		M10 X 18, (SUB FOR AT131372)
30	AP34654	ROLLER	2		
35	19M7403	CAP SCREW	8		M12 X 35

TRACK CHAIN ASSEMBLY AND SHOES

T153230 -UN-05APR02

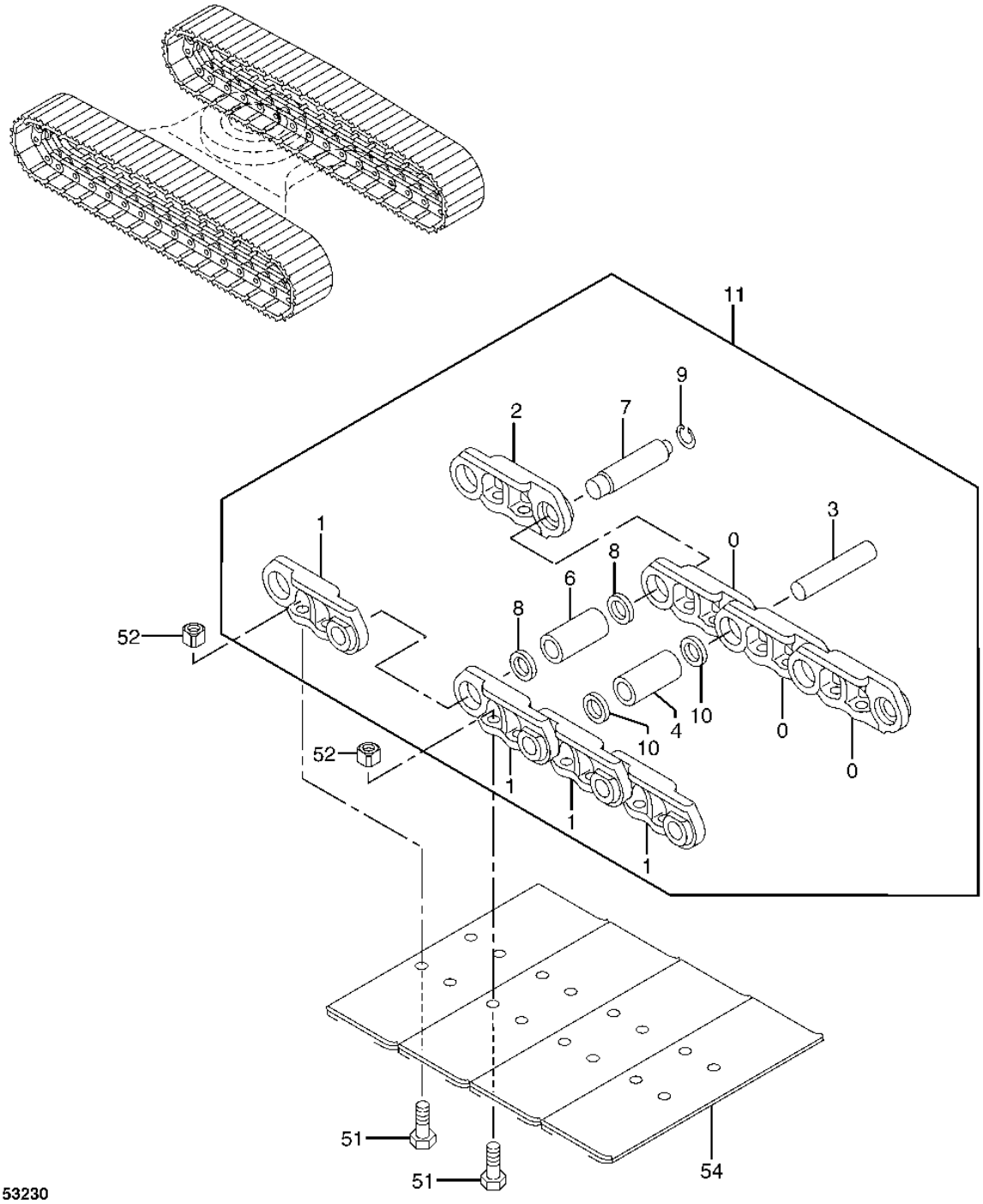

TRACK CHAIN ASSEMBLY AND SHOES

KEY	PART NO.	PART NAME	QTY	SERIAL NO.	REMARKS
0	AT185783	STRUTTED LINK-RH	43		(RIGHT LINK)
1	AT185784	STRUTTED LINK-LH	43		(LEFT LINK)
2	AT185785	MASTER TRACK LINK-RH	1		(MASTER RIGHT LINK)
3	AT185786	PIN	43		
4	T191229	BUSHING	43		
6	T191230	BUSHING	1		
7	AT185788	TRACK PIN	1		(MASTER PIN)
8	AT185789	SPACER	1		
9	T209259	SNAP RING	1		(SUB FOR AT174863)
10	AT185787	SEAL	86		
11	AT185781	TRACK CHAIN W/O SHOES	1		(COMPLETE TRACK CHAIN ASSEMBLY WITHOUT SHOES)
51	AT180444	BOLT	176		
52	AT180443	NUT	176		
54	AT180446	OPEN CENTER 3 BAR SHOE	44		(600 MM)
	AT180447	OPEN CENTER 3 BAR SHOE	44		(700 MM)
	AT306787	SHOE	44		(600MM RUBBER PADS)

TRACK FRAME (FOR USE WITH BLADE)

T152981 -UN-05APR02

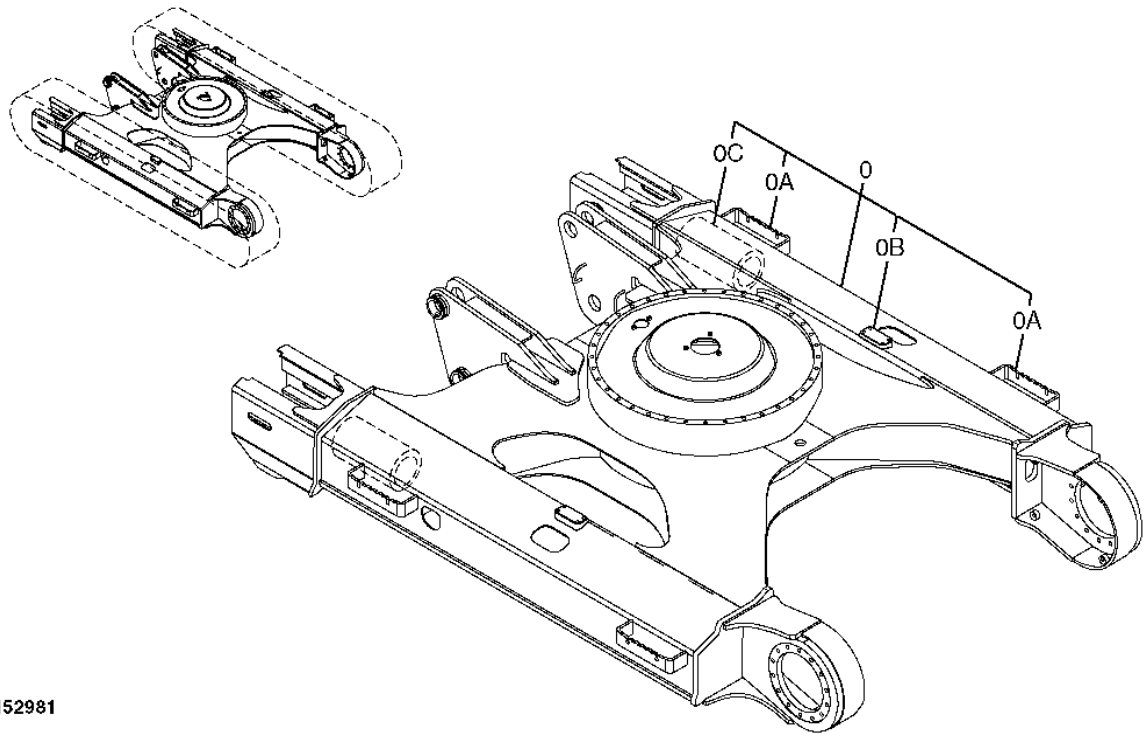

TRACK FRAME (FOR USE WITH BLADE)

KEY	PART NO.	PART NAME	QTY	SERIAL NO.	REMARKS
0	5007175	FRAME	1		
0A	4447431	STEP	2		
0B	3087511	BRACKET	2		
0C	4284441	PIPE	2		

TRACK LOWER ROLLER COMPONENTS

T188375 -UN-27MAR03

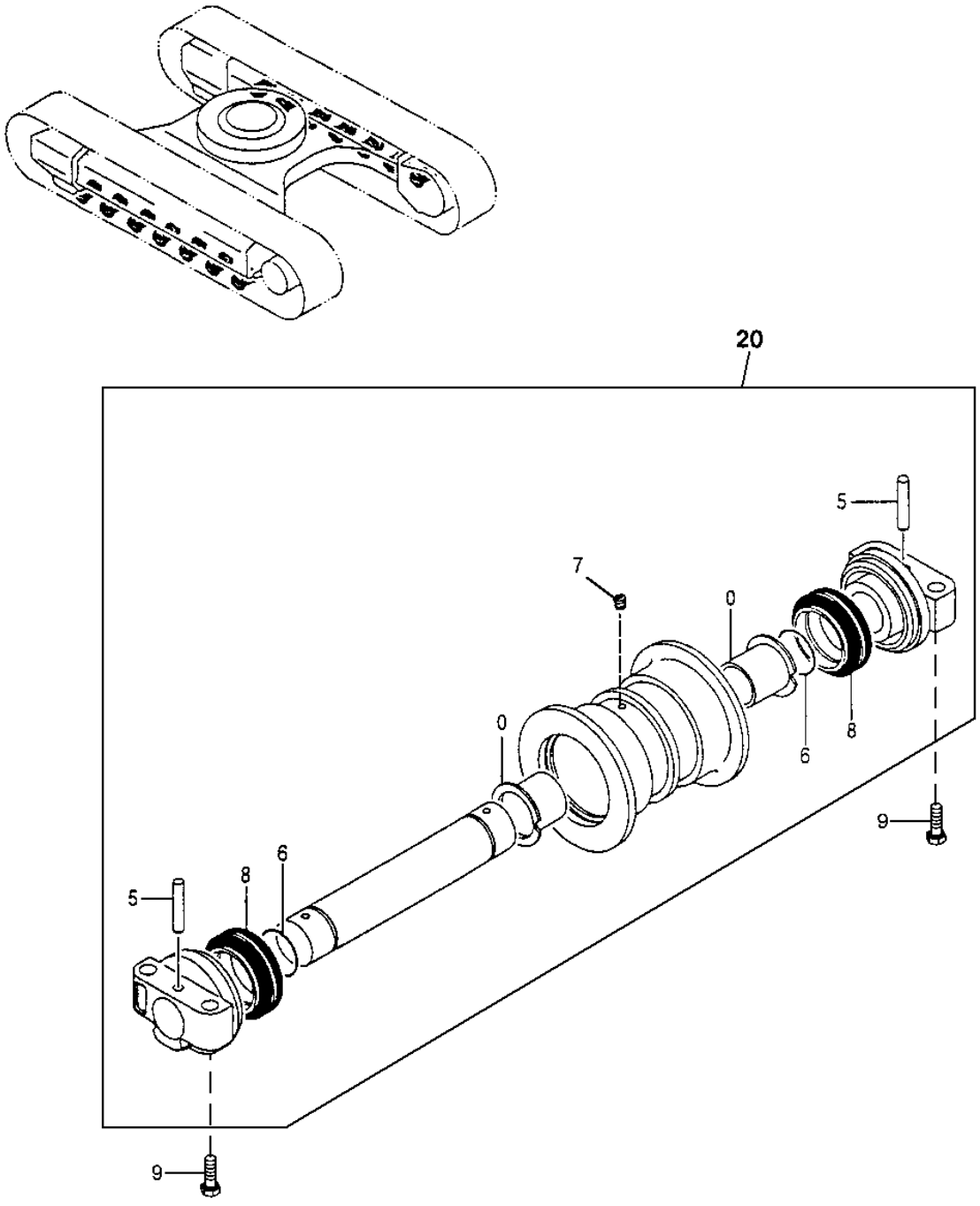

T188375

TRACK LOWER ROLLER COMPONENTS

KEY	PART NO.	PART NAME	QTY	SERIAL NO.	REMARKS
0	AT180375	BUSHING	2		
5	AT180376	PIN FASTENER	2		
6	AT180377	O-RING	2		
7	AT180378	FITTING PLUG	1		
8	AT180379	SEAL	2		
9	19M8529	CAP SCREW	56		
20	AP34655	ROLLER	14		

PROPEL GEAR BOX SUPPORT

T148059 -UN-13NOV01

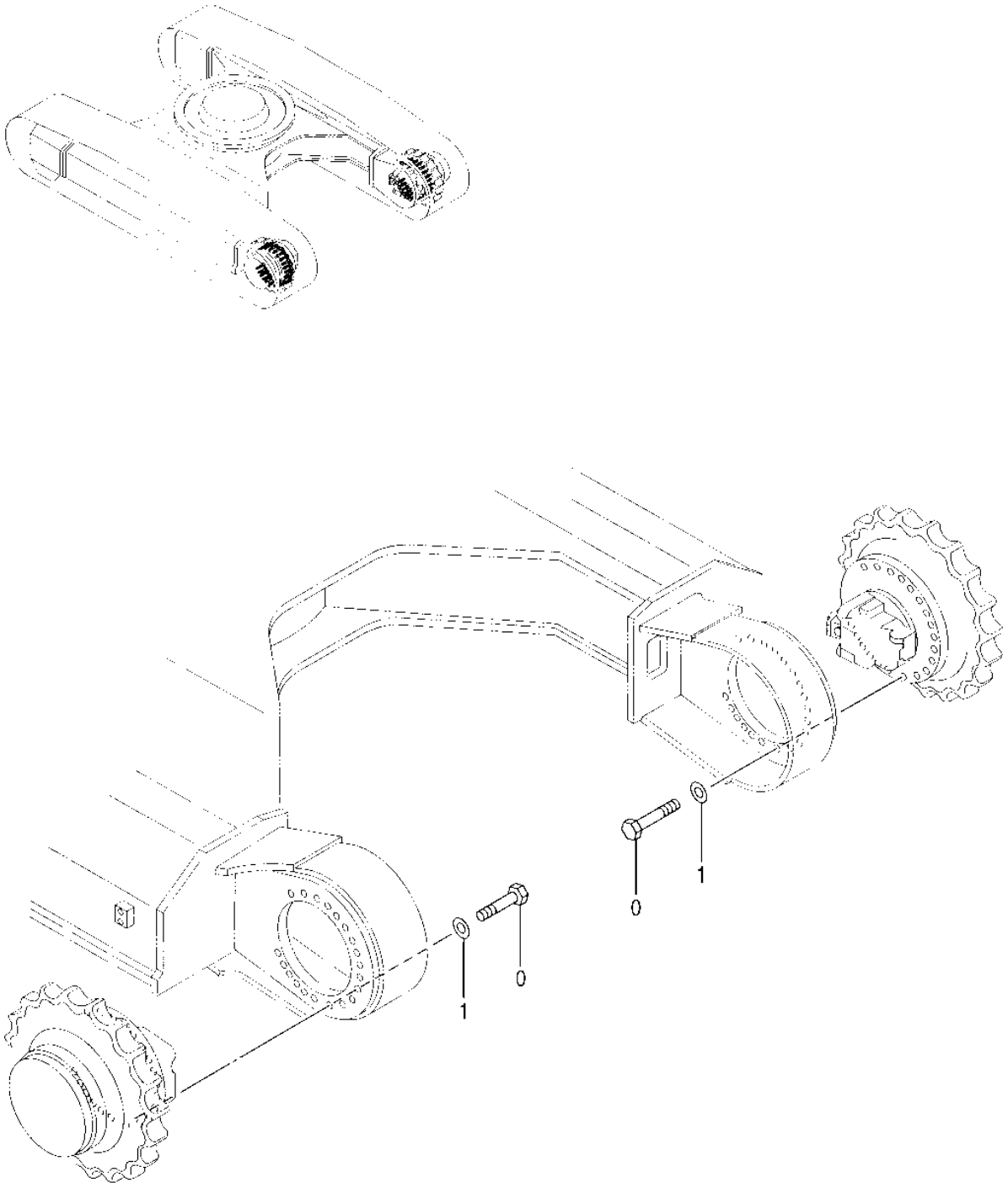

T148059

PROPEL GEAR BOX SUPPORT

KEY	PART NO.	PART NAME	QTY	SERIAL NO.	REMARKS
0	4272305	BOLT	28		(SUB FOR AT250016)
1	24M7338	WASHER	28		17 X 30 X 3 MM

PROPEL GEARBOX COMPONENTS

T153745 -UN-08APR02

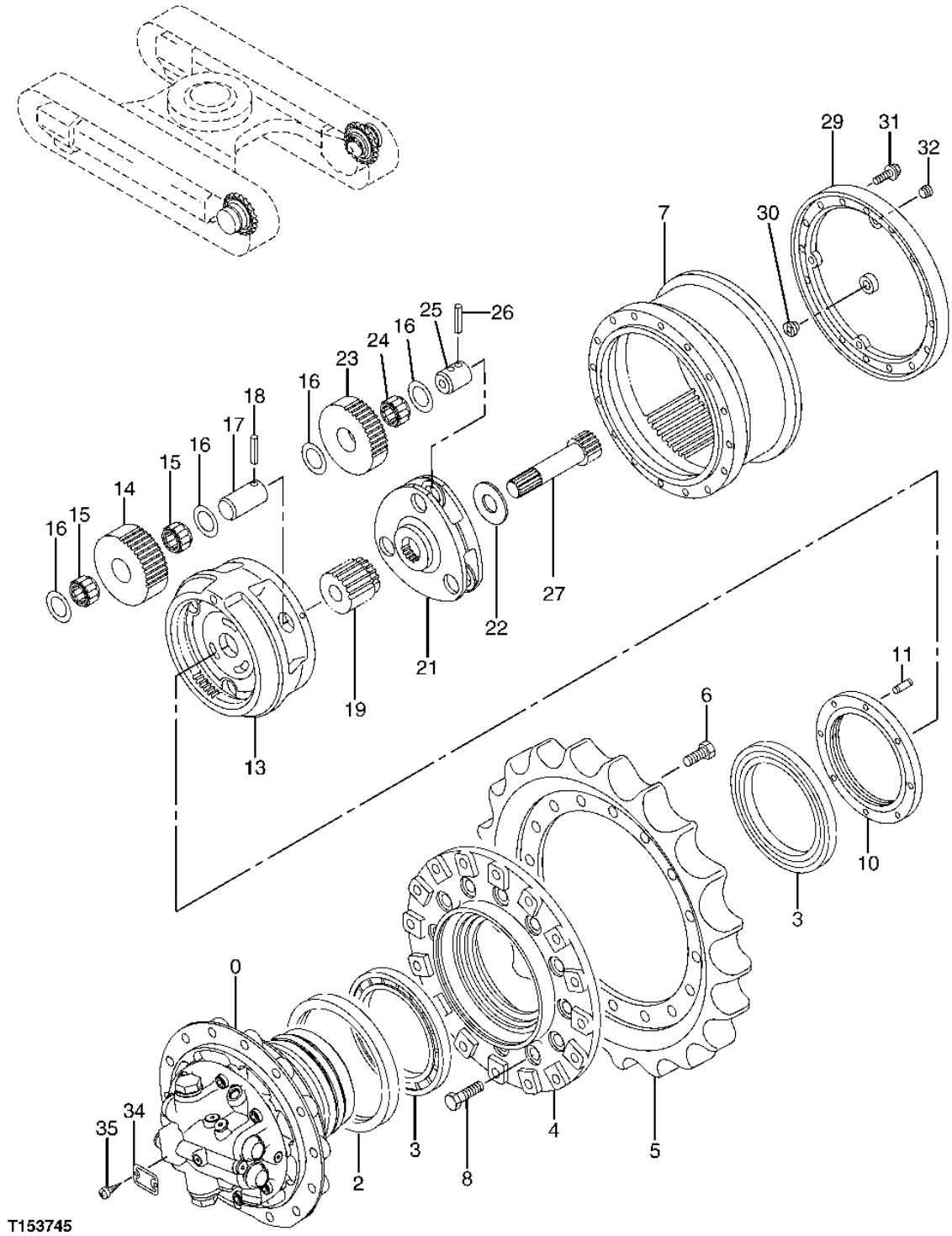

T153745

PROPEL GEARBOX COMPONENTS

KEY	PART NO.	PART NAME	QTY	SERIAL NO.	REMARKS
0	9196238	HYDRAULIC MOTOR	1		(SUB FOR 9196238EX)
2	4110369	SEAL	1		
3	4321887	CYLINDRICAL ROLLER BEARING	2		
4	1016125	DRUM	1		
5	1010325	CHAIN SPROCKET	1		
6	J931640	CAP SCREW	16		
7	1027082	GEAR	1		
8	J931660	CAP SCREW	16		
10	3085728	NUT	1		
11	4436242	PIN FASTENER	1		
13	1027076	PLANET PINION CARRIER	1		
14	3085566	GEAR	3		
15	4442789	NEEDLE BEARING	6		
16	4192982	PLATE	12		
17	4245966	PIN	3		
18	4144020	SPRING PIN	3		
19	3085569	GEAR	1		
21	2043774	PLANET PINION CARRIER	1		
22	4418771	SPACER	1		
23	3085568	GEAR	3		
24	4442788	NEEDLE BEARING	3		
25	4178203	BUSHING	3		
26	4192020	SPRING PIN	3		
27	2043769	SHAFT	1		
29	2028800	COVER	1		
30	4258916	PIN	1		
31	J011230	CAP SCREW	12		
32	94-2013	FITTING PLUG	3		(SUB FOR 4245797)
34	3053559	LABEL	1		
35	37H99	SCREW	2		
42	AT154148	HUB	2		

ROTARY MANIFOLD TO PROPEL MOTOR HOSES

T153238 -UN-05APR02

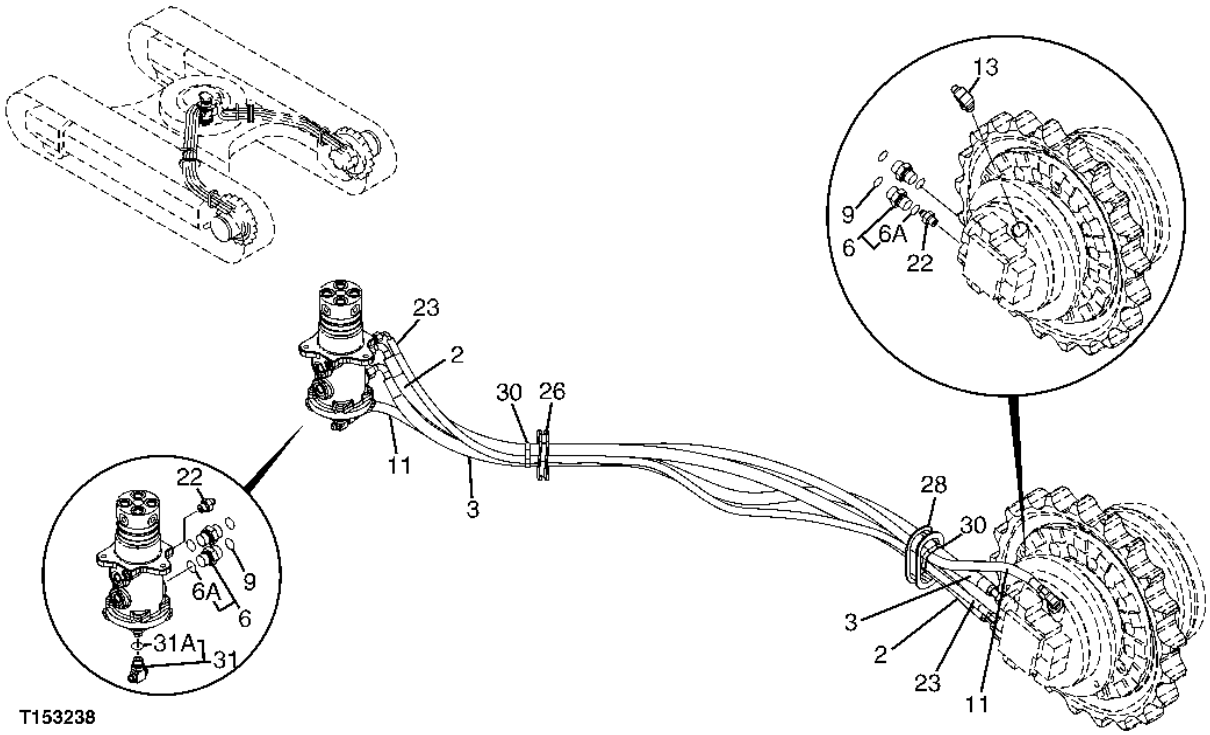

T153238

ROTARY MANIFOLD TO PROPEL MOTOR HOSES

KEY	PART NO.	PART NAME	QTY	SERIAL NO.	REMARKS
2	P60456	HYDRAULIC HOSE - FABRICATE	1		
3	4219356	HYDRAULIC HOSE - FABRICATE	1		
6	A853144	ADAPTER	4		
	4506418	O-RING	1		
9	T77857	O-RING	4		
11	4447483	HYDRAULIC HOSE - FABRICATE	1		
13	A852333	ELBOW FITTING	1		
	4509180	O-RING	1		
22	A852122	ADAPTER	2		
	M800650	PACKING	1		(SUB FOR 957366)
23	4447490	HYDRAULIC HOSE - FABRICATE	1		
26	4445210	BUSHING	1		
28	4426662	BUSHING	1		
30	H77698	TIE BAND	2		(SUB FOR 4121859)
31	A852543	TEE FITTING	1		
	4506418	O-RING	1		

PROPEL MOTOR COMPONENTS

T188378 -UN-28MAR03

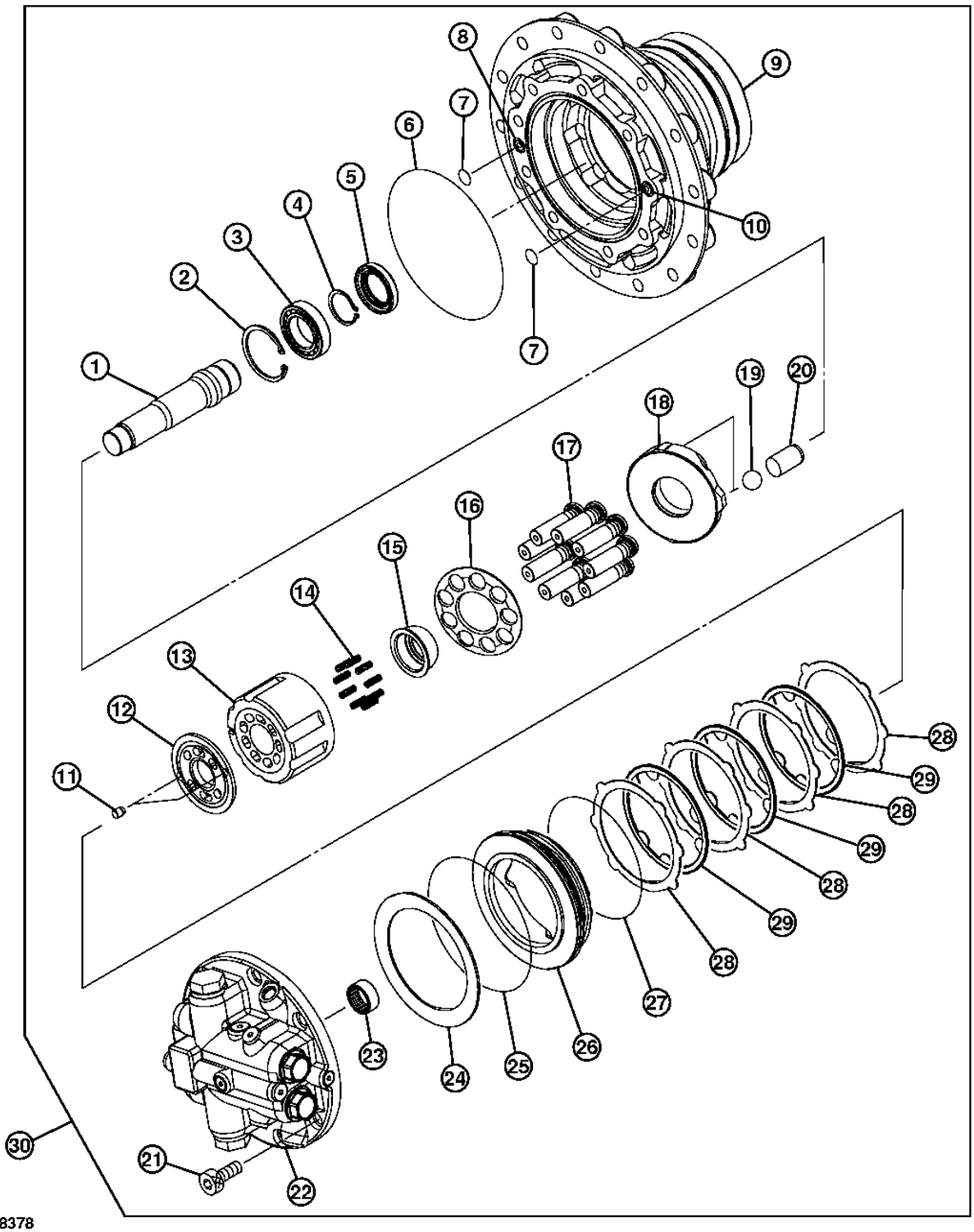

T188378

PROPEL MOTOR COMPONENTS

KEY	PART NO.	PART NAME	QTY	SERIAL NO.	REMARKS
1	3085780	SHAFT	1		
2	991725	SNAP RING	1		
3	4427427	CYLINDRICAL ROLLER BEARING	1		
4	962002	SNAP RING	1		
5	4364328	SEAL	1		
6	4364323	O-RING	1		
7	T111819	O-RING	2		(SUB FOR 4506415)
9	1027085	HOUSING	1		
11	4271350	PIN	2		
12	3102353	PLATE	1		(3085697 NO LONGER AVAILABLE) (USE ALONG WITH 2049901)
13	2049901	ROTOR	1		(2043791 NO LONGER AVAILABLE) (USE ALONG WITH 3102353)
14	4312681	COMPRESSION SPRING	9		
15	4419159	BUSHING	1		
16	3085713	RETAINER	1		
17	8076030	PISTON	9		
18	3085761	PLATE	1		
19	4419238	BALL	2		
20	4417431	PISTON	1		
21	M341432	SCREW	8		
22	9180466	VALVE	1		
	9196236	FLOW CONTROL HYD. VALVE	1		
23	4234840	NEEDLE BEARING	1		
24	3085871	PLATE	4		
	4364329	DISK SPRING	1		
25	4430357	O-RING	1		
26	3082754	PISTON	1		
27	4430356	O-RING	1		
29	3085844	PLATE	3		
30	9196238	HYDRAULIC MOTOR	1		

PROPEL MOTOR BRAKE VALVE COMPONENTS

T188773 -UN-28MAR03

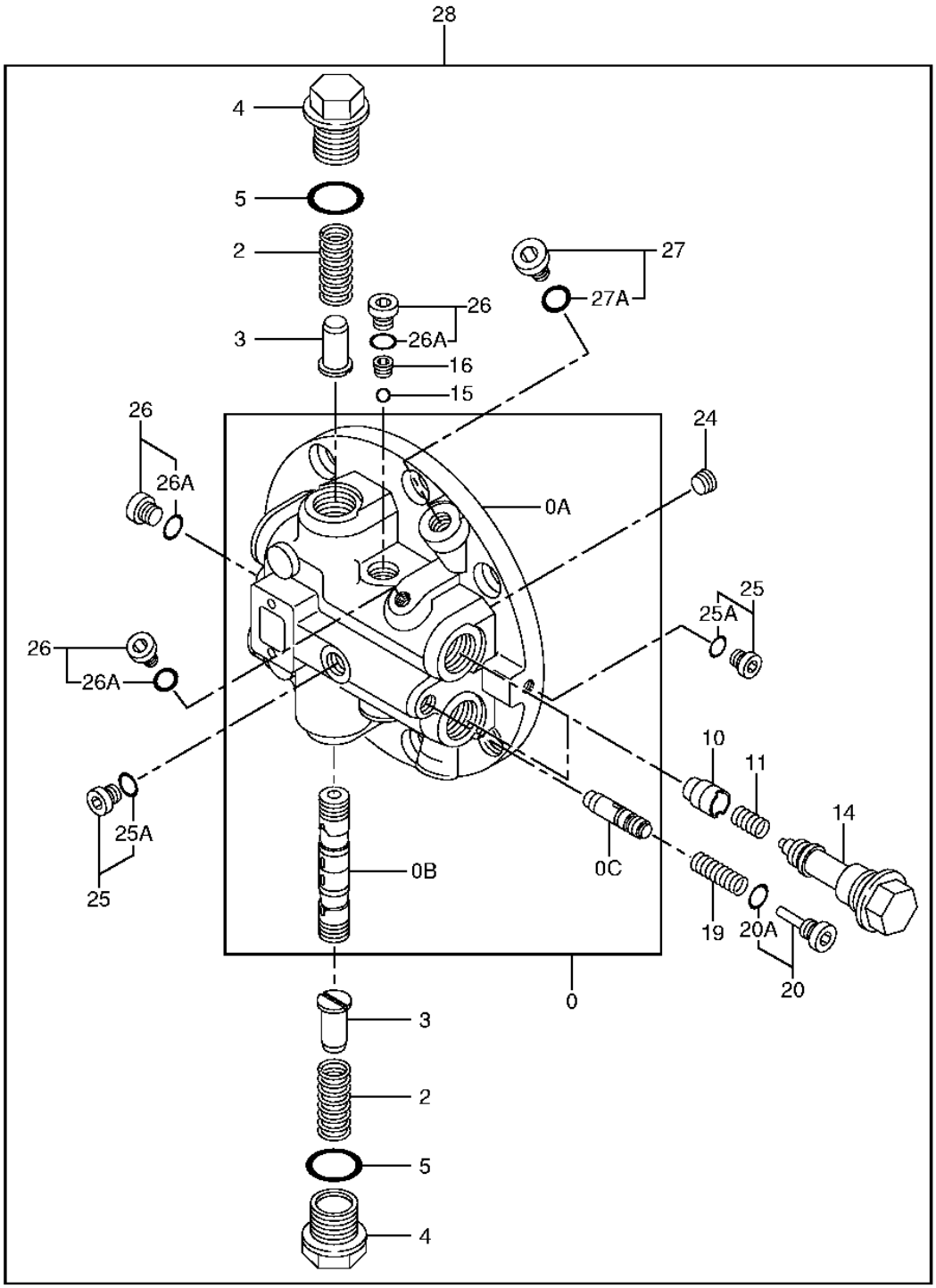

T188773

PROPEL MOTOR BRAKE VALVE COMPONENTS

KEY	PART NO.	PART NAME	QTY	SERIAL NO.	REMARKS
0	8076163	CASE	1		
0A	.....	CASE	1		
0B	.....	SPOOL	1		
0C	.....	SPOOL	1		
2	4372079	SPRING	2		
3	4427428	STOP	2		
	4427428	STOP	2		
4	4229631	DRAIN PLUG	2		
10	4300918	POPPET	2		
11	4383067	SPRING	2		
14	9159923	PRESSURE RELIEF VALVE	2		
15	4509493	BALL	1		
16	4193400	PLUG	1		
19	4297257	COMPRESSION SPRING	1		
20	9167977	PIPE PLUG	1		
20A	M800650	PACKING	1		(SUB FOR 957366)
24	4050968	PIPE PLUG	1		
25	9134109	DRAIN PLUG	2		
25A	4506408	O-RING	1		
26	9134110	PIPE PLUG	4		
26A	M800650	PACKING	1		(SUB FOR 957366)
27	9134111	PIPE PLUG	1		
27A	4509180	O-RING	1		
28	9196236	FLOW CONTROL HYD. VALVE	1		

PROPEL MOTOR BRAKE RELIEF VALVE COMPONENTS

T188776 -UN-28MAR03

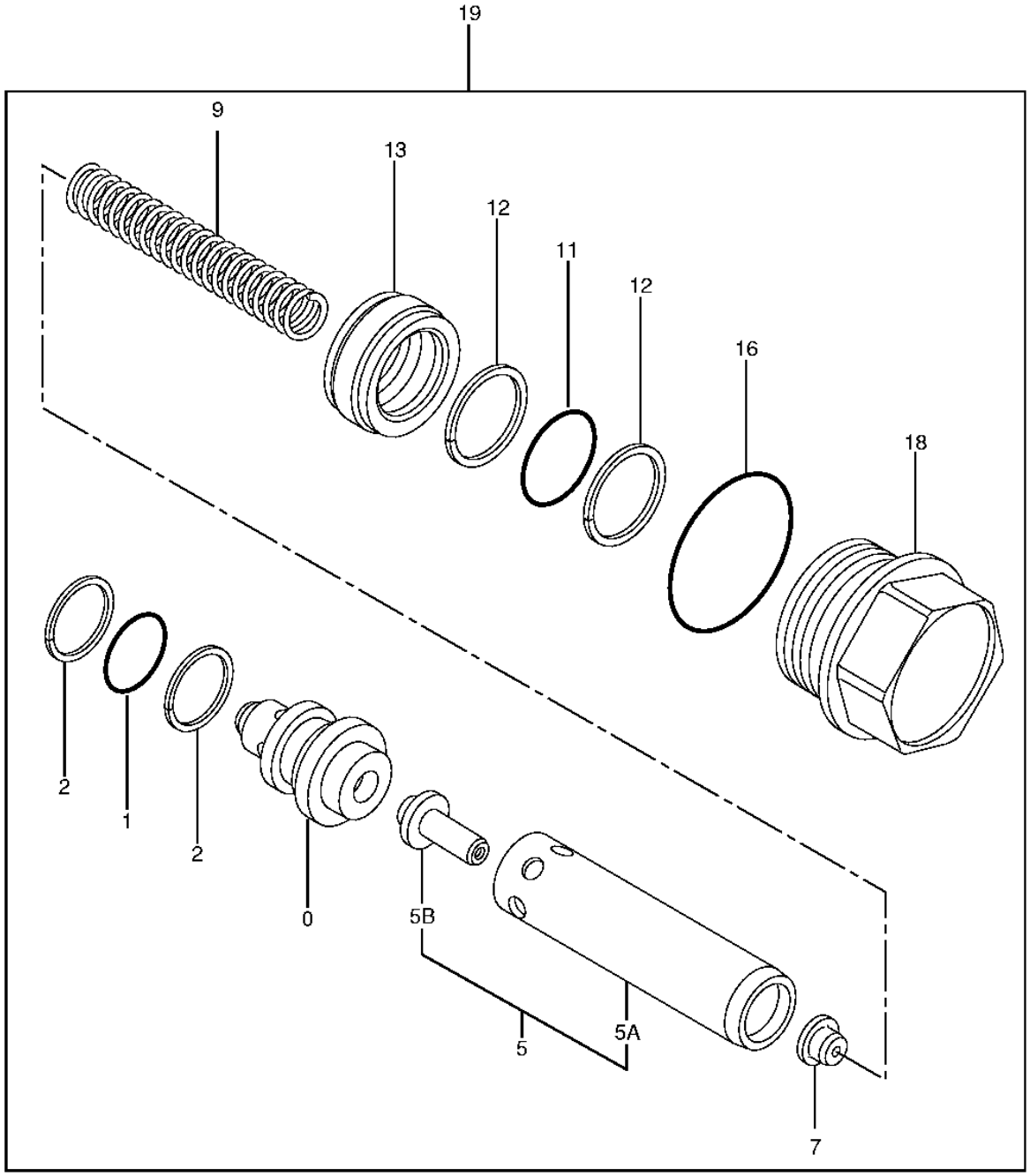

T188776

PROPEL MOTOR BRAKE RELIEF VALVE COMPONENTS

KEY	PART NO.	PART NAME	QTY	SERIAL NO.	REMARKS
0	4382901	SLEEVE	1		
1	4509180	O-RING	1		
2	4038533	BACK-UP RING	2		
5	9745380	RELIEF VALVE	1		
5A	.....	RELIEF VALVE	1		
5B	.....	POPPET	1		
7	4272420	GUIDE	1		
9	4311378	COMPRESSION SPRING	1		
11	4506418	O-RING	1		
12	4033725	BACK-UP RING	2		
13	4272425	PISTON	1		
16	4044013	O-RING	1		
18	4311779	CAP SCREW	1		
19	9159923	PRESSURE RELIEF VALVE	1		

ROTARY MANIFOLD COMPONENTS AND MOUNTING

T188379 -UN-02APR03

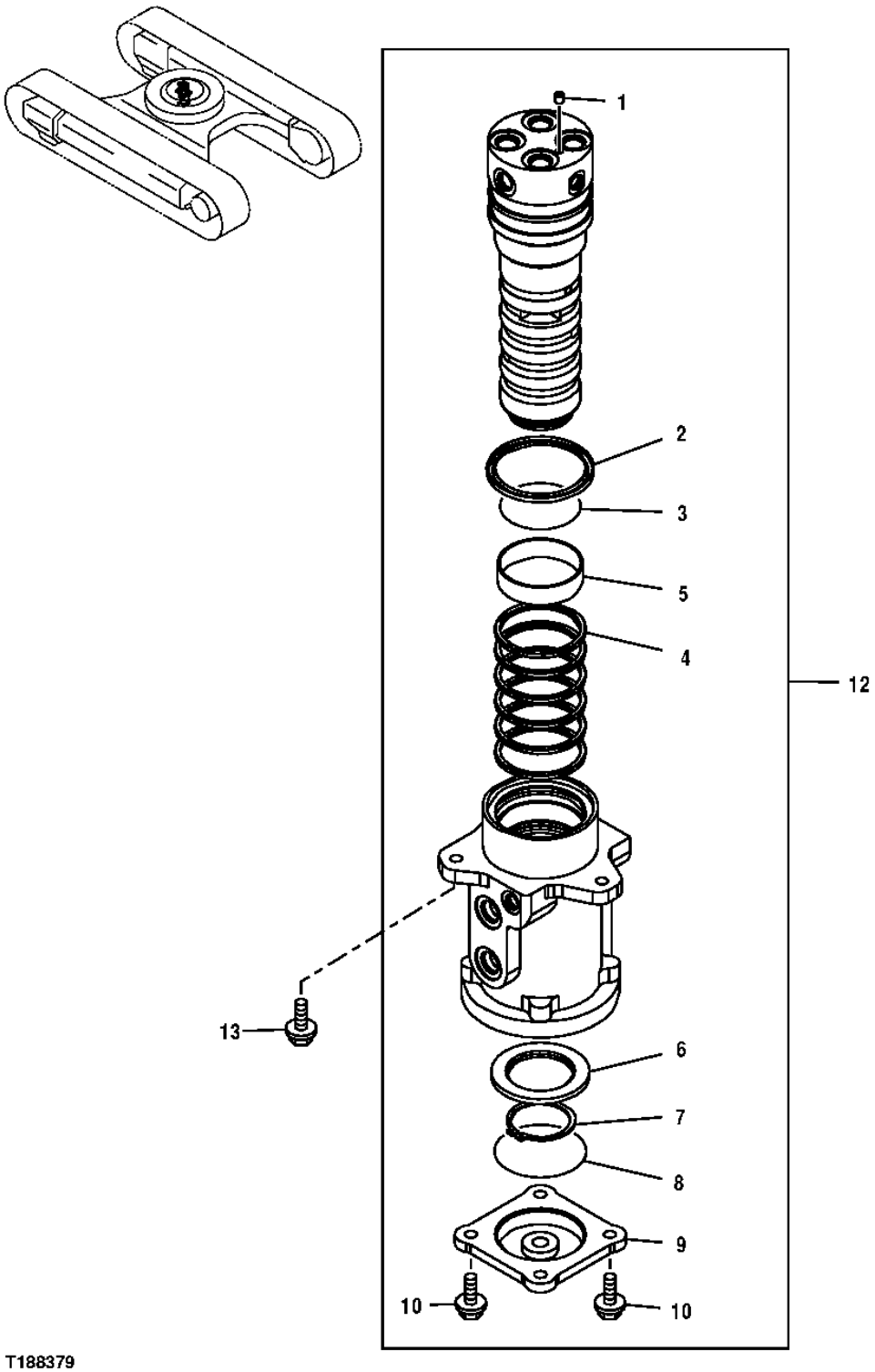

T188379

ROTARY MANIFOLD COMPONENTS AND MOUNTING

KEY	PART NO.	PART NAME	QTY	SERIAL NO.	REMARKS
0	9195313EX	VALVE	1		(NOT ILLUSTRATED)
1B	4239611	PLUG	1		
2	4410445	SEAL	1		
3	4410446	O-RING	1		
4	4406165	SEAL	6		
5	4410066	BUSHING	1		
6	3070250	RING	1		
7	40M7048	SNAP RING	1		
8	CH16109	PACKING	1		
9	2034607	COVER	1		
10	19M7662	CAP SCREW	4		M10 X 30, (SUB FOR J011030)
	12M7066	LOCK WASHER	4		10 MM
12	.....	VALVE	1		(9195313 NOT AVAILABLE - FURNISH 9195313EX)
13	19M7550	CAP SCREW	3		M10 X 35
	12M7066	LOCK WASHER	3		10 MM

ROTARY MANIFOLD COMPONENTS (WITH BLADE)

T188380 -UN-28MAR03

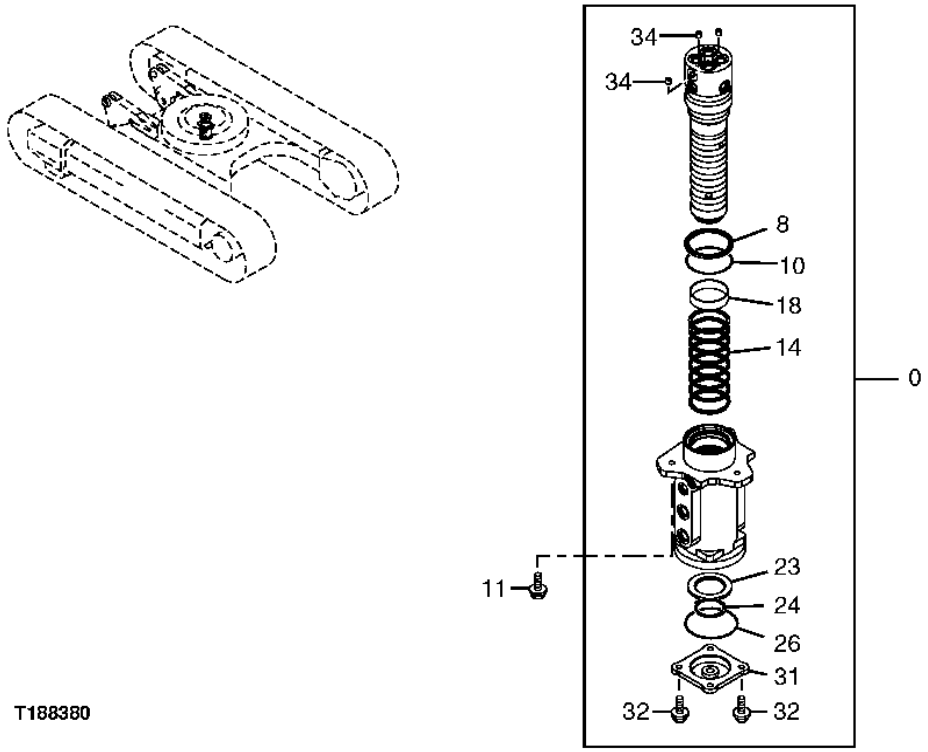

ROTARY MANIFOLD COMPONENTS (WITH BLADE)

KEY	PART NO.	PART NAME	QTY	SERIAL NO.	REMARKS
0	9196167	MANIFOLD	1		(SUB FOR 9193338)
8	4410445	SEAL	1		
10	4410446	O-RING	1		
11	19M7550	CAP SCREW	3		M10 X 35
	12M7066	LOCK WASHER	3		10 MM
14	4406165	SEAL	8		
18	4410066	BUSHING	1		
23	3070250	RING	1		
24	991347	SNAP RING	1		
26	A810100	PACKING	1		
31	2034607	COVER	1		
32	J011030	CAP SCREW	4		
34	94-2011	FITTING PLUG	2		

ROTARY MANIFOLD SUPPORT

TP48002 -UN-28MAY96

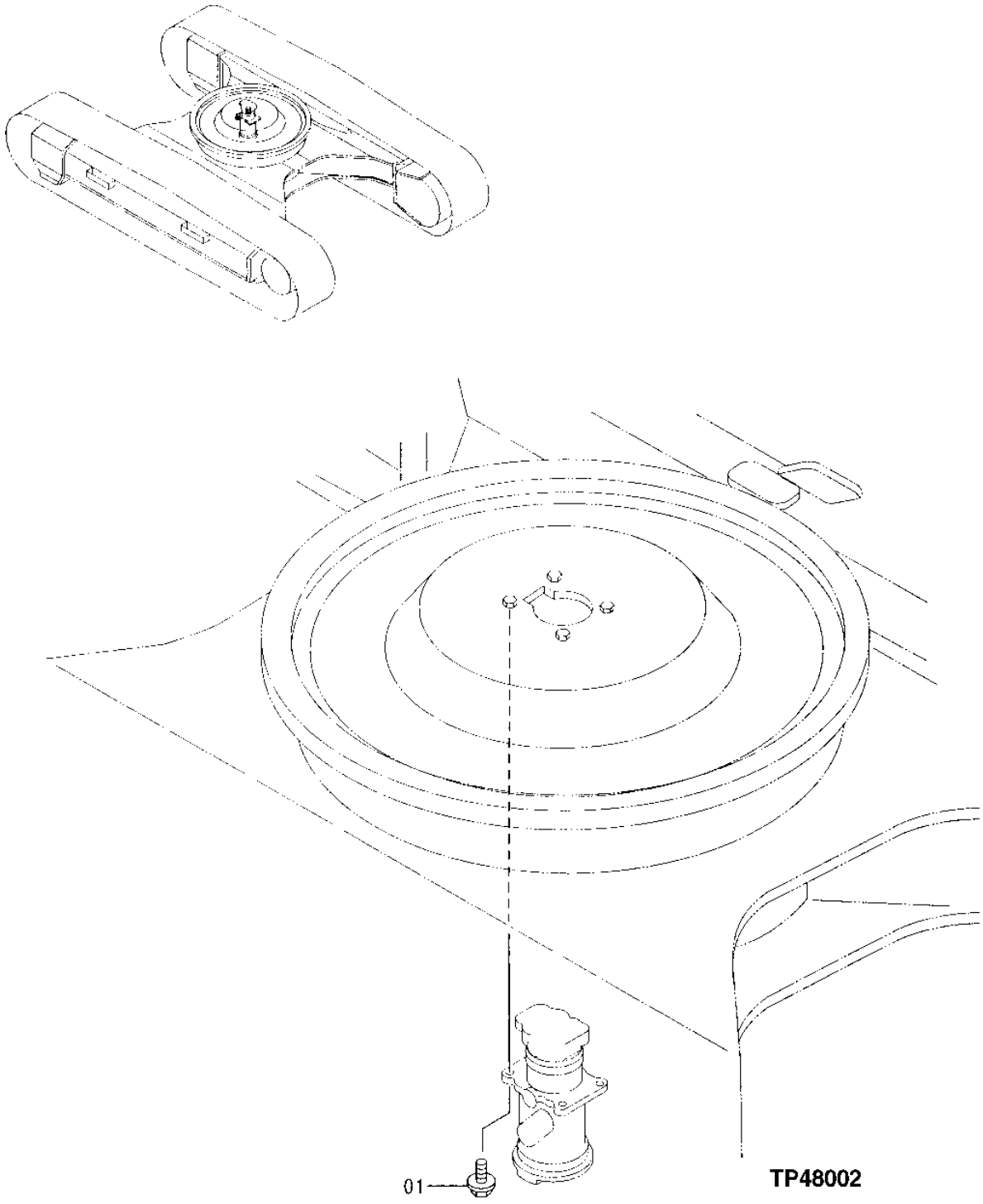

ROTARY MANIFOLD SUPPORT

KEY	PART NO.	PART NAME	QTY	SERIAL NO.	REMARKS
1	12H301	LOCK WASHER	4		12.700 MM (1/2")
	19M7403	CAP SCREW	4		M12 X 35

ROTARY MANIFOLD TOP COVER AND MOUNTING BRACKET

T153217 -UN-05APR02

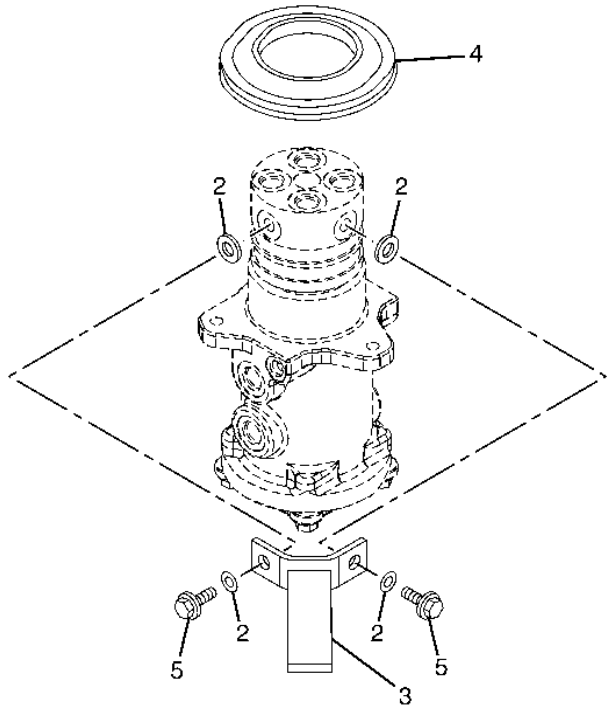

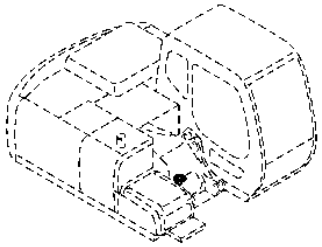

T153217

ROTARY MANIFOLD TOP COVER AND MOUNTING BRACKET

KEY	PART NO.	PART NAME	QTY	SERIAL NO.	REMARKS
2	24M7345	WASHER	4		
3	8082204	BRACKET	1		(FOR USE WITHOUT BLADE)
	9755255	STOP	1		(FOR USE WITH BLADE)
4	4425270	COVER	1		
5	19M7403	CAP SCREW	2		

ROTARY MANIFOLD (TRACK FRAME) SEAL

T192733 -UN-07JUL03

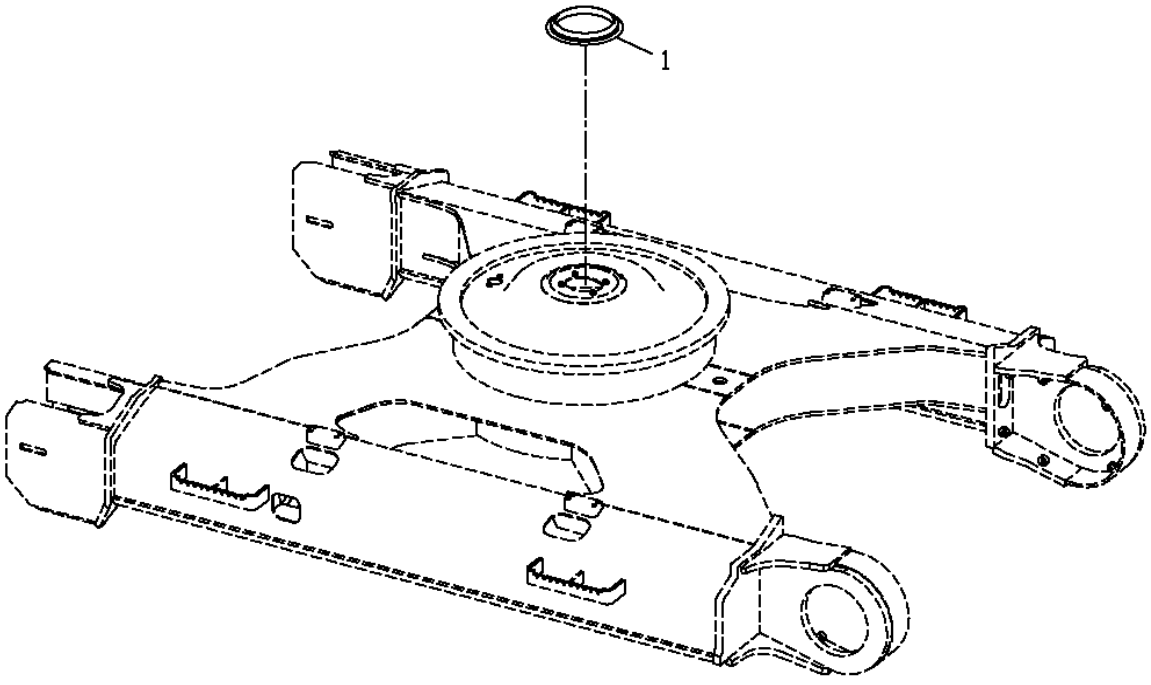

T192733

ROTARY MANIFOLD (TRACK FRAME) SEAL

KEY	PART NO.	PART NAME	QTY	SERIAL NO.	REMARKS
1	4483676	SEAL	1		(SUB FOR 9229187)

PROPEL MOTOR COVER

TP54494 -UN-17JAN97

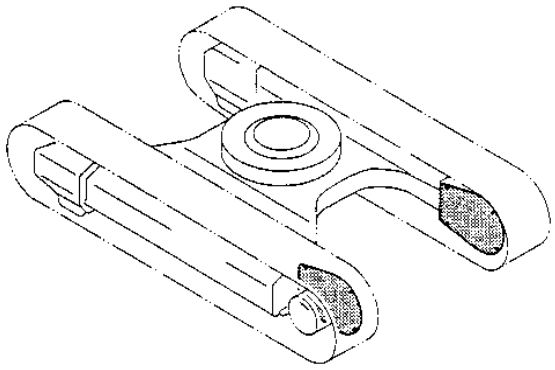

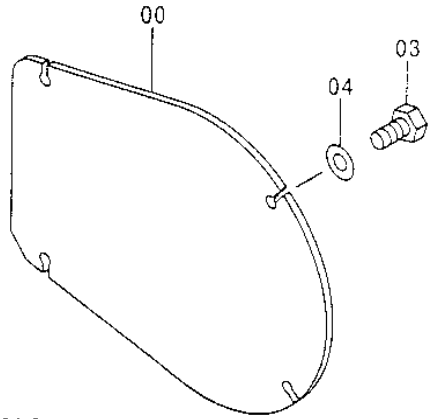

TP54494

PROPEL MOTOR COVER

KEY	PART NO.	PART NAME	QTY	SERIAL NO.	REMARKS
0	P60463	COVER	2		(SUB FOR AT176629)
3	19M6332	CAP SCREW	4		M14 X 35
4	AT200011	WASHER	4		

CRANKSHAFT,CRANKSHAFT GEARS AND MAIN BEARINGS

T145419 -UN-12NOV01

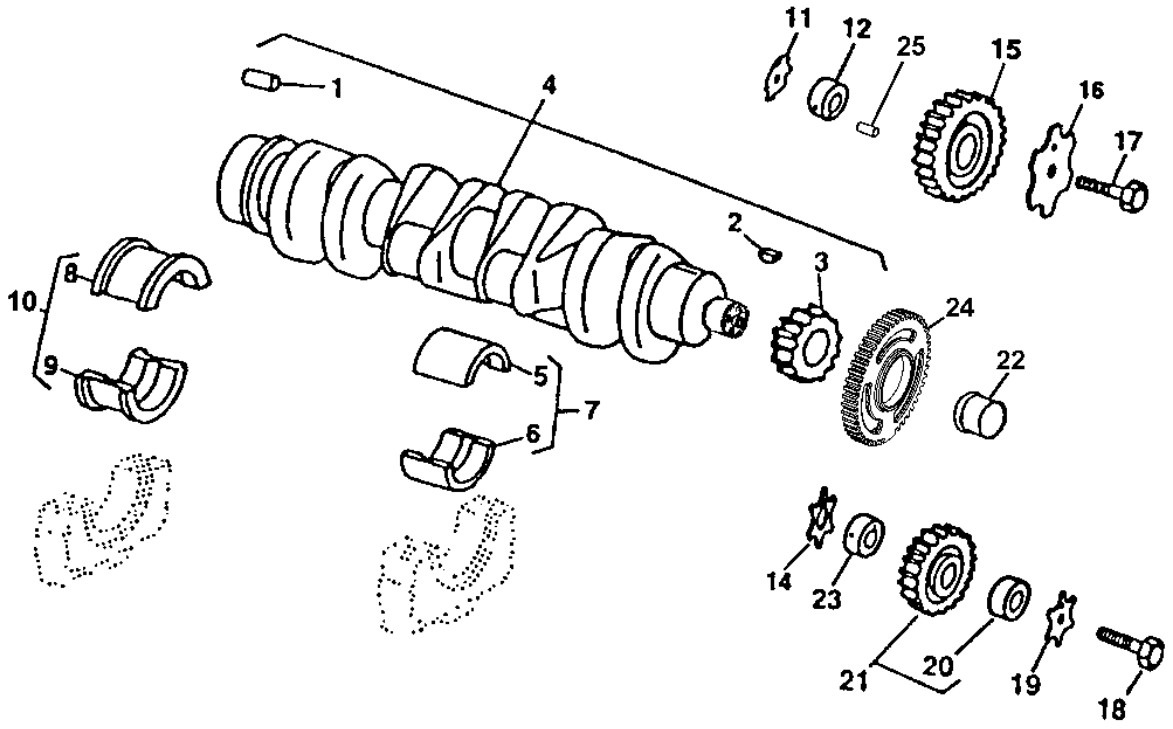

T145419

CRANKSHAFT,CRANKSHAFT GEARS AND MAIN BEARINGS

KEY	PART NO.	PART NAME	QTY	ENGINE SERIAL NO.	REMARKS
1	R48685	DOWEL PIN	1		12.700 X 28.448 MM (1/2" X 1.120")
2	R505609	SHAFT KEY	1		
3	R120631	HELICAL GEAR	1		(30 TEETH)
4	RE504638	CRANKSHAFT	1		(MARKED R113596) (ALSO ORDER RE59811)
5	.....	BEARING	4		(STANDARD UPPER) (MARKED R123561)
	.....	BEARING	4		(UNDERSIZE UPPER .254 MM) (MARKED R130576)
6	.....	BEARING	4		STANDARD LOWER (MARKED R123562)
	.....	BEARING	4		UNDERSIZE LOWER .254MM (MARKED R130577)
7	RE65165	BEARING KIT	4		STANDARD
	RE65911	BEARING	4		UNDERSIZE .254MM
8	.....	BEARING	1		STANDARD UPPER (MARKED R123563)
	.....	BEARING	1		UNDERSIZE UPPER .254MM (MARKED R130574)
9	.....	BEARING	1		STANDARD LOWER, (MARKED R123564)
	.....	BEARING	1		UNDERSIZE LOWER .254MM (MARKED R130575)
10	RE65168	BEARING KIT	1		STANDARD
	RE65912	THRUST BEARING	1		UNDERSIZE .254MM
11	R123174	LOCK WASHER	1		
12	R120641	SHAFT	1		
14	R101225	THRUST WASHER	1		
15	RE56313	GEAR	1		(MARKED R500563)
16	R131283	THRUST WASHER	1		
17	19M8997	SCREW	1		M10 X 65
18	19M8966	SCREW	1		M10 X 50
19	R131283	THRUST WASHER	1		
20	R114193	BUSHING	1		
21	RE56369	GEAR	1		
22	RE59811	SLEEVE	1		
23	R114194	SHAFT	1		
24	R501489	WHEEL SPEED SENSOR	1		CRANKSHAFT TIMING
25	34H288	SPRING PIN	1		

CAMSHAFT

TP69520 -UN-02JUN00

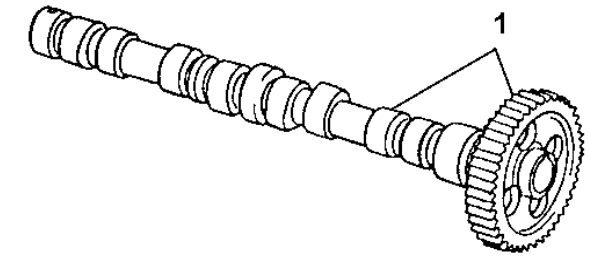

TP69520

KEY	PART NO.	PART NAME	QTY	ENGINE SERIAL NO.	REMARKS
1	RE507595	CAMSHAFT	1		(MARKED R504534) WITH GEAR AND KEY

ROCKER ARM SHAFT, PUSH RODS AND ROCKER ARMS

TP49263 -UN-20JUN95

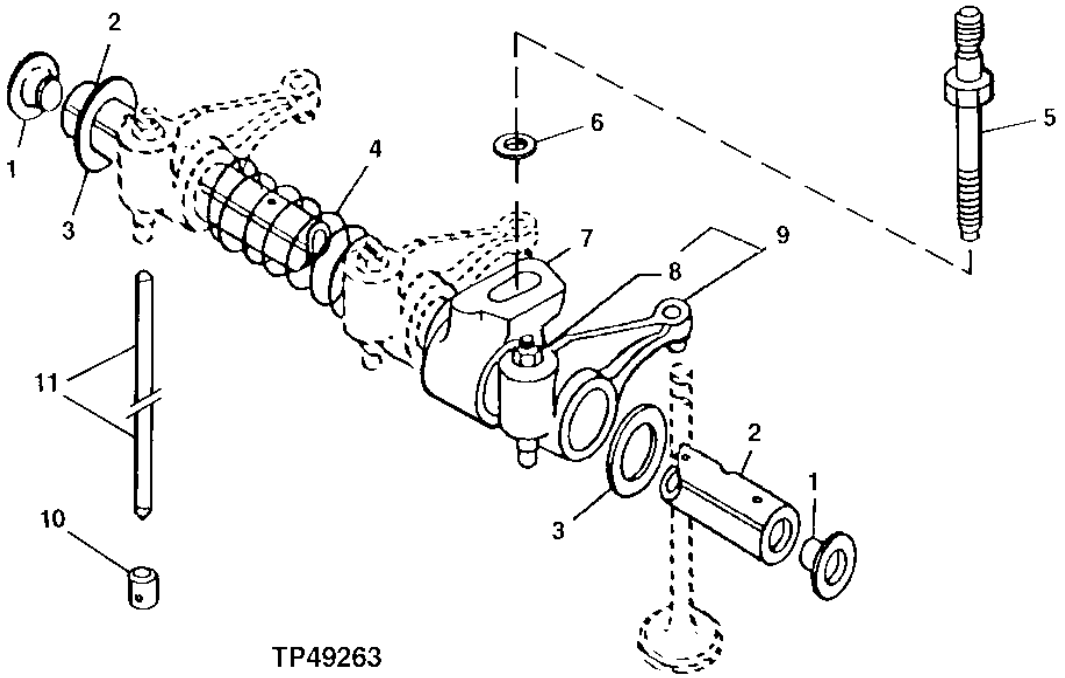

TP49263

KEY	PART NO.	PART NAME	QTY	ENGINE SERIAL NO.	REMARKS
1	R54565	PLUG	2		
2	R123513	ROCKER ARM SHAFT	1		
3	T20316	WASHER	2		
4	T20314	SPRING	3		
5	R123271	STUD	4		
6	24M7346	WASHER	4		11 X 20 X 2 MM
7	R123161	SUPPORT	4		
8	14M7148	NUT	1		M10
9	RE68695	ROCKER ARM	8		
10	R123565	FOLLOWER	8		
11	R107731	PUSH ROD	8		

ROCKER ARM COVER AND OIL FILLER CAP

T154137 -UN-16APR02

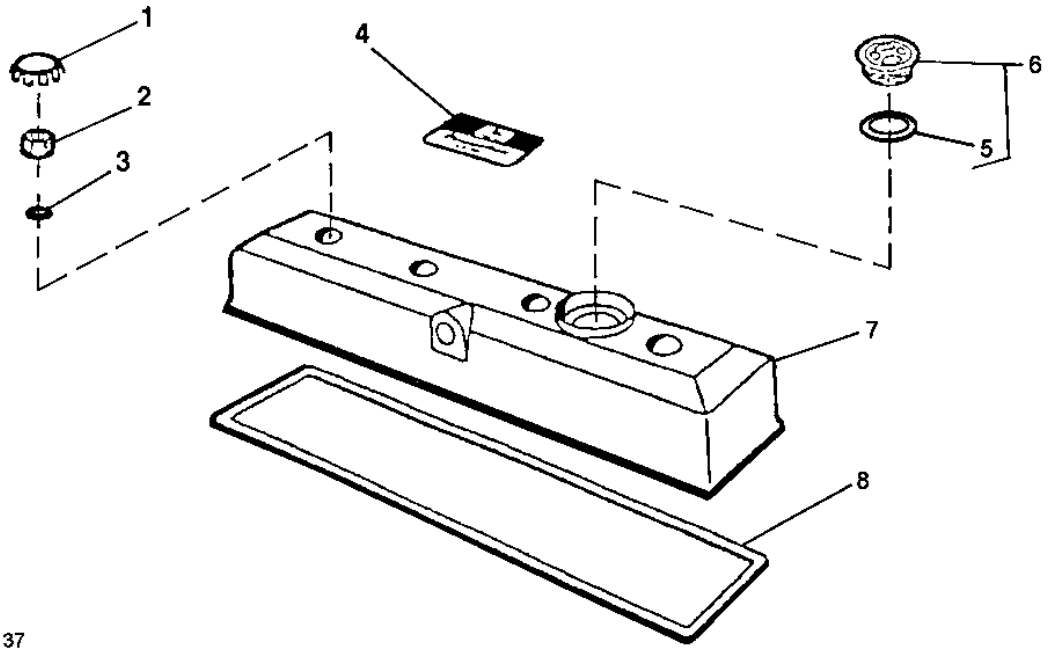

T154137

KEY	PART NO.	PART NAME	QTY	ENGINE SERIAL NO.	REMARKS
1	H23125	PLUG	4		
2	R123574	NUT	4		
3	R123575	O-RING	4		
4	R116324	MEDALLION	1		
5	R502902	PACKING	1		
6	RE500005	FILLER CAP	1		
7	RE70403	VALVE COVER	1		
8	R123542	GASKET	1		

MEMORANDA

TIMING GEAR COVER AND GASKET

T153624 -UN-05APR02

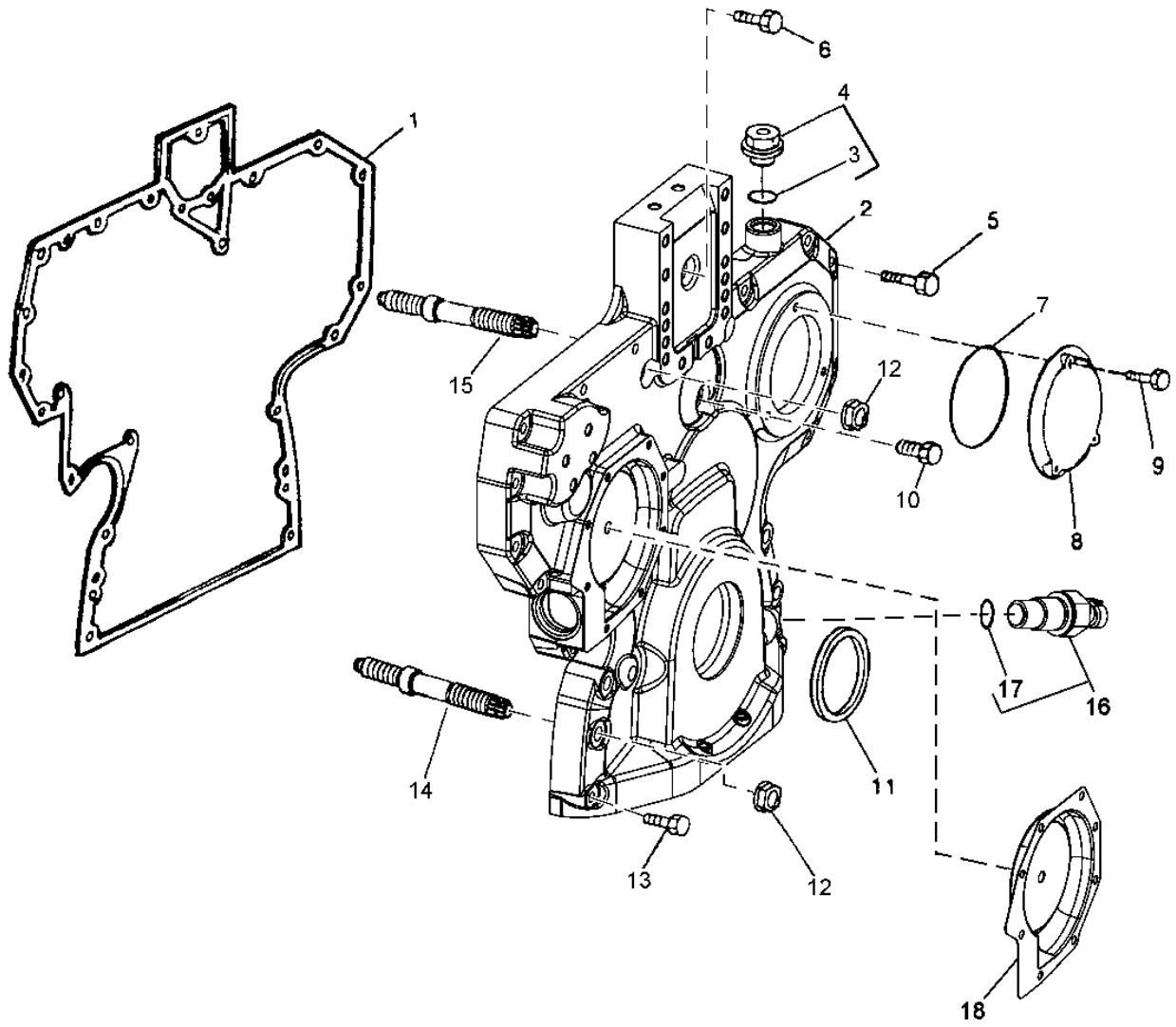

T153624

TIMING GEAR COVER AND GASKET

KEY	PART NO.	PART NAME	QTY	ENGINE SERIAL NO.	REMARKS
1	R136515	GASKET	1		
2	R504724	COVER	1		
3	51M7044	O-RING	1		(WITHOUT TACHOMETER SENSOR)
4	RE501938	PLUG	1		
5	19M8317	SCREW	10		M8 X 40
	RE67239	SCREW	1		
6	19M8291	SCREW	1		M8 X 35
7	R121424	O-RING	1		
8	R121411	COVER	1		
9	19M7775	SCREW	3		M6 X 16
10	19M7801	SCREW	1		M8 X 60
11	RE516340	SEAL	1		(MARKED RE52346 OR RE505515) (SUB FOR RE59810)
12	14M7296	FLANGE NUT	6		M10
13	19M7979	SCREW	2		M8 X 55
14	R123584	STUD	1		
15	R134518	STUD	1		
16	RE519144	SENSOR	1		(SUB FOR RE508195) (CONTAINS 51M7044) (CRANKSHAFT POSITION SENSOR)
17	51M7044	O-RING	1		
18	RE508566	KIT	1		WATER PUMP INSERT REPAIR

PISTON,CYLINDER LINER,CONNECTING ROD AND BEARINGS

TP49283 -UN-17JUL95

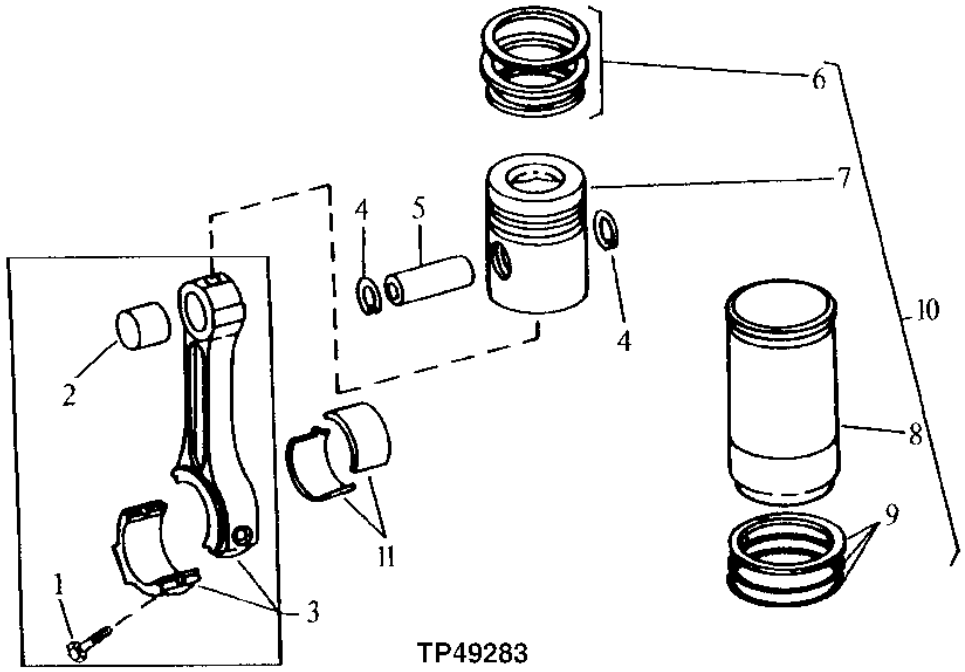

KEY	PART NO.	PART NAME	QTY	ENGINE SERIAL NO.	REMARKS
1	R501124	SCREW	8		(USE WITH ROD MARKED R500335)
2	R114082	BUSHING	4		
3	RE500608	CONNECTING ROD	4		(MARKED R500335)
4	R54114	SNAP RING	8		
5	R123177	PISTON PIN	4		
6	RE507852	PISTON RING KIT	4		
7	.....	PISTON	4		
8	.....	CYLINDER LINER	4		STANDARD
9	AR65507	O-RING KIT	4		CYLINDER LINER
10	RE505112	PISTON-LINER KIT	4		PISTON WITH LINER, (SUB FOR RE65969)
11	RE65908	BEARING	4		STANDARD
	RE65909	BEARING	4		.010" UNDERSIZE

ENGINE FRONT PLATE AND AUXILLARY DRIVE COVER

TP49620 -UN-28APR97

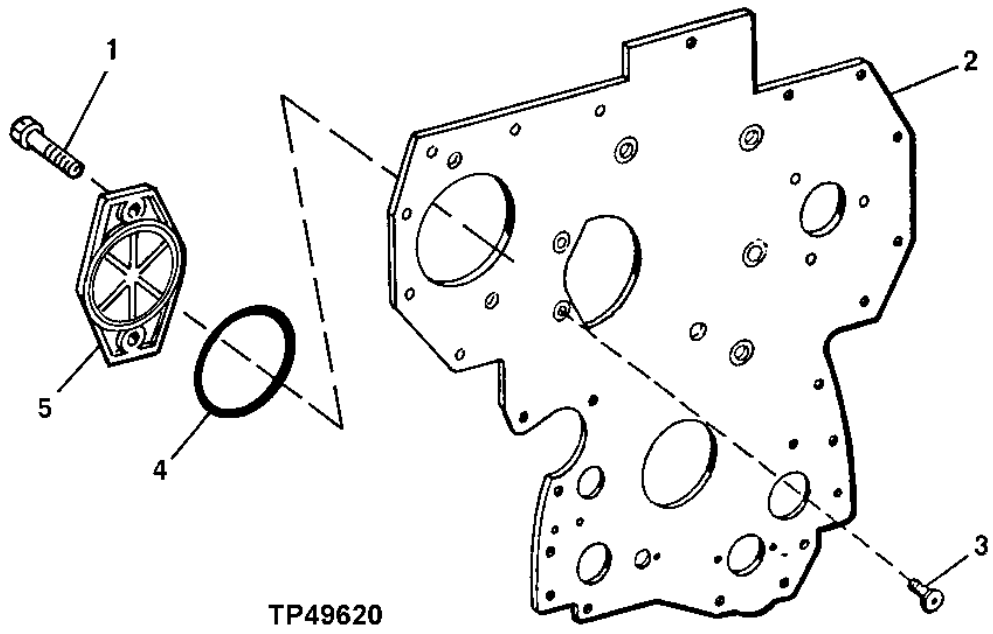

KEY	PART NO.	PART NAME	QTY	ENGINE SERIAL NO.	REMARKS
1	19M7790	SCREW	2		M12 X 35
2	R134526	PLATE	1		
3	R136475	SCREW	4		
4	T20758	O-RING	1		(WITHOUT AUXILLARY DRIVE)
5	R135757	COVER	1		(WITHOUT AUXILLARY DRIVE)

CYLINDER BLOCK AND MAIN BEARING CAP

T146510 -UN-15OCT01

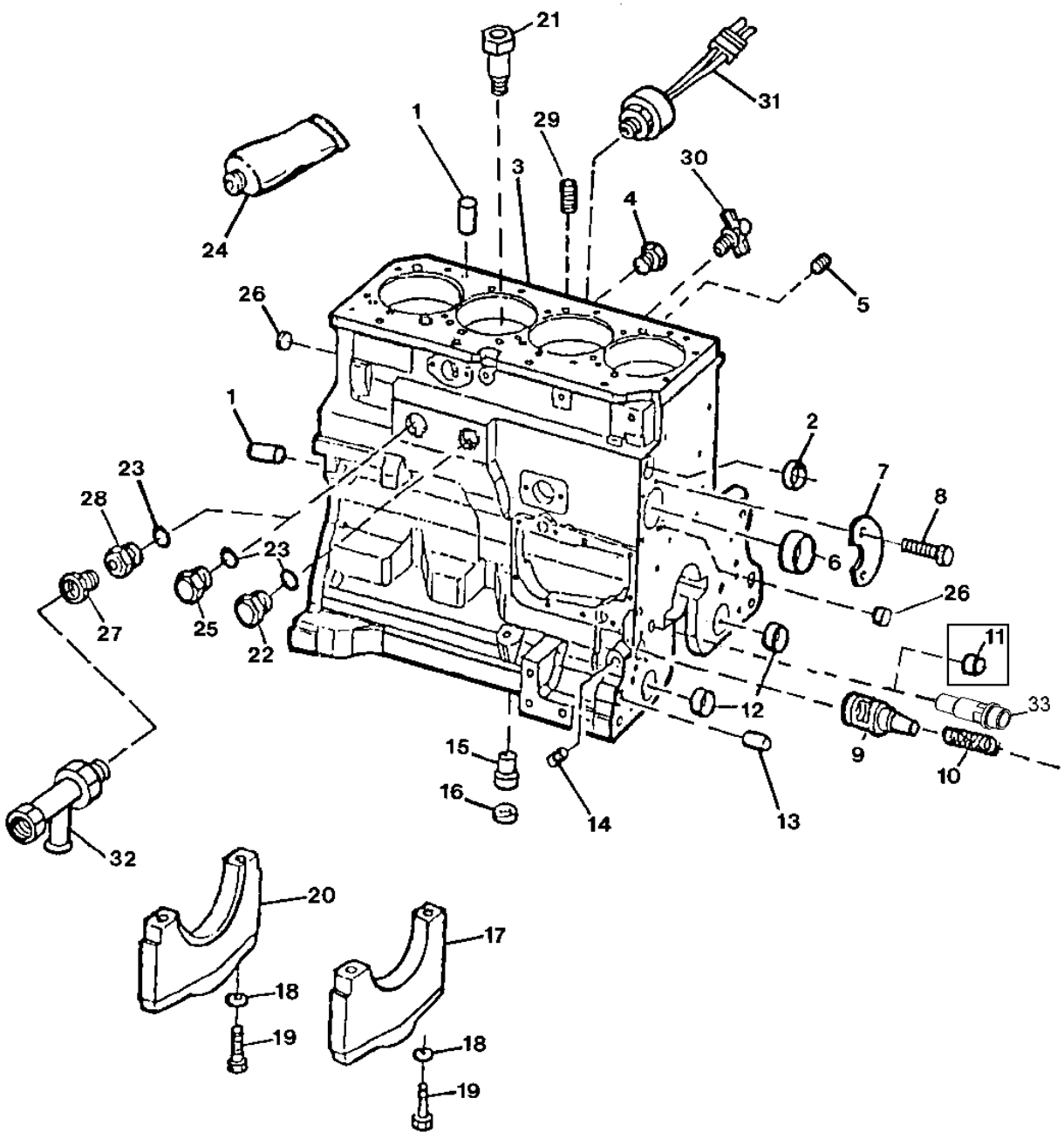

T146510

CYLINDER BLOCK AND MAIN BEARING CAP-CONTINUED

KEY	PART NO.	PART NAME	QTY	ENGINE SERIAL NO.	REMARKS
1	R48685	DOWEL PIN	4		
2	R116466	PLUG	1		
3	.....	CYLINDER BLOCK	1		(MARKED R115081) (ORDER RE520023)
4	R55233	PIPE PLUG	1		COOLANT DRAIN
5	R104592	PIPE PLUG	5		
6	R119874	BUSHING	1		CAMSHAFT
7	R132518	PLATE	1		
8	19M8999	SCREW	2		M8 X 25
9	R121043	FLOW CONTROL HYD. VALVE	1		ENGINE OIL BY-PASS
10	R111137	SPRING	1		
11	R26493	BUSHING	1		OIL PRESSURE REGULATING
12	R115299	BUSHING	6		BALANCER SHAFT
13	R26650	DOWEL PIN	2		
14	15H623	PIPE PLUG	1		3/8"
15	R115390	BUSHING	1		
16	R75892	O-RING	1		
17	R114241	BEARING CAP	4		
18	T20168	WASHER	10		
19	T23474	CAP SCREW	10		
20	R132186	BEARING CAP	1		
21	R131182	ORIFICE	4		
22	RE508185	DRAIN PLUG	1		
23	U13639	O-RING	2		
24	PM38655	SEALANT	1		(SUB FOR TY6304) (LIQUID GASKET)
25	RE508185	DRAIN PLUG	1		WITHOUT CAB HEATER
26	T18891	PLUG	2		
27	RE46685	PLUG	1		WITHOUT CAB HEATER
28	R123616	PLUG	1		WITH CAB HEATER
29	15H624	PIPE PLUG	AR		1/2"
30	AT13740	DRAIN VALVE	1		
31	RE55145	SWITCH	1		ENGINE OIL PRESSURE
32	RE507952	DRAIN VALVE	1		(WITH CAB HEATER)
33	RE505501	BLEED VALVE	1		(OIL PRESSURE REGULATING)

ENGINE SHORT BLOCK

T146110 -UN-15OCT01

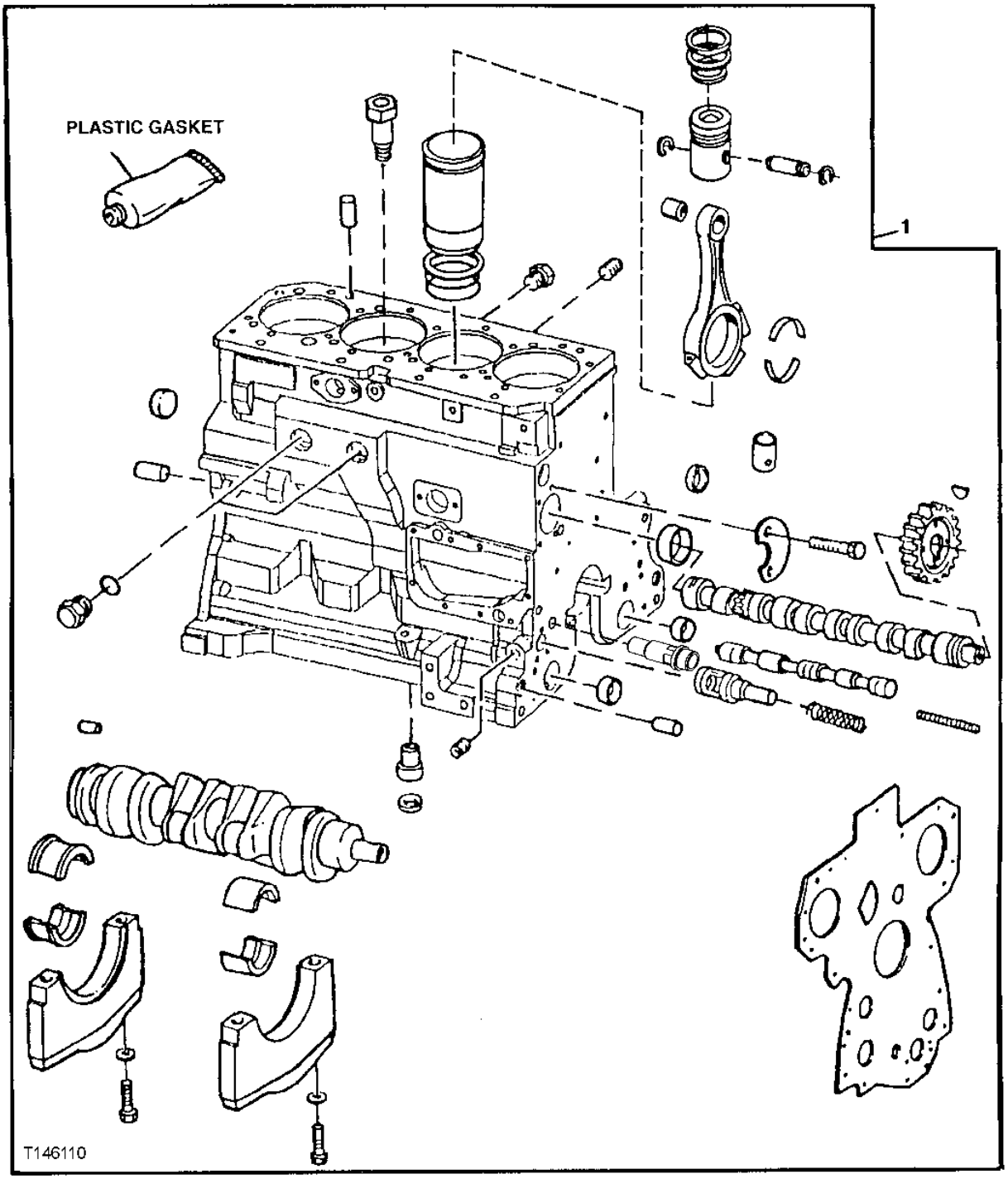

ENGINE SHORT BLOCK

KEY	PART NO.	PART NAME	QTY	ENGINE SERIAL NO.	REMARKS
1	RE520023	SHORT BLOCK ASSEMBLY	1		

MEMORANDA

ENGINE OIL DIPSTICK

TP69502 -UN-02MAY00

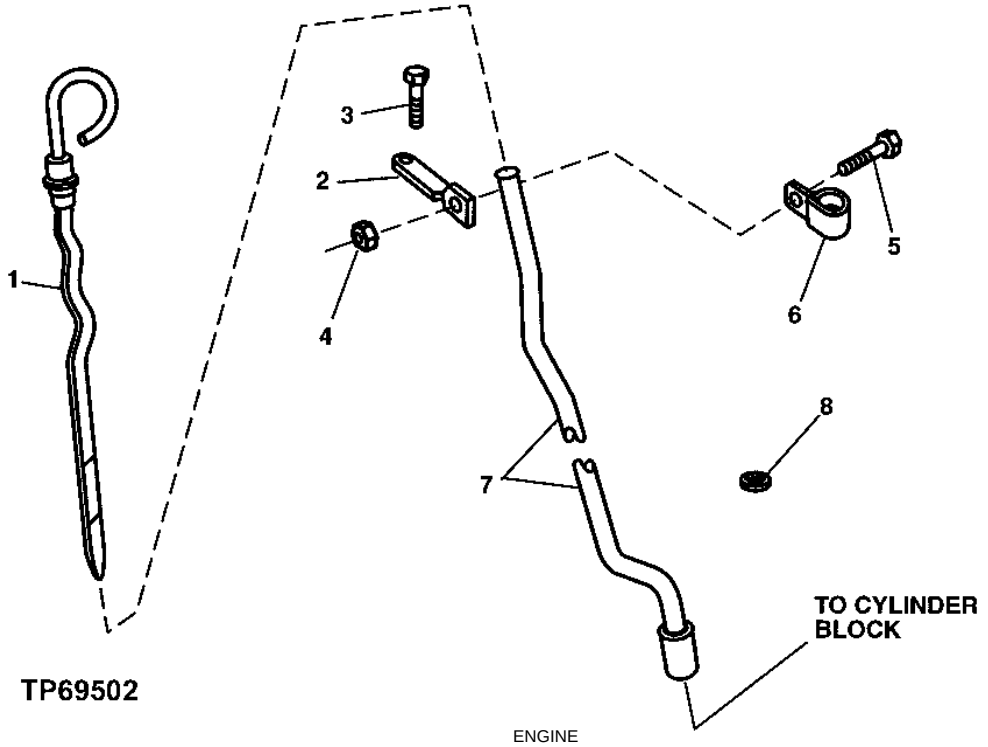

KEY	PART NO.	PART NAME	QTY	ENGINE SERIAL NO.	REMARKS
1	RE66178	DIPSTICK	1		
2	R134552	BRACKET	1		
3	19M7784	SCREW	1		M10 X 20
4	14M7298	FLANGE NUT	1		M8
5	19M7866	SCREW	1		M8 X 20
6	T28862	CLAMP	1		
7	R502465	DIPSTICK TUBE	1		
8	R502725	PLUG	1		L.H.DIPSTICK HOLE

ENGINE OIL FILLER INLET COVER

TP53437 -UN-03APR97

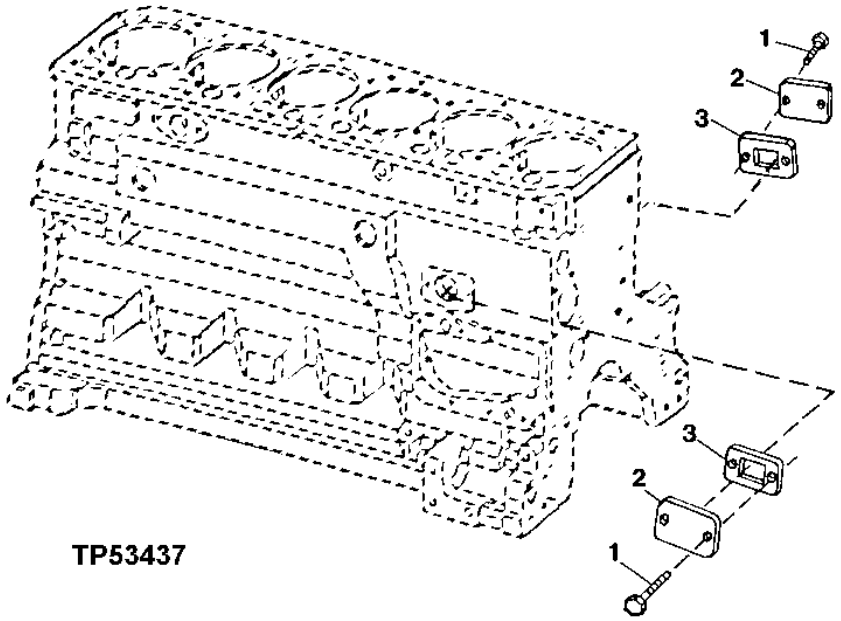

KEY	PART NO.	PART NAME	QTY	ENGINE SERIAL NO.	REMARKS
1	RE67238	SCREW	4		M8 X 20 (WITH PRE-APPLIED SEALANT)
2	R116296	COVER	2		
3	R136495	GASKET	2		

ENGINE OIL PUMP AND OIL PUMP INTAKE

TP49570 -UN-17FEB97

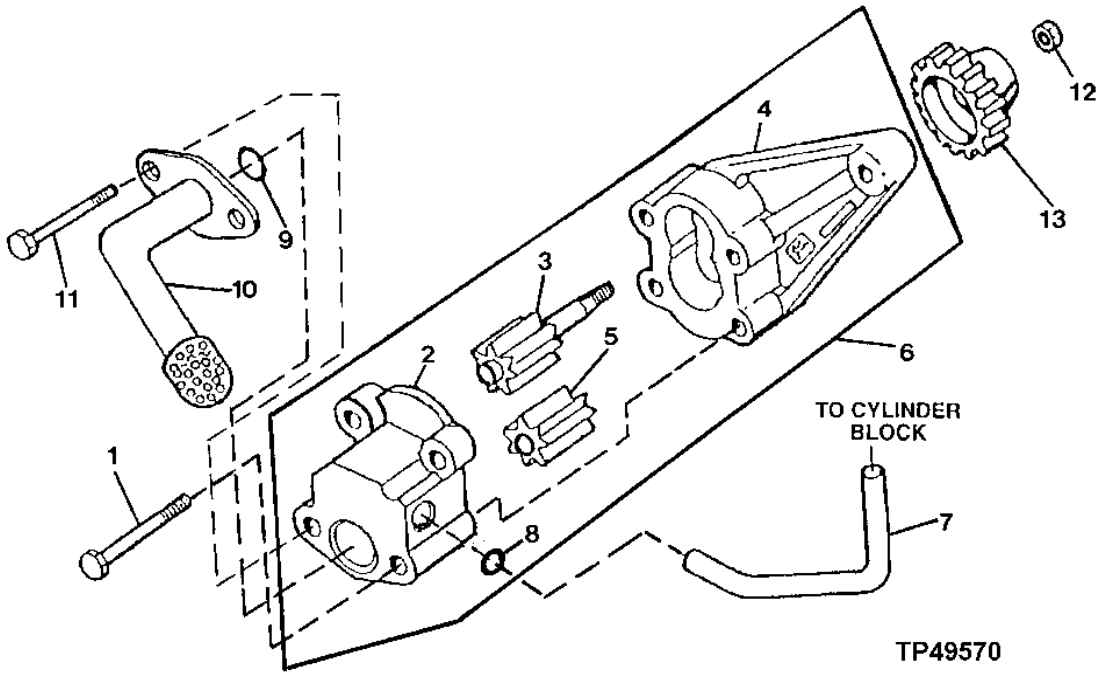

KEY	PART NO.	PART NAME	QTY	ENGINE SERIAL NO.	REMARKS
1	19M8987	SCREW	2		M8 X 65
2	.....	COVER	1		
3	.....	GEAR	1		
4	.....	HOUSING	1		
5	.....	GEAR	1		
6	RE504914	OIL PUMP	1		(MARKED R502867)
7	R121376	TUBE	1		
8	R97185	O-RING	1		
9	R61871	O-RING	1		
10	RE57619	OIL PUMP INTAKE	1		
11	19M8986	SCREW	2		M8 X 100
12	14M7066	NUT	1		M12
13	R120638	GEAR	1		(30 TEETH)

ENGINE OIL PAN AND GASKET

TP49547 -UN-12FEB97

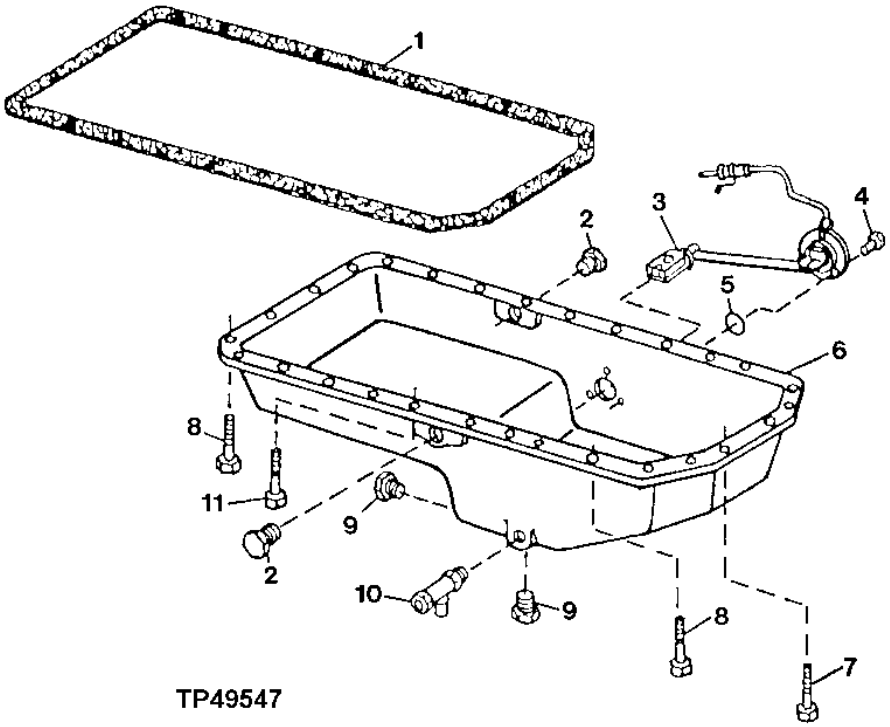

ENGINE OIL PAN AND GASKET

KEY	PART NO.	PART NAME	QTY	ENGINE SERIAL NO.	REMARKS
1	R123353	GASKET	1		
2	RE46687	DRAIN PLUG	2		
3	RE16223	SENSOR	1		ENGINE OIL LEVEL
4	19M7560	CAP SCREW	3		M6 X 16
5	R47154	O-RING	1		
6	R121622	OIL PAN	1		
7	19M7868	SCREW	4		M8 X 30
8	19M7867	CAP SCREW	24		M8 X 25
9	RE46685	PLUG	2		
10	RE507952	DRAIN VALVE	1		
11	19M7799	SCREW	1		

ENGINE OIL FILTER HEADER AND FILTER ELEMENT

T145377 -UN-14SEP01

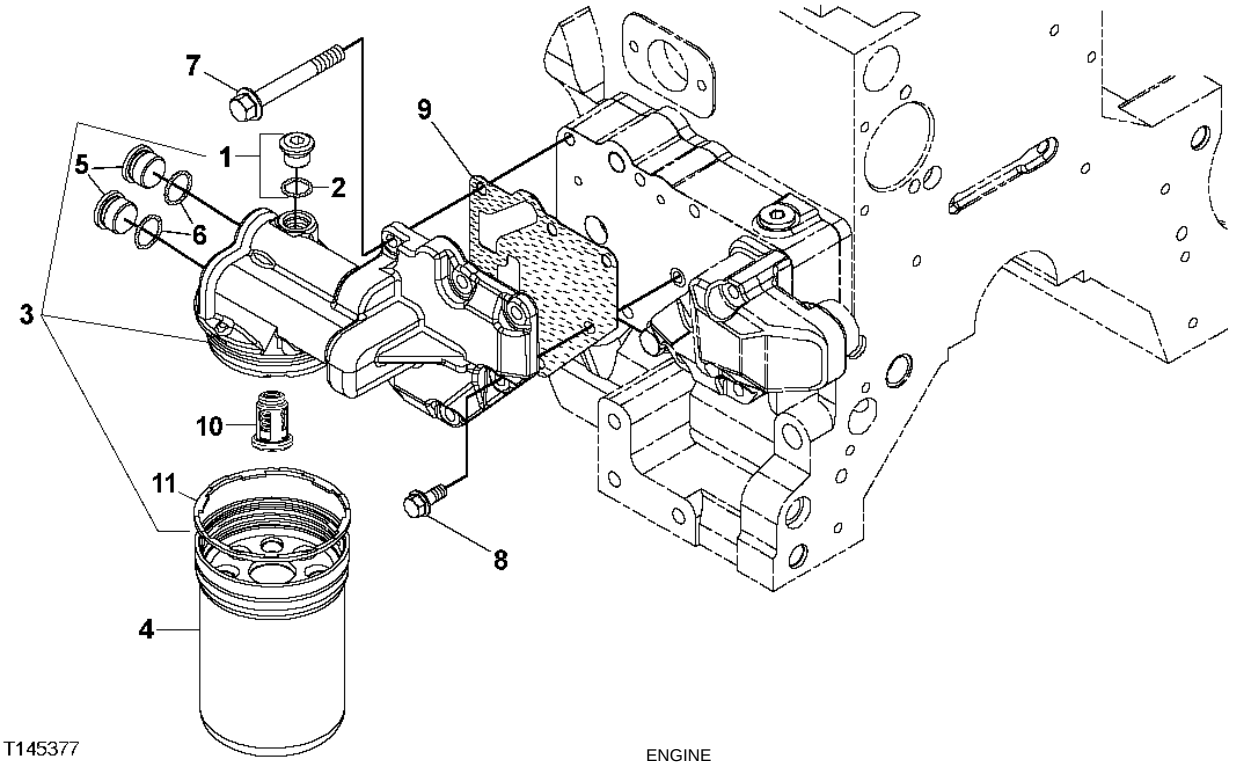

T145377

KEY	PART NO.	PART NAME	QTY	ENGINE SERIAL NO.	REMARKS
1	RE52242	DRAIN PLUG	1		M16 X 1.5
2	51M7042	O-RING	1		13.300 X 2.200 MM
3	RE504564	FILTER HEAD	1		(MARKED R502505)
4	RE504836	OIL FILTER	1		(ALSO ORDER R502513)
5	R116115	FITTING	2		
6	51M7045	O-RING	2		19.300 X 2.200 MM
7	19M7802	SCREW	5		M8 X 65
8	RE67238	SCREW	1		M22 X 1.5
9	R500374	GASKET	1		
10	RE504543	FLOW CONTROL HYD. VALVE	1		
11	R502513	SEAL	1		

MEMORANDA

VENTILATING HOSE

TP54600 -UN-19MAR97

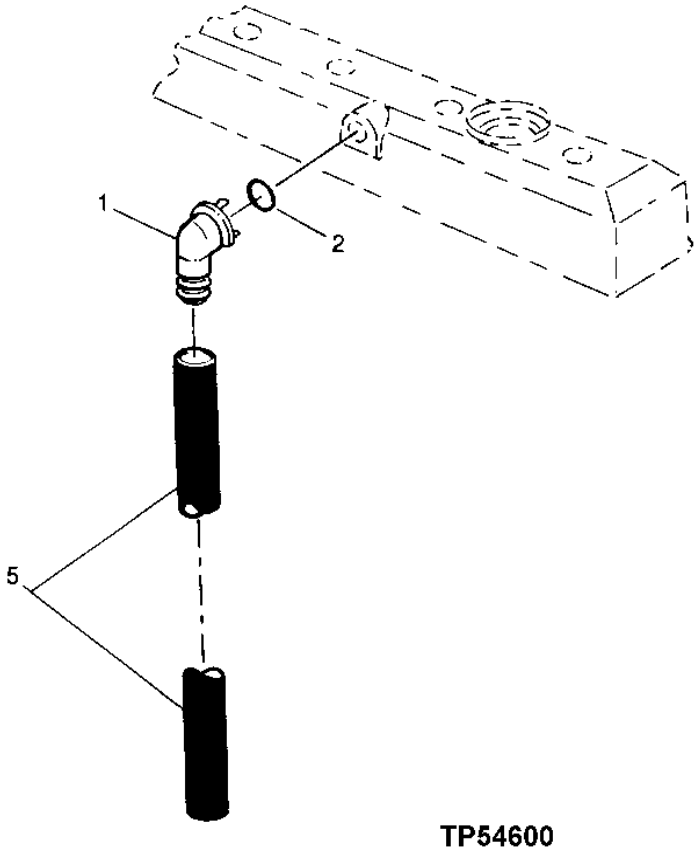

TP54600

VENTILATING HOSE

KEY	PART NO.	PART NAME	QTY	ENGINE SERIAL NO.	REMARKS
1	R120467	ELBOW FITTING	1		
2	R72328	O-RING	1		18.720 X 2.616 MM (0.737" X 0.103")
5	.....	HOSE	1		(MAKE FROM TY22450 BULK MATERIAL,CUT TO LENGTH)

MEMORANDA

MEMORANDA

CYLINDER HEAD, HEAD GASKET AND VALVES

TP55161 -UN-19AUG97

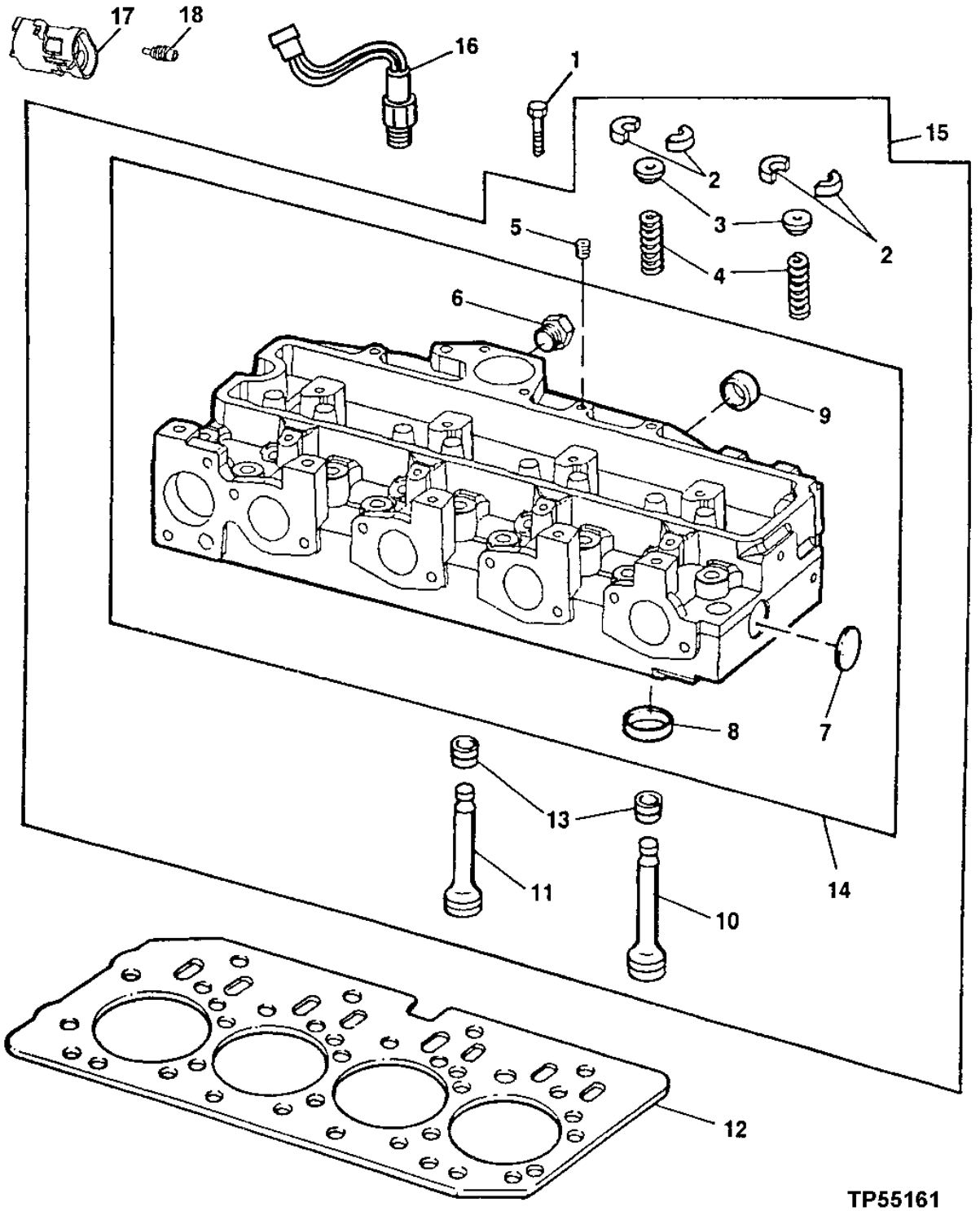

CYLINDER HEAD, HEAD GASKET AND VALVES

KEY	PART NO.	PART NAME	QTY	ENGINE SERIAL NO.	REMARKS
1	R85363	CAP SCREW	18		
2	R91889	RETAINER	16		
3	RE60005	ROTATOR	8		
4	R26125	SPRING	8		
5	R104592	PIPE PLUG	1		
6	T58477	FITTING	1		
	R26906	O-RING	1		
7	CD16284	PLUG	1		
8	R98063	VALVE SEAT INSERT	4		STANDARD SIZE INTAKE VALVE
	R98335	VALVE SEAT INSERT	4		OVERSIZE INTAKE VALVE
	R85687	VALVE SEAT INSERT	4		STANDARD SIZE EXHAUST VALVE
	R93910	VALVE SEAT INSERT	4		OVERSIZE EXHAUST VALVE
9	R43409	PLUG	2		
10	R90692	EXHAUST VALVE	4		STANDARD
11	R98062	INTAKE VALVE	4		STANDARD
12	R116515	ENGINE CYLINDER HEAD GASKET	1		
13	RE31617	SEAL	8		
14	.....	CYLINDER HEAD	1		(MARKED R121402)
15	RE57234	CYLINDER HEAD	1		(MARKED R121402)
16	AT174989	SWITCH	1		ENGINE COOLANT TEMPERATURE
17	R78053	ELECTRICAL CONNECTOR ASSY	1		
18	R78064	ELEC. CONNECTOR CAVITY PLUG	1		

EXHAUST MANIFOLD

TP58371 -UN-28OCT98

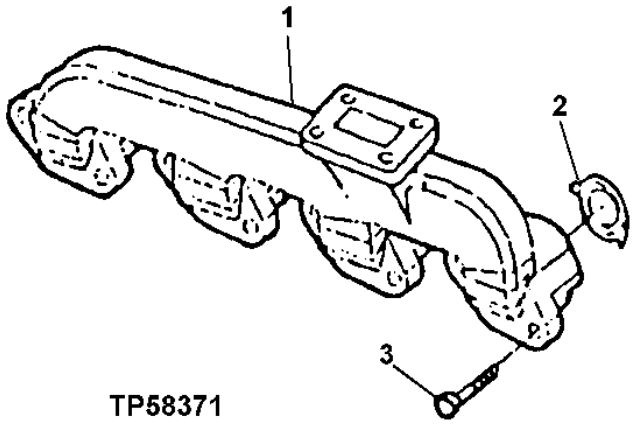

KEY	PART NO.	PART NAME	QTY	ENGINE SERIAL NO.	REMARKS
1	R132509	EXHAUST MANIFOLD	1		
2	R90658	GASKET	4		
3	19M7810	SCREW	8		M10 X 80

FUEL INJECTION NOZZLE

TP48976 -UN-26OCT96

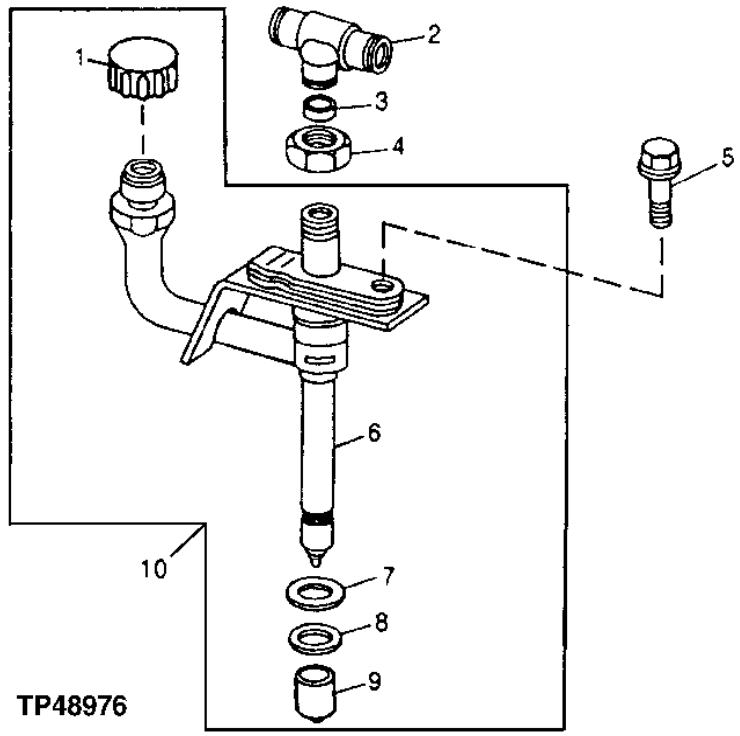

KEY	PART NO.	PART NAME	QTY	ENGINE SERIAL NO.	REMARKS
1	.....	CAP (HAT)	1		
2	R71963	TEE FITTING	1		
3	R79605	WASHER	1		
4	R79604	TUBE NUT	1		
5	R116366	SCREW	1		
6	.....	NOZZLE	1		
7	R92352	PACKING	1		
8	R48000	SEAL	1		(USE WITH OVERSIZE NOZZLE BORE)
	R500390	WASHER	1		(USE WITH STANDARD NOZZLE BORE)
9	T24472	CAP	1		
10	RE48786	INJECTION NOZZLE	1		
	SE500826	NOZZLE	1		(REMANUFACTURED) (PKG OF 4)

FUEL INJECTION PUMP,FUEL INJECTION LINES AND ENGINE CONTROLLER

T157511 -UN-18JUL02

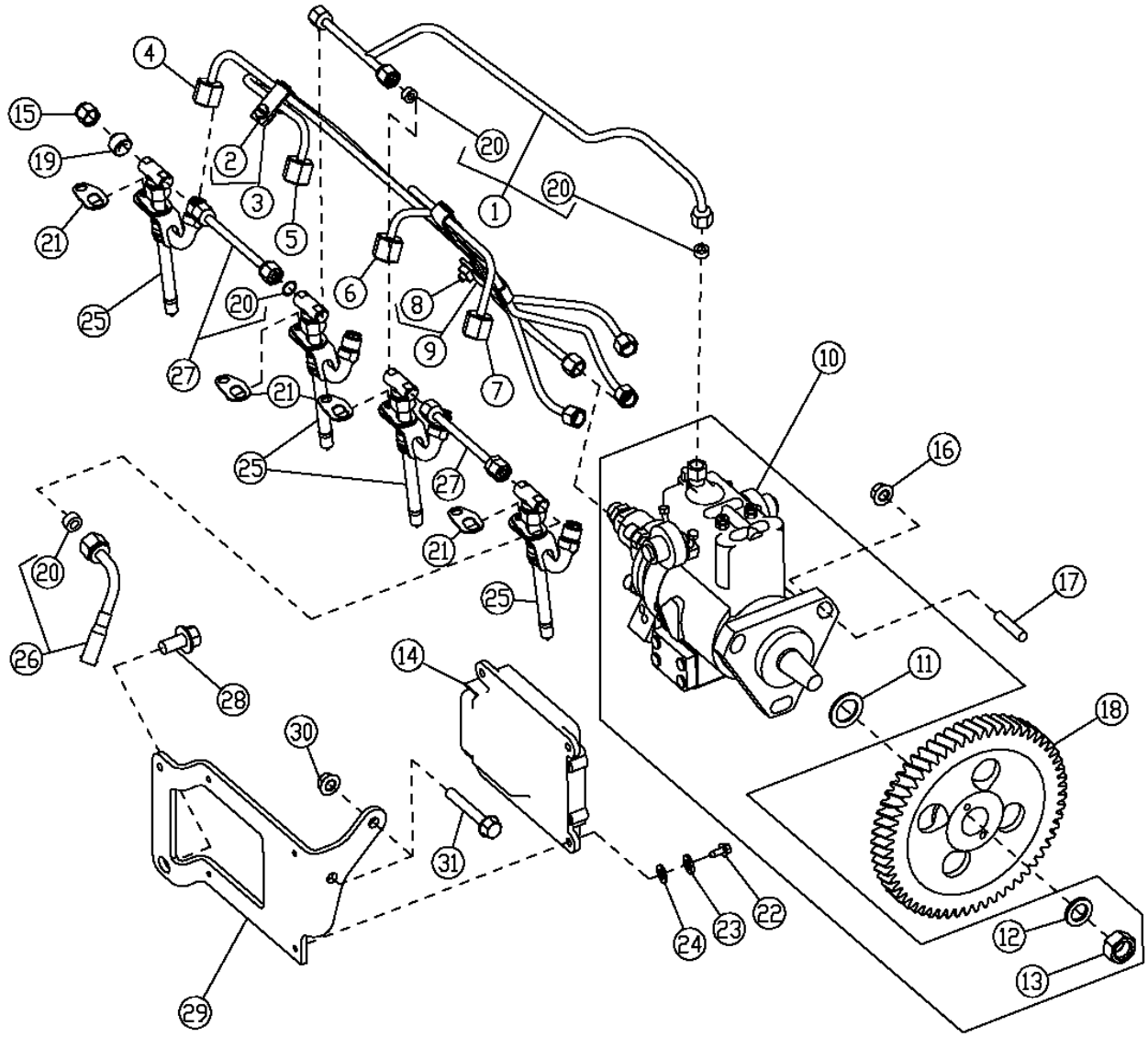

FUEL INJECTION PUMP,FUEL INJECTION LINES AND ENGINE CONTROLLER

KEY	PART NO.	PART NAME	QTY	ENGINE SERIAL NO.	REMARKS
1	RE507598	FUEL LINE	1		LEAK-OFF
2	19M6614	CAP SCREW	2		M6 X 12
3	RE19797	CLAMP	2		
4	RE507646	FUEL LINE	1		NO.1
5	RE507647	FUEL LINE	1		NO.2
6	RE507648	FUEL LINE	1		NO.3
7	RE507649	FUEL LINE	1		NO.4
8	19M6614	CAP SCREW	1		M6 X 12
9	RE19799	CLAMP	1		
10	RE518086	FUEL INJECTION PUMP	1		(SUB FOR RE507968 AND RE518167) (12V)
11	R502076	BACK-UP RING	1		
12	R132874	WASHER	1		
13	R91360	NUT	1		
14	RE508153	ENGINE CONTROLLER	1		
15	R123593	TUBE NUT	1		
16	14M7298	FLANGE NUT	3		M8
17	R116386	STUD	3		
18	R505472	GEAR	1		
19	AR85519	PLUG	1		
20	R51936	SEALING WASHER	7		
21	RE508716	CLAMP	4		
22	19M7640	CAP SCREW	4		M5 X 12
23	12H316	LOCK WASHER	4		0.216"
24	24M7027	WASHER	4		5.300 X 10 X 1 MM
25	RE507766	INJECTION NOZZLE	4		
26	RE16142	FUEL LINE	1		
27	RE68748	TUBE	2		
	R123593	TUBE NUT	4		
28	19M7784	SCREW	1		M10 X 20
29	R503520	BRACKET	1		
30	14M7298	FLANGE NUT	2		M8
31	19M7979	SCREW	2		M8 X 55

AIR INTAKE

T144949 -UN-30AUG01

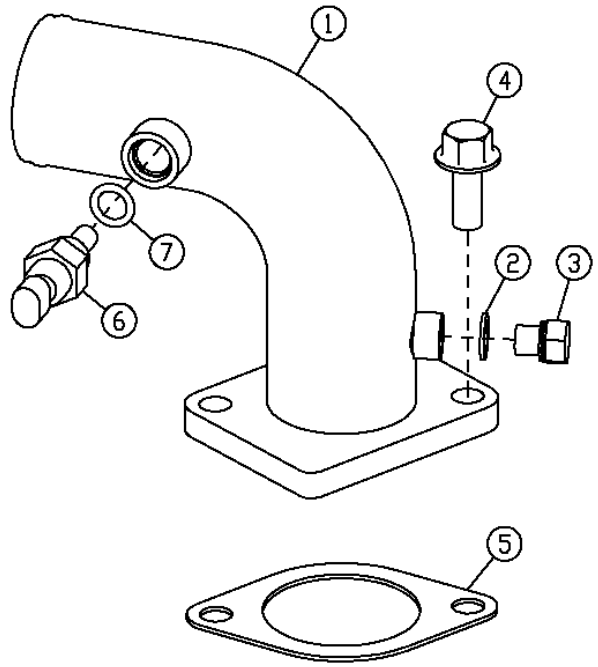

T144949

KEY	PART NO.	PART NAME	QTY	ENGINE SERIAL NO.	REMARKS
1	RE506991	AIR INTAKE	1		
2	51M7039	O-RING	1		8.100 X 1.600 MM
3	RE60071	FITTING	1		
4	19M7786	SCREW	2		M10 X 30
5	R81275	GASKET	1		
6	RE61812	SENSOR	1		(AIR TEMPERATURE SENSOR)
7	51M7041	O-RING	1		11.300 X 2.200 MM

MEMORANDA

ENGINE BALANCER SHAFT

T153911 -UN-11APR02

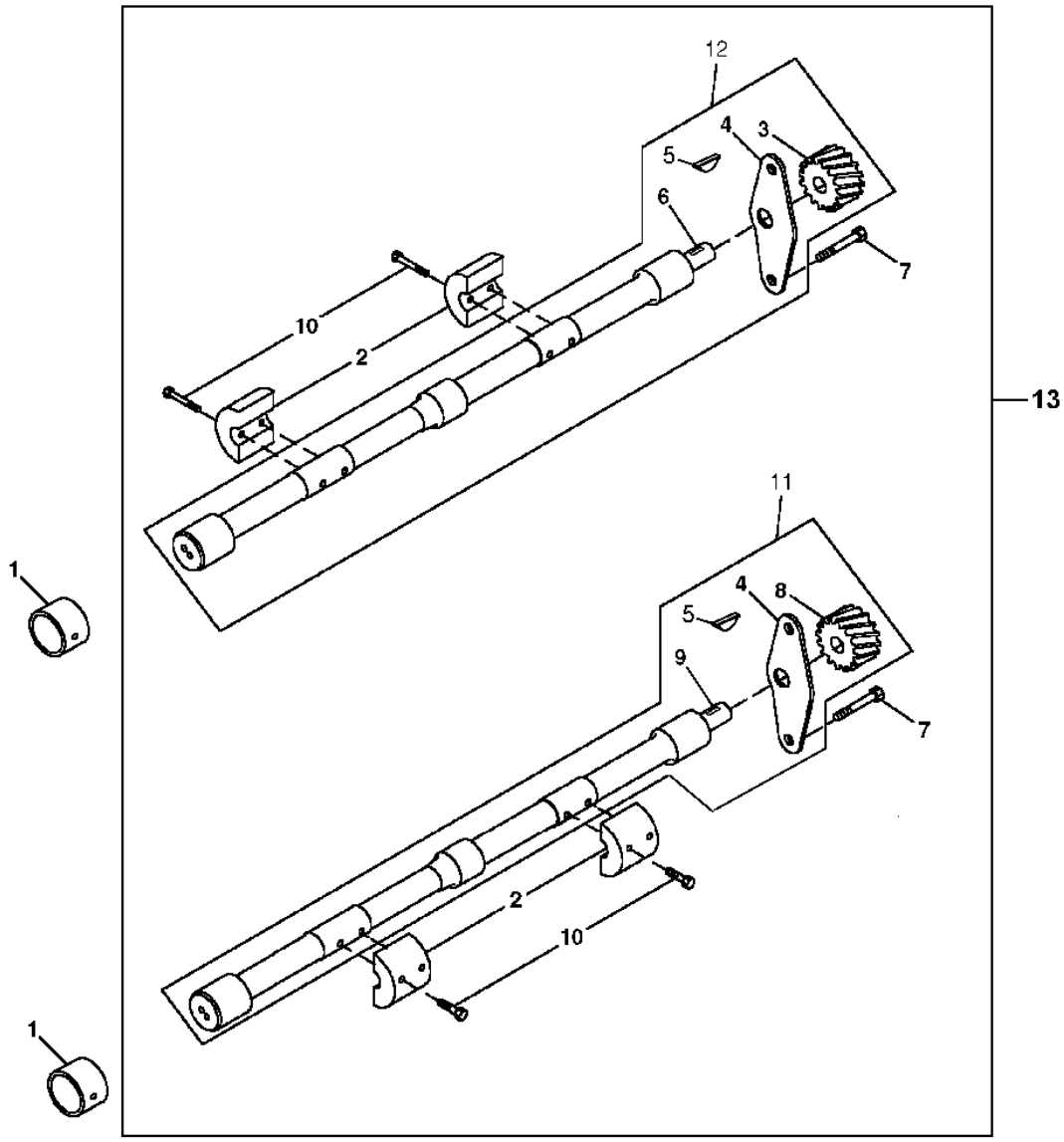

T153911

ENGINE BALANCER SHAFT

KEY	PART NO.	PART NAME	QTY	SERIAL NO.	REMARKS
1	R115299	BUSHING	6		
2	R500650	WEIGHT	4		HEAVY DUTY
3	.....	GEAR	1		(15 TEETH)
4	.....	PLATE	2		
5	R133303	SHAFT KEY	2		
6	.....	BALANCER SHAFT	1		(MARKED R500266) LEFT HAND
7	19M8998	SCREW	4		M8 X 12
8	.....	GEAR	1		(15 TEETH)
9	.....	BALANCER SHAFT	1		(MARKED R500668) RIGHT HAND
10	19M8882	SCREW	8		M8 X 40
11	RE500448	BALANCER SHAFT	1		RIGHT HAND
12	RE500449	BALANCER SHAFT	1		LEFT HAND
13	RE504742	BALANCER SHAFT	1		

MEMORANDA

TURBOCHARGER

T155125 -UN-22MAY02

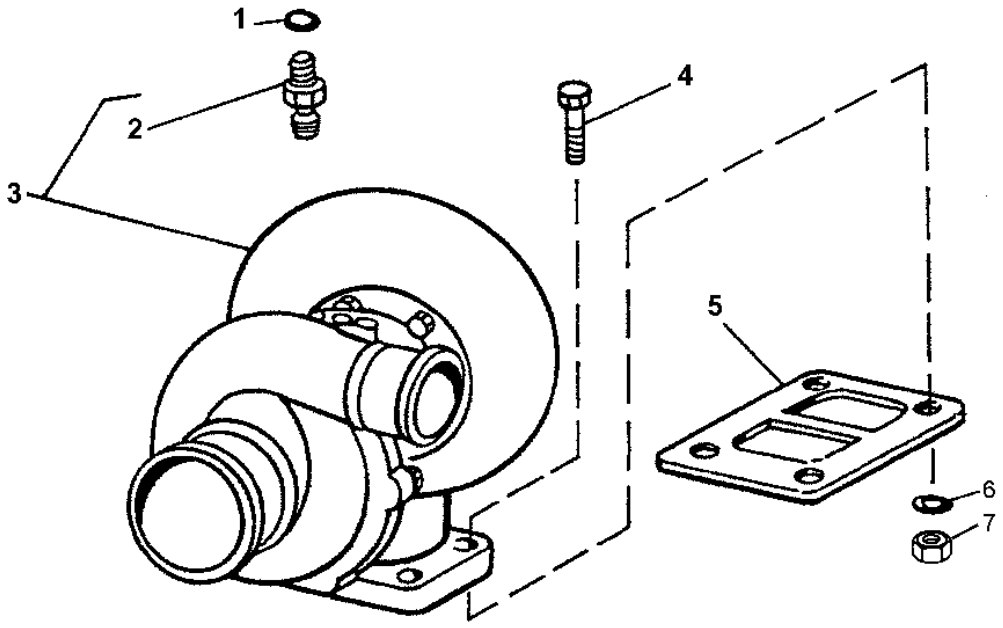

T155125

KEY	PART NO.	PART NAME	QTY	ENGINE SERIAL NO.	REMARKS
1	R63548	O-RING	1		
2	M87733	ADAPTER	1		
3	RE509572	TURBOCHARGER	1		REMANFACTURED
4	19M8637	CAP SCREW	4		M10 X 40
5	R92097	GASKET	1		
6	14M7296	FLANGE NUT	4		M10
7	24M7096	WASHER	4		10.500 X 18 X 1.600 MM

TURBOCHARGER OIL LINES

TP68244 -UN-17MAR00

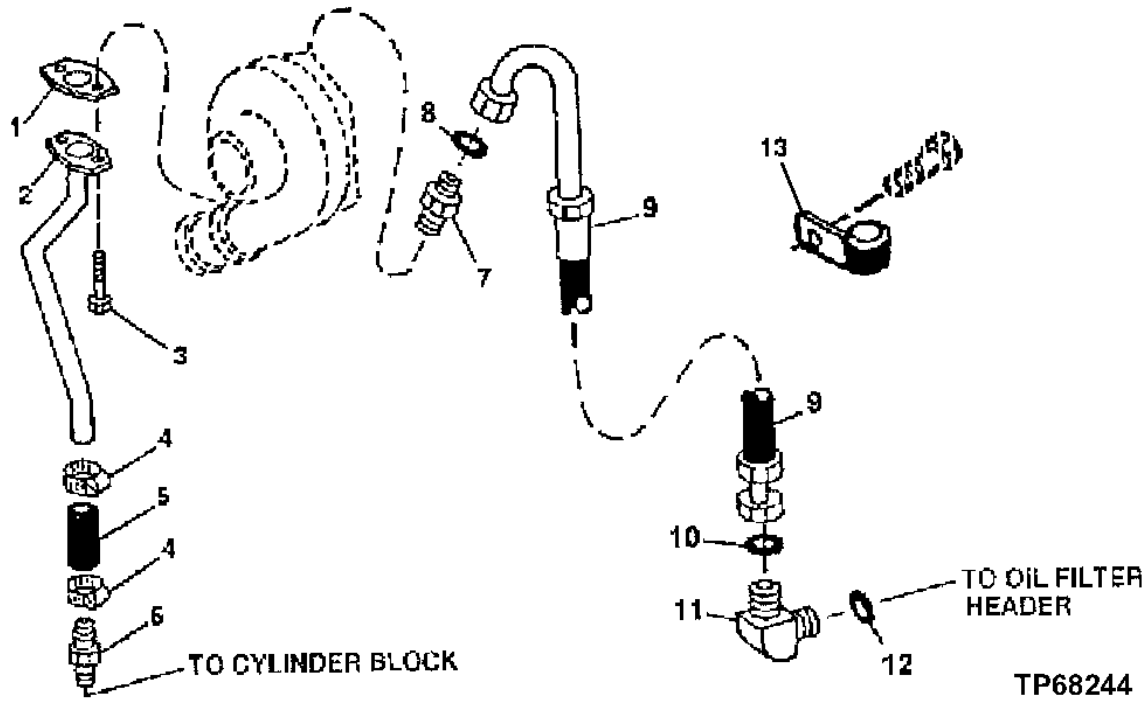

KEY	PART NO.	PART NAME	QTY	ENGINE SERIAL NO.	REMARKS
1	R503891	GASKET	1		
2	RE509605	OIL LINE	1		
3	19M7775	SCREW	2		
4	RE65978	CLAMP	2		
5	.....	HOSE	1		(MAKE FROM R120013 CUT TO LENGHT)
6	RE54885	HOSE FITTING	1		
7	M87733	ADAPTER	1		
8	R63548	O-RING	1		
9	RE503211	OIL LINE	1		
10	T77613	O-RING	1		
11	38H5154	ELBOW FITTING	1		
12	51M7042	O-RING	1		
13	R72853	CLAMP	1		

WATER PUMP PULLEY AND INLET

TP49351 -UN-14DEC95

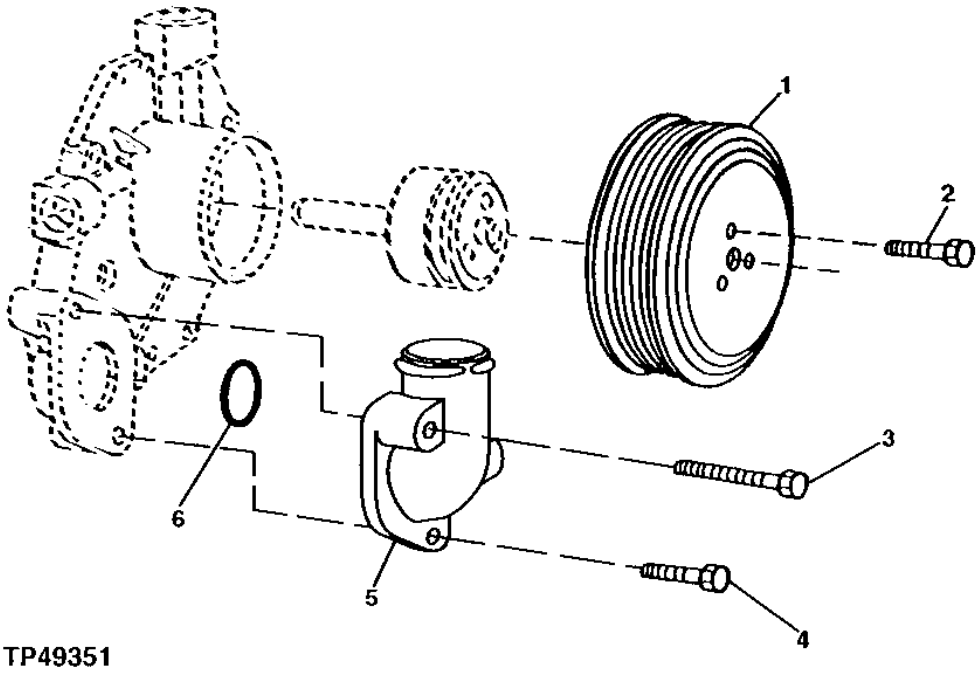

TP49351

KEY	PART NO.	PART NAME	QTY	ENGINE SERIAL NO.	REMARKS
1	R128662	PULLEY	1		
2	19M7774	SCREW	3		M6 X 12
3	19M7802	SCREW	1		M8 X 65
4	19M7867	SCREW	1		M8 X 25
5	R121635	ELBOW FITTING	1		
6	R89944	O-RING	1		50.394 X 3.531 MM

WATER PUMP AND REPAIR KIT

T153222 -UN-04APR02

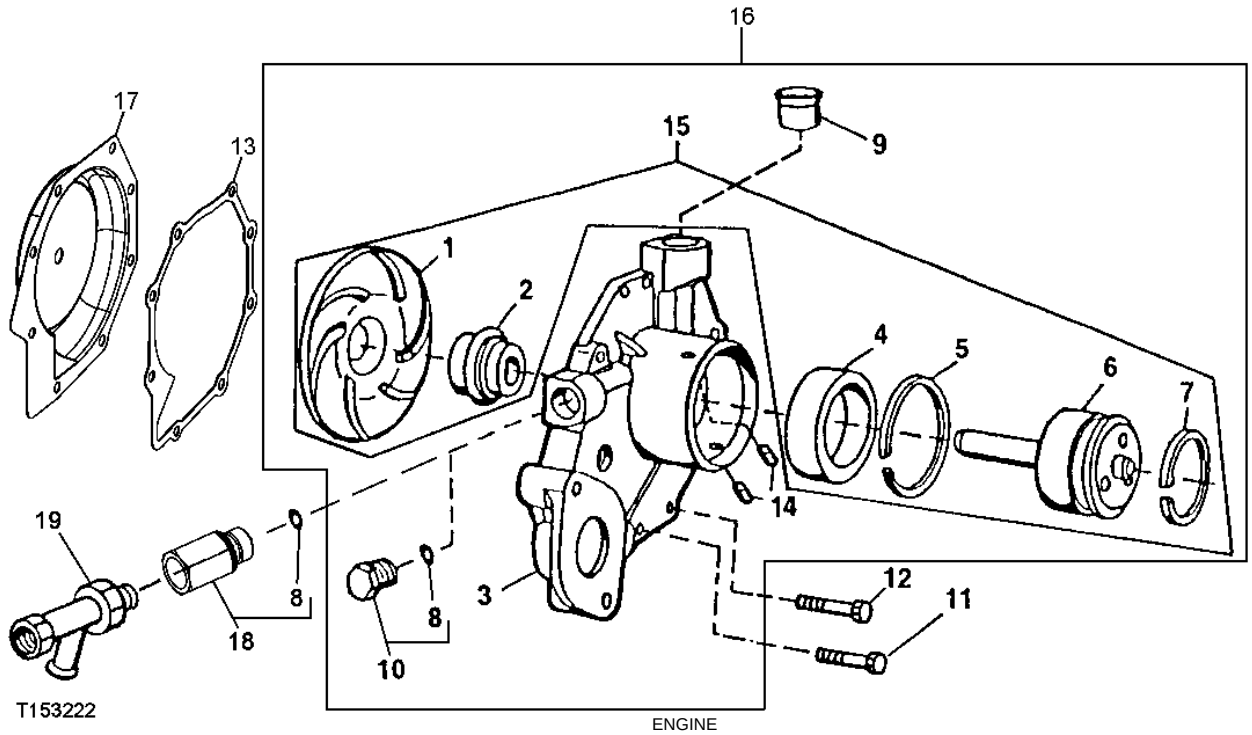

KEY	PART NO.	PART NAME	QTY	ENGINE SERIAL NO.	REMARKS
1	.....	IMPELLER	1		(MARKED R123395)
2	.....	SEAL	1		
3	.....	HOUSING	1		
4	.....	BALL BEARING	1		
5	.....	RING	1		
6	.....	SHAFT	1		
7	A364R	SNAP RING	1		
8	51M7043	O-RING	2		15.300 X 2.200 MM
9	R123226	SEAL	1		
10	RE46685	PLUG	1		(WITHOUT CAB HEAT)
11	19M7863	SCREW	5		M6 X 25
12	19M7796	SCREW	3		M6 X 30
13	R123417	GASKET	1		
14	R100369	FILTER	2		
15	RE70962	KIT	1		WATER PUMP REPAIR
16	RE505980	WATER PUMP	1		(MARKED R503509)
17	RE508566	KIT	1		(WATER PUMP INSERT REPAIR)
18	RE520229	ADAPTER	1		(SUB FOR RE68908) (WITH CAB HEAT)
19	RE507952	DRAIN VALVE	1		(WITH CAB HEAT)

MEMORANDA

THERMOSTAT, THERMOSTAT HOUSING, COVER, AND TEMPERATURE SENSOR

T188381 -UN-27MAR03

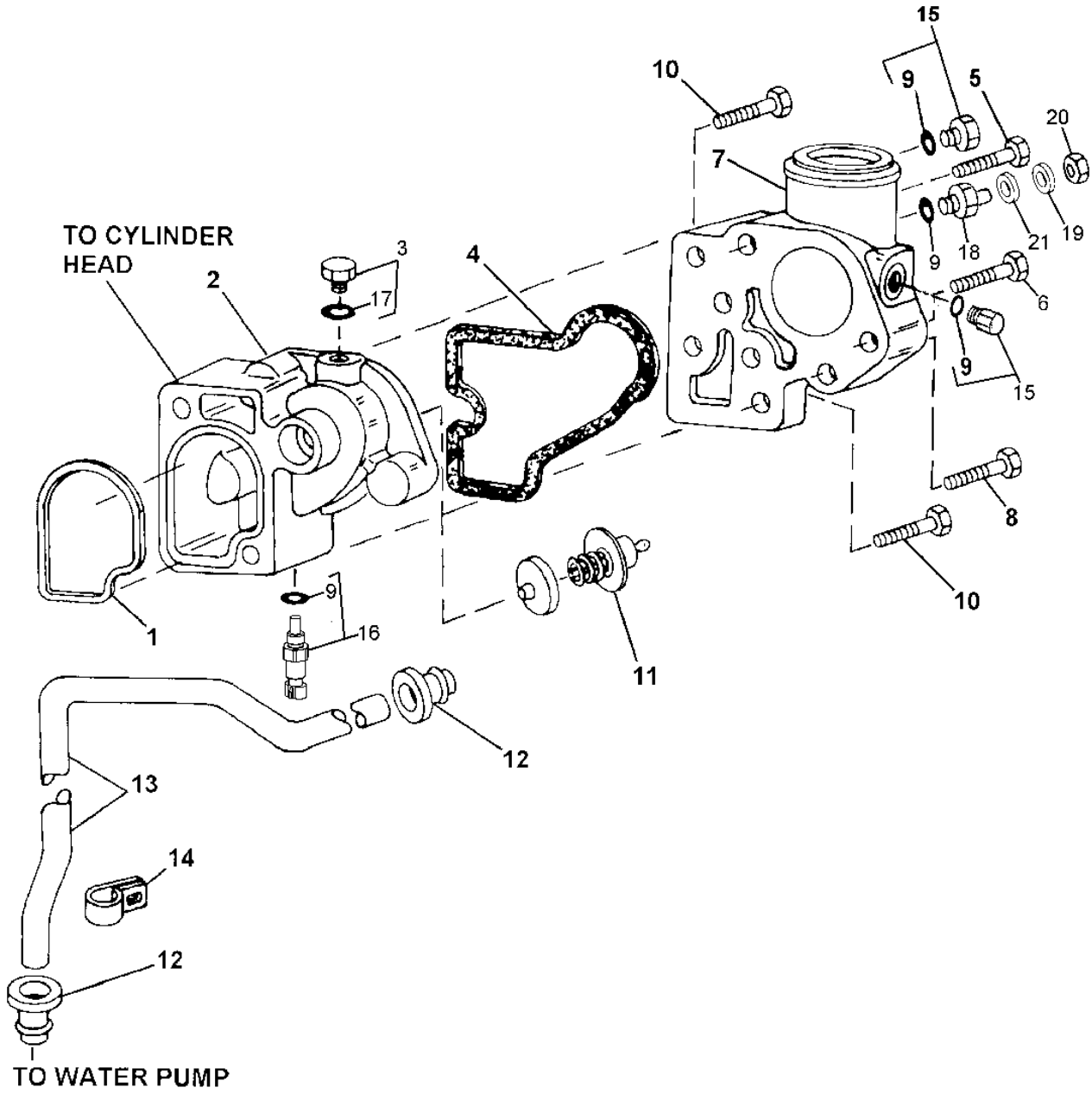

T188381

THERMOSTAT, THERMOSTAT HOUSING, COVER, AND TEMPERATURE SENSOR

KEY	PART NO.	PART NAME	QTY	ENGINE SERIAL NO.	REMARKS
1	R501228	SEAL	1		
2	R500471	HOUSING	1		
3	RE46686	PLUG	1		
4	R501227	SEAL	1		
5	19M7810	SCREW	1		M10 X 80
6	19M7785	SCREW	1		M10 X 25
7	R500472	COVER	1		
8	19M7809	SCREW	1		M10 X 70
9	51M7041	O-RING	4		
10	19M7811	SCREW	2		M10 X 90
11	RE520831	THERMOSTAT	1		
12	R123226	SEAL	2		
13	R500704	TUBE	1		BY-PASS TUBE
14	R123324	CLAMP	1		
15	RE46684	PLUG	3		
16	RE52722	SENSOR	1		(TEMPERATURE SENSOR FOR ECU)
17	51M7040	O-RING	1		9.300 X 2.200 MM
18	4456798	SENSOR	1		(TEMPERATURE GAUGE SENSOR)
19	12M7064	LOCK WASHER	1		5 MM
20	14M7297	NUT	1		M5
21	24M7027	WASHER	1		5.300 X 10 X 1 MM

ENGINE OIL COOLER

T153916 -UN-11APR02

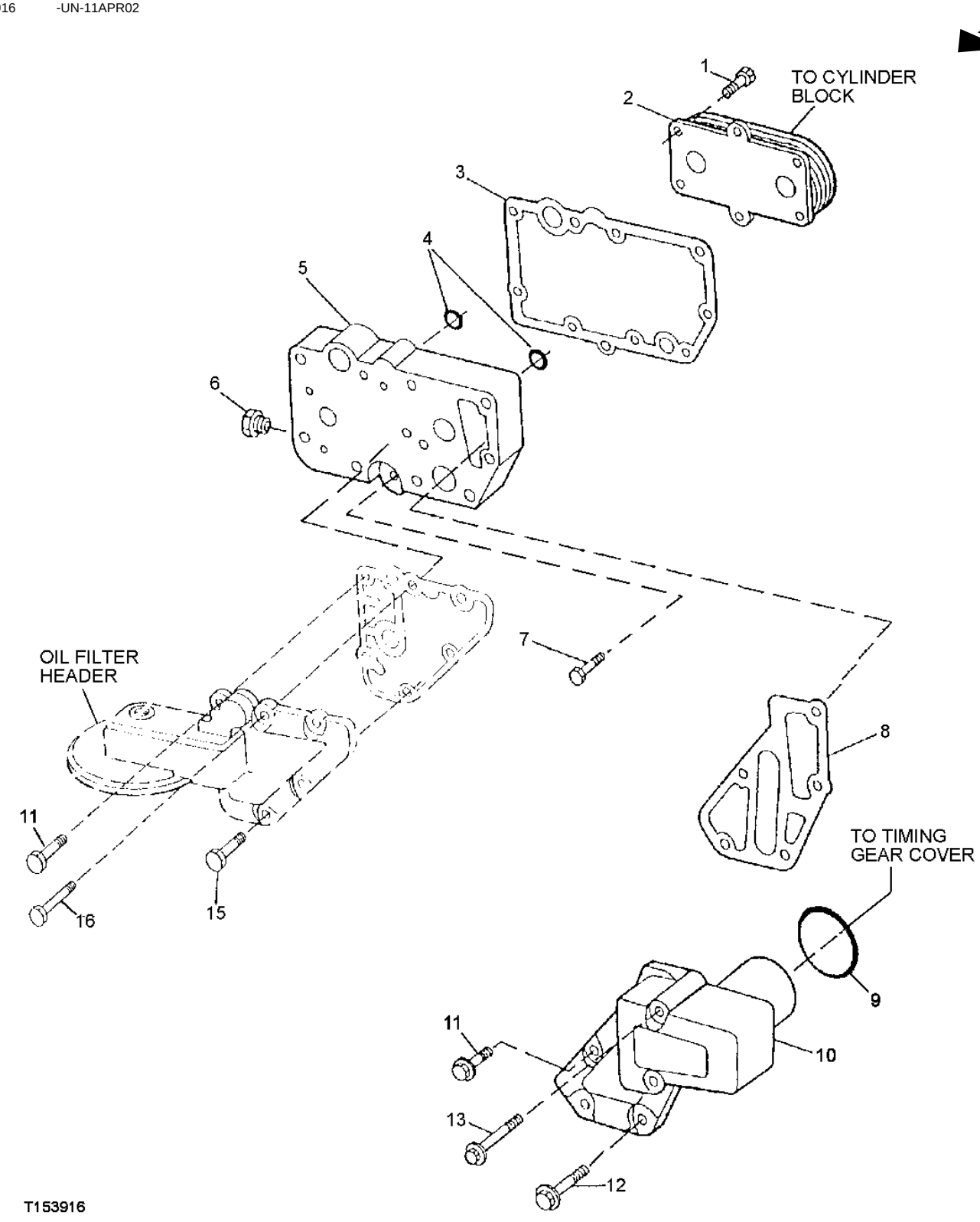

ENGINE OIL COOLER

KEY	PART NO.	PART NAME	QTY	ENGINE SERIAL NO.	REMARKS
1	RE67231	SCREW	6		M6 X 16 (WITH PRE-APPLIED SEALANT)
2	RE59296	OIL COOLER	1		
	RE522820	OIL COOLER	1		(RE522820 INCLUDES: (1) RE59296, (6) RE67231, (1) R123471 AND T122075).
3	R123501	GASKET	1		
4	T122075	O-RING	2		
5	R123471	HOUSING	1		
6	RE46686	PLUG	1		
7	RE46685	PLUG	1		
8	R501428	GASKET	1		
9	R504734	O-RING	1		
10	R502811	ADAPTER	1		
11	RE67238	SCREW	2		
12	19M7802	SCREW	2		M8 X 65
13	19M7970	SCREW	2		M8 X 100
14	RE67238	SCREW	1		M8 X 20 (WITH PRE-APPLIED SEALANT)
15	19M7802	SCREW	4		M8 X 65
16	19M7970	SCREW	1		M8 X 100

FINAL FUEL FILTER FUEL LINES

T152653 -UN-14MAR02

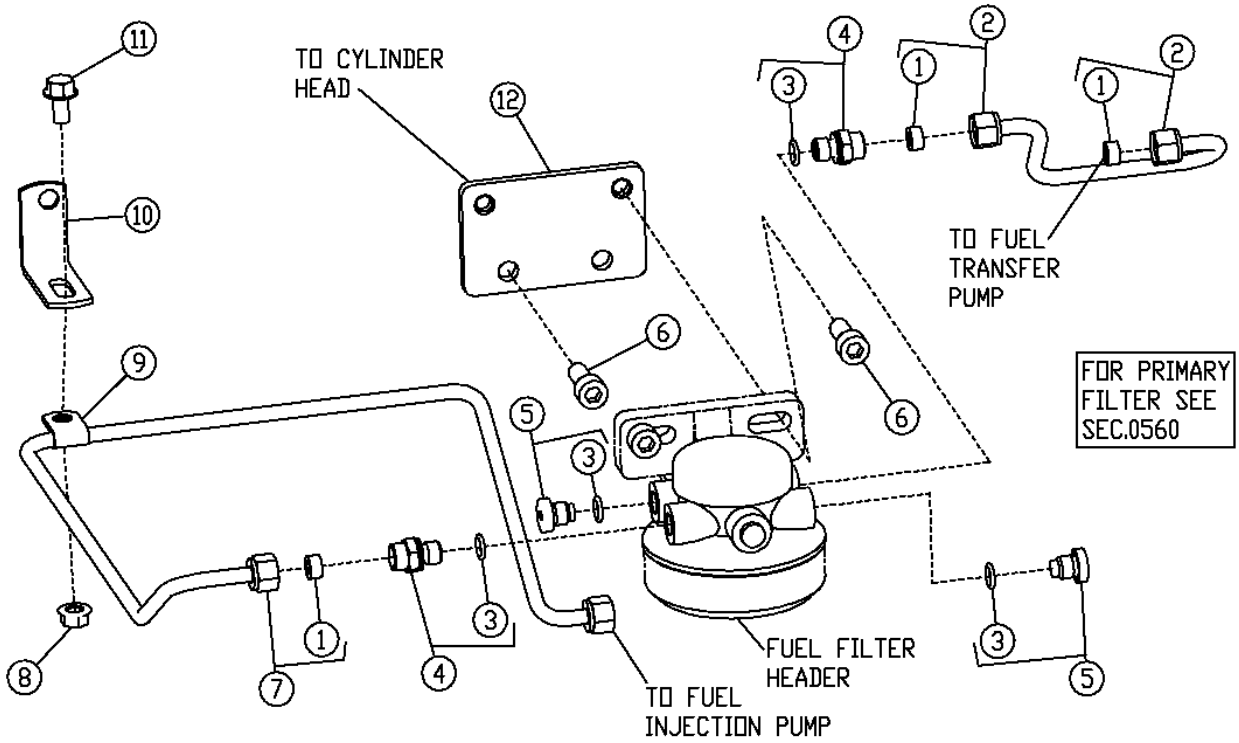

T152653

FINAL FUEL FILTER FUEL LINES

KEY	PART NO.	PART NAME	QTY	ENGINE SERIAL NO.	REMARKS
1	R74012	SEALING WASHER	4		
2	RE507997	FUEL LINE	1		
3	51M7040	O-RING	1		
4	RE60029	ADAPTER	2		
5	RE46686	PLUG	2		
6	19M7784	SCREW	2		M10 X 20
7	RE507996	FUEL LINE	1		
8	14M7298	FLANGE NUT	1		M8
9	T14050	CLAMP	1		
10	R116116	BRACKET	1		
11	19M7865	SCREW	1		M8 X 16
12	R123566	BRACKET	1		

FINAL AND PRIMARY FUEL FILTER SERVICE KITS AND ELEMENT

T152740 -UN-19MAR02

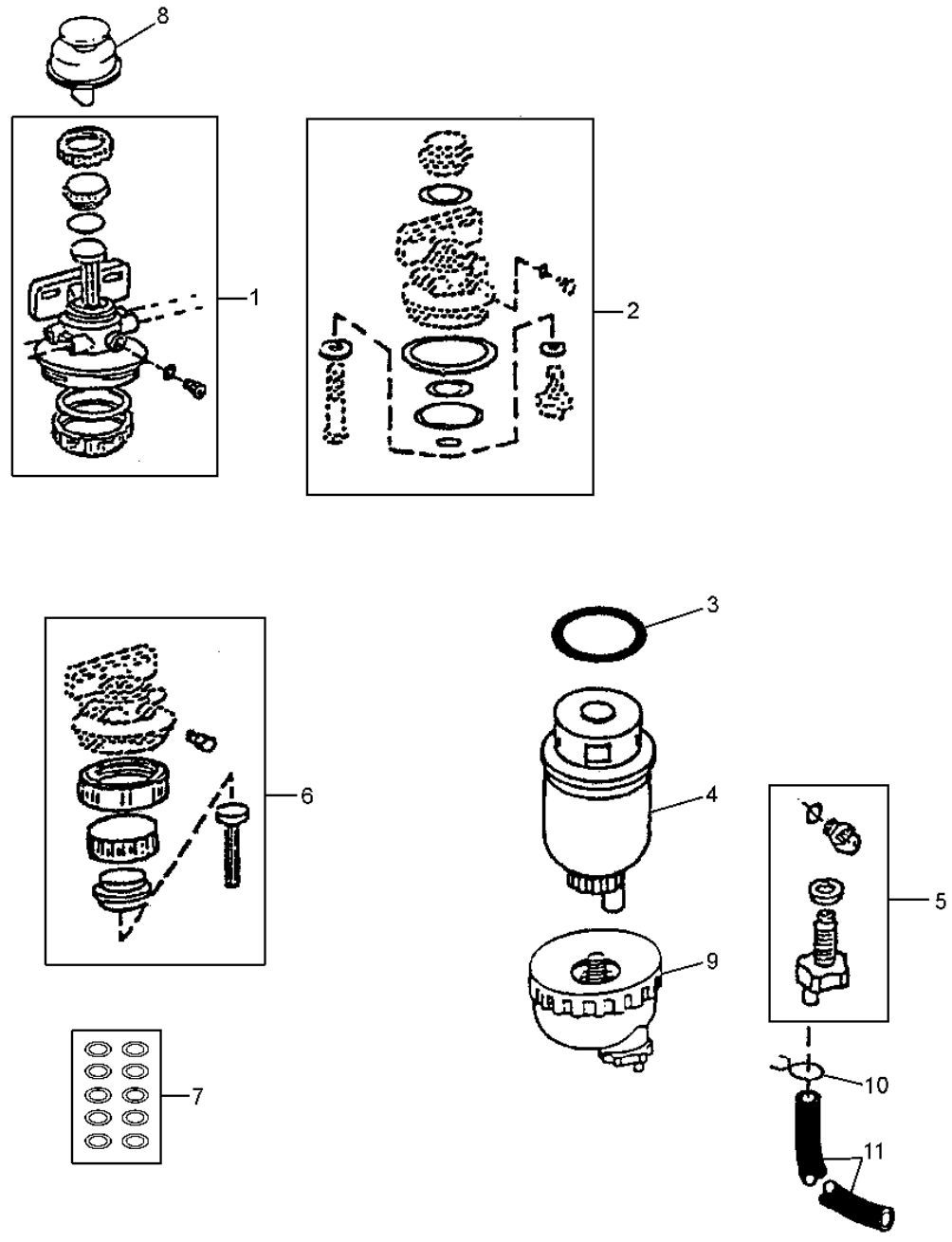

T152740

FINAL AND PRIMARY FUEL FILTER SERVICE KITS AND ELEMENT

KEY	PART NO.	PART NAME	QTY	ENGINE SERIAL NO.	REMARKS
1	RE509794	SEAL KIT	1		HEADER(FOR FINAL FUEL FILTER)
	RE508847	FILTER HEAD	1		HEADER SEAL KIT(FOR PRIMARY FILTER)
2	RE516553	KIT	1		(FOR PRIMARY AND FINAL FUEL FILTER)
3	R113565	SEAL	1		(FOR FINAL FUEL FILTER)
4	RE509031	FILTER ELEMENT	1		(FOR FINAL FUEL FILTER)
	RE517181	FILTER ELEMENT	1		(FOR PRIMARY FUEL FILTER)
5	RE60854	KIT	1		(FOR PRIMARY AND FINAL FUEL FILTERS)
6	RE51649	SEAL KIT	1		(FOR PRIMARY AND FINAL FUEL FILTERS)
7	RE516512	KIT	1		(WITHOUT HAND PRIMER) (CONTAINS 10 O-RINGS)
	RE516513	KIT	1		(WITH HAND PRIMER) (CONTAINS 10 O-RINGS)
8	RE515404	KIT	1		(FOR PRIMARY FUEL FILTER)
9	RE51650	SEDIMENT BOWL	1		(FOR PRIMARY FUEL FILTER)
10	T13254	CLAMP	1		(FOR PRIMARY AND FINAL FUEL FILTERS)
11	R126086	HOSE	1		(FOR PRIMARY AND FINAL FUEL FILTERS)

FUEL TRANSFER PUMP

T153331 -UN-09APR02

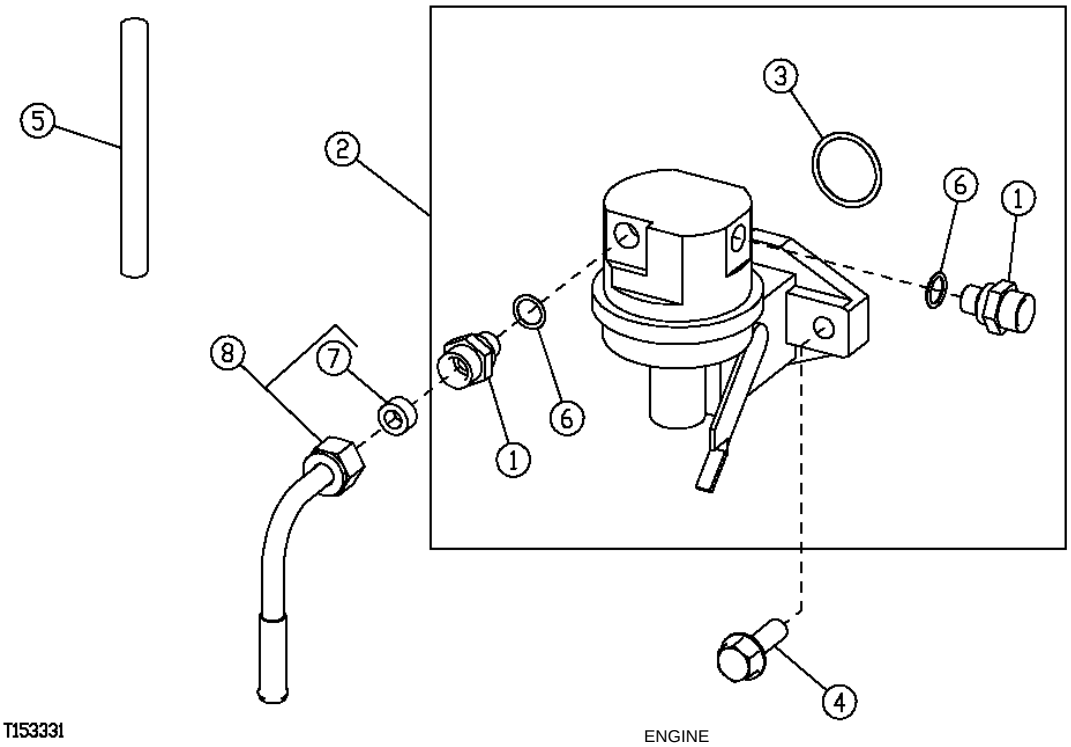

T153331

KEY	PART NO.	PART NAME	QTY	ENGINE SERIAL NO.	REMARKS
1	R500270	FITTING	2		
2	RE66153	FUEL PUMP	1		
3	R123273	O-RING	1		
4	RE504233	SCREW	2		
5	R133405	PUSH ROD	1		
6	R500271	O-RING	2		
7	R74012	SEALING WASHER	1		
8	AP35377	ADAPTER	1		

MEMORANDA

STARTING MOTOR, GROUND CABLE, AND WIRING HARNESS

T188382 -UN-27MAR03

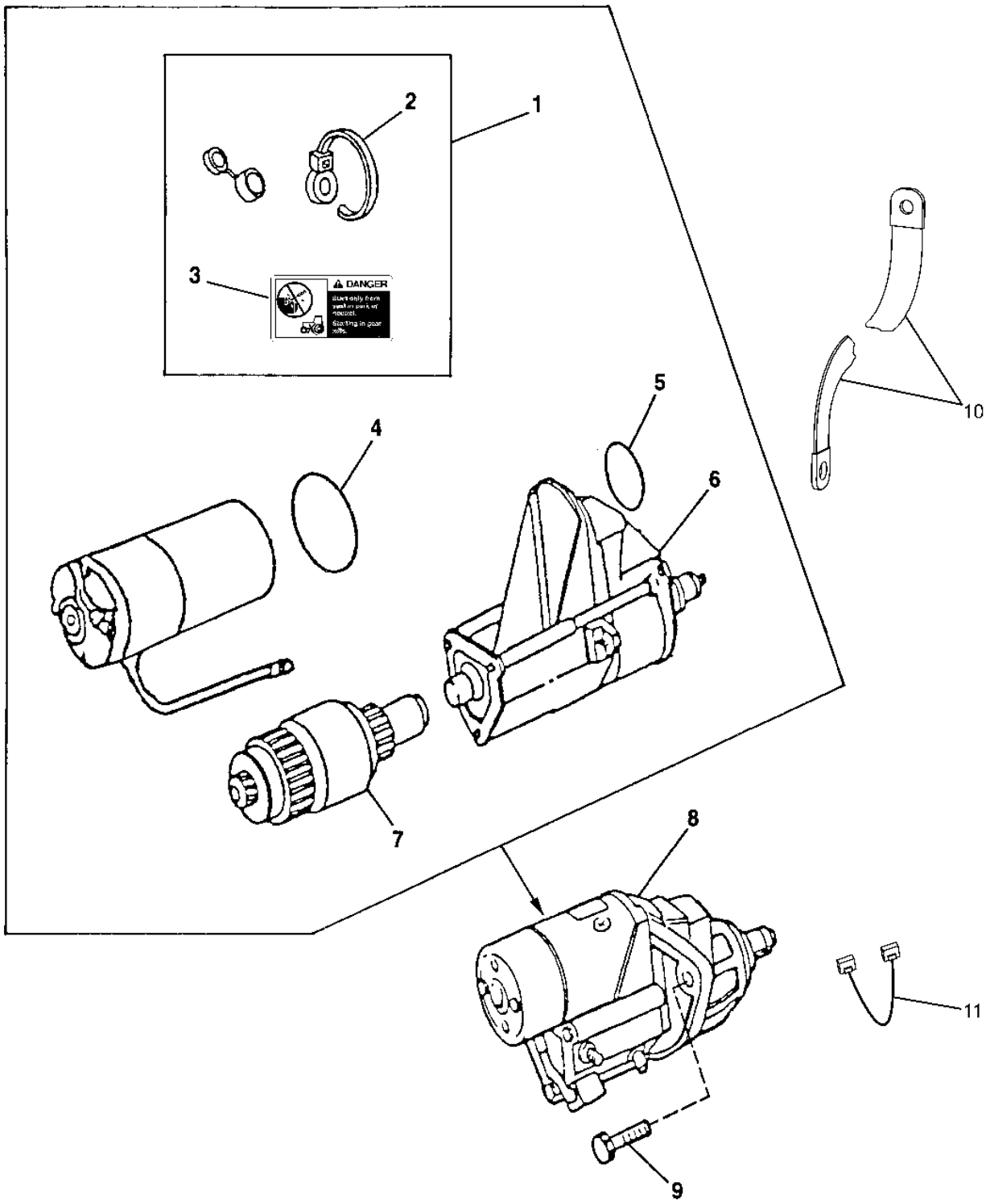

T153930

STARTING MOTOR, GROUND CABLE, AND WIRING HARNESS

KEY	PART NO.	PART NAME	QTY	SERIAL NO.	REMARKS
1	RE70756	KIT	1		BYPASS START
2	R96703	TIE BAND	1		
3	T146102	LABEL	1		BYPASS START
4	R135509	SEAL	1		
5	R135510	O-RING	1		
6	RE70681	SWITCH	1		
7	RE70487	CLUTCH	1		
8	RE500345	STARTER MOTOR KIT	1		24-VOLT (NIPPONDENSO)
9	19M7786	SCREW	3		M10 X 30
10	AT38449	GROUND CABLE	1		
11	4448296	WIRING HARNESS	1		

ALTERNATOR MOUNTING BRACKETS AND ADJUSTING STRAP

TP49740 -UN-09OCT98

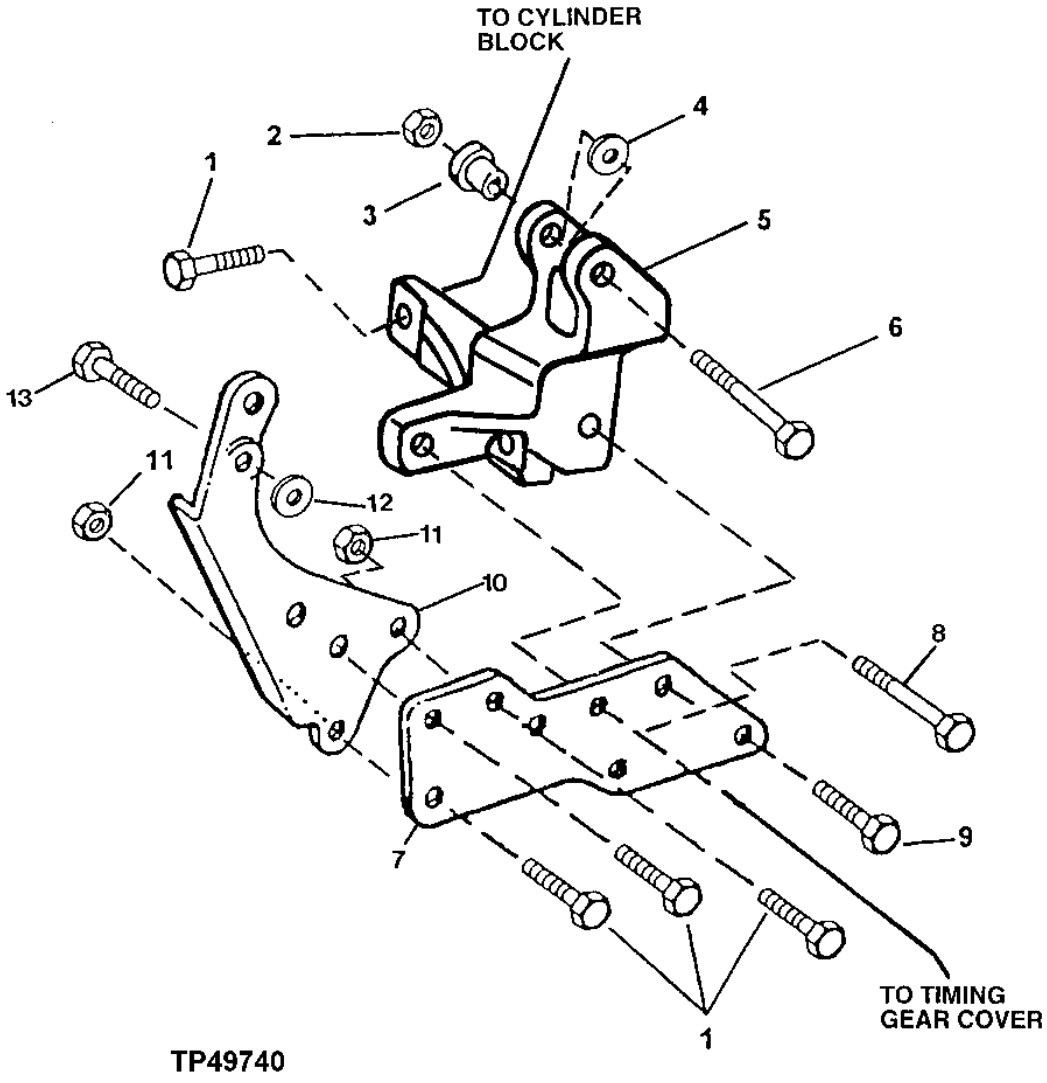

ALTERNATOR MOUNTING BRACKETS AND ADJUSTING STRAP

KEY	PART NO.	PART NAME	QTY	ENGINE SERIAL NO.	REMARKS
1	19M7786	SCREW	5		M10 X 30
2	14M7296	FLANGE NUT	1		M10
3	R100377	BUSHING	1		
4	R64525	THRUST WASHER	1		
5	R132166	BRACKET	1		
6	19M7812	SCREW	1		M10 X 100
7	R132913	SUPPORT	1		
8	19M7785	SCREW	3		M10 X 25
9	19M7801	SCREW	1		M8 X 60
10	R500531	STRAP	1		
11	14M7296	FLANGE NUT	3		M10
12	R48808	WASHER	1		
13	19M7867	SCREW	1		M8 X 25

CRANKSHAFT PULLEY AND ACCESSORY DRIVE BELT

TP53312 -UN-03JAN97

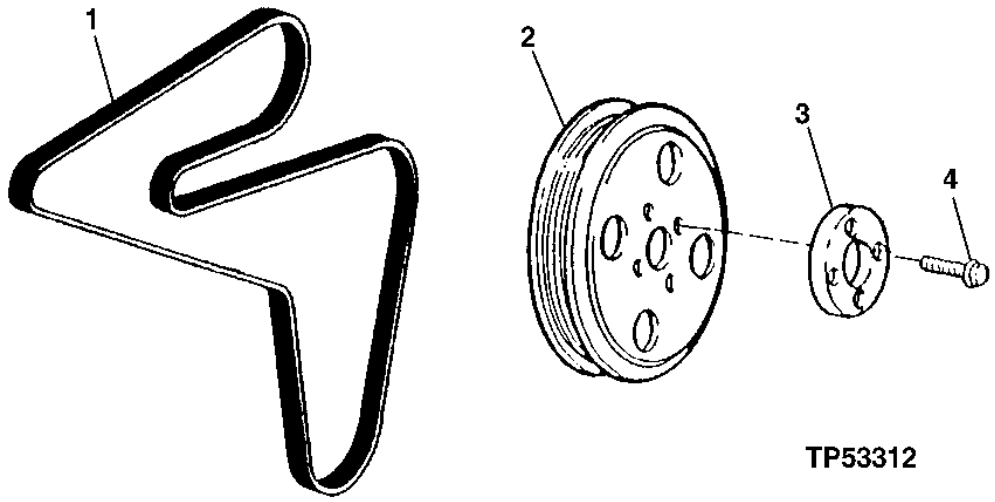

KEY	PART NO.	PART NAME	QTY	ENGINE SERIAL NO.	REMARKS
1	R123442	V-BELT	1		
2	R133295	PULLEY	1		
3	R123486	ADAPTER	1		
4	R121897	SCREW	4		

CRANKSHAFT AUXILIARY DRIVE PULLEY

TP53330 -UN-05SEP96

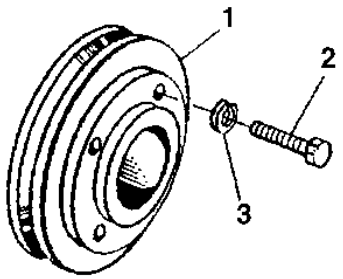

TP53330

KEY	PART NO.	PART NAME	QTY	ENGINE SERIAL NO.	REMARKS
1	R504762	PULLEY	1		
2	19H2633	CAP SCREW	1		3/8" X 1-1/2"
3	12H304	LOCK WASHER	2		3/8"

FAN DRIVE SUPPORT,PULLEY AND FAN BELT TENSIONERS

TP55205 -UN-12SEP97

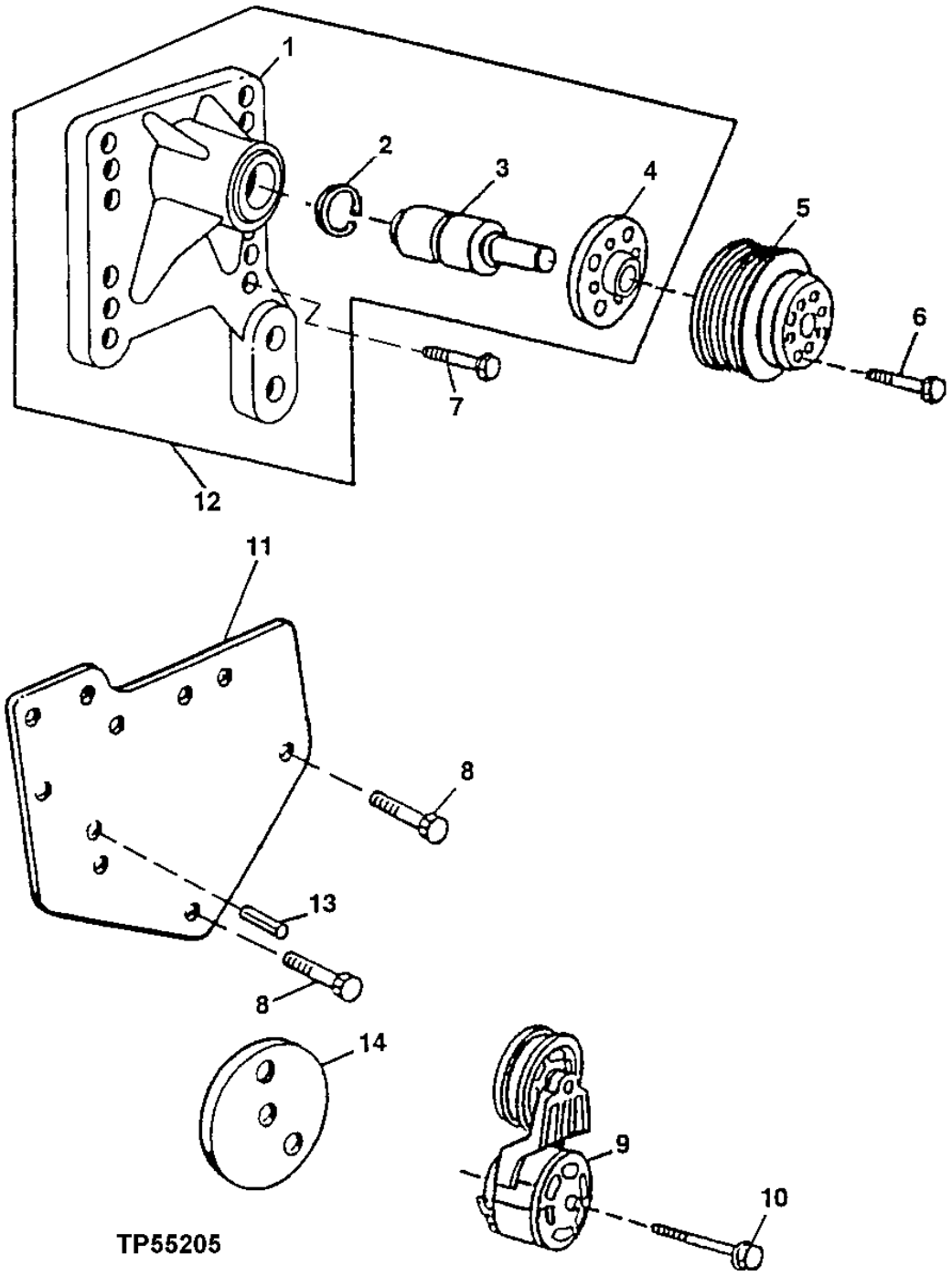

FAN DRIVE SUPPORT,PULLEY AND FAN BELT TENSIONERS

KEY	PART NO.	PART NAME	QTY	ENGINE SERIAL NO.	REMARKS
1	.....	BEARING HOUSING W/ BEARING	1		(MARKED R502014)
2	E1343FN	SNAP RING	1		
3	.....	SHAFT	1		
4	RE500538	BEARING HOUSING W/ BEARING	1		(MARKED R123284)
5	R128662	PULLEY	1		
6	19M7784	SCREW	4		M10 X 20
7	19M7835	SCREW	4		M10 X 35
8	19M7801	SCREW	1		M8 X 60
9	RE70536	PULLEY	1		
10	19M8131	SCREW	1		M10 X 70
11	R132168	SUPPORT	1		
12	RE503664	SUPPORT	1		(MARKED R502014)
13	34M7061	SPRING PIN	1		8 X 20 MM
14	R500321	SPACER	1		

FAN BELT AND PULLEYS

TP58352 -UN-28OCT98

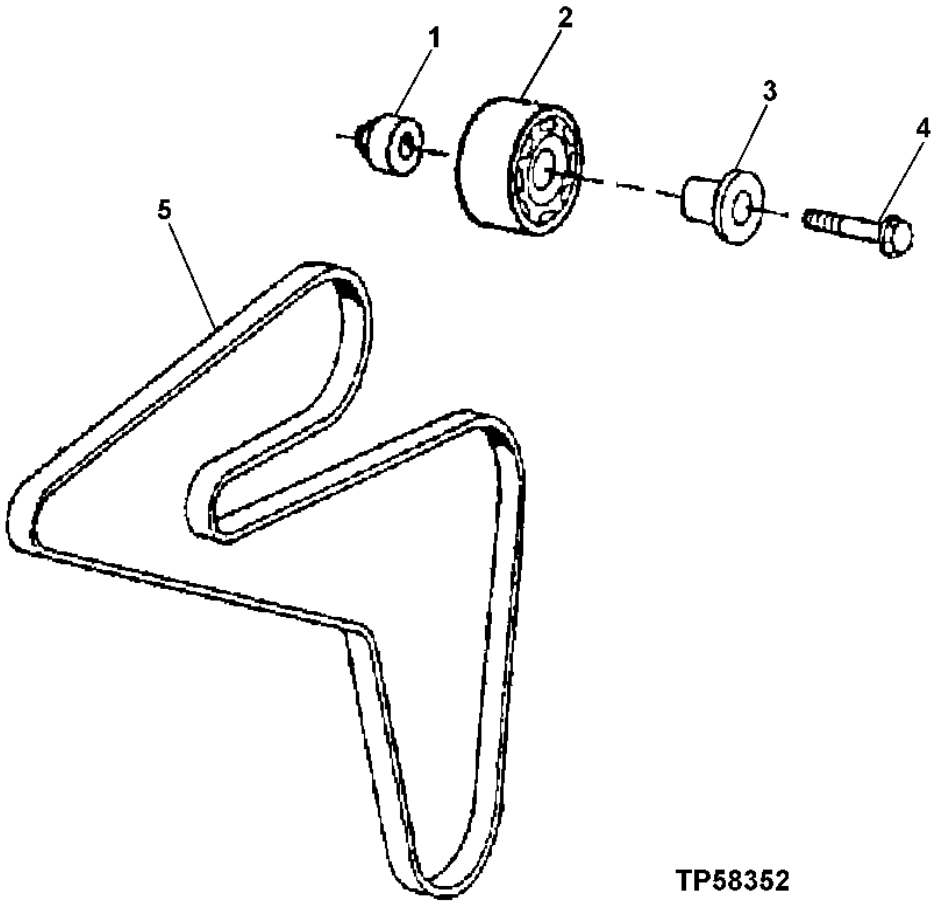

FAN BELT AND PULLEY

KEY	PART NO.	PART NAME	QTY	ENGINE SERIAL NO.	REMARKS
1	R500320	SPACER	1		
2	RE505264	IDLER	1		
3	R502079	SLEEVE	1		
4	19M7808	SCREW	1		M10 X 65
5	R123442	V-BELT	1		

ENGINE FLYWHEEL

TP49557 -UN-05FEB97

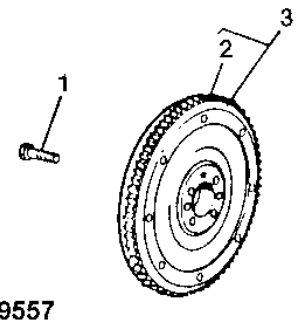

TP49557

KEY	PART NO.	PART NAME	QTY	ENGINE SERIAL NO.	REMARKS
1	R135918	BOLT	6		
2	R28811	RING GEAR	6		(129 TEETH)
3	RE500527	FLYWHEEL	1	-034261	(MARKED R500293)
	RE519566	FLYWHEEL	1	034262-	

ENGINE FLYWHEEL HOUSING

TP62295 -UN-13DEC99

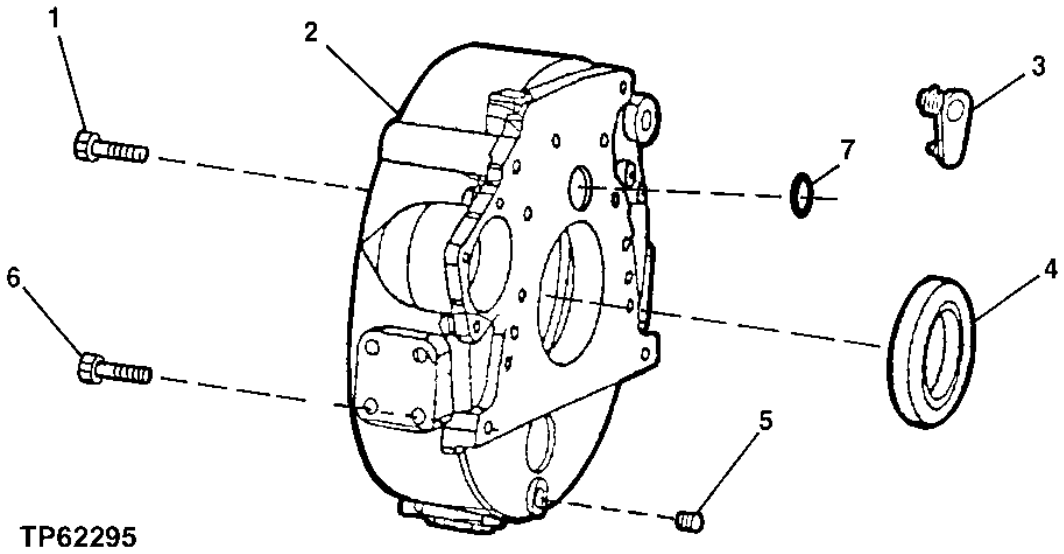

KEY	PART NO.	PART NAME	QTY	ENGINE SERIAL NO.	REMARKS
1	R135918	BOLT	8		
2	R503444	HOUSING	1		
3	R131768	PLUG	1		
4	RE44574	SEAL	1		
5	15H624	PIPE PLUG	1		1/2"
6	19M8306	SCREW	4		M12 X 50
7	R61467	O-RING	1		

MEMORANDA

CYLINDER HEAD REMOVAL AND IN VEHICLE OVERHAUL GASKET SETS

T153522 -UN-04APR02

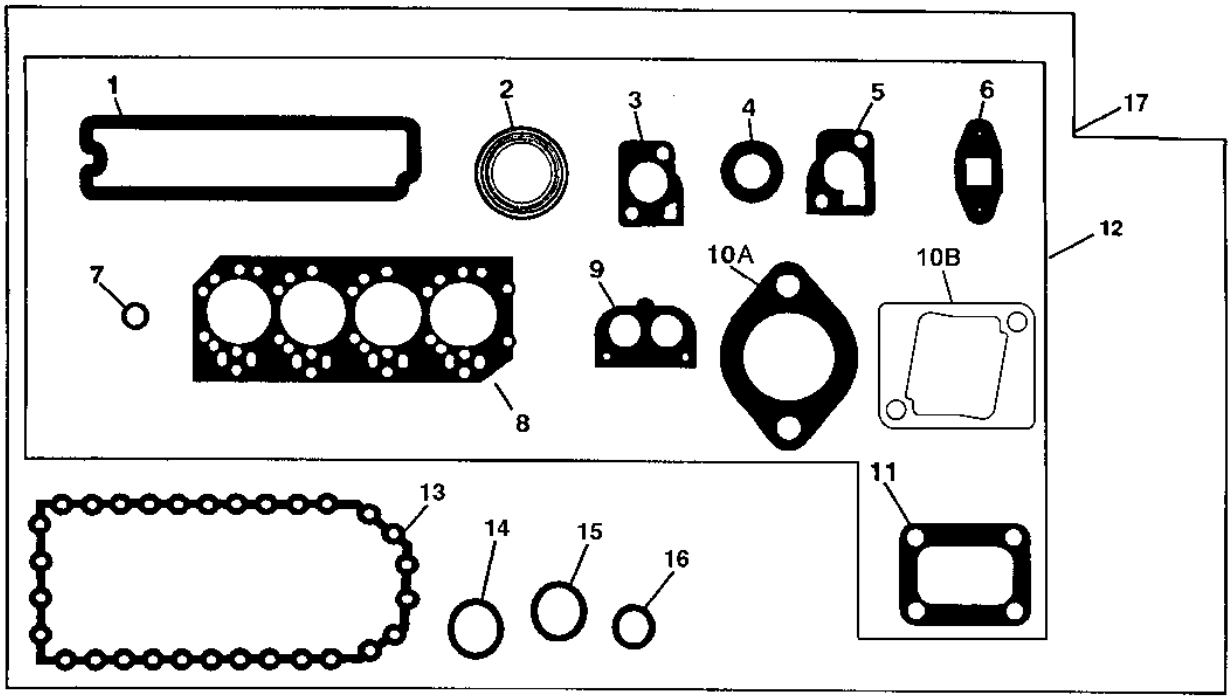

T153522

KEY	PART NO.	PART NAME	QTY	ENGINE SERIAL NO.	REMARKS
1	R123542	GASKET	1		ROCKER ARM COVER
2	R90658	GASKET	4		EXHAUST MANIFOLD
3	R502814	GASKET	1		(SUB FOR R135896) THERMOSTAT COVER
4	R123226	SEAL	2		WATER BY-PASS TUBE
5	R123345	GASKET	1		THERMOSTAT HOUSING
6	R123570	GASKET	1		TURBOCHARGER OIL OUTLET LINE
7	R123575	O-RING	4		ROCKER ARM COVER HOLD DOWN STUD
8	R116515	ENGINE CYLINDER HEAD GASKET	1		CYLINDER HEAD
9	R501373	GASKET	1		THERMOSTAT COVER, (SUB FOR R54638)
10A	R81275	GASKET	1		AIR INLET
10B	R133893	GASKET	1		AIR INLET
11	R92097	GASKET	1		TURBOCHARGER TO EXHAUST MANIFOLD
12	RE66082	GASKET KIT	1		CYLINDER HEAD REMOVAL
13	R123352	GASKET	1		ENGINE OIL PAN
14	R75892	O-RING	1		OIL PUMP TUBE CONNECTOR
15	R97185	O-RING	1		OIL PUMP OUTLET TUBE TO COVER
16	R61871	O-RING	1		OIL PUMP INTAKE TUBE
17	RE66084	GASKET KIT	1		IN CHASSIS OVERHAUL

ENGINE MAJOR OVERHAUL GASKET SET AND ENGINE REBUILD KIT

T153746 -UN-09APR02

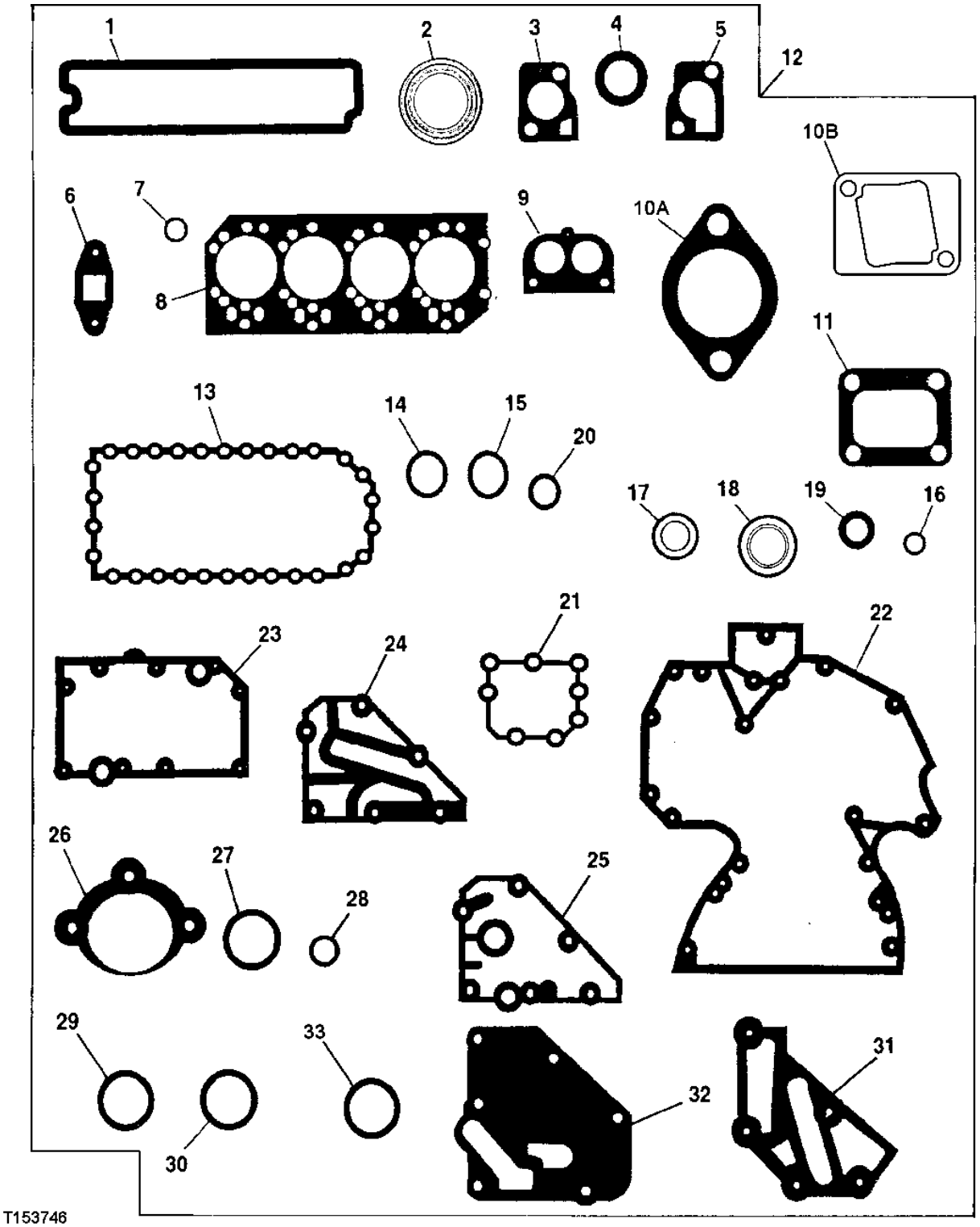

ENGINE MAJOR OVERHAUL GASKET SET AND REBUILD KIT

KEY	PART NO.	PART NAME	QTY	ENGINE SERIAL NO.	REMARKS
1	R123542	GASKET	1		ROCKER ARM COVER
2	R90658	GASKET	4		EXHAUST MANIFOLD
3	R121416	GASKET	1		THERMOSTAT COVER
4	R123226	SEAL	2		WATER BY-PASS TUBE
5	R123345	GASKET	1		THERMOSTAT HOUSING
6	R123570	GASKET	1		TURBOCHARGER OIL OUTLET TUBE
7	R123575	O-RING	4		ROCKER ARM COVER HOLD DOWN STUD
8	R116515	ENGINE CYLINDER HEAD GASKET	1		CYLINDER HEAD
9	R501373	GASKET	1		THERMOSTAT COVER
10A	R81275	GASKET	1		AIR INLET
10B	R133893	GASKET	1		AIR INLET
11	R92097	GASKET	1		TURBOCHARGER TO EXHAUST MANIFOLD
12	RE501455	GASKET KIT	1		MAJOR OVERHAUL
	RE508083	ENGINE OVERHAUL KIT	1		ENGINE OVERHAUL (INCLUDES ENGINE MAJOR OVERHAUL GASKET SET; ENGINE CONNECTING ROD BEARINGS;ENGINE MAIN BEARINGS AND PISTON AND CYLINDER LINER KITS) (ORDER ONE KIT PER ENGINE)
13	R123352	GASKET	1		ENGINE OIL PAN
14	R75892	O-RING	1		OIL PUMP TUBE CONNECTOR
15	R97185	O-RING	1		OIL PUMP OUTLET TUBE TO COVER
16	R61871	O-RING	1		OIL PUMP INTAKE TUBE
17	A4827R	WASHER	1		OIL PRESSURE REGULATOR PLUG
18	RE44574	SEAL	1		REAR OIL SEAL
19	RE516340	KIT	1		FRONT OIL SEAL, (MARKED RE52346 OR RE505515) (SUB FOR RE59810)
20	R112316	VALVE	1		FUEL TRANSFER PUMP
21	R123417	GASKET	1		WATER PUMP
22	R136516	GASKET	1		TIMING GEAR COVER
23	R123501	GASKET	1		OIL COOLER HOUSING
24	R123504	GASKET	1		REMOTE OIL FILTER ADAPTER
25	R123525	GASKET	AR		OIL FILTER HEADER
26	R53108	GASKET	1		STARTING MOTOR
27	R72328	O-RING	4		OIL FILTER TUBES
28	R89944	O-RING	1		WATER PUMP INLET
29	R61105	O-RING	2		CONNECTOR TUBE TO TIMING GEAR COVER
30	T122075	O-RING	2		OIL COOLER TO HOUSING
31	R501428	GASKET	1		COOLANT PASSAGE ADAPTER
32	R500374	GASKET	1		OIL FILTER HEADER
33	R123273	O-RING	1		FUEL TRANSFER PUMP(PE4045HP050)

COLD WEATHER STARTING AID

TP60728 -UN-24JUL98

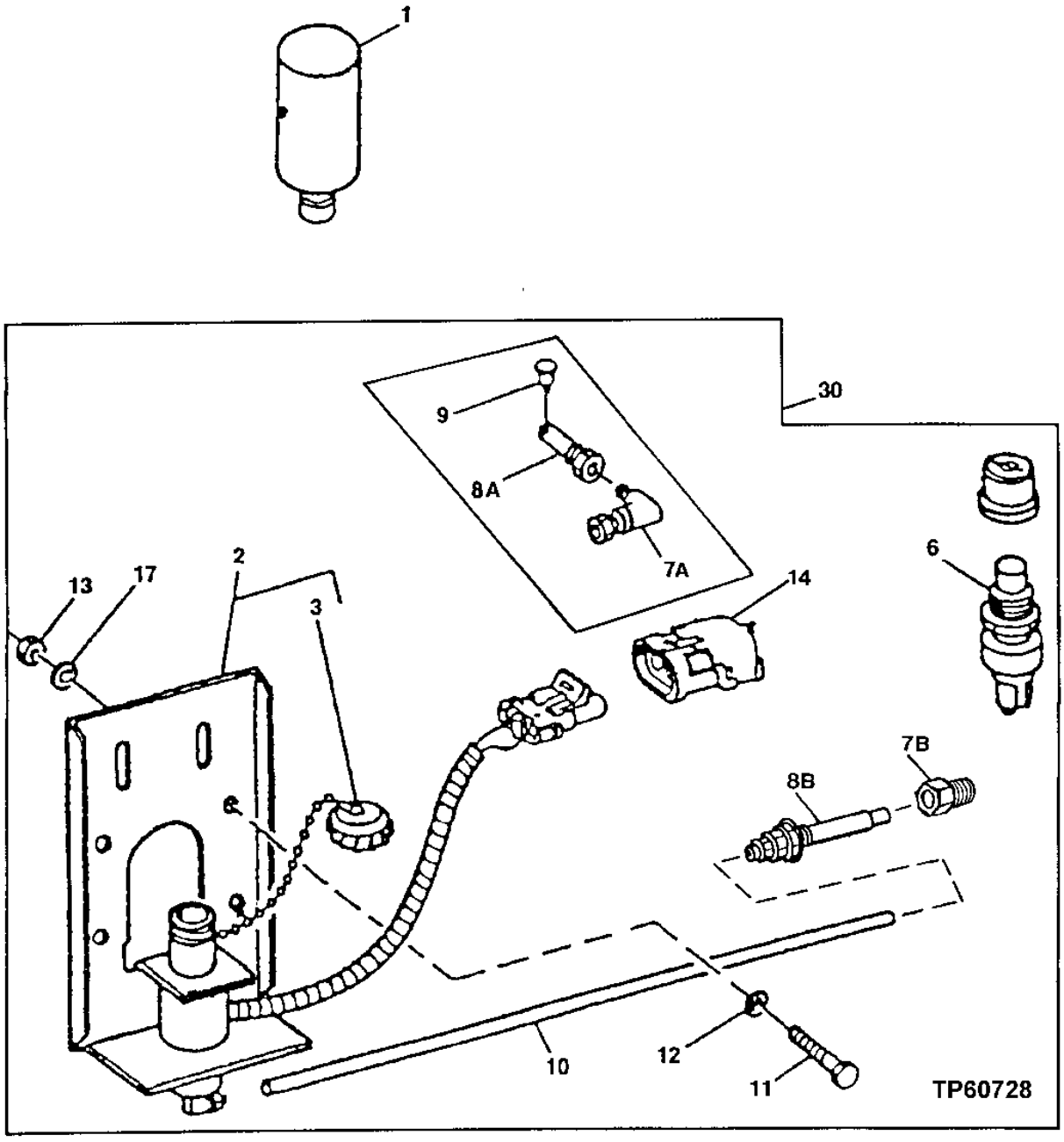

COLD WEATHER STARTING AID

KEY	PART NO.	PART NAME	QTY	SERIAL NO.	REMARKS
1	AT171162	STARTING FLUID	1		
2	AT170759	SOLENOID	1		
3	AT171539	CAP (HAT)	1		
6	AT178893	SWITCH	1		
7A	RE21790	ELBOW FITTING	1		(SUB FOR AT183222 AND T175293, THIS APPLICATION)
7B	T175293	ADAPTER	1		
8A	R47160	NOZZLE HOLDER	1		(SUB FOR AT183222 AND T175293, THIS APPLICATION)
8B	AT183222	NOZZLE	1		
9	T155858	NOZZLE	1		(USE WITH R47160)
10	.....	TUBE	1		(CUT TO LENGTH FROM T78593 BULK MATERIAL)
11	19M7407	CAP SCREW	4		M8 X 25
12	12M7065	LOCK WASHER	4		8 MM (0.315")
13	14M7273	NUT	4		M8
14	.....	CONNECTOR	1		(AL2976T NO LONGER REQUIRED)
17	24M7055	WASHER	4		8.400 X 16 X 1.600 MM (0.331" X 0.630" X 0.063")
18	R44302	TIE BAND	AR		(NOT ILLUSTRATED)
30	AT178845	STARTING AID	1		WHOLEGOODS (ETHER)

FUEL FIRED COOLANT HEATER KIT

T197544 -UN-09FEB04

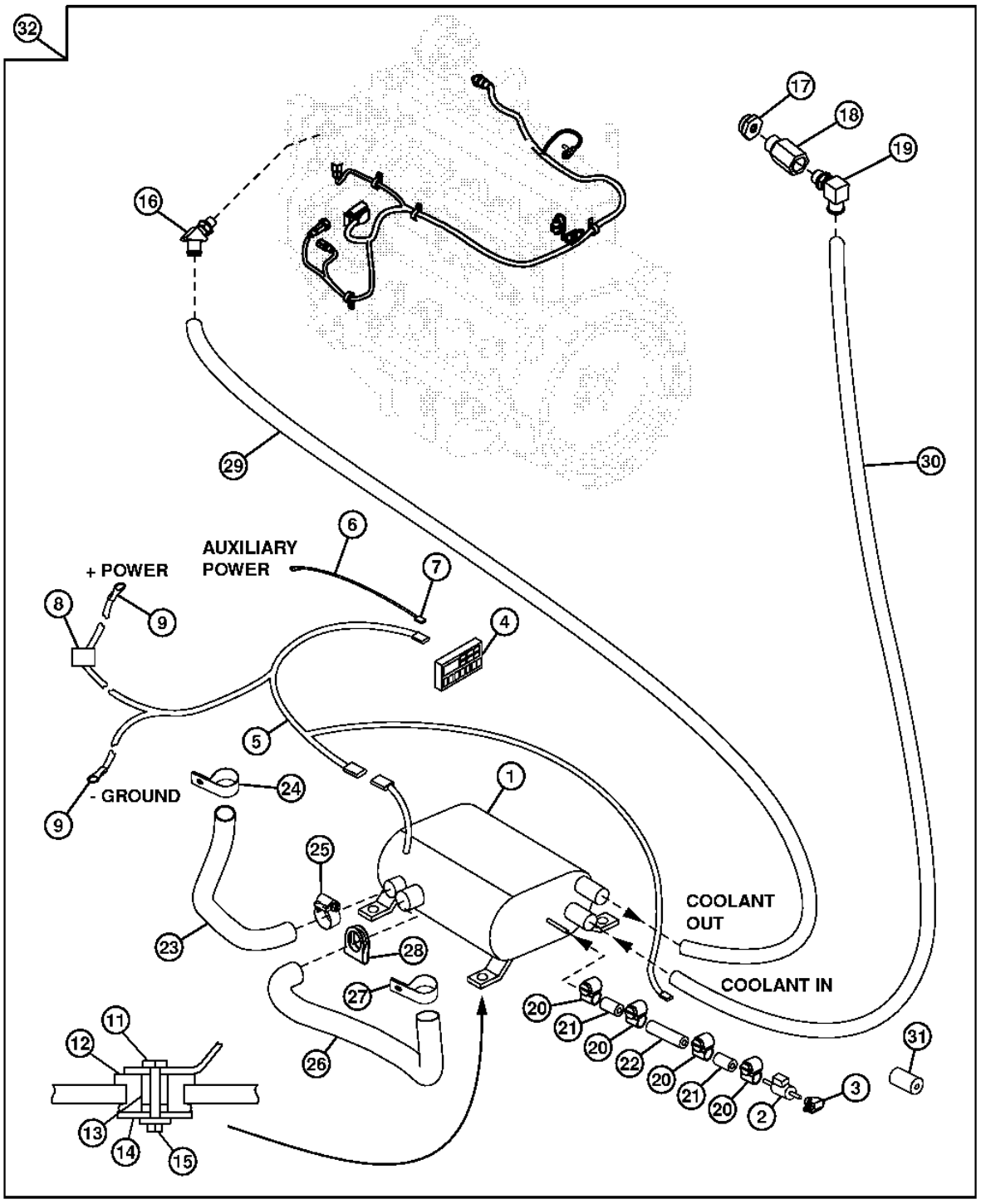

T197544

FUEL FIRED COOLANT HEATER KIT

KEY	PART NO.	PART NAME	QTY	SERIAL NO.	REMARKS
1	AT222697	COOLANT HEATER	1		
2	AT307812	FUEL PUMP	1		
3	T120343	TEE FITTING	1		
4	AT221990	DIGITAL DISPLAY	1		
5	AT307817	WIRING HARNESS	1		
6	AT307271	WIRING LEAD	1		
7	.....	ELEC. CONNECTOR TERMINAL	1		
8	AT307277	WIRING LEAD	1		
9	.....	EYELET	1		
11	19M7874	CAP SCREW	4		
12	AT116162	ISOLATOR	4		
13	L101283	SPACER	4		
14	M142541	WASHER	4		
15	N207956	LOCK NUT	4		
16	AT221439	ELBOW FITTING	1		(TO OPEN PORT IN THERMOSTAT HOUSING COVER)
17	R123616	PLUG	1		
18	RE520229	ADAPTER	1		(SUB FOR RE68908)
19	AT221440	FITTING	1		
20	TY22462	CLAMP	4		(SUB FOR AR48236)
21	T177580	HOSE	2		
22	T206125	HOSE	1		
23	T206127	BULK HOSE	1		(AIR INLET HOSE)
24	T179306	CLAMP	1		
25	AR21837	CLAMP	1		
26	T206126	EXHAUST PIPE	1		(EXHAUST PIPE)
27	T179306	CLAMP	1		
28	AT221605	CLAMP	1		
29	.....	BULK HOSE	1		(MAKE FROM TY22330)(CUT TO 90 INCHES)
30	.....	BULK HOSE	1		(MAKE FROM TY22330)(CUT TO 100 INCHES)
31	AT307815	ISOLATOR	1		
32	**AT307267**	**KIT**	**1**		**(WHOLE GOODS) (DIESEL FIRED ENGINE COOLANT HEATER KIT)**

ENGINE COOLANT HEATER

TP15727 -UN-01JAN94

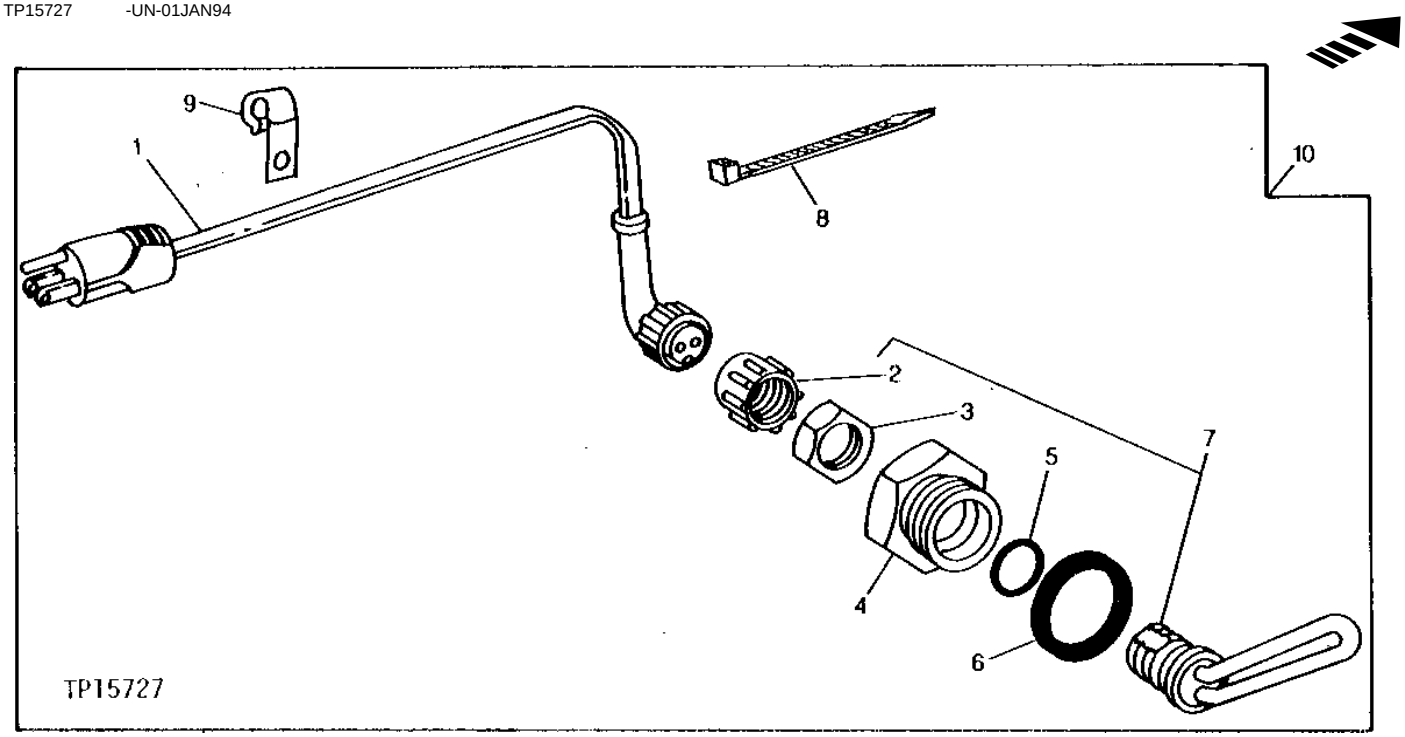

KEY	PART NO.	PART NAME	QTY	SERIAL NO.	REMARKS
1	AT73296	POWER CORD	1		
2	.....	CAP	1		(R54510 NO LONGER AVAILABLE)
3	.....	NUT	1		(R54511 NO LONGER AVAILABLE)
4	R54123	ADAPTER	1		
5	R206883	WASHER	1		(SUB FOR R47693)
6	U13639	O-RING	1		37.465 X 2.997 MM (1.475" X 0.118")
7	RE42139	HEATING ELEMENT	1		(SUB FOR AR62399, THIS APPLICATION)
8	H77698	TIE BAND	1		(SUB FOR R44302, THIS APPLICATION)
9	T19935	CLAMP	1		
10	AT74940	COOLANT HEATER	1		WHOLEGOODS

FAN BLADE AND SPACER

T144839 -UN-22AUG01

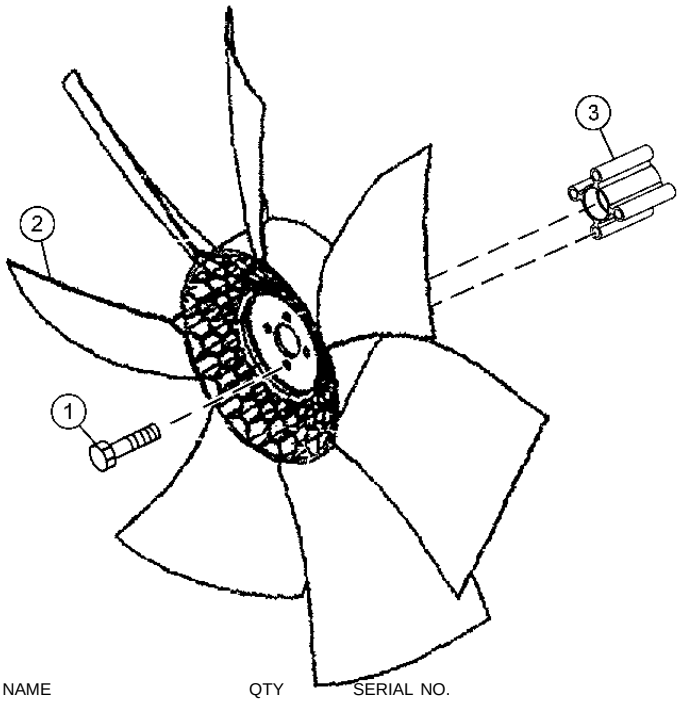

T144839

KEY	PART NO.	PART NAME	QTY	SERIAL NO.	REMARKS
1	19M7811	SCREW	4		M10 X 90
2	AP35324	SUCTION FAN	1		
3	R81911	HUB	1		

ENGINE COOLANT RECOVERY SYSTEM

T188383 -UN-28MAR03

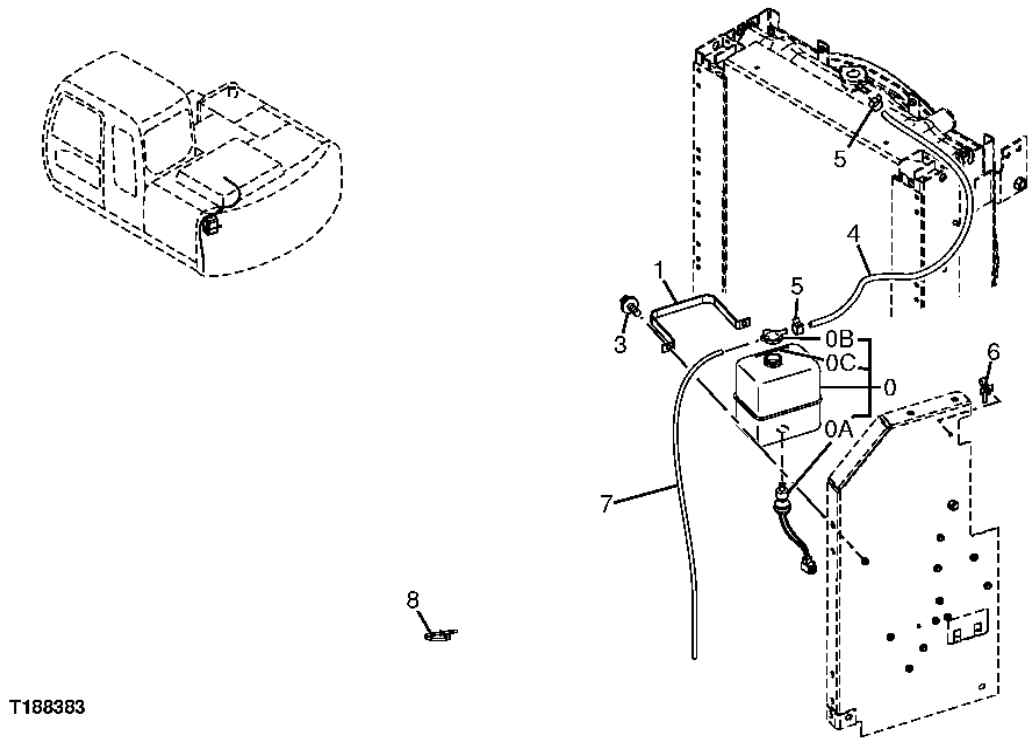

T188383

ENGINE COOLANT RECOVERY SYSTEM

KEY	PART NO.	PART NAME	QTY	SERIAL NO.	REMARKS
0	4130139	TANK	1		
0A	4153251	SENDER	1		
0B	4396809	CAP	1		
0C	4288260	PLATE	1		
1	4180555	BRACKET	1		
3	19M7881	SCREW	2		M8 X 20
	24M7055	WASHER	2		8.400 X 16 X 1.600 MM
4	T79477	HOSE	1		(CUT TO LENGTH FROM BULK)
5	TY22462	CLAMP	2		(SUB FOR AR48236) (SUB FOR 4208073)
6	4254600	CLIP	1		
7	T79477	HOSE	1		(CUT TO LENGTH FROM BULK MATERIAL) (SUB FOR 4142844)
8	H77698	TIE BAND	1		

RADIATOR, FUEL COOLER, OIL COOLER, AND CHARGE AIR COOLER

T191229 -UN-10JUL03

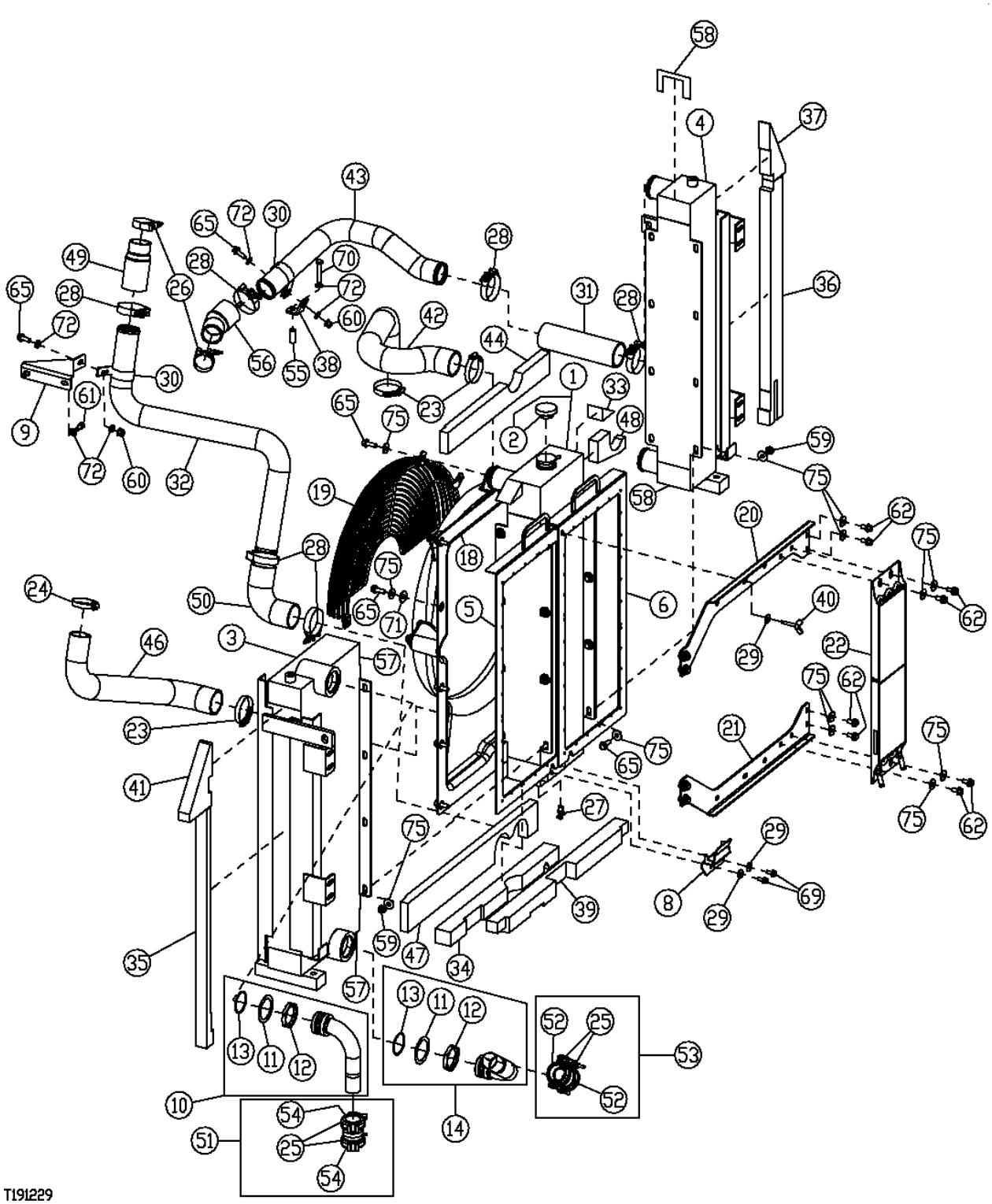

THIS PARTS LISTING IS CONTINUED

RADIATOR, FUEL COOLER, OIL COOLER, AND CHARGE AIR COOLER

KEY	PART NO.	PART NAME	QTY	SERIAL NO.	REMARKS
1	AT317586	RADIATOR	1		(SUB FOR AP35298)
2	AT173610	FILLER CAP	1		
3	AT317587	OIL COOLER	1		(SUB FOR AP35299)
4	AT317606	INTERCOOLER	1		CHARGE AIR COOLER, (SUB FOR AP35300)
5	AP35301	SCREEN	1		LEFT TRASHSCREEN
6	AP35302	SCREEN	1		RIGHT TRASHSCREEN
8	AP35306	SHROUD	1		
9	AP35307	ANGLE	1		
10	AP35316	FITTING	1		
11	P61266	WASHER	2		
12	P61267	LOCK NUT	2		
13	R43750	O-RING	2		
14	AP35317	FITTING	1		
18	AP35337	SHROUD	1		FAN SHROUD
19	AP35338	GUARD	1		FAN GUARD
20	AP35372	ANGLE	1		
21	AP35373	ANGLE	1		
22	AP35374	HEAT SINK	1		FUEL COOLER
23	DH400620	HOSE CLAMP	3		(AR21999 NOT USED FOR THIS APPLICTION)
24	4357297	HOSE CLAMP	1		(AR40418 NOT USED FOR THIS APPLICTION)
25	.....	HOSE CLAMP	4		(PROVIDED WITH KITS)
26	AT105289	CLAMP	2		
27	AT13740	DRAIN VALVE	1		DRAIN
28	AT198270	CLAMP	6		
29	24M7298	WASHER	3		8.400 X 25 X 2 MM
30	F1451R	CLAMP	2		
31	P61231	HOSE	1		CAC TO INTAKE MANIFOLD
32	P61235	TUBE	1		TURBO TO CAC
33	P61236	ISOLATOR	2		(TOP TANK BAFFLE)
34	P61237	PAD	1		
35	P61238	PAD	1		
36	P61239	PAD	1		
37	P61249	PAD	1		
38	P61265	PAD	1		
39	P61273	PAD	1		
40	P61323	WING SCREW	1		
41	P61332	PAD	1		
42	P61333	RADIATOR HOSE	1		
43	P61334	TUBE	1		CAC TUBE
44	P61335	PAD	1		
46	P61337	HOSE	1		LOWER RADIATOR HOSE
47	P61338	PAD	1		
48	P61339	PAD	1		
49	P61340	HOSE	1		TURBO TO CAC- HOT SIDE
50	P61341	RADIATOR HOSE	1		TURBO TO CHARGE AIR COOLER- COLD SIDE
51	4069801	COUPLING	1		
52	4196260	SEAL	2		(SUB FOR TH106967)
53	4067834	COUPLING	1		
54	4196259	SEAL	2		(SUB FOR TH106966)
55	28H1497	BUSHING	1		
56	T160123	HOSE	1		CAC TO CYLINDER HEAD INTAKE - COLD SIDE
57	T63018	ISOLATOR	1		
58	DH400609	ISOLATOR	1		(AT66778 NOT USED FOR THIS APPLICATION)
59	14M7296	FLANGE NUT	11		M10
60	14M7400	LOCK NUT	2		M10
61	19M7695	SCREW	2		M10 X 20
62	19M7784	SCREW	14		M10 X 20
65	19M7786	SCREW	32		
69	19M7866	SCREW	2		
70	19M8499	CAP SCREW	1		M10 X 60
71	24H1330	WASHER	10		15/32" X 1-3/8" X 7/64"
72	24M7239	WASHER	7		10.700 X 21 X 2.500 MM
75	24M7296	WASHER	62		10.500 X 30 X 2.500 MM

RADIATOR MOUNTING AND SUPPORT BRACKET

T191216 -UN-02JUN03

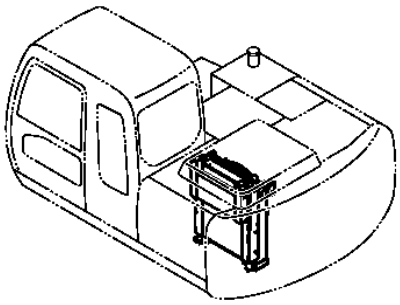

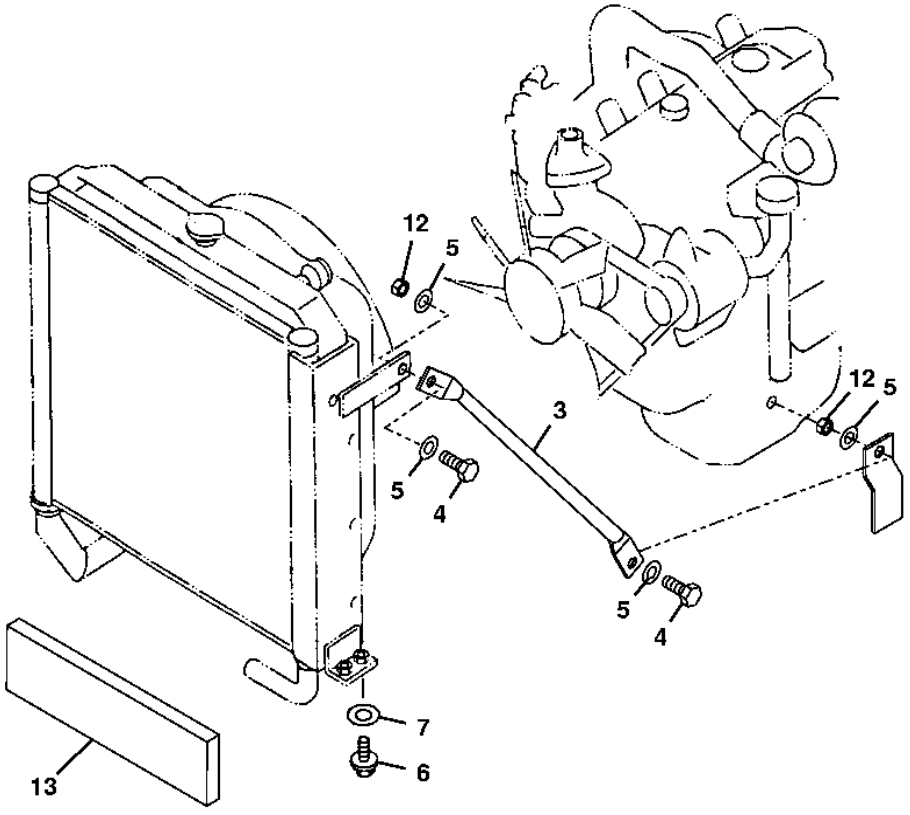

T191216

RADIATOR MOUNTING AND SUPPORT BRACKET

KEY	PART NO.	PART NAME	QTY	SERIAL NO.	REMARKS
3	P68157	SUPPORT	1		
4	19M7409	CAP SCREW	2		M16 X 50
5	24M7241	WASHER	4		17 X 34 X 4 MM
6	19M7814	SCREW	4		M12 X 50
7	24M7180	WASHER	4		13 X 37 X 3 MM, (SUB FOR 24M7345, THIS APPLICATION)
12	14M7328	LOCK NUT	2		M16
13	P63201	PAD	1		

AIR CLEANER, RESTRICTION SENSOR, AND HOSES TO TURBOCHARGER

T188389 -UN-28MAR03

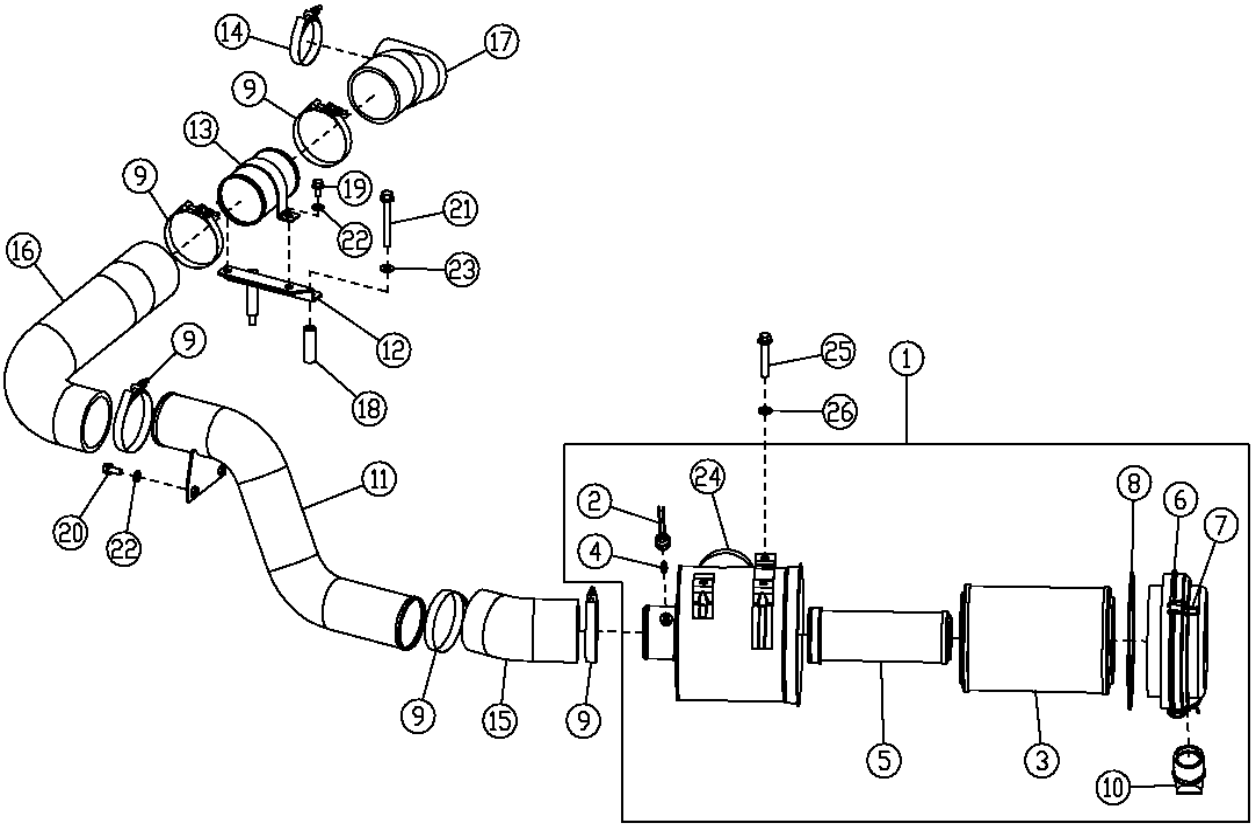

T188389

AIR CLEANER, RESTRICTION SENSOR, AND HOSES TO TURBOCHARGER

KEY	PART NO.	PART NAME	QTY	SERIAL NO.	REMARKS
1	AP35304	AIR CLEANER	1		
2	AP33252	SENSOR	1		
3	AP35310	AIR FILTER	1		
4	AR44361	FITTING	1		
5	AT175345	AIR FILTER	1		
6	AT175357	COVER	1		
7	AT209926	CLIP	3		
8	T163113	O-RING	1		
9	AP35251	HOSE CLAMP	5		
10	T158495	VALVE	1		
11	AP35330	PIPE	1		
12	AP35331	BRACKET	1		
13	AT218156	PIPE	1		
14	AT50923	HOSE CLAMP	1		
15	P61290	HOSE	1		
16	P61291	HOSE	1		
17	P61292	HOSE	1		
18	T161818	BUSHING	2		
19	19M7784	SCREW	2		M10 X 20
20	19M7785	SCREW	2		M10 X 25
21	19M7820	SCREW	2		M12 X 100
22	24M7239	WASHER	2		10.700 X 21 X 2.500 MM
23	24M7240	WASHER	2		13 X 25 X 3 MM
24	AT206888	CAP	1		
25	19M7875	CAP SCREW	3		M10 X 70, (AIR CLEANER TO TOP COVER)
26	24M7101	WASHER	3		11 X 34 X 3 MM

AIR PRE-CLEANER

T197429 -UN-23JAN04

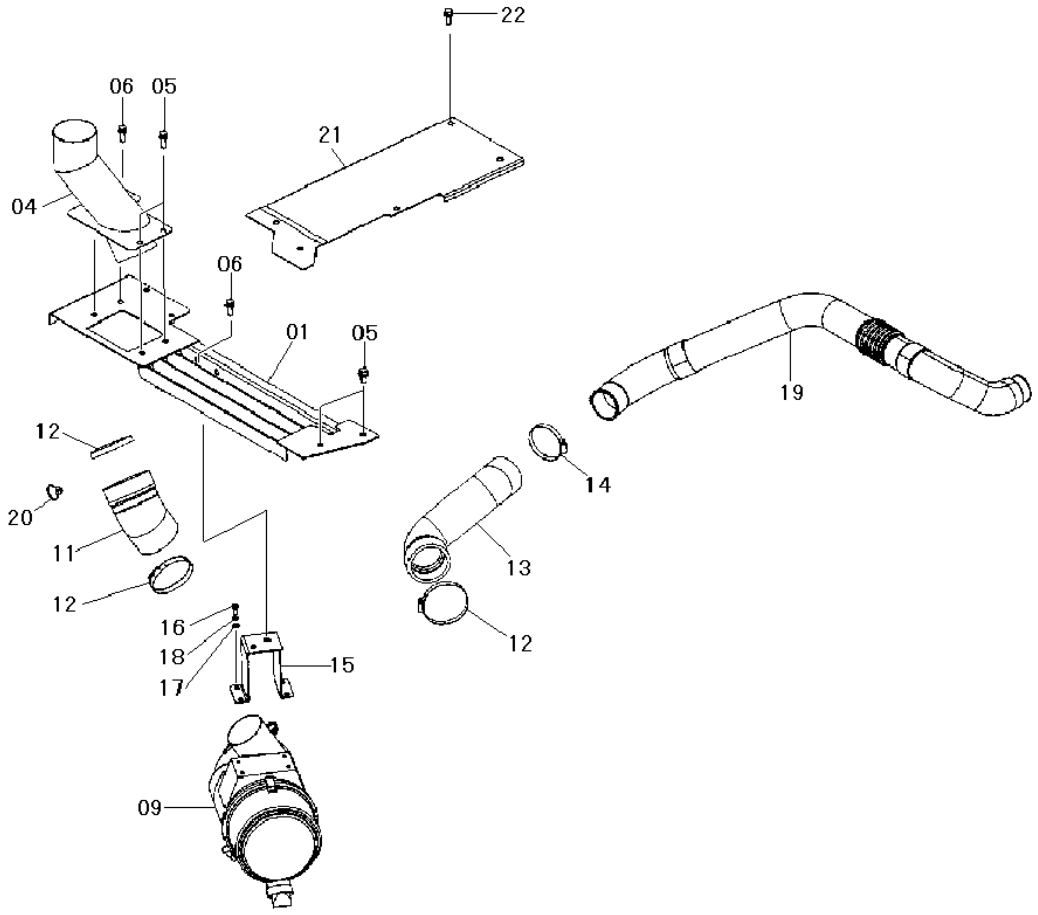

T197429

AIR PRE-CLEANER

KEY	PART NO.	PART NAME	QTY	SERIAL NO.	REMARKS
1	7043267	COVER	1		
4	8089810	AIR FLOW TUBE	1		
5	19M7402	CAP SCREW	4		
6	12M7066	LOCK WASHER	4		
	19M7662	CAP SCREW	4		
	24M7028	WASHER	4		
9	4485408	AIR CLEANER	1		
11	4482253	HOSE	1		
12	Z29925	CLAMP	3		
13	2048626	HOSE	1		
14	4503469	HOSE CLAMP	1		
15	8089811	BRACKET	1		
16	19M7139	CAP SCREW	4		
17	24M7055	WASHER	4		
18	12M7056	LOCK WASHER	4		
19	4485409	AIR DUCT	1		
20	H77698	TIE BAND	2		
21	3097024	COVER	1		
22	12M7066	LOCK WASHER	5		
	19M7662	CAP SCREW	5		
	24M7028	WASHER	5		

EXHAUST PIPE, MUFFLER, AND BRACKET

T188390 -UN-28MAR03

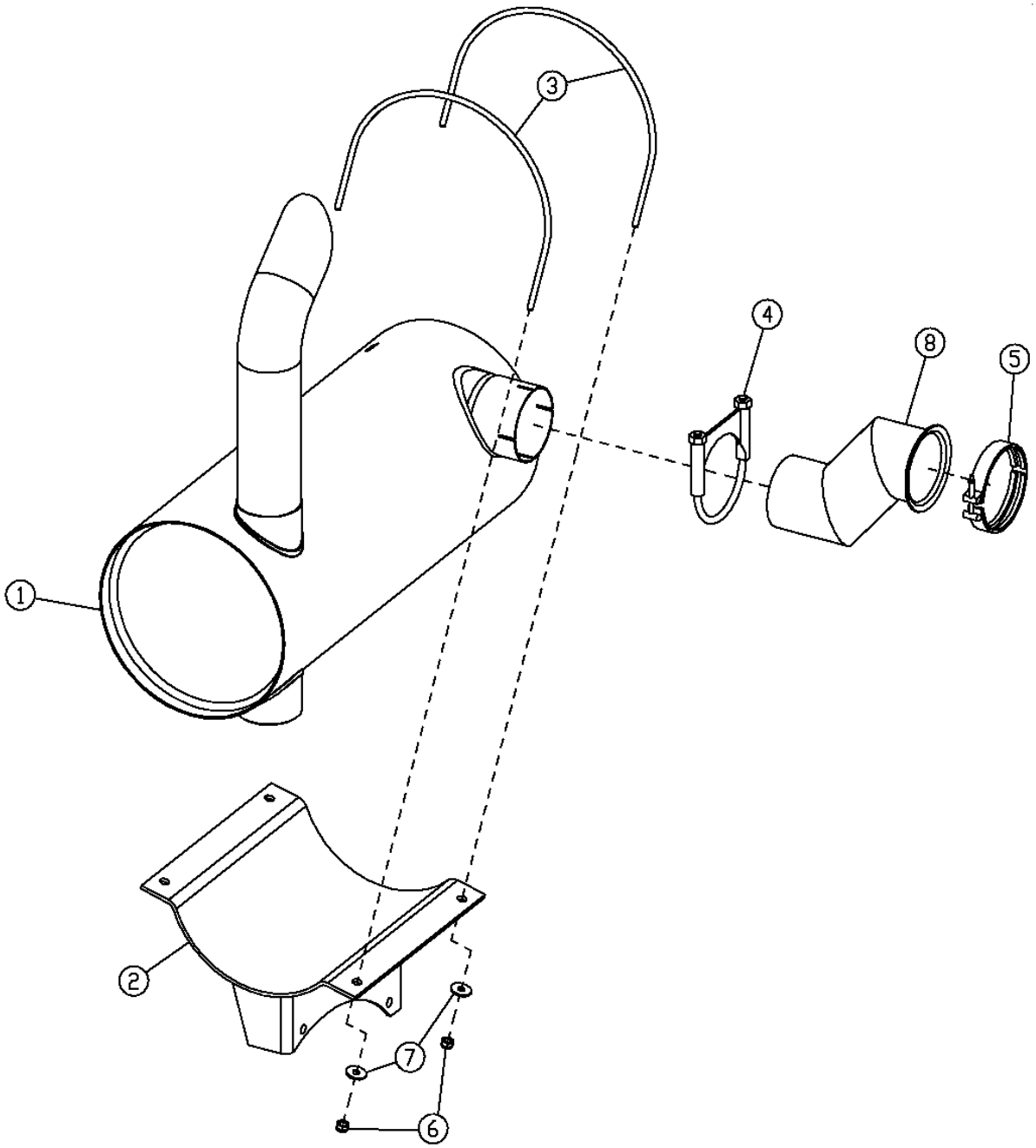

T188390

EXHAUST PIPE, MUFFLER, AND BRACKET

KEY	PART NO.	PART NAME	QTY	SERIAL NO.	REMARKS
1	AP35308	MUFFLER	1		
2	AP35250	SUPPORT	2		
3	P60649	HOOK BOLT	2		
4	AT147401	CLAMP	1		
5	RE40048	CLAMP	1		
6	14M7166	LOCK NUT	4		M8
7	24M7298	WASHER	4		8.400 X 25 X 2 MM
8	P61112	EXHAUST PIPE	1		

ENGINE MOUNTING BRACKETS AND ISOLATORS

T158627 -UN-21AUG02

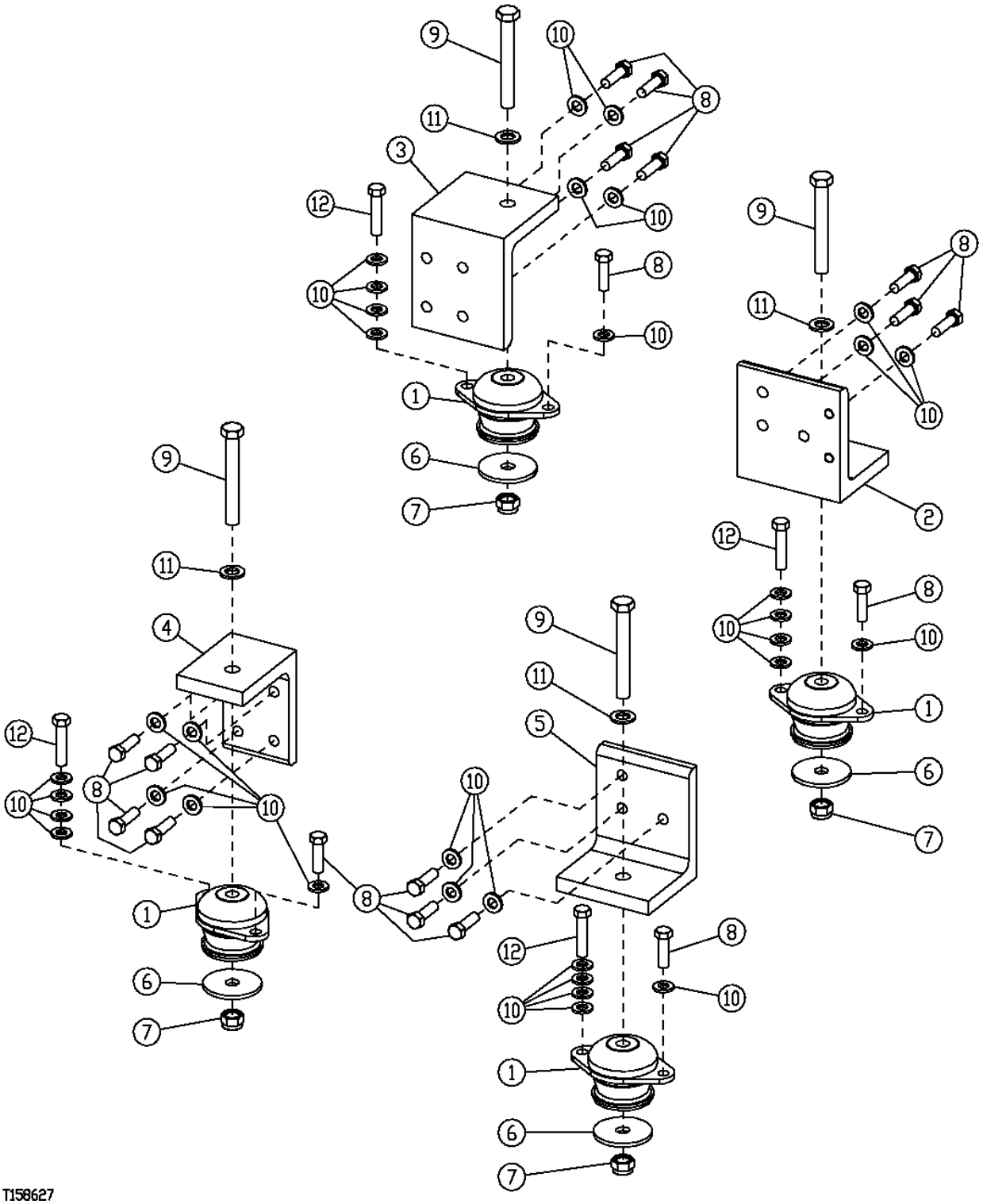

ENGINE MOUNTING BRACKETS AND ISOLATORS

KEY	PART NO.	PART NAME	QTY	SERIAL NO.	REMARKS
1	AP35325	ISOLATOR	4		
2	P61260	ANGLE	1		
3	P61261	ANGLE	1		
4	P61262	ANGLE	1		
5	P61263	ANGLE	1		
6	R111207	WASHER	4		
7	14M7238	FLANGE NUT	4		M18
8	19M7493	CAP SCREW	18		M12 X 40
9	19M7941	CAP SCREW	4		M16 X 120
10	24M7240	WASHER	34		13 X 25 X 3 MM, (WASHERS ARE REQUIRED FOR TORSIONAL STABILITY)
11	24M7338	WASHER	4		17 X 30 X 3 MM
12	19M7362	CAP SCREW	4		M12 X 55

FUEL TANK, LEVEL FLOAT, AND FILLER CAP

T188391 -UN-24APR03

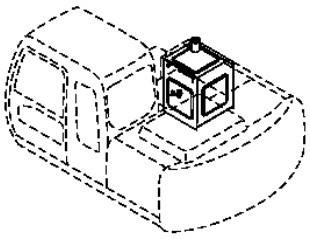

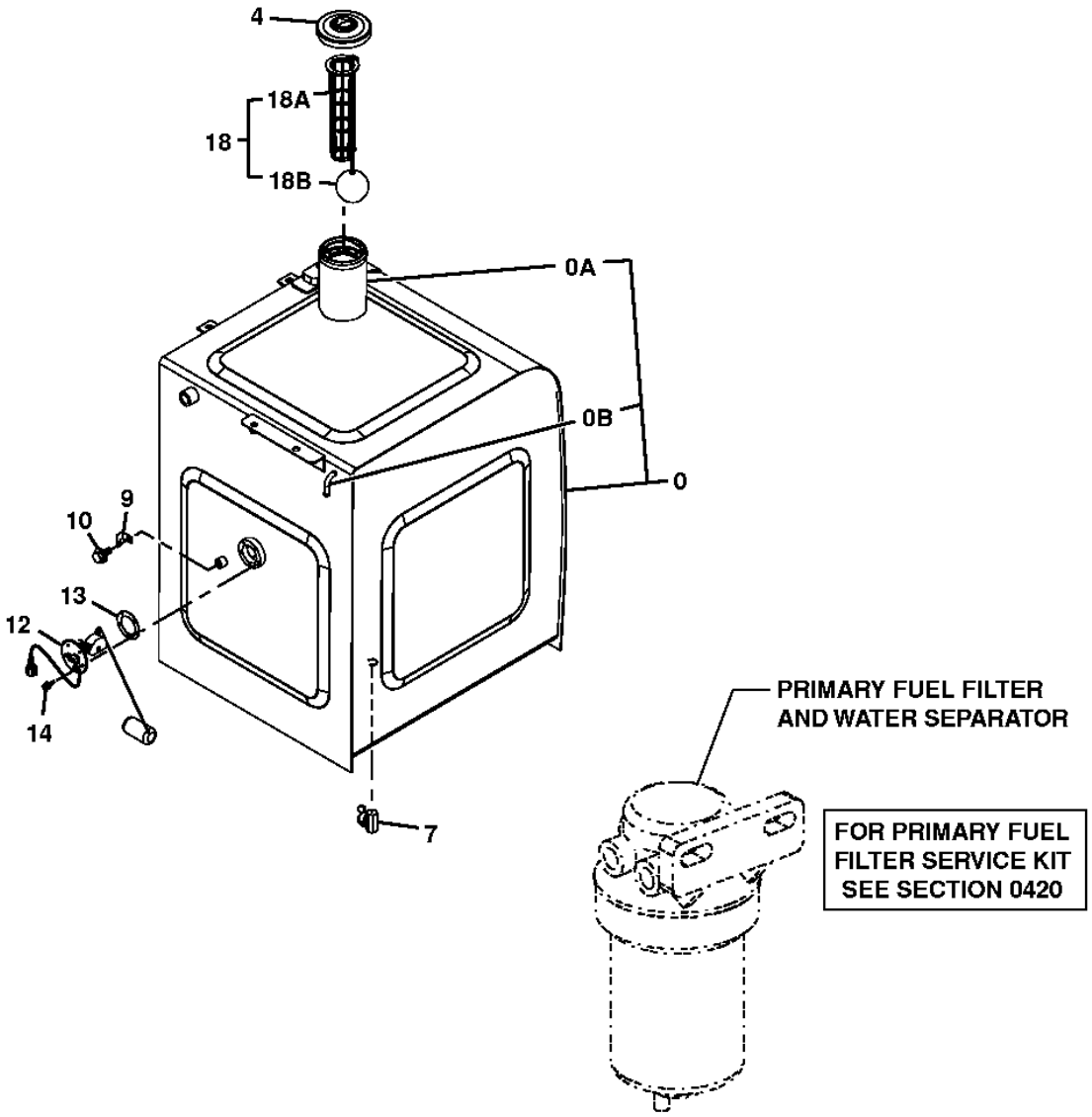

T188391

FUEL TANK, LEVEL FLOAT, AND FILLER CAP

KEY	PART NO.	PART NAME	QTY	SERIAL NO.	REMARKS
0	AP37217	FUEL TANK	1		
0A	4121497	BUSHING	1		
0B	4249777	PIPE	1		
4	4361638	FILLER CAP	1		
7	AT13740	DRAIN VALVE	1		
9	4257159	BRACKET	1		
10	19M7938	CAP SCREW	1		M10 X 20
	12M7066	LOCK WASHER	1		10 MM
12	4257128	FLOAT	1		
13	U42323	GASKET	1		
14	21M7278	SCREW	5		M5 X 10
	12M7064	LOCK WASHER	5		5 MM
18	4353560	STRAINER	1		
18A	4353560	STRAINER	1		(SUB FOR 4372619)
18B	4372620	FLOAT	1		

FUEL TANK MOUNTING

TP54540 -UN-21JAN97

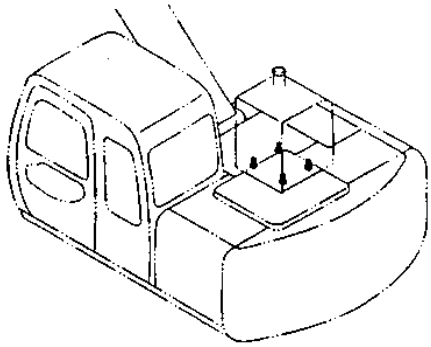

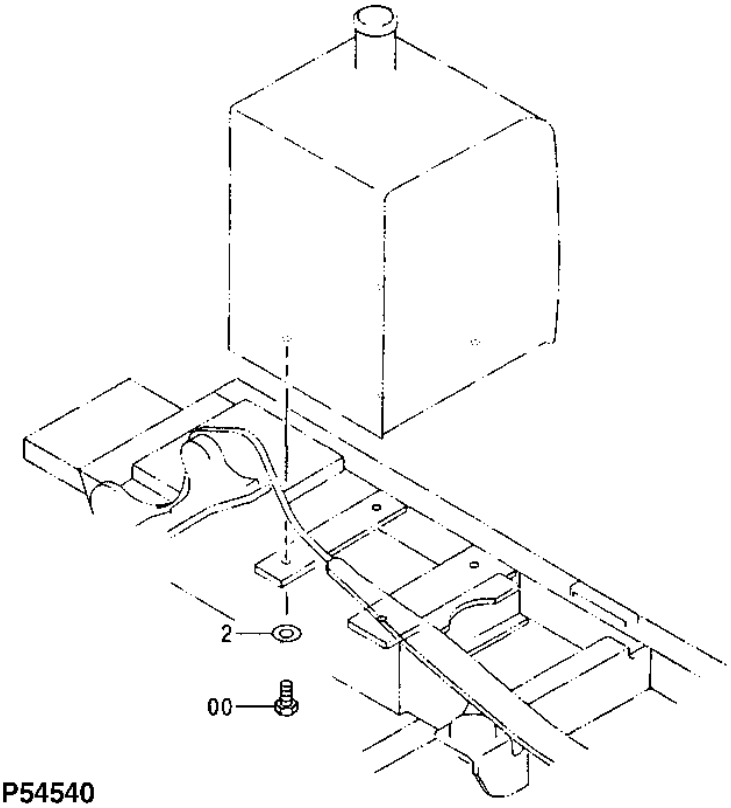

TP54540

FUEL TANK MOUNTING

KEY	PART NO.	PART NAME	QTY	SERIAL NO.	REMARKS
0	19M8035	CAP SCREW	4		M16 X 35
2	24M7241	WASHER	4		17 X 34 X 4 MM (0.669" X 1.339" X 0.157")

LOW PRESSURE FUEL HOSES FROM FUEL TANK TO ENGINE

T189309 -UN-11APR03

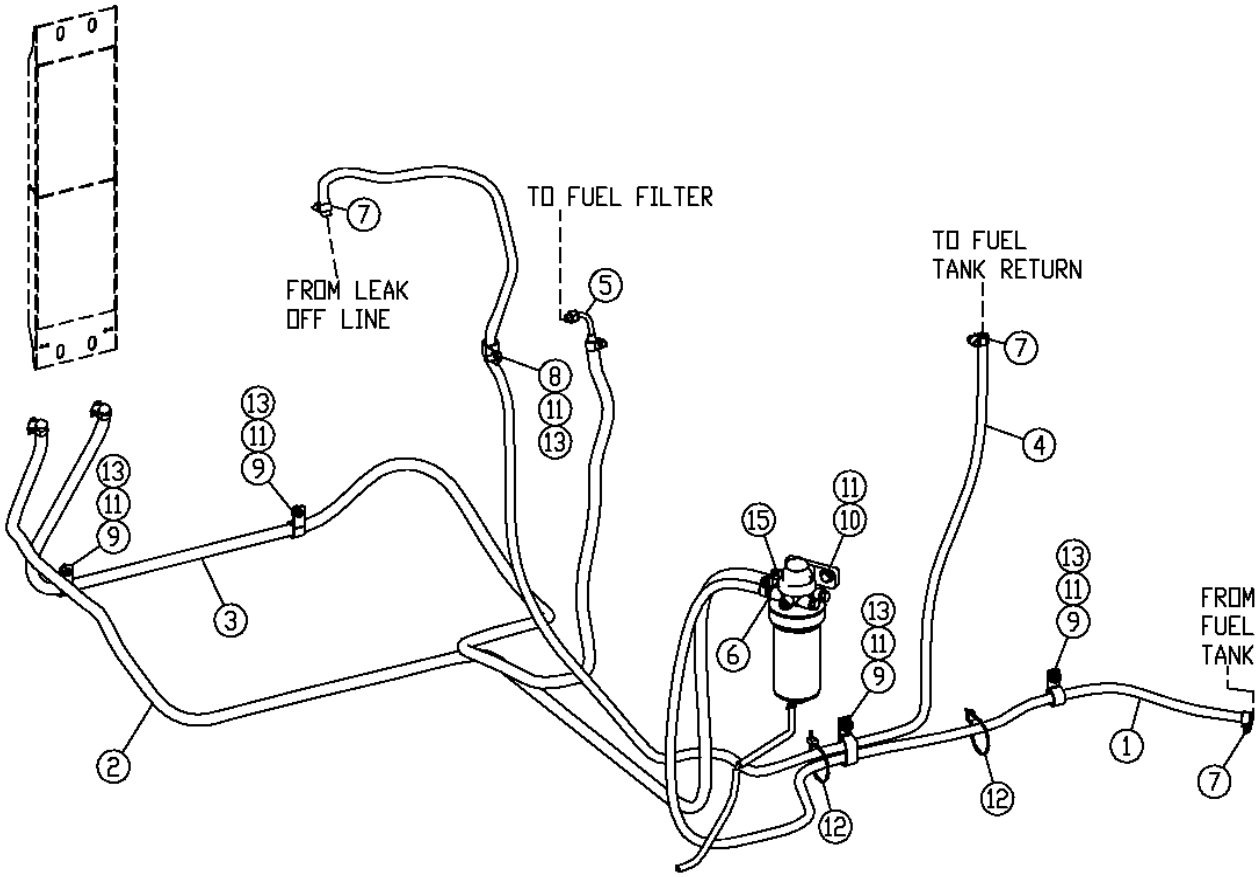

T189309

LOW PRESSURE FUEL HOSES FROM FUEL TANK TO ENGINE

KEY	PART NO.	PART NAME	QTY	SERIAL NO.	REMARKS
1	.....	HOSE	1		(FURNISH TY24398 CUT TO 2000MM) (SUB FOR AP34468)
2	.....	HOSE	1		(FURNISH TY24399 CUT TO LENGTH) (SUB FOR AP39339)
3	.....	HOSE	1		(FURNISH TY24399 CUT TO LENGTH) (SUB FOR AP39339)
4	.....	HOSE	1		(FURNISH TY24398 CUT TO 3070MM) (SUB FOR AP34469)
5	AP35377	ADAPTER	1		
6	AP35375	FITTING	1		
7	AT145649	CLAMP	8		
8	19M8440	SCREW	2		M10 X 25
9	19M7274	CAP SCREW	5		M8 X 70
10	19M7576	SCREW	2		M10 X 30
11	24M7028	WASHER	8		10.500 X 20 X 2 MM
12	H77698	TIE BAND	2		
13	4190266	CLIP	4		
14	T24432	CLAMP	2		(SUB FOR 4190277)
15	RE500576	ADAPTER	1		

LABELS AND DECALS

T188918 -UN-10APR03

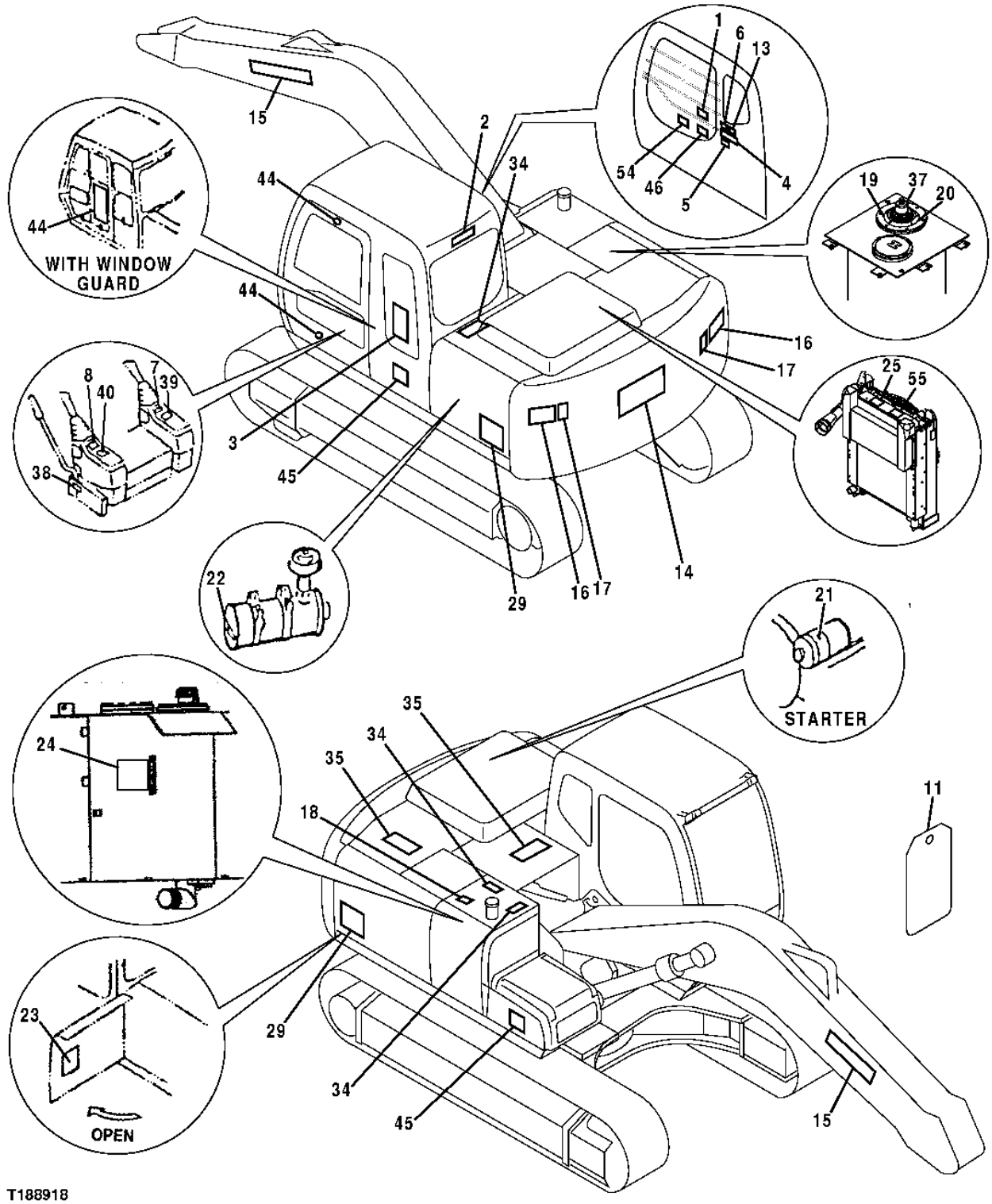

LABELS AND DECALS

KEY	PART NO.	PART NAME	QTY	SERIAL NO.	REMARKS
1	T188862	LABEL	1		(OPERATION DECAL)
2	T187535	LABEL	1		(CAUTION)(FRONT WINDOW)
3	T190514	LABEL	1		(120C LIFT CHART)
4	T146668	SAFETY SIGN	1		(WARNING - AVOID CRUSHING)
5	T159887	SAFETY SIGN	1		(CAUTION)
6	T146667	SAFETY SIGN	1		(DANGER-ELECTROCUTION)
7	.....	LABEL	1		(SUB T201519) (SUB FOR T159842, THIS APPLICATION) (RIGHT CONTROL LEVER - SAE PATTERN) (WHITE BACKGROUND)
	T159843	LABEL	1		(CONTROL RIGHT)
8	.....	LABEL	1		(SUB T201519) (SUB FOR T159841, THIS APPLICATION) (LEFT CONTROL LEVER - SAE PATTERN) (WHITE BACKGROUND)
	T159844	LABEL	1		(CONTROL LEFT)
11	T84064	TAG	1		(DEERE)
13	T190393	LABEL	1		
14	T180076	LABEL	1		(DEERE)
15	T184020	LABEL	2		(DEERE CTWT)
16	T190310	SAFETY SIGN	2		(WARNING)
17	JD5909	REFLECTOR	2		(RED REFLECTOR TAPE) (CUT TO LENGTH FROM JD5909 BULK MATERIAL)
18	T79632	LABEL	1		(DIESEL ONLY, ENGLISH)
19	T101942	LABEL	1		(HYDRAULIC OIL)
20	P63448	LABEL	1		(CF100)
21	T146102	LABEL	1		(SAFETY DECAL - BYPASS START, ENGLISH)
22	R56902	LABEL	1		(DRY AIR CLEANER)
23	T208019	LABEL	1		PERIODIC MAINTENANCE) (SUB FOR T190933)
24	T149983	LABEL	1		(IMPORTANT OIL LEVEL)
25	T152657	SAFETY SIGN	1		(RADIATOR)
29	T190516	LABEL	2		(SERIES 120C)
34	H21259	MAT	2		(ANTI-SKID)
35	T25838	MAT	1		(TH110224 NOT AVAILABLE)
37	T187710	LABEL	1		(RESERVOIR COVER)
38	4299059	LABEL	1		(HYDRAULIC LOCKOUT)
39	4264805	LABEL	1		(IGNITION KEY SWITCH)
40	4288971	LABEL	1		(ETHER AID/MOTION)
41	T188737	LABEL	1		(INSTALLATION INSTRUCTION)
44	T187642	STOP	2		(DOOR STOP LABEL)
45	JD5765	LABEL	2		(LEAPING DEER)
46	T163997	LABEL	1		
54	T201519	LABEL	1		(PATTERN CHANGER) (SUB FOR T159842, T159841)
55	T146671	SAFETY SIGN	1		(RADIATOR CAP LABEL)
56	4121128	MAT	1		(NOT ILLUSTRATED)

METRIC O-RING KIT

TP70402 -UN-13JUL00

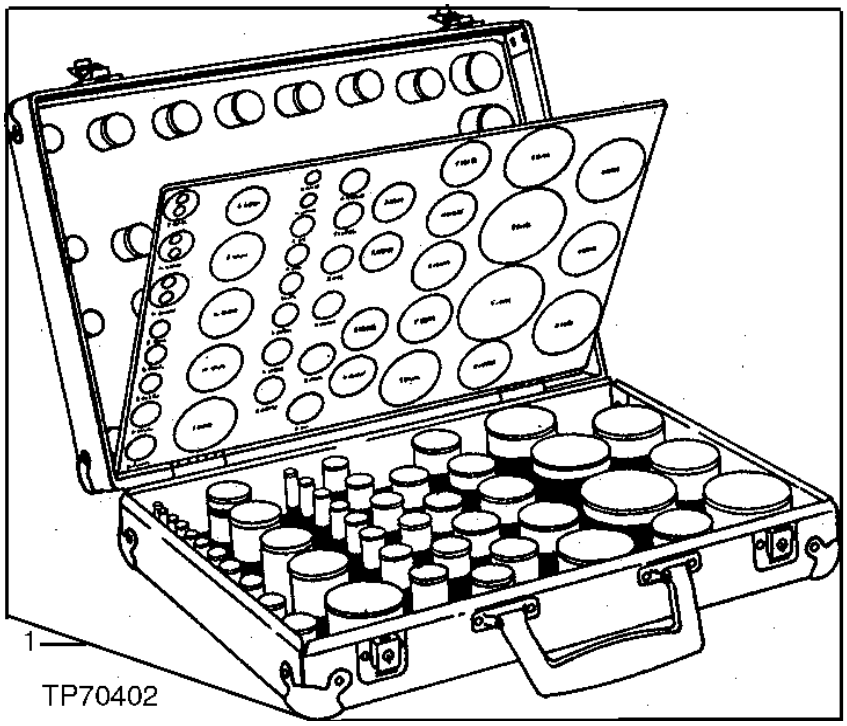

METRIC O-RING KIT

KEY	PART NO.	PART NAME	QTY	SERIAL NO.	REMARKS
1	AT130157	O-RING KIT	1		(CONTAINS ALL ITEMS LISTED BELOW)
..	CH11436	O-RING	5		49.400 X 3.100 MM (1.945" X 0.122")
..	CH11569	PACKING	5		
..	CH11570	O-RING	5		13.800 X 2.400 MM (0.543" X 0.094")
..	CH11571	PACKING	5		
..	CH11572	PACKING	2		
..	CH12329	PACKING	5		
..	CH14634	O-RING	5		17.800 X 2.400 MM (0.701" X 0.094")
..	CH14701	O-RING	5		39.400 X 3.100 MM (1.551" X 0.122")
..	CH17167	O-RING	2		9.800 X 1.900 MM (0.386" X 0.075")
..	CH19111	O-RING	5		7.645 X 1.778 MM (0.301" X 0.070")
..	M800650	PACKING	10		
..	M800893	PACKING	5		
..	AT264324	O-RING	5		(SUB FOR TH100044)
..	TH100055	O-RING	10		23.700 X 3.500 MM (0.933" X 0.138")
..	AT264347	O-RING	5		(SUB FOR TH100136)
..	TH101300	O-RING	5		29.400 X 3.100 MM (1.157" X 0.122")
..	TH101490	O-RING	2		7.800 X 1.900 MM (0.307" X 0.075")
..	TH101926	O-RING	5		28.700 X 3.500 MM (1.130" X 0.138")
..	TH102706	O-RING	2		39.700 X 3.500 MM (1.563" X 0.138")
..	TH102992	O-RING	2		39.400 X 3.100 MM (1.551" X 0.122")
..	TH103446	O-RING	2		3.800 X 1.900 MM (0.150" X 0.075")
..	AT264354	O-RING	5		(SUB FOR TH103574)
..	TH104634	O-RING	2		37.700 X 3.500 MM (1.484" X 0.138")
..	AT264360	O-RING	2		(SUB FOR 4506430, TH104930)
..	T110590	PACKING	5		
..	T110593	PACKING	5		
..	T59014	O-RING	5		24.994 X 3.531 MM (63/64" X 0.139")
..	A811045	O-RING	5		(SUB FOR T74492)
..	U10778	O-RING	5		16.358 X 2.210 MM (0.644" X 0.087")
..	U17409	O-RING	5		26.619 X 2.946 MM (1.048" X 0.116")
..	U46489	O-RING	10		17.800 X 2.400 MM (0.701" X 0.094")
..	AT318035	O-RING	10		(SUB FOR 4506424, TH100055)
..	A811030	O-RING	5		29.400 X 3.100 MM (1.157" X 0.122") (SUB FOR TH101300)
..	4506408	O-RING	2		7.800 X 1.900 MM (0.307" X 0.075") (SUB FOR TH101490)
..	957474	O-RING	2		39.700 X 3.500 MM (1.563" X 0.138") (SUB FOR TH102706)
..	A811040	O-RING	2		39.400 X 3.100 MM (1.551" X 0.122") (SUB FOR TH102992)
..	4153084	O-RING	2		3.800 X 1.900 MM (0.150" X 0.075") (SUB FOR TH103446)
..	970860	O-RING	2		37.700 X 3.500 MM (1.484" X 0.138") (SUB FOR TH104634)
..	4506418	O-RING	10		(SUB FOR U46489)

FLUID ANALYSIS PRODUCTS (OILSCAN PLUS TEST KIT)

T135474 -UN-15NOV00



T135474

FLUID ANALYSIS PRODUCTS (OILSCAN PLUS TEST KIT)

KEY	PART NO.	PART NAME	QTY	SERIAL NO.	REMARKS
1	.....	KIT	1		STANDARD ENGINE, SELF EXTRACTION (12 PER PACKAGE)(INCLUDES SPECTROCHEMICAL ANALYSIS, VISCOSITY, ° WATER, FUEL DILUTION, GLYCOL, FUEL SOOT) (SUB FOR AT178843) (AT178840 NO LONGER AVAILABLE FOR SERVICE - SUB AT180333)
	AT180333	KIT	1		STANDARD ENGINE, 4 OZ BOTTLE (10 PER PACKAGE) (SAME AS AT178840) (SUB FOR AT180335)
	.....	KIT	1		COMPREHENSIVE ENGINE W/TBN (EXTENDED DRAIN) (12 PER PACKAGE)(SAME AS AT178840 PLUS TBN) (AT178842 NO LONGER AVAILABLE FOR SERVICE - SUB AT180334)
	AT180334	KIT	1		COMPREHENSIVE ENGINE W/TBN (EXTENDED DRAIN) 4 OZ BOTTLE (10 PRT PACKAGE) (SAME AS AT178842)
	AT303189	KIT	1		COMPREHENSIVE HYDRAULIC & HYDROSTATIC SYSTEMS, 4 OZ BOTTLE (10 PER PACKAGE) (REQUIRES USE OF A SAMPLING VALVE FOR ACCURATE RESULTS) (SUB FOR AT178844)
	IPSKIT3	PUMP	1		OIL EXTRACTION (1 PER PACKAGE)(CAN BE USED WITH AT180333, AT180334, AND AT180335 KITS TO EXTRACT OIL SAMPLE)
	DS0345	TUBE	1		500'ROLL (USED WITH IPSKIT3 PUMP TO EXTRACT SAMPLE)
	DS0346	TUBE	1		100' ROLL (USED WITH IPSKIT3 PUMP TO EXTRACT SAMPLE)

FLUID ANALYSIS PRODUCTS (COOLSCAN PLUS TEST KIT)

T135475 -UN-15NOV00



T135475

KEY	PART NO.	PART NAME	QTY	SERIAL NO.	REMARKS
1	AT183016	KIT	1		COOLANT ANALYSIS (6 PER PACKAGE)(TESTS FREEZE POINT, ° ANTIFREEZE, PH, RESERVE ALKALINITY, NITRITE, MOLYBDATE, SILICATE, VISUAL ASSESSMENT & CORROSION METALS (IRON, COPPER, ALUMINUM & LEAD))

FLUID ANALYSIS PRODUCTS (DIESELSCAN TEST KIT)

T135476 -UN-15NOV00



T135476

KEY	PART NO.	PART NAME	QTY	SERIAL NO.	REMARKS
1	AT180344	KIT	1		DIESEL ANALYSIS (6 PER PACKAGE)(USED TO VERIFY TYPE, SUITABILITY FOR COLD TEMPERATURE OPERATIONS, CLEANLINESS, WATER CONTENT AND IF FUEL IS WITHIN ASTM SPECIFICATIONS. CHECKS API GRAVITY, VISCOSITY AT 40C, SULFUR, CETANE INDEX, DISTILLATION, CLOUD POINT, POUR POINT AND COLD FILTER PLUGGING POINT.

BATTERY, BATTERY CABLES, RELAY, AND COVER

T188399 -UN-28MAR03

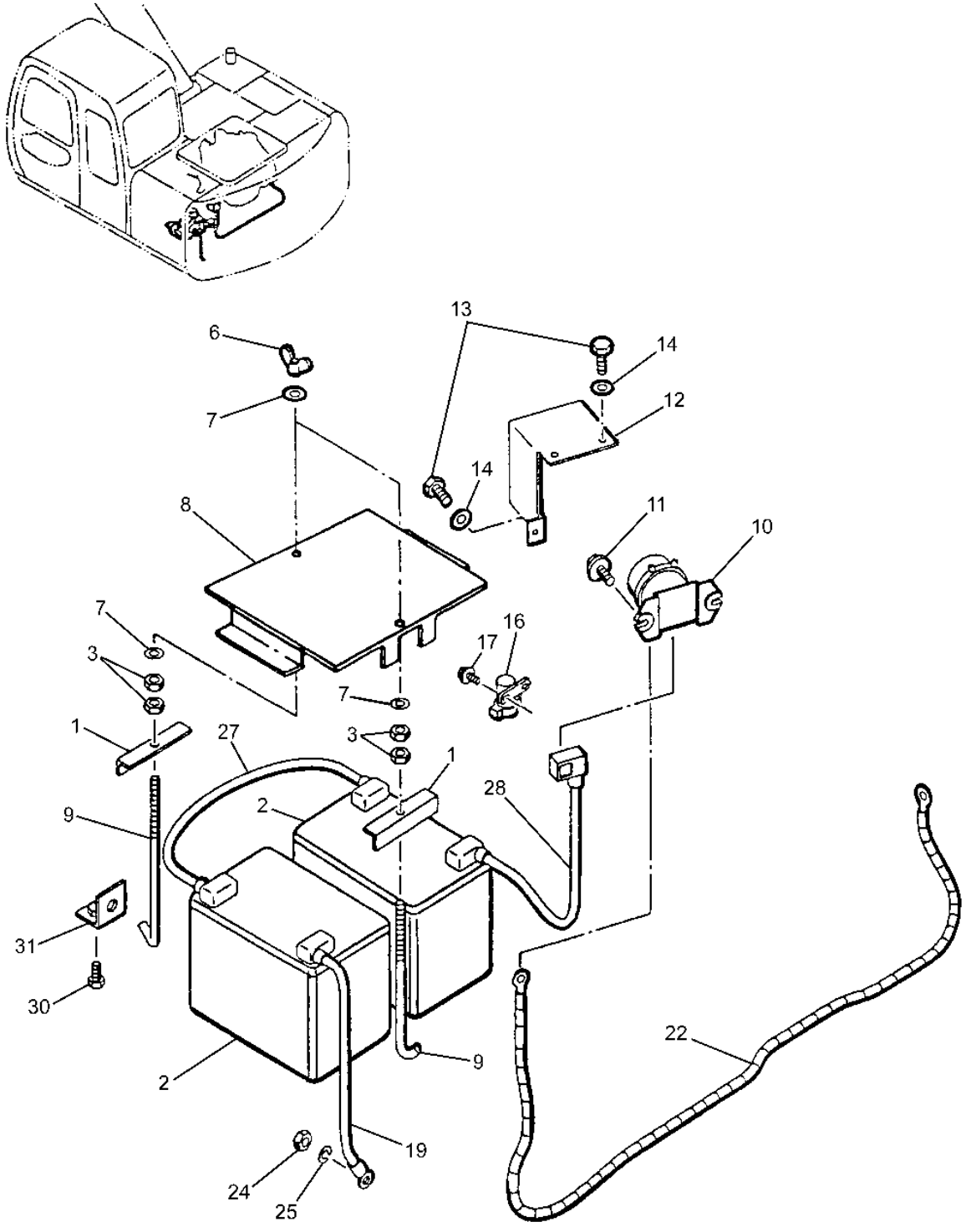

T188399

BATTERY, BATTERY CABLES, RELAY, AND COVER

KEY	PART NO.	PART NAME	QTY	SERIAL NO.	REMARKS
1	AT200425	ANGLE	2		
2	TY25803	DRY CHARGED BATTERY	2		(SUB FOR TY25803) (T174338 NOT AVAILABLE FOR SERVICE)
3	14M7274	NUT	4		M10
6	14M7025	WING NUT	2		M10
7	24M7028	WASHER	4		10.500 X 20 X 2 MM, (SUB FOR A590110)
8	DH800107	COVER	1		(SUB FOR P60923)
9	4257034	HOOK BOLT	2		
10	4255762	RELAY	1		
11	21M7288	SCREW	2		M6 X 10
12	3087816	COVER	1		
13	19M7162	CAP SCREW	3		
14	24M7055	WASHER	3		
16	AT145341	RELAY	1		
17	21M7267	SCREW	2		
19	AR45925	BATTERY CABLE	1		
22	4373214	WIRING HARNESS	1		
27	AP33487	WIRING HARNESS	1		
28	AP33486	WIRING HARNESS	1		
30	19M7402	CAP SCREW	2		M10 X 25
	24M7028	WASHER	2		10.500 X 20 X 2 MM
	12M7066	LOCK WASHER	2		10 MM
31	AP33477	BRACKET	1		

ALTERNATOR AND WIRING HARNESS

T188404 -UN-27MAR03

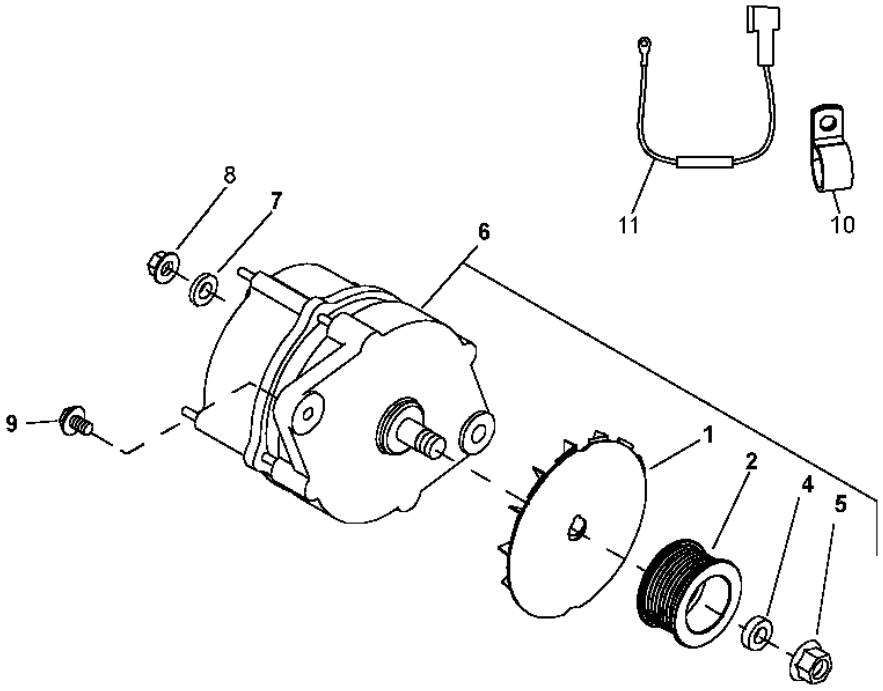

T188404

KEY	PART NO.	PART NAME	QTY	ENGINE SERIAL NO.	REMARKS
1	T158584	FAN	1		
2	R501486	PULLEY	1		
4	R48808	WASHER	1		
5	14M7296	FLANGE NUT	1		M10
6	TY24322	ALTERNATOR	1		24V, 45 AMP, (SUB FOR AT185696) (NEW CONVENIENCE ASSEMBLY)
	TY24322	ALTERNATOR	1		(REMANUFACTURED)
7	14M7297	NUT	1		M5
8	24M7210	WASHER	1		5.500 X 18 X 2 MM
10	T190303	CLAMP	1		
11	AT197149	WIRING HARNESS	1		

MEMORANDA

MEMORANDA

CONVERTER (24-VOLT TO 12-VOLT)

TP32780 -UN-01JAN94

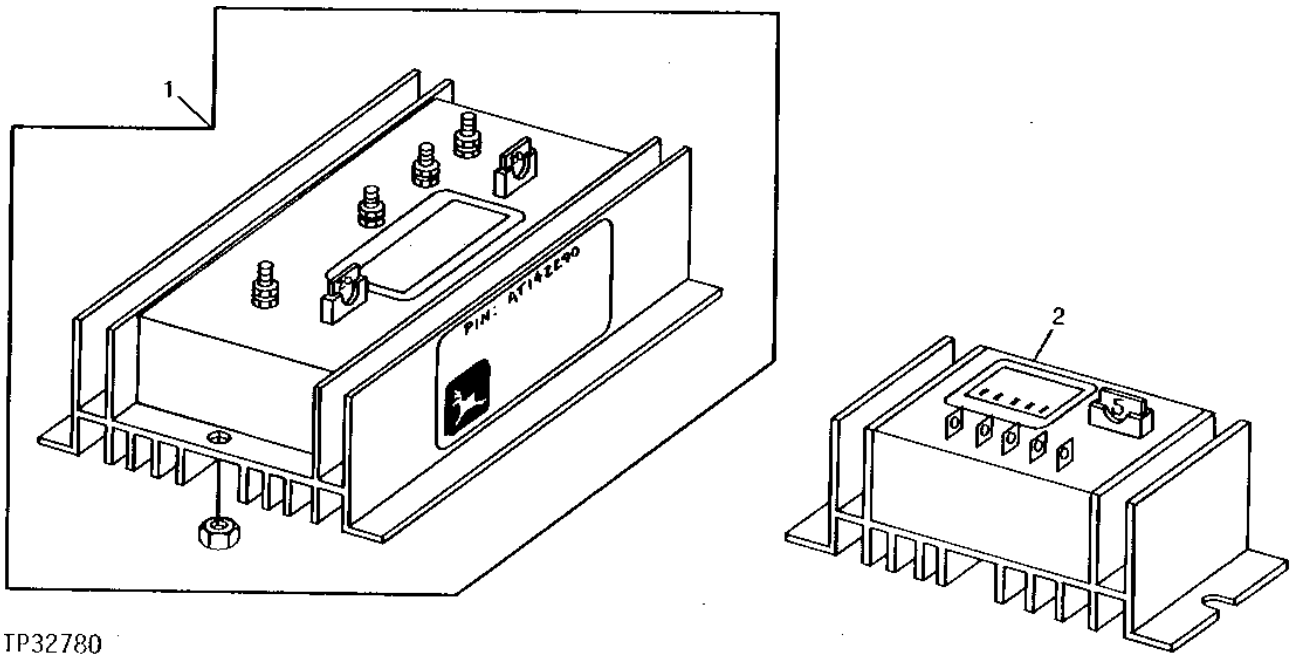

KEY	PART NO.	PART NAME	QTY	SERIAL NO.	REMARKS
1	AT142288	CONVERTER	1		(10/20 AMP - 24/12 VOLT)
	14H786	NUT	2		1/4", (NOT ILLUSTRATED)
2	AT224893	CONVERTER	1		(SUB FOR AT164676 AND AT223785) (5 AMP - 24/12 VOLT)

MIC CONTROLLER

T153299 -UN-05APR02

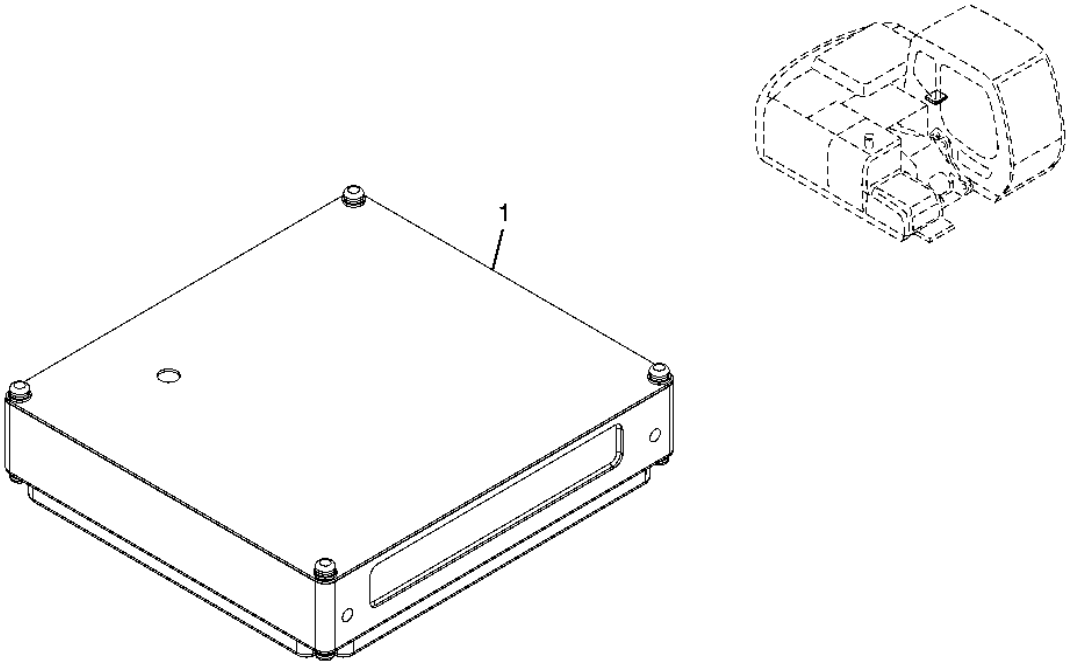

T153299

MIC CONTROLLER

KEY	PART NO.	PART NAME	QTY	SERIAL NO.	REMARKS
1	9239568	VEHICLE CONTROLLER	1		(MIC CONTROLLER) (SUB FOR 9194416 OR 9212078)

MIC CUSTOMER KIT AND CABLE (WITH MIC CONTROLLER)

T192372A -UN-19JUN03

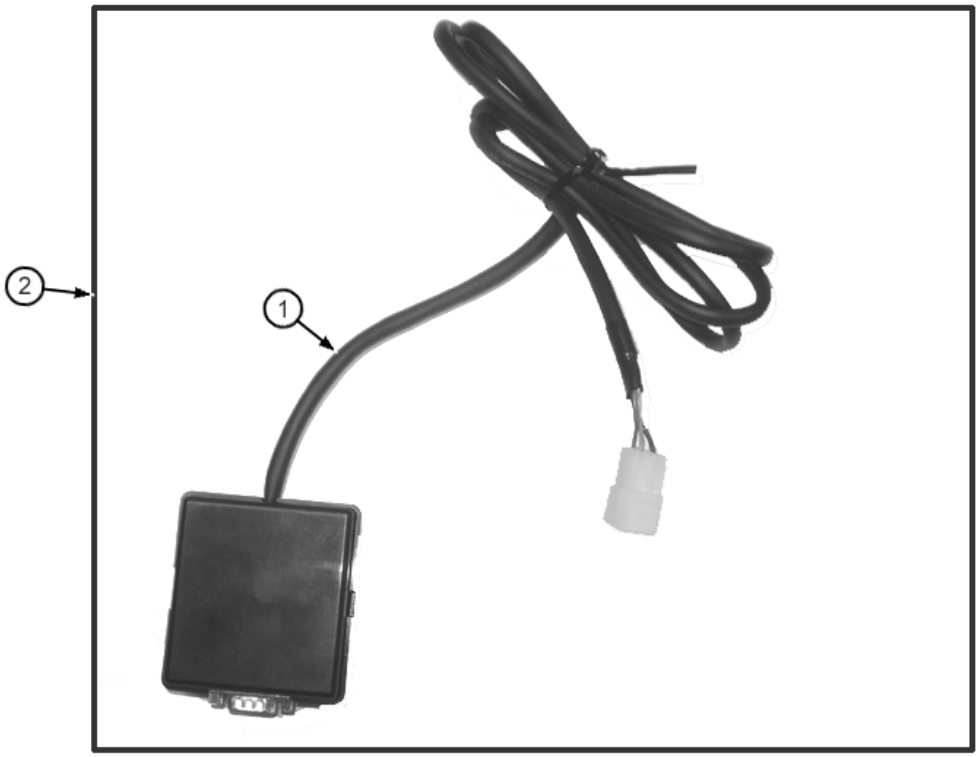

THIS PARTS LISTING IS CONTINUED

MIC CUSTOMER KIT AND CABLE (WITH MIC CONTROLLER)

KEY	PART NO.	PART NAME	QTY	SERIAL NO.	REMARKS
1	TH3100010	CABLE	1		
2	AT301723	KIT	1		(WHOLEGOODS)(MIC CUSTOMER KIT)(INCLUDES SOFTWARE AND CABLE)

CAB DISPLAY MONITOR AND WIRING HARNESS

T143273 -UN-28JUN01

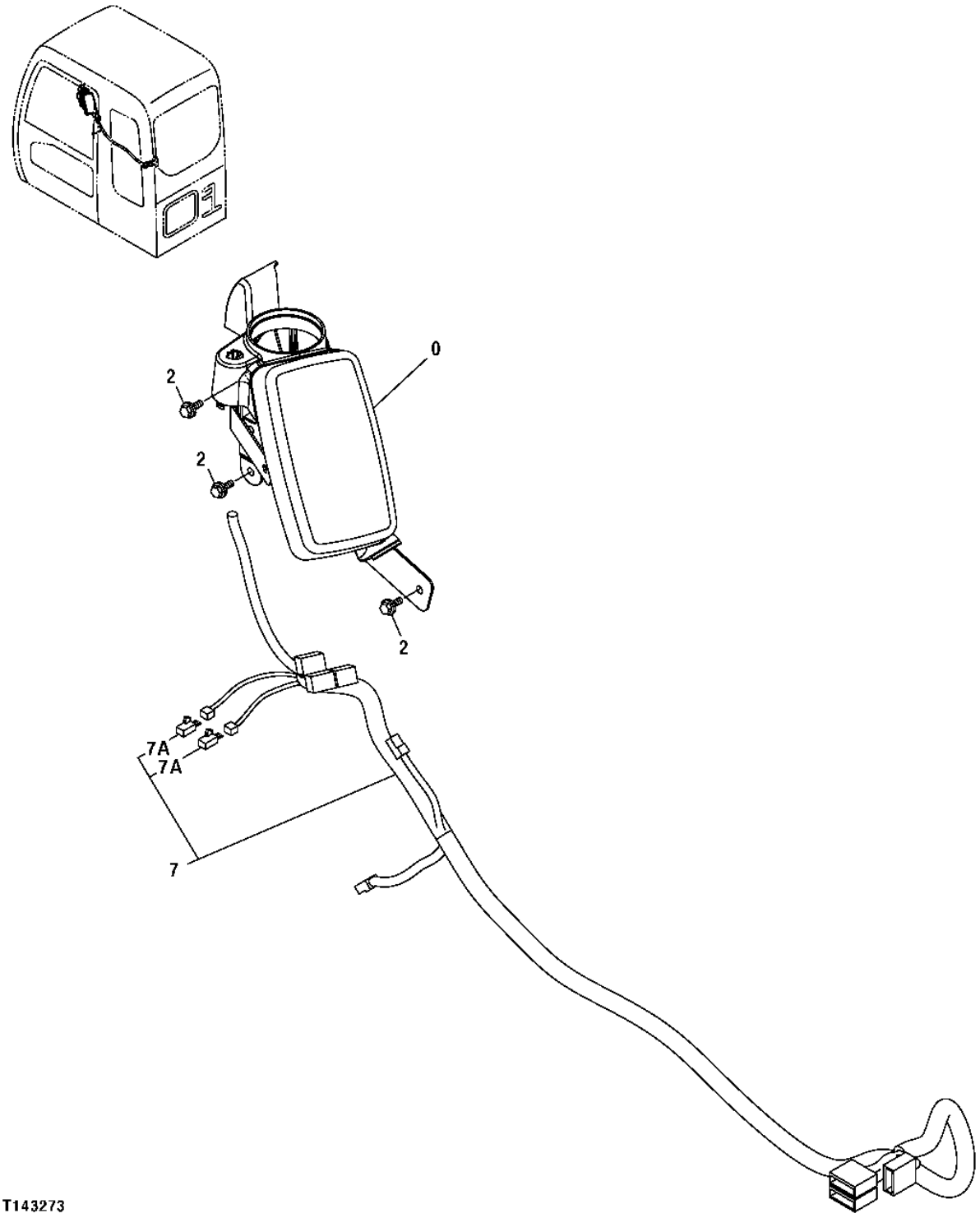

CAB DISPLAY MONITOR AND WIRING HARNESS

KEY	PART NO.	PART NAME	QTY	SERIAL NO.	REMARKS
0	4456486	MONITOR	1	-XXXXXX	(MONITOR WITH OIL AND COOLANT LEVEL LIGHTS INCLUDING MATCHING CONNECTORS)
	4609754	MONITOR	1	XXXXXX-	(MONITOR WITHOUT OIL AND COOLANT LEVEL LIGHTS INCLUDING MATCHING CONNECTORS)
2	19M7932	CAP SCREW	3		M8 X 16
	12M7065	LOCK WASHER	3		8 MM
7	1027579	WIRING HARNESS	1		
7A	4456778	DIODE	2		

CAB REAR ELECTRICAL COMPONENTS AND RIGHT CONTROL PANEL

T161605 -UN-13NOV02

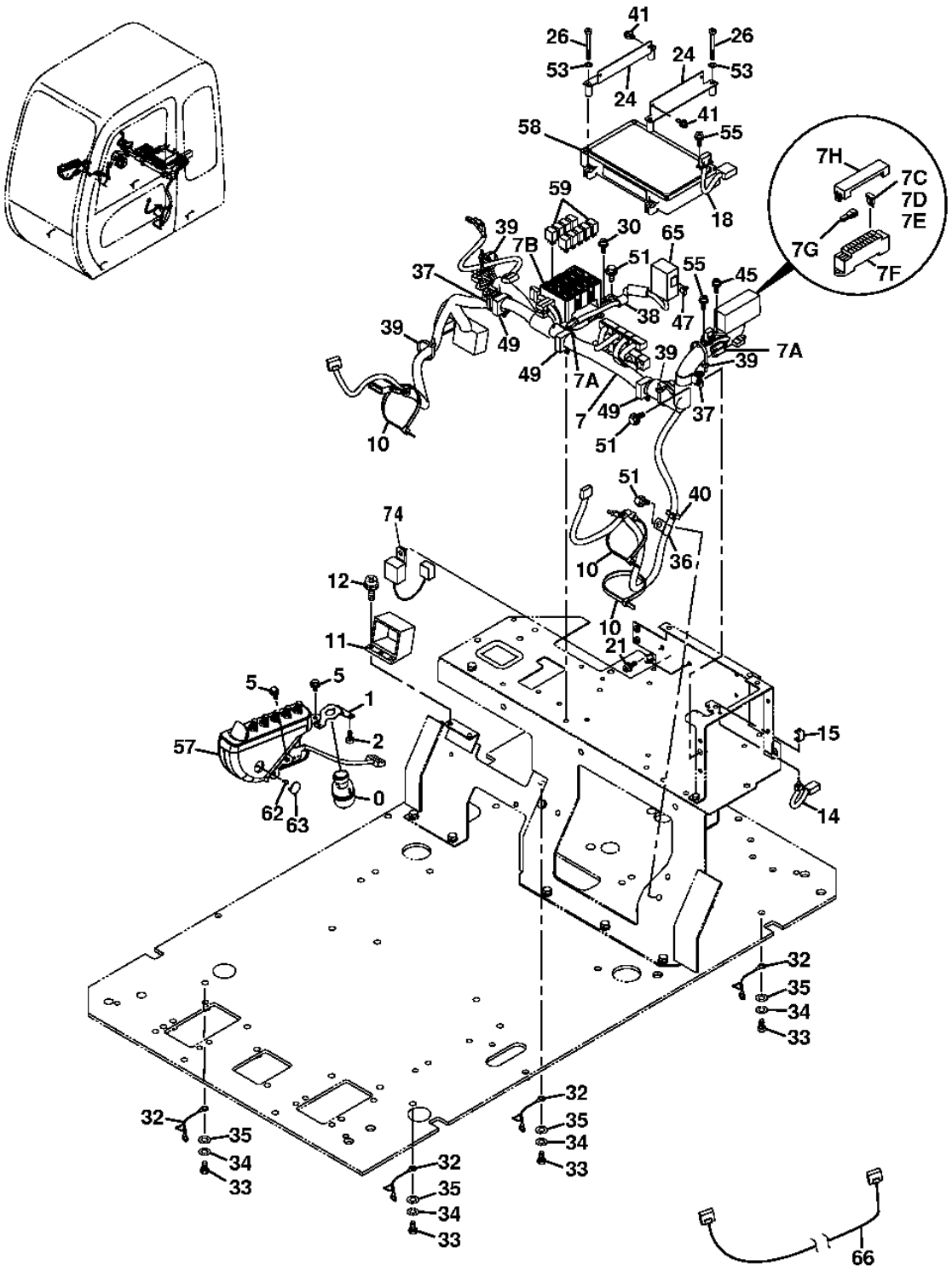

T161605

CAB REAR ELECTRICAL COMPONENTS AND RIGHT CONTROL PANEL

KEY	PART NO.	PART NAME	QTY	SERIAL NO.	REMARKS
0	4477373	SWITCH	1		
	AT194969	KEY	1		(SUB FOR AT147803)
1	3087882	BRACKET	1		
2	4361800	SCREW	3		
5	J010814	SCREW WITH WASHER	3		(TH4436737 NOT AVAILABLE FOR SERVICE)
7	0004616	WIRING HARNESS	1		(WITHOUT MIC CONTROLLER)
	0004069	WIRING HARNESS	1		(WITH MIC CONTROLLER)
7A	4456778	DIODE	5		
7B	4427429	CIRCUIT BOX	1		
7C	4428910	FUSE	10		
7D	4428911	FUSE	7		
7E	4436736	FUSE	2		
7F	4456735	FUSE HOLDER	1		(WITHOUT MIC CONTROLLER)
	4460037	FUSE BOX	1		(WITH MIC CONTROLLER)
7G	.....	PULLER	1		
7H	4443490	COVER	1		
10	H77698	TIE BAND	3		(SUB FOR 4121859)
11	4431090	ELECTRICAL CONNECTOR ASSY	1		
12	J460620	SCREW WITH WASHER	2		
14	4359384	SWITCH	1		
15	4367375	BRACKET	1		
18	4439897	WIRING HARNESS	1		
21	J460616	SCREW	2		
24	8082329	BRACKET	2		
26	M430660	SCREW	4		
30	J460620	SCREW WITH WASHER	4		
32	4281293	GROUND CABLE	4		
33	J901016	CAP SCREW	4		
34	A590910	WASHER	4		
35	24M7028	WASHER	4		10.500 X 20 X 2 MM, (SUB FOR A590110)
36	4190261	CLIP	1		
37	4192035	CLIP	1		
38	4190253	CLIP	1		
39	.....	CLIP	5		(4055312 NOT AVAILABLE FOR SERVICE)
40	.....	CLIP	1		(4055311 NOT AVAILABLE FOR SERVICE)
41	J460510	SCREW	4		
45	J460620	SCREW WITH WASHER	2		
47	J020816	BOLT	2		
49	4449019	CLIP	3		
51	J011020	CAP SCREW	3		
53	24M7054	WASHER	4		6.400 X 12 X 1.600 MM, (SUB FOR A590106)
55	J460310	SCREW	4		
57	4454518	CONTROL CONSOLE	1		
58	9226756	VEHICLE CONTROLLER	1		(SUB FOR 4449503)
59	4436534	RELAY	9		
62	4381572	SCREW	1		
63	4426354	CAP	1		
65	4452160	RELAY	1		
66	2048203	WIRING HARNESS	1		(2.75M EXTENSION)
	2048184	WIRING HARNESS	1		(4.6M EXTENSION)
74	AT195741	WIRING HARNESS	1		(WITH RELAY, ALTERNATOR)

BOOM MOUNTED FRONT WORK LIGHT AND WIRING HARNESS

TP61303 -UN-25SEP98

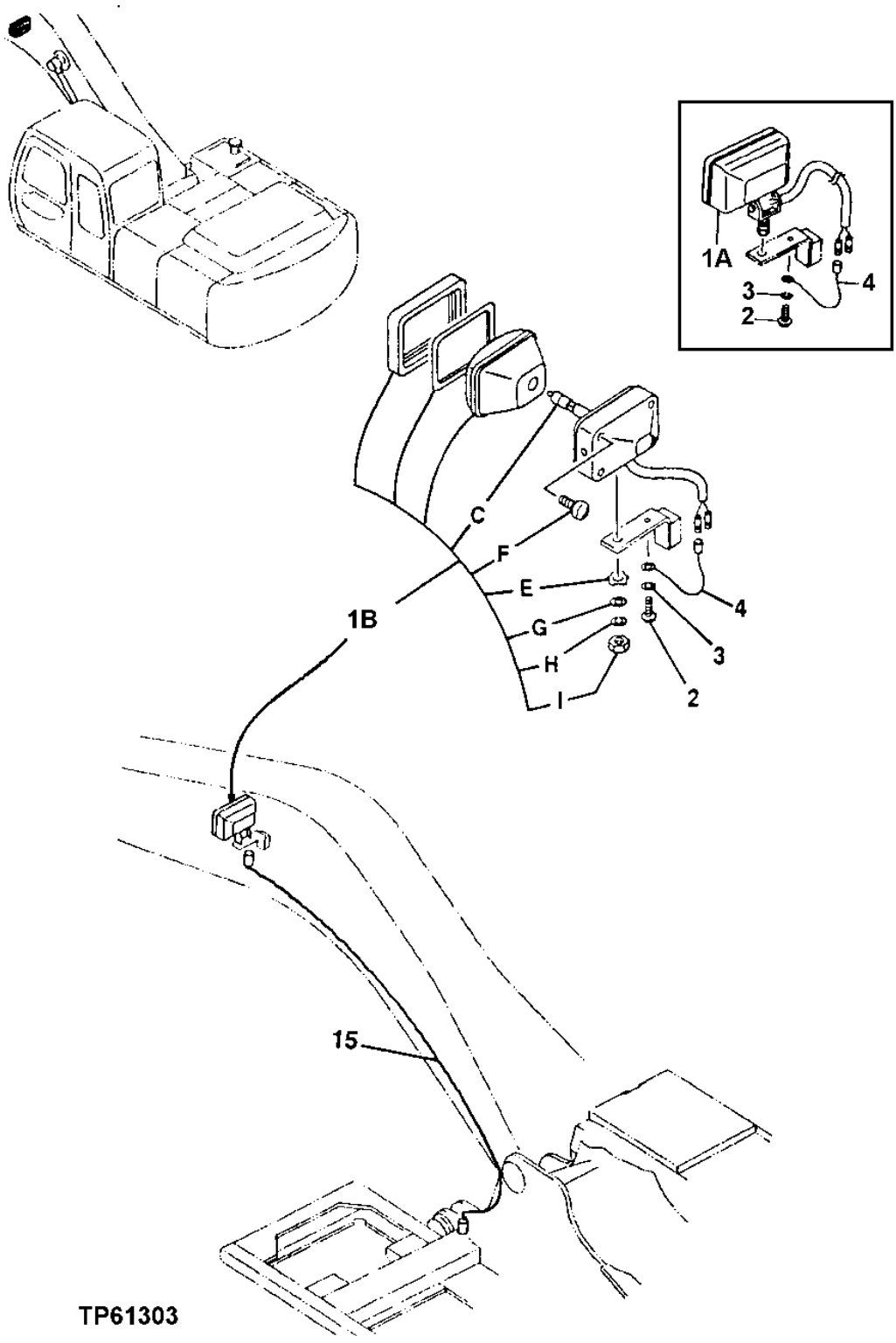

BOOM MOUNTED FRONT WORK LIGHT AND WIRING HARNESS

KEY	PART NO.	PART NAME	QTY	SERIAL NO.	REMARKS
1A	4336570	LAMP	1		
1B	AT165110	LAMP	1		
1C	AT135758	BULB	1		
1E	T144361	WASHER	1		
1F	T144362	SCREW	1		
1G	24M7085	WASHER	1		15 X 28 X 2.500 MM (0.591" X 1.102" X 0.098")
1H	12H317	LOCK WASHER	1		14.288 MM (9/16")
1I	TH103791	NUT	1		
2	21M7285	SCREW	1		M6 X 12
3	12M7006	LOCK WASHER	1		6 MM (0.236")
4	4254604	WIRING HARNESS	1		
15	4430382	WIRING HARNESS	1		

VEHICLE MAIN WIRING HARNESS AND MOUNTING

T188648 -UN-28MAR03

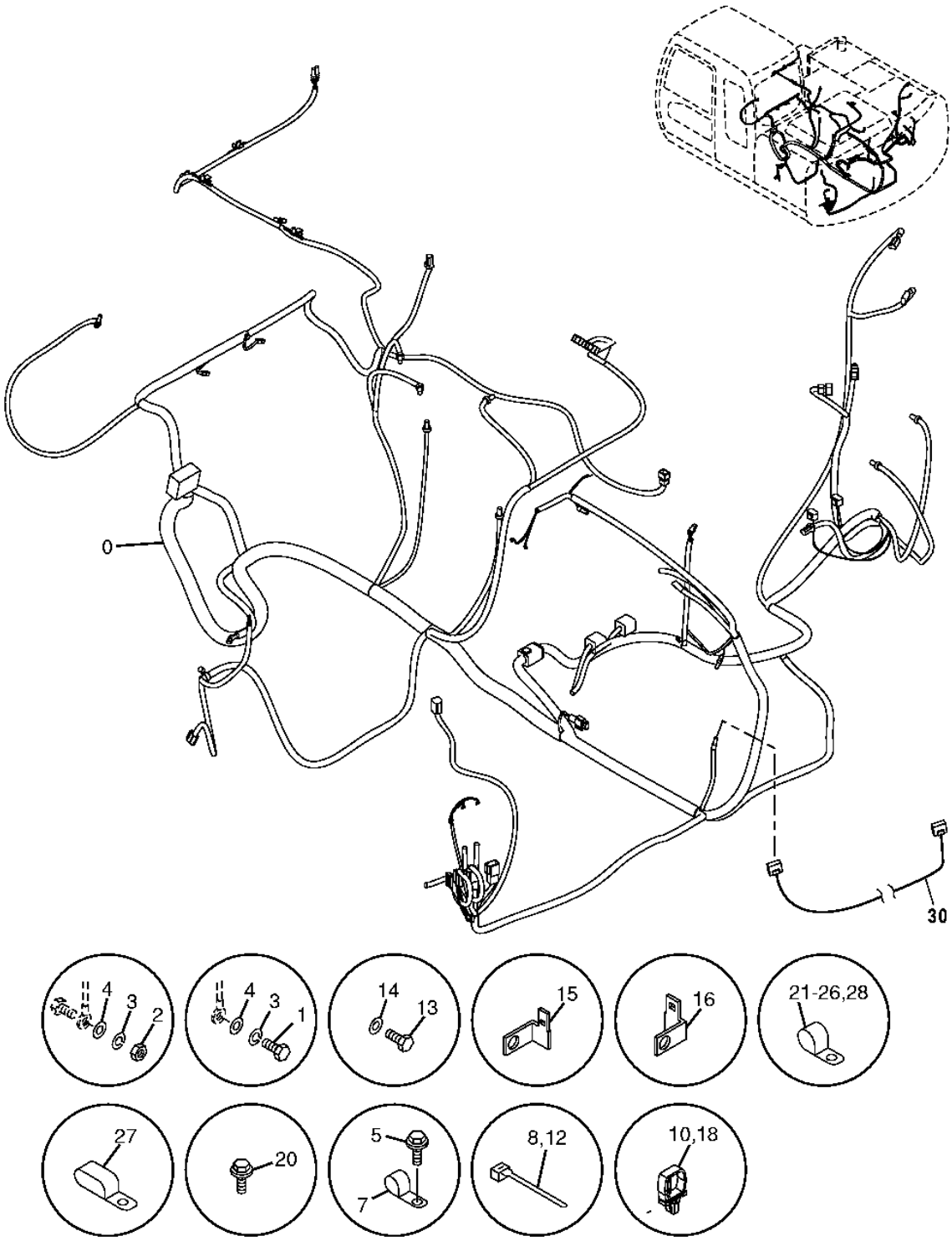

T188648

VEHICLE MAIN WIRING HARNESS AND MOUNTING

KEY	PART NO.	PART NAME	QTY	SERIAL NO.	REMARKS
0	0004909	WIRING HARNESS	1		(SUB FOR 0004099)
1	J901025	CAP SCREW	2		
2	14M7274	NUT	3		(SUB FOR J950010)
3	A590910	WASHER	5		
4	24M7028	WASHER	5		10.500 X 20 X 2 MM, (SUB FOR A590110)
5	J010616	CAP SCREW	1		
7	4450494	CLIP	1		
8	H77698	TIE BAND	7		
10	4449250	CLIP	2		
12	H77698	TIE BAND	1		
13	19M7938	CAP SCREW	1		M10 X 20, (SUB FOR J901020)
14	24M7028	WASHER	1		10.500 X 20 X 2 MM, (SUB FOR A590110)
15	4257159	BRACKET	1		
16	4418301	BRACKET	1		
18	4449250	CLIP	4		
20	J011020	CAP SCREW	23		
21	4193848	CLIP	2		(SUB FOR 4190264)
22	4192035	CLIP	2		
23	4190274	CLIP	4		
24	4190275	CLIP	6		
25	4190261	CLIP	2		
26	4190263	CLIP	1		
27	4190282	CLAMP	3		
28	4190273	CLIP	2		
30	AT303736		1	XXXXXX-	(WITHOUT OIL PAN SENSOR) (JUMPER HARNESS FROM MAIN HARNESS TO FRAME)

OPTIONAL BOOM LIGHT

T153296 -UN-05APR02

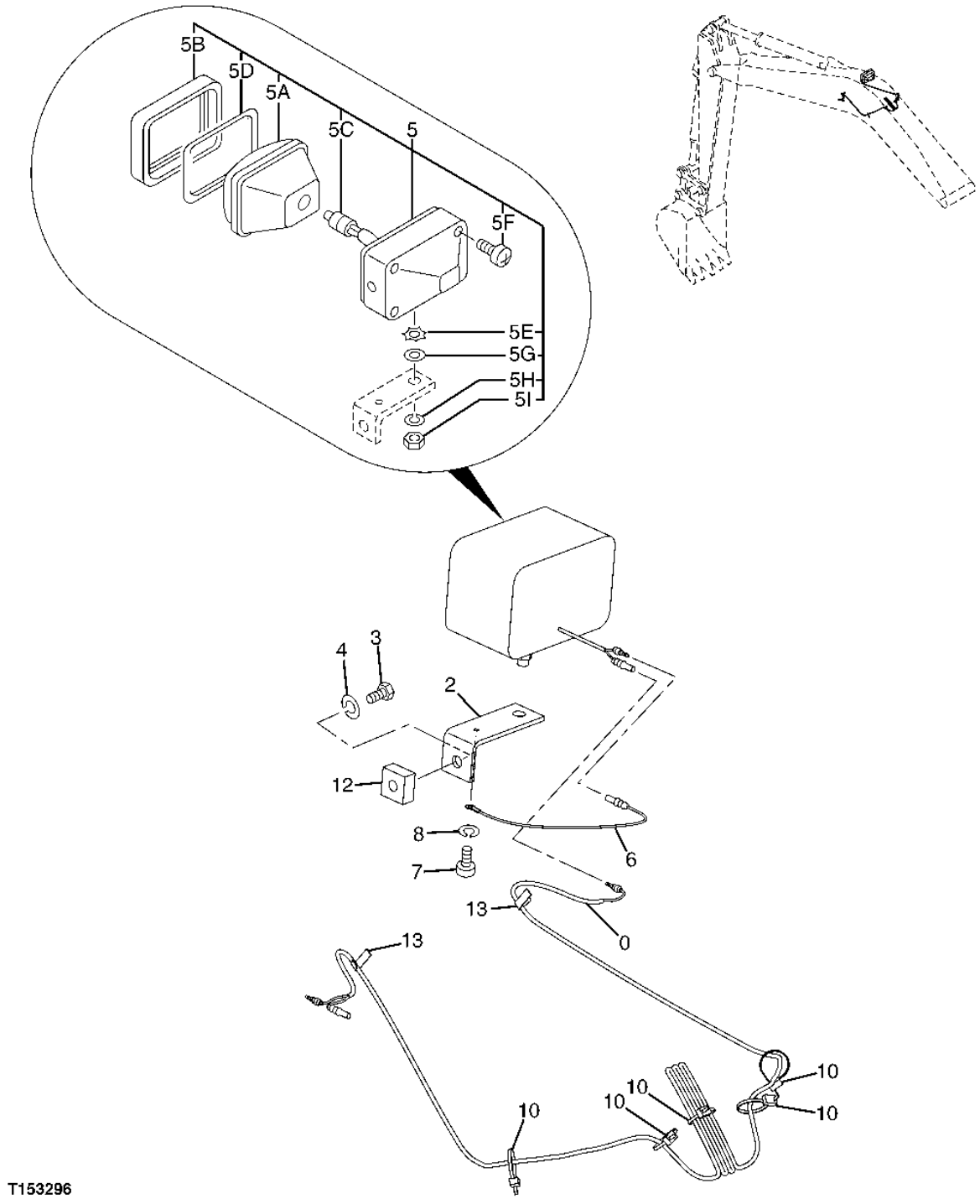

OPTIONAL BOOM LIGHT

KEY	PART NO.	PART NAME	QTY	SERIAL NO.	REMARKS
0	4344125	WIRING HARNESS	1		
2	4224631	BRACKET	1		
3	J901425	CAP SCREW	1		
4	A590914	LOCK WASHER	1		
5	4336570	LAMP	1		
5A	4326801	LENS	1		
5B	4326802	FRAME	1		
5C	4285648	BULB	1		
5D	4326803	GASKET	1		
5E	4307026	WASHER	1		
5F	4307027	SCREW	1		
5G	A590114	WASHER	1		
5H	A590914	LOCK WASHER	1		
5I	J952014	NUT	1		
6	4254604	GROUND CABLE	1		
7	M430613	SCREW	1		
8	12M7006	LOCK WASHER	1		(SUB FOR A590906)
10	.....	CLIP	5		(4055311 NOT AVAILABLE FOR SERVICE)
12	4224632	BUSHING	1		
13	4272256	CLIP	2		

ENGINE WIRING HARNESS

T148745 -UN-08DEC01

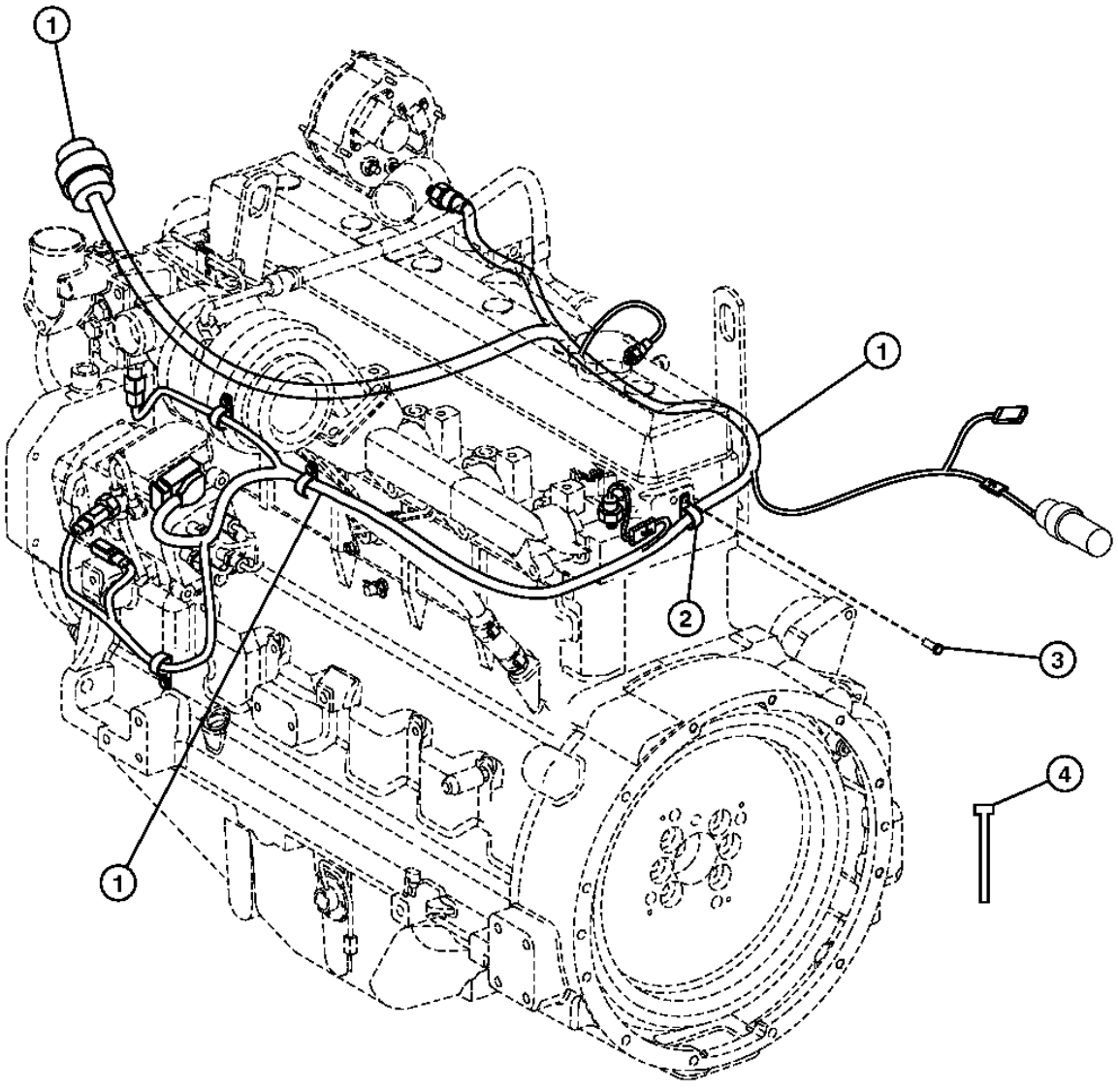

T148745

ENGINE WIRING HARNESS

KEY	PART NO.	PART NAME	QTY	SERIAL NO.	REMARKS
1	AT191463	WIRING HARNESS	1		
2	T75197	CLAMP	4		
3	19M7783	SCREW	4		M10 X 16
4	R44302	TIE BAND	8		

ENGINE CONTROL UNIT WIRING HARNESS

T159315 -UN-11SEP02

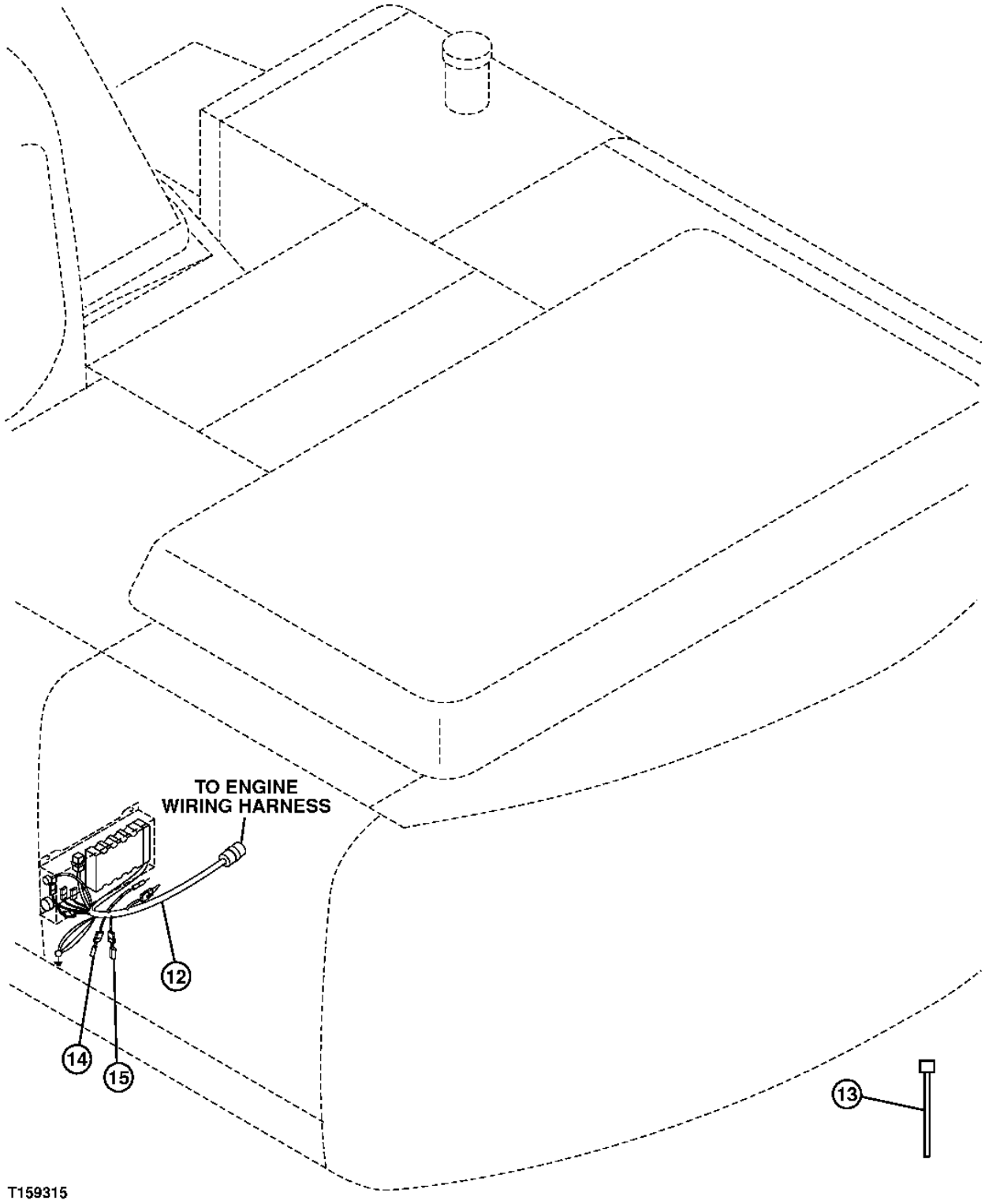

ENGINE CONTROL UNIT WIRING HARNESS

KEY	PART NO.	PART NAME	QTY	SERIAL NO.	REMARKS
12	AT191462	WIRING HARNESS	1		
13	H77698	TIE BAND	AR		
14	AT202778	WIRING HARNESS	1		(TERMINATION NODE)
15	AT190929	RESISTOR	1		

ENGINE CONTROL UNIT ASSEMBLY

T188419 -UN-28MAR03

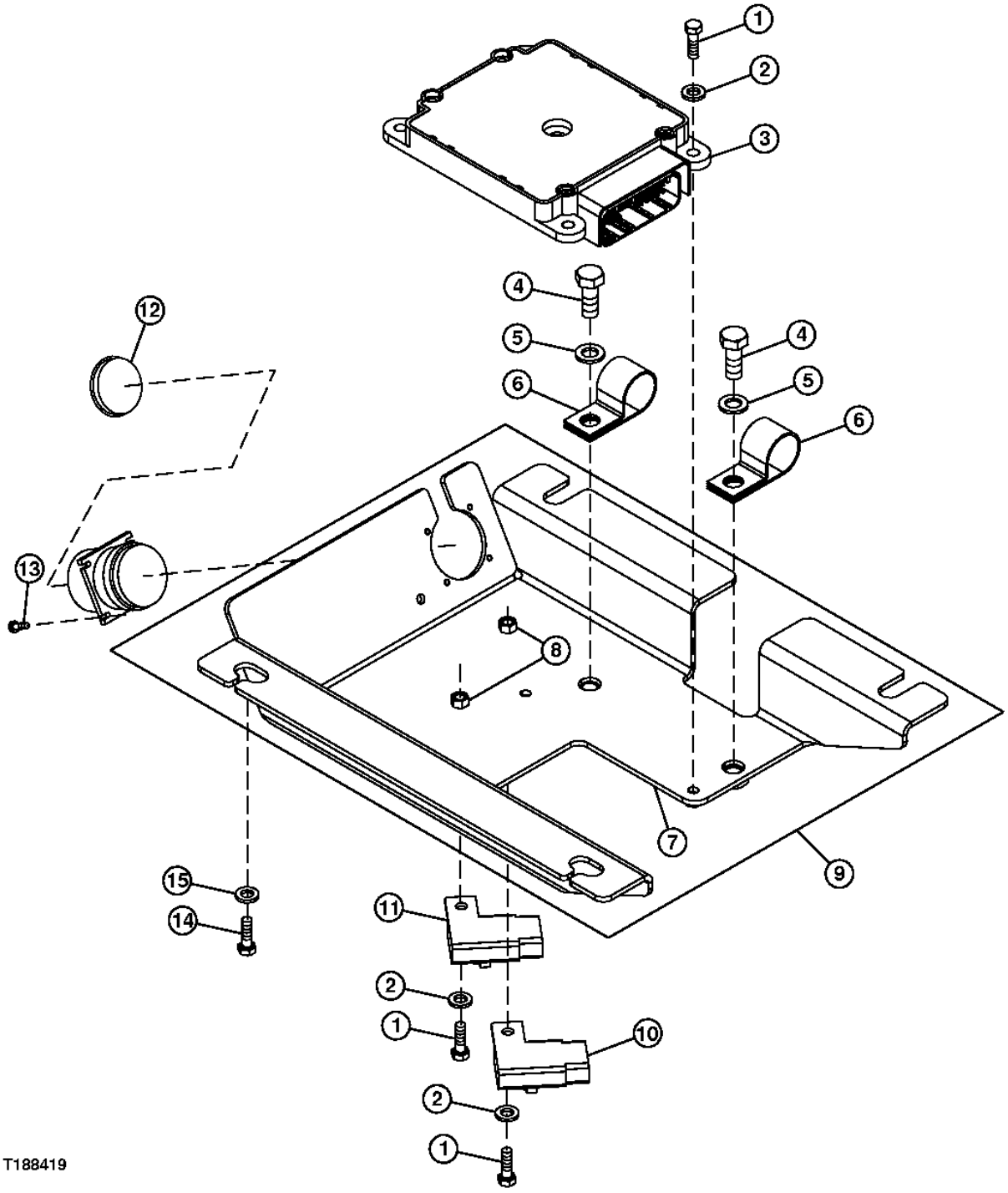

ENGINE CONTROL UNIT ASSEMBLY

KEY	PART NO.	PART NAME	QTY	SERIAL NO.	REMARKS
1	19M7372	CAP SCREW	6		M5 X 16
2	24M7088	WASHER	6		6.600 X 12 X 1.600 MM
3	RE518177	ENGINE CONTROLLER	1		(BLANK ECU)(MUST DOWNLOAD SOFTWARE ACCORDING TO ENGINE SERIAL NUMBER)
4	19M7881	SCREW	2		M8 X 20
5	24M7095	WASHER	2		8.400 X 15 X 1.600 MM
6	T78787	CLAMP	2		
7	.....	CHANNEL	1		(T188696 NO LONGER AVAILABLE FOR SERVICE - SUB AT196349)
8	14M7297	NUT	6		M5
9	AT196349	SUPPORT	1		
10	57M7121	FUSE	1		ECU, 10 AMP
11	57M7125	FUSE	1		SERVICE EXPERT, 5 AMP
12	57M7477	ELECTRICAL CONNECTOR ASSY	1		
13	21M7394	SCREW	4		M3 X 10
14	19M8533	SCREW	4		M10 X 25
15	24M7028	WASHER	4		10.500 X 20 X 2 MM

MANUAL ENGINE CONTROL SWITCH BOX

T197096 -UN-07JAN04

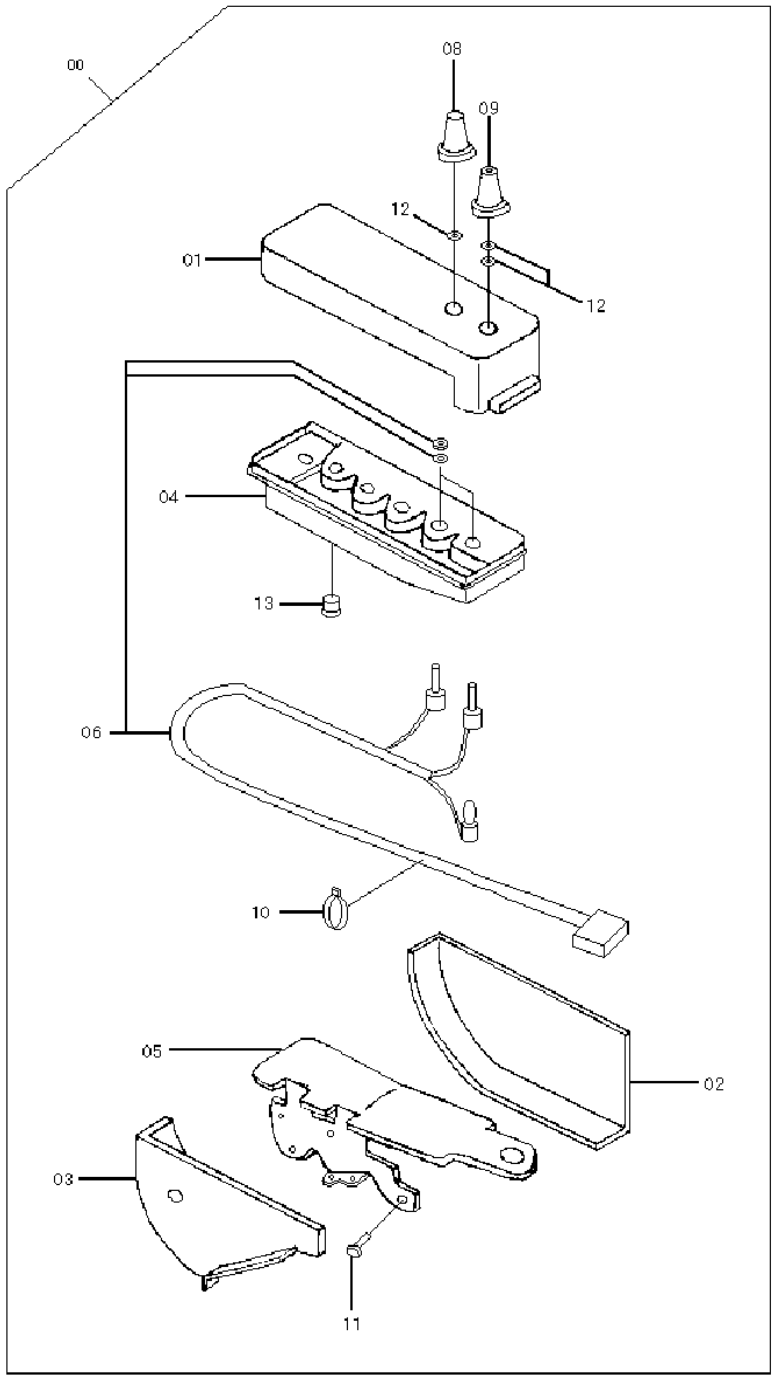

T197096

MANUAL ENGINE CONTROL SWITCH BOX

KEY	PART NO.	PART NAME	QTY	SERIAL NO.	REMARKS
0	4451764	SWITCH	1		
1	4483282	CASE	1		
2	4483202	COVER	1		
3	4483203	COVER	1		
4	4483204	CIRCUIT BOARD	1		
5	4483205	BRACKET	1		
6	4483283	SWITCH	1		
8	4483208	DIAL KNOB	4		
9	4483209	DIAL KNOB	1		
10	4426700	CLAMP	1		
11	4381572	SCREW	7		
12	4485825	O-RING	3		
13	4288796	CAP	1		

FRONT CAB LIGHTING

T207660 -UN-23FEB05

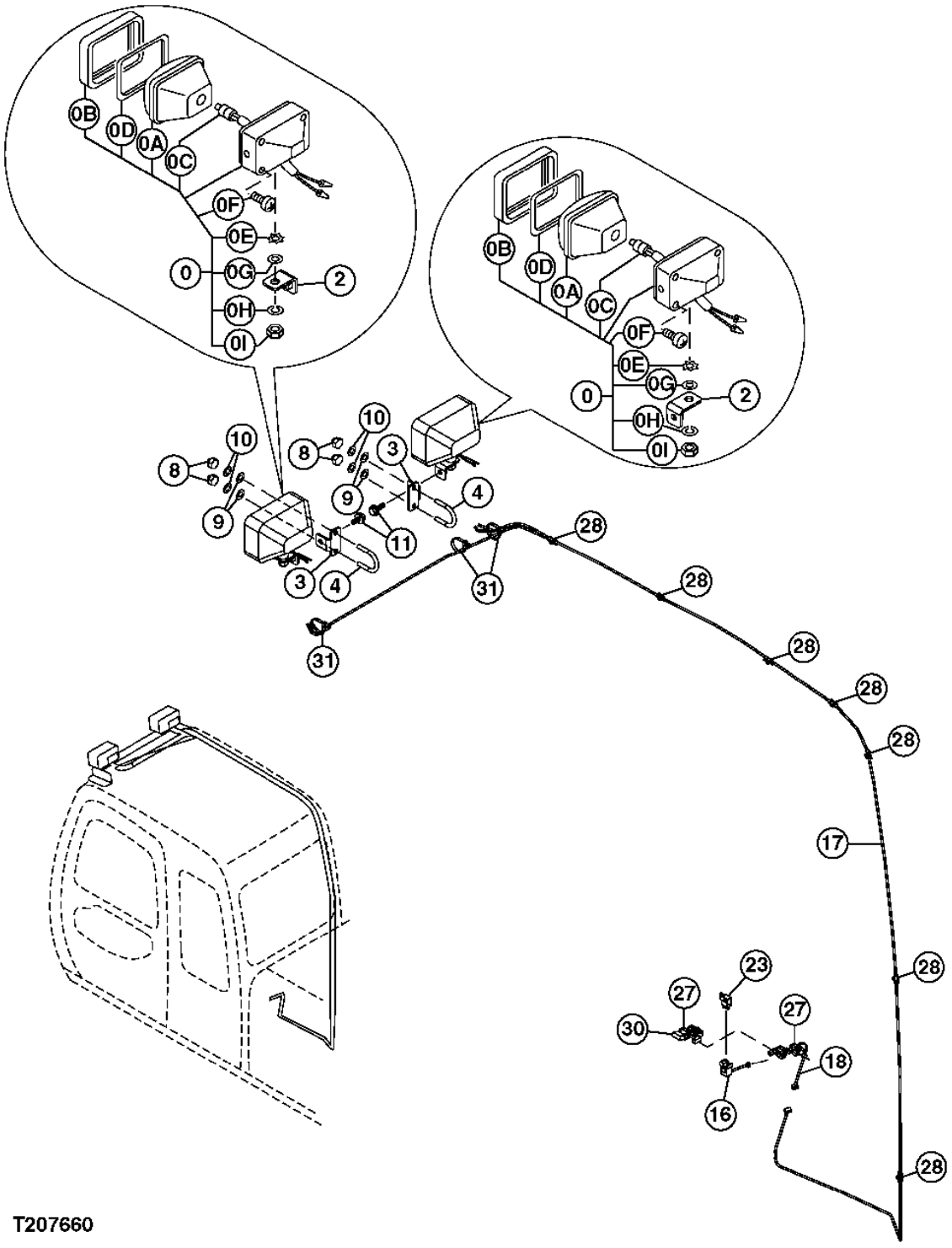

FRONT CAB LIGHTING

KEY	PART NO.	PART NAME	QTY	SERIAL NO.	REMARKS
0	.....	LAMP	2		(4336570 FOR PRODUCTION ONLY) (SERVICE 4326800)
	4326800	LAMP	2		
0A	4326801	LENS	1		
0B	4326802	FRAME	1		
0C	AT135758	BULB	1		(SUB FOR 4285648 OR AT154990)
0D	4326803	GASKET	1		
0E	4307026	WASHER	1		
0F	4307027	SCREW	4		
0G	24M7085	WASHER	1		15 X 28 X 2.500 MM, (SUB FOR A590114)
0H	12H317	LOCK WASHER	1		14.288 MM, (SUB FOR A590914)
0I	J952014	NUT	1		
2	9756005	BRACKET	2		
3	4447765	BRACKET	2		
4	4447868	U-BOLT	2		
8	4447870	NUT	4		
9	24M7028	WASHER	4		(SUB FOR J253110 OR A590110)
10	12M7066	LOCK WASHER	4		10 MM, (SUB FOR J252210)
11	.....	CAP SCREW	2		(J271030 NO LONGER AVAILABLE) (SUB 19M7168, 12M7066 AND 24M7096)
	19M7168	CAP SCREW	1		M10 X 30
	12M7066	LOCK WASHER	1		10 MM
	24M7096	WASHER	1		10.500 X 18 X 1.600 MM
16	4451681	WIRING HARNESS	1		
17	4362178	WIRING HARNESS	1		
18	4366592	WIRING HARNESS	1		
23	4414207	RELAY	1		
27	4289708	TIE BAND	6		
28	4050373	CLIP	7		
30	3074559	WIRING HARNESS	1		
31	H77698	TIE BAND	3		(SUB FOR 4055312)

MAIN FRAME AND BOOM CYLINDER PINS

T149487 -UN-05APR02

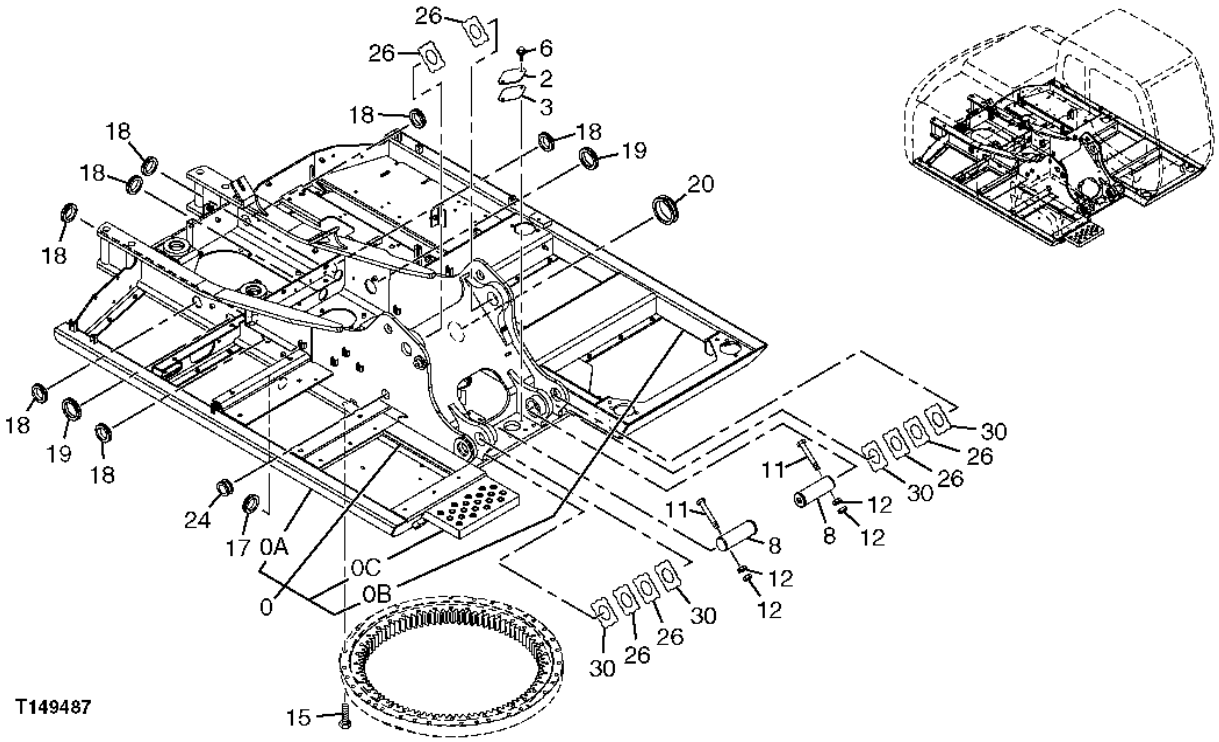

MAIN FRAME AND BOOM CYLINDER PINS

KEY	PART NO.	PART NAME	QTY	SERIAL NO.	REMARKS
0	AP37267	MAIN FRAME	1		
0A	.....	FRAME	1		(3087057 NOT AVAILABLE FOR SERVICE)
0B	.....	FRAME	1		(3087101 NOT AVAILABLE FOR SERVICE)
0C	3084653	STEP	1		
2	4255799	COVER	1		
3	4161735	GASKET	1		
6	19M7402	CAP SCREW	2		M10 X 25
	24M7028	WASHER	2		10.500 X 20 X 2 MM
8	AT154899	PIN	2		
11	19M7907	SCREW	2		M20 X 140
12	14M7277	NUT	4		M20
15	J921890	BOLT	30		
17	4509404	GROMMET	1		
18	4509404	GROMMET	7		
19	4211191	GROMMET	2		
20	4190960	GROMMET	1		
24	4221018	BUSHING	1		
26	P61821	PLATE	6		
30	P61822	PLATE	4		

BOOM TO MAIN FRAME PIN

T153215 -UN-08APR02

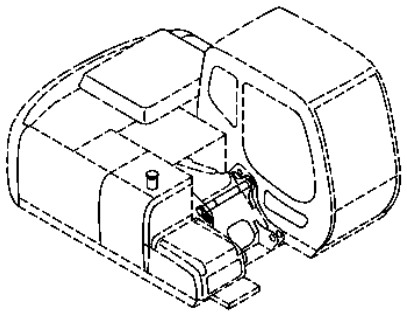

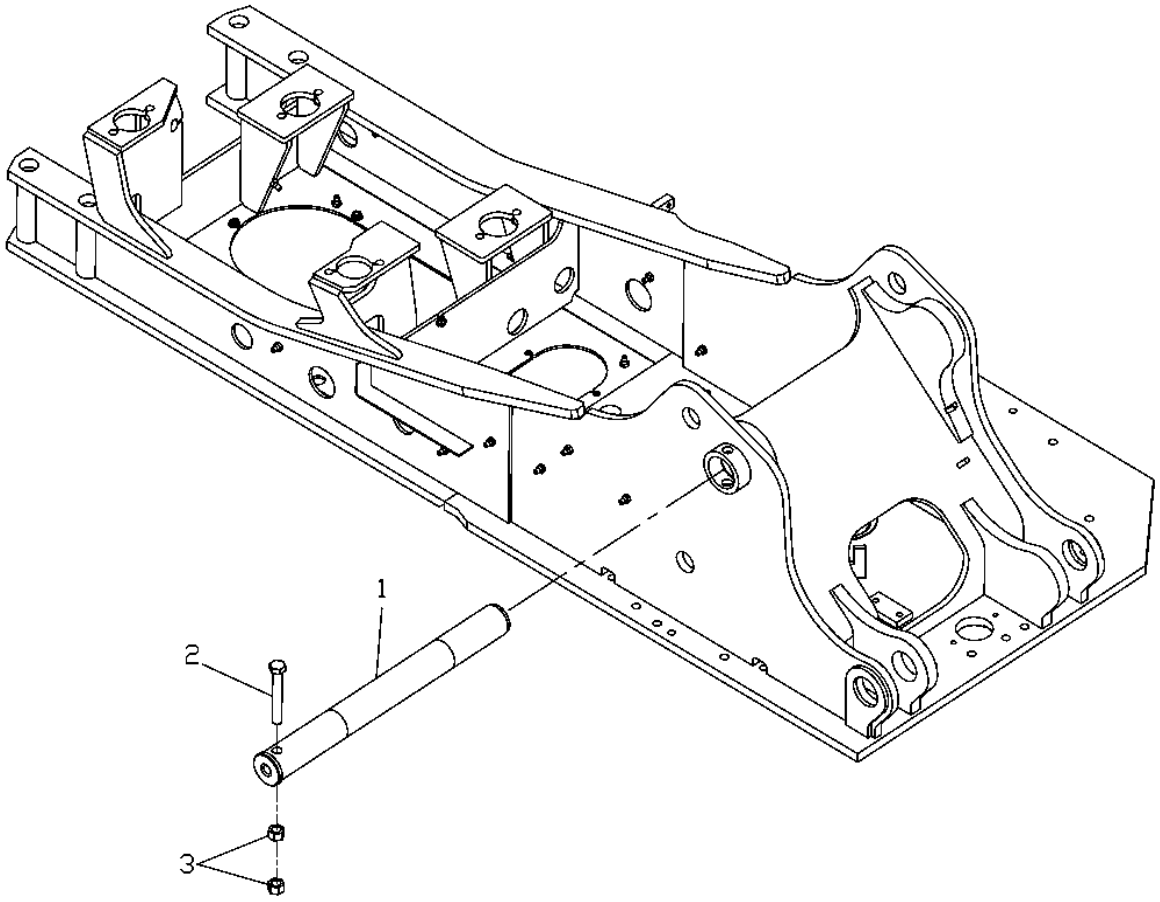

T153215

BOOM TO MAIN FRAME PIN

KEY	PART NO.	PART NAME	QTY	SERIAL NO.	REMARKS
1	8094471	PIN FASTENER	1		(SUB FOR 8081497, AT154896, THIS APPLICATION)
2	19M7907	SCREW	1		M20 X 140
3	14M7277	NUT	2		M20

COUNTERWEIGHT AND ISOLATORS

T188461 -UN-28MAR03

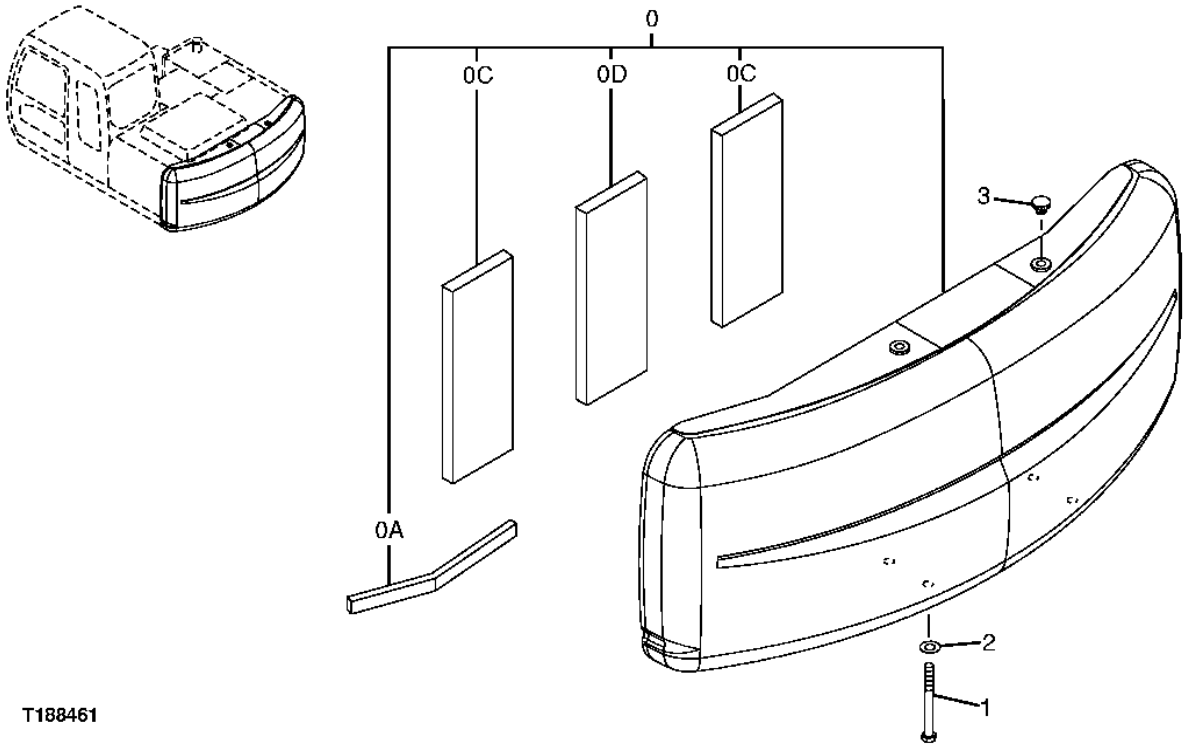

T188461

COUNTERWEIGHT AND ISOLATORS

KEY	PART NO.	PART NAME	QTY	SERIAL NO.	REMARKS
0	DH500059	COUNTERWEIGHT	1		(CONVENIENCE ASSEMBLY) (SUB FOR AP37215)
0A	P65620	ISOLATOR	1		
0C	P67782	ISOLATOR	3		
1	J932723	BOLT	4		
2	4126485	BUSHING	4		
3	4149678	PLUG	2		

SWING BEARING COMPONENTS

T188460 -UN-27MAR03

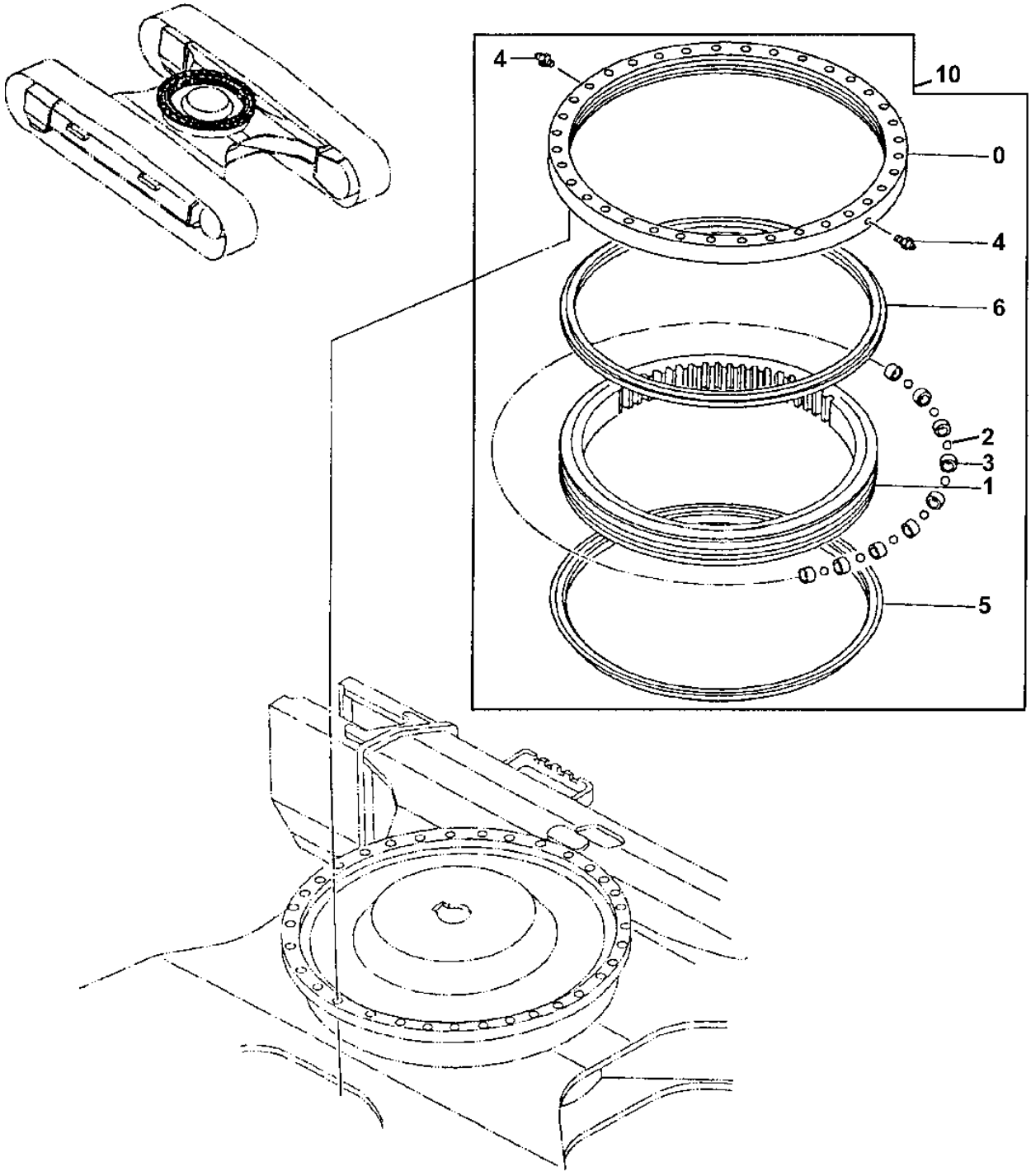

T188460

SWING BEARING COMPONENTS

KEY	PART NO.	PART NAME	QTY	SERIAL NO.	REMARKS
0	.....	BEARING RACE	1		
1	.....	BEARING RACE	1		
2	4428919	BALL	99		
3	4127708	SPACER	99		
4	J75481	LUBRICATION FITTING	2		
5	4633528	SEAL	1		(SUB FOR 4289757)
6	4315493	SEAL	1		
10	9184497	SWING BEARING	1		

SWING BEARING MOUNTING

T153295 -UN-05APR02

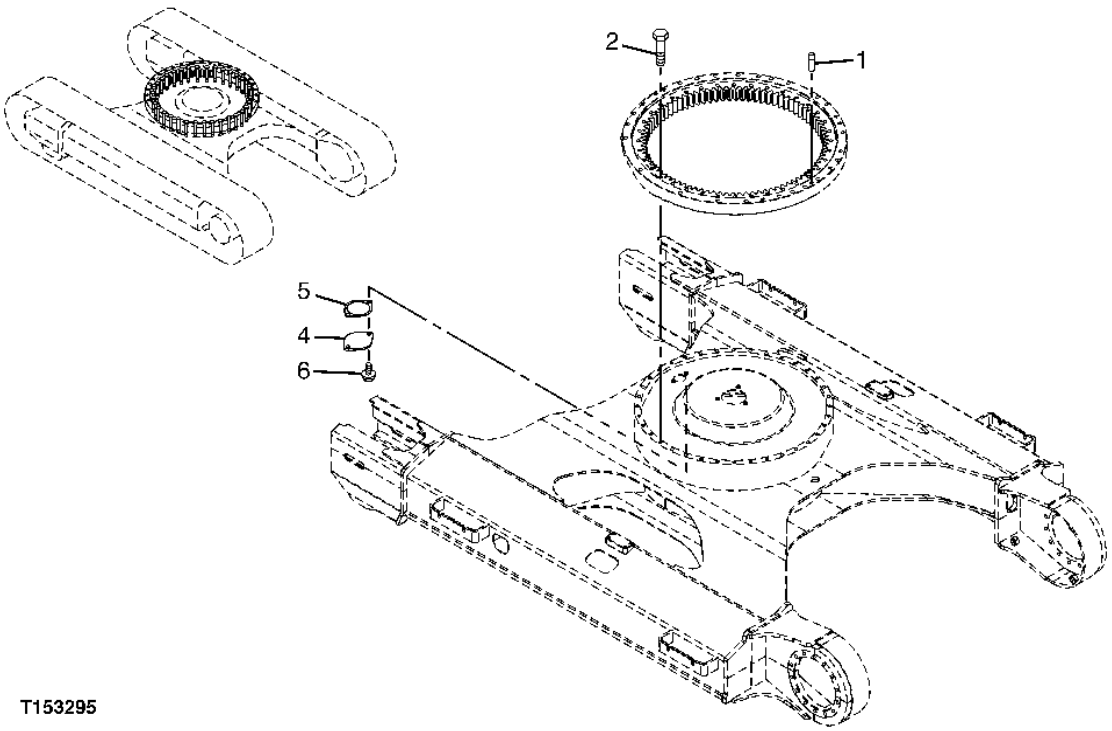

SWING BEARING MOUNTING

KEY	PART NO.	PART NAME	QTY	SERIAL NO.	REMARKS
1	4425980	PIN FASTENER	1		
2	J931695	BOLT	36		
4	4128863	PLATE	1		
5	4272297	GASKET	1		
6	19M7402	CAP SCREW	2		M10 X 25
	12M7066	LOCK WASHER	2		10 MM (0.394")

CAB LEFT AND RIGHT CONSOLES

T142593 -UN-14JUN01

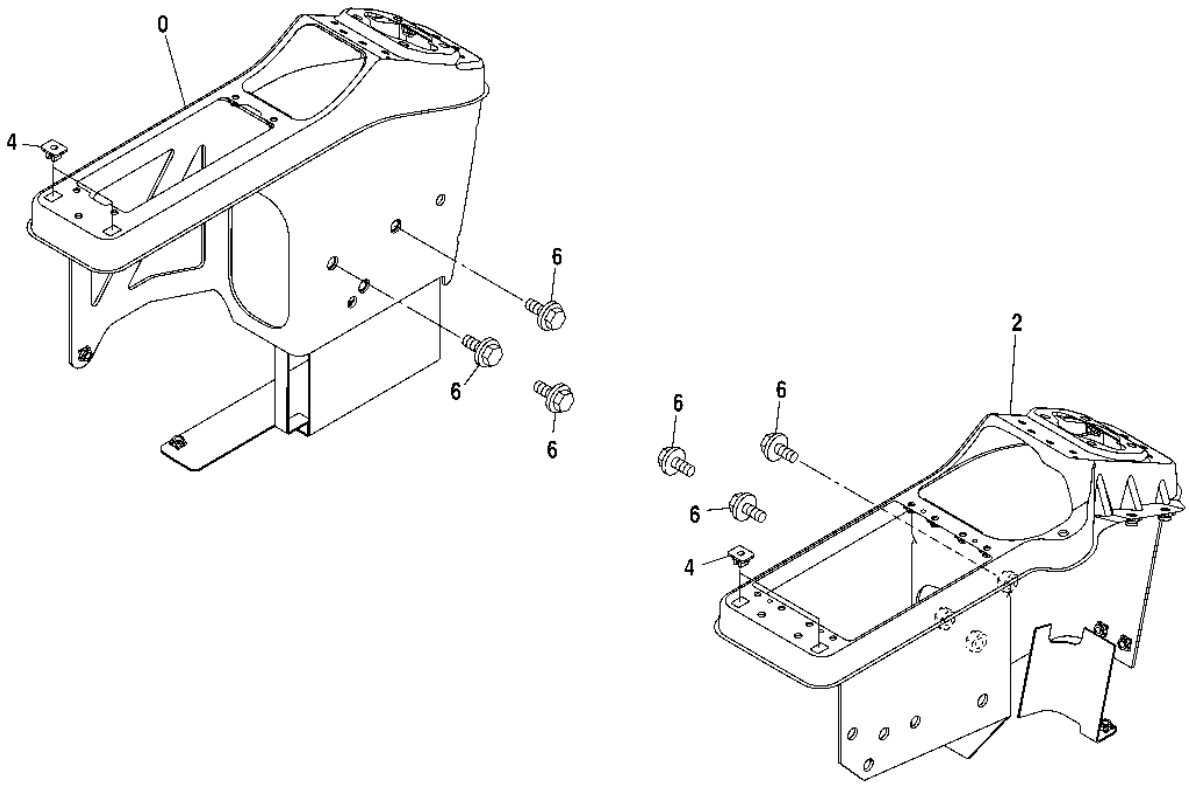

T142593

CAB LEFT AND RIGHT CONSOLES

KEY	PART NO.	PART NAME	QTY	SERIAL NO.	REMARKS
0	7036594	CONSOLE	1		LEFT
2	7036595	CONSOLE	1		RIGHT
4	AT213958	CLIP	4		
6	19M7402	CAP SCREW	6		M10 X 25
	24M7096	WASHER	6		10.500 X 18 X 1.600 MM
	12M7066	LOCK WASHER	6		10 MM

CAB LEFT AND RIGHT CONSOLE COVERS

T142594 -UN-14JUN01

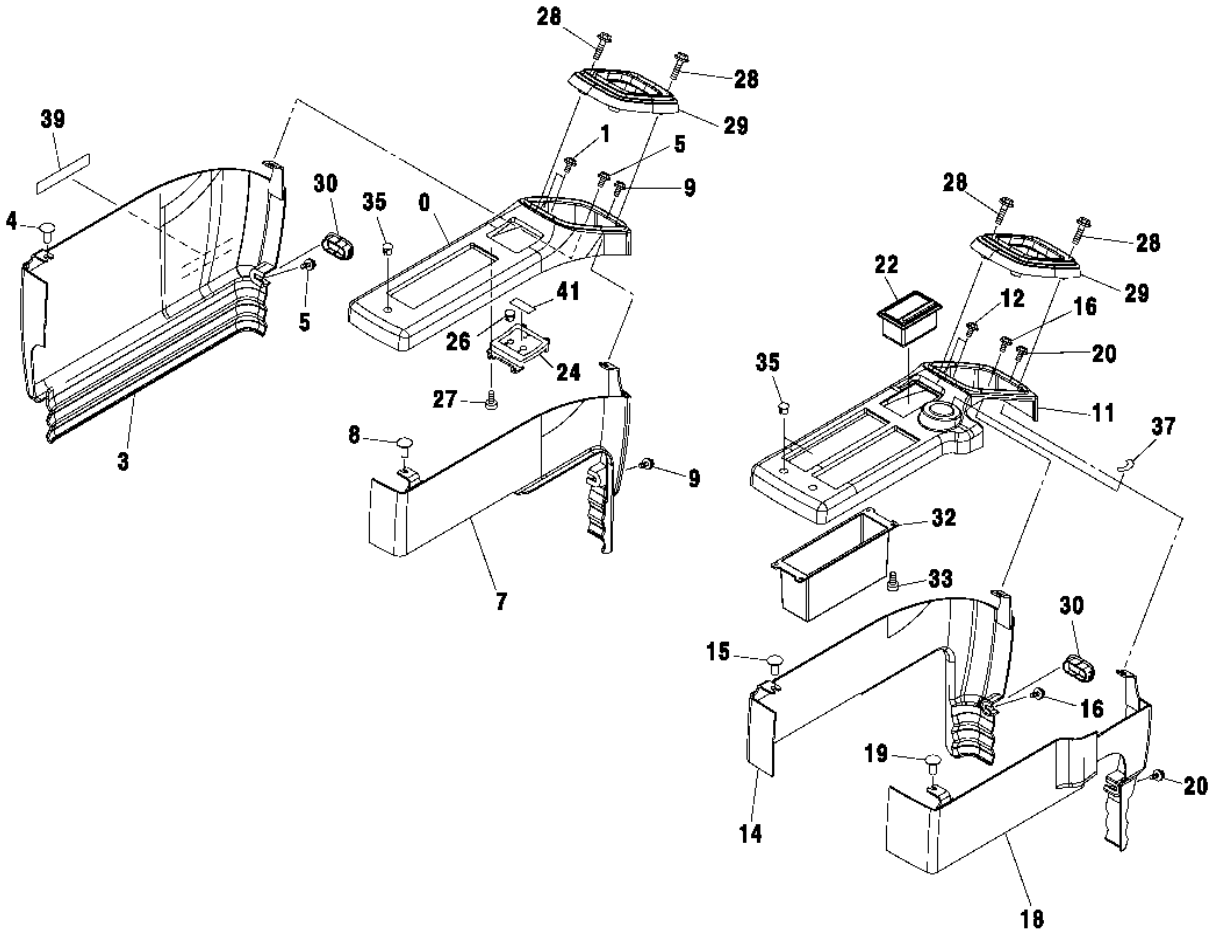

T142594

CAB LEFT AND RIGHT CONSOLE COVERS

KEY	PART NO.	PART NAME	QTY	SERIAL NO.	REMARKS
0	4420875	COVER	1		
1	21M7246	SCREW	3		M6 X 16
	12M7006	LOCK WASHER	3		6 MM
	24M7105	WASHER	3		6 X 12 X 1.600 MM
3	4420876	COVER	1		
4	AT214012	SCREW	1		
5	21M7246	SCREW	5		M6 X 16
	12M7006	LOCK WASHER	5		6 MM
	24M7105	WASHER	5		6 X 12 X 1.600 MM
7	4420877	COVER	1		
8	AT214012	SCREW	1		
9	21M7246	SCREW	2		M6 X 16
	12M7006	LOCK WASHER	2		6 MM
	24M7105	WASHER	2		6 X 12 X 1.600 MM
11	4420878	COVER	1		
12	21M7246	SCREW	4		M6 X 16
	12M7006	LOCK WASHER	4		6 MM
	24M7105	WASHER	4		6 X 12 X 1.600 MM
14	4420879	COVER	1		
15	AT214012	SCREW	1		
16	21M7246	SCREW	2		M6 X 16
	12M7006	LOCK WASHER	2		6 MM
	24M7105	WASHER	2		6 X 12 X 1.600 MM
18	4420880	COVER	1		(TH4451095 NOT AVAILABLE FOR SERVICE)
19	AT214012	SCREW	1		
20	21M7246	SCREW	2		M6 X 16
	12M7006	LOCK WASHER	2		6 MM
	24M7105	WASHER	2		6 X 12 X 1.600 MM
22	4415024	ASHTRAY	1		
24	3091842	PANEL	1		(SUB FOR TH3091842)
26	AT215503	CAP	1		
27	4452613	SCREW	1		
28	19M7177	CAP SCREW	8		M6 X 35
	12M7006	LOCK WASHER	8		6 MM
	24M7293	WASHER	8		6.500 X 13 X 1.600 MM
29	2045509	COVER	2		
30	TH4441117	CAP	2		
32	3090025	HOLDER	1		
33	AT214011	SCREW	4		M4 X 8
35	4448990	CAP	3		
37	4264805	LABEL	1		(SUB FOR AT155730) (IGNITION KEY SWITCH)
39	T138886	LABEL	1		(LOCKOUT)
41	.....	LABEL	1		(TH4459435 NOT AVAILABLE)

CAB INSIDE LOWER RIGHT FRONT COVER

T142595 -UN-06JUL01

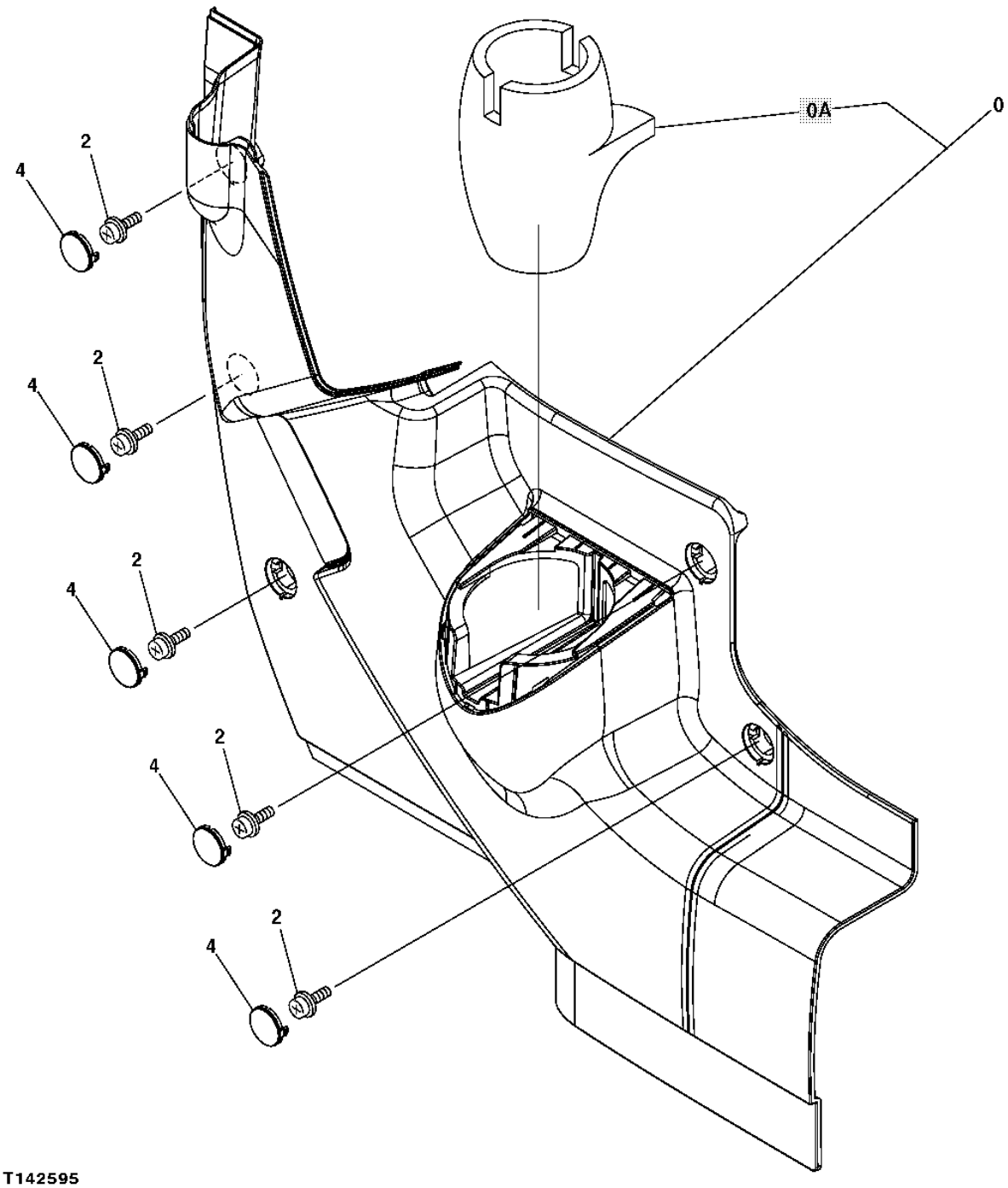

T142595

CAB INSIDE LOWER RIGHT FRONT COVER

KEY	PART NO.	PART NAME	QTY	SERIAL NO.	REMARKS
0	TH4445917	COVER	1		
0A	TH4445932	COVER	1		
2	19M8425	CAP SCREW	5		M6 X 16
	12M7006	LOCK WASHER	5		6 MM
	24M7293	WASHER	5		6.500 X 13 X 1.600 MM
4	TH4426354	CAP	5		

CAB TO MAIN FRAME MOUNTING

T150989 -UN-06FEB02

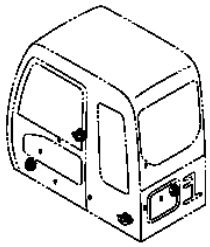

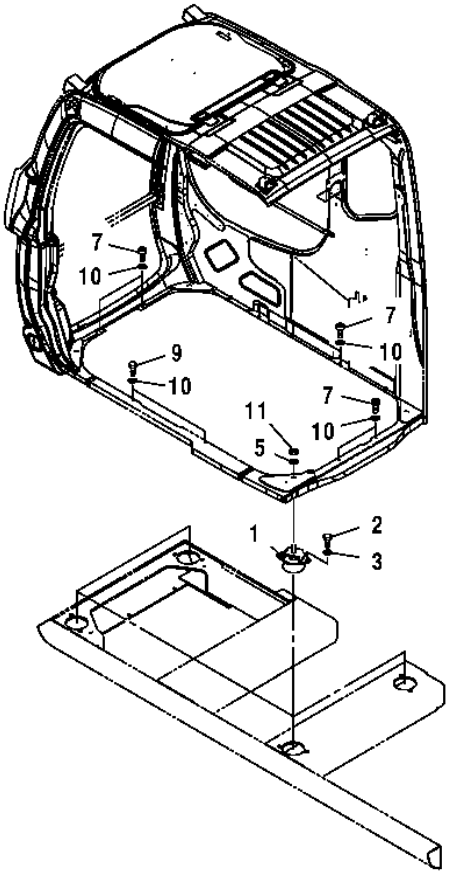

T150989

2B12

CAB TO MAIN FRAME MOUNTING

KEY	PART NO.	PART NAME	QTY	SERIAL NO.	REMARKS
1	4409999	ISOLATOR	4		
2	J921240	CAP SCREW	8		(SUB FOR 4330785)
3	12H301	LOCK WASHER	8		1/2"
5	24M7338	WASHER	4		17 X 30 X 3 MM
7	19M8337	SCREW	4		M10 X 30
9	19M7402	CAP SCREW	6		M10 X 25
	12M7066	LOCK WASHER	6		10 MM
	24M7028	WASHER	6		10.500 X 20 X 2 MM
10	24M7346	WASHER	8		11 X 20 X 2 MM
11	14M7328	LOCK NUT	4		M16

CAB

T150990 -UN-06FEB02

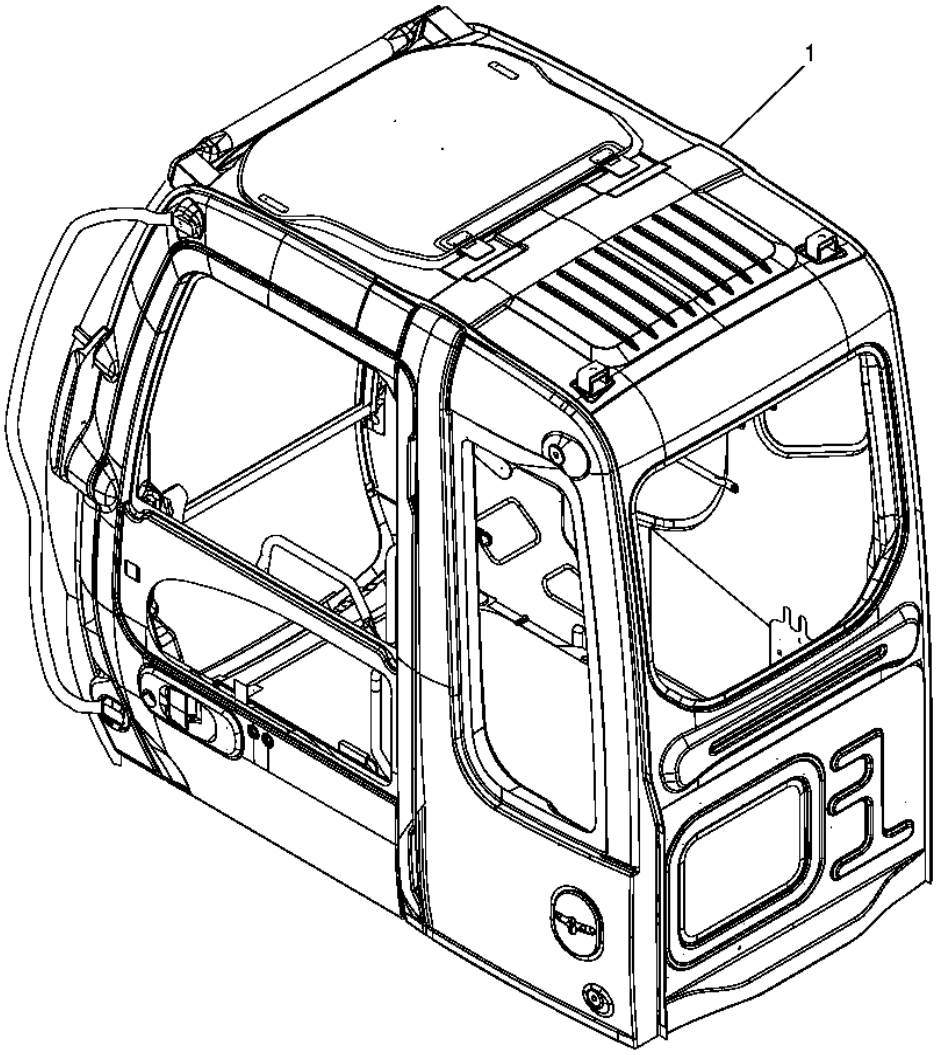

T150990

2B14

CAB

KEY	PART NO.	PART NAME	QTY	SERIAL NO.	REMARKS
1	4602549	CAB	1		(SUB FOR 4474296) (SEE FOLLOWING PAGES FOR COMPONENTS)

WINDSHIELD WIPER, RADIO SPEAKERS, AND ANTENNA

T196845 -UN-19DEC03

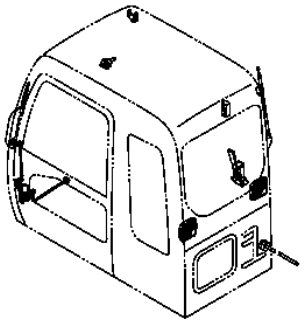

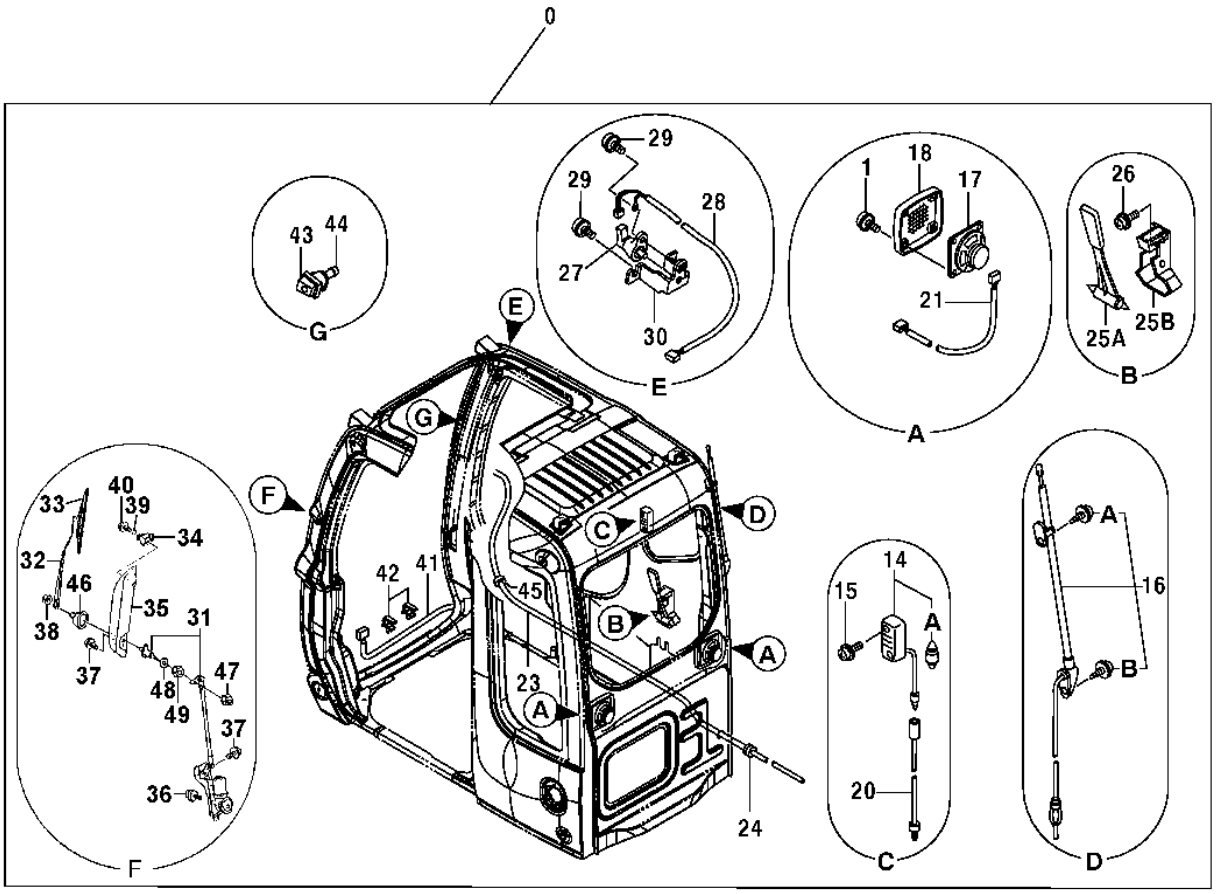

T196845

WINDSHIELD WIPER, RADIO SPEAKERS, AND ANTENNA

KEY	PART NO.	PART NAME	QTY	SERIAL NO.	REMARKS
0	4602549	CAB	1		(SUB FOR 4474296) (CONTAINS ALL PARTS LISTED ON THIS PAGE - ADDITIONAL COMPONENTS LISTED ON FOLLOWING PAGES)
1	TH4456427	SCREW	8		
14	4187082	LAMP	1		(SUB FOR TH108567)
14A	4187083	BULB	1		(SUB FOR TH108568)
15	TH4456428	SCREW	2		
16	AT131697	ANTENNA	1		
16A	AT131864	SCREW	1		
16B	AT131865	SCREW	1		
17	4361302	SPEAKER	2		(SUB FOR AT214007)
18	AT214017	GRILLE	2		
20	4260369	WIRING HARNESS	1		(SUB FOR AT154278)
21	AT214061	WIRING HARNESS	2		
23	AT214063	HOSE	1		
24	4287903	GROMMET	1		(SUB FOR AT154413)
25A	4362700	HAMMER	1		(SUB FOR T158020)
25B	2038764	BRACKET	1		(SUB FOR T158021)
26	TH4456428	SCREW	2		
27	AT182625	SWITCH	1		
28	AT182626	WIRING HARNESS	1		
29	.....	SCREW	3		(TH4456456 NOT AVAILABLE FOR SERVICE)
30	TH4456429	BRACKET	1		
31	TH4453690	WIPER MOTOR	1		
32	TH4453687	WIPER ARM	1		
33	TH4453686	WIPER BLADE	1		
34	TH4456433	HOLDER	1		
35	TH4456434	GUARD	1		
36	19M7881	SCREW	3		M8 X 20
	12M7065	LOCK WASHER	3		8 MM
	24M7055	WASHER	3		8.400 X 16 X 1.600 MM
37	TH4456238	BOLT	4		
38	14M7273	NUT	1		M8
39	AT154150	O-RING	1		5.800 X 1.900 MM (0.228" X 0.075")
40	TH4456458	BOLT	1		
41	TH4456435	WIRING HARNESS	1		
42	TH4456436	CLIP	2		
43	TH4456450	NOZZLE	1		
44	4367481	FLOW CONTROL HYD. VALVE	1		(SUB FOR AT214041)
45	AT214079	GROMMET	1		
46	4603011	CAP	1		
47	4603012	NUT	1		
48	4603013	WASHER	1		
49	4431859	NUT	1		

CAB LEFT AND REAR WINDOWS, ROOF, AND HANDRAIL

T201892 -UN-26JUL04

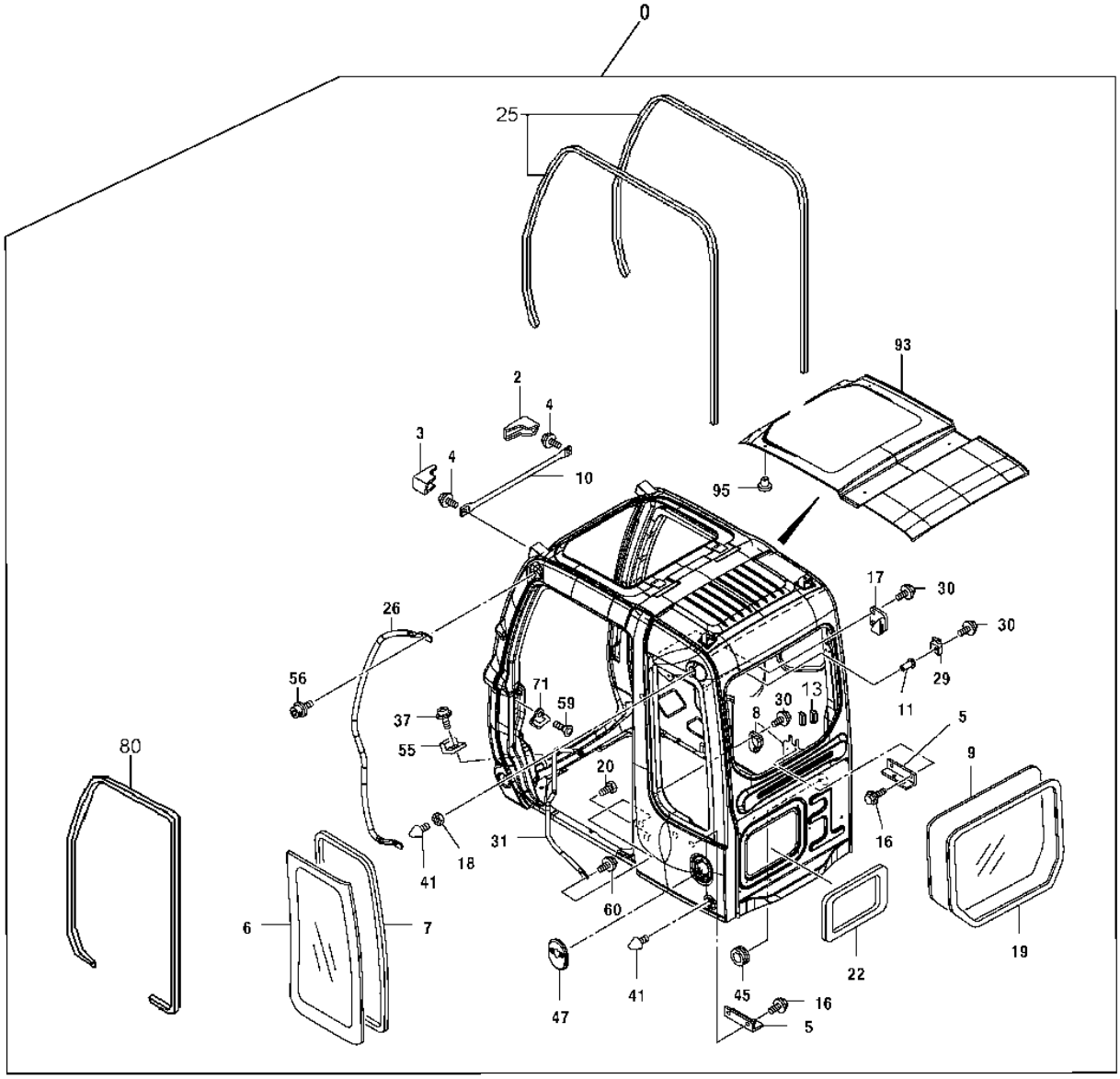

T201892

2B18

CAB LEFT AND REAR WINDOWS, ROOF, AND HANDRAIL

KEY	PART NO.	PART NAME	QTY	SERIAL NO.	REMARKS
0	4602549	CAB	1		(SUB FOR 4474296) (CONTAINS ALL ITEMS ON THIS PAGE - ADDITIONAL COMPONENTS LISTED ON PREVIOUS AND FOLLOWING PAGES)
2	TH4456177	COVER	1		
3	TH4456178	COVER	1		
4	TH4456179	BOLT	2		
5	TH4456181	BRACKET	2		
6	4448311	WINDOWPANE	1		(BRONZE) (SUB FOR 4468944)
	4602567	WINDOWPANE	1		(GREEN)
7	AT218190	SEAL	1		
8	TH4456183	ISOLATOR	1		
9	4448314	WINDOWPANE	1		(BRONZE)
	4602569	WINDOWPANE	1		(GREEN)
10	4474300	PIPE	1		
11	TH4456185	NUT	1		
13	4603008	ISOLATOR	2		
16	19M7402	CAP SCREW	4		M10 X 25
	12M7066	LOCK WASHER	4		10 MM
	24M7028	WASHER	4		10.500 X 20 X 2 MM
17	TH4456182	ISOLATOR	1		
18	4414857	NUT	1		(SUB FOR AT157068)
19	4448319	ISOLATOR	1		(USE WITH 4448314)
	4602577	ISOLATOR	1		(USE WITH 4602569)
20	19M8425	CAP SCREW	1		M6 X 16
	24H1287	WASHER	1		9/32" X 5/8" X 0.065"
	12M7006	LOCK WASHER	1		6 MM
22	TH4453667	ISOLATOR	1		
25	4456175	ISOLATOR	2		
26	4474298	HANDRAIL	1		
29	TH4456184	ISOLATOR	1		
30	AT214310	SCREW WITH WASHER	5		
31	TH4453663	HANDRAIL	1		
37	21M7246	SCREW	2		M6 X 16
	12M7006	LOCK WASHER	2		6 MM
	24M7293	WASHER	2		6.500 X 13 X 1.600 MM
41	4304827	BUMPER	2		(SUB FOR AT156970)
45	AT214078	GROMMET	1		
47	4474299	COVER	1		
55	AT214173	ISOLATOR	2		
56	19M7550	CAP SCREW	2		M10 X 35
	24H1305	WASHER	2		13/32" X 13/16" X 0.065"
	12M7066	LOCK WASHER	2		10 MM
59	4320163	SCREW	2		(SUB FOR AT200584)
60	AT214305	SCREW WITH WASHER	2		
71	AT214129	STRIKER	1		
80	4453672	ISOLATOR	1		
93	TH4453665	SHEET	1		
95	TH4453666	CLIP	14		

CAB DOOR ASSEMBLY, LATCH, AND WINDOWS

T146539 -UN-12OCT01

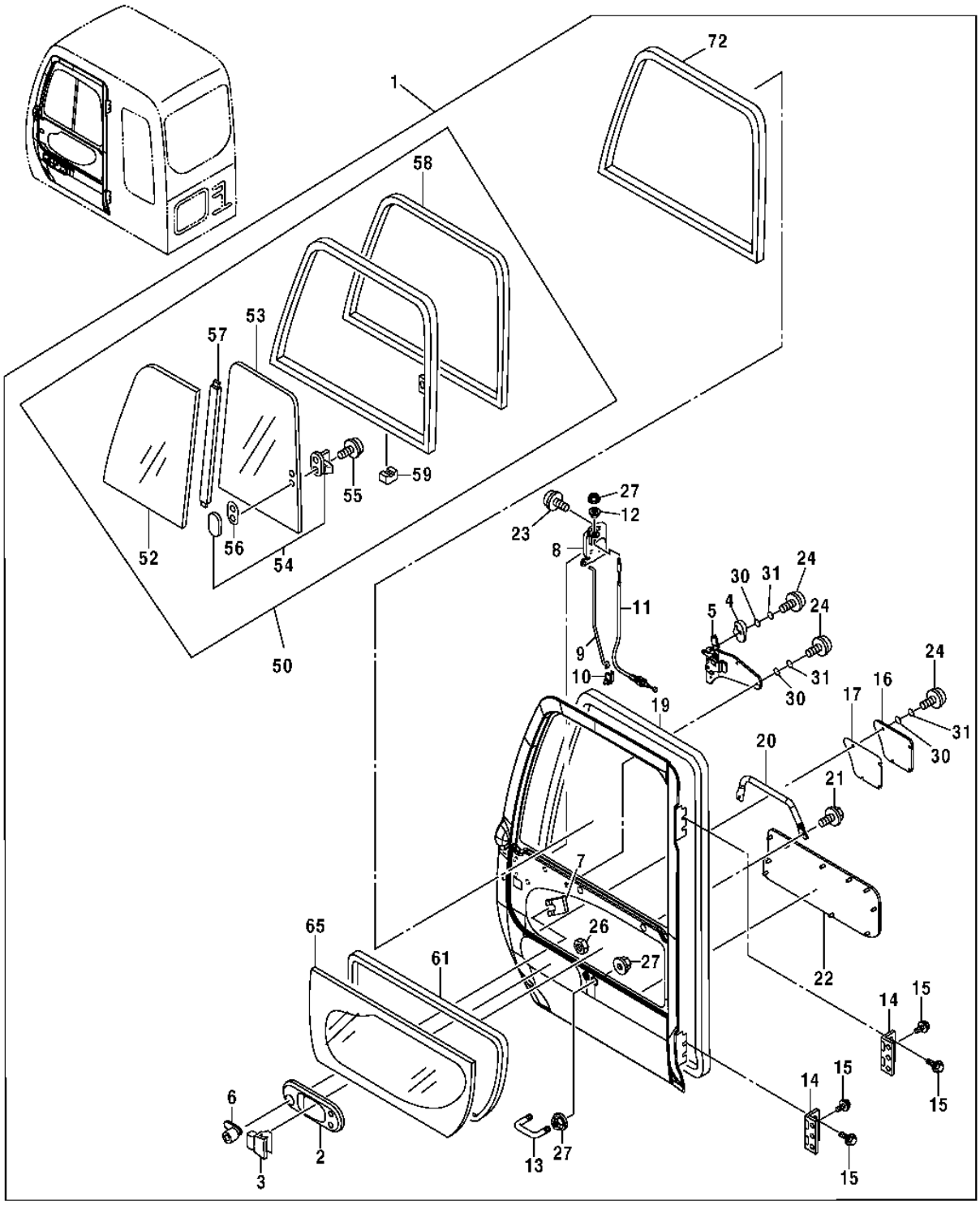

T146539

CAB DOOR ASSEMBLY, LATCH, AND WINDOWS

KEY	PART NO.	PART NAME	QTY	SERIAL NO.	REMARKS
0	4602549	CAB	1		(SUB FOR 4474296) (NOT ILLUSTRATED) (CONTAINS ALL ITEMS ON THIS PAGE - ADDITIONAL COMPONENTS LISTED ON PREVIOUS AND FOLLOWING PAGES)
1	4474301	DOOR	1		(ASSEMBLY)
2	TH4455979	COVER	1		
3	AT214145	HANDLE	1		(INNER)
4	TH4455975	HANDLE	1		
5	4620431	HANDLE	1		(INNER) (SUB FOR 4474302, 4456173)
6	AT176789	LOCK	1		
7	AT214290	CLIP	1		
8	TH4455982	LOCK	1		
9	TH4455983	ROD	1		
10	TH4444664	HOLDER	1		
11	TH4456171	WIRE	1		
12	TH4455981	BUSHING	1		
13	AT214160	U-BOLT	1		
14	4474303	HINGE	2		
15	AT214313	SCREW WITH WASHER	6		
16	4474304	COVER	1		
17	TH4455977	ISOLATOR	1		
19	TH4455978	WEATHERSTRIP	1		
20	TH4453670	HANDRAIL	1		
21	AT214299	SCREW WITH WASHER	2		
22	TH4453671	SHEET	1		
23	AT213624	SCREW	3		
	AT214314	WASHER	3		
24	21M7285	SCREW	8		M6 X 12, (SUB FOR 21M7246)
26	TH4456172	NUT	1		
27	4414857	NUT	4		(SUB FOR AT157068)
30	12M7006	LOCK WASHER	8		6 MM
31	24M7293	WASHER	8		6.500 X 13 X 1.600 MM
50	4453676	WINDOW	1		(BRONZE) (SUB FOR TH4453676)
	4602582	WINDOW	1		(GREEN)
52	4448308	WINDOWPANE	1		(BRONZE) (SUB FOR TH4448308)
	4602564	WINDOWPANE	1		(GREEN)
53	4448309	WINDOWPANE	1		(BRONZE) (SUB FOR TH4448309)
	4602565	WINDOWPANE	1		(GREEN)
54	AT214152	LOCK	1		
55	AT213608	SCREW WITH WASHER	2		
56	AT214292	GASKET	1		
57	TH4453675	ISOLATOR	1		
58	TH4453674	WINDOW	1		
59	4147896	SPACER	3		(SUB FOR TH108646)
61	AT218141	SEAL	1		
65	4448310	WINDOWPANE	1		(BRONZE) (SUB FOR 4468943)
	4602566	WINDOWPANE	1		(GREEN)
72	TH4448315	ISOLATOR	1		

CAB FRONT WINDOWS, HANDLES, AND OPENING TRACKS

T146541 -UN-17OCT01

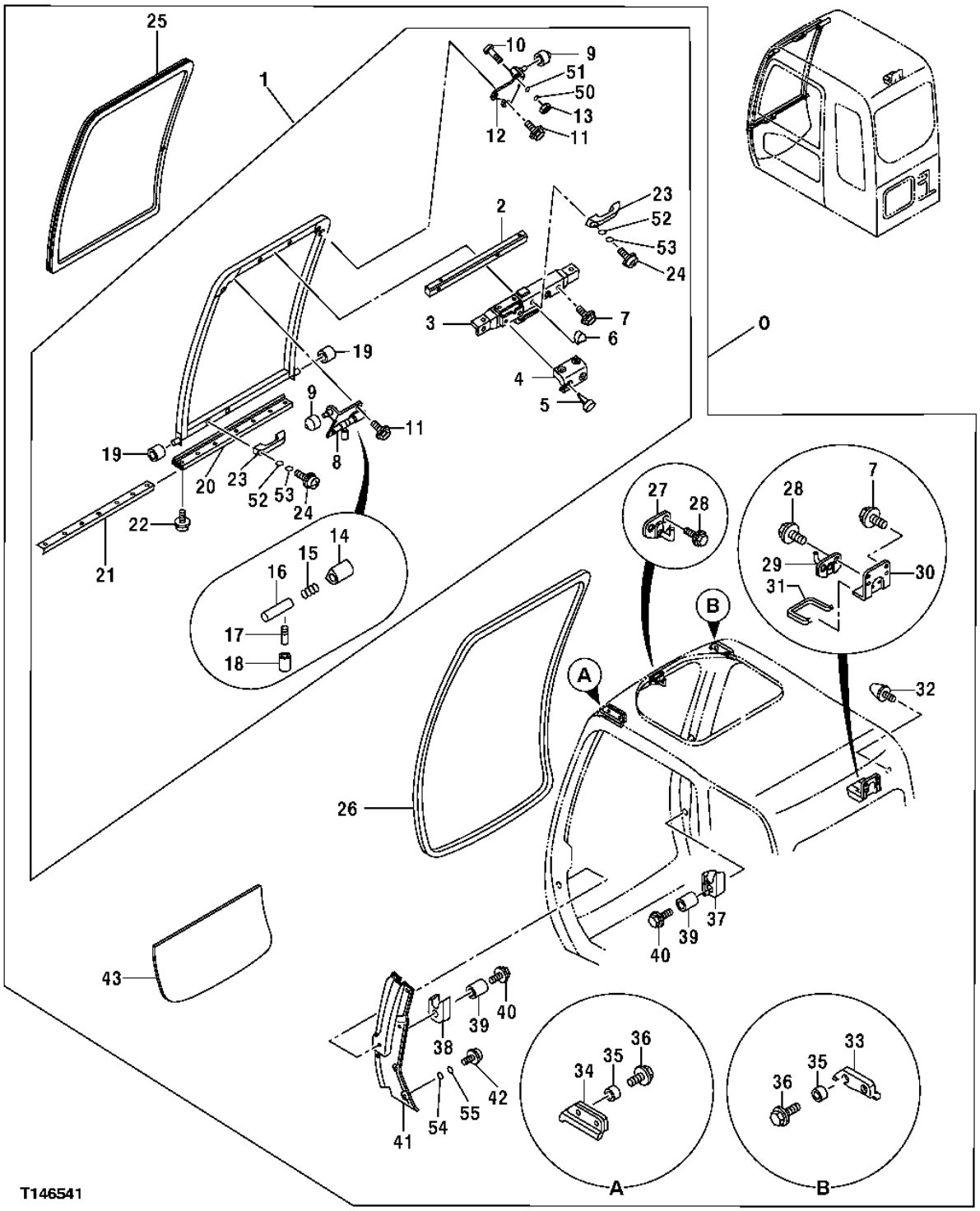

CAB FRONT WINDOWS, HANDLES, AND OPENING TRACKS

KEY	PART NO.	PART NAME	QTY	SERIAL NO.	REMARKS
0	4602549	CAB	1		(SUB FOR 4474296) (CONTAINS ALL ITEMS ON THIS PAGE - ADDITIONAL COMPONENTS LISTED ON PREVIOUS AND FOLLOWING PAGES)
1	TH4453689	WINDOW	1		
2	TH4456218	WELD NUT	1		
3	TH4456219	LOCK	1		
4	TH4456220	COVER	1		
5	TH4456221	CLIP	4		
6	TH4456222	COVER	1		
7	AT214311	SCREW WITH WASHER	4		
8	TH4456223	BRACKET	1		
9	TH4456224	ROLLER	2		
10	TH4456225	SCREW	1		
11	AT214305	SCREW WITH WASHER	4		
12	TH4456226	BRACKET	1		
13	19M7361	CAP SCREW	1		M12 X 50
14	TH4456227	COVER	1		
15	494918	SPRING	1		(SUB FOR TH106783)
16	AT214104	PIN	1		
17	4295480	LEVER	1		(SUB FOR AT156993)
18	4295876	COVER	1		(SUB FOR AT156994)
19	4204558	ROLLER	2		(SUB FOR TH108638)
20	TH4456228	ISOLATOR	1		
21	TH4456229	PLATE	1		
22	AT214301	SCREW	4		
23	4204579	HANDLE	2		(SUB FOR TH108661)
24	19M8425	CAP SCREW	4		M6 X 16
25	4448306	WINDOWPANE	1		(BRONZE) (SUB FOR 4474531)
	4602562	WINDOWPANE	1		(GREEN)
26	TH4456230	ISOLATOR	1		
27	TH4456231	STRIKER	1		
28	AT214297	SCREW WITH WASHER	4		
29	TH4456232	STRIKER	1		
30	TH4456233	BRACKET	1		
31	TH4456234	ISOLATOR	1		
32	4204586	STOP	1		(SUB FOR TH108668)
33	TH4456235	ISOLATOR	1		
34	TH4456236	ISOLATOR	1		
35	TH4456237	BUSHING	4		
36	TH4456238	BOLT	4		
37	TH4456239	STOP	1		
38	TH4456240	STOP	1		
39	TH4456241	BUSHING	2		
40	TH4456242	BOLT	2		
41	4474532	COVER	1		
42	21M7246	SCREW	6		M6 X 16
43	4448307	WINDOWPANE	1		(BRONZE)
	4602563	WINDOWPANE	1		(GREEN)
50	12M7068	LOCK WASHER	1		14 MM
51	24M7047	WASHER	1		13 X 24 X 2.500 MM
52	12M7006	LOCK WASHER	4		6 MM
53	24M7293	WASHER	4		6.500 X 13 X 1.600 MM
54	12M7006	LOCK WASHER	6		6 MM
55	24M7293	WASHER	6		6.500 X 13 X 1.600 MM

CAB RIGHT WINDOWS AND GUARDS

T158509 -UN-20AUG02

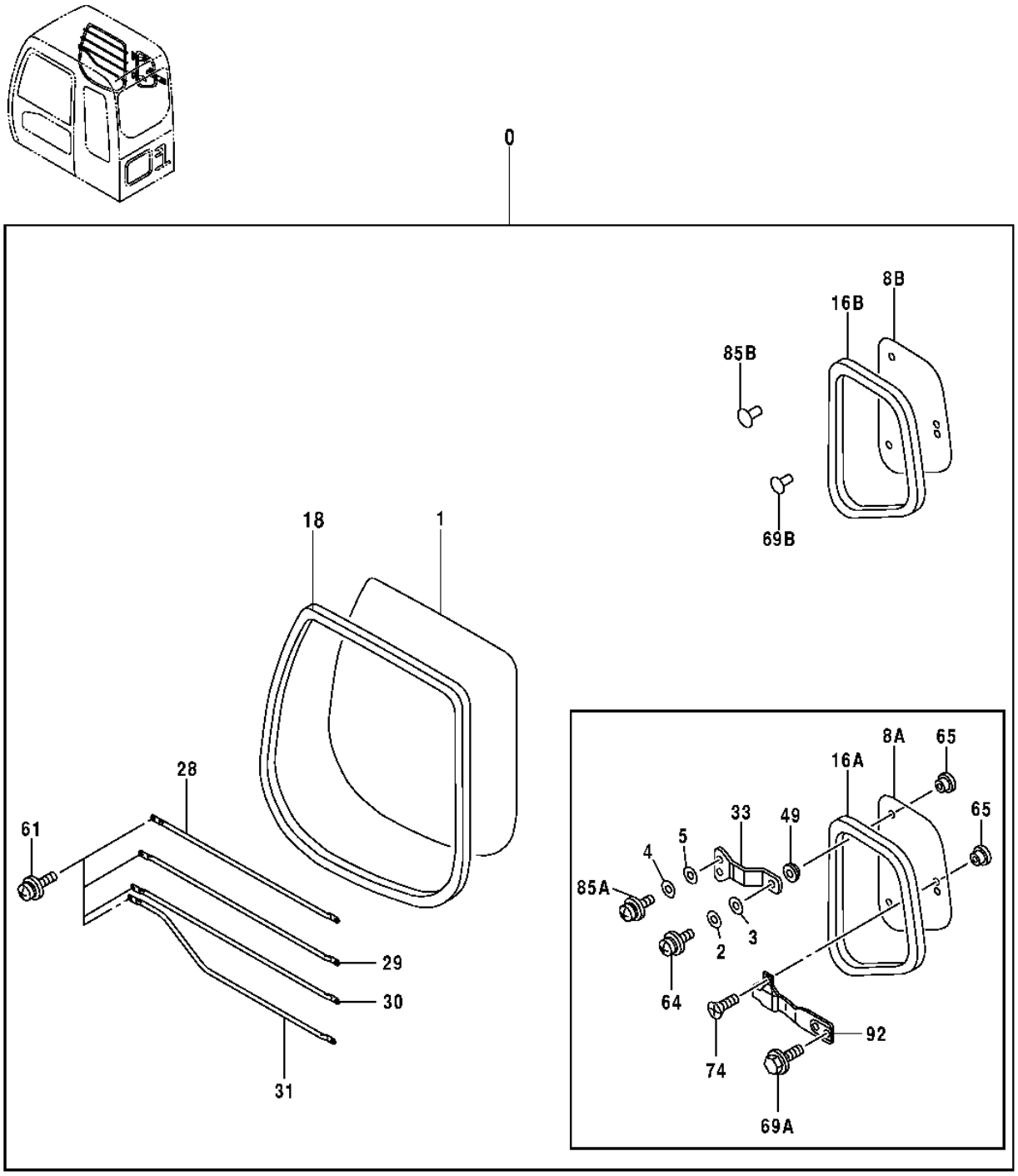

T158509

CAB RIGHT WINDOWS AND GUARDS

KEY	PART NO.	PART NAME	QTY	SERIAL NO.	REMARKS
0	4602549	CAB	1		(SUB FOR 4474296) (CONTAINS ALL ITEMS ON THIS PAGE - ADDITIONAL COMPONENTS LISTED ON PREVIOUS AND FOLLOWING PAGES)
1	4448312	WINDOWPANE	1	-XXXXXX	(BRONZE TINT)
	4602568	WINDOWPANE	1	XXXXXX-	(GREEN TINT)
2	12M7064	LOCK WASHER	2	-XXXXXX	5 MM
3	24M7348	WASHER	2	-XXXXXX	5.500 X 10 X 1 MM
4	12M7006	LOCK WASHER	4	-XXXXXX	6 MM
5	24M7293	WASHER	4	-XXXXXX	6.500 X 13 X 1.600 MM
8A	4448313	WINDOWPANE	1	-XXXXXX	(BRONZE TINT)
8B	4602570	WINDOWPANE	1	XXXXXX-	(GREEN TINT)
16A	4463390	ISOLATOR	1	-XXXXXX	(SUB FOR 4453680)
16B	4602576	ISOLATOR	1	XXXXXX-	
18	TH4448318	ISOLATOR	1		
28	TH4453681	GUARD	1		
29	4463392	GUARD	1		(SUB FOR 4453682 AND TH4453682)
30	4463393	GUARD	1		(SUB FOR TH4453683 AND 4453683)
31	4463394	GUARD	1		(SUB FOR TH4453683 AND 4453684)
33	AT214169	SPRING	2	-XXXXXX	
49	AT214170	BUSHING	2	-XXXXXX	
61	AT214299	SCREW WITH WASHER	8		
64	21M6070	SCREW	2	-XXXXXX	M5 X 16
65	AT214172	BUSHING	4	-XXXXXX	
69A	AT214309	SCREW WITH WASHER	2	-XXXXXX	
69B	4377817	CLIP	2	XXXXXX-	
74	AT214300	SCREW	2	-XXXXXX	
85A	21M7246	SCREW	4	-XXXXXX	
85B	4372088	CLIP	4	XXXXXX-	
92	AT214171	LOCK	1	-XXXXXX	

CAB TOP HATCH AND SUN SHADE

T188477 -UN-13MAR03

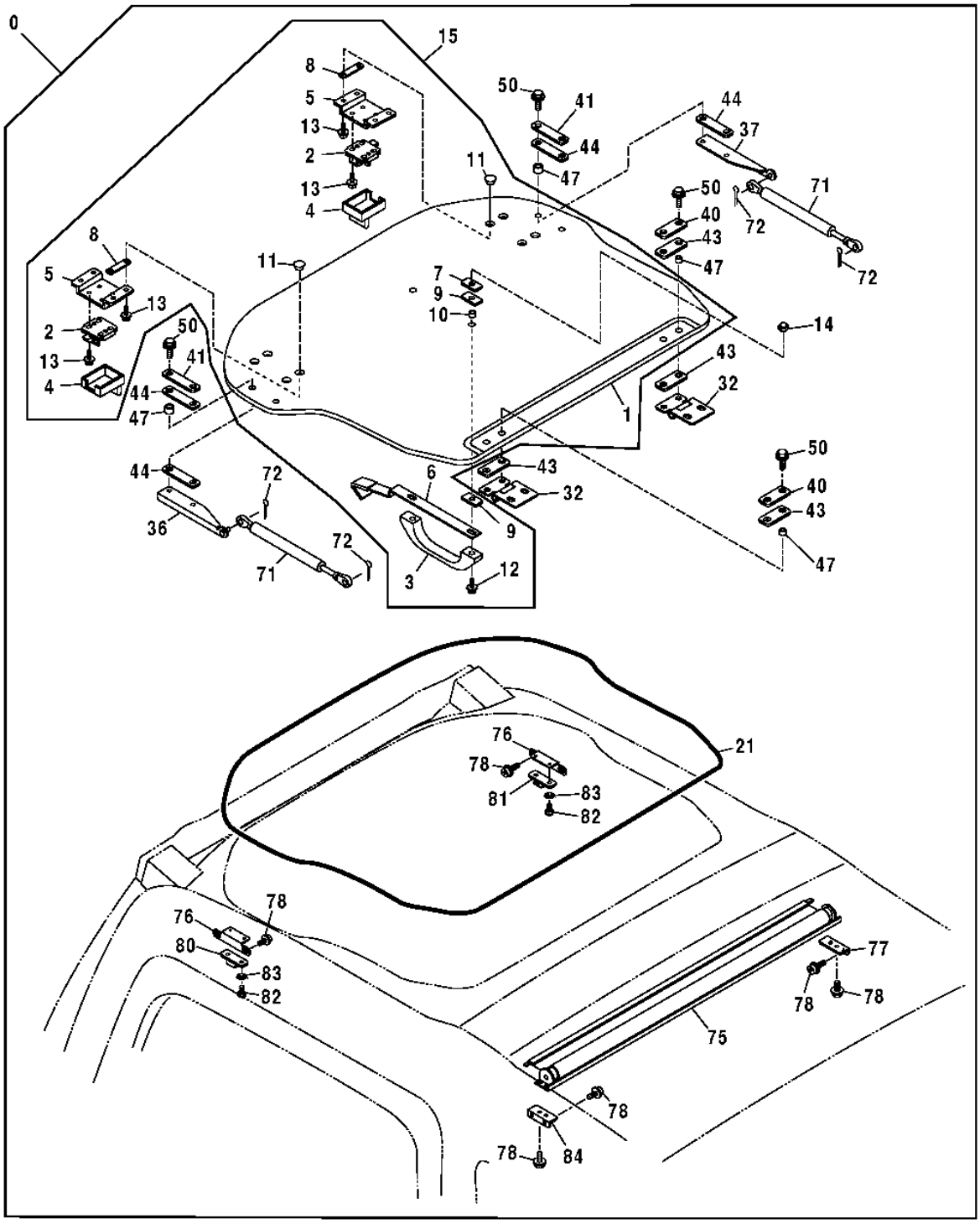

T188477

CAB TOP HATCH AND SUN SHADE

KEY	PART NO.	PART NAME	QTY	SERIAL NO.	REMARKS
0	4602549	CAB	1		(SUB FOR 4474296) (CONTAINS ALL ITEMS ON THIS PAGE - ADDITIONAL COMPONENTS LISTED ON PREVIOUS AND FOLLOWING PAGES)
1	4460405	WINDOW	1		
2	4369615	LOCK	2		(SUB FOR (2) AT214118)
3	4204579	HANDLE	1		(SUB FOR 4411821)
4	4369616	COVER	2		(SUB FOR (2) AT214119)
5	4474479	BRACKET	2		
6	4474498	BRACKET	1		
7	4386452	PLATE	2		
8	4474480	PACKING	4		
9	4386450	PACKING	4		
10	4474494	BUSHING	2		
11	4369674	BUSHING	8		(SUB FOR (8) AT214172)
12	J680630	SCREW	2		
13	J680514	SCREW WITH WASHER	16		(SUB FOR (16) AT213610)
14	4474493	NUT	2		
15	.....	ROOF	1		KIT(ROOF ASSEMBLY) (4456952 NOT AVAILABLE)
21	4474515	ISOLATOR	1		
32	4474478	HINGE	2		
36	4477219	BRACKET	1		
37	4477218	BRACKET	1		
40	4474477	PLATE	2		
41	4477217	PLATE	2		
43	4474476	PACKING	4		
44	4477216	PACKING	4		
47	4474482	BUSHING	8		
50	19M7162	CAP SCREW	8		(SUB FOR (8) AT214307)
	12M7065	LOCK WASHER	8		
	24M1136	WASHER	8		
71	4369619	CYLINDER	2		(SUB FOR (2) AT214122)
72	H132922	COTTER PIN	4		
75	4474499	ROLLER	1		
76	4474514	BRACKET	2		
77	4609477	BRACKET	1		(SUB FOR 4474513) (RIGHT BRACKET)
	4609479	SCREW	1		
	4609480	ISOLATOR	1		
78	4444634	SCREW	12		
80	4474518	STOP	1		
81	4474517	STOP	1		
82	21M7258	SCREW	4		
83	4459249	WASHER	4		
84	4609478	BRACKET	1		(SUB FOR 4474513) (LEFT BRACKET)
	4609479	SCREW	1		
	4609480	ISOLATOR	1		

SECONDARY EXIT KIT

T150988 -UN-06FEB02

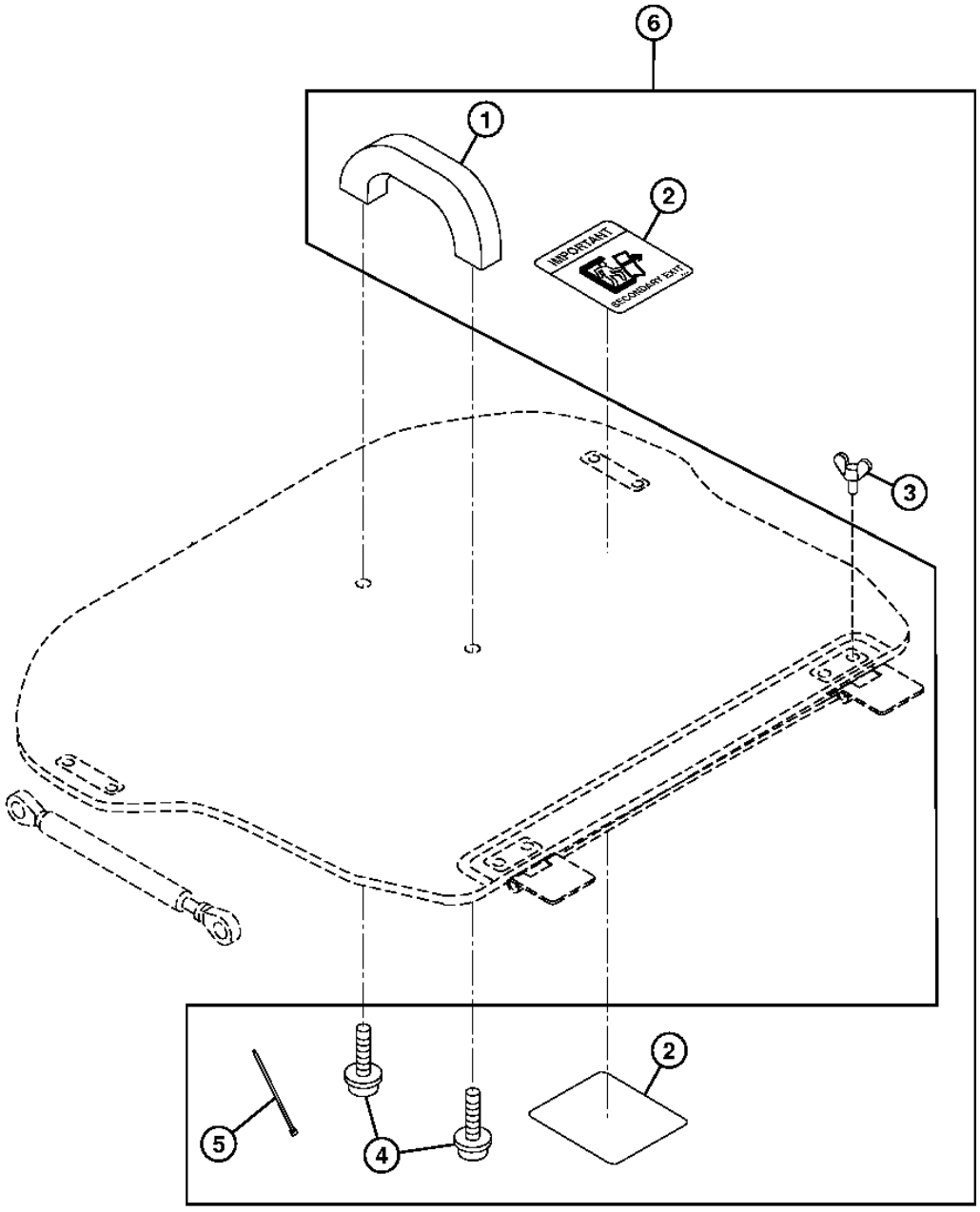

T150988

SECONDARY EXIT KIT

KEY	PART NO.	PART NAME	QTY	SERIAL NO.	REMARKS
1	4204579	HANDLE	1		(SUB FOR TH108661)
2	T167256	LABEL	2		
3	21M7243	WING SCREW	4		M8 X 16
4	21M7085	SCREW	2		M6 X 20, (SUB FOR 21M7322)
5	R44302	TIE BAND	2		
6	**AT196567**	**KIT**	**1**		**(WHOLEGOODS) (SECONDARY EXIT KIT)**

CAB DOOR HOLD OPEN LATCH COMPONENTS

T142617 -UN-14JUN01

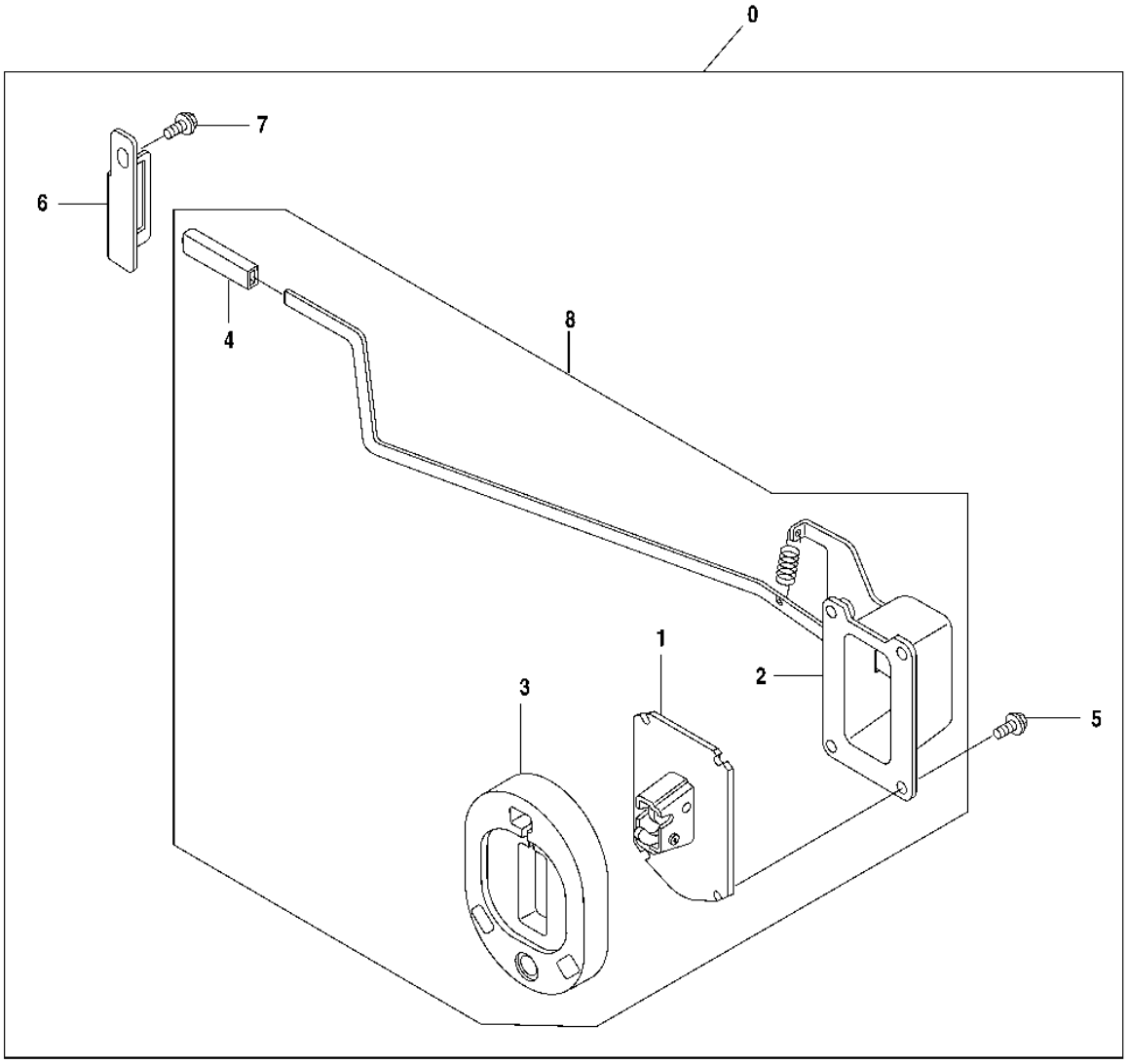

T142617

CAB DOOR HOLD OPEN LATCH COMPONENTS

KEY	PART NO.	PART NAME	QTY	SERIAL NO.	REMARKS
0	4602549	CAB	1		(CONTAINS ALL ITEMS ON THIS PAGE - ADDITIONAL COMPONENTS ON PREVIOUS PAGES) (SUB FOR 4474296)
1	.....	CATCH	1		(TH4456245 NOT AVAILABLE)
2	TH4456246	CASE	1		
3	TH4456247	STOP	1		
4	4089012	CAP	4		
5	19M7881	SCREW	4		M8 X 20
	12M7065	LOCK WASHER	4		8 MM
6	TH4456248	STOP	1		
7	19M7402	CAP SCREW	1		M10 X 25
	12M7066	LOCK WASHER	1		10 MM
	24M7028	WASHER	1		10.500 X 20 X 2 MM
8	TH4456244	CATCH	1		DOOR CATCH ASSEMBLY

WINDSHIELD WASHER RESERVOIR, PUMP, AND MOUNTING BRACKET

T192347 -UN-24JUN03

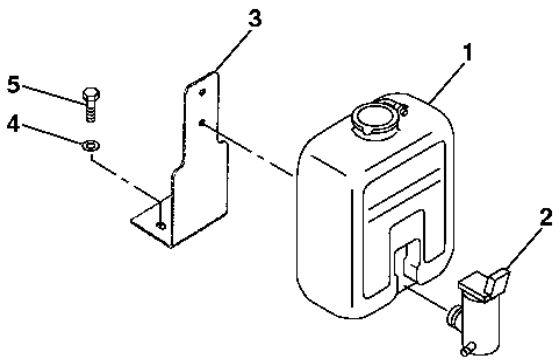

T192347

WINDSHIELD WASHER RESERVOIR, PUMP, AND MOUNTING BRACKET

KEY	PART NO.	PART NAME	QTY	SERIAL NO.	REMARKS
0	AT177804	WINDSHIELD WASHER	1		
1	4369472	RESERVOIR	1		
2	4326095	PUMP	1		
3	DH970015	BRACKET	1		
4	24M7054	WASHER	2		6.400 X 12 X 1.600 MM
5	19M8425	CAP SCREW	2		M6 X 16

CAB REAR CONSOLE SUPPORT BRACKETS AND FLOOR MATS

T142627 -UN-14JUN01

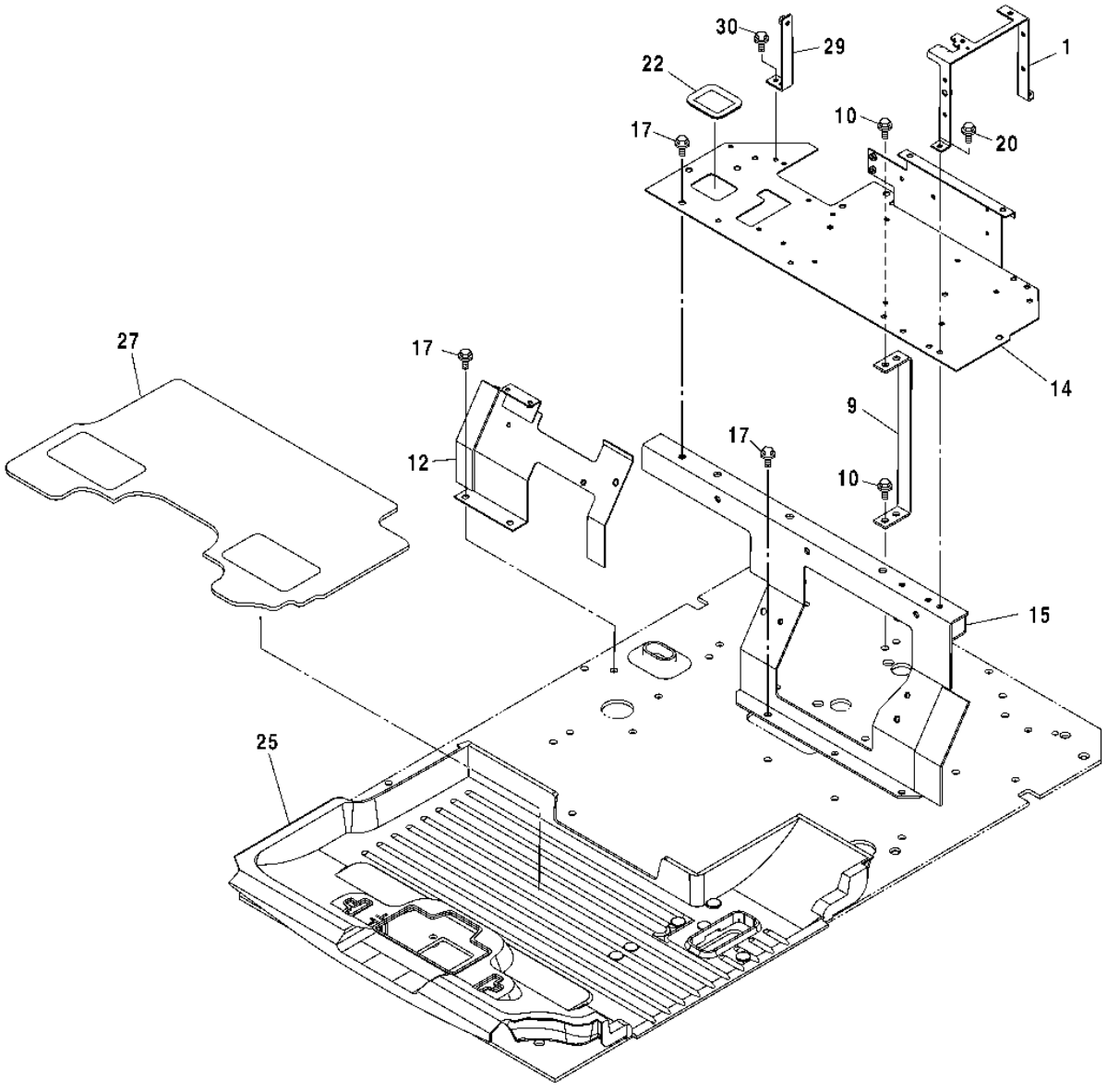

CAB REAR CONSOLE SUPPORT BRACKETS AND FLOOR MATS

KEY	PART NO.	PART NAME	QTY	SERIAL NO.	REMARKS
1	TH7039389	BRACKET	1		
9	TH8076619	SUPPORT	1		
10	19M7402	CAP SCREW	3		M10 X 25
	12M7066	LOCK WASHER	3		10 MM
12	TH6019838	BRACKET	1		
14	TH6019252	BRACKET	1		
15	TH5007342	BRACKET	1		
17	19M7402	CAP SCREW	7		M10 X 25
	12M7066	LOCK WASHER	7		10 MM
	24M7028	WASHER	7		10.500 X 20 X 2 MM
20	19M7881	SCREW	2		M8 X 20
	12M7065	LOCK WASHER	2		8 MM
22	TH4445220	BUSHING	1		
25	TH0003929	MAT	1		
27	TH4448601	MAT	1		
29	TH9757192	BRACKET	1		
30	19M8425	CAP SCREW	2		M6 X 16
	12M7006	LOCK WASHER	2		6 MM
	24M7293	WASHER	2		6.500 X 13 X 1.600 MM

CAB FLOOR PLATFORM

T146603 -UN-17OCT01

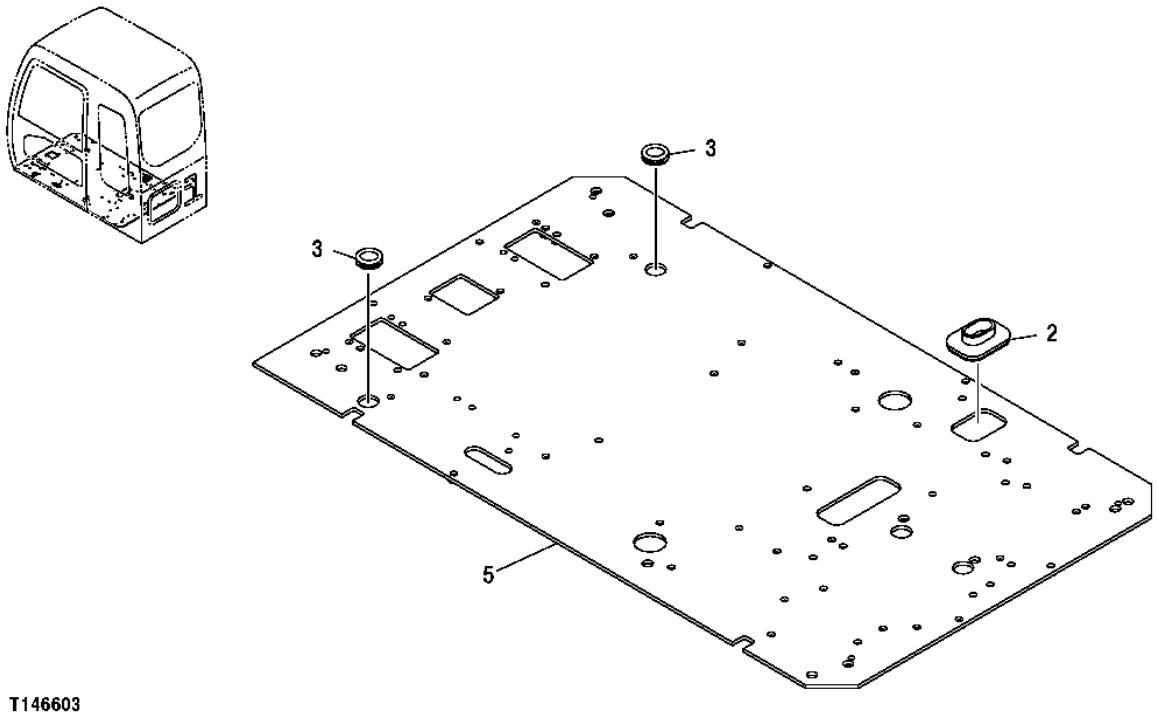

T146603

CAB FLOOR PLATFORM

KEY	PART NO.	PART NAME	QTY	SERIAL NO.	REMARKS
2	AT213954	GROMMET	1		
3	4205084	GROMMET	2		(SUB FOR TH108616)
5	6020352	PLATE	1		

CAB WINDOW VANDAL PROTECTION KIT

T150991 -UN-06FEB02

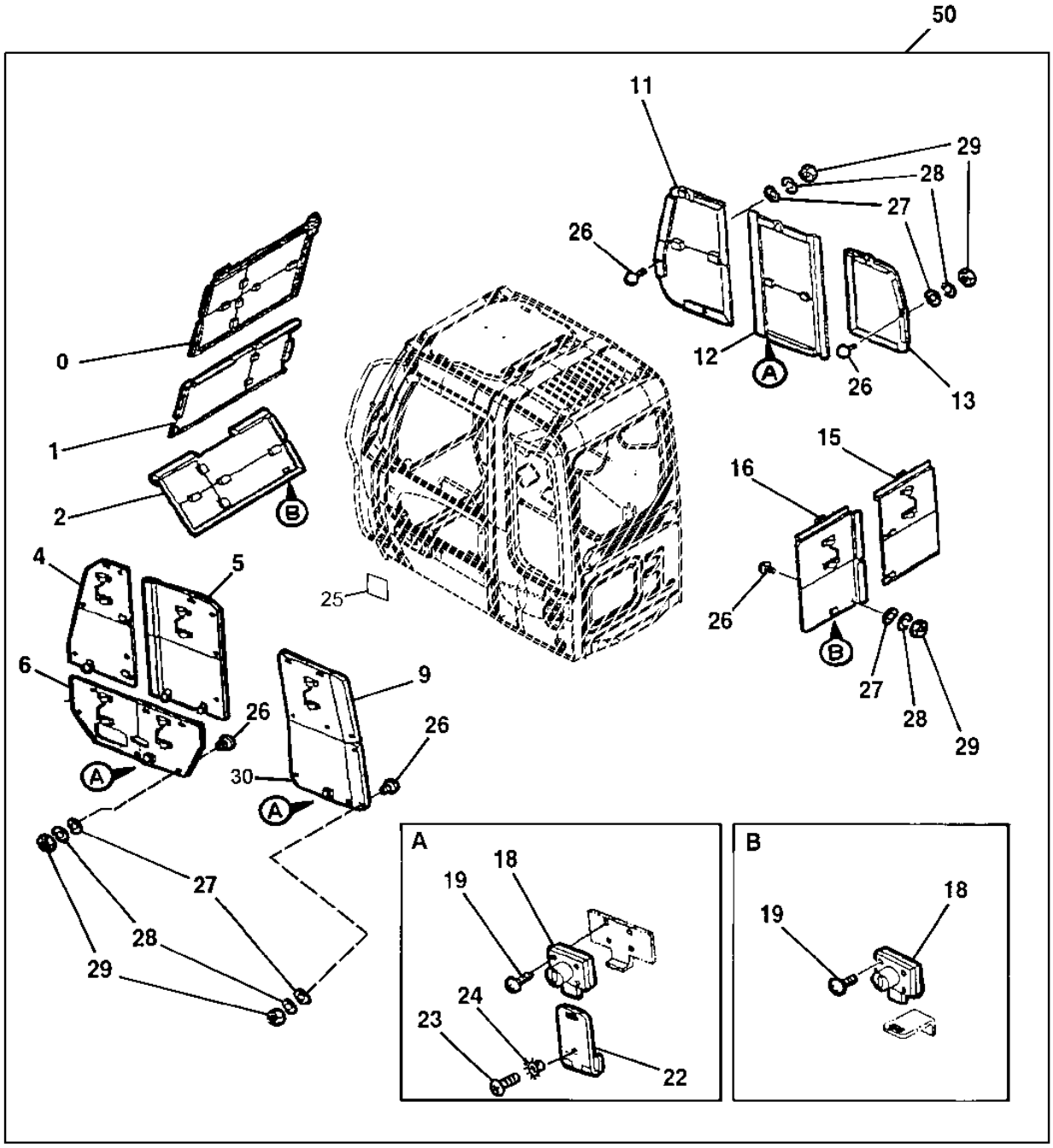

T150991

2C14

CAB WINDOW VANDAL PROTECTION KIT

KEY	PART NO.	PART NAME	QTY	SERIAL NO.	REMARKS
0	AP38748	COVER	1		
1	AP38749	COVER	1		
2	AP38750	COVER	1		
4	AP38751	COVER	1		
5	AP38752	COVER	1		
6	AP38753	COVER	1		
9	AP38754	COVER	1		
11	AP38756	COVER	1		
12	AP38757	COVER	1		
13	AP38758	COVER	1		
15	AP38760	COVER	1		
16	AP38759	COVER	1		
18	4361601	LOCK	5		(SUB FOR AT176636)
18A	AT194969	KEY	1		(SUB FOR AT147803) (H800) (NOT ILLUSTRATED)
19	21M7022	SCREW	20		M5 X 20
	12M7064	LOCK WASHER	20		5 MM
22	TH108983	HINGE	3		
23	21M7249	SCREW	6		M5 X 10
24	T205218	WASHER	6		(SUB FOR TH111908, 4107762)
25	T188737	LABEL	1		
26	AT155189	STOP	33		
27	24M7027	WASHER	33		5.300 X 10 X 1 MM
28	12M7064	LOCK WASHER	33		5 MM
29	14M7297	NUT	33		M5
30	AP38755	COVER	1		
50	**AP38763**	**KIT**	**1**		**WHOLEGOODS (VANDAL PROTECTION)**

SEAT, SEAT SUSPENSION, ARM REST, AND HEAD REST

T196825 -UN-15DEC03

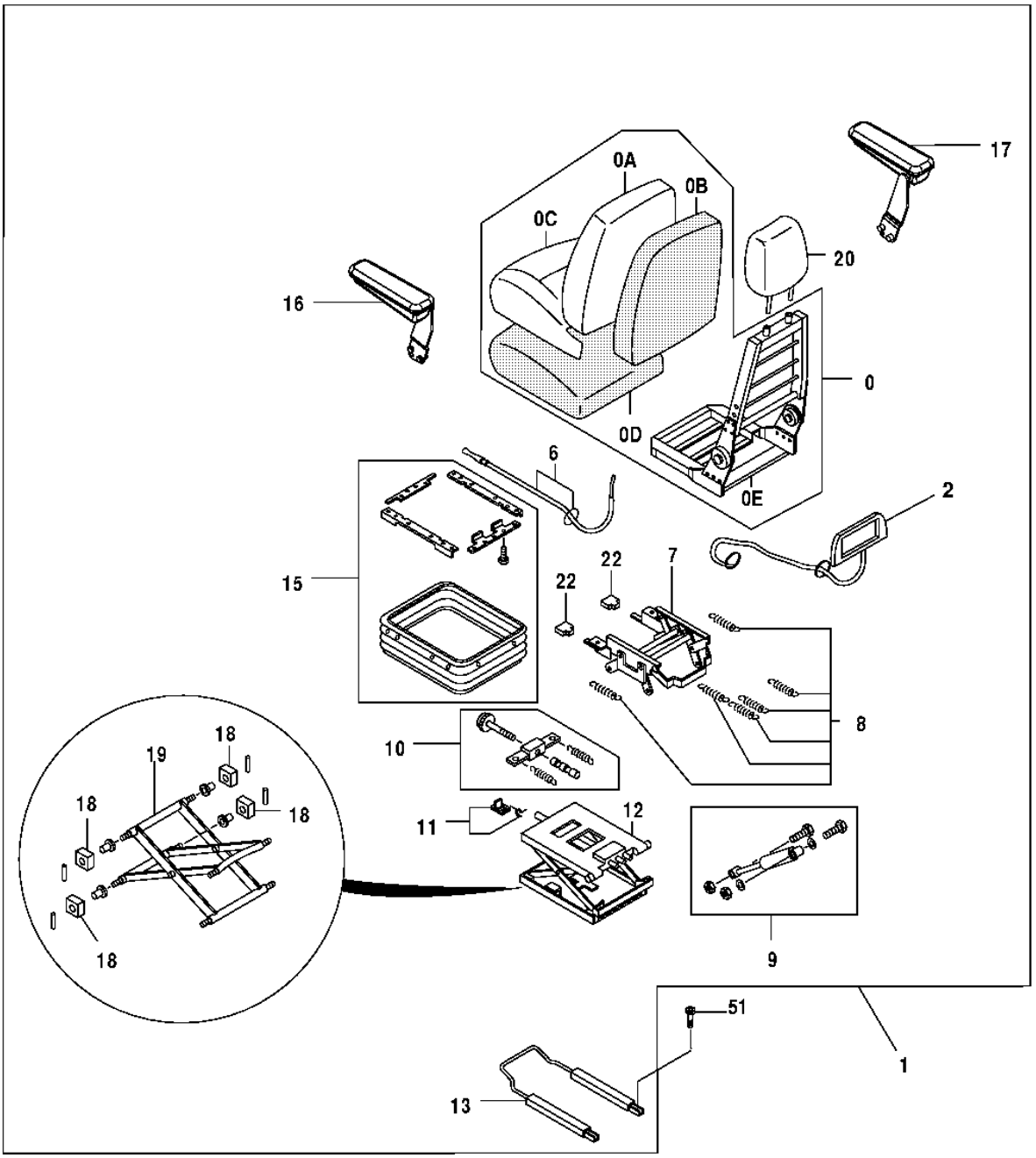

T196825

SEAT, SEAT SUSPENSION, ARM RESTS, AND HEAD REST

KEY	PART NO.	PART NAME	QTY	SERIAL NO.	REMARKS
0	AT195286	SEAT BACK	1		SEAT UPPER KIT
0A	AT309263	CUSHION COVER	1		
0B	AT309264	PAD	1		
0C	AT195278	CUSHION	1		(FABRIC)
0D	AT195279	PAD	1		(SEAT)
0E	.....	FRAME	1		
1	AT193964	SEAT	1		FABRIC
2	AT195284	KIT	1		(AIR LUMBAR KIT)
6	AT216522	CABLE	1		
7	AT180971	STAND	1		RECLINER CABLE KIT
8	AT195287	SPRING	1		
9	AT180973	TORSIONAL DAMPER	1		(KIT)
10	AT180974	ADJUSTER	1		HEIGHT RISER SPRING
11	AT322189	LEVER	1		(SUB FOR AT180975 OR 4392805)
12	AT180976	SEAT SUSPENSION	1		
13	AT180977	ADJUSTER	1		
15	AT180978	COVER	1		(SUSPENSION COVER KIT)
16	AT199748	ARMREST KIT	1		(SUB FOR AT195282) LEFT
17	AT199749	ARMREST KIT	1		(SUB FOR AT195283) RIGHT
18	AT180979	BUSHING	1		KIT
19	AT180980	LINK	1		LEVER/CENTER PIVOT KIT
20	AT195280	HEAD RESTRAINT	1		
21	AT216532	KIT	1	-063508	
	4610640	HANDLE	1	063509-	
22	AT216532	KIT	1	-063508	
	4610641	HANDLE	1	063509-	
51	19M7647	SCREW	4		M8 X 16, (SUB FOR AT217709)

3.00 INCH SEAT BELT KIT

T144006 -UN-13JUL01

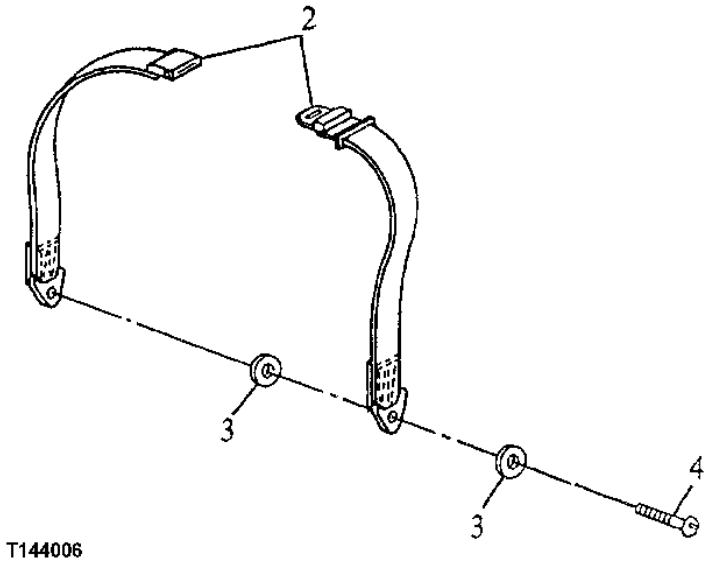

3.00 INCH SEAT BELT KIT

KEY	PART NO.	PART NAME	QTY	SERIAL NO.	REMARKS
2	**AT173678**	**SEAT BELT**	**1**		**WHOLEGOODS (INCLUDES HARDWARE)**
	T157779	FLANGE NUT	2		7/16" (NOT ILLUSTRATED)
3	T105740	WASHER	4		
4	R41778	BOLT	2		11.125 X 31.750 MM

SEAT BASE BRACKET AND SLIDER KIT

T142631 -UN-28JUN01

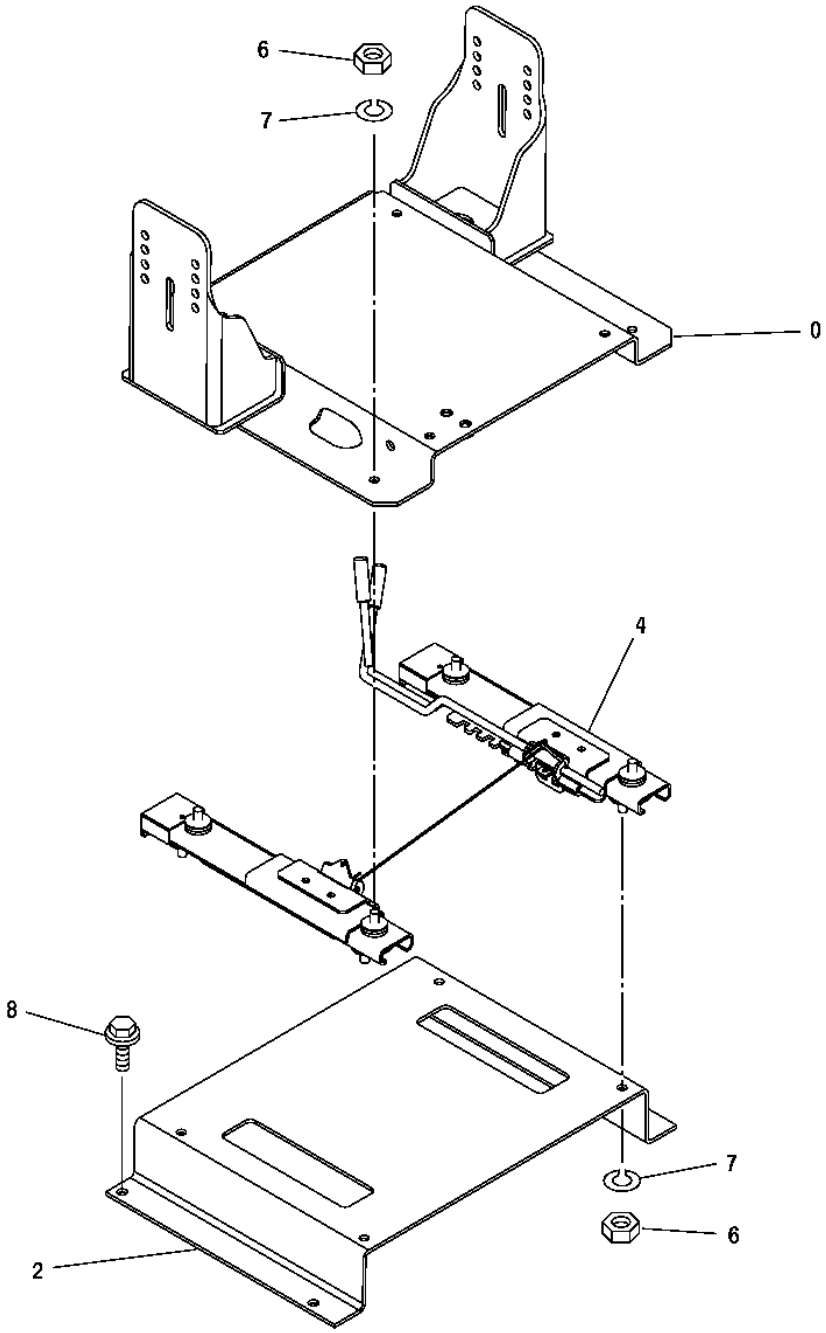

T142631

SEAT BASE BRACKET AND SLIDER KIT

KEY	PART NO.	PART NAME	QTY	SERIAL NO.	REMARKS
0	6020125	BRACKET	1		(SUB FOR TH6020171)
2	TH3089486	BRACKET	1		
4	TH4405128	SEAT SLIDE TRACK KIT	1		
6	J952010	NUT	8		(SUB FOR TH104196)
7	12M7066	LOCK WASHER	8		10 MM
8	19M7402	CAP SCREW	4		M10 X 25

SEAT BELT

T188984 -UN-26MAR03

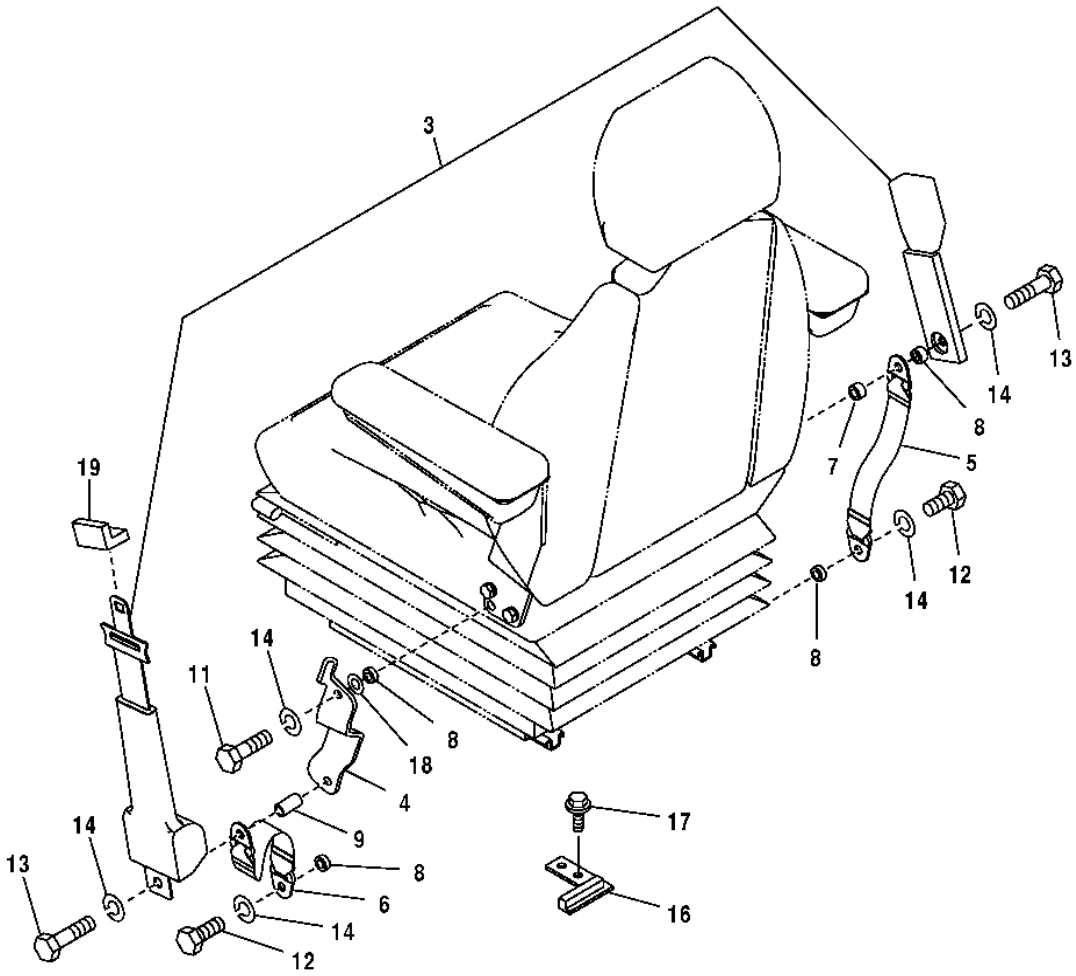

T188984

SEAT BELT

KEY	PART NO.	PART NAME	QTY	SERIAL NO.	REMARKS
3	4384239	SEAT BELT	1		
4	7042657	BRACKET	1		
5	4382410	SEAT BELT	1		
6	4453869	SEAT BELT	1		
7	4453874	SPACER	1		
8	4372200	SPACER	3		(SUB FOR P60915)
9	4382432	SLEEVE	1		
11	19M7647	SCREW	2		M8 X 16
12	19H3187	CAP SCREW	2		7/16" X 1-1/2", (SUB FOR 4235232)
13	4380534	CAP SCREW	2		
14	J219167	SPRING WASHER	5		
16	9756736	BRACKET	1		
17	19M7402	CAP SCREW	2		M10 X 25
	12M7066	LOCK WASHER	2		10 MM
18	24M7047	WASHER	1		13 X 24 X 2.500 MM
19	3097862	BUSHING	1		

CAB HEATER AND AIR CONDITIONER UNIT DUCTS AND HOSES

T157338 -UN-07OCT02

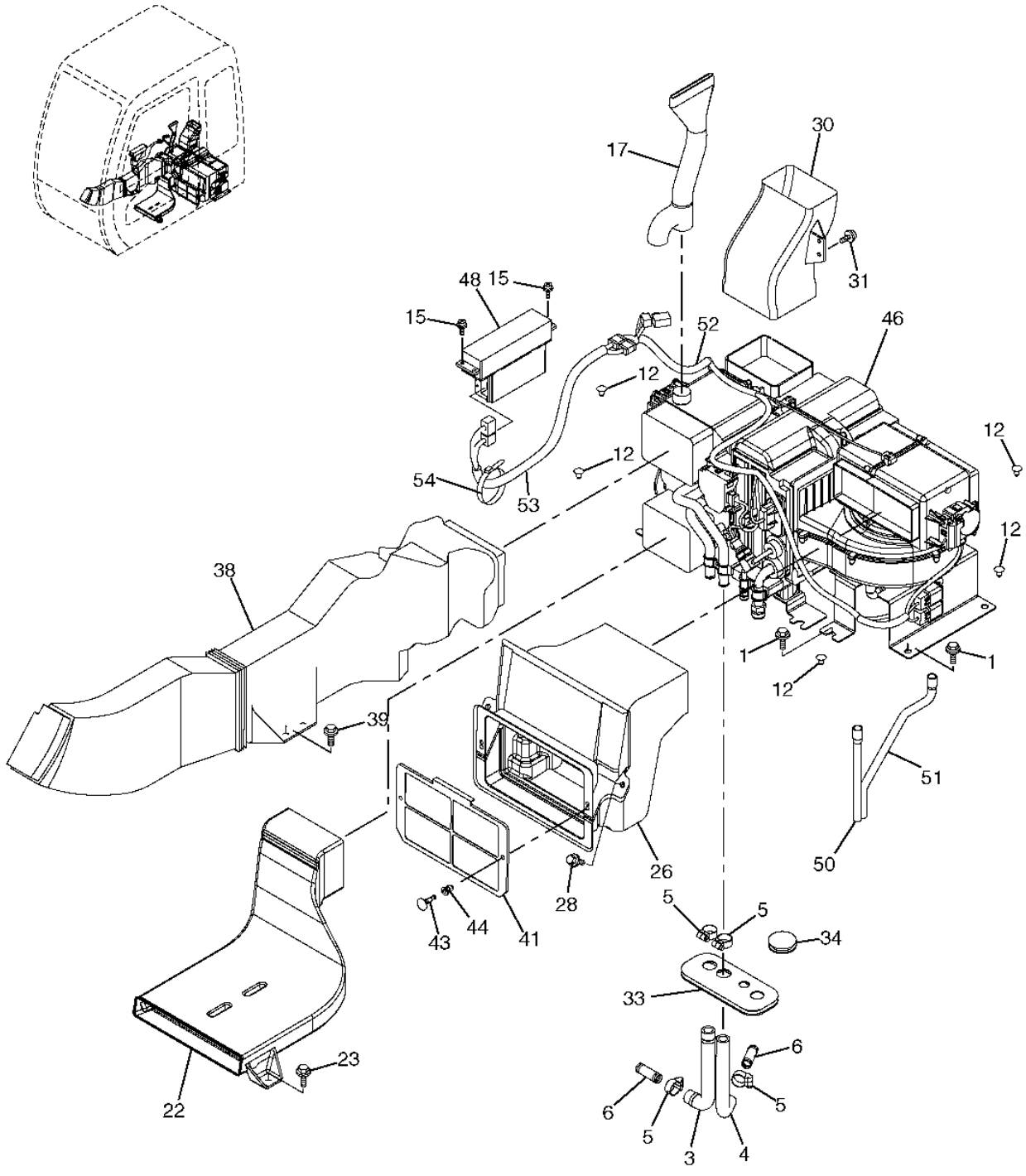

T157338

CAB HEATER AND AIR CONDITIONER UNIT DUCTS AND HOSES

KEY	PART NO.	PART NAME	QTY	SERIAL NO.	REMARKS
1	19M7402	CAP SCREW	6		M10 X 25
	12M7066	LOCK WASHER	6		10 MM (0.394")
	24M7028	WASHER	6		10.500 X 20 X 2 MM (0.413" X 0.787" X 0.079")
3	4366623	HOSE	1		
4	4344638	HOSE	1		
5	4514699	HOSE CLAMP	4		
6	4347396	FITTING	2		
12	4280359	PLUG	5		
15	21M7265	SCREW	4		M5 X 12
17	4436442	AIR DUCT	1		
22	4426155	AIR DUCT	1		
23	19M7662	CAP SCREW	2		M10 X 30
	12M7066	LOCK WASHER	2		10 MM (0.394")
	24M7028	WASHER	2		10.500 X 20 X 2 MM (0.413" X 0.787" X 0.079")
26	4431227	AIR DUCT	1		
28	19M7881	SCREW	2		M8 X 20
	12M7065	LOCK WASHER	2		8 MM (0.315")
	24M7055	WASHER	2		8.400 X 16 X 1.600 MM (0.331" X 0.630" X 0.063")
30	4426157	AIR DUCT	1		
31	19M8425	CAP SCREW	2		M6 X 16
	12M7006	LOCK WASHER	2		6 MM (0.236")
	24M7293	WASHER	2		6.500 X 13 X 1.600 MM (0.256" X 0.512" X 0.063")
33	2044923	BUSHING	1		
34	4288445	BUSHING	1		
38	4426158	AIR DUCT	1		
39	19M7662	CAP SCREW	2		M10 X 30
	12M7066	LOCK WASHER	2		10 MM (0.394")
	24M7028	WASHER	2		10.500 X 20 X 2 MM (0.413" X 0.787" X 0.079")
41	4441139	GRILLE	1		
43	4441059	CLIP	2		
44	4441061	CLIP	2		
46	4431079	AIR CONDITIONER	1		
48	4431080	AIR HEATER CONTROLLER	1		
50	4441130	REFRIGERANT HOSE	1		
51	4441131	REFRIGERANT HOSE	1		
52	4452187	WIRING HARNESS	1		
53	4452188	WIRING HARNESS	1		
54	H77698	TIE BAND	1		(SUB FOR 4121859)

HEATER AND AIR CONDITIONER UNIT COMPONENTS

T160182 -UN-07OCT02

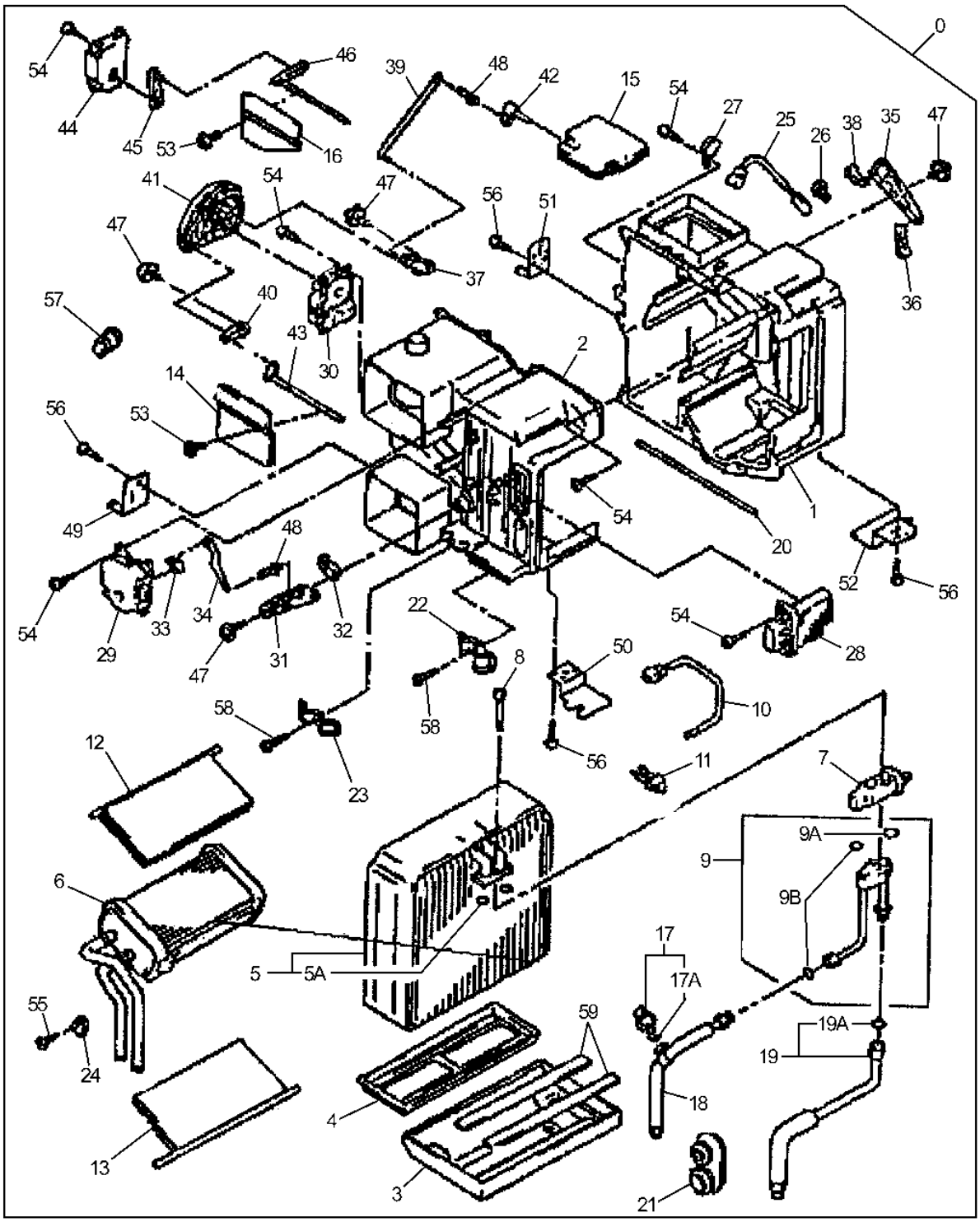

T160182

HEATER AND AIR CONDITIONER UNIT COMPONENTS

KEY	PART NO.	PART NAME	QTY	SERIAL NO.	REMARKS
0	4431079	AIR CONDITIONER	1		(COMPLETE) (CONTAINS ALL ITEMS ON THIS PAGE - ADDITIONAL COMPONENTS LISTED ON ANOTHER PAGE)
1	4475264	CASE	1		
2	4475265	CASE	1		
3	4475283	CASE	1		
4	4475284	PLATE	1		
5	4469056	EVAPORATOR	1		
5A	4350206	O-RING	2		
6	4469057	CORE	1		
7	4465995	FLOW CONTROL HYD. VALVE	1		
8	4475285	BOLT	2		
9	4475286	STRUCTURAL TUBING	1		
9A	4450206	ISOLATOR	1		
9B	4350187	O-RING	2		
10	4469058	THERMOSTAT	1		
11	4475287	CLIP	2		
12	4475288	DOOR	1		
13	4475289	DOOR	1		
14	4475290	DOOR	1		
15	4475291	PULLEY WITH DAMPENER	1		
16	4475345	DOOR	1		
17	4469059	SWITCH	1		(PRESSURE)
17A	4475346	O-RING	1		
18	4475347	HOSE	1		
19	4475348	HOSE	1		
19A	4350206	O-RING	1		
20	4475349	PACKING	1		
21	4475350	ISOLATOR	1		
22	4475351	CLIP	1		
23	4475352	CLIP	1		
24	4475353	BRACKET	1		
25	4418144	THERMOSTAT	1		
26	4418143	CLAMP	1		
27	4418142	BRACKET	1		
28	4469060	INTEGRATED CIRCUIT	1		
29	4469061	MOTOR	1		
30	4469062	MOTOR	1		
31	4475364	PLATE	1		
32	4475365	LEVER	1		
33	4475366	LEVER	1		
34	4475367	ROD	1		
35	4475368	PLATE	1		
36	4475369	LEVER	1		
37	4475370	PLATE	1		
38	4475371	LEVER	1		
39	4475372	ROD	1		
40	4475399	PLATE	1		
41	4475400	PLATE	1		
42	4475401	LEVER	1		
43	4475402	LEVER	1		
44	4469063	MOTOR	1		
45	4475403	LEVER	1		
46	4475404	LEVER	1		
47	4475405	BOLT	4		(TAPPING SCREW)
48	4469047	CLAMP	2		
49	4475406	BRACKET	1		
50	4475407	BRACKET	1		
51	4475430	BRACKET	1		
52	4475431	BRACKET	1		
53	4475432	BOLT	4		
54	4382883	SCREW	23		(TAPPING)
55	4236448	SCREW	1		
56	4382882	BOLT	8		(TAPPING SCREW)
57	4475433	BUSHING	1		
58	4475434	BOLT	2		(TAPPING SCREW)
59	4475435	PACKING	2		

HEATER AND AIR CONDITIONER UNIT COMPONENTS (CONTINUED)

T160183 -UN-07OCT02

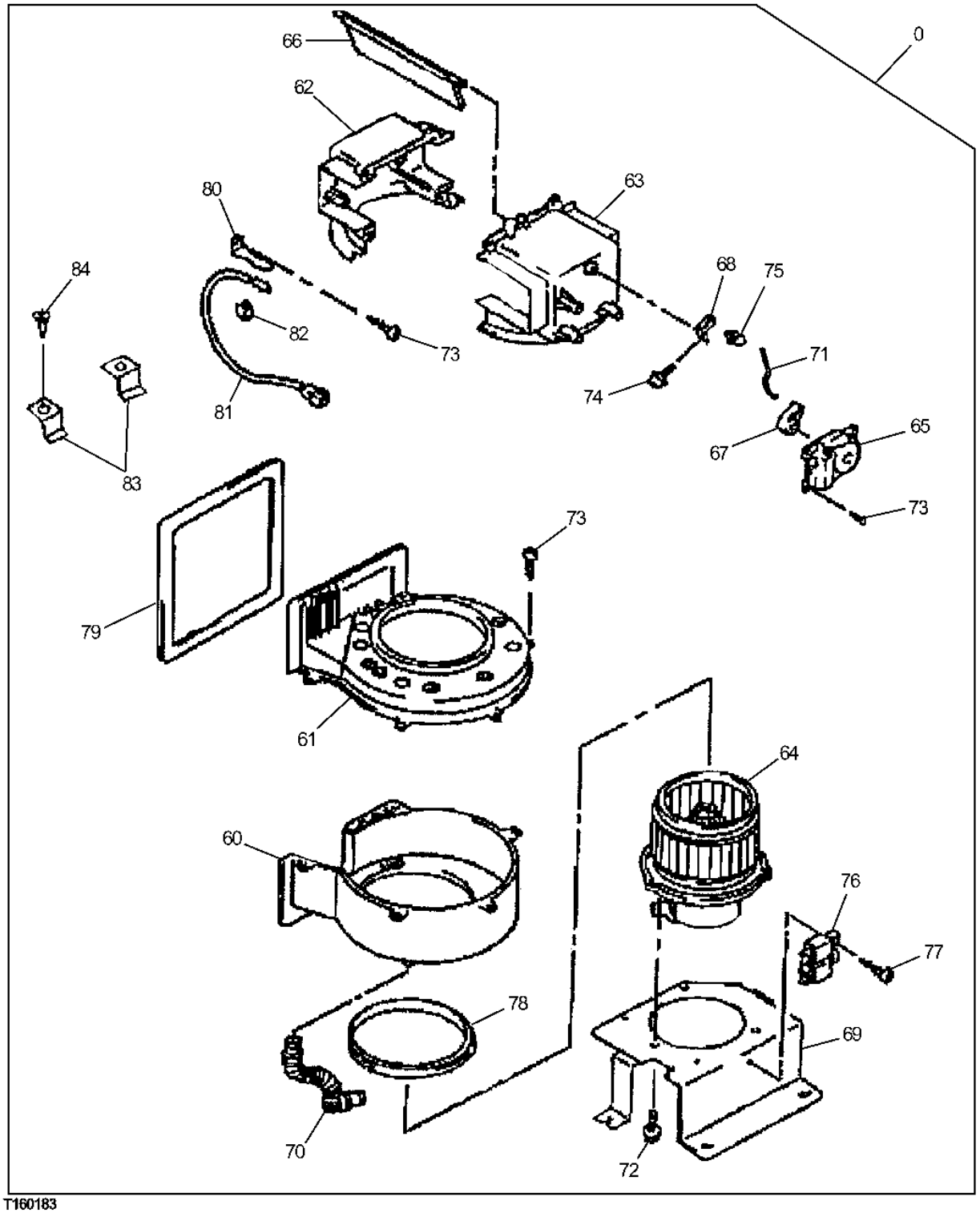

T160183

HEATER AND AIR CONDITIONER UNIT COMPONENTS (CONTINUED)

KEY	PART NO.	PART NAME	QTY	SERIAL NO.	REMARKS
0	4431079	AIR CONDITIONER	1		COMPLETE (CONTAINS ALL ITEMS LISTED ON THIS PAGE - ADDITIONAL COMPONENTS LISTED ON ANOTHER PAGE)
60	4475247	CASE	1		
61	4475248	CASE	1		
62	4475249	CASE	1		
63	4475250	CASE	1		
64	4469040	ELECTRIC MOTOR	1		
65	4469063	MOTOR	1		
66	.....	DOOR	1		(4469043 NOT AVAILABLE FOR SERVICE)
67	.....	LEVER	1		(4469044 NOT AVAILABLE FOR SERVICE)
68	.....	LEVER	1		(4469045 NOT AVAILABLE FOR SERVICE)
69	4475257	BRACKET	1		
70	4475258	HOSE	1		
71	.....	SHAFT	1		(4469046 NOT AVAILABLE FOR SERVICE)
72	4475259	BOLT	3		
73	4482883	BOLT	17		
74	4475260	BOLT	1		
75	4469047	CLAMP	1		
76	4382860	RELAY	2		
77	4382832	SCREW	2		
78	4475261	PACKING	1		
79	4475262	PACKING	1		
80	4475263	BRACKET	1		
81	4418147	THERMOSTAT	1		
82	4418149	CLAMP	1		
83	4475229	BRACKET	2		
84	4382882	BOLT	2		

A/C COMPRESSOR BRACKET, DRIVE BELT, AND REFRIDERANT HOSES

T157339 -UN-07OCT02

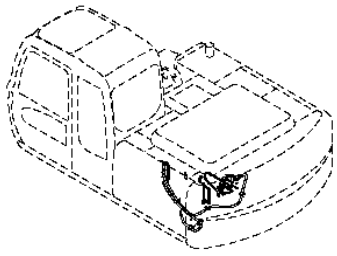

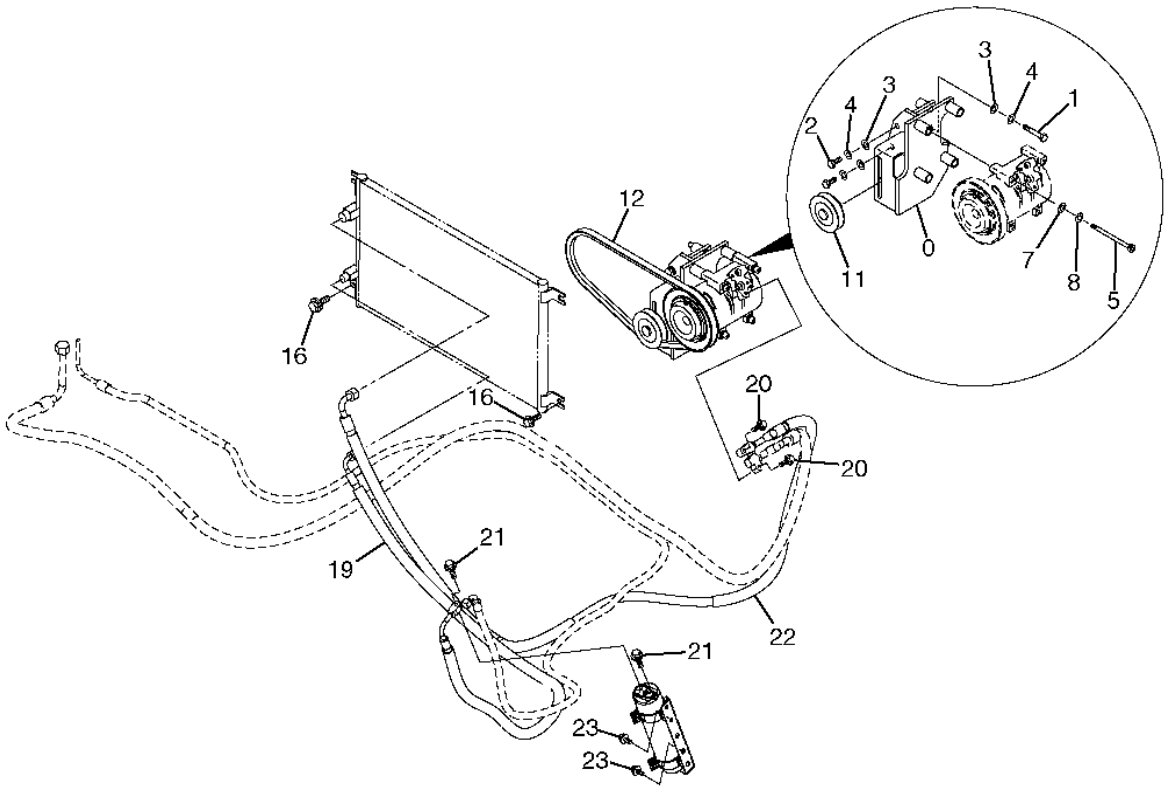

T157339

A/C COMPRESSOR BRACKET, DRIVE BELT, AND REFRIDERANT HOSES

KEY	PART NO.	PART NAME	QTY	SERIAL NO.	REMARKS
0	AP37369	BRACKET	1		
1	19M7403	CAP SCREW	2		M12 X 35
2	19M7488	CAP SCREW	2		M16 X 40
3	24M7053	WASHER	4		17 X 30 X 3 MM
4	24M7047	WASHER	4		13 X 24 X 2.500 MM
5	19M8006	SCREW	4		M8 X 120
7	24M7055	WASHER	4		8.400 X 16 X 1.600 MM
8	12M7065	LOCK WASHER	4		8 MM
11	4346770	PULLEY	1		
12	P70104	V-BELT	1		
16	19M7402	CAP SCREW	4		M10 X 25
	12M7066	LOCK WASHER	4		10 MM (0.394")
	24M7096	WASHER	4		10.500 X 18 X 1.600 MM (0.413" X 0.709" X 0.063")
19	4429678	REFRIGERANT HOSE	1		
20	19M7874	CAP SCREW	2		M6 X 30
	12H302	LOCK WASHER	2		1/4"
	24M7054	WASHER	2		6.400 X 12 X 1.600 MM (0.252" X 0.472" X 0.063")
21	19M7286	CAP SCREW	2		M6 X 25
	12M7006	LOCK WASHER	2		6 MM (0.236")
	24M7054	WASHER	2		6.400 X 12 X 1.600 MM (0.252" X 0.472" X 0.063")
22	4482953	REFRIGERANT HOSE	1		
23	19M7139	CAP SCREW	2		M8 X 20
	12M7065	LOCK WASHER	2		8 MM (0.315")
	24M7055	WASHER	2		8.400 X 16 X 1.600 MM (0.331" X 0.630" X 0.063")

AIR CONDITIONER COMPRESSOR, CONDENSOR, AND RECEIVER/DRYER

T160181 -UN-07OCT02

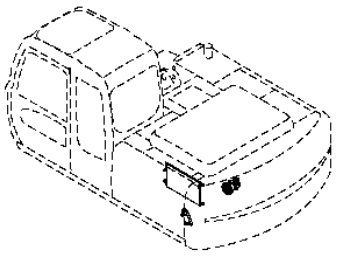

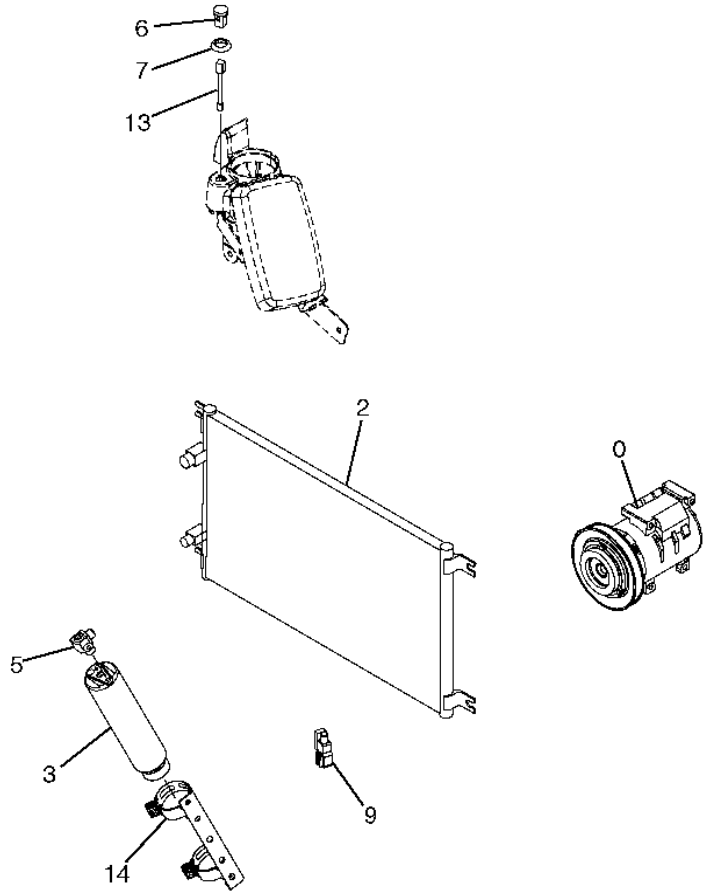

T160181

AIR CONDITIONER COMPRESSOR, CONDENSOR, AND RECEIVER/DRYER

KEY	PART NO.	PART NAME	QTY	SERIAL NO.	REMARKS
0	4431081	COMPRESSOR	1		
2	4431082	VAPOR CONDENSER	1		
3	4333461	TANK	1		
5	4374958	ADAPTER	1		
6	4405814	SENSOR	1		
7	4405194	SPACER	1		
9	4405815	SENSOR	1		
13	4413801	WIRING HARNESS	1		
14	4446657	HOLDER	1		

CAB HEATER/AIR CONDITIONER AIR INTAKE AND DISCHARGE DUCTS

T147810 -UN-07JAN02

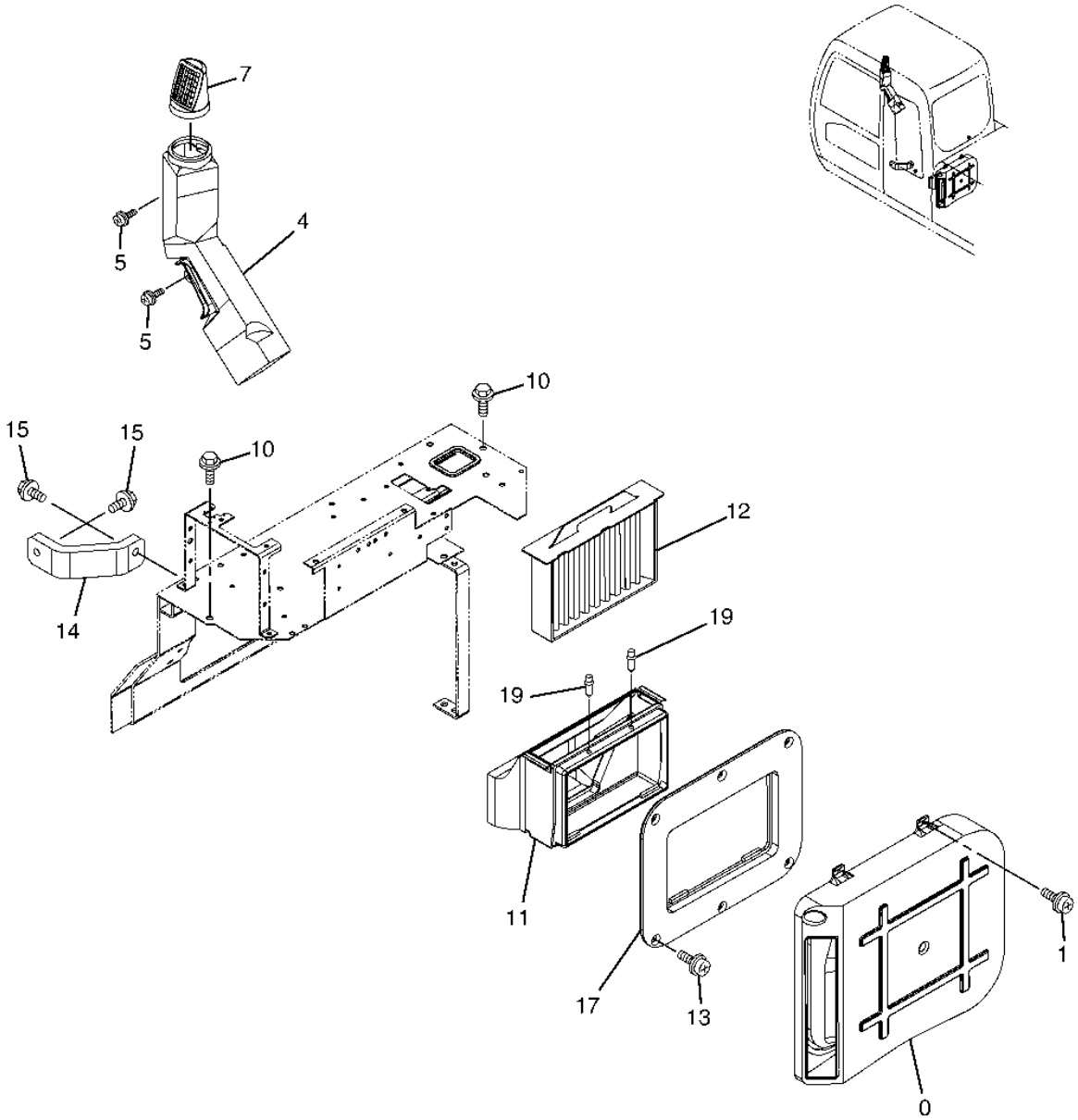

T147810

CAB HEATER/AIR CONDITIONER AIR INTAKE AND DISCHARGE DUCTS

KEY	PART NO.	PART NAME	QTY	SERIAL NO.	REMARKS
0	4426160	AIR DUCT	1		
1	19M8425	CAP SCREW	6		M6 X 16
	12M7006	LOCK WASHER	6		6 MM
	24M7293	WASHER	6		6.500 X 13 X 1.600 MM
4	4426159	AIR DUCT	1		
5	19M8425	CAP SCREW	2		M6 X 16
	12M7006	LOCK WASHER	2		6 MM
	24M7293	WASHER	2		6.500 X 13 X 1.600 MM
7	4449068	AIR DUCT	1		
10	J031025	BOLT	2		
11	4433064	AIR DUCT	1		
12	4350249	FILTER ELEMENT	1		
13	19M8425	CAP SCREW	6		M6 X 16
	12M7006	LOCK WASHER	6		6 MM
	24M7293	WASHER	6		6.500 X 13 X 1.600 MM
14	3091234	SUPPORT	1		
15	J031045	BOLT	2		
17	4449348	AIR DUCT	1		
19	4445916	CLIP	2		

CAB REAR CONSOLE COVER, POWER SUPPLY, AND AIR DIFFUSER

T196517 -UN-21NOV03

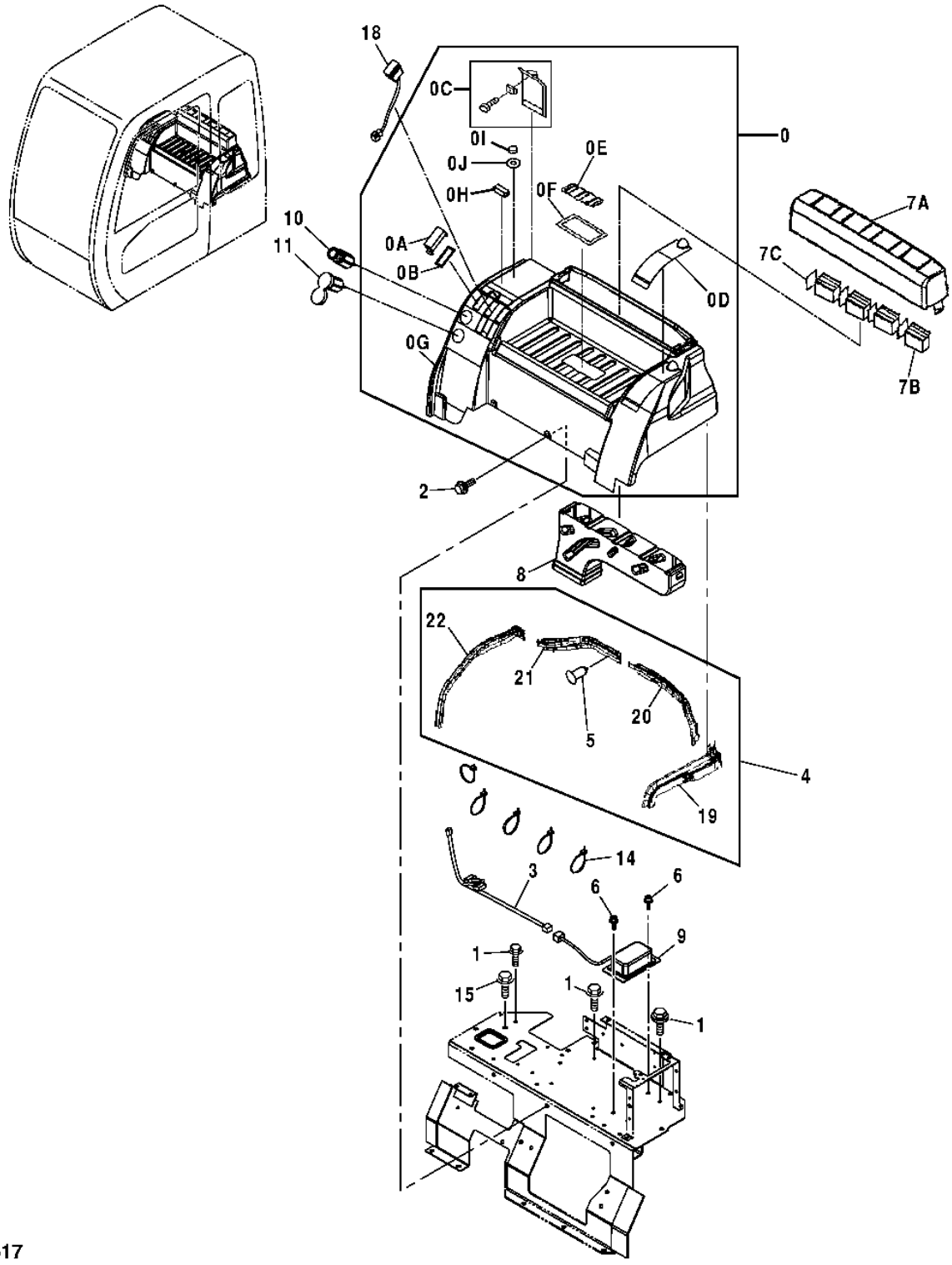

CAB REAR CONSOLE COVER, POWER SUPPLY, AND AIR DIFFUSER

KEY	PART NO.	PART NAME	QTY	SERIAL NO.	REMARKS
0	4433793	TRAY	1		(SUB FOR TH4433793)
0A	4456725	COVER	5		(SUB FOR TH4456725)
0B	4456723	ISOLATOR	5		(SUB FOR TH4456723)
0C	4458228	COVER	1		(RELAY)
0D	4458230	COVER	1		(FUSE)
0E	4458231	COVER	1		(CENTER)
0F	4458232	SEAL	1		
0G	4458227	TRAY	1		
0H	4458229	MAGNET	1		
0I	4458233	COVER	1		
0J	4458234	SEAL	1		
1	19M7866	SCREW	3		M8 X 20, (SUB FOR AT213603 OR J050820, ALONG WITH 24M7036 AND 12M7065)
	24M7036	WASHER	3		9 X 16 X 1.600 MM (0.354" X 0.630" X 0.063")
	12M7065	LOCK WASHER	3		8 MM (0.315")
2	19M7402	CAP SCREW	2		M10 X 25
	12M7066	LOCK WASHER	2		10 MM
	24M7028	WASHER	2		10.500 X 20 X 2 MM
3	3091204	WIRING HARNESS	1		(SUB FOR TH3091204)
4	.....	ISOLATOR	1		(4436132 NO LONGER AVAILABLE - FURNISH 4458238, 4458239, 4458240 AND 4458241)
5	4425573	CLIP	13		(SUB FOR TH4425573)
6	19M8425	CAP SCREW	2		M6 X 16
	12M7006	LOCK WASHER	2		6 MM
	24M7293	WASHER	2		6.500 X 13 X 1.600 MM
7	4433794	COVER	1		(SUB FOR TH4433794)
7A	4458235	COVER	1		
7B	4458236	LOUVER	4		
7C	4458237	BRACKET	4		
8	4426156	AIR DUCT	1		(SUB FOR TH4426156)
9	4450008	POWER SUPPLY	1		(SUB FOR TH4450008)
10	AR60937	ELECTRICAL LIGHTER	1		(12 VOLT)
	AU42809	RESISTOR	1		(12 VOLT)
	AT78634	WIRING LEAD	1		(12 VOLT)
	AT78633	HOUSING	1		(12 VOLT)
	.....	ELECTRICAL LIGHTER	1		(4357862 NO LONGER AVAILABLE) (SUB FOR AT190190) (24 VOLT)
11	4432965	ELEC. CONNECTOR TERMINAL	1		(SUB FOR TH4432965)
14	H77698	TIE BAND	5		
15	19M7938	CAP SCREW	1		M10 X 20
	12M7066	LOCK WASHER	1		10 MM
18	4352947	SWITCH	2		(SUB FOR TH4352947) (FOR USE WITH AUXILIARY FUNCTIONS)
19	4458238	SEAL	1		
20	4458239	SEAL	1		
21	4458240	SEAL	1		
22	4458241	SEAL	1		

REFRIDGERANT HOSES (HVAC UNIT TO COMPRESSOR AND RECEIVER/DRYER)

T157343 -UN-08NOV02

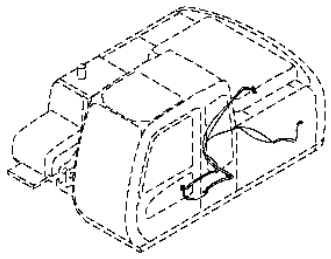

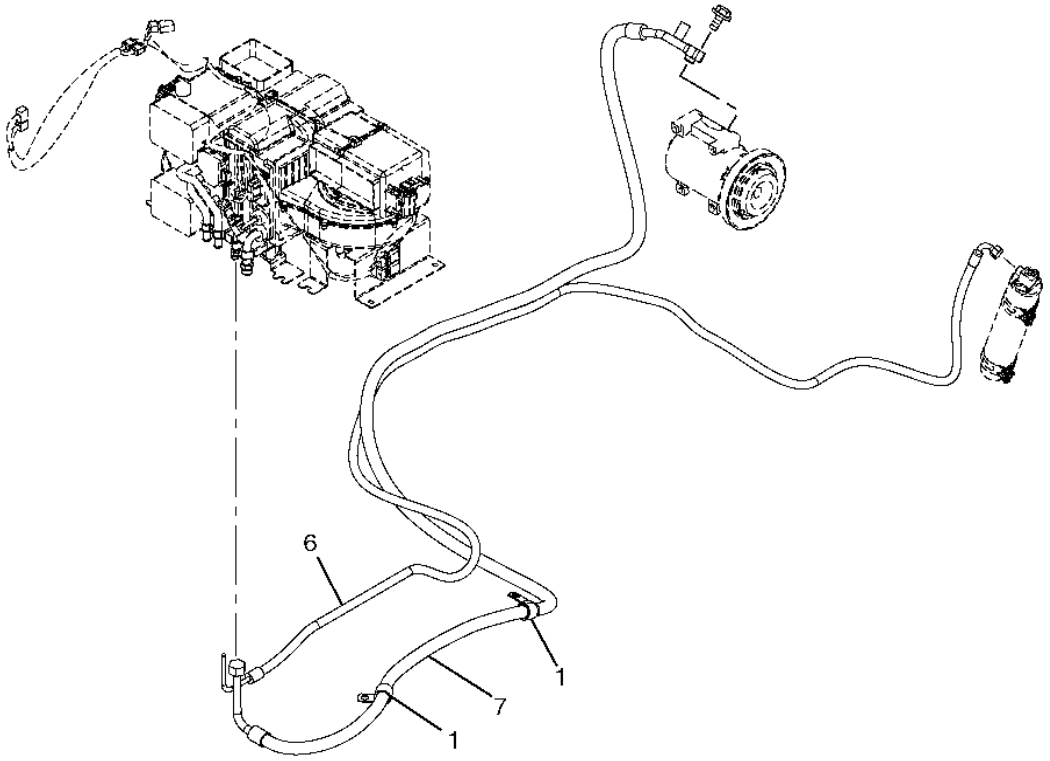

T157343

2D14

REFRIDGERANT HOSES (HVAC UNIT TO COMPRESSOR AND RECEIVER/DRYER)

KEY	PART NO.	PART NAME	QTY	SERIAL NO.	REMARKS
1	4190263	CLIP	2		
6	4429450	REFRIGERANT HOSE	1		
7	4482959	REFRIGERANT HOSE	1		

HEATER CORE TO ENGINE HOSES (CAB HEATER)

T189380 -UN-10APR03

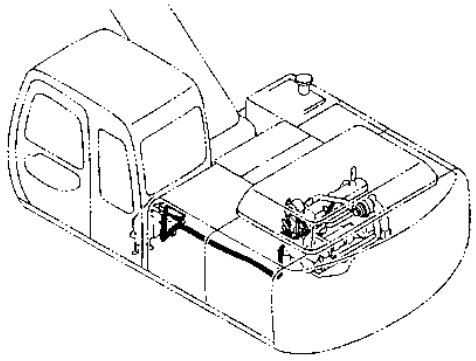

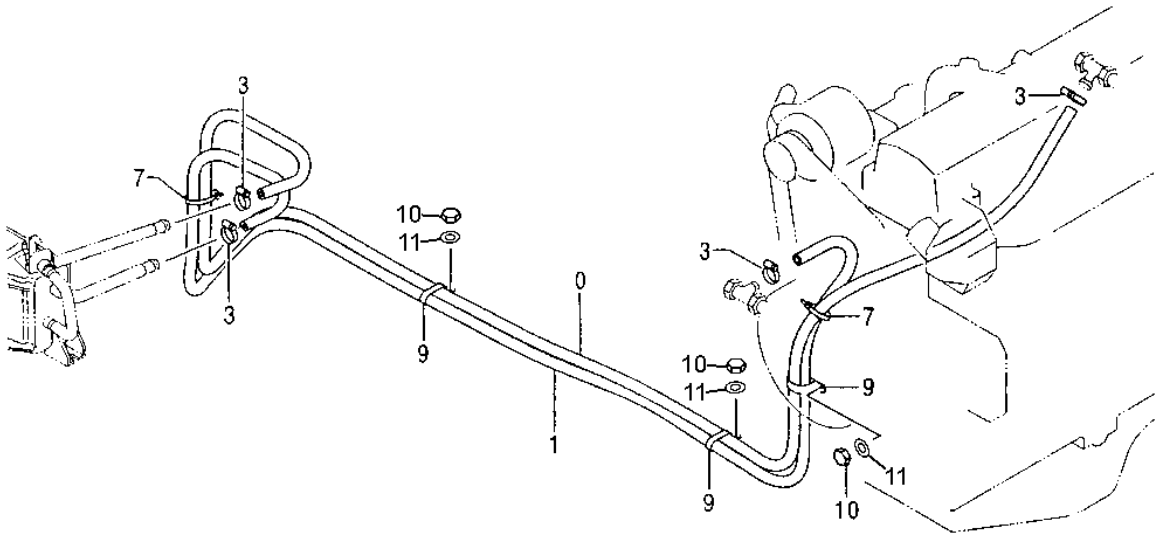

T189380

HEATER CORE TO ENGINE HOSES (CAB HEATER)

KEY	PART NO.	PART NAME	QTY	SERIAL NO.	REMARKS
0	.....	BULK HOSE	1		(IN) (P63687 NOT AVAILABLE FOR SERVICE) (FURNISH T60811 BULK MATERIAL CUT TO LENGTH)
1	.....	BULK HOSE	1		(OUT) (P63688 NOT AVAILABLE FOR SERVICE) (FURNISH T60811 BULK MATERIAL CUT TO LENGTH)
3	WZ2141223	HOSE CLAMP	4		(SUB FOR AA34965)
7	H77698	TIE BAND	AR		
9	4192034	CLIP	3		(SUB FOR TH109445)
10	14M7274	NUT	3		M10
11	24M7346	WASHER	3		11 X 20 X 2 MM

DEFROSTER/AIR CIRCULATION FAN

T144798 -UN-14AUG01

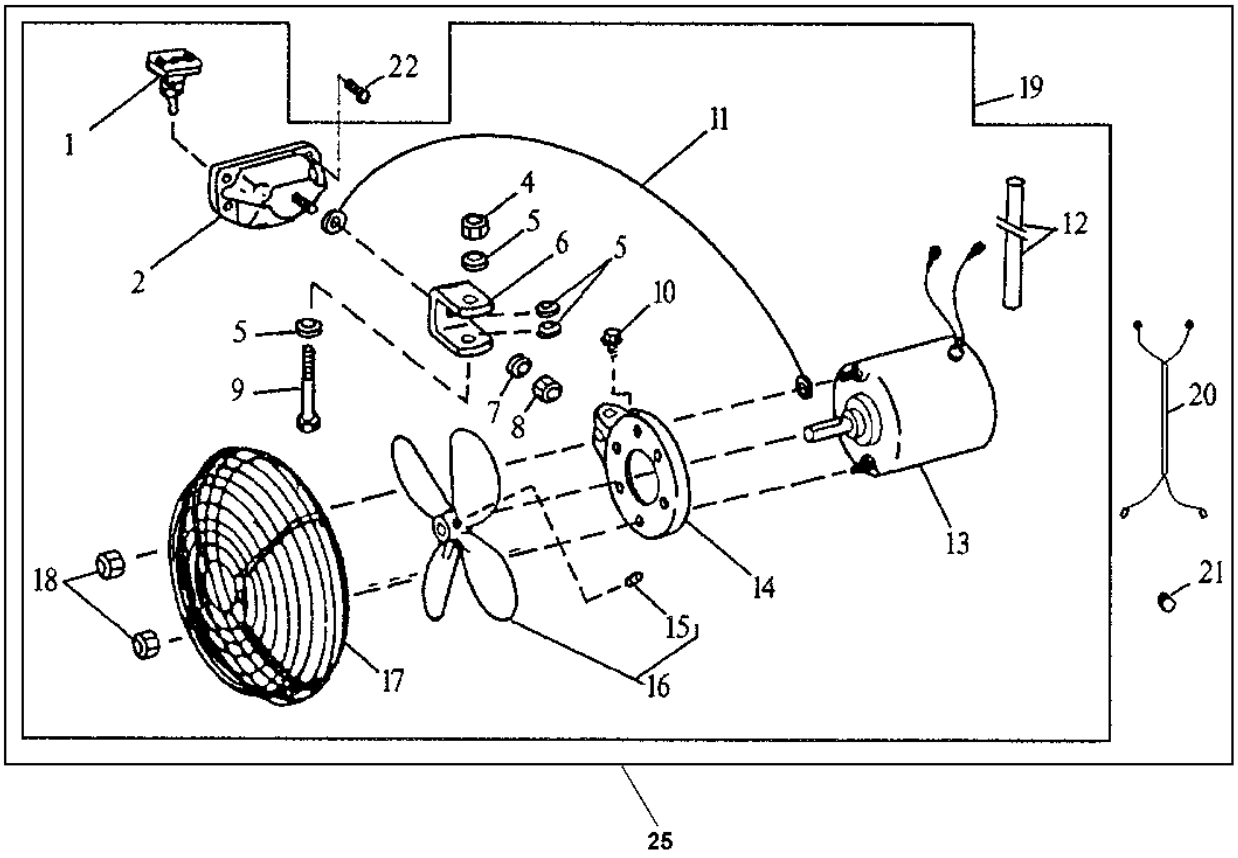

T144798

2D18

DEFROSTER/AIR CIRCULATION FAN

KEY	PART NO.	PART NAME	QTY	SERIAL NO.	REMARKS
1	T55564	TOGGLE/ROCKER SWITCH	1		
2	.....	BASE	1		(NOT AVAILABLE)
4	.....	LOCK NUT	1		(USE E19700 IF AVAILABLE)
5	T27860	WASHER	4		
6	.....	BRACKET	1		
7	24H1136	WASHER	2		11/32" X 11/16" X 0.065"
8	.....	LOCK NUT	1		
9	19H2650	CAP SCREW	1		1/4" X 2"
10	N162946	SCREW	1		
11	.....	WIRING LEAD	1		(MAKE FROM PM797NA WIRE KIT)
12	T105943	CONDUIT	1		
13	.....	MOTOR	1		
14	.....	BRACKET	1		
15	.....	SET SCREW	1		
16	AT101945	FAN BLADE	1		
17	AT101944	GUARD	1		
18	.....	LOCK NUT	2		
19	AT84953	FAN	1		
20	AT159804	WIRING HARNESS	1		
21	R26409	GROMMET	1		
22	37H129	SCREW	4		
25	AT161192	KIT	1		(AIR CIRCULATION FAN)

HEATER UNIT AIR DUCTS AND HOSES (HEAT ONLY)

T201844 -UN-26JUL04

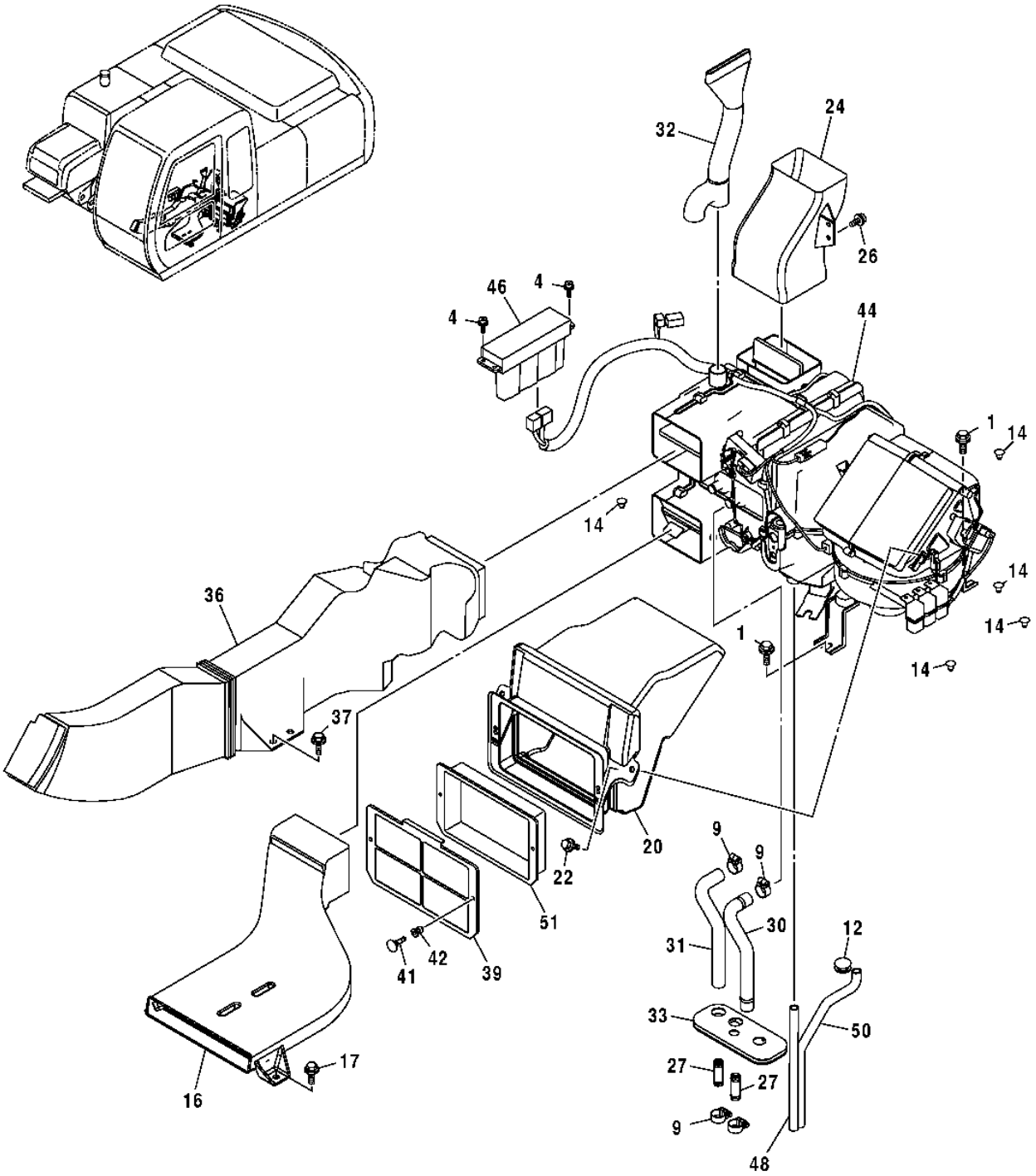

T201844

HEATER UNIT AIR DUCTS AND HOSES (HEAT ONLY)

KEY	PART NO.	PART NAME	QTY	SERIAL NO.	REMARKS
1	19M7402	CAP SCREW	6		M10 X 25
	12M7066	LOCK WASHER	6		10 MM (0.394")
	24M7028	WASHER	6		10.500 X 20 X 2 MM (0.413" X 0.787" X 0.079")
4	21M7265	SCREW	4		M5 X 12
9	WZ2141223	HOSE CLAMP	4		(SUB FOR AA34965)
12	4205084	GROMMET	2		(SUB FOR TH108616)
14	4280359	PLUG	6		(SUB FOR AT154351)
16	4426155	AIR DUCT	1		(SUB FOR TH4426155)
17	19M7662	CAP SCREW	2		M10 X 30
	12M7066	LOCK WASHER	2		10 MM (0.394")
	24M7028	WASHER	2		10.500 X 20 X 2 MM (0.413" X 0.787" X 0.079")
20	4426162	AIR DUCT	1		(SUB FOR TH4426162)
22	19M7881	SCREW	2		M8 X 20
	12M7056	LOCK WASHER	2		8 MM (0.315") (SUB FOR 12M7065)
	24M7055	WASHER	2		8.400 X 16 X 1.600 MM (0.331" X 0.630" X 0.063")
24	4426157	AIR DUCT	1		(SUB FOR TH4426157)
26	19M8425	CAP SCREW	2		M6 X 16
	12M7006	LOCK WASHER	2		6 MM (0.236")
	24M7293	WASHER	2		6.500 X 13 X 1.600 MM (0.256" X 0.512" X 0.063")
27	4347396	FITTING	2		(SUB FOR TH4347396)
30	.....	RADIATOR HOSE	1		(4430873 NO LONGER AVAILABLE) (SUB 4430872)
31	4430872	RADIATOR HOSE	1		
32	4436441	AIR DUCT	1		(SUB FOR TH4436441)
33	2044922	BUSHING	1		(SUB FOR TH2044922)
36	4426158	AIR DUCT	1		(SUB FOR TH4426158)
37	19M7662	CAP SCREW	2		M10 X 30
	12M7066	LOCK WASHER	2		10 MM (0.394")
	24M7028	WASHER	2		10.500 X 20 X 2 MM (0.413" X 0.787" X 0.079")
39	4441139	GRILLE	1		(SUB FOR TH4441139)
41	4441059	CLIP	2		(SUB FOR TH4441059)
42	4441061	CLIP	2		(SUB FOR TH4441061)
44	4609676	HEATER	1		(SUB FOR TH4450707, 4450707) (ALSO ORDER 4610412)
45	4610412	WIRING HARNESS	1		(NOT ILLUSTRATED)
46	4426048	AIR HEATER CONTROLLER	1		(SUB FOR TH4426048) (AIR CONDITIONER)
	4450708	AIR HEATER CONTROLLER	1		(SUB FOR TH4450708) (HEATER)
48	4430870	HYDRAULIC HOSE	1		(SUB FOR TH4430870) (FOR USE WITH AIR CONDITIONER)
50	4430871	HYDRAULIC HOSE	1		(SUB FOR TH4430871) (FOR USE WITH AIR CONDITIONER)
51	4484453	FILTER	1		(RETURN AIR FILTER)

CAB HEATER UNIT COMPONENTS (HEAT ONLY)

T188534 -UN-28MAR03

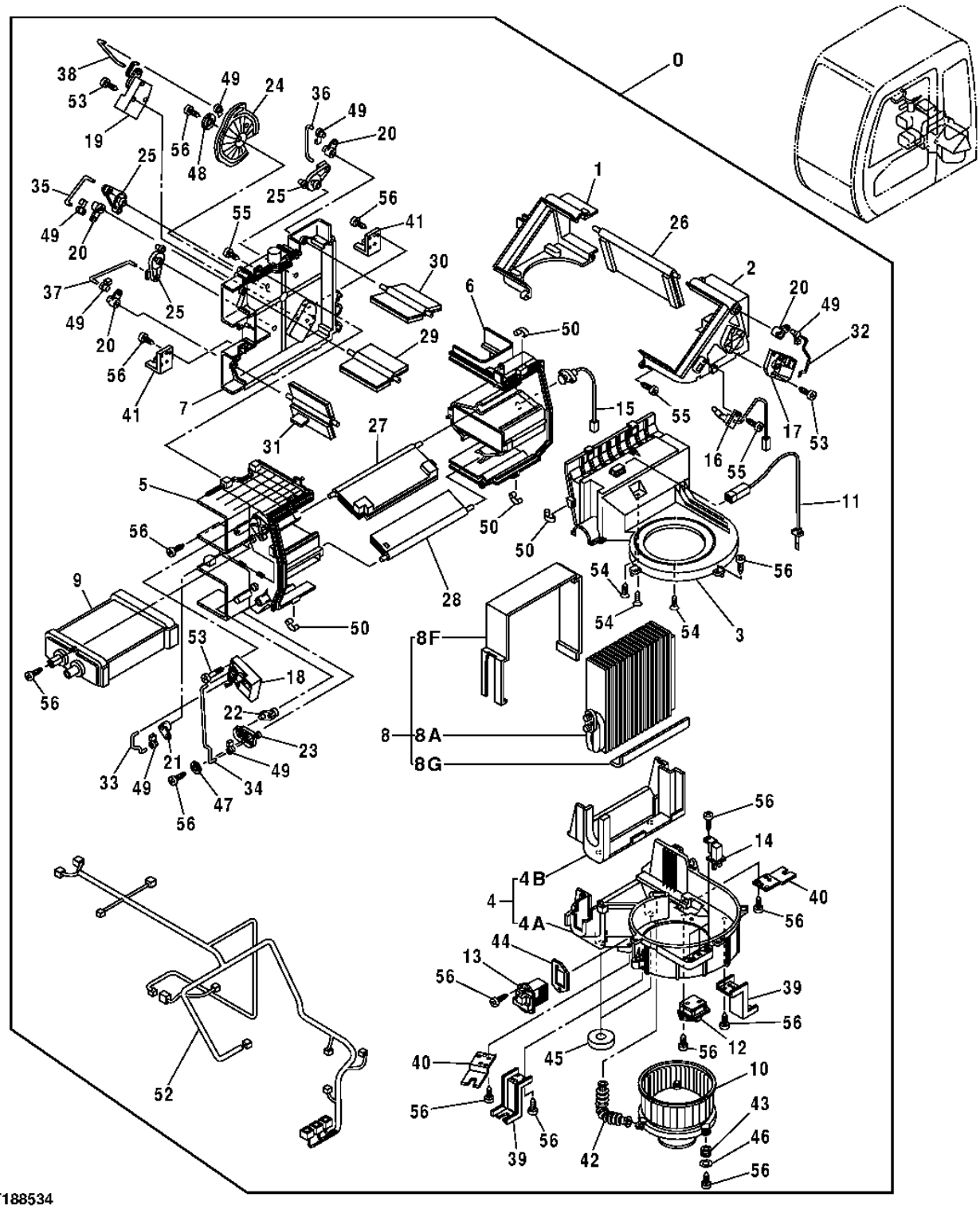

CAB HEATER UNIT COMPONENTS (HEAT ONLY)

KEY	PART NO.	PART NAME	QTY	SERIAL NO.	REMARKS
0	4609049	AIR CONDITIONER	1		(SUB FOR TH4426047, 4426047)
	4450707	HEATER	1		
1	4464341	CASE	1		(SUB FOR TH4464341)
2	4464342	CASE	1		(SUB FOR TH4464342)
3	4464343	CASE	1		(SUB FOR TH4464343)
4	.....	CASE	1		(4464344 NO LONGER AVAILABLE) (SUB FOR TH4464344)
4A	4464345	CASE	1		
4B	4464346	LINING	1		
5	4464347	CASE	1		(SUB FOR TH4464347)
6	4464349	CASE	1		(SUB FOR TH4464349)
7	4464350	CASE	1		(SUB FOR TH4464350)
8A	4464353	EVAPORATOR	1		(TH4464353 NOT AVAILABLE)
8F	4464357	LINING	1		
8G	4464274	LINING	1		
9	4464275	HEATER	1		(SUB FOR TH4464275)
10	4464276	ELECTRIC MOTOR	1	-XXXXXX	(SUB FOR TH4464276) (USE WITH 4426047)
	4370266	BLOWER	1	XXXXXX-	(USE WITH 4609049)
11	4464277	SWITCH	1		(SUB FOR TH4464277)
12	4464278	RESISTOR	1		(SUB FOR TH4464278)
13	4464279	TRANSISTOR	1		(SUB FOR TH4464279)
14	4370269	RELAY	3		
15	4464280	SENSOR	1		(SUB FOR TH4464280)
16	4448925	SENSOR	1		(SUB FOR TH4448925)
17	4464281	ELECTRIC MOTOR	1		(SUB FOR TH4464281)
18	4464282	ELECTRIC MOTOR	1		(SUB FOR TH4464282)
19	4464283	ELECTRIC MOTOR	1		(SUB FOR TH4464283)
20	4464284	LEVER	4		(SUB FOR TH4464284)
21	4464285	LEVER	1		(SUB FOR TH4464285)
22	4464286	LEVER	1		(SUB FOR TH4464286)
23	4464287	LEVER	1		(SUB FOR TH4464287)
24	4464288	LEVER	1		(SUB FOR TH4464288)
25	4464450	LEVER	3		(SUB FOR TH4464450)
26	4464451	DOOR	1		(SUB FOR TH4464451)
27	4464452	DOOR	1		(SUB FOR TH4464452)
28	4464453	DOOR	1		(SUB FOR TH4464453)
29	4464454	DOOR	1		(SUB FOR TH4464454)
30	4464455	DOOR	1		(SUB FOR TH4464455)

CAB HEATER UNIT COMPONENTS, CONTINUED (HEAT ONLY)

T188534 -UN-28MAR03

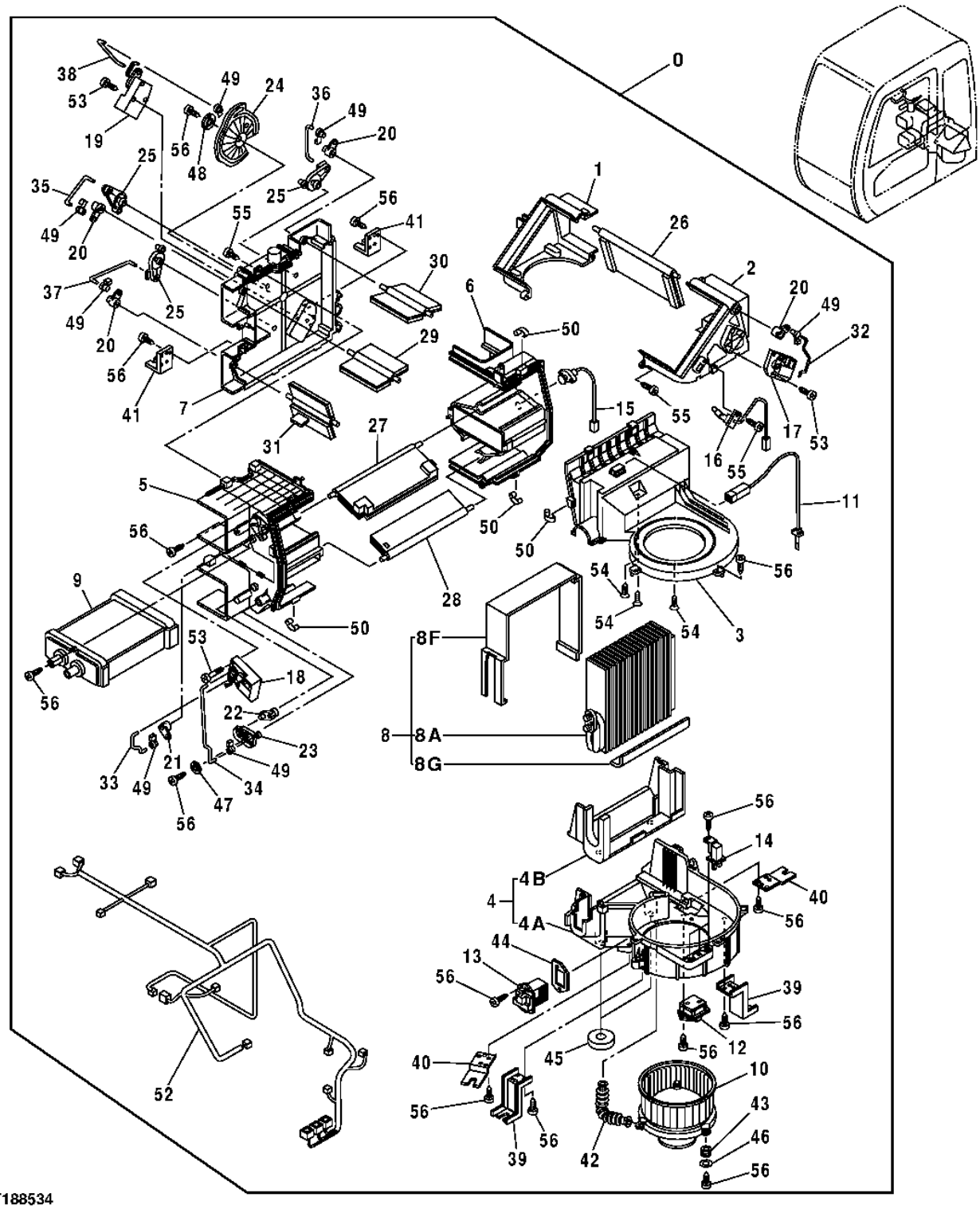

CAB HEATER UNIT COMPONENTS, CONTINUED (HEAT ONLY)

KEY	PART NO.	PART NAME	QTY	SERIAL NO.	REMARKS
31	4464456	DOOR	1		(SUB FOR TH4464456)
32	4464457	ROD	1		(SUB FOR TH4464457)
33	4464458	ROD	1		(SUB FOR TH4464458)
34	4464459	ROD	2		(SUB FOR TH4464459)
35	4464460	ROD	1		(SUB FOR TH4464460)
36	4464461	ROD	1		(SUB FOR TH4464461)
37	4464462	ROD	1		(SUB FOR TH4464462)
38	4464463	ROD	1		(SUB FOR TH4464463)
39	4370296	BRACKET	2		
40	4464465	BRACKET	2		(SUB FOR TH4464465)
41	4464466	BRACKET	2		(SUB FOR TH4464466)
42	4464473	HOSE	1		(SUB FOR TH4464473)
43	4370267	ISOLATOR	3		(SUB FOR AT214213)
44	4464474	SEAL	1		(SUB FOR TH4464474)
45	4464475	ISOLATOR	2		(SUB FOR TH4464475)
46	4370299	WASHER	3		(SUB FOR AT214245)
47	4464476	WASHER	1		(SUB FOR TH4464476)
48	4370298	WASHER	1		
49	4464477	CLIP	7		(SUB FOR TH4464477)
50	4464478	CLIP	12		(SUB FOR TH4464478)
52	4610412	WIRING HARNESS	1		(SUB FOR TH4464479, 4464479)
53	4370308	SCREW	9		
54	4464480	SCREW	5		(SUB FOR TH4464480)
55	4370309	SCREW	17		
56	4464483	SCREW	32		(SUB FOR TH4464483)

CAB REAR CONSOLE, POWER SUPPLY, AND AIR DIFFUSER (HEAT ONLY)

T188536 -UN-28MAR03

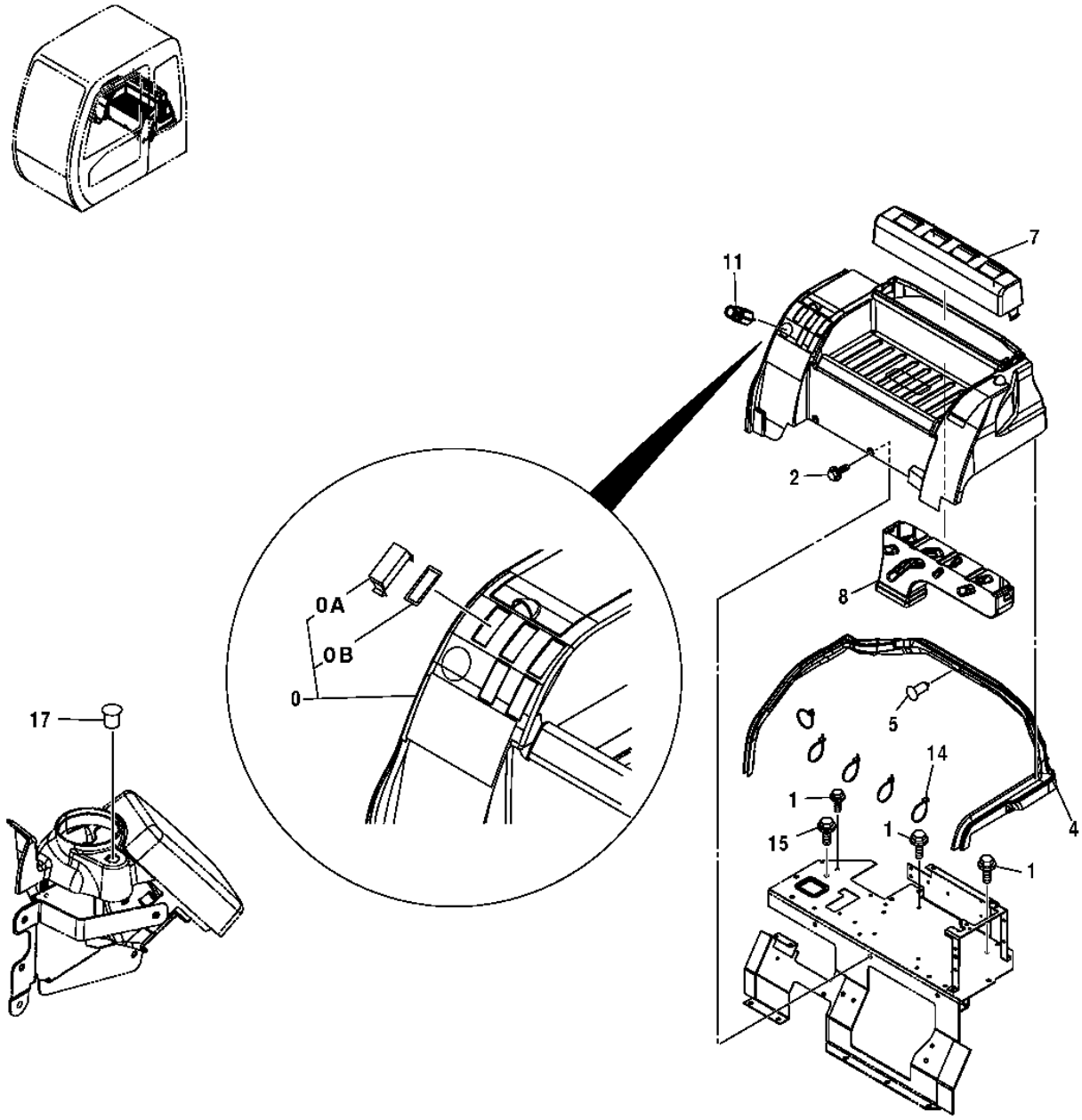

T188536

CAB REAR CONSOLE, POWER SUPPLY, AND AIR DIFFUSER (HEAT ONLY)

KEY	PART NO.	PART NAME	QTY	SERIAL NO.	REMARKS
0	4433793	TRAY	1		(SUB FOR TH4433793)
0A	4456725	COVER	5		(SUB FOR TH4456725)
0B	4456723	ISOLATOR	5		(SUB FOR TH4456723)
1	19M7866	SCREW	3		M8 X 20, (SUB FOR AT213603 OR J050820, ALONG WITH 24M7036 AND 12M7065)
	24M7036	WASHER	3		9 X 16 X 1.600 MM (0.354" X 0.630" X 0.063")
	12M7065	LOCK WASHER	3		8 MM (0.315")
2	19M7402	CAP SCREW	2		M10 X 25
	12M7066	LOCK WASHER	2		10 MM
	24M7028	WASHER	2		10.500 X 20 X 2 MM
4	4436132	ISOLATOR	1		(4436132 NO LONGER AVAILABLE - FURNISH 4458238, 4458239, 4458240 AND 4458241)
5	4425573	CLIP	13		(SUB FOR TH4425573)
7	4433794	COVER	1		(SUB FOR TH4433794)
8	4426156	AIR DUCT	1		(SUB FOR TH4426156)
11	4432965	ELEC. CONNECTOR TERMINAL	1		(SUB FOR TH4432965)
14	H77698	TIE BAND	5		
15	19M7938	CAP SCREW	1		M10 X 20
	12M7066	LOCK WASHER	1		10 MM
17	4209296	GROMMET	1		

RADIATOR COMPARTMENT FRONT AND REAR PANELS

T201861 -UN-27JUL04

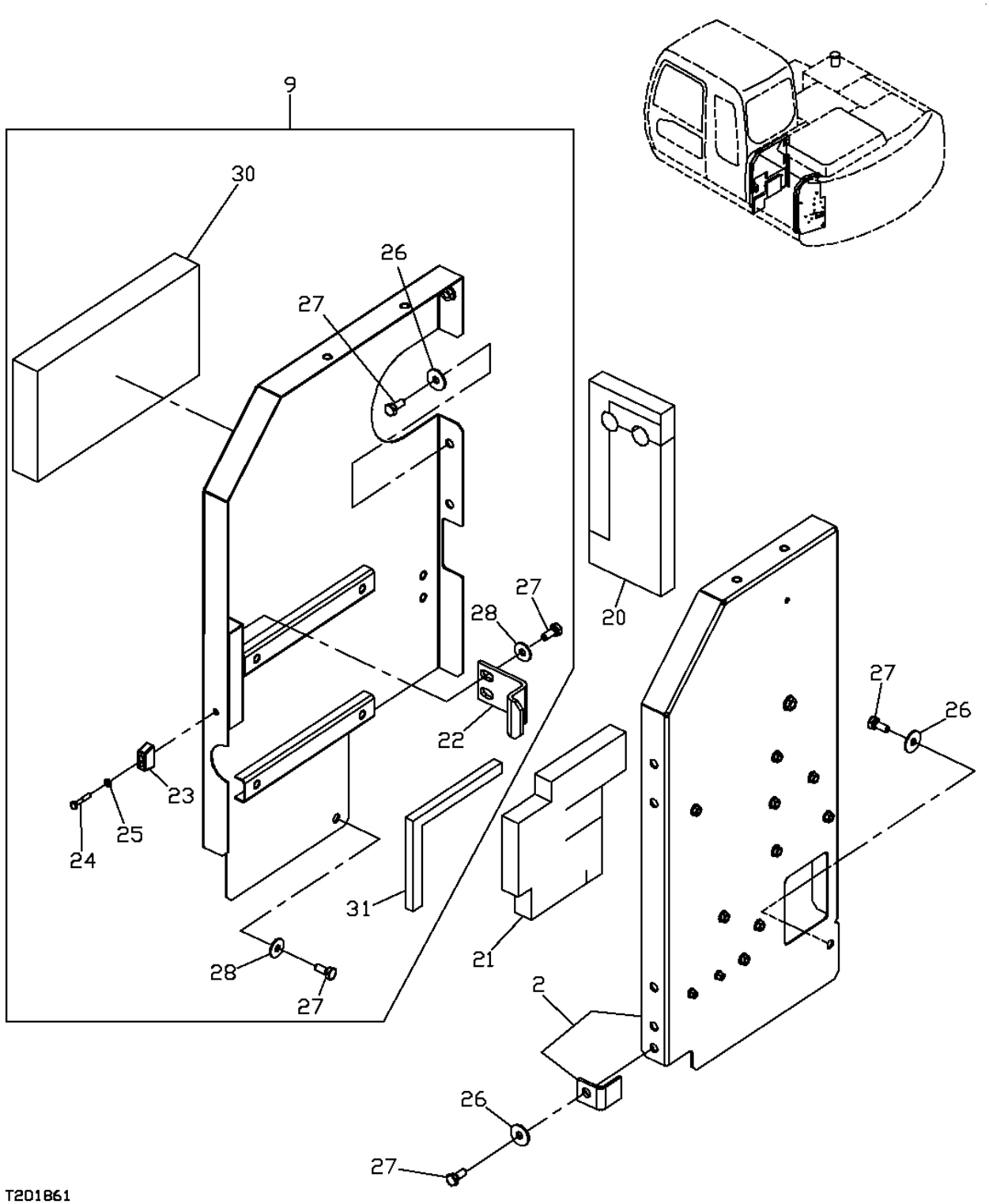

RADIATOR COMPARTMENT FRONT AND REAR PANELS

KEY	PART NO.	PART NAME	QTY	SERIAL NO.	REMARKS
2	AP37259	COVER	1		
9	AP37341	COVER	1		
20	DH400607	ISOLATOR	1		
21	P67786	ISOLATOR	1		
22	4431357	STOP	1		
23	4424157	STOP	1		
24	19M7177	CAP SCREW	1		M6 X 35
25	24M7054	WASHER	1		6.400 X 12 X 1.600 MM
26	24M7101	WASHER	5		11 X 34 X 3 MM
27	19M7402	CAP SCREW	8		M10 X 25
28	24M7296	WASHER	3		10.500 X 30 X 2.500 MM
30	DH400607	ISOLATOR	1		
31	DH400622	SEALING TRIM	1		

RADIATOR AND PUMP COMPARTMENT ACCESS DOORS

T188545 -UN-28MAR03

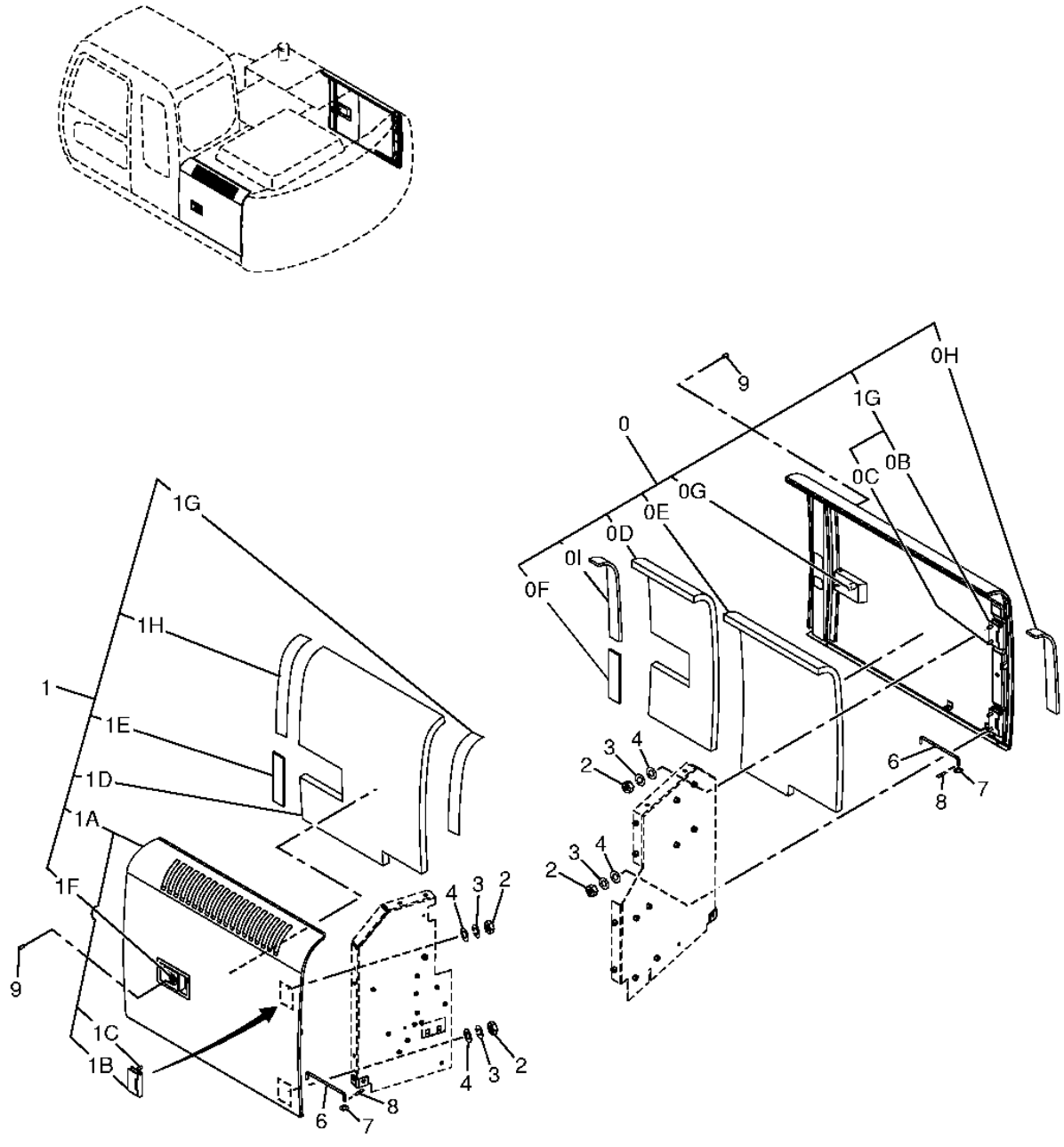

T188545

RADIATOR AND PUMP COMPARTMENT ACCESS DOORS

KEY	PART NO.	PART NAME	QTY	SERIAL NO.	REMARKS
0	AP37371	DOOR	1		(5006713 NOT AVAILABLE FOR SERVICE)
0A	.....	DOOR	1		
0B	4445380	HINGE	2		
0C	J901025	CAP SCREW	4		
0D	P67818	ISOLATOR	1		
0E	P67819	ISOLATOR	1		
0F	P68167	ISOLATOR	1		
0G	AT166994	LATCH	1		(LATCH WITH 4 HOLES) (5006714 NOT AVAILABLE FOR SERVICE)
	DH400030	LOCK	1		(LATCH WITH 6 HOLES)
0H	P68168	ISOLATOR	1		
0I	P67816	ISOLATOR	1		
1	AP37370	DOOR	1		
1A	.....	DOOR	1		
1B	4445380	HINGE	2		
1C	J901025	CAP SCREW	4		
1D	P67817	ISOLATOR	1		
1E	P68167	ISOLATOR	1		
1F	AT166994	LATCH	1		(LATCH WITH 4 HOLES)
	DH400030	LOCK	1		(LATCH WITH 6 HOLES)
1G	P68168	ISOLATOR	1		
1H	P67816	ISOLATOR	1		
2	14M7274	NUT	8		M10
3	12M7066	LOCK WASHER	8		10 MM (0.394")
4	24M7028	WASHER	8		10.500 X 20 X 2 MM, (SUB FOR A590110)
6	4341788	ROD	2		
7	24M7055	WASHER	2		8.400 X 16 X 1.600 MM, (SUB FOR A590108)
8	4022697	COTTER PIN	2		
9	M63200	RIVET	12		

HYDRAULIC PUMP COMPARTMENT TOP COVER AND SUPPORTS

T201878 -UN-26JUL04

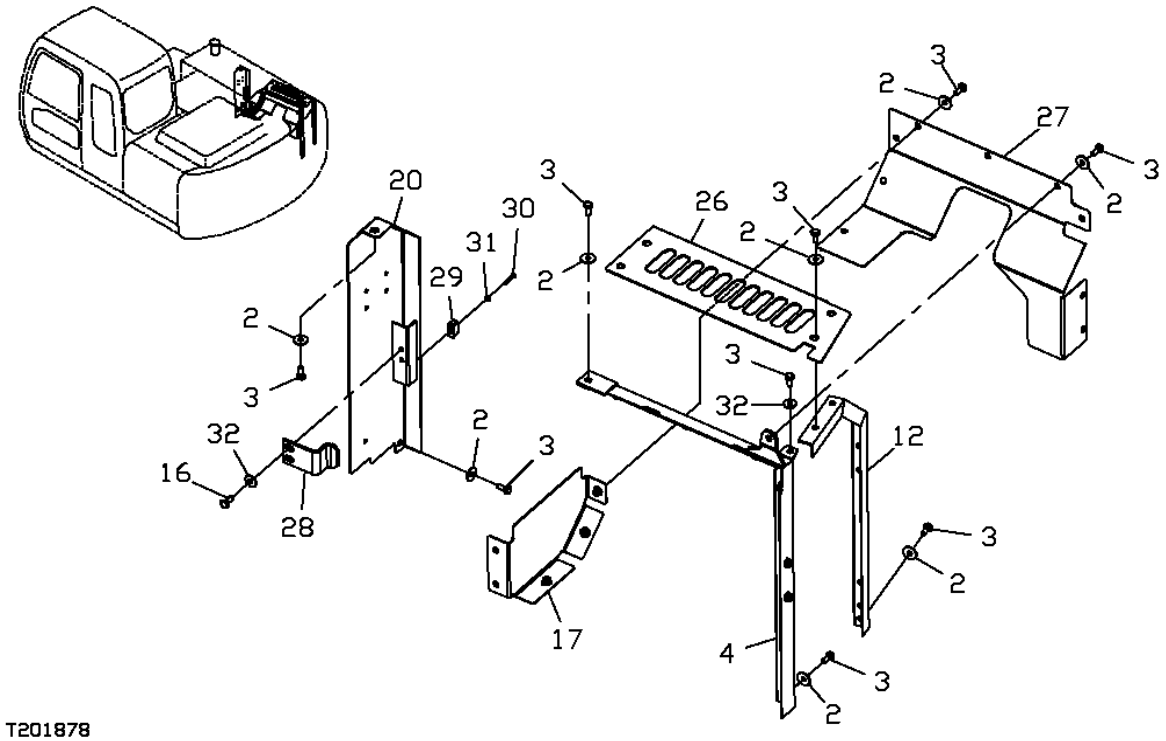

HYDRAULIC PUMP COMPARTMENT TOP COVER AND SUPPORTS

KEY	PART NO.	PART NAME	QTY	SERIAL NO.	REMARKS
2	24M7101	WASHER	18		11 X 34 X 3 MM
3	19M7402	CAP SCREW	21		M10 X 25
4	AP37249	BRACKET	1		
12	AP37250	SUPPORT	1		
16	19M7662	CAP SCREW	1		M10 X 30
	12M7067	LOCK WASHER	1		12 MM
	24M7346	WASHER	1		11 X 20 X 2 MM
17	AP37251	COVER	1		
20	AP37256	COVER	1		
26	P70715	COVER	1		
27	P67751	COVER	1		
28	4431357	STOP	1		
29	4424157	STOP	1		
30	19M7177	CAP SCREW	1		M6 X 35
31	24M7054	WASHER	1		6.400 X 12 X 1.600 MM
32	24M7296	WASHER	4		10.500 X 30 X 2.500 MM

RADIATOR COMPARTMENT AND FRONT MIDDLE DECK COVER

T188553 -UN-28MAR03

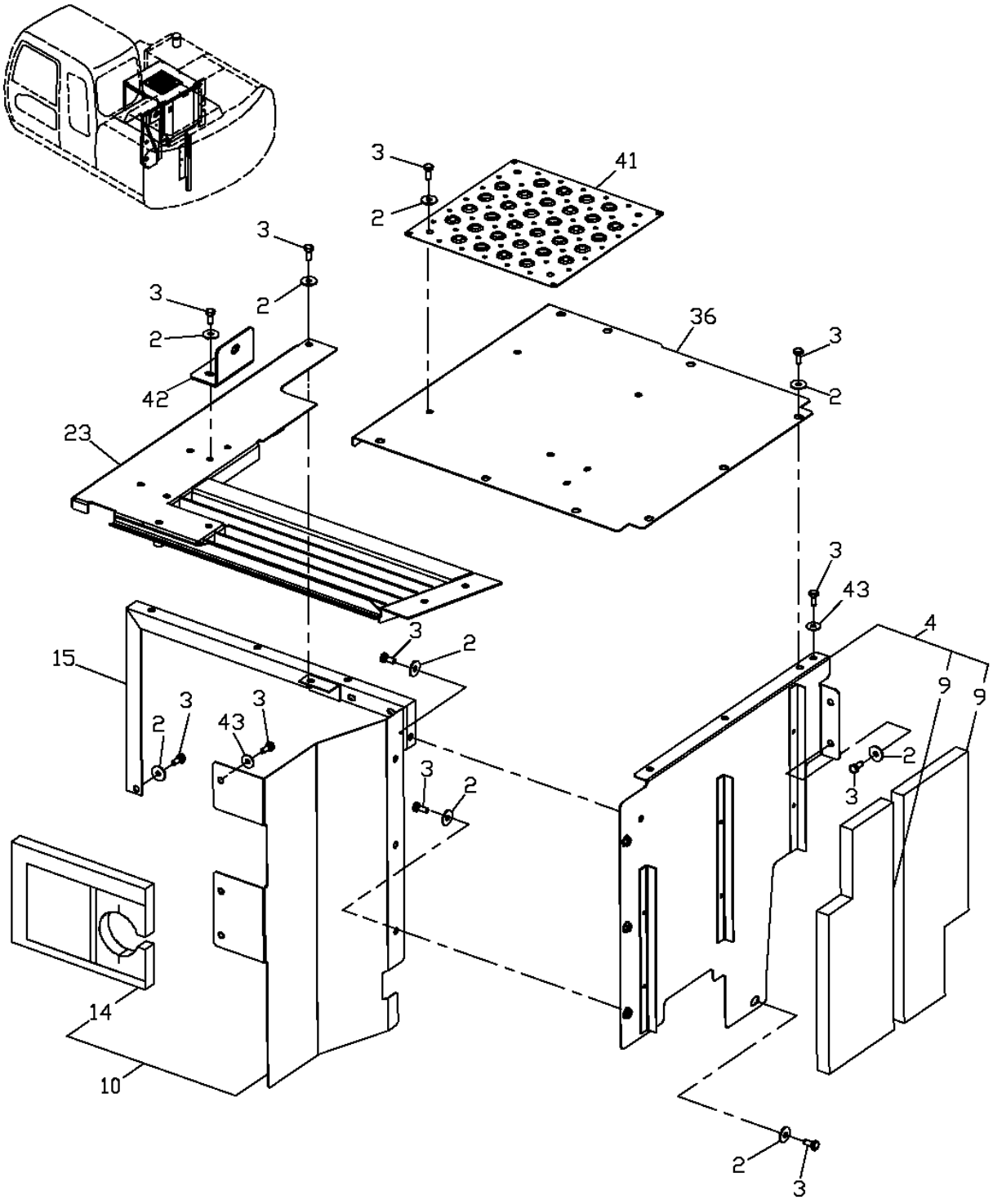

RADIATOR COMPARTMENT AND FRONT MIDDLE DECK COVER

KEY	PART NO.	PART NAME	QTY	SERIAL NO.	REMARKS
2	24M7101	WASHER	28		11 X 34 X 3 MM (0.433" X 1.339" X 0.118")
3	19M7402	CAP SCREW	30		M10 X 25
4	AP37340	COVER	1		
9	P67782	ISOLATOR	2		
10	AP37342	COVER	1		
14	DH400608	ISOLATOR	1		
15	AP37253	BRACKET	1		
23	AP37262	COVER	1		
36	AP37263	COVER	1		
41	P68228	PLATE	2		
42	P67780	BRACKET	1		
43	24M7296	WASHER	2		10.500 X 30 X 2.500 MM (0.413" X 1.181" X 0.098")

TOOL BOX, COVER, AND RIGHT FRONT HANDRAIL

T192402 -UN-24JUN03

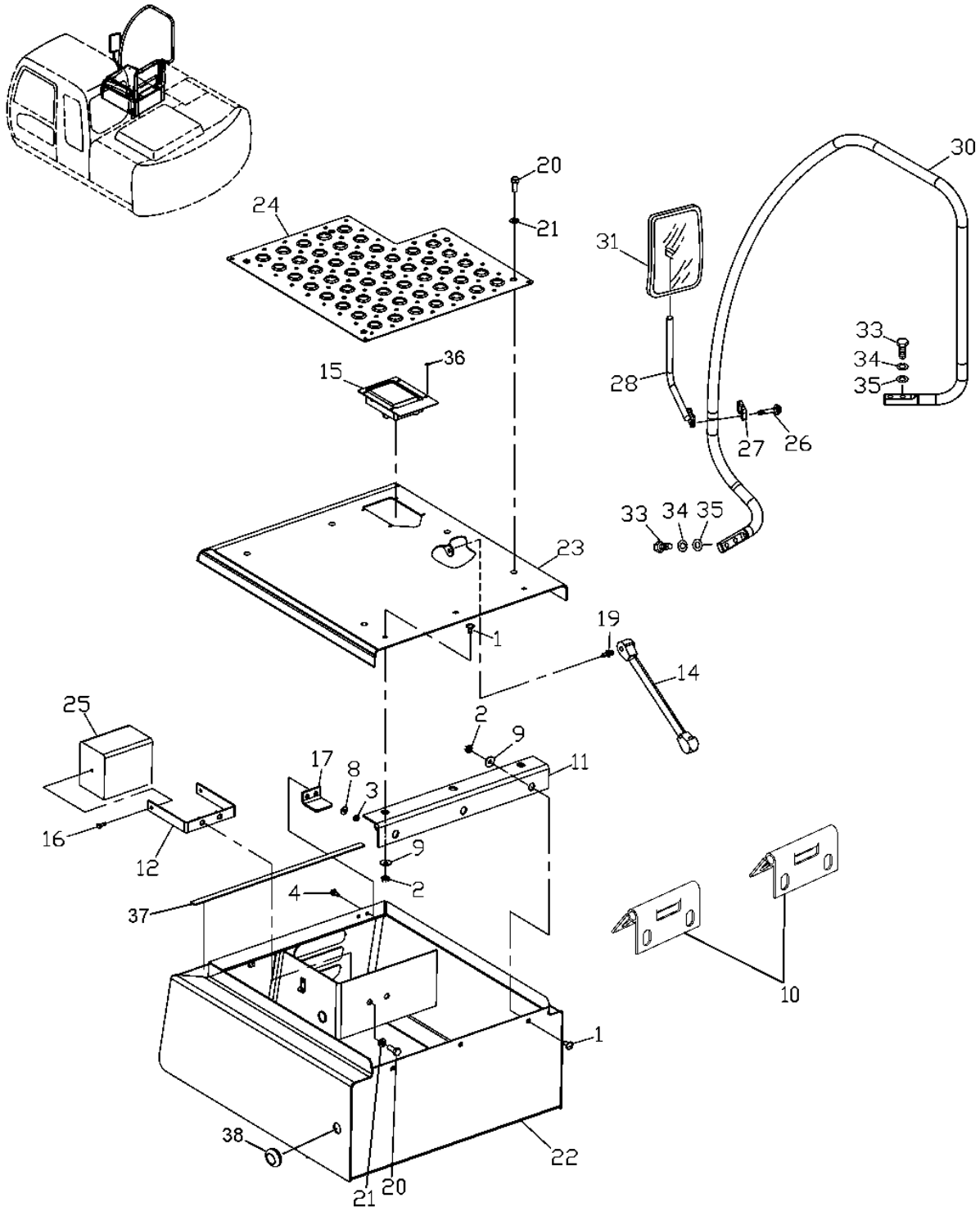

T192402

TOOL BOX, COVER, AND RIGHT FRONT HANDRAIL

KEY	PART NO.	PART NAME	QTY	SERIAL NO.	REMARKS
1	03M7184	BOLT	6		M8 X 20, (WITH 1 LARGE HINGE)
	03M7190	BOLT	8		M10 X 20, (WITH 2 SMALL HINGES)
2	14M7298	FLANGE NUT	6		M8, (WITH 1 LARGE HINGE)
	14M7296	FLANGE NUT	8		M10, (WITH 2 SMALL HINGES)
3	14M7303	FLANGE NUT	1		M6
4	19M7775	SCREW	1		M6 X 16
8	24M7139	WASHER	1		6.400 X 18 X 1.600 MM (0.252" X 0.709" X 0.063")
9	24M7298	WASHER	6		8.400 X 25 X 2 MM (0.331" X 0.984" X 0.079") (WITH 1 LARGE HINGE)
	24M7296	WASHER	8		10.500 X 30 X 2.500 MM (0.413" X 1.181" X 0.098") (WITH 2 SMALL HINGES)
10	DH300125	HINGE	2		(SUB FOR P61315)
11	DH300125	HINGE	1		(SUB FOR AP33223)
12	AP33341	BRACKET	1		
14	AT146294	CYLINDER	4		(SUB FOR DH200049)
15	AT166994	LATCH	1		
16	19M7560	CAP SCREW	1		M6 X 16
17	P60616	STRIKER	2		
19	T142651	BALL STUD	2		
20	19M7402	CAP SCREW	2		M10 X 25
21	24M7028	WASHER	7		10.500 X 20 X 2 MM (0.413" X 0.787" X 0.079")
22	DH500068	TOOLBOX	1		(SUB FOR AP36328, AP39351)
23	AP39145	COVER	1		
24	P70345	PLATE	1		
25	4274478	FLOODLAMP	1		
26	12M7065	LOCK WASHER	1		8 MM
	19M7981	CAP SCREW	1		M8 X 55
27	DH400660	CLAMP	1		(SUB FOR 4416704) (4425481 NOT USED FOR THIS APPLICATION)
28	8077521	BRACKET	1		
30	7039248	HANDRAIL	1		
31	4420724	REAR VIEW MIRROR	1		
33	J921240	CAP SCREW	4		
34	A590912	LOCK WASHER	4		
35	24M7047	WASHER	4		13 X 24 X 2.500 MM, (SUB FOR A590112)
36	M63200	RIVET	6		
37	P60752	ISOLATOR	1		
38	4613243	GROMMET	1		(SUB FOR 94-2807)

BOTTOM PROTECTION COVERS

T188599 -UN-28MAR03

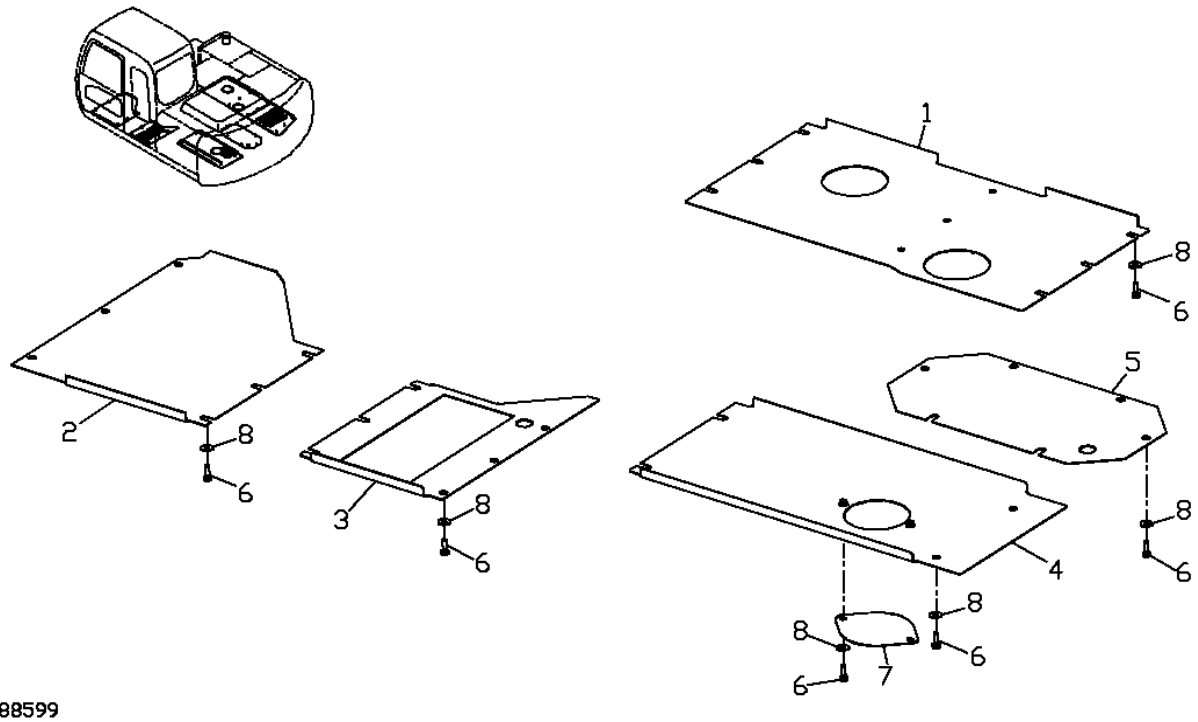

T188599

BOTTOM PROTECTION COVERS

KEY	PART NO.	PART NAME	QTY	SERIAL NO.	REMARKS
1	P67675	COVER	1	-034724	
	3087009	COVER	1	034725-	
2	P67745	COVER	1	-034724	
	3087011	COVER	1	034725-	
3	P67744	COVER	1	-034724	
	3087012	COVER	1	034725-	
4	AP37365	COVER	1		
5	P67743	COVER	1		
6	19M7662	CAP SCREW	33		M10 X 30
7	P65608	COVER	1		
8	24M7296	WASHER	33		10.500 X 30 X 2.500 MM

ENGINE COMPARTMENT HOOD

T157463 -UN-07OCT02

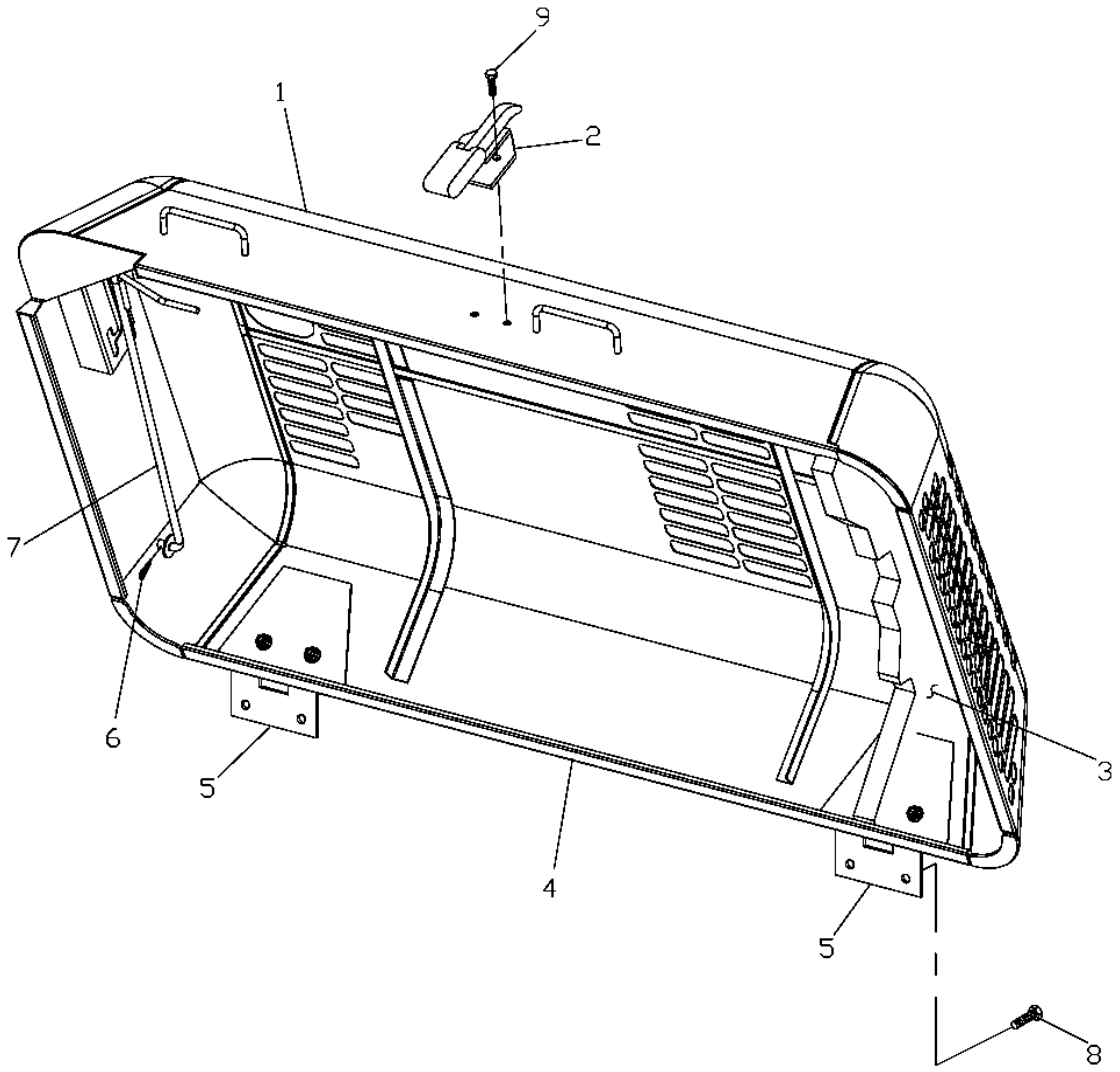

T157463

ENGINE COMPARTMENT HOOD

KEY	PART NO.	PART NAME	QTY	SERIAL NO.	REMARKS
1	DH500067	HOOD	1		(SUB FOR AP35339)
2	4361455	CATCH	1		
3	P70773	PAD	1		
4	DH400621	ISOLATOR	3		(3 FIT FROM LEFT SIDE TO LATCH) (P66463 NOT USED FOR THIS APPLICATION)
	DH400613	ISOLATOR	1		(FITS FROM LATCH TO TOP LEFT CORNER)
5	DH300125	HINGE	2		(SUB FOR P61315)
6	11H236	COTTER PIN	2		
7	AP35340	ROD	1		
8	19M7872	CAP SCREW	8		M12 X 25
	24M7047	WASHER	8		13 X 24 X 2.500 MM (0.512" X 0.945" X 0.098")
9	19M7881	SCREW	4		M8 X 20
	24M7055	WASHER	4		8.400 X 16 X 1.600 MM (0.331" X 0.630" X 0.063")

COOLING PACKAGE AND HYDRAULIC PUMP COMPARTMENT DOORS(VENTED)

T165693 -UN-11MAR03

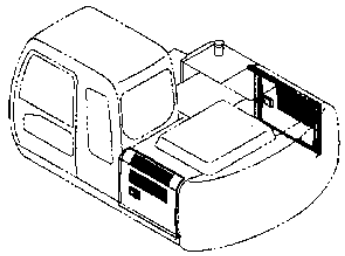

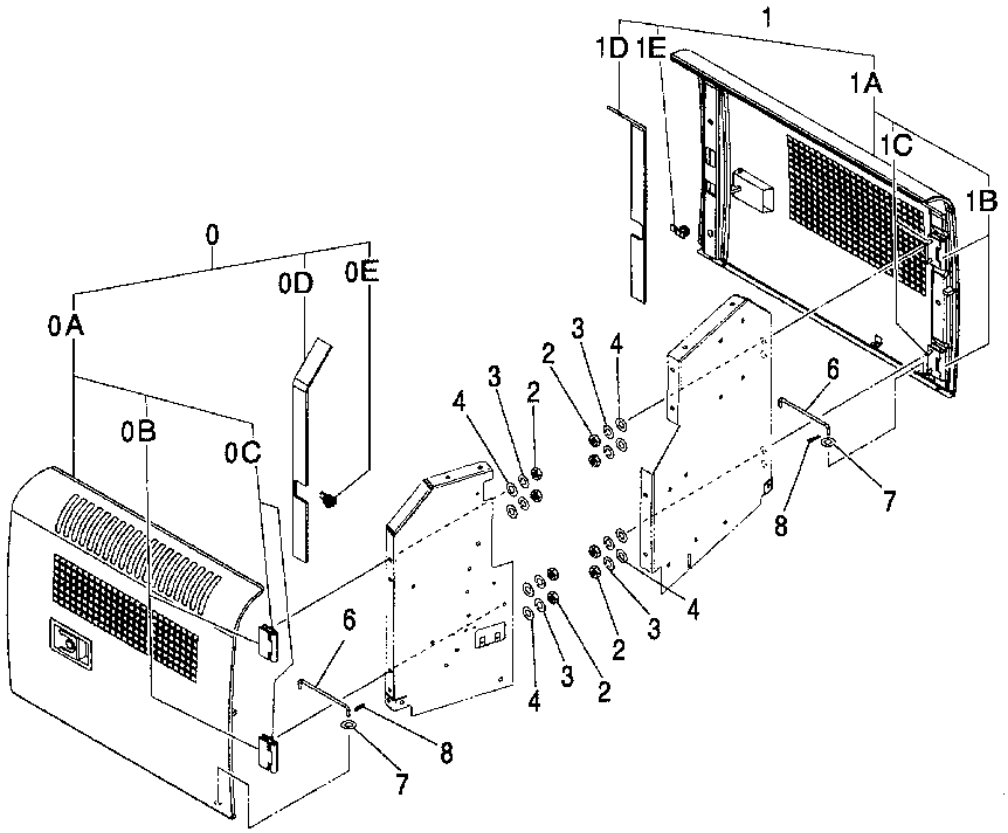

T165693

COOLING PACKAGE AND HYDRAULIC PUMP COMPARTMENT DOORS(VENTED)

KEY	PART NO.	PART NAME	QTY	SERIAL NO.	REMARKS
0	7040052	DOOR	1		(ASSEMBLY)
0A	.....	DOOR	1		(5007544 NOT AVAILABLE)
0B	4445380	HINGE	2		
0C	19M7402	CAP SCREW	4		M10 X 25
0D	4425575	ISOLATOR	1		
0E	4409396	LOCK	1		
1	7040051	DOOR	1		(ASSEMBLY)
1A	.....	DOOR	1		(5007545 NOT AVAILABLE) (FURNISH 7040052)
1B	4445380	HINGE	2		
1C	19M7402	CAP SCREW	4		M10 X 25
1D	4425575	ISOLATOR	1		
1E	4409396	LOCK	1		
2	14M7274	NUT	8		M10
3	12M7066	LOCK WASHER	8		10 MM
4	24M7028	WASHER	8		10.500 X 20 X 2 MM
6	4341788	ROD	2		
7	24M7055	WASHER	2		8.400 X 16 X 1.600 MM, (SUB FOR A590108)
8	4022697	COTTER PIN	2		

RADIO, MOUNTING BRACKETS, AND WIRING HARNESS

T157403 -UN-01OCT02

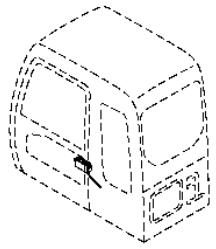

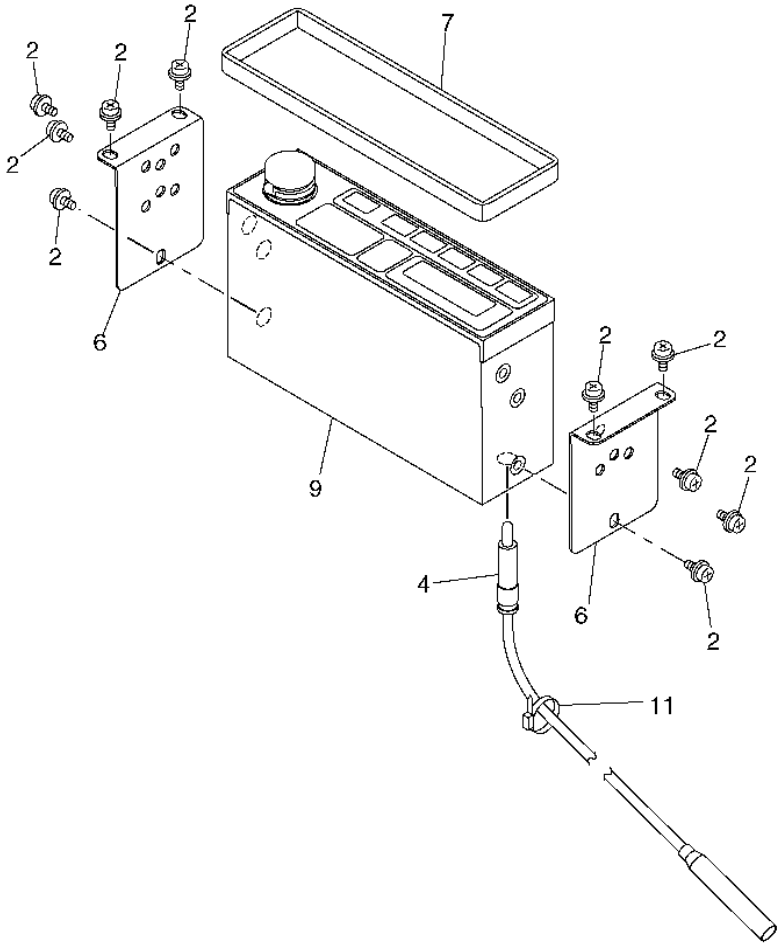

T157403

RADIO, MOUNTING BRACKETS, AND WIRING HARNESS

KEY	PART NO.	PART NAME	QTY	SERIAL NO.	REMARKS
2	J460510	SCREW	10		
4	4102096	WIRING HARNESS	1		
6	4341706	BRACKET	2		
7	4368973	ISOLATOR	1		
9	4640468	RADIO	1		(SUB FOR 4613913, 4351187)
11	4055311	TIE BAND	1		

LEFT REAR VIEW MIRROR

T151065 -UN-06FEB02

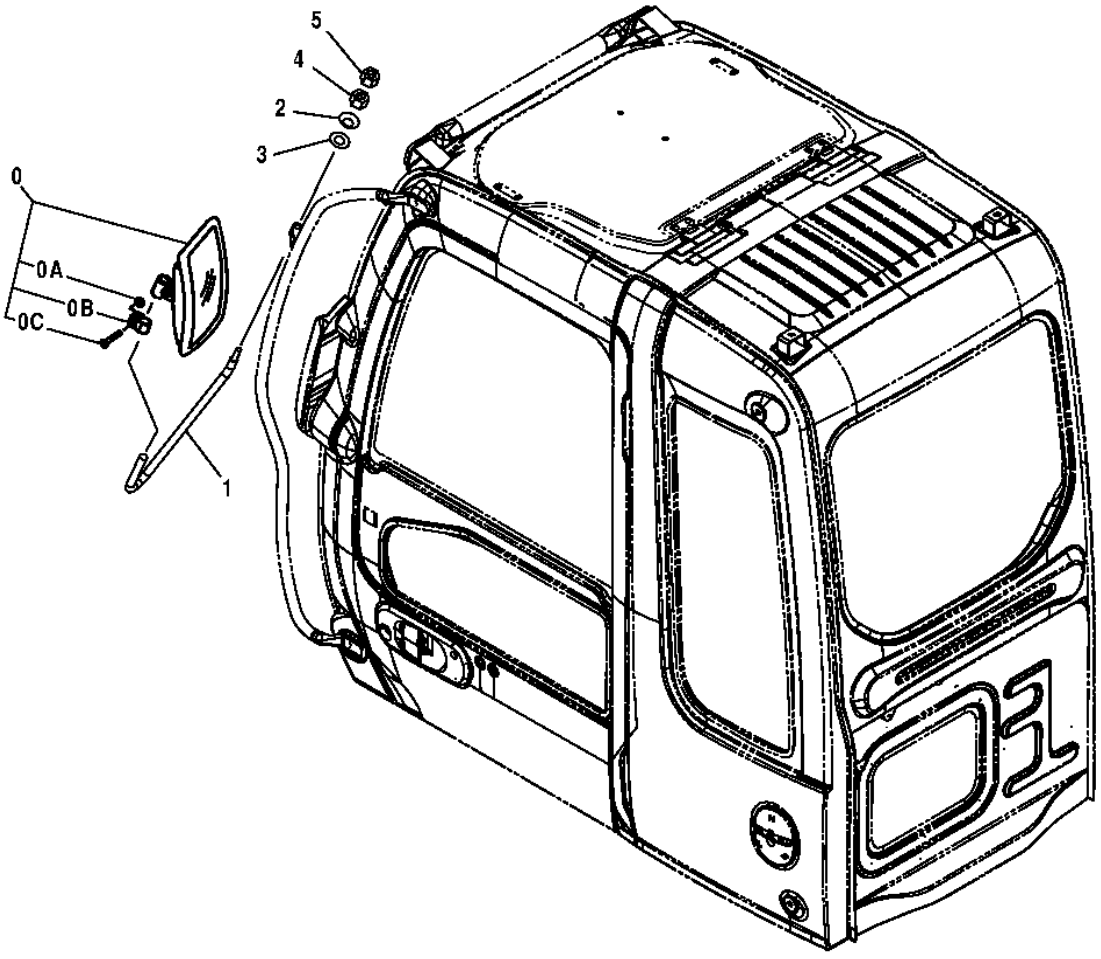

T151065

LEFT REAR VIEW MIRROR

KEY	PART NO.	PART NAME	QTY	SERIAL NO.	REMARKS
0	4420724	REAR VIEW MIRROR	1		(SUB FOR AT185207)
0A	14M7400	LOCK NUT	1		M10
0B	.....	CLAMP	1		(NOT AVAILABLE FOR SERVICE)
0C	03M7193	BOLT	1		M10 X 35
1	3091096	BRACKET	1		
2	TH104118	WASHER	2		
3	24M7047	WASHER	2		13 X 24 X 2.500 MM (0.512" X 0.945" X 0.098")
4	14M7275	NUT	1		M12
5	TH4449509	NUT	1		

HORN AND WIRING HARNESS

TP47966 -UN-21MAY96

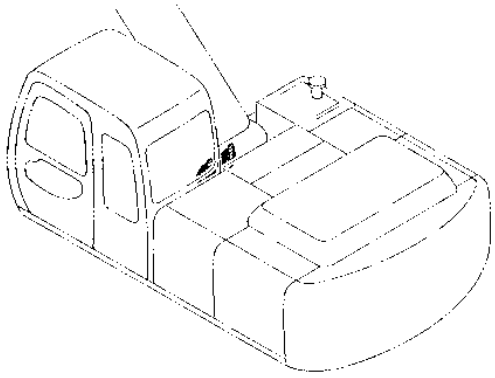

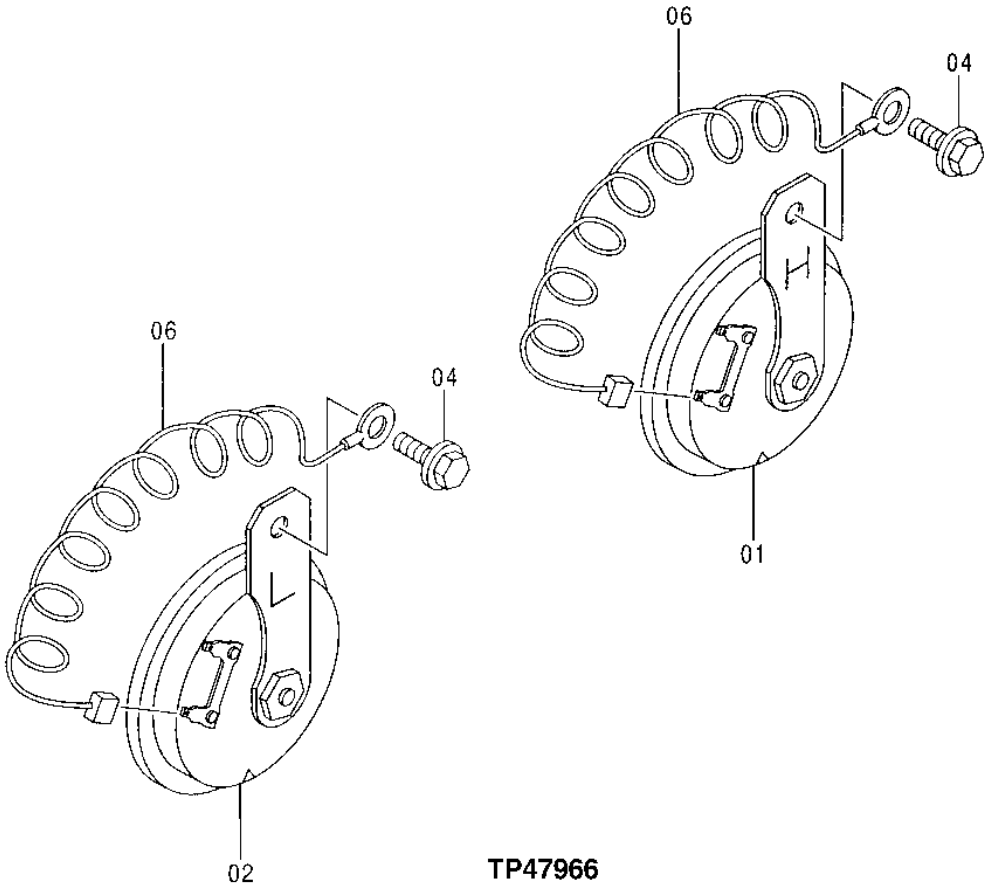

TP47966

HORN AND WIRING HARNESS

KEY	PART NO.	PART NAME	QTY	SERIAL NO.	REMARKS
1	AT64237	HORN	1		
2	AT64237	HORN	1		
4	19M7163	CAP SCREW	2		M8 X 25
	24M7055	WASHER	2		8.400 X 16 X 1.600 MM (0.331" X 0.630" X 0.063")
6	4254603	WIRING HARNESS	2		

PROPEL MOTION ALARM

T143276 -UN-12OCT01

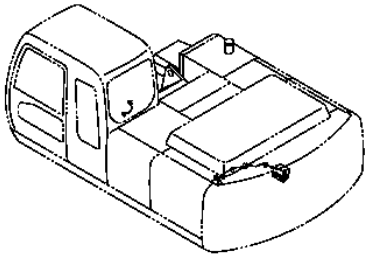

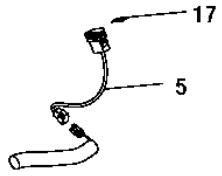

ELECTRIC PARTS

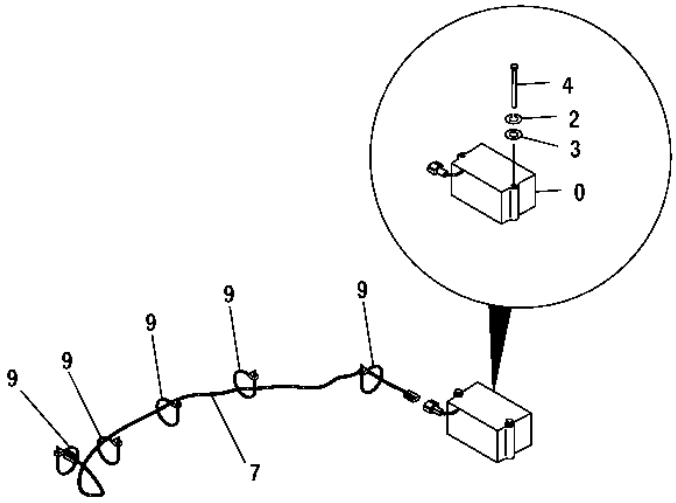

T143276

PROPEL MOTION ALARM

KEY	PART NO.	PART NAME	QTY	SERIAL NO.	REMARKS
0	AT301074	ALARM SYSTEM	1		(SUB FOR 4283028)
2	12M7065	LOCK WASHER	2		8 MM, (SUB FOR A590908)
3	24M7055	WASHER	2		8.400 X 16 X 1.600 MM, (SUB FOR A590108)
4	19M7296	CAP SCREW	2		
5	4384758	SWITCH	1		(ROUND STYLE)
7	3088568	WIRING HARNESS	1		
9	H77698	TIE BAND	5		
17	4450174	LABEL	1		(SUB FOR 4441246)

AUXILIARY DRIVE ADAPTER KIT (SAE "A" MOUNT, 9 TOOTH)
RGP9008 -UN-08AUG02

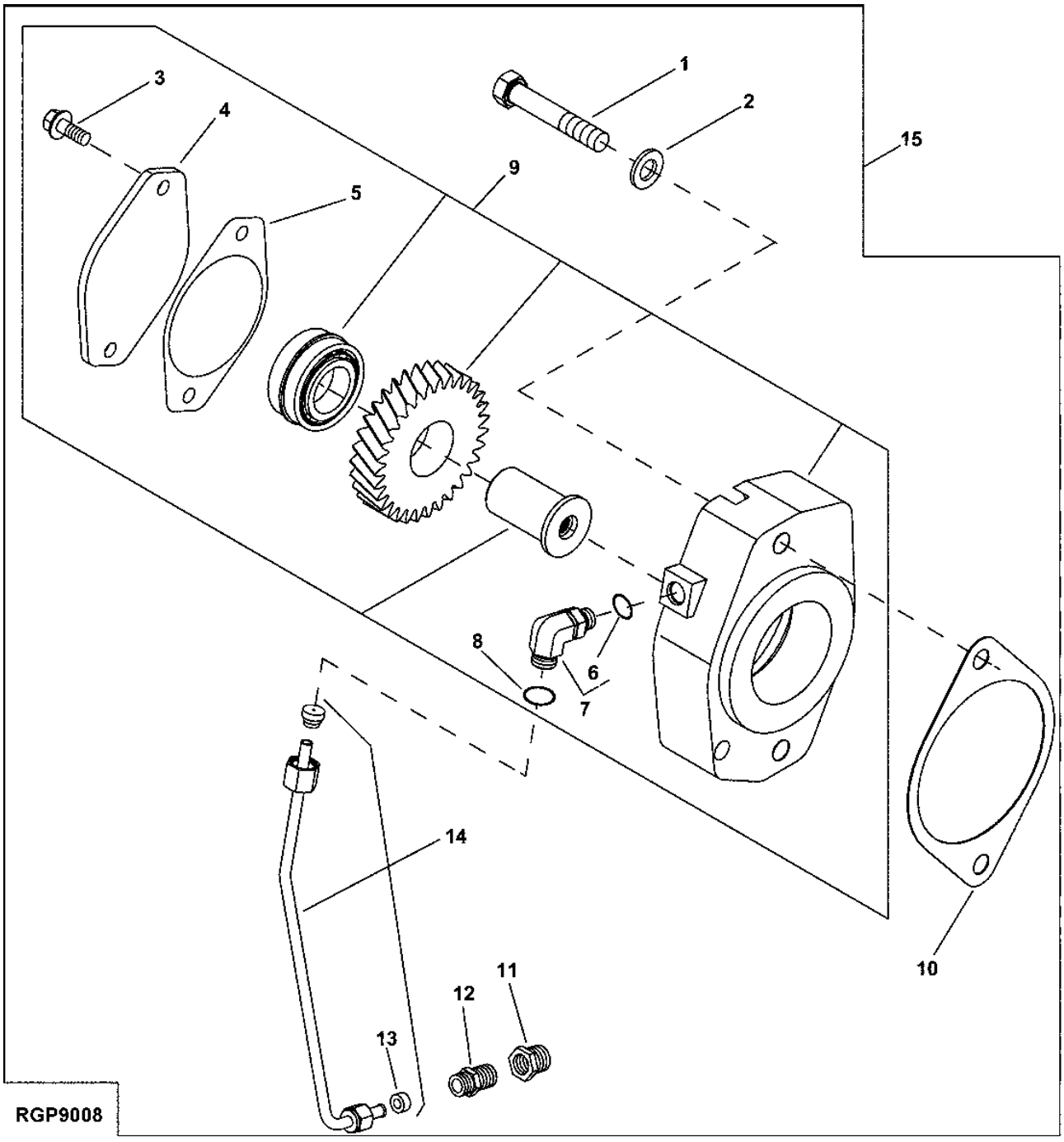

AUXILIARY DRIVE ADAPTER KIT (SAE "A" MOUNT, 9 TOOTH)

KEY	PART NO.	PART NAME	QTY	ENGINE SERIAL NO.	REMARKS
1	19M7753	CAP SCREW	2		M12 X 70
2	24M7047	WASHER	2		13 X 24 X 2.500 MM
3	19M7785	SCREW	2		M10 X 25
4	R85145	COVER	1		
5	R96935	GASKET	1		
6	51M7040	O-RING	1		9.300 X 2.200 MM
7	.....	ELBOW FITTING	1		(38H5015 NO LONGER AVAILABLE)
8	T77814	O-RING	1		7.645 X 1.778 MM (0.301" X 0.070")
9	RE500825	ADAPTER	1		(MARKED R135120)
10	R134465	GASKET	1		
11	15H642	PIPE BUSHING	1		1/4"
12	R110664	COUPLING	1		
13	R51936	SEALING WASHER	1		
14	RE500718	OIL LINE	1		
15	RE500884	KIT	1		

AUXILIARY DRIVE ADAPTER KIT (SAE "B" MOUNT, 13 TOOTH)
RGP8512 -UN-22JAN02

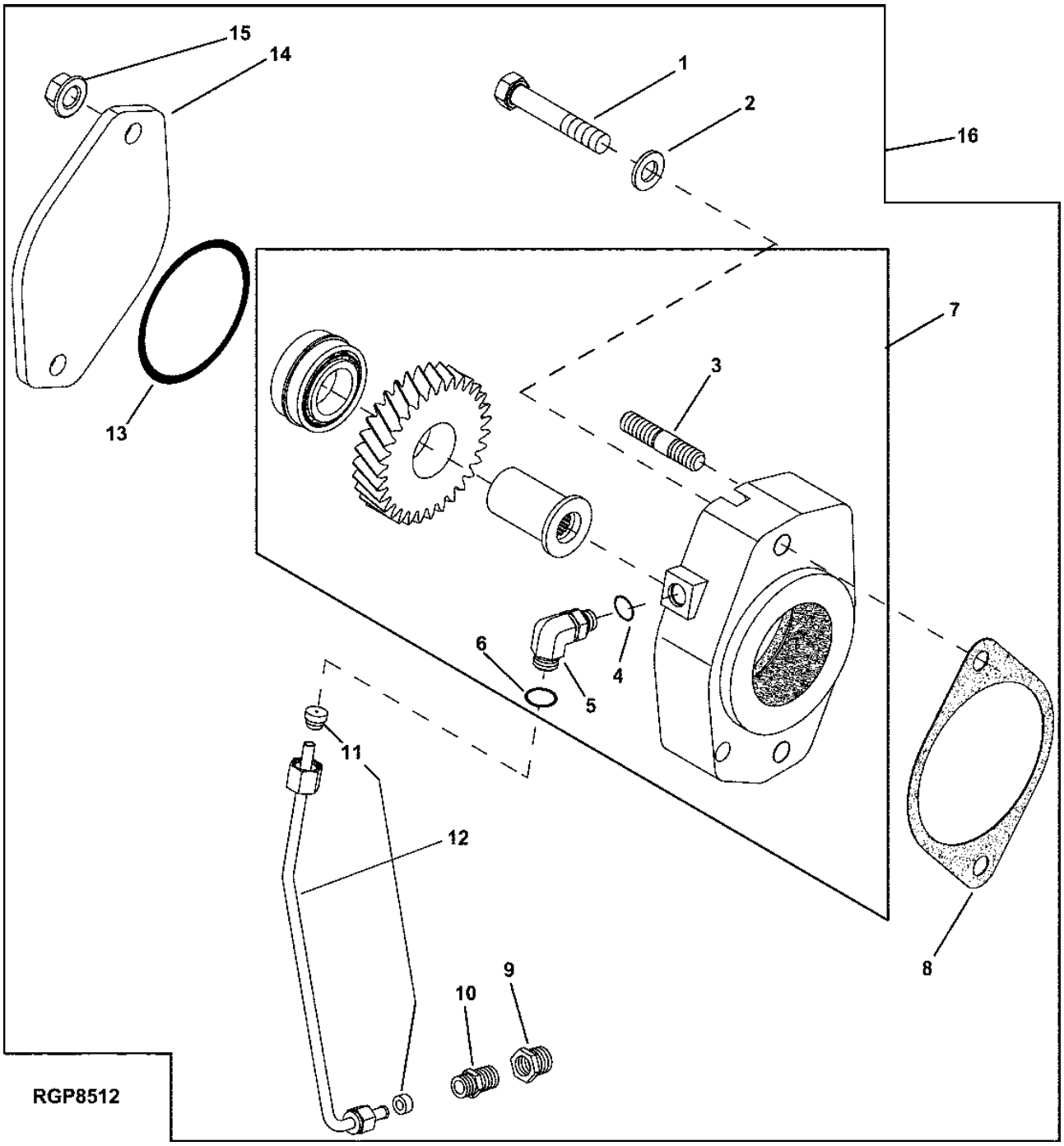

AUXILIARY DRIVE ADAPTER KIT (SAE "B" MOUNT, 13 TOOTH)

KEY	PART NO.	PART NAME	QTY	ENGINE SERIAL NO.	REMARKS
1	19M7753	CAP SCREW	2		M12 X 70
2	24M7047	WASHER	2		13 X 24 X 2.500 MM
3	42M7071	STUD	2		
4	T77814	O-RING	1		7.645 X 1.778 MM
5	.....	ELBOW FITTING	1		(38H5015 NO LONGER AVAILABLE)
6	T77814	O-RING	1		7.645 X 1.778 MM (0.301" X 0.070")
7	RE500824	ADAPTER	1		(MARKED R135121)
8	R134465	GASKET	1		
9	15H642	PIPE BUSHING	1		1/4"
10	R110664	COUPLING	1		
11	R51936	SEALING WASHER	1		
12	RE500718	OIL LINE	1		
13	T20758	O-RING	1		107.620 X 2.616 MM (4.237" X 0.103")
14	R135757	COVER	1		
15	14M7299	FLANGE NUT	2		M12
16	RE500883	KIT	1		

MEMORANDA

BLADE, BLADE MOUNTS, AND BLADE CYLINDER COVERS

KEY	PART NO.	PART NAME	QTY	SERIAL NO.	REMARKS
0	AP39225	BLADE	1		(SUB FOR DH700119)
1	P64892	BUSHING	2		
8	TH104472	SEAL	4		
9	P64898	PIN FASTENER	6		
11	TH100074	LUBRICATION FITTING	6		
13	P61796	BOLT	6		M20 X 160
	14M7277	NUT	12		M20
15	P61821	PLATE	8		
16	P61822	PLATE	4		
17	4366692	THRUST WASHER	4		
18	4367410	THRUST WASHER	4		
19	3091704	COVER	2		
20	19M8011	CAP SCREW	4		M12 X 30
	12M7067	LOCK WASHER	4		12 MM
	24M7047	WASHER	4		13 X 24 X 2.500 MM

GENERAL PURPOSE BUCKET ASSEMBLY (ORDER TEETH SEPARATELY)

TP70466 -UN-08SEP00

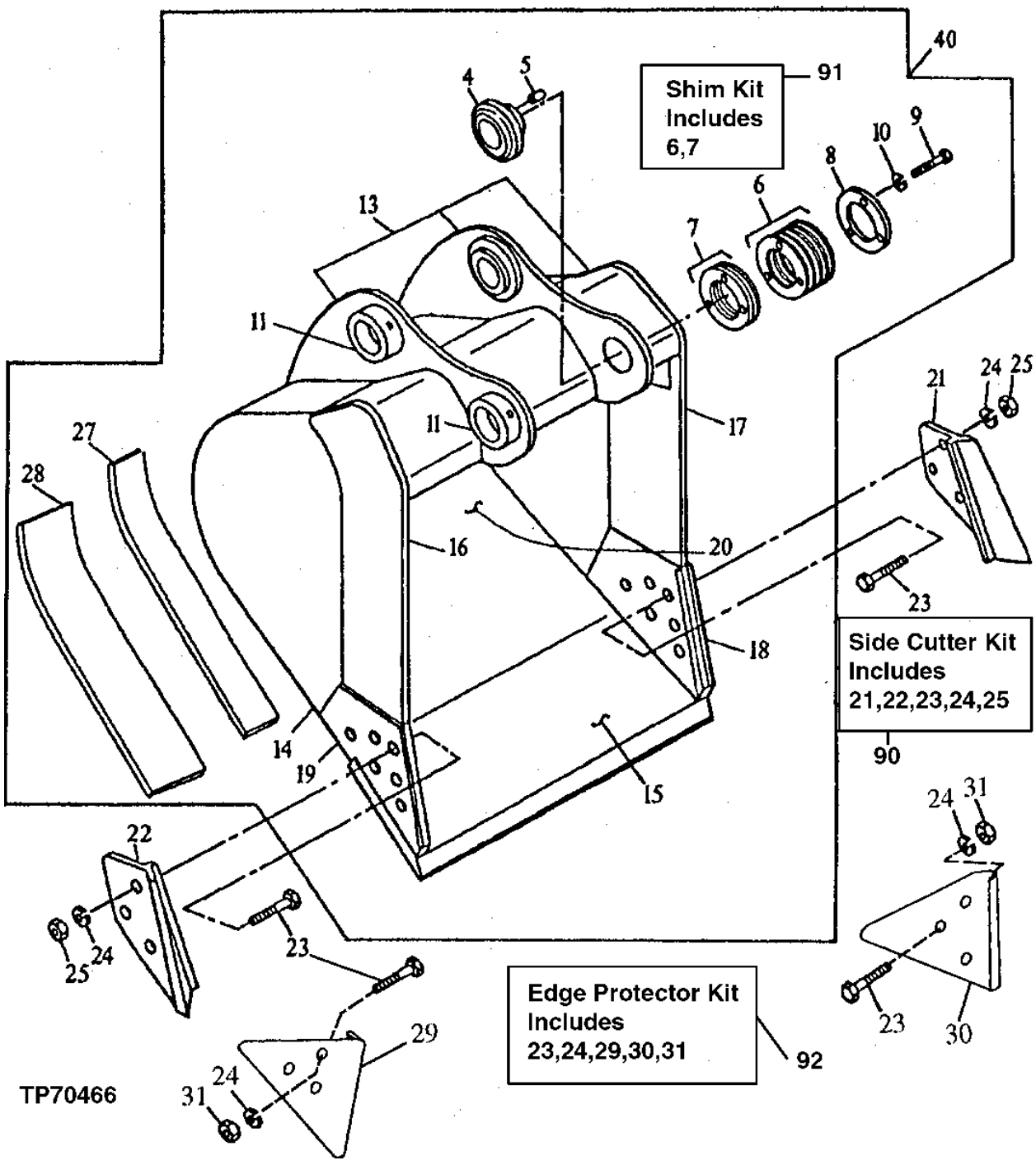

GENERAL PURPOSE BUCKET ASSEMBLY (ORDER TEETH SEPARATELY)

KEY	PART NO.	PART NAME	QTY	SERIAL NO.	REMARKS
4	TH100346	BUSHING	1		
5	TH103619	PIN	1		
6	.....	WASHER	7		(SUB AT146242) (K2) (TH100348 NO LONGER AVAILABLE)
7	.....	SHIM	3		(SUB AT146242) (K2) (TH100349 NO LONGER AVAILABLE)
8	TH100347	WASHER	1		
9	19M7404	CAP SCREW	3		M14 X 40
10	12H317	LOCK WASHER	3		9/16"
11	TH108649	BUSHING	2		
13	C610778	PIVOT	1		(ORDER DIRECTLY FROM CENTRAL FABRICATORS) (BUCKET EAR BLANK ASSEMBLY)
14	607048	PLATE	2		(ORDER DIRECTLY FROM CENTRAL FABRICATORS) (RIGHT AND LEFT SIDE)
	304403	PLATE	2		(ORDER DIRECTLY FROM CENTRAL FABRICATORS) (RIGHT AND LEFT SIDE) (FOR USE WITH AT163573 42 INCH - .79 CUBIC YARD BUCKET ONLY)
15	AT131081	CUTTING EDGE	1		(CUT TO LENGTH) (72 INCH LENGTH)
16	304954	VERTICAL CUTTER	1		(ORDER DIRECTLY FROM CENTRAL FABRICATORS) (UPPER RIGHT SIDE CUTTER)
	305331	VERTICAL CUTTER	1		(ORDER DIRECTLY FROM CENTRAL FABRICATORS) (UPPER RIGHT SIDE CUTTER) (FOR USE WITH AT163573 42 INCH - .79 CUBIC YARD BUCKET ONLY)
17	304955	VERTICAL CUTTER	1		(ORDER DIRECTLY FROM CENTRAL FABRICATORS) (UPPER LEFT SIDE CUTTER)
	307186	VERTICAL CUTTER	1		(ORDER DIRECTLY FROM CENTRAL FABRICATORS) (UPPER LEFT SIDE CUTTER) (FOR USE WITH AT163573 42 INCH - .79 CUBIC YARD BUCKET ONLY)
18	304953	VERTICAL CUTTER	1		(ORDER DIRECTLY FROM CENTRAL FABRICATORS) (LEFT SIDE CUTTER INSERT)
19	304952	VERTICAL CUTTER	1		(ORDER DIRECTLY FROM CENTRAL FABRICATORS) (RIGHT SIDE CUTTER INSERT)
20	604664	MOLDBOARD	1		(ORDER DIRECTLY FROM CENTRAL FABRICATORS) (18 INCH BUCKET)
	604667	MOLDBOARD	1		(ORDER DIRECTLY FROM CENTRAL FABRICATORS) (24 INCH BUCKET)
	604669	MOLDBOARD	1		(ORDER DIRECTLY FROM CENTRAL FABRICATORS) (30 INCH BUCKET)
	604670	MOLDBOARD	1		(ORDER DIRECTLY FROM CENTRAL FABRICATORS) (36 INCH BUCKET)
	604671	MOLDBOARD	1		(ORDER DIRECTLY FROM CENTRAL FABRICATORS) (42 INCH - .79 CUBIC YARD BUCKET)
	604671	MOLDBOARD	1		(ORDER DIRECTLY FROM CENTRAL FABRICATORS) (42 INCH - .92 CUBIC YARD BUCKET)
	604672	MOLDBOARD	1		(ORDER DIRECTLY FROM CENTRAL FABRICATORS) (48 INCH BUCKET)
90	AT131080	END BIT	1		INCLUDES ALL (K) PARTS
91	AT146242	SHIM	1		INCLUDES ALL (K1) PARTS
92	AT167874	KIT	1		INCLDES ALL (K2) PARTS (EDGE PROTECTOR KIT)

GENERAL PURPOSE BUCKET ASSEMBLY (CONTINUED, ALSO ORDER TEETH)

TP70466 -UN-08SEP00

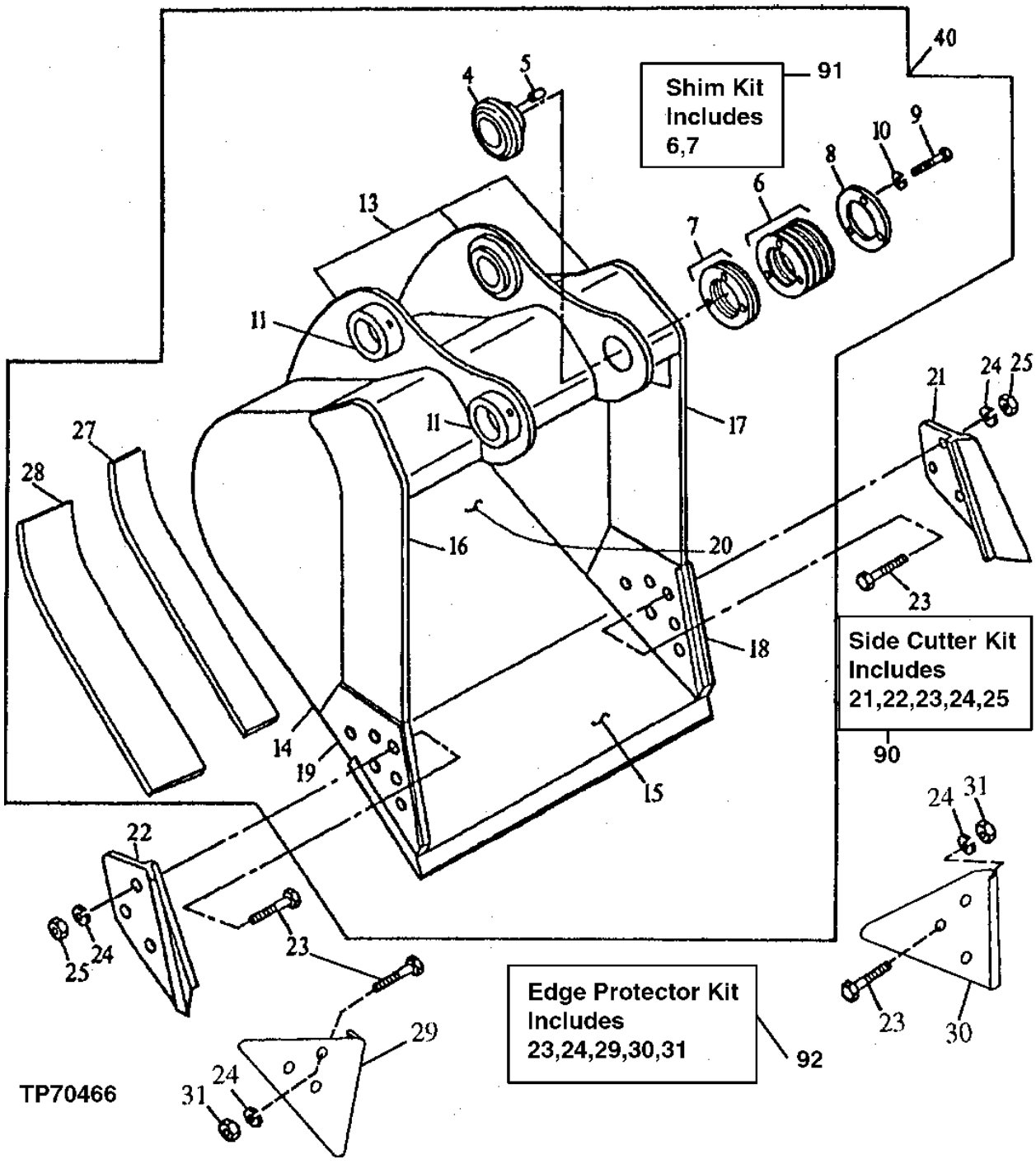

GENERAL PURPOSE BUCKET ASSEMBLY (CONTINUED, ALSO ORDER TEETH)

KEY	PART NO.	PART NAME	QTY	SERIAL NO.	REMARKS
21	.....	CUTTING EDGE	1		(K) (SUB AT131080)
22	.....	CUTTING EDGE	1		(K) (SUB AT131080)
23	09H1770	BOLT	6		(K) 7/8" X 2-1/2"
24	12H245	LOCK WASHER	6		(K) 7/8"
25	14H1077	NUT	6		(K) 7/8"
27	304966	BAR	1		(ORDER DIRECTLY FROM CENTRAL FABRICATORS) (INNER WEAR)
28	306618	BAR	2		(ORDER DIRECTLY FROM CENTRAL FABRICATORS) (OUTER WEAR)
29	.....	SHROUD	1		(SUB AT167874) (K3) (WEAR SHROUD)
30	.....	SHROUD	1		(SUB AT167874) (K3) (WEAR SHROUD)
31	14H1044	NUT	6		22.225 MM (7/8") (K3)
40	**AT163568**	**EXCAVATOR BUCKET**	**1**		**WHOLEGOODS (18 INCH - .34 CUBIC YARD) (AVAILABLE TOOTH ASSEMBLIES ON SEPARATE PAGE)**
	AT163569	**EXCAVATOR BUCKET**	**1**		**WHOLEGOODS (24 INCH - .50 CUBIC YARD) (AVAILABLE TOOTH ASSEMBLIES ON SEPARATE PAGE)**
	AT163570	**EXCAVATOR BUCKET**	**1**		**WHOLEGOODS (30 INCH - .64 CUBIC YARD) (AVAILABLE TOOTH ASSEMBLIES ON SEPARATE PAGE)**
	AT163571	**EXCAVATOR BUCKET**	**1**		**WHOLEGOODS (36 INCH - .78 CUBIC YARD) (AVAILABLE TOOTH ASSEMBLIES ON SEPARATE PAGE)**
	AT163574	**EXCAVATOR BUCKET**	**1**		**WHOLEGOODS (42 INCH - .92 CUBIC YARD) (AVAILABLE TOOTH ASSEMBLIES ON SEPARATE PAGE)**
	AT163575	**EXCAVATOR BUCKET**	**1**		**WHOLEGOODS (48 INCH - 1.06 CUBIC YARD) (AVAILABLE TOOTH ASSEMBLIES ON SEPARATE PAGE)**
90	AT131080	END BIT	1		INCLUDES ALL (K1) PARTS
91	AT146242	SHIM	1		INCLUDES ALL (K2) PARTS
92	AT167874	KIT	1		INCLUDES ALL (K3) PARTS (EDGE PROTECTOR KIT)

HEAVY DUTY BUCKET ASSEMBLY (ORDER TEETH SEPARATELY)

TP70466 -UN-08SEP00

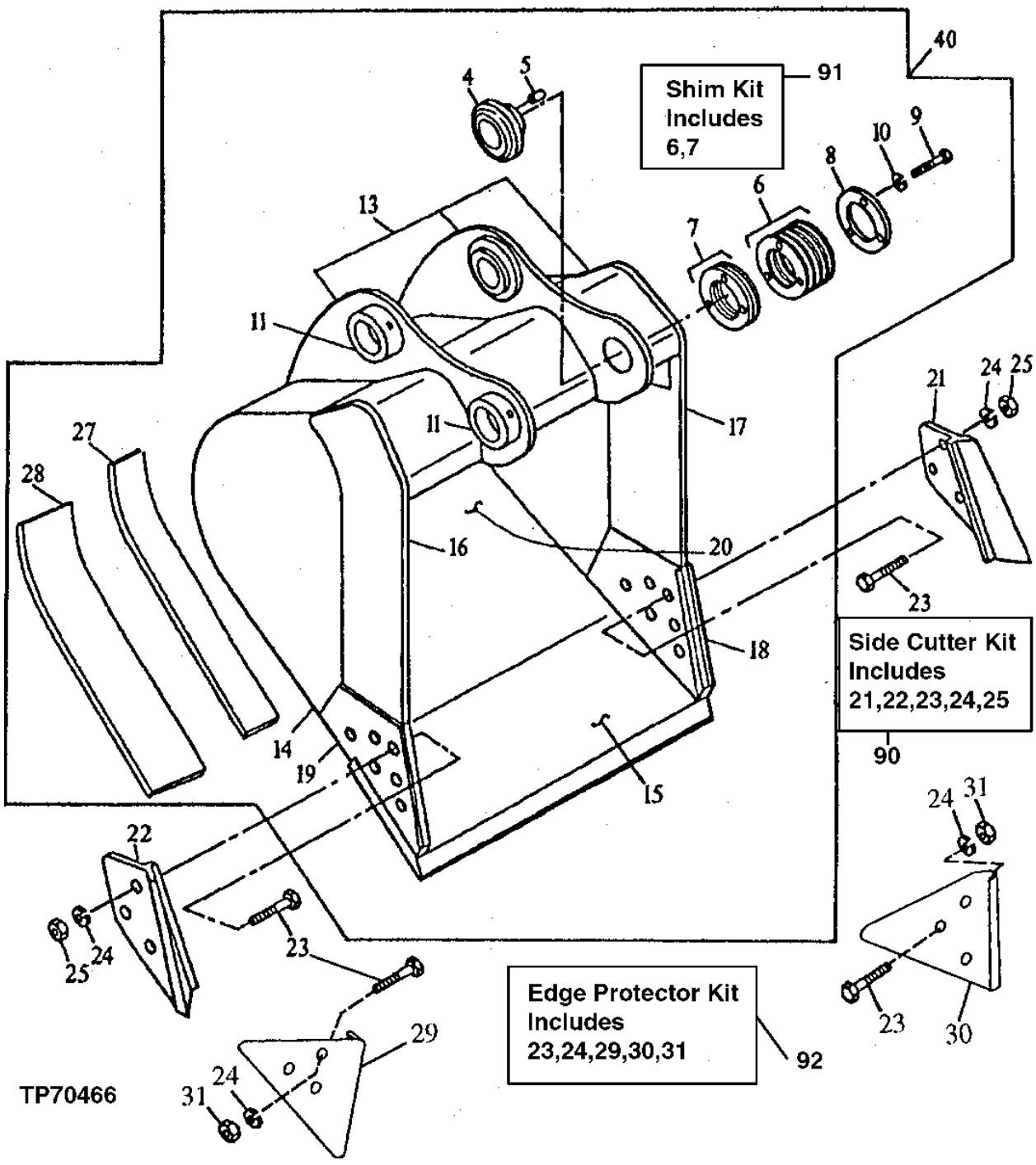

HEAVY DUTY BUCKET ASSEMBLY (ORDER TEETH SEPARATELY)

KEY	PART NO.	PART NAME	QTY	SERIAL NO.	REMARKS
4	TH100346	BUSHING	1		
5	TH103619	PIN	1		
6	.....	WASHER	7		(SUB AT146242) (K2) (TH100348 NO LONGER AVAILABLE)
7	.....	SHIM	3		(SUB AT146242) (K2) (TH100349 NO LONGER AVAILABLE)
8	TH100347	WASHER	1		
9	19M7404	CAP SCREW	3		
10	12H317	LOCK WASHER	3		9/16"
11	TH108649	BUSHING	2		
13	C610778	PIVOT	1		(ORDER DIRECTLY FROM CENTRAL FABRICATORS) (BUCKET EAR BLANK ASSEMBLY)
14	607048	PLATE	2		(ORDER DIRECTLY FROM CENTRAL FABRICATORS) (RIGHT AND LEFT SIDE)
15	AT131081	CUTTING EDGE	1		(CUT TO LENGTH)
16	304960	VERTICAL CUTTER	1		(ORDER DIRECTLY FROM CENTRAL FABRICATORS) (UPPER RIGHT SIDE CUTTER)
17	304961	VERTICAL CUTTER	1		(ORDER DIRECTLY FROM CENTRAL FABRICATORS) (UPPER LEFT SIDE CUTTER)
18	304968	VERTICAL CUTTER	1		(ORDER DIRECTLY FROM CENTRAL FABRICATORS) (LEFT SIDE CUTTER INSERT)
19	304967	VERTICAL CUTTER	1		(ORDER DIRECTLY FROM CENTRAL FABRICATORS) (RIGHT SIDE CUTTER INSERT)
20	604647	MOLDBOARD	1		(ORDER DIRECTLY FROM CENTRAL FABRICATORS) (18 INCH BUCKET)
	604650	MOLDBOARD	1		(ORDER DIRECTLY FROM CENTRAL FABRICATORS) (24 INCH BUCKET)
	604652	MOLDBOARD	1		(ORDER DIRECTLY FROM CENTRAL FABRICATORS) (30 INCH BUCKET)
	604653	MOLDBOARD	1		(ORDER DIRECTLY FROM CENTRAL FABRICATORS) (36 INCH BUCKET)
21	.....	CUTTING EDGE	1		(K) (SUB AT131080)
22	.....	CUTTING EDGE	1		(K) (SUB AT131080)
23	09H1770	BOLT	6		(K) 7/8" X 2-1/2", (K3)
24	12H245	LOCK WASHER	6		(K) 7/8", (K3)
25	14H1077	NUT	6		(K) 7/8"
27	304966	BAR	1		(ORDER DIRECTLY FROM CENTRAL FABRICATORS) (INNER WEAR)
28	306618	BAR	2		(ORDER DIRECTLY FROM CENTRAL FABRICATORS) (OUTER WEAR)
29	.....	SHROUD	1		(WEAR SHROUD) (SUB AT167874) (K3)
30	.....	SHROUD	1		(WEAR SHROUD) (SUB AT167874) (K3)
31	14H1044	NUT	6		22.225 MM (7/8") (K3)
40	**AT163576**	**EXCAVATOR BUCKET**	**1**		**WHOLEGOODS (18 INCH - .34 CUBIC YARD) (AVAILABLE TOOTH ASSEMBLIES ON SEPARATE PAGE)**
	AT163577	**EXCAVATOR BUCKET**	**1**		**WHOLEGOODS (24 INCH - .50 CUBIC YARD) (AVAILABLE TOOTH ASSEMBLIES ON SEPARATE PAGE)**
	AT163578	**EXCAVATOR BUCKET**	**1**		**WHOLEGOODS (30 INCH - .64 CUBIC YARD) (AVAILABLE TOOTH ASSEMBLIES ON SEPARATE PAGE)**
	AT163579	**EXCAVATOR BUCKET**	**1**		**WHOLEGOODS (36 INCH - .78 CUBIC YARD) (AVAILABLE TOOTH ASSEMBLIES ON SEPARATE PAGE)**
	AT198293	**EXCAVATOR BUCKET**	**1**		**WHOLEGOODS (42 INCH - 0.92 CUBIC YARD)**
90	AT131080	END BIT	1		INCLUDES ALL (K1) PARTS
91	AT146242	SHIM	1		INCLUDES ALL (K2) PARTS
92	AT167874	KIT	1		INCLUDES ALL (K3) PARTS (EDGE PROTECTOR KIT)

DITCH CLEANING BUCKET ASSEMBLY

TP70467 -UN-29SEP00

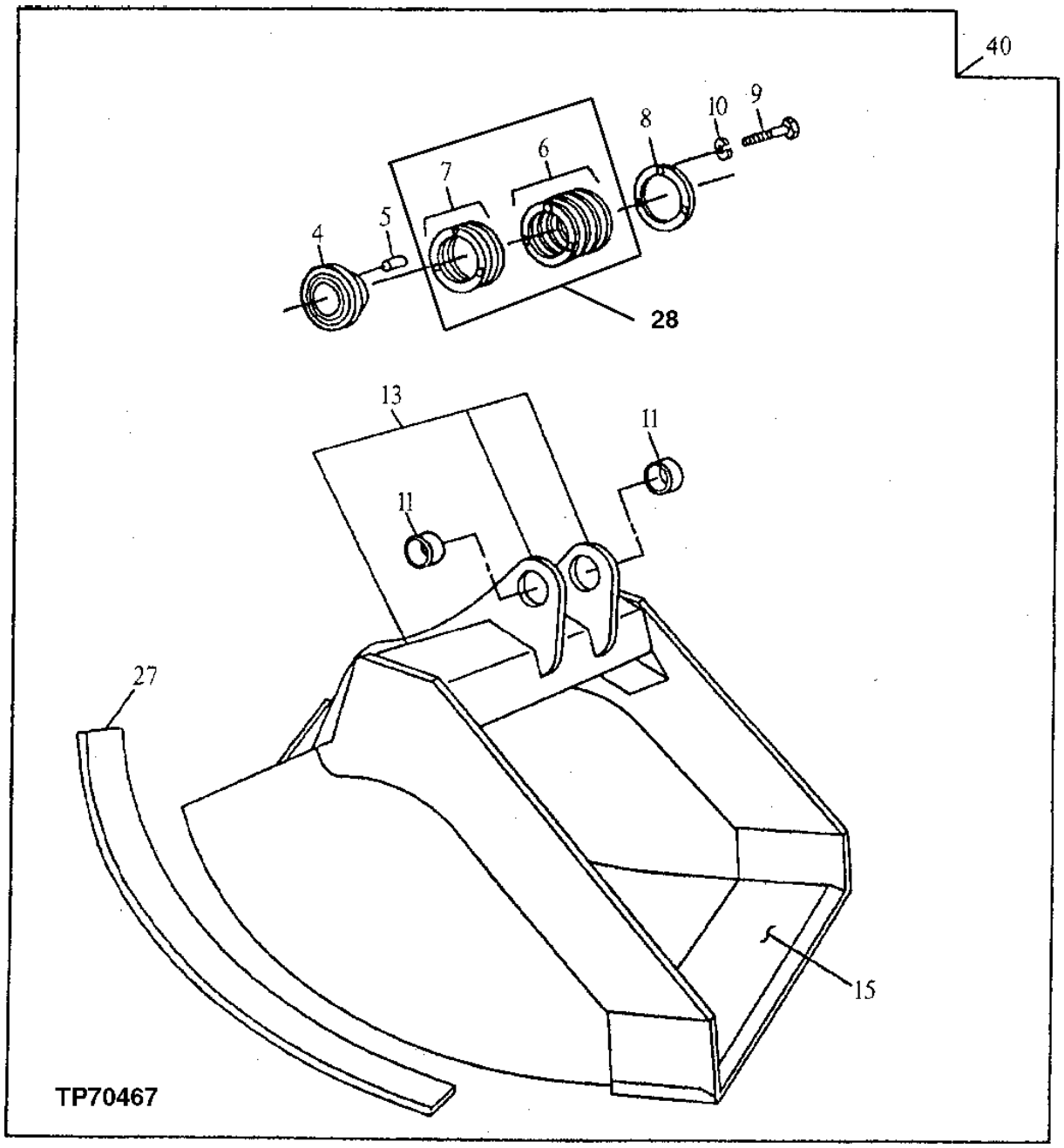

DITCH CLEANING BUCKET ASSEMBLY

KEY	PART NO.	PART NAME	QTY	SERIAL NO.	REMARKS
4	TH100346	BUSHING	1		
5	TH103619	PIN	1		
6	.....	WASHER	7		(SUB AT146242) (K2) (TH100348 NO LONGER AVAILABLE)
7	.....	SHIM	3		(SUB AT146242) (K2) (TH100349 NO LONGER AVAILABLE)
8	TH100347	WASHER	1		
9	19M7404	CAP SCREW	3		M14 X 40
10	12H317	LOCK WASHER	3		9/16"
11	TH108649	BUSHING	2		
13	C610778	PIVOT	1		(ORDER DIRECTLY FROM CENTRAL FABRICATORS) (BUCKET EAR BLANK ASSEMBLY)
15	.....	CUTTING EDGE	1		(CUT TO LENGTH FROM AT131089 BULK MATERIAL)
27	300292	BAR	4		(ORDER DIRECTLY FROM CENTRAL FABRICATORS) (WEAR STRIP)
28	AT146242	SHIM	1		INCLUDES ALL (K2) PARTS
40	**AT131360**	**EXCAVATOR BUCKET**	**1**		**WHOLEGOODS (48 INCH - .67 CUBIC YARD)**
	AT131361	**EXCAVATOR BUCKET**	**1**		**WHOLEGOODS (60 INCH - .90 CUBIC YARD)**
	AT199350	**EXCAVATOR BUCKET**	**1**		**WHOLEGOODS (72" 1.06 CUBIC YARD)**

ROADBUILDER KIT (ALSO ORDER HEAVY DUTY BUCKET AND TEETH)

T141017 -UN-05APR01

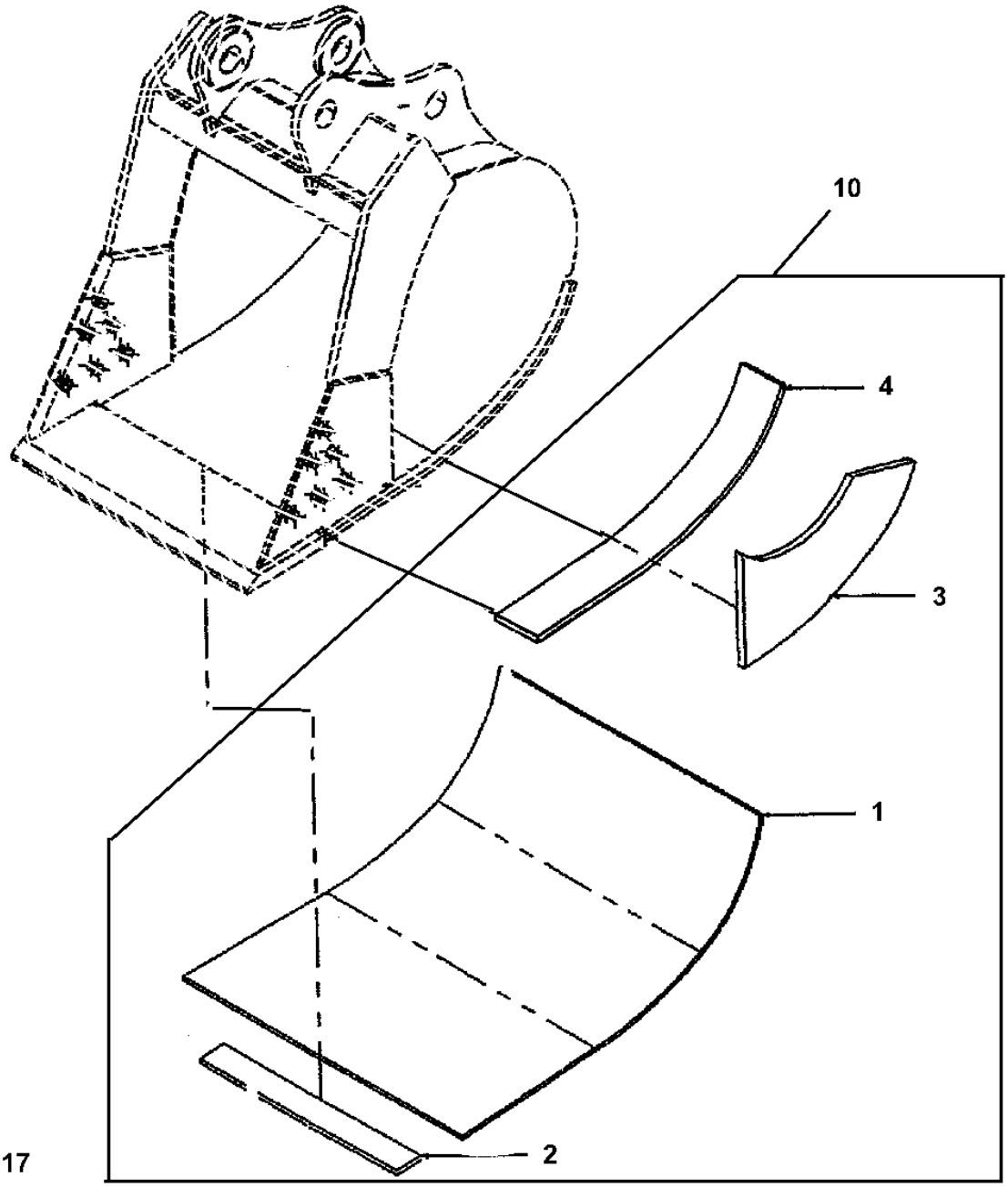

ROADBUILDER KIT (ALSO ORDER HEAVY DUTY BUCKET AND TEETH)

KEY	PART NO.	PART NAME	QTY	SERIAL NO.	REMARKS
1	622655	MOLDBOARD	1		ORDER DIRECTLY FROM CENTRAL FABRICATORS. (USE WITH 24 INCH BUCKET)
	622656	MOLDBOARD	1		ORDER DIRECTLY FROM CENTRAL FABRICATORS. (USE WITH 30 INCH BUCKET)
	622657	MOLDBOARD	1		ORDER DIRECTLY FROM CENTRAL FABRICATORS. (USE WITH 36 INCH BUCKET)
2	28026	BAR	5		ORDER DIRECTLY FROM CENTRAL FABRICATORS. (HORIZONTAL WEAR BAR) (USE WITH 24 INCH BUCKET)
	28032	BAR	5		ORDER DIRECTLY FROM CENTRAL FABRICATORS. (HORIZONTAL WEAR BAR) (USE WITH 30 INCH BUCKET)
	28038	BAR	5		ORDER DIRECTLY FROM CENTRAL FABRICATORS. (HORIZONTAL WEAR BAR) (USE WITH 36 INCH BUCKET)
3	310872	PLATE	2		ORDER DIRECTLY FROM CENTRAL FABRICATORS.
4	306618	PLATE	2		ORDER DIRECTLY FROM CENTRAL FABRICATORS. (OUTER WEAR BAR)
10	**AT187237**	**KIT**	**1**		**(WHOLEGOODS) (ALSO ORDER AT163577 24 INCH HEAVY DUTY BUCKET AND APPROPRIATE TOOTH KIT)**
	AT187240	**KIT**	**1**		**(WHOLEGOODS) (ALSO ORDER AT163578 30 INCH HEAVY DUTY BUCKET AND APPROPRIATE TOOTH KIT)**
	AT187242	**KIT**	**1**		**(WHOLEGOODS) (ALSO ORDER AT163579 36 INCH HEAVY DUTY BUCKET AND APPROPRIATE TOOTH KIT)**

ESCO BUCKET CUTTING EDGES, TEETH AND ADAPTERS

T149713 -UN-04JAN02

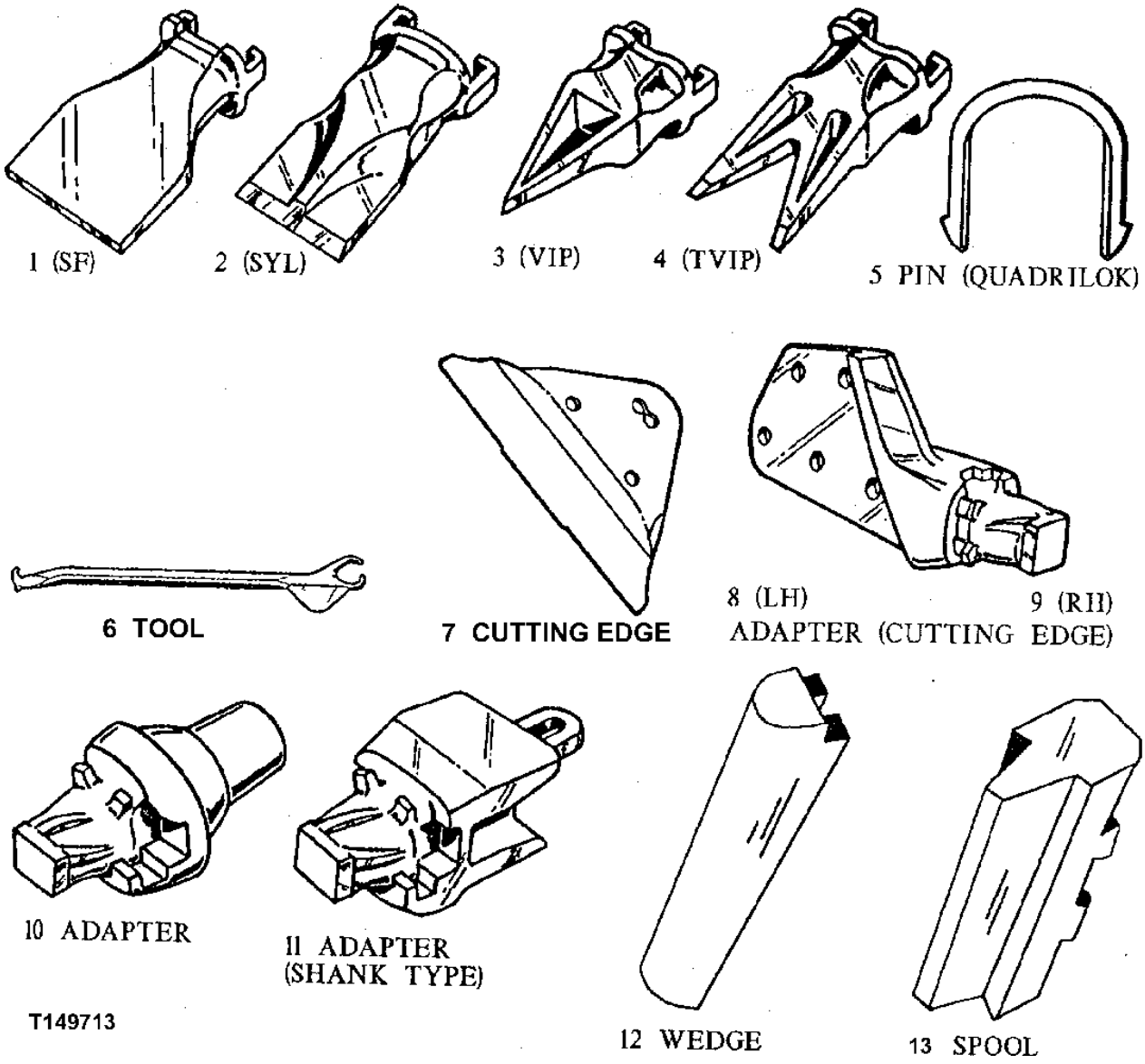

ESCO BUCKET CUTTING EDGES, TEETH AND ADAPTERS

KEY	PART NO.	PART NAME	QTY	SERIAL NO.	REMARKS
1	EX21S5F	TOOTH	AR		
2	EX21SYL	TOOTH	AR		
	EX47SYL	TOOTH	AR		
	EX27SYL	TOOTH	AR		
	EX37SYL	TOOTH	AR		
3	EX21VIP	TOOTH	AR		
4	EX21TVIP	TOOTH	AR		
5	EX21LK	PIN	AR		
	EX47LK	PIN	AR		
	EX27LK	PIN	AR		
	EX37LK	PIN	AR		
	EX27VPN	PIN	AR		
6	EX21-27QRT	TOOL	AR		
7	TPDE31329	SHROUD	AR		(SUB FOR EX31329-X)
8	.....	BUCKET TOOTH ADAPTER	AR		(EX1550-21 NLA)
9	.....	BUCKET TOOTH ADAPTER	AR		(EX1551-21 NLA)
10	EX360-21	BUCKET TOOTH ADAPTER	AR		
11	EX119-21	BUCKET TOOTH ADAPTER	AR		
	EX129A-37	BUCKET TOOTH ADAPTER	AR		
	EX5824-37	BUCKET TOOTH ADAPTER	AR		
	EX1829A-47	BUCKET TOOTH ADAPTER	AR		
	EX4894-21	SHANK	AR		
	EX5850-27V	BUCKET TOOTH ADAPTER	AR		(SUB FOR EX5827-27, ALONG WITH EX27VPN AND EX27VPL)
	EX5854-21	BUCKET TOOTH ADAPTER	AR		
	EX119-27	BUCKET TOOTH ADAPTER	AR		
12	EX29W1	WEDGE	AR		
	EX20W1	WEDGE	AR		
13	EX20SP	SPOOL	AR		
	EX29SP	SPOOL	AR		
14	EX27VPL	PLUG	AR		(NOT ILLUSTRATED)

BUCKET TOOTH ASSEMBLY
(GENERAL PURPOSE OR HEAVY DUTY)
(18, 24, 30, 36, 42 OR 48 INCH BUCKET)

TP43732 -UN-01JAN94

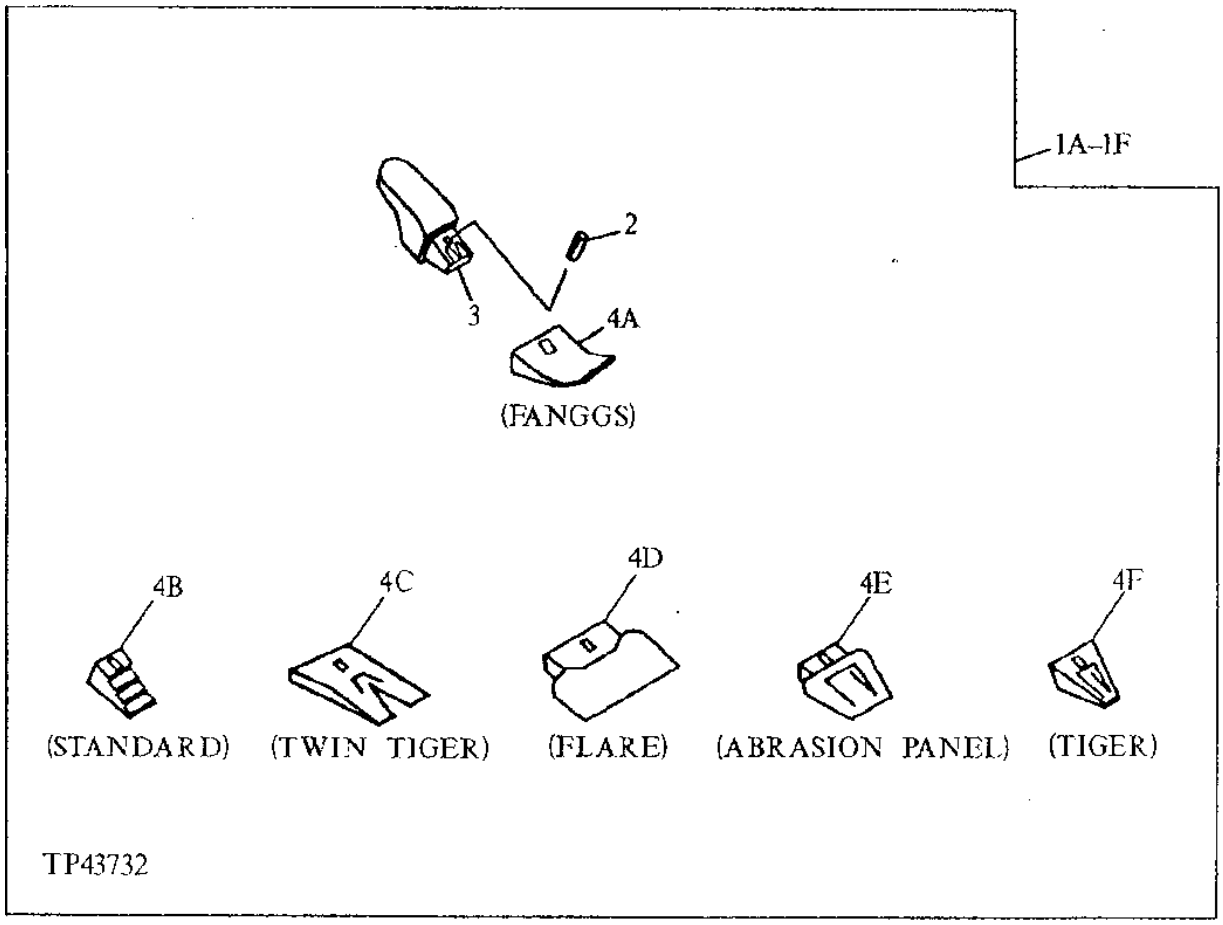

ORDER 3 SETS WITH 18 INCH BUCKET
ORDER 4 SETS WITH 24 INCH BUCKET
ORDER 4 SETS WITH 30 INCH BUCKET
ORDER 5 SETS WITH 36 INCH BUCKET
ORDER 6 SETS WITH 42 INCH BUCKET
ORDER 7 SETS WITH 48 INCH BUCKET

THIS PARTS LISTING IS CONTINUED

BUCKET TOOTH ASSEMBLY
(GENERAL PURPOSE OR HEAVY DUTY)
(18, 24, 30, 36, 42 OR 48 INCH BUCKET)

KEY	PART NO.	PART NAME	QTY	SERIAL NO.	REMARKS
1A	.....	KIT	1		(TOOTH) WHOLEGOODS(FANGGS 220 TOOTH ASSEMBLY) (AT163528 ONLY AVAILABLE WHEN ORDERING BUCKET)
	.....	KIT	1		(TOOTH) WHOLEGOODS(FANGGS 290 TOOTH ASSEMBLY) (AT178738 ONLY AVAILABLE WHEN ORDERING BUCKET)
1B	.....	KIT	1		(TOOTH) WHOLEGOODS (STANDARD 220 TOOTH ASSEMBLY) (AT163532 ONLY AVAILABLE WHEN ORDERING BUCKET)
	.....	KIT	1		(TOOTH) WHOLEGOODS (STANDARD 290 TOOTH ASSEMBLY) (AT178739 ONLY AVAILABLE WHEN ORDERING BUCKET)
1C	.....	KIT	1		(TOOTH) WHOLEGOODS (TWIN TIGER 220 TOOTH ASSEMBLY) (AT163536 ONLY AVAILABLE WHEN ORDERING BUCKET)
	.....	KIT	1		(TOOTH) WHOLEGOODS (TWIN TIGER 290 TOOTH ASSEMBLY) (AT178741 ONLY AVAILABLE WHEN ORDERING BUCKET)
1D	.....	KIT	1		(TOOTH) WHOLEGOODS (FLARE) (AT163535 ONLY AVAILABLE WHEN ORDERING BUCKET)
1E	.....	KIT	1		(TOOTH) WHOLEGOODS (ABRASION PANEL) (AT163534 ONLY AVAILABLE WHEN ORDERING BUCKET)
1F	.....	KIT	1		(TOOTH) WHOLEGOODS (TIGER 220 TOOTH ASSEMBLY) (AT163533 ONLY AVAILABLE WHEN ORDERING BUCKET)
	.....	KIT	1		(TOOTH) WHOLEGOODS (TIGER 290 TOOTH ASSEMBLY) (AT178740 ONLY AVAILABLE WHEN ORDERING BUCKET)
1G	.....	KIT	1		(TOOTH) WHOLEGOODS (ESCO STANDARD TOOTH ASSEMBLY) (NOT ILLUSTRATED) (AT167184 ONLY AVAILABLE WHEN ORDERING BUCKET)
1H	.....	KIT	1		(TOOTH) WHOLEGOODS (ESCO TWIN TIGER TOOTH ASSEMBLY) (NOT ILLUSTRATED) (AT167186 ONLY AVAILABLE WHEN ORDERING BUCKET)
1I	.....	KIT	1		(TOOTH) WHOLEGOODS (ESCO FLARE TOOTH ASSEMBLY) (NOT ILLUSTRATED) (AT167187 ONLY AVAILABLE WHEN ORDERING BUCKET)
1J	.....	KIT	1		(TOOTH) WHOLEGOODS (ESCO TIGER TOOTH ASSEMBLY) (NOT ILLUSTRATED) (AT167185 ONLY AVAILABLE WHEN ORDERING BUCKET)
1K	.....	KIT	1		(TOOTH) WHOLEGOODS (CATERPILLAR REPLACEMENT FANGGS TOOTH ASSEMBLY) (NOT ILLUSTRATED) (AT167188 ONLY AVAILABLE WHEN ORDERING BUCKET)
1L	.....	KIT	1		WHOLEGOODS (CATERPILLAR REPLACEMENT STANDARD TOOTH ASSEMBLY) (NOT ILLUSTRATED) (AT167189 ONLY AVAILABLE WHEN ORDERING BUCKET)
1M	.....	KIT	1		WHOLEGOODS (CATERPILLAR REPLACEMENT TWIN TIGER TOOTH ASSEMBLY) (NOT ILLUSTRATED) (AT167191 ONLY AVAILABLE WHEN ORDERING BUCKET)
1N	.....	KIT	1		(TOOTH) WHOLEGOODS (CATERPILLAR REPLACEMENT TIGER TOOTH ASSEMBLY) (NOT ILLUSTRATED) (AT167190 ONLY AVAILABLE WHEN ORDERING BUCKET)
1O	.....	KIT	1		(TOOTH) WHOLEGOODS (V-STYLE EV23SYL TOOTH KIT) (AT199349 ONLY AVAILABLE WHEN ORDERING BUCKET)

BUCKET TOOTH ASSEMBLY
(GENERAL PURPOSE OR HEAVY DUTY)
(18, 24, 30, 36, 42 OR 48 INCH BUCKET)

TP43732 -UN-01JAN94

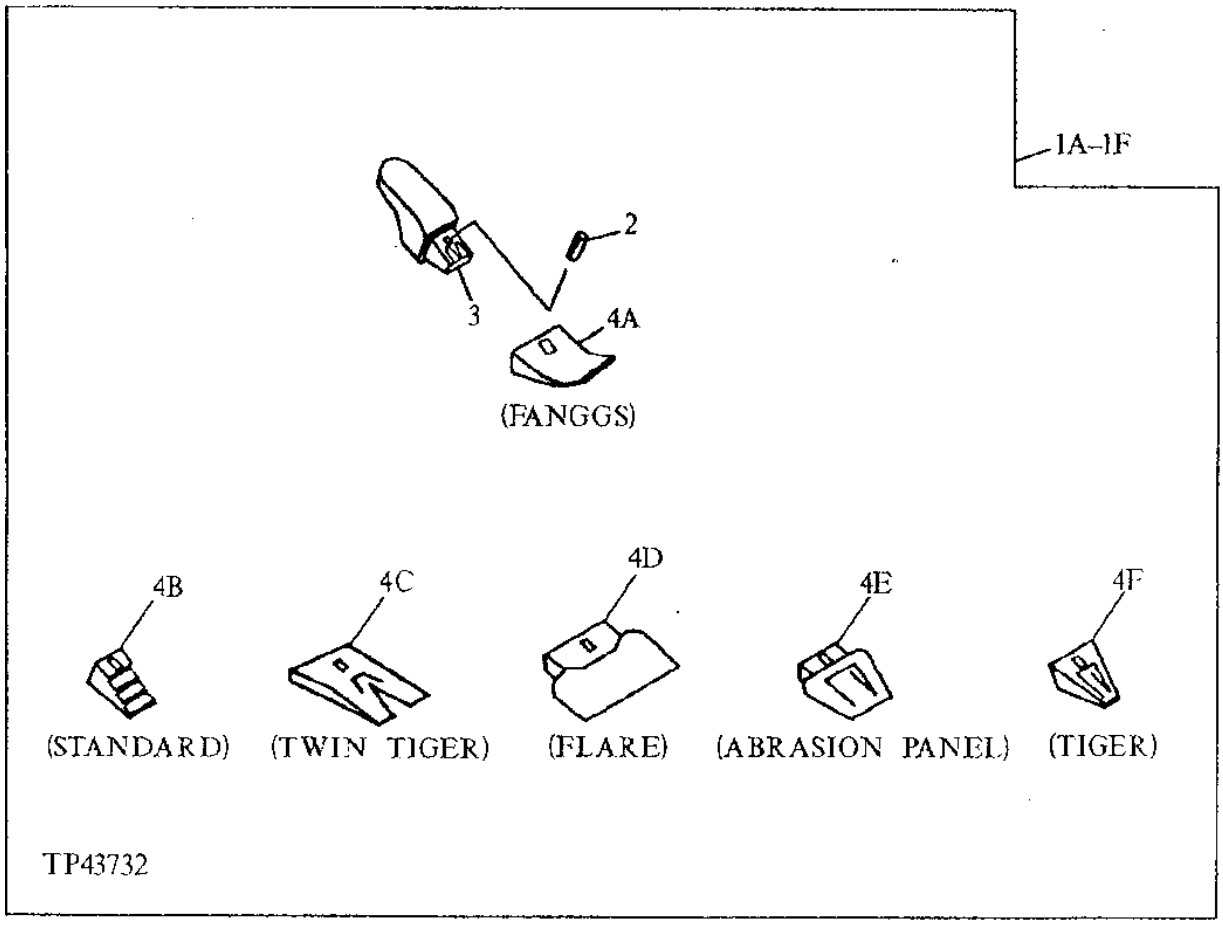

ORDER 3 SETS WITH 18 INCH BUCKET

ORDER 4 SETS WITH 24 INCH BUCKET

ORDER 4 SETS WITH 30 INCH BUCKET

ORDER 5 SETS WITH 36 INCH BUCKET

ORDER 6 SETS WITH 42 INCH BUCKET

ORDER 7 SETS WITH 48 INCH BUCKET

THIS PARTS LISTING IS CONTINUED

BUCKET TOOTH ASSEMBLY
(GENERAL PURPOSE OR HEAVY DUTY)
(18, 24, 30, 36, 42 OR 48 INCH BUCKET)

KEY	PART NO.	PART NAME	QTY	SERIAL NO.	REMARKS
2	TP160L	SPRING PIN	1		(SUB FOR TP160, THIS APPLICATION) (USE WITH 220 TOOTH ASSEMBLIES)
	TK290	PIN	1		(USE WITH 290 TOOTH ASSEMBLIES)
	EX21LK	PIN	1		(ESCO) (NOT ILLUSTRATED ON THIS PAGE - SEE ESCO TOOTH PAGE)
	T9J2308	PIN FASTENER	1		(CATERPILLAR) (NOT ILLUSTRATED)
	EV23PN	PIN FASTENER	1		(FOR V-STYLE EV23SYL TOOTH KIT)
3	T109X220	BUCKET TOOTH ADAPTER	1		(USE WITH 220 TOOTH ASSEMBLIES)
	T127X290	BUCKET TOOTH ADAPTER	1		(USE WITH 290 TOOTH ASSEMBLIES)
	EX5849-21	BUCKET TOOTH ADAPTER	1		(ESCO) (NOT ILLUSTRATED ON THIS PAGE - SEE ESCO TOOTH PAGE)
	T3G6304	BUCKET TOOTH ADAPTER	1		(CATERPILLAR) (NOT ILLUSTRATED)
	EV5849-V23	BUCKET TOOTH ADAPTER	1		(FOR V-STYLE EV23SYL TOOTH KIT)
4A	TF220	TOOTH	1		(ALSO ORDER TP160L) (FANGGS 220)
	TF290	TOOTH	1		(FANGGS 290)
4B	TX220	TOOTH	1		(ALSO ORDER TP160L) (STANDARD 220)
	TX290	TOOTH	1		(STANDARD 290)
4C	TX220WT	TOOTH	1		(ALSO ORDER TP160L) (TWIN TIGER 220)
	TX290WT	TOOTH	1		(TWIN TIGER 290)
4D	TX220F	TOOTH	1		(ALSO ORDER TP160L)
4E	TX220AP	TOOTH	1		(ALSO ORDER TP160L)
4F	TT220	TOOTH	1		(ALSO ORDER TP160L) (TIGER 220)
	TT290	TOOTH	1		(TIGER 290)
4G	EX21SYL	TOOTH	1		(ESCO STANDARD) (NOT ILLUSTRATED ON THIS PAGE - SEE ESCO TOOTH PAGE)
4H	EX21TVIP	TOOTH	1		(ESCO TWIN TIGER) (NOT ILLUSTRATED ON THIS PAGE - SEE ESCO TOOTH PAGE)
4I	EX21S5F	TOOTH	1		(ESCO FLARE) (NOT ILLUSTRATED ON THIS PAGE - SEE ESCO TOOTH PAGE)
4J	EX21VIP	TOOTH	1		(ESCO TIGER) (NOT ILLUSTRATED ON THIS PAGE - SEE ESCO TOOTH PAGE)
4K	TF1U3302D	TOOTH	1		(CATERPILLAR REPLACEMENT FANGGS) (NOT ILLUSTRATED)
4L	T1U3302	TOOTH	1		(CATERPILLAR REPLACEMENT STANDARD) (NOT ILLUSTRATED)
4M	TX1U3302WT	TOOTH	1		(CATERPILLAR REPLACEMENT TWIN TIGER) (NOT ILLUSTRATED)
4N	TT1U3302	TOOTH	1		(CATERPILLAR REPLACEMENT TIGER) (NOT ILLUSTRATED)
4O	EV23SYL	TOOTH	1		(FOR V-STYLE EV23SYL TOOTH KIT)
5	T3G9609	WASHER	1		(CATERPILLAR REPLACEMENT) (NOT ILLUSTRATED)

GENERAL PURPOSE AND HEAVY DUTY BUCKET PIN-UP DATA

T188607 -UN-27MAR03

EXCAVATOR BUCKET PIN-UP DATA

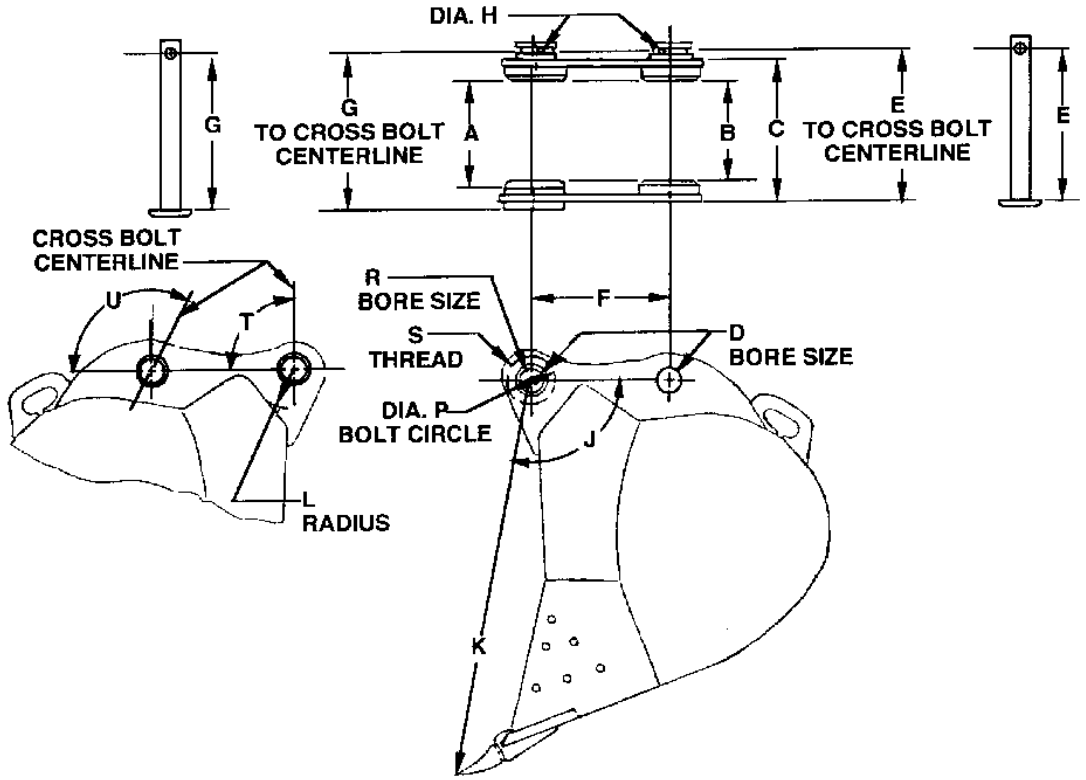

MODEL	490	490D 495D	120C	MODEL	490	490D 495D	120C
A	[272] 10.71	[273] 10.75	[273] 10.75	J (ANGLE)	106°	109°	109°
B	[255] 10.04	[255] 10.04	[255] 10.04	K	[1230] 48.43	[1230] 48.43	[1230] 48.43
C	[357] 14.04	[357] 14.04	[357] 14.04	L	[101.6] 4.00	[90] 3.54	[90] 3.54
D	[65] 2.559	[65] 2.559	[65] 2.559	P	[125] 4.92	[125] 4.92	[125] 4.92
E	[377] 14.84	[386] 15.20	[386] 15.20	R	[100] 3.94	[100] 3.94	[100] 3.94
F	[410.5] 16.16	[420] 16.54	[362] 14.25	S (3 HOLES)	M14 X 2	M14 X 2	M14 X 2
G	------ ------	[400] 15.75	[400] 15.75	T (ANGLE)	165°	165°	165°
H	------	[17] 0.67	[17] 0.67	U (ANGLE)	75°	75°	75°

T188607

THIS PARTS LISTING IS CONTINUED

MEMORANDA

PROPEL PILOT CONTROL LEVERS, PEDALS, AND FOOTRESTS

T142559 -UN-18JUN01

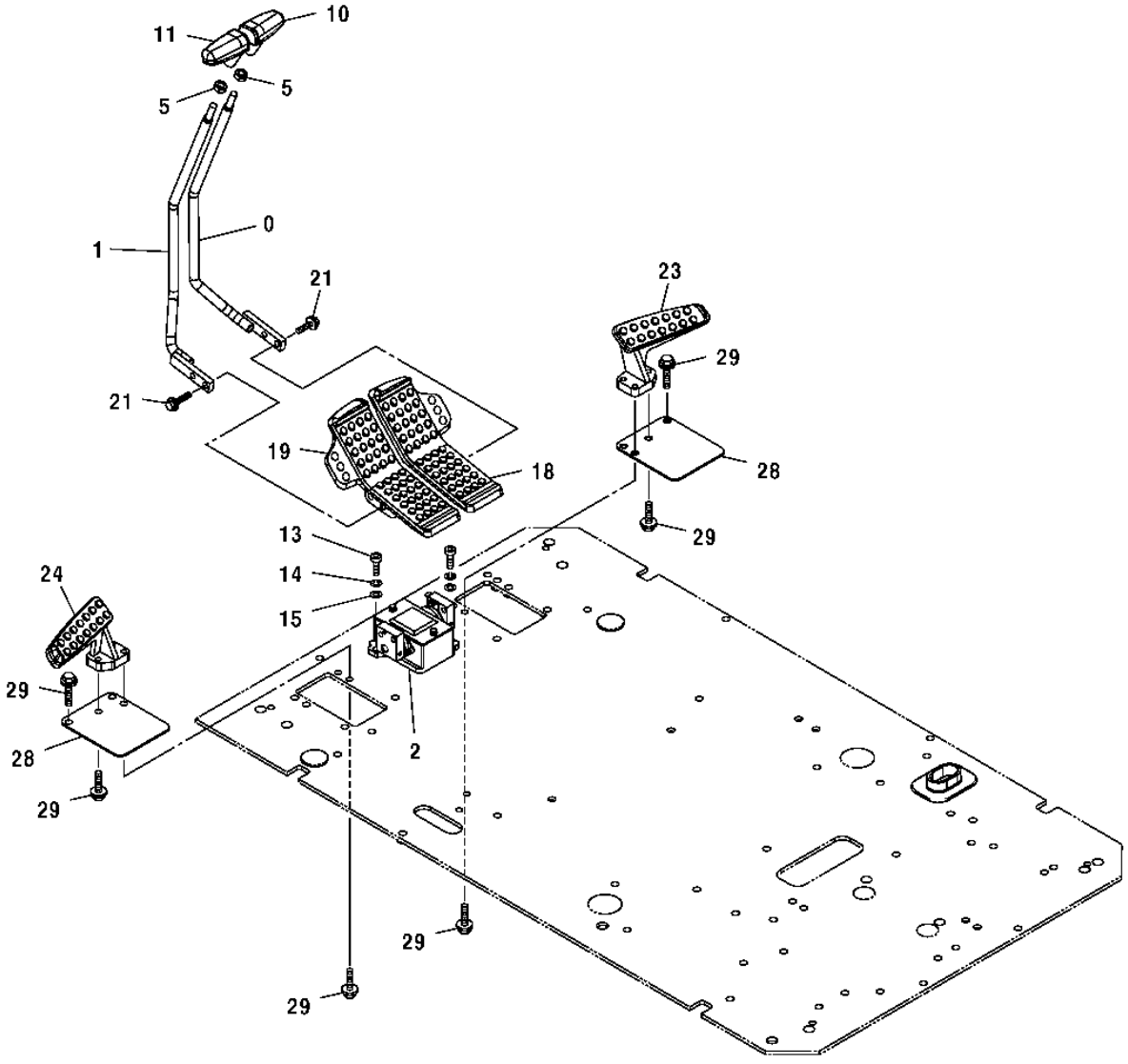

T142559

PROPEL PILOT CONTROL LEVERS, PEDALS, AND FOOTRESTS

KEY	PART NO.	PART NAME	QTY	SERIAL NO.	REMARKS
0	8075450	LEVER	1		
1	8075449	LEVER	1		
2	9195307	HYDR./PILOT CONTROL VALVE	1	-XXXXXX	
	9235551	HYDR./PILOT CONTROL VALVE	1	XXXXXX-	
5	4424185	NUT	2		
10	2051176	GRIP	1		(SUB FOR 2045468)
11	2051177	GRIP	1		(SUB FOR 2045469)
13	19M8337	SCREW	2		(SUB FOR J781035)
14	12M7066	LOCK WASHER	2		10 MM
15	24M7028	WASHER	2		10.500 X 20 X 2 MM
18	1024384	PEDAL	1		
19	1024224	PEDAL	1		
21	J051050	BOLT	4		
23	1015478	FOOTREST	1		
24	1015477	FOOTREST	1		
28	3052543	COVER	2		
29	19M7550	CAP SCREW	8		M10 X 35
	12M7066	LOCK WASHER	8		10 MM

PROPEL PILOT CONTROLLER COMPONENTS

T142562 -UN-18JUN01

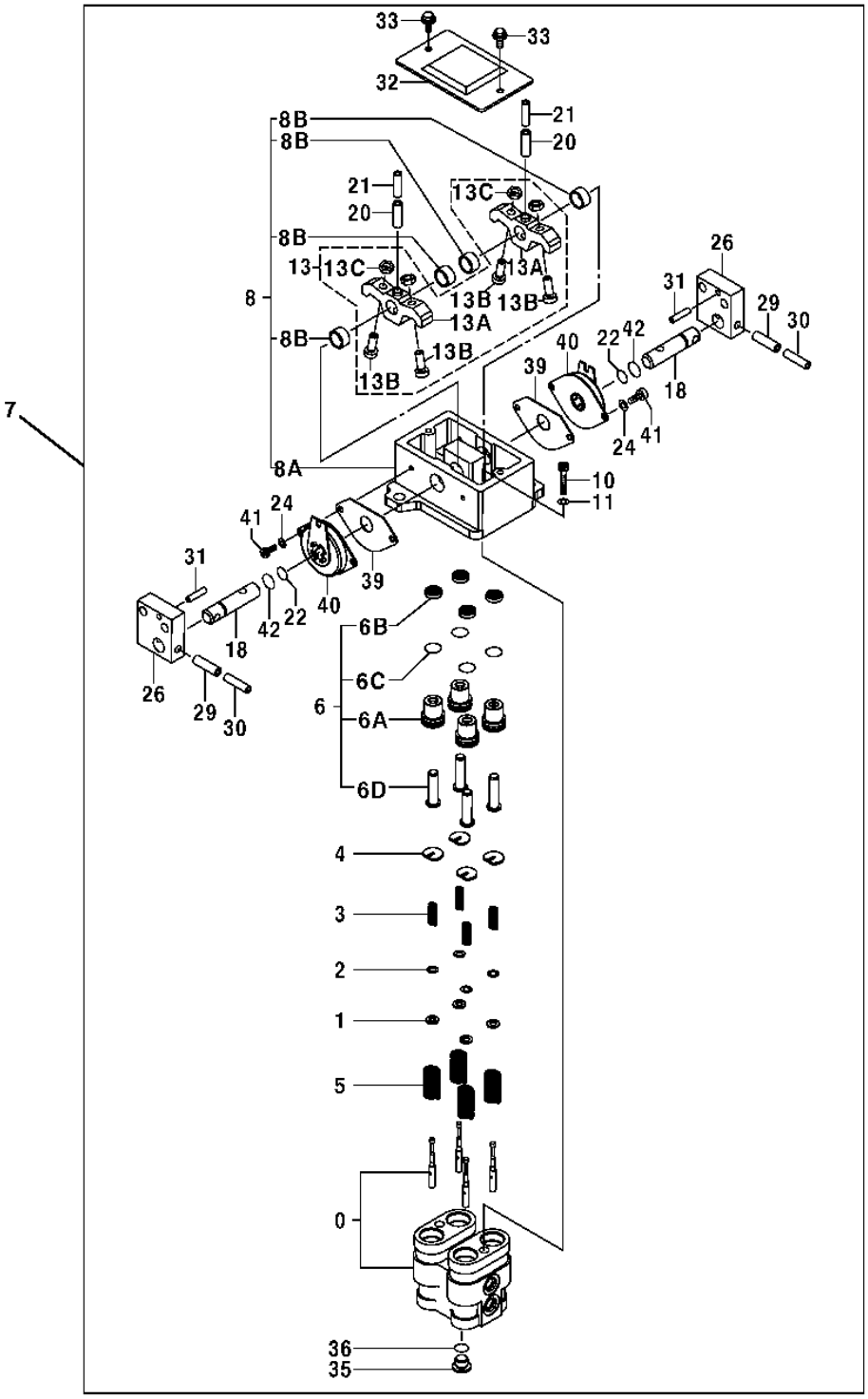

T142562

PROPEL PILOT CONTROLLER COMPONENTS

KEY	PART NO.	PART NAME	QTY	SERIAL NO.	REMARKS
0	8063718	HOUSING	1		
1	4319299	SPACER	4		
2	4203411	SHIM	12		
3	4368629	COMPRESSION SPRING	4		
4	4364970	GUIDE	4		
5	4368630	COMPRESSION SPRING	4		
6	9151724	PLUNGER	4		
6A	.....	BUSHING	1		(NOT AVAILABLE FOR SERVICE)
6B	4447050	SEAL	1		
6C	CH11562	O-RING	1		
6D	3072517	PLUNGER	1		
7	9195307	HYDR./PILOT CONTROL VALVE	1		
8	9184275	HOLDER	1		
8A	.....	HOLDER	1		(NOT AVAILABLE FOR SERVICE)
8B	4437433	BUSHING	4		
10	J781030	SCREW	2		
11	12M7066	LOCK WASHER	2		10 MM
13	9199146	KIT	2		
13A	.....	CAM	1		(3087264 NOT AVAILABLE)
13B	4425290	SCREW	2		
13C	4122395	NUT	2		
18	4425305	PIN FASTENER	2		
20	34M7225	SPRING PIN	2		8 X 28 MM
21	4213419	SPRING PIN	2		
22	4185600	O-RING	2		
24	12M7006	LOCK WASHER	4		6 MM
26	3087987	BRACKET	2		
29	34M7124	SPRING PIN	2		8 X 30 MM
30	34M7062	SPRING PIN	2		5 X 32 MM
31	4051262	SPRING PIN	2		
32	8077903	COVER	1		
33	19M7923	CAP SCREW	2		M6 X 12
	12M7006	LOCK WASHER	2		6 MM
	24M7293	WASHER	2		6.500 X 13 X 1.600 MM
35	4208977	DRAIN PLUG	1		
36	CH11561	PACKING	1		
39	4437432	GASKET	2		
40	4428902	ABSORBER	2		
41	J780612	BOLT	4		
42	4447067	O-RING	2		

DIG AND SWING PILOT CONTROL LEVER COMPONENTS

T145759 -UN-05OCT01

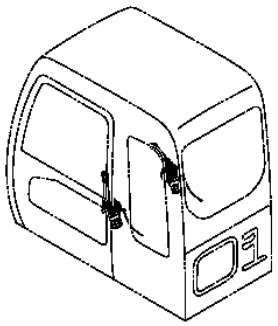

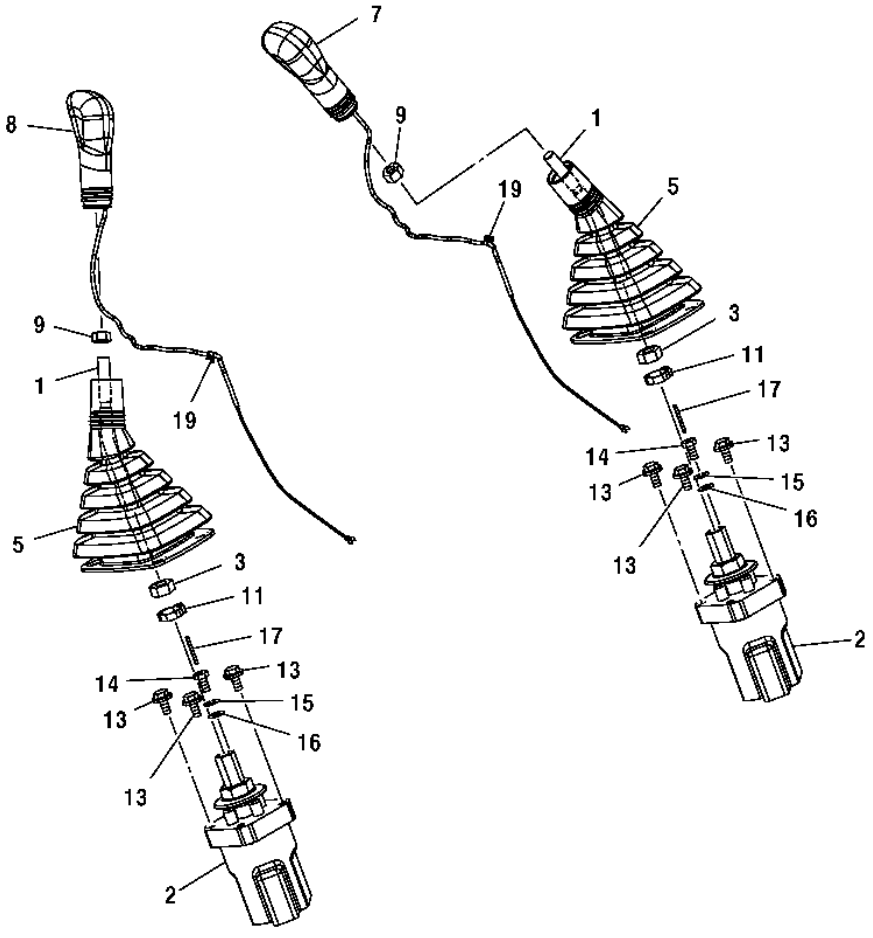

T145759

DIG AND SWING PILOT CONTROL LEVER COMPONENTS

KEY	PART NO.	PART NAME	QTY	SERIAL NO.	REMARKS
1	4445322	LEVER	2		(SUB FOR TH4445322)
2	9195304	HYDR./PILOT CONTROL VALVE	2	-065712	(SUB FOR TH9195304) (USE IF AVAILABLE - IF NOT AVAILABLE SUB 9239583, ALONG WITH (3) 19M7139, (3) 24M7055, AND 4609956)
	9239583	HYDR./PILOT CONTROL VALVE	2	065713-	
3	14M7141	NUT	2		M14
5	2045470	BOOT	2		(SUB FOR TH2045470)
7	2045473	GRIP	1		
8	2045472	GRIP	1		(SUB FOR TH2045472)
9	14M7357	NUT	2		M12
11	H77698	TIE BAND	2		
13	19M7932	CAP SCREW	6	-065712	M8 X 16
	12M7056	LOCK WASHER	6	-065712	8 MM, (SUB FOR 12M7065)
	19M7932	CAP SCREW	6	-065712	M8 X 16, (SUB FOR 19M7162)
	19M7139	CAP SCREW	6	065713-	(SUB FOR J260820 OR J900820)
	24M7055	WASHER	6	065713-	(SUB FOR A590108)
14	4438279	BOLT	2	-065712	(SUB FOR TH4438279)
	4609956	BOLT	2	065713-	
15	12M7056	LOCK WASHER	2		8 MM, (SUB FOR 12M7065)
16	24M7055	WASHER	2		8.400 X 16 X 1.600 MM
17	34M7086	SPRING PIN	2		3 X 32 MM
19	H77698	TIE BAND	2		

PILOT CONTROLLER VALVE COMPONENTS(DIG AND SWING)(SN -065712)

T142561 -UN-18JUN01

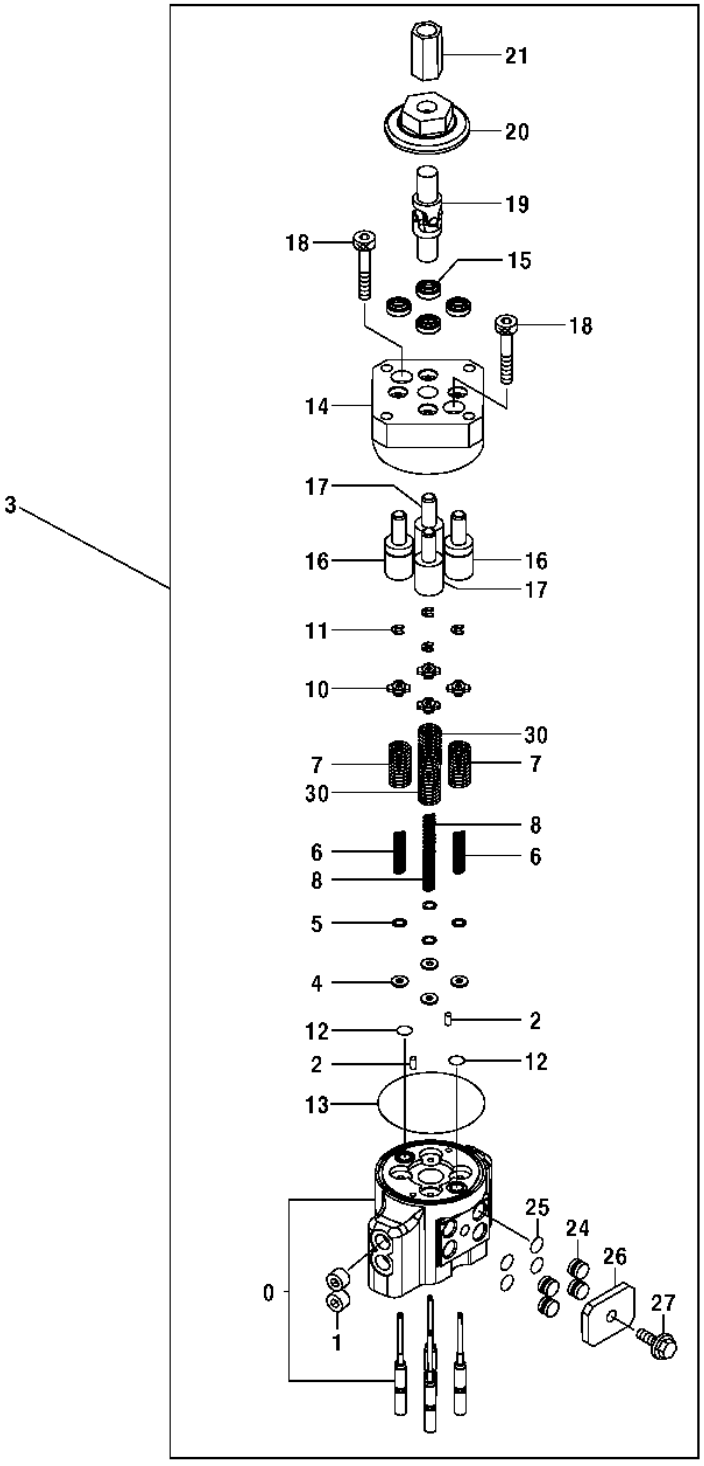

T142561

PILOT CONTROLLER VALVE COMPONENTS(DIG AND SWING)(SN -065712)

KEY	PART NO.	PART NAME	QTY	COMPONENT SERIAL NO.	REMARKS
0	.....	CASE	1		(TH8081319 NOT AVAILABLE)
1	94-2011	FITTING PLUG	2		
2	J400408	PIN	2		
3	9195304	HYDR./PILOT CONTROL VALVE	1	-065712	(USE IF AVAILABLE - IF NOT AVAILABLE SUB 9239583, ALONG WITH (3) 19M7139, (3) 24M7055, AND 4609956)
4	4410898	SPACER	4		
5	4173208	SHIM	12		
6	4425414	SPRING	2		
7	4421771	SPRING	2		
8	4429120	SPRING	2		
10	4429119	GUIDE	4		
11	4437333	SNAP RING	4		
12	4431914	O-RING	2		
13	4431915	O-RING	1		
14	.....	MANIFOLD	1	-034068	(2044350 NO LONGER AVAILABLE) (SUB 9234284, (4) 4477852, (2) 9759158 AND (2) 9759157) (MANIFOLD HAS ONE PUNCH MARK ON TOP FACE)
	9234284	MANIFOLD	1	034069-	(SUB FOR 2044350, ALONG WITH (4) 4477852, (2) 9759158 AND(2) 9759157) (MANIFOLD HAS TWO PUNCH MARKS ON TOP FACE)
15	.....	SEAL	4	-034068	(4447050 NO LONGER AVAILABLE) (SUB 9234284, (4) 4477852, (2) 9759158 AND (2) 9759157) (USE WITH 2044350)
	.....	SEAL	4	034069-	(SUB FOR 4447050, ALONG WITH 9234284, (2) 9759158, AND (2) 9759157) (USE WITH 9234284) (4477852 NO LONGER AVAILABLE FOR SERVICE)
16	.....	PISTON	2	-034068	(9754825 NO LONGER AVAILABLE) (SUB 9234284, (4) 4477852, (2) 9759158 AND (2) 9759157) (USE WITH 2044350)
	9759157	PISTON	2	034069-	(SUB FOR 9754825, ALONG WITH (4) 4477852, 9234284, AND (2) 9759158) (USE WITH 9234284)
17	.....	PISTON	2	-034068	(9754826 NO LONGER AVAILABLE) (SUB 9234284, (4) 4477852, (2) 9759158 AND (2) 9759157) (USE WITH 2044350)
	9759158	PISTON	2	034069-	(SUB FOR 9754826, ALONG WITH (4) 4477852, (2)9759158, AND 9234284) (USE WITH 9234284)
18	J780845	BOLT	2		
19	4335060	UNIVERSAL JOINT	1		
20	4437106	CAM	1		
21	4182067	JOINTER	1		
24	4442323	PIPE PLUG	4		
25	CH11560	PACKING	4		
26	4442339	PLATE	1		
27	19M7932	CAP SCREW	1		M8 X 16
30	4446960	SPRING	2		

PILOT CONTROLLER VALVE COMPONENTS (DIG AND SWING)(SN 065713-)

T206912 -UN-31JAN05

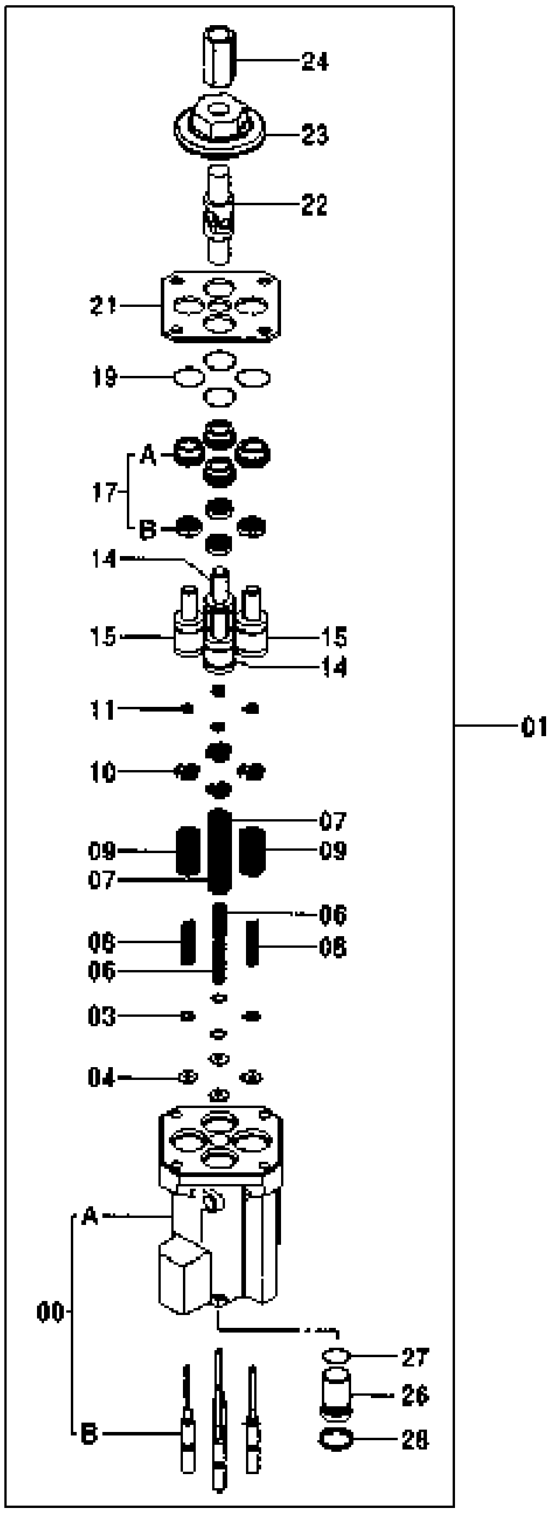

T206912

PILOT CONTROLLER VALVE COMPONENTS (DIG AND SWING)(SN 065713-)

KEY	PART NO.	PART NAME	QTY	COMPONENT SERIAL NO.	REMARKS
0	8094446	CASE	1		
0A	.....	HOUSING	1		(NOT CURRENTLY AVAILABLE)
0B	.....	SPOOL	4		(NOT CURRENTLY AVAILABLE)
3	4203411	SHIM	4		
4	4410898	SPACER	4		
6	4429120	SPRING	2		
7	4446960	SPRING	2		
8	4425414	SPRING	2		
9	4421771	SPRING	2		
10	4615610	GUIDE	4		
11	4437333	SNAP RING	4		
14	9759157	PISTON	2		
15	9759158	PISTON	2		
17	9246436	SLEEVE	4		
17A	.....	SLEEVE	1		(NOT CURRENTLY AVAILABLE)
17B	.....	SEAL	1		(NOT CURRENTLY AVAILABLE)
19	4201993	O-RING	4		
21	4614296	PLATE	1		
22	4335060	UNIVERSAL JOINT	1		
23	4437106	CAM	1		
24	4182067	JOINTER	1		
26	4614286	PLUG	1		
27	4170585	O-RING	1		
28	4614331	SNAP RING	1		

PILOT SHUT-OFF LEVER AND MOUNTING BRACKET

T142560 -UN-28JUN01

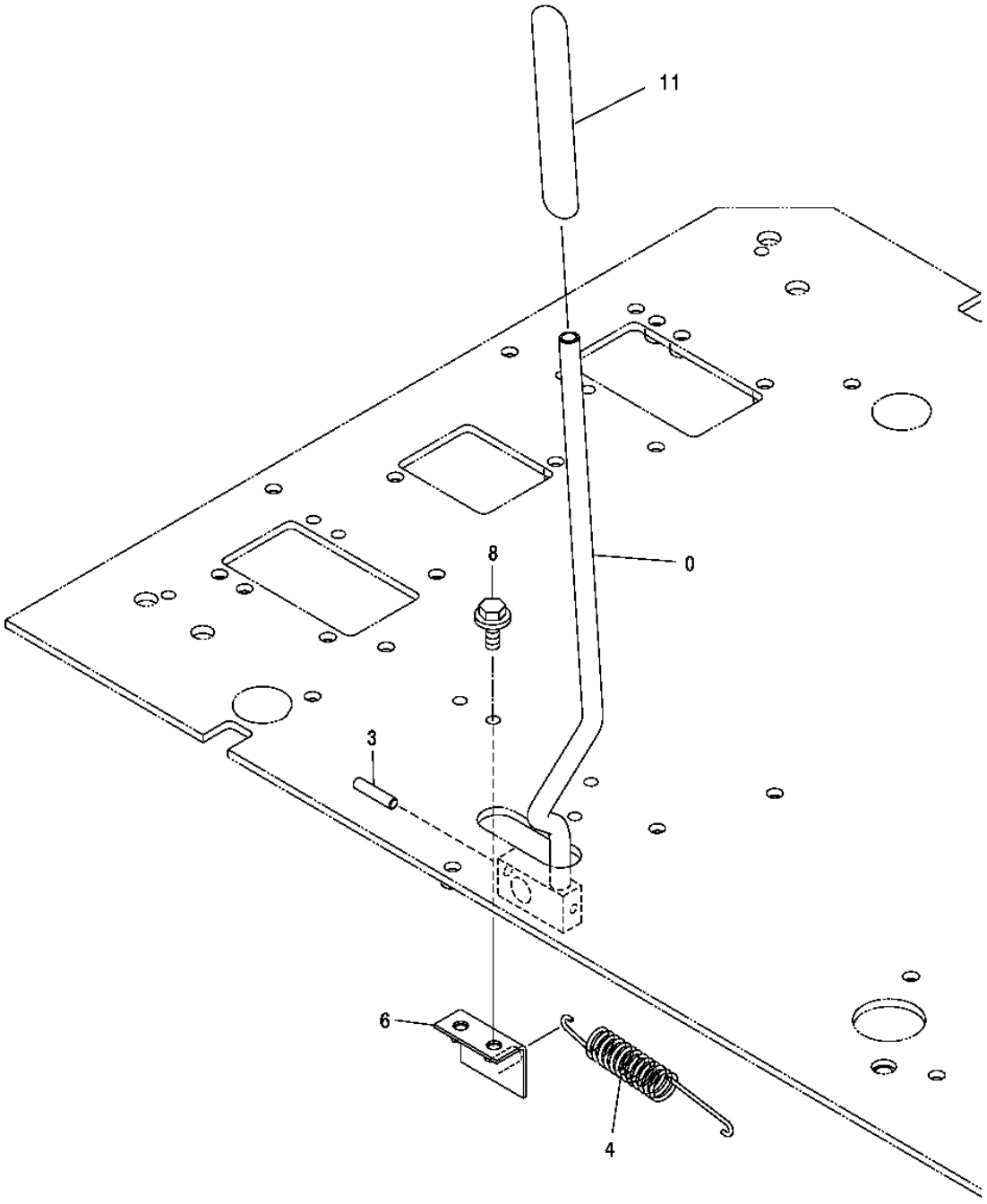

T142560

PILOT SHUT-OFF LEVER AND MOUNTING BRACKET

KEY	PART NO.	PART NAME	QTY	SERIAL NO.	REMARKS
0	7035503	LEVER	1		
3	4116310	SPRING PIN	1		
4	4189184	EXTENSION SPRING	1		
6	8073901	BRACKET	1		
8	J021030	BOLT	2		
11	3089848	GRIP	1		

BLADE PILOT CONTROL LEVER AND CABLE

T152933 -UN-05APR02

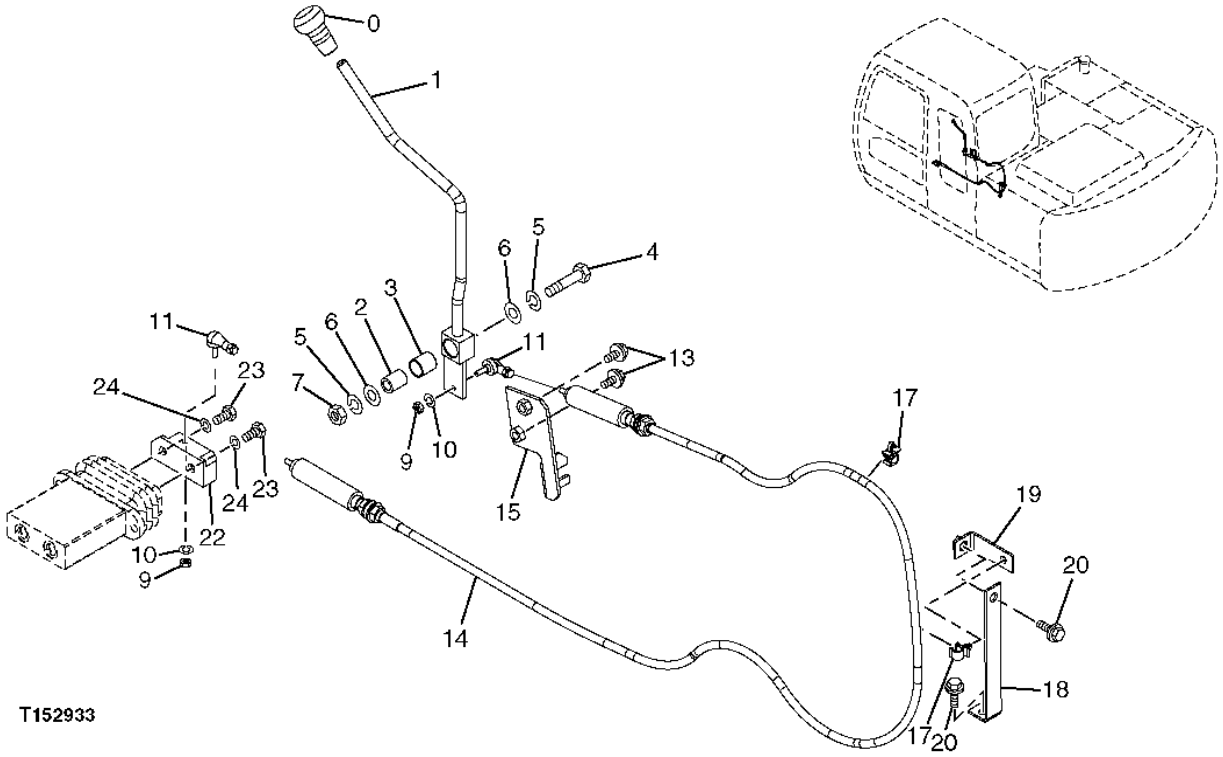

BLADE PILOT CONTROL LEVER AND CABLE

KEY	PART NO.	PART NAME	QTY	SERIAL NO.	REMARKS
0	4280117	GRIP	1		(USE WITH 8081981)
	4363754	GRIP	1		(USE WITH 7045626)
1	7045626	LEVER	1		(SUB FOR 8081981)
	8094751	BRACKET	1		(NOT ILLUSTRATED)
2	4279507	BUSHING	1		
3	4396083	BUSHING	1		
4	J901255	CAP SCREW	1		
5	A590912	LOCK WASHER	2		
6	449490	WASHER	2		
7	J951012	NUT	1		
9	14M7272	NUT	2		M6, (SUB FOR M500605)
10	12M7006	LOCK WASHER	2		(SUB FOR A590906)
11	4056017	BALL JOINT	2		
13	J021025	CAP SCREW	2		
14	4445267	CABLE	1		
15	8083721	BRACKET	1		
17	.....	CLIP	2		(4445372 NOT AVAILABLE FOR SERVICE)
18	4445484	BRACKET	1		
19	9755747	BRACKET	1		
20	J021025	CAP SCREW	2		
22	9754977	BRACKET	1		
23	19M7938	CAP SCREW	2		M10 X 20, (SUB FOR J901020)
24	A590910	WASHER	2		

BLADE PILOT CONTROLLER VALVE COMPONENTS

T188783 -UN-28MAR03

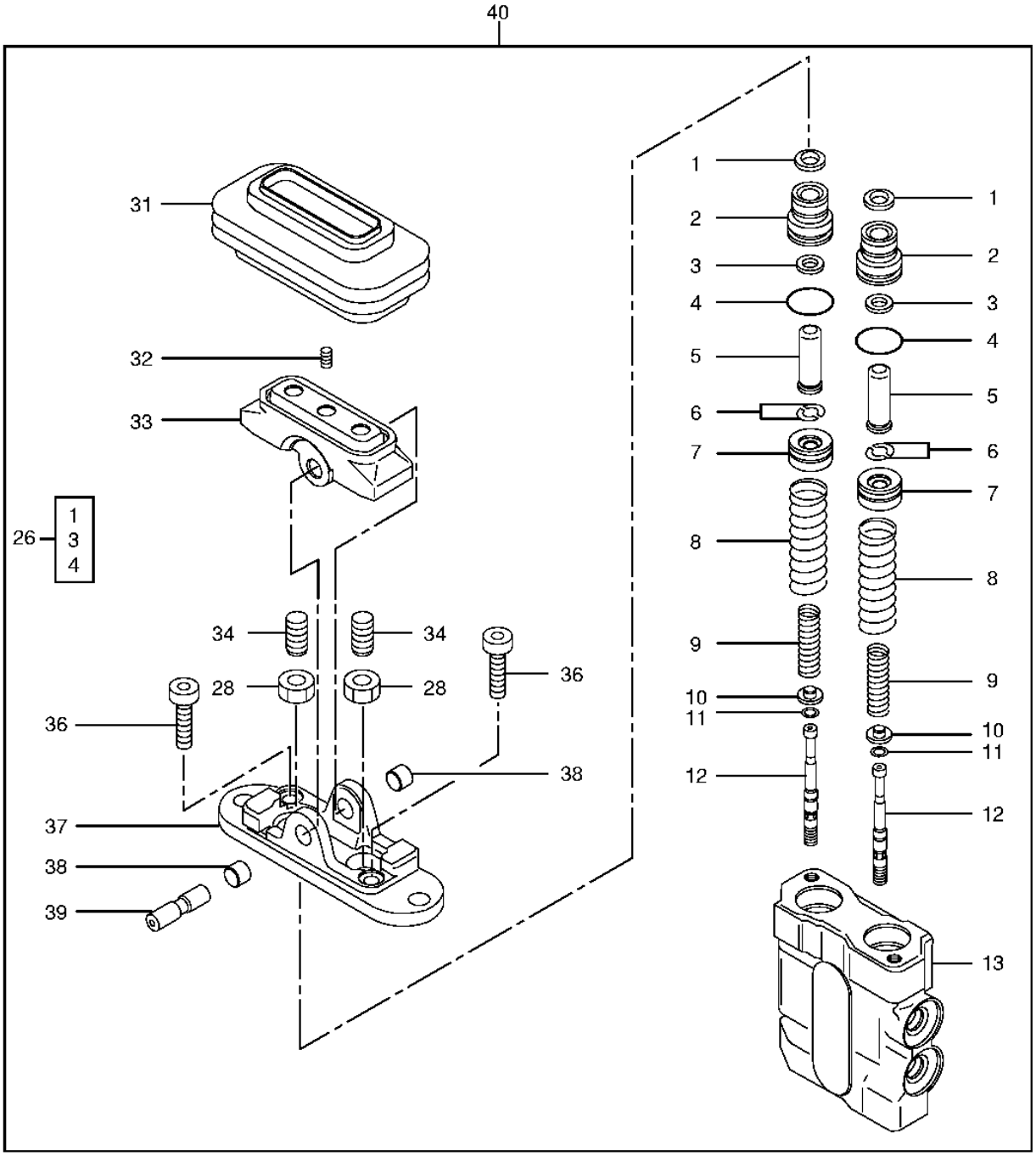

T188783

BLADE PILOT CONTROLLER VALVE COMPONENTS

KEY	PART NO.	PART NAME	QTY	SERIAL NO.	REMARKS
1	0630703	RING	2		
2	0630702	PIPE PLUG	2		
3	0628908	SEAL	2		
4	4506420	PACKING	2		
5	0681301	ROD	2		
6	0428906	WASHER	4		
7	0630706	VALVE SEAT	2		
8	0681302	SPRING	2		
9	0630707	SPRING	2		
10	.....	PLATE	2		
11	0428910	WASHER	2		
12	.....	SPOOL VALVE	2		
13	.....	HOUSING	1		
26	4345769	SEAL KIT	1		
28	14M7274	NUT	2		M10, (SUB FOR 0630713)
31	0630714	BOOT	1		
32	0179001	SCREW	1		
33	0630711	CAM	1		
34	0630712	SCREW	2		
36	0630705	BOLT	2		
37	0630701	COVER	1		
38	0630709	BUSHING	2		
39	0630710	SHAFT	1		
40	4357586	HYDR./PILOT CONTROL VALVE	1		

AUXILIARY 2-WAY HYDRAULIC FOOT PEDAL CONTROL

T158465 -UN-16AUG02

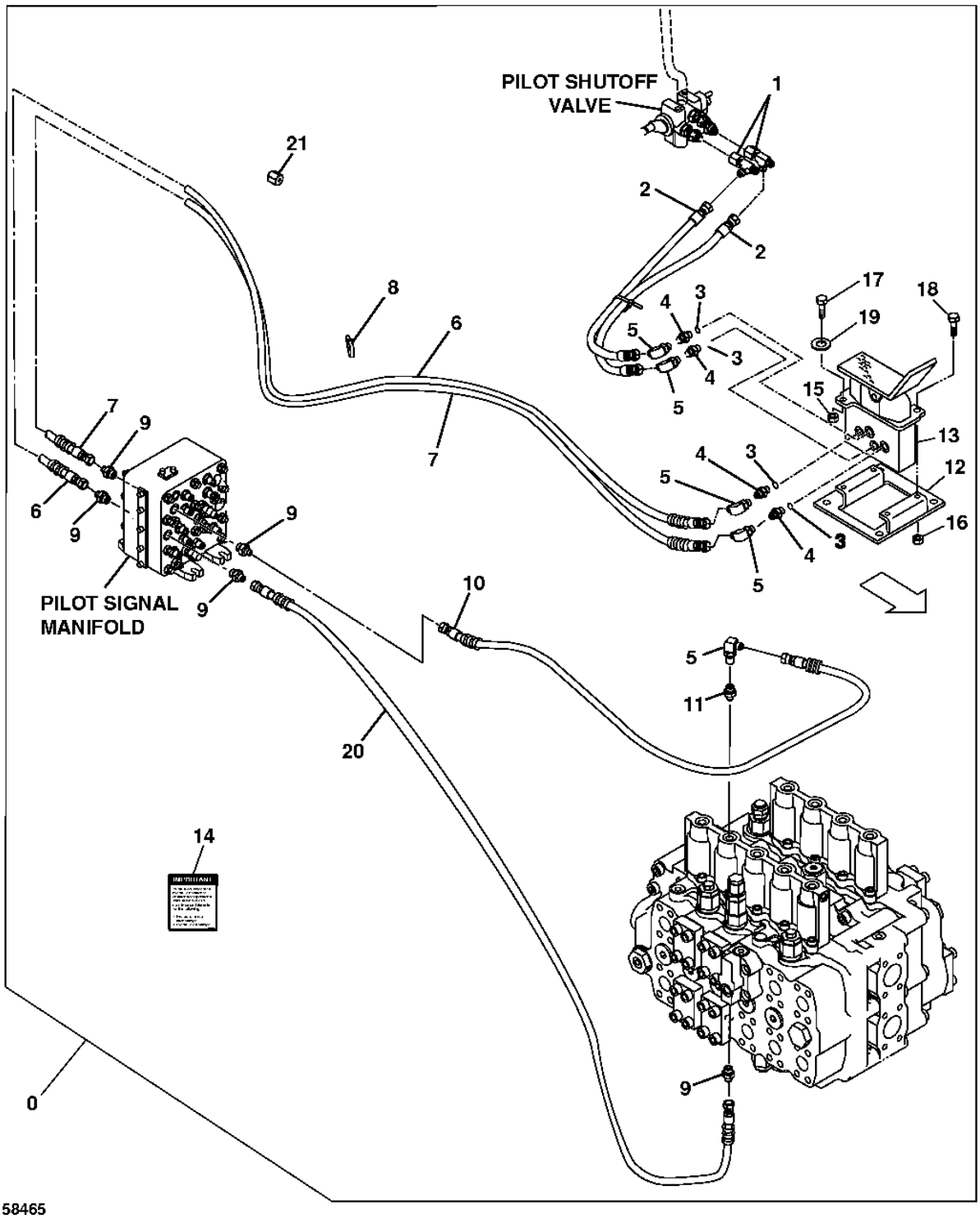

AUXILIARY 2-WAY HYDRAULIC FOOT PEDAL CONTROL

KEY	PART NO.	PART NAME	QTY	SERIAL NO.	REMARKS
0	**AT195684**	**KIT**	**1**		**WHOLEGOODS (AUXILIARY FOOT PEDAL CONTROL)**
1	AT36921	TEE FITTING	2		
2	AH108250	HOSE	2		9/16" X 787 MM (31") X 9/16"
3	R26448	O-RING	4		
4	R27212	FITTING	4		
5	AE24616	ELBOW FITTING	5		
6	AE42067	HYDRAULIC HOSE	1		9/16" X 3 700 MM (145-3/4") X 9/16"
7	AE42067	HYDRAULIC HOSE	1		9/16" X 3 700 MM (145-3/4") X 9/16"
8	H77698	TIE BAND	5		
9	4200466	ADAPTER	5		(SUB FOR TH108320)
	CH11570	O-RING	5		
10	AT68901	HYDRAULIC HOSE - FABRICATE	2		9/16" X 965 MM (38") X 9/16"
11	4202422	ADAPTER	1		(SUB FOR TH108440)
	CH11570	O-RING	1		
12	AT115535	SUPPORT	1		
13	AT152120	HAND OPERATED VALVE	1		
14	T149434	LABEL	1		
15	14M7296	FLANGE NUT	1		M10
16	14M7298	FLANGE NUT	4		M8
17	19M7784	SCREW	2		M10 X 20
18	19M7866	SCREW	4		M8 X 20
19	24M7296	WASHER	2		10.500 X 30 X 2.500 MM
20	AR90081	HYDRAULIC HOSE	1		
21	R31147	FITTING	1		(TANK PORT DRAIN LINE)

AUXILIARY FOOT CONTROL VALVE COMPONENTS

TP68659 -UN-22DEC99

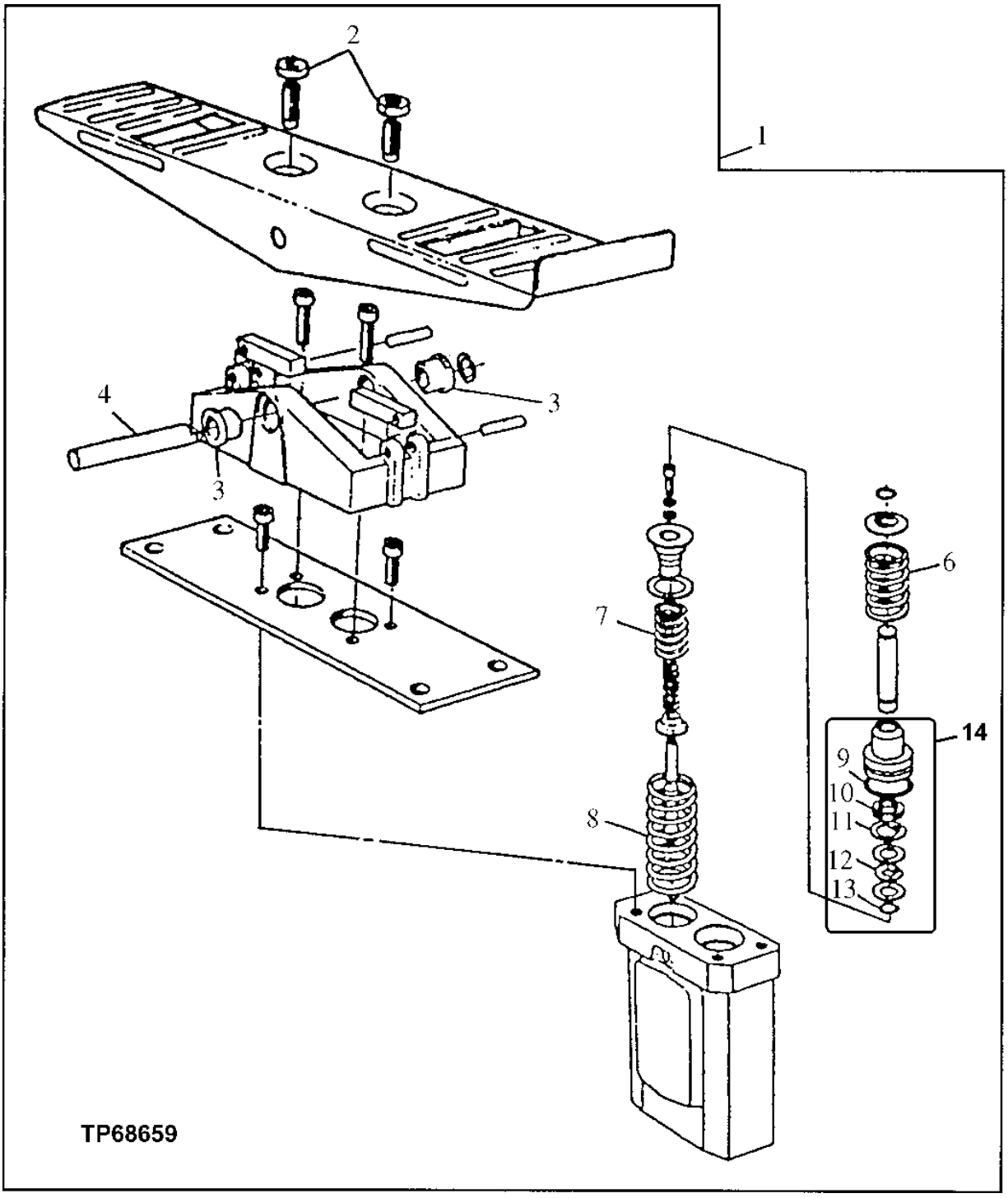

AUXILIARY FOOT CONTROL VALVE COMPONENTS

KEY	PART NO.	PART NAME	QTY	SERIAL NO.	REMARKS
1	AT152120	VALVE	1		WHOLEGOODS
2	14M7151	NUT	2		M8
3	T139695	BUSHING	2		
4	T139696	SHAFT	1		
6	T139694	SPRING	2		
7	T139693	SPRING	2		
8	T114617	SPRING	2		
9	.....	SEAL	1		
10	.....	SEAL	1		
11	.....	SNAP RING	1		
12	.....	SNAP RING	1		
13	.....	O-RING	1		
14	AT115146	SEAL KIT	1		

SINGLE PEDAL CONTROL KIT

T148421 -UN-06DEC01

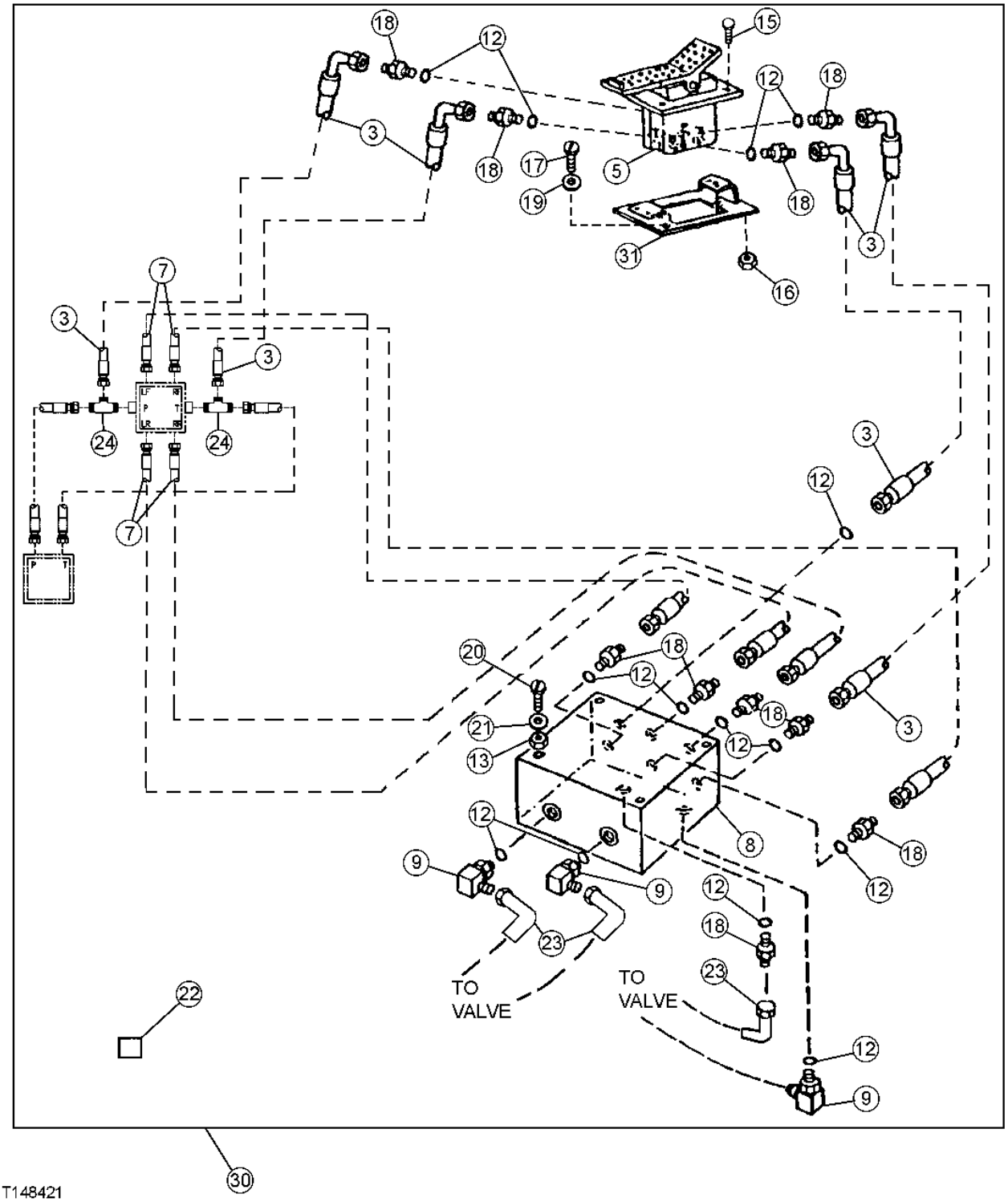

SINGLE PEDAL CONTROL KIT

KEY	PART NO.	PART NAME	QTY	SERIAL NO.	REMARKS
3	AT71082	HYDRAULIC HOSE - FABRICATE	4		9/16" X 711 MM (28") X 9/16"
5	AT152120	HAND OPERATED VALVE	1		(FOOT)
7	AT215538	HYDRAULIC HOSE - FABRICATE	4		9/16" X 880 MM (34-3/4") X 9/16"
8	AT170459	HYD ACTUATED CONTROL VALVE	1		
9	AT35121	ELBOW FITTING	3		
12	R26448	O-RING	14		11.887 X 1.981 MM (0.468" X 5/64")
13	14M7273	NUT	4		M8
15	19M7866	SCREW	4		M8 X 20
16	14M7298	FLANGE NUT	4		M8
17	19M7784	SCREW	2		M10 X 20
18	R27212	FITTING	11		
19	24M7296	WASHER	2		10.500 X 30 X 2.500 MM
20	19M8456	CAP SCREW	4		M8 X 100
21	24M7036	WASHER	4		9 X 16 X 1.600 MM (0.354" X 0.630" X 0.063")
22	T153674	LABEL	1		(WITHOUT AUXILIARY HYDRAULICS) (LOWER FRONT OF RIGHT SIDE CAB WINDOW)
	T153676	LABEL	1		(WITH AUXILIARY HYDRAULICS) (LOWER FRONT OF RIGHT SIDE CAB WINDOW)
23	AE24616	ELBOW FITTING	3		
24	AT36921	TEE FITTING	2		
30	**AT196435**	**KIT**	**1**		**(WHOLEGOODS) (SINGLE PEDAL PROPEL KIT)**
31	AT115535	SUPPORT	1		

ARM, PINS, AND BUCKET CYLINDER HOSES (STANDARD ARM, 2.52M)

T189350 -UN-10APR03

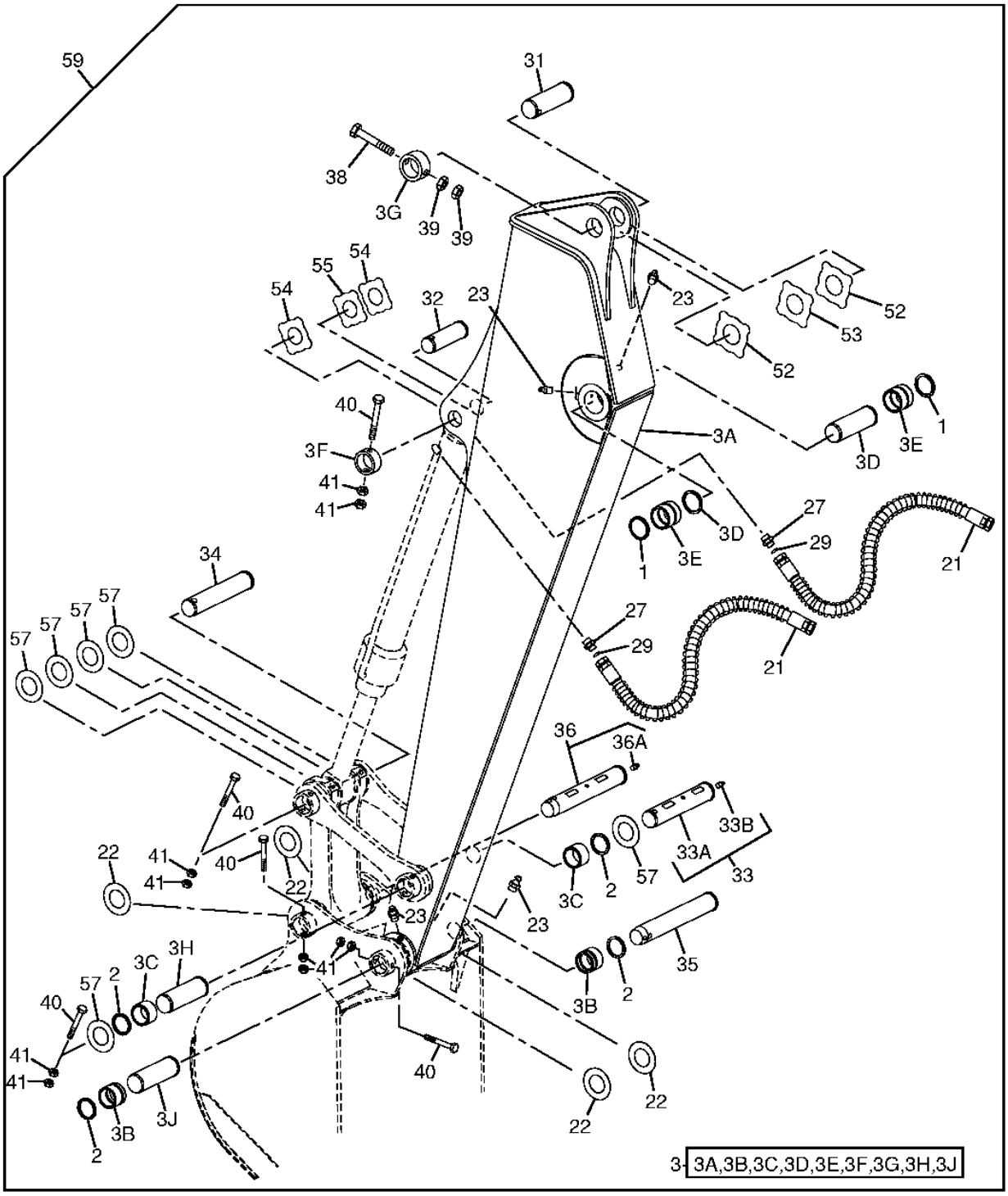

T189350

ARM, PINS, AND BUCKET CYLINDER HOSES (STANDARD ARM, 2.52M)

KEY	PART NO.	PART NAME	QTY	SERIAL NO.	REMARKS
1	4084578	BACK-UP RING	2		
2	4065687	SEAL	4		
3	AP37202	ARM	1		
3A	.....	ARM	1		
3B	4424953	BUSHING	2		
3C	4344898	BUSHING	2		
3D	P63186	SPACER	1		(SUB FOR P68265)
3E	4443878	BUSHING	2		
3F	4434951	STOP	1		
3G	4434952	STOP	1		
3H	P68261	SPACER	1		
3J	P68263	SPACER	1		
21	4296276	HYDRAULIC HOSE - FABRICATE	2		
22	4276696	O-RING	4		
23	TH100074	LUBRICATION FITTING	4		
27	A853144	ADAPTER	2		
29	T77857	O-RING	2		
31	3089156	PIN FASTENER	1		
32	TH108939	PIN	1		
33	AP33639	PIN	1		
33A	.....	PIN	1		(3089106 NOT AVAILABLE FOR SERVICE)
33B	TH100074	LUBRICATION FITTING	1		
34	P66990	SHEAR PIN	1		
35	3089243	PIN FASTENER	1		
36	P68886	PIN	1		
36A	TH100074	LUBRICATION FITTING	1		
38	19M7907	SCREW	1		M20 X 140
39	14M7277	NUT	2		M20, (SUB FOR J950020)
40	19M8043	CAP SCREW	5		M16 X 140
41	14M7276	NUT	10		M16
52	TH108045	WASHER	2		
53	AT154378	WASHER	1		
54	TH105592	WASHER	2		
55	TH105593	WASHER	1		
57	TH108944	WASHER	6		
59	AP35346	KIT	1		(WHOLEGOODS) (INCLUDES ARM, BUCKET CYLINDER, HOSES, AND LINKAGE)

ARM, PINS, AND BUCKET CYLINDER HOSES (LONG ARM, 3.01M)

T189350 -UN-10APR03

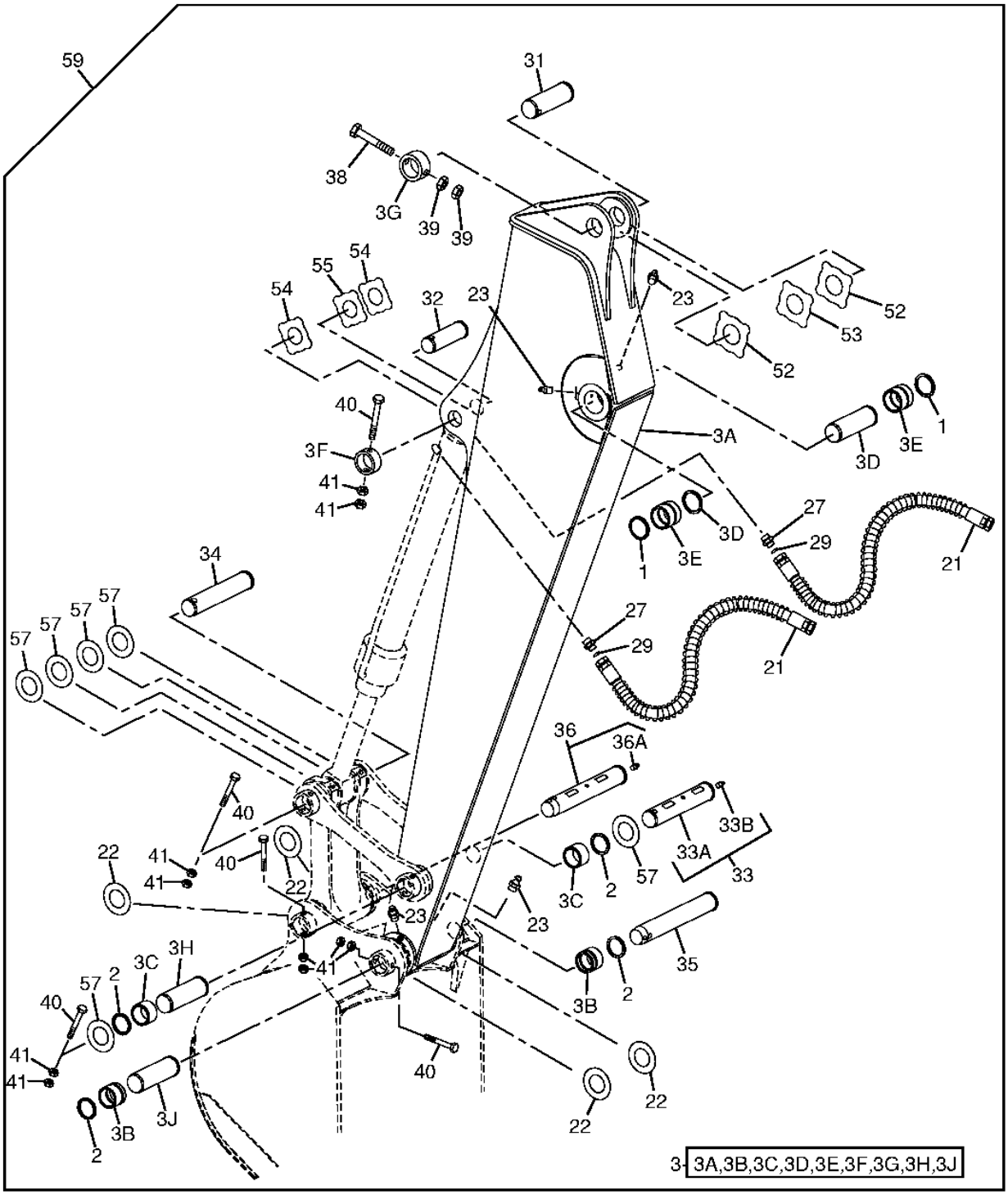

T189350

ARM, PINS, AND BUCKET CYLINDER HOSES (LONG ARM, 3.01M)

KEY	PART NO.	PART NAME	QTY	SERIAL NO.	REMARKS
1	4084578	BACK-UP RING	2		
2	4065687	SEAL	4		
3	AP37224	ARM	1		
3A	.....	ARM	1		
3B	4424953	BUSHING	2		
3C	4344898	BUSHING	2		
3D	P63186	SPACER	1		(SUB FOR P68265)
3E	4443878	BUSHING	2		
3F	4434951	STOP	1		
3G	4434952	STOP	1		
3H	P68261	SPACER	1		
3J	P68263	SPACER	1		
21	4359576	HYDRAULIC HOSE - FABRICATE	2		
22	4276696	O-RING	4		
23	TH100074	LUBRICATION FITTING	4		
27	A853144	ADAPTER	2		
29	T77857	O-RING	2		
31	3091546	PIN FASTENER	1		
	TH100074	LUBRICATION FITTING	1		
32	TH108939	PIN	1		
33	AP33639	PIN	1		
33A	.....	PIN	1		(3089106 NOT AVAILABLE FOR SERVICE)
33B	TH100074	LUBRICATION FITTING	1		
34	P66990	SHEAR PIN	1		
35	3089243	PIN FASTENER	1		
36	P68886	PIN	1		
36A	TH100074	LUBRICATION FITTING	1		
38	19M7907	SCREW	1		M20 X 140
39	14M7277	NUT	2		M20, (SUB FOR J950020)
40	19M8043	CAP SCREW	5		M16 X 140
41	14M7276	NUT	10		M16
52	TH108045	WASHER	2		
53	AT154378	WASHER	1		
54	TH105592	WASHER	2		
55	TH105593	WASHER	1		
57	TH108944	WASHER	6		
59	AP35347	KIT	1		(WHOLEGOODS) (INCLUDES ARM, BUCKET CYLINDER, HOSES, AND LINKAGE)

BUCKET DRIVE LINK COMPONENTS

T188624 -UN-02APR03

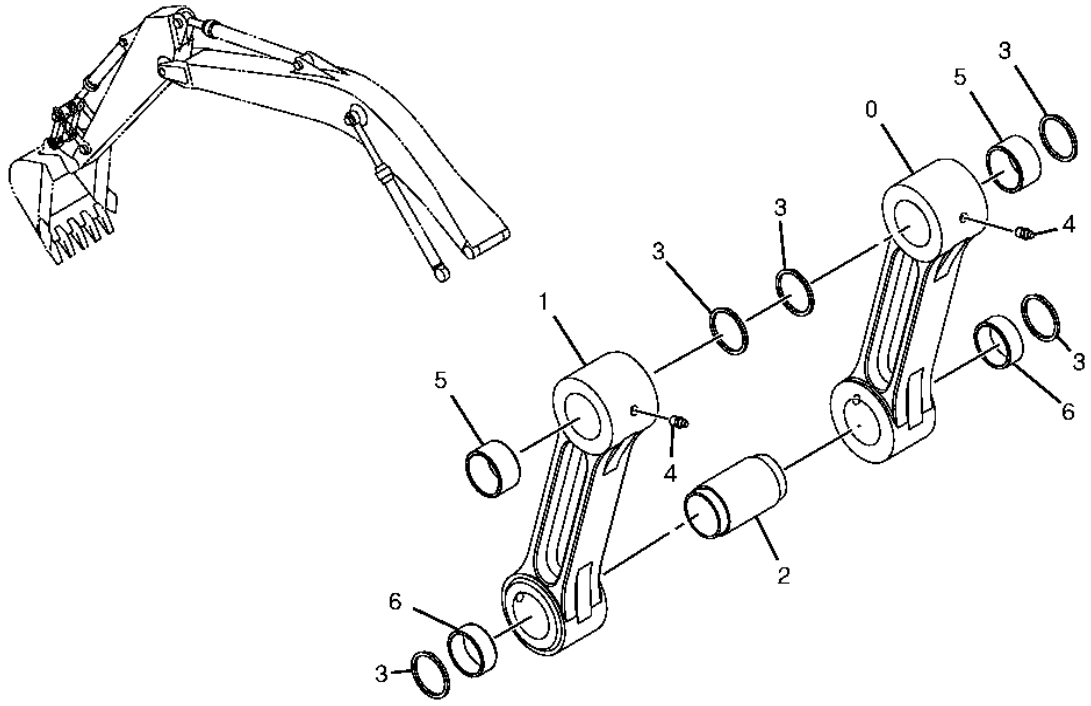

T188624

BUCKET DRIVE LINK COMPONENTS

KEY	PART NO.	PART NAME	QTY	SERIAL NO.	REMARKS
0	AP37850	LINK	1		
1	AP37852	LINK	1		
2	P67382	PIPE	1		
3	TH100374	SEAL	6		
4	TH100074	LUBRICATION FITTING	2		
5	TH108930	BUSHING	2		
6	AT122209	BUSHING	2		

BUCKET GUIDE LINK

T143326 -UN-28JUN01

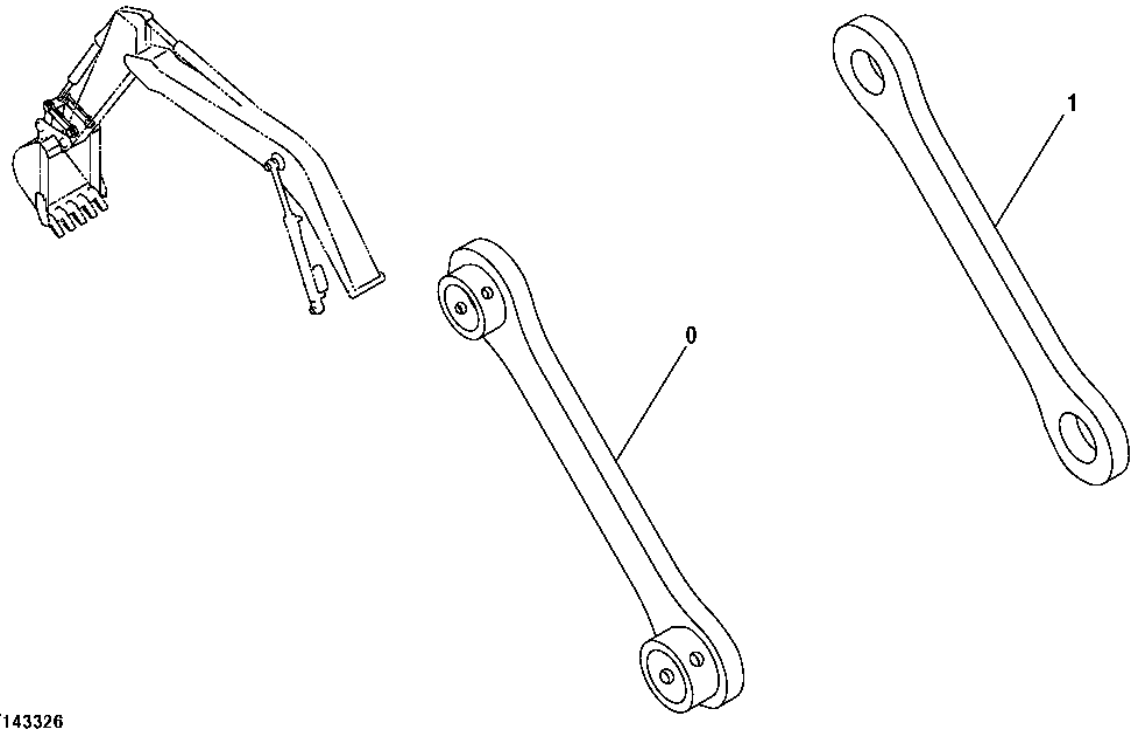

T143326

BUCKET GUIDE LINK

KEY	PART NO.	PART NAME	QTY	SERIAL NO.	REMARKS
0	AP37246	LINKAGE	1		
1	P67728	LINKAGE	1		

BOOM ASSEMBLY AND PINS

T189147 -UN-02APR03

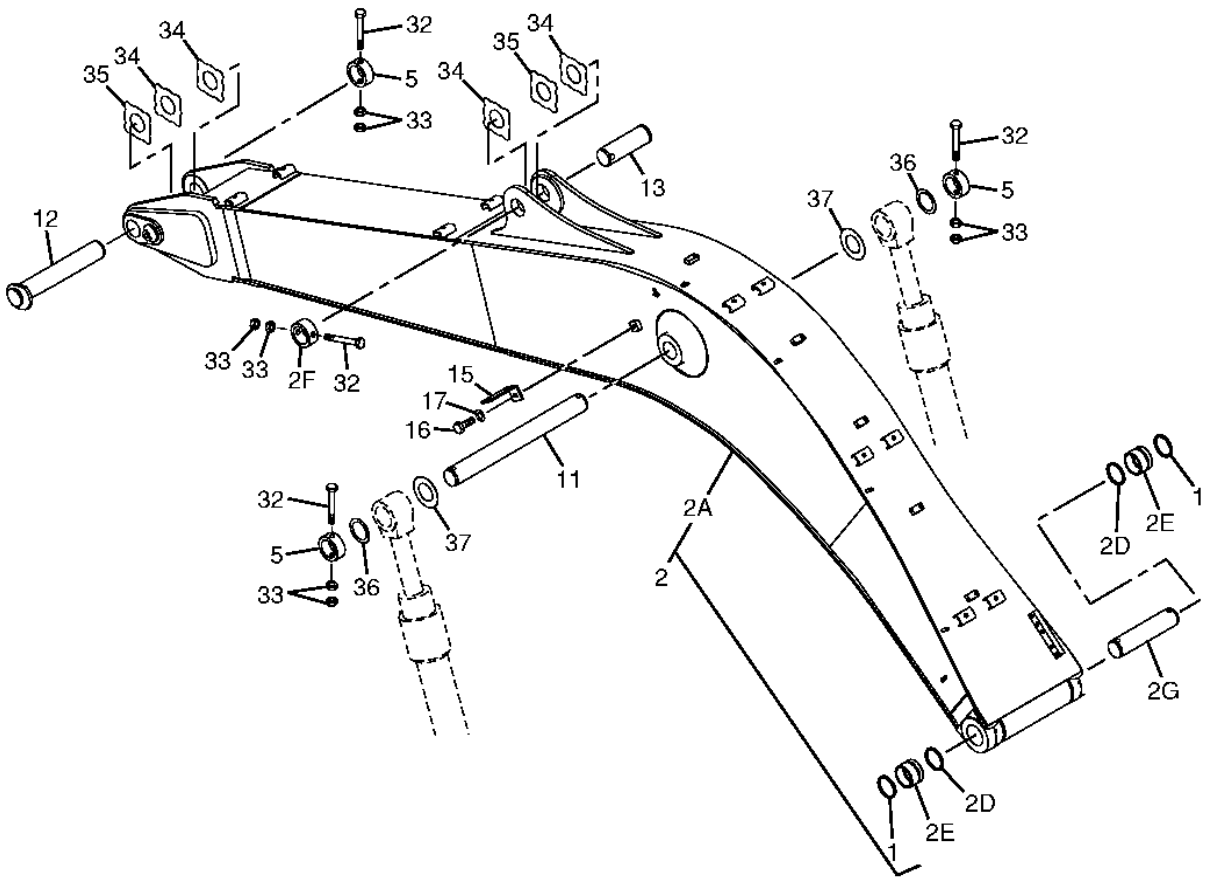

T189147

BOOM ASSEMBLY AND PINS

KEY	PART NO.	PART NAME	QTY	SERIAL NO.	REMARKS
1	4084578	BACK-UP RING	2		
2	AP37222	EXCAVATOR BOOM	1		
2A	.....	EXCAVATOR BOOM	1		(5006700 NOT AVAILABLE FOR SERVICE)
2D	4084578	BACK-UP RING	2		
2E	4443878	BUSHING	2		
2F	4434952	STOP	1		
2G	P60420	SPACER	1		
5	DH400614	PLUG	2		(SUB FOR P60784, THIS APPLICATION)
11	P61727	PIN	1		
12	8094523	PIN FASTENER	1		(SUB FOR P68030)
13	P68424	PIN FASTENER	1		
15	4224631	BRACKET	1		
16	J901425	CAP SCREW	1		
17	12H317	LOCK WASHER	1		14.288 MM (9/16")
29	4434952	STOP	1		
32	19M7907	SCREW	4		M20 X 140
33	14M7277	NUT	8		M20, (SUB FOR J950020)
34	TH105592	WASHER	4		
35	TH105593	WASHER	2		
36	P63319	WASHER	2		
37	P63302	WASHER	2		

ELECTRIC FOOT SWITCH (FOR ONE SOLENOID AUXILIARY CONTROL)

TP44347 -UN-01JAN94

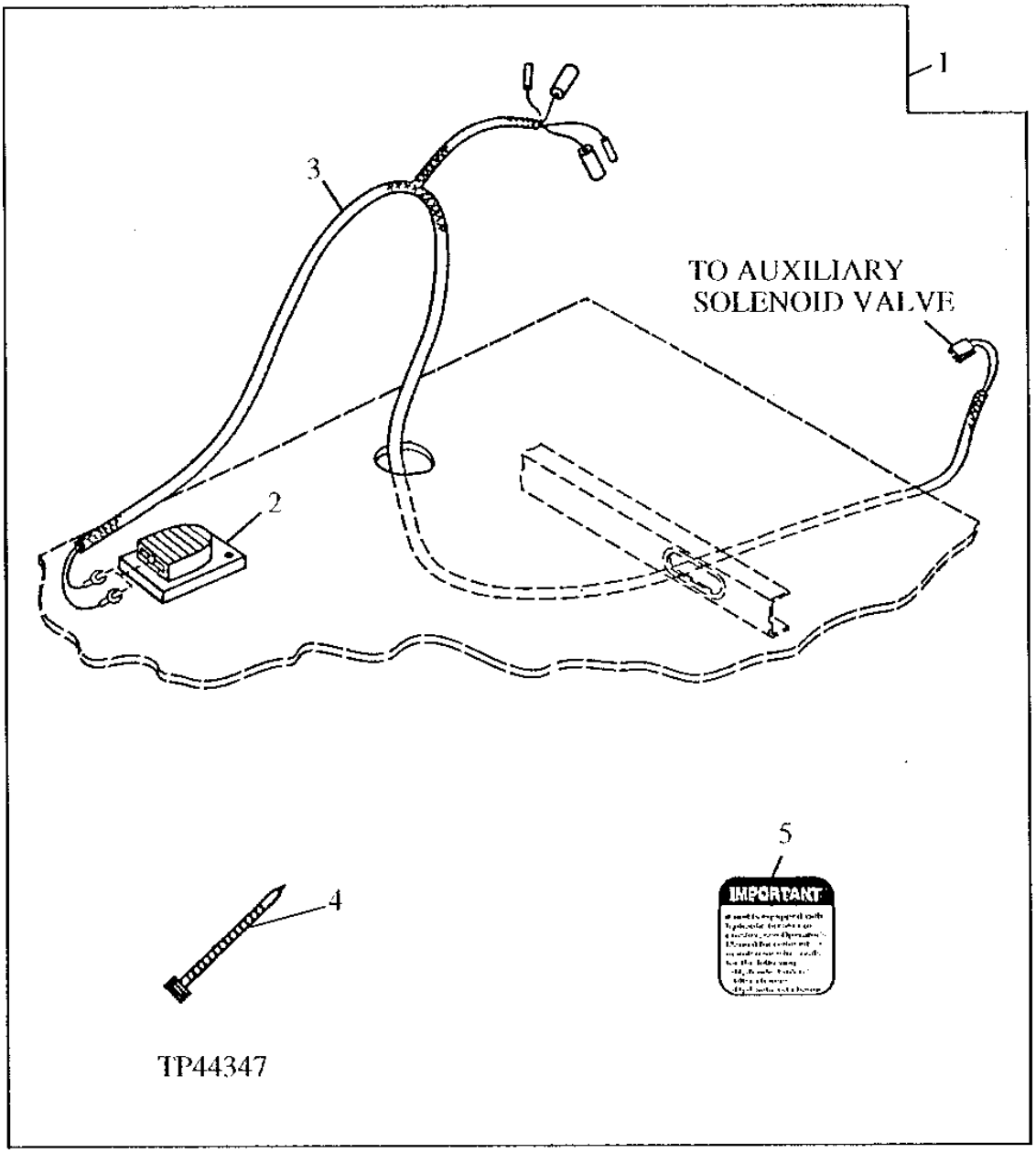

ELECTRIC FOOT SWITCH (FOR ONE SOLENOID AUXILIARY CONTROL)

KEY	PART NO.	PART NAME	QTY	SERIAL NO.	REMARKS
1	**AT196587**	**SWITCH**	**1**		**WHOLEGOODS (ELECTRIC FOOT SWITCH FOR AUXILIARY VALVE)**
2	AT82210	SWITCH	1		(ELECTRIC FOOT CONTROL)
3	AT196588	WIRING HARNESS	1		
4	R44302	TIE BAND	2		(USE AS REQUIRED)
5	T149434	LABEL	1		(IMPORTANT - AUXILIARY ELECTRIC CONTROL)

DUAL CONTROL HANDLE FOR AUXILIARY CONTROLS (2 SOLENOIDS)

T144288 -UN-06AUG01

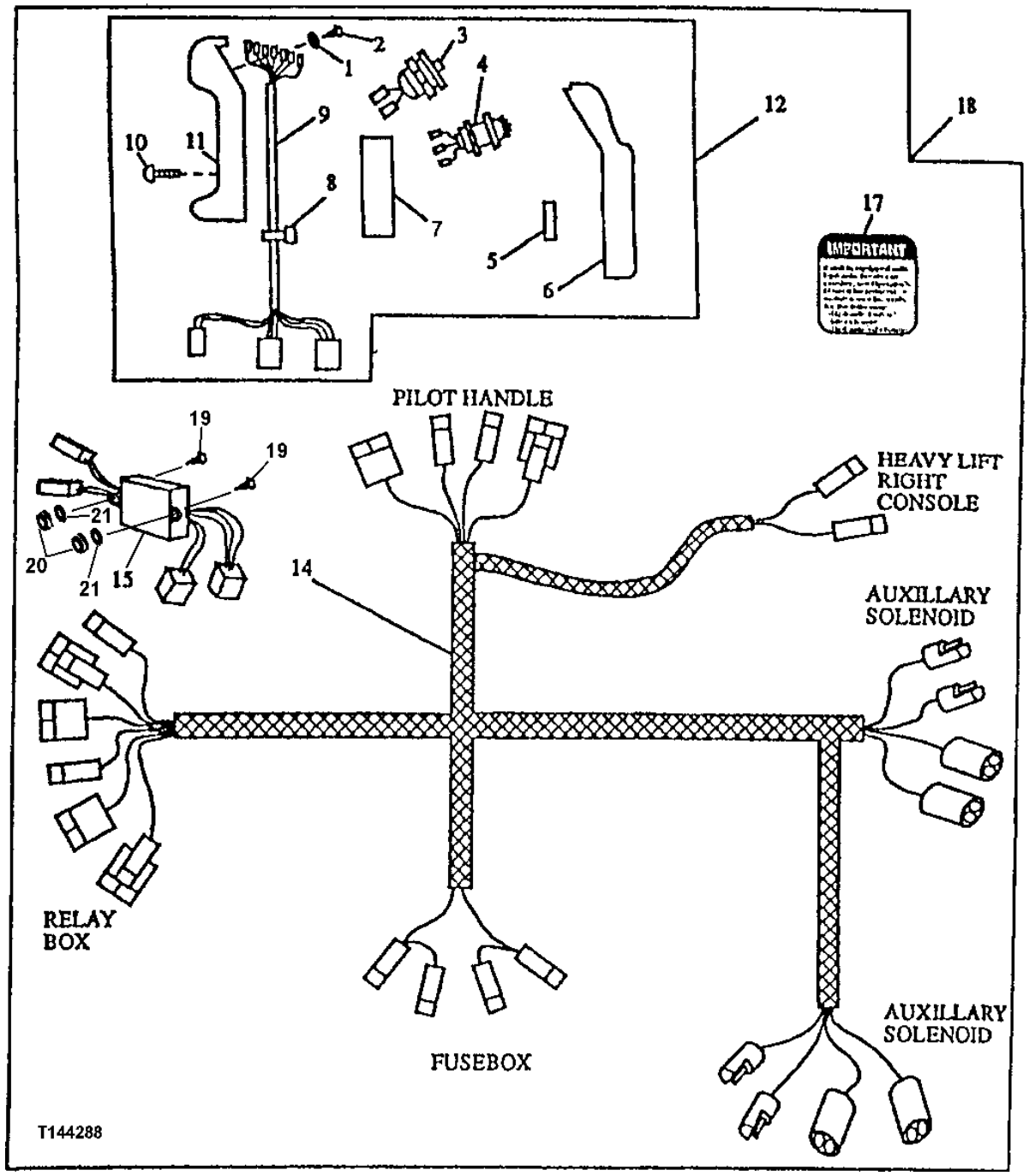

DUAL CONTROL HANDLE FOR AUXILIARY CONTROLS (2 SOLENOIDS)

KEY	PART NO.	PART NAME	QTY	SERIAL NO.	REMARKS
1	12H321	WASHER	7		0.138"
2	21H1308	SCREW	7		0.138" X 3/8"
3	AT139383	TOGGLE/ROCKER SWITCH	1		PUSH BUTTON (MOMENTARY)
4	AT139382	TOGGLE/ROCKER SWITCH	2		
5	R71799	NEEDLE ROLLER	2		
6	T114699	HANDLE	1		
7	T114698	SUPPORT	1		
8	R44302	TIE BAND	2		
9	AT195787	WIRING HARNESS	1		
10	T80394	SCREW	6		
11	AT115448	HANDLE	1		
12	AT195786	CONTROL LEVER	1		PILOT CONTROL
14	AT195788	WIRING HARNESS	1		SOLENOID VALVE
15	AT141562	RELAY MODULE	1		
17	T149434	LABEL	1		(IMPORTANT) (BETWEEN ASHTRAY AND OPERATOR'S CAUTION DECAL ON RIGHT SIDE OF CAB)
18	**AT195784**	**KIT**	**1**		**(CONTROL HANDLE WITH SWITCHES) (SUB FOR AT162242) WHOLEGOODS**
19	21M7246	SCREW	2		M6 X 16
20	14M7272	NUT	2		M6
21	24M7293	WASHER	2		6.500 X 13 X 1.600 MM

AUXILIARY HYDRAULIC HOSES AND LINES KIT (BOOM AND ARM)(FIELD)

T191195 -UN-02JUN03

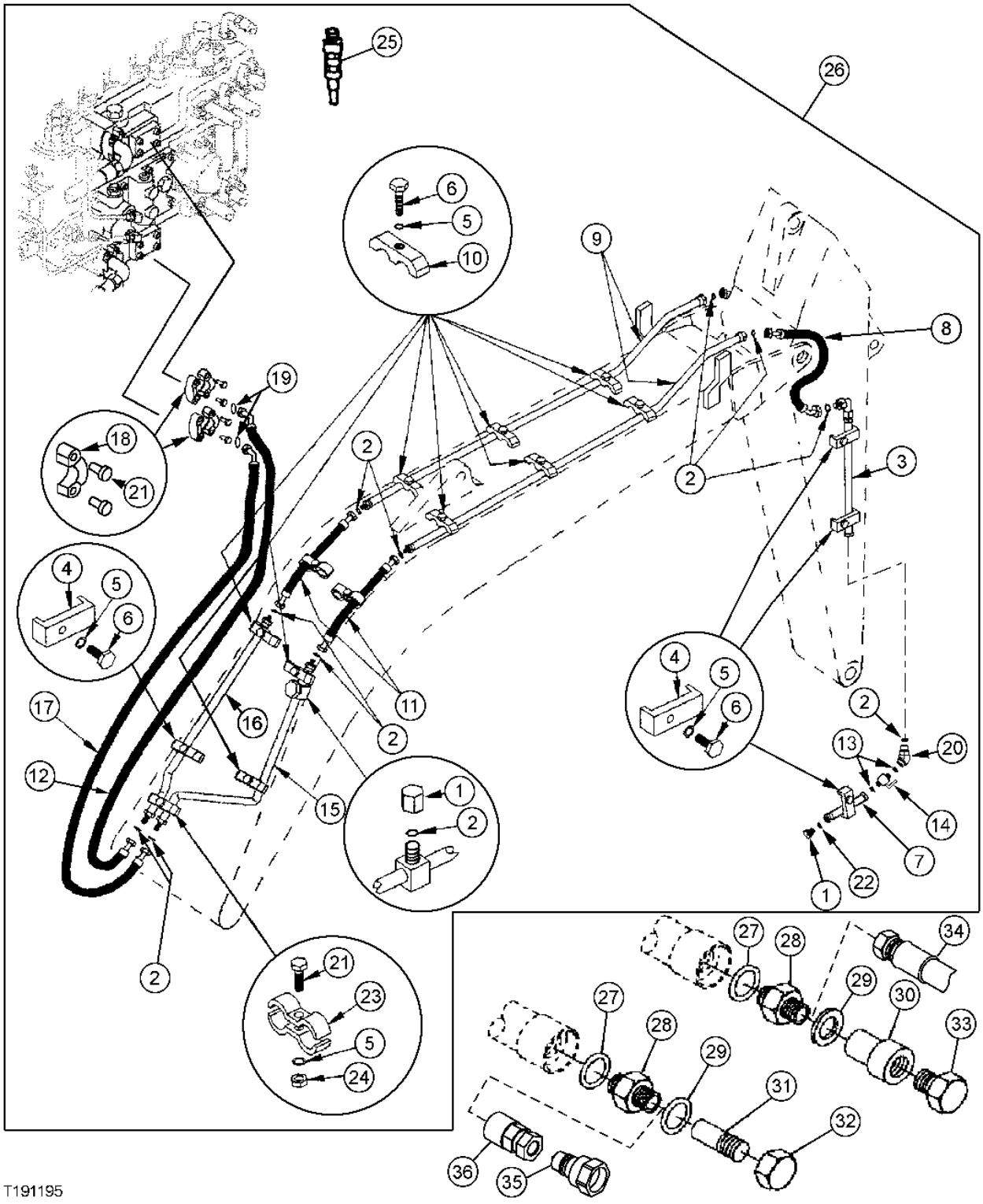

T191195

AUXILIARY HYDRAULIC HOSES AND LINES KIT (BOOM AND ARM)(FIELD)

KEY	PART NO.	PART NAME	QTY	SERIAL NO.	REMARKS
1	38H1418	FITTING	3		
2	T77858	O-RING	13		
3	AT160177	OIL TUBE	2		
4	4190126	CLAMP	7		
5	12H301	LOCK WASHER	17		
6	19M7363	CAP SCREW	16		
7	38H1215	ADAPTER	2		
8	AT160176	HYDRAULIC HOSE - FABRICATE	2		
9	AT160159	OIL TUBE	2		
10	4141806	CLAMP	9		
11	AT160161	HYDRAULIC HOSE - FABRICATE	2		
12	AP33342	HOSE	1		
13	U12547	O-RING	4		
14	AT197375	BALL COCK VALVE	2		
15	AP33323	PIPE	1		
16	AP33324	PIPE	1		
17	AP33343	HYDRAULIC HOSE - FABRICATE	1		
18	R29424	FLANGE FITTING	4		
19	T59014	O-RING	2		
20	38H1431	ELBOW FITTING	2		
21	19M8337	SCREW	8		M10 X 30
22	T76938	O-RING	2		
23	4202103	CLAMP	2		
24	14M7295	NUT	1		M12
25	9200504	PRESSURE RELIEF VALVE	2		
26	AT197400	KIT	1		
27	U12547	O-RING	2		
28	38H1179	ADAPTER	2		(ALSO ORDER T76938) (1" ORFS)
	38H1215	ADAPTER	2		(ALSO ORDER T77858) (3/4" ORFS)
	AT83306	ADAPTER	2		(1" SAE, MALE)
	R27267	FITTING	2		(3/4" 37 DEGREE)
	T34433	ADAPTER	2		(1" 37 DEGREE)
29	R29936	O-RING	2		
30	AT186111	QUICK COUPLER	1		(1" FEMALE)(SCREW TOGETHER COUPLER)
	.....	KIT	1		(AT189410 NO LONGER AVAILABLE)
31	AT186112	QUICK COUPLER	1		(1" MALE)(SCREW TOGETHER COUPLER)
	.....	KIT	1		(AT189409 NO LONGER AVAILABLE)
32	AT186113	CAP	1		
33	AT186114	PLUG	1		
34	X1JS78-20-16	HOSE FITTING	2		HOSE END - STRAIGHT - 1 1/4 X 1 IN
	X1J978-20-16	ELBOW FITTING	2		HOSE END - 90 DEG 1 1/4 X 1 IN
35	AT117365	HYDR.QUICK COUPLER PLUG	2		MALE QUICK COUPLER (-12) 1 1/16 SAE O-RING
	AT120498	COUPLING	2		MALE QUICK COUPLER (-16) 1 5/16 SAE O-RING
36	AT117364	HYDR.QUICK COUPLER SOCKET	2		FEMALE QUICK COUPLER (-12) 1 1/16 SAE O-RING
	AT120499	COUPLING	2		FEMALE QUICK COUPLER (-16) 1 5/16 SAE O-RING

AUXILIARY HYDRAULIC OPTIONAL LOW PRESSURE RETURN PLUMBING

T191246 -UN-03JUN03

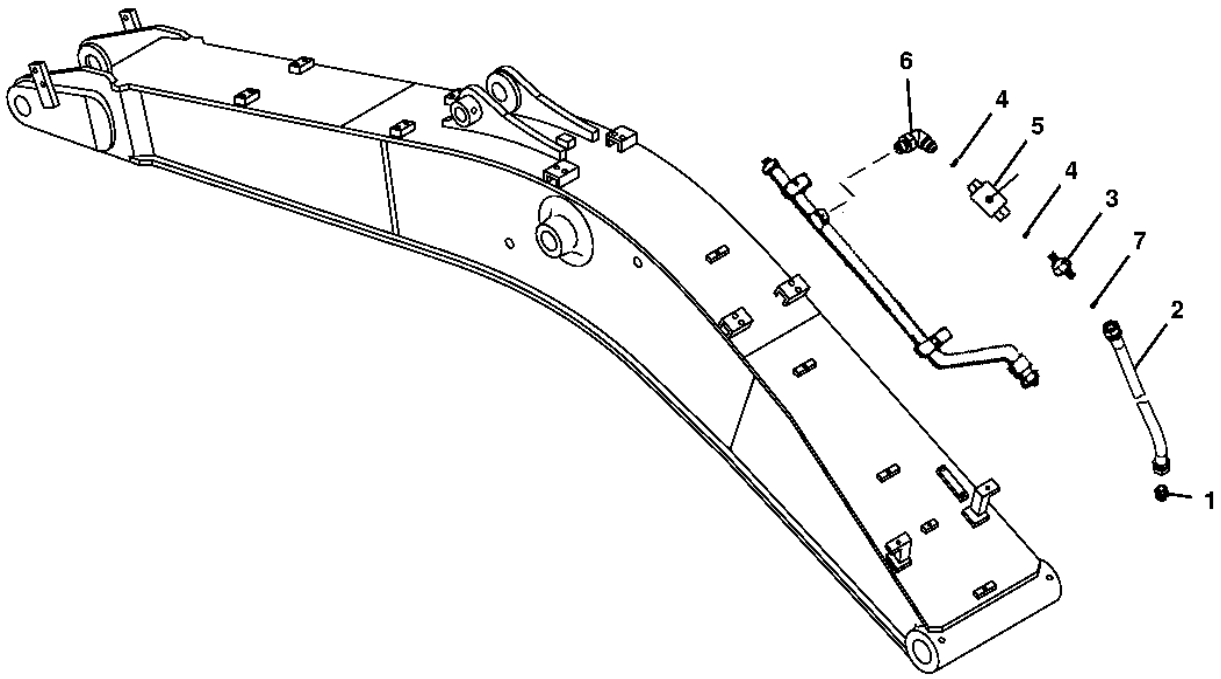

T191246

AUXILIARY HYDRAULIC OPTIONAL LOW PRESSURE RETURN PLUMBING

KEY	PART NO.	PART NAME	QTY	SERIAL NO.	REMARKS
1	4189619	ADAPTER	1		
2	AT304739	HYDRAULIC HOSE - FABRICATE	1		
3	38H1163	ADAPTER	1		
4	U12547	O-RING	2		
5	AT197375	BALL COCK VALVE	1		
6	38H1097	ELBOW FITTING	1		
7	T77858	O-RING	1		

ELECTRIC SOLENOID VALVE KIT (W/O PRESSURE SWITCH, 1 WAY/2 WAY)

T200912 -UN-14JUN04

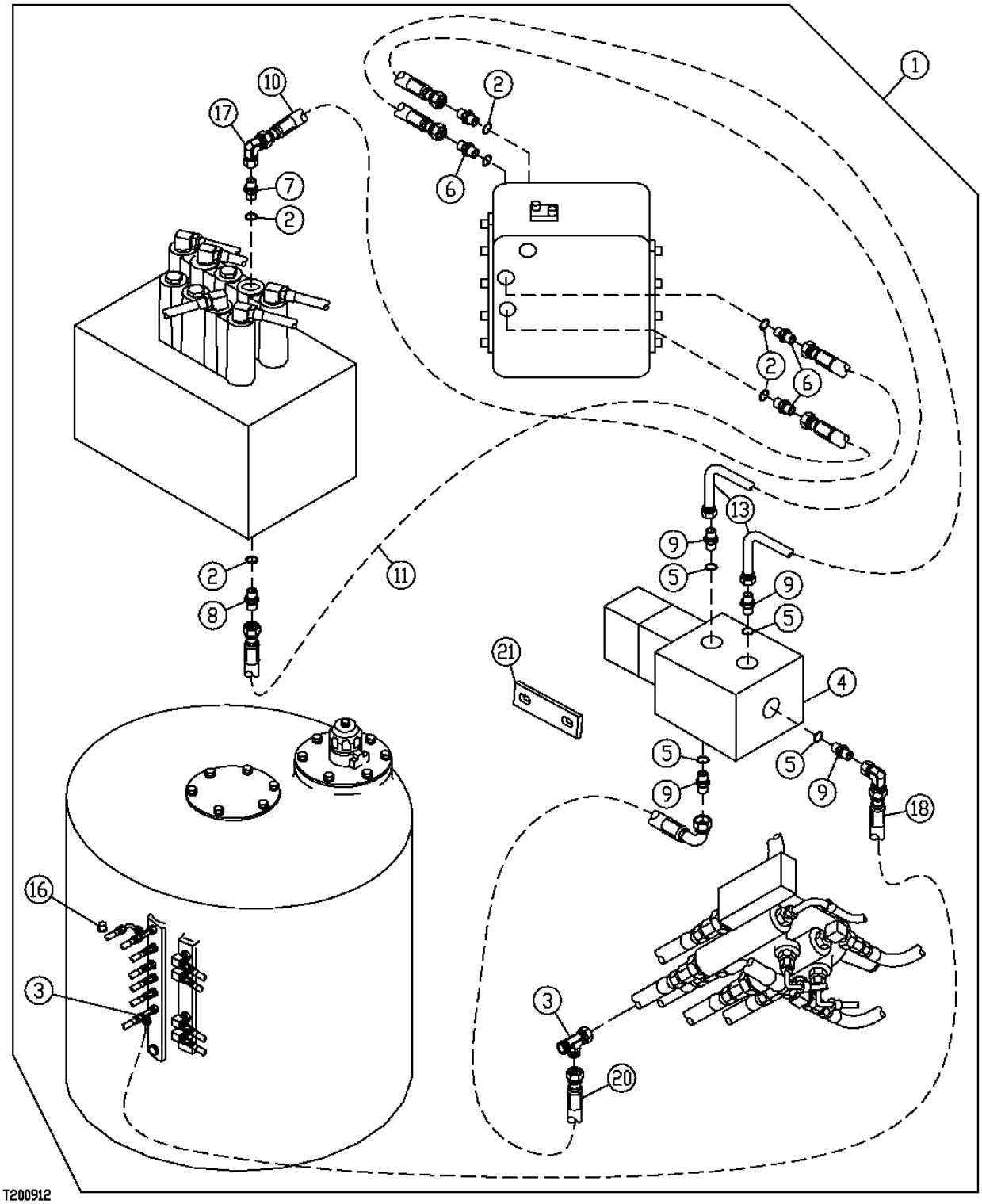

ELECTRIC SOLENOID VALVE KIT (W/O PRESSURE SWITCH, 1 WAY/2 WAY)

KEY	PART NO.	PART NAME	QTY	SERIAL NO.	REMARKS
1	**AT195713**	**KIT**	**1**		**(WHOLEGOODS) ELECTRIC SOLENOID VALVE (INCLUDES H102543 FITTING)**
2	CH11570	O-RING	6		13.800 X 2.400 MM (0.543" X 0.094")
3	AT36921	TEE FITTING	2		
4	AT180585	SOLENOID	1		
5	R26448	O-RING	4		11.887 X 1.981 MM (0.468" X 5/64")
6	TH108320	ADAPTER	4		
7	AT130053	ADAPTER	1		
8	AT131445	ADAPTER	1		
9	R27212	FITTING	4		
10	AT108783	HYDRAULIC HOSE - FABRICATE	1		9/16" X 567 MM (22-1/4") X 9/16"
11	AR90081	HYDRAULIC HOSE	1		9/16" X 1 270 MM (50") X 9/16"
12	24M7054	WASHER	4		6.400 X 12 X 1.600 MM, (NOT ILLUSTRATED)
13	AT68901	HYDRAULIC HOSE - FABRICATE	2		9/16" X 965 MM (38") X 9/16"
14	14M7272	NUT	2		M6, (NOT ILLUSTRATED)
15	19M7529	CAP SCREW	2		M6 X 55, (NOT ILLUSTRATED)
16	R31147	FITTING	1		(CAP)
17	AE24616	ELBOW FITTING	1		
18	AT71732	HYDRAULIC HOSE - FABRICATE	1		9/16" X 1 422 MM (56") X 9/16"
20	AT78124	HYDRAULIC HOSE - FABRICATE	1		9/16" X 3 531 MM (139") X 9/16"
21	T202379	STRAP	2		

AUXILIARY SOLENOID AND FLOW CONTROL VALVE KIT (1-WAY)

T189802 -UN-21APR03

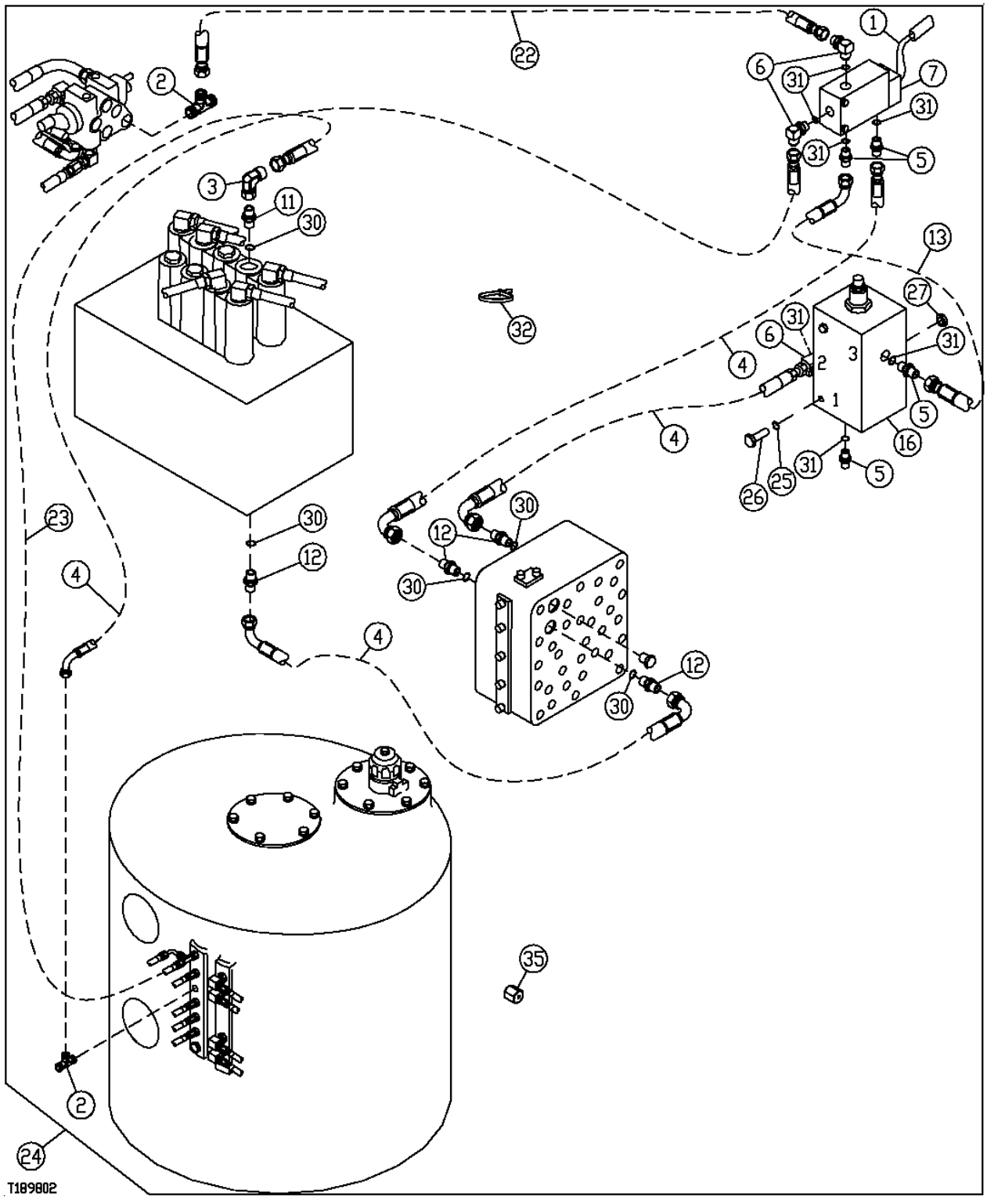

THIS PARTS LISTING IS CONTINUED

AUXILIARY SOLENOID AND FLOW CONTROL VALVE KIT (1-WAY)

KEY	PART NO.	PART NAME	QTY	SERIAL NO.	REMARKS
1	AT191297	WIRING HARNESS	1		
2	AT36921	TEE FITTING	3		
3	AE24616	ELBOW FITTING	1		
4	AT71732	HYDRAULIC HOSE - FABRICATE	4		
5	R27212	FITTING	4		
6	AT35121	ELBOW FITTING	4		
7	AT306723	ELEC.PROPORTIONAL VALVE	1		SOLENOID, (SUB FOR AT116486 AND AT140041)
	.....	ELECTRICAL COIL	1		(AT140041 NO LONGER AVAILABLE)
11	AT130053	ADAPTER	1		
12	4200466	ADAPTER	4		
13	AE42718	HYDRAULIC HOSE	1		
16	AT186623	HYDRAULIC PRESSURE VALVE	1		
22	AT130684	HYDRAULIC HOSE - FABRICATE	1		9/16" X 2 520 MM X 9/16"
23	AT71082	HYDRAULIC HOSE - FABRICATE	1		9/16" X 711 MM X 9/16"
24	**AT186622**	**SPOOL VALVE**	**1**		**(WHOLEGOODS) (COMPLETE KIT) (ALSO ORDER T188662 INSTRUCTIONS)**
25	24M7139	WASHER	4		6.400 X 18 X 1.600 MM, (NOT ILLUSTRATED)
26	19M7529	CAP SCREW	4		M6 X 55
27	14M7272	NUT	4		M6
30	CH11570	O-RING	5		
31	R26448	O-RING	7		
32	R44302	TIE BAND	4		
33	AH75160	ELBOW FITTING	2		(NOT ILLUSTRATED)
35	R31147	FITTING	1		

CONTROL PATTERN SELECTOR KIT

T191711 -UN-04JUN03

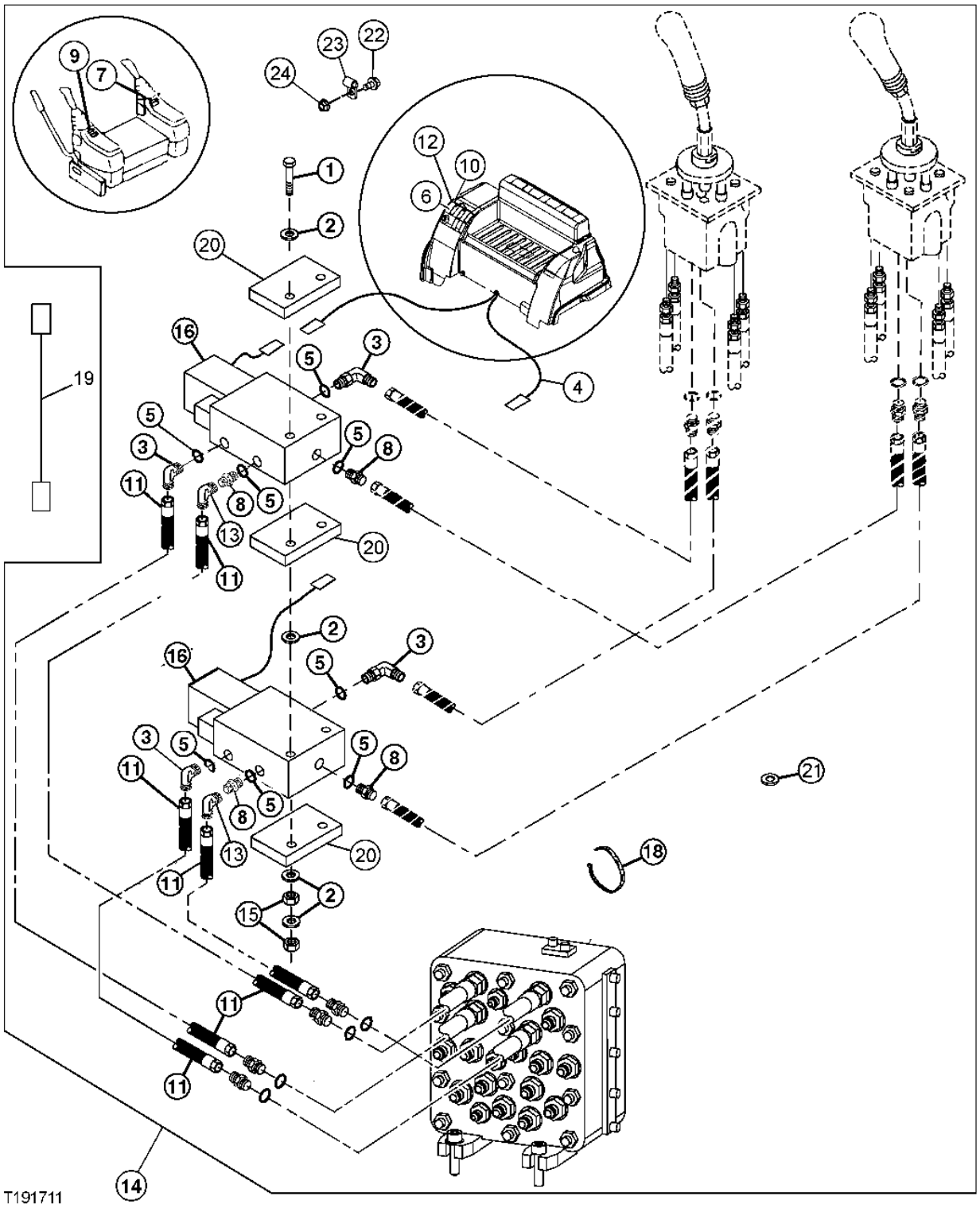

THIS PARTS LISTING IS CONTINUED

CONTROL PATTERN SELECTOR KIT

KEY	PART NO.	PART NAME	QTY	SERIAL NO.	REMARKS
1	19M8332	CAP SCREW	2		M6 X 90
2	24M7100	WASHER	10		6.600 X 22 X 2 MM
3	AT35121	ELBOW FITTING	4		37 DEG FLARE O-RING
4	AT307710	WIRING HARNESS	1		(SUB FOR AT190535)
5	R26448	O-RING	8		
6	AT83721	TOGGLE/ROCKER SWITCH	1		LOCKING
7	T159843	LABEL	4		CONTROL RIGHT
8	R27212	FITTING	4		
9	T159844	LABEL	1		CONTROL LEFT
10	T184858	LABEL	1		CONTROL PATTERN
11	AT71082	HYDRAULIC HOSE - FABRICATE	4		9/16" X 711 MM (28") X 9/16"
12	37H43	SCREW	2		DRIVE SELF TAPPING
13	AE24616	ELBOW FITTING	2		
14	.....	KIT	1		(AT307709 NO LONGER AVAILABLE) (WHOLEGOODS) CONTROL PATTERN SELECTOR KIT, (SUB FOR AT191397)
15	14M7272	NUT	4		M6
16	AT306723	ELEC.PROPORTIONAL VALVE	2		(SUB FOR AT116486 AND AT140041) PIN DISCONNECT
	.....	ELECTRICAL COIL	1		(AT140041 NO LONGER AVAILABLE)
18	R44302	TIE BAND	AR		
20	T202379	BRACKET	3		
21	T63817	GROMMET	1		
22	19M7863	SCREW	3		
23	T22645	CLIP	4		
24	14M7272	NUT	3		
25	AR94101	DIODE	1		(NOT ILLUSTRATED)

MECHANICAL PATTERN CHANGER KIT

T197438 -UN-29JAN04

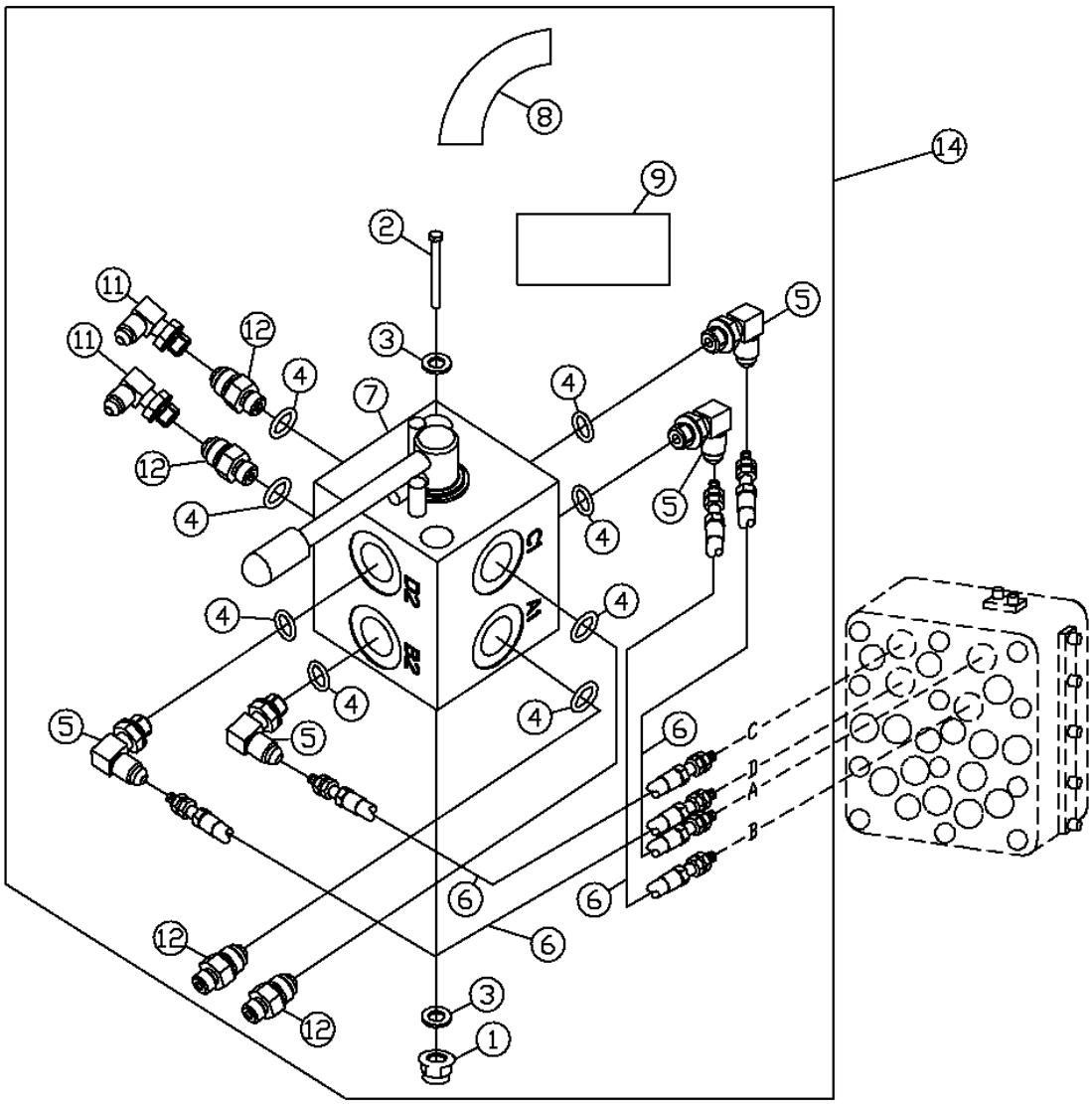

T197438

MECHANICAL PATTERN CHANGER KIT

KEY	PART NO.	PART NAME	QTY	SERIAL NO.	REMARKS
1	14M7396	LOCK NUT	2		M8
2	19M8504	CAP SCREW	2		M8 X 80
3	24M7095	WASHER	4		8.400 X 15 X 1.600 MM
4	R28782	O-RING	8		
5	AH63565	ELBOW FITTING	4		
6	AT306775	HYDRAULIC HOSE - FABRICATE	4		
7	AT306737	MANUAL HYDRAULIC VALVE	1		
8	T205175	LABEL	1		
9	T201519	LABEL	1		
11	AE24616	ELBOW FITTING	2		
12	T61120	ADAPTER	4		
14	**AT306757**	**KIT**	**1**		**(WHOLEGOODS)**

ARM ANTI-DRIFT KIT

T192468 -UN-02JUL03

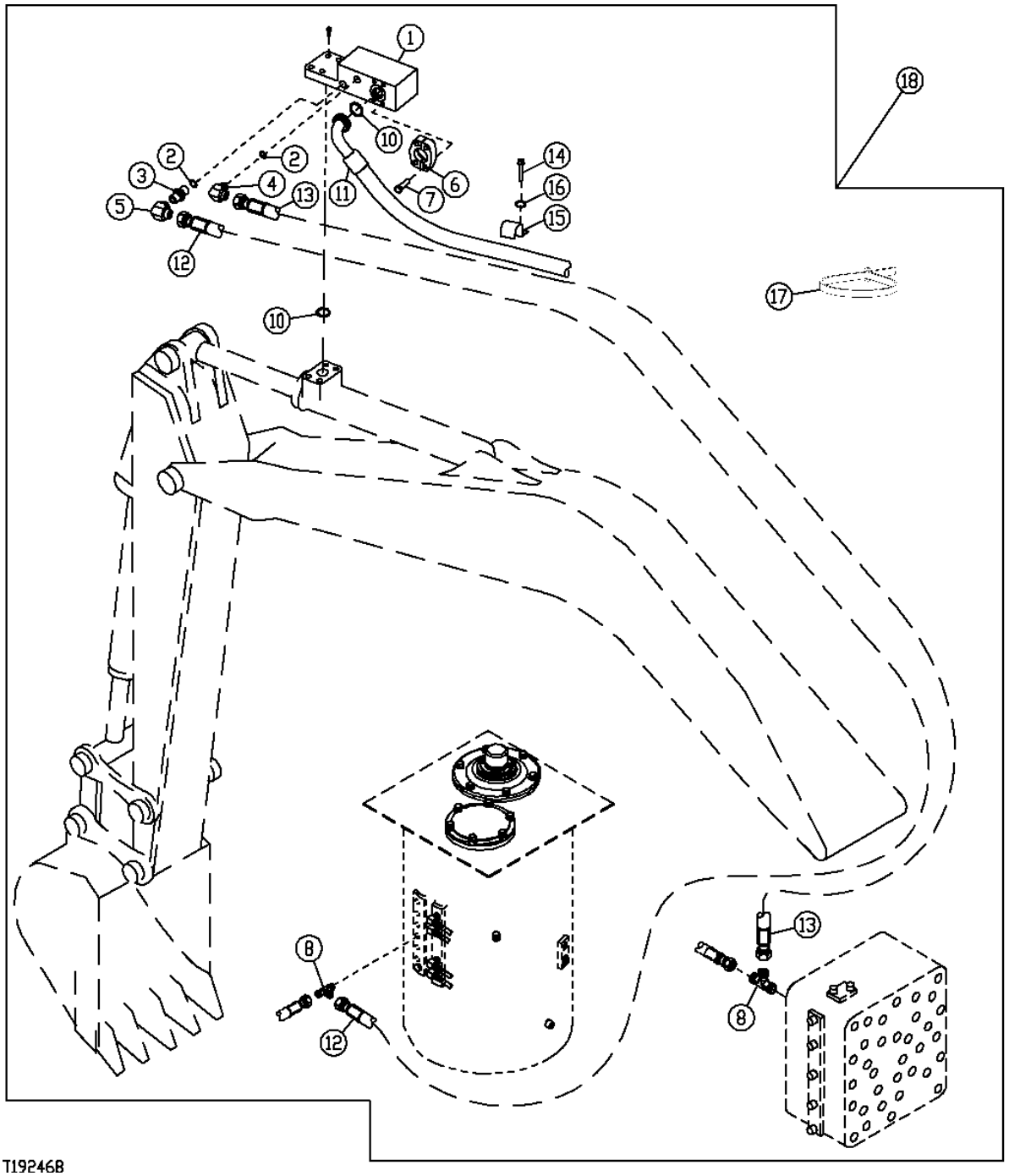

THIS PARTS LISTING IS CONTINUED

ARM ANTI-DRIFT KIT

KEY	PART NO.	PART NAME	QTY	SERIAL NO.	REMARKS
1	AT303703	CHECK VALVE	1		
2	AT300313	SEALING RING	2		
3	X6F4OMXS	ADAPTER	1		
4	X6C4OMXS	ELBOW FITTING	1		
5	AE24616	ELBOW FITTING	1		
6	T107446	FLANGE FITTING	2		
7	19M8395	SCREW	4		
8	AT36921	TEE FITTING	2		
10	T72888	O-RING	2		
11	AT303666	HYDRAULIC HOSE - FABRICATE	1		
12	AT303668	HYDRAULIC HOSE - FABRICATE	1		
13	AT303667	HYDRAULIC HOSE - FABRICATE	1		
14	19M7872	CAP SCREW	1		
15	T126057	CLAMP	1		
16	24M7044	WASHER	1		
17	H77698	TIE BAND	20		
18	**AT303665**	**KIT**	**1**		**ARM ANTI-DRIFT KIT (ALSO ORDER AT303666. NOT INCLUDED IN KIT)**

BOOM ANTI-DRIFT KIT

T191664 -UN-16JUN03

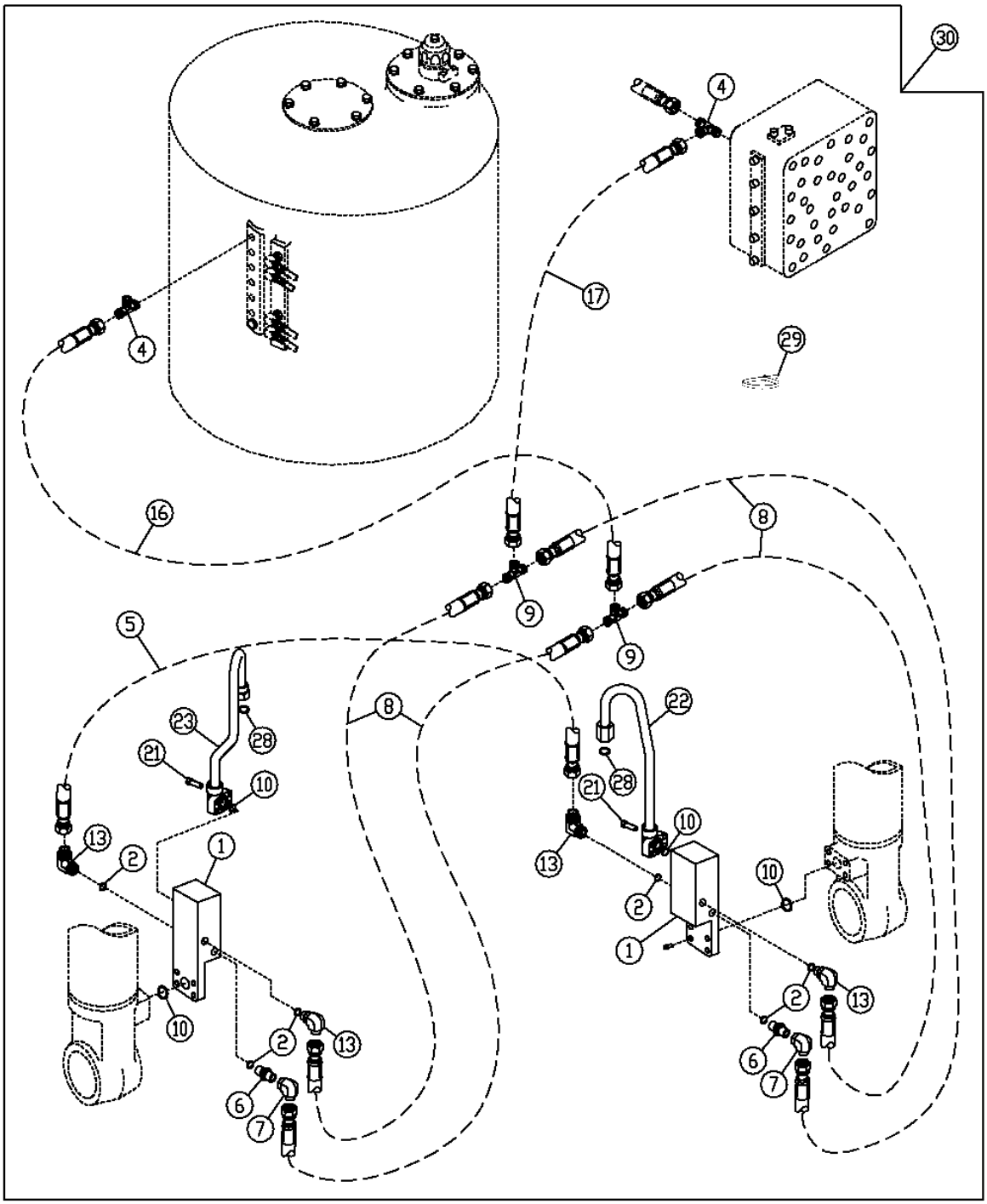

T191664

BOOM ANTI-DRIFT KIT

KEY	PART NO.	PART NAME	QTY	SERIAL NO.	REMARKS
1	AT303955	CHECK VALVE	2		
2	AT300313	SEALING RING	6		
4	AT36921	TEE FITTING	2		
5	AT300337	HYDRAULIC HOSE - FABRICATE	1		
6	X6F4OMXS	ADAPTER	2		
7	AE24616	ELBOW FITTING	2		
8	AT303956	HYDRAULIC HOSE - FABRICATE	4		
9	X6JTX-S	TEE FITTING	2		
10	T72888	O-RING	4		
13	X6C4OMXS	ELBOW FITTING	4		
16	AT300465	HYDRAULIC HOSE - FABRICATE	1		
17	AT300466	HYDRAULIC HOSE - FABRICATE	1		
21	19M8412	SCREW	8		
22	AT303468	OIL LINE	1		
23	AT302830	OIL LINE	1		
28	T77857	O-RING	2		
29	H77698	TIE BAND	20		
30	**AT303957**	**KIT**	**1**		**BOOM ANTI-DRIFT KIT**

HYDRAULIC PUMP MOUNTING AND SPACER

T192291 -UN-20JUN03

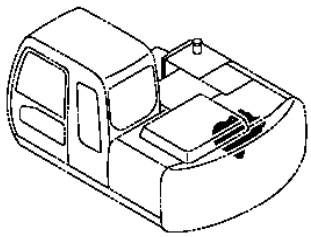

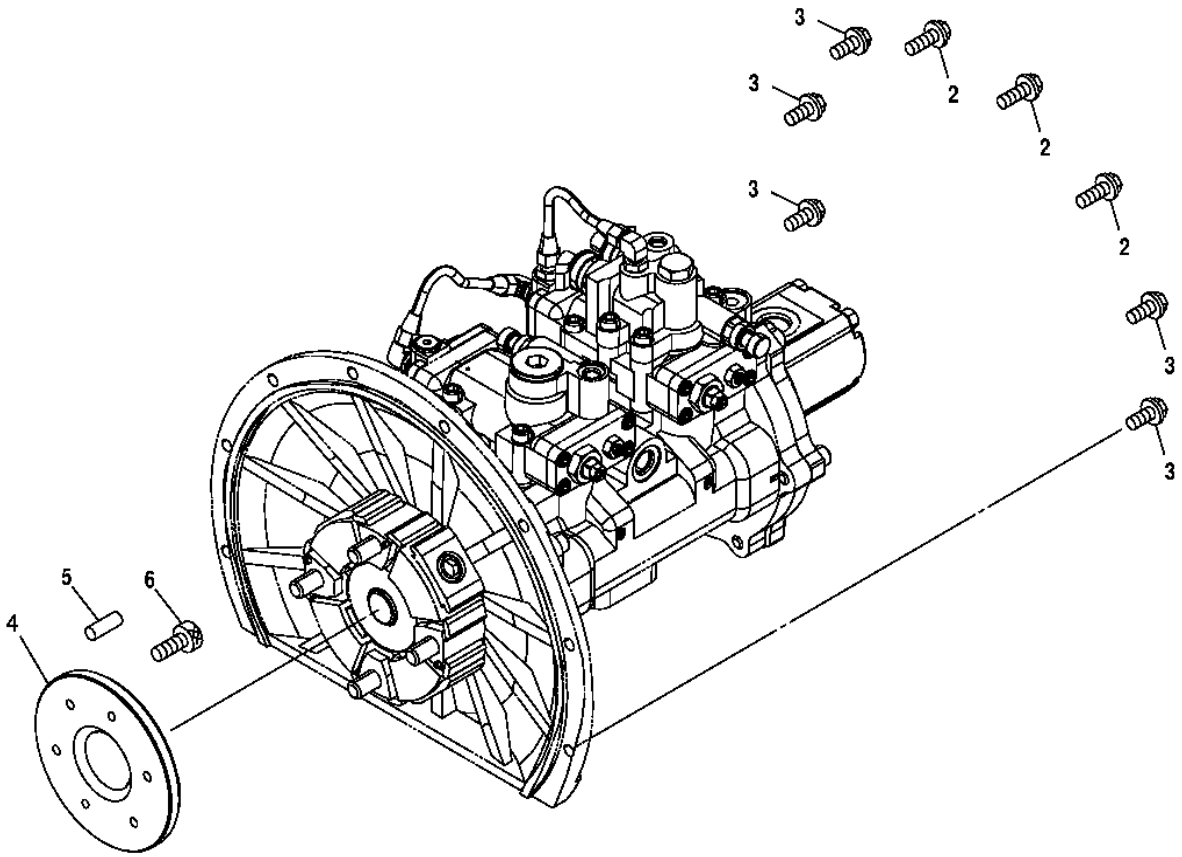

T192291

HYDRAULIC PUMP MOUNTING AND SPACER

KEY	PART NO.	PART NAME	QTY	SERIAL NO.	REMARKS
2	19M7550	CAP SCREW	3		M10 X 35
3	19M7662	CAP SCREW	5		M10 X 30
4	P64258	SPACER	1	-034261	
	DH300124	SPACER	1	034262-	
5	34M7117	SPRING PIN	2	-034261	5 X 10 MM
	34M7117	SPRING PIN	3	034262-	5 X 10 MM
6	19M8208	SCREW	4	-034261	M16 X 50, (APPLY LOCTITE ON CAPSCREW BEFORE ASSEMBLY)
	J781450	BOLT	3	034262-	

HYDRAULIC PUMP, PILOT PUMP, AND REGULATOR ASSEMBLY

T206435 -UN-28DEC04

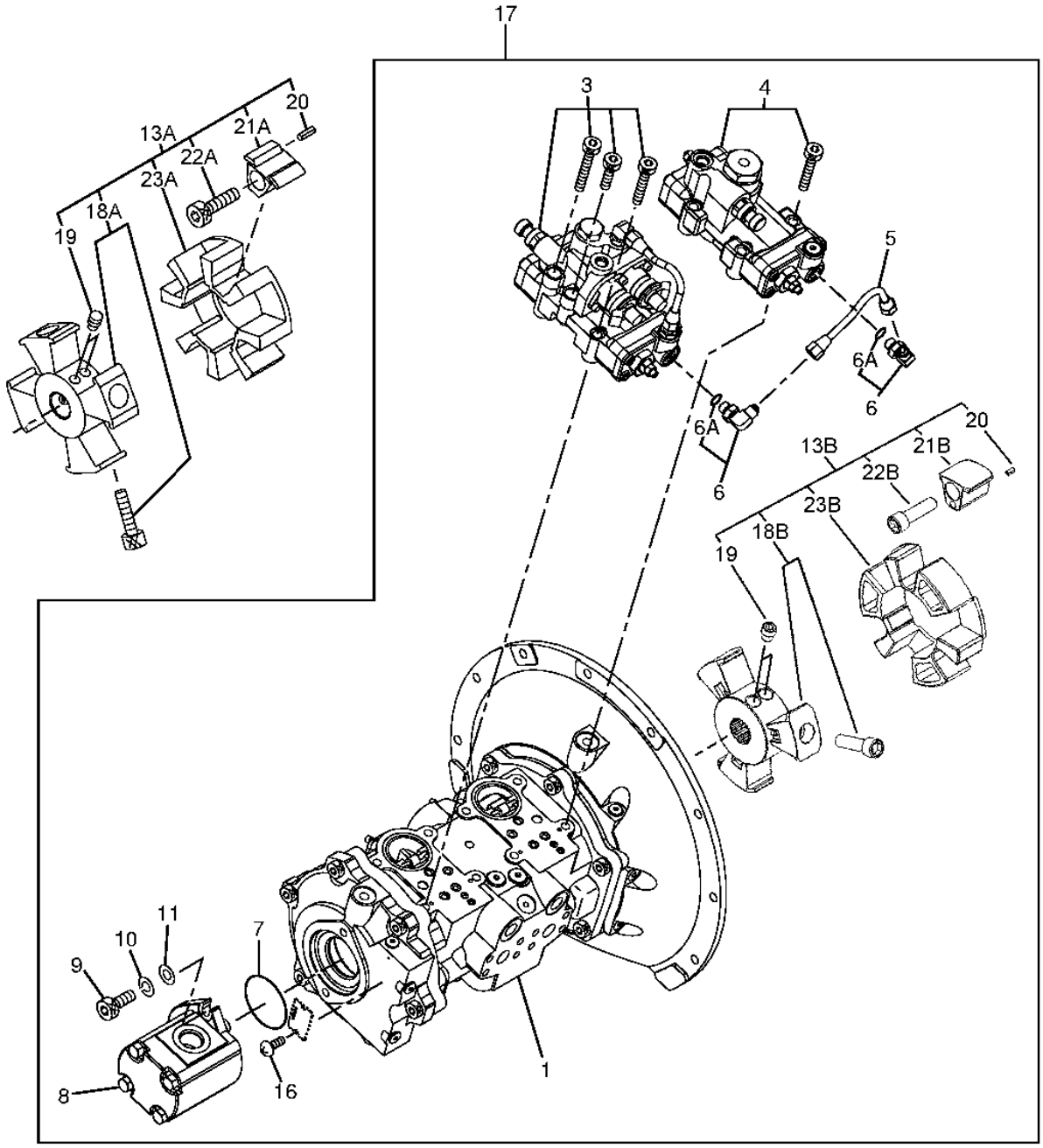

T206435

HYDRAULIC PUMP, PILOT PUMP, AND REGULATOR ASSEMBLY

KEY	PART NO.	PART NAME	QTY	SERIAL NO.	REMARKS
1	.....	HYDRAULIC PUMP	1		(9192497 NOT AVAILABLE FOR SERVICE)
3	9198153	REGULATOR	1		
4	9198154	REGULATOR	1		
5	4429488	PIPE	1		
6	4293950	ELBOW FITTING	2		
6A	M800650	PACKING	1		
7	4153543	O-RING	1		
8	9217993	PUMP	1		(SUB FOR 4181700)
9	19M8337	SCREW	2		M10 X 30
10	12M6791	LOCK WASHER	2		10.200 MM
11	4114402	WASHER	2		
13A	4340275	COUPLING	1	-034261	
13B	4464407	COUPLING	2	034262-	
16	37H99	SCREW	2		0.100" X 1/4"
17	9197338	HYDRAULIC PUMP	1	-034261	
	9227923EX	HYDRAULIC PUMP	1	034262-	(SUB FOR 9227923)
18A	4366376	HUB	1	-034261	
18B	4627119	HUB	1	034262-	
19	4334899	SET SCREW	2		
20	34M7117	SPRING PIN	4		5 X 10 MM, (SUB FOR 4101345)
21A	4334892	INSERT	4	-034261	
21B	4627120	INSERT	4	034262-	
22A	4334894	BOLT	4	-034261	
22B	4627121	BOLT	4	034262-	
23A	4334891	COUPLING	1	-034261	
23B	4627118	COUPLING	1	034262-	

HYDRAULIC PUMP COMPONENTS

T189037 -UN-02APR03

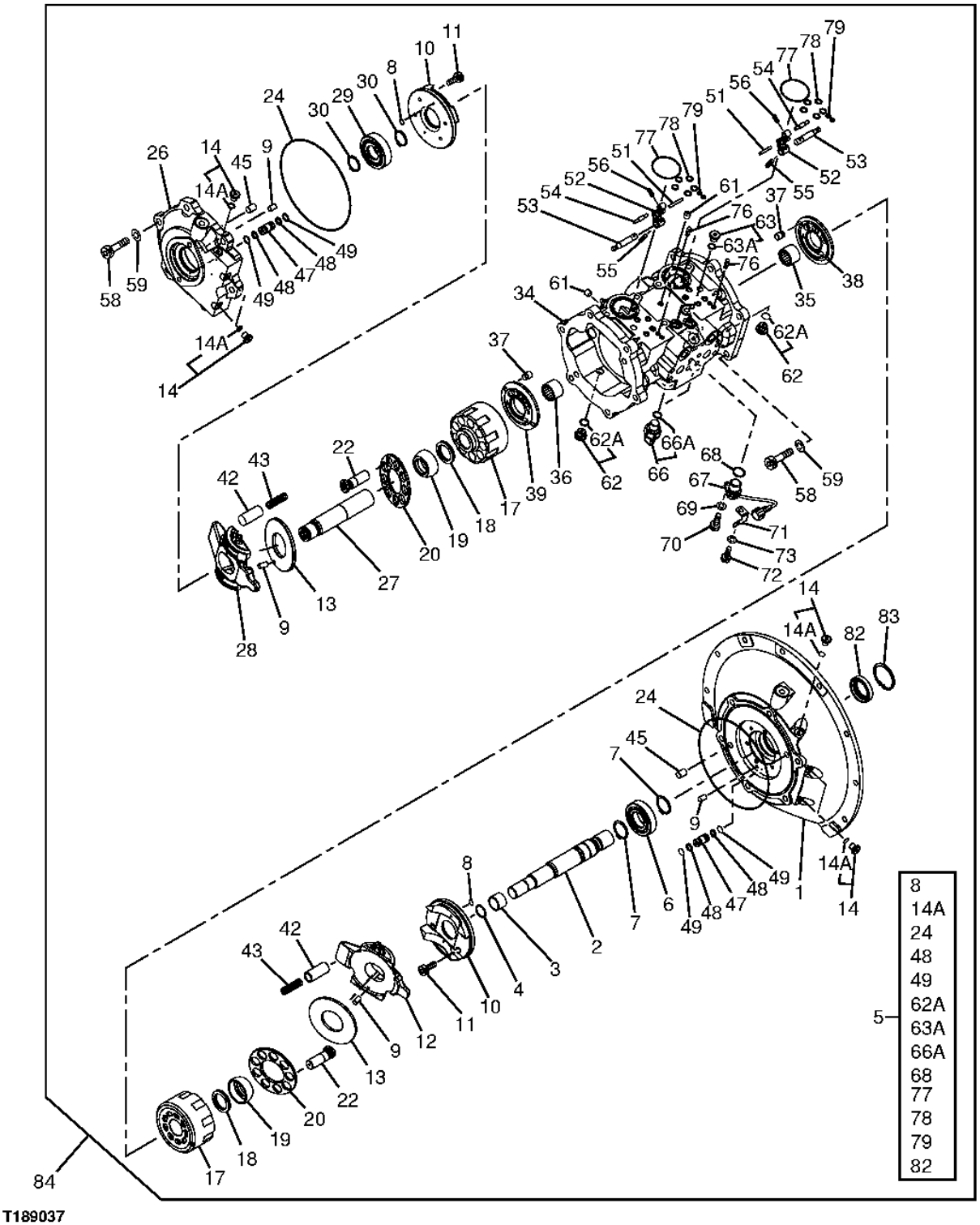

T189037

HYDRAULIC PUMP COMPONENTS

KEY	PART NO.	PART NAME	QTY	SERIAL NO.	REMARKS
1	1026892	CASE	1		
2	2038178	SHAFT	1		
3	4355286	BEARING RACE	1		
4	4229543		1		
5	4463047	SEAL KIT	1		
6	4280841	CYLINDRICAL ROLLER BEARING	1		
7	991342	SNAP RING	2		
8	4343074	O-RING	4		
9	4198956	PIN FASTENER	4		
10	2042069	PLATE	2		
11	M340613	BOLT	8		
12	1025666	PLATE	1		
13	4382272	PLATE	2		
	4407464	PLATE	2		
14	9134109	DRAIN PLUG	6		
14A	4506408	O-RING	6		
17	2042059	ROTOR	2		
18	4289874	DISK SPRING	2		
19	3065991	BUSHING	2		
20	3065989	RETAINER	2		
22	8071391	PISTON	18		
24	4410166	O-RING	2		
26	1025540	CASE	1		
27	2038174	SHAFT	1		
28	1025667	PLATE	1		
29	4355279	CYLINDRICAL ROLLER BEARING	1		
30	40M7084	SNAP RING	2		
34	0003076	CASE	1		
35	4355272	NEEDLE BEARING	1		
36	4355277	NEEDLE BEARING	1		
37	4271350	PIN	4		
38	2044792	PLATE	1		
39	2044793	PLATE	1		
42	4428917	PISTON	6		
43	4397537	SPRING	6		
45	4409640	PIN FASTENER	2		
47	4432356	PIN FASTENER	2		
48	4436322	BACK-UP RING	4		
49	CH11560	PACKING	4		(SUB FOR 4180349)
51	4200227	DOWEL PIN	2		
52	3081504	LINK	2		
53	4397509	PIN FASTENER	2		
54	4404102	PIN FASTENER	2		
55	4144013	PIN FASTENER	2		
56	4116299	PIN FASTENER	2		
58	M341240	SCREW	12		
59	12M7058	LOCK WASHER	12		12 MM (0.472")
61	4427347	PIPE PLUG	3		
62	9134111	PIPE PLUG	2		
62A	4509180	O-RING	1		
63	9134110	PIPE PLUG	2		
63A	M800650	PACKING	1		(SUB FOR 957366)
66	4436271	SENSOR	2		(SUB FOR AT179981 OR 4355012)
66A	TH102560	O-RING	1		
67	4265372	SENSOR	1		
68	4306888	O-RING	1		
69	24M7054	WASHER	1		6.400 X 12 X 1.600 MM, (SUB FOR A590106)
70	M340616	SCREW	1		
71	4252767	BRACKET	1		
72	M340613	BOLT	1		
73	4169516	LOCK WASHER	1		
76	4515041	SPRING PIN	4		
77	4348665	O-RING	2		
78	CH11560	PACKING	10		(SUB FOR 4180349)
79	4343074	O-RING	4		
82	4320490	SEAL	1		
83	930451	SNAP RING	1		
84	9197338	HYDRAULIC PUMP	1		(SUB FOR 9197338EX)

HYDRAULIC PUMP RIGHT REGULATOR COMPONENTS

T147618 -UN-01NOV01

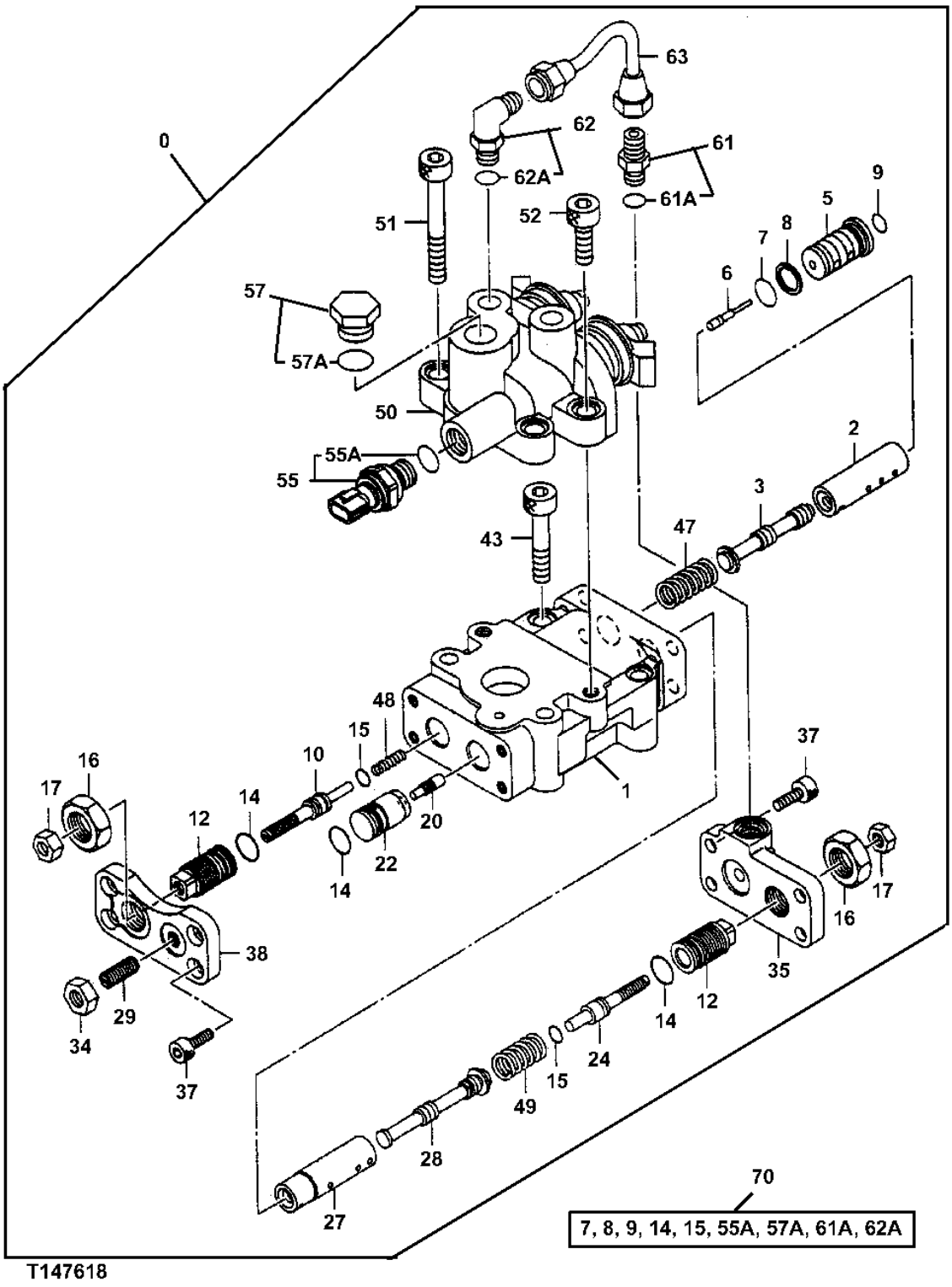

HYDRAULIC PUMP RIGHT REGULATOR COMPONENTS

KEY	PART NO.	PART NAME	QTY	SERIAL NO.	REMARKS
0	9198153	REGULATOR	1		
1	.....	REGULATOR	1		(1026282 NOT AVAILABLE)
2	4179155	SLEEVE	1		
3	4179156	SPOOL	1		
5	4367385	PISTON	1		
6	4367500	PISTON	1		
7	4150302	O-RING	1		
8	4085607	BACK-UP RING	1		
9	CH11560	PACKING	1		(SUB FOR 4180349)
10	4368619	STOP	1		
12	4179161	STOP	2		
14	4342843	O-RING	3		
15	4342841	O-RING	2		
16	4068898	NUT	2		
17	M500807	NUT	2		
20	4179171	PISTON	1		
22	4451498	PISTON	1		
24	4347107	STOP	1		
27	4424628	SLEEVE	1		
28	4346521	VALVE SPOOL	1		
29	4265964	SET SCREW	1		
34	14M7274	NUT	1		(SUB FOR J950010)
35	3075775	END PLATE	1		
37	M340820	SCREW	8		
38	4433327	COVER	1		
43	M341056	SCREW	2		
47	4194176	COMPRESSION SPRING	1		
48	4332878	COMPRESSION SPRING	1		
49	4350928	COMPRESSION SPRING	1		
50	4400442	SOLENOID VALVE	1		
51	M341080	BOLT	2		
52	M341030	SCREW	2		
55	4436536	SENSOR	1		
55A	CH11570	O-RING	1		
57	4174541	FITTING	1		
57A	4506418	O-RING	1		
61	4255304	FITTING	1		
61A	M800650	PACKING	1		(SUB FOR 957366)
62	4293950	FITTING	1		
62A	M800650	PACKING	1		(SUB FOR 957366)
63	4436800	OIL LINE	1		
70	4455733	SEAL KIT	1		

HYDRAULIC PUMP LEFT REGULATOR COMPONENTS

T147610 -UN-31OCT01

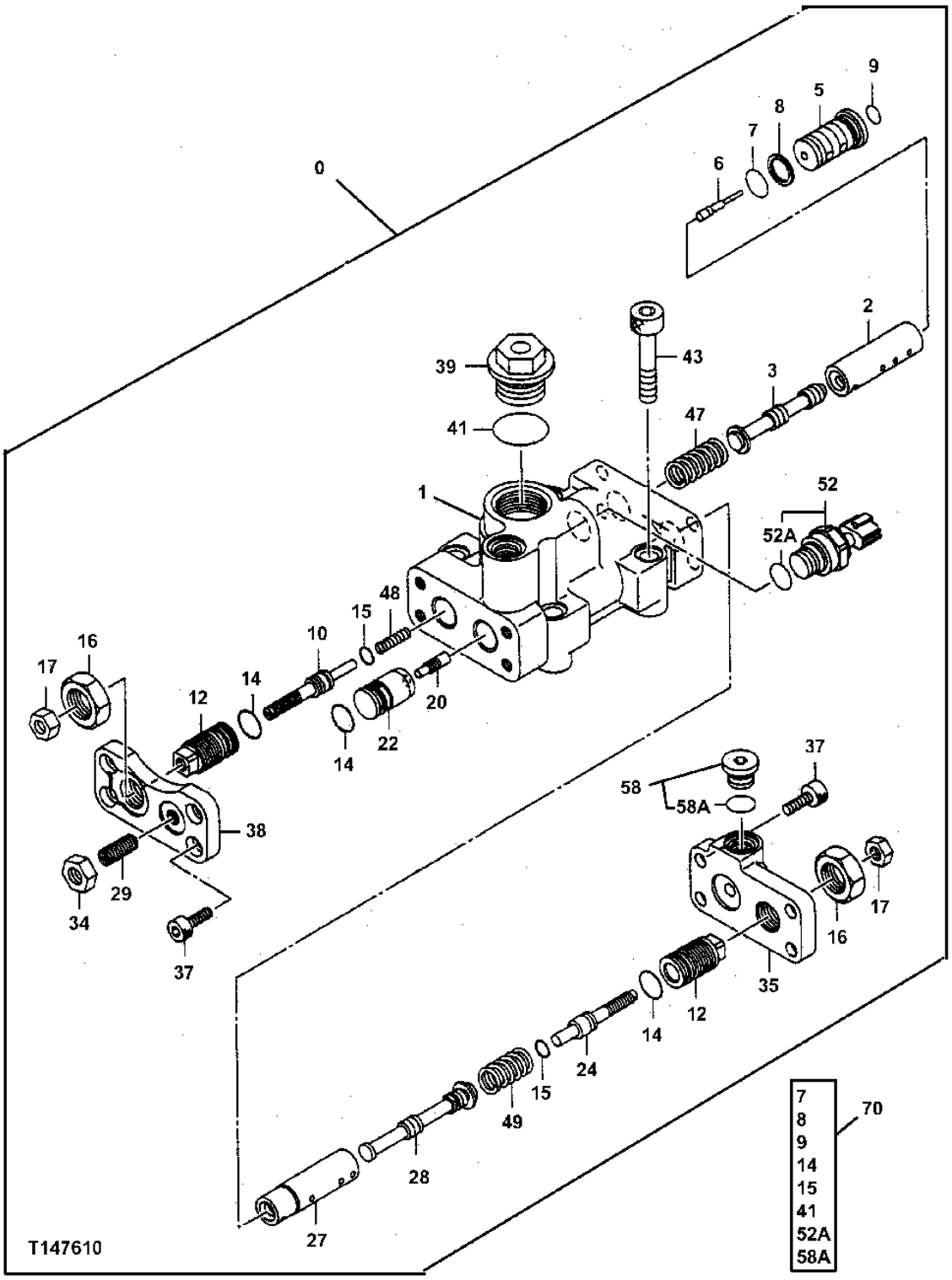

HYDRAULIC PUMP LEFT REGULATOR COMPONENTS

KEY	PART NO.	PART NAME	QTY	SERIAL NO.	REMARKS
0	9198154	REGULATOR	1		
1	.....	REGULATOR	1		(1027149 NOT AVAILABLE)
2	4179155	SLEEVE	1		
3	4179156	SPOOL	1		
5	4367385	PISTON	1		
6	4367500	PISTON	1		
7	4150302	O-RING	1		
8	4085607	BACK-UP RING	1		
9	CH11560	PACKING	1		(SUB FOR 4180349)
10	4368619	STOP	1		
12	4179161	STOP	2		
14	4342843	O-RING	3		
15	4342841	O-RING	2		
16	4068898	NUT	2		
17	M500807	NUT	2		
20	4179171	PISTON	1		
22	4451498	PISTON	1		
24	4347107	STOP	1		
27	4424628	SLEEVE	1		
28	4346521	VALVE SPOOL	1		
29	4265964	SET SCREW	1		
34	14M7274	NUT	1		(SUB FOR J950010)
35	3075775	END PLATE	1		
37	M340820	SCREW	8		
38	4433327	COVER	1		
39	4447264	PIPE PLUG	1		
41	4342846	O-RING	1		
43	M341056	SCREW	4		
47	4194176	COMPRESSION SPRING	1		
48	4332878	COMPRESSION SPRING	1		
49	4350928	COMPRESSION SPRING	1		
52	4436536	SENSOR	1		
52A	CH11570	O-RING	1		
58	9134110	FITTING	1		
58A	M800650	PACKING	1		(SUB FOR 957366)
70	4455719	SEAL KIT	1		

PILOT PUMP COMPONENTS

T188723 -UN-28MAR03

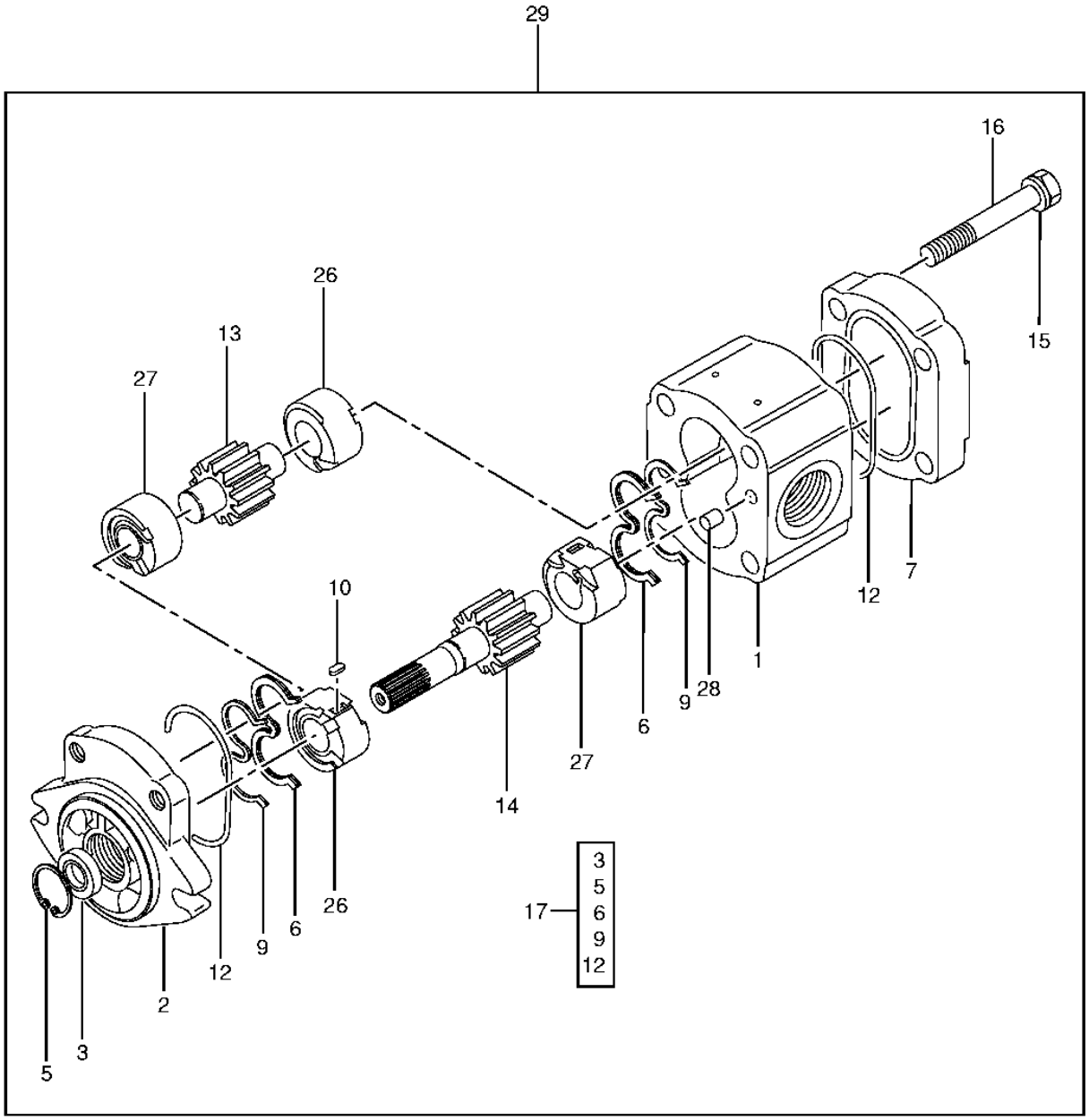

T188723

PILOT PUMP COMPONENTS

KEY	PART NO.	PART NAME	QTY	SERIAL NO.	REMARKS
1	.....	HOUSING	1		
2	.....	FLANGE	1		
3	4206158	SEAL	1		
5	447068	SNAP RING	1		
6	4206159	SEAL	2		
7	.....	COVER	1		
9	4206161	BACK-UP RING	2		
10	4206162	KEY	2		
12	AT153835	O-RING	2		
13	.....	SPUR GEAR	1		(NOT AVAILABLE)
14	.....	PINION SHAFT	1		(NOT AVAILABLE)
15	0266736	WASHER	4		
16	4206165	CAP SCREW	4		
17	4206167	SEAL KIT	1		
26	.....	BUSHING	2		(NOT AVAILABLE)
27	.....	BUSHING	2		(NOT AVAILABLE)
28	4206166	DOWEL PIN	2		
29	9217993	PUMP	1		

CONTROL VALVE

T149615 -UN-05APR02

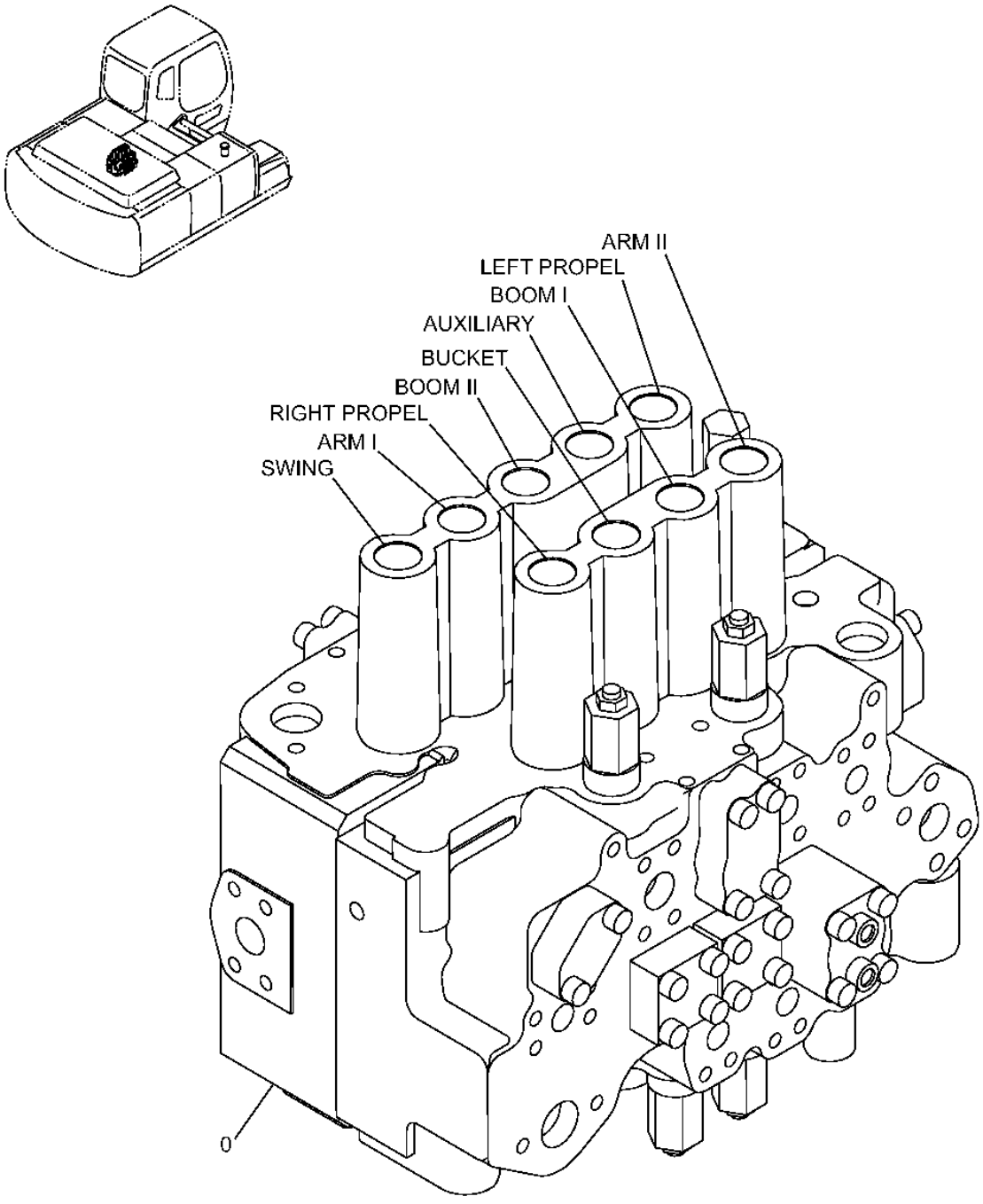

T149615

CONTROL VALVE

KEY	PART NO.	PART NAME	QTY	SERIAL NO.	REMARKS
0	9207699	FLOW CONTROL HYD. VALVE	1		(SUB FOR 9207699EX)

CONTROL VALVE MOUNTING BRACKETS

T149614 -UN-05APR02

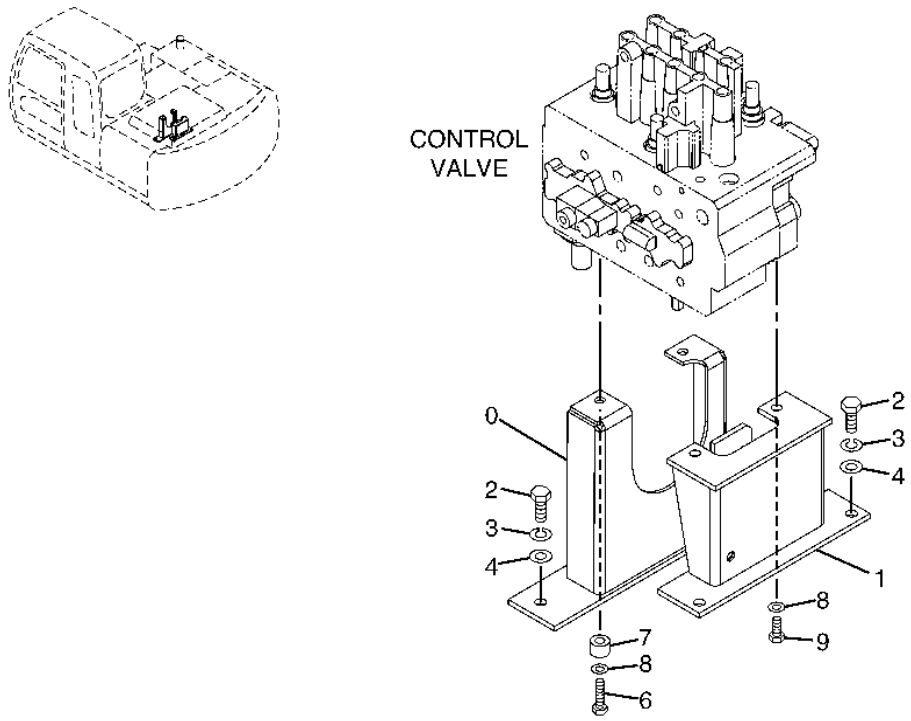

T149614

CONTROL VALVE MOUNTING BRACKETS

KEY	PART NO.	PART NAME	QTY	SERIAL NO.	REMARKS
0	8077220	BRACKET	1		
1	8077221	BRACKET	1		
2	19M7488	CAP SCREW	4		M16 X 40
3	12H294	LOCK WASHER	4		15.875 MM (5/8")
4	24M7053	WASHER	4		17 X 30 X 3 MM
6	J921450	BOLT	2		
7	P61827	SPACER	2		
8	J222014	WASHER	4		
9	19M7877	CAP SCREW	2		M14 X 30

CONTROL VALVE COMPONENTS (4-SPOOL SIDE)

T188753 -UN-28MAR03

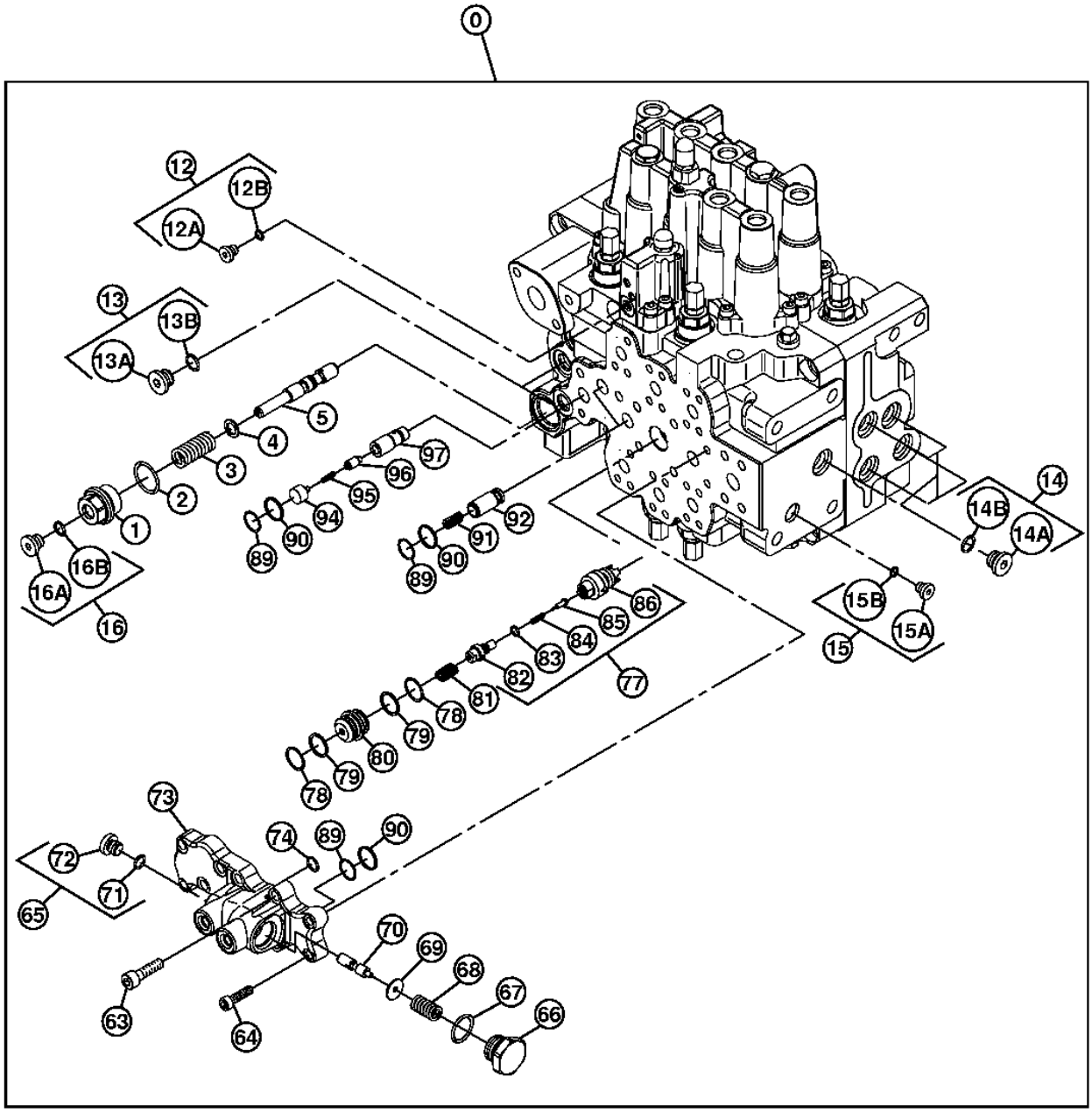

T188753

CONTROL VALVE COMPONENTS (4-SPOOL SIDE)

KEY	PART NO.	PART NAME	QTY	SERIAL NO.	REMARKS
0	9201715	HYD ACTUATED CONTROL VALVE	1		(SUB FOR 4410248) (INCLUDES ALL PARTS ON THIS PAGE. ADDITIONAL PARTS ON FOLLOWING PAGES.)
1	0793209	PIPE PLUG	1		
2	AT264347	O-RING	1		(SUB FOR 4506428)
3	0793208	SPRING	1		
4	0670303	WASHER	1		
5	0793207	VALVE SPOOL	1		
10	4410248	CONTROL VALVE	1		
12	0669502	PIPE PLUG	2		
12A	0669503	FITTING PLUG	1		
12B	4506408	O-RING	1		
13	0664404	FITTING PLUG	7		
13A	0669504	FITTING PLUG	1		
13B	4509180	O-RING	1		
14	0664404	FITTING PLUG	7		
14A	0669504	FITTING PLUG	1		
14B	4509180	O-RING	1		
15	0669502	PIPE PLUG	2		
15A	0669503	FITTING PLUG	1		
15B	4506408	O-RING	1		
16	.....	PIPE PLUG	2		(0669614 NO LONGER AVAILABLE FOR SERVICE - SUB COMPONENTS)
16A	4336166	PIPE PLUG	1		(SUB FOR 0669615)
16B	M800650	PACKING	1		(SUB FOR 957366)
63	0411912	BOLT	7		
64	0411804	SCREW	3		
65	.....	PIPE PLUG	2		(0669614 NO LONGER AVAILABLE FOR SERVICE - SUB 4336166 PLUG AND M800650 O-RING)
66	0793206	PIPE PLUG	1		
67	AT318035	O-RING	1		(SUB FOR 4506424)
68	0669617	SPRING	1		
69	0669616	WASHER	1		
70	0669613	SPOOL VALVE	1		
71	M800650	PACKING	1		(SUB FOR 957366)
72	4336166	PIPE PLUG	1		(SUB FOR 0669615)
73	0793205	PLATE	1		
74	4506412	PACKING	1		
77	0669601	VALVE SEAT INSERT	1		
78	985099	O-RING	2		
79	0669608	BACK-UP RING	2		
80	0669607	BUSHING	1		
81	0669606	SPRING	1		
82	0669605	FITTING PLUG	1		
83	4506408	O-RING	1		
84	0669604	SPRING	1		
85	0669603	CHECK VALVE	1		
86	.....	VALVE SEAT	1		
89	0669624	O-RING	4		
90	0669625	BACK-UP RING	4		
91	0309413	SPRING	2		
92	0669801	CHECK VALVE	2		
94	0793202	PIPE PLUG	1		
95	0793203	SPRING	1		
96	0793204	CHECK VALVE	1		
97	0793201	BUSHING	1		

CONTROL VALVE COMPONENTS (5-SPOOL SIDE)

T188754 -UN-28MAR03

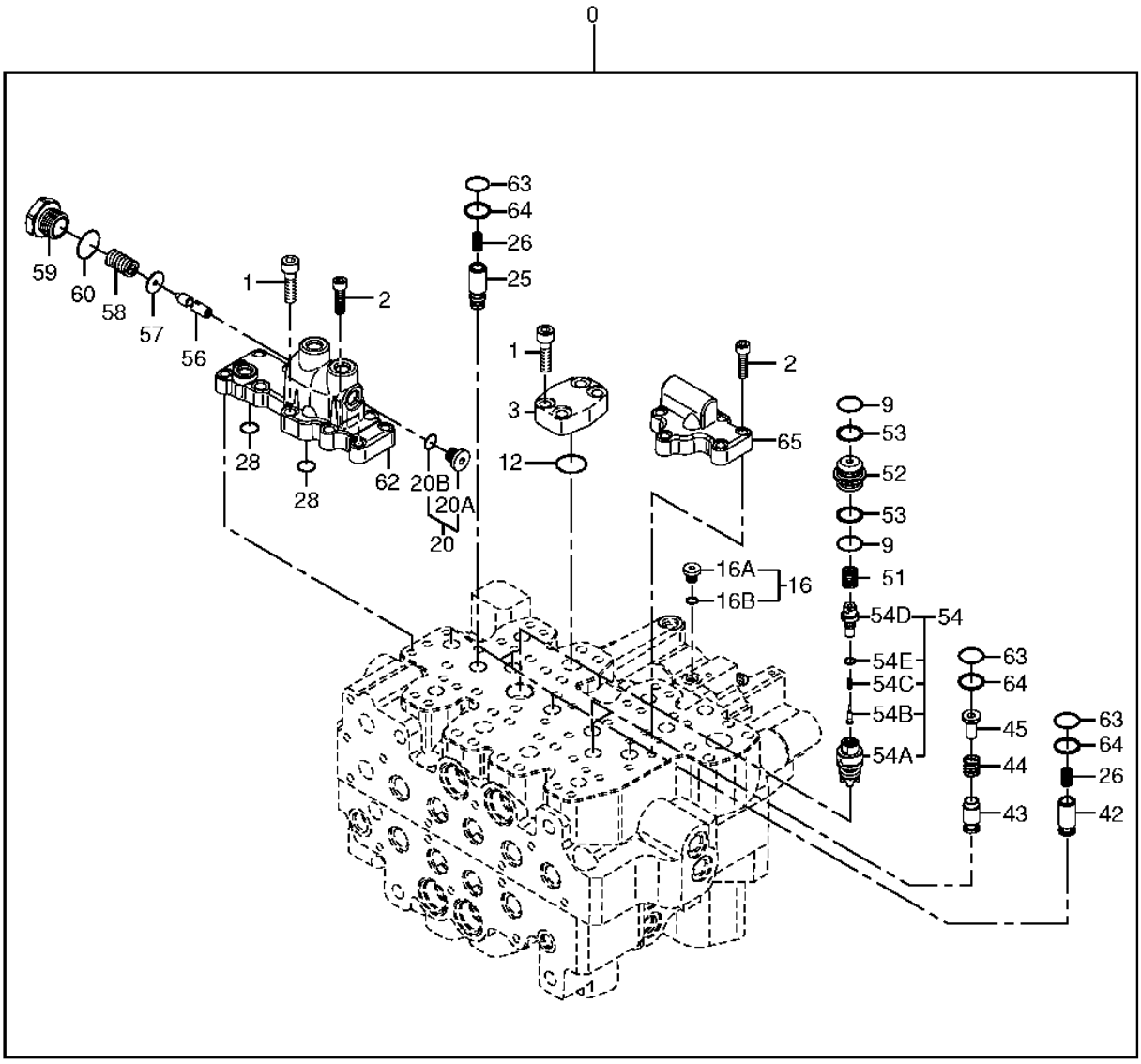

T188754

CONTROL VALVE COMPONENTS (5-SPOOL SIDE)

KEY	PART NO.	PART NAME	QTY	SERIAL NO.	REMARKS
0	9201715	HYD ACTUATED CONTROL VALVE	1		(SUB FOR 4410248) (CONTAINS ALL PARTS ON THIS PAGE - ADDITIONAL COMPONENTS ON PREVIOUS AND FOLLOWING PAGES)
1	0411912	BOLT	10		
2	0411804	SCREW	11		
3	0669701	COVER	1		
9	985099	O-RING	2		
12	0411901	O-RING	1		
16	0669502	PIPE PLUG	1		
16A	0669503	FITTING PLUG	1		
16B	4506408	O-RING	1		
20	.....	PIPE PLUG	1		(0669614 NO LONGER AVAILABLE FOR SERVICE - SUB COMPONENTS)
20A	4336166	PIPE PLUG	1		(SUB FOR 0669615)
20B	M800650	PACKING	1		(SUB FOR 957366)
25	0793301	VALVE	1		
26	0309413	SPRING	5		
28	4506412	PACKING	2		
42	0669801	CHECK VALVE	4		
43	0669610	CHECK VALVE	2		
44	0669609	SPRING	2		
45	0669611	VALVE SEAT	2		
51	0669606	SPRING	1		
52	0669607	BUSHING	1		
53	0669608	BACK-UP RING	2		
54	0669802	VALVE	1		
54A	0669803	VALVE SEAT	1		
54B	0669603	CHECK VALVE	1		
54C	0669604	SPRING	1		
54D	0669605	FITTING PLUG	1		
54E	4506408	O-RING	1		
56	0669613	SPOOL VALVE	1		
57	0669616	WASHER	1		
58	0669617	SPRING	1		
59	0669618	FITTING PLUG	1		
60	AT318035	O-RING	1		(SUB FOR 4506424)
62	0793302	MANIFOLD	1		
63	0669624	O-RING	7		
64	0669625	BACK-UP RING	7		
65	0793303	PLATE	1		

CONTROL VALVE COMPONENTS (BOTTOM)

T188756 -UN-28MAR03

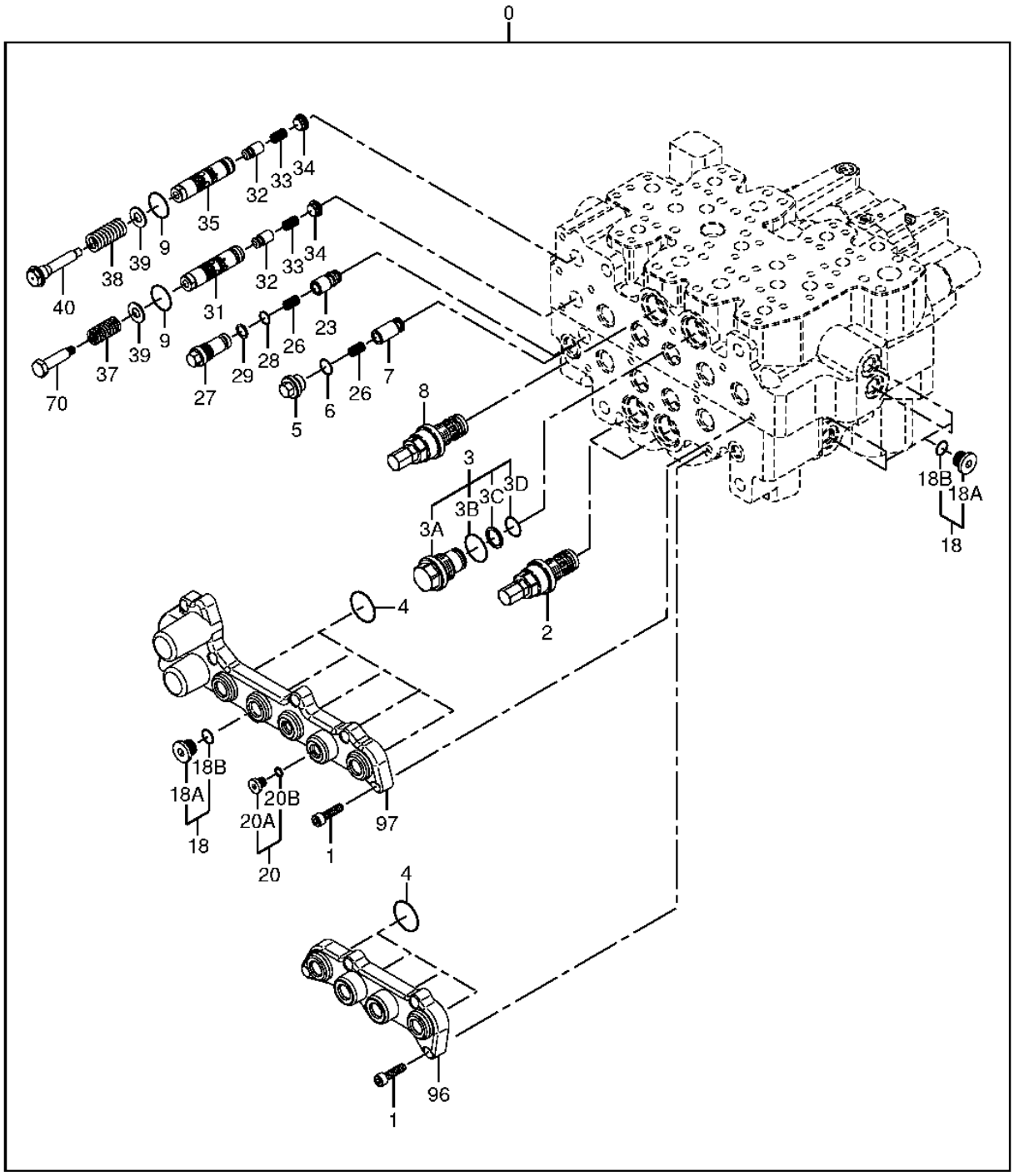

T188756

CONTROL VALVE COMPONENTS (BOTTOM)

KEY	PART NO.	PART NAME	QTY	SERIAL NO.	REMARKS
0	9201715	HYD ACTUATED CONTROL VALVE	1		(SUB FOR 9207699EX) (CONTAINS ALL PARTS ON THIS PAGE - ADDITIONAL COMPONENTS ON PREVIOUS AND FOLLOWING PAGES)
1	0411804	SCREW	14		
2	9200495	FLOW CONTROL HYD. VALVE	2		(SUB FOR 0761702)
3	0309461	PLUG	1		
3A	0412209	PIPE PLUG	1		
3B	AT264347	O-RING	1		(SUB FOR 4506428)
3C	0412003	BACK-UP RING	1		
3D	4506420	PACKING	1		
4	0669906	O-RING	9		
5	0793414	PIPE PLUG	1		
6	4506416	O-RING	1		(SUB FOR 0669501)
7	0793413	CHECK VALVE	1		
8	4372683	PRESSURE RELIEF VALVE	1		
9	0393902	O-RING	2		
18	0664404	FITTING PLUG	5		
18A	0669504	FITTING PLUG	1		
18B	4509180	O-RING	1		
20	.....	PIPE PLUG	1		(0669614 NO LONGER AVAILABLE FOR SERVICE - SUB COMPONENTS)
20A	4336166	PIPE PLUG	1		(SUB FOR 0669615)
20B	M800650	PACKING	1		(SUB FOR 957366)
23	0793401	VALVE	1		
26	0309413	SPRING	2		
27	0669902	FITTING PLUG	1		
28	4506412	PACKING	1		
29	0309416	BACK-UP RING	1		
31	0793402	SPOOL VALVE	1		
32	0793403	CHECK VALVE	2		
33	0793404	SPRING	2		
34	0793405	PIPE PLUG	2		
35	0793406	SPOOL VALVE	1		
37	0793407	SPRING	1		
38	0793408	SPRING	1		
39	0793409	WASHER	2		
40	0793410	BOLT	1		
70	0670305	SCREW	1		
96	0793411	HOUSING	1		
97	0793412	HOUSING	1		

CONTROL VALVE COMPONENTS (TOP SPOOLS, 5-SPOOL SIDE)

T188759 -UN-28MAR03

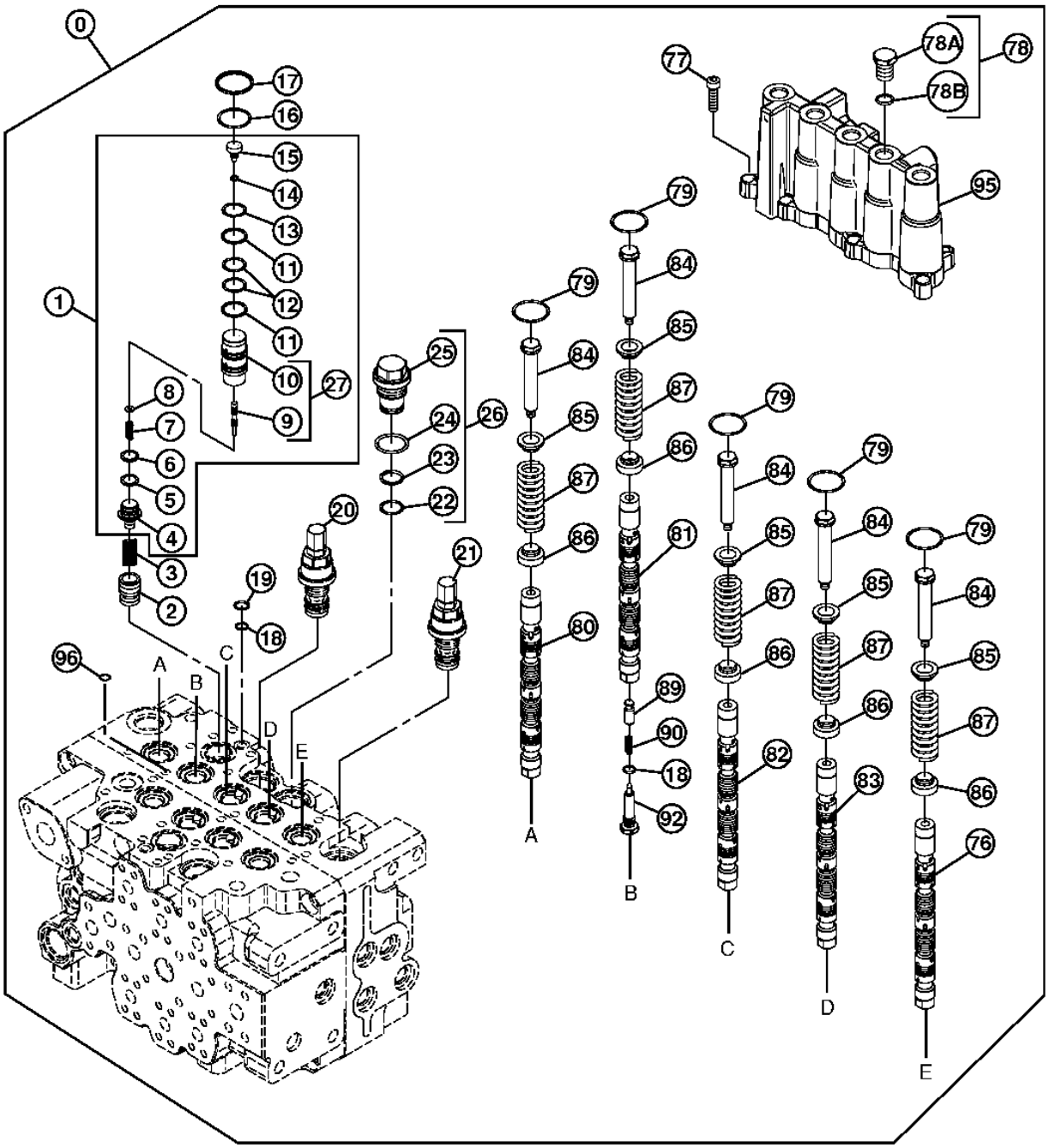

T188759

CONTROL VALVE COMPONENTS (TOP SPOOLS, 5-SPOOL SIDE)

KEY	PART NO.	PART NAME	QTY	SERIAL NO.	REMARKS
0	9201715	HYD ACTUATED CONTROL VALVE	1		(SUB FOR 4410248) (CONTAINS ALL PARTS ON THIS PAGE - ADDITIONAL COMPONENTS ON PREVIOUS AND FOLLOWING PAGES)
1	4455788	VALVE	1		
2	0793601	VALVE	1		
3	0412212	SPRING	1		
4	0670107	FITTING PLUG	1		
5	4509180	O-RING	1		
6	4297661	BACK-UP RING	1		
7	.....	SPRING	1		(0793603 NOT AVAILABLE)
8	0670105	WASHER	1		
9	.....	SPOOL	1		
10	.....	SLEEVE	1		
11	0670104	BACK-UP RING	2		
12	AT264354	O-RING	2		(SUB FOR 4509181, TH103574)
13	4506420	PACKING	1		
14	4506405	O-RING	1		
15	.....	STOP	1		(0793604 NOT AVAILABLE)
16	0309402	O-RING	1		
17	0793605	BACK-UP RING	1		
18	CH17167	O-RING	1		(SUB FOR 4506320)
19	0793606	BACK-UP RING	1		
20	4372684	PRESSURE RELIEF VALVE	1		
21	4372682	PRESSURE RELIEF VALVE	1		
22	4506420	PACKING	1		
23	0412003	BACK-UP RING	1		
24	AT264347	O-RING	1		(SUB FOR 4506428)
25	0412209	PIPE PLUG	1		
26	0309461	PLUG	1		
27	.....	VALVE	1		(0793602 NOT AVAILABLE)
76	.....	SPOOL VALVE	1		
77	0411804	SCREW	10		
78	4385798	PIPE PLUG	1		
78A	0309466	FITTING PLUG	1		
78B	4509180	O-RING	1		
79	0669906	O-RING	5		
80	.....	SPOOL VALVE	1		
81	.....	SPOOL VALVE	1		
82	.....	SPOOL VALVE	1		
83	.....	SPOOL VALVE	1		
84	0670002	SCREW	5		
85	0670003	VALVE SEAT	5		
86	0670004	VALVE SEAT	5		
87	0793501	SPRING	5		
89	0412015	VALVE	1		
90	0412016	SPRING	1		
92	0670001	FITTING PLUG	1		
95	0793502	HOUSING	1		
96	4506408	O-RING	1		

CONTROL VALVE COMPONENTS (TOP SPOOLS, 4-SPOOL SIDE)

T153124 -UN-05APR02

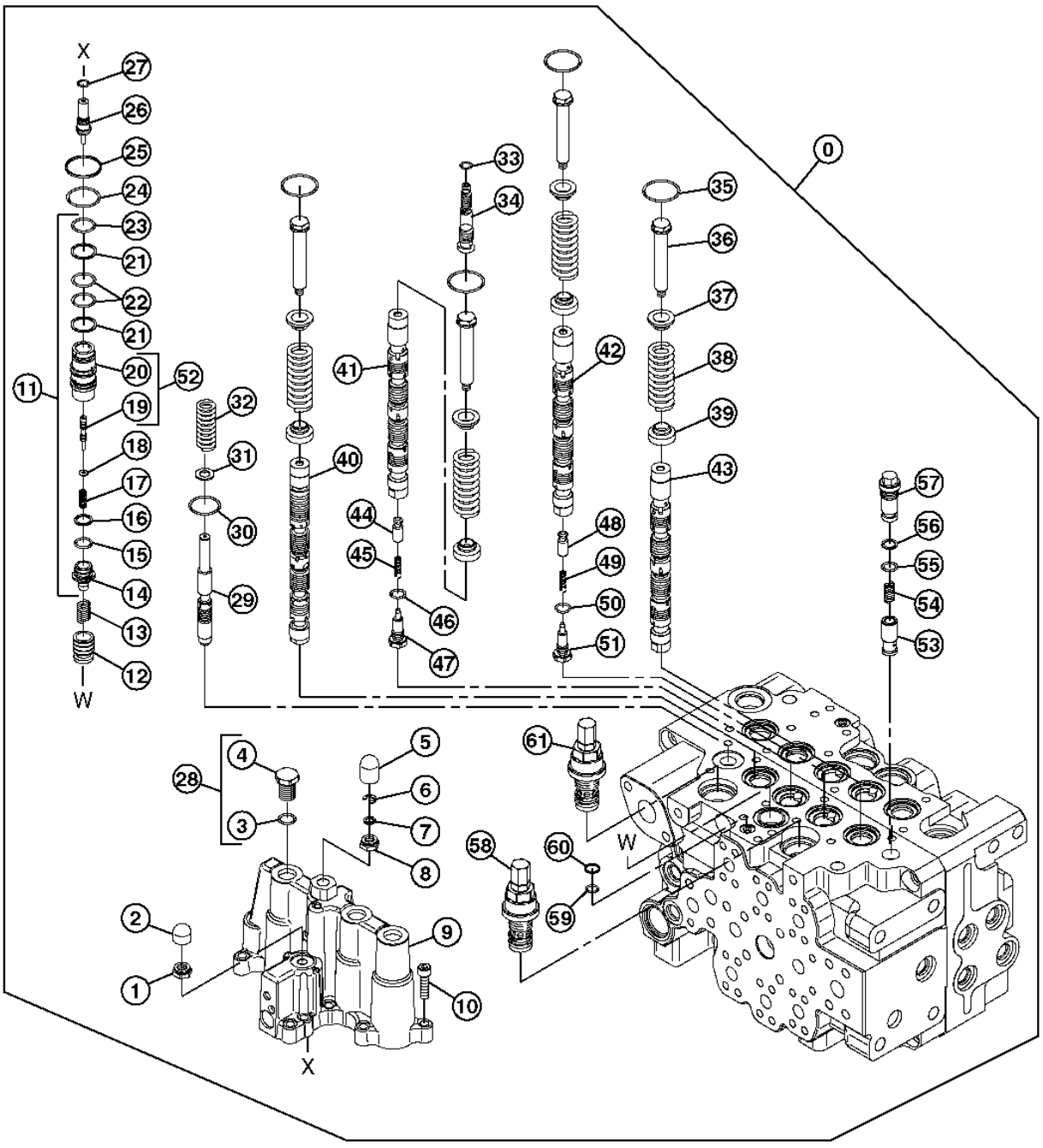

T153124

CONTROL VALVE COMPONENTS (TOP SPOOLS, 4-SPOOL SIDE)

KEY	PART NO.	PART NAME	QTY	SERIAL NO.	REMARKS
0	9201715	HYD ACTUATED CONTROL VALVE	1		(SUB FOR 4410248) (CONTAINS ALL PARTS ON THIS PAGE - ADDITIONAL COMPONENTS ON PREVIOUS AND FOLLOWING PAGES)
1	0412202	NUT	2		
2	0412204	CAP	1		
3	4509180	O-RING	1		
4	0309466	FITTING PLUG	1		
5	0670207	CAP	1		
6	0412203	RING	1		
7	0670208	WASHER	1		
9	0793701	HOUSING	1		
10	0411804	SCREW	11		
11	4455787	VALVE	1		
12	0793601	VALVE	1		
13	0412212	SPRING	1		
14	0670107	FITTING PLUG	1		
15	4509180	O-RING	1		
16	4297661	BACK-UP RING	1		
17	.....	SPRING	1		(0793603 NOT AVAILABLE)
18	0670105	WASHER	1		
19	.....	SPOOL	1		
20	.....	SLEEVE	1		
21	0670104	BACK-UP RING	2		
22	AT264354	O-RING	2		(SUB FOR 4509181, TH103574)
23	4506420	PACKING	1		
24	0309402	O-RING	1		
25	0793605	BACK-UP RING	1		
26	0793803	SCREW	1		
27	4506409	PACKING	1		
28	4385798	PIPE PLUG	1		
29	0793801	VALVE SPOOL	1		
30	0393902	O-RING	1		
31	0670303	WASHER	1		
32	0670307	SPRING	1		
33	4506409	PACKING	1		
34	0670206	SCREW	1		
35	0669906	O-RING	4		
36	0670002	SCREW	4		
37	0670003	VALVE SEAT	4		
38	0793501	SPRING	4		
39	0670004	VALVE SEAT	4		
40	.....	SPOOL VALVE	1		
41	.....	SPOOL VALVE	1		
42	.....	SPOOL VALVE	1		
43	.....	SPOOL VALVE	1		
46	CH17167	O-RING	1		
48	0412015	VALVE	2		
49	0412016	SPRING	2		
50	CH17167	O-RING	2		(SUB FOR 4506320)
51	0670201	FITTING PLUG	2		
52	.....	HOUSING	1		(0793802 NOT AVAILABLE)
53	0793804	CHECK VALVE	1		
54	0309413	SPRING	1		
55	4506412	PACKING	1		
56	0309416	BACK-UP RING	1		
57	0669902	FITTING PLUG	1		
58	4372684	PRESSURE RELIEF VALVE	1		
59	CH17167	O-RING	1		(SUB FOR 4506320)
60	0793606	BACK-UP RING	1		
61	4372683	PRESSURE RELIEF VALVE	1		

CONTROL VALVE COMPONENTS (MANIFOLD ASSEMBLY AND SEALS)

T153725 -UN-08APR02

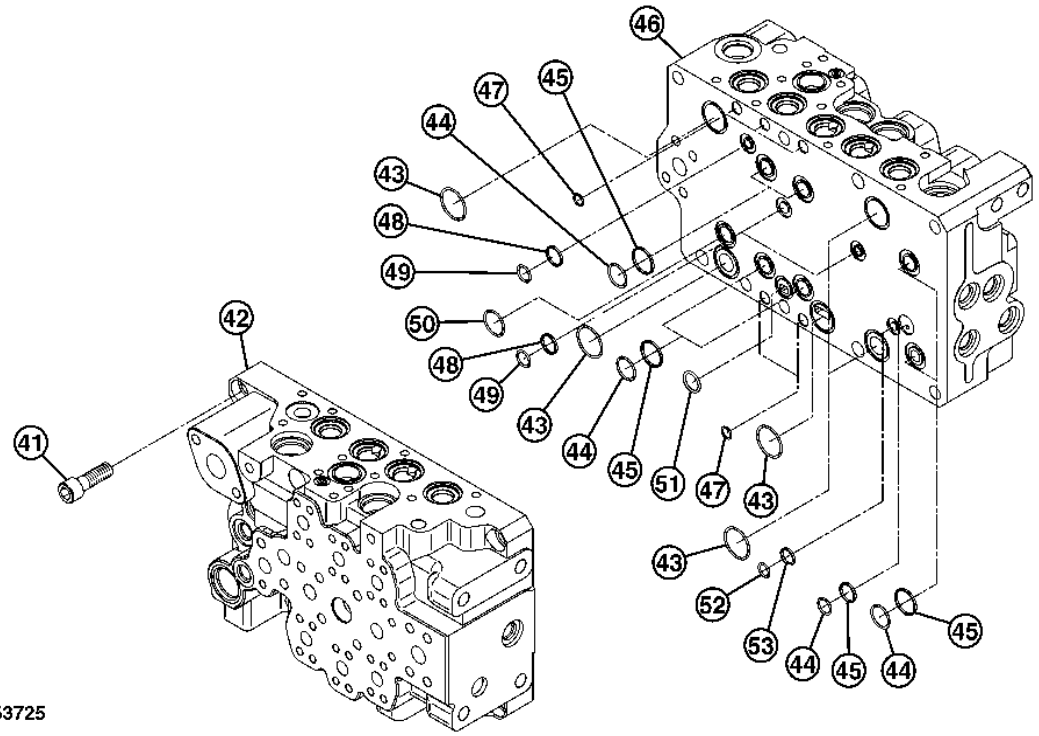

CONTROL VALVE COMPONENTS (MANIFOLD ASSEMBLY AND SEALS)

KEY	PART NO.	PART NAME	QTY	SERIAL NO.	REMARKS
0	9201715	HYD ACTUATED CONTROL VALVE	1		(SUB FOR 4410248) (CONTAINS ALL PARTS ON THIS PAGE - ADDITIONAL COMPONENTS ON PREVIOUS AND FOLLOWING PAGES)
41	0411801	SCREW	9		
42	.....	HOUSING	1		
43	0309402	O-RING	5		
44	985099	O-RING	7		
45	0309401	BACK-UP RING	7		
46	.....	HOUSING	1		
47	CH17167	O-RING	5		(SUB FOR 4506320)
48	0309403	BACK-UP RING	3		
49	4509180	O-RING	3		
50	0411901	O-RING	1		
51	4506420	PACKING	1		
52	M800650	PACKING	1		(SUB FOR 957366)
53	0412502	BACK-UP RING	1		

MEMORANDA

BRAKE VALVE (TRAVEL)

KEY	PART NO.	PART NAME	QTY	SERIAL NO.	REMARKS
0	8076163	CASE	1		
0A	.....	CASE	1		
0B	.....	SPOOL	1		
0C	.....	SPOOL	1		
2	4372079	SPRING	2		
3	4427428	STOP	2		
	4427428	STOP	2		
4	4229631	DRAIN PLUG	2		
10	4300918	POPPET	2		
11	4383067	SPRING	2		
14	9159923	PRESSURE RELIEF VALVE	2		
15	4509493	BALL	1		
16	4193400	PLUG	1		
19	4297257	COMPRESSION SPRING	1		
20	9167977	PIPE PLUG	1		
20A	M800650	PACKING	1		(SUB FOR 957366)
24	4050968	PIPE PLUG	1		
25	9134109	DRAIN PLUG	2		
25A	4506408	O-RING	1		
26	9134110	PIPE PLUG	4		
26A	M800650	PACKING	1		(SUB FOR 957366)
27	9134111	PIPE PLUG	1		
27A	4509180	O-RING	1		

BLADE CONTROL VALVE COMPONENTS

T188777 -UN-28MAR03

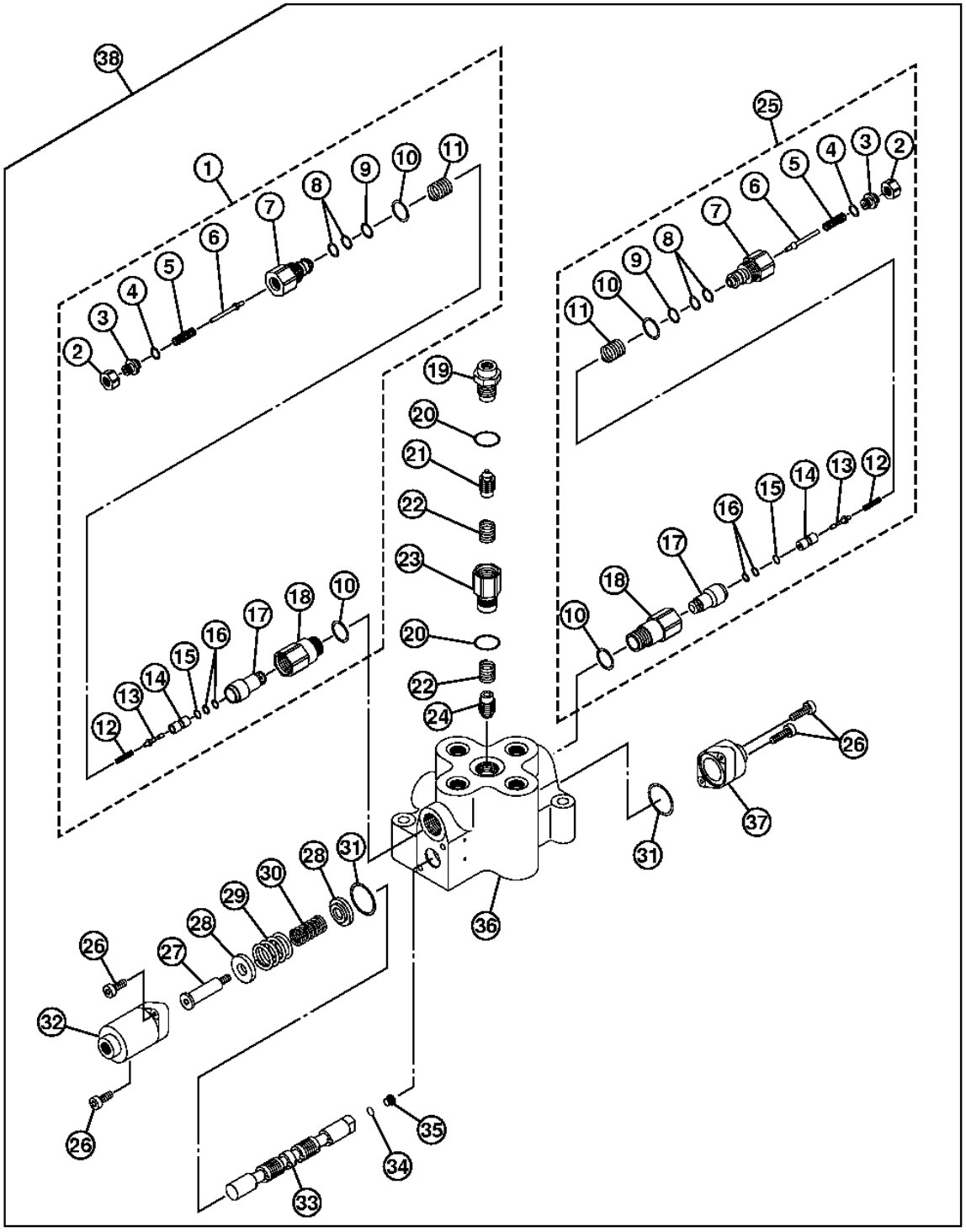

T188777

BLADE CONTROL VALVE COMPONENTS

KEY	PART NO.	PART NAME	QTY	SERIAL NO.	REMARKS
1	0757606	PRESSURE RELIEF VALVE	1		
2	.....	NUT	1		
	.....	NUT	1		
3	.....	SCREW	1		
	.....	SCREW	1		
4	.....	O-RING	1		
	.....	O-RING	1		
5	.....	SPRING	1		
	.....	SPRING	1		
6	.....	ROD	1		
	.....	ROD	1		
7	.....	HOUSING	1		
	.....	HOUSING	1		
8	.....	BACK-UP RING	2		
	.....	BACK-UP RING	2		
9	.....	O-RING	1		
	.....	O-RING	1		
10	.....	O-RING	2		
	.....	O-RING	2		
11	.....	SPRING	1		
	.....	SPRING	1		
12	.....	SPRING	1		
	.....	SPRING	1		
13	.....	PISTON PIN	1		
	.....	PISTON PIN	1		
14	.....	POPPET	1		
	.....	POPPET	1		
15	.....	O-RING	1		
	.....	O-RING	1		
16	.....	BACK-UP RING	2		
	.....	BACK-UP RING	2		
17	.....	POPPET	1		
	.....	POPPET	1		
18	.....	ADAPTER	1		
	.....	ADAPTER	1		
19	0757603	ELECTRICAL CONNECTOR ASSY	1		
20	AT318035	O-RING	2		(SUB FOR 4506424)
21	0757604	PLUNGER	1		
22	0766508	SPRING	2		
23	0757601	ADAPTER	1		
24	0757602	PLUNGER	1		
25	0757605	PRESSURE RELIEF VALVE	1		
26	0370410	BOLT	4		
27	0766505	END	1		
28	0766504	HOLDER	2		
29	0766503	SPRING	1		
30	0766509	SPRING	1		
31	0766510	O-RING	2		
32	0766501	COVER	1		
33	.....	SPOOL VALVE	1		
34	4506408	O-RING	1		
35	0343512	FITTING PLUG	1		
36	.....	HOUSING	1		
37	0766502	COVER	1		
38	4401481	HYD ACTUATED CONTROL VALVE	1		

SOLENOID VALVE COMPONENTS

T153137 -UN-05APR02

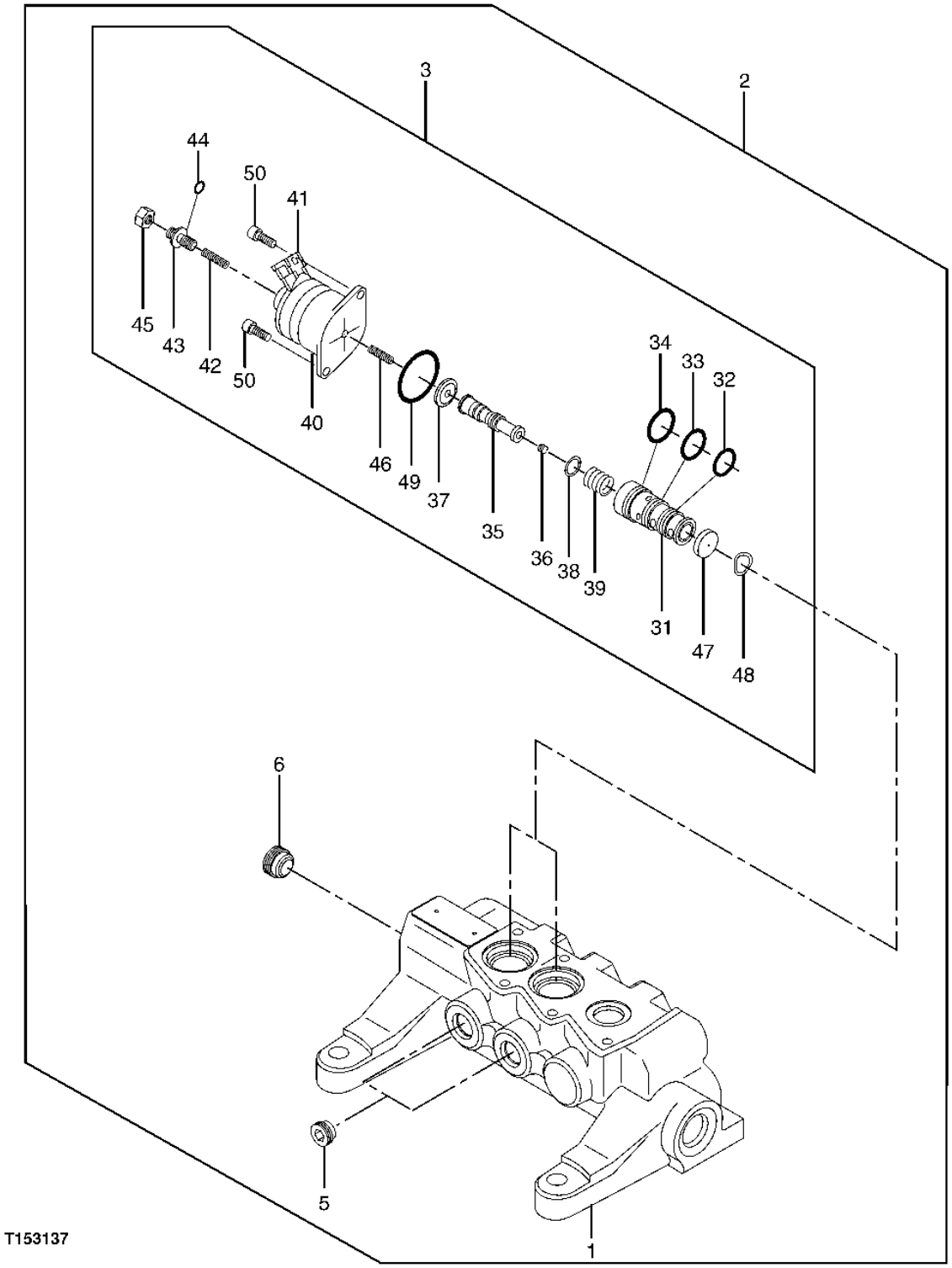

SOLENOID VALVE COMPONENTS

KEY	PART NO.	PART NAME	QTY	SERIAL NO.	REMARKS
1	.....	HOUSING	1		
2	9218271	SOLENOID VALVE	1		
3	4455991	SOLENOID VALVE	2		
5	9761179	FILTER	2		(SUB FOR 4455986)
6	4455987	PIPE PLUG	1		
31	.....	SLEEVE	1		
32	4185600	O-RING	1		(SUB FOR 0408409)
33	0408410	O-RING	1		
34	0408411	O-RING	1		
35	.....	SPOOL VALVE	1		
36	.....	ORIFICE	1		
37	.....	DIAPHRAGM	1		
38	.....	WASHER	1		
39	.....	SPRING	1		
40	.....	SOLENOID	1		
41	.....	SOCKET	1		
42	.....	SPRING	1		
43	.....	SCREW	1		
44	.....	O-RING	1		
45	.....	NUT	1		
46	.....	SPRING	1		
47	.....	PLATE	1		
48	4455990	WASHER	1		
49	4455989	SEAL	1		
50	0387804	SCREW	2		

BLADE PUMP PRESSURE RELIEF VALVE COMPONENTS

T188785 -UN-28MAR03

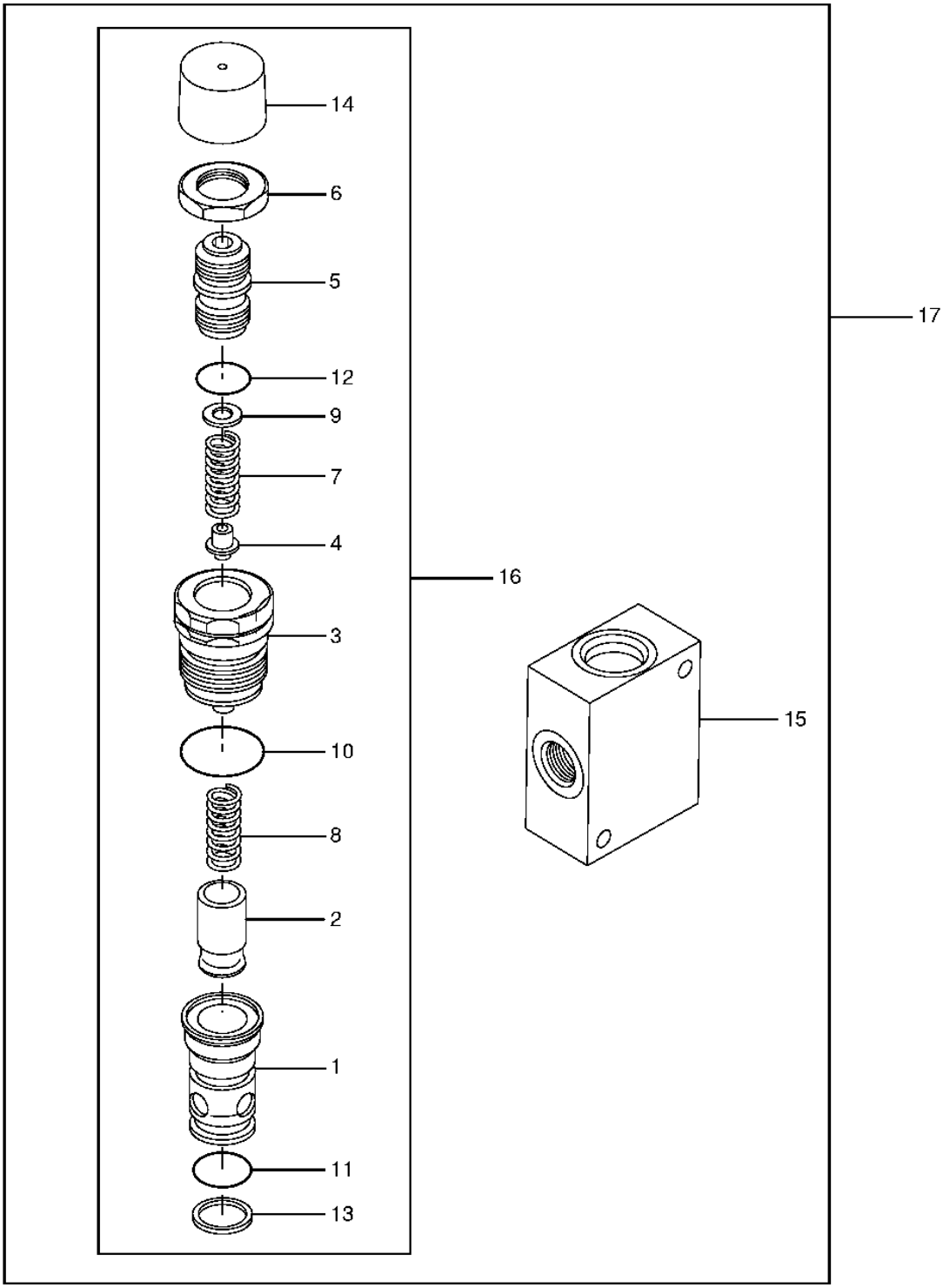

T188785

BLADE PUMP PRESSURE RELIEF VALVE COMPONENTS

KEY	PART NO.	PART NAME	QTY	SERIAL NO.	REMARKS
1	.....	HOUSING	1		
2	.....	PLUNGER	1		
3	.....	HOUSING	1		
4	.....	POPPET	1		
5	.....	SCREW	1		
6	.....	NUT	1		
7	.....	SPRING	1		
8	.....	SPRING	1		
9	.....	SHIM	1		
10	0301301	O-RING	1		
11	0230906	O-RING	1		
12	.....	O-RING	1		
13	0230908	BACK-UP RING	2		
14	0287601	CAP	1		
15	0778501	MANIFOLD	1		
16	4446002	PRESSURE RELIEF VALVE	1		
17	4411019	PRESSURE RELIEF VALVE	1		

FLOW COMBINER SHUTTLE VALVE COMPONENTS

T153484 -UN-05APR02

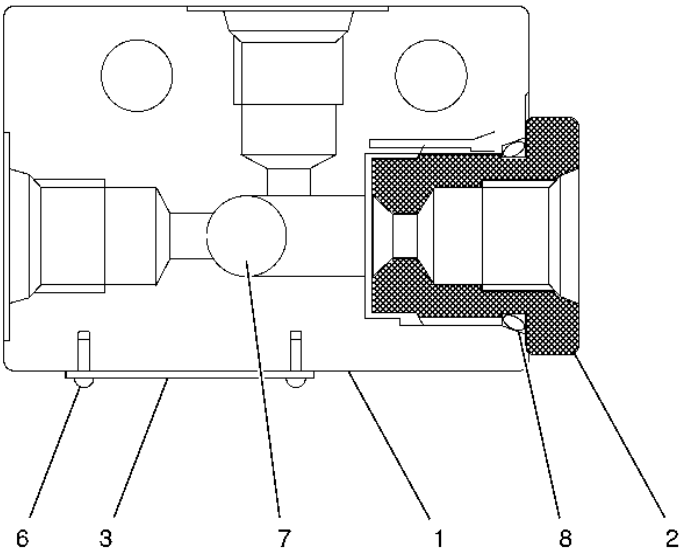

T153484

FLOW COMBINER SHUTTLE VALVE COMPONENTS

KEY	PART NO.	PART NAME	QTY	SERIAL NO.	REMARKS
1	0361001	HOUSING	1		
2	0361002	BUSHING	1		
3	.....	NAME BADGE	1		
6	.....	SCREW	2		
7	0334605	BALL	1		
8	0229210	O-RING	1		

PILOT SIGNAL MANIFOLD HOUSING AND GASKETS

T149601 -UN-17JAN02

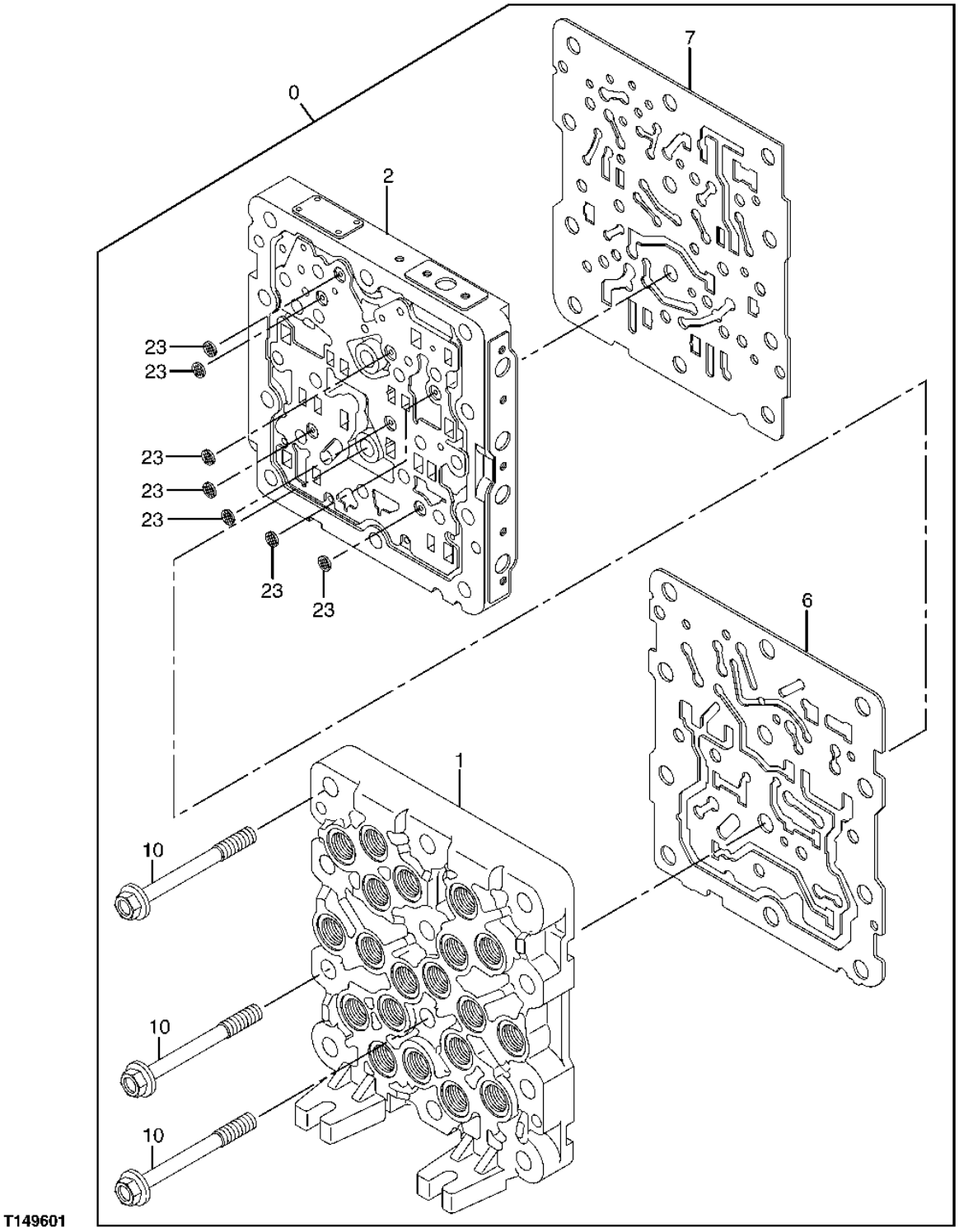

PILOT SIGNAL MANIFOLD HOUSING AND GASKETS

KEY	PART NO.	PART NAME	QTY	SERIAL NO.	REMARKS
0	4468336	FLOW CONTROL HYD. VALVE	1		(ADDITIONAL COMPONENTS ON FOLLOWING PAGES)
1	.....	HOUSING	1		(NOT AVAILABLE FOR SERVICE)
2	.....	HOUSING	1		(NOT AVAILABLE FOR SERVICE)
6	.....	GASKET	1		(NOT AVAILABLE FOR SERVICE)
7	.....	GASKET	1		(NOT AVAILABLE FOR SERVICE)
10	.....	BOLT	12		(NOT AVAILABLE FOR SERVICE)
23	.....	FILTER ELEMENT	7		(NOT AVAILABLE FOR SERVICE)

PILOT SIGNAL MANIFOLD HOUSING AND GASKETS (CONTINUED)

T149603 -UN-17JAN02

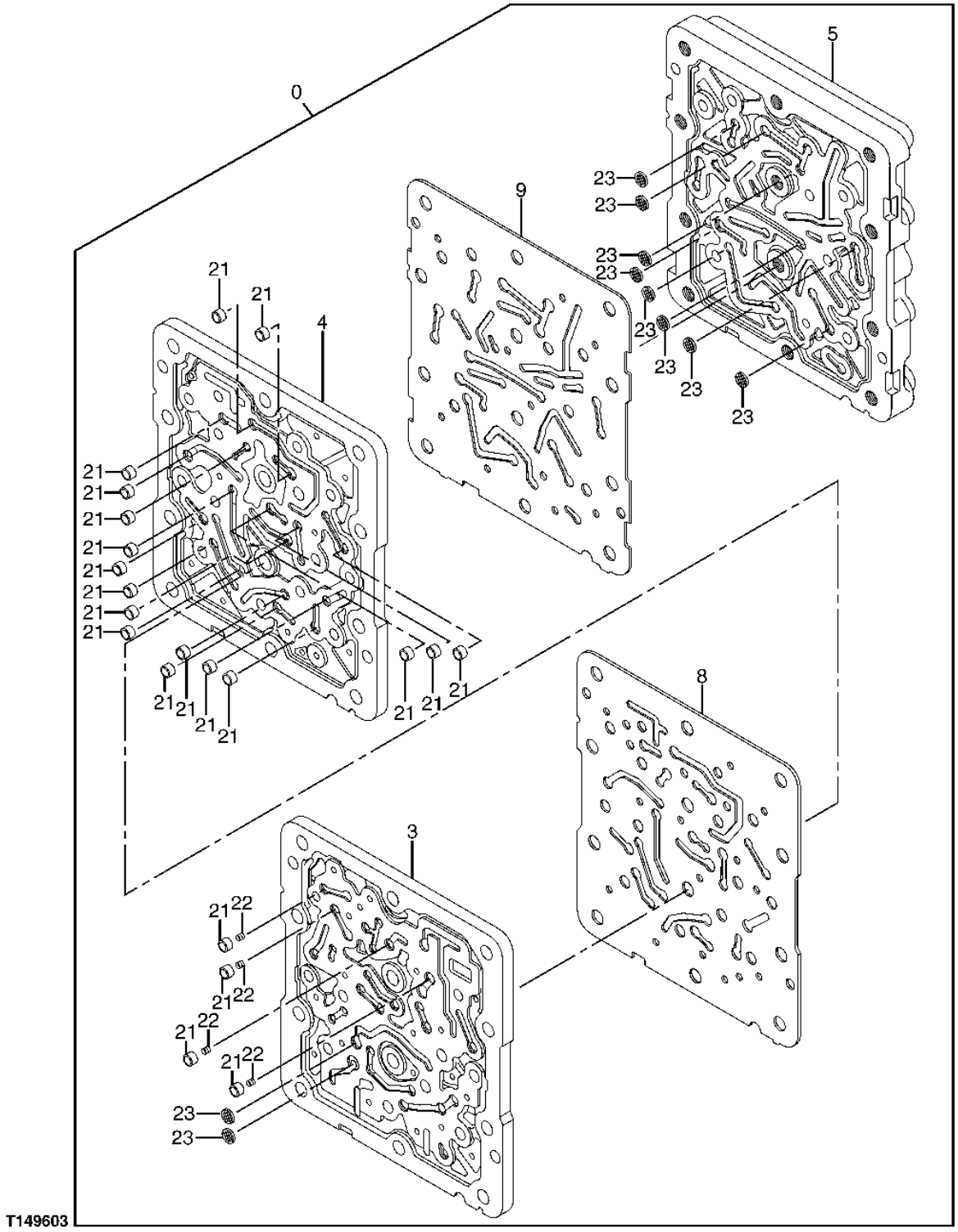

PILOT SIGNAL MANIFOLD (VALVE SECTION)

KEY	PART NO.	PART NAME	QTY	SERIAL NO.	REMARKS
0	4468336	FLOW CONTROL HYD. VALVE	1		(ADDITIONAL COMPONENTS ON PREVIOUS AND FOLLOWING PAGES)
3	.....	HOUSING	1		(NOT AVAILABLE FOR SERVICE)
4	.....	HOUSING	1		(NOT AVAILABLE FOR SERVICE)
5	.....	HOUSING	1		(NOT AVAILABLE FOR SERVICE)
8	.....	GASKET	1		(NOT AVAILABLE FOR SERVICE)
9	.....	GASKET	1		(NOT AVAILABLE FOR SERVICE)
21	.....	SLEEVE	21		(NOT AVAILABLE FOR SERVICE)
22	.....	SPRING	4		(NOT AVAILABLE FOR SERVICE)
23	.....	FILTER ELEMENT	10		(NOT AVAILABLE FOR SERVICE)

PILOT SIGNAL MANIFOLD FITTINGS (PILOT CONTROLLER SIDE)

T149604 -UN-17JAN02

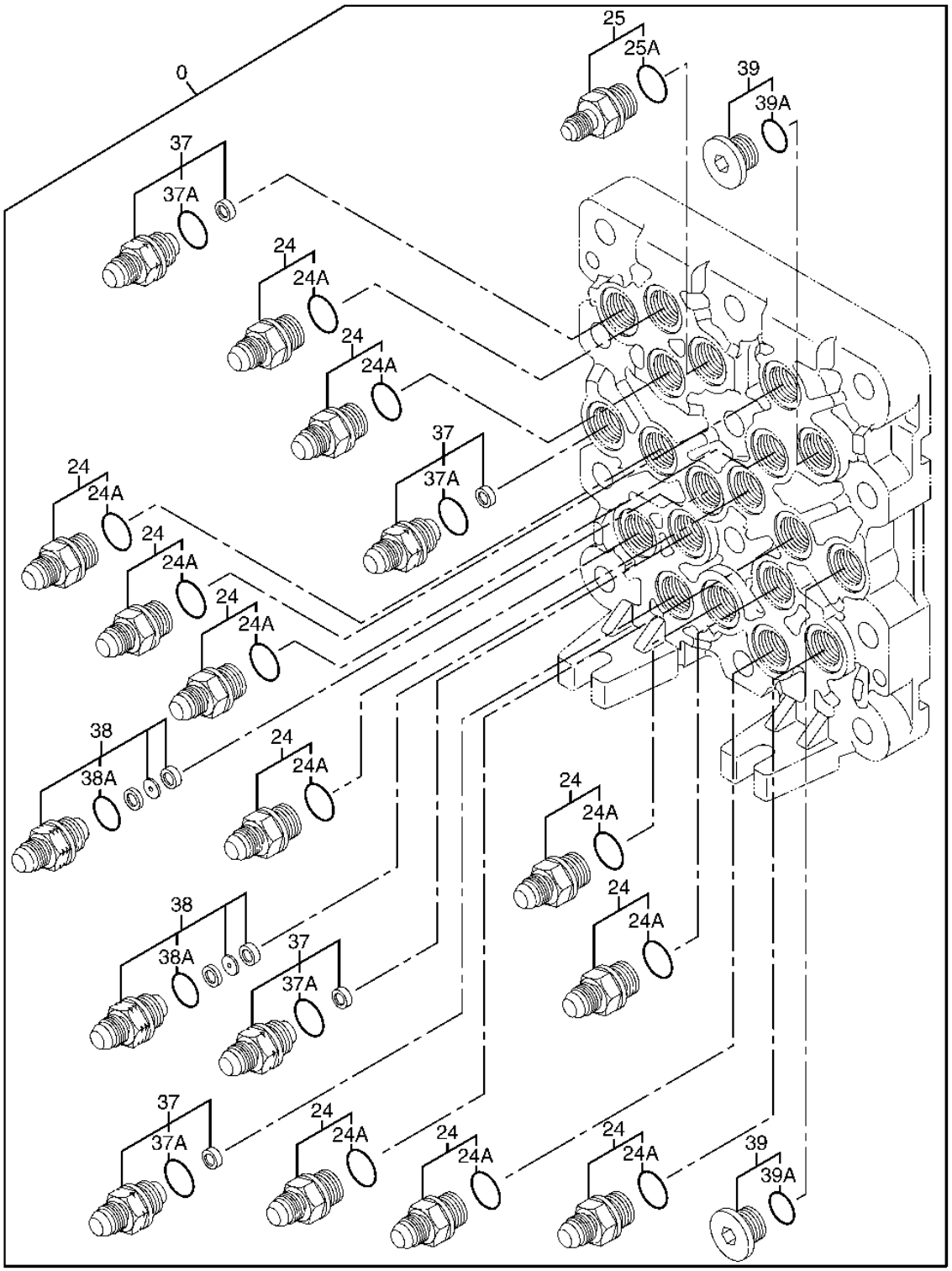

PILOT SIGNAL MANIFOLD FITTINGS (PILOT CONTROLLER SIDE)

KEY	PART NO.	PART NAME	QTY	SERIAL NO.	REMARKS
0	4468336	FLOW CONTROL HYD. VALVE	1		(ADDITIONAL COMPONENTS ON PREVIOUS AND FOLLOWING PAGES)
24	4451784	ADAPTER	11		
24A	CH11570	O-RING	1		
25	4451785	ADAPTER	2		
25A	CH11570	O-RING	1		
37	4451787	ADAPTER	3		
37A	CH11570	O-RING	1		
38	4482233	ADAPTER	2		(SUB FOR TH4451788 OR 4451788)
38A	CH11570	O-RING	1		
39	4451789	PIPE PLUG	2		
39A	CH11570	O-RING	1		

PILOT SIGNAL MANIFOLD FITTINGS (CONTROL VALVE SIDE)

T149605 -UN-17JAN02

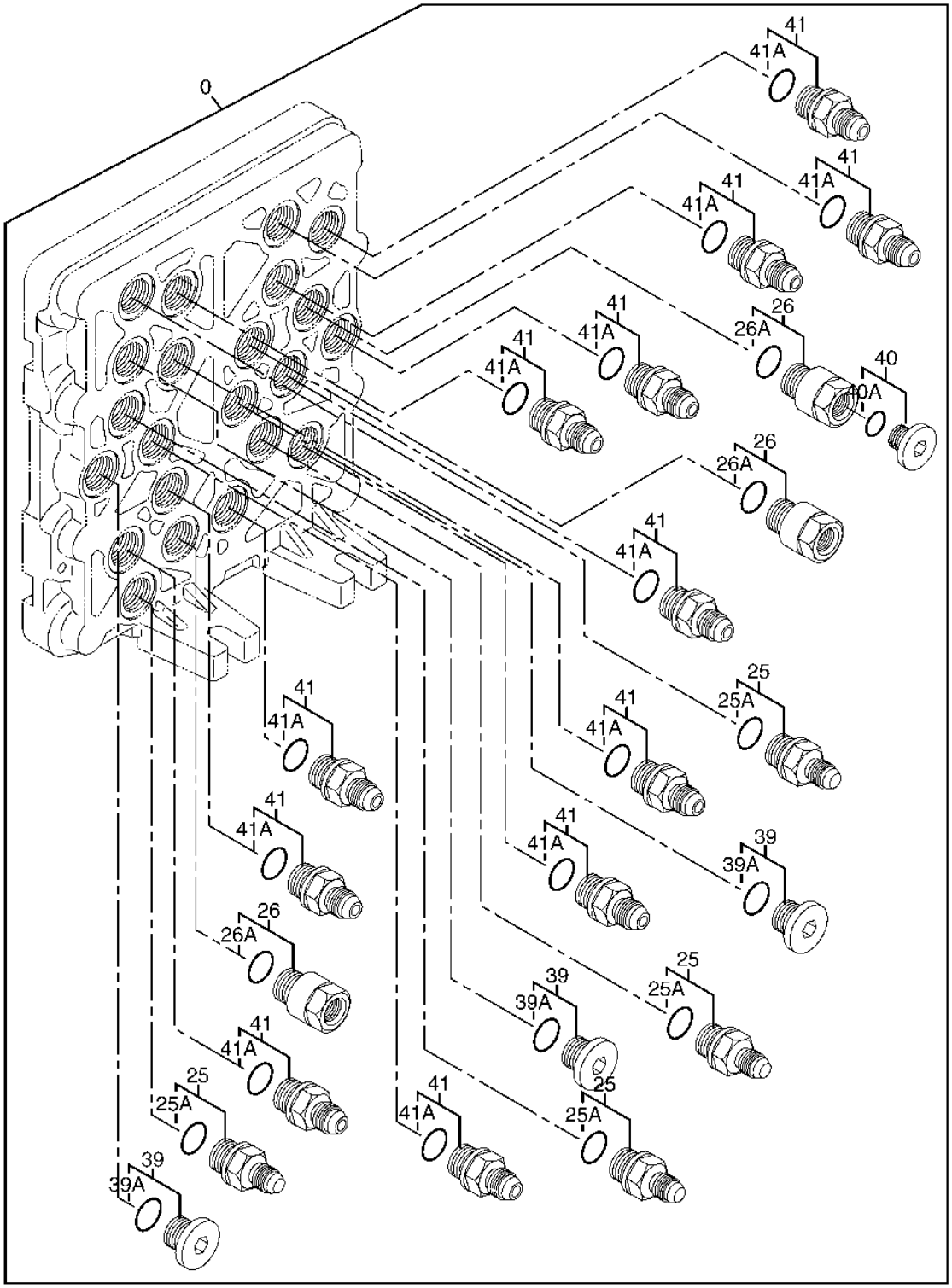

PILOT SIGNAL MANIFOLD FITTINGS (CONTROL VALVE SIDE)

KEY	PART NO.	PART NAME	QTY	SERIAL NO.	REMARKS
0	4468336	FLOW CONTROL HYD. VALVE	1		(ADDITIONAL COMPONENTS ON PREVIOUS AND FOLLOWING PAGES)
25	4451785	ADAPTER	4		
25A	CH11570	O-RING	1		
26	4451786	REDUCER	3		
26A	CH11570	O-RING	1		
39	4451789	PIPE PLUG	3		
39A	CH11570	O-RING	1		
40	4451790	PIPE PLUG	1		
40A	M800650	PACKING	1		
41	4451797	ADAPTER	12		
41A	CH11570	O-RING	1		

PILOT SIGNAL MANIFOLD SPOOLS AND SPRINGS

T149606 -UN-17JAN02

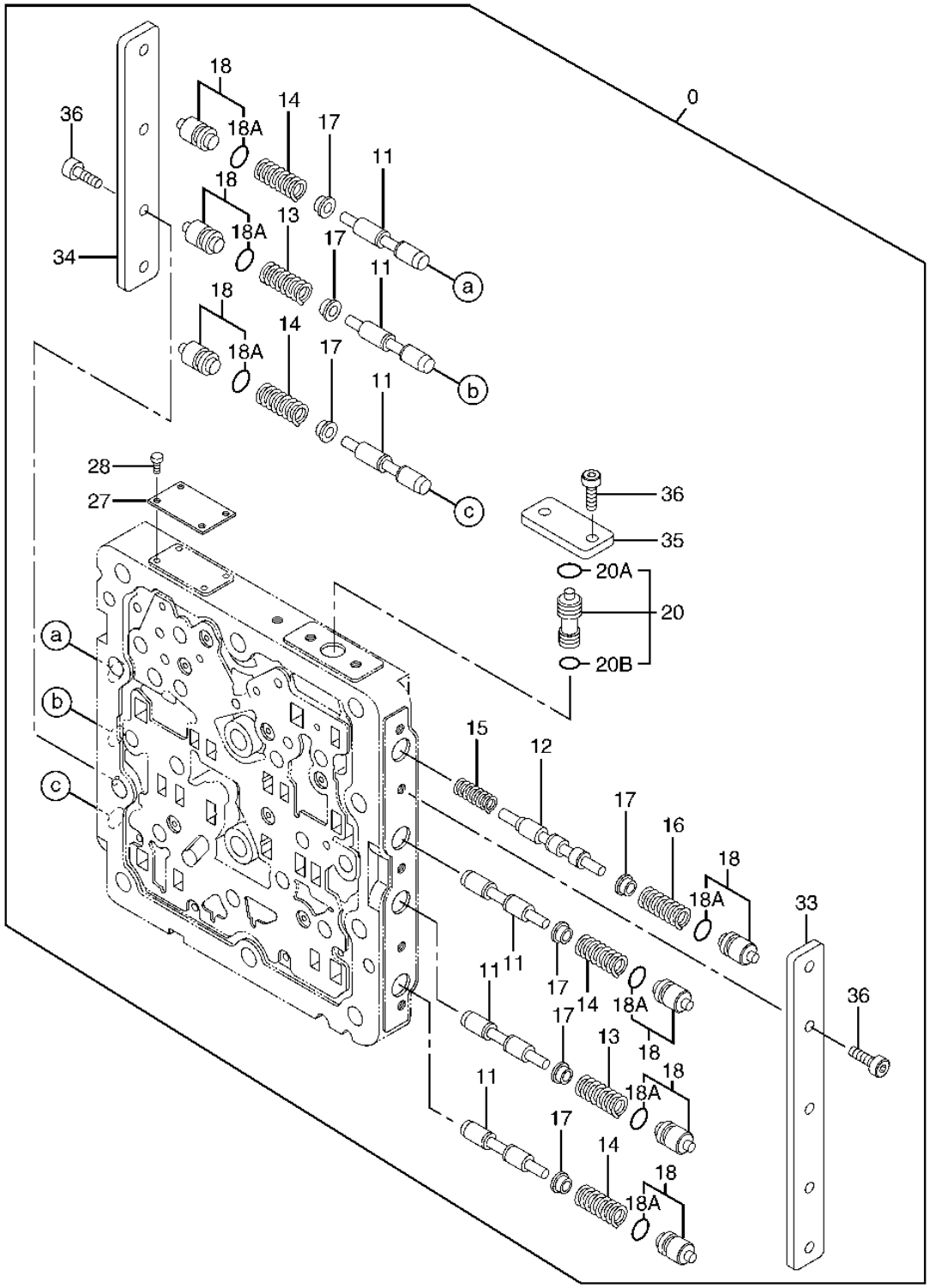

PILOT SIGNAL MANIFOLD SPOOLS AND SPRINGS

KEY	PART NO.	PART NAME	QTY	SERIAL NO.	REMARKS
0	4468336	FLOW CONTROL HYD. VALVE	1		(ADDITIONAL COMPONENTS ON PREVIOUS PAGES)
11	4453819	SPOOL VALVE	6		
12	4453820	SPOOL VALVE	1		
13	0788703	SPRING	2		
14	0788704	SPRING	4		
15	0788705	SPRING	1		
16	0788706	SPRING	1		
17	0788707	VALVE SEAT	7		
18	4452647	PIPE PLUG	7		
18A	4140436	PACKING	1		
20	4452649	FLOW CONTROL HYD. VALVE	1		
20A	4140436	PACKING	1		
20B	992526	PACKING	1		
27	.....	IDENTIFICATION PLATE	1		(NOT AVAILABLE FOR SERVICE)
28	.....	SCREW	4		(NOT AVAILABLE FOR SERVICE)
33	0788710	PLATE	1		
34	0788711	PLATE	1		
35	0788712	PLATE	1		
36	0788713	BOLT	11		

PILOT SHUTOFF VALVE COMPONENTS

T145817 -UN-08OCT01

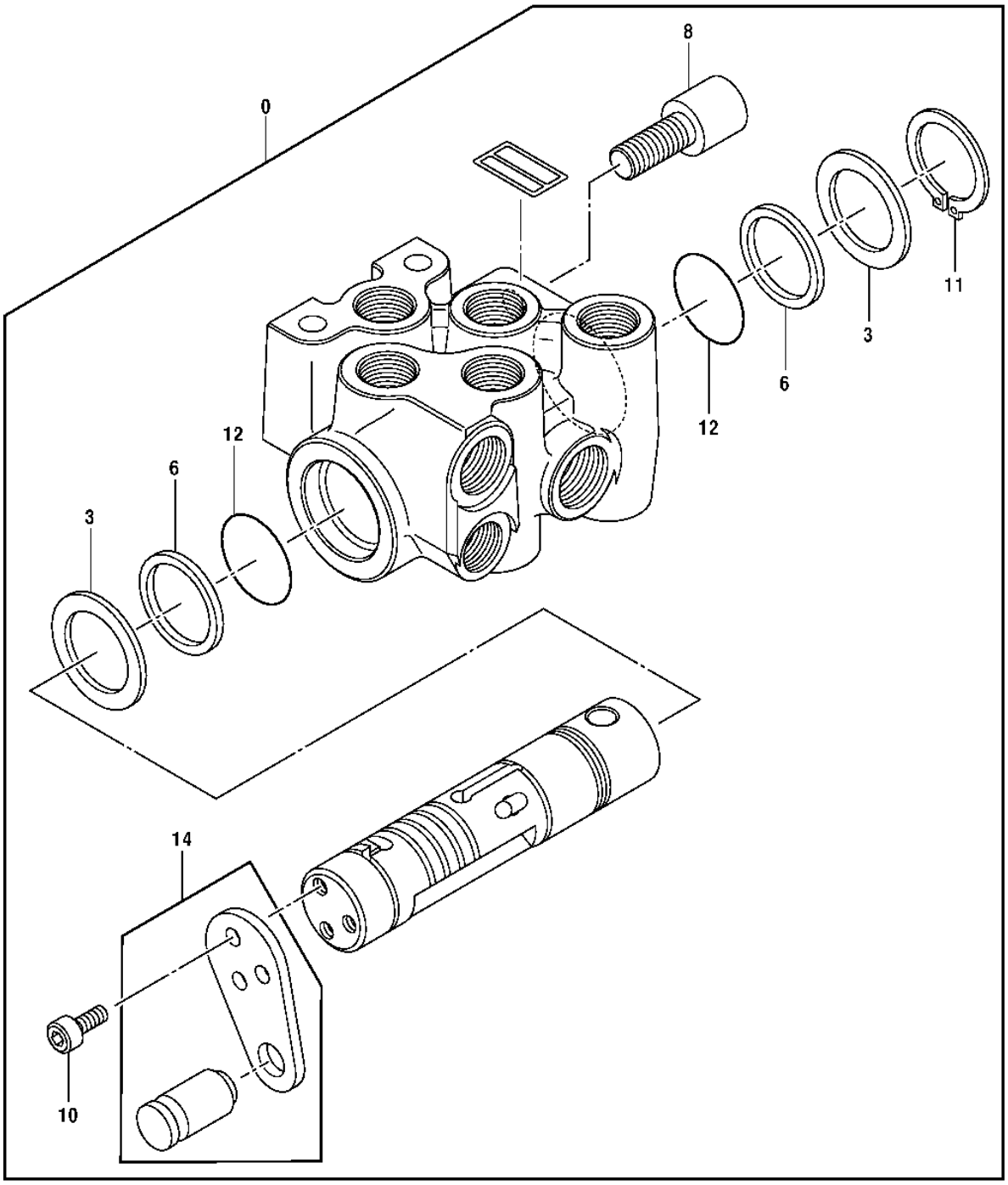

T145817

PILOT SHUTOFF VALVE COMPONENTS

KEY	PART NO.	PART NAME	QTY	SERIAL NO.	REMARKS
0	4407253	FLOW CONTROL HYD. VALVE	1		(SUB FOR TH4407253)
3	0794201	WASHER	2		(SUB FOR TH0794201)
6	0794202	RING	2		(SUB FOR TH0794202)
8	0794203	PIN FASTENER	1		(SUB FOR TH0794203)
10	0794204	BOLT	3		(SUB FOR TH0794204)
11	0794205	SNAP RING	1		(SUB FOR TH0794205)
12	0794206	O-RING	2		(SUB FOR TH0794206)
14	0794207	BRACKET	1		(SUB FOR TH0794207)

HYDRAULIC RESERVOIR TO PUMP LOW PRESSURE HOSES AND LINES

T149600 -UN-05APR02

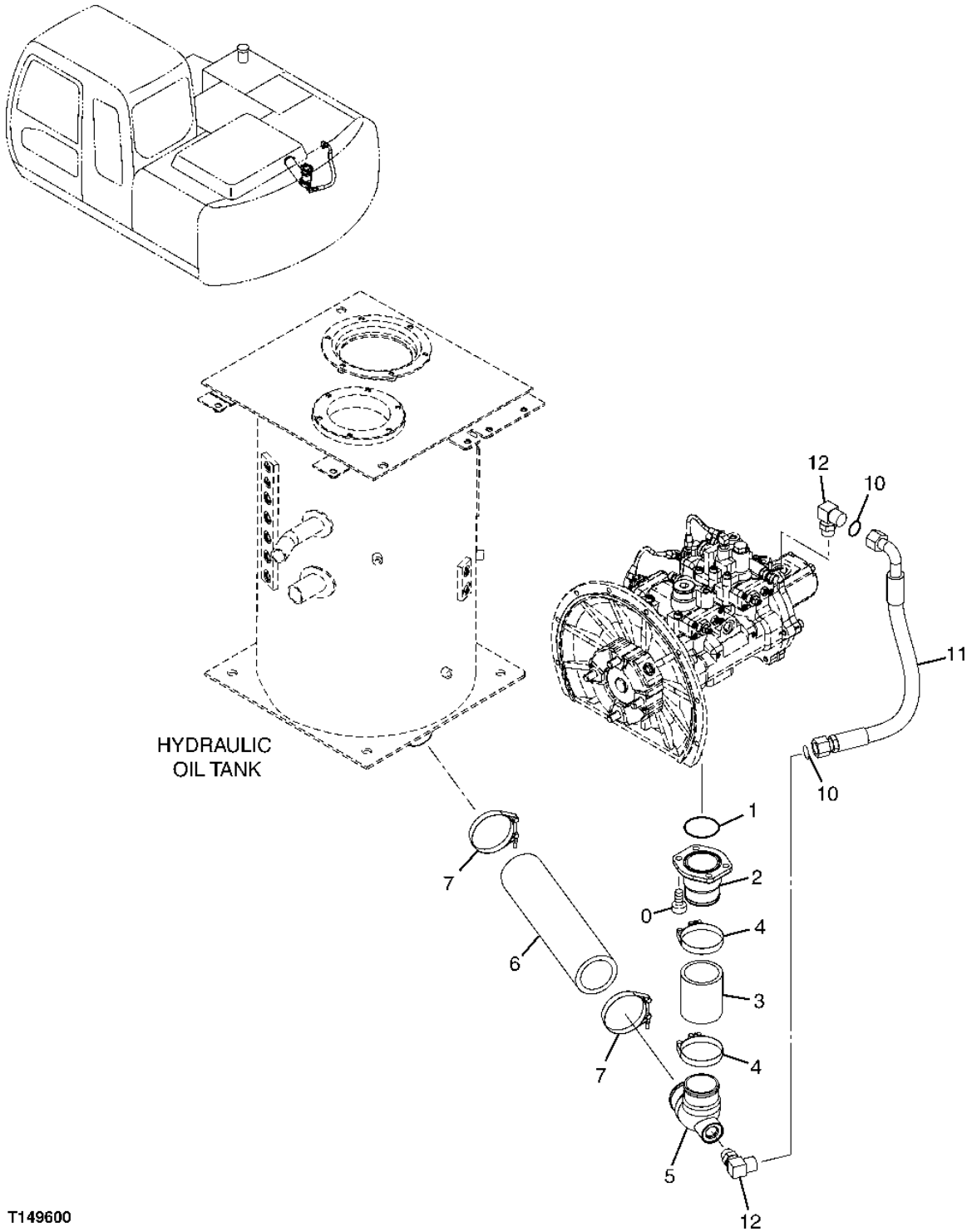

HYDRAULIC RESERVOIR TO PUMP LOW PRESSURE HOSES AND LINES

KEY	PART NO.	PART NAME	QTY	SERIAL NO.	REMARKS
0	J781230	SCREW	4		
1	TH105684	O-RING	1		(SUB FOR A811075)
2	3087133	PIPE	1		
3	P68308	HYDRAULIC HOSE	1		(SUB FOR P67788)
4	AT37476	HOSE CLAMP	2		
5	3073276	PIPE	1		
6	P67787	HOSE	1		
7	AT43291	HOSE CLAMP	2		
10	T77858	O-RING	2		
11	4217388	HYDRAULIC HOSE - FABRICATE	1		(SUB FOR AT202096)
12	A853366	ELBOW FITTING	2		
	AT318035	O-RING	1		(SUB FOR 4506424)

RETURN LINES (CONTROL VALVE AND OIL COOLER TO OIL TANK)

T201023 -UN-18JUN04

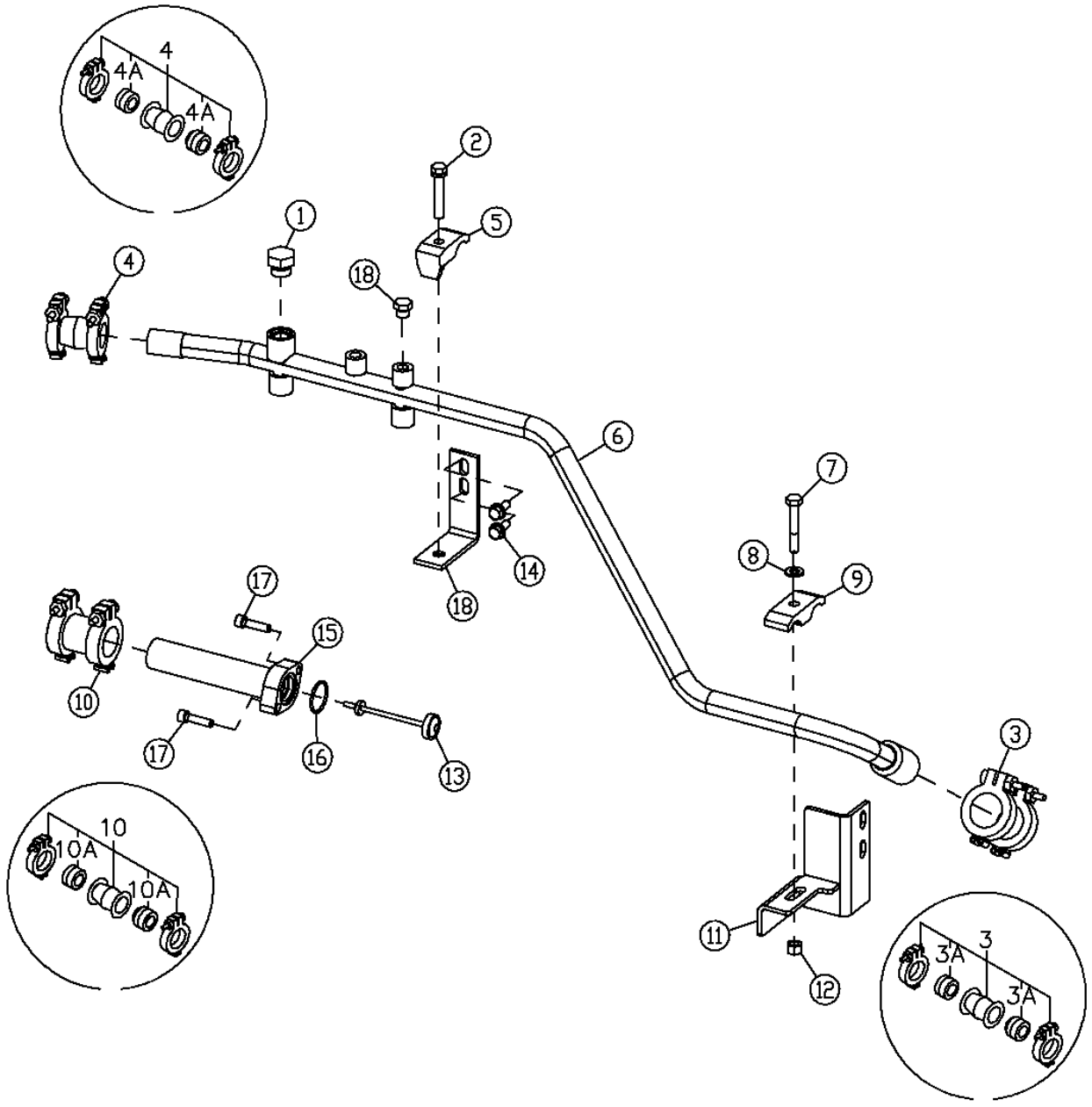

T201023

RETURN LINES (CONTROL VALVE AND OIL COOLER TO OIL TANK)

KEY	PART NO.	PART NAME	QTY	SERIAL NO.	REMARKS
1	A885006	PLUG	1		
2	19M7753	CAP SCREW	1		M12 X 70
3	4067834	COUPLING	1		
3A	4196260	SEAL	2		
4	4071213	COUPLING	1		
4A	4196258	SEAL	2		
5	4190127	CLAMP	1		
6	AP37555	PIPE	1		(OIL TANK TO OIL COOLER)
7	19M8088	CAP SCREW	1		M12 X 75
8	24M7240	WASHER	1		13 X 25 X 3 MM
9	4189860	CLAMP	1		
10	4069801	COUPLING	1		
10A	4196259	SEAL	2		
11	DH400683	BRACKET	1		
12	14M7168	LOCK NUT	1		M12
13	4266481	FLOW CONTROL HYD. VALVE	1		
14	19M7550	CAP SCREW	2		M10 X 35
15	AP33538	PIPE	1		(OIL TANK TO CONTROL VALVE)
16	A811040	O-RING	1		
17	L159272	SCREW	2		(SUB FOR J781040)
18	DH800115	BRACKET	1		

CONTROL VALVE TO OIL COOLER LINE

T199726 -UN-11MAY04

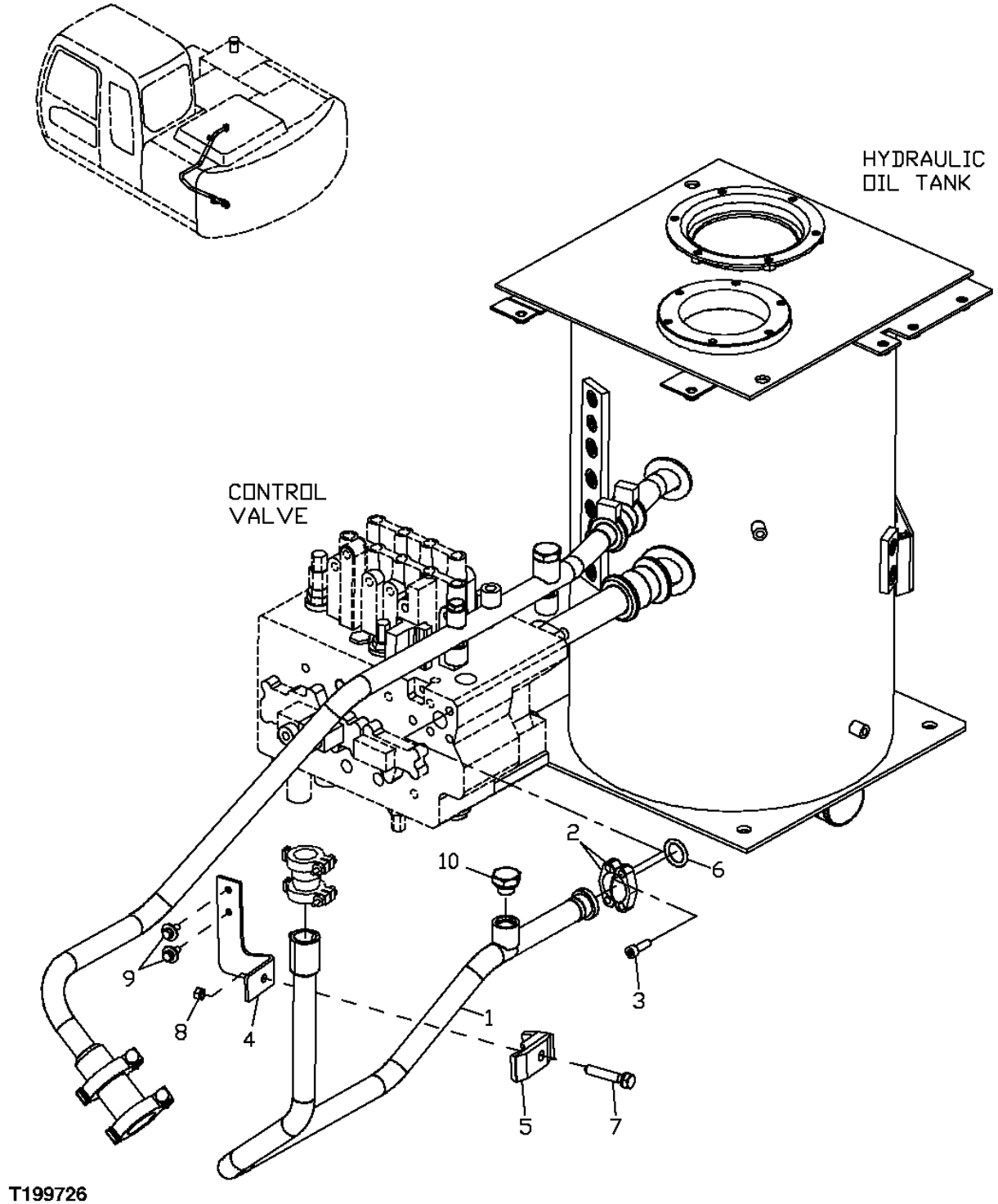

CONTROL VALVE TO OIL COOLER LINE

KEY	PART NO.	PART NAME	QTY	SERIAL NO.	REMARKS
1	AP37269	PIPE	1		
2	H61354	FLANGE FITTING	2		
3	J781030	SCREW	4		
4	DH800121	BRACKET	1	034511-	
5	4190127	CLAMP	1	034511-	
6	T78313	O-RING	1		
7	19M8348	CAP SCREW	1	034511-	M12 X 65
8	4137295	WELD NUT	1	034511-	
9	19M7662	CAP SCREW	2	034511-	M10 X 30, (SUB FOR J031030)
	12M7067	LOCK WASHER	2	034511-	12 MM
	24M7346	WASHER	2	034511-	11 X 20 X 2 MM
10	A885006	PLUG	1		
	AT318035	O-RING	1		(SUB FOR 4506424)

HYDRAULIC PUMP TO CONTROL VALVE HIGH PRESSURE HOSES

TP80444 -UN-16FEB00

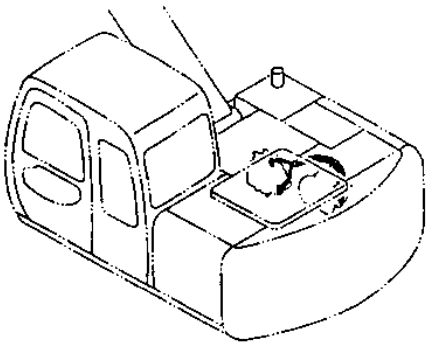

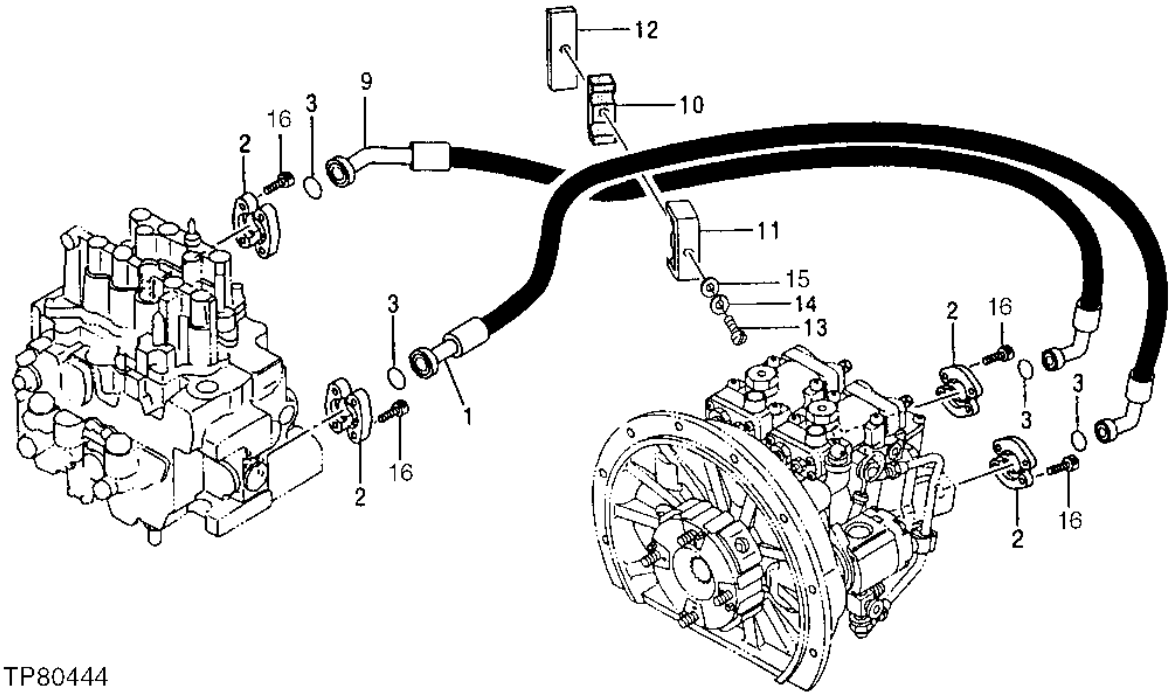

TP80444

HYDRAULIC PUMP TO CONTROL VALVE HIGH PRESSURE HOSES

KEY	PART NO.	PART NAME	QTY	SERIAL NO.	REMARKS
1	AP39028	HOSE	1		
2	T107446	FLANGE FITTING	8		
3	T59014	O-RING	4		24.994 X 3.531 MM (63/64" X 0.139")
9	AP39027	HOSE	1		
10	3072291	CLAMP	1		
11	8062021	CLAMP	1		
12	AT204853	CLAMP	1		
13	19M8088	CAP SCREW	1		M12 X 75
14	12M7067	LOCK WASHER	1		12 MM
15	24M7047	WASHER	1		13 X 24 X 2.500 MM
16	19M8337	SCREW	16		M10 X 30

DRAIN HOSES (SWING MOTOR TO CONTROL VALVE, RETURN LINE)

T149599 -UN-05APR02

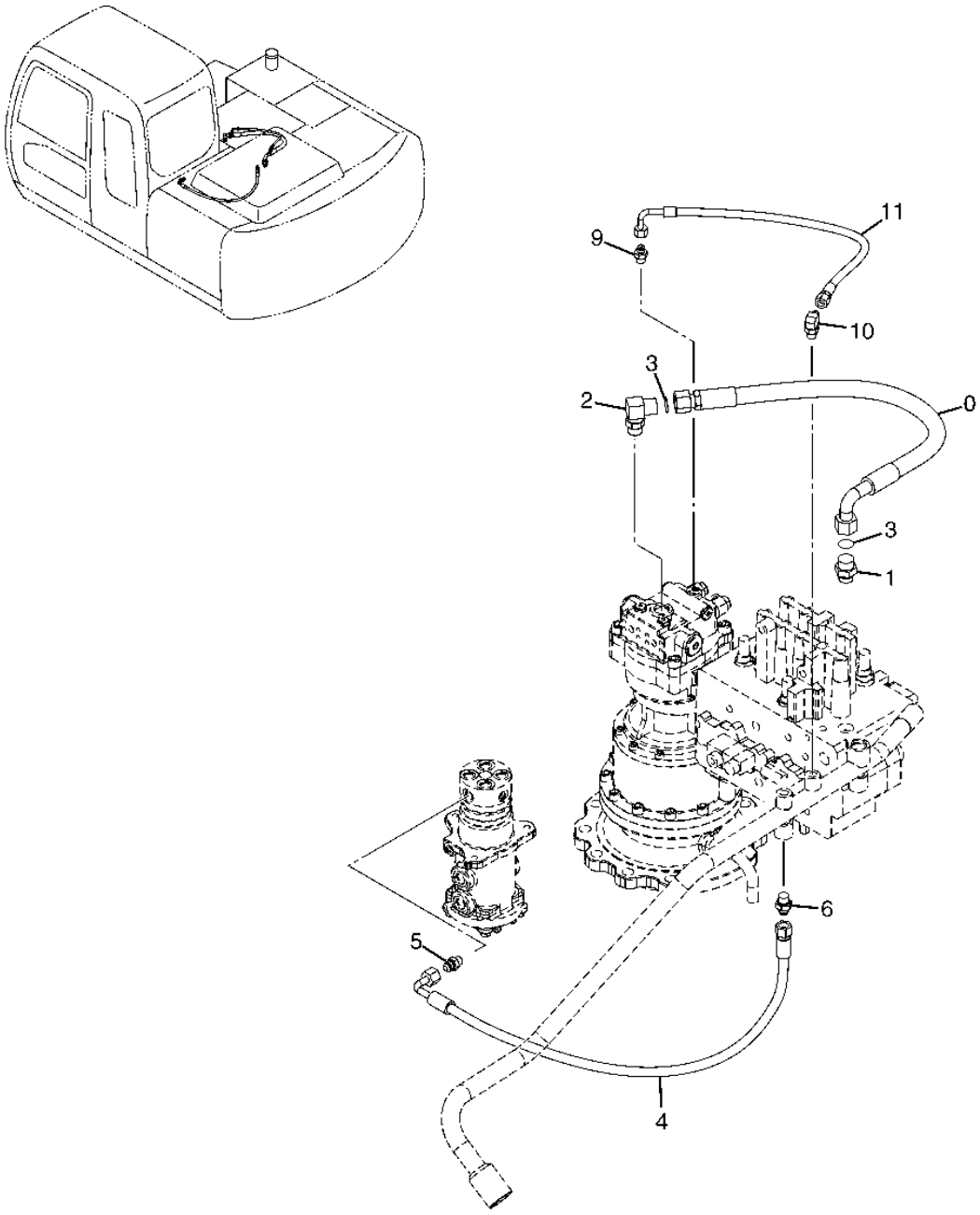

T149599

DRAIN HOSES (SWING MOTOR TO CONTROL VALVE, RETURN LINE)

KEY	PART NO.	PART NAME	QTY	SERIAL NO.	REMARKS
0	4374023	HYDRAULIC HOSE - FABRICATE	1		
1	A853166	ADAPTER	1		
	AT318035	O-RING	1		(SUB FOR 4506424)
2	A853366	ELBOW FITTING	1		
	AT318035	O-RING	1		(SUB FOR 4506424)
3	T77858	O-RING	2		
4	4400654	HYDRAULIC HOSE - FABRICATE	1		
5	A852134	ADAPTER	1		
	CH11570	O-RING	1		
6	A852144	ADAPTER	1		
	4506418	O-RING	1		
9	A852133	ADAPTER	1		
	CH11570	O-RING	1		
10	A852333	ELBOW FITTING	1		
	CH11570	O-RING	1		
11	4450974	HYDRAULIC HOSE - FABRICATE	1		

CONTROL VALVE TO BOOM CYLINDER HOSES AND LINES

T188793 -UN-28MAR03

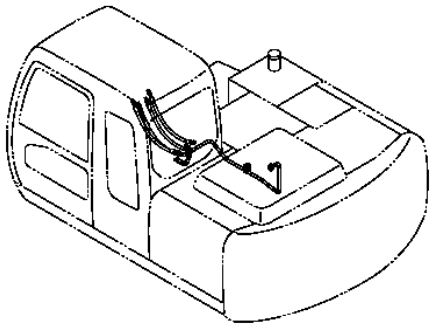

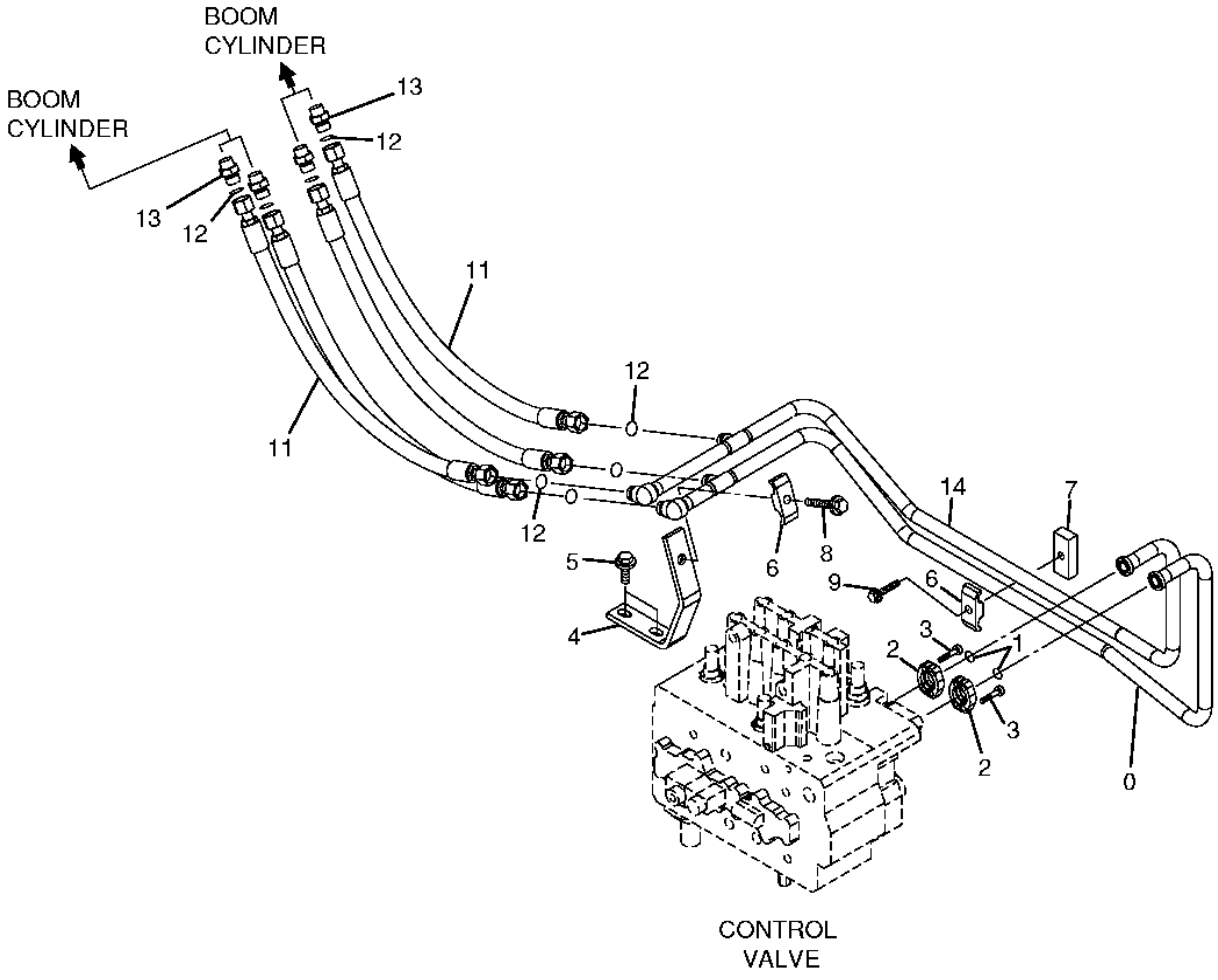

T188793

CONTROL VALVE TO BOOM CYLINDER HOSES AND LINES

KEY	PART NO.	PART NAME	QTY	SERIAL NO.	REMARKS
0	8077222	PIPE	1		
1	R69667	O-RING	2		
2	4510173	FLANGE FITTING	4		
3	J780825	SCREW	8		(SUB FOR P61954)
4	9737118	SUPPORT	1		
5	19M7872	CAP SCREW	2		M12 X 25
6	4189858	CLAMP	2		
7	4369262	MANIFOLD	1		
8	19M7363	CAP SCREW	1		M12 X 60
9	19M7361	CAP SCREW	1		M12 X 50
11	4285464	HYDRAULIC HOSE - FABRICATE	4		
12	T77857	O-RING	8		
13	A853144	ADAPTER	4		
	4506418	O-RING	1		
14	8077223	PIPE	1		

CONTROL VALVE TO BOOM LINE HOSES (ARM AND BUCKET CYLINDER)

T149622 -UN-05APR02

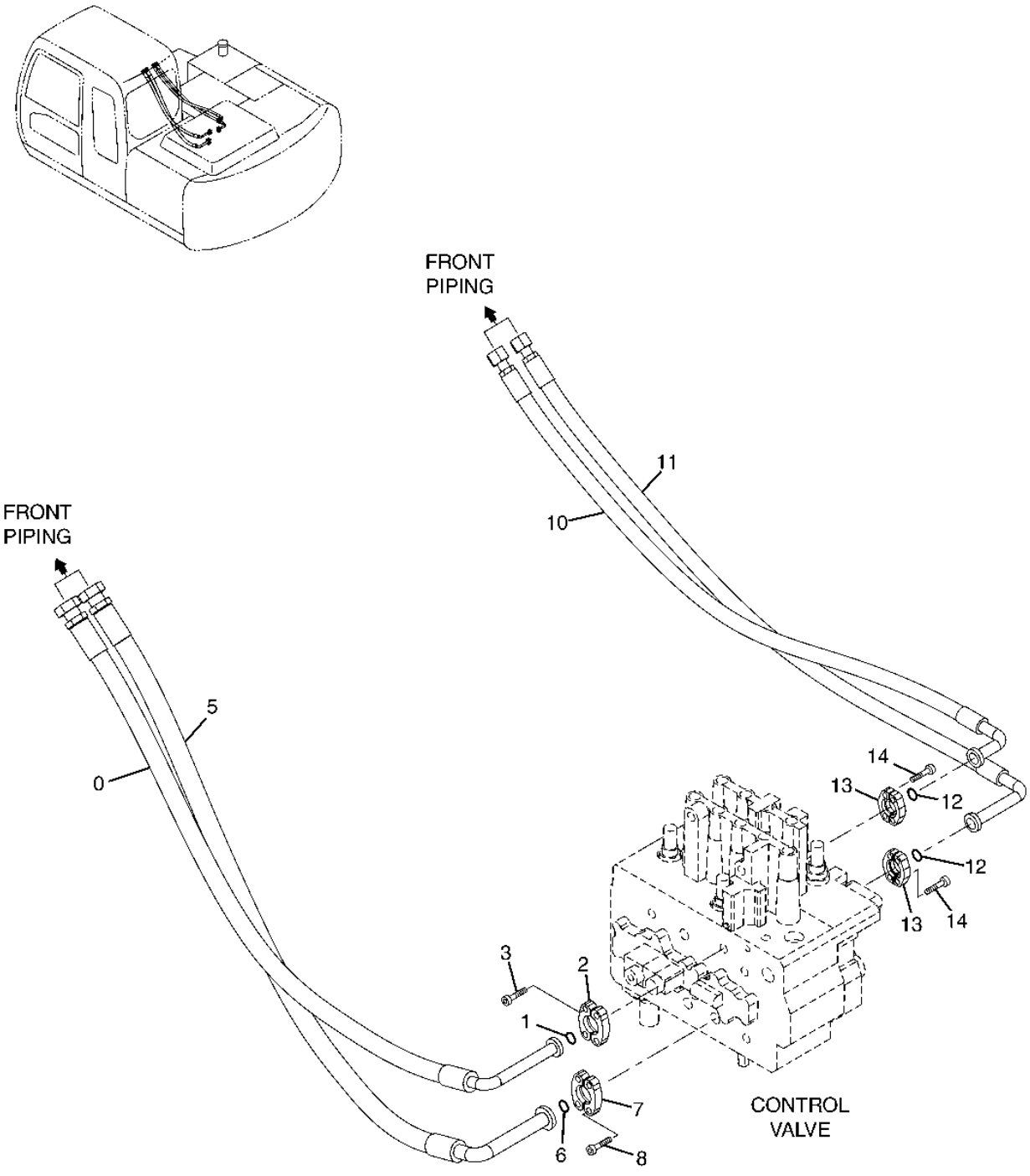

T149622

CONTROL VALVE TO BOOM LINE HOSES (ARM AND BUCKET CYLINDER)

KEY	PART NO.	PART NAME	QTY	SERIAL NO.	REMARKS
0	P61778	HYDRAULIC HOSE	1		
1	R69667	O-RING	1		
2	4510173	FLANGE FITTING	2		
3	J780825	SCREW	4		(SUB FOR P61954)
5	P61635	HYDRAULIC HOSE	1		
6	T59014	O-RING	1		
7	R29424	FLANGE FITTING	2		
8	J781030	SCREW	4		
10	9149508	HYDRAULIC HOSE	1		(SUB FOR P61779)
11	9149508	HYDRAULIC HOSE	1		(SUB FOR P61779)
12	R69667	O-RING	2		
13	4510173	FLANGE FITTING	4		
14	J780825	SCREW	8		(SUB FOR P61954)

CONTROL VALVE TO SWING MOTOR HOSES

TP54456 -UN-04DEC96

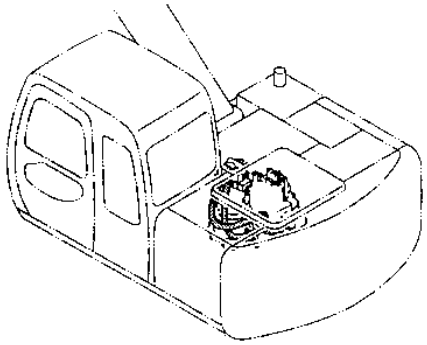

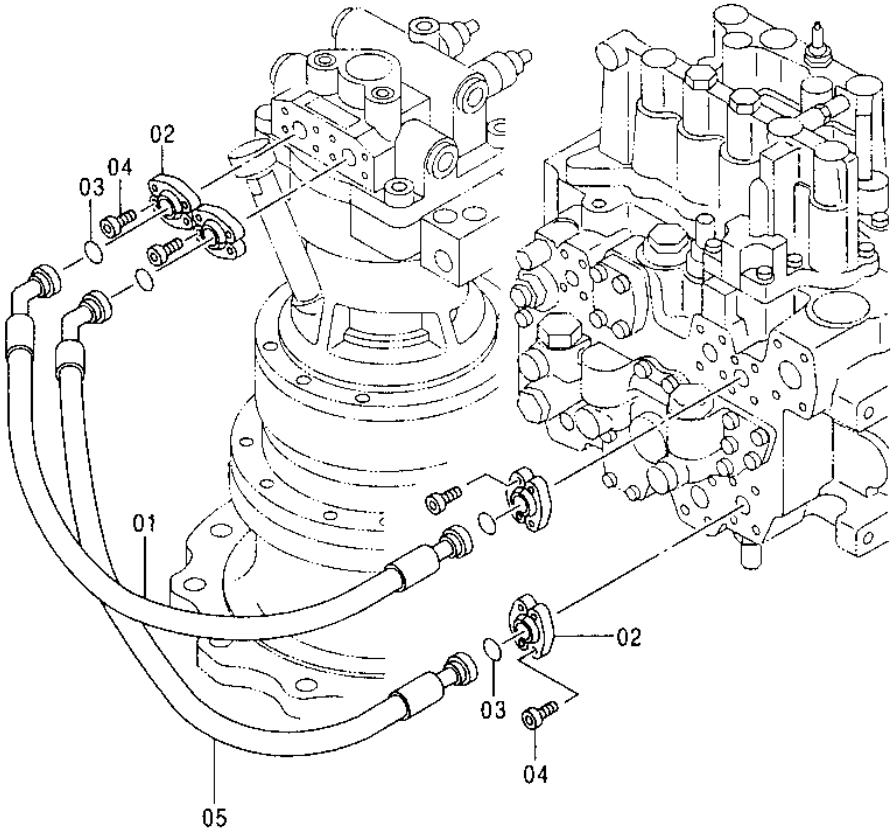

TP54456

CONTROL VALVE TO SWING MOTOR HOSES

KEY	PART NO.	PART NAME	QTY	SERIAL NO.	REMARKS
1	4333700	HYDRAULIC HOSE - FABRICATE	1		(SUB FOR P61783 OR AP35848)
2	4510173	FLANGE FITTING	8		
3	R69667	O-RING	4		18.644 X 3.531 MM (47/64" X 0.139")
4	J780825	SCREW	16		(SUB FOR P61954)
5	4333699	HYDRAULIC HOSE - FABRICATE	1		(SUB FOR P61782 OR AP35847)

CONTROL VALVE TO ROTARY MANIFOLD HOSES

T153291 -UN-05APR02

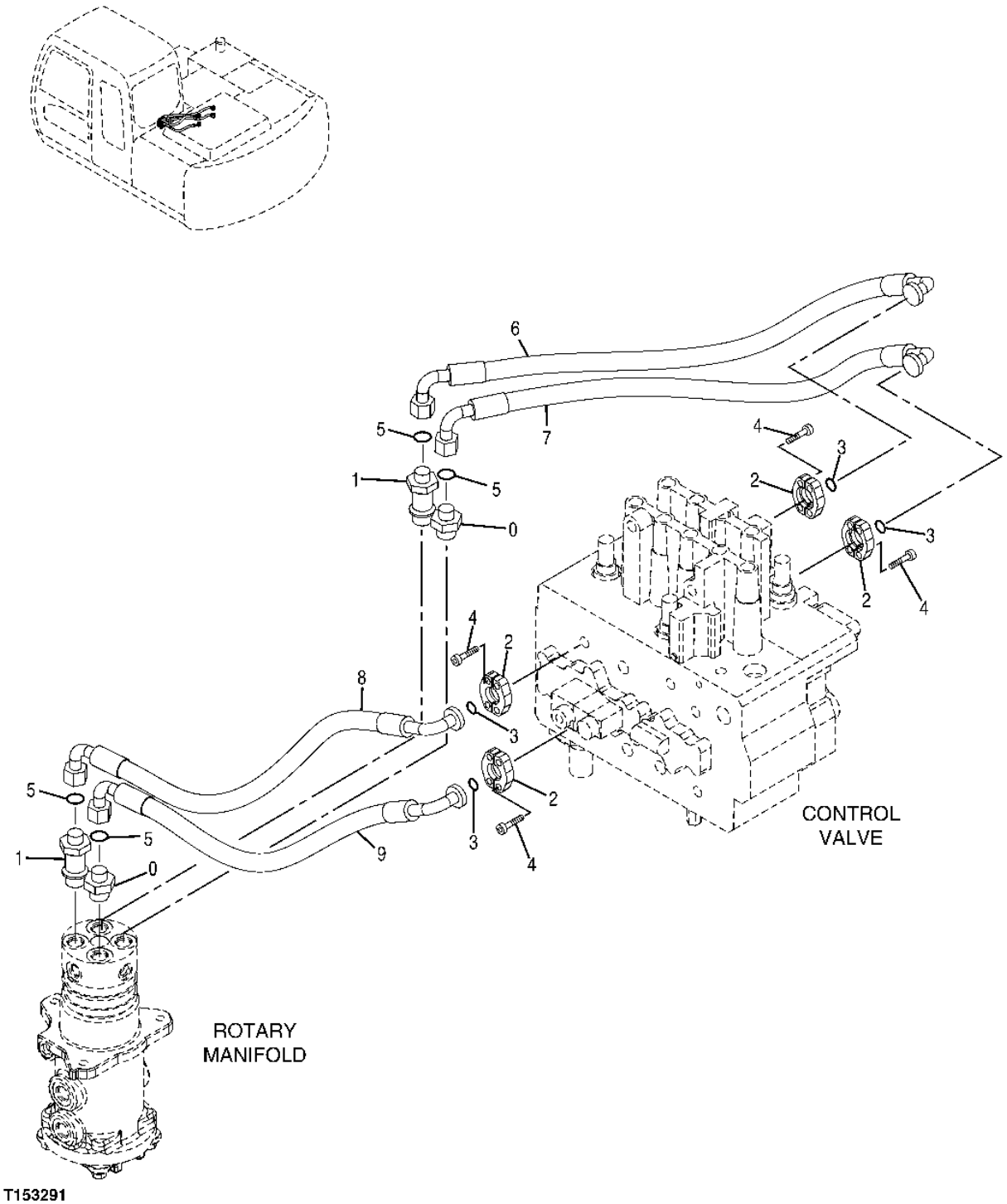

T153291

CONTROL VALVE TO ROTARY MANIFOLD HOSES

KEY	PART NO.	PART NAME	QTY	SERIAL NO.	REMARKS
0	A853144	ADAPTER	2		
	U46489	O-RING	1		
1	4199247	ADAPTER	2		
	U46489	O-RING	1		
2	4510173	FLANGE FITTING	8		
3	R69667	O-RING	4		
4	J780825	SCREW	16		(SUB FOR P61954)
5	T77857	O-RING	4		
6	4203130	HYDRAULIC HOSE - FABRICATE	1		
7	4203129	HYDRAULIC HOSE - FABRICATE	1		
8	4192047	HYDRAULIC HOSE - FABRICATE	1		
9	4354467	HYDRAULIC HOSE - FABRICATE	1		

ATTENUATOR HOSES

T153292 -UN-05APR02

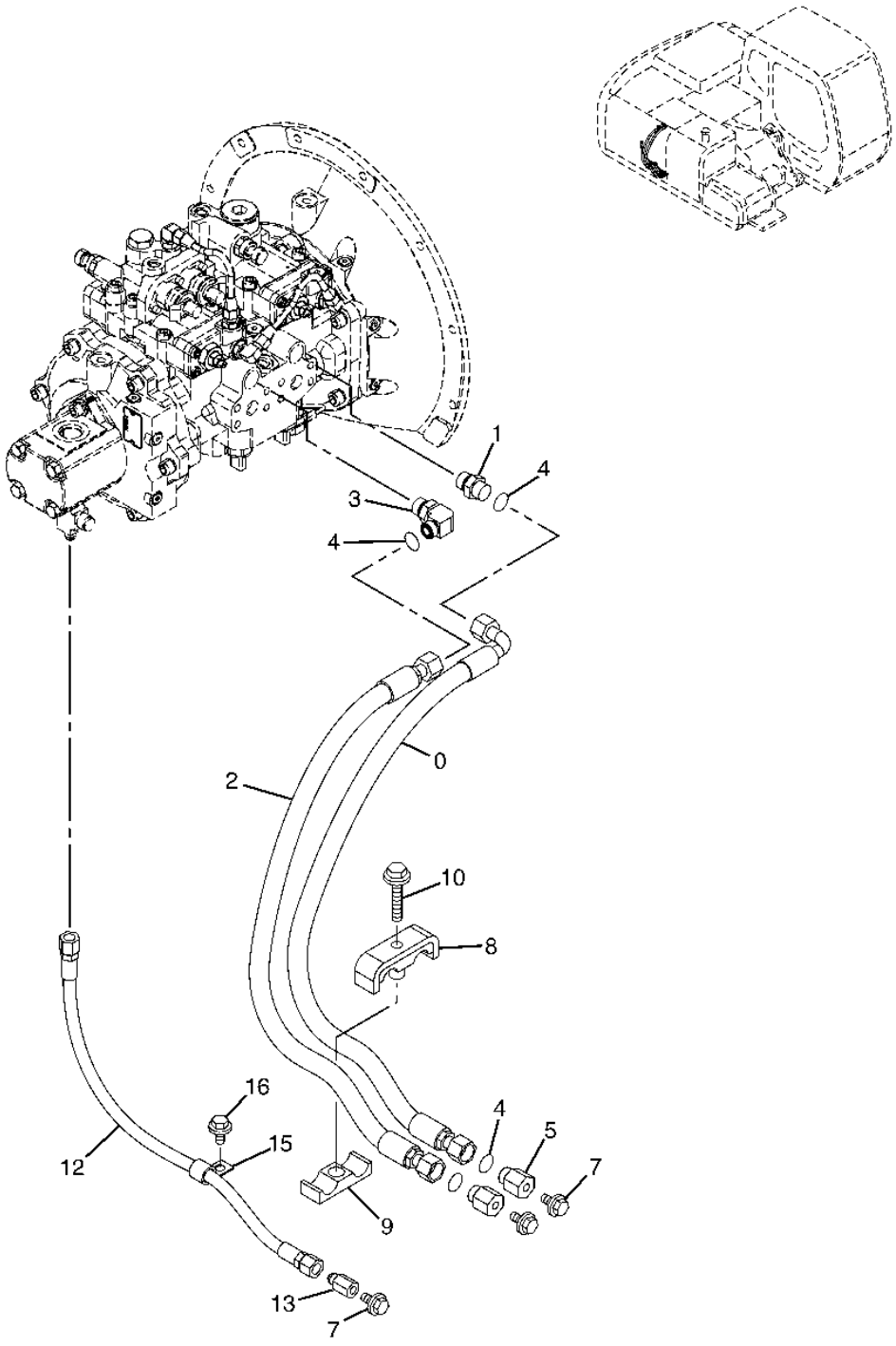

T153292

ATTENUATOR HOSES

KEY	PART NO.	PART NAME	QTY	SERIAL NO.	REMARKS
0	4250063	HYDRAULIC HOSE	1		
1	A853144	ADAPTER	1		
	4506418	O-RING	1		
2	4285801	HYDRAULIC HOSE - FABRICATE	1		
3	A853344	ELBOW FITTING	1		
	4506418	O-RING	1		
4	T77857	O-RING	4		
5	4446638	PIPE PLUG	2		
7	J021025	CAP SCREW	3		
8	8082431	CLAMP	1		
9	AT318021	CLAMP	1		(SUB FOR 4285722)
10	19M7753	CAP SCREW	1		
12	4446587	HYDRAULIC HOSE - FABRICATE	1		
13	4444381	PIPE PLUG	1		
15	4190273	CLIP	1		
16	19M7938	CAP SCREW	1		M10 X 20
	12M7066	LOCK WASHER	1		10 MM

PILOT PIPING

T200617 -UN-04JUN04

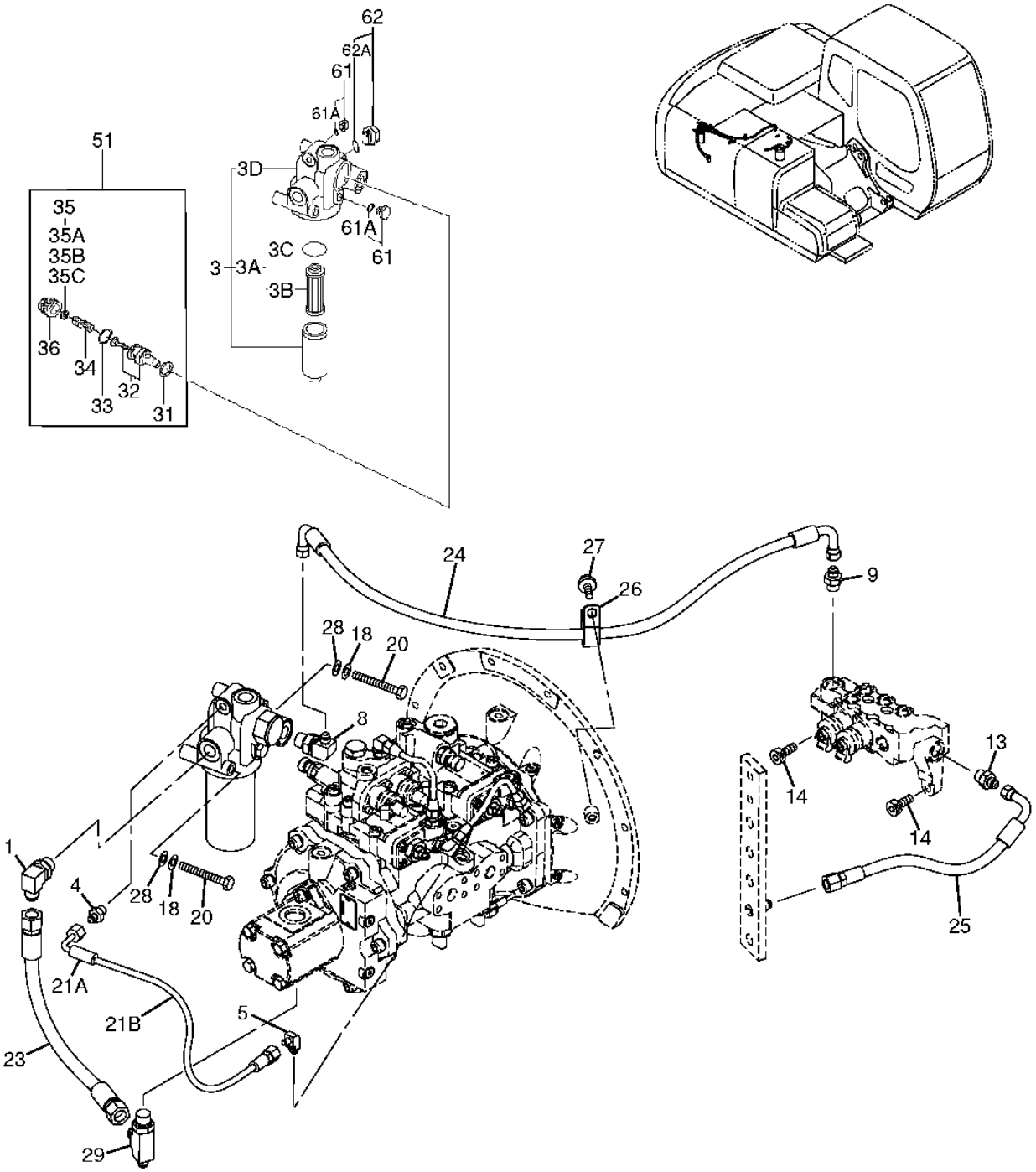

T200617

PILOT PIPING

KEY	PART NO.	PART NAME	QTY	SERIAL NO.	REMARKS
1	A852344	ELBOW FITTING	1		
	4506418	O-RING	1		
3	4611025	OIL FILTER	1		(SUB FOR 4408959)
3A	AT186554	FILTER ELEMENT	1		(SUB FOR 4370435 OR AT214263)
3B	.....	FILTER ELEMENT	1		(4191301 NOT AVAILABLE FOR SERVICE)
3C	TH105683	O-RING	1		(SUB FOR A811060, 4153538, TH0430809 OR 0430809)
3D	4472430	PRESSURE RELIEF VALVE	1		
4	A852122	ADAPTER	1		
	M800650	PACKING	1		(SUB FOR 957366)
5	4154670	ELBOW FITTING	1		(SUB FOR A852322, P67984 OR THA852322)
	M800650	PACKING	1		(SUB FOR 957366)
8	A852343	ELBOW FITTING	1		
	4506418	O-RING	1		
9	A852133	ADAPTER	1		
	4509180	O-RING	1		
13	A852133	ADAPTER	1		
	4509180	O-RING	1		
14	J781030	SCREW	2		
18	A590910	WASHER	2		
20	J901002	BOLT	2		
21A	4427782	HYDRAULIC HOSE - FABRICATE	1		(SUB FOR P67913 OR 9204539, ALONG WITH 4327293)
21B	4327293	HOSE GUARD	1		
23	DH400574	HYDRAULIC HOSE - FABRICATE	1		(4437927 NOT USED FOR THIS APPLICATION)
24	DH400576	HYDRAULIC HOSE - FABRICATE	1		(SUB FOR 4439460 OR P67919)
25	4445714	HYDRAULIC HOSE - FABRICATE	1		
26	4193848	CLIP	1		
27	J011025	CAP SCREW	1		
28	24M7028	WASHER	2		10.500 X 20 X 2 MM, (SUB FOR A590110)
29	4445981	TEE FITTING	1		
	4506418	O-RING	1		
31	0308704	GASKET	1		
32	0308703	PRESSURE RELIEF VALVE	1		
33	0308705	O-RING	1		
34	.....	SPRING	1		
35	4293211	SHIM	1		
35A	4309836	SHIM	2		
35B	4309837	SHIM	2		
35C	4309838	SHIM	2		
51	0709701	RELIEF VALVE	1		
61	4174541	DRAIN PLUG	2		
61A	M800650	PACKING	1		
62	A885002	PLUG	1		
62A	4506418	O-RING	1		

PILOT HOSES (HYDRAULIC PUMP REGULATOR TO SIGNAL MANIFOLD, RESERVOIR)

T149549 -UN-05APR02

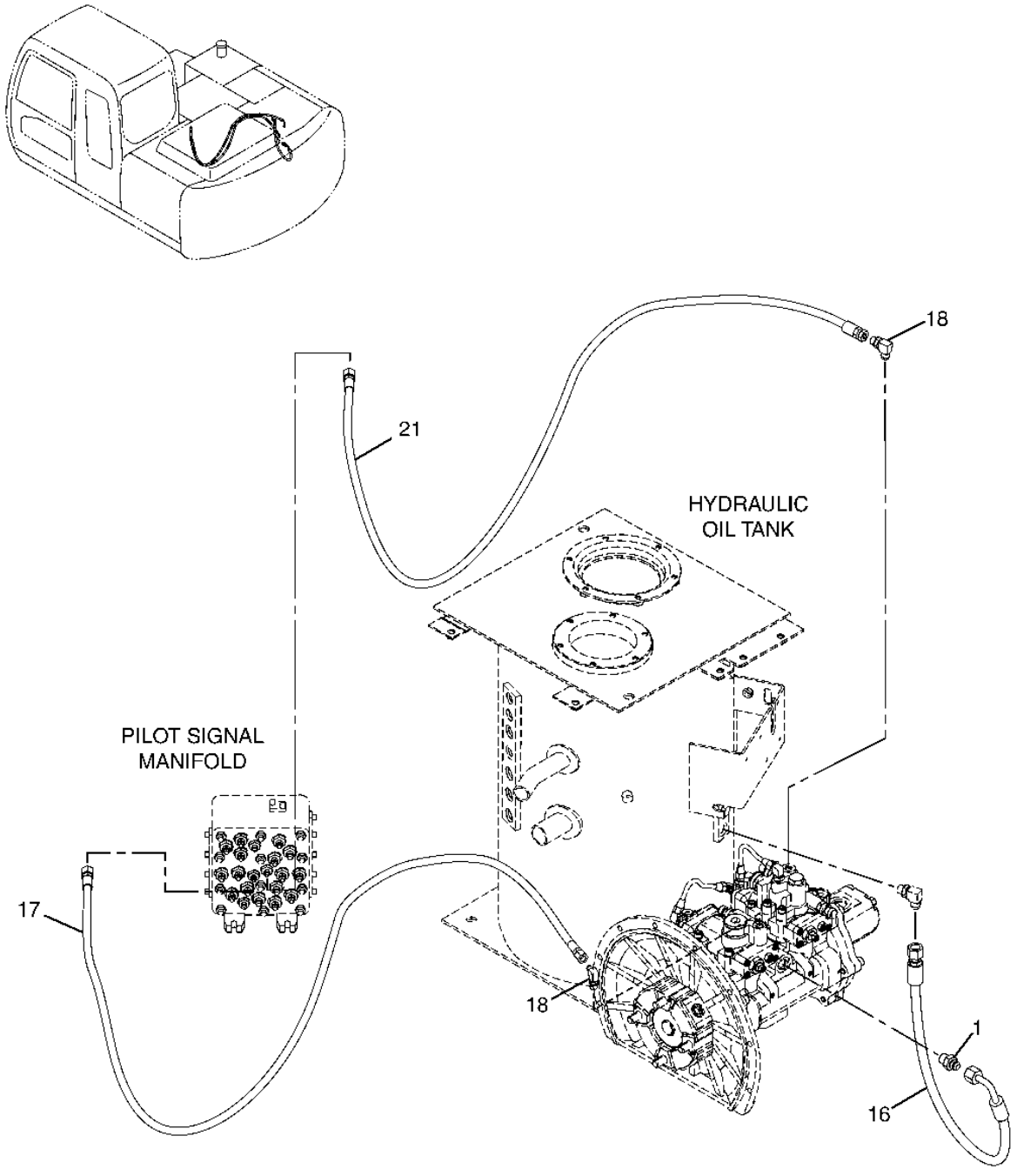

PILOT HOSES (HYDRAULIC PUMP REGULATOR TO SIGNAL MANIFOLD, RESERVOIR)

KEY	PART NO.	PART NAME	QTY	SERIAL NO.	REMARKS
1	A852144	ADAPTER	1		
	4506418	O-RING	1		
16	4446905	HYDRAULIC HOSE - FABRICATE	1		
17	DH400612	HYDRAULIC HOSE - FABRICATE	1		(1100MM) (ALSO ORDER 4327293) (DH900431 NOT AVAILABLE) (4442766 NOT USED FOR THIS APPLICATION)
	4327293	HOSE GUARD	1		(1100MM)
18	A852323	ELBOW FITTING	2		
	M800650	PACKING	1		(SUB FOR 957366)
21	DH400611	HYDRAULIC HOSE - FABRICATE	1		(1100MM) (ALSO ORDER 4327293) (DH900430 NOT AVAILABLE) (SUB FOR 4449328) (4449326 NOT USED FOR THIS APPLICATION)
	4327293	HOSE GUARD	1		(1100MM)

PILOT PIPING

T149548 -UN-05APR02

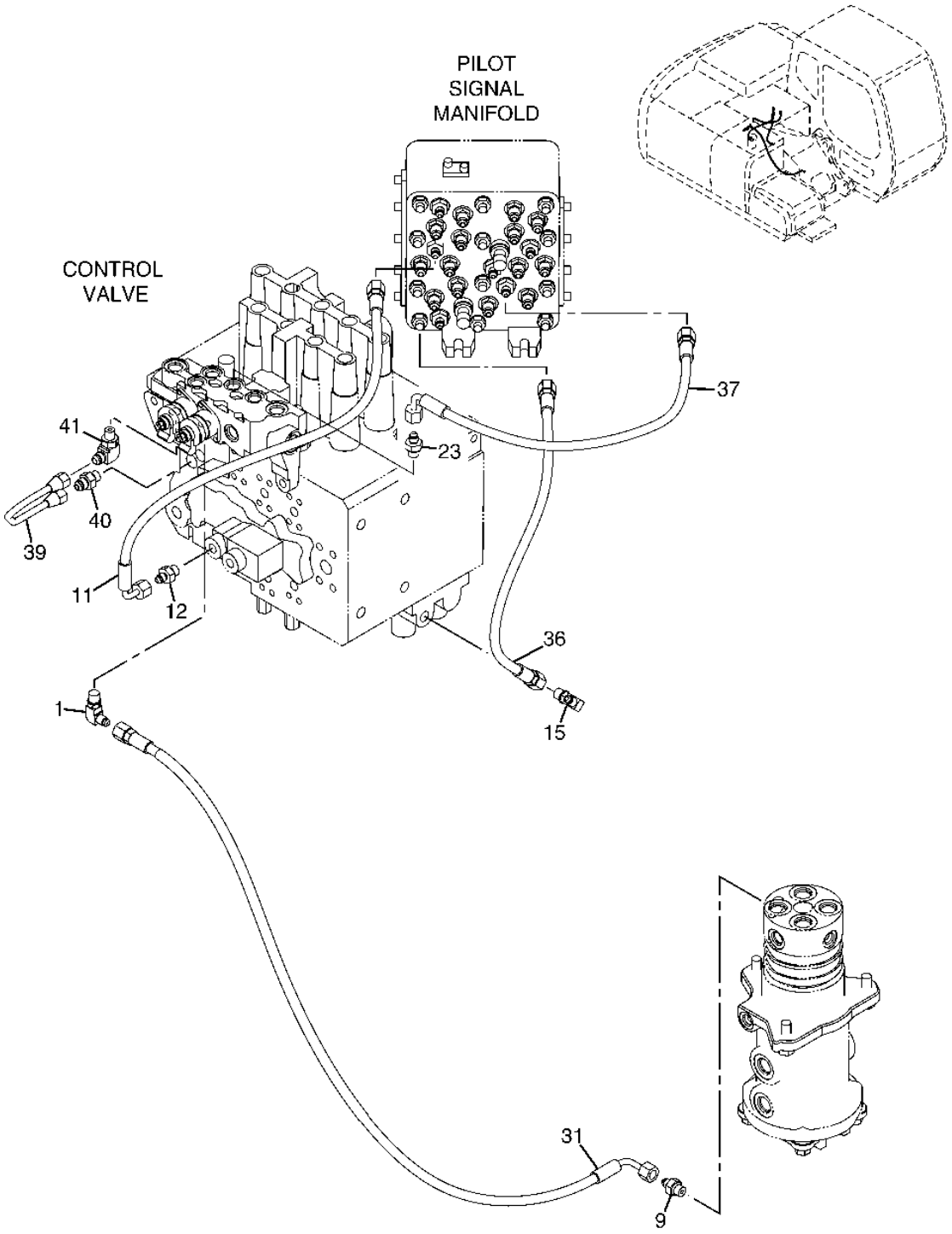

PILOT PIPING

KEY	PART NO.	PART NAME	QTY	SERIAL NO.	REMARKS
1	4154670	ELBOW FITTING	1		(SUB FOR A852322, P67984 OR THA852322)
	M800650	PACKING	1		(SUB FOR 957366)
9	A852122	ADAPTER	1		
	M800650	PACKING	1		(SUB FOR 957366)
11	4427782	HYDRAULIC HOSE - FABRICATE	1		
12	A852122	ADAPTER	1		
	M800650	PACKING	1		(SUB FOR 957366)
15	4154670	ELBOW FITTING	1		(SUB FOR A852322, P67984 OR THA852322)
	M800650	PACKING	1		(SUB FOR 957366)
23	A852122	ADAPTER	1		
	M800650	PACKING	1		(SUB FOR 957366)
31	4427781	HYDRAULIC HOSE - FABRICATE	1		
36	4437282	HYDRAULIC HOSE - FABRICATE	1		
37	4437388	HYDRAULIC HOSE - FABRICATE	1		
39	4452289	PIPE	1		
40	4255304	ADAPTER	1		
	M800650	PACKING	1		(SUB FOR 957366)
41	4293950	ELBOW FITTING	1		
	M800650	PACKING	1		(SUB FOR 957366)

PILOT PIPING

T149547 -UN-05APR02

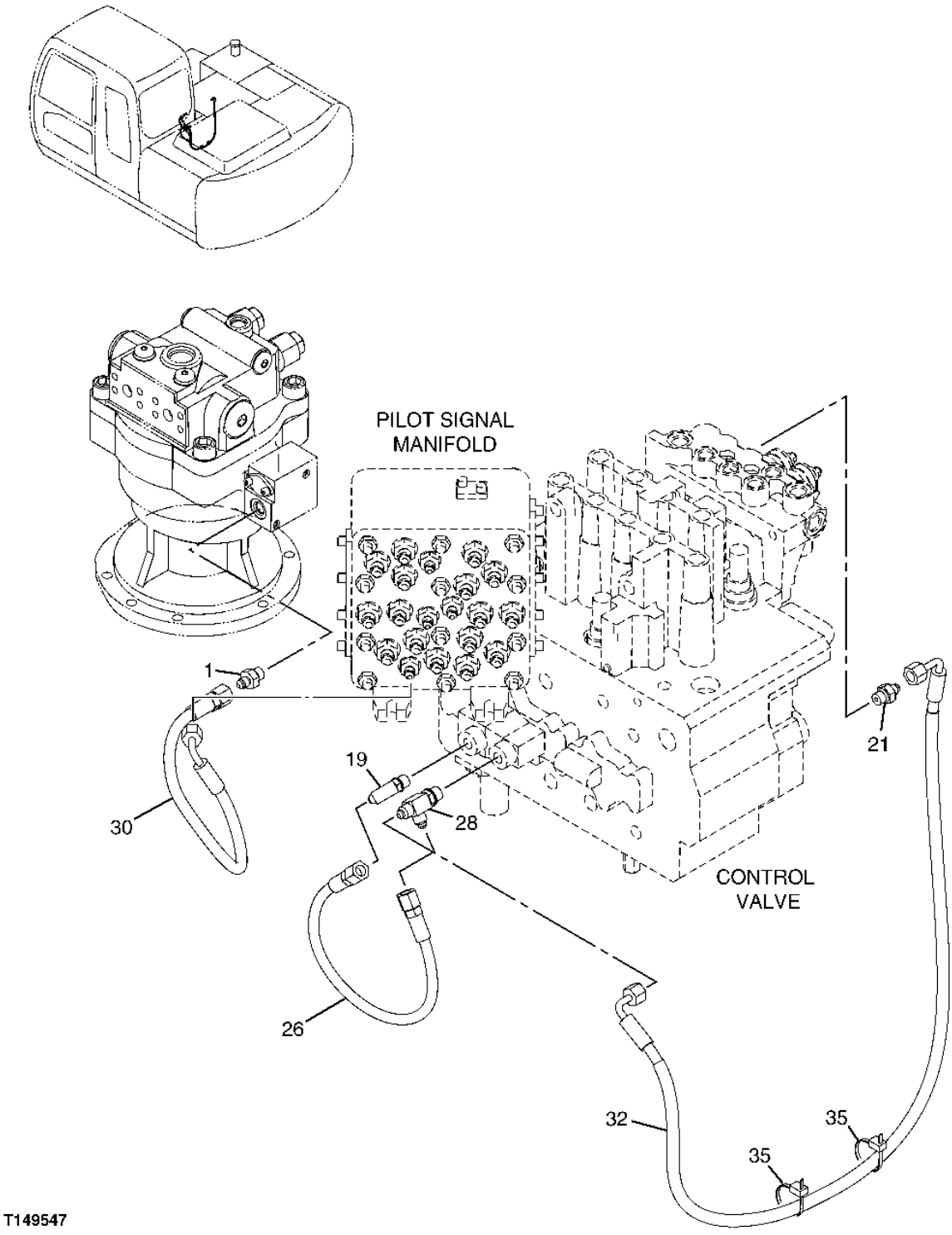

PILOT PIPING

KEY	PART NO.	PART NAME	QTY	SERIAL NO.	REMARKS
1	A852122	ADAPTER	1		
	M800650	PACKING	1		(SUB FOR 957366)
19	4154670	ELBOW FITTING	1		(SUB FOR A852322, P67984 OR THA852322)
	M800650	PACKING	1		(SUB FOR 957366)
21	A852122	ADAPTER	1		
	M800650	PACKING	1		(SUB FOR 957366)
26	4442331	HYDRAULIC HOSE - FABRICATE	1		
28	A852422	TEE FITTING	1		
	M800650	PACKING	1		(SUB FOR 957366)
30	4436298	HYDRAULIC HOSE - FABRICATE	1		
32	4445676	HYDRAULIC HOSE - FABRICATE	1		
35	4055311	TIE BAND	2		

PROPEL PILOT CONTROLLER TO PILOT SIGNAL MANIFOLD HOSES

T188799 -UN-28MAR03

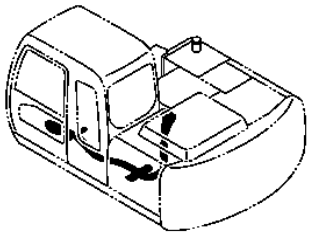

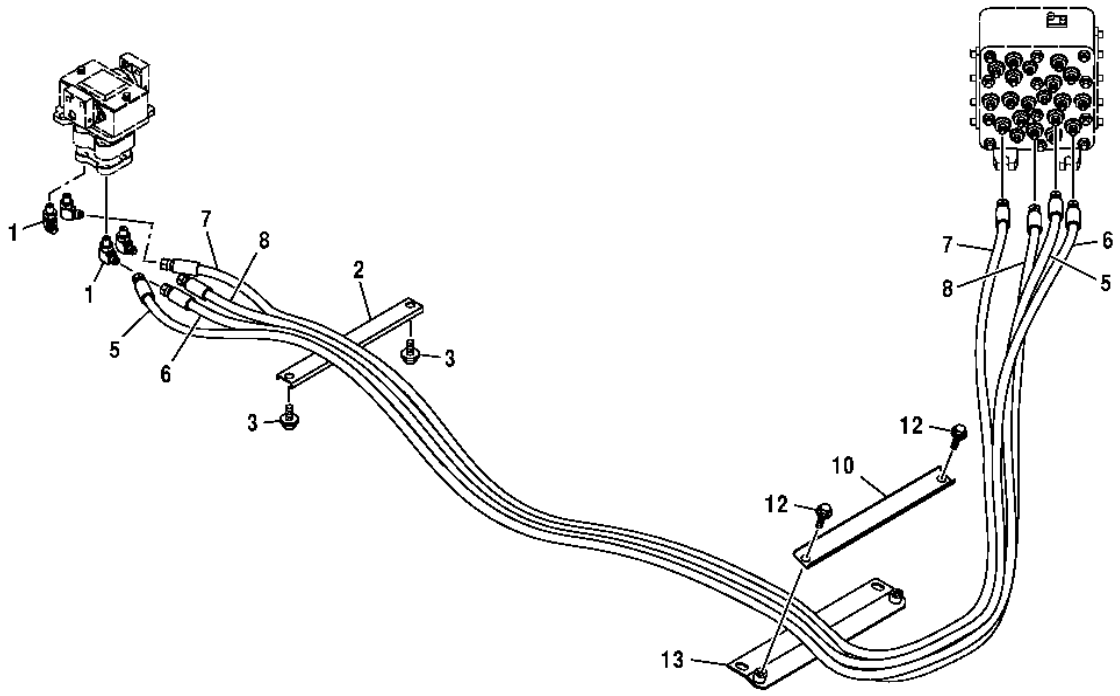

T188799

PROPEL PILOT CONTROLLER TO SIGNAL MANIFOLD HOSES

KEY	PART NO.	PART NAME	QTY	SERIAL NO.	REMARKS
1	A852323	ELBOW FITTING	4		
	M800650	PACKING	1		
2	4341877	CHANNEL	1		
3	19M7402	CAP SCREW	2		M10 X 25
	24M7096	WASHER	2		10.500 X 18 X 1.600 MM
	12M7066	LOCK WASHER	2		10 MM
5	4426610	HYDRAULIC HOSE	1		
6	4426611	HYDRAULIC HOSE	1		
7	4426612	HYDRAULIC HOSE	1		
8	4426613	HYDRAULIC HOSE	1		
10	4425177	CLAMP	1		
12	19M7402	CAP SCREW	2		M10 X 25
	24M7028	WASHER	2		10.500 X 20 X 2 MM
	12M7066	LOCK WASHER	2		10 MM
13	8077444	BRACKET	1		

PILOT SHUT-OFF VALVE TO PROPEL PILOT CONTROLLER VALVE LINES

T188802 -UN-28MAR03

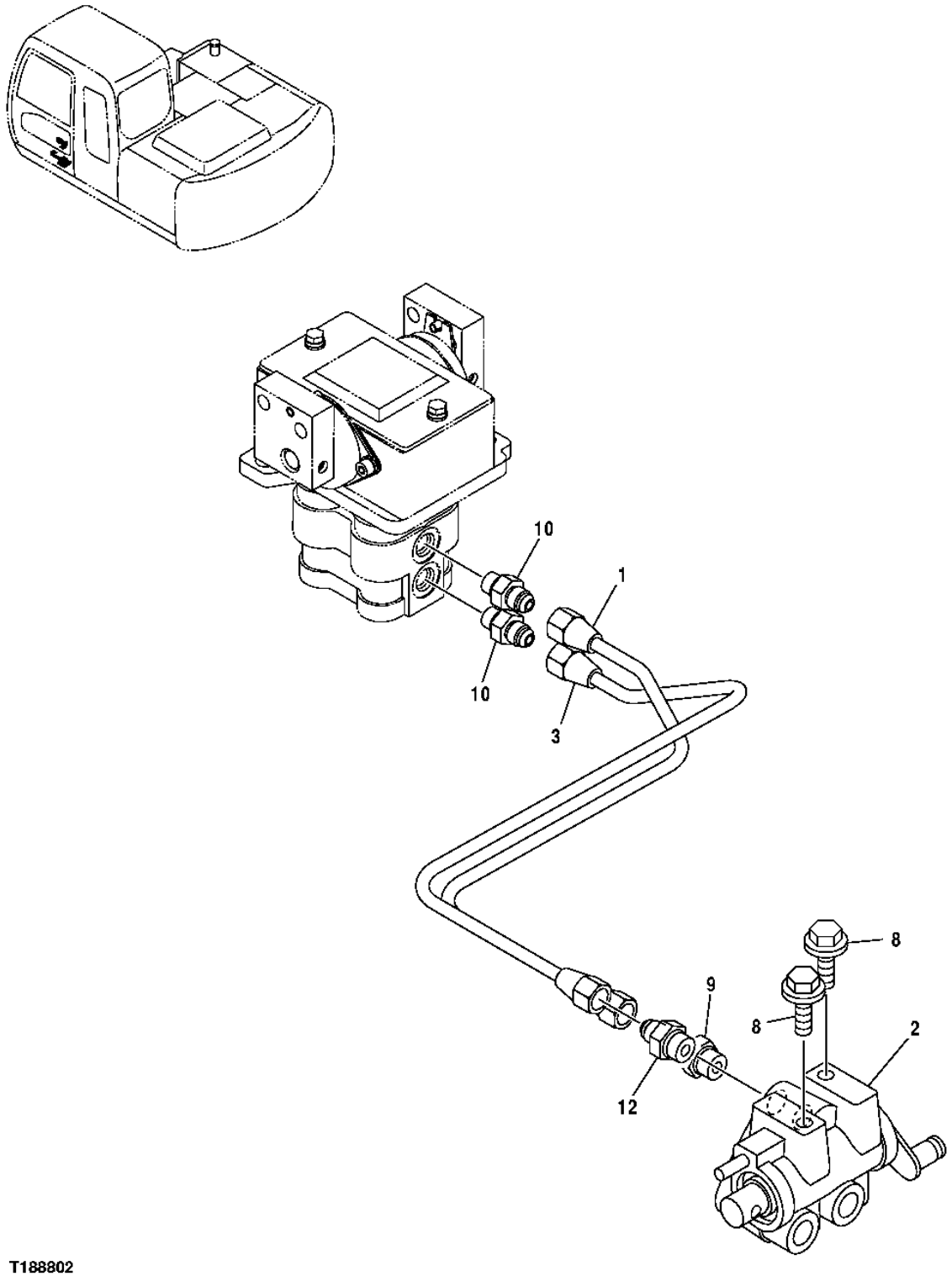

T188802

PILOT SHUT-OFF VALVE TO PROPEL PILOT CONTROLLER VALVE LINES

KEY	PART NO.	PART NAME	QTY	SERIAL NO.	REMARKS
1	4452053	OIL LINE	1	-XXXXXX	
	4607399	OIL LINE	1	XXXXXX-	
2	4407253	FLOW CONTROL HYD. VALVE	1		
3	4452052	OIL LINE	1	-XXXXXX	
	4607398	OIL LINE	1	XXXXXX-	
8	19M7402	CAP SCREW	2		M10 X 25
	24M7028	WASHER	2		10.500 X 20 X 2 MM
	12M7066	LOCK WASHER	2		10 MM
9	A852133	ADAPTER	1		
	CH11570	O-RING	1		
10	A852123	ADAPTER	2		
	M800650	PACKING	2		
12	4261938	FITTING	1		
	CH11570	O-RING	1		

PILOT HOSES (LEFT CONTROLLER TO SIGNAL MANIFOLD, SHUTOFF VALVE)

T188805 -UN-28MAR03

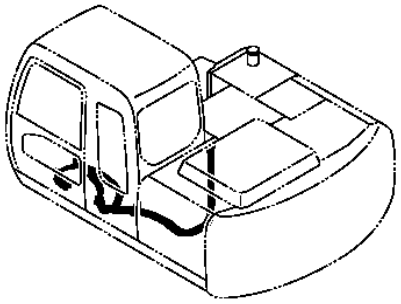

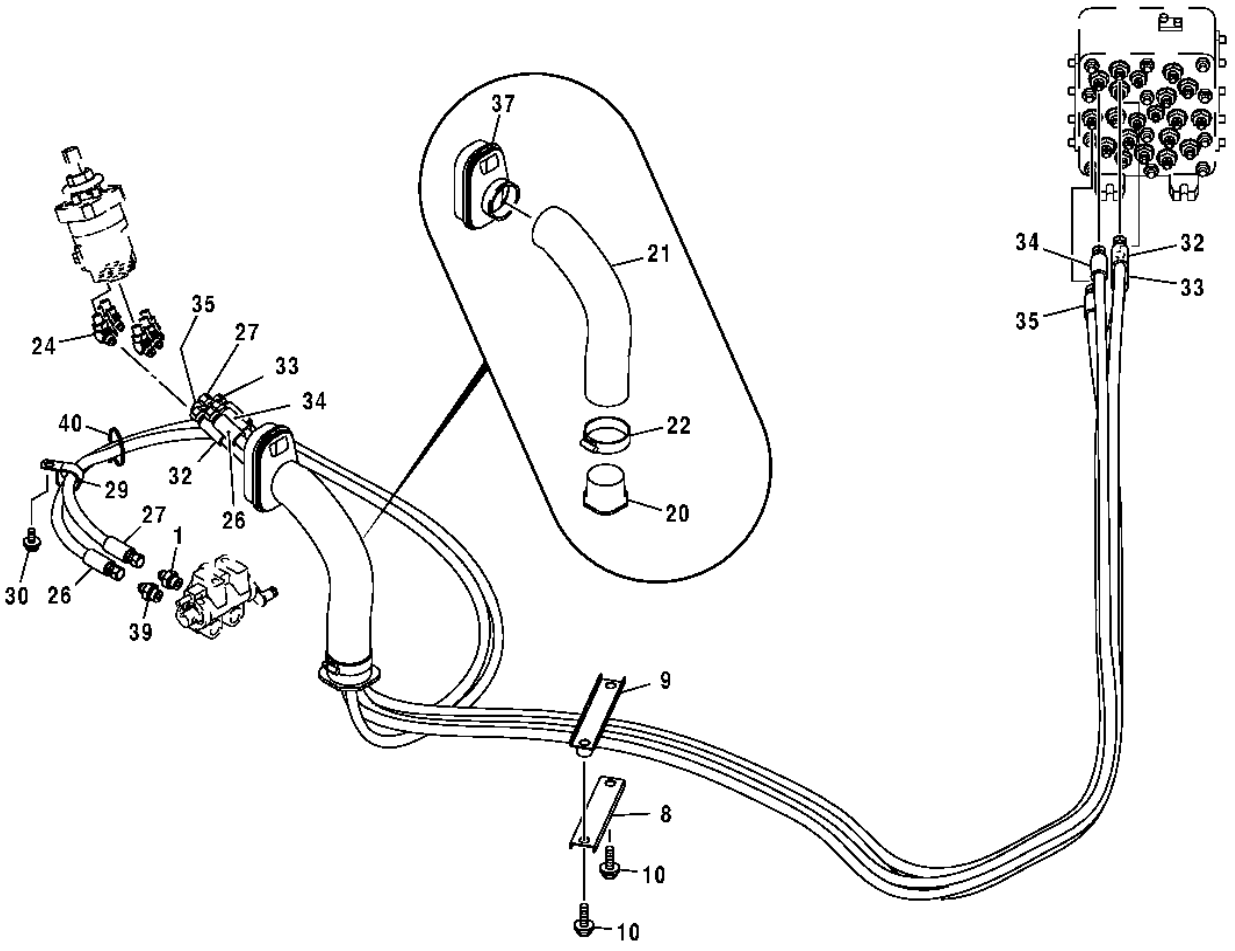

T188805

PILOT HOSES (LEFT CONTROLLER TO SIGNAL MANIFOLD, SHUTOFF VALVE)

KEY	PART NO.	PART NAME	QTY	SERIAL NO.	REMARKS
1	A852133	ADAPTER	1		
	CH11570	O-RING	1		
8	4412666	CLAMP	1		
9	9751787	CLAMP	1		
10	19M7358	CAP SCREW	2		M10 X 40
	12M7066	LOCK WASHER	2		10 MM
20	3079728	BUSHING	1		
21	4351175	HOSE	1		
22	4351774	CLAMP	1		
24	A852223	ELBOW FITTING	6		
	M800650	PACKING	6		
26	4437656	HYDRAULIC HOSE - FABRICATE	1		
27	4437653	HYDRAULIC HOSE - FABRICATE	1		
29	4193848	CLIP	1		(SUB FOR 4190264)
30	19M8324	CAP SCREW	1		M10 X 16
	12M7067	LOCK WASHER	1		12 MM
32	4453225	HYDRAULIC HOSE	1		
33	4453226	HYDRAULIC HOSE	1		
34	4453225	HYDRAULIC HOSE	1		(SUB FOR 4453227)
35	4453228	HYDRAULIC HOSE	1		
37	2045998	BUSHING	1		
39	4261938	FITTING	1		
	CH11570	O-RING	1		
40	H77698	TIE BAND	1		

PILOT HOSES(RIGHT CONTROLLER TO SIGNAL MANIFOLD, SHUTOFF VALVE)

T188806 -UN-28MAR03

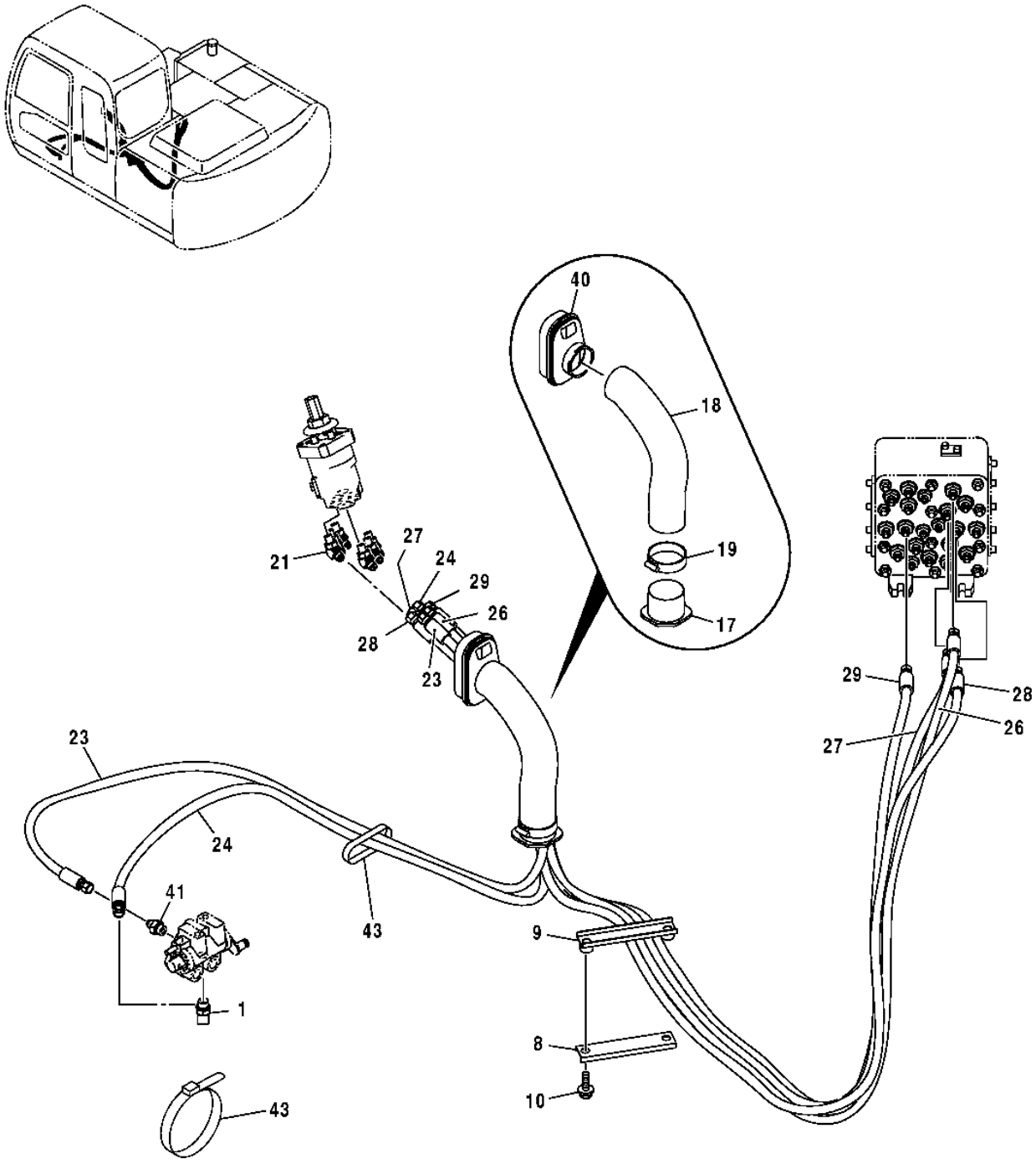

T188806

PILOT HOSES(RIGHT CONTROLLER TO SIGNAL MANIFOLD, SHUTOFF VALVE)

KEY	PART NO.	PART NAME	QTY	SERIAL NO.	REMARKS
1	A852223	ELBOW FITTING	1		
	CH11570	O-RING	1		
8	4412666	CLAMP	1		
9	9751787	CLAMP	1		
10	19M7358	CAP SCREW	2		M10 X 40
	12M7066	LOCK WASHER	2		10 MM
17	3079728	BUSHING	1		
18	4351175	HOSE	1		
19	4351774	CLAMP	1		
21	A852223	ELBOW FITTING	6		
	M800650	PACKING	6		
23	4438290	HYDRAULIC HOSE	1		
24	4438288	HYDRAULIC HOSE - FABRICATE	1		
26	4453229	HYDRAULIC HOSE	1		
27	4450443	HYDRAULIC HOSE	1		
28	4453230	HYDRAULIC HOSE	1		
29	4453231	HYDRAULIC HOSE	1		
40	2045998	BUSHING	1		
41	4261938	FITTING	1		
	CH11570	O-RING	1		
43	H77698	TIE BAND	2		

PILOT LINES (BOTTOM OF CONTROL VALVE TO SIGNAL MANIFOLD)

T149546 -UN-05APR02

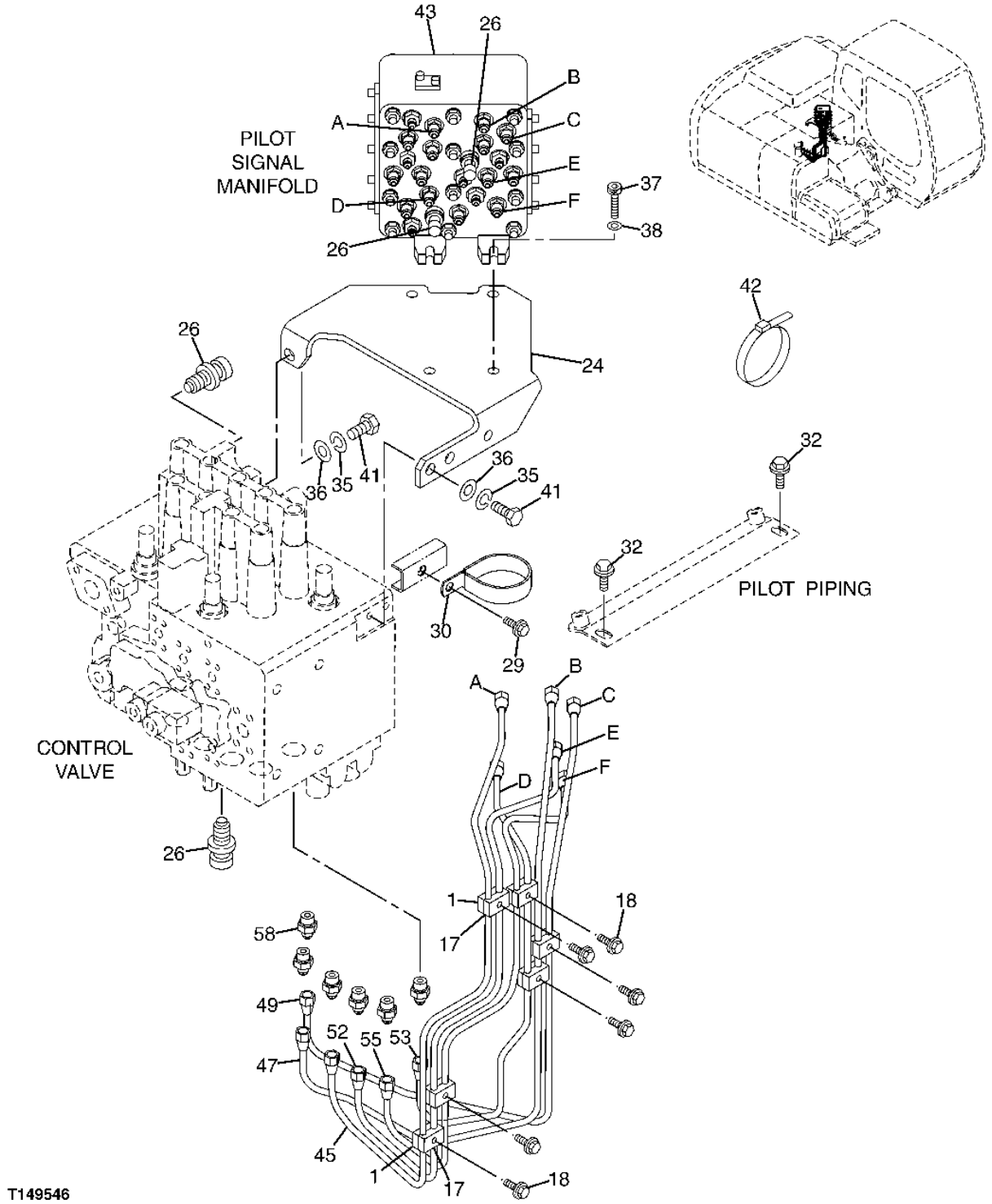

PILOT LINES (BOTTOM OF CONTROL VALVE TO SIGNAL MANIFOLD)

KEY	PART NO.	PART NAME	QTY	SERIAL NO.	REMARKS
1	9735305	CLAMP	6		(SUB FOR AP33637)
17	9735306	CLAMP	6		(SUB FOR AP33638)
18	J010825	CAP SCREW	6		
24	8081659	BRACKET	1		
26	4436535	SENSOR	4		
29	J011020	CAP SCREW	1		
30	4204136	CLIP	1		
32	J021025	CAP SCREW	2		
35	A590914	LOCK WASHER	3		
36	A590114	WASHER	3		
37	L159272	SCREW	4		(SUB FOR J781040)
38	24M7028	WASHER	4		10.500 X 20 X 2 MM, (SUB FOR A590110)
41	J901435	CAP SCREW	3		
42	H77698	TIE BAND	4		
43	4468336	FLOW CONTROL HYD. VALVE	1		(ALSO ORDER 4467088 AND A852123) (SUB FOR 4452625)
45	3091717	PIPE	1		
47	3091735	PIPE	1		
49	3091736	PIPE	1		
52	3091718	PIPE	1		
53	3091719	PIPE	1		
55	3091739	PIPE	1		
58	4255305	ADAPTER	6		
	4509180	O-RING	6		
59	4467088	HOSE	1		(NOT ILLUSTRATED)
60	A852123	ADAPTER	1		(NOT ILLUSTRATED)

PILOT LINES (TOP OF CONTROL VALVE TO SIGNAL MANIFOLD)

T149510 -UN-05APR02

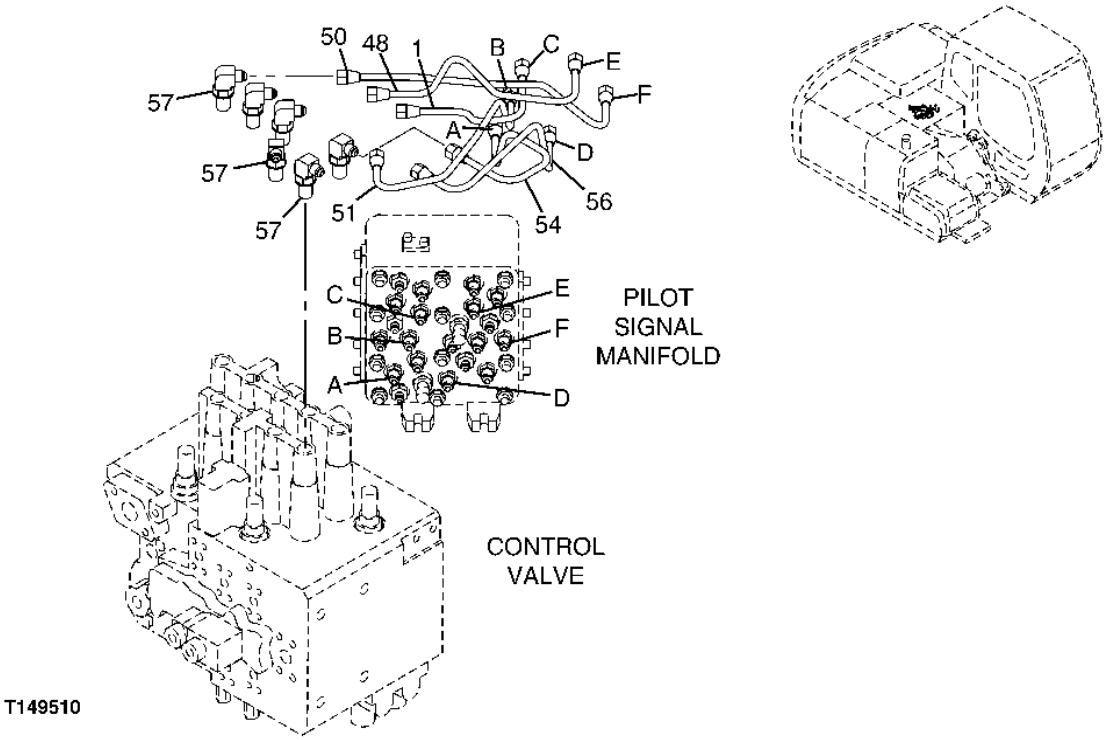

PILOT LINES (TOP OF CONTROL VALVE TO SIGNAL MANIFOLD)

KEY	PART NO.	PART NAME	QTY	SERIAL NO.	REMARKS
1	4452290	PIPE	1		
48	4452341	PIPE	1		
50	4452342	PIPE	1		
51	4452291	PIPE	1		
54	4452292	PIPE	1		
56	4452362	PIPE	1		
57	4420392	FITTING	6		
	4509180	O-RING	1		

PILOT HOSES (RESERVOIR TO SIGNAL MANIFOLD, CONTROL VALVE)

T198684 -UN-16APR04

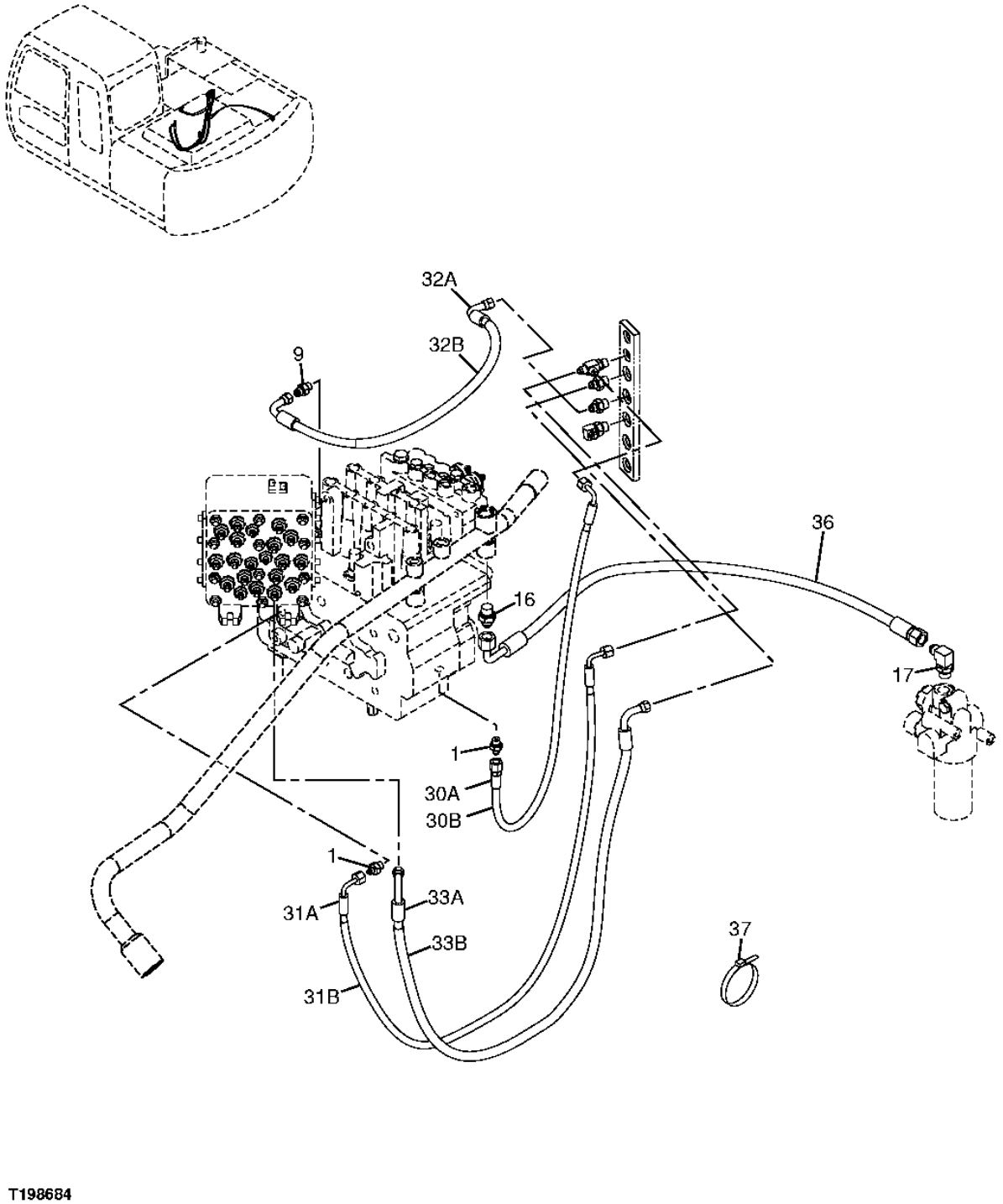

T198684

PILOT HOSES (RESERVOIR TO SIGNAL MANIFOLD, CONTROL VALVE)

KEY	PART NO.	PART NAME	QTY	SERIAL NO.	REMARKS
1	A852122	ADAPTER	2		
9	A852123	ADAPTER	1		
	M800650	PACKING	1		(SUB FOR 957366)
16	A852144	ADAPTER	1		
	4506418	O-RING	1		
17	A852344	ELBOW FITTING	1		
	4506418	O-RING	1		
30A	4427782	HYDRAULIC HOSE - FABRICATE	1		(SUB FOR 4427839) (SUB FOR 9195629, ALONG WITH 4327293)
30B	4327293	HOSE GUARD	1		
31A	4445716	HYDRAULIC HOSE - FABRICATE	1		(SUB FOR 9195589, ALONG WITH (2) 4327293)
31B	4327293	HOSE GUARD	2		
32A	4426634	HYDRAULIC HOSE - FABRICATE	1		(SUB FOR 9194323, ALONG WITH 4327293)
32B	4327293	HOSE GUARD	1		
33A	4445799	HYDRAULIC HOSE - FABRICATE	1		(SUB FOR 9195590, ALONG WITH (3) 4327293)
33B	4327293	HOSE GUARD	3		
36	4400638	HYDRAULIC HOSE - FABRICATE	1		
37	H77698	TIE BAND	2		

PILOT PIPING

T149533 -UN-05APR02

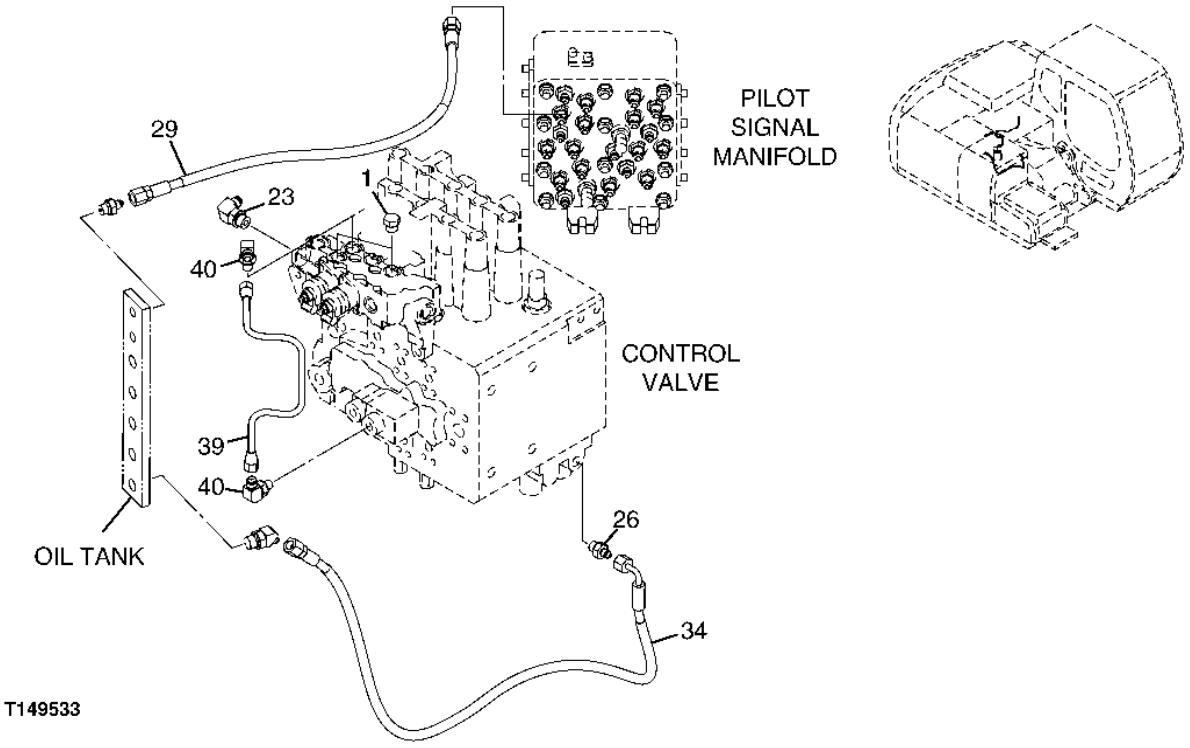

PILOT PIPING

KEY	PART NO.	PART NAME	QTY	SERIAL NO.	REMARKS
1	A885002	PLUG	2		
	M800650	PACKING	1		(SUB FOR 957366)
23	A852333	ELBOW FITTING	1		
	4509180	O-RING	1		
26	A852122	ADAPTER	1		
	M800650	PACKING	1		(SUB FOR 957366)
29	4427838	HYDRAULIC HOSE - FABRICATE	1		
34	4445718	HYDRAULIC HOSE - FABRICATE	1		
39	4452393	PIPE	1		
40	4293950	ELBOW FITTING	2		
	M800650	PACKING	1		(SUB FOR 957366)

PILOT HOSES (SHUT-OFF VALVE TO SIGNAL MANIFOLD, SOLENOID VALVE)

T153300 -UN-05APR02

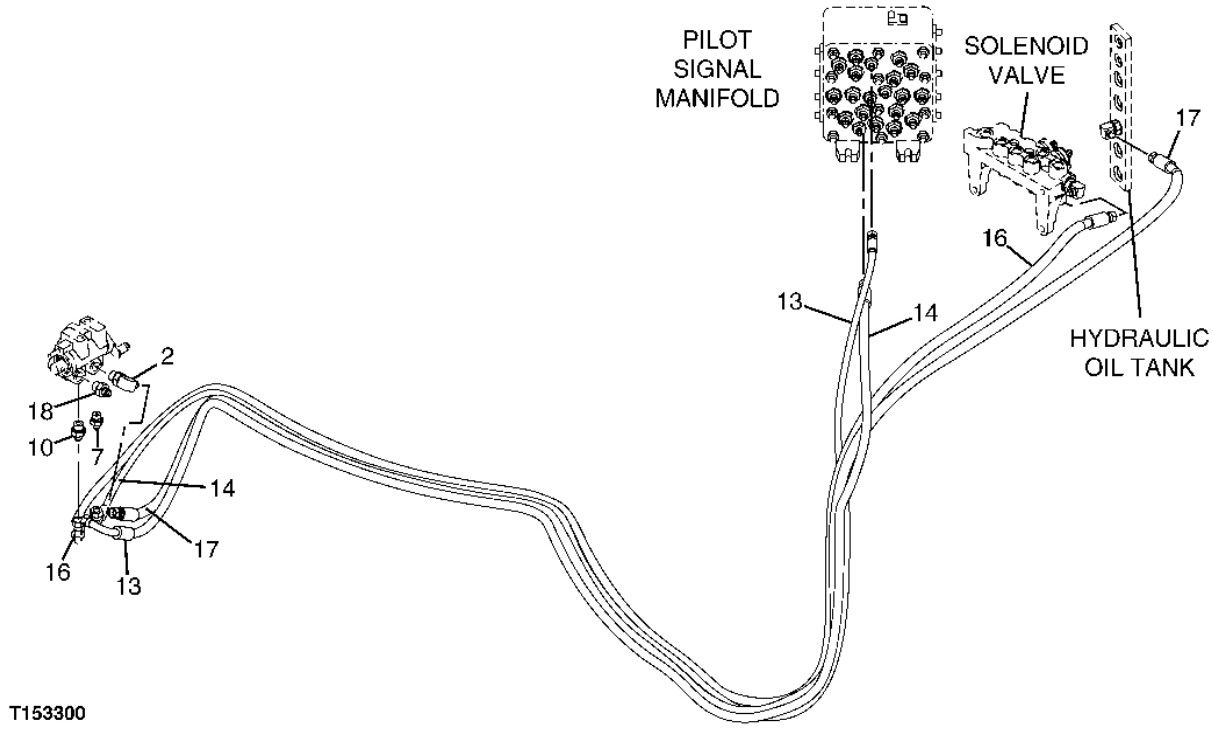

PILOT HOSES (SHUT-OFF VALVE TO SIGNAL MANIFOLD, SOLENOID VALVE)

KEY	PART NO.	PART NAME	QTY	SERIAL NO.	REMARKS
2	A852333	ELBOW FITTING	1		
	4509180	O-RING	1		
7	A852122	ADAPTER	1		
	M800650	PACKING	1		(SUB FOR 957366)
10	A852133	ADAPTER	1		
	4509180	O-RING	1		
13	4444262	HYDRAULIC HOSE	1		
14	4430533	HYDRAULIC HOSE	1		
16	4427775	HYDRAULIC HOSE	1		(SUB FOR 9194321) (ALSO ORDER 4327293)
	4327293	HOSE GUARD	1		
17	4441179	HYDRAULIC HOSE	1		(SUB FOR 9194322) (ALSO ORDER (2) 4327293)
	4327293	HOSE GUARD	2		
18	4261938	FITTING	1		
	4509180	O-RING	1		

LONG ARM LUBRICATION HOSE AND LINE

T149493 -UN-05APR02

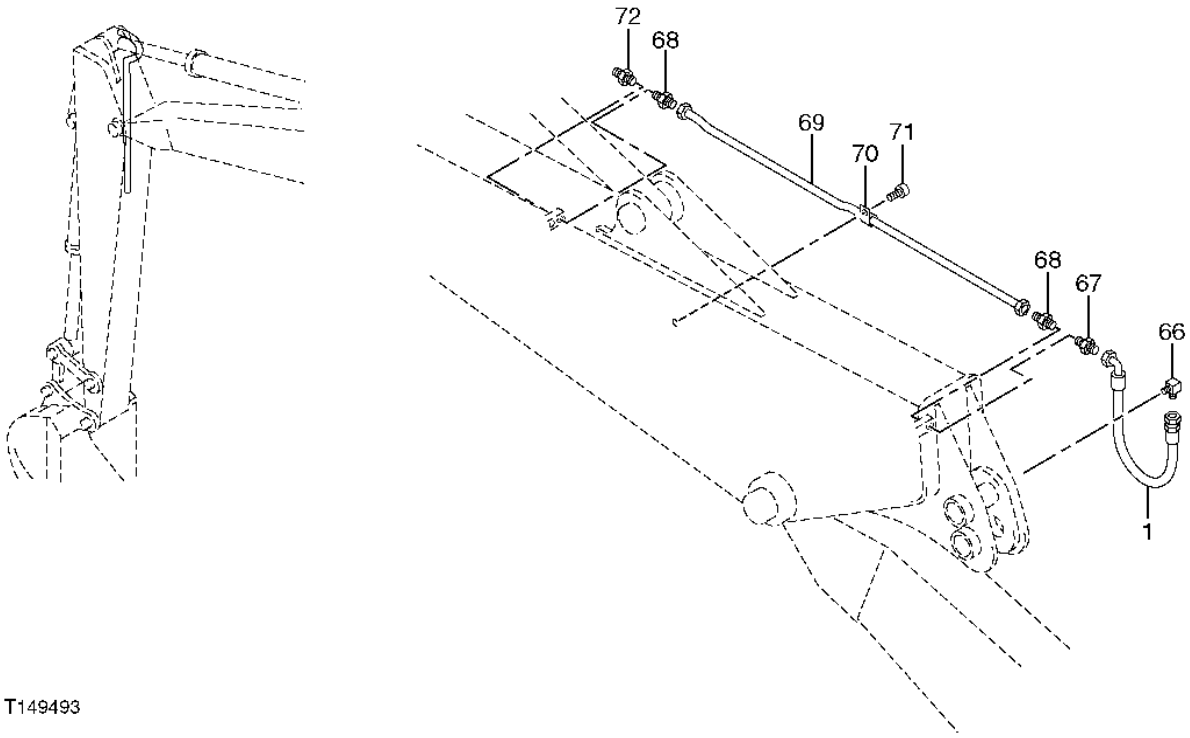

T149493

LONG ARM LUBRICATION HOSE AND LINE

KEY	PART NO.	PART NAME	QTY	SERIAL NO.	REMARKS
1	4227083	HYDRAULIC HOSE - FABRICATE	1	-063822	
	4451760	HOSE	1	063823-	
66	4154656	ELBOW FITTING	1		
67	4154651	ADAPTER	1		
68	4130169	FITTING	2		
69	4271447	PIPE	1	-063822	
	4605564	PIPE	1	063823-	
70	TH101388	CLIP	1		(SUB FOR 4000854)
71	21M7288	SCREW	1		(SUB FOR M430610)
72	T116334	LUBRICATION FITTING	1	-063822	(SUB FOR J75581)
	TH100074	LUBRICATION FITTING	1	063823-	

BOOM LINES TO ARM AND BUCKET CYLINDERS

TP54498 -UN-17JAN97

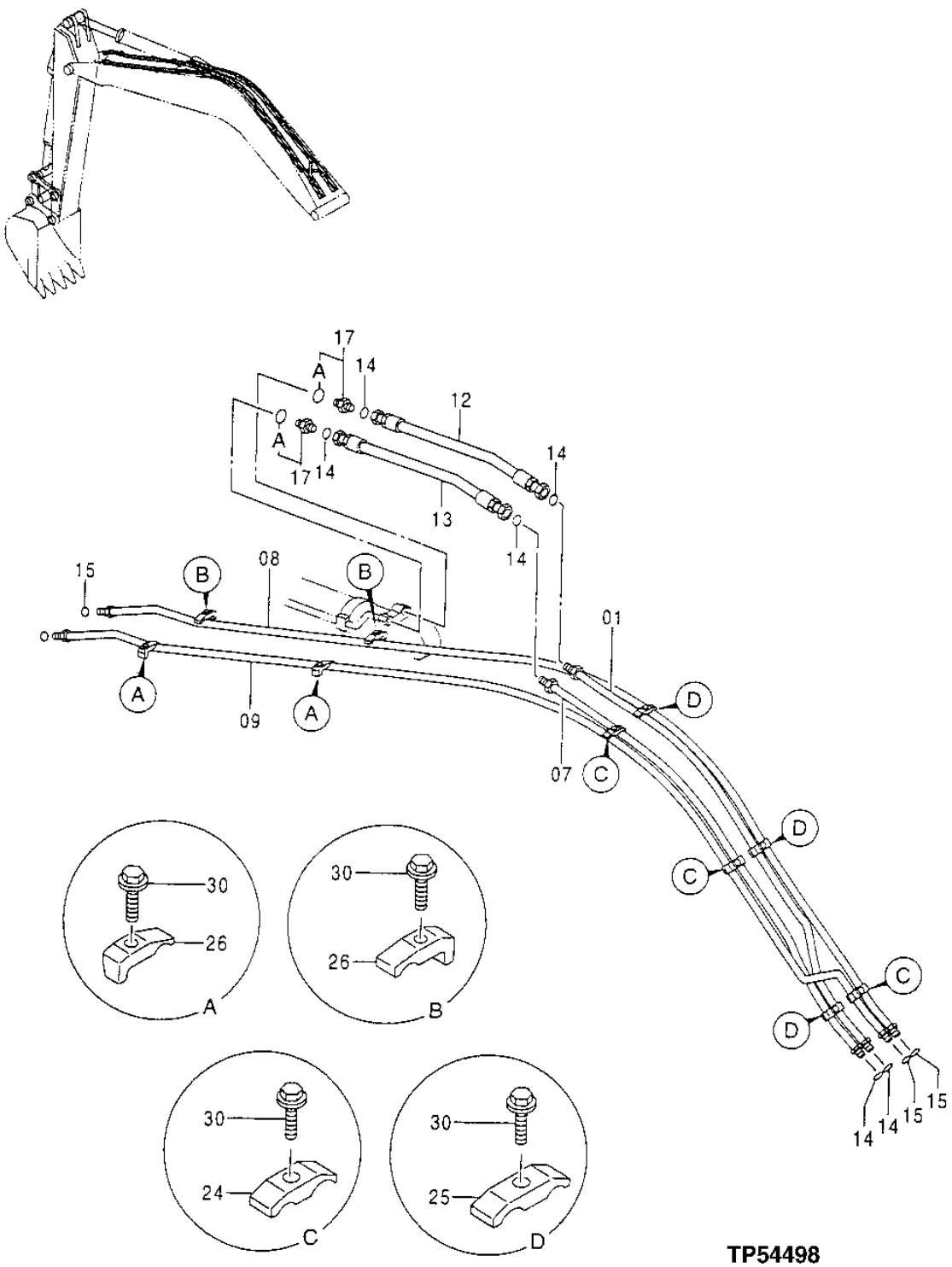

TP54498

BOOM LINES TO ARM AND BUCKET CYLINDERS

KEY	PART NO.	PART NAME	QTY	SERIAL NO.	REMARKS
1	P67963	PIPE	1		
7	P67964	PIPE	1		
8	P67967	PIPE	1		
9	P67966	PIPE	1		
12	4260127	HYDRAULIC HOSE - FABRICATE	2		
13	4259322	HYDRAULIC HOSE - FABRICATE	1		
14	4187308	O-RING	6		
15	T77857	O-RING	4		
17	A853166	ADAPTER	2		
17A	AT318035	O-RING	1		(SUB FOR 4506424)
24	4189858	CLAMP	3		
25	4141806	CLAMP	3		
26	4190125	CLAMP	4		
30	19M7872	CAP SCREW	10		M12 X 25
	12M7067	LOCK WASHER	10		12 MM (0.472")

LUBRICATION HOSES AND LINES (ON BOOM)

T153248 -UN-05APR02

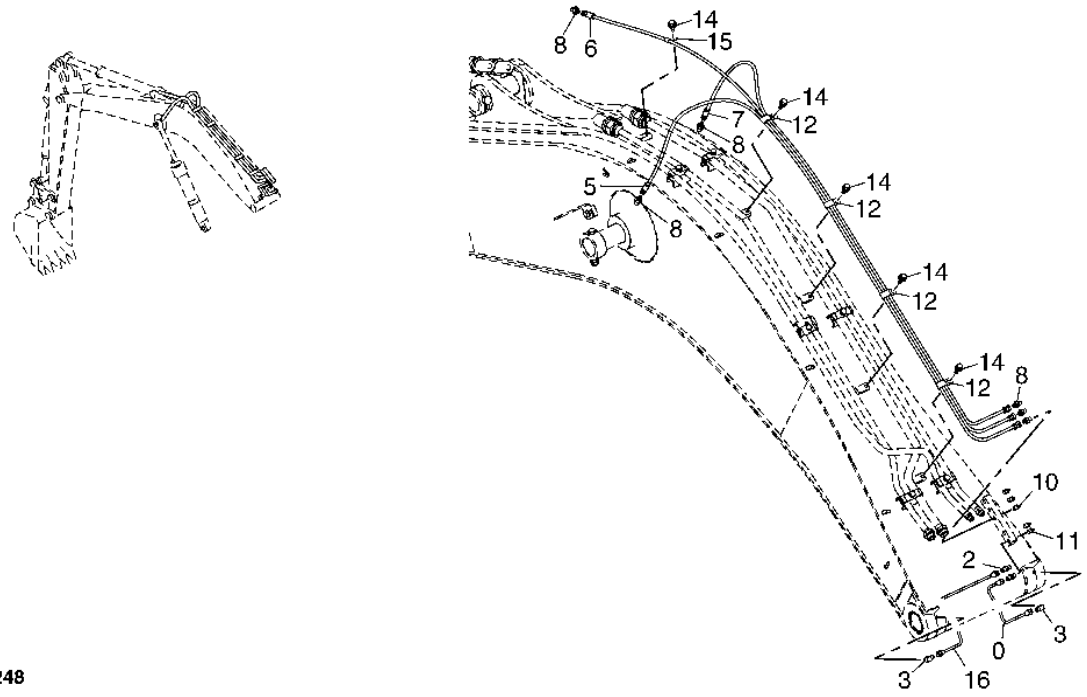

T153248

LUBRICATION HOSES AND LINES (ON BOOM)

KEY	PART NO.	PART NAME	QTY	SERIAL NO.	REMARKS
0	4361021	OIL LINE	1		
2	4360981	ADAPTER	2		
3	4345297	ELBOW FITTING	2		
5	4260314	HYDRAULIC HOSE - FABRICATE	1		
6	4429017	HYDRAULIC HOSE - FABRICATE	1		
7	4260314	HYDRAULIC HOSE - FABRICATE	1		
8	4154651	ADAPTER	6		
10	TH100364	LUBRICATION FITTING	3		
11	4148896	LUBRICATION FITTING	2		
12	T152608	CLAMP	4		
14	19M8324	CAP SCREW	5		M10 X 16
15	TH108600	CLIP	1		
16	4370492	PIPE	1		(SUB FOR P63321)

BLADE HOSES (RETURN, PRESSURE AND PILOT)

T198094 -UN-08JUN04

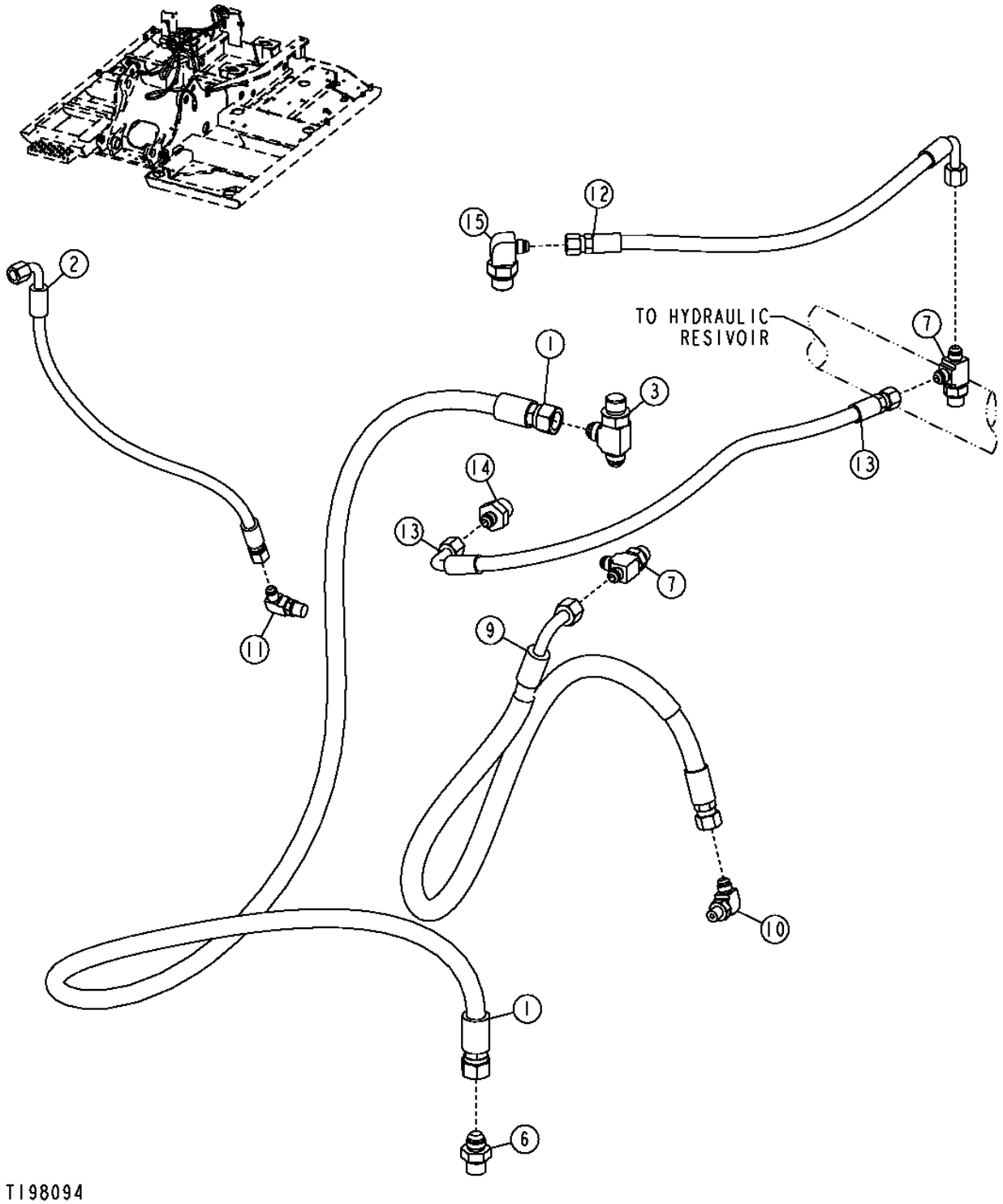

BLADE HOSES (RETURN, PRESSURE AND PILOT)

KEY	PART NO.	PART NAME	QTY	SERIAL NO.	REMARKS
1	DH400575	HYDRAULIC HOSE - FABRICATE	1		
2	4462425	HYDRAULIC HOSE - FABRICATE	1		
3	A852444	TEE FITTING	1		
6	A852144	ADAPTER	1		
7	A852433	TEE FITTING	2		
9	4442771	HYDRAULIC HOSE - FABRICATE	1		
	4327293	HOSE GUARD	2		
10	A852323	ELBOW FITTING	1		
11	4154670	ELBOW FITTING	1		
12	4427152	HYDRAULIC HOSE - FABRICATE	1		
13	4624812	HOSE	1		
14	A852143	ADAPTER	1		
15	A852343	ELBOW FITTING	1		

BLADE HYDRAULIC HOSES (PUMP TO RELIEF VALVE, TO CONTROL VALVE)

T198093 -UN-08JUN04

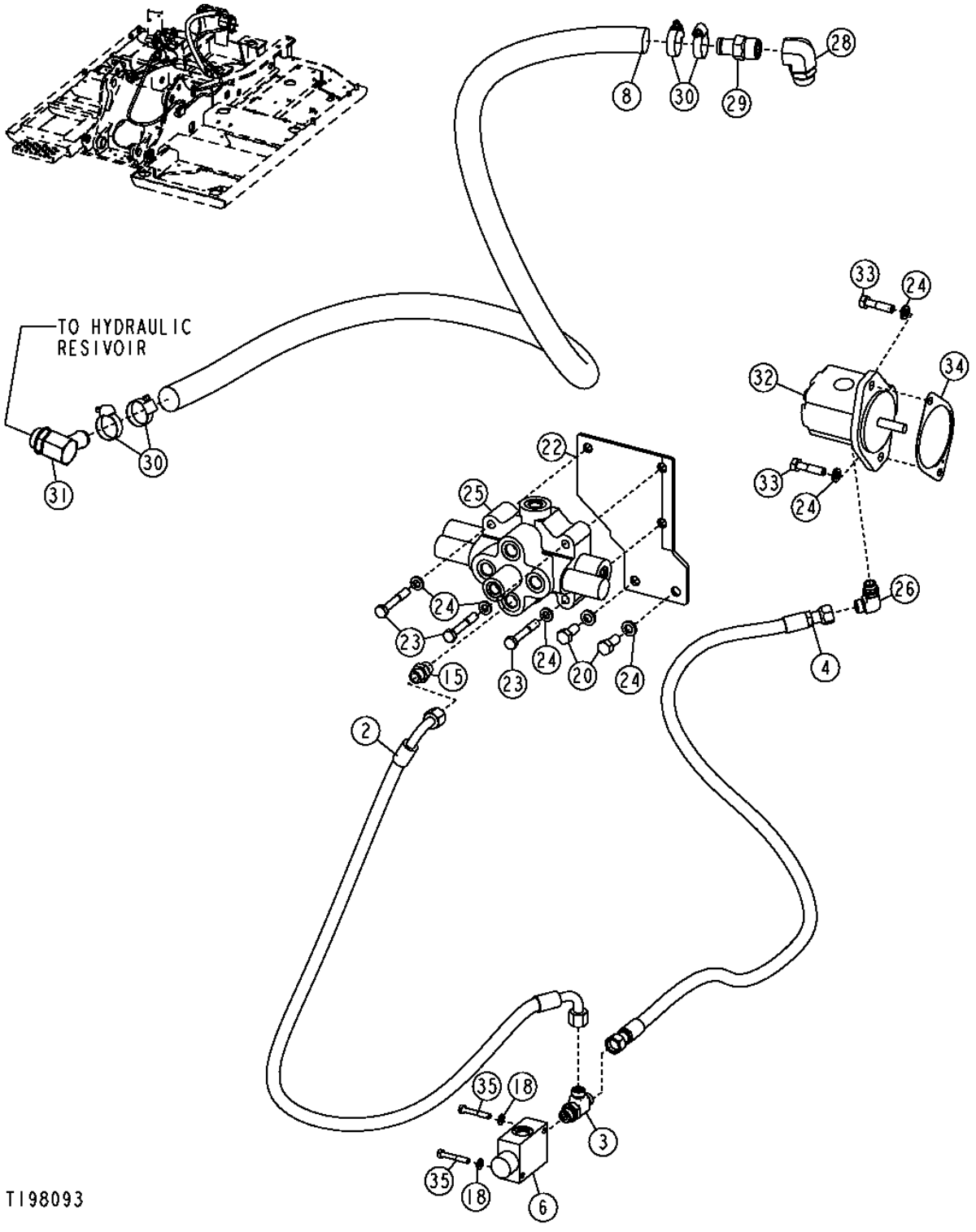

BLADE HYDRAULIC HOSES (PUMP TO RELIEF VALVE, TO CONTROL VALVE)

KEY	PART NO.	PART NAME	QTY	SERIAL NO.	REMARKS
2	DH400583	HYDRAULIC HOSE - FABRICATE	1		
3	A853444	TEE FITTING	1		
4	DH400584	HYDRAULIC HOSE - FABRICATE	1		
6	4411019	PRESSURE RELIEF VALVE	1		
8	P70724	HYDRAULIC HOSE	1		
9	T77857	O-RING	4		(NOT ILLUSTRATED)
15	A853144	ADAPTER	1		
18	24M7055	WASHER	2		8.400 X 16 X 1.600 MM
20	19M7877	CAP SCREW	2		M14 X 30
21	12H317	LOCK WASHER	2		9/16"
22	8081166	BRACKET	1		
23	19M7364	CAP SCREW	3		M12 X 80
24	12H301	LOCK WASHER	5		1/2"
25	.....	CONTROL VALVE	1		(9219730 NOT AVAILABLE FOR SERVICE)
26	38H1005	ELBOW FITTING	1		
27	51M7043	O-RING	1		15.300 X 2.200 MM
28	DH400618	ELBOW FITTING	1		
29	R49518	FITTING	1		
30	DH400627	CLAMP	4		(TY22470 NOT USED FOR THIS APPLICATION)
31	AH75162	FITTING	1		
32	AP35371	HYDRAULIC PUMP	1		
33	19M7361	CAP SCREW	2		M12 X 50
34	R134465	GASKET	1		
35	19M8397	CAP SCREW	2		M8 X 50

BLADE CONTROL VALVE TO ROTARY MANIFOLD HOSES

T198092 -UN-08JUN04

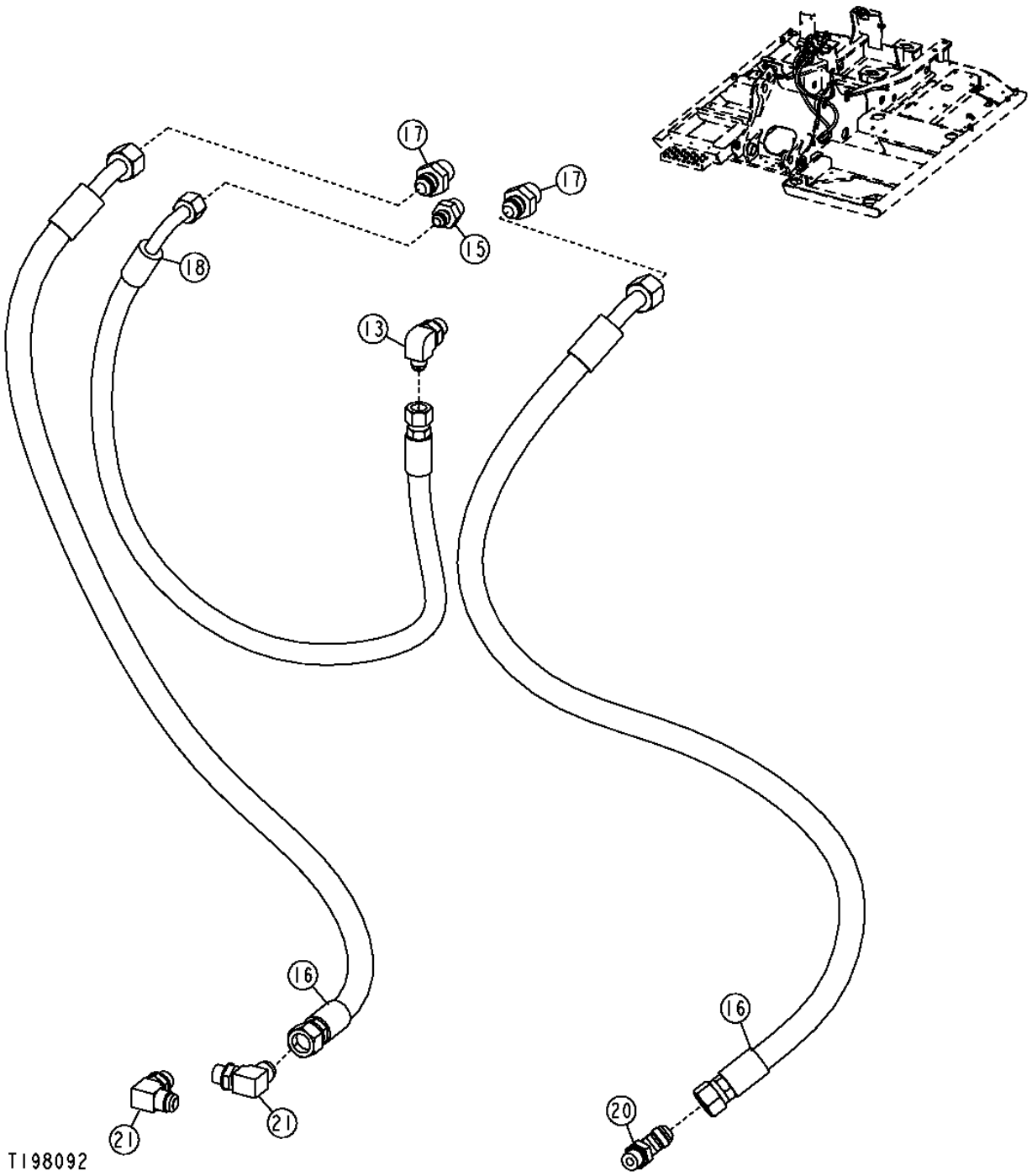

BLADE CONTROL VALVE TO ROTARY MANIFOLD HOSES

KEY	PART NO.	PART NAME	QTY	SERIAL NO.	REMARKS
13	A852333	ELBOW FITTING	1		
15	4376657	ADAPTER	1		
16	4451392	HYDRAULIC HOSE - FABRICATE	2		
17	A852144	ADAPTER	2		
18	4359370	HYDRAULIC HOSE - FABRICATE	1		
20	A852234	ELBOW FITTING	1		
21	A852334	ELBOW FITTING	2		

ROTARY MANIFOLD TO BLADE CYLINDER HOSES

T152931 -UN-05APR02

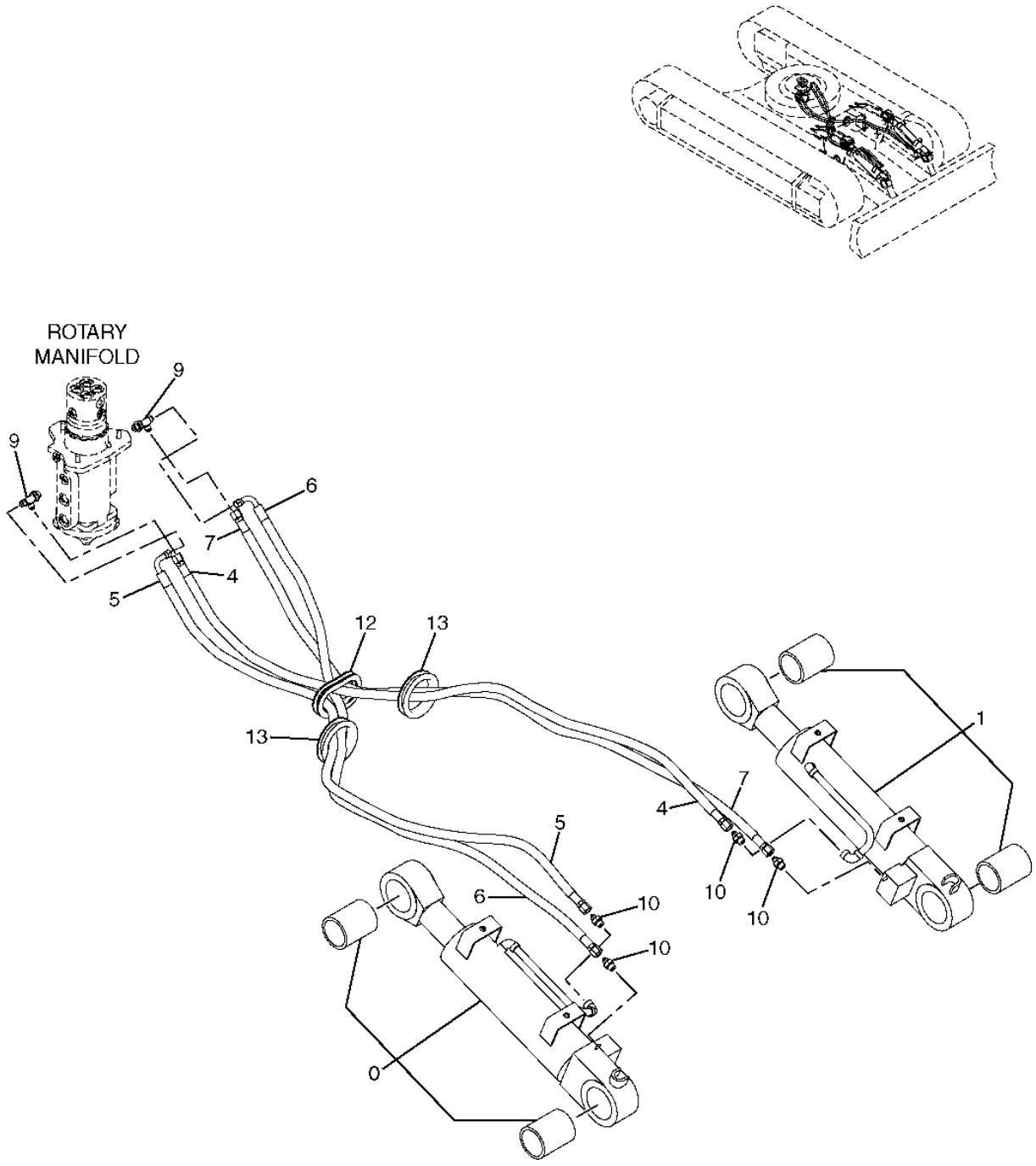

T152931

ROTARY MANIFOLD TO BLADE CYLINDER HOSES

KEY	PART NO.	PART NAME	QTY	SERIAL NO.	REMARKS
0	9187648	CYLINDER	1		
1	9187647	CYLINDER	1		
4	4440410	HYDRAULIC HOSE - FABRICATE	1		
5	4440419	HYDRAULIC HOSE - FABRICATE	1		
6	4440426	HYDRAULIC HOSE - FABRICATE	1		
7	4440431	HYDRAULIC HOSE - FABRICATE	1		
9	A852433	TEE FITTING	2		
	4509180	O-RING	2		
10	A852133	ADAPTER	4		
10A	4509180	O-RING	4		
12	4334566	BUSHING	1		
13	4201986	GROMMET	2		

BLADE PILOT VALVE AND HOSES

T198091 -UN-08JUN04

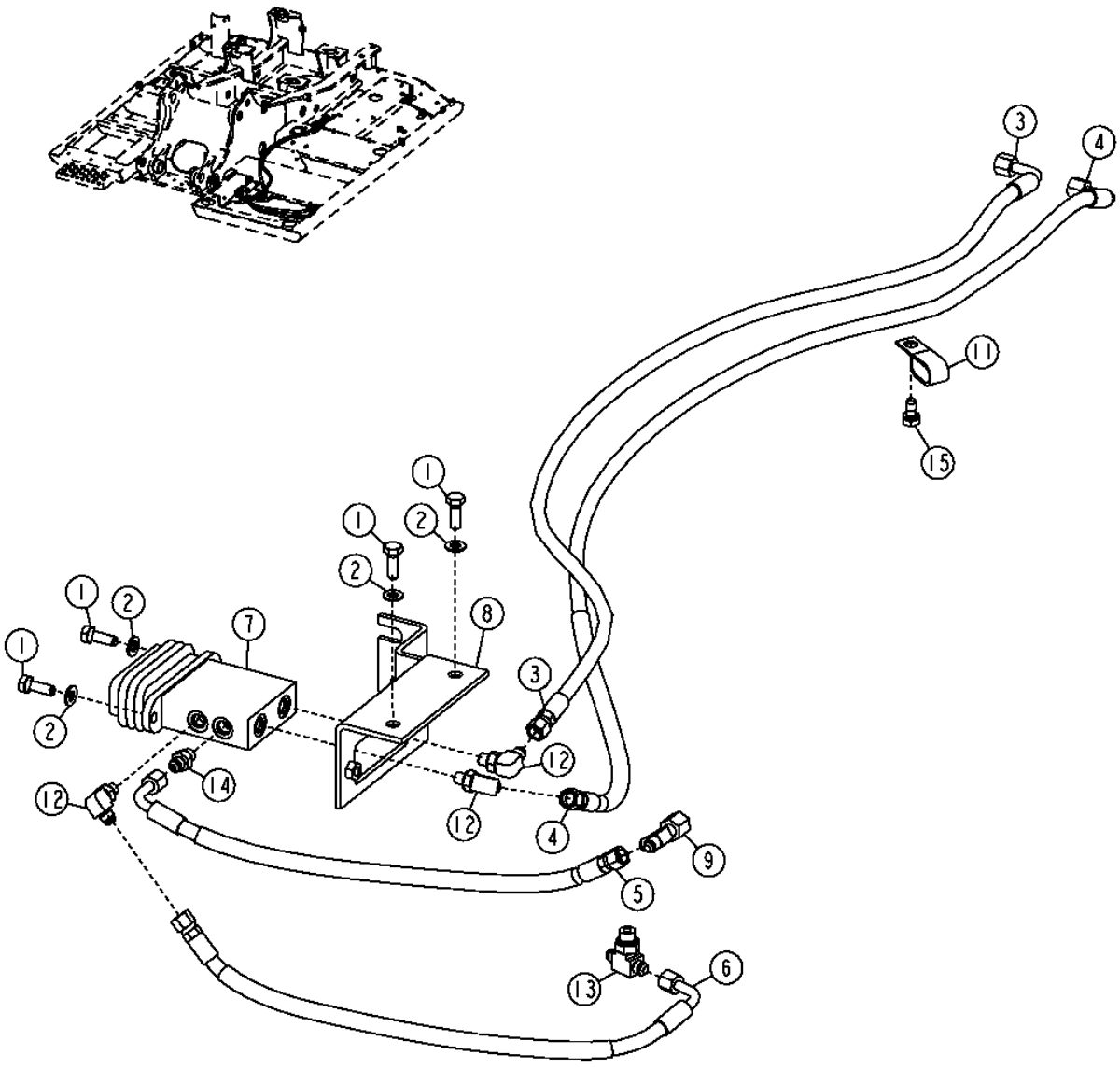

THIS PARTS LISTING IS CONTINUED

BLADE PILOT VALVE AND HOSES

KEY	PART NO.	PART NAME	QTY	SERIAL NO.	REMARKS
1	19M7662	CAP SCREW	4		M10 X 30
2	24M7028	WASHER	4		10.500 X 20 X 2 MM
3	4441254	HYDRAULIC HOSE - FABRICATE	1		
4	4441255	HYDRAULIC HOSE - FABRICATE	1		
5	4624812	HOSE	1		
6	4437944	HYDRAULIC HOSE - FABRICATE	1		
7	4357586	HYDR./PILOT CONTROL VALVE	1		
8	7033089	BRACKET	1		
9	4246672	TEE FITTING	1		
11	T32854	CLAMP	1		
12	A852323	ELBOW FITTING	3		
	M800650	PACKING	3		(SUB FOR 957366)
13	A852533	TEE FITTING	1		
14	A852123	ADAPTER	1		
	M800650	PACKING	1		
15	19M7938	CAP SCREW	1		M10 X 20

BLADE PILOT HOSES, BLADE VALVE HOSES, SHUTTLE VALVES AND PILOT VALVES

T200764 -UN-08JUN04

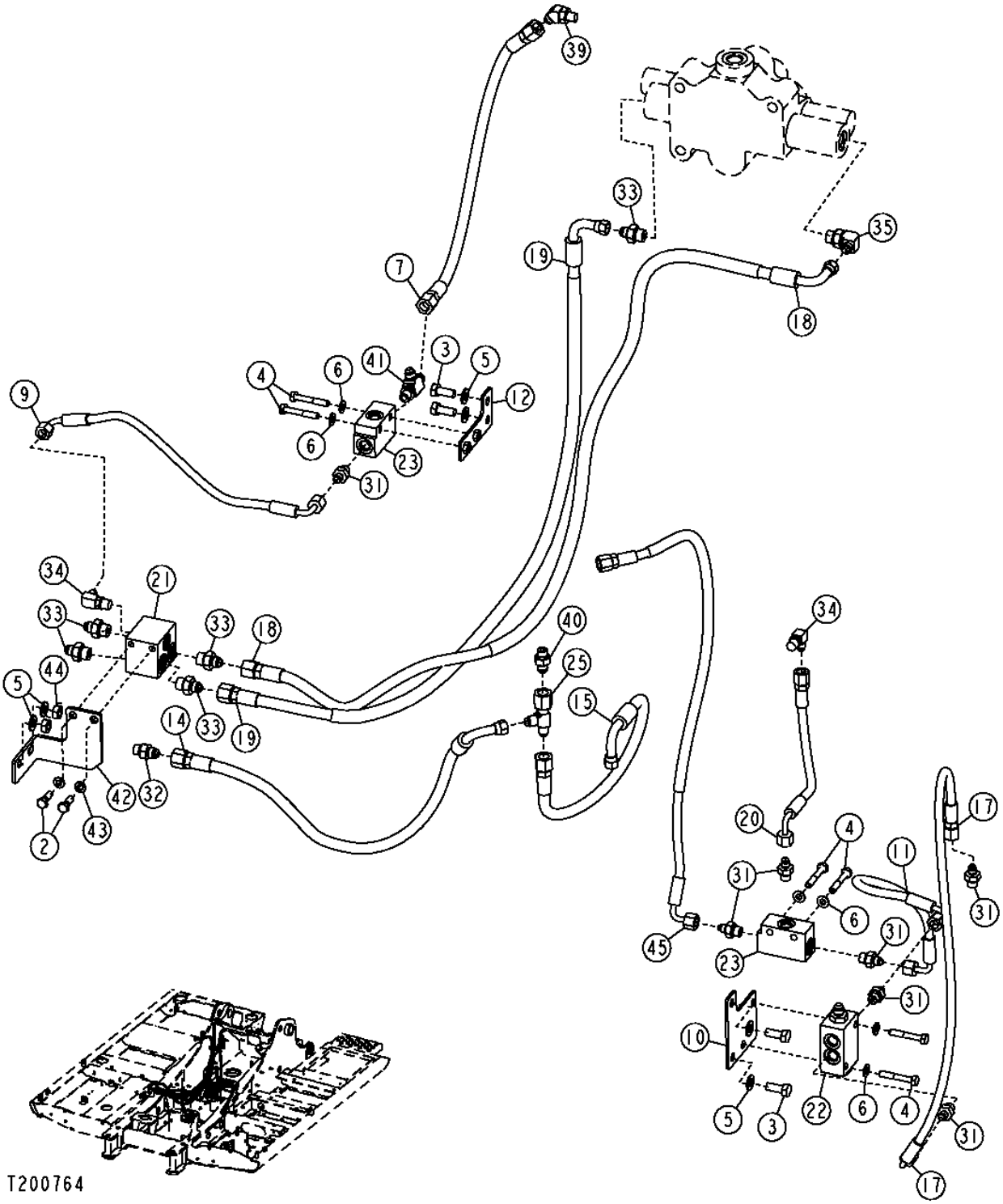

BLADE PILOT HOSES, BLADE VALVE HOSES, SHUTTLE VALVES AND PILOT VALVES

KEY	PART NO.	PART NAME	QTY	SERIAL NO.	REMARKS
2	19M7163	CAP SCREW	2		M8 X 25
3	19M7402	CAP SCREW	4		M10 X 25
4	19M8397	CAP SCREW	6		M8 X 50
5	24M7028	WASHER	6		10.500 X 20 X 2 MM
6	24M7055	WASHER	6		8.400 X 16 X 1.600 MM
7	4375673	HYDRAULIC HOSE - FABRICATE	1		
9	4442340	HYDRAULIC HOSE - FABRICATE	1		
10	AP38667	BRACKET	1		
11	4442333	HYDRAULIC HOSE - FABRICATE	1		
12	AP38669	BRACKET	1		
14	4462435	HYDRAULIC HOSE - FABRICATE	1		
15	4462438	HYDRAULIC HOSE - FABRICATE	1		
17	4462433	HYDRAULIC HOSE - FABRICATE	1		
18	4462443	HYDRAULIC HOSE - FABRICATE	1		
	4327293	HOSE GUARD	2		
19	9206523	HYDRAULIC HOSE - FABRICATE	1		
20	4442325	HYDRAULIC HOSE - FABRICATE	1		
21	4330230	FLOW CONTROL HYD. VALVE	1		(SHUTTLE)
22	4337928	FLOW CONTROL HYD. VALVE	1		
23	4203447	FLOW CONTROL HYD. VALVE	2		
25	4246672	TEE FITTING	1		
31	A852122	ADAPTER	7		
32	A852123	ADAPTER	2		
33	A852133	ADAPTER	5		
34	4154670	ELBOW FITTING	2		
35	A852333	ELBOW FITTING	1		
39	A852223	ELBOW FITTING	1		
40	A852123	ADAPTER	1		
41	A852423	TEE FITTING	1		
42	DH300134	BRACKET	1		
43	12M7065	LOCK WASHER	2		8 MM
44	14M7274	NUT	2		M10
45	4454732	HOSE	1		
	4327293	HOSE GUARD	1		

CONTROL VALVE TO HOSE LINE(AUXILIARY PLUMBING, FACTORY INSTALL)

T149616 -UN-05APR02

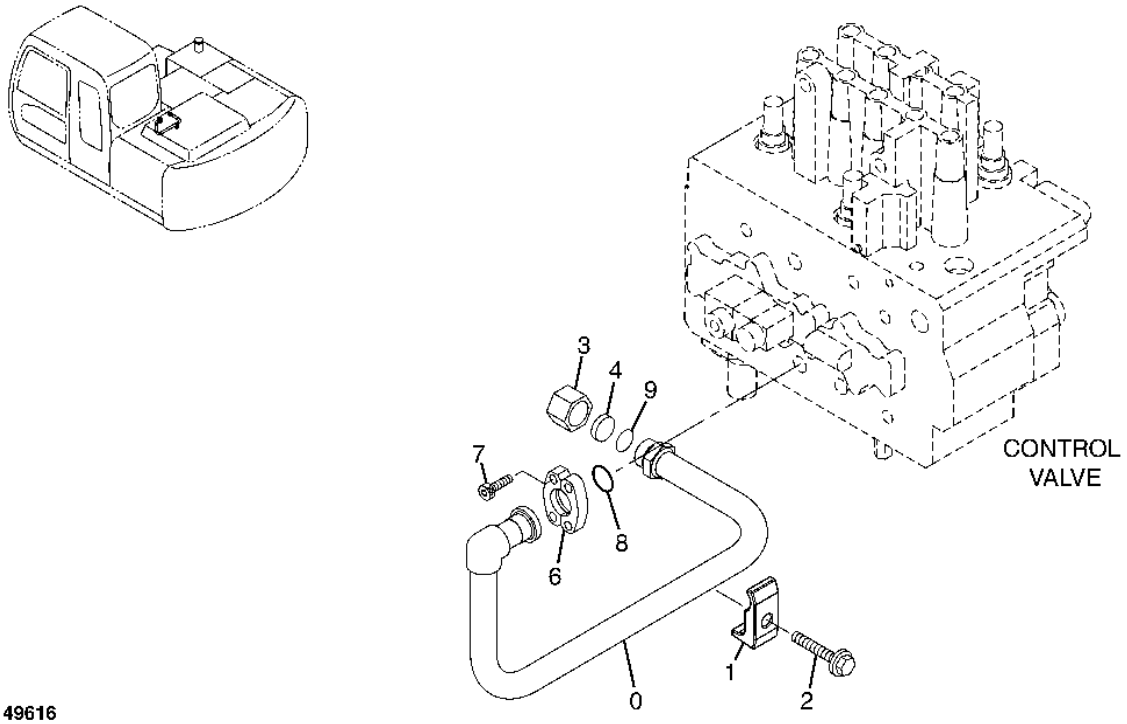

T149616

CONTROL VALVE TO HOSE LINE(AUXILIARY PLUMBING, FACTORY INSTALL)

KEY	PART NO.	PART NAME	QTY	SERIAL NO.	REMARKS
0	8080641	PIPE	1		
1	4190126	CLAMP	1		
2	19M8348	CAP SCREW	1		M12 X 65, (SUB FOR J011265)
3	4188136	TUBE NUT	1		
4	4189094	FITTING PLUG	1		
6	986910	FLANGE FITTING	2		
7	J781030	SCREW	4		
8	971489	O-RING	1		
9	4187308	O-RING	1		

CONTROL VALVE PRESSURE AND RETURN AUXILIARY PLUMBING (FACTORY)

T198927 -UN-26APR04

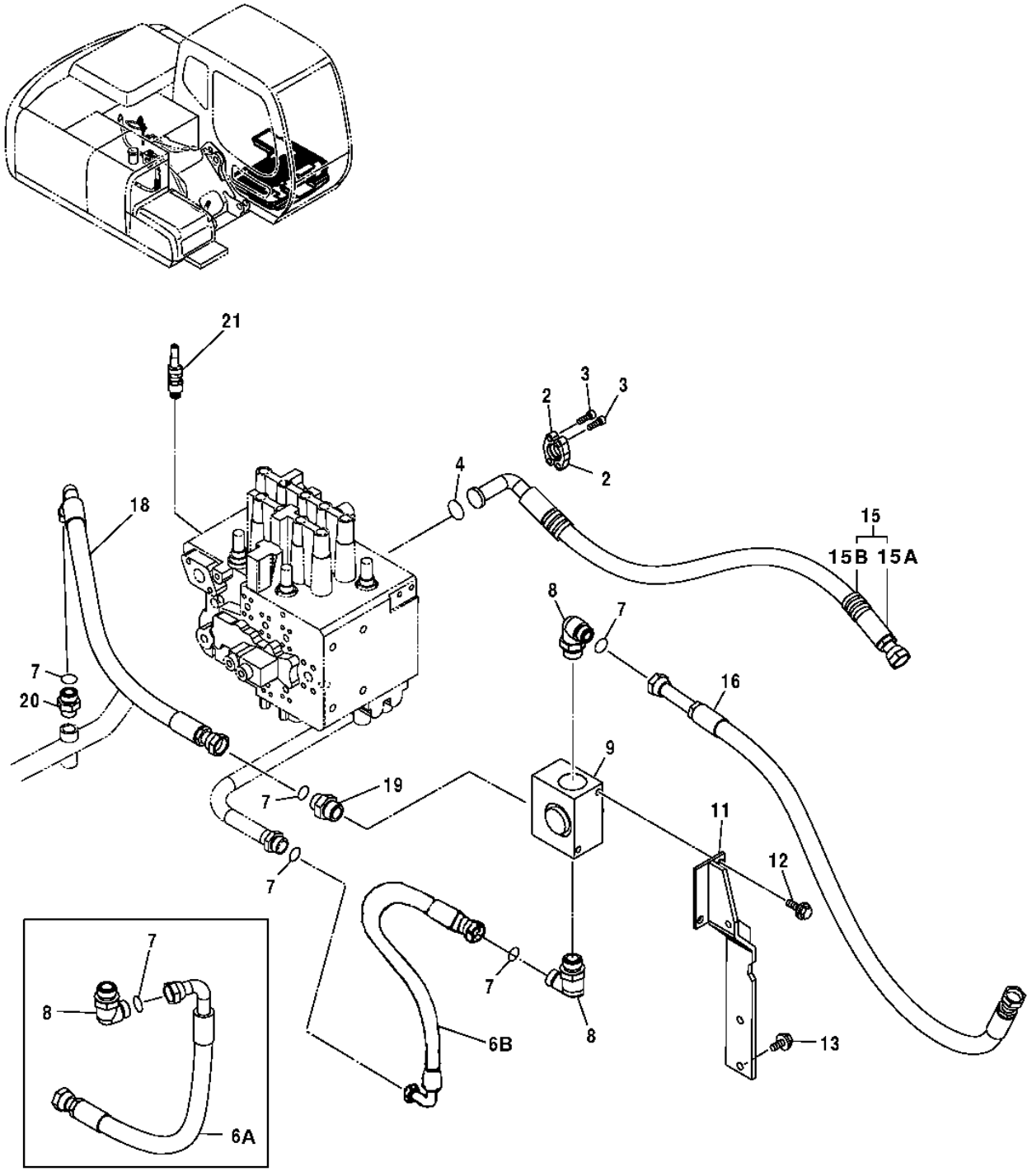

T198927

CONTROL VALVE PRESSURE AND RETURN AUXILIARY PLUMBING (FACTORY)

KEY	PART NO.	PART NAME	QTY	SERIAL NO.	REMARKS
2	R29424	FLANGE FITTING	2		
3	J781030	SCREW	4		
4	T59014	O-RING	1		
6A	.....	HYDRAULIC HOSE - FABRICATE	1	-XXXXXX	(4411920 NO LONGER AVAILABLE) (UNITS BUILT BEFORE OCTOBER 2003)
6B	4407004	HOSE	1	XXXXXX-	(UNITS BUILT AFTER SEPTEMBER 2003)
7	T77858	O-RING	5		
8	4202113	ELBOW FITTING	2		
	TH101926	O-RING	2		
9	4609664	VALVE	1		
11	.....	BRACKET	1	-XXXXXX	(8081420 NO LONGER AVAILABLE) (UNITS BUILT BEFORE OCTOBER 2003)
	8095475	BRACKET	1	XXXXXX-	(UNITS BUILT AFTER SEPTEMBER 2003)
12	19M8011	CAP SCREW	2		M12 X 30
13	19M7403	CAP SCREW	2		M12 X 35
15	.....	HYDRAULIC HOSE	1		(9197248 NOT AVAILABLE FOR SERVICE)
15A	4434465	HYDRAULIC HOSE	1		
15B	4327294	HOSE GUARD	3		
16	4449490	HYDRAULIC HOSE - FABRICATE	1		
18	4323280	HYDRAULIC HOSE - FABRICATE	1		
19	AT318016	ADAPTER	1		(SUB FOR 4189537)
	TH101926	O-RING	1		
20	4189619	ADAPTER	1		
	AT318035	O-RING	1		(SUB FOR 4506424)
21	9200504	PRESSURE RELIEF VALVE	2		

BOOM HOSES AND LINES (FACTORY INSTALLED AUXILIARY PLUMBING)

T189307 -UN-10APR03

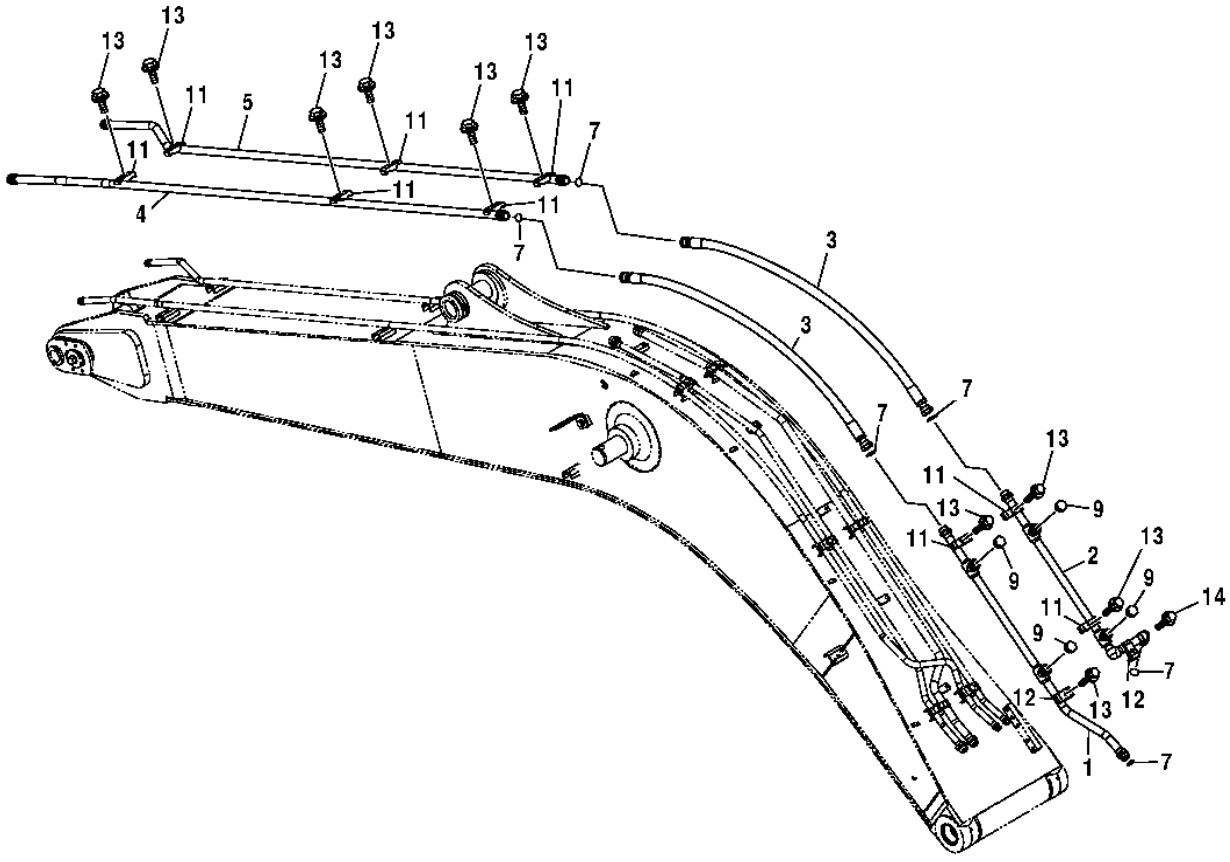

T189307

BOOM HOSES AND LINES (FACTORY INSTALLED AUXILIARY PLUMBING)

KEY	PART NO.	PART NAME	QTY	SERIAL NO.	REMARKS
1	9745411	PIPE	1		
2	8079467	PIPE	1		
3	AT131293	HYDRAULIC HOSE - FABRICATE	2		
4	DH800105	PIPE	1		(SUB FOR 8082279, THIS APPLICATION)
5	DH800106	PIPE	1		(SUB FOR 8082278, THIS APPLICATION)
7	T77858	O-RING	6		
9	4174542	DRAIN PLUG	4		
	AT318035	O-RING	4		(SUB FOR 4506424)
11	4141806	CLAMP	9		
12	4190126	CLAMP	2		
13	19M7363	CAP SCREW	10		M12 X 60
	12H301	LOCK WASHER	10		12.700 MM (1/2")
14	19M8348	CAP SCREW	1		M12 X 65
	12H301	LOCK WASHER	1		12.700 MM (1/2")

ARM HOSES AND LINES (FACTORY AUXILIARY PLUMBING)

T191182 -UN-22MAY03

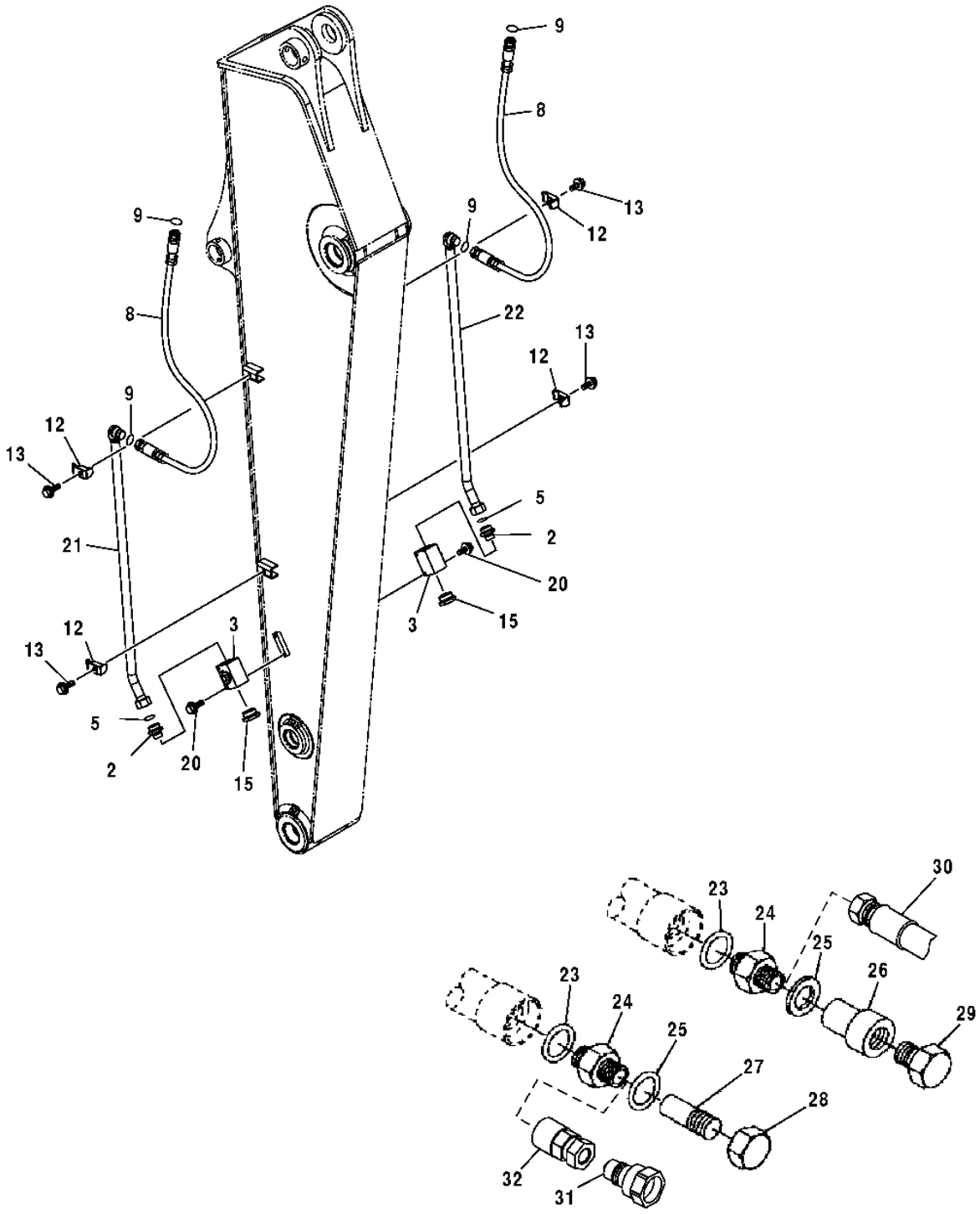

T191182

ARM HOSES AND LINES (FACTORY AUXILIARY PLUMBING)

KEY	PART NO.	PART NAME	QTY	SERIAL NO.	REMARKS
2	A853188	ADAPTER	2		
	TH101926	O-RING	2		
3	4600164	CHECK VALVE	2		
5	T76938	O-RING	2		
8	AT215504	HYDRAULIC HOSE - FABRICATE	2		(FOR USE WITH 2.52M ARM)
	AT155744	HYDRAULIC HOSE - FABRICATE	2		(FOR USE WITH 3.01M ARM)
9	T77858	O-RING	4		
12	4190126	CLAMP	4		
13	19M7363	CAP SCREW	4		M12 X 60
	12H301	LOCK WASHER	4		12.700 MM (1/2")
15	4113926	DRAIN PLUG	2		
	TH101926	O-RING	2		
20	19M8081	CAP SCREW	4		M10 X 80
21	AT318039	PIPE	1		(SUB FOR 8083834)
22	AT318040	PIPE	1		(SUB FOR 8084096)
23	TH101926	O-RING	2		
24	4189535	ADAPTER	2		(1" ORFS)
	AT318016	ADAPTER	2		(SUB FOR 4189537) (3/4" ORFS)
	AT301151	FITTING	2		(1" SAE, MALE)
	X12-16F4OMXS	ADAPTER	2		(3/4" 37 DEGREE)
	X16F4OMXS	ADAPTER	2		(1" 37 DEGREE)
	AT305641	FITTING	2		(3/4" SAE, MALE)
25	R29936	O-RING	2		
26	AT186111	QUICK COUPLER	1		(1" FEMALE)(SCREW TOGETHER COUPLER)
	.....	KIT	1		(AT189410 NO LONGER AVAILABLE)
27	AT186112	QUICK COUPLER	1		(1" MALE)(SCREW TOGETHER COUPLER)
	.....	KIT	1		(AT189409 NO LONGER AVAILABLE)
28	AT186113	CAP	1		
29	AT186114	PLUG	1		
30	X1JS78-20-16	HOSE FITTING	2		HOSE END - STRAIGHT - 1 1/4 X 1 IN
	X1J978-20-16	ELBOW FITTING	2		HOSE END - 90 DEG 1 1/4 X 1 IN
31	AT117365	HYDR.QUICK COUPLER PLUG	2		MALE QUICK COUPLER (-12) 1 1/16 SAE O-RING
	AT120498	COUPLING	2		MALE QUICK COUPLER (-16) 1 5/16 SAE O-RING
32	AT117364	HYDR.QUICK COUPLER SOCKET	2		FEMALE QUICK COUPLER (-12) 1 1/16 SAE O-RING
	AT120499	COUPLING	2		FEMALE QUICK COUPLER (-16) 1 5/16 SAE O-RING

HYDRAULIC RESERVOIR, FILTER ELEMENTS, AND LEVEL GAUGE

T191782 -UN-25JUN03

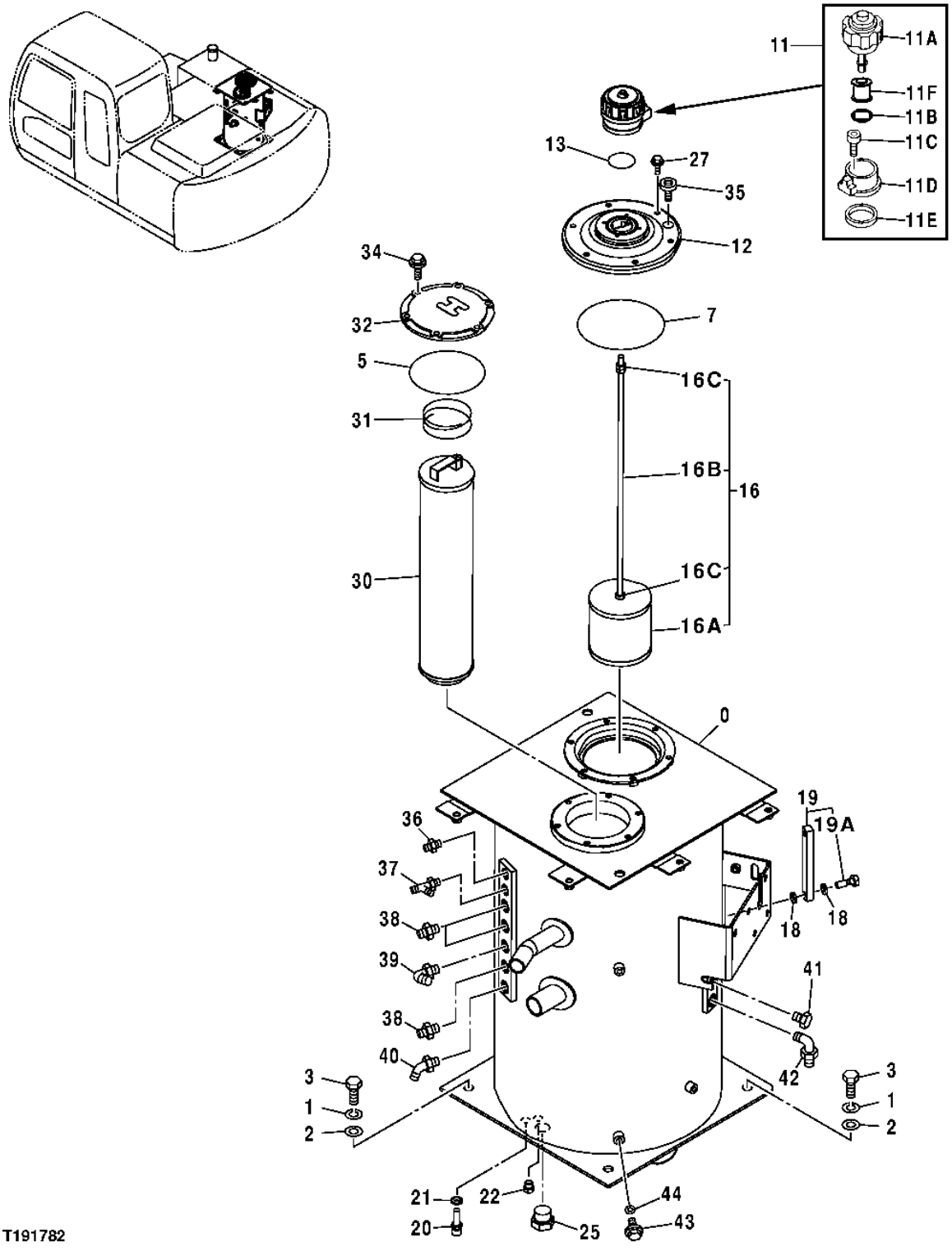

T191782

HYDRAULIC RESERVOIR, FILTER ELEMENTS, AND LEVEL GAUGE

KEY	PART NO.	PART NAME	QTY	SERIAL NO.	REMARKS
0	AP37223	HYDRAULIC RESERVOIR	1		
1	12H294	LOCK WASHER	4		15.875 MM (5/8")
2	24M7241	WASHER	4		17 X 34 X 4 MM
3	19M7488	CAP SCREW	4		M16 X 40
5	997330	O-RING	1		
7	TH100679	O-RING	1		
11	.....	BREATHER	1		
11A	4326285	CAP	1		
11B	953612	O-RING	1		
11C	19M8146	SCREW	3		M5 X 16
11D	4222875	BASE	1		
11E	4222876	PACKING	1		
11F	4251384	FILTER ELEMENT	1		
12	8084816	COVER	1		
13	CH11571	PACKING	1		
16	.....	FILTER	1		(4424867 NOT AVAILABLE FOR SERVICE)
16A	4285577	STRAINER	1		
16B	4454418	ROD	1		
16C	14M7274	NUT	3		M10
18	449558	WASHER	4		
19	8053499	LEVEL GAUGE	1		
19A	4100967	FITTING	2		
20	4250260	SENSOR	1		
21	4250261	GASKET	1		
22	A885002	PLUG	1		
	M800650	PACKING	1		
25	THA885008	PIPE PLUG	1		(SUB FOR A885008)
	TH101926	O-RING	1		
27	19M7938	CAP SCREW	6		M10 X 20
30	4443596	FILTER ELEMENT	1		
31	4444482	SPRING	1		
32	4443782	COVER	1		
34	19M7402	CAP SCREW	6		M10 X 25
	12M7066	LOCK WASHER	6		10 MM
35	TH109514	FITTING PLUG	1		
36	A852122	ADAPTER	1		
	M800650	PACKING	1		
37	A852422	TEE FITTING	1		
	M800650	PACKING	1		
38	A852133	ADAPTER	3		
	CH11570	O-RING	1		
39	A852333	ELBOW FITTING	1		
	CH11570	O-RING	1		
40	A852232	FITTING PLUG	1		
	CH11570	O-RING	1		
41	A885002	PLUG	1		
	M800650	PACKING	1		
42	A852334	ELBOW FITTING	1		
	CH11570	O-RING	1		
43	R36636	FITTING PLUG	1		(TO SUCTION OUTLET ON BOTTOM OF RESERVOIR)
44	R29936	O-RING	1		

HYDRAULIC FILTER RESTRICTION INDICATOR

T188695 -UN-27MAR03

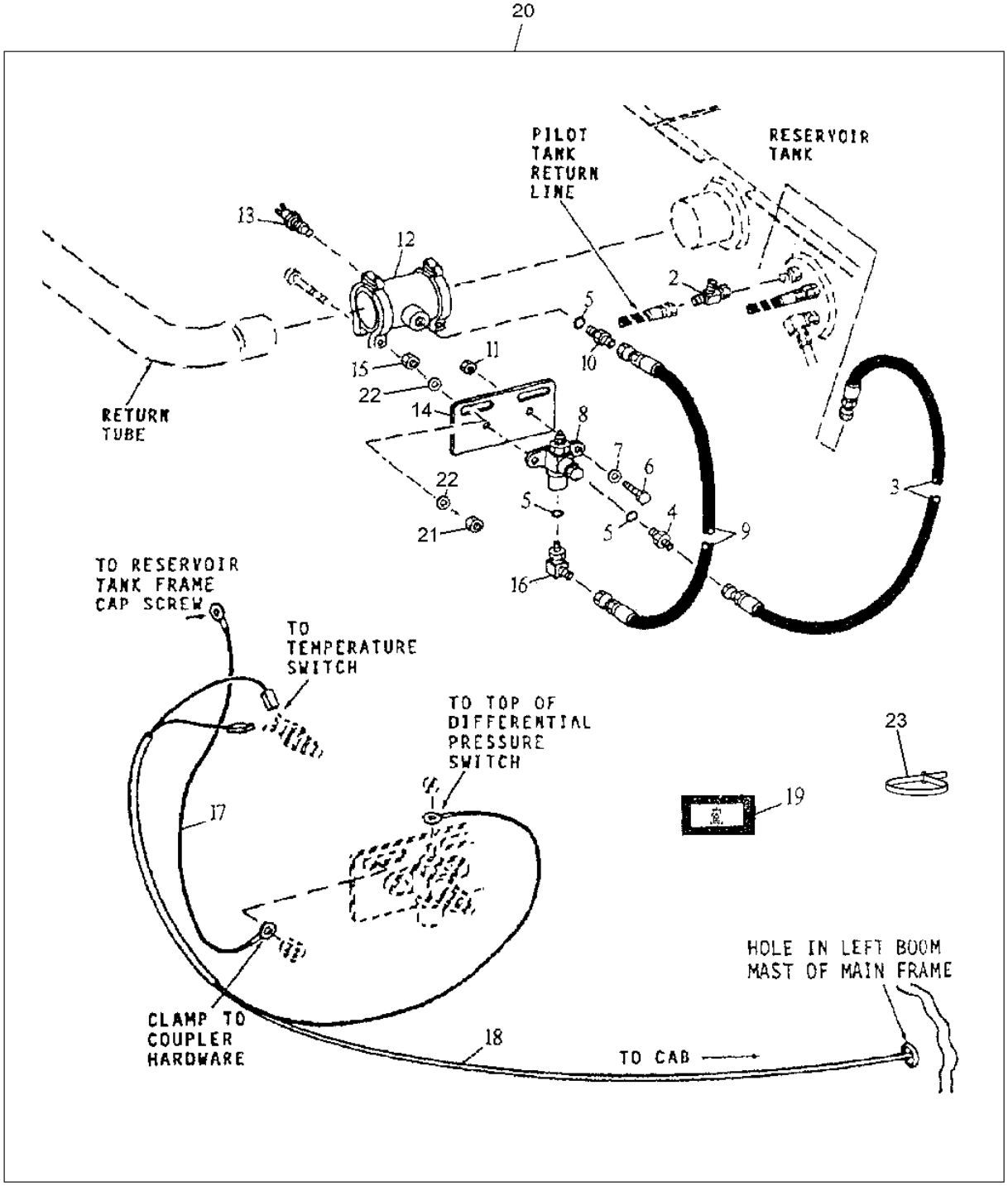

T188695

HYDRAULIC FILTER RESTRICTION INDICATOR

KEY	PART NO.	PART NAME	QTY	SERIAL NO.	REMARKS
2	AE45056	TEE FITTING	1		
3	AH97777	HYDRAULIC HOSE	1		7/16" X 407 MM (16") X 7/16"
4	H75414	ADAPTER	1		
5	T70177	O-RING	3		
6	19H1919	CAP SCREW	2		1/4" X 5/8"
7	24H1286	WASHER	2		9/32" X 1/2" X 1/16"
8	AT131436	PRESSURE SWITCH	1		
9	AT38628	HYDRAULIC HOSE - FABRICATE	1		
10	R27212	FITTING	1		
11	14H786	NUT	2		1/4"
12	AT134345	COUPLING	1		
13	AT131437	SWITCH	1		
14	T138910	BRACKET	1		
15	14M7274	NUT	2		M10
16	AT35121	ELBOW FITTING	1		
17	AR76140	WIRING LEAD	1		
18	AT196334	WIRING HARNESS	1		(SUB FOR AT157668)
19	T153187	LABEL	1		(AMBER)
20	AT189638	KIT	1		INCLUDES AT134345, WHOLEGOODS
21	14M7273	NUT	2		M8
22	24M7036	WASHER	2		9 X 16 X 1.600 MM
23	R44302	TIE BAND	AR		

RIGHT BOOM CYLINDER COMPONENTS AND OIL LINES

T189039 -UN-02APR03

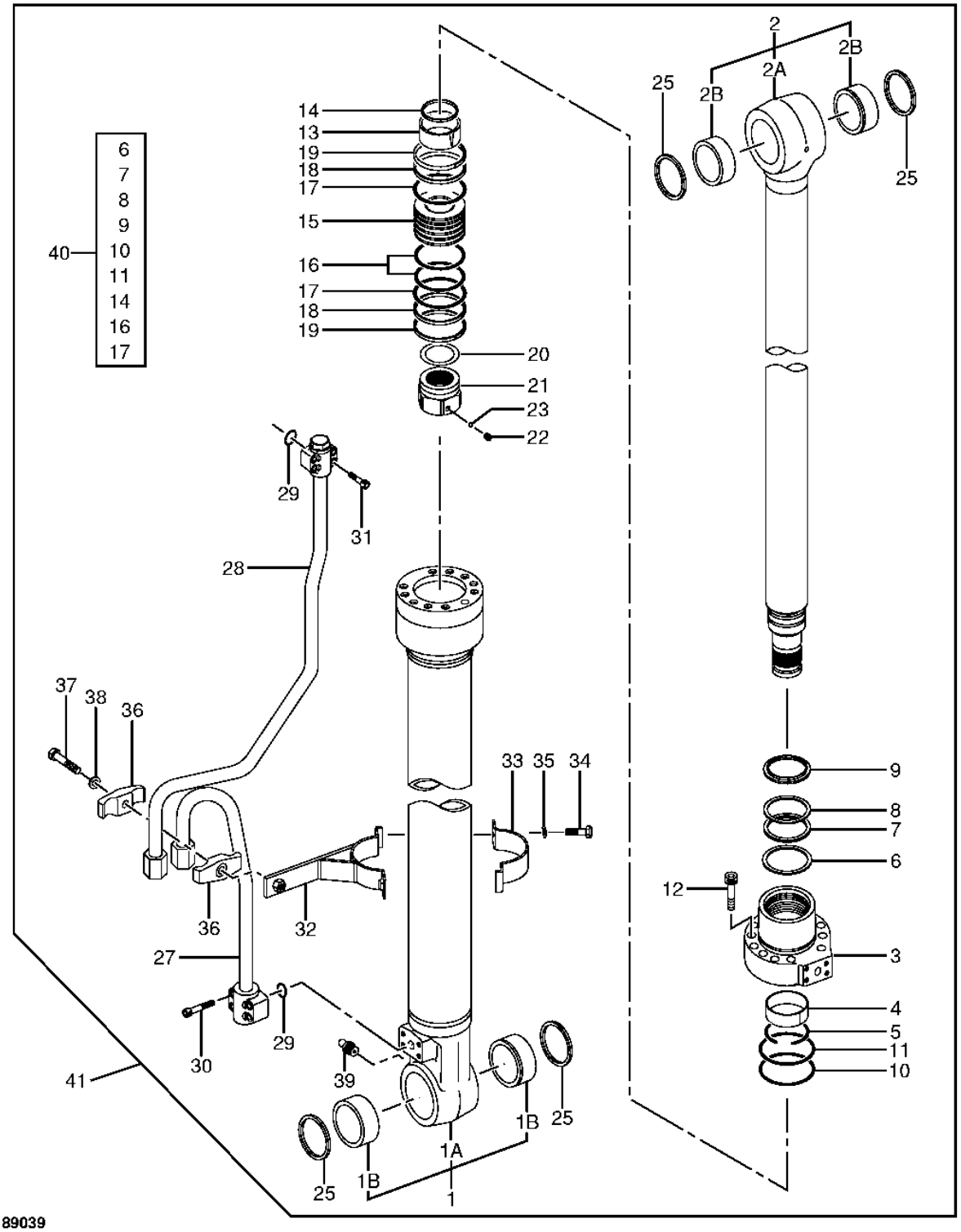

T189039

RIGHT BOOM CYLINDER COMPONENTS AND OIL LINES

KEY	PART NO.	PART NAME	QTY	SERIAL NO.	REMARKS
1	0789301	HYDRAULIC CYLINDER BARREL	1		
1A	.....	HYDRAULIC CYLINDER	1		(0789302 NOT AVAILABLE)
1B	4352638	BUSHING	2		
2	0789303	ROD	1		
2A	.....	ROD	1		(0789304 NO LONGER AVAILABLE FOR SERVICE)
2B	4352400	BUSHING	2		
3	0789305	CYLINDER HEAD	1		
4	0310304	SPACER	1		
5	0271304	SNAP RING	1		
6	0789306	RING	1		
7	AT264256	PACKING	1		(SUB FOR AT133633, 0271309)
8	AT264257	BACK-UP RING	1		(SUB FOR 0271310, AT133634)
9	0666806	SCRAPER RING	1		
10	AT264319	O-RING	1		(SUB FOR A811100)
11	0310506	BACK-UP RING	1		
12	0408805	SCREW	12		
13	0408806	BEARING	1		
14	H158461	SEAL	1		
15	H158463	PISTON	1		(SUB FOR 0408808)
16	AT264387	RING	2		(SUB FOR 0310508)
17	0408809	BACK-UP RING	2		
18	0666808	SCRAPER RING	2		
19	AT264388	RING	2		(SUB FOR TH109324, 0310510 AND 4S00155)
20	0310514	SHIM	1		
21	0789307	NUT	1		
22	0309011	SET SCREW	1		
23	0111707	BALL	1		
25	TH104472	SEAL	4		
27	AH149467	OIL LINE	1		(SUB FOR 0408811)
28	AH149466	OIL LINE	1		
29	AT264354	O-RING	2		(SUB FOR 4509181, TH103574)
30	0309019	SCREW	4		
31	0310310	PART NOT CODED	4		
32	0408814	BAND	1		
33	0310707	BAND	1		
34	19M7550	CAP SCREW	2		
35	12M7066	LOCK WASHER	2		(SUB FOR 0325913)
36	0310312	BUSHING	2		
37	0224115	CAP SCREW	1		
38	0208516	LOCK WASHER	1		
39	TH100074	LUBRICATION FITTING	1		
40	4448395	SEAL KIT	1		
41	4428436Y	CYLINDER	1		(PAINTED PART - YELLOW)

LEFT BOOM CYLINDER COMPONENTS AND OIL LINES

T189040 -UN-02APR03

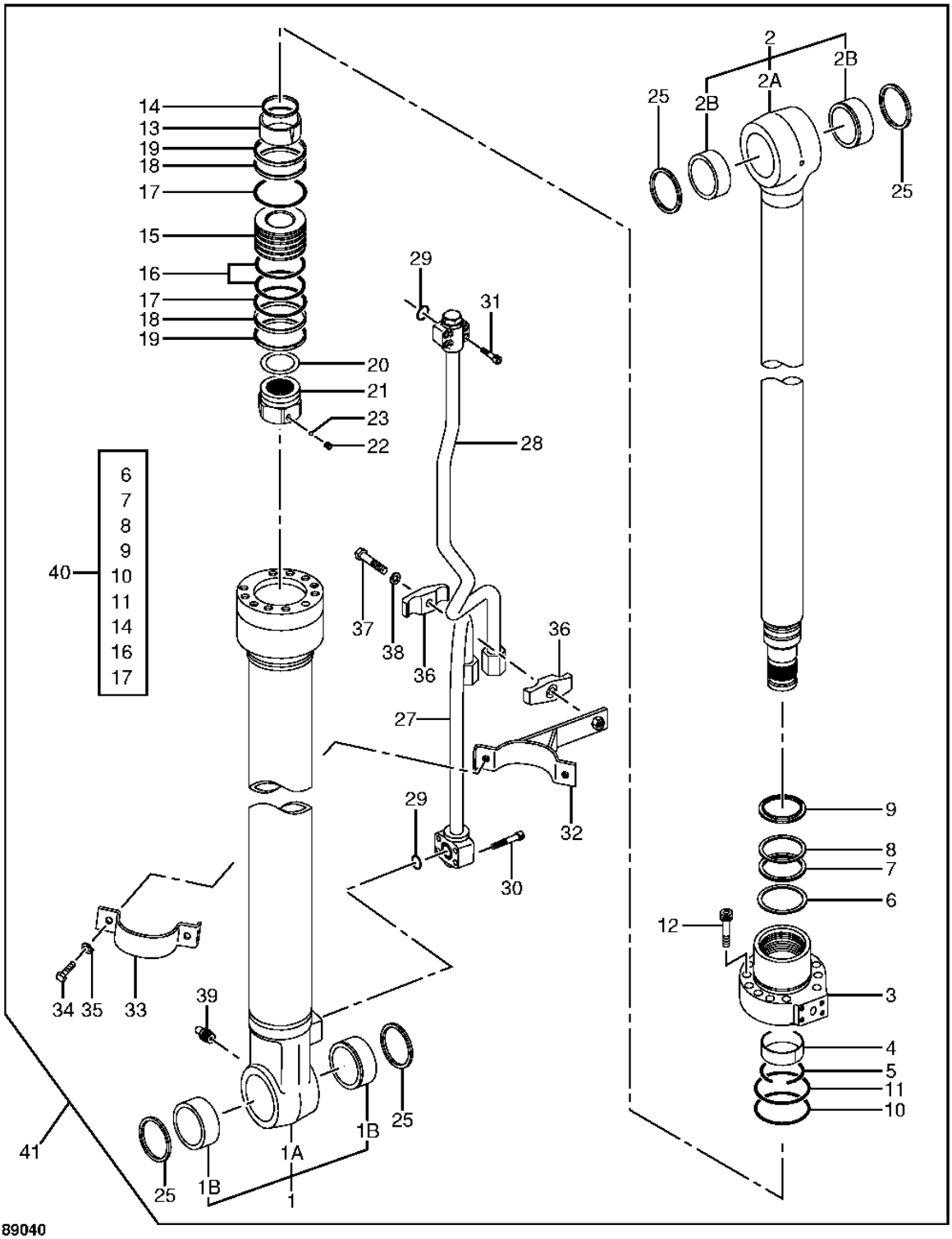

LEFT BOOM CYLINDER COMPONENTS AND OIL LINES

KEY	PART NO.	PART NAME	QTY	SERIAL NO.	REMARKS
1	0789401	HYDRAULIC CYLINDER BARREL	1		
1A	.....	HYDRAULIC CYLINDER	1		(0789402 NOT AVAILABLE)
1B	4352638	BUSHING	2		
2	0789303	ROD	1		
2A	.....	ROD	1		(0789304 NO LONGER AVAILABLE FOR SERVICE)
2B	4352400	BUSHING	2		
3	0789305	CYLINDER HEAD	1		
4	0310304	SPACER	1		
5	0271304	SNAP RING	1		
6	0789306	RING	1		
7	AT264256	PACKING	1		(SUB FOR AT133633, 0271309)
8	AT264257	BACK-UP RING	1		(SUB FOR 0271310, AT133634)
9	0666806	SCRAPER RING	1		
10	AT264319	O-RING	1		(SUB FOR A811100)
11	0310506	BACK-UP RING	1		
12	0408805	SCREW	12		
13	0408806	BEARING	1		
14	H158461	SEAL	1		
15	H158463	PISTON	1		(SUB FOR 0408808)
16	AT264387	RING	2		(SUB FOR 0310508)
17	0408809	BACK-UP RING	2		
18	0666808	SCRAPER RING	2		
19	AT264388	RING	2		(SUB FOR TH109324, 0310510 AND 4S00155)
20	0310514	SHIM	1		
21	0789307	NUT	1		
22	0309011	SET SCREW	1		
23	0111707	BALL	1		
25	TH104472	SEAL	4		
27	AH149465	OIL LINE	1		(SUB FOR 0408902)
28	0666903	OIL LINE	1		
29	AT264354	O-RING	2		(SUB FOR 4509181, TH103574)
30	0309019	SCREW	4		
31	T116311	BOLT	4		(0310310 NOT AVAILABLE FOR SERVICE)
32	0408814	BAND	1		
33	0310707	BAND	1		
34	19M7550	CAP SCREW	2		
35	12M7066	LOCK WASHER	2		(SUB FOR 0325913)
36	0310312	BUSHING	2		
37	0224115	CAP SCREW	1		
38	0208516	LOCK WASHER	1		
39	TH100074	LUBRICATION FITTING	1		
40	4448395	SEAL KIT	1		
41	4428437Y	CYLINDER	1		(PAINTED PART - YELLOW)

ARM CYLINDER COMPONENTS AND OIL LINES

T202711 -UN-07SEP04

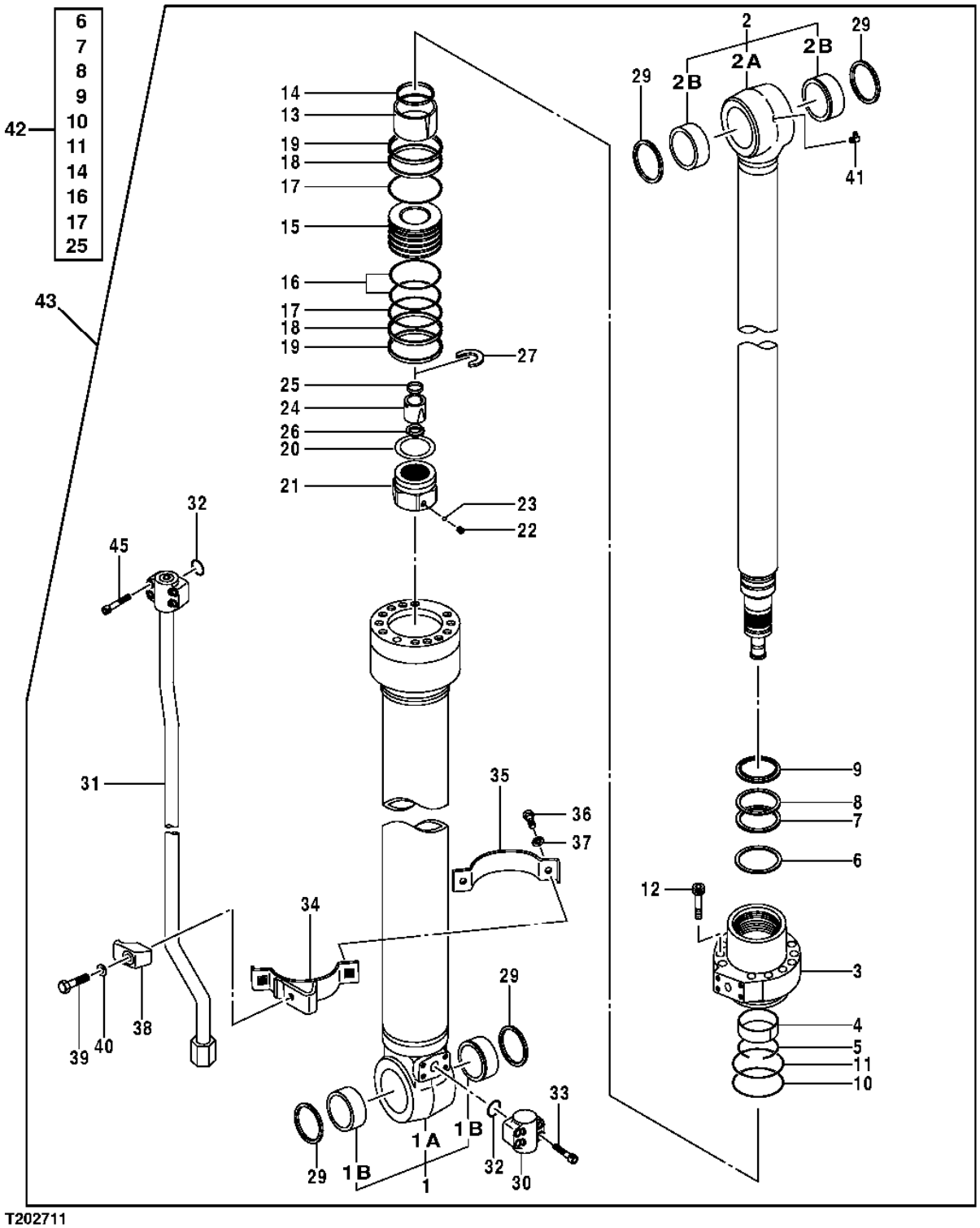

T202711

ARM CYLINDER COMPONENTS AND OIL LINES

KEY	PART NO.	PART NAME	QTY	SERIAL NO.	REMARKS
1	0789501	HYDRAULIC CYLINDER BARREL	1		
1A	.....	HYDRAULIC CYLINDER BARREL	1		
1B	4352400	BUSHING	2		
2	0789503	ROD	1		
2A	.....	ROD	1		(0789504 NO LONGER AVAILABLE FOR SERVICE)
2B	4352400	BUSHING	2		
3	0789205	CYLINDER HEAD	1		
4	AT264314	WEAR RING	1		
5	TH104908	SNAP RING	1		
6	0789206	RING	1		
7	AT264357	SEAL	1		
8	AT264358	BACK-UP RING	1		
9	H157235	SCRAPER RING	1		
10	AT264320	O-RING	1		(SUB FOR T110448)
11	TH109353	BACK-UP RING	1		
12	19M8931	SCREW	10		M16 X 75
13	0409005	BEARING	1		
14	H157237	SEAL	1		
15	0789505	PISTON	1		
16	TH105767	RING	1		
17	H163431	BACK-UP RING	2		
18	H163432	SCRAPER RING	2		
19	AT309610	RING	2		(SUB FOR 4S00157)
20	0409010	SHIM	1		
21	0789506	NUT	1		
22	22M7009	SET SCREW	1		M12 X 12
23	T13624	BALL	1		
24	0409012	BEARING	1		
25	0667010	SEAL	1		
26	0409014	STOP	2		
27	0409015	RING	1		
29	TH104472	SEAL	4		
30	.....	UNIVERSAL JOINT	1		(0409016 NO LONGER AVAILABLE)
	0796601	UNIVERSAL JOINT	1		(ALSO ORDER A853166, 19M7662, AND 12M7066)
31	0789508	MUFFLER EXTENSION	1		(SUB FOR 0789507, ALONG WITH (4) 19M7662 SCREWS)
32	AT264360	O-RING	2		
33	19M8213	SCREW	4		M10 X 50
34	AH156744	CLAMP	1		
35	H163434	BAND	1		
36	19M7550	CAP SCREW	1		M10 X 35
37	12M7066	LOCK WASHER	2		10 MM
38	T108036	CLAMP	2		
39	19M7362	CAP SCREW	1		M12 X 55
40	12M7067	LOCK WASHER	1		12 MM
41	JD7781	LUBRICATION FITTING	1		
42	4448396	SEAL KIT	1		
43	9183013J	HYDRAULIC CYLINDER	1		(SUB FOR 4423852Y) (PAINTED PART - YELLOW)
45	19M8213	SCREW	4		M10 X 50, (USE WITH 0789507)
	19M7662	CAP SCREW	4		M10 X 30, (USE WITH 0789508)
46	A853166	ADAPTER	1		(NOT ILLUSTRATED)
47	19M7662	CAP SCREW	4		M10 X 30, (NOT ILLUSTRATED)
48	12M7066	LOCK WASHER	4		10 MM (0.394") (NOT ILLUSTRATED)

BUCKET CYLINDER COMPONENTS AND OIL LINES

T162711 -UN-10JAN03

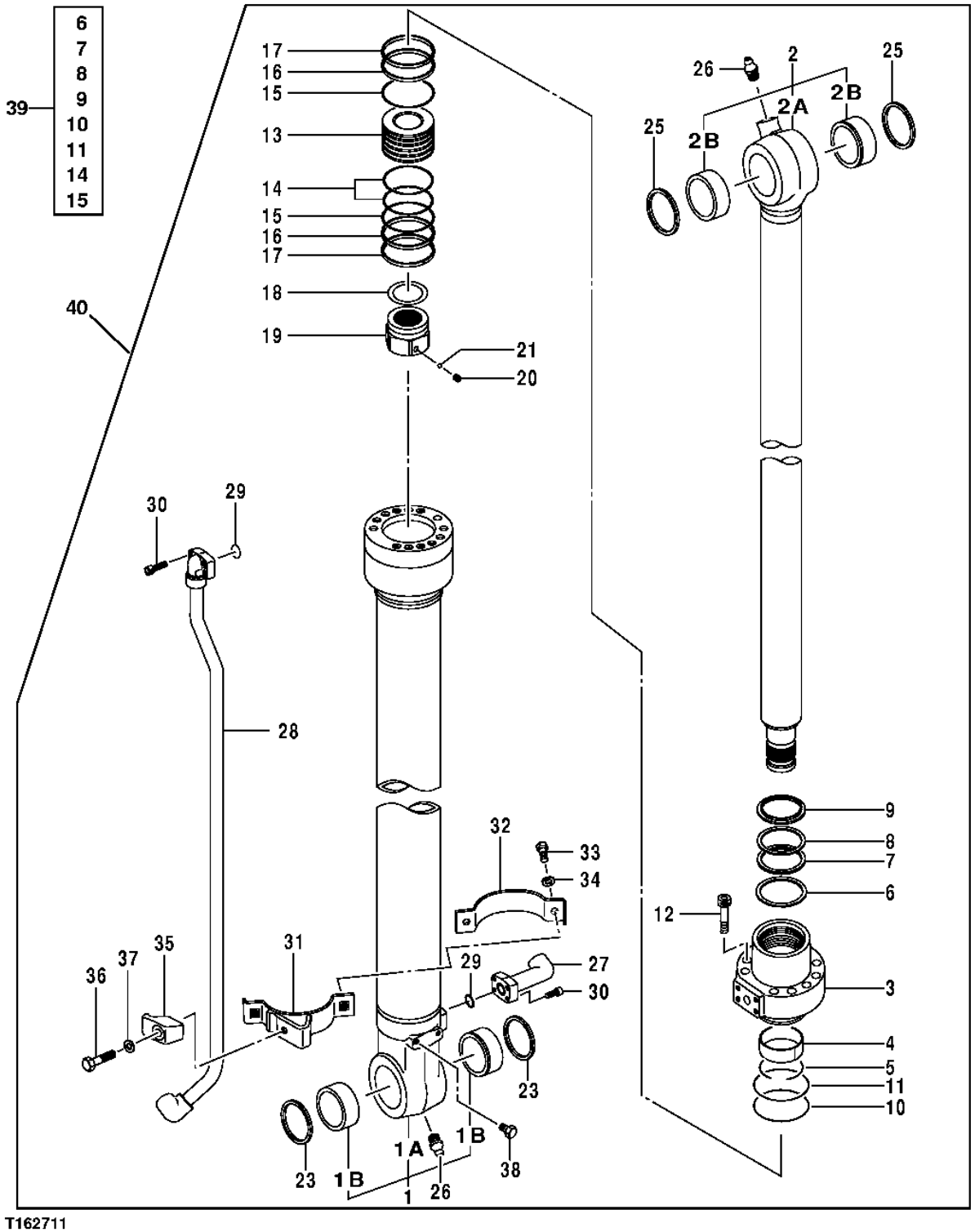

T162711

BUCKET CYLINDER COMPONENTS AND OIL LINES

KEY	PART NO.	PART NAME	QTY	SERIAL NO.	REMARKS
1	TH0789601	HYDRAULIC CYLINDER BARREL	1		
1A	.....	HYDRAULIC CYLINDER BARREL	1		(TH0789602 NO LONGER AVAILABLE)
1B	4365897	BUSHING	1		
2	TH0789603	ROD	2		
2A	.....	ROD	1		
2B	4365448	BUSHING	1		
3	TH0789605	CYLINDER HEAD	2		
4	0310304	SPACER	1		
5	0271304	SNAP RING	1		
6	0789306	RING	1		
7	AT264256	PACKING	1		
8	AT133634	BACK-UP RING	1		
9	H158453	SCRAPER RING	1		
10	AT264318	O-RING	1		(SUB FOR T110446)
11	0254905	BACK-UP RING	1		
12	M341465	BOLT	12		
13	0686705	PISTON	1		
14	0240807	RING	1		
15	0686706	BACK-UP RING	2		
16	0686707	RING	2		
17	0254908	RING	2		
18	0326007	SHIM	1		
19	0789606	NUT	1		
20	22M7139	SET SCREW	1		M10 X 10
21	400R	BALL	1		
23	TH105979	SEAL	2		
25	TH100374	SEAL	2		
26	TH100074	LUBRICATION FITTING	2		
27	0409113	UNIVERSAL JOINT	1		(ELBOW JOINT)
28	0789610	OIL LINE	1		(SUB FOR TH0789607)
29	AT264354	O-RING	2		
30	19M8439	SCREW	8		M8 X 25
31	TH0789609	CLAMP	1		
32	0326012	CLAMP	1		
33	19M7550	CAP SCREW	2		M10 X 35
34	12M7066	LOCK WASHER	2		10 MM
35	0310616	CLAMP	1		
36	19M7361	CAP SCREW	1		M12 X 50
37	12M7067	LOCK WASHER	1		12 MM
38	J901218	BOLT	2		(SUB FOR AT131538)
39	4448397	SEAL KIT	1		
40	9183014J	HYDRAULIC CYLINDER	1		(SUB FOR 4423853Y) (PAINTED PART - YELLOW)

RIGHT BLADE CYLINDER AND OIL LINES (FACTORY INSTALLED)

T189142 -UN-02APR03

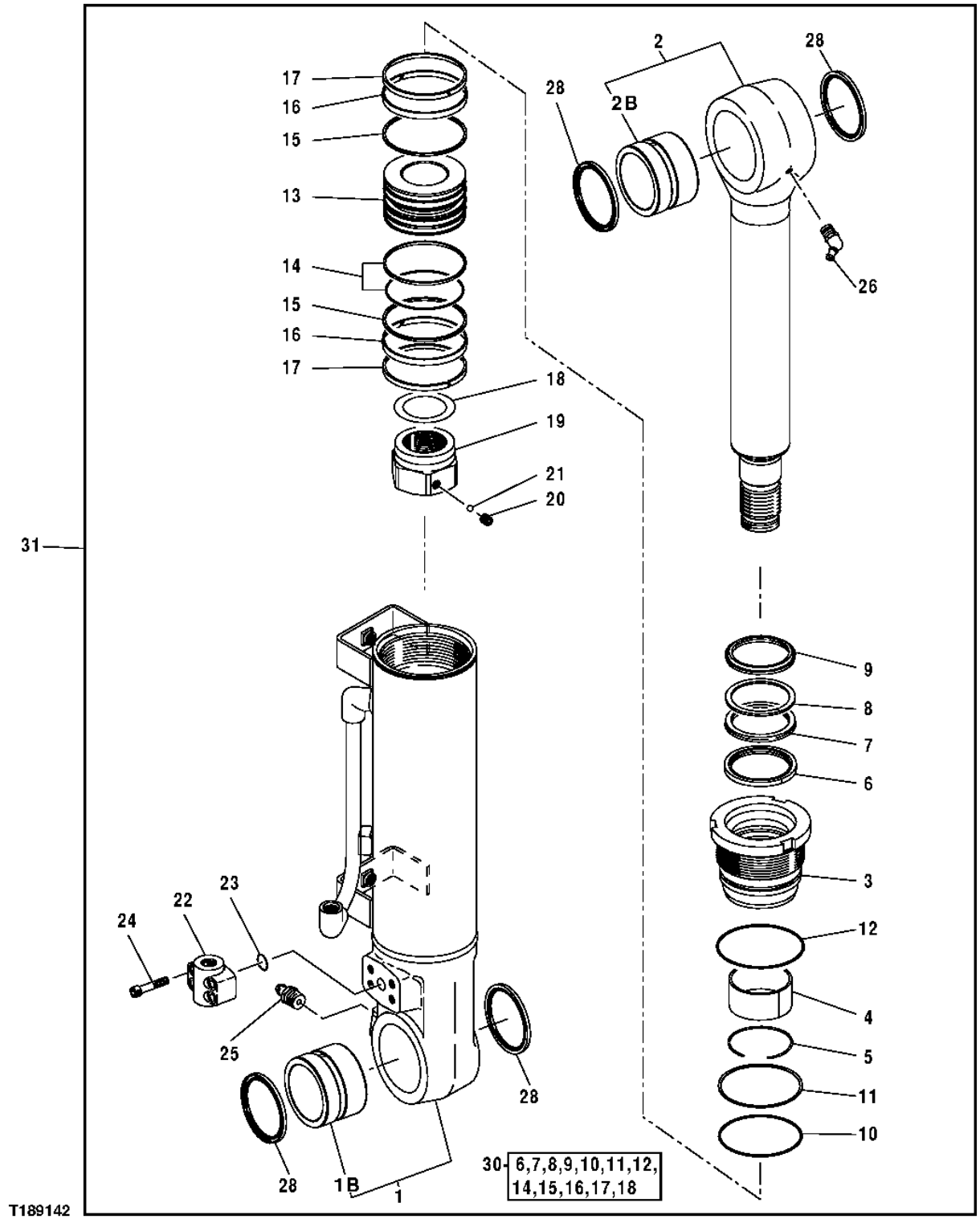

RIGHT BLADE CYLINDER AND OIL LINES (FACTORY INSTALLED)

KEY	PART NO.	PART NAME	QTY	SERIAL NO.	REMARKS
1	0727101	HYDRAULIC CYLINDER BARREL	1		
1B	0686702	BUSHING	1		
2	0727102	ROD	1		
2B	0686702	BUSHING	1		
3	0686704	HYDRAULIC CYLINDER CAP	1		
4	0683402		1		
5	0271304	SNAP RING	1		
6	AT264258	GUIDE	1		
7	AT264256	PACKING	1		
8	AT264257	BACK-UP RING	1		
9	H158453	SCRAPER RING	1		
10	T110446	O-RING	1		
11	0254905	BACK-UP RING	1		
12	CH16109	PACKING	1		
13	0686705	PISTON	1		
14	0240807	RING	1		
15	0686706	BACK-UP RING	2		
16	0686707	RING	2		
17	0254908	RING	2		
18	0326007	SHIM	1		
19	H158175	NUT	1		
20	21M7139	SCREW	1		
21	400R	BALL	1		
22	0686708	ADAPTER	1		
23	AT264354	O-RING	1		
24	0310310	PART NOT CODED	4		
25	TH100074	LUBRICATION FITTING	1		
26	T116334	LUBRICATION FITTING	1		
28	TH104472	SEAL	4		
30	4388027	SEAL KIT	1		
31	.....	HYDRAULIC CYLINDER	1		(4397512 AND 9168999 NOT AVAILABLE FOR SERVICE) (SUB 9187648)

RIGHT BLADE CYLINDER AND OIL LINES (REPLACEMENT CYLINDER)

T188910 -UN-28MAR03

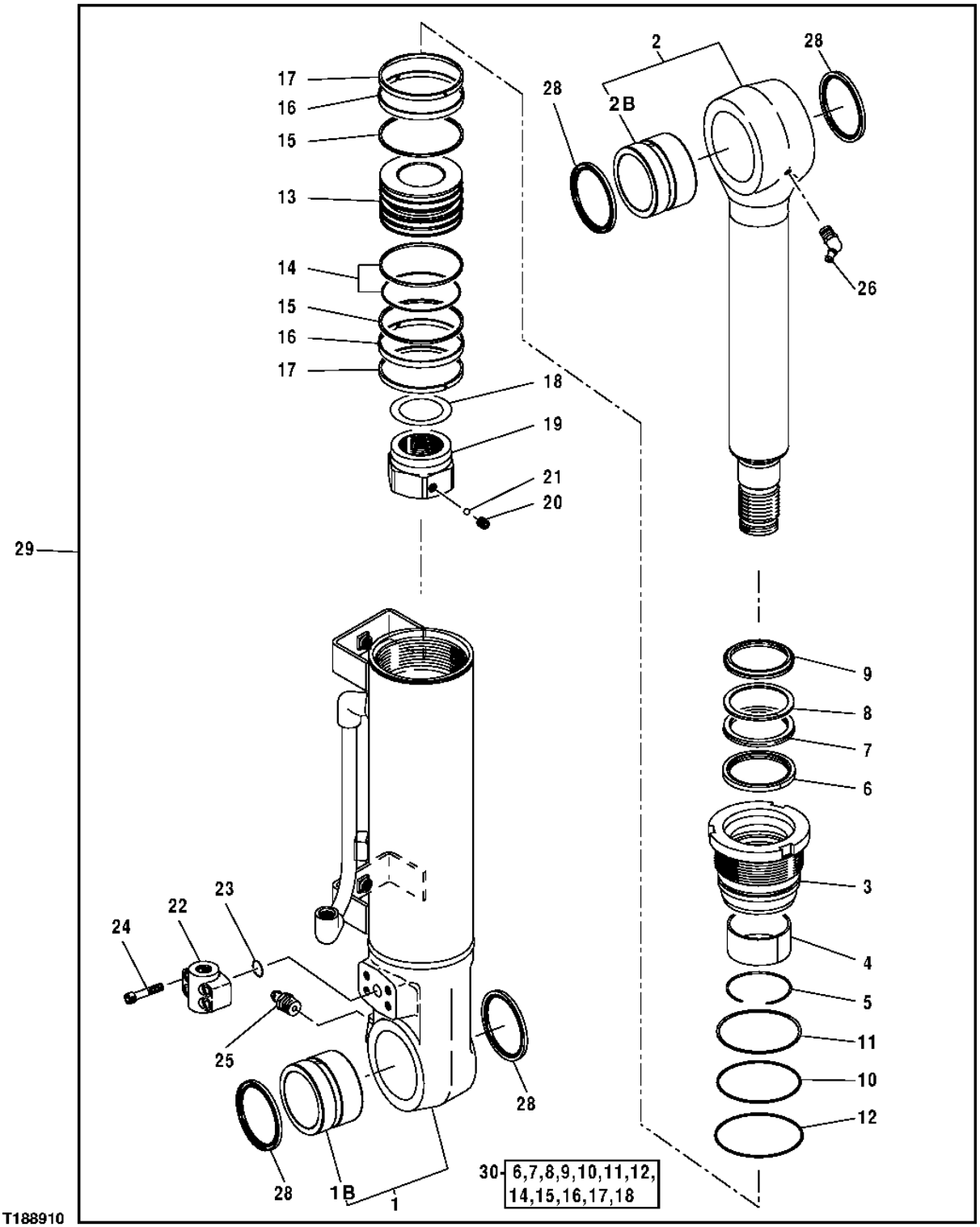

RIGHT BLADE CYLINDER AND OIL LINES (REPLACEMENT CYLINDER)

KEY	PART NO.	PART NAME	QTY	SERIAL NO.	REMARKS
1	0779201	HYDRAULIC CYLINDER BARREL	1		
1B	0779302	BUSHING	1		
2	0779303	ROD	1		
2B	0779302	BUSHING	1		
3	0686704	HYDRAULIC CYLINDER CAP	1		
4	0683402		1		
5	0271304	SNAP RING	1		
6	AT133635	GUIDE	1		
7	AT133633	PACKING	1		
8	AT133634	BACK-UP RING	1		
9	H158453	SCRAPER RING	1		
10	T110446	O-RING	1		
11	0254905	BACK-UP RING	1		
12	CH16109	PACKING	1		
13	0686705	PISTON	1		
14	0240807	RING	1		
15	0686706	BACK-UP RING	2		
16	0686707	RING	2		
17	0254908	RING	2		
18	0326007	SHIM	1		
19	H158175	NUT	1		
20	21M7139	SCREW	1		
21	400R	BALL	1		
22	0686708	ADAPTER	1		
23	AT264354	O-RING	1		
24	0310310	PART NOT CODED	4		
25	TH100074	LUBRICATION FITTING	1		
26	T116334	LUBRICATION FITTING	1		
28	TH104472	SEAL	4		(SUB FOR AT153920)
29	9187648	CYLINDER	1		(SUB FOR 4397512 AND 9168999)
30	4388027	SEAL KIT	1		

LEFT BLADE CYLINDER AND OIL LINES (FACTORY INSTALLED)

T189143 -UN-02APR03

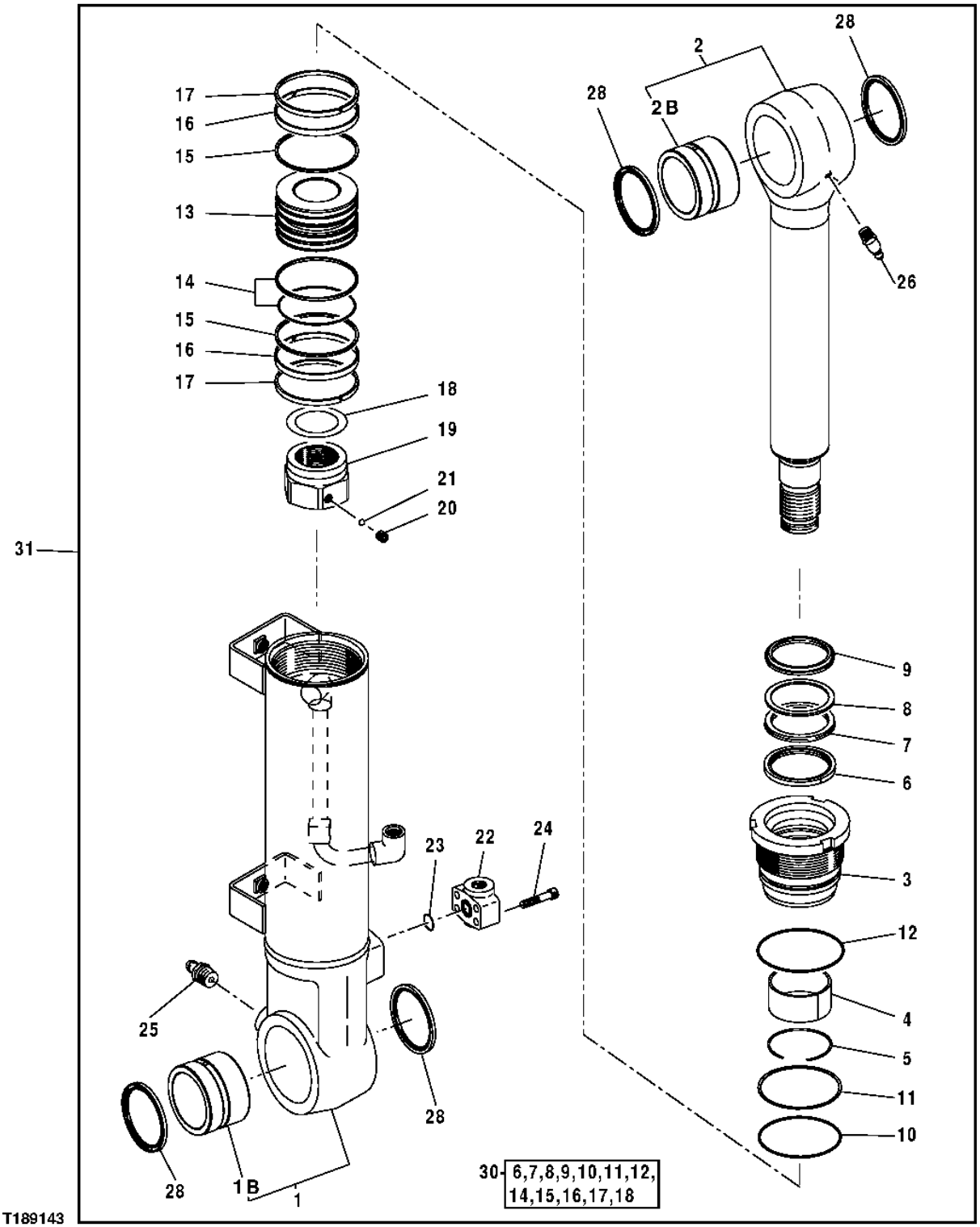

LEFT BLADE CYLINDER AND OIL LINES (FACTORY INSTALLED)

KEY	PART NO.	PART NAME	QTY	SERIAL NO.	REMARKS
1	0727401	HYDRAULIC CYLINDER BARREL	1		
1B	0686702	BUSHING	1		
2	0727102	ROD	1		
2B	0686702	BUSHING	1		
3	0686704	HYDRAULIC CYLINDER CAP	1		
4	0683402		1		
5	0271304	SNAP RING	1		
6	AT264258	GUIDE	1		
7	AT264256	PACKING	1		
8	AT264257	BACK-UP RING	1		
9	H158453	SCRAPER RING	1		
10	T110446	O-RING	1		
11	0254905	BACK-UP RING	1		
12	CH16109	PACKING	1		
13	0686705	PISTON	1		
14	0240807	RING	1		
15	0686706	BACK-UP RING	2		
16	0686707	RING	2		
17	0254908	RING	2		
18	0326007	SHIM	1		
19	H158175	NUT	1		
20	21M7139	SCREW	1		
21	400R	BALL	1		
22	0686708	ADAPTER	1		
23	AT264354	O-RING	1		
24	0310310	PART NOT CODED	4		
25	TH100074	LUBRICATION FITTING	1		
26	T116334	LUBRICATION FITTING	1		
28	TH104472	SEAL	4		
30	4388027	SEAL KIT	1		
31	.....	HYDRAULIC CYLINDER	1		(4397513 AND 9169000 NOT AVAILABLE FOR SERVICE) (SUB 9187647)

LEFT BLADE CYLINDER AND OIL LINES (REPLACEMENT CYLINDER)

T188916 -UN-28MAR03

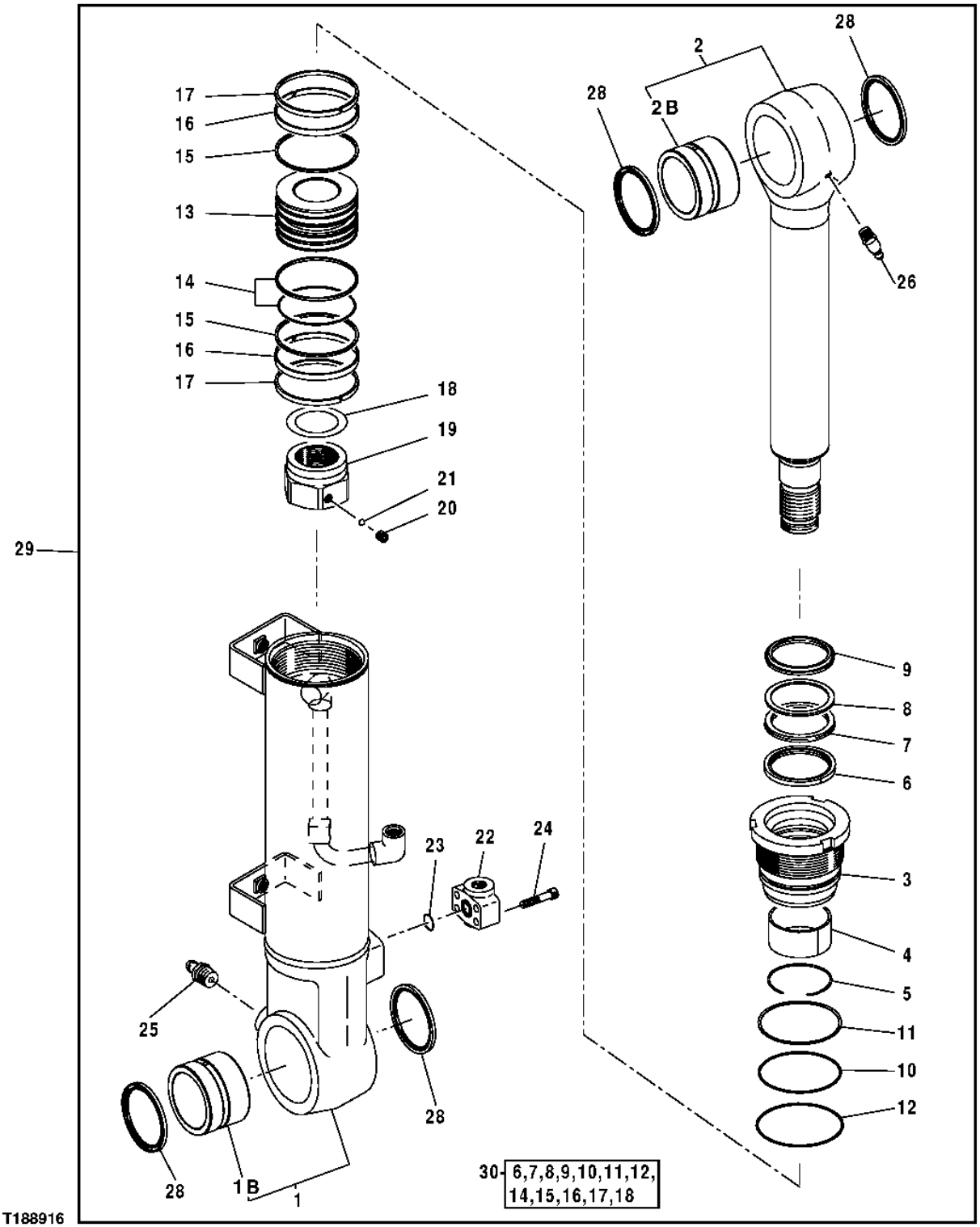

LEFT BLADE CYLINDER AND OIL LINES (REPLACEMENT CYLINDER)

KEY	PART NO.	PART NAME	QTY	SERIAL NO.	REMARKS
1	0779301	HYDRAULIC CYLINDER BARREL	1		
1B	0779302	BUSHING	1		
2	0779303	ROD	1		
2B	0779302	BUSHING	1		
3	0686704	HYDRAULIC CYLINDER CAP	1		
4	0683402		1		
5	0271304	SNAP RING	1		
6	AT133635	GUIDE	1		
7	AT133633	PACKING	1		
8	AT133634	BACK-UP RING	1		
9	H158453	SCRAPER RING	1		
10	T110446	O-RING	1		
11	0254905	BACK-UP RING	1		
12	CH16109	PACKING	1		
13	0686705	PISTON	1		
14	0240807	RING	1		
15	0686706	BACK-UP RING	2		
16	0686707	RING	2		
17	0254908	RING	2		
18	0326007	SHIM	1		
19	H158175	NUT	1		
20	21M7139	SCREW	1		
21	400R	BALL	1		
22	0686708	ADAPTER	1		
23	AT264354	O-RING	1		
24	0310310	PART NOT CODED	4		
25	TH100074	LUBRICATION FITTING	1		
26	T116334	LUBRICATION FITTING	1		
28	TH104472	SEAL	4		(SUB FOR AT153920)
29	9187647	CYLINDER	1		(SUB FOR 4397513 AND 9169000)
30	4388027	SEAL KIT	1		

BLADE, BLADE MOUNTS, AND BLADE CYLINDER COVERS

T157198 -UN-15JUL02

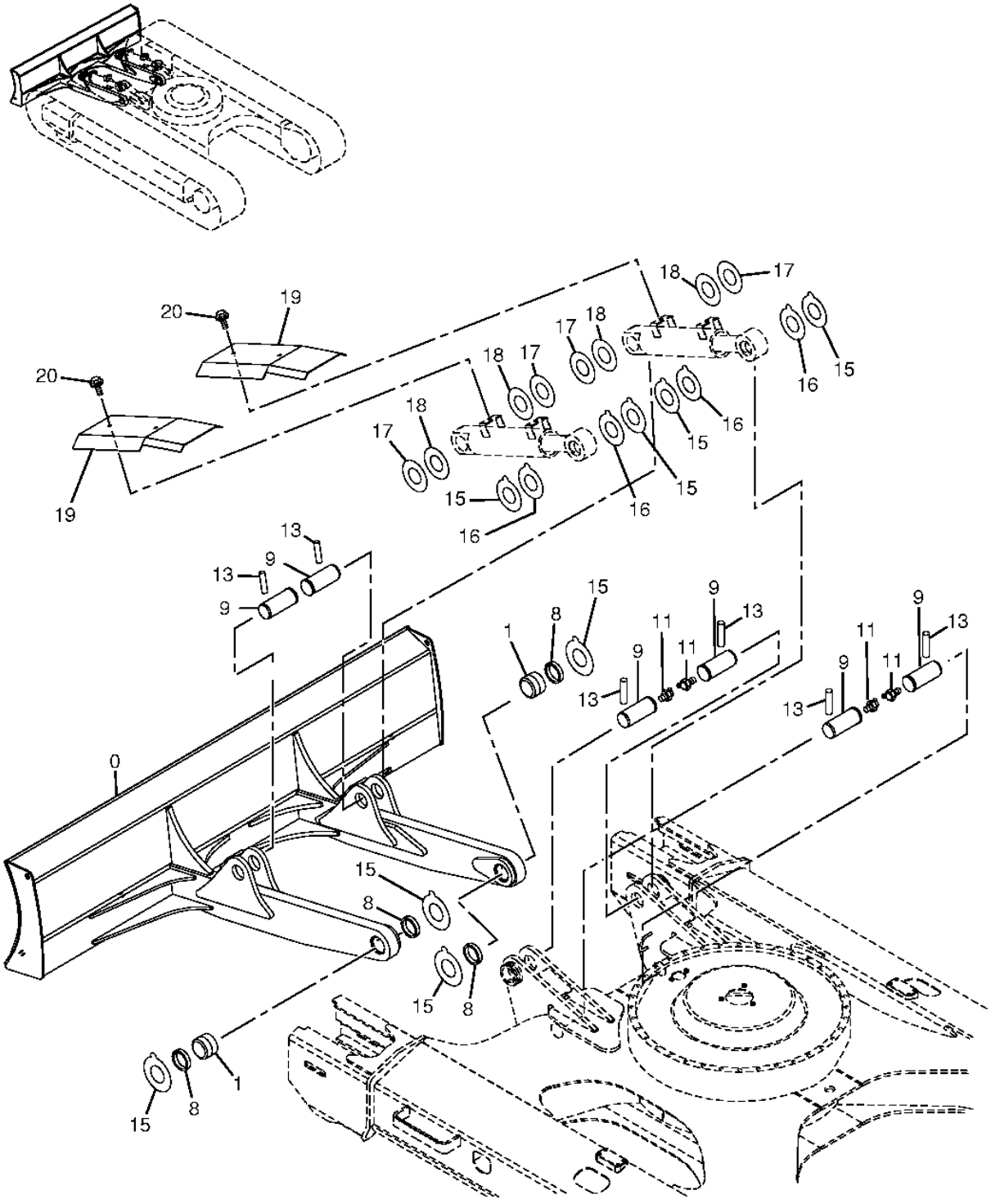

BLADE, BLADE MOUNTS, AND BLADE CYLINDER COVERS

KEY	PART NO.	PART NAME	QTY	SERIAL NO.	REMARKS
0	AP38576	BLADE	1		(WITH 600MM SHOES, 2590MM WIDE) (SUB FOR DH700120)
	AP39225	BLADE	1		(WITH 700MM SHOES, 2690MM WIDE) (SUB FOR DH700119)
	T211450	CUTTING EDGE	1		(WELD ON CUTTING EDGE) (CUT TO LENGTH)
1	4376210	BUSHING	2		
8	4084578	BACK-UP RING	4		
9	4348569	PIN FASTENER	6		
11	TH100074	LUBRICATION FITTING	6		
13	P61796	BOLT	6		M20 X 160
	14M7277	NUT	12		M20
15	P61821	PLATE	8		
16	P61822	PLATE	4		
17	4366692	THRUST WASHER	4		
18	4367410	THRUST WASHER	4		
19	3091704	COVER	2		
20	19M8011	CAP SCREW	4		M12 X 30
	12M7067	LOCK WASHER	4		12 MM
	24M7047	WASHER	4		13 X 24 X 2.500 MM

SWING GEARBOX COMPONENTS

T153252 -UN-05APR02

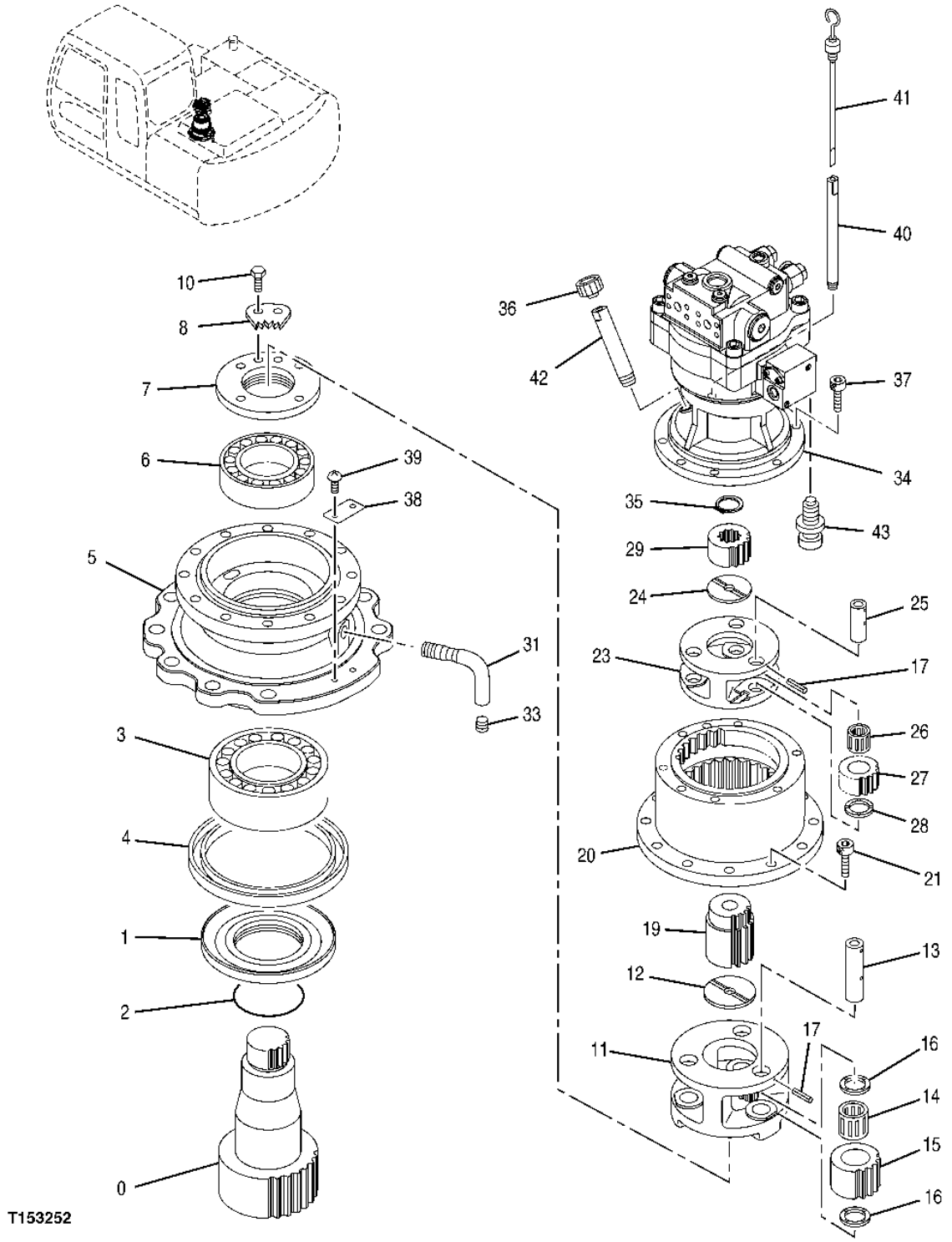

SWING GEARBOX COMPONENTS

KEY	PART NO.	PART NAME	QTY	SERIAL NO.	REMARKS
0	2044629	SHAFT	1		
1	3083710	SLEEVE	1		
2	AT264318	O-RING	1		
3	4430041	CYLINDRICAL ROLLER BEARING	1		
4	4411143	SEAL	1		
5	1027901	HOUSING	1		
6	4408119	CYLINDRICAL ROLLER BEARING	1		
7	3083674	PLATE	1		
8	4407745	PLATE	1		
10	19M7938	CAP SCREW	2		M10 X 20, (SUB FOR J901020)
11	2042965	PLANET PINION CARRIER	1		
12	4176070	PLATE	1		
13	4408102	PIN FASTENER	3		
14	4414855	NEEDLE BEARING	3		
15	3084940	GEAR	3		
16	4414833	PLATE	6		
17	4116308	SPRING PIN	6		
19	3092035	SUN GEAR	1		
20	2045146	RING GEAR	1		
21	M341440	SCREW	12		
23	2042964	PLANET PINION CARRIER	1		
24	4244904	PLATE	1		
25	4408122	PIN FASTENER	3		
26	4430040	NEEDLE BEARING	3		
27	3083741	GEAR	3		
28	4408002	PLATE	3		
29	3083740	SUN GEAR	1		
31	3087949	PIPE	1		
33	94-2012	FITTING PLUG	1		
34	9196961	HYDRAULIC MOTOR	1		(SUB FOR 9177550)
35	927488	SNAP RING	1		
36	4298608	CAP	1		
37	19M8440	SCREW	7		M10 X 25, (SUB FOR M341025)
38	3053093	PLATE	1		
39	M492564	SCREW	2		
40	4449144	PIPE	1		
41	3090862	DIPSTICK	1		
42	4449182	PIPE	1		
43	4436535	SENSOR	1		

SWING GEARBOX MOUNTING

TP48193 -UN-05NOV96

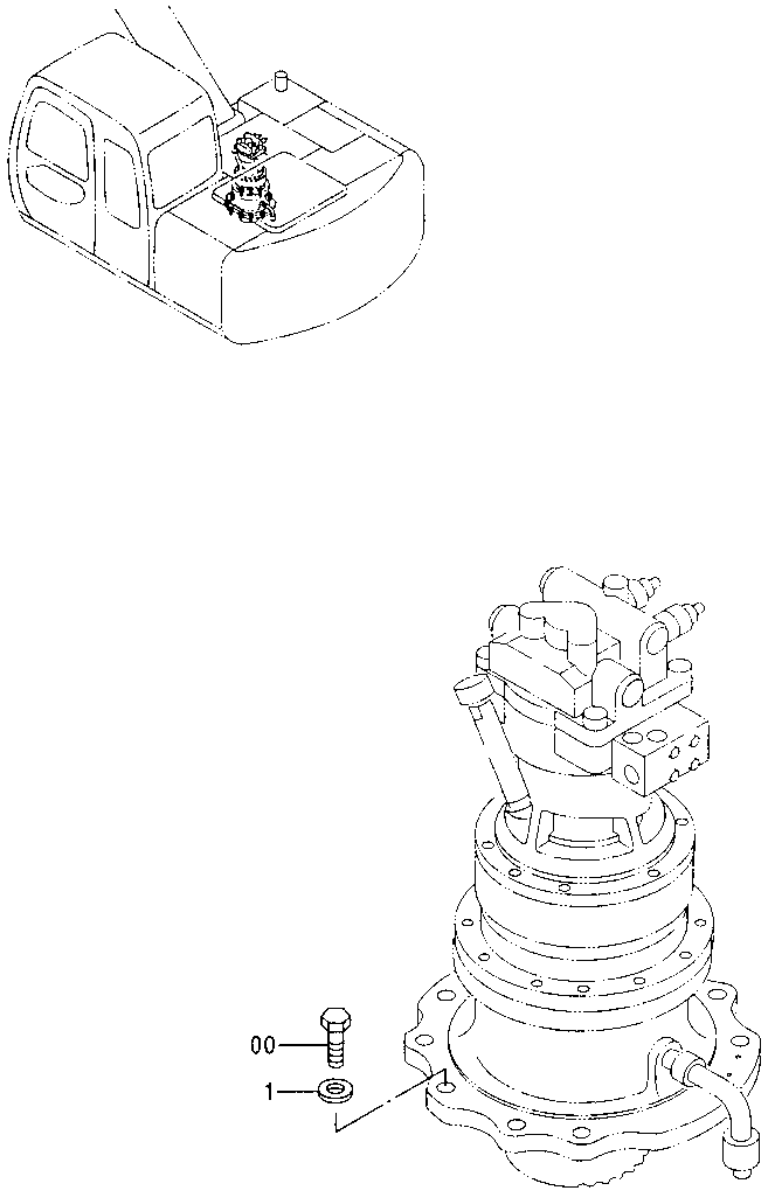

TP48193

SWING GEARBOX MOUNTING

KEY	PART NO.	PART NAME	QTY	SERIAL NO.	REMARKS
0	J922060	CAP SCREW	10		
1	J222020	WASHER	10		

SWING MOTOR BRAKE VALVE COMPONENTS

T188765 -UN-28MAR03

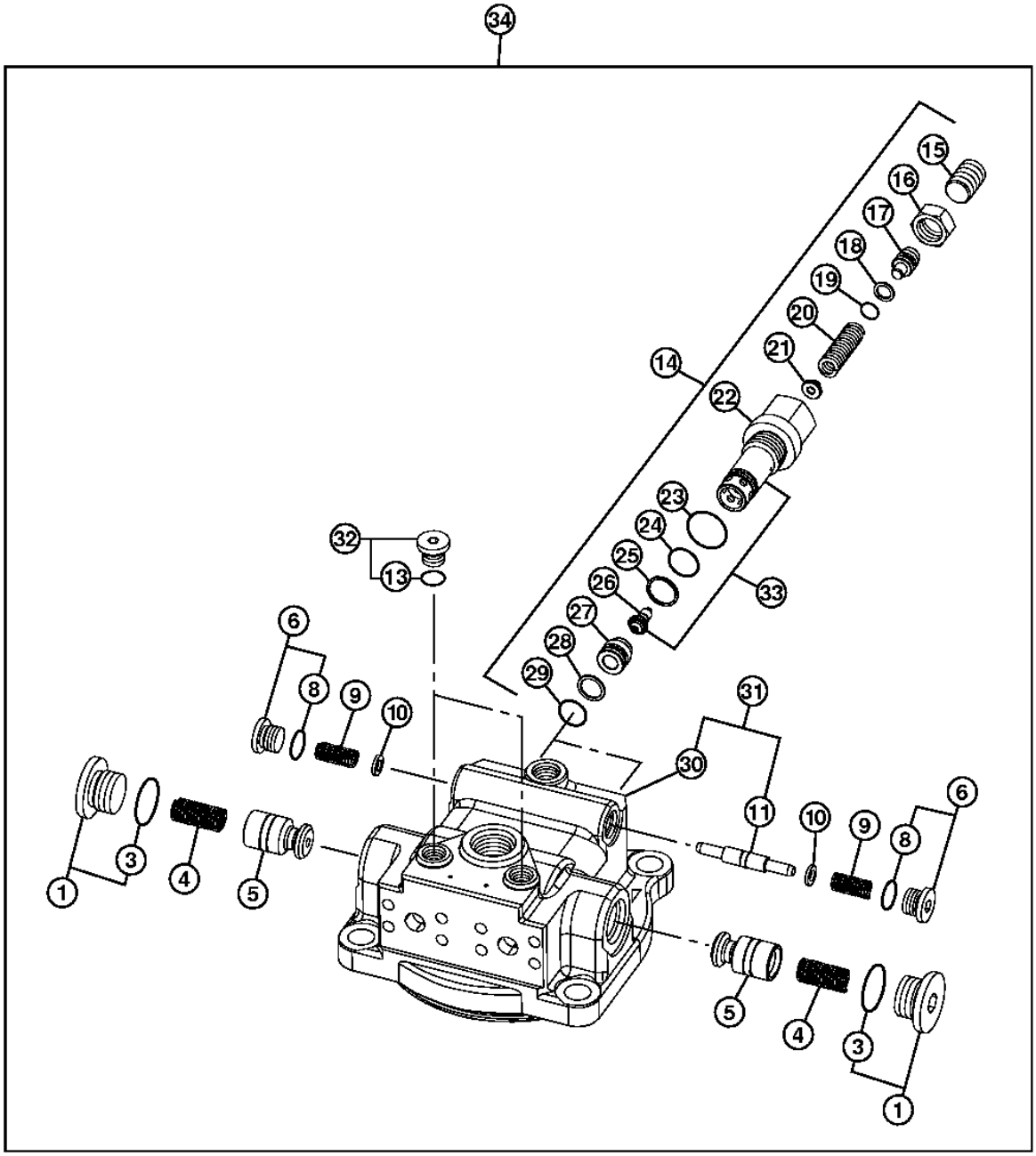

T188765

SWING MOTOR BRAKE VALVE COMPONENTS

KEY	PART NO.	PART NAME	QTY	SERIAL NO.	REMARKS
1	9134113	PIPE PLUG	2		
3	AT318035	O-RING	1		(SUB FOR 4506424)
4	4396103	SPRING	2		
5	4408141	POPPET	2		
6	9134111	PIPE PLUG	2		
8	4509180	O-RING	1		
9	4413859	SPRING	2		
10	4413752	RING	2		
11	.....	SPOOL	1		
13	M800650	PACKING	1		(SUB FOR 957366)
14	9168631	PRESSURE RELIEF VALVE	2		
15	.....	SCREW	1		(4396251 NOT AVAILABLE)
16	.....	NUT	1		(4396081 NOT AVAILABLE)
17	.....	PIN	1		(4396078 NOT AVAILABLE)
18	4144044	BACK-UP RING	1		
19	971823	O-RING	1		
20	.....	SPRING	1		(4400482 NOT AVAILABLE)
21	.....	PLATE	1		(4396077 NOT AVAILABLE)
23	AT318035	O-RING	1		(SUB FOR 4506424)
24	.....	O-RING	1		(4396080 NOT AVAILABLE)
25	.....	O-RING	1		(4396068 NOT AVAILABLE)
27	.....	PLUG	1		(4396076 NOT AVAILABLE)
28	4040814	BACK-UP RING	1		
29	T111819	O-RING	1		(SUB FOR 4506415)
30	.....	CASE	1		
31	8075038	CASE	1		
32	9134110	PIPE PLUG	2		
33	.....	RELIEF VALVE	1		(9749336 NOT AVAILABLE)
34	9198979	FLOW CONTROL HYD. VALVE	1		

SWING MOTOR COMPONENTS

T188923 -UN-28MAR03

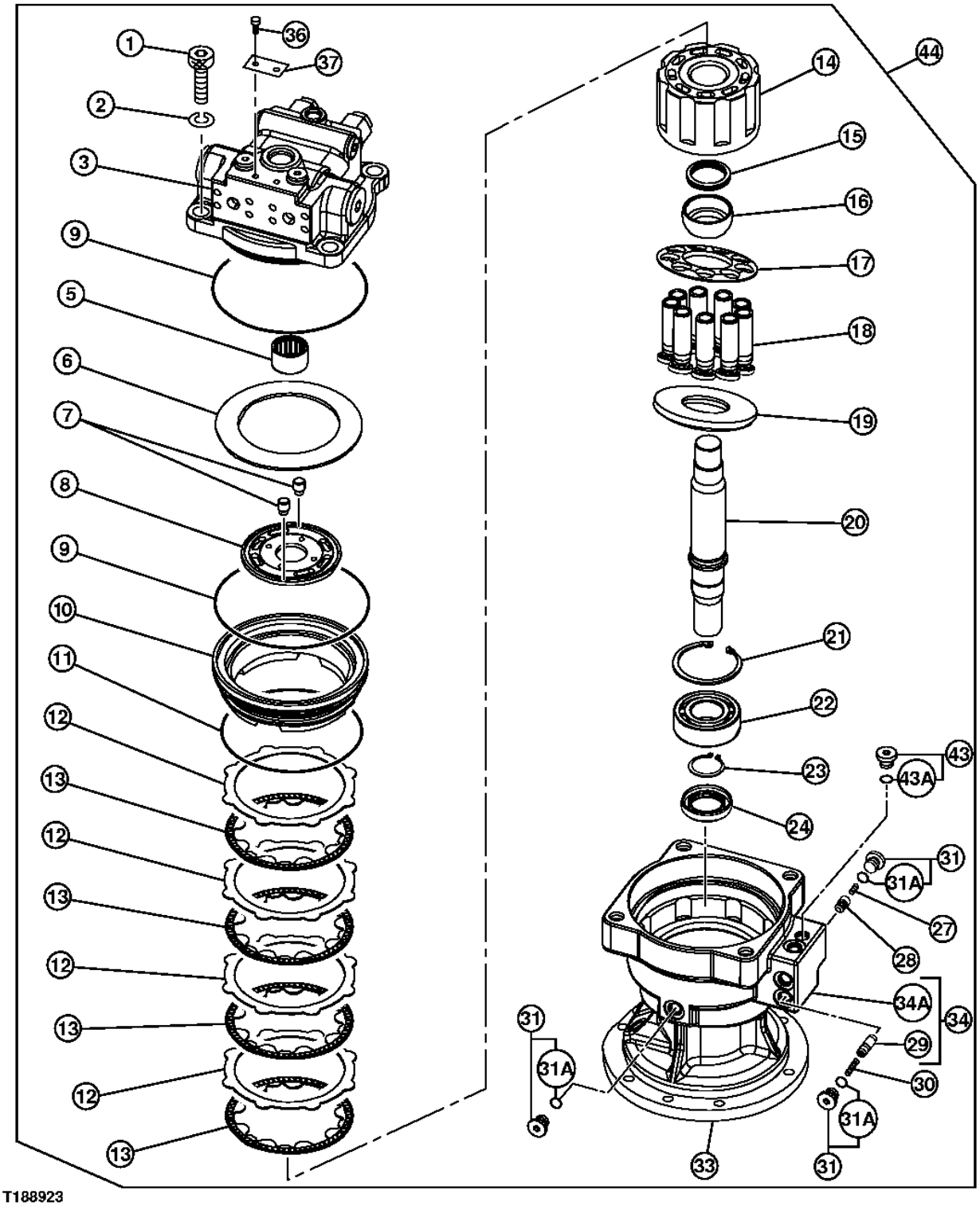

T188923

SWING MOTOR COMPONENTS

KEY	PART NO.	PART NAME	QTY	SERIAL NO.	REMARKS
1	19M8208	SCREW	4		
2	12H294	LOCK WASHER	4		
3	9177595	VALVE	1		
5	4413768	NEEDLE BEARING	2		
6	4434436	SPRING	1		
7	4413761	PIN FASTENER	2		
8	3089613	PLATE	1		
9	4413764	O-RING	2		
10	3084716	PISTON	1		
11	4413765	O-RING	1		
12	3075729	PLATE	4		
13	3087818	PLATE	4		
14	2043442	ROTOR	1		
15	4413753	SPRING	1		
16	4413700	BUSHING	1		
17	3081727	RETAINER	1		
18	8071556	PISTON	9		
19	4396102	PLATE	1		
20	3085794	SHAFT	1		
21	40M7044	SNAP RING	1		
22	4402669	CYLINDRICAL ROLLER BEARING	1		
23	40M7046	SNAP RING	1		
24	4320490	SEAL	1		
27	4398846	SPRING	1		
28	4399892	POPPET	1		
29	.....	PLUNGER	1		
30	4398889	SPRING	1		
31	9134110	PIPE PLUG	3		
31A	M800650	PACKING	1		
34	8080152	CASE	1		
34A	.....	CASE	1		
37	.....	IDENTIFICATION PLATE	1		
43	9134109	DRAIN PLUG	1		
43A	4506408	O-RING	1		
44	9196961	HYDRAULIC MOTOR	1		

MEMORANDA

1L3

NUMERICAL INDEX

PART NO.	GRID	KEY	PAGE
AA34965	2D16	3	1830 - 19
AA34965	2D20	9	1830 - 23
AE24616	3C25	5	3315 - 11
AE24616	3D4	23	3315 - 17
AE24616	3D24	17	3360 - 9
AE24616	3E2	3	3360 - 11
AE24616	3E4	13	3360 - 13
AE24616	3E6	11	3360 - 13B
AE24616	3E8	5	3360 - 15
AE24616	3E10	7	3360 - 17
AE42067	3C25	6	3315 - 11
AE42067	3C25	7	3315 - 11
AE42718	3E2	13	3360 - 11
AE45056	3J14	2	3364 - 5
AH108250	3C25	2	3315 - 11
AH149465	3J18	27	3365 - 11
AH149466	3J16	28	3365 - 5
AH149467	3J16	27	3365 - 5
AH156744	3J20	34	3365 - 15
AH63565	3E6	5	3360 - 13B
AH75160	3E2	33	3360 - 11
AH75162	3I18	31	3363 - 65
AH97777	3J14	3	3364 - 5
AL2976T	1F9	14	0505 - 3
AP33223	2E14	11	1910 - 11
AP33252	1F21	2	0520 - 3
AP33323	3D20	15	3360 - 7
AP33324	3D20	16	3360 - 7
AP33341	2E14	12	1910 - 11
AP33342	3D20	12	3360 - 7
AP33343	3D20	17	3360 - 7
AP33477	1G21	31	1671 - 3
AP33486	1G21	28	1671 - 3
AP33487	1G21	27	1671 - 3
AP33538	3G14	15	3363 - 5
AP33637	3H24	1	3363 - 43
AP33638	3H24	17	3363 - 43
AP33639	3D6	33	3340 - 3
AP33639	3D8	33	3340 - 5
AP34468	1G8	1	0560 - 7
AP34469	1G8	4	0560 - 7
AP34654	1B11	30	0130 - 9
AP34655	1B17	20	0130 - 17
AP35250	1F25	2	0530 - 3
AP35251	1F21	9	0520 - 3
AP35298	1F17	1	0510 - 5
AP35299	1F17	3	0510 - 5
AP35300	1F17	4	0510 - 5
AP35301	1F17	5	0510 - 5
AP35302	1F17	6	0510 - 5
AP35304	1F21	1	0520 - 3
AP35306	1F17	8	0510 - 5
AP35307	1F17	9	0510 - 5
AP35308	1F25	1	0530 - 3
AP35310	1F21	3	0520 - 3
AP35316	1F17	10	0510 - 5
AP35317	1F17	14	0510 - 5
AP35324	1F13	2	0510 - 1
AP35325	1G2	1	0540 - 3
AP35330	1F21	11	0520 - 3
AP35331	1F21	12	0520 - 3
AP35337	1F17	18	0510 - 5
AP35338	1F17	19	0510 - 5
AP35339	2E18	1	1910 - 15
AP35340	2E18	7	1910 - 15
AP35346	3D6	59	3340 - 3
AP35347	3D8	59	3340 - 5
AP35371	3I18	32	3363 - 65
AP35372	1F17	20	0510 - 5
AP35373	1F17	21	0510 - 5
AP35374	1F17	22	0510 - 5
AP35375	1G8	6	0560 - 7
AP35377	1E15	8	0421 - 2
AP35377	1G8	5	0560 - 7
AP35847	3H2	5	3363 - 17
AP35848	3H2	1	3363 - 17
AP36328	2E14	22	1910 - 11
AP37202	3D6	3	3340 - 3
AP37215	1I7	0	1740 - 7
AP37217	1G4	0	0560 - 3
AP37222	3D14	2	3344 - 3
AP37223	3J12	0	3364 - 3
AP37224	3D8	3	3340 - 5
AP37246	3D12	0	3340 - 9
AP37249	2E10	4	1910 - 7
AP37250	2E10	12	1910 - 7
AP37251	2E10	17	1910 - 7
AP37253	2E12	15	1910 - 9
AP37256	2E10	20	1910 - 7
AP37259	2E6	2	1910 - 3
AP37262	2E12	23	1910 - 9
AP37263	2E12	36	1910 - 9
AP37267	1I3	0	1740 - 3
AP37269	3G16	1	3363 - 7
AP37340	2E12	4	1910 - 9
AP37341	2E6	9	1910 - 3
AP37342	2E12	10	1910 - 9
AP37365	2E16	4	1910 - 13
AP37369	2D6	0	1830 - 9
AP37370	2E8	1	1910 - 5
AP37371	2E8	0	1910 - 5
AP37555	3G14	6	3363 - 5
AP37850	3D10	0	3340 - 7
AP37852	3D10	1	3340 - 7
AP38576	3K9	0	3401 - 3
AP38667	3J2	10	3363 - 73
AP38669	3J2	12	3363 - 73
AP38748	2C14	0	1810 - 35
AP38749	2C14	1	1810 - 35
AP38750	2C14	2	1810 - 35
AP38751	2C14	4	1810 - 35
AP38752	2C14	5	1810 - 35
AP38753	2C14	6	1810 - 35
AP38754	2C14	9	1810 - 35
AP38755	2C14	30	1810 - 35
AP38756	2C14	11	1810 - 35
AP38757	2C14	12	1810 - 35
AP38758	2C14	13	1810 - 35
AP38759	2C14	16	1810 - 35
AP38760	2C14	15	1810 - 35
AP38763	2C14	50	1810 - 35
AP39027	3G18	9	3363 - 9
AP39028	3G18	1	3363 - 9
AP39145	2E14	23	1910 - 11
AP39225	3B15	0	3301 - 3
AP39225	3K9	0	3401 - 3
AP39339	1G8	2	0560 - 7
AP39339	1G8	3	0560 - 7
AP39351	2E14	22	1910 - 11
AR21837	1F11	25	0505 - 5
AR21999	1F17	23	0510 - 5
AR40418	1F17	24	0510 - 5
AR44361	1F21	4	0520 - 3
AR45925	1G21	19	1671 - 3
AR48236	1F11	20	0505 - 5
AR48236	1F15	5	0510 - 3
AR60937	2D12	10	1830 - 15
AR62399	1F12	7	0505 - 6
AR65507	1D4	9	0403 - 2
AR76140	3J14	17	3364 - 5
AR85519	1D23	19	0413 - 3
AR90081	3C25	20	3315 - 11
AR90081	3D24	11	3360 - 9
AR94101	3E4	25	3360 - 13
AT101944	2D18	17	1830 - 21
AT101945	2D18	16	1830 - 21
AT105289	1F17	26	0510 - 5
AT108783	3D24	10	3360 - 9
AT115146	3D2	14	3315 - 15
AT115448	3D18	11	3360 - 5
AT115535	3C25	12	3315 - 11
AT115535	3D4	31	3315 - 17
AT116162	1F11	12	0505 - 5
AT116486	3E2	7	3360 - 11
AT116486	3E4	16	3360 - 13
AT117364	3D20	36	3360 - 7
AT117364	3J10	32	3363 - 87
AT117365	3D20	35	3360 - 7
AT117365	3J10	31	3363 - 87
AT120498	3D20	35	3360 - 7
AT120498	3J10	31	3363 - 87
AT120499	3D20	36	3360 - 7
AT120499	3J10	32	3363 - 87
AT122209	3D10	6	3340 - 7
AT130053	3D24	7	3360 - 9
AT130053	3E2	11	3360 - 11
AT130157	1G13	1	1369 - 3
AT130684	3E2	22	3360 - 11
AT131080	3B17	90	3302 - 3
AT131080	3B19	21	3302 - 5
AT131080	3B19	22	3302 - 5
AT131080	3B19	90	3302 - 5
AT131080	3B21	21	3302 - 7
AT131080	3B21	22	3302 - 7
AT131080	3B21	90	3302 - 7
AT131081	3B17	15	3302 - 3
AT131081	3B21	15	3302 - 7
AT131089	3B23	15	3302 - 9
AT131293	3J8	3	3363 - 85
AT131360	3B23	40	3302 - 9
AT131361	3B23	40	3302 - 9
AT131372	1B11	12	0130 - 9
AT131436	3J14	8	3364 - 5
AT131437	3J14	13	3364 - 5
AT131445	3D24	8	3360 - 9
AT131538	3J22	38	3365 - 17
AT131697	2B16	16	1810 - 13
AT131864	2B16	16A	1810 - 13
AT131865	2B16	16B	1810 - 13
AT133633	3J16	7	3365 - 5
AT133633	3J18	7	3365 - 11
AT133633	3K2	7	3365 - 19B
AT133633	3K6	7	3365 - 23
AT133634	3J16	8	3365 - 5
AT133634	3J18	8	3365 - 11
AT133634	3J22	8	3365 - 17
AT133634	3K2	8	3365 - 19B
AT133634	3K6	8	3365 - 23
AT133635	3K2	6	3365 - 19B
AT133635	3K6	6	3365 - 23
AT134345	3J14	12	3364 - 5

NUMERICAL INDEX - CONTINUED

PART NO.	GRID	KEY	PAGE
AT134345	3J14	20	3364 - 5
AT135758	1H8	1C	1674 - 9
AT135758	1H22	0C	1674 - 27
AT13740	1D7	30	0404 - 3
AT13740	1F17	27	0510 - 5
AT13740	1G4	7	0560 - 3
AT139382	3D18	4	3360 - 5
AT139383	3D18	3	3360 - 5
AT140041	3E2	7	3360 - 11
AT140041	3E4	16	3360 - 13
AT141562	3D18	15	3360 - 5
AT142288	1G23	1	1674 - 1
AT145341	1G21	16	1671 - 3
AT145649	1G8	7	0560 - 7
AT146242	3B17	6	3302 - 3
AT146242	3B17	7	3302 - 3
AT146242	3B17	91	3302 - 3
AT146242	3B19	91	3302 - 5
AT146242	3B21	6	3302 - 7
AT146242	3B21	7	3302 - 7
AT146242	3B21	91	3302 - 7
AT146242	3B23	6	3302 - 9
AT146242	3B23	7	3302 - 9
AT146242	3B23	28	3302 - 9
AT146294	2E14	14	1910 - 11
AT147401	1F25	4	0530 - 3
AT147803	1H6	0	1674 - 7
AT147803	2C14	18A	1810 - 35
AT152120	3C25	13	3315 - 11
AT152120	3D2	1	3315 - 15
AT152120	3D4	5	3315 - 17
AT153835	3E22	12	3361 - 13
AT153920	3K2	28	3365 - 19B
AT153920	3K6	28	3365 - 23
AT154148	1B23	42	0260 - 3
AT154150	2B16	39	1810 - 13
AT154223	1B9	11	0130 - 7B
AT154278	2B16	20	1810 - 13
AT154351	2D20	14	1830 - 23
AT154378	3D6	53	3340 - 3
AT154378	3D8	53	3340 - 5
AT154413	2B16	24	1810 - 13
AT154896	1I5	1	1740 - 5
AT154899	1I3	8	1740 - 3
AT154990	1H22	0C	1674 - 27
AT155189	2C14	26	1810 - 35
AT155730	2B8	37	1810 - 5
AT155744	3J10	8	3363 - 87
AT156970	2B18	41	1810 - 15
AT156993	2B22	17	1810 - 19
AT156994	2B22	18	1810 - 19
AT157068	2B18	18	1810 - 15
AT157068	2B20	27	1810 - 17
AT157668	3J14	18	3364 - 5
AT159804	2D18	20	1830 - 21
AT160159	3D20	9	3360 - 7
AT160161	3D20	11	3360 - 7
AT160176	3D20	8	3360 - 7
AT160177	3D20	3	3360 - 7
AT161192	2D18	25	1830 - 21
AT162242	3D18	18	3360 - 5
AT163528	3C4	1A	3302 - 15
AT163532	3C4	1B	3302 - 15
AT163533	3C4	1F	3302 - 15
AT163534	3C4	1E	3302 - 15
AT163535	3C4	1D	3302 - 15
AT163536	3C4	1C	3302 - 15
AT163568	3B19	40	3302 - 5
AT163569	3B19	40	3302 - 5
AT163570	3B19	40	3302 - 5
AT163571	3B19	40	3302 - 5
AT163573	3B17	14	3302 - 3
AT163573	3B17	16	3302 - 3
AT163573	3B17	17	3302 - 3
AT163574	3B19	40	3302 - 5
AT163575	3B19	40	3302 - 5
AT163576	3B21	40	3302 - 7
AT163577	3B21	40	3302 - 7
AT163577	3B25	10	3302 - 11
AT163578	3B21	40	3302 - 7
AT163578	3B25	10	3302 - 11
AT163579	3B21	40	3302 - 7
AT163579	3B25	10	3302 - 11
AT164676	1G23	2	1674 - 1
AT165110	1H8	1B	1674 - 9
AT166994	2E8	0G	1910 - 5
AT166994	2E8	1F	1910 - 5
AT166994	2E14	15	1910 - 11
AT167184	3C4	1G	3302 - 15
AT167185	3C4	1J	3302 - 15
AT167186	3C4	1H	3302 - 15
AT167187	3C4	1I	3302 - 15
AT167188	3C4	1K	3302 - 15
AT167189	3C4	1L	3302 - 15
AT167190	3C4	1N	3302 - 15
AT167191	3C4	1M	3302 - 15
AT167874	3B17	92	3302 - 3
AT167874	3B19	29	3302 - 5
AT167874	3B19	30	3302 - 5
AT167874	3B19	92	3302 - 5
AT167874	3B21	29	3302 - 7
AT167874	3B21	30	3302 - 7
AT167874	3B21	92	3302 - 7
AT170459	3D4	8	3315 - 17
AT170759	1F9	2	0505 - 3
AT171162	1F9	1	0505 - 3
AT171539	1F9	3	0505 - 3
AT172698	1B5	3A	0130 - 5
AT173610	1F17	2	0510 - 5
AT173678	2C18	2	1821 - 5
AT174863	1B13	9	0130 - 13
AT174989	1D19	16	0409 - 3
AT175345	1F21	5	0520 - 3
AT175357	1F21	6	0520 - 3
AT176629	1C18	0	0260 - 17
AT176789	2B20	6	1810 - 17
AT177804	2C8	0	1810 - 29
AT178738	3C4	1A	3302 - 15
AT178739	3C4	1B	3302 - 15
AT178740	3C4	1F	3302 - 15
AT178741	3C4	1C	3302 - 15
AT178840	1G15	1	1369 - 5
AT178842	1G15	1	1369 - 5
AT178843	1G15	1	1369 - 5
AT178844	1G15	1	1369 - 5
AT178845	1F9	30	0505 - 3
AT178893	1F9	6	0505 - 3
AT179981	3E16	66	3361 - 7
AT180333	1G15	1	1369 - 5
AT180334	1G15	1	1369 - 5
AT180335	1G15	1	1369 - 5
AT180344	1G17	1	1369 - 7
AT180375	1B17	0	0130 - 17
AT180376	1B17	5	0130 - 17
AT180377	1B17	6	0130 - 17
AT180378	1B17	7	0130 - 17
AT180379	1B17	8	0130 - 17
AT180380	1B11	1	0130 - 9
AT180381	1B11	5	0130 - 9
AT180383	1B11	9	0130 - 9
AT180384	1B7	5	0130 - 7
AT180385	1B9	1	0130 - 7B
AT180387	1B7	1C	0130 - 7
AT180387	1B9	2	0130 - 7B
AT180388	1B9	3	0130 - 7B
AT180389	1B9	5	0130 - 7B
AT180391	1B9	4	0130 - 7B
AT180392	1B7	15	0130 - 7
AT180392	1B9	9	0130 - 7B
AT180393	1B7	16	0130 - 7
AT180393	1B9	10	0130 - 7B
AT180397	1B7	12	0130 - 7
AT180397	1B9	8	0130 - 7B
AT180421	1B5	10	0130 - 5
AT180422	1B5	3	0130 - 5
AT180423	1B5	3B	0130 - 5
AT180424	1B5	1	0130 - 5
AT180425	1B5	2	0130 - 5
AT180426	1B5	5	0130 - 5
AT180427	1B5	6	0130 - 5
AT180443	1B13	52	0130 - 13
AT180444	1B13	51	0130 - 13
AT180446	1B13	54	0130 - 13
AT180447	1B13	54	0130 - 13
AT180449	1B11	11	0130 - 9
AT180461	1B5	4	0130 - 5
AT180585	3D24	4	3360 - 9
AT180971	2C16	7	1821 - 3
AT180973	2C16	9	1821 - 3
AT180974	2C16	10	1821 - 3
AT180975	2C16	11	1821 - 3
AT180976	2C16	12	1821 - 3
AT180977	2C16	13	1821 - 3
AT180978	2C16	15	1821 - 3
AT180979	2C16	18	1821 - 3
AT180980	2C16	19	1821 - 3
AT182625	2B16	27	1810 - 13
AT182626	2B16	28	1810 - 13
AT183016	1G16	1	1369 - 6
AT183222	1F9	7A	0505 - 3
AT183222	1F9	8A	0505 - 3
AT183222	1F9	8B	0505 - 3
AT185207	2E25	0	2002 - 3
AT185696	1G22	6	1672 - 2
AT185781	1B13	11	0130 - 13
AT185783	1B13	0	0130 - 13
AT185784	1B13	1	0130 - 13
AT185785	1B13	2	0130 - 13
AT185786	1B13	3	0130 - 13
AT185787	1B13	10	0130 - 13
AT185788	1B13	7	0130 - 13
AT185789	1B13	8	0130 - 13
AT186111	3D20	30	3360 - 7
AT186111	3J10	26	3363 - 87
AT186112	3D20	31	3360 - 7
AT186112	3J10	27	3363 - 87
AT186113	3D20	32	3360 - 7
AT186113	3J10	28	3363 - 87
AT186114	3D20	33	3360 - 7
AT186114	3J10	29	3363 - 87
AT186554	3H8	3A	3363 - 27

NUMERICAL INDEX - CONTINUED

PART NO.	GRID	KEY	PAGE
AT186622	3E2	24	3360 - 11
AT186623	3E2	16	3360 - 11
AT186635	1B9	6	0130 - 7B
AT186636	1B7	11	0130 - 7
AT186636	1B9	7	0130 - 7B
AT186637	1B9	0	0130 - 7B
AT187237	3B25	10	3302 - 11
AT187240	3B25	10	3302 - 11
AT187242	3B25	10	3302 - 11
AT189409	3D20	31	3360 - 7
AT189409	3J10	27	3363 - 87
AT189410	3D20	30	3360 - 7
AT189410	3J10	26	3363 - 87
AT189638	3J14	20	3364 - 5
AT190190	2D12	10	1830 - 15
AT190535	3E4	4	3360 - 13
AT190929	1H16	15	1674 - 21
AT191297	3E2	1	3360 - 11
AT191397	3E4	14	3360 - 13
AT191462	1H16	12	1674 - 21
AT191463	1H14	1	1674 - 19
AT193964	2C16	1	1821 - 3
AT194969	1H6	0	1674 - 7
AT194969	2C14	18A	1810 - 35
AT195278	2C16	0C	1821 - 3
AT195279	2C16	0D	1821 - 3
AT195280	2C16	20	1821 - 3
AT195282	2C16	16	1821 - 3
AT195283	2C16	17	1821 - 3
AT195284	2C16	2	1821 - 3
AT195286	2C16	0	1821 - 3
AT195287	2C16	8	1821 - 3
AT195684	3C25	0	3315 - 11
AT195713	3D24	1	3360 - 9
AT195741	1H6	74	1674 - 7
AT195784	3D18	18	3360 - 5
AT195786	3D18	12	3360 - 5
AT195787	3D18	9	3360 - 5
AT195788	3D18	14	3360 - 5
AT196334	3J14	18	3364 - 5
AT196349	1H18	7	1674 - 23
AT196349	1H18	9	1674 - 23
AT196435	3D4	30	3315 - 17
AT196567	2C4	6	1810 - 25
AT196587	3D16	1	3360 - 3
AT196588	3D16	3	3360 - 3
AT197149	1G22	11	1672 - 2
AT197375	3D20	14	3360 - 7
AT197375	3D22	5	3360 - 7B
AT197400	3D20	26	3360 - 7
AT198270	1F17	28	0510 - 5
AT198293	3B21	40	3302 - 7
AT199349	3C4	1O	3302 - 15
AT199350	3B23	40	3302 - 9
AT199748	2C16	16	1821 - 3
AT199749	2C16	17	1821 - 3
AT200011	1C18	4	0260 - 17
AT200425	1G21	1	1671 - 3
AT200584	2B18	59	1810 - 15
AT202096	3G12	11	3363 - 3
AT202778	1H16	14	1674 - 21
AT204853	3G18	12	3363 - 9
AT206888	1F21	24	0520 - 3
AT209926	1F21	7	0520 - 3
AT213603	2D12	1	1830 - 15
AT213603	2E2	1	1830 - 29
AT213608	2B20	55	1810 - 17
AT213610	2C2	13	1810 - 23
AT213624	2B20	23	1810 - 17
AT213954	2C12	2	1810 - 33
AT213958	2B6	4	1810 - 3
AT214007	2B16	17	1810 - 13
AT214011	2B8	33	1810 - 5
AT214012	2B8	4	1810 - 5
AT214012	2B8	8	1810 - 5
AT214012	2B8	15	1810 - 5
AT214012	2B8	19	1810 - 5
AT214017	2B16	18	1810 - 13
AT214041	2B16	44	1810 - 13
AT214061	2B16	21	1810 - 13
AT214063	2B16	23	1810 - 13
AT214078	2B18	45	1810 - 15
AT214079	2B16	45	1810 - 13
AT214104	2B22	16	1810 - 19
AT214118	2C2	2	1810 - 23
AT214119	2C2	4	1810 - 23
AT214122	2C2	71	1810 - 23
AT214129	2B18	71	1810 - 15
AT214145	2B20	3	1810 - 17
AT214152	2B20	54	1810 - 17
AT214160	2B20	13	1810 - 17
AT214169	2B24	33	1810 - 21
AT214170	2B24	49	1810 - 21
AT214171	2B24	92	1810 - 21
AT214172	2B24	65	1810 - 21
AT214172	2C2	11	1810 - 23
AT214173	2B18	55	1810 - 15
AT214213	2D24	43	1830 - 27
AT214245	2D24	46	1830 - 27
AT214263	3H8	3A	3363 - 27
AT214290	2B20	7	1810 - 17
AT214292	2B20	56	1810 - 17
AT214297	2B22	28	1810 - 19
AT214299	2B20	21	1810 - 17
AT214299	2B24	61	1810 - 21
AT214300	2B24	74	1810 - 21
AT214301	2B22	22	1810 - 19
AT214305	2B18	60	1810 - 15
AT214305	2B22	11	1810 - 19
AT214307	2C2	50	1810 - 23
AT214309	2B24	69A	1810 - 21
AT214310	2B18	30	1810 - 15
AT214311	2B22	7	1810 - 19
AT214313	2B20	15	1810 - 17
AT214314	2B20	23	1810 - 17
AT215503	2B8	26	1810 - 5
AT215504	3J10	8	3363 - 87
AT215538	3D4	7	3315 - 17
AT216522	2C16	6	1821 - 3
AT216532	2C16	21	1821 - 3
AT216532	2C16	22	1821 - 3
AT217709	2C16	51	1821 - 3
AT218141	2B20	61	1810 - 17
AT218156	1F21	13	0520 - 3
AT218190	2B18	7	1810 - 15
AT221439	1F11	16	0505 - 5
AT221440	1F11	19	0505 - 5
AT221605	1F11	28	0505 - 5
AT221990	1F11	4	0505 - 5
AT222697	1F11	1	0505 - 5
AT223785	1G23	2	1674 - 1
AT224893	1G23	2	1674 - 1
AT250016	1B21	0	0260 - 1B
AT264256	3J16	7	3365 - 5
AT264256	3J18	7	3365 - 11
AT264256	3J22	7	3365 - 17
AT264256	3J24	7	3365 - 19
AT264256	3K4	7	3365 - 21
AT264257	3J16	8	3365 - 5
AT264257	3J18	8	3365 - 11
AT264257	3J24	8	3365 - 19
AT264257	3K4	8	3365 - 21
AT264258	3J24	6	3365 - 19
AT264258	3K4	6	3365 - 21
AT264314	3J20	4	3365 - 15
AT264318	3J22	10	3365 - 17
AT264318	3K12	2	4360 - 3
AT264319	3J16	10	3365 - 5
AT264319	3J18	10	3365 - 11
AT264320	3J20	10	3365 - 15
AT264324	1G13	..	1369 - 3
AT264347	1G13	..	1369 - 3
AT264347	3F4	2	3362 - 7
AT264347	3F8	3B	3362 - 11
AT264347	3F10	24	3362 - 13
AT264354	1G13	..	1369 - 3
AT264354	3F10	12	3362 - 13
AT264354	3F12	22	3362 - 15
AT264354	3J16	29	3365 - 5
AT264354	3J18	29	3365 - 11
AT264354	3J22	29	3365 - 17
AT264354	3J24	23	3365 - 19
AT264354	3K2	23	3365 - 19B
AT264354	3K4	23	3365 - 21
AT264354	3K6	23	3365 - 23
AT264357	3J20	7	3365 - 15
AT264358	3J20	8	3365 - 15
AT264360	1G13	..	1369 - 3
AT264360	3J20	32	3365 - 15
AT264387	3J16	16	3365 - 5
AT264387	3J18	16	3365 - 11
AT264388	3J16	19	3365 - 5
AT264388	3J18	19	3365 - 11
AT300313	3E8	2	3360 - 15
AT300313	3E10	2	3360 - 17
AT300337	3E10	5	3360 - 17
AT300465	3E10	16	3360 - 17
AT300466	3E10	17	3360 - 17
AT301074	2F4	0	2004 - 5
AT301151	3J10	24	3363 - 87
AT301723	1H2	2	1674 - 3B
AT302830	3E10	23	3360 - 17
AT303189	1G15	1	1369 - 5
AT303468	3E10	22	3360 - 17
AT303665	3E8	18	3360 - 15
AT303666	3E8	11	3360 - 15
AT303666	3E8	18	3360 - 15
AT303667	3E8	13	3360 - 15
AT303668	3E8	12	3360 - 15
AT303703	3E8	1	3360 - 15
AT303736	1H10	30	1674 - 11
AT303955	3E10	1	3360 - 17
AT303956	3E10	8	3360 - 17
AT303957	3E10	30	3360 - 17
AT304739	3D22	2	3360 - 7B
AT305641	3J10	24	3363 - 87
AT306723	3E2	7	3360 - 11
AT306723	3E4	16	3360 - 13
AT306737	3E6	7	3360 - 13B
AT306757	3E6	14	3360 - 13B
AT306775	3E6	6	3360 - 13B

NUMERICAL INDEX - CONTINUED

PART NO.	GRID	KEY	PAGE
AT306787	1B13	54	0130 - 13
AT307267	1F11	32	0505 - 5
AT307271	1F11	6	0505 - 5
AT307277	1F11	8	0505 - 5
AT307709	3E4	14	3360 - 13
AT307710	3E4	4	3360 - 13
AT307812	1F11	2	0505 - 5
AT307815	1F11	31	0505 - 5
AT307817	1F11	5	0505 - 5
AT309263	2C16	0A	1821 - 3
AT309264	2C16	0B	1821 - 3
AT309610	3J20	19	3365 - 15
AT317586	1F17	1	0510 - 5
AT317587	1F17	3	0510 - 5
AT317606	1F17	4	0510 - 5
AT318016	3J6	19	3363 - 83
AT318016	3J10	24	3363 - 87
AT318021	3H6	9	3363 - 25
AT318035	1G13	..	1369 - 3
AT318035	3F4	67	3362 - 7
AT318035	3F6	60	3362 - 9
AT318035	3F17	20	3362 - 25
AT318035	3G12	12	3363 - 3
AT318035	3G16	10	3363 - 7
AT318035	3G20	1	3363 - 11
AT318035	3G20	2	3363 - 11
AT318035	3I12	17A	3363 - 55
AT318035	3J6	20	3363 - 83
AT318035	3J8	9	3363 - 85
AT318035	3K16	3	4360 - 7
AT318035	3K16	23	4360 - 7
AT318039	3J10	21	3363 - 87
AT318040	3J10	22	3363 - 87
AT322189	2C16	11	1821 - 3
AT35121	3D4	9	3315 - 17
AT35121	3E2	6	3360 - 11
AT35121	3E4	3	3360 - 13
AT35121	3J14	16	3364 - 5
AT36921	3C25	1	3315 - 11
AT36921	3D4	24	3315 - 17
AT36921	3D24	3	3360 - 9
AT36921	3E2	2	3360 - 11
AT36921	3E8	8	3360 - 15
AT36921	3E10	4	3360 - 17
AT37476	3G12	4	3363 - 3
AT38449	1E17	10	0422 - 3
AT38628	3J14	9	3364 - 5
AT43291	3G12	7	3363 - 3
AT50923	1F21	14	0520 - 3
AT64237	2F2	1	2004 - 3
AT64237	2F2	2	2004 - 3
AT66778	1F17	58	0510 - 5
AT68901	3C25	10	3315 - 11
AT68901	3D24	13	3360 - 9
AT71082	3D4	3	3315 - 17
AT71082	3E2	23	3360 - 11
AT71082	3E4	11	3360 - 13
AT71732	3D24	18	3360 - 9
AT71732	3E2	4	3360 - 11
AT73296	1F12	1	0505 - 6
AT74940	1F12	10	0505 - 6
AT78124	3D24	20	3360 - 9
AT78633	2D12	10	1830 - 15
AT78634	2D12	10	1830 - 15
AT82210	3D16	2	3360 - 3
AT83306	3D20	28	3360 - 7
AT83721	3E4	6	3360 - 13
AT84953	2D18	19	1830 - 21
AU42809	2D12	10	1830 - 15
A364R	1E6	7	0417 - 2
A4827R	1F5	17	0452 - 3
A590106	1H6	53	1674 - 7
A590106	3E16	69	3361 - 7
A590108	2E8	7	1910 - 5
A590108	2E20	7	1910 - 17
A590108	2F4	3	2004 - 5
A590108	3C13	13	3315 - 5
A590110	1G21	7	1671 - 3
A590110	1H6	35	1674 - 7
A590110	1H10	4	1674 - 11
A590110	1H10	14	1674 - 11
A590110	1H22	9	1674 - 27
A590110	2E8	4	1910 - 5
A590110	3H8	28	3363 - 27
A590110	3H24	38	3363 - 43
A590112	2E14	35	1910 - 11
A590114	1H12	5G	1674 - 13
A590114	1H22	0G	1674 - 27
A590114	3H24	36	3363 - 43
A590906	1H12	8	1674 - 13
A590906	3C21	10	3315 - 9
A590908	2F4	2	2004 - 5
A590910	1H6	34	1674 - 7
A590910	1H10	3	1674 - 11
A590910	3C21	24	3315 - 9
A590910	3H8	18	3363 - 27
A590912	2E14	34	1910 - 11
A590912	3C21	5	3315 - 9
A590914	1H12	4	1674 - 13
A590914	1H12	5H	1674 - 13
A590914	1H22	0H	1674 - 27
A590914	3H24	35	3363 - 43
A810100	1C10	26	0260 - 11
A811030	1G13	..	1369 - 3
A811040	1G13	..	1369 - 3
A811040	3G14	16	3363 - 5
A811045	1G13	..	1369 - 3
A811060	3H8	3C	3363 - 27
A811075	3G12	1	3363 - 3
A811100	3J16	10	3365 - 5
A811100	3J18	10	3365 - 11
A852122	1B25	22	0260 - 5
A852122	3H8	4	3363 - 27
A852122	3H12	9	3363 - 31
A852122	3H12	12	3363 - 31
A852122	3H12	23	3363 - 31
A852122	3H14	1	3363 - 33
A852122	3H14	21	3363 - 33
A852122	3I4	1	3363 - 47
A852122	3I6	26	3363 - 49
A852122	3I8	7	3363 - 51
A852122	3J2	31	3363 - 73
A852122	3J12	36	3364 - 3
A852123	3H18	10	3363 - 37
A852123	3H24	43	3363 - 43
A852123	3H24	60	3363 - 43
A852123	3I4	9	3363 - 47
A852123	3I24	14	3363 - 71
A852123	3J2	32	3363 - 73
A852123	3J2	40	3363 - 73
A852133	3G20	9	3363 - 11
A852133	3H8	9	3363 - 27
A852133	3H8	13	3363 - 27
A852133	3H18	9	3363 - 37
A852133	3H20	1	3363 - 39
A852133	3I8	10	3363 - 51
A852133	3I22	10	3363 - 69
A852133	3J2	33	3363 - 73
A852133	3J12	38	3364 - 3
A852134	3G20	5	3363 - 11
A852143	3I16	14	3363 - 63
A852144	3G20	6	3363 - 11
A852144	3H10	1	3363 - 29
A852144	3I4	16	3363 - 47
A852144	3I16	6	3363 - 63
A852144	3I20	17	3363 - 67
A852223	3H20	24	3363 - 39
A852223	3H22	1	3363 - 41
A852223	3H22	21	3363 - 41
A852223	3J2	39	3363 - 73
A852232	3J12	40	3364 - 3
A852234	3I20	20	3363 - 67
A852322	3H8	5	3363 - 27
A852322	3H12	1	3363 - 31
A852322	3H12	15	3363 - 31
A852322	3H14	19	3363 - 33
A852323	3H10	18	3363 - 29
A852323	3H16	1	3363 - 35
A852323	3I16	10	3363 - 63
A852323	3I24	12	3363 - 71
A852333	1B25	13	0260 - 5
A852333	3G20	10	3363 - 11
A852333	3I6	23	3363 - 49
A852333	3I8	2	3363 - 51
A852333	3I20	13	3363 - 67
A852333	3J2	35	3363 - 73
A852333	3J12	39	3364 - 3
A852334	3I20	21	3363 - 67
A852334	3J12	42	3364 - 3
A852343	3H8	8	3363 - 27
A852343	3I16	15	3363 - 63
A852344	3H8	1	3363 - 27
A852344	3I4	17	3363 - 47
A852422	3H14	28	3363 - 33
A852422	3J12	37	3364 - 3
A852423	3J2	41	3363 - 73
A852433	3I16	7	3363 - 63
A852433	3I22	9	3363 - 69
A852444	3I16	3	3363 - 63
A852533	3I24	13	3363 - 71
A852543	1B25	31	0260 - 5
A853144	1B25	6	0260 - 5
A853144	3D6	27	3340 - 3
A853144	3D8	27	3340 - 5
A853144	3G22	13	3363 - 13
A853144	3H4	0	3363 - 19
A853144	3H6	1	3363 - 25
A853144	3I18	15	3363 - 65
A853166	3G20	1	3363 - 11
A853166	3I12	17	3363 - 55
A853166	3J20	30	3365 - 15
A853166	3J20	46	3365 - 15
A853188	3J10	2	3363 - 87
A853344	3H6	3	3363 - 25
A853366	3G12	12	3363 - 3
A853366	3G20	2	3363 - 11
A853444	3I18	3	3363 - 65
A885002	3H8	62	3363 - 27
A885002	3I6	1	3363 - 49
A885002	3J12	22	3364 - 3
A885002	3J12	41	3364 - 3

NUMERICAL INDEX - CONTINUED

PART NO.	GRID	KEY	PAGE
A885006	3G14	1	3363 - 5
A885006	3G16	10	3363 - 7
A885008	3J12	25	3364 - 3
CD16284	1D19	7	0409 - 3
CH11436	1G13	..	1369 - 3
CH11560	3C15	25	3315 - 5B
CH11560	3E16	49	3361 - 7
CH11560	3E16	78	3361 - 7
CH11560	3E18	9	3361 - 9
CH11560	3E20	9	3361 - 11
CH11561	3C11	36	3315 - 3B
CH11562	3C11	6C	3315 - 3B
CH11569	1G13	..	1369 - 3
CH11570	1G13	..	1369 - 3
CH11570	3C25	9	3315 - 11
CH11570	3C25	11	3315 - 11
CH11570	3D24	2	3360 - 9
CH11570	3E2	30	3360 - 11
CH11570	3E18	55A	3361 - 9
CH11570	3E20	52A	3361 - 11
CH11570	3G4	24A	3362 - 49
CH11570	3G4	25A	3362 - 49
CH11570	3G4	37A	3362 - 49
CH11570	3G4	38A	3362 - 49
CH11570	3G4	39A	3362 - 49
CH11570	3G6	25A	3362 - 51
CH11570	3G6	26A	3362 - 51
CH11570	3G6	39A	3362 - 51
CH11570	3G6	41A	3362 - 51
CH11570	3G20	5	3363 - 11
CH11570	3G20	9	3363 - 11
CH11570	3G20	10	3363 - 11
CH11570	3H18	9	3363 - 37
CH11570	3H18	12	3363 - 37
CH11570	3H20	1	3363 - 39
CH11570	3H20	39	3363 - 39
CH11570	3H22	1	3363 - 41
CH11570	3H22	41	3363 - 41
CH11570	3J12	38	3364 - 3
CH11570	3J12	39	3364 - 3
CH11570	3J12	40	3364 - 3
CH11570	3J12	42	3364 - 3
CH11571	1G13	..	1369 - 3
CH11571	3J12	13	3364 - 3
CH11572	1G13	..	1369 - 3
CH12329	1G13	..	1369 - 3
CH14634	1G13	..	1369 - 3
CH14701	1G13	..	1369 - 3
CH16109	1C8	8	0260 - 9
CH16109	3J24	12	3365 - 19
CH16109	3K2	12	3365 - 19B
CH16109	3K4	12	3365 - 21
CH16109	3K6	12	3365 - 23
CH17167	1G13	..	1369 - 3
CH17167	3F10	18	3362 - 13
CH17167	3F12	46	3362 - 15
CH17167	3F12	50	3362 - 15
CH17167	3F12	59	3362 - 15
CH17167	3F14	47	3362 - 17
CH19111	1G13	..	1369 - 3
C610778	3B17	13	3302 - 3
C610778	3B21	13	3302 - 7
C610778	3B23	13	3302 - 9
DH200049	2E14	14	1910 - 11
DH300124	3E12	4	3361 - 3
DH300125	2E14	10	1910 - 11
DH300125	2E14	11	1910 - 11
DH300125	2E18	5	1910 - 15
DH300134	3J2	42	3363 - 73
DH400030	2E8	0G	1910 - 5
DH400030	2E8	1F	1910 - 5
DH400574	3H8	23	3363 - 27
DH400575	3I16	1	3363 - 63
DH400576	3H8	24	3363 - 27
DH400583	3I18	2	3363 - 65
DH400584	3I18	4	3363 - 65
DH400607	2E6	20	1910 - 3
DH400607	2E6	30	1910 - 3
DH400608	2E12	14	1910 - 9
DH400609	1F17	58	0510 - 5
DH400611	3H10	21	3363 - 29
DH400612	3H10	17	3363 - 29
DH400613	2E18	4	1910 - 15
DH400614	3D14	5	3344 - 3
DH400618	3I18	28	3363 - 65
DH400620	1F17	23	0510 - 5
DH400621	2E18	4	1910 - 15
DH400622	2E6	31	1910 - 3
DH400627	3I18	30	3363 - 65
DH400660	2E14	27	1910 - 11
DH400683	3G14	11	3363 - 5
DH500059	1I7	0	1740 - 7
DH500067	2E18	1	1910 - 15
DH500068	2E14	22	1910 - 11
DH700119	3B15	0	3301 - 3
DH700119	3K9	0	3401 - 3
DH700120	3K9	0	3401 - 3
DH800105	3J8	4	3363 - 85
DH800106	3J8	5	3363 - 85
DH800107	1G21	8	1671 - 3
DH800115	3G14	18	3363 - 5
DH800121	3G16	4	3363 - 7
DH900430	3H10	21	3363 - 29
DH900431	3H10	17	3363 - 29
DH970015	2C8	3	1810 - 29
DS0345	1G15	1	1369 - 5
DS0346	1G15	1	1369 - 5
EV23PN	3C6	2	3302 - 15B
EV23SYL	3C6	4O	3302 - 15B
EV5849-V23	3C6	3	3302 - 15B
EX119-21	3C2	11	3302 - 13
EX119-27	3C2	11	3302 - 13
EX129A-37	3C2	11	3302 - 13
EX1829A-47	3C2	11	3302 - 13
EX20SP	3C2	13	3302 - 13
EX20W1	3C2	12	3302 - 13
EX21-27QRT	3C2	6	3302 - 13
EX21LK	3C2	5	3302 - 13
EX21LK	3C6	2	3302 - 15B
EX21SYL	3C2	2	3302 - 13
EX21SYL	3C6	4G	3302 - 15B
EX21S5F	3C2	1	3302 - 13
EX21S5F	3C6	4I	3302 - 15B
EX21TVIP	3C2	4	3302 - 13
EX21TVIP	3C6	4H	3302 - 15B
EX21VIP	3C2	3	3302 - 13
EX21VIP	3C6	4J	3302 - 15B
EX27LK	3C2	5	3302 - 13
EX27SYL	3C2	2	3302 - 13
EX27VPL	3C2	11	3302 - 13
EX27VPL	3C2	14	3302 - 13
EX27VPN	3C2	5	3302 - 13
EX27VPN	3C2	11	3302 - 13
EX29SP	3C2	13	3302 - 13
EX29W1	3C2	12	3302 - 13
EX31329-X	3C2	7	3302 - 13
EX360-21	3C2	10	3302 - 13
EX37LK	3C2	5	3302 - 13
EX37SYL	3C2	2	3302 - 13
EX47LK	3C2	5	3302 - 13
EX47SYL	3C2	2	3302 - 13
EX4894-21	3C2	11	3302 - 13
EX5824-37	3C2	11	3302 - 13
EX5827-27	3C2	11	3302 - 13
EX5849-21	3C6	3	3302 - 15B
EX5850-27V	3C2	11	3302 - 13
EX5854-21	3C2	11	3302 - 13
E1343FN	1E23	2	0429 - 5
F1451R	1F17	30	0510 - 5
H102543	3D24	1	3360 - 9
H132922	2C2	72	1810 - 23
H157235	3J20	9	3365 - 15
H157237	3J20	14	3365 - 15
H158175	3J24	19	3365 - 19
H158175	3K2	19	3365 - 19B
H158175	3K4	19	3365 - 21
H158175	3K6	19	3365 - 23
H158453	3J22	9	3365 - 17
H158453	3J24	9	3365 - 19
H158453	3K2	9	3365 - 19B
H158453	3K4	9	3365 - 21
H158453	3K6	9	3365 - 23
H158461	3J16	14	3365 - 5
H158461	3J18	14	3365 - 11
H158463	3J16	15	3365 - 5
H158463	3J18	15	3365 - 11
H163431	3J20	17	3365 - 15
H163432	3J20	18	3365 - 15
H163434	3J20	35	3365 - 15
H21259	1G11	34	1322 - 3
H23125	1D1	1	0402 - 4
H61354	3G16	2	3363 - 7
H75414	3J14	4	3364 - 5
H77698	1B25	30	0260 - 5
H77698	1F12	8	0505 - 6
H77698	1F15	8	0510 - 3
H77698	1F23	20	0520 - 5
H77698	1G8	12	0560 - 7
H77698	1H6	10	1674 - 7
H77698	1H10	8	1674 - 11
H77698	1H10	12	1674 - 11
H77698	1H16	13	1674 - 21
H77698	1H22	31	1674 - 27
H77698	2C24	54	1830 - 3
H77698	2D12	14	1830 - 15
H77698	2D16	7	1830 - 19
H77698	2E2	14	1830 - 29
H77698	2F4	9	2004 - 5
H77698	3C13	11	3315 - 5
H77698	3C13	19	3315 - 5
H77698	3C25	8	3315 - 11
H77698	3E8	17	3360 - 15
H77698	3E10	29	3360 - 17
H77698	3H20	40	3363 - 39
H77698	3H22	43	3363 - 41
H77698	3H24	42	3363 - 43
H77698	3I4	37	3363 - 47
IPSKIT3	1G15	1	1369 - 5
JD5765	1G11	45	1322 - 3
JD5909	1G11	17	1322 - 3
JD7781	3J20	41	3365 - 15

NUMERICAL INDEX - CONTINUED

PART NO.	GRID	KEY	PAGE
J010616	1H10	5	1674 - 11
J010814	1H6	5	1674 - 7
J010825	3H24	18	3363 - 43
J011020	1H6	51	1674 - 7
J011020	1H10	20	1674 - 11
J011020	3H24	29	3363 - 43
J011025	3H8	27	3363 - 27
J011030	1C8	10	0260 - 9
J011030	1C10	32	0260 - 11
J011230	1B23	31	0260 - 3
J011265	3J4	2	3363 - 81
J020816	1H6	47	1674 - 7
J021025	3C21	13	3315 - 9
J021025	3C21	20	3315 - 9
J021025	3H6	7	3363 - 25
J021025	3H24	32	3363 - 43
J021030	3C19	8	3315 - 7
J031025	2D10	10	1830 - 13
J031030	3G16	9	3363 - 7
J031045	2D10	15	1830 - 13
J050820	2D12	1	1830 - 15
J050820	2E2	1	1830 - 29
J051050	3C9	21	3315 - 3
J219167	2C22	14	1821 - 9
J222014	3F2	8	3362 - 5
J222020	3K14	1	4360 - 5
J252210	1H22	10	1674 - 27
J253110	1H22	9	1674 - 27
J260820	3C13	13	3315 - 5
J271030	1H22	11	1674 - 27
J400408	3C15	2	3315 - 5B
J460310	1H6	55	1674 - 7
J460510	1H6	41	1674 - 7
J460510	2E23	2	2001 - 3
J460616	1H6	21	1674 - 7
J460620	1H6	12	1674 - 7
J460620	1H6	30	1674 - 7
J460620	1H6	45	1674 - 7
J680514	2C2	13	1810 - 23
J680630	2C2	12	1810 - 23
J75481	1I9	4	1740 - 9
J75581	3I10	72	3363 - 53
J780612	3C11	41	3315 - 3B
J780825	3G22	3	3363 - 13
J780825	3G24	3	3363 - 15
J780825	3G24	14	3363 - 15
J780825	3H2	4	3363 - 17
J780825	3H4	4	3363 - 19
J780845	3C15	18	3315 - 5B
J781030	3C11	10	3315 - 3B
J781030	3G16	3	3363 - 7
J781030	3G24	8	3363 - 15
J781030	3H8	14	3363 - 27
J781030	3J4	7	3363 - 81
J781030	3J6	3	3363 - 83
J781035	3C9	13	3315 - 3
J781040	3G14	17	3363 - 5
J781040	3H24	37	3363 - 43
J781230	3G12	0	3363 - 3
J781450	3E12	6	3361 - 3
J900820	3C13	13	3315 - 5
J901002	3H8	20	3363 - 27
J901016	1H6	33	1674 - 7
J901020	1H10	13	1674 - 11
J901020	3C21	23	3315 - 9
J901020	3K12	10	4360 - 3
J901025	1H10	1	1674 - 11
J901025	2E8	0C	1910 - 5
J901025	2E8	1C	1910 - 5
J901218	3J22	38	3365 - 17
J901255	3C21	4	3315 - 9
J901425	1H12	3	1674 - 13
J901425	3D14	16	3344 - 3
J901435	3H24	41	3363 - 43
J921240	2B12	2	1810 - 9
J921240	2E14	33	1910 - 11
J921450	3F2	6	3362 - 5
J921890	1I3	15	1740 - 3
J922060	3K14	0	4360 - 5
J931640	1B23	6	0260 - 3
J931660	1B23	8	0260 - 3
J931695	1I11	2	1740 - 11
J932723	1I7	1	1740 - 7
J950010	1H10	2	1674 - 11
J950010	3E18	34	3361 - 9
J950010	3E20	34	3361 - 11
J950020	3D6	39	3340 - 3
J950020	3D8	39	3340 - 5
J950020	3D14	33	3344 - 3
J951012	3C21	7	3315 - 9
J952010	2C20	6	1821 - 7
J952014	1H12	5I	1674 - 13
J952014	1H22	0I	1674 - 27
L101283	1F11	13	0505 - 5
L159272	3G14	17	3363 - 5
L159272	3H24	37	3363 - 43
M142541	1F11	14	0505 - 5
M340613	3E16	11	3361 - 7
M340613	3E16	72	3361 - 7
M340616	3E16	70	3361 - 7
M340820	3E18	37	3361 - 9
M340820	3E20	37	3361 - 11
M341025	3K12	37	4360 - 3
M341030	3E18	52	3361 - 9
M341056	3E18	43	3361 - 9
M341056	3E20	43	3361 - 11
M341080	3E18	51	3361 - 9
M341240	3E16	58	3361 - 7
M341432	1C2	21	0260 - 7
M341440	3K12	21	4360 - 3
M341465	3J22	12	3365 - 17
M351018	1B11	12	0130 - 9
M430610	3I10	71	3363 - 53
M430613	1H12	7	1674 - 13
M430660	1H6	26	1674 - 7
M492564	3K12	39	4360 - 3
M500605	3C21	9	3315 - 9
M500807	3E18	17	3361 - 9
M500807	3E20	17	3361 - 11
M63200	2E8	9	1910 - 5
M63200	2E14	36	1910 - 11
M800650	1B25	22	0260 - 5
M800650	1C4	20A	0260 - 7B
M800650	1C4	26A	0260 - 7B
M800650	1G13	..	1369 - 3
M800650	3E14	6A	3361 - 5
M800650	3E16	63A	3361 - 7
M800650	3E18	61A	3361 - 9
M800650	3E18	62A	3361 - 9
M800650	3E20	58A	3361 - 11
M800650	3F4	16B	3362 - 7
M800650	3F4	65	3362 - 7
M800650	3F4	71	3362 - 7
M800650	3F6	20B	3362 - 9
M800650	3F8	20B	3362 - 11
M800650	3F14	52	3362 - 17
M800650	3F15	20A	3362 - 21
M800650	3F15	26A	3362 - 21
M800650	3G6	40A	3362 - 51
M800650	3H8	4	3363 - 27
M800650	3H8	5	3363 - 27
M800650	3H8	61A	3363 - 27
M800650	3H10	18	3363 - 29
M800650	3H12	1	3363 - 31
M800650	3H12	9	3363 - 31
M800650	3H12	12	3363 - 31
M800650	3H12	15	3363 - 31
M800650	3H12	23	3363 - 31
M800650	3H12	40	3363 - 31
M800650	3H12	41	3363 - 31
M800650	3H14	1	3363 - 33
M800650	3H14	19	3363 - 33
M800650	3H14	21	3363 - 33
M800650	3H14	28	3363 - 33
M800650	3H16	1	3363 - 35
M800650	3H18	10	3363 - 37
M800650	3H20	24	3363 - 39
M800650	3H22	21	3363 - 41
M800650	3I4	9	3363 - 47
M800650	3I6	1	3363 - 49
M800650	3I6	26	3363 - 49
M800650	3I6	40	3363 - 49
M800650	3I8	7	3363 - 51
M800650	3I24	12	3363 - 71
M800650	3I24	14	3363 - 71
M800650	3J12	22	3364 - 3
M800650	3J12	36	3364 - 3
M800650	3J12	37	3364 - 3
M800650	3J12	41	3364 - 3
M800650	3K16	13	4360 - 7
M800650	3K18	31A	4367 - 3
M800893	1G13	..	1369 - 3
M87733	1E3	2	0416 - 1
M87733	1E4	7	0416 - 2
N162946	2D18	10	1830 - 21
N207956	1F11	15	0505 - 5
PM38655	1D7	24	0404 - 3
P60420	3D14	2G	3344 - 3
P60456	1B25	2	0260 - 5
P60463	1C18	0	0260 - 17
P60616	2E14	17	1910 - 11
P60649	1F25	3	0530 - 3
P60752	2E14	37	1910 - 11
P60784	3D14	5	3344 - 3
P60915	2C22	8	1821 - 9
P60923	1G21	8	1671 - 3
P61112	1F25	8	0530 - 3
P61231	1F17	31	0510 - 5
P61235	1F17	32	0510 - 5
P61236	1F17	33	0510 - 5
P61237	1F17	34	0510 - 5
P61238	1F17	35	0510 - 5
P61239	1F17	36	0510 - 5
P61249	1F17	37	0510 - 5
P61260	1G2	2	0540 - 3
P61261	1G2	3	0540 - 3
P61262	1G2	4	0540 - 3
P61263	1G2	5	0540 - 3
P61265	1F17	38	0510 - 5
P61266	1F17	11	0510 - 5
P61267	1F17	12	0510 - 5

NUMERICAL INDEX - CONTINUED

PART NO.	GRID	KEY	PAGE
P61273	1F17	39	0510 - 5
P61290	1F21	15	0520 - 3
P61291	1F21	16	0520 - 3
P61292	1F21	17	0520 - 3
P61315	2E14	10	1910 - 11
P61315	2E18	5	1910 - 15
P61323	1F17	40	0510 - 5
P61332	1F17	41	0510 - 5
P61333	1F17	42	0510 - 5
P61334	1F17	43	0510 - 5
P61335	1F17	44	0510 - 5
P61337	1F17	46	0510 - 5
P61338	1F17	47	0510 - 5
P61339	1F17	48	0510 - 5
P61340	1F17	49	0510 - 5
P61341	1F17	50	0510 - 5
P61635	3G24	5	3363 - 15
P61727	3D14	11	3344 - 3
P61778	3G24	0	3363 - 15
P61779	3G24	10	3363 - 15
P61779	3G24	11	3363 - 15
P61782	3H2	5	3363 - 17
P61783	3H2	1	3363 - 17
P61796	3B15	13	3301 - 3
P61796	3K9	13	3401 - 3
P61821	1I3	26	1740 - 3
P61821	3B15	15	3301 - 3
P61821	3K9	15	3401 - 3
P61822	1I3	30	1740 - 3
P61822	3B15	16	3301 - 3
P61822	3K9	16	3401 - 3
P61827	3F2	7	3362 - 5
P61954	3G22	3	3363 - 13
P61954	3G24	3	3363 - 15
P61954	3G24	14	3363 - 15
P61954	3H2	4	3363 - 17
P61954	3H4	4	3363 - 19
P63186	3D6	3D	3340 - 3
P63186	3D8	3D	3340 - 5
P63201	1F19	13	0510 - 7
P63302	3D14	37	3344 - 3
P63319	3D14	36	3344 - 3
P63321	3I14	16	3363 - 57
P63448	1G11	20	1322 - 3
P63687	2D16	0	1830 - 19
P63688	2D16	1	1830 - 19
P64258	3E12	4	3361 - 3
P64892	3B15	1	3301 - 3
P64898	3B15	9	3301 - 3
P65608	2E16	7	1910 - 13
P65620	1I7	0A	1740 - 7
P66463	2E18	4	1910 - 15
P66990	3D6	34	3340 - 3
P66990	3D8	34	3340 - 5
P67382	3D10	2	3340 - 7
P67675	2E16	1	1910 - 13
P67728	3D12	1	3340 - 9
P67743	2E16	5	1910 - 13
P67744	2E16	3	1910 - 13
P67745	2E16	2	1910 - 13
P67751	2E10	27	1910 - 7
P67780	2E12	42	1910 - 9
P67782	1I7	0C	1740 - 7
P67782	2E12	9	1910 - 9
P67786	2E6	21	1910 - 3
P67787	3G12	6	3363 - 3
P67788	3G12	3	3363 - 3
P67816	2E8	0I	1910 - 5
P67816	2E8	1H	1910 - 5
P67817	2E8	1D	1910 - 5
P67818	2E8	0D	1910 - 5
P67819	2E8	0E	1910 - 5
P67913	3H8	21A	3363 - 27
P67919	3H8	24	3363 - 27
P67963	3I12	1	3363 - 55
P67964	3I12	7	3363 - 55
P67966	3I12	9	3363 - 55
P67967	3I12	8	3363 - 55
P67984	3H8	5	3363 - 27
P67984	3H12	1	3363 - 31
P67984	3H12	15	3363 - 31
P67984	3H14	19	3363 - 33
P68030	3D14	12	3344 - 3
P68152	1B5	11	0130 - 5
P68157	1F19	3	0510 - 7
P68167	2E8	0F	1910 - 5
P68167	2E8	1E	1910 - 5
P68168	2E8	0H	1910 - 5
P68168	2E8	1G	1910 - 5
P68228	2E12	41	1910 - 9
P68261	3D6	3H	3340 - 3
P68261	3D8	3H	3340 - 5
P68263	3D6	3J	3340 - 3
P68263	3D8	3J	3340 - 5
P68265	3D6	3D	3340 - 3
P68265	3D8	3D	3340 - 5
P68308	3G12	3	3363 - 3
P68424	3D14	13	3344 - 3
P68886	3D6	36	3340 - 3
P68886	3D8	36	3340 - 5
P70104	2D6	12	1830 - 9
P70345	2E14	24	1910 - 11
P70715	2E10	26	1910 - 7
P70724	3I18	8	3363 - 65
P70773	2E18	3	1910 - 15
RE16142	1D23	26	0413 - 3
RE16223	1D14	3	0407 - 5
RE19797	1D23	3	0413 - 3
RE19799	1D23	9	0413 - 3
RE21790	1F9	7A	0505 - 3
RE31617	1D19	13	0409 - 3
RE40048	1F25	5	0530 - 3
RE42139	1F12	7	0505 - 6
RE44574	1F2	4	0433 - 3
RE44574	1F5	18	0452 - 3
RE46684	1E8	15	0418 - 3
RE46685	1D7	27	0404 - 3
RE46685	1D14	9	0407 - 5
RE46685	1E6	10	0417 - 2
RE46685	1E10	7	0419 - 3
RE46686	1E8	3	0418 - 3
RE46686	1E10	6	0419 - 3
RE46686	1E12	5	0420 - 3
RE46687	1D14	2	0407 - 5
RE48786	1D21	10	0413 - 1
RE500005	1D1	6	0402 - 4
RE500345	1E17	8	0422 - 3
RE500448	1E2	11	0415 - 3
RE500449	1E2	12	0415 - 3
RE500527	1F1	3	0433 - 2
RE500538	1E23	4	0429 - 5
RE500576	1G8	15	0560 - 7
RE500608	1D4	3	0403 - 2
RE500718	2F7	14	2160 - 3
RE500718	2F9	12	2160 - 5
RE500824	2F9	7	2160 - 5
RE500825	2F7	9	2160 - 3
RE500883	2F9	16	2160 - 5
RE500884	2F7	15	2160 - 3
RE501455	1F5	12	0452 - 3
RE501938	1D3	4	0402 - 7
RE503211	1E4	9	0416 - 2
RE503664	1E23	12	0429 - 5
RE504233	1E15	4	0421 - 2
RE504543	1D15	10	0407 - 6
RE504564	1D15	3	0407 - 6
RE504638	1C23	4	0401 - 3
RE504742	1E2	13	0415 - 3
RE504836	1D15	4	0407 - 6
RE504914	1D12	6	0407 - 3
RE505112	1D4	10	0403 - 2
RE505264	1E25	2	0429 - 7
RE505501	1D7	33	0404 - 3
RE505515	1D3	11	0402 - 7
RE505515	1F5	19	0452 - 3
RE505980	1E6	16	0417 - 2
RE506991	1D24	1	0414 - 2
RE507595	1C24	1	0402 - 2
RE507598	1D23	1	0413 - 3
RE507646	1D23	4	0413 - 3
RE507647	1D23	5	0413 - 3
RE507648	1D23	6	0413 - 3
RE507649	1D23	7	0413 - 3
RE507766	1D23	25	0413 - 3
RE507852	1D4	6	0403 - 2
RE507952	1D7	32	0404 - 3
RE507952	1D14	10	0407 - 5
RE507952	1E6	19	0417 - 2
RE507968	1D23	10	0413 - 3
RE507996	1E12	7	0420 - 3
RE507997	1E12	2	0420 - 3
RE508083	1F5	12	0452 - 3
RE508153	1D23	14	0413 - 3
RE508185	1D7	22	0404 - 3
RE508185	1D7	25	0404 - 3
RE508195	1D3	16	0402 - 7
RE508566	1D3	18	0402 - 7
RE508566	1E6	17	0417 - 2
RE508716	1D23	21	0413 - 3
RE508847	1E14	1	0420 - 5
RE509031	1E14	4	0420 - 5
RE509572	1E3	3	0416 - 1
RE509605	1E4	2	0416 - 2
RE509794	1E14	1	0420 - 5
RE515404	1E14	8	0420 - 5
RE516340	1D3	11	0402 - 7
RE516340	1F5	19	0452 - 3
RE51649	1E14	6	0420 - 5
RE51650	1E14	9	0420 - 5
RE516512	1E14	7	0420 - 5
RE516513	1E14	7	0420 - 5
RE516553	1E14	2	0420 - 5
RE517181	1E14	4	0420 - 5
RE518086	1D23	10	0413 - 3
RE518167	1D23	10	0413 - 3
RE518177	1H18	3	1674 - 23
RE519144	1D3	16	0402 - 7
RE519566	1F1	3	0433 - 2
RE520023	1D7	3	0404 - 3
RE520023	1D9	1	0404 - 5
RE520229	1E6	18	0417 - 2

NUMERICAL INDEX - CONTINUED

PART NO.	GRID	KEY	PAGE
RE520229	1F11	18	0505 - 5
RE520831	1E8	11	0418 - 3
RE52242	1D15	1	0407 - 6
RE522820	1E10	2	0419 - 3
RE52346	1D3	11	0402 - 7
RE52346	1F5	19	0452 - 3
RE52722	1E8	16	0418 - 3
RE54885	1E4	6	0416 - 2
RE55145	1D7	31	0404 - 3
RE56313	1C23	15	0401 - 3
RE56369	1C23	21	0401 - 3
RE57234	1D19	15	0409 - 3
RE57619	1D12	10	0407 - 3
RE59296	1E10	2	0419 - 3
RE59810	1D3	11	0402 - 7
RE59810	1F5	19	0452 - 3
RE59811	1C23	22	0401 - 3
RE60005	1D19	3	0409 - 3
RE60029	1E12	4	0420 - 3
RE60071	1D24	3	0414 - 2
RE60854	1E14	5	0420 - 5
RE61812	1D24	6	0414 - 2
RE65165	1C23	7	0401 - 3
RE65168	1C23	10	0401 - 3
RE65908	1D4	11	0403 - 2
RE65909	1D4	11	0403 - 2
RE65911	1C23	7	0401 - 3
RE65912	1C23	10	0401 - 3
RE65969	1D4	10	0403 - 2
RE65978	1E4	4	0416 - 2
RE66082	1F3	12	0452 - 1
RE66084	1F3	17	0452 - 1
RE66153	1E15	2	0421 - 2
RE66178	1D10	1	0407 - 1
RE67231	1E10	1	0419 - 3
RE67238	1D11	1	0407 - 2
RE67238	1D15	8	0407 - 6
RE67238	1E10	11	0419 - 3
RE67238	1E10	14	0419 - 3
RE67239	1D3	5	0402 - 7
RE68695	1C25	9	0402 - 3
RE68748	1D23	27	0413 - 3
RE68908	1E6	18	0417 - 2
RE68908	1F11	18	0505 - 5
RE70403	1D1	7	0402 - 4
RE70487	1E17	7	0422 - 3
RE70536	1E23	9	0429 - 5
RE70681	1E17	6	0422 - 3
RE70756	1E17	1	0422 - 3
RE70962	1E6	15	0417 - 2
R100369	1E6	14	0417 - 2
R100377	1E19	3	0423 - 3
R101225	1C23	14	0401 - 3
R104592	1D7	5	0404 - 3
R104592	1D19	5	0409 - 3
R107731	1C25	11	0402 - 3
R110664	2F7	12	2160 - 3
R110664	2F9	10	2160 - 5
R111137	1D7	10	0404 - 3
R111207	1G2	6	0540 - 3
R112316	1F5	20	0452 - 3
R113565	1E14	3	0420 - 5
R114082	1D4	2	0403 - 2
R114193	1C23	20	0401 - 3
R114194	1C23	23	0401 - 3
R114241	1D7	17	0404 - 3
R115081	1D7	3	0404 - 3
R115299	1D7	12	0404 - 3
R115299	1E2	1	0415 - 3
R115390	1D7	15	0404 - 3
R116115	1D15	5	0407 - 6
R116116	1E12	10	0420 - 3
R116296	1D11	2	0407 - 2
R116324	1D1	4	0402 - 4
R116366	1D21	5	0413 - 1
R116386	1D23	17	0413 - 3
R116466	1D7	2	0404 - 3
R116515	1D19	12	0409 - 3
R116515	1F3	8	0452 - 1
R116515	1F5	8	0452 - 3
R119874	1D7	6	0404 - 3
R120467	1D17	1	0408 - 3
R120631	1C23	3	0401 - 3
R120638	1D12	13	0407 - 3
R120641	1C23	12	0401 - 3
R121043	1D7	9	0404 - 3
R121376	1D12	7	0407 - 3
R121402	1D19	14	0409 - 3
R121402	1D19	15	0409 - 3
R121411	1D3	8	0402 - 7
R121416	1F5	3	0452 - 3
R121424	1D3	7	0402 - 7
R121622	1D14	6	0407 - 5
R121635	1E5	5	0417 - 1
R121897	1E20	4	0429 - 2
R123161	1C25	7	0402 - 3
R123174	1C23	11	0401 - 3
R123177	1D4	5	0403 - 2
R123226	1E6	9	0417 - 2
R123226	1E8	12	0418 - 3
R123226	1F3	4	0452 - 1
R123226	1F5	4	0452 - 3
R123271	1C25	5	0402 - 3
R123273	1E15	3	0421 - 2
R123273	1F5	33	0452 - 3
R123284	1E23	4	0429 - 5
R123324	1E8	14	0418 - 3
R123345	1F3	5	0452 - 1
R123345	1F5	5	0452 - 3
R123352	1F3	13	0452 - 1
R123352	1F5	13	0452 - 3
R123353	1D14	1	0407 - 5
R123395	1E6	1	0417 - 2
R123417	1E6	13	0417 - 2
R123417	1F5	21	0452 - 3
R123442	1E20	1	0429 - 2
R123442	1E25	5	0429 - 7
R123471	1E10	5	0419 - 3
R123486	1E20	3	0429 - 2
R123501	1E10	3	0419 - 3
R123501	1F5	23	0452 - 3
R123504	1F5	24	0452 - 3
R123513	1C25	2	0402 - 3
R123525	1F5	25	0452 - 3
R123542	1D1	8	0402 - 4
R123542	1F3	1	0452 - 1
R123542	1F5	1	0452 - 3
R123564	1C23	9	0401 - 3
R123565	1C25	10	0402 - 3
R123566	1E12	12	0420 - 3
R123570	1F3	6	0452 - 1
R123570	1F5	6	0452 - 3
R123574	1D1	2	0402 - 4
R123575	1D1	3	0402 - 4
R123575	1F3	7	0452 - 1
R123575	1F5	7	0452 - 3
R123584	1D3	14	0402 - 7
R123593	1D23	15	0413 - 3
R123593	1D23	27	0413 - 3
R123616	1D7	28	0404 - 3
R123616	1F11	17	0505 - 5
R126086	1E14	11	0420 - 5
R128662	1E5	1	0417 - 1
R128662	1E23	5	0429 - 5
R130574	1C23	8	0401 - 3
R130575	1C23	9	0401 - 3
R131182	1D7	21	0404 - 3
R131283	1C23	16	0401 - 3
R131283	1C23	19	0401 - 3
R131768	1F2	3	0433 - 3
R132166	1E19	5	0423 - 3
R132168	1E23	11	0429 - 5
R132186	1D7	20	0404 - 3
R132509	1D20	1	0410 - 2
R132518	1D7	7	0404 - 3
R132874	1D23	12	0413 - 3
R132913	1E19	7	0423 - 3
R133295	1E20	2	0429 - 2
R133303	1E2	5	0415 - 3
R133405	1E15	5	0421 - 2
R133893	1F3	10B	0452 - 1
R133893	1F5	10B	0452 - 3
R134465	2F7	10	2160 - 3
R134465	2F9	8	2160 - 5
R134465	3I18	34	3363 - 65
R134518	1D3	15	0402 - 7
R134526	1D5	2	0404 - 1
R134552	1D10	2	0407 - 1
R135120	2F7	9	2160 - 3
R135121	2F9	7	2160 - 5
R135509	1E17	4	0422 - 3
R135510	1E17	5	0422 - 3
R135757	1D5	5	0404 - 1
R135757	2F9	14	2160 - 5
R135896	1F3	3	0452 - 1
R135918	1F1	1	0433 - 2
R135918	1F2	1	0433 - 3
R136475	1D5	3	0404 - 1
R136495	1D11	3	0407 - 2
R136515	1D3	1	0402 - 7
R136516	1F5	22	0452 - 3
R206883	1F12	5	0505 - 6
R26125	1D19	4	0409 - 3
R26409	2D18	21	1830 - 21
R26448	3C25	3	3315 - 11
R26448	3D4	12	3315 - 17
R26448	3D24	5	3360 - 9
R26448	3E2	31	3360 - 11
R26448	3E4	5	3360 - 13
R26493	1D7	11	0404 - 3
R26650	1D7	13	0404 - 3
R26906	1D19	6	0409 - 3
R27212	3C25	4	3315 - 11
R27212	3D4	18	3315 - 17
R27212	3D24	9	3360 - 9
R27212	3E2	5	3360 - 11
R27212	3E4	8	3360 - 13
R27212	3J14	10	3364 - 5
R27267	3D20	28	3360 - 7
R28782	3E6	4	3360 - 13B
R28811	1F1	2	0433 - 2

NUMERICAL INDEX - CONTINUED

PART NO.	GRID	KEY	PAGE
R29424	3D20	18	3360 - 7
R29424	3G24	7	3363 - 15
R29424	3J6	2	3363 - 83
R29936	3D20	29	3360 - 7
R29936	3J10	25	3363 - 87
R29936	3J12	44	3364 - 3
R31147	3C25	21	3315 - 11
R31147	3D24	16	3360 - 9
R31147	3E2	35	3360 - 11
R36636	3J12	43	3364 - 3
R41778	2C18	4	1821 - 5
R43409	1D19	9	0409 - 3
R43750	1F17	13	0510 - 5
R44302	1F9	18	0505 - 3
R44302	1F12	8	0505 - 6
R44302	1H14	4	1674 - 19
R44302	2C4	5	1810 - 25
R44302	3D16	4	3360 - 3
R44302	3D18	8	3360 - 5
R44302	3E2	32	3360 - 11
R44302	3E4	18	3360 - 13
R44302	3J14	23	3364 - 5
R47154	1D14	5	0407 - 5
R47160	1F9	8A	0505 - 3
R47160	1F9	9	0505 - 3
R47693	1F12	5	0505 - 6
R48000	1D21	8	0413 - 1
R48685	1C23	1	0401 - 3
R48685	1D7	1	0404 - 3
R48808	1E19	12	0423 - 3
R48808	1G22	4	1672 - 2
R49518	3I18	29	3363 - 65
R500266	1E2	6	0415 - 3
R500270	1E15	1	0421 - 2
R500271	1E15	6	0421 - 2
R500293	1F1	3	0433 - 2
R500320	1E25	1	0429 - 7
R500321	1E23	14	0429 - 5
R500335	1D4	3	0403 - 2
R500374	1D15	9	0407 - 6
R500374	1F5	32	0452 - 3
R500390	1D21	8	0413 - 1
R500471	1E8	2	0418 - 3
R500472	1E8	7	0418 - 3
R500531	1E19	10	0423 - 3
R500650	1E2	2	0415 - 3
R500668	1E2	9	0415 - 3
R500704	1E8	13	0418 - 3
R501124	1D4	1	0403 - 2
R501227	1E8	4	0418 - 3
R501228	1E8	1	0418 - 3
R501373	1F3	9	0452 - 1
R501373	1F5	9	0452 - 3
R501428	1E10	8	0419 - 3
R501428	1F5	31	0452 - 3
R501486	1G22	2	1672 - 2
R501489	1C23	24	0401 - 3
R502014	1E23	1	0429 - 5
R502014	1E23	12	0429 - 5
R502076	1D23	11	0413 - 3
R502079	1E25	3	0429 - 7
R502465	1D10	7	0407 - 1
R502513	1D15	4	0407 - 6
R502513	1D15	11	0407 - 6
R502725	1D10	8	0407 - 1
R502811	1E10	10	0419 - 3
R502814	1F3	3	0452 - 1
R502867	1D12	6	0407 - 3
R502902	1D1	5	0402 - 4
R503444	1F2	2	0433 - 3
R503509	1E6	16	0417 - 2
R503520	1D23	29	0413 - 3
R503891	1E4	1	0416 - 2
R504534	1C24	1	0402 - 2
R504724	1D3	2	0402 - 7
R504734	1E10	9	0419 - 3
R504762	1E21	1	0429 - 3
R505472	1D23	18	0413 - 3
R505609	1C23	2	0401 - 3
R51936	1D23	20	0413 - 3
R51936	2F7	13	2160 - 3
R51936	2F9	11	2160 - 5
R53108	1F5	26	0452 - 3
R54114	1D4	4	0403 - 2
R54123	1F12	4	0505 - 6
R54510	1F12	2	0505 - 6
R54511	1F12	3	0505 - 6
R54565	1C25	1	0402 - 3
R54638	1F3	9	0452 - 1
R55233	1D7	4	0404 - 3
R56902	1G11	22	1322 - 3
R61105	1F5	29	0452 - 3
R61467	1F2	7	0433 - 3
R61871	1D12	9	0407 - 3
R61871	1F3	16	0452 - 1
R61871	1F5	16	0452 - 3
R63548	1E3	1	0416 - 1
R63548	1E4	8	0416 - 2
R64525	1E19	4	0423 - 3
R69667	3G22	1	3363 - 13
R69667	3G24	1	3363 - 15
R69667	3G24	12	3363 - 15
R69667	3H2	3	3363 - 17
R69667	3H4	3	3363 - 19
R71799	3D18	5	3360 - 5
R71963	1D21	2	0413 - 1
R72328	1D17	2	0408 - 3
R72328	1F5	27	0452 - 3
R72853	1E4	13	0416 - 2
R74012	1E12	1	0420 - 3
R74012	1E15	7	0421 - 2
R75892	1D7	16	0404 - 3
R75892	1F3	14	0452 - 1
R75892	1F5	14	0452 - 3
R78053	1D19	17	0409 - 3
R78064	1D19	18	0409 - 3
R79604	1D21	4	0413 - 1
R79605	1D21	3	0413 - 1
R81275	1D24	5	0414 - 2
R81275	1F3	10A	0452 - 1
R81275	1F5	10A	0452 - 3
R81911	1F13	3	0510 - 1
R85145	2F7	4	2160 - 3
R85363	1D19	1	0409 - 3
R85687	1D19	8	0409 - 3
R89944	1E5	6	0417 - 1
R89944	1F5	28	0452 - 3
R90658	1D20	2	0410 - 2
R90658	1F3	2	0452 - 1
R90658	1F5	2	0452 - 3
R90692	1D19	10	0409 - 3
R91360	1D23	13	0413 - 3
R91889	1D19	2	0409 - 3
R92097	1E3	5	0416 - 1
R92097	1F3	11	0452 - 1
R92097	1F5	11	0452 - 3
R92352	1D21	7	0413 - 1
R93910	1D19	8	0409 - 3
R96703	1E17	2	0422 - 3
R96935	2F7	5	2160 - 3
R97185	1D12	8	0407 - 3
R97185	1F3	15	0452 - 1
R97185	1F5	15	0452 - 3
R98062	1D19	11	0409 - 3
R98063	1D19	8	0409 - 3
R98335	1D19	8	0409 - 3
SE500826	1D21	10	0413 - 1
TF1U3302D	3C6	4K	3302 - 15B
TF220	3C6	4A	3302 - 15B
TF290	3C6	4A	3302 - 15B
THA852322	3H8	5	3363 - 27
THA852322	3H12	1	3363 - 31
THA852322	3H12	15	3363 - 31
THA852322	3H14	19	3363 - 33
THA885008	3J12	25	3364 - 3
TH0003929	2C10	25	1810 - 31
TH0430809	3H8	3C	3363 - 27
TH0789601	3J22	1	3365 - 17
TH0789602	3J22	1A	3365 - 17
TH0789603	3J22	2	3365 - 17
TH0789605	3J22	3	3365 - 17
TH0789607	3J22	28	3365 - 17
TH0789609	3J22	31	3365 - 17
TH0794201	3G10	3	3362 - 55
TH0794202	3G10	6	3362 - 55
TH0794203	3G10	8	3362 - 55
TH0794204	3G10	10	3362 - 55
TH0794205	3G10	11	3362 - 55
TH0794206	3G10	12	3362 - 55
TH0794207	3G10	14	3362 - 55
TH100044	1G13	..	1369 - 3
TH100055	1G13	..	1369 - 3
TH100074	3B15	11	3301 - 3
TH100074	3D6	23	3340 - 3
TH100074	3D6	33B	3340 - 3
TH100074	3D6	36A	3340 - 3
TH100074	3D8	23	3340 - 5
TH100074	3D8	31	3340 - 5
TH100074	3D8	33B	3340 - 5
TH100074	3D8	36A	3340 - 5
TH100074	3D10	4	3340 - 7
TH100074	3I10	72	3363 - 53
TH100074	3J16	39	3365 - 5
TH100074	3J18	39	3365 - 11
TH100074	3J22	26	3365 - 17
TH100074	3J24	25	3365 - 19
TH100074	3K2	25	3365 - 19B
TH100074	3K4	25	3365 - 21
TH100074	3K6	25	3365 - 23
TH100074	3K9	11	3401 - 3
TH100136	1G13	..	1369 - 3
TH100346	3B17	4	3302 - 3
TH100346	3B21	4	3302 - 7
TH100346	3B23	4	3302 - 9
TH100347	3B17	8	3302 - 3
TH100347	3B21	8	3302 - 7
TH100347	3B23	8	3302 - 9
TH100348	3B17	6	3302 - 3
TH100348	3B21	6	3302 - 7
TH100348	3B23	6	3302 - 9
TH100349	3B17	7	3302 - 3

NUMERICAL INDEX - CONTINUED

PART NO.	GRID	KEY	PAGE
TH100349	3B21	7	3302 - 7
TH100349	3B23	7	3302 - 9
TH100364	3I14	10	3363 - 57
TH100374	3D10	3	3340 - 7
TH100374	3J22	25	3365 - 17
TH100434	1B5	7	0130 - 5
TH100434	1B11	8	0130 - 9
TH100679	3J12	7	3364 - 3
TH101300	1G13	..	1369 - 3
TH101388	3I10	70	3363 - 53
TH101490	1G13	..	1369 - 3
TH101926	1G13	..	1369 - 3
TH101926	3J6	8	3363 - 83
TH101926	3J6	19	3363 - 83
TH101926	3J10	2	3363 - 87
TH101926	3J10	15	3363 - 87
TH101926	3J10	23	3363 - 87
TH101926	3J12	25	3364 - 3
TH102560	3E16	66A	3361 - 7
TH102706	1G13	..	1369 - 3
TH102992	1G13	..	1369 - 3
TH103446	1G13	..	1369 - 3
TH103574	1G13	..	1369 - 3
TH103574	3F10	12	3362 - 13
TH103574	3F12	22	3362 - 15
TH103574	3J16	29	3365 - 5
TH103574	3J18	29	3365 - 11
TH103619	3B17	5	3302 - 3
TH103619	3B21	5	3302 - 7
TH103619	3B23	5	3302 - 9
TH103791	1H8	1I	1674 - 9
TH104118	2E25	2	2002 - 3
TH104196	2C20	6	1821 - 7
TH104472	3B15	8	3301 - 3
TH104472	3J16	25	3365 - 5
TH104472	3J18	25	3365 - 11
TH104472	3J20	29	3365 - 15
TH104472	3J24	28	3365 - 19
TH104472	3K2	28	3365 - 19B
TH104472	3K4	28	3365 - 21
TH104472	3K6	28	3365 - 23
TH104634	1G13	..	1369 - 3
TH104908	3J20	5	3365 - 15
TH104930	1G13	..	1369 - 3
TH105592	3D6	54	3340 - 3
TH105592	3D8	54	3340 - 5
TH105592	3D14	34	3344 - 3
TH105593	3D6	55	3340 - 3
TH105593	3D8	55	3340 - 5
TH105593	3D14	35	3344 - 3
TH105683	3H8	3C	3363 - 27
TH105684	3G12	1	3363 - 3
TH105767	3J20	16	3365 - 15
TH105979	3J22	23	3365 - 17
TH106783	2B22	15	1810 - 19
TH106966	1F17	54	0510 - 5
TH106967	1F17	52	0510 - 5
TH108045	3D6	52	3340 - 3
TH108045	3D8	52	3340 - 5
TH108320	3C25	9	3315 - 11
TH108320	3D24	6	3360 - 9
TH108440	3C25	11	3315 - 11
TH108567	2B16	14	1810 - 13
TH108568	2B16	14A	1810 - 13
TH108600	3I14	15	3363 - 57
TH108616	2C12	3	1810 - 33
TH108616	2D20	12	1830 - 23
TH108638	2B22	19	1810 - 19
TH108646	2B20	59	1810 - 17
TH108649	3B17	11	3302 - 3
TH108649	3B21	11	3302 - 7
TH108649	3B23	11	3302 - 9
TH108661	2B22	23	1810 - 19
TH108661	2C4	1	1810 - 25
TH108668	2B22	32	1810 - 19
TH108930	3D10	5	3340 - 7
TH108939	3D6	32	3340 - 3
TH108939	3D8	32	3340 - 5
TH108944	3D6	57	3340 - 3
TH108944	3D8	57	3340 - 5
TH108983	2C14	22	1810 - 35
TH109324	3J16	19	3365 - 5
TH109324	3J18	19	3365 - 11
TH109353	3J20	11	3365 - 15
TH109445	2D16	9	1830 - 19
TH109514	3J12	35	3364 - 3
TH110224	1G11	35	1322 - 3
TH111908	2C14	24	1810 - 35
TH2044922	2D20	33	1830 - 23
TH2045470	3C13	5	3315 - 5
TH2045472	3C13	8	3315 - 5
TH3089486	2C20	2	1821 - 7
TH3091204	2D12	3	1830 - 15
TH3091842	2B8	24	1810 - 5
TH3100010	1H2	1	1674 - 3B
TH4347396	2D20	27	1830 - 23
TH4352947	2D12	18	1830 - 15
TH4405128	2C20	4	1821 - 7
TH4407253	3G10	0	3362 - 55
TH4425573	2D12	5	1830 - 15
TH4425573	2E2	5	1830 - 29
TH4426047	2D22	0	1830 - 25
TH4426048	2D20	46	1830 - 23
TH4426155	2D20	16	1830 - 23
TH4426156	2D12	8	1830 - 15
TH4426156	2E2	8	1830 - 29
TH4426157	2D20	24	1830 - 23
TH4426158	2D20	36	1830 - 23
TH4426162	2D20	20	1830 - 23
TH4426354	2B10	4	1810 - 7
TH4430870	2D20	48	1830 - 23
TH4430871	2D20	50	1830 - 23
TH4432965	2D12	11	1830 - 15
TH4432965	2E2	11	1830 - 29
TH4433793	2D12	0	1830 - 15
TH4433793	2E2	0	1830 - 29
TH4433794	2D12	7	1830 - 15
TH4433794	2E2	7	1830 - 29
TH4436441	2D20	32	1830 - 23
TH4436737	1H6	5	1674 - 7
TH4438279	3C13	14	3315 - 5
TH4441059	2D20	41	1830 - 23
TH4441061	2D20	42	1830 - 23
TH4441117	2B8	30	1810 - 5
TH4441139	2D20	39	1830 - 23
TH4444664	2B20	10	1810 - 17
TH4445220	2C10	22	1810 - 31
TH4445322	3C13	1	3315 - 5
TH4445917	2B10	0	1810 - 7
TH4445932	2B10	0A	1810 - 7
TH4448308	2B20	52	1810 - 17
TH4448309	2B20	53	1810 - 17
TH4448315	2B20	72	1810 - 17
TH4448318	2B24	18	1810 - 21
TH4448601	2C10	27	1810 - 31
TH4448925	2D22	16	1830 - 25
TH4449509	2E25	5	2002 - 3
TH4450008	2D12	9	1830 - 15
TH4450707	2D20	44	1830 - 23
TH4450708	2D20	46	1830 - 23
TH4451095	2B8	18	1810 - 5
TH4451788	3G4	38	3362 - 49
TH4453663	2B18	31	1810 - 15
TH4453665	2B18	93	1810 - 15
TH4453666	2B18	95	1810 - 15
TH4453667	2B18	22	1810 - 15
TH4453670	2B20	20	1810 - 17
TH4453671	2B20	22	1810 - 17
TH4453674	2B20	58	1810 - 17
TH4453675	2B20	57	1810 - 17
TH4453676	2B20	50	1810 - 17
TH4453681	2B24	28	1810 - 21
TH4453682	2B24	29	1810 - 21
TH4453683	2B24	30	1810 - 21
TH4453683	2B24	31	1810 - 21
TH4453686	2B16	33	1810 - 13
TH4453687	2B16	32	1810 - 13
TH4453689	2B22	1	1810 - 19
TH4453690	2B16	31	1810 - 13
TH4455975	2B20	4	1810 - 17
TH4455977	2B20	17	1810 - 17
TH4455978	2B20	19	1810 - 17
TH4455979	2B20	2	1810 - 17
TH4455981	2B20	12	1810 - 17
TH4455982	2B20	8	1810 - 17
TH4455983	2B20	9	1810 - 17
TH4456171	2B20	11	1810 - 17
TH4456172	2B20	26	1810 - 17
TH4456177	2B18	2	1810 - 15
TH4456178	2B18	3	1810 - 15
TH4456179	2B18	4	1810 - 15
TH4456181	2B18	5	1810 - 15
TH4456182	2B18	17	1810 - 15
TH4456183	2B18	8	1810 - 15
TH4456184	2B18	29	1810 - 15
TH4456185	2B18	11	1810 - 15
TH4456218	2B22	2	1810 - 19
TH4456219	2B22	3	1810 - 19
TH4456220	2B22	4	1810 - 19
TH4456221	2B22	5	1810 - 19
TH4456222	2B22	6	1810 - 19
TH4456223	2B22	8	1810 - 19
TH4456224	2B22	9	1810 - 19
TH4456225	2B22	10	1810 - 19
TH4456226	2B22	12	1810 - 19
TH4456227	2B22	14	1810 - 19
TH4456228	2B22	20	1810 - 19
TH4456229	2B22	21	1810 - 19
TH4456230	2B22	26	1810 - 19
TH4456231	2B22	27	1810 - 19
TH4456232	2B22	29	1810 - 19
TH4456233	2B22	30	1810 - 19
TH4456234	2B22	31	1810 - 19
TH4456235	2B22	33	1810 - 19
TH4456236	2B22	34	1810 - 19
TH4456237	2B22	35	1810 - 19
TH4456238	2B16	37	1810 - 13
TH4456238	2B22	36	1810 - 19
TH4456239	2B22	37	1810 - 19
TH4456240	2B22	38	1810 - 19
TH4456241	2B22	39	1810 - 19

NUMERICAL INDEX - CONTINUED

PART NO.	GRID	KEY	PAGE
TH4456242	2B22	40	1810 - 19
TH4456244	2C6	8	1810 - 27
TH4456245	2C6	1	1810 - 27
TH4456246	2C6	2	1810 - 27
TH4456247	2C6	3	1810 - 27
TH4456248	2C6	6	1810 - 27
TH4456427	2B16	1	1810 - 13
TH4456428	2B16	15	1810 - 13
TH4456428	2B16	26	1810 - 13
TH4456429	2B16	30	1810 - 13
TH4456433	2B16	34	1810 - 13
TH4456434	2B16	35	1810 - 13
TH4456435	2B16	41	1810 - 13
TH4456436	2B16	42	1810 - 13
TH4456450	2B16	43	1810 - 13
TH4456456	2B16	29	1810 - 13
TH4456458	2B16	40	1810 - 13
TH4456723	2D12	0B	1830 - 15
TH4456723	2E2	0B	1830 - 29
TH4456725	2D12	0A	1830 - 15
TH4456725	2E2	0A	1830 - 29
TH4459435	2B8	41	1810 - 5
TH4464275	2D22	9	1830 - 25
TH4464276	2D22	10	1830 - 25
TH4464277	2D22	11	1830 - 25
TH4464278	2D22	12	1830 - 25
TH4464279	2D22	13	1830 - 25
TH4464280	2D22	15	1830 - 25
TH4464281	2D22	17	1830 - 25
TH4464282	2D22	18	1830 - 25
TH4464283	2D22	19	1830 - 25
TH4464284	2D22	20	1830 - 25
TH4464285	2D22	21	1830 - 25
TH4464286	2D22	22	1830 - 25
TH4464287	2D22	23	1830 - 25
TH4464288	2D22	24	1830 - 25
TH4464341	2D22	1	1830 - 25
TH4464342	2D22	2	1830 - 25
TH4464343	2D22	3	1830 - 25
TH4464344	2D22	4	1830 - 25
TH4464347	2D22	5	1830 - 25
TH4464349	2D22	6	1830 - 25
TH4464350	2D22	7	1830 - 25
TH4464353	2D22	8A	1830 - 25
TH4464450	2D22	25	1830 - 25
TH4464451	2D22	26	1830 - 25
TH4464452	2D22	27	1830 - 25
TH4464453	2D22	28	1830 - 25
TH4464454	2D22	29	1830 - 25
TH4464455	2D22	30	1830 - 25
TH4464456	2D24	31	1830 - 27
TH4464457	2D24	32	1830 - 27
TH4464458	2D24	33	1830 - 27
TH4464459	2D24	34	1830 - 27
TH4464460	2D24	35	1830 - 27
TH4464461	2D24	36	1830 - 27
TH4464462	2D24	37	1830 - 27
TH4464463	2D24	38	1830 - 27
TH4464465	2D24	40	1830 - 27
TH4464466	2D24	41	1830 - 27
TH4464473	2D24	42	1830 - 27
TH4464474	2D24	44	1830 - 27
TH4464475	2D24	45	1830 - 27
TH4464476	2D24	47	1830 - 27
TH4464477	2D24	49	1830 - 27
TH4464478	2D24	50	1830 - 27
TH4464479	2D24	52	1830 - 27
TH4464480	2D24	54	1830 - 27
TH4464483	2D24	56	1830 - 27
TH5007342	2C10	15	1810 - 31
TH6019252	2C10	14	1810 - 31
TH6019838	2C10	12	1810 - 31
TH6020171	2C20	0	1821 - 7
TH7039389	2C10	1	1810 - 31
TH8076619	2C10	9	1810 - 31
TH8081319	3C15	0	3315 - 5B
TH9195304	3C13	2	3315 - 5
TH9757192	2C10	29	1810 - 31
TK290	3C6	2	3302 - 15B
TPDE31329	3C2	7	3302 - 13
TP160	3C6	2	3302 - 15B
TP160L	3C6	2	3302 - 15B
TP160L	3C6	4A	3302 - 15B
TP160L	3C6	4B	3302 - 15B
TP160L	3C6	4C	3302 - 15B
TP160L	3C6	4D	3302 - 15B
TP160L	3C6	4E	3302 - 15B
TP160L	3C6	4F	3302 - 15B
TT1U3302	3C6	4N	3302 - 15B
TT220	3C6	4F	3302 - 15B
TT290	3C6	4F	3302 - 15B
TX1U3302WT	3C6	4M	3302 - 15B
TX220	3C6	4B	3302 - 15B
TX220AP	3C6	4E	3302 - 15B
TX220F	3C6	4D	3302 - 15B
TX220WT	3C6	4C	3302 - 15B
TX290	3C6	4B	3302 - 15B
TX290WT	3C6	4C	3302 - 15B
TY22330 (CUT	1F11	29	0505 - 5
TY22330 (CUT	1F11	30	0505 - 5
TY22462	1F11	20	0505 - 5
TY22462	1F15	5	0510 - 3
TY22470	3I18	30	3363 - 65
TY24322	1G22	6	1672 - 2
TY24398	1G8	1	0560 - 7
TY24398	1G8	4	0560 - 7
TY24399	1G8	2	0560 - 7
TY24399	1G8	3	0560 - 7
TY25803	1G21	2	1671 - 3
TY6304	1D7	24	0404 - 3
T1U3302	3C6	4L	3302 - 15B
T101942	1G11	19	1322 - 3
T105740	2C18	3	1821 - 5
T105943	2D18	12	1830 - 21
T107446	3E8	6	3360 - 15
T107446	3G18	2	3363 - 9
T108036	3J20	38	3365 - 15
T109X220	3C6	3	3302 - 15B
T110446	3J22	10	3365 - 17
T110446	3J24	10	3365 - 19
T110446	3K2	10	3365 - 19B
T110446	3K4	10	3365 - 21
T110446	3K6	10	3365 - 23
T110448	3J20	10	3365 - 15
T110590	1G13	..	1369 - 3
T110593	1G13	..	1369 - 3
T111819	1C2	7	0260 - 7
T111819	3K16	29	4360 - 7
T114617	3D2	8	3315 - 15
T114698	3D18	7	3360 - 5
T114699	3D18	6	3360 - 5
T116311	3J18	31	3365 - 11
T116334	3I10	72	3363 - 53
T116334	3J24	26	3365 - 19
T116334	3K2	26	3365 - 19B
T116334	3K4	26	3365 - 21
T116334	3K6	26	3365 - 23
T120343	1F11	3	0505 - 5
T122075	1E10	4	0419 - 3
T122075	1F5	30	0452 - 3
T126057	3E8	15	3360 - 15
T127X290	3C6	3	3302 - 15B
T13254	1E14	10	0420 - 5
T13624	3J20	23	3365 - 15
T138886	2B8	39	1810 - 5
T138910	3J14	14	3364 - 5
T139693	3D2	7	3315 - 15
T139694	3D2	6	3315 - 15
T139695	3D2	3	3315 - 15
T139696	3D2	4	3315 - 15
T14050	1E12	9	0420 - 3
T142651	2E14	19	1910 - 11
T144361	1H8	1E	1674 - 9
T144362	1H8	1F	1674 - 9
T146102	1E17	3	0422 - 3
T146102	1G11	21	1322 - 3
T146667	1G11	6	1322 - 3
T146668	1G11	4	1322 - 3
T146671	1G11	55	1322 - 3
T149434	3C25	14	3315 - 11
T149434	3D16	5	3360 - 3
T149434	3D18	17	3360 - 5
T149983	1G11	24	1322 - 3
T152608	3I14	12	3363 - 57
T152657	1G11	25	1322 - 3
T153187	3J14	19	3364 - 5
T153674	3D4	22	3315 - 17
T153676	3D4	22	3315 - 17
T155858	1F9	9	0505 - 3
T157779	2C18	2	1821 - 5
T158020	2B16	25A	1810 - 13
T158021	2B16	25B	1810 - 13
T158495	1F21	10	0520 - 3
T158584	1G22	1	1672 - 2
T159841	1G11	8	1322 - 3
T159841	1G11	54	1322 - 3
T159842	1G11	7	1322 - 3
T159842	1G11	54	1322 - 3
T159843	1G11	7	1322 - 3
T159843	3E4	7	3360 - 13
T159844	1G11	8	1322 - 3
T159844	3E4	9	3360 - 13
T159887	1G11	5	1322 - 3
T160123	1F17	56	0510 - 5
T161818	1F21	18	0520 - 3
T163113	1F21	8	0520 - 3
T163997	1G11	46	1322 - 3
T167256	2C4	2	1810 - 25
T174338	1G21	2	1671 - 3
T175293	1F9	7A	0505 - 3
T175293	1F9	7B	0505 - 3
T175293	1F9	8A	0505 - 3
T177580	1F11	21	0505 - 5
T179306	1F11	24	0505 - 5
T179306	1F11	27	0505 - 5
T180076	1G11	14	1322 - 3
T184020	1G11	15	1322 - 3
T184858	3E4	10	3360 - 13
T187535	1G11	2	1322 - 3
T187642	1G11	44	1322 - 3
T187710	1G11	37	1322 - 3

NUMERICAL INDEX - CONTINUED

PART NO.	GRID	KEY	PAGE
T188662	3E2	24	3360 - 11
T188696	1H18	7	1674 - 23
T188737	1G11	41	1322 - 3
T188737	2C14	25	1810 - 35
T188862	1G11	1	1322 - 3
T18891	1D7	26	0404 - 3
T190303	1G22	10	1672 - 2
T190310	1G11	16	1322 - 3
T190393	1G11	13	1322 - 3
T190514	1G11	3	1322 - 3
T190516	1G11	29	1322 - 3
T190933	1G11	23	1322 - 3
T191229	1B13	4	0130 - 13
T191230	1B13	6	0130 - 13
T19935	1F12	9	0505 - 6
T201519	1G11	7	1322 - 3
T201519	1G11	8	1322 - 3
T201519	1G11	54	1322 - 3
T201519	3E6	9	3360 - 13B
T20168	1D7	18	0404 - 3
T202379	3D24	21	3360 - 9
T202379	3E4	20	3360 - 13
T202382	1B7	14	0130 - 7
T202383	1B7	6	0130 - 7
T202384	1B7	1B	0130 - 7
T202386	1B7	4	0130 - 7
T202387	1B7	3	0130 - 7
T202388	1B7	1A	0130 - 7
T20314	1C25	4	0402 - 3
T20316	1C25	3	0402 - 3
T205175	3E6	8	3360 - 13B
T205218	2C14	24	1810 - 35
T206125	1F11	22	0505 - 5
T206126	1F11	26	0505 - 5
T206127	1F11	23	0505 - 5
T20758	1D5	4	0404 - 1
T20758	2F9	13	2160 - 5
T208019	1G11	23	1322 - 3
T209259	1B13	9	0130 - 13
T211450	3K9	0	3401 - 3
T22645	3E4	23	3360 - 13
T23474	1D7	19	0404 - 3
T24432	1G8	14	0560 - 7
T24472	1D21	9	0413 - 1
T25838	1G11	35	1322 - 3
T27860	2D18	5	1830 - 21
T28862	1D10	6	0407 - 1
T3G6304	3C6	3	3302 - 15B
T3G9609	3C6	5	3302 - 15B
T32854	3I24	11	3363 - 71
T34433	3D20	28	3360 - 7
T55564	2D18	1	1830 - 21
T58477	1D19	6	0409 - 3
T59014	1G13	..	1369 - 3
T59014	3D20	19	3360 - 7
T59014	3G18	3	3363 - 9
T59014	3G24	6	3363 - 15
T59014	3J6	4	3363 - 83
T60811	2D16	0	1830 - 19
T60811	2D16	1	1830 - 19
T61120	3E6	12	3360 - 13B
T63018	1F17	57	0510 - 5
T63817	3E4	21	3360 - 13
T70177	3J14	5	3364 - 5
T72888	3E8	10	3360 - 15
T72888	3E10	10	3360 - 17
T74492	1G13	..	1369 - 3
T75197	1H14	2	1674 - 19
T76938	3D20	22	3360 - 7
T76938	3D20	28	3360 - 7
T76938	3J10	5	3363 - 87
T77613	1E4	10	0416 - 2
T77814	2F7	8	2160 - 3
T77814	2F9	4	2160 - 5
T77814	2F9	6	2160 - 5
T77857	1B25	9	0260 - 5
T77857	3D6	29	3340 - 3
T77857	3D8	29	3340 - 5
T77857	3E10	28	3360 - 17
T77857	3G22	12	3363 - 13
T77857	3H4	5	3363 - 19
T77857	3H6	4	3363 - 25
T77857	3I12	15	3363 - 55
T77857	3I18	9	3363 - 65
T77858	3D20	2	3360 - 7
T77858	3D20	28	3360 - 7
T77858	3D22	7	3360 - 7B
T77858	3G12	10	3363 - 3
T77858	3G20	3	3363 - 11
T77858	3J6	7	3363 - 83
T77858	3J8	7	3363 - 85
T77858	3J10	9	3363 - 87
T78313	3G16	6	3363 - 7
T78593	1F9	10	0505 - 3
T78787	1H18	6	1674 - 23
T79477	1F15	4	0510 - 3
T79477	1F15	7	0510 - 3
T79632	1G11	18	1322 - 3
T80394	3D18	10	3360 - 5
T84064	1G11	11	1322 - 3
T9J2308	3C6	2	3302 - 15B
U10778	1G13	..	1369 - 3
U12547	3D20	13	3360 - 7
U12547	3D20	27	3360 - 7
U12547	3D22	4	3360 - 7B
U13639	1D7	23	0404 - 3
U13639	1F12	6	0505 - 6
U17409	1G13	..	1369 - 3
U42323	1G4	13	0560 - 3
U46489	1G13	..	1369 - 3
U46489	3H4	0	3363 - 19
U46489	3H4	1	3363 - 19
WZ2141223	2D16	3	1830 - 19
WZ2141223	2D20	9	1830 - 23
X1JS78-20-16	3D20	34	3360 - 7
X1JS78-20-16	3J10	30	3363 - 87
X1J978-20-16	3D20	34	3360 - 7
X1J978-20-16	3J10	30	3363 - 87
X12-16F4OMXS	3J10	24	3363 - 87
X16F4OMXS	3J10	24	3363 - 87
X6C4OMXS	3E8	4	3360 - 15
X6C4OMXS	3E10	13	3360 - 17
X6F4OMXS	3E8	3	3360 - 15
X6F4OMXS	3E10	6	3360 - 17
X6JTX-S	3E10	9	3360 - 17
Z29925	1F23	12	0520 - 5
0003076	3E16	34	3361 - 7
0004069	1H6	7	1674 - 7
0004099	1H10	0	1674 - 11
0004616	1H6	7	1674 - 7
0004909	1H10	0	1674 - 11
0111707	3J16	23	3365 - 5
0111707	3J18	23	3365 - 11
0179001	3C23	32	3315 - 9B
0208516	3J16	38	3365 - 5
0208516	3J18	38	3365 - 11
0224115	3J16	37	3365 - 5
0224115	3J18	37	3365 - 11
0229210	3F23	8	3362 - 43
0230906	3F21	11	3362 - 41
0230908	3F21	13	3362 - 41
0240807	3J22	14	3365 - 17
0240807	3J24	14	3365 - 19
0240807	3K2	14	3365 - 19B
0240807	3K4	14	3365 - 21
0240807	3K6	14	3365 - 23
0254905	3J22	11	3365 - 17
0254905	3J24	11	3365 - 19
0254905	3K2	11	3365 - 19B
0254905	3K4	11	3365 - 21
0254905	3K6	11	3365 - 23
0254908	3J22	17	3365 - 17
0254908	3J24	17	3365 - 19
0254908	3K2	17	3365 - 19B
0254908	3K4	17	3365 - 21
0254908	3K6	17	3365 - 23
0266736	3E22	15	3361 - 13
0271304	3J16	5	3365 - 5
0271304	3J18	5	3365 - 11
0271304	3J22	5	3365 - 17
0271304	3J24	5	3365 - 19
0271304	3K2	5	3365 - 19B
0271304	3K4	5	3365 - 21
0271304	3K6	5	3365 - 23
0271309	3J16	7	3365 - 5
0271309	3J18	7	3365 - 11
0271310	3J16	8	3365 - 5
0271310	3J18	8	3365 - 11
0287601	3F21	14	3362 - 41
0301301	3F21	10	3362 - 41
0308703	3H8	32	3363 - 27
0308704	3H8	31	3363 - 27
0308705	3H8	33	3363 - 27
0309011	3J16	22	3365 - 5
0309011	3J18	22	3365 - 11
0309019	3J16	30	3365 - 5
0309019	3J18	30	3365 - 11
0309401	3F14	45	3362 - 17
0309402	3F10	16	3362 - 13
0309402	3F12	24	3362 - 15
0309402	3F14	43	3362 - 17
0309403	3F14	48	3362 - 17
0309413	3F4	91	3362 - 7
0309413	3F6	26	3362 - 9
0309413	3F8	26	3362 - 11
0309413	3F12	54	3362 - 15
0309416	3F8	29	3362 - 11
0309416	3F12	56	3362 - 15
0309461	3F8	3	3362 - 11
0309461	3F10	26	3362 - 13
0309466	3F10	78A	3362 - 13
0309466	3F12	4	3362 - 15
0310304	3J16	4	3365 - 5
0310304	3J18	4	3365 - 11
0310304	3J22	4	3365 - 17
0310310	3J16	31	3365 - 5
0310310	3J24	24	3365 - 19
0310310	3K2	24	3365 - 19B
0310310	3K4	24	3365 - 21
0310310	3K6	24	3365 - 23
0310312	3J16	36	3365 - 5

NUMERICAL INDEX - CONTINUED

PART NO.	GRID	KEY	PAGE
0310312	3J18	36	3365 - 11
0310506	3J16	11	3365 - 5
0310506	3J18	11	3365 - 11
0310508	3J16	16	3365 - 5
0310508	3J18	16	3365 - 11
0310510	3J16	19	3365 - 5
0310510	3J18	19	3365 - 11
0310514	3J16	20	3365 - 5
0310514	3J18	20	3365 - 11
0310616	3J22	35	3365 - 17
0310707	3J16	33	3365 - 5
0310707	3J18	33	3365 - 11
0325913	3J16	35	3365 - 5
0325913	3J18	35	3365 - 11
0326007	3J22	18	3365 - 17
0326007	3J24	18	3365 - 19
0326007	3K2	18	3365 - 19B
0326007	3K4	18	3365 - 21
0326007	3K6	18	3365 - 23
0326012	3J22	32	3365 - 17
0334605	3F23	7	3362 - 43
0343512	3F17	35	3362 - 25
0361001	3F23	1	3362 - 43
0361002	3F23	2	3362 - 43
0370410	3F17	26	3362 - 25
0387804	3F19	50	3362 - 35
0393902	3F8	9	3362 - 11
0393902	3F12	30	3362 - 15
0408409	3F19	32	3362 - 35
0408410	3F19	33	3362 - 35
0408411	3F19	34	3362 - 35
0408805	3J16	12	3365 - 5
0408805	3J18	12	3365 - 11
0408806	3J16	13	3365 - 5
0408806	3J18	13	3365 - 11
0408808	3J16	15	3365 - 5
0408808	3J18	15	3365 - 11
0408809	3J16	17	3365 - 5
0408809	3J18	17	3365 - 11
0408811	3J16	27	3365 - 5
0408814	3J16	32	3365 - 5
0408814	3J18	32	3365 - 11
0408902	3J18	27	3365 - 11
0409005	3J20	13	3365 - 15
0409010	3J20	20	3365 - 15
0409012	3J20	24	3365 - 15
0409014	3J20	26	3365 - 15
0409015	3J20	27	3365 - 15
0409016	3J20	30	3365 - 15
0409113	3J22	27	3365 - 17
0411801	3F14	41	3362 - 17
0411804	3F4	64	3362 - 7
0411804	3F6	2	3362 - 9
0411804	3F8	1	3362 - 11
0411804	3F10	77	3362 - 13
0411804	3F12	10	3362 - 15
0411901	3F6	12	3362 - 9
0411901	3F14	50	3362 - 17
0411912	3F4	63	3362 - 7
0411912	3F6	1	3362 - 9
0412003	3F8	3C	3362 - 11
0412003	3F10	23	3362 - 13
0412015	3F10	89	3362 - 13
0412015	3F12	48	3362 - 15
0412016	3F10	90	3362 - 13
0412016	3F12	49	3362 - 15
0412202	3F12	1	3362 - 15
0412203	3F12	6	3362 - 15
0412204	3F12	2	3362 - 15
0412209	3F8	3A	3362 - 11
0412209	3F10	25	3362 - 13
0412212	3F10	3	3362 - 13
0412212	3F12	13	3362 - 15
0412502	3F14	53	3362 - 17
0428906	3C23	6	3315 - 9B
0428910	3C23	11	3315 - 9B
0430809	3H8	3C	3363 - 27
0628908	3C23	3	3315 - 9B
0630701	3C23	37	3315 - 9B
0630702	3C23	2	3315 - 9B
0630703	3C23	1	3315 - 9B
0630705	3C23	36	3315 - 9B
0630706	3C23	7	3315 - 9B
0630707	3C23	9	3315 - 9B
0630709	3C23	38	3315 - 9B
0630710	3C23	39	3315 - 9B
0630711	3C23	33	3315 - 9B
0630712	3C23	34	3315 - 9B
0630713	3C23	28	3315 - 9B
0630714	3C23	31	3315 - 9B
0664404	3F4	13	3362 - 7
0664404	3F4	14	3362 - 7
0664404	3F8	18	3362 - 11
0666806	3J16	9	3365 - 5
0666806	3J18	9	3365 - 11
0666808	3J16	18	3365 - 5
0666808	3J18	18	3365 - 11
0666903	3J18	28	3365 - 11
0667010	3J20	25	3365 - 15
0669501	3F8	6	3362 - 11
0669502	3F4	12	3362 - 7
0669502	3F4	15	3362 - 7
0669502	3F6	16	3362 - 9
0669503	3F4	12A	3362 - 7
0669503	3F4	15A	3362 - 7
0669503	3F6	16A	3362 - 9
0669504	3F4	13A	3362 - 7
0669504	3F4	14A	3362 - 7
0669504	3F8	18A	3362 - 11
0669601	3F4	77	3362 - 7
0669603	3F4	85	3362 - 7
0669603	3F6	54B	3362 - 9
0669604	3F4	84	3362 - 7
0669604	3F6	54C	3362 - 9
0669605	3F4	82	3362 - 7
0669605	3F6	54D	3362 - 9
0669606	3F4	81	3362 - 7
0669606	3F6	51	3362 - 9
0669607	3F4	80	3362 - 7
0669607	3F6	52	3362 - 9
0669608	3F4	79	3362 - 7
0669608	3F6	53	3362 - 9
0669609	3F6	44	3362 - 9
0669610	3F6	43	3362 - 9
0669611	3F6	45	3362 - 9
0669613	3F4	70	3362 - 7
0669613	3F6	56	3362 - 9
0669614	3F4	16	3362 - 7
0669614	3F4	65	3362 - 7
0669614	3F6	20	3362 - 9
0669614	3F8	20	3362 - 11
0669615	3F4	16A	3362 - 7
0669615	3F4	72	3362 - 7
0669615	3F6	20A	3362 - 9
0669615	3F8	20A	3362 - 11
0669616	3F4	69	3362 - 7
0669616	3F6	57	3362 - 9
0669617	3F4	68	3362 - 7
0669617	3F6	58	3362 - 9
0669618	3F6	59	3362 - 9
0669624	3F4	89	3362 - 7
0669624	3F6	63	3362 - 9
0669625	3F4	90	3362 - 7
0669625	3F6	64	3362 - 9
0669701	3F6	3	3362 - 9
0669801	3F4	92	3362 - 7
0669801	3F6	42	3362 - 9
0669802	3F6	54	3362 - 9
0669803	3F6	54A	3362 - 9
0669902	3F8	27	3362 - 11
0669902	3F12	57	3362 - 15
0669906	3F8	4	3362 - 11
0669906	3F10	79	3362 - 13
0669906	3F12	35	3362 - 15
0670001	3F10	92	3362 - 13
0670002	3F10	84	3362 - 13
0670002	3F12	36	3362 - 15
0670003	3F10	85	3362 - 13
0670003	3F12	37	3362 - 15
0670004	3F10	86	3362 - 13
0670004	3F12	39	3362 - 15
0670104	3F10	11	3362 - 13
0670104	3F12	21	3362 - 15
0670105	3F10	8	3362 - 13
0670105	3F12	18	3362 - 15
0670107	3F10	4	3362 - 13
0670107	3F12	14	3362 - 15
0670201	3F12	51	3362 - 15
0670206	3F12	34	3362 - 15
0670207	3F12	5	3362 - 15
0670208	3F12	7	3362 - 15
0670303	3F4	4	3362 - 7
0670303	3F12	31	3362 - 15
0670305	3F8	70	3362 - 11
0670307	3F12	32	3362 - 15
0681301	3C23	5	3315 - 9B
0681302	3C23	8	3315 - 9B
0683402	3J24	4	3365 - 19
0683402	3K2	4	3365 - 19B
0683402	3K4	4	3365 - 21
0683402	3K6	4	3365 - 23
0686702	3J24	1B	3365 - 19
0686702	3J24	2B	3365 - 19
0686702	3K4	1B	3365 - 21
0686702	3K4	2B	3365 - 21
0686704	3J24	3	3365 - 19
0686704	3K2	3	3365 - 19B
0686704	3K4	3	3365 - 21
0686704	3K6	3	3365 - 23
0686705	3J22	13	3365 - 17
0686705	3J24	13	3365 - 19
0686705	3K2	13	3365 - 19B
0686705	3K4	13	3365 - 21
0686705	3K6	13	3365 - 23
0686706	3J22	15	3365 - 17
0686706	3J24	15	3365 - 19
0686706	3K2	15	3365 - 19B
0686706	3K4	15	3365 - 21
0686706	3K6	15	3365 - 23
0686707	3J22	16	3365 - 17
0686707	3J24	16	3365 - 19

NUMERICAL INDEX - CONTINUED

PART NO.	GRID	KEY	PAGE
0686707	3K2	16	3365 - 19B
0686707	3K4	16	3365 - 21
0686707	3K6	16	3365 - 23
0686708	3J24	22	3365 - 19
0686708	3K2	22	3365 - 19B
0686708	3K4	22	3365 - 21
0686708	3K6	22	3365 - 23
0709701	3H8	51	3363 - 27
0727101	3J24	1	3365 - 19
0727102	3J24	2	3365 - 19
0727102	3K4	2	3365 - 21
0727401	3K4	1	3365 - 21
0757601	3F17	23	3362 - 25
0757602	3F17	24	3362 - 25
0757603	3F17	19	3362 - 25
0757604	3F17	21	3362 - 25
0757605	3F17	25	3362 - 25
0757606	3F17	1	3362 - 25
0761702	3F8	2	3362 - 11
0766501	3F17	32	3362 - 25
0766502	3F17	37	3362 - 25
0766503	3F17	29	3362 - 25
0766504	3F17	28	3362 - 25
0766505	3F17	27	3362 - 25
0766508	3F17	22	3362 - 25
0766509	3F17	30	3362 - 25
0766510	3F17	31	3362 - 25
0778501	3F21	15	3362 - 41
0779201	3K2	1	3365 - 19B
0779301	3K6	1	3365 - 23
0779302	3K2	1B	3365 - 19B
0779302	3K2	2B	3365 - 19B
0779302	3K6	1B	3365 - 23
0779302	3K6	2B	3365 - 23
0779303	3K2	2	3365 - 19B
0779303	3K6	2	3365 - 23
0788703	3G8	13	3362 - 53
0788704	3G8	14	3362 - 53
0788705	3G8	15	3362 - 53
0788706	3G8	16	3362 - 53
0788707	3G8	17	3362 - 53
0788710	3G8	33	3362 - 53
0788711	3G8	34	3362 - 53
0788712	3G8	35	3362 - 53
0788713	3G8	36	3362 - 53
0789205	3J20	3	3365 - 15
0789206	3J20	6	3365 - 15
0789301	3J16	1	3365 - 5
0789302	3J16	1A	3365 - 5
0789303	3J16	2	3365 - 5
0789303	3J18	2	3365 - 11
0789304	3J16	2A	3365 - 5
0789304	3J18	2A	3365 - 11
0789305	3J16	3	3365 - 5
0789305	3J18	3	3365 - 11
0789306	3J16	6	3365 - 5
0789306	3J18	6	3365 - 11
0789306	3J22	6	3365 - 17
0789307	3J16	21	3365 - 5
0789307	3J18	21	3365 - 11
0789401	3J18	1	3365 - 11
0789402	3J18	1A	3365 - 11
0789501	3J20	1	3365 - 15
0789503	3J20	2	3365 - 15
0789504	3J20	2A	3365 - 15
0789505	3J20	15	3365 - 15
0789506	3J20	21	3365 - 15
0789507	3J20	31	3365 - 15
0789507	3J20	45	3365 - 15
0789508	3J20	31	3365 - 15
0789508	3J20	45	3365 - 15
0789606	3J22	19	3365 - 17
0789610	3J22	28	3365 - 17
0793201	3F4	97	3362 - 7
0793202	3F4	94	3362 - 7
0793203	3F4	95	3362 - 7
0793204	3F4	96	3362 - 7
0793205	3F4	73	3362 - 7
0793206	3F4	66	3362 - 7
0793207	3F4	5	3362 - 7
0793208	3F4	3	3362 - 7
0793209	3F4	1	3362 - 7
0793301	3F6	25	3362 - 9
0793302	3F6	62	3362 - 9
0793303	3F6	65	3362 - 9
0793401	3F8	23	3362 - 11
0793402	3F8	31	3362 - 11
0793403	3F8	32	3362 - 11
0793404	3F8	33	3362 - 11
0793405	3F8	34	3362 - 11
0793406	3F8	35	3362 - 11
0793407	3F8	37	3362 - 11
0793408	3F8	38	3362 - 11
0793409	3F8	39	3362 - 11
0793410	3F8	40	3362 - 11
0793411	3F8	96	3362 - 11
0793412	3F8	97	3362 - 11
0793413	3F8	7	3362 - 11
0793414	3F8	5	3362 - 11
0793501	3F10	87	3362 - 13
0793501	3F12	38	3362 - 15
0793502	3F10	95	3362 - 13
0793601	3F10	2	3362 - 13
0793601	3F12	12	3362 - 15
0793602	3F10	27	3362 - 13
0793603	3F10	7	3362 - 13
0793603	3F12	17	3362 - 15
0793604	3F10	15	3362 - 13
0793605	3F10	17	3362 - 13
0793605	3F12	25	3362 - 15
0793606	3F10	19	3362 - 13
0793606	3F12	60	3362 - 15
0793701	3F12	9	3362 - 15
0793801	3F12	29	3362 - 15
0793802	3F12	52	3362 - 15
0793803	3F12	26	3362 - 15
0793804	3F12	53	3362 - 15
0794201	3G10	3	3362 - 55
0794202	3G10	6	3362 - 55
0794203	3G10	8	3362 - 55
0794204	3G10	10	3362 - 55
0794205	3G10	11	3362 - 55
0794206	3G10	12	3362 - 55
0794207	3G10	14	3362 - 55
0796601	3J20	30	3365 - 15
1010325	1B23	5	0260 - 3
1015477	3C9	24	3315 - 3
1015478	3C9	23	3315 - 3
1016125	1B23	4	0260 - 3
1024224	3C9	19	3315 - 3
1024384	3C9	18	3315 - 3
1025540	3E16	26	3361 - 7
1025666	3E16	12	3361 - 7
1025667	3E16	28	3361 - 7
1026282	3E18	1	3361 - 9
1026892	3E16	1	3361 - 7
1027076	1B23	13	0260 - 3
1027082	1B23	7	0260 - 3
1027085	1C2	9	0260 - 7
1027149	3E20	1	3361 - 11
1027579	1H4	7	1674 - 5
1027901	3K12	5	4360 - 3
2028800	1B23	29	0260 - 3
2034607	1C8	9	0260 - 9
2034607	1C10	31	0260 - 11
2038174	3E16	27	3361 - 7
2038178	3E16	2	3361 - 7
2038764	2B16	25B	1810 - 13
2042059	3E16	17	3361 - 7
2042069	3E16	10	3361 - 7
2042964	3K12	23	4360 - 3
2042965	3K12	11	4360 - 3
2043442	3K18	14	4367 - 3
2043769	1B23	27	0260 - 3
2043774	1B23	21	0260 - 3
2043791	1C2	13	0260 - 7
2044350	3C15	14	3315 - 5B
2044350	3C15	15	3315 - 5B
2044350	3C15	16	3315 - 5B
2044350	3C15	17	3315 - 5B
2044629	3K12	0	4360 - 3
2044792	3E16	38	3361 - 7
2044793	3E16	39	3361 - 7
2044922	2D20	33	1830 - 23
2044923	2C24	33	1830 - 3
2045146	3K12	20	4360 - 3
2045468	3C9	10	3315 - 3
2045469	3C9	11	3315 - 3
2045470	3C13	5	3315 - 5
2045472	3C13	8	3315 - 5
2045473	3C13	7	3315 - 5
2045509	2B8	29	1810 - 5
2045998	3H20	37	3363 - 39
2045998	3H22	40	3363 - 41
2048184	1H6	66	1674 - 7
2048203	1H6	66	1674 - 7
2048626	1F23	13	0520 - 5
2049901	1C2	12	0260 - 7
2049901	1C2	13	0260 - 7
2051176	3C9	10	3315 - 3
2051177	3C9	11	3315 - 3
28026	3B25	2	3302 - 11
28032	3B25	2	3302 - 11
28038	3B25	2	3302 - 11
300292	3B23	27	3302 - 9
304403	3B17	14	3302 - 3
304952	3B17	19	3302 - 3
304953	3B17	18	3302 - 3
304954	3B17	16	3302 - 3
304955	3B17	17	3302 - 3
304960	3B21	16	3302 - 7
304961	3B21	17	3302 - 7
304966	3B19	27	3302 - 5
304966	3B21	27	3302 - 7
304967	3B21	19	3302 - 7
304968	3B21	18	3302 - 7
3052543	3C9	28	3315 - 3
3053093	3K12	38	4360 - 3
305331	3B17	16	3302 - 3
3053559	1B23	34	0260 - 3
3065989	3E16	20	3361 - 7

NUMERICAL INDEX - CONTINUED

PART NO.	GRID	KEY	PAGE
3065991	3E16	19	3361 - 7
306618	3B19	28	3302 - 5
306618	3B21	28	3302 - 7
306618	3B25	4	3302 - 11
3070250	1C8	6	0260 - 9
3070250	1C10	23	0260 - 11
307186	3B17	17	3302 - 3
3072291	3G18	10	3363 - 9
3072517	3C11	6D	3315 - 3B
3073276	3G12	5	3363 - 3
3074559	1H22	30	1674 - 27
3075729	3K18	12	4367 - 3
3075775	3E18	35	3361 - 9
3075775	3E20	35	3361 - 11
3079728	3H20	20	3363 - 39
3079728	3H22	17	3363 - 41
3081504	3E16	52	3361 - 7
3081727	3K18	17	4367 - 3
3082754	1C2	26	0260 - 7
3083674	3K12	7	4360 - 3
3083710	3K12	1	4360 - 3
3083740	3K12	29	4360 - 3
3083741	3K12	27	4360 - 3
3084653	1I3	0C	1740 - 3
3084716	3K18	10	4367 - 3
3084940	3K12	15	4360 - 3
3085566	1B23	14	0260 - 3
3085568	1B23	23	0260 - 3
3085569	1B23	19	0260 - 3
3085697	1C2	12	0260 - 7
3085713	1C2	16	0260 - 7
3085728	1B23	10	0260 - 3
3085761	1C2	18	0260 - 7
3085780	1C2	1	0260 - 7
3085794	3K18	20	4367 - 3
3085844	1C2	29	0260 - 7
3085871	1C2	24	0260 - 7
3087009	2E16	1	1910 - 13
3087011	2E16	2	1910 - 13
3087012	2E16	3	1910 - 13
3087057	1I3	0A	1740 - 3
3087101	1I3	0B	1740 - 3
3087133	3G12	2	3363 - 3
3087264	3C11	13A	3315 - 3B
3087511	1B3	0B	0130 - 3
3087511	1B15	0B	0130 - 15
3087816	1G21	12	1671 - 3
3087818	3K18	13	4367 - 3
3087882	1H6	1	1674 - 7
3087949	3K12	31	4360 - 3
3087987	3C11	26	3315 - 3B
3088568	2F4	7	2004 - 5
3089156	3D6	31	3340 - 3
3089243	3D6	35	3340 - 3
3089243	3D8	35	3340 - 5
3089613	3K18	8	4367 - 3
3089848	3C19	11	3315 - 7
3090025	2B8	32	1810 - 5
3090862	3K12	41	4360 - 3
3091096	2E25	1	2002 - 3
3091204	2D12	3	1830 - 15
3091234	2D10	14	1830 - 13
3091546	3D8	31	3340 - 5
3091704	3B15	19	3301 - 3
3091704	3K9	19	3401 - 3
3091717	3H24	45	3363 - 43
3091718	3H24	52	3363 - 43
3091719	3H24	53	3363 - 43
3091735	3H24	47	3363 - 43
3091736	3H24	49	3363 - 43
3091739	3H24	55	3363 - 43
3091842	2B8	24	1810 - 5
3092035	3K12	19	4360 - 3
3097024	1F23	21	0520 - 5
3097862	2C22	19	1821 - 9
3102353	1C2	12	0260 - 7
3102353	1C2	13	0260 - 7
310872	3B25	3	3302 - 11
4S00155	3J16	19	3365 - 5
4S00155	3J18	19	3365 - 11
4S00157	3J20	19	3365 - 15
400R	3J22	21	3365 - 17
400R	3J24	21	3365 - 19
400R	3K2	21	3365 - 19B
400R	3K4	21	3365 - 21
400R	3K6	21	3365 - 23
4000854	3I10	70	3363 - 53
4022697	2E8	8	1910 - 5
4022697	2E20	8	1910 - 17
4033725	1C6	12	0260 - 7D
4038533	1C6	2	0260 - 7D
4040814	3K16	28	4360 - 7
4044013	1C6	16	0260 - 7D
4050373	1H22	28	1674 - 27
4050968	1C4	24	0260 - 7B
4050968	3F15	24	3362 - 21
4051262	3C11	31	3315 - 3B
4055311	1H6	40	1674 - 7
4055311	1H12	10	1674 - 13
4055311	2E23	11	2001 - 3
4055311	3H14	35	3363 - 33
4055312	1H6	39	1674 - 7
4055312	1H22	31	1674 - 27
4056017	3C21	11	3315 - 9
4065687	3D6	2	3340 - 3
4065687	3D8	2	3340 - 5
4067834	1F17	53	0510 - 5
4067834	3G14	3	3363 - 5
4068898	3E18	16	3361 - 9
4068898	3E20	16	3361 - 11
4069801	1F17	51	0510 - 5
4069801	3G14	10	3363 - 5
4071213	3G14	4	3363 - 5
4084578	3D6	1	3340 - 3
4084578	3D8	1	3340 - 5
4084578	3D14	1	3344 - 3
4084578	3D14	2D	3344 - 3
4084578	3K9	8	3401 - 3
4085607	3E18	8	3361 - 9
4085607	3E20	8	3361 - 11
4089012	2C6	4	1810 - 27
4100967	3J12	19A	3364 - 3
4101345	3E14	20	3361 - 5
4102096	2E23	4	2001 - 3
4107762	2C14	24	1810 - 35
4110369	1B23	2	0260 - 3
4113926	3J10	15	3363 - 87
4114402	3E14	11	3361 - 5
4116299	3E16	56	3361 - 7
4116308	3K12	17	4360 - 3
4116310	3C19	3	3315 - 7
4121128	1G11	56	1322 - 3
4121497	1G4	0A	0560 - 3
4121859	1B25	30	0260 - 5
4121859	1H6	10	1674 - 7
4121859	2C24	54	1830 - 3
4122395	3C11	13C	3315 - 3B
4126485	1I7	2	1740 - 7
4127708	1I9	3	1740 - 9
4128863	1I11	4	1740 - 11
4130139	1F15	0	0510 - 3
4130169	3I10	68	3363 - 53
4137295	3G16	8	3363 - 7
4140436	3G8	18A	3362 - 53
4140436	3G8	20A	3362 - 53
4141806	3D20	10	3360 - 7
4141806	3I12	25	3363 - 55
4141806	3J8	11	3363 - 85
4142844	1F15	7	0510 - 3
4144013	3E16	55	3361 - 7
4144020	1B23	18	0260 - 3
4144044	3K16	18	4360 - 7
4147896	2B20	59	1810 - 17
4148896	3I14	11	3363 - 57
4149678	1I7	3	1740 - 7
4150302	3E18	7	3361 - 9
4150302	3E20	7	3361 - 11
4153084	1G13	..	1369 - 3
4153251	1F15	0A	0510 - 3
4153538	3H8	3C	3363 - 27
4153543	3E14	7	3361 - 5
4154651	3I10	67	3363 - 53
4154651	3I14	8	3363 - 57
4154656	3I10	66	3363 - 53
4154670	3H8	5	3363 - 27
4154670	3H12	1	3363 - 31
4154670	3H12	15	3363 - 31
4154670	3H14	19	3363 - 33
4154670	3I16	11	3363 - 63
4154670	3J2	34	3363 - 73
4161735	1I3	3	1740 - 3
4169516	3E16	73	3361 - 7
4170585	3C17	27	3315 - 5D
4173208	3C15	5	3315 - 5B
4174541	3E18	57	3361 - 9
4174541	3H8	61	3363 - 27
4174542	3J8	9	3363 - 85
4176070	3K12	12	4360 - 3
4178203	1B23	25	0260 - 3
4179155	3E18	2	3361 - 9
4179155	3E20	2	3361 - 11
4179156	3E18	3	3361 - 9
4179156	3E20	3	3361 - 11
4179161	3E18	12	3361 - 9
4179161	3E20	12	3361 - 11
4179171	3E18	20	3361 - 9
4179171	3E20	20	3361 - 11
4180349	3E16	49	3361 - 7
4180349	3E16	78	3361 - 7
4180349	3E18	9	3361 - 9
4180349	3E20	9	3361 - 11
4180555	1F15	1	0510 - 3
4181700	3E14	8	3361 - 5
4182067	3C15	21	3315 - 5B
4182067	3C17	24	3315 - 5D
4185600	3C11	22	3315 - 3B
4185600	3F19	32	3362 - 35
4187082	2B16	14	1810 - 13
4187083	2B16	14A	1810 - 13
4187308	3I12	14	3363 - 55
4187308	3J4	9	3363 - 81

NUMERICAL INDEX - CONTINUED

PART NO.	GRID	KEY	PAGE
4188136	3J4	3	3363 - 81
4189094	3J4	4	3363 - 81
4189184	3C19	4	3315 - 7
4189535	3J10	24	3363 - 87
4189537	3J6	19	3363 - 83
4189537	3J10	24	3363 - 87
4189619	3D22	1	3360 - 7B
4189619	3J6	20	3363 - 83
4189858	3G22	6	3363 - 13
4189858	3I12	24	3363 - 55
4189860	3G14	9	3363 - 5
4190125	3I12	26	3363 - 55
4190126	3D20	4	3360 - 7
4190126	3J4	1	3363 - 81
4190126	3J8	12	3363 - 85
4190126	3J10	12	3363 - 87
4190127	3G14	5	3363 - 5
4190127	3G16	5	3363 - 7
4190253	1H6	38	1674 - 7
4190261	1H6	36	1674 - 7
4190261	1H10	25	1674 - 11
4190263	1H10	26	1674 - 11
4190263	2D14	1	1830 - 17
4190264	1H10	21	1674 - 11
4190264	3H20	29	3363 - 39
4190266	1G8	13	0560 - 7
4190273	1H10	28	1674 - 11
4190273	3H6	15	3363 - 25
4190274	1H10	23	1674 - 11
4190275	1H10	24	1674 - 11
4190277	1G8	14	0560 - 7
4190282	1H10	27	1674 - 11
4190960	1I3	20	1740 - 3
4191301	3H8	3B	3363 - 27
4192020	1B23	26	0260 - 3
4192034	2D16	9	1830 - 19
4192035	1H6	37	1674 - 7
4192035	1H10	22	1674 - 11
4192047	3H4	8	3363 - 19
4192982	1B23	16	0260 - 3
4193400	1C4	16	0260 - 7B
4193400	3F15	16	3362 - 21
4193848	1H10	21	1674 - 11
4193848	3H8	26	3363 - 27
4193848	3H20	29	3363 - 39
4194176	3E18	47	3361 - 9
4194176	3E20	47	3361 - 11
4196258	3G14	4A	3363 - 5
4196259	1F17	54	0510 - 5
4196259	3G14	10A	3363 - 5
4196260	1F17	52	0510 - 5
4196260	3G14	3A	3363 - 5
4198956	3E16	9	3361 - 7
4199247	3H4	1	3363 - 19
4200227	3E16	51	3361 - 7
4200466	3C25	9	3315 - 11
4200466	3E2	12	3360 - 11
4201986	3I22	13	3363 - 69
4201993	3C17	19	3315 - 5D
4202103	3D20	23	3360 - 7
4202113	3J6	8	3363 - 83
4202422	3C25	11	3315 - 11
4203129	3H4	7	3363 - 19
4203130	3H4	6	3363 - 19
4203411	3C11	2	3315 - 3B
4203411	3C17	3	3315 - 5D
4203447	3J2	23	3363 - 73
4204136	3H24	30	3363 - 43
4204558	2B22	19	1810 - 19
4204579	2B22	23	1810 - 19
4204579	2C2	3	1810 - 23
4204579	2C4	1	1810 - 25
4204586	2B22	32	1810 - 19
4205084	2C12	3	1810 - 33
4205084	2D20	12	1830 - 23
4206158	3E22	3	3361 - 13
4206159	3E22	6	3361 - 13
4206161	3E22	9	3361 - 13
4206162	3E22	10	3361 - 13
4206165	3E22	16	3361 - 13
4206166	3E22	28	3361 - 13
4206167	3E22	17	3361 - 13
4208073	1F15	5	0510 - 3
4208977	3C11	35	3315 - 3B
4209296	2E2	17	1830 - 29
4211191	1I3	19	1740 - 3
4213419	3C11	21	3315 - 3B
4217388	3G12	11	3363 - 3
4219356	1B25	3	0260 - 5
4221018	1I3	24	1740 - 3
4222875	3J12	11D	3364 - 3
4222876	3J12	11E	3364 - 3
4224631	1H12	2	1674 - 13
4224631	3D14	15	3344 - 3
4224632	1H12	12	1674 - 13
4227083	3I10	1	3363 - 53
4229543	3E16	4	3361 - 7
4229631	1C4	4	0260 - 7B
4229631	3F15	4	3362 - 21
4234840	1C2	23	0260 - 7
4235232	2C22	12	1821 - 9
4236448	2D2	55	1830 - 5
4239611	1C8	1B	0260 - 9
4244904	3K12	24	4360 - 3
4245797	1B23	32	0260 - 3
4245966	1B23	17	0260 - 3
4246672	3I24	9	3363 - 71
4246672	3J2	25	3363 - 73
4249777	1G4	0B	0560 - 3
4250063	3H6	0	3363 - 25
4250260	3J12	20	3364 - 3
4250261	3J12	21	3364 - 3
4251384	3J12	11F	3364 - 3
4252767	3E16	71	3361 - 7
4254600	1F15	6	0510 - 3
4254603	2F2	6	2004 - 3
4254604	1H8	4	1674 - 9
4254604	1H12	6	1674 - 13
4255055	1B7	17	0130 - 7
4255055	1B9	11	0130 - 7B
4255304	3E18	61	3361 - 9
4255304	3H12	40	3363 - 31
4255305	3H24	58	3363 - 43
4255762	1G21	10	1671 - 3
4255799	1I3	2	1740 - 3
4257034	1G21	9	1671 - 3
4257128	1G4	12	0560 - 3
4257159	1G4	9	0560 - 3
4257159	1H10	15	1674 - 11
4258916	1B23	30	0260 - 3
4259322	3I12	13	3363 - 55
4260127	3I12	12	3363 - 55
4260314	3I14	5	3363 - 57
4260314	3I14	7	3363 - 57
4260369	2B16	20	1810 - 13
4261938	3H18	12	3363 - 37
4261938	3H20	39	3363 - 39
4261938	3H22	41	3363 - 41
4261938	3I8	18	3363 - 51
4264805	1G11	39	1322 - 3
4264805	2B8	37	1810 - 5
4265372	3E16	67	3361 - 7
4265964	3E18	29	3361 - 9
4265964	3E20	29	3361 - 11
4266481	3G14	13	3363 - 5
4271350	1C2	11	0260 - 7
4271350	3E16	37	3361 - 7
4271447	3I10	69	3363 - 53
4272256	1H12	13	1674 - 13
4272297	1I11	5	1740 - 11
4272305	1B21	0	0260 - 1B
4272420	1C6	7	0260 - 7D
4272425	1C6	13	0260 - 7D
4274478	2E14	25	1910 - 11
4276696	3D6	22	3340 - 3
4276696	3D8	22	3340 - 5
4279507	3C21	2	3315 - 9
4280117	3C21	0	3315 - 9
4280359	2C24	12	1830 - 3
4280359	2D20	14	1830 - 23
4280841	3E16	6	3361 - 7
4281293	1H6	32	1674 - 7
4283028	2F4	0	2004 - 5
4284441	1B3	0C	0130 - 3
4284441	1B15	0C	0130 - 15
4285464	3G22	11	3363 - 13
4285577	3J12	16A	3364 - 3
4285648	1H12	5C	1674 - 13
4285648	1H22	0C	1674 - 27
4285722	3H6	9	3363 - 25
4285801	3H6	2	3363 - 25
4287903	2B16	24	1810 - 13
4288260	1F15	0C	0510 - 3
4288445	2C24	34	1830 - 3
4288796	1H20	13	1674 - 25
4288971	1G11	40	1322 - 3
4289708	1H22	27	1674 - 27
4289757	1I9	5	1740 - 9
4289874	3E16	18	3361 - 7
4293211	3H8	35	3363 - 27
4293950	3E14	6	3361 - 5
4293950	3E18	62	3361 - 9
4293950	3H12	41	3363 - 31
4293950	3I6	40	3363 - 49
4295480	2B22	17	1810 - 19
4295876	2B22	18	1810 - 19
4296276	3D6	21	3340 - 3
4297257	1C4	19	0260 - 7B
4297257	3F15	19	3362 - 21
4297661	3F10	6	3362 - 13
4297661	3F12	16	3362 - 15
4298608	3K12	36	4360 - 3
4299059	1G11	38	1322 - 3
4300918	1C4	10	0260 - 7B
4300918	3F15	10	3362 - 21
4304827	2B18	41	1810 - 15
4306888	3E16	68	3361 - 7
4307026	1H12	5E	1674 - 13
4307026	1H22	0E	1674 - 27
4307027	1H12	5F	1674 - 13
4307027	1H22	0F	1674 - 27

NUMERICAL INDEX - CONTINUED

PART NO.	GRID	KEY	PAGE
4309836	3H8	35A	3363 - 27
4309837	3H8	35B	3363 - 27
4309838	3H8	35C	3363 - 27
4311378	1C6	9	0260 - 7D
4311779	1C6	18	0260 - 7D
4312681	1C2	14	0260 - 7
4315493	1I9	6	1740 - 9
4319299	3C11	1	3315 - 3B
4320163	2B18	59	1810 - 15
4320490	3E16	82	3361 - 7
4320490	3K18	24	4367 - 3
4321887	1B23	3	0260 - 3
4323280	3J6	18	3363 - 83
4326095	2C8	2	1810 - 29
4326285	3J12	11A	3364 - 3
4326800	1H22	0	1674 - 27
4326801	1H12	5A	1674 - 13
4326801	1H22	0A	1674 - 27
4326802	1H12	5B	1674 - 13
4326802	1H22	0B	1674 - 27
4326803	1H12	5D	1674 - 13
4326803	1H22	0D	1674 - 27
4327293	3H8	21A	3363 - 27
4327293	3H8	21B	3363 - 27
4327293	3H10	17	3363 - 29
4327293	3H10	21	3363 - 29
4327293	3I4	30A	3363 - 47
4327293	3I4	30B	3363 - 47
4327293	3I4	31A	3363 - 47
4327293	3I4	31B	3363 - 47
4327293	3I4	32A	3363 - 47
4327293	3I4	32B	3363 - 47
4327293	3I4	33A	3363 - 47
4327293	3I4	33B	3363 - 47
4327293	3I8	16	3363 - 51
4327293	3I8	17	3363 - 51
4327293	3I16	9	3363 - 63
4327293	3J2	18	3363 - 73
4327293	3J2	45	3363 - 73
4327294	3J6	15B	3363 - 83
4330230	3J2	21	3363 - 73
4330785	2B12	2	1810 - 9
4332878	3E18	48	3361 - 9
4332878	3E20	48	3361 - 11
4333461	2D8	3	1830 - 11
4333699	3H2	5	3363 - 17
4333700	3H2	1	3363 - 17
4334566	3I22	12	3363 - 69
4334891	3E14	23A	3361 - 5
4334892	3E14	21A	3361 - 5
4334894	3E14	22A	3361 - 5
4334899	3E14	19	3361 - 5
4335060	3C15	19	3315 - 5B
4335060	3C17	22	3315 - 5D
4336166	3F4	16A	3362 - 7
4336166	3F4	65	3362 - 7
4336166	3F4	72	3362 - 7
4336166	3F6	20A	3362 - 9
4336166	3F8	20A	3362 - 11
4336570	1H8	1A	1674 - 9
4336570	1H12	5	1674 - 13
4336570	1H22	0	1674 - 27
4337928	3J2	22	3363 - 73
4340275	3E14	13A	3361 - 5
4341706	2E23	6	2001 - 3
4341788	2E8	6	1910 - 5
4341788	2E20	6	1910 - 17
4341877	3H16	2	3363 - 35
4342841	3E18	15	3361 - 9
4342841	3E20	15	3361 - 11
4342843	3E18	14	3361 - 9
4342843	3E20	14	3361 - 11
4342846	3E20	41	3361 - 11
4343074	3E16	8	3361 - 7
4343074	3E16	79	3361 - 7
4344125	1H12	0	1674 - 13
4344638	2C24	4	1830 - 3
4344898	3D6	3C	3340 - 3
4344898	3D8	3C	3340 - 5
4345297	3I14	3	3363 - 57
4345769	3C23	26	3315 - 9B
4346521	3E18	28	3361 - 9
4346521	3E20	28	3361 - 11
4346770	2D6	11	1830 - 9
4347107	3E18	24	3361 - 9
4347107	3E20	24	3361 - 11
4347396	2C24	6	1830 - 3
4347396	2D20	27	1830 - 23
4348569	3K9	9	3401 - 3
4348665	3E16	77	3361 - 7
4350187	2D2	9B	1830 - 5
4350206	2D2	5A	1830 - 5
4350206	2D2	19A	1830 - 5
4350249	2D10	12	1830 - 13
4350928	3E18	49	3361 - 9
4350928	3E20	49	3361 - 11
4351175	3H20	21	3363 - 39
4351175	3H22	18	3363 - 41
4351187	2E23	9	2001 - 3
4351774	3H20	22	3363 - 39
4351774	3H22	19	3363 - 41
4352400	3J16	2B	3365 - 5
4352400	3J18	2B	3365 - 11
4352400	3J20	1B	3365 - 15
4352400	3J20	2B	3365 - 15
4352638	3J16	1B	3365 - 5
4352638	3J18	1B	3365 - 11
4352947	2D12	18	1830 - 15
4353560	1G4	18	0560 - 3
4353560	1G4	18A	0560 - 3
4354467	3H4	9	3363 - 19
4355012	3E16	66	3361 - 7
4355272	3E16	35	3361 - 7
4355277	3E16	36	3361 - 7
4355279	3E16	29	3361 - 7
4355286	3E16	3	3361 - 7
4357297	1F17	24	0510 - 5
4357586	3C23	40	3315 - 9B
4357586	3I24	7	3363 - 71
4357862	2D12	10	1830 - 15
4359370	3I20	18	3363 - 67
4359384	1H6	14	1674 - 7
4359576	3D8	21	3340 - 5
4360981	3I14	2	3363 - 57
4361021	3I14	0	3363 - 57
4361302	2B16	17	1810 - 13
4361455	2E18	2	1910 - 15
4361601	2C14	18	1810 - 35
4361638	1G4	4	0560 - 3
4361800	1H6	2	1674 - 7
4362178	1H22	17	1674 - 27
4362700	2B16	25A	1810 - 13
4363754	3C21	0	3315 - 9
4364323	1C2	6	0260 - 7
4364328	1C2	5	0260 - 7
4364329	1C2	24	0260 - 7
4364970	3C11	4	3315 - 3B
4365448	3J22	2B	3365 - 17
4365897	3J22	1B	3365 - 17
4366376	3E14	18A	3361 - 5
4366592	1H22	18	1674 - 27
4366623	2C24	3	1830 - 3
4366692	3B15	17	3301 - 3
4366692	3K9	17	3401 - 3
4367375	1H6	15	1674 - 7
4367385	3E18	5	3361 - 9
4367385	3E20	5	3361 - 11
4367410	3B15	18	3301 - 3
4367410	3K9	18	3401 - 3
4367481	2B16	44	1810 - 13
4367500	3E18	6	3361 - 9
4367500	3E20	6	3361 - 11
4368619	3E18	10	3361 - 9
4368619	3E20	10	3361 - 11
4368629	3C11	3	3315 - 3B
4368630	3C11	5	3315 - 3B
4368973	2E23	7	2001 - 3
4369262	3G22	7	3363 - 13
4369472	2C8	1	1810 - 29
4369615	2C2	2	1810 - 23
4369616	2C2	4	1810 - 23
4369619	2C2	71	1810 - 23
4369674	2C2	11	1810 - 23
4370266	2D22	10	1830 - 25
4370267	2D24	43	1830 - 27
4370269	2D22	14	1830 - 25
4370296	2D24	39	1830 - 27
4370298	2D24	48	1830 - 27
4370299	2D24	46	1830 - 27
4370308	2D24	53	1830 - 27
4370309	2D24	55	1830 - 27
4370435	3H8	3A	3363 - 27
4370492	3I14	16	3363 - 57
4372079	1C4	2	0260 - 7B
4372079	3F15	2	3362 - 21
4372088	2B24	85B	1810 - 21
4372200	2C22	8	1821 - 9
4372619	1G4	18A	0560 - 3
4372620	1G4	18B	0560 - 3
4372682	3F10	21	3362 - 13
4372683	3F8	8	3362 - 11
4372683	3F12	61	3362 - 15
4372684	3F10	20	3362 - 13
4372684	3F12	58	3362 - 15
4373214	1G21	22	1671 - 3
4374023	3G20	0	3363 - 11
4374958	2D8	5	1830 - 11
4375673	3J2	7	3363 - 73
4376210	3K9	1	3401 - 3
4376657	3I20	15	3363 - 67
4377817	2B24	69B	1810 - 21
4380534	2C22	13	1821 - 9
4381572	1H6	62	1674 - 7
4381572	1H20	11	1674 - 25
4382272	3E16	13	3361 - 7
4382410	2C22	5	1821 - 9
4382432	2C22	9	1821 - 9
4382832	2D4	77	1830 - 7
4382860	2D4	76	1830 - 7
4382882	2D2	56	1830 - 5
4382882	2D4	84	1830 - 7

NUMERICAL INDEX - CONTINUED

PART NO.	GRID	KEY	PAGE
4382883	2D2	54	1830 - 5
4382901	1C6	0	0260 - 7D
4383067	1C4	11	0260 - 7B
4383067	3F15	11	3362 - 21
4384239	2C22	3	1821 - 9
4384758	2F4	5	2004 - 5
4385798	3F10	78	3362 - 13
4385798	3F12	28	3362 - 15
4386450	2C2	9	1810 - 23
4386452	2C2	7	1810 - 23
4388027	3J24	30	3365 - 19
4388027	3K2	30	3365 - 19B
4388027	3K4	30	3365 - 21
4388027	3K6	30	3365 - 23
4392805	2C16	11	1821 - 3
4396068	3K16	25	4360 - 7
4396076	3K16	27	4360 - 7
4396077	3K16	21	4360 - 7
4396078	3K16	17	4360 - 7
4396080	3K16	24	4360 - 7
4396081	3K16	16	4360 - 7
4396083	3C21	3	3315 - 9
4396102	3K18	19	4367 - 3
4396103	3K16	4	4360 - 7
4396251	3K16	15	4360 - 7
4396809	1F15	0B	0510 - 3
4397509	3E16	53	3361 - 7
4397512	3J24	31	3365 - 19
4397512	3K2	29	3365 - 19B
4397513	3K4	31	3365 - 21
4397513	3K6	29	3365 - 23
4397537	3E16	43	3361 - 7
4398846	3K18	27	4367 - 3
4398889	3K18	30	4367 - 3
4399892	3K18	28	4367 - 3
4400442	3E18	50	3361 - 9
4400482	3K16	20	4360 - 7
4400638	3I4	36	3363 - 47
4400654	3G20	4	3363 - 11
4401481	3F17	38	3362 - 25
4402669	3K18	22	4367 - 3
4404102	3E16	54	3361 - 7
4405194	2D8	7	1830 - 11
4405814	2D8	6	1830 - 11
4405815	2D8	9	1830 - 11
4406165	1C8	4	0260 - 9
4406165	1C10	14	0260 - 11
4407004	3J6	6B	3363 - 83
4407253	3G10	0	3362 - 55
4407253	3H18	2	3363 - 37
4407464	3E16	13	3361 - 7
4407745	3K12	8	4360 - 3
4408002	3K12	28	4360 - 3
4408102	3K12	13	4360 - 3
4408119	3K12	6	4360 - 3
4408122	3K12	25	4360 - 3
4408141	3K16	5	4360 - 7
4408959	3H8	3	3363 - 27
4409396	2E20	0E	1910 - 17
4409396	2E20	1E	1910 - 17
4409640	3E16	45	3361 - 7
4409999	2B12	1	1810 - 9
4410066	1C8	5	0260 - 9
4410066	1C10	18	0260 - 11
4410166	3E16	24	3361 - 7
4410248	3F4	0	3362 - 7
4410248	3F4	10	3362 - 7
4410248	3F6	0	3362 - 9
4410248	3F10	0	3362 - 13
4410248	3F12	0	3362 - 15
4410248	3F14	0	3362 - 17
4410445	1C8	2	0260 - 9
4410445	1C10	8	0260 - 11
4410446	1C8	3	0260 - 9
4410446	1C10	10	0260 - 11
4410898	3C15	4	3315 - 5B
4410898	3C17	4	3315 - 5D
4411019	3F21	17	3362 - 41
4411019	3I18	6	3363 - 65
4411143	3K12	4	4360 - 3
4411821	2C2	3	1810 - 23
4411920	3J6	6A	3363 - 83
4412666	3H20	8	3363 - 39
4412666	3H22	8	3363 - 41
4413700	3K18	16	4367 - 3
4413752	3K16	10	4360 - 7
4413753	3K18	15	4367 - 3
4413761	3K18	7	4367 - 3
4413764	3K18	9	4367 - 3
4413765	3K18	11	4367 - 3
4413768	3K18	5	4367 - 3
4413801	2D8	13	1830 - 11
4413859	3K16	9	4360 - 7
4414207	1H22	23	1674 - 27
4414833	3K12	16	4360 - 3
4414855	3K12	14	4360 - 3
4414857	2B18	18	1810 - 15
4414857	2B20	27	1810 - 17
4415024	2B8	22	1810 - 5
4416704	2E14	27	1910 - 11
4417431	1C2	20	0260 - 7
4418142	2D2	27	1830 - 5
4418143	2D2	26	1830 - 5
4418144	2D2	25	1830 - 5
4418147	2D4	81	1830 - 7
4418149	2D4	82	1830 - 7
4418301	1H10	16	1674 - 11
4418771	1B23	22	0260 - 3
4419159	1C2	15	0260 - 7
4419238	1C2	19	0260 - 7
4420392	3I2	57	3363 - 45
4420724	2E14	31	1910 - 11
4420724	2E25	0	2002 - 3
4420875	2B8	0	1810 - 5
4420876	2B8	3	1810 - 5
4420877	2B8	7	1810 - 5
4420878	2B8	11	1810 - 5
4420879	2B8	14	1810 - 5
4420880	2B8	18	1810 - 5
4421771	3C15	7	3315 - 5B
4421771	3C17	9	3315 - 5D
4423852Y	3J20	43	3365 - 15
4423853Y	3J22	40	3365 - 17
4424157	2E6	23	1910 - 3
4424157	2E10	29	1910 - 7
4424185	3C9	5	3315 - 3
4424628	3E18	27	3361 - 9
4424628	3E20	27	3361 - 11
4424867	3J12	16	3364 - 3
4424953	3D6	3B	3340 - 3
4424953	3D8	3B	3340 - 5
4425177	3H16	10	3363 - 35
4425270	1C14	4	0260 - 15
4425290	3C11	13B	3315 - 3B
4425305	3C11	18	3315 - 3B
4425414	3C15	6	3315 - 5B
4425414	3C17	8	3315 - 5D
4425481	2E14	27	1910 - 11
4425573	2D12	5	1830 - 15
4425573	2E2	5	1830 - 29
4425575	2E20	0D	1910 - 17
4425575	2E20	1D	1910 - 17
4425980	1I11	1	1740 - 11
4426047	2D22	0	1830 - 25
4426047	2D22	10	1830 - 25
4426048	2D20	46	1830 - 23
4426155	2C24	22	1830 - 3
4426155	2D20	16	1830 - 23
4426156	2D12	8	1830 - 15
4426156	2E2	8	1830 - 29
4426157	2C24	30	1830 - 3
4426157	2D20	24	1830 - 23
4426158	2C24	38	1830 - 3
4426158	2D20	36	1830 - 23
4426159	2D10	4	1830 - 13
4426160	2D10	0	1830 - 13
4426162	2D20	20	1830 - 23
4426354	1H6	63	1674 - 7
4426610	3H16	5	3363 - 35
4426611	3H16	6	3363 - 35
4426612	3H16	7	3363 - 35
4426613	3H16	8	3363 - 35
4426634	3I4	32A	3363 - 47
4426662	1B25	28	0260 - 5
4426700	1H20	10	1674 - 25
4427152	3I16	12	3363 - 63
4427347	3E16	61	3361 - 7
4427427	1C2	3	0260 - 7
4427428	1C4	3	0260 - 7B
4427428	3F15	3	3362 - 21
4427429	1H6	7B	1674 - 7
4427775	3I8	16	3363 - 51
4427781	3H12	31	3363 - 31
4427782	3H8	21A	3363 - 27
4427782	3H12	11	3363 - 31
4427782	3I4	30A	3363 - 47
4427838	3I6	29	3363 - 49
4427839	3I4	30A	3363 - 47
4428436Y	3J16	41	3365 - 5
4428437Y	3J18	41	3365 - 11
4428902	3C11	40	3315 - 3B
4428910	1H6	7C	1674 - 7
4428911	1H6	7D	1674 - 7
4428917	3E16	42	3361 - 7
4428919	1I9	2	1740 - 9
4429017	3I14	6	3363 - 57
4429119	3C15	10	3315 - 5B
4429120	3C15	8	3315 - 5B
4429120	3C17	6	3315 - 5D
4429450	2D14	6	1830 - 17
4429488	3E14	5	3361 - 5
4429678	2D6	19	1830 - 9
4430040	3K12	26	4360 - 3
4430041	3K12	3	4360 - 3
4430356	1C2	27	0260 - 7
4430357	1C2	25	0260 - 7
4430382	1H8	15	1674 - 9
4430533	3I8	14	3363 - 51
4430870	2D20	48	1830 - 23
4430871	2D20	50	1830 - 23
4430872	2D20	30	1830 - 23

NUMERICAL INDEX - CONTINUED

PART NO.	GRID	KEY	PAGE
4430872	2D20	31	1830 - 23
4430873	2D20	30	1830 - 23
4431079	2C24	46	1830 - 3
4431079	2D2	0	1830 - 5
4431079	2D4	0	1830 - 7
4431080	2C24	48	1830 - 3
4431081	2D8	0	1830 - 11
4431082	2D8	2	1830 - 11
4431090	1H6	11	1674 - 7
4431227	2C24	26	1830 - 3
4431357	2E6	22	1910 - 3
4431357	2E10	28	1910 - 7
4431859	2B16	49	1810 - 13
4431914	3C15	12	3315 - 5B
4431915	3C15	13	3315 - 5B
4432356	3E16	47	3361 - 7
4432965	2D12	11	1830 - 15
4432965	2E2	11	1830 - 29
4433064	2D10	11	1830 - 13
4433327	3E18	38	3361 - 9
4433327	3E20	38	3361 - 11
4433793	2D12	0	1830 - 15
4433793	2E2	0	1830 - 29
4433794	2D12	7	1830 - 15
4433794	2E2	7	1830 - 29
4434436	3K18	6	4367 - 3
4434465	3J6	15A	3363 - 83
4434951	3D6	3F	3340 - 3
4434951	3D8	3F	3340 - 5
4434952	3D6	3G	3340 - 3
4434952	3D8	3G	3340 - 5
4434952	3D14	2F	3344 - 3
4434952	3D14	29	3344 - 3
4436132	2D12	4	1830 - 15
4436132	2E2	4	1830 - 29
4436242	1B23	11	0260 - 3
4436271	3E16	66	3361 - 7
4436298	3H14	30	3363 - 33
4436322	3E16	48	3361 - 7
4436441	2D20	32	1830 - 23
4436442	2C24	17	1830 - 3
4436534	1H6	59	1674 - 7
4436535	3H24	26	3363 - 43
4436535	3K12	43	4360 - 3
4436536	3E18	55	3361 - 9
4436536	3E20	52	3361 - 11
4436736	1H6	7E	1674 - 7
4436800	3E18	63	3361 - 9
4437106	3C15	20	3315 - 5B
4437106	3C17	23	3315 - 5D
4437282	3H12	36	3363 - 31
4437333	3C15	11	3315 - 5B
4437333	3C17	11	3315 - 5D
4437388	3H12	37	3363 - 31
4437432	3C11	39	3315 - 3B
4437433	3C11	8B	3315 - 3B
4437653	3H20	27	3363 - 39
4437656	3H20	26	3363 - 39
4437927	3H8	23	3363 - 27
4437944	3I24	6	3363 - 71
4438279	3C13	14	3315 - 5
4438288	3H22	24	3363 - 41
4438290	3H22	23	3363 - 41
4439460	3H8	24	3363 - 27
4439897	1H6	18	1674 - 7
4440410	3I22	4	3363 - 69
4440419	3I22	5	3363 - 69
4440426	3I22	6	3363 - 69
4440431	3I22	7	3363 - 69
4441059	2C24	43	1830 - 3
4441059	2D20	41	1830 - 23
4441061	2C24	44	1830 - 3
4441061	2D20	42	1830 - 23
4441130	2C24	50	1830 - 3
4441131	2C24	51	1830 - 3
4441139	2C24	41	1830 - 3
4441139	2D20	39	1830 - 23
4441179	3I8	17	3363 - 51
4441246	2F4	17	2004 - 5
4441254	3I24	3	3363 - 71
4441255	3I24	4	3363 - 71
4442323	3C15	24	3315 - 5B
4442325	3J2	20	3363 - 73
4442331	3H14	26	3363 - 33
4442333	3J2	11	3363 - 73
4442339	3C15	26	3315 - 5B
4442340	3J2	9	3363 - 73
4442766	3H10	17	3363 - 29
4442771	3I16	9	3363 - 63
4442788	1B23	24	0260 - 3
4442789	1B23	15	0260 - 3
4443490	1H6	7H	1674 - 7
4443596	3J12	30	3364 - 3
4443782	3J12	32	3364 - 3
4443878	3D6	3E	3340 - 3
4443878	3D8	3E	3340 - 5
4443878	3D14	2E	3344 - 3
4444262	3I8	13	3363 - 51
4444381	3H6	13	3363 - 25
4444482	3J12	31	3364 - 3
4444634	2C2	78	1810 - 23
4445210	1B25	26	0260 - 5
4445267	3C21	14	3315 - 9
4445322	3C13	1	3315 - 5
4445372	3C21	17	3315 - 9
4445380	2E8	0B	1910 - 5
4445380	2E8	1B	1910 - 5
4445380	2E20	0B	1910 - 17
4445380	2E20	1B	1910 - 17
4445484	3C21	18	3315 - 9
4445676	3H14	32	3363 - 33
4445714	3H8	25	3363 - 27
4445716	3I4	31A	3363 - 47
4445718	3I6	34	3363 - 49
4445799	3I4	33A	3363 - 47
4445916	2D10	19	1830 - 13
4445981	3H8	29	3363 - 27
4446002	3F21	16	3362 - 41
4446587	3H6	12	3363 - 25
4446638	3H6	5	3363 - 25
4446657	2D8	14	1830 - 11
4446905	3H10	16	3363 - 29
4446960	3C15	30	3315 - 5B
4446960	3C17	7	3315 - 5D
4447050	3C11	6B	3315 - 3B
4447050	3C15	15	3315 - 5B
4447067	3C11	42	3315 - 3B
4447264	3E20	39	3361 - 11
4447431	1B3	0A	0130 - 3
4447431	1B15	0A	0130 - 15
4447483	1B25	11	0260 - 5
4447490	1B25	23	0260 - 5
4447765	1H22	3	1674 - 27
4447868	1H22	4	1674 - 27
4447870	1H22	8	1674 - 27
4448296	1E17	11	0422 - 3
4448306	2B22	25	1810 - 19
4448307	2B22	43	1810 - 19
4448308	2B20	52	1810 - 17
4448309	2B20	53	1810 - 17
4448310	2B20	65	1810 - 17
4448311	2B18	6	1810 - 15
4448312	2B24	1	1810 - 21
4448313	2B24	8A	1810 - 21
4448314	2B18	9	1810 - 15
4448314	2B18	19	1810 - 15
4448319	2B18	19	1810 - 15
4448395	3J16	40	3365 - 5
4448395	3J18	40	3365 - 11
4448396	3J20	42	3365 - 15
4448397	3J22	39	3365 - 17
4448925	2D22	16	1830 - 25
4448990	2B8	35	1810 - 5
4449019	1H6	49	1674 - 7
4449068	2D10	7	1830 - 13
4449144	3K12	40	4360 - 3
4449182	3K12	42	4360 - 3
4449250	1H10	10	1674 - 11
4449250	1H10	18	1674 - 11
4449326	3H10	21	3363 - 29
4449328	3H10	21	3363 - 29
4449348	2D10	17	1830 - 13
4449490	3J6	16	3363 - 83
4449503	1H6	58	1674 - 7
4450008	2D12	9	1830 - 15
4450174	2F4	17	2004 - 5
4450206	2D2	9A	1830 - 5
4450443	3H22	27	3363 - 41
4450494	1H10	7	1674 - 11
4450707	2D20	44	1830 - 23
4450707	2D22	0	1830 - 25
4450708	2D20	46	1830 - 23
4450974	3G20	11	3363 - 11
4451392	3I20	16	3363 - 67
4451498	3E18	22	3361 - 9
4451498	3E20	22	3361 - 11
4451681	1H22	16	1674 - 27
4451760	3I10	1	3363 - 53
4451764	1H20	0	1674 - 25
4451784	3G4	24	3362 - 49
4451785	3G4	25	3362 - 49
4451785	3G6	25	3362 - 51
4451786	3G6	26	3362 - 51
4451787	3G4	37	3362 - 49
4451788	3G4	38	3362 - 49
4451789	3G4	39	3362 - 49
4451789	3G6	39	3362 - 51
4451790	3G6	40	3362 - 51
4451797	3G6	41	3362 - 51
4452052	3H18	3	3363 - 37
4452053	3H18	1	3363 - 37
4452160	1H6	65	1674 - 7
4452187	2C24	52	1830 - 3
4452188	2C24	53	1830 - 3
4452289	3H12	39	3363 - 31
4452290	3I2	1	3363 - 45
4452291	3I2	51	3363 - 45
4452292	3I2	54	3363 - 45
4452341	3I2	48	3363 - 45
4452342	3I2	50	3363 - 45
4452362	3I2	56	3363 - 45

NUMERICAL INDEX - CONTINUED

PART NO.	GRID	KEY	PAGE
4452393	3I6	39	3363 - 49
4452613	2B8	27	1810 - 5
4452625	3H24	43	3363 - 43
4452647	3G8	18	3362 - 53
4452649	3G8	20	3362 - 53
4453225	3H20	32	3363 - 39
4453225	3H20	34	3363 - 39
4453226	3H20	33	3363 - 39
4453227	3H20	34	3363 - 39
4453228	3H20	35	3363 - 39
4453229	3H22	26	3363 - 41
4453230	3H22	28	3363 - 41
4453231	3H22	29	3363 - 41
4453672	2B18	80	1810 - 15
4453676	2B20	50	1810 - 17
4453680	2B24	16A	1810 - 21
4453682	2B24	29	1810 - 21
4453683	2B24	30	1810 - 21
4453684	2B24	31	1810 - 21
4453819	3G8	11	3362 - 53
4453820	3G8	12	3362 - 53
4453869	2C22	6	1821 - 9
4453874	2C22	7	1821 - 9
4454418	3J12	16B	3364 - 3
4454518	1H6	57	1674 - 7
4454732	3J2	45	3363 - 73
4455719	3E20	70	3361 - 11
4455733	3E18	70	3361 - 9
4455787	3F12	11	3362 - 15
4455788	3F10	1	3362 - 13
4455986	3F19	5	3362 - 35
4455987	3F19	6	3362 - 35
4455989	3F19	49	3362 - 35
4455990	3F19	48	3362 - 35
4455991	3F19	3	3362 - 35
4456173	2B20	5	1810 - 17
4456175	2B18	25	1810 - 15
4456486	1H4	0	1674 - 5
4456723	2D12	0B	1830 - 15
4456723	2E2	0B	1830 - 29
4456725	2D12	0A	1830 - 15
4456725	2E2	0A	1830 - 29
4456735	1H6	7F	1674 - 7
4456778	1H4	7A	1674 - 5
4456778	1H6	7A	1674 - 7
4456798	1E8	18	0418 - 3
4456952	2C2	15	1810 - 23
4458227	2D12	0G	1830 - 15
4458228	2D12	0C	1830 - 15
4458229	2D12	0H	1830 - 15
4458230	2D12	0D	1830 - 15
4458231	2D12	0E	1830 - 15
4458232	2D12	0F	1830 - 15
4458233	2D12	0I	1830 - 15
4458234	2D12	0J	1830 - 15
4458235	2D12	7A	1830 - 15
4458236	2D12	7B	1830 - 15
4458237	2D12	7C	1830 - 15
4458238	2D12	4	1830 - 15
4458238	2D12	19	1830 - 15
4458238	2E2	4	1830 - 29
4458239	2D12	4	1830 - 15
4458239	2D12	20	1830 - 15
4458239	2E2	4	1830 - 29
4458240	2D12	4	1830 - 15
4458240	2D12	21	1830 - 15
4458240	2E2	4	1830 - 29
4458241	2D12	4	1830 - 15
4458241	2D12	22	1830 - 15
4458241	2E2	4	1830 - 29
4459249	2C2	83	1810 - 23
4460037	1H6	7F	1674 - 7
4460405	2C2	1	1810 - 23
4462425	3I16	2	3363 - 63
4462433	3J2	17	3363 - 73
4462435	3J2	14	3363 - 73
4462438	3J2	15	3363 - 73
4462443	3J2	18	3363 - 73
4463047	3E16	5	3361 - 7
4463390	2B24	16A	1810 - 21
4463392	2B24	29	1810 - 21
4463393	2B24	30	1810 - 21
4463394	2B24	31	1810 - 21
4464274	2D22	8G	1830 - 25
4464275	2D22	9	1830 - 25
4464276	2D22	10	1830 - 25
4464277	2D22	11	1830 - 25
4464278	2D22	12	1830 - 25
4464279	2D22	13	1830 - 25
4464280	2D22	15	1830 - 25
4464281	2D22	17	1830 - 25
4464282	2D22	18	1830 - 25
4464283	2D22	19	1830 - 25
4464284	2D22	20	1830 - 25
4464285	2D22	21	1830 - 25
4464286	2D22	22	1830 - 25
4464287	2D22	23	1830 - 25
4464288	2D22	24	1830 - 25
4464341	2D22	1	1830 - 25
4464342	2D22	2	1830 - 25
4464343	2D22	3	1830 - 25
4464344	2D22	4	1830 - 25
4464345	2D22	4A	1830 - 25
4464346	2D22	4B	1830 - 25
4464347	2D22	5	1830 - 25
4464349	2D22	6	1830 - 25
4464350	2D22	7	1830 - 25
4464353	2D22	8A	1830 - 25
4464357	2D22	8F	1830 - 25
4464407	3E14	13B	3361 - 5
4464450	2D22	25	1830 - 25
4464451	2D22	26	1830 - 25
4464452	2D22	27	1830 - 25
4464453	2D22	28	1830 - 25
4464454	2D22	29	1830 - 25
4464455	2D22	30	1830 - 25
4464456	2D24	31	1830 - 27
4464457	2D24	32	1830 - 27
4464458	2D24	33	1830 - 27
4464459	2D24	34	1830 - 27
4464460	2D24	35	1830 - 27
4464461	2D24	36	1830 - 27
4464462	2D24	37	1830 - 27
4464463	2D24	38	1830 - 27
4464465	2D24	40	1830 - 27
4464466	2D24	41	1830 - 27
4464473	2D24	42	1830 - 27
4464474	2D24	44	1830 - 27
4464475	2D24	45	1830 - 27
4464476	2D24	47	1830 - 27
4464477	2D24	49	1830 - 27
4464478	2D24	50	1830 - 27
4464479	2D24	52	1830 - 27
4464480	2D24	54	1830 - 27
4464483	2D24	56	1830 - 27
4465995	2D2	7	1830 - 5
4467088	3H24	43	3363 - 43
4467088	3H24	59	3363 - 43
4468336	3F25	0	3362 - 45
4468336	3G2	0	3362 - 47
4468336	3G4	0	3362 - 49
4468336	3G6	0	3362 - 51
4468336	3G8	0	3362 - 53
4468336	3H24	43	3363 - 43
4468943	2B20	65	1810 - 17
4468944	2B18	6	1810 - 15
4469040	2D4	64	1830 - 7
4469043	2D4	66	1830 - 7
4469044	2D4	67	1830 - 7
4469045	2D4	68	1830 - 7
4469046	2D4	71	1830 - 7
4469047	2D2	48	1830 - 5
4469047	2D4	75	1830 - 7
4469056	2D2	5	1830 - 5
4469057	2D2	6	1830 - 5
4469058	2D2	10	1830 - 5
4469059	2D2	17	1830 - 5
4469060	2D2	28	1830 - 5
4469061	2D2	29	1830 - 5
4469062	2D2	30	1830 - 5
4469063	2D2	44	1830 - 5
4469063	2D4	65	1830 - 7
447068	3E22	5	3361 - 13
4472430	3H8	3D	3363 - 27
4474296	2B14	1	1810 - 11
4474296	2B16	0	1810 - 13
4474296	2B18	0	1810 - 15
4474296	2B20	0	1810 - 17
4474296	2B22	0	1810 - 19
4474296	2B24	0	1810 - 21
4474296	2C2	0	1810 - 23
4474296	2C6	0	1810 - 27
4474298	2B18	26	1810 - 15
4474299	2B18	47	1810 - 15
4474300	2B18	10	1810 - 15
4474301	2B20	1	1810 - 17
4474302	2B20	5	1810 - 17
4474303	2B20	14	1810 - 17
4474304	2B20	16	1810 - 17
4474476	2C2	43	1810 - 23
4474477	2C2	40	1810 - 23
4474478	2C2	32	1810 - 23
4474479	2C2	5	1810 - 23
4474480	2C2	8	1810 - 23
4474482	2C2	47	1810 - 23
4474493	2C2	14	1810 - 23
4474494	2C2	10	1810 - 23
4474498	2C2	6	1810 - 23
4474499	2C2	75	1810 - 23
4474513	2C2	77	1810 - 23
4474513	2C2	84	1810 - 23
4474514	2C2	76	1810 - 23
4474515	2C2	21	1810 - 23
4474517	2C2	81	1810 - 23
4474518	2C2	80	1810 - 23
4474531	2B22	25	1810 - 19
4474532	2B22	41	1810 - 19
4475229	2D4	83	1830 - 7
4475247	2D4	60	1830 - 7
4475248	2D4	61	1830 - 7
4475249	2D4	62	1830 - 7

NUMERICAL INDEX - CONTINUED

PART NO.	GRID	KEY	PAGE
4475250	2D4	63	1830 - 7
4475257	2D4	69	1830 - 7
4475258	2D4	70	1830 - 7
4475259	2D4	72	1830 - 7
4475260	2D4	74	1830 - 7
4475261	2D4	78	1830 - 7
4475262	2D4	79	1830 - 7
4475263	2D4	80	1830 - 7
4475264	2D2	1	1830 - 5
4475265	2D2	2	1830 - 5
4475283	2D2	3	1830 - 5
4475284	2D2	4	1830 - 5
4475285	2D2	8	1830 - 5
4475286	2D2	9	1830 - 5
4475287	2D2	11	1830 - 5
4475288	2D2	12	1830 - 5
4475289	2D2	13	1830 - 5
4475290	2D2	14	1830 - 5
4475291	2D2	15	1830 - 5
4475345	2D2	16	1830 - 5
4475346	2D2	17A	1830 - 5
4475347	2D2	18	1830 - 5
4475348	2D2	19	1830 - 5
4475349	2D2	20	1830 - 5
4475350	2D2	21	1830 - 5
4475351	2D2	22	1830 - 5
4475352	2D2	23	1830 - 5
4475353	2D2	24	1830 - 5
4475364	2D2	31	1830 - 5
4475365	2D2	32	1830 - 5
4475366	2D2	33	1830 - 5
4475367	2D2	34	1830 - 5
4475368	2D2	35	1830 - 5
4475369	2D2	36	1830 - 5
4475370	2D2	37	1830 - 5
4475371	2D2	38	1830 - 5
4475372	2D2	39	1830 - 5
4475399	2D2	40	1830 - 5
4475400	2D2	41	1830 - 5
4475401	2D2	42	1830 - 5
4475402	2D2	43	1830 - 5
4475403	2D2	45	1830 - 5
4475404	2D2	46	1830 - 5
4475405	2D2	47	1830 - 5
4475406	2D2	49	1830 - 5
4475407	2D2	50	1830 - 5
4475430	2D2	51	1830 - 5
4475431	2D2	52	1830 - 5
4475432	2D2	53	1830 - 5
4475433	2D2	57	1830 - 5
4475434	2D2	58	1830 - 5
4475435	2D2	59	1830 - 5
4477216	2C2	44	1810 - 23
4477217	2C2	41	1810 - 23
4477218	2C2	37	1810 - 23
4477219	2C2	36	1810 - 23
4477373	1H6	0	1674 - 7
4477852	3C15	14	3315 - 5B
4477852	3C15	15	3315 - 5B
4477852	3C15	16	3315 - 5B
4477852	3C15	17	3315 - 5B
4482233	3G4	38	3362 - 49
4482253	1F23	11	0520 - 5
4482883	2D4	73	1830 - 7
4482953	2D6	22	1830 - 9
4482959	2D14	7	1830 - 17
4483202	1H20	2	1674 - 25
4483203	1H20	3	1674 - 25
4483204	1H20	4	1674 - 25
4483205	1H20	5	1674 - 25
4483208	1H20	8	1674 - 25
4483209	1H20	9	1674 - 25
4483282	1H20	1	1674 - 25
4483283	1H20	6	1674 - 25
4483676	1C16	1	0260 - 15B
4484453	2D20	51	1830 - 23
4485408	1F23	9	0520 - 5
4485409	1F23	19	0520 - 5
4485825	1H20	12	1674 - 25
449490	3C21	6	3315 - 9
449558	3J12	18	3364 - 3
4503469	1F23	14	0520 - 5
4506320	3F10	18	3362 - 13
4506320	3F12	50	3362 - 15
4506320	3F12	59	3362 - 15
4506320	3F14	47	3362 - 17
4506405	3F10	14	3362 - 13
4506408	1C4	25A	0260 - 7B
4506408	1G13	..	1369 - 3
4506408	3E16	14A	3361 - 7
4506408	3F4	12B	3362 - 7
4506408	3F4	15B	3362 - 7
4506408	3F4	83	3362 - 7
4506408	3F6	16B	3362 - 9
4506408	3F6	54E	3362 - 9
4506408	3F10	96	3362 - 13
4506408	3F15	25A	3362 - 21
4506408	3F17	34	3362 - 25
4506408	3K18	43A	4367 - 3
4506409	3F12	27	3362 - 15
4506409	3F12	33	3362 - 15
4506412	3F4	74	3362 - 7
4506412	3F6	28	3362 - 9
4506412	3F8	28	3362 - 11
4506412	3F12	55	3362 - 15
4506415	1C2	7	0260 - 7
4506415	3K16	29	4360 - 7
4506416	3F8	6	3362 - 11
4506418	1B25	6	0260 - 5
4506418	1B25	31	0260 - 5
4506418	1C6	11	0260 - 7D
4506418	1G13	..	1369 - 3
4506418	3E18	57A	3361 - 9
4506418	3G20	6	3363 - 11
4506418	3G22	13	3363 - 13
4506418	3H6	1	3363 - 25
4506418	3H6	3	3363 - 25
4506418	3H8	1	3363 - 27
4506418	3H8	8	3363 - 27
4506418	3H8	29	3363 - 27
4506418	3H8	62A	3363 - 27
4506418	3H10	1	3363 - 29
4506418	3I4	16	3363 - 47
4506418	3I4	17	3363 - 47
4506420	3C23	4	3315 - 9B
4506420	3F8	3D	3362 - 11
4506420	3F10	13	3362 - 13
4506420	3F10	22	3362 - 13
4506420	3F12	23	3362 - 15
4506420	3F14	51	3362 - 17
4506424	1G13	..	1369 - 3
4506424	3F4	67	3362 - 7
4506424	3F6	60	3362 - 9
4506424	3F17	20	3362 - 25
4506424	3G12	12	3363 - 3
4506424	3G16	10	3363 - 7
4506424	3G20	1	3363 - 11
4506424	3G20	2	3363 - 11
4506424	3I12	17A	3363 - 55
4506424	3J6	20	3363 - 83
4506424	3J8	9	3363 - 85
4506424	3K16	3	4360 - 7
4506424	3K16	23	4360 - 7
4506428	3F4	2	3362 - 7
4506428	3F8	3B	3362 - 11
4506428	3F10	24	3362 - 13
4506430	1G13	..	1369 - 3
4509180	1B25	13	0260 - 5
4509180	1C4	27A	0260 - 7B
4509180	1C6	1	0260 - 7D
4509180	3E16	62A	3361 - 7
4509180	3F4	13B	3362 - 7
4509180	3F4	14B	3362 - 7
4509180	3F8	18B	3362 - 11
4509180	3F10	5	3362 - 13
4509180	3F10	78B	3362 - 13
4509180	3F12	3	3362 - 15
4509180	3F12	15	3362 - 15
4509180	3F14	49	3362 - 17
4509180	3F15	27A	3362 - 21
4509180	3H8	9	3363 - 27
4509180	3H8	13	3363 - 27
4509180	3H24	58	3363 - 43
4509180	3I2	57	3363 - 45
4509180	3I6	23	3363 - 49
4509180	3I8	2	3363 - 51
4509180	3I8	10	3363 - 51
4509180	3I8	18	3363 - 51
4509180	3I22	9	3363 - 69
4509180	3I22	10A	3363 - 69
4509180	3K16	8	4360 - 7
4509181	3F10	12	3362 - 13
4509181	3F12	22	3362 - 15
4509181	3J16	29	3365 - 5
4509181	3J18	29	3365 - 11
4509404	1I3	17	1740 - 3
4509404	1I3	18	1740 - 3
4509493	1C4	15	0260 - 7B
4509493	3F15	15	3362 - 21
4510173	3G22	2	3363 - 13
4510173	3G24	2	3363 - 15
4510173	3G24	13	3363 - 15
4510173	3H2	2	3363 - 17
4510173	3H4	2	3363 - 19
4514699	2C24	5	1830 - 3
4515041	3E16	76	3361 - 7
4600164	3J10	3	3363 - 87
4602549	2B14	1	1810 - 11
4602549	2B16	0	1810 - 13
4602549	2B18	0	1810 - 15
4602549	2B20	0	1810 - 17
4602549	2B22	0	1810 - 19
4602549	2B24	0	1810 - 21
4602549	2C2	0	1810 - 23
4602549	2C6	0	1810 - 27
4602562	2B22	25	1810 - 19
4602563	2B22	43	1810 - 19
4602564	2B20	52	1810 - 17
4602565	2B20	53	1810 - 17
4602566	2B20	65	1810 - 17
4602567	2B18	6	1810 - 15

NUMERICAL INDEX - CONTINUED

PART NO.	GRID	KEY	PAGE
4602568	2B24	1	1810 - 21
4602569	2B18	9	1810 - 15
4602569	2B18	19	1810 - 15
4602570	2B24	8B	1810 - 21
4602576	2B24	16B	1810 - 21
4602577	2B18	19	1810 - 15
4602582	2B20	50	1810 - 17
4603008	2B18	13	1810 - 15
4603011	2B16	46	1810 - 13
4603012	2B16	47	1810 - 13
4603013	2B16	48	1810 - 13
4605564	3I10	69	3363 - 53
4607398	3H18	3	3363 - 37
4607399	3H18	1	3363 - 37
4609049	2D22	0	1830 - 25
4609049	2D22	10	1830 - 25
4609477	2C2	77	1810 - 23
4609478	2C2	84	1810 - 23
4609479	2C2	77	1810 - 23
4609479	2C2	84	1810 - 23
4609480	2C2	77	1810 - 23
4609480	2C2	84	1810 - 23
4609664	3J6	9	3363 - 83
4609676	2D20	44	1830 - 23
4609754	1H4	0	1674 - 5
4609956	3C13	2	3315 - 5
4609956	3C13	14	3315 - 5
4609956	3C15	3	3315 - 5B
4610412	2D20	44	1830 - 23
4610412	2D20	45	1830 - 23
4610412	2D24	52	1830 - 27
4610640	2C16	21	1821 - 3
4610641	2C16	22	1821 - 3
4611025	3H8	3	3363 - 27
4613243	2E14	38	1910 - 11
4613913	2E23	9	2001 - 3
4614286	3C17	26	3315 - 5D
4614296	3C17	21	3315 - 5D
4614331	3C17	28	3315 - 5D
4615610	3C17	10	3315 - 5D
4620431	2B20	5	1810 - 17
4624812	3I16	13	3363 - 63
4624812	3I24	5	3363 - 71
4627118	3E14	23B	3361 - 5
4627119	3E14	18B	3361 - 5
4627120	3E14	21B	3361 - 5
4627121	3E14	22B	3361 - 5
4633528	1I9	5	1740 - 9
4640468	2E23	9	2001 - 3
494918	2B22	15	1810 - 19
5006700	3D14	2A	3344 - 3
5006714	2E8	0G	1910 - 5
5006769	1B3	0	0130 - 3
5007175	1B15	0	0130 - 15
5007544	2E20	0A	1910 - 17
5007545	2E20	1A	1910 - 17
6020125	2C20	0	1821 - 7
6020352	2C12	5	1810 - 33
604647	3B21	20	3302 - 7
604650	3B21	20	3302 - 7
604652	3B21	20	3302 - 7
604653	3B21	20	3302 - 7
604664	3B17	20	3302 - 3
604667	3B17	20	3302 - 3
604669	3B17	20	3302 - 3
604670	3B17	20	3302 - 3
604671	3B17	20	3302 - 3
604672	3B17	20	3302 - 3
607048	3B17	14	3302 - 3
607048	3B21	14	3302 - 7
622655	3B25	1	3302 - 11
622656	3B25	1	3302 - 11
622657	3B25	1	3302 - 11
7033089	3I24	8	3363 - 71
7035503	3C19	0	3315 - 7
7036594	2B6	0	1810 - 3
7036595	2B6	2	1810 - 3
7039248	2E14	30	1910 - 11
7040051	2E20	1	1910 - 17
7040052	2E20	0	1910 - 17
7040052	2E20	1A	1910 - 17
7042657	2C22	4	1821 - 9
7043267	1F23	1	0520 - 5
7045626	3C21	0	3315 - 9
7045626	3C21	1	3315 - 9
8053499	3J12	19	3364 - 3
8062021	3G18	11	3363 - 9
8063718	3C11	0	3315 - 3B
8071391	3E16	22	3361 - 7
8071556	3K18	18	4367 - 3
8073901	3C19	6	3315 - 7
8075038	3K16	31	4360 - 7
8075449	3C9	1	3315 - 3
8075450	3C9	0	3315 - 3
8076030	1C2	17	0260 - 7
8076163	1C4	0	0260 - 7B
8076163	3F15	0	3362 - 21
8077220	3F2	0	3362 - 5
8077221	3F2	1	3362 - 5
8077222	3G22	0	3363 - 13
8077223	3G22	14	3363 - 13
8077444	3H16	13	3363 - 35
8077521	2E14	28	1910 - 11
8077903	3C11	32	3315 - 3B
8079467	3J8	2	3363 - 85
8080152	3K18	34	4367 - 3
8080641	3J4	0	3363 - 81
8081166	3I18	22	3363 - 65
8081420	3J6	11	3363 - 83
8081497	1I5	1	1740 - 5
8081659	3H24	24	3363 - 43
8081981	3C21	0	3315 - 9
8081981	3C21	1	3315 - 9
8082204	1C14	3	0260 - 15
8082278	3J8	5	3363 - 85
8082279	3J8	4	3363 - 85
8082329	1H6	24	1674 - 7
8082431	3H6	8	3363 - 25
8083721	3C21	15	3315 - 9
8083834	3J10	21	3363 - 87
8084096	3J10	22	3363 - 87
8084816	3J12	12	3364 - 3
8089810	1F23	4	0520 - 5
8089811	1F23	15	0520 - 5
8094446	3C17	0	3315 - 5D
8094471	1I5	1	1740 - 5
8094523	3D14	12	3344 - 3
8094751	3C21	1	3315 - 9
8095475	3J6	11	3363 - 83
9092402	1B11	2	0130 - 9
9134109	1C4	25	0260 - 7B
9134109	3E16	14	3361 - 7
9134109	3F15	25	3362 - 21
9134109	3K18	43	4367 - 3
9134110	1C4	26	0260 - 7B
9134110	3E16	63	3361 - 7
9134110	3E20	58	3361 - 11
9134110	3F15	26	3362 - 21
9134110	3K16	32	4360 - 7
9134110	3K18	31	4367 - 3
9134111	1C4	27	0260 - 7B
9134111	3E16	62	3361 - 7
9134111	3F15	27	3362 - 21
9134111	3K16	6	4360 - 7
9134113	3K16	1	4360 - 7
9149508	3G24	10	3363 - 15
9149508	3G24	11	3363 - 15
9151724	3C11	6	3315 - 3B
9159923	1C4	14	0260 - 7B
9159923	1C6	19	0260 - 7D
9159923	3F15	14	3362 - 21
9167977	1C4	20	0260 - 7B
9167977	3F15	20	3362 - 21
9168631	3K16	14	4360 - 7
9168999	3J24	31	3365 - 19
9168999	3K2	29	3365 - 19B
9169000	3K4	31	3365 - 21
9169000	3K6	29	3365 - 23
9177595	3K18	3	4367 - 3
9180466	1C2	22	0260 - 7
9183013J	3J20	43	3365 - 15
9183014J	3J22	40	3365 - 17
9184275	3C11	8	3315 - 3B
9184497	1I9	10	1740 - 9
9187647	3I22	1	3363 - 69
9187647	3K4	31	3365 - 21
9187647	3K6	29	3365 - 23
9187648	3I22	0	3363 - 69
9187648	3J24	31	3365 - 19
9187648	3K2	29	3365 - 19B
9193338	1C10	0	0260 - 11
9194321	3I8	16	3363 - 51
9194322	3I8	17	3363 - 51
9194323	3I4	32A	3363 - 47
9194416	1G25	1	1674 - 3
9195304	3C13	2	3315 - 5
9195304	3C15	3	3315 - 5B
9195307	3C9	2	3315 - 3
9195307	3C11	7	3315 - 3B
9195313	1C8	12	0260 - 9
9195313EX	1C8	0	0260 - 9
9195313EX	1C8	12	0260 - 9
9195589	3I4	31A	3363 - 47
9195590	3I4	33A	3363 - 47
9195629	3I4	30A	3363 - 47
9196167	1C10	0	0260 - 11
9196236	1C2	22	0260 - 7
9196236	1C4	28	0260 - 7B
9196238	1B23	0	0260 - 3
9196238	1C2	30	0260 - 7
9196238EX	1B23	0	0260 - 3
9196961	3K12	34	4360 - 3
9196961	3K18	44	4367 - 3
9197248	3J6	15	3363 - 83
9197338	3E14	17	3361 - 5
9197338	3E16	84	3361 - 7
9197338EX	3E16	84	3361 - 7
9198153	3E14	3	3361 - 5
9198153	3E18	0	3361 - 9
9198154	3E14	4	3361 - 5
9198154	3E20	0	3361 - 11

NUMERICAL INDEX - CONTINUED

PART NO.	GRID	KEY	PAGE
9198979	3K16	34	4360 - 7
9199146	3C11	13	3315 - 3B
9200495	3F8	2	3362 - 11
9200504	3D20	25	3360 - 7
9200504	3J6	21	3363 - 83
9201715	3F4	0	3362 - 7
9201715	3F6	0	3362 - 9
9201715	3F8	0	3362 - 11
9201715	3F10	0	3362 - 13
9201715	3F12	0	3362 - 15
9201715	3F14	0	3362 - 17
9204539	3H8	21A	3363 - 27
9206523	3J2	19	3363 - 73
9207699	3E24	0	3362 - 3
9207699EX	3E24	0	3362 - 3
9207699EX	3F8	0	3362 - 11
9212078	1G25	1	1674 - 3
9217993	3E14	8	3361 - 5
9217993	3E22	29	3361 - 13
9218271	3F19	2	3362 - 35
9219730	3I18	25	3363 - 65
9226756	1H6	58	1674 - 7
9227923	3E14	17	3361 - 5
9227923EX	3E14	17	3361 - 5
9229187	1C16	1	0260 - 15B
9234284	3C15	14	3315 - 5B
9234284	3C15	15	3315 - 5B
9234284	3C15	16	3315 - 5B
9234284	3C15	17	3315 - 5B
9235551	3C9	2	3315 - 3
9239568	1G25	1	1674 - 3
9239583	3C13	2	3315 - 5
9239583	3C15	3	3315 - 5B
9246436	3C17	17	3315 - 5D
927488	3K12	35	4360 - 3
930451	3E16	83	3361 - 7
94-2011	1B5	7	0130 - 5
94-2011	1B11	8	0130 - 9
94-2011	1C10	34	0260 - 11
94-2011	3C15	1	3315 - 5B
94-2012	3K12	33	4360 - 3
94-2013	1B23	32	0260 - 3
94-2807	2E14	38	1910 - 11
953612	3J12	11B	3364 - 3
957366	1B25	22	0260 - 5
957366	1C4	20A	0260 - 7B
957366	1C4	26A	0260 - 7B
957366	3E16	63A	3361 - 7
957366	3E18	61A	3361 - 9
957366	3E18	62A	3361 - 9
957366	3E20	58A	3361 - 11
957366	3F4	16B	3362 - 7
957366	3F4	71	3362 - 7
957366	3F6	20B	3362 - 9
957366	3F8	20B	3362 - 11
957366	3F14	52	3362 - 17
957366	3F15	20A	3362 - 21
957366	3F15	26A	3362 - 21
957366	3H8	4	3363 - 27
957366	3H8	5	3363 - 27
957366	3H10	18	3363 - 29
957366	3H12	1	3363 - 31
957366	3H12	9	3363 - 31
957366	3H12	12	3363 - 31
957366	3H12	15	3363 - 31
957366	3H12	23	3363 - 31
957366	3H12	40	3363 - 31
957366	3H12	41	3363 - 31
957366	3H14	1	3363 - 33
957366	3H14	19	3363 - 33
957366	3H14	21	3363 - 33
957366	3H14	28	3363 - 33
957366	3I4	9	3363 - 47
957366	3I6	1	3363 - 49
957366	3I6	26	3363 - 49
957366	3I6	40	3363 - 49
957366	3I8	7	3363 - 51
957366	3I24	12	3363 - 71
957366	3K16	13	4360 - 7
957474	1G13	..	1369 - 3
962002	1C2	4	0260 - 7
970860	1G13	..	1369 - 3
971489	3J4	8	3363 - 81
971823	3K16	19	4360 - 7
9735305	3H24	1	3363 - 43
9735306	3H24	17	3363 - 43
9737118	3G22	4	3363 - 13
9745380	1C6	5	0260 - 7D
9745411	3J8	1	3363 - 85
9749336	3K16	33	4360 - 7
9751787	3H20	9	3363 - 39
9751787	3H22	9	3363 - 41
9754825	3C15	16	3315 - 5B
9754826	3C15	17	3315 - 5B
9754977	3C21	22	3315 - 9
9755255	1C14	3	0260 - 15
9755747	3C21	19	3315 - 9
9756005	1H22	2	1674 - 27
9756736	2C22	16	1821 - 9
9759157	3C15	14	3315 - 5B
9759157	3C15	15	3315 - 5B
9759157	3C15	16	3315 - 5B
9759157	3C15	17	3315 - 5B
9759157	3C17	14	3315 - 5D
9759158	3C15	14	3315 - 5B
9759158	3C15	15	3315 - 5B
9759158	3C15	16	3315 - 5B
9759158	3C15	17	3315 - 5B
9759158	3C17	15	3315 - 5D
9761179	3F19	5	3362 - 35
985099	3F4	78	3362 - 7
985099	3F6	9	3362 - 9
985099	3F14	44	3362 - 17
986910	3J4	6	3363 - 81
991342	3E16	7	3361 - 7
991347	1C10	24	0260 - 11
991725	1C2	2	0260 - 7
992526	3G8	20B	3362 - 53
997330	3J12	5	3364 - 3

PART NO.	GRID	KEY	PAGE