120G

RUTHZIL TRATOR COMERCIAL DE PEÇAS LTDA 11 97083-6812 ROLANDO

MOTOR GRADER 87V1138-82V668 78P

SISTEMA DE FRENO

2G7700 AIR DRYER GROUP-Serial No. 87V2262-Up and 82V740-Up
Removes moisture and impurities from the air system.

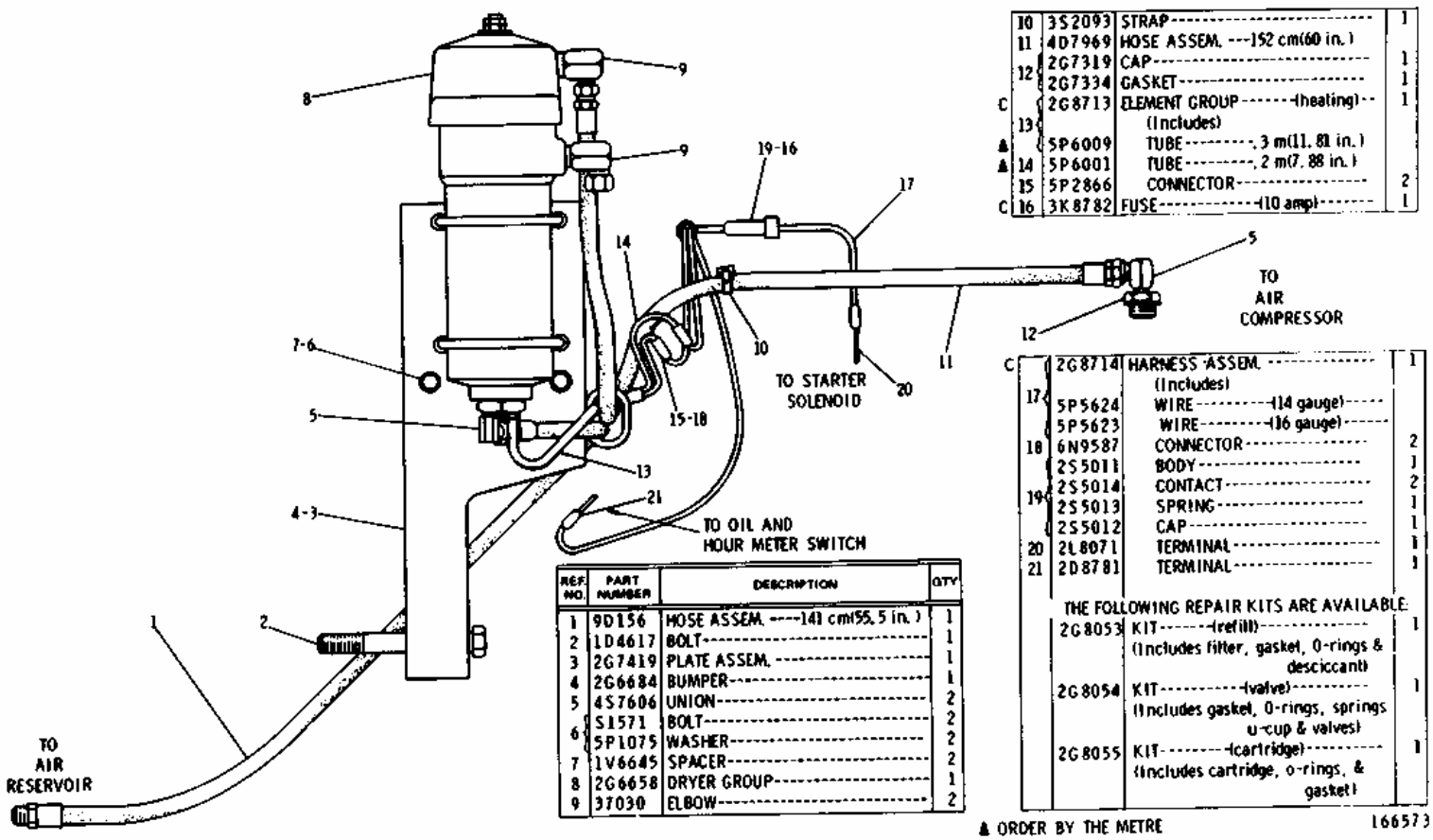

REF. NO.	PART NUMBER	DESCRIPTION	QTY.
1	9D156	HOSE ASSEM. ----141 cm(55.5 in.)	1
2	1D4617	BOLT	1
3	2G7419	PLATE ASSEM.	1
4	2G6684	BUMPER	1
5	4S7606	UNION	2
6	0S1571	BOLT	2
	5P1075	WASHER	2
7	1V6645	SPACER	2
8	2G6658	DRYER GROUP	1
9	37030	ELBOW	2
10	3S2093	STRAP	1
11	4D7969	HOSE ASSEM. ---152 cm(60 in.)	
12	2G7319	CAP	1
	2G7334	GASKET	1
C 13	2G8713	ELEMENT GROUP -------(heating)-- (Includes)	1
▲	5P6009	TUBE ---------, 3 m(11. 81 in.)	
▲ 14	5P6001	TUBE ---------, 2 m(7. 88 in.)	
15	5P2866	CONNECTOR	2
C 16	3K8782	FUSE ----------(10 amp)------	1
C	2G8714	HARNESS ASSEM. ---------- (Includes)	1
17	5P5624	WIRE ---------(14 gauge)-----	
	5P5623	WIRE ---------(16 gauge)-----	
18	6N9587	CONNECTOR ----------	2
19	2S5011	BODY ----------	1
	2S5014	CONTACT ----------	2
	2S5013	SPRING ----------	1
	2S5012	CAP ----------	1
20	2L8071	TERMINAL ----------	1
21	2D8781	TERMINAL ----------	1

THE FOLLOWING REPAIR KITS ARE AVAILABLE:

2G8053	KIT -------(refill)---------- (Includes filter, gasket, O-rings & desiccant)	1
2G8054	KIT ----------(valve)---------- (Includes gasket, O-rings, springs u-cup & valves)	1
2G8055	KIT --------(cartridge)---------- (Includes cartridge, o-rings, & gasket)	1

▲ ORDER BY THE METRE

166573

1 NPR 9D-0156 1 HOSE ASSEM. 141 cm(55.5 in.)

2 NPR 1D-4617 1 BOLT

3 NPR 2G-7419 1 PLATE ASSEM.

4 NPR 2G-6684 1 BUMPER

5 NPR 4S-7606 2 UNION

6 NPR 0S-1571 2 BOLT

NPR 5P-1075 2 WASHER

7 NPR 1V-6645 2 SPACER

8 NPR 2G-6658 1 DRYER GROUP

9 NPR 003-7030 2 ELBOW

10 NPR 3S-2093 1 STRAP

11 NPR 4D-7969 HOSE ASSEM. 152 cm(60 in.)

12 NPR 2G-7319 1 CAP

NPR 2G-7334 1 GASKET

13 NPR C 2G-8713 1 ELEMENT GROUP (heating)

(Includes)

NPR H 5P-6009 TUBE .3 m(11.81 in.)

14 NPR H 5P-6001 TUBE .2 m)7.88 in.)

15 NPR 5P-2866 2 CONNECTOR

16 NPR C 3K-8782 1 FUSE (10 amp)

17 NPR C 2G-8714 1 HARNESS ASSEM.

(Includes)

NPR 5P-5624 WIRE (14 gauge)

NPR 5P-5623 WIRE (16 gauge)

18 NPR 6N-9587 2 CONNECTOR

19 NPR 2S-5011 1 BODY

NPR 2S-5014 2 CONTACT

NPR 2S-5013 1 SPRING

NPR 2S-5012 1 CAP

20 NPR 2L-8071 1 TERMINAL

21 NPR 2D-8781 1 TERMINAL

THE FOLLOWING REPAIR KITS ARE AVAILABLE:

NPR 2G-8053 1 KIT (refill)

(Includes filter, gasket, O-rings & desciccant)

NPR 2G-8054 1 KIT (valve)

(Includes gasket, O-rings, springs u-cup & valves)

NPR 2G-8055 1 KIT (cartridge)

(Includes cartridge, o-rings, & gasket)

Key: H - ORDER BY THE METRE

9D3480 SERVICE BRAKE GROUP-SERIAL NO. 87V5275 TO 87V5971 INCLUSIVE

REF NO.	PART NUMBER	DESCRIPTION	QTY
1	1D4719	NUT	60
2	3B4508	LOCKWASHER	72
3	S1587	BOLT	4

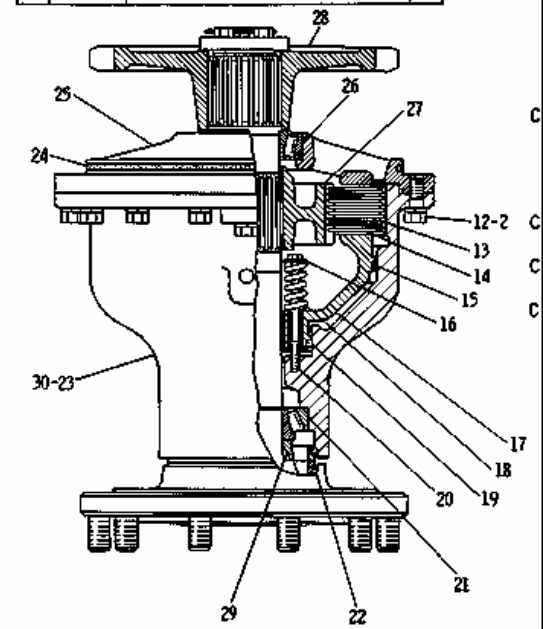

	4	8D8806	PLATE	4
		3J4818	LOCKWASHER	4
▲	5	5P6628	WIRE, .812 m(32 in.)	
	6	333134	BOLT	12
	7	8D8791	SHIM-0.20 mm(.007 in.) thick	24
		8D8792	SHIM-0.13 mm(.005 in.) thick	24
		9D7085	SHIM-0.51 mm(.020 in.) thick	8
	8	2S672	RETAINER	4
	9	8D8787	SPROCKET-(rear mounting)	2
	10	2G7682	SPINDLE	4
C	11	6V1319	STUD	40
	12	S1595	BOLT-31.8 mm(1.25 in.) long	8
	13	2G9908	DISC ASSEM.	36
	14	8D8794	DISC	40
	15	8D8795	SEAL	4
C	16	4B4279	WASHER	24
	17	2G5369	PISTON	4
C	18	9J5498	SPRING	24
	19	9D7972	SEAL	4
C	20	6G905	BOLT	24
	21	9D3241	CUP	4
		9D3242	CONE	4
	22	3S303	SEAL GROUP (Each Includes)	4
		3S302	RING	2
	23	2G4612	HOUSING	4
	24	5P2545	SEAL	8
	25	8D8805	COVER	4
	26	2N2138	CUP	4
		2N2139	CONE	4
	27	2G6336	HUB	4
	28	8D8787	SPROCKET-(front mounting)	2
	29	9D4029	SPACER	4
	30	3J5390	PLUG	4

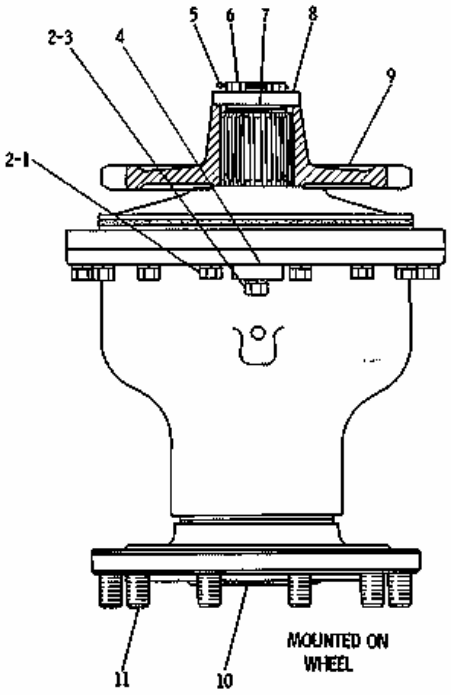

NOTE: QUANTITIES SHOWN ARE THOSE REQUIRED FOR BOTH R.H. & L.H. BRAKES

▲ ORDER BY THE METER
C INDICATES CHANGE

228066

1 NPR 1D-4719 60 NUT

2 NPR 3B-4508 72 LOCKWASHER

3 NPR 0S-1587 4 BOLT

4 NPR 8D-8806 4 PLATE

NPR 3J-4818 4 LOCKWASHER

5 NPR H 5P-6628 WIRE .812 m(32 in.)

6 NPR 033-3134 12 BOLT

7 NPR 8D-8791 24 SHIM 0.20 mm(.007 in.) thick

NPR 8D-8792 24 SHIM 0.13 mm(.005 in.) thick

NPR 9D-7085 8 SHIM 0.51 mm(.020 in.) thick

8 NPR 2S-0672 4 RETAINER

9 NPR 8D-8787 2 SPROCKET (rear mounting)

10 NPR 2G-7682 4 SPINDLE

11 NPR C 6V-1319 40 STUD

12 NPR 0S-1595 8 BOLT 31.8 mm(1.25 in.) long

13 NPR 2G-9908 36 DISC ASSEM.

14 NPR 8D-8794 40 DISC

15 NPR 8D-8795 4 SEAL

16 NPR C 4B-4279 24 WASHER

17 NPR 2G-5369 4 PISTON

18 NPR C 9J-5498 24 SPRING

19 NPR 9D-7972 4 SEAL

20 NPR C 6G-0905 24 BOLT

21 NPR 9D-3241 4 CUP

NPR 9D-3242 4 CONE

22 NPR 3S-0303 4 SEAL GROUP

(Each Includes)

NPR 3S-0302 2 RING

23 NPR 2G-4612 4 HOUSING

24 NPR 5P-2545 8 SEAL

25 NPR CL 8D-8805 4 COVER

CL NPR 299-2002 1 COVER-CLA

26 NPR 2N-2138 4 CUP

NPR 2N-2139 4 CONE

27 NPR CL 2G-6336 4 HUB

CL NPR 282-6551 1 HUB-BRK-CLA

28 NPR 8D-8787 2 SPROCKET (front mounting)

29 NPR 9D-4029 4 SPACER

30 NPR 3J-5390 4 PLUG

Key:

CL - Classic Part Available
C - INDICATES CHANGE
H - ORDER BY THE METER

8D8790 PARKING BRAKE CONTROL GROUP-SERIAL NO. 87V5275 TO 87V6260 INCLUSIVE
5D470,5D4382-PAGE 158

REF NO.	PART NUMBER	DESCRIPTION	QTY.
C 1	6G2260	ACTUATOR GROUP---------- (Includes)	1
	8K8467	SPRING----------	1
C 2	1B4206	NUT----------	2
3	3B4510	LOCKWASHER----------	4
4	5K292	ROD END----------	1
C 5	9S1354	NUT----------	1
6	4K1540	PIN----------	1
	3B4617	COTTER PIN----------	1
7	8D2205	BRACKET----------	1
8	S1625	BOLT----------	2
C	1D4720	NUT----------	2
9	9M8406	CLIP----------	1
10	5K2408	NIPPLE----------	1
11	5D470	VALVE ASSEM. ----(relief)---- (Separate Illustration)	1
12	5M6213	PLUG----------	1

REF NO.	PART NUMBER	DESCRIPTION	QTY.
13	7D9708	BOLT----------	2
	T431	WASHER----------	4
14	5F8494	SPRING----------	1
15	T883	WASHER----------	2
16	9D948	BRACKET ASSEM. ---------- (Includes)	1
17	9F2978	NUT----------	1
18	2D2285	BOLT----------	1
	9F5644	LOCKWASHER----------	1
19	9D945	LEVER ASSEM. ---------- (Includes)	1
20	5H1514	PIN----------	1
▲ 21	4H6147	UNION--------(straight)----------	2
22	2D7325	TEE----------	1
23	6D1432	VALVE----------(check)----------	1
24	8H7696	FITTING----------	1
25	5D4382	VALVE ASSEM. --------(air)-------- (Separate Illustration)	1
26	2M8908	KNOB----------	1
27	2G3765	SPRING----------	1
28	9D951	PLATE----------	1
29	4D2560	UNION----------	1

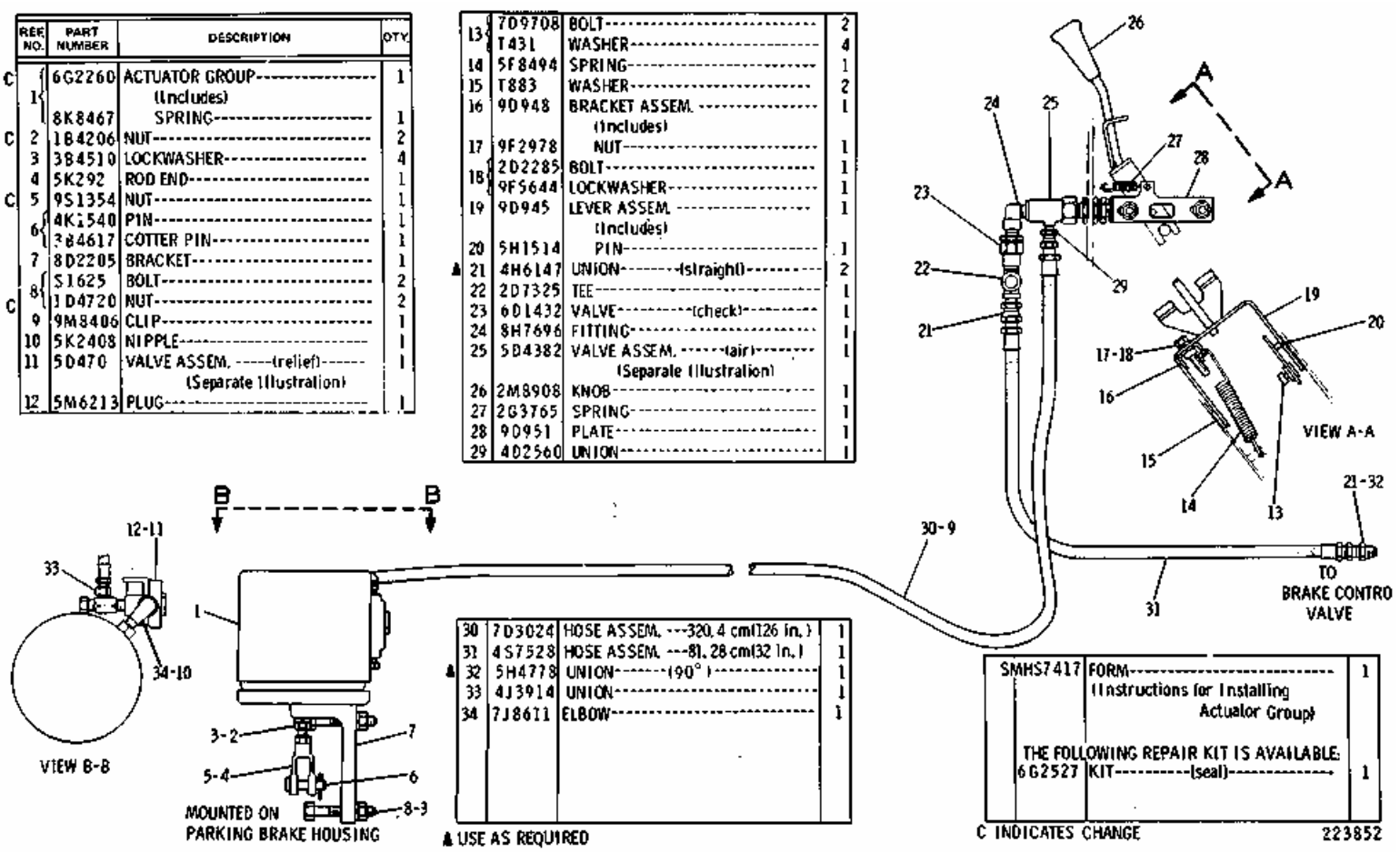

REF NO.	PART NUMBER	DESCRIPTION	QTY.
30	7D3024	HOSE ASSEM. ---320.4 cm(126 in.)----	1
31	4S7528	HOSE ASSEM. ---81.28 cm(32 in.)----	1
▲ 32	5H4778	UNION--------(90°)----------	1
33	4J3914	UNION----------	1
34	7J8611	ELBOW----------	1

▲ USE AS REQUIRED

SMHS7417	FORM---------- (Instructions for Installing Actuator Group)		1
	THE FOLLOWING REPAIR KIT IS AVAILABLE:		
6G2527	KIT----------(seal)----------		1

C INDICATES CHANGE 223852

1 NPR C 6G-2260 1 ACTUATOR GROUP

(Includes)

NPR 8K-8467 1 SPRING

2 NPR C 1B-4206 2 NUT

3 NPR 3B-4510 4 LOCKWASHER

4 NPR 5K-0292 1 ROD END

5 NPR C 9S-1354 1 NUT

6 NPR 4K-1540 1 PIN

NPR 3B-4617 1 COTTER PIN

7 NPR 8D-2205 1 BRACKET

8 NPR 0S-1625 2 BOLT

	NPR C	1D-4720	2	NUT
9	NPR	9M-8406	1	CLIP
10	NPR	5K-2408	1	NIPPLE
11	NPR Y	5D-0470	1	VALVE ASSEM. (relief)
(Separate Illustration)				
12	NPR	5M-6213	1	PLUG
13	NPR	7D-9708	2	BOLT
	NPR	0T-0431	4	WASHER
14	NPR	5F-8494	1	SPRING
15	NPR	0T-0883	2	WASHER
16	NPR	9D-0948	1	BRACKET ASSEM.
(Includes)				
17	NPR	9F-2978	1	NUT
18	NPR	2D-2285	1	BOLT
	NPR	9F-5644	1	LOCKWASHER
19	NPR	9D-0945	1	LEVER ASSEM.
(Includes)				
20	NPR	5H-1514	1	PIN
21	NPR H	4H-6147	2	UNION (straight)
22	NPR	2D-7325	1	TEE
23	NPR	6D-1432	1	VALVE (check)
24	NPR	8H-7696	1	FITTING
25	NPR Y	5D-4382	1	VALVE ASSEM. (air)

(Separate Illustration)

26	**NPR**	**2M-8908**	**1**	**KNOB**
27	**NPR**	**2G-3765**	**1**	**SPRING**
28	**NPR**	**9D-0951**	**1**	**PLATE**
29	**NPR**	**4D-2560**	**1**	**UNION**
30	**NPR**	**7D-3024**	**1**	**HOSE ASSEM. 320.4 cm(126 in.)**
31	**NPR**	**4S-7528**	**1**	**HOSE ASSEM. 81.28 cm(32 in.)**
32	**NPR H**	**5H-4778**	**1**	**UNION (90 degrees)**
33	**NPR**	**4J-3914**	**1**	**UNION**
34	**NPR**	**7J-8611**	**1**	**ELBOW**

THE FOLLOWING REPAIR KIT IS AVAILABLE:

NPR	**6G-2527**	**1**	**KIT (seal)**

Key:

H - USE AS REQUIRED
Y - SEPARATE ILLUSTRATION
C - INDICATES CHANGE

2G5780 BRAKE CONTROL GROUP-PART 1 OF 3-SERIAL NO. 87V5275 TO 87V5589 INCLUSIVE

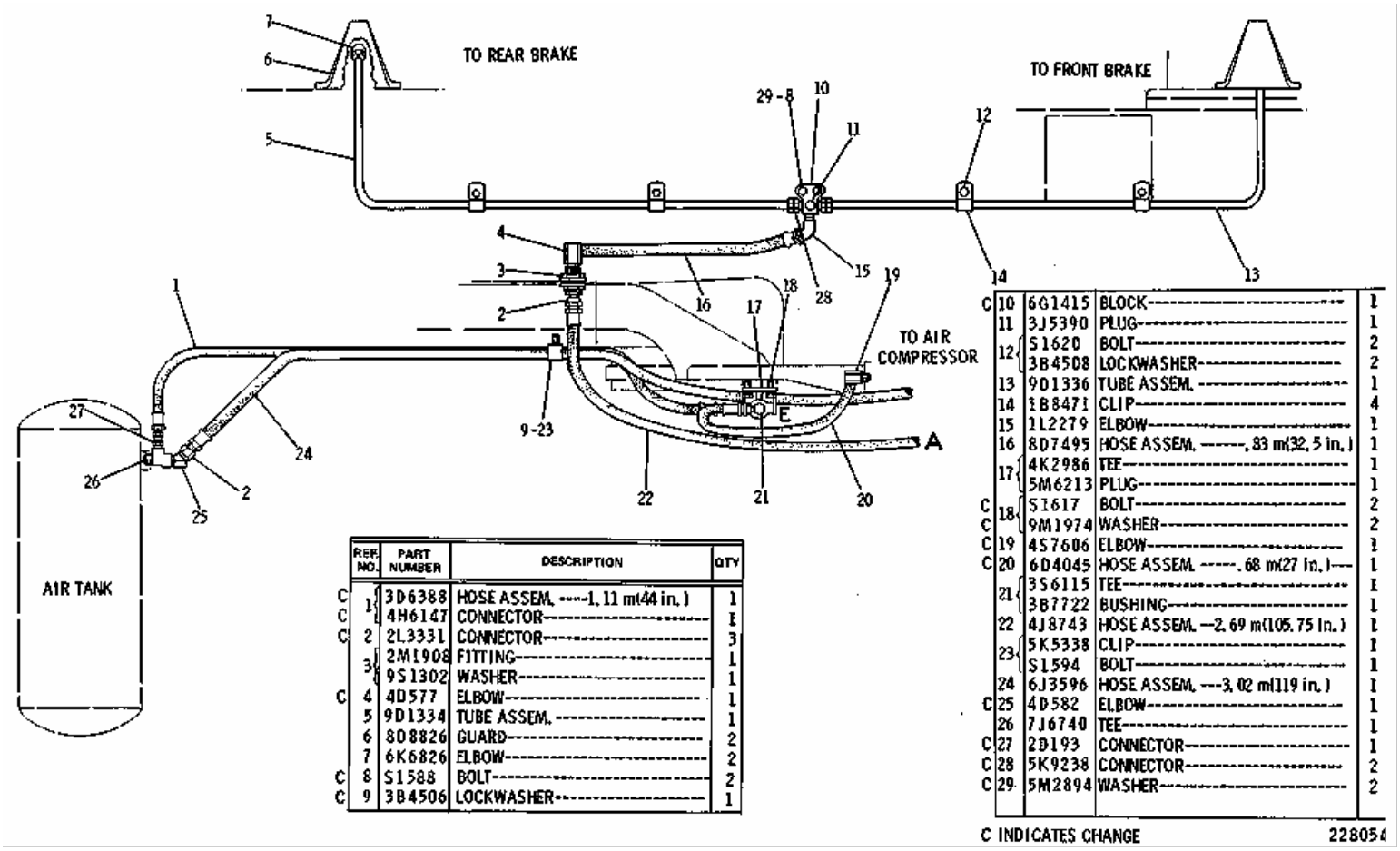

REF. NO.	PART NUMBER	DESCRIPTION	QTY
C 1	3D6388	HOSE ASSEM. ----1.11 m(44 in.)	1
C	4H6147	CONNECTOR	1
C 2	2L3331	CONNECTOR	3
3	2M1908	FITTING	1
	9S1302	WASHER	1
C 4	4D577	ELBOW	1
5	9D1334	TUBE ASSEM.	1
6	8D8826	GUARD	2
7	6K6826	ELBOW	2
C 8	S1588	BOLT	2
C 9	3B4506	LOCKWASHER	1
C 10	6G1415	BLOCK	1
11	3J5390	PLUG	1
12	S1620	BOLT	2
	3B4508	LOCKWASHER	2
13	9D1336	TUBE ASSEM.	1
14	1B8471	CLIP	4
15	1L2279	ELBOW	1
16	8D7495	HOSE ASSEM. ------.83 m(32.5 in.)	1
17	4K2986	TEE	1
	5M6213	PLUG	1
C 18	S1617	BOLT	2
C	9M1974	WASHER	2
C 19	4S7606	ELBOW	1
C 20	6D4045	HOSE ASSEM. -----.68 m(27 in.)	1
21	3S6115	TEE	1
	3B7722	BUSHING	1
22	4J8743	HOSE ASSEM. --2.69 m(105.75 in.)	1
23	5K5338	CLIP	1
	S1594	BOLT	1
24	6J3596	HOSE ASSEM. ---3.02 m(119 in.)	1
C 25	4D582	ELBOW	1
26	7J6740	TEE	1
C 27	2D193	CONNECTOR	1
C 28	5K9238	CONNECTOR	2
C 29	5M2894	WASHER	2

C INDICATES CHANGE 228054

1 NPR C 3D-6388 1 HOSE ASSEM. 1.11 m(44 in.)

NPR C 4H-6147 1 CONNECTOR

2 NPR C 2L-3331 3 CONNECTOR

3 NPR 2M-1908 1 FITTING

NPR 9S-1302 1 WASHER

4 NPR C 4D-0577 1 ELBOW

5 NPR 9D-1334 1 TUBE ASSEM.

6 NPR 8D-8826 2 GUARD

7 NPR 6K-6826 2 ELBOW

8 NPR C 0S-1588 2 BOLT

9 NPR C 3B-4506 1 LOCKWASHER

10 NPR C 6G-1415 1 BLOCK

11 NPR 3J-5390 1 PLUG

12 NPR 0S-1620 2 BOLT

NPR 3B-4508 2 LOCKWASHER

13 NPR 9D-1336 1 TUBE ASSEM.

14 NPR 1B-8471 4 CLIP

15 NPR 1L-2279 1 ELBOW

16 NPR 8D-7495 1 HOSE ASSEM. .83 m(32.5 in.)

17 NPR 4K-2986 1 TEE

NPR 5M-6213 1 PLUG

18 NPR C 0S-1617 2 BOLT

NPR C 9M-1974 2 WASHER

19 NPR C 4S-7606 1 ELBOW

20 NPR C 6D-4045 1 HOSE ASSEM. .68 m(27 in.)

21 NPR 3S-6115 1 TEE

NPR 3B-7722 1 BUSHING

22 NPR 4J-8743 1 HOSE ASSEM. 2.69 m(105.75 in.)

23 NPR 5K-5338 1 CLIP

NPR 0S-1594 1 BOLT

24 NPR 6J-3596 1 HOSE ASSEM. 3.02 m(119 in.)

25 NPR C 4D-0582 1 ELBOW

26 NPR 7J-6740 1 TEE

27 NPR C 2D-0193 1 CONNECTOR

28 NPR C 5K-9238 2 CONNECTOR

29 NPR C 5M-2894 2 WASHER

Key:

C - INDICATES CHANGE

2G5780 BRAKE CONTROL GROUP-PART 2 OF 3-SERIAL NO. 87V5275 TO 87V5589 INCLUSIVE

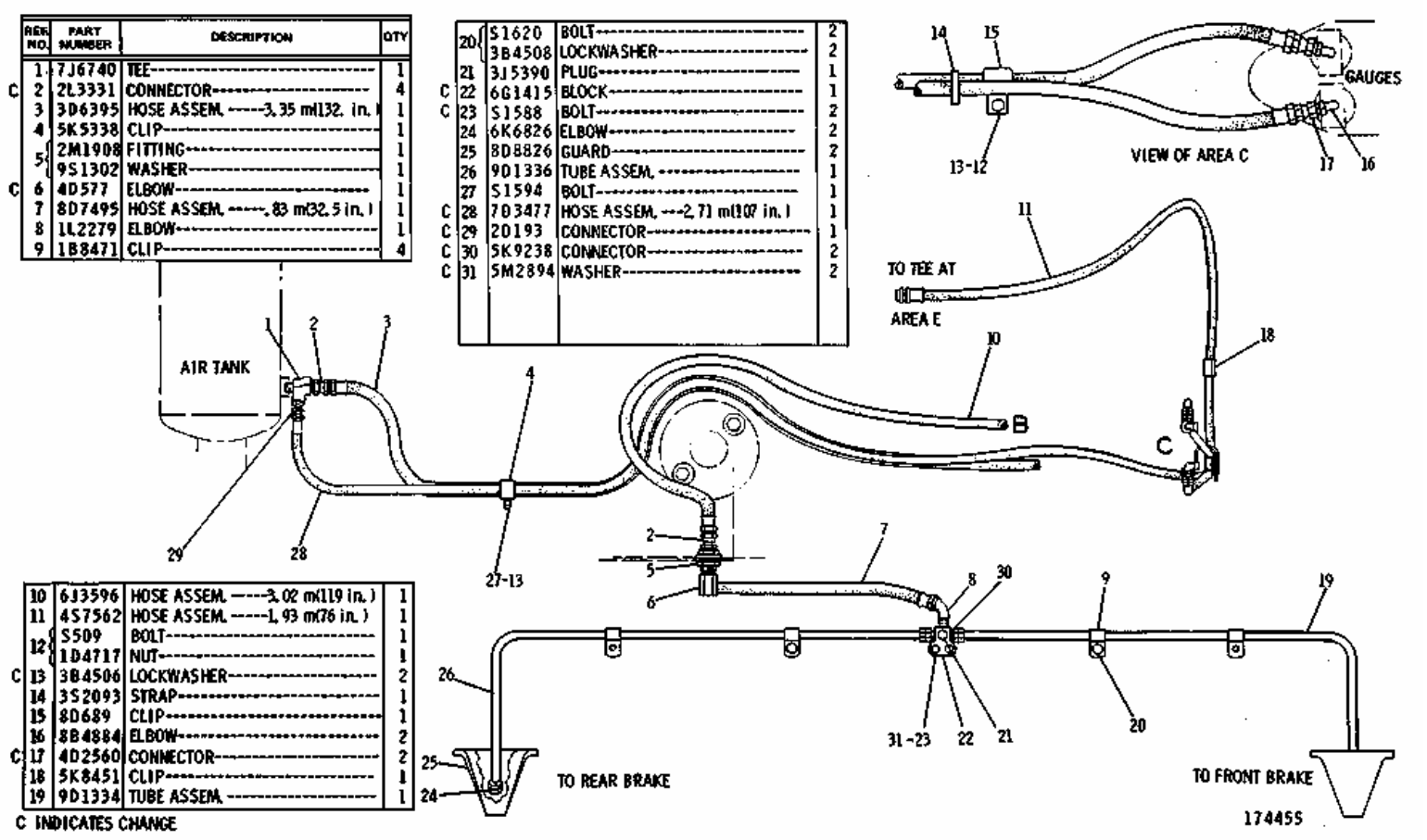

REF NO.	PART NUMBER	DESCRIPTION	QTY
1	7J6740	TEE	1
C 2	2L3331	CONNECTOR	4
3	3D6395	HOSE ASSEM. -----3.35 m(132. in.)	1
4	5K5338	CLIP	1
5	2M1908	FITTING	1
	9S1302	WASHER	1
C 6	4D577	ELBOW	1
7	8D7495	HOSE ASSEM. -----.83 m(32.5 in.)	1
8	1L2279	ELBOW	1
9	1B8471	CLIP	4
10	6J3596	HOSE ASSEM. -----3.02 m(119 in.)	1
11	4S7562	HOSE ASSEM. -----1.93 m(76 in.)	1
12	S509	BOLT	1
	1D4717	NUT	1
C 13	3B4506	LOCKWASHER	2
14	3S2093	STRAP	1
15	8D689	CLIP	1
16	8B4884	ELBOW	2
C 17	4D2560	CONNECTOR	2
18	5K8451	CLIP	1
19	9D1334	TUBE ASSEM.	1
20	S1620	BOLT	2
	3B4508	LOCKWASHER	2
21	3J5390	PLUG	1
C 22	6G1415	BLOCK	1
C 23	S1588	BOLT	2
24	6K6826	ELBOW	2
25	8D8826	GUARD	2
26	9D1336	TUBE ASSEM.	1
27	S1594	BOLT	1
C 28	7D3477	HOSE ASSEM. ---2.71 m(107 in.)	1
C 29	2D193	CONNECTOR	1
C 30	5K9238	CONNECTOR	2
C 31	5M2894	WASHER	2

C INDICATES CHANGE

1 NPR 7J-6740 1 TEE

2 NPR C 2L-3331 4 CONNECTOR

3 NPR 3D-6395 1 HOSE ASSEM. 3.35 m(132 in.)

4 NPR 5K-5338 1 CLIP

5 NPR 2M-1908 1 FITTING

NPR 9S-1302 1 WASHER

6 NPR C 4D-0577 1 ELBOW

7 NPR 8D-7495 1 HOSE ASSEM. .83 m(32.5 in.)

8 NPR 1L-2279 1 ELBOW

9 NPR 1B-8471 4 CLIP

10 NPR 6J-3596 1 HOSE ASSEM. 3.02 m(119 in.)

11 NPR 4S-7562 1 HOSE ASSEM. 1.93 m(76 in.)

12 NPR 0S-0509 1 BOLT

NPR 1D-4717 1 NUT

13 NPR C 3B-4506 2 LOCKWASHER

14 NPR 3S-2093 1 STRAP

15 NPR 8D-0689 1 CLIP

16 NPR 8B-4884 2 ELBOW

17 NPR C 4D-2560 2 CONNECTOR

18 NPR 5K-8451 1 CLIP

19 NPR 9D-1334 1 TUBE ASSEM.

20 NPR 0S-1620 2 BOLT

NPR 3B-4508 2 LOCKWASHER

21 NPR 3J-5390 1 PLUG

22 NPR C 6G-1415 1 BLOCK

23 NPR C 0S-1588 2 BOLT

24 NPR 6K-6826 2 ELBOW

25 NPR 8D-8826 2 GUARD

26 NPR 9D-1336 1 TUBE ASSEM.

27 NPR 0S-1594 1 BOLT

28 NPR C 7D-3477 1 HOSE ASSEM. 2.71 m(107 in.)

29 NPR C 2D-0193 1 CONNECTOR

30 NPR C 5K-9238 2 CONNECTOR

31 NPR C 5M-2894 2 WASHER

Key: C - INDICATES CHANGE

2G5780 BRAKE CONTROL GROUP-PART 3 OF 3--SERIAL NO. 87V5275 TO 87V5589 INCLUSIVE
2G5680 VALVE PARTS ARE SHOWN ON PAGE 163

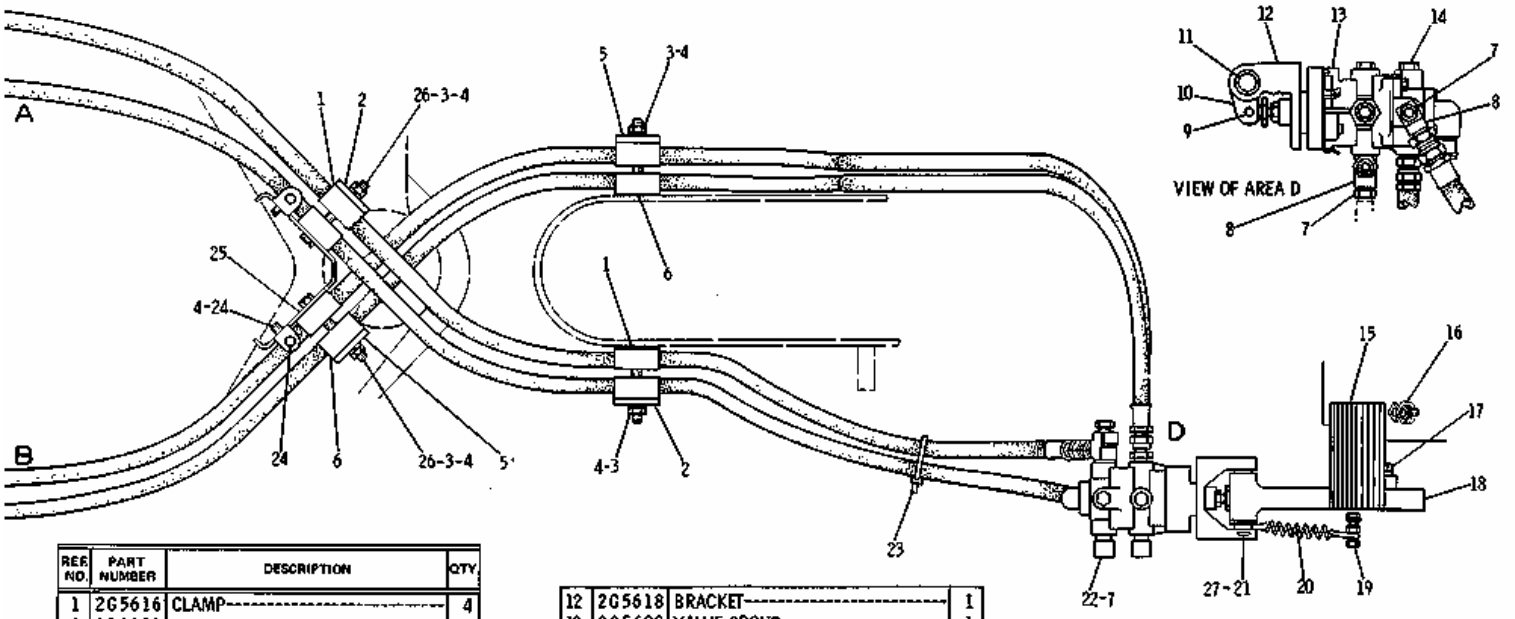

REF NO.	PART NUMBER	DESCRIPTION	QTY
1	2G5616	CLAMP	4
2	8D9251	PLATE	2
3	1D4717	NUT	8
4	4B4278	WASHER	10
5	8D9247	PLATE	2
6	2G5617	CLAMP	4
7	3B7722	BUSHING	4
8	7J6740	TEE	2
9	8D5189	PIN	1
	3B4607	COTTER PIN	1
10	9D8121	ROLLER	1
11	8D6841	SHAFT	1
	7K2135	BEARING	2

12	2G5618	BRACKET	1
13	2G5680	VALVE GROUP (Separate Illustration)	1
14	3J5390	PLUG	2
15	8D9	TREAD	1
C 16	4B3611	SCREW	1
	1B2578	NUT	1
17	S1587	BOLT	2
	3B4508	LOCKWASHER	2
18	8D6749	PEDAL	1
	S1616	BOLT	2
19	1B4330	NUT	4
	1H3338	LOCKWASHER	2

20	1D1313	SPRING	1
21	3B4621	COTTER PIN	1
22	9M5501	ELBOW	2
23	3S2093	STRAP	1
24	S509	BOLT	4
	3B4506	WASHER	4
25	9D1968	BRACKET ASSEM. (Includes)	1
26	T65	BOLT	4
C 27	6B863	WASHER	1

C INDICATES CHANGE

228055

1 NPR 2G-5616 4 CLAMP

2 NPR 8D-9251 2 PLATE

3 NPR 1D-4717 8 NUT

4 NPR 4B-4278 10 WASHER

5 NPR 8D-9247 2 PLATE

6 NPR 2G-5617 4 CLAMP

7 NPR 3B-7722 4 BUSHING

8 NPR 7J-6740 2 TEE

9 NPR 8D-5189 1 PIN

NPR 3B-4607 1 COTTER PIN

10 NPR 9D-8121 1 ROLLER

11 NPR 8D-6841 1 SHAFT

	NPR	7K-2135	2	BEARING
12	NPR	2G-5618	1	BRACKET
13	NPR Y	2G-5680	1	VALVE GROUP
(Separate Illustration)				
14	NPR	3J-5390	2	PLUG
15	NPR	8D-0009	1	TREAD
16	NPR C	4B-3611	1	SCREW
	NPR	1B-2578	1	NUT
17	NPR	0S-1587	2	BOLT
	NPR	3B-4508	2	LOCKWASHER
18	NPR	8D-6749	1	PEDAL
19	NPR	0S-1616	2	BOLT
	NPR	1B-4330	4	NUT
	NPR	1H-3338	2	LOCKWASHER
20	NPR	1D-1313	1	SPRING
21	NPR	3B-4621	1	COTTER PIN
22	NPR	9M-5501	2	ELBOW
23	NPR	3S-2093	1	STRAP
24	NPR	0S-0509	4	BOLT
	NPR	3B-4506	4	WASHER
25	NPR	9D-1968	1	BRACKET ASSEM.
(Includes)				
26	NPR	0T-0065	4	BOLT
27	NPR C	6B-0863	1	WASHER

Key: C - INDICATES CHANGE Y - SEPARATE ILLUSTRATION

5D4382 AIR VALVE ASSEMBLY-PART OF 8D8790 PARKING BRAKE CONTORL GROUP SHOWN ON PAGE 157

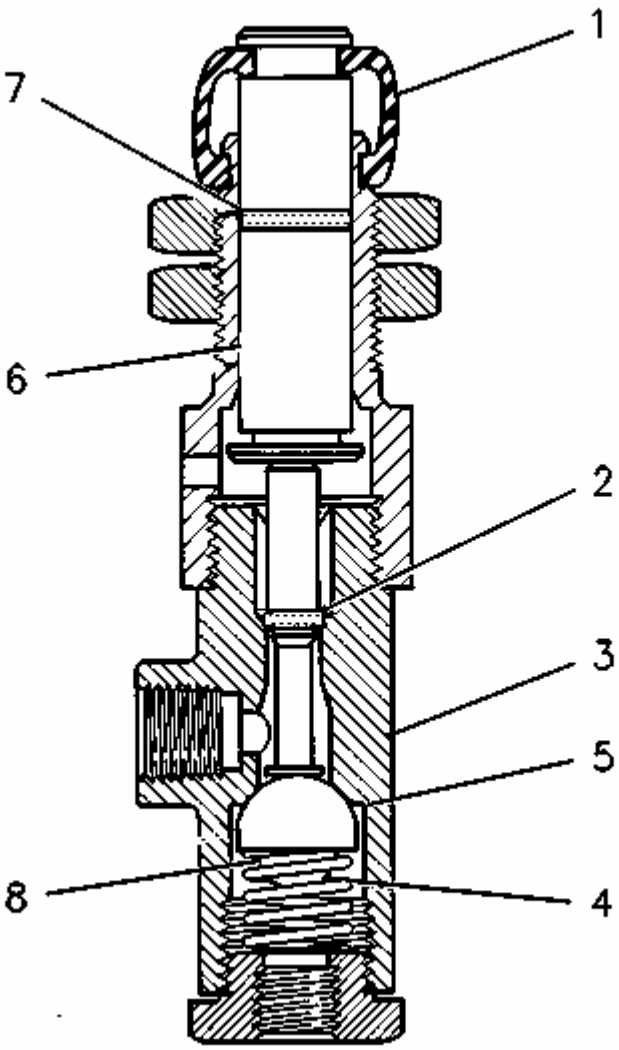

1	**NPR**	**5D-7778**	**1**	**BOOT**
2	**NPR**	**6H-9691**	**1**	**SEAL-O-RING**
3	**NPR**	**4J-8524**	**1**	**BODY**
4	**NPR**	**4J-3957**	**1**	**SPRING**
5	**NPR**	**4D-1138**	**1**	**VALVE-INLET**
6	**NPR**	**4J-8527**	**1**	**STEM**
7	**NPR**	**1H-1023**	**1**	**SEAL-O-RING**
8	**NPR**	**4D-1135**	**1**	**SEAT-SPRING**

5D470 QUICK RELEASE VALVE ASSEMBLY
PART OF 8D8790 PARKING BRAKE CONTORL GROUP SHOWN ON PAGE 157

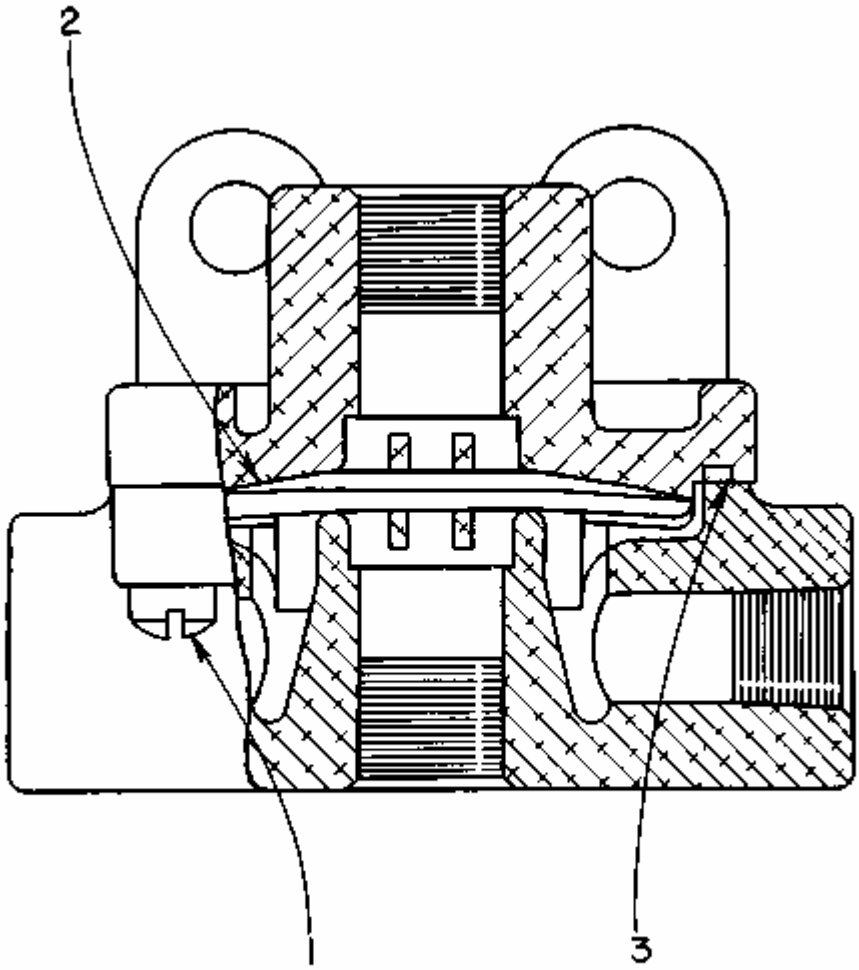

1	**NPR**	**4B-1321**	**4**	**SCREW-MACHINE**
2	**NPR**	**5D-0863**	**1**	**DIAPHRAGM**
3	**NPR**	**5D-5716**	**1**	**SEAL**

2G5680 AIR CONTROL VALVE GROUP-SERIAL NO. 87V5275 TO 87V5589 INCLUSIVE
PART OF 2G5780 BRAKE CONTROL GROUP SHOWN ON PAGE 162

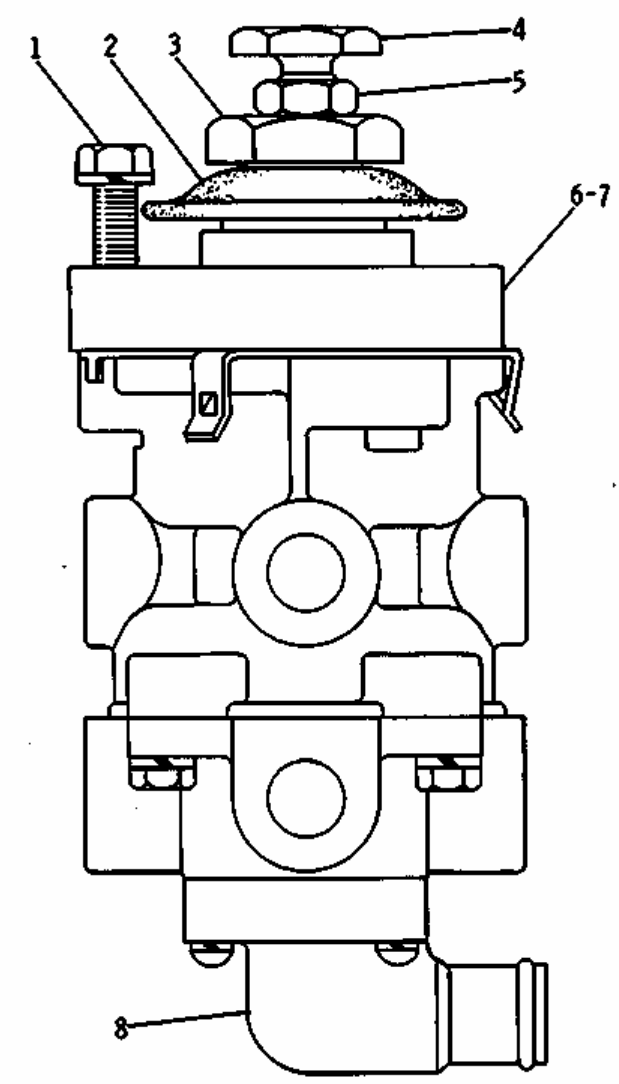

	REF. NO.	PART NUMBER	DESCRIPTION	QTY
	1	2B2694	BOLT	3
		3B4505	LOCKWASHER	3
C	2	2G8772	BOOT	1
	3	2G6284	PLUNGER	1
	4	2G6291	SCREW	1
	5	5B3254	NUT	1
	6	2G6286	SPACER	1
	7	5D768	SPRING	1
	8	2G6287	COVER	1
			THE FOLLOWING REPAIR KIT IS AVAILABLE:	
		2G6285	VALVE KIT----(air control)------- (Includes Diaphragm, Filter, Inlet & Exhaust Valve, Locknut, O-Rings, and Springs)	1

C INDICATES CHANGE

216137

1 NPR 2B-2694 3 BOLT

NPR 3B-4505 3 LOCKWASHER

2 NPR C 2G-8772 1 BOOT

3 NPR 2G-6284 1 PLUNGER

4 NPR 2G-6291 1 SCREW

5 NPR 5B-3254 1 NUT

6 NPR 2G-6286 1 SPACER

7 NPR 5D-0768 1 SPRING

8 NPR 2G-6287 1 COVER

THE FOLLOWING REPAIR KIT IS AVAILABLE:

NPR 2G-6285 1 VALVE KIT (air control)

(Includes Diaphragm, Filter, Inlet & Exhaust Valve, Locknut, O-Rings, and Springs)

Key: C - INDICATES CHANGE

ELECTRICAL

SYSTEM

9D1329 ALARM GROUP-SERIAL NO. 87V5275 TO 87V5733 INCLUSIVE
PART OF 2G7620 BATTERY & WIRING

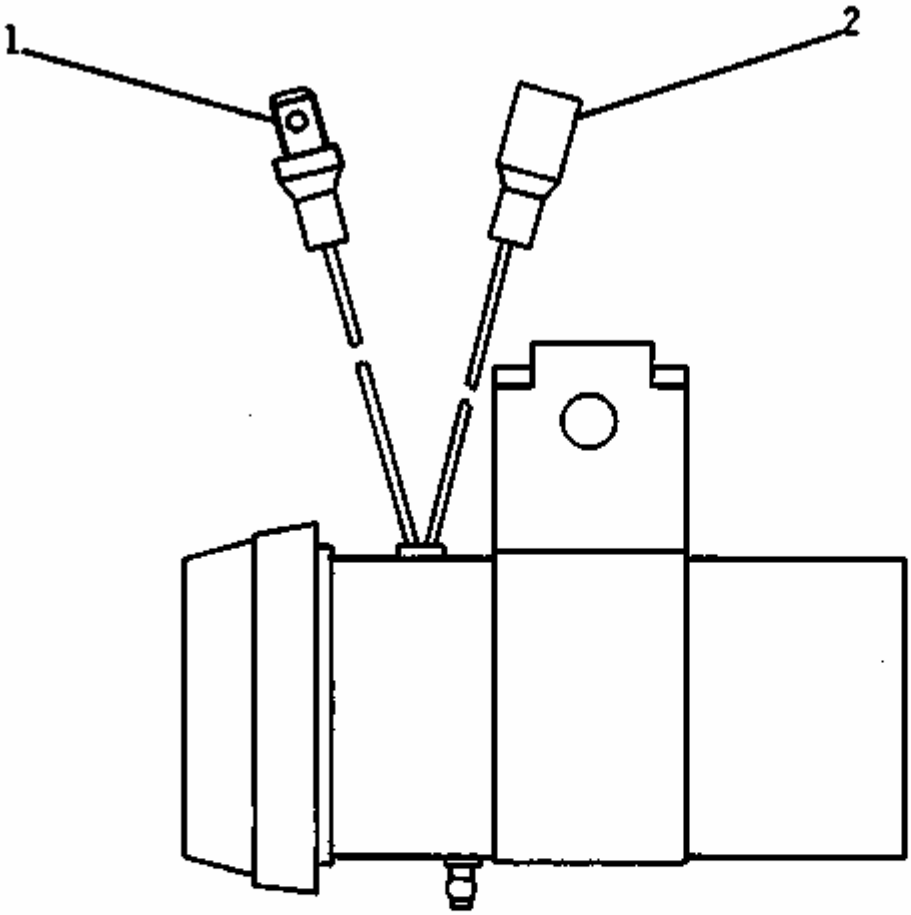

REF. NO.	PART NUMBER	DESCRIPTION	QTY
1	4S1988	CONNECTOR-------(male +)--------	1
2	5P4571	TERMINAL---------(female -)------	1

218013

1 NPR 4S-1988 1 CONNECTOR (male +)

2 NPR 5P-4571 1 TERMINAL (female -)

2G5090 BACK-UP WARNING GROUP-SERIAL NO. 87V5275 TO 87V5733 INCLUSIVE

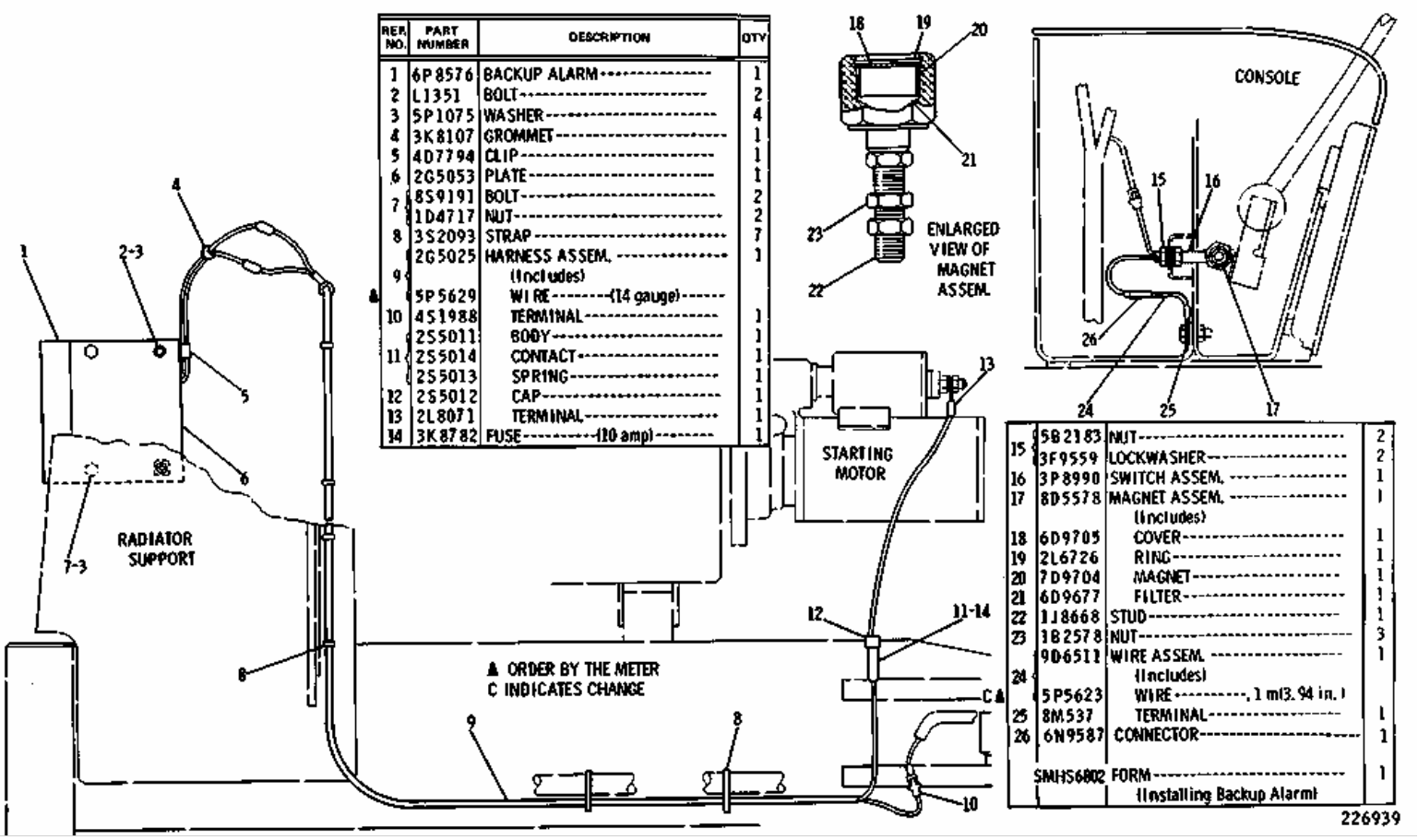

REF NO.	PART NUMBER	DESCRIPTION	QTY
1	6P8576	BACKUP ALARM	1
2	L1351	BOLT	2
3	5P1075	WASHER	4
4	3K8107	GROMMET	1
5	4D7794	CLIP	1
6	2G5053	PLATE	1
7	8S9191	BOLT	2
	1D4717	NUT	2
8	3S2093	STRAP	7
9	2G5025	HARNESS ASSEM. (Includes)	1
▲	5P5629	WIRE--------(14 gauge)------	
10	451988	TERMINAL	1
	2S5011	BODY	1
11	2S5014	CONTACT	1
	2S5013	SPRING	1
12	2S5012	CAP	1
13	2L8071	TERMINAL	1
14	3K8782	FUSE----------(10 amp)--------	1
15	5B2183	NUT	2
	3F9559	LOCKWASHER	2
16	3P8990	SWITCH ASSEM.	1
17	8D5578	MAGNET ASSEM. (Includes)	1
18	6D9705	COVER	1
19	2L6726	RING	1
20	7D9704	MAGNET	1
21	6D9677	FILTER	1
22	1J8668	STUD	1
23	1B2578	NUT	3
	9D6511	WIRE ASSEM. (Includes)	1
24	5P5623	WIRE----------, 1 m(3.94 in.)	
25	8M537	TERMINAL	1
26	6N9587	CONNECTOR	1
	SMHS6802	FORM (Installing Backup Alarm)	1

1 NPR 6P-8576 1 BACKUP ALARM

2 NPR 0L-1351 2 BOLT

3 NPR 5P-1075 4 WASHER

4 NPR 3K-8107 1 GROMMET

5 NPR 4D-7794 1 CLIP

6 NPR 2G-5053 1 PLATE

7 NPR 8S-9191 2 BOLT

NPR 1D-4717 2 NUT

8 NPR 3S-2093 7 STRAP

9 NPR 2G-5025 1 HARNESS ASSEM.

(Includes)

NPR H 5P-5629 WIRE (14 gauge)

10 NPR 4S-1988 1 TERMINAL

11 NPR 2S-5011 1 BODY

NPR 2S-5014 1 CONTACT

NPR 2S-5013 1 SPRING

12 NPR 2S-5012 1 CAP

13 NPR 2L-8071 1 TERMINAL

14 NPR 3K-8782 1 FUSE (10 amp)

15 NPR 5B-2183 2 NUT

NPR 3F-9559 2 LOCKWASHER

16 NPR 3P-8990 1 SWITCH ASSEM.

17 NPR 8D-5578 1 MAGNET ASSEM.

(Includes)

18 NPR 6D-9705 1 COVER

19 NPR 2L-6726 1 RING

20 7D-9704 1 MAGNET

21 NPR 6D-9677 1 FILTER

22 NPR 1J-8668 1 STUD

23 NPR 1B-2578 3 NUT

24 NPR 9D-6511 1 WIRE ASSEM.

(Includes)

NPR CH 5P-5623 WIRE .1 m(3.94 in.)

25 NPR 8M-0537 1 TERMINAL

26 NPR 6N-9587 1 CONNECTOR

Key: C - INDICATES CHANGE H - ORDER BY THE METER

6G7250 WARNING GP-BACK-UP--TYPE 1-SOUND SUPPRESSION-PART OF 2G2580 SOUND SUPPRESSION

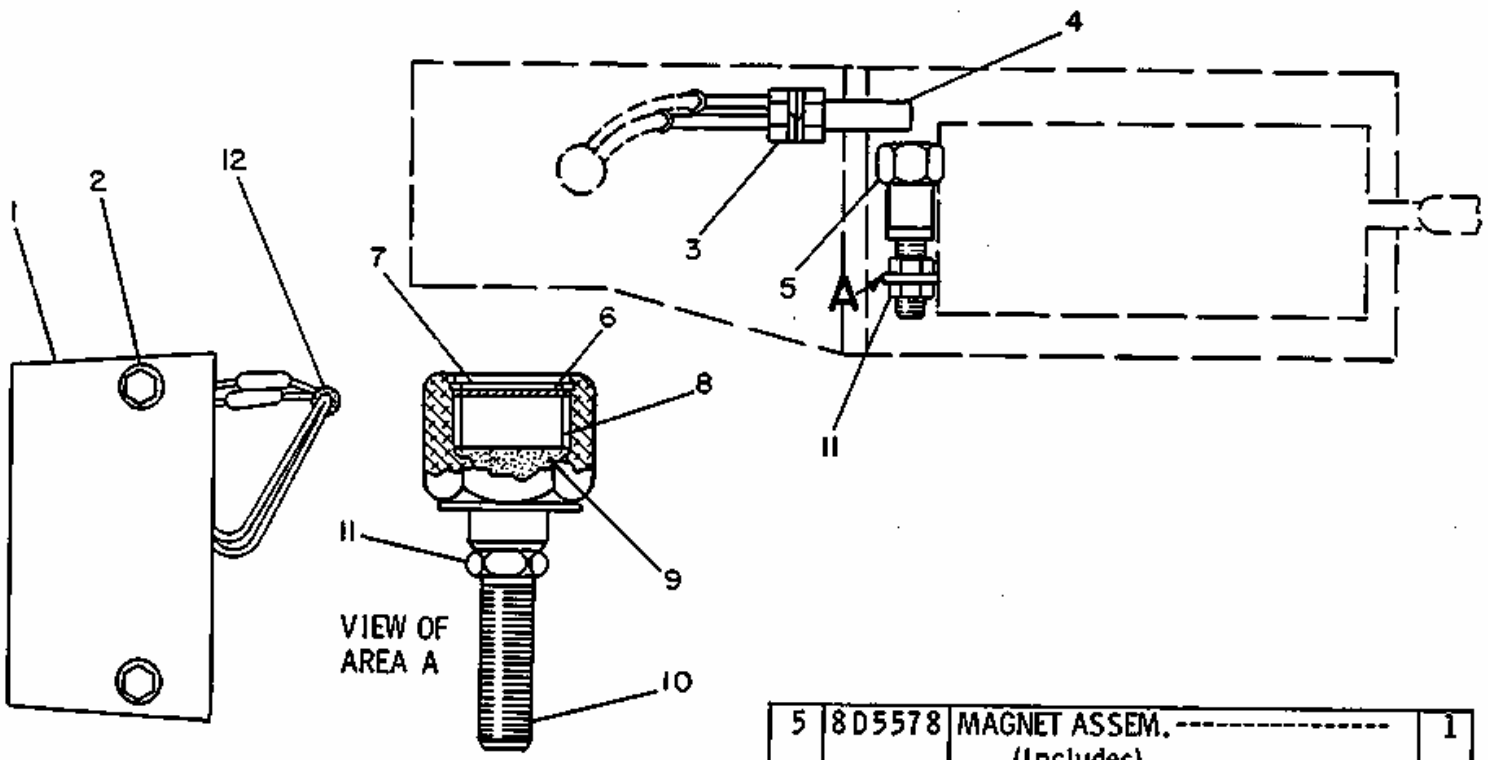

REF. NO.	PART NUMBER	DESCRIPTION	QTY.
1	6P8576	ALARM----------	1
2	2H9889	CAPSCREW----------	2
	5M2894	WASHER----------	2
3	5B2183	NUT----------	2
	3F9559	LOCKWASHER----------	2
4	3P8990	SWITCH ASSEM.----------	1
		(To transmission control console)	

5	8D5578	MAGNET ASSEM.----------	1
		(Includes)	
6	6D9705	COVER----------	1
7	2L6726	RING----------	1
8	6D9704	MAGNET----------	1
9	6D9677	FILTER----------	1
10	1J8668	STUD----------	1
11	1B2578	NUT----------	3
12	4M7470	GROMMET----------	1
▲	8M8948	FUSE-------(15 amp)----------	1
		(Mounted in fuse box)	

▲ NOT SHOWN

232826

1 NPR 6P-8576 1 ALARM

2 NPR 2H-9889 2 CAPSCREW

NPR 5M-2894 2 WASHER

3 NPR 5B-2183 2 NUT

NPR 3F-9559 2 LOCKWASHER

4 NPR 3P-8990 1 SWITCH ASSEM.

(To transmission control console)

5 NPR 8D-5578 1 MAGNET ASSEM.

(Includes)

6 NPR 6D-9705 1 COVER

7 NPR 2L-6726 1 RING

8 NPR 6D-9704 1 MAGNET

9 NPR 6D-9677 1 FILTER

10 NPR 1J-8668 1 STUD

11 NPR 1B-2578 3 NUT

12 NPR 4M-7470 1 GROMMET

NPR H 8M-8948 1 FUSE (15 amp)

(Mounted in fuse box)

Key:

H - NOT SHOWN

6G7250 WARNING GP-BACKUP-SOUND SUPPRESSION. TYPE 2-PART OF 5T4161 & 8W4694 SUPPRESSIONS-SOUND

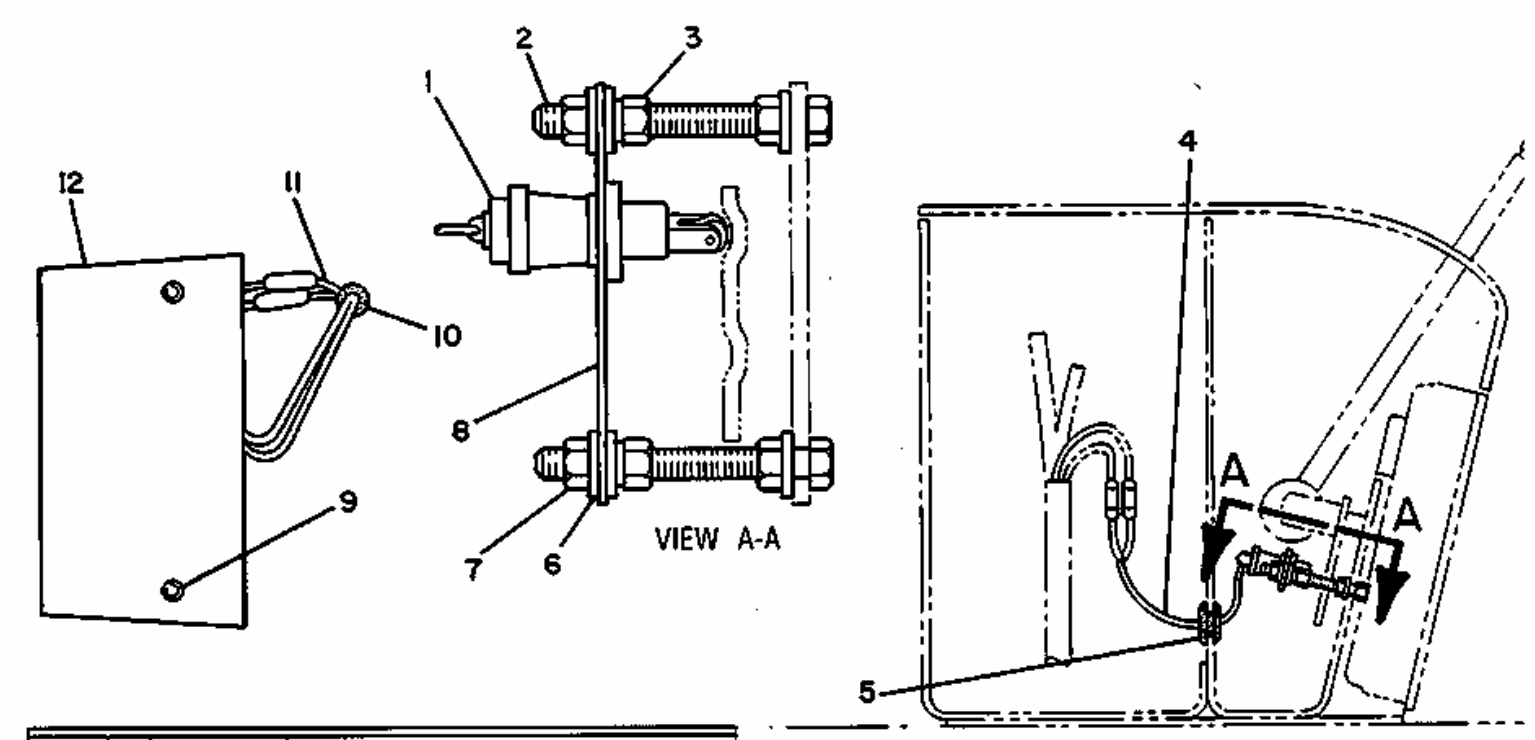

NOTE	REF NO	PART NUMBER	QTY	DESCRIPTION
C	1	9G2795	1	SWITCH AS.
		2H3922	1	LOCKWASHER (LARGE)
		8F1434	2	LOCKWASHER (SMALL)
		6V8363	2	SCREW
		6V8370	1	NUT
		7T6184	1	BOOT
C	2	5B4274	2	BOLT
C	3	4J8265	2	NUT
C	4	5T8328	1	WIRE AS.
C	5	3P5414	1	GROMMET
C	6	5P1075	6	WASHER
C	7	8L7395	4	NUT
C	8	5T8290	1	PLATE
	9	2H9889	2	CAPSCREW
		5M2894	2	WASHER
	10	4M7470	1	GROMMET
C	11	9G9019	2	WIRE AS.
C	12	3T1815	1	ALARM
F		8M8948	1	FUSE (15 AMP)

C INDICATES CHANGE

F NOT SHOWN

337927

1 NPR C 9G-2795 1 SWITCH AS

NPR 2H-3922 1 LOCKWASHER (LARGE)

NPR 8F-1434 2 LOCKWASHER (SMALL)

NPR 6V-8363 2 SCREW

NPR 6V-8370 1 NUT-HEX

NPR 7T-6184 1 BOOT-SWITCH

2 NPR C 5B-4274 2 BOLT

3 NPR C 4J-8265 2 NUT

4	NPR	C	5T-8328	1	WIRE AS
5	NPR	C	3P-5414	1	GROMMET
6	NPR	C	5P-1075	6	WASHER-HARD
7	NPR	C	8L-7395	4	NUT-FULL
8	NPR	C	5T-8290	1	PLATE
9	NPR		2H-9889	2	CAPSCREW
	NPR		5M-2894	2	WASHER
10	NPR		4M-7470	1	GROMMET
11	NPR	C	9G-9019	2	WIRE AS
12	NPR	C	3T-1815	1	ALARM-BACK-UP
	NPR	F	8M-8948	1	FUSE (15 AMP)

Key:

C - CHANGE FROM PREVIOUS TYPE
F - NOT SHOWN

8N9282 ALTERNATOR GROUP-24 VOLT, 50 AMPERE-SERIAL NO. 87V5275 TO 87V5733 INCLUSIVE

NPR RY 5S-9088 1 ALTERNATOR GROUP

NPR 6G-4417 1 HARNESS ASSEMBLY

2 2L8049 TERMINAL

.3M 5P5689 WIRE

1 4L3916 TERMINAL

.4M 5P5623 WIRE

Key: R - REMFG PART MAY BE AVAILABLE Y - SEPARATE ILLUSTRATION

1P9572 ALTERNATOR GROUP-24 VOLT, 35 AMPERE
6N9294 ALTERNATOR PARTS ARE SHOWN ON PAGES 90 & 91

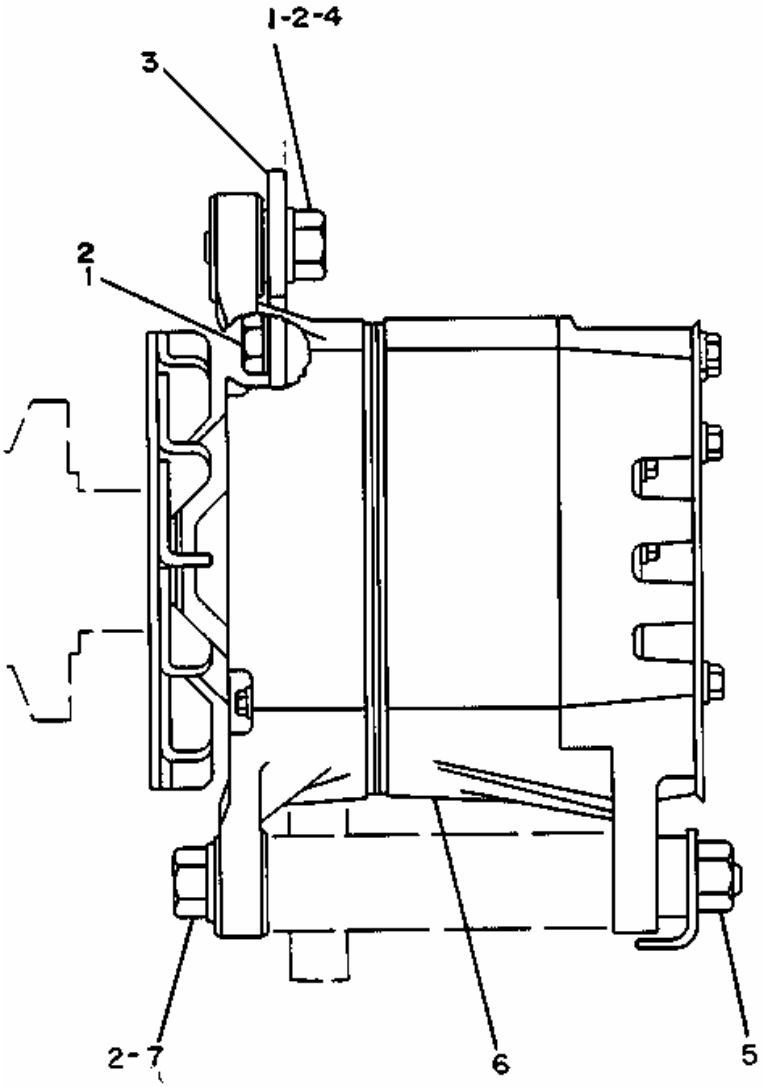

NOTE	REF NO	PART NUMBER	QTY	DESCRIPTION
	1	S1595	2	BOLT 31.7MM(1.25IN.)LONG
C	2	5P8245	3	WASHER 2.38MM(.094IN.)THK
	3	8S4183	1	STRAP
CB	4	T883	3	WASHER 1.65MM(.065IN.)THK
	5	9S1240	1	NUT ASSEM.
Y	6	6N9294	1	ALTERNATOR GROUP
	7	9H8260	1	BOLT

B USE AS REQUIRED
C INDICATES CHANGE
Y SEPARATE ILLUSTRATION

308816

1 NPR 0S-1595 2 BOLT 31.7MM(1.25IN.)LONG

2 NPR C 5P-8245 3 WASHER 2.38MM(.094IN.)THK

3 NPR 8S-4183 1 STRAP

4 NPR CB 0T-0883 3 WASHER 1.65MM(.065IN.)THK

5 NPR 9S-1240 1 NUT ASSEM.

6 NPR RY 6N-9294 1 ALTERNATOR GROUP

R NPR 0R-5217 1 ALTERNATOR GP

7 NPR 9H-8260 1 BOLT

Key: R - REMFG PART MAY BE AVAILABLE Y - SEPARATE ILLUSTRATION
B - USE AS REQUIRED
C - INDICATES CHANGE

6N9294 ALTERNATOR GP*R--24 VOLT, 35 AMPERE. S/N 87V5275-6364
PART OF 1P9572 ALTERNATOR

NPR Y 9G-8255 1 ALTERNATOR GP-DELCO-REMY

- OR -

NPR RY 7N-9720 1 ALTERNATOR GP

R NPR 0R-5217 1 ALTERNATOR GP

Key: Y - SEPARATE ILLUSTRATION

7N9720 ALTERNATOR GROUP-24 VOLT, 35 AMPERE-TYPE 1-PART OF 6N9294 ALTERNATOR

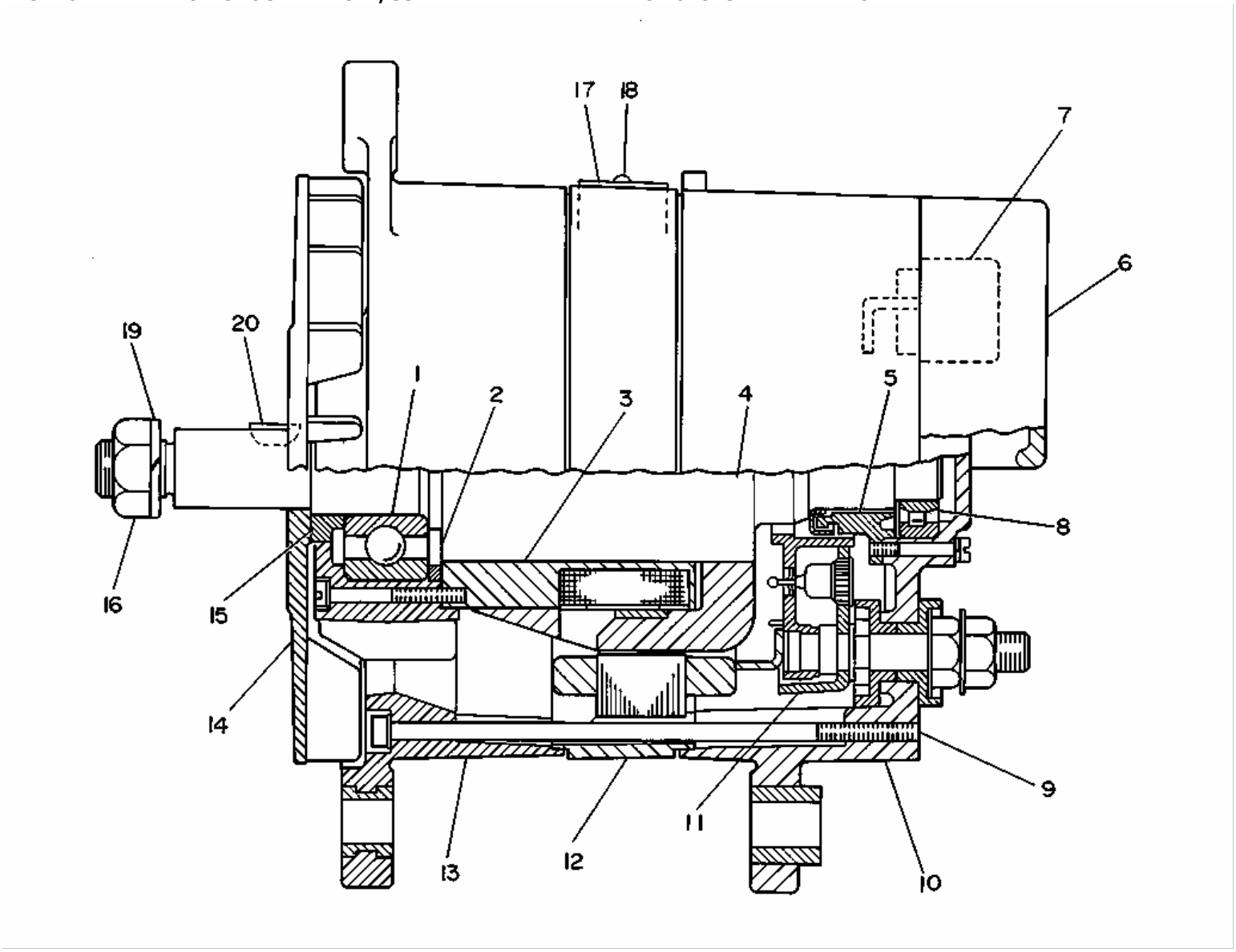

1	NPR	9G-7551	1	BEARING
2	NPR	9G-7548	1	RING
3	NPR	9G-7558	1	COIL AS-FIELD
4	NPR	9G-7560	1	ROTOR AS
5	NPR	9G-7553	1	RING-COVER
6	NPR	9G-7562	1	COVER AS
7	NPR	9G-7567	1	REGULATOR AS
8	NPR	9G-7552	1	BEARING
9	NPR	9G-7557	1	SCREW AS
10	NPR	9G-7568	1	FRAME AS-REAR
11	NPR	9G-7563	1	DIODE AS
12	NPR	9G-7561	1	STATOR AS
13	NPR	9G-7566	1	FRAME-DRIVE END
14	NPR	9G-7564	1	FAN

15 NPR 9G-7549 1 SPACER

16 NPR 2K-4821 1 LOCKNUT

17 NPR C 3T-5962 1 PLATE-IDENTIFICATION

18 NPR C 2H-3880 2 SCREW-DRIVE

19 NPR C 3B-4510 1 LOCKWASHER

20 NPR C 1B-8705 1 KEY-WOODRUFF

THE FOLLOWING REPAIR KITS ARE AVAILABLE:

NPR 9G-7554 1 KIT-TERMINAL GROUND

(INCL NUTS AND LOCKWASHERS)

NPR 9G-7555 1 KIT-TERMINAL OUTPUT

(INCL NUTS, WASHERS AND BUSHINGS)

NPR 9G-7556 1 KIT-CAPACITOR

(INCL CAPACITOR, SCREW, LOCKWASHER AND WASHER)

NPR 9G-7559 1 KIT-TERMINAL RELAY

(INCL SPLICE,TUBE, NUT, TERMINAL, LOCKWASHER, WASHERS AND BUSHING)

NPR 9G-7565 1 KIT-TERMINAL REGULATOR

(INCL NUTS, LOCKWASHERS, WASHERS & BUSHING)

Key: C - CHANGE FROM PREVIOUS TYPE

7N9720 ALTERNATOR GROUP-24 VOLT, 35 AMPERE-TYPE 2-PART OF 6N9294 ALTERNATOR

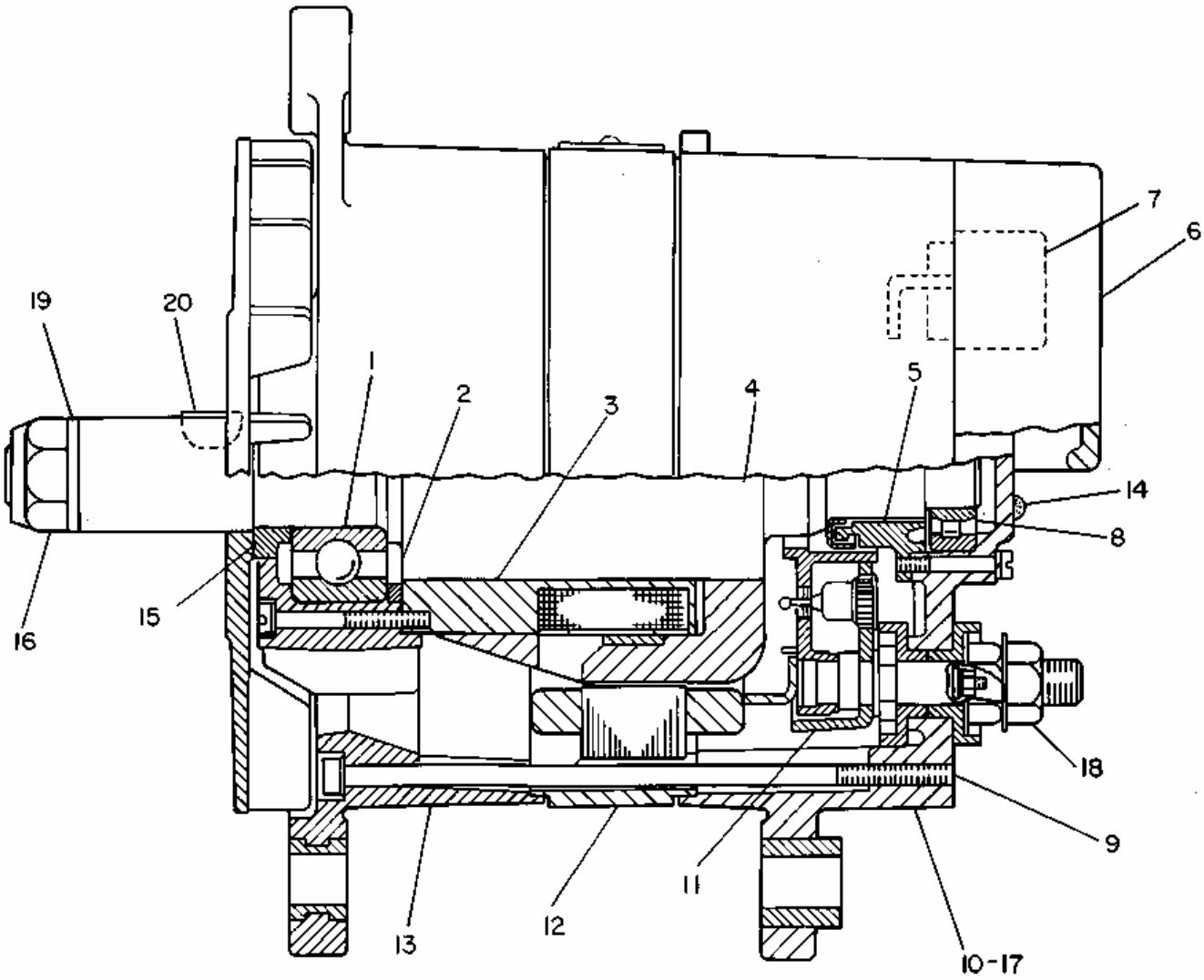

1	**NPR**	**9G-7551**	**1**	**BEARING**
2	**NPR**	**9G-7548**	**1**	**RING**
3	**NPR**	**9G-7558**	**1**	**COIL AS-FIELD**
4	**NPR**	**9G-7560**	**1**	**ROTOR AS**
5	**NPR**	**9G-7553**	**1**	**RING-COVER**
6	**NPR**	**9G-7562**	**1**	**COVER AS**
7	**NPR**	**9G-7567**	**1**	**REGULATOR AS**
8	**NPR**	**9G-7552**	**1**	**BEARING**

9 NPR 9G-7557 4 SCREW AS

10 NPR 9G-7568 1 FRAME AS-REAR

11 NPR 3T-1887 1 DIODE AS

12 NPR 9G-7561 1 STATOR AS

13 NPR 9G-7566 1 FRAME-DRIVE END

14 NPR C 9L-6770 1 CAP

15 NPR 9G-7549 1 SPACER

16 NPR 2K-4821 1 LOCKNUT

17 NPR M 5C-2874 1 NUT

NPR 7X-0620 1 WASHER-HARD

NPR 8F-1434 1 LOCKWASHER

18 NPR 1L-9048 1 NUT-JAM-PLATED

NPR 8T-5360 1 WASHER

NPR 2H-3920 1 LOCKWASHER

19 NPR 7F-7621 1 WASHER

20 NPR 1B-8705 1 KEY-WOODRUFF

THE FOLLOWING REPAIR

KITS ARE AVAILABLE:

NPR 9G-7554 1 KIT-TERMINAL GROUND (INCL NUTS

AND LOCKWASHERS)

NPR 9G-7555 1 KIT-TERMINAL OUTPUT (OUTPUT-INCL NUTS

WASHERS AND BUSHINGS)

NPR 9G-7556 1 KIT-CAPACITOR (INCL CAPACITOR, SCREW,

AND LOCKWASHER)

NPR 9G-7559 1 KIT-TERMINAL RELAY (RELAY-INCL SPLICE, NUT,

TUBE, TERMINAL, WASHERS,

LOCKWASHER AND BUSHING)

NPR 9G-7565 1 KIT-TERMINAL REGULATOR (REGULATOR-INCL NUTS,

LOCKWASHERS, WASHERS

AND BUSHING)

NPR C 7T-0816 1 KIT-FAN (INCL FAN, SUPPORT,

PLATE AND SPACER)

Key:

C - CHANGE FROM PREVIOUS TYPE
M - METRIC PART

9G8255 ALTERNATOR GROUP-DELCO-REMY-24 VOLT, 35 AMPERE-SIDE VIEW
SERIAL NO. 87V5275 TO 87V6364 INCLUSIVE
PART OF 6N9294 ALTERNATOR GROUP LISTED ON PAGE 90

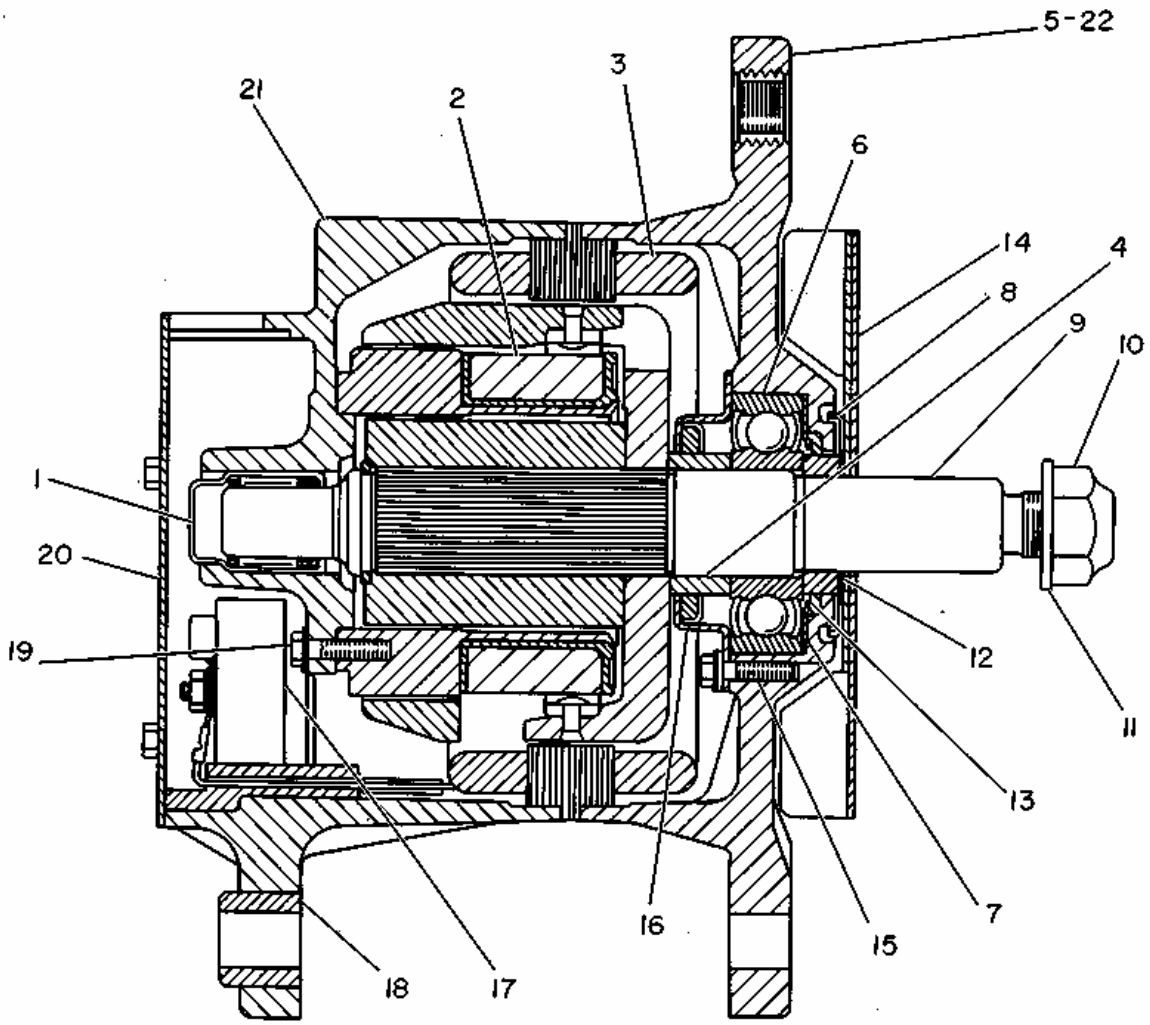

1	NPR	5P-6920	1	BEARING-ROLLER
2	NPR	7N-7806	1	COIL AS-FIELD
3	NPR	7N-7804	1	STATOR AS
4	NPR	7N-7795	1	COLLAR
5	NPR	7N-7810	1	FRAME AS-DRIVE END
6	NPR	5P-9514	1	BALL BEARING
7	NPR	9L-2140	1	PLATE
8	NPR	9L-6782	1	SHIELD-DUST
9	NPR	7N-7800	1	ROTOR AS

10	**NPR**	**2K-4821**	**1**	**LOCKNUT**
11	**NPR**	**7F-7621**	**1**	**WASHER**
12	**NPR**	**9L-6783**	**1**	**COLLAR**
13	**NPR**	**9L-2139**	**1**	**WASHER-FELT**
14	**NPR**	**9N-1210**	**1**	**FAN AS**
15	**NPR**	**7N-9020**	**3**	**SCREW AS**
16	**NPR**	**9L-2137**	**1**	**RETAINER AS**
17	**NPR**	**7N-7122**	**1**	**RECTIFIER AS**
18	**NPR**	**9S-2396**	**1**	**BUSHING**
19	**NPR**	**9S-2007**	**4**	**SCREW-LOCKING**
20	**NPR**	**7N-7809**	**1**	**PLATE**
21	**NPR**	**7N-7805**	**1**	**HOUSING**
22	**NPR**	**7N-9024**	**4**	**BOLT**

9G8255 ALTERNATOR GROUP-DELCO-REMY-24 VOLT, 35 AMPERE-END VIEW
SERIAL NO. 87V5275 TO 87V6364 INCLUSIVE-PART OF 6N9294 ALTERNATOR GROUP LISTED ON PAGE 90

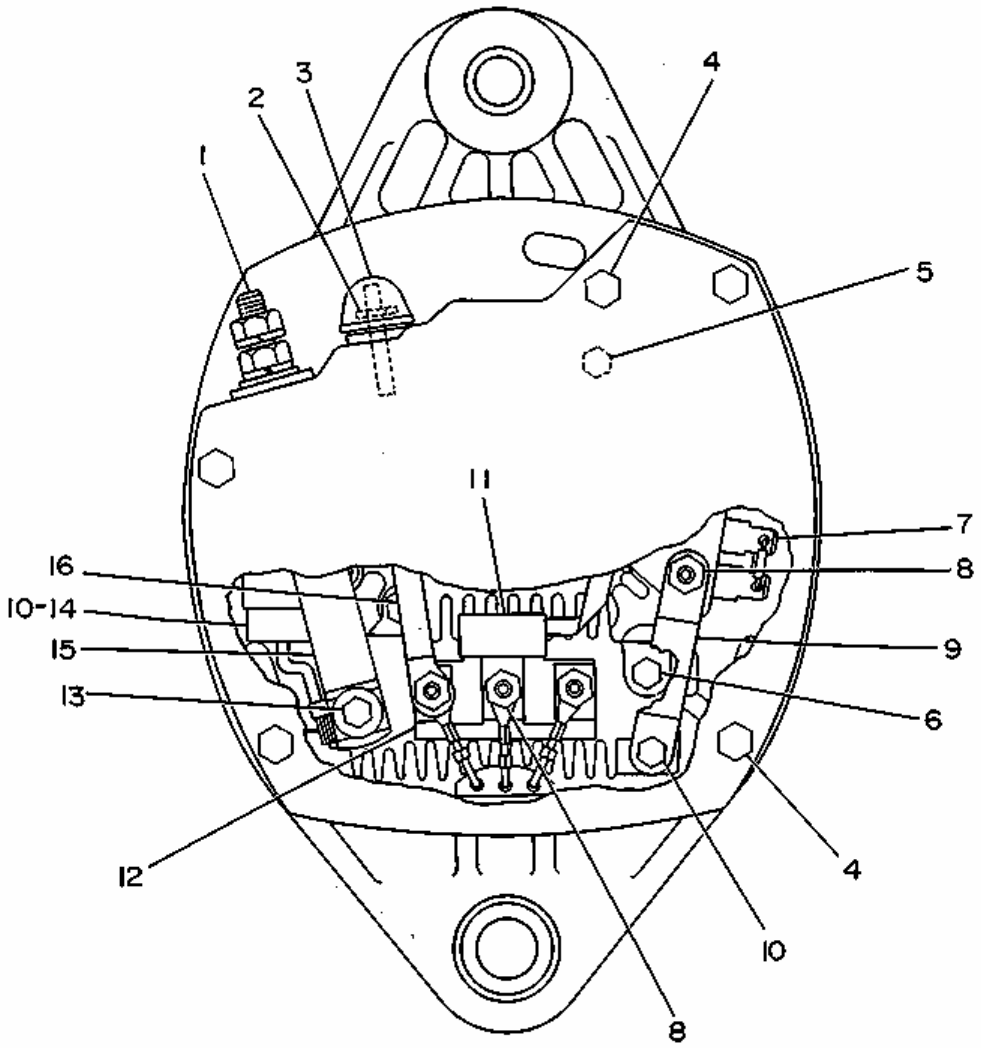

1 NPR 7N-7807 1 KIT-TERMINAL (OUTPUT)

(INCLUDES INSULATOR,

SCREW, WASHERS, NUT,

LOCKWASHER & ADAPTER)

2 NPR 7N-7808 1 KIT-TERMINAL

(INCLUDES STUD, NUT AS,

BUSHINGS & WASHERS)

3 NPR 9L-6770 1 CAP

4 NPR 8N-0740 5 SCREW AS

5	NPR	7N-9022	2	SCREW AS
	NPR	9N-0938	2	WASHER
6	NPR	7N-9023	2	SCREW AS
7	NPR C	3T-6354	1	REGULATOR AS
8	NPR	6N-1869	4	NUT AS
9	NPR	7N-7811	1	CONNECTOR
10	NPR	7N-9018	3	SCREW AS
11	NPR	9N-1202	1	DIODE AS
12	NPR	7N-7797	2	INSULATOR
13	NPR	7N-9021	1	SCREW AS
	NPR	7N-7796	1	BUSHING
14	NPR	7N-7802	1	CAPACITOR AS
	NPR	3N-4082	1	BRACKET
15	NPR	7N-7798	1	CONNECTOR
16	NPR	7N-7801	1	CONNECTOR

Key:

C - CHANGE FROM PREVIOUS TYPE

5S9088 ALTERNATOR AS-PART 1 OF 2*R--PART OF 8N9282 ALTERNATOR

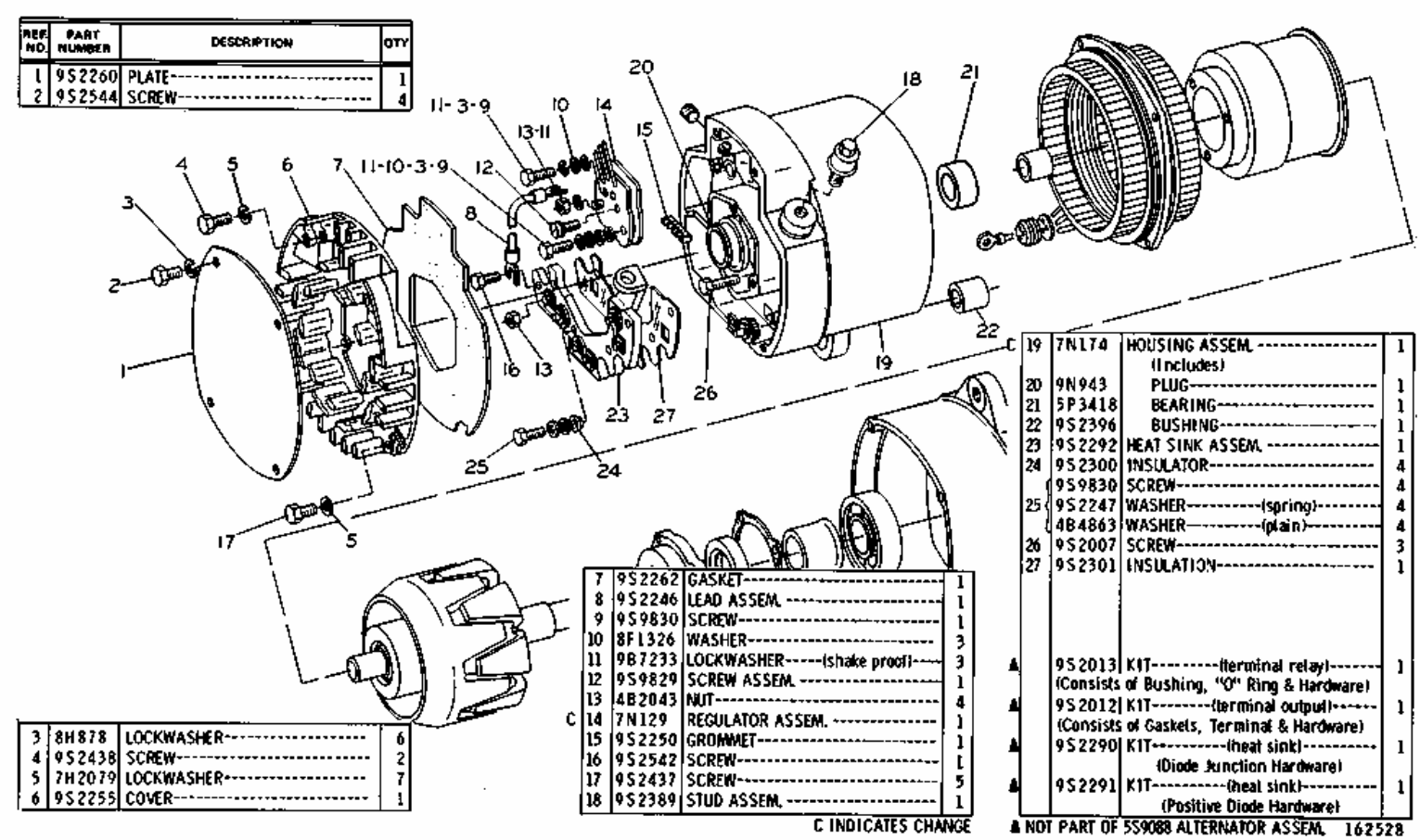

REF NO.	PART NUMBER	DESCRIPTION	QTY
1	9S2260	PLATE	1
2	9S2544	SCREW	4
3	8H878	LOCKWASHER	6
4	9S2438	SCREW	2
5	7H2079	LOCKWASHER	7
6	9S2255	COVER	1
7	9S2262	GASKET	1
8	9S2246	LEAD ASSEM.	1
9	9S9830	SCREW	1
10	8F1326	WASHER	3
11	9B7233	LOCKWASHER-----(shake proof)----	3
12	9S9829	SCREW ASSEM.	1
13	4B2043	NUT	4
C 14	7N129	REGULATOR ASSEM.	1
15	9S2250	GROMMET	1
16	9S2542	SCREW	1
17	9S2437	SCREW	5
18	9S2389	STUD ASSEM.	1
C 19	7N174	HOUSING ASSEM. (Includes)	1
20	9N943	PLUG	1
21	5P3418	BEARING	1
22	9S2396	BUSHING	1
23	9S2292	HEAT SINK ASSEM.	1
24	9S2300	INSULATOR	4
	9S9830	SCREW	4
25	9S2247	WASHER----------(spring)--------	4
	4B4863	WASHER----------(plain)--------	4
26	9S2007	SCREW	3
27	9S2301	INSULATION	1
▲	9S2013	KIT---------(terminal relay)------- (Consists of Bushing, "O" Ring & Hardware)	1
▲	9S2012	KIT--------(terminal output)------ (Consists of Gaskets, Terminal & Hardware)	1
▲	9S2290	KIT----------(heat sink)---------- (Diode Junction Hardware)	1
▲	9S2291	KIT----------(heat sink)---------- (Positive Diode Hardware)	1

C INDICATES CHANGE

▲ NOT PART OF 5S9088 ALTERNATOR ASSEM. 162528

1 NPR 9S-2260 1 PLATE

2 NPR 9S-2544 4 SCREW

3 NPR 8H-0878 6 LOCKWASHER

4 NPR 9S-2438 2 SCREW

5 NPR 7H-2079 7 LOCKWASHER

6 NPR 9S-2255 1 COVER

7 NPR 9S-2262 1 GASKET

8 NPR 9S-2246 1 LEAD ASSEM.

9 NPR 9S-9830 1 SCREW

10 NPR 8F-1326 3 WASHER

11 NPR 9B-7233 3 LOCKWASHER (shake proof)

12 NPR 9S-9829 1 SCREW ASSEM.

13 NPR 4B-2043 4 NUT

14 NPR C 7N-0129 1 REGULATOR ASSEM.

15 NPR 9S-2250 1 GROMMET

16 NPR 9S-2542 1 SCREW

17 NPR 9S-2437 5 SCREW

18 NPR 9S-2389 1 STUD ASSEM.

19 NPR C 7N-0174 1 HOUSING ASSEM.

(Includes)

20 NPR 9N-0943 1 PLUG

21 NPR 5P-3418 1 BEARING

22 NPR 9S-2396 1 BUSHING

23 NPR 9S-2292 1 HEAT SINK ASSEM.

24 NPR 9S-2300 4 INSULATOR

25 NPR 9S-9830 4 SCREW

NPR 9S-2247 4 WASHER (spring)

NPR 4B-4863 4 WASHER (plain)

26 NPR 9S-2007 3 SCREW

27 NPR 9S-2301 1 INSULATION

NPR A 9S-2013 1 KIT (terminal relay)

(Consists of Bushing, "O" Ring and Hardware)

NPR A 9S-2012 1 KIT (terminal output)

(Consists of Gaskets, Terminal and Hardware)

NPR A 9S-2290 1 KIT (heat sink)

(Diode Junction Hardware)

NPR A 9S-2291 1 KIT (heat sink)

(Positive Diode Hardware)

Key: A - NOT PART OF THIS GROUP C - INDICATES CHANGE

5S9088 ALTERNATOR AS-PART 2 OF 2*R--PART OF 8N9282 ALTERNATOR

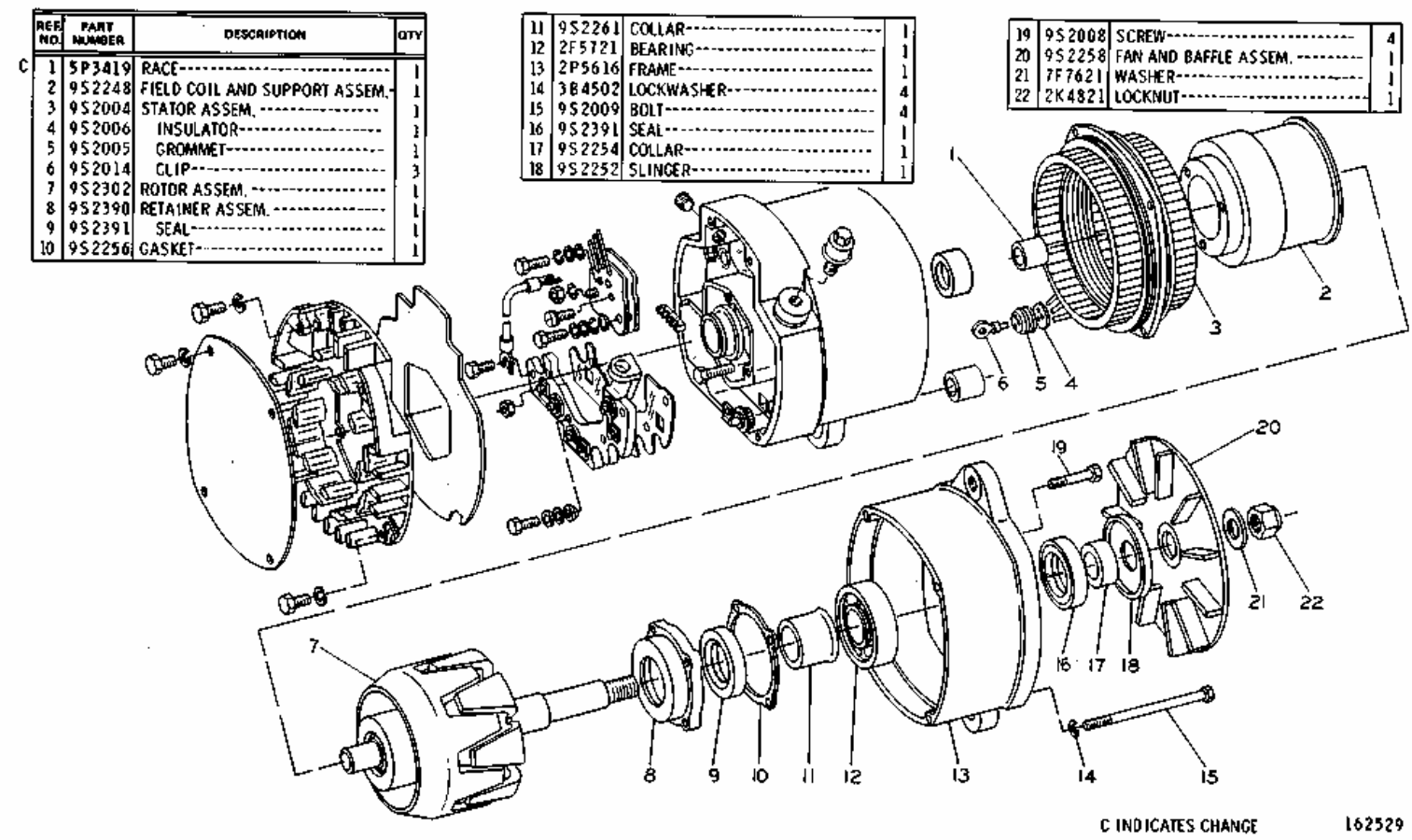

1 NPR C 5P-3419 1 RACE
2 NPR 9S-2248 1 FIELD COIL AND SUPPORT ASSEM.
3 NPR 9S-2004 1 STATOR ASSEM.
4 NPR 9S-2006 1 INSULATOR
5 NPR 9S-2005 1 GROMMET
6 NPR 9S-2014 3 CLIP
7 NPR 9S-2302 1 ROTOR ASSEM.
8 NPR 9S-2390 1 RETAINER ASSEM.
9 NPR 9S-2391 1 SEAL
10 NPR 9S-2256 1 GASKET
11 NPR 9S-2261 1 COLLAR
12 NPR 2F-5721 1 BEARING
13 NPR 2P-5616 1 FRAME
14 NPR 3B-4502 4 LOCKWASHER
15 NPR 9S-2009 4 BOLT
16 NPR 9S-2391 1 SEAL
17 NPR 9S-2254 1 COLLAR
18 NPR 9S-2252 1 SLINGER
19 NPR 9S-2008 4 SCREW
20 NPR 9S-2258 1 FAN AND BAFFLE ASSEM.
21 NPR 7F-7621 1 WASHER
22 NPR 2K-4821 1 LOCKNUT

Key: C - INDICATES CHANGE

6G1070 SUPPORT GP-ALTERNATOR & FAN

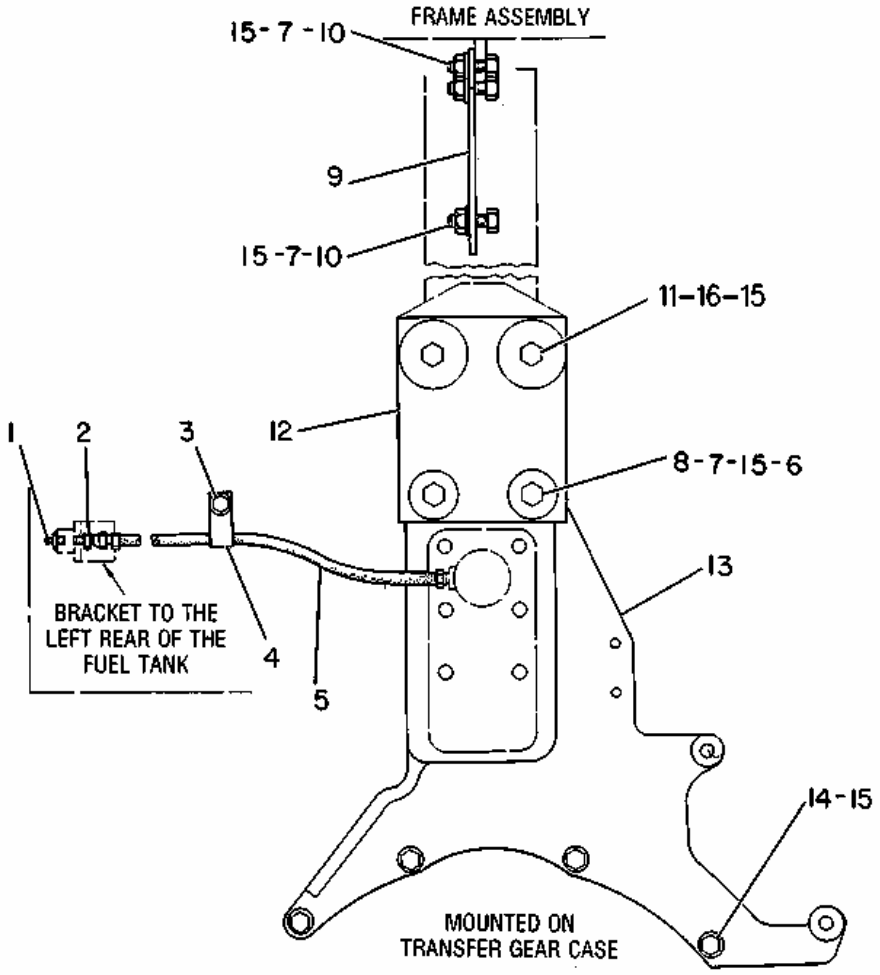

1	NPR	3B-8489	1	FITTING-GREASE
2	NPR	2R-1922	1	CONNECTOR
3	NPR	5M-3062	1	BOLT
	NPR	5P-1075	1	WASHER-HARD
4	NPR	4D-8123	1	CLIP
5	NPR	5K-7577	1	HOSE AS
6	NPR	2S-1654	2	WASHER 44.5MM(1.75IN)OD
7	NPR	1D-4719	5	NUT

8 NPR C 0S-1587 2 BOLT

9 NPR 2G-3199 1 PLATE

10 NPR C 7B-3235 3 BOLT

11 NPR 9S-1366 2 BOLT

NPR 1B-4287 2 WASHER 58.74MM(2.31IN)OD

NPR 9M-1853 2 MOUNTING

12 NPR 2G-3223 1 PLATE

13 NPR C 6G-6268 1 BRACKET

14 NPR C 1A-1460 4 BOLT

15 NPR C 5P-8245 11 WASHER 25.5MM(1IN)OD

16 NPR 1K-6872 2 LOCKNUT

Key:

C - CHANGE FROM PREVIOUS TYPE

2G5120 HEAVY DUTY BATTERY GROUP-12 VOLT, 172 AMPERE HOURS
PART OF 6N7288 STARTING ARRANGEMENT & 5T5113 SUPPLEMENTAL STERRING ARRANGEMENT SHOWN ON PAGES 77 & 198B. AN ATTACHMENT

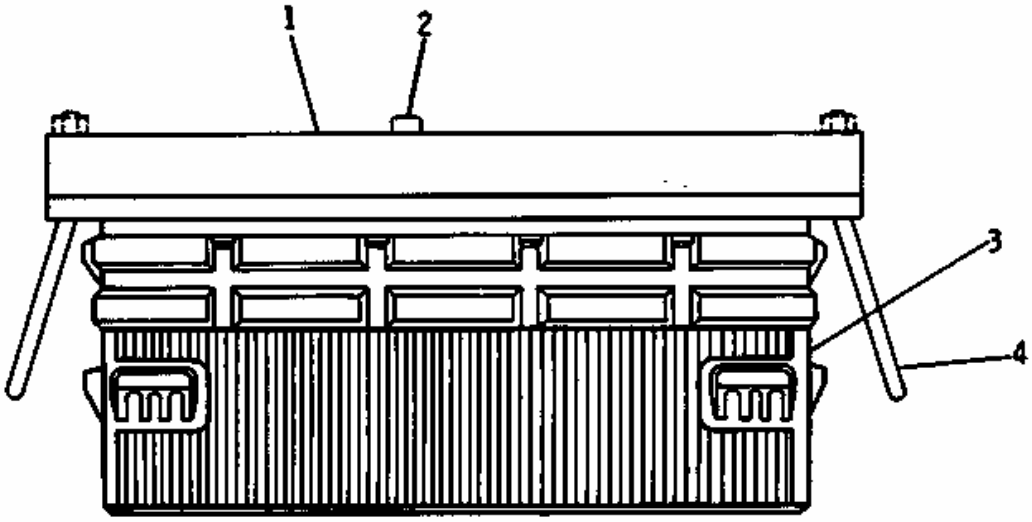

REF. NO.	PART NUMBER	DESCRIPTION	QTY
1	1S8230	HOLDDOWN ASSEM. ---------- (Each Includes)	2
2	9M5617	GROMMET----------	6
3	4S9261	BATTERY----------	2
4	2S1686	U-BOLT----------	4

161820

1 NPR 1S-8230 2 HOLDDOWN ASSEM.

(Each Includes)

2 NPR 9M-5617 6 GROMMET

3 NPR 4S-9261 2 BATTERY

4 NPR 2S-1686 4 U-BOLT

2G4950 BATTERY GP--HEAVY DUTY-12 VOLT, 172 AMPERE HOURS
PART OF 6N7213 STARTING AR

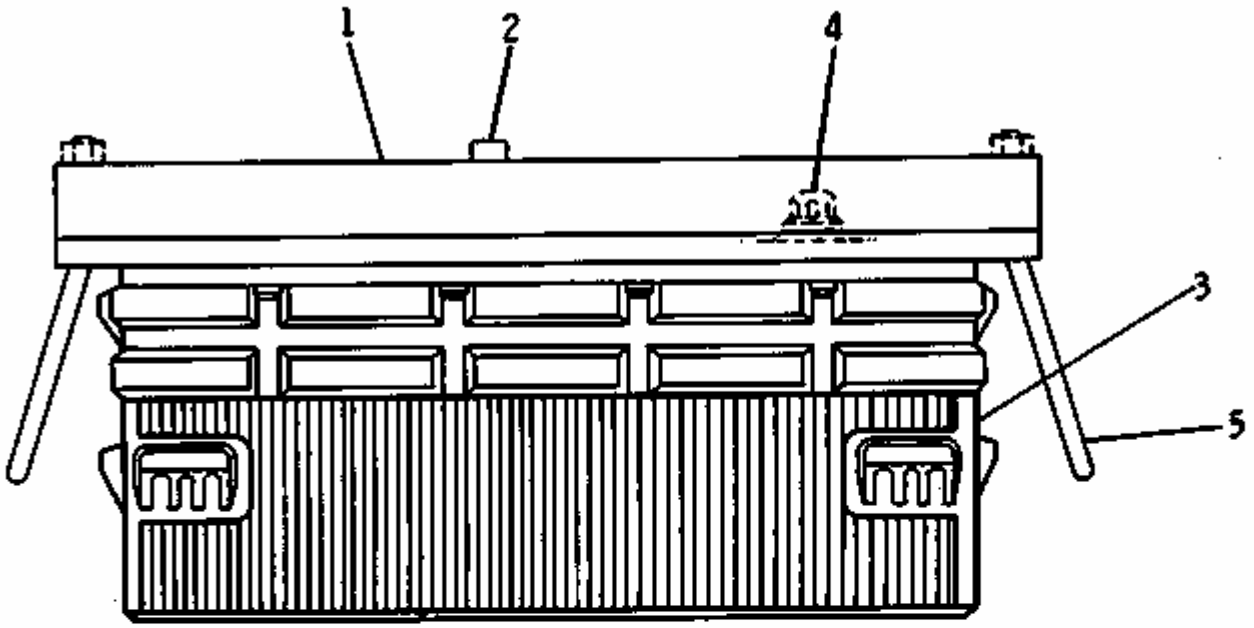

REF. NO.	PART NUMBER	DESCRIPTION	QTY
1	1S8230	HOLDDOWN ASSEM. ----------	2
		(Each Includes)	
2	9M5617	GROMMET----------	6
3	4S9261	BATTERY----------	2
		(Each Includes)	
4	7S5041	PLUG----------	6
5	2S1686	U-BOLT----------	4

209830

1 NPR 1S-8230 2 HOLDDOWN ASSEM.

(Each Includes)

2 NPR 9M-5617 6 GROMMET

3 NPR 4S-9261 2 BATTERY

(Each Includes)

4 NPR 7S-5041 6 PLUG

5 NPR 2S-1686 4 U-BOLT

2G7620 BATTERY AND WIRING GROUP-24 VOLT-PART 1 OF 5
SERIAL NO. 87V5275 TO 87V5733 INCLUSIVE

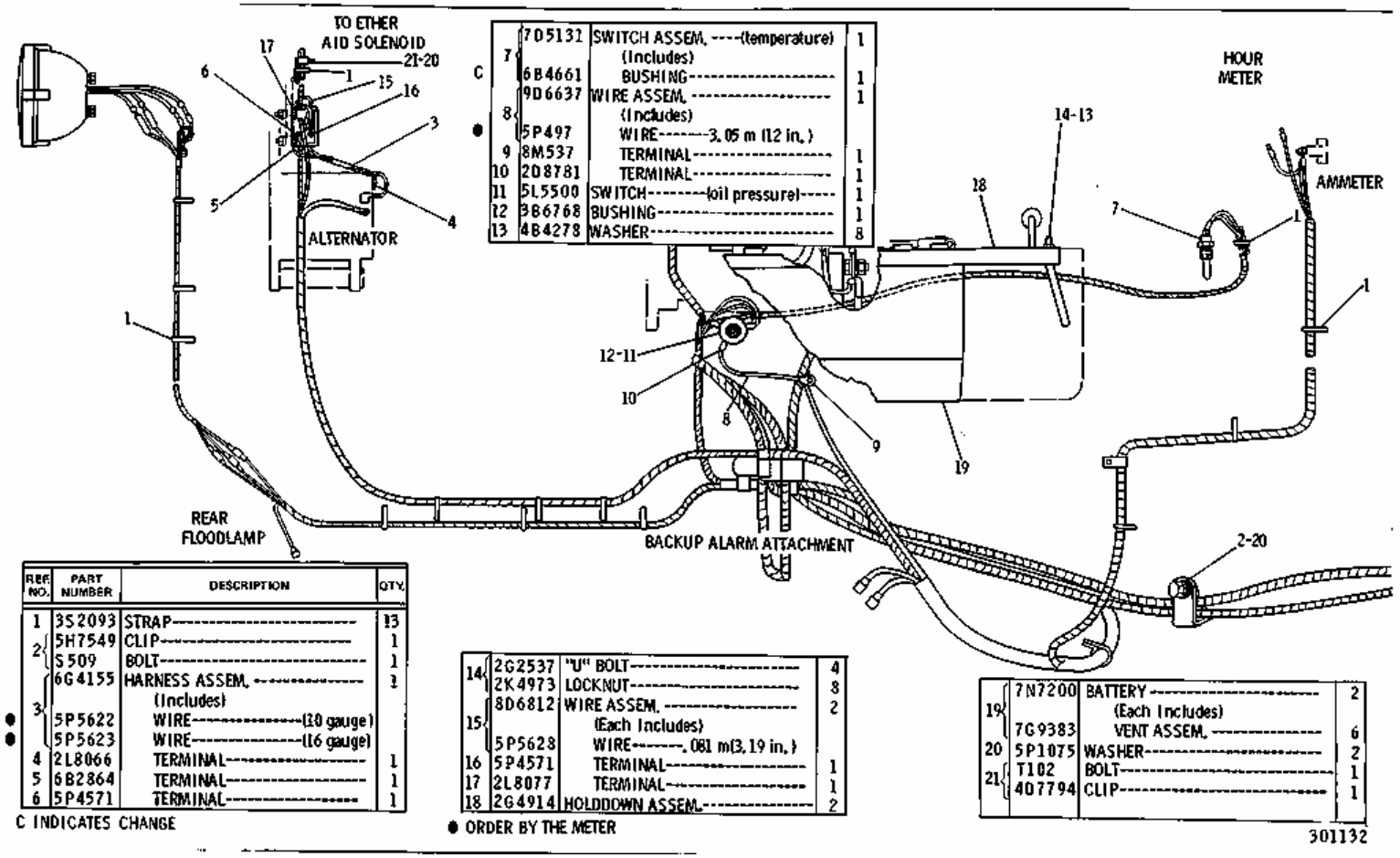

REF NO.	PART NUMBER	DESCRIPTION	QTY.
1	3S2093	STRAP	13
2	5H7549	CLIP	1
	S509	BOLT	1
3	6G4155	HARNESS ASSEM. (Includes)	1
●	5P5622	WIRE-----(10 gauge)	
●	5P5623	WIRE-----(16 gauge)	
4	2L8066	TERMINAL	1
5	6B2864	TERMINAL	1
6	5P4571	TERMINAL	1

C INDICATES CHANGE

C 7	7D5131	SWITCH ASSEM. ----(temperature) (Includes)	1
	6B4661	BUSHING	1
8	9D6637	WIRE ASSEM. (Includes)	1
●	5P497	WIRE-------3.05 m (12 in.)	
9	8M537	TERMINAL	1
10	2D8781	TERMINAL	1
11	5L5500	SWITCH--------(oil pressure)	1
12	3B6768	BUSHING	1
13	4B4278	WASHER	8

14	2G2537	"U" BOLT	4
	2K4973	LOCKNUT	8
15	8D6812	WIRE ASSEM. (Each Includes)	2
	5P5628	WIRE-------.081 m(3.19 in.)	
16	5P4571	TERMINAL	1
17	2L8077	TERMINAL	1
18	2G4914	HOLDDOWN ASSEM.	2

● ORDER BY THE METER

19	7N7200	BATTERY	2
	7G9383	(Each Includes) VENT ASSEM.	6
20	5P1075	WASHER	2
21	T102	BOLT	1
	4D7794	CLIP	1

301132

1 NPR 3S-2093 13 STRAP

2 NPR 5H-7549 1 CLIP

NPR 0S-0509 1 BOLT

3 NPR 6G-4155 1 HARNESS ASSEM.

(Includes)

NPR J 5P-5622 WIRE (10 gauge)

NPR J 5P-5623 WIRE (16 gauge)

4 NPR 2L-8066 1 TERMINAL

5 NPR 6B-2864 1 TERMINAL

6 NPR 5P-4571 1 TERMINAL

7 NPR 7D-5131 1 SWITCH ASSEM. (temperature)

(Includes)

NPR C 6B-4661 1 BUSHING

8 NPR 9D-6637 1 WIRE ASSEM.

(Includes)

NPR J 5P-0497 WIRE 3.05 m (12 in.)

9 NPR 8M-0537 1 TERMINAL

10 NPR 2D-8781 1 TERMINAL

11 NPR 5L-5500 1 SWITCH (oil pressure)

12 NPR 3B-6768 1 BUSHING

13 NPR 4B-4278 8 WASHER

14 NPR 2G-2537 4 "U" BOLT

NPR 2K-4973 8 LOCKNUT

15 NPR 8D-6812 2 WIRE ASSEM.

(Each Includes)

NPR 5P-5628 WIRE .081 m(3.19 in.)

16 NPR 5P-4571 1 TERMINAL

17 NPR 2L-8077 1 TERMINAL

18 NPR 2G-4914 2 HOLDDOWN ASSEM.

19 NPR 7N-7200 2 BATTERY

(Each Includes)

NPR 7G-9383 6 VENT ASSEM.

20 NPR 5P-1075 2 WASHER

21 NPR 0T-0102 1 BOLT

NPR 4D-7794 1 CLIP

Key: C - INDICATES CHANGE J - ORDER BY THE METER

9D5249 BACK-UP WARNING GROUP--Replaced by 2G5090 shown on Page 112A

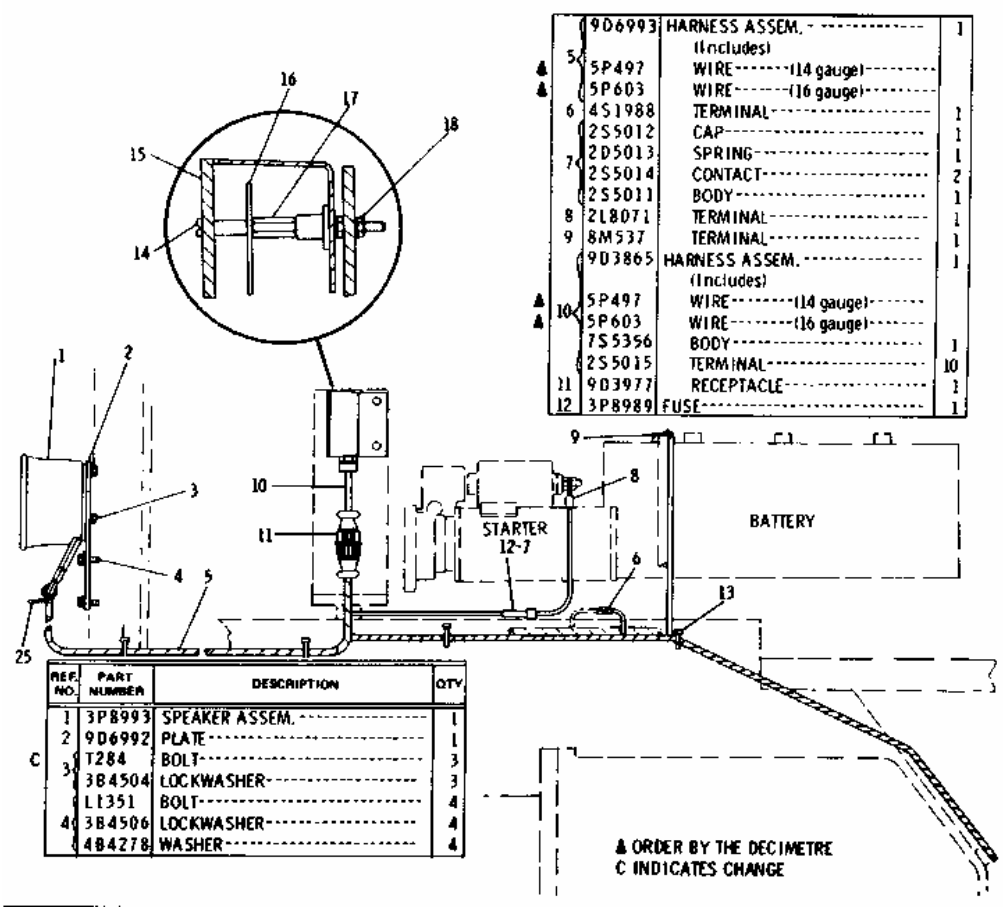

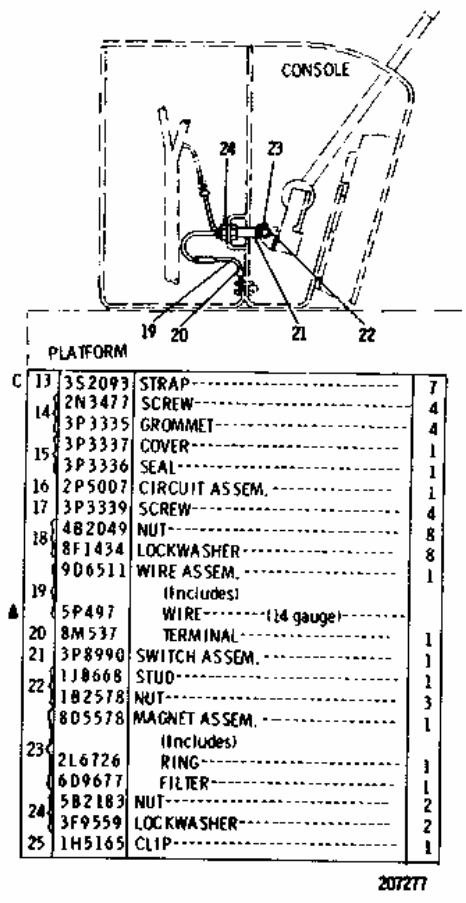

1 NPR 3P-8993 1 SPEAKER ASSEM.

2 NPR 9D-6992 1 PLATE

3 NPR C 0T-0284 3 BOLT

NPR 3B-4504 3 LOCKWASHER

4 NPR 0L-1351 4 BOLT

NPR 3B-4506 4 LOCKWASHER

NPR 4B-4278 4 WASHER

5 NPR 9D-6993 1 HARNESS ASSEM.

(Includes)

NPR H 5P-0497 WIRE (14 gauge)

H 5P-0603 WIRE (16 gauge)

6 NPR 4S-1988 1 TERMINAL

7 NPR 2S-5012 1 CAP

2D-5013 1 SPRING

NPR 2S-5014 2 CONTACT

NPR 2S-5011 1 BODY

8 NPR 2L-8071 1 TERMINAL

9 NPR 8M-0537 1 TERMINAL

10 NPR 9D-3865 1 HARNESS ASSEM.

(Includes)

NPR H 5P-0497 WIRE (14 gauge)

H 5P-0603 WIRE (16 gauge)

NPR 7S-5356 1 BODY

NPR 2S-5015 10 TERMINAL

11 NPR 9D-3977 1 RECEPTACLE

12 NPR 3P-8989 1 FUSE

13 NPR C 3S-2093 7 STRAP

14 NPR 2N-3477 4 SCREW

NPR 3P-3335 4 GROMMET

15 NPR 3P-3337 1 COVER

NPR 3P-3336 1 SEAL

16 NPR 2P-5007 1 CIRCUIT ASSEM.

17 NPR 3P-3339 4 SCREW

18 NPR 4B-2049 8 NUT

	NPR	8F-1434	8	LOCKWASHER
19	NPR	9D-6511	1	WIRE ASSEM.
(Includes)				
	NPR H	5P-0497		WIRE (14 gauge)
20	NPR	8M-0537	1	TERMINAL
21	NPR	3P-8990	1	SWITCH ASSEM.
22	NPR	1J-8668	1	STUD
	NPR	1B-2578	3	NUT
23	NPR	8D-5578	1	MAGNET ASSEM.
(Includes)				
	NPR	2L-6726	1	RING
	NPR	6D-9677	1	FILTER
24	NPR	5B-2183	2	NUT
	NPR	3F-9559	2	LOCKWASHER
25	NPR	1H-5165	1	CLIP

Key:

C - INDICATES CHANGE
H - ORDER BY THE DECIMETRE

2G5090 BACK-UP WARNING GROUP--Serial No. 87V2262-Up and 82V740-Up
Available as an attachment Serial No. 87V1138 to 87V2261 inclusive and 82V668 to 82V739 inclusive

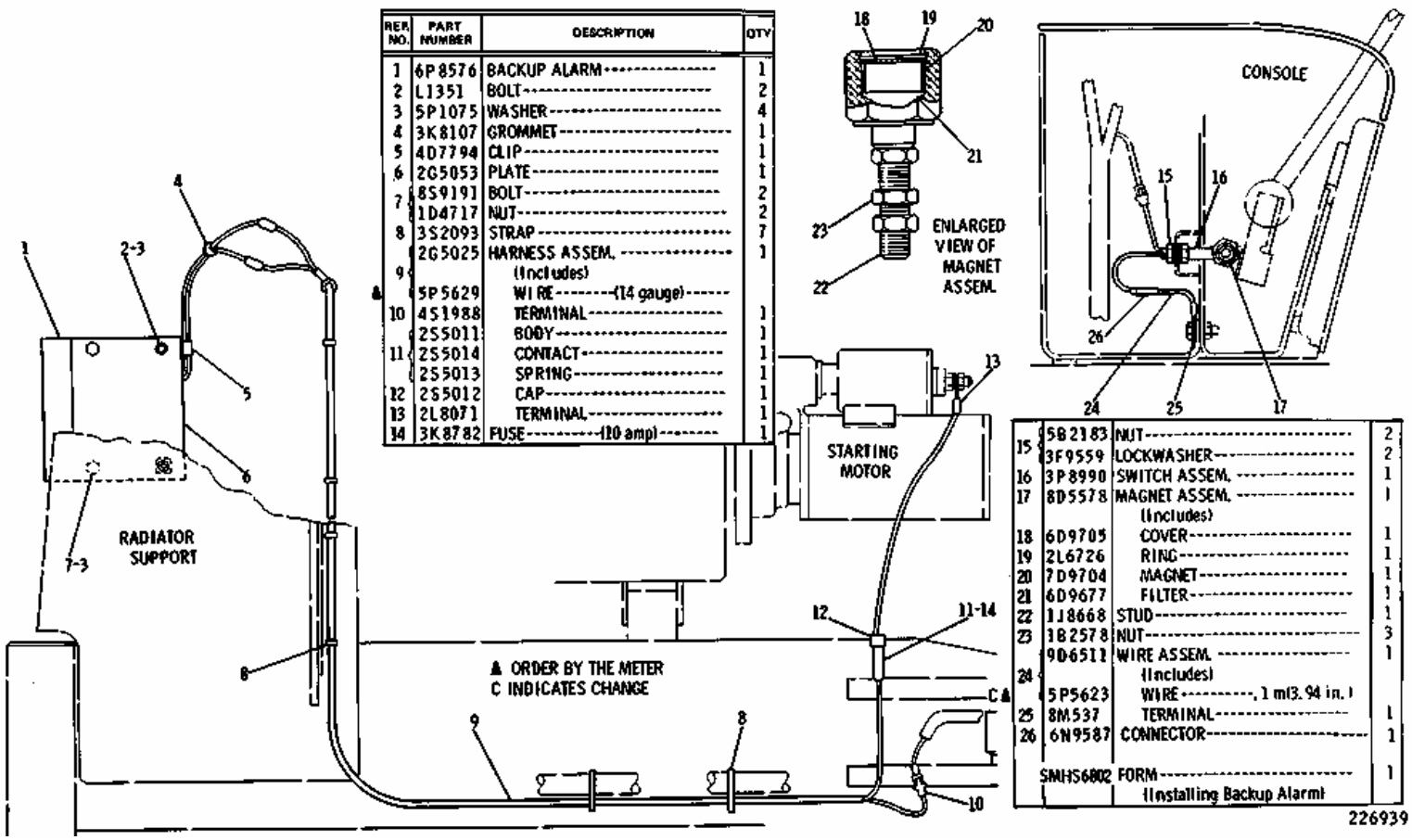

REF NO.	PART NUMBER	DESCRIPTION	QTY
1	6P8576	BACKUP ALARM	1
2	L1351	BOLT	2
3	5P1075	WASHER	4
4	3K8107	GROMMET	1
5	4D7794	CLIP	1
6	2G5053	PLATE	1
7	8S9191	BOLT	2
	1D4717	NUT	2
8	3S2093	STRAP	7
9	2G5025	HARNESS ASSEM. (Includes)	1
▲	5P5629	WIRE---(14 gauge)	
10	4S1988	TERMINAL	1
11	2S5011	BODY	1
	2S5014	CONTACT	1
	2S5013	SPRING	1
12	2S5012	CAP	1
13	2L8071	TERMINAL	1
14	3K8782	FUSE---(10 amp)	1

REF NO.	PART NUMBER	DESCRIPTION	QTY
15	5B2183	NUT	2
	3F9559	LOCKWASHER	2
16	3P8990	SWITCH ASSEM.	1
17	8D5578	MAGNET ASSEM. (Includes)	1
18	6D9705	COVER	1
19	2L6726	RING	1
20	7D9704	MAGNET	1
21	6D9677	FILTER	1
22	1J8668	STUD	1
23	1B2578	NUT	3
	9D6511	WIRE ASSEM. (Includes)	1
24	5P5623	WIRE---, 1 m(3.94 in.)	
25	8M537	TERMINAL	1
26	6N9587	CONNECTOR	1
	SMHS6802	FORM (Installing Backup Alarm)	1

226939

1 NPR 6P-8576 1 BACKUP ALARM

2 NPR 0L-1351 2 BOLT

3 NPR 5P-1075 4 WASHER

4 NPR 3K-8107 1 GROMMET

5 NPR 4D-7794 1 CLIP

6 NPR 2G-5053 1 PLATE

7 NPR 8S-9191 2 BOLT

NPR 1D-4717 2 NUT

8 NPR 3S-2093 7 STRAP

9 NPR 2G-5025 1 HARNESS ASSEM.

(Includes)

NPR H 5P-5629 WIRE (14 gauge)

10 NPR 4S-1988 1 TERMINAL

11 NPR 2S-5011 1 BODY

NPR 2S-5014 1 CONTACT

NPR 2S-5013 1 SPRING

12 NPR 2S-5012 1 CAP

13 NPR 2L-8071 1 TERMINAL

14 NPR 3K-8782 1 FUSE (10 amp)

15 NPR 5B-2183 2 NUT

NPR 3F-9559 2 LOCKWASHER

16 NPR 3P-8990 1 SWITCH ASSEM.

17 NPR 8D-5578 1 MAGNET ASSEM.

(Includes)

18 NPR 6D-9705 1 COVER

19 NPR 2L-6726 1 RING

20 7D-9704 1 MAGNET

21 NPR 6D-9677 1 FILTER

22 NPR 1J-8668 1 STUD

23 NPR 1B-2578 3 NUT

24 NPR 9D-6511 1 WIRE ASSEM.

(Includes)

NPR CH 5P-5623 WIRE .1 m(3.94 in.)

25 NPR 8M-0537 1 TERMINAL

26 NPR 6N-9587 1 CONNECTOR

Key: C - INDICATES CHANGE H - ORDER BY THE METER

9D3370 BATTERY AND WIRING GROUP--24 Volt--Part 2 of 5
Serial No. 87V2262 to 87V2925 inclusive and 82V740 to 82V784 inclusive
8D389 Lamp parts are shown on Page 102

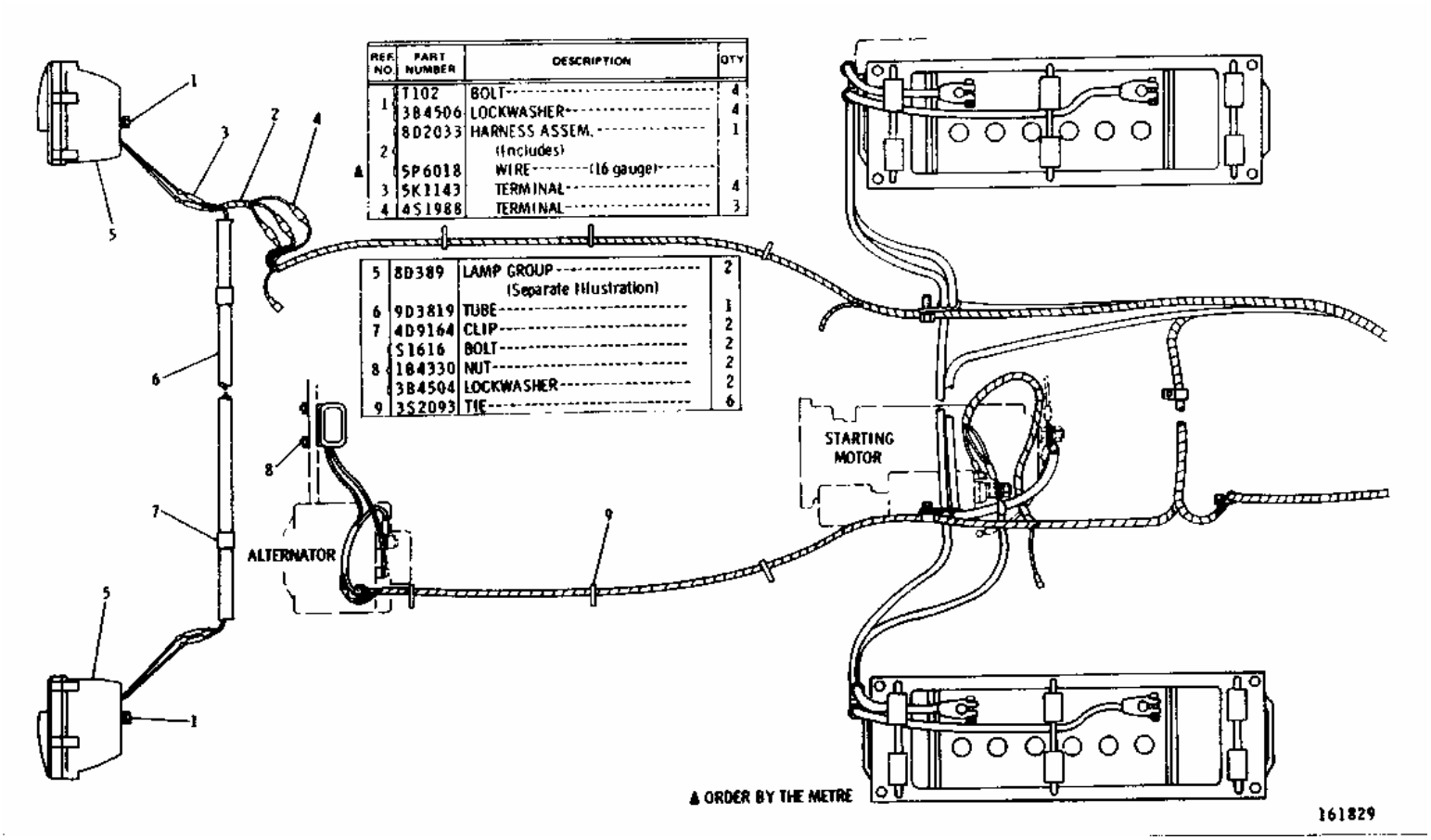

1 NPR 0T-0102 4 BOLT

NPR 3B-4506 4 LOCKWASHER

2 NPR 8D-2033 1 HARNESS ASSEM.

(Includes)

NPR H 5P-6018 WIRE (16 gauge)

3 NPR 5K-1143 4 TERMINAL

4 NPR 4S-1988 3 TERMINAL

5 NPR Y 8D-0389 2 LAMP GROUP

(Separate Illustration)

6 NPR 9D-3819 1 TUBE

7 NPR 4D-9164 2 CLIP

8	**NPR**	**0S-1616**	**2**	**BOLT**
	NPR	**1B-4330**	**2**	**NUT**
	NPR	**3B-4504**	**2**	**LOCKWASHER**
9	**NPR**	**3S-2093**	**6**	**TIE**

Key:

H - ORDER BY THE METRE
Y - SEPARATE ILLUSTRATION

9D3370 BATTERY AND WIRING GROUP--24 Volt--Part 4 of 5
Serial No. 87V2262 to 87V2925 inclusive and 82V740 to 82V784 inclusive
7H7290 Switch, 9D1329 Alarm and 9D6636 Harness parts are shown on Pages 102, 102A and 103

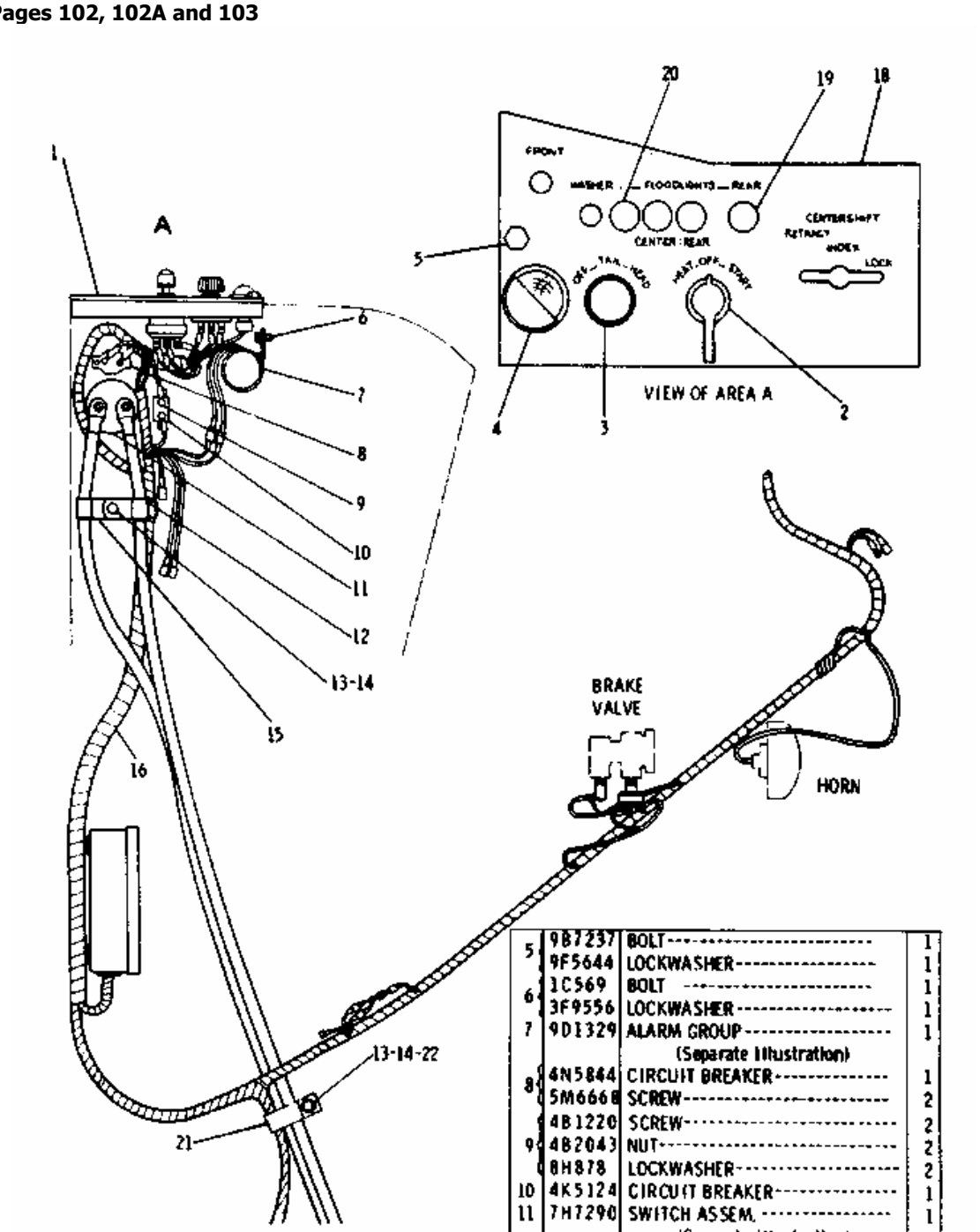

REF. NO.	PART NUMBER	DESCRIPTION	QTY
1	9D3806	COVER	1
	8S7713	SWITCH ASSEM. --(heat and start)--	1
		(Includes)	
2	8F3437	LEVER	1
	5L7200	SCREW	1
	3B4501	LOCKWASHER	1
	GMG00698	FORM(Installation Instructions)	1
	7S6402	SWITCH ASSEM. --(three position)--	1
3		(Includes)	
	7S5432	KNOB	1
	9D1344	LAMP ASSEM.	1
4		(Includes)	
	2D1959	BULB	1
5	9B7237	BOLT	1
	9F5644	LOCKWASHER	1
6	1C569	BOLT	1
	3F9556	LOCKWASHER	1
7	9D1329	ALARM GROUP	1
		(Separate Illustration)	
8	4N5844	CIRCUIT BREAKER	1
	5M6668	SCREW	2
	4B1220	SCREW	2
9	4B2043	NUT	2
	8H878	LOCKWASHER	2
10	4K5124	CIRCUIT BREAKER	1
11	7H7290	SWITCH ASSEM.	1
		(Separate Illustration)	
12	6D3479	CLIP	2
C 13	S1594	BOLT	2
C 14	3B4506	LOCKWASHER	2
15	8S948	CLIP	1
16	9D6636	HARNESS ASSEM.	1
		(Separate Illustration)	
18	9D3809	PLATE	1
19	3D9871	BUTTON	1
20	3D9872	BUTTON	3
C 21	5H7549	CLIP	1
22	4B4278	WASHER	1

C INDICATES CHANGE 161831

1 NPR 9D-3806 1 COVER

2 NPR 8S-7713 1 SWITCH ASSEM. (heat and start)

(Includes)

2 NPR 8F-3437 1 LEVER

NPR 5L-7200 1 SCREW

NPR 3B-4501 1 LOCKWASHER

3 NPR 7S-6402 1 SWITCH ASSEM. (three position)

(Includes)

NPR 7S-5432 1 KNOB

4 NPR 9D-1344 1 LAMP ASSEM.

(Includes)

NPR 2D-1959 1 BULB

5 NPR 9B-7237 1 BOLT

NPR 9F-5644 1 LOCKWASHER

6 NPR 1C-0569 1 BOLT

NPR 3F-9556 1 LOCKWASHER

7 NPR Y 9D-1329 1 ALARM GROUP

(Separate Illustration)

8 NPR 4N-5844 1 CIRCUIT BREAKER

NPR 5M-6668 2 SCREW

9 NPR 4B-1220 2 SCREW

NPR 4B-2043 2 NUT

NPR 8H-0878 2 LOCKWASHER

10 NPR 4K-5124 1 CIRCUIT BREAKER

11 NPR Y 7H-7290 1 SWITCH ASSEM.

(Separate Illustration)

12 NPR 6D-3479 2 CLIP

13 NPR C 0S-1594 2 BOLT

14 NPR C 3B-4506 2 LOCKWASHER

15 NPR 8S-0948 1 CLIP

16 NPR Y 9D-6636 1 HARNESS ASSEM.

(Separate Illustration)

18 NPR 9D-3809 1 PLATE

19 NPR 3D-9871 1 BUTTON

20 NPR 3D-9872 3 BUTTON

21 NPR C 5H-7549 1 CLIP

22 NPR 4B-4278 1 WASHER

Key:

C - INDICATES CHANGE
Y - SEPARATE ILLUSTRATION

9D3370 BATTERY AND WIRING GROUP--24 Volt--Part 3 of 5
Serial No. 87V2262 to 87V2925 inclusive and 82V740 to 82V784 inclusive

REF NO.	PART NUMBER	DESCRIPTION	QTY
C	2G6365	CABLE ASSEM. ----------	1
1		(Includes)	
A	5P746	CABLE------285 cm(112.20 in.)	
2	3D2098	TERMINAL ASSEM. ----------	2
		(Each Includes)	
3	1M6119	NUT----------	1
	1M6120	BOLT----------	1
	9D3822	CABLE ASSEM. ----------	1
		(Includes)	
A 4	5P746	CABLE----345.44 cm(136 in.)	
	1M4986	TERMINAL--13.49cm(.531 in.) hole	1
	1S7252	TERMINAL--10.31 cm(.41 in.) hole	1
C	2G5836	CABLE ASSEM. ----------	1
		(Includes)	
A 5	5P746	CABLE------127.5 cm(28.94 in.)	
	1M4986	TERMINAL----------	1
6	3D2098	TERMINAL ASSEM. ----------	1
		(Includes)	
7	1M6119	BOLT----------	1
	1M6120	NUT----------	1
C 8	S509	BOLT----------	4
C	3B4506	LOCKWASHER----------	4
	5M851	CABLE ASSEM. ----------	1
		(Includes)	
A 9	5P746	CABLE------325.12 cm(128 in.)	
	1S7252	TERMINAL----------	1
10	3D2098	TERMINAL ASSEM. ----------	1
		(Includes)	
11	1M6119	BOLT----------	1
	1M6120	NUT----------	1
12	4K6177	CLIP----------(large)----------	2
C 13	8M2770	CLIP----------(small)----------	8
14	1C569	BOLT----------	1
15	3B4505	LOCKWASHER----------	1
C 16	2G5009	BUSHING----------	12

A ORDER BY THE CENTIMETRE C INDICATES CHANGE

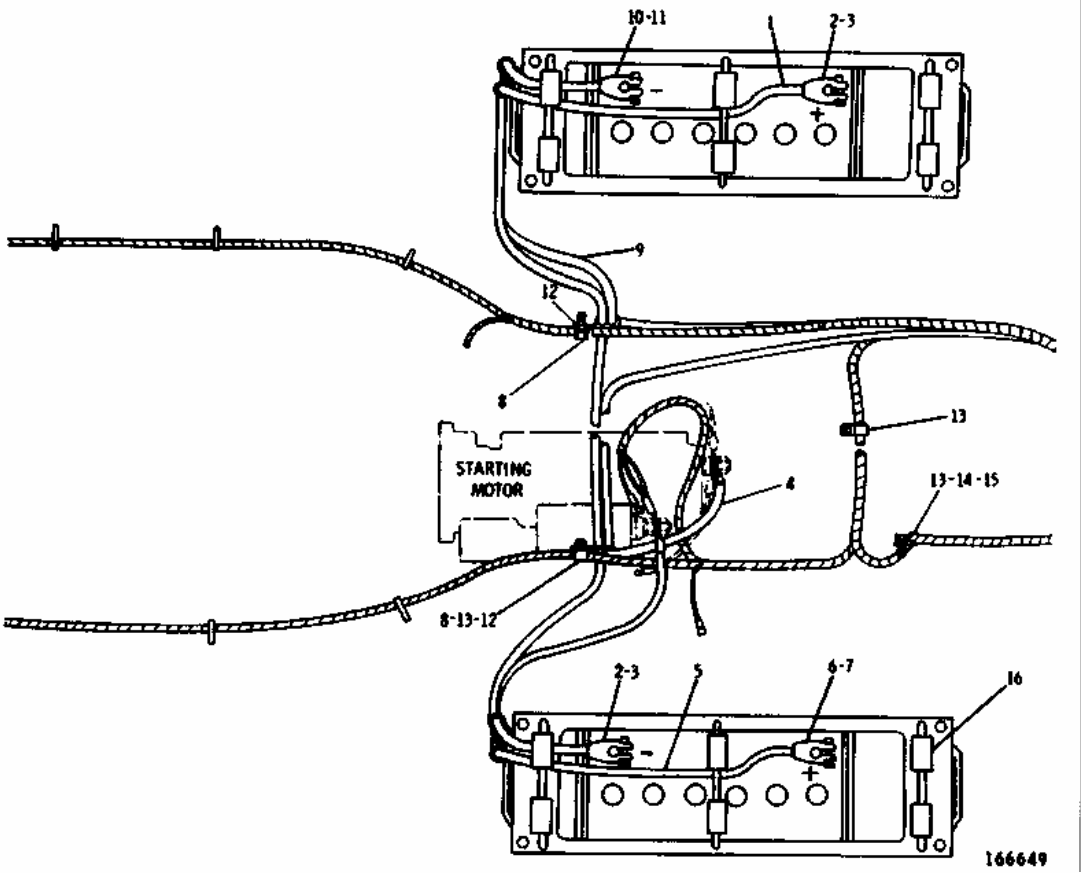

1 NPR C 2G-6365 1 CABLE ASSEM.

(Includes)

NPR H 5P-0746 CABLE 285 cm(112.20 in.)

2 NPR 3D-2098 2 TERMINAL ASSEM.

(Each Includes)

3 NPR 1M-6119 1 NUT

NPR 1M-6120 1 BOLT

4 NPR 9D-3822 1 CABLE ASSEM.

(Includes)

NPR H 5P-0746 CABLE 345.44 cm(136 in.)

NPR 1M-4986 TERMINAL 13.49 cm(.531 in.) hole

NPR 1S-7252 1 TERMINAL 10.31 cm(.41 in.) hole

5 NPR C 2G-5836 1 CABLE ASSEM.

(Includes)

NPR H 5P-0746 CABLE 127.5 cm(28.94 in.)

NPR 1M-4986 1 TERMINAL

6 NPR 3D-2098 1 TERMINAL ASSEM.

(Includes)

7 NPR 1M-6119 1 BOLT

NPR 1M-6120 1 NUT

8 NPR C 0S-0509 4 BOLT

NPR C 3B-4506 4 LOCKWASHER

9 NPR 5M-0851 1 CABLE ASSEM.

(Includes)

NPR H 5P-0746 CABLE 325.12 cm(128 in.)

NPR 1S-7252 1 TERMINAL

10 NPR 3D-2098 1 TERMINAL ASSEM.

(Includes)

11 NPR 1M-6119 1 BOLT

NPR 1M-6120 1 NUT

12 NPR 4K-6177 2 CLIP (large)

13 NPR C 8M-2770 8 CLIP (small)

14 NPR 1C-0569 1 BOLT

15 NPR 3B-4505 1 LOCKWASHER

16 NPR C 2G-5009 12 BUSHING

Key: C - INDICATES CHANGE H - ORDER BY THE CENTIMETRE

9D3370 BATTERY AND WIRING GROUP--24 Volt--Part 5 of 5
Serial No. 87V2262 to 87V2925 inclusive and 82V740 to 82V784 inclusive

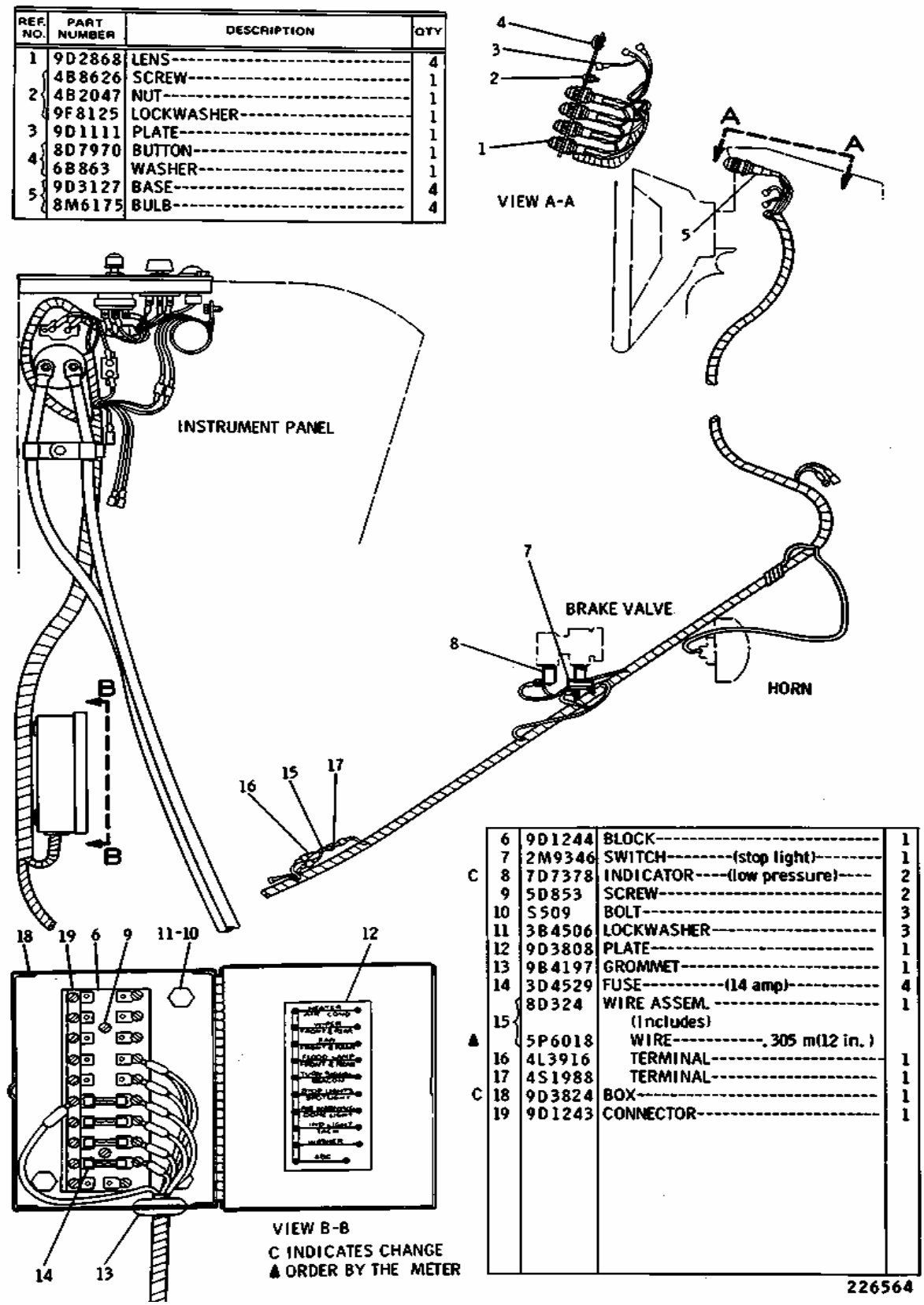

REF. NO.	PART NUMBER	DESCRIPTION	QTY
1	9D2868	LENS	4
2	4B8626	SCREW	1
	4B2047	NUT	1
	9F8125	LOCKWASHER	1
3	9D1111	PLATE	1
4	8D7970	BUTTON	1
	6B863	WASHER	1
5	9D3127	BASE	4
	8M6175	BULB	4
6	9D1244	BLOCK	1
7	2M9346	SWITCH--(stop light)	1
C 8	7D7378	INDICATOR--(low pressure)	2
9	5D853	SCREW	2
10	S509	BOLT	3
11	3B4506	LOCKWASHER	3
12	9D3808	PLATE	1
13	9B4197	GROMMET	1
14	3D4529	FUSE--(14 amp)	4
15	8D324	WIRE ASSEM. (Includes)	1
▲	5P6018	WIRE-----.305 m(12 in.)	
16	4L3916	TERMINAL	1
17	4S1988	TERMINAL	1
C 18	9D3824	BOX	1
19	9D1243	CONNECTOR	1

NPR 9D-2868 4 LENS

2 NPR 4B-8626 1 SCREW

1 NPR 4B-2047 1 NUT

NPR 9F-8125 1 LOCKWASHER

3 NPR 9D-1111 1 PLATE

4 NPR 8D-7970 1 BUTTON

NPR 6B-0863 1 WASHER

5 NPR 9D-3127 4 BASE

NPR 8M-6175 4 BULB

6 NPR 9D-1244 1 BLOCK

7 NPR 2M-9346 1 SWITCH (stop light)

8 NPR C 7D-7378 2 INDICATOR (low pressure)

9 NPR 5D-0853 2 SCREW

10 NPR 0S-0509 3 BOLT

11 NPR 3B-4506 3 LOCKWASHER

12 NPR 9D-3808 1 PLATE

13 NPR 9B-4197 1 GROMMET

14 NPR 3D-4529 4 FUSE 14 amp)

15 NPR 8D-0324 1 WIRE ASSEM.

(Includes)

NPR H 5P-6018 WIRE .305 m(12 in.)

16 NPR 4L-3916 1 TERMINAL

17 NPR 4S-1988 1 TERMINAL

18 NPR C 9D-3824 1 BOX

19 NPR 9D-1243 1 CONNECTOR

Key: C - INDICATES CHANGE H - ORDER BY THE METER

9D6636 HARNESS ASSEMBLY--Serial No. 87V1138 to 87V2975 inclusive and 82V668 to 82V794 inclusive
Part of 9D3370 Battery and Wiring Group shown on Pages 99, 100D, 100J,100P & 100Q-4

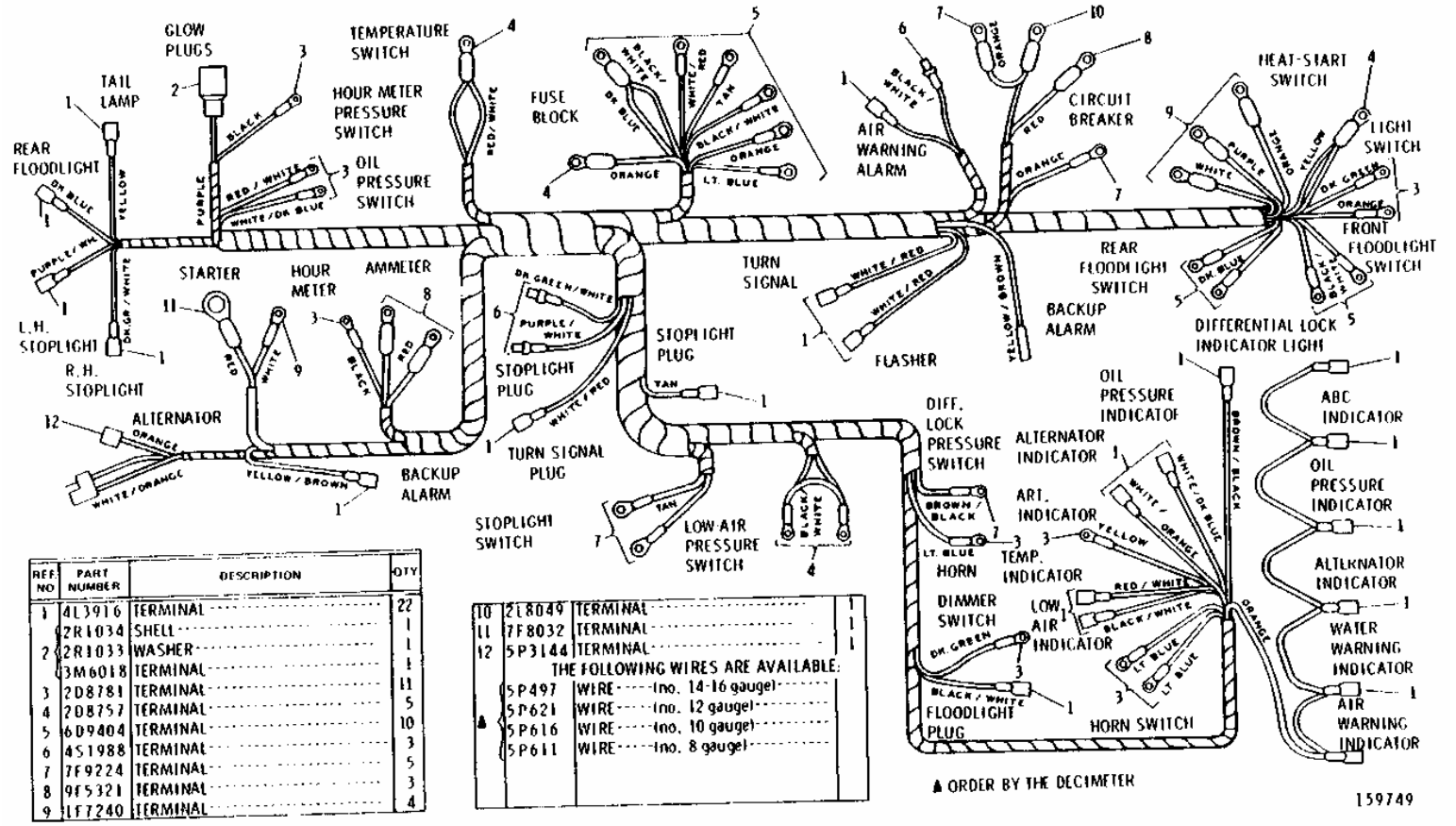

REF NO	PART NUMBER	DESCRIPTION	QTY
1	4L3916	TERMINAL	22
2	2R1034	SHELL	1
	2R1033	WASHER	1
	3M6018	TERMINAL	1
3	2D8781	TERMINAL	11
4	2D8757	TERMINAL	5
5	6D9404	TERMINAL	10
6	4S1988	TERMINAL	3
7	7F9224	TERMINAL	5
8	9F5321	TERMINAL	3
9	1F7240	TERMINAL	4
10	2L8049	TERMINAL	1
11	7F8032	TERMINAL	1
12	5P3144	TERMINAL	1
		THE FOLLOWING WIRES ARE AVAILABLE:	
	5P497	WIRE (no. 14-16 gauge)	
▲	5P621	WIRE (no. 12 gauge)	
▲	5P616	WIRE (no. 10 gauge)	
▲	5P611	WIRE (no. 8 gauge)	

1 NPR 4L-3916 22 TERMINAL

2 NPR 2R-1034 1 SHELL

NPR 2R-1033 1 WASHER

NPR 3M-6018 1 TERMINAL

3 NPR 2D-8781 11 TERMINAL

4 NPR 2D-8757 5 TERMINAL

5 NPR 6D-9404 10 TERMINAL

6 NPR 4S-1988 3 TERMINAL

7 NPR 7F-9224 5 TERMINAL

8 NPR 9F-5321 3 TERMINAL

9 NPR 1F-7240 4 TERMINAL

10 NPR 2L-8049 1 TERMINAL

11 NPR 7F-8032 1 TERMINAL

12 NPR 5P-3144 1 TERMINAL

THE FOLLOWING WIRES ARE AVAILABLE:

NPR H 5P-0497 WIRE (no. 14-16 gauge)

NPR H 5P-0621 WIRE (no. 12 gauge)

NPR H 5P-0616 WIRE (no. 10 gauge)

NPR H 5P-0611 WIRE (no. 8 gauge)

Key:

H - ORDER BY THE DECIMETER

2G7610 BLADE FLOAT CONTROL WIRING GROUP--Type 1
Serial No. 87V2578 to 87V3935 inclusive. Part of 2G8085 Blade Float Arrangement listed on Page 208A. 9D5461 Harness parts are shown on Page 263. AN ATTACHMENT

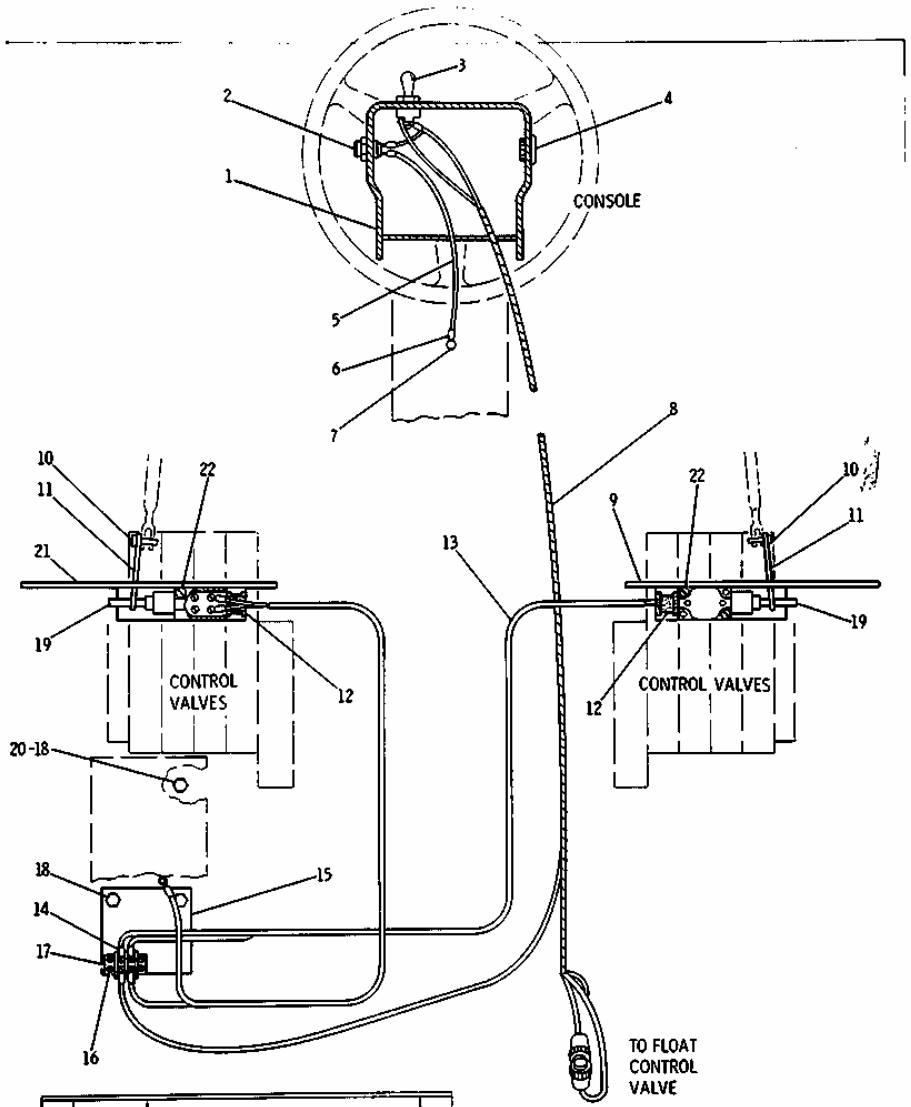

REF. NO.	PART NUMBER	DESCRIPTION	QTY
1	2G3015	HOOD	1
2	9D3127	BASE	1
	9D2867	LENS----------(amber)	1
	8M6175	LAMP	1
3	7N2353	SWITCH ASSEM. ----(cushion blade	1
4	8D7970	PLUG	1
5	2G8697	WIRE ASSEM. (Includes)	1
▲	5P5629	WIRE--------.55 m(21.5 in.)	
	2L8076	TERMINAL------(switch)-----	1
6	4L3916	TERMINAL	1
7	1H2204	SCREW	1
	4B2047	NUT	1
	8F1434	LOCKWASHER	1
8	9D5461	HARNESS ASSEMBLY (Separate Illustration)	1
9	2G7629	PLATE ASSEM.	1

10	6J2256	PIN	2
11	2G7582	PLATE	2
12	4K3787	GROMMET	2
13	2G8698	HARNESS ASSEM. (Includes)	2
14	6D9404	TERMINAL	4
15	2G8670	PLATE	1
16	5M6668	SCREW	4
	3B4501	LOCKWASHER	4
17	2N3810	TERMINAL STRIP	1
18	L1351	BOLT	3
19	7N2354	SWITCH----------(limit)--------	2
20	3K925	WASHER	1
21	2G7628	PLATE ASSEM.	1
22	328924	SCREW	4
	3B4502	LOCKWASHER	4

▲ ORDER BY THE METER

222596

1 NPR 2G-3015 1 HOOD

2 NPR 9D-3127 1 BASE

NPR 9D-2867 1 LENS (amber)

NPR 8M-6175 1 LAMP

3 NPR 7N-2353 1 SWITCH ASSEM. (cushion blade)

4 NPR 8D-7970 1 PLUG

5 NPR 2G-8697 1 WIRE ASSEM.

(Includes)

NPR H 5P-5629 WIRE .55 m(21.5 in.)

NPR 2L-8076 1 TERMINAL (switch)

6 NPR 4L-3916 1 TERMINAL

7 NPR 1H-2204 1 SCREW

NPR 4B-2047 1 NUT

NPR 8F-1434 1 LOCKWASHER

8 NPR Y 9D-5461 1 HARNESS ASSEMBLY

(Separate Illustration)

9 NPR 2G-7629 1 PLATE ASSEM.

10 NPR 6J-2256 2 PIN

11 NPR 2G-7582 2 PLATE

12 NPR 4K-3787 2 GROMMET

13 NPR 2G-8698 2 HARNESS ASSEM.

(Includes)

14 NPR 6D-9404 4 TERMINAL

15 NPR 2G-8670 1 PLATE

16 NPR 5M-6668 4 SCREW

NPR 3B-4501 4 LOCKWASHER

17 NPR 2N-3810 1 TERMINAL STRIP

18	**NPR**	**0L-1351**	**3**	**BOLT**
19	**NPR**	**7N-2354**	**2**	**SWITCH (limit)**
20	**NPR**	**3K-0925**	**1**	**WASHER**
21	**NPR**	**2G-7628**	**1**	**PLATE ASSEM.**
22	**NPR**	**032-8924**	**4**	**SCREW**
	NPR	**3B-4502**	**4**	**LOCKWASHER**

Key:

H - ORDER BY THE METER
Y - SEPARATE ILLUSTRATION

9D5675 WIRING GROUP
Part of 9D8435, 9D8433, 8D8434 and 9D8425 Hydraulic Control Arrangements listed on Page 260
9D5461 Harness parts are shown on Page 263

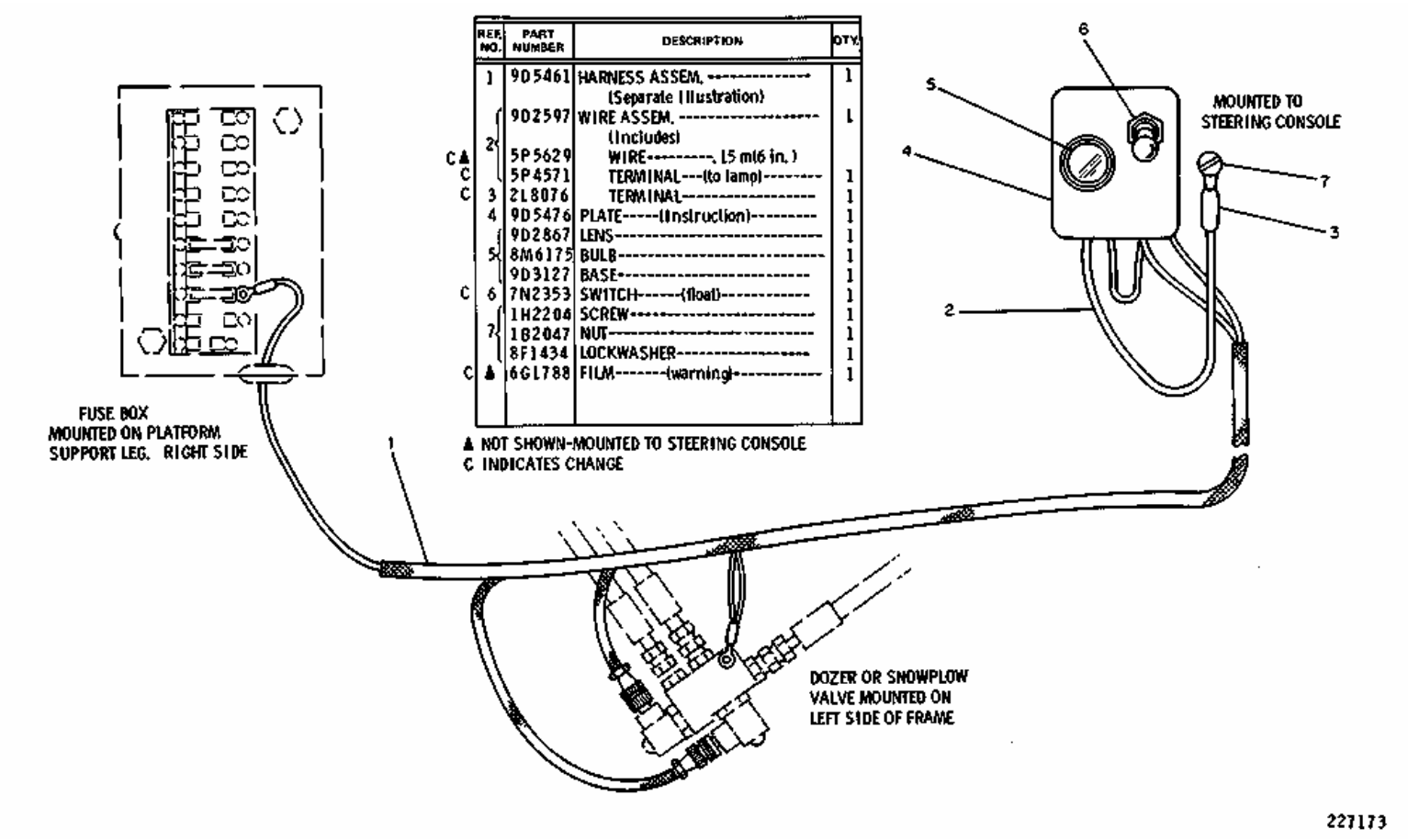

REF. NO.	PART NUMBER	DESCRIPTION	QTY.
1	9D5461	HARNESS ASSEM. (Separate Illustration)	1
2	9D2597	WIRE ASSEM. (Includes)	1
C▲	5P5629	WIRE---------, 15 m(6 in.)	
C	5P4571	TERMINAL---(to lamp)--------	1
C	3 2L8076	TERMINAL----------	1
4	9D5476	PLATE-----(Instruction)---------	1
5	9D2867	LENS----------	1
	8M6175	BULB----------	1
	9D3127	BASE----------	1
C 6	7N2353	SWITCH------(float)----------	1
7	1H2204	SCREW----------	1
	1B2047	NUT----------	1
	8F1434	LOCKWASHER----------	1
C▲	6G1788	FILM-------(warning)----------	1

1 NPR Y 9D-5461 1 HARNESS ASSEM.

(Separate Illustration)

2 NPR 9D-2597 1 WIRE ASSEM.

(Includes)

NPR CH 5P-5629 WIRE .15 m(6 in.)

NPR C 5P-4571 1 TERMINAL (to lamp)

3 NPR C 2L-8076 1 TERMINAL

4 NPR 9D-5476 1 PLATE (Instruction)

5 NPR 9D-2867 1 LENS

NPR 8M-6175 1 BULB

NPR 9D-3127 1 BASE

6 NPR C 7N-2353 1 SWITCH (float)

7 NPR 1H-2204 1 SCREW

1B-2047 1 NUT

NPR 8F-1434 1 LOCKWASHER

NPR CH 6G-1788 1 FILM (warning)

Key:

H - NOT SHOWN-MOUNTED TO STEERING CONSOLE
Y - SEPARATE ILLUSTRATION
C - INDICATES CHANGE

9D5461 HARNESS ASSEMBLY
Part of 2G7610, 6G2240 and 9D5675 Wiring Groups shown on Pages 208D, 208D-2, 208D-3 and 262

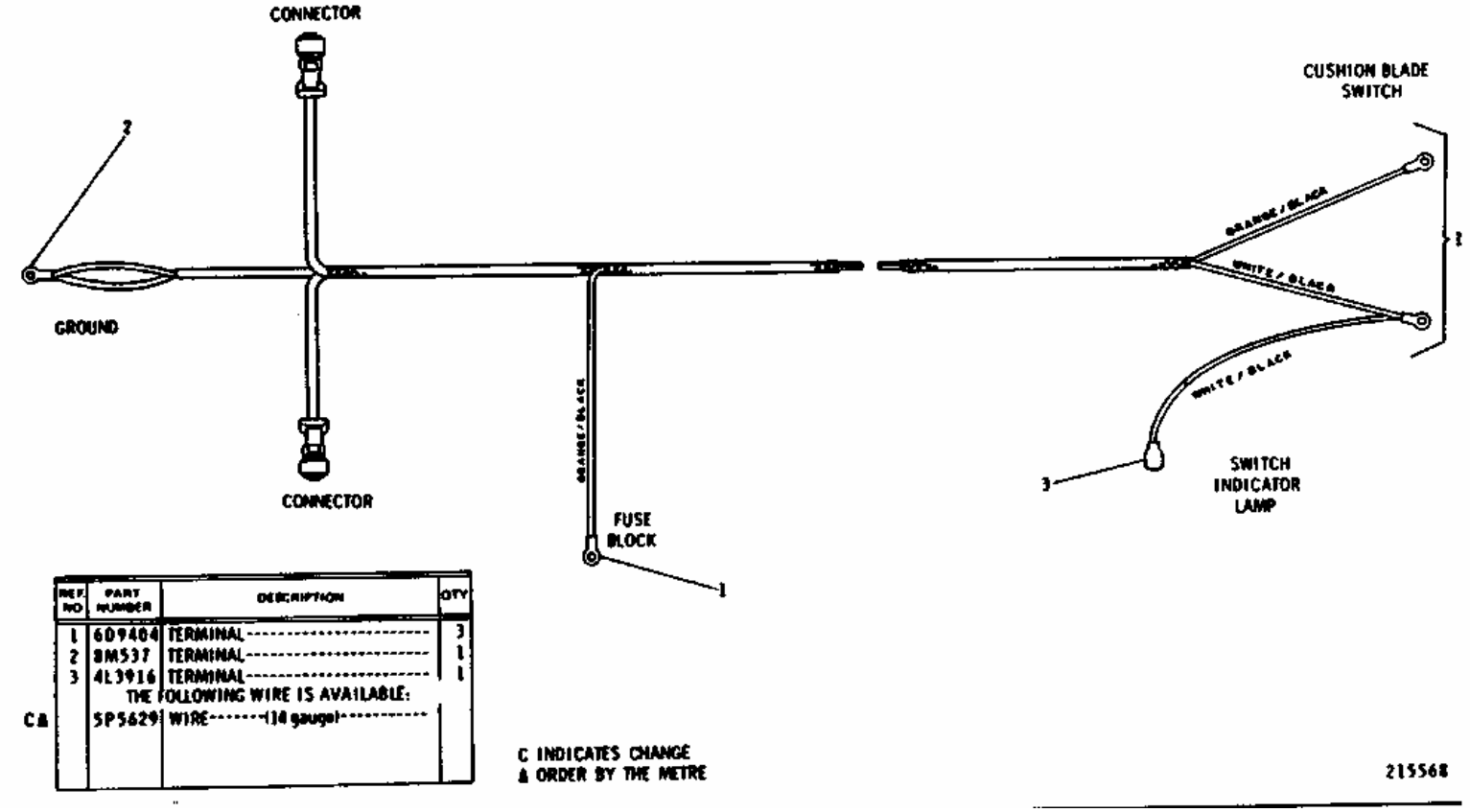

REF NO	PART NUMBER	DESCRIPTION	QTY
1	6D9404	TERMINAL	3
2	8M537	TERMINAL	1
3	4L3916	TERMINAL	1
		THE FOLLOWING WIRE IS AVAILABLE:	
C&	5P5629	WIRE (14 gauge)	

C INDICATES CHANGE
& ORDER BY THE METRE

1 NPR 6D-9404 3 TERMINAL

2 NPR 8M-0537 1 TERMINAL

3 NPR 4L-3916 1 TERMINAL

THE FOLLOWING WIRE IS AVAILABLE:

NPR CH 5P-5629 WIRE (14 gauge)

Key:

C - INDICATES CHANGE
H - ORDER BY THE METER

9D3580 CAB WIRING GROUP
Serial No. 87V1729 to 87V3137 inclusive and 82V720 to 82V799 inclusive. Also part of 9D5195 Roll-Over Protective System Arrangement and 2C8049 Cab Arrangement listed on Pages 280 and 280B. 9D8707 Harness parts are shown on Page 297

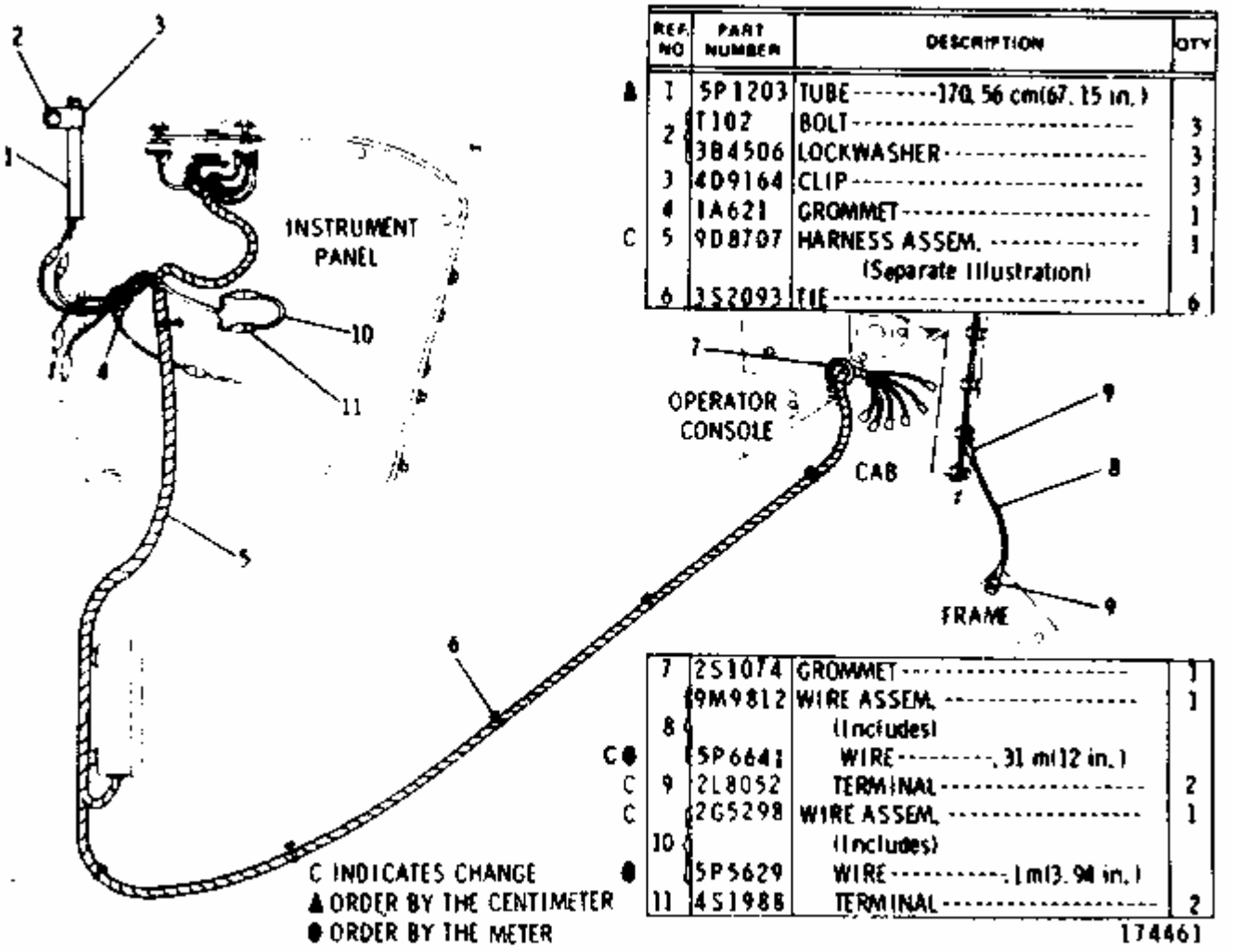

REF. NO	PART NUMBER	DESCRIPTION	QTY
▲ 1	5P1203	TUBE ----------170.56 cm(67.15 in.)	
2	T102	BOLT ----------	3
	3B4506	LOCKWASHER ----------	3
3	4D9164	CLIP ----------	3
4	1A621	GROMMET ----------	1
C 5	9D8707	HARNESS ASSEM. ----------	1
		(Separate Illustration)	
6	3S2093	TIE ----------	6
7	2S1074	GROMMET ----------	1
8	9M9812	WIRE ASSEM. ----------	1
		(Includes)	
C ●	5P6641	WIRE ----------(.31 m(12 in.)	
C 9	2L8052	TERMINAL ----------	2
C	2G5298	WIRE ASSEM. ----------	1
10		(Includes)	
●	5P5629	WIRE ----------(1 m(3.94 in.)	
11	4S1988	TERMINAL ----------	2

1 NPR H 5P-1203 TUBE 170.56 cm(67.15 in.)

2 NPR 0T-0102 3 BOLT

NPR 3B-4506 3 LOCKWASHER

3 NPR 4D-9164 3 CLIP

4 NPR 1A-0621 1 GROMMET

5 NPR YC 9D-8707 1 HARNESS ASSEM.

(Separate Illustration)

6 NPR 3S-2093 6 TIE

7 NPR 2S-1074 1 GROMMET

8 NPR 9M-9812 1 WIRE ASSEM.

(Includes)

NPR CJ 5P-6641 WIRE .31 m(12 in.)

9 NPR C 2L-8052 2 TERMINAL

10 NPR C 2G-5298 1 WIRE ASSEM.

(Includes)

NPR J 5P-5629 WIRE .1m(3.94 in.)

11 NPR 4S-1988 2 TERMINAL

Key:

C - INDICATES CHANGE
Y - SEPARATE ILLUSTRATION
H - ORDER BY THE CENTIMETER
J - ORDER BY THE METER

9D8707 HARNESS ASSEMBLY
Part of 9D3580 Cab Wiring Group shown on Page 296

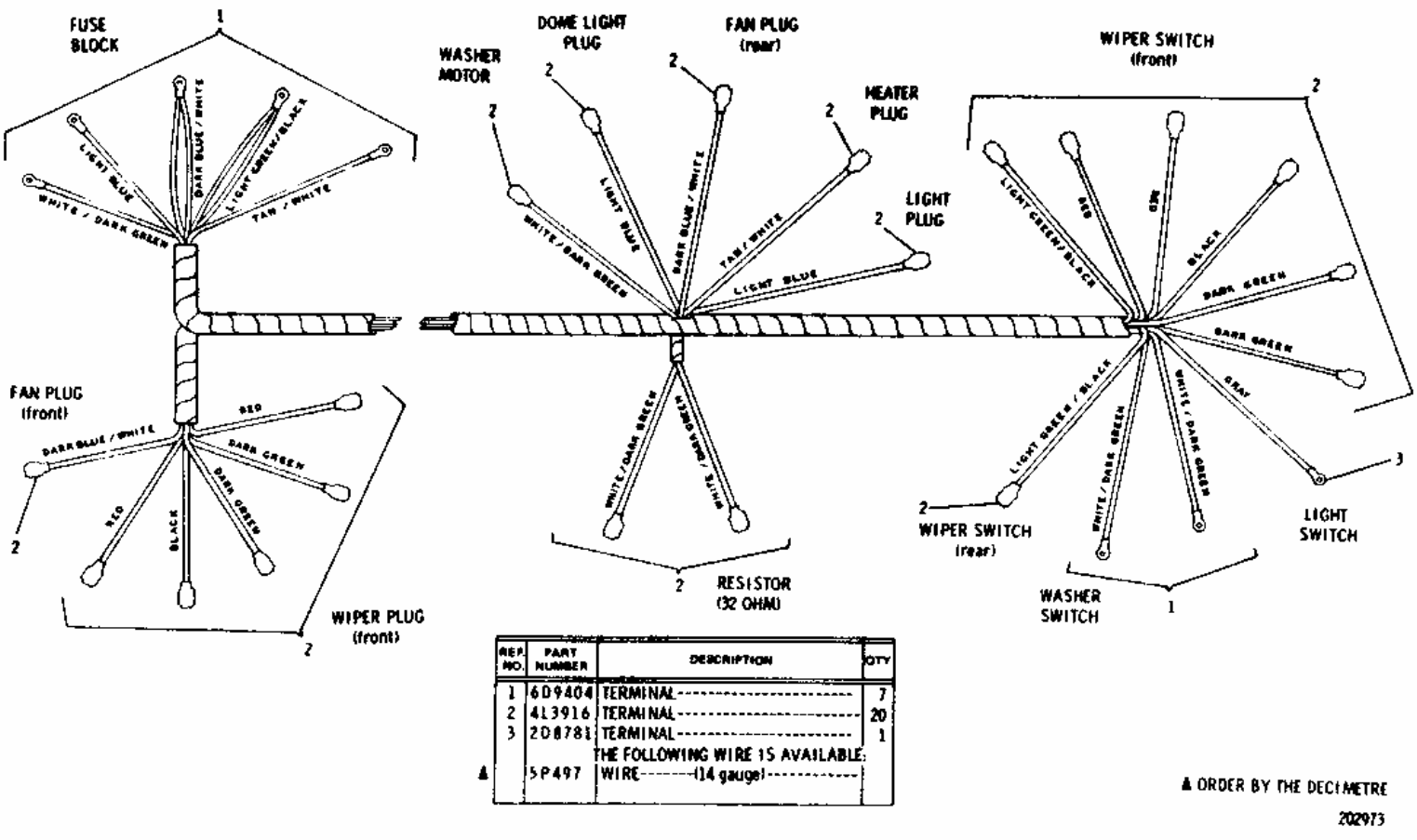

REF. NO.	PART NUMBER	DESCRIPTION	QTY
1	6D9404	TERMINAL	7
2	4L3916	TERMINAL	20
3	2D8781	TERMINAL	1
		THE FOLLOWING WIRE IS AVAILABLE:	
&	5P497	WIRE-------(14 gauge)----------	

& ORDER BY THE DECIMETRE

202973

1 NPR 6D-9404 7 TERMINAL

2 NPR 4L-3916 20 TERMINAL

3 NPR 2D-8781 1 TERMINAL

THE FOLLOWING WIRE IS AVAILABLE:

NPR H 5P-0497 WIRE (14 gauge)

Key:

H - ORDER BY THE DECIMETRE

6G5805 CAB WIRING GROUP--Part 1
Also part of 5T567 ROPS Arrangement listed on Page 280A-2
6G5783 Harness parts are shown on Pages 297G & 297H

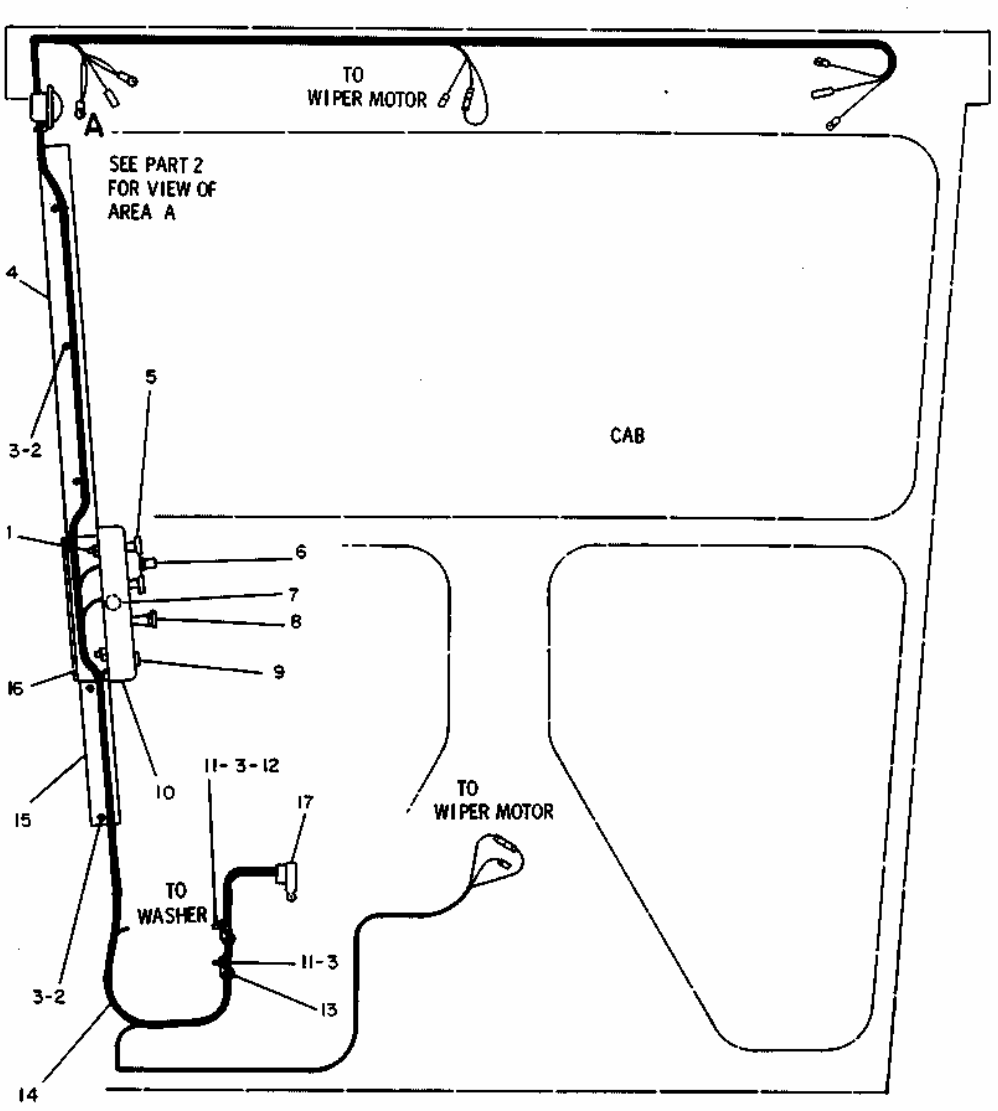

REF. NO.	PART NUMBER	DESCRIPTION	QTY.
1	5K906	BOLT	2
	4M5280	NUT	2
	7H3937	LOCKWASHER	2
2	4L6458	NUT	5
	9P2553	SPACER	5
3	8H5505	WASHER	7
4	6G7721	PLATE	1
5	1V7362	SWITCH--(Rotary Wiper-Washer)--(Each Includes)	2
	7N4033	KNOB	1
6	7G9730	LAMP ASSEM.	1
	8D1429	LAMP	1
7	2S9727	GROMMET	1
8	8N2353	KNOB ASSEM.	1
	8N2354	HOUSING ASSEM.	1
9	3V4694	PLUG	1
10	6G5768	PANEL	1
	4V6981	SCREW	2
C 11	4M5283	BOLT	2
12	1H3338	LOCKWASHER	1
13	8J1256	CLIP	2
14	6G5783	HARNESS ASSEM. (Separate Illustration)	1
15	6G7723	PLATE	1
16	6G5769	BRACKET ASSEM.	1
C 17	3T50	CLIP	1

C INDICATES CHANGE

182589

1 NPR 5K-0906 2 BOLT

NPR 4M-5280 2 NUT

NPR 7H-3937 2 LOCKWASHER

2 NPR 4L-6458 5 NUT

NPR 9P-2553 5 SPACER

3 NPR 8H-5505 7 WASHER

4 NPR 6G-7721 1 PLATE

5 NPR 1V-7362 2 SWITCH (Rotary Wiper-Washer)

(Each Includes)

NPR 7N-4033 1 KNOB

6 NPR 7G-9730 1 LAMP ASSEM.

NPR 8D-1429 1 LAMP

7 NPR 2S-9727 1 GROMMET

8 NPR 8N-2353 1 KNOB ASSEM.

NPR 8N-2354 1 HOUSING ASSEM.

9 NPR 3V-4694 1 PLUG

10 NPR 6G-5768 1 PANEL

NPR 4V-6981 2 SCREW

11 NPR C 4M-5283 2 BOLT

12 NPR 1H-3338 1 LOCKWASHER

13 NPR 8J-1256 2 CLIP

14 NPR Y 6G-5783 1 HARNESS ASSEM.

(Separate Illustration)

15 NPR 6G-7723 1 PLATE

16 NPR 6G-5769 1 BRACKET ASSEM.

17 NPR C 3T-0050 1 CLIP

Key: C - INDICATES CHANGE Y - SEPARATE ILLUSTRATION

6G5805 CAB WIRING GROUP--Part 2--Also part of 5T567 ROPS listed on Page 280A-2

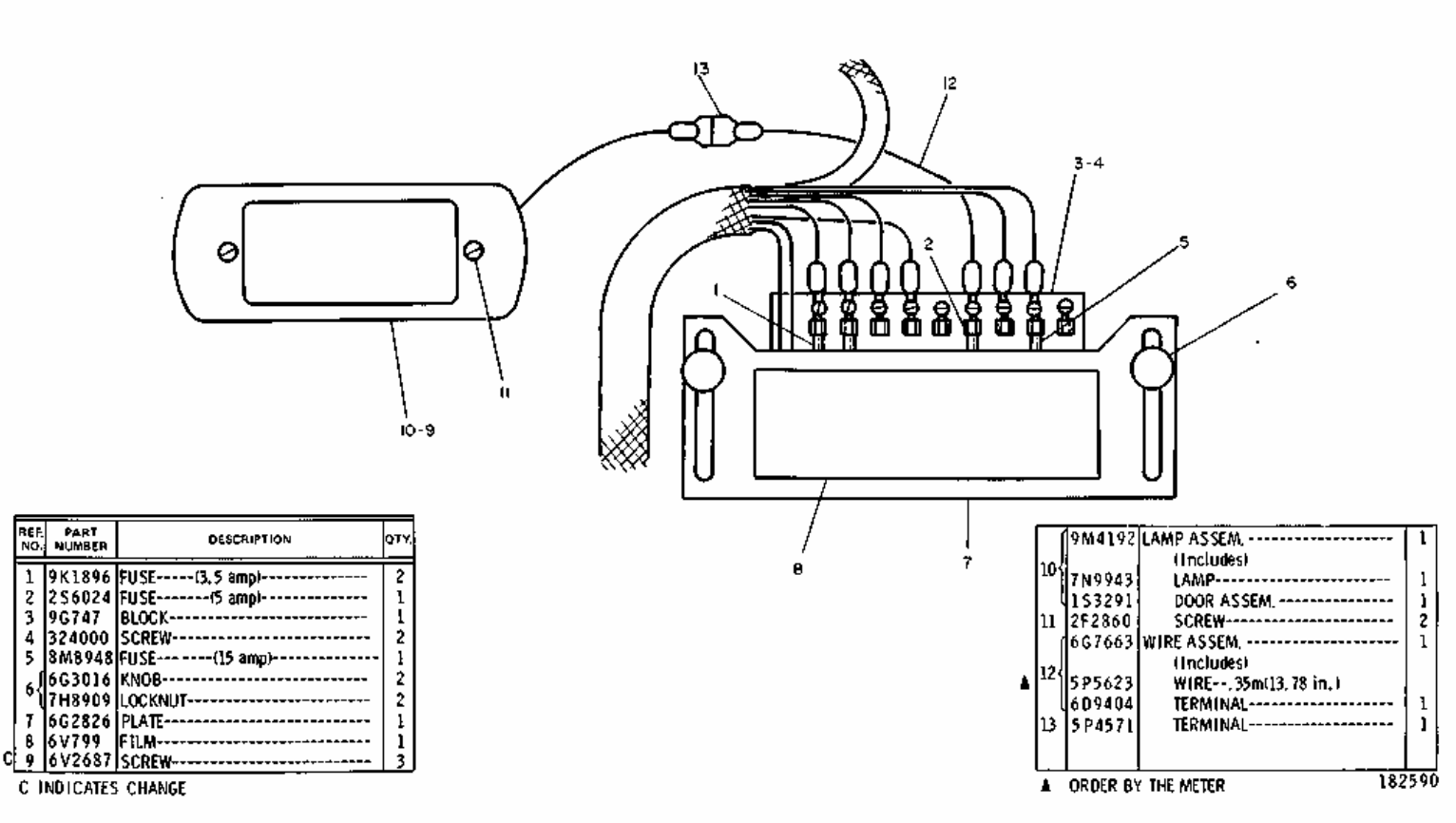

REF. NO.	PART NUMBER	DESCRIPTION	QTY.
1	9K1896	FUSE-----(3.5 amp)----------	2
2	2S6024	FUSE-------(5 amp)----------	1
3	9G747	BLOCK----------	1
4	324000	SCREW----------	2
5	8M8948	FUSE---------(15 amp)----------	1
6	6G3016	KNOB----------	2
	7H8909	LOCKNUT----------	2
7	6G2826	PLATE----------	1
8	6V799	FILM----------	1
C 9	6V2687	SCREW----------	3

C INDICATES CHANGE

10	9M4192	LAMP ASSEM. ----------	1
		(Includes)	
	7N9943	LAMP----------	1
	1S3291	DOOR ASSEM. ----------	1
11	2F2860	SCREW----------	2
12	6G7663	WIRE ASSEM. ----------	1
		(Includes)	
▲	5P5623	WIRE--.35m(13.78 in.)	
	6D9404	TERMINAL----------	1
13	5P4571	TERMINAL----------	1

▲ ORDER BY THE METER

182590

1 NPR 9K-1896 2 FUSE (3.5 amp)

2 NPR 2S-6024 1 FUSE (5 amp)

3 NPR 9G-0747 1 BLOCK

4 NPR 032-4000 2 SCREW

5 NPR 8M-8948 1 FUSE (15 amp)

6 NPR 6G-3016 2 KNOB

NPR 7H-8909 2 LOCKNUT

7 NPR 6G-2826 1 PLATE

8 NPR 6V-0799 1 FILM

9 NPR C 6V-2687 3 SCREW

10 NPR 9M-4192 1 LAMP ASSEM.

(Includes)

	NPR	7N-9943	1	LAMP
	NPR	1S-3291	1	DOOR ASSEM.
11	NPR	2F-2860	2	SCREW
12	NPR	6G-7663	1	WIRE ASSEM.
(Includes)				
	NPR H	5P-5623		WIRE .35m(13.78 in.)
	NPR	6D-9404	1	TERMINAL
13	NPR	5P-4571	1	TERMINAL

Key:

C - INDICATES CHANGE
H - ORDER BY THE METER

6G5810 CAB WIRING GROUP--Part 1
Part of 5T566 ROPS Arrangement listed on Page 280A-2
6G5784 Harness parts are shown on Page 297E. AN ATTACHMENT

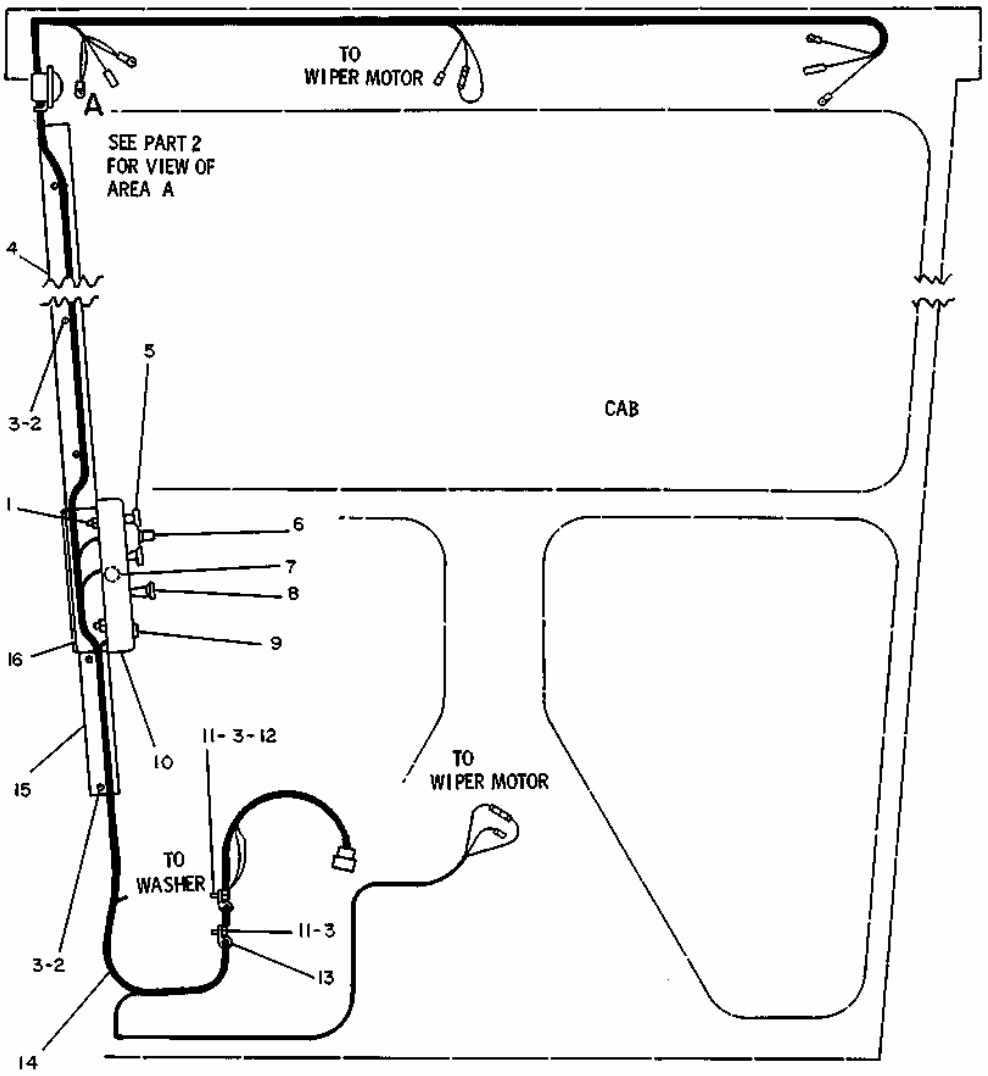

REF. NO.	PART NUMBER	DESCRIPTION	QTY.
1	5K906	BOLT	2
	4M5280	NUT	2
	7H3937	LOCKWASHER	2
2	4L6458	NUT	5
	9P2553	SPACER	5
3	8H5505	WASHER	7
4	6G7722	PLATE	1
5	1V7362	SWITCH--(Rotary Wiper-Washer)--(Each Includes)	2
	7N4033	KNOB	1
6	7G9730	LAMP ASSEM.	1
	8D1429	LAMP	1
7	2S9727	GROMMET	1
C 8	8N2353	KNOB ASSEM. ----(lighter)----	1
	8N2354	HOUSING ASSEM.	1
9	3V4694	PLUG	1
10	6G5768	PANEL	1
	4V6981	SCREW	2
C 11	4M5283	BOLT	2
12	1H3338	LOCKWASHER	1
13	8J1256	CLIP	2
14	6G5784	HARNESS ASSEM. (Separate Illustration)	1
15	6G7723	PLATE	1
16	6G5769	BRACKET ASSEM.	1

C INDICATES CHANGE 237449

1 NPR 5K-0906 2 BOLT

NPR 4M-5280 2 NUT

NPR 7H-3937 2 LOCKWASHER

2 NPR 4L-6458 5 NUT

NPR 9P-2553 5 SPACER

3 NPR 8H-5505 7 WASHER

4 NPR 6G-7722 1 PLATE

5 NPR 1V-7362 2 SWITCH (Rotary Wiper-Washer)

(Each Includes)

NPR 7N-4033 1 KNOB

6 NPR 7G-9730 1 LAMP ASSEM.

NPR 8D-1429 1 LAMP

7 NPR 2S-9727 1 GROMMET

8 NPR C 8N-2353 1 KNOB ASSEM. (lighter)

NPR 8N-2354 1 HOUSING ASSEM.

9 NPR 3V-4694 1 PLUG

10 NPR 6G-5768 1 PANEL

NPR 4V-6981 2 SCREW

11 NPR C 4M-5283 2 BOLT

12 NPR 1H-3338 1 LOCKWASHER

13 NPR 8J-1256 2 CLIP

14 NPR Y 6G-5784 1 HARNESS ASSEM.

(Separate Illustration)

15 NPR 6G-7723 1 PLATE

16 NPR 6G-5769 1 BRACKET ASSEM.

Key: C - INDICATES CHANGE Y - SEPARATE ILLUSTRATION

6G5810 CAB WIRING GROUP--Part 2--Part of 5T566 ROPS Arrangement listed on Page 280A-2

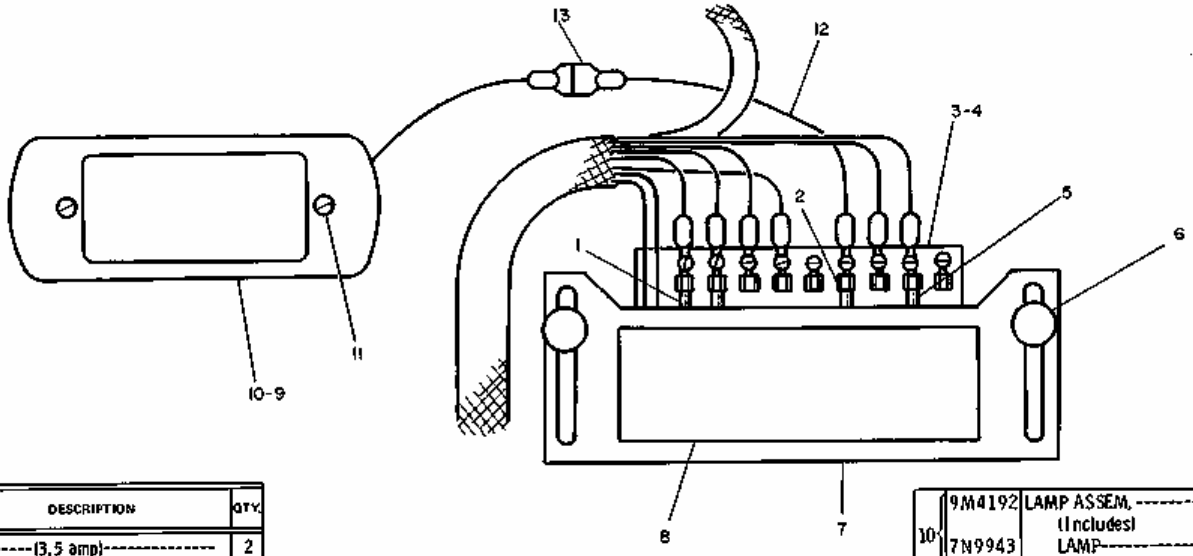

REF. NO.	PART NUMBER	DESCRIPTION	QTY.
1	9K1896	FUSE-----(3.5 amp)----------	2
2	2S6024	FUSE--------(5 amp)----------	1
3	9G747	BLOCK----------	1
4	324000	SCREW----------	2
5	8M8948	FUSE--- ----(15 amp)----------	1
6	6G3016	KNOB----------	2
	7H8909	LOCKNUT----------	2
7	6G2826	PLATE----------	1
8	6V799	FILM----------	1
9	5P7111	SCREW----------	3

10	9M4192	LAMP ASSEM. ----------		1
		(Includes)		
	7N9943	LAMP----------		1
	1S3291	DOOR ASSEM. ----------		1
11	2F2860	SCREW----------		2
12	6G7663	WIRE ASSEM. ----------		1
		(Includes)		
▲	5P5623	WIRE--.35m(13.78 in.)		
	6D9404	TERMINAL----------		1
13	5P4571	TERMINAL----------		1

▲ ORDER BY THE METER 233203

1 NPR 9K-1896 2 FUSE (3.5 amp)

2 NPR 2S-6024 1 FUSE (5 amp)

3 NPR 9G-0747 1 BLOCK

4 NPR 032-4000 2 SCREW

5 NPR 8M-8948 1 FUSE (15 amp)

6 NPR 6G-3016 2 KNOB

NPR 7H-8909 2 LOCKNUT

7 NPR 6G-2826 1 PLATE

8 NPR 6V-0799 1 FILM

9 NPR 5P-7111 3 SCREW

10 NPR 9M-4192 1 LAMP ASSEM.

(Includes)

NPR 7N-9943 1 LAMP

	NPR	1S-3291	1	DOOR ASSEM.
11	NPR	2F-2860	2	SCREW
12	NPR	6G-7663	1	WIRE ASSEM.

(Includes)

NPR H	5P-5623		WIRE .35m(13.78 in.)
NPR	6D-9404	1	TERMINAL
13 NPR	5P-4571	1	TERMINAL

Key:

H - ORDER BY THE METER

6G5784 HARNESS ASSEMBLY--Part 1-Part of 6G5810 Cab Wiring Group shown on Page 297D

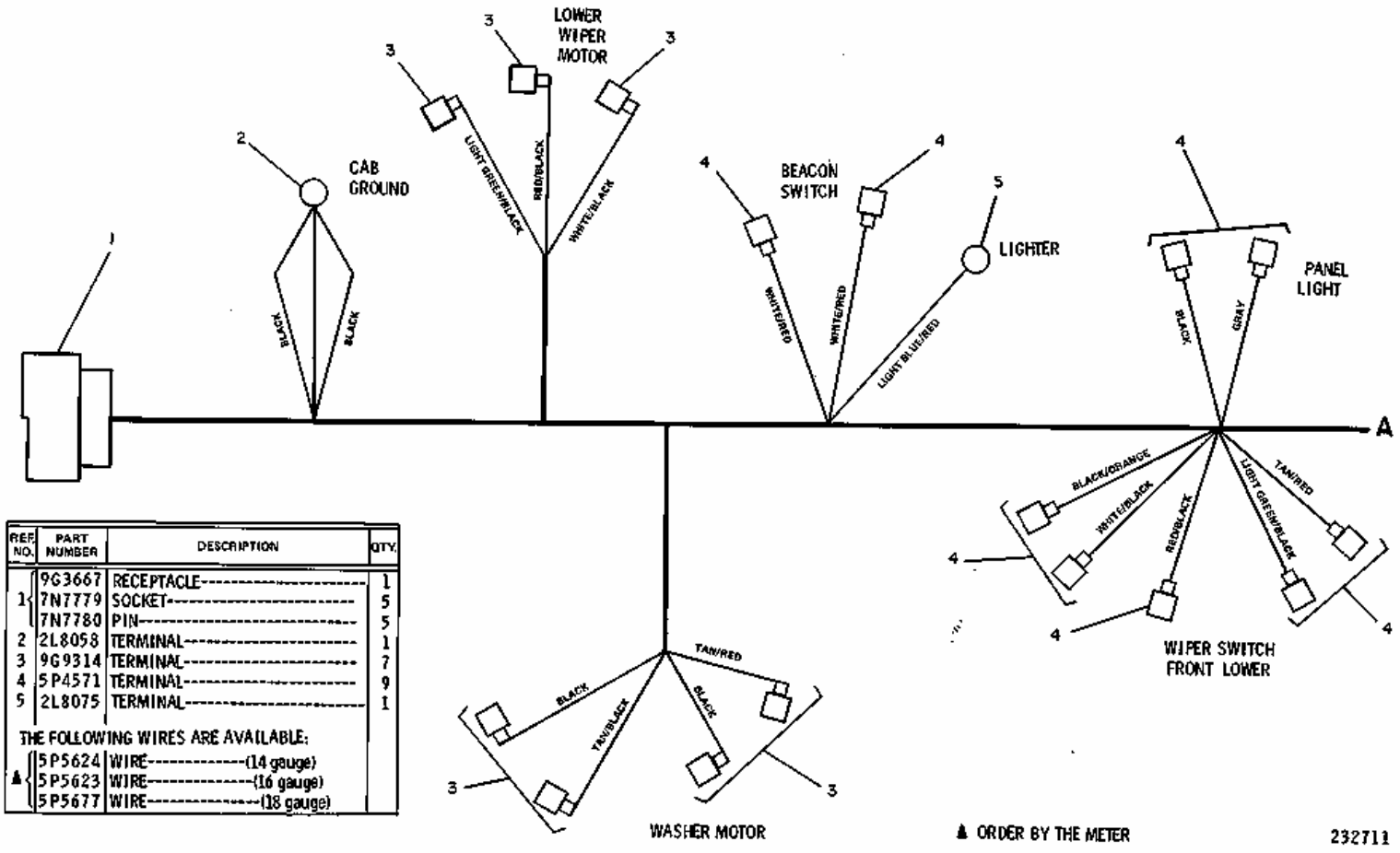

REF. NO.	PART NUMBER	DESCRIPTION	QTY.
1	9G3667	RECEPTACLE	1
	7N7779	SOCKET	5
	7N7780	PIN	5
2	2L8058	TERMINAL	1
3	9G9314	TERMINAL	7
4	5P4571	TERMINAL	9
5	2L8075	TERMINAL	1
	THE FOLLOWING WIRES ARE AVAILABLE:		
♣	5P5624	WIRE-----(14 gauge)	
♣	5P5623	WIRE-----(16 gauge)	
♣	5P5677	WIRE-----(18 gauge)	

♣ ORDER BY THE METER

232711

1 NPR 9G-3667 1 RECEPTACLE

NPR 7N-7779 5 SOCKET

NPR 7N-7780 5 PIN

2 NPR 2L-8058 1 TERMINAL

3 NPR 9G-9314 7 TERMINAL

4 NPR 5P-4571 9 TERMINAL

5 NPR 2L-8075 1 TERMINAL

THE FOLLOWING WIRES ARE AVAILABLE:

NPR H 5P-5624 WIRE (14 gauge)

NPR 5P-5623 WIRE (16 gauge)

NPR 5P-5677 WIRE (18 gauge)

Key: H - ORDER BY THE METER

6G5784 HARNESS ASSEMBLY--Part 2-Part of 6G5810 Cab Wiring Group shown on Page 297D

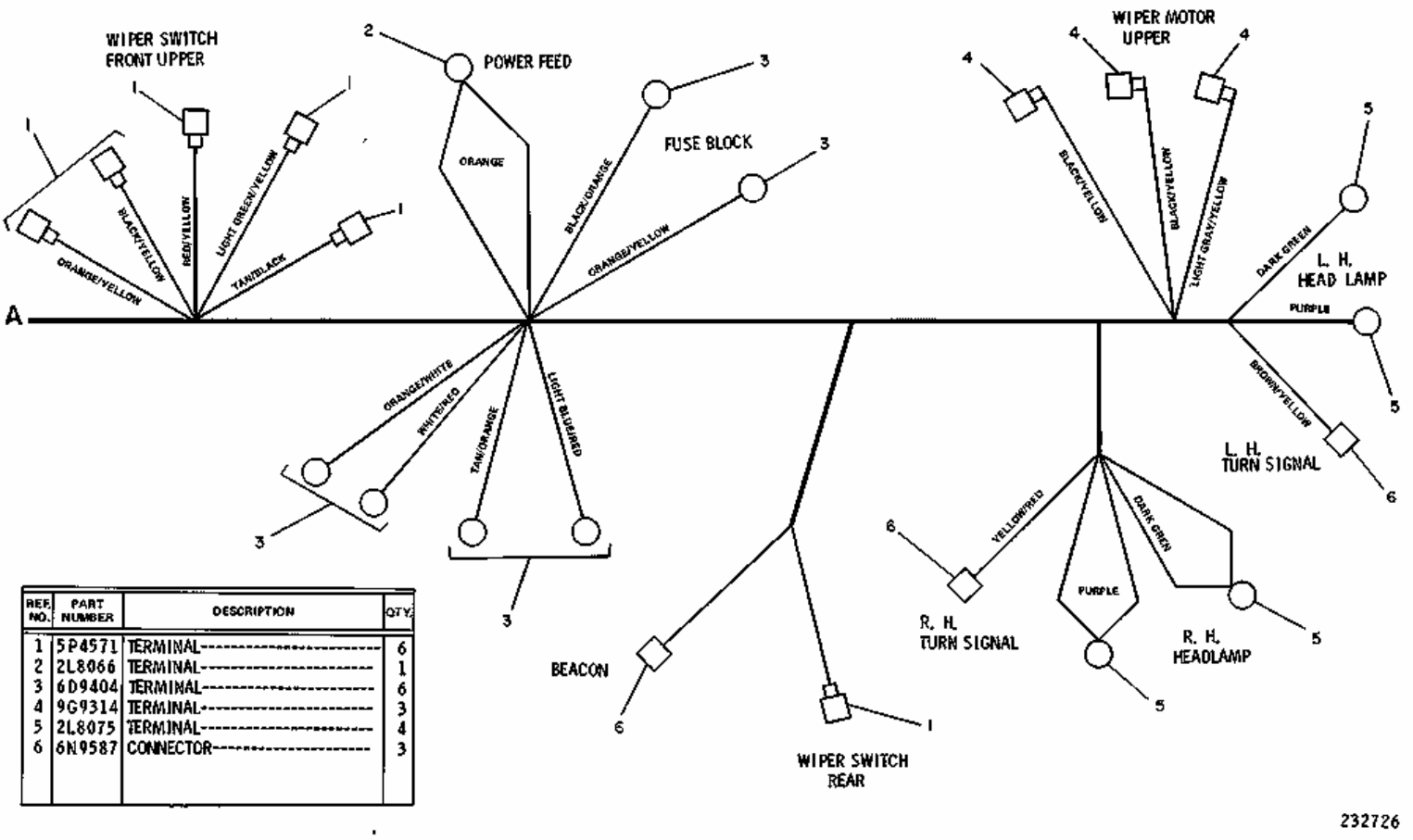

REF. NO.	PART NUMBER	DESCRIPTION	QTY.
1	5P4571	TERMINAL	6
2	2L8066	TERMINAL	1
3	6D9404	TERMINAL	6
4	9G9314	TERMINAL	3
5	2L8075	TERMINAL	4
6	6N9587	CONNECTOR	3

1 NPR 5P-4571 6 TERMINAL

2 NPR 2L-8066 1 TERMINAL

3 NPR 6D-9404 6 TERMINAL

4 NPR 9G-9314 3 TERMINAL

5 NPR 2L-8075 4 TERMINAL

6 NPR 6N-9587 3 CONNECTOR

6G5783 HARNESS ASSEMBLY--Part 1-Part of 6G5805 Cab Wiring Group shown on Page 297A

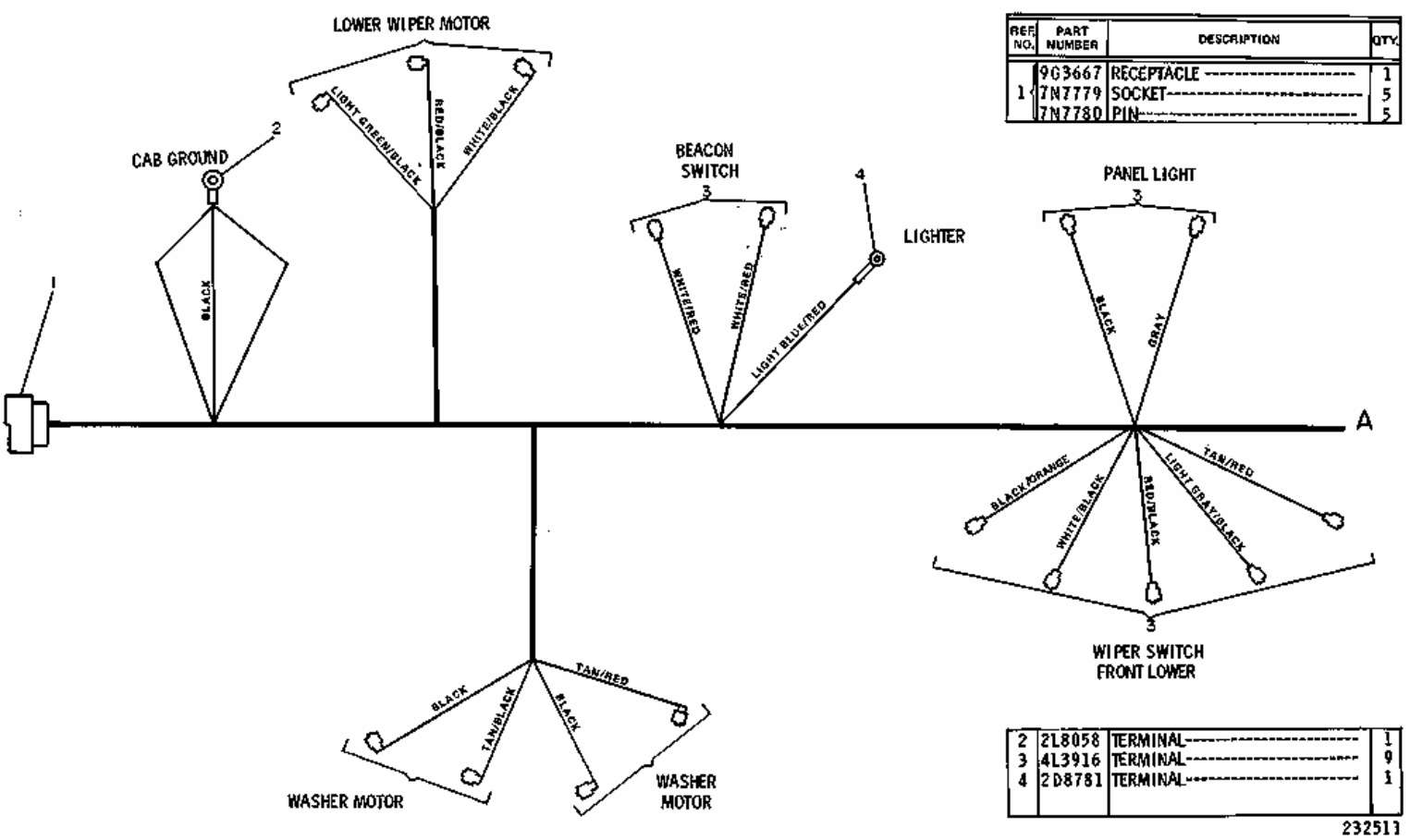

REF. NO.	PART NUMBER	DESCRIPTION	QTY.
1	9G3667	RECEPTACLE	1
	7N7779	SOCKET	5
	7N7780	PIN	5

2	2L8058	TERMINAL	1
3	4L3916	TERMINAL	9
4	2D8781	TERMINAL	1

232511

1 NPR 9G-3667 1 RECEPTACLE

NPR 7N-7779 5 SOCKET

NPR 7N-7780 5 PIN

2 NPR 2L-8058 1 TERMINAL

3 NPR 4L-3916 9 TERMINAL

4 NPR 2D-8781 1 TERMINAL

6G5783 HARNESS ASSEMBLY--Part 2-Part of 6G5805 Cab Wiring Group shown on Page 297A

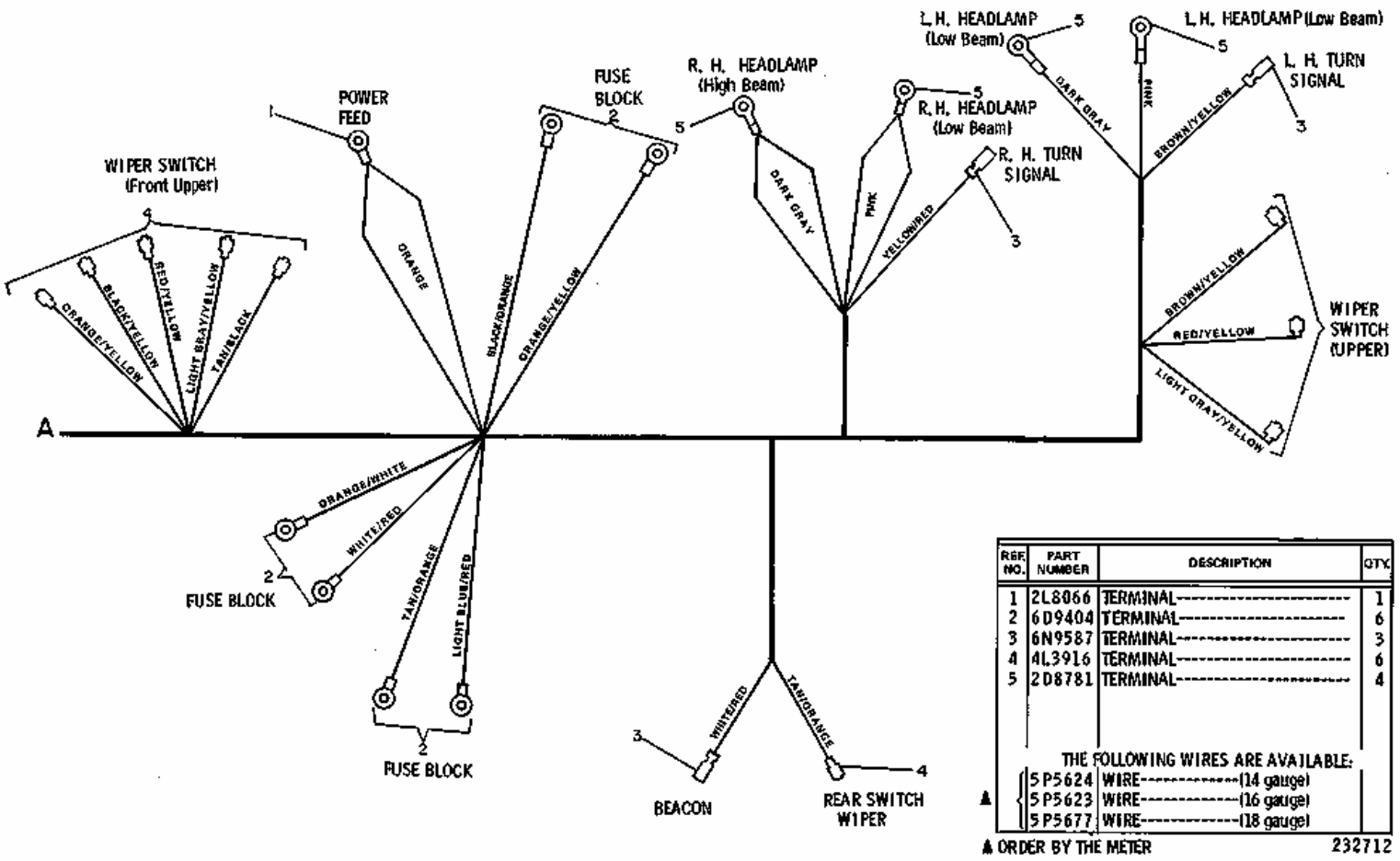

REF. NO.	PART NUMBER	DESCRIPTION	QTY.
1	2L8066	TERMINAL	1
2	6D9404	TERMINAL	6
3	6N9587	TERMINAL	3
4	4L3916	TERMINAL	6
5	2D8781	TERMINAL	4
		THE FOLLOWING WIRES ARE AVAILABLE:	
A	5P5624	WIRE----------(14 gauge)	
A	5P5623	WIRE----------(16 gauge)	
A	5P5677	WIRE----------(18 gauge)	

A ORDER BY THE METER 232712

1 NPR 2L-8066 1 TERMINAL

2 NPR 6D-9404 6 TERMINAL

3 NPR 6N-9587 3 TERMINAL

4 NPR 4L-3916 6 TERMINAL

5 NPR 2D-8781 4 TERMINAL

THE FOLLOWING WIRES ARE AVAILABLE:

NPR 5P-5624 WIRE (14 gauge)

NPR H 5P-5623 WIRE (16 gauge)

NPR 5P-5677 WIRE (18 gauge)

Key:

H - ORDER BY THE METER

5T819 HARNESS ASSEMBLY--Cab Retrofit
Part of 5T566 and 5T567 Conversion Arrangement listed on Page 280A-2

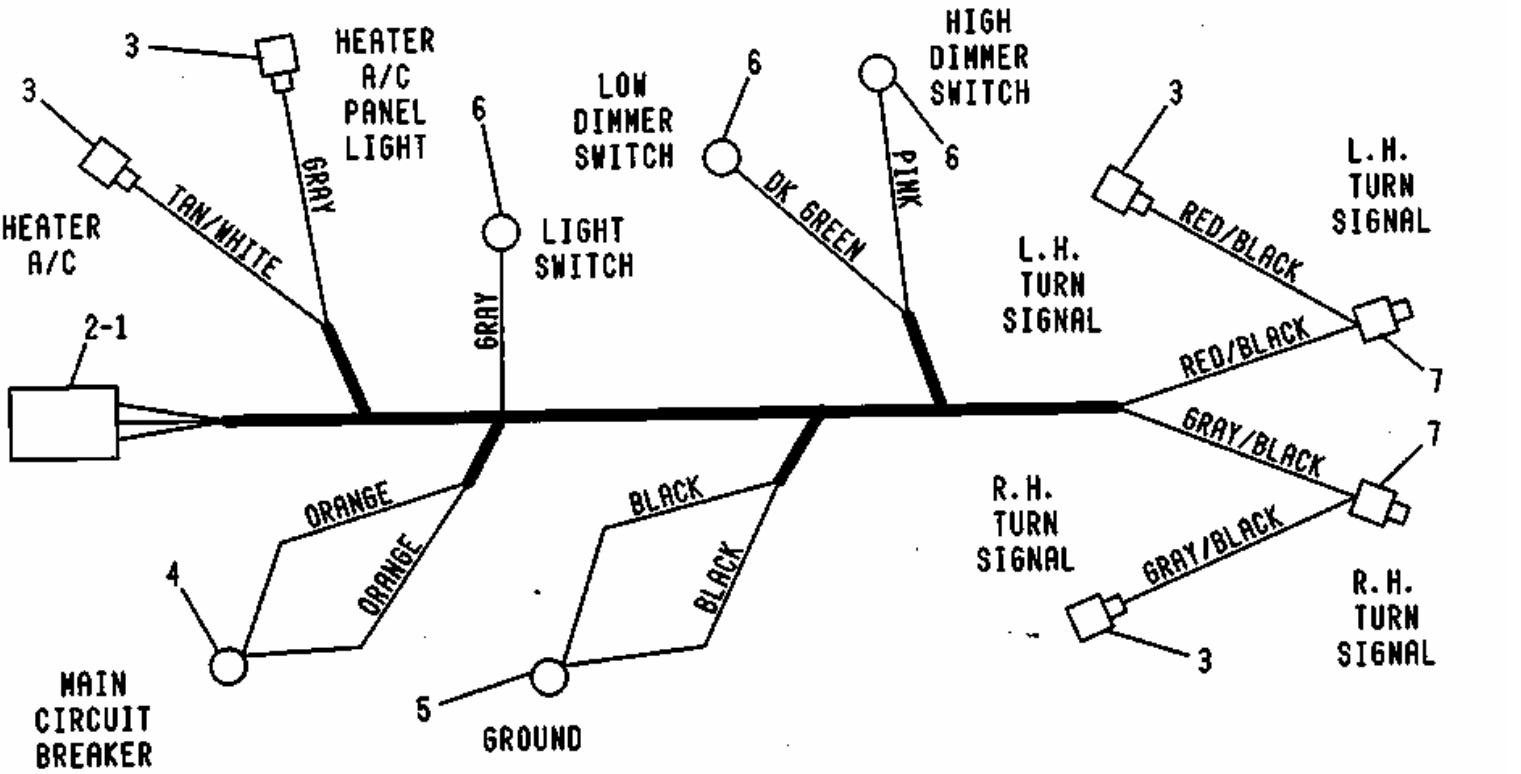

REF. NO.	PART NUMBER	DESCRIPTION	QTY.
1	7N7779	SOCKET----------	5
	7N7780	PIN----------	5
2	9G3673	HOUSING----------	1
3	3D4467	TERMINAL----------	4
4	2L8066	TERMINAL----------	1
5	6B2759	TERMINAL----------	1
6	2L8075	TERMINAL----------	3
7	4S1988	TERMINAL----------	2
		THE FOLLOWING WIRES ARE AVAILABLE:	
▲	5P5624	WIRE----------(14 gauge)	
▲	5P5623	WIRE----------(16 gauge)	
▲	5P5677	WIRE----------(18 gauge)	

▲ ORDER BY THE METER * 180316

1 NPR 7N-7779 5 SOCKET

NPR 7N-7780 5 PIN

2 NPR 9G-3673 1 HOUSING

3 NPR 3D-4467 4 TERMINAL

4 NPR 2L-8066 1 TERMINAL

5 NPR 6B-2759 1 TERMINAL

6 NPR 2L-8075 3 TERMINAL

7 NPR 4S-1988 2 TERMINAL

THE FOLLOWING WIRES ARE AVAILABLE:

NPR H 5P-5624 WIRE (14 gauge)

NPR H 5P-5623 WIRE (16 gauge)

NPR H 5P-5677 WIRE (18 gauge)

Key: H - ORDER BY THE METER

7N8292 FUSE HOLDER, FUSE & WIRE KIT--Field Installation
Provides protection from overload failure of 6N5906 Hour Meter without sealed vent holes. Those hour meters with vent holes have a white dash mark under two central figures

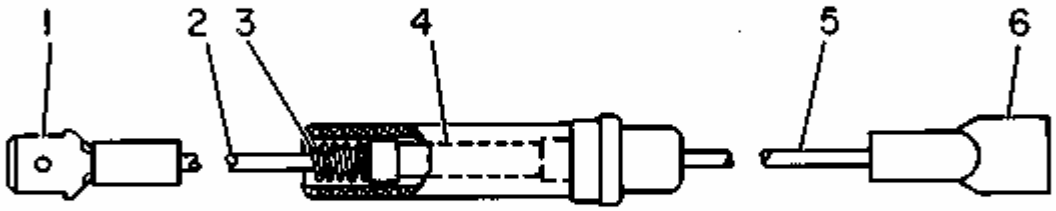

1	NPR	4S-1988	1	TERMINAL
2	NPR D	5P-5624		WIRE .08M(3.15IN)
3	NPR	2S-5013	1	SPRING-HOLDER
4	NPR	2S-6024	1	FUSE (5 AMP)
	NPR	2S-8708	2	CONTACT-HOLDER
5	NPR D	5P-5624		WIRE .06M(2.36IN)
6	NPR	5P-4571	1	TERMINAL

Key: D - ORDER BY THE METER

6N5123 SOLENOID SWITCH ASSEMBLY--24 Volt
Part of 4N3182 and 2P2502 Electric Starting Motor Groups shown on
Pages 79 and 84

REF. NO.	PART NUMBER	DESCRIPTION	QTY
C 1	7N908	TERMINAL ASSEM.	1
1		(Includes)	
	4M1834	PLATE	1
2	7F4907	STRIP	1
3	3H3681	NUT	2
4	3B4508	LOCKWASHER	4
5	3H3680	NUT	2
6	7F3494	WASHER	2
7	4M1836	INSULATOR	2
8	4M1837	BUSHING	2
C 9	7F4906	STUD	1
10	7N909	TERMINAL ASSEM.	1
11	9S4490	GASKET	1
12	4M5274	SCREW--(large)	1
		- OR -	
C	5P9132	SCREW--(small)	1
13	9S4489	SCREW ASSEM.	4
14	4M3217	SCREW	2
15	4M1814	CONTACT ASSEM.	1
16	3P72	CASE ASSEM.	1
17	1F73	CLIP	2
18	4M1815	SPRING	1

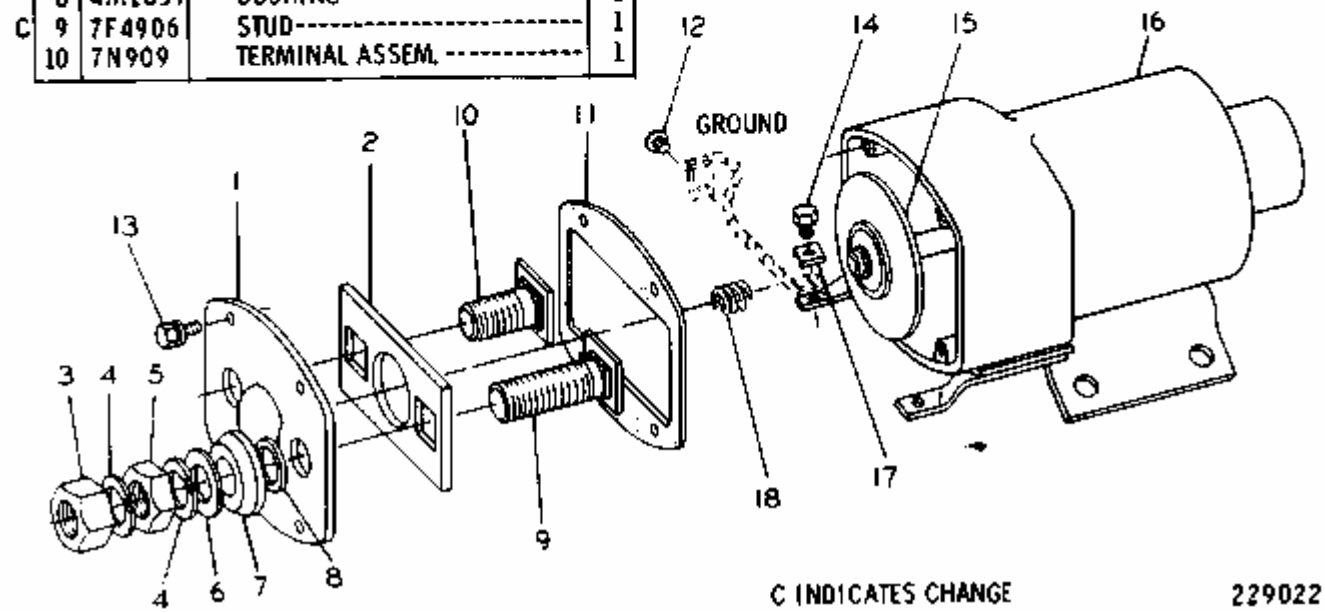

1 NPR C 7N-0908 1 TERMINAL ASSEM.

(Includes)

NPR 4M-1834 1 PLATE

2 NPR 7F-4907 1 STRIP

3 NPR 3H-3681 2 NUT

4 NPR 3B-4508 4 LOCKWASHER

5 NPR 3H-3680 2 NUT

6 NPR 7F-3494 2 WASHER

7 NPR 4M-1836 2 INSULATOR

8 NPR 4M-1837 2 BUSHING

9 NPR C 7F-4906 1 STUD

10 NPR 7N-0909 1 TERMINAL ASSEM.

11 NPR 9S-4490 1 GASKET

12 NPR 4M-5274 1 SCREW (large)

-OR-

NPR C 5P-9132 1 SCREW (small)

13 NPR 9S-4489 4 SCREW ASSEM.

14 NPR 4M-3217 2 SCREW

15 NPR 4M-1814 1 CONTACT ASSEM.

16 NPR 3P-0072 1 CASE ASSEM.

17 NPR 1F-0073 2 CLIP

18 NPR 4M-1815 1 SPRING

Key:

C - INDICATES CHANGE

4M1812 SOLENOID SWITCH ASSEMBLY--24 Volt
Part of 4N3182 and 7N1285 Electric Starting Motor Group shown on Pages 81A & 85A

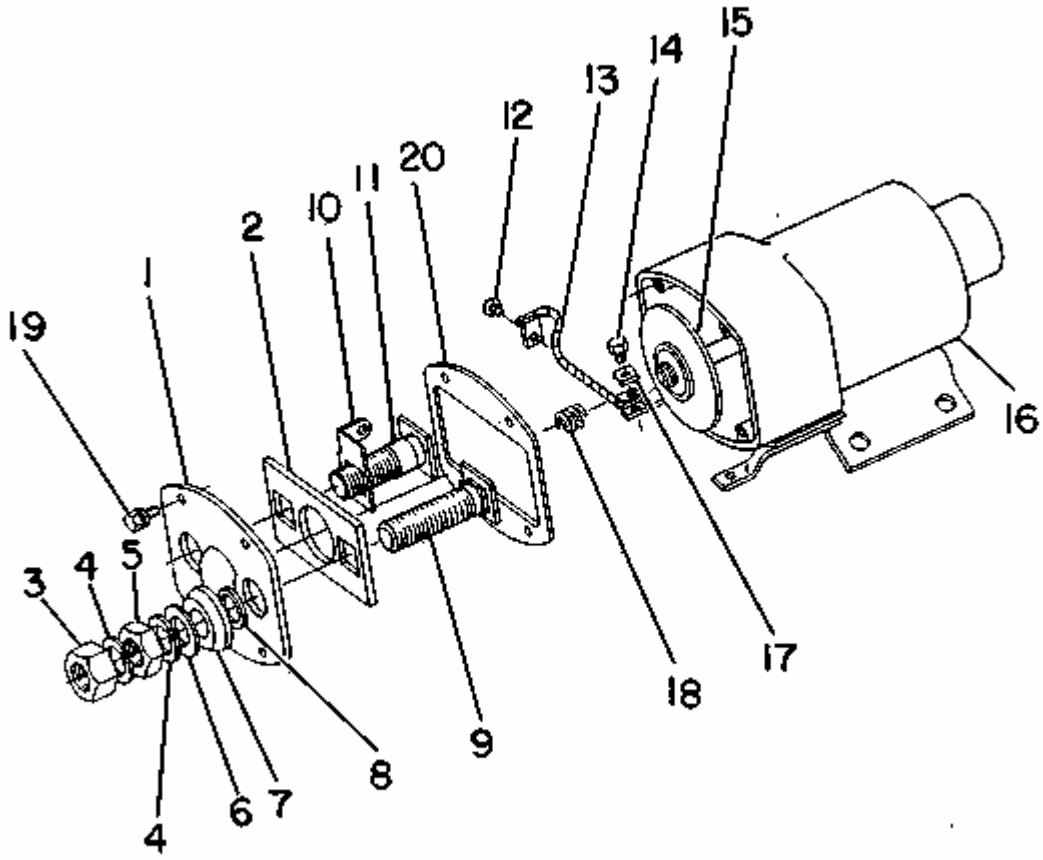

1	NPR C	7N-1269	1	TERMINAL & PLATE AS
	NPR	4M-1834	1	PLATE-TERMINAL
2	NPR	7F-4907	1	STRIP-INSULATION
3	NPR	3H-3681	2	NUT-FULL
4	NPR	3B-4508	4	LOCKWASHER
5	NPR	3H-3680	2	NUT-JAM
6	NPR	7F-3494	2	WASHER-STUD
7	NPR	4M-1836	2	INSULATOR

8 NPR 4M-1837 2 BUSHING

9 NPR 7F-4906 1 STUD-TERMINAL

10 NPR 4M-2800 1 TERMINAL

11 NPR 7N-1271 1 TERMINAL AS

12 NPR 4M-5274 1 SCREW-MACHINE (HEX HEAD)

NPR C 5P-9132 1 SCREW-WASHER HEAD (TRUSS HEAD)

13 NPR 1P-3879 1 LEAD AS

14 NPR 4M-3217 2 SCREW

15 NPR C 9G-6770 1 CONTACT AS

16 NPR 4M-1813 1 CASE & COIL AS

17 NPR 1F-0073 2 CLAMP

18 NPR 4M-1815 1 SPRING-CONTACT

19 NPR 9M-7657 4 NUT-SEALING

NPR 9S-4489 4 SCREW AS

20 NPR 9S-4490 4 GASKET-PLATE

Key:

C - CHANGE FROM PREVIOUS TYPE

7H7290 DISCONNECT SWITCH ASSEMBLY--Replaced by 7N718 shown on Page 102A
Part of 9D3370 Battery & Wiring Group shown on Pages 99, 100D, 100J & 100P

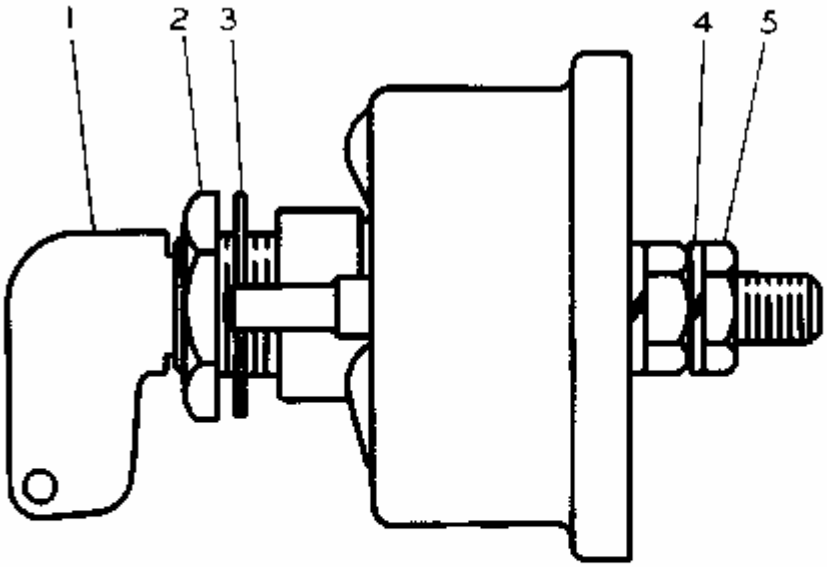

REF. NO.	PART NUMBER	DESCRIPTION	QTY
1	8H5306	KEY	1
2	8H5303	NUT	1
3	2H3922	LOCKWASHER	1
4	7F7259	LOCKWASHER	4
5	6F7045	NUT	4

112435

1 NPR 8H-5306 1 KEY

2 NPR 8H-5303 1 NUT

3 NPR 2H-3922 1 LOCKWASHER

4 NPR 7F-7259 4 LOCKWASHER

5 NPR 6F-7045 4 NUT

7N718 DISCONNECT SWITCH ASSEMBLY
Part of 9D3370 Battery and Wiring Group shown on Pages 100Q-4, 100Q-9, 101B, 101G, 101M and 101S

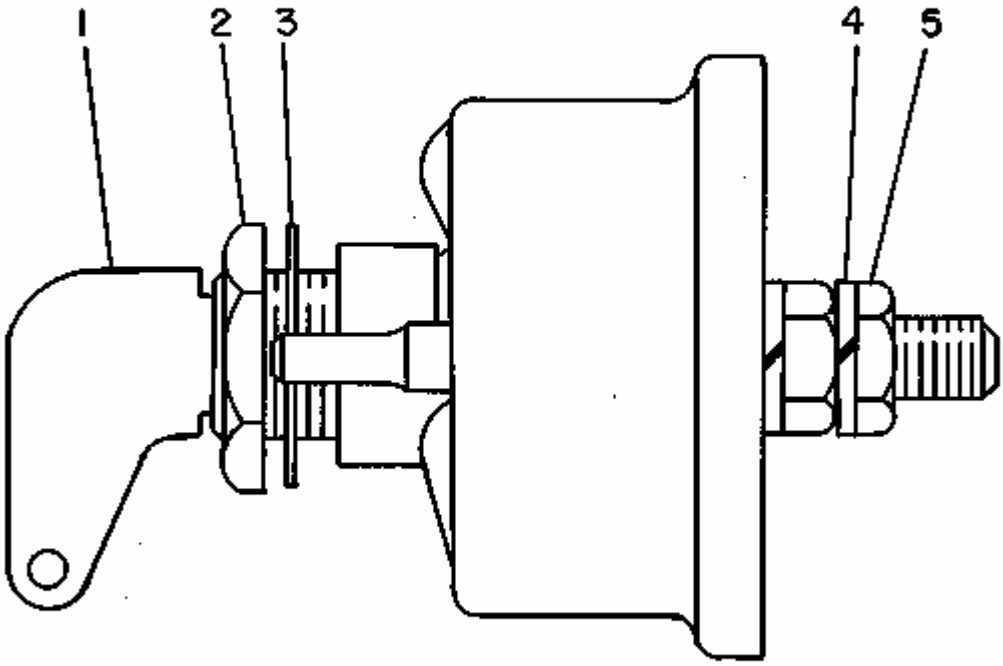

1	NPR	8H-5306	1	KEY
2	NPR	8H-5303	1	NUT-HEX
3	NPR	2H-3922	1	LOCKWASHER
4	NPR C	9F-5644	2	LOCKWASHER
5	NPR C	6F-7045	2	NUT-FULL

Key: C - CHANGE FROM PREVIOUS TYPE

4N8985 COOLANT FLOW SWITCH GROUP--Replaced by 2G7540

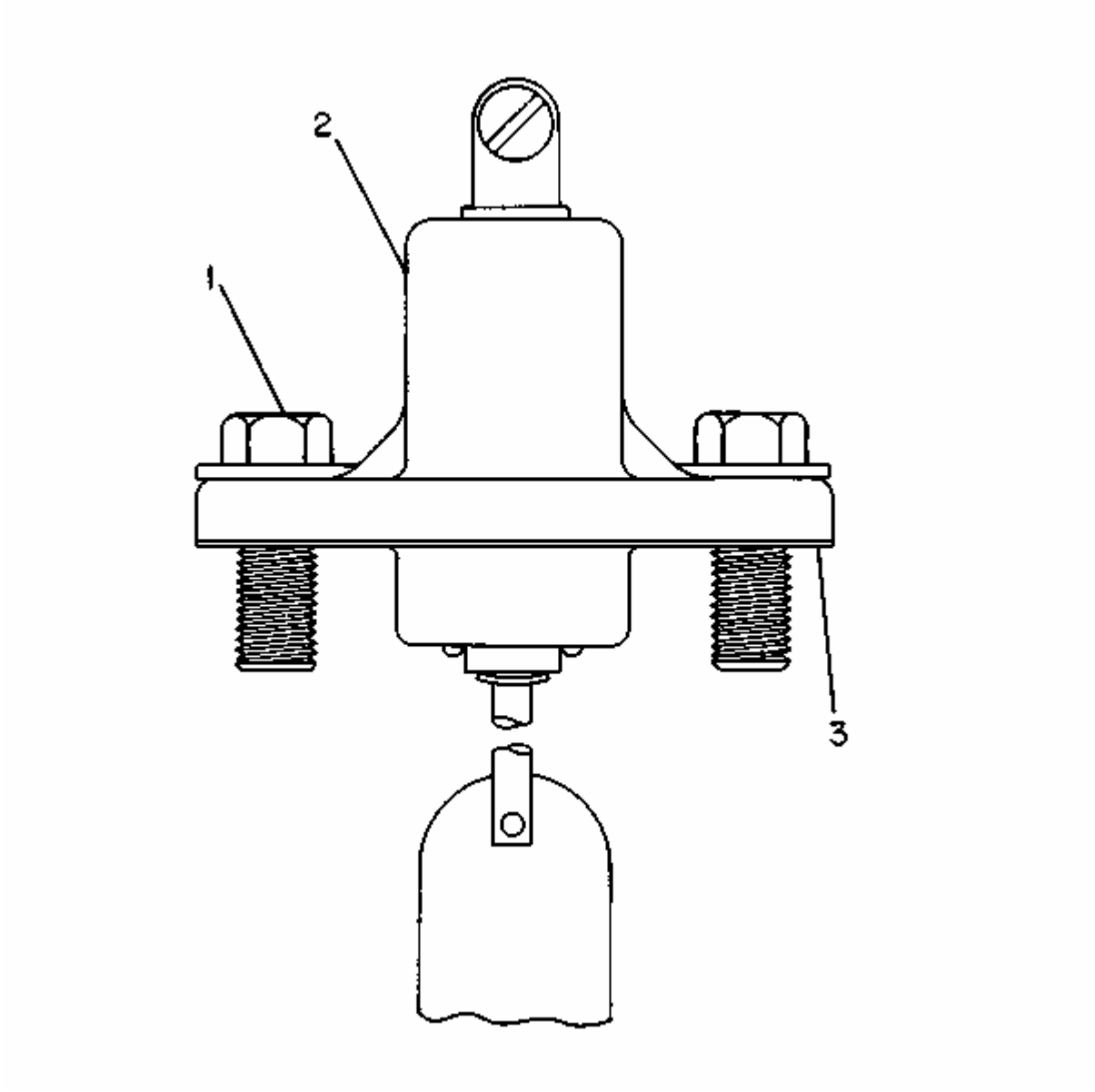

1	**NPR**	**2B-2695**	**2**	**BOLT**
	NPR C	**9M-1974**	**2**	**WASHER**
2	**NPR**	**4N-9072**	**1**	**SWITCH AS-FLOW**
3	**NPR**	**4N-3841**	**1**	**GASKET**

Key:

C - CHANGE FROM PREVIOUS TYPE

2G7540 COOLANT FLOW SWITCH GROUP

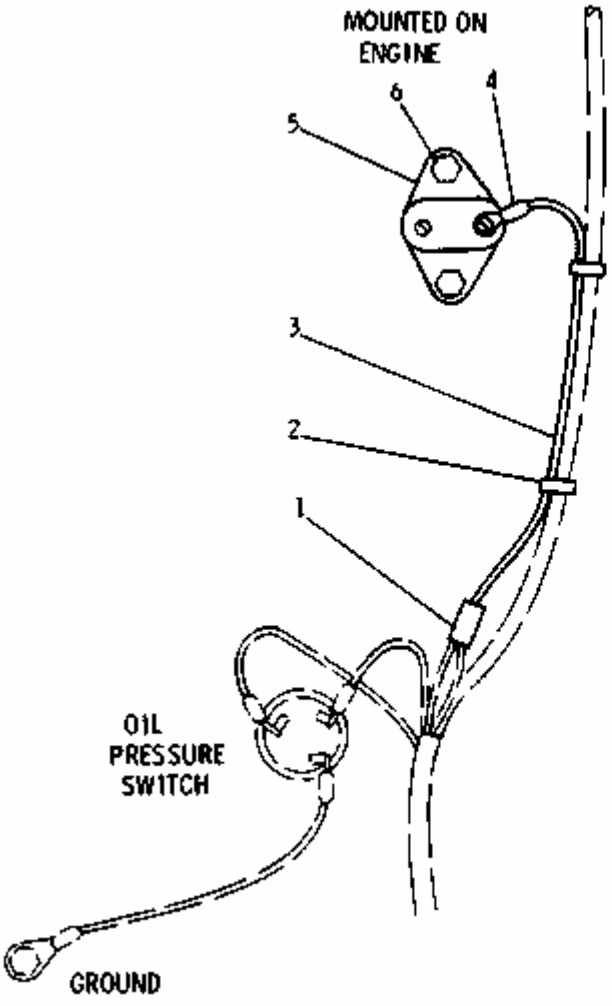

REF NO.	PART NUMBER	DESCRIPTION	QTY
1	2S1043	SPLICE	1
2	2S2093	STRAP	2
3	2G7561	WIRE ASSEM.	1
		(Includes)	
▲	5P5629	WIRE .61 m(24.01 in.)	
4	2D8781	TERMINAL	1
5	4N9072	SWITCH	1
	4N3841	GASKET	1
6	2B2695	BOLT	2
	9M1974	WASHER	2

▲ ORDER BY THE METRE

161523

1 NPR 2S-1043 1 SPLICE

2 NPR 2S-2093 2 STRAP

3 NPR 2G-7561 1 WIRE ASSEM.

(Includes)

NPR H 5P-5629 WIRE .61 m(24.01 in.)

4 NPR 2D-8781 1 TERMINAL

5 NPR 4N-9072 1 SWITCH

NPR 4N-3841 1 GASKET

6 NPR 2B-2695 2 BOLT

NPR 9M-1974 2 WASHER

Key: H - ORDER BY THE METRE

7S3622 STARTING MOTOR GROUP--24 Volt
Also part of 6N7288 and 4N8601 Direct Electric Starting Arrangements listed on Pages 76B and 77. 4N3182 and 4N7752 Starting Motor parts are shown on Pages 79, 80, 81, 82 and 83. AN ATTACHMENT

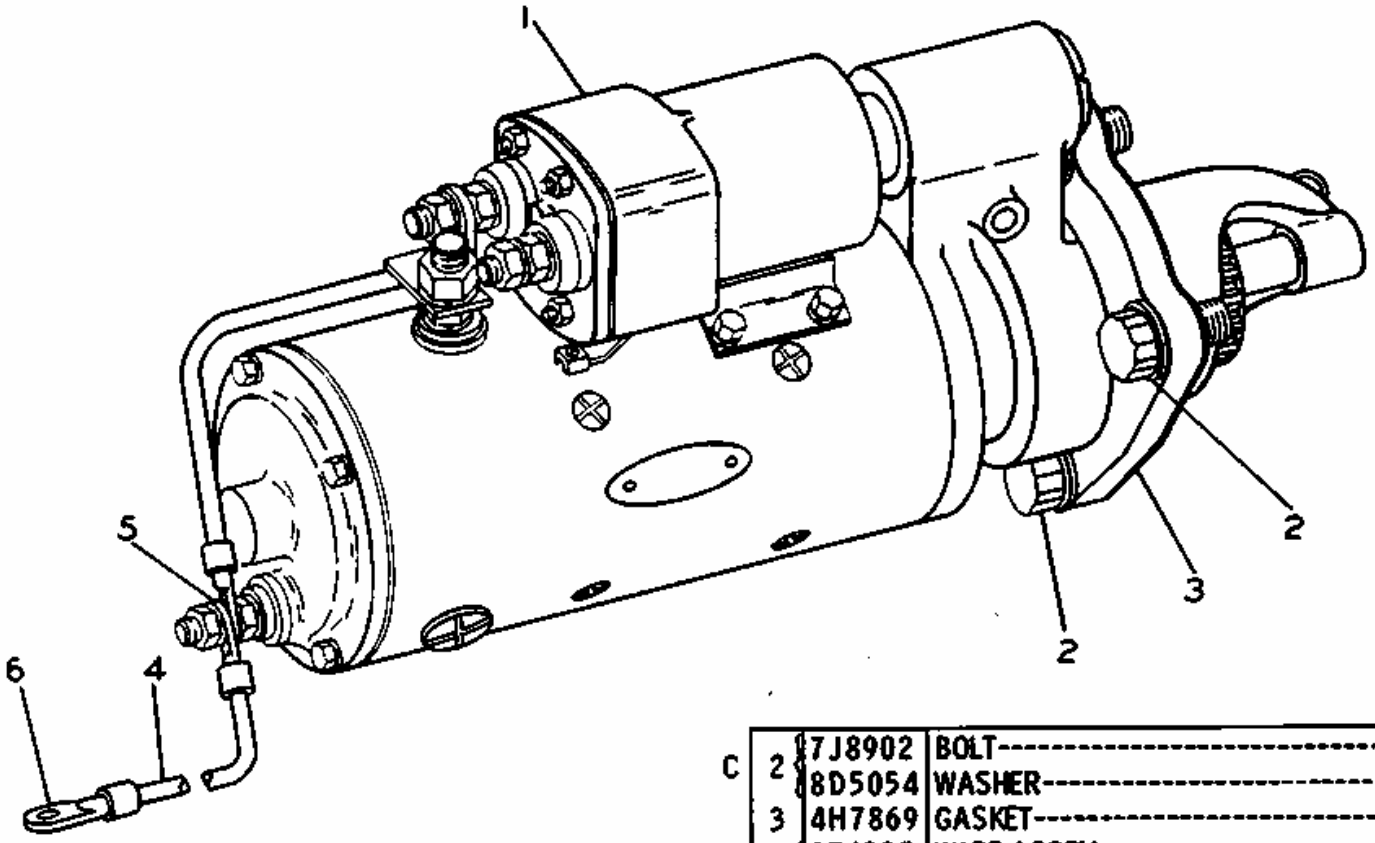

	REF. NO.	PART NUMBER	DESCRIPTION	QTY
C	1	4N3182	MOTOR	1
			-OR-	
		4N7752	MOTOR (Separate Illustration)	1

▲ ORDER BY THE DECIMETRE

	REF. NO.	PART NUMBER	DESCRIPTION	QTY
C	2	7J8902	BOLT	3
		8D5054	WASHER	3
	3	4H7869	GASKET	1
	4	9F4337	WIRE ASSEM. (Includes)	1
▲		5P606	WIRE---2.03 dm(8 in.)	
	5	9F3068	TERMINAL	1
	6	7F8032	TERMINAL---(ground)	1

C INDICATES CHANGE

203067

1 NPR YC 4N-3182 1 MOTOR
- OR -
NPR Y 4N-7752 1 MOTOR
(Separate Illustration)

2 NPR C 7J-8902 3 BOLT
NPR C 8D-5054 3 WASHER
3 NPR 4H-7869 1 GASKET
4 NPR 9F-4337 1 WIRE ASSEM.
(Includes)
NPR T 5P-0606 WIRE 2.03 dm(8 in.)

5 NPR 9F-3068 1 TERMINAL
6 NPR 7F-8032 1 TERMINAL (ground)

Key: C - INDICATES CHANGE Y - SEPARATE ILLUSTRATION T - ORDER BY THE DECIMETRE

7S4090 ELECTRIC STARTING MOTOR GROUP--24 Volt--Type 1
2P2502 and 3P6 Starting Motor parts are shown on Pages 84, 85, 86 and 87

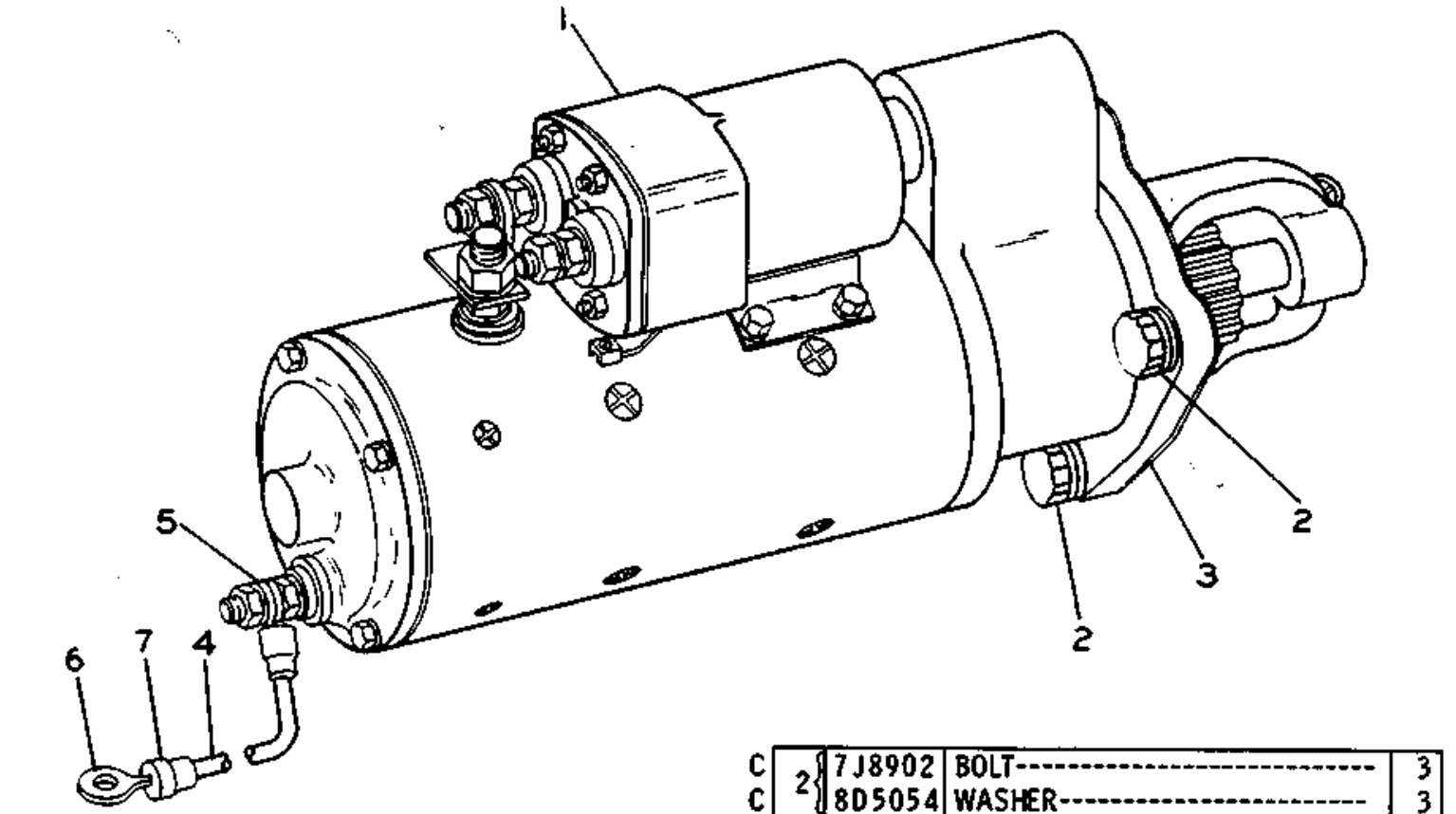

	REF. NO.	PART NUMBER	DESCRIPTION	QTY
C	1	2P2502	MOTOR GROUP	1
			-OR-	
		3P6	MOTOR GROUP (Separate Illustration)	1

	REF. NO.	PART NUMBER	DESCRIPTION	QTY
C	2	7J8902	BOLT	3
C		8D5054	WASHER	3
	3	4H7869	GASKET	1
	4	9F4337	WIRE ASSEM.	1
	5	9F3068	TERMINAL	1
	6	7F8032	TERMINAL------(Ground)------	1
	7	9F5509	INSULATOR	1

C INDICATES CHANGE

205711

1 NPR CY 2P-2502 1 MOTOR GROUP

-OR-

NPR CY 3P-0006 1 MOTOR GROUP

(Separate Illustration)

2 NPR C 7J-8902 3 BOLT

NPR 8D-5054 3 WASHER

3 NPR 4H-7869 1 GASKET

4 NPR 9F-4337 1 WIRE ASSEM.

5 NPR 9F-3068 1 TERMINAL

6 NPR 7F-8032 1 TERMINAL (Ground)
7 NPR 9F-5509 1 INSULATOR
Key: C - INDICATES CHANGE Y - SEPARATE ILLUSTRATION

7S4090 ELECTRIC STARTING MOTOR GROUP--24 Volt--Type 2
7N1285 and 3P6 Starting Motor parts are shown on Pages 85A, 85B, 86 and 87

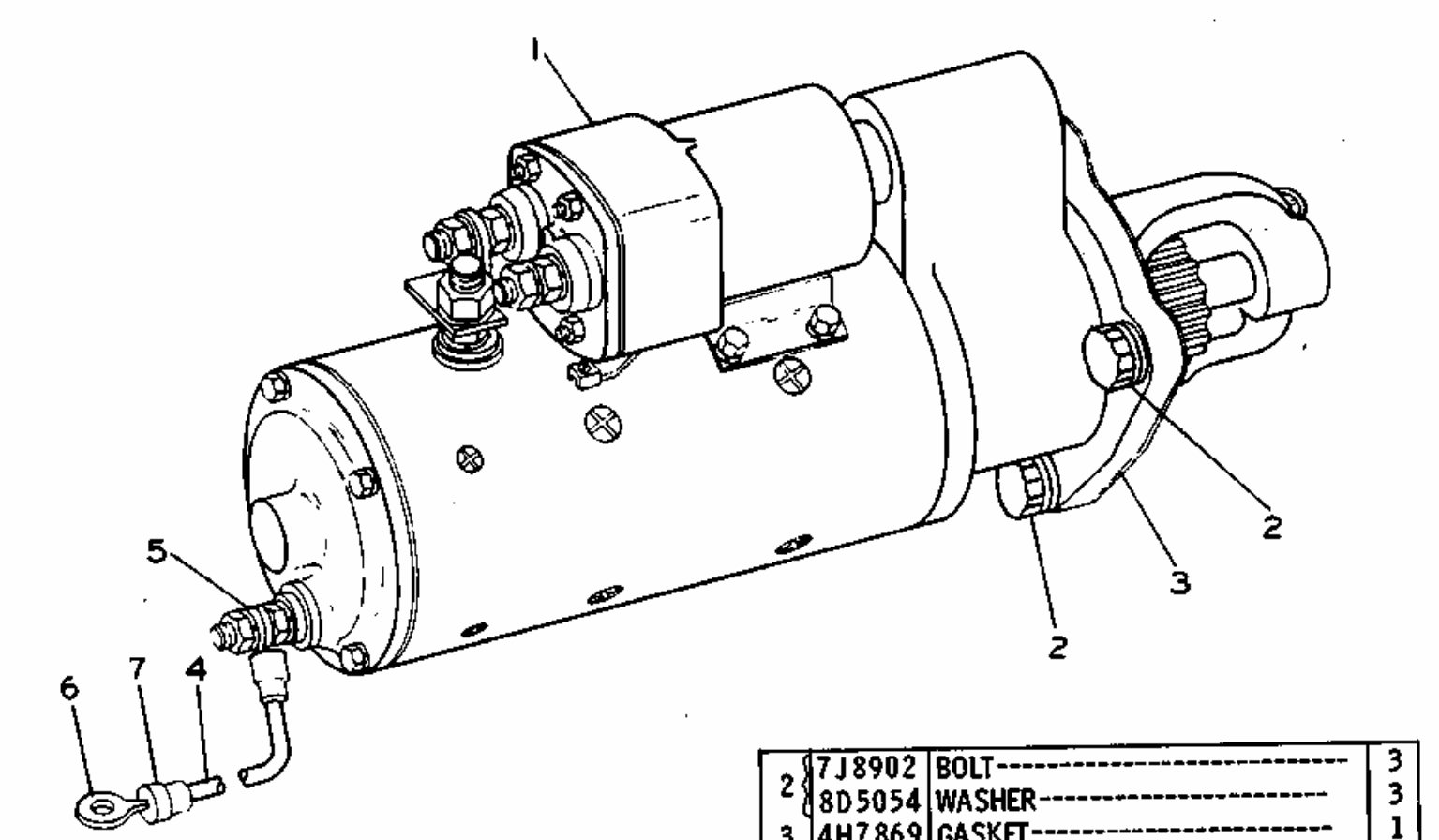

	REF. NO.	PART NUMBER	DESCRIPTION	QTY
C	1	7N1285	MOTOR GROUP	1
			-OR-	
		3P6	MOTOR GROUP (Separate Illustration)	1

REF. NO.	PART NUMBER	DESCRIPTION	QTY
2	7J8902	BOLT	3
	8D5054	WASHER	3
3	4H7869	GASKET	1
4	9F4337	WIRE ASSEM. (Includes)	1
5	9F3068	TERMINAL	1
6	7F8032	TERMINAL--------(ground)---	1
7	9F5509	INSULATOR	1

C INDICATES CHANGE 215551

NPR CY 7N-1285 1 MOTOR GROUP

-OR-

NPR Y 3P-0006 1 MOTOR GROUP

(Separate Illustration)

2 NPR 7J-8902 3 BOLT

NPR 8D-5054 3 WASHER

3 NPR 4H-7869 1 GASKET

4 NPR 9F-4337 1 WIRE ASSEM.

(Includes)

5	**NPR**	**9F-3068**	**1**	**TERMINAL**
6	**NPR**	**7F-8032**	**1**	**TERMINAL (ground)**
7	**NPR**	**9F-5509**	**1**	**INSULATOR**

Key:

C - INDICATES CHANGE
Y - SEPARATE ILLUSTRATION

7S4090 ELECTRIC STARTING MOTOR GROUP--24 Volt--Type 3
7N1285 and 9G4337 Motor parts are shown on Pages 85A, 85B, 87A and 87B

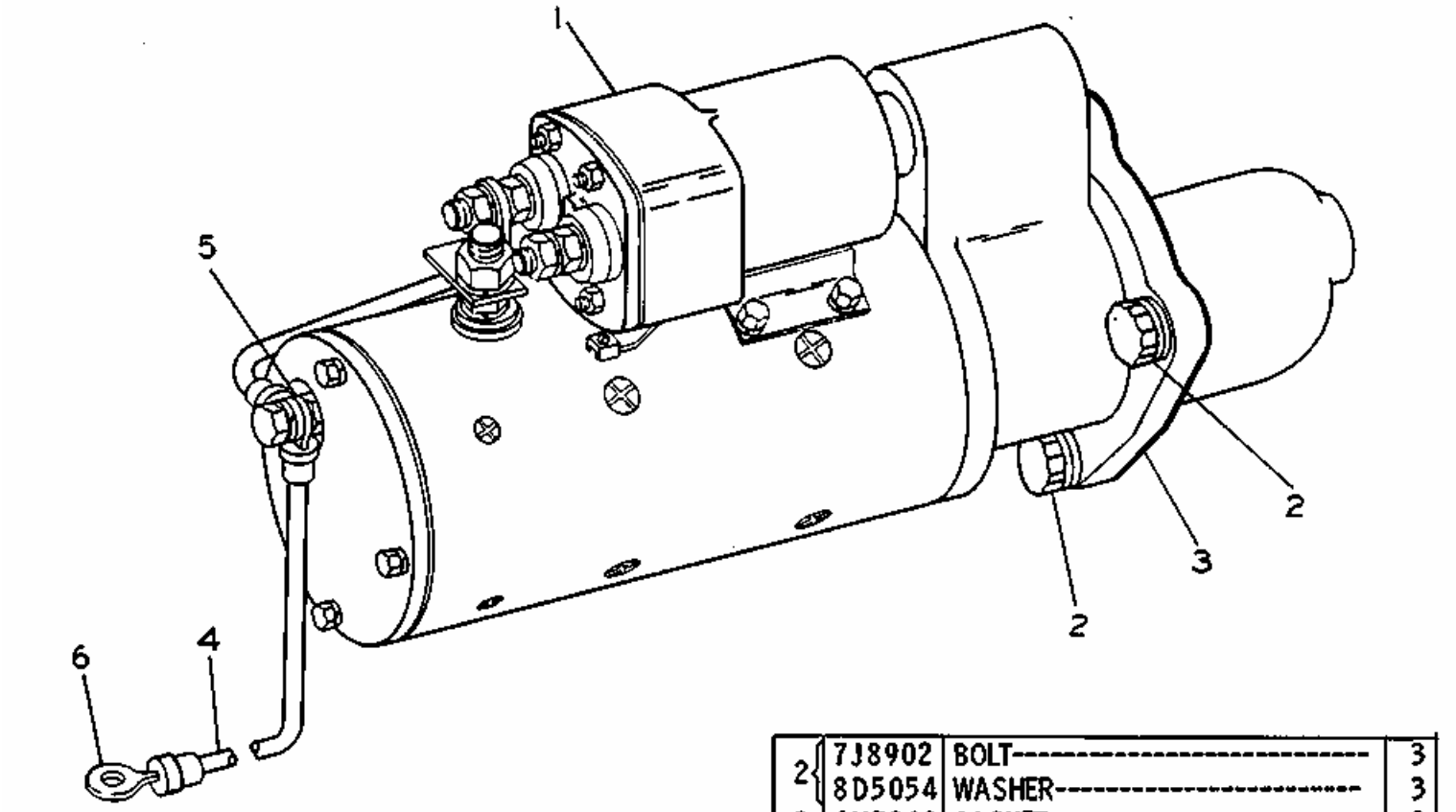

	REF. NO.	PART NUMBER	DESCRIPTION	QTY.
	1	7N1285	MOTOR GROUP----------	1
			- OR -	
C		9G4337	MOTOR GROUP---------- (Separate Illustration)	1
	2	7J8902	BOLT----------	3
		8D5054	WASHER----------	3
	3	4H7869	GASKET----------	1
	4	9F4337	WIRE ASSEM.---------- (Includes)	1
C▲		5P6641	WIRE--.228m(9 in.)	
C	5	2L8052	TERMINAL----------	1
C	6	2L8054	TERMINAL----------	1

▲ ORDER BY THE METER

C INDICATES CHANGE

230347

1 NPR Y 7N-1285 1 MOTOR GROUP

- OR -

NPR CY 9G-4337 1 MOTOR GROUP

(Separate Illustration)

2 NPR 7J-8902 3 BOLT

NPR 8D-5054 3 WASHER

3 NPR 4H-7869 1 GASKET

4 NPR 9F-4337 1 WIRE ASSEM.

(Includes)

	NPR CD	5P-6641		WIRE .228m(9 in.)
5	NPR C	2L-8052	1	TERMINAL
6	NPR C	2L-8054	1	TERMINAL

Key:

C - INDICATES CHANGE
Y - SEPARATE ILLUSTRATION
D - ORDER BY THE METER

4N3182 ELECTRIC STARTING MOTOR GROUP--Delco-Remy--24 Volt--Part 1 of 3--Type 1
Part of 7S3622 Starting Motor Group shown on Page 77. 6N5123 Switch parts are shown on Page 88

REF NO	PART NUMBER	DESCRIPTION	QTY
1	7F4556	BOLT	4
2	1L4789	LOCKWASHER	4
3	4M1844	FRAME ASSEM.	1
4	7S9826	PLUG	1
5	3S2398	BUSHING	1
6	2B4602	PLUG	1
7	9F2547	WICK	1
8	2L8166	WASHER	1
9	4M1868	ARMATURE ASSEM.	1
10	3L3380	BUSHING	1
11	4M1839	COIL ASSEM.	1
12	9H3757	WASHER	2
13	7F3494	WASHER	1
14	4M1841	CONNECTOR	1
15	LD5117	NUT	2

	REF NO	PART NUMBER	DESCRIPTION	QTY
C	16	6N5123	SWITCH ASSEM. (Separate Illustration)	1
	17	6H3622	SCREW ASSEM.	4
	18	3B4508	LOCKWASHER	1
	19	3F379	SCREW	8
C	20	2N3145	INSULATOR	1
	21	4M1831	PLUG	2
	22	4M1832	GASKET	2
	23	1H2629	STRIP	2
	24	8H1141	SHOE	4

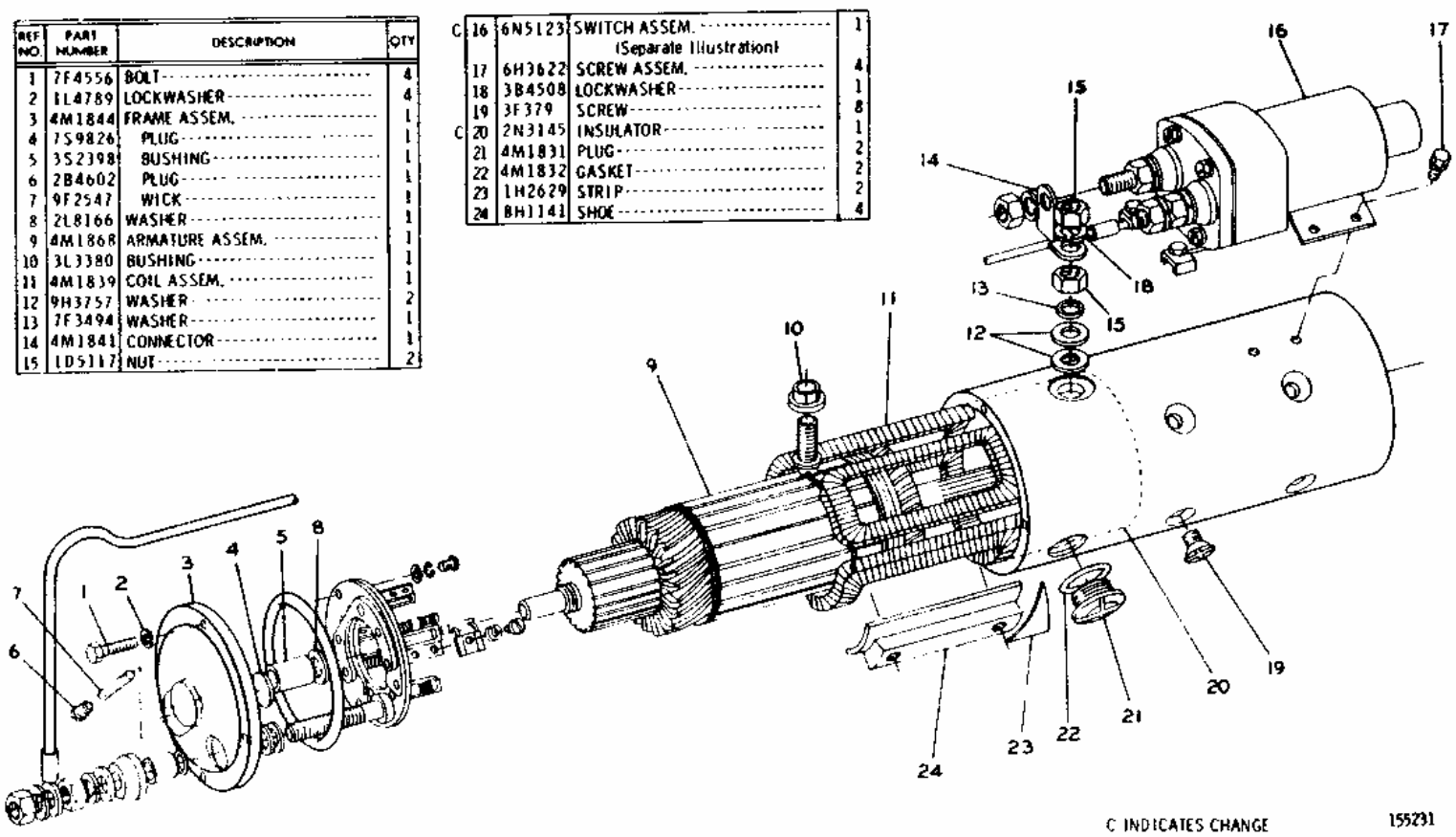

1 NPR 7F-4556 4 BOLT

2 NPR 1L-4789 4 LOCKWASHER

3 NPR 4M-1844 1 FRAME ASSEM.

4 NPR 7S-9826 1 PLUG

5 NPR 3S-2398 1 BUSHING

6 NPR 2B-4602 1 PLUG

7 NPR 9F-2547 1 WICK

8 NPR 2L-8166 1 WASHER

9 NPR 4M-1868 1 ARMATURE ASSEM.

10 NPR 3L-3380 1 BUSHING

11 NPR 4M-1839 1 COIL ASSEM.

12 NPR 9H-3757 2 WASHER

13	NPR	7F-3494	1	WASHER
14	NPR	4M-1841	1	CONNECTOR
15	NPR	1D-5117	2	NUT
16	NPR YC	6N-5123	1	SWITCH ASSEM.
	(Separate Illustration)			
17	NPR	6H-3622	4	SCREW ASSEM.
18	NPR	3B-4508	1	LOCKWASHER
19	NPR	3F-0379	8	SCREW
20	NPR C	2N-3145	1	INSULATOR
21	NPR	4M-1831	2	PLUG
22	NPR	4M-1832	2	GASKET
23	NPR	1H-2629	2	STRIP
24	NPR	8H-1141	4	SHOE

Key:

C - INDICATES CHANGE
Y - SEPARATE ILLUSTRATION

4N3182 ELECTRIC STARTING MOTOR GROUP--Delco-Remy--24 Volt--Part 2 of 3--Type 1
Part of 7S3622 Starting Motor Group shown on Page 77

REF. NO.	PART NUMBER	DESCRIPTION	QTY
1	4M1849	LEAD ASSEM.	1
2	4M189	SEAL	1
3	7F3529	WASHER	3
4	8H878	LOCKWASHER	3
5	4B1221	SCREW	3
6	4M1846	PLATE ASSEM.	1
7	7F3525	BUSHING	8
8	7F4550	PLATE	1
9	5H6467	SCREW	2
10	7H2079	LOCKWASHER	8
11	2L6679	PLATE	2
12	7F4546	HOLDER	4
13	7F3522	SCREW	2
14	7F3512	SPRING	8
15	4M1891	PLATE ASSEM.	1
16	7F4549	PLATE	2
17	4B1311	SCREW	2
18	7F4545	PLATE	1
19	3H3697	SCREW	2

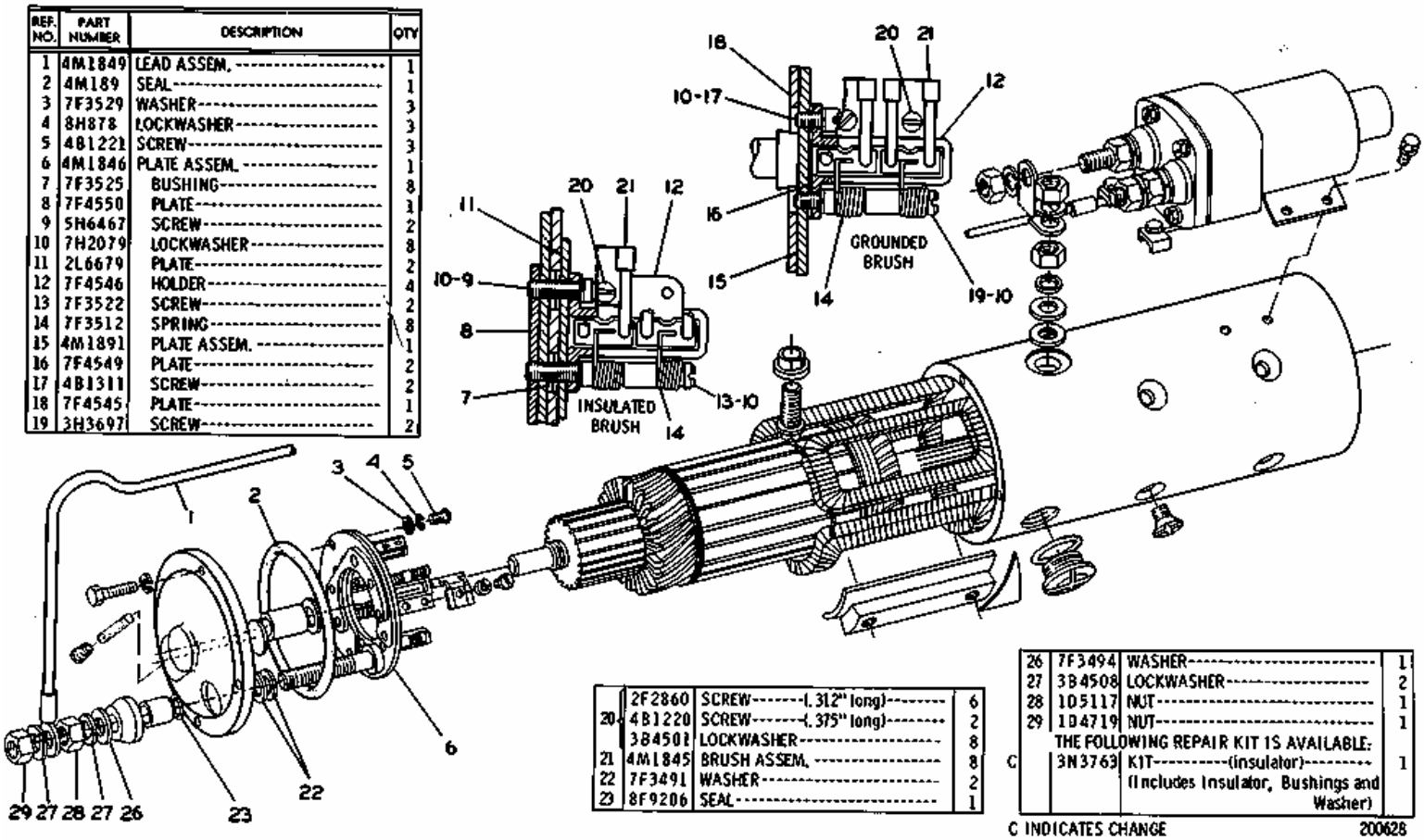

	2F2860	SCREW-------(.312" long)--------	6
20	4B1220	SCREW-------(.375" long)--------	2
	3B4501	LOCKWASHER----------	8
21	4M1845	BRUSH ASSEM.	8
22	7F3491	WASHER----------	2
23	8F9206	SEAL----------	1

26	7F3494	WASHER----------	1
27	3B4508	LOCKWASHER----------	2
28	1D5117	NUT----------	1
29	1D4719	NUT----------	1
		THE FOLLOWING REPAIR KIT IS AVAILABLE:	
C	3N3763	KIT----------(Insulator)--------- (Includes Insulator, Bushings and Washer)	1

C INDICATES CHANGE 200628

1 NPR 4M-1849 1 LEAD ASSEM.

2 NPR 4M-0189 1 SEAL

3 NPR 7F-3529 3 WASHER

4 NPR 8H-0878 3 LOCKWASHER

5 NPR 4B-1221 3 SCREW

6 NPR 4M-1846 1 PLATE ASSEM.

7 NPR 7F-3525 8 BUSHING

8 NPR 7F-4550 1 PLATE

9 NPR 5H-6467 2 SCREW

10 NPR 7H-2079 8 LOCKWASHER

11 NPR 2L-6679 2 PLATE

12 NPR 7F-4546 4 HOLDER

13 NPR 7F-3522 2 SCREW

14 NPR 7F-3512 8 SPRING

15 NPR 4M-1891 1 PLATE ASSEM.

16 NPR 7F-4549 2 PLATE

17 NPR 4B-1311 2 SCREW

18 NPR 7F-4545 1 PLATE

19 NPR 3H-3697 2 SCREW

20 NPR 2F-2860 6 SCREW (.312" long)

NPR 4B-1220 2 SCREW (.375" long)

NPR 3B-4501 8 LOCKWASHER

21 NPR 4M-1845 8 BRUSH ASSEM.

22 NPR 7F-3491 2 WASHER

23 NPR 8F-9206 1 SEAL

26 NPR 7F-3494 1 WASHER

27 NPR 3B-4508 2 LOCKWASHER

28 NPR 1D-5117 1 NUT

29 NPR 1D-4719 1 NUT

THE FOLLOWING REPAIR KIT IS AVAILABLE:

NPR C 3N-3763 1 KIT (insulator)

(Includes Insulator, Bushings and Washer)

Key:

C - INDICATES CHANGE

4N3182 ELECTRIC STARTING MOTOR GROUP--Delco-Remy--24 Volt--Part 3 of 3--Type 1
Part of 7S3622 Starting Motor Group shown on Page 77

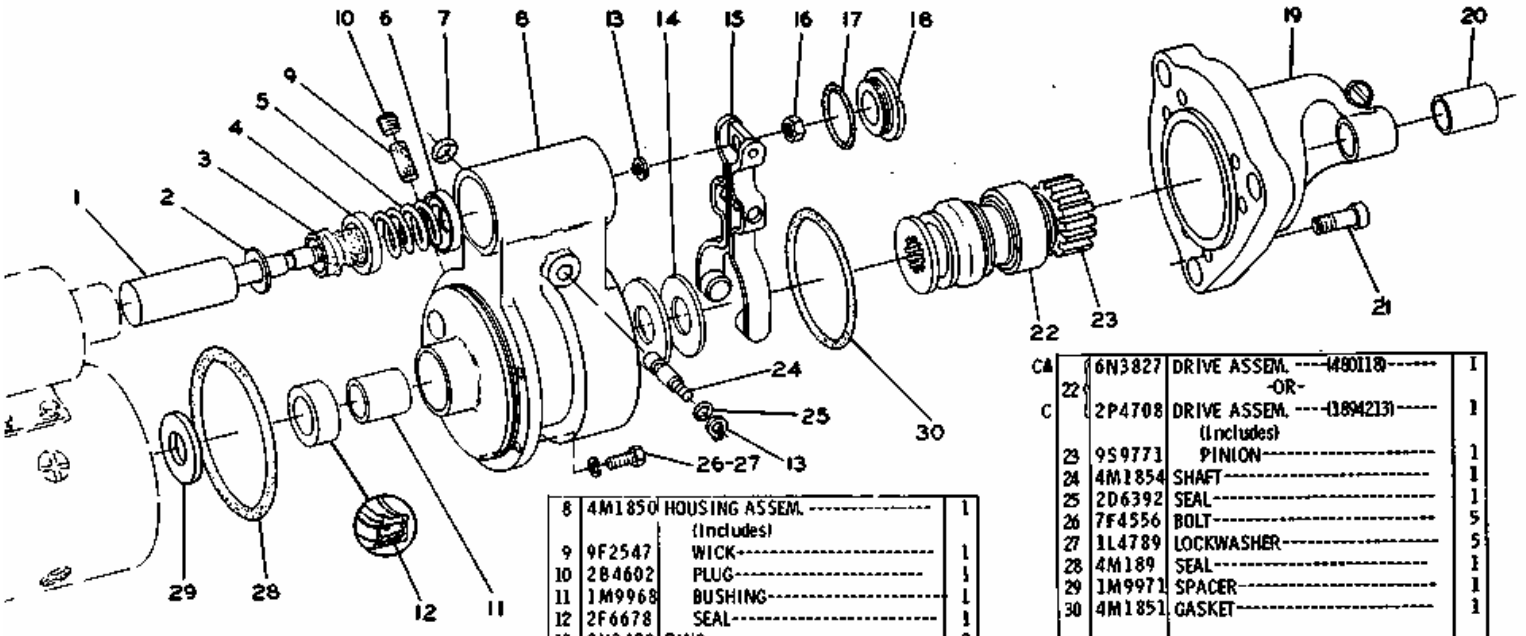

REF. NO.	PART NUMBER	DESCRIPTION	QTY
1	4M1855	PLUNGER ASSEM.	1
	FM055075	FORM----(installation instructions)	1
2	2S4027	WASHER	1
3	4M1829	BOOT	1
4	4M1828	RETAINER	1
5	9M7609	SPRING	1
6	4M1827	RETAINER	1
7	1H1023	SEAL	1

8	4M1850	HOUSING ASSEM. (Includes)	1
9	9F2547	WICK	1
10	2B4602	PLUG	1
11	1M9968	BUSHING	1
12	2F6678	SEAL	1
13	2H3429	RING	2
14	4L2729	WASHER	1
15	4M1853	LEVER ASSEM.	1
16	3F2617	NUT	1
17	4M1832	GASKET	1
18	4M1831	PLUG	1
19	1S297	HOUSING ASSEM. (Includes)	1
20	4M1896	BUSHING	1
21	4M1833	SCREW---1.50 in. (38.10 mm) long	5
	7M336	SCREW---.875 in. (22.23 mm) long	1

C INDICATES CHANGE

CA	22 6N3827	DRIVE ASSEM. ----(480118)---- -OR-	1
C	2P4708	DRIVE ASSEM. ----(1894213)---- (Includes)	1
23	9S9771	PINION	1
24	4M1854	SHAFT	1
25	2D6392	SEAL	1
26	7F4556	BOLT	5
27	1L4789	LOCKWASHER	5
28	4M189	SEAL	1
29	1M9971	SPACER	1
30	4M1851	GASKET	1
		THE FOLLOWING REPAIR KITS ARE AVAILABLE FOR 2P4708 DRIVE ASSEM.:	
C	7N6098	KIT----(spring)---- (Includes Cup & Spring)	1
	9S9825	KIT----(cup)---- (Includes Cup & Washers)	1
	4S9459	KIT----(washer)---- (Includes Cup & Washers)	1
	FM035152	FORM. ----(cup kit installation)---	1

▲ NOT PART OF 4N3182 MOTOR GROUP 217034

1 NPR 4M-1855 1 PLUNGER ASSEM.

2 NPR 2S-4027 1 WASHER

3 NPR 4M-1829 1 BOOT

4 NPR 4M-1828 1 RETAINER

5 NPR 9M-7609 1 SPRING

6 NPR 4M-1827 1 RETAINER

7 NPR 1H-1023 1 SEAL

8 NPR 4M-1850 1 HOUSING ASSEM.

(Includes)

9 NPR 9F-2547 1 WICK

10 NPR 2B-4602 1 PLUG

11 NPR 1M-9968 1 BUSHING

12 NPR 2F-6678 1 SEAL

13 NPR 2H-3429 2 RING

14 NPR 4L-2729 1 WASHER

15 NPR 4M-1853 1 LEVER ASSEM.

16 NPR 3F-2617 1 NUT

17 NPR 4M-1832 1 GASKET

18 NPR 4M-1831 1 PLUG

19 NPR 1S-0297 1 HOUSING ASSEM.

(Includes)

20 NPR 4M-1896 1 BUSHING

21 NPR 4M-1833 5 SCREW 1.50 in. (38.10 mm) long

NPR 7M-0336 1 SCREW .875 in. (22.23 mm) long

22 NPR CA 6N-3827 1 DRIVE ASSEM. (480118)

- OR -

NPR C 2P-4708 1 DRIVE ASSEM. (1894213)

(Includes)

23 NPR 9S-9771 1 PINION

24 NPR 4M-1854 1 SHAFT

25 NPR 2D-6392 1 SEAL

26 NPR 7F-4556 5 BOLT

27 NPR 1L-4789 5 LOCKWASHER

28 NPR 4M-0189 1 SEAL

29 NPR 1M-9971 1 SPACER

30 NPR 4M-1851 1 GASKET

THE FOLLOWING REPAIR KITS ARE AVAILABLE FOR 2P4708 DRIVE ASSEM.

NPR C 7N-6098 1 KIT (spring)

(Includes Cup and Spring)

NPR 9S-9825 1 KIT (Cup)

(Includes Cup and Washers)

NPR 4S-9459 1 KIT (washer)

(Includes Cup and Washers)

Key:

A - NOT PART OF THIS GROUP
C - INDICATES CHANGE

4N3182 ELECTRIC STARTING MOTOR GROUP--Delco-Remy--24 Volt--Part 1 of 3--Type 2
Part of 7S3622 Starting Motor Group shown on Page 77
4M1812 Switch parts are shown on Page 89A

REF. NO.	PART NUMBER	DESCRIPTION	QTY
1	7F4556	BOLT	4
2	1L4789	LOCKWASHER	4
3	4M1844	FRAME ASSEM.	1
4	7S9826	PLUG	1
C 5	9G4100	BUSHING	1
6	2B4602	PLUG	1
7	9F2547	WICK	1
8	2L8166	WASHER	1
9	4M1868	ARMATURE ASSEM.	1
10	3L3380	BUSHING	1
11	4M1839	COIL ASSEM.	1
12	9N3757	WASHER	2
13	7F3494	WASHER	1
14	4M1841	CONNECTOR	1
15	1D5117	NUT	2
C 16	4M1812	SWITCH ASSEM. (Separate Illustration)	1
17	6H3622	SCREW ASSEM.	4
18	3B4508	LOCKWASHER	1
19	3F379	SCREW	8
20	2N3145	INSULATOR	1
21	4M1831	PLUG	2
22	4M1832	GASKET	2
23	1H2629	STRIP	2
24	8H1141	SHOE	4
C	GM.G00012	FORM (Installing Electric Starting Motor)	1

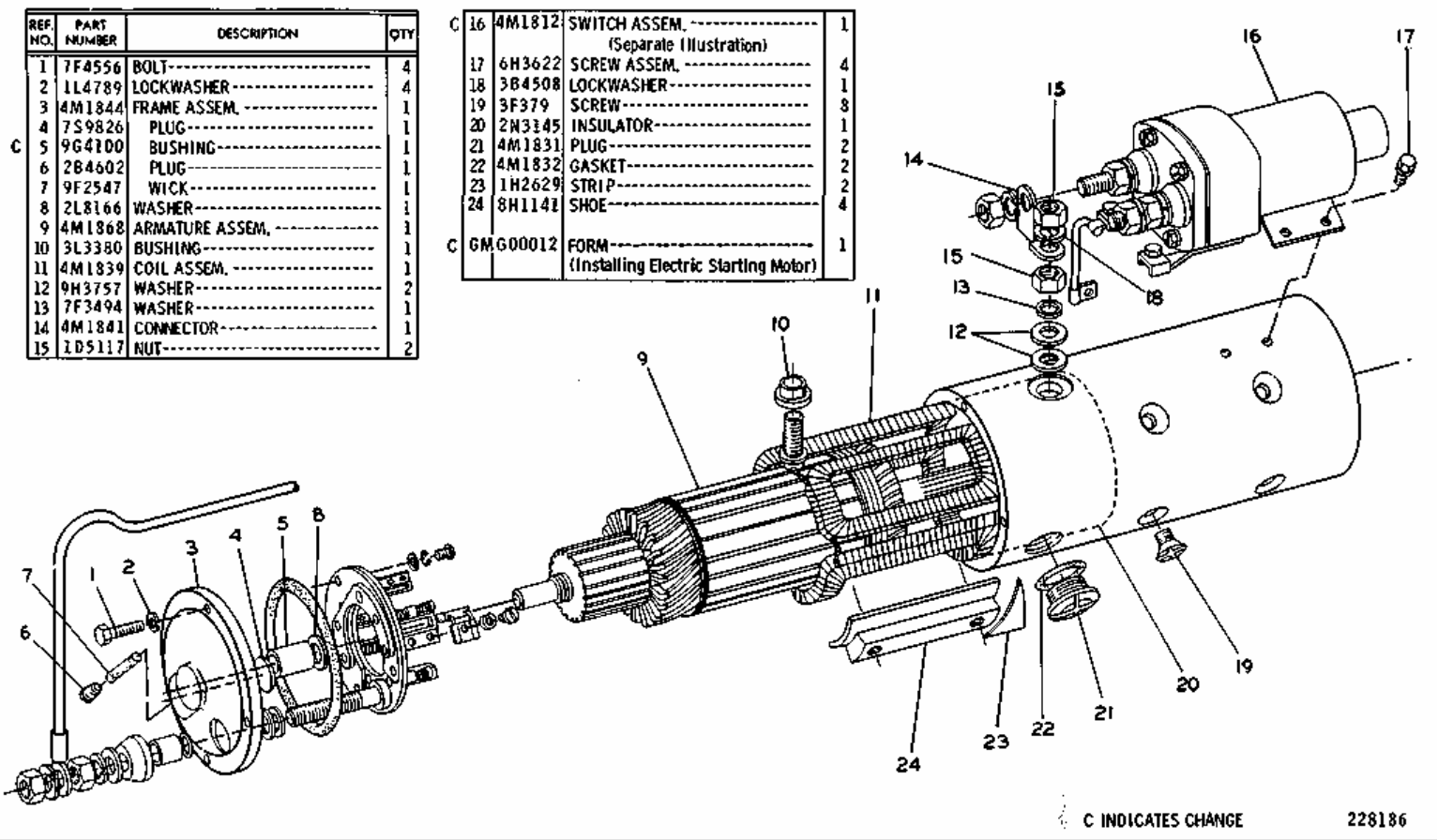

1 NPR 7F-4556 4 BOLT

2 NPR 1L-4789 4 LOCKWASHER

3 NPR 4M-1844 1 FRAME ASSEM.

4 NPR 7S-9826 1 PLUG

5 NPR C 9G-4100 1 BUSHING

6 NPR 2B-4602 1 PLUG

7 NPR 9F-2547 1 WICK

8 NPR 2L-8166 1 WASHER

9 NPR 4M-1868 1 ARMATURE ASSEM.

10 NPR 3L-3380 1 BUSHING

11 NPR 4M-1839 1 COIL ASSEM.

12 NPR 9N-3757 2 WASHER

13	NPR	7F-3494	1	WASHER
14	NPR	4M-1841	1	CONNECTOR
15	NPR	1D-5117	2	NUT
16	NPR CY	4M-1812	1	SWITCH ASSEM.
	(Separate Illustration)			
17	NPR	6H-3622	4	SCREW ASSEM.
18	NPR	3B-4508	1	LOCKWASHER
19	NPR	3F-0379	8	SCREW
20	NPR	2N-3145	1	INSULATOR
21	NPR	4M-1831	2	PLUG
22	NPR	4M-1832	2	GASKET
23	NPR	1H-2629	2	STRIP
24	NPR	8H-1141	4	SHOE

Key:

C - INDICATES CHANGE
Y - SEPARATE ILLUSTRATION

4N3182 ELECTRIC STARTING MOTOR GROUP--Delco-Remy--24 Volt--Part 2 of 3--Type 2
Part of 7S3622 Starting Motor Group shown on Page 77

REF. NO.	PART NUMBER	DESCRIPTION	QTY
1	4M1849	LEAD ASSEM.	1
2	4M189	SEAL	1
3	7F3529	WASHER	3
4	8H878	LOCKWASHER	3
5	4B1221	SCREW	3
6	4M1846	PLATE ASSEM.	1
7	7F3525	BUSHING	8
8	7F4550	PLATE	1
9	5H6467	SCREW	2
10	7H2079	LOCKWASHER	8
11	2L6679	PLATE	2
12	7F4546	HOLDER	4
13	7F3522	SCREW	2
14	7F3512	SPRING	8
15	4M1891	PLATE ASSEM.	1
16	7F4549	PLATE	2
17	4B1311	SCREW	2
18	7F4545	PLATE	1
19	3H3697	SCREW	2

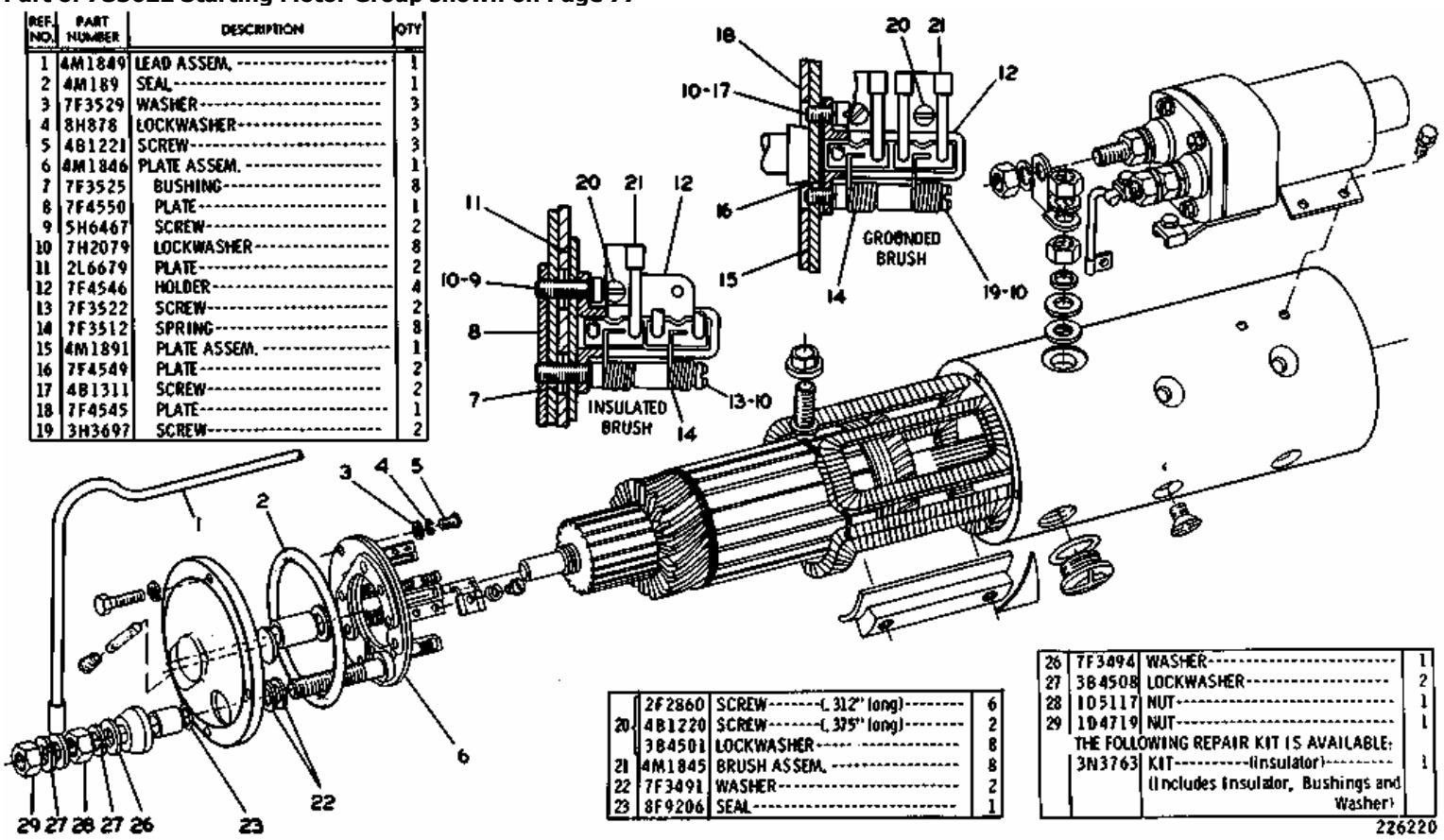

	2F2860	SCREW-------(.312" long)--------	6
20	4B1220	SCREW-------(.375" long)--------	2
	3B4508	LOCKWASHER----------	8
21	4M1845	BRUSH ASSEM.	8
22	7F3491	WASHER	2
23	8F9206	SEAL	1

26	7F3494	WASHER	1
27	3B4508	LOCKWASHER	2
28	105117	NUT	1
29	104719	NUT	1
	THE FOLLOWING REPAIR KIT IS AVAILABLE:		
	3N3763	KIT----------(Insulator)---------- (Includes Insulator, Bushings and Washer)	1

226220

1 NPR 4M-1849 1 LEAD ASSEM.

2 NPR 4M-0189 1 SEAL

3 NPR 7F-3529 3 WASHER

4 NPR 8H-0878 3 LOCKWASHER

5 NPR 4B-1221 3 SCREW

6 NPR 4M-1846 1 PLATE ASSEM.

7 NPR 7F-3525 8 BUSHING

8 NPR 7F-4550 1 PLATE

9 NPR 5H-6467 2 SCREW

10 NPR 7H-2079 8 LOCKWASHER

11 NPR 2L-6679 2 PLATE

12 NPR 7F-4546 4 HOLDER

13	NPR	7F-3522	2	SCREW
14	NPR	7F-3512	8	SPRING
15	NPR	4M-1891	1	PLATE ASSEM.
16	NPR	7F-4549	2	PLATE
17	NPR	4B-1311	2	SCREW
18	NPR	7F-4545	1	PLATE
19	NPR	3H-3697	2	SCREW
20	NPR	2F-2860	6	SCREW (.312" long)
	NPR	4B-1220	2	SCREW (.375" long)
	NPR	3B-4501	8	LOCKWASHER
21	NPR	4M-1845	8	BRUSH ASSEM.
22	NPR	7F-3491	2	WASHER
23	NPR	8F-9206	1	SEAL
26	NPR	7F-3494	1	WASHER
27	NPR	3B-4508	2	LOCKWASHER
28	NPR	1D-5117	1	NUT
29	NPR	1D-4719	1	NUT

THE FOLLOWING REPAIR KIT IS AVAILABLE:

	NPR	3N-3763	1	KIT (insulator)

(Includes Insulator,Bushings and Washer)

4N3182 ELECTRIC STARTING MOTOR GROUP--Delco-Remy--24 Volt--Part 3 of 3--Type 2
Part of 7S3622 Starting Motor Group shown on Page 77

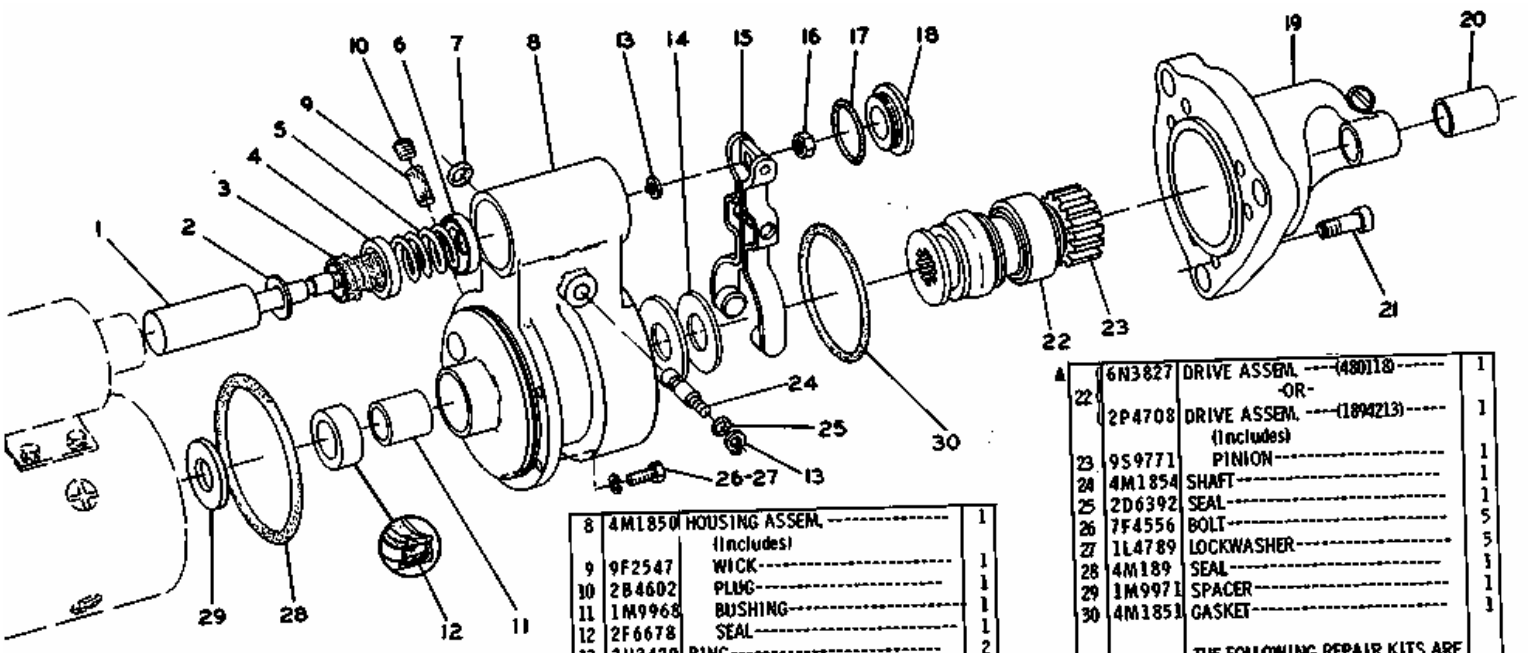

REF. NO.	PART NUMBER	DESCRIPTION	QTY
1	4M1855	PLUNGER ASSEM.	1
	FM055075	FORM----(installation instructions)	1
2	2S4027	WASHER	1
3	4M1829	BOOT	1
4	4M1828	RETAINER	1
5	9M7609	SPRING	1
6	4M1827	RETAINER	1
7	1H1023	SEAL	1
8	4M1850	HOUSING ASSEM. (Includes)	1
9	9F2547	WICK	1
10	2B4602	PLUG	1
11	1M9968	BUSHING	1
12	2F6678	SEAL	1
13	2H3429	RING	2
14	4L2729	WASHER	1
15	4M1853	LEVER ASSEM.	1
16	3F2617	NUT	1
17	4M1832	GASKET	1
18	4M1831	PLUG	1
19	1S297	HOUSING ASSEM. (Includes)	1
20	4M1896	BUSHING	1
21	4M1833	SCREW---1.50 in. (38.10 mm) long	5
	7M336	SCREW---.875 in. (22.23 mm) long	1
▲ 22	6N3827	DRIVE ASSEM. ----(480118)----	1
		-OR-	
	2P4708	DRIVE ASSEM. ----(1894213)---- (Includes)	1
23	9S9771	PINION	1
24	4M1854	SHAFT	1
25	2D6392	SEAL	1
26	7F4556	BOLT	5
27	1L4789	LOCKWASHER	5
28	4M189	SEAL	1
29	1M9971	SPACER	1
30	4M1851	GASKET	1
		THE FOLLOWING REPAIR KITS ARE AVAILABLE FOR 2P4708 DRIVE ASSEM.:	
	7N6098	KIT----(spring)---- (Includes Cup & Spring)	1
	9S9825	KIT----(cup)---- (Includes Cup & Washers)	1
	4S9459	KIT----(washer)---- (Includes Cup & Washers)	1
	FM035152	FORM. ----(cup kit installation)---	1

226221

▲ NOT PART OF 4N3182 MOTOR GROUP

1 NPR 4M-1855 1 PLUNGER ASSEM.

2 NPR 2S-4027 1 WASHER

3 NPR 4M-1829 1 BOOT

4 NPR 4M-1828 1 RETAINER

5 NPR 9M-7609 1 SPRING

6 NPR 4M-1827 1 RETAINER

7 NPR 1H-1023 1 SEAL

8 NPR 4M-1850 1 HOUSING ASSEM.

(Includes)

9 NPR 9F-2547 1 WICK

10 NPR 2B-4602 1 PLUG

11 NPR 1M-9968 1 BUSHING

12 NPR 2F-6678 1 SEAL

13 NPR 2H-3429 2 RING

14 NPR 4L-2729 1 WASHER

15 NPR 4M-1853 1 LEVER ASSEM.

16 NPR 3F-2617 1 NUT

17 NPR 4M-1832 1 GASKET

18 NPR 4M-1831 1 PLUG

19 NPR 1S-0297 1 HOUSING ASSEM.

(Includes)

20 NPR 4M-1896 1 BUSHING

21 NPR 4M-1833 5 SCREW 1.50 in.(38.10 mm) long

NPR 7M-0336 1 SCREW .875 in.(22.23 mm) long

22 NPR A 6N-3827 1 DRIVE ASSEM. (480118)

- OR -

NPR 2P-4708 1 DRIVE ASSEM. (1894213)

(Includes)

23 NPR 9S-9771 1 PINION

24 NPR 4M-1854 1 SHAFT

25 NPR 2D-6392 1 SEAL

26 NPR 7F-4556 5 BOLT

27 NPR 1L-4789 5 LOCKWASHER

28 NPR 4M-0189 1 SEAL

29 NPR 1M-9971 1 SPACER

30 NPR 4M-1851 1 GASKET

THE FOLLOWING REPAIR KITS ARE AVAILABLE FOR 2P4708 DRIVE ASSEM.:

NPR 7N-6098 1 KIT (spring)

(Includes Cup and Spring)

NPR 9S-9825 1 KIT (cup)

(Includes Cup and Washers)

NPR 4S-9459 1 KIT (washer)

(Include Cup and Washers)

Key:

A - NOT PART OF THIS GROUP

4N7752 ELECTRIC STARTING MOTOR--Prestolite--24 Volt--Part 1
Part of 7S3622 Starting Motor Group shown on Page 77. 9S7976 Switch parts are shown on Page 88

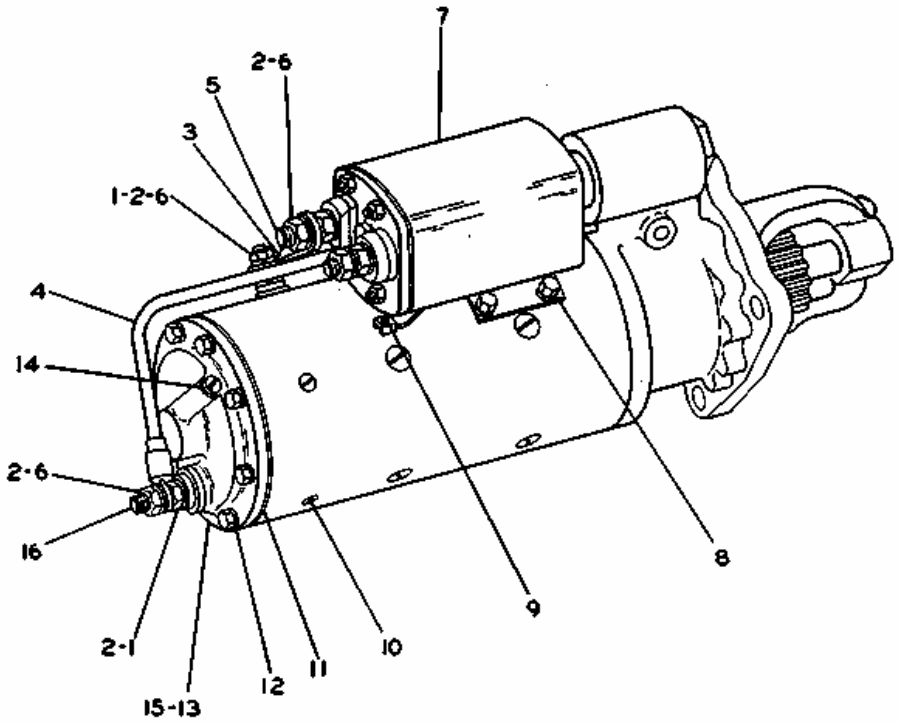

REF. NO.	PART NUMBER	DESCRIPTION	QTY
1	1D5117	NUT---------(jam)----------	2
2	3B4508	LOCKWASHER----------	6
3	4N9405	CONNECTOR----------	1
4	4N9404	LEAD ASSEM.----------	1
5	2P8819	KIT-----(Field Terminal Stud)----- (Includes Stud, Bushing & Washers)	1
6	1D4719	NUT----------	4
7	9S7976	SOLENOID ASSEM.---------- (Separate Illustration)	1
8	6H3622	SCREW----------	4
	3B4504	LOCKWASHER----------	4
	3K6116	WASHER----------	4
9	4M3217	SCREW----------	2
10	4B1220	SCREW----------	3
11	8S1553	GASKET----------	1
12	3B4502	LOCKWASHER----------	7
13	1P7831	HEAD ASSEM. --(Commutator End)-	1
14	2B4602	PLUG----------	1
15	1P7832	KIT--------(Bearing & Wick)------	1
16	4N9403	KIT-(Commutator End Terminal Stud) (Includes Stud, Bushing & Washers)	1

200573

1 NPR 1D-5117 2 NUT (jam)

2 NPR 3B-4508 6 LOCKWASHER

3 NPR 4N-9405 1 CONNECTOR

4 NPR 4N-9404 1 LEAD ASSEM.

5 NPR 2P-8819 1 KIT (Field Terminal Stud)

(Includes Stud, Bushing and Washers)

6 NPR 1D-4719 4 NUT

7 NPR Y 9S-7976 1 SOLENOID ASSEM.

(Separate Illustration)

8 NPR 6H-3622 4 SCREW

NPR 3B-4504 4 LOCKWASHER

	NPR	3K-6116	4	WASHER
9	NPR	4M-3217	2	SCREW
10	NPR	4B-1220	3	SCREW
11	NPR	085-1553	1	GASKET
12	NPR	3B-4502	7	LOCKWASHER
13	NPR	1P-7831	1	HEAD ASSEM. (Commutator End)
14	NPR	2B-4602	1	PLUG
15	NPR	1P-7832	1	KIT (Bearing and Wick)
16	NPR	4N-9403	1	KIT (Commutator End Terminal Stud)

(Includes Stud, Bushing and Washers)

Key:

Y - SEPARATE ILLUSTRATION

4N7752 ELECTRIC STARTING MOTOR--Prestolite--24 Volt--Part 2
Part of 7S3622 Starting Motor Group shown on Page 77

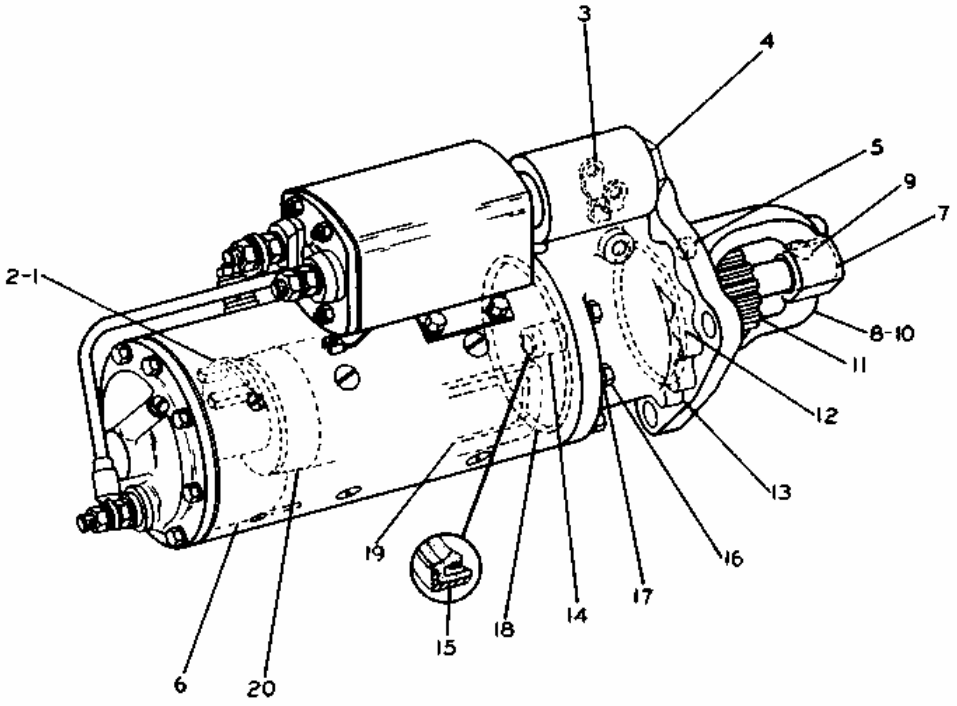

REF. NO.	PART NUMBER	DESCRIPTION	QTY
1	2P8822	PLATE ASSEM.	1
2	4N9401	KIT--(Includes 6 Brushes)	1
	2P8868	KIT--(Includes 8 Springs)	1
3	2P8825	SHIFT YOKE ASSEM.	1
4	2P8817	KIT--(Yoke Adjusting) (Includes Plugs, Pin, Gasket & Nut)	1
5	8S1535	KIT--(Includes 6 Plugs)	1
6	4N9402	KIT--(Includes 10 Insulations)	1
7	8S4684	KIT--(Bearing & Wick)	1
8	8S1543	HOUSING ASSEM.--(Pinion)	1
9	2B4602	PLUG	1
10	8S4680	KIT--(Includes 10 Seals)	1
11	4N4517	DRIVE ASSEM.	1
12	2H3931	SEAL	1
13	2P8824	HOUSING ASSEM.	1
	2B4602	PLUG	1
14	8S2226	BUSHING	1
15	8S2225	SEAL	1
16	L1340	SCREW	7
	2P8816	KIT--(Includes Housing Screws)	1
17	3B4504	LOCKWASHER	7
18	4M189	SEAL	1
19	2P8818	KIT--(Field Coil) (Includes Coils, Gaskets & Screws)	1
20	8S1546	ARMATURE ASSEM.	1
	8S8075	KIT--(Armature Thrust Washers)	1

200574

1 NPR 2P-8822 1 PLATE ASSEM.

2 NPR 4N-9401 1 KIT (Includes 6 Brushes)

NPR 2P-8868 1 KIT (Includes 8 Springs)

3 NPR 2P-8825 1 SHIFT YOKE ASSEM.

4 NPR 2P-8817 1 KIT (Yoke Adjusting)

(Includes Plugs, Pin, Gasket & Nut)

5 NPR 8S-1535 1 KIT (Includes 6 Plugs)

6 NPR 4N-9402 1 KIT (Includes 10 Insulations)

7 NPR 8S-4684 1 KIT (Bearing & Wick)

8 NPR 8S-1543 1 HOUSING ASSEM. (Pinion)

9 NPR 2B-4602 1 PLUG

10 NPR 8S-4680 1 KIT (Includes 10 Seals)

11 NPR 4N-4517 1 DRIVE ASSEM.

12 NPR 2H-3931 1 SEAL

13 NPR 2P-8824 1 HOUSING ASSEM.

NPR 2B-4602 1 PLUG

14 NPR 8S-2226 1 BUSHING

15 NPR 8S-2225 1 SEAL

16 NPR 0L-1340 7 SCREW

NPR 2P-8816 1 KIT (Includes Housing Screws)

17 NPR 3B-4504 7 LOCKWASHER

18 NPR 4M-0189 1 SEAL

19 NPR 2P-8818 1 KIT (Field Coil)

(Includes Coils, Gaskets & Screws)

20 NPR 8S-1546 1 ARMATURE ASSEM.

NPR 8S-8075 1 KIT (Armature Thrust Washers)

2P2502 ELECTRIC STARTING MOTOR GROUP--Delco-Remy--24 Volt--Part 1--Replaced by 7N1285 shown on Pages 85A & 85B
Part of 7S4090 Electric Starting Motor Group shown on Page 78. 6N5123 Switch parts are shown on Page 88

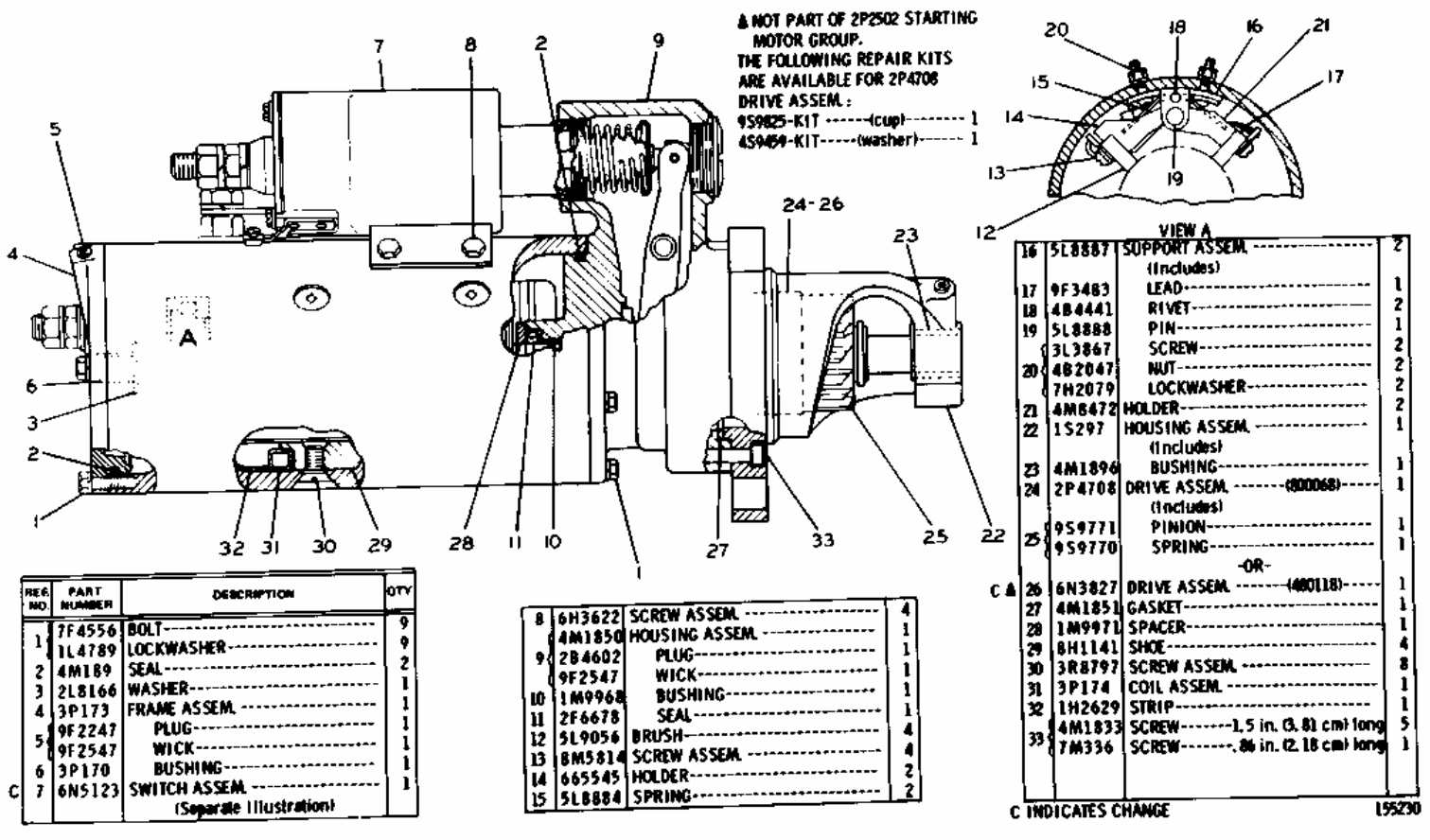

REG. NO.	PART NUMBER	DESCRIPTION	QTY
1	7F4556	BOLT	9
	1L4789	LOCKWASHER	9
2	4M189	SEAL	2
3	2L8166	WASHER	1
4	3P173	FRAME ASSEM.	1
5	9F2247	PLUG	1
	9F2547	WICK	1
6	3P170	BUSHING	1
C 7	6N5123	SWITCH ASSEM. (Separate Illustration)	1
8	6H3622	SCREW ASSEM.	4
9	4M1850	HOUSING ASSEM. (Includes)	1
	2B4602	PLUG	1
	9F2547	WICK	1
10	1M9968	BUSHING	1
11	2F6678	SEAL	1
12	5L9056	BRUSH	4
13	8M5814	SCREW ASSEM.	4
14	665545	HOLDER	2
15	5L8884	SPRING	2
16	5L8887	SUPPORT ASSEM. (Includes)	2
17	9F3483	LEAD	1
18	4B4441	RIVET	2
19	5L8888	PIN	1
20	3L3867	SCREW	2
	4B2047	NUT	2
	7H2079	LOCKWASHER	2
21	4M8472	HOLDER	2
22	1S297	HOUSING ASSEM. (Includes)	1
23	4M1896	BUSHING	1
24	2P4708	DRIVE ASSEM. -------(800068)----- (Includes)	1
25	9S9771	PINION	1
	9S9770	SPRING	1
		-OR-	
C ▲ 26	6N3827	DRIVE ASSEM. -------(480118)-----	1
27	4M1851	GASKET	1
28	1M9971	SPACER	1
29	8H1141	SHOE	4
30	3R8797	SCREW ASSEM.	8
31	3P174	COIL ASSEM.	1
32	1H2629	STRIP	1
	4M1833	SCREW-------1.5 in. (3.81 cm) long	5
33	7M336	SCREW-------.86 in. (2.18 cm) long	1

1 NPR 7F-4556 9 BOLT

NPR 1L-4789 9 LOCKWASHER

2 NPR 4M-0189 2 SEAL

3 NPR 2L-8166 1 WASHER

4 NPR 3P-0173 1 FRAME ASSEM.

5 NPR 9F-2247 1 PLUG

NPR 9F-2547 1 WICK

6 NPR 3P-0170 1 BUSHING

7 NPR YC 6N-5123 1 SWITCH ASSEM.

(Separate Illustration)

8 NPR 6H-3622 4 SCREW ASSEM.

9 NPR 4M-1850 1 HOUSING ASSEM.

	NPR	2B-4602	1	PLUG
	NPR	9F-2547	1	WICK
10	NPR	1M-9968	1	BUSHING
11	NPR	2F-6678	1	SEAL
12	NPR	5L-9056	4	BRUSH
13	NPR	8M-5814	4	SCREW ASSEM.
14	NPR	066-5545	2	HOLDER
15	NPR	5L-8884	2	SPRING
16	NPR	5L-8887	2	SUPPORT ASSEM.
(Includes)				
17	NPR	9F-3483	1	LEAD
18	NPR	4B-4441	2	RIVET
19	NPR	5L-8888	1	PIN
20	NPR	3L-3867	2	SCREW
	NPR	4B-2047	2	NUT
	NPR	7H-2079	2	LOCKWASHER
21	NPR	4M-8472	2	HOLDER
22	NPR	1S-0297	1	HOUSING ASSEM.
(Includes)				
23	NPR	4M-1896	1	BUSHING
24	NPR	2P-4708	1	DRIVE ASSEM. (800068)
(Includes)				
25	NPR	9S-9771	1	PINION

	NPR	9S-9770	1	SPRING

-OR-

26	NPR CH	6N-3827	1	DRIVE ASSEM. (480118)
27	NPR	4M-1851	1	GASKET
28	NPR	1M-9971	1	SPACER
29	NPR	8H-1141	4	SHOE
30	NPR	3R-8797	8	SCREW ASSEM.
31	NPR	3P-0174	1	COIL ASSEM.
32	NPR	1H-2629	1	STRIP
33	NPR	4M-1833	5	SCREW 1.5 in. (3.81 cm) long
	NPR	7M-0336	1	SCREW .86 in. (2.18 cm) long

THE FOLLOWING REPAIR KITS ARE AVAILABLE FOR 2P4708 DRIVE ASSEM.:

NPR	9S-9825	1	KIT (cup)
NPR	4S-9459	1	KIT (washer)

Key:

C - INDICATES CHANGE
Y - SEPARATE ILLUSTRATION
H - NOT PART OF 2P2502 STARTING MO

2P2502 ELECTRIC STARTING MOTOR GROUP--Delco-Remy--24 Volt--Part 2--Replaced by 7N1285 shown on Pages 85A & 85B
Part of 7S4090 Electric Starting Motor Group shown on Page 78

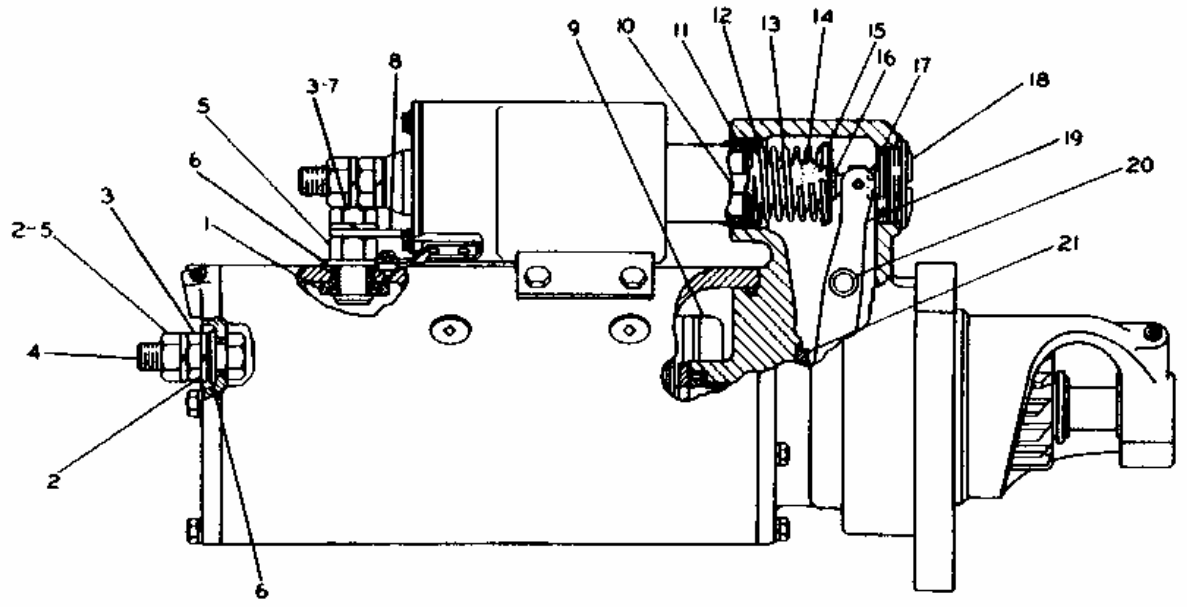

REF. NO.	PART NUMBER	DESCRIPTION	QTY
C 1	3L3380	BUSHING	1
2	3J4818	LOCKWASHER	2
3	3H3680	NUT	2
C 4	S1587	BOLT	1
5	3H3681	NUT	2
6	9H3757	WASHER (large)	2
C 6	7F3494	WASHER (small)	2
7	9F4976	LOCKWASHER	1
8	4M1841	CONNECTOR	1
9	5L8877	ARMATURE ASSEM.	1
10	9M7606	PLUNGER ASSEM.	1
11	4M188	WASHER	1
12	4M1828	RETAINER	1
13	9M7609	SPRING	1
14	4M1829	BOOT	1
15	4M1827	RETAINER	1
16	9M7611	RING	2
17	3F2617	NUT	1
18	4M1831	PLUG	1
	7L2894	GASKET	1
	4M1853	LEVER ASSEM.	1
19		(Includes)	
	4M1830	GUIDE	1
	4M1854	SHAFT	1
20	1H1023	SEAL--9.37 mm(.369 in.) diameter	1
	2D6392	SEAL--6.07 mm(.239 in.) diameter	1
21	4L2729	WASHER	1
		THE FOLLOWING REPAIR KIT IS AVAILABLE:	
C	3N3763	TERMINAL KIT (Insulator)	1

C INDICATES CHANGE

1 NPR C 3L-3380 1 BUSHING

2 NPR 3J-4818 2 LOCKWASHER

3 NPR 3H-3680 2 NUT

4 NPR C 0S-1587 1 BOLT

5 NPR 3H-3681 2 NUT

6 NPR 9H-3757 2 WASHER (large)

NPR C 7F-3494 2 WASHER (small)

7 NPR 9F-4976 1 LOCKWASHER

8 NPR 4M-1841 1 CONNECTOR

9 NPR 5L-8877 1 ARMATURE ASSEM.

10 NPR 9M-7606 1 PLUNGER ASSEM.

11 NPR 4M-0188 1 WASHER

12 NPR 4M-1828 1 RETAINER

13 NPR 9M-7609 1 SPRING

14 NPR 4M-1829 1 BOOT

15 NPR 4M-1827 1 RETAINER

16 NPR 9M-7611 2 RING

17 NPR 3F-2617 1 NUT

18 NPR 4M-1831 1 PLUG

NPR 7L-2894 1 GASKET

19 NPR 4M-1853 1 LEVER ASSEM.

(Includes)

NPR 4M-1830 1 GUIDE

20 NPR 4M-1854 1 SHAFT

NPR 1H-1023 1 SEAL 9.37 mm(.369 in.) diameter

NPR 2D-6392 1 SEAL 6.07 mm(.239 in.) diameter

21 NPR 4L-2729 1 WASHER

THE FOLLOWING REPAIR KIT IS AVAILABLE:

NPR C 3N-3763 1 TERMINAL KIT (insulator)

Key:

C - INDICATES CHANGE

7N1285 ELECTRIC STARTING MOTOR GROUP--Delco-Remy--24 Volt--Part 1
Part of 7S4090 Electric Starting Motor Group shown on Page 78A. 4M1812 Switch parts are shown on Page 89A

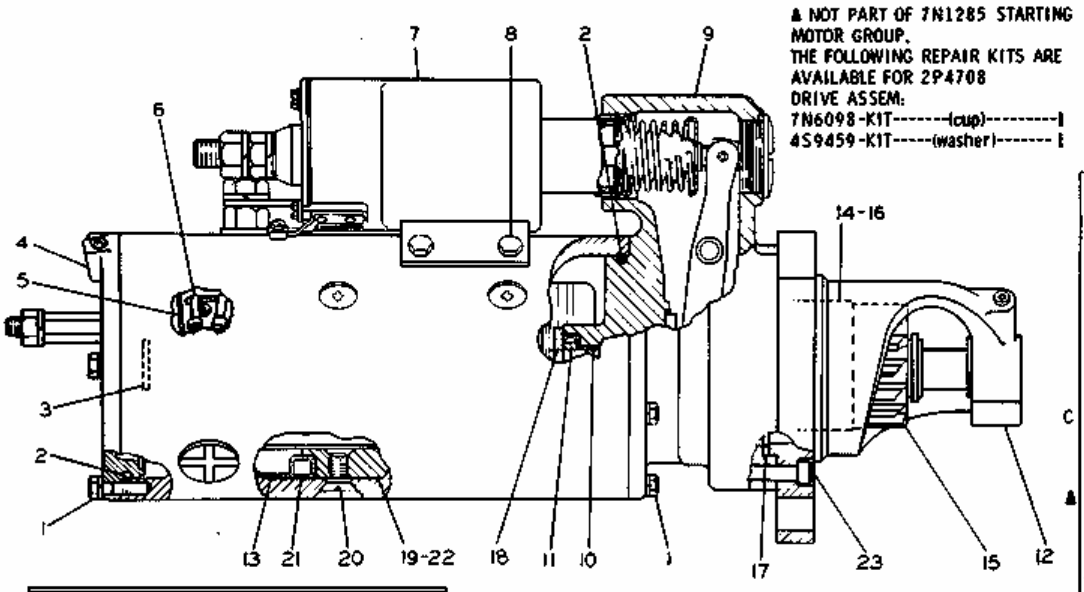

REF. NO.	PART NUMBER	DESCRIPTION	QTY
1	7F4556	BOLT	9
	1L4789	LOCKWASHER	9
2	4M189	SEAL	2
3	2L8166	WASHER	1
4	7N1284	FRAME ASSEM.	1
5	7N1282	BRUSH PLATE	1
	6F5829	SCREW ASSEM.	1
6	4M1845	BRUSH	4
	7N1281	SPRING	4
	2F2860	SCREW	4

	7	4M1812	SWITCH ASSEM. (Separate Illustration)	1
	8	6H3622	SCREW ASSEM.	4
	9	4M1850	HOUSING ASSEM. (Includes)	1
		2B4602	PLUG	1
		9F2547	WICK	1
	10	1M9968	BUSHING	1
	11	2F6678	SEAL	1
	12	8L5265	HOUSING ASSEM.	1
	13	7N1280	INSULATOR	1
C	14	2P4708	DRIVE ASSEM.---(1894213)---- (Includes)	1
	15	9S9771	PINION	1
			-OR-	
&	16	6N3827	DRIVE ASSEM---(480118)-----	1
	17	4M1851	GASKET	1
	18	1M9971	SPACER	1
	19	8H1141	SHOE	4
	20	3R8797	SCREW ASSEM.	8
	21	7N1283	COIL ASSEM.	1
	22	1H2629	STRIP	1
	23	4M1833	SCREW-----3.81 cm(1.5 in.) long	5
		7M336	SCREW-----2.18 cm(.86 in.) long	1

C INDICATES CHANGE

217019

1 NPR 7F-4556 9 BOLT

NPR 1L-4789 9 LOCKWASHER

2 NPR 4M-0189 2 SEAL

3 NPR 2L-8166 1 WASHER

4 NPR 7N-1284 1 FRAME ASSEM.

5 NPR 7N-1282 1 BRUSH PLATE

NPR 6F-5829 1 SCREW ASSEM.

6 NPR 4M-1845 4 BRUSH

NPR 7N-1281 4 SPRING

NPR 2F-2860 4 SCREW

7 NPR Y 4M-1812 1 SWITCH ASSEM.

(Separate Illustration)

8 NPR 6H-3622 4 SCREW ASSEM.

9 NPR 4M-1850 1 HOUSING ASSEM.

(Includes)

NPR 2B-4602 1 PLUG

NPR 9F-2547 1 WICK

10 NPR 1M-9968 1 BUSHING

11 NPR 2F-6678 1 SEAL

12 NPR 8L-5265 1 HOUSING ASSEM.

13 NPR 7N-1280 1 INSULATOR

14 NPR C 2P-4708 1 DRIVE ASSEM. (1894213)

(Includes)

15 NPR 9S-9771 1 PINION

-OR-

16 NPR J 6N-3827 1 DRIVE ASSEM. (480118)

17 NPR 4M-1851 1 GASKET

18 NPR 1M-9971 1 SPACER

19 NPR 8H-1141 4 SHOE

20 NPR 3R-8797 8 SCREW ASSEM.

21 NPR 7N-1283 1 COIL ASSEM.

22 NPR 1H-2629 1 STRIP

23 NPR 4M-1833 5 SCREW 3.81 cm(1.5 in.) long

NPR 7M-0336 1 SCREW 2.18 cm(.86 in.) long

THE FOLLOWING REPAIR KITS ARE AVAILABLE FOR 2P4708 DRIVE ASSEM:

NPR 7N-6098 1 KIT (cup)

NPR 4S-9459 1 KIT (washer)

Key:

J - NOT PART OF 7N1285 STARTING MO
Y - SEPARATE ILLUSTRATION
C - INDICATES CHANGE

7N1285 ELECTRIC STARTING MOTOR GROUP--Delco-Remy--24 Volt--Part 2
Part of 7S4090 Electric Starting Motor Group shown on Page 78A

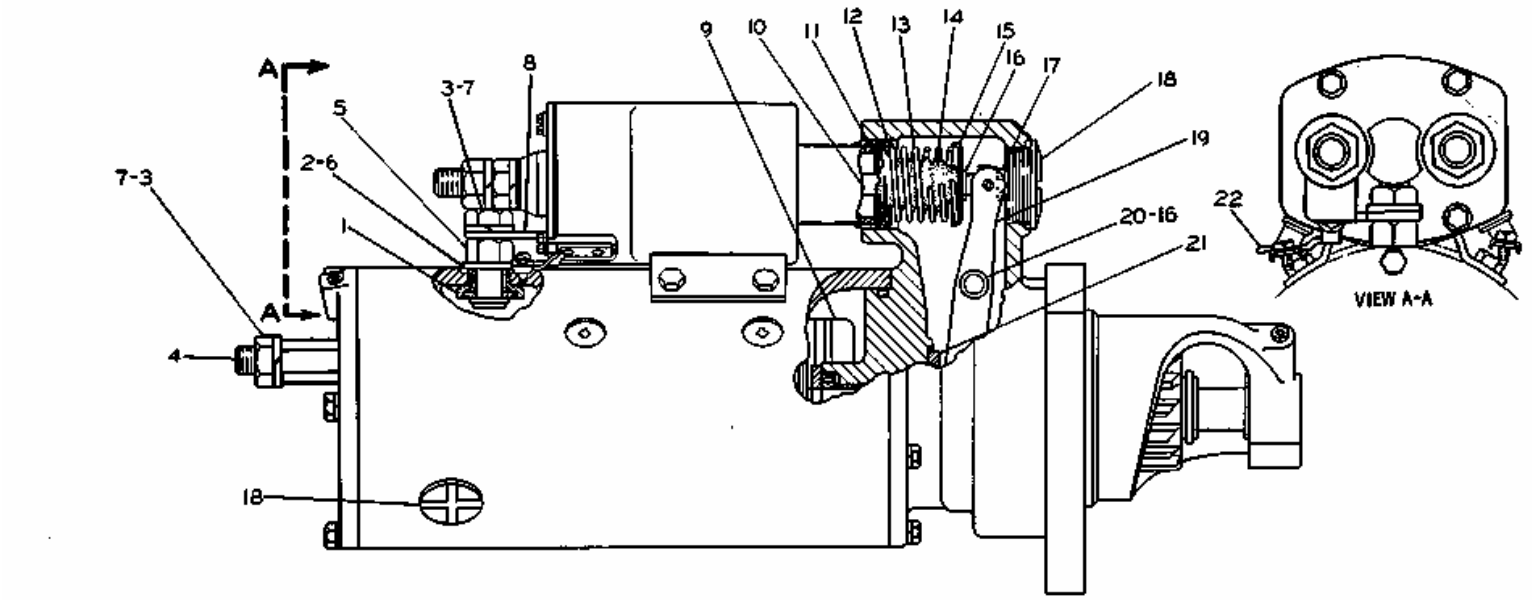

REF. NO.	PART NUMBER	DESCRIPTION	QTY
1	3L3380	BUSHING	1
2	690811	STUD	1
3	3H3680	NUT	1
4	7N1279	STUD ADAPTER	1
5	3H3681	NUT	1
6	9H3757	WASHER---(large)	2
	7F3494	WASHER---(small)	1
7	9F4976	LOCKWASHER	2

8	4M1841	CONNECTOR	1
9	5L8877	ARMATURE ASSEM.	1
10	9M7606	PLUNGER ASSEM.	1
11	369821	WASHER	1
12	4M1828	RETAINER	1
13	9M7609	SPRING	1
14	4M1829	BOOT	1
15	4M1827	RETAINER	1
16	9M7611	RING	2
17	3F2617	NUT	1

18	4M1831	PLUG	3
	7L2894	GASKET	3
19	690797	LEVER ASSEM.	1
20	4M1854	SHAFT	1
	1H1023	SEAL--9.37 mm(.369 in.) diameter	1
	2D6392	SEAL--6.07 mm(.239 in.) diameter	1
21	4L2729	WASHER	1
22	1P3879	LEAD ASSEM.	1
	THE FOLLOWING REPAIR KIT IS AVAILABLE:		
	3N3763	TERMINAL KIT---(insulator)	1

215553

1 NPR 3L-3380 1 BUSHING

2 NPR 069-0811 1 STUD

3 NPR 3H-3680 1 NUT

4 NPR 7N-1279 1 STUD ADAPTER

5 NPR 3H-3681 1 NUT

6 NPR 9H-3757 2 WASHER (large)

NPR 7F-3494 1 WASHER (small)

7 NPR 9F-4976 2 LOCKWASHER

8 NPR 4M-1841 1 CONNECTOR

9 NPR 5L-8877 1 ARMATURE ASSEM.

10 NPR 9M-7606 1 PLUNGER ASSEM.

11 NPR 036-9821 1 WASHER

12 NPR 4M-1828 1 RETAINER

13 NPR 9M-7609 1 SPRING

14 NPR 4M-1829 1 BOOT

15 NPR 4M-1827 1 RETAINER

16 NPR 9M-7611 2 RING

17 NPR 3F-2617 1 NUT

18 NPR 4M-1831 3 PLUG

NPR 7L-2894 3 GASKET

19 NPR 069-0797 1 LEVER ASSEM.

20 NPR 4M-1854 1 SHAFT

NPR 1H-1023 1 SEAL 9.37mm(.369 in.) diameter

NPR 2D-6392 1 SEAL 6.07mm(.239 in.) diameter

21 NPR 4L-2729 1 WASHER

22 NPR 1P-3879 1 LEAD ASSEM.

THE FOLLOWING REPAIR KIT IS AVAILABLE:

NPR 3N-3763 1 TERMINAL KIT---(insulator)----

3P6 ELECTRIC STARTING MOTOR GROUP--Prestolite--24 Volt--Part 1
Part of 7S4090 Electric Starting Motor Group shown on Page 78. 9S7976 Switch parts are shown on Page 88

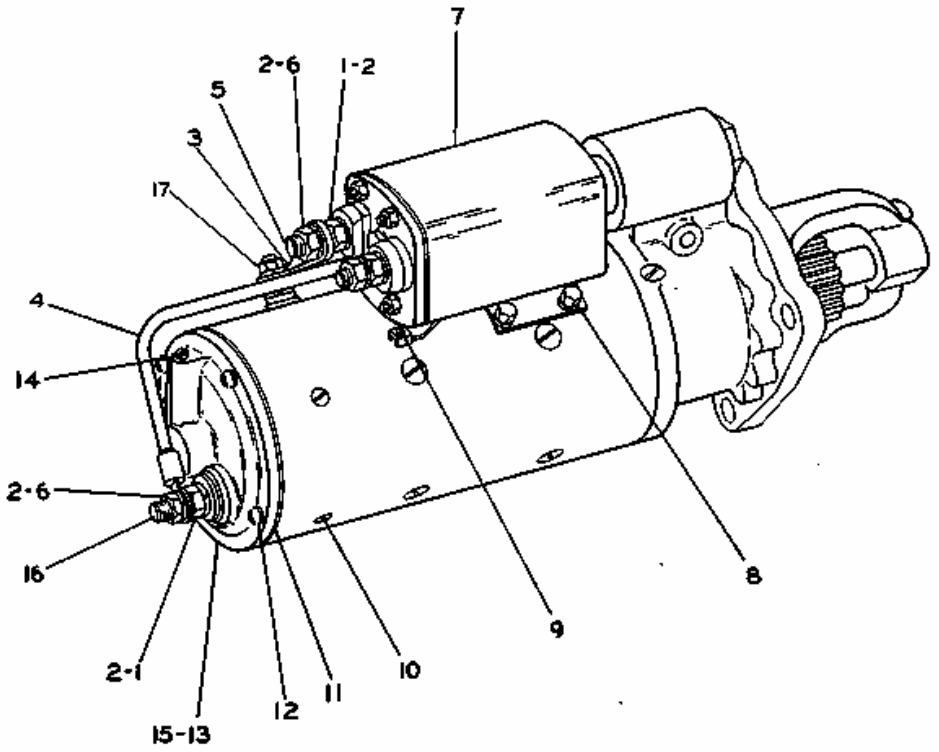

	REF. NO.	PART NUMBER	DESCRIPTION	QTY
	1	1D5117	NUT	3
	2	3B4508	LOCKWASHER	6
	3	8S2771	CONNECTOR	1
C	4	4N9404	LEAD ASSEM.	1
	5	4N4694	KIT-----(Field Terminal Stud)----- (Includes Stud, Bushing & Washers)	1
	6	1D4719	NUT	3
	7	9S7976	SOLENOID ASSEM. (Separate Illustration)	1
		6H3622	SCREW	4
	8	3B4504	LOCKWASHER	4
		3K6116	WASHER	4
	9	4M3217	SCREW	2
	10	4B1220	SCREW	3
	11	8S6035	GASKET	1
	12	3B4502	LOCKWASHER	4
	13	8S2769	HEAD ASSEM. --(Commutator End)-	1
	14	2B4602	PLUG	1
	15	8S4682	KIT--------(Bearing & Wick)------	1
	16	4N4693	KIT-(Commutator End Terminal Stud) (Includes Stud, Bushing & Washers)	1
		1D4717	NUT----------(plain)----------	1
	17	1B2578	NUT----------(jam)----------	1
		3B4506	LOCKWASHER	2

C INDICATES CHANGE 207040

1 NPR 1D-5117 3 NUT

2 NPR 3B-4508 6 LOCKWASHER

3 NPR 085-2771 1 CONNECTOR

4 NPR C 4N-9404 1 LEAD ASSEM.

5 NPR 4N-4694 1 KIT (Field Terminal Stud)

(Includes Stud, Bushing and Washers)

6 NPR 1D-4719 3 NUT

7 NPR Y 9S-7976 1 SOLENOID ASSEM.

(Separate Illustration)

8 NPR 6H-3622 4 SCREW

NPR 3B-4504 4 LOCKWASHER

NPR 3K-6116 4 WASHER

9 NPR 4M-3217 2 SCREW

10 NPR 4B-1220 3 SCREW

11 NPR 8S-6035 1 GASKET

12 NPR 3B-4502 4 LOCKWASHER

13 NPR 8S-2769 1 FIELD ASSEM. (Commutator End)

14 NPR 2B-4602 1 PLUG

15 NPR 8S-4682 1 KIT (Bearing and Wick)

16 NPR 4N-4693 KIT (Commutator End Terminal Stud)

(Includes Stud, Bushing and Washers)

17 NPR 1D-4717 1 NUT (plain)

NPR 1B-2578 1 NUT (jam)

NPR 3B-4506 2 LOCKWASHER

Key:

C - INDICATES CHANGE
Y - SEPARATE ILLUSTRATION

3P6 ELECTRIC STARTING MOTOR GROUP--Prestolite--24 Volt--Part 2
Part of 7S4090 Electric Starting Motor Group shown on Page 78

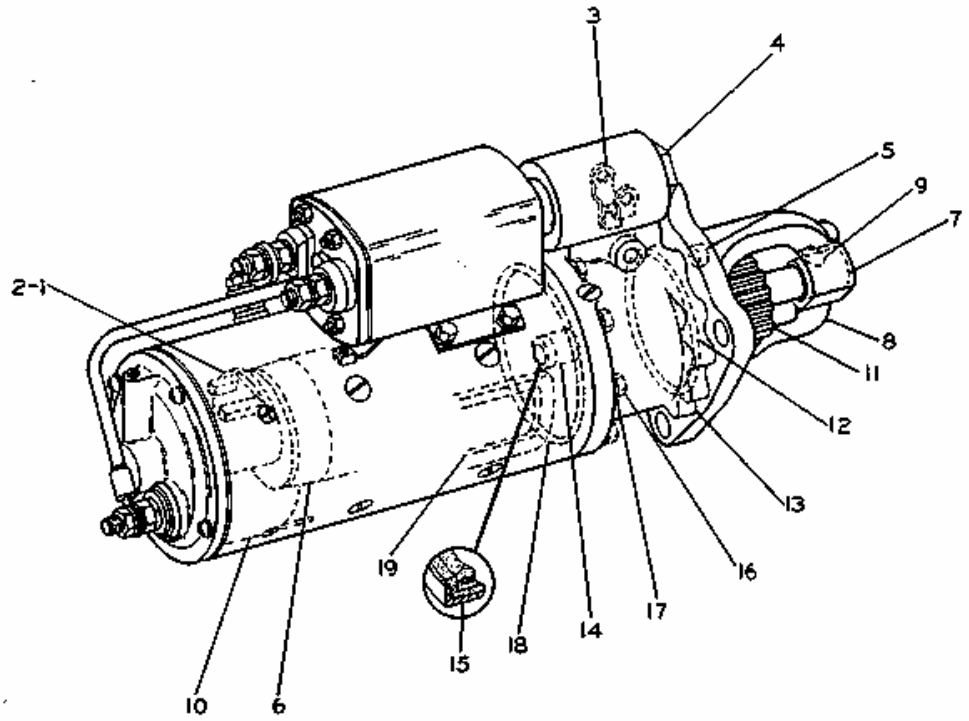

	REF. NO.	PART NUMBER	DESCRIPTION	QTY
	1	4N4691	PLATE ASSEM.	1
C	2	4N8618	KIT-(Includes 3 Brushes & 1 Clip)	1
		4N4692	KIT-----(Includes 8 Springs)-----	1
C	3	2P8825	SHIFT YOKE ASSEM.	1
	4	2P8817	KIT-------(Yoke Adjusting)------- (Includes Plugs, Pin, Gasket & Nut)	1
	5	8S1535	KIT------(Includes 6 Plugs)------	1
	6	9S6100	ARMATURE ASSEM.	1
		8S8071	KIT--(Armature Thrust Washers)--	1
	7	8S4684	KIT--------(Bearing & Wick)--------	1
	8	8S1543	HOUSING ASSEM. ----(Pinion)----	1
	9	2B4602	PLUG	1
	10	8S2780	KIT---(Includes 10 Insulations)---	1
C	11	4N4517	MOTOR DRIVE ASSEM.	1
	12	2H3931	SEAL	1
	13	2P8824	HOUSING ASSEM.	1
		2B4602	PLUG	1
	14	8S2226	BUSHING	1
	15	8S2225	SEAL	1
	16	2P8816	KIT--(Includes Housing Screws)--	1
	17	3B4504	LOCKWASHER	7
	18	4M189	SEAL	1
	19	4N4690	KIT---------(Field Coil)--------- (Includes Coils, Gaskets & Screws)	1

C INDICATES CHANGE 215137

1 NPR 4N-4691 1 PLATE ASSEM.

2 NPR C 4N-8618 1 KIT (Includes 3 Brushes and 1 Clip)

NPR 4N-4692 1 KIT (Includes 8 Springs)

3 NPR C 2P-8825 1 SHIFT YOKE ASSEM.

4 NPR 2P-8817 1 KIT (Yoke Adjusting)

(Includes Plugs, Pin, Gasket and Nut)

5 NPR 8S-1535 1 KIT (Includes 6 Plugs)

6 NPR 9S-6100 1 ARMATURE ASSEM.

NPR 8S-8071 1 KIT (Armature Thrust Washers)

7 NPR 8S-4684 1 KIT (Bearing and Wick)

8 NPR 8S-1543 1 HOUSING ASSEM. (Pinion)

9 NPR 2B-4602 1 PLUG

10 NPR 8S-2780 1 KIT (Includes 10 Insulations)

11 NPR C 4N-4517 1 MOTOR DRIVE ASSEM.

12 NPR 2H-3931 1 SEAL

13 NPR 2P-8824 1 HOUSING ASSEM.

NPR 2B-4602 1 PLUG

14 NPR 8S-2226 1 BUSHING

15 NPR 8S-2225 1 SEAL

16 NPR 2P-8816 1 KIT (Includes Housing Screws)

17 NPR 3B-4504 7 LOCKWASHER

18 NPR 4M-0189 1 SEAL

19 NPR 4N-4690 1 KIT (Field Coil)

(Includes Coils, Gaskets and Screws)

Key:

C - INDICATES CHANGE

9G4337 ELECTRIC STARTING MOTOR GROUP--Prestolite--24 Volt--Part 1
Part of 7S4090 Electric Starting Motor Group shown on Page 78A
9S7976 Solenoid Switch parts shown on Page 88

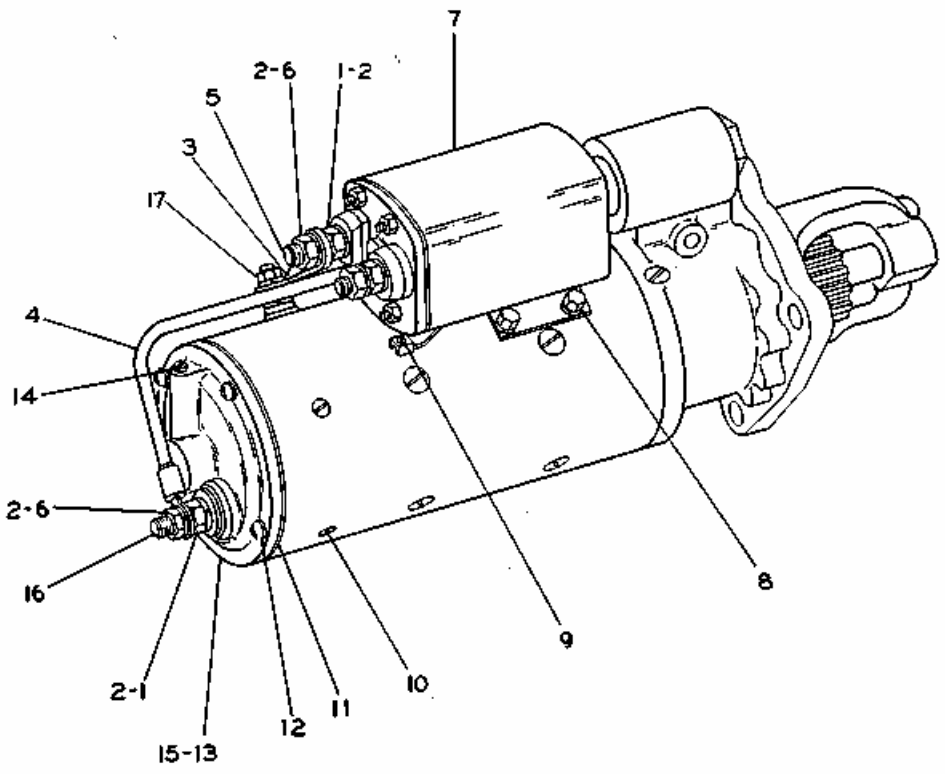

	REF. NO.	PART NUMBER	DESCRIPTION	QTY
	1	1D5117	NUT	3
	2	3B4508	LOCKWASHER	6
	3	8S2771	CONNECTOR	1
C	4	4N9404	LEAD ASSEM.	1
	5	4N4694	KIT-----(Field Terminal Stud)-----	1
			(Includes Stud, Bushing & Washers)	
	6	1D4719	NUT	3
	7	9S7976	SOLENOID ASSEM.	1
			(Separate Illustration)	
		6H3622	SCREW	4
	8	3B4504	LOCKWASHER	4
		3K6116	WASHER	4
	9	4M3217	SCREW	2
	10	4B1220	SCREW	3
	11	8S6035	GASKET	1
	12	3B4502	LOCKWASHER	4
	13	8S2769	HEAD ASSEM.--(Commutator End)-	1
	14	2B4602	PLUG	1
	15	8S4682	KIT--------(Bearing & Wick)------	1
	16	4N4693	KIT-(Commutator End Terminal Stud	1
			(Includes Stud, Bushing & Washers)	
		1D4717	NUT----------(plain)----------	1
	17	1B2578	NUT----------(jam)----------	1
		3B4506	LOCKWASHER	2

C INDICATES CHANGE 230348

1 NPR 1D-5117 3 NUT

2 NPR 3B-4508 6 LOCKWASHER

3 NPR 8S-2771 1 CONNECTOR

4 NPR C 4N-9404 1 LEAD ASSEM.

5 NPR 4N-4694 1 KIT (Field Terminal Stud)

(Includes Stud, Bushing and Washers)

6 NPR 1D-4719 3 NUT

7 NPR Y 9S-7976 1 SOLENOID ASSEM.

(Separate Illustration)

8 NPR 6H-3622 4 SCREW

NPR 3B-4504 4 LOCKWASHER

NPR 3K-6116 4 WASHER

9	NPR	4M-3217	2	SCREW
10	NPR	4B-1220	3	SCREW
11	NPR	8S-6035	1	GASKET
12	NPR	3B-4502	4	LOCKWASHER
13	NPR	8S-2769	1	HEAD ASSEM. (Commutator End)
14	NPR	2B-4602	1	PLUG
15	NPR	8S-4682	1	KIT (Bearing and Wick)
16	NPR	4N-4693	1	KIT (Commutator End Terminal Stud)
				(Includes Stud, Bushing and Washers)
17	NPR	1D-4717	1	NUT (plain)
	NPR	1B-2578	1	NUT (jam)
	NPR	3B-4506	2	LOCKWASHER

Key:

C - INDICATES CHANGE
Y - SEPARATE ILLUSTRATION

9G4337 ELECTRIC STARTING MOTOR GROUP--Prestolite--24 Volt--Part 2
Part of 7S4090 Electric Starting Motor Group shown on Page 78A

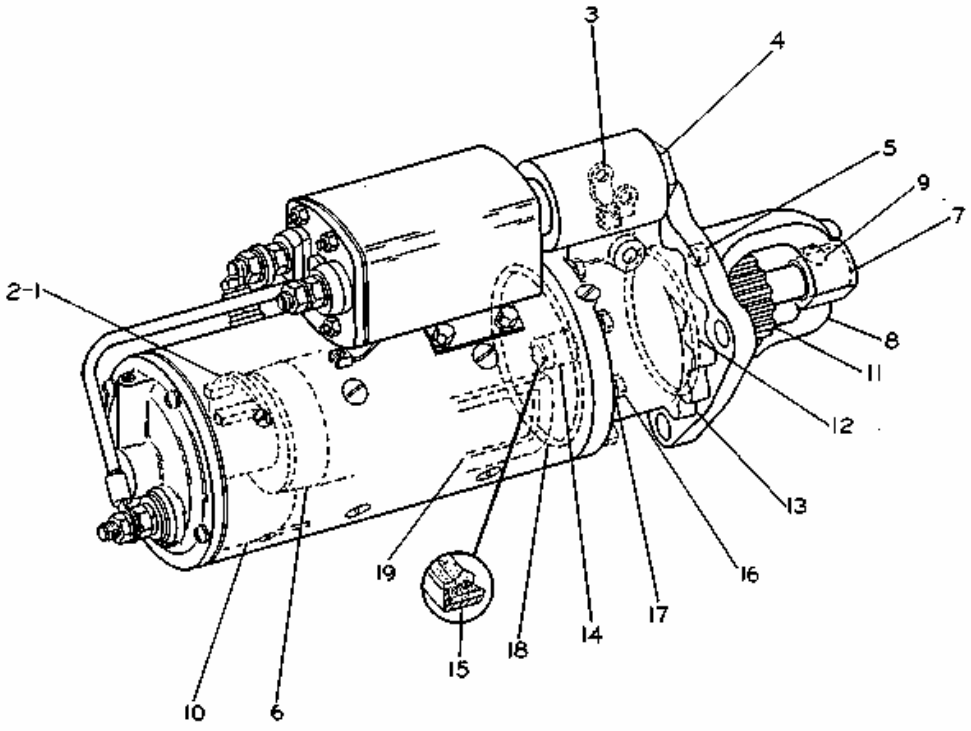

REF. NO.	PART NUMBER	DESCRIPTION	QTY
1	4N4691	PLATE ASSEM.	1
2	4N8618	KIT-(Includes 3 Brushes & 1 Clip)	1
	4N4692	KIT-----(Includes 8 Springs)-----	1
3	2P8825	SHIFT YOKE ASSEM.	1
4	2P8817	KIT-------(Yoke Adjusting)------- (Includes Plugs, Pin, Gasket &Nut)	1
5	8S1535	KIT------(Includes 6 Plugs)------	1
6	9S6100	ARMATURE ASSEM.	1
	8S8071	KIT--(Armature Thrust Washers)--	1
7	8S4684	KIT-------(Bearing & Wick)-------	1
8	9G5854	HOUSING ASSEM. ----(Pinion)----	1
9	9F2247	PLUG	1
10	8S2780	KIT---(Includes 10 Insulations)---	1
11	9G5587	MOTOR DRIVE ASSEM.	1
12	2H3931	SEAL	1
13	2P8824	HOUSING ASSEM.	1
	2B4602	PLUG	1
14	8S2226	BUSHING	1
15	8S2225	SEAL	1
16	2P8816	KIT--(Includes Housing Screws)--	1
17	3B4504	LOCKWASHER	7
18	4M189	SEAL	1
19	4N4690	KIT---------(Field Coil)---------- (Includes Coils, Gaskets & Screws)	1
		THE FOLLOWING REPAIR KIT IS AVAILABLE:	
	8S4684	KIT--(pinion housing repair)------	1

230349

1 NPR 4N-4691 1 PLATE ASSEM.

2 NPR 4N-8618 1 KIT (Includes 3 Brushes and 1 Clip)

NPR 4N-4692 1 KIT (Includes 8 Springs)

3 NPR 2P-8825 1 SHIFT YOKE ASSEM.

4 NPR 2P-8817 1 KIT (Yoke Adjusting)

(Includes Plugs, Pin, Gasket and Nut)

5 NPR 8S-1535 1 KIT (Includes 6 Plugs)

6 NPR 9S-6100 1 ARMATURE ASSEM.

NPR 8S-8071 1 KIT (Armature Thrust Washers)

7 NPR 8S-4684 1 KIT (Bearing and Wick)

8 NPR 9G-5854 1 HOUSING ASSEM. (Pinion)

9 NPR 9F-2247 1 PLUG

10 NPR 8S-2780 1 KIT (Includes 10 Insulations)

11 NPR 9G-5587 1 MOTOR DRIVE ASSEM.

12 NPR 2H-3931 1 SEAL

13 NPR 2P-8824 1 HOUSING ASSEM.

NPR 2B-4602 1 PLUG

14 NPR 8S-2226 1 BUSHING

15 NPR 8S-2225 1 SEAL

16 NPR 2P-8816 1 KIT (Includes Housing Screws)

17 NPR 3B-4504 7 LOCKWASHER

18 NPR 4M-0189 1 SEAL

19 NPR 4N-4690 1 KIT (Field Coil)

(Includes Coils, Gaskets and Screws)

THE FOLLOWING REPAIR KIT IS AVAILABLE.

NPR 8S-4684 1 KIT--(pinion housing repair)-----

6N7288 STARTING ARRANGEMENT--For Cold Weather
Serial No. 87V2262-Up and 82V740-Up. AN ATTACHMENT

NPR Y	2G-5120	1	HEAVY DUTY BATTERY GROUP
NPR Y	7S-3622	1	ELECTRIC STARTING MOTOR GROUP

Key: **Y - SEPARATE ILLUSTRATION**

9S7976 SOLENOID ASSEMBLY--24 Volt-Part of 4N7752, 3P6 & 9G4337 Electric Starting Motor Groups shown on Pages 82, 86 & 87A

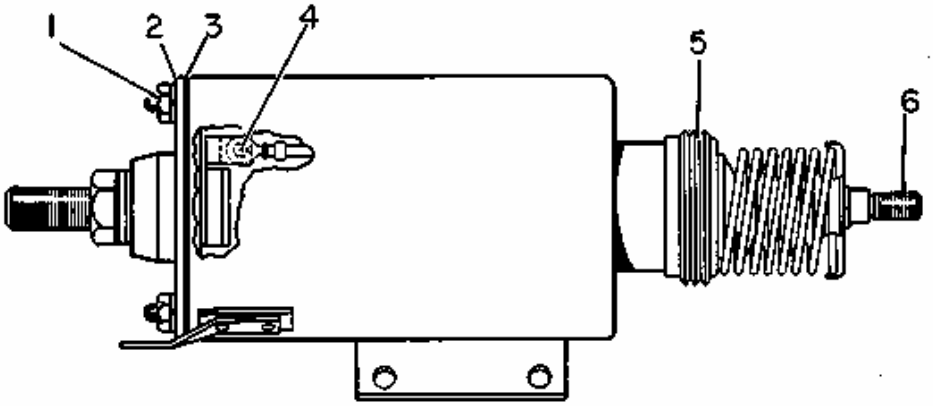

1	NPR C	9M-7657	4	NUT-SEALING
2	NPR	8S-8023	1	COVER AS
3	NPR	8S-8024	1	GASKET-COVER
4	NPR	9B-7235	1	SCREW-MACHINE
	NPR	9B-7233	1	LOCKWASHER
5	NPR	8S-1528	1	BOOT
6	NPR	8S-8021	1	CORE AS

THE FOLLOWING REPAIR KITS ARE AVAILABLE:

NPR	8S-1524	1	KIT-TERMINAL STUD (BATTERY)
NPR	8S-1525	1	KIT-TERMINAL STUD (MOTOR)
NPR	9S-8688	1	KIT-CONTACT END CORE
NPR	8S-1527	1	KIT-YOKE END CORE

Key: C - CHANGE FROM PREVIOUS TYPE

8D389 LAMP GROUP--24 Volt--Tail, Stop and Turn
Part of 9D3370 Battery & Wiring Group shown on Pages 97, 100B, 100G, 100M, 100Q-2, 100Q-7, 101, 101E, 101K and 101Q

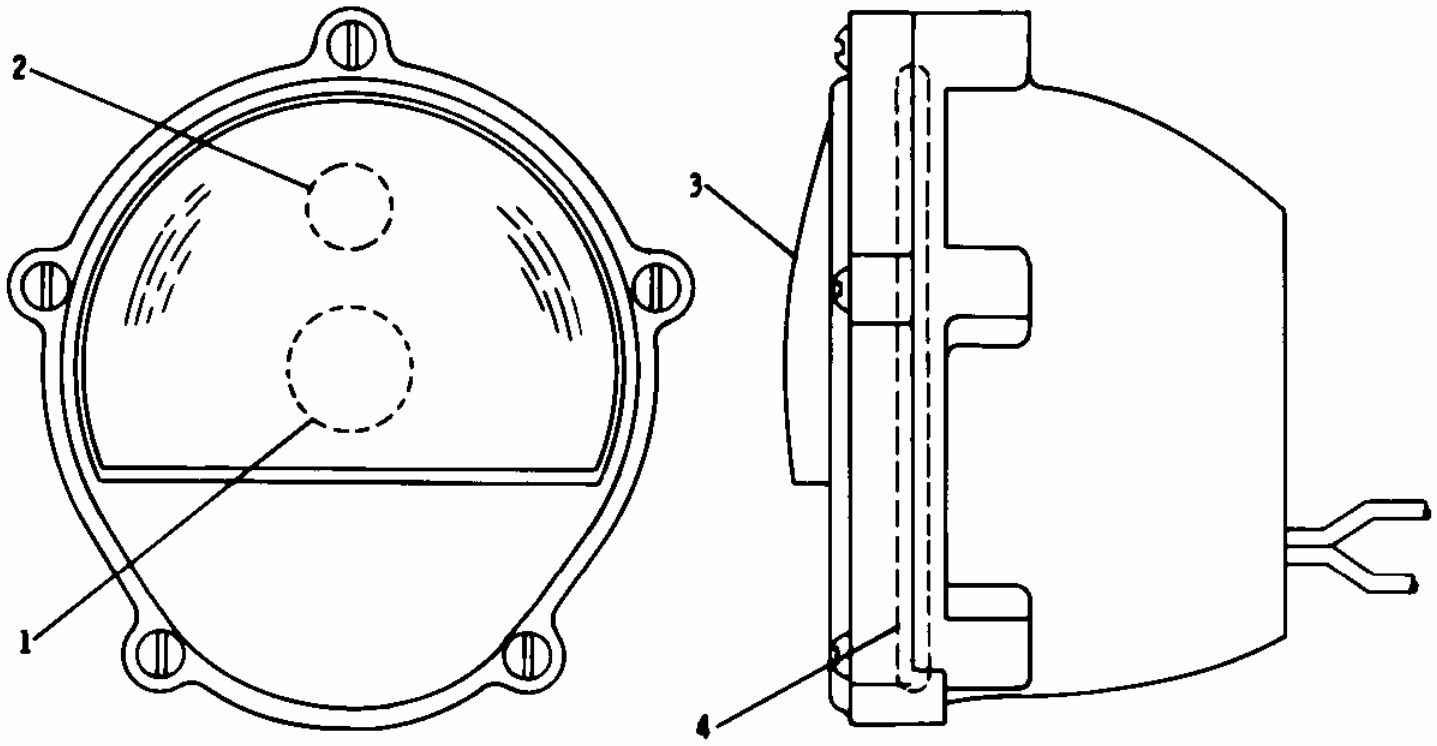

REF. NO.	PART NUMBER	DESCRIPTION	QTY
1	7H2976	BULB	1
2	2D1959	BULB	1
3	9D6113	COVER	1
4	3F5792	SEAL	1

119601

1 NPR 7H-2976 1 BULB

2 NPR 2D-1959 1 BULB

3 NPR 9D-6113 1 COVER

4 NPR 3F-5792 1 SEAL

8D2045 FRONT FLOODLAMP LIGHTING GROUP
1M1882 Lamp parts are shown on Page 105. AN ATTACHMENT

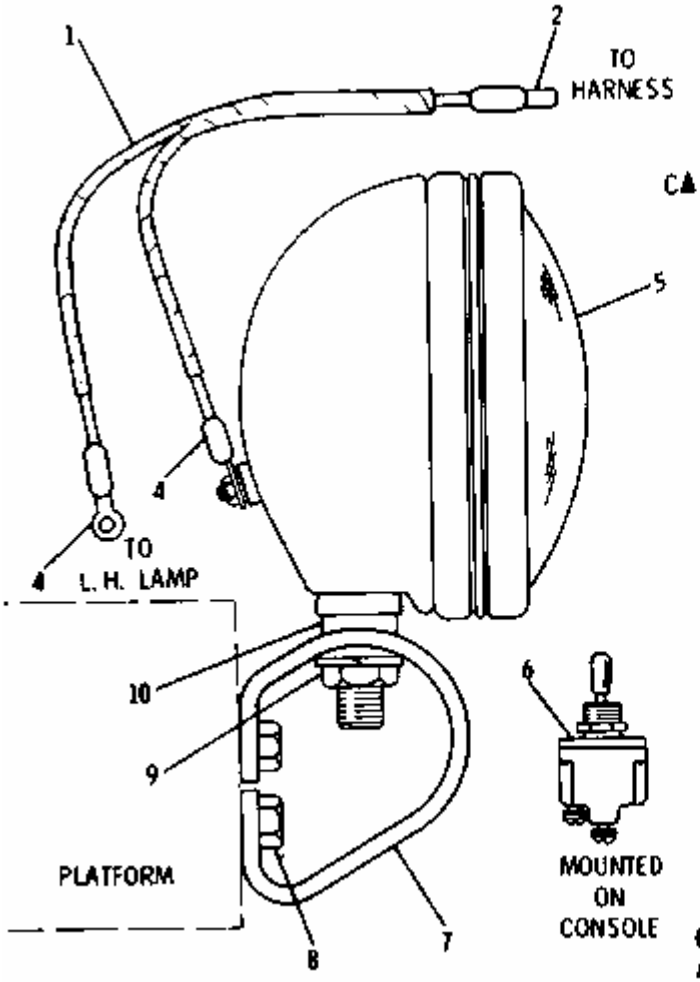

REF. NO.	PART NUMBER	DESCRIPTION	QTY
	8D8800	WIRE ASSEM.	1
CA 1	5P6018	WIRE---2.54 m(100 in.)	
2	4S1988	TERMINAL	1
4	2D8781	TERMINAL	2
5	1M1882	LAMP ASSEM.---(R. H. & L. H.)---(Separate Illustration)	2
6	8D2676	SWITCH---(toggle)	1
7	8D1992	BRACKET	2
	0S1594	BOLT	4
8	1D4717	NUT	4
	3B4506	LOCKWASHER	4
	5D3183	NUT	2
9	5D3184	LOCKWASHER	2
	6D2256	SPACER	2
10	3D7854	SPACER	2
●	3D4529	FUSE---(14 AMP)	1

● NOT SHOWN
▲ ORDER BY THE METRE

210055

1 NPR 8D-8800 1 WIRE ASSEM.

NPR CH 5P-6018 WIRE 2.54 m(100 in.)

2 NPR 4S-1988 1 TERMINAL

4 NPR 2D-8781 2 TERMINAL

5 NPR Y 1M-1882 2 LAMP ASSEM. (R.H. & L.H.)

(Separate Illustration)

6 NPR 8D-2676 1 SWITCH (toggle)

7 NPR 8D-1992 2 BRACKET

8 NPR 0S-1594 4 BOLT

NPR 1D-4717 4 NUT

	NPR	3B-4506	4	LOCKWASHER
9	NPR	5D-3183	2	NUT
	NPR	5D-3184	2	LOCKWASHER
	NPR	6D-2256	2	SPACER
10	NPR	3D-7854	2	SPACER
	NPR J	3D-4529	1	FUSE (14 amp)

Key:

J - NOT SHOWN
Y - SEPARATE ILLUSTRATION
H - ORDER BY THE METRE
C - INDICATES CHANGE

8D2035 REAR FLOODLAMP LIGHTING GROUP-1M1882 Lamp parts are shown on Page 105. AN ATTACHMENT

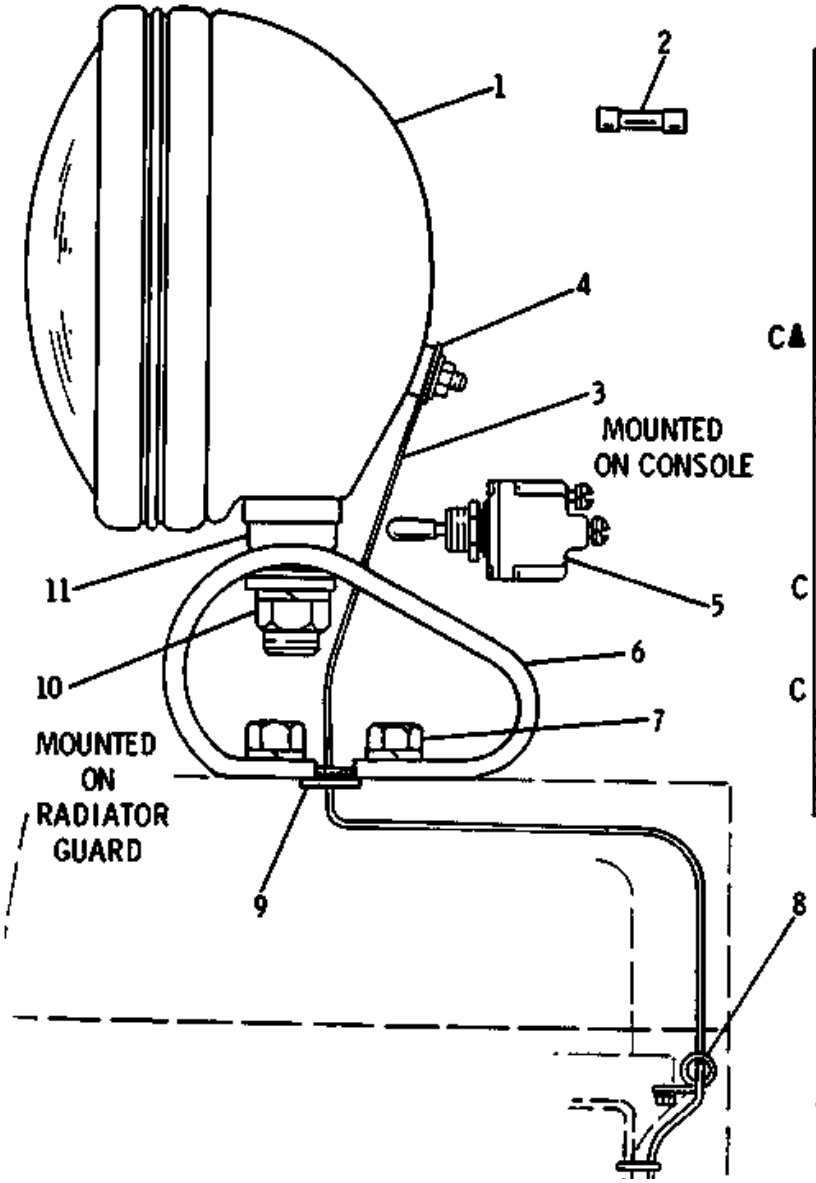

	REF. NO.	PART NUMBER	DESCRIPTION	QTY
	1	1M1882	LAMP ASSEM. (Separate Illustration)	1
	2	3D4529	FUSE---(14 amp)	1
	3	8D8749	WIRE ASSEM. (Includes)	1
C▲		5P5629	WIRE---2.27m (89.50 in.)	
		4S1988	TERMINAL	1
	4	2D8781	TERMINAL	1
	5	8D2676	SWITCH---(toggle)	1
	6	8D1992	BRACKET	1
	7	L1351	BOLT	2
		3B4506	LOCKWASHER	2
C	8	3S2093	STRAP	6
	9	3K8107	GROMMET	1
	10	5D3183	NUT	1
C		5D3184	LOCKWASHER	1
		6D2256	SPACER	1
	11	3D7854	SPACER	1

▲ ORDER BY THE METER
C INDICATES CHANGE

222015

1 NPR Y 1M-1882 1 LAMP ASSEM.
(Separate Illustration)
2 NPR 3D-4529 1 FUSE (14 amp)
3 NPR 8D-8749 1 WIRE ASSEM.
(Includes)
NPR CH 5P-5629 WIRE 2.27m (89.50 in.)
NPR 4S-1988 1 TERMINAL
4 NPR 2D-8781 1 TERMINAL
5 NPR 8D-2676 1 SWITCH (toggle)
6 NPR 8D-1992 1 BRACKET
7 NPR 0L-1351 2 BOLT
NPR 3B-4506 2 LOCKWASHER
8 NPR C 3S-2093 6 STRAP
9 NPR 3K-8107 1 GROMMET
NPR 5D-3183 1 NUT
10 NPR C 5D-3184 1 LOCKWASHER
NPR 6D-2256 1 SPACER
11 NPR 3D-7854 1 SPACER

Key: H - ORDER BY THE METER Y - SEPARATE ILLUSTRATION C - INDICATES CHANGE

1M1882 FLOODLAMP ASSEMBLY--24 Volt-Part of 8D2045 and 8D2035 Floodlamp Lighting Groups shown on Page 104

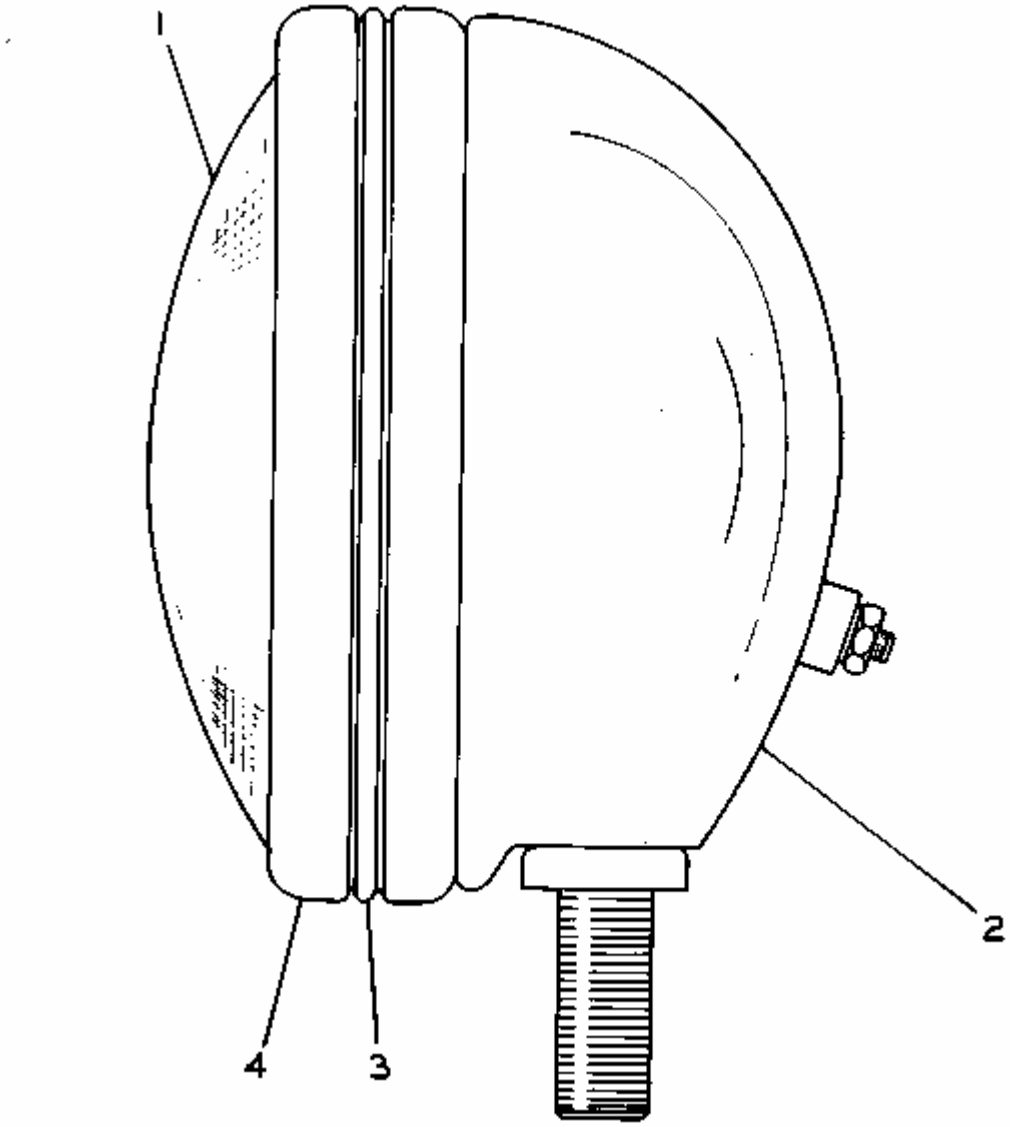

1	NPR	1M-5898	1	LAMP-SEALED UNIT
2	NPR	2P-2541	1	BODY AS
3	NPR	2M-5282	1	RING-MOUNTING
4	NPR	2M-5284	2	MOLDING AS
	NPR	5M-6668	2	SCREW-MACHINE

7D8089 BASIC LAMP ASSEMBLY--24 Volt--Signal Lamp
Part of 9D5720 and 2G1170 Signal Lighting Groups shown on Pages 106, 106-1, 106-2, 107 & 107B

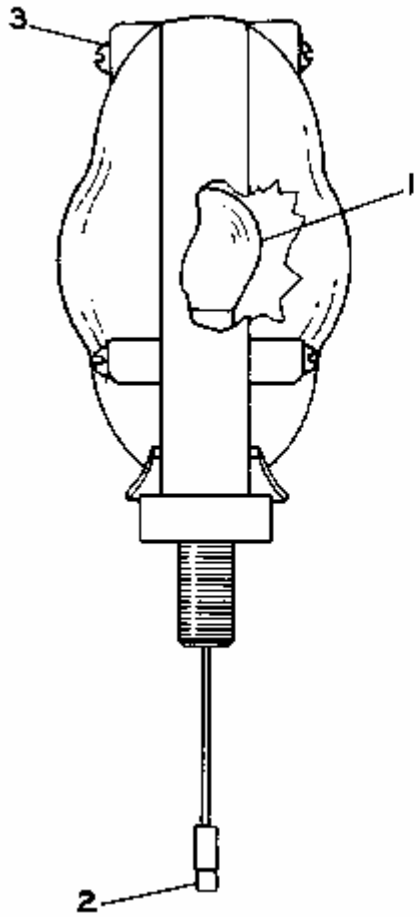

REF. NO.	PART NUMBER	DESCRIPTION	QTY
1	7H2976	BULB	1
2	4S1988	TERMINAL	1
3	2S6218	SCREW	6
	The following repair kits are available:		
	7D8713	KIT-------(Lens - Amber)---------	1
	7D8714	KIT--------(Lens - Red)----------	1

134377

1 NPR 7H-2976 1 BULB

2 NPR 4S-1988 1 TERMINAL

3 NPR 2S-6218 6 SCREW

The following repair kits are available:

NPR 7D-8713 1 KIT (Lens - Amber)

NPR 7D-8714 1 KIT (Lens - Red)

8D8290 DOME LIGHTING GROUP
Serial No. 87V1729-Up and 82V720-Up. Also part of 9D5195 Roll-Over Protective System Arrangement listed on Page 280

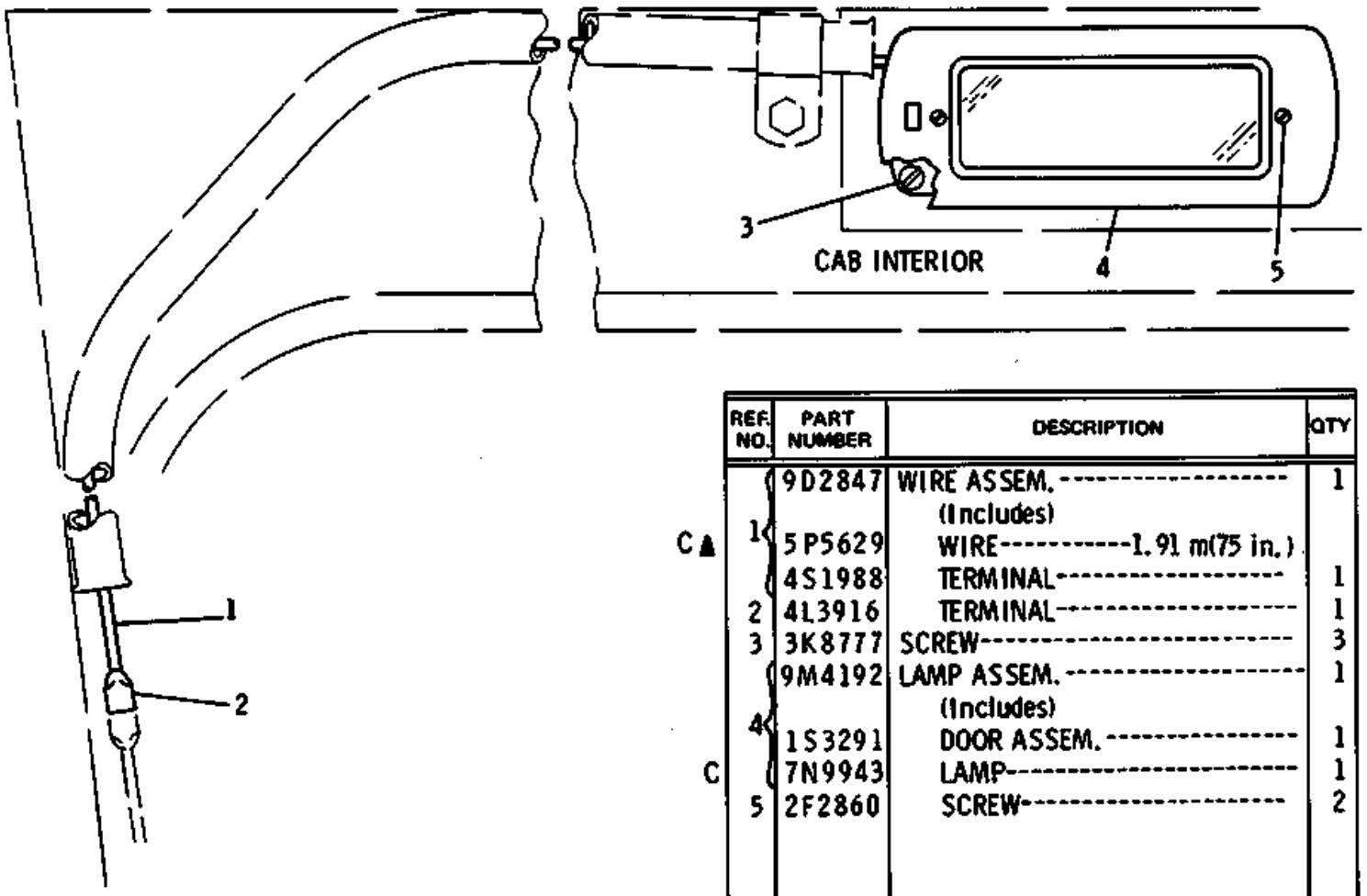

	REF. NO.	PART NUMBER	DESCRIPTION	QTY
		9D2847	WIRE ASSEM.	1
			(Includes)	
C▲	1	5P5629	WIRE----------1.91 m(75 in.)	
		4S1988	TERMINAL	1
	2	4L3916	TERMINAL	1
	3	3K8777	SCREW	3
		9M4192	LAMP ASSEM.	1
			(Includes)	
	4	1S3291	DOOR ASSEM.	1
C		7N9943	LAMP	1
	5	2F2860	SCREW	2

C INDICATES CHANGE ▲ ORDER BY THE METER 226937

1 NPR 9D-2847 1 WIRE ASSEM.

(Includes)

NPR CH 5P-5629 WIRE 1.91 m(75 in.)

NPR 4S-1988 1 TERMINAL

2 NPR 4L-3916 1 TERMINAL

3 NPR 3K-8777 3 SCREW

4 NPR 9M-4192 1 LAMP ASSEM.

(Includes)

NPR 1S-3291 1 DOOR ASSEM.

NPR C 7N-9943 1 LAMP

5 NPR 2F-2860 2 SCREW

Key: C - INDICATES CHANGE H - ORDER BY THE METER

1M6052 HEAD LAMP ASSEMBLY--24 Volt
Part of 8D1480 and 2G1040 Lighting Groups shown on Pages 106A and 108

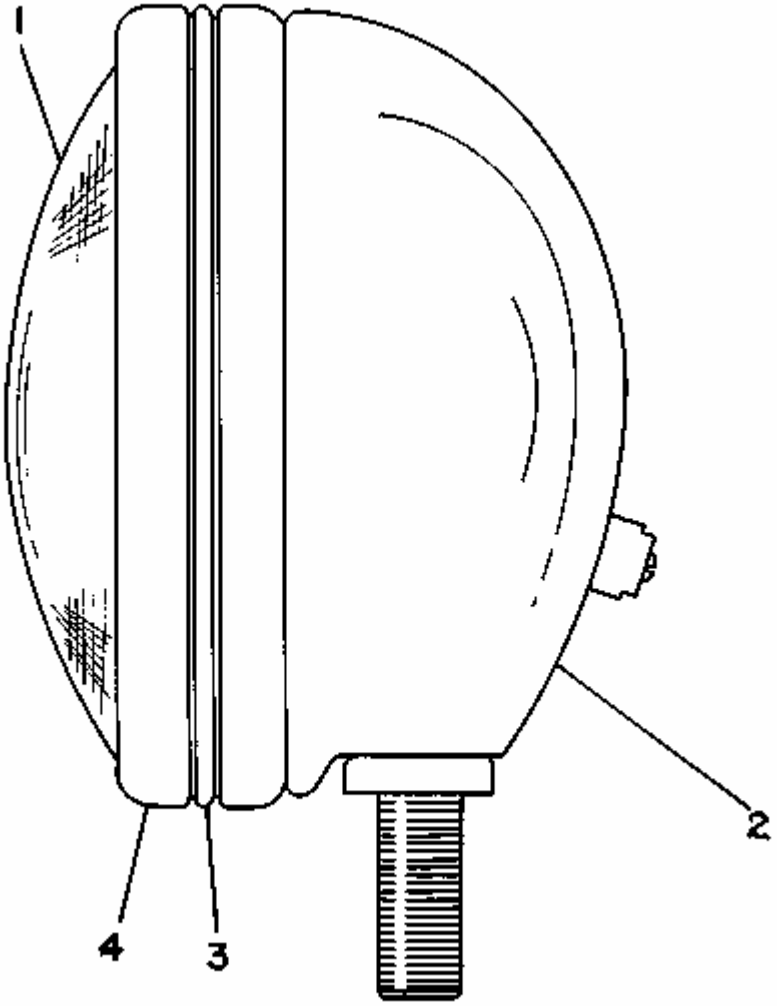

1	NPR	1M-5899	1	LAMP-SEALED UNIT
2	NPR C	2P-2540	1	BODY AS-LAMP
3	NPR	2M-5282	1	RING-MOUNTING
4	NPR	2M-5284	2	MOLDING AS
	NPR	5M-6668	2	SCREW-MACHINE

Key:

C - CHANGE FROM PREVIOUS TYPE

2G6095 WARNING LIGHTING GROUP--Blue Lens--Type 2-Provides Rotating Warning Light. AN ATTACHMENT

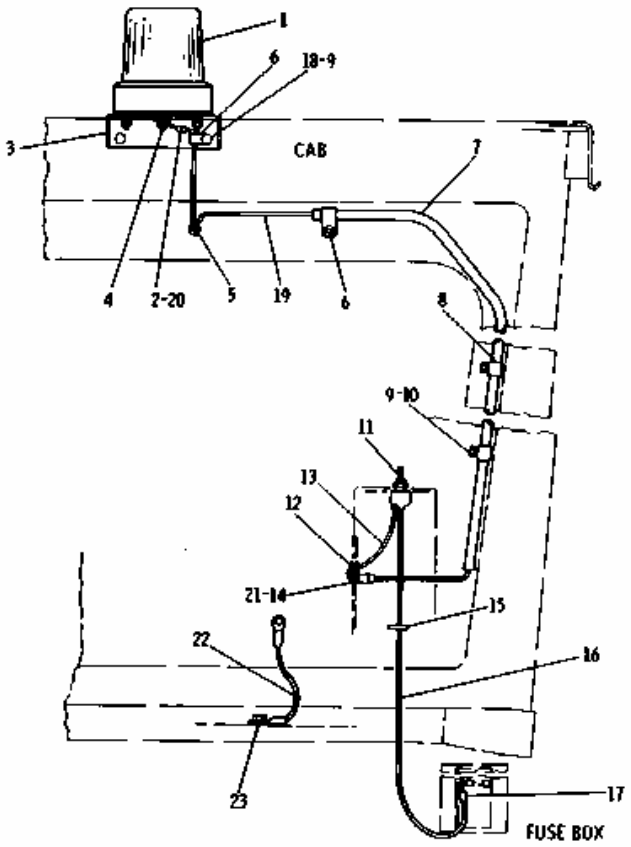

REF. NO.		PART NUMBER	DESCRIPTION	QTY
C		2G7639	LAMP GROUP	1
			(Includes)	
	1	7D8855	BULB	1
		2G6004	LENS	1
		2S6218	SCREW	3
	2	5P5610	TERMINAL	1
	3	2G645	PLATE ASSEM.	1
		7D8866	SCREW	3
	4	4B2047	NUT	3
		9F8125	LOCKWASHER	3
	5	2D9535	GROMMET	2
	6	6K8179	CLIP	1
▲	7	5P1203	TUBE---------170.56 cm(67.15 in.)	
	8	4D9164	CLIP	3
	9	3B4506	LOCKWASHER	5
	10	T102	BOLT	3
C	11	8D2676	SWITCH-----(warning light)	1
	12	1A621	GROMMET	1
		2G656	WIRE ASSEM.	1
			(Includes)	
●	13	5P5629	WIRE-------.559 m(22 in.)	
		6D9404	TERMINAL	1
	14	4L3916	TERMINAL	1
	15	3S2093	TIE	2
		9D6082	WIRE ASSEM.	1
			(Includes)	
●	16	5P5629	WIRE----------1.3 m(50.00 in.)	
	17	2L8074	TERMINAL	2
	18	S509	BOLT	2
C		2G7637	WIRE ASSEM.	1
			(Includes)	
●	19	5P5629	WIRE----------2.24 m(88.19 in.)	
	20	6N9587	CONNECTOR-----(female)	1
	21	4S1988	TERMINAL	1
C	22	9M9812	WIRE ASSEM.	1
			(Includes)	
	23	2L8052	TERMINAL	2

C INDICATES CHANGE
● ORDER BY THE METRE
▲ ORDER BY THE CENTIMETRE

168920

1 NPR C 2G-7639 1 LAMP GROUP

(Includes)

NPR 7D-8855 1 BULB

NPR 2G-6004 1 LENS

NPR 2S-6218 3 SCREW

2 NPR 5P-5610 1 TERMINAL

3 NPR 2G-0645 1 PLATE ASSEM.

4 NPR 7D-8866 3 SCREW

NPR 4B-2047 3 NUT

NPR 9F-8125 3 LOCKWASHER

5 NPR 2D-9535 2 GROMMET

6 NPR 6K-8179 1 CLIP

7 NPR E 5P-1203 TUBE 170.56 cm(67.15 in.)

8 NPR 4D-9164 3 CLIP

9 NPR 3B-4506 5 LOCKWASHER

10 NPR 0T-0102 3 BOLT

11 NPR C 8D-2676 1 SWITCH (warning light)

12 NPR 1A-0621 1 GROMMET

13 NPR 2G-0656 1 WIRE ASSEM.

(Includes)

NPR D 5P-5629 WIRE .559 m(22 in.)

NPR 6D-9404 1 TERMINAL

14 NPR 4L-3916 1 TERMINAL

15 NPR 3S-2093 2 TIE

16 NPR 9D-6082 1 WIRE ASSEM.

(Includes)

NPR D 5P-5629 WIRE 1.3 m(50.00 in.)

17 NPR 2L-8074 2 TERMINAL

18 NPR 0S-0509 2 BOLT

19 NPR C 2G-7637 1 WIRE ASSEM.

(Includes)

NPR D 5P-5629 WIRE 2.24 m(88.19 in.)

20 NPR 6N-9587 1 CONNECTOR (female)

21 NPR 4S-1988 1 TERMINAL

22 NPR C 9M-9812 1 WIRE ASSEM.

(Includes)

23 NPR 2L-8052 2 TERMINAL

Key: C - INDICATES CHANGE D - ORDER BY THE METRE E - ORDER BY THE CENTIMETR

2G6095 WARNING LIGHTING GROUP--Blue Lens--Type 1
Provides Rotating Warning Light. AN ATTACHMENT

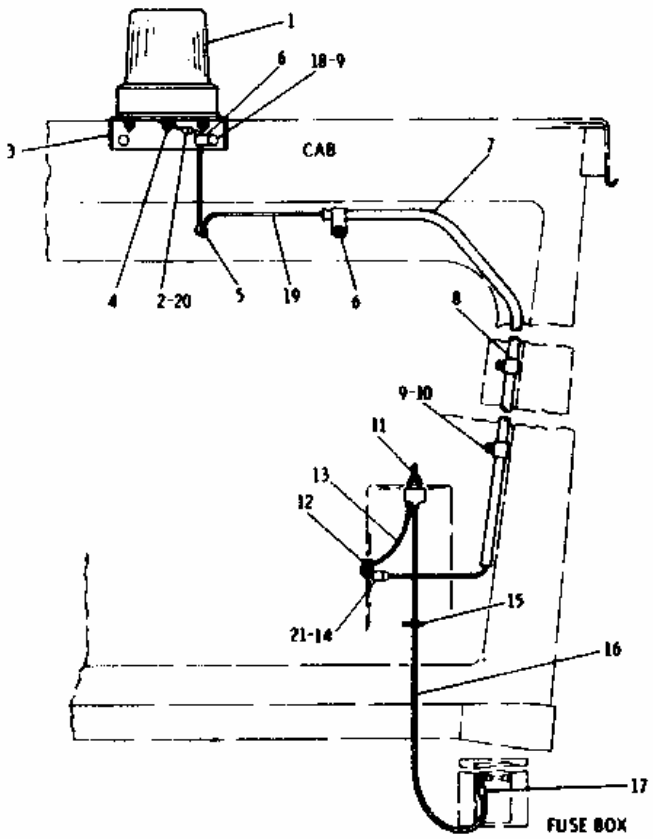

REF NO	PART NUMBER	DESCRIPTION	QTY
	2G6045	LAMP GROUP	1
		(Includes)	
1	7D8855	BULB	1
	2G6004	LENS	1
	2S6218	SCREW	3
2	4S1988	TERMINAL	1
3	2G645	PLATE ASSEM.	1
	7D8866	SCREW	3
4	4B2047	NUT	3
	9F8125	LOCKWASHER	3
5	2D9535	GROMMET	2
6	6K8179	CLIP	1
▲ 7	5P1203	TUBE ---170.56 cm(67.15 in.)	
8	4D9164	CLIP	3
9	3B4506	LOCKWASHER	5
10	T102	BOLT	3
11	8D2676	SWITCH ---(toggle)	1
12	1A621	GROMMET	1
	2G656	WIRE ASSEM.	1
		(Includes)	
● 13	5P5629	WIRE ---.559 m(22 in.)	
	6D9404	TERMINAL	1
14	4L3916	TERMINAL	1
15	3S2093	TIE	2
	9D6082	WIRE ASSEM.	1
		(Includes)	
● 16	5P5629	WIRE ---1.3 m(50.00 in.)	
17	2L8074	TERMINAL	2
18	5509	BOLT	2
	2G646	WIRE ASSEM.	1
		(Includes)	
● 19	5P5629	WIRE ---2.235 m(88 in.)	
20	4L3916	TERMINAL	1
21	4S1988	TERMINAL	1

● ORDER BY THE METRE ▲ ORDER BY THE CENTIMETRE 209838

1 NPR 2G-6045 1 LAMP GROUP

(Includes)

NPR 7D-8855 1 BULB

NPR 2G-6004 1 LENS

NPR 2S-6218 3 SCREW

2 NPR 4S-1988 1 TERMINAL

3 NPR 2G-0645 1 PLATE ASSEM.

4 NPR 7D-8866 3 SCREW

NPR 4B-2047 3 NUT

NPR 9F-8125 3 LOCKWASHER

5 NPR 2D-9535 2 GROMMET

6 NPR 6K-8179 1 CLIP

7 NPR H 5P-1203 TUBE 170.56 cm(67.15 in.)

8 NPR 4D-9164 3 CLIP

9 NPR 3B-4506 5 LOCKWASHER

10 NPR 0T-0102 3 BOLT

11 NPR 8D-2676 1 SWITCH (toggle)

12 NPR 1A-0621 1 GROMMET

13 NPR 2G-0656 1 WIRE ASSEM.

(Includes)

NPR J 5P-5629 WIRE .559 m(22 in.)

NPR 6D-9404 1 TERMINAL

14 NPR 4L-3916 1 TERMINAL

15 NPR 3S-2093 2 TIE

16 NPR 9D-6082 1 WIRE ASSEM.

(Includes)

NPR J 5P-5629 WIRE 1.3 m(50.00 in.)

17 NPR 2L-8074 2 TERMINAL

18 NPR 0S-0509 2 BOLT

19 NPR 2G-0646 1 WIRE ASSEM.

(Includes)

NPR J 5P-5629 WIRE 2.235 m(88 in.)

20 NPR 4L-3916 1 TERMINAL

21 NPR 4S-1988 1 TERMINAL

Key: H - ORDER BY THE CENTIMETRE J - ORDER BY THE METRE

2G6115 WARNING LIGHTING GROUP--Blue Lens--Type 3
FOR USE WITH CAB. Provides Rotating Warning Light. AN ATTACHMENT

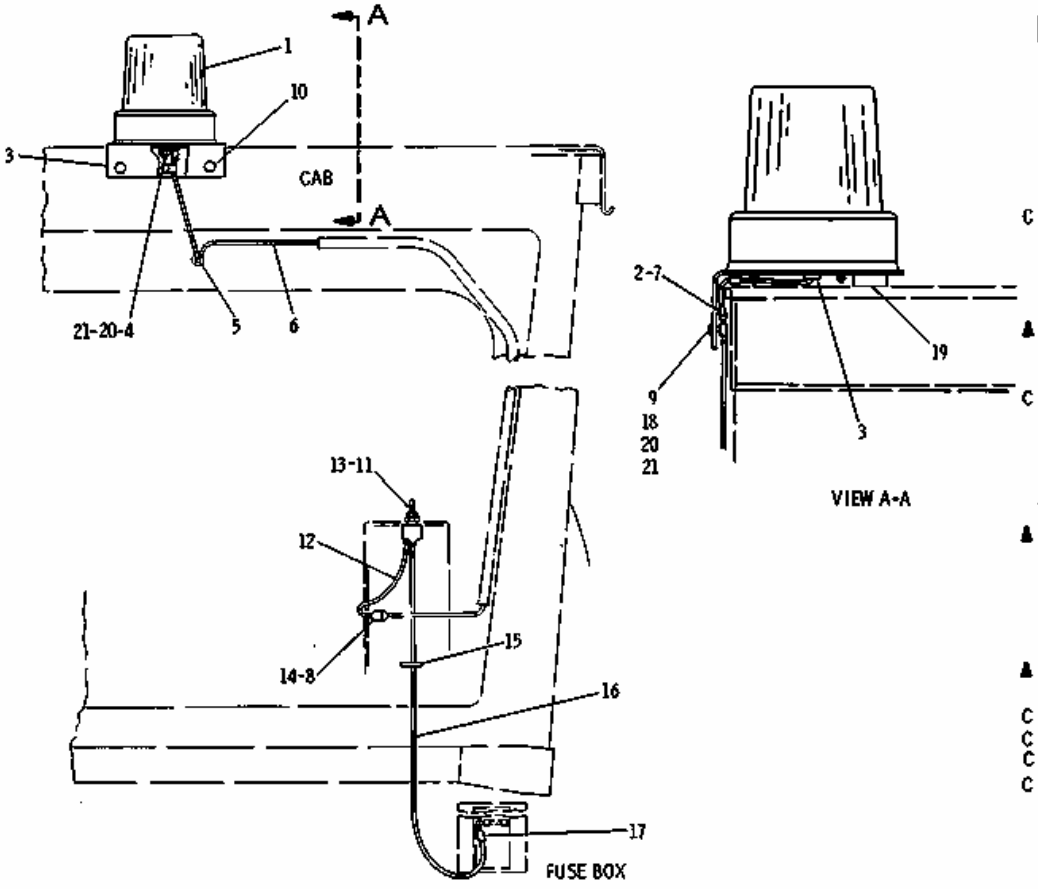

REF NO.	PART NUMBER	DESCRIPTION	QTY.
	2G7639	LAMP GROUP (Includes)	1
1	7D8855	BULB	1
	2G6004	LENS	1
	2S6218	SCREW	3
2	5P5610	TERMINAL	1
C 3	6G7166	PLATE	1
4	7D8866	SCREW	3
5	2D9535	GROMMET	2
	2G7637	WIRE ASSEM. (Includes)	1
6	5P5629	▲ WIRE---2.24 m(88.19 in.)	
7	6N9587	CONNECTOR---(female)	1
8	4S1988	TERMINAL	1
C 9	1V3113	CLIP	1
	S509	BOLT	2
10	3B4506	LOCKWASHER	2
11	8D2676	SWITCH---(warning light)	1
	2G656	WIRE ASSEM. (Includes)	1
12	5P5629	▲ WIRE---.559 m(22 in.)	
13	6D9404	TERMINAL	1
14	4L3916	TERMINAL	1
15	3S2093	TIE	2
	9D6082	WIRE ASSEM. (Includes)	1
16	5P5629	▲ WIRE---1.3 m(50.00 in.)	
17	2L8074	TERMINAL	2
C 18	89792	SCREW	2
C 19	2G7382	BUMPER	1
C 20	4B2047	NUT	5
C 21	9F8125	LOCKWASHER	5

▲ ORDER BY THE METER C INDICATES CHANGE 180452

1 NPR 2G-7639 1 LAMP GROUP

(Includes)

NPR 7D-8855 1 BULB

NPR 2G-6004 1 LENS

NPR 2S-6218 3 SCREW

2 NPR 5P-5610 1 TERMINAL

3 NPR C 6G-7166 1 PLATE

4 NPR 7D-8866 3 SCREW

5 NPR 2D-9535 2 GROMMET

6 NPR 2G-7637 1 WIRE ASSEM.

(Includes)

	NPR H	5P-5629		WIRE 2.24 m(88.19 in.)
7	NPR	6N-9587	1	CONNECTOR (female)
8	NPR	4S-1988	1	TERMINAL
9	NPR C	1V-3113	1	CLIP
10	NPR	0S-0509	2	BOLT
	NPR	3B-4506	2	LOCKWASHER
11	NPR	8D-2676	1	SWITCH (warning light)
12	NPR	2G-0656	1	WIRE ASSEM.
(Includes)				
	NPR H	5P-5629		WIRE .559 m(22 in.)
13	NPR	6D-9404	1	TERMINAL
14	NPR	4L-3916	1	TERMINAL
15	NPR	3S-2093	2	TIE
16	NPR	9D-6082	1	WIRE ASSEM.
(Includes)				
	NPR H	5P-5629		WIRE 1.3 m(50.00 in.)
17	NPR	2L-8074	2	TERMINAL
18	NPR C	008-9792	2	SCREW
19	NPR C	2G-7382	1	BUMPER
20	NPR C	4B-2047	5	NUT
21	NPR C	9F-8125	5	LOCKWASHER

Key:

C - INDICATES CHANGE
H - ORDER BY THE METER

2G6115 WARNING LIGHTING GROUP--Blue Lens--Type 2
FOR USE WITH CAB. Provides Rotating Warning Light. AN ATTACHMENT

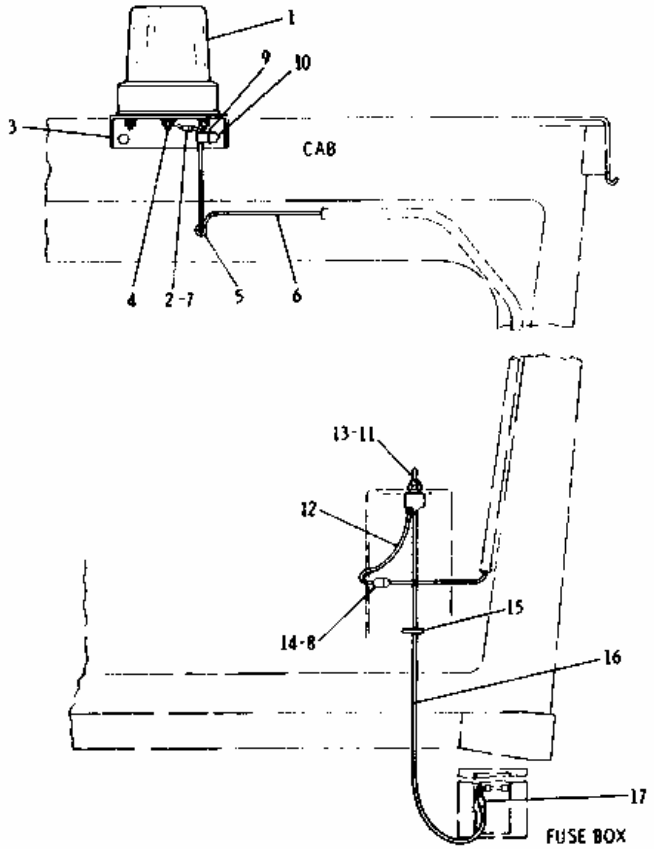

	REF. NO.	PART NUMBER	DESCRIPTION	QTY
C		2G7639	LAMP GROUP	1
			(Includes)	
	1	7D8855	BULB	1
		2G6004	LENS	1
		2S6218	SCREW	3
	2	5P5610	TERMINAL	1
	3	2G645	PLATE ASSEM.	1
		7D8866	SCREW	3
	4	4B2047	NUT	3
		9F8125	LOCKWASHER	3
	5	2D9535	GROMMET	2
C		2G7637	WIRE ASSEM.	1
	6		(Includes)	
▲		5P5629	WIRE--------2.24 m(88.19 in.)	
	7	6N9587	CONNECTOR-----(female)------	1
	8	4S1988	TERMINAL	1
	9	6K8179	CLIP	1
	10	S509	BOLT	2
		3B4506	LOCKWASHER	2
C	11	8D2676	SWITCH------(warning light)-----	1
		2G656	WIRE ASSEM.	1
	12		(Includes)	
▲		5P5629	WIRE---------.559 m(22 in.)	
	13	6D9404	TERMINAL	1
	14	4L3916	TERMINAL	1
	15	3S2093	TIE	2
		9D6082	WIRE ASSEM.	1
	16		(Includes)	
▲		5P5629	WIRE-------1.3 m(50.00 in.)	
	17	2L8074	TERMINAL	2

▲ ORDER BY THE METRE C INDICATES CHANGE 166541

1 NPR C 2G-7639 1 LAMP GROUP

(Includes)

NPR 7D-8855 1 BULB

NPR 2G-6004 1 LENS

NPR 2S-6218 3 SCREW

2 NPR 5P-5610 1 TERMINAL

3 NPR 2G-0645 1 PLATE ASSEM.

4 NPR 7D-8866 3 SCREW

NPR 4B-2047 3 NUT

NPR 9F-8125 3 LOCKWASHER

5 NPR 2D-9535 2 GROMMET

6 NPR C 2G-7637 1 WIRE ASSEM.

(Includes)

NPR D 5P-5629 WIRE 2.24 m(88.19 in.)

7 NPR 6N-9587 1 CONNECTOR (female)

8 NPR 4S-1988 1 TERMINAL

9 NPR 6K-8179 1 CLIP

10 NPR 0S-0509 2 BOLT

NPR 3B-4506 2 LOCKWASHER

11 NPR C 8D-2676 1 SWITCH (warning light)

12 NPR 2G-0656 1 WIRE ASSEM.

(Includes)

NPR D 5P-5629 WIRE .559 m(22 in.)

13 NPR 6D-9404 1 TERMINAL

14 NPR 4L-3916 1 TERMINAL

15 NPR 3S-2093 2 TIE

16 NPR 9D-6082 1 WIRE ASSEM.

(Includes)

NPR D 5P-5629 WIRE 1.3 m(50.00 in.)

17 NPR 2L-8074 2 TERMINAL

Key:

C - INDICATES CHANGE
D - ORDER BY THE METRE

2G6115 WARNING LIGHTING GROUP--Blue Lens--Type 1
FOR USE WITH CAB. Provides Rotating Warning Light. AN ATTACHMENT

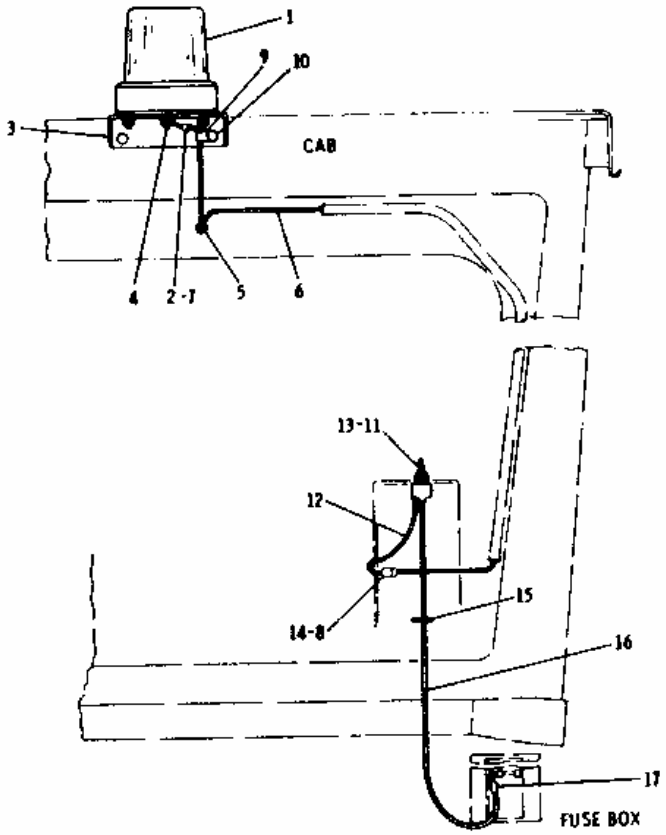

REF NO.	PART NUMBER	DESCRIPTION	QTY
	2G6045	LAMP GROUP	1
		(Includes)	
1	7D8855	BULB	1
	2G6004	LENS	1
	2S6218	SCREW	3
2	4S1988	TERMINAL	1
3	2G645	PLATE ASSEM.	1
	7D8866	SCREW	3
4	4B2047	NUT	3
	9F8125	LOCKWASHER	3
5	2D9535	GROMMET	2
	2G646	WIRE ASSEM.	1
6		(Includes)	
▲	5P5629	WIRE--------2.235 m(88 in.)	
7	4L3916	TERMINAL	1
8	4S1988	TERMINAL	1
9	6K8179	CLIP	1
	S509	BOLT	2
10	3B4506	LOCKWASHER	2
11	8D2676	SWITCH---------(toggle)	1
	2G656	WIRE ASSEM.	1
12		(Includes)	
▲	5P5629	WIRE--------.559 m(22 in.)	
13	6D9404	TERMINAL	1
14	4L3916	TERMINAL	1
15	3S2093	TIE	2
	9D6082	WIRE ASSEM.	1
16		(Includes)	
▲	5P5629	WIRE-------1.3 m(50.00 in.)	
17	2L8074	TERMINAL	2

209837

▲ ORDER BY THE METRE

1 NPR 2G-6045 1 LAMP GROUP

(Includes)

NPR 7D-8855 1 BULB

NPR 2G-6004 1 LENS

NPR 2S-6218 3 SCREW

2 NPR 4S-1988 1 TERMINAL

3 NPR 2G-0645 1 PLATE ASSEM.

4 NPR 7D-8866 3 SCREW

NPR 4B-2047 3 NUT

NPR 9F-8125 3 LOCKWASHER

5 NPR 2D-9535 2 GROMMET

6 NPR 2G-0646 1 WIRE ASSEM.

(Includes)

NPR H 5P-5629 WIRE 2.235 m(88 in.)

7 NPR 4L-3916 1 TERMINAL

8 NPR 4S-1988 1 TERMINAL

9 NPR 6K-8179 1 CLIP

10 NPR 0S-0509 2 BOLT

NPR 3B-4506 2 LOCKWASHER

11 NPR 8D-2676 1 SWITCH (toggle)

12 NPR 2G-0656 1 WIRE ASSEM.

(Includes)

NPR H 5P-5629 WIRE .559 m(22 in.)

13 NPR 6D-9404 1 TERMINAL

14 NPR 4L-3916 1 TERMINAL

15 NPR 3S-2093 2 TIE

16 NPR 9D-6082 1 WIRE ASSEM.

(Includes)

NPR H 5P-5629 WIRE 1.3 m(50.00 in.)

17 NPR 2L-8074 2 TERMINAL

Key:

H - ORDER BY THE METRE

2G1010 LIGHTING GROUP--24 Volt--Type 2
FOR USE WITH 9D5195 ROLL-OVER PROTECTIVE SYSTEM LISTED ON PAGE 280
Provides rotating warning light. AN ATTACHMENT

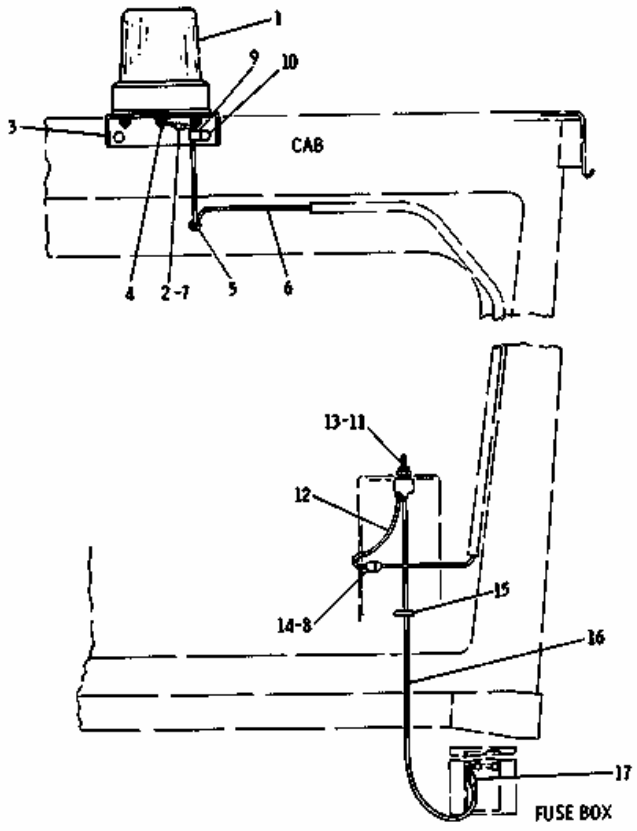

REF. NO.	PART NUMBER	DESCRIPTION	QTY
C	2G7638	LAMP GROUP	1
		(Includes)	
1	7D8855	BULB	1
	7D8783	LENS	1
	2S6218	SCREW	3
2	5P5610	CONNECTOR	1
3	2G645	PLATE	1
	7D8866	SCREW	3
4	4B2047	NUT	3
	9F8125	LOCKWASHER	3
5	2D9535	GROMMET	2
C	2G7637	WIRE ASSEM.	1
6		(Includes)	
▲	5P5629	WIRE --------2.24 m(88.18 in.)	
7	6N9587	TERMINAL	1
8	4S1988	TERMINAL	1
9	6K8179	CLIP	1
10	S509	BOLT	2
	3B4506	LOCKWASHER	2
11	8D2676	SWITCH---------(toggle)	1
12	2G656	WIRE ASSEM.	1
		(Includes)	
C▲	5P5629	WIRE----------.55 m(22 in.)	
13	6D9404	TERMINAL	1
14	4L3916	TERMINAL	1
15	3S2093	TIE	2
16	9D6082	WIRE ASSEM.	1
		(Includes)	
C▲	5P5629	WIRE----------1.30 m(50 in.)	
17	2L8074	TERMINAL	2

C INDICATES CHANGE ▲ ORDER BY THE METRE 166539

1 NPR C 2G-7638 1 LAMP GROUP

(Includes)

NPR 7D-8855 1 BULB

NPR 7D-8783 1 LENS

NPR 2S-6218 3 SCREW

2 NPR 5P-5610 1 CONNECTOR

3 NPR 2G-0645 1 PLATE

4 NPR 7D-8866 3 SCREW

NPR 4B-2047 3 NUT

NPR 9F-8125 3 LOCKWASHER

5 NPR 2D-9535 2 GROMMET

6 NPR C 2G-7637 1 WIRE ASSEM.

(Includes)

NPR H 5P-5629 WIRE 2.24 m(88.18 in.)

7 NPR 6N-9587 1 TERMINAL

8 NPR 4S-1988 1 TERMINAL

9 NPR 6K-8179 1 CLIP

10 NPR 0S-0509 2 BOLT

NPR 3B-4506 2 LOCKWASHER

11 NPR 8D-2676 1 SWITCH (toggle)

12 NPR 2G-0656 1 WIRE ASSEM.

(Includes)

NPR CH 5P-5629 WIRE .55 m(22 in.)

13 NPR 6D-9404 1 TERMINAL

14 NPR 4L-3916 1 TERMINAL

15 NPR 3S-2093 2 TIE

16 NPR 9D-6082 1 WIRE ASSEM.

(Includes)

NPR CH 5P-5629 WIRE 1.30 m(50 in.)

17 NPR 2L-8074 2 TERMINAL

Key:

C - INDICATES CHANGE
H - ORDER BY THE METRE

2G1010 LIGHTING GROUP--24 Volt--Type 1
FOR USE WITH 9D5195 ROLL-OVER PROTECTIVE SYSTEM LISTED ON PAGE 280
Provides rotating warning light. AN ATTACHMENT

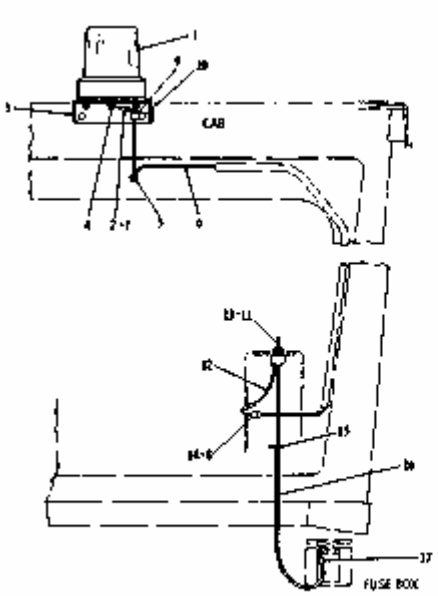

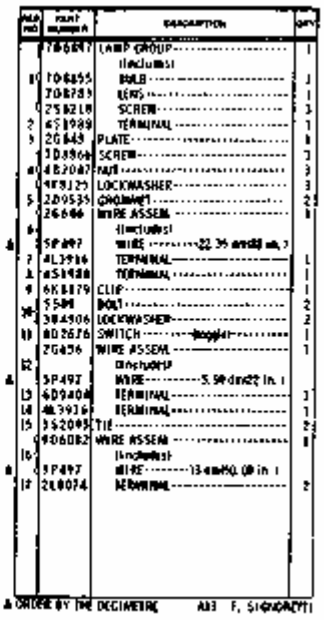

1 NPR 7D-6897 1 LAMP GROUP

(Includes)

NPR 7D-8855 1 BULB

NPR 7D-8783 1 LENS

NPR 2S-6218 3 SCREW

2 NPR 4S-1988 1 TERMINAL

3 NPR 2G-0645 1 PLATE

4 NPR 7D-8866 3 SCREW

NPR 4B-2047 3 NUT

NPR 9F-8125 3 LOCKWASHER

5 NPR 2D-9535 2 GROMMET

6 NPR 2G-0646 1 WIRE ASSEM.

(Includes)

NPR H 5P-0497 WIRE 22.35dm(88 in.)

7 NPR 4L-3916 1 TERMINAL

8 NPR 4S-1988 1 TERMINAL

9 NPR 6K-8179 1 CLIP

10 NPR 0S-0509 2 BOLT

NPR 3B-4506 2 LOCKWASHER

11 NPR 8D-2676 1 SWITCH (toggle)

12 NPR 2G-0656 1 WIRE ASSEM.

(Includes)

NPR H 5P-0497 WIRE 5.59dm(22 in.)

13 NPR 6D-9404 1 TERMINAL

14 NPR 4L-3916 1 TERMINAL

15 NPR 3S-2093 2 TIE

16 NPR 9D-6082 1 WIRE ASSEM.

(Includes)

NPR H 5P-0497 WIRE 13 dm(50.00 in.)

17 NPR 2L-8074 2 TERMINAL

Key:

H - ORDER BY THE DECIMETRE

2G995 LIGHTING GROUP--24 Volt--Type 3-FOR USE WITH 9D5185 ROLL-OVER PROTECTIVE SYSTEM LISTED ON PAGE 280
Provides rotating warning light. AN ATTACHMENT

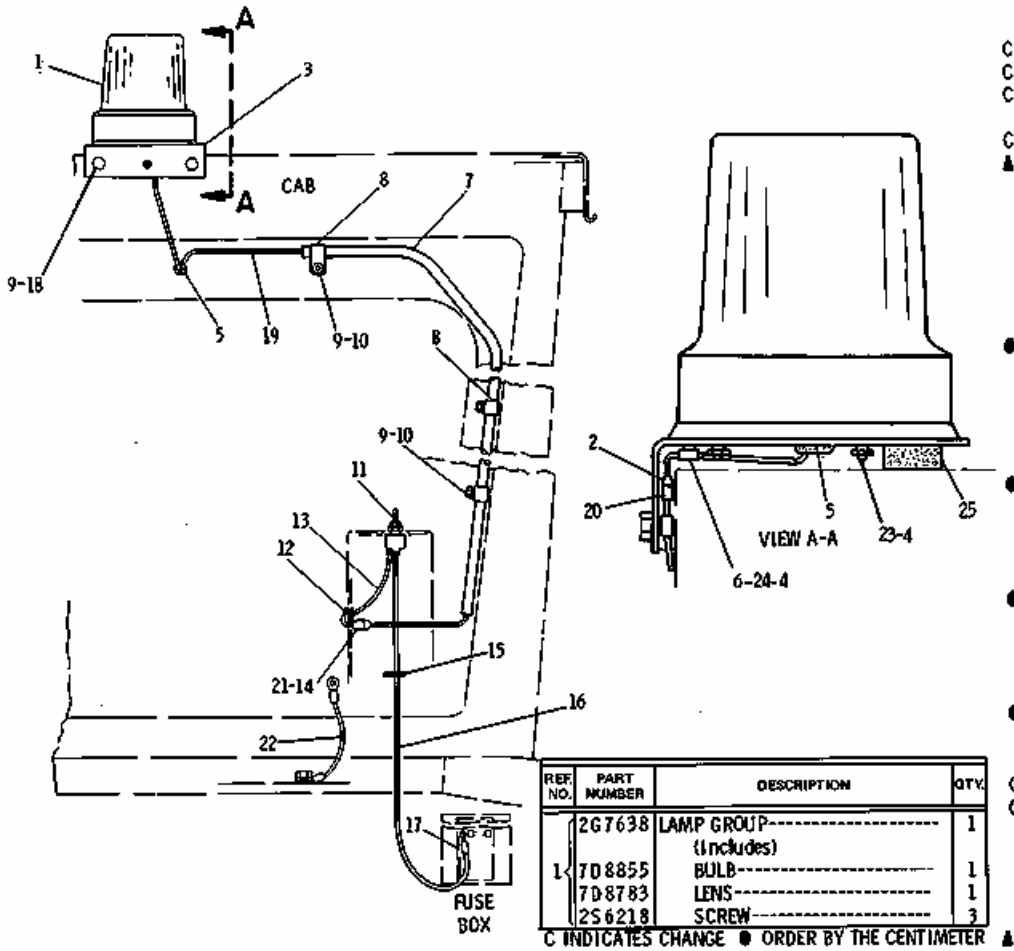

REF. NO.	PART NUMBER	DESCRIPTION	QTY.
	2G7638	LAMP GROUP	1
		(Includes)	
1	7D8855	BULB	1
	7D8783	LENS	1
	2S6218	SCREW	3
2	5P5610	CONNECTOR	1
C 3	6G7166	PLATE ASSEM.	1
C 4	4B2047	NUT	5
C	9F8125	LOCKWASHER	5
5	2D9535	GROMMET	2
C 6	1V3113	CLIP	2
▲ 7	5P1203	TUBE---------170.56 cm(67.15 in.)	
8	4D9164	CLIP	3
9	3B4506	LOCKWASHER	5
10	T102	BOLT	3
11	8D2676	SWITCH	1
12	1A621	GROMMET	1
	2G656	WIRE ASSEM.	1
		(Includes)	
● 13	5P5629	WIRE----------.55 m(22 in.)	
	6D9404	TERMINAL	1
14	4L3916	TERMINAL	1
15	3S2093	TIE	2
	9D6082	WIRE ASSEM.	1
		(Includes)	
● 16	5P5629	WIRE----------1.3 m(50 in.)	
17	2L8074	TERMINAL	2
18	S509	BOLT	2
	2G7637	WIRE ASSEM.	1
		(Includes)	
● 19	5P5629	WIRE---------2.24 m(88.18 in.)	
20	6N9587	CONNECTOR	1
21	4S1988	TERMINAL	1
	9M9812	WIRE ASSEM. ------(ground)------	1
		(Includes)	
● 22	5P6641	WIRE------.3 m(12 in.)	
	2L8052	TERMINAL	2
23	7D8866	SCREW	3
C 24	89792	SCREW	2
C 25	2G7382	BUMPER	1

C INDICATES CHANGE ● ORDER BY THE CENTIMETER ▲ ORDER BY THE METER 181204

1 NPR 2G-7638 1 LAMP GROUP

(Includes)

NPR 7D-8855 1 BULB

NPR 7D-8783 1 LENS

NPR 2S-6218 3 SCREW

2 NPR 5P-5610 1 CONNECTOR

3 NPR C 6G-7166 1 PLATE ASSEM.

4 NPR C 4B-2047 5 NUT

NPR C 9F-8125 5 LOCKWASHER

5 NPR 2D-9535 2 GROMMET

6 NPR C 1V-3113 2 CLIP

7 NPR H 5P-1203 TUBE 170.56 cm(67.15 in.)

8 NPR 4D-9164 3 CLIP

9 NPR 3B-4506 5 LOCKWASHER

10 NPR 0T-0102 3 BOLT

11 NPR 8D-2676 1 SWITCH

12 NPR 1A-0621 1 GROMMET

13 NPR 2G-0656 1 WIRE ASSEM.

(Includes)

NPR J 5P-5629 WIRE .55 m(22 in.)

NPR 6D-9404 1 TERMINAL

14 NPR 4L-3916 1 TERMINAL

15 NPR 3S-2093 2 TIE

16 NPR 9D-6082 1 WIRE ASSEM.

(Includes)

NPR J 5P-5629 WIRE 1.3 m(50 in.)

17 NPR 2L-8074 2 TERMINAL

18 NPR 0S-0509 2 BOLT

19 NPR 2G-7637 1 WIRE ASSEM.

(Includes)

NPR J 5P-5629 WIRE 2.24 m(88.18 in.)

20 NPR 6N-9587 1 CONNECTOR

21 NPR 4S-1988 1 TERMINAL

22 NPR 9M-9812 1 WIRE ASSEM. (ground)

(Includes)

NPR J 5P-6641 WIRE .3 m(12 in.)

NPR 2L-8052 2 TERMINAL

23 NPR 7D-8866 3 SCREW

24 NPR C 008-9792 2 SCREW

25 NPR C 2G-7382 1 BUMPER

Key: C - INDICATES CHANGE J - ORDER BY THE CENTIMETER H - ORDER BY THE METER

9D5720 SIGNAL LIGHTING GROUP--With Cab--24 Volt--Type 1
7D8089 Lamp parts are shown on Page 105. AN ATTACHMENT

REF. NO.	PART NUMBER	DESCRIPTION	QTY
	9D2825	LENS	2
1	8M6175	BULB	2
	9D3127	BASE	2
2	8D6947	SWITCH--(turn signal)	1
3	5H9743	GROMMET	1
4	9D6698	BRACKET--(R. H.)	1
	9D6699	BRACKET--(L. H.)	1
5	5S7379	BOLT	6
	2K4973	NUT	6
6	7D8089	LAMP GROUP--(signal) (Separate Illustration)	2
7	1B4430	NUT	2
	3B4508	LOCKWASHER	2
	9D5812	HARNESS ASSEM. (Includes)	1
8 ▲	5P603	WIRE--65.54 dm(258 in.)	
	4L3916	TERMINAL--(signal lamps)	2
9	4S1988	TERMINAL	2
10	4B2047	NUT	1
	9F8125	LOCKWASHER	1
	8D8995	HARNESS ASSEM. (Includes)	1
11 ●	4S8787	WIRE--347 in.	
12	4L3916	TERMINAL	10
13	4S1988	TERMINAL	2
14	3S2093	TIE	4
	9D2790	WIRE ASSEM. (Includes)	1
15 ●	4S8787	WIRE--15in.	
16	7F9224	TERMINAL	1
17	9D2824	WIRE ASSEM.	1
18	9D2823	WIRE ASSEM.	1
19	5S7349	BOLT	2
	1L4789	LOCKWASHER	2
	4B1237	SCREW	2
20	4B2049	NUT	2
	7H2079	LOCKWASHER	2
21	8D6946	FLASHER	1
22	9D2792	BRACKET	1

▲ ORDER BY THE DECIMETRE
● ORDER BY THE FOOT

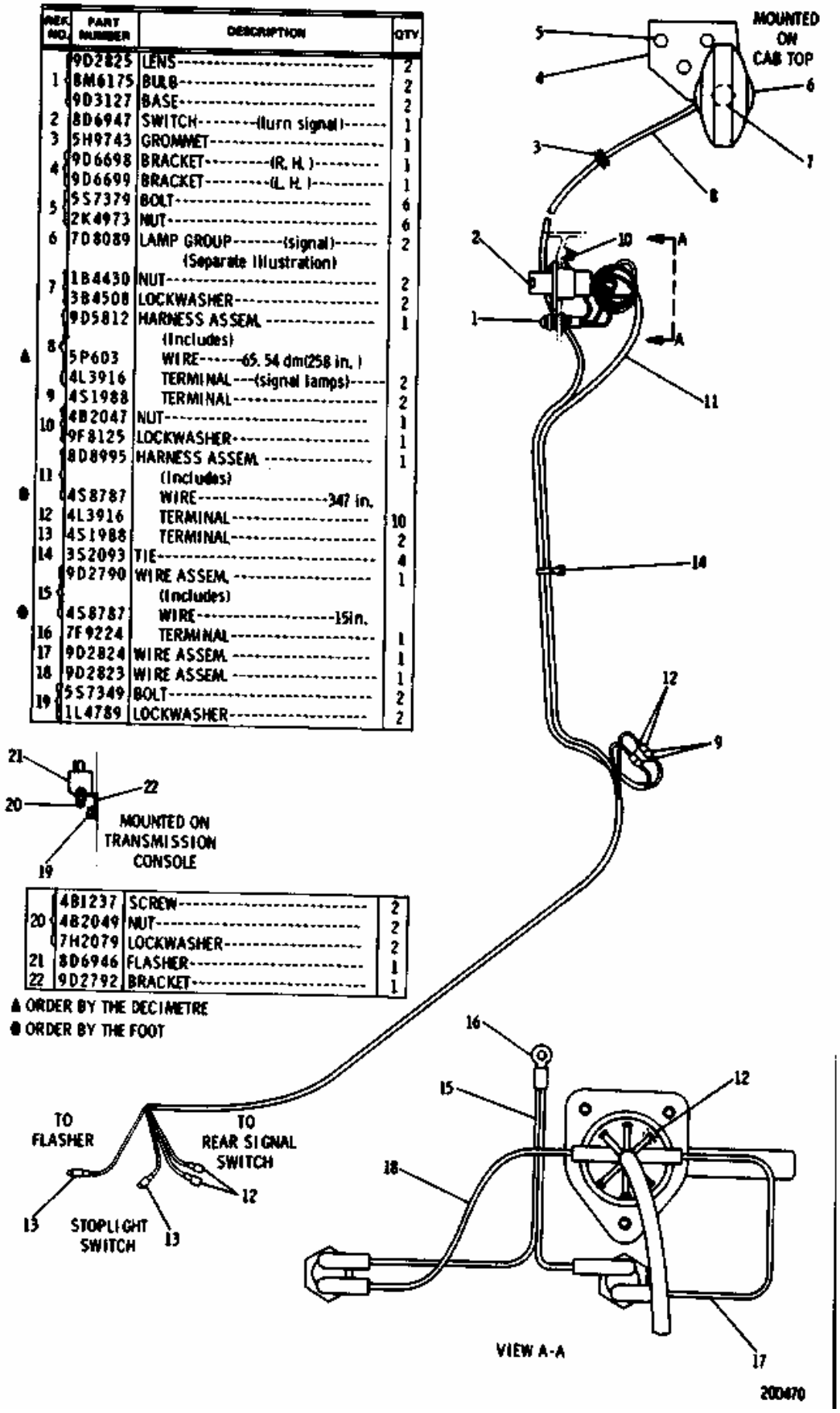

1 NPR 9D-2825 2 LENS

NPR 8M-6175 2 BULB

NPR 9D-3127 2 BASE

2 NPR 8D-6947 1 SWITCH (turn signal)

3 NPR 5H-9743 1 GROMMET

4 NPR 9D-6698 1 BRACKET (R.H.)

NPR 9D-6699 1 BRACKET (L.H.)

5 NPR 5S-7379 6 BOLT

NPR 2K-4973 6 NUT

6 NPR Y 7D-8089 2 LAMP GROUP (signal)

(Separate Illustration)

7 NPR 1B-4430 2 NUT

NPR 3B-4508 2 LOCKWASHER

8 NPR 9D-5812 1 HARNESS ASSEM.

(Includes)

H 5P-0603 WIRE 65.54 dm(258 in.)

NPR 4L-3916 2 TERMINAL (signal lamps)

9 NPR 4S-1988 2 TERMINAL

10 NPR 4B-2047 1 NUT

NPR 9F-8125 1 LOCKWASHER

11 NPR 8D-8995 1 HARNESS ASSEM.

(Includes)

NPR J 4S-8787 WIRE 347 in.

12 NPR 4L-3916 10 TERMINAL

13 NPR 4S-1988 2 TERMINAL

14 NPR 3S-2093 4 TIE

15 NPR 9D-2790 1 WIRE ASSEM.

(Includes)

NPR J 4S-8787 WIRE 15in.

16 NPR 7F-9224 1 TERMINAL

17 NPR 9D-2824 1 WIRE ASSEM.

18 NPR 9D-2823 1 WIRE ASSEM.

19 NPR 5S-7349 2 BOLT

NPR 1L-4789 2 LOCKWASHER

20 NPR 4B-1237 2 SCREW

NPR 4B-2049 2 NUT

NPR 7H-2079 2 LOCKWASHER

21 NPR 8D-6946 1 FLASHER

22 NPR 9D-2792 1 BRACKET

Key:

H - ORDER BY THE DECIMETRE
Y - SEPARATE ILLUSTRATION
J - ORDER BY THE FOOT

9D5720 SIGNAL LIGHTING GROUP--With Cab--24 Volt--Type 2
7D8089 Lamp parts are shown on Page 105. AN ATTACHMENT

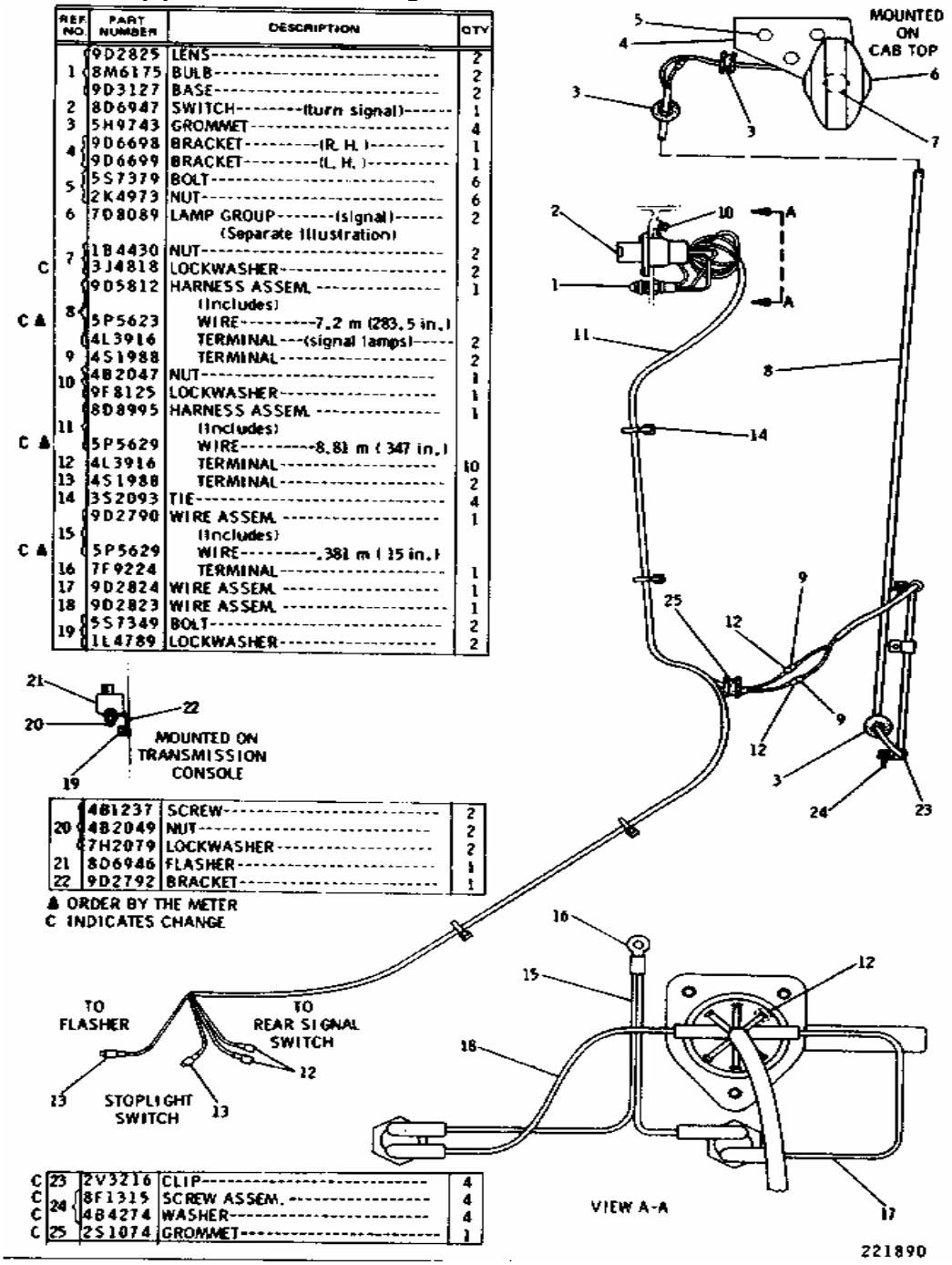

REF NO.	PART NUMBER	DESCRIPTION	QTY
	9D2825	LENS	2
1	8M6175	BULB	2
	9D3127	BASE	2
2	8D6947	SWITCH--------(turn signal)------	1
3	5H9743	GROMMET	4
4	9D6698	BRACKET---------(R. H.)---------	1
	9D6699	BRACKET---------(L. H.)---------	1
5	5S7379	BOLT	6
	2K4973	NUT	6
6	7D8089	LAMP GROUP--------(signal)------ (Separate Illustration)	2
7	1B4430	NUT	2
C	3J4818	LOCKWASHER	2
	9D5812	HARNESS ASSEM. (Includes)	1
C ▲ 8	5P5623	WIRE---------7.2 m (283.5 in.)	
	4L3916	TERMINAL---(signal lamps)-----	2
9	4S1988	TERMINAL	2
10	4B2047	NUT	1
	9F8125	LOCKWASHER	1
	8D8995	HARNESS ASSEM. (Includes)	1
11			
C ▲	5P5629	WIRE---------8.81 m (347 in.)	
12	4L3916	TERMINAL	10
13	4S1988	TERMINAL	2
14	3S2093	TIE	4
	9D2790	WIRE ASSEM. (Includes)	1
15			
C ▲	5P5629	WIRE---------.381 m (15 in.)	
16	7F9224	TERMINAL	1
17	9D2824	WIRE ASSEM.	1
18	9D2823	WIRE ASSEM.	1
19	5S7349	BOLT	2
	1L4789	LOCKWASHER	2
	4B1237	SCREW	2
20	4B2049	NUT	2
	7H2079	LOCKWASHER	2
21	8D6946	FLASHER	1
22	9D2792	BRACKET	1
C 23	2V3216	CLIP	4
C 24	8F1315	SCREW ASSEM.	4
C	4B4274	WASHER	4
C 25	2S1074	GROMMET	1

▲ ORDER BY THE METER
C INDICATES CHANGE

1 NPR 9D-2825 2 LENS

NPR 8M-6175 2 BULB

NPR 9D-3127 2 BASE

2 NPR 8D-6947 1 SWITCH (turn signal)

3 NPR 5H-9743 4 GROMMET

4 NPR 9D-6698 1 BRACKET (R. H.)

NPR 9D-6699 1 BRACKET (L. H.)

5 NPR 5S-7379 6 BOLT

NPR 2K-4973 6 NUT

6 NPR Y 7D-8089 2 LAMP GROUP (signal)

(Separate Illustration)

7 NPR 1B-4430 2 NUT

NPR C 3J-4818 2 LOCKWASHER

8 NPR 9D-5812 1 HARNESS ASSEM.

(Includes)

NPR CH 5P-5623 WIRE 7.2 m(283.5 in.)

NPR 4L-3916 2 TERMINAL (signal lamps)

9 NPR 4S-1988 2 TERMINAL

10 NPR 4B-2047 1 NUT

NPR 9F-8125 1 LOCKWASHER

11 NPR 8D-8995 1 HARNESS ASSEM.

(Includes)

NPR CH 5P-5629 WIRE 8.81 m (347 in.)

12 NPR 4L-3916 10 TERMINAL

13 NPR 4S-1988 2 TERMINAL

14 NPR 3S-2093 4 TIE

15 NPR 9D-2790 1 WIRE ASSEM.

(Includes)

NPR CH 5P-5629 WIRE .381 m (15 in.)

16 NPR 7F-9224 1 TERMINAL

17 NPR 9D-2824 1 WIRE ASSEM.

18 NPR 9D-2823 1 WIRE ASSEM.

19 NPR 5S-7349 2 BOLT

NPR 1L-4789 2 LOCKWASHER

20 NPR 4B-1237 2 SCREW

NPR 4B-2049 2 NUT

NPR 7H-2079 2 LOCKWASHER

21 NPR 8D-6946 1 FLASHER

22 NPR 9D-2792 1 BRACKET

23 NPR C 2V-3216 4 CLIP

24 NPR C 8F-1315 4 SCREW ASSEM.

NPR C 4B-4274 4 WASHER

25 NPR C 2S-1074 1 GROMMET

Key: H - ORDER BY THE METER Y - SEPARATE ILLUSTRATION C - INDICATES CHANGE

8D1480 CAB LIGHTING GROUP--Type 1--1M6052 Lamp parts are shown on Page 111

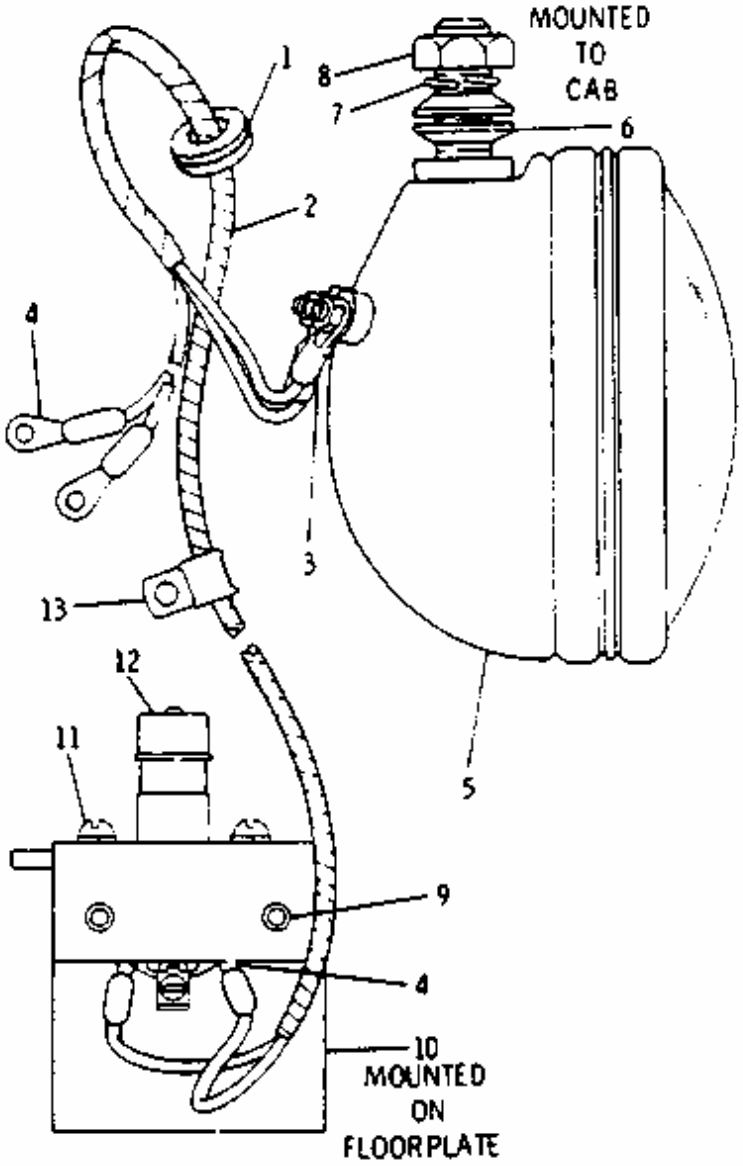

REF. NO.	PART NUMBER	DESCRIPTION	QTY
C 1	5H9743	GROMMET	4
2	8D2031	HARNESS ASSEM.	1
▲ 2	4S8727	WIRE (16 gauge)	
3	2D8757	TERMINAL	2
4	2D8781	TERMINAL	4
5	1M6052	LAMP ASSEM. (Separate Illustration)	2
6	2B8352	WASHER	4
7	5D3184	LOCKWASHER	2
8	5D3183	NUT	2
9	0S1617	BOLT	2
	3B4505	LOCKWASHER	2
10	9D1396	BRACKET	1
11	4B1320	SCREW	2
	3B4504	LOCKWASHER	2
12	2H1855	SWITCH (dimmer)	1
13	4D7794	CLIP	4

▲ ORDER BY THE FOOT C INDICATES CHANGE 152292

1 NPR C 5H-9743 4 GROMMET
2 NPR 8D-2031 1 HARNESS ASSEM.
NPR H 4S-8727 WIRE (16 gauge)
3 NPR 2D-8757 2 TERMINAL
4 NPR 2D-8781 4 TERMINAL
5 NPR Y 1M-6052 2 LAMP ASSEM.
(Separate Illustration)
6 NPR 2B-8352 4 WASHER
7 NPR 5D-3184 2 LOCKWASHER
8 NPR 5D-3183 2 NUT
9 NPR 0S-1617 2 BOLT
NPR 3B-4505 2 LOCKWASHER
10 NPR 9D-1396 1 BRACKET
11 NPR 4B-1320 2 SCREW
NPR 3B-4504 2 LOCKWASHER
12 NPR 2H-1855 1 SWITCH (dimmer)
13 NPR 4D-7794 4 CLIP

Key: H - ORDER BY THE FOOT Y - SEPARATE ILLUSTRATION C - INDICATES CHANGE

8D1480 CAB LIGHTING GROUP--Type 2 --4N9303 Lamp parts are shown on Page 106B

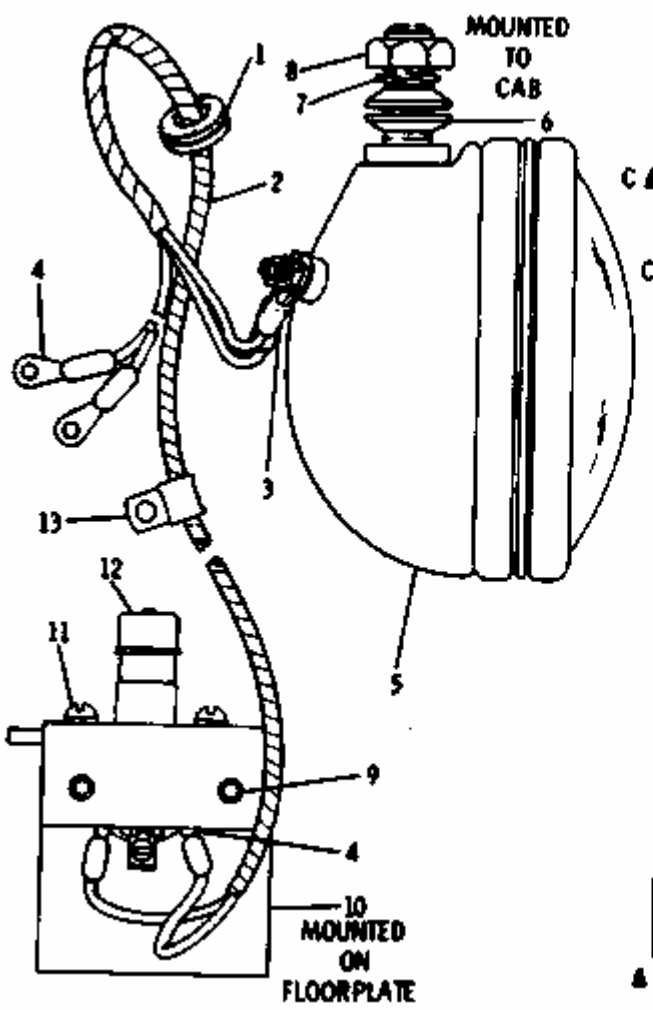

REF. NO.	PART NUMBER	DESCRIPTION	QTY
1	5H9743	GROMMET	4
2	8D2031	HARNESS ASSEM.	1
C ▲	5P5629	WIRE (16 gauge)	
3	2D8757	TERMINAL	2
4	2D8781	TERMINAL	4
C 5	4N9303	LAMP GROUP (Separate Illustration)	2
6	2B8352	WASHER	4
7	5D3184	LOCKWASHER	2
8	5D3183	NUT	2
9	0S1617	BOLT	2
	3B4505	LOCKWASHER	2
10	9D1396	BRACKET	1
11	4B1320	SCREW	2
	3B4504	LOCKWASHER	2
12	2H1855	SWITCH (dimmer)	1
13	4D7794	CLIP	4

▲ ORDER BY THE METRE C INDICATES CHANGE 158881

1 NPR 5H-9743 4 GROMMET
2 NPR 8D-2031 1 HARNESS ASSEM.
NPR CH 5P-5629 WIRE (16 gauge)
3 NPR 2D-8757 2 TERMINAL
4 NPR 2D-8781 4 TERMINAL
5 NPR YC 4N-9303 2 LAMP GROUP
(Separate Illustration)
6 NPR 2B-8352 4 WASHER
7 NPR 5D-3184 2 LOCKWASHER
8 NPR 5D-3183 2 NUT
9 NPR 0S-1617 2 BOLT
NPR 3B-4505 2 LOCKWASHER
10 NPR 9D-1396 1 BRACKET
11 NPR 4B-1320 2 SCREW
NPR 3B-4504 2 LOCKWASHER
12 NPR 2H-1855 1 SWITCH (dimmer)
13 NPR 4D-7794 4 CLIP

Key: H - ORDER BY THE METRE Y - SEPARATE ILLUSTRATION C - INDICATES CHANGE

4N9303 HEAD LAMP GROUP--Part of 8D1480 Cab Lighting Group shown on Page 106A & 106B

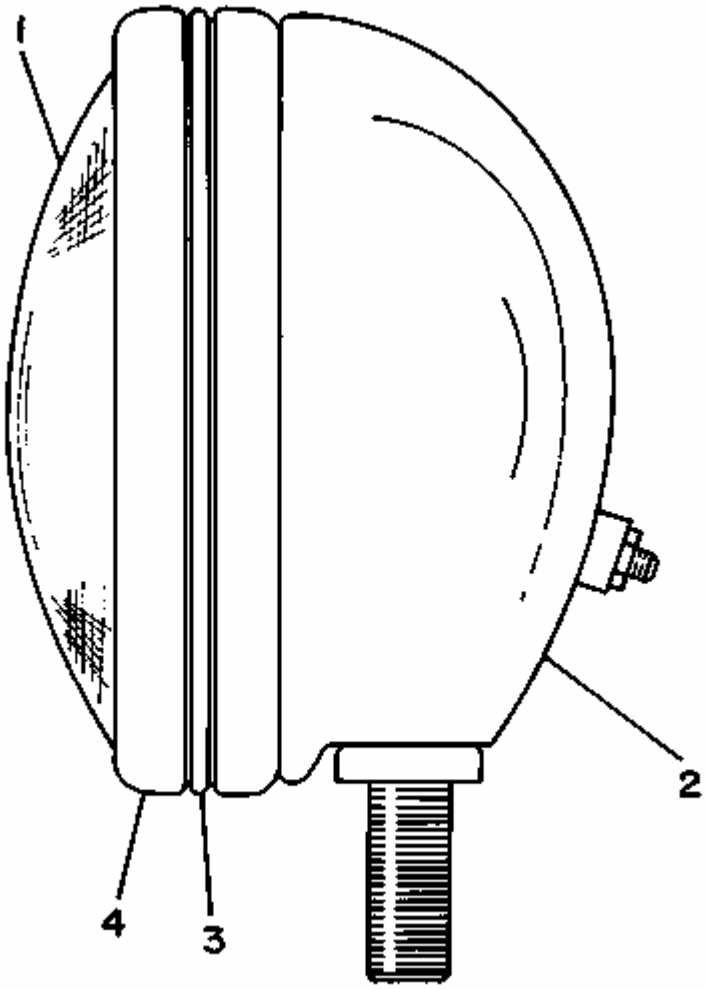

1	NPR	1M-5899	1	LAMP-SEALED UNIT
2	NPR	2P-2540	1	BODY AS-LAMP
3	NPR	2M-5282	1	RING-MOUNTING
4	NPR	2M-5284	2	MOLDING AS
	NPR	5M-6668	2	SCREW-MACHINE

2G1170 SIGNAL LIGHTING GROUP--Light Bar--Type 1
FOR USE WITH 2G1040 LIGHTING GROUP SHOWN ON PAGE 108
7D8089 Lamp parts are shown on Page 105. AN ATTACHMENT

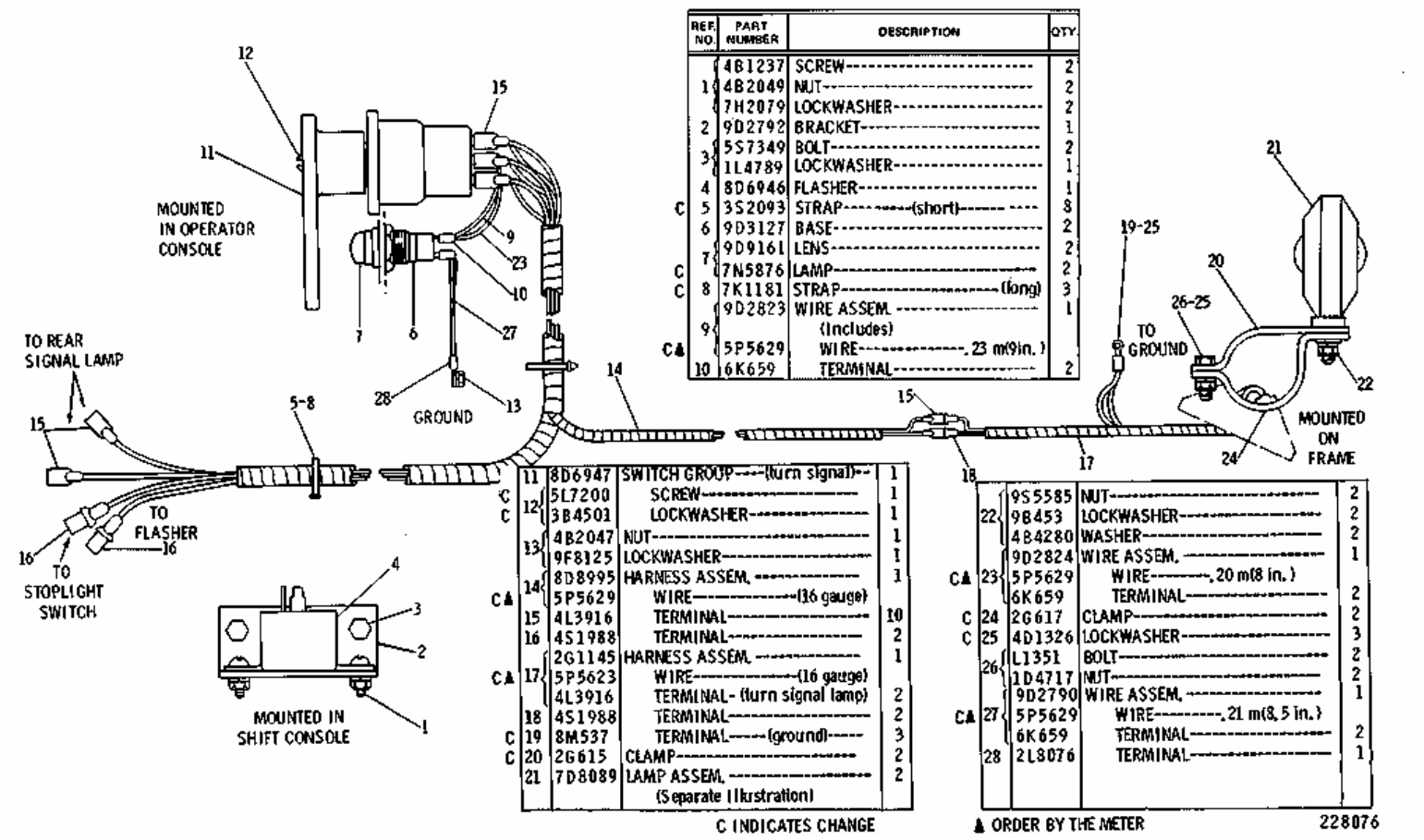

REF. NO.	PART NUMBER	DESCRIPTION	QTY.
	4B1237	SCREW	2
1	4B2049	NUT	2
	7H2079	LOCKWASHER	2
2	9D2792	BRACKET	1
3	5S7349	BOLT	2
	1L4789	LOCKWASHER	1
4	8D6946	FLASHER	1
C 5	3S2093	STRAP (short)	8
6	9D3127	BASE	2
7	9D9161	LENS	2
C	7N5876	LAMP	2
C 8	7K1181	STRAP (long)	3
	9D2823	WIRE ASSEM. (Includes)	1
9 CA	5P5629	WIRE, .23 m(9 in.)	
10	6K659	TERMINAL	2
11	8D6947	SWITCH GROUP (turn signal)	1
C	5L7200	SCREW	1
12 C	3B4501	LOCKWASHER	1
13	4B2047	NUT	1
	9F8125	LOCKWASHER	1
	8D8995	HARNESS ASSEM.	1
14 CA	5P5629	WIRE (16 gauge)	
15	4L3916	TERMINAL	10
16	4S1988	TERMINAL	2
	2G1145	HARNESS ASSEM.	1
17 CA	5P5623	WIRE (16 gauge)	
	4L3916	TERMINAL- (turn signal lamp)	2
18	4S1988	TERMINAL	2
C 19	8M537	TERMINAL (ground)	3
C 20	2G615	CLAMP	2
21	7D8089	LAMP ASSEM. (Separate Illustration)	2
	9S5585	NUT	2
22	9B453	LOCKWASHER	2
	4B4280	WASHER	2
	9D2824	WIRE ASSEM.	1
CA 23	5P5629	WIRE, .20 m(8 in.)	
	6K659	TERMINAL	2
C 24	2G617	CLAMP	2
C 25	4D1326	LOCKWASHER	3
	L1351	BOLT	2
26	1D4717	NUT	2
	9D2790	WIRE ASSEM.	1
CA 27	5P5629	WIRE, .21 m(8.5 in.)	
	6K659	TERMINAL	2
28	2L8076	TERMINAL	1

C INDICATES CHANGE ▲ ORDER BY THE METER 228076

1 NPR 4B-1237 2 SCREW

NPR 4B-2049 2 NUT

NPR 7H-2079 2 LOCKWASHER

2 NPR 9D-2792 1 BRACKET

3 NPR 5S-7349 2 BOLT

NPR 1L-4789 1 LOCKWASHER

4 NPR 8D-6946 1 FLASHER

5 NPR C 3S-2093 8 STRAP (short)

6 NPR 9D-3127 2 BASE

7 NPR 9D-9161 2 LENS

NPR C 7N-5876 2 LAMP

8 NPR C 7K-1181 3 STRAP (long)

9 NPR 9D-2823 1 WIRE ASSEM.

(Includes)

NPR CH 5P-5629 WIRE .23 m(9in.)

10 NPR 6K-0659 2 TERMINAL

11 NPR 8D-6947 1 SWITCH GROUP (turn signal)

12 NPR C 5L-7200 1 SCREW

NPR C 3B-4501 1 LOCKWASHER

13 NPR 4B-2047 1 NUT

NPR 9F-8125 1 LOCKWASHER

14 NPR 8D-8995 1 HARNESS ASSEM.

NPR CH 5P-5629 WIRE (16 gauge)

15 NPR 4L-3916 10 TERMINAL

16 NPR 4S-1988 2 TERMINAL

17 NPR 2G-1145 1 HARNESS ASSEM.

NPR CH 5P-5623 WIRE (16 gauge)

NPR 4L-3916 2 TERMINAL (turn signal lamp)

18 NPR 4S-1988 2 TERMINAL

19 NPR C 8M-0537 3 TERMINAL (ground)

20 NPR C 2G-0615 2 CLAMP

21 NPR Y 7D-8089 2 LAMP ASSEM.

(Separate Illustration)

22 NPR 9S-5585 2 NUT

NPR 9B-0453 2 LOCKWASHER

NPR 4B-4280 2 WASHER

23 NPR 9D-2824 1 WIRE ASSEM.

NPR CH 5P-5629 WIRE .20 m(8 in.)

NPR 6K-0659 2 TERMINAL

24 NPR C 2G-0617 2 CLAMP

25 NPR C 4D-1326 3 LOCKWASHER

26 NPR 0L-1351 2 BOLT

NPR 1D-4717 2 NUT

27 NPR 9D-2790 1 WIRE ASSEM.

NPR CH 5P-5629 WIRE .21 m(8.5 in.)

NPR 6K-0659 2 TERMINAL

28 NPR 2L-8076 1 TERMINAL

Key: C - INDICATES CHANGE Y - SEPARATE ILLUSTRATION H - ORDER BY THE METER

2G1170 SIGNAL LIGHTING GROUP--Light Bar--Type 2
FOR USE WITH 2G1040 LIGHTING GROUP SHOWN ON PAGE 108
7D8089 Lamp parts shown on Page 105. AN ATTACHMENT

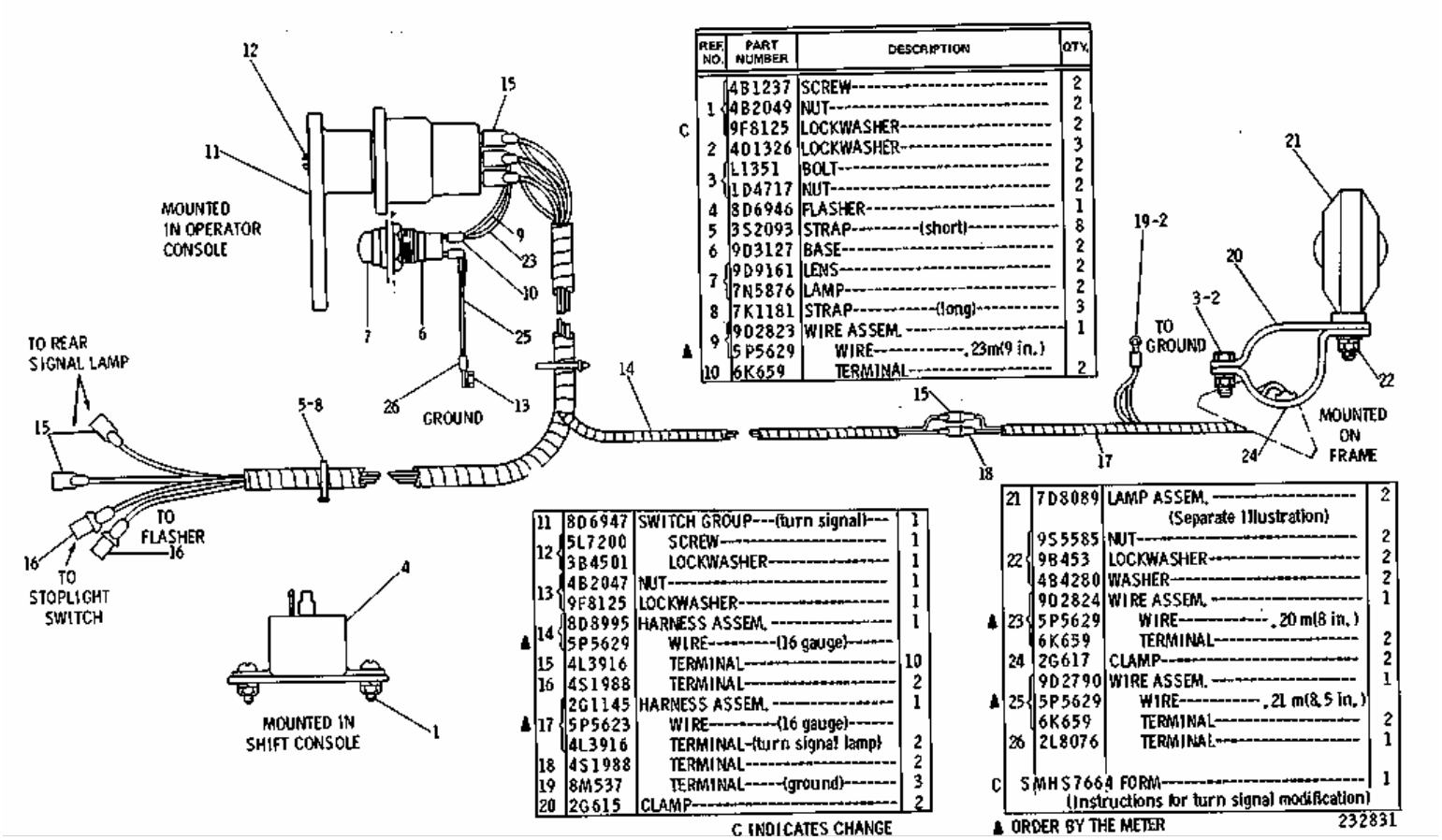

REF. NO.	PART NUMBER	DESCRIPTION	QTY.
1	4B1237	SCREW	2
	4B2049	NUT	2
C	9F8125	LOCKWASHER	2
2	4D1326	LOCKWASHER	3
3	0L1351	BOLT	2
	1D4717	NUT	2
4	8D6946	FLASHER	1
5	3S2093	STRAP---(short)	8
6	9D3127	BASE	2
7	9D9161	LENS	2
	7N5876	LAMP	2
8	7K1181	STRAP---(long)	3
9	9D2823	WIRE ASSEM.	1
♣	5P5629	WIRE---.23m(9 in.)	
10	6K659	TERMINAL	2

11	8D6947	SWITCH GROUP---(turn signal)	1
12	5L7200	SCREW	1
	3B4501	LOCKWASHER	1
13	4B2047	NUT	1
	9F8125	LOCKWASHER	1
14	8D8995	HARNESS ASSEM.	1
♣	5P5629	WIRE---(16 gauge)	
15	4L3916	TERMINAL	10
16	4S1988	TERMINAL	2
	2G1145	HARNESS ASSEM.	1
♣ 17	5P5623	WIRE---(16 gauge)	
	4L3916	TERMINAL-(turn signal lamp)	2
18	4S1988	TERMINAL	2
19	8M537	TERMINAL---(ground)	3
20	2G615	CLAMP	2

21	7D8089	LAMP ASSEM. (Separate Illustration)	2
	9S5585	NUT	2
22	9B453	LOCKWASHER	2
	4B4280	WASHER	2
	9D2824	WIRE ASSEM.	1
♣ 23	5P5629	WIRE---.20 m(8 in.)	
	6K659	TERMINAL	2
24	2G617	CLAMP	2
	9D2790	WIRE ASSEM.	1
♣ 25	5P5629	WIRE---.21 m(8.5 in.)	
	6K659	TERMINAL	2
26	2L8076	TERMINAL	1
C	SMHS7664	FORM (Instructions for turn signal modification)	1

C INDICATES CHANGE
♣ ORDER BY THE METER
232831

1 NPR 4B-1237 2 SCREW

NPR 4B-2049 2 NUT

NPR C 9F-8125 2 LOCKWASHER

2 NPR 4D-1326 3 LOCKWASHER

3 NPR 0L-1351 2 BOLT

NPR 1D-4717 2 NUT

4 NPR 8D-6946 1 FLASHER

5 NPR 3S-2093 8 STRAP (short)

6 NPR 9D-3127 2 BASE

7 NPR 9D-9161 2 LENS

NPR 7N-5876 2 LAMP

8 NPR 7K-1181 3 STRAP (long)

9 NPR 9D-2823 1 WIRE ASSEM.

NPR H 5P-5629 WIRE .23m(9 in.)

10 NPR 6K-0659 2 TERMINAL

11 NPR 8D-6947 1 SWITCH GROUP (turn signal)

12 NPR 5L-7200 1 SCREW

NPR 3B-4501 1 LOCKWASHER

13 NPR 4B-2047 1 NUT

NPR 9F-8125 1 LOCKWASHER

14 NPR 8D-8995 1 HARNESS ASSEM.

NPR H 5P-5629 WIRE (16 gauge)

15 NPR 4L-3916 10 TERMINAL

16 NPR 4S-1988 2 TERMINAL

17 NPR 2G-1145 1 HARNESS ASSEM.

NPR H 5P-5623 WIRE (16 gauge)

NPR 4L-3916 2 TERMINAL (turn signal lamp)

18 NPR 4S-1988 2 TERMINAL

19 NPR 8M-0537 3 TERMINAL (ground)

20 NPR 2G-0615 2 CLAMP

21 NPR Y 7D-8089 2 LAMP ASSEM.

(Separate Illustration)

22 NPR 9S-5585 2 NUT

NPR 9B-0453 2 LOCKWASHER

NPR 4B-4280 2 WASHER

23 NPR 9D-2824 1 WIRE ASSEM.

NPR H 5P-5629 WIRE .20 m(8 in.)

NPR 6K-0659 2 TERMINAL

24 NPR 2G-0617 2 CLAMP

25 NPR 9D-2790 1 WIRE ASSEM.

NPR H 5P-5629 WIRE .21 m(8.5 in.)

NPR 6K-0659 2 TERMINAL

26 NPR 2L-8076 1 TERMINAL

Key: C - INDICATES CHANGE Y - SEPARATE ILLUSTRATION H - ORDER BY THE METER

2G1040 LIGHTING GROUP--Light Bar-1M6052 Lamp parts shown on Page 111

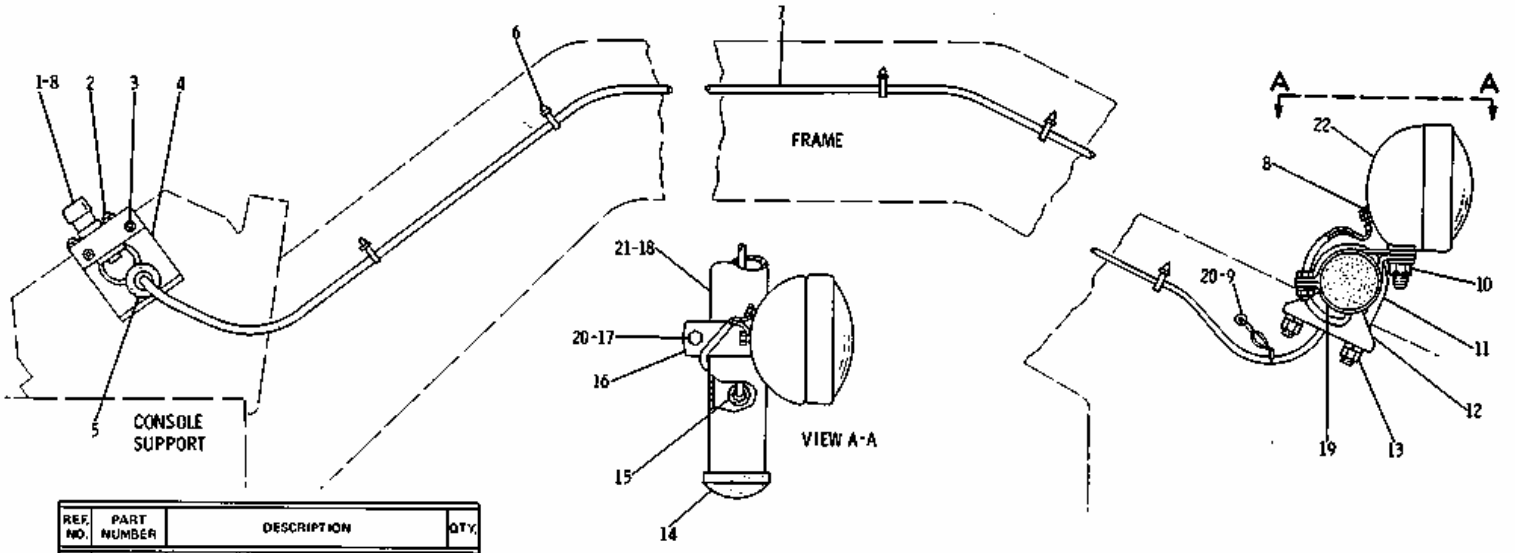

	REF. NO.	PART NUMBER	DESCRIPTION	QTY.
	1	2H1855	DIMMER SWITCH	1
	2	4B1320	SCREW	2
		3B4504	LOCKWASHER	2
	3	S1617	BOLT	2
		3B4505	LOCKWASHER	2
	4	9D1396	BRACKET	1
	5	2S1074	GROMMET	1
C	6	3S2093	STRAP	9
	7	2G1033	HARNESS ASSEM. (Includes)	1
C♣		5P5623	WIRE (16 gauge)	
		2D8757	TERMINAL--(L. H. headlamp)	2
	8	2D8781	TERMINAL	4
C	9	8M537	TERMINAL	3
C	10	5D3183	NUT	2
		6F253	LOCKWASHER	2
	11	3J1930	"U" BOLT	2
	12	2G659	BRACKET	2
	13	1D4719	NUT	4
		3B4508	LOCKWASHER	4
	14	2G988	CAP	2
C	15	9P719	GROMMET	3
C	16	2G615	CLAMP	2
	17	L1351	BOLT	2
		1D4717	NUT	2
	18	2G658	TUBE	1
C	19	2G617	CLAMP	2
C	20	4D1326	LOCKWASHER	3
C	21	7K1181	STRAP	1
	22	1M6052	LAMP ASSEM. (Separate Illustration)	1

♣ ORDER BY THE METER

C INDICATES CHANGE

178620

1 NPR 2H-1855 1 DIMMER SWITCH

2 NPR 4B-1320 2 SCREW

NPR 3B-4504 2 LOCKWASHER

3 NPR 0S-1617 2 BOLT

NPR 3B-4505 2 LOCKWASHER

4 NPR 9D-1396 1 BRACKET

5 NPR 2S-1074 1 GROMMET

6 NPR C 3S-2093 9 STRAP

7 NPR 2G-1033 1 HARNESS ASSEM.

(Includes)

NPR CH 5P-5623 WIRE (16 gauge)

NPR 2D-8757 2 TERMINAL (L.H. headlamp)

8	NPR	2D-8781	4	TERMINAL
9	NPR C	8M-0537	3	TERMINAL
10	NPR C	5D-3183	2	NUT
	NPR	6F-0253	2	LOCKWASHER
11	NPR	3J-1930	2	"U" BOLT
12	NPR	2G-0659	2	BRACKET
13	NPR	1D-4719	4	NUT
	NPR	3B-4508	4	LOCKWASHER
14	NPR	2G-0988	2	CAP
15	NPR C	9P-0719	3	GROMMET
16	NPR C	2G-0615	2	CLAMP
17	NPR	0L-1351	2	BOLT
	NPR	1D-4717	2	NUT
18	NPR	2G-0658	1	TUBE
19	NPR C	2G-0617	2	CLAMP
20	NPR C	4D-1326	3	LOCKWASHER
21	NPR C	7K-1181	1	STRAP
22	NPR Y	1M-6052	1	LAMP ASSEM.

(Separate Illustration)

Key: H - ORDER BY THE METER Y - SEPARATE ILLUSTRATION C - INDICATES CHANGE

4N3586 JACKET WATER HEATER GROUP--Type 1

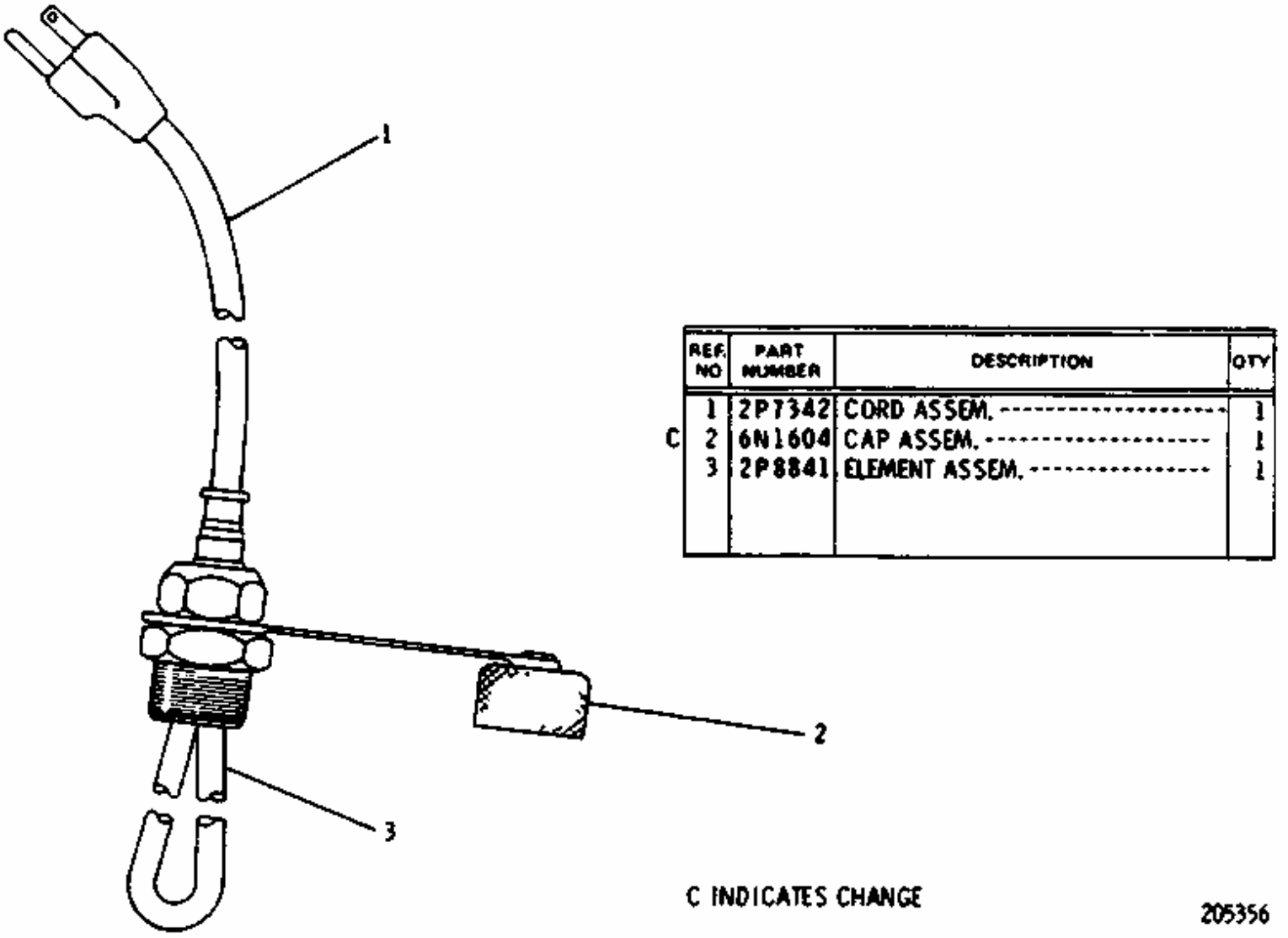

1 NPR 2P-7342 1 CORD ASSEM.

2 NPR C 6N-1604 1 CAP ASSEM.

3 NPR 2P-8841 1 ELEMENT ASSEM.

Key:

C - INDICATES CHANGE

4N3586 JACKET WATER HEATER GROUP--Type 2

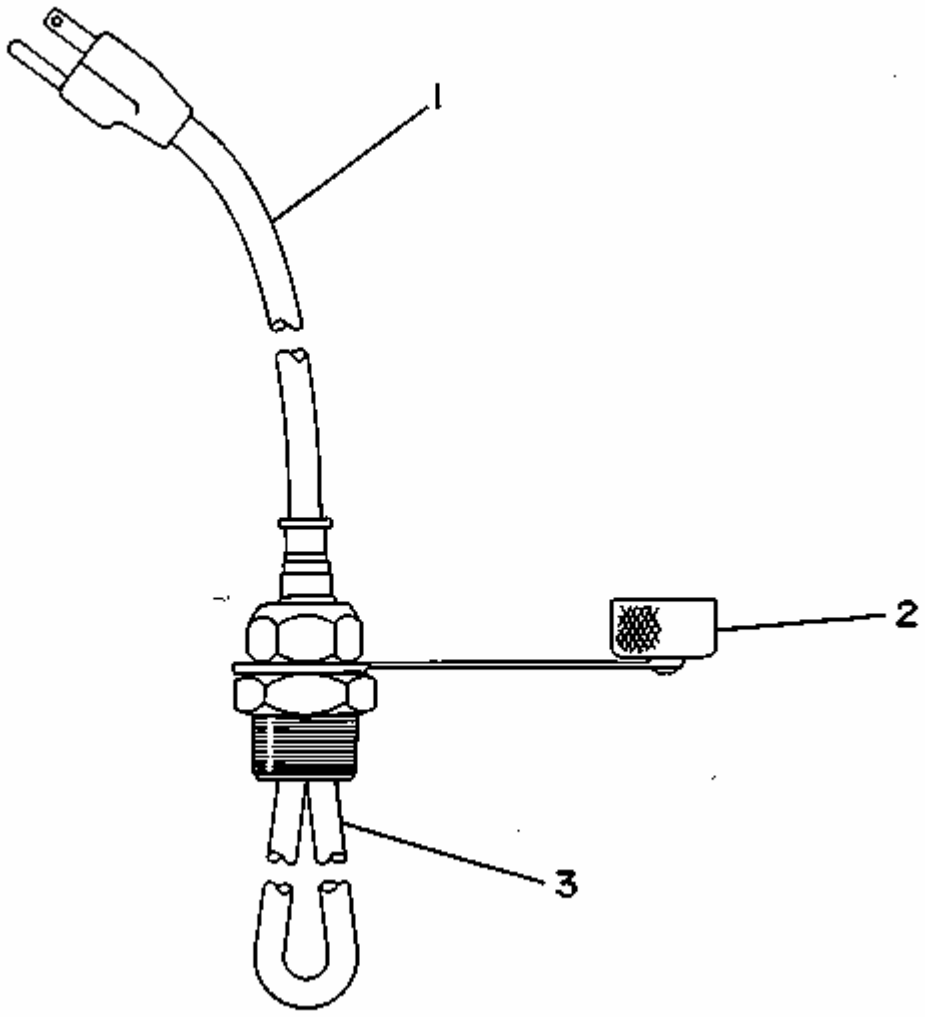

1 NPR C 9N-5253 1 CORD AS-HEATER

2 NPR 6N-1604 1 CAP AS-DUST

3 NPR C 9G-6657 1 ELEMENT AS (120V/1250W)

Key: C - CHANGE FROM PREVIOUS TYPE

5S8500 GLOW PLUG GROUP-Serial No. 78P18799 to 78P19626 inclusive

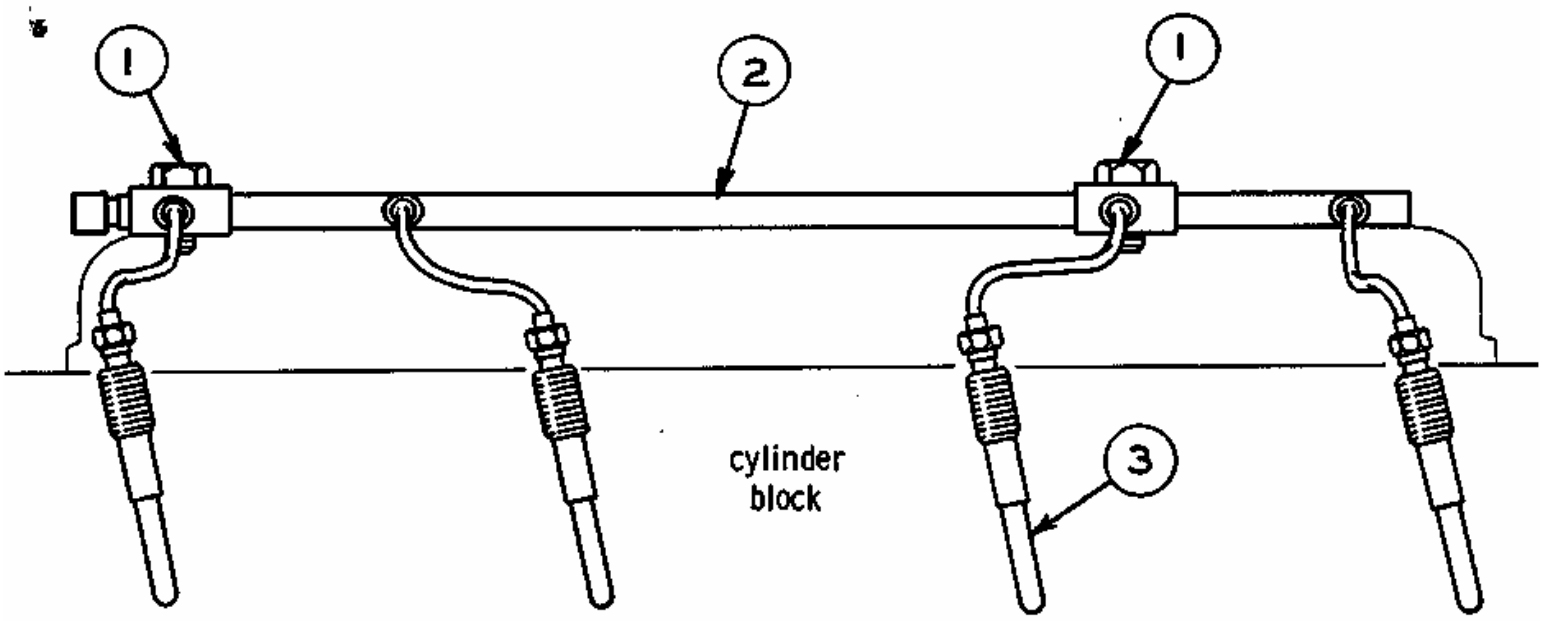

REF. NO.	PART NUMBER	DESCRIPTION	QTY.
1	2H3755	BOLT	2
	3B4505	LOCKWASHER	2
	4B4277	WASHER	2
2	5S8480	LEAD ASSEM.	1
3	1P7324	GLOW PLUG	4

112663

1 NPR 2H-3755 2 BOLT

NPR 3B-4505 2 LOCKWASHER

NPR 4B-4277 2 WASHER

2 NPR 5S-8480 1 LEAD ASSEM.

3 NPR 1P-7324 4 GLOW PLUG

5S8500 GLOW PLUG GROUP--Serial No. 78P19627-Up

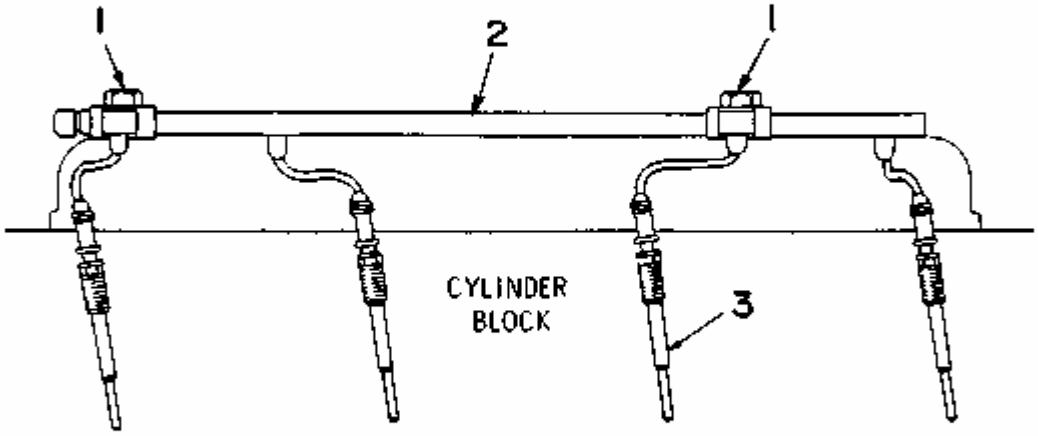

1 NPR 2H-3755 2 BOLT

NPR C 9M-1974 2 WASHER

2 NPR C 7N-9634 1 LEAD AS-PLUG

3 NPR C 4N-0360 4 PLUG-GLOW

Key:

C - CHANGE FROM PREVIOUS TYPE

AIR INLET AND EXHAUST SYSTEM

4N8302 DUST EJECTOR GROUP

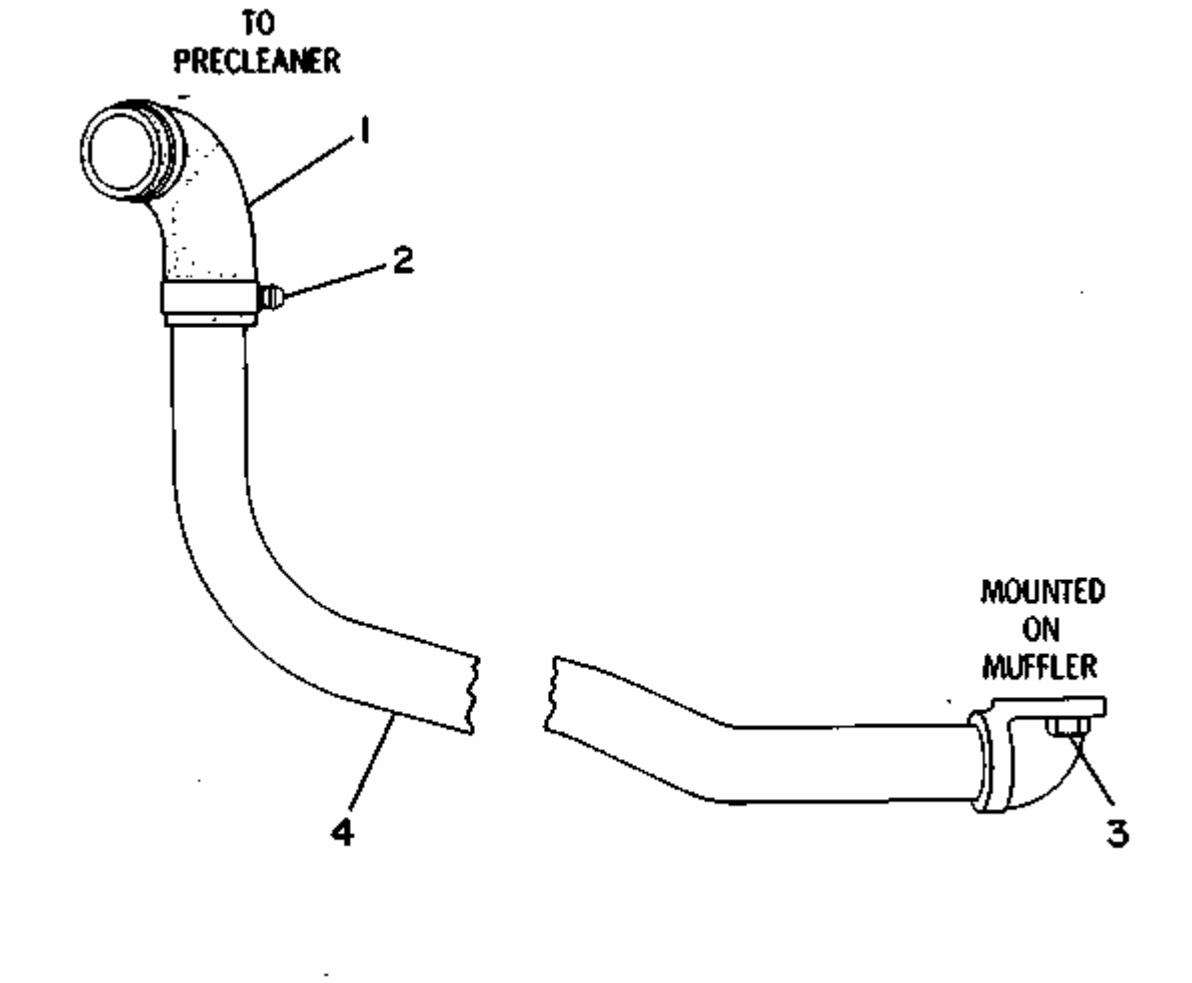

1	NPR	5S-5063	1	HOSE-FLOW
2	NPR	5P-0597	2	CLAMP
3	NPR	1B-5355	2	NUT-FULL
4	NPR	3P-0080	1	TUBE AS-SECONDARY FLOW

3P87 AIR CLEANER GROUP-Note: 7S6340 Prescreener Assembly is available

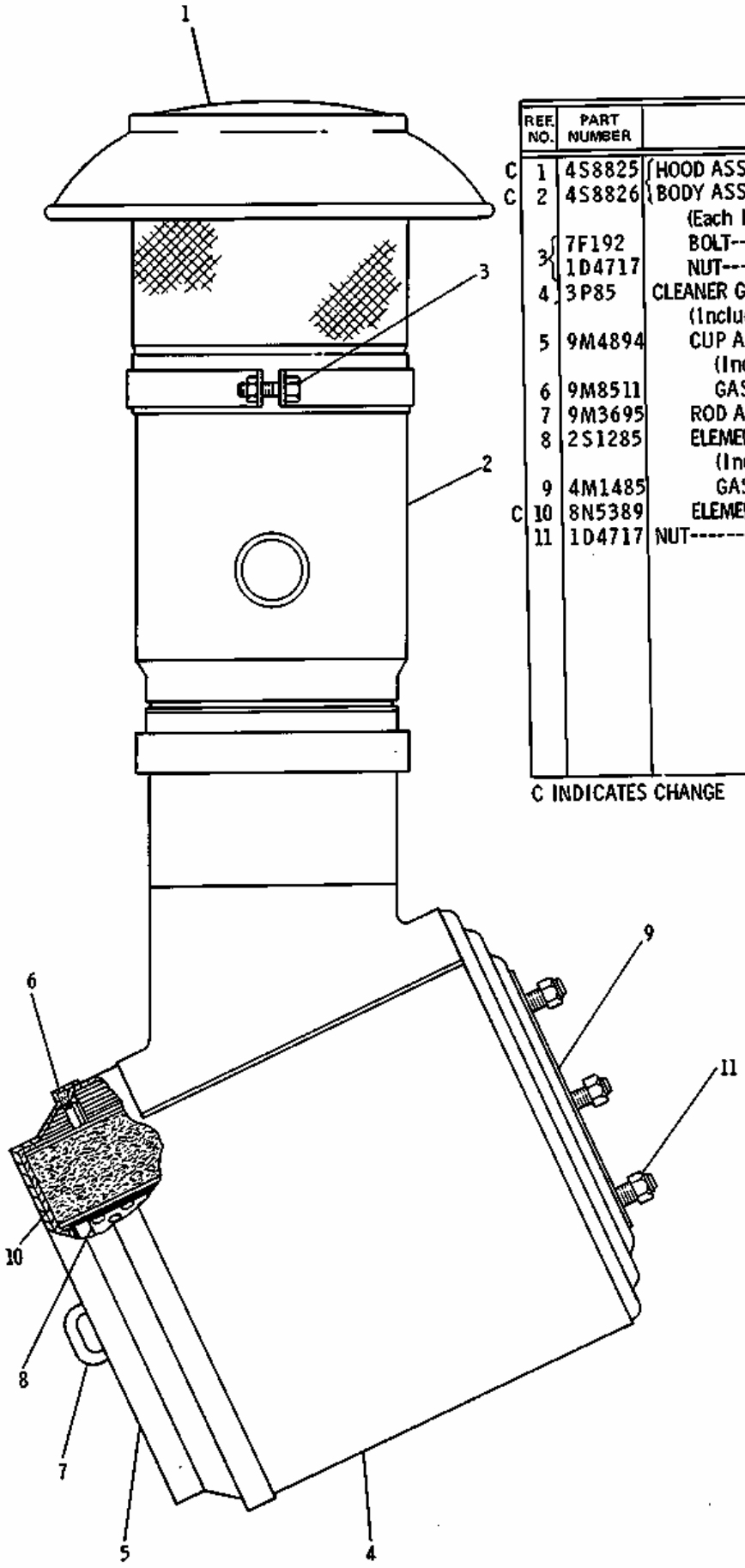

	REF. NO.	PART NUMBER	DESCRIPTION	QTY.
C	1	4S8825	HOOD ASSEM.	1
C	2	4S8826	BODY ASSEM. (Each Includes)	1
	3	7F192	BOLT	1
		1D4717	NUT	1
	4	3P85	CLEANER GROUP (Includes)	1
	5	9M4894	CUP ASSEM. (Includes)	1
	6	9M8511	GASKET	1
	7	9M3695	ROD ASSEM.	1
	8	2S1285	ELEMENT ASSEM. --(secondary) (Includes)	1
	9	4M1485	GASKET	1
C	10	8N5389	ELEMENT ASSEM. --(primary)--	1
	11	1D4717	NUT	6

C INDICATES CHANGE

228065

1 NPR C 4S-8825 1 HOOD ASSEM.

2 NPR C 4S-8826 1 BODY ASSEM.

(Each Includes)

3 NPR 7F-0192 1 BOLT

NPR 1D-4717 1 NUT

4 NPR 3P-0085 1 CLEANER GROUP

(Includes)

5 NPR 9M-4894 1 CUP ASSEM.

(Includes)

6 NPR 9M-8511 1 GASKET

7 NPR 9M-3695 1 ROD ASSEM.

8 NPR 2S-1285 1 ELEMENT ASSEM. (secondary)

(Includes)

9 NPR 4M-1485 1 GASKET

10 NPR C 8N-5389 1 ELEMENT ASSEM. (primary)

11 NPR 1D-4717 6 NUT

Key:

C - INDICATES CHANGE

8S2541 AIR FILTER SERVICE INDICATOR GROUP-Part of 9D5430 Gauge Group shown on Page 314, 314A and 314B

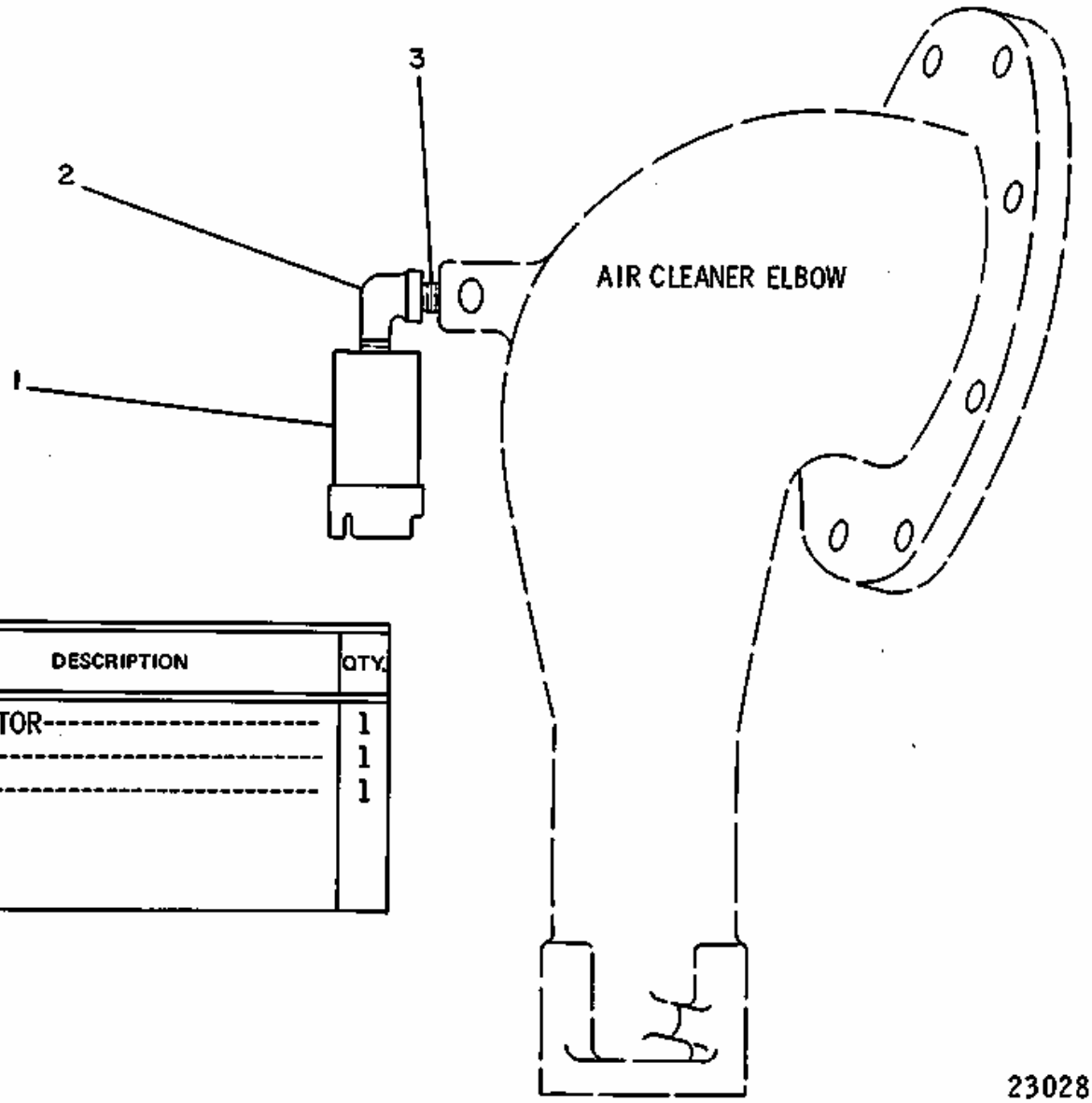

	REF. NO.	PART NUMBER	DESCRIPTION	QTY.
C	1	1W613	INDICATOR----------	1
	2	3B6552	ELBOW----------	1
	3	3B7264	NIPPLE----------	1

C INDICATES CHANGE

1 NPR C 1W-0613 1 INDICATOR

2 NPR 3B-6552 1 ELBOW

3 NPR 3B-7264 1 NIPPLE

Key: C - INDICATES CHANGE

4N8298 EXHAUST EXTENSION GROUP--Serial No. 87V1390-Up

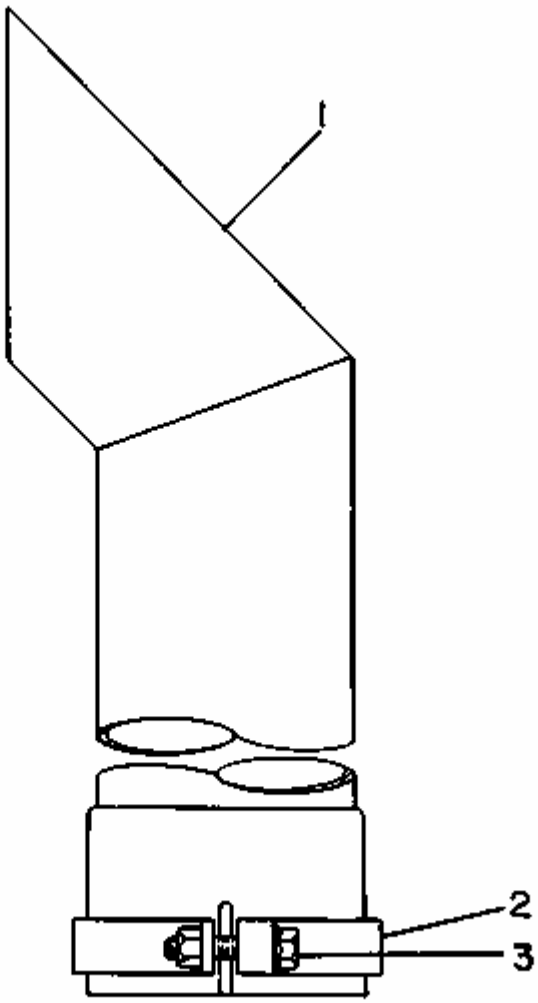

1	NPR	2P-4611	1	PIPE-EXHAUST
2	NPR	7S-8735	1	CLAMP
3	NPR	2P-3205	1	BOLT-WASHER HEAD
	NPR	1B-5355	1	NUT-FULL

4N4101 EXHAUST EXTENSION GROUP--Type 1
Part of 9D6950 and 2G4490 Sound Suppression Arrangements listed on Pages 170C and 170D. AN ATTACHMENT

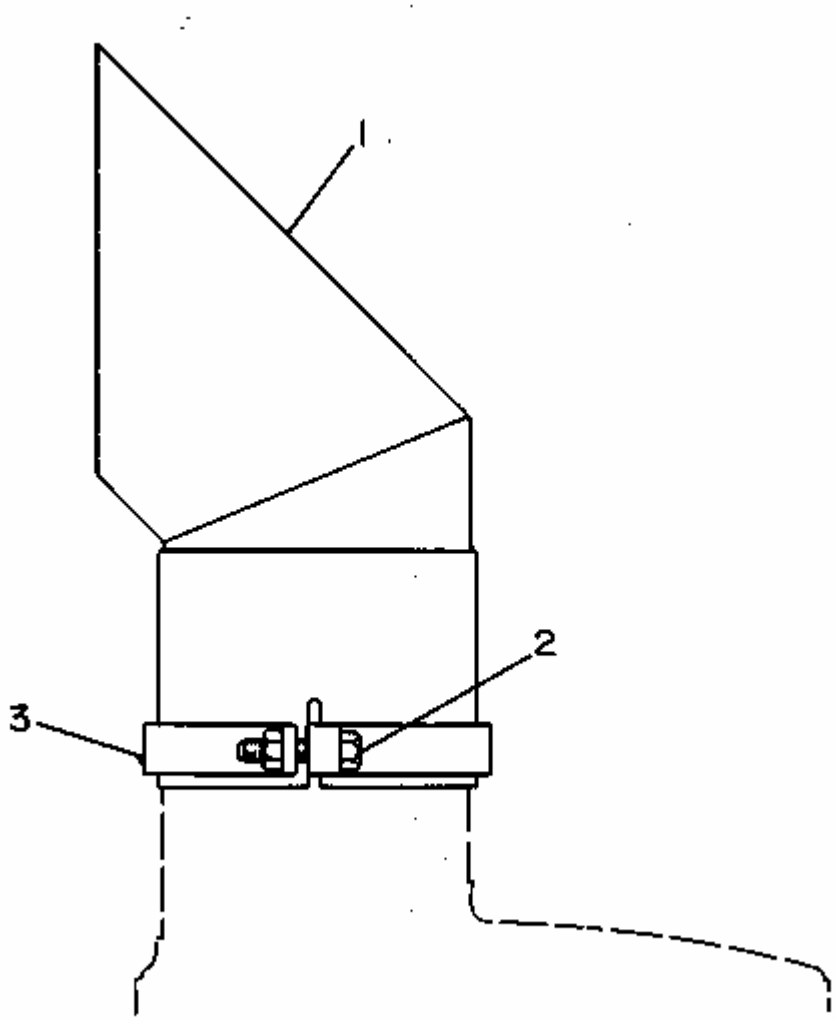

1	NPR	8S-6782	1	ADAPTER-EXHAUST
2	NPR	0S-1571	1	BOLT
	NPR	1B-5355	1	NUT-FULL
3	NPR	8S-6783	1	CLAMP

4N4101 EXHAUST EXTENSION GROUP--Type 2
Part of 9D6950 and 2G4490 Sound Suppression Arrangements listed on Pages 170C and 170D. AN ATTACHMENT

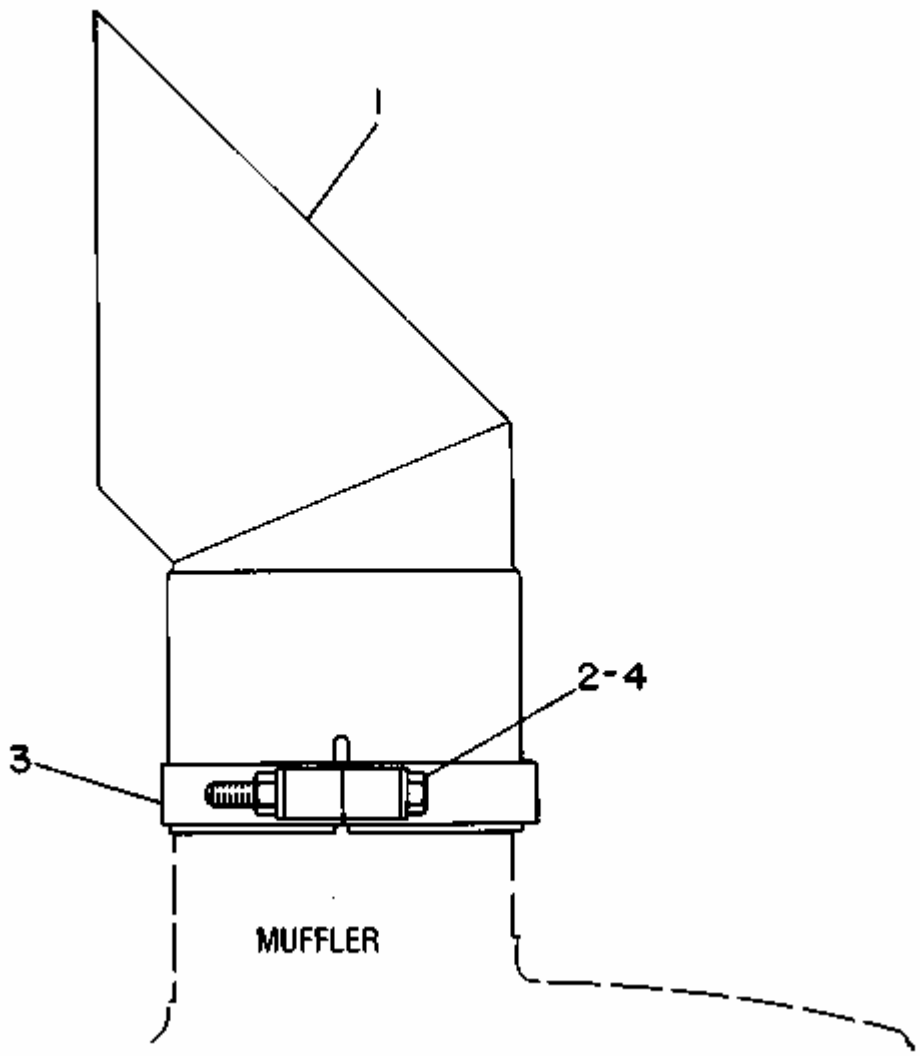

1 NPR 8S-6782 1 ADAPTER-EXHAUST

2 NPR C 0S-1619 1 BOLT

NPR 1B-5355 1 NUT-FULL

3 NPR C 7N-5685 1 CLAMP

4 NPR C 5M-2894 2 WASHER

Key: C - CHANGE FROM PREVIOUS TYPE

3P88 AIR LINES GROUP-Serial No. 87V1138 to 87V3609, 3611 to 3626, 3629 and 87V3639 to 87V3644 inclusive and Serial No. 82V668 to 82V834 inclusive

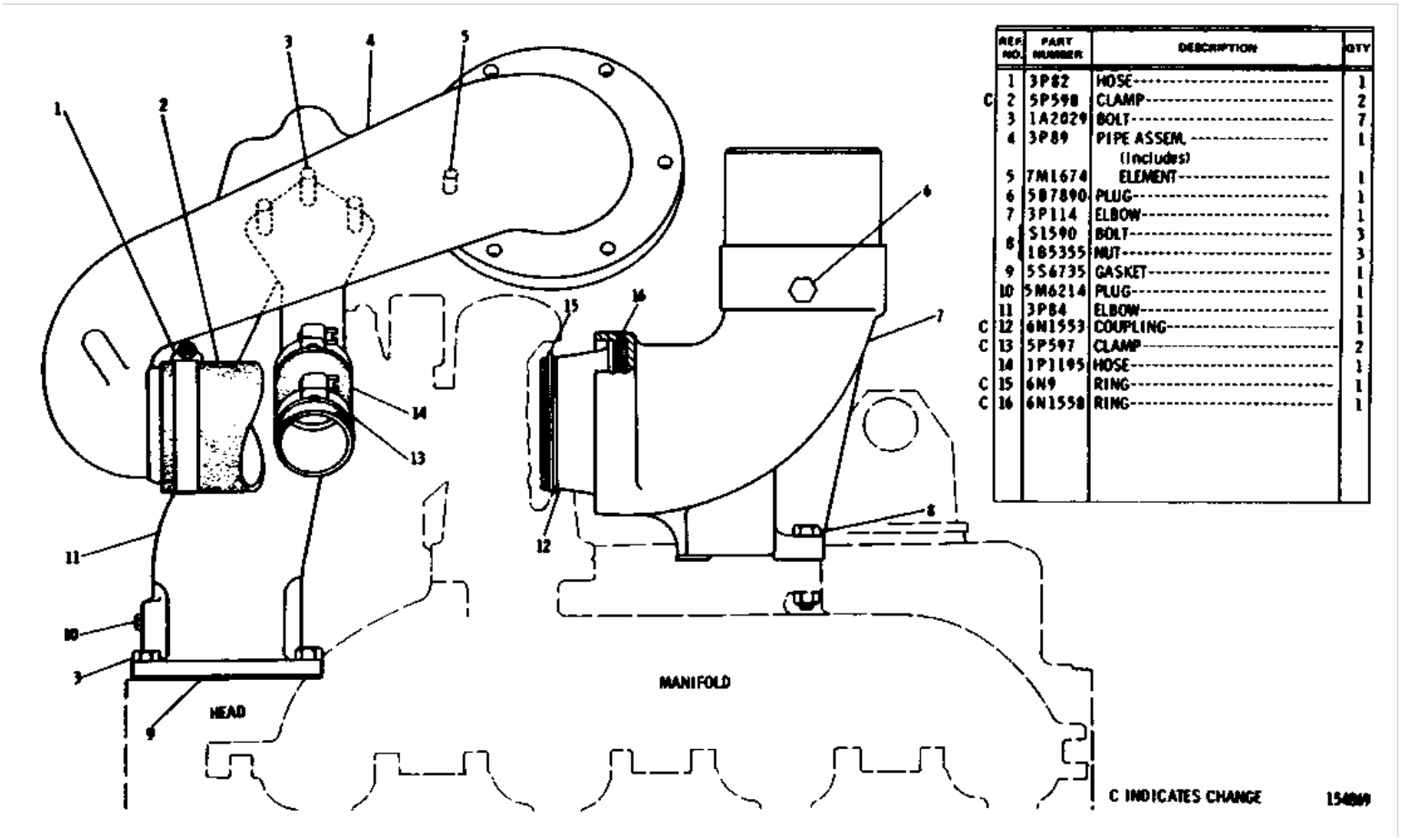

REF. NO.	PART NUMBER	DESCRIPTION	QTY
1	3P82	HOSE	1
C 2	5P598	CLAMP	2
3	1A2029	BOLT	7
4	3P89	PIPE ASSEM. (Includes)	1
5	7M1674	ELEMENT	1
6	5B7890	PLUG	1
7	3P114	ELBOW	1
8	0S1590	BOLT	3
	1B5355	NUT	3
9	5S6735	GASKET	1
10	5M6214	PLUG	1
11	3P84	ELBOW	1
C 12	6N1553	COUPLING	1
C 13	5P597	CLAMP	2
14	1P1195	HOSE	1
C 15	6N9	RING	1
C 16	6N1558	RING	1

1 NPR 3P-0082 1 HOSE

2 NPR C 5P-0598 2 CLAMP

3 NPR 1A-2029 7 BOLT

4 NPR 3P-0089 1 PIPE ASSEM.

(Includes)

5 NPR 7M-1674 1 ELEMENT

6 NPR 5B-7890 1 PLUG

7 NPR 3P-0114 1 ELBOW

8 NPR 0S-1590 3 BOLT

NPR 1B-5355 3 NUT

9 NPR 5S-6735 1 GASKET

10 NPR 5M-6214 1 PLUG

11 NPR 3P-0084 1 ELBOW

12 NPR CLC 6N-1553 1 COUPLING

CL NPR 295-6422 1 COUPLING-CLA

13 NPR C 5P-0597 2 CLAMP

14 NPR 1P-1195 1 HOSE

15 NPR C 6N-0009 1 RING

16 NPR C 6N-1558 1 RING

Key:

CL - Classic Part Available
C - INDICATES CHANGE

7N4144 AIR LINES GROUP--Engine Serial No. 78P38774-Up

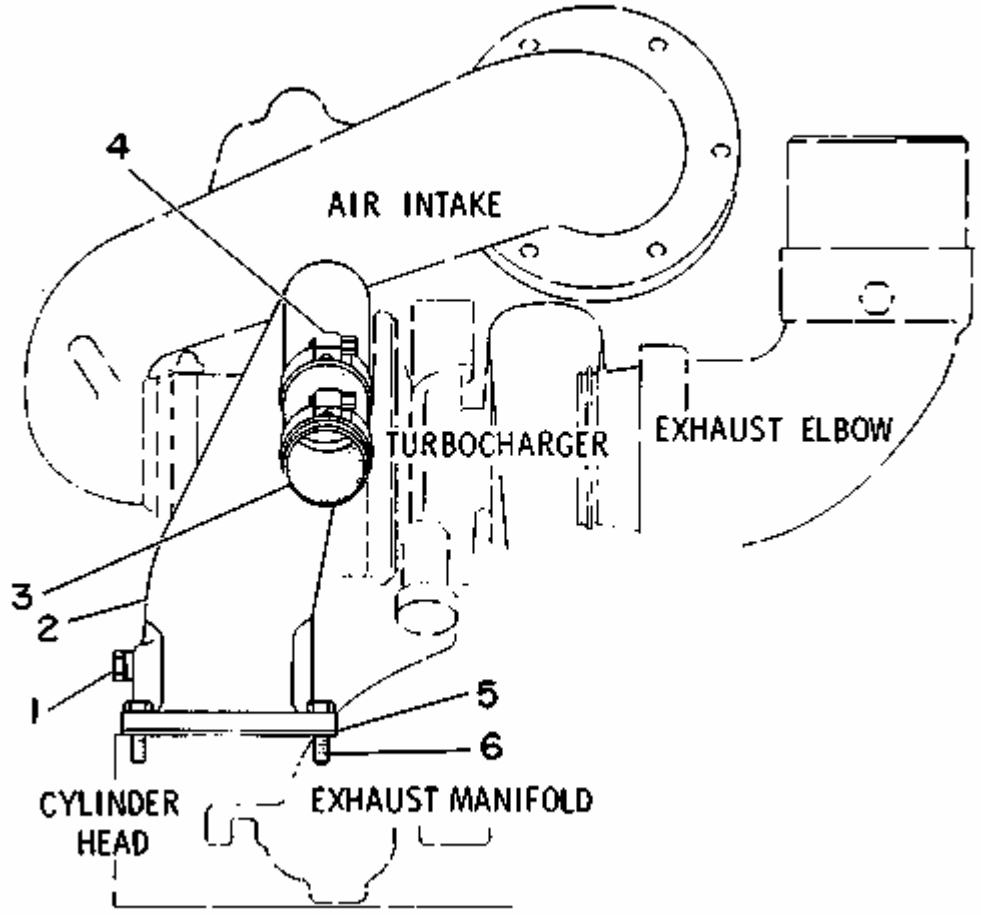

1	**NPR**	**5M-6214**	**1**	**PLUG-PIPE**
2	**NPR**	**3P-0084**	**1**	**ELBOW-AIR OUTLET**
3	**NPR**	**1P-1195**	**1**	**HOSE**
4	**NPR**	**5P-0597**	**2**	**CLAMP**
5	**NPR**	**5S-6735**	**1**	**GASKET**
6	**NPR**	**1A-2029**	**4**	**BOLT**

2P6571 EXHAUST MANIFOLD GROUP

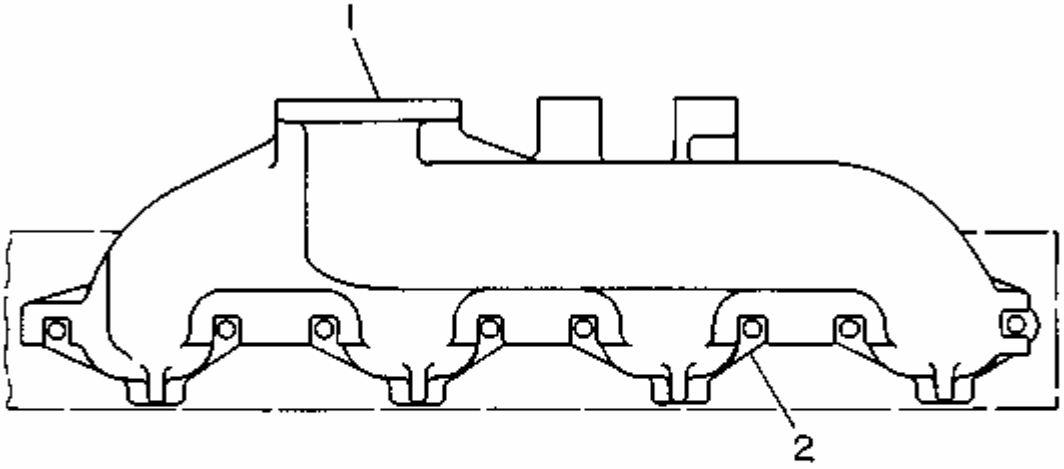

1 NPR C 5C-8564 1 MANIFOLD

2 NPR 8S-8258 4 GASKET

Key:

C - CHANGE FROM PREVIOUS TYPE

4N9584 EXHAUST MANIFOLD FASTENER GROUP

	REF. NO.	PART NUMBER	DESCRIPTION	QTY
	1	6B6205	SPACER	1
	2	2P1974	STUD	2
		5M2894	WASHER	2
	3	4N9587	SHIELD ASSEM.	1
C	4	7S6719	STUD	6
	5	1B5355	NUT	8
	6	6N508	SPACER	1
	7	8M7145	WASHER	7
	8	9M6527	WASHER	1

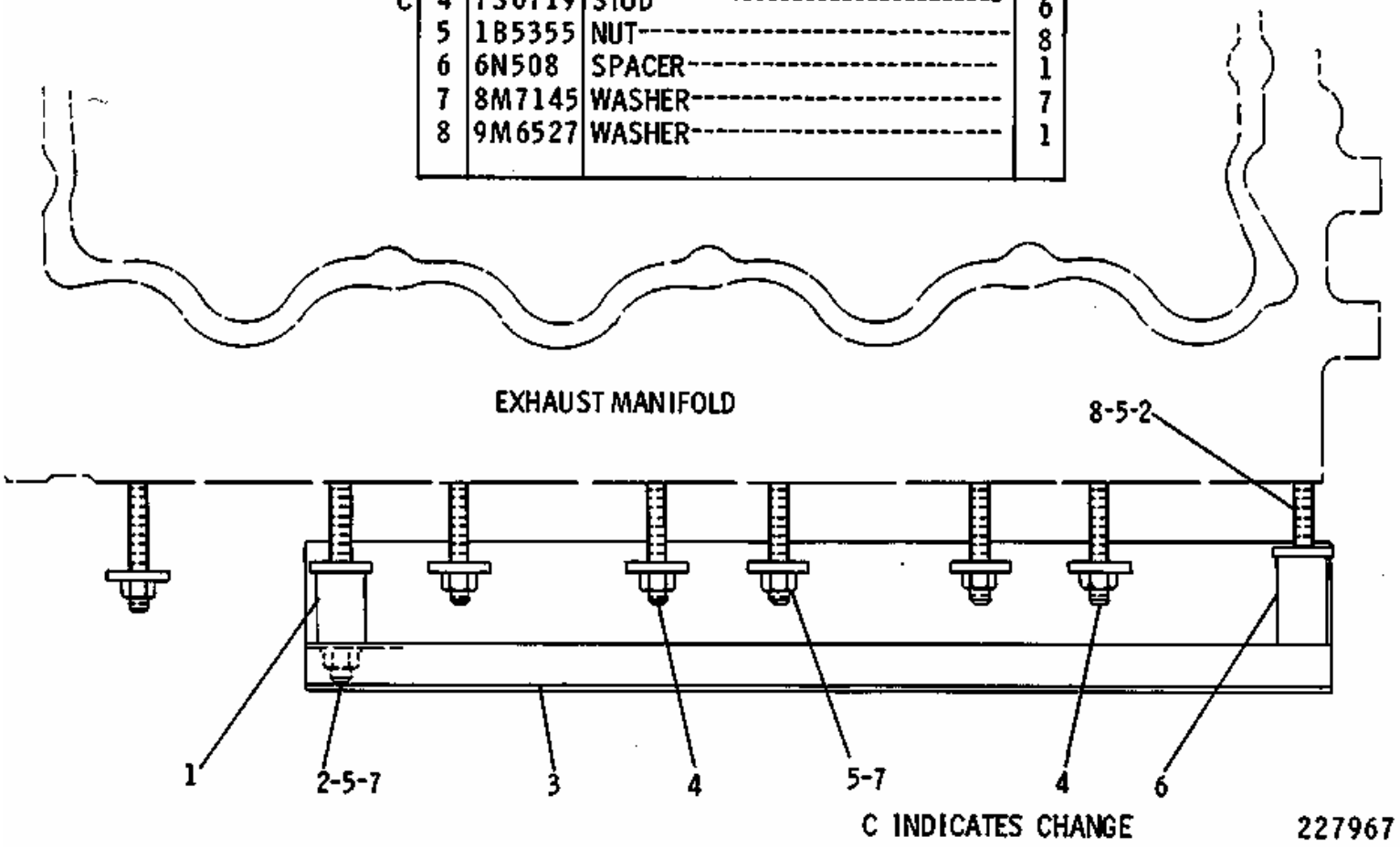

1 NPR 6B-6205 1 SPACER

2 NPR 2P-1974 2 STUD

NPR 5M-2894 2 WASHER

3 NPR CL 4N-9587 1 SHIELD ASSEM.

CL NPR 297-7260 1 SHIELD-CLA

4 NPR C 7S-6719 6 STUD

5 NPR 1B-5355 8 NUT

6 NPR 6N-0508 1 SPACER

7 NPR 8M-7145 7 WASHER

8 NPR 9M-6527 1 WASHER

Key: CL- Classic Part Available C - INDICATES CHANGE

4N9197 MUFFLER GROUP-Serial No. 87V2262-Up and 82V740-Up. Part of 2G4490 Sound Suppression Arrangement listed on Page 170D. AN ATTACHMENT

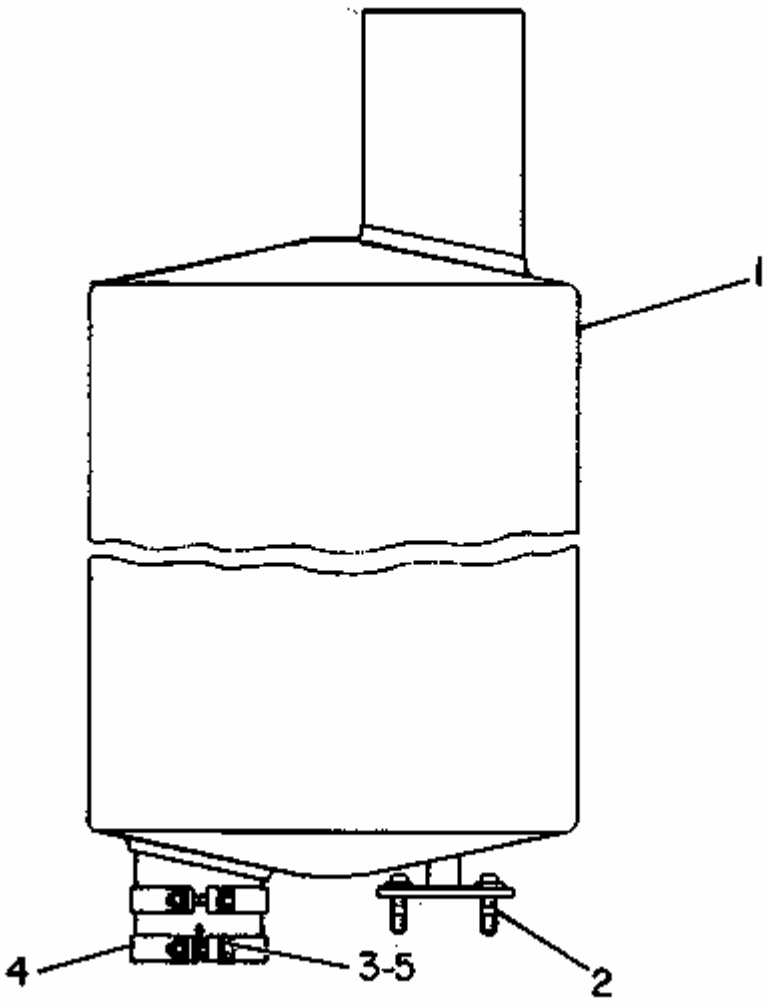

1	NPR	4N-8942	1	MUFFLER AS
2	NPR C	6F-7012	2	STUD
3	NPR C	0S-1590	2	BOLT
	NPR C	1B-5355	2	NUT-FULL
4	NPR C	4F-4974	2	CLAMP
5	NPR C	5M-2894	4	WASHER

Key: C - CHANGE FROM PREVIOUS TYPE

6N5252 MUFFLER GROUP-Serial No. 87V2262-Up and 82V740-Up. Page of 2G2580 Sound Suppression Arrangement listed on Page 170D. AN ATTACHMENT

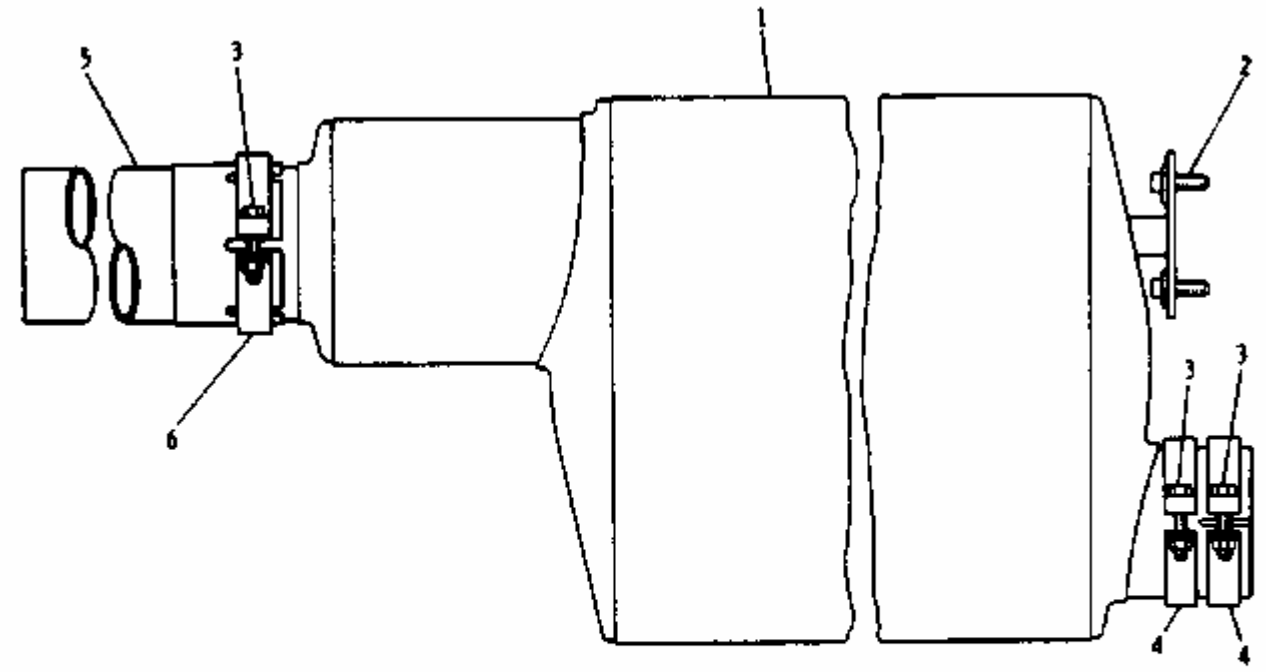

	REF. NO.	PART NUMBER	DESCRIPTION	QTY.
	1	6N1878	MUFFLER ASSEM.	1
	2	2B6296	STUD	2
C	3	0S1590	BOLT	3
		1B5355	NUT	3
		5M2894	WASHER	3
	4	4F4974	CLAMP	2
C	5	8S5120	PIPE	1
C	6	7S8735	CLAMP	1

C INDICATES CHANGE 304388

1 NPR 6N-1878 1 MUFFLER ASSEM.

2 NPR 2B-6296 2 STUD

3 NPR C 0S-1590 3 BOLT

NPR 1B-5355 3 NUT

NPR 5M-2894 3 WASHER

4 NPR 4F-4974 2 CLAMP

5 NPR C 8S-5120 1 PIPE

6 NPR C 7S-8735 1 CLAMP

Key:

C - INDICATES CHANGE

4N8297 MUFFLER GROUP

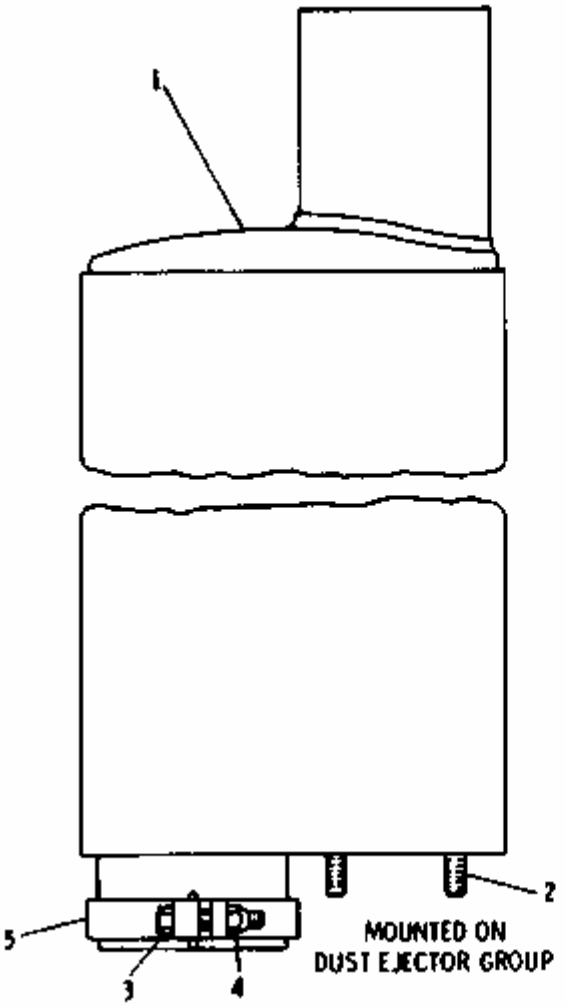

	REF. NO.	PART NUMBER	DESCRIPTION	QTY
	1	4N7870	MUFFLER ASSEM.	1
C	2	6F7012	STUD	2
	3	2P3205	BOLT	1
	4	1B5355	NUT	1
	5	4F4974	CLAMP	1

C INDICATES CHANGE

209649

1 NPR 4N-7870 1 MUFFLER ASSEM.

2 NPR C 6F-7012 2 STUD

3 NPR 2P-3205 1 BOLT

4 NPR 1B-5355 1 NUT

5 NPR 4F-4974 1 CLAMP

Key:

C - INDICATES CHANGE

4N6856 TURBOCHARGER GROUP-4N6858 Turbocharger parts are shown on Page 55

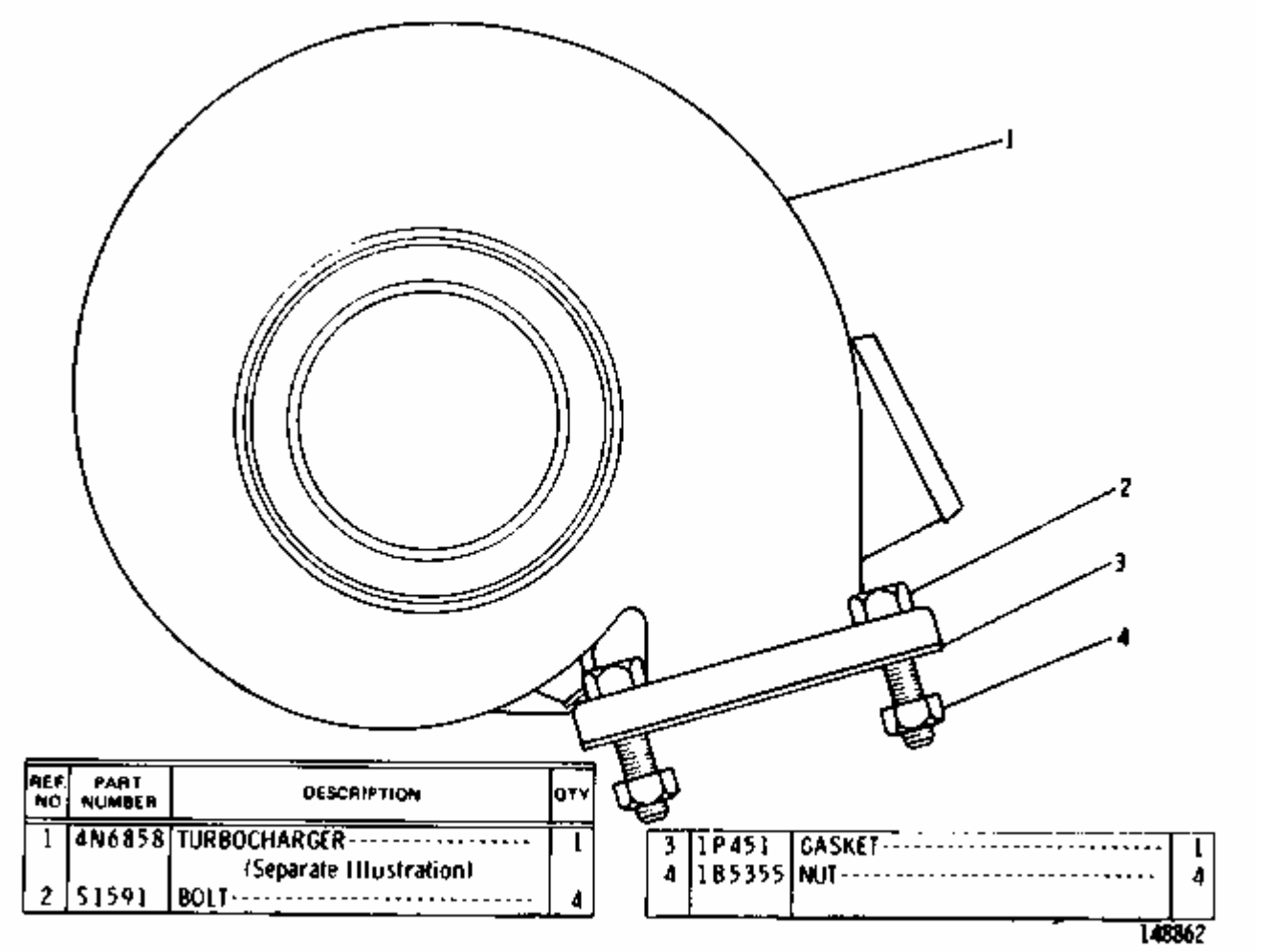

REF NO	PART NUMBER	DESCRIPTION	QTY
1	4N6858	TURBOCHARGER (Separate Illustration)	1
2	51591	BOLT	4
3	1P451	GASKET	1
4	1B5355	NUT	4

1 NPR Y 4N-6858 1 TURBOCHARGER

(Separate Illustration)

2 NPR 0S-1591 4 BOLT

3 NPR 1P-0451 1 GASKET

4 NPR 1B-5355 4 NUT

Key:

Y - SEPARATE ILLUSTRATION

4N6858 TURBOCHARGER GROUP-Part of 4N6856 Turbocharger Group shown on Page 54

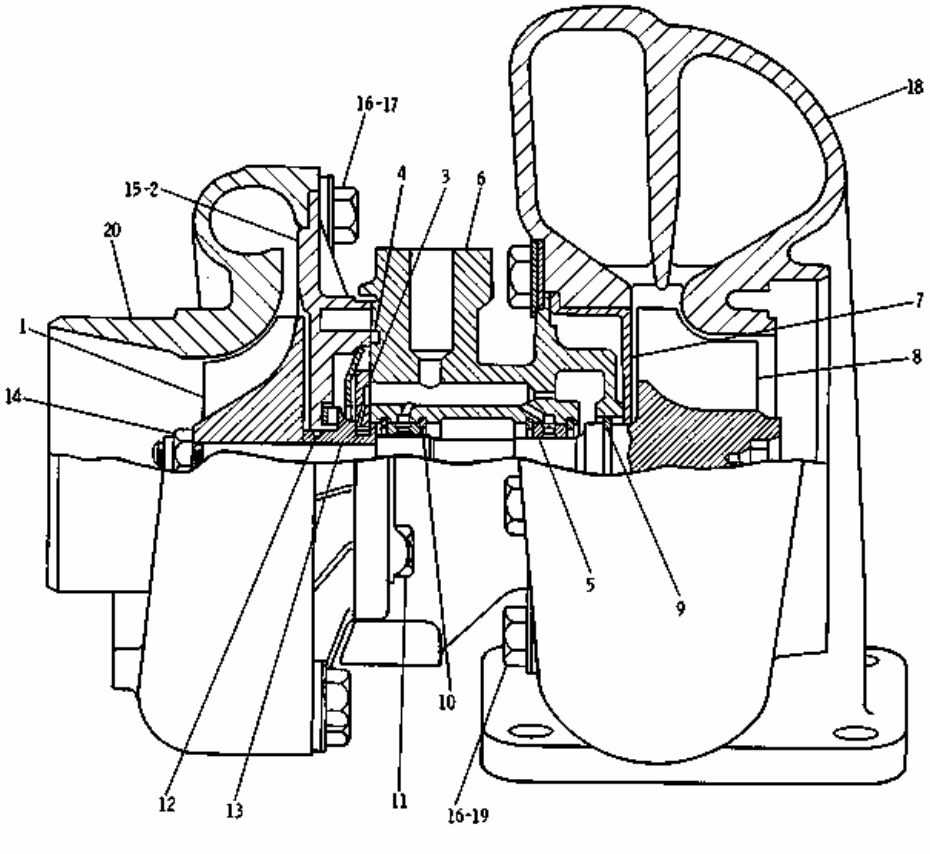

	REF NO.	PART NUMBER	DESCRIPTION	QTY.
	1	4N6860	CARTRIDGE ASSEM.	1
			(Includes)	
		4N6861	WHEEL	1
	2	4N6863	BACKPLATE ASSEM.	1
	3	1P1111	BEARING	1
●	4	1P1120	RING	1
●	5	1P1114	BEARING	2
	6	2P9635	HOUSING ASSEM.	1
			(Includes)	
		1P1136	PIN	2
C	7	7N12	SHROUD	1
	8	1P1116	SHAFT AND WHEEL ASSEM.	1
●	9	1P1115	RING	1
●	10	2P9607	RING	4
●	11	2A762	BOLT	4
●		1P1117	PLATE	2
●	12	1P1124	RING	1
●	13	1P1123	COLLAR	1
●	14	1P1125	NUT	1
C	15	7N2434	NAMEPLATE	1
C		2F808	SCREW	2
	16	1C569	BOLT	12
	17	4N6864	CLAMP	3
		4N6865	LOCKPLATE	3
	18	6N565	HOUSING------- (turbin)	1
	19	1P1112	CLAMP	3
		1P1113	LOCKPLATE	3
	20	4N6862	HOUSING------- (compressor)	1
			THE FOLLOWING REPAIR KIT IS AVAILABLE:	
C		6N7236	KIT-------(cartridge repair)--------	1
			(Includes parts marked ●)	
●		SMHS6768	FORM----(Installing repair kit)----	1

C INDICATES CHANGE 217641

1 NPR R 4N-6860 1 CARTRIDGE ASSEM.

R NPR 0R-5888 1 CARTRIDGE GP

(Includes)

NPR 4N-6861 1 WHEEL

2 NPR R 4N-6863 1 BACKPLATE ASSEM.

3 NPR 1P-1111 1 BEARING

4 NPR J 1P-1120 1 RING

5 NPR J 1P-1114 2 BEARING

6 NPR R 2P-9635 1 HOUSING ASSEM.

(Includes)

NPR 1P-1136 2 PIN

7 NPR C 7N-0012 1 SHROUD

8 NPR R 1P-1116 1 SHAFT AND WHEEL ASSEM.

9 NPR J 1P-1115 1 RING

10 NPR J 2P-9607 4 RING

11 NPR J 2A-0762 4 BOLT

NPR J 1P-1117 2 PLATE

12 NPR J 1P-1124 1 RING

13 NPR J 1P-1123 1 COLLAR

14 NPR J 1P-1125 1 NUT

15 NPR C 7N-2434 1 NAMEPLATE

NPR C 2F-0808 2 SCREW

16 NPR 1C-0569 12 BOLT

17 NPR 4N-6864 3 CLAMP

NPR 4N-6865 3 LOCKPLATE

18 NPR R 6N-0565 1 HOUSING (turbin)

19 NPR 1P-1112 3 CLAMP

NPR 1P-1113 3 LOCKPLATE

20 NPR 4N-6862 1 HOUSING (compressor)

THE FOLLOWING REPAIR KIT IS AVAILABLE:

NPR C 6N-7236 1 KIT (cartridge repair)

(Includes parts marked j)

Key: C - INDICATES CHANGE R - REMFG PART MAY BE AVAILABLE

4N3923 TURBOCHARGER OIL LINES GROUP
Engine Serial No. 78P18799 to 78P21411 inclusive

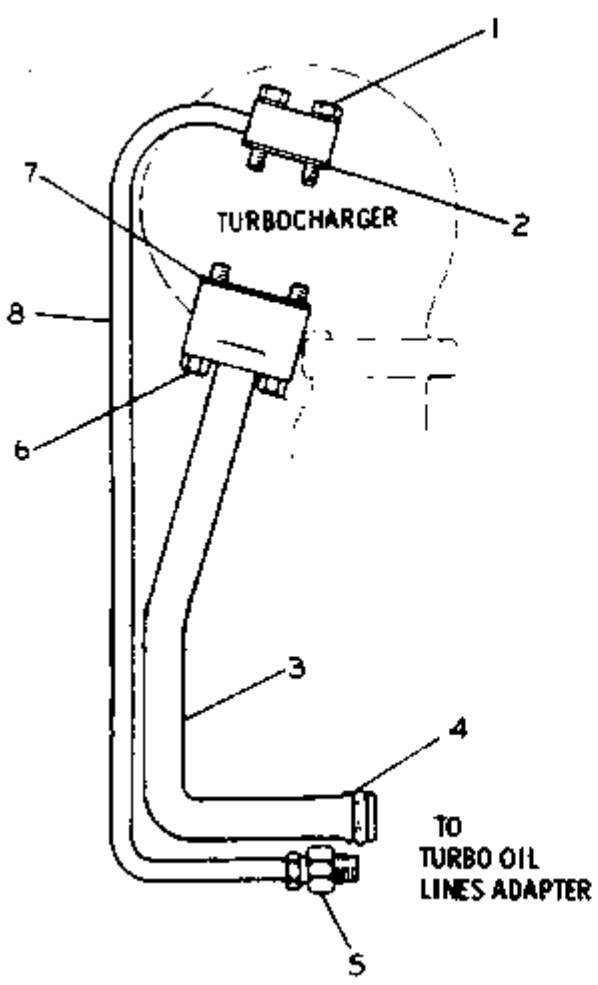

REF. NO.	PART NUMBER	DESCRIPTION	QTY
1	1B9575	BOLT	2
	9M1974	WASHER	2
2	7B5932	GASKET	1
3	4N3820	TUBE ASSEM.	1
4	9M4849	SEAL	1
5	5K9238	CONNECTOR	1
6	2P3208	BOLT	2
7	1P1255	GASKET	1
8	4N3842	TUBE ASSEM.	1

162493

1 NPR 1B-9575 2 BOLT

NPR 9M-1974 2 WASHER

2 NPR 7B-5932 1 GASKET

3 NPR 4N-3820 1 TUBE ASSEM.

4 NPR 9M-4849 1 SEAL

5 NPR 5K-9238 1 CONNECTOR

6 NPR 2P-3208 2 BOLT

7 NPR 1P-1255 1 GASKET

8 NPR 4N-3842 1 TUBE ASSEM.

4N3923 TURBOCHARGER OIL LINES GROUP-Engine Serial No. 78P21412-Up

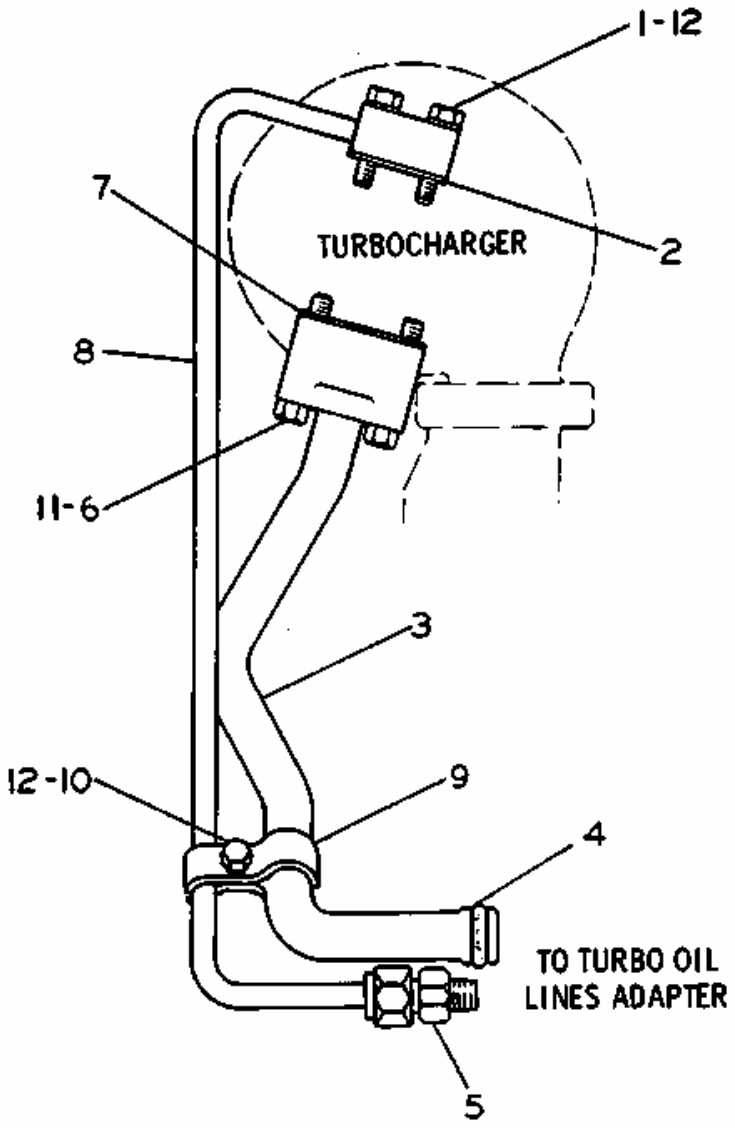

	REF. NO.	PART NUMBER	DESCRIPTION	QTY
	1	1B9575	BOLT	2
	2	7B5932	GASKET	1
C	3	6N6120	TUBE ASSEM.	1
	4	9M4849	SEAL	1
C	5	8M755	CONNECTOR	1
C	6	L1143	BOLT	2
	7	1P1255	GASKET	1
C	8	6N6122	TUBE ASSEM.	1
C	9	6N6033	CLIP	2
C	10	2H3755	BOLT	1
C		1D4716	NUT	1
C	11	5M2894	WASHER	2
C	12	9M1974	WASHER	4

C INDICATES CHANGE

217640

1 NPR 1B-9575 2 BOLT
2 NPR 7B-5932 1 GASKET
3 NPR C 6N-6120 1 TUBE ASSEM.
4 NPR 9M-4849 1 SEAL
5 NPR C 8M-0755 1 CONNECTOR
6 NPR C 0L-1143 2 BOLT
7 NPR 1P-1255 1 GASKET
8 NPR C 6N-6122 1 TUBE ASSEM.
9 NPR C 6N-6033 2 CLIP
10 NPR C 2H-3755 1 BOLT
NPR C 1D-4716 1 NUT
11 NPR C 5M-2894 2 WASHER
12 NPR C 9M-1974 4 WASHER

Key: C - INDICATES CHANGE

BASIC

ENGINE

4N8056 AIR COMPRESSOR LINES GROUP

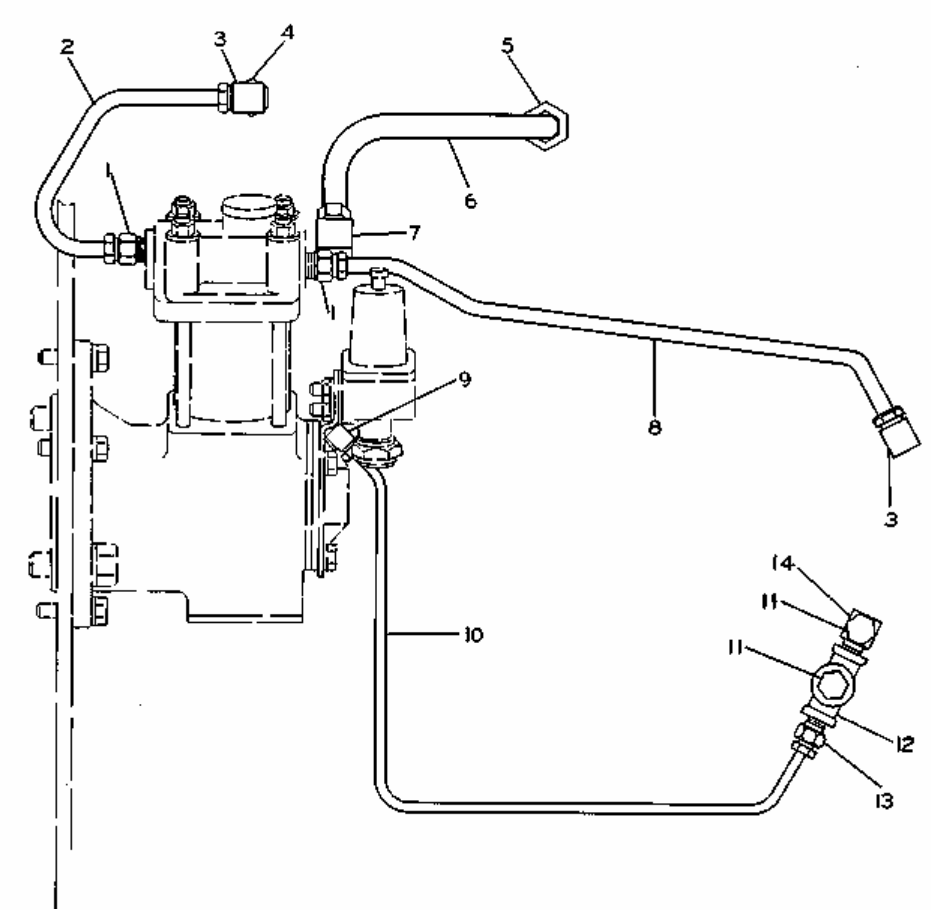

	REF. NO.	PART NUMBER	DESCRIPTION	QTY
	1	5K9248	CONNECTOR	2
	2	2P6210	TUBE ASSEM.	1
	3	5K9237	ELBOW	2
	4	3B7255	BUSHING	1
	5	6K8079	CONNECTOR	1
	6	2P2698	TUBE ASSEM.	1
	7	1P210	ELBOW	1
	8	2P2706	TUBE ASSEM.	1
	9	5K9243	ELBOW	1
	10	4N8884	TUBE ASSEM.	1
	11	5M6213	PLUG	2
	12	7B192	CROSS	1
C		3B7262	NIPPLE	1
	13	5K9239	CONNECTOR	1
C	14	7F9311	FITTING	1

C INDICATES CHANGE

182110

1 NPR 5K-9248 2 CONNECTOR

2 NPR 2P-6210 1 TUBE ASSEM.

3 NPR 5K-9237 2 ELBOW

4 NPR 3B-7255 1 BUSHING

5 NPR 6K-8079 1 CONNECTOR

6 NPR 2P-2698 1 TUBE ASSEM.

7 NPR 1P-0210 1 ELBOW

8 NPR 2P-2706 1 TUBE ASSEM.

9 NPR 5K-9243 1 ELBOW

10 NPR 4N-8884 1 TUBE ASSEM.

11 NPR 5M-6213 2 PLUG

12 NPR 7B-0192 1 CROSS

NPR C 3B-7262 1 NIPPLE

13 NPR 5K-9239 1 CONNECTOR

14 NPR C 7F-9311 1 FITTING

Key: C - INDICATES CHANGE

2P9613 AIR COMPRESSOR GROUP-2P9614 Air Compressor parts are shown on Page 56C

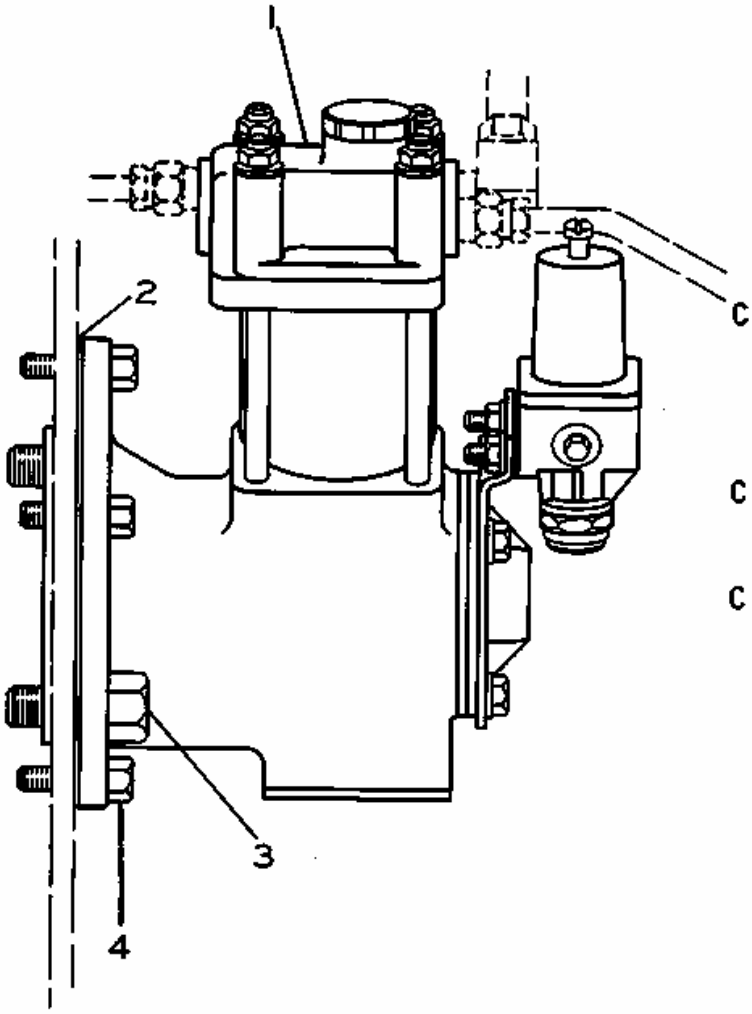

	REF. NO.	PART NUMBER	DESCRIPTION	QTY.
C	1	2P9614	COMPRESSOR---------- (Separate Illustration)	1
	2	2P220	GASKET----------	1
	3	1A1135	BOLT------5.08 cm(2 in.)long	2
			- OR -	
C		S1589	BOLT-------4.45 cm(1.75 in.) long	2
	4	S1591	BOLT------3.81 cm(1.5 in.) long--	3
			- OR -	
C		3B1915	BOLT------3.49 cm(1.375 in.) long	3

C INDICATES CHANGE

174484

1 NPR CY 2P-9614 1 COMPRESSOR

(Separate Illustration)

2 NPR 2P-0220 1 GASKET

3 NPR 1A-1135 2 BOLT 5.08 cm(2 in.)long

-OR-

NPR C 0S-1589 2 BOLT 4.45 cm(1.75 in.) long

4 NPR 0S-1591 3 BOLT 3.81 cm(1.5 in.) long

-OR-

NPR C 3B-1915 3 BOLT 3.49 cm(1.375 in.) long

Key: C - INDICATES CHANGE Y - SEPARATE ILLUSTRATION

2P9614 AIR COMPRESSOR GROUP-Part of 2P9613 Air Compressor Group shown on Page 56B

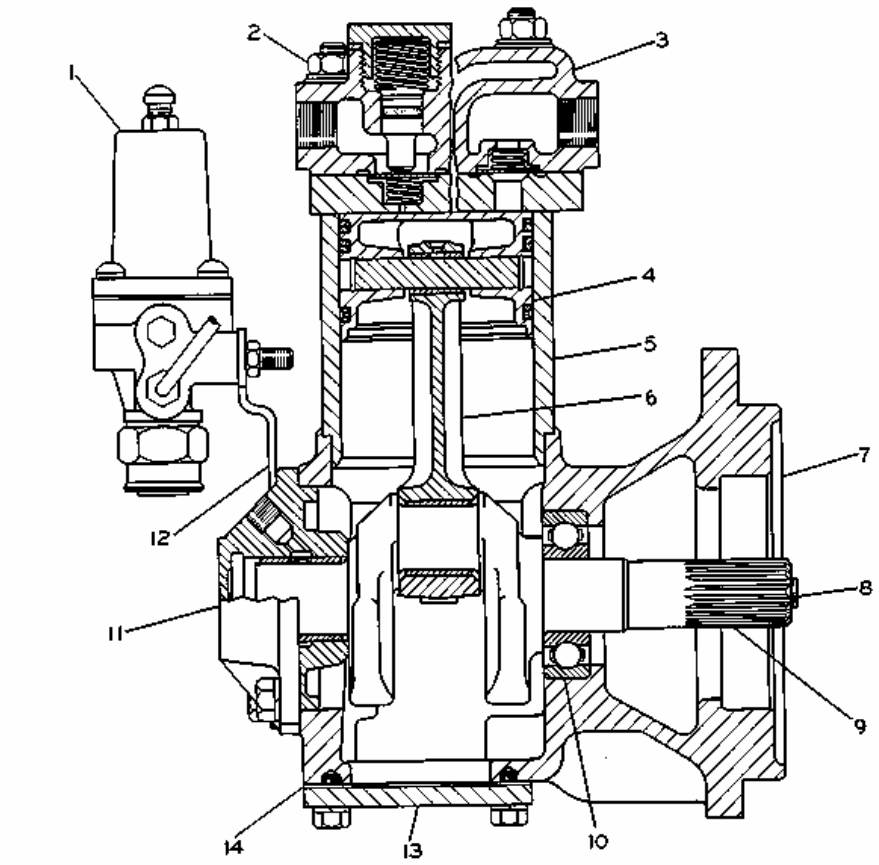

REF NO.	PART NUMBER	DESCRIPTION	QTY
1	2P9615	GOVERNOR ASSEM.	1
2	1B4203	NUT	4
C 3	7N2833	HEAD ASSEM.	1
4	8A2252	PISTON ASSEM.	1
5	8A2251	LINER	1
6	8A2248	ROD ASSEM.	1
7	2P7849	CRANKCASE	1
8	9F2247	PLUG	1
9	2P7850	CRANKSHAFT	1
10	2F5721	BEARING	1
11	1P5480	COVER ASSEM.	1
12	2P7848	BRACKET	1
13	4N5224	COVER	1
14	4N5225	GASKET	1
		THE FOLLOWING REPAIR KITS ARE AVAILABLE:	
	8A2250	KIT----(Includes 5 Piston rings)--	1
C	8A2305	KIT----(Governor-Major Repair)--- (Includes Diaphragms, Followers, Valve, Guide, Plunger, "O" Ring, Spring & Hardware)	1
C	7N2834	KIT----(Compressor-Major Repair)- (Includes Valves, Bearings, Gaskets, Rings, Strap, Springs, Shims, "O" Ring & Hardware)	1
	1P6059	KIT-------(Unloader Valve)------- (Includes Cap, Clip, Washer, Spring, Plunger, & "O" Ring)	1
	4N4027	KIT--------(Governor Lines)----- (Includes Elbow Assem., Pipe, Fitting, & Washer)	1

C INDICATES CHANGE 227968

1 NPR 2P-9615 1 GOVERNOR ASSEM.

2 NPR 1B-4203 4 NUT

3 NPR C 7N-2833 1 HEAD ASSEM.

4 NPR 8A-2252 1 PISTON ASSEM.

5 NPR 8A-2251 1 LINER

6 NPR 8A-2248 1 ROD ASSEM.

7 NPR 2P-7849 1 CRANKCASE

8 NPR 9F-2247 1 PLUG

9 NPR 2P-7850 1 CRANKSHAFT

10 NPR 2F-5721 1 BEARING

11 NPR CL 1P-5480 1 COVER ASSEM.

CL NPR 299-1998 1 COVER AS.-CLA

12 NPR 2P-7848 1 BRACKET

13 NPR 4N-5224 1 COVER

14 NPR 4N-5225 1 GASKET

THE FOLLOWING REPAIR KITS ARE AVAILABLE:

NPR 8A-2250 1 KIT (Includes 5 Piston rings)

NPR C 8A-2305 1 KIT (Governor-Major Repair)

(Includes Diaphragms, Followers, Valve, Guide, Plunger, "O" Ring, Spring & Hardware)

NPR C 7N-2834 1 KIT (Compressor-Major Repair)

(Includes Valves, Bearings, Gaskets, Rings, Strap, Springs, Shims, "O" Ring & Hardware)

NPR 1P-6059 1 KIT (Unloader Valve)

(Includes Cap, Clip, Washer, Spring, Plunger, & "O" Ring)

NPR 4N-4027 1 KIT (Governor Lines)

(Includes Elbow Assem., Pipe, Fitting, & Washer)

Key:

CL - Classic Part Available
C - INDICATES CHANGE

5S6425 BALANCER GROUP

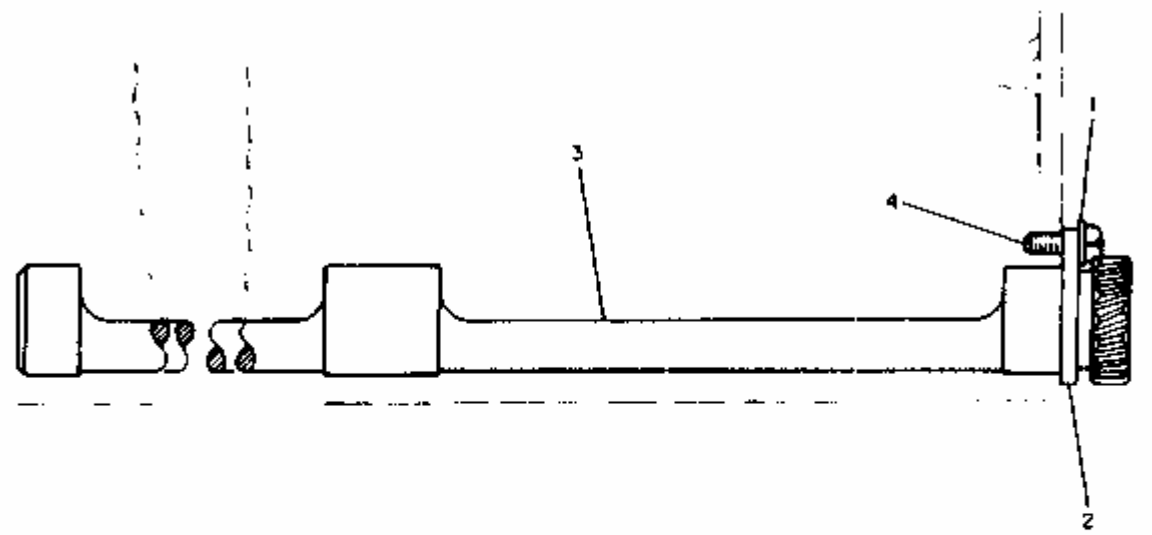

NOTE	REF NO	PART NUMBER	QTY	DESCRIPTION
C	1	5M2894	4	WASHER
	2	4S6417	2	PLATE
C	3	4N7977	1	SHAFT ASSEM (R.H.)
C		4N7978	1	SHAFT ASSEM (L.H.) (20 TEETH)
	4	S1594	4	BOLT
		1N8354	2	LOCK
				-OR-
C		308535	4	BOLT

C INDICATES CHANGE

309021

1 NPR C 5M-2894 4 WASHER

2 NPR 4S-6417 2 PLATE

3 NPR C 4N-7977 1 SHAFT ASSEM. (R.H.)

NPR C 4N-7978 1 SHAFT ASSEM. (L.H.) (20 TEETH)

4 NPR 0S-1594 4 BOLT

NPR 1N-8354 2 LOCK

-OR-

NPR C 030-8535 4 BOLT

Key: C - INDICATES CHANGE

2P6201 CAMSHAFT GROUP

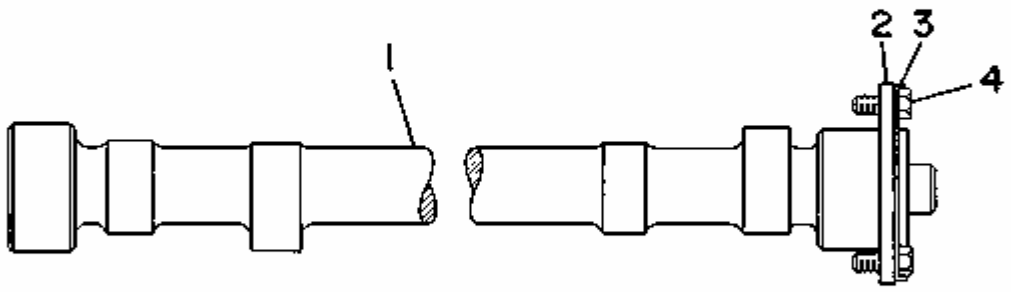

1	**NPR**	**C**	**8N-4111**	**1**	**CAMSHAFT**
2	**NPR**		**7S-2204**	**1**	**WASHER-THRUST**
3	**NPR**		**8S-1491**	**1**	**LOCK**
4	**NPR**		**0S-0509**	**2**	**BOLT**

Key:

C - CHANGE FROM PREVIOUS TYPE

2P6218 CRANKSHAFT GROUP
Engine Serial No. 78P18799 to 78P29149 inclusive
Note: For Field Replacement of 4N7695 Crankshaft Assembly order 4N7692

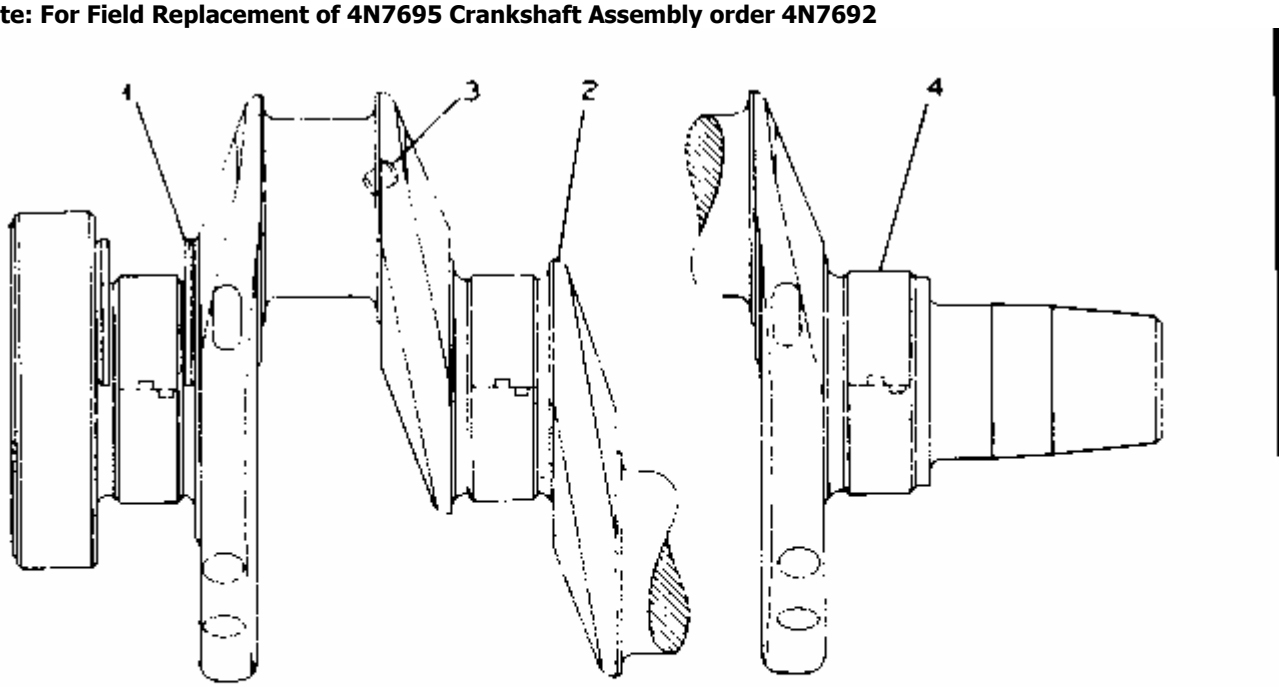

REF NO	PART NUMBER	DESCRIPTION	QTY
1	2P716	PLATE	2
2	4N7695	CRANKSHAFT ASSEM.	1
3	9F2247	PLUG	4
4	3S9730	BEARING	5

155609

1 NPR 2P-0716 2 PLATE

2 NPR 4N-7695 1 CRANKSHAFT ASSEM.

3 NPR 9F-2247 4 PLUG

4 NPR 3S-9730 5 BEARING

4N7692 CRANKSHAFT ASSEMBLY--Field Installation

Grp NPR 4N-7692 CRANKSHAFT AS

R NPR 0R-1212 CRANKSH.020IN US

R NPR 0R-1214 CRANKSH.030IN US

R NPR 0R-2521 CRANKSHUTN

R NPR 0R-5167 CRANKSHAFT AS

CL NPR 242-3440 CSHFT AS-CLASSIC

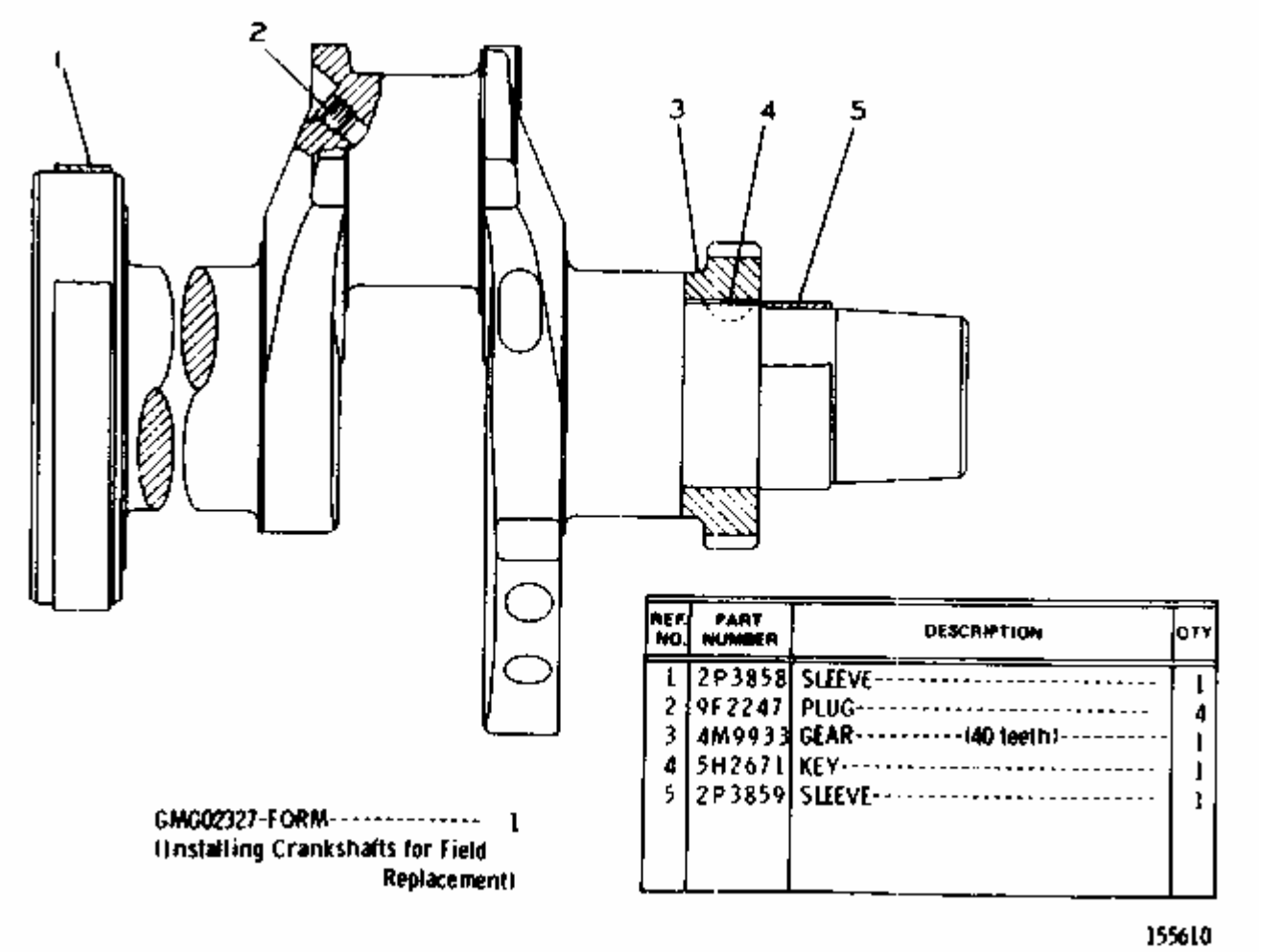

REF. NO.	PART NUMBER	DESCRIPTION	QTY
1	2P3858	SLEEVE	1
2	9F2247	PLUG	4
3	4M9933	GEAR (40 teeth)	1
4	5H2671	KEY	1
5	2P3859	SLEEVE	1

1 NPR 2P-3858 1 SLEEVE

2 NPR 9F-2247 4 PLUG

3 NPR 4M-9933 1 GEAR (40 teeth)

4 NPR 5H-2671 1 KEY

5 NPR 2P-3859 1 SLEEVE

Key: CL - Classic Part Available

2P6218 CRANKSHAFT GROUP
Engine Serial No. 78P29150 to 78P47087 inclusive. Note: For Field Replacement of 4N7695 Crankshaft Assembly order 4N7692 shown on Page 22

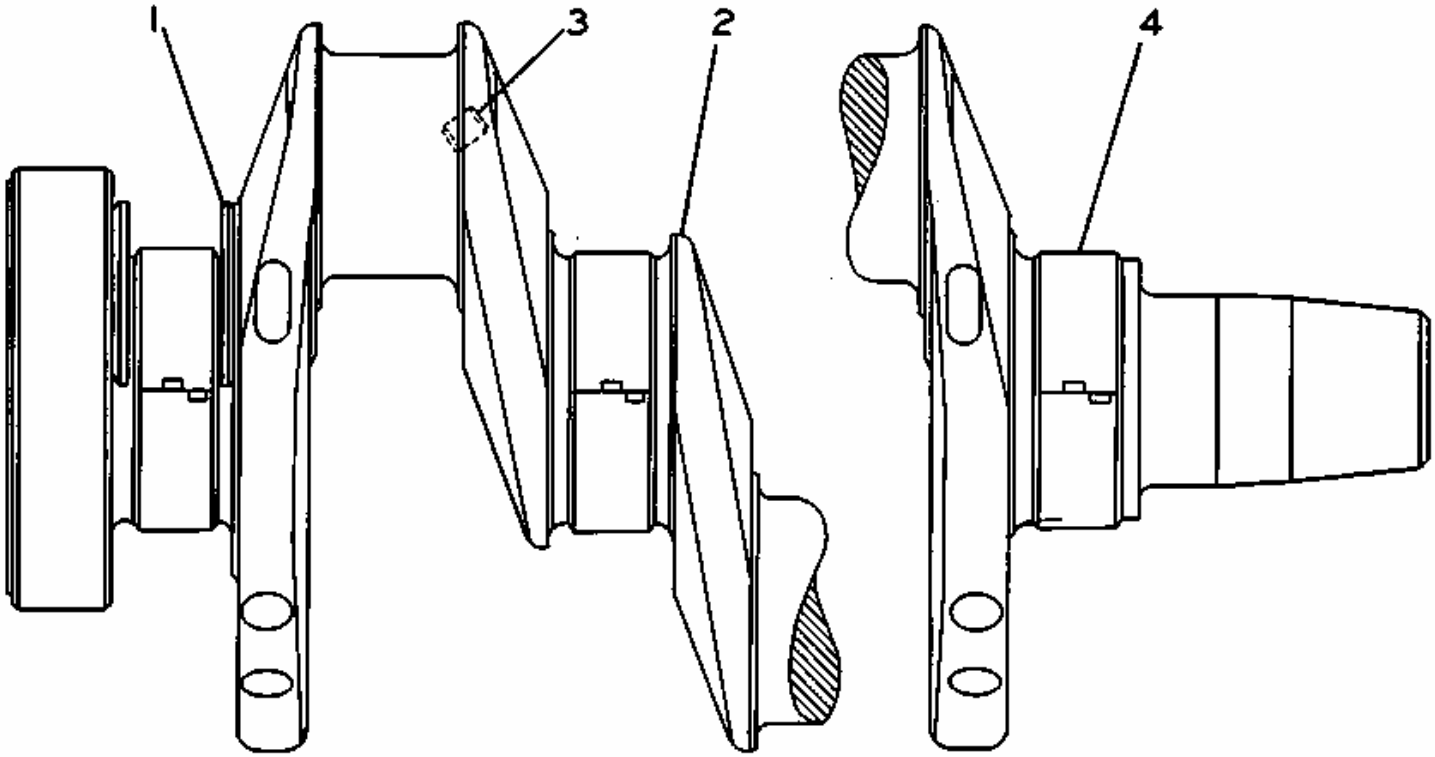

	REF. NO.	PART NUMBER	DESCRIPTION	QTY
C	1	6N8940	PLATE	2
	2	4N7695	CRANKSHAFT ASSEM.	1
	3	9F2247	PLUG	4
	4	3S9730	BEARING	5

C INDICATES CHANGE 211892

1 NPR C 6N-8940 2 PLATE

2 NPR 4N-7695 1 CRANKSHAFT ASSEM.

3 NPR 9F-2247 4 PLUG

4 NPR 3S-9730 5 BEARING

Key:

C - INDICATES CHANGE

6N8080 CRANKSHAFT GROUP
Engine Serial No. 78P47088-Up. Note: For Field Replacement of 4N7695
Crankshaft Assembly order 4N7692 shown on Page 22

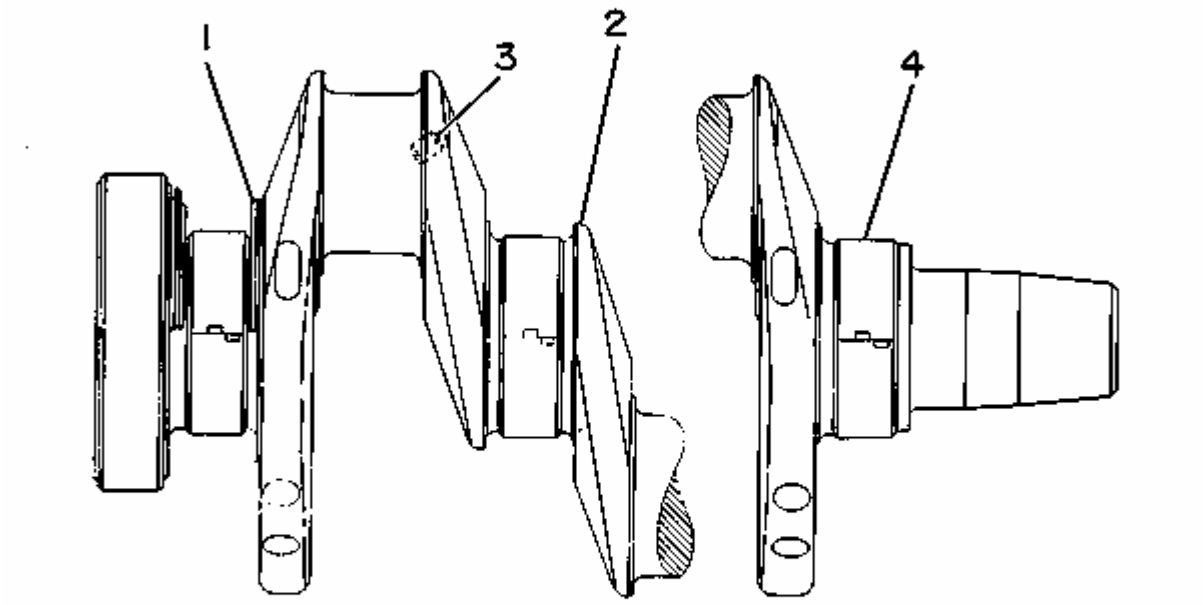

1	**NPR**	**7N-9342**	**2**	**PLATE**
2	**NPR**	**4N-7695**	**1**	**CRANKSHAFT ASSEM.**
(Includes)				
3	**NPR**	**9F-2247**	**4**	**PLUG**
4	**NPR**	**3S-9730**	**5**	**BEARING**

CRANKSHAFT SERVICE THRUST PLATE--Field Installation
Provides a Thrust Plate to be used in the event a "Wide" Thrust Journal Crankshaft is installed in a Spacer Plate Cylinder Block

Grp **CRANKSHAFT SERVICE THRUST PLATE**

NPR 7N-9343 1 THRUST PLATE

CRANKSHAFT BEARING REPLACEMENTS

CYLINDER BLOCK NOT REBORED

CRANKSHAFT GROUND FOR UNDERSIZE BEARING I.D. OF	QTY.	.25 MM	.51 MM	.76 MM
MAIN	5	8N8225	8N8226	8N8227

CYLINDER BLOCK REBORED (.51 MM)
(BEARING OVERSIZE O.D.)

CRANKSHAFT GROUND FOR UNDERSIZE BEARING I.D. OF	QTY.	0 (STANDARD)	.25 MM	
MAIN	5	8N8228	8N8229	

O.D. --OUTSIDE DIAMETER
I.D. --INSIDE DIAMETER

2P6224 CRANKSHAFT SEAL GROUP

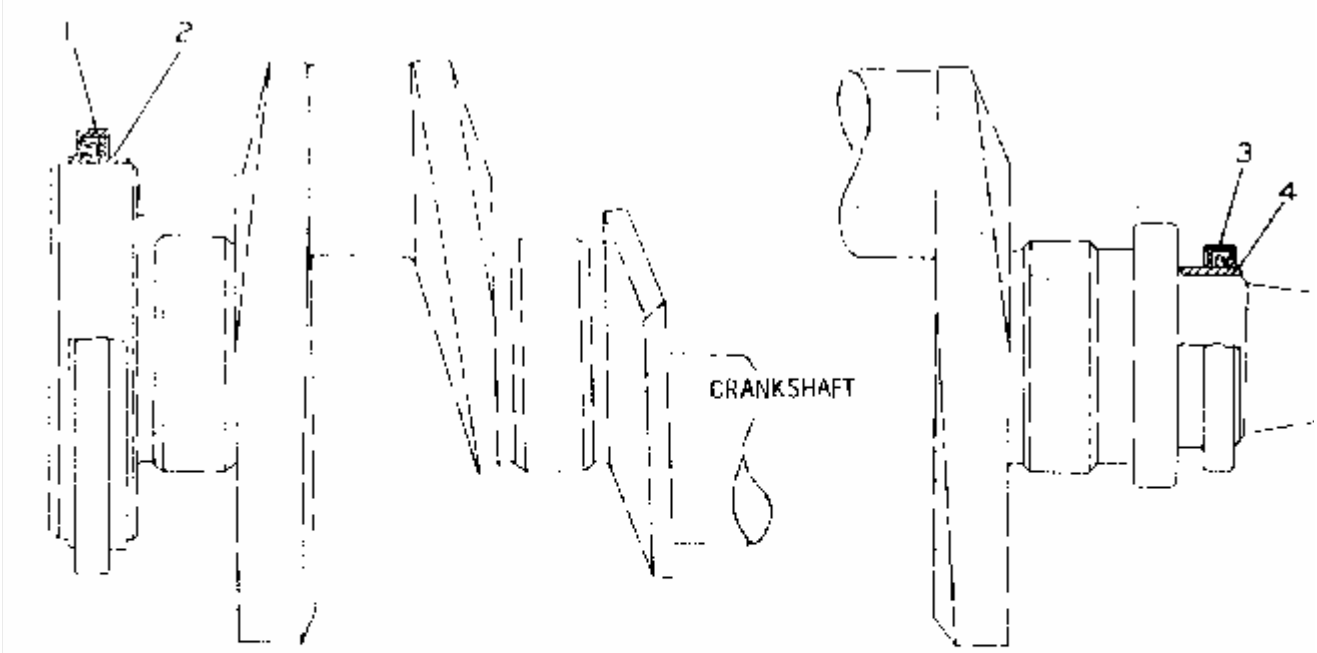

	REF. NO.	PART NUMBER	DESCRIPTION	QTY.
C	1	1N3216	SEAL GROUP----------	1
			(Includes)	
		9S3111	SEAL----------	1
	2	2P3858	SLEEVE----------	1
	3	5S6296	SEAL----------	1
	4	2P3859	SLEEVE----------	1

C INDICATES CHANGE

228583

1 NPR C 1N-3216 1 SEAL GROUP

(Includes)

NPR 9S-3111 1 SEAL

2 NPR 2P-3858 1 SLEEVE

3 NPR 5S-6296 1 SEAL

4 NPR 2P-3859 1 SLEEVE

Key: C - INDICATES CHANGE

3P103 CRANKSHAFT HUB GROUP

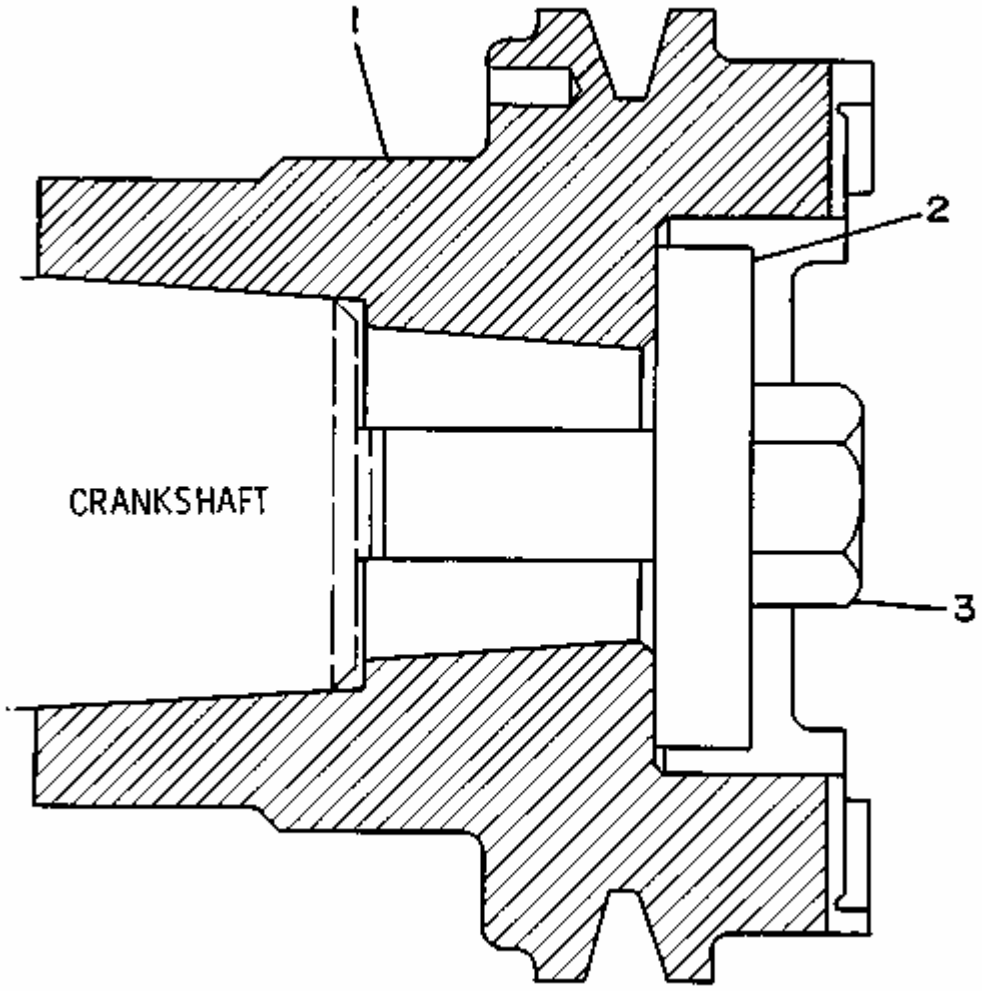

1 NPR 3P-0100 1 HUB

2 NPR C 8N-0794 1 WASHER

3 NPR 7B-5163 1 BOLT

Key:

C - INDICATES CHANGE

7N1088 CYLINDER BLOCK COVERS GROUP--Engine Serial No. 78P47088-Up

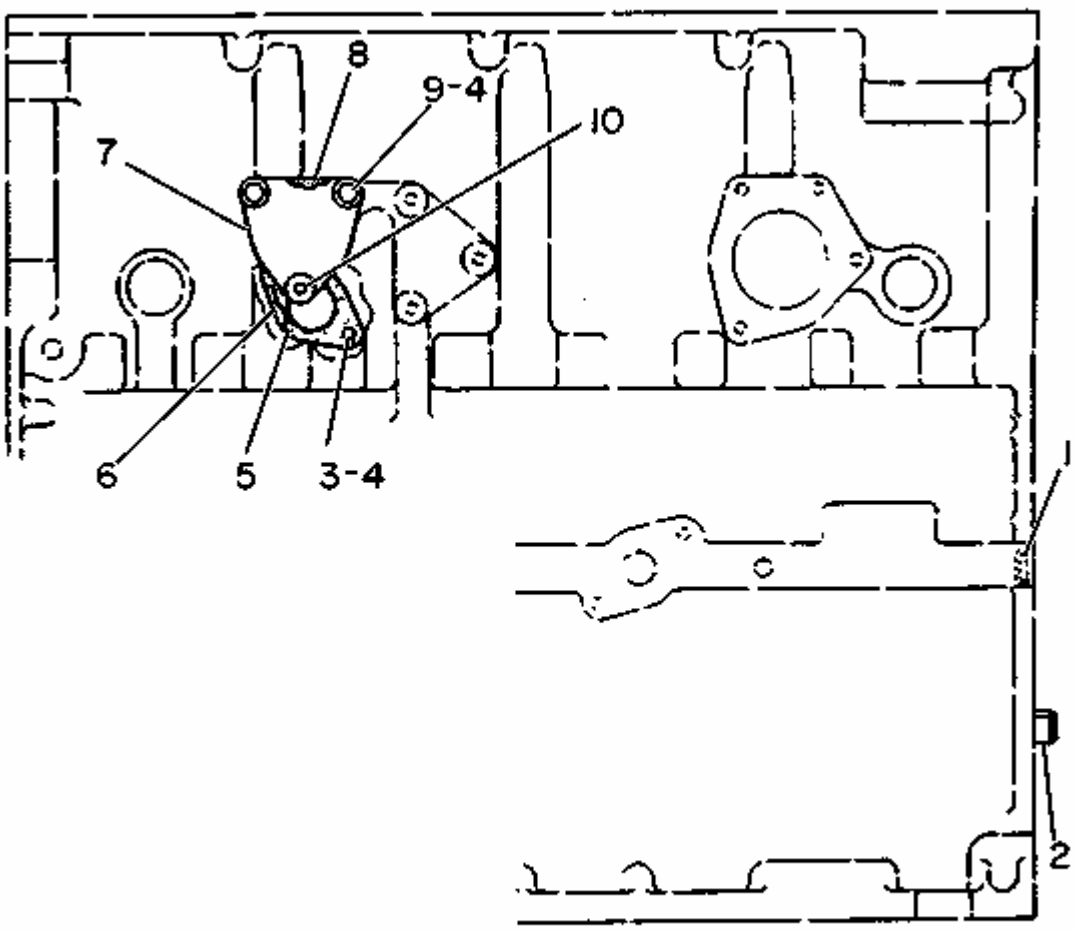

1	NPR	4B-3938	1	PLUG-CUP
2	NPR	2A-3798	2	DOWEL
3	NPR	1A-2029	2	BOLT
4	NPR	5M-2894	4	WASHER
5	NPR	4M-2250	1	GASKET
6	NPR	5M-1903	1	COVER
7	NPR	8L-8662	1	COVER
8	NPR	5S-8055	1	GASKET
9	NPR	0L-1351	2	BOLT
10	NPR	8M-3267	1	SCREW-HEX SOCKET

2P6540 CYLINDER BLOCK GROUP--Engine Serial No. 78P18799 to 78P47087 inclusive
2P8774 Cylinder Block parts are shown on Page 20B

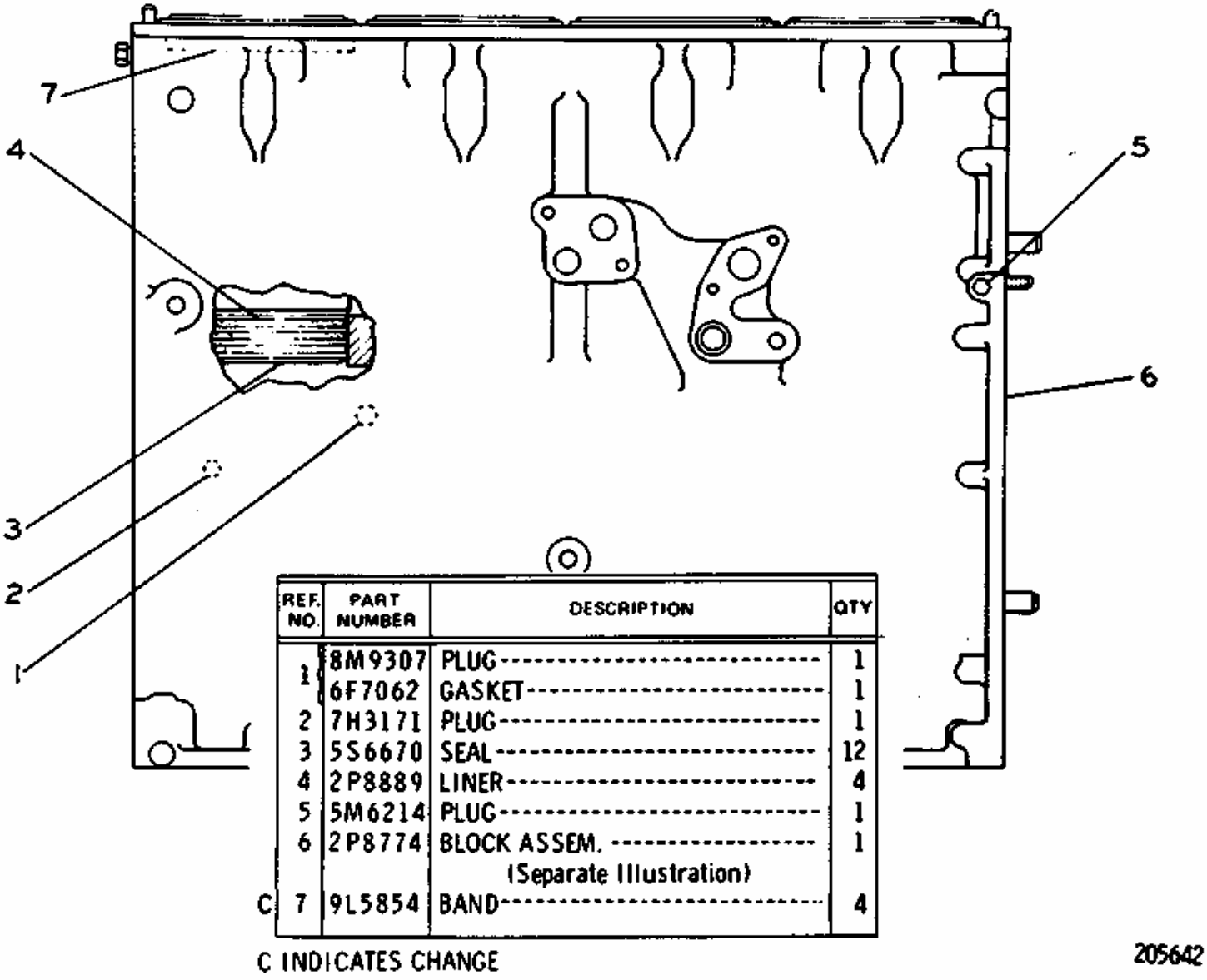

	REF. NO.	PART NUMBER	DESCRIPTION	QTY
	1	8M9307	PLUG	1
		6F7062	GASKET	1
	2	7H3171	PLUG	1
	3	5S6670	SEAL	12
	4	2P8889	LINER	4
	5	5M6214	PLUG	1
	6	2P8774	BLOCK ASSEM.	1
			(Separate Illustration)	
C	7	9L5854	BAND	4

C INDICATES CHANGE

205642

1 NPR 8M-9307 1 PLUG

NPR 6F-7062 1 GASKET

2 NPR 7H-3171 1 PLUG

3 NPR 5S-6670 12 SEAL

4 NPR 2P-8889 4 LINER

5 NPR 5M-6214 1 PLUG

6 NPR RY 2P-8774 1 BLOCK ASSEM.

(Separate Illustration)

7 NPR C 9L-5854 4 BAND

Key: R - REMFG PART MAY BE AVAILABLE Y - SEPARATE ILLUSTRATION C - INDICATES CHANGE

7N8014 CYLINDER BLOCK GROUP-Engine Serial No. 78P47088-Up
6N8127 Cylinder Block parts are shown on Page 21

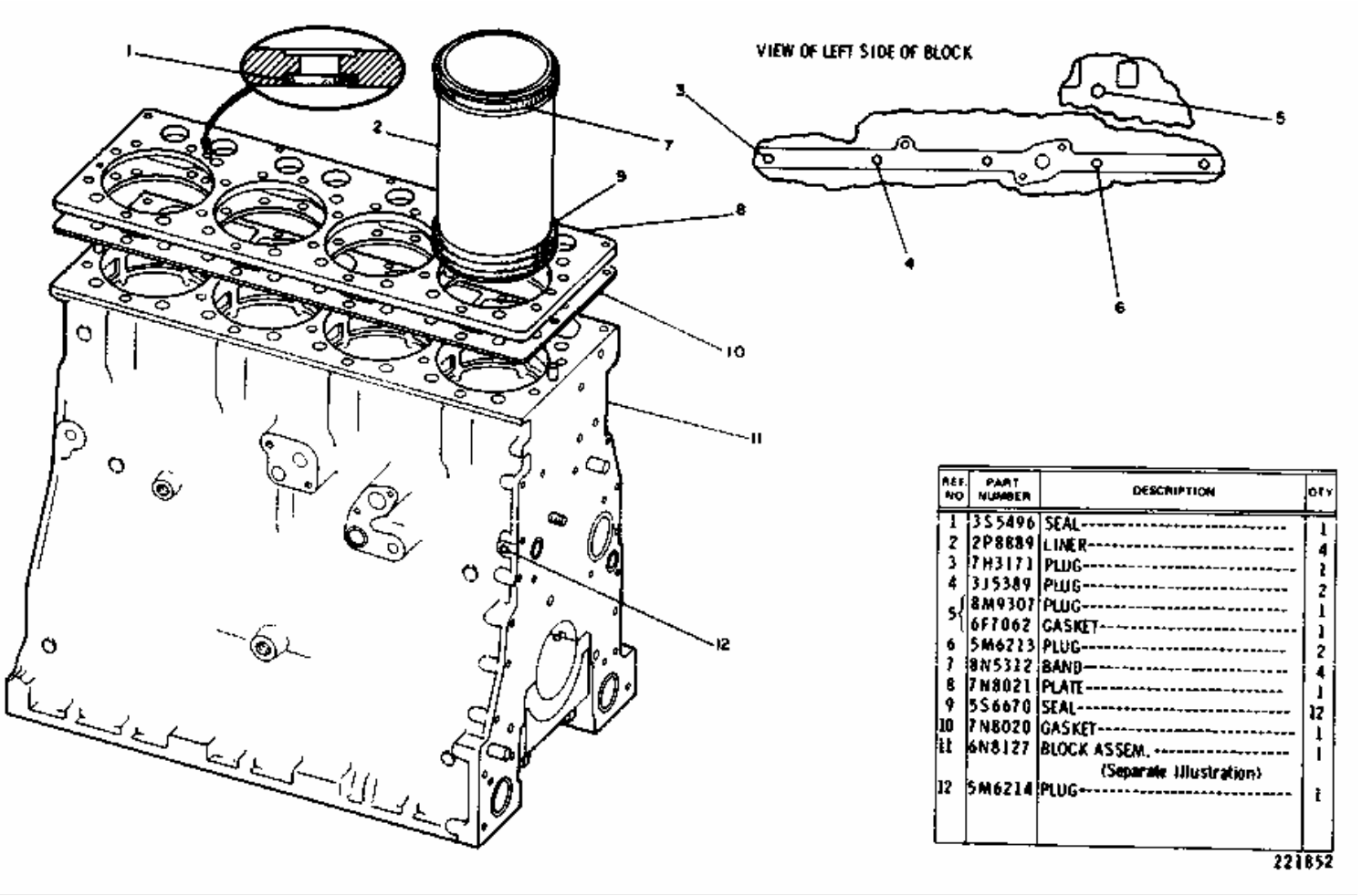

REF. NO	PART NUMBER	DESCRIPTION	QTY
1	3S5496	SEAL	1
2	2P8889	LINER	4
3	7H3171	PLUG	1
4	3J5389	PLUG	2
5	8M9307	PLUG	1
	6F7062	GASKET	1
6	5M6213	PLUG	2
7	8N5312	BAND	4
8	7N8021	PLATE	1
9	5S6670	SEAL	12
10	7N8020	GASKET	1
11	6N8127	BLOCK ASSEM. (Separate Illustration)	1
12	5M6214	PLUG	1

221852

1 NPR 3S-5496 1 SEAL

2 NPR 2P-8889 4 LINER

3 NPR 7H-3171 1 PLUG

4 NPR 3J-5389 2 PLUG

5 NPR 8M-9307 1 PLUG

NPR 6F-7062 1 GASKET

6 NPR 5M-6213 2 PLUG

7 8N-5312 4 BAND

8 NPR 7N-8021 1 PLATE

9 NPR 5S-6670 12 SEAL

10 NPR 7N-8020 1 GASKET

11 NPR Y 6N-8127 1 BLOCK ASSEM.

(Separate Illustration)

12 NPR 5M-6214 1 PLUG

Key: Y - SEPARATE ILLUSTRATION

2P8774 CYLINDER BLOCK ASSEMBLY-Engine Serial No. 78P18799 to 78P47087 inclusive
Part of 2P6540 Cylinder Block Group shown on Page 20

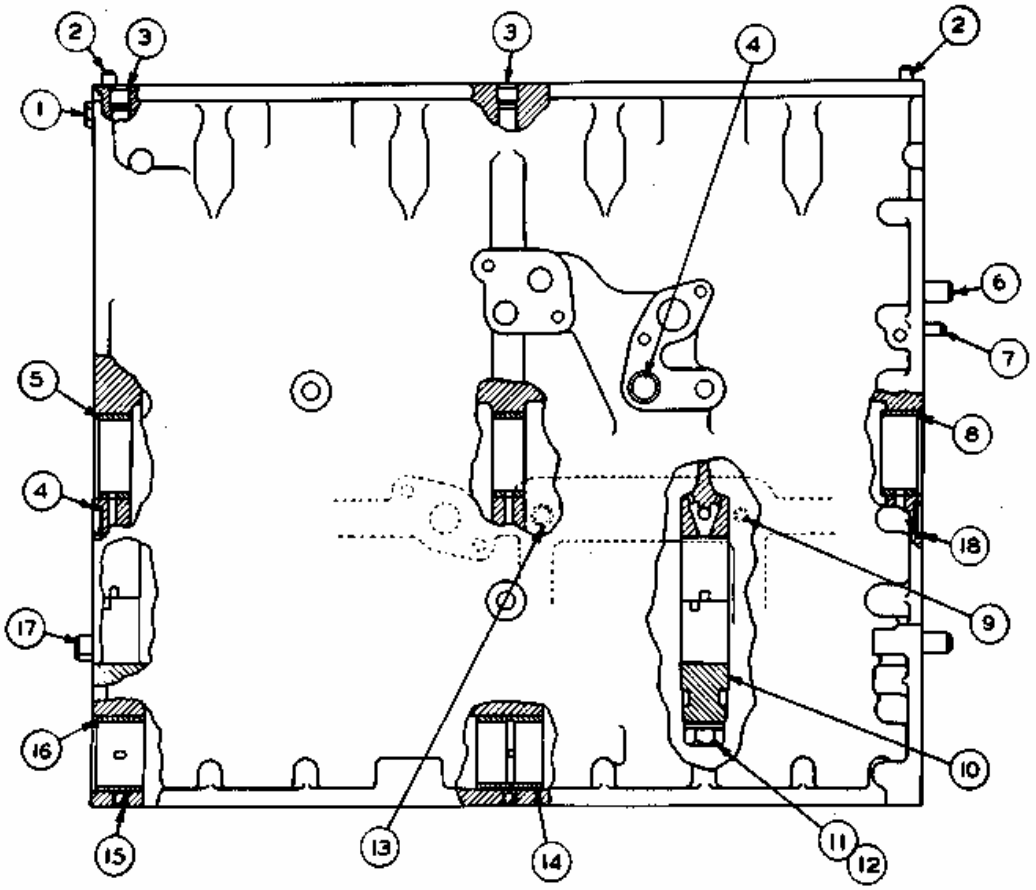

	REF. NO.	PART NUMBER	DESCRIPTION	QTY
	1	5M6213	PLUG	1
	2	8B1312	DOWEL	2
	3	5B7652	DOWEL	2
C	4	4B5387	PLUG	1
	5	7M4046	BEARING	2
	6	8B6349	DOWEL	2
	7	5S8462	STUD	1
	8	9M5477	BEARING	1
	9	1H974	DOWEL	1
	10	1P2717	BEARING CAP	5
	11	7S3224	BOLT	10
	12	2S5658	WASHER	10
	13	8S835	DOWEL	1
	14	5S6420	BEARING	2
	15	4B9782	BALL	5
	16	5S6419	BEARING	4
	17	2A3798	DOWEL	2
	18	4B5387	PLUG--24.01 mm(.945 in.) hole dia.	2
			-OR-	
C		4B3938	PLUG--28.95 mm(1.14 in.) hole dia.	2

C INDICATES CHANGE

214988

1 NPR 5M-6213 1 PLUG
2 NPR 8B-1312 2 DOWEL
3 NPR 5B-7652 2 DOWEL
4 NPR C 4B-5387 1 PLUG

5 NPR 7M-4046 2 BEARING
6 NPR 8B-6349 2 DOWEL
7 NPR 5S-8462 1 STUD

8 NPR 9M-5477 1 BEARING
9 NPR 1H-0974 1 DOWEL
10 NPR 1P-2717 5 BEARING CAP
11 NPR 7S-3224 10 BOLT
12 NPR 2S-5658 10 WASHER
13 NPR 8S-0835 1 DOWEL
14 NPR 5S-6420 2 BEARING
15 NPR 4B-9782 5 BALL
16 NPR 5S-6419 4 BEARING
17 NPR 2A-3798 2 DOWEL
18 NPR 4B-5387 2 PLUG 24.01 mm(.945 in.) hole dia.

-OR-
NPR C 4B-3938 2 PLUG 28.95 mm(1.14 in.) hole dia.
Key: C - INDICATES CHANGE

6N8127 CYLINDER BLOCK GROUP-Engine Serial No. 78P47088-Up
Part of 7N8014 Cylinder Block Group shown on Page 20A

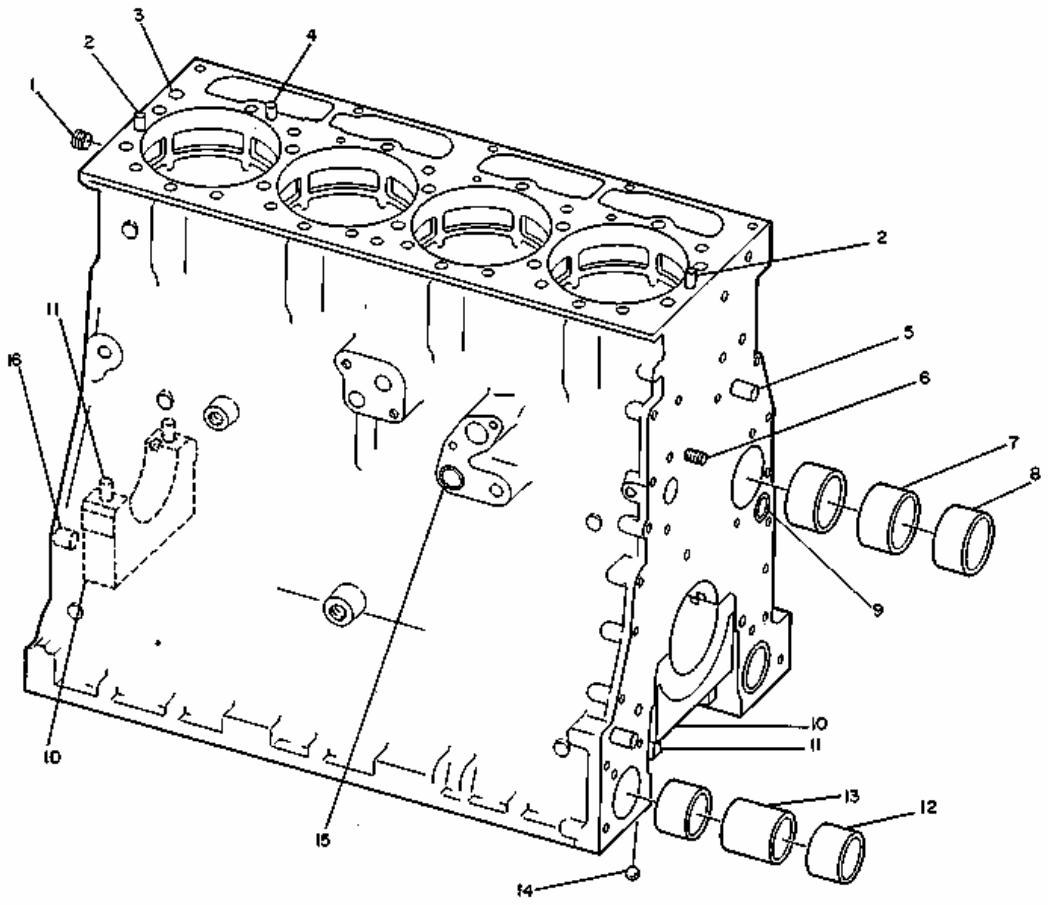

	REF NO.	PART NUMBER	DESCRIPTION	QTY
	1	2B858	PLUG	1
	2	8K1207	DOWEL	2
	3	5B7652	DOWEL	2
	4	1S9540	DOWEL	1
	5	8B6349	DOWEL	2
	6	5S8462	STUD	1
	7	7M4046	BEARING	2
C	8	8N4110	BEARING	1
	9	4B3938	PLUG	2
	10	6N8003	CAP	5
	11	7S3224	BOLT	10
		2S5658	WASHER	10
	12	5S6419	BEARING	4
	13	5S6420	BEARING	2
	14	4B9782	BALL	5
	15	4B5387	PLUG	1
	16	2A3798	DOWEL	2

C INDICATES CHANGE

227964

1 NPR 2B-0858 1 PLUG
2 NPR 8K-1207 2 DOWEL
3 NPR 5B-7652 2 DOWEL
4 NPR 1S-9540 1 DOWEL
5 NPR 8B-6349 2 DOWEL
6 NPR 5S-8462 1 STUD
7 NPR 7M-4046 2 BEARING
8 NPR C 8N-4110 1 BEARING
9 NPR 4B-3938 2 PLUG
10 NPR 6N-8003 5 CAP
11 NPR 7S-3224 10 BOLT
NPR 2S-5658 10 WASHER
12 NPR 5S-6419 4 BEARING
13 NPR 5S-6420 2 BEARING
14 NPR 4B-9782 5 BALL
15 NPR 4B-5387 1 PLUG
16 NPR 2A-3798 2 DOWEL

Key: C - INDICATES CHANGE

8N6274 CYLINDER BLOCK HARDWARE KIT--Field Installation-Engine Serial No. 78P47088-Up
PROVIDES THE NECESSARY HARDWARE TO ALLOW A COUNTERBORE 3304
ENGINE TO BE SERVICED WITH A SPACER PLATE BLOCK

NPR	8N-3663	1	PLATE
NPR	7N-8022	1	GASKET
NPR	8N-3661	1	GASKET
NPR	3J-5389	2	PLUG
NPR	7N-8018	4	SEAL
NPR	7N-8025	12	SEAL
NPR	5B-9603	5	BOLT
NPR	7N-9342	2	PLATE
NPR	7N-9343	2	PLATE
NPR	9S-1366	1	BOLT
NPR	0S-1585	2	BOLT

2P6484 CYLINDER HEAD GROUP--Engine Serial No. 78P18799 to 78P33936 inclusive
4N7444 Cylinder Head parts are shown on Page 26B

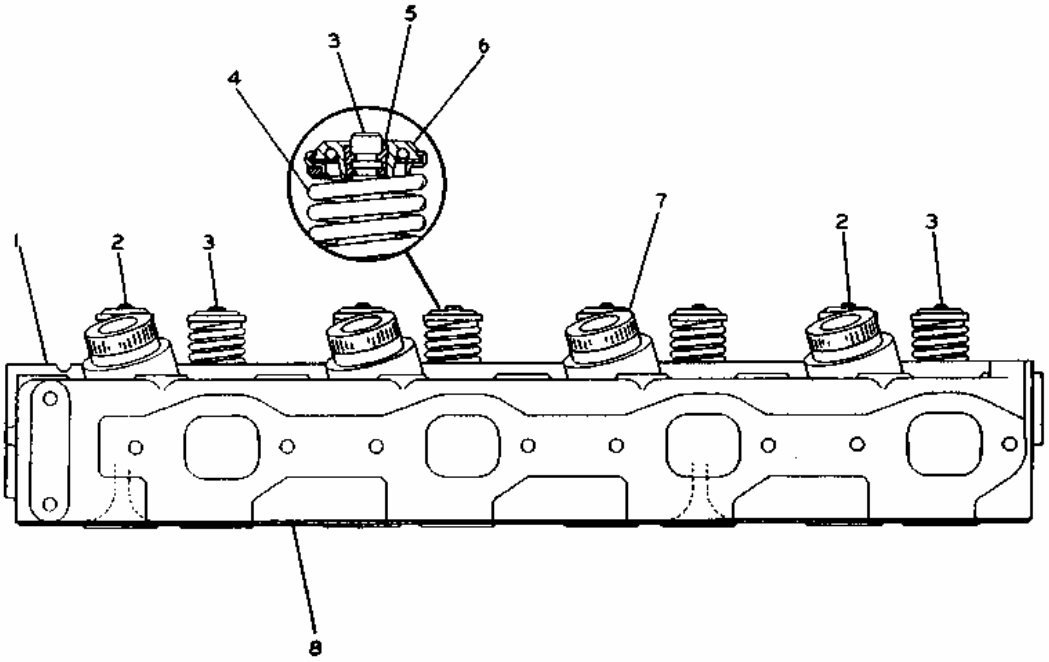

	REF NO.	PART NUMBER	DESCRIPTION	QTY
	1	4N7444	HEAD ASSEM. (Separate Illustration)	1
C	2	5S6452	VALVE (Intake)	4
C	3	5S7232	VALVE (Exhaust)	4
	4	7S7144	SPRING	8
	5	2A4429	LOCK	16
	6	5S5874	ROTO COIL	8
		8S3970	CHAMBER ASSEM.	4
		7S3206	SEAL	4
C	7	5M2667	GASKET---4.93 mm(.194 in.) thick	4
C		2S8959	GASKET---5.66 mm(.223 in.) thick	4
C		2S8960	GASKET---6.3 mm(.248 in.) thick	4
	8	5S6277	GASKET	1

C INDICATES CHANGE 207276

1 NPR Y 4N-7444 1 HEAD ASSEM.

(Separate Illustration)

2 NPR C 5S-6452 4 VALVE (Intake)

3 NPR C 5S-7232 4 VALVE (Exhaust)

4 NPR 7S-7144 8 SPRING

5 NPR 2A-4429 16 LOCK

6 NPR 5S-5874 8 ROTO COIL

7 NPR CL 8S-3970 4 CHAMBER ASSEM.

CL NPR 242-3438 1 PC AS-CLASSIC

NPR 7S-3206 4 SEAL

NPR C 5M-2667 4 GASKET 4.93 mm(.194 in.) thick

NPR C 2S-8959 4 GASKET 5.66 mm(.223 in.) thick

NPR 2S-8960 4 GASKET 6.3 mm(.248 in.) thick

8 NPR 5S-6277 1 GASKET

Key: CL - Classic Part Available C - INDICATES CHANGE Y - SEPARATE ILLUSTRATION

2P6484 CYLINDER HEAD GROUP-Engine Serial No. 78P33937 to 44430, 46254, 46256, 46257, 46259, 46262, 46265, 46267, 46268, 46270, 46271, 46273 to 46276, 46278, 46280 and 78P46282 inclusive. 6N8875 Cylinder Head parts are shown on Page 27

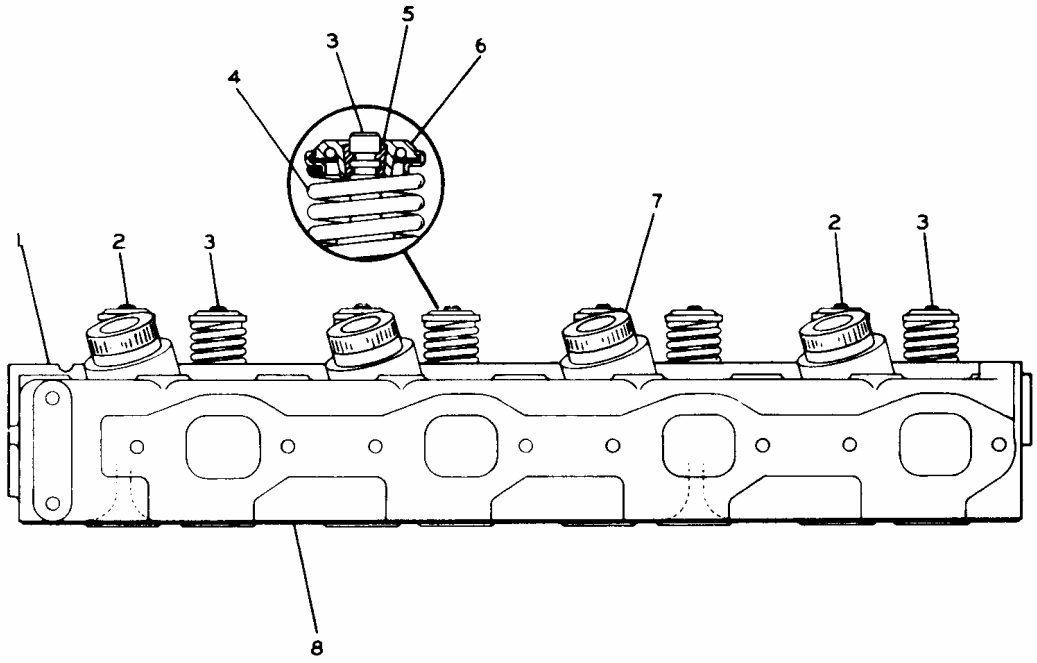

	REF. NO.	PART NUMBER	DESCRIPTION	QTY
C	1	6N8875	HEAD ASSEM. (Separate Illustration)	1
	2	5S6452	VALVE (Intake)	4
	3	5S7232	VALVE (Exhaust)	4
	4	7S7144	SPRING	8
	5	2A4429	LOCK	16
	6	5S5874	ROTO COIL	8
	7	8S3970	CHAMBER ASSEM.	4
		7S3206	SEAL	4
		5M2667	GASKET---4.93 mm(.194 in.) thick	4
		2S8959	GASKET---5.66 mm(.223 in.) thick	4
		2S8960	GASKET---6.3 mm(.248 in.) thick	4
C	8	7N7386	GASKET	1

C INDICATES CHANGE 217001

1 NPR RCY 6N-8875 1 HEAD ASSEM.

R NPR 0R-1394 1 HEAD AS-CYLINDER

(Separate Illustration)

2 NPR 5S-6452 4 VALVE (Intake)

3 NPR 5S-7232 4 VALVE (Exhaust)

4 NPR 7S-7144 8 SPRING

5 NPR 2A-4429 16 LOCK

6 NPR 5S-5874 8 ROTO COIL

7 NPR CL 8S-3970 4 CHAMBER ASSEM.

CL NPR 242-3438 1 PC AS-CLASSIC

NPR 7S-3206 4 SEAL

NPR 5M-2667 4 GASKET 4.93 mm(.194 in.) thick

NPR 2S-8959 4 GASKET 5.66 mm(.223 in.) thick

NPR 2S-8960 4 GASKET 6.3 mm(.248 in.) thick

8 NPR C 7N-7386 1 GASKET

Key: CL - Classic Part Available C - INDICATES CHANGE R - REMFG PART MAY BE AVAILABLE Y - SEPARATE ILLUSTRATION

2P6484 CYLINDER HEAD GROUP-Engine Serial No. 78P44431 to 46253, 46255, 46258, 46260, 46261, 46263, 46264, 46266, 46269, 46272, 46277, 46279, 46281 and 78P46283 to 78P47087 inclusive

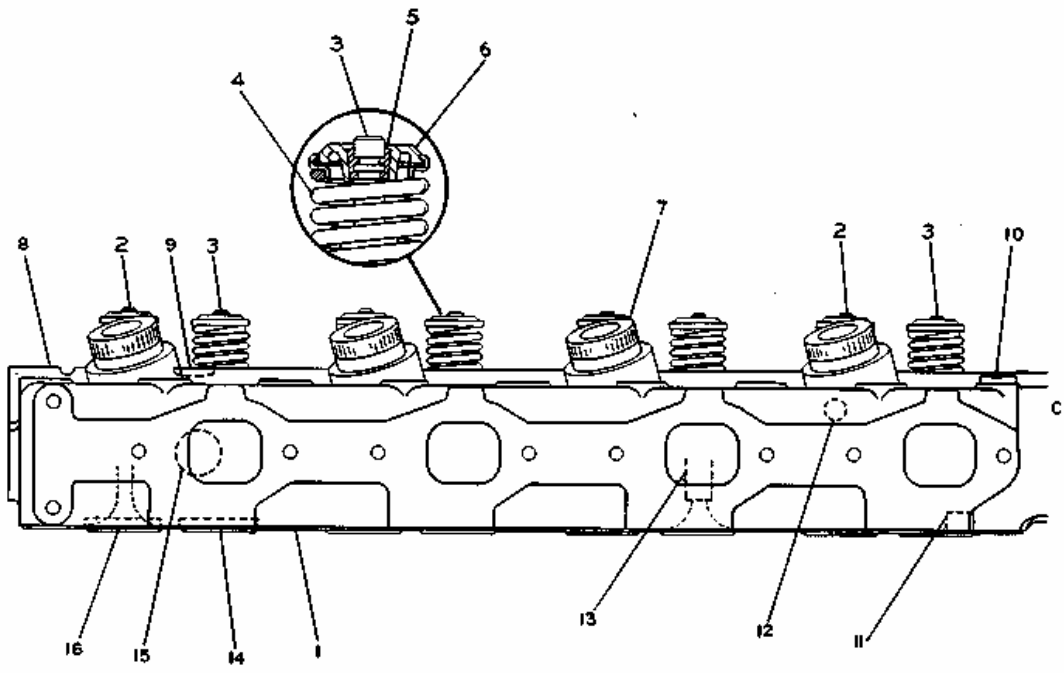

REF. NO.	PART NUMBER	DESCRIPTION	QTY.
1	7N7386	GASKET	1
2	5S6452	VALVE-------(intake)----------	4
3	5S7232	VALVE-------(exhaust)---------	4
4	7S7144	SPRING	8
5	2A4429	LOCK	16
6	5S5874	ROTO COIL	8
7	8S3970	CHAMBER ASSEM.	4
	7S3206	SEAL	4
	5M2667	GASKET--4.93 mm (.194 in.) thick	4
	2S8959	GASKET------5.66mm(.223 in.)thick	4
	2S8960	GASKET----6.3 mm (.248 in.) thick	4
8	6N8121	HEAD ASSEM. (Includes)	1
9	3B623	PLUG	4
10	7N2597	SPACER	1
11	1S3062	DIRECTOR	12
12	2B858	PLUG	3
13	2P1262	GUIDE	8
14	5S7221	INSERT	4
15	3S8313	PLUG	4
16	7N4448	INSERT	4

C INDICATES CHANGE 220699

1 NPR 7N-7386 1 GASKET

2 NPR 5S-6452 4 VALVE (intake)

3 NPR 5S-7232 4 VALVE (exhaust)

4 NPR 7S-7144 8 SPRING

5 NPR 2A-4429 16 LOCK

6 NPR 5S-5874 8 ROTO COIL

7 NPR CL 8S-3970 4 CHAMBER ASSEM.

CL NPR 242-3438 1 PC AS-CLASSIC

NPR 7S-3206 4 SEAL

NPR 5M-2667 4 GASKET 4.93 mm (.194 in.) thick

NPR 2S-8959 4 GASKET 5.66mm(.223 in.)thick

NPR 2S-8960 4 GASKET 6.3 mm (.248 in.) thick

8 NPR RC 6N-8121 1 HEAD ASSEM.

R NPR 0R-0821 1 HEAD AS-CYLINDER

(Includes)

9 NPR 3B-0623 4 PLUG

10 NPR 7N-2597 1 SPACER

11 NPR 1S-3062 12 DIRECTOR

12 NPR 2B-0858 3 PLUG

13 NPR 2P-1262 8 GUIDE

14 NPR 5S-7221 4 INSERT

15 NPR 3S-8313 4 PLUG

16 NPR 7N-4448 4 INSERT

Key:

CL - Classic Part Available
C - INDICATES CHANGE
R - REMFG PART MAY BE AVAILABLE

6N8101 CYLINDER HEAD GROUP--Engine Serial No. 78P47088 to 78P53418 inclusive
8N1188 Head parts are shown on Page 26B

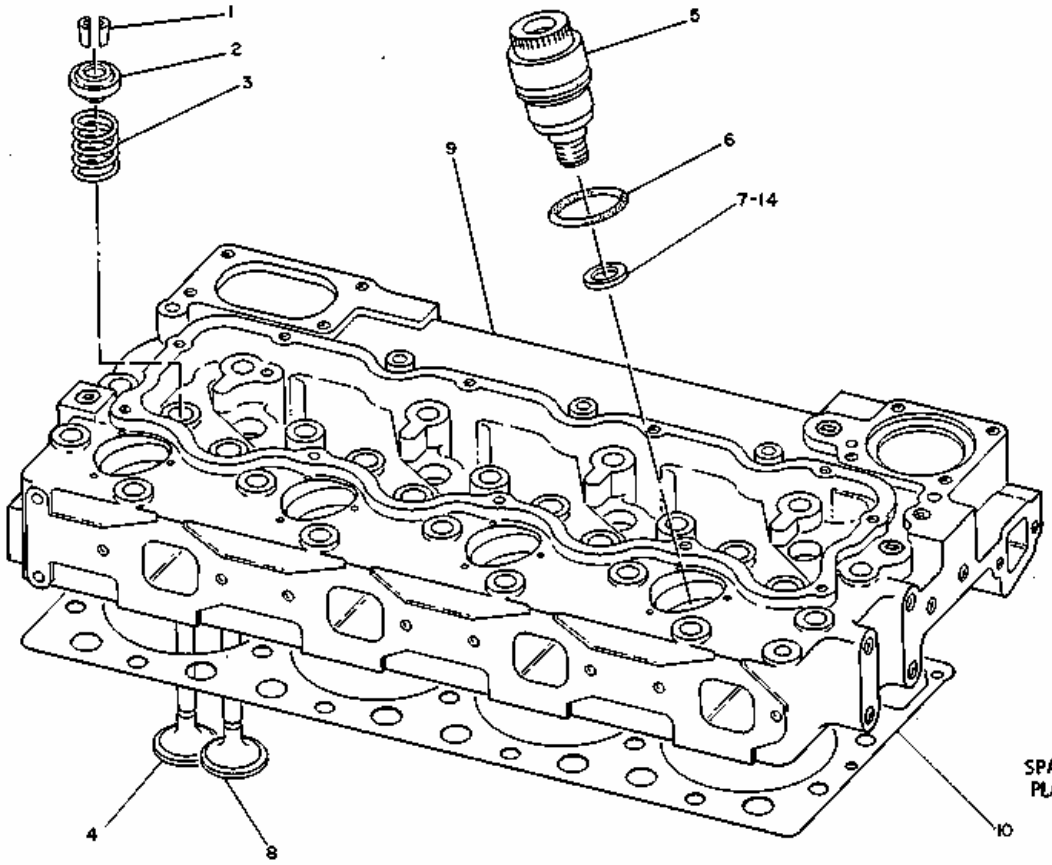

REF NO.	PART NUMBER	DESCRIPTION	QTY
1	2A4429	LOCK	16
2	5S5874	ROTOCOIL	8
3	7S7144	SPRING	8
4	5S6452	VALVE---(intake)	4
5	8S3970	CHAMBER ASSEM.	4
C 6	6V1585	SEAL	4
7	5M2667	GASKET	4
8	5S7232	VALVE---(exhaust)	4
9	8N1188	HEAD ASSEM. (Separate Illustration)	1
10	7N8022	GASKET	1
11	3S5496	SEAL	1
12	7N8025	SEAL	12
13	7N8018	SEAL	4
14	2S8959	GASKET---5.67 mm(.223 in.) thick	4
	2S8960	GASKET---6.30 mm(.248 in.) thick	4

C INDICATES CHANGE

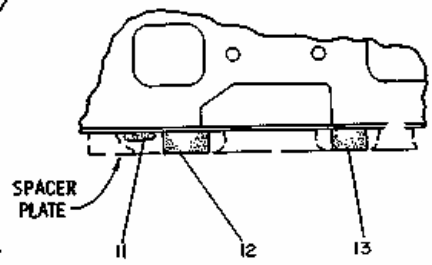

175629

1 NPR 2A-4429 16 LOCK

2 NPR 5S-5874 8 ROTOCOIL

3 NPR 7S-7144 8 SPRING

4 NPR 5S-6452 4 VALVE (intake)

5 NPR CL 8S-3970 4 CHAMBER ASSEM.

CL NPR 242-3438 1 PC AS-CLASSIC

6 NPR C 6V-1585 4 SEAL

7 NPR 5M-2667 4 GASKET

8 NPR 5S-7232 4 VALVE (exhaust)

9 NPR CLRY 8N-1188 1 HEAD ASSEM.

R NPR 0R-0821 1 HEAD AS-CYLINDER

R NPR 0R-2086 1 HEAD AS-CYL -UTN

CL NPR 242-3436 1 HEAD AS-CLASSIC

(Separate Illustration)

10 NPR 7N-8022 1 GASKET

11 NPR 3S-5496 1 SEAL

12 NPR 7N-8025 12 SEAL

13 NPR 7N-8018 4 SEAL

14 NPR 2S-8959 4 GASKET 5.67 mm(.223 in.) thick

NPR 2S-8960 4 GASKET 6.30 mm(.248 in.) thick

Key:

CL - Classic Part Available
C - INDICATES CHANGE
R - REMFG PART MAY BE AVAILABLE
Y - SEPARATE ILLUSTRATION

7N9534 CYLINDER HEAD FASTENER GROUP-Engine Serial No. 78P47088-Up

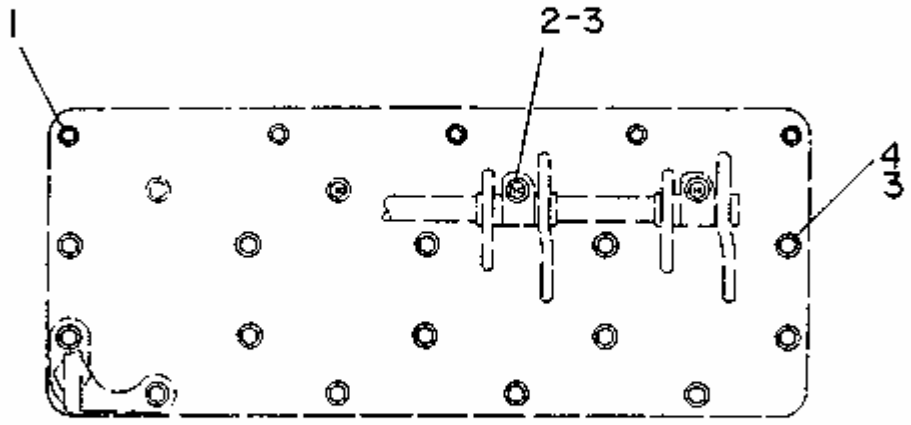

1 NPR 5B-9603 5 BOLT (3/8-16X5IN)

2 NPR C 1B-7709 3 BOLT (5/8-11X8IN)

3 NPR C 2S-0736 17 WASHER-HARD

4 NPR 1D-4595 14 BOLT (5/8-11X6IN)

Key: C - CHANGE FROM PREVIOUS TYPE

2P6544 CYLINDER HEAD FASTENER GROUP-Engine Serial No. 78P18799 to 78P47087 inclusive

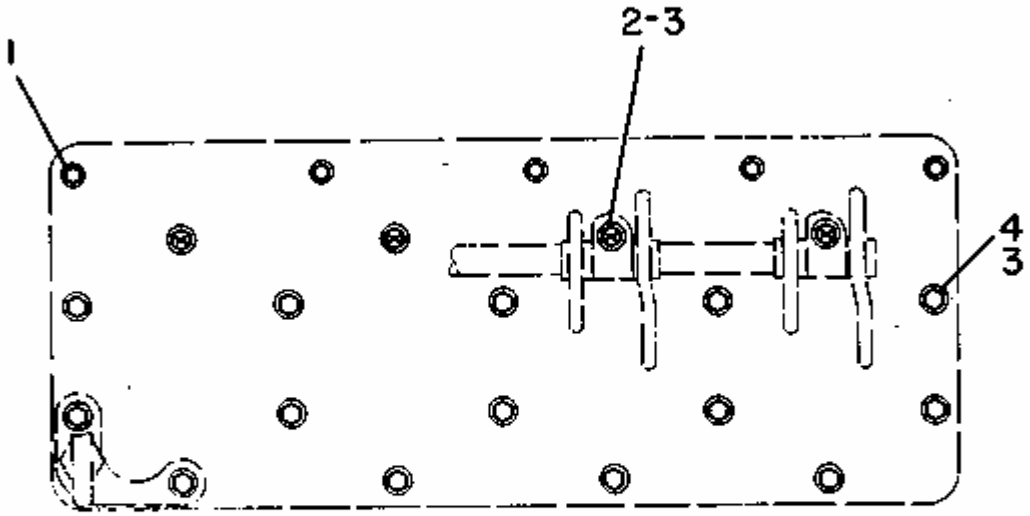

1 NPR 1A-5183 5 BOLT (3/8-16X4.75IN)

NPR 5B-3850 5 WASHER

-OR-

NPR C 1A-5964 5 BOLT (3/8-16X4.5IN)

2 NPR 1B-7709 4 BOLT (5/8-11X8IN)

3 NPR 2S-0736 18 WASHER-HARD

4 NPR 1D-4595 14 BOLT (5/8-11X6IN)

Key: C - CHANGE FROM PREVIOUS TYPE

6N8875 CYLINDER HEAD ASSEMBLY
Engine Serial No. 78P33937 to 44430, 46254, 46256, 46257, 46259, 46262, 46265, 46267, 46268, 46270, 46271, 46273 to 46276, 46278, 46280 and 78P46282 inclusive. Part of 2P6484 Cylinder Head Group shown on Page 26A

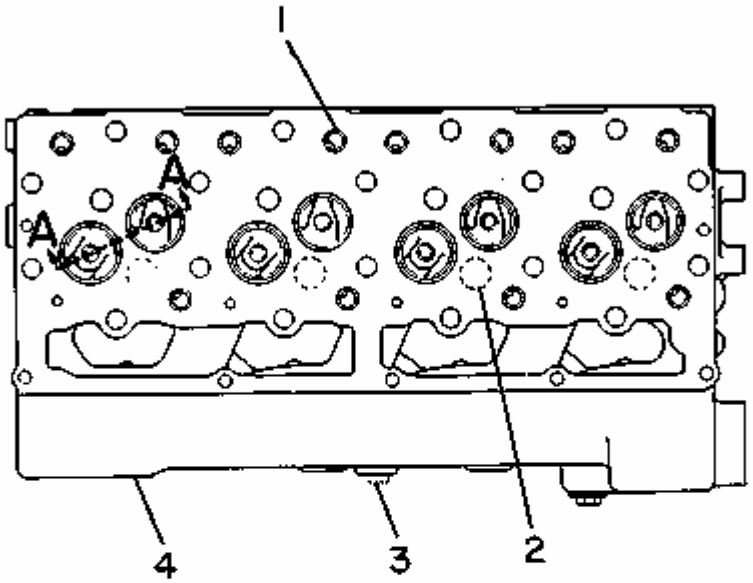

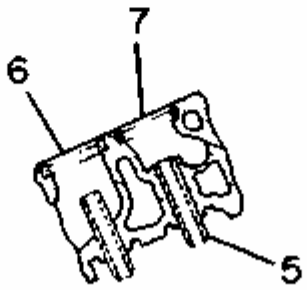

SECTION A-A

1	NPR	1S-3062	12	DIRECTOR-WATER
2	NPR	3B-0623	4	PLUG-CUP
3	NPR	2B-0858	3	PLUG-PIPE
4	NPR	3S-8313	4	PLUG-CUP
5	NPR	2P-1262	8	GUIDE-VALVE
6	NPR	5S-7218	4	INSERT-VALVE SEAT (INTAKE)
7	NPR	1P-6837	4	INSERT-VALVE SEAT (EXHAUST)

8N1188 CYLINDER HEAD GROUP--Pngine Serial No. 78P47088-Up
Part of 6N8101 Cylinder Head Group shown on Page 26A-2

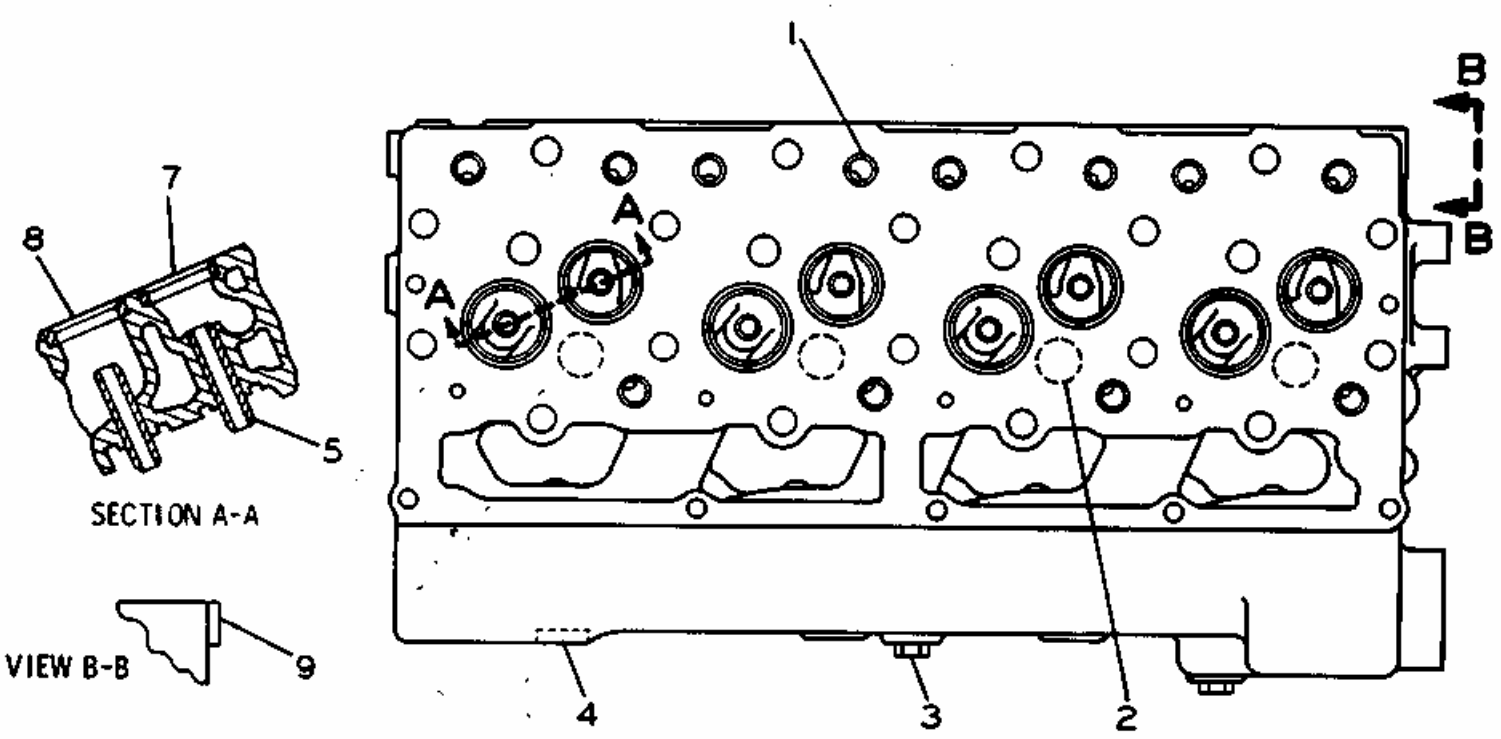

REF. NO.	PART NUMBER	DESCRIPTION	QTY
1	1S3062	DIRECTOR	12
2	3B623	PLUG	4
3	2B858	PLUG	3
4	3S8313	PLUG	4
5	2P1262	GUIDE	8
7	5S7221	INSERT---------(exhaust)--------	4
8	7N4448	INSERT---------(intake)----------	4
9	7N2597	SPACER----------	1

222676

1 NPR 1S-3062 12 DIRECTOR

2 NPR 3B-0623 4 PLUG

3 NPR 2B-0858 3 PLUG

4 NPR 3S-8313 4 PLUG

5 NPR 2P-1262 8 GUIDE

7 NPR 5S-7221 4 INSERT (exhaust)

8 NPR 7N-4448 4 INSERT (intake)

9 NPR 7N-2597 1 SPACER

Key: CL - Classic Part Available

4N7444 CYLINDER HEAD ASSEMBLY-Engine Serial No. 78P18799 to 78P33936 inclusive
Part of 2P6484 Cylinder Head Group shown on Page 26

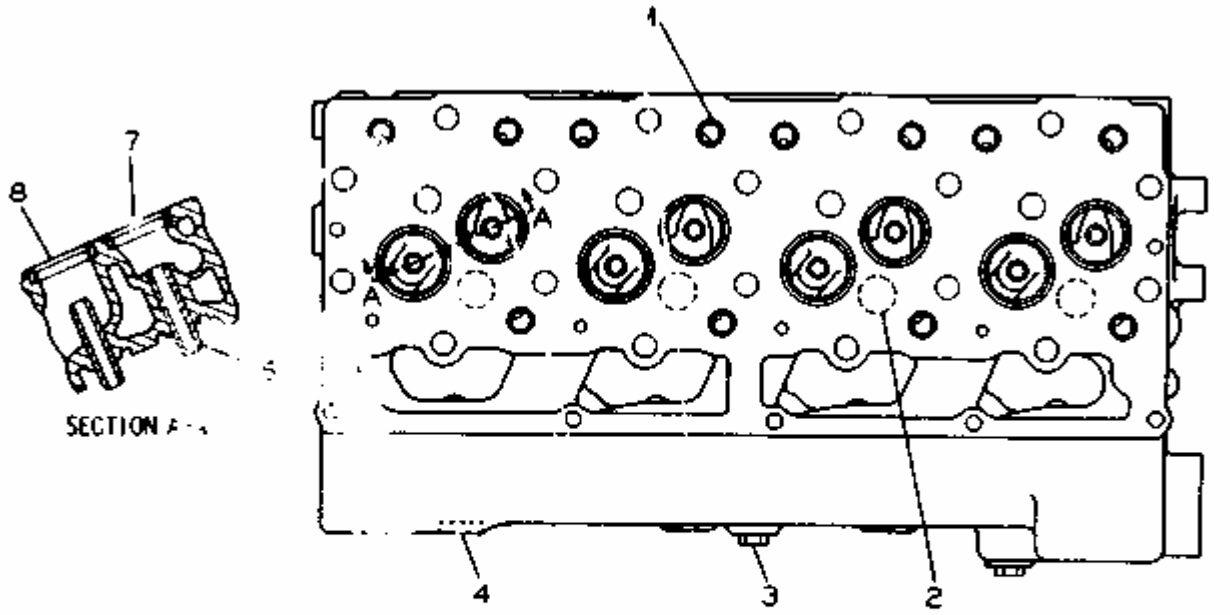

REF. NO.	PART NUMBER		QTY
1	1S3062	DIRECTOR	12
2	3B623	PLUG	4
3	2B858	PLUG	3
4	3S8313	PLUG	4
5	2P1262	GUIDE	8
7	5S7221	INSERT---------(exhaust)--------	4
8	5S7218	INSERT---------(intake)----------	4

202759

1 NPR 1S-3062 12 DIRECTOR

2 NPR 3B-0623 4 PLUG

3 NPR 2B-0858 3 PLUG

4 NPR 3S-8313 4 PLUG

5 NPR 2P-1262 8 GUIDE

7 NPR 5S-7221 4 INSERT (exhaust)

8 NPR 5S-7218 4 INSERT (intake)

3P59 FAN DRIVE GROUP--Serial No. 87V1138 to 87V4875 inclusive

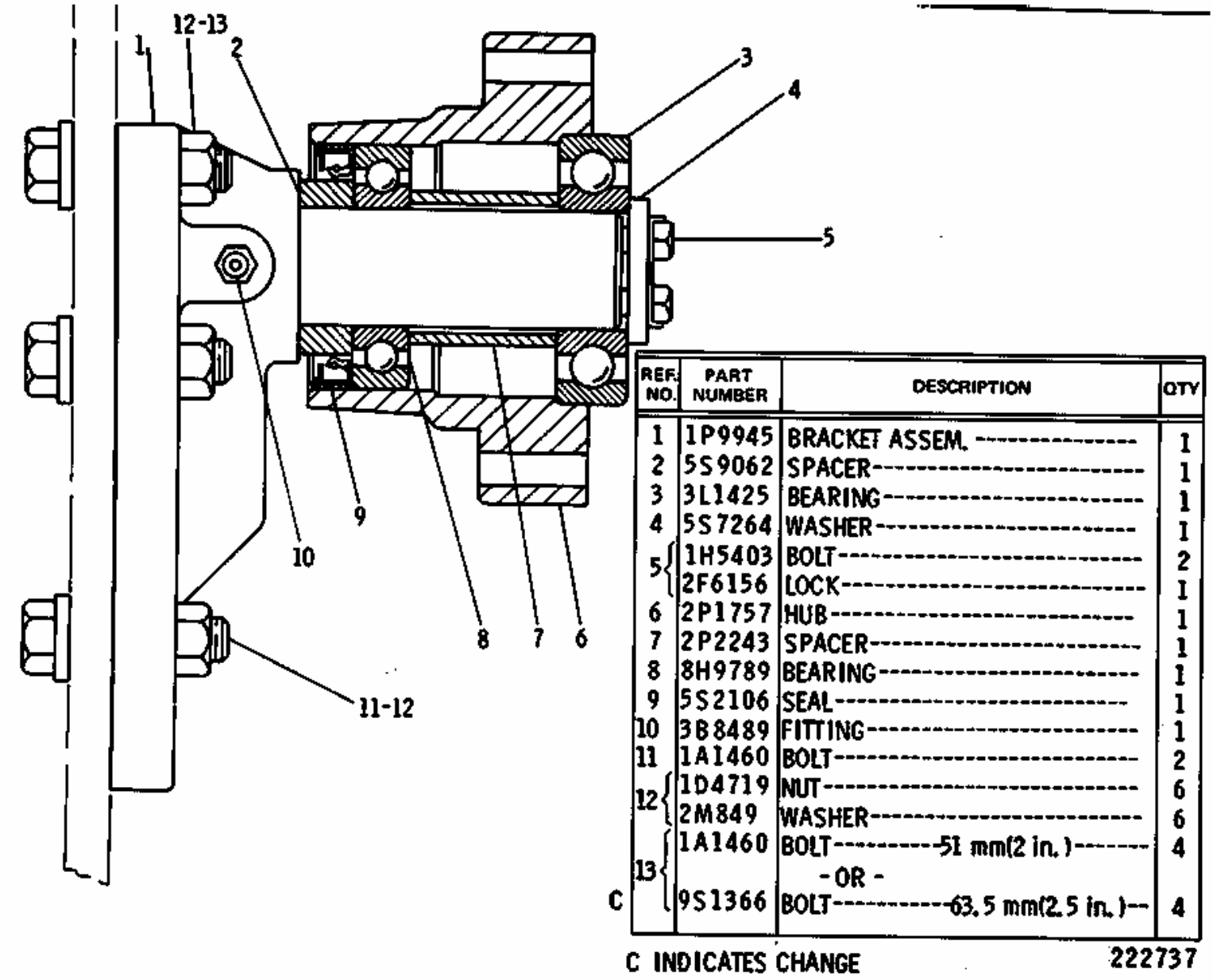

	REF. NO.	PART NUMBER	DESCRIPTION	QTY
	1	1P9945	BRACKET ASSEM.	1
	2	5S9062	SPACER	1
	3	3L1425	BEARING	1
	4	5S7264	WASHER	1
	5	1H5403	BOLT	2
		2F6156	LOCK	1
	6	2P1757	HUB	1
	7	2P2243	SPACER	1
	8	8H9789	BEARING	1
	9	5S2106	SEAL	1
	10	3B8489	FITTING	1
	11	1A1460	BOLT	2
	12	1D4719	NUT	6
		2M849	WASHER	6
	13	1A1460	BOLT--51 mm(2 in.)	4
			- OR -	
C		9S1366	BOLT--63.5 mm(2.5 in.)	4

C INDICATES CHANGE

222737

1 NPR CL 1P-9945 1 BRACKET ASSEM.

CL NPR 296-1344 1 BRACKET-CLA

2 NPR 5S-9062 1 SPACER

3 NPR 3L-1425 1 BEARING

4 NPR 5S-7264 1 WASHER

5 NPR 1H-5403 1 BOLT

NPR 2F-6156 1 LOCK

6 NPR CL 2P-1757 1 HUB

CL	NPR	296-1357	1	HUB-CLA
7	NPR	2P-2243	1	SPACER
8	NPR	8H-9789	1	BEARING
9	NPR	5S-2106	1	SEAL
10	NPR	3B-8489	1	FITTING
11	NPR	1A-1460	2	BOLT
12	NPR	1D-4719	6	NUT
	NPR	2M-0849	6	WASHER
13	NPR	1A-1460	4	BOLT 51 mm(2 in.)
-OR-				
	NPR C	9S-1366	4	BOLT 63.5 mm(2.5 in.)

Key:

CL - Classic Part Available
C - INDICATES CHANGE

3P59 FAN DRIVE GROUP--Serial No. 87V4876 to 87V5849 inclusive

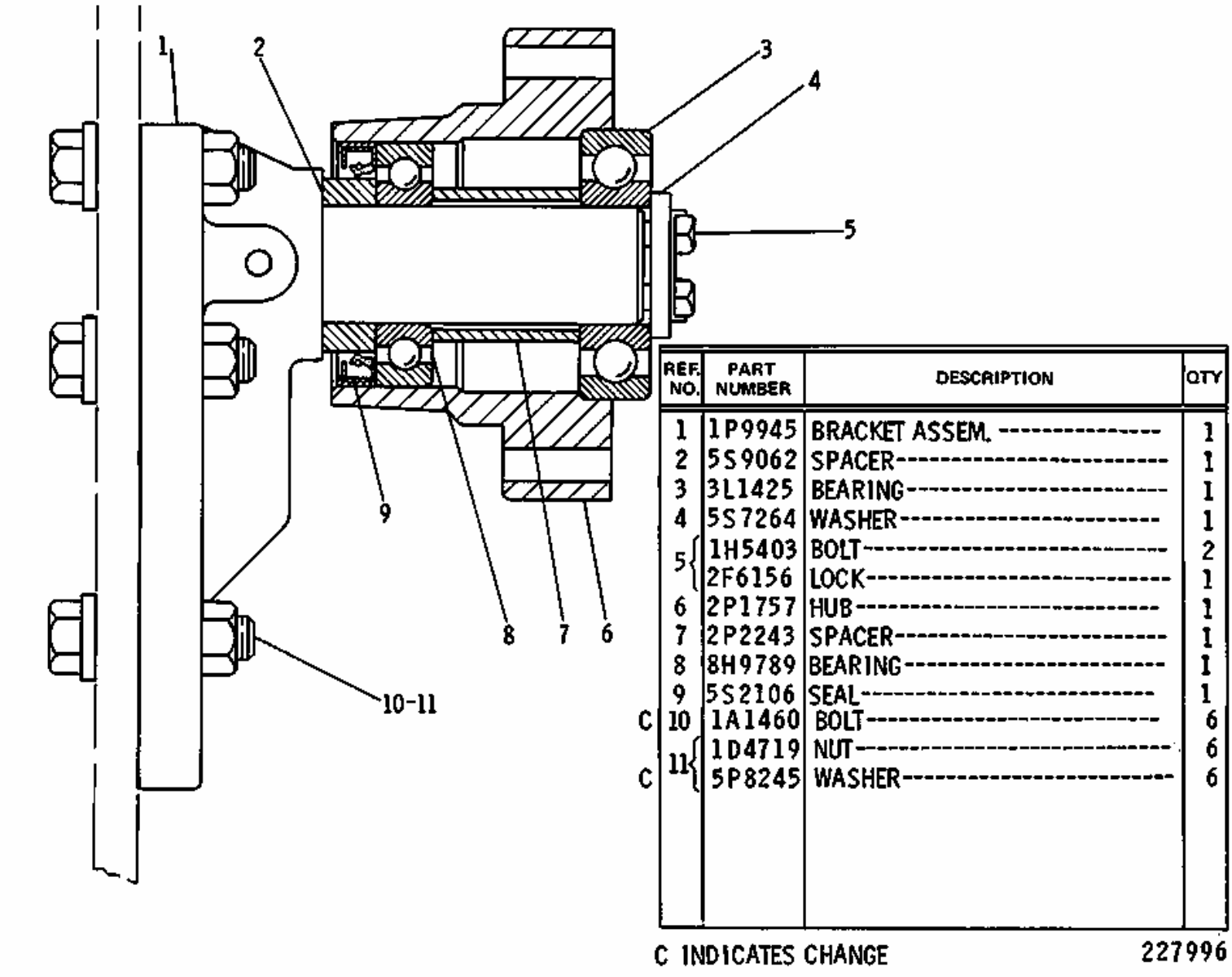

	REF. NO.	PART NUMBER	DESCRIPTION	QTY
	1	1P9945	BRACKET ASSEM.	1
	2	5S9062	SPACER	1
	3	3L1425	BEARING	1
	4	5S7264	WASHER	1
	5	1H5403	BOLT	2
		2F6156	LOCK	1
	6	2P1757	HUB	1
	7	2P2243	SPACER	1
	8	8H9789	BEARING	1
	9	5S2106	SEAL	1
C	10	1A1460	BOLT	6
	11	1D4719	NUT	6
C		5P8245	WASHER	6

C INDICATES CHANGE 227996

1 NPR CL 1P-9945 1 BRACKET ASSEM.

CL NPR 296-1344 1 BRACKET-CLA

2 NPR 5S-9062 1 SPACER

3 NPR 3L-1425 1 BEARING

4 NPR 5S-7264 1 WASHER

5 NPR 1H-5403 2 BOLT

NPR 2F-6156 1 LOCK

6 NPR CL 2P-1757 1 HUB

CL	NPR	296-1357	1	HUB-CLA
7	NPR	2P-2243	1	SPACER
8	NPR	8H-9789	1	BEARING
9	NPR	5S-2106	1	SEAL
10	NPR C	1A-1460	6	BOLT
11	NPR	1D-4719	6	NUT
	NPR C	5P-8245	6	WASHER

Key:

CL - Classic Part Available
C - INDICATES CHANGE

6N4599 FAN DRIVE GROUP--Serial No. 87V2262-Up and 82V470-Up. Part of 2G2580 Sound Suppression Arrangement listed on Page 170D. AN ATTACHMENT

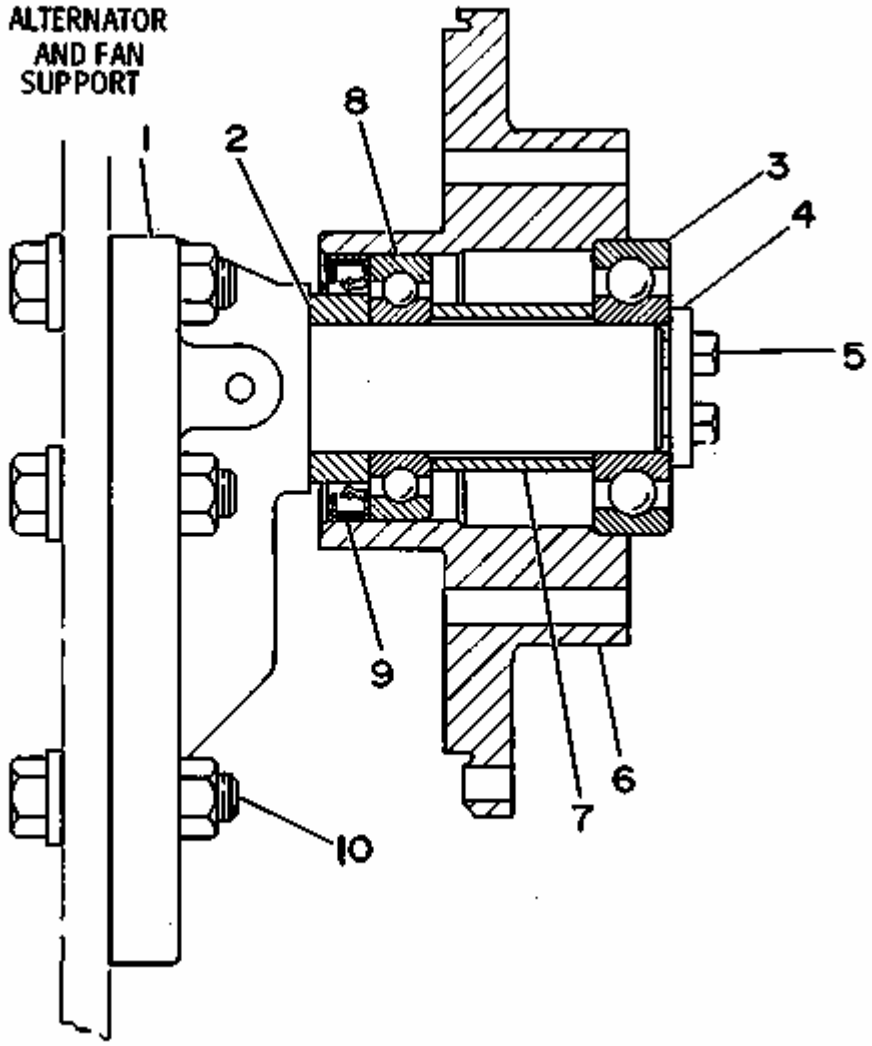

1 NPR CL 1P-9945 1 BRACKET AS-FAN

CL NPR 296-1344 1 BRACKET-CLA

2 NPR 5S-9062 1 SPACER

3 NPR 3L-1425 1 BALL BEARING

4 NPR 5S-7264 1 WASHER-RETAINING

5 NPR 1H-5403 2 BOLT

NPR 2F-6156 1 LOCK-NUT

-OR-

NPR C 6V-4626 2 BOLT-SELF LOCKING

6	NPR	6N-4600	1	HUB-FAN PULLEY
7	NPR C	8N-5305	1	SPACER
8	NPR	8H-9789	1	BALL BEARING
9	NPR	5S-2106	1	SEAL-LIP TYPE
10	NPR	1D-4719	6	NUT
	NPR C	5P-8245	6	WASHER

Key:

CL - Classic Part Available
C - CHANGE FROM PREVIOUS TYPE

1P9581 FLYWHEEL GROUP

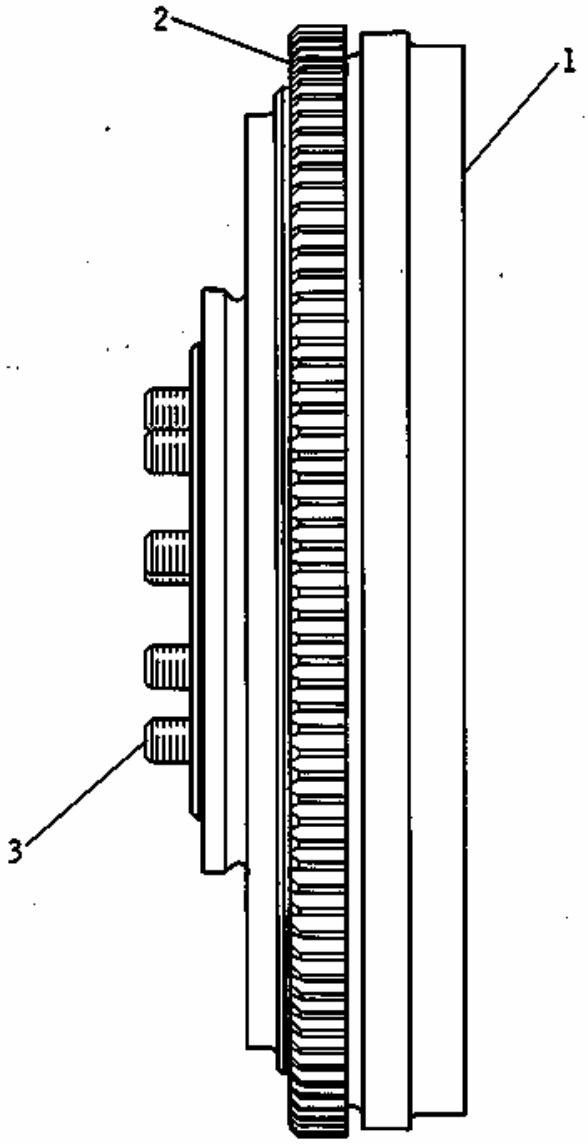

	REF. NO.	PART NUMBER	DESCRIPTION	QTY
	1	2P174	FLYWHEEL ASSEM.	1
			(Includes)	
C	2	7N9145	GEAR-------(130 teeth)--------	1
	3	S1576	BOLT	9

C INDICATES CHANGE

227962

1 NPR 2P-0174 1 FLYWHEEL ASSEM.

(Includes)

2 NPR C 7N-9145 1 GEAR (130 teeth)

3 NPR 0S-1576 9 BOLT

Key: C - INDICATES CHANGE

2P9641 FRONT HOUSING GROUP--Engine Serial No. 78P18799 to 78P53510 inclusive

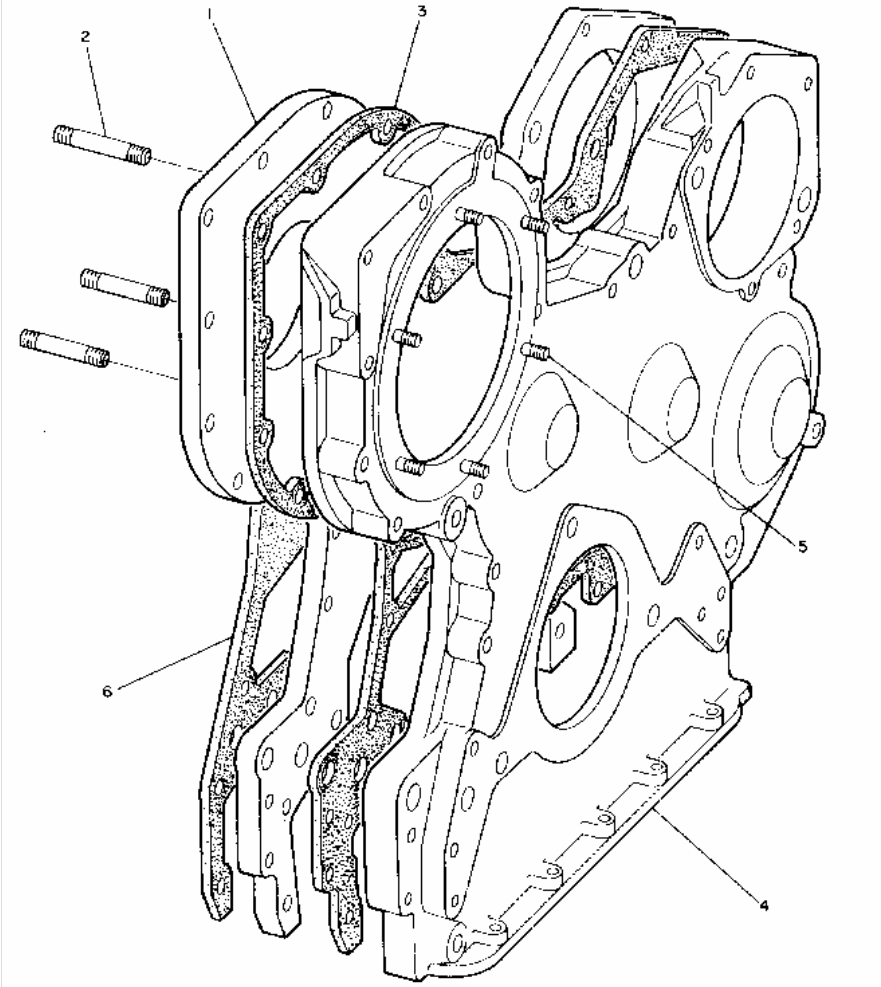

	REF NO.	PART NUMBER	DESCRIPTION	QTY
	1	6N9060	PLATE ASSEM.---------- (Includes)	1
	2	4M8743	STUD----------	3
	3	2P1274	GASKET----------	1
C	4	8N7711	HOUSING ASSEM.---------- (Includes)	1
	5	2S42	STUD----------	6
	6	2P1273	GASKET----------	1

C INDICATES CHANGE

228004

1 NPR 6N-9060 1 PLATE ASSEM.

(Includes)

2 NPR 4M-8743 3 STUD

3 NPR 2P-1274 1 GASKET

4 C 8N-7711 1 HOUSING ASSEM.

(Includes)

5 NPR 2S-0042 6 STUD

6 NPR 2P-1273 1 GASKET

Key: C - INDICATES CHANGE

7N8024 VALVE MECHANISM GROUP--Engine Serial No.78P50619-Up

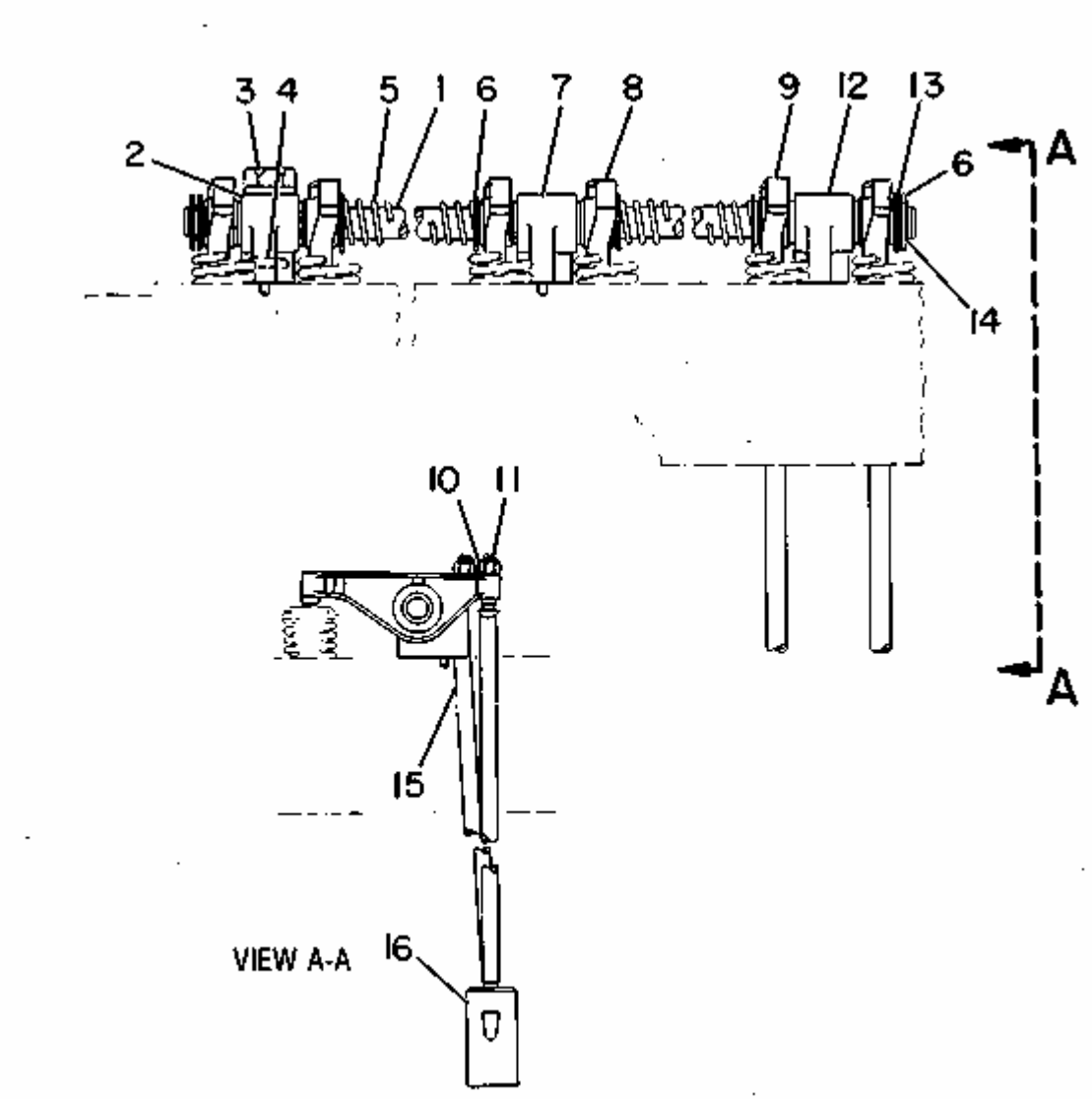

1	NPR	C	8N-3313	1 SHAFT ASSEM.
	(Includes)			
	NPR		0L-1026	2 PLUG
2	NPR		7N-8015	1 BRACKET
	NPR		5M-4606	1 DOWEL
3	NPR		1B-7709	1 BOLT
	NPR		2S-0736	1 WASHER
4	NPR		5P-5598	1 SEAL
5	NPR		4B-4910	3 SPRING
6	NPR		9H-1110	8 WASHER
7	NPR		5S-5879	2 BRACKET
8	NPR	C	8N-3324	4 ARM ASSEM. (exhaust)
9	NPR	C	8N-3326	4 ARM ASSEM. (intake)
10	NPR		1B-4203	8 NUT
11	NPR		5S-5917	8 SCREW
12	NPR		8S-1499	1 BRACKET ASSEM.
	(Includes)			
	NPR		1L-5072	1 DOWEL
13	NPR	H	9M-9886	2 WASHER
	NPR		9H-1112	2 SPRING
14	NPR		9H-1113	2 RING
15	NPR		5S-5918	8 ROD
16	NPR	CL	7S-3161	8 LIFTER
CL	NPR		279-4996	1 LIFTER-CLASSIC

Key: CL - Classic Part Available C - INDICATES CHANGE H - USE AS REQUIRED

7N8024 VALVE MECHANISM GROUP--Engine Serial No. 78P47088 to 78P50618 inclusive

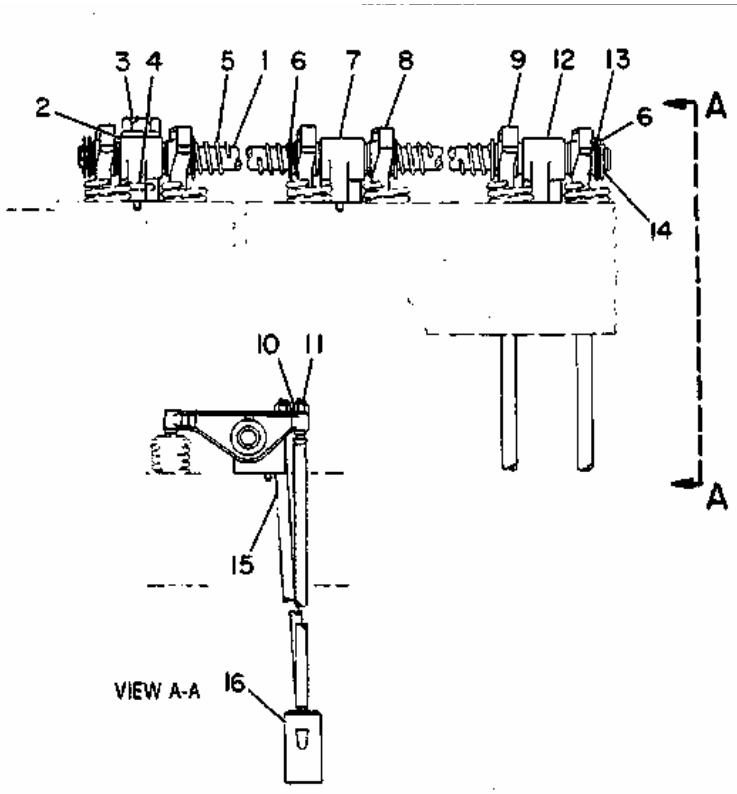

NOTE	REF NO	PART NUMBER	QTY	PART NAME
	1	7N8023	1	SHAFT AS-ROCKER
		0L1026	2	PLUG-CUP
	2	7N8015	1	BRACKET-ROCKER ARM SHAFT
		5M4606	1	DOWEL
C	3	1B7709	1	BOLT
C		2S0736	1	WASHER-HARD
	4	5P5598	1	SEAL-O-RING
	5	4B4910	3	SPRING
	6	9H1110	8	WASHER
	7	5S5879	2	BRACKET-SHAFT
	8	5S6855	4	ARM AS-ROCKER (EXHAUST)
	9	5S6854	4	ARM AS-ROCKER (INTAKE)
	10	1B4203	8	NUT-FULL
	11	5S5917	8	SCREW-ROCKER ADJUSTING
	12	8S1499	1	BRACKET AS-SHAFT
		1L5072	1	DOWEL
B	13	9M9886	2	WASHER
		9H1112	2	SPRING
	14	9H1113	2	RING-RETAINER
	15	5S5918	8	ROD-VALVE PUSH
	16	7S3161	8	LIFTER-VALVE

B-USE AS REQUIRED
C-CHANGE FROM PREVIOUS TYPE

B- 227937

1 NPR 7N-8023 1 SHAFT AS-ROCKER
NPR 0L-1026 2 PLUG-CUP
2 NPR 7N-8015 1 BRACKET-ROCKER ARM SHAFT
NPR 5M-4606 1 DOWEL
3 NPR C 1B-7709 1 BOLT
NPR C 2S-0736 1 WASHER-HARD
4 NPR 5P-5598 1 SEAL-O-RING
5 NPR 4B-4910 3 SPRING
6 NPR 9H-1110 8 WASHER
7 NPR 5S-5879 2 BRACKET-SHAFT
8 NPR 5S-6855 4 ARM AS-ROCKER (EXHAUST)
9 NPR 5S-6854 4 ARM AS-ROCKER (INTAKE)
10 NPR 1B-4203 8 NUT-FULL
11 NPR 5S-5917 8 SCREW-ROCKER ADJUSTING
12 NPR 8S-1499 1 BRACKET AS-SHAFT
NPR 1L-5072 1 DOWEL
13 NPR B 9M-9886 2 WASHER
NPR 9H-1112 2 SPRING
14 NPR 9H-1113 2 RING-RETAINER
15 NPR 5S-5918 8 ROD-VALVE PUSH
16 NPR CL 7S-3161 8 LIFTER-VALVE

CL NPR 279-4996 1 LIFTER-CLASSIC

Key: CL - Classic Part Available B - USE AS REQUIRED C - CHANGE FROM PREVIOUS TYPE

2P6524 VALVE MECHANISM GROUP--Engine Serial No. 78P45839 to 78P46445 inclusive

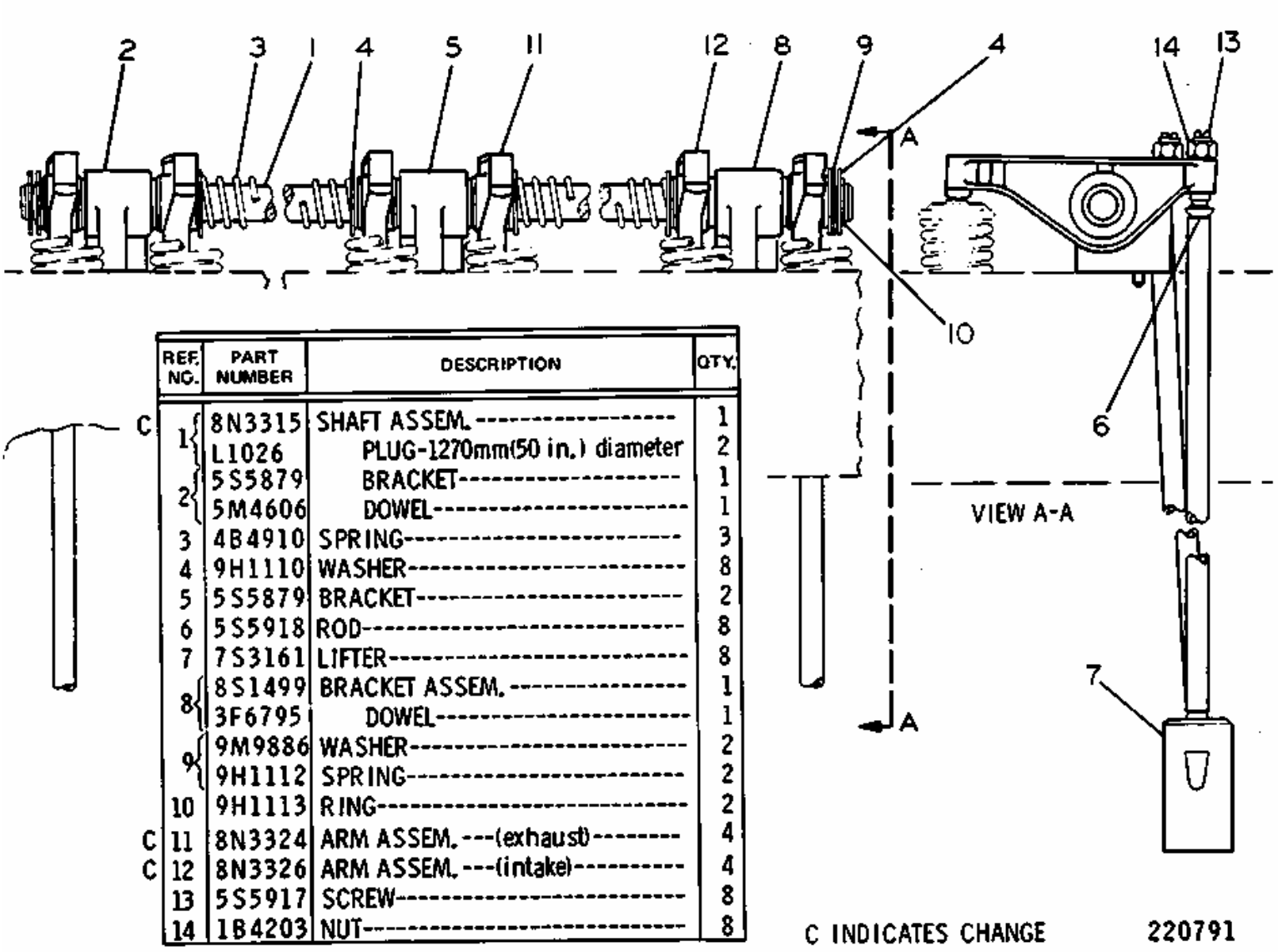

REF. NO.	PART NUMBER	DESCRIPTION	QTY.
C 1	8N3315	SHAFT ASSEM.	1
	L1026	PLUG-1270mm(50 in.) diameter	2
2	5S5879	BRACKET	1
	5M4606	DOWEL	1
3	4B4910	SPRING	3
4	9H1110	WASHER	8
5	5S5879	BRACKET	2
6	5S5918	ROD	8
7	7S3161	LIFTER	8
8	8S1499	BRACKET ASSEM.	1
	3F6795	DOWEL	1
9	9M9886	WASHER	2
	9H1112	SPRING	2
10	9H1113	RING	2
C 11	8N3324	ARM ASSEM.---(exhaust)	4
C 12	8N3326	ARM ASSEM.---(intake)	4
13	5S5917	SCREW	8
14	1B4203	NUT	8

C INDICATES CHANGE 220791

1 NPR C 8N-3315 1 SHAFT ASSEM.

NPR 0L-1026 2 PLUG -1270mm(50 in.) diameter

2 NPR 5S-5879 1 BRACKET

NPR 5M-4606 1 DOWEL

3 NPR 4B-4910 3 SPRING

4 NPR 9H-1110 8 WASHER

5 NPR 5S-5879 2 BRACKET

6 NPR 5S-5918 8 ROD

7 NPR CL 7S-3161 8 LIFTER

CL	NPR	279-4996	1	LIFTER-CLASSIC
8	NPR	8S-1499	1	BRACKET ASSEM.
	NPR	3F-6795	1	DOWEL
9	NPR	9M-9886	2	WASHER
	NPR	9H-1112	2	SPRING
10	NPR	9H-1113	2	RING
11	NPR C	8N-3324	4	ARM ASSEM. (exhaust)
12	NPR C	8N-3326	4	ARM ASSEM. (intake)
13	NPR	5S-5917	8	SCREW
14	NPR	1B-4203	8	NUT

Key CL - Classic Part Available C - INDICATES CHANGE

2P6524 VALVE MECHANISM GROUP-Engine Serial No. 78P18799 to 78P45838 and 78P46446 to 78P47087 inclusive

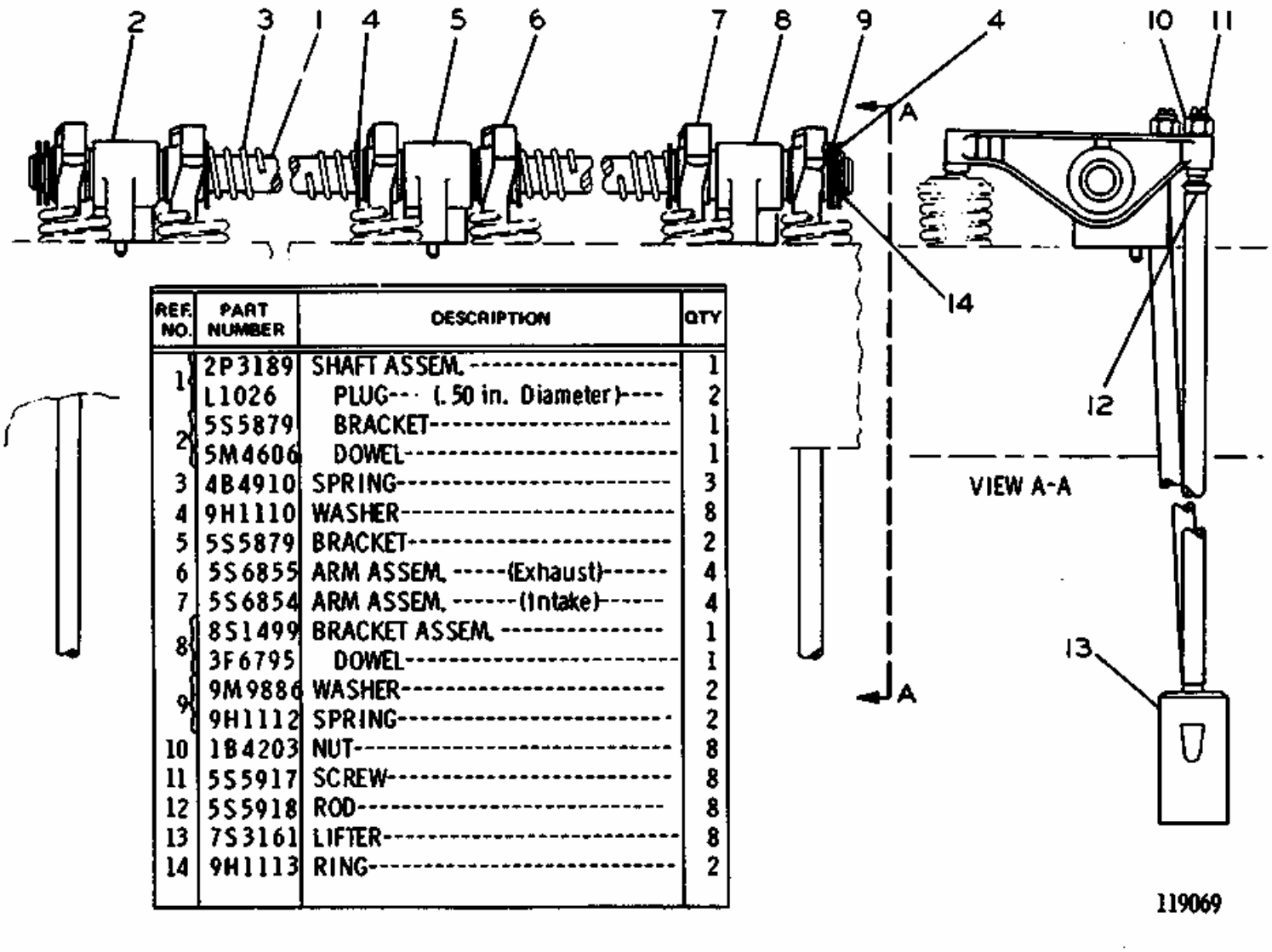

REF. NO.	PART NUMBER	DESCRIPTION	QTY
1	2P3189	SHAFT ASSEM.	1
	L1026	PLUG (.50 in. Diameter)	2
2	5S5879	BRACKET	1
	5M4606	DOWEL	1
3	4B4910	SPRING	3
4	9H1110	WASHER	8
5	5S5879	BRACKET	2
6	5S6855	ARM ASSEM. (Exhaust)	4
7	5S6854	ARM ASSEM. (Intake)	4
8	8S1499	BRACKET ASSEM.	1
	3F6795	DOWEL	1
9	9M9886	WASHER	2
	9H1112	SPRING	2
10	1B4203	NUT	8
11	5S5917	SCREW	8
12	5S5918	ROD	8
13	7S3161	LIFTER	8
14	9H1113	RING	2

1 NPR 2P-3189 1 SHAFT ASSEM.

NPR 0L-1026 2 PLUG (.50 in. Diameter)

2 NPR 5S-5879 1 BRACKET

NPR 5M-4606 1 DOWEL

3 NPR 4B-4910 3 SPRING

4 NPR 9H-1110 8 WASHER

5 NPR 5S-5879 2 BRACKET

6 NPR 5S-6855 4 ARM ASSEM. (Exhaust)

7 NPR 5S-6854 4 ARM ASSEM. (Intake)

8 NPR 8S-1499 1 BRACKET ASSEM.

NPR 3F-6795 1 DOWEL

9 NPR 9M-9886 2 WASHER

NPR 9H-1112 2 SPRING

10 NPR 1B-4203 8 NUT

11 NPR 5S-5917 8 SCREW

12 NPR 5S-5918 8 ROD

13 NPR CL 7S-3161 8 LIFTER

CL NPR 279-4996 1 LIFTER-CLASSIC

14 NPR 9H-1113 2 RING

Key:

CL - Classic Part Available

2P6514 VALVE MECHANISM COVER GROUP

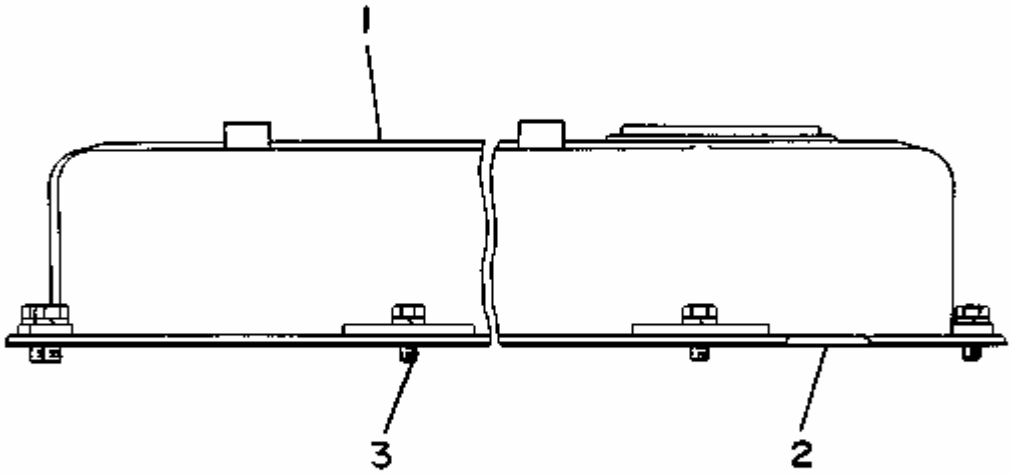

1	NPR	2N-3871	1	COVER AS-HEAD
2	NPR	8S-1606	1	GASKET-COVER
3	NPR	0S-1617	11	BOLT
	NPR	3B-4505	11	LOCKWASHER

3P67 PULLEY GROUP

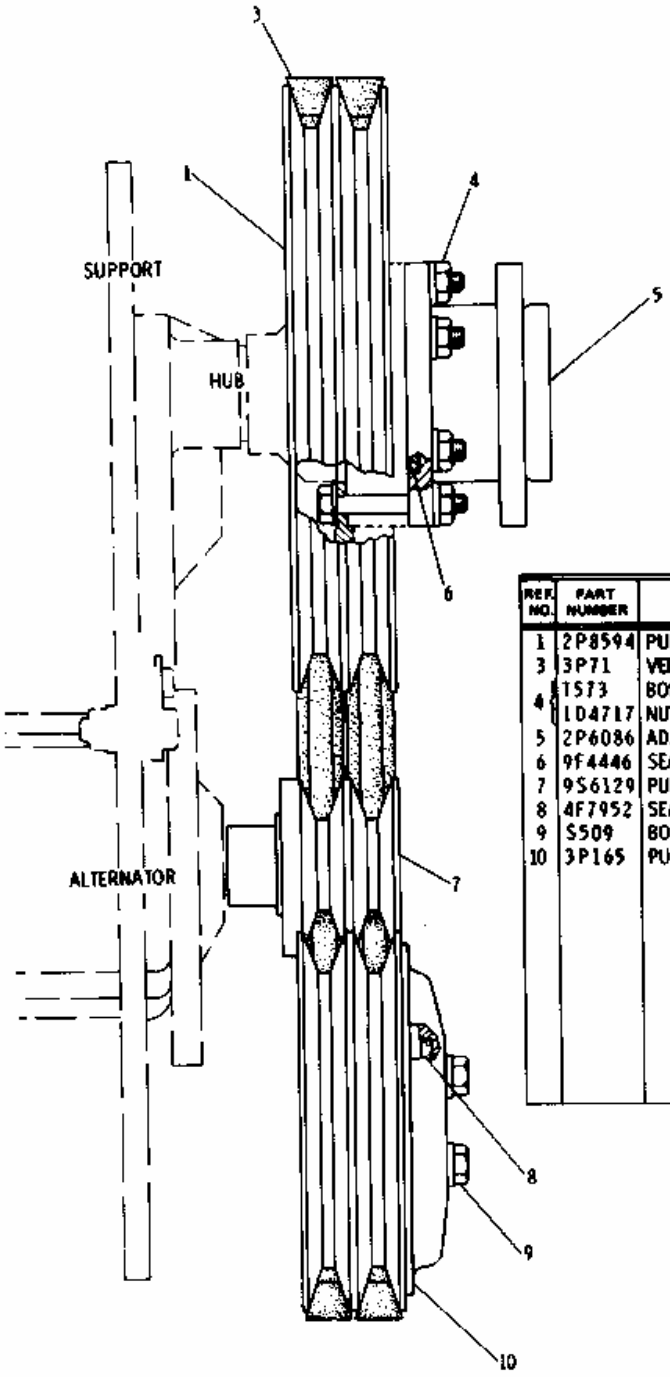

REF NO.	PART NUMBER	DESCRIPTION	QTY
1	2P8594	PULLEY	1
3	3P71	VEE BELT SET-------(2 belt)--------	1
4	1T573	BOLT	6
	1D4717	NUT	6
5	2P6086	ADAPTER	1
6	9f4446	SEAL	1
7	9S6129	PULLEY	1
8	4F7952	SEAL	1
9	S509	BOLT	4
10	3P165	PULLEY	1

203369

1 NPR 2P-8594 1 PULLEY

3 NPR 3P-0071 1 VEE BELT SET (2 belt)

4 NPR 0T-0573 6 BOLT

NPR 1D-4717 6 NUT

5 NPR 2P-6086 1 ADAPTER

6 NPR 9F-4446 1 SEAL

7 NPR CL 9S-6129 1 PULLEY

CL NPR 264-5891 1 PULLEY-CLASSIC

8 NPR 4F-7952 1 SEAL

9 NPR 0S-0509 4 BOLT

10 NPR 3P-0165 1 PULLEY

Key:

CL - Classic Part Available

6N5334 PULLEY GROUP-Serial No. 87V2262-Up and 82V470-Up. Part of 2G2580 Sound Suppression Arrangement listed on Page 170D. AN ATTACHMENT

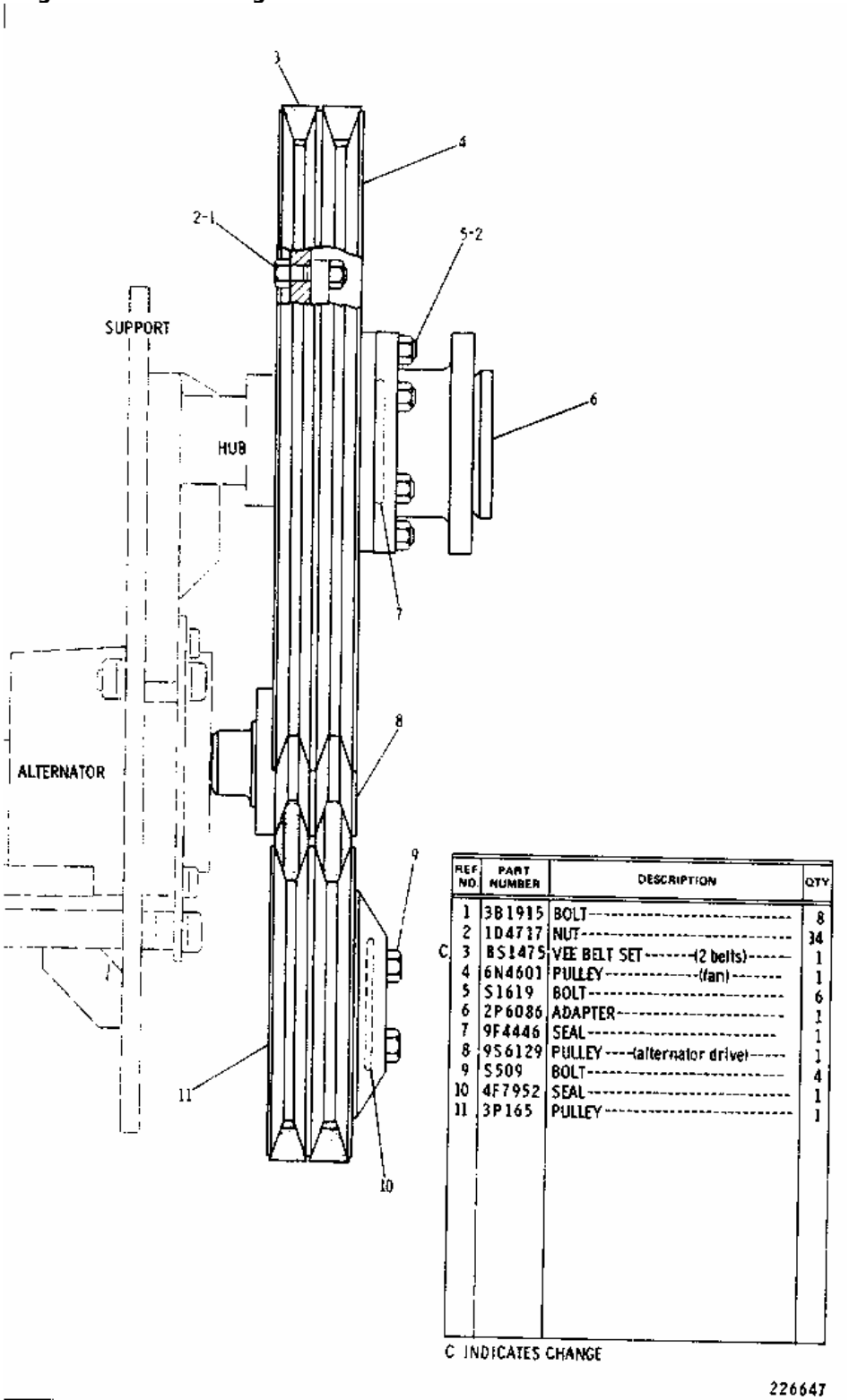

REF NO.	PART NUMBER	DESCRIPTION	QTY
1	3B1915	BOLT	8
2	1D4717	NUT	14
C 3	8S1475	VEE BELT SET (2 belts)	1
4	6N4601	PULLEY (fan)	1
5	S1619	BOLT	6
6	2P6086	ADAPTER	1
7	9F4446	SEAL	1
8	9S6129	PULLEY (alternator drive)	1
9	S509	BOLT	4
10	4F7952	SEAL	1
11	3P165	PULLEY	1

C INDICATES CHANGE

226647

1 NPR 3B-1915 8 BOLT

2 NPR 1D-4717 14 NUT

3 NPR C 8S-1475 1 VEE BELT SET (2 belts)

4 NPR 6N-4601 1 PULLEY (fan)

5 NPR 0S-1619 6 BOLT

6 NPR 2P-6086 1 ADAPTER

7 NPR 9F-4446 1 SEAL

8 NPR CL 9S-6129 1 PULLEY (alternator drive)

CL NPR 264-5891 1 PULLEY-CLASSIC

9 NPR 0S-0509 4 BOLT

10 NPR 4F-7952 1 SEAL

11 NPR 3P-0165 1 PULLEY

Key:

CL - Classic Part Available
C - INDICATES CHANGE

9S8912 CONNECTING ROD AND PISTON GROUP--4 Required
Engine Serial No. 78P18799 to 78P51947 inclusive

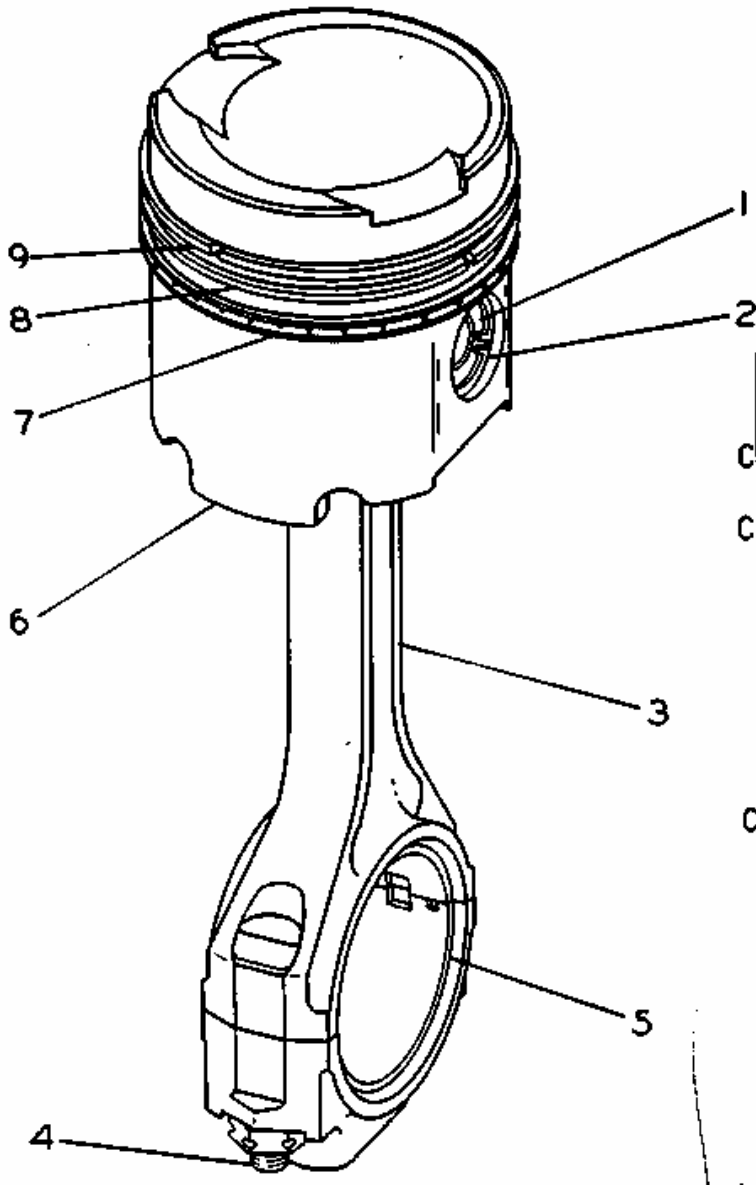

	REF. NO.	PART NUMBER	DESCRIPTION	QTY
C	1	7N9804	PIN	1
	2	9H4015	RETAINER	2
C	3	6N8061	ROD ASSEM.	1
		7S9347	BEARING	1
	4	1P9956	BOLT	2
		5S6348	NUT	2
	5	7M7821	BEARING-------(Standard)-------	1
		2S502	BEARING----(.010" Undersize)----	1
		2S503	BEARING----(.020" Undersize)----	1
		7M7826	BEARING----(.030" Undersize)----	1
C	6	8N3183	PISTON GROUP	1
	7	9S7788	RING---------(Oil)----------	1
	8	5S6750	RING-----(Intermediate)-------	1
	9	7S8378	RING---------(Top)----------	1
		7S9404	RING GROUP (Consists of Complete Set of Rings For One Piston)	1

C INDICATES CHANGE

222701

1 NPR C 7N-9804 1 PIN

2 NPR 9H-4015 2 RETAINER

3 NPR CLC 6N-8061 1 ROD ASSEM.

CL NPR 242-3441 1 ROD AS-CLA

NPR 7S-9347 1 BEARING

4 NPR 1P-9956 2 BOLT

NPR 5S-6348 2 NUT

5 NPR 7M-7821 1 BEARING (Standard)

NPR 2S-0502 1 BEARING (.010" Undersize)

NPR 2S-0503 1 BEARING (.020" Undersize)

NPR 7M-7826 1 BEARING (.030" Undersize)

6 NPR CLC 8N-3183 1 PISTON GROUP

CL NPR 250-6556 1 LINER KIT-CLA

7 NPR 9S-7788 1 RING (Oil)

8 NPR 5S-6750 1 RING (Intermediate)

9 NPR 7S-8378 1 RING (Top)

NPR 7S-9404 1 RING GROUP

(Consists of Complete Set of Rings For One Piston)

Key:

CL - Classic Part Available
C - INDICATES CHANGE

9S8912 CONNECTING ROD AND PISTON GROUP--4 Required
Engine Serial No. 78P51948-Up

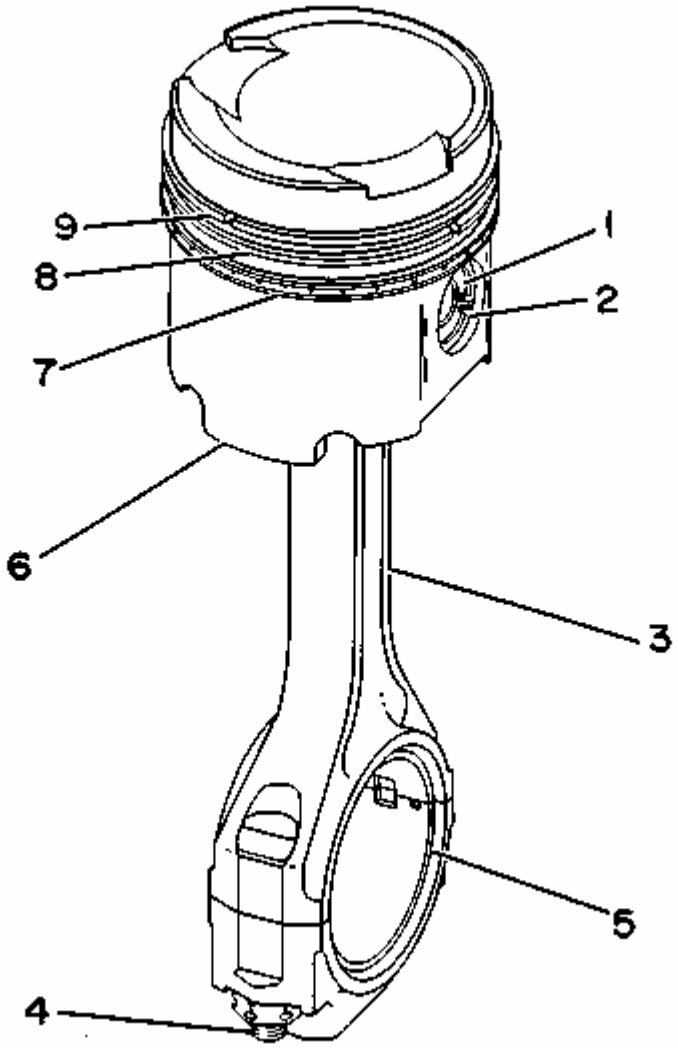

1 NPR CL 7N-9805 1 PIN-PISTON

CL NPR 295-6438 1 PIN-CLA

2 NPR 1S-9543 2 RETAINER-PIN

3 NPR CLR 8N-1721 1 ROD AS-CONNECTING

CL NPR 269-5291 1 ROD AS.-CLASSIC

NPR 8N-1849 1 BEARING-CONNECTING ROD

4 NPR 1P-9956 2 BOLT-CONNECTING ROD

NPR 5S-6348 2 NUT-SPECIAL

5	NPR C	8N-8219	1	BEARING-CONNECTING ROD
	NPR	2S-0502	1	BEARING-.254MM US
	NPR	2S-0503	1	BEARING-.508MM US
	NPR	7M-7826	1	BEARING-.762MM US
6	NPR	8N-2533	1	PISTON GP
7	NPR	9L-6934	1	RING-PISTON (OIL)
8	NPR	9L-6933	1	RING-PISTON INTERMEDIATE
9	NPR	9L-6932	1	RING-PISTON TOP
	NPR	9L-6935	1	RING GP-PISTON

(CONSISTS OF COMPLETE

SET OF RINGS FOR ONE

PISTON)

Key:

CL - Classic Part Available
C - CHANGE FROM PREVIOUS TYPE
R - REMFG PART MAY BE AVAILABLE

2P6155 OIL PAN GROUP
Engine Serial No. 78P18799 to 78P54468 inclusive

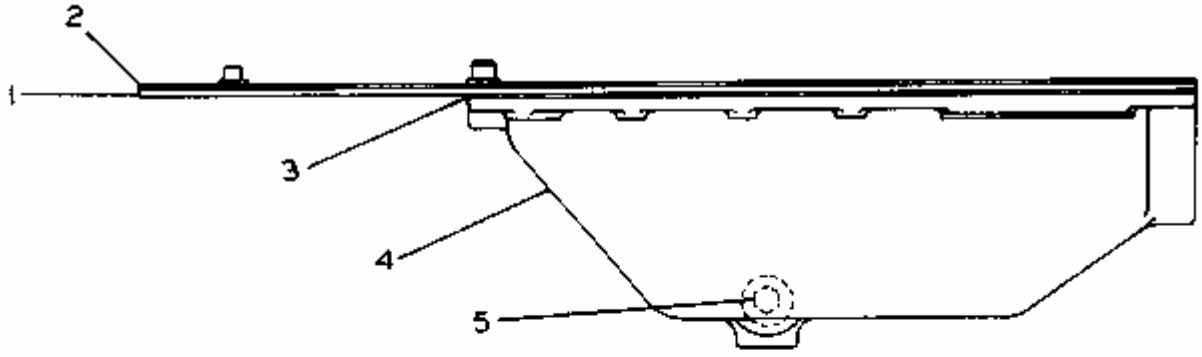

REF. NO.	PART NUMBER	DESCRIPTION	QTY
1	2P2351	PLATE ASSEM.	1
2	5S6045	GASKET	1
3	8S1963	GASKET	1
4	2P7828	PAN	1
5	4B7739	PLUG	1

11733I

1 NPR 2P-2351 1 PLATE ASSEM.

2 NPR 5S-6045 1 GASKET

3 NPR 8S-1963 1 GASKET

4 NPR 2P-7828 1 PAN

5 NPR 4B-7739 1 PLUG

2P6155 OIL PAN GROUP--Engine Serial No. 78P54469-Up

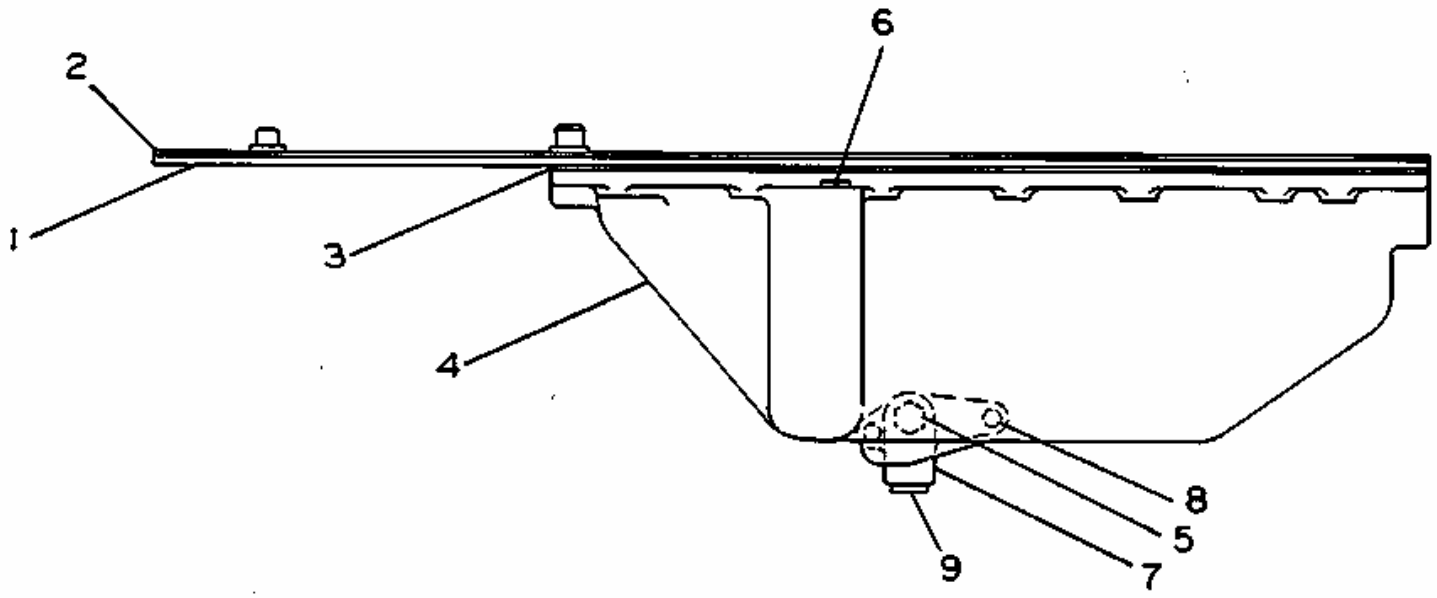

	REF. NO.	PART NUMBER	DESCRIPTION	QTY
	1	2P2351	PLATE ASSEM.	1
	2	5S6045	GASKET	1
	3	8S1963	GASKET	1
C	4	7N2942	PAN	1
	5	4B7739	PLUG	1
C	6	2B858	PLUG	1
C	7	8N6849	ADAPTER	1
C	7	8N6854	GASKET	1
C	8	3B1915	BOLT	2
C	9	1B5174	PLUG	1

C INDICATES CHANGE

227293

1 NPR 2P-2351 1 PLATE ASSEM.

2 NPR 5S-6045 1 GASKET

3 NPR 8S-1963 1 GASKET

4 NPR C 7N-2942 1 PAN

5 NPR 4B-7739 1 PLUG

6 NPR C 2B-0858 1 PLUG

7 NPR C 8N-6849 1 ADAPTER

NPR C 8N-6854 1 GASKET

8 NPR C 3B-1915 2 BOLT

9 NPR C 1B-5174 1 PLUG

Key: C - INDICATES CHANGE

2P6189 OIL PAN FASTENER GROUP
Engine Serial No. 78P18799 to 78P54468 inclusive

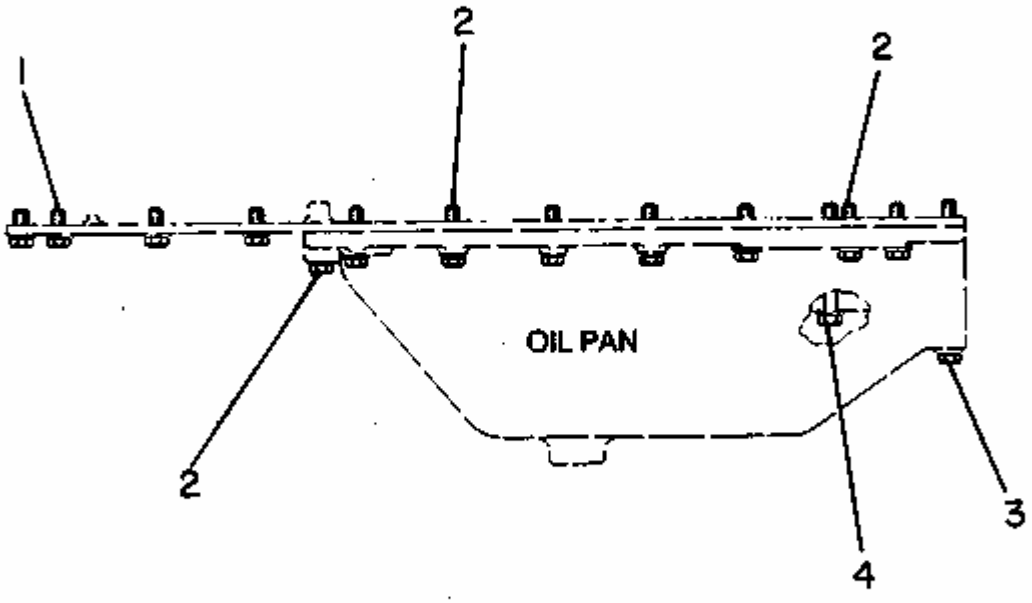

1	**NPR**	**2P-3200**	**12**	**BOLT-WASHER HEAD (.75IN)LONG**
2	**NPR**	**2P-3204**	**17**	**BOLT-WASHER HEAD (1.50IN)LONG**
3	**NPR**	**2P-3213**	**5**	**BOLT-WASHER HEAD (4.50IN)LONG**
4	**NPR**	**2P-1301**	**2**	**BOLT-WASHER HEAD (3.25IN)LONG**

2P6189 OIL PAN FASTENER GROUP-Engine Serial No. 78P54469-Up

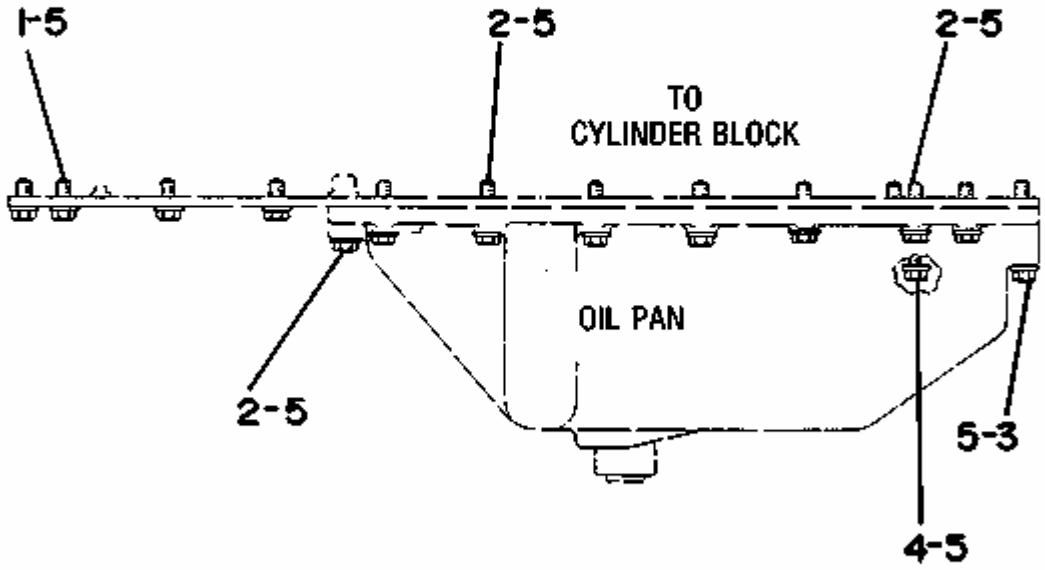

1 NPR C 0S-1594 12 BOLT 2.54CM(1IN)LG

2 NPR C 0S-1591 17 BOLT 3.81CM(1.5IN)LG

3 NPR C 0T-0573 6 BOLT 6.98CM(2.75IN)LG

4 NPR C 0L-1143 1 BOLT 6.35CM(2.50IN)LG

5 NPR C 5M-2894 36 WASHER

Key:

C - CHANGE FROM PREVIOUS TYPE

3P124 OIL DRAIN EXTENSION GROUP

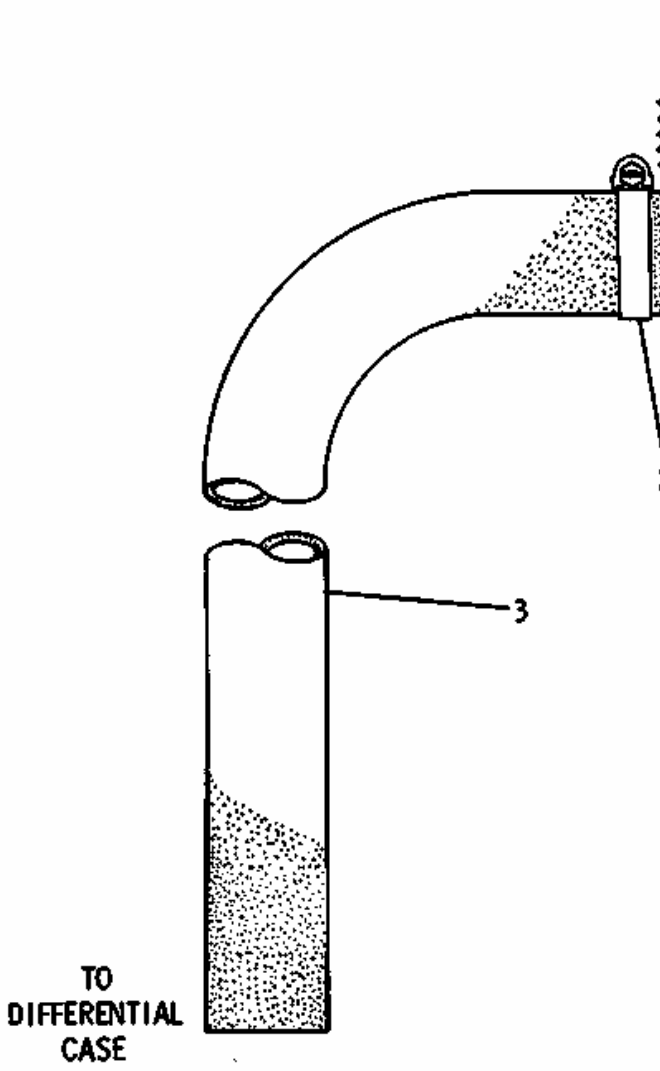

REF. NO.	PART NUMBER	DESCRIPTION	QTY
1	87245	ELBOW----------	1
2	7H1442	CLAMP----------	1
C▲ 3	5P742	HOSE-------56 cm(22.05 in.)	

C INDICATES CHANGE ▲ ORDER BY THE CENTIMETRE 206256

1 NPR 008-7245 1 ELBOW

2 NPR 7H-1442 1 CLAMP

3 NPR CH 5P-0742 HOSE 56 cm(22.05 in.)

Key:

C - INDICATES CHANGE
H - ORDER BY THE CENTIMETRE

2P6246 TRUNNION GROUP
Engine Serial No. 78P18799 to 78P51875 inclusive

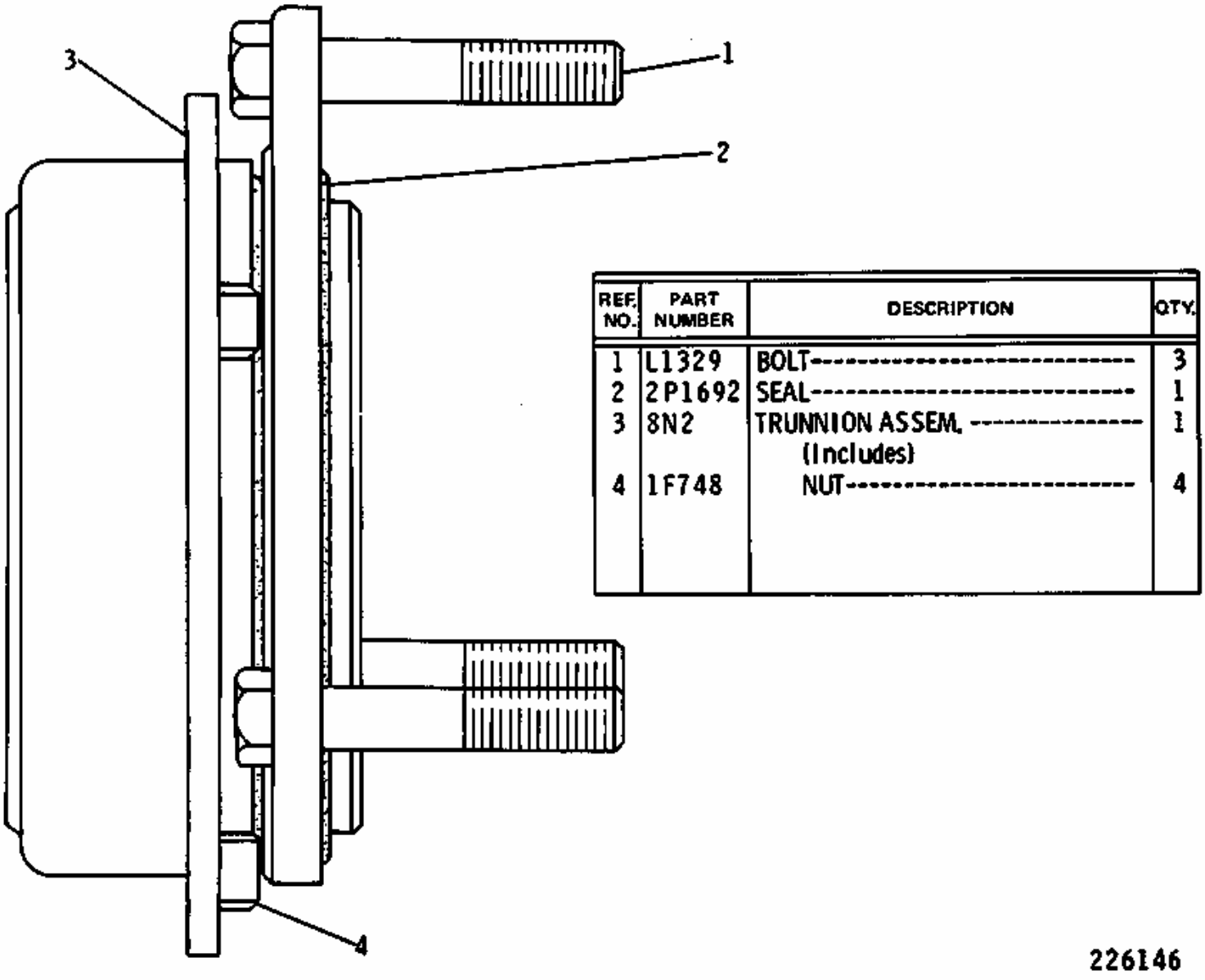

REF. NO.	PART NUMBER	DESCRIPTION	QTY.
1	L1329	BOLT	3
2	2P1692	SEAL	1
3	8N2	TRUNNION ASSEM. (Includes)	1
4	1F748	NUT	4

1 NPR 0L-1329 3 BOLT

2 NPR 2P-1692 1 SEAL

3 NPR 8N-0002 1 TRUNNION ASSEM.

(Includes)

4 NPR 1F-0748 4 NUT

7N9589 TRUNNION GROUP
Engine Serial No. 78P51876-Up

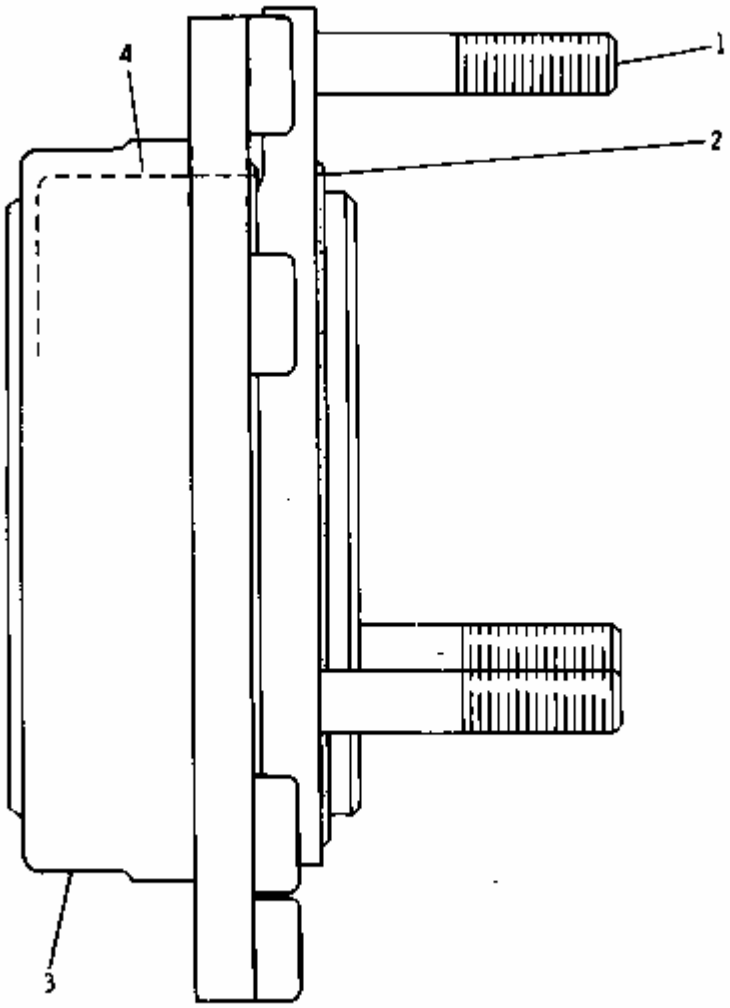

1	NPR	0L-1329	3	BOLT
2	NPR	2P-1692	1	SEAL
3	NPR	7N-9590	1	TRUNNION ASSEM.
	NPR	8N-0081	1	TRUNNION
4	NPR	2P-1487	1	RING

3P128 SUPPORT GROUP--Front and Rear
Engine Serial No. 78P18799 to 78P40899 inclusive

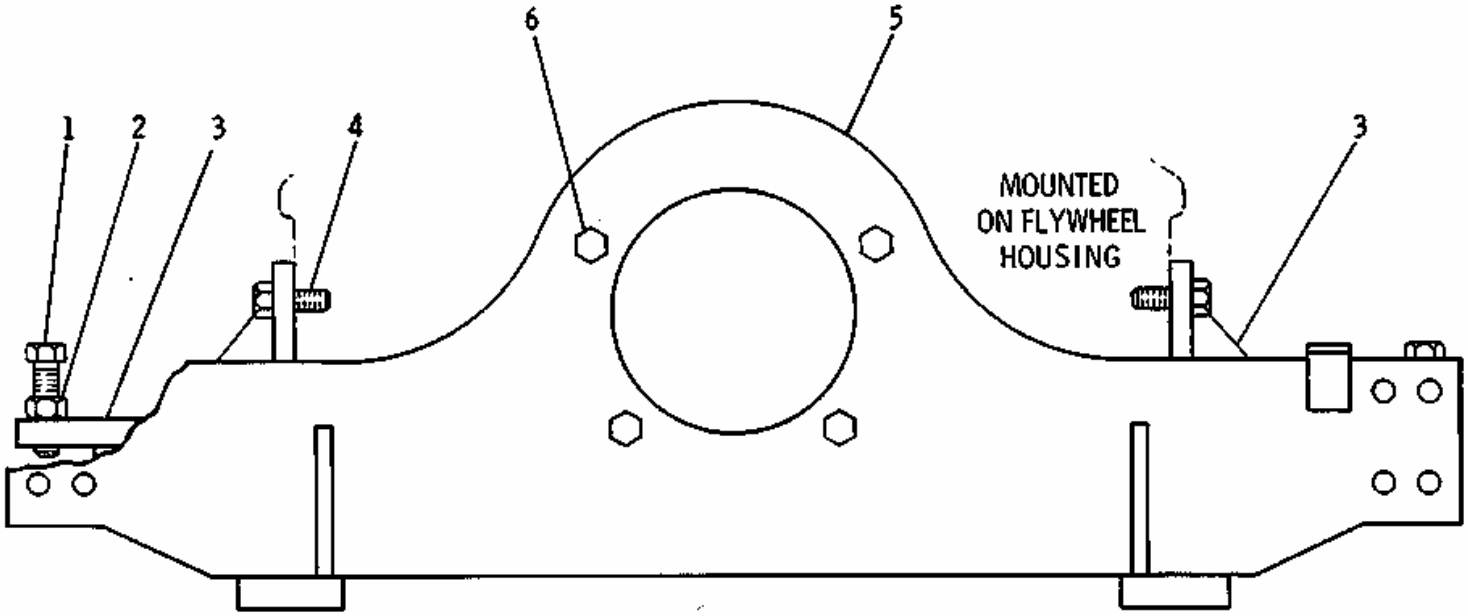

REF. NO.	PART NUMBER	DESCRIPTION	QTY
1	8H6508	BOLT----------	2
2	1D5118	NUT----------	2
3	3P132	SUPPORT ASSEM.----------	2
4	S1595	BOLT----------	8
5	2P8847	SUPPORT ASSEM.----(front)-----	1
6	S1585	BOLT----------	4
	2M849	WASHER----------	4

202812

1 NPR 8H-6508 2 BOLT

2 NPR 1D-5118 2 NUT

3 NPR 3P-0132 2 SUPPORT ASSEM.

4 NPR 0S-1595 8 BOLT

5 NPR 2P-8847 1 SUPPORT ASSEM. (front)

6 NPR 0S-1585 4 BOLT

NPR 2M-0849 4 WASHER

7N4147 ENGINE SUPPORT GROUP--Front
Engine Serial No. 78P40900 to 78P43117 inclusive

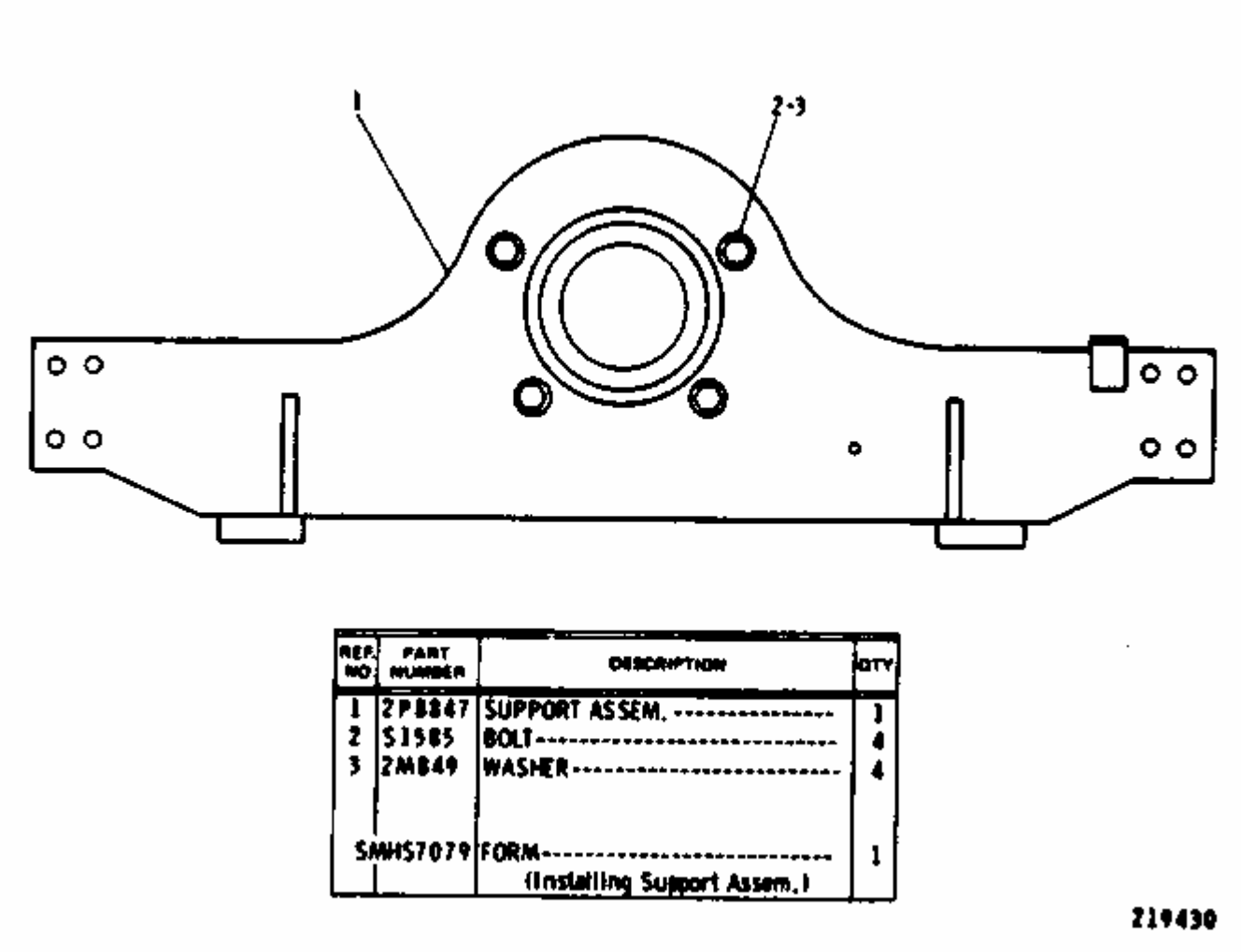

REF. NO.	PART NUMBER	DESCRIPTION	QTY
1	2P8847	SUPPORT ASSEM.	1
2	S1585	BOLT	4
3	2M849	WASHER	4
	SMHS7079	FORM (Installing Support Assem.)	1

1 NPR 2P-8847 1 SUPPORT ASSEM.

2 NPR 0S-1585 4 BOLT

3 NPR 2M-0849 4 WASHER

1P9586 ENGINE SUPPORT GROUP--Front
Engine Serial No. 78P43118 to 78P51875 inclusive

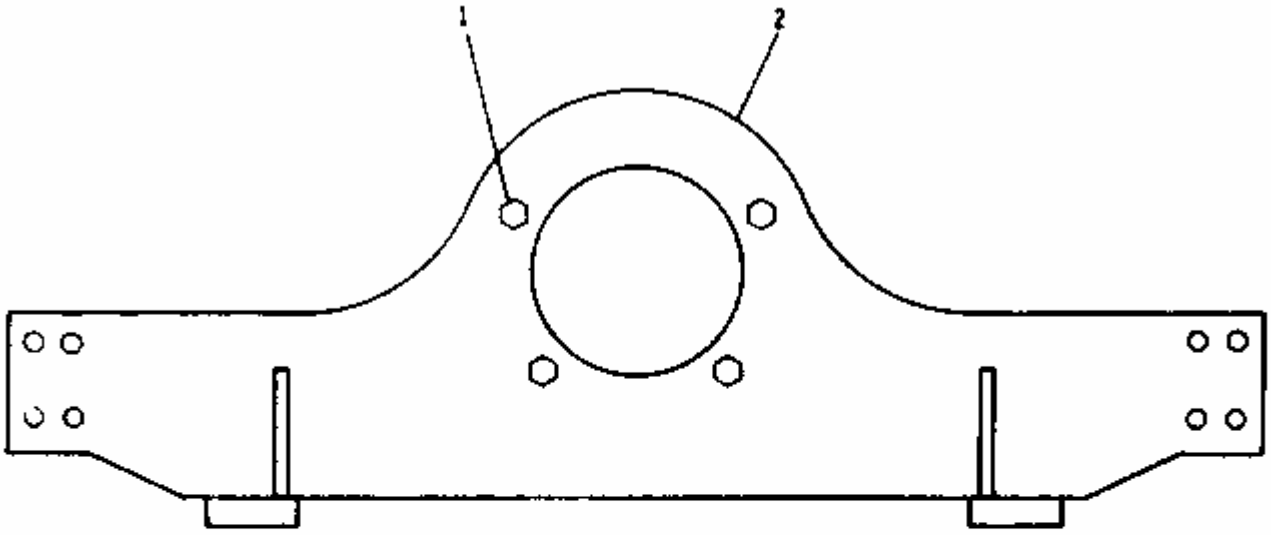

	REF. NO.	PART NUMBER	DESCRIPTION	QTY
C	1	S1595	BOLT	4
	2	2P8847	SUPPORT ASSEM.	1

C INDICATES CHANGE

152466

1 NPR C 0S-1595 4 BOLT

2 NPR 2P-8847 1 SUPPORT ASSEM.

Key:

C - INDICATES CHANGE

1P9586 ENGINE SUPPORT GROUP--Front
Engine Serial No. 78P51876-Up

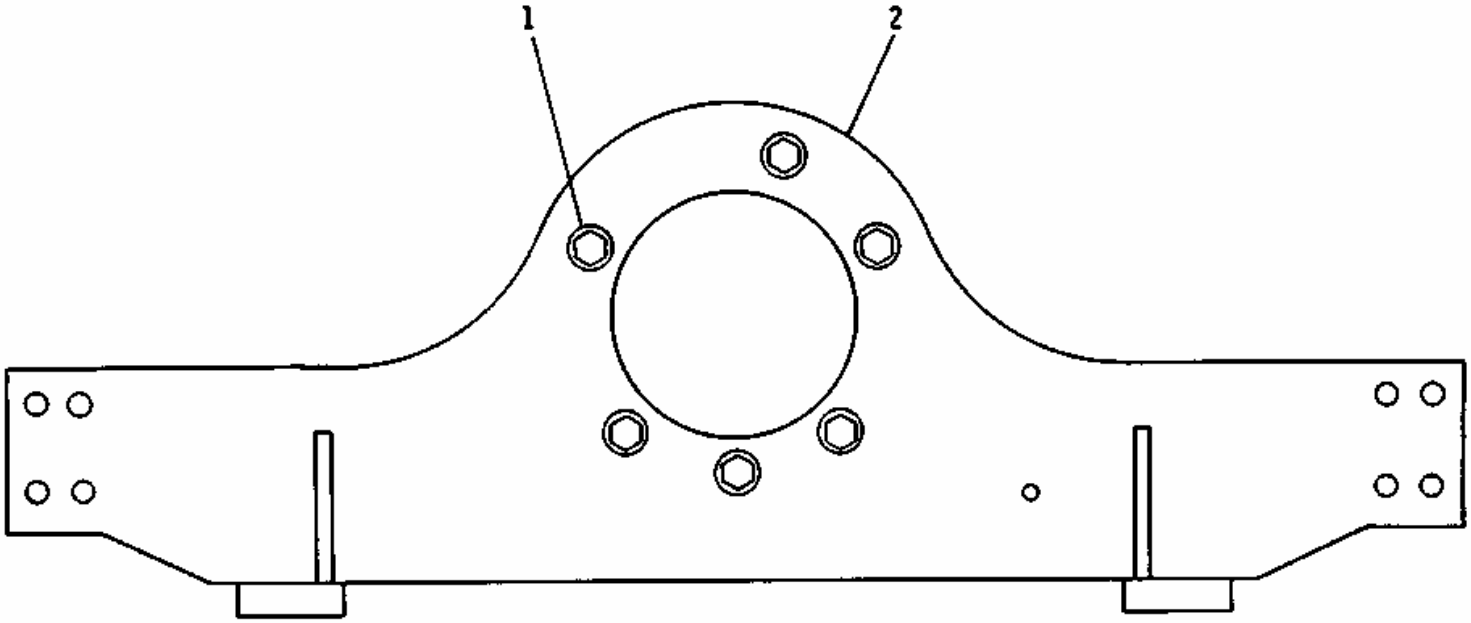

	REF. NO.	PART NUMBER	DESCRIPTION	QTY.
C	1	S1585	BOLT----------	6
C	1	5P8245	WASHER----------	6
C	2	8N5686	SUPPORT ASSEM. ----------	1

C INDICATES CHANGE

175742

1 NPR C 0S-1585 6 BOLT

NPR C 5P-8245 6 WASHER

2 NPR C 8N-5686 1 SUPPORT ASSEM.

Key:

C - INDICATES CHANGE

3P64 ENGINE MOUNTING HARDWARE GROUP

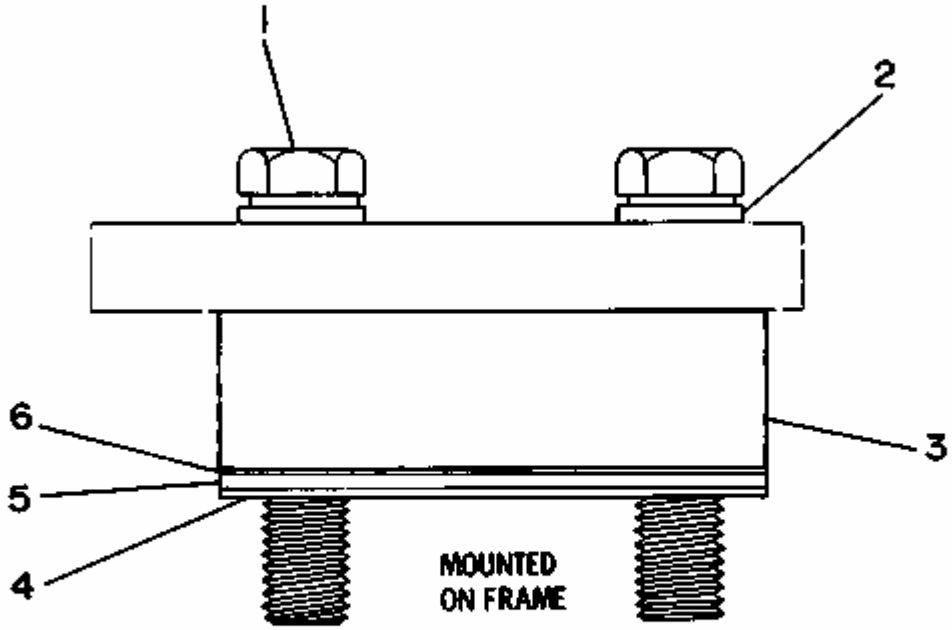

1	NPR	1D-4586	4	BOLT
2	NPR	4D-3704	4	WASHER-HARD
3	NPR	7D-2844	2	BLOCK
4	NPR	7B-5531	8	SHIM 0.36MM(.014IN)THK
5	NPR	7B-9677	4	SHIM 1.66MM(.065IN)THK
6	NPR	7B-5530	4	SHIM 0.82MM(.032IN)THK

1P3840 LIFTING EYE GROUP

REF. NO.	PART NUMBER	DESCRIPTION	QTY
1	5L4544	EYE	2

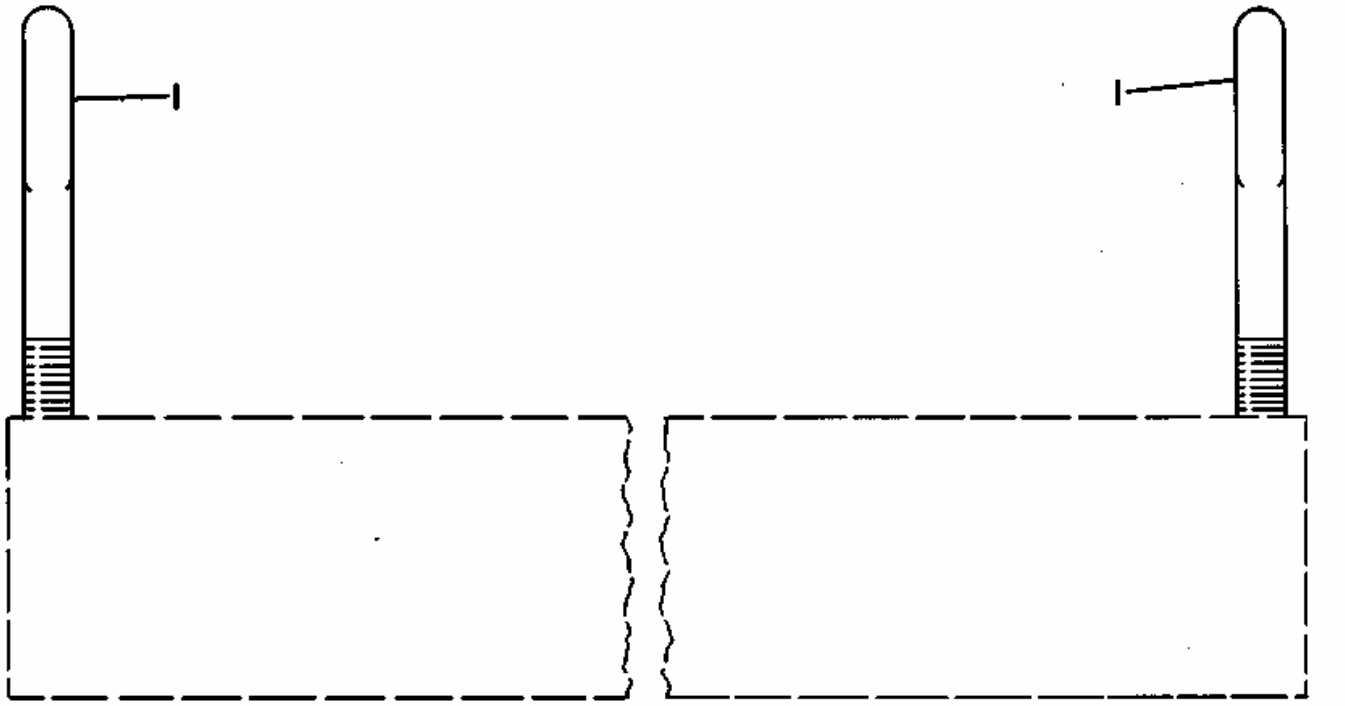

112542

1 NPR 5L-4544 2 EYE

6N8326 ENGINE LIFTING GROUP

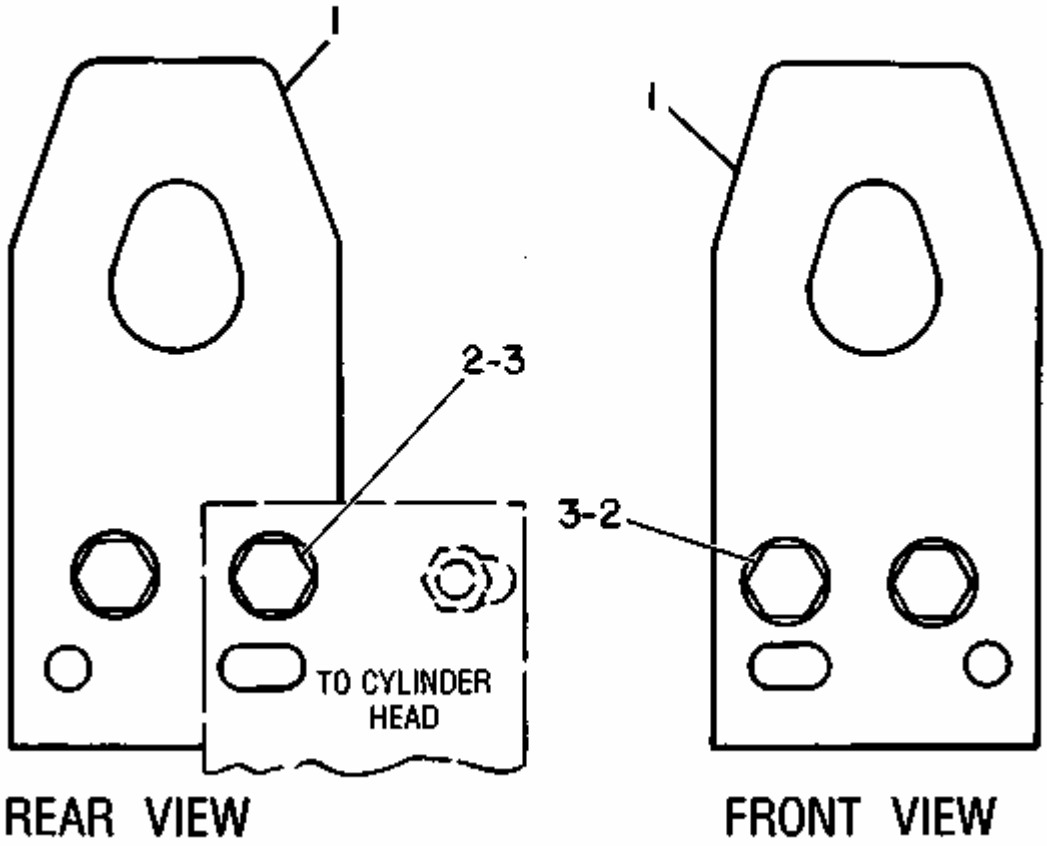

1 NPR 6N-7650 2 PLATE-LIFTING EYE

2 NPR CB 4B-3823 4 BOLT

3 NPR CB 5P-8245 4 WASHER

Key:

B - USE AS REQUIRED
C - CHANGE FROM PREVIOUS TYPE

7N9122 ENGINE LIFTING GROUP

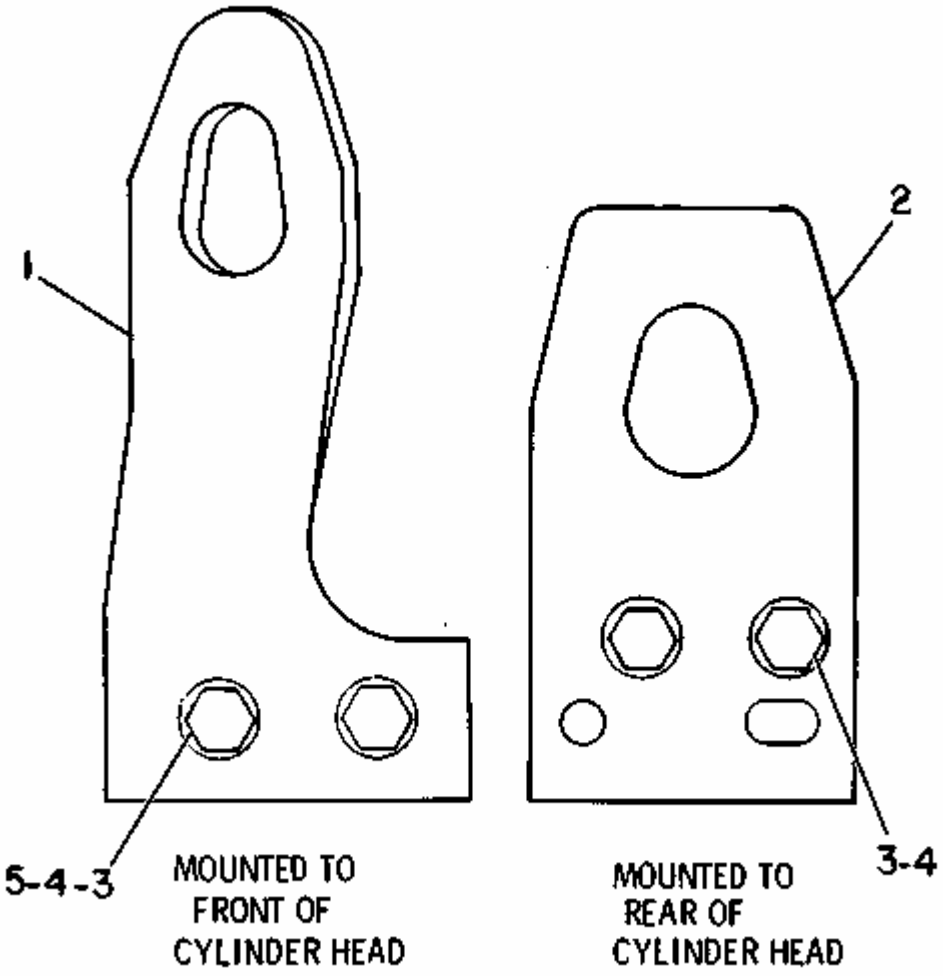

1 NPR 7N-9123 1 PLATE-LIFTING EYE

2 NPR 6N-7650 1 PLATE-LIFTING EYE

3 NPR C 4B-3823 4 BOLT

4 NPR C 5P-8245 4 WASHER 25.5MM(1IN)THK

5 NPR 7M-1026 2 WASHER 1.5MM(.060IN)THK

Key:

C - CHANGE FROM PREVIOUS TYPE

2P6498 FRONT HOUSING FASTENER GROUP

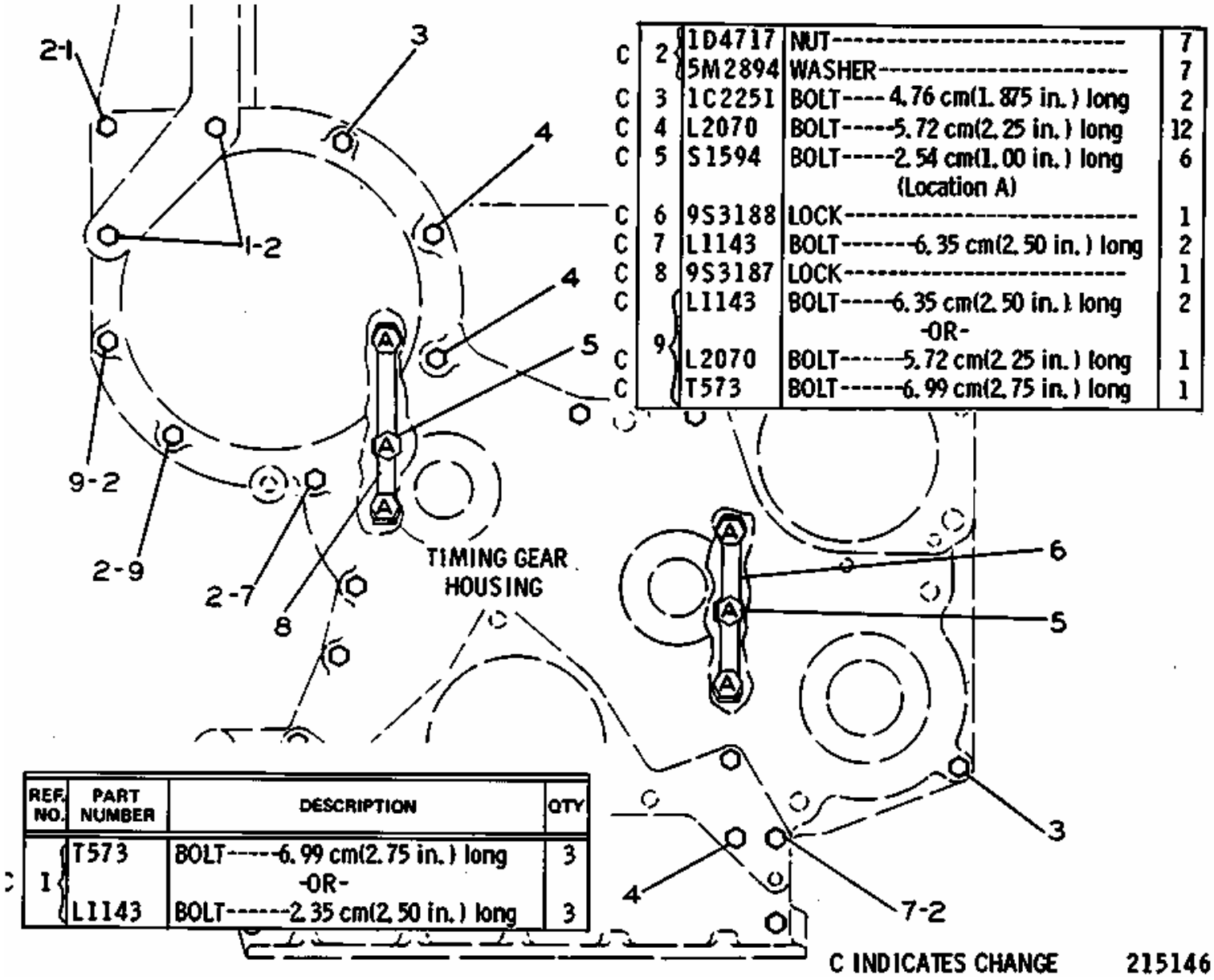

	REF. NO.	PART NUMBER	DESCRIPTION	QTY
C	1	T573	BOLT-----6.99 cm(2.75 in.) long	3
			-OR-	
		L1143	BOLT------2.35 cm(2.50 in.) long	3

	REF. NO.	PART NUMBER	DESCRIPTION	QTY
C	2	1D4717	NUT----------	7
		5M2894	WASHER----------	7
C	3	1C2251	BOLT----4.76 cm(1.875 in.) long	2
C	4	L2070	BOLT-----5.72 cm(2.25 in.) long	12
C	5	S1594	BOLT-----2.54 cm(1.00 in.) long (Location A)	6
C	6	9S3188	LOCK----------	1
C	7	L1143	BOLT-------6.35 cm(2.50 in.) long	2
C	8	9S3187	LOCK----------	1
C	9	L1143	BOLT-----6.35 cm(2.50 in.) long	2
			-OR-	
C		L2070	BOLT------5.72 cm(2.25 in.) long	1
C		T573	BOLT------6.99 cm(2.75 in.) long	1

C INDICATES CHANGE 215146

1 NPR C 0T-0573 3 BOLT 6.99 cm(2.75 in.) long

- OR -

NPR C 0L-1143 3 BOLT 2.35 cm(2.50 in.) long

2 NPR C 1D-4717 7 NUT

NPR C 5M-2894 1 WASHER

3 NPR C 1C-2251 2 BOLT 4.76 cm(1.875 in.) long

4 NPR C 0L-2070 12 BOLT 5.72 cm(2.25 in.) long

5 NPR C 0S-1594 6 BOLT 2.54 cm(1.00 in.) long

(Location A)

6 NPR C 9S-3188 1 LOCK

7 NPR C 0L-1143 2 BOLT 6.35 cm(2.50 in.) long

8 NPR C 9S-3187 1 LOCK

9 NPR C 0L-1143 2 BOLT 6.35 cm(2.50 in.) long

- OR -

NPR C 0L-2070 1 BOLT 5.72 cm(2.25 in.) long

NPR C 0T-0573 1 BOLT 6.99 cm(2.75 in.) long

Key:

C - INDICATES CHANGE

2P6529 FRONT HOUSING COVER GROUP

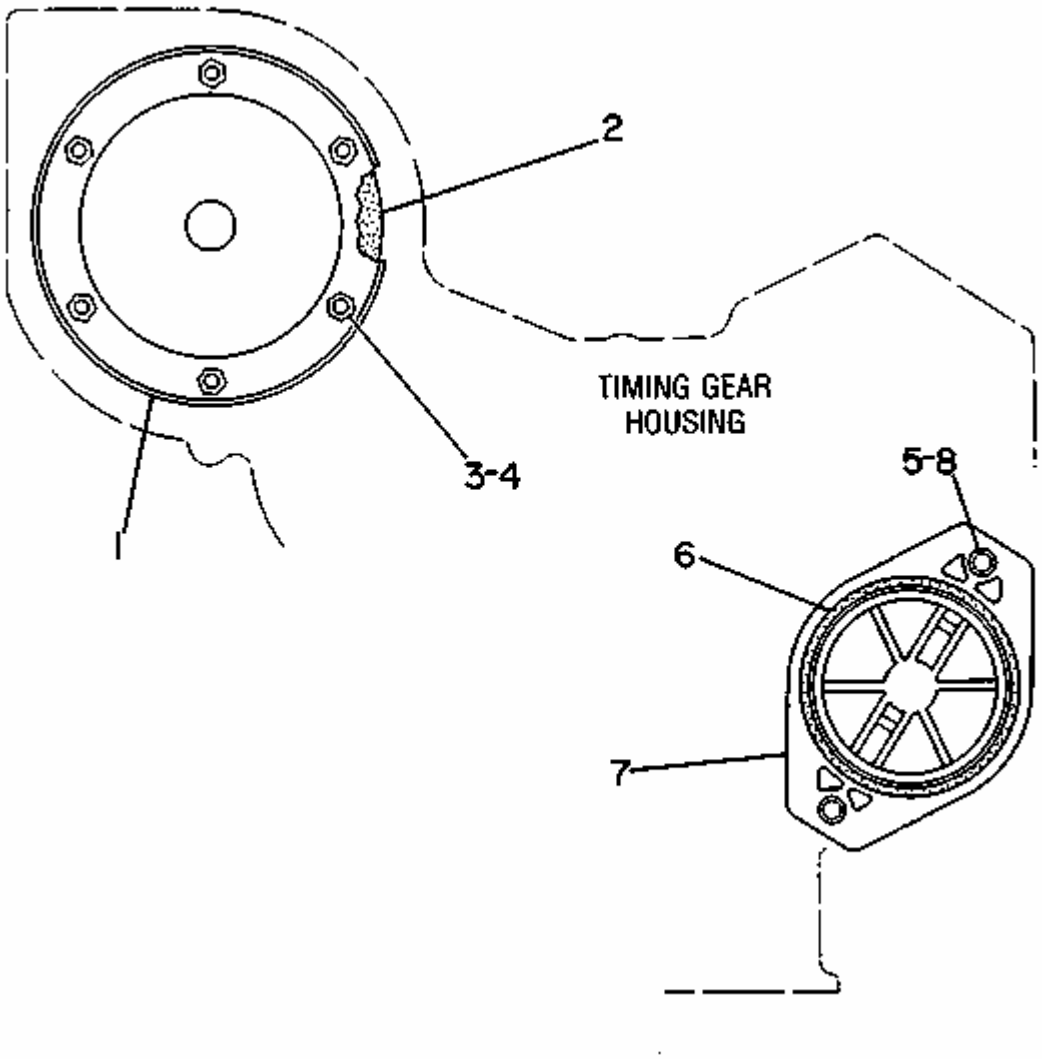

1	NPR	2P-8701	1	COVER-FRONT HOUSING
2	NPR	6N-7887	1	GASKET-HOUSING COVER
3	NPR	1B-4203	6	NUT-FULL
4	NPR	5M-2894	6	WASHER
5	NPR	0S-1566	2	BOLT
6	NPR	5F-3106	1	SEAL-O-RING
7	NPR C	7N-8374	1	COVER-DRIVE OPENING
8	NPR C	5P-8247	2	WASHER-HARD

Key: C - CHANGE FROM PREVIOUS TYPE

2P9641 FRONT HOUSING GROUP--Engine Serial No. 78P53511-Up

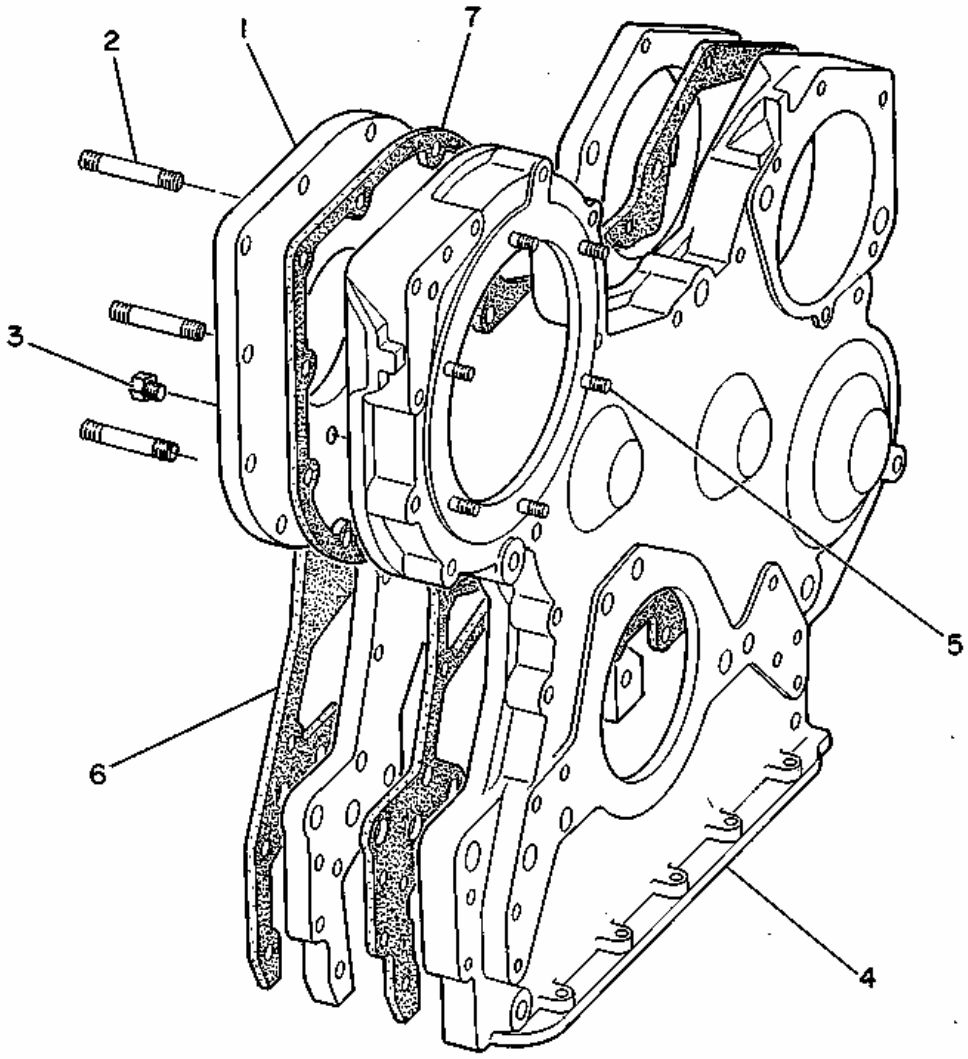

1	NPR	6N-9060	1	PLATE AS-FRONT
	NPR C	1W-7110	1	PLATE-FRONT
2	NPR	4M-8743	3	STUD
3	NPR C	5M-6214	1	PLUG-PIPE
4	NPR	8N-0109	1	HOUSING AS-FRONT
5	NPR	2S-0042	6	STUD
6	NPR	8N-0110	1	GASKET-FRONT PLATE
7	NPR C	1W-3900	1	GASKET

Key: C - CHANGE FROM PREVIOUS TYPE

2P9644 FLYWHEEL HOUSING GROUP-Engine Serial No. 78P18799 to 78P24774 inclusive

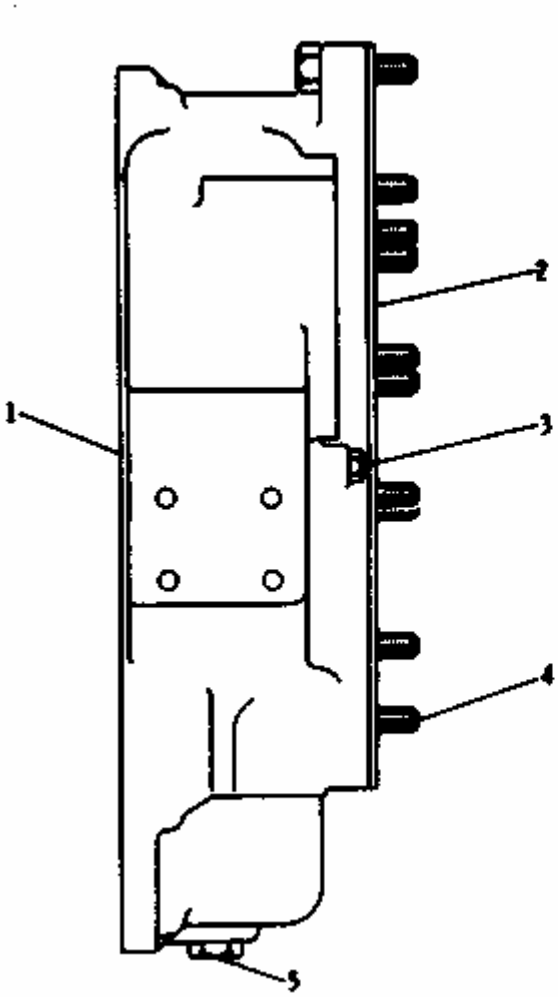

REF. NO.	PART NUMBER	DESCRIPTION	QTY
1	3P127	HOUSING	1
2	9H5921	GASKET	1
3	5M6213	PLUG	1
4	0S1587	BOLT	13
5	3J5389	PLUG (drain)	1

200580

1 NPR 3P-0127 1 HOUSING

2 NPR 9H-5921 1 GASKET

3 NPR 5M-6213 1 PLUG

4 NPR 0S-1587 13 BOLT

5 NPR 3J-5389 1 PLUG (drain

2P6166 FLYWHEEL HOUSING GROUP--Engine Serial No. 78P24775-Up

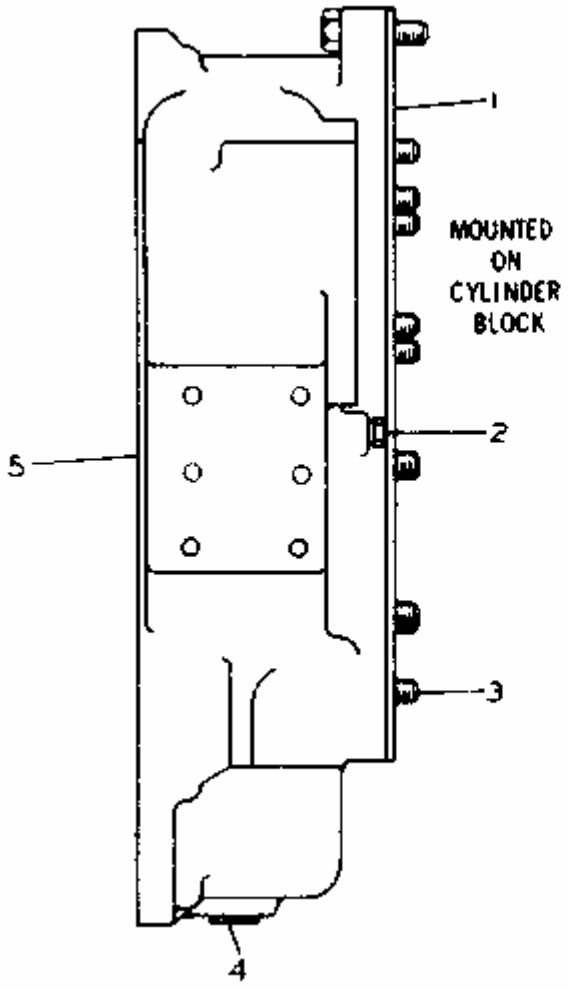

	REF. NO	PART NUMBER	DESCRIPTION	QTY
	1	9H5921	GASKET	1
	2	5M6213	PLUG	1
	3	S1587	BOLT	13
C	4	2B858	PLUG	1
C	5	6N2019	HOUSING	1

C INDICATES CHANGE 209653

1 NPR 9H-5921 1 GASKET

2 NPR 5M-6213 1 PLUG

3 NPR 0S-1587 13 BOLT

4 NPR C 2B-0858 1 PLUG

5 NPR C 6N-2019 1 HOUSING

Key: C - INDICATES CHANGE

8N5014 FLYWHEEL HOUSING GROUP

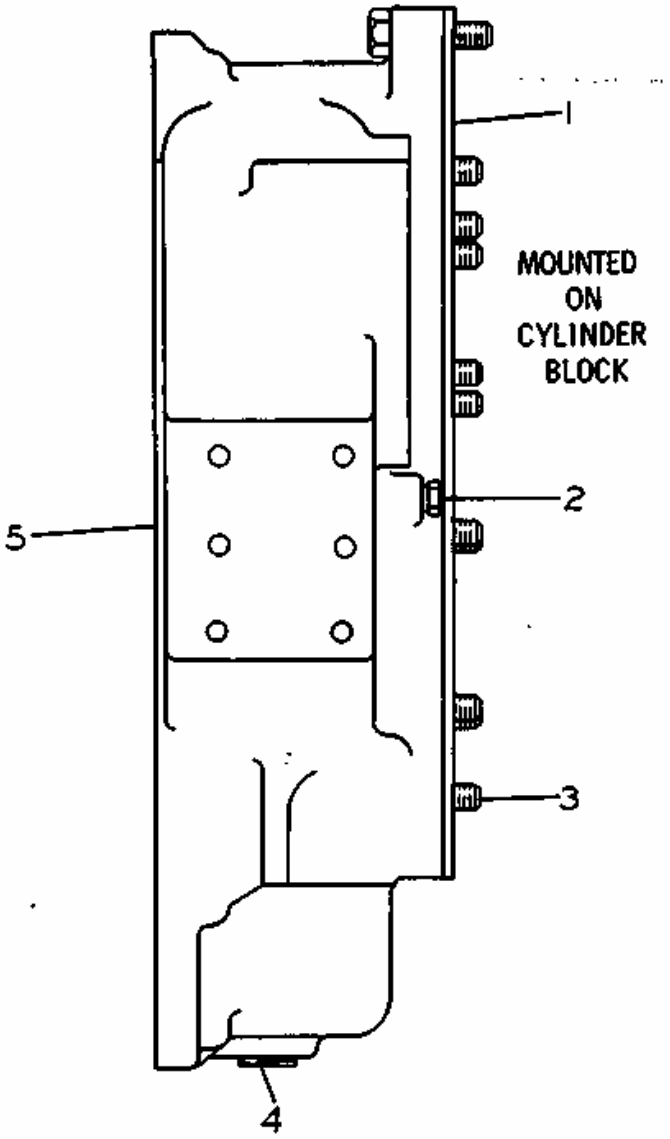

REF. NO.	PART NUMBER	DESCRIPTION	QTY
1	9H5921	GASKET	1
2	5M6213	PLUG	1
3	6V1615	BOLT	13
4	2B858	PLUG	1
5	6N2019	HOUSING	1
	SMHS7518	FORM (Installing Flywheel Housing)	1

224218

1 NPR 9H-5921 1 GASKET

2 NPR 5M-6213 1 PLUG

3 NPR 6V-1615 13 BOLT

4 NPR 2B-0858 1 PLUG

5 NPR 6N-2019 1 HOUSING

2P9642 FRONT GEAR GROUP--Timing

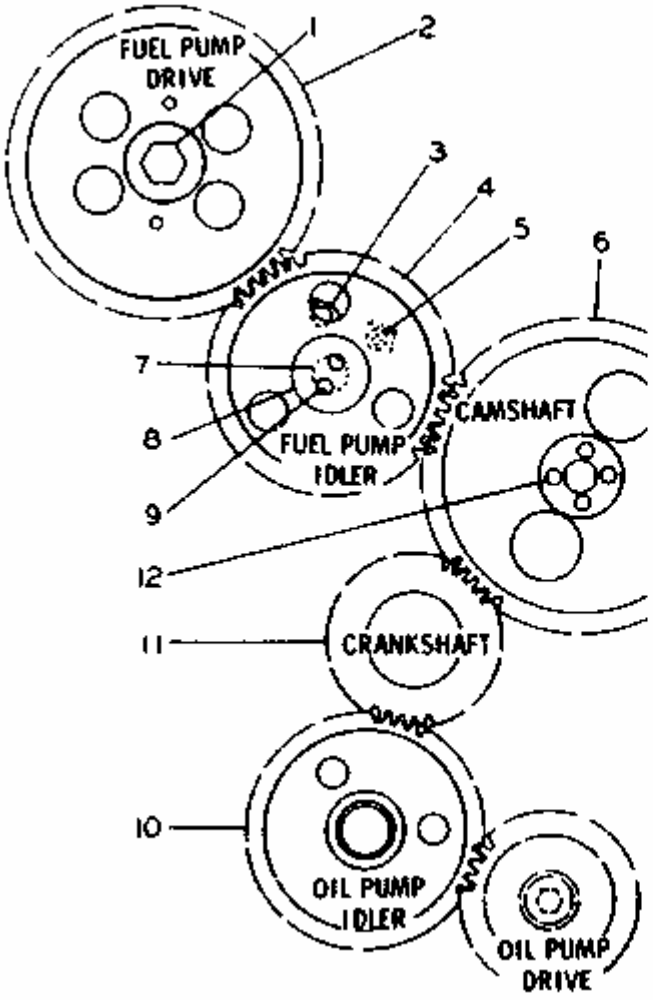

REF NO.	PART NUMBER	DESCRIPTION	QTY
1	5 1603	BOLT	1
	4N3371	WASHER	1
2	4N3330	GEAR (80 Teeth)	1
3	L1351	BOLT	2
4	5S7660	GEAR ASSEM. (57 Teeth)	1
	5S7630	BEARING	1
5	5B9079	NUT	1
	5S7611	LOCK	1
6	5S3804	GEAR (80 Teeth)	1
7	5S7608	SHAFT	1
8	5S7612	PLATE	1
9	2H3755	BOLT	2
10	2P1172	GEAR ASSEM. (60 Teeth)	1
	2P1168	BEARING	1
11	4M9933	GEAR (40 Teeth)	1
	5H2671	KEY	1
12	51748	BOLT	4

207194

1 NPR 0S-1603 1 BOLT
NPR 4N-3371 1 WASHER
2 NPR 4N-3330 1 GEAR-FUEL PUMP DRIVE (80 TEETH)
3 NPR 0L-1351 2 BOLT
4 NPR 5S-7660 1 GEAR AS (57 TEETH)
NPR 5S-7630 1 BEARING-SLEEVE
5 NPR 5B-9079 1 NUT-JAM
NPR 5S-7611 1 LOCK-SHAFT
6 NPR 5S-3804 1 GEAR-CAMSHAFT (80 TEETH)
7 NPR 5S-7608 1 SHAFT-DRIVE IDLER
8 NPR 5S-7612 1 PLATE-THRUST
9 NPR 2H-3755 2 BOLT
10 NPR 2P-1172 1 GEAR AS (60 TEETH)
NPR 2P-1168 1 BEARING-SLEEVE
11 NPR 4M-9933 1 GEAR-CRANKSHAFT (40 TEETH)
NPR 5H-2671 1 KEY-WOODRUFF
12 NPR 0S-1748 4 BOLT

LUBRICATION SYSTEM

1P4244 BREATHER GROUP

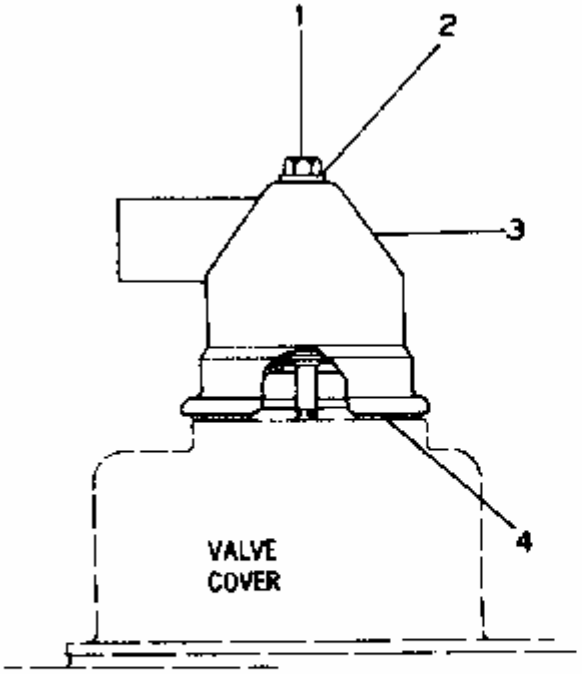

	REF. NO.	PART NUMBER	DESCRIPTION	QTY.
	1	3H3243	BOLT	1
	2	4K9890	WASHER	1
	3	8S248	BREATHER ASSEM.	1
C	4	4L9564	SEAL	1

C INDICATES CHANGE 227531

---

1 NPR 3H-3243 1 BOLT

2 NPR 4K-9890 1 WASHER

3 NPR 8S-0248 1 BREATHER ASSEM.

4 NPR C 4L-9564 1 SEAL

Key:

C - INDICATES CHANGE

6N1568 OIL LEVEL GAUGE PROTECTION GROUP--Type 1--Replaced by 1N4297--
Page 36A

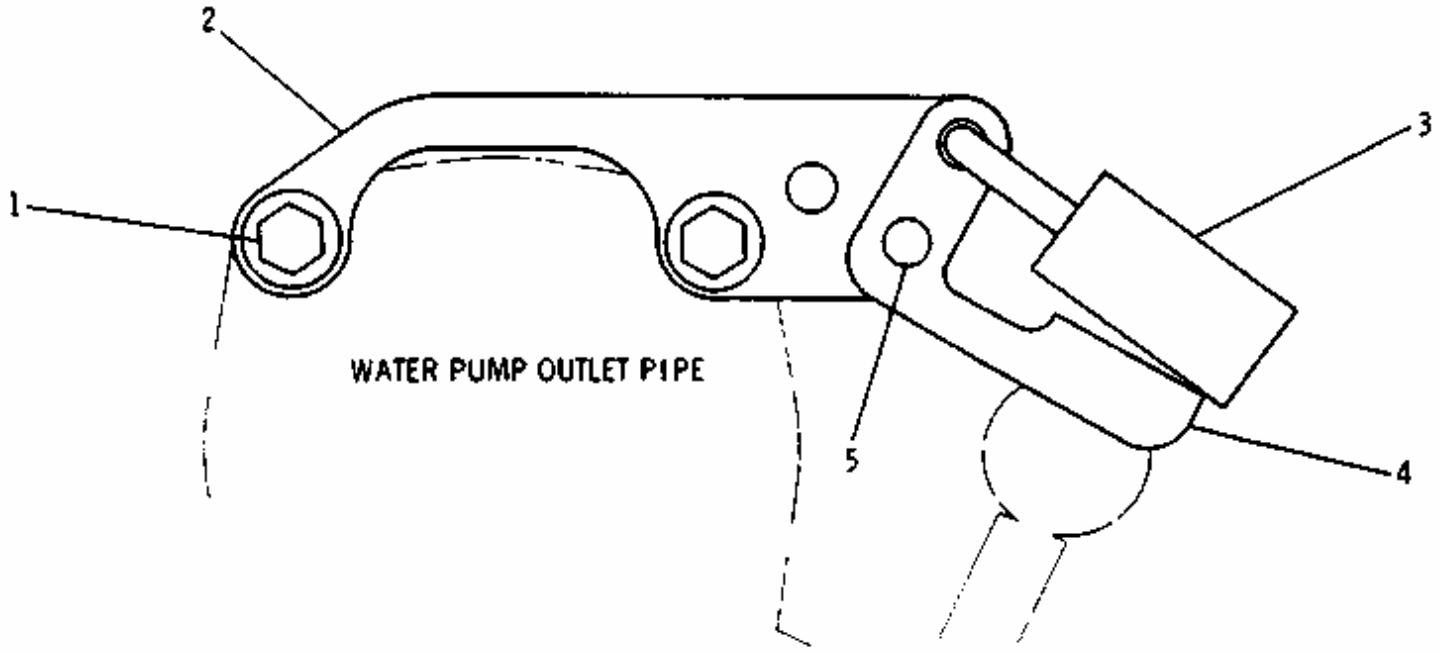

REF. NO.	PART NUMBER	DESCRIPTION	QTY
1	1S1588	BOLT	2
	5M2894	WASHER	2
2	6N1567	BRACKET	1
3	8S7949	PADLOCK	1
	8M439	KEY	1
4	6N1536	HASP	1
5	6N2011	RIVET	1

205359

1 NPR 0S-1588 2 BOLT

NPR 5M-2894 2 WASHER

2 NPR 6N-1567 1 BRACKET

3 NPR 8S-7949 1 PADLOCK

NPR 8M-0439 1 KEY

4 NPR 6N-1536 1 HASP

5 NPR 6N-2011 1 RIVET

6N1568 ENGINE OIL LEVEL GAUGE PROTECTION GROUP--Type 2--
Replaced by 1N4297--Page 36A

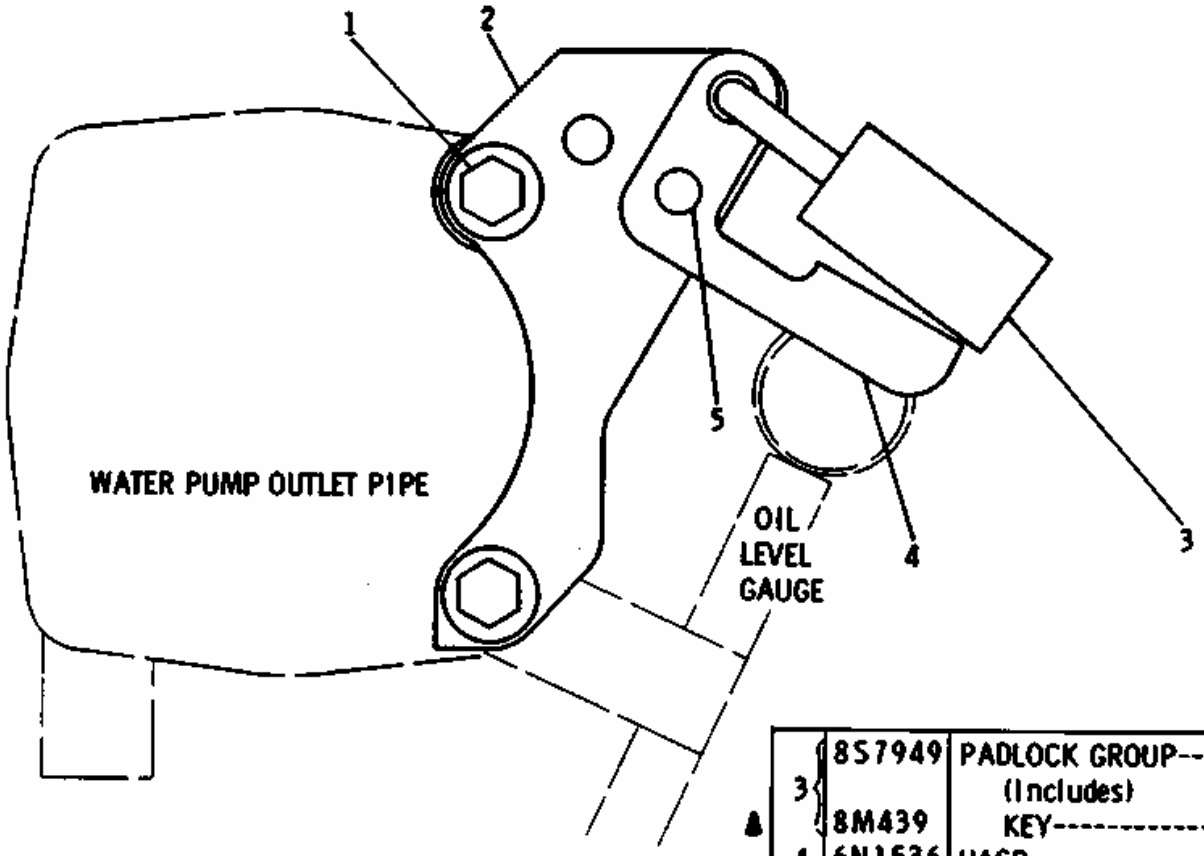

	REF. NO.	PART NUMBER	DESCRIPTION	QTY
C	1	S1591	BOLT	2
		5M2894	WASHER	2
C	2	6N7325	BRACKET	1
	3	8S7949	PADLOCK GROUP (Includes)	1
A		8M439	KEY	2
	4	6N1536	HASP	1
	5	6N2011	RIVET	1
C		8H3526	WASHER	1

A NOT PART OF 6N1568 PROTECTION GROUP C INDICATES CHANGE 211204

1 NPR C 0S-1591 2 BOLT

NPR 5M-2894 2 WASHER

2 NPR C 6N-7325 1 BRACKET

3 NPR 8S-7949 1 PADLOCK GROUP

(Includes)

NPR A 8M-0439 2 KEY

4 NPR 6N-1536 1 HASP

5 NPR 6N-2011 1 RIVET

NPR C 8H-3526 1 WASHER

Key: A - NOT PART OF THIS GROUP C - INDICATES CHANGE

1N4297 VANDALISM PROTECTION GROUP--Oil Level Gauge
Single Key Security System

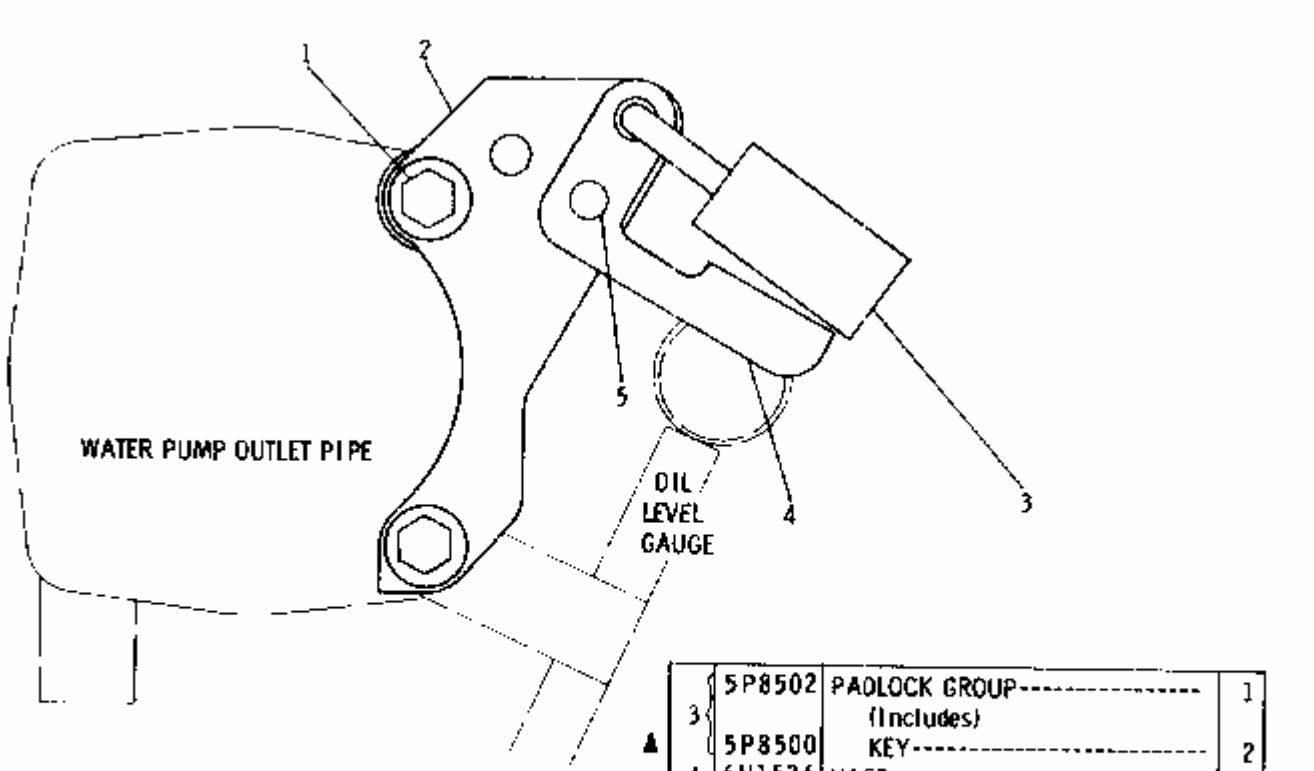

REF NO.	PART NUMBER	DESCRIPTION	QTY
1	S1591	BOLT	2
	5M2894	WASHER	2
2	6N7325	BRACKET	1

	REF NO.	PART NUMBER	DESCRIPTION	QTY
	3	5P8502	PADLOCK GROUP (Includes)	1
A		5P8500	KEY	2
	4	6N1536	HASP	1
	5	6N2011	RIVET	1
		8H3526	WASHER	1

A NOT PART OF 1N4297 GROUP 232340

1 NPR 0S-1591 2 BOLT

NPR 5M-2894 2 WASHER

2 NPR 6N-7325 1 BRACKET

3 NPR 5P-8502 1 PADLOCK GROUP

(Includes)

NPR A 5P-8500 2 KEY

4 NPR 6N-1536 1 HASP

5 NPR 6N-2011 1 RIVET

NPR 8H-3526 1 WASHER

Key:

A - NOT PART OF THIS GROUP

2P6855 ENGINE OIL FILLER GROUP

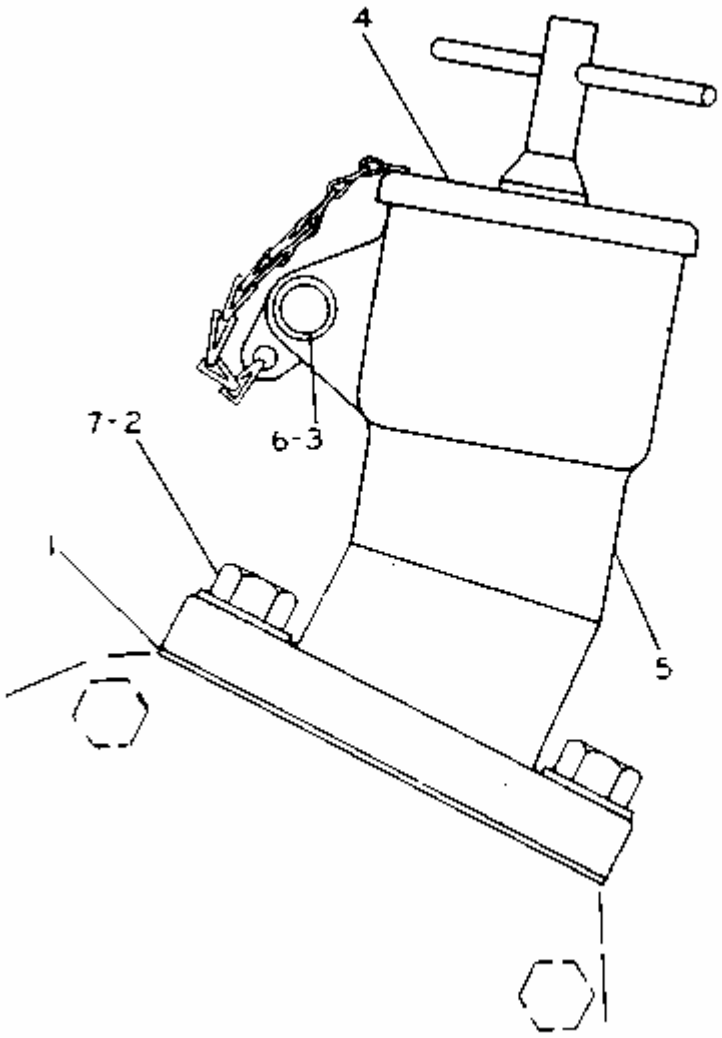

1 NPR 2P-2720 1 GASKET

2 NPR C 1A-2029 2 BOLT

3 NPR 9M-5732 1 RIVET-POP

4 NPR C 6N-2985 1 CAP AS-FILLER

5 NPR 2P-2719 1 PIPE-OIL FILLER

6 NPR 2A-3211 1 WASHER

7 NPR C 5M-2894 2 WASHER

Key: C - CHANGE FROM PREVIOUS TYPE

2P6854 ENGINE OIL FILLER AND PROTECTION COVER GROUP
Replaced by 5N8553 shown on Page 40A

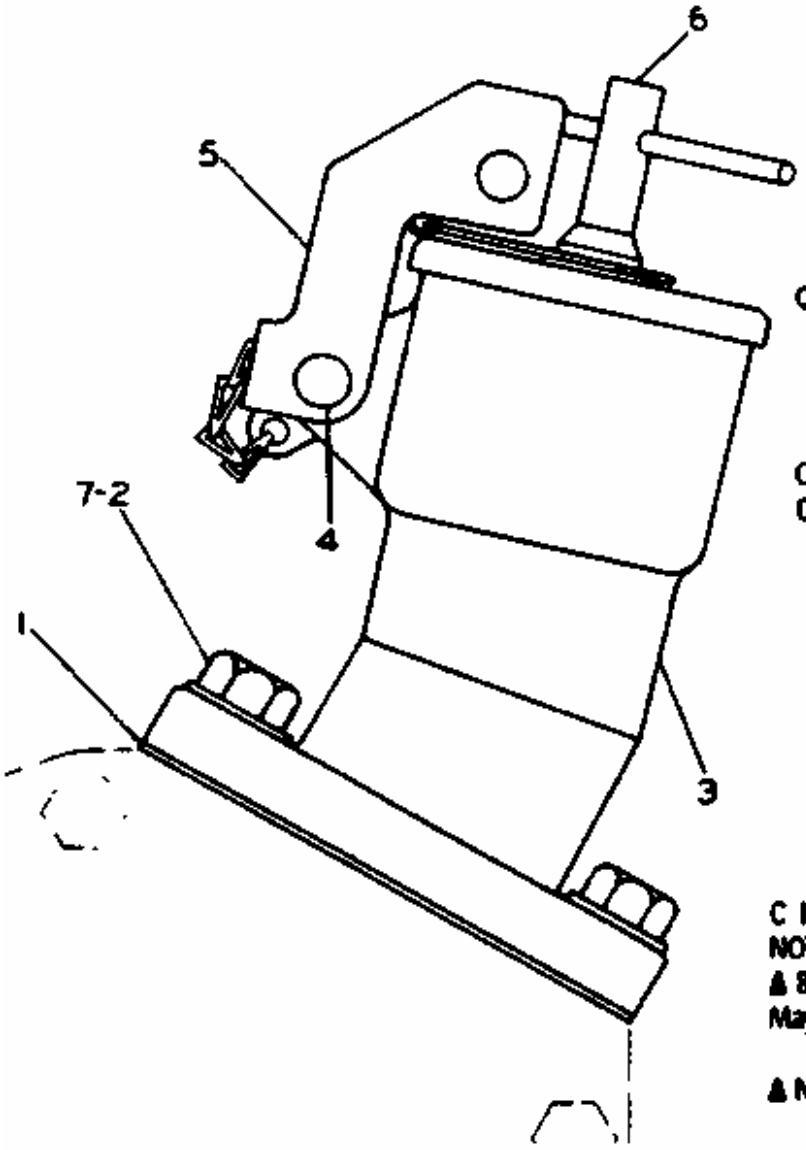

	REF. NO.	PART NUMBER	DESCRIPTION	QTY
	1	2P2720	GASKET	1
C	2	S1588	BOLT	2
	3	2P2721	PIPE ASSEM.	1
		2P2719	PIPE	1
	4	8S4212	RIVET	1
	5	2P2717	HASP	1
C	6	6N2985	CAP ASSEM.	1
C	7	5M2894	WASHER	2

C INDICATES CHANGE
NOTE:
▲ 8S7949 PADLOCK GROUP (Includes 8M439 -KEY---2)
May Be Obtained From Parts Department

▲ NOT PART OF 2P6854 OIL FILLER GROUP

212537

1 NPR 2P-2720 1 GASKET

2 NPR C 0S-1588 2 BOLT

3 NPR 2P-2721 1 PIPE ASSEM.

NPR 2P-2719 1 PIPE

4 NPR 8S-4212 1 RIVET

5 NPR 2P-2717 1 HASP

6 NPR C 6N-2985 1 CAP ASSEM.

7 NPR C 5M-2894 2 WASHER

NPR H 8S-7949 PADLOCK GROUP

(Includes)

NPR 8M-0439 2 KEY

(May Be Obtained From Parts Department

Key: C - INDICATES CHANGE H - NOT PART OF 2P6854 OIL FILLER

5N8553 OIL FILTER AND PROTECTION COVER GROUP

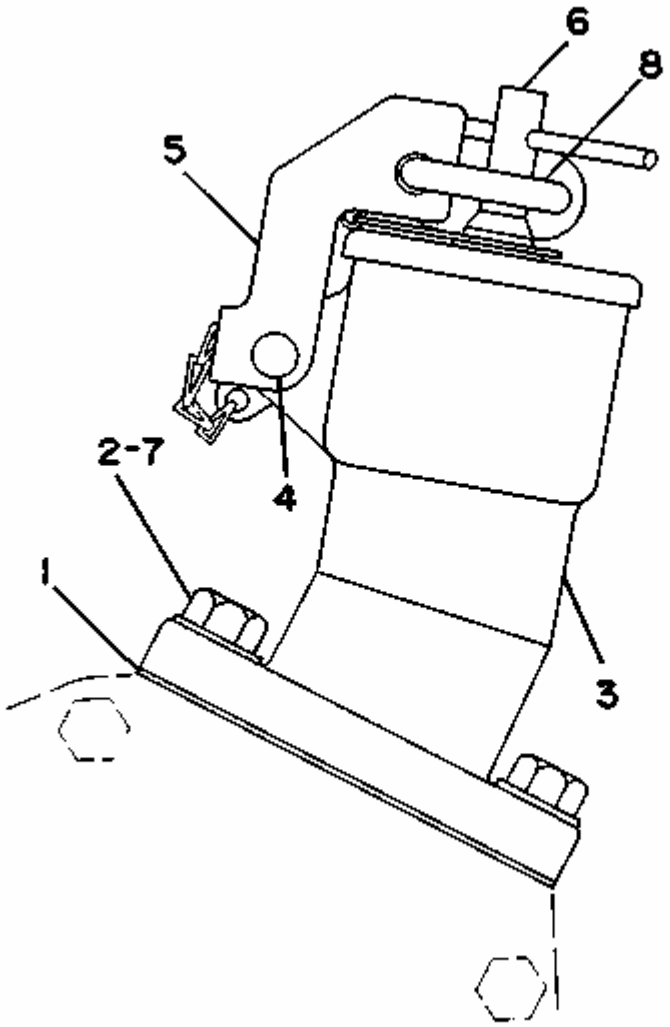

1	NPR	2P-2720	1	GASKET
2	NPR	0S-1588	2	BOLT
3	NPR	2P-2721	1	PIPE AS-OIL FILLER
	NPR	2P-2719	1	PIPE-OIL FILLER
4	NPR	8S-4212	1	RIVET
5	NPR	2P-2717	1	HASP-OIL FILLER
6	NPR	6N-2985	1	CAP AS-FILLER
7	NPR	5M-2894	2	WASHER
8	NPR	5P-8502	1	PADLOCK GP
	NPR A	5P-8500	2	KEY

Key: A - NOT PART OF THIS GROUP

6G9005 TRANSMISSION OIL FILLER PROTECTION COVER GROUP

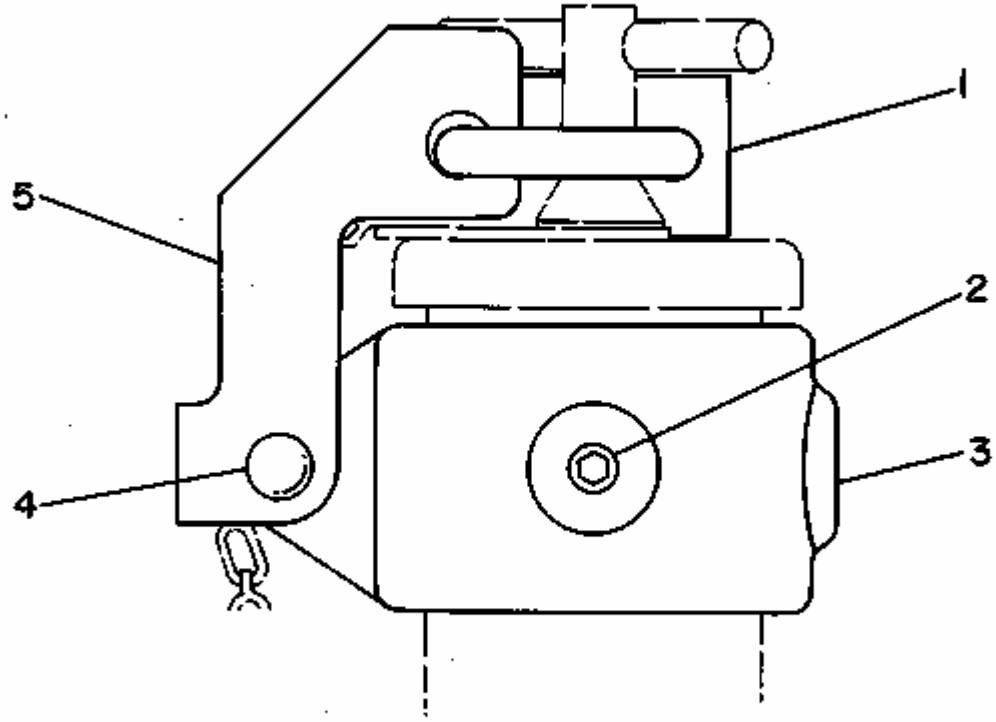

1	NPR	5P-8502	1	PADLOCK GP
	NPR A	5P-8500	2	KEY
2	NPR	8B-7179	2	SETSCREW-SOCKET
3	NPR	9D-5299	1	COLLAR AS
4	NPR	8S-4212	1	RIVET
5	NPR	2P-2717	1	HASP-OIL FILLER

Key: A - NOT PART OF THIS GROUP

6G9000 PROTECTION COVER GROUP--Transmission Oil Level Gauge

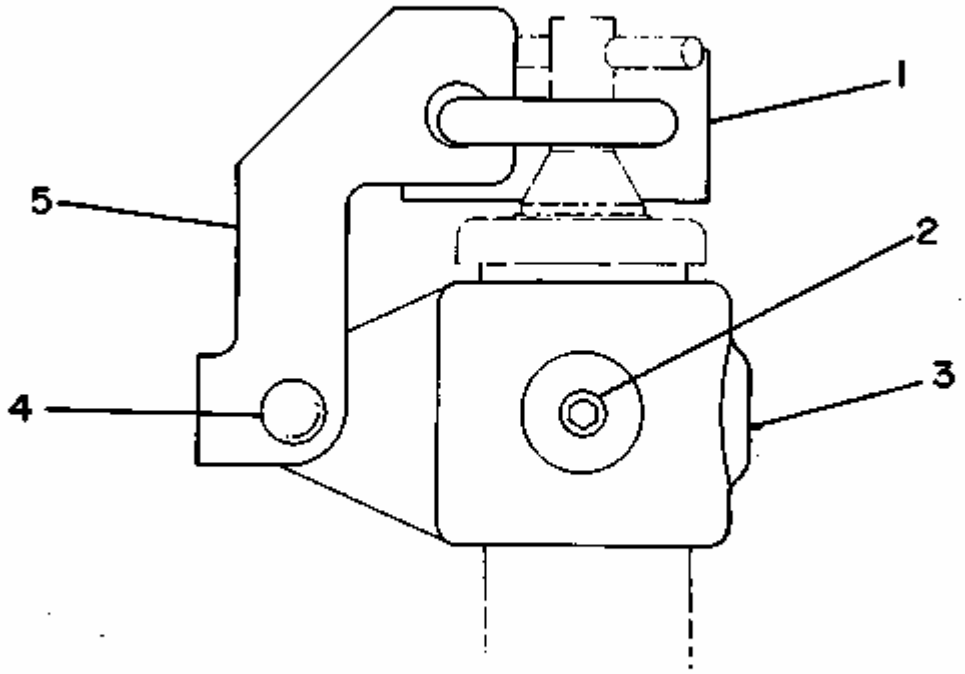

1	NPR	5P-8502	1	PADLOCK GP
	NPR A	5P-8500	2	KEY
2	NPR	8B-7179	2	SETSCREW-SOCKET
3	NPR	9D-5298	1	COLLAR AS
4	NPR	8S-4212	1	RIVET
5	NPR	2P-2717	1	HASP-OIL FILLER

Key: A - NOT PART OF THIS GROUP

9D5455 PROTECTION COVER GROUP--Transmission Oil Level Gauge
Replaced by 6G9000 shown on Page 40B

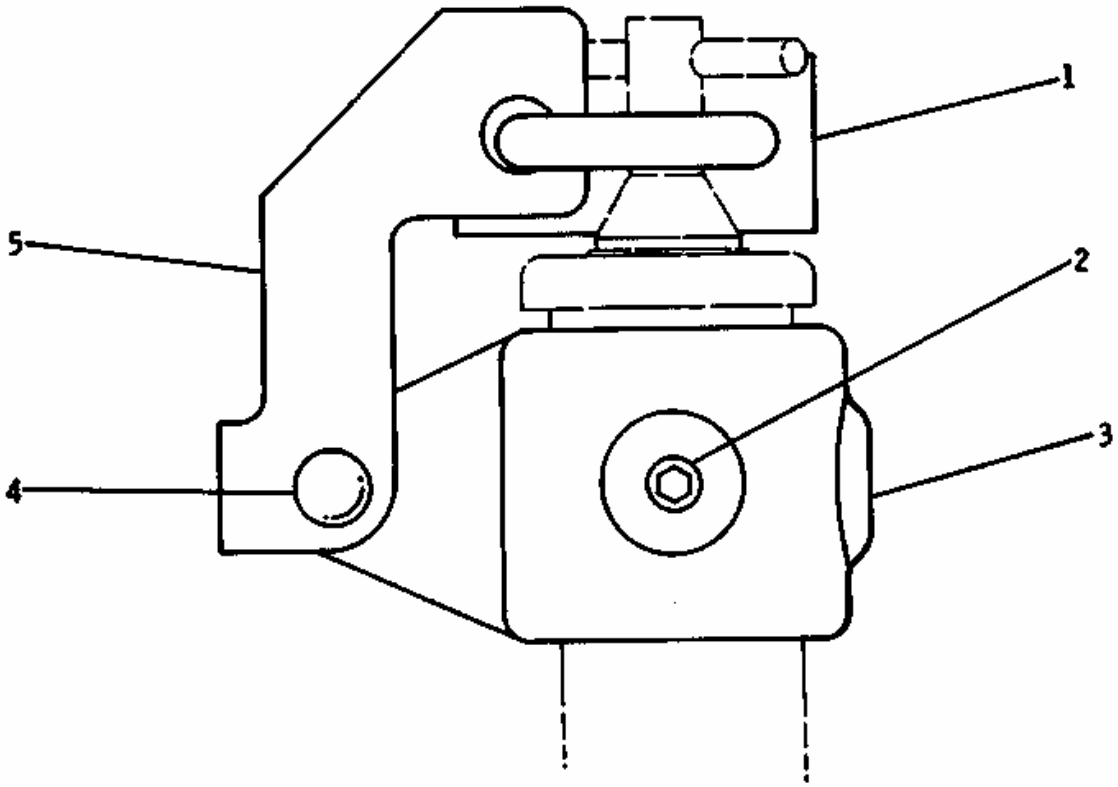

REF. NO.	PART NUMBER	DESCRIPTION	QTY
1	8S7949	PADLOCK GROUP---------- (Includes)	1
▲	8M439	KEY----------	2
2	8B7179	SCREW----------	2
C 3	9D5298	COLLAR ASSEM. ---------- (Includes)	1
4	8S4212	RIVET----------	1
5	2P2717	HASP----------	1

C INDICATES CHANGE ▲ NOT PART OF 9D5455 PROTECTION COVER GROUP 154032

1 NPR 8S-7949 1 PADLOCK GROUP

(Includes)

NPR H 8M-0439 2 KEY

2 NPR 8B-7179 2 SCREW

3 NPR C 9D-5298 1 COLLAR ASSEM.

(Includes)

4 NPR 8S-4212 1 RIVET

5 NPR 2P-2717 1 HASP

Key: C - INDICATES CHANGE H - NOT PART OF 9D5455 PROTECTION COVER GROUP

2P6475 OIL FILTER GROUP

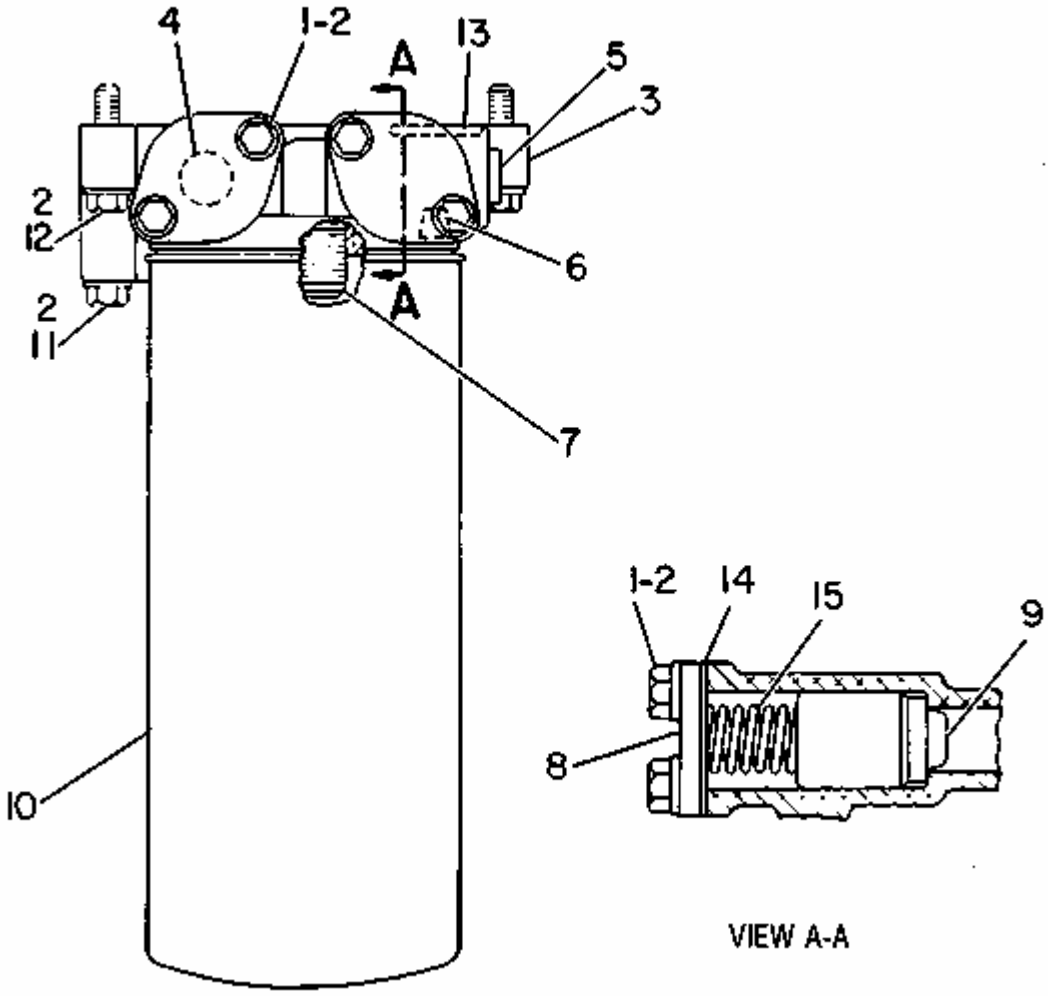

1	NPR	0S-1618	4	BOLT
2	NPR	9M-1974	8	WASHER
3	NPR	1P-6448	1	BASE AS-OIL FILTER
4	NPR	1B-5174	3	PLUG-PIPE 1.91CM(.75IN)THK
5	NPR	3L-1850	1	PLUG-PIPE 1.27CM(.5IN)THK
6	NPR	7H-3171	1	PLUG-PIPE
7	NPR	2P-2537	1	STUD-HOLLOW
8	NPR	6B-0830	2	COVER
9	NPR	1P-1367	2	PLUNGER
10	NPR	2P-4004	1	FILTER AS-OIL
11	NPR	1D-4540	1	BOLT 6.99CM(2.75IN)LG
12	NPR	1A-9579	3	BOLT 3.81CM(1.5IN)LG
13	NPR	8M-4432	2	SEAL-O-RING
14	NPR	4N-8207	2	GASKET
15	NPR	8M-3182	2	SPRING

6N1665 FUMES DISPOSAL GROUP--Breather

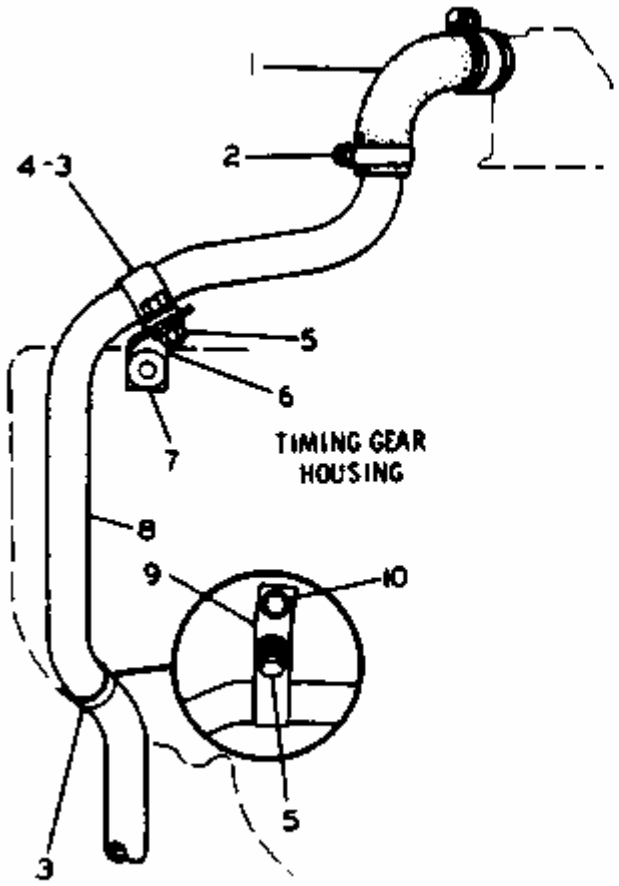

REF NO.	PART NUMBER	DESCRIPTION	QTY
1	4N3326	HOSE	1
2	9M2904	CLAMP	2
3	T386	CLIP	2
4	6D8384	STRIP	1
	0S1594	BOLT	2
5	1D4717	NUT	2
	5M2894	WASHER	4
6	5S1445	BRACKET	1
7	3L9689	WASHER	1
8	4N3328	TUBE	1
9	6N1369	CLIP	1
10	4F7957	BOLT	1
	5P537	WASHER	1

202731

1 NPR 4N-3326 1 HOSE

2 NPR 9M-2904 2 CLAMP

3 NPR 0T-0386 2 CLIP

4 NPR 6D-8384 1 STRIP

5 NPR 0S-1594 2 BOLT

NPR 1D-4717 2 NUT

NPR 5M-2894 4 WASHER

6 NPR 5S-1445 1 BRACKET

7 NPR 3L-9689 1 WASHER

8 NPR 4N-3328 1 TUBE

9 NPR 6N-1369 1 CLIP

10 NPR 4F-7957 1 BOLT

NPR 5P-0537 1 WASHER

2P6491 OIL LEVEL GAUGE GROUP

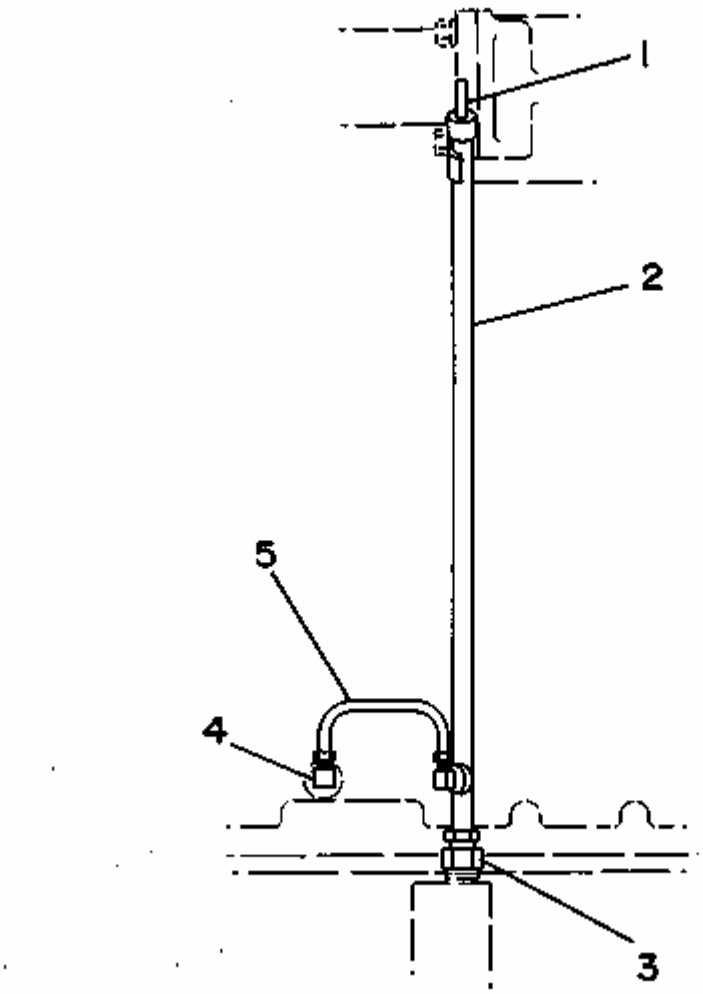

1	NPR	5S-8115	1	GAUGE AS-LEVEL
2	NPR	2P-2547	1	TUBE AS-GUIDE
3	NPR	8S-1326	1	CONNECTOR AS-SPECIAL
	NPR	8F-8998	1	NUT-FITTING
4	NPR	5K-9243	2	ELBOW-FLARED
5	NPR	2P-2697	1	TUBE AS-AIR VENT

2P6512 OIL LINES GROUP--Engine Serial No. 78P18799 to 78P40899 inclusive

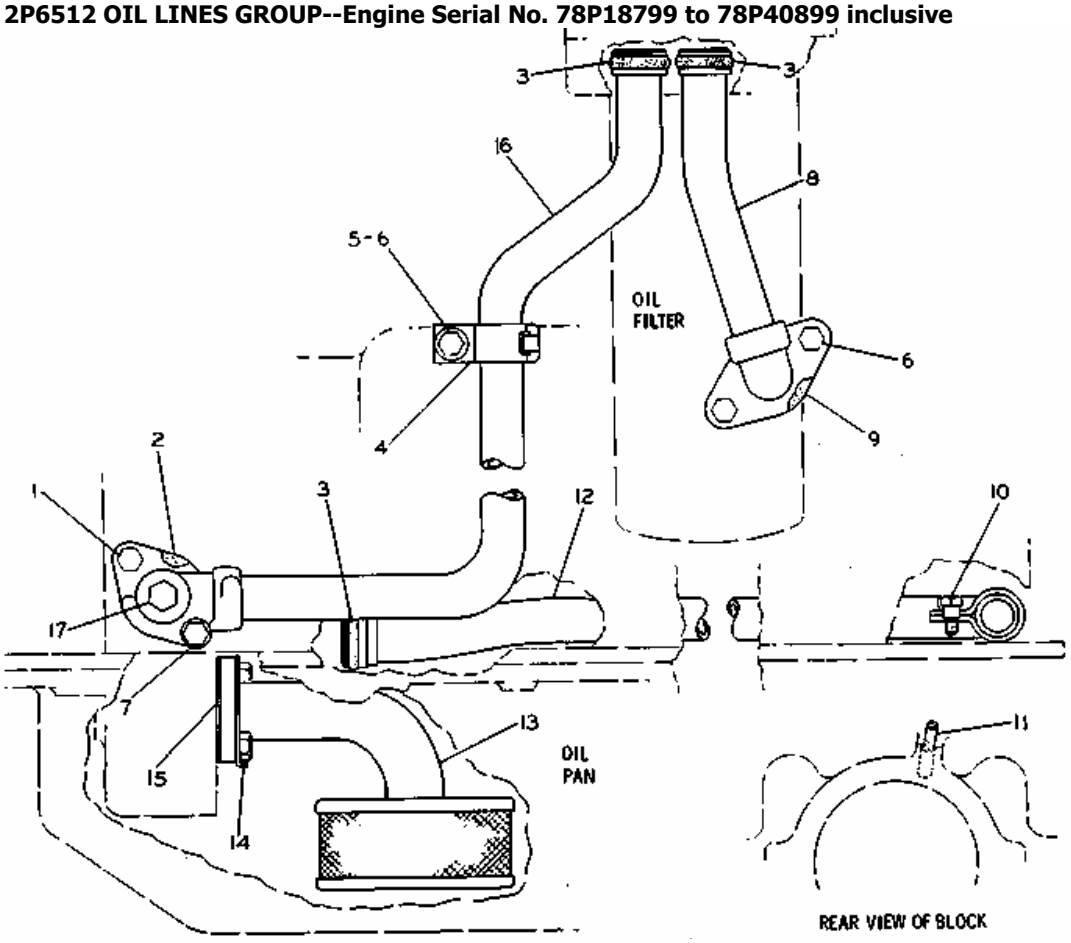

REF NO.	PART NUMBER	DESCRIPTION	QTY
1	2P3202	BOLT	1
2	2M5407	GASKET	1
C 3	9M4849	SEAL	3
4	7S3919	CLIP	1
	7S3916	CLIP (Tab)	1
5	4B4278	WASHER	1
6	2P3201	BOLT	3
7	2P3207	BOLT	1
8	2P2460	TUBE ASSEM.	1
9	7F7590	GASKET	1
10	T102	BOLT	1
	L364	LOCK	1
11	2S1541	ORIFICE	4
12	2P744	TUBE ASSEM.	1
13	2P1776	BELL ASSEM.	1
14	S1594	BOLT	2
	8S8874	LOCK	1
15	8M904	GASKET	1
16	2P2519	TUBE ASSEM. (Includes)	1
C 17	5M6213	PLUG	1

C INDICATES CHANGE

168737

1 NPR 2P-3202 1 BOLT

2 NPR 2M-5407 1 GASKET

3 NPR C 9M-4849 3 SEAL

4 NPR 7S-3919 1 CLIP

NPR 7S-3916 1 CLIP (Tab)

5 NPR 4B-4278 1 WASHER

6 NPR 2P-3201 3 BOLT

7 NPR 2P-3207 1 BOLT

8 NPR 2P-2460 1 TUBE ASSEM.

9 NPR 7F-7590 1 GASKET

10 NPR 0T-0102 1 BOLT

NPR 0L-0364 1 LOCK

11 NPR 2S-1541 4 ORIFICE

12 NPR 2P-0744 1 TUBE ASSEM.

13 NPR 2P-1776 1 BELL ASSEM.

14 NPR 0S-1594 2 BOLT

NPR 8S-8874 1 LOCK

15 NPR 8M-0904 1 GASKET

16 NPR 2P-2519 1 TUBE ASSEM.

(Includes)

17 NPR C 5M-6213 1 PLUG

Key:

C - INDICATES CHANGE

2P6512 OIL LINES GROUP--Engine Serial No. 78P40900 to 78P54106 inclusive

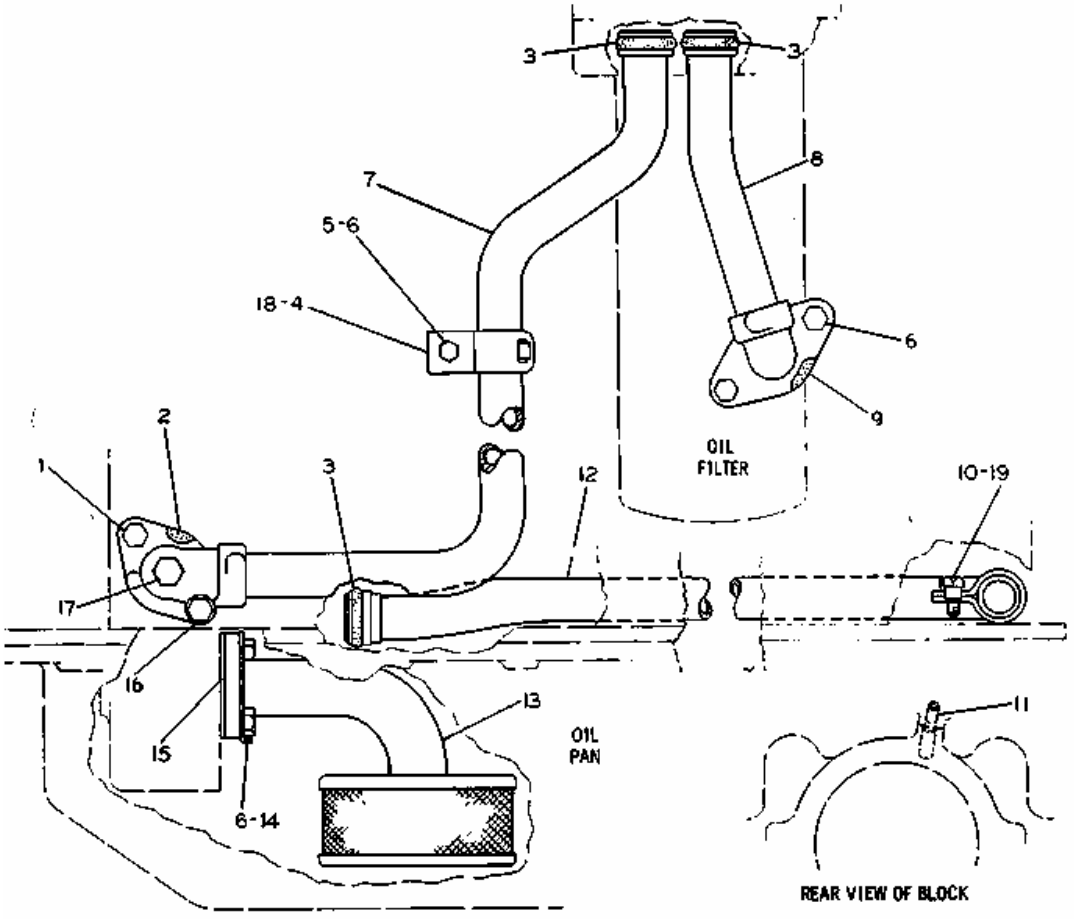

	REF. NO.	PART NUMBER	DESCRIPTION	QTY.
	1	1A2029	BOLT	1
	2	2M5407	GASKET	1
	3	9M4849	SEAL	3
	4	7S3919	CLIP-(slot)	1
C	5	9L9132	WASHER	1
C	6	S1594	BOLT	5
C	7	2P2519	TUBE ASSEM.	1
	8	2P2460	TUBE ASSEM.	1
	9	7F7590	GASKET	1
	10	L364	LOCK	1
	11	2S1541	ORIFICE	4
	12	2P744	TUBE ASSEM.	1
	13	2P1776	BELL ASSEM.	1
	14	8S8874	LOCK	1
	15	8M904	GASKET	1
C	16	L2070	BOLT	1
C	17	5M6213	PLUG	1
C	18	7S3916	CLIP-(tab)	1
	19	T102	BOLT-(plain)	1
			-OR-	
C		4F29	BOLT-(drilled head)	1

C INDICATES CHANGE

172345

1 NPR 1A-2029 1 BOLT

2 NPR 2M-5407 1 GASKET

3 NPR 9M-4849 3 SEAL

4 NPR 7S-3919 1 CLIP (slot)

5 NPR C 9L-9132 1 WASHER

6 NPR C 0S-1594 5 BOLT

7 NPR C 2P-2519 1 TUBE ASSEM.

8 NPR 2P-2460 1 TUBE ASSEM.

9 NPR 7F-7590 1 GASKET

10 NPR 0L-0364 1 LOCK

11 NPR 2S-1541 4 ORIFICE

12 NPR 2P-0744 1 TUBE ASSEM.

13 NPR 2P-1776 1 BELL ASSEM.

14 NPR 8S-8874 1 LOCK

15 NPR 8M-0904 1 GASKET

16 NPR C 0L-2070 1 BOLT

17 NPR C 5M-6213 1 PLUG

18 NPR C 7S-3916 1 CLIP (tab)

19 NPR 0T-0102 1 BOLT (plain)

-OR-

NPR C 4F-0029 1 BOLT (drilled head)

Key:

C - INDICATES CHANGE

2P6512 OIL LINES GROUP--Engine Serial No. 78P54107-Up

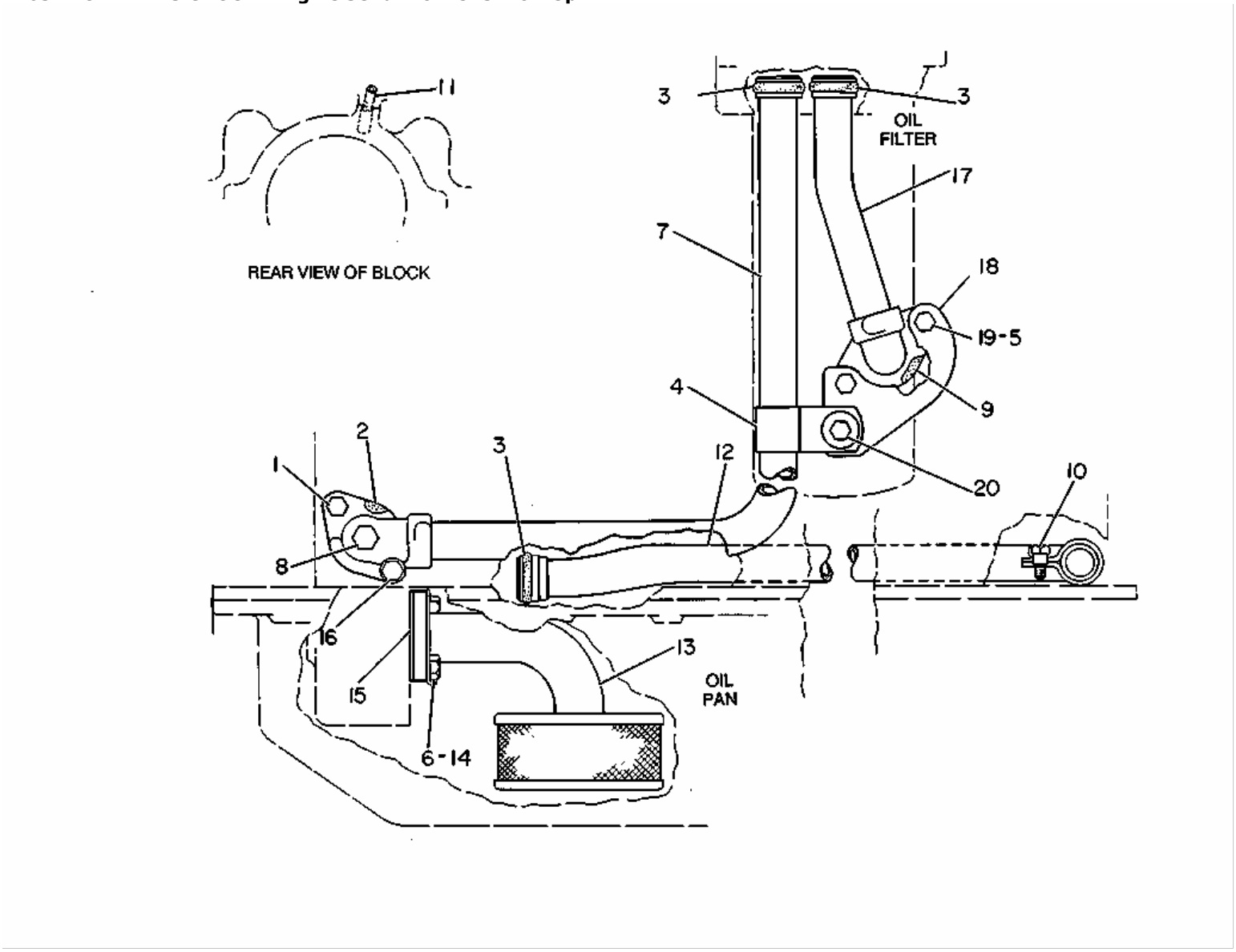

1	NPR	1A-2029	1	BOLT
2	NPR	2M-5407	1	GASKET
3	NPR	9M-4849	3	SEAL-O-RING
4	NPR C	8M-2769	1	CLIP
5	NPR C	8D-5898	2	SPACER
6	NPR C	0S-1594	2	BOLT
7	NPR C	8N-7318	1	TUBE AS-INLET
8	NPR	5M-6213	1	PLUG
9	NPR	7F-7590	1	GASKET
10	NPR	4F-0029	1	BOLT
	NPR	0L-0364	1	LOCK
11	NPR	2S-1541	4	ORIFICE-JET
12	NPR	2P-0744	1	TUBE AS-PUMP
13	NPR	2P-1776	1	BELL AS-SUCTION

14	NPR	8S-8874	1	LOCK-NUT
15	NPR	8M-0904	1	GASKET
16	NPR	0L-2070	1	BOLT
17	NPR C	8N-7315	1	TUBE AS-OUTLET
18	NPR C	8N-5739	1	BRACKET
19	NPR C	0S-1571	2	BOLT
	NPR C	5M-2894	2	WASHER
20	NPR C	0L-1351	1	BOLT
	NPR C	1D-4717	1	NUT
	NPR C	9L-9132	1	WASHER

Key: C - CHANGE FROM PREVIOUS TYPE

4N3923 TURBOCHARGER OIL LINES GROUP-Engine Serial No. 78P18799 to 78P21411 inclusive

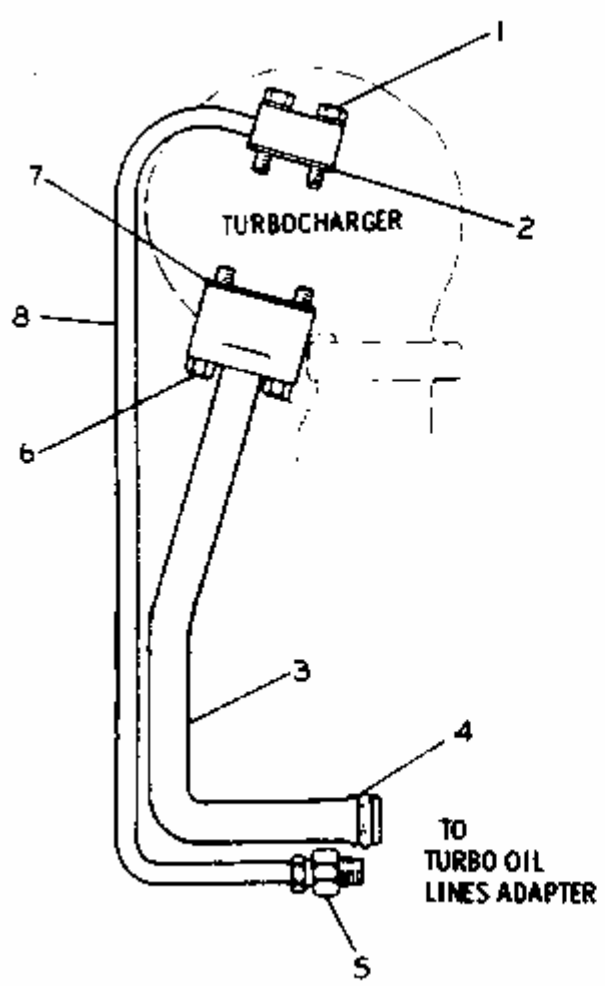

REF. NO.	PART NUMBER	DESCRIPTION	QTY
1	1B9575	BOLT	2
	9M1974	WASHER	2
2	7B5932	GASKET	1
3	4N3820	TUBE ASSEM.	1
4	9M4849	SEAL	1
5	5K9238	CONNECTOR	1
6	2P3208	BOLT	2
7	1P1255	GASKET	1
8	4N3842	TUBE ASSEM.	1

162493

1 NPR 1B-9575 2 BOLT

NPR 9M-1974 2 WASHER

2 NPR 7B-5932 1 GASKET

3 NPR 4N-3820 1 TUBE ASSEM.

4 NPR 9M-4849 1 SEAL

5 NPR 5K-9238 1 CONNECTOR

6 NPR 2P-3208 2 BOLT

7 NPR 1P-1255 1 GASKET

8 NPR 4N-3842 1 TUBE ASSEM.

4N3923 TURBOCHARGER OIL LINES GROUP-Engine Serial No. 78P21412-Up

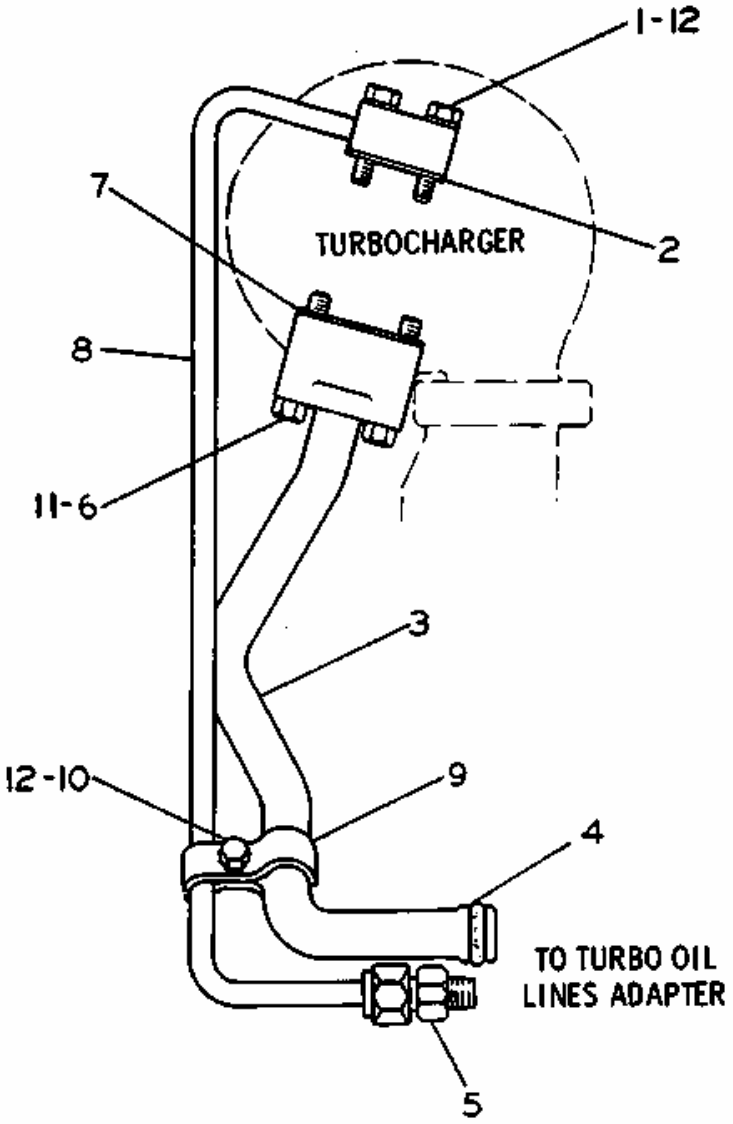

	REF. NO.	PART NUMBER	DESCRIPTION	QTY
	1	1B9575	BOLT	2
	2	7B5932	GASKET	1
C	3	6N6120	TUBE ASSEM.	1
	4	9M4849	SEAL	1
C	5	8M755	CONNECTOR	1
C	6	L1143	BOLT	2
	7	1P1255	GASKET	1
C	8	6N6122	TUBE ASSEM.	1
C	9	6N6033	CLIP	2
C	10	2H3755	BOLT	1
C		1D4716	NUT	1
C	11	5M2894	WASHER	2
C	12	9M1974	WASHER	4

C INDICATES CHANGE

217640

1 NPR 1B-9575 2 BOLT

2 NPR 7B-5932 1 GASKET

3 NPR C 6N-6120 1 TUBE ASSEM.

4 NPR 9M-4849 1 SEAL

5 NPR C 8M-0755 1 CONNECTOR
6 NPR C 0L-1143 2 BOLT
7 NPR 1P-1255 1 GASKET
8 NPR C 6N-6122 1 TUBE ASSEM.
9 NPR C 6N-6033 2 CLIP
10 NPR C 2H-3755 1 BOLT
NPR C 1D-4716 1 NUT
11 NPR C 5M-2894 2 WASHER
12 NPR C 9M-1974 4 WASHER
Key: C - INDICATES CHANGE

2P1784 OIL PUMP GROUP--2P1785 Gear Pump parts are shown on Page 38

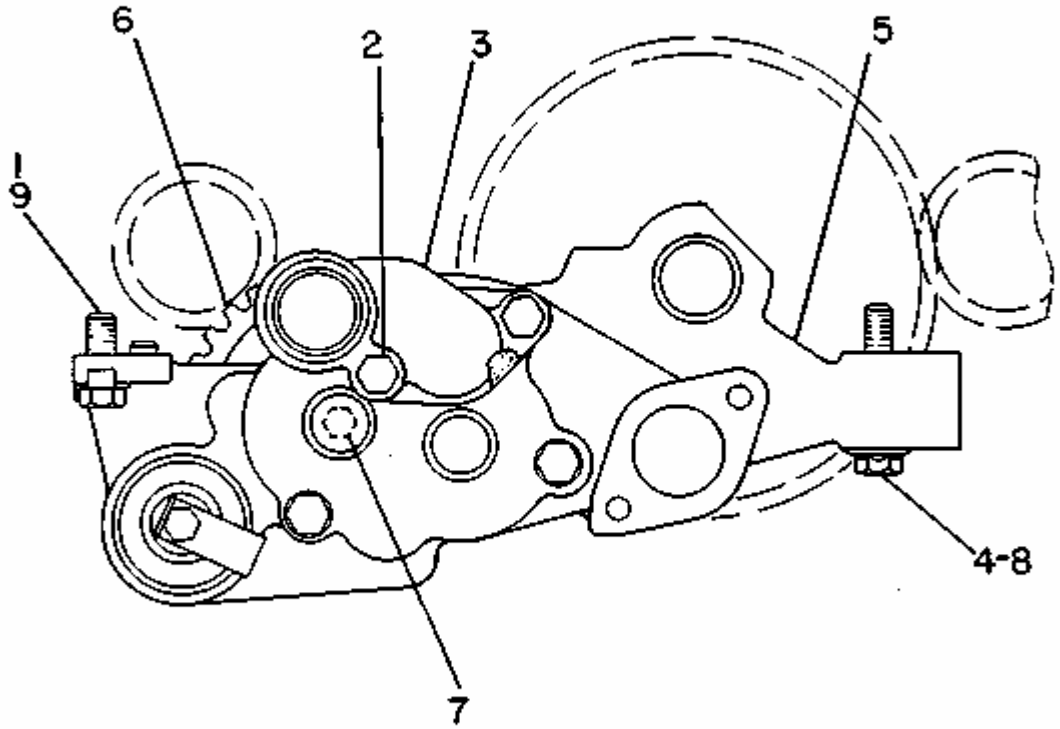

1 NPR 8M-7587 2 LOCK-NUT
2 NPR 2P-3210 1 BOLT-WASHER HEAD
-OR-
NPR C 0S-1619 1 BOLT (STD HEX HEAD)
3 NPR 4N-5353 1 ELBOW-LINE
NPR 2P-8746 1 GASKET
4 NPR 2P-3206 3 BOLT-WASHER HEAD
-OR-
NPR 0S-1590 3 BOLT (STD HEX HEAD)
5 NPR YR 2P-1785 1 PUMP GP-ENGINE OIL
6 NPR C 8S-0497 1 GEAR-OIL PUMP INPUT (40 TEETH)
NPR C 8M-5599 1 KEY-SPECIAL WOODRUFF
7 NPR C 0S-1590 1 BOLT
NPR C 1P-7346 1 WASHER
8 NPR C 5M-2894 2 WASHER
9 NPR 1A-2029 2 BOLT 28.5MM(1.25IN)LONG
-OR-

NPR C 3B-1915 2 BOLT 34.9MM(1.375IN)LONG

Key: C - CHANGE FROM PREVIOUS TYPE R - REMFG PART MAY BE AVAILABLE Y - SEPARATE ILLUSTRATION

2P1785 GEAR PUMP GROUP-Part of 2P1784 Oil Pump Group shown on Page 37

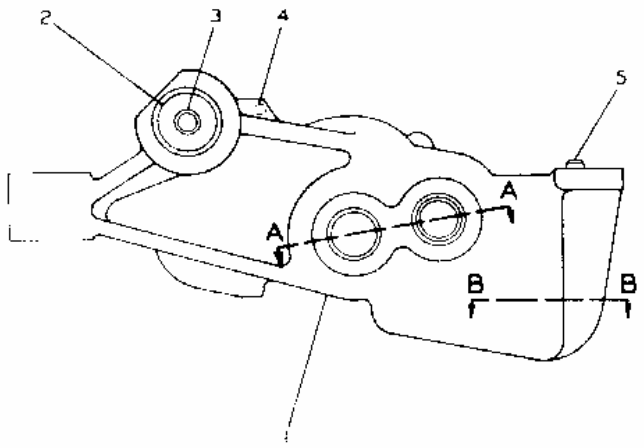

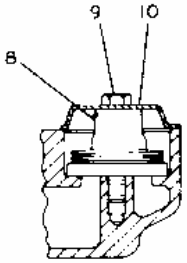

SECTION B-B

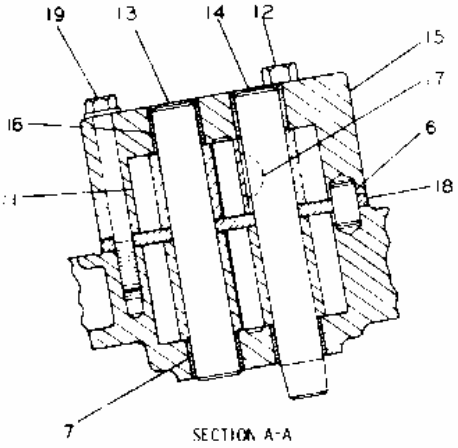

SECTION A-A

REF NO	PART NUMBER	DESCRIPTION	QTY
1	2P685	BODY ASSEM.	1
2	2P1170	SHAFT ASSEM	1
3	6F7172	DOWEL	1
4	4B9880	BALL	1
5	1F1006	DOWEL	1
6	1M3735	DOWEL	2
7	8S6511	BEARING	2

	REF NO	PART NUMBER	DESCRIPTION	QTY
C	8	4N8385	VALVE ASSEM.	1
	9	1B9575	BOLT	1
	10	4N3732	COVER	1
C	11	6N1036	GEAR (8 Teeth)	2
C	12	T65	BOLT	2
C	13	8S493	SHAFT ASSEM.	1
	14	2P6245	SHAFT ASSEM.	1

	REF NO	PART NUMBER	DESCRIPTION	QTY
	15	4N4055	BODY ASSEM	1
	16	8S6511	BEARING	2
	17	1B8709	KEY	1
	18	2P1781	SPACER	1
C	19	2M3403	BOLT	1
C		5M2894	WASHER	1

C INDICATES CHANGE

208705

---

1 NPR 2P-0685 1 BODY ASSEM.

2 NPR CL 2P-1170 1 SHAFT ASSEM.

CL NPR 296-1367 1 SHAFT AS-CLA

3 NPR 6F-7172 1 DOWEL

4 NPR 4B-9880 1 BALL

5 NPR 1F-1006 1 DOWEL

6 NPR 1M-3735 2 DOWEL

7 NPR 8S-6511 2 BEARING

8 NPR C 4N-8385 1 VALVE ASSEM.

9 NPR 1B-9575 1 BOLT

10 NPR 4N-3732 1 COVER

11 NPR CLC 6N-1036 2 GEAR (8 Teeth)

CL	NPR	279-4991	1	GEAR-OP-CLA
12	NPR C	0T-0065	2	BOLT
13	NPR C	8S-0493	1	SHAFT ASSEM.
14	NPR	2P-6245	1	SHAFT ASSEM.
15	NPR	4N-4055	1	BODY ASSEM.
16	NPR	8S-6511	2	BEARING
17	NPR	1B-8709	1	KEY
18	NPR	2P-1781	1	SPACER
19	NPR C	2M-3403	1	BOLT
	NPR C	5M-2894	1	WASHER

Key:

CL - Classic Part Available
C - INDICATES CHANGE

FUEL

SYSTEM

8N9751 FUEL HEATER CHANGEOVER GROUP--Field Installation

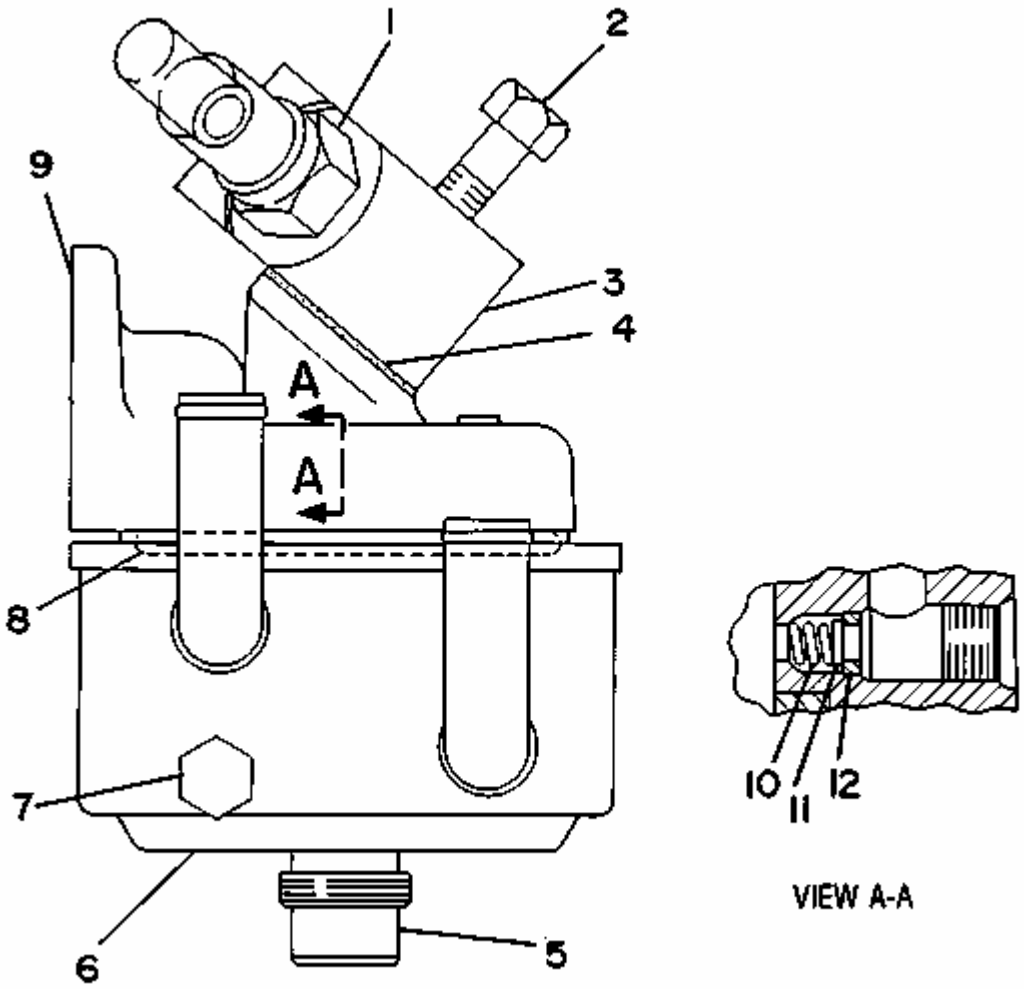

1	NPR	8N-9707	1	REGULATOR-FUEL TEMP
	NPR	2M-9780	1	SEAL-O-RING
2	NR	1D-4539	1	BOLT (LARGE)
	NPR	1B-2714	1	BOLT (SMALL)
3	NPR	8N-9584	1	ADAPTER
4	NPR	1P-0436	2	GASKET
5	NPR	8N-2100	1	CONNECTOR
6	NPR	8N-9455	1	HEATER AS-FUEL
7	NPR	5M-6214	1	PLUG-PIPE
8	NPR	8N-2301	1	SEAL
9	NPR	8N-9747	1	BASE AS-FUEL FILTER
	NPR	8N-9800	1	INSERT-FUEL FILTER
10	NPR	4N-3296	1	SPRING
11	NPR	4N-3297	1	DISK-RELIEF VALVE
12	NPR	4N-3298	1	SEAT-RELIEF VALVE

9D1065 GOVERNOR CONTROL GROUP--Part 1
Serial No. 87V1138 to 87V3086 inclusive and 82V668 to 82V798 inclusive

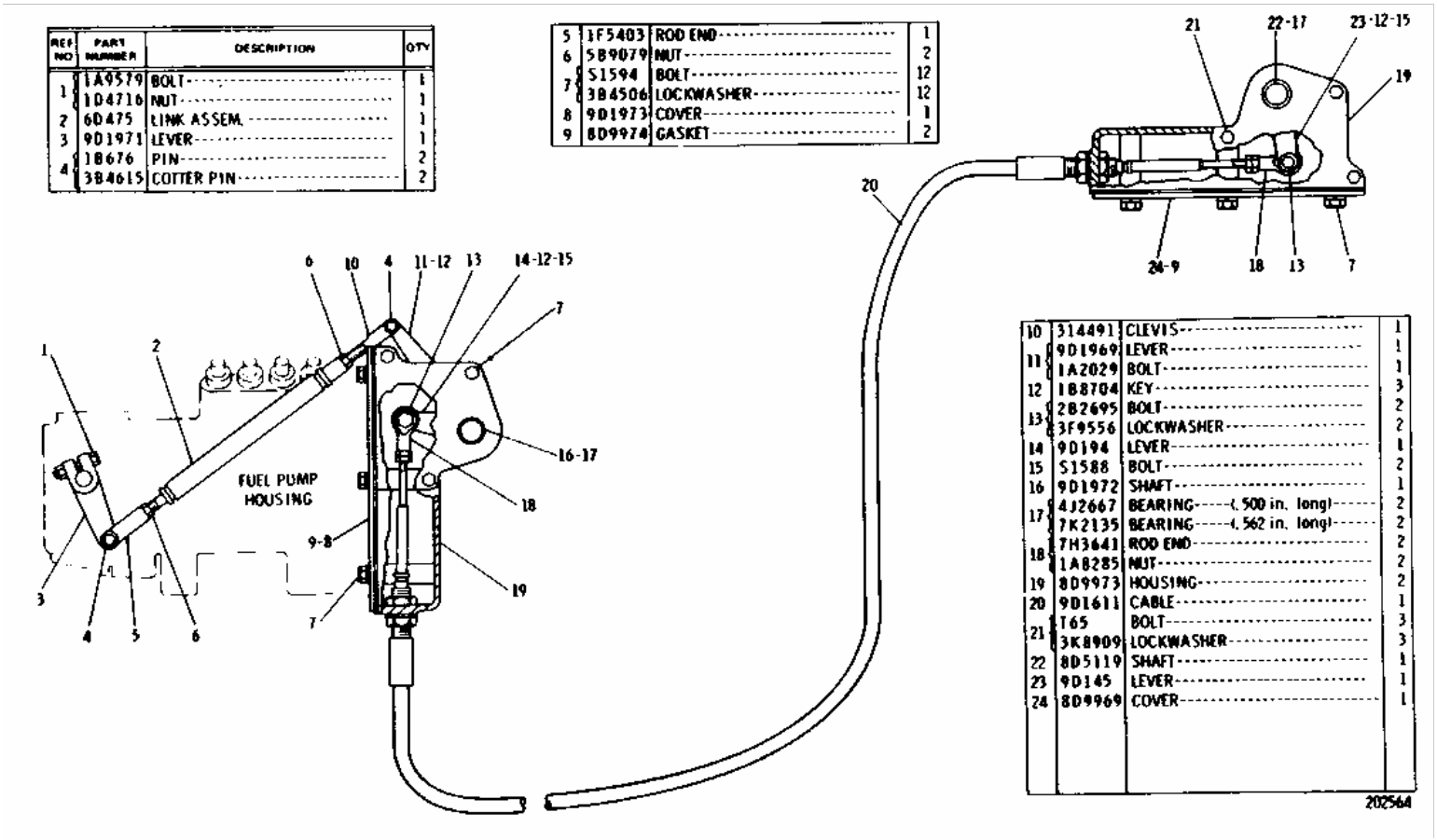

REF NO	PART NUMBER	DESCRIPTION	QTY
1	1A9579	BOLT	1
	1D4716	NUT	1
2	6D475	LINK ASSEM.	1
3	9D1971	LEVER	1
4	1B676	PIN	2
	3B4615	COTTER PIN	2
5	1F5403	ROD END	1
6	5B9079	NUT	2
7	S1594	BOLT	12
	3B4506	LOCKWASHER	12
8	9D1973	COVER	1
9	8D9974	GASKET	2
10	314491	CLEVIS	1
11	9D1969	LEVER	1
	1A2029	BOLT	1
12	1B8704	KEY	3
13	2B2695	BOLT	2
	3F9556	LOCKWASHER	2
14	9D194	LEVER	1
15	S1588	BOLT	2
16	9D1972	SHAFT	1
17	4J2667	BEARING (.500 in. long)	2
	7K2135	BEARING (.562 in. long)	2
18	7H3641	ROD END	2
	1A8285	NUT	2
19	8D9973	HOUSING	2
20	9D1611	CABLE	1
21	T65	BOLT	3
	3K8909	LOCKWASHER	3
22	8D5119	SHAFT	1
23	9D145	LEVER	1
24	8D9969	COVER	1

202564

1 NPR 1A-9579 1 BOLT

NPR 1D-4716 1 NUT

2 NPR 6D-0475 1 LINK ASSEM.

3 NPR 9D-1971 1 LEVER

4 NPR 1B-0676 2 PIN

NPR 3B-4615 2 COTTER PIN

5 NPR 1F-5403 1 ROD END

6 NPR 5B-9079 2 NUT

7 NPR 0S-1594 12 BOLT

NPR 3B-4506 12 LOCKWASHER

8 NPR 9D-1973 1 COVER

9 NPR 8D-9974 2 GASKET

10 NPR 031-4491 1 CLEVIS

11 NPR 9D-1969 1 LEVER

NPR 1A-2029 1 BOLT

12 NPR 1B-8704 3 KEY

13 NPR 2B-2695 2 BOLT

NPR 3F-9556 2 LOCKWASHER

14 NPR 9D-0194 1 LEVER

15 NPR 0S-1588 2 BOLT

16 NPR 9D-1972 1 SHAFT

17 NPR 4J-2667 2 BEARING (.500 in. long)

NPR 7K-2135 2 BEARING (.562 in. long)

18 NPR 7H-3641 2 ROD END

NPR 1A-8285 2 NUT

19 NPR 8D-9973 2 HOUSING

20 NPR 9D-1611 1 CABLE

21 NPR 0T-0065 3 BOLT

NPR 3K-8909 3 LOCKWASHER

22 NPR 8D-5119 1 SHAFT

23 NPR 9D-0145 1 LEVER

24 NPR 8D-9969 1 COVER

9D1065 GOVERNOR CONTROL GROUP--Part 2
Serial No. 87V1138 to 87V3086 inclusive and 82V668 to 82V798 inclusive

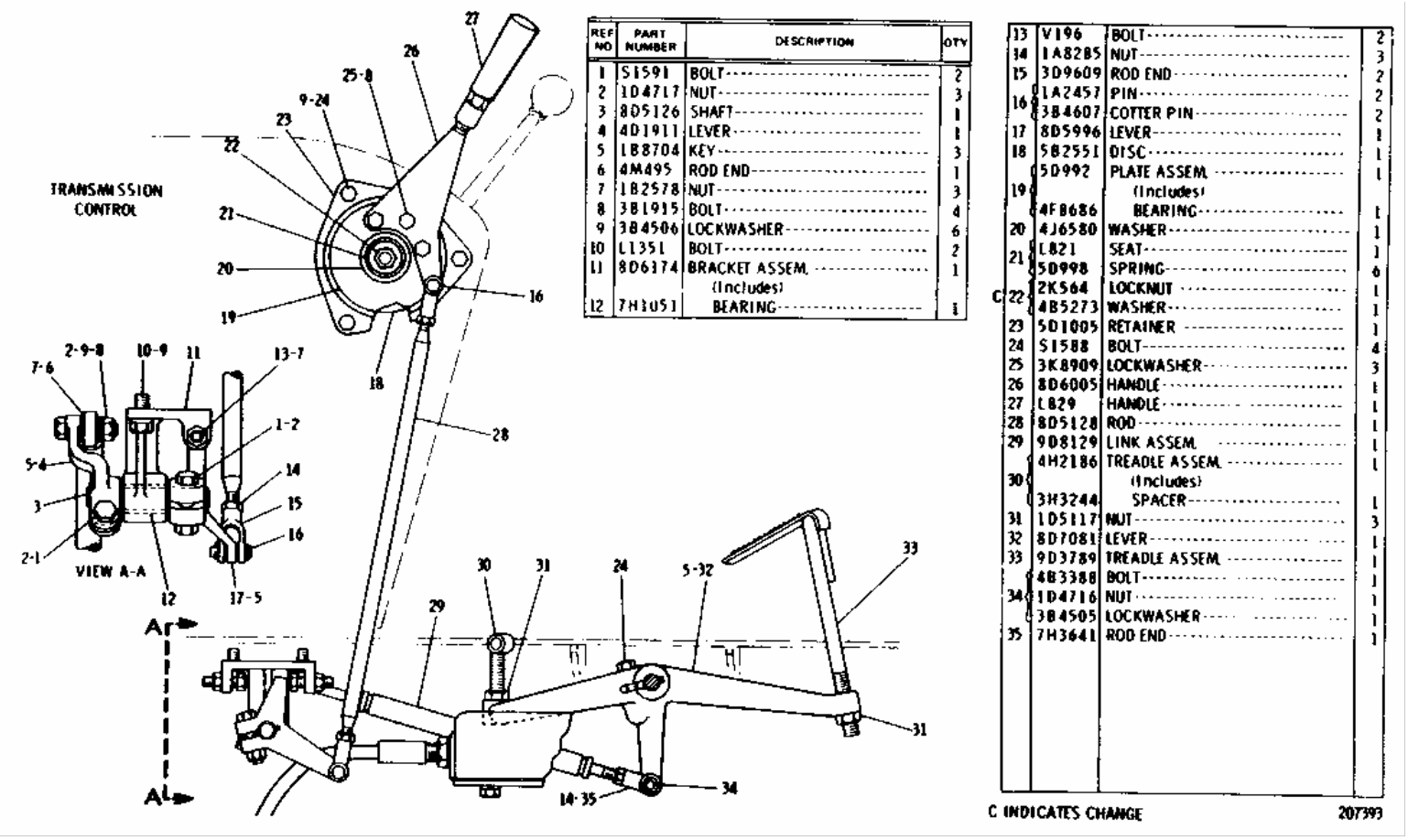

REF NO	PART NUMBER	DESCRIPTION	QTY
1	S1591	BOLT	2
2	1D4717	NUT	3
3	8D5126	SHAFT	1
4	4D1911	LEVER	1
5	1B8704	KEY	3
6	4M495	ROD END	1
7	1B2578	NUT	3
8	3B1915	BOLT	4
9	3B4506	LOCKWASHER	6
10	L1351	BOLT	2
11	8D6174	BRACKET ASSEM. (Includes)	1
12	7H3051	BEARING	1
13	V196	BOLT	2
14	1A8285	NUT	3
15	3D9609	ROD END	2
16	1A2457	PIN	2
	3B4607	COTTER PIN	2
17	8D5996	LEVER	1
18	5B2551	DISC	1
19	5D992	PLATE ASSEM. (Includes)	1
	4F8686	BEARING	1
20	4J6580	WASHER	1
21	L821	SEAT	1
	5D998	SPRING	6
C 22	2K564	LOCKNUT	1
	4B5273	WASHER	1
23	5D1005	RETAINER	1
24	S1588	BOLT	4
25	3K8909	LOCKWASHER	3
26	8D6005	HANDLE	1
27	L829	HANDLE	1
28	8D5128	ROD	1
29	9D8129	LINK ASSEM.	1
30	4H2186	TREADLE ASSEM. (Includes)	1
	3H3244	SPACER	1
31	1D5117	NUT	3
32	8D7081	LEVER	1
33	9D3789	TREADLE ASSEM.	1
	4B3388	BOLT	1
34	1D4716	NUT	1
	3B4505	LOCKWASHER	1
35	7H3641	ROD END	1

C INDICATES CHANGE 207393

1 NPR 0S-1591 2 BOLT

2 NPR 1D-4717 3 NUT

3 NPR 8D-5126 1 SHAFT

4 NPR 4D-1911 1 LEVER

5 NPR 1B-8704 3 KEY

6 NPR 4M-0495 1 ROD END

7 NPR 1B-2578 3 NUT

8 NPR 3B-1915 4 BOLT

9 NPR 3B-4506 6 LOCKWASHER

10 NPR 0L-1351 2 BOLT

11 NPR 8D-6174 1 BRACKET ASSEM.

(Includes)

12 NPR 7H-1051 1 BEARING

13 NPR 0V-0196 2 BOLT

14 NPR 1A-8285 3 NUT

15 NPR 3D-9609 2 ROD END

16 NPR 1A-2457 2 PIN

NPR 3B-4607 2 COTTER PIN

17 NPR 8D-5996 1 LEVER

18 NPR 5B-2551 1 DISC

19 NPR 5D-0992 1 PLATE ASSEM.

(Includes)

NPR 4F-8686 1 BEARING

20 NPR 4J-6580 1 WASHER

21 NPR 0L-0821 1 SEAT

NPR 5D-0998 6 SPRING

22 NPR C 2K-0564 1 LOCKNUT

NPR 4B-5273 1 WASHER

23 NPR 5D-1005 1 RETAINER

24 NPR 0S-1588 4 BOLT

25 NPR 3K-8909 3 LOCKWASHER

26 NPR 8D-6005 1 HANDLE

27 NPR 0L-0829 1 HANDLE

28 NPR 8D-5128 1 ROD

29 NPR 9D-8129 1 LINK ASSEM.

30 NPR 4H-2186 1 TREADLE ASSEM.

(Includes)

NPR 3H-3244 1 SPACER

31 NPR 1D-5117 3 NUT

32 NPR 8D-7081 1 LEVER

33 NPR 9D-3789 1 TREADLE ASSEM.

34 NPR 4B-3388 1 BOLT

NPR 1D-4716 1 NUT

NPR 3B-4505 1 LOCKWASHER

35 NPR 7H-3641 1 ROD END

Key:

C - INDICATES CHANGE

4N3303 FUEL FILTER GROUP-Engine Serial No. 78P18799 to 78P46310 inclusive

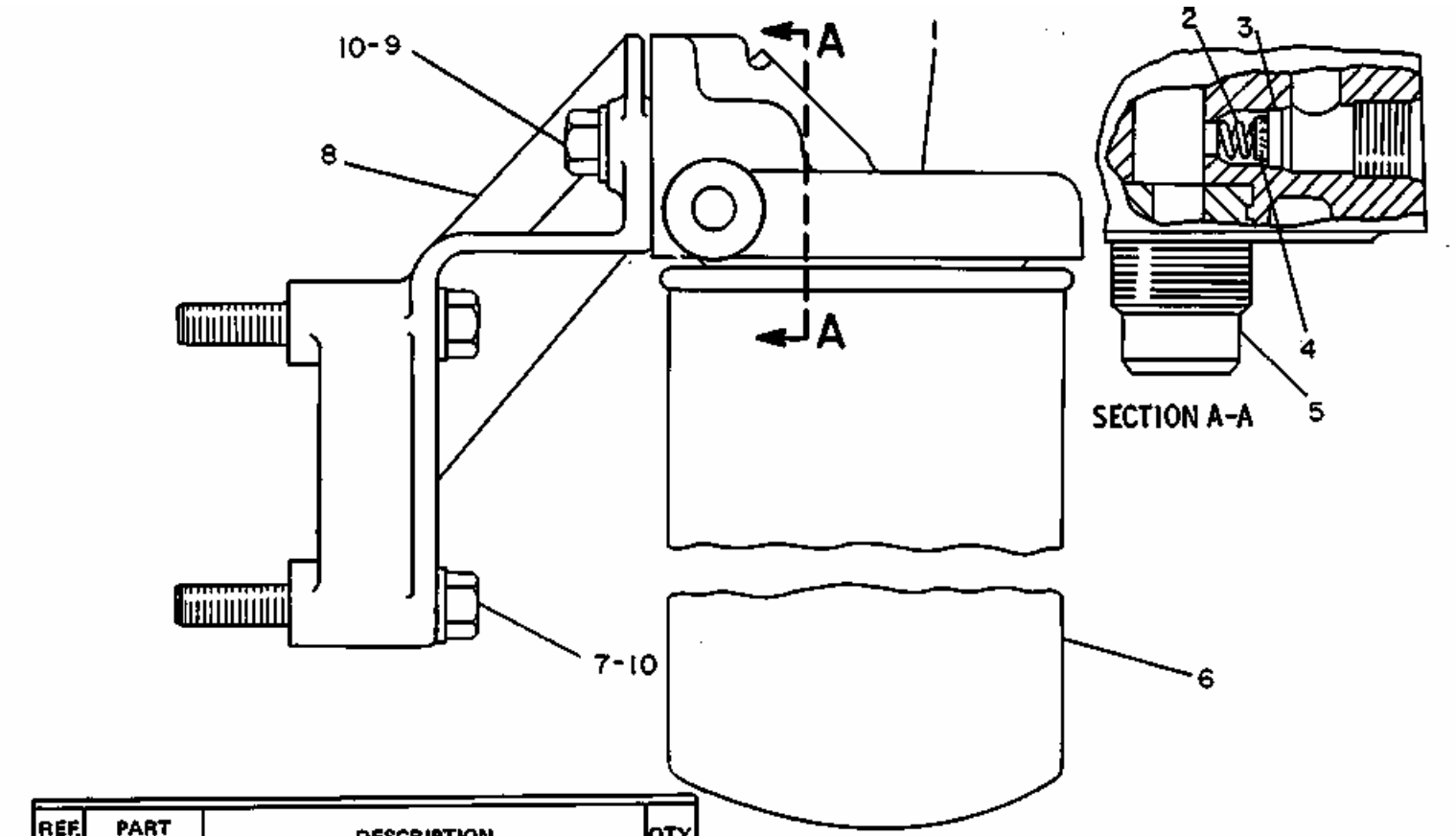

	REF. NO.	PART NUMBER	DESCRIPTION	QTY.
C	1	4N3302	BASE ASSEM. ---------- (Includes)	1
	2	4N3296	SPRING----------	1
	3	4N3298	SEAT----------	1
	4	4N3297	DISK----------	1
	5	4N3294	INSERT----------	1
	6	1P2299	FILTER ASSEM. ----------	1
C	7	S1571	BOLT----------	2
C	8	1W6009	SUPPORT----------	1
	9	S1594	BOLT--------25.40 mm(1 in.) long - OR -	2
C		1A2029	BOLT----29.97 mm(1.125 in.) long	2
C	10	5M2894	WASHER----------	4

C INDICATES CHANGE 180184

1 NPR C 4N-3302 1 BASE ASSEM.

(Includes)

2 NPR 4N-3296 1 SPRING

3 NPR 4N-3298 1 SEAT

4 NPR 4N-3297 1 DISK

5 NPR 4N-3294 1 INSERT

6 NPR 1P-2299 1 FILTER ASSEM.

7 NPR C 0S-1571 2 BOLT

8 NPR C 1W-6009 1 SUPPORT

9 NPR 0S-1594 2 BOLT- 25.40 mm(1 in.) long

- OR -

NPR C 1A-2029 2 BOLT -29.97 mm(1.125 in.) long

10 NPR C 5M-2894 4 WASHER

Key:

C - INDICATES CHANGE

8H4681 PRIMARY FUEL FILTER GROUP--Type 1
Part of 8N3569 and 9N5458 Fuel Pump Groups shown on Page 74B

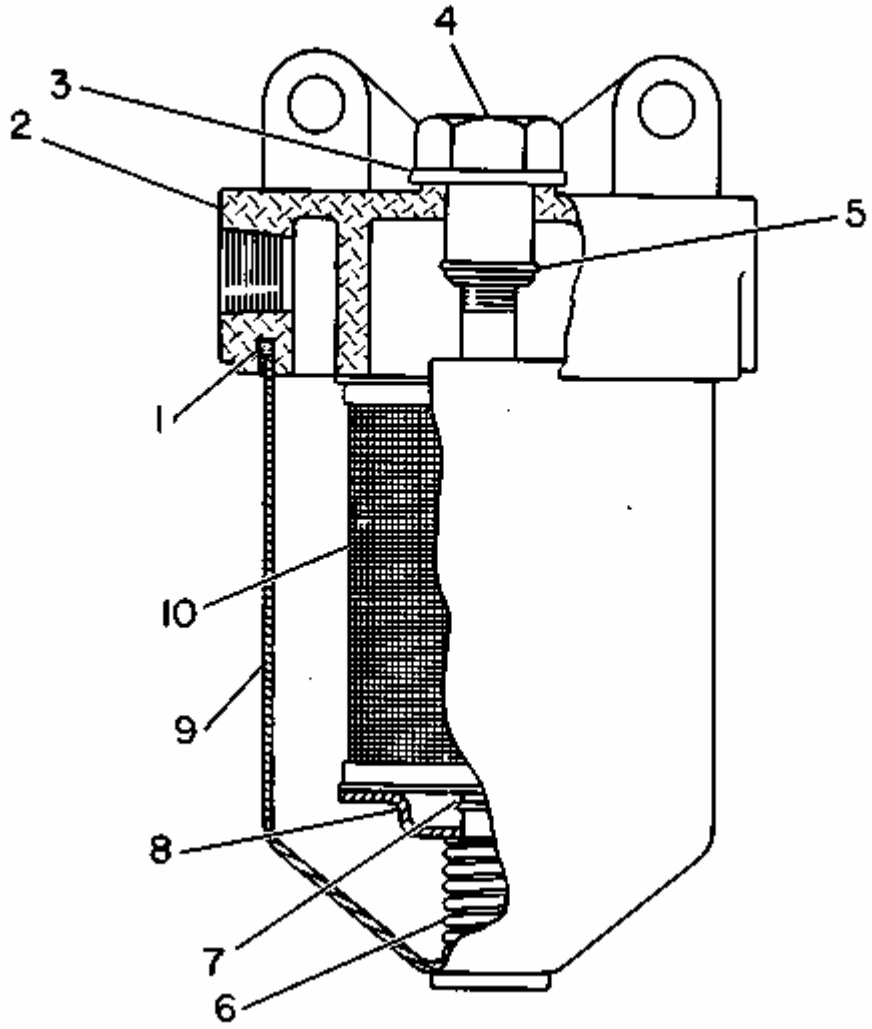

1 NPR 8H-2778 1 GASKET

2 NPR 7H-9680 1 COVER-FILTER

3 NPR C 8N-4410 1 WASHER-SEALING

4 NPR 8H-2807 1 NUT

5 NPR 1L-3769 1 RING-RETAINING

6 NPR 7S-9323 1 SPRING

7 NPR 2H-3429 1 RING-RETAINING

8 NPR 7H-9678 1 RETAINER-ELEMENT

9 NPR 8H-2810 1 CASE AS-FILTER

10 NPR 9M-2341 1 ELEMENT AS (WASHABLE)

Key:

C - CHANGE FROM PREVIOUS TYPE

8H4681 PRIMARY FUEL FILTER GROUP--Type 2
Part of 8N3569 and 9N5458 Fuel Pump Groups shown on Page 74B

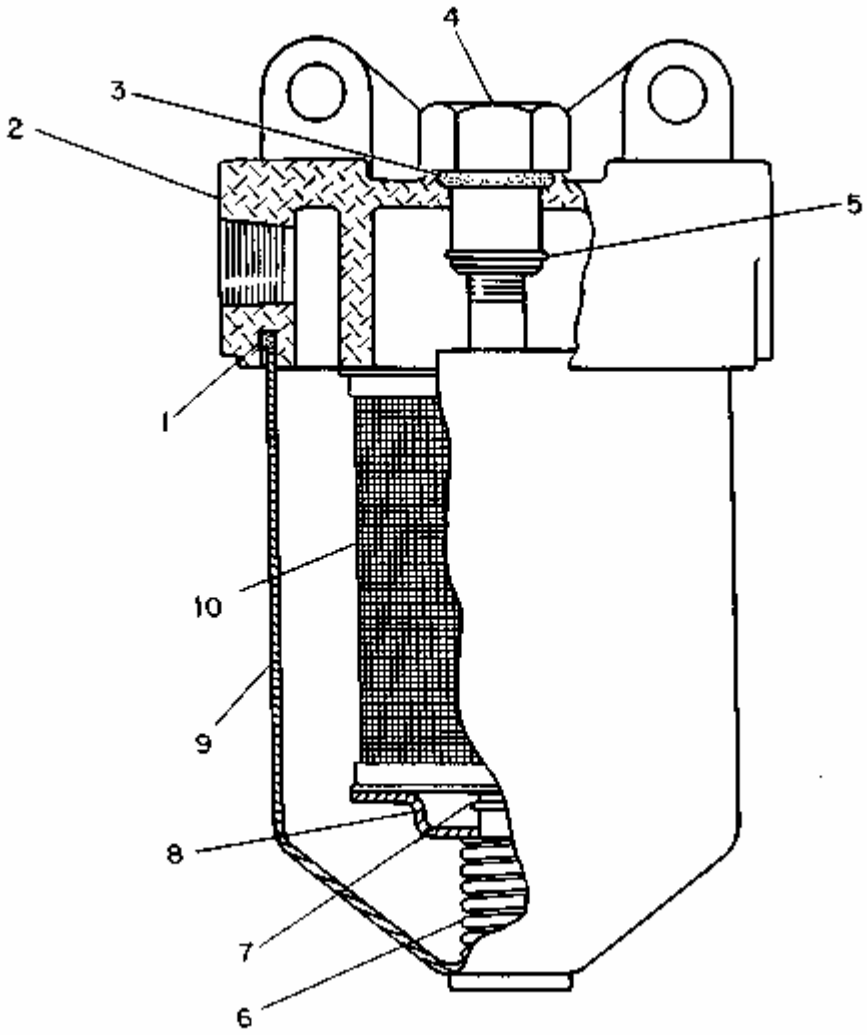

1	NPR	8H-2778	1	GASKET
2	NPR C	1N-3583	1	BASE-FUEL FILTER
3	NPR C	2J-0157	1	SEAL-O-RING
4	NPR C	7N-1628	1	NUT
5	NPR	1L-3769	1	RING-RETAINING
6	NPR	7S-9323	1	SPRING
7	NPR	2H-3429	1	RING-RETAINING
8	NPR	7H-9678	1	RETAINER-ELEMENT
9	NPR	8H-2810	1	CASE AS-FILTER

10 NPR 9M-2341 1 ELEMENT AS (WASHABLE)

Key:

C - CHANGE FROM PREVIOUS TYPE

6N288 GOVERNOR AND FUEL INJECTION PUMP GROUP--Replaced by 4N6116 listed on Page 65A
Engine Serial No. 78P18799 to 78P29364 inclusive. 6N1504 Governor and Fuel Injection Pump and 6N509 Torque Control parts are shown on Pages 67, 67B and 72

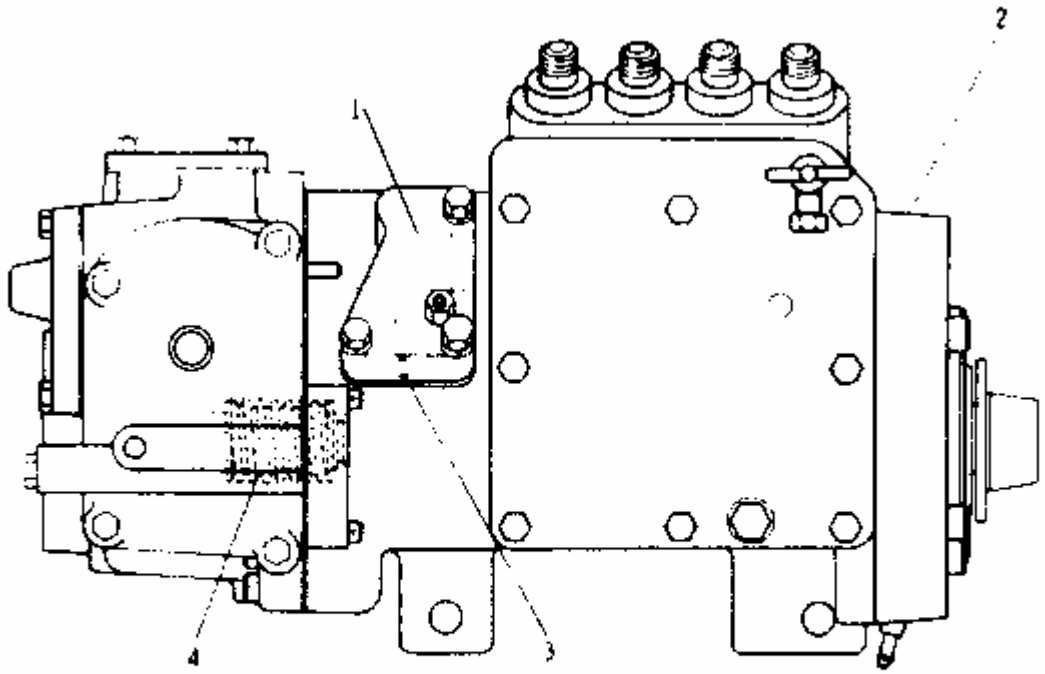

REF NO	PART NUMBER	DESCRIPTION	QTY
1	Not Serv	TORQUE CONTROL	1
2	Not Serv	GOVERNOR & FUEL INJECTION PUMP (Separate Illustration)	1
3	4N443	PIN	1
4	4N4227	SPRING	1

202729

1 NOTSERV 1 TORQUE CONTROL

2 Y NOTSERV 1 GOVERNOR & FUEL INJECTION PUMP

(Separate Illustration)

3 NPR 4N-0443 1 PIN

4 NPR 4N-4227 1 SPRING

Key:

Y - SEPARATE ILLUSTRATION

6N5735 GOVERNOR AND FUEL INJECTION PUMP GROUP--Replaced by 4N6116 listed on Page 65A
Engine Serial No. 78P27439 to 78P39473 inclusive. Part of 6N5537 Engine Procurement Arrangement and 2G4120 Spectator Sound Suppression Arrangement listed on Pages 19B and 170C. 6N1504 Governor and Fuel Injection Pump and 6N599 Torque Control parts are shown on Pages 67, 67B and 72A

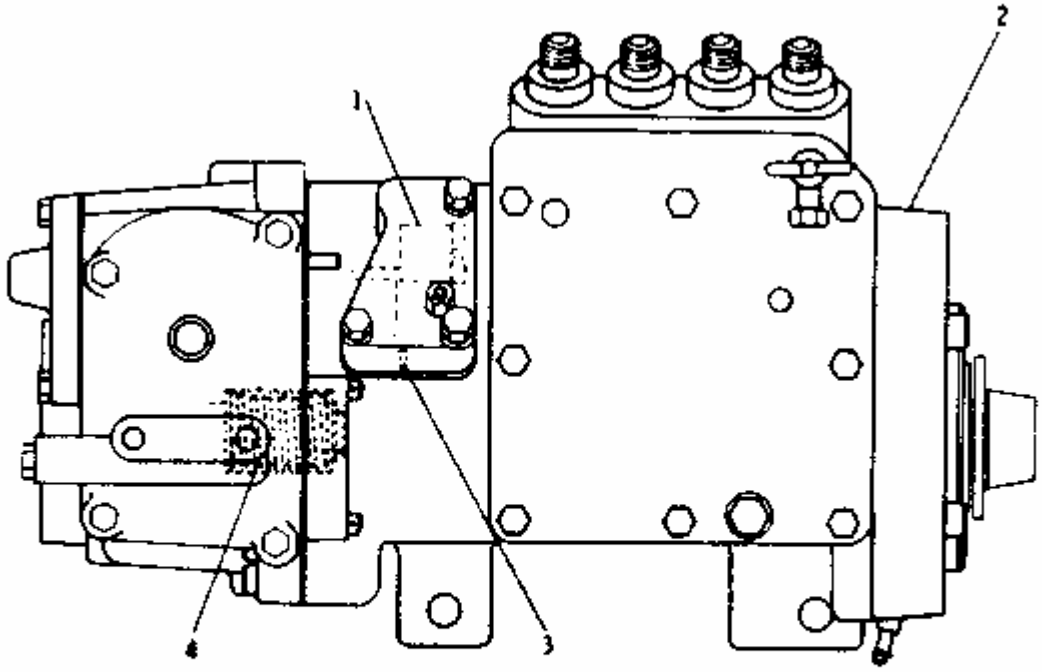

REF. NO.	PART NUMBER	DESCRIPTION	QTY
1	6N599	TORQUE CONTROL	1
2	6N1504	GOVERNOR & FUEL INJECTION PUMP (Separate Illustration)	1
3	4N443	PIN	1
4	4N4227	SPRING	1

212149

1 NPR Y 6N-0599 1 TORQUE CONTROL

2 NPR Y 6N-1504 1 GOVERNOR & FUEL INJECTION PUMP

(Separate Illustration)

3 NPR 4N-0443 1 PIN

4 NPR 4N-4227 1 SPRING

Key:

Y - SEPARATE ILLUSTRATION

6N288 GOVERNOR AND FUEL INJECTION PUMP GROUP
Replaced by 4N6116 listed on Page 65A. Engine Serial No. 78P29365-Up. 6N1504 Governor and Fuel Injection Pump and 7N576 Torque Control parts are shown on Pages 67, 67B & 72A

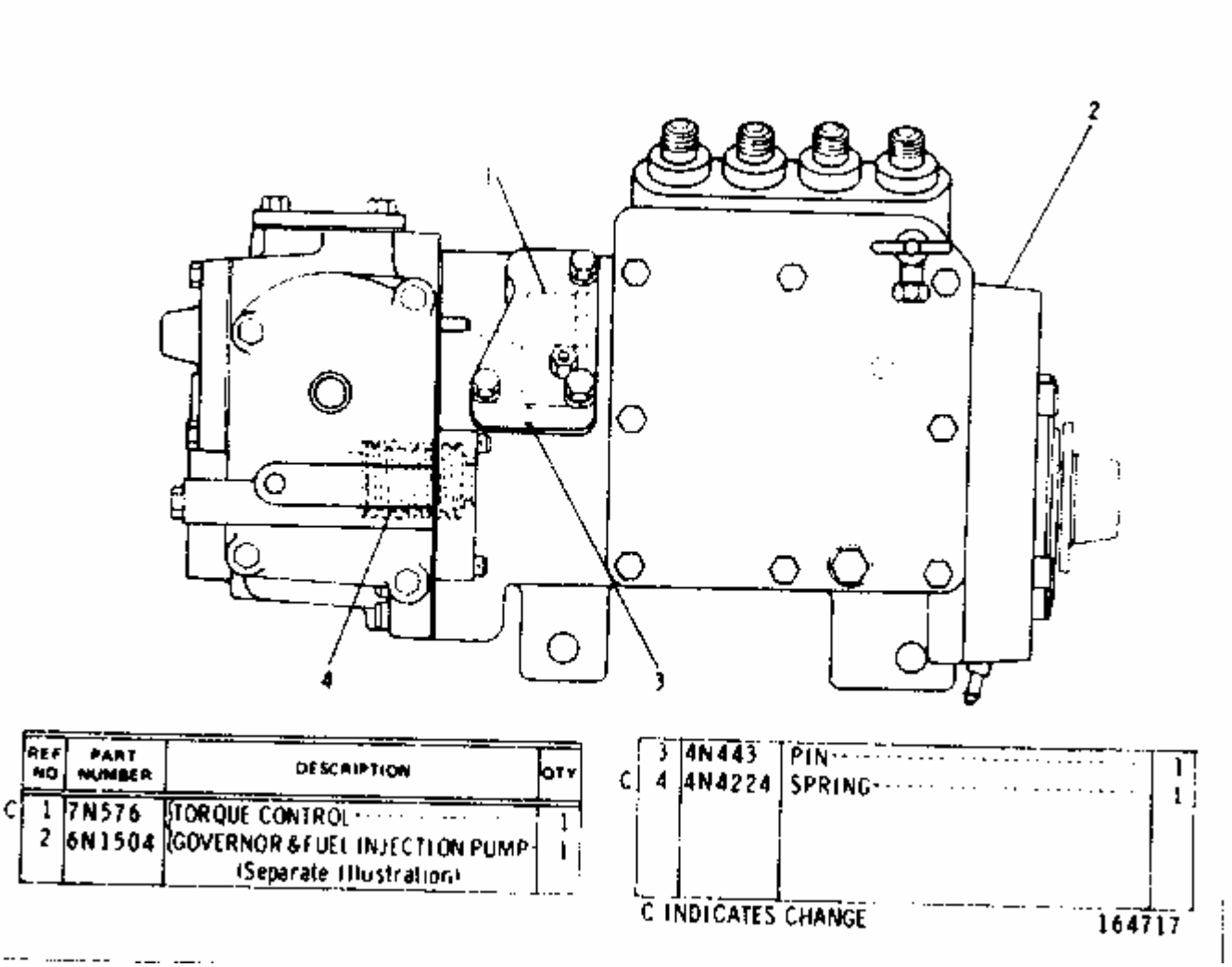

	REF NO	PART NUMBER	DESCRIPTION	QTY
C	1	7N576	TORQUE CONTROL	1
	2	6N1504	GOVERNOR & FUEL INJECTION PUMP (Separate Illustration)	1
	3	4N443	PIN	1
C	4	4N4224	SPRING	1

C INDICATES CHANGE

164717

1 NPR YC 7N-0576 1 TORQUE CONTROL

2 NPR Y 6N-1504 1 GOVERNOR & FUEL INJECTION PUMP

(Separate Illustration)

3 NPR 4N-0443 1 PIN

4 NPR C 4N-4224 1 SPRING

Key:

C - INDICATES CHANGE
Y - SEPARATE ILLUSTRATION

6N5356 GOVERNOR AND FUEL INJECTION PUMP GROUP--Part 1 of 4--Type 2
Part of 4N6115 and 6N1504 Governor and Fuel Injection Pump Groups shown on Pages 65B and 67B

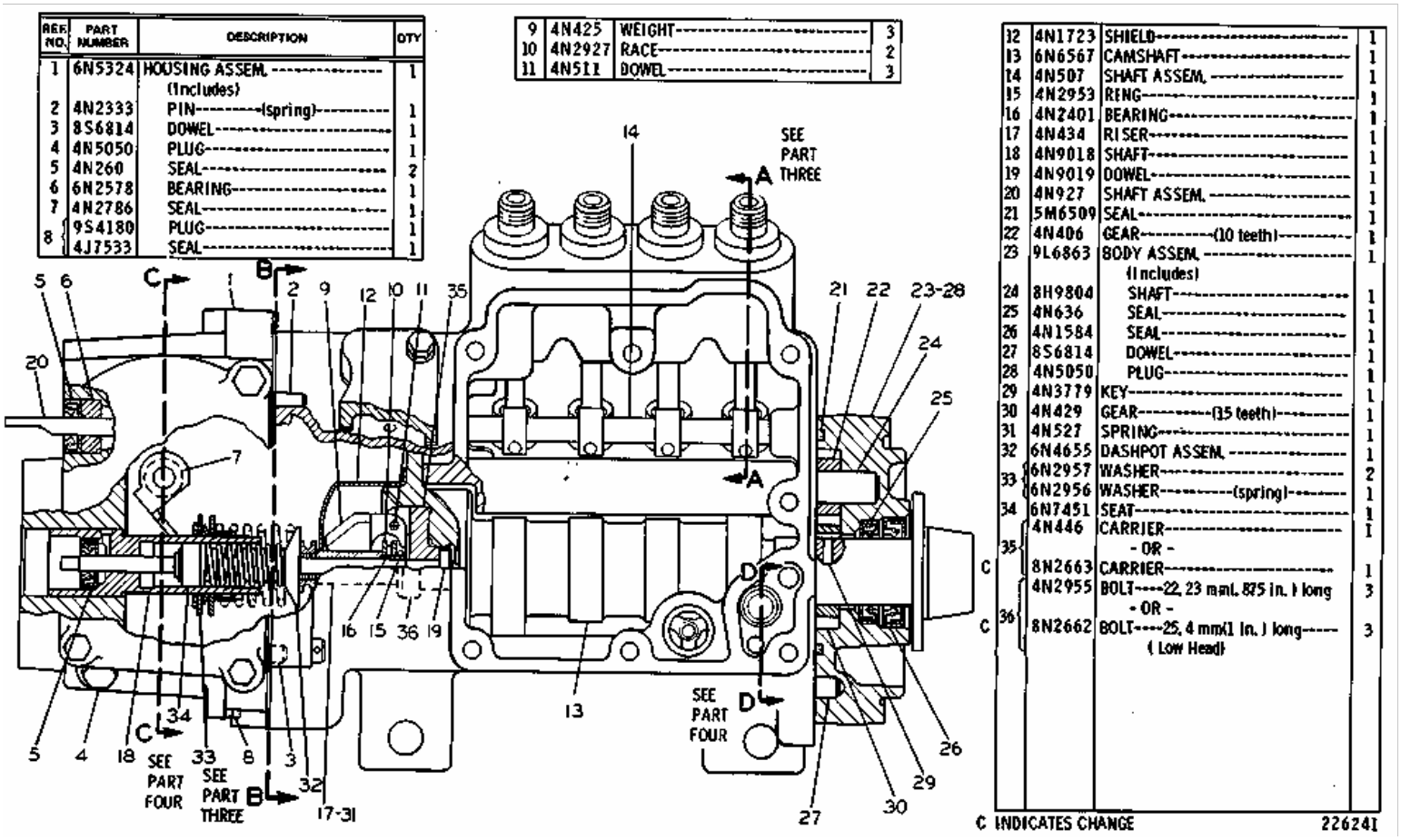

REF. NO.	PART NUMBER	DESCRIPTION	QTY
1	6N5324	HOUSING ASSEM. (Includes)	1
2	4N2333	PIN---------(spring)----------	1
3	8S6814	DOWEL----------	1
4	4N5050	PLUG----------	1
5	4N260	SEAL----------	2
6	6N2578	BEARING----------	1
7	4N2786	SEAL----------	1
8	9S4180	PLUG----------	1
	4J7533	SEAL----------	1
9	4N425	WEIGHT----------	3
10	4N2927	RACE----------	2
11	4N511	DOWEL----------	3
12	4N1723	SHIELD----------	1
13	6N6567	CAMSHAFT----------	1
14	4N507	SHAFT ASSEM.----------	1
15	4N2953	RING----------	1
16	4N2401	BEARING----------	1
17	4N434	RISER----------	1
18	4N9018	SHAFT----------	1
19	4N9019	DOWEL----------	1
20	4N927	SHAFT ASSEM.----------	1
21	5M6509	SEAL----------	1
22	4N406	GEAR----------(10 teeth)----------	1
23	9L6863	BODY ASSEM.---------- (Includes)	1
24	8H9804	SHAFT----------	1
25	4N636	SEAL----------	1
26	4N1584	SEAL----------	1
27	8S6814	DOWEL----------	1
28	4N5050	PLUG----------	1
29	4N3779	KEY----------	1
30	4N429	GEAR----------(35 teeth)----------	1
31	4N527	SPRING----------	1
32	6N4655	DASHPOT ASSEM.----------	1
33	6N2957	WASHER----------	2
	6N2956	WASHER----------(spring)----------	1
34	6N7451	SEAT----------	1
35	4N446	CARRIER----------	1
		- OR -	
	8N2663	CARRIER----------	1
	4N2955	BOLT----22, 23 mm(.875 in.) long	3
		- OR -	
36	8N2662	BOLT----25, 4 mm(1 in.) long---------- (Low Head)	3

1 NPR 6N-5324 1 HOUSING ASSEM.

(Includes)

2 NPR 4N-2333 1 PIN (spring)

3 NPR 8S-6814 1 DOWEL

4 NPR 4N-5050 1 PLUG

5 NPR 4N-0260 2 SEAL

6 NPR 6N-2578 1 BEARING

7 NPR 4N-2786 1 SEAL

8 NPR 9S-4180 1 PLUG

NPR 4J-7533 1 SEAL

9 NPR 4N-0425 3 WEIGHT

10 NPR 4N-2927 2 RACE

11	NPR	4N-0511	3	DOWEL
12	NPR	4N-1723	1	SHIELD
13	NPR	6N-6567	1	CAMSHAFT
14	NPR	4N-0507	1	SHAFT ASSEM.
15	NPR	4N-2953	1	RING
16	NPR	4N-2401	1	BEARING
17	NPR	4N-0434	1	RISER
18	NPR	4N-9018	1	SHAFT
19	NPR	4N-9019	1	DOWEL
20	NPR	4N-0927	1	SHAFT ASSEM.
21	NPR	5M-6509	1	SEAL
22	NPR	4N-0406	1	GEAR (10 teeth)
23	NPR	9L-6863	1	BODY ASSEM.
(Includes)				
24	NPR	8H-9804	1	SHAFT
25	NPR	4N-0636	1	SEAL
26	NPR	4N-1584	1	SEAL
27	NPR	8S-6814	1	DOWEL
28	NPR	4N-5050	1	PLUG
29	NPR	4N-3779	1	KEY
30	NPR	4N-0429	1	GEAR (15 teeth)
31	NPR	4N-0527	1	SPRING

32 NPR 6N-4655 1 DASHPOT ASSEM.

33 NPR 6N-2957 2 WASHER

NPR 6N-2956 1 WASHER (spring)

34 NPR 6N-7451 1 SEAT

35 NPR 4N-0446 1 CARRIER

- OR -

C NPR 8N-2663 1 CARRIER

36 NPR 4N-2955 3 BOLT- 22.23 mm(.875 in.) long

- OR -

NPR C 8N-2662 3 BOLT- 25.4 mm(1 in.) long (Low Head)

Key:

C - INDICATES CHANGE

6N5356 GOVERNOR AND FUEL INJECTION PUMP GROUP--Part 2 of 4--Type 2
Part of 4N6115 and 6N1504 Governor and Fuel Injection Pump Groups shown on Pages 65B and 67B

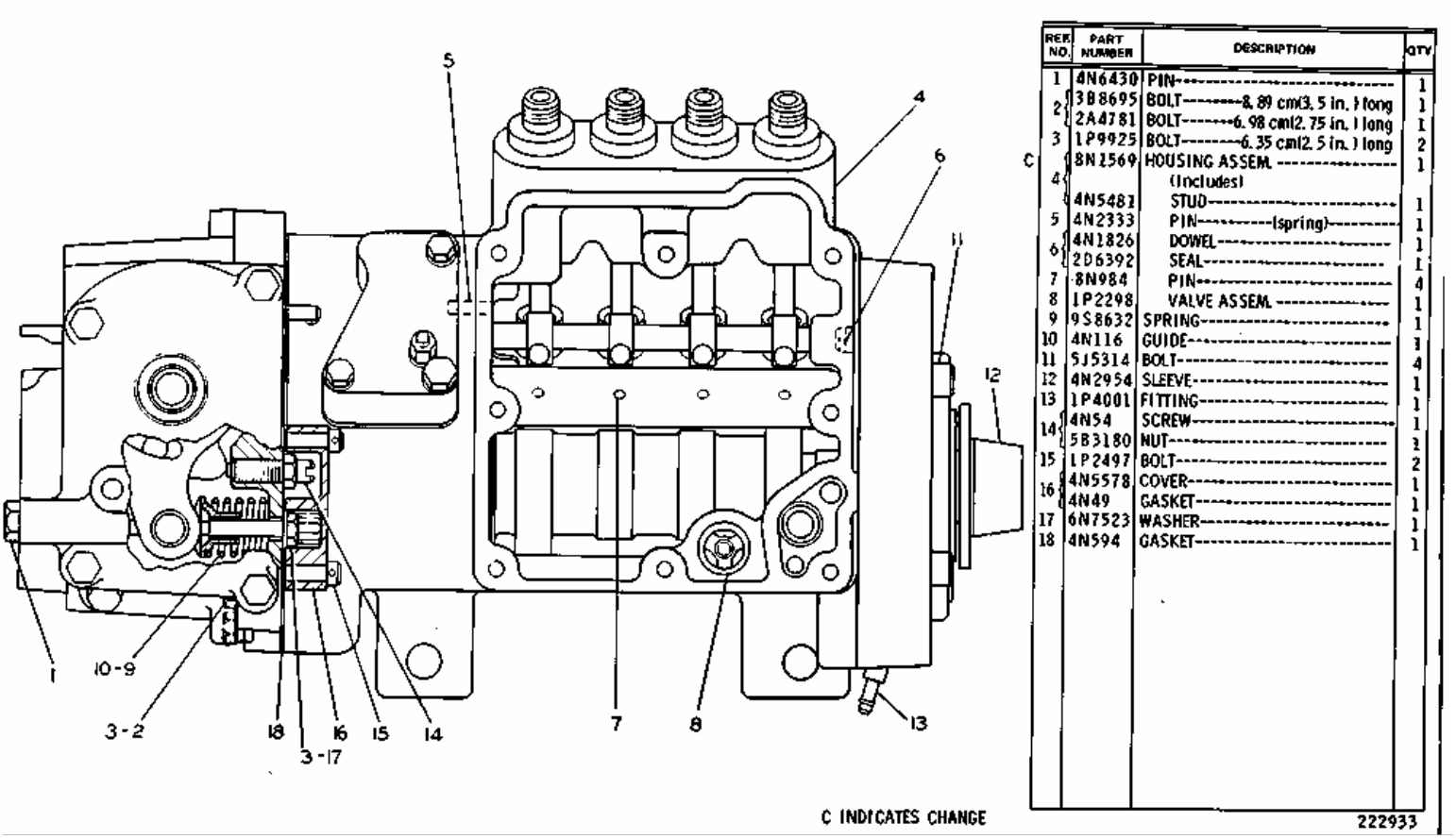

REF. NO.	PART NUMBER	DESCRIPTION	QTY
1	4N6430	PIN	1
2	3B8695	BOLT--8.89 cm(3.5 in.) long	1
	2A4781	BOLT--6.98 cm(2.75 in.) long	1
3	1P9925	BOLT--6.35 cm(2.5 in.) long	2
C 4	8N1569	HOUSING ASSEM.	1
		(Includes)	
	4N5481	STUD	1
5	4N2333	PIN-(spring)	1
6	4N1826	DOWEL	1
	2D6392	SEAL	1
7	8N984	PIN	4
8	1P2298	VALVE ASSEM.	1
9	9S8632	SPRING	1
10	4N116	GUIDE	1
11	5J5314	BOLT	4
12	4N2954	SLEEVE	1
13	1P4001	FITTING	1
14	4N54	SCREW	1
	5B3180	NUT	1
15	1P2497	BOLT	2
16	4N5578	COVER	1
	4N49	GASKET	1
17	6N7523	WASHER	1
18	4N594	GASKET	1

1 NPR 4N-6430 1 PIN

2 NPR 3B-8695 1 BOLT 8.89 cm(3.5 in.) long

NPR 2A-4781 1 BOLT 6.98 cm(2.75 in.) long

3 NPR 1P-9925 2 BOLT 6.35 cm(2.5 in.) long

4 NPR C 8N-1569 1 HOUSING ASSEM.

(Includes)

NPR 4N-5481 1 STUD

5 NPR 4N-2333 1 PIN (spring)

6 NPR 4N-1826 1 DOWEL

NPR 2D-6392 1 SEAL

7 NPR 8N-0984 4 PIN

8 NPR 1P-2298 1 VALVE ASSEM.

9	NPR	9S-8632	1	SPRING
10	NPR	4N-0116	1	GUIDE
11	NPR	5J-5314	4	BOLT
12	NPR CL	4N-2954	1	SLEEVE
CL	NPR	299-2059	1	SLEEVE-CLA
13	NPR	1P-4001	1	FITTING
14	NPR	4N-0054	1	SCREW
	NPR	5B-3180	1	NUT
15	NPR	1P-2497	2	BOLT
16	NPR	4N-5578	1	COVER
	NPR	4N-0049	1	GASKET
17	NPR	6N-7523	1	WASHER
18	NPR	4N-0594	1	GASKET

Key:

CL - Classic Part Available
C - INDICATES CHANGE

6N5356 GOVERNOR AND FUEL INJECTION PUMP GROUP--Part 3 of 4--Type 2
Part of 4N6115 and 6N1504 Governor and Fuel Injection Pump Groups shown on Pages 65B and 67B

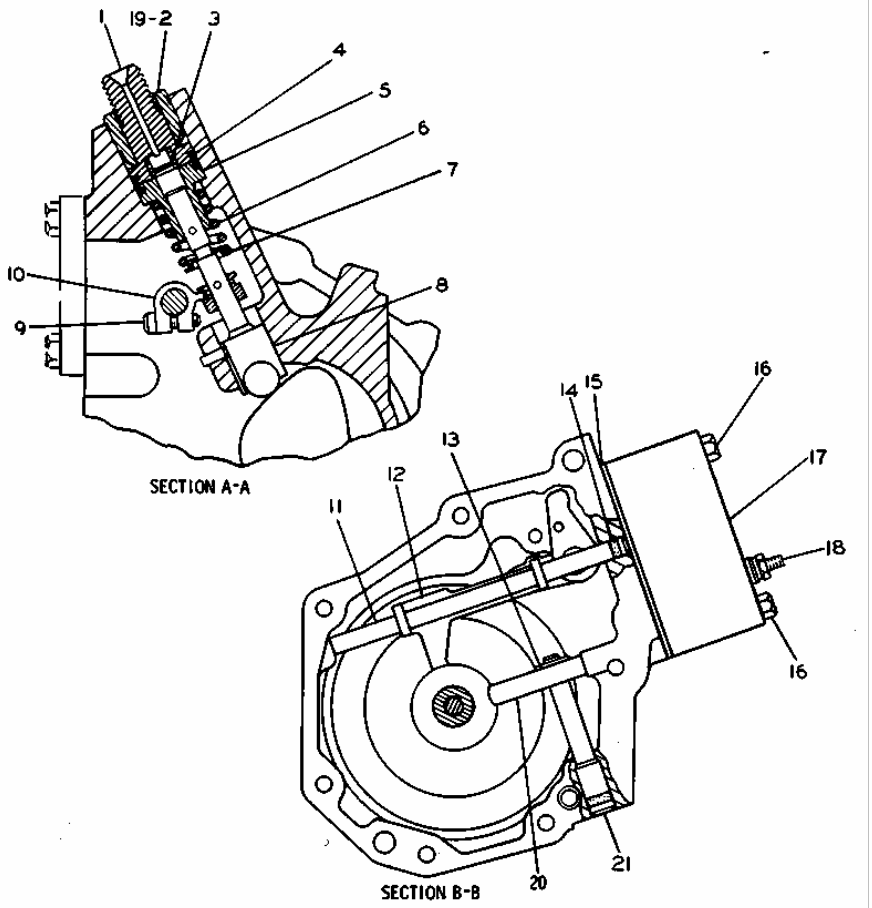

REF. NO.	PART NUMBER	DESCRIPTION	QTY.
1	4N209	BONNET	4
2	4N218	BUSHING	4
3	9B1320	VALVE	4
	9L9424	SPRING	4
4	4N224	RING	4
5	4N1765	PLUNGER AND BARREL ASSEM.	4
6	4N4318	SPRING	4
7	4N2728	WASHER	4
C 8	8N1317	LIFTER	4
C	4N2685	ROLLER	4
9	2N2658	SCREW	4
10	4N1763	LEVER	4
11	4N528	SHAFT	1
12	4N2677	LEVER ASSEM.	1
13	2M7819	RING	1
14	3H442	SEAL	1
15	4N508	GASKET	1
16	2M5471	BOLT	2

17	4N1591	COVER ASSEM. (Includes)	1
	4N506	COVER	1
C	4N1594	SCREW	1
	4B2042	NUT	1
18	3B4501	LOCKWASHER	1
	1P7326	WASHER--1.53 mm(.06 in.)thick	1
	8F1326	WASHER--.82 mm (.032 in.)thick	1
19	4N223	SEAL	4
20	4N445	LEVER	1
21	4N523	DOWEL	1
	2D6392	SEAL	1

C INDICATES CHANGE 227045

1 NPR 4N-0209 4 BONNET

2 NPR 4N-0218 4 BUSHING

3 NPR 9B-1320 4 VALVE

NPR 9L-9424 4 SPRING

4 NPR 4N-0224 4 RING

5	NPR	4N-1765	4	PLUNGER AND BARREL ASSEM.
6	NPR	4N-4318	4	SPRING
7	NPR	4N-2728	4	WASHER
8	NPR C	8N-1317	4	LIFTER
	NPR C	4N-2685	4	ROLLER
9	NPR	2N-2658	4	SCREW
10	NPR	4N-1763	4	LEVER
11	NPR	4N-0528	1	SHAFT
12	NPR	4N-2677	1	LEVER ASSEM.
13	NPR	2M-7819	1	RING
14	NPR	3H-0442	1	SEAL
15	NPR	4N-0508	1	GASKET
16	NPR	2M-5471	2	BOLT
17	NPR	4N-1591	1	COVER ASSEM.
(Includes)				
	NPR	4N-0506	1	COVER
18	NPR C	4N-1594	1	SCREW
	NPR	4B-2042	1	NUT
	NPR	3B-4501	1	LOCKWASHER
	NPR	1P-7326	1	WASHER -1.53 mm(.06 in.) thick
	NPR	8F-1326	1	WASHER -.82 mm (.032 in.)thick
19	NPR	4N-0223	4	SEAL
20	NPR	4N-0445	1	LEVER
21	NPR	4N-0523	1	DOWEL
	NPR	2D-6392	1	SEAL

Key: C - INDICATES CHANGE

6N5356 GOVERNOR AND FUEL INJECTION PUMP GROUP--Part 4 of 4--Type 2
Part of 4N6115 and 6N1504 Governor and Fuel Injection Pump Group shown on Pages 65B and 67B

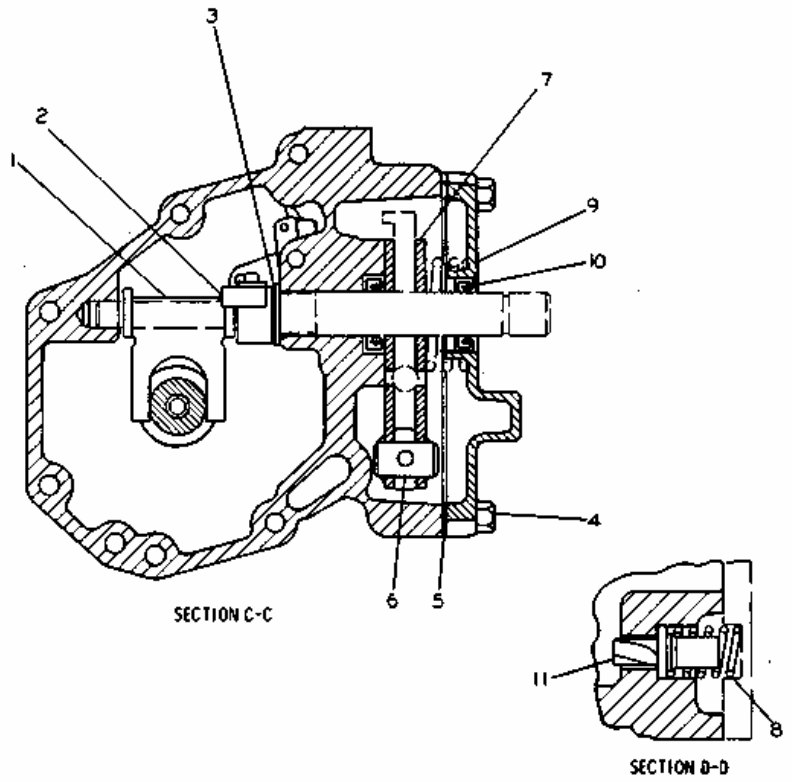

REF. NO.	PART NUMBER	DESCRIPTION	QTY
1	4N1881	LEVER	1
2	4N448	LEVER ASSEM. (Includes)	1
	9L8571	DOWEL	1
3	8F5368	WASHER	1
4	S1616	BOLT	4
5	4N402	GASKET	1
6	9S8601	PIN	1
7	6N5482	PLATE	2
8	4N605	SPRING	1
9	4N687	COVER ASSEM. (Includes)	1
10	4N2786	SEAL	1
11	4N1767	VALVE	1

160293

1 NPR 4N-1881 1 LEVER

2 NPR 4N-0448 1 LEVER ASSEM.

(Includes)

NPR 9L-8571 1 DOWEL

3 NPR 8F-5368 1 WASHER

4 NPR 0S-1616 4 BOLT

5 NPR 4N-0402 1 GASKET

6 NPR 9S-8601 1 PIN

7 NPR 6N-5482 2 PLATE

8 NPR 4N-0605 1 SPRING

9 NPR 4N-0687 1 COVER ASSEM.

(Includes)

10 NPR 4N-2786 1 SEAL

11 NPR 4N-1767 1 VALVE

6N1504 GOVERNOR AND FUEL INJECTION PUMP GROUP--Type 2
Part of 6N288 and 6N5735 Governor and Fuel Injection Pump Groups shown on Page 64
6N5356 Governor and Fuel Injection Pump parts are shown on Pages 71E, 71F, 71G and 71H

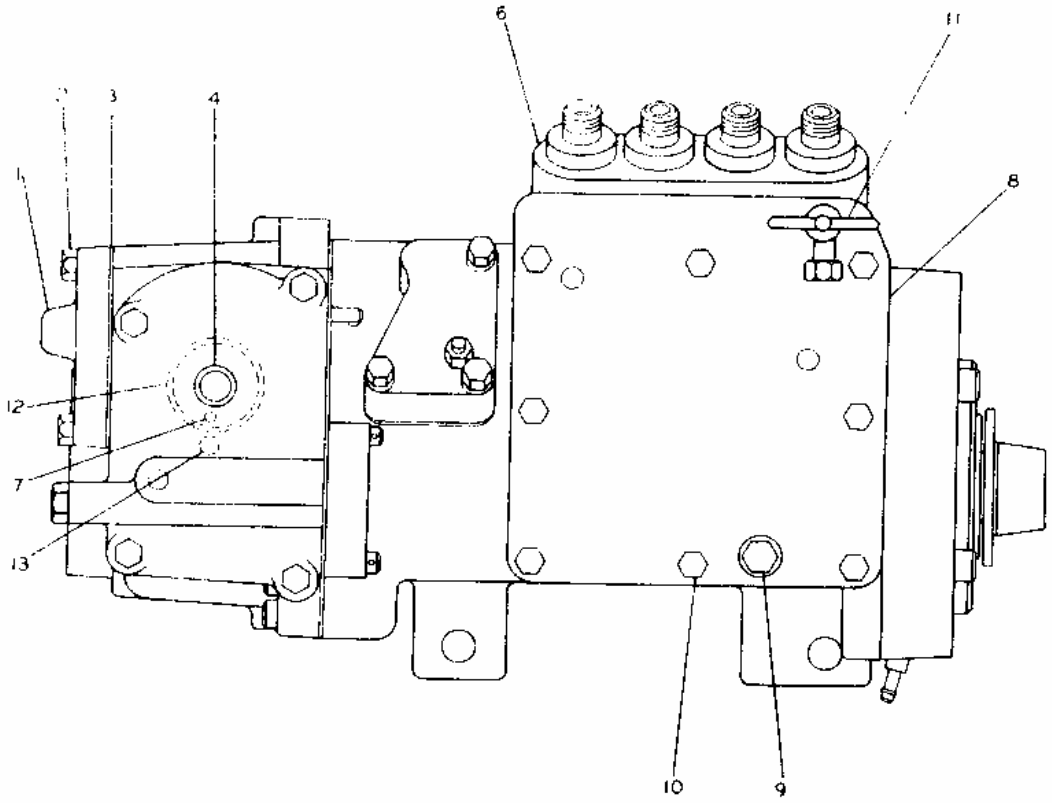

	REF NO	PART NUMBER	DESCRIPTION	QTY
	1	4N53	COVER	1
	2	S1616	BOLT (1 in. long)	1
		8S4710	BOLT (4 in. long)	2
	3	4N159	GASKET	1
	4	4N4320	SHAFT ASSEM.	1
C	6	6N5356	GOVERNOR AND FUEL PUMP (Separate Illustration)	1
	7	4N444	SPACER	2
	8	4N9338	COVER	1
		4N9056	GASKET	1
	9	9S4180	PLUG	1
		4J7533	SEAL	1
	10	S1615	BOLT	8
	11	6D238	VALVE ASSEM.	1
	12	2P726	SPRING	1
	13	4N8179	PIN	1

C INDICATES CHANGE 160372

1 NPR 4N-0053 1 COVER

2 NPR 0S-1616 1 BOLT (1 in. long)

NPR 8S-4710 2 BOLT (4 in. long)

3 NPR 4N-0159 1 GASKET

4 NPR 4N-4320 1 SHAFT ASSEM.

6 NPR YC 6N-5356 1 GOVERNOR AND FUEL PUMP

(Separate Illustration)

7 NPR 4N-0444 2 SPACER

8 NPR 4N-9338 1 COVER

NPR 4N-9056 1 GASKET

9 NPR 9S-4180 1 PLUG

	NPR	4J-7533	1	SEAL
10	NPR	0S-1615	8	BOLT
11	NPR	6D-0238	1	VALVE ASSEM.
12	NPR	2P-0726	1	SPRING
13	NPR	4N-8179	1	PIN

Key:

C - INDICATES CHANGE
Y - SEPARATE ILLUSTRATION

4N1834 GOVERNOR AND FUEL INJECTION PUMP GROUP--Part 1 of 4--Type 1
Part of 6N2477 and 6N1504 Governor and Fuel Injection Pump Groups shown on Pages 66 and 67

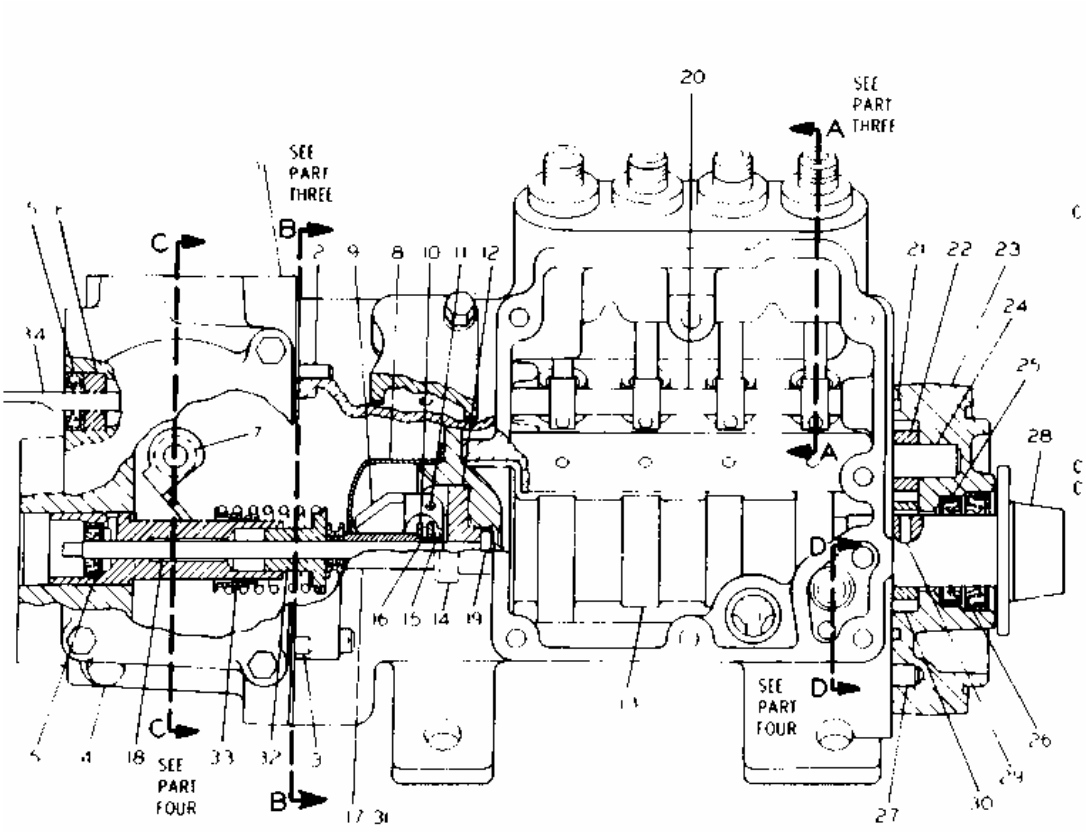

REF NO	PART NUMBER	DESCRIPTION	QTY
1	4N1178	HOUSING ASSEM.	1
		(Includes)	
2	4N2333	DOWEL	1
3	8S6814	DOWEL	1
4	4N5050	PLUG	1
5	4N260	SEAL	2
C 6	6N2578	BEARING	1
7	4N2786	SEAL	1
8	4N1723	SHIELD	1
9	4N425	WEIGHT	3
10	4N2927	RACE	2
11	4N511	DOWEL	3
12	4N446	CARRIER	1
13	4N4312	CAMSHAFT	1
14	4N2955	BOLT	3
15	4N2953	RING	1
16	4N2401	BEARING	1
17	4N434	RISER	1
C 18	4N9018	SHAFT	1
C 19	4N9019	DOWEL	1
20	4N507	SHAFT ASSEM.	1
21	5M6509	SEAL	1
22	4N406	GEAR (10 teeth)	1
23	4N1131	BODY ASSEM.	1
		(Includes)	
24	8H9804	SHAFT	1
25	4N636	SEAL	1
26	4N1584	SEAL	1
27	8S6814	DOWEL	1
28	4N2954	SLEEVE	1
29	4N3779	KEY	1
30	4N429	GEAR (15 teeth)	1
31	4N527	SPRING	1
32	4N435	SEAT	1
33	4N436	SEAT	1
34	4N927	SHAFT ASSEM.	1

C INDICATES CHANGE 207189

1 NPR 4N-1178 1 HOUSING ASSEM.

(Includes)

2 NPR 4N-2333 1 DOWEL

3 NPR 8S-6814 1 DOWEL

4 NPR 4N-5050 1 PLUG

5 NPR 4N-0260 2 SEAL

6 NPR C 6N-2578 1 BEARING

7 NPR 4N-2786 1 SEAL

8 NPR 4N-1723 1 SHIELD

9 NPR 4N-0425 3 WEIGHT

10 NPR 4N-2927 2 RACE

11 NPR 4N-0511 3 DOWEL

12 NPR 4N-0446 1 CARRIER

13 NPR 4N-4312 1 CAMSHAFT

14 NPR 4N-2955 3 BOLT

15 NPR 4N-2953 1 RING

16 NPR 4N-2401 1 BEARING

17 NPR 4N-0434 1 RISER

18 NPR C 4N-9018 1 SHAFT

19 NPR C 4N-9019 1 DOWEL

20 NPR 4N-0507 1 SHAFT ASSEM.

21 NPR 5M-6509 1 SEAL

22 NPR 4N-0406 1 GEAR (10 teeth)

23 NPR 4N-1131 1 BODY ASSEM.

(Includes)

24 NPR 8H-9804 1 SHAFT

25 NPR 4N-0636 1 SEAL

26 NPR 4N-1584 1 SEAL

27 NPR 8S-6814 1 DOWEL

28 NPR CL 4N-2954 1 SLEEVE

CL NPR 299-2059 1 SLEEVE-CLA

29 NPR 4N-3779 1 KEY

30 NPR 4N-0429 1 GEAR (15 teeth)

31 NPR 4N-0527 1 SPRING

32 NPR 4N-0435 1 SEAT

33 NPR 4N-0436 1 SEAT

34 NPR 4N-0927 1 SHAFT ASSEM.

Key:

CL - Classic Part Available

4N1834 GOVERNOR AND FUEL INJECTION PUMP GROUP--Part 2 of 4--Type 1
Part of 6N2477 and 6N1504 Governor and Fuel Injection Pump Groups shown on Pages 66 and 67

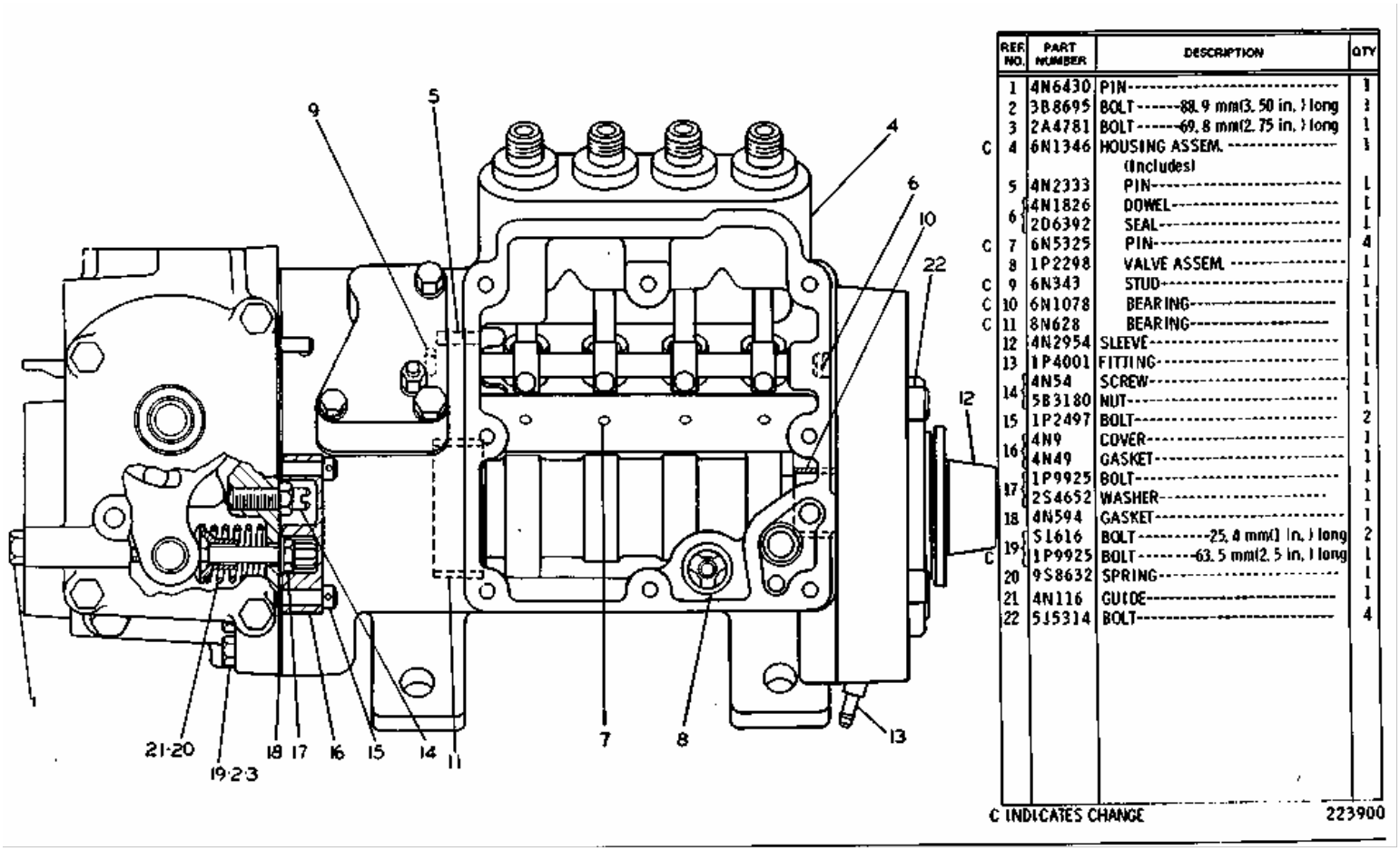

	REF NO.	PART NUMBER	DESCRIPTION	QTY
	1	4N6430	PIN	1
	2	3B8695	BOLT---88.9 mm(3.50 in.) long	1
	3	2A4781	BOLT---69.8 mm(2.75 in.) long	1
C	4	6N1346	HOUSING ASSEM. (Includes)	1
	5	4N2333	PIN	1
	6	4N1826	DOWEL	1
		2D6392	SEAL	1
C	7	6N5325	PIN	4
	8	1P2298	VALVE ASSEM.	1
C	9	6N343	STUD	1
C	10	6N1078	BEARING	1
C	11	8N628	BEARING	1
	12	4N2954	SLEEVE	1
	13	1P4001	FITTING	1
	14	4N54	SCREW	1
		5B3180	NUT	1
	15	1P2497	BOLT	2
	16	4N9	COVER	1
		4N49	GASKET	1
	17	1P9925	BOLT	1
		2S4652	WASHER	1
	18	4N594	GASKET	1
	19	5L616	BOLT---25.4 mm(1 in.) long	2
C		1P9925	BOLT---63.5 mm(2.5 in.) long	1
	20	9S8632	SPRING	1
	21	4N116	GUIDE	1
	22	5J5314	BOLT	4

C INDICATES CHANGE 223900

1 NPR 4N-6430 1 PIN

2 NPR 3B-8695 1 BOLT 88.9 mm(3.50 in.) long

3 NPR 2A-4781 1 BOLT 69.8 mm(2.75 in.) long

4 NPR C 6N-1346 1 HOUSING ASSEM.

(Includes)

5 NPR 4N-2333 1 PIN

6 NPR 4N-1826 1 DOWEL

NPR 2D-6392 1 SEAL

7 NPR C 6N-5325 4 PIN

8 NPR 1P-2298 1 VALVE ASSEM.

9 NPR C 6N-0343 1 STUD

10 NPR C 6N-1078 1 BEARING

11 NPR C 8N-0628 1 BEARING

12 NPR CL 4N-2954 1 SLEEVE

CL NPR 299-2059 1 SLEEVE-CLA

13 NPR 1P-4001 1 FITTING

14 NPR 4N-0054 1 SCREW

NPR 5B-3180 1 NUT

15 NPR 1P-2497 2 BOLT

16 NPR 4N-0009 1 COVER

NPR 4N-0049 1 GASKET

17 NPR 1P-9925 1 BOLT

NPR 2S-4652 1 WASHER

18 NPR 4N-0594 1 GASKET

19 NPR 0S-1616 2 BOLT 25.4 mm(1 in.) long

NPR C 1P-9925 1 BOLT 63.5 mm(2.5 in.) long

20 NPR 9S-8632 1 SPRING

21 NPR 4N-0116 1 GUIDE

22 NPR 5J-5314 4 BOLT

Key:

CL - Classic Part Available
C - INDICATES CHANGE

4N1834 GOVERNOR AND FUEL INJECTION PUMP GROUP--Part 3 of 4--Type 1
Part of 6N2477 and 6N1504 Governor and Fuel Injection Pump Groups shown on Pages 66 and 67

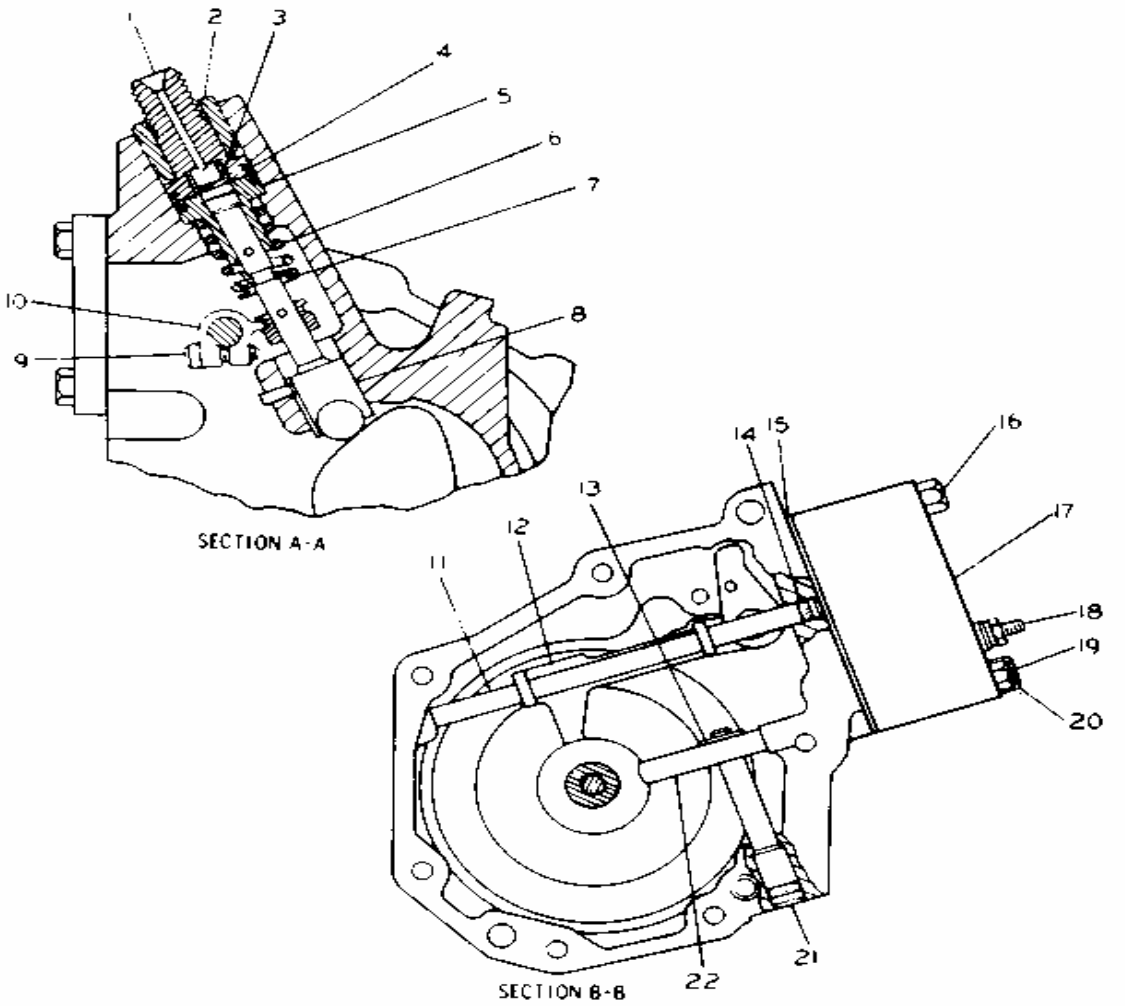

	REF NO	PART NUMBER	DESCRIPTION	QTY
	1	4N209	BONNET	4
	2	4N218	BUSHING	4
C	3	9B1320	VALVE	4
		9L9424	SPRING	4
	4	4N224	RING	4
	5	4N1765	PLUNGER & BARREL ASSEM.	4
	6	4N4318	SPRING	4
	7	4N2728	WASHER	4
	8	4N1750	LIFTER	4
		4N2685	ROLLER	4
	9	2N2658	SCREW	4
	10	4N1763	LEVER	4
	11	4N528	SHAFT	1
	12	4N2677	LEVER ASSEM.	1
	13	2M7819	RING	1
	14	3H442	SEAL	1
	15	4N508	GASKET	1

	REF NO	PART NUMBER	DESCRIPTION	QTY
C	16	2M5471	BOLT	1
	17	4N1591	COVER ASSEM	1
		4N506	COVER	1
		4N1594	MACHINE SCREW	1
		4B2042	NUT	1
	18	3B4501	LOCKWASHER	1
		1P7326	WASHER--1.52 mm(.06 in.) thick	1
		8F1326	WASHER--.82 mm(.032 in.) thick	1
	19	2M5471	BOLT	1
	20	2P3200	BOLT	1
		1J9671	SEAL	1
	21	4N523	DOWEL	1
		2D6392	SEAL	1
	22	4N445	LEVER	1

C INDICATES CHANGE

207191

1 NPR 4N-0209 4 BONNET

2 NPR 4N-0218 4 BUSHING

3 NPR C 9B-1320 4 VALVE

	NPR	9L-9424	4	SPRING
4	NPR	4N-0224	4	RING
5	NPR	4N-1765	4	PLUNGER & BARREL ASSEM.
6	NPR	4N-4318	4	SPRING
7	NPR	4N-2728	4	WASHER
8	NPR	4N-1750	4	LIFTER
	NPR	4N-2685	4	ROLLER
9	NPR	2N-2658	4	SCREW
10	NPR	4N-1763	4	LEVER
11	NPR	4N-0528	1	SHAFT
12	NPR	4N-2677	1	LEVER ASSEM.
13	NPR	2M-7819	1	RING
14	NPR	3H-0442	1	SEAL
15	NPR	4N-0508	1	GASKET
16	NPR C	2M-5471	1	BOLT
17	NPR	4N-1591	1	COVER ASSEM.
	NPR	4N-0506	1	COVER
18	NPR	4N-1594	1	MACHINE SCREW
	NPR	4B-2042	1	NUT
	NPR	3B-4501	1	LOCKWASHER
	NPR	1P-7326	1	WASHER 1.52 mm(.06 in.) thick
	NPR	8F-1326	1	WASHER 82 mm(.032 in.) thick
19	NPR	2M-5471	1	BOLT

20 NPR 2P-3200 1 BOLT

NPR 1J-9671 1 SEAL

21 NPR 4N-0523 1 DOWEL

NPR 2D-6392 1 SEAL

22 NPR 4N-0445 1 LEVER

4N1834 GOVERNOR AND FUEL INJECTION PUMP GROUP--Part 4 of 4--Type 1
Part of 6N2477 and 6N1504 Governor and Fuel Injection Pump Groups shown on Pages 66 and 67

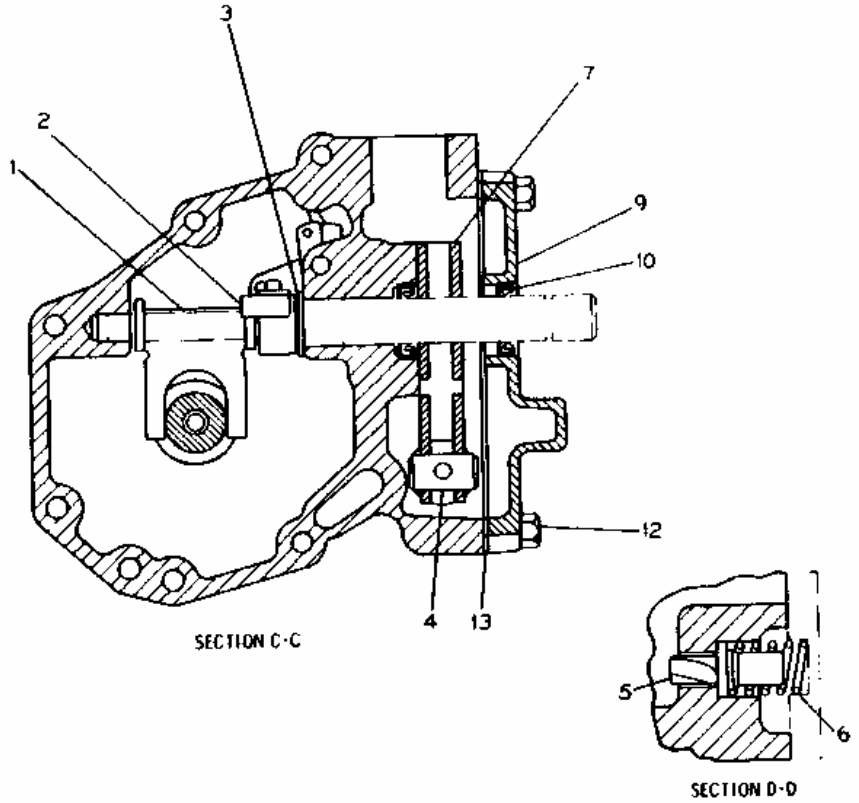

REF NO	PART NUMBER	DESCRIPTION	QTY
1	4N1881	LEVER	1
	4N448	LEVER ASSEM.	1
2		* (Includes)	
	9L8571	DOWEL	1
3	8F5368	WASHER	1
4	9S8601	PIN	1
5	4N1767	VALVE	1
6	4N605	SPRING	1
7	4N613	PLATE	2
9	4N687	COVER ASSEM.	1
		(Includes)	
C 10	4N2786	SEAL	1
12	S1616	BOLT	4
13	4N402	GASKET	1

C INDICATES CHANGE

161567

1 NPR 4N-1881 1 LEVER

2 NPR 4N-0448 1 LEVER ASSEM.

(Includes)

NPR 9L-8571 1 DOWEL

3 NPR 8F-5368 1 WASHER

4 NPR 9S-8601 1 PIN

5 NPR 4N-1767 1 VALVE

6 NPR 4N-0605 1 SPRING

7 NPR 4N-0613 2 PLATE

9 NPR 4N-0687 1 COVER ASSEM.

(Includes)

10 NPR C 4N-2786 1 SEAL

12 NPR 0S-1616 4 BOLT

13 NPR 4N-0402 1 GASKET

Key:

C - INDICATES CHANGE

4N3287 FUEL PRIMING PUMP GROUP
Engine Serial No. 78P18799 to 78P46310 inclusive

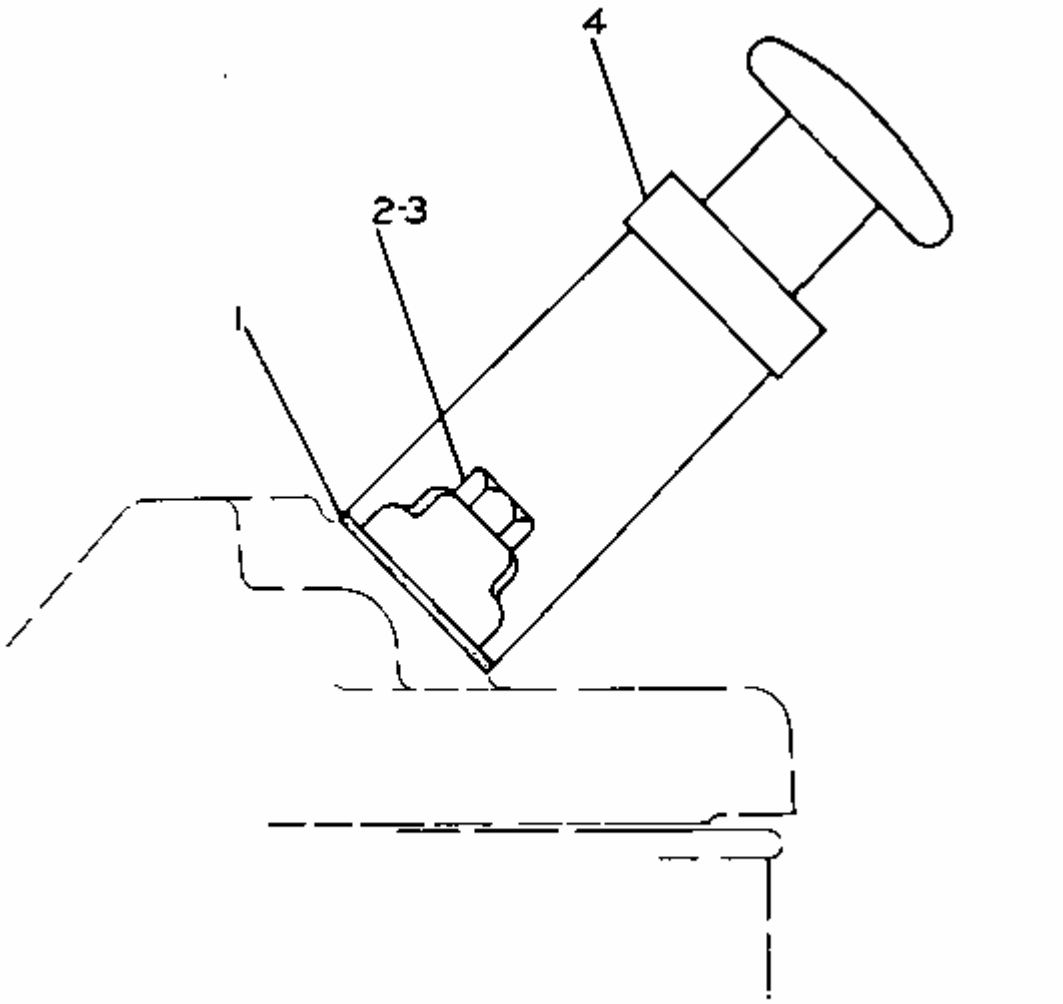

1 NPR 1P-0436 1 GASKET

2 NPR 4B-3388 1 BOLT

2.86 CM(1.125 IN)LONG

-OR-

NPR C 1B-2790 1 BOLT

3.49 CM(1.375 IN)LONG

NPR C 9M-1974 1 WASHER

7.95 MM(.313 IN)DIA

3 NPR 0S-1616 1 BOLT

2.54 CM(1 IN)LONG

-OR-

NPR C 7B-2742 1 BOLT

3.18 CM(1.25 IN)LONG

NPR C 5P-0537 1 WASHER

6.35 MM(.25 IN)DIA

4 NPR 4N-2511 1 PUMP AS-FUEL PRIMING

Key:

C - CHANGE FROM PREVIOUS TYPE

8N4454 FUEL PRIMING AND PRIMARY FILTER PUMP GROUP
Engine Serial No. 78P46311-Up
8N4435 Pump parts shown on Pages 74A and 74A-2

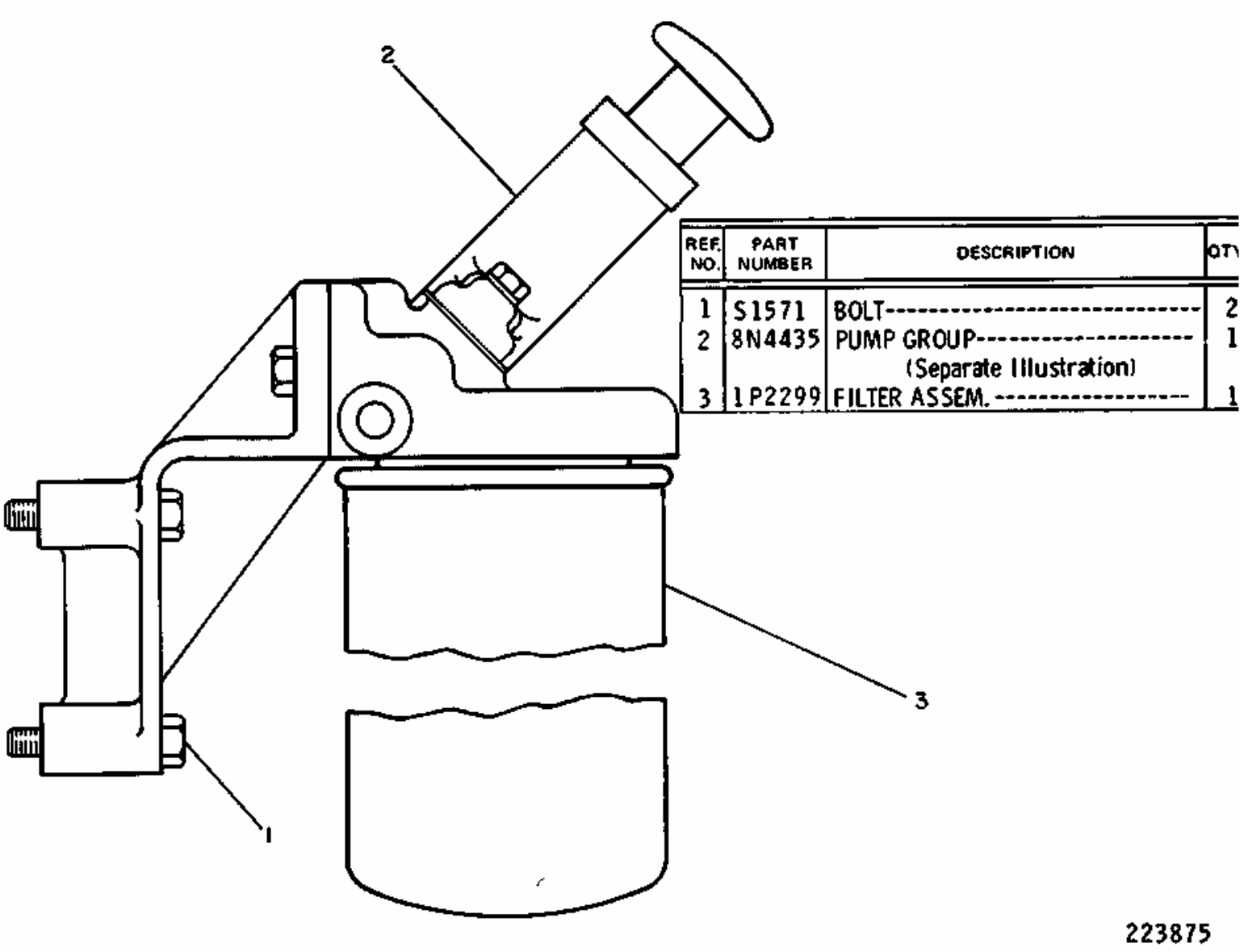

REF. NO.	PART NUMBER	DESCRIPTION	QTY
1	S1571	BOLT----------	2
2	8N4435	PUMP GROUP---------- (Separate Illustration)	1
3	1P2299	FILTER ASSEM.----------	1

1 NPR 0S-1571 2 BOLT

2 NPR Y 8N-4435 1 PUMP GROUP

(Separate Illustration)

3 NPR 1P-2299 1 FILTER ASSEM.

Key:

Y - SEPARATE ILLUSTRATION

8N4435 FUEL PRIMING PUMP GROUP
Engine Serial No. 78P46311 to 78P50292 inclusive
Part of 8N4454 Fuel Priming and Primary Filter Group

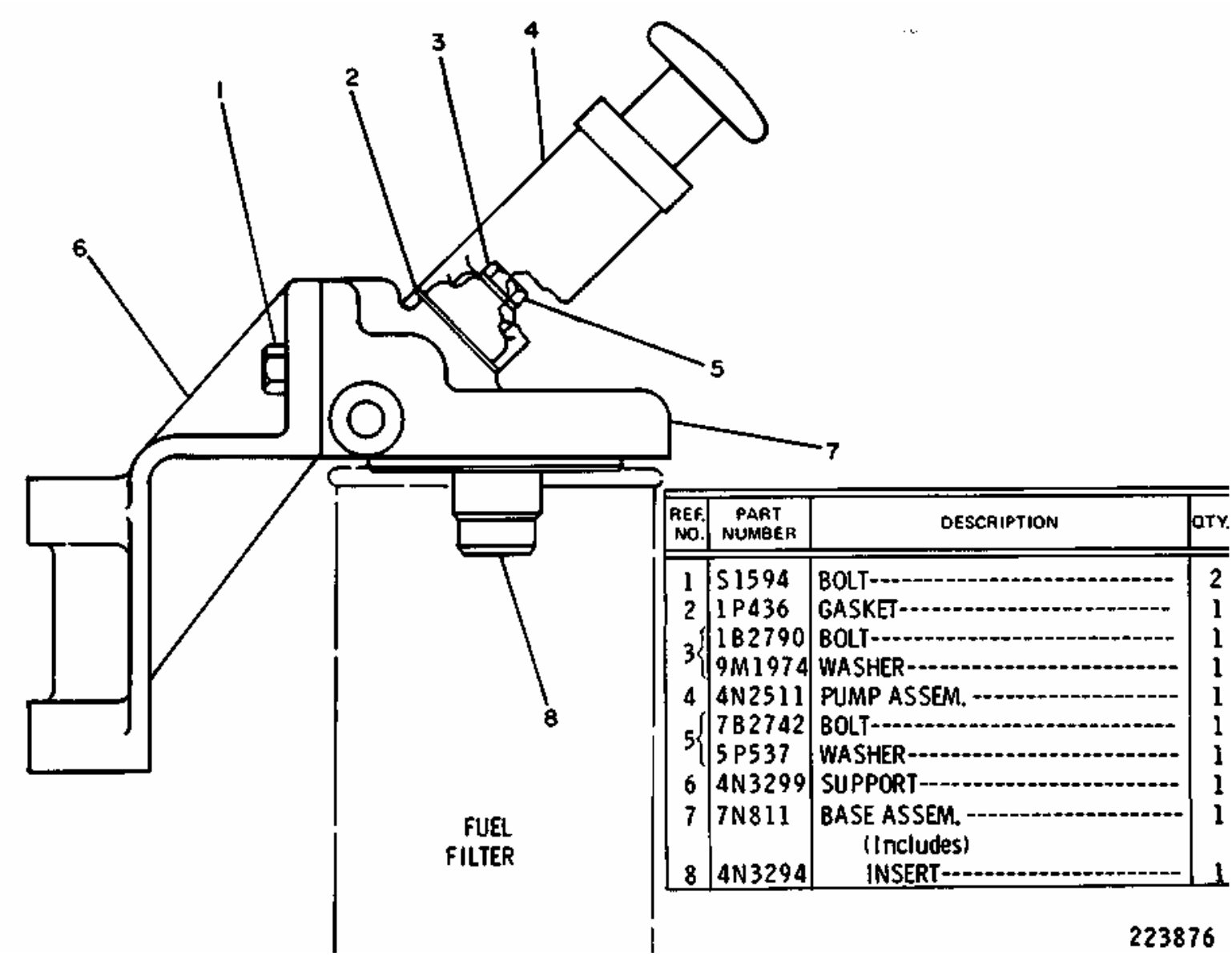

REF. NO.	PART NUMBER	DESCRIPTION	QTY.
1	S1594	BOLT	2
2	1P436	GASKET	1
3	1B2790	BOLT	1
	9M1974	WASHER	1
4	4N2511	PUMP ASSEM.	1
5	7B2742	BOLT	1
	5P537	WASHER	1
6	4N3299	SUPPORT	1
7	7N811	BASE ASSEM. (Includes)	1
8	4N3294	INSERT	1

223876

1 NPR 0S-1594 2 BOLT

2 NPR 1P-0436 1 GASKET

3 NPR 1B-2790 1 BOLT

NPR 9M-1974 1 WASHER

4 NPR 4N-2511 1 PUMP ASSEM.

5 NPR 7B-2742 1 BOLT

NPR 5P-0537 1 WASHER

6 NPR 4N-3299 1 SUPPORT

7 NPR 7N-0811 1 BASE ASSEM.

(Includes)

8 NPR 4N-3294 1 INSERT

8N4435 FUEL PRIMING PUMP GROUP
Engine Serial No. 78P50293-Up
Part of 8N4454 Fuel Priming Pump and Primary Filter Group shown on Page 74A

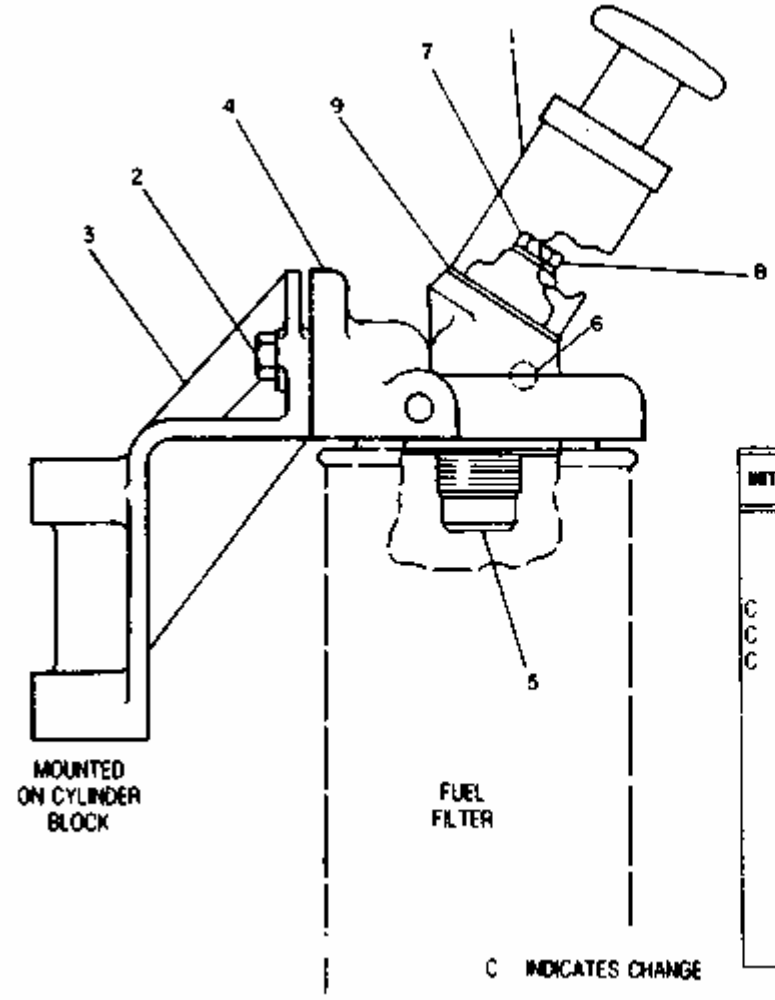

NOTE	REF NO	PART NUMBER	QTY	DESCRIPTION
	1	4N2511	1	PUMP ASSEM.
	2	S1594	2	BOLT
				-OR-
C		1A2029	2	BOLT
C		5M2894	2	WASHER
C	3	1W6009	1	SUPPORT
	4	4N3302	1	BASE ASSEM.
	5	4N3295	1	BASE ASSEM.
		4N3294	1	INSERT
	6	4N3296	1	SPRING
		4N3297	1	DISK
		4N3298	1	SEAT
	7	1B2790	1	BOLT
		9M1974	1	BOLT
	8	7B2742	1	BOLT
		5P537	1	WASHER
	9	1P436	1	GASKET

305770

1 NPR 4N-2511 1 PUMP ASSEM.

2 NPR 0S-1594 2 BOLT

-OR-

NPR C 1A-2029 2 BOLT

NPR C 5M-2894 2 WASHER

3 NPR C 1W-6009 1 SUPPORT

4 NPR 4N-3302 1 BASE ASSEM.

5 NPR 4N-3295 1 BASE ASSEM.

NPR 4N-3294 1 INSERT

6 NPR 4N-3296 1 SPRING

	NPR	4N-3297	1	DISK
	NPR	4N-3298	1	SEAT
7	NPR	1B-2790	1	BOLT
	NPR	9M-1974	1	BOLT
8	NPR	7B-2742	1	BOLT
	NPR	5P-0537	1	WASHER
9	NPR	1P-0436	1	GASKET

Key:

C - INDICATES CHANGE

8N3569 FUEL PUMP GROUP--BOOST--24 Volt--Field Installation
Provides positive pressure to the sleeve metering fuel system components on the suction side of the fuel transfer pump

NPR Y 8H-4681 1 PRIMARY FUEL FILTER GROUP

NPR 6N-0006 1 FUEL PUMP ASSEMBLY

Key: Y - SEPARATE ILLUSTRATION

9N5458 ELECTRICAL FUEL PUMP GROUP--Boost--12 Volt--Field Installation
8H4681 Filter parts are shown on Page 74C

1 NPR Y 8H-4681 1 FILTER GP-PRIMARY FUEL

2 NPR 9N-5459 1 PUMP AS-FUEL

Key: Y - SEPARATE ILLUSTRATION

5D1920 PROTECTION COVER GROUP--Fuel Tank Cap

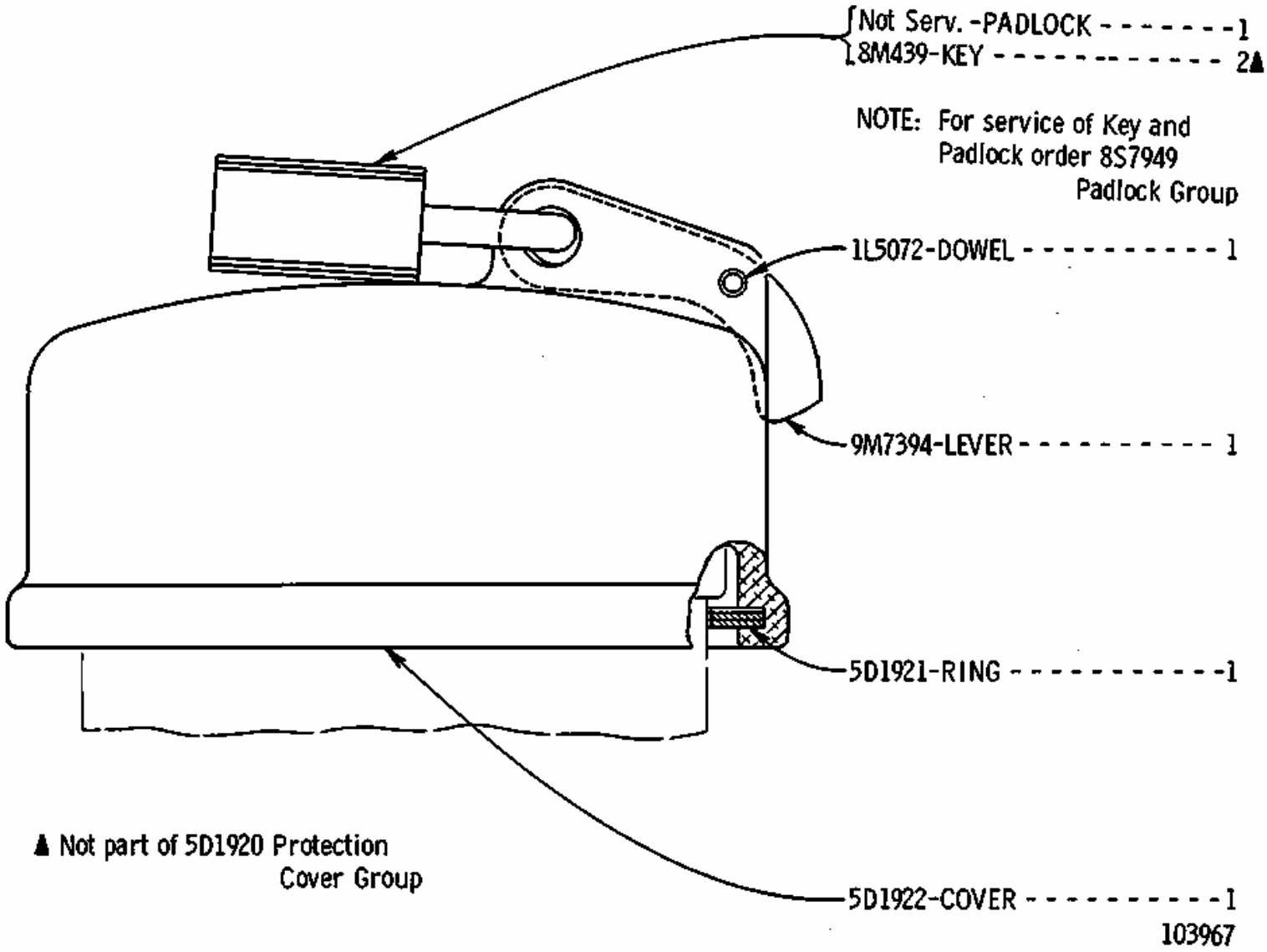

NOTSERV 1 PADLOCK

NPR H 8M-0439 2 KEY

NPR 1L-5072 1 DOWEL

NPR 9M-7394 1 LEVER

NPR 5D-1921 1 RING

NPR 5D-1922 1 COVER

Key:

H - NOT PART OF 5D1920 PROTECTION COVER GROUP

9D540 FUEL TANK GROUP--60 U.S. Gallon--Serial No. 87V2262-Up

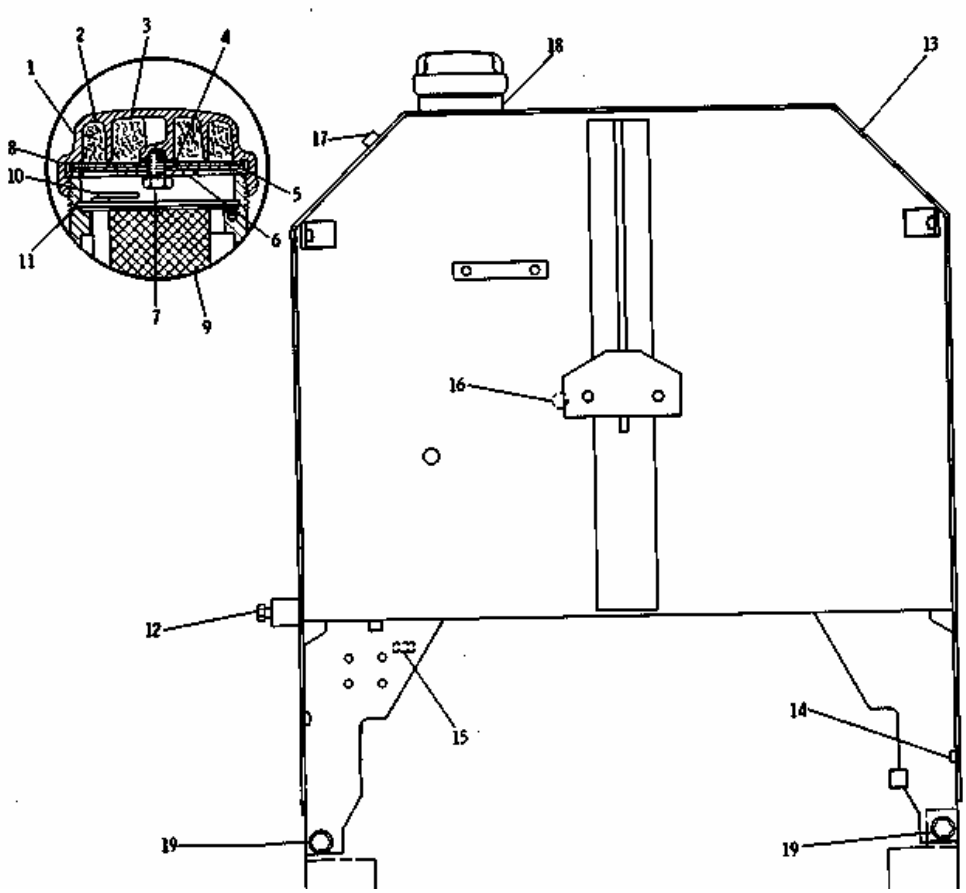

REF. NO.	PART NUMBER	DESCRIPTION	QTY
1	4B1455	CAP ASSEM.	1
		(Includes)	
2	4B1663	ELEMENT	1
3	4B5949	ELEMENT	1
4	3F4135	BAFFLE	1
5	2B4031	GASKET	1
6	7B2001	WASHER	1
7	7F7461	SCREW	1
8	4B1453	GASKET	1
9	4D1998	STRAINER ASSEM.	1
10	9D4426	PLUNGER	1
11	1A2540	LOCK	1
12	1H8306	SCREW	1
C 13	2G7045	TANK ASSEM.	1
		(Includes)	
14	9F2978	NUT	4
15	2K7051	BAR	1
16	4D9376	BOSS	1
17	3D6751	LUG	1
18	4D8778	TUBE ASSEM.	1
19	1D4616	BOLT	2
	1B4331	NUT	2
	3B4512	LOCKWASHER	2
	2S115	WASHER	4

C INDICATES CHANGE

211770

1 NPR 4B-1455 1 CAP ASSEM.

(Includes)

2 NPR 4B-1663 1 ELEMENT

3 NPR 4B-5949 1 ELEMENT

4 NPR 3F-4135 1 BAFFLE

5 NPR 2B-4031 1 GASKET

6 NPR 7B-2001 1 WASHER

7 NPR 7F-7461 1 SCREW

8 NPR 4B-1453 1 GASKET

9 NPR 4D-1998 1 STRAINER ASSEM.

10 NPR 9D-4426 1 PLUNGER

11 NPR 1A-2540 1 LOCK

12 NPR 1H-8306 1 SCREW

13 NPR C 2G-7045 1 TANK ASSEM.

(Includes)

14 NPR 9F-2978 4 NUT

15 NPR 2K-7051 1 BAR

16 NPR 4D-9376 1 BOSS

17 NPR 3D-6751 1 LUG

18 NPR 4D-8778 1 TUBE ASSEM.

19 NPR 1D-4616 2 BOLT

NPR 1B-4331 2 NUT

NPR 3B-4512 2 LOCKWASHER

NPR 2S-0115 4 WASHER

Key:

C - INDICATES CHANGE

6N509 TORQUE CONTROL GROUP
Engine Serial No. 78P18799 to 78P29364 inclusive. Part of 6N288, 4N6115 and 6N2477 Governor and Fuel Injection Pump Groups shown on Pages 64, 65B and 66

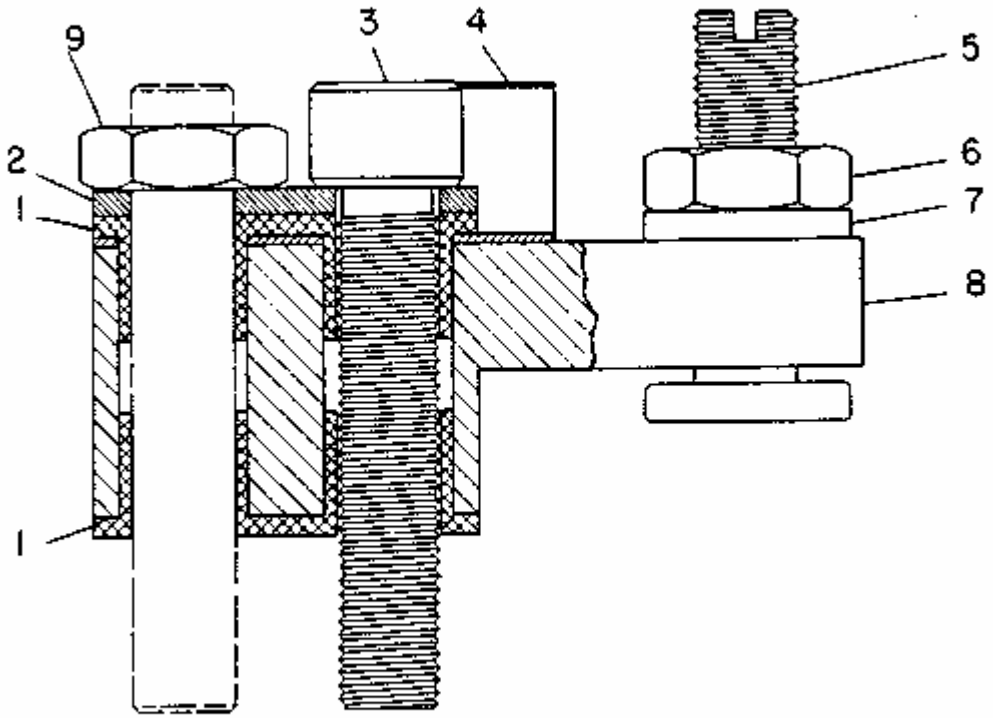

1	NPR	1P-6452	2	INSULATOR
2	NPR	8M-9064	1	SHIM-SPRING
3	NPR	4L-7124	1	BOLT
4	NPR	4N-3882	1	CONTACT-STOP
5	NPR	4N-3881	1	SCREW
6	NPR	9M-1311	1	NUT-JAM
7	NPR	4N-3884	1	WASHER-SPRING
8	NPR	4N-3883	1	BAR-LOAD STOP
9	NPR	4L-6458	1	NUT-FULL

7N576 TORQUE CONTROL GROUP
Engine Serial No. 78P29365 to 78P39473 inclusive
Part of 6N288 Governor and Fuel Injection Pump Group shown on Page 64A

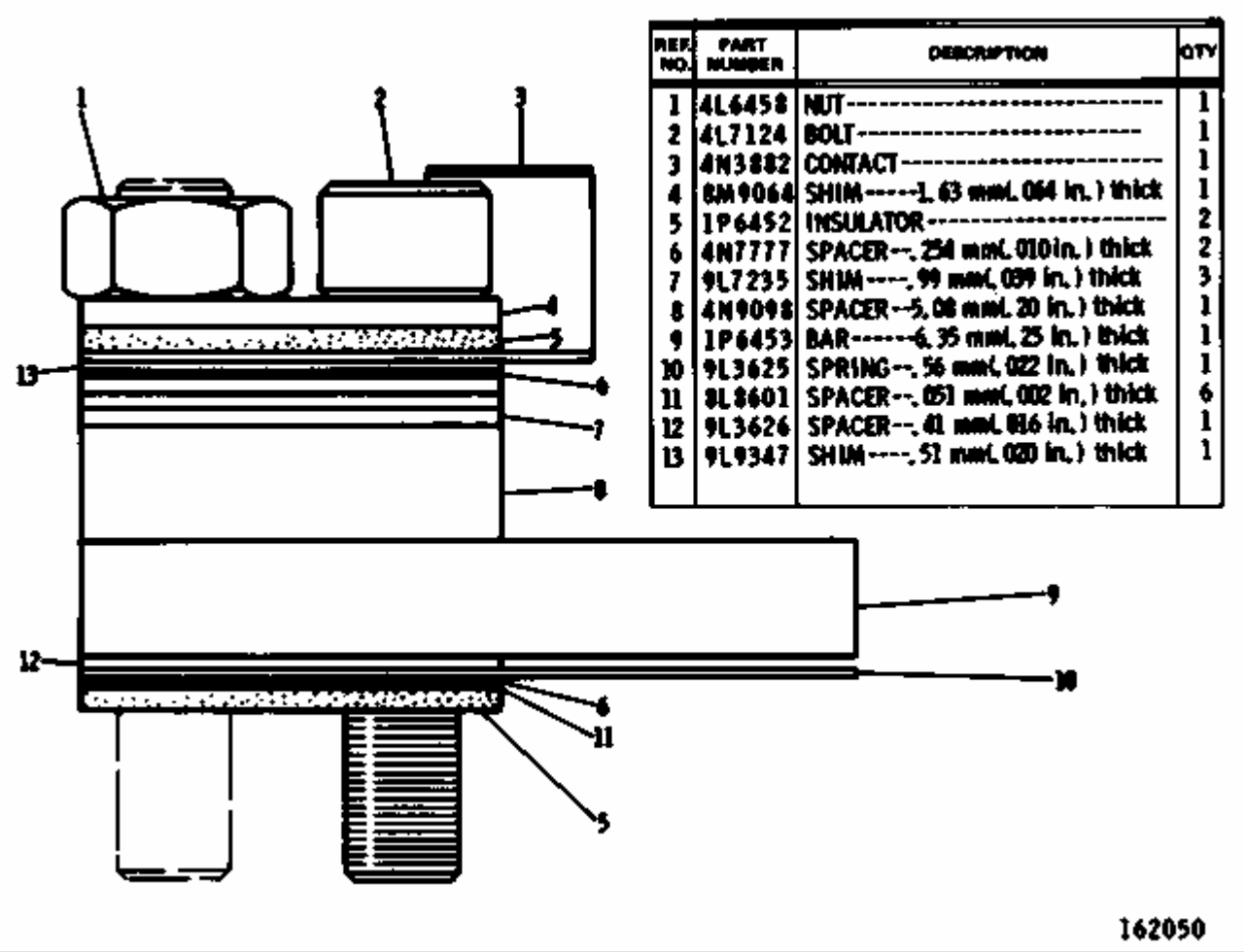

REF. NO.	PART NUMBER	DESCRIPTION	QTY
1	4L6458	NUT	1
2	4L7124	BOLT	1
3	4N3882	CONTACT	1
4	8M9064	SHIM-----1.63 mm(.064 in.) thick	1
5	1P6452	INSULATOR	2
6	4N7777	SPACER--.254 mm(.010 in.) thick	2
7	9L7235	SHIM----.99 mm(.039 in.) thick	3
8	4N9098	SPACER--5.08 mm(.20 in.) thick	1
9	1P6453	BAR------6.35 mm(.25 in.) thick	1
10	9L3625	SPRING--.56 mm(.022 in.) thick	1
11	8L8601	SPACER--.051 mm(.002 in.) thick	6
12	9L3626	SPACER--.41 mm(.016 in.) thick	1
13	9L9347	SHIM----.51 mm(.020 in.) thick	1

1 NPR 4L-6458 1 NUT

2 NPR 4L-7124 1 BOLT

3 NPR 4N-3882 1 CONTACT

4 NPR 8M-9064 1 SHIM 1.63 mm(.064 in.) thick

5 NPR 1P-6452 2 INSULATOR

6 NPR 4N-7777 2 SPACER .254 mm(.010 in.) thick

7 NPR 9L-7235 3 SHIM .99 mm(.039 in.) thick

8 NPR 4N-9098 1 SPACER 5.08 mm(.20 in.) thick

9 NPR 1P-6453 1 BAR 6.35 mm(.25 in.) thick

10 NPR 9L-3625 1 SPRING .56 mm(.022 in.) thick

11 NPR 8L-8601 6 SPACER .051 mm(.002 in.) thick

12	**NPR**	**9L-3626**	**1**	**SPACER .41 mm(.016 in.) thick**
13	**NPR**	**9L-9347**	**1**	**SHIM .51 mm(.020 in.) thick**

6N599 TORQUE CONTROL GROUP
Part of 6N5735 Governor and Fuel Injection Pump Group shown on Page 64

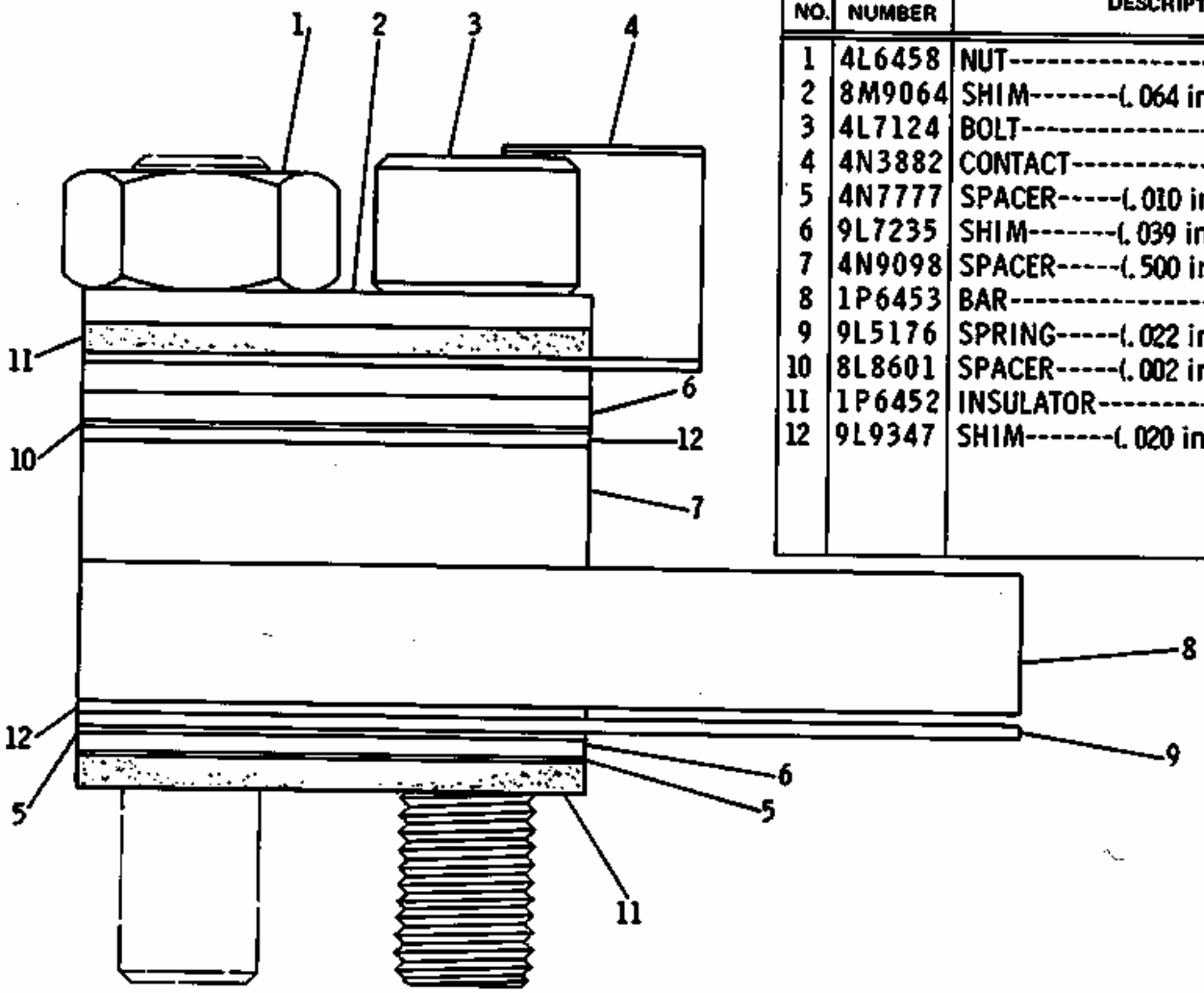

REF. NO.	PART NUMBER	DESCRIPTION	QTY
1	4L6458	NUT	1
2	8M9064	SHIM-------(.064 in. thick)-------	1
3	4L7124	BOLT	1
4	4N3882	CONTACT	1
5	4N7777	SPACER-----(.010 in. thick)------	2
6	9L7235	SHIM-------(.039 in. thick)-------	3
7	4N9098	SPACER-----(.500 in. thick)------	1
8	1P6453	BAR	1
9	9L5176	SPRING-----(.022 in. thick)------	1
10	8L8601	SPACER-----(.002 in. thick)------	6
11	1P6452	INSULATOR	2
12	9L9347	SHIM-------(.020 in. thick)------	2

202488

1 NPR 4L-6458 1 NUT

2 NPR 8M-9064 1 SHIM (.064 in. thick)

3 NPR 4L-7124 1 BOLT

4 NPR 4N-3882 1 CONTACT

5 NPR 4N-7777 2 SPACER (.010 in. thick)

6 NPR 9L-7235 3 SHIM (.039 in. thick)

7 NPR 4N-9098 1 SPACER (.500 in. thick)

8 NPR 1P-6453 1 BAR

9 NPR 9L-5176 1 SPRING (.022 in. thick)

10	**NPR**	**8L-8601**	**6**	**SPACER (.002 in. thick)**
11	**NPR**	**1P-6452**	**2**	**INSULATOR**
12	**NPR**	**9L-9347**	**2**	**SHIM (.020 in. thick)**

6N3609 TORQUE CONTROL GROUP-Engine Serial No. 78P39474-Up
Part of 6N5735 Governor and Fuel Injection Pump Group shown on Page 64A

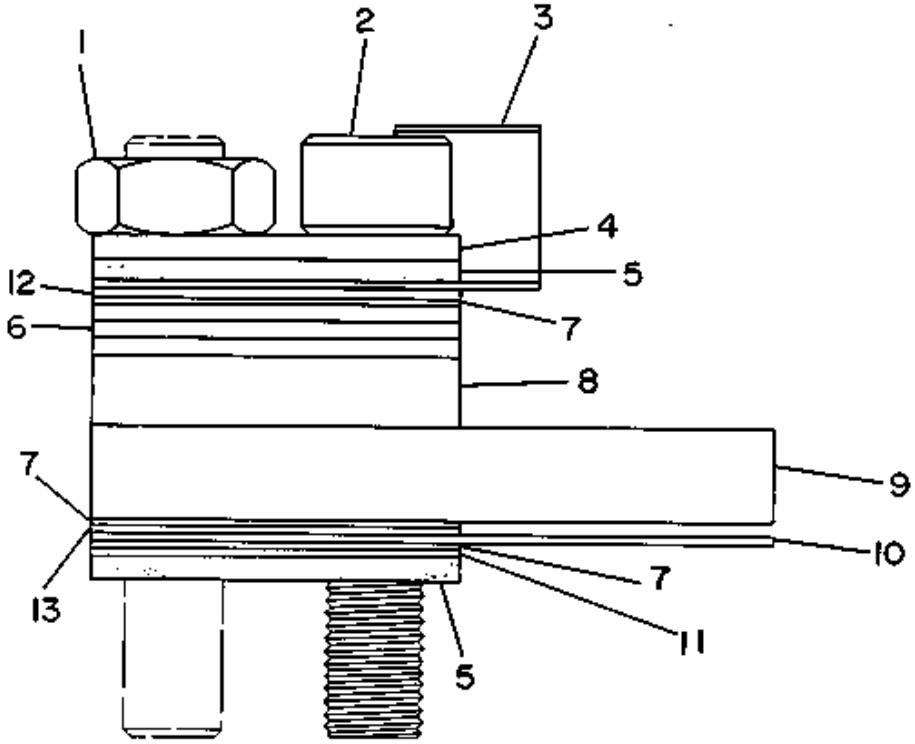

1	NPR	4L-6458	1	NUT-FULL
2	NPR	4L-7124	1	BOLT
3	NPR	4N-3882	1	CONTACT-STOP
4	NPR	8M-9064	1	SHIM-SPRING .064IN(1.626MM)THK
5	NPR	1P-6452	2	INSULATOR
6	NPR	9L-7235	3	SHIM-TORQUE SPRING .039IN(.991MM)THK
7	NPR	4N-7777	3	SPACER .010IN(.2540MM)THK
8	NPR	4N-9098	1	SPACER .500IN(12.7MM)THK
9	NPR	1P-6453	1	BAR-LOAD STOP
10	NPR	9S-9662	1	SPRING-GOVERNOR TORQUE .018IN(.4572MM)THK
11	NPR	8L-8601	6	SPACER .002IN(.0508MM)THK
12	NPR	9L-9347	1	SHIM-TORQUE SPRING .020IN(.5080MM)THK
13	NPR	9L-3626	1	SPACER .016IN(.4064MM)THK

COOLING

SYSTEM

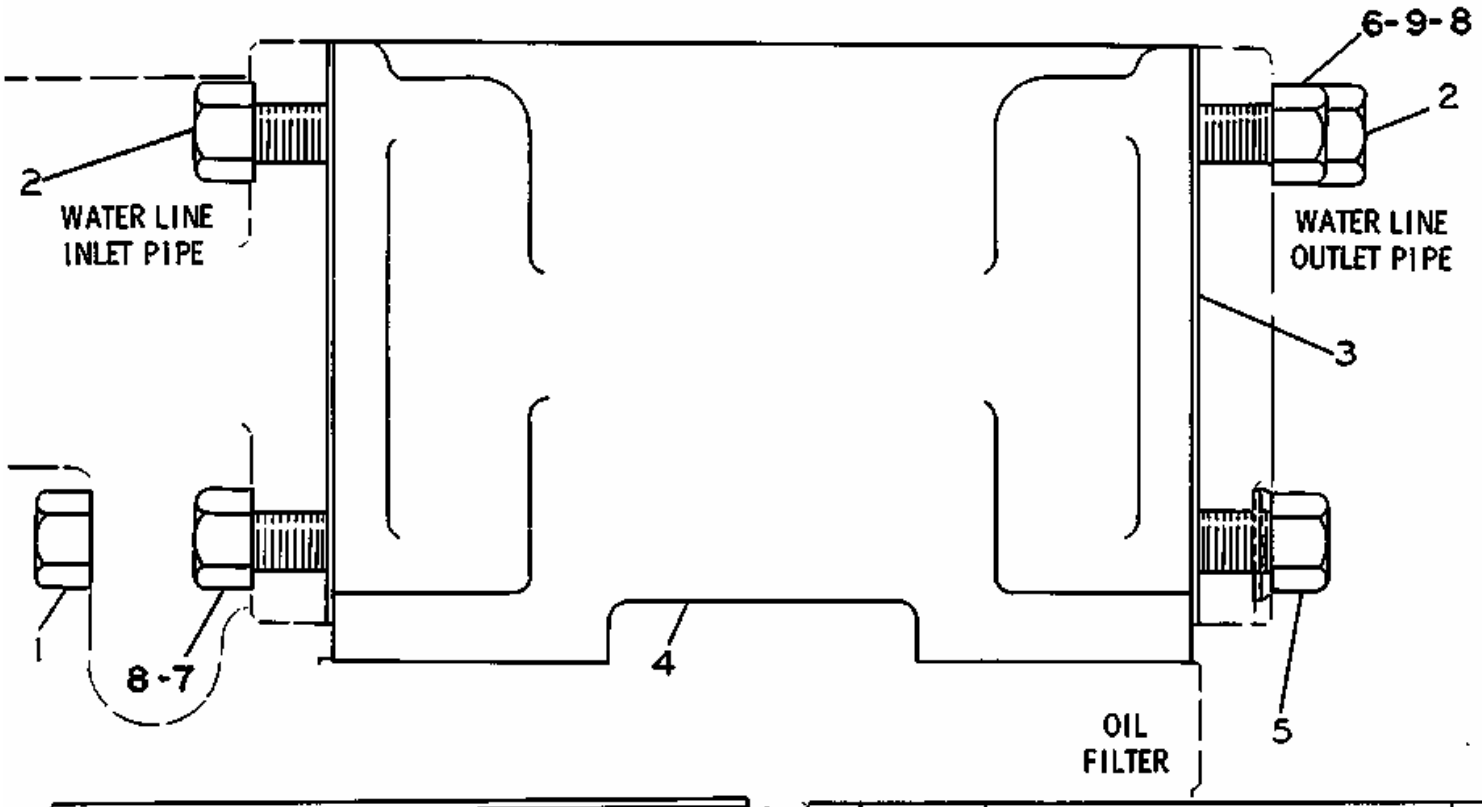

REF. NO.	PART NUMBER	DESCRIPTION	QTY.
1	L2070	BOLT----------	1
2	1A2029	BOLT----------	6
3	5S6051	GASKET----------	2
4	7N165	CORE ASSEM.----------	1
5	2P3202	BOLT---2.85 cm(1.125 in.)long----	1
		- OR -	
	1T765	BOLT------2.54 cm(1 in.)long-----	1
C▲	6 T573	BOLT----------	1
C▲	7 S1591	BOLT----------	1
C▲	8 5M2894	WASHER----------	2
C▲	9 3B1915	BOLT----------	1

C INDICATES CHANGE

▲ USE AS REQUIRED

234137

1 NPR 0L-2070 1 BOLT

2 NPR 1A-2029 6 BOLT

3 NPR 5S-6051 2 GASKET

4 NPR CLR 7N-0165 1 CORE ASSEM.

R NPR 0R-3499 1 CORE AS-OIL CLR

CL NPR 295-5670 1 CORE AS-CLA

5 NPR 2P-3202 1 BOLT 2.85 cm(1.125 in.)long

- OR -

NPR 1T-0765 1 BOLT 2.54 cm(1 in.)long

6 NPR CB 0T-0573 1 BOLT

7 NPR CB 0S-1591 1 BOLT

8 NPR CB 5M-2894 2 WASHER

9 NPR CB 3B-1915 1 BOLT

Key:

CL - Classic Part Available
C - INDICATES CHANGE
R - REMFG PART MAY BE AVAILABLE
B - USE AS REQUIRED

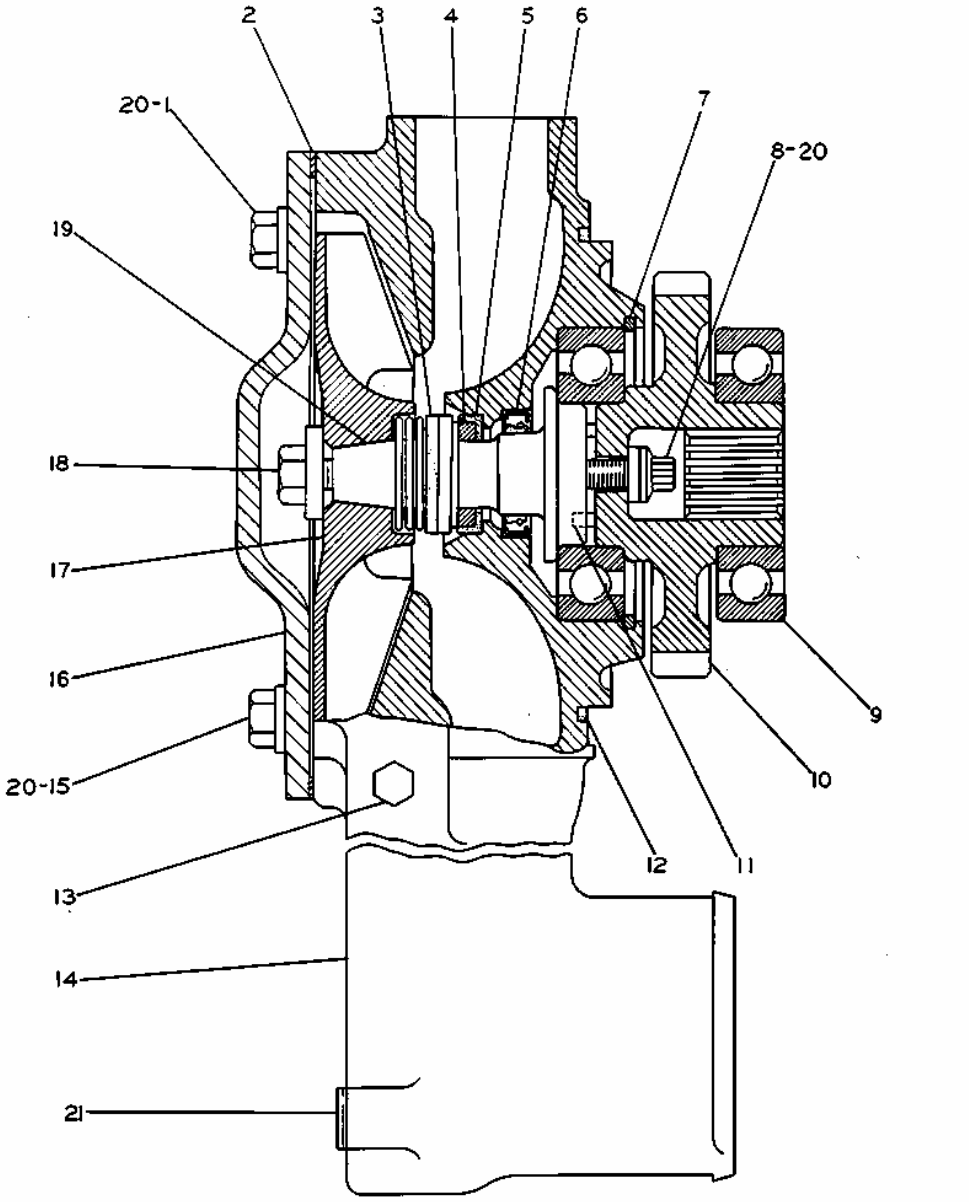

REF. NO.	PART NUMBER	DESCRIPTION	QTY.
1	L1351	BOLT	2
2	8N5928	GASKET	1
3	4N6556	SEAL ASSEM.	1
4	8S7762	RING	1
5	8S8821	SEAL	1
6	8H9520	SEAL	1
▲ 7	1K6985	RING	1
▲ 8	5P76	BOLT	1
▲ 9	6H3957	BEARING	2
10	7N5189	GEAR ASSEM. ---(40 teeth)--- (Includes)	1
11	2L5893	PIN	2
12	5F3106	SEAL	1
13	5M6213	PLUG	1
14	7N6198	HOUSING	1
15	T55	BOLT	2
16	8N5929	COVER	1
▲ 17	7N5910	IMPELLER	1
▲ 18	4L6454	BOLT	1
▲ 18	9M6527	WASHER	1
▲ 19	7N5899	SHAFT	1
▲ 20	5M2894	WASHER	5
21	1B5174	PLUG	1
	7N9954	REBUILD KIT (Includes part marked ▲)	1

225410

1 NPR 0L-1351 2 BOLT

2 NPR 8N-5928 1 GASKET

3 NPR 4N-6556 1 SEAL ASSEM.

4 NPR 8S-7762 1 RING

5 NPR 8S-8821 1 SEAL

6 NPR 8H-9520 1 SEAL

7 NPR H 1K-6985 1 RING

8 NPR H 5P-0076 1 BOLT

9 NPR H 6H-3957 2 BEARING

10 NPR 7N-5189 1 GEAR ASSEM. (40 teeth)

(Includes)

11 NPR 2L-5893 2 PIN

12 NPR 5F-3106 1 SEAL

13 NPR 5M-6213 1 PLUG

14 NPR 7N-6198 1 HOUSING

15 NPR 0T-0055 2 BOLT

16 NPR CL 8N-5929 1 COVER

CL NPR 296-1349 1 COVER-CLA

17 NPR H 7N-5910 1 IMPELLER

18 NPR H 4L-6454 1 BOLT

NPR H 9M-6527 1 WASHER

19 NPR H 7N-5899 1 SHAFT

20 NPR H 5M-2894 5 WASHER

21 NPR 1B-5174 1 PLUG

NPR 7N-9954 1 REBUILD KIT

(Includes part marked h)

Key: CL - Classic Part Available

120G MOTOR GRADERS 3304 ENGINE
1W3061 WATER PUMP GROUP--ENGINE SERIAL NO. 7Z2159 TO 7Z3028 INCLUSIVE-PART OF 7N6206 WATER PUMP

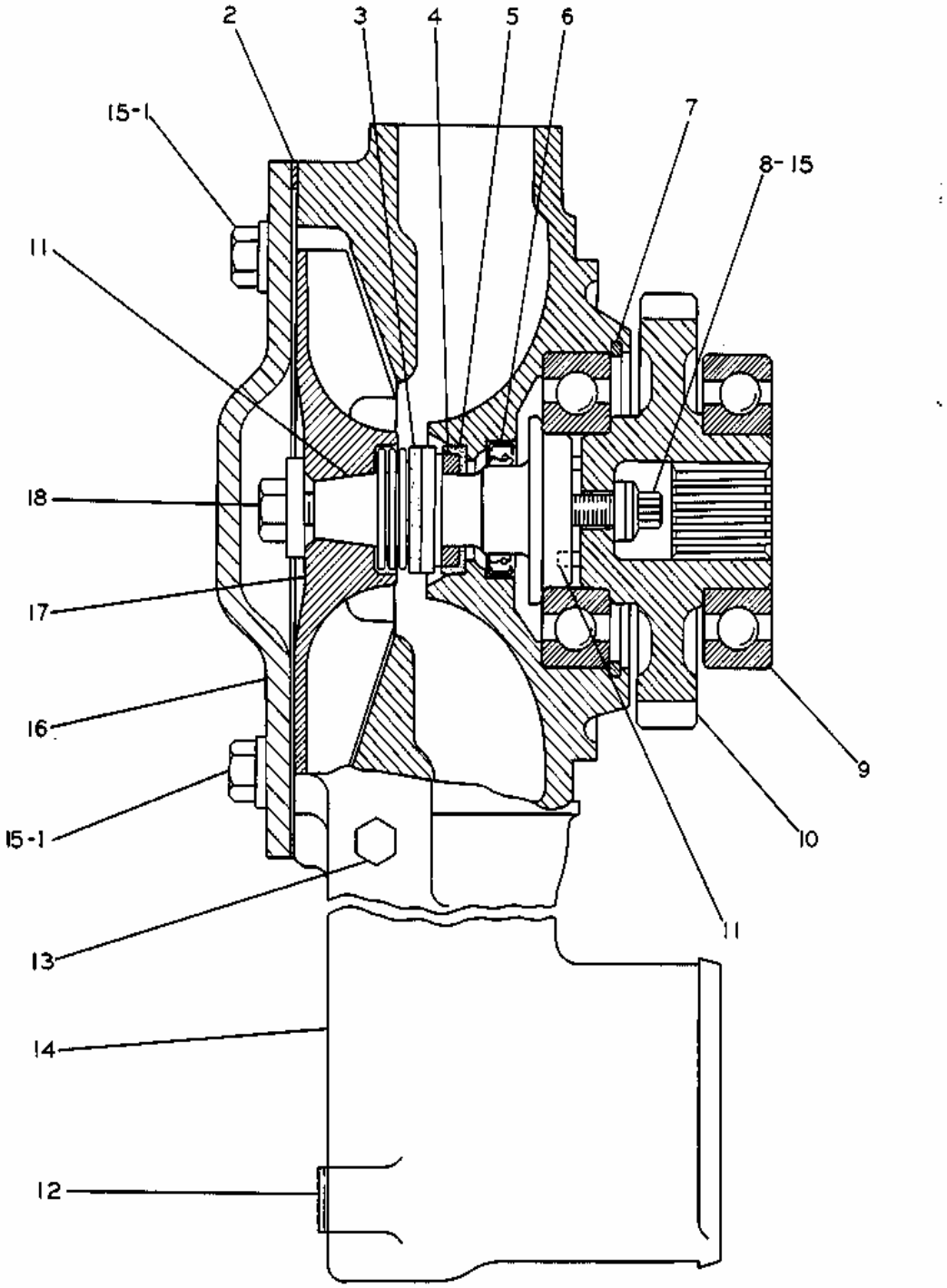

NOTE	REF NO	PART NUMBER	QTY	DESCRIPTION
	1	L1351	2	BOLT
	2	8N5928	1	GASKET
	3	6N9312	1	SEAL ASSEM.
	4	8S7762	1	RING
	5	8S8821	1	SEAL
	6	6V3988	1	SEAL
J	7	1K6985	1	RING
J	8	5P76	1	BOLT
J	9	6H3957	2	BEARING
	10	7N5186	1	GEAR ASSEM. (40 TEETH)
J	11	7N5899	1	SHAFT
	12	1B5174	1	PLUG
	13	5M6213	1	PLUG
	14	7N6198	1	HOUSING
J	15	5M2894	3	WASHER
	16	8N5929	1	COVER
	17	7N5910	1	IMPELLER
J	18	4L6454	1	BOLT
		9M6527	1	WASHER
		1W7052	1	REBUILD KIT (INCLUDES PARTS MARKED J)

308857

1	NPR	0L-1351	2	BOLT
2	NPR	8N-5928	1	GASKET
3	NPR	6N-9312	1	SEAL ASSEM.
4	NPR	8S-7762	1	RING
5	NPR	8S-8821	1	SEAL
6	NPR	6V-3988	1	SEAL
7	NPR J	1K-6985	1	RING
8	NPR J	5P-0076	1	BOLT
9	NPR J	6H-3957	2	BEARING
10	NPR	7N-5186	1	GEAR ASSEM. (40 TEETH)
11	NPR J	7N-5899	1	SHAFT
12	NPR	1B-5174	1	PLUG
13	NPR	5M-6213	1	PLUG
14	NPR	7N-6198	1	HOUSING
15	NPR J	5M-2894	3	WASHER
16	NPR CL	8N-5929	1	COVER
CL	NPR	296-1349	1	COVER-CLA
17	NPR	7N-5910	1	IMPELLER
18	NPR J	4L-6454	1	BOLT
	NPR	9M-6527	1	WASHER
	NPR	1W-7052	1	REBUILT KIT

(INCLUDES PARTS MARKED J)

Key: CL - Classic Part Available

120G MOTOR GRADERS 3304 ENGINE
1W6601 PUMP GP-WATER--ENGINE S/N 7Z3029-6736--PART OF 7N6206 PUMP-WATER

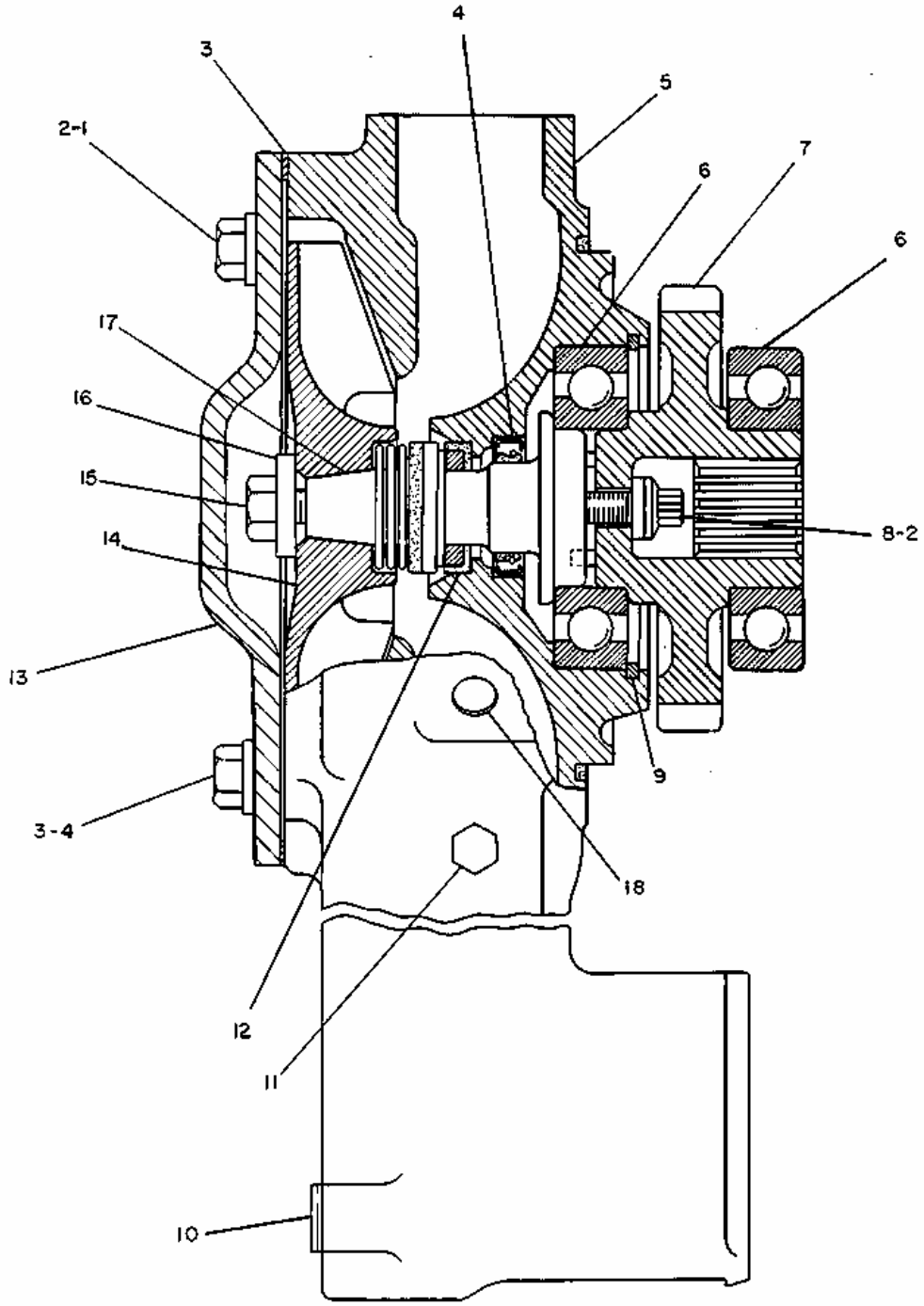

NOTE	REF NO	PART NUMBER	QTY	PART NAME
	1	0L1351	2	BOLT
	2	5M2894	3	WASHER
J	3	8N5928	1	GASKET
C	4	8C5210	1	SEAL-LIP TYPE
	5	1W6558	1	HOUSING-PUMP
J	6	6H3957	2	BEARING-BALL
C	7	2W7678	1	GEAR AS (40 TEETH)
J	8	5P0076	1	BOLT-12 POINT HEAD
J	9	1K6985	1	RING-RETAINING
	10	1B5174	1	PLUG-PIPE
	11	5M6213	1	PLUG
C	12	4W3864	1	SEAL GP
	13	8N5929	1	COVER-WATER PUMP
	14	7N5910	1	IMPELLER-PUMP
J	15	4L6454	1	BOLT
J	16	9M6527	1	WASHER-HARD
J	17	7N5899	1	SHAFT-WATER PUMP
C	18	4N5834	1	FILTER
				THE FOLLOWING REPAIR KIT IS AVAILABLE:
C		1W7052	1	KIT-REBUILD (INCL PARTS MARKED J)

C-INDICATES CHANGE

411205

1 NPR 0L-1351 2 BOLT

2 NPR 5M-2894 3 WASHER

3 NPR J 8N-5928 1 GASKET

4 NPR C 8C-5210 1 SEAL-LIP TYPE

5 NPR 1W-6558 1 HOUSING-PUMP

6 NPR J 6H-3957 2 BALL BEARING

7 NPR C 2W-7678 1 GEAR AS (40 TEETH)

8 NPR J 5P-0076 1 BOLT-12 POINT HEAD

9 NPR J 1K-6985 1 RING-RETAINING

10 NPR 1B-5174 1 PLUG-PIPE

11 NPR 5M-6213 1 PLUG

12 NPR C 4W-3864 1 SEAL GP

13 NPR CL 8N-5929 1 COVER-WATER PUMP

CL NPR 296-1349 1 COVER-CLA

14 NPR 7N-5910 1 IMPELLER-PUMP

15 NPR J 4L-6454 1 BOLT

16 NPR J 9M-6527 1 WASHER-HARD

17 NPR J 7N-5899 1 SHAFT-WATER PUMP

18 NPR C 4N-5834 1 FILTER

THE FOLLOWING REPAIR KIT IS AVAILABLE:

NPR C 1W-7052 1 KIT-REBUILD

(INCL PARTS MARKED J)

Key: CL - Classic Part Available C - CHANGE FROM PREVIOUS TYPE

120G MOTOR GRADERS 3304 ENGINE--2W8003 PUMP GP-WATER*R
ENGINE S/N 7Z6737-16623--PART OF 7N6206 PUMP-WATER

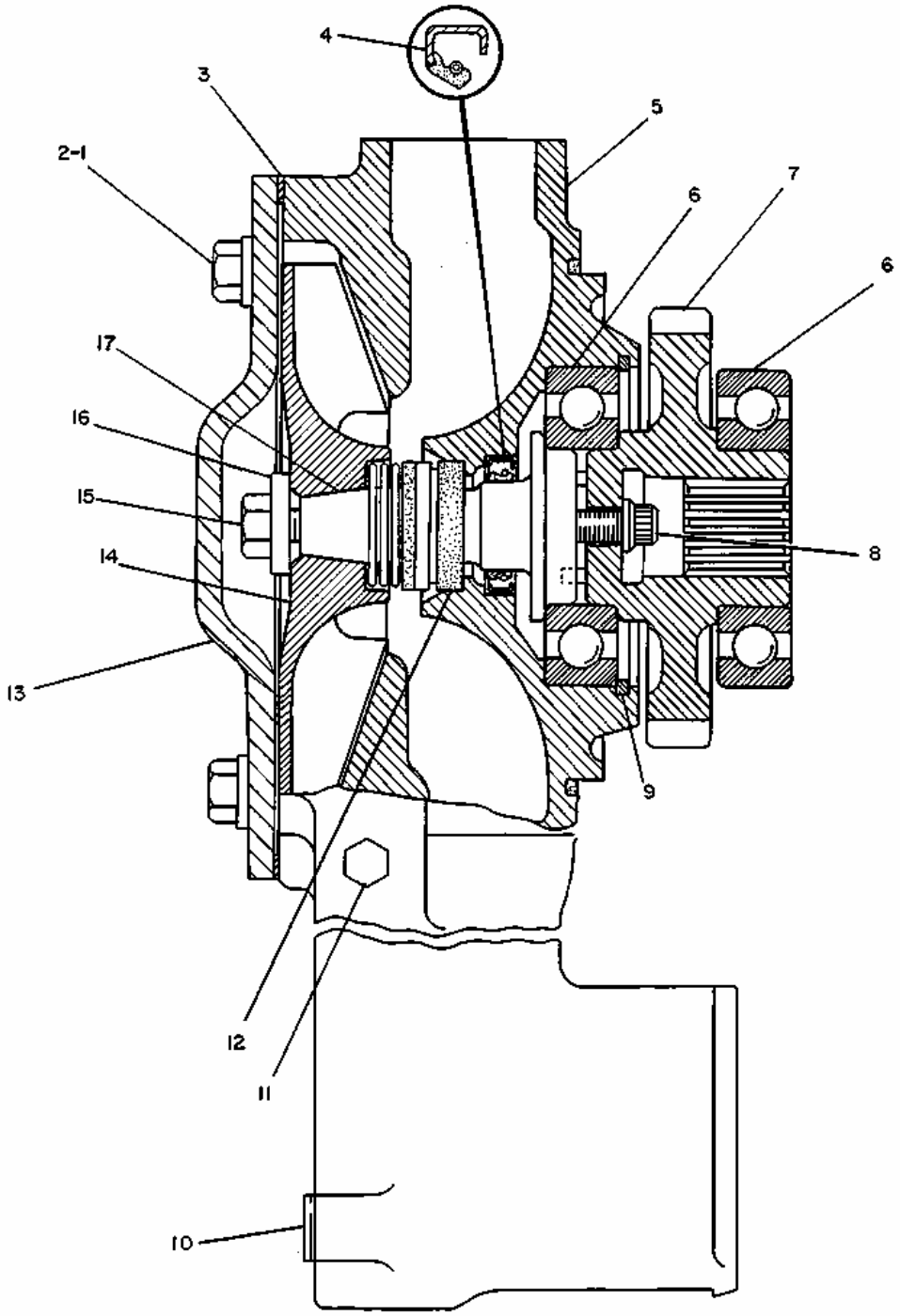

NOTE	REF NO	PART NUMBER	QTY	DESCRIPTION
	1	0L1351	2	BOLT
	2	5M2894	2	WASHER
	3	8N5928	1	GASKET
C	4	8T5919	1	SEAL
	5	1W6558	1	HOUSING
J	6	6H3957	2	BEARING
	7	2W7678	1	GEAR AS. (40 TEETH)
	8	6K3771	1	BOLT
J	9	1K6985	1	RING
	10	1B5174	1	PLUG
	11	5M6213	1	PLUG
C	12	4W3864	1	SEAL GP.
	13	8N5929	1	COVER
	14	7N5910	1	IMPELLER
J	15	4L6454	1	BOLT
J	16	9M6527	1	WASHER
J	17	2W7255	1	SHAFT
				THE FOLLOWING REPAIR KIT IS AVAILABLE:
		6V9928	1	KIT (REBUILD) (INCL. PARTS MARKED J)

C INDICATES CHANGE

338423

1	NPR	0L-1351	2	BOLT
2	NPR	5M-2894	2	WASHER
3	NPR	8N-5928	1	GASKET
4	NPR C	8T-5919	1	SEAL
5	NPR	1W-6558	1	HOUSING
6	NPR J	6H-3957	2	BEARING
7	NPR	2W-7678	1	GEAR AS. (40 TEETH)
8	NPR	6K-3771	1	BOLT
9	NPR J	1K-6985	1	RING
10	NPR	1B-5174	1	PLUG
11	NPR	5M-6213	1	PLUG
12	NPR C	4W-3864	1	SEAL GP.
13	NPR CL	8N-5929	1	COVER
CL	NPR	296-1349	1	COVER-CLA
14	NPR	7N-5910	1	IMPELLER
15	NPR J	4L-6454	1	BOLT
16	NPR J	9M-6527	1	WASHER
17	NPR J	2W-7255	1	SHAFT

THE FOLLOWING REPAIR KIT IS AVAILABLE:

NPR 6V-9928 1 KIT (REBUILD)

(INCL. PARTS MARKED J)

Key: CL - Classic Part Available C - INDICATES CHANGE

2W8003 PUMP GP-WATER*R-ENGINE S/N 7Z16624-UP-PART OF 7N6206 PUMP-WATER

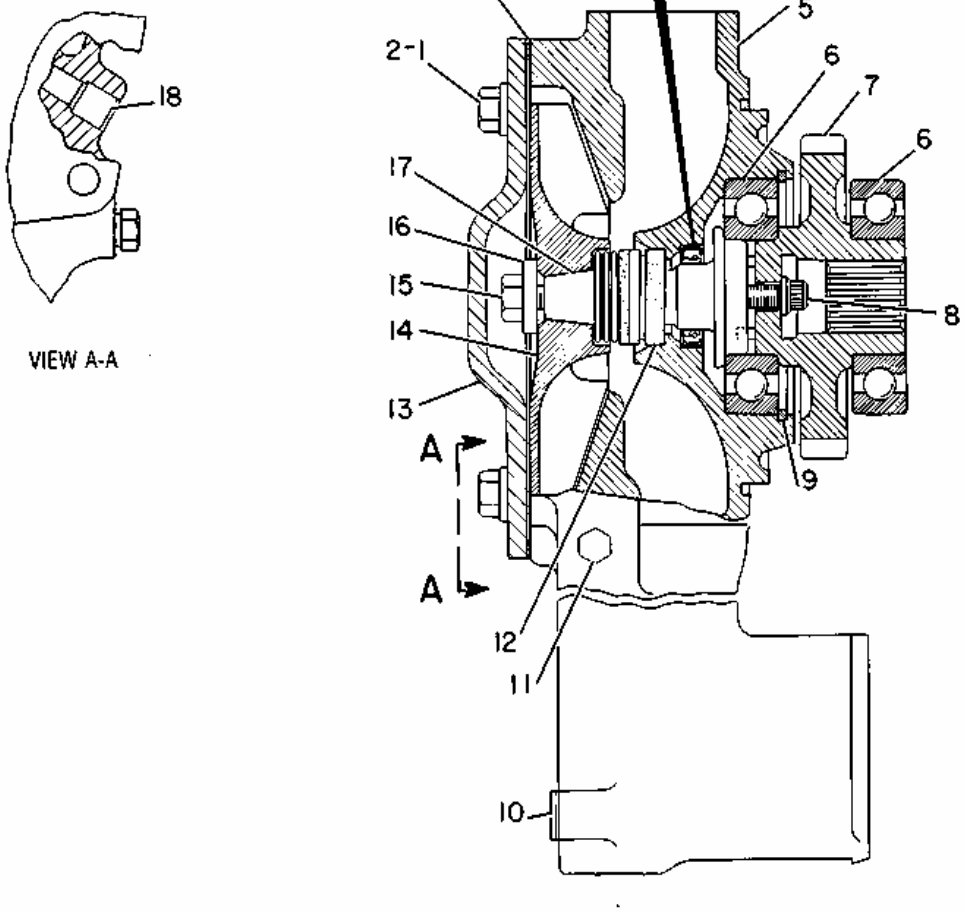

1 NPR 0L-1351 2 BOLT

2 NPR 5M-2894 2 WASHER

3 NPR 8N-5928 1 GASKET

4 NPR 8T-5919 1 SEAL-LIP TYPE

5 NPR 1W-6558 1 HOUSING-PUMP

6 NPR J 6H-3957 2 BALL BEARING

7 NPR 2W-7678 1 GEAR AS

8 NPR 6K-3771 1 BOLT-12 POINT HEAD

9 NPR J 1K-6985 1 RING-RETAINING

10 NPR 1B-5174 1 PLUG-PIPE

11 NPR 5M-6213 1 PLUG

12 NPR 4W-3864 1 SEAL GP

13 NPR CL 8N-5929 1 COVER-WATER PUMP

CL NPR 296-1349 1 COVER-CLA

14 NPR 7N-5910 1 IMPELLER-PUMP

15 NPR J 4L-6454 1 BOLT

16 NPR J 9M-6527 1 WASHER-HARD

17 NPR J 2W-7255 1 SHAFT-WATER PUMP

18 NPR C 4N-5834 1 FILTER

THE FOLLOWING REPAIR

KIT IS AVAILABLE:

NPR 6V-9928 1 KIT-WATER PUMP (REBUILD)

(INCL PARTS MARKED J)

Key:

CL - Classic Part Available
C - CHANGE FROM PREVIOUS TYPE

2P6215 ENGINE OIL COOLER GROUP-ENGINE SERIAL NO. 7Z1 TO 7Z9339 INCLUSIVE
REFER TO PAGE 40B.02 FOR COOLER

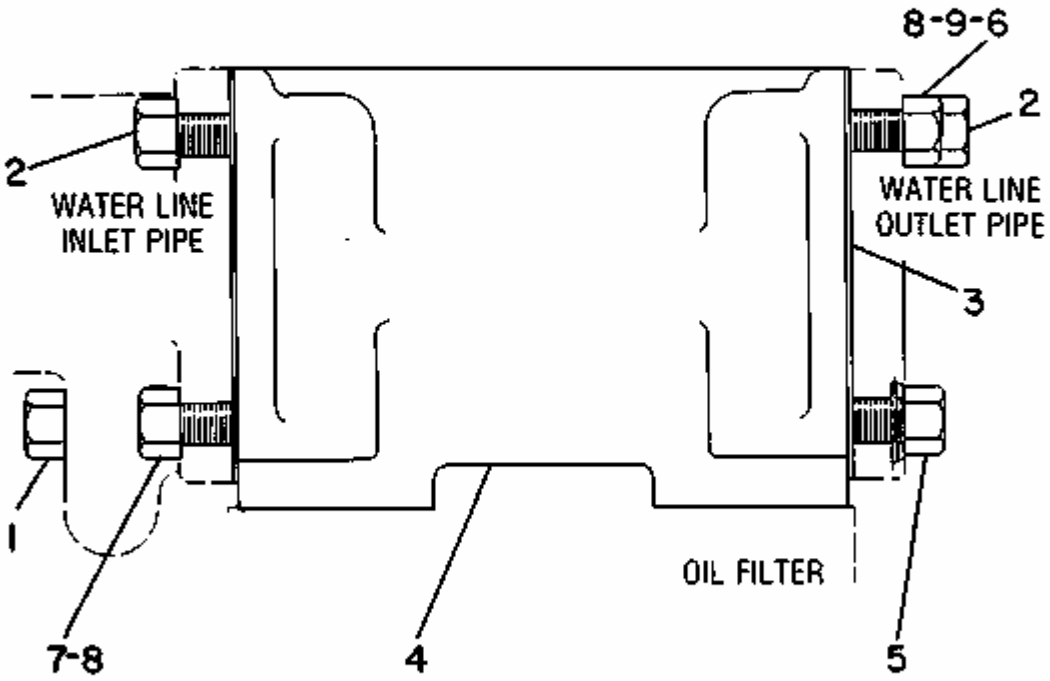

1 NPR 0L-2070 1 BOLT
2 NPR C 1A-2029 8 BOLT
3 NPR 5S-6051 2 GASKET
4 NPR CLR 7N-0165 1 CORE AS-OIL COOLER
R NPR 0R-3499 1 CORE AS-OIL CLR
CL NPR 295-5670 1 CORE AS-CLA
5 NPR 2P-3202 1 BOLT-WASHER HEAD 2.85CM(1.125IN)LONG
-OR-
NPR 1T-0765 1 BOLT 2.54CM(1IN)LONG
6 NPR BC 0S-1619 1 BOLT
7 NPR BC 0S-1591 1 BOLT
8 NPR BC 5M-2894 2 WASHER
9 NPR BC 3B-1915 1 BOLT

Key: CL - Classic Part Available B - USE AS REQUIRED C - CHANGE FROM PREVIOUS TYPE
R - REMFG PART MAY BE AVAILABLE

2W5636 COOLER GP-FILTER BASE & ENGINE OIL-ENGINE S/N 7Z9340-UP
2W2660-PAGE 40B.02

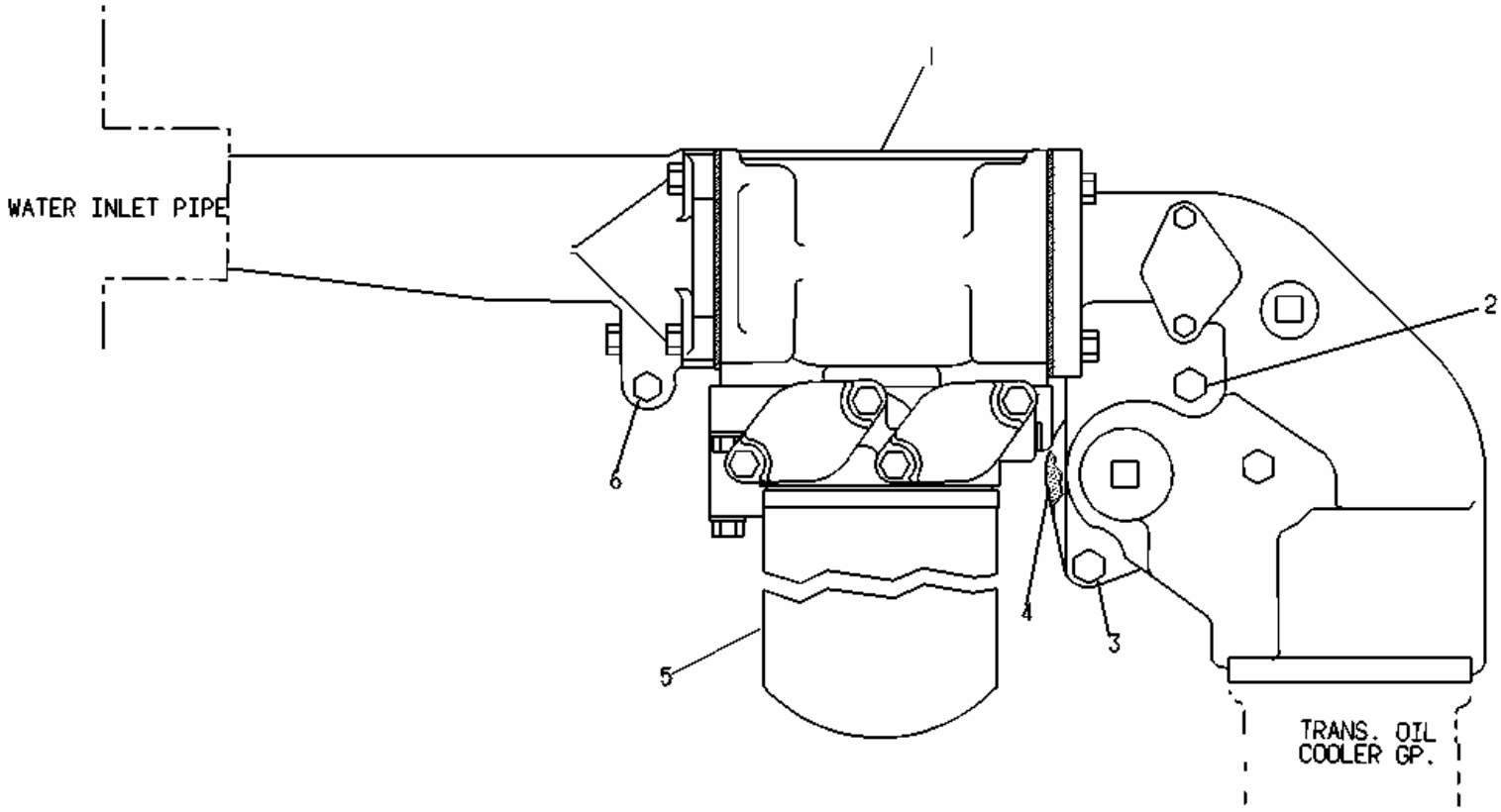

1	NPR Y	2W-2660	1	COOLER GP-FLTR BASE & ENG OIL
2	NPR	0L-1352	1	BOLT
3	NPR	0S-1591	1	BOLT
4	NPR	2W-4561	1	GASKET
5	NPR C	2P-4004	1	FILTER AS-OIL
6	NPR C	3B-1915	1	BOLT
	NPR C	5M-2894	1	WASHER

Key: C - CHANGE FROM PREVIOUS TYPE Y - SEPARATE ILLUSTRATION

2W2660 COOLER GP-FILTER BASE & ENGINE OIL-ENGINE S/N 7Z9340-17666
8N4457-PAGE 40A-PART OF 2W5636 COOLER-FILTER BASE & ENGINE OIL

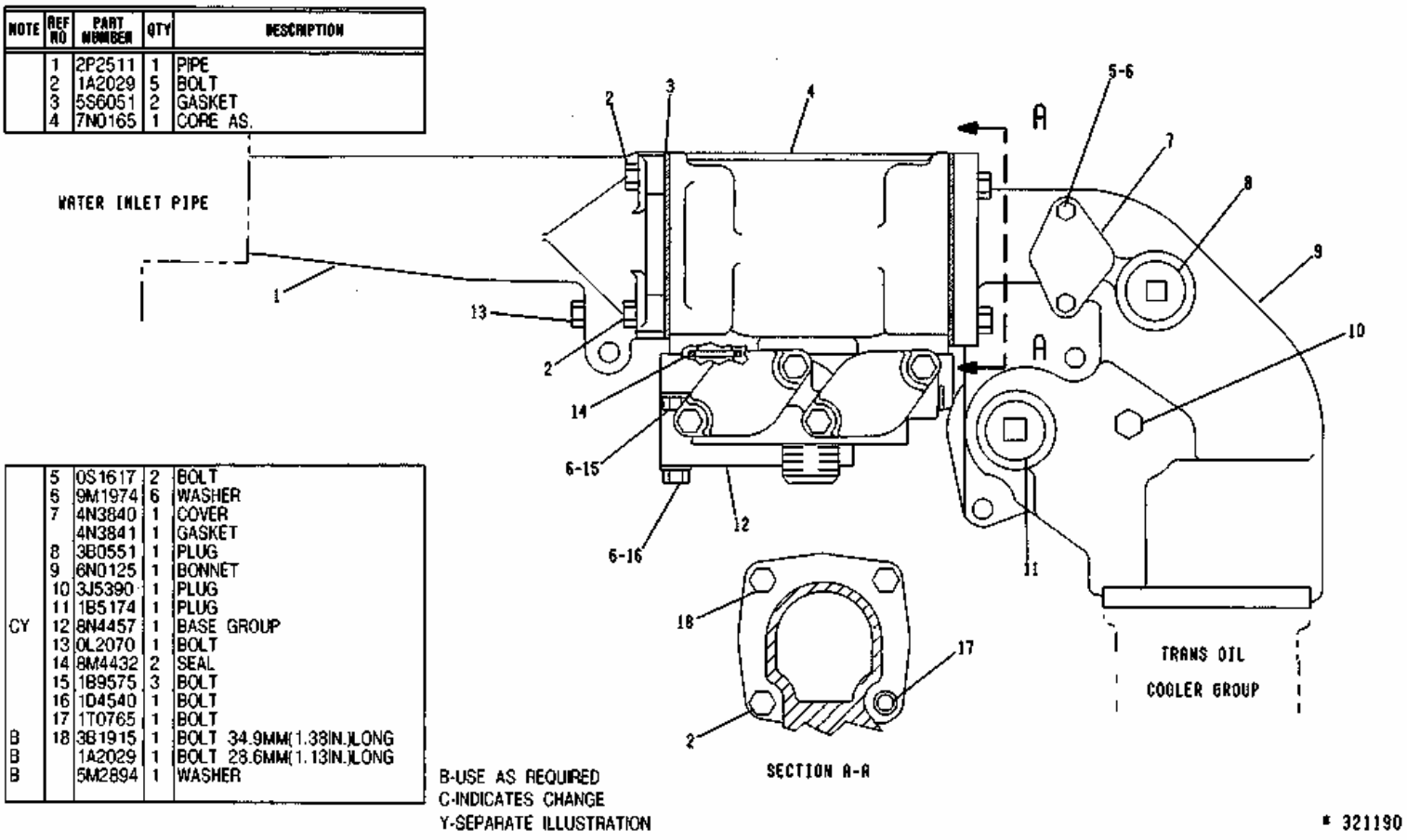

NOTE	REF NO	PART NUMBER	QTY	DESCRIPTION
	1	2P2511	1	PIPE
	2	1A2029	5	BOLT
	3	5S6051	2	GASKET
	4	7N0165	1	CORE AS.
	5	0S1617	2	BOLT
	6	9M1974	6	WASHER
	7	4N3840	1	COVER
		4N3841	1	GASKET
	8	3B0551	1	PLUG
	9	6N0125	1	BONNET
	10	3J5390	1	PLUG
	11	1B5174	1	PLUG
CY	12	8N4457	1	BASE GROUP
	13	0L2070	1	BOLT
	14	8M4432	2	SEAL
	15	1B9575	3	BOLT
	16	1D4540	1	BOLT
	17	1T0765	1	BOLT
B	18	3B1915	1	BOLT 34.9MM(1.38IN.)LONG
B		1A2029	1	BOLT 28.6MM(1.13IN.)LONG
B		5M2894	1	WASHER

1 NPR 2P-2511 1 PIPE

2 NPR 1A-2029 5 BOLT

3 NPR 5S-6051 2 GASKET

4 NPR CLR 7N-0165 1 CORE AS.

R NPR 0R-3499 1 CORE AS-OIL CLR

CL NPR 295-5670 1 CORE AS-CLA

5 NPR 0S-1617 2 BOLT

6 NPR 9M-1974 6 WASHER

7 NPR 4N-3840 1 COVER

NPR 4N-3841 1 GASKET

8 NPR 3B-0551 1 PLUG

9 NPR 6N-0125 1 BONNET

10 NPR 3J-5390 1 PLUG

11 NPR 1B-5174 1 PLUG

12 NPR CY 8N-4457 1 BASE GROUP

13 NPR 0L-2070 1 BOLT

14 NPR 8M-4432 2 SEAL

15 NPR 1B-9575 3 BOLT

16 NPR 1D-4540 1 BOLT

17 NPR 1T-0765 1 BOLT

18 NPR B 3B-1915 1 BOLT 34.9MM(1.38IN.)LONG

NPR B 1A-2029 1 BOLT 28.6MM(1.13IN.)LONG

NPR B 5M-2894 1 WASHER

Key: CL - Classic Part Available R - REMFG PART MAY BE AVAILABLE Y - SEPARATE ILLUSTRATION
B - USE AS REQUIRED
C - INDICATES CHANGE

2W2660 COOLER GP-FILTER BASE & ENGINE OIL--ENGINE S/N 7Z17667-UP
8N4457-PAGE 40A--PART OF 2W5636 COOLER-FILTER BASE & ENGINE OIL

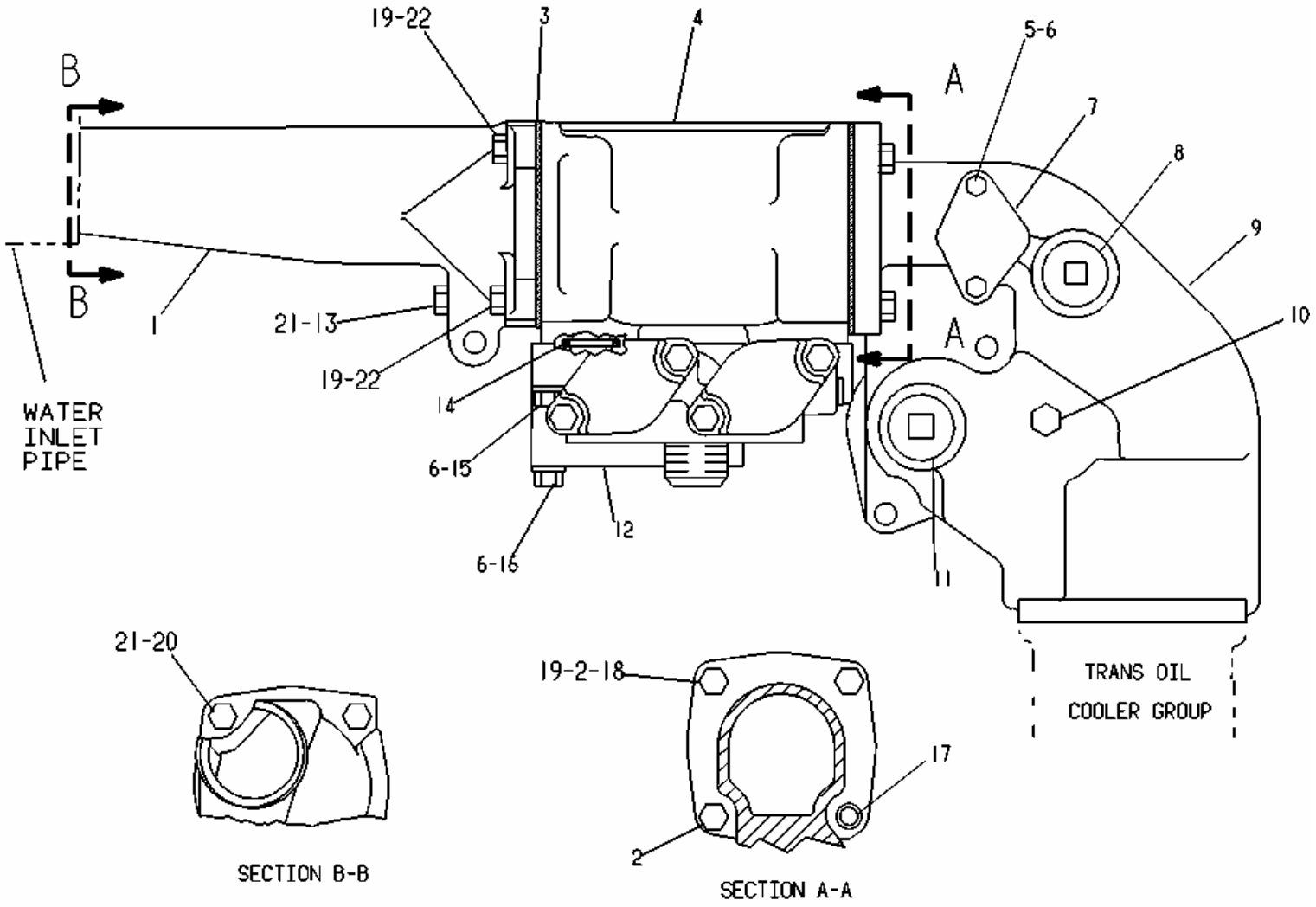

1 NPR C 2W-5240 1 PIPE-PUMP OUTLET

2 NPR 1A-2029 3 BOLT 28.6MM(1.127IN)LG

3 NPR 5S-6051 2 GASKET

4 NPR CLR 7N-0165 1 CORE AS-OIL COOLER

R NPR 0R-3499 1 CORE AS-OIL CLR

CL NPR 295-5670 1 CORE AS-CLA

5 NPR 0S-1617 2 BOLT

6 NPR 9M-1974 6 WASHER

7 NPR 4N-3840 1 COVER

	NPR	4N-3841	1	GASKET
8	NPR	3B-0551	1	PLUG-PIPE
9	NPR	6N-0125	1	BONNET-TC OIL COOLER
10	NPR	3J-5390	1	PLUG
11	NPR	1B-5174	1	PLUG-PIPE
12	NPR Y	8N-4457	1	BASE GP-OIL FILTER
13	NPR	0L-2070	1	BOLT
14	NPR	8M-4432	2	SEAL-O-RING
15	NPR	1B-9575	3	BOLT
16	NPR	1D-4540	1	BOLT
17	NPR	1T-0765	1	BOLT (12 PT HEAD)
18	NPR B	3B-1915	1	BOLT 34.9MM(1.375IN)LG
19	NPR CB	5M-2894	3	WASHER
20	NPR C	0S-1588	1	BOLT
21	NPR C	5M-2894	2	WASHER
22	NPR CB	0S-1588	2	BOLT

Key: CL - Classic Part Available B - USE AS REQUIRED C - CHANGE FROM PREVIOUS TYPE
R - REMFG PART MAY BE AVAILABLE
Y - SEPARATE ILLUSTRATION

1P9570 BLOWER FAN GROUP

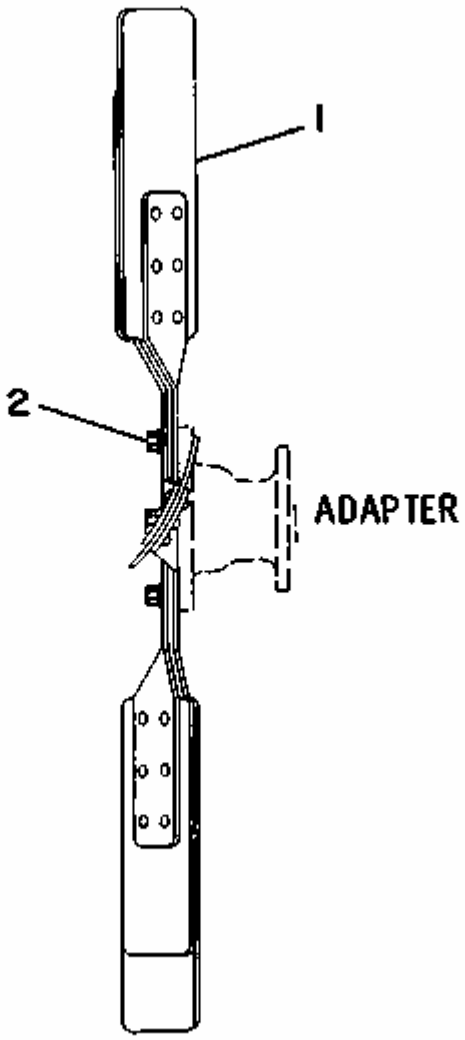

1	NPR	2P-8907	1	SPIDER ASSEM.
2	NPR	0S-1588	6	BOLT
	NPR	5M-2894	6	WASHER

6G1070 SUPPORT GP-ALTERNATOR & FAN

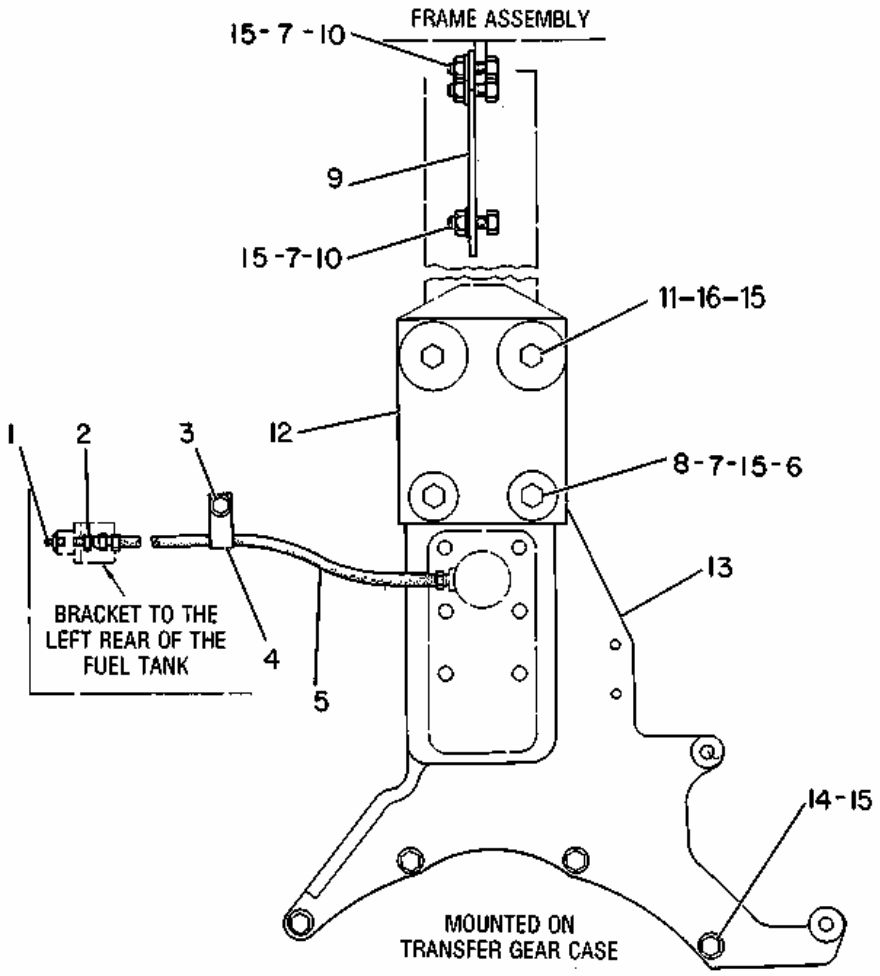

1	NPR	3B-8489	1	FITTING-GREASE
2	NPR	2R-1922	1	CONNECTOR
3	NPR	5M-3062	1	BOLT
	NPR	5P-1075	1	WASHER-HARD
4	NPR	4D-8123	1	CLIP
5	NPR	5K-7577	1	HOSE AS
6	NPR	2S-1654	2	WASHER 44.5MM(1.75IN)OD
7	NPR	1D-4719	5	NUT

8 NPR C 0S-1587 2 BOLT

9 NPR 2G-3199 1 PLATE

10 NPR C 7B-3235 3 BOLT

11 NPR 9S-1366 2 BOLT

NPR 1B-4287 2 WASHER 58.74MM(2.31IN)OD

NPR 9M-1853 2 MOUNTING

12 NPR 2G-3223 1 PLATE

13 NPR C 6G-6268 1 BRACKET

14 NPR C 1A-1460 4 BOLT

15 NPR C 5P-8245 11 WASHER 25.5MM(1IN)OD

16 NPR 1K-6872 2 LOCKNUT

Key:

C - CHANGE FROM PREVIOUS TYPE

8N4112 LINES GP-WATER--BYPASS & OUTLET ELBOW-PART OF 7N7211 LINES-WATER

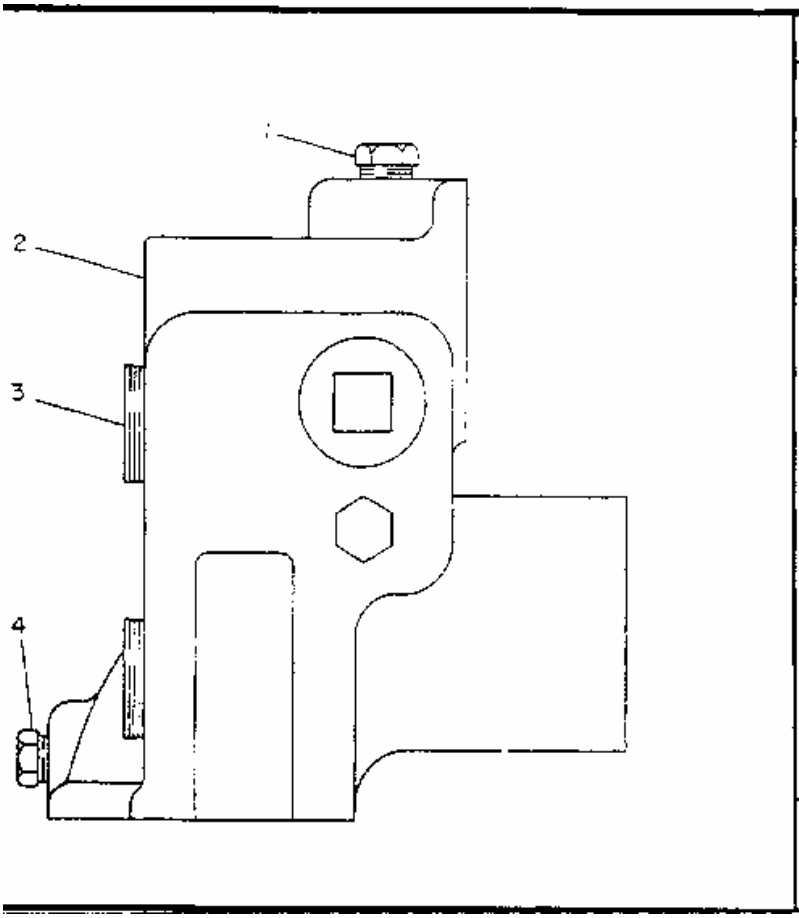

NOTE	REF NO	PART NUMBER	QTY	PART NAME
B	1	3J5390	1	PLUG
	2	7N0172	1	ELBOW
B	3	1B5174	3	PLUG-PIPE
B	4	5M6213	2	PLUG

B-USE AS REQUIRED

B-313095 EP

1 NPR B 3J-5390 1 PLUG

2 NPR 7N-0172 1 ELBOW

3 NPR B 1B-5174 3 PLUG-PIPE

4 NPR B 5M-6213 2 PLUG

Key:

B - USE AS REQUIRED

7N7211 LINES GP-WATER--ENGINE S/N 7Z1-3336-8N4112-PAGE 39.02

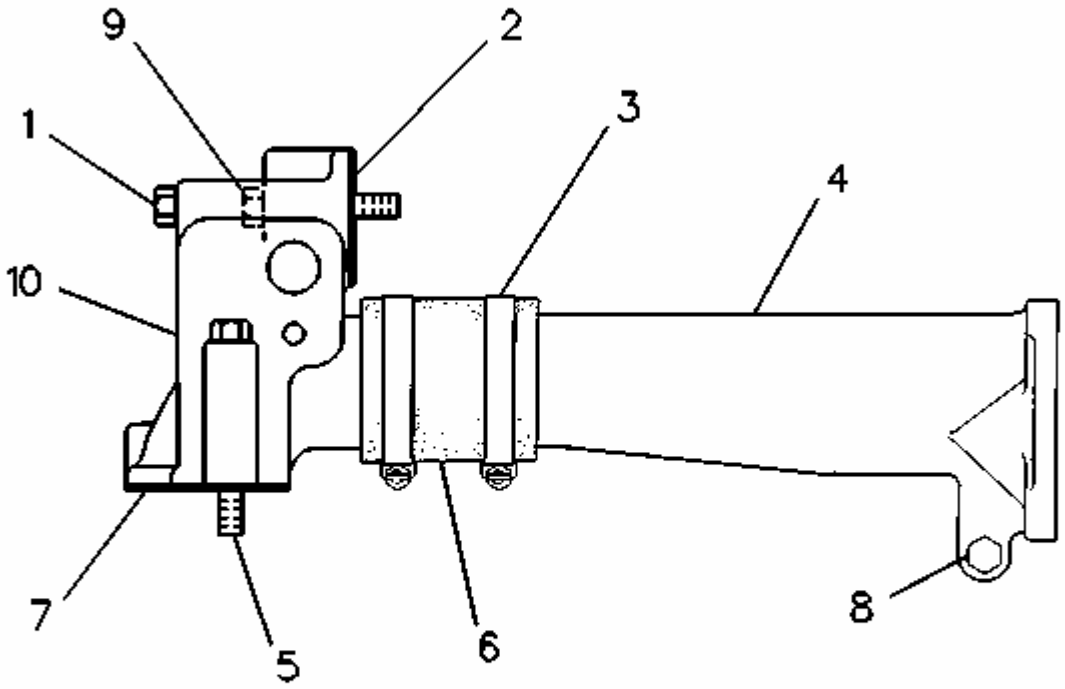

1	NPR	0T-0065	1	BOLT
2	NPR	2P-6132	1	GASKET-ELBOW
3	NPR	5P-4868	2	CLAMP
4	NPR	2P-2511	1	PIPE-PUMP OUTLET
5	NPR	0S-1619	2	BOLT
6	NPR E	5P-1260		HOSE 7.62CM(3IN)
7	NPR	7N-0200	1	GASKET
8	NPR	0S-1588	1	BOLT
9	NPR	0S-1590	1	BOLT
10	NPR Y	8N-4112	1	LINES GP-WATER

Key: E - ORDER BY THE CENTIMETER Y - SEPARATE ILLUSTRATION

1N4219 WATER LINES GROUP--ENGINE SERIAL NO. 7Z3337 TO 7Z9339 INCLUSIVE

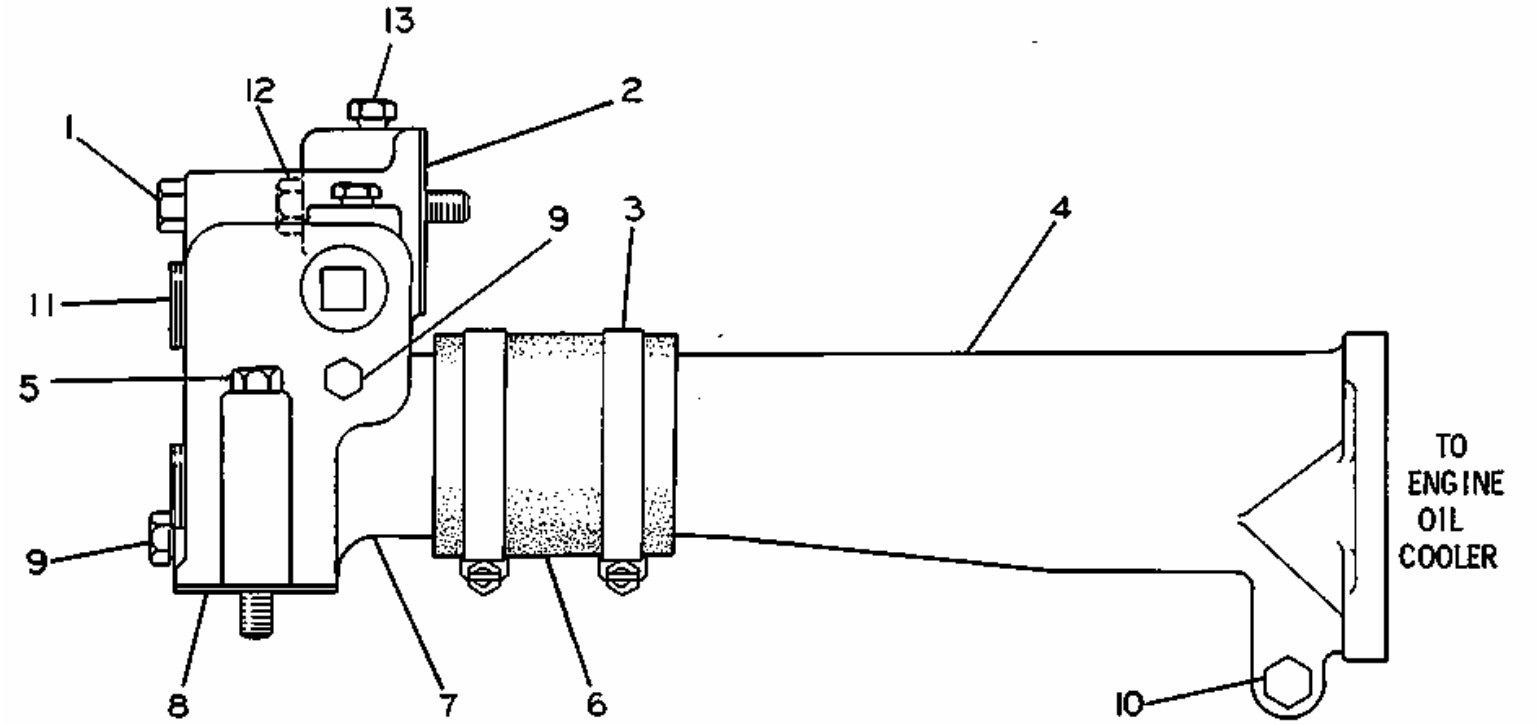

REF. NO.	PART NUMBER	DESCRIPTION	QTY.
1	T65	BOLT	1
2	2P6132	GASKET	1
3	5P4868	CLAMP	2
4	2P2511	PIPE	1
5	S1619	BOLT	2
▲ 6	5P1260	HOSE----80 cm(3.15 in.)	
7	1N3958	ELBOW	1
8	7N200	GASKET	1
9	5M6213	PLUG	2
10	S1588	BOLT	1
11	1B5174	PLUG	3
12	S1590	BOLT	1
13	3J5390	PLUG	2

▲ ORDER BY THE CENTIMETER

233157

1 NPR 0T-0065 1 BOLT

2 NPR 2P-6132 1 GASKET

3 NPR 5P-4868 2 CLAMP

4 NPR 2P-2511 1 PIPE

5 NPR 0S-1619 2 BOLT

6 NPR H 5P-1260 HOSE 80 cm(3.15 in.)

7 NPR 1N-3958 1 ELBOW

8 NPR 7N-0200 1 GASKET

9 NPR 5M-6213 2 PLUG

10 NPR 0S-1588 1 BOLT

11 NPR 1B-5174 3 PLUG

12 NPR 0S-1590 1 BOLT

13 NPR 3J-5390 2 PLUG

Key: H - ORDER BY THE CENTIMETER

2W7060 WATER LINES GROUP--ENGINE SERIAL NO. 7Z9340-UP
REFER TO PAGE 40B.02 FOR OIL COOLER PIPE

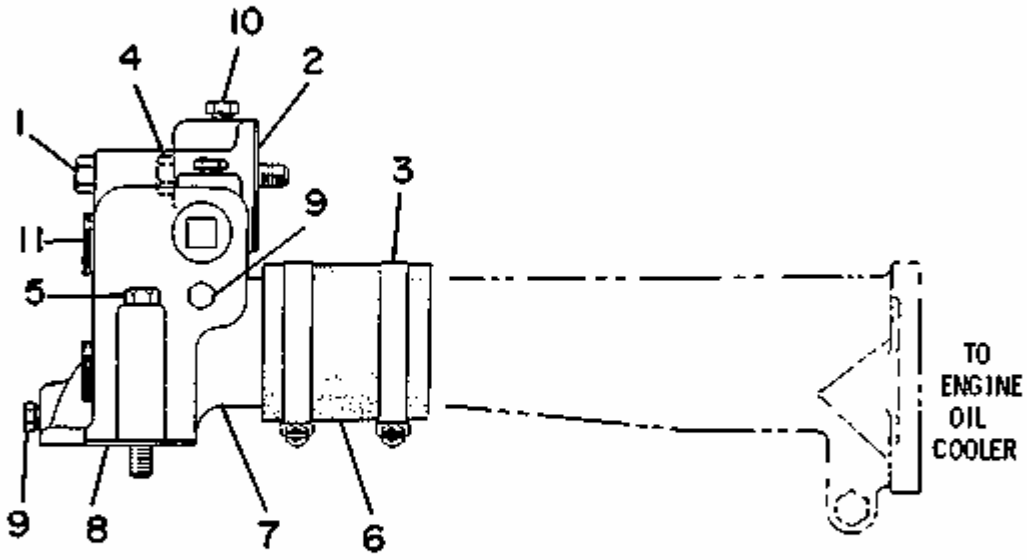

1	NPR	0T-0065	1	BOLT
2	NPR	2P-6132	1	GASKET-ELBOW
3	NPR	5P-4868	2	CLAMP
4	NPR	0S-1590	1	BOLT
5	NPR	0S-1619	2	BOLT
6	NPR BE	5P-1260		HOSE
7	NPR	1N-3958	1	ELBOW
8	NPR	7N-0200	1	GASKET
9	NPR	5M-6213	2	PLUG
10	NPR	3J-5390	2	PLUG
11	NPR	1B-5174	3	PLUG-PIPE

Key: B - USE AS REQUIRED E - ORDER BY THE CENTIMETER

2P661 WATER PUMP GROUP--Engine Serial No. 78P18799 to 78P29111 inclusive

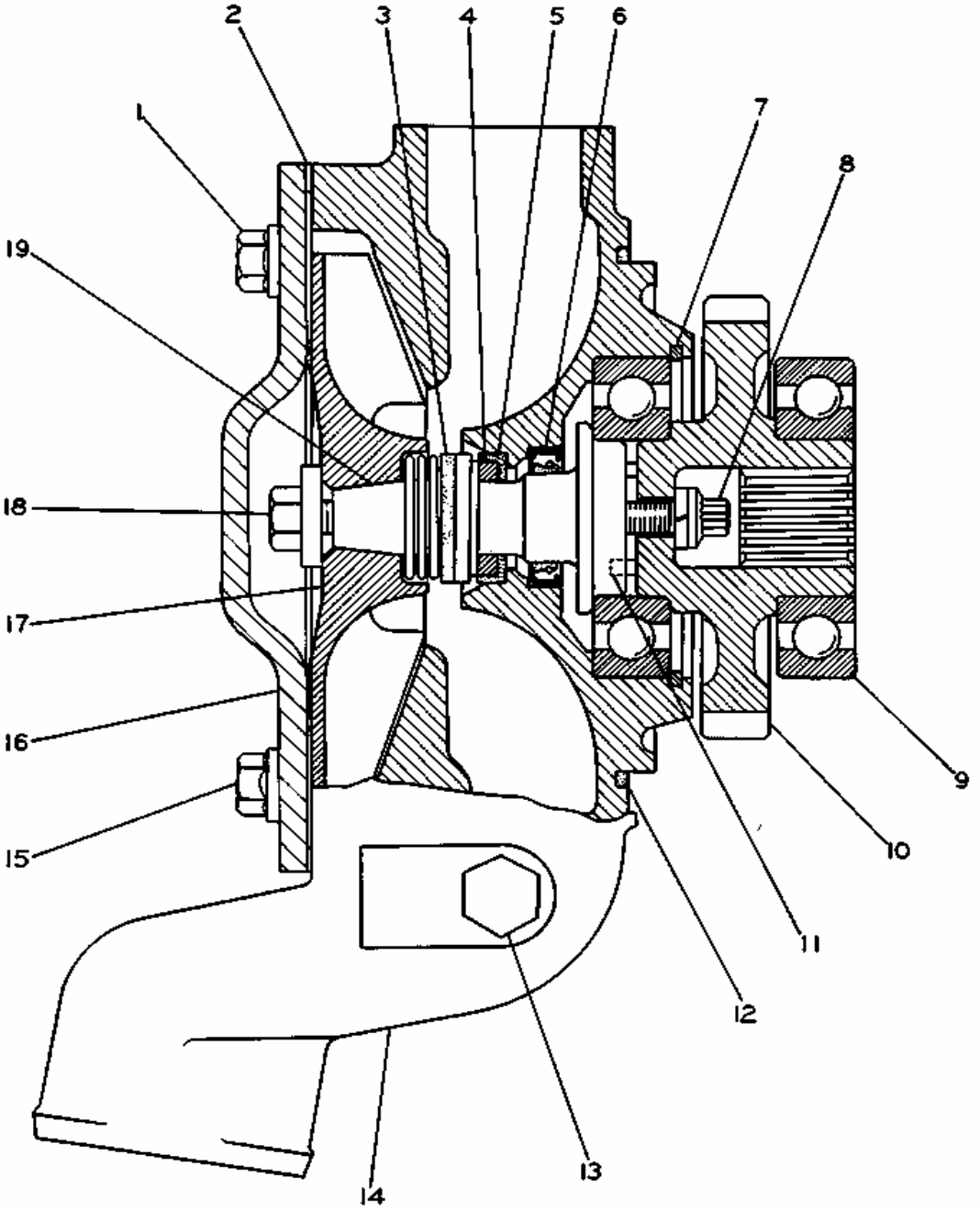

C6N9604-REBUILD KIT----------1
(Consists of parts marked ▲)

	REF. NO.	PART NUMBER	DESCRIPTION	QTY
	1	2P3200	BOLT----------	2
	2	2P405	GASKET----------	1
C	3	4N6556	SEAL ASSEM. ----------	1
	4	8S7762	RING----------	1
	5	8S8821	SEAL----------	1
	6	8H9520	SEAL----------	1
▲	7	1K6985	RETAINER----------	1
▲	8	5P76	BOLT----------	1
▲		3B4506	LOCKWASHER----------	1
▲	9	6H3957	BEARING----------	2
	10	2P659	GEAR ASSEM. ----(40 teeth)------	1
	11	2L5893	PIN----------	2
	12	5F3106	SEAL----------	1
▲	13	5M6213	PLUG----------	1
	14	2P671	HOUSING----------	1
	15	2P7557	BOLT--------9.53 cm(3.75 in.) long	2
			-OR-	
		8S9191	BOLT----------10.16 cm(4 in.) long	2
		5M2894	WASHER----------	2
	16	2P404	COVER----------	1
▲	17	1P9952	IMPELLER----------	1
▲	18	4L6454	BOLT----------	1
▲		9M6527	WASHER----------	1
▲	19	1P9929	SHAFT----------	1

C INDICATES CHANGE

209424

1 NPR 2P-3200 2 BOLT

2 NPR 2P-0405 1 GASKET

3 NPR C 4N-6556 1 SEAL ASSEM.

4 NPR 8S-7762 1 RING

5 NPR 8S-8821 1 SEAL

6 NPR 8H-9520 1 SEAL

7 NPR H 1K-6985 1 RETAINER

8 NPR CH 5P-0076 1 BOLT

NPR H 3B-4506 1 LOCKWASHER

9 NPR H 6H-3957 2 BEARING

10 NPR 2P-0659 1 GEAR ASSEM. (40 teeth)

11 NPR 2L-5893 2 PIN

NPR C 6N-9604 1 REBUILD KIT

(Consists of parts marked h)

12 NPR 5F-3106 1 SEAL

13 NPR H 5M-6213 1 PLUG

14 NPR 2P-0671 1 HOUSING

15 NPR 2P-7557 2 BOLT 9.53 cm(3.75 in.) long

-OR-

NPR 8S-9191 2 BOLT 10.16 cm(4 in.) long

NPR 5M-2894 2 WASHER

16 NPR 2P-0404 1 COVER

17 NPR H 1P-9952 1 IMPELLER

18 NPR H 4L-6454 1 BOLT

NPR H 9M-6527 1 WASHER

19 NPR H 1P-9929 1 SHAFT

Key: C - INDICATES CHANGE

6N8952 WATER PUMP GROUP--Engine Serial No. 78P31998 to 78P49900 inclusive

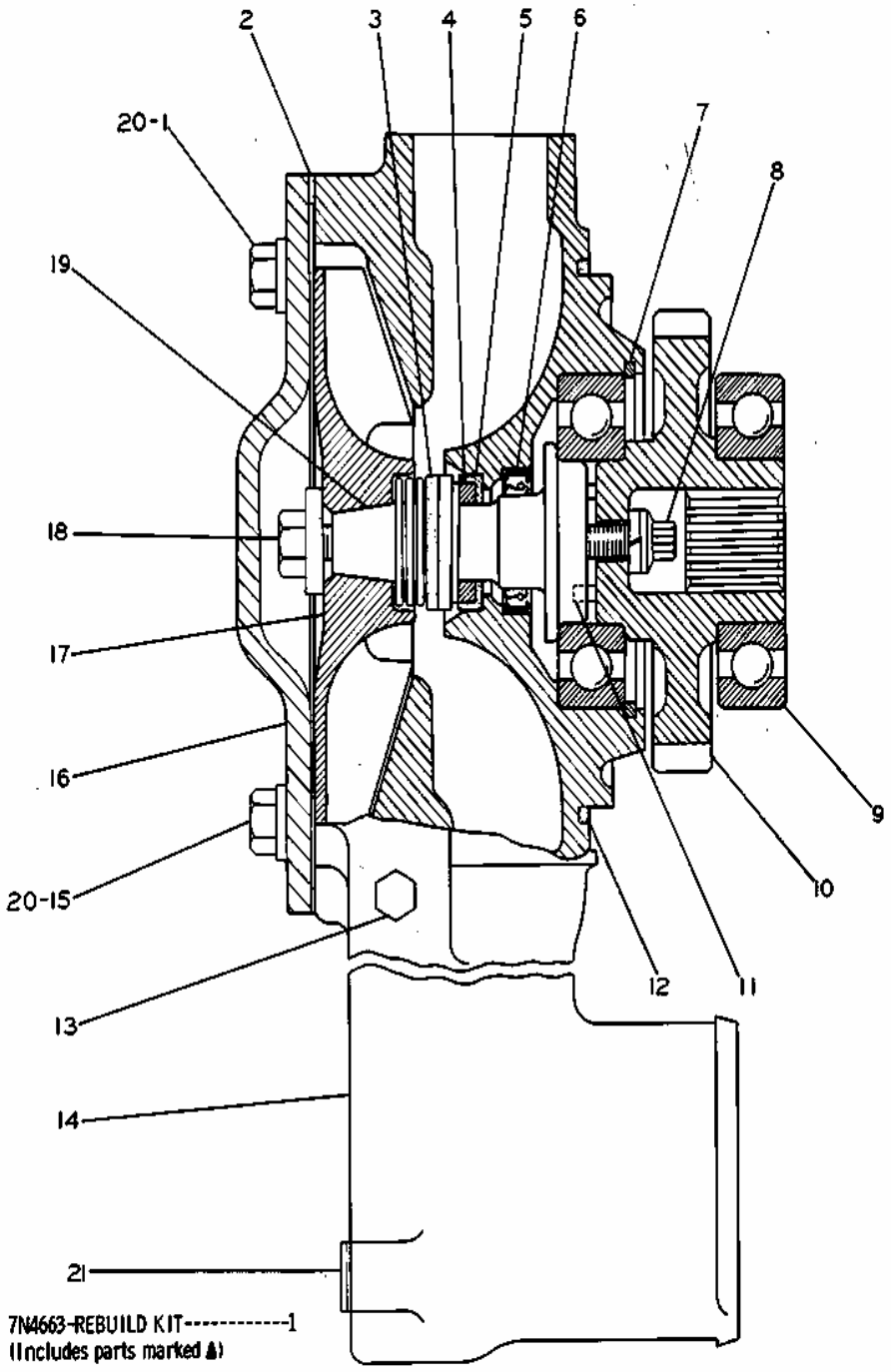

7N4663-REBUILD KIT----------1
(Includes parts marked ♣)

REF. NO.	PART NUMBER	DESCRIPTION	QTY
1	L1351	BOLT	2
2	6N8190	GASKET	1
3	4N6556	SEAL ASSEM.	1
4	8S7762	RING	1
5	8S8821	SEAL	1
6	8H9520	SEAL	1
♣ 7	1K6985	RETAINER	1
♣ 8	5P76	BOLT	1
♣	3B4506	LOCKWASHER	1
♣ 9	6H3957	BEARING	2
10	2P659	GEAR ASSEM. ----(40 teeth)------	1
11	2L5893	PIN	2
12	5F3106	SEAL	1
♣ 13	5M6213	PLUG	1
14	6N8970	HOUSING	1
15	8S9191	BOLT	2
C 16	8N5929	COVER	1
♣ 17	6N8411	IMPELLER	1
♣ 18	4L6454	BOLT	1
♣	9M6527	WASHER	1
♣ 19	1P9929	SHAFT	1
♣ 20	5M2894	WASHER	4
21	1B5174	PLUG	1

C INDICATES CHANGE

226490

1	NPR	0L-1351	2	BOLT
2	NPR	6N-8190	1	GASKET
3	NPR	4N-6556	1	SEAL ASSEM.
4	NPR	8S-7762	1	RING
5	NPR	8S-8821	1	SEAL
6	NPR	8H-9520	1	SEAL
7	NPR H	1K-6985	1	RETAINER
8	NPR H	5P-0076	1	BOLT
	NPR H	3B-4506	1	LOCKWASHER
9	NPR H	6H-3957	2	BEARING
10	NPR	2P-0659	1	GEAR ASSEM. (40 teeth)
11	NPR	2L-5893	2	PIN
12	NPR	5F-3106	1	SEAL
13	NPR H	5M-6213	1	PLUG
14	NPR	6N-8970	1	HOUSING
15	NPR	8S-9191	2	BOLT
16	NPR CLC	8N-5929	1	COVER
CL	NPR	296-1349	1	COVER-CLA
17	NPR H	6N-8411	1	IMPELLER
18	NPR H	4L-6454	1	BOLT
	NPR H	9M-6527	1	WASHER
19	NPR H	1P-9929	1	SHAFT
20	NPR H	5M-2894	4	WASHER
21	NPR	1B-5174	1	PLUG
	NPR	7N-4663	1	REBUILD KIT

(Includes parts marked H)

Key: CL - Classic Part Available C - INDICATES CHANGE

7N6206 WATER PUMP GROUP--Serial No. 78P49901-Up

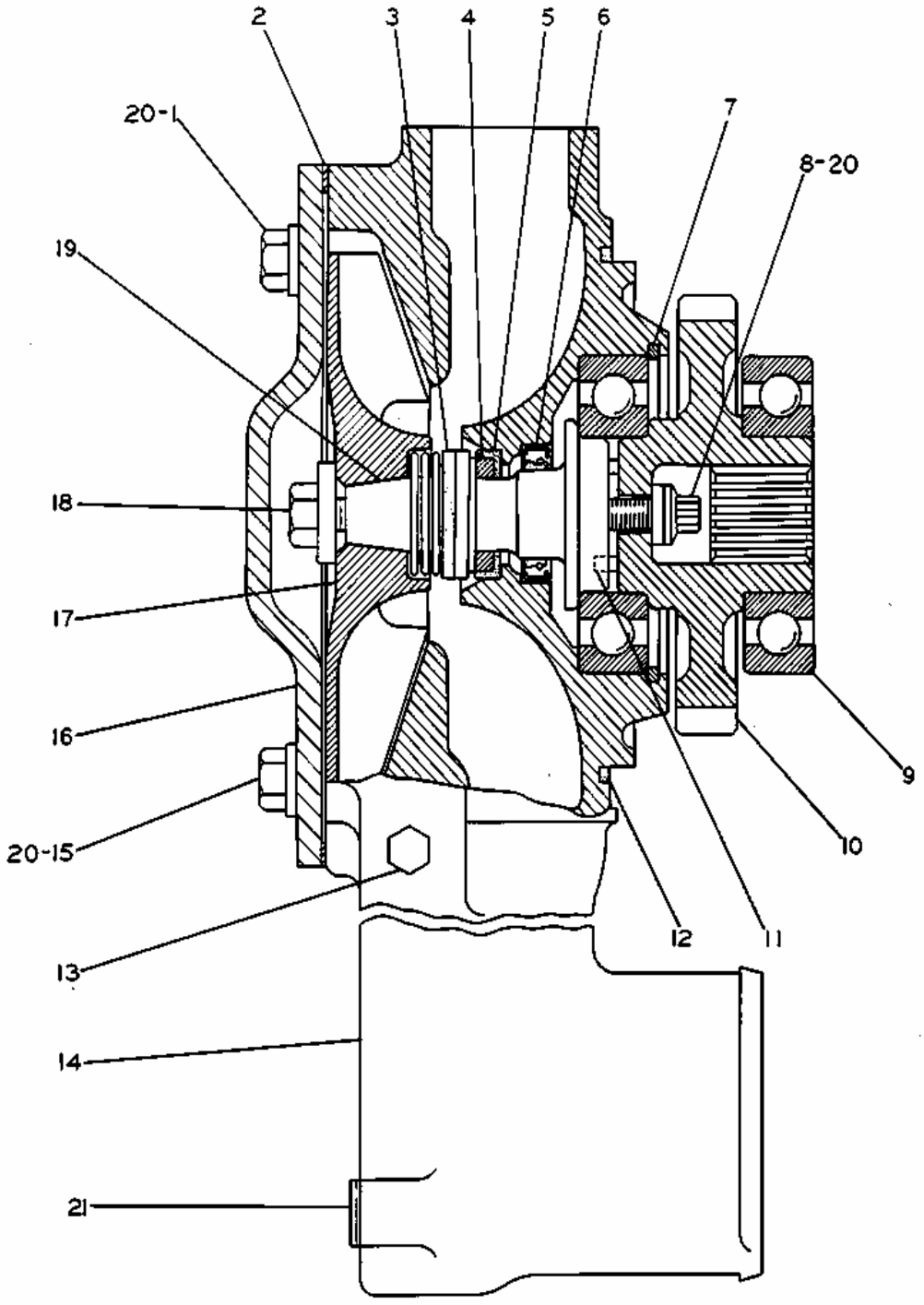

REF. NO.	PART NUMBER	DESCRIPTION	QTY.
1	L1351	BOLT	2
2	8N5928	GASKET	1
3	4N6556	SEAL ASSEM.	1
4	8S7762	RING	1
5	8S8821	SEAL	1
6	8H9520	SEAL	1
▲ 7	1K6985	RING	1
▲ 8	5P76	BOLT	1
▲ 9	6H3957	BEARING	2
10	7N5189	GEAR ASSEM. ---(40 teeth) (Includes)	1
11	2L5893	PIN	2
12	5F3106	SEAL	1
13	5M6213	PLUG	1
14	7N6198	HOUSING	1
15	T55	BOLT	2
16	8N5929	COVER	1
▲ 17	7N5910	IMPELLER	1
▲ 18	4L6454	BOLT	1
▲	9M6527	WASHER	1
▲ 19	7N5899	SHAFT	1
▲ 20	5M2894	WASHER	5
21	1B5174	PLUG	1
	7N9954	REBUILD KIT (Includes part marked ▲)	1

225410

1 NPR 0L-1351 2 BOLT
2 NPR 8N-5928 1 GASKET
3 NPR 4N-6556 1 SEAL ASSEM.
4 NPR 8S-7762 1 RING
5 NPR 8S-8821 1 SEAL
6 NPR 8H-9520 1 SEAL
7 NPR H 1K-6985 1 RING
8 NPR H 5P-0076 1 BOLT
9 NPR H 6H-3957 2 BEARING
10 NPR 7N-5189 1 GEAR ASSEM. (40 teeth)
(Includes)
11 NPR 2L-5893 2 PIN
12 NPR 5F-3106 1 SEAL
13 NPR 5M-6213 1 PLUG
14 NPR 7N-6198 1 HOUSING
15 NPR 0T-0055 2 BOLT
16 NPR CL 8N-5929 1 COVER
CL NPR 296-1349 1 COVER-CLA
17 NPR H 7N-5910 1 IMPELLER
18 NPR H 4L-6454 1 BOLT
NPR H 9M-6527 1 WASHER
19 NPR H 7N-5899 1 SHAFT
20 NPR H 5M-2894 5 WASHER
21 NPR 1B-5174 1 PLUG
NPR 7N-9954 1 REBUILD KIT
(Includes part marked h)
Key: CL - Classic Part Available

2P9640 RADIATOR GROUP--Type 3-Serial No. 87V2262-Up and 82V740-Up
Part of 2G2580 Sound Suppression Arrangement listed on Page 170D

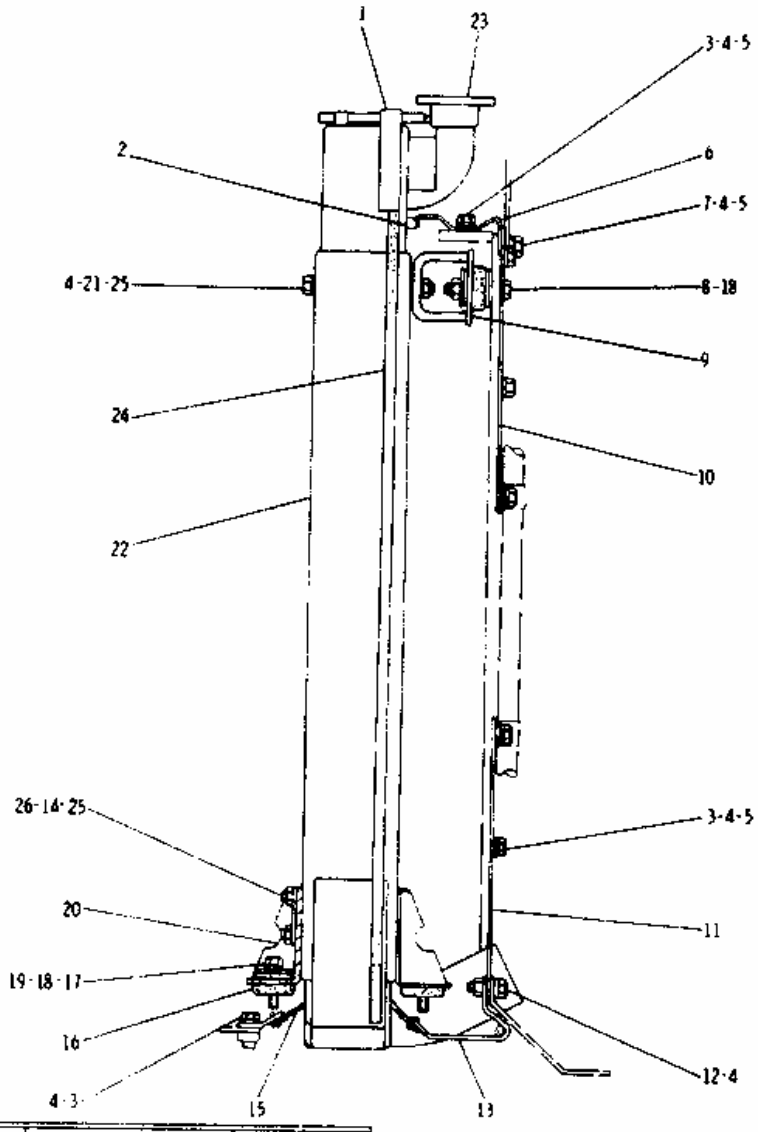

REF NO	PART NUMBER	DESCRIPTION	QTY
▲ 1	5P9909	SEAL---------1.09 m(42.91 in.)	
▲ 2	5P5930	SEAL---------.93 m(36.61 in.)	
3	L1351	BOLT----------	20
4	SM2894	WASHER----------	35
5	4B4278	WASHER----------	18
6	6N3934	BAFFLE ASSEM. ---------- (Includes)	1
	9F2978	NUT-------(weld)---------	6
7	S1588	BOLT----------	6
8	1A5822	BOLT----------	2
	1D4719	NUT----------	2
9	3P57	BRACKET ASSEM. ----------	1
10	3P58	SHIELD----------	1
11	3P115	SHIELD-------(L. H.)---------	1
	2P408	SHIELD-------(R. H.)---------	1
12	1A2029	BOLT----------	5
13	2P440	BAFFLE ASSEM. ----------	1
C 14	5P1075	WASHER----------	4
15	2P5187	BAFFLE ASSEM. ----------	1
16	9M1853	MOUNTING----------	6
17	1A1460	BOLT----------	4
18	2M849	WASHER----------	6
19	2J7258	WASHER----------	10
20	2P5190	BRACKET ASSEM. ----------	4
C 21	1D4717	NUT----------	2
22	7N7330	RADIATOR ASSEM. ---------- (Includes)	1
23	321464	CAP----------	1
▲ 24	5P5930	SEAL-------9.70 m(38.19 in.)	
25	7F3425	BOLT----------	6
C	8N7837	PLATE ASSEM. ---------- (Includes)	1
26	9F2978	NUT----------	2

C INDICATES CHANGE

▲ ORDER BY THE METER

176856

1 NPR H 5P-9909 SEAL 1.09 m(42.91 in.)

2 NPR H 5P-5930 SEAL .93 m(36.61 in.)

3 NPR 0L-1351 20 BOLT

4 NPR 5M-2894 35 WASHER

5 NPR 4B-4278 18 WASHER

6 NPR 6N-3934 1 BAFFLE ASSEM.

(Includes)

NPR 9F-2978 6 NUT (weld)

7 NPR 0S-1588 6 BOLT

8 NPR 1A-5822 2 BOLT

NPR 1D-4719 2 NUT

9 NPR 3P-0057 1 BRACKET ASSEM.

10 NPR 3P-0058 1 SHIELD

11 NPR 3P-0115 1 SHIELD (L.H.)

NPR 2P-0408 1 SHIELD (R.H.)

12 NPR 1A-2029 5 BOLT

13 NPR 2P-0440 1 BAFFLE ASSEM.

14 NPR C 5P-1075 4 WASHER

15 NPR 2P-5187 1 BAFFLE ASSEM.

16 NPR 9M-1853 6 MOUNTING

17 NPR 1A-1460 4 BOLT

18 NPR 2M-0849 6 WASHER

19 NPR 2J-7258 10 WASHER

20 NPR 2P-5190 4 BRACKET ASSEM.

21 NPR C 1D-4717 2 NUT

22 NPR 7N-7330 1 RADIATOR ASSEM.

(Includes)

23 NPR 032-1464 1 CAP

24 NPR H 5P-5930 SEAL 9.70 m(38.19 in.)

25 NPR 7F-3425 6 BOLT

26 NPR C 8N-7837 1 PLATE ASSEM.

(Includes)

NPR 9F-2978 2 NUT

Key: C - INDICATES CHANGE H - ORDER BY THE METER

2P6495 CYLINDER BLOCK COVERS GROUP-Engine Serial No. 78P18799 to 78P40787 inclusive

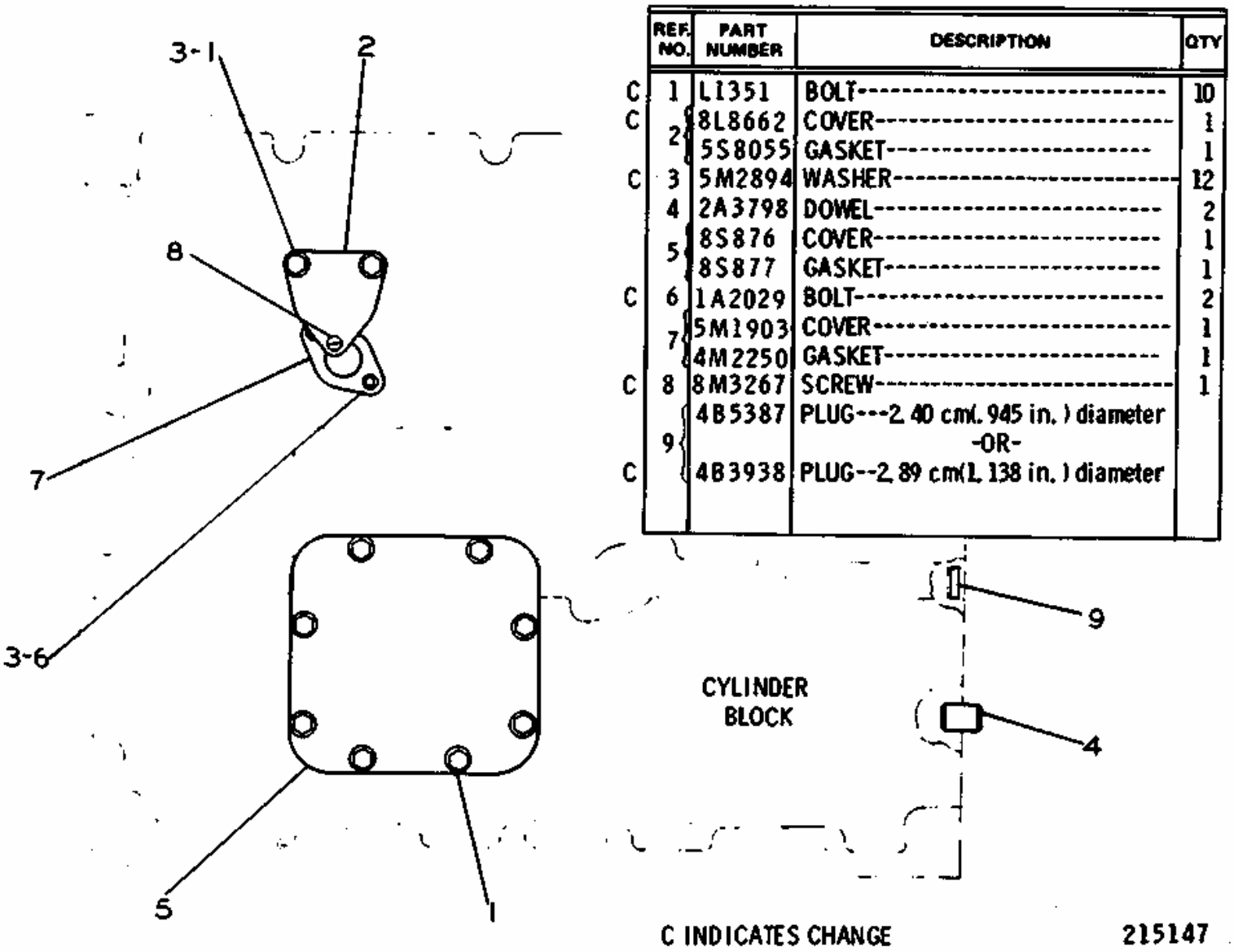

	REF. NO.	PART NUMBER	DESCRIPTION	QTY
C	1	L1351	BOLT	10
C	2	8L8662	COVER	1
		5S8055	GASKET	1
C	3	5M2894	WASHER	12
	4	2A3798	DOWEL	2
	5	8S876	COVER	1
		8S877	GASKET	1
C	6	1A2029	BOLT	2
	7	5M1903	COVER	1
		4M2250	GASKET	1
C	8	8M3267	SCREW	1
	9	4B5387	PLUG---2.40 cm(.945 in.) diameter	
			-OR-	
C		4B3938	PLUG--2.89 cm(1.138 in.) diameter	

C INDICATES CHANGE

215147

1 NPR C 0L-1351 10 BOLT

2 NPR C 8L-8662 1 COVER

NPR 5S-8055 1 GASKET

3 NPR C 5M-2894 12 WASHER

4 NPR 2A-3798 2 DOWEL

5 NPR 8S-0876 1 COVER

NPR 8S-0877 1 GASKET

6 NPR C 1A-2029 2 BOLT

7 NPR 5M-1903 1 COVER

NPR 4M-2250 1 GASKET

8 NPR C 8M-3267 1 SCREW

9 NPR 4B-5387 PLUG 2.40 cm(.945 in.) diameter

-OR-

NPR C 4B-3938 PLUG 2.89 cm(1.138 in.) diameter

Key:

C - INDICATES CHANGE

9D5450 PROTECTION COVER GROUP--Transmission Oil Filler Cap
Replaced by 6G9005 shown on Page 40B

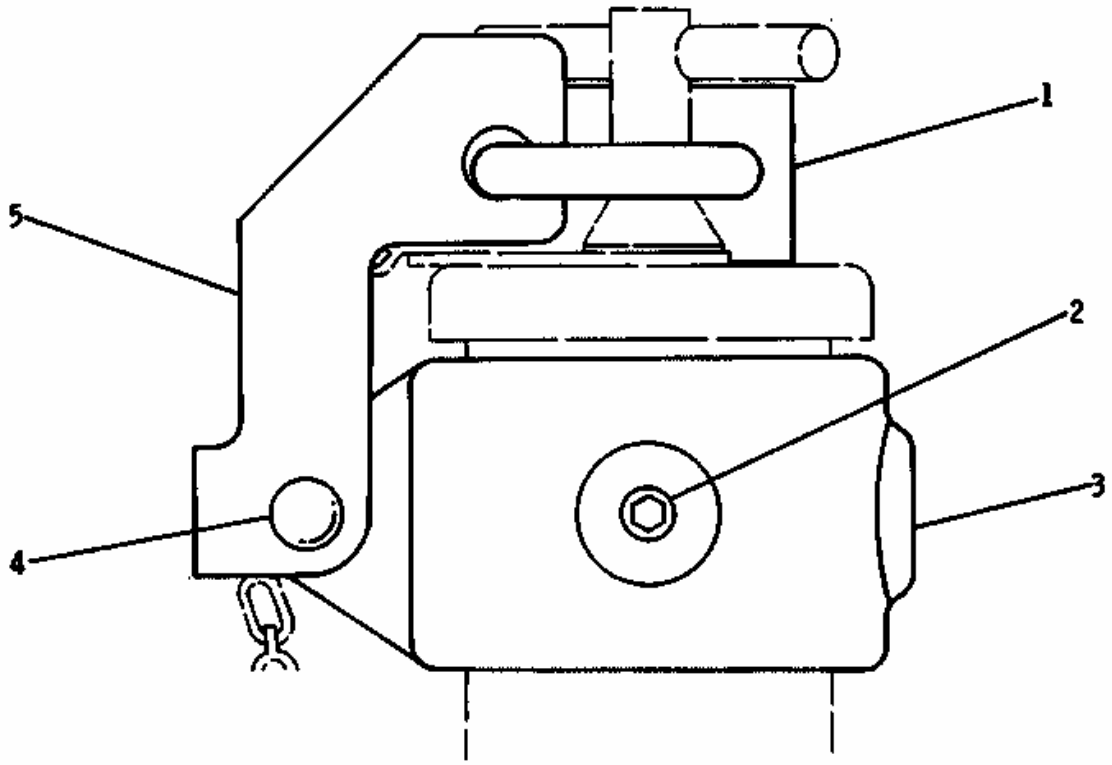

REF. NO.	PART NUMBER	DESCRIPTION	QTY
1	8S7949	PADLOCK GROUP----------	1
		(Includes)	
▲	8M439	KEY----------	2
2	8B7179	SCREW----------	2
C 3	9D5299	COLLAR ASSEM.----------	1
		(Includes)	
4	8S4212	RIVET----------	1
5	2P2717	HASP----------	1

C INDICATES CHANGE ▲ NOT PART OF 9D5450 PROTECTION COVER GROUP 154031

1 NPR 8S-7949 1 PADLOCK GROUP

(Includes)

NPR H 8M-0439 2 KEY

2 NPR 8B-7179 2 SCREW

3 NPR C 9D-5299 1 COLLAR ASSEM.

(Includes)

4 NPR 8S-4212 1 RIVET

5 NPR 2P-2717 1 HASP

Key: C - INDICATES CHANGE H - NOT PART OF 9D5450 PROTECTION COVER GROUP

6G8995 RADIATOR CAP PROTECTION COVER GROUP

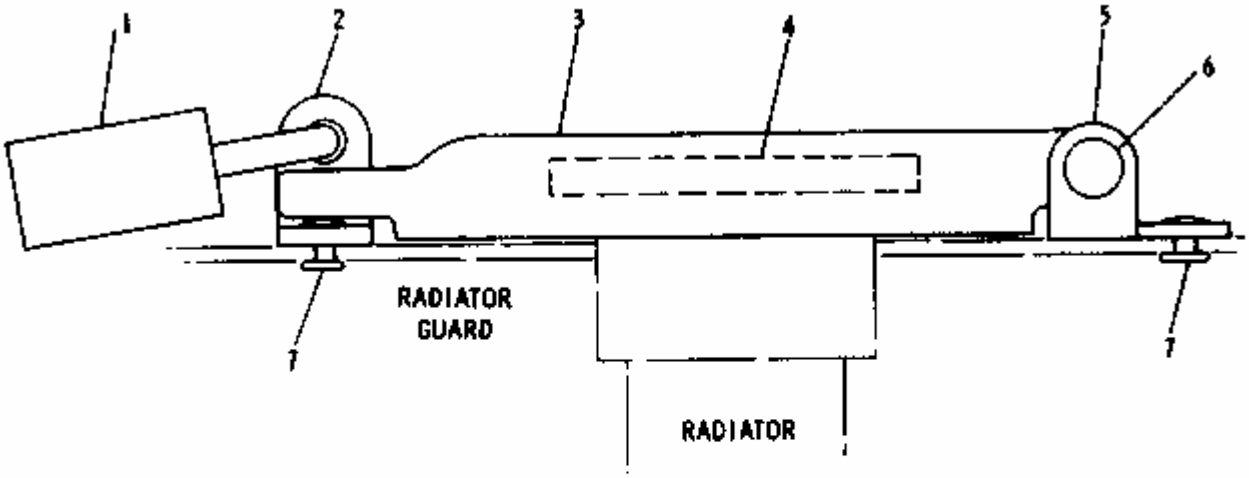

REF. NO.	PART NUMBER	DESCRIPTION	QTY
	5P8502	PADLOCK GROUP----------	1
1		(Includes)	
♣	5P8500	KEY----------	1
2	9D5264	PLATE ASSEM.----------	1
3	9D5267	CAP----------	1
4	9D5317	STRIP----------	1
5	9D5266	BRACKET----------	1
6	8F964	RIVET----------	1
7	9M5732	RIVET----------	5

♣ NOT PART OF 6G8995 PROTECTION COVER GROUP

234194

1 NPR 5P-8502 1 PADLOCK GROUP

(Includes)

NPR H 5P-8500 1 KEY

2 NPR 9D-5264 1 PLATE ASSEM.

3 NPR 9D-5267 1 CAP

4 NPR 9D-5317 1 STRIP

5 NPR 9D-5266 1 BRACKET

6 NPR 8F-0964 1 RIVET

7 NPR 9M-5732 5 RIVET

Key:

H - NOT PART OF 6G8995 PROTECTION

9D5465 RADIATOR PROTECTION COVER GROUP
Replaced by 6G8995 shown on Page 48B

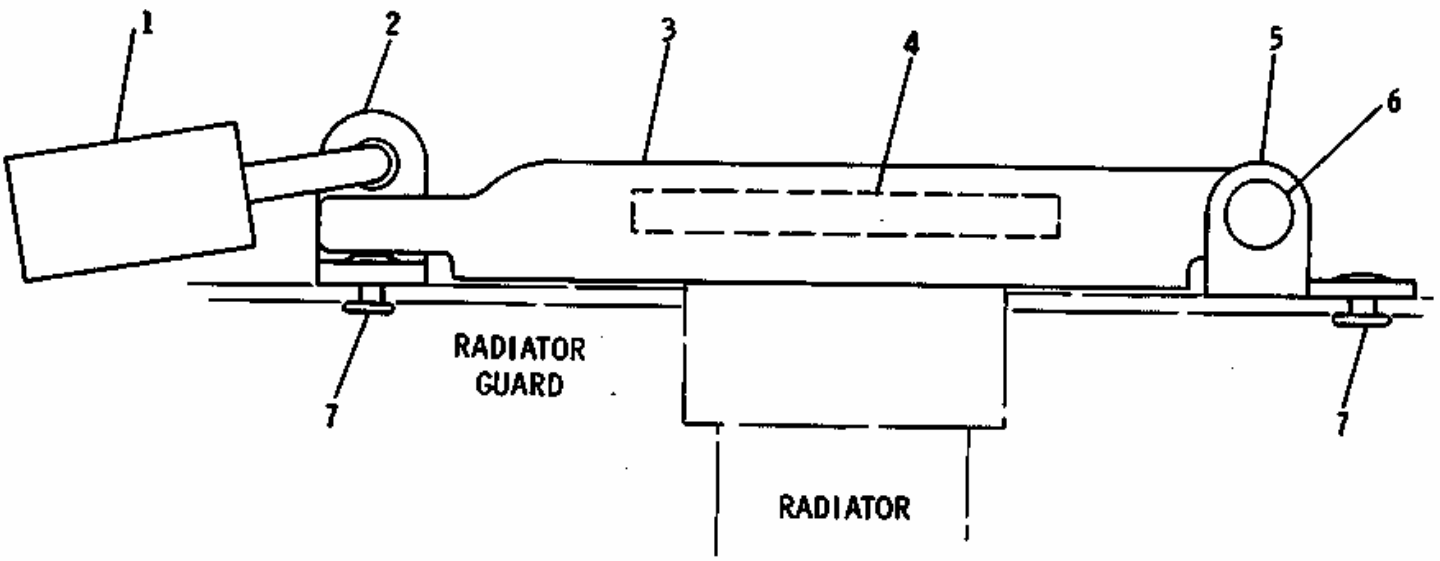

REF. NO.	PART NUMBER	DESCRIPTION	QTY
1	8S7949	PADLOCK GROUP----------	1
		(Includes)	
▲	8M439	KEY----------	1
2	9D5264	PLATE ASSEM.----------	1
3	9D5267	CAP----------	1
4	9D5317	STRIP----------	1
5	9D5266	BRACKET----------	1
6	8F964	RIVET----------	1
7	9M5732	RIVET----------	5

▲ NOT PART OF 9D5465 PROTECTION COVER GROUP

200469

1 NPR 8S-7949 1 PADLOCK GROUP

(Includes)

NPR H 8M-0439 1 KEY

2 NPR 9D-5264 1 PLATE ASSEM.

3 NPR 9D-5267 1 CAP

4 NPR 9D-5317 1 STRIP

5 NPR 9D-5266 1 BRACKET

6 NPR 8F-0964 1 RIVET

7 NPR 9M-5732 5 RIVET

Key: H - NOT PART OF 9D5465 PROTECTION COVER GROUP

1P9566 RADIATOR GROUP--Serial No. 87V1138 to 87V2987 inclusive and 82V668 to 82V794 inclusive

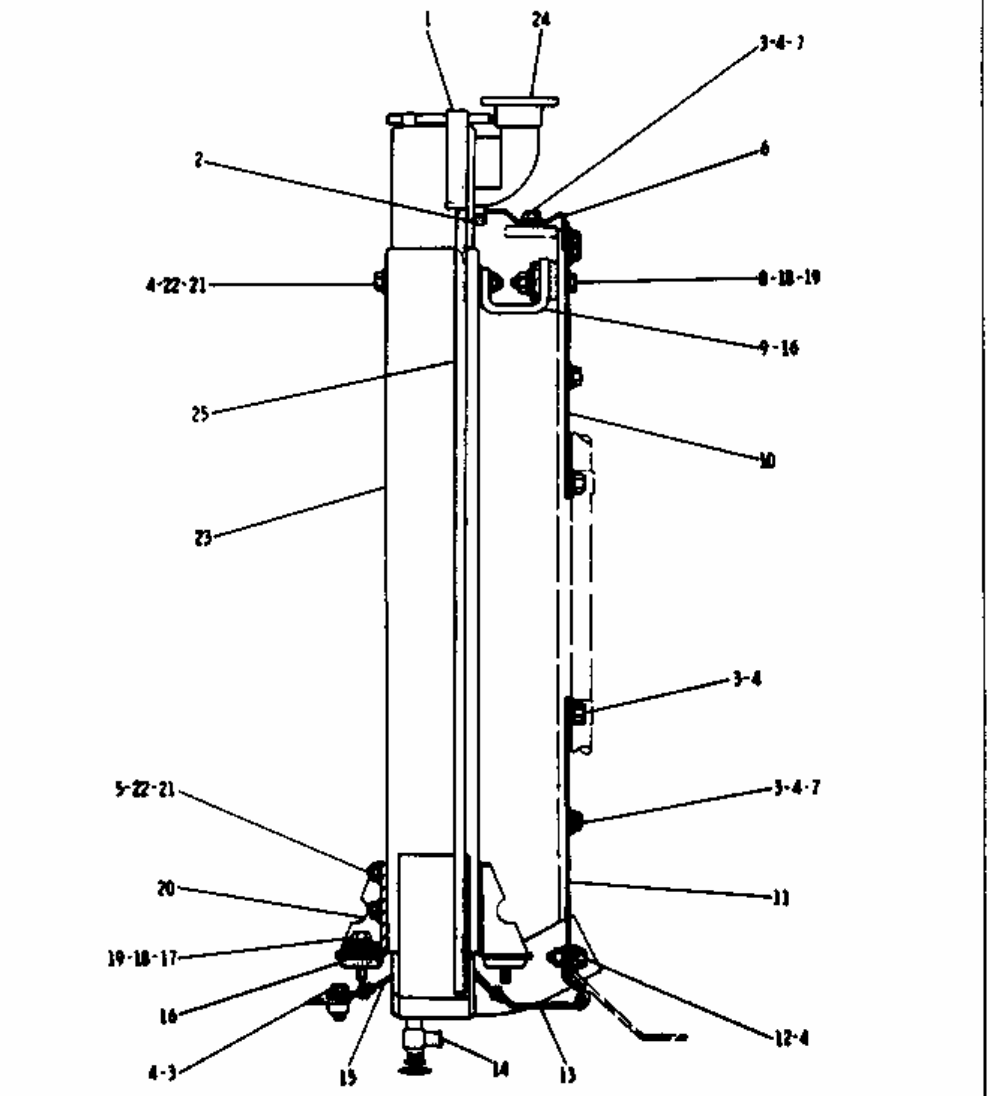

REF. NO.	PART NUMBER	DESCRIPTION	QTY
C& 1	5P5936	SEAL----------1.09 m(42.91 in.)	
C& 2	5P5930	SEAL----------.93 m(36.61 in.)	
3	L1351	BOLT----------	26
C 4	5M2894	WASHER----1.82 cm(.719 in.) O.D.	35
C 5	5P1075	WASHER----2.22 cm(.875 in.) O.D.	8
C 6	6N3934	BAFFLE ASSEM. ----------	1
C 7	4B4278	WASHER----2.06 cm(.812 in.) O.D.	18
8	2B947	BOLT----------	2
	1D4719	NUT----------	2
9	2P226	BRACKET----------	1
10	2P410	SHIELD----------	1
11	3P115	SHIELD----------(L. H.)----------	1
	2P408	SHIELD----------(R. H.)----------	1
12	1A2029	BOLT----------	5
13	2P440	BAFFLE ASSEM. ----------	1
C 14	8F8151	COCK----------	1
15	2P5187	BAFFLE ASSEM. ----------	1
16	9M1853	MOUNTING----------	8
17	1A1460	BOLT----------	4
C 18	2M849	WASHER----2.54 cm(1 in.) O.D.	6
19	2J7258	WASHER----4.99 cm(1.81 in.) O.D.	6
20	2P5190	BRACKET ASSEM. ----------	4
C 21	7F3425	BOLT----------	6
22	1D4717	NUT----------	6
23	1P9959	RADIATOR ASSEM. ---------- (Includes)	1
24	321464	CAP----------	1
C& 25	5P5930	SEAL----------L. 94 m(76. 38 in.)	

O.D. = OUTSIDE DIAMETER
& ORDER BY THE METRE
C INDICATES CHANGE

214857

1 NPR CH 5P-5936 SEAL 1.09 m(42.91 in.)

2 NPR CH 5P-5930 SEAL .93 m(36.61 in.)

3 NPR 0L-1351 26 BOLT

4 NPR C 5M-2894 35 WASHER 1.82 cm(.719 in.) O.D.

5 NPR C 5P-1075 8 WASHER 2.22 cm(.875 in.) O.D.

6 NPR C 6N-3934 1 BAFFLE ASSEM.

7 NPR C 4B-4278 18 WASHER 2.06 cm(.812 in.) O.D.

8 NPR 2B-0947 2 BOLT

NPR 1D-4719 2 NUT

9 NPR 2P-0226 1 BRACKET

10 NPR 2P-0410 1 SHIELD

11 NPR 3P-0115 1 SHIELD (L.H.)

NPR 2P-0408 1 SHIELD (R.H.)

12 NPR 1A-2029 5 BOLT

13 NPR 2P-0440 1 BAFFLE ASSEM.

14 NPR C 8F-8151 1 COCK

15 NPR 2P-5187 1 BAFFLE ASSEM.

16 NPR 9M-1853 6 MOUNTING

17 NPR 1A-1460 4 BOLT

18 NPR C 2M-0849 6 WASHER 2.54 cm(1 in.) O.D.

19 NPR 2J-7258 6 WASHER 4.59 cm(1.81 in.) O.D.

20 NPR 2P-5190 4 BRACKET ASSEM.

21 NPR C 7F-3425 6 BOLT

22 NPR 1D-4717 6 NUT

23 NPR 1P-9959 1 RADIATOR ASSEM.

(Includes)

24 NPR 032-1464 1 CAP

25 NPR CH 5P-5930 SEAL 1.94 m(76.38 in.)

Key: C - INDICATES CHANGE H - ORDER BY THE METRE

2P9640 RADIATOR GROUP--Type 1
Serial No. 87V2262-Up and 82V740-Up. Part of 2G2580 Sound Suppression Arrangement listed on Page 170D. AN ATTACHMENT

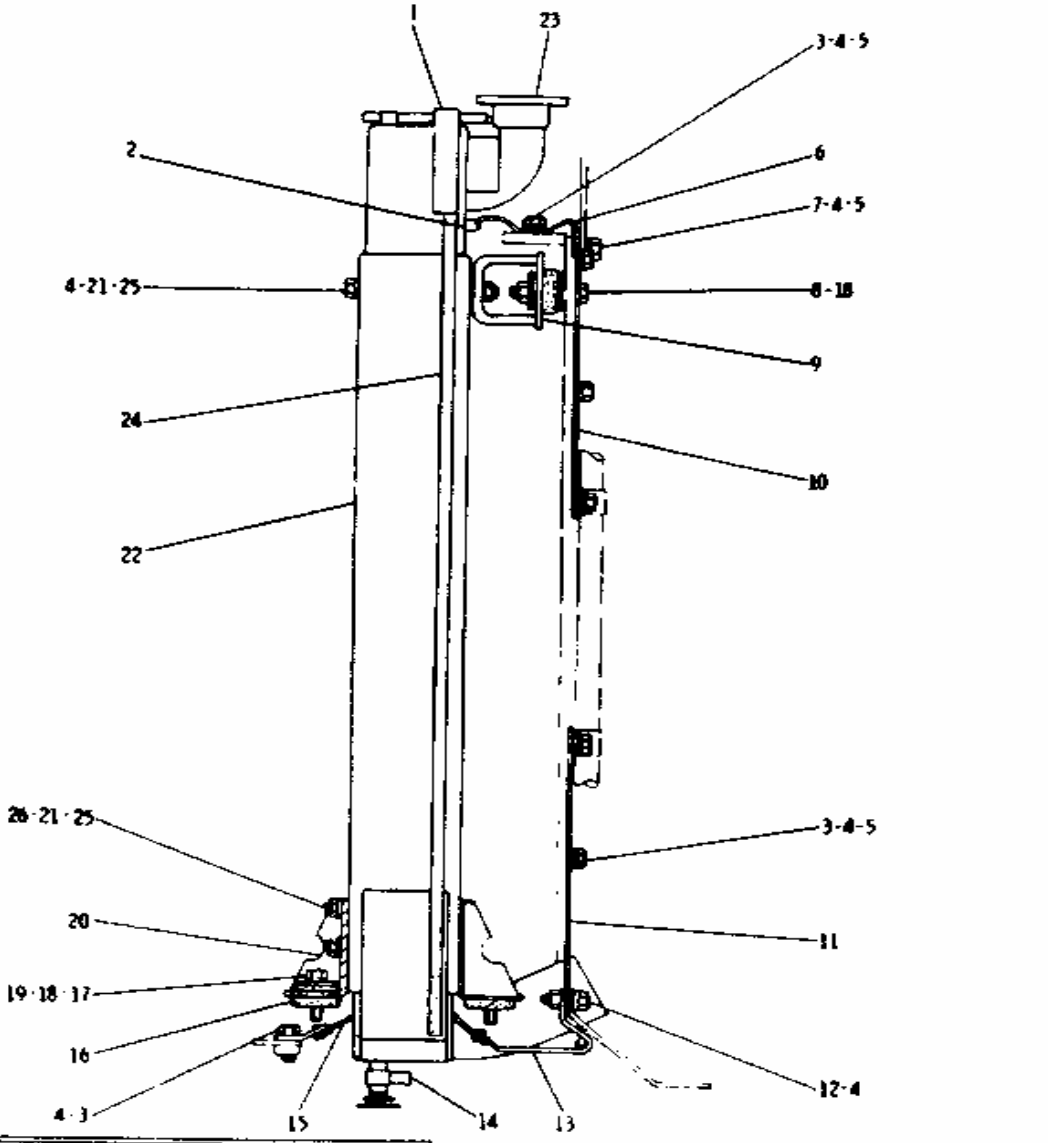

	REF NO	PART NUMBER	DESCRIPTION	QTY
C&	1	5P5936	SEAL---------1.09 m(42.91in.)	
&	2	5P5930	SEAL---------.93 m(36.61 in.)	
	3	L1351	BOLT----------	20
C	4	5M2894	WASHER----------	35
C	5	484278	WASHER----------	18
C	6	6N3934	BAFFLE ASSEM. ---------- (Includes)	1
		9F2978	NUT-------(weld)---------	6
	7	S1588	BOLT----------	6
	8	1A5822	BOLT----------	2
		1D4719	NUT----------	2
	9	3P57	BRACKET ASSEM. ----------	1
	10	3P58	SHIELD----------	1
	11	3P115	SHIELD-------(L. H.)---------	1
		2P408	SHIELD-------(R. H.)---------	1
	12	1A2029	BOLT----------	5
	13	2P440	BAFFLE ASSEM. ----------	1
C	14	8F8153	DRAIN COCK----------	1
	15	2P5187	BAFFLE ASSEM. ----------	1
	16	9M1853	MOUNTING----------	6
	17	1A1460	BOLT----------	4
C	18	2M849	WASHER----------	6
	19	2J7258	WASHER----------	10
	20	2P5190	BRACKET ASSEM. ----------	4
	21	1D4737	NUT----------	6
	22	2P9586	RADIATOR ASSEM. ---------- (Includes)	1
C	23	321464	CAP----------	1
C&	24	5P5930	SEAL-------1.94 m(76.38 in.)	
C	25	7F3425	BOLT----------	6
C	26	5P1075	WASHER----------	8

C INDICATES CHANGE

& ORDER BY THE METRE

216671

1 NPR CH 5P-5936 SEAL 1.09 m(42.91 in.)

2 NPR H 5P-5930 SEAL .93 m(36.61 in.)

3 NPR 0L-1351 20 BOLT

4 NPR C 5M-2894 35 WASHER

5 NPR C 4B-4278 18 WASHER

6 NPR C 6N-3934 1 BAFFLE ASSEM.

(Includes)

NPR 9F-2978 6 NUT (weld)

7 NPR 0S-1588 6 BOLT

8 NPR 1A-5822 2 BOLT

NPR 1D-4719 2 NUT

9 NPR 3P-0057 1 BRACKET ASSEM.

10 NPR 3P-0058 1 SHIELD

11 NPR 3P-0115 1 SHIELD (L.H.)

NPR 2P-0408 1 SHIELD (R.H.)

12 NPR 1A-2029 5 BOLT

13 NPR 2P-0440 1 BAFFLE ASSEM.

14 NPR C 8F-8151 1 DRAIN COCK

15 NPR 2P-5187 1 BAFFLE ASSEM.

16 NPR 9M-1853 6 MOUNTING

17 NPR 1A-1460 4 BOLT

18 NPR C 2M-0849 6 WASHER

19 NPR 2J-7258 10 WASHER

20 NPR 2P-5190 4 BRACKET ASSEM.

21 NPR 1D-4717 6 NUT

22 NPR 2P-9586 1 RADIATOR ASSEM.

(Includes)

23 NPR C 032-1464 1 CAP

24 NPR CH 5P-5930 SEAL 1.94 m(76.38 in.)

25 NPR C 7F-3425 6 BOLT

26 NPR C 5P-1075 8 WASHER

Key: C - INDICATES CHANGE
H - ORDER BY THE METRE

3N3271 HOUSING AND REGULATOR GROUP

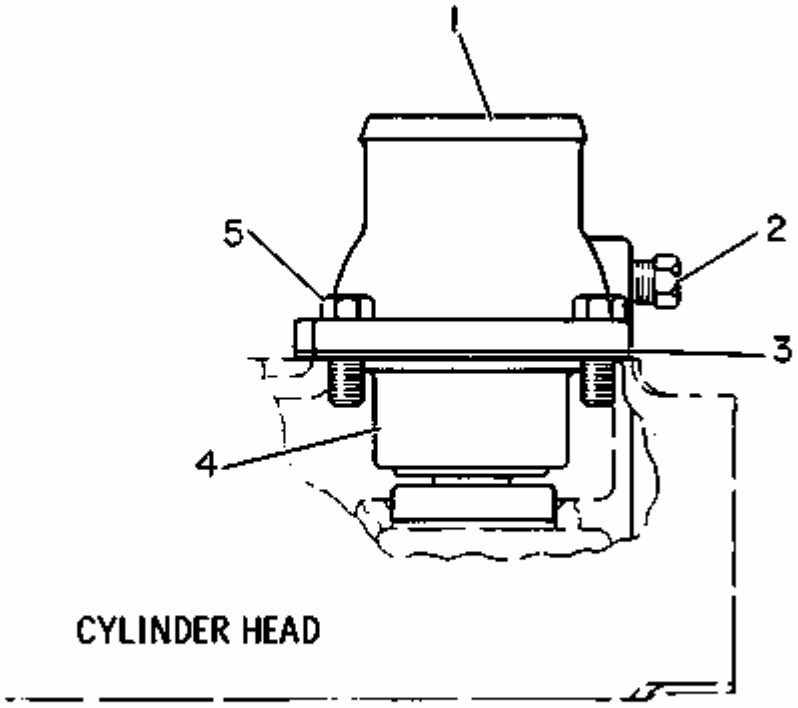

1	NPR	1P-9989	1	PIPE
2	NPR	5M-6213	1	PLUG
3	NPR C	7N-0944	1	GASKET
4	NPR C	7N-0208	1	REGULATOR
5	NPR C	0S-1594	4	BOLT

Key: C - INDICATES CHANGE

WORK

TOOLS

9D1905 BLADE LIFT GROUP--Part 1-Serial No. 87V1573-Up and 82V697-Up

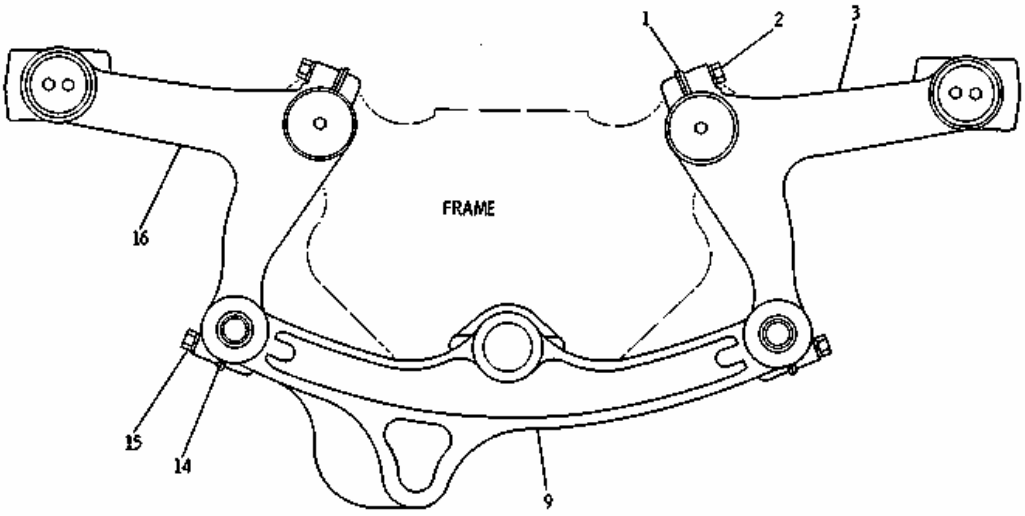

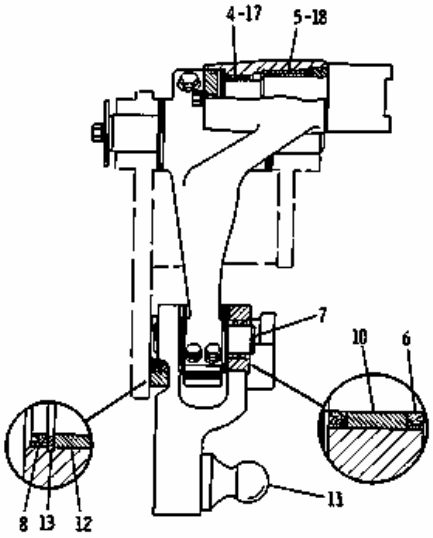

	REF. NO.	PART NUMBER	DESCRIPTION	QTY.
C	1	2G7917	LOCK ASSEM.	2
	2	7F5227	BOLT	4
		3B4512	LOCKWASHER	4
	3	9D1510	ARM ASSEM. (Includes)	1
	4	9D1511	BEARING	1
	5	9D1512	BEARING	1
	6	9D6582	SEAL	8
	7	9D1532	PIN	2
	8	9D6583	SEAL	1
C	9	2G5853	BAR ASSEM. (Includes)	1
	10	8D9296	BEARING	4
	11	2G5689	BALLSTUD	1
	12	9D733	BEARING	2
		9D6546	SPACER	1
	13	9D6538	RING	1
C	14	2G7935	LOCK ASSEM.	2
	15	S1573	BOLT	4
		3B4508	LOCKWASHER	4
	16	9D1509	ARM ASSEM. (Includes)	1
	17	9D1511	BEARING	1
	18	9D1512	BEARING	1

C INDICATES CHANGE 227969

1 NPR C 2G-7917 2 LOCK ASSEM.

2 NPR 7F-5227 4 BOLT

NPR 3B-4512 4 LOCKWASHER

3 NPR 9D-1510 1 ARM ASSEM.

(Includes)

4 NPR 9D-1511 1 BEARING

5 NPR 9D-1512 1 BEARING

6 NPR 9D-6582 8 SEAL

7 NPR 9D-1532 2 PIN

8 NPR 9D-6583 1 SEAL

9 NPR C 2G-5853 1 BAR ASSEM.

(Includes)

10 NPR 8D-9296 4 BEARING

11 NPR 2G-5689 1 BALLSTUD

12	NPR	9D-0733	2	BEARING
	NPR	9D-6546	1	SPACER
13	NPR	9D-6538	1	RING
14	NPR C	2G-7935	2	LOCK ASSEM.
15	NPR	0S-1573	4	BOLT
	NPR	3B-4508	4	LOCKWASHER
16	NPR	9D-1509	1	ARM ASSEM.
(Includes)				
17	NPR	9D-1511	1	BEARING
18	NPR	9D-1512	1	BEARING

Key:

C - INDICATES CHANGE

9D1905 BLADE LIFT GROUP--Part 2-Serial No. 87V1573-Up and 82V697-Up

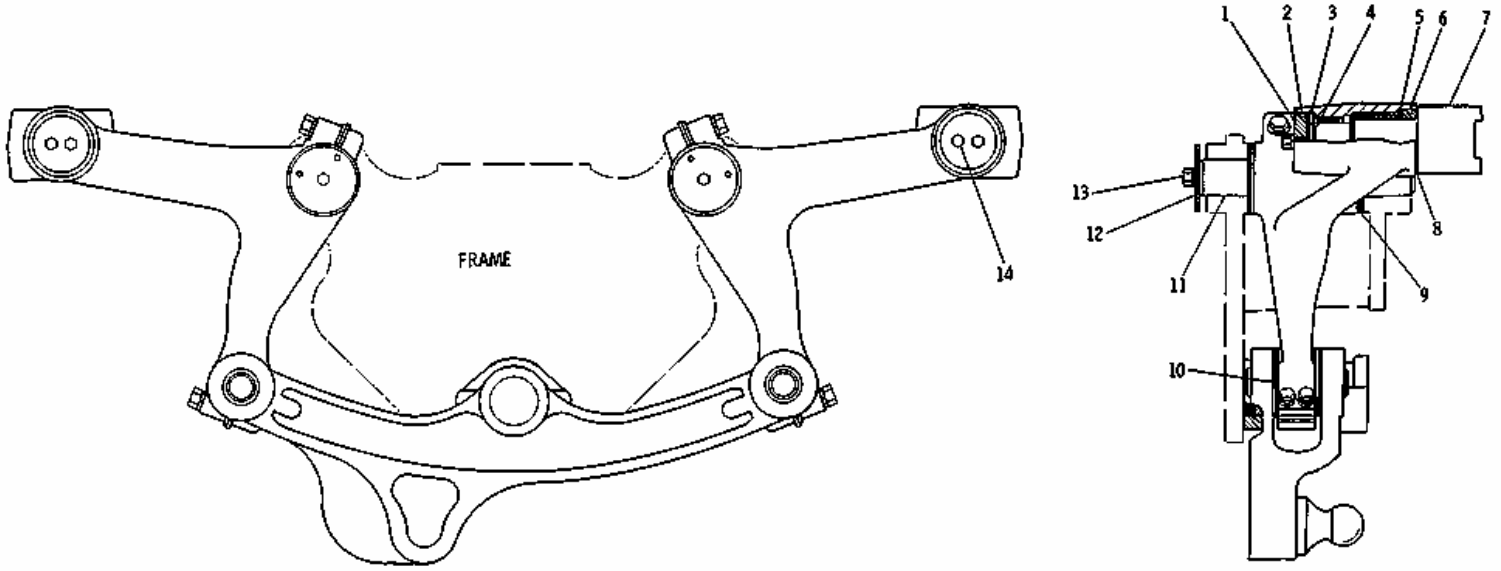

REF NO.	PART NUMBER	DESCRIPTION	QTY
1	9D1519	RETAINER	2
2	9D1521	SEAL-------(plastic)----------	2
	5F3092	SEAL---------(rubber)----------	2
3	9D1524	WASHER--. 094 in. (2. 39 mm) thick	2
	9D1525	WASHER--. 075 in. (1. 91 mm) thick	4
4	9D1526	SHIM----. 005 in. (. 127 mm) thick	8
	9D1527	SHIM----. 010 in. (. 254 mm) thick	6
	9D1528	SHIM----. 020 in. (. 508 mm) thick	2

	5	9D1522	WASHER---. 094 in. (2. 39 mm) thick	2
		9D1523	WASHER---. 075 in. (1. 91 mm) thick	4
	6	9D1520	SEAL---------(plastic)----------	2
		1H474	SEAL---------(rubber)----------	2
C	7	2G8239	YOKE ASSEM. ----------	2
			(Each Includes)	
	8	2G8236	RING----------	1
	9	9D1530	WASHER--. 075 in. (1. 91 mm) thick	8
		9D1529	WASHER--. 094 in. (2. 39 mm) thick	4

		9D1533	WASHER--. 094 in. (2. 39 mm) thick	4
	10	9D1535	WASHER--. 048 in. (1. 22 mm) thick	10
		9D1534	WASHER--. 030 in. (. 762 mm) thick	10
	11	9D1531	PIN----------	2
C	12	2G3986	PLATE----------	2
	13	9S1366	BOLT----------	2
		2M849	WASHER----------	2
	14	9S1587	BOLT----------	4
		3B4508	LOCKWASHER----------	4

C INDICATES CHANGE

227970

1 NPR 9D-1519 2 RETAINER

2 NPR 9D-1521 2 SEAL (plastic)

NPR 5F-3092 2 SEAL (rubber)

3 NPR 9D-1524 2 WASHER .094 in. (2.39 mm) thick

NPR 9D-1525 4 WASHER .075 in. (1.91 mm) thick

4 NPR 9D-1526 8 SHIM .005 in. (.127 mm) thick

NPR 9D-1527 6 SHIM .010 in. (.254 mm) thick

NPR 9D-1528 2 SHIM .020 in. (.508 mm) thick

5 NPR 9D-1522 2 WASHER .094 in. (2.39 mm) thick

NPR 9D-1523 4 WASHER .075 in. (1.91 mm) thick

6 NPR 9D-1520 2 SEAL (plastic)

NPR 1H-0474 2 SEAL (rubber)

7 NPR CLC 2G-8239 2 YOKE ASSEM.

CL NPR 282-6632 1 YOKE - AS.-CLA

(Each Includes)

8 NPR 2G-8236 1 RING

9 NPR 9D-1530 8 WASHER .075 in. (1.91 mm) thick

NPR 9D-1529 4 WASHER .094 in. (2.39 mm) thick

10 NPR 9D-1533 4 WASHER .094 in. (2.39 mm) thick

NPR 9D-1535 10 WASHER .048 in. (1.22 mm) thick

NPR 9D-1534 10 WASHER .030 in. (.762 mm) thick

11 NPR 9D-1531 2 PIN

12 NPR C 2G-3986 2 PLATE

13 NPR 9S-1366 2 BOLT

NPR 2M-0849 2 WASHER

14 NPR 0S-1587 4 BOLT

NPR 3B-4508 4 LOCKWASHER

Key:

CL - Classic Part Available
C - INDICATES CHANGE

9D4925 BLADE EXTENSION--L.H.--2 Foot-FOR USE WITH POWER BLADE. AN ATTACHMENT

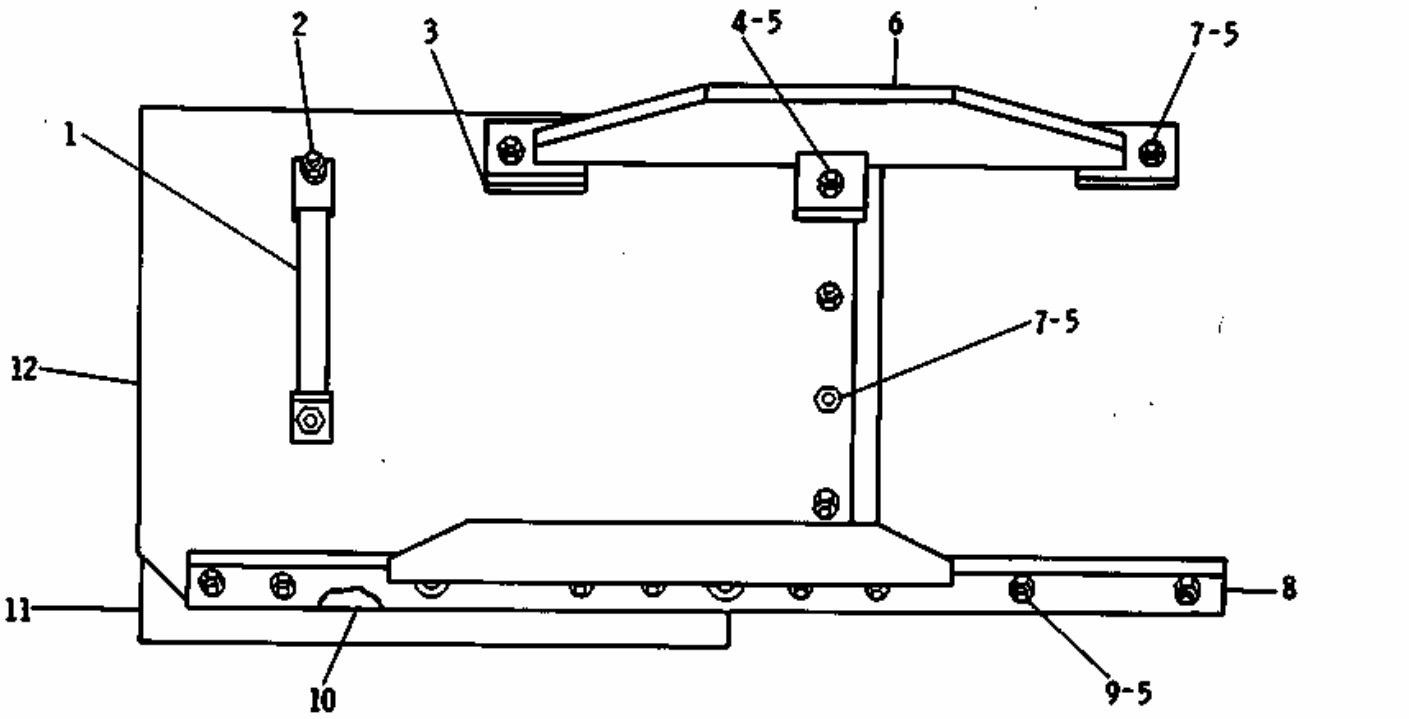

REF. NO.	PART NUMBER	DESCRIPTION	QTY
1	4B7769	SOCKET ASSEM.	1
2	4F3664	BOLT	2
	1D4720	NUT	2
	3B4510	LOCKWASHER	2
3	9D5596	PLATE	1
4	4F3658	BOLT	2
5	4K367	NUT	15
6	9D6034	PLATE ASSEM.	1
7	3F5108	BOLT	5
8	6D7564	ANGLE ASSEM.	1
9	4F3657	BOLT	8
10	9B1566	SPACER	3
11	1D5728	CUTTING EDGE	1
12	3B6198	EXTENSION	1

200571

1 NPR 4B-7769 1 SOCKET ASSEM.

2 NPR 4F-3664 2 BOLT

NPR 1D-4720 2 NUT

NPR 3B-4510 2 LOCKWASHER

3 NPR 9D-5596 1 PLATE

4 NPR 4F-3658 2 BOLT

5 NPR 4K-0367 15 NUT

6 NPR 9D-6034 1 PLATE ASSEM.

7 NPR 3F-5108 5 BOLT

8 NPR 6D-7564 1 ANGLE ASSEM.

9	NPR	4F-3657	8	BOLT
10	NPR	9B-1566	3	SPACER
11	NPR	1D-5728	1	CUTTING EDGE
12	NPR	3B-6198	1	EXTENSION

9D4924 BLADE EXTENSION--R.H.--2 Foot-FOR USE WITH POWER BLADE. AN ATTACHMENT

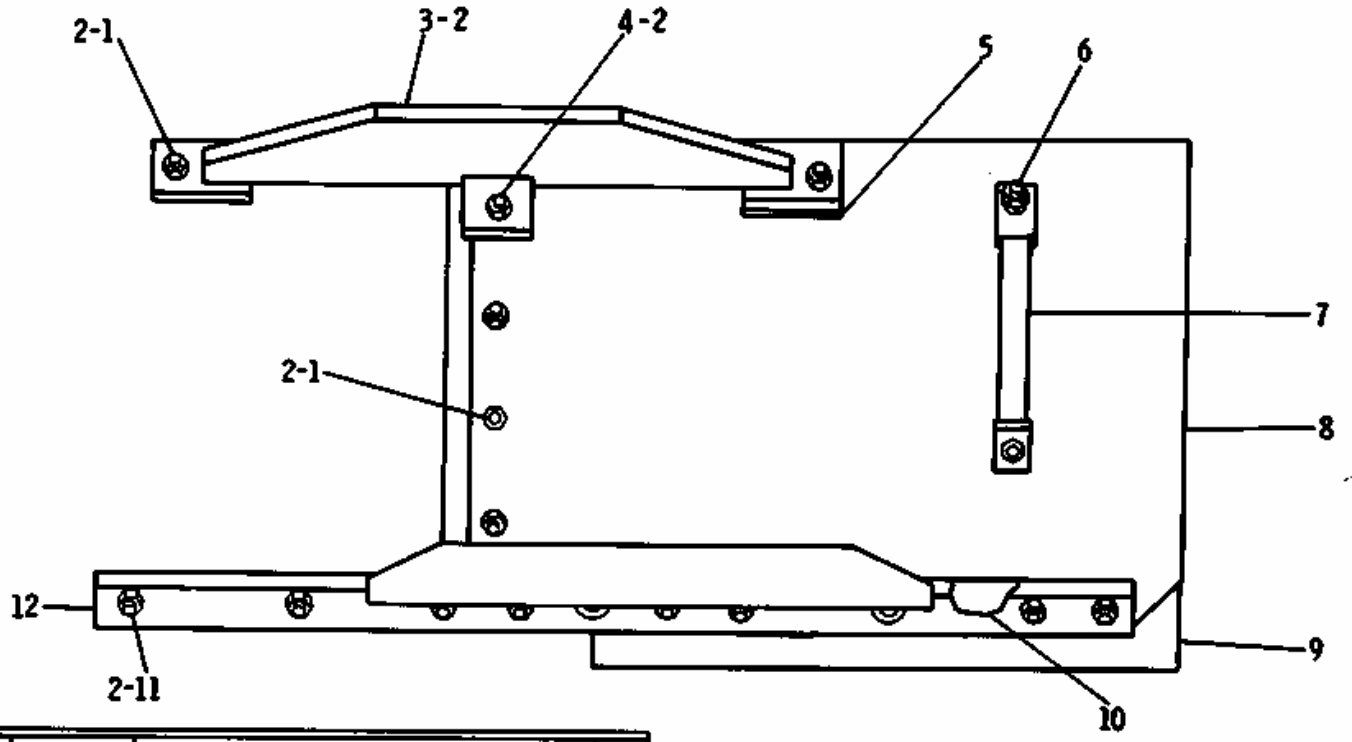

REF. NO.	PART NUMBER	DESCRIPTION	QTY
1	3F5108	BOLT	5
2	4K367	NUT	15
3	9D5576	PLATE ASSEM.	1
4	4F3658	BOLT	2
5	9D5596	PLATE	1
6	4F3664	BOLT	2
	1D4720	NUT	2
	3B4510	LOCKWASHER	2
7	4B7769	SOCKET ASSEM.	1
8	3B6197	EXTENSION	1
9	1D5728	CUTTING EDGE	1
10	9B1565	SPACER	3
11	4F3657	BOLT	8
12	6D7563	ANGLE ASSEM.	1

200570

1 NPR 3F-5108 5 BOLT

2 NPR 4K-0367 15 NUT

3 NPR 9D-5576 1 PLATE ASSEM.

4 NPR 4F-3658 2 BOLT

5 NPR 9D-5596 1 PLATE

6 NPR 4F-3664 2 BOLT

NPR 1D-4720 2 NUT

NPR 3B-4510 2 LOCKWASHER

7 NPR 4B-7769 1 SOCKET ASSEM.

8 NPR 3B-6197 1 EXTENSION

9 NPR 1D-5728 1 CUTTING EDGE

10 NPR 9B-1565 3 SPACER

11 NPR 4F-3657 8 BOLT

12 NPR 6D-7563 1 ANGLE ASSEM.

5D3061 BLADE EXTENSION GROUP--R.H.--2 Foot-5D3062 BLADE EXTENSION GROUP--L.H.--2 Foot

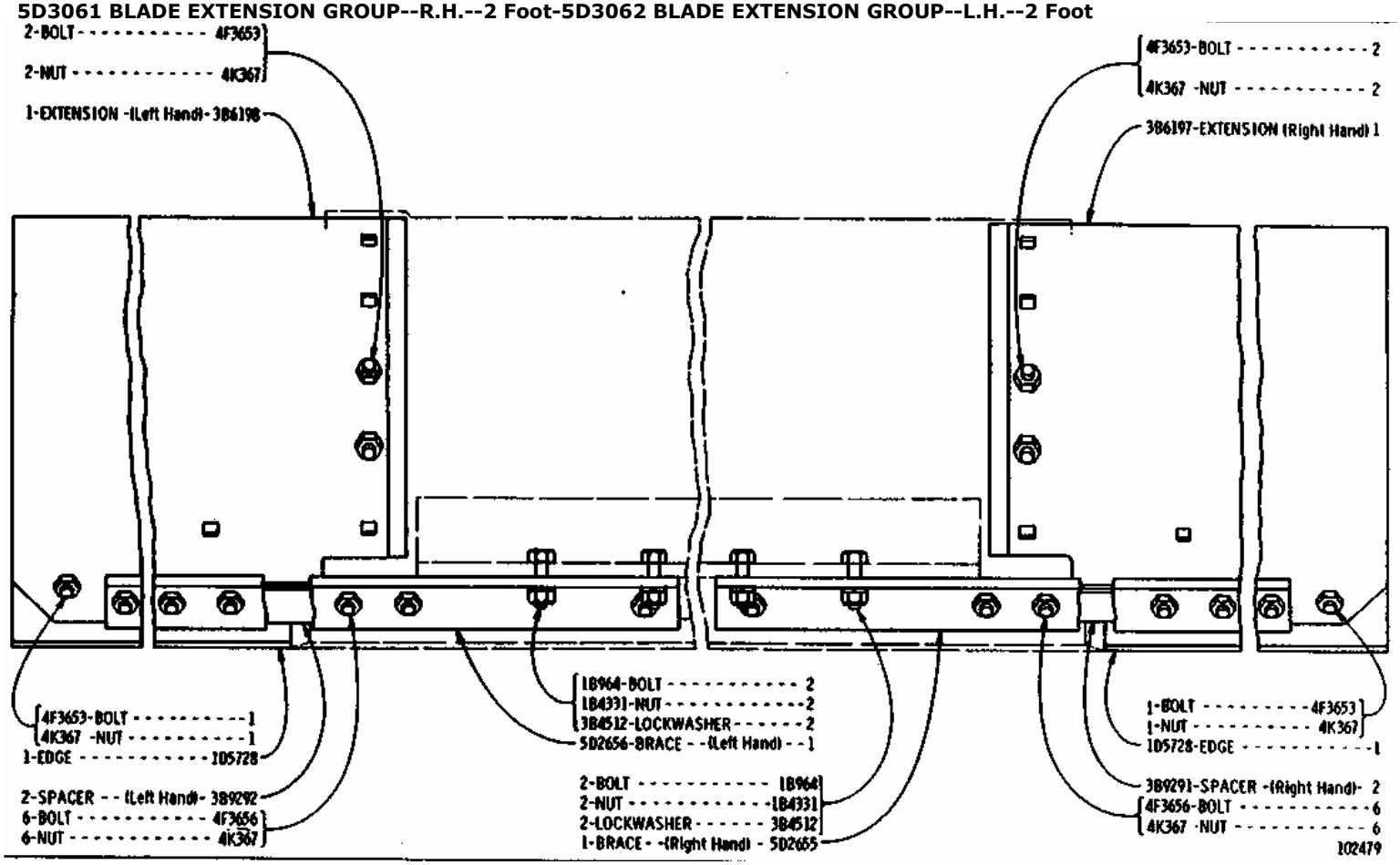

4F-3653 2 BOLT

4K-0367 2 NUT

3B-6198 1 EXTENSION (Left Hand)

4F-3653 1 BOLT

4K-0367 1 NUT

1D-5728 1 EDGE

3B-9292 2 SPACER (Left Hand)

4F-3656 6 BOLT

4K-0367 6 NUT

1B-0964 2 BOLT

1B-4331 2 NUT

3B-4512 2 LOCKWASHER

5D-2656 1 BRACE (Left Hand)

1B-0964 2 BOLT

1B-4331 2 NUT

3B-4512 2 LOCKWASHER

5D-2655 1 BRACE (Right Hand)

4F-3653 2 BOLT

4K-0367 2 NUT

3B-6197 1 EXTENSION (Right Hand)

4F-3653 1 BOLT

4K-0367 1 NUT

1D-5728 1 EDGE

3B-9291 2 SPACER (Right Hand)

4F-3656 6 BOLT

4K-0367 6 NUT

5D3061 BLADE EXTENSION GROUP--R.H.--2 Foot
5D3062 BLADE EXTENSION GROUP--L.H.--2 Foot

4F-3653	2	BOLT
4K-0367	2	NUT
3B-6198	1	EXTENSION (Left Hand)
4F-3653	1	BOLT
4K-0367	1	NUT
1D-5728	1	EDGE
3B-9292	2	SPACER (Left Hand)
4F-3656	6	BOLT
4K-0367	6	NUT
1B-0964	2	BOLT
1B-4331	2	NUT
3B-4512	2	LOCKWASHER
5D-2656	1	BRACE (Left Hand)
1B-0964	2	BOLT
1B-4331	2	NUT
3B-4512	2	LOCKWASHER
5D-2655	1	BRACE (Right Hand)
4F-3653	2	BOLT
4K-0367	2	NUT
3B-6197	1	EXTENSION (Right Hand)
4F-3653	1	BOLT
4K-0367	1	NUT
1D-5728	1	EDGE
3B-9291	2	SPACER (Right Hand)
4F-3656	6	BOLT
4K-0367	6	NUT

9D3380 BLADE GROUP--12 Foot
Part of 9D8850 Mechanical Rail Blade Arrangement listed on Page 270

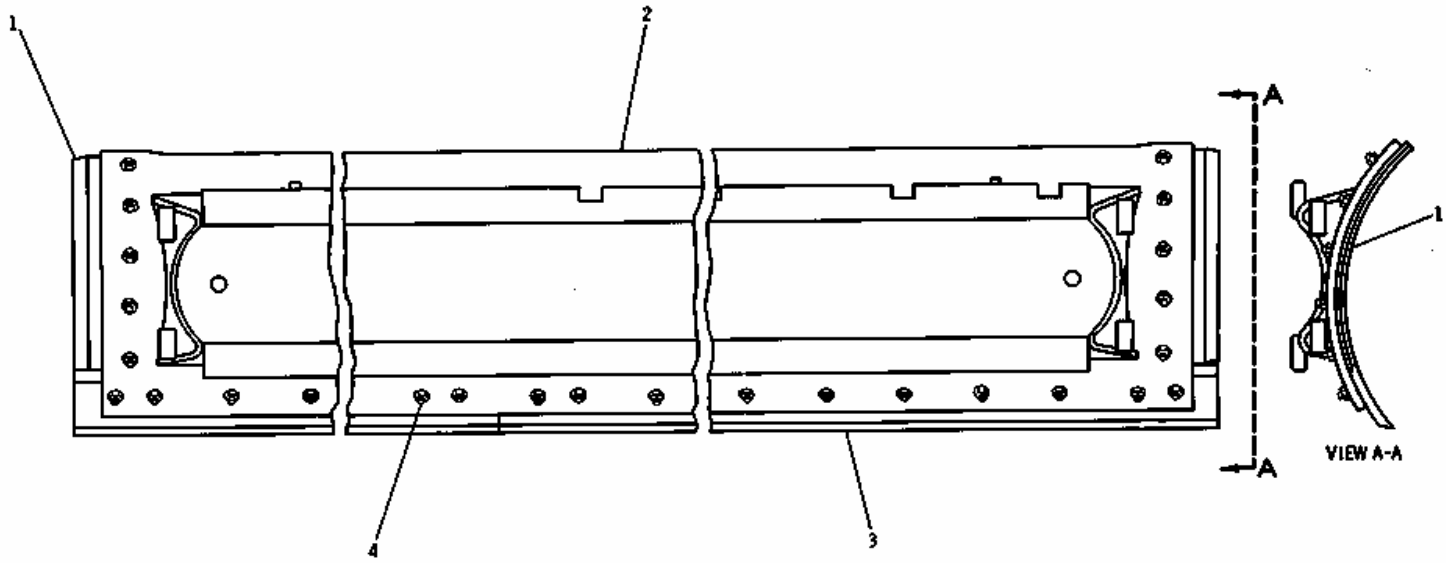

REF. NO.	PART NUMBER	DESCRIPTION	QTY
1	7D2052	END BIT	2
2	9D3990	MOLDBOARD ASSEM.	1
3	5D9553	CUTTING EDGE	2
4	3F5108	BOLT	36
	4K367	NUT	36

202240

1 NPR 7D-2052 2 END BIT

2 NPR 9D-3990 1 MOLDBOARD ASSEM.

3 NPR 5D-9553 2 CUTTING EDGE

4 NPR 3F-5108 36 BOLT

NPR 4K-0367 36 NUT

9D9780 POWER BLADE GROUP--14 Foot
Part of 2G430 and 2G460 Power Blade Arrangement listed on Pages 271 and 271B

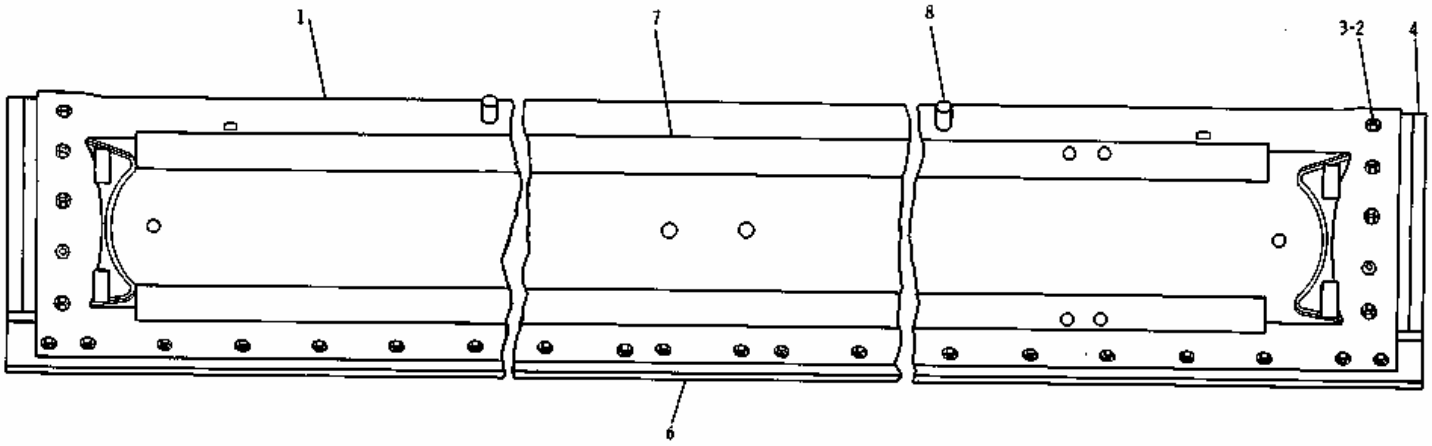

	REF NO.	PART NUMBER	DESCRIPTION	QTY
	1	9D9796	MOLDBOARD ASSEM	1
	2	3F5108	BOLT	40
	3	4K367	NUT	40
	4	7D2052	BIT	2
	6	5D9554	CUTTING EDGE	2
C	7	8B3401	RAIL	2
C	8	5T279	BOSS	2

C INDICATES CHANGE

182364

1 NPR 9D-9796 1 MOLDBOARD AS

2 NPR 3F-5108 40 BOLT-PLOW

3 NPR 4K-0367 40 NUT

4 NPR 7D-2052 2 BIT

6 NPR 5D-9554 2 EDGE-CUTTING

7 NPR C 8B-3401 2 RAIL-MOLDBOARD

8 NPR C 5T-0279 2 BOSS

Key:

C - CHANGE FROM PREVIOUS TYPE

2G400 BLADE GROUP--14 Foot-Part of 2G430 and 2G460 Blade Arrangements listed on Pages 271 and 271B

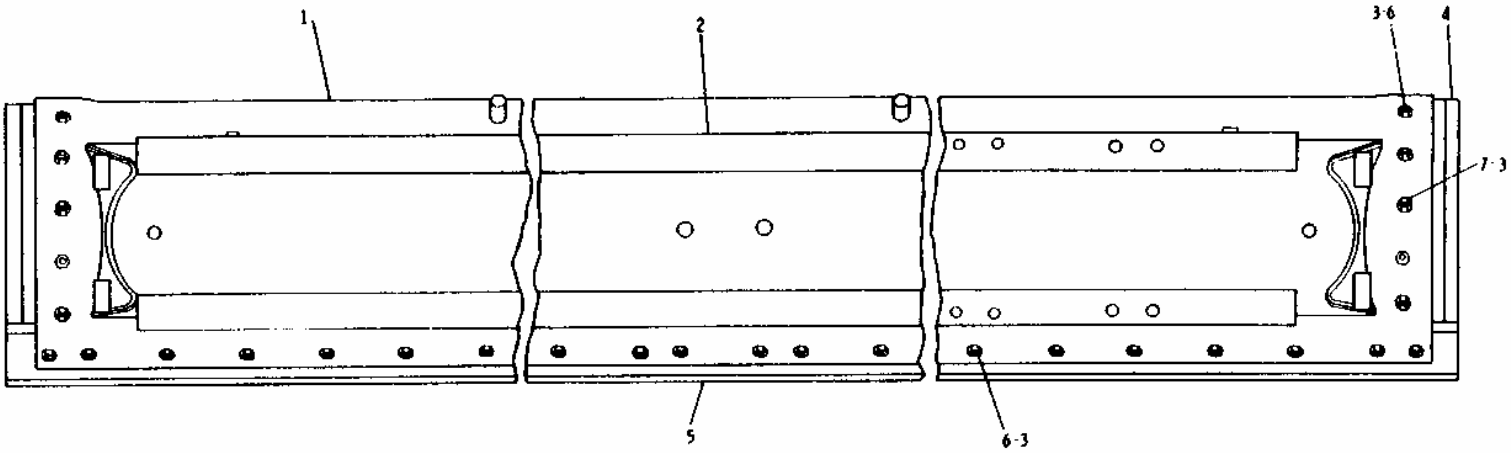

REF NO	PART NUMBER	DESCRIPTION	QTY
1	2G389	MOLDBOARD ASSEM.	1
		(Includes)	
2	8B3401	RAIL	2
3	4K367	NUT	40
4	7D2052	BIT	2
5	5D9554	CUTTING EDGE	2
6	3F5108	BOLT-------5.71 cm(2.25 in.) long	30
7	4F3654	BOLT----------5.08 cm(2 in.) long	10

159234

1 NPR 2G-0389 1 MOLDBOARD ASSEM.

(Includes)

2 NPR 8B-3401 2 RAIL

3 NPR 4K-0367 40 NUT

4 NPR 7D-2052 2 BIT

5 NPR 5D-9554 2 CUTTING EDGE

6 NPR 3F-5108 30 BOLT 5.71 cm(2.25 in.) long

7 NPR 4F-3654 10 BOLT 5.08 cm(2 in.) long

2G6059 BLADE GROUP
Part of 2G6321 Power Blade and 2G6316 Power Blade and Tip Arrangements listed on Pages 271 and 271B

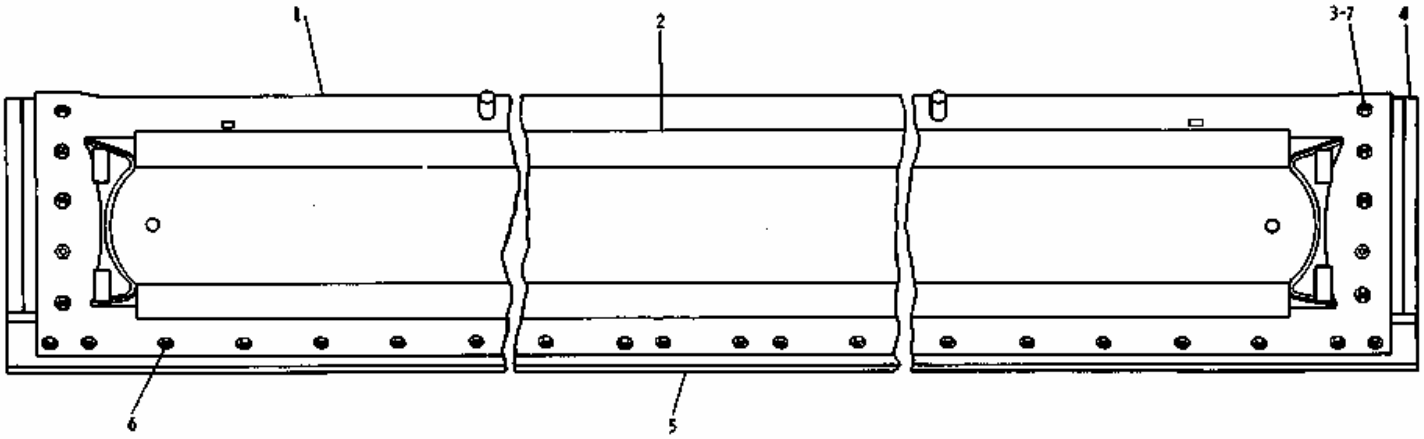

REF NO.	PART NUMBER	DESCRIPTION	QTY
1	2G6063	MOLDBOARD ASSEM. (Includes)	1
2	7B5030	RAIL	2
3	4K367	NUT	36
4	7D2052	BIT	2
5	5D9553	CUTTING EDGE	2
6	3F5108	BOLT	26
7	4F3654	BOLT	10

162064

1 NPR 2G-6063 1 MOLDBOARD ASSEM.

(Includes)

2 NPR 7B-5030 2 RAIL

3 NPR 4K-0367 36 NUT

4 NPR 7D-2052 2 BIT

5 NPR 5D-9553 2 CUTTING EDGE

6 NPR 3F-5108 26 BOLT

7 NPR 4F-3654 10 BOLT

9D6495 BLADE GROUP--14 Foot
Part of 9D6500 Power Blade and 9D6370 Power Blade and Tip Arrangements listed on Pages 271 and 271A

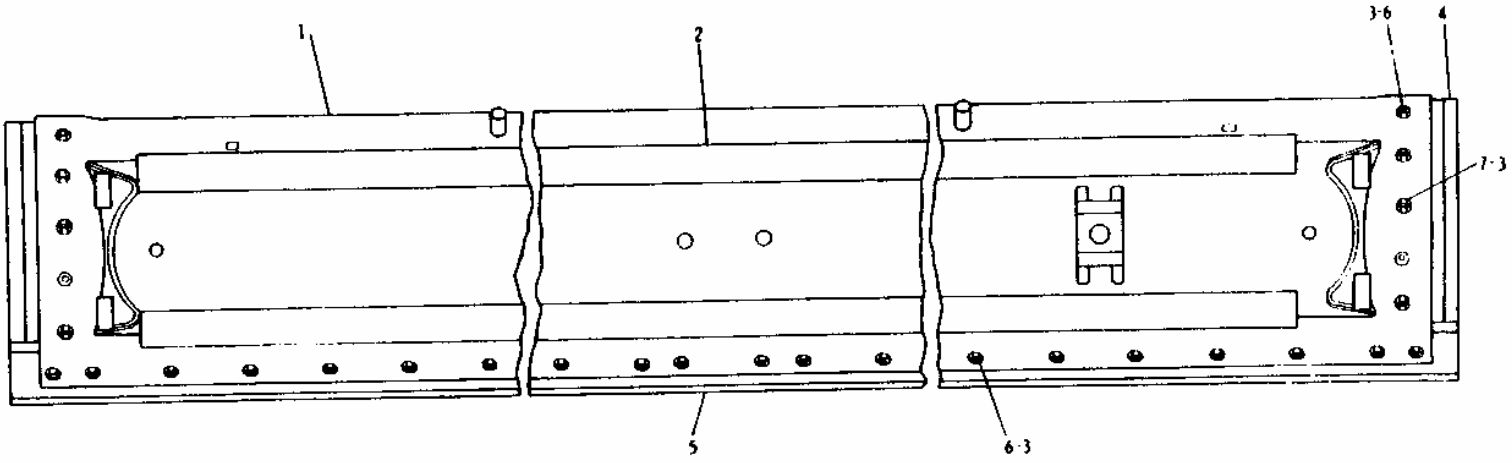

REF NO.	PART NUMBER	DESCRIPTION	QTY.
1	9D6382	MOLDBOARD ASSEM.	1
		(Includes)	
2	8B3401	RAIL	2
3	4K367	NUT	40
4	7D2052	BIT	2
5	5D9554	CUTTING EDGE	2
6	3F5108	BOLT-(2.25 in. long)	30
7	4F3654	BOLT-(2 in. long)	10

202213

1 NPR 9D-6382 1 MOLDBOARD ASSEM.

(Includes)

2 NPR 8B-3401 2 RAIL

3 NPR 4K-0367 40 NUT

4 NPR 7D-2052 2 BIT

5 NPR 5D-9554 2 CUTTING EDGE

6 NPR 3F-5108 30 BOLT (2.25 in. long)

7 NPR 4F-3654 10 BOLT (2 in. long)

9D1605 BLADE GROUP--12 Foot
Part of 9D6335 Power Blade and 9D6330 Power Blade and Tip Arrangements listed on Pages 271 and 271A

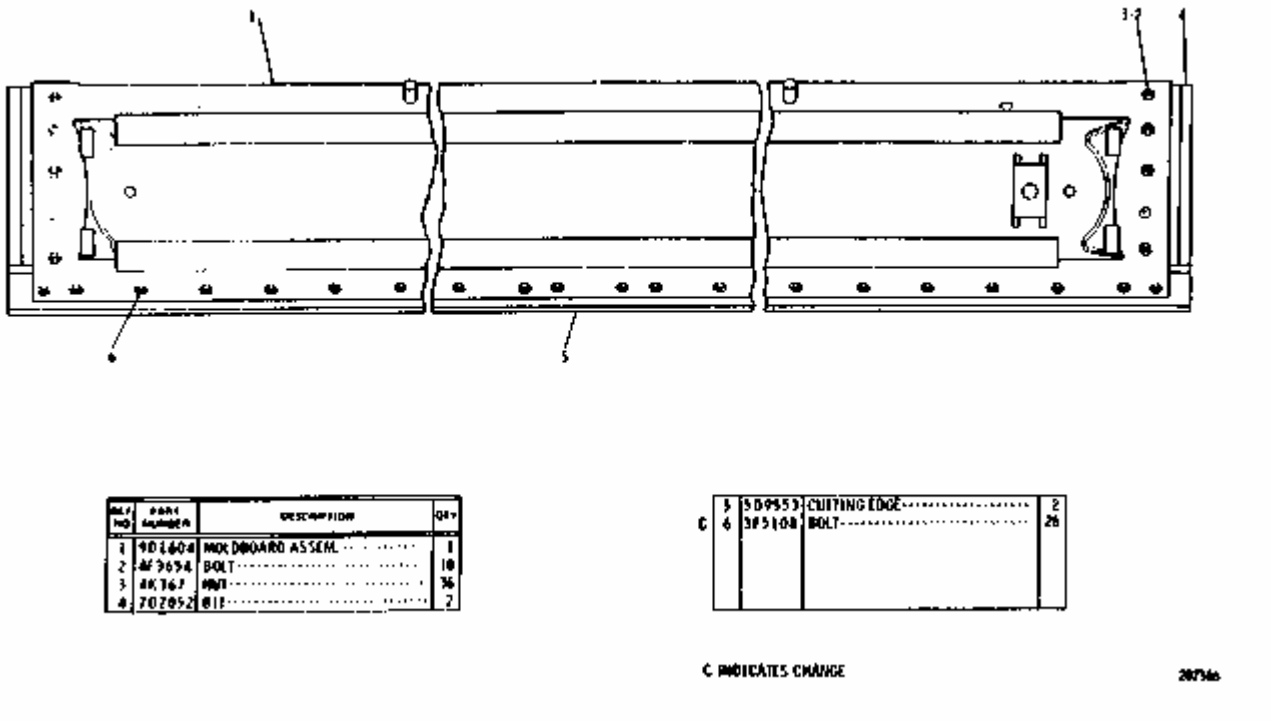

REF NO	PART NUMBER	DESCRIPTION	QTY
1	9D1604	MOLDBOARD ASSEM.	1
2	4F3654	BOLT	10
3	4K367	NUT	36
4	7D2052	BIT	2
5	5D9553	CUTTING EDGE	2
C 6	3F5108	BOLT	26

C INDICATES CHANGE

207546

1 NPR 9D-1604 1 MOLDBOARD ASSEM.

2 NPR 4F-3654 10 BOLT

3 NPR 4K-0367 36 NUT

4 NPR 7D-2052 2 BIT

5 NPR 5D-9553 2 CUTTING EDGE

6 NPR C 3F-5108 26 BOLT

Key:

C - INDICATES CHANGE

9D740 BLADE GROUP--12 Foot

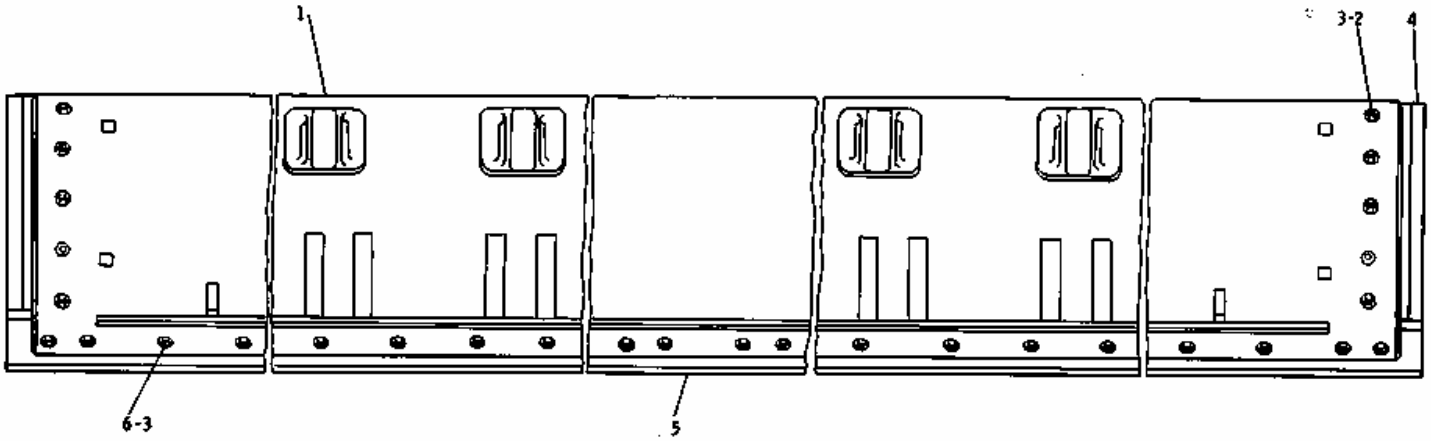

REF. NO.	PART NUMBER	DESCRIPTION	QTY
1	5D2219	MOLDBOARD ASSEM.	1
2	4F3654	BOLT	10
3	4K367	NUT	36
4	7D2052	BIT	2
5	5D9553	CUTTING EDGE	2
6	3F5108	BOLT	26

202563

1 NPR 5D-2219 4 MOLDBOARD ASSEM.

2 NPR 4F-3654 10 BOLT

3 NPR 4K-0367 36 NUT

4 NPR 7D-2052 2 BIT

5 NPR 5D-9553 2 CUTTING EDGE

6 NPR 3F-5108 26 BOLT

7D6255 CUTTING EDGE GROUP-FOR USE WITH 14 FOOT BLADE

NPR	5D-9559	2	CUTTING EDGE

7D6265 CUTTING EDGE GROUP-FOR USE WITH 12 FOOT BLADE

NPR	5D-9558	2	CUTTING EDGE

7D6671 ENDBIT OVERLAY GROUP-FOR USE WITH 6" CUTTING EDGE

NPR	6D-1904	2	END BIT
NPR	4F-3657	10	BOLT

CUTTING EDGE REPLACEMENT -- Field Installation--FOR USE WITH 3.66 m (12 Ft.) BLADE GROUP

2	4T2243	Cutting Edge—Straight—1.83 m (6 Ft.)— 203.2 mm (8 in.) Wide & 25.4 mm (1 in) Thick
2	4T2244	Cutting Edge—Curved—1.83 m (6 Ft.)— 203.2 mm (8 in.) Wide & 25.4 mm (1 in) Thick
2	4T2231	Cutting Edge—Curved—1.83 m (6 Ft.)— 203.2 mm (8 in.) Wide & 25.4 mm (1 in) Thick
2	4T2232	Cutting Edge—Straight—1.83 m (6 Ft.)— 203.2 mm (8 in.) Wide & 25.4 mm (1 in) Thick

CUTTING EDGE REPLACEMENT -- Field Installation
FOR USE WITH 4.27 m (14 Ft.) BLADE GROUP

2	4T2241	Cutting Edge—Straight—2.13 m (7 Ft.)— 203.2 mm (8 in.) Wide & 25.4 mm (1 in) Thick
2	4T2242	Cutting Edge—Curved—2.13 m (7 Ft.)— 203.2 mm (8 in.) Wide & 25.4 mm (1 in) Thick

9D6780 CUTTING EDGE AND ENDBIT GROUP

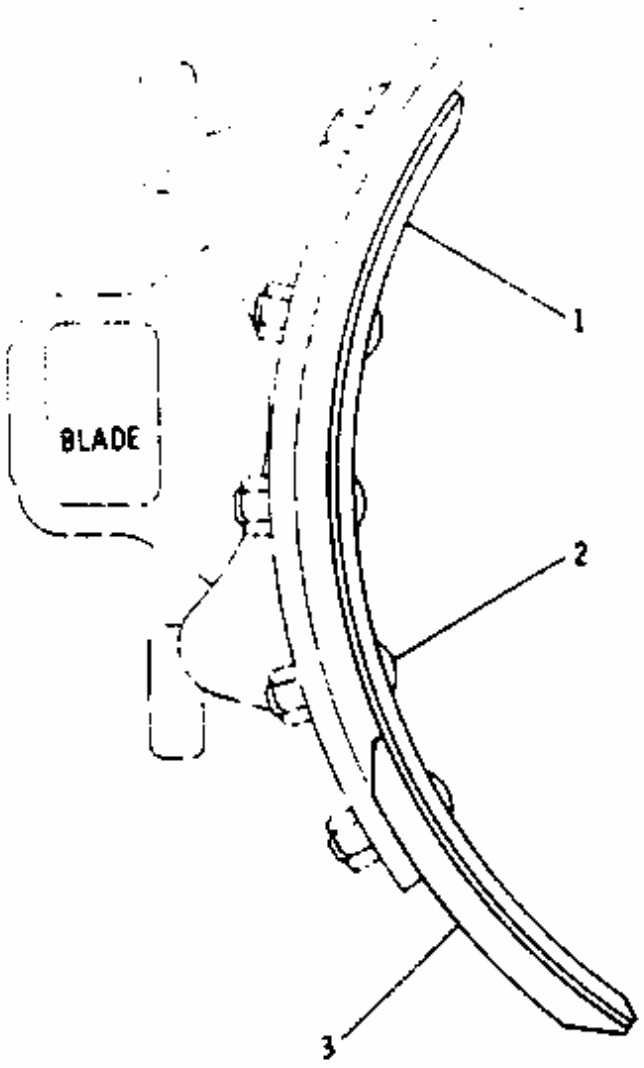

REF NO	PART NUMBER	DESCRIPTION	QTY
1	6D1948	END BIT	2
2	4F3656	BOLT	10
3	5D9558	CUTTING EDGE	2

202217

1 NPR 6D-1948 2 END BIT

2 NPR 4F-3656 10 BOLT

3 NPR 5D-9558 2 CUTTING EDGE

9D6770 CUTTING EDGE AND ENDBIT GROUP

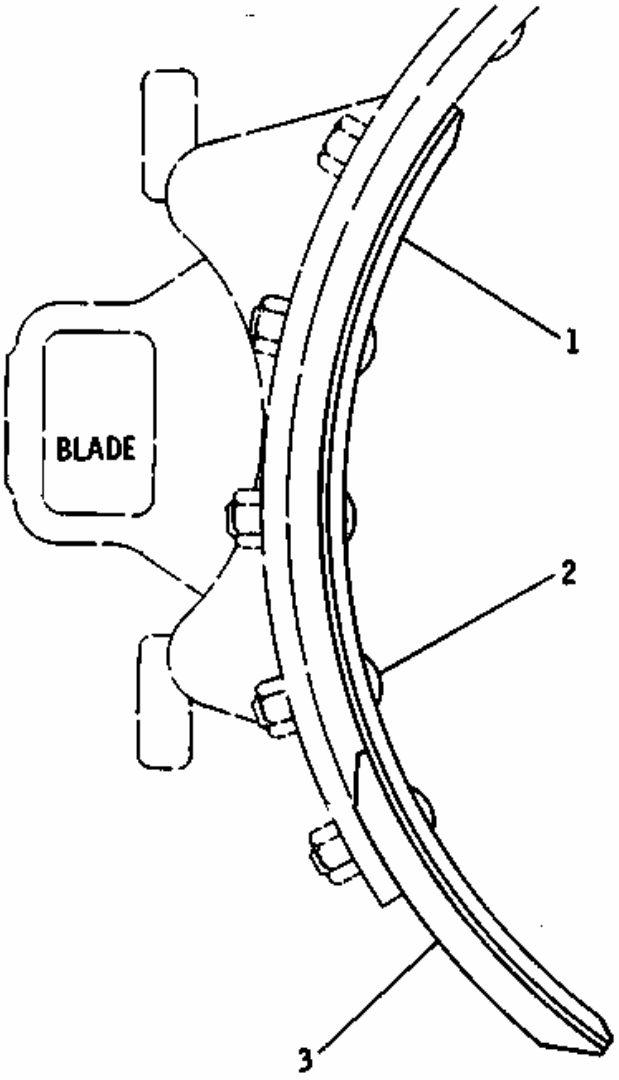

REF. NO.	PART NUMBER	DESCRIPTION	QTY
1	6D1948	END BIT----------	2
2	4F3656	BOLT----------	10
3	5D9559	CUTTING EDGE----------	2

202218

1 NPR 6D-1948 2 END BIT

2 NPR 4F-3656 10 BOLT

3 NPR 5D-9559 2 CUTTING EDGE

9D1690 HYDRAULIC SCARIFIER GROUP--1 Circuit--"V" Type--Part 1--Replaced by 2G5560 shown on Pages 269A & 269B
Serial No. 87V1138 to 87V3202 inclusive and 82V668 to 82V803 inclusive
Part of 9D5545 VEE Scarifier Arrangement listed on Page 270

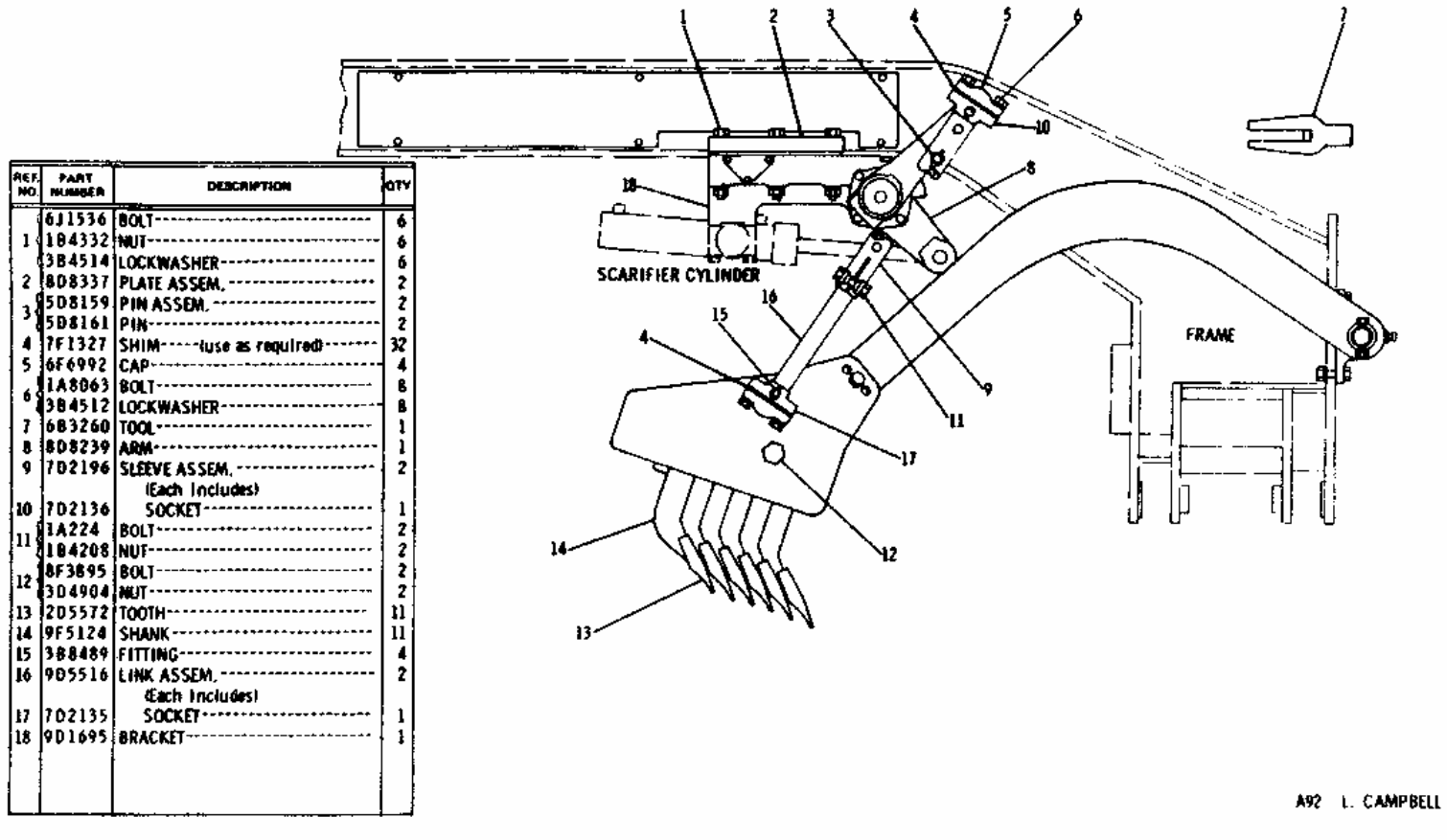

REF. NO.	PART NUMBER	DESCRIPTION	QTY
	6J1536	BOLT	6
1	1B4332	NUT	6
	3B4514	LOCKWASHER	6
2	8D8337	PLATE ASSEM.	2
3	5D8159	PIN ASSEM.	2
	5D8161	PIN	2
4	7F1327	SHIM-----(use as required)	32
5	6F6992	CAP	4
6	1A8063	BOLT	8
	3B4512	LOCKWASHER	8
7	6B3260	TOOL	1
8	8D8239	ARM	1
9	7D2196	SLEEVE ASSEM. (Each Includes)	2
10	7D2136	SOCKET	1
11	1A224	BOLT	2
	1B4208	NUT	2
12	8F3895	BOLT	2
	3D4904	NUT	2
13	2D5572	TOOTH	11
14	9F5124	SHANK	11
15	3B8489	FITTING	4
16	9D5516	LINK ASSEM. (Each Includes)	2
17	7D2135	SOCKET	1
18	9D1695	BRACKET	1

1 NPR 6J-1536 6 BOLT

NPR 1B-4332 6 NUT

NPR 3B-4514 6 LOCKWASHER

2 NPR 8D-8337 2 PLATE ASSEM.

3 NPR 5D-8159 2 PIN ASSEM.

NPR 5D-8161 2 PIN

4 NPR 7F-1327 32 SHIM (use as required)

5 NPR CL 6F-6992 4 CAP

CL NPR 297-7160 1 CAP-CLA

6 NPR 1A-8063 8 BOLT

NPR 3B-4512 8 LOCKWASHER

7 NPR 6B-3260 1 TOOL

8 NPR 8D-8239 1 ARM

9 NPR 7D-2196 2 SLEEVE ASSEM.

(Each Includes)

10 NPR 7D-2136 1 SOCKET

11 NPR 1A-0224 2 BOLT

NPR 1B-4208 2 NUT

12 NPR 8F-3895 2 BOLT

NPR 3D-4904 2 NUT

13 NPR 2D-5572 11 TOOTH

14 NPR 9F-5124 11 SHANK

15 NPR 3B-8489 4 FITTING

16 NPR 9D-5516 2 LINK ASSEM.

(Each Includes)

17 NPR 7D-2135 1 SOCKET

18 NPR 9D-1695 1 BRACKET

Key:

CL - Classic Part Available

9D1690 HYDRAULIC SCARIFIER GROUP--1 Circuit "V" Type--Part 2--Replaced by 2G5560 shown on Pages 269A & 269B
Serial No. 87V1138 to 87V3202 inclusive and 82V668 to 82V803 inclusive
Part of 9D5545 VEE Scarifier Arrangement listed on Page 270

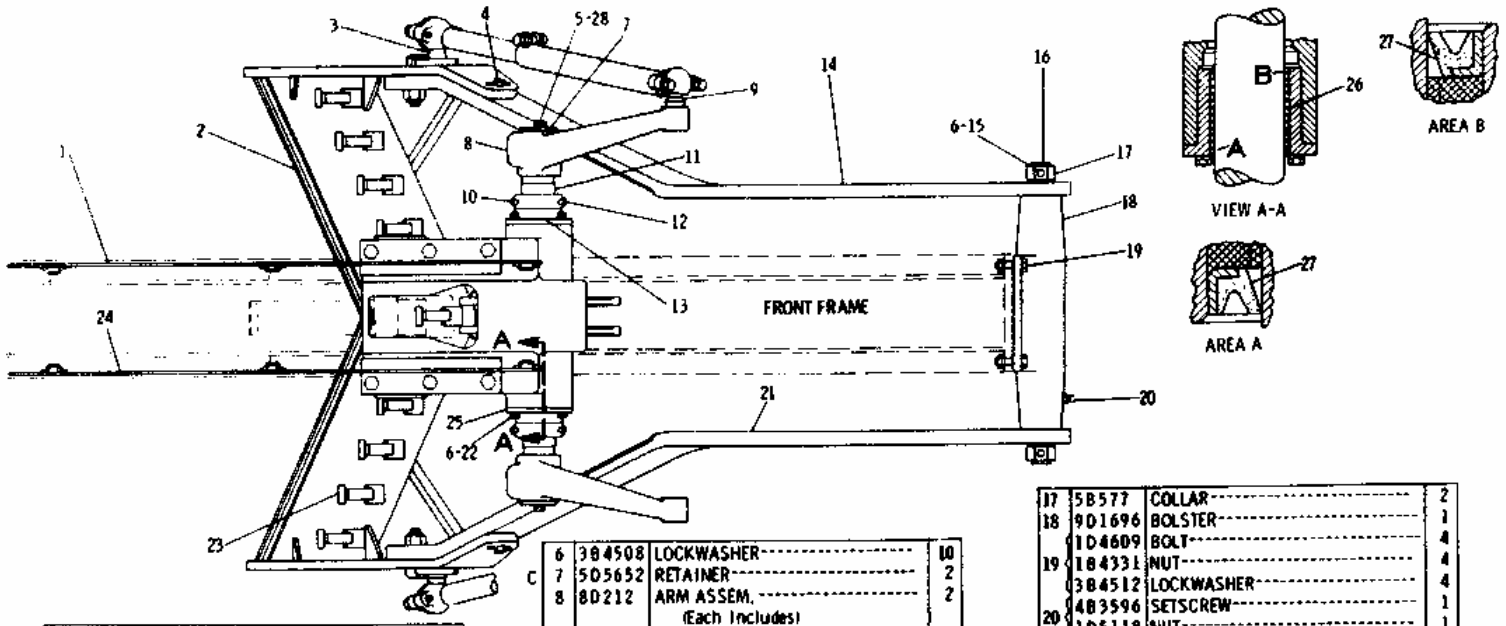

REF. NO.	PART NUMBER	DESCRIPTION	QTY
1	9D5472	COVER ASSEM. ------(L.H.)------	1
2	2G1778	BLOCK ASSEM. ----------	1
		(Includes)	
3	9D6451	BALLSTUD ASSEM. ----------	2
		(Each Includes)	
	7D8245	BALLSTUD----------	1
4	2H3856	BOLT----------	2
	6K545	NUT----------	2
5	S1626	BOLT----------	2
6	3B4508	LOCKWASHER----------	10
C 7	5D5652	RETAINER----------	2
8	8D212	ARM ASSEM. ----------	2
		(Each Includes)	
9	7D8245	BALLSTUD----------	1
10	S1571	BOLT----------	4
	3B4506	LOCKWASHER----------	4
C 11	2G1257	SHAFT----------	1
12	7D4024	CLAMP---------(top)----------	2
	7D4025	CLAMP-----(bottom)----------	2
13	8D8214	SPACER----------	2
14	9D7152	DRAWBAR---------(L.H.)---------	1
15	L2315	BOLT----------	2
	1B4205	NUT----------	2
16	4D1472	SHAFT----------	1
17	5B577	COLLAR----------	2
18	9D1696	BOLSTER----------	1
19	1D4609	BOLT----------	4
	1B4331	NUT----------	4
	3B4512	LOCKWASHER----------	4
20	4B3596	SETSCREW----------	1
	1D5118	NUT----------	1
21	9D7151	DRAWBAR---------(R.H.)---------	1
22	S1585	BOLT----------	8
23	9F5116	PIN----------	11
24	9D5471	COVER ASSEM. ------(R.H.)------	1
25	8D8346	BEARING ASSEM. ----------	2
		(Each Includes)	
26	8D8572	BEARING----------	1
27	9D6591	SEAL----------	4
C 28	1B8589	LOCKWASHER----------	2

C INDICATES CHANGE A18 L. CAMPBELL

1 NPR 9D-5472 1 COVER ASSEM. (L.H.)

2 NPR 2G-1778 1 BLOCK ASSEM.

(Includes)

3 NPR 9D-6451 2 BALLSTUD ASSEM.

(Each Includes)

NPR 7D-8245 1 BALLSTUD

4 NPR 2H-3856 2 BOLT

NPR 6K-0545 2 NUT

5 NPR 0S-1626 2 BOLT

6 NPR 3B-4508 10 LOCKWASHER

7 NPR C 5D-5652 2 RETAINER

8 NPR 8D-0212 2 ARM ASSEM.

(Each Includes)

9 NPR 7D-8245 1 BALLSTUD

10 NPR 0S-1571 4 BOLT

NPR 3B-4506 4 LOCKWASHER

11 NPR C 2G-1257 1 SHAFT

12 NPR 7D-4024 2 CLAMP (top)

NPR 7D-4025 2 CLAMP (bottom)

13 NPR 8D-8214 2 SPACER

14 NPR 9D-7152 1 DRAWBAR (L.H.)

15 NPR 0L-2315 2 BOLT

NPR 1B-4205 2 NUT

16 NPR 4D-1472 1 SHAFT

17 NPR CL 5B-0577 2 COLLAR

CL NPR 299-1992 1 COLLAR-CLA

18 NPR 9D-1696 1 BOLSTER

19 NPR 1D-4609 4 BOLT

NPR 1B-4331 4 NUT

NPR 3B-4512 4 LOCKWASHER

20 NPR 4B-3596 1 SETSCREW

NPR 1D-5118 1 NUT

21 NPR 9D-7151 1 DRAWBAR (R.H.)

22 NPR 0S-1585 8 BOLT

23 NPR 9F-5116 11 PIN

24 NPR 9D-5471 1 COVER ASSEM. (R.H.)

25 NPR 8D-8346 2 BEARING ASSEM.

(Each Includes)

26 NPR 8D-8572 1 BEARING

27 NPR 9D-6591 4 SEAL

28 NPR C 1B-8589 2 LOCKWASHER

Key:

CL - Classic Part Available
C - INDICATES CHANGE

2G5560 HYDRAULIC SCARIFIER GROUP--1 Circuit--"V" Type--Part 1
Serial No. 87V1138 to 87V3202 inclusive and 82V668 to 82V803 inclusive
Part of 9D5545 VEE Scarifier Arrangement listed on Page 270

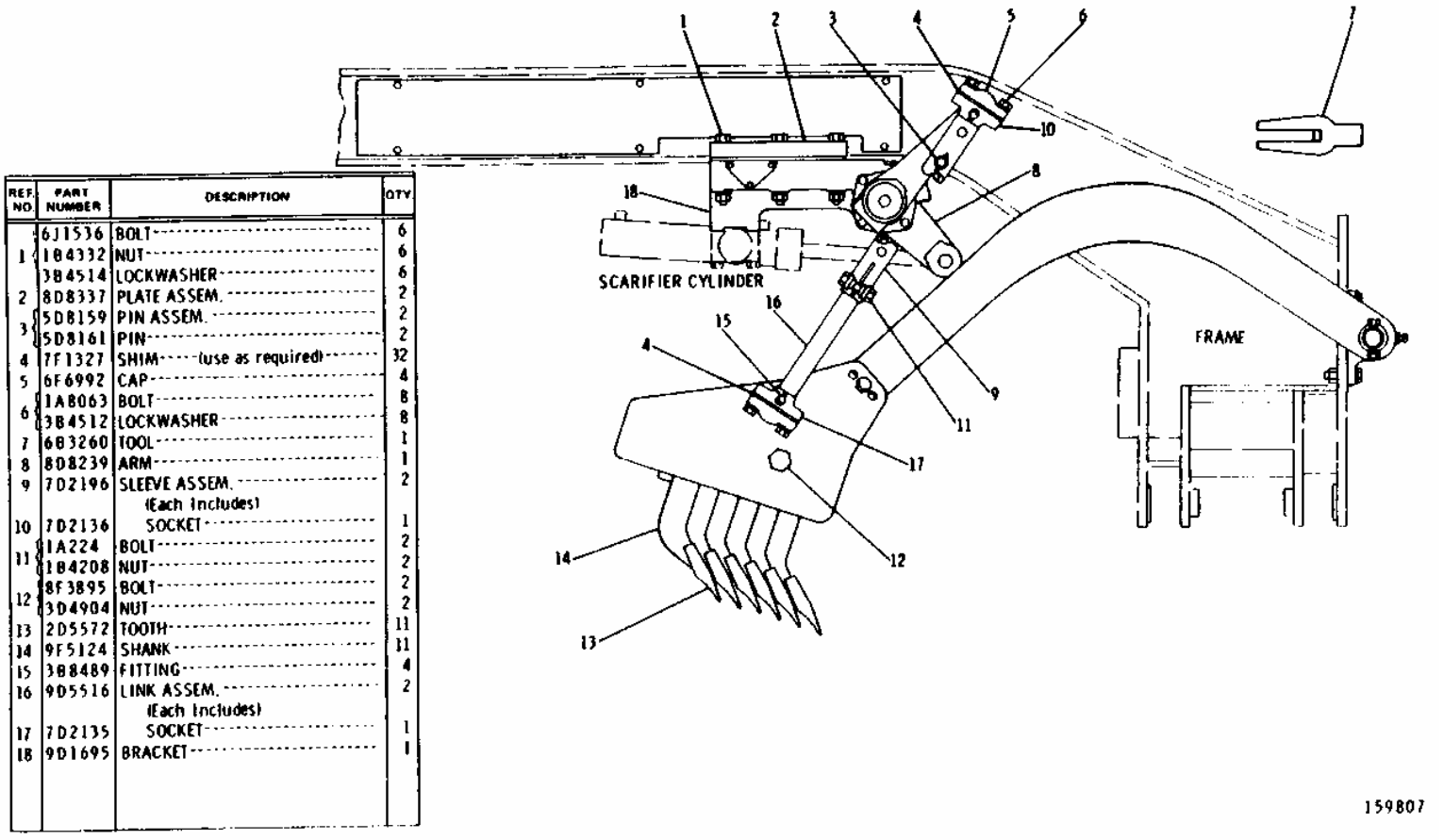

REF. NO.	PART NUMBER	DESCRIPTION	QTY.
	6J1536	BOLT	6
1	1B4332	NUT	6
	3B4514	LOCKWASHER	6
2	8D8337	PLATE ASSEM.	2
3	5D8159	PIN ASSEM.	2
	5D8161	PIN	2
4	7F1327	SHIM-----(use as required)	32
5	6F6992	CAP	4
6	1A8063	BOLT	8
	3B4512	LOCKWASHER	8
7	6B3260	TOOL	1
8	8D8239	ARM	1
9	7D2196	SLEEVE ASSEM. (Each Includes)	2
10	7D2136	SOCKET	1
11	1A224	BOLT	2
	1B4208	NUT	2
12	8F3895	BOLT	2
	3D4904	NUT	2
13	2D5572	TOOTH	11
14	9F5124	SHANK	11
15	3B8489	FITTING	4
16	9D5516	LINK ASSEM. (Each Includes)	2
17	7D2135	SOCKET	1
18	9D1695	BRACKET	1

1 NPR 6J-1536 6 BOLT

NPR 1B-4332 6 NUT

NPR 3B-4514 6 LOCKWASHER

2 NPR 8D-8337 2 PLATE ASSEM.

3 NPR 5D-8159 2 PIN ASSEM.

NPR 5D-8161 2 PIN

4 NPR 7F-1327 32 SHIM (use as required)

5 NPR CL 6F-6992 4 CAP

CL NPR 297-7160 1 CAP-CLA

6 NPR 1A-8063 8 BOLT

NPR 3B-4512 8 LOCKWASHER

7 NPR 6B-3260 1 TOOL

8 NPR 8D-8239 1 ARM

9 NPR 7D-2196 2 SLEEVE ASSEM.

(Each Includes)

10 NPR 7D-2136 1 SOCKET

11 NPR 1A-0224 2 BOLT

NPR 1B-4208 2 NUT

12 NPR 8F-3895 2 BOLT

NPR 3D-4904 2 NUT

13 NPR 2D-5572 11 TOOTH

14 NPR 9F-5124 11 SHANK

15 NPR 3B-8489 4 FITTING

16 NPR 9D-5516 2 LINK ASSEM.

(Each Includes)

17 NPR 7D-2135 1 SOCKET

18 NPR 9D-1695 1 BRACKET

Key:

CL - Classic Part Available

2G5560 HYDRAULIC SCARIFIER GROUP--1 Circuit--"V" Type--Part 2
Serial No. 87V1138 to 87V3202 inclusive and 82V668 to 82V803 inclusive
Part of 9D5545 VEE Scarifier Arrangement listed on Page 270

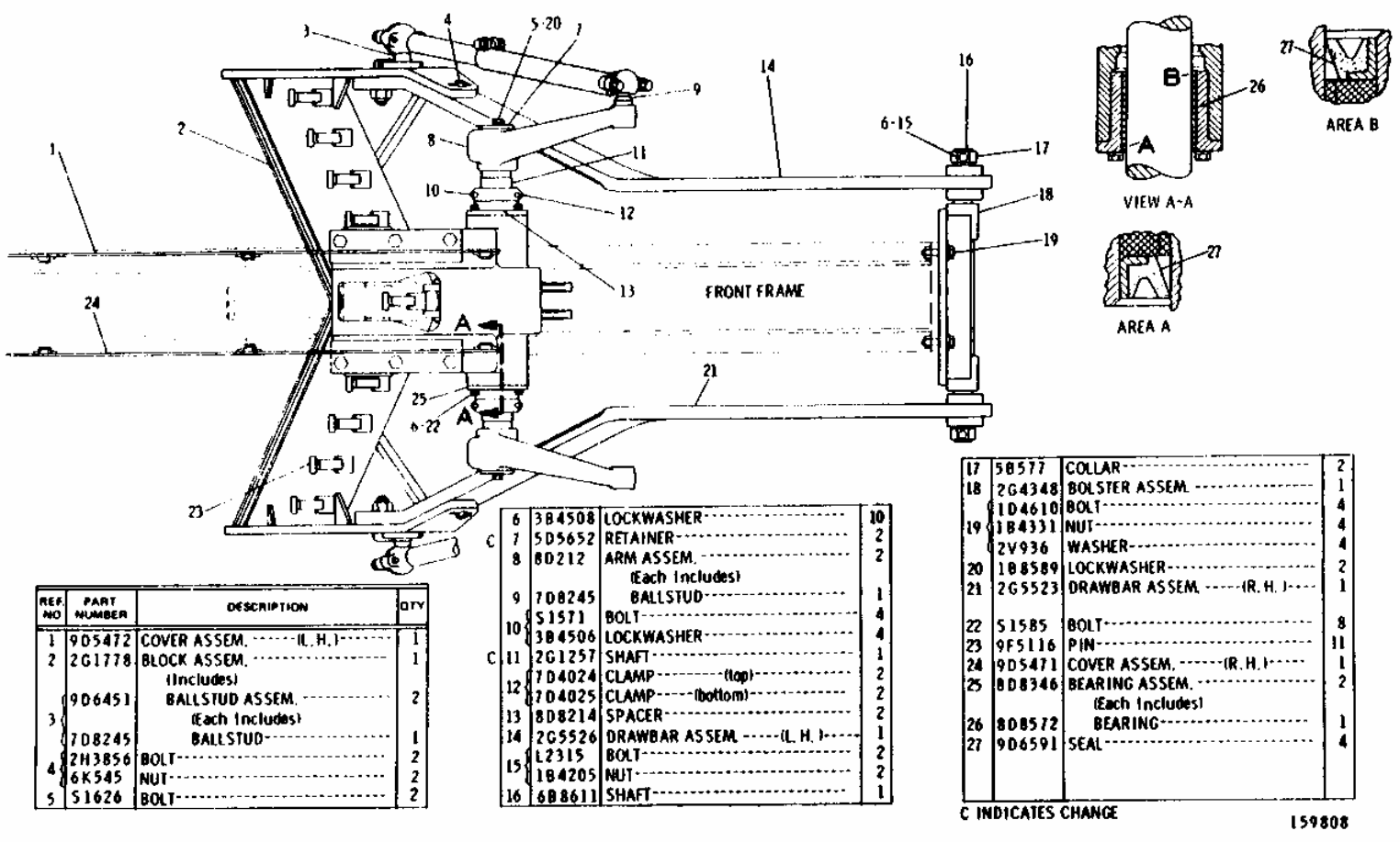

REF NO	PART NUMBER	DESCRIPTION	QTY
1	9D5472	COVER ASSEM. (L.H.)	1
2	2G1778	BLOCK ASSEM.	1
		(Includes)	
3	9D6451	BALLSTUD ASSEM.	2
		(Each Includes)	
	7D8245	BALLSTUD	1
4	2H3856	BOLT	2
	6K545	NUT	2
5	S1626	BOLT	2
6	3B4508	LOCKWASHER	10
C 7	5D5652	RETAINER	2
8	8D212	ARM ASSEM.	2
		(Each Includes)	
9	7D8245	BALLSTUD	1
10	S1571	BOLT	4
	3B4506	LOCKWASHER	4
C 11	2G1257	SHAFT	1
12	7D4024	CLAMP (top)	2
	7D4025	CLAMP (bottom)	2
13	8D8214	SPACER	2
14	2G5526	DRAWBAR ASSEM. (L.H.)	1
15	L2315	BOLT	2
	1B4205	NUT	2
16	6B8611	SHAFT	1
17	5B577	COLLAR	2
18	2G4348	BOLSTER ASSEM.	1
	1D4610	BOLT	4
19	1B4331	NUT	4
	2V936	WASHER	4
20	1B8589	LOCKWASHER	2
21	2G5523	DRAWBAR ASSEM. (R.H.)	1
22	S1585	BOLT	8
23	9F5116	PIN	11
24	9D5471	COVER ASSEM. (R.H.)	1
25	8D8346	BEARING ASSEM.	2
		(Each Includes)	
26	8D8572	BEARING	1
27	9D6591	SEAL	4

C INDICATES CHANGE

159808

1 NPR 9D-5472 1 COVER ASSEM. (L.H.)

2 NPR 2G-1778 1 BLOCK ASSEM.

(Includes)

3 NPR 9D-6451 2 BALLSTUD ASSEM.

(Each Includes)

NPR 7D-8245 1 BALLSTUD

4 NPR 2H-3856 2 BOLT

NPR 6K-0545 2 NUT

5 NPR 0S-1626 2 BOLT

6 NPR 3B-4508 10 LOCKWASHER

7 NPR C 5D-5652 2 RETAINER

8 NPR 8D-0212 2 ARM ASSEM.

(Each Includes)

9 NPR 7D-8245 1 BALLSTUD

10 NPR 0S-1571 4 BOLT

NPR 3B-4506 4 LOCKWASHER

11 NPR C 2G-1257 1 SHAFT

12 NPR 7D-4024 2 CLAMP (top)

NPR 7D-4025 2 CLAMP (bottom)

13 NPR 8D-8214 2 SPACER

14 NPR 2G-5526 1 DRAWBAR ASSEM. (L.H.)

15 NPR 0L-2315 2 BOLT

NPR 1B-4205 2 NUT

16 NPR 6B-8611 1 SHAFT

17 NPR CL 5B-0577 2 COLLAR

CL NPR 299-1992 1 COLLAR-CLA

18 NPR 2G-4348 1 BOLSTER ASSEM.

19 NPR 1D-4610 4 BOLT

NPR 1B-4331 4 NUT

NPR 2V-0936 4 WASHER

20 NPR 1B-8589 2 LOCKWASHER

21 NPR 2G-5523 1 DRAWBAR ASSEM. (R.H.)

22 NPR 0S-1585 8 BOLT

23 NPR 9F-5116 11 PIN

24 NPR 9D-5471 1 COVER ASSEM. (R.H.)

25 NPR 8D-8346 2 BEARING ASSEM.

(Each Includes)

26 NPR 8D-8572 1 BEARING

27 NPR 9D-6591 4 SEAL

Key: CL - Classic Part Available C - INDICATES CHANGE

POWER

TRAIN

9D9850 ENGINE TO TRANSMISSION ADAPTER GROUP

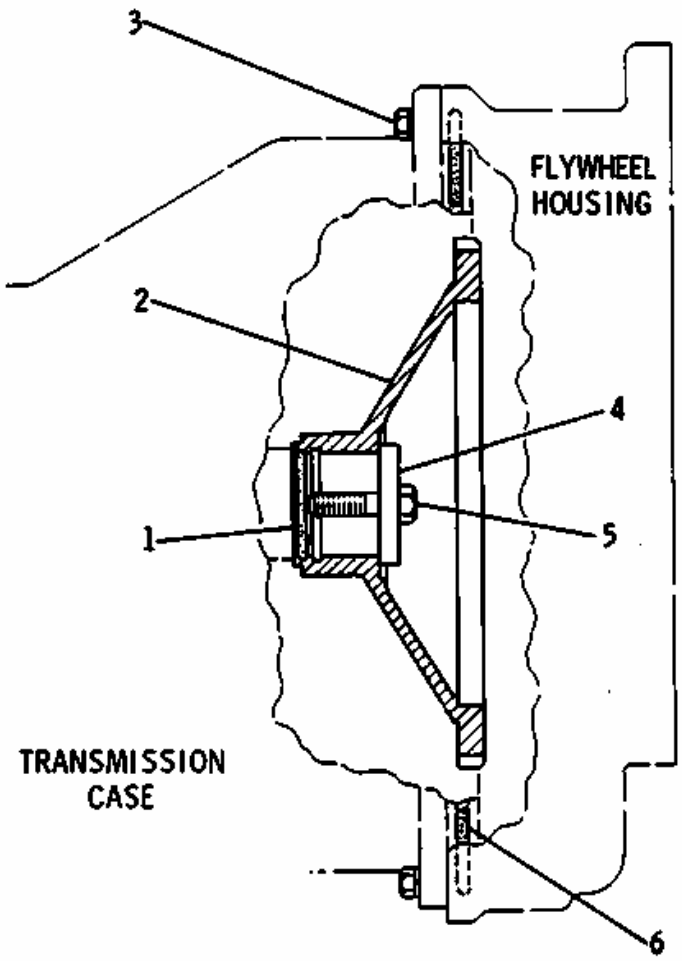

	REF. NO.	PART NUMBER	DESCRIPTION	QTY
	1	8F6711	SEAL	1
	2	3P324	COUPLING	1
	3	3B1915	BOLT	12
		3B4506	LOCKWASHER	12
	4	4S5824	RETAINER	1
	5	S1579	BOLT	1
C	6	5M6200	SEAL	1

C INDICATES CHANGE 155940

1 NPR 8F-6711 1 SEAL

2 NPR 3P-0324 1 COUPLING

3 NPR 3B-1915 12 BOLT

NPR 3B-4506 12 LOCKWASHER

4 NPR 4S-5824 1 RETAINER

5 NPR 0S-1579 1 BOLT

6 NPR C 5M-6200 1 SEAL

Key: C - INDICATES CHANGE

2G585 CHAIN GROUP

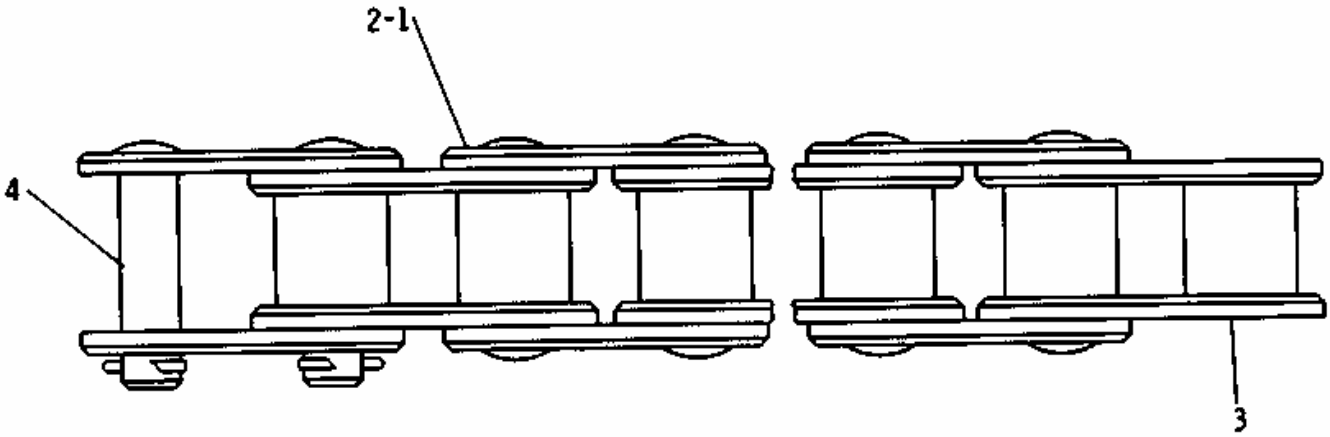

	REF. NO.	PART NUMBER	DESCRIPTION	QTY.
	1	2G581	CHAIN GROUP----------	4
			(Each Includes)	
	2	2G584	LINK-------(pin)----------	26
	3	2G583	LINK-------(roller)----------	27
	4	2G582	LINK-------(connecting)-----	1
			THE FOLLOWING REPAIR KIT IS AVAILABLE:	
C		6G5874	KIT-------(cotter)----------	1

C INDICATES CHANGE

228067

1 NPR 2G-0581 4 CHAIN GROUP

(Each Includes)

2 NPR 2G-0584 26 LINK (pin)

3 NPR 2G-0583 27 LINK (roller)

4 NPR 2G-0582 1 LINK (connecting)

THE FOLLOWING REPAIR KIT IS AVAILABLE:

NPR C 6G-5874 1 KIT (cotter)

Key: C - INDICATES CHANGE

9D5020 CLUTCH CONTROL GROUP

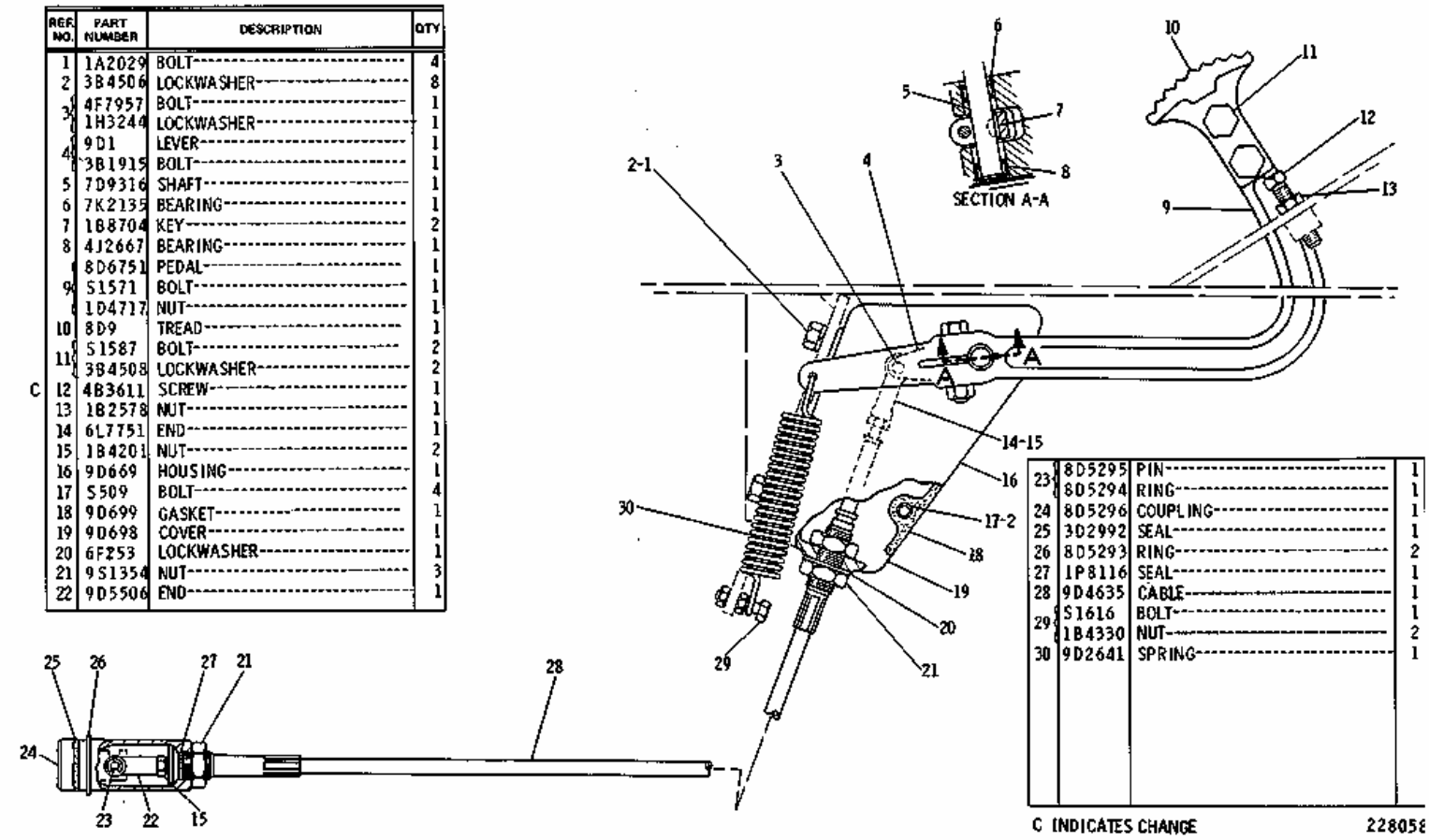

REF. NO.	PART NUMBER	DESCRIPTION	QTY
1	1A2029	BOLT	4
2	3B4506	LOCKWASHER	8
3	4F7957	BOLT	1
	1H3244	LOCKWASHER	1
4	9D1	LEVER	1
	3B1915	BOLT	1
5	7D9316	SHAFT	1
6	7K2135	BEARING	1
7	1B8704	KEY	2
8	4J2667	BEARING	1
9	8D6751	PEDAL	1
	S1571	BOLT	1
	1D4717	NUT	1
10	8D9	TREAD	1
11	S1587	BOLT	2
	3B4508	LOCKWASHER	2
C 12	4B3611	SCREW	1
13	1B2578	NUT	1
14	6L7751	END	1
15	1B4201	NUT	2
16	9D669	HOUSING	1
17	S509	BOLT	4
18	9D699	GASKET	1
19	9D698	COVER	1
20	6F253	LOCKWASHER	1
21	9S1354	NUT	3
22	9D5506	END	1

23	8D5295	PIN	1
	8D5294	RING	1
24	8D5296	COUPLING	1
25	3D2992	SEAL	1
26	8D5293	RING	2
27	1P8116	SEAL	1
28	9D4635	CABLE	1
29	S1616	BOLT	1
	1B4330	NUT	2
30	9D2641	SPRING	1

C INDICATES CHANGE

228058

1 NPR 1A-2029 4 BOLT

2 NPR 3B-4506 8 LOCKWASHER

3 NPR 4F-7957 1 BOLT

NPR 1H-3244 1 LOCKWASHER

4 NPR 9D-0001 1 LEVER

NPR 3B-1915 1 BOLT

5 NPR 7D-9316 1 SHAFT

6 NPR 7K-2135 1 BEARING

7 NPR 1B-8704 2 KEY

8 NPR 4J-2667 1 BEARING

9 NPR 8D-6751 1 PEDAL

NPR 0S-1571 1 BOLT

NPR 1D-4717 1 NUT

10	NPR	8D-0009	1	TREAD
11	NPR	0S-1587	2	BOLT
	NPR	3B-4508	2	LOCKWASHER
12	NPR C	4B-3611	1	SCREW
13	NPR	1B-2578	1	NUT
14	NPR	6L-7751	1	END
15	NPR	1B-4201	2	NUT
16	NPR	9D-0669	1	HOUSING
17	NPR	0S-0509	4	BOLT
18	NPR	9D-0699	1	GASKET
19	NPR	9D-0698	1	COVER
20	NPR	6F-0253	1	LOCKWASHER
21	NPR	9S-1354	3	NUT
22	NPR	9D-5506	1	END
23	NPR	8D-5295	1	PIN
	NPR	8D-5294	1	RING
24	NPR	8D-5296	1	COUPLING
25	NPR	3D-2992	1	SEAL
26	NPR	8D-5293	2	RING
27	NPR	1P-8116	1	SEAL
28	NPR	9D-4635	1	CABLE
29	NPR	0S-1616	1	BOLT
	NPR	1B-4330	2	NUT
30	NPR	9D-2641	1	SPRING

Key: C - INDICATES CHANGE

9D2140 DIFFERENTIAL LOCK CONTROL--Type 1
Part of 9D5815 Differential Lock Arrangement listed on Page 138
8D6813 and 2P7014 Valve parts are shown on Page 142

REF. NO.	PART NUMBER	DESCRIPTION	QTY.
1	2P7014	VALVE GROUP (Separate Illustration)	1
2	5H4778	UNION	3
3	7D3024	HOSE ASSEM. --30.48 dm (126 in.)	1
4	4S7563	HOSE ASSEM. --7.49 dm (29.50 in.)	1
5	8D6813	VALVE GROUP (Separate Illustration)	1
6	S1594	BOLT	2
7	3B4506	LOCKWASHER	4
8	2L9038	NUT	1
	4B4276	WASHER	1
9	4S5854	SPRING	1
	8D4852	PEDAL ASSEM. (Includes)	1
10	4F3492	DOWEL	1
	1F2697	BEARING	1
11	8D4872	YOKE ASSEM.	1
12	4B2605	PIN	1
	3B4609	COTTER PIN	1
13	3B6768	BUSHING	1
14	3L6521	TEE	1
15	4H6147	UNION	1
16	8D4844	BRACKET ASSEM. (Includes)	1
17	9F4233	BUSHING	2
18	6J3335	PIN	2
	3B4615	COTTER PIN	2
19	8D7564	INSERT	1
20	4B4278	WASHER	1
21	8D5099	LEVER ASSEM. (Includes)	1
22	4H89	BUSHING	2
23	8D4977	PIN	1
C 24	5M8009	PIN	1
C 25	2G356	SPRING	1
26	3B6553	ELBOW	1
27	L2070	BOLT	2
28	8M4437	SEAL	3
29	4D6434	CLIP	1
C 30	9M8406	CLIP	1

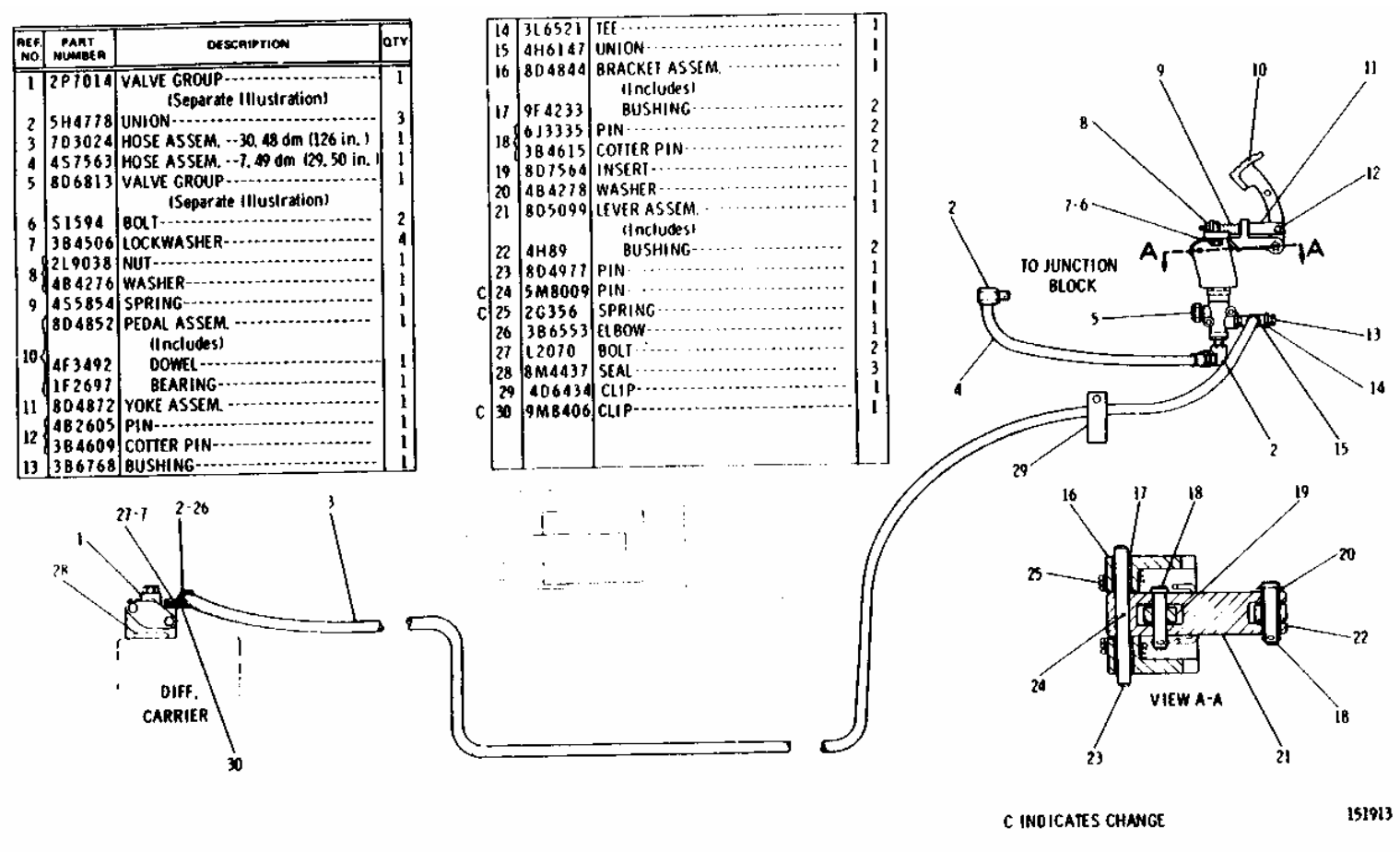

1 NPR Y 2P-7014 1 VALVE GROUP

(Separate Illustration)

2 NPR 5H-4778 3 UNION

3 NPR 7D-3024 1 HOSE ASSEM. 30.48 dm (126 in.)

4 NPR 4S-7563 1 HOSE ASSEM. 7.49 dm (29.50 in.)

5 NPR Y 8D-6813 1 VALVE GROUP

(Separate Illustration)

6 NPR 0S-1594 2 BOLT

7 NPR 3B-4506 4 LOCKWASHER

8 NPR 2L-9038 1 NUT

NPR 4B-4276 1 WASHER

9 NPR 4S-5854 1 SPRING

10 NPR 8D-4852 1 PEDAL ASSEM.

(Includes)

NPR 4F-3492 1 DOWEL

NPR 1F-2697 1 BEARING

11 NPR 8D-4872 1 YOKE ASSEM.

12 NPR 4B-2605 1 PIN

NPR 3B-4609 1 COTTER PIN

13 NPR 3B-6768 1 BUSHING

14 NPR 3L-6521 1 TEE

15 NPR 4H-6147 1 UNION

16 NPR 8D-4844 1 BRACKET ASSEM.

(Includes)

17 NPR 9F-4233 2 BUSHING

18 NPR 6J-3335 2 PIN

NPR 3B-4615 2 COTTER PIN

19 NPR 8D-7564 1 INSERT

20 NPR 4B-4278 1 WASHER

21 NPR 8D-5099 1 LEVER ASSEM.

(Includes)

22 NPR 4H-0089 2 BUSHING

23 NPR 8D-4977 1 PIN

24 NPR C 5M-8009 1 PIN

25 NPR C 2G-0356 1 SPRING

26 NPR 3B-6553 1 ELBOW

27 NPR 0L-2070 2 BOLT

28 NPR 8M-4437 3 SEAL

29 NPR 4D-6434 1 CLIP

30 NPR C 9M-8406 1 CLIP

Key: C - INDICATES CHANGE Y - SEPARATE ILLUSTRATION

9D2140 DIFFERENTIAL LOCK CONTROL GROUP--Type 2
Part of 9D5815 Differential Lock Arrangement listed on Page 138
8D6813 and 6P8226 Valve parts are shown on Pages 142 and 143

REF NO	PART NUMBER	DESCRIPTION	QTY
C 1	6P8226	VALVE GROUP (Separate Illustration)	1
2	5H4778	UNION	3
3	7D3024	HOSE ASSEM. --30.48 dm (126 in.)	1
4	4S7563	HOSE ASSEM. --7.49 dm (29.50 in.)	1
5	8D6813	VALVE GROUP (Separate Illustration)	1
6	S1594	BOLT	2
7	3B4506	LOCKWASHER	4
8	2L9038	NUT	1
	4B4276	WASHER	1
9	4S5854	SPRING	1
10	8D4852	PEDAL ASSEM. (Includes)	1
	4F3492	DOWEL	1
	1F2697	BEARING	1
11	8D4872	YOKE ASSEM.	1
12	4B2605	PIN	1
	3B4609	COTTER PIN	1
13	3B6768	BUSHING	1
14	3L6521	TEE	1
15	4H6147	UNION	1
16	8D4844	BRACKET ASSEM. (Includes)	1
17	9F4233	BUSHING	2
18	6J3335	PIN	2
	3B4615	COTTER PIN	2
19	8D7564	INSERT	1
20	4B4278	WASHER	1
21	8D5099	LEVER ASSEM. (Includes)	1
22	4H89	BUSHING	2
23	8D4977	PIN	1
24	5M8009	PIN	1
25	2G396	SPRING	1
26	3B6553	ELBOW	1
27	L2070	BOLT	2
C 28	8M4438	SEAL	3
29	4D6434	CLIP	1
30	9M8406	CLIP	1

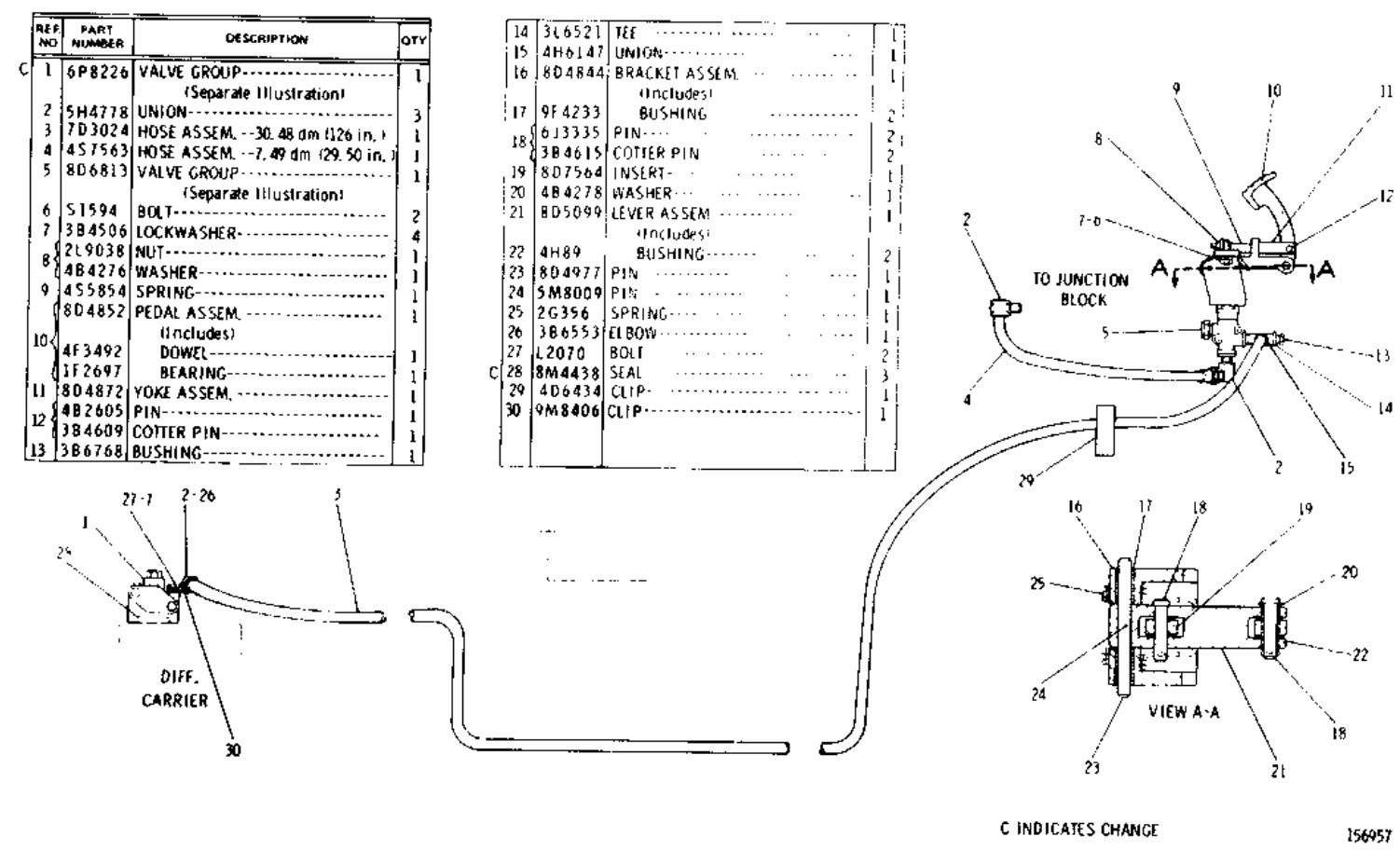

1 NPR YC 6P-8226 1 VALVE GROUP

(Separate Illustration)

2 NPR 5H-4778 3 UNION

3 NPR 7D-3024 1 HOSE ASSEM. 30.48 dm (126 in.)

4 NPR 4S-7563 1 HOSE ASSEM. 7.49 dm (29.50 in.)

5 NPR Y 8D-6813 1 VALVE GROUP

(Separate Illustration)

6 NPR 0S-1594 2 BOLT

7 NPR 3B-4506 4 LOCKWASHER

8 NPR 2L-9038 1 NUT

NPR 4B-4276 1 WASHER

9 NPR 4S-5854 1 SPRING

10 NPR 8D-4852 1 PEDAL ASSEM.

(Includes)

NPR 4F-3492 1 DOWEL

NPR 1F-2697 1 BEARING

11 NPR 8D-4872 1 YOKE ASSEM.

12 NPR 4B-2605 1 PIN

NPR 3B-4609 1 COTTER PIN

13 NPR 3B-6768 1 BUSHING

14 NPR 3L-6521 1 TEE

15 NPR 4H-6147 1 UNION

16 NPR 8D-4844 1 BRACKET ASSEM.

(Includes)

17 NPR 9F-4233 2 BUSHING

18 NPR 6J-3335 2 PIN

NPR 3B-4615 2 COTTER PIN

19 NPR 8D-7564 1 INSERT

20 NPR 4B-4278 1 WASHER

21 NPR 8D-5099 1 LEVER ASSEM.

(Includes)

22 NPR 4H-0089 2 BUSHING

23 NPR 8D-4977 1 PIN

24 NPR 5M-8009 1 PIN

25 NPR 2G-0356 1 SPRING

26 NPR 3B-6553 1 ELBOW

27 NPR 0L-2070 2 BOLT

28 NPR C 8M-4438 3 SEAL

29 NPR 4D-6434 1 CLIP

30 NPR 9M-8406 1 CLIP

Key: C - INDICATES CHANGE Y - SEPARATE ILLUSTRATION

9D2140 DIFFERENTIAL LOCK CONTROL GROUP--Type 3
Part of 9D5815 Differential Lock Arrangement listed on Page 138
8D6813 and 6P8226 Valve parts are shown on Pages 142 and 143

REF. NO.	PART NUMBER	DESCRIPTION	QTY
1	6P8226	VALVE GROUP (Separate Illustration)	1
C 2	5H4778	UNION	1
3	7D3024	HOSE ASSEM. -304.8 cm(126 in.)	1
4	4S7563	HOSE ASSEM. -74.9 cm(29.50 in.)	1
5	8D6813	VALVE GROUP (Separate Illustration)	1
6	S1594	BOLT	2
7	3B4506	LOCKWASHER	4
8	2L9038	NUT	1
	4B4276	WASHER	1
9	4S5854	SPRING	1
10	8D4852	PEDAL ASSEM. (Includes)	1
	4F3492	DOWEL	1
	1F2697	BEARING	1
11	8D4872	YOKE ASSEM.	1
12	4B2605	PIN	1
	3B4609	COTTER PIN	1
13	3B6768	BUSHING	1
C 14	2D7325	TEE	2
15	4H6147	UNION	1
16	8D4844	BRACKET ASSEM. (Includes)	1
17	9F4233	BUSHING	2
18	6J3335	PIN	2
	3B4615	COTTER PIN	2
19	8D7564	INSERT	1
20	4B4278	WASHER	1
21	8D5099	LEVER ASSEM. (Includes)	1
22	4H89	BUSHING	2
23	8D4977	PIN	1
C 24	3K8428	PIN	1
25	2G356	SPRING	1
26	3B6553	ELBOW	1
27	L2070	BOLT	2
28	8M4438	SEAL	3
29	4D6434	CLIP	1
30	9M8406	CLIP	1
C 31	3S6115	TEE	1

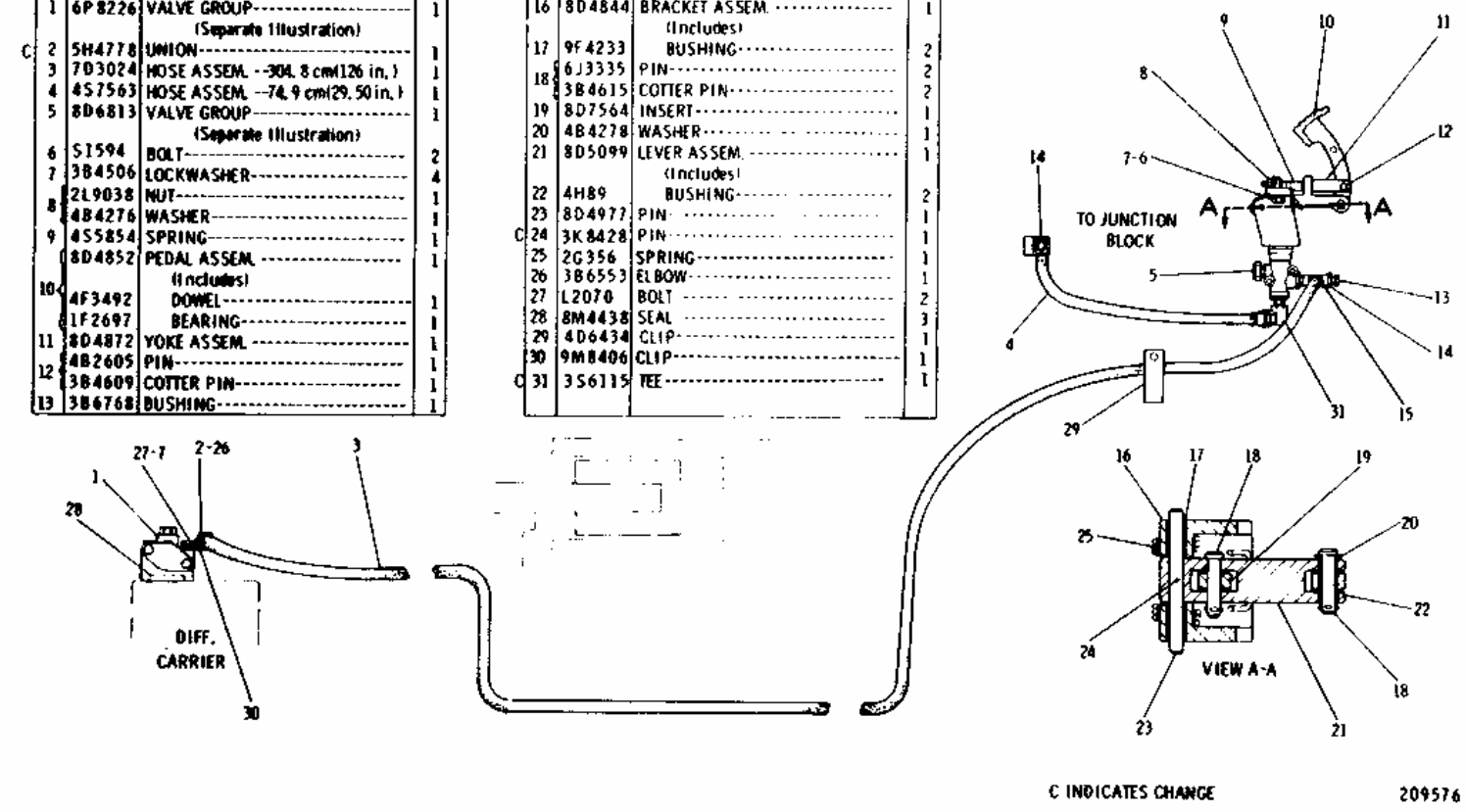

1 NPR Y 6P-8226 1 VALVE GROUP

(Separate Illustration)

2 NPR C 5H-4778 1 UNION

3 NPR 7D-3024 1 HOSE ASSEM. 304.8 cm(126 in.)

4 NPR 4S-7563 1 HOSE ASSEM. 74.9 cm(29.50 in.)

5 NPR Y 8D-6813 1 VALVE GROUP

(Separate Illustration)

6 NPR 0S-1594 2 BOLT

7 NPR 3B-4506 4 LOCKWASHER

8 NPR 2L-9038 1 NUT

NPR 4B-4276 1 WASHER

9 NPR 4S-5854 1 SPRING

10 NPR 8D-4852 1 PEDAL ASSEM.

(Includes)

NPR 4F-3492 1 DOWEL

NPR 1F-2697 1 BEARING

11 NPR 8D-4872 1 YOKE ASSEM.

12 NPR 4B-2605 1 PIN

NPR 3B-4609 1 COTTER PIN

13 NPR 3B-6768 1 BUSHING

14 NPR C 2D-7325 2 TEE

15 NPR 4H-6147 1 UNION

16 NPR 8D-4844 1 BRACKET ASSEM.

(Includes)

17 NPR 9F-4233 2 BUSHING

18 NPR 6J-3335 2 PIN

NPR 3B-4615 2 COTTER PIN

19 NPR 8D-7564 1 INSERT

20 NPR 4B-4278 1 WASHER

21 NPR 8D-5099 1 LEVER ASSEM.

(Includes)

22 NPR 4H-0089 2 BUSHING

23 NPR 8D-4977 1 PIN

24 NPR C 3K-8428 1 PIN

25 NPR 2G-0356 1 SPRING

26 NPR 3B-6553 1 ELBOW

27 NPR 0L-2070 2 BOLT

28 NPR 8M-4438 3 SEAL

29 NPR 4D-6434 1 CLIP

30 NPR 9M-8406 1 CLIP

31 NPR C 3S-6115 1 TEE

Key:

C - INDICATES CHANGE
Y - SEPARATE ILLUSTRATION

9D5785 DIFFERENTIAL LOCK CONTROL GROUP--Type 1
Part of 9D5820 Differential Lock Arrangement listed on Page 138
8D6813 and 2P7014 Valve parts are shown on Page 142

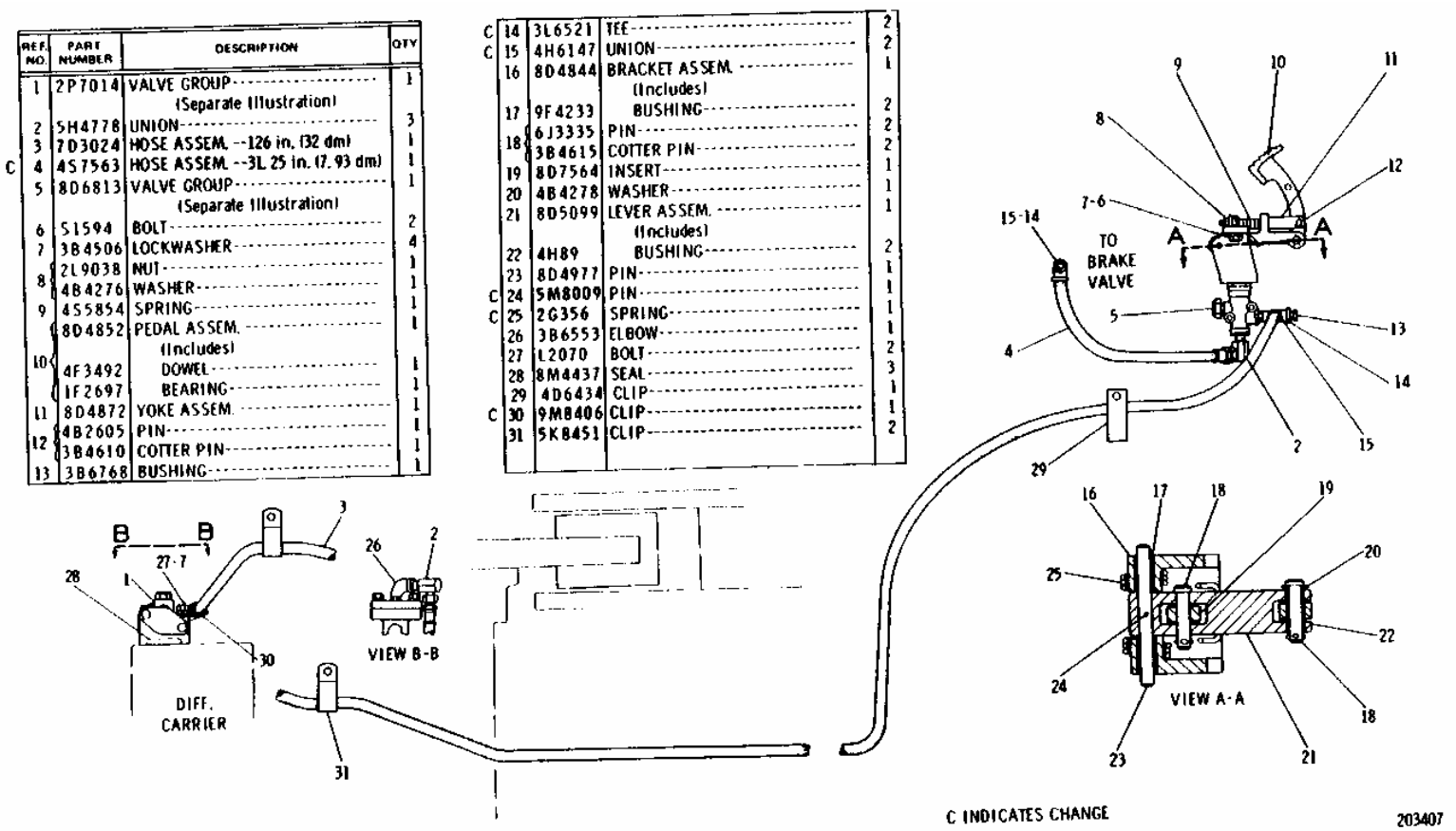

1 NPR Y 2P-7014 1 VALVE GROUP

(Separate Illustration)

2 NPR 5H-4778 3 UNION

3 NPR 7D-3024 1 HOSE ASSEM. 126 in. (32 dm)

4 NPR C 4S-7563 1 HOSE ASSEM. 31.25 in. (7.93 dm)

5 NPR Y 8D-6813 1 VALVE GROUP

(Separate Illustration)

6 NPR 0S-1594 2 BOLT

7 NPR 3B-4506 4 LOCKWASHER

8 NPR 2L-9038 1 NUT

NPR 4B-4276 1 WASHER

9 NPR 4S-5854 1 SPRING

10 NPR 8D-4852 1 PEDAL ASSEM.

(Includes)

NPR 4F-3492 1 DOWEL

NPR 1F-2697 1 BEARING

11 NPR 8D-4872 1 YOKE ASSEM.

12 NPR 4B-2605 1 PIN

NPR 3B-4610 1 COTTER PIN

13 NPR 3B-6768 1 BUSHING

14 NPR C 3L-6521 2 TEE

15 NPR C 4H-6147 2 UNION

16 NPR 8D-4844 1 BRACKET ASSEM.

(Includes)

17 NPR 9F-4233 2 BUSHING

18 NPR 6J-3335 2 PIN

NPR 3B-4615 2 COTTER PIN

19 NPR 8D-7564 1 INSERT

20 NPR 4B-4278 1 WASHER

21 NPR 8D-5099 1 LEVER ASSEM.

(Includes)

22 NPR 4H-0089 2 BUSHING

23 NPR 8D-4977 1 PIN

24 NPR C 5M-8009 1 PIN

25 NPR C 2G-0356 1 SPRING

26 NPR 3B-6553 1 ELBOW

27 NPR 0L-2070 2 BOLT

28 NPR 8M-4437 3 SEAL

29 NPR 4D-6434 1 CLIP

30 NPR C 9M-8406 1 CLIP

31 NPR 5K-8451 2 CLIP

Key:

C - INDICATES CHANGE
Y - SEPARATE ILLUSTRATION

9D5785 DIFFERENTIAL LOCK CONTROL GROUP--Type 2
Part of 9D5820 Differential Lock Arrangement listed on Page 138
8D6813 and 6P8226 Valve parts are shown on Pages 142 and 143

	REF. NO.	PART NUMBER	DESCRIPTION	QTY
C	1	6P8226	VALVE GROUP---(selector)-------- (Separate Illustration)	1
	2	5H4778	UNION----------	3
	3	7D3024	HOSE ASSEM. ----320 cm(126 in.)	1
	4	4S7563	HOSE ASSEM. --79.30 cm(31.25 in.)	1
	5	8D6813	VALVE GROUP---(air control) ----- (Separate Illustration)	1
	6	5S1594	BOLT----------	2
	7	3B4506	LOCKWASHER----------	4
	8	2L9038	NUT----------	1
		4B4276	WASHER----------	1
	9	4S5854	SPRING----------	1
	10	8D4852	PEDAL ASSEM. ---------- (Includes)	1
		4F3492	DOWEL----------	1
		1F2697	BEARING----------	1
	11	8D4872	YOKE ASSEM. ----------	1
	12	4B2605	PIN----------	1
		3B4610	COTTER PIN----------	1
	13	3B6768	BUSHING----------	1
	14	3L6521	TEE----------	2
	15	4H6147	UNION----------	2
	16	8D4844	BRACKET ASSEM. ---------- (Includes)	1
	17	9F4233	BUSHING----------	2
	18	6J3335	PIN----------	2
		3B4615	COTTER PIN----------	2
	19	8D7564	INSERT----------	1
	20	4B4278	WASHER----------	1
	21	8D5099	LEVER ASSEM. ---------- (Includes)	1
	22	4H89	BUSHING----------	2
	23	8D4977	PIN----------	1
C	24	3K8428	PIN----------	1
	25	2G356	SPRING----------	1
	26	3B6553	ELBOW----------	1
	27	LZD70	BOLT----------	2
C	28	8M4438	SEAL----------	3
	29	4D6434	CLIP----------	1
	30	9M8406	CLIP----------	1
	31	5K8451	CLIP----------	2

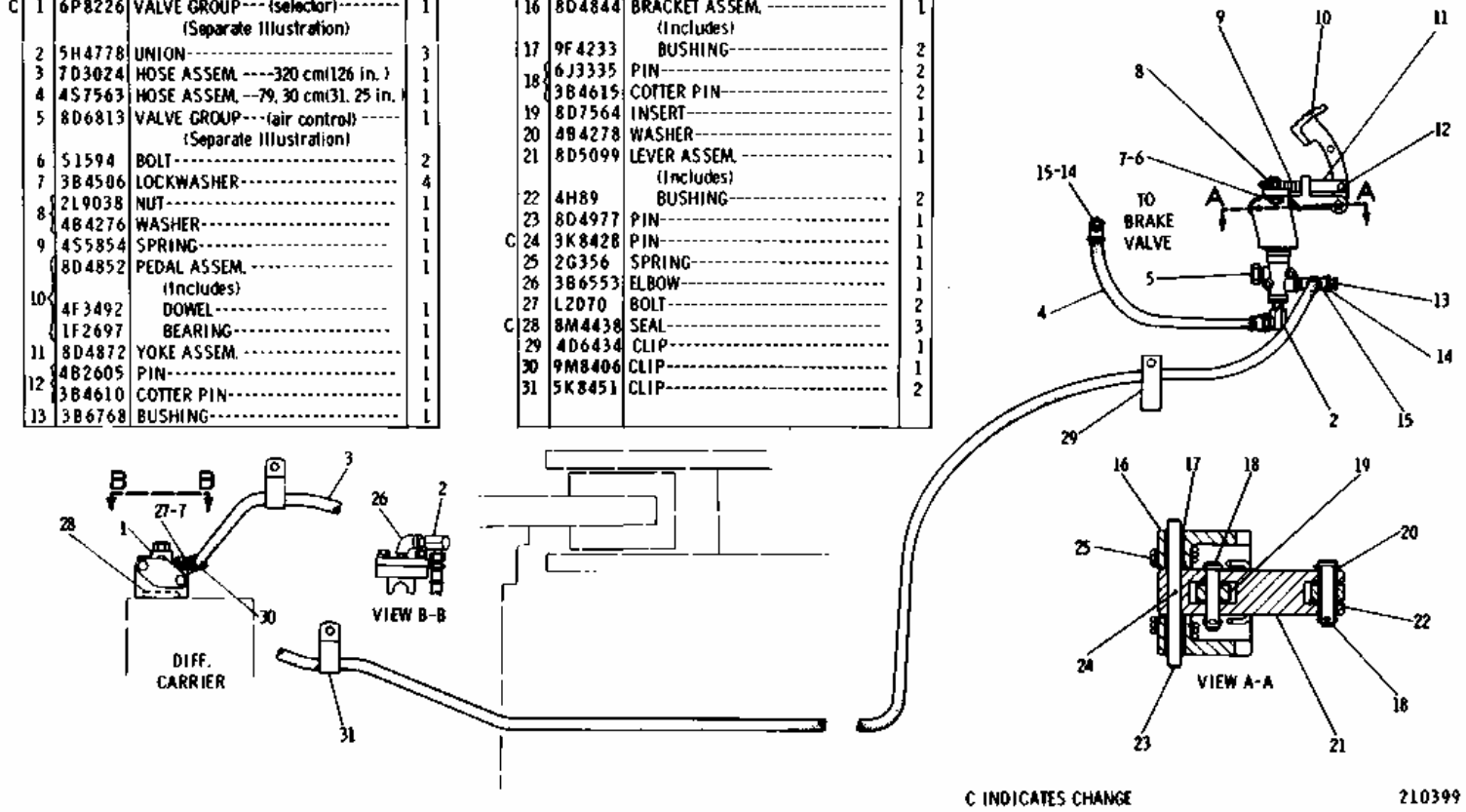

C INDICATES CHANGE 210399

1 NPR YC 6P-8226 1 VALVE GROUP (selector)

(Separate Illustration)

2 NPR 5H-4778 3 UNION

3 NPR 7D-3024 1 HOSE ASSEM. 320 cm(126 in.)

4 NPR 4S-7563 1 HOSE ASSEM. 79.30 cm(31.25 in.)

5 NPR Y 8D-6813 1 VALVE GROUP (air control)

(Separate Illustration)

6 NPR 0S-1594 2 BOLT

7 NPR 3B-4506 4 LOCKWASHER

8 NPR 2L-9038 1 NUT

NPR 4B-4276 1 WASHER

9 NPR 4S-5854 1 SPRING

10 NPR 8D-4852 1 PEDAL ASSEM.

(Includes)

	NPR	4F-3492	1	DOWEL
	NPR	1F-2697	1	BEARING
11	NPR	8D-4872	1	YOKE ASSEM.
12	NPR	4B-2605	1	PIN
	NPR	3B-4610	1	COTTER PIN
13	NPR	3B-6768	1	BUSHING
14	NPR	3L-6521	2	TEE
15	NPR	4H-6147	2	UNION
16	NPR	8D-4844	1	BRACKET ASSEM.

(Includes)

17	NPR	9F-4233	2	BUSHING
18	NPR	6J-3335	2	PIN
	NPR	3B-4615	2	COTTER PIN
19	NPR	8D-7564	1	INSERT
20	NPR	4B-4278	1	WASHER
21	NPR	8D-5099	1	LEVER ASSEM.

(Includes)

22	NPR	4H-0089	2	BUSHING
23	NPR	8D-4977	1	PIN
24	NPR C	3K-8428	1	PIN
25	NPR	2G-0356	1	SPRING
26	NPR	3B-6553	1	ELBOW
27	NPR	0L-2070	2	BOLT
28	NPR C	8M-4438	3	SEAL

29	**NPR**	**4D-6434**	**1**	**CLIP**
30	**NPR**	**9M-8406**	**1**	**CLIP**
31	**NPR**	**5K-8451**	**2**	**CLIP**

Key:

C - INDICATES CHANGE
Y - SEPARATE ILLUSTRATION

3P2807 TRANSMISSION HYDRAULIC CONTROL GROUP
Serial No. 87V1138 to 87V2414 inclusive and 82V668 to 82V754 inclusive. Test No. 1377-Up
Part of 3P1750 Transmission Arrangement shown on Page 115. 3P840 and 3P841 Valve parts are shown on Pages 126 and 127

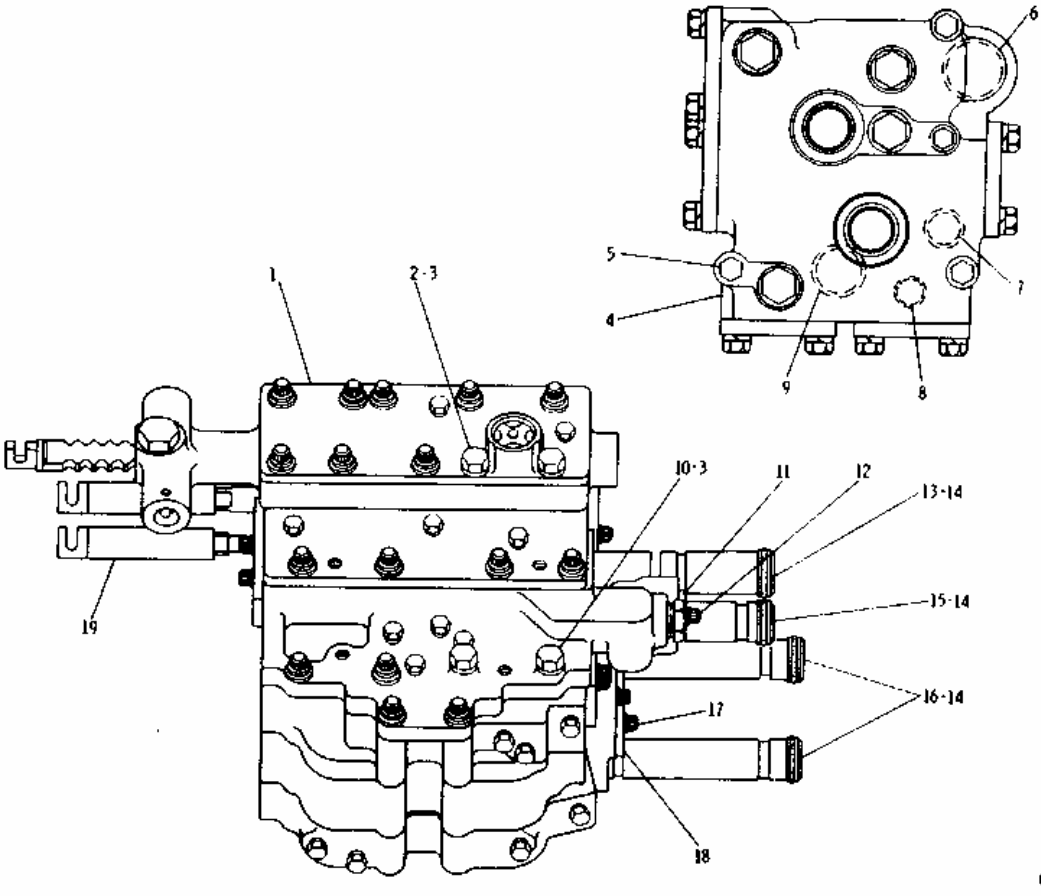

	REF NO	PART NUMBER	DESCRIPTION	QTY
C	1	3P841	VALVE GROUP	1
			(Separate Illustration)	
	2	5F6044	BOLT	2
	3	5M2894	WASHER	4
	4	3P840	VALVE GROUP	1
			(Separate Illustration)	
	5	0L1352	BOLT	4
		3B4506	LOCKWASHER	4
	6	6F6673	SEAL	1
	7	5F7054	SEAL	1
	8	2J157	SEAL	2
	9	2H3932	SEAL	3
	10	4F411	BOLT	2
	11	3P2781	PLATE	1
	12	1T416	BOLT	1
	13	3P868	SLEEVE	1
	14	4M8303	SEAL	8
	15	3P869	SLEEVE	1
	16	3P870	SLEEVE	2
	17	6L4783	BOLT	2
	18	3P2777	PLATE	1
C	19	6P5095	LINK	2

C INDICATES CHANGE 207453

1 NPR YC 3P-0841 1 VALVE GROUP

(Separate Illustration)

2 NPR 5F-6044 2 BOLT

3 NPR 5M-2894 4 WASHER

4 NPR Y 3P-0840 1 VALVE GROUP

(Separate Illustration)

5 NPR 0L-1352 4 BOLT

NPR 3B-4506 4 LOCKWASHER

6 NPR 6F-6673 1 SEAL

7 NPR 5F-7054 1 SEAL

8 NPR 2J-0157 2 SEAL

9 NPR 2H-3932 3 SEAL

10	NPR	4F-0411	2	BOLT
11	NPR	3P-2781	1	PLATE
12	NPR	1T-0416	1	BOLT
13	NPR	3P-0868	1	SLEEVE
14	NPR	4M-8303	8	SEAL
15	NPR	3P-0869	1	SLEEVE
16	NPR	3P-0870	2	SLEEVE
17	NPR	6L-4783	2	BOLT
18	NPR	3P-2777	1	PLATE
19	NPR C	6P-5095	2	LINK

Key:

C - INDICATES CHANGE
Y - SEPARATE ILLUSTRATION

9D1700 TRANSMISSION OIL COOLER LINES GROUP
Serial No. 87V1138 to 87V6479 inclusive

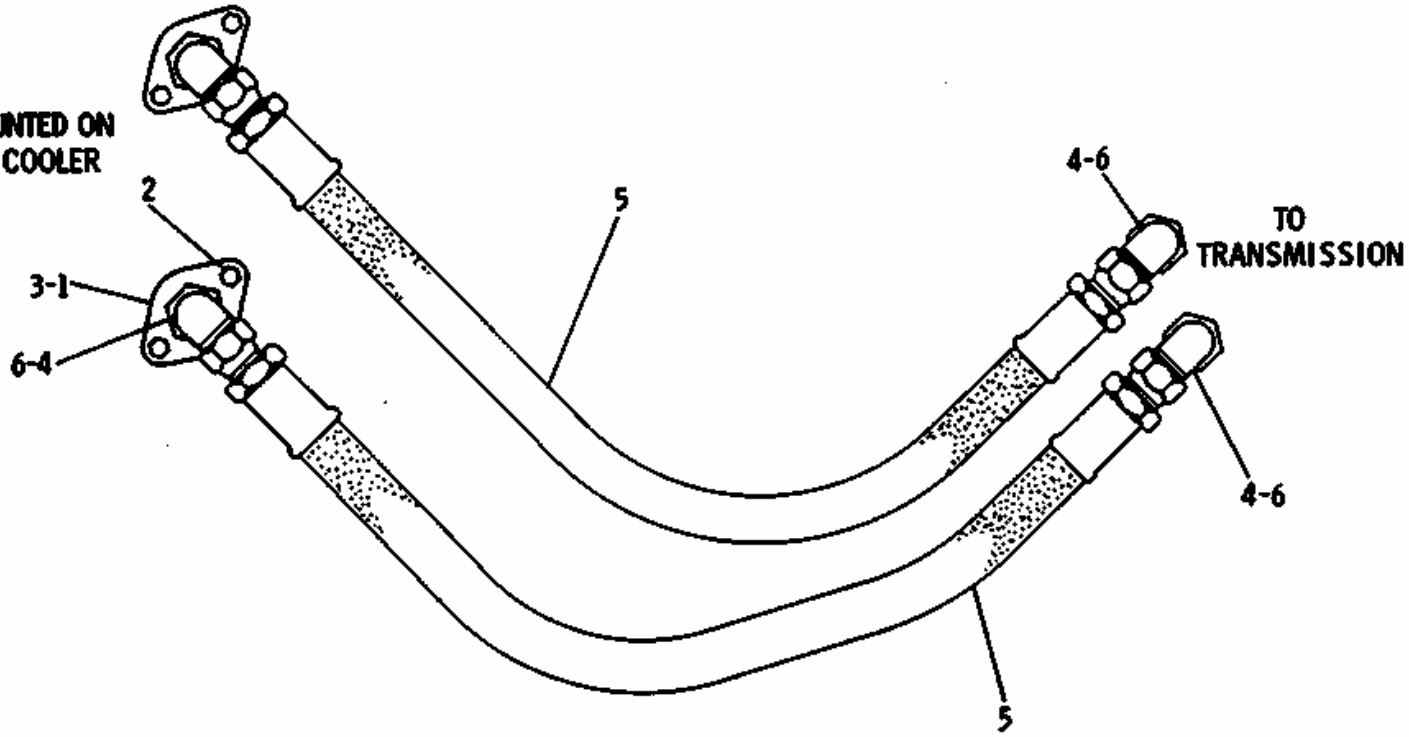

REF. NO.	PART NUMBER	DESCRIPTION	QTY
1	8D6543	FLANGE	2
2	S1591	BOLT	4
	3B4506	LOCKWASHER	4
3	4J520	SEAL	2
4	307950	ELBOW	4

		9D6262	HOSE ASSEM.	2
			For service of each furnish:	
▲	5	5P180	HOSE--------27 cm(10.63 in.)	
		3S7166	SLEEVE	2
		8S3759	COUPLING ASSEM.	2
	6	3D2824	SEAL	4

▲ ORDER BY THE CENTIMETRE 203305

1 NPR 8D-6543 2 FLANGE

2 NPR 0S-1591 4 BOLT

NPR 3B-4506 4 LOCKWASHER

3 NPR 4J-0520 2 SEAL

4 NPR 030-7950 4 ELBOW

5 NPR 9D-6262 2 HOSE ASSEM.

For service of each furnish:

NPR H 5P-0180 HOSE 27 cm(10.63 in.)

NPR 3S-7166 2 SLEEVE

NPR 8S-3759 2 COUPLING ASSEM.

6 NPR 3D-2824 4 SEAL

Key:
H - ORDER BY THE CENTIMETRE

2P6508 TRANSMISSION OIL COOLER GROUP

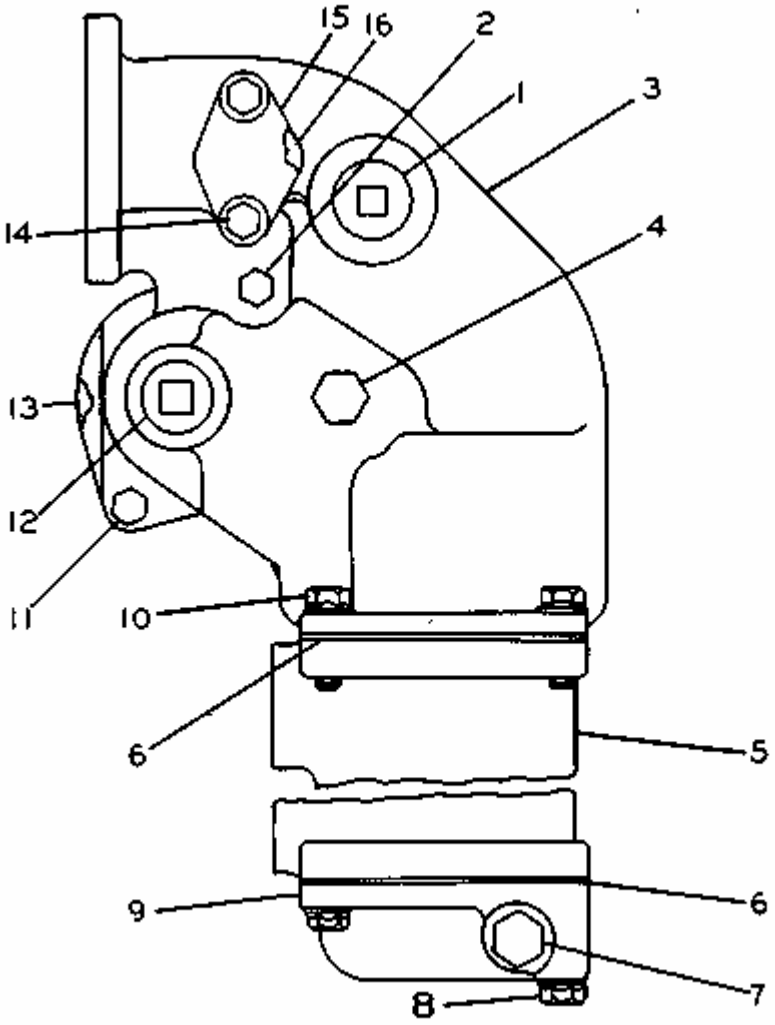

1 NPR 3B-0551 1 PLUG-PIPE

2 NPR C 0L-1352 1 BOLT

3 NPR C 6N-0125 1 BONNET-TC OIL COOLER

4 NPR 3J-5390 1 PLUG

5 NPR CLCR 7N-0128 1 CORE AS-OIL COOLER

R NPR 0R-3500 1 CORE AS-OIL CLR

CL NPR 299-1994 1 CORE AS-CLA

6 NPR 2M-4108 2 GASKET

7 NPR 2H-8829 1 PLUG-DRAIN

NPR 6F-7062 1 WASHER

8	NPR C	0S-1590	1	BOLT
9	NPR	5S-7607	1	BONNET-OIL COOLER
10	NPR C	0S-1594	7	BOLT
11	NPR C	0S-1591	1	BOLT
12	NPR	1B-5174	1	PLUG-PIPE
13	NPR C	1W-1172	1	GASKET
14	NPR C	0S-1617	2	BOLT
	NPR	9M-1974	2	WASHER
15	NPR C	4N-3840	1	COVER
16	NPR C	4N-3841	1	GASKET

Key: CL - Classic Part Available C - CHANGE FROM PREVIOUS TYPE R - REMFG PART MAY BE AVAILABLE

9D5820 DIFFERENTIAL LOCK ARRANGEMENT
FOR USE WITH SINGLE TANK AIR SYSTEM

NPR Y	8D-9895	1	DIFFERENTIAL AND BEVEL GEAR GROUP
NPR Y	9D-5785	1	DIFFERENTIAL LOCK CONTROL GROUP
NPR	4D-4785	1	SWITCH DIFFERENTIAL LOCK TO BUSHING
NPR	8D-6547	1	WIRE ASSEMBLY LOCK SWITCH TO GROUND
NPR	2D-8781	1	TERMINAL
NPR	8M-0537	1	TERMINAL
NPR	4S-8787		WIRE (NO. 16) 8 INCHES
NPR	9D-3127	1	BASE LIGHT TO STEERING CONSOLE
NPR	9D-2867	1	LENS TO BASE FOR DIFFERENTIAL LOCK
NPR	8M-6175	1	BULB TO BASE

Key:

Y - SEPARATE ILLUSTRATION

9D5815 DIFFERENTIAL LOCK ARRANGEMENT
FOR USE WITH DUAL TANK AIR SYSTEM
SERIAL NO. 87V1138 TO 87V2975 AND 86V668 TO
86V793 INCLUSIVE

NPR Y	8D-9895	1	DIFFERENTIAL AND BEVEL GEAR GROUP
NPR Y	9D-2140	1	DIFFERENTIAL LOCK CONTROL GROUP
NPR	4D-4785	1	SWITCH DIFFERENTIAL LOCK TO BUSHING
NPR	8D-6547	1	WIRE ASSEMBLY LOCK SWITCH TO GROUND
NPR	2D-8781	1	TERMINAL
NPR	8M-0537	1	TERMINAL
NPR	4S-8787		WIRE (NO. 16) 8 INCHES
NPR	9D-3127	1	BASE LIGHT TO STEERING CONSOLE
NPR	9D-2867	1	LENS TO BASE FOR DIFFERENTIAL LOCK
NPR	8M-6175	1	BULB TO BASE

Key:

Y - SEPARATE ILLUSTRATION

8D9895 DIFFERENTIAL AND BEVEL GEAR GROUP--Part 1
Part of 9D5820, 9D5815 and 2G8969 Differential Lock Arrangements listed on Pages 138 and 138A. 8D9890 Differential parts are shown on Pages 146 and 147

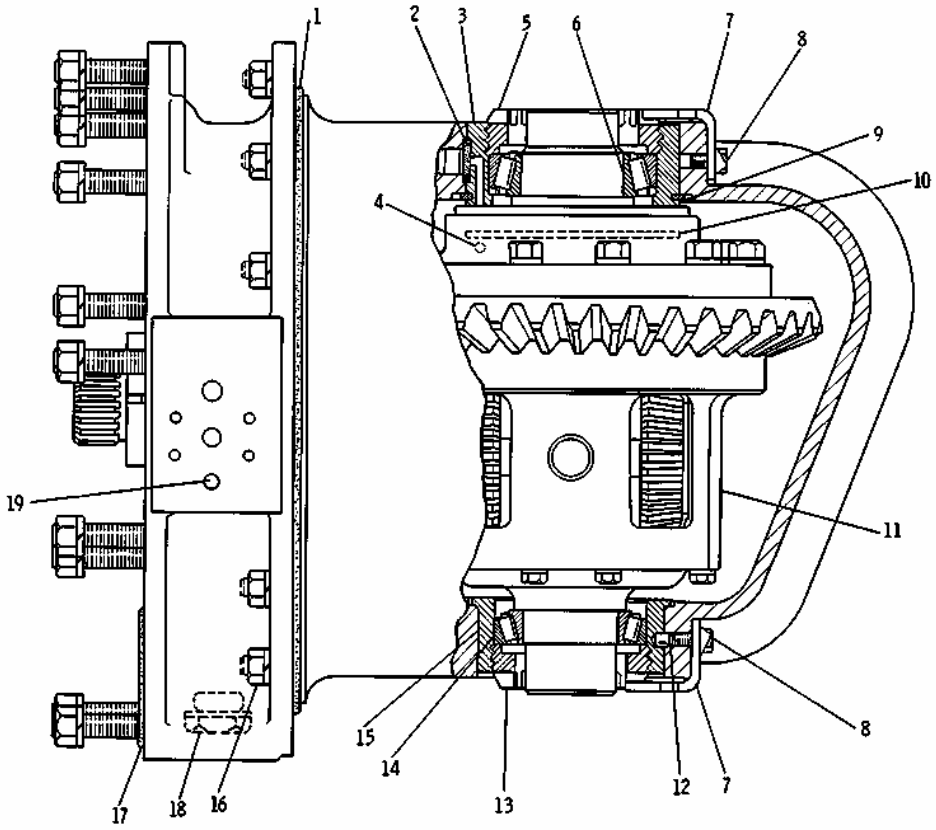

	REF. NO.	PART NUMBER	DESCRIPTION	QTY
	1	7S4571	SEAL	1
	2	9D8799	RING	1
		2S1914	SEAL	1
	3	8D9752	CAGE ASSEM. (Includes)	1
	4	2D6642	BALL	1
C	5	6G4702	NUT	1
	6	2N2139	CONE	1
		2N2138	CUP	1
	7	8D9784	LOCK	2
	8	S509	BOLT	2
		9D9334	LOCKNUT	2
	9	8D9746	RING	1
	10	9D2816	RING	2
	11	8D9890	DIFFERENTIAL GROUP (Separate Illustration)	1
	12	4B8353	DOWEL	1
C	13	6G4701	NUT	1
	14	1P2636	CUP	1
		1P2662	CONE	1
	15	8D4313	CAGE	1
	16	1D4719	NUT	11
		3B4508	LOCKWASHER	11
C		7F8268	SEAL----5.36 cm(2.109 in.) I.D.	1
C	17	4F8946	SEAL----2.66 cm(1.046 in.) I.D.	1
C		4F7952	SEAL----3.77 cm(1.484 in.) I.D.	1
C	18	6B5262	PLUG	1
C		2A3398	GASKET	1
C	19	9F2247	PLUG	1

I.D. -INSIDE DIAMETER
C INDICATES CHANGE

228089

1 NPR 7S-4571 1 SEAL

2 NPR 9D-8799 1 RING

NPR 2S-1914 1 SEAL

3 NPR 8D-9752 1 CAGE ASSEM.

(Includes)

4 NPR 2D-6642 1 BALL

5 NPR C 6G-4702 1 NUT

6 NPR 2N-2139 1 CONE

NPR 2N-2138 1 CUP

7 NPR 8D-9784 2 LOCK

8 NPR 0S-0509 2 BOLT

NPR 9D-9334 2 LOCKNUT

9 NPR 8D-9746 1 RING

10 NPR 9D-2816 2 RING

11 NPR Y 8D-9890 1 DIFFERENTIAL GROUP

(Separate Illustration)

12 NPR 4B-8353 1 DOWEL

13 NPR C 6G-4701 1 NUT

14 NPR 1P-2636 1 CUP

NPR 1P-2662 1 CONE

15 NPR 8D-4313 1 CAGE

16 NPR 1D-4719 11 NUT

NPR 3B-4508 11 LOCKWASHER

17 NPR C 7F-8268 1 SEAL 5.36 cm(2.109 in.) I.D.

NPR C 4F-8946 1 SEAL 2.66 cm(1.046 in.) I.D.

NPR C 4F-7952 1 SEAL 3.77 cm(1.484 in.) I.D.

18 NPR C 6B-5262 1 PLUG

NPR C 2A-3398 1 GASKET

19 NPR C 9F-2247 1 PLUG

Key: C - INDICATES CHANGE Y - SEPARATE ILLUSTRATION

8D9895 DIFFERENTIAL AND BEVEL GEAR GROUP--Part 2
Part of 9D5820, 9D5815 and 2G8969 Differential Lock Arrangements listed on Pages 138 and 138A

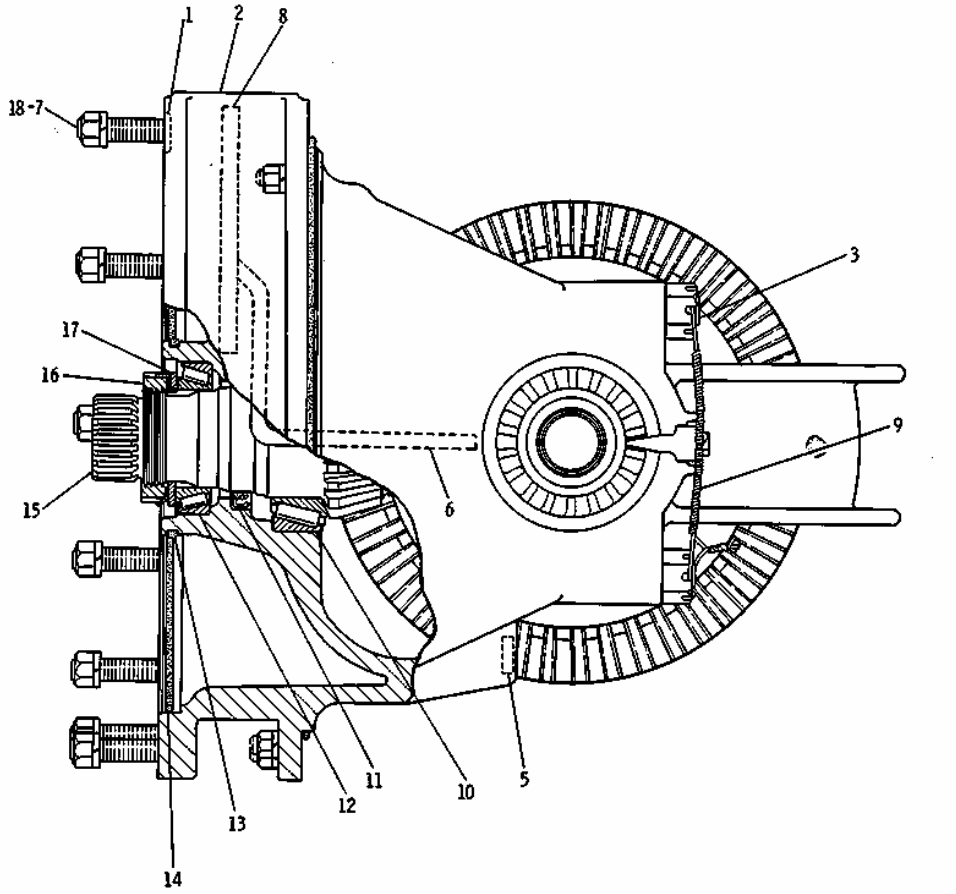

	REF. NO.	PART NUMBER	DESCRIPTION	QTY
	1	8M4990	SEAL	1
	2	8D9533	CARRIER ASSEM. (Includes)	1
	3	8D4651	STUD	4
		1B4439	NUT	4
	5	3S8313	PLUG	2
C	6	2G3989	TUBE	1
C		2G1314	SLEEVE	1
	7	3D8439	STUD	10
	8	8D9911	TUBE	1
C▲	9	5P6628	WIRE------1.06 m(41.74 in.)	
	10	6D1138	CUP	1
		6D1137	CONE	1
	11	1M3003	SEAL	1
	12	7D8348	CUP	1
		7D8349	CONE	1
	13	2S8439	SEAL	1
	14	4D1577	SEAL	1
C	15	2G8872	PINION------(15 teeth)	1
C	16	5P5813	NUT	1
		9B143	LOCK	1
	17	7D8347	WASHER	1
	18	1D4720	NUT	10
		3B4510	LOCKWASHER	10

▲ ORDER BY THE METER
C INDICATES CHANGE

228090

1 NPR 8M-4990 1 SEAL

2 NPR 8D-9533 1 CARRIER ASSEM.

(Includes)

3 NPR 8D-4651 4 STUD

	NPR	1B-4439	4	NUT	
5	NPR	3S-8313	2	PLUG	
6	NPR C	2G-3989	1	TUBE	
	NPR C	2G-1314	1	SLEEVE	
7	NPR	3D-8439	10	STUD	
8	NPR	8D-9911	1	TUBE	
9	NPR CH	5P-6628	WIRE 1.06 m(41.74 in.)		
10	NPR	6D-1138	1	CUP	
	NPR	6D-1137	1	CONE	
11	NPR	1M-3003	1	SEAL	
12	NPR	7D-8348	1	CUP	
	NPR	7D-8349	1	CONE	
13	NPR	2S-8439	1	SEAL	
14	NPR	4D-1577	1	SEAL	
15	NPR CLC	2G-8872	1	PINION (15 teeth)	
CL	NPR	275-5271	1	SHAFT-BEV-CLA	
16	NPR C	5P-5813	1	NUT	
	NPR	9B-0143	1	LOCK	
17	NPR	7D-8347	1	WASHER	
18	NPR	1D-4720	10	NUT	
	NPR	3B-4510	10	LOCKWASHER	

Key:

CL - Classic Part Available
C - INDICATES CHANGE
H - ORDER BY THE METER

8D9890 DIFFERENTIAL GROUP-Serial No. 87V1194-Up and 82V680-Up
Part of 8D9895 Differential and Bevel Gear Group shown on Page 144

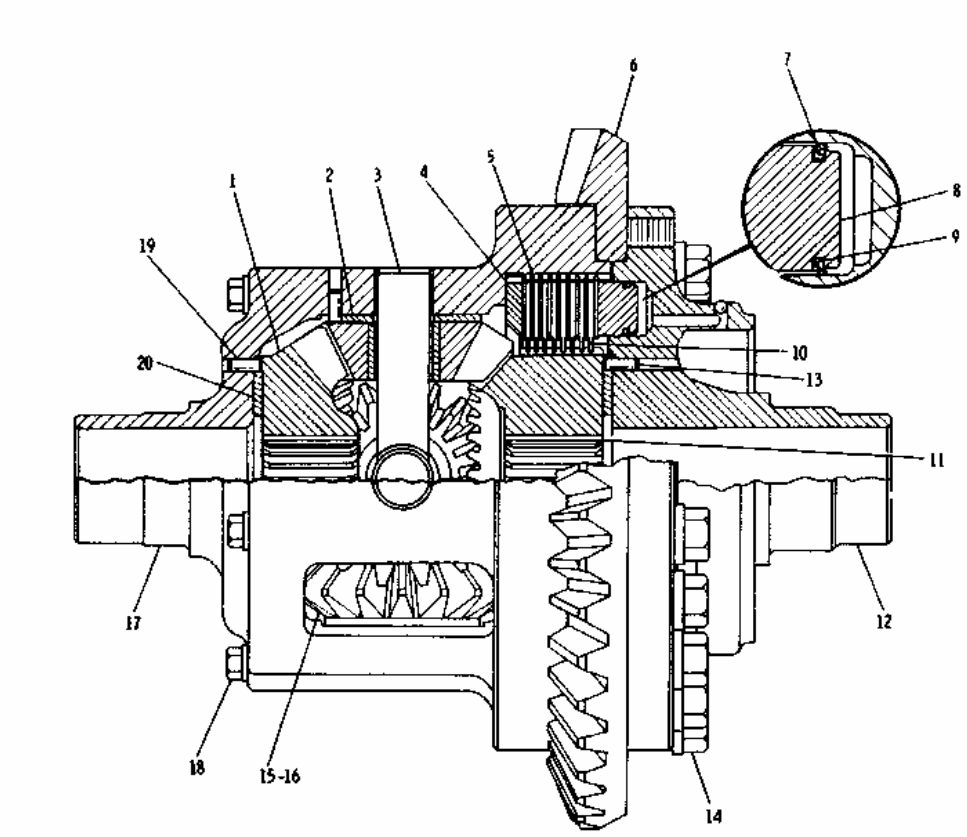

REF NO.	PART NUMBER	DESCRIPTION	QTY
1	8D9692	GEAR--------(16 teeth)----------	1
2	8D9754	WASHER----------	4
3	8D9662	SPIDER----------	1
C 4	2G1084	DISC----------	1
5	8D9718	DISC----------	9
6	8D6491	GEAR--------(53 teeth)----------	1
7	8D9738	SEAL----------	1
C 8	2G1086	PISTON----------	1
9	8D9739	SEAL----------	1
10	8D9719	DISC----------	8
C 11	2G1087	GEAR---------(16 teeth)----------	1
C	2G1083	HOUSING ASSEM.----------	1
12		(Includes)	
	2D6642	BALL----------	1
13	3D6509	DOWEL----------	2
14	1A8537	BOLT----------	16
	4D3704	WASHER----------	16
15	8D9753	PINION ASSEM.----------	4
		(Each Includes)	
16	8D9749	BEARING----------	1
C 17	2G1085	HOUSING ASSEM.----------	1
		(Includes)	
18	5L608	BOLT----------	8
	5M2894	WASHER----------	8
19	3D6509	DOWEL----------	6
20	8D9756	WASHER----------	2

C INDICATES CHANGE 230793

1 NPR 8D-9692 1 GEAR (16 teeth)

2 NPR 8D-9754 4 WASHER

3 NPR 8D-9662 1 SPIDER

4 NPR C 2G-1084 1 DISC

5 NPR 8D-9718 9 DISC

6 NPR 8D-6491 1 GEAR (53 teeth)

7 NPR 8D-9738 1 SEAL

8 NPR C 2G-1086 1 PISTON

9 NPR 8D-9739 1 SEAL

10 NPR 8D-9719 8 DISC

11 NPR C 2G-1087 1 GEAR (16 teeth)

12 NPR C 2G-1083 1 HOUSING ASSEM.

(Includes)

	NPR	2D-6642	1	BALL
13	NPR	3D-6509	2	DOWEL
14	NPR	1A-8537	16	BOLT
	NPR	4D-3704	16	WASHER
15	NPR	8D-9753	4	PINION ASSEM.
(Each Includes)				
16	NPR	8D-9749	1	BEARING
17	NPR C	2G-1085	1	HOUSING ASSEM.
(Includes)				
18	NPR	0S-1608	8	BOLT
	NPR	5M-2894	8	WASHER
19	NPR	3D-6509	6	DOWEL
20	NPR	8D-9756	2	WASHER

Key:

C - INDICATES CHANGE

9D3340 BEVEL GEAR GROUP--Part 1

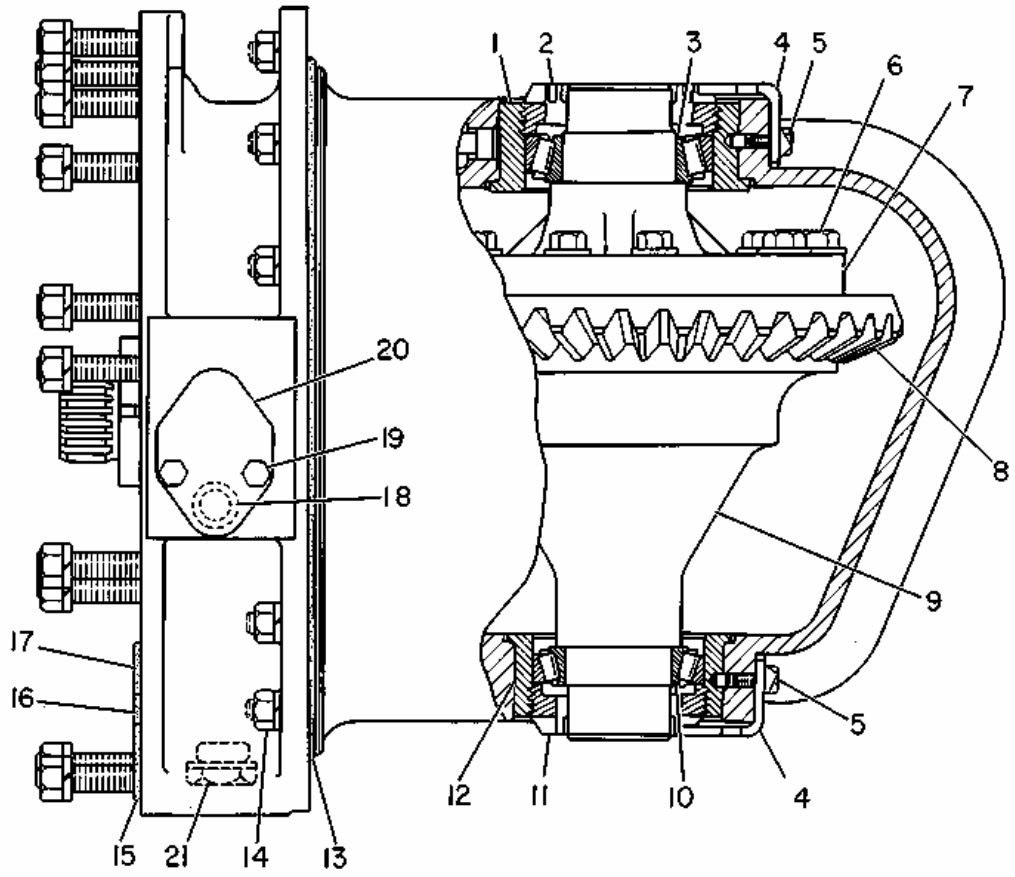

1 NPR 9D-3306 1 CAGE

2 NPR 9K-0096 1 NUT

3 NPR 2N-2139 1 CONE-ROLLER BEARING

NPR 2N-2138 1 CUP-ROLLER BEARING

4 NPR 8D-9784 2 LOCK

5 NPR 0S-0509 2 BOLT

NPR 9D-9334 2 LOCK-NUT

NPR 4B-8353 2 PIN (DOWEL)

6 NPR 1A-8537 16 BOLT

NPR 4D-3704 16 WASHER-HARD

7	NPR	9D-3307	1	HUB
8	NPR	8D-6491	1	GEAR (53 TEETH)
9	NPR	9D-3308	1	HUB
10	NPR	1P-2662	1	CONE-ROLLER BEARING
	NPR	1P-2636	1	CUP-ROLLER BEARING
11	NPR	7D-8355	1	NUT
12	NPR	8D-4313	1	CAGE
13	NPR	7S-4571	1	SEAL-O-RING
14	NPR	1D-4719	11	NUT
	NPR	3B-4508	11	LOCKWASHER
15	NPR	4F-7952	1	SEAL-O-RING 3.77CM(1.484IN)ID
16	NPR	4F-8946	1	SEAL-O-RING 2.66CM(1.046IN)ID
17	NPR	7F-8268	1	SEAL-O-RING 5.36CM(2.109IN)ID
18	NPR	8M-8283	3	SEAL-O-RING
19	NPR	0S-1594	2	BOLT
	NPR	3B-4506	2	LOCKWASHER
20	NPR	8D-8196	1	PLATE
21	NPR C	6B-5262	1	PLUG-DRAIN
	NPR C	2A-3398	1	GASKET

Key:

C - CHANGE FROM PREVIOUS TYPE

9D3340 BEVEL GEAR GROUP--Part 2

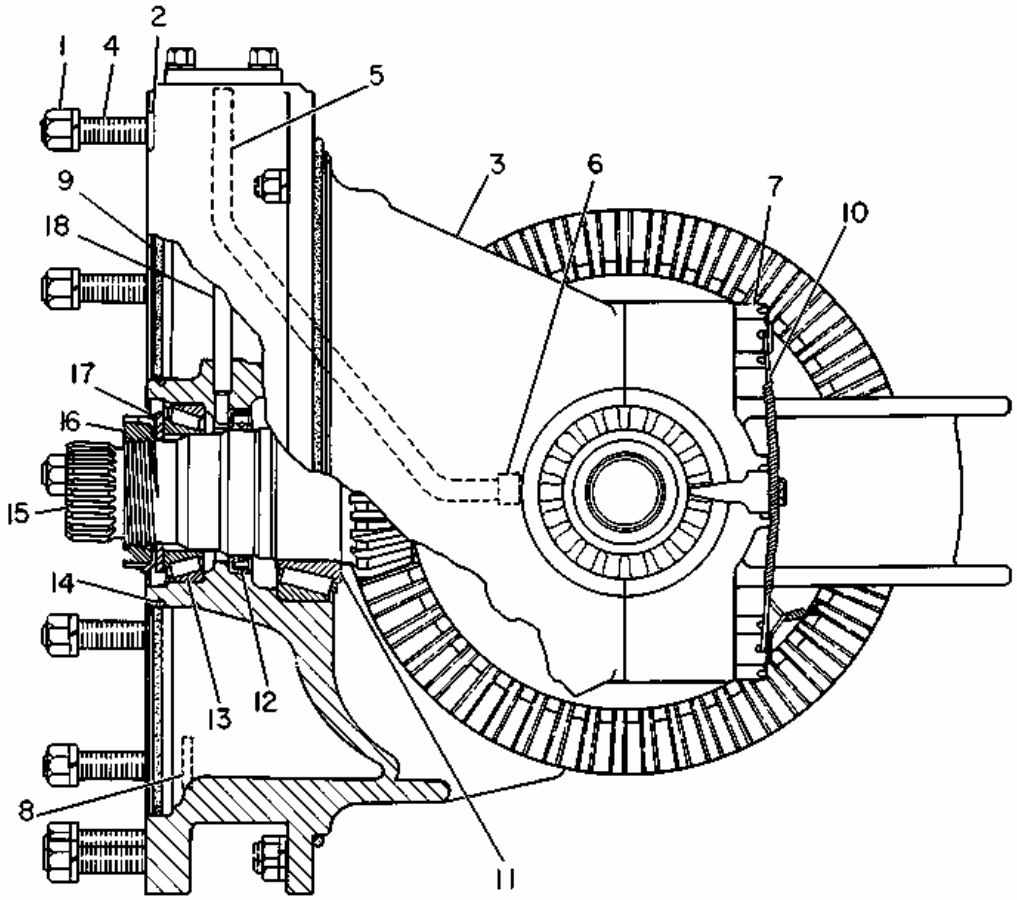

1	NPR	1D-4720	10	NUT
	NPR	3B-4510	10	LOCKWASHER
2	NPR	8M-4990	1	SEAL-O-RING
3	NPR	8D-9533	1	CARRIER AS-DIFFERENTIAL
4	NPR	3D-8439	10	STUD
5	NPR C	2G-3989	1	TUBE
6	NPR C	2G-1314	1	SLEEVE
7	NPR	8D-4651	4	STUD
	NPR	1B-4439	4	NUT-SLOTTED
8	NPR	3S-8313	2	PLUG-CUP

9	NPR	4D-1577	1	SEAL-O-RING
10	NPR D	5P-6628		LOCKWIRE 1.08M(42.13IN)
11	NPR	6D-1137	1	CONE-ROLLER BEARING
	NPR	6D-1138	1	CUP-ROLLER BEARING
12	NPR	1M-3003	1	SEAL-LIP TYPE
13	NPR	7D-8348	1	CUP-ROLLER BEARING
	NPR	7D-8349	1	CONE-ROLLER BEARING
14	NPR	2S-8439	1	SEAL-O-RING
15	NPR	8D-6489	1	PINION
16	NPR C	5P-5813	1	NUT-BEARING LOCK
	NPR	9B-0143	1	LOCK-NUT
17	NPR	7D-8347	1	WASHER
18	NPR	8D-9911	1	TUBE

Key: C - CHANGE FROM PREVIOUS TYPE
D - ORDER BY THE METER

9D750 TRANSMISSION OIL FILLER GROUP

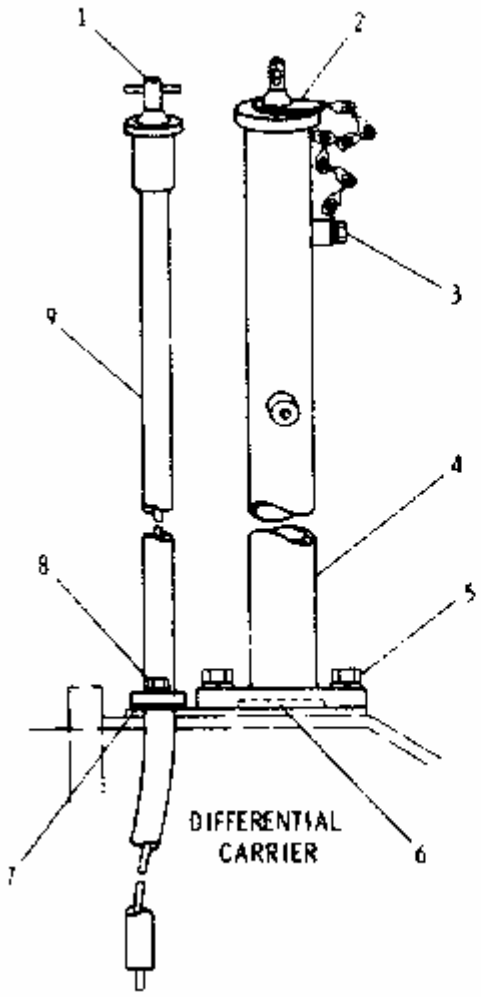

	REF. NO	PART NUMBER	DESCRIPTION	QTY
C	1	2G8520	GAUGE	1
	2	7D4801	CAP ASSEM.	1
	3	5S1613	BOLT	1
		3B4504	LOCKWASHER	1
	4	2G4589	TUBE ASSEM.	1
	5	308538	BOLT	2
		3B4508	LOCKWASHER	2
	6	7F8268	SEAL	1
	7	5F3181	GASKET	1
	8	5D353	BOLT	2
		3B4506	LOCKWASHER	2
	9	9D751	TUBE ASSEM.	1

C INDICATES CHANGE

228068

1 NPR C 2G-8520 1 GAUGE

2 NPR 7D-4801 1 CAP ASSEM.

3 NPR 0S-1613 1 BOLT

NPR 3B-4504 1 LOCKWASHER

4 NPR 2G-4589 1 TUBE ASSEM.

5 NPR 030-8538 2 BOLT

NPR 3B-4508 2 LOCKWASHER

6 NPR 7F-8268 1 SEAL

7 NPR 5F-3181 1 GASKET

8 NPR 5D-0353 2 BOLT

NPR 3B-4506 2 LOCKWASHER

9 NPR 9D-0751 1 TUBE ASSEM.

Key: C - INDICATES CHANGE

6P2091 TRANSMISSION FILTER GROUP
IF TRANSMISSION IS SERIALIZED USE TRANSMISSION SERIAL NO. OTHERWISE USE VEHICLE SERIAL NO. Serial No. 87V1138 to 87V5039 inclusive and 82V668 to 82V870 inclusive. Transmission Serial No. 2FA1-Up. Part of 3P1750 and 8P5957 Transmission Arrangements shown on Pages 115 and 115B

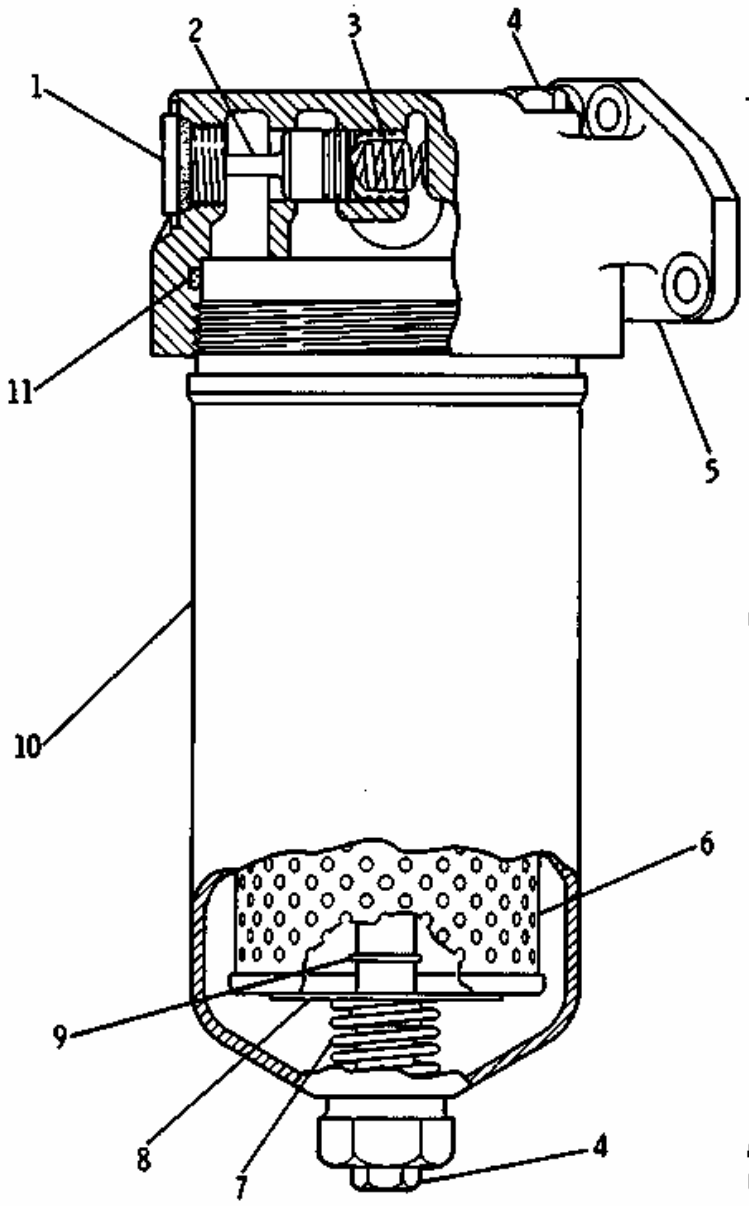

MOUNTED ON TRANSMISSION

	REF. NO.	PART NUMBER	DESCRIPTION	QTY
	1	9S8008	PLUG	1
		3D2824	SEAL	1
C	2	3T688	SPOOL	1
C	3	9M1986	SPRING	1
	4	9S4191	PLUG	2
		3J1907	SEAL	2
	5	6P2090	BASE	1
	6	9M9740	ELEMENT	1
			-OR-	
C ▲		1U2093	ELEMENT (For use with fire resistant hydraulic system)	1
	7	3S8652	SPRING	1
	8	7S6745	RETAINER	1
	9	2J6356	RING	1
	10	3P887	HOUSING	1
	11	2S8439	SEAL	1

▲ NOT PART OF 6P2091 FILTER GROUP
C INDICATES CHANGE

178817

1 NPR 9S-8008 1 PLUG

NPR 3D-2824 1 SEAL

2 NPR C 3T-0688 1 SPOOL

3 NPR C 9M-1986 1 SPRING

4 NPR 9S-4191 2 PLUG

NPR 3J-1907 2 SEAL

5 NPR 6P-2090 1 BASE

6 NPR 9M-9740 1 ELEMENT

-OR-

NPR CH 1U-2093 1 ELEMENT

(For use with fire resistant hydraulic system)

7 NPR 3S-8652 1 SPRING

8 NPR 7S-6745 1 RETAINER

9 NPR 2J-6356 1 RING

10 NPR 3P-0887 1 HOUSING

11 NPR 2S-8439 1 SEAL

Key:

C - INDICATES CHANGE
H - NOT PART OF 6P2091 FILTER GROUP

2G6240 FINAL DRIVE GROUP
Serial No. 87V2262 to 4296, 4305 to 87V4311 inclusive and 82V740 to 82V869

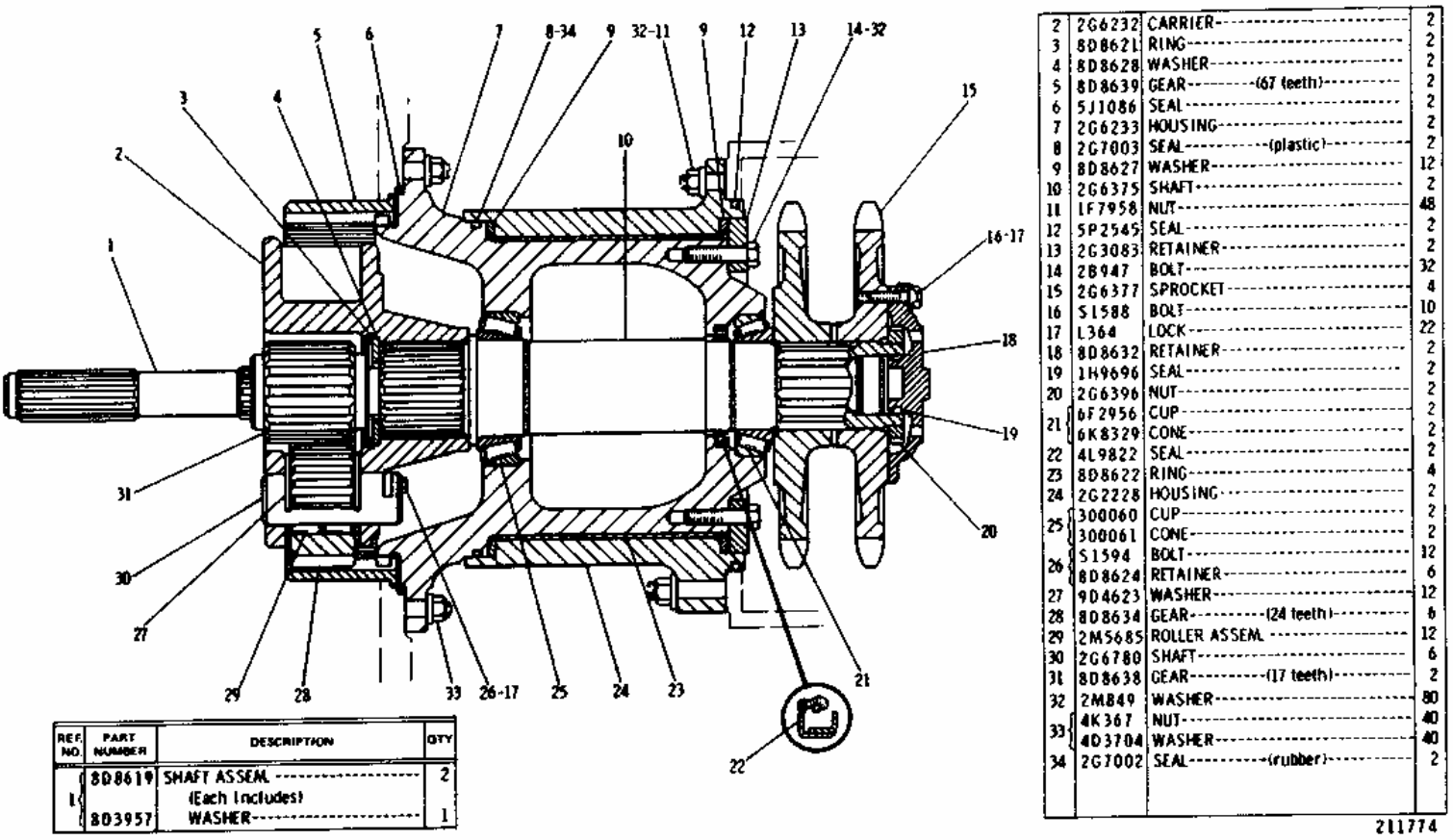

REF. NO.	PART NUMBER	DESCRIPTION	QTY
1	8D8619	SHAFT ASSEM.	2
		(Each Includes)	
	8D3957	WASHER	1

2	2G6232	CARRIER	2
3	8D8621	RING	2
4	8D8628	WASHER	2
5	8D8639	GEAR-(67 teeth)	2
6	5J1086	SEAL	2
7	2G6233	HOUSING	2
8	2G7003	SEAL-(plastic)	2
9	8D8627	WASHER	12
10	2G6375	SHAFT	2
11	LF7958	NUT	48
12	5P2545	SEAL	2
13	2G3083	RETAINER	2
14	2B947	BOLT	32
15	2G6377	SPROCKET	4
16	S1588	BOLT	10
17	L364	LOCK	22
18	8D8632	RETAINER	2
19	1H9696	SEAL	2
20	2G6396	NUT	2
21	6F2956	CUP	2
	6K8329	CONE	2
22	4L9822	SEAL	2
23	8D8622	RING	4
24	2G2228	HOUSING	2
25	300060	CUP	2
	300061	CONE	2
26	S1594	BOLT	12
	8D8624	RETAINER	6
27	9D4623	WASHER	12
28	8D8634	GEAR-(24 teeth)	6
29	2M5685	ROLLER ASSEM.	12
30	2G6780	SHAFT	6
31	8D8638	GEAR-(17 teeth)	2
32	2M849	WASHER	80
33	4K367	NUT	40
	4D3704	WASHER	40
34	2G7002	SEAL-(rubber)	2

211774

1 NPR 8D-8619 2 SHAFT ASSEM.

(Each Includes)

NPR 8D-3957 1 WASHER

2 NPR 2G-6232 2 CARRIER

3 NPR 8D-8621 2 RING

4 NPR 8D-8628 2 WASHER

5 NPR CL 8D-8639 2 GEAR (67 teeth)

CL NPR 275-5277 1 GEAR-RING-CLA

6 NPR 5J-1086 2 SEAL

7 NPR 2G-6233 2 HOUSING

8 NPR 2G-7003 2 SEAL (plastic)

9 NPR 8D-8627 12 WASHER

10 NPR CL 2G-6375 2 SHAFT

CL NPR 275-5282 1 SHAFT-DRIVE-CLA

11 NPR 1F-7958 48 NUT

12 NPR 5P-2545 2 SEAL

13 NPR 2G-3083 2 RETAINER

14 NPR 2B-0947 32 BOLT

15 NPR CL 2G-6377 4 SPROCKET

CL NPR 275-5286 1 SPROCKET-CLA

16 NPR 0S-1588 10 BOLT

17 NPR 0L-0364 22 LOCK

18 NPR 8D-8632 2 RETAINER

19 NPR 1H-9696 2 SEAL

20 NPR 2G-6396 2 NUT

21 NPR 6F-2956 2 CUP

NPR 6K-8329 2 CONE

22 NPR 4L-9822 2 SEAL

23 NPR 8D-8622 4 RING

24 NPR 2G-2228 2 HOUSING

25 NPR 030-0060 2 CUP

	NPR	030-0061	2	CONE	
26	NPR	0S-1594	12	BOLT	
	NPR	8D-8624	6	RETAINER	
27	NPR	9D-4623	12	WASHER	
28	NPR CL	8D-8634	6	GEAR (24 teeth)	
CL	NPR	275-5275	1	GEAR-PLANET-CLA	
29	NPR	2M-5685	12	ROLLER ASSEM.	
30	NPR	2G-6780	6	SHAFT	
31	NPR CL	8D-8638	2	GEAR (17 teeth)	
CL	NPR	275-5279	1	GEAR-SUN-CLA	
32	NPR	2M-0849	80	WASHER	
33	NPR	4K-0367	40	NUT	
	NPR	4D-3704	40	WASHER	
34	NPR	2G-7002	2	SEAL (rubber)	

Key:

CL - Classic Part Available

6G4745 FINAL DRIVE SEAL GROUP--Field Installation
Serial No. 87V2262 to 4538 and 87V4564 inclusive

NPR	6G-5479	1	SEAL INNER HOUSING TO OUTER HOUSING
NPR	6G-3205	2	WASHER INNER HOUSING TO OUTER HOUSING

RETAINER TO OUTER HOUSING

NPR	8D-8622	2	RING INNER HOUSING TO OUTER HOUSING
NPR	6G-4083	1	SHIM RETAINER TO INNER HOUSING

3P1751 TRANSFER GEAR GROUP--Part 1 of 3
Serial No. 87V1138 to 3029 and 87V3032 to 87V3035 inclusive and 82V668 to 82V794 inclusive. Part of 3P1750 and 8P5957 Transmission Arrangements shown on Pages 115 and 115B. 3P1752 Transmission Case parts are shown on Page 119
Note: 5P3763 Gasket Kit is available

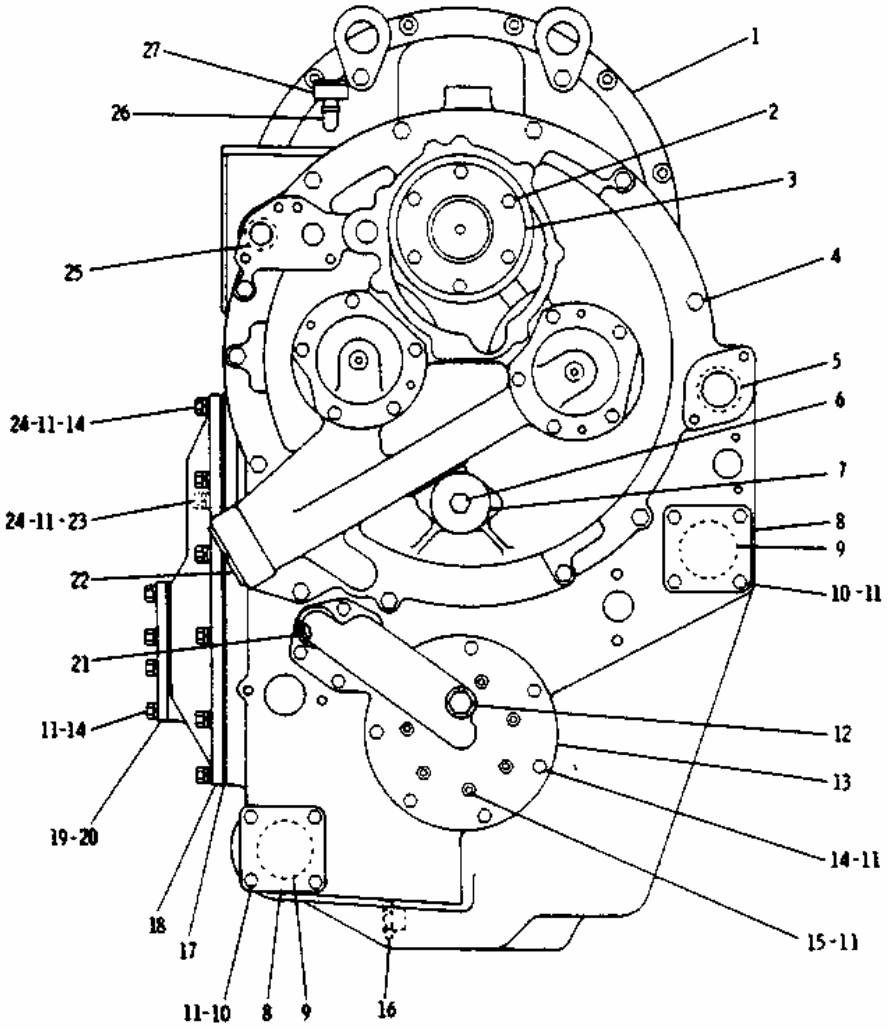

REF. NO.	PART NUMBER	DESCRIPTION	QTY
1	3P1752	CASE ASSEM. (Separate Illustration)	1
2	1A2029	BOLT	6
	5M2894	WASHER	6
3	3P321	CAGE	1
	3P322	SHIM PACK	1
4	S1585	BOLT	12
	3B4508	LOCKWASHER	12
5	7F8268	SEAL	1
6	L2315	BOLT	1
7	4S5824	RETAINER	1
8	4H5440	COVER	2
	7L3111	GASKET	2
9	8S9130	SCREEN	2
	8S9129	FILTER	2
10	S1594	BOLT	8
11	3B4506	LOCKWASHER	46
12	9S4191	PLUG	1
	3J1907	SEAL	1
13	3P320	COVER	1
14	S1588	BOLT	31
15	1D4717	NUT	6
16	6B5262	PLUG	1
	6K5551	GASKET	1
17	2P9326	GASKET	1
18	2P9325	COVER	1
19	3P6061	GASKET	1
20	2N822	PLATE	1
21	6F6673	SEAL	1
22	9S8009	PLUG	2
	4K1388	SEAL	2
23	S1591	BOLT	1
24	4B4278	WASHER	19
25	4F9029	SEAL	5
26	3B6553	ELBOW	1
27	8S5820	BREATHER	1

203372

1 NPR Y 3P-1752 1 CASE ASSEM.

(Separate Illustration)

2 NPR 1A-2029 6 BOLT

NPR 5M-2894 6 WASHER

3 NPR 3P-0321 1 CAGE

NPR 3P-0322 1 SHIM PACK

4 NPR 0S-1585 12 BOLT

NPR 3B-4508 12 LOCKWASHER

5 NPR 7F-8268 1 SEAL

6 NPR 0L-2315 1 BOLT

7 NPR 4S-5824 1 RETAINER

8 NPR 4H-5440 2 COVER

NPR 7L-3111 2 GASKET

9 NPR 8S-9130 2 SCREEN

NPR 8S-9129 2 FILTER

10 NPR 0S-1594 8 BOLT

11 NPR 3B-4506 46 LOCKWASHER

12 NPR 9S-4191 1 PLUG

NPR 3J-1907 1 SEAL

13 NPR 3P-0320 1 COVER

14 NPR 0S-1588 31 BOLT

15	NPR	1D-4717	6	NUT
16	NPR	6B-5262	1	PLUG
	NPR	6K-5551	1	GASKET
17	NPR	2P-9326	1	GASKET
18	NPR	2P-9325	1	COVER
19	NPR	3P-6061	1	GASKET
20	NPR	2N-0822	1	PLATE
21	NPR	6F-6673	1	SEAL
22	NPR	9S-8009	2	PLUG
	NPR	4K-1388	2	SEAL
23	NPR	0S-1591	1	BOLT
24	NPR	4B-4278	19	WASHER
25	NPR	4F-9029	5	SEAL
26	NPR	3B-6553	1	ELBOW
27	NPR	8S-5820	1	BREATHER

Key:

Y - SEPARATE ILLUSTRATION

3P1751 TRANSFER GEAR GROUP--Part 2 of 3
Serial No. 87V1138 to 3029 and 87V3032 to 87V3035 inclusive and 82V668 to 82V794 inclusive. Part of 3P1750 and 8P5957 Transmission Arrangements shown on Pages 115 and 115B

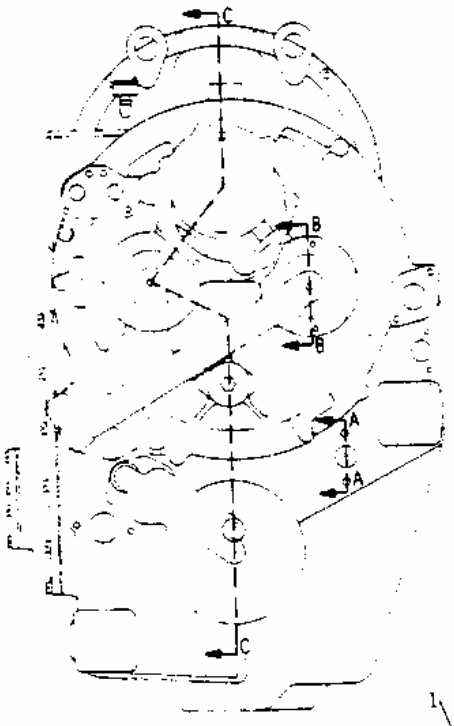

SEE PART 3

REF NO	PART NUMBER	DESCRIPTION	QTY
13	8J6322	CUP	2
	1B3953	CONE	2
14	1L8497	RING	1
15	8S9030	CARRIER	1
16	8S6378	SEAL	2
18	1T234	RING	2
19	1S8478	SPRING	6
20	3P5360	HUB	1
21	3P5726	RING	1
22	3P335	PLATE	1
23	3P5359	PISTON	1
24	3P5347	PLATE	1
25	3D2898	SEAL	1
26	3P327	SHIM PACK	2
27	3P325	CAGE ASSEM.	2
		(Includes)	
28	1L8497	RING	1
29	8S9030	CARRIER	1

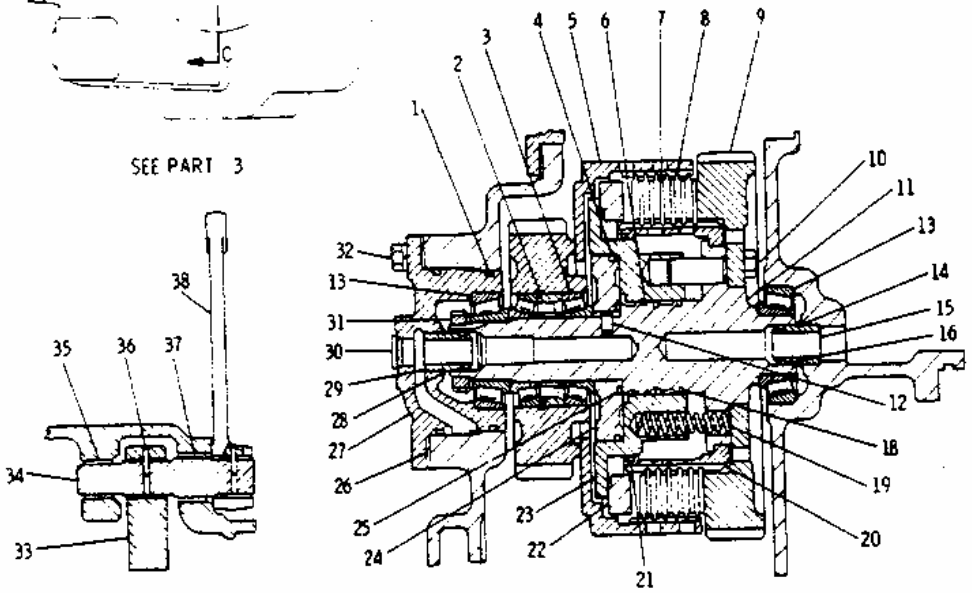

SECTION A-A

SECTION B-B

REF NO	PART NUMBER	DESCRIPTION	QTY
1	2H3934	SEAL	2
2	3P6599	RING	1
3	1P9341	BEARING ASSEM.	1
4	2P1068	RING	1
5	3P329	DRUM ASSEM.	1
6	3P5728	RING	1
	3P5859	SEAL	1
7	3P337	PLATE (clutch)	6
8	3P340	DISC ASSEM.	6
9	3P341	GEAR (teeth)	1
10	4F8965	BOLT	8
11	3P5737	SHAFT ASSEM.	2
		(Includes)	
	3P7009	PLUG	1
	7D225	DOWEL	2
12	7M4673	DOWEL	1

REF NO	PART NUMBER	DESCRIPTION	QTY
30	9S8005	PLUG	2
	3K360	SEAL	2
31	2H3777	NUT	2
	5F8916	LOCK	2
32	1A2029	BOLT	10
	3B4506	LOCKWASHER	10
33	3P3426	LEVER	1
34	3P3424	SHAFT	1
35	2N7609	BEARING	1
36	3K4897	PIN	2
37	6K8088	BEARING	1
38	3P6159	LEVER	1

155938

1 NPR 2H-3934 2 SEAL

2 NPR 3P-6599 1 RING

3 NPR 1P-9341 1 BEARING ASSEM.

4 NPR 2P-1068 1 RING

5 NPR 3P-0329 1 DRUM ASSEM.

6 NPR 3P-5728 1 RING

NPR 3P-5859 1 SEAL

7 NPR 3P-0337 6 PLATE (clutch)

8 NPR 3P-0340 6 DISC ASSEM.

9 NPR 3P-0341 1 GEAR (teeth)

10 NPR 4F-8965 8 BOLT

11 NPR CL 3P-5737 2 SHAFT ASSEM.

CL NPR 275-5273 1 SHAFT AS.-CLA

(Includes)

NPR 3P-7009 1 PLUG

NPR 7D-0225 2 DOWEL

12 NPR 7M-4673 1 DOWEL

13 NPR 8J-6322 2 CUP

NPR 1B-3953 2 CONE

14 NPR 1L-8497 1 RING

15 NPR 8S-9030 1 CARRIER

16 NPR 8S-6378 2 SEAL

18 NPR 1T-0234 2 RING

19 NPR 1S-8478 6 SPRING

20 NPR 3P-5360 1 HUB

21 NPR 3P-5726 1 RING

22 NPR CL 3P-0335 1 PLATE

CL NPR 297-7228 1 PLATE-CLA R

23 NPR CL 3P-5359 1 PISTON

CL NPR 299-2037 1 PISTON-CLA

24 NPR 3P-5347 1 PLATE

25 NPR 3D-2898 1 SEAL

26 NPR 3P-0327 2 SHIM PACK

27 NPR 3P-0325 2 CAGE ASSEM.

(Includes)

28 NPR 1L-8497 1 RING

29 NPR 8S-9030 1 CARRIER

30 NPR 9S-8005 2 PLUG

NPR 3K-0360 2 SEAL

31 NPR 2H-3777 2 NUT

NPR 5F-8916 2 LOCK

32 NPR 1A-2029 10 BOLT

	NPR	3B-4506	10	LOCKWASHER
33	NPR	3P-3426	1	LEVER
34	NPR	3P-3424	1	SHAFT
35	NPR	2N-7609	1	BEARING
36	NPR	3K-4897	2	PIN
37	NPR	6K-8088	1	BEARING
38	NPR	3P-6159	1	LEVER

Key:

CL - Classic Part Available

3P1751 TRANSFER GEAR GROUP--Part 3 of 3-Serial No. 87V1138 to 3029 and 87V3032 to 87V3035 inclusive and 82V668 to 82V794-inclusive. Part of 3P1750 and 8P5957 Transmission Arrangements shown on-Pages 115 and 115B

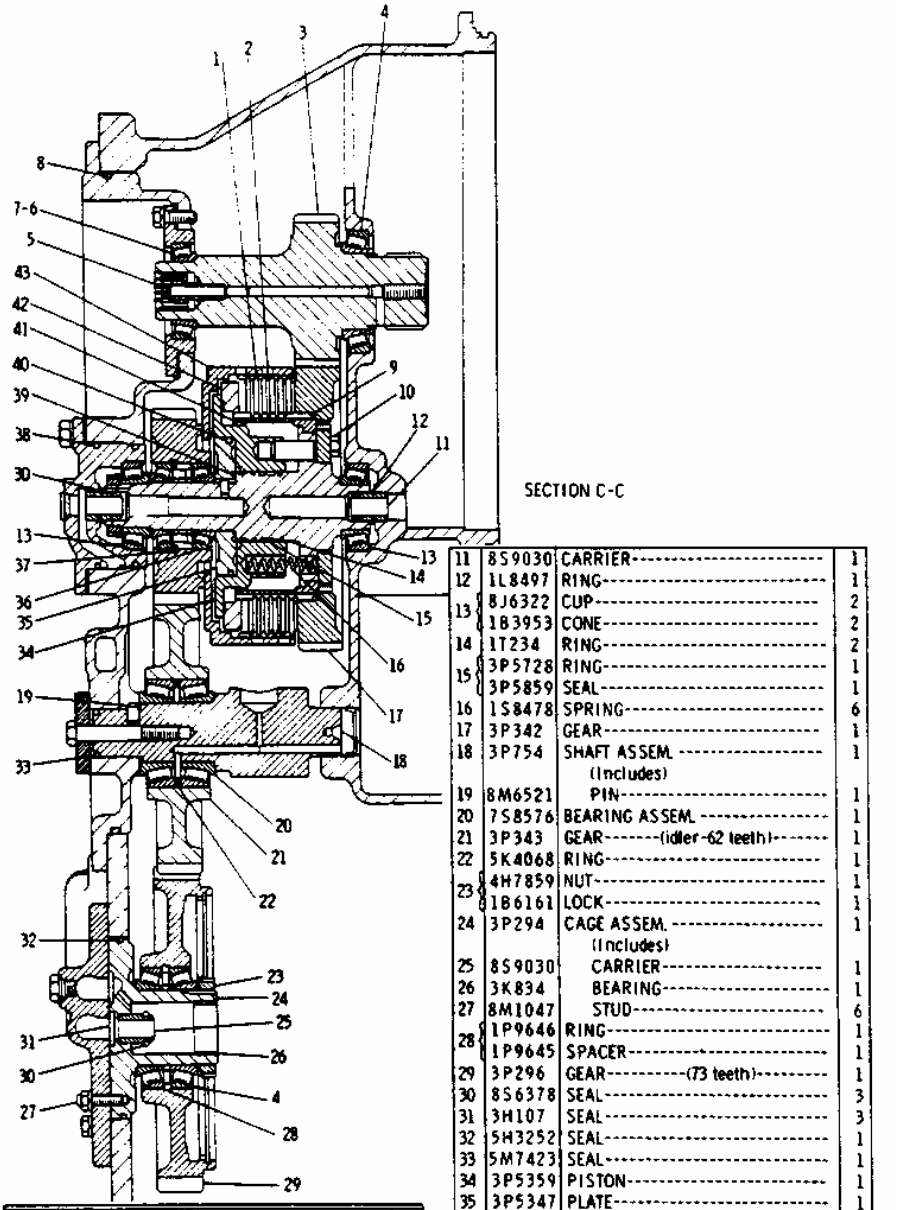

REF. NO.	PART NUMBER	DESCRIPTION	QTY
1	3P340	DISC ASSEM.	6
2	3P337	PLATE (clutch)	6
3	3P323	GEAR (47 teeth)	1
4	1P2636	CUP	3
	1P2662	CONE	3
5	4B9530	GUIDE	1
6	9S3582	CONE	1
7	9S3581	CUP	1
8	2R98	SEAL	1
9	3P5360	HUB	1
10	4F8965	BOLT	8
11	8S9030	CARRIER	1
12	1L8497	RING	1
13	8J6322	CUP	2
	1B3953	CONE	2
14	1T234	RING	2
15	3P5728	RING	1
	3P5859	SEAL	1
16	1S8478	SPRING	6
17	3P342	GEAR	1
18	3P754	SHAFT ASSEM. (Includes)	1
19	8M6521	PIN	1
20	7S8576	BEARING ASSEM.	1
21	3P343	GEAR (idler-62 teeth)	1
22	5K4068	RING	1
23	4H7859	NUT	1
	1B6161	LOCK	1
24	3P294	CAGE ASSEM. (Includes)	1
25	8S9030	CARRIER	1
26	3K834	BEARING	1
27	8M1047	STUD	6
28	1P9646	RING	1
	1P9645	SPACER	1
29	3P296	GEAR (73 teeth)	1
30	8S6378	SEAL	3
31	3H107	SEAL	3
32	5H3252	SEAL	1
33	5M7423	SEAL	1
34	3P5359	PISTON	1
35	3P5347	PLATE	1
36	1P9341	BEARING ASSEM.	1
37	3P6599	RING	1
38	2H3934	SEAL	2
39	3D2898	SEAL	1
40	2P1068	RING	1
41	3P5726	RING	1
42	3P335	PLATE	1
43	3P329	DRUM ASSEM.	1

1 NPR 3P-0340 6 DISC ASSEM.

2 NPR 3P-0337 6 PLATE (clutch)

3 NPR 3P-0323 1 GEAR (47 teeth)

4 NPR 1P-2636 3 CUP

	NPR	1P-2662	3	CONE
5	NPR	4B-9530	1	GUIDE
6	NPR	9S-3582	1	CONE
7	NPR	9S-3581	1	CUP
8	NPR	2R-0098	1	SEAL
9	NPR	3P-5360	1	HUB
10	NPR	4F-8965	8	BOLT
11	NPR	8S-9030	1	CARRIER
12	NPR	1L-8497	1	RING
13	NPR	8J-6322	2	CUP
	NPR	1B-3953	2	CONE
14	NPR	1T-0234	2	RING
15	NPR	3P-5728	1	RING
	NPR	3P-5859	1	SEAL
16	NPR	1S-8478	6	SPRING
17	NPR	3P-0342	1	GEAR
18	NPR	3P-0754	1	SHAFT ASSEM.
(Includes)				
19	NPR	8M-6521	1	PIN
20	NPR	7S-8576	1	BEARING ASSEM.

21 NPR 3P-0343 1 GEAR (idler-62 teeth)

22 NPR 5K-4068 1 RING

23 NPR 4H-7859 1 NUT

NPR 1B-6161 1 LOCK

24 NPR 3P-0294 1 CAGE ASSEM.

(Includes)

25 NPR 8S-9030 1 CARRIER

26 NPR 3K-0834 1 BEARING

27 NPR 8M-1047 6 STUD

28 NPR 1P-9646 1 RING

NPR 1P-9645 1 SPACER

29 NPR 3P-0296 1 GEAR (73 teeth)

30 NPR 8S-6378 3 SEAL

31 NPR 3H-0107 3 SEAL

32 NPR 5H-3252 1 SEAL

33 NPR 5M-7423 1 SEAL

34 NPR CL 3P-5359 1 PISTON

CL NPR 299-2037 1 PISTON-CLA

35 NPR 3P-5347 1 PLATE

36 NPR 1P-9341 1 BEARING ASSEM.

37 NPR 3P-6599 1 RING

38	NPR	2H-3934	2	SEAL
39	NPR	3D-2898	1	SEAL
40	NPR	2P-1068	1	RING
41	NPR	3P-5726	1	RING
42	NPR CL	3P-0335	1	PLATE
CL	NPR	297-7228	1	PLATE-CLA R
43	NPR	3P-0329	1	DRUM ASSEM.

Key:

CL - Classic Part Available

9D5900 WHEEL GROUP--14.00 x 24 Tubeless Tires--Type 1

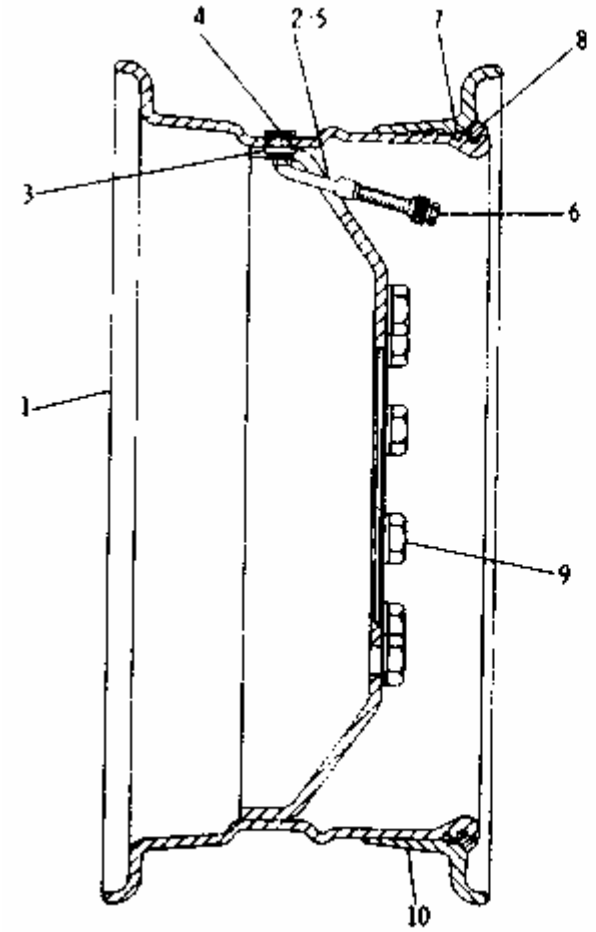

REF NO	PART NUMBER	DESCRIPTION	QTY
1	9D5852	WHEEL	6
C 2	4D2004	VALVE GROUP	6
		(Each Includes)	
3	7D5252	SPUD ASSEM.	1
		(Includes)	
4	2D2509	NUT	1
	2D2508	GROMMET	1
5	4D3398	STEM ASSEM.	1
		(Includes)	
6	9K7951	CAP	1
	6F3930	CORE	1
7	2D2565	SEAL	6
8	2D2654	RING	6
9	7D8508	NUT	60
	4M6953	WASHER	60
10	2D2655	FLANGE	6

C INDICATES CHANGE 207378

1 NPR 9D-5852 6 WHEEL

2 NPR C 4D-2004 6 VALVE GROUP

(Each Includes)

3 NPR 7D-5252 1 SPUD ASSEM.

(Includes)

4 NPR 2D-2509 1 NUT

NPR 2D-2508 1 GROMMET

5 NPR 4D-3398 1 STEM ASSEM.

(Includes)

6 NPR 9K-7951 1 CAP

	NPR	6F-3930	1	CORE
7	NPR	2D-2565	6	SEAL
8	NPR	2D-2654	6	RING
9	NPR	7D-8508	60	NUT
	NPR	4M-6953	60	WASHER
10	NPR	2D-2655	6	FLANGE

Key:

C - INDICATES CHANGE

7D8510 WHEEL GROUP--13.00 x 24 Tubeless Tires
Serial No. 87V1488-Up and 82V692-Up

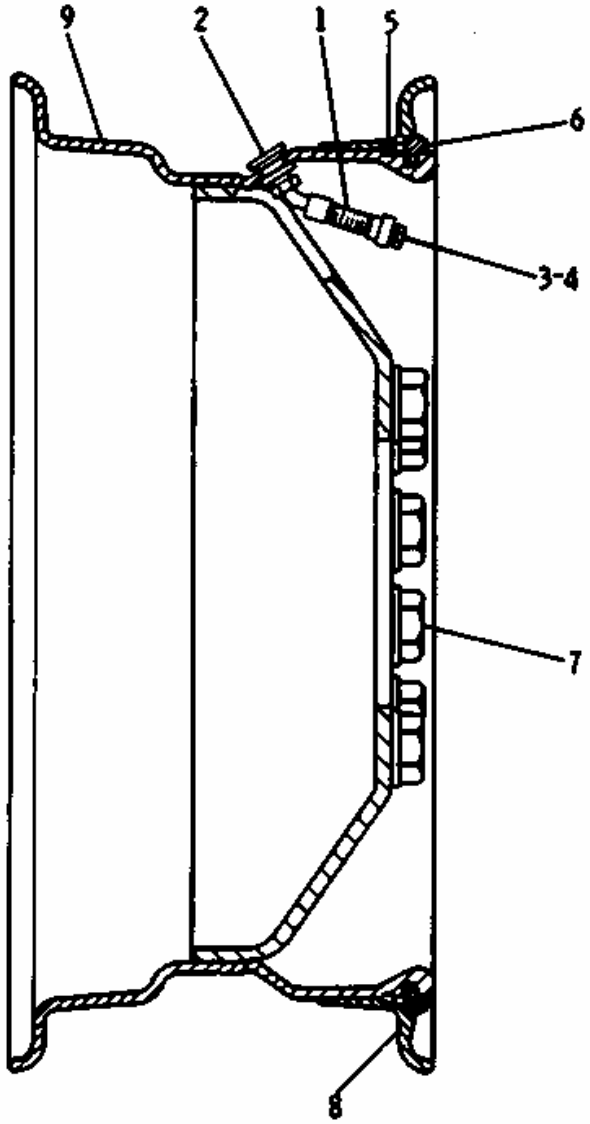

	REF. NO.	PART NUMBER	DESCRIPTION	QTY
C	1	2G6595	VALVE GROUP---------- (Each Includes)	6
	2	2D2507	SPUD----------	1
		2D2509	NUT----------	1
		2D2508	GROMMMET----------	1
	3	9K7951	CAP----------	1
	4	6F3930	CORE----------	1
	5	2D2565	SEAL----------	6
	6	2D2566	RING----------	6
	7	7D8508	NUT----------	60
		4M6953	WASHER----------	60
	8	2D2567	FLANGE----------	6
C	9	2G5744	WHEEL----------	6

C INDICATES CHANGE 159933

1 NPR C 2G-6595 6 VALVE GROUP

(Each Includes)

2 NPR 2D-2507 1 SPUD

NPR 2D-2509 1 NUT

NPR 2D-2508 1 GROMMET

3 NPR 9K-7951 1 CAP

4 NPR 6F-3930 1 CORE

5 NPR 2D-2565 6 SEAL

6	NPR CL	2D-2566	6	RING
CL	NPR	299-2050	1	RING-CLASSIC
7	NPR	7D-8508	60	NUT
	NPR	4M-6953	60	WASHER
8	NPR	2D-2567	6	FLANGE
9	NPR C	2G-5744	6	WHEEL

Key:

CL - Classic Part Available
C - INDICATES CHANGE

9D5900 WHEEL GROUP--14.00 x 24 Tubeless Tires--Type 2

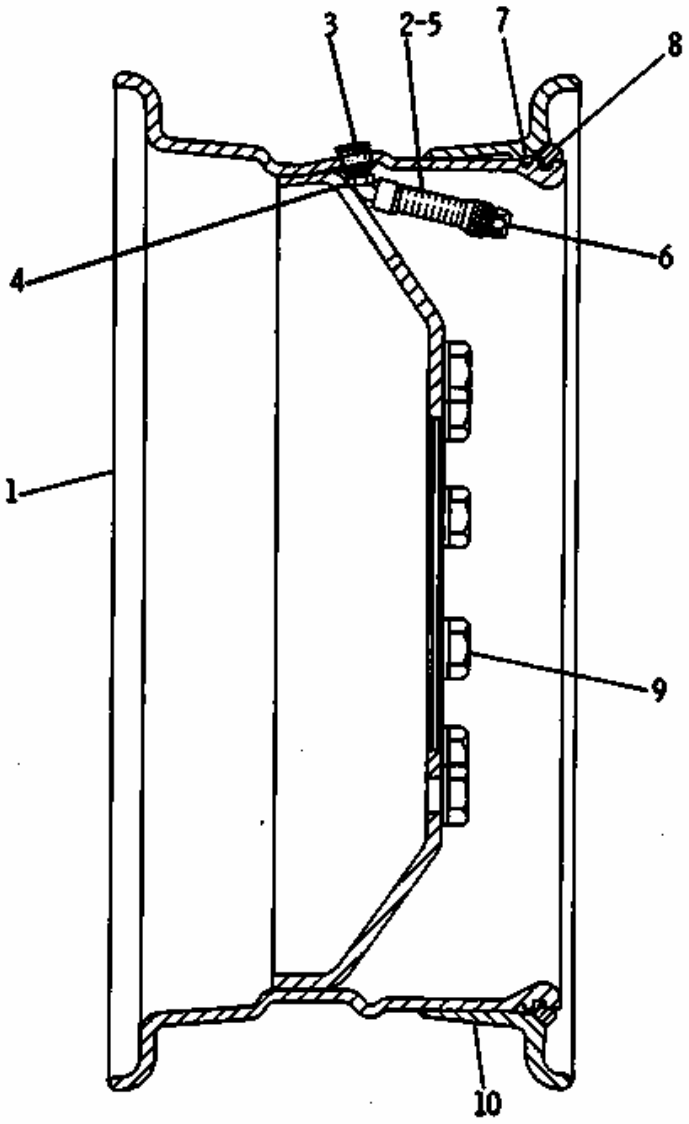

	REF. NO.	PART NUMBER	DESCRIPTION	QTY
C	1	2G5745	WHEEL	6
C	2	2G6595	VALVE GROUP	6
			(Each Includes)	
	3	7D5252	SPUD ASSEM.	1
			(Includes)	
	4	2D2509	NUT	1
		2D2508	GROMMET	1
	5	2G6567	STEM ASSEM.	1
			(Includes)	
	6	9K7951	CAP	1
		6F3930	CORE	1
	7	2D2565	SEAL	6
	8	2D2654	RING	6
	9	7D8508	NUT	60
		4M6953	WASHER	60
	10	2D2655	FLANGE	6

C INDICATES CHANGE 210284

1 NPR C 2G-5745 6 WHEEL

2 NPR C 2G-6595 6 VALVE GROUP

(Each Includes)

3 NPR 7D-5252 1 SPUD ASSEM.

(Includes)

4 NPR 2D-2509 1 NUT

NPR 2D-2508 1 GROMMET

5 2G-6567 1 STEM ASSEM.

(Includes)

6	NPR	9K-7951	1	CAP
	NPR	6F-3930	1	CORE
7	NPR	2D-2565	6	SEAL
8	NPR	2D-2654	6	RING
9	NPR	7D-8508	60	NUT
	NPR	4M-6953	60	WASHER
10	NPR	2D-2655	6	FLANGE

Key:

C - INDICATES CHANGE

9D5797 WHEEL GROUP--15.5 x 25 Tubeless Tires--Type 1

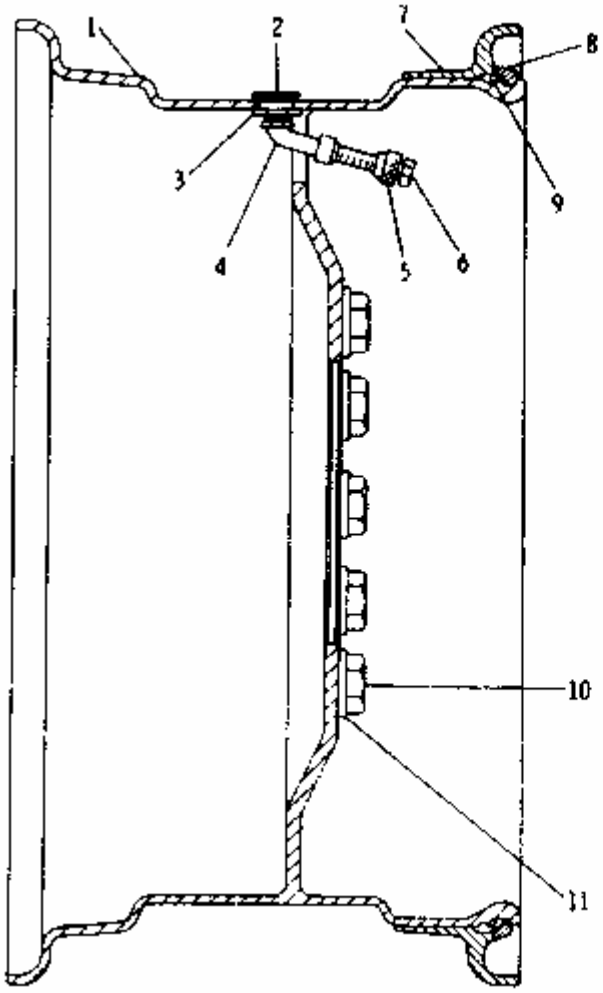

REF. NO	PART NUMBER	DESCRIPTION	QTY
1	9D5718	WHEEL	6
	4D2004	VALVE GROUP	6
		(Each Includes)	
2	2D2507	SPUD	1
	2D2508	GROMMET	1
3	2D2509	NUT	1
4	4D3398	STEM ASSEM.	1
		(Includes)	
5	6F3930	CORE	1
6	9K7951	CAP	1
7	9D8038	FLANGE	6
8	9D8037	RING	6
9	4K4879	SEAL	6
10	7D8508	NUT	60
11	4M6953	WASHER	60

200559

1 NPR 9D-5718 6 WHEEL

2 NPR 4D-2004 6 VALVE GROUP

(Each Includes)

NPR 2D-2507 1 SPUD

NPR 2D-2508 1 GROMMET

3 NPR 2D-2509 1 NUT

4 NPR 4D-3398 1 STEM ASSEM.

(Includes)

5 NPR 6F-3930 1 CORE

6 NPR 9K-7951 1 CAP

7	NPR	9D-8038	6	FLANGE
8	NPR	9D-8037	6	RING
9	NPR	4K-4879	6	SEAL
10	NPR	7D-8508	60	NUT
11	NPR	4M-6953	60	WASHER

9D5797 WHEEL GROUP--15.5 x 25 Tubeless Tires--Type 2
Replaced by 6G1526 on Page 155

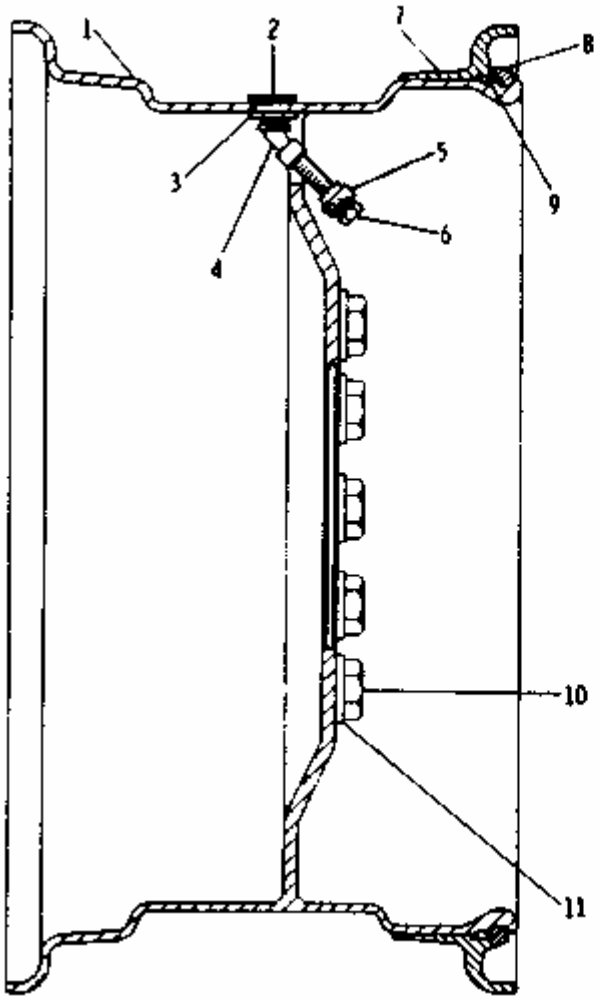

REF. NO.	PART NUMBER	DESCRIPTION	QTY
1	9D5718	WHEEL	6
C	2G6595	VALVE GROUP (Each Includes)	6
2	2D2507	SPUD	1
	2D2508	GROMMET	1
3	2D2509	NUT	1
4	2G6567	STEM ASSEM. (Includes)	1
5	6F3930	CORE	1
6	9K7951	CAP	1
7	9D8038	FLANGE	6
8	9D8037	RING	6
9	4K4879	SEAL	6
10	7D8508	NUT	60
11	4M6953	WASHER	60

C INDICATES CHANGE

161851

1 NPR 9D-5718 6 WHEEL

2 NPR C 2G-6595 6 VALVE GROUP

(Each Includes)

NPR 2D-2507 1 SPUD

NPR 2D-2508 1 GROMMET

3 NPR 2D-2509 1 NUT

4 2G-6567 1 STEM ASSEM.

(Includes)

5 NPR 6F-3930 1 CORE

6	NPR	9K-7951	1	CAP
7	NPR	9D-8038	6	FLANGE
8	NPR	9D-8037	6	RING
9	NPR	4K-4879	6	SEAL
10	NPR	7D-8508	60	NUT
11	NPR	4M-6953	60	WASHER

Key:

C - INDICATES CHANGE

6G1526 WHEEL GROUP--15.5 x 25 Tubeless Tires

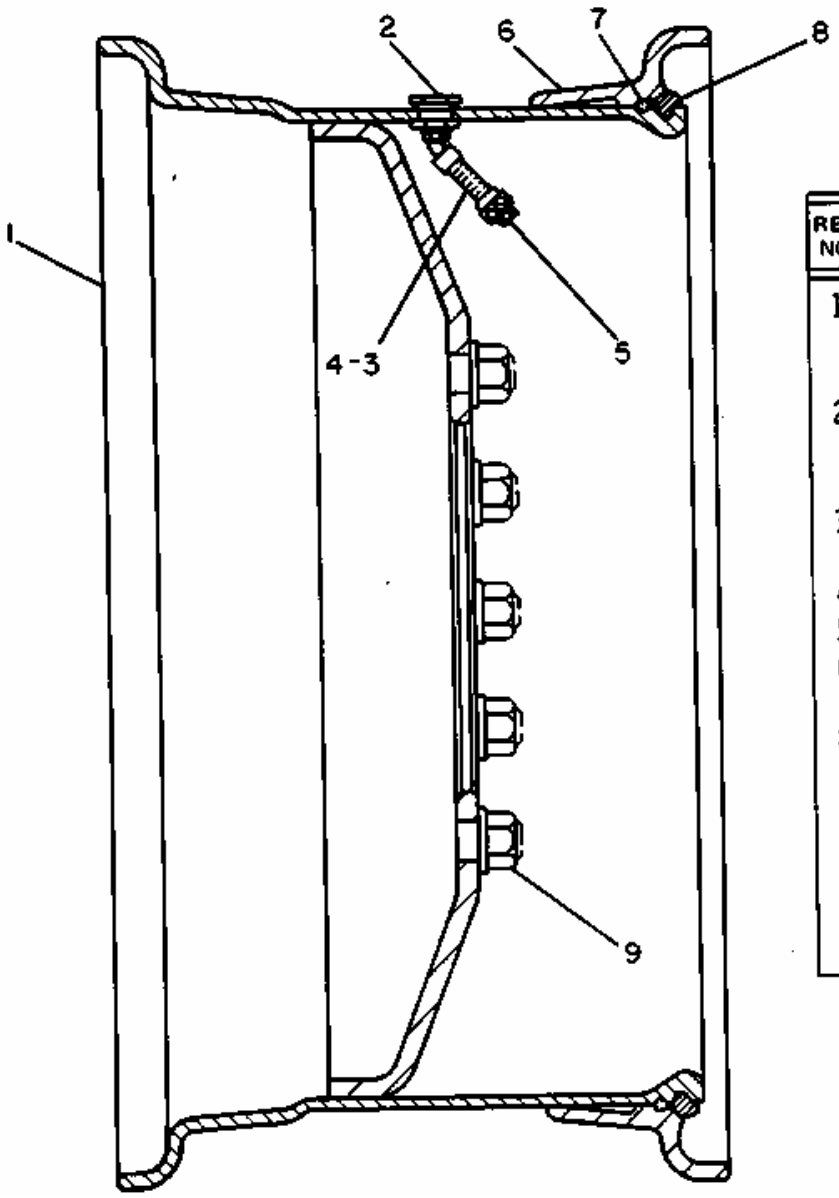

REF. NO.	PART NUMBER	DESCRIPTION	QTY.
1	6G1527	WHEEL	6
2	2G6595	VALVE GROUP (Each Includes)	6
	2D2507	SPUD	1
	2D2508	GROMMET	1
	2D2509	NUT	1
3	2G6567	STEM ASSEM. (Includes)	1
4	6F3930	CORE	1
5	9K7951	CAP	1
6	6G1533	FLANGE	6
7	4K4879	SEAL	6
8	4K4881	RING	6
9	7D8508	NUT	60
	4M6953	WASHER	60

223853

1 NPR 6G-1527 6 WHEEL

2 NPR 2G-6595 6 VALVE GROUP

(Each Includes)

NPR 2D-2507 1 SPUD

NPR 2D-2508 1 GROMMET

NPR 2D-2509 1 NUT

3 2G-6567 1 STEM ASSEM.

(Includes)

4	NPR	6F-3930	1	CORE
5	NPR	9K-7951	1	CAP
6	NPR	6G-1533	6	FLANGE
7	NPR	4K-4879	6	SEAL
8	NPR	4K-4881	6	RING
9	NPR	7D-8508	60	NUT
	NPR	4M-6953	60	WASHER

2G4990 SOUND SUPPRESSION ARRANGEMENT
Serial No. 87V2262-Up and 82V740-Up

NPR	Y	4N-9197	1	MUFFLER GROUP
NPR	Y	4N-4101	1	EXTENSION GROUP
		2G-4615	1	HOOD ASSEMBLY
		8D-6634	1	STRIP
		2G-4483	1	STRIP
NPR		7K-1400	4	HANDLE
NPR		2D-9581	4	HOOK
		2G-3284	1	STRIP

Key:

Y - SEPARATE ILLUSTRATION

3P2807 TRANSMISSION HYDRAULIC GROUP
IF TRANSMISSION IS SERIALIZED USE TRANSMISSION SERIAL NO. OTHERWISE USE VEHICLE SERIAL NO.
Serial No. 87V2415 to 87V5039 inclusive and 82V755 to 82V870 inclusive. Test No. 311-Up. Transmission Serial No. 2FA1-Up
Part of 8P5957 Transmission Arrangement shown on Page 115B. 8P4301 and 3P841 Valve parts are shown on Pages 126A and 127

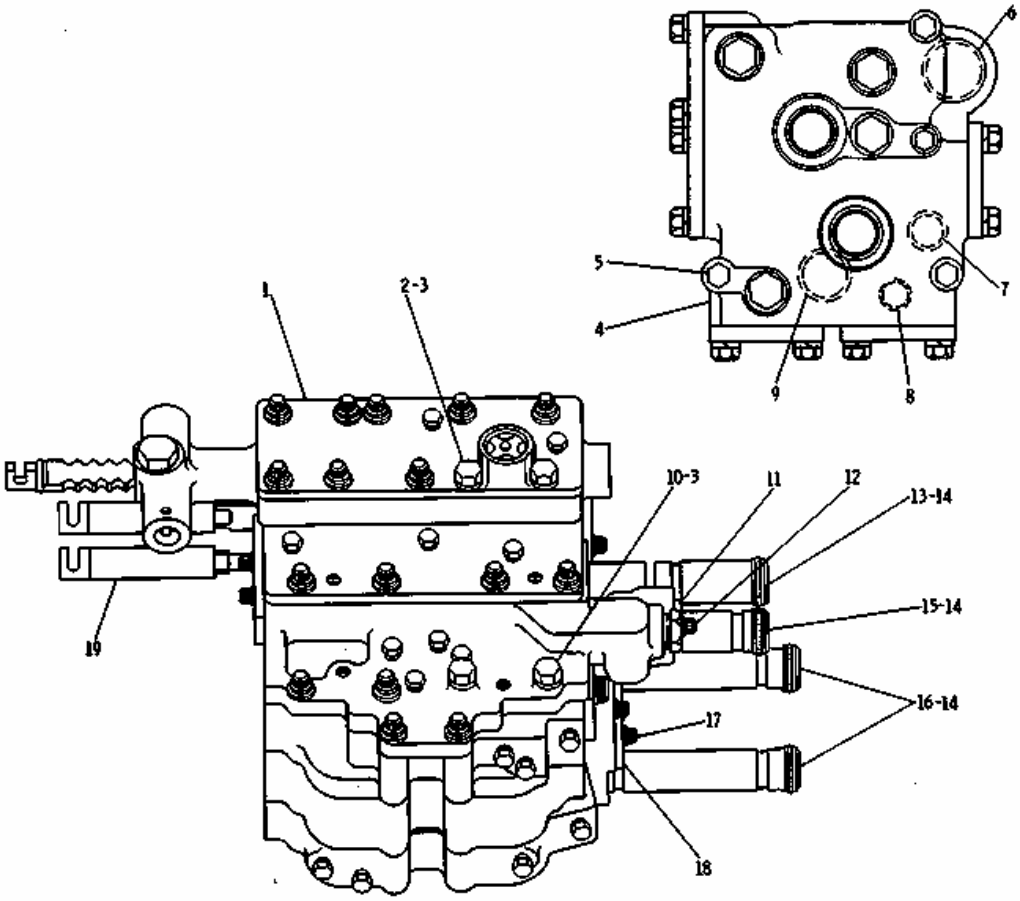

	REF. NO.	PART NUMBER	DESCRIPTION	QTY
	1	3P841	VALVE GROUP (Separate Illustration)	1
	2	5F6044	BOLT	2
	3	5M2894	WASHER	4
C	4	8P4301	VALVE GROUP (Separate Illustration)	1
	5	0L1352	BOLT	4
		3B4506	LOCKWASHER	4
	6	6F6673	SEAL	1
	7	5F7054	SEAL	1
	8	2J157	SEAL	2
	9	2H3932	SEAL	3
	10	4F411	BOLT	2
	11	3P2781	PLATE	1
	12	1T416	BOLT	1
	13	3P868	SLEEVE	1
	14	4M8303	SEAL	8
	15	3P869	SLEEVE	1
	16	3P870	SLEEVE	2
	17	6L4783	BOLT	2
	18	3P2777	PLATE	1
	19	6P5095	LINK	2

C INDICATES CHANGE 211783

1 NPR Y 3P-0841 1 VALVE GROUP

(Separate Illustration)

2 NPR 5F-6044 2 BOLT

3 NPR 5M-2894 4 WASHER

4 NPR CY 8P-4301 1 VALVE GROUP

(Separate Illustration)

5 NPR 0L-1352 4 BOLT

NPR 3B-4506 4 LOCKWASHER

6 NPR 6F-6673 1 SEAL

7	NPR	5F-7054	1	SEAL
8	NPR	2J-0157	2	SEAL
9	NPR	2H-3932	3	SEAL
10	NPR	4F-0411	2	BOLT
11	NPR	3P-2781	1	PLATE
12	NPR	1T-0416	1	BOLT
13	NPR	3P-0868	1	SLEEVE
14	NPR	4M-8303	8	SEAL
15	NPR	3P-0869	1	SLEEVE
16	NPR	3P-0870	2	SLEEVE
17	NPR	6L-4783	2	BOLT
18	NPR	3P-2777	1	PLATE
19	NPR	6P-5095	2	LINK

Key:

C - INDICATES CHANGE
Y - SEPARATE ILLUSTRATION

3P843 SELECTOR AND PRESSURE CONTROL VALVE GROUP
IF TRANSMISSION IS SERIALIZED USE TRANSMISSION SERIAL NO. OTHERWISE USE VEHICLE SERIAL NO.
Serial No. 87V1138 to 87V5039 inclusive and 82V668 to 82V870 inclusive. Test No. 7813-Up. Transmission Serial No. 2FA1-Up
Part of 3P841 Control Valve Group shown on Pages 126B and 127

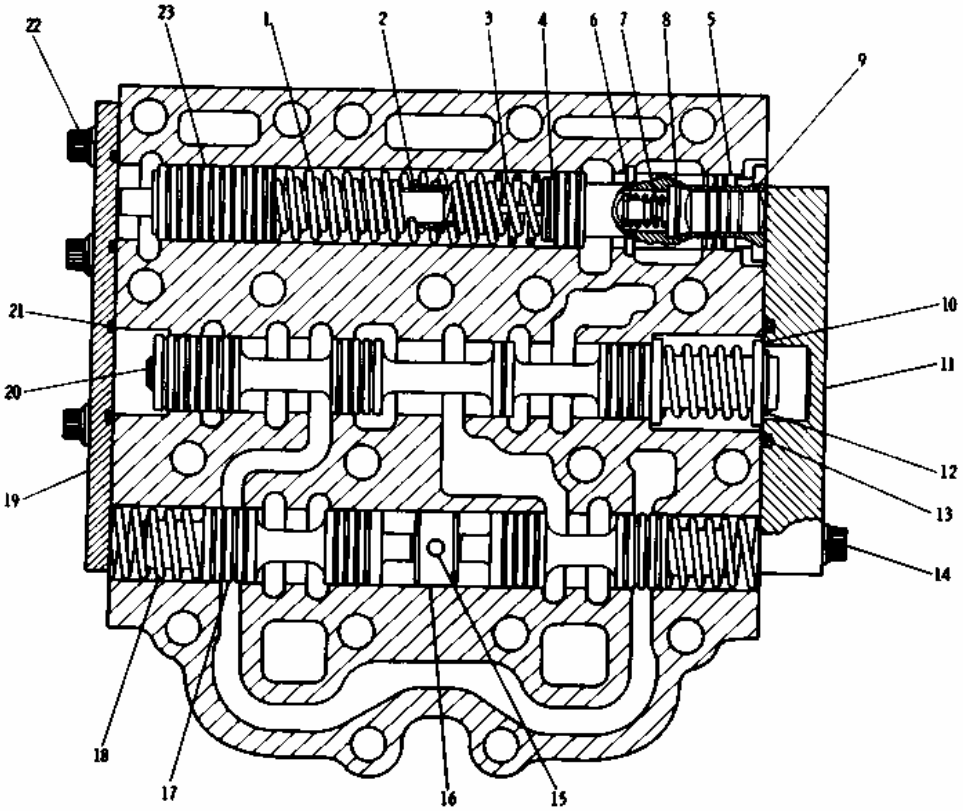

REF. NO.	PART NUMBER	DESCRIPTION	QTY
1	2P4500	SPRING----------(outer)----------	1
2	2P4397	SPACER----------	1
3	2P4499	SPRING----------(inner)----------	1
4	7M1396	SPACER----1.58mm(.062 in.)thick	1
	7M1397	SPACER----0.92mm(.036 in.)thick	1
	5M3492	SPACER----0.26mm(.010 in.)thick	4
		(Use as Required)	
C 5	6P4700	SPOOL ASSEM. ----------	1
		(Includes)	
	5M8009	PIN----------	1
6	1S2121	PLUNGER----------	1
7	4M2381	SPRING----------	1
8	1S1636	RETAINER----------	1
	1S1638	RING----------	1
9	5M2504	SLUG----------	1
10	2P9186	WASHER----------	2
11	3P1798	COVER----------	1
12	1L3769	RING----------	1
13	6F6673	SEAL----------	1
14	6L4783	BOLT----------	3
15	8H5244	DOWEL----------	1
16	5S7906	STOP----------	1
17	2P4486	SPOOL----------	1
18	2P4501	SPRING----------	2
19	2P4502	COVER----------	3
20	2P4372	SPOOL----------	1
21	3D4245	SEAL----------	1
22	T416	BOLT----------	2
23	2P4396	PISTON----------	5

C INDICATES CHANGE 207455

1 NPR 2P-4500 1 SPRING (outer)

2 NPR 2P-4397 1 SPACER

3 NPR 2P-4499 1 SPRING (inner)

4 NPR 7M-1396 1 SPACER 1.58 mm(.062 in.) thick

NPR 7M-1397 1 SPACER 0.92 mm(.036 in.) thick

NPR 5M-3492 4 SPACER 0.26 mm(.010 in.) thick

(Use as Required)

5 NPR C 6P-4700 1 SPOOL ASSEM.

(Includes)

NPR 5M-8009 1 PIN

6	NPR	1S-2121	1	PLUNGER
7	NPR	4M-2381	1	SPRING
8	NPR	1S-1636	1	RETAINER
	NPR	1S-1638	1	RING
9	NPR	5M-2504	1	SLUG
10	NPR	2P-9186	2	WASHER
11	NPR	3P-1798	1	COVER
12	NPR	1L-3769	1	RING
13	NPR	6F-6673	1	SEAL
14	NPR	6L-4783	3	BOLT
15	NPR	8H-5244	1	DOWEL
16	NPR	5S-7906	1	STOP
17	NPR	2P-4486	2	SPOOL
18	NPR	2P-4501	3	SPRING
19	NPR	2P-4502	1	COVER
20	NPR	2P-4372	1	SPOOL
21	NPR	3D-4245	2	SEAL
22		0T-0416	5	BOLT
23	NPR	2P-4396	1	PISTON

Key: C - INDICATES CHANGE

8P1101 SELECTOR AND PRESSURE REDUCING VALVE GROUP
IF TRANSMISSION IS SERIALIZED USE TRANSMISSION SERIAL NO. OTHERWISE USE VEHICLE SERIAL NO.
Serial No. 87V2324, 2326, 2327 to 2330, 2332, 2335 to 2337 and 87V2342 to 87V5039 inclusive and 82V750 to 82V870 inclusive
Test No. 7813-Up. Transmission Serial No. 2FA1-Up. Part of 3P841 Control Valve Group shown on Page 127

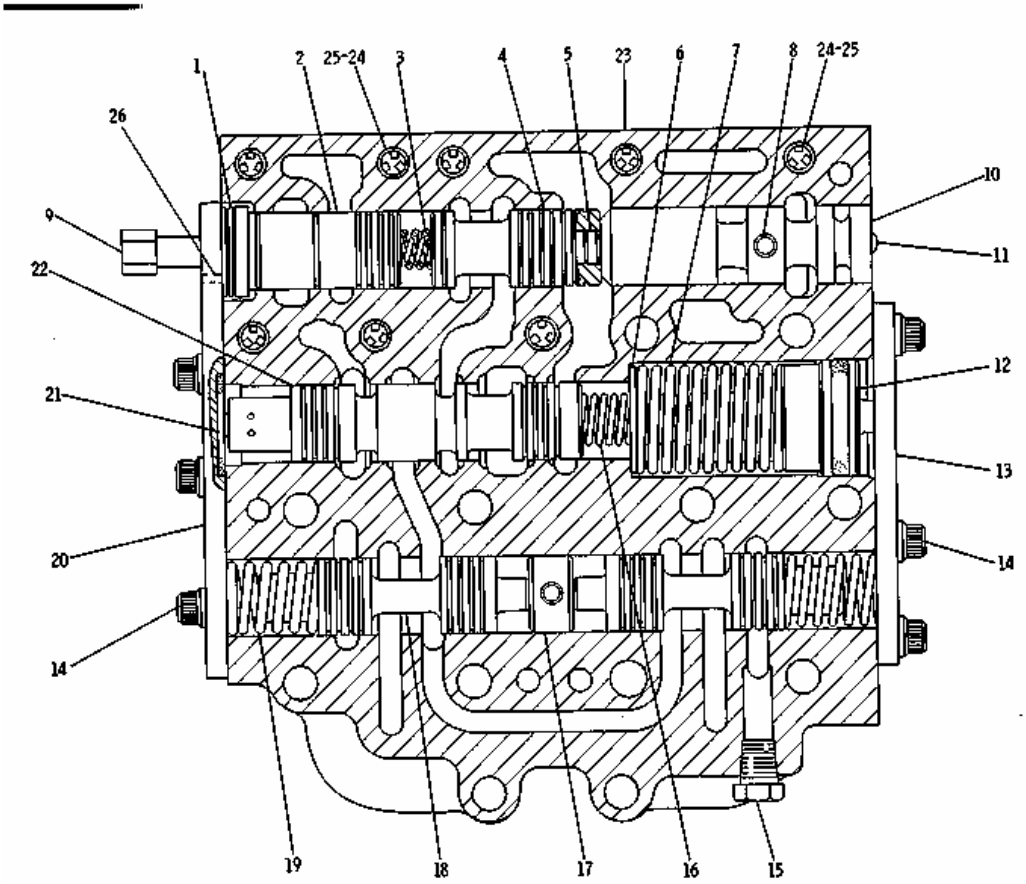

REF. NO.	PART NUMBER	DESCRIPTION	QTY
1	3P8042	SPRING	1
2	8P1097	SLEEVE	1
3	3P812	SPRING--------(outer)	1
	2P4547	SPRING--------(inner)	1
4	8P1096	PISTON	1
5	2M1168	SLUG	1
6	3S9951	WASHER	1
7	3P6669	SPRING	1
8	8H5244	DOWEL	2
9	8P1095	SPOOL	1
10	3P7834	STOP ASSEM. (Includes)	1
	2P4484	STOP	1
11	4B9880	BALL	1
12	2P4506	PLUG	1
	2H3932	SEAL	1
13	2P4507	COVER	1
14	1T416	BOLT	7
15	5M6214	PLUG	3
16	3S9949	SPRING	1
17	5S7906	STOP	1
18	2P4486	SPOOL	2
19	2P4501	SPRING	2
20	2P4504	COVER	1
21	3D4245	SEAL	1
22	1P561	SPOOL	1
23	8P1098	BODY SELECTOR (Includes)	1
24	6P3223	DAMPER--28.44mm(1.12in.)long	8
25	8M8489	DOWEL------15 mm(.59 in.)long	4
C 26	3H1118	PIN	1

C INDICATES CHANGE 228072

1 NPR 3P-8042 1 SPRING

2 NPR 8P-1097 1 SLEEVE

3 NPR 3P-0812 1 SPRING (outer)

NPR 2P-4547 1 SPRING (inner)

4 NPR 8P-1096 1 PISTON

5 NPR 2M-1168 1 SLUG

6 NPR 3S-9951 1 WASHER

7 NPR 3P-6669 1 SPRING

8 NPR 8H-5244 2 DOWEL

9 NPR 8P-1095 1 SPOOL

10 NPR 3P-7834 1 STOP ASSEM.

(Includes)

NPR 2P-4484 1 STOP

11 NPR 4B-9880 1 BALL

12 NPR 2P-4506 1 PLUG

NPR 2H-3932 1 SEAL

13 NPR 2P-4507 1 COVER

14 NPR 1T-0416 7 BOLT

15 NPR 5M-6214 3 PLUG

16 NPR 3S-9949 1 SPRING

17 NPR 5S-7906 1 STOP

18 NPR 2P-4486 2 SPOOL

19 NPR 2P-4501 2 SPRING

20 NPR 2P-4504 1 COVER

21 NPR 3D-4245 1 SEAL

22 NPR 1P-0561 1 SPOOL

23 NPR 8P-1098 1 BODY SELECTOR

(Includes)

24 NPR 6P-3223 8 DAMPER 28.44mm(1.12in.)long

25 NPR 8M-8489 4 DOWEL 15 mm(.59 in.)long

26 NPR C 3H-1118 1 PIN

Key: C - INDICATES CHANGE

3P842 PILOT VALVE GROUP--Speed Selector
IF TRANSMISSION IS SERIALIZED USE TRANSMISSION SERIAL NO. OTHERWISE USE VEHICLE SERIAL NO. Serial No. 87V1138 to 87V5039 inclusive and 82V668 to 82V870 inclusive. Transmission Serial No. 2FA1-Up. Part of 3P841 Control Valve Group shown on Pages 126B and 127

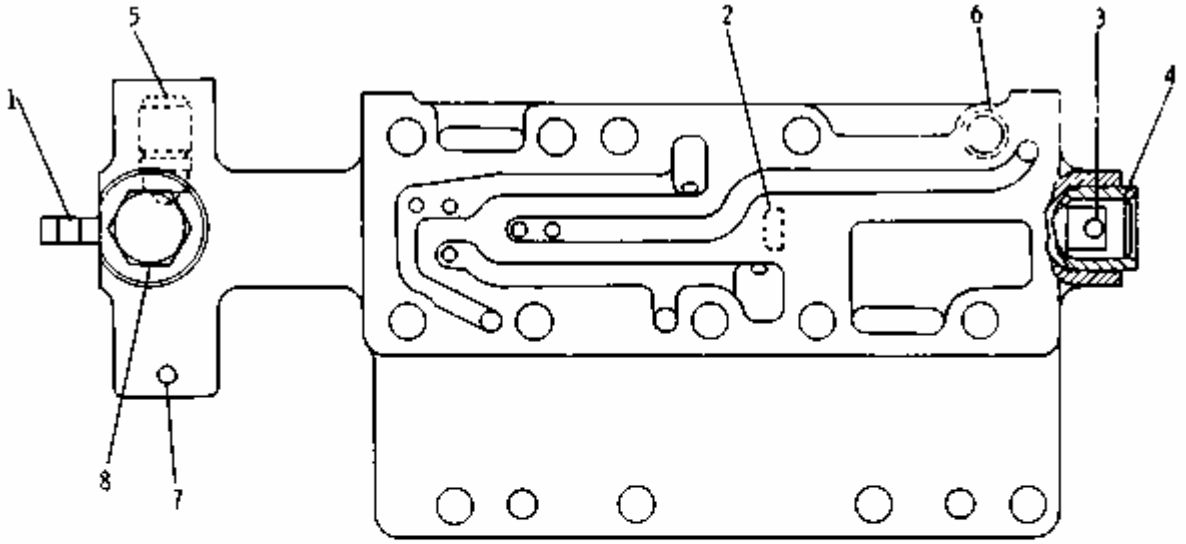

REF. NO.	PART NUMBER	DESCRIPTION	QTY
1	2P7030	SPOOL ASSEM.	1
		(Includes)	
2	2A3746	PLUG	1
3	6H2948	PIN	1
4	2P4503	PLUG	1
5	7S4607	DETENT ASSEM.	2
6	8M8489	DOWEL	2
7	2H6264	PIN	1
8	3P4362	STOP	1
	3K360	SEAL	1

308873

1 NPR 2P-7030 1 SPOOL ASSEM.

(Includes)

2 NPR 2A-3746 1 PLUG

3 NPR 6H-2948 1 PIN

4 NPR 2P-4503 1 PLUG

5 NPR 7S-4607 2 DETENT ASSEM.

6 NPR 8M-8489 2 DOWEL

7 NPR 2H-6264 1 PIN

8 NPR 3P-4362 1 STOP

NPR 3K-0360 1 SEAL

8P4301 RELIEF CONTROL VALVE GROUP--Replaced by 2P5811 shown on Page 128A
IF TRANSMISSION IS SERIALIZED USE TRANSMISSION SERIAL NO. OTHERWISE USE VEHICLE SERIAL NO. Serial No. 87V2415 to 87V5039 inclusive and 82V755 to 82V870 inclusive. Transmission Serial No. 2FA1-Up. Part of 3P2807 Transmission Hydraulic Group shown on Page 123. 2P4548 Valve parts are shown on Page 129

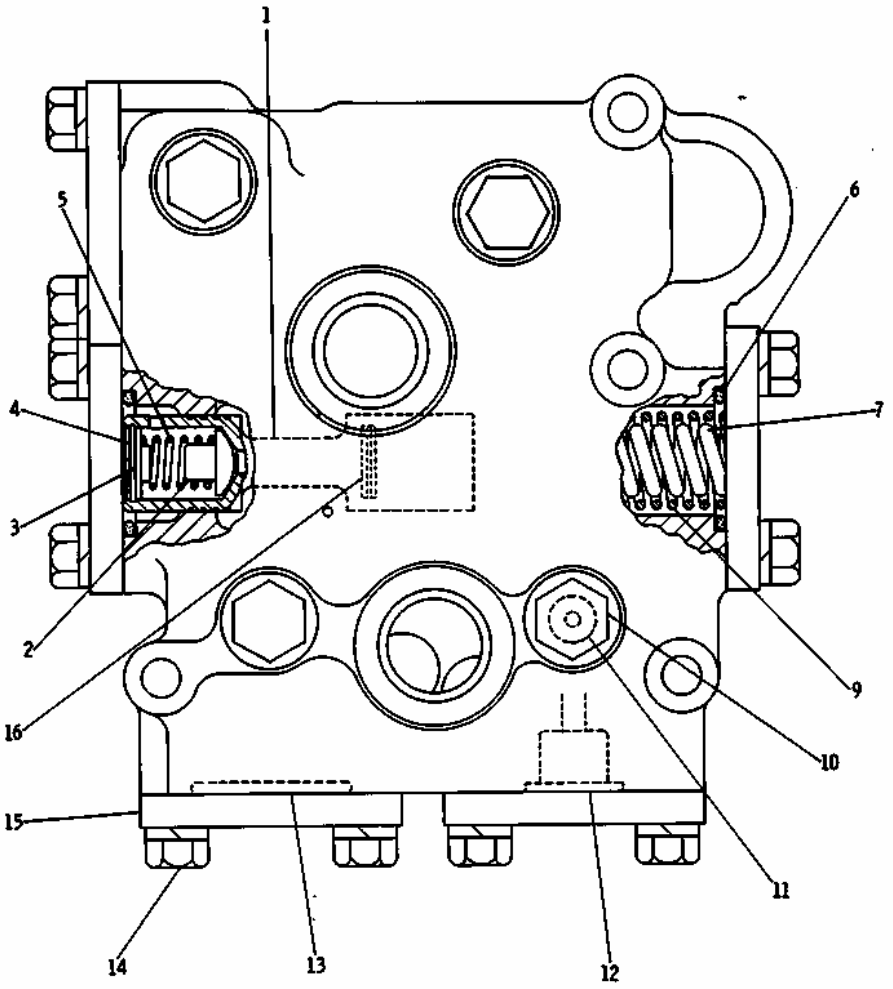

REF. NO.	PART NUMBER	DESCRIPTION	QTY
1	1P562	VALVE ASSEM. -----(relief)------- (Includes)	1
	4S5982	VALVE----------	1
2	9M4313	POPPET----------	1
3	8M2537	RETAINER----------	1
4	1L3162	RING----------	1
5	5M9548	SPRING----------	1
6	6F6673	SEAL----------	3
7	8P2893	SPRING----------	1
9	2P5677	SPRING----------	1
C 10	9S4191	PLUG----------	4
C	3J1907	SEAL----------	4
11	6P4917	PIN----------	2
12	2P4548	VALVE ASSEM. ---------- (Separate Illustration)	2
13	3H1461	SEAL----------	2
14	1A2029	BOLT----------	10
	3B4506	LOCKWASHER----------	10
C 15	2M1656	COVER----------	5
	7M1396	SPACER-1.57mm(.062 in.) thick--	1
16	7M1397	SPACER-- .914mm(.036 in.) thick-	1
	5M3492	SPACER-- .254mm(.010 in.) thick-	4
	GMG02282	FORM---------- (Installation Instructions for Valve Group)	1

C INDICATES CHANGE

218639

1	NPR	1P-0562	1	VALVE ASSEM. (relief)
	(Includes)			
	NPR	4S-5982	1	VALVE
2	NPR	9M-4313	1	POPPET
3	NPR	8M-2537	1	RETAINER
4	NPR	1L-3162	1	RING
5	NPR	5M-9548	1	SPRING
6	NPR	6F-6673	3	SEAL
7	NPR	8P-2893	1	SPRING
9	NPR	2P-5677	1	SPRING
10	NPR C	9S-4191	4	PLUG
	NPR C	3J-1907	4	SEAL
11	NPR	6P-4917	2	PIN
12	NPR Y	2P-4548	2	VALVE ASSEM.
	(Separate Illustration)			
13	NPR	3H-1461	2	SEAL
14	NPR	1A-2029	10	BOLT
	NPR	3B-4506	10	LOCKWASHER
15	NPR C	2M-1656	5	COVER
16	NPR	7M-1396	1	SPACER 1.57mm(.062 in.) thick
	NPR	7M-1397	1	SPACER .914mm(.036 in.) thick
	NPR	5M-3492	4	SPACER .254mm(.010 in.) thick

Key: C - INDICATES CHANGE Y - SEPARATE ILLUSTRATION

2P5811 RELIEF CONTROL VALVE GROUP
Serial No. 87V2415-Up and 82V755-Up
2P4548 Valve parts are shown on Page 129

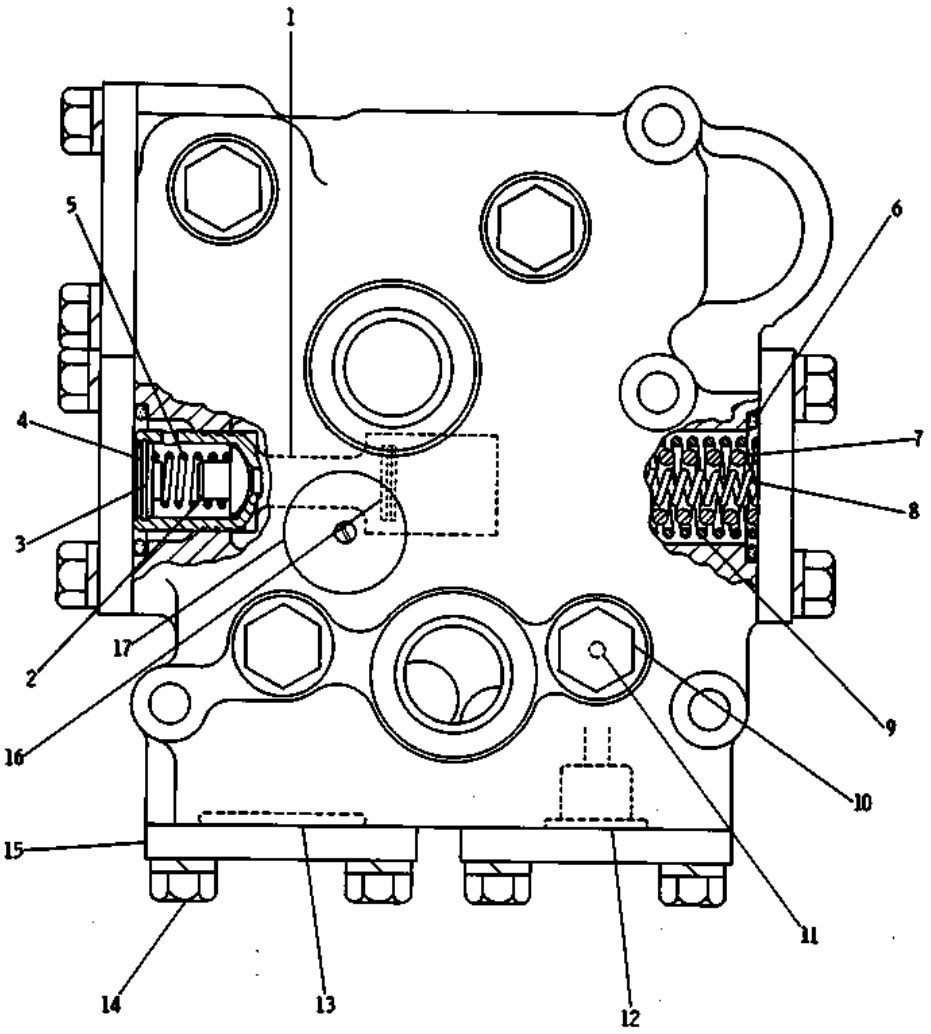

REF. NO.	PART NUMBER	DESCRIPTION	QTY
	1P562	VALVE ASSEM.	1
1		(Includes)	
	4S5982	VALVE	1
2	9M4313	POPPET	1
3	8M2537	RETAINER	1
4	1L3162	RING	1
5	5M9548	SPRING	1
6	6F6673	SEAL	3
C 7	8P2893	SPRING	1
8	2S1413	SPRING	1
9	2P5677	SPRING	1
C	9S4191	PLUG	4
C 10	3J1907	SEAL	4
11	6P4917	PIN	2
12	2P4548	VALVE ASSEM.	2
		(Separate Illustration)	
13	3H1461	SEAL	2
13	3H1461	SEAL	2
14	1A2029	BOLT	10
	3B4506	LOCKWASHER	10
C 15	2M1656	COVER	5
	7M1396	SPACER---1.57 mm(.062 in.) thick	1
16	7M1397	SPACER---.914 mm(.036 in.) thick	1
	5M3492	SPACER---.254 mm(.01 in.) thick	4
17	3P4566	PLATE------(Identification)	1
	7B3028	SCREW	1
	GMG02282	FORM	1
		(Installation Instructions for Valve Group)	

C INDICATES CHANGE 218977

1 NPR 1P-0562 1 VALVE ASSEM.

(Includes)

	NPR	4S-5982	1	VALVE
2	NPR	9M-4313	1	POPPET
3	NPR	8M-2537	1	RETAINER
4	NPR	1L-3162	1	RING
5	NPR	5M-9548	1	SPRING
6	NPR	6F-6673	3	SEAL
7	NPR C	8P-2893	1	SPRING
8	NPR	2S-1413	1	SPRING
9	NPR	2P-5677	1	SPRING
10	NPR C	9S-4191	4	PLUG
	NPR C	3J-1907	4	SEAL
11	NPR	6P-4917	2	PIN
12	NPR Y	2P-4548	2	VALVE ASSEM.
(Separate Illustration)				
13	NPR	3H-1461	2	SEAL
13	NPR	3H-1461	2	SEAL
14	NPR	1A-2029	10	BOLT
	NPR	3B-4506	10	LOCKWASHER
15	NPR C	2M-1656	5	COVER
16	NPR	7M-1396	1	SPACER 1.57 mm(.062 in.) thick

	NPR	7M-1397	1	SPACER .914 mm(.036 in.) thick
	NPR	5M-3492	4	SPACER .254 mm(.01 in.) thick
17	NPR	3P-4566	1	PLATE (identification)
	NPR	7B-3028	1	SCREW

Key:

C - INDICATES CHANGE
Y - SEPARATE ILLUSTRATION

2P4548 VALVE ASSEMBLY
IF TRANSMISSION IS SERIALIZED USE TRANSMISSION SERIAL NO. OTHERWISE USE VEHICLE SERIAL NO. Serial No. 87V1138 to 87V5039 inclusive and 82V668 to 82V870 inclusive. Transmission Serial No. 2FA1-Up. Part of 3P840, 8P4301 and 2P5811 Relief Control Valve Groups shown on Pages 126, 126A and 128

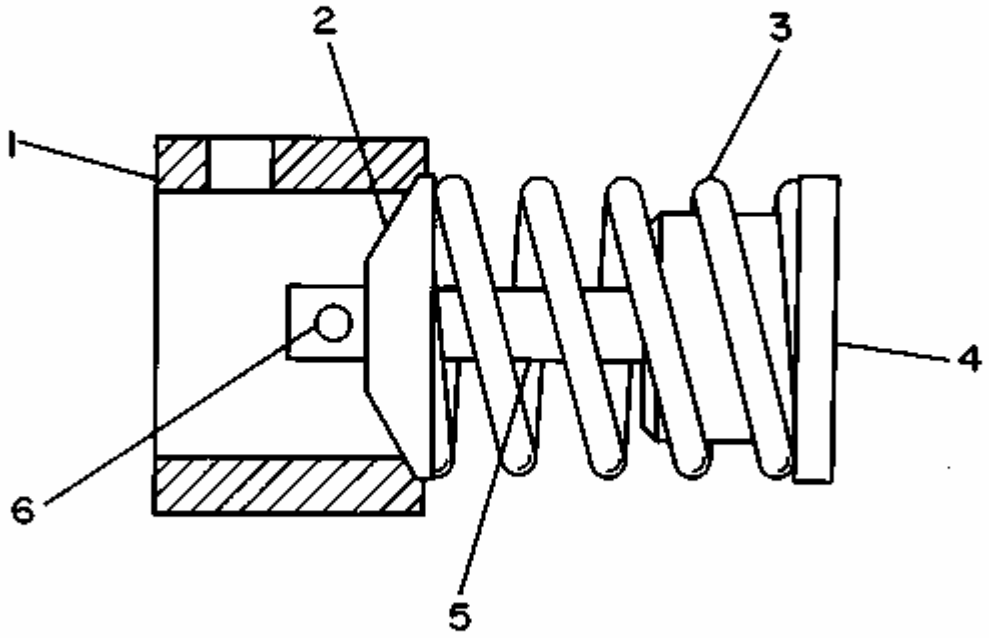

1	NPR	3P-7686	1	COLLAR-VALVE SEAT
2	NPR	9L-0672	1	VALVE-CHECK
3	NPR	3P-7685	1	SPRING
4	NPR	3P-8006	1	RETAINER
5	NPR	1P-5274	1	PIN-VALVE SPRING
6	NPR	3H-1156	1	PIN

2P5814 SELECTOR AND PRESSURE CONTROL VALVE GROUP
IF TRANSMISSION IS SERIALIZED USE TRANSMISSION SERIAL NO. OTHERWISE USE VEHICLE SERIAL NO.
Serial No. 87V1138 to 87V5039 inclusive and 82V668 to 82V870 inclusive. Test No. 7813-Up. Transmission Serial No. 2FA1-Up
Part of 3P841 Control Valve Group shown on Page 126B and 127

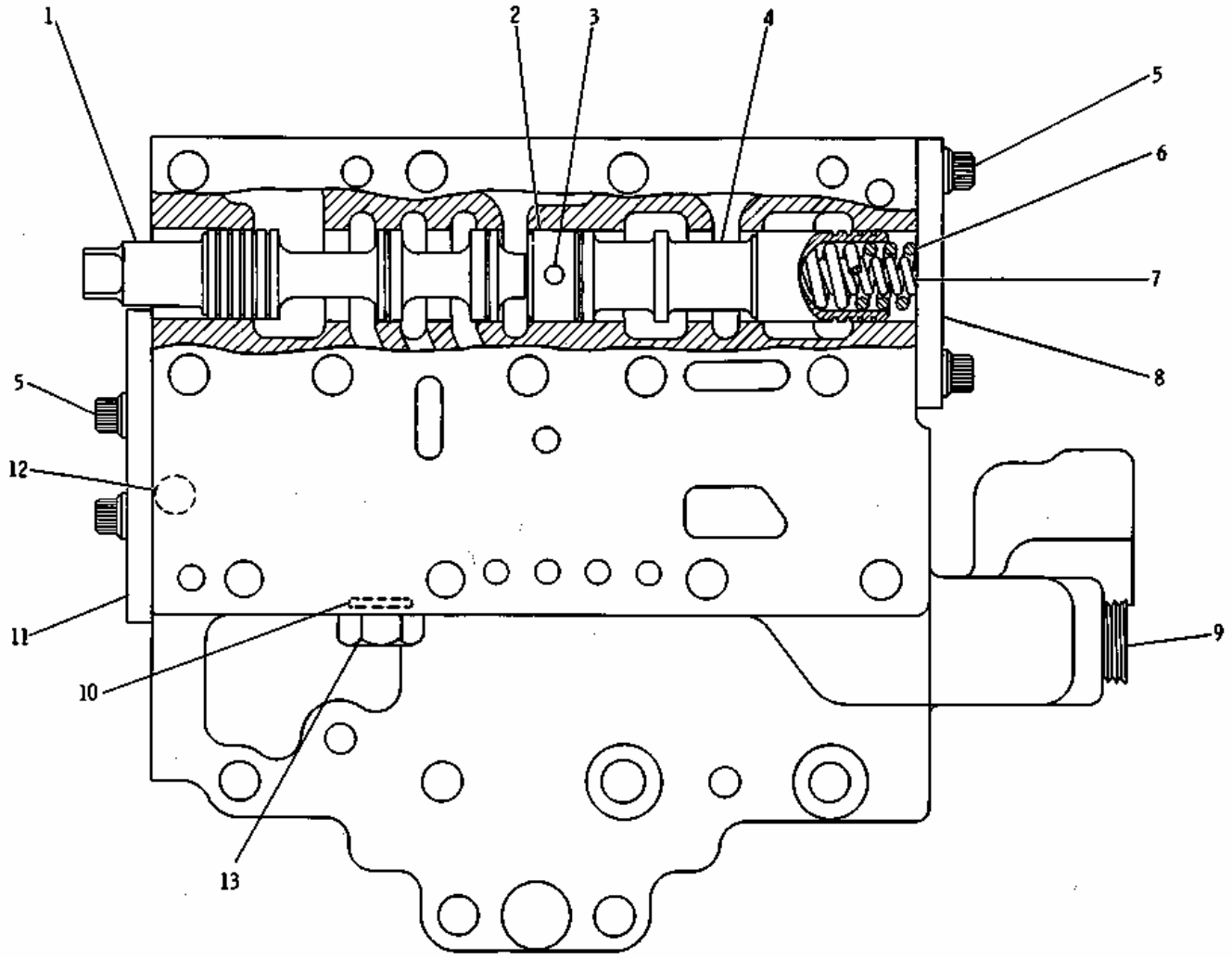

1	NPR	1P-9685	1	SPOOL
2	NPR	5S-7906	1	STOP
3	NPR	8H-5244	1	DOWEL
4	NPR	2P-4529	1	SPOOL-REDUCING
5	NPR	1T-0416	4	BOLT
6	NPR	2P-5700	1	SPRING (OUTER)
7	NPR	2P-5701	1	SPRING (INNER)

8	NPR	2P-5803	1	PLATE
9	NPR C	2B-0858	1	PLUG-PIPE
10	NPR C	3J-1907	1	SEAL
11	NPR	3P-2706	1	PLATE
12	NPR	4B-9782	1	BALL
13	NPR C	9S-4191	1	PLUG-O-RING

Key:

C - CHANGE FROM PREVIOUS TYPE

2P7014 DIFFERENTIAL LOCK VALVE GROUP-Part of 9D2140 and 9D5785 Differential Lock Control Groups
shown on Pages 139 and 140

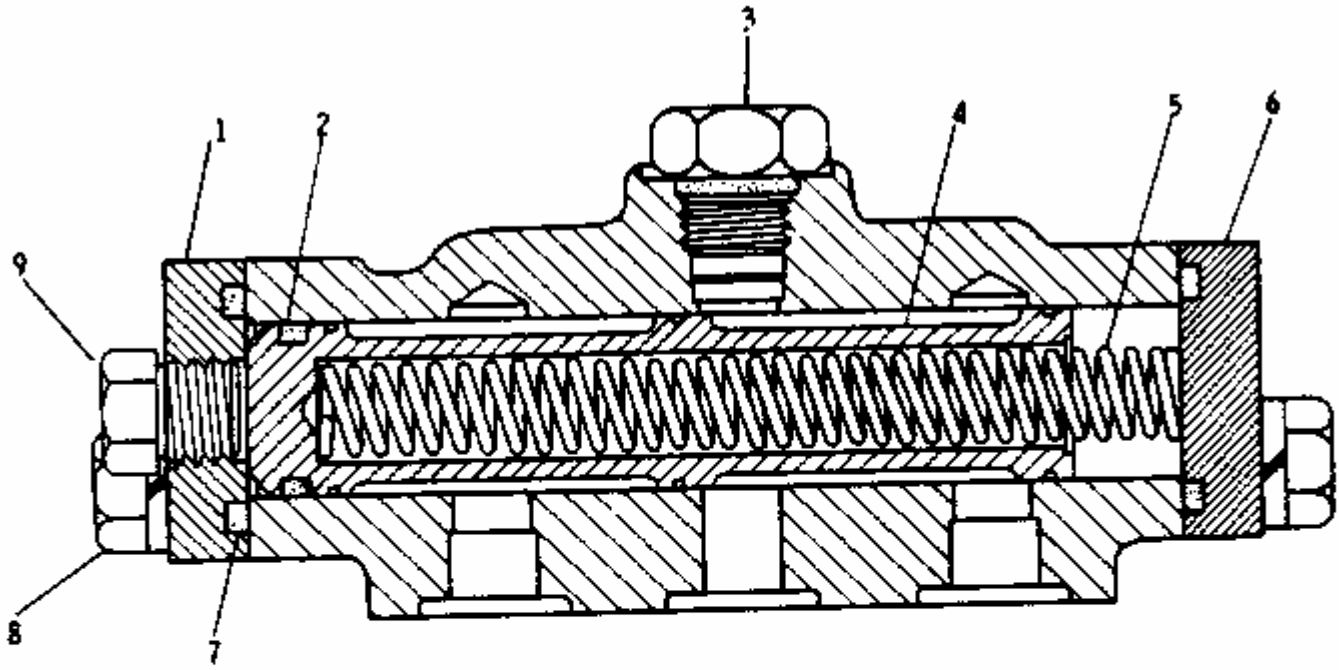

REF. NO.	PART NUMBER	DESCRIPTION	QTY
1	3P2439	COVER	1
2	8M4438	SEAL	1
3	9S4191	PLUG	1
	3J1907	SEAL	1
4	3P2440	SPOOL	1
5	9S9876	SPRING	1
6	6H944	COVER	1
7	8M4988	SEAL	1
8	1A2029	BOLT	4
	3B4506	LOCKWASHER	4
9	5M6213	PLUG	1

119794

1 NPR 3P-2439 1 COVER

2 NPR 8M-4438 1 SEAL

3 NPR 9S-4191 1 PLUG

NPR 3J-1907 1 SEAL

4 NPR 3P-2440 1 SPOOL

5 NPR 9S-9876 1 SPRING

6 NPR 6H-0944 1 COVER

7 NPR 8M-4988 1 SEAL

8 NPR 1A-2029 4 BOLT

NPR 3B-4506 4 LOCKWASHER

9 NPR 5M-6213 1 PLUG

7D8075 VALVE ASSEMBLY

Part of 9D5700 Service Brake Control Group shown on Page 164

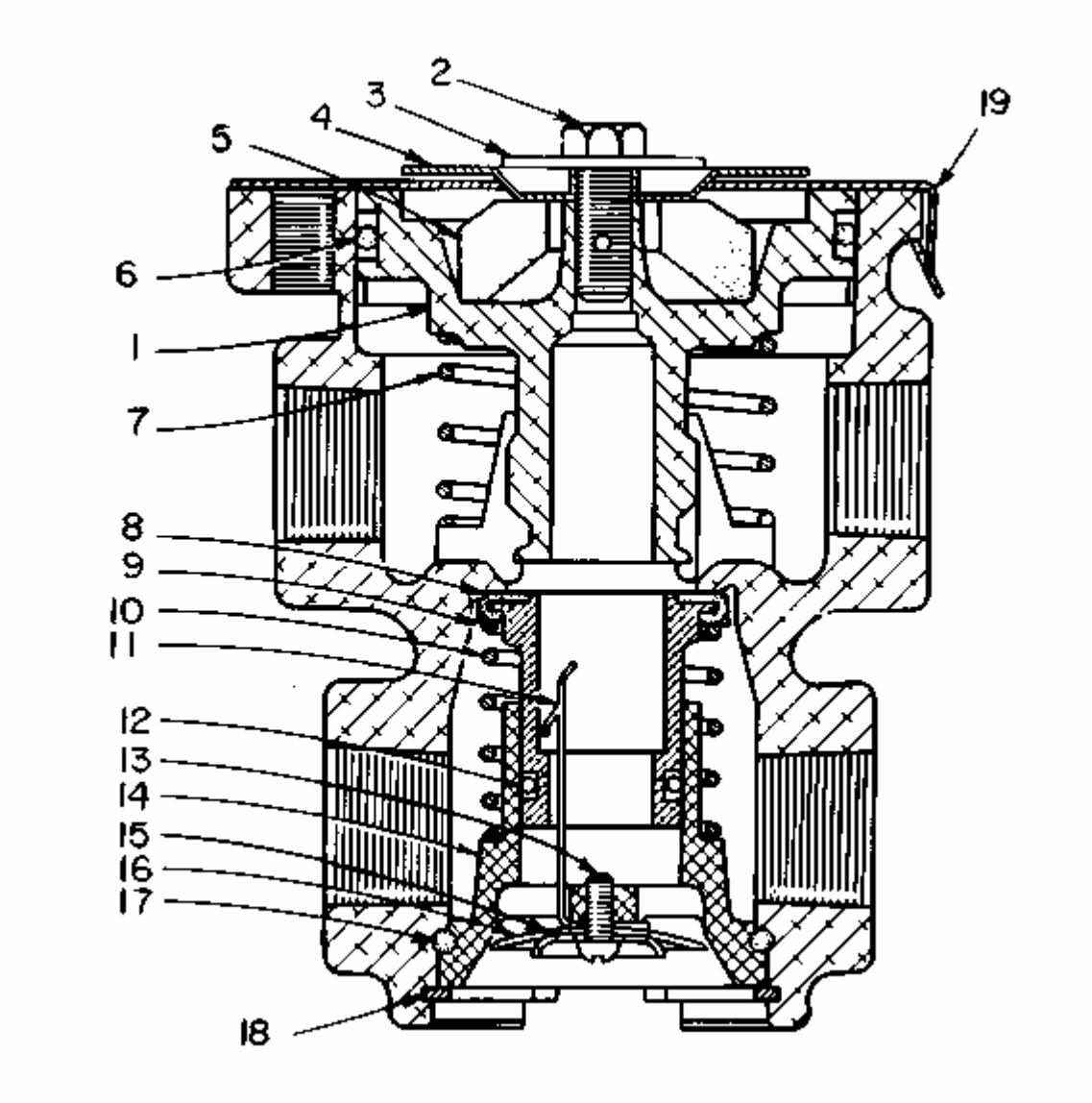

1	NPR	7D-8074	1	PISTON AS
2	NPR	4D-2304	1	BOLT
3	NPR	4D-2303	1	WASHER
4	NPR	7D-8073	1	SEAT
5	NPR	5D-0768	1	SPRING
6	NPR	7F-8268	1	SEAL-O-RING
7	NPR	4D-2634	1	SPRING
8	NPR	4D-2289	1	VALVE AS

	NPR	4D-2295	1	VALVE
9	NPR	1S-3612	1	RETAINER-VALVE
10	NPR	4D-2298	1	SPRING
11	NPR	4D-2291	1	SPRING
12	NPR	4D-2297	1	SEAL
13	NPR	5D-8412	1	SCREW-ROUND HEAD
14	NPR	5D-9702	1	SEAT
15	NPR	4D-2293	1	WASHER
16	NPR	4D-2292	1	DIAPHRAGM
17	NPR	5M-2057	1	SEAL-O-RING
18	NPR C	004-1683	1	RING-SNAP
19	NPR	4D-2305	1	RETAINER

Key:

C - CHANGE FROM PREVIOUS TYPE

8P5957 TRANSMISSION ARRANGEMENT
IF TRANSMISSION IS SERIALIZED USE TRANSMISSION SERIAL NO. OTHERWISE USE VEHICLE SERIAL NO. Serial No. 87V2416 to 87V5039 inclusive and 82V755 to 82V870 inclusive. Test No. 311-Up. Transmission Serial No. 2FA1-Up. 3P1751 Transfer Gear, 8P5958 Planetary Transmission, 3P2807 Transmission Hydraulic Control, 3P2833 Transmission Lines, 6P2091 Transmission Filter and 3P892 Gear Pump parts are shown on Pages 116, 117, 118, 122A, 123, 134 and 135
Note: 5P3764 Gasket Kit is available

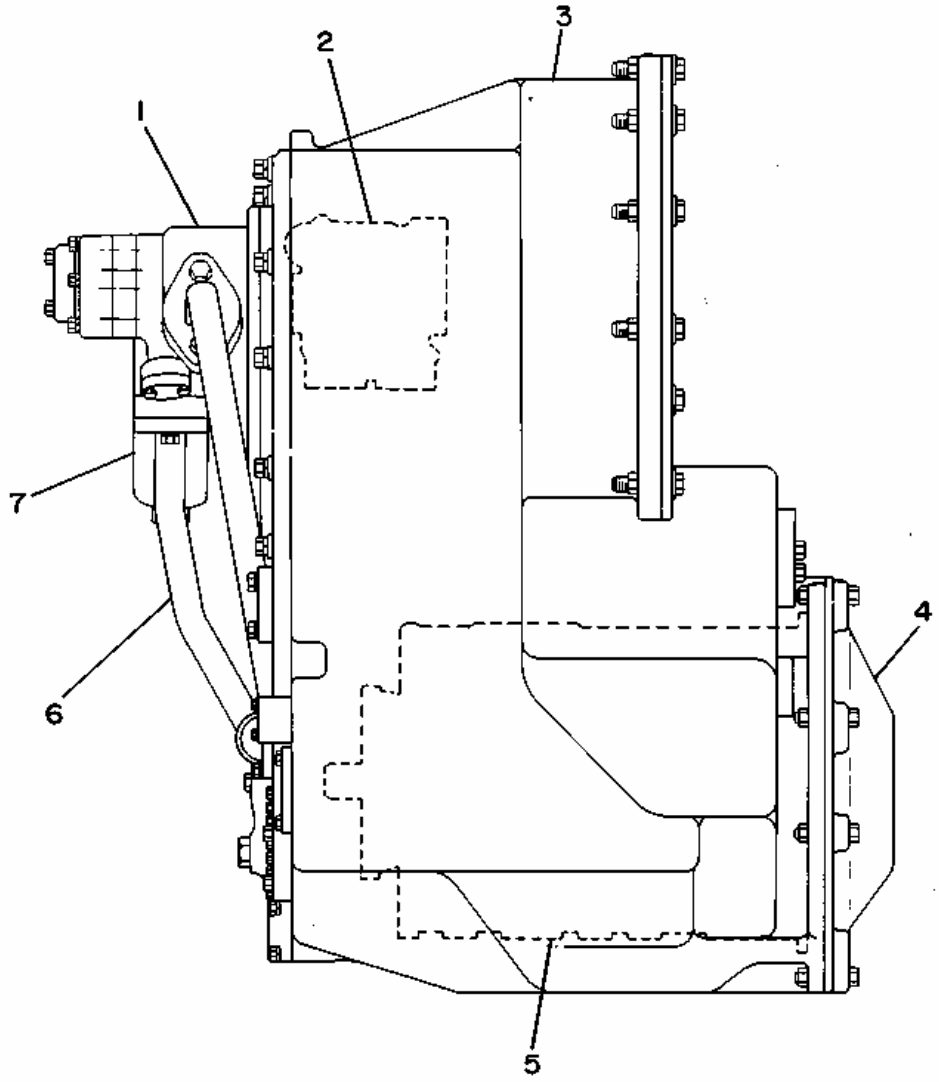

1 NPR Y 3P-0892 1 PUMP GP-TRANSMISSION GEAR

2 NPR Y 3P-2807 1 CONTROL GP-TRANSMISSION HYD

3 NPR Y 3P-1751 1 CASE & TRANSFER GEAR GP

4 NPR 3P-5826 1 COVERS GP-SHIPPING

(STORAGE-CONSISTS OF

COVERS, GASKETS, PLUGS,

SEALS & HARDWARE)

5	NPR	Y	8P-5958	1	PLANETARY GP
6	NPR	Y	3P-2833	1	LINES GP-POWER TRAIN OIL (OIL)
7	NPR	Y	6P-2091	1	FILTER GP-TRANSMISSION

Key:

Y - SEPARATE ILLUSTRATION

3P1752 TRANSMISSION CASE ASSEMBLY
IF TRANSMISSION IS SERIALIZED USE TRANSMISSION SERIAL NO. OTHERWISE USE VEHICLE SERIAL NO. Serial No. 87V1138 to 87V5039 inclusive and 82V668 to 82V870 inclusive. Transmission Serial No. 2FA1-Up. Part of 3P1751 Transfer Gear Group shown on Pages 116 and 118A

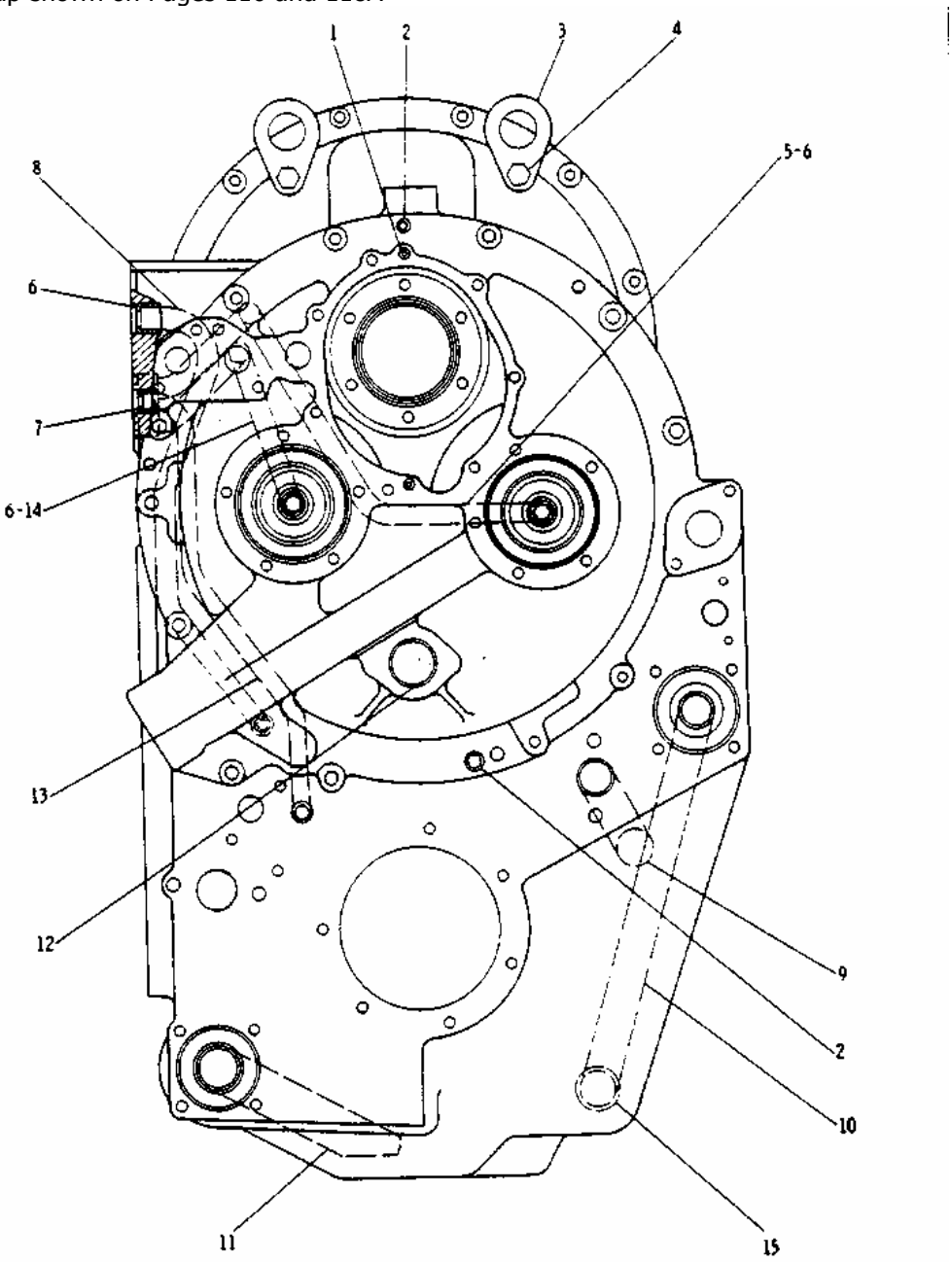

REF. NO.	PART NUMBER	DESCRIPTION	QTY
1	L2061	DOWEL	2
2	9M4007	DOWEL	2
3	1P8654	EYE	2
4	S1589	BOLT	2
	3B4510	LOCKWASHER	2
5	3P852	TUBE	1
6	1P8594	SLEEVE	6
7	2P5780	SLEEVE	2
8	3P854	TUBE	1
9	3P857	TUBE	1
10	3P1749	TUBE	1
11	3P858	TUBE	1
12	5S385	PLUG	1
13	3P853	TUBE	1
14	3P851	TUBE	1
C 15	6P8273	SLEEVE	1

C INDICATES CHANGE

152288

1 NPR 0L-2061 2 DOWEL

2	NPR	9M-4007	2	DOWEL
3	NPR	1P-8654	2	EYE
4	NPR	0S-1589	2	BOLT
	NPR	3B-4510	2	LOCKWASHER
5	NPR	3P-0852	1	TUBE
6	NPR	1P-8594	6	SLEEVE
7	NPR	2P-5780	2	SLEEVE
8	NPR	3P-0854	1	TUBE
9	NPR	3P-0857	1	TUBE
10	NPR	3P-1749	1	TUBE
11	NPR	3P-0858	1	TUBE
12	NPR	5S-0385	1	PLUG
13	NPR	3P-0853	1	TUBE
14	NPR	3P-0851	1	TUBE
15	NPR C	6P-8273	1	SLEEVE

Key:

C - INDICATES CHANGE

8P5958 PLANETARY TRANSMISSION GROUP--Part 1 of 3
Serial No. 87V2416 to 3363, 3365 to 3367, 3371 to 3378, 3381, 3382 and 87V3384 inclusive and 82V755 to 82V819 inclusive
Test No. 311 to 4307 inclusive. Part of 8P5957 Transmission Arrangement shown on Page 115B

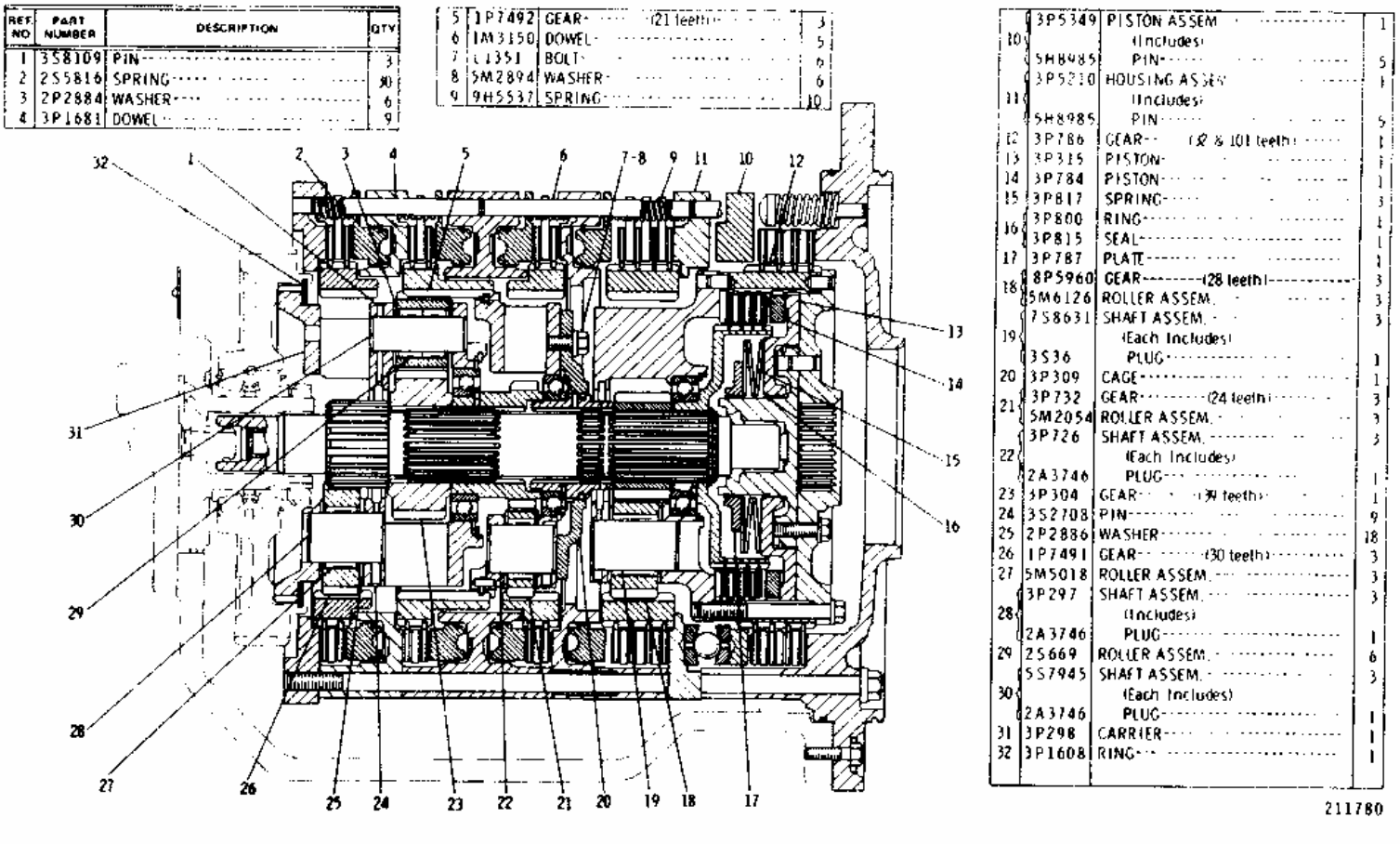

REF NO	PART NUMBER	DESCRIPTION	QTY
1	3S8109	PIN	3
2	2S5816	SPRING	30
3	2P2884	WASHER	6
4	3P1681	DOWEL	9
5	1P7492	GEAR (21 teeth)	3
6	1M3150	DOWEL	5
7	0L1351	BOLT	6
8	5M2894	WASHER	6
9	9H5537	SPRING	10
10	3P5349	PISTON ASSEM (Includes)	1
	5H8985	PIN	5
11	3P5230	HOUSING ASSEM (Includes)	1
	5H8985	PIN	5
12	3P786	GEAR (18 & 101 teeth)	1
13	3P315	PISTON	1
14	3P784	PISTON	1
15	3P817	SPRING	3
16	3P800	RING	1
	3P815	SEAL	1
17	3P787	PLATE	1
18	8P5960	GEAR (28 teeth)	3
	5M6126	ROLLER ASSEM.	3
	7S8631	SHAFT ASSEM.	3
19		(Each Includes)	
	3S36	PLUG	1
20	3P309	CAGE	1
21	3P732	GEAR (24 teeth)	3
	5M2054	ROLLER ASSEM.	3
	3P726	SHAFT ASSEM.	3
22		(Each Includes)	
	2A3746	PLUG	1
23	3P304	GEAR (39 teeth)	1
24	3S2708	PIN	9
25	2P2886	WASHER	18
26	1P7491	GEAR (30 teeth)	3
27	5M5018	ROLLER ASSEM.	3
	3P297	SHAFT ASSEM.	3
28		(Includes)	
	2A3746	PLUG	1
29	2S669	ROLLER ASSEM.	6
	5S7945	SHAFT ASSEM.	3
30		(Each Includes)	
	2A3746	PLUG	1
31	3P298	CARRIER	1
32	3P1608	RING	1

1 NPR 3S-8109 3 PIN

2 NPR 2S-5816 30 SPRING

3 NPR 2P-2884 6 WASHER

4 NPR 3P-1681 9 DOWEL

5 NPR 1P-7492 3 GEAR (21 teeth)

6 NPR 1M-3150 5 DOWEL

7 NPR 0L-1351 6 BOLT

8 NPR 5M-2894 6 WASHER

9 NPR 9H-5537 10 SPRING

10 NPR CL 3P-5349 1 PISTON ASSEM.

CL NPR 275-5292 1 PISTON AS.-CLA

(Includes)

NPR 5H-8985 5 PIN

11 NPR 3P-5210 1 HOUSING ASSEM.

(Includes)

NPR 5H-8985 5 PIN

12 NPR 3P-0786 1 GEAR (32 & 101 teeth)

13 NPR 3P-0315 1 PISTON

14 NPR 3P-0784 1 PISTON

15 NPR 3P-0817 3 SPRING

16 NPR 3P-0800 1 RING

NPR 3P-0815 1 SEAL

17 NPR 3P-0787 1 PLATE

18 NPR 8P-5960 3 GEAR (28 teeth)

NPR 5M-6126 3 ROLLER ASSEM.

19 NPR CL 7S-8631 3 SHAFT ASSEM.

CL NPR 275-5296 1 SHAFT AS.-CLA

(Each Includes)

NPR 3S-0036 1 PLUG

20 NPR 3P-0309 1 CAGE

21 NPR 3P-0732 3 GEAR (24 teeth)

NPR 5M-2054 3 ROLLER ASSEM.

22 NPR CL 3P-0726 3 SHAFT ASSEM.

CL NPR 275-5298 1 SHAFT AS.-CLA

(Each Includes)

NPR 2A-3746 1 PLUG

23 NPR 3P-0304 1 GEAR (39 teeth)

24 NPR 3S-2708 9 PIN

25 NPR 2P-2886 18 WASHER

26 NPR 1P-7491 3 GEAR (30 teeth)

27 NPR 5M-5018 3 ROLLER ASSEM.

28 NPR CL 3P-0297 3 SHAFT ASSEM.

CL NPR 275-5297 1 SHAFT AS.-CLA

(Includes)

NPR 2A-3746 1 PLUG

29 NPR 2S-0669 6 ROLLER ASSEM.

30 NPR CL 5S-7945 3 SHAFT ASSEM.

CL NPR 275-5299 1 SHAFT AS.-CLA

(Each Includes)

NPR 2A-3746 1 PLUG

31 NPR 3P-0298 1 CARRIER

32 NPR 3P-1608 1 RING

Key: CL - Classic Part Available

8P5958 PLANETARY TRANSMISSION GROUP--Part 2 of 3
Serial No. 87V2416 to 3363, 3365 to 3367, 3371 to 3378, 3381, 3382 and 87V3384 inclusive and 82V755 to 82V819 inclusive
Test No. 311 to 4307 inclusive. Part of 8P5957 Transmission Arrangement shown on Page 115B

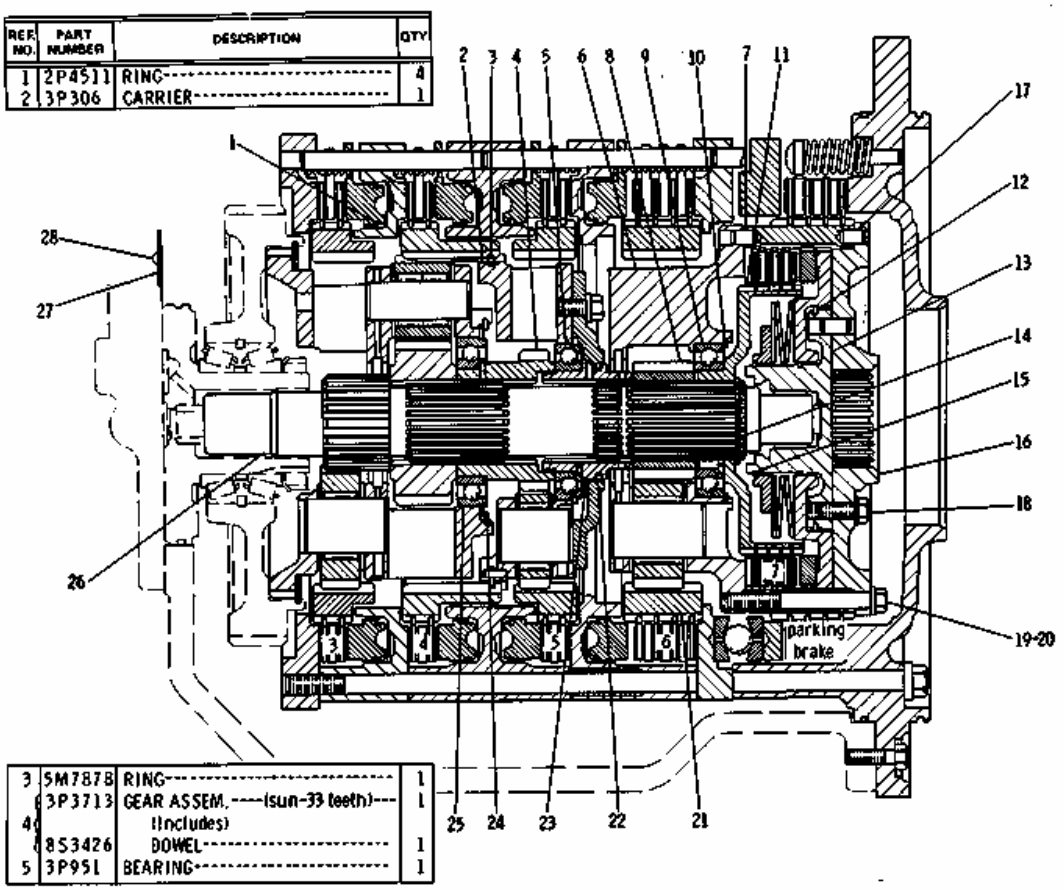

REF. NO.	PART NUMBER	DESCRIPTION	QTY
1	2P4511	RING	4
2	3P306	CARRIER	1
3	5M7878	RING	1
4	3P3713	GEAR ASSEM. (sun-33 teeth)	1
		(Includes)	
	8S3426	DOWEL	1
5	3P951	BEARING	1
6	3P789	CARRIER ASSEM.	1
		(Includes)	
7	8M6521	DOWEL	2
8	8P5959	GEAR (sun-26 teeth)	1
9	3P952	BEARING	1
10	8S9104	RING	1
11	3P785	HUB ASSEM.	1
		(Includes)	
	8S3426	DOWEL	1
12	3P814	RING	1
13	3P1654	CAGE ASSEM.	1
		(Includes)	
C	1S9572	BEARING	1
C 14	8L9811	RING	1
15	8H8830	RING	1
16	3P316	HUB ASSEM.	1
		(Includes)	
17	8M6521	DOWEL	4
18	1S1594	BOLT	4
	1S8572	LOCK	2
19	1S1608	BOLT	14
20	5M2894	WASHER	14
21	8P5961	GEAR (ring-82 teeth)	1
22	3K1432	RING	1
23	3P307	CAGE ASSEM.	1
		(Includes)	
	8S3426	DOWEL	1
24	1M8649	RING	1
25	3P953	BEARING	1
26	3P299	SHAFT ASSEM. (center)	1
27	5M2477	PLATE (number)	1
28	7B3028	SCREW (drive)	2

C INDICATES CHANGE 165529

1 NPR 2P-4511 4 RING

2 NPR 3P-0306 1 CARRIER

3 NPR 5M-7878 1 RING

4 NPR CL 3P-3713 1 GEAR ASSEM. (sun-33 teeth)

CL NPR 275-5288 1 GEAR AS.-CLA

(Includes)

NPR 8S-3426 1 DOWEL

5 NPR 3P-0951 1 BEARING

6 NPR 3P-0789 1 CARRIER ASSEM.

(Includes)

7 NPR 8M-6521 2 DOWEL

8 NPR 8P-5959 1 GEAR (sun-26 teeth)

9 NPR 3P-0952 1 BEARING

10 NPR 8S-9104 1 RING

11 NPR 3P-0785 1 HUB ASSEM.

(Includes)

NPR 8S-3426 1 DOWEL

12 NPR 3P-0814 1 RING

13 NPR 3P-1654 1 CAGE ASSEM.

(Includes)

NPR C 1S-9572 1 BEARING

14 NPR C 8L-9811 1 RING

15 NPR 8H-8830 1 RING

16 NPR 3P-0316 1 HUB ASSEM.

(Includes)

17 NPR 8M-6521 4 DOWEL

18 NPR 0S-1594 4 BOLT

NPR 1S-8572 2 LOCK

19 NPR 0S-1608 14 BOLT

20 NPR 5M-2894 14 WASHER

21	NPR	8P-5961	1	GEAR (ring-82 teeth)
22	NPR	3K-1432	1	RING
23	NPR	3P-0307	1	CAGE ASSEM.

(Includes)

	NPR	8S-3426	1	DOWEL
24	NPR	1M-8649	1	RING
25	NPR	3P-0953	1	BEARING
26	NPR	3P-0299	1	SHAFT ASSEM. (center)
27	NPR	5M-2477	1	PLATE (number)
28	NPR	7B-3028	2	SCREW (drive)

Key:

CL - Classic Part Available
C - INDICATES CHANGE

8P5958 PLANETARY TRANSMISSION GROUP--Part 3 of 3
Serial No. 87V2416 to 87V3363, 3365 to 3367, 3371 to 3378, 3381, 3382 and 87V3384 inclusive & 82V755 to 82V819 inclusive. Test No. 311 to 4307 inclusive. Part of 8P5957 Transmission Arrangement shown on Page 115B

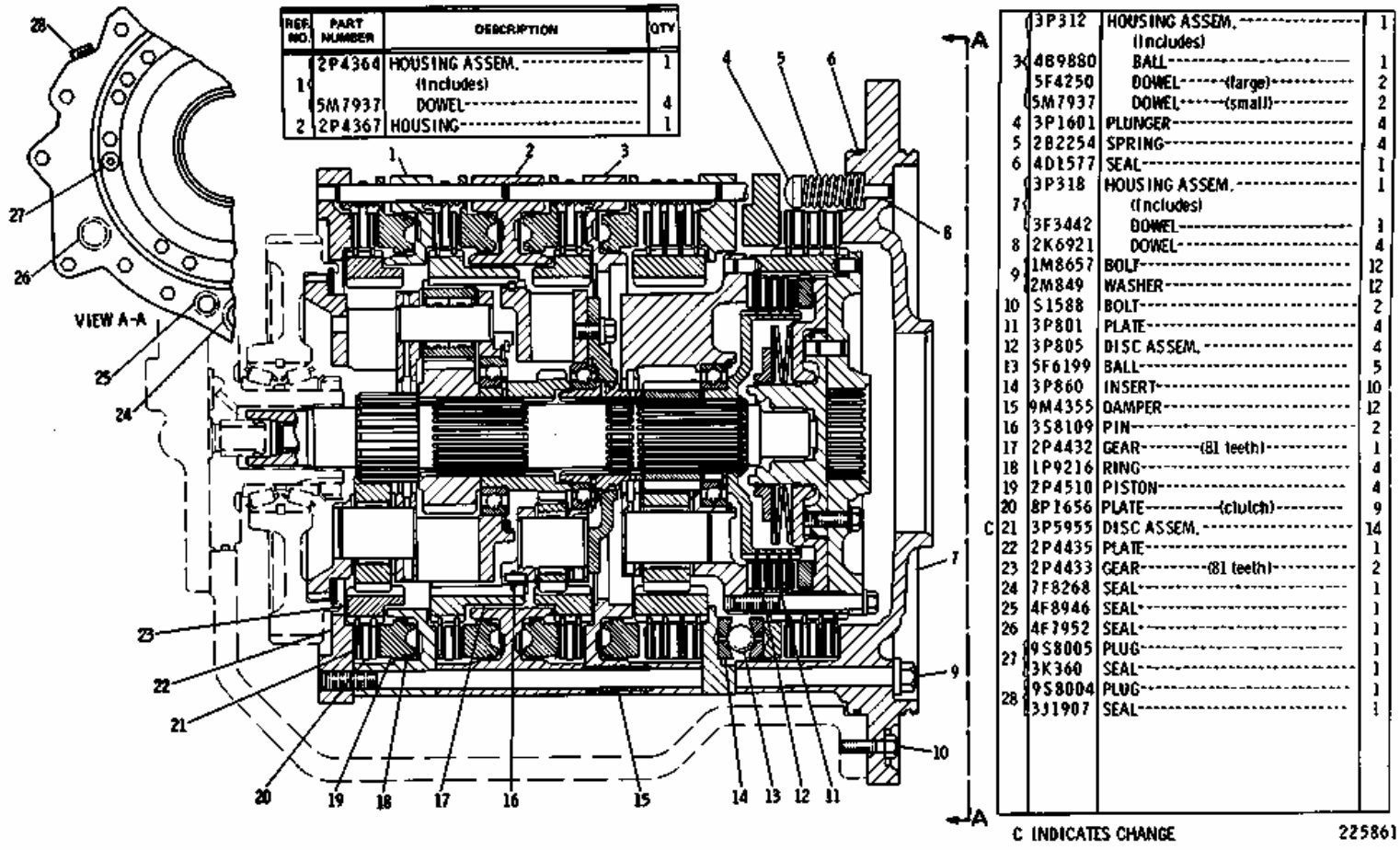

REF. NO.	PART NUMBER	DESCRIPTION	QTY
1	2P4364	HOUSING ASSEM.	1
		(Includes)	
	5M7937	DOWEL	4
2	2P4367	HOUSING	1

	3P312	HOUSING ASSEM. (Includes)	1
3	4B9880	BALL	1
	5F4250	DOWEL (large)	2
	5M7937	DOWEL (small)	2
4	3P1601	PLUNGER	4
5	2B2254	SPRING	4
6	4D1577	SEAL	1
7	3P318	HOUSING ASSEM. (Includes)	1
	3F3442	DOWEL	1
8	2K6921	DOWEL	4
9	1M8657	BOLT	12
	2M849	WASHER	12
10	S1588	BOLT	2
11	3P801	PLATE	4
12	3P805	DISC ASSEM.	4
13	5F6199	BALL	5
14	3P860	INSERT	10
15	9M4355	DAMPER	12
16	3S8109	PIN	2
17	2P4432	GEAR (81 teeth)	1
18	1P9216	RING	4
19	2P4510	PISTON	4
20	8P1656	PLATE (clutch)	9
C 21	3P5955	DISC ASSEM.	14
22	2P4435	PLATE	1
23	2P4433	GEAR (81 teeth)	2
24	7F8268	SEAL	1
25	4F8946	SEAL	1
26	4F7952	SEAL	1
27	9S8005	PLUG	1
	3K360	SEAL	1
28	9S8004	PLUG	1
	3J1907	SEAL	1

C INDICATES CHANGE 225861

1 NPR 2P-4364 1 HOUSING ASSEM.

(Includes)

NPR 5M-7937 4 DOWEL

2 NPR 2P-4367 1 HOUSING

3 NPR 3P-0312 1 HOUSING ASSEM.

(Includes)

NPR 4B-9880 1 BALL

NPR 5F-4250 2 DOWEL (large)

NPR 5M-7937 2 DOWEL (small)

4 NPR 3P-1601 4 PLUNGER

5 NPR 2B-2254 4 SPRING

6 NPR 4D-1577 1 SEAL

7 NPR 3P-0318 1 HOUSING ASSEM.

(Includes)

NPR 3F-3442 1 DOWEL

8 NPR 2K-6921 4 DOWEL

9 NPR 1M-8657 12 BOLT

NPR 2M-0849 12 WASHER

10 NPR 0S-1588 2 BOLT

11 NPR 3P-0801 4 PLATE

12 NPR 3P-0805 4 DISC ASSEM.

13 NPR 5F-6199 5 BALL

14 NPR 3P-0860 10 INSERT

15 NPR 9M-4355 12 DAMPER

16 NPR 3S-8109 2 PIN

17 NPR 2P-4432 1 GEAR (81 teeth)

18 NPR 1P-9216 4 RING

19 NPR CL 2P-4510 4 PISTON

CL NPR 275-5293 1 PISTON AS.-CLA

20 NPR R 8P-1656 9 PLATE (clutch)

R	NPR	0R-5009	1	PLATE-CLUTCH
21	NPR C	3P-5955	14	DISC ASSEM.
22	NPR CL	2P-4435	1	PLATE
CL	NPR	275-5295	1	PLATE-CLA
23	NPR	2P-4433	2	GEAR (81 teeth)
24	NPR	7F-8268	1	SEAL
25	NPR	4F-8946	1	SEAL
26	NPR	4F-7952	1	SEAL
27	NPR	9S-8005	1	PLUG
	NPR	3K-0360	1	SEAL
28	NPR	9S-8004	1	PLUG
	NPR	3J-1907	1	SEAL

Key:

CL - Classic Part Available
C - INDICATES CHANGE