RUTHZIL TRATOR COMERCIAL DE PEÇAS LTDA 11 97083-6812 ROLANDO CITRANGULO

120G CATERPILLAR

General Electric de Colombia
DEPARTAMENTO DE MAQUINAS

CONTENTS

JANEIRO 1984

ALPHABETICAL INDEX OF GROUPS__ 3
CONVERSION EQUIVALENT TABLES INSIDE BACK COVER
ORDERING PARTS_____ 2
QUICK REFERENCE CHART INSIDE FRONT COVER
USING THE PARTS BOOK_____2

ING. MECANICO

PARTS BOOK 120G MOTOR GRADER

POWERED BY 3304 ENGINE

SERIAL NUMBER
87V5275-UP (VEHICLE)
7Z1-UP (ENGINE)
2FA1-UP (TRANSMISSION)

REVISION PUBLISHED JANUARY 1984
CATERPILLAR TRACTOR CO.
PUBLICATIONS DIV.—SERVICE G.O.
PEORIA, ILL. U.S.A.

QUICK REFERENCE GUIDE TO MAJOR SECTIONS

REPLACEMENT ITEMS AND SCHEMATIC
BASIC ENGINE
LUBRICATION SYSTEM
COOLING SYSTEM
INTAKE & EXHAUST SYSTEM
FUEL SYSTEM & GOVERNOR
STARTING & ELECTRICAL SYSTEM
POWER TRAIN - POWER TRANSMISSION UNI
BRAKES
CHASSIS
BLADE CONTROL HYDRAULIC & STEERING SYSTEM
IMPLEMENTS
CAB, GAUGES & ACCESSORIES

...INE ...TIFICATION Caterpillar ...chines are identified with SERIAL NUMBERS. ...bers are assigned to the chassis and to the engine. ... engine also carry ARRANGEMENT NUMBERS ... ...ODIFICATION NUMBERS. These numbers are shown on the serial numb... ...he master plate in the operator's compartment. For the location of the serial n... ...MATI... ...efer to the Specification Section at the back of this Parts Book.

Caterpillar dealers need these numbers to determine which components were inclu... machine when it was assembled at the factory. This permits accurate identification of re... ...nent part numbers.

ORDERING PARTS Quality Caterpillar Replacement parts are available from Caterpillar ... throughout the world. Their parts stocks are up to date and include ... normally required to protect your investment in Caterpillar machines ordering parts, your order should specify the quantity, part number, part name and t... number, arrangement number and any modification numbers of the machine for wh... parts are needed. If in doubt about the part number, please provide your dealer with a complete description of the needed item.

HOW TO USE THE PARTS BOOK Caterpillar Parts Books include illustrations of the groups or assemblies which make up the machine. These illustrations show the standard components plus many of the attachments available for the machine.

The alphabetical index located in the front ...art of the book should be used to deter... ...e the page number on which specific ... ...ations are shown. Reference to those ...es will identify each of the individual ser... ...eable parts.

...aptions The caption under each illustra... ...tion identifies the part number and name of the group or assembly shown. If more than one illustration is included for any group, the caption identifies the specific machine serial numbers to which each illustration applies. In some cases it is not possible to determine the specific machine serial numbers to which different illustrations are applicable. In those cases the caption identifies the illustration as "First Type", "Second Type", etc. Reference to the actual group or assembly is necessary in those cases to determine which illustration should be used.

...ptions provide additional information ... as page numbers where illustrations of ...assemblies are shown, information re... ...g quantities used and other informa... ...ended to assist the user in deter... ...ts needs.

Indented Part Names Within each illustration is a parts list identifying each serviceable part in the illustration. When a part name is indented in this list, it means that serviceable item is a part of the serviceable item under which it is indented.

Abbreviations and Symbols

▲ ●	Used to call attention to additional information shown elsewhere within the illustration.	
R.H.	Right Hand	Refers to the side of the machine as viewed from the operator's compartment.
L.H.	Left Hand	
C	Indicates changes from the previous illustration of the same group or assembly.	
O.D.	Outside Diameter	
I.D.	Inside Diameter	
N/S	Not Serviced	
Assem.	Assembly	
in.	Inch	
ft	Foot	
cm	Centimeter	
dm	Decimeter	

Note: Continuing improvement and advancement of product design may cause changes to your machine which may not be included in this publication. Each publication is reviewed and revised, as required, to update and include these changes in later editions.

Whenever a question arises regarding your Caterpillar product, or this publication, please consult your Caterpillar dealer for the latest available information.

REPLACEMENT ITEMS

The following chart provides a convenient listing of those items which require occasional replacement during normal operation or maintenance.

	PART NO.	QTY. USED	PAGE NO.
BATTERIES — 12 Volt	7N7200 or	2	94
Heavy Duty	4S9261	2	77
BREATHERS			
Crankcase — Breather Assem.	8S248	1	35
Transmission	8S5820	1	136
COOLING SYSTEM			
Relief Valve Assem. — Cap	321464	1	37
FILTERS			
Air Cleaner			
Element Assem. — Primary	8N5389	1	44
Element Assem. — Secondary	2S1285	1	44
Air Conditioner — Filter Assem.	2G403 &	1	315
Filter Assem.	2G406	1	315
Crankcase — Filter Assem.	2P4004	1	31
Fuel			
Filter Assem.	1P2299	1	69
Hydraulic			
Screen — Filler	1J9575	1	206
Tank — Element Assem.	9M9740 or	2	207
(Use with Fire Resistant Fluid)	3G3467	2	207
Seal	5H6734	2	207
Transmission			
Element Assem.	9M9740 or	1	125
(Use with Fire Resistant Fluid)	3G3467	1	125
Seal	2S8439	1	125
Screen — Transfer Case	8S9130	2	136
Filter — Transfer Case	8S9129	2	136
GASKETS			
Hydraulic Filler Cap	9H6454	1	206
Radiator Filler Cap	321464	1	37
Valve Cover	8S1606	1	17
HOSES — Fumes Disposal	1N4102	8.00 cm	35
LAMPS			
Flood — Sealed Unit	1M5898	2	114
Front & Rear — Sealed Units	1M5899	2	114
SEAT BELT	6G1606	1	321
VEE BELTS			
Alternator & Fan	3P71	(Includes 2 Belts)	20
Refrigerant Compressor	1P9744	1	319
WINDSHIELD WIPER BLADES			
Front	5K1028	1	303
Front	9D1242	2	303
Rear	5K1028	1	304

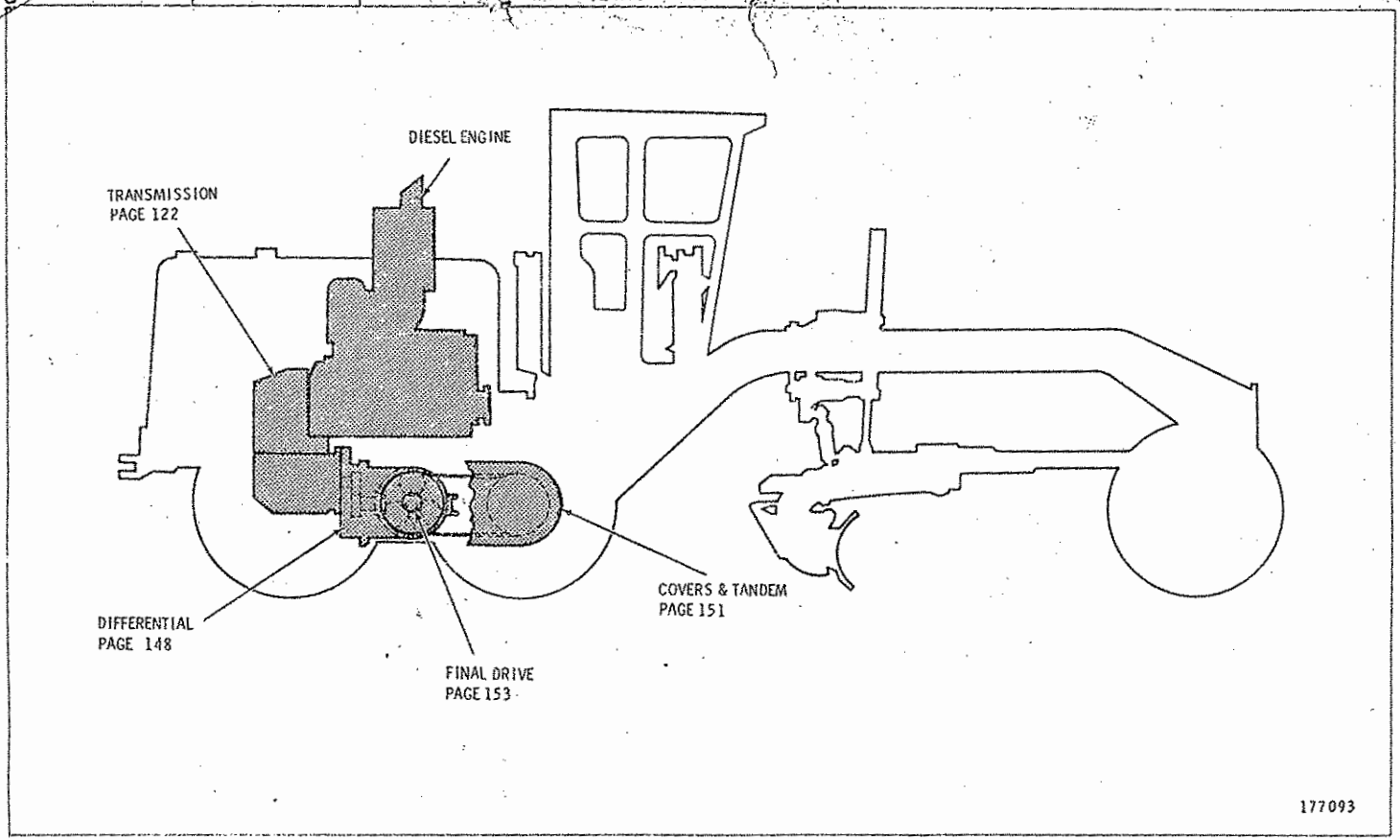
DIESEL ENGINE
TRANSMISSION
PAGE 122
COVERS & TANDEM
PAGE 151
DIFFERENTIAL
PAGE 148
FINAL DRIVE
PAGE 153
177093

POWER TRAIN

INDEX

ENGINE ARRANGEMENT LIST STARTS ON PAGE 4

A

Name	Page
Adapter—Engine to Transmission	154
Air Cleaner	44
Air Compressor	50
Air Compressor Lines	49
Air Conditioner and Mounting	316
Air Conditioner Arrangement	313
Air Conditioner Lines	317
Air Conditioner Wiring	318
Air Control Valve	208
Air Dryer	164
Air Filter—Cab	315G
Air Filter Service Indicator	325
Air Inflation	331
Air Lines—Engine	45
Air Lines—Turbocharger Intake and Exhaust	46
Air Tank	156
Alarm	99
Alternator	89
Alternator and Fan Support	171
Articulated Hitch	184
Articulation Cylinder	242
Articulation Cylinder and Mounting	241
Articulation Indicator	329
Articulation Lines	224

B

Name	Page
Back-up Warning	103
Balancer	14
Battery — Heavy Duty	77
Battery and Wiring	94
Battery Box	183
Bearings — Camshaft	9
Bevel Gear	148
Blade	276
Blade Extension	280
Blade Float Arrangement	230
Blade Float Control Wiring	119
Blade Lift	250
Blade Lift Cylinder	243
Blade Lift Cylinder and Mounting	241
Blade Shift Cylinder	246
Blade Shift Cylinder and Mounting	244
Blade Shift Lines	228
Blade Tip Cylinder	245
Blade Tip Cylinder and Mounting	244
Blade Tip Lines	227
Bottom Guard Arrangement	169
Brake Control	160
Breather — Crankcase	35
Bumper — Rear	165

C

Name	Page
Cab—Non ROPS	290
Cab Arrangement	286
Cab Door	295
Cab Heater	311
Cab Liner	292
Cab Panel	298
Cab Pressurizer Arrangement	310B
Cab Wiring	115
Camshaft	14
Cap—Fuel Tank	75
Cap—Oil Filler	29
Cartridge—Turbocharger	48
Centershift Cylinder	240
Centershift Cylinder and Mounting	239
Centershift Extension	239
Centershift Lines	223
Centershift Lock	204
Centershift Lock Control	20

Name	Page
Chain—Tandem Drive	152
Circle	186
Circle Drive	196
Circle Drive Motor Lines	194
Clutch and Refrigerant Compressor	320
Clutch Control	143
Condenser and Mounting—Air Conditioner	313
Connecting Rod and Pistons	13
Control and Duct—Heater & Air Conditioner	315H
Control and Duct—Pressurizer	312D
Control Valve—Articulation	268
Control Valve—Articulation, Blade Lift, Bulldozer, Centershift, Scarifier and Wheel Lean	271
Control Valve—Articulation, Blade Lift, Centershift and Wheel Lean	264
Control Valve—Blade Lift	265
Control Valve—Blade Lift and Circle Drive	264
Control Valve—Blade Lift, Blade Tip, Circle Drive and Side Shift	269
Control Valve—Blade Lift, Blade Tip, Circle Drive, Side Shift, Wing Tip and Slide	272
Control Valve—Blade Lift, Centershift, Scarifier, Wheel Lean and Articulation	270
Control Valve—Blade Lift, Circle Drive and Side Shift	269
Control Valve—Circle Drive	266
Circle Valve—Circle Drive, Side Shift, Blade Lift, Wing Tip and Slide	273
Control Valve—Scarifier, Bulldozer, Snowplow and Blade Tip	274
Control Valve—Wingstrut, Centershift and Wheel Lean	267
Control Valve—Wing Tip, Wing Slide and Side Shift	275
Coolant Flow Switch	121
Cooler—Engine Oil	40
Cooler—Transmission Oil	39
Cover—Cylinder Head	16A
Covers and Tandem	151
Crankshaft	11
Crankshaft Bearing Replacements	10
Crankshaft Hub	12
Crankshaft Seal	12
Crankshaft Thrust Plate	13
Cutting Edge and Endbit	284
Cylinder Block	8
Cylinder Block Cover	10
Cylinder Head	15
Cylinder Head Fastener	16
Cylinder Liner	8

D

Defroster Fan	309
Differential and Bevel Gear	146
Differential Lock Arrangement	144
Differential Lock Control	145
Drawbar	191
Drive Shaft Guard	182
Dust Ejector	51

E

Endbit Overlay	285
Engine Arrangement	4
Engine Mounting Hardware	19
Engine Oil Cooler	40
Ether Starting Aid	120
Exhaust Extension	54
Exhaust Manifold	53
Exhaust Manifold Fasteners	54

F

Fan — Blower	38
Fan Drive	22

Name	Page
Filter—Air Cleaner	44
Filter—Air Conditioner	315
Filter—Engine Oil	31
Filter—Fuel	69
Filter—Hydraulic Tank	207
Filter—Transmission	125
Final Drive	153
Flood Lamp	114
Flywheel	26
Flywheel Housing	25
Frame—Front	185
Frame and Case	180
Front Axle	192
Front Frame	185
Front Housing—Timing Gear	24
Front Housing Cover—Timing Gears	23
Front Housing Fastener—Timing Gear	25
Front Timing Gears	23
Fuel Drain Lines	72
Fuel Heater	68
Fuel Heater Changeover	68
Fuel Injection Lines	74
Fuel Injection Nozzle	74
Fuel Lines	70
Fuel Priming Pump and Filter	69
Fuel Tank	75
Fumes Disposal	35
Fuse Holder, Fuse and Wire Kit	325

G

Name	Page
Gasket—Cylinder Head	15
Gasket—Valve Mechanism Cover	17
Gasket Kits	333
Gauge—Oil Level	28
Gauge—Transmission Oil	30
Gauges	324
Gerotor Motor	195
Governor and Fuel Injection Pump	58
Governor and Fuel Injection Pump—Field Installation	60
Governor Control	5
Governor Cover	5
Grease Gun	33
Guard—Bottom	17
Guard—Drive Shaft	18
Guard—Platform	182

H

Name	Page
Harness—Cab Pressurizer	315
Harness—Monitor Wiring	101
Head Lamp	11
Heater—Fuel	6
Hood	17
Hood Side Door	174
Horn—Electric	310
Housing and Regulator	42
Hydraulic Control Arrangements	252
Hydraulic Oil Cooler	38
Hydraulic Pump Drive	209
Hydraulic Tank	206

I

Name	Page
Implement Pump and Mounting	21

J

Name	Page
Jacket Water Heater	42

K

Name	Page
Key — Cab Door	296
Kit — Air Compressor Repair	50
Kit — Air Control Valve	163
Kit — Alternator Repair	91
Kit — Electric Starting Motor	

Name Page

Kit — Turbocharger Repair 48
Kit — Water Pump Rebuild 43

L

Lamp—Tail, Stop and Turn..... 102
Leaning Wheel Cylinder and Mounting..... 247
Lever—Hydraulic Valve Control..... 253
Lift Cylinder Lines 225
Lifting Eye—Engine 16
Lighting—Cab..... 112
Lighting—Dome 112
Lighting—Floodlamp..... 111
Lighting—Spectator Sound 103A
Lines—Articulation..... 224
Lines—Blade Shift..... 228
Lines—Blade Tip 227
Lines—Centershift..... 223
Lines—Front Attachment..... 235
Lines—Hydraulic—Blade Float..... 232
Lines—Hydraulic—Leaning Wheels.. 234
Lines—Lift Cylinder 225
Lines—Scarifier 238
Lines—Transmission Oil Cooler..... 39
Linkage—Governor Control 56
Linkage and Valve—Blade Lift, Articulation, Centershift, Circle and Wheel Lean..... 254
Linkage and Valve—Blade Lift, Wheel Lean, Centershift and Scarifier 262
Linkage and Valve—Blade Shift, Blade Tip, Bulldozer, Snowplow and Scarifier..... 260
Linkage and Valve—Blade Shift, Bulldozer, Snowplow and Wing 263
Linkage and Valve—Bulldozer, Blade Shift, Blade Tip, Scarifier, Snowplow and Wing 261
Linkage and Valve—Power Blade ... 259
Linkage and Valve—Power Blade and Scarifier..... 257

Name Page

Linkage and Valve—Power Blade and Tip 256
Linkage and Valve—Power Blade, Tip and Scarifier 258
Linkage and Valve—Scarifier..... 259

M

Metering Pump—Steering Control... 199
Monitor Wiring 98F
Motor—Circle Drive 195
Mounting—Implement Pump 211
Mounting and Monitor 324B
Muffler 52

N

Name Plates and Films..... 334
Non—ROPS Conversion Arrangement 287B

O

Oil Drain Extension — Oil Pan 27
Oil Filler — Engine 29
Oil Filler Protection Cover — Engine .. 29
Oil Level Gauge 28
Oil Level Gauge Protection 28
Oil Lines — Engine 32
Oil Pan — Engine 27
Oil Pan Fastener 26
Oil Pump — Engine 33
Operator Console 326

P

Padlock—Fuel Tank Cap 76
Padlock—Hydraulic Tank Cap 208
Padlock—Oil Level Gauge Protection . 28
Padlock—Radiator Cap Cover 37
Padlock—Transmission Oil Filler 30
Panel—Sound Suppression—Cylinder Block 9B

Name	Page
Parking Brake Control	157
Pedal—Clutch Control	143
Piston Rings	13
Planetary Transmission	140
Power Blade and Tip Arrangements	279
Power Blade Arrangements	279
Power Train Schematic	2B
Pressurizer—Cab	315C
Pressurizer and Mounting	312C
Protection Cover—Fuel Tank Cap	76
Protection Cover—Hydraulic Tank Cap	208
Protection Cover—Radiator Cap	37
Protection Cover—Transmission Gauge	31
Protection Cover—Transmission Oil Filler	30
Pulley—Fan Drive	20
Pump—Metering—Steering Control	199
Pump—Piston and Gear—Implement	212
Pump—Slipper	214
Pump—Transmission—Gear	124
Pump Control Head—Implement	213
Pump Lines—Hydraulic	220

R

Name	Page
Radiator	36
Radiator Drain Extension	37
Radiator Guard and Support	166
Rear Bumper	165
Rear Cab Panel	300
Rear View Mirror	306
Refrigerant Compressor	319
Rocker Arm — Valve Mechanism	17
Roll-over Protective Structure Arrangement	287

S

Name	Page
Scarifier	282
Scarifier Cylinder	249
Scarifier Cylinder and Mounting	247
Seal — Crankshaft	12
Seal — Timing Gear Housing	23
Seals — Cylinder Head Spacer Plate	15
Seals — Fuel Pump Housing to Engine	74
Seat	321
Service Brake	159
Shaft and Link — Windshield Wiper	306
Signal Lamp	113
Solenoid Switch — Starting Motor	88
Sound Suppression Arrangement	168
Spacer Plate — Cylinder Block	8
Specifications	336
Starting Arrangement — Cold Weather	77
Starting Motor — Electric	78
Steering Control	198
Steering Cylinder	200
Steering Cylinder and Mounting	198
Steering Lines	202
Step	165
Suction Bell — Oil Pan	32
Support — Alternator and Fan	171
Support — Engine	18
Switch — Bulldozer Float	117
Switch — Coolant Flow	121
Switch — Differential Lock Control	145
Switch — Dimmer	110
Switch — Disconnect	99
Switch — Starting Motor Solenoid	88
Switch — Turn Signal	108
Swivel — Blade Tip Lines	229
Swivel Joint — Blade Shift Lines	230

T

Name	Page
Tachograph Drive	330
Tandem Drive Covers	151
Thermostat — Water Temperature	42
Timing Gears — Engine	23
Tool Box	

Name	Page
Tools	332
Torque Control	67
Transfer Gear	136
Transmission Arrangement	122
Transmission Case	139
Transmission Control	126
Transmission Hydraulic Control	128
Transmission Oil Cooler	39
Transmission Oil Cooler Lines	39
Transmission Oil Filler	30
Transmission Oil Lines	123
Trunnion — Engine	19
Turbocharger	47
Turbocharger Oil Lines	47
Turn Signal Lighting	108

U

Name	Page
Universal Joint Drive — Hydraulic Pump	210

V

Name	Page
Valve—Air—Parking Brake Control	158
Valve—Air Control	163 & 208
Valve—Check—Centershift Lines	226
Valve—Check—Front Attachment Lines	237
Valve—Check—Hydraulic Lines	231
Valve—Check and Relief—Blade Tip Lines	229
Valve—Check and Relief—Lift Cylinder	226
Valve—Check and Relief—Scarifier Lines	237
Valve—Combination—Pump Lines	218
Valve—Cylinder Lock	195
Valve—Direct Operated Cooler Relief	217
Valve—Follower	216
Valve—Intake and Exhaust	15
Valve—Pilot—Front Attachment Lines	236
Valve—Pilot—Selector and Pressure Control	132
Valve—Pilot—Speed Selector	131
Valve—Pressure Reducing	217
Valve—Quick Release—Parking Brake	158
Valve—Relief—Pilot Operated	219
Valve—Relief—Steering Lines	204
Valve—Relief Control —Transmission	129
Valve—Selector and Pressure Control	133
Valve—Selector and Pressure Reducing	135
Valve—Servo—Pump Control Head	216
Valve—Unloading	218
Valve Mechanism	17
Valve Mechanism Cover	17
Vandalism Guard—Instrument Panel	328
Vandalism Guard—Shift Console	328B
Vandalism Guard—Steering Console	328A
Vee Belt—Fan Drive	20
Vee Scarifier Arrangement	281

W

Name	Page
Warning Lighting—Rotating	104
Water Lines	40
Water Lines—Radiator to Engine	41
Water Pump	43
Weather Insulation—Cab	294
Wheel	154
Wheel Lean Cylinder	248
Windshield	299
Windshield Washer	300
Windshield Wiper	302
Wiring—Blade Float Control	119
Wiring—Bulldozer	117
Wiring—Monitor	98F
Wiring Harness—Battery and Wiring	100
Wiring Harness—Cab	116

INDEX ALPHABÉTIQUE

Les versions fournies par les usines sont indiquées page 4.

Moteur de base (Page 8)

Désignation	Page
Arbre à cames	14
Bielles et pistons	13
Bloc-cylindres	8
Bloc-cylindres (couvercle)	10
Brides de levage	16
Carter avant	24
Carter avant (boulonnerie)	25
Carter avant (couvercle)	23
Carter de volant	25
Carter inférieur	27
Carter inférieur (boulonnerie)	26
Coussinets de rechange de vilebrequin	10
Culasse	15
Culasse (boulonnerie)	16
Engrenage de distribution avant	23
Ensemble moteur	4
Entraînement de ventilateur	22
Équilibreur dynamique	14
Joint de vilebrequin	12
Moyeu de vilebrequin	12
Pièces de fixation du moteur	19
Plaque de butée de rechange de vilebrequin	13
Poulie	20
Soupapes (couvercle)	17
Soupapes et train de commande	17
Support moteur (arrière)	18
Support moteur (avant)	18
Tourillon	19
Tuyauterie de vidange d'huile	27
Vilebrequin	11
Volant	26

Circuit de graissage (Page 28)

Désignation	Page
Canalisations de graissage	32
Chapeau de sécurité (tubulure de remplissage d'huile de transmission)	30
Chapeau de sécurité (tubulure de remplissage d'huile moteur)	29
Couvercle de protection (jauge de niveau d'huile)	28
Couvercle de protection (jauge d'huile de transmission)	31
Filtre à huile	31
Jauge de niveau d'huile	28
Pompe à huile	33
Reniflard	35
Tubulure de remplissage d'huile de transmission	30
Tubulure de remplissage d'huile moteur	29
Tuyauterie d'évacuation des vapeurs d'huile	35

Circuit de refroidissement (Page 36)

Désignation	Page
Chapeau de sécurité (bouchon de radiateur)	37
Pompe à eau	43
Radiateur	36
Réchauffeur d'eau de cylindres	42
Refroidisseur d'huile de transmission	39
Refroidisseur d'huile hydraulique	38
Refroidisseur d'huile moteur	40
Thermostat et boîtier	42
Transmission (tuyauterie de refroidisseur)	39
Tuyauterie de vidange de radiateur	37
Tuyauterie d'eau	40
Ventilateur soufflant	38

Admission et échappement (Page 44)

Désignation	Page
Canalisations d'air	45
Collecteur d'échappement	53

Désignation	Page
Collecteur d'échappement (boulonnerie)	54
Compresseur d'air	51
Compresseur d'air (canalisations)	49
Éjecteur de poussière	51
Filtre à air	44
Silencieux d'échappement	52
Turbocompresseur	47
Turbocompresseur (canalisations d'huile)	47
Tuyau d'échappement (rallonge)	54

Alimentation en carburant et régulateur (Page 56)

Canalisations de carburant	70
Chapeau de sécurité (bouchon de réservoir de carburant)	76
Pompe d'amorçage et filtre	69
Réchauffeur carburant (conversion)	68
Régulateur (couvercle)	58
Régulateur et pompe d'injection	58
Régulateur (timonerie extérieure)	56
Réservoir de carburant	75
Tuyauterie de vidange	72
Tuyauterie d'injection de carburant	74

Circuit électrique et démarrage (Page 77)

Alternateur	89
Avertisseur de recul	103
Batterie et câblage	94
Câblage (bulldozer)	117
Câblage (cabine)	115
Câblage (lame — commande de position libre)	119
Clignotants	108
Contacteur d'indicateur de manque de débit d'eau	121
Démarreur	77
Démarreur électrique	78
Éclairage (cabine)	112
Ensemble de phares AV	109
Girophare	104
Injection d'éther	120
Plafonnier	112
Projecteur d'éclairage (arrière)	111
Projecteur d'éclairage (avant)	111

Train de transmission (Page 122)

Canalisations d'huile (transmission)	123
Chaîne	152
Commande d'embrayage	143
Commande hydraulique (transmission)	128
Couple conique	148
Couvercles et entraînement en tandem	151
Engrenage de transfert	136
Filtre (transmission)	125
Mécanisme de transmission	28
Pièces d'accouplement de la transmission	154
Pompe à engrenages (transmission)	124
Réducteur de roue	153
Roue	154
Transmission	122
Transmission à trains planétaires	140
Verrouillage du différentiel	144
Vitesses (commande)	126

Freins (Page 156)

Dessiccateur du circuit d'air	164
Frein de stationnement (commande)	157
Freins (commande)	160
Freins de manœuvre	159
Réservoir d'air	156

Francisco Alzona Gomes
ING. MECANICO

Bâti (Page 165)

Désignation	Page
Bouclier de protection inférieur	169
Capot	172
Cercle	186
Châssis AV	185
Châssis et carter	180
Coffre à batterie	183
Coffre à outils	182
Essieu AV	192
Flèche de cercle	191
Groupe d'insonorisation	168
Marchepied	165
Panneaux latéraux de capot	174
Pare-chocs arrière	165
Pivot d'articulation	184
Protection de l'arbre d'entraînement	182
Protège-radiateur et support	166
Support de ventilateur et alternateur	171

Commandes de la lame, circuit hydraulique et de direction (Page 194)

Désignation	Page
Commande de direction	198
Commande de verrouillage de déport de cercle	205
Commande hydraulique	252
Canalisations de direction	202
Canalisations de pompe	220
Canalisations de scarificateur	238
Canalisations hydrauliques (articulation de flèche)	224
Canalisations hydrauliques (déport de cercle)	223
Canalisations hydrauliques (déport latéral de lame)	228
Canalisations hydrauliques (incidence de lame)	227
Canalisations (inclinaison des roues)	234
Chapeau de sécurité (bouchon de réservoir hydraulique)	208
Entraînement du cercle	196
Entraînement de pompe hydraulique	209
Lame — dispositif de commande de position libre	230
Moteur d'entraînement du cercle (canalisations)	194
Pompe pour équipements et montage	211
Rallonge de déport de cercle	239
Relevage de lame	250
Réservoir hydraulique	206
Servo-valve de rappel	216
Tringlerie et soupapes	254
Vérin d'articulation et montage	241
Vérin de commande du déport de cercle et montage	239
Vérin de déport latéral de lame et montage	244
Vérin de direction et montage	198
Vérin de relevage de lame (canalisations)	225
Vérin de relevage de lame et montage	241
Vérin de scarificateur et montage	247
Vérin d'incidence de lame et montage	244
Vérin d'inclinaison des roues et montage	247
Verrouillage de déport de cercle	204

Équipements (Page 276)

Désignation	Page
Bord tranchant et embouts	284
Embout rapporté	285
Lame	276
Lame à déport et incidence hydrauliques	279
Lame (déport hydraulique)	279
Rallonge de lame	280
Scarificateur en V	281

Cabine, instruments de contrôle et accessoires (Page 286)

Désignation	Page
Avertisseur sonore électrique	310
Bâti de sécurité	287, 288
Cabine	286
Chauffage cabine	311
Climatiseur	313
Compresseur de climatiseur	319
Console du conducteur	326
Dégivreur	309
Entraînement de tachographe	330
Essuie-glace	302
Fusible, porte-fusible et fil (horomètre)	325
Garniture de plancher (cabine)	294
Garniture d'insonorisation	292
Indicateur d'angle d'articulation	329
Instruments de contrôle	324
Lave-glace	301
Panneau arrière (cabine)	300
Panneau de cabine	298
Pare-brise	299
Porte de cabine	295
Protection contre le vandalisme	328
Rétroviseur	306
Siège	321
Siège à suspension	322

Divers (Page 331)

Désignation	Page
Caractéristiques	337
Gonfleur	331
Jeux de joints	333
Outil à main	332
Plaques signalétiques et instructions sur film	334

INDICE

Motor Básico (Página 8)

Nombre	Página
Arbol de levas	14
Armellas de levantamiento	16
Bielas y pistones	13
Bloque de motor	8
Caja delantera	24
Caja del volante	25
Cárter	27
Cigüeñal	11
Cigüeñal y plancha de engranaje de repuesto	13
Cojinetes de bancada de repuesto	11
Conjunto de motor	4
Culata	15
Engranajes compensadores	14
Engranajes de distribución	23
Extensión de drenado del aceite	27
Herrajes de la caja delantera	25
Herrajes de la culata	16
Herrajes del cárter	26
Herrajes para montaje de motor	19
Mando del ventilador	22
Maza del cigüeñal	12
Mecanismo de la válvula	17
Muñón	19
Polea	20
Sello del cigüeñal	12
Soporte del motor delantero	18
Soporte del motor trasero	18
Tapa de la caja delantera	23
Tapa del bloque de motor	10
Tapa del mecanismo de las válvulas	16
Volante	25

Sistema de Lubricación (Página 28)

Nombre	Página
Bomba del aceite	33
Filtro del aceite	31
Protección de la varilla indicadora del nivel del aceite	28
Respiradero	35
Tapa protectora del tubo de llenado de la transmisión	30
Tapa protectora del instrumento de la transmisión	31
Tapa protectora del tubo de llenado del aceite del motor	29
Tuberías del aceite	32
Tubo de llenado del aceite del motor	29
Tubo de llenado de la transmisión	30
Varilla indicadora del nivel del aceite	28

Sistema de Enfriamiento (Página 36)

Nombre	Página
Bomba del agua	43
Caja y regulador	42
Calentador del agua de las camisas	42
Enfriador del aceite de la transmisión	39
Enfriador del aceite del motor	40
Enfriador del aceite hidráulico	38
Extensión de vaciado del radiador	37
Radiador	3
Tapa protectora del radiador	
Tuberías del agua	
Tuberías del enfriador del aceite de la transmisión	39
Ventilador insuflador	38

Sistema Admisión [illegible]pe (Pági[illegible]

Compresor de a[illegible]	51
Extensión de [illegible]	54
Eyector de [illegible]	51
Filtro de a[illegible]	44
Herrajes [illegible]ltiple de escape	45
Múltiple [illegible]ape	53
Silencia[illegible]	52

Nombre Página

Tuberías de aire 45
Tuberías del aceite
del turboalimentador 47
Tuberías del compresor de aire. . . 49
Turboalimentador 47

Sistema del Combustible y Regulador (Página 56)

Bomba de cebado de combustible
y filtro primario 69
Cambio del calentador
del combustible. 68
Control del regulador 56
Regulador y bombas de
inyección del combustible. . . . 58
Tanque del combustible 75
Tapa del regulador. 58
Tapa protectora del
tanque del combustible. 76
Tuberías de drenado 72
Tuberías de inyección
del combustible. 74
Tuberías del combustible 70

Sistema de Arranque Eléctrico (Página 77)

Alambrado — control de posición
libre de la hoja 119
Alambrado de la cabina 115
Alambrado de la
hoja empujadora 117
Alarma de retroceso. 103
Alternador 89
Arranque por éter 120
Batería y alambrado. 94
Conjunto de arranque. 77
Interruptor del flujo
del refrigerante 121
Luces de alarma 104
Luces de la cabina 112
Luces del techo de la cabina 112
Luces de señales 108
Motor de arranque eléctrico. 78
Reflectores delanteros 111
Reflectores traseros 111

Tren de Potencia — Unidad de Transmisión de Fuerza (Página 122)

Nombre Página

Adaptador del motor
a la transmisión. 154
Bomba de engranaje
de la transmisión 124
Cadena 152
Conjunto de traba del diferencial . 144
Control de la transmisión 126
Control del embrague. 143
Control hidráulico
de la transmisión 128
Corona 148
Engranaje de transferencia. 136
Filtro de la transmisión. 125
Mando final 153
Rueda 154
Tapas y tándem. 151
Transmisión 122
Transmisión planetaria 140
Tren de potencia 28
Tuberías de aceite
de la transmisión 123

Frenos (Página 156)

Control del freno
de estacionamiento 157
Control del freno 160
Freno de servicio. 159
Secador de aire
de los frenos. 164
Tanque de aire 156

Chasís (Página 165)

Alternador y soporte
del ventilador 171
Barra de tiro. 191
Bastidor delantero 185
Bastidor y caja 180
Caja de herramientas 182
Caja de la batería. 183
Capota 172
Capota y puerta lateral 174

Nombre	Página
Círculo	186
Conjunto de la protección inferior	169
Eje delantero	192
Enganche articulado	184
Parachoques trasero	165
Pisadera	155
Protección del eje motriz	182
Protección y soporte del radiador	166
Supresión de ruidos	168

Controles de la Hoja, Sistema Hidráulico y de Dirección (Página 194)

Nombre	Página
Bomba de implementos y montaje	211
Cilindro de articulación y montaje	241
Cilindro de dirección y montaje	198
Cilindro de desplazamiento de la hoja y montaje	244
Cilindro de escarificador y montaje	247
Cilindro de inclinación de la hoja y montaje	244
Cilindro de inclinación de la rueda y montaje	247
Cilindro de la cremallera curvada y montaje	239
Cilindro de levantamiento de la hoja y montaje	241
Conjunto de la posición libre de la hoja	230
Conjunto del control hidráulico	252
Control de dirección	198
Control de traba de la cremallera curvada	205
Extensión de la cremallera curvada	239
Levantamiento de la hoja	250
Mando de la bomba hidráulica	209
Mando del círculo	196
Tanque hidráulico	206
Tapa protectora del tanque hidráulico	208
Traba de la cremallera curvada	204
Tuberías de articulación	224
Tuberías de cilindro de levantamiento	225
Tuberías de dirección	202
Tuberías del escarificador	238
Tuberías de inclinación de la hoja	227
Tuberías de inclinación de las ruedas	234
Tuberías de la bomba	220
Tuberías de la cremallera curvada	223
Tuberías de desplazamiento de la hoja	228
Tuberías del motor de mando del círculo	194
Válvula seguidora	216
Varillaje y válvula	254

Implementos (Página 276)

Nombre	Página
Conjunto de la hoja hidráulica	279
Cuchilla y punta	284
Escarificador en "V"	281
Extensión de la hoja	280
Hoja	276
Hoja hidráulica y conjunto de inclinación	279
Sobrepunta	285

Cabina, Instrumentos y Accesorios (Página 286)

Nombre	Página
Aislación climática	294
Asiento	321
Bocina eléctrica	310
Calentador de la cabina	311
Compresor del refrigerante	319
Conjunto del acondicionador de aire	313
Conjunto de la cabina	286
Conjunto de la estructura protectora contra vuelcos	287
Consola del operador	326

Nombre	Página
Espejo	306
Estructura protectora contra vuelcos	288
Indicador de articulación	329
Instrumentos	324
Juego del portafusibles, cable del portafusible — medidor de servicio	325
Lavador de parabrisas	301
Limpiaparabrisas	302
Mando de tacógrafo	330
Parabrisas	299
Protección contra vandalismo	328
Puerta de la cabina	295
Recubrimiento de la cabina	292
Suspensión del asiento	322
Tablero de la cabina	298
Tablero trasero de la cabina	300
Ventilador descongelador	309

Materiales Diversos (Página 331)

Nombre	Página
Calcomanías y placas de identificación	334
Dispositivo para inflar neumáticos	331
Especificaciones	338
Herramientas	332
Juegos de empaquetaduras	333

INHALTSVERZEICHNIS

MOTORAUSFÜHRUNGEN SIND AB SEITE 4 AUFGEFÜHRT.

Motor (Seite 8)

Bezeichnung	Seite
Auswuchter	14
Huböse	16
Kurbelwelle	11
Kurbelwellendichtung	12
Kurbelwellen-Ersatzdrucklager	13
Kurbelwellen-Ersatzlager	10
Kurbelwellennabe	12
Lüfterantrieb	22
Montagezapfen	19
Motorauflager, hinten	18
Motorauflager, vorne	18
Motorausführung	4
Motorblock	8
Motorblockdeckel	10
Motor-Halteteile	19
Nockenwelle	14
Ölablaßverlängerung	27
Ölwanne	27
Ölwannen-Halteteile	26
Pleuelstange und Kolben	13
Riemenscheibe	20
Schwungscheibe	26
Schwungscheibengehäuse	25
Stirnrad	23
Stirnradgehäuse	24
Stirnradgehäusedeckel	23
Stirnradgehäuse-Halteteile	25
Ventildeckel	17
Ventilsteuerung	17
Zylinderkopf	15
Zylinderkopf-Halteteile	16

Schmiersystem (Seite 28)

Bezeichnung	Seite
Entdunster	35
Entlüfter	35
Getriebeöleinfüllstutzen	30
Motoröleinfüllstutzen	29
Ölleitungen	32
Ölmeßstab	28
Schmierfilter	31
Schmierpumpe	33
Schutzkappe des Getriebeöleinfüllstutzens	30
Schutzkappe des Getriebeölmeßstabs	31
Schutzkappe des Motoröleinfüllstutzens	29
Schutzkappe des Ölmeßstabs	28

Kühlsystem (Seite 36)

Bezeichnung	Seite
Ablaßverlängerung	37
Drucklüfter	38
Gehäuse und Thermostat	42
Getriebeölkühler	39
Getriebeölkühlerleitungen	39
Hydraulikölkühler	38
Kühlerkappe	37
Kühlernetz	36
Kühlwasserheizung	42
Motorölkühler	40
Wasserleitungen	40
Wasserpumpe	43

Ansaug- und Abgasanlage (Seite 44)

Bezeichnung	Seite
Auspuffkrümmer	53
Auspuffkrümmer-Halteteile	54
Auspuffverlängerung	54
Druckluftleitungen	45
Luftkompressor	51
Luftkompressorleitungen	49
Luftreiniger	44
Schalldämpfer	52
Staubauswerfer	51
Turbolader	47
Turboladerölleitungen	47

Kraftstoffanlage und Regler (Seite 56)

Bezeichnung	Seite
Ablaßleitungen	72
Kraftstoffeinspritzleitungen	74
Kraftstoffentlüftungspumpe und -filter	69
Kraftstoffheizungs-Umbausatz	68
Kraftstoffleitungen	70
Kraftstofftank	75
Regler und Kraftstoffeinspritzpumpe	58
Reglerdeckel	58
Reglersteuerung	56
Tankkappe	76

Anlasser und elektr. Anlage (Seite 77)

Anlasser, elektr.	78
Anlasser – Teilliste	77
Ätherstarthilfe	120
Batterie und Verdrahtung	94
Blinkleuchten	108
Brems- und Rücklicht	109
Deckenleuchte	112
Drehstromlichtmaschine	89
Fahrerhausbeleuchtung	112
Fahrerhausverdrahtung	115
Frontarbeitsleuchten	111
Heckarbeitsleuchten	111
Kühlwarnschalter	121
Rückfahrwarnhorn	103
Verdrahtung – Schargleitsteuerung	119
Verdrahtung – Verteilerschild	117
Warnleuchten	104

Kraftübertragung – Getriebe (Seite 122)

Differentialsperre	144
Getriebe	122
Getriebeanschluß	154
Getriebefilter	125
Getriebehydraulik	128
Getriebeölleitungen	123
Getriebepumpe	124
Kette	152
Kraftübertragung	2B
Kupplungsgestänge	143
Planetengetriebe	140
Rad	154
Schaltgestänge	126
Seitenantrieb	153
Tandemgehäuse und Deckel	151
Tellerrad	148
Vorgelege	136

Bremsen (Seite 156)

Betriebsbremse	159
Bremsgestänge	160
Bremslufttrockner	164
Drucklufttank	156
Parkbremsgestänge	157

Fahrwerk (Seite 165)

Antriebswellenverkleidung	182
Batteriekasten	183
Drehkranz	186
Heckstoßstange	165
Knickrahmenanschluß	184
Kühlerverkleidung und Unterbau	166
Lichtmaschinen- und Lüfteraufhängung	171
Motorhaube	172
Motorseitentür	174
Panzerwanne – Teilliste	169
Rahmen und Gehäuse	180
Schalldämpfende Verkleidung	168
Scharzugrahmen	191
Steigleiter	165
Vorderachse	192
Vorderrahmen	185
Werkzeugkasten	182

		CONSISTS OF:	PAGE
LUBRICATION SYSTEM			
1	2P6491	OIL LEVEL GAUGE GROUP	28
1	2P1784	ENGINE OIL PUMP GROUP	33
1	2P6512	ENGINE OIL LINES GROUP	32
1	2P6475	OIL FILTER GROUP	31
1	2P6855	OIL FILLER GROUP	29
1	1P4244	BREATHER GROUP	35
COOLING SYSTEM			
1	7N6206	WATER PUMP GROUP	43
1	7N7211	WATER LINES GROUP	40
	- OR -		
1	1N4219	WATER LINES GROUP	40A
1	2P6215	ENGINE OIL COOLER GROUP	40
1	2P6508	TRANSMISSION OIL COOLER GROUP	39
INTAKE AND EXHAUST SYSTEM			
1	7N4144	AIR LINES GROUP	45
1	2P6571	EXHAUST MANIFOLD GROUP	53
1	4N9584	EXHAUST MANIFOLD FASTENER GROUP	54
1	7N4650	TURBOCHARGER GROUP	47
1	4N3923	TURBOCHARGER OIL LINES GROUP	47
1	2P9613	AIR COMPRESSOR GROUP	51
	- OR -		
1	7N9912	AIR COMPRESSOR GROUP	51B
1	4N8056	AIR COMPRESSOR LINES GROUP	49
	- OR -		
1	7N9919	AIR COMPRESSOR LINES GROUP	49B
FUEL SYSTEM AND GOVERNOR			
1	8N6838	FUEL PRIMING PUMP AND FILTER GROUP	69
	- OR -		
1	8N4454	FUEL PRIMING PUMP AND FILTER GROUP	69B
1	7N1645	FUEL INJECTION LINES GROUP	74
1	4N4510	GOVERNOR COVER GROUP	58
1	7N1733	GOVERNOR AND FUEL INJECTION PUMP GROUP	58
1	7N3651	DRAIN LINES GROUP	72

NOTE: REFER TO INDEX FOR PAGE LOCATION OF GASKET KITS

CONSISTS OF:

			PAGE
CENTRAL STRUCTURE			
1	7N8014	CYLINDER BLOCK GROUP	8
1	7N1088	CYLINDER BLOCK COVER GROUP	10
1	6N8080	CRANKSHAFT GROUP	11
1	2P6224	CRANKSHAFT SEAL GROUP	12
4	8N2531	CONNECTING ROD AND PISTON GROUP	13
	- OR -		
4	1W6588	CONNECTING ROD AND PISTON GROUP	13B
1	2P6201	CAMSHAFT GROUP	14
1	5S6425	BALANCER GROUP	14
1	8N9465	SOUND SUPPRESSION PANEL GROUP SERIAL NO. 7Z1 TO 7Z4371 INCLUSIVE	9B
	- OR -		
1	1W6524	SOUND SUPPRESSION PANEL GROUP SERIAL NO. 7Z4372--UP	9A-4
UPPER STRUCTURE			
1	7N8674	CYLINDER HEAD GROUP	15
1	7N9534	CYLINDER HEAD FASTENER GROUP	16
1	7N8024	VALVE MECHANISM GROUP	17
1	8N4446	VALVE MECHANISM COVER GROUP	17
1	7N9122	ENGINE LIFTING GROUP	16
	- OR -		
1	1W5567	ENGINE LIFTING GROUP	16A
FRONT STRUCTURE			
1	2P9641	FRONT HOUSING GROUP	24
1	2P6529	FRONT HOUSING COVER GROUP	23
1	2P6498	FRONT HOUSING FASTENER GROUP	25
1	2P9642	FRONT TIMING GEAR GROUP	23
1	7N9589	ENGINE TRUNNION GROUP	19
1	8N5585	ENGINE SUPPORT GROUP	18
1	3P103	CRANKSHAFT HUB GROUP	12
REAR STRUCTURE			
1	2P6166	FLYWHEEL HOUSING GROUP	25
1	1P9581	FLYWHEEL GROUP	26
LOWER STRUCTURE			
1	2P6155	OIL PAN GROUP	27
1	2P6189	OIL PAN FASTENER GROUP	26

7N8049 ENGINE ARRANGEMENT—Spectator Sound—80 Decibel—Part 1
3304 Engine Serial No. 7Z1—Up. FOR USE WITH 6G6331 SOUND SUPPRESSION ARRANGEMENT LISTED ON PAGE 168. NOTE: WHEN ORDERING PARTS GIVE ENGINE ARRANGEMENT NUMBER AND SERIAL NUMBER

ÍNDICE

OS ARRANJOS DO MOTOR ESTÃO RELACIONADOS A PARTIR DA PÁGINA 4.

Partes da máquina relativas ao motor (Página 8)

Designação	Página
Arranjo básico do motor	4
Biela e pistão	13
Bloco do motor	8
Cabeçote	15
Caixa das engrenagens de distribuição	24
Caixa do volante	25
Cárter do óleo	27
Comando do ventilador	22
Contrabalanço	14
Cubo do virabrequim	12
Eixo de comando das válvulas	14
Engrenagens de distribuição	23
Extensão do dreno de óleo	27
Mancais principais do virabrequim	10
Mecanismo das válvulas	17
Munhão	19
Olhal de levantamento	16
Peças para montagem da caixa das engrenagens de distribuição	25
Peças para montagem do cabeçote	16
Peças para montagem do cárter	26
Peças para montagem do motor	19
Placa de encosto do virabrequim	13
Polia	20
Suporte do motor — dianteiro	18
Suporte do motor — traseiro	18
Tampa da caixa das engrenagens de distribuição	23
Tampa do bloco do motor	10
Tampa superior do motor	17
Vedador do virabrequim	12
Virabrequim	11
Volante	26

Sistema de lubrificação (Página 28)

Designação	Página
Bocal de enchimento de óleo	29
Bocal de enchimento de óleo e tampa com cadeado	29
Bomba de óleo	33
Bocal de óleo da caixa de mudanças	30
Filtro de óleo	31
Protetor da vareta de nível do óleo	28
Respiro	35
Tampa da vareta de nível do óleo da caixa de mudanças	31
Tampa do bocal de óleo da caixa de mudanças	30
Tubulações de óleo	32
Vareta de nível do óleo	28
Ventilação do cárter	35

Sistema de arrefecimento (Página 36)

Aquecedor d'água do motor	42
Arrefecedor de óleo da caixa de mudanças	39
Arrefecedor de óleo hidráulico	38
Arrefecedor de óleo do motor	40
Bomba d'água	43
Extensão do dreno do radiador	37
Radiador	36
Tampa do radiador com cadeado	37
Termostato	42
Tubos d'água	40
Tublações do arrefecedor de óleo do sistema de transmissão	46
Ventilador insuflador	38

Sistema de admissão e escape (Página 44)

Designação	Página
Coletor de escape	53
Compressor de ar	51
Ejetor de poeira	51
Extensão do tubo de escape	54
Peças para montagem do coletor de escape	54
Purificador de ar	44
Silenciador	52
Tubos de ar	45
Tubos de óleo do turbocompressor	47
Tubulações de ar do compressor	49
Turbocompressor	47

Sistema de combustível e governador (Página 56)

Arranjo para conversão do aquecedor do combustível	68
Bomba de purgação do combustível e filtro	69
Comando do governador	56
Governador e bomba injetora do combustível	58
Tampa do governador	58
Tampa do tanque de combustível com cadeado	76
Tanque de combustível	75
Tubos de drenagem	72
Tubos injetores	74
Tubulações de combustível	70

Sistema elétrico e de partida (Página 77)

Alarme de marcha à ré	103
Alternador	89
Bateria e instalação elétrica	94
Detector do nível d'água	121
Faróis dianteiros	109
Injetor de éter	120
Instalação elétrica — cabine	115
Instalação elétrica — lâmina	117
Instalação elétrica — válvula de controle da lâmina	119
Luz do teto	112
Luzes da cabine	112
Luzes de alarme	104
Motor de arranque	77
Motor de arranque elétrico	78
Refletor dianteiro	111
Refletor traseiro	111
Sinalização de direção	108

Sistema de transmissão (Página 122)

Adaptador entre o motor e a caixa de mudanças	154
Bomba de engrenagens	124
Caixa das correntes	151
Caixa de mudanças	122
Comando final	153
Controle da embreagem	143
Controle das marchas	126
Controle hidráulico das marchas	128
Coroa do diferencial	148
Corrente	152
Engrenagens da caixa de mudanças	140
Engrenagens de transferência	136
Filtro do sistema de transmissão	125
Roda	154
Sistema de transmissão	28
Trava do diferencial	144
Tubulações de óleo do sistema de transmissão	123

Freios (Página 156)

Controle do freio de estacionamento	157
Controle do freio de marcha	160
Freio de marcha	159
Secador de ar	164
Tanque de ar	156

Chassi (Página 165)

Designação	Página
Alternador e suporte do ventilador	171
Arranjo silenciador	168
Barra de tração	191
Caixa da bateria	183
Caixa para ferramentas	182
Capô	172
Chassi dianteiro	185
Chassi traseiro	180
Círculo	186
Degrau	165
Eixo dianteiro	192
Engate articulado	184
Pára-choque traseiro	165
Protetor da árvore de transmissão	182
Protetor do radiador e suporte	166
Protetor inferior	169
Tampa lateral do capô	174

Controles da lâmina, sistema hidráulico e direção (Página 194)

Designação	Página
Bomba e suporte	211
Cilindro de articulação e suporte	241
Cilindro de deslizamento da lâmina e suporte	244
Cilindro de deslocamento lateral e suporte	239
Cilindro de direção e suporte	198
Cilindro de inclinação das rodas e suporte	247
Cilindro de levantamento e suporte	241
Cilindro de tombamento e suporte	244
Cilindro do escarificador e suporte	247
Comando da bomba hidráulica	209
Comando hidráulico	252
Controle da direção	198
Controle da lâmina	230
Controle do pino mestre do deslocamento lateral	205
Extensão do deslocamento lateral	239
Levantamento da lâmina	250
Motor de reversão do círculo	196
Pino mestre do deslocamento lateral	204
Reservatório hidráulico	206
Tampa do reservatório hidráulico com cadeado	208
Tubulações da articulação	224
Tubulações da bomba	220
Tubulações da direção	202
Tubulações de inclinação das rodas	234
Tubulações de levantamento da lâmina	225
Tubulações de tombamento da lâmina	227
Tubulações do deslizamento da lâmina	223
Tubulações do deslocamento lateral	223
Tubulações do escarificador	238
Tubulações do motor de reversão do círculo	194
Válvula e articulações	254
Válvula seguidora da placa de reação da bomba	216

Implementos (Página 276)

Designação	Página
Borda cortante e canto	284
Canto da lâmina sobreposto	285
Escarificador em "V"	281
Extensão da lâmina	280
Lâmina	276
Lâmina de deslizamento longitudinal	279
Lâmina hidráulica (deslizamento longitudinal e tombamento)	279

Cabine, indicadores e acessórios (Página 286)

Designação	Página
Aquecedor da cabine	311
Assento	321

Designação	Página
Assento – suspensão	322
Buzina elétrica	310
Cabine	286
Comando do tacômetro	330
Compressor do refrigerador de ar	319
Consolo do operador	326
Desembaciador do pára-brisa	309
Espelho retrovisor	306
Estrutura contra capotagem – ROPS	287, 288
Forro da cabine	292
Horômetro	325
Indicador da articulação	329
Indicadores	324
Isolamento da cabine	294
Lavador do pára-brisa	301
Limpador do pára-brisa	302
Painel da cabine	298
Painel traseiro da cabine	300
Pára-brisa	299
Porta da cabine	295
Refrigerador de ar da cabine	313
Tampas com cadeado	328

Equipamento para manutenção e diversos (Página 331)

Designação	Página
Decalcomanias	334
Especificações	339
Ferramentas	332
Inflação dos pneus	331
Jogos de juntas	33

		CONSISTS OF:	PAGE
LUBRICATION SYSTEM			
1	2P6491	OIL LEVEL GAUGE GROUP	28
1	2P1784	ENGINE OIL PUMP GROUP	33
1	2P6512	ENGINE OIL LINES GROUP	32
1	2P6475	OIL FILTER GROUP	31
1	2P6855	OIL FILLER GROUP	29
1	1P4244	BREATHER GROUP	35
COOLING SYSTEM			
1	7N6206	WATER PUMP GROUP	43
1	7N7211	WATER LINES GROUP	40
	- OR -		
1	1N4219	WATER LINES GROUP	40A
1	2P6215	ENGINE OIL COOLER GROUP	40
1	2P6508	TRANSMISSION OIL COOLER GROUP	39
INTAKE AND EXHAUST SYSTEM			
1	7N4144	AIR LINES GROUP	45
1	2P6571	EXHAUST MANIFOLD GROUP	53
1	1N4579	EXHAUST MANIFOLD FASTENER GROUP	55
1	7N4650	TURBOCHARGER GROUP	47
1	4N3923	TURBOCHARGER OIL LINES GROUP	47
1	2P9613	AIR COMPRESSOR GROUP	51
	- OR -		
1	7N9912	AIR COMPRESSOR GROUP	51B
1	4N8056	AIR COMPRESSOR LINES GROUP	49
	- OR -		
1	7N9919	AIR COMPRESSOR LINES GROUP	49B
FUEL SYSTEM AND GOVERNOR			
1	8N6838	FUEL PRIMING PUMP AND FILTER GROUP	69
	- OR -		
1	8N4454	FUEL PRIMING PUMP AND FILTER GROUP	69B
1	7N1645	FUEL INJECTION LINES GROUP	74
1	4N4510	GOVERNOR COVER GROUP	58
1	7N6949	GOVERNOR AND FUEL INJECTION PUMP GROUP	59
1	7N3651	DRAIN LINES GROUP	72

NOTE: REFER TO INDEX FOR PAGE LOCATION OF GASKET KITS

7N8049 ENGINE ARRANGEMENT—Spectator Sound—80 Decibel—Part 2
3304 Engine Serial No. 7Z1—Up. FOR USE WITH 6G6331 SOUND SUPPRESSION ARRANGEMENT LISTED ON PAGE 168. NOTE: WHEN ORDERING PARTS GIVE ENGINE ARRANGEMENT NUMBER AND SERIAL NUMBER

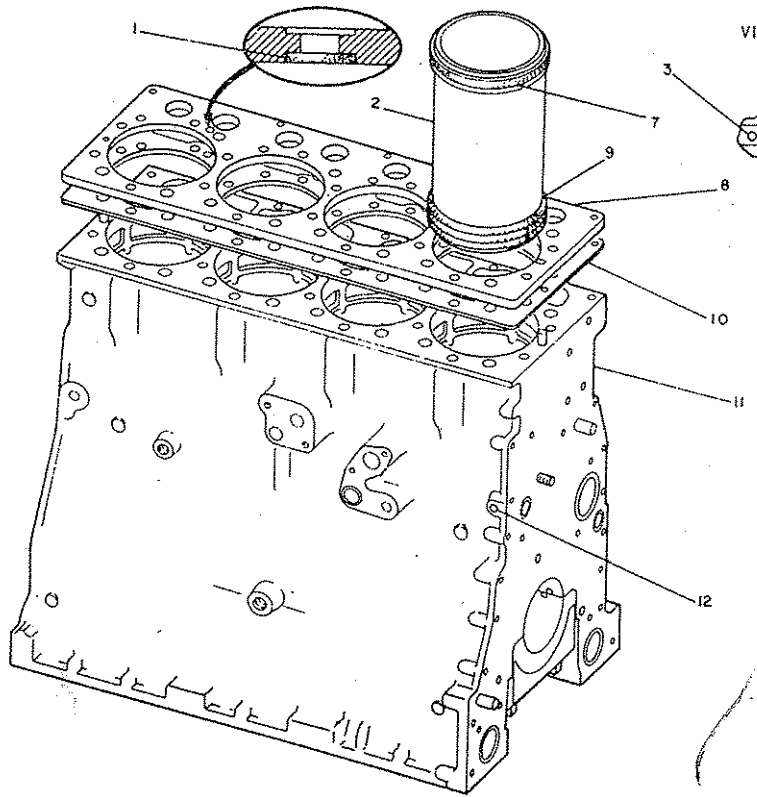

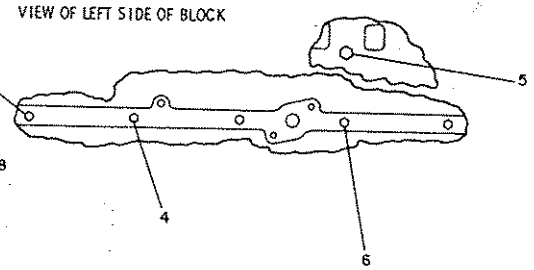

REF NO	PART NUMBER	DESCRIPTION	QTY
1	3S5496	SEAL	1
2	2P8889	LINER	4
3	7H3171	PLUG	1
4	3J5389	PLUG	2
5	8M9307	PLUG	1
	6F7062	GASKET	1
6	5M6213	PLUG	2
7	8N5312	BAND	4
8	7N8021	PLATE	1
9	5S6670	SEAL	12
10	7N8020	GASKET	1
11	6N8127	BLOCK ASSEM. (Separate Illustration)	1
12	5M6214	PLUG	1

221852

7N8014 CYLINDER BLOCK GROUP
Serial No. 7Z1 to 7Z865 inclusive
6N8127 Block parts are shown on Page 9

6N8127 CYLINDER BLOCK ASSEMBLY
Serial No. 7Z1 to 7Z865 inclusive
Part of 7N8014 Cylinder Block Group shown on Page 8

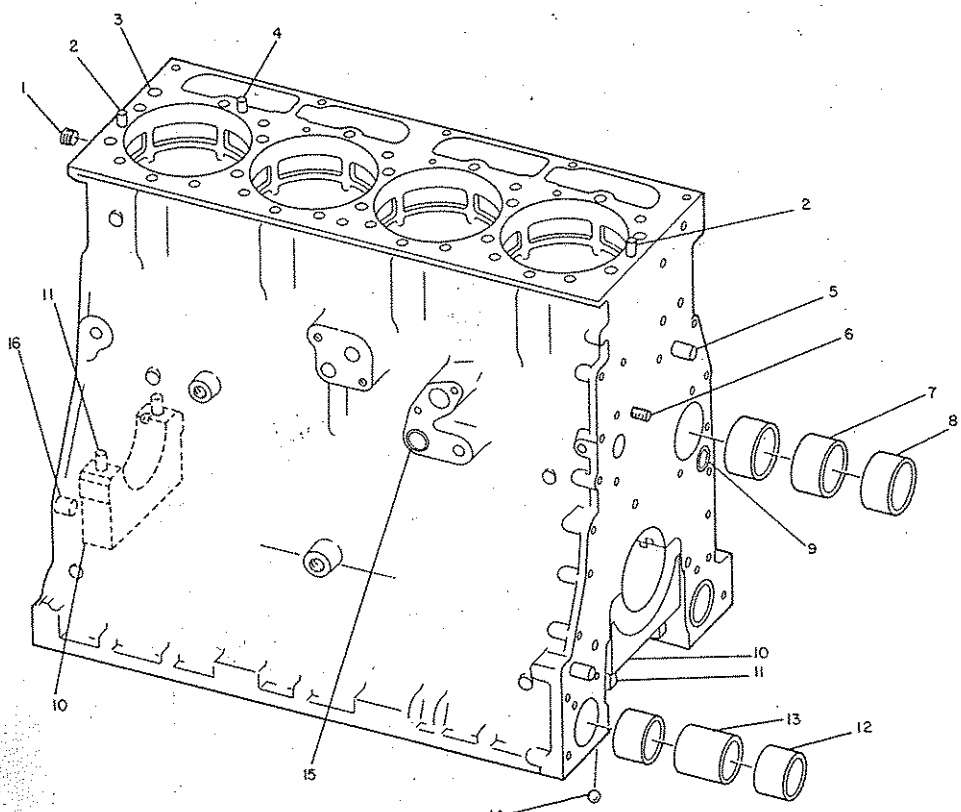

REF. NO.	PART NUMBER	DESCRIPTION	QTY
1	2B858	PLUG	1
2	8K1207	DOWEL	2
3	5B7652	DOWEL	2
4	1S9540	DOWEL	1
5	8B6349	DOWEL	2
6	5S8462	STUD	1
7	7M4046	BEARING	2
C 8	8N4110	BEARING	1
9	4B3938	PLUG	2
10	6N8003	CAP	5
11	7S3224	BOLT	10
	2S5658	WASHER	10
12	5S6419	BEARING	4
13	5S6420	BEARING	2
14	4B9782	BALL	5
15	4B5387	PLUG	1
16	2A3798	DOWEL	2

C INDICATES CHANGE

227964

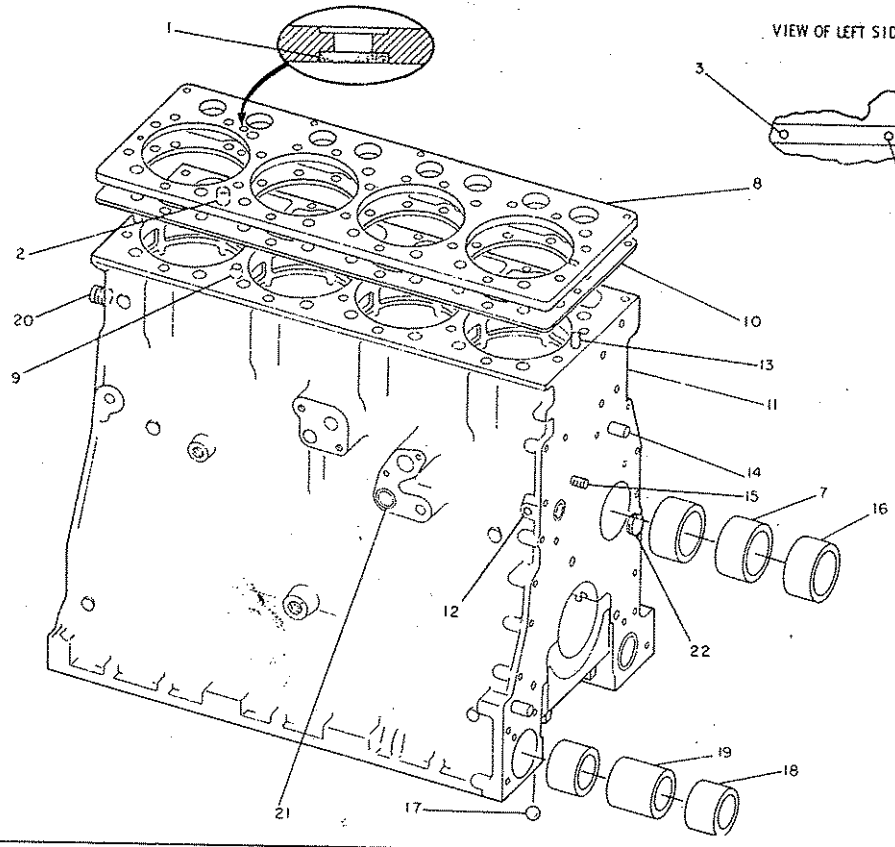

REF. NO.	PART NUMBER	DESCRIPTION	QTY.
1	3S5496	SEAL	1
2	1S9540	DOWEL	1
3	7H3171	PLUG	1
4	3J5389	PLUG	2
5	8M9307	PLUG	1
	6F7062	WASHER	1
6	5M6213	PLUG	2
7	7M4046	BEARING	2
8	7N8021	PLATE	1
9	5B7652	DOWEL	2
10	7N8020	GASKET	1
C 11	7N6552	BLOCK ASSEM. (Separate Illustration)	1
12	5M6214	PLUG	1
13	8K1207	DOWEL	2
14	8B6349	DOWEL	2
15	5S8462	STUD	1
16	8N4110	BEARING	1
17	4B9782	BALL	5
18	5S6419	BEARING	4
19	5S6420	BEARING	2
C 20	3J6019	PLUG	1
21	4B5387	PLUG	1
C 22	4B3938	PLUG	1

C INDICATES CHANGE

306650

7N8014 CYLINDER BLOCK GROUP
Engine Serial No. 7Z866—Up
7N6552 Block parts are shown on Page 9A-1

7N6552 CYLINDER BLOCK ASSEMBLY
For Field Replacement order 1N3574 shown on Pages 9A-2 & 9A-3
Engine Serial No. 7Z866—Up. Part of 7N8014 Cylinder Block Group shown on Page 9A

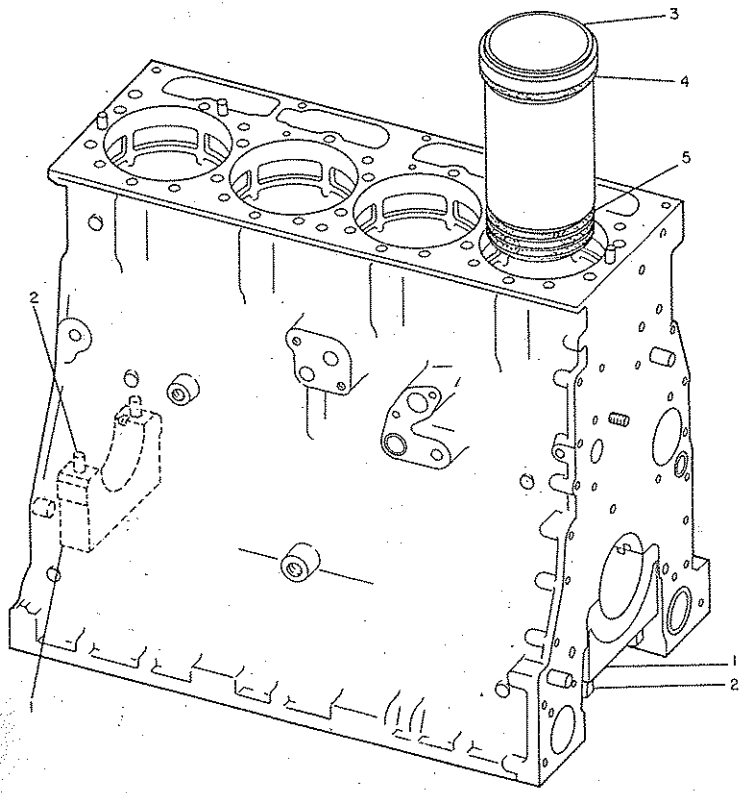

REF. NO.	PART NUMBER	DESCRIPTION	QTY.
1	6N8003	CAP	5
2	7S3224	BOLT	10
	2S5658	WASHER	10
3	2P8889	LINER	4
4	9L5854	BAND	4
5	5S6670	SEAL	12

232391

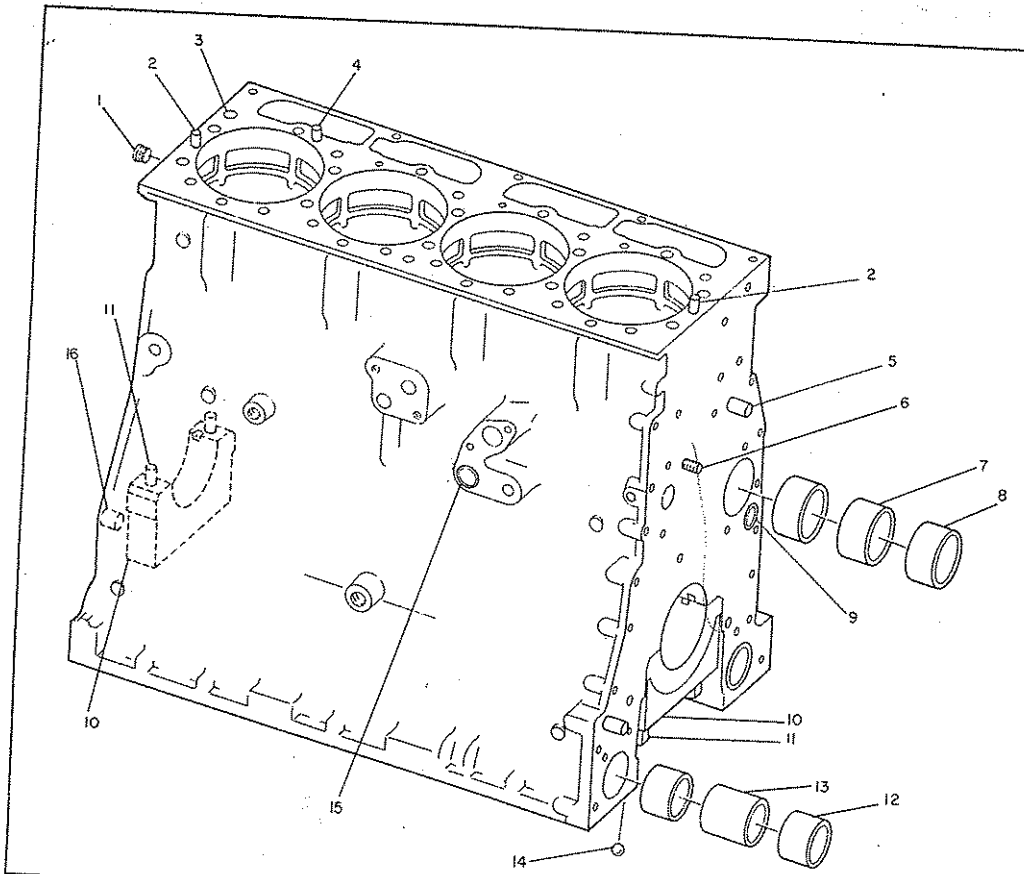

REF. NO.	PART NUMBER	DESCRIPTION	QTY
1	28858	PLUG	1
2	8KI207	PIN	2
3	5B7652	DOWEL	2
4	1S9540	DOWEL	2
5	8B6349	DOWEL	1
6	5S8462	STUD	2
7	7M4046	BEARING	1
8	4N4110	BEARING	2
9	4B3938	PLUG	1
10	6N8003	CAP	2
11	7S3224	BOLT	5
	2S5658	WASHER	10
12	5S6419	BEARING	10
13	5S6420	BEARING	4
14	4B9782	BALL	2
15	4B5387	PLUG	5
16	2A3798	DOWEL	1
			2

1N3574 CYLINDER BLOCK GROUP—Type 1
Serial No. 7Z866—Up
Provides Field Replacement for 7N6552 shown on Page 9A-1

1N3574 CYLINDER BLOCK GROUP—Type 2
Serial No. 7Z866—Up
Provides Field Replacement for 7N6552 shown on Page 9A-1

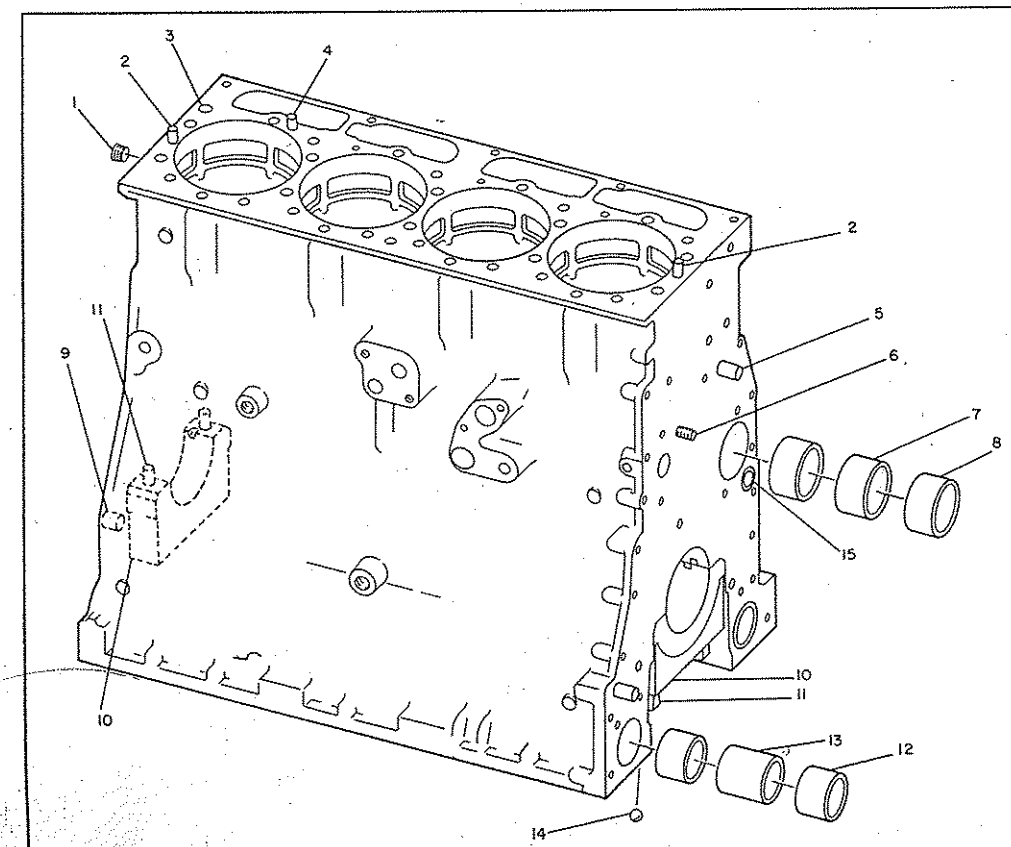

	REF NO	PART NUMBER	DESCRIPTION	QTY
C	1	3J6019	PLUG	1
	2	8K1207	PIN	2
	3	5B7652	DOWEL	2
	4	1S9540	DOWEL	1
	5	8B6349	DOWEL	2
	6	5S8462	STUD	1
	7	7M4046	BEARING	2
	8	8N4110	BEARING	1
	9	2A3798	DOWEL	2
	10	6N8003	CAP	5
	11	7S3224	BOLT	10
		2S5658	WASHER	10
	12	5S6419	BEARING	4
	13	5S6420	BEARING	2
	14	4B9782	BALL	5
C	15	4B3938	PLUG	1

C INDICATES CHANGE

181965

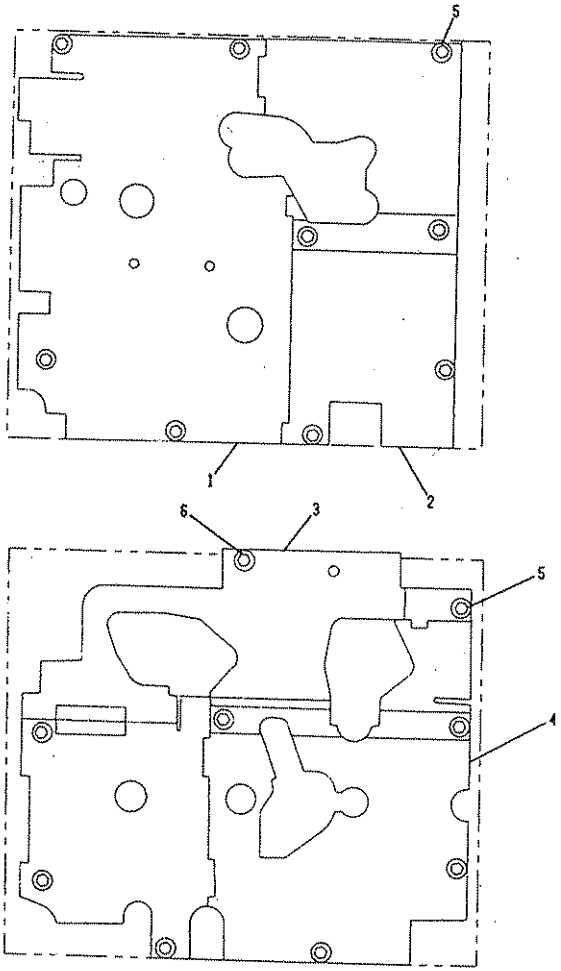

NOTE	REF NO	PART NUMBER	QTY	DESCRIPTION
	1	1W6508	1	PANEL ASSEM.(R.H.)
	2	1W6510	1	PANEL ASSEM.(R.H.)
	3	1W6503	1	PANEL ASSEM.(L.H.)
	4	1W6507	1	PANEL ASSEM.(L.H.)
	5	9N869	18	BOLT
		4B3388	18	WASHER
		4N9915	18	GROMMET ASSEM.
B	6	9N869	1	BOLT
		4B3388	1	WASHER
		4N9915	1	GROMMET ASSEM.

B-USE AS REQUIRED

303434

1W6524 SOUND SUPPRESSION PANEL GROUP

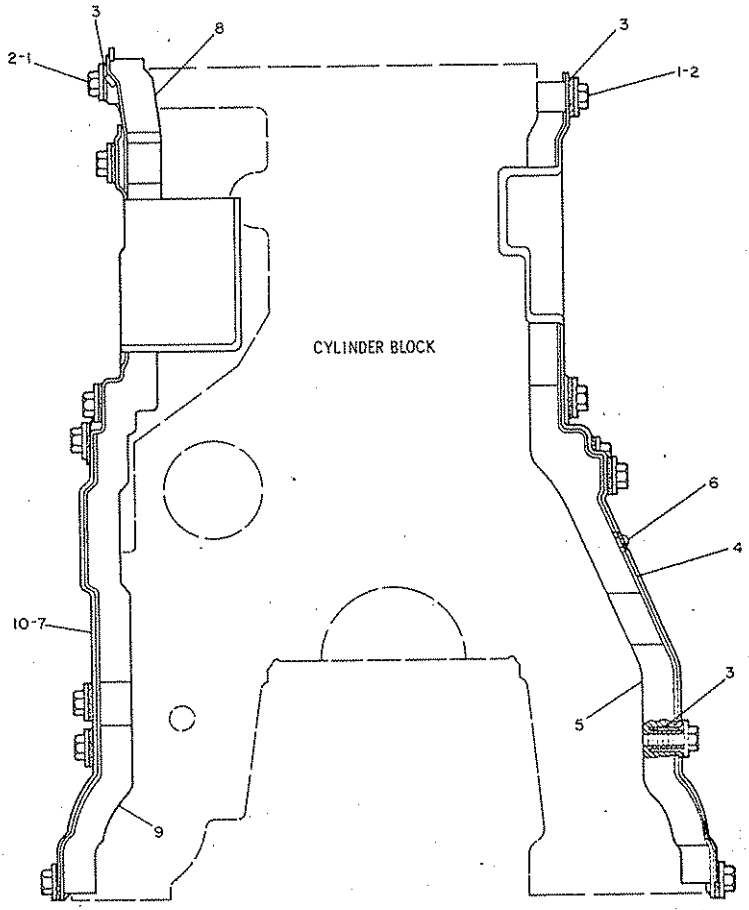

REF. NO.	PART NUMBER	DESCRIPTION	QTY.
1	4B3388	BOLT	19
2	9N869	WASHER	19
3	4N9915	GROMMET ASSEM.	19
4	7N673	PANEL ASSEM. -----(R. H.)-------- (Includes)	1
5	1N3090	BLANKET	1
6	8K1115	BUMPER	2
7	7N723	PANEL ASSEM. -----(L. H.)-------- (Includes)	1
8	1N3091	BLANKET	1
9	1N3092	BLANKET	1
10	8K1115	BUMPER	2

177109

8N9465 SOUND SUPPRESSION PANEL GROUP—Cylinder Block
Also part of 6G6331 Sound Suppression Arrangement listed on Page 168

CATERPILLAR 120G MOTOR GRADER

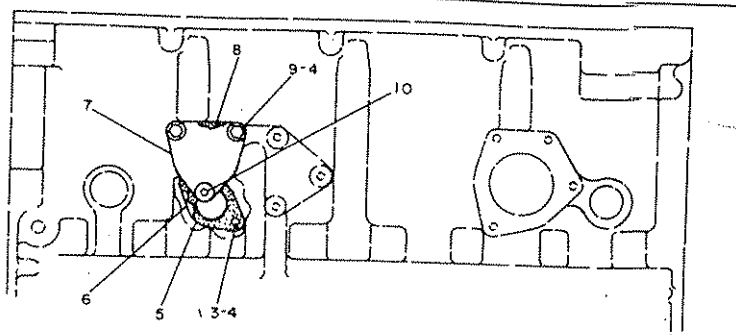

REF NO.	PART NUMBER	DESCRIPTION	QTY
1	4B3938	PLUG	1
2	2A3798	DOWEL	2
3	1A2029	BOLT	2
4	5M2894	WASHER	4
5	4M2250	GASKET	1
6	5M1903	COVER	1
7	8L8662	COVER	1
8	5S8055	GASKET	1
9	L1351	BOLT	2
10	8M3267	SCREW	1

7N1088 CYLINDER BLOCK COVER GROUP
Engine Serial No. 7Z1 to 7Z5607 inclusive

CYLINDER BLOCK NOT REBORED			
CRANKSHAFT GROUND FOR UNDERSIZE BEARING I.D. OF	.010 IN.	.020 IN.	.030 IN.
QTY. 5	4S8881	4S8883	4S8885

CYLINDER BLOCK REBORED			
CRANKSHAFT GROUND FOR UNDERSIZE BEARING I.D. OF	0 (STANDARD)	.010 IN.	
QTY. 5	6N3823	6N3822	

O.D. --OUTSIDE DIAMETER
I.D. --INSIDE DIAMETER

CRANKSHAFT BEARING REPLACEMENTS

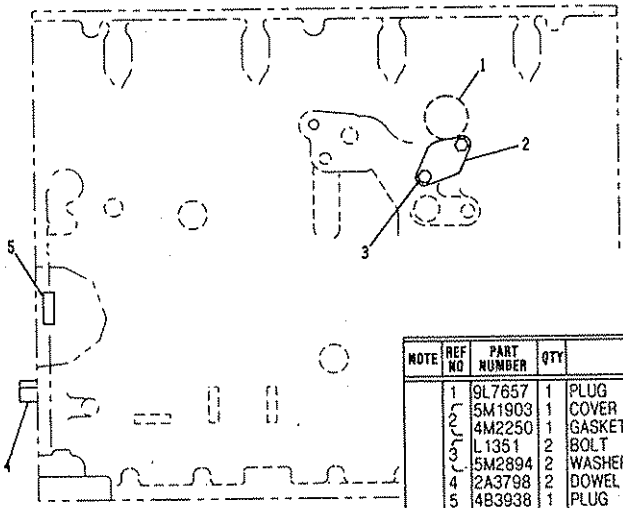

NOTE	REF NO	PART NUMBER	QTY	DESCRIPTION
	1	9L7657	1	PLUG
	2	5M1903	1	COVER
		4M2250	1	GASKET
	3	L1351	2	BOLT
		5M2894	2	WASHER
	4	2A3798	2	DOWEL
	5	4B3938	1	PLUG

* 303502

2W102 CYLINDER BLOCK COVER GROUP
Engine Serial No. 7Z5608—Up

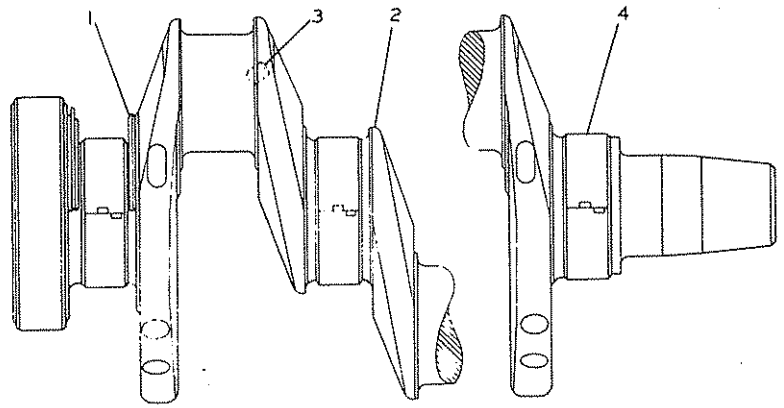

REF. NO	PART NUMBER	DESCRIPTION	QTY
1	7N9342	PLATE	2
2	4N7695	CRANKSHAFT ASSEM. (Includes)	1
3	9F2247	PLUG	4
4	3S9730	BEARING	5

222680

6N8080 CRANKSHAFT GROUP
For Field Replacement of 4N7695 Crankshaft Assembly order 4N7692

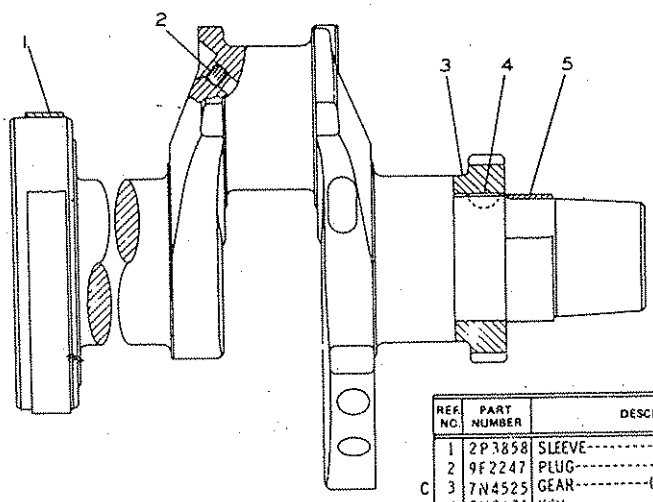

REF. NO.	PART NUMBER	DESCRIPTION	QTY
1	2P3858	SLEEVE	1
2	9F2247	PLUG	4
C 3	7N4525	GEAR ----------(40 teeth)----------	1
4	5H2671	KEY	1
5	2P3859	SLEEVE	1

GMG02327-FORM---------- 1
(Installing Crankshafts for Field Replacement)

C INDICATES CHANGE

224348

4N7692 CRANKSHAFT ASSEMBLY—Field Installation

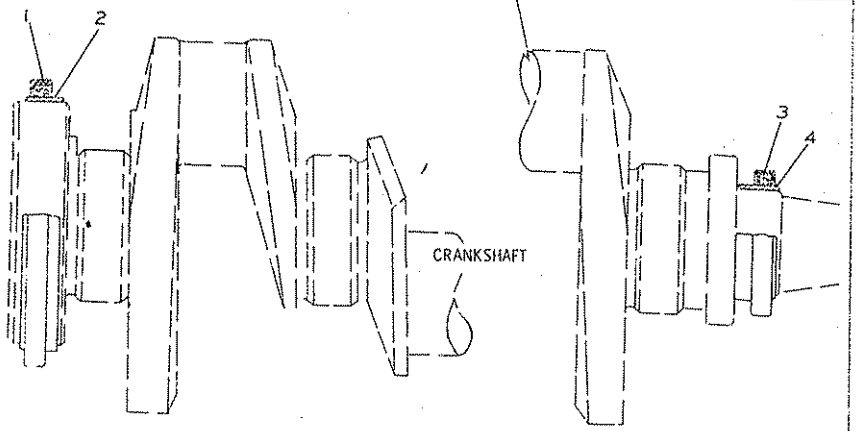

	REF. NO.	PART NUMBER	DESCRIPTION	QTY.
C	1	1N3216	SEAL GROUP	1
			(Includes)	
		9S3111	SEAL	1
	2	2P3858	SLEEVE	1

REF. NO.	PART NUMBER	DESCRIPTION	QTY.
3	5S6296	SEAL	1
4	2P3859	SLEEVE	1

C INDICATES CHANGE

228583

2P6224 CRANKSHAFT SEAL GROUP

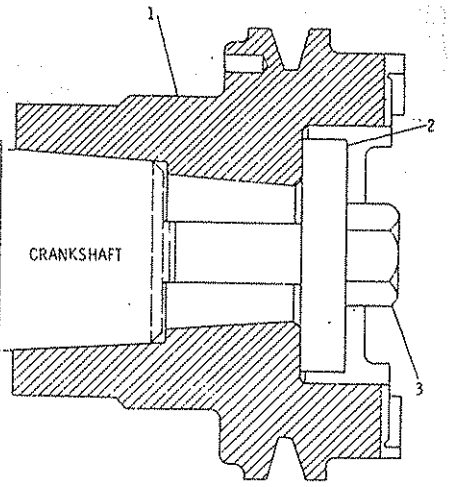

	REF. NO	PART NUMBER	DESCRIPTION	QTY
C	1	3P100	HUB	1
C	2	8N794	WASHER	1
	3	785163	BOLT	1

C INDICATES CHANGE

230280

3P103 CRANKSHAFT HUB GROUP

1	7N9343	THRUST PLATE
1	.....	FORM SMHS7060

CRANKSHAFT SERVICE THRUST PLATE—Field Installation
Provides a Thrust Plate to be used in the event a "Wide" Thrust Journal Crankshaft is installed in a Spacer Plate Cylinder Block

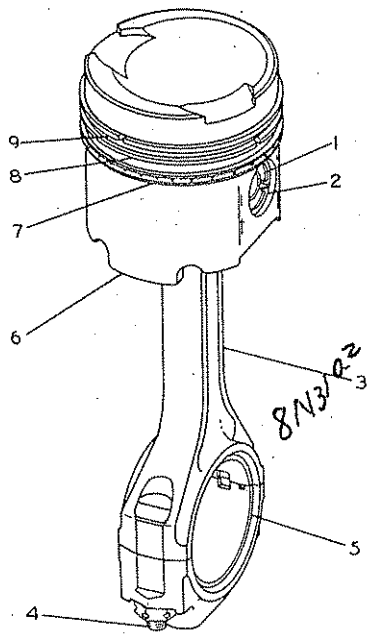

REF NO.	PART NUMBER	DESCRIPTION	QTY.
1	7N9805	PIN	1
2	1S9543	RETAINER	2
3	8N1721	ROD ASSEM. (Includes)	1
	8N1849	BEARING	1
4	1P9956	BOLT	2
	5S6348	NUT	2
C	8N8219	BEARING-------(Standard)--------	1
	2S502	BEARING, .254mm(.01 in.)undersize	1
5	2S503	BEARING, .508mm(.02 in.)undersize	1
	7M7826	BEARING, .762mm(.03 in.)undersize	1
6	8N2533	PISTON GROUP (Includes)	1
7	9L6934	RING-----(Oil)----------	1
8	9L6933	RING---(Intermediate)--------	1
9	9L6932	RING-----(Top)----------	1
	9L6935	RING GROUP (Consists of Complete Set of Rings For One Piston)	1

C INDICATES CHANGE

233029

8N2531 CONNECTING ROD AND PISTON GROUP—4 Required
Engine Serial No. 7Z1 to 7Z2123 Inclusive

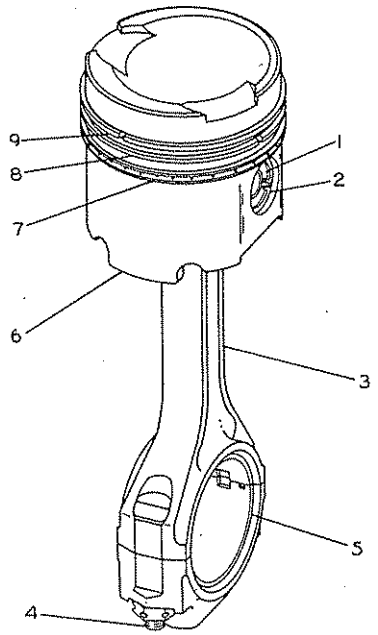

REF. NO.	PART NUMBER	DESCRIPTION	QTY.
1	7N9805	PIN	1
2	1S9543	RETAINER	2
3	8N1721	ROD ASSEM. (Includes)	1
	8N1849	BEARING	1
4	1P9956	BOLT	2
	5S6348	NUT	2
5	8N8219	BEARING-(Standard)	1
	2S502	BEARING-(.01 in.)Undersize	1
	2S503	BEARING-(.02 in.)Undersize	1
	7M7826	BEARING-(.03 in.)Undersize	1
6	1W6757	BODY ASSEM.	1
7	9L6934	RING-(oil)	1
8	5S6750	RING-(intermediate)	1
9	9S3029	RING-(top)	1

234318

1W6588 CONNECTING ROD AND PISTON GROUP—4 Required
Engine Serial No. 7Z2124—Up

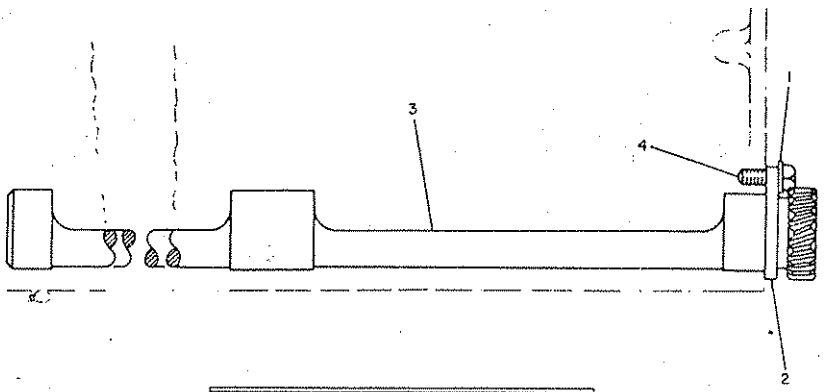

NOTE	REF NO	PART NUMBER	QTY	DESCRIPTION
C	1	5M2894	4	WASHER
	2	4S6417	2	PLATE
C	3	4N7977	1	SHAFT ASSEM. (R.H.)
C		4N7978	1	SHAFT ASSEM. (L.H.) (20 TEETH)
	4	S1594	4	BOLT
		1N8354	2	LOCK
				-OR-
C		308535	4	BOLT

C INDICATES CHANGE

309021

5S6425 BALANCER GROUP

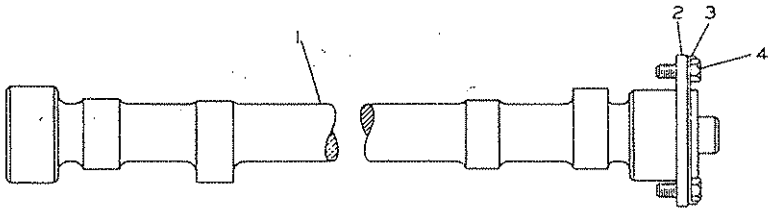

	REF NO.	PART NUMBER	DESCRIPTION	QTY
C	1	8N4111	CAMSHAFT	1
	2	7S2204	WASHER	1
	3	8S1491	LOCK	1
	4	S509	BOLT	2

C INDICATES CHANGE

227965

2P6201 CAMSHAFT GROUP

7N8874 CYLINDER HEAD GROUP

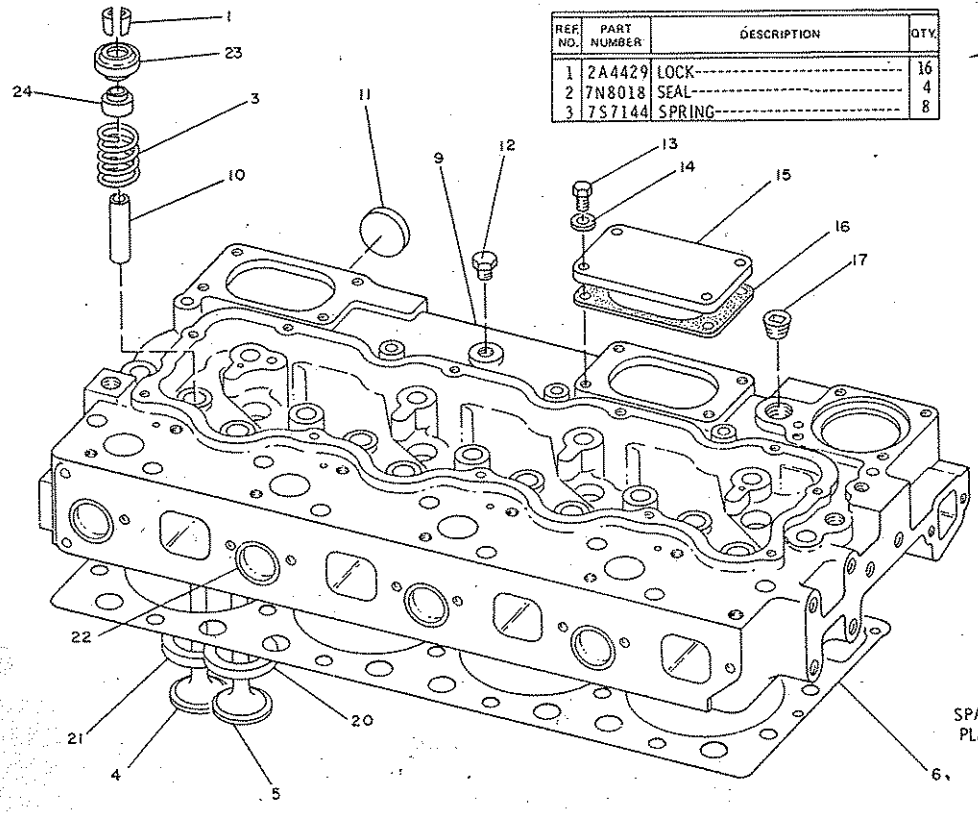

REF. NO.	PART NUMBER	DESCRIPTION	QTY.
1	2A4429	LOCK	16
2	7N8018	SEAL	4
3	7S7144	SPRING	8

	4	6N9915	VALVE--------(intake)----------	4
	5	6N9916	VALVE--------(exhaust)----------	4
	6	7N8022	GASKET----------	1
	7	3S5496	SEAL----------	1
	8	7N8025	SEAL----------	12
	9	1N4304	HEAD ASSEM. ----------	1
			(Includes)	
	10	2P1262	GUIDE----------	8
	11	3S8312	PLUG----------	4
	12	5M6213	PLUG----------	1
	13	S1594	BOLT----------	4
	14	5M2894	WASHER----------	4
	15	1P6367	COVER----------	1
	16	5S6735	GASKET----------	1
	17	2B858	PLUG----------	3
	18	3B623	PLUG----------	4
	19	1S3062	DIRECTOR----------	12
	20	8N435	INSERT-------(exhaust)-------	4
	21	7N4448	INSERT-------(intake)---------	4
	22	3P1896	PLUG----------	8
		1W5300	ROTOCOIL ASSEM. ----------	8
C	23		(Each Includes)	
		8N7782	ROTOCOIL ASSEM. ----------	1
C	24	6N7174	SHIELD----------	1

C INDICATES CHANGE

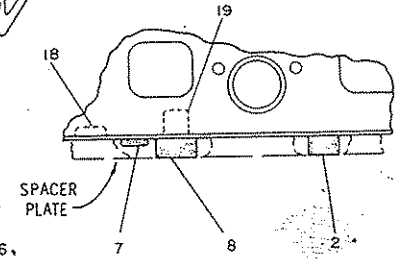

182339

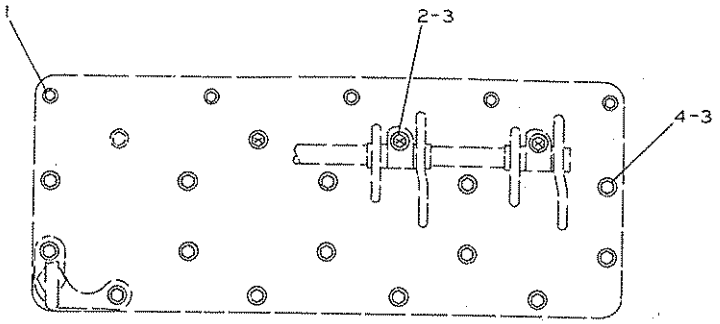

	REF. NO.	PART NUMBER	DESCRIPTION	QTY.
	1	5B9603	BOLT---------127mm(5 in.) long---	5
C	2	1B7709	BOLT---------203mm(8 in.) long---	3
C	3	2S736	WASHER----------	17
	4	1D4595	BOLT-----152mm(6 in.) long-----	14

C INDICATES CHANGE

227966

7N9534 CYLINDER HEAD FASTENER GROUP

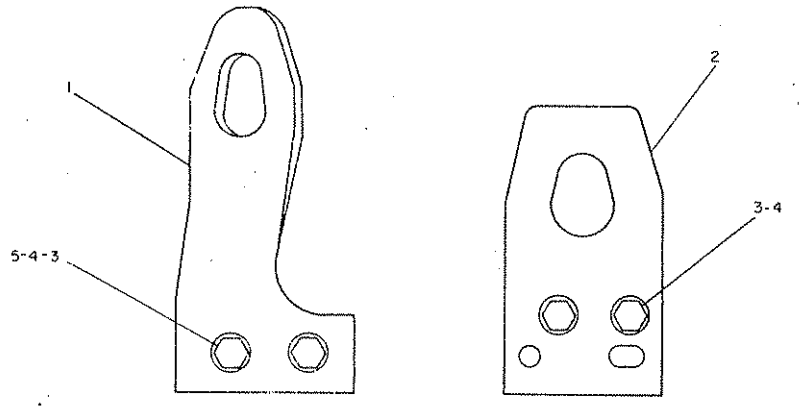

MOUNTED TO FRONT OF CYLINDER HEAD

MOUNTED TO REAR OF CYLINDER HEAD

	REF. NO.	PART NUMBER	DESCRIPTION	QTY
	1	7N9123	PLATE----------	1
	2	6N7650	PLATE----------	1
C	3	4B3823	BOLT----------	4
C	4	5P8245	WASHER----25.5 mm(1 in.) thick	4
	5	7M1026	WASHER----1.5 mm(.060 in.) thick	2

C INDICATES CHANGE

226950

7N9122 ENGINE LIFTING GROUP

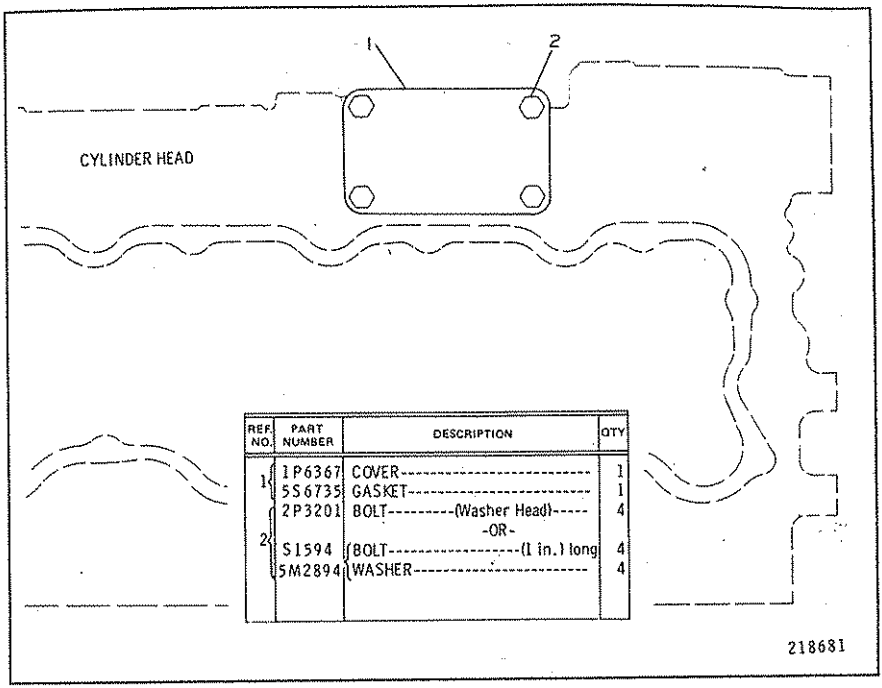

REF. NO.	PART NUMBER	DESCRIPTION	QTY
1	1P6367	COVER	1
	5S6735	GASKET	1
	2P3201	BOLT-(Washer Head)	4
		-OR-	
2	S1594	BOLT-(1 in.) long	4
	5M2894	WASHER	4

2P6530 CYLINDER HEAD COVER GROUP

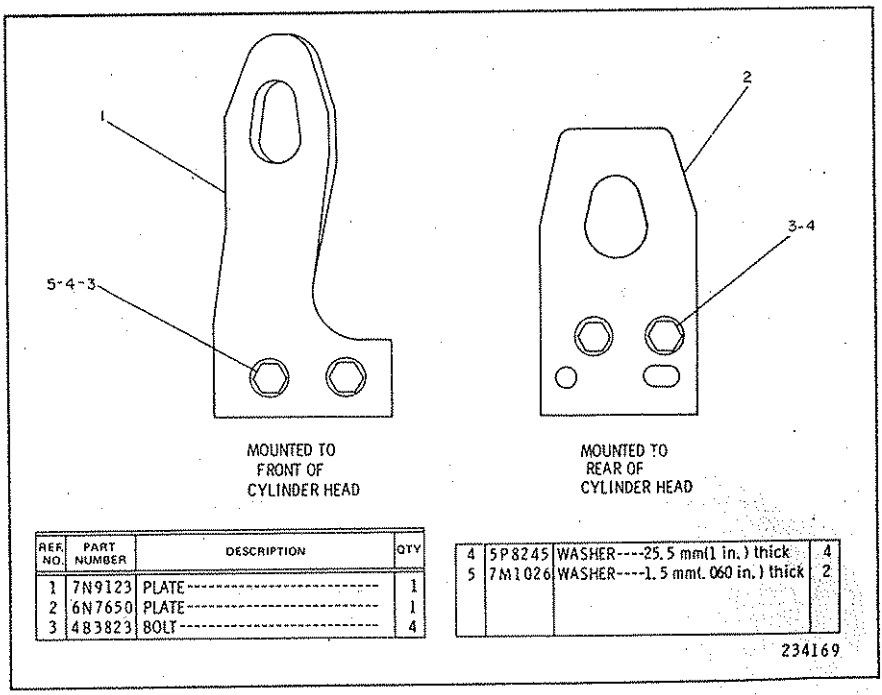

REF. NO.	PART NUMBER	DESCRIPTION	QTY
1	7N9123	PLATE	1
2	6N7650	PLATE	1
3	4B3823	BOLT	4
4	5P8245	WASHER----25.5 mm(1 in.) thick	4
5	7M1026	WASHER----1.5 mm(.060 in.) thick	2

1W5567 ENGINE LIFTING GROUP
Engine Serial No. 7Z928 to 7Z1838 inclusive

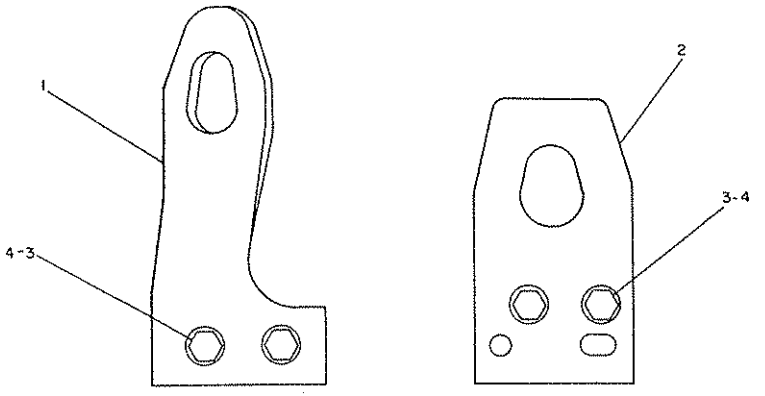

	REF. NO.	PART NUMBER	DESCRIPTION	QTY
C	1	8N6827	PLATE	1
C	2	8N8721	PLATE	1
C	3	6V1999	BOLT	4
C	4	8D5054	WASHER	4

C INDICATES CHANGE

233152

7N9122 ENGINE LIFTING GROUP
Engine Serial No. 7Z1839—Up

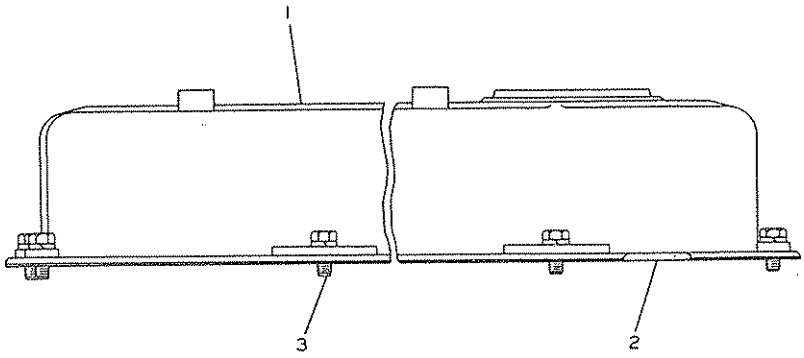

REF. NO.	PART NUMBER	DESCRIPTION	QTY
1	8N264	COVER ASSEM.	1
2	8S1606	GASKET	1
3	S1617	BOLT	11
	3B4505	LOCKWASHER	11

228526

8N4446 VALVE MECHANISM COVER GROUP

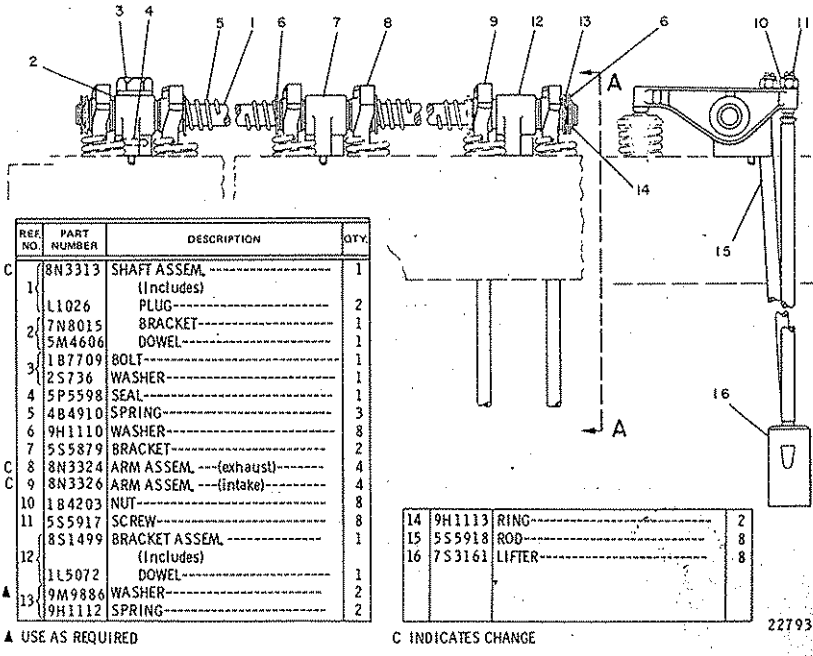

	REF. NO.	PART NUMBER	DESCRIPTION	QTY.
C	1	8N3313	SHAFT ASSEM. (Includes)	1
		L1026	PLUG	2
	2	7N8015	BRACKET	1
		5M4606	DOWEL	1
	3	1B7709	BOLT	1
		2S736	WASHER	1
	4	5P5598	SEAL	1
	5	4B4910	SPRING	3
	6	9H1110	WASHER	8
	7	5S5879	BRACKET	2
C	8	8N3324	ARM ASSEM. --(exhaust)	4
C	9	8N3326	ARM ASSEM. --(intake)	4
	10	1B4203	NUT	8
	11	5S5917	SCREW	8
	12	8S1499	BRACKET ASSEM. (Includes)	1
		1L5072	DOWEL	1
▲	13	9M9886	WASHER	2
		9H1112	SPRING	2
	14	9H1113	RING	2
	15	5S5918	ROD	8
	16	7S3161	LIFTER	8

▲ USE AS REQUIRED

C INDICATES CHANGE

227938

7N8024 VALVE MECHANISM GROUP

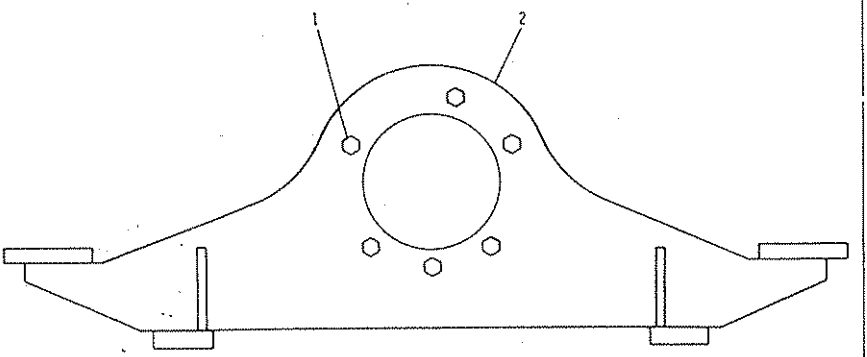

REF NO	PART NUMBER	DESCRIPTION	QTY
1	S1585	BOLT	6
	5P8245	WASHER	6
2	8N5600	SUPPORT ASSEM.	1

225431

8N5585 ENGINE SUPPORT GROUP—Front

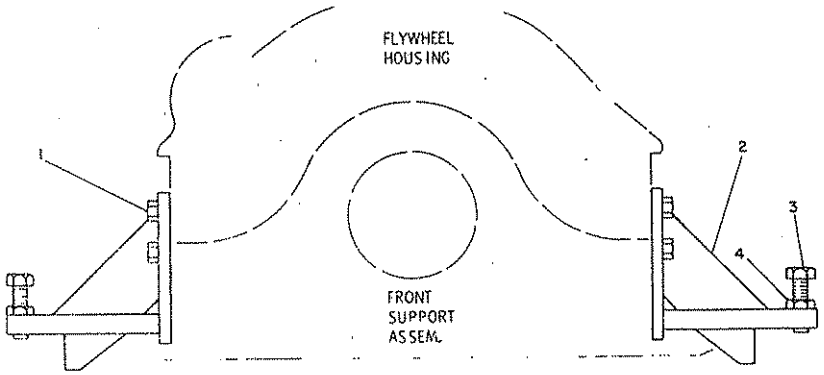

REF NO.	PART NUMBER	DESCRIPTION	QTY.
1	S1595	BOLT	8
2	3P132	SUPPORT ASSEM.	2
		(Includes)	
	2J7716	SPACER	1
3	8H6508	BOLT	2
4	1D5118	NUT	2

170813

7N4141 ENGINE SUPPORT GROUP—Rear

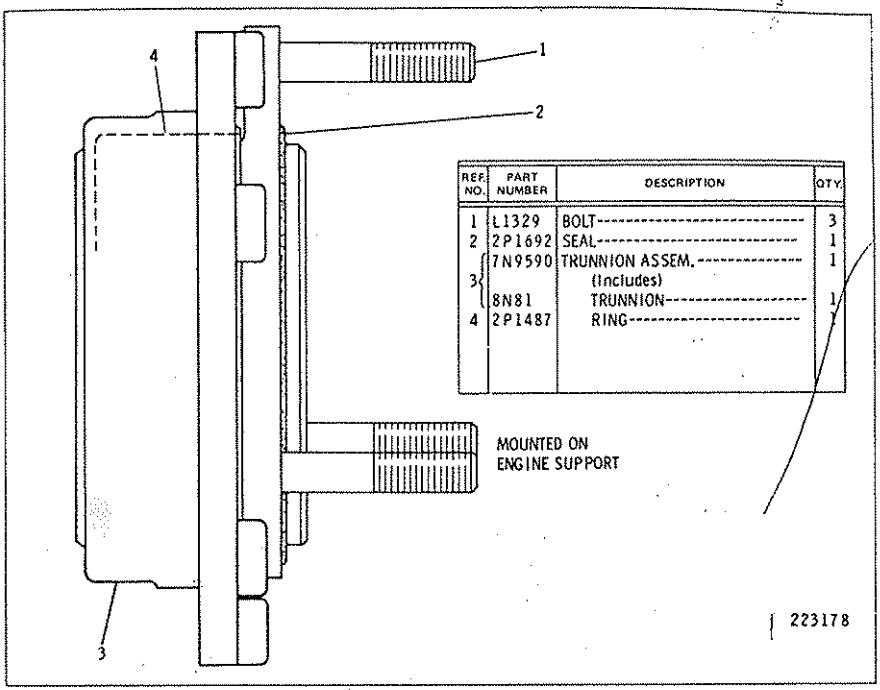

REF. NO.	PART NUMBER	DESCRIPTION	QTY.
1	L1329	BOLT	3
2	2P1692	SEAL	1
3	7N9590	TRUNNION ASSEM. (Includes)	1
	8N81	TRUNNION	1
4	2P1487	RING	1

7N9589 TRUNNION GROUP

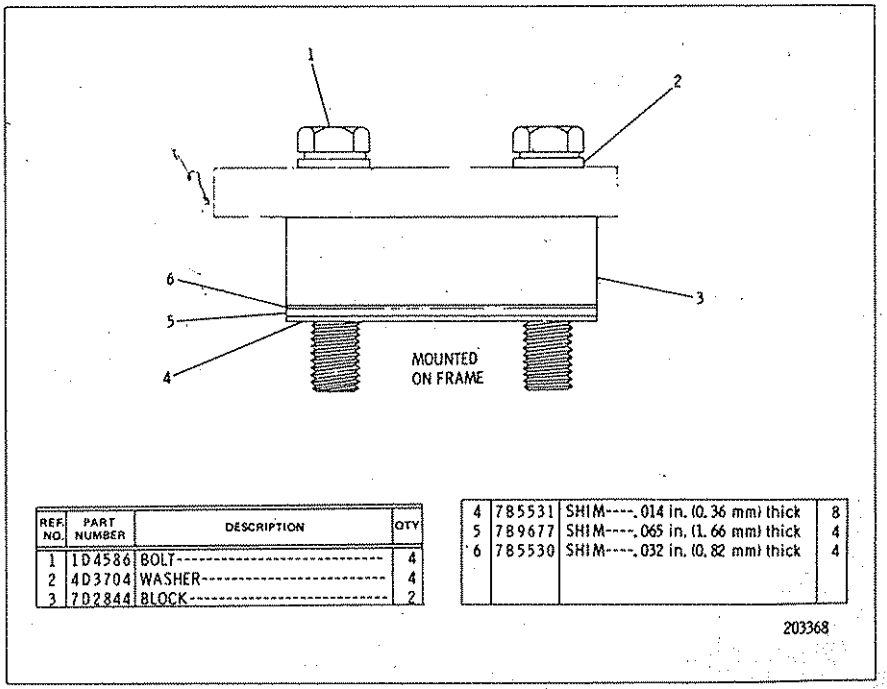

REF. NO.	PART NUMBER	DESCRIPTION	QTY
1	1D4586	BOLT	4
2	4D3704	WASHER	4
3	7D2844	BLOCK	2
4	7B5531	SHIM----.014 in. (0.36 mm) thick	8
5	7B9677	SHIM----.065 in. (1.66 mm) thick	4
6	7B5530	SHIM----.032 in. (0.82 mm) thick	4

3P64 ENGINE MOUNTING HARDWARE GROUP

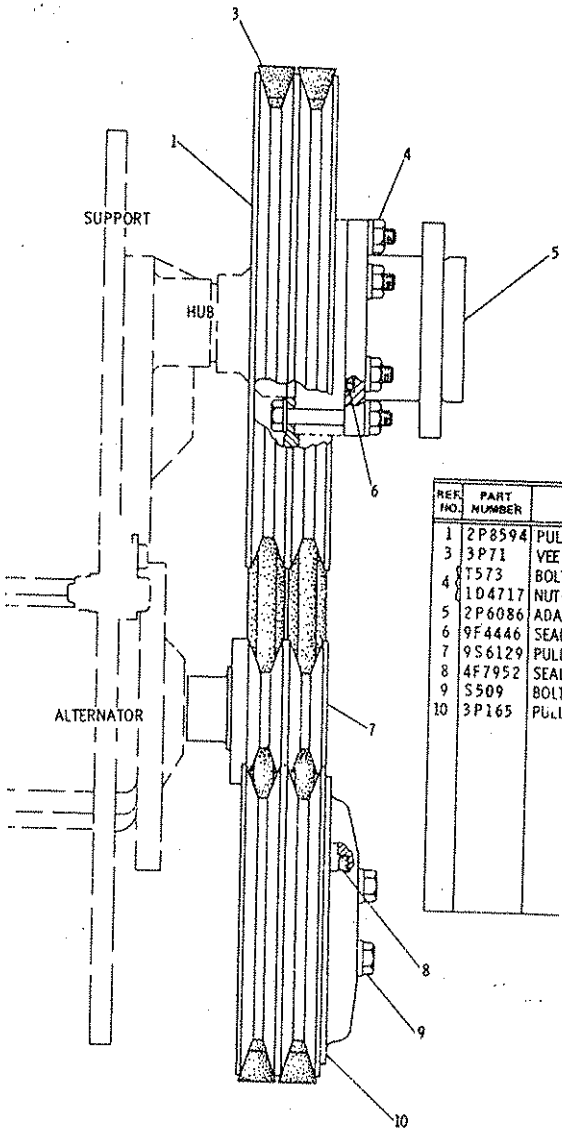

REF. NO.	PART NUMBER	DESCRIPTION	QTY
1	2P8594	PULLEY	1
3	3P71	VEE BELT SET-------(2 belt)	1
4	T573	BOLT	6
	1D4717	NUT	6
5	2P6086	ADAPTER	1
6	9F4446	SEAL	1
7	9S6129	PULLEY	1
8	4F7952	SEAL	1
9	S509	BOLT	4
10	3P165	PULLEY	1

3P67 PULLEY GROUP
Serial No. 87V5275 to 87V5576 inclusive

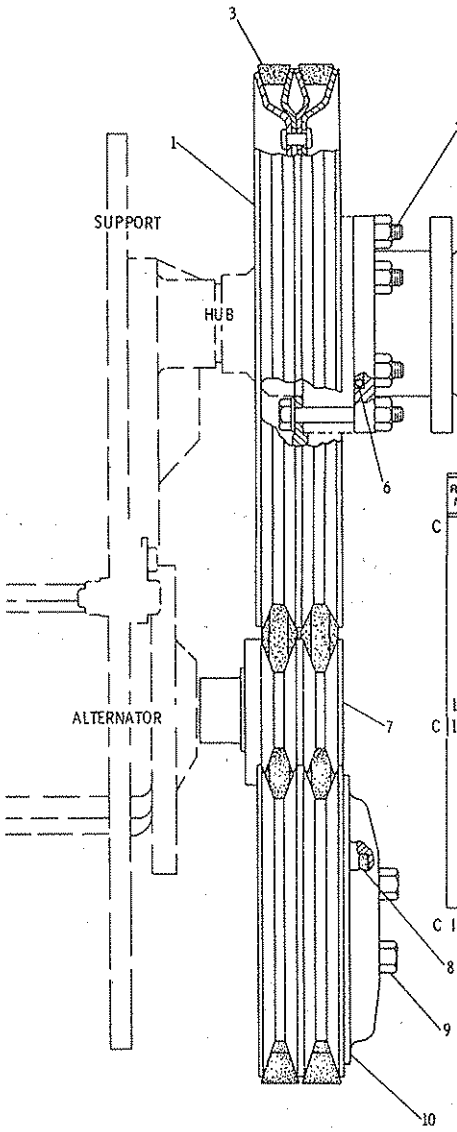

	REF NO.	PART NUMBER	DESCRIPTION	QTY
C	1	7N619	PULLEY	1
	3	3P71	VEE BELT SET-----(2 belt)	1
	4	T573	BOLT	6
		1D4717	NUT	6
	5	2P6086	ADAPTER	1
	6	9F4446	SEAL	1
	7	9S6129	PULLEY	1
	8	4F7952	SEAL	1
	9	S509	BOLT	4
	10	3P165	PULLEY	1
C	11	5M2894	WASHER	6

C INDICATES CHANGE

227955

3P67 PULLEY GROUP
Serial No. 87V5577—Up

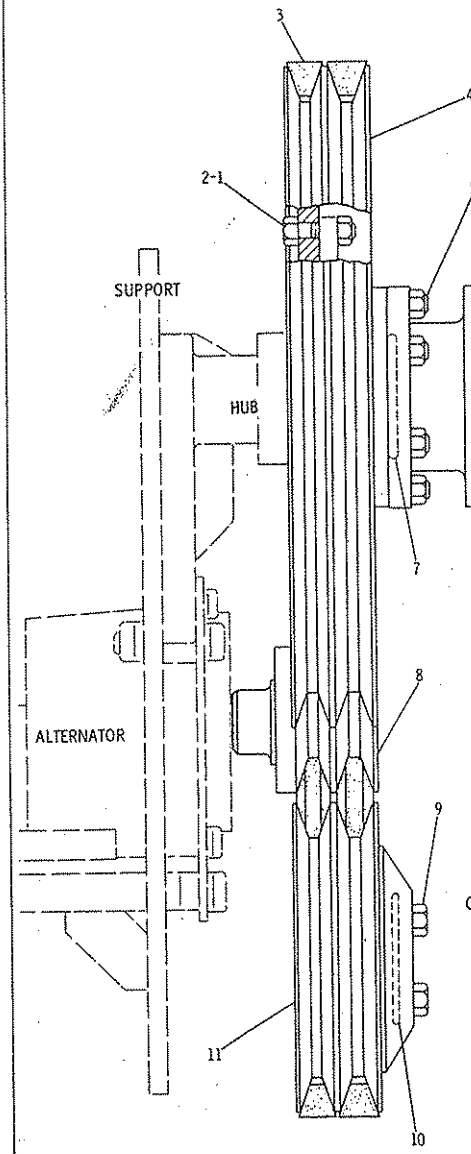

REF. NO.	PART NUMBER	DESCRIPTION	QTY
1	3B1915	BOLT	8
2	1D4717	NUT	14
C 3	8S1475	VEE BELT SET-(2 belts)	1
4	6N4601	PULLEY-(fan)	1
5	S1619	BOLT	6
6	2P6086	ADAPTER	1
7	9F4446	SEAL	1
8	9S6129	PULLEY-(alternator drive)	1
9	S509	BOLT	4
10	4F7952	SEAL	1
11	3P165	PULLEY	1

C INDICATES CHANGE

226647

6N5334 PULLEY GROUP
Part of 2G2580 Sound Suppression Arrangement listed on Page 168
AN ATTACHMENT

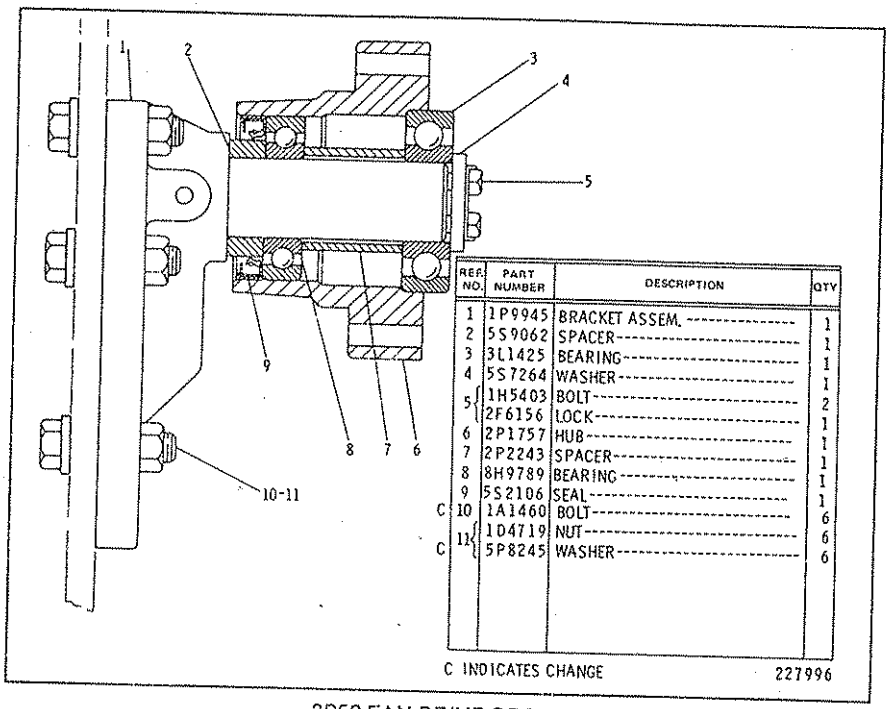

REF. NO.	PART NUMBER	DESCRIPTION	QTY
1	1P9945	BRACKET ASSEM.	1
2	5S9062	SPACER	1
3	3L1425	BEARING	1
4	5S7264	WASHER	1
5	1H5403	BOLT	2
	2F6156	LOCK	1
6	2P1757	HUB	1
7	2P2243	SPACER	1
8	8H9789	BEARING	1
9	5S2106	SEAL	1
C 10	1A1460	BOLT	6
11	1D4719	NUT	6
C	5P8245	WASHER	6

C INDICATES CHANGE 227996

3P59 FAN DRIVE GROUP
Serial No. 87V5275 to 87V5849 inclusive

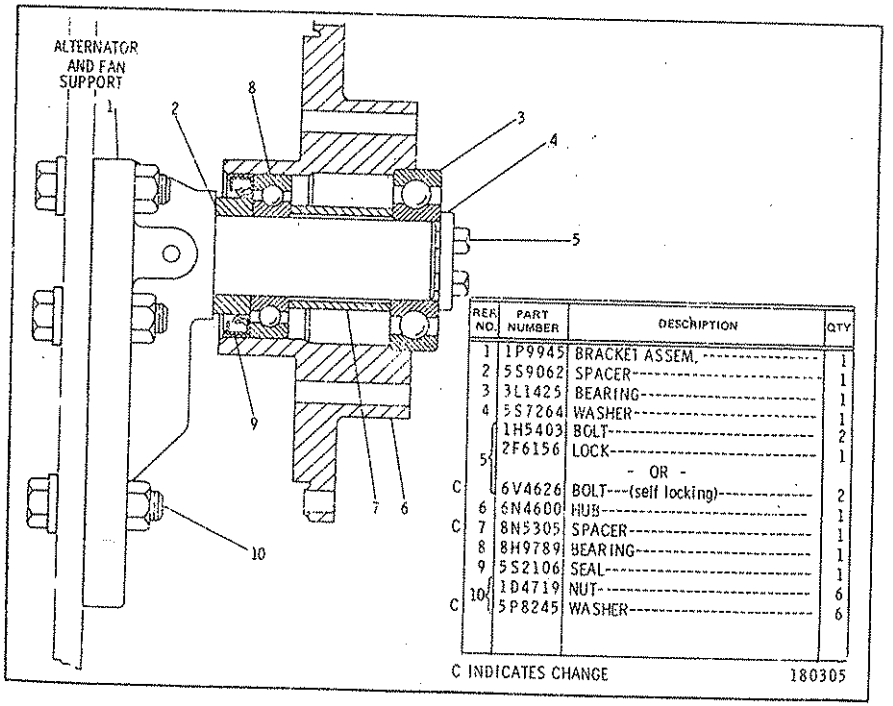

REF. NO.	PART NUMBER	DESCRIPTION	QTY
1	1P9945	BRACKET ASSEM.	1
2	5S9062	SPACER	1
3	3L1425	BEARING	1
4	5S7264	WASHER	1
5	1H5403	BOLT	2
	2F6156	LOCK	1
		- OR -	
C	6V4626	BOLT---(self locking)	2
6	6N4600	HUB	1
C 7	8N5305	SPACER	1
8	8H9789	BEARING	1
9	5S2106	SEAL	1
10	1D4719	NUT	6
C	5P8245	WASHER	6

C INDICATES CHANGE 180305

6N4599 FAN DRIVE GROUP
Part of 2G2580 Sound Suppression Arrangement listed on Page 168

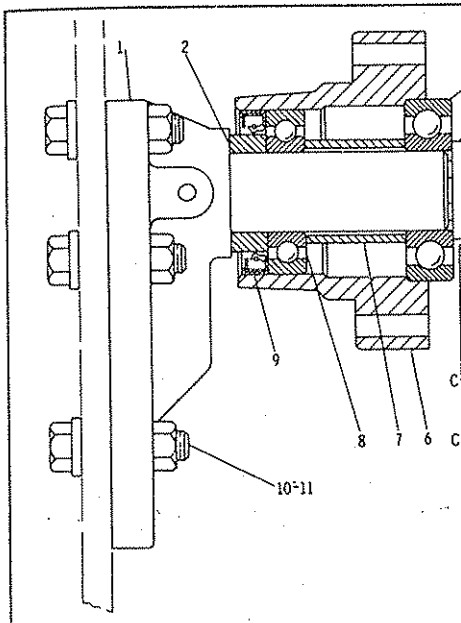

	REF. NO.	PART NUMBER	DESCRIPTION	QTY.
	1	1P9945	BRACKET ASSEM.	1
	2	5S9062	SPACER	1
	3	3L1425	BEARING	1
	4	5S7264	WASHER	1
C	5	6V4626	BOLT	2
	6	2P1757	HUB	1
C	7	8N5305	SPACER	1
	8	8H9789	BEARING	1
	9	5S2106	SEAL	1
	10	1A1460	BOLT	6
	11	1D4719	NUT	6
		5P8245	WASHER	6

C INDICATES CHANGE 180277

3P59 FAN DRIVE GROUP
Serial No. 87V5850—Up

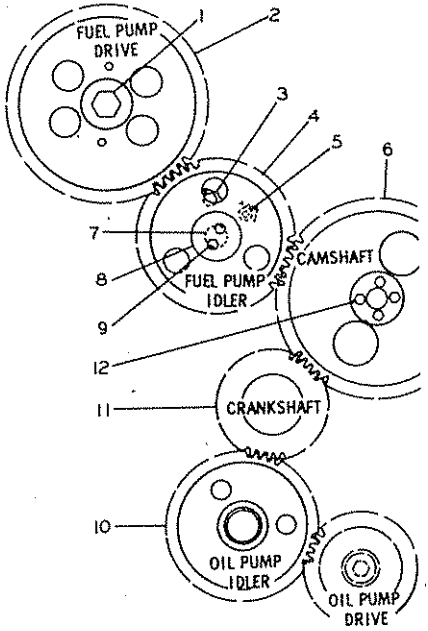

REF. NO.	PART NUMBER	DESCRIPTION	QTY
1	S1603	BOLT	1
	4N3371	WASHER	1
2	4N3330	GEAR (80 Teeth)	1
3	L1351	BOLT	2
4	5S7660	GEAR ASSEM. (57 Teeth)	1
	5S7630	BEARING	1
5	5B9079	NUT	1
	5S7611	LOCK	1
6	5S3804	GEAR (80 Teeth)	1
7	5S7608	SHAFT	1
8	5S7612	PLATE	1
9	2H3755	BOLT	2
10	2P1172	GEAR ASSEM. (60 Teeth)	1
	2P1168	BEARING	1
11	4M9933	GEAR (40 Teeth)	1
	5H2671	KEY	1
12	S1748	BOLT	4

207194

2P9642 FRONT TIMING GEAR GROUP
Engine Serial No. 7Z1 to 7Z10 inclusive

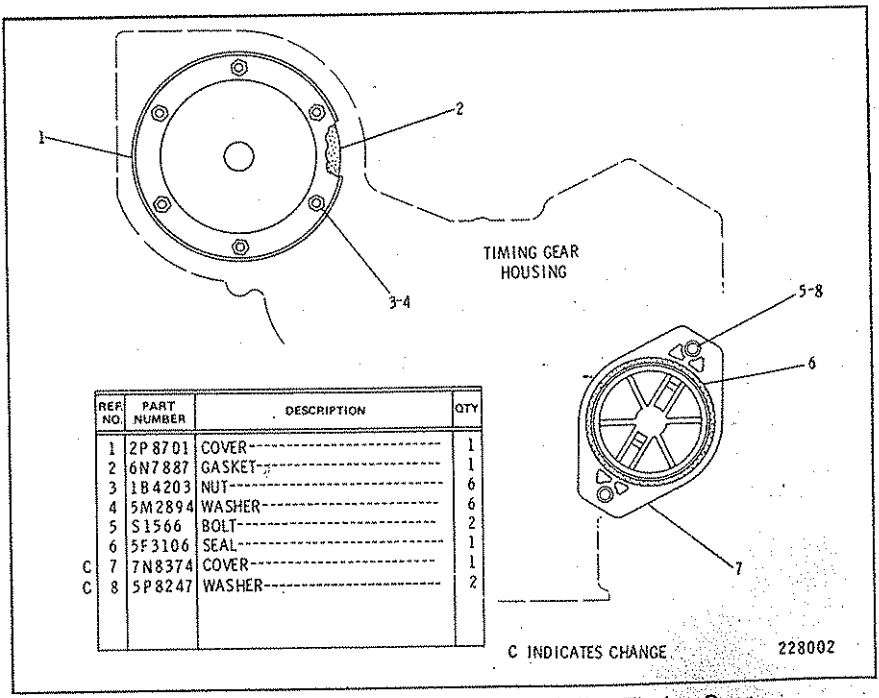

	REF. NO.	PART NUMBER	DESCRIPTION	QTY
	1	2P8701	COVER	1
	2	6N7887	GASKET	1
	3	1B4203	NUT	6
	4	5M2894	WASHER	6
	5	S1566	BOLT	2
	6	5F3106	SEAL	1
C	7	7N8374	COVER	1
C	8	5P8247	WASHER	2

C INDICATES CHANGE

228002

2P6529 FRONT HOUSING COVER GROUP—Timing Gear

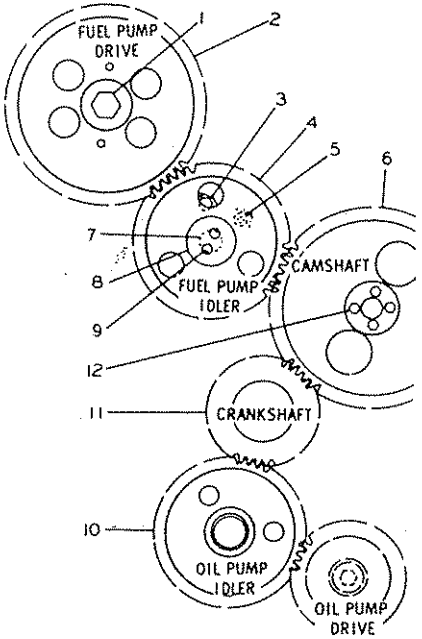

REF NO.		PART NUMBER	DESCRIPTION	QTY.
	1	S1603	BOLT	1
		4N3371	WASHER	1
C	2	7N3536	GEAR--------(80 teeth)----------	1
	3	L1351	BOLT	2
C	4	7N4791	GEAR ASSEM. -----(57 teeth)----- (Includes)	1
		5S7630	BEARING	1
	5	5B9079	NUT	1
		5S7611	LOCK	1
C	6	7N3515	GEAR---------(80 teeth)----------	1
C	7	8N4959	SHAFT	1
C	8	8N4960	PLATE	1
C	9	S1618	BOLT	2
C	10	7N4716	GEAR----------(60 teeth)-------	1
		2P1168	BEARING	1
C	11	7N4525	GEAR----------(40 teeth)--------	1
		5H2671	KEY	1
	12	S1748	BOLT	4

C INDICATES CHANGE

226714

2P9642 FRONT TIMING GEAR GROUP
Engine Serial No. 7Z11 to 7Z3028 inclusive

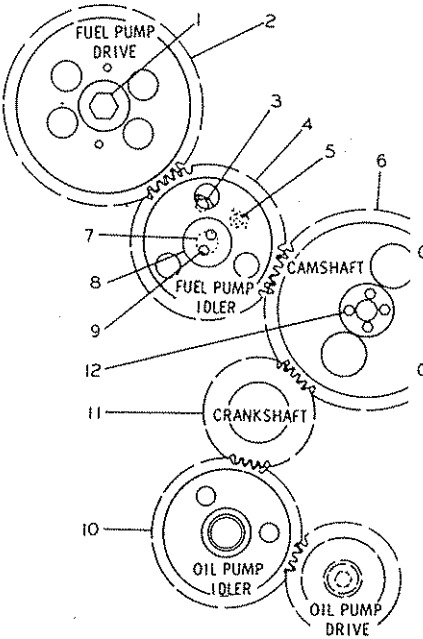

REF NO.		PART NUMBER	DESCRIPTION	QTY.
	1	S1603	BOLT	1
		4N3371	WASHER	1
	2	7N3536	GEAR--------(80 teeth)----------	1
	3	L1351	BOLT	2
	4	7N4791	GEAR ASSEM. -----(57 teeth)----- (Includes)	1
		5S7630	BEARING	1
	5	5B9079	NUT	1
		5S7611	LOCK	1
C	6	1W4402	GEAR---------(80 teeth)----------	1
	7	8N4959	SHAFT	1
	8	8N4960	PLATE	1
	9	S1618	BOLT	2
	10	7N4716	GEAR----------(60 teeth)-------	1
		2P1168	BEARING	1
C	11	1W4405	GEAR----------(40 teeth)--------	1
		5H2671	KEY	1
	12	S1748	BOLT	4

C INDICATES CHANGE

300757

2P9642 FRONT TIMING GEAR GROUP
Engine Serial No. 7Z3029—Up

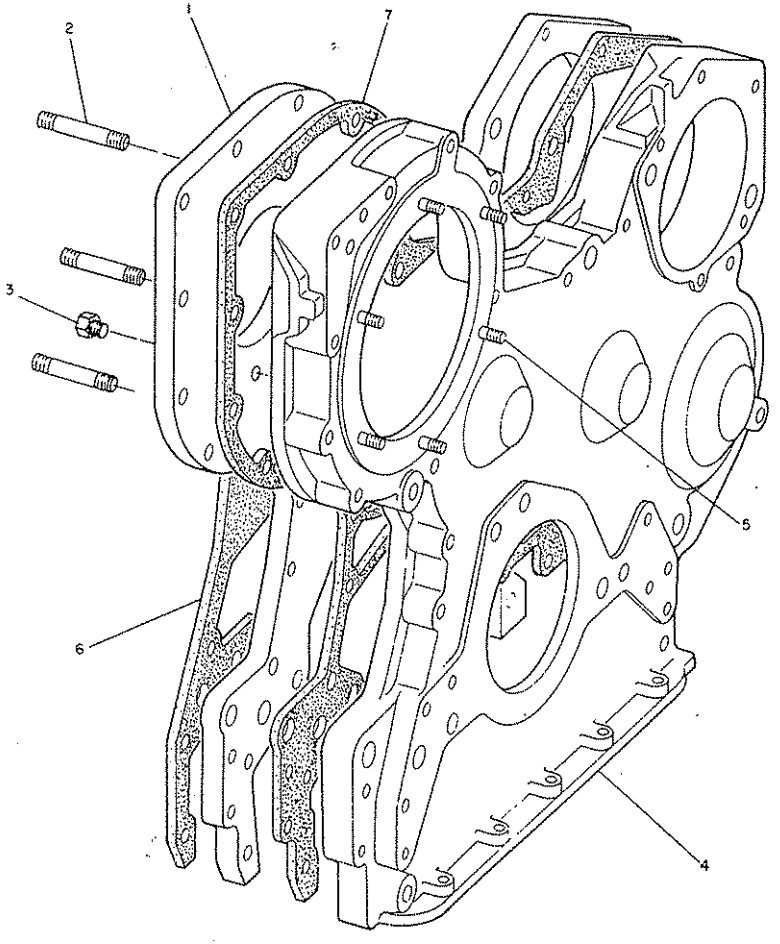

	REF. NO.	PART NUMBER	DESCRIPTION	QTY.
	1	6N9060	PLATE ASSEM.	1
C		1W7110	PLATE	1
	2	4M8743	STUD	3
C	3	5M6214	PLUG	1
	4	8N109	HOUSING ASSEM.	1
	5	2S42	STUD	6
	6	8N110	GASKET	1
C	7	1W3900	GASKET	1

C INDICATES CHANGE

304412

2P9641 FRONT HOUSING GROUP—Timing Gear

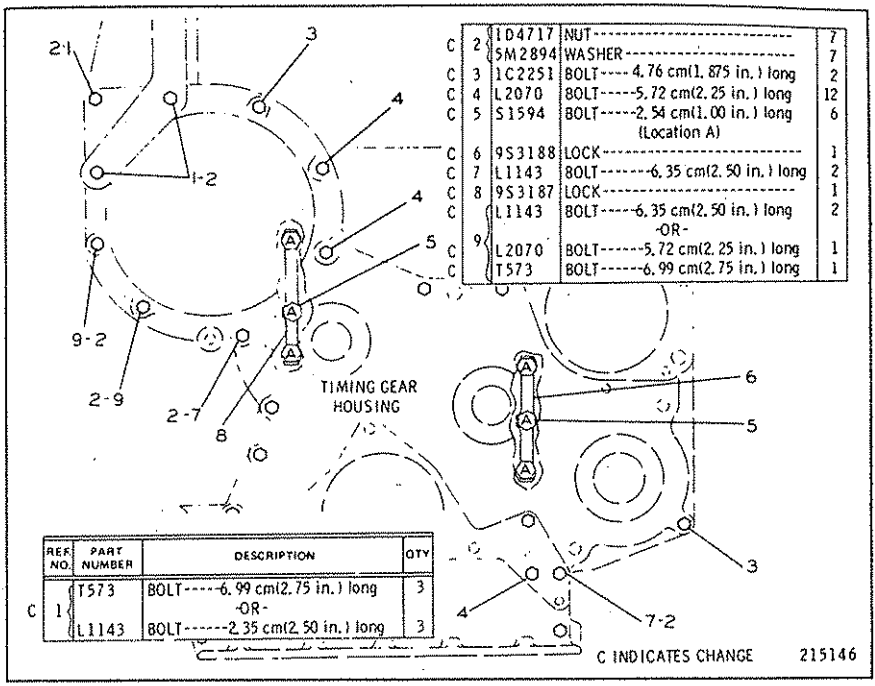

	REF. NO.	PART NUMBER	DESCRIPTION	QTY
C	2	1D4717	NUT	7
		5M2894	WASHER	7
C	3	1C2251	BOLT----- 4.76 cm(1.875 in.) long	2
C	4	L2070	BOLT-----5.72 cm(2.25 in.) long	12
C	5	S1594	BOLT-----2.54 cm(1.00 in.) long (Location A)	6
C	6	9S3188	LOCK	1
C	7	L1143	BOLT-------6.35 cm(2.50 in.) long	2
C	8	9S3187	LOCK	1
C	9	L1143	BOLT-----6.35 cm(2.50 in.) long	2
			-OR-	
C		L2070	BOLT------5.72 cm(2.25 in.) long	1
C		T573	BOLT------6.99 cm(2.75 in.) long	1
C	1	T573	BOLT-----6.99 cm(2.75 in.) long	3
			-OR-	
		L1143	BOLT------2.35 cm(2.50 in.) long	3

C INDICATES CHANGE 215146

2P6498 FRONT HOUSING FASTENER GROUP—Timing Gear
Engine Serial No. 7Z1 to 7Z3028 inclusive

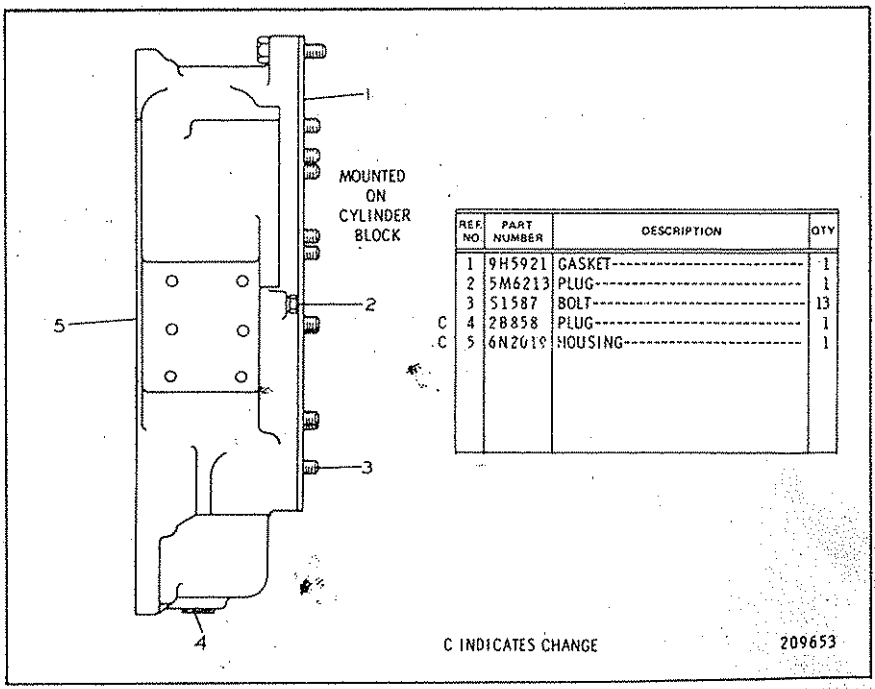

	REF. NO.	PART NUMBER	DESCRIPTION	QTY
	1	9H5921	GASKET	1
	2	5M6213	PLUG	1
	3	S1587	BOLT	13
C	4	2B858	PLUG	1
C	5	6N2019	HOUSING	1

C INDICATES CHANGE 209653

2P6166 FLYWHEEL HOUSING GROUP

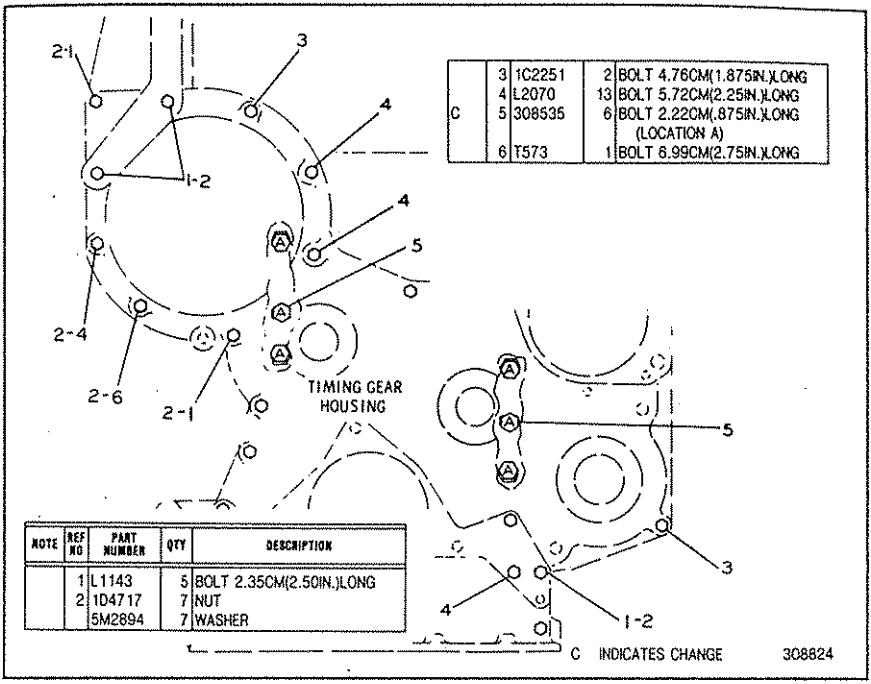

	3	1C2251	2	BOLT 4.76CM(1.875IN.)LONG
	4	L2070	13	BOLT 5.72CM(2.25IN.)LONG
C	5	308535	6	BOLT 2.22CM(.875IN.)LONG (LOCATION A)
	6	T573	1	BOLT 6.99CM(2.75IN.)LONG

NOTE	REF NO	PART NUMBER	QTY	DESCRIPTION
	1	L1143	5	BOLT 2.35CM(2.50IN.)LONG
	2	1D4717	7	NUT
		5M2894	7	WASHER

C INDICATES CHANGE 308824

2P6498 FRONT HOUSING FASTENER GROUP—Timing Gear
Engine Serial No. 7Z3029—Up

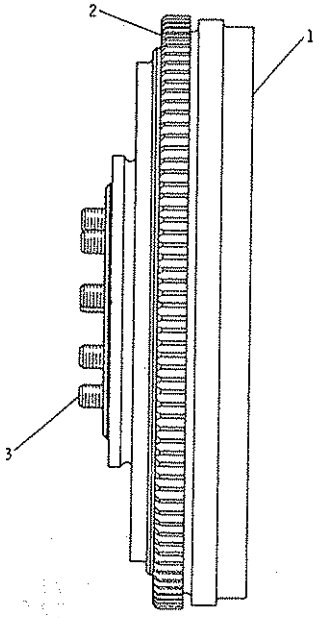

	REF. NO.	PART NUMBER	DESCRIPTION	QTY
	1	2P174	FLYWHEEL ASSEM.---------- (Includes)	1
C	2	7N9145	GEAR-------(130 teeth)--------	1
	3	S1576	BOLT----------	9

C INDICATES CHANGE

227962

1P9581 FLYWHEEL GROUP

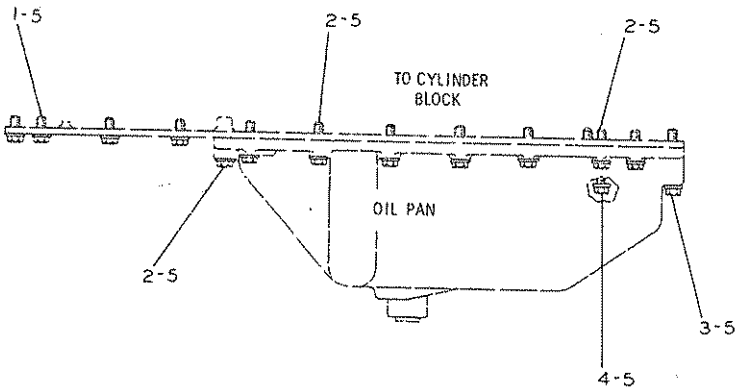

	REF. NO.	PART NUMBER	DESCRIPTION	QTY
C	1	S1594	BOLT----------2.54 cm(1 in.) long	12
C	2	S1591	BOLT---------3.81 cm(1.5 in.) long	17
C	3	T573	BOLT----6.98 cm(2.75 in.) long---	6
C	4	L1143	BOLT-----6.35 cm(2.50 in.) long--	1
C	5	5M2894	WASHER----------	36

C INDICATES CHANGE

227294

2P6189 OIL PAN FASTENER GROUP

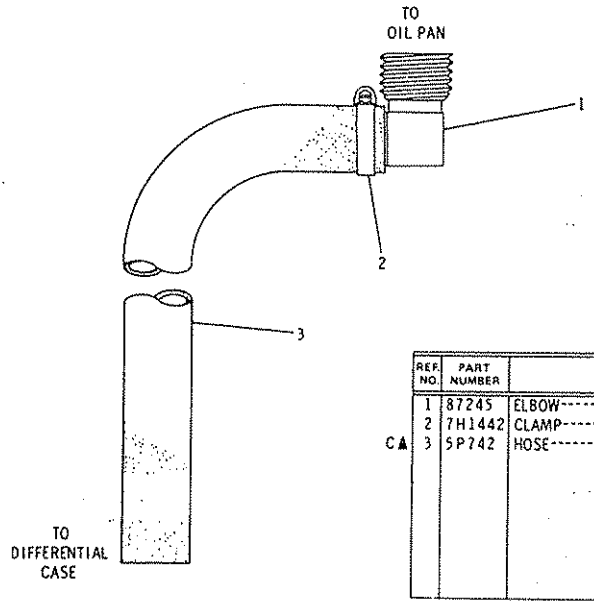

	REF. NO.	PART NUMBER	DESCRIPTION	QTY
	1	87245	ELBOW	1
	2	7H1442	CLAMP	1
C▲	3	5P742	HOSE-------56 cm(22.05 in.)	

C INDICATES CHANGE ▲ ORDER BY THE CENTIMETRE 206256

3P124 OIL DRAIN EXTENSION GROUP

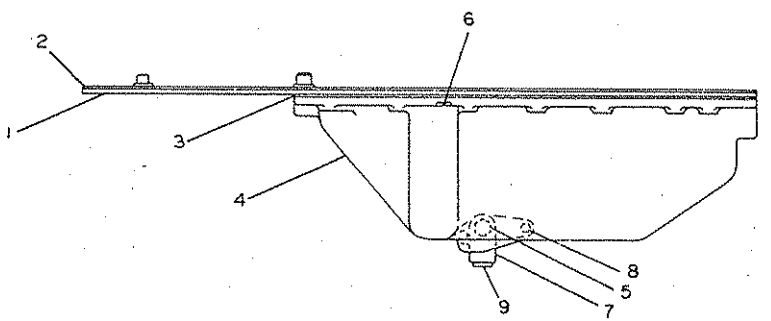

	REF. NO.	PART NUMBER	DESCRIPTION	QTY
	1	2P2351	PLATE ASSEM.	1
	2	5S6045	GASKET	1
	3	8S1963	GASKET	1
C	4	7N2942	PAN	1
	5	487739	PLUG	1
C	6	28858	PLUG	1
C	7	8N6849	ADAPTER	1
C		8N6854	GASKET	1
C	8	381915	BOLT	2
C	9	1B5174	PLUG	1

C INDICATES CHANGE 227293

2P6155 OIL PAN GROUP
Engine Serial No. 7Z1 to 7Z2512 inclusive

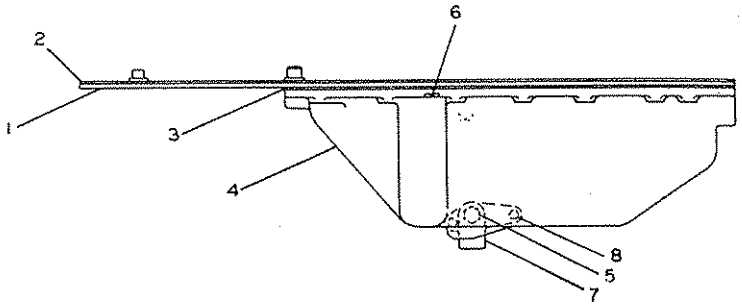

	REF. NO.	PART NUMBER	DESCRIPTION	QTY
	1	2P2351	PLATE ASSEM.	1
	2	5S6045	GASKET	1
	3	8S1963	GASKET	1
	4	7N2942	PAN	1
C	5	5N8780	PLUG	1
	6	2B858	PLUG	1
	7	8N6849	ADAPTER	1
		8N6854	GASKET	1
	8	3B1915	BOLT	2

C INDICATES CHANGE

302914

2P6155 OIL PAN GROUP
Engine Serial No. 7Z2513—Up

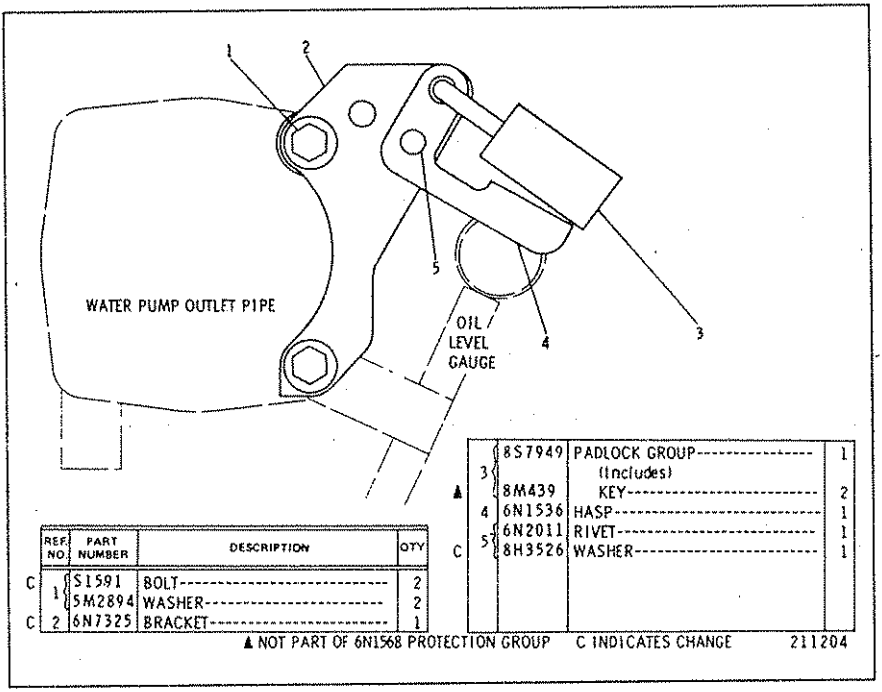

REF NO.	PART NUMBER	DESCRIPTION	QTY
C 1	1S1591	BOLT	2
	5M2894	WASHER	2
C 2	6N7325	BRACKET	1
3	8S7949	PADLOCK GROUP (Includes)	1
▲	8M439	KEY	2
4	6N1536	HASP	1
5	6N2011	RIVET	1
C	8H3526	WASHER	1

▲ NOT PART OF 6N1568 PROTECTION GROUP C INDICATES CHANGE 211204

6N1568 OIL LEVEL GAUGE PROTECTION GROUP—Replaced by 1N4297
shown on Page 28A
AN ATTACHMENT

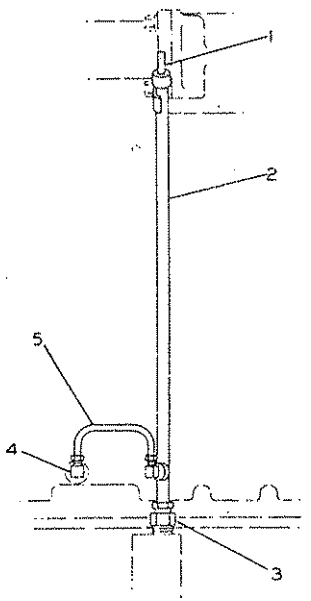

REF NO.	PART NUMBER	DESCRIPTION	QTY
1	5S8115	GAUGE	1
2	2P2547	TUBE ASSEM.	1
3	8S1326	FITTING	1
	8F8998	NUT	1
4	5K9243	ELBOW	2
5	2P2697	TUBE ASSEM.	1

117328

2P6491 OIL LEVEL GAUGE GROUP

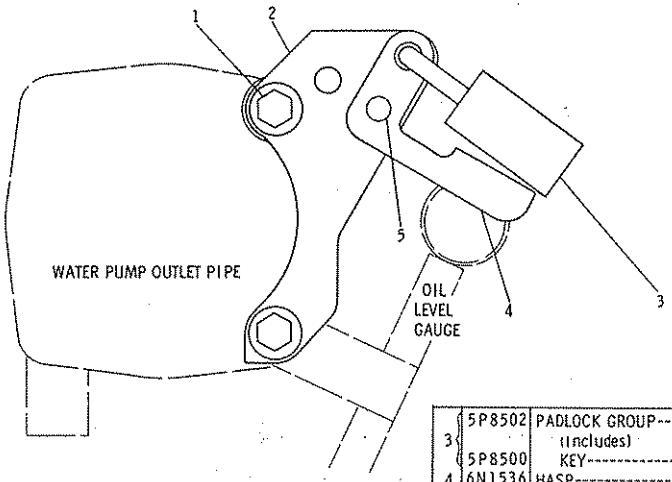

REF. NO.	PART NUMBER	DESCRIPTION	QTY
1	S1591	BOLT	2
	5M2894	WASHER	2
2	6N7325	BRACKET	1

3	5P8502	PADLOCK GROUP (Includes)	1
	5P8500	KEY	2
4	6N1536	HASP	1
5	6N2011	RIVET	1
	8H3526	WASHER	1

232340

1N4297 VANDALISM PROTECTION GROUP—Oil Level Gauge Single Key Security System. AN ATTACHMENT

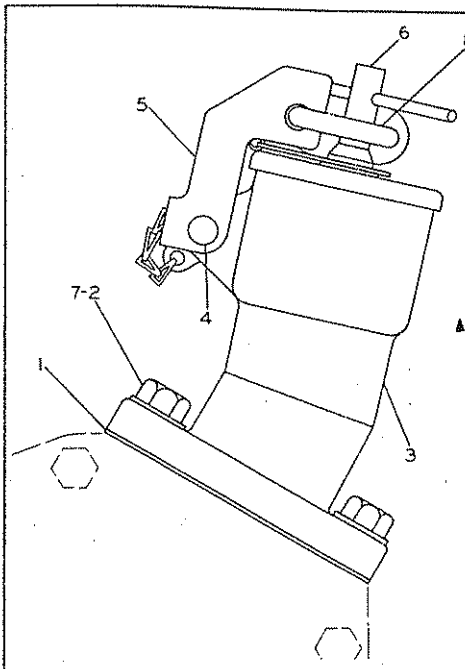

REF NO.	PART NUMBER	DESCRIPTION	QTY.
1	2P2720	GASKET	1
2	S1588	BOLT	2
3	2P2721	PIPE ASSEM. (Includes)	1
	2P2719	PIPE	1
4	8S4212	RIVET	1
5	2P2717	HASP	1
6	6N2985	CAP ASSEM.	1
7	5M2894	WASHER	2
8	5P8502	PADLOCK GROUP (Includes)	1
▲	5P8500	KEY	2

▲ NOT PART OF 5N8553 OIL FILLER GROUP

234196

5N8553 OIL FILLER AND PROTECTION COVER GROUP
AN ATTACHMENT

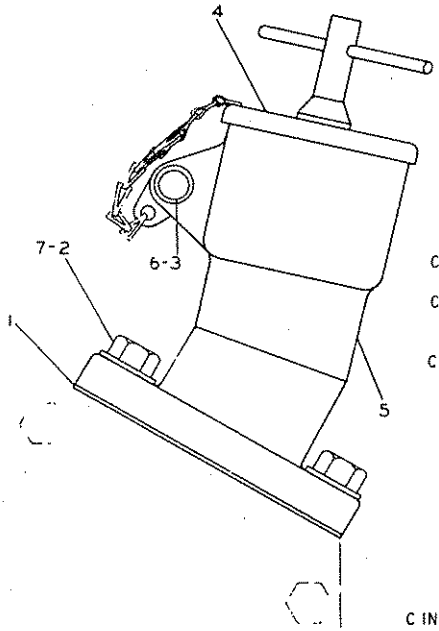

	REF NO	PART NUMBER	DESCRIPTION	QTY
	1	2P2720	GASKET	1
C	2	1A2029	BOLT	2
	3	9M5732	RIVET	1
C	4	6N2985	CAP ASSEM.	1
	5	2P2719	PIPE	1
	6	2A3211	WASHER	1
C	7	5M2894	WASHER	2

C INDICATES CHANGE

167624

2P6855 ENGINE OIL FILLER GROUP

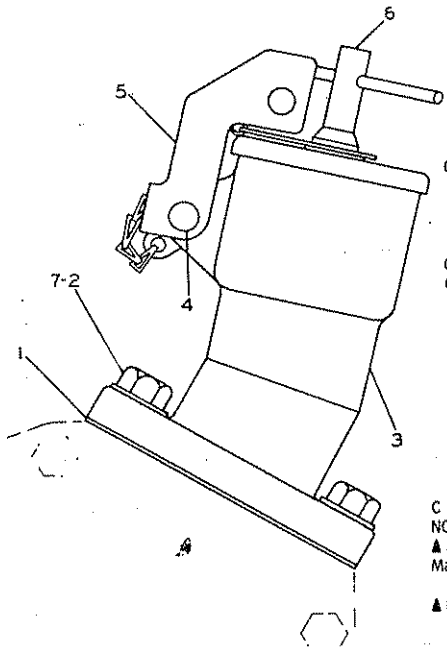

	REF NO	PART NUMBER	DESCRIPTION	QTY
	1	2P2720	GASKET	1
C	2	S1588	BOLT	2
	3	2P2721	PIPE ASSEM.	1
		2P2719	PIPE	1
	4	8S4212	RIVET	1
	5	2P2717	HASP	1
C	6	6N2985	CAP ASSEM.	1
C	7	5M2894	WASHER	2

C INDICATES CHANGE

NOTE:

▲ 8S7949 PADLOCK GROUP (Includes 8M439 -KEY---2) May Be Obtained From Parts Department

▲ NOT PART OF 2P6854 OIL FILLER GROUP

212537

2P6854 ENGINE OIL FILLER AND PROTECTION COVER GROUP AN ATTACHMENT

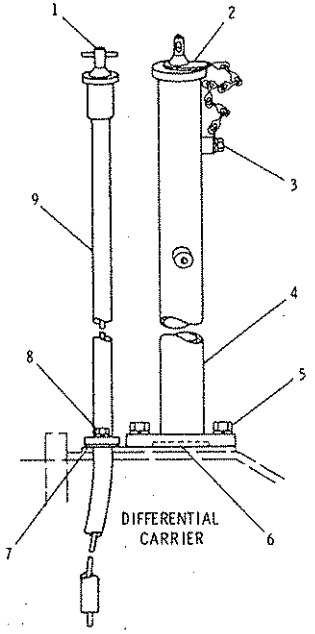

	REF. NO.	PART NUMBER	DESCRIPTION	QTY
C	1	2G8520	GAUGE	1
	2	7D4801	CAP ASSEM.	1
	3	S1613	BOLT	1
		3B4504	LOCKWASHER	1
	4	2G4589	TUBE ASSEM.	1
	5	308538	BOLT	2
		3B4508	LOCKWASHER	2
	6	7F8268	SEAL	1
	7	5F3181	GASKET	1
	8	5D353	BOLT	2
		3B4506	LOCKWASHER	2
	9	9D751	TUBE ASSEM.	1

C INDICATES CHANGE

228068

9D750 TRANSMISSION OIL FILLER GROUP

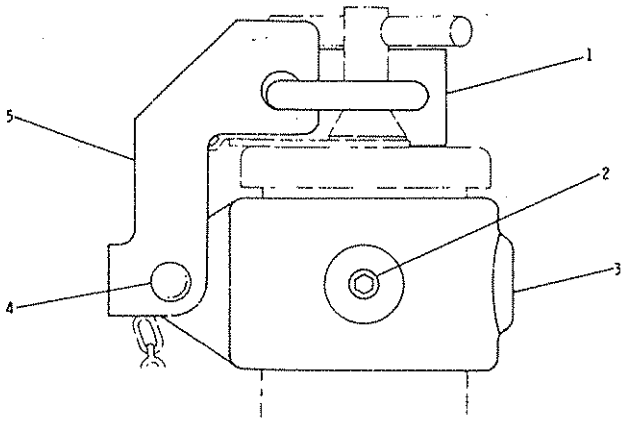

	REF. NO.	PART NUMBER	DESCRIPTION	QTY
	1	8S7949	PADLOCK GROUP (Includes)	1
▲		8M439	KEY	2
	2	8B7179	SCREW	2
C	3	9D5299	COLLAR ASSEM. (Includes)	1
	4	8S4212	RIVET	1
	5	2P2717	HASP	1

C INDICATES CHANGE ▲ NOT PART OF 9D5450 PROTECTION COVER GROUP 15403

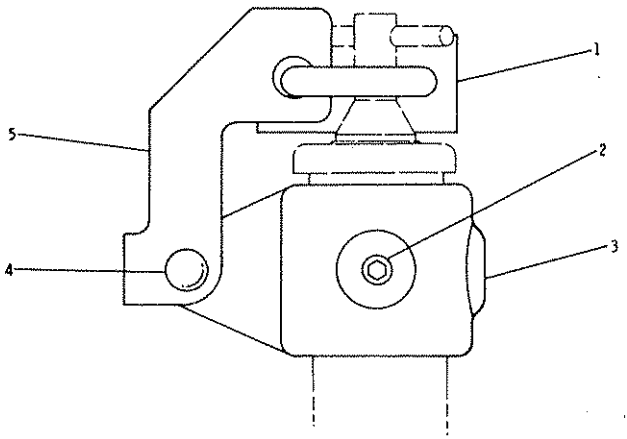

REF. NO.	PART NUMBER	DESCRIPTION	QTY
▲ 1	8S7949	PADLOCK GROUP---------- (Includes)	1
▲	8M439	KEY----------	2
2	8B7179	SCREW----------	2
C 3	9D5298	COLLAR ASSEM.---------- (Includes)	1
4	8S4212	RIVET----------	1
5	2P2717	HASP----------	1

C INDICATES CHANGE ▲ NOT PART OF 9D5455 PROTECTION COVER GROUP 154032

9D5455 PROTECTION COVER GROUP—Transmission Gauge
Replaced by 6G9000 shown on Pages 31A
AN ATTACHMENT

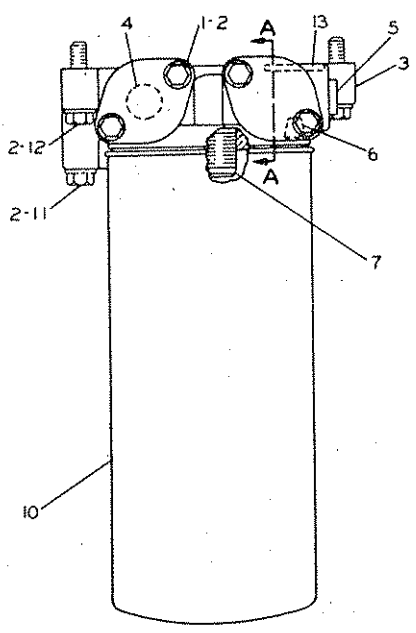

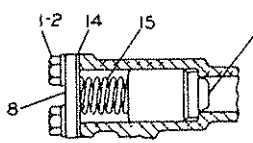

REF. NO.	PART NUMBER	DESCRIPTION	QTY.
1	S1618	BOLT----------	4
2	9M1974	WASHER----------	8
3	1P6448	BASE ASSEM.---------- (Includes)	1
4	1B5174	PLUG-1, 91cm(, 75 in.) thread	3
5	3L1850	PLUG-1, 27 cm(, 5 in.) thread	1
6	7H3171	PLUG----------	1
7	2P2537	STUD----------	1
8	6B830	COVER----------	2
9	1P1367	PLUNGER----------	2
10	2P4004	FILTER ASSEM.----------	1
11	1D4540	BOLT-----6, 99 cm(2, 75 in.) long	1
12	1A9579	BOLT-----3, 81 cm(1, 5 in.) long	3
13	8M4432	SEAL----------	2
14	4N8207	GASKET----------	2
15	8M3182	SPRING----------	2

226160

2P6475 OIL FILTER GROUP
Engine Serial No. 7Z1 to 7Z499 inclusive

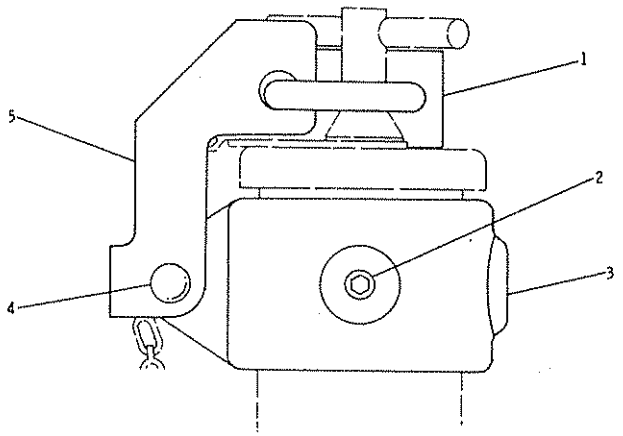

REF. NO.	PART NUMBER	DESCRIPTION	QTY
1	5P8502	PADLOCK GROUP (Includes)	1
▲	5P8500	KEY	2
2	8B7179	SCREW	2
3	9D5299	COLLAR ASSEM. (Includes)	1
4	8S4212	RIVET	1
5	2P2717	HASP	1

▲ NOT PART OF 6G9005 PROTECTION COVER GROUP 234192

6G9005 TRANSMISSION OIL FILLER PROTECTION COVER GROUP
AN ATTACHMENT

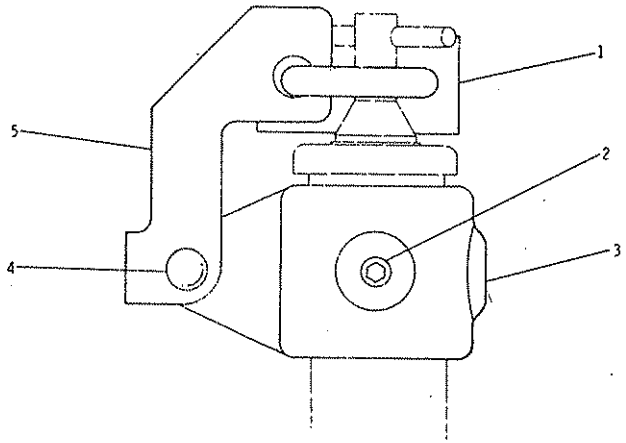

REF. NO.	PART NUMBER	DESCRIPTION	QTY
1	5P8502	PADLOCK GROUP (Includes)	1
▲	5P8500	KEY	2
2	8B7179	SCREW	2
3	9D5298	COLLAR ASSEM. (Includes)	1
4	8S4212	RIVET	1
5	2P2717	HASP	1

▲ NOT PART OF 6G9000 PROTECTION COVER GROUP 234193

6G9000 PROTECTION COVER GROUP

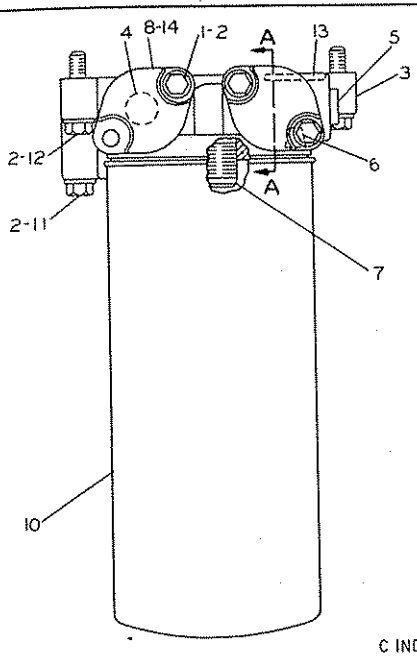

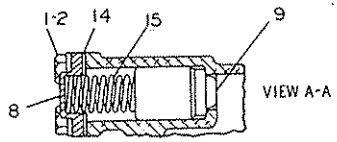

	REF NO.	PART NUMBER	DESCRIPTION	QTY.
	1	S1618	BOLT----------	3
	2	9M1974	WASHER----------	8
	3	8N6212	BASE ASSEM. ---------- (Includes)	1
	4	2R5657	PLUG-2.54 cm(1 in.)thread	3
	5	2B858	PLUG-1.27 cm(.5 in.) thread	1
	6	7H3171	PLUG----------	1
	7	2P2537	STUD----------	1
C	8	8N6986	COVER----------	2
	9	1P1367	PLUNGER----------	2
	10	2P4004	FILTER ASSEM. ----------	1
	11	1D4540	BOLT-----6.99 cm(2.75 in.) long	1
	12	1B9575	BOLT-----4.44 cm(1.75 in.)long-	3
	13	8M4432	SEAL----------	2
C	14	8N6985	GASKET----------	2
	15	8M3182	SPRING----------	2

C INDICATES CHANGE

227300

2P6475 OIL FILTER GROUP
Engine Serial No. 7Z500—Up

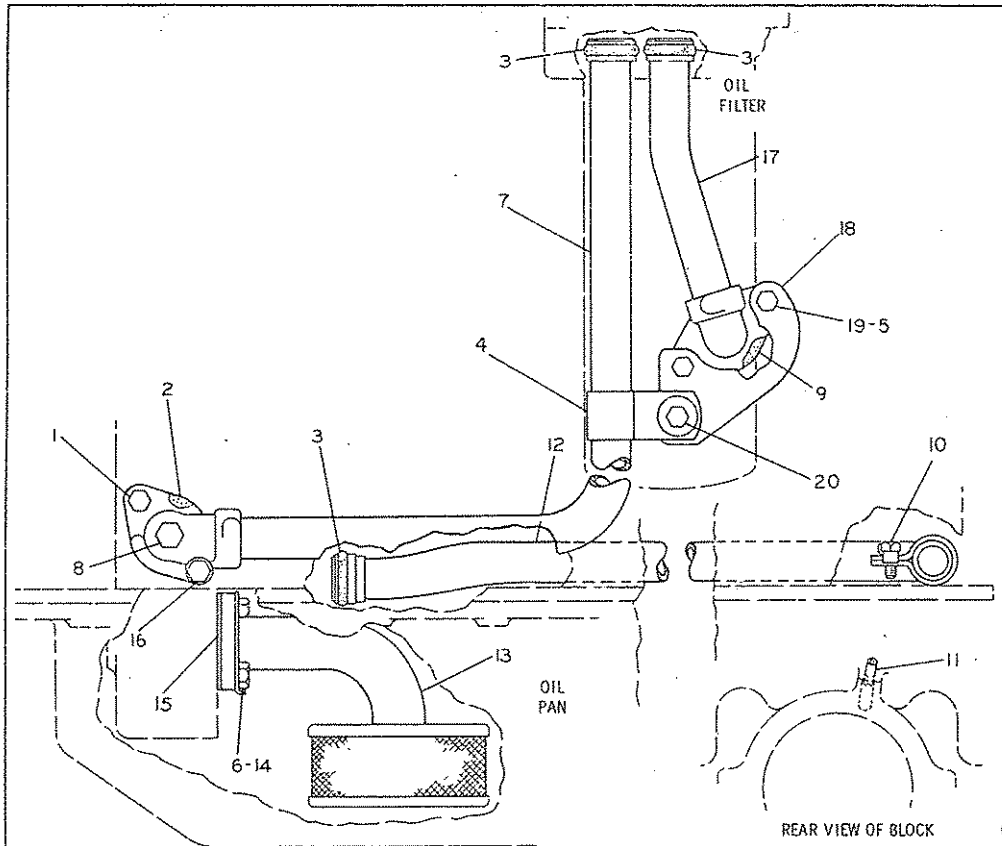

	REF NO.	PART NUMBER	DESCRIPTION	QTY.
	1	1A2029	BOLT	1
	2	2M5407	GASKET	1
	3	9M4849	SEAL	3
C	4	8M2769	CLIP	1
C	5	8D5898	SPACER	2
C	6	S1594	BOLT	2
C	7	8N7318	TUBE ASSEM. (Includes)	1
	8	5M6213	PLUG	1
	9	7F7590	GASKET	1
	10	4F29	BOLT	1
		L364	LOCK	1
	11	2S1541	ORIFICE	4
	12	2P744	TUBE ASSEM.	1
	13	2P1776	BELL ASSEM.	1
	14	8S8874	LOCK	1
	15	8M904	GASKET	1
	16	L2070	BOLT	1
C	17	8N7315	TUBE ASSEM.	1
C	18	8N5739	BRACKET	1
C	19	S1571	BOLT	2
C		5M2894	WASHER	2
C		L1351	BOLT	1
C	20	1D4717	NUT	1
C		9L9132	WASHER	1

C INDICATES CHANGE

234136

2P6512 OIL LINES GROUP
Engine Serial No. 7Z1 to 7Z4851

2P6512 OIL LINES GROUP
Engine Serial No. 7Z4852—Up

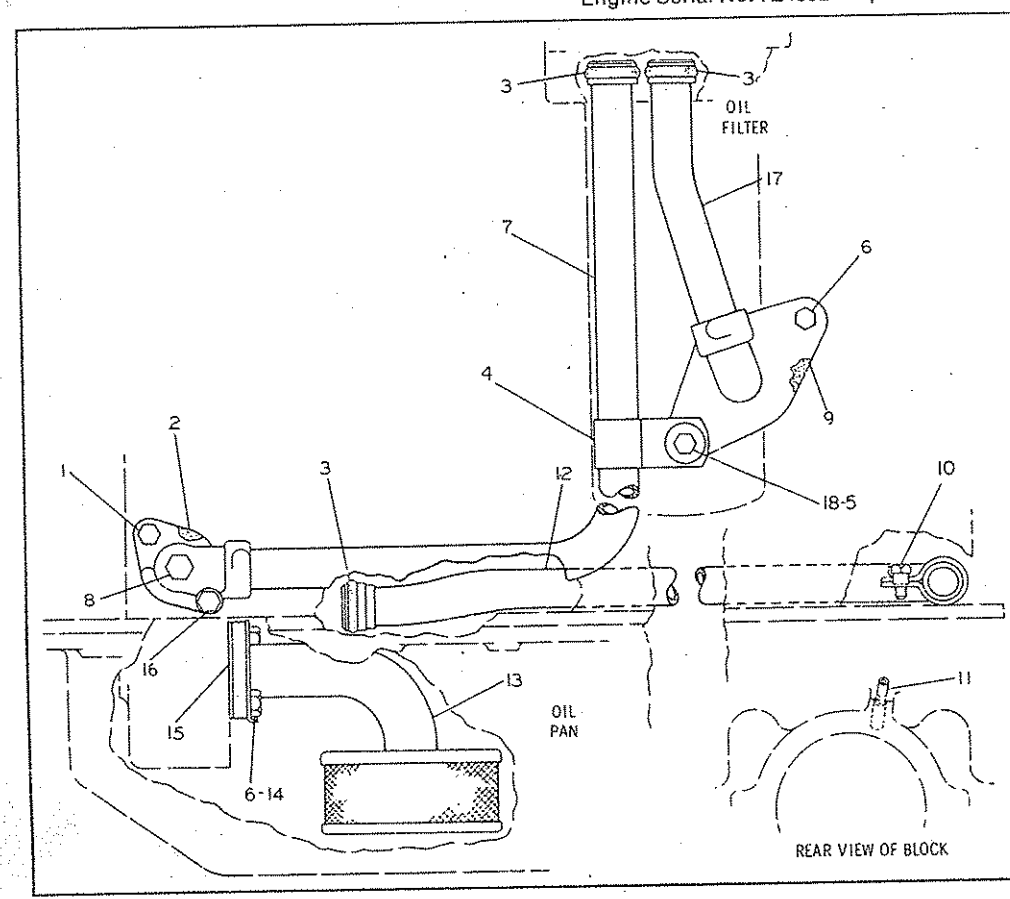

	REF. NO.	PART NUMBER	DESCRIPTION	QTY.
	1	1A2029	BOLT	1
	2	2M5407	GASKET	1
	3	9M4849	SEAL	3
C	4	3P2404	CLIP	1
C	5	1L5081	SPACER	2
C	6	S1594	BOLT	3
	7	8N7318	TUBE ASSEM.	1
			(Includes)	
	8	5M6213	PLUG	1
	9	7F7590	GASKET	1
	10	4F29	BOLT	1
		L364	LOCK	1
	11	2S1541	ORIFICE	4
	12	2P744	TUBE ASSEM.	1
	13	2P1776	BELL ASSEM.	1
	14	8S8874	LOCK	1
	15	8M904	GASKET	1
	16	L2070	BOLT	1
	17	8N7315	TUBE ASSEM.	1
	18	S1571	BOLT	1
		5M2894	WASHER	1

C INDICATES CHANGE

308835

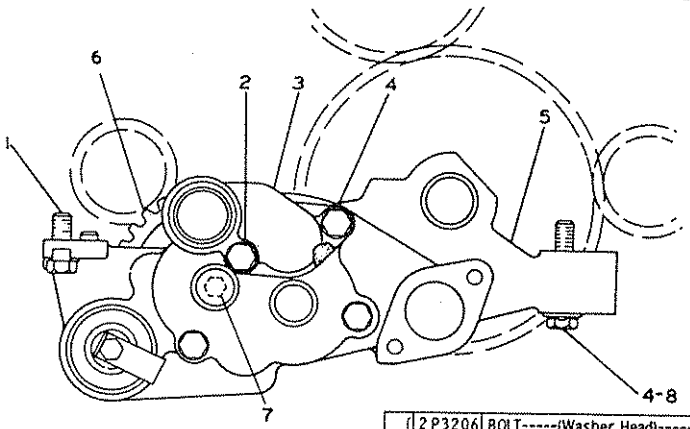

	REF NO.	PART NUMBER	DESCRIPTION	QTY.
	1	1A2029	BOLT	2
		8M7587	LOCK	2
	2	2P3210	BOLT-(Washer Head)	1
			- OR -	
C		S1619	BOLT-(Std. Hex Head)	1
	3	4N5353	ELBOW	1
		2P8746	GASKET	1
	4	2P3206	BOLT-(Washer Head)	3
			- OR -	
C		S1590	BOLT-(Std. Hex Head)	3
	5	2P1785	PUMP GROUP (Separate Illustration)	1
C	6	8S497	GEAR-(40 teeth)	1
C		8M5599	KEY	1
C	7	S1590	BOLT	1
C		1P7346	WASHER	1
C	8	5M2894	WASHER	2

C INDICATES CHANGE 224342

2P1784 OIL PUMP GROUP

2P1785 Pump parts are shown on Page 34

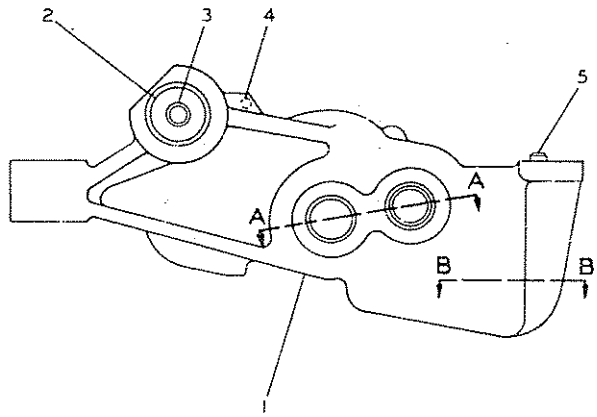

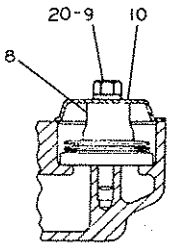

SECTION B-B

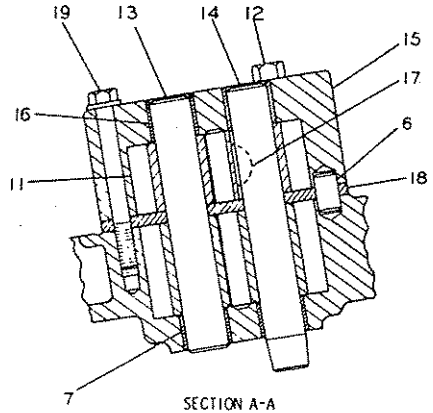

SECTION A-A

REF. NO.	PART NUMBER	DESCRIPTION	QTY
1	2P685	BODY ASSEM.	1
2	2P1170	SHAFT ASSEM.	1
3	6F7172	DOWEL	1
4	4B9880	BALL	1
5	1F1006	DOWEL	1
6	1M3735	DOWEL	2
7	8S6511	BEARING	2

C	8	4N8385	VALVE ASSEM.	1
C	9	2B2694	BOLT	1
	10	4N3732	COVER	1
C	11	6N1036	GEAR (8 Teeth)	2
C	12	T65	BOLT	2
C	13	8S493	SHAFT ASSEM.	1
	14	2P6245	SHAFT ASSEM.	1

	15	4N4055	BODY ASSEM.	1
	16	8S6511	BEARING	2
	17	1B8709	KEY	1
	18	2P1781	SPACER	1
C	19	2M3403	BOLT	1
C		5M2894	WASHER	1
C	20	9M1974	WASHER	1

C INDICATES CHANGE

217789

2P1785 GEAR PUMP GROUP—Oil
Engine Serial No. 7Z1 to 7Z1042 and 7Z1240 to 7Z1243 Inclusive
Part of 2P1784 Oil Pump Group shown on Page 33

2P1785 GEAR PUMP GROUP
Engine Serial No. 7Z1043 to 7Z1239 and 7Z1244—Up
Part of 2P1784 Oil Pump Group shown on Page 33

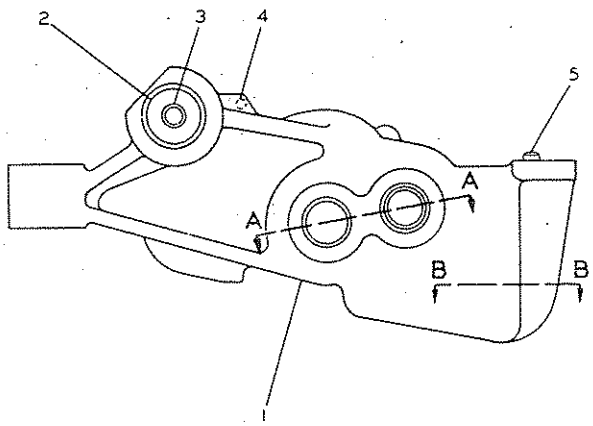

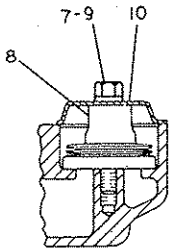

SECTION B-B

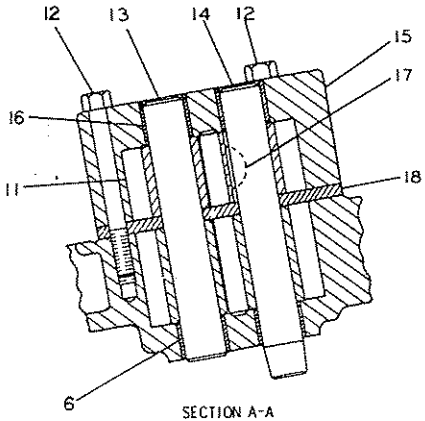

SECTION A-A

	REF. NO.	PART NUMBER	DESCRIPTION	QTY.
C	1	8N8636	BODY ASSEM.	1
	2	2P1170	SHAFT ASSEM.	1
	3	6F7172	DOWEL	1
	4	4B9880	BALL	1
	5	1F1006	DOWEL	1
	6	8S6511	BEARING	2
	7	9M1974	WASHER	1

C INDICATES CHANGE

	8	4N8385	VALVE ASSEM.	1
	9	2B2694	BOLT	1
	10	4N3732	COVER	1
	11	6N1036	GEAR-----(8 teeth)	2
C	12	T65	BOLT	2
	13	8S493	SHAFT ASSEM.	1
	14	2P6245	SHAFT ASSEM.	1

15	4N4055	BODY ASSEM.	1
16	8S6511	BEARING	2
17	1B8709	KEY	1
18	2P1781	SPACER	1

C INDICATES CHANGE

308836

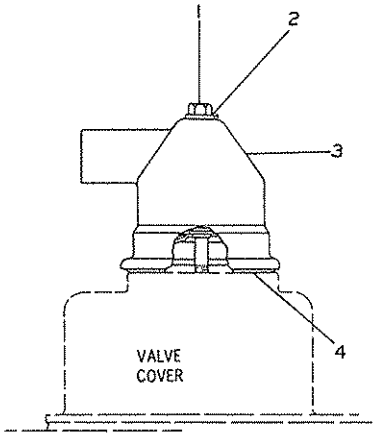

	REF NO.	PART NUMBER	DESCRIPTION	QTY.
	1	3H3243	BOLT	1
	2	4K9890	WASHER	1
	3	8S248	BREATHER ASSEM.	1
C	4	4L9564	SEAL	1

C INDICATES CHANGE

227531

1P4244 BREATHER GROUP

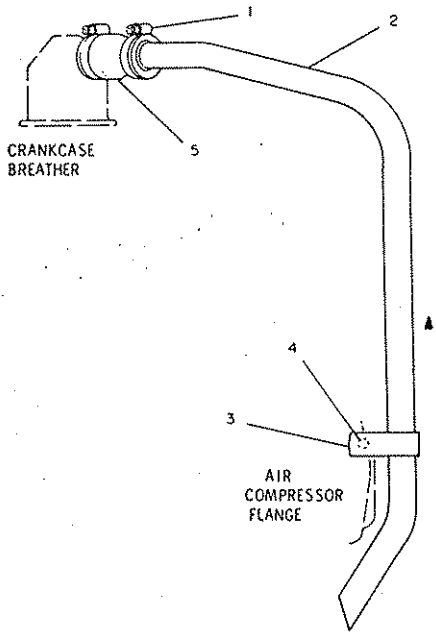

	REF NO.	PART NUMBER	DESCRIPTION	QTY.
	1	9M2904	CLAMP	2
	2	1N3824	TUBE	1
	3	5D4204	CLIP	1
	4	5M2894	WASHER	1
▲	5	1N4102	HOSE---8.00 cm(3.15 in.)	1

▲ ORDER BY THE CENTIMETER

226947

8N7254 FUMES DISPOSAL GROUP

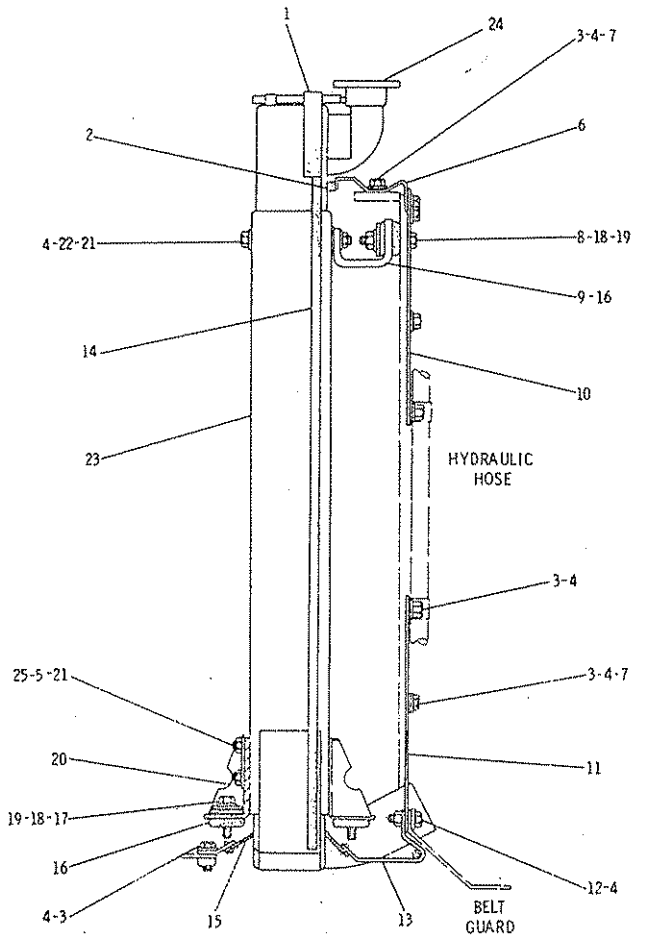

	REF. NO.	PART NUMBER	DESCRIPTION	QTY
CA	1	5P9909	SEAL----------1.09 m(42.91 in.)	
A	2	5P5930	SEAL----------.93 m(36.61 in.)	
	3	L1351	BOLT----------	26
C	4	5M2894	WASHER----1.62 cm(.719 in.) O.D.	35
C	5	5P1075	WASHER----------	4
	6	6N3934	BAFFLE ASSEM.----------	1
C	7	4B4278	WASHER----2.06 cm(.812 in.) O.D.	18
C	8	9S1366	BOLT----------	2
		1D4719	NUT----------	2
	9	2P226	BRACKET----------	2
	10	2P410	SHIELD----------	1
	11	3P115	SHIELD----------(L.H.)----------	1
		2P408	SHIELD----------(R.H.)----------	1
	12	1A2029	BOLT----------	5
	13	2P440	BAFFLE ASSEM.----------	1
A	14	5P5930	SEAL---------1.94 m(76.38 in.)	
	15	2P5187	BAFFLE ASSEM.----------	1
	16	9M1853	MOUNTING----------	6
	17	1A1460	BOLT----------	4
	18	2M849	WASHER-----2.54 m(1 in.) O.D.----	6
	19	2J7258	WASHER----4.59 cm(1.81 in.) O.D.-	6
	20	2P5190	BRACKET ASSEM.----------	4
	21	7F3425	BOLT----------	6
C	22	1D4717	NUT----------	2
C	23	8N73	RADIATOR GROUP---------- (Includes)	1
	24	321464	CAP----------	1
C	25	8N7837	PLATE ASSEM.---------- (Each Includes)	2
		9F2978	NUT----------	2

C INDICATES CHANGE

O. D. - OUTSIDE DIAMETER
A ORDER BY THE METER

228602

6N8845 RADIATOR GROUP
Serial No. 87V5275 to 87V5733 Inclusive

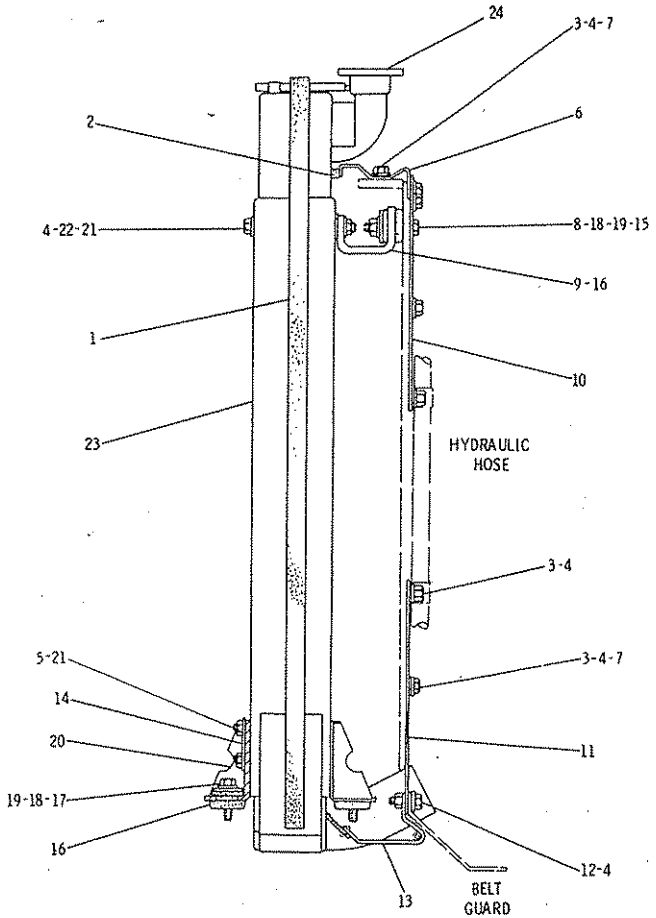

	REF. NO.	PART NUMBER	DESCRIPTION	QTY.
C▲	1	5P9909	SEAL---3.03m(109.2 in.)	
▲	2	5P5930	SEAL---.93m(36.61 in.)	
C	3	L1351	BOLT----------	22
C	4	5M2894	WASHER--I.82cm(.719 in.)O.D.--	31
	5	5P1075	WASHER----------	4
	6	6N3934	BAFFLE ASSEM.----------	1
	7	4B4278	WASHER--2.06 cm(.812 in.)O.D.--	18
	8	9S1366	BOLT----------	2
	9	2P226	BRACKET----------	2
	10	2P410	SHIELD----------	1
	11	3P115	SHIELD--------(L.H.)----------	1
		2P408	SHIELD--------(R.H.)----------	1
	12	1A2029	BOLT----------	5
	13	2P440	BAFFLE ASSEM.----------	1

REF. NO.	PART NUMBER	DESCRIPTION	QTY.
14	8N7837	PLATE ASSEM.---------- (Each Includes)	2
	9F2978	NUT----------	2
15	1D4719	NUT----------	2
16	9M1853	MOUNTING----------	6
17	1A1460	BOLT----------	4
18	2M849	WASHER--2.54m(1 in.)O.D.------	6
19	2J7258	WASHER--4.59 cm(1.81 in.)O.D.-	6
20	2P5190	BRACKET ASSEM.----------	4
21	7F3425	BOLT----------	6
22	1D4717	NUT----------	2
23	8N73	RADIATOR GROUP---------- (Includes)	1
24	321464	CAP----------	1

C INDICATES CHANGE

▲ ORDER BY THE METER

180304

6N8845 RADIATOR GROUP
Serial No. 87V5734 to 87V6636 inclusive

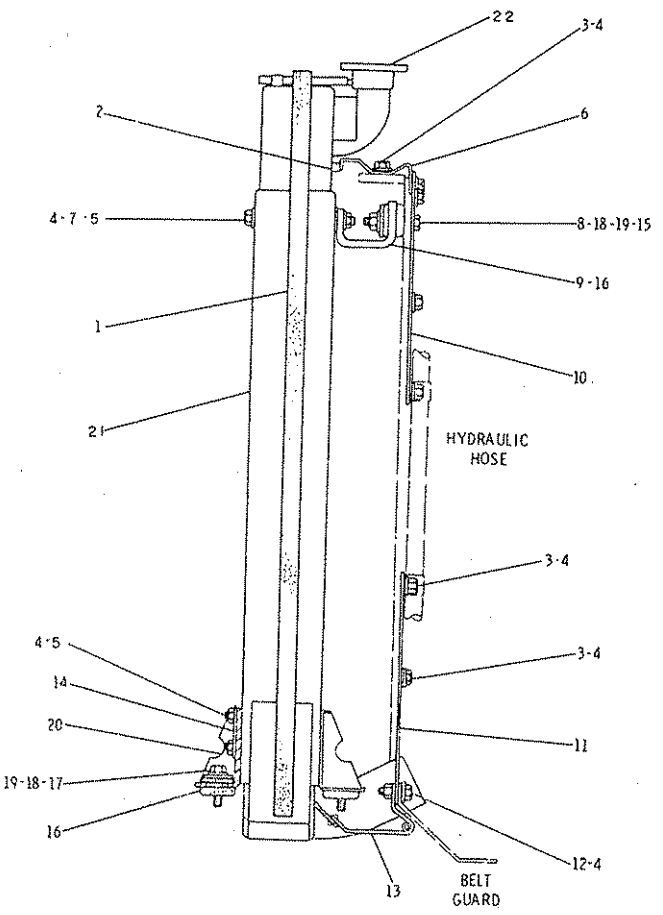

NOTE	REF NO	PART NUMBER	QTY	DESCRIPTION
D	1	5P9909		SEAL 3.03M(109.2IN.)
D	2	5P5930		SEAL .93M(36.61IN.)
C	3	L1351	20	BOLT
C	4	5P1075	33	WASHER
	5	7F3425	6	BOLT
C	6	2W117	1	BAFFLE ASSEM.
C	7	1D4717	2	NUT
	8	9S1366	2	BOLT
	9	2P226	2	BRACKET
C	10	2W116	1	SHIELD
	11	3P115	1	SHIELD (L.H.)
		2P408	1	SHIELD (R.H.)
	12	1A2029	5	BOLT
	13	2P440	1	BAFFLE ASSEM.
	14	8N7837	2	PLATE ASSEM. (EACH INCLUDES)
		9F2978	2	NUT
	15	1D4719	2	NUT
	16	9M1853	6	MOUNTING
	17	1A1460	4	BOLT
	18	2M849	6	WASHER 2.54M(.1IN.)O.D.
	19	2J7258	6	WASHER 4.59CM(1.81IN.)O.D.
	20	2P5190	4	BRACKET ASSEM.
	21	8N73	1	RADIATOR GROUP
	22	321464	1	CAP

C INDICATES CHANGE
D ORDER BY THE METER

308684

6N8845 RADIATOR GROUP
Serial No. 87V6637—Up

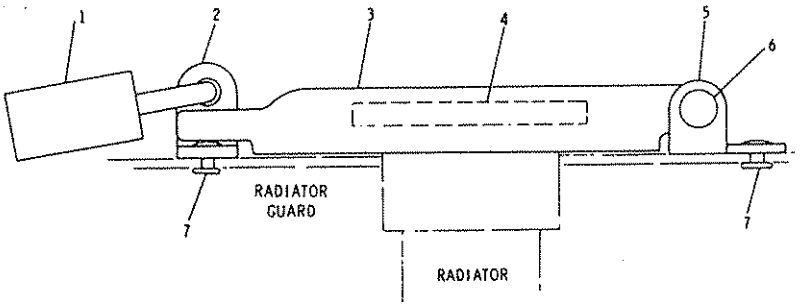

REF NO.	PART NUMBER	DESCRIPTION	QTY
1	8S7949	PADLOCK GROUP (Includes)	1
▲	8M439	KEY	1
2	9D5264	PLATE ASSEM.	1
3	9D5267	CAP	1
4	9D5317	STRIP	1
5	9D5266	BRACKET	1
6	8F964	RIVET	1
7	9M5732	RIVET	5

▲ NOT PART OF 9D5465 PROTECTION COVER GROUP

200469

9D5465 PROTECTION COVER GROUP—Radiator Cap
Replaced by 6G8995 shown on Page 37B
AN ATTACHMENT

REF NO	PART NUMBER	DESCRIPTION	QTY
1	2M1908	FITTING	1
2	7D7026	CONNECTOR	1
3	6G2007	HOSE	1
4	5D1026	CLAMP	2
5	86904	FITTING	1
6	1P7297	VALVE	1

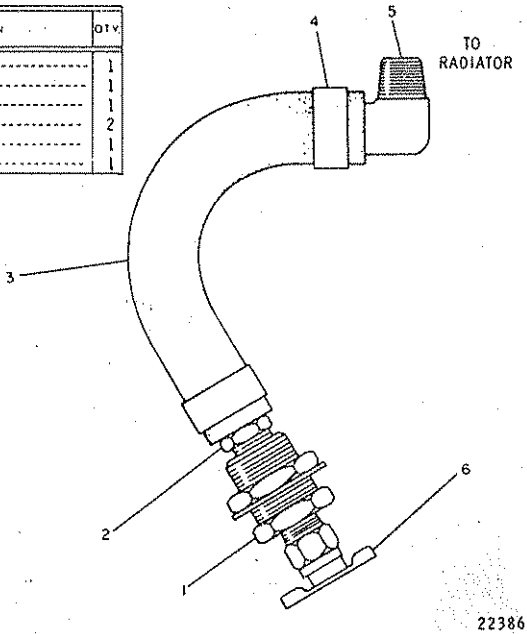

223869

6G2000 RADIATOR DRAIN EXTENSION GROUP

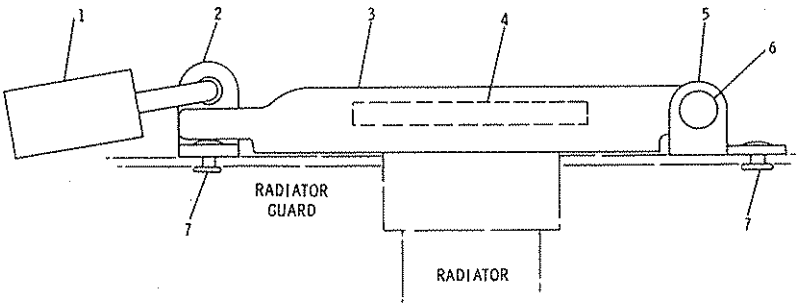

REF. NO.	PART NUMBER	DESCRIPTION	QTY
1	5P8502	PADLOCK GROUP	1
		(Includes)	
▲	5P8500	KEY	1
2	9D5264	PLATE ASSEM.	1
3	9D5267	CAP	1
4	9D5317	STRIP	1
5	9D5266	BRACKET	1
6	8F964	RIVET	1
7	9M5732	RIVET	5

▲ NOT PART OF 6G8995 PROTECTION COVER GROUP

234194

6G8995 PROTECTION COVER GROUP—Radiator Cap AN ATTACHMENT

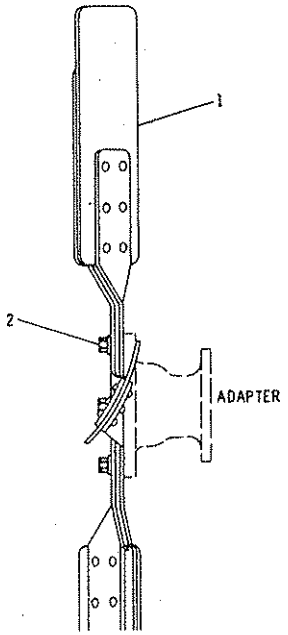

REF. NO.	PART NUMBER	DESCRIPTION	QTY
1	2P8907	SPIDER ASSEM.	1
2	1S1588	BOLT	6
	5M2894	WASHER	6

200286

1P9570 BLOWER FAN GROUP

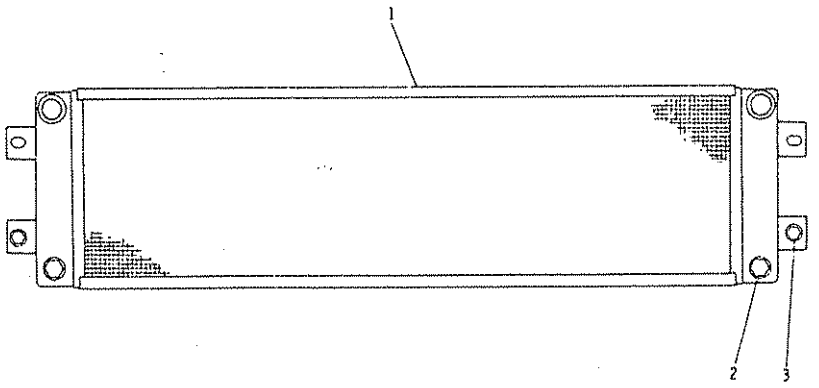

	REF. NO	PART NUMBER	DESCRIPTION	QTY
C	1	1W289	CORE ASSEM.	1
			(Includes)	
	2	3J5390	PLUG	2
	3	1S1594	BOLT	2
		8M9024	WASHER	2

C INDICATES CHANGE

230279

1P9575 HYDRAULIC OIL COOLER GROUP

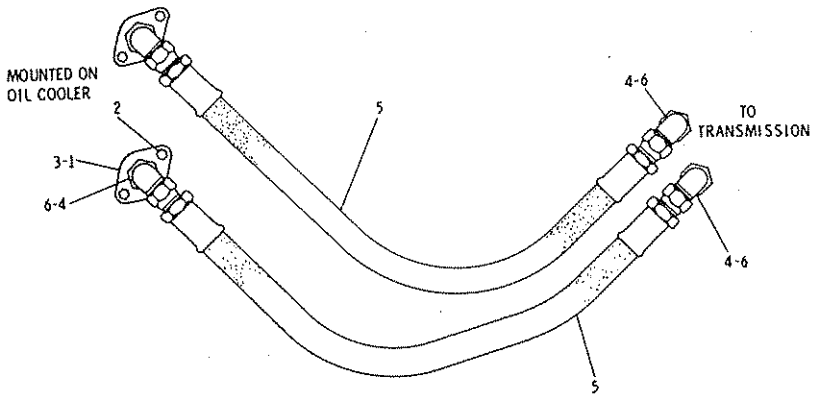

REF. NO.	PART NUMBER	DESCRIPTION	QTY
1	8D6543	FLANGE	2
2	S1591	BOLT	4
	3B4506	LOCKWASHER	4
3	4J520	SEAL	2
4	307950	ELBOW	4

	REF. NO.	PART NUMBER	DESCRIPTION	QTY
	5	9D6262	HOSE ASSEM.	2
			For service of each furnish:	
▲		5P180	HOSE---------27 cm(10. 63 in.)	
		3S7166	SLEEVE	2
		8S3759	COUPLING ASSEM.	2
	6	3D2824	SEAL	4

▲ ORDER BY THE CENTIMETRE 203305

9D1700 TRANSMISSION OIL COOLER LINES GROUP

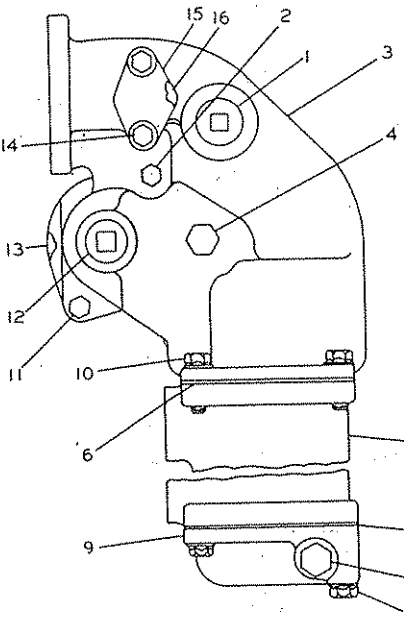

	REF. NO.	PART NUMBER	DESCRIPTION	QTY
	1	3B551	PLUG	1
C	2	L1352	BOLT	1
C	3	6N125	BONNET	1
	4	3J5390	PLUG	1
C	5	7N128	CORE ASSEM.	1
	6	2M4108	GASKET	2
	7	2H8829	PLUG	1
		6F7062	GASKET	1
C	8	S1590	BOLT	1
	9	5S7607	BONNET	1
C	10	S1594	BOLT	7
C	11	S1591	BOLT	1
	12	1B5174	PLUG	1
C	13	1W1172	GASKET	1
C	14	S1617	BOLT	2
		9M1974	WASHER	2
C	15	4N3840	COVER	1
C	16	4N3841	GASKET	1

C INDICATES CHANGE 234138

2P6508 TRANSMISSION OIL COOLER GROUP

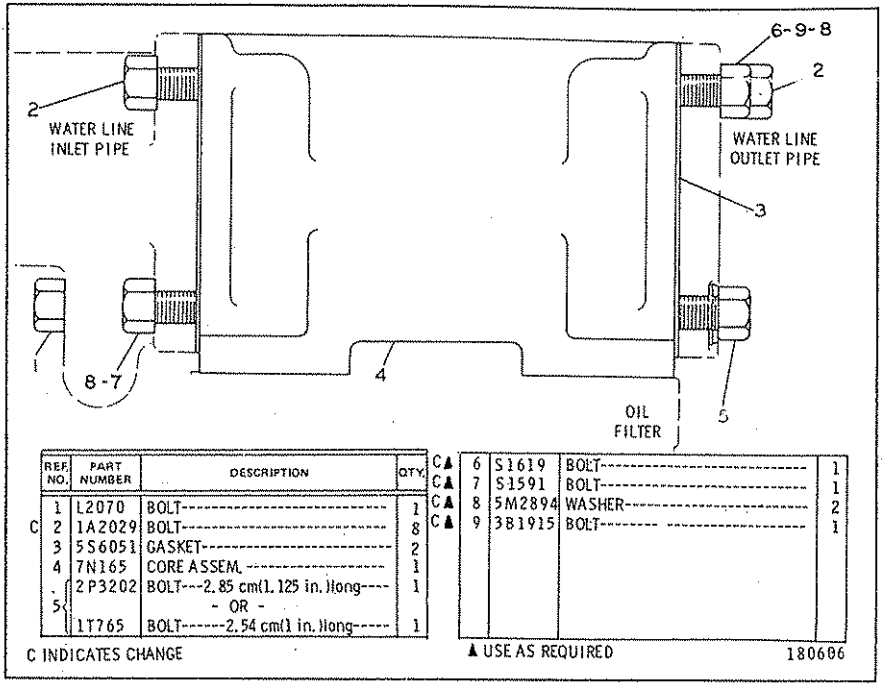

	REF. NO.	PART NUMBER	DESCRIPTION	QTY.
	1	L2070	BOLT	1
C	2	1A2029	BOLT	8
	3	5S6051	GASKET	2
	4	7N165	CORE ASSEM.	1
	5	2P3202	BOLT---2.85 cm(1.125 in.)long	1
			- OR -	
		1T765	BOLT---2.54 cm(1 in.)long	1

C INDICATES CHANGE

C▲	6	S1619	BOLT	1
C▲	7	S1591	BOLT	1
C▲	8	5M2894	WASHER	2
C▲	9	3B1915	BOLT	1

▲ USE AS REQUIRED 180606

2P6215 ENGINE OIL COOLER GROUP

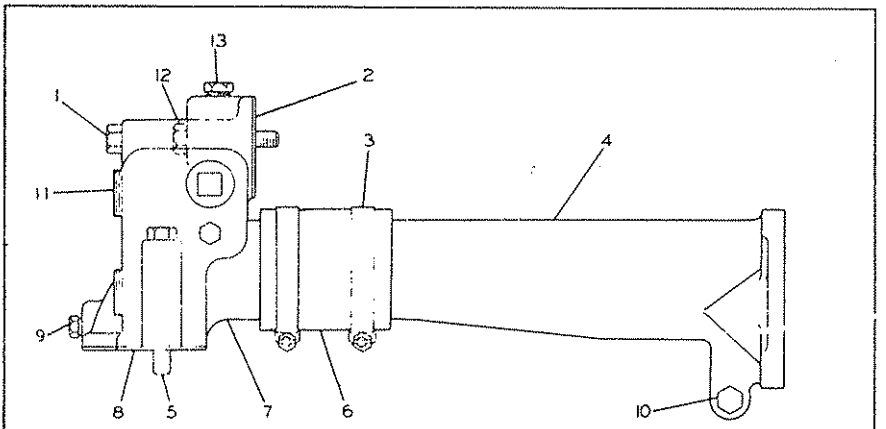

REF. NO.	PART NUMBER	DESCRIPTION	QTY.
1	T65	BOLT	1
2	2P6132	GASKET	1
3	5P4868	CLAMP	2
4	2P2511	PIPE	1
5	S1619	BOLT	2
▲ 6	5P1260	HOSE---7.62 cm(3 in.)	
7	7N172	ELBOW	1

8	7N200	GASKET	1
9	5M6213	PLUG	2
10	S1588	BOLT	1
11	1B5174	PLUG	3
12	S1590	BOLT	1
13	3J5390	PLUG	1

▲ ORDER BY THE CENTIMETRE 216810

7N7211 WATER LINES GROUP

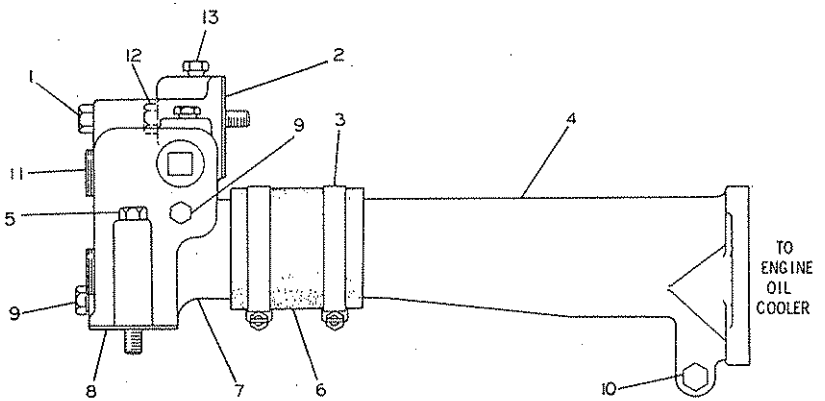

REF. NO.	PART NUMBER	DESCRIPTION	QTY.
1	T65	BOLT	1
2	2P6132	GASKET	1
3	5P4868	CLAMP	2
4	2P2511	PIPE	1
5	S1619	BOLT	2
▲ 6	5P1260	HOSE----80 cm(3.15 in.)	
7	1N3958	ELBOW	1
8	7N200	GASKET	1
9	5M6213	PLUG	2
10	S1588	BOLT	1
11	1B5174	PLUG	3
12	S1590	BOLT	1
13	3J5390	PLUG	2

▲ ORDER BY THE CENTIMETER

233157

1N4219 WATER LINES GROUP
Engine Serial No. 7Z3337—Up

9D620 WATER LINES GROUP

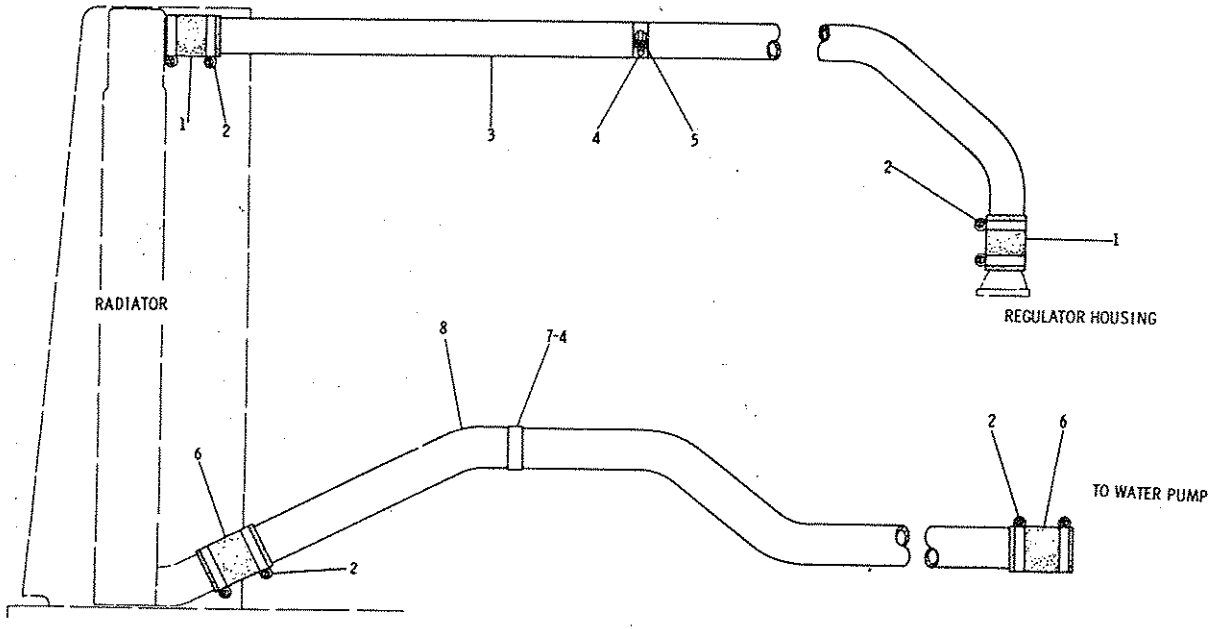

	REF. NO.	PART NUMBER	DESCRIPTION	QTY
C ▲	1	5P1262	HOSE----------20.32 cm(8 in.)	
C	2	5P598	CLAMP----------	8
	3	9D1697	TUBE----------	1
C	4	1S1594	BOLT----------	2
C		5P1075	WASHER----------	2

C	5	2S7010	CLIP----------	1
C ▲	6	5P1265	HOSE-------22.86 cm(9 in.)	
	7	8D8259	CLAMP----------	1
C	8	2G6383	TUBE----------	1

C INDICATES CHANGE

▲ {ORDER BY THE CENTIMETRE
{USE AS REQUIRED

165584

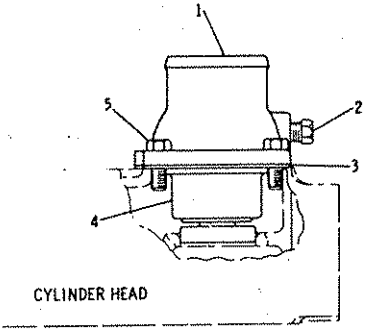

	REF. NO.	PART NUMBER	DESCRIPTION	QTY
	1	1P9989	PIPE	1
	2	5M6213	PLUG	1
C	3	7N944	GASKET	1
C	4	7N208	REGULATOR	1
C	5	S1594	BOLT	4

C INDICATES CHANGE

213542

3N3271 HOUSING AND REGULATOR GROUP

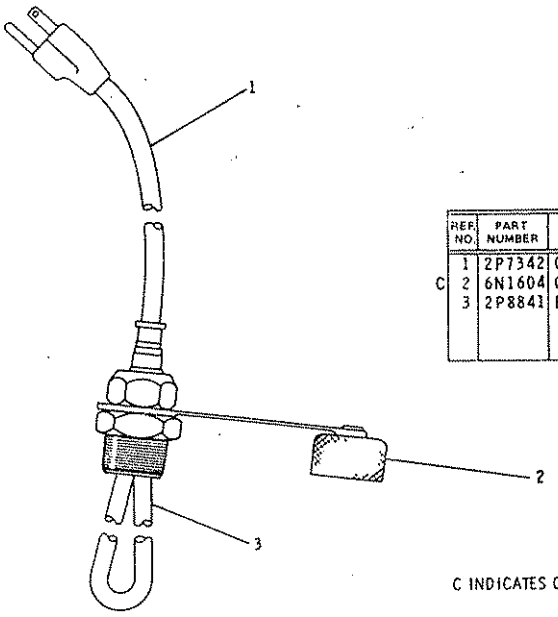

	REF. NO.	PART NUMBER	DESCRIPTION	QTY
	1	2P7342	CORD ASSEM.	1
C	2	6N1604	CAP ASSEM.	1
	3	2P8841	ELEMENT ASSEM.	1

C INDICATES CHANGE

205356

4N3586 JACKET WATER HEATER GROUP—Type 1

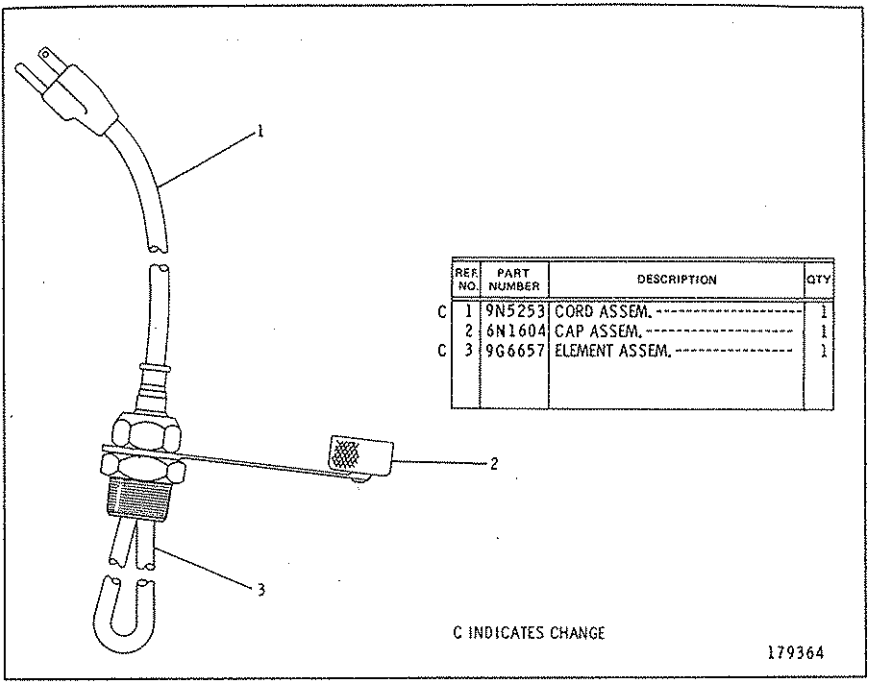

	REF. NO.	PART NUMBER	DESCRIPTION	QTY
C	1	9N5253	CORD ASSEM.	1
	2	6N1604	CAP ASSEM.	1
C	3	9G6657	ELEMENT ASSEM.	1

C INDICATES CHANGE

179364

4N3586 JACKET WATER HEATER GROUP—Type 2
AN ATTACHMENT

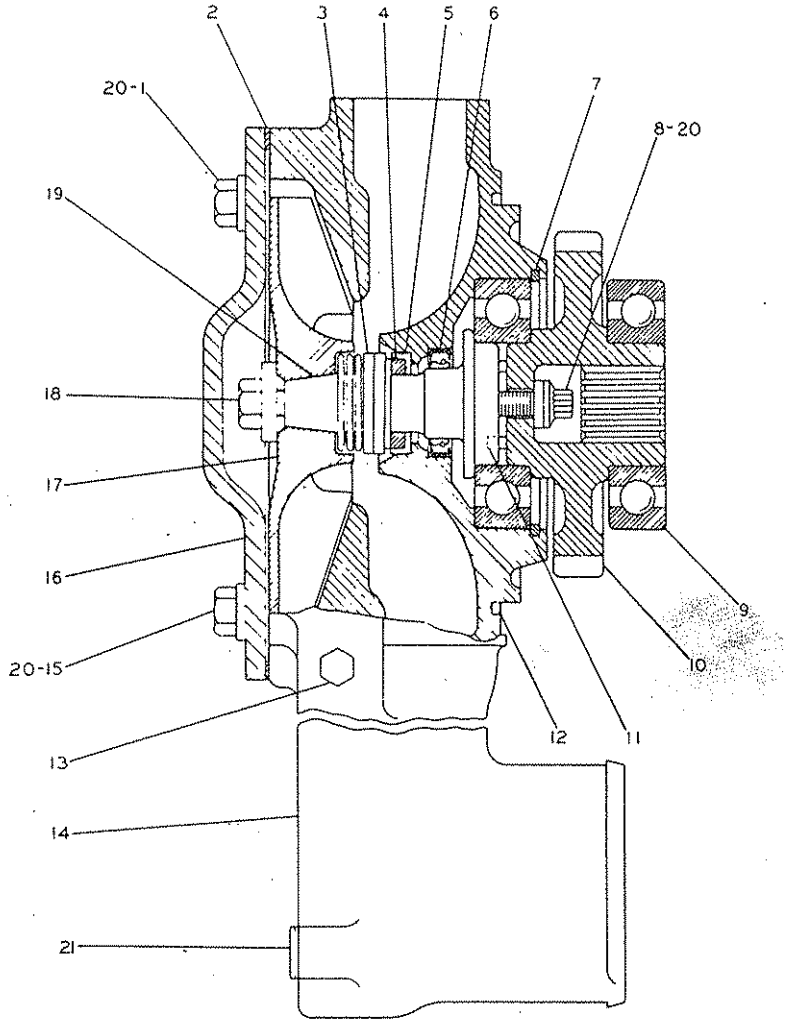

REF NO	PART NUMBER	DESCRIPTION	QTY
1	L1351	BOLT	2
2	8N5928	GASKET	1
3	4N6556	SEAL ASSEM.	1
4	8S7762	RING	1
5	8S8821	SEAL	1
6	8H9520	SEAL	1
▲ 7	1K6985	RING	1
▲ 8	5P76	BOLT	1
▲ 9	6H3957	BEARING	2
10	7N5189	GEAR ASSEM. ---(40 teeth)--- (Includes)	1
11	2L5893	PIN	2
12	5F3106	SEAL	1
13	5M6213	PLUG	1
14	7N6198	HOUSING	1
15	T55	BOLT	2
16	8N5929	COVER	1
▲ 17	7N5910	IMPELLER	1
▲ 18	4L6454	BOLT	1
▲ 18	9M6527	WASHER	1
▲ 19	7N5899	SHAFT	1
▲ 20	5M2894	WASHER	5
21	185174	PLUG	1
	7N9954	REBUILD KIT (Includes part marked ▲)	1

225410

7N6206 WATER PUMP GROUP
Serial No. 7Z1 to 7Z2158 inclusive

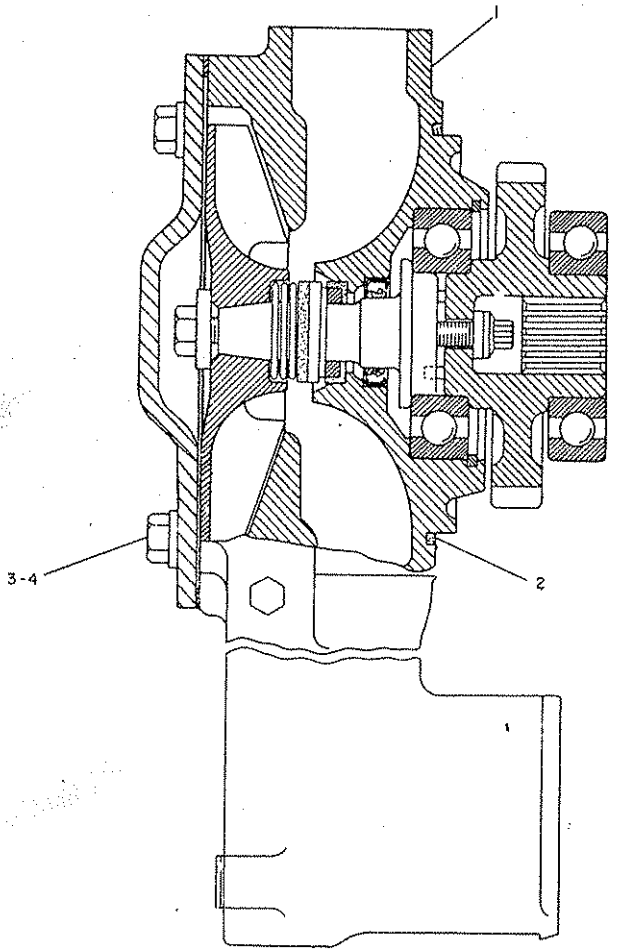

REF. NO.	PART NUMBER	DESCRIPTION	QTY.
1	1W3061	PUMP GROUP---------- (Separate Illustration)	1
2	5F3106	SEAL----------	1
3	T55	BOLT----------	2
4	5M2894	WASHER----------	2

180309

7N6206 WATER PUMP GROUP
Serial No. 7Z2159—Up
1W3061 Pump parts are shown on Page 43B

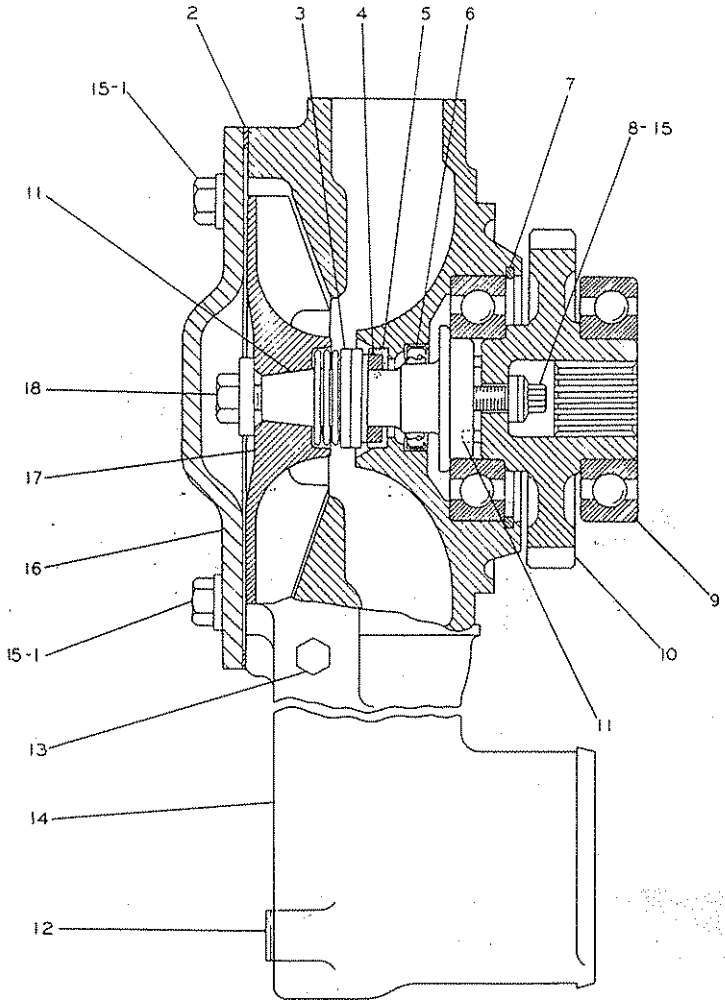

NOTE	REF NO	PART NUMBER	QTY	DESCRIPTION
	1	L1351	2	BOLT
	2	8N5928	1	GASKET
	3	6N9312	1	SEAL ASSEM.
	4	8S7762	1	RING
	5	8S8821	1	SEAL
	6	6V3988	1	SEAL
J	7	1K6985	1	RING
J	8	5P76	1	BOLT
J	9	6H3957	2	BEARING
	10	7N5186	1	GEAR ASSEM. (40 TEETH)
J	11	7N5899●	1	SHAFT
	12	1B5174	1	PLUG
	13	5M6213	1	PLUG
	14	7N6198	1	HOUSING
J	15	5M2894	3	WASHER
	16	8N5929	1	COVER
	17	7N5910 ●	1	IMPELLER
J	18	4L6454	1	BOLT
		9M6527	1	WASHER
		1W7052	1	REBUILD KIT. (INCLUDES PARTS MARKED J)

308857

1W3061 WATER PUMP GROUP
Serial No. 7Z2159—Up
Part of 7N6206 Water Pump Group shown on Page 43A

7W8007

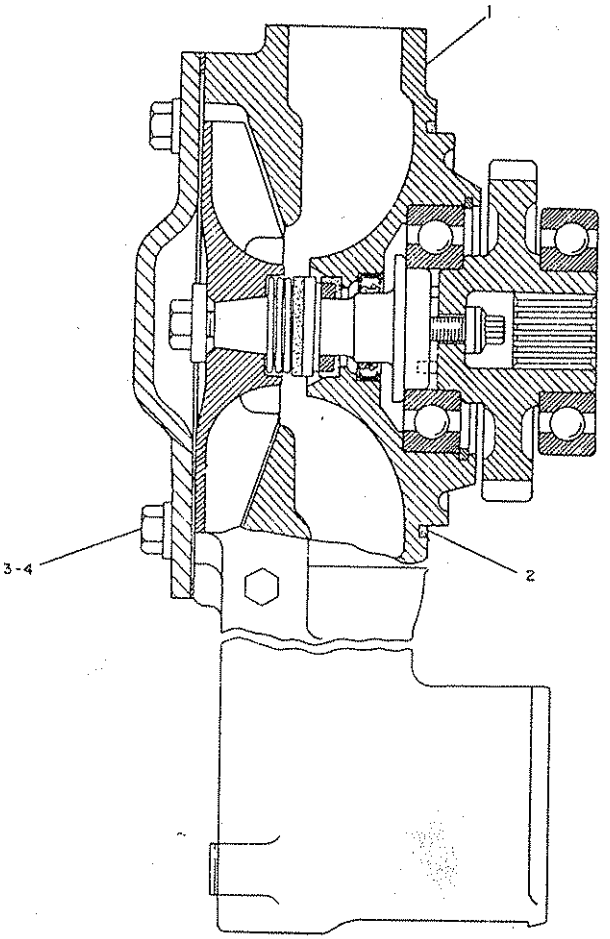

	REF. NO.	PART NUMBER	DESCRIPTION	QTY.
C	1	1W6601	PUMP GROUP---------- (Separate Illustration)	1
	2	5F3106	SEAL----------	1
	3	T55	BOLT----------	2
	4	5M2894	WASHER----------	2

C INDICATES CHANGE

300662

7N6206 WATER PUMP GROUP
Serial No. 7Z3029—Up
1W6601 Pump parts are shown on Page 43D

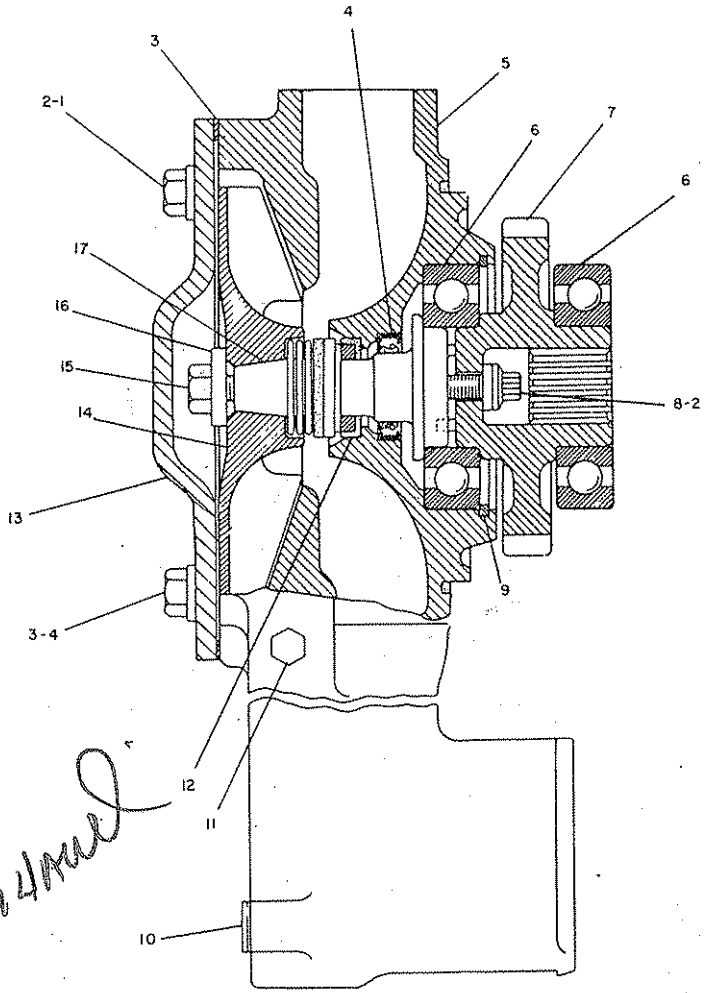

REF. NO.	PART NUMBER	DESCRIPTION	QTY.
1	L1351	BOLT	2
2	5M2894	WASHER	3
▲ 3	8N5928	GASKET	1
4	6V3988	SEAL	1
5	1W6558	HOUSING	1
▲ 6	6H3957	BEARING	2
7	7N5186	GEAR ASSEM. ----(40 teeth)	1
▲ 8	5P76	BOLT	1
▲ 9	1K6985	RING	1
10	1B5174	PLUG	1
11	5M6213	PLUG	1

12	6N9312	SEAL GROUP (Includes)	1
	8S7762	RING	1
	8S8821	SEAL	1
13	8N5929	COVER	1
14	7N5910	IMPELLER	1
▲ 15	4L6454	BOLT	1
▲ 16	9M6527	WASHER	1
▲ 17	7N5899	SHAFT	1
C	1W7052	THE FOLLOWING REPAIR KIT IS AVAILABLE: KIT-----(REBUILD) (INCLUDES PARTS MARKED ▲)	

308858

1W6601 WATER PUMP GROUP
Serial No. 7Z3029—Up
Part of 7N6206 Water Pump Group shown on Page 43C

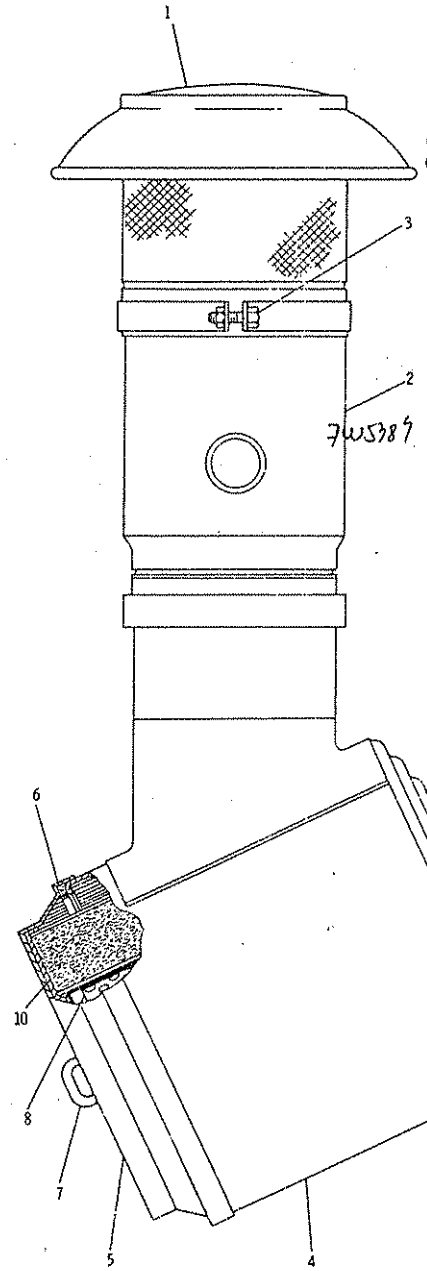

REF. NO.		PART NUMBER	DESCRIPTION	QTY.
C	1	4S8825	HOOD ASSEM.	1
C	2	4S8826	BODY ASSEM. (Each Includes)	1
	3	7F192	BOLT	1
		1D4717	NUT	1
	4	3P85	CLEANER GROUP (Includes)	1
	5	9M4894	CUP ASSEM. (Includes)	1
	6	9M8511	GASKET	1
	7	9M3695	ROD ASSEM.	1
	8	2S1285	ELEMENT ASSEM. --(secondary) (Includes)	1
	9	4M1485	GASKET	1
C	10	8N5389	ELEMENT ASSEM. --(primary)--	1
	11	1D4717	NUT	6

C INDICATES CHANGE

228065

3P87 AIR CLEANER GROUP
Note: 7S6340 Prescreener Assembly is available

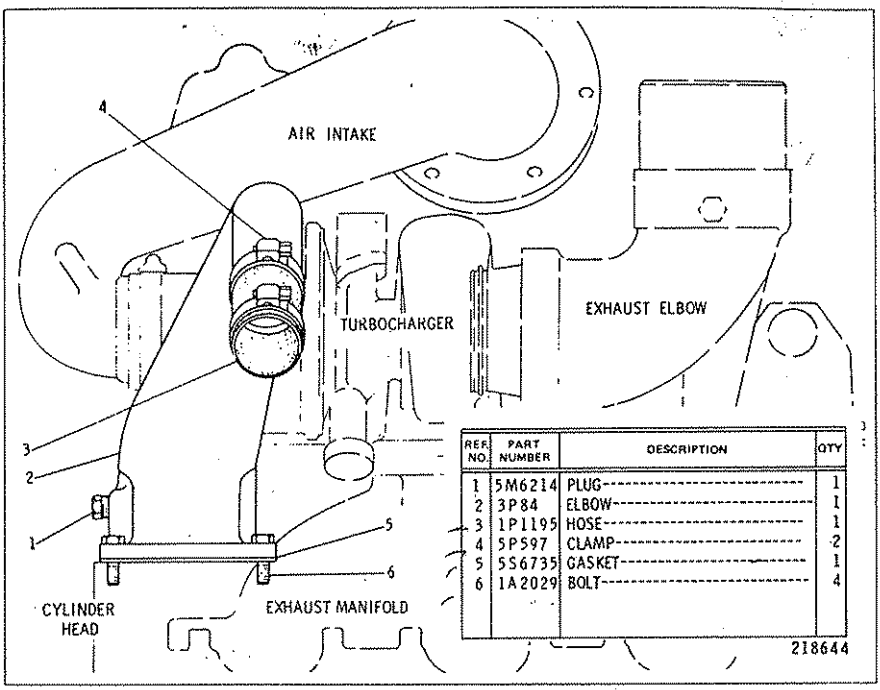

REF. NO.	PART NUMBER	DESCRIPTION	QTY
1	5M6214	PLUG	1
2	3P84	ELBOW	1
3	1P1195	HOSE	1
4	5P597	CLAMP	2
5	5S6735	GASKET	1
6	1A2029	BOLT	4

7N4144 AIR LINES GROUP

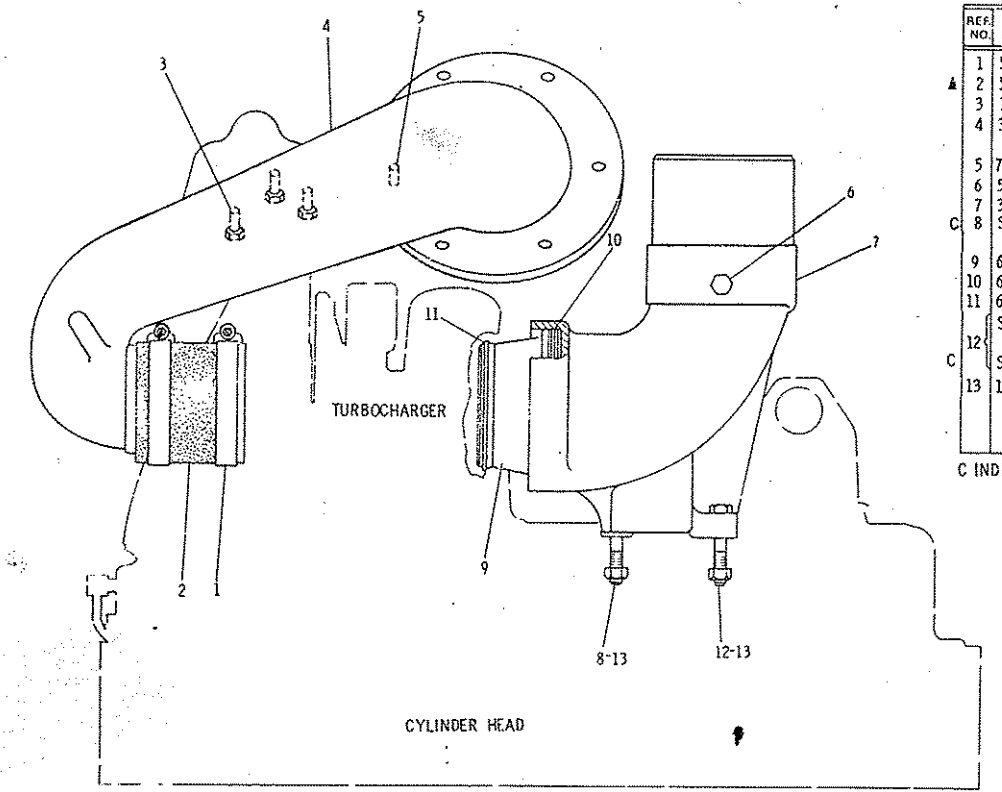

REF. NO.	PART NUMBER	DESCRIPTION	QTY
1	5P598	CLAMP	2
▲ 2	5P1263	HOSE---8 cm(3.15 in.)	
3	1A2029	BOLT	3
4	3P89	PIPE ASSEM. (Includes)	1
5	7M1674	ELEMENT	1
6	5B7890	PLUG	1
7	3P114	ELBOW	1
C 8	S1590	BOLT	2
9	6N1553	COUPLING	1
10	6N1558	RING	1
11	6N9	RING	1
12	S1590	BOLT---5 cm(2 in.)long	1
		- OR -	
C	S1571	BOLT--4.5 cm(1.75 in.)long	1
13	1B5355	NUT	3

C INDICATES CHANGE

▲ ORDER BY THE CENTIMETER

182340

7N4143 AIR LINES GROUP

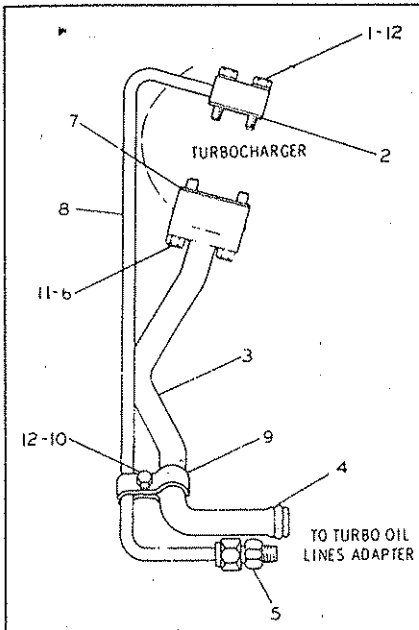

	REF NO	PART NUMBER	DESCRIPTION	QTY
	1	1B9575	BOLT	2
	2	7B5932	GASKET	1
C	3	6N6120	TUBE ASSEM.	1
	4	9M4849	SEAL	1
C	5	8M755	CONNECTOR	1
C	6	L1143	BOLT	2
	7	1P1255	GASKET	1
C	8	6N6122	TUBE ASSEM.	1
C	9	6N6033	CLIP	2
C	10	2H3755	BOLT	1
C		1D4716	NUT	1
C	11	5M2894	WASHER	2
C	12	9M1974	WASHER	4

C INDICATES CHANGE

217640

4N3923 TURBOCHARGER OIL LINES GROUP

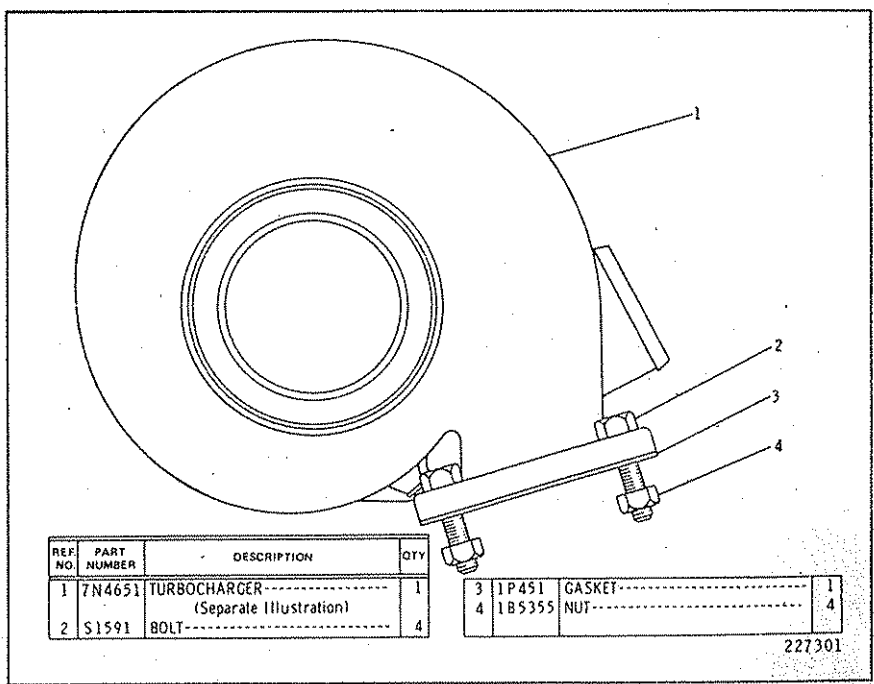

REF NO.	PART NUMBER	DESCRIPTION	QTY
1	7N4651	TURBOCHARGER (Separate Illustration)	1
2	S1591	BOLT	4
3	1P451	GASKET	1
4	1B5355	NUT	4

227301

7N4650 TURBOCHARGER GROUP
Engine Serial No. 7Z1 to 7Z5281 inclusive
7N4651 Turbocharger parts are shown on Page 48

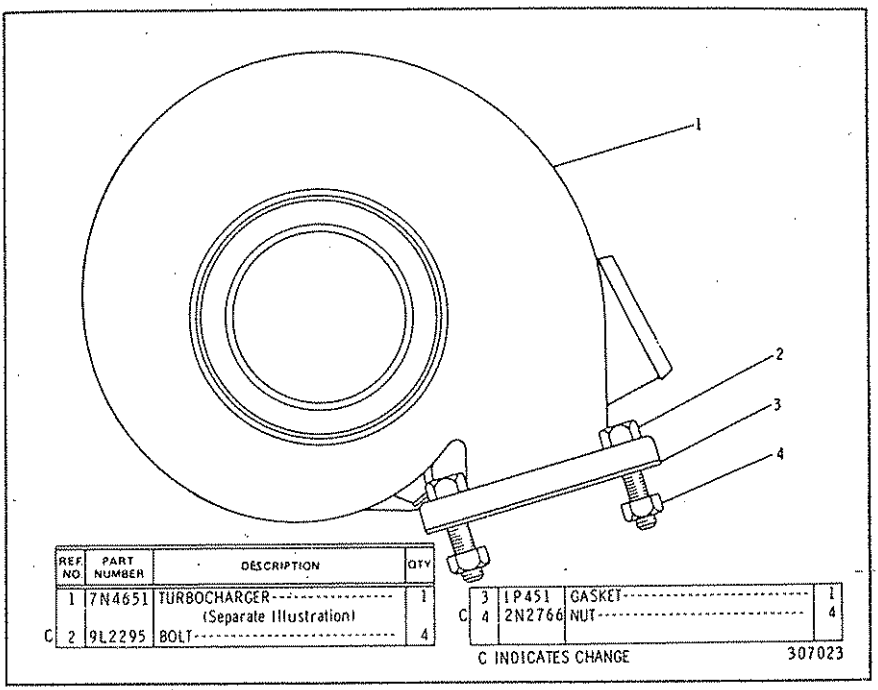

	REF NO.	PART NUMBER	DESCRIPTION	QTY
	1	7N4651	TURBOCHARGER	1
			(Separate Illustration)	
C	2	9L2295	BOLT	4
	3	1P451	GASKET	1
C	4	2N2766	NUT	4

C INDICATES CHANGE

307023

7N4650 TURBOCHARGER GROUP
Engine Serial No. 7Z5282—Up
7N4651 Turbocharger parts are shown on Page 48

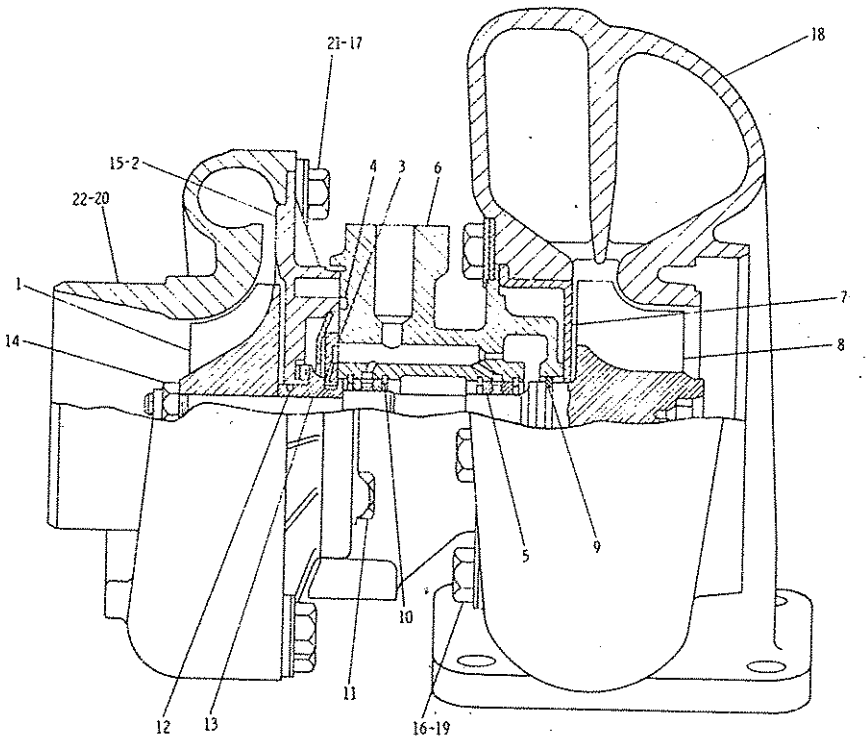

REF NO	PART NUMBER	DESCRIPTION	QTY
	4N6860	CARTRIDGE ASSEM.	1
1		(Includes)	
	4N6861	WHEEL	1
2	4N6863	BACKPLATE ASSEM.	1
3	1P1111	BEARING	1
● 4	1P1120	RING	1
● 5	1P1114	BEARING	2
	2P9635	HOUSING ASSEM.	1
6		(Includes)	
	1P1136	PIN	2
7	7N12	SHROUD	1
8	1P1116	SHAFT AND WHEEL ASSEM.	1
● 9	7N6609	RING	1
● 10	2P9607	RING	4
11	2A762	BOLT	4
●	1P1117	PLATE	2
● 12	1P1124	RING	1
13	1P1123	COLLAR	1
● 14	1P1125	NUT	1
15	7N2434	NAMEPLATE	1
	2F808	SCREW	2
16	6V2489	BOLT	6
17	4N6864	CLAMP	3
	4N6865	LOCKPLATE	3
18	7N1687	HOUSING (turbine)	1
19	1P1112	CLAMP	3
	1P1113	LOCKPLATE	3
20	4N6862	HOUSING (compressor)	1
21	1C569	BOLT	6
22	2P1167	NAMEPLATE	1
		THE FOLLOWING REPAIR KIT IS AVAILABLE:	
C	2W716	KIT (cartridge repair)	1
		(Includes parts marked ●)	
●	SMHS6768	FORM (installing, repair kit)	1

C INDICATES CHANGE

305763

7N4651 TURBOCHARGER GROUP

Part of 7N4650 Turbocharger Group shown on Page 47

4N8056 AIR COMPRESSOR LINES GROUP
Engine Serial No. 7Z1 to 7Z2552 & 7Z2589 to 7Z2761 inclusive

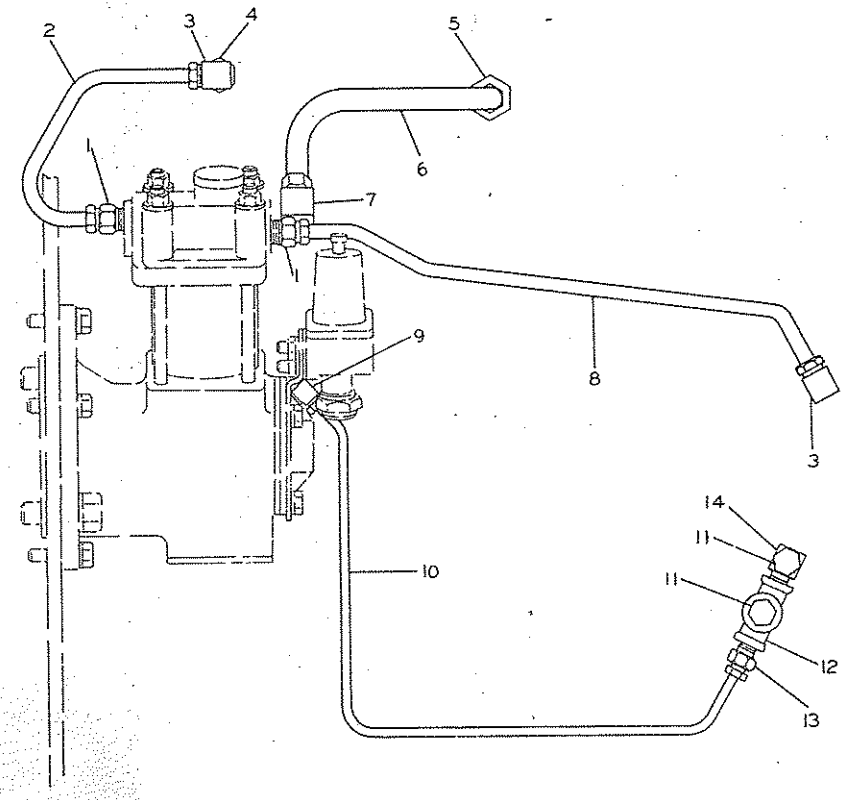

REF. NO.	PART NUMBER	DESCRIPTION	QTY
1	5K9248	CONNECTOR	2
2	2P6210	TUBE ASSEM.	1
3	5K9237	ELBOW	2
4	3B7255	BUSHING	1
5	6K8079	CONNECTOR	1
6	2P2698	TUBE ASSEM.	1
7	1P210	ELBOW	1
8	2P2706	TUBE ASSEM.	1
9	5K9243	ELBOW	1
10	4N8884	TUBE ASSEM.	1
11	5M6213	PLUG	2
12	7B192	CROSS	1
C	3B7262	NIPPLE	1
13	5K9239	CONNECTOR	1
C 14	7F9311	FITTING	1

C INDICATES CHANGE

182110

7N9919 AIR COMPRESSOR LINES GROUP
Engine Serial No. 7Z2553 to 2588 and 7Z2762—Up

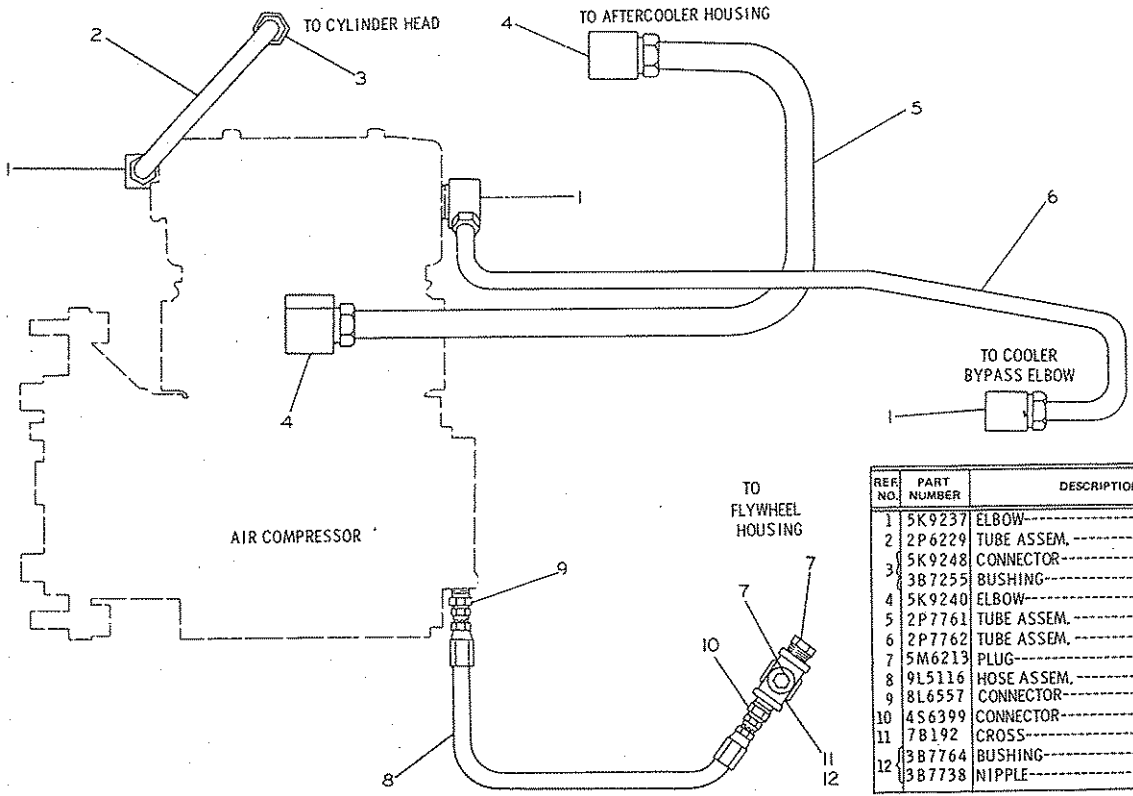

REF. NO.	PART NUMBER	DESCRIPTION	QTY
1	5K9237	ELBOW	3
2	2P6229	TUBE ASSEM.	1
3	5K9248	CONNECTOR	1
	3B7255	BUSHING	1
4	5K9240	ELBOW	2
5	2P7761	TUBE ASSEM.	1
6	2P7762	TUBE ASSEM.	1
7	5M6213	PLUG	2
8	9L5116	HOSE ASSEM.	1
9	8L6557	CONNECTOR	1
10	4S6399	CONNECTOR	1
11	7B192	CROSS	1
12	3B7764	BUSHING	1
	3B7738	NIPPLE	1

182241

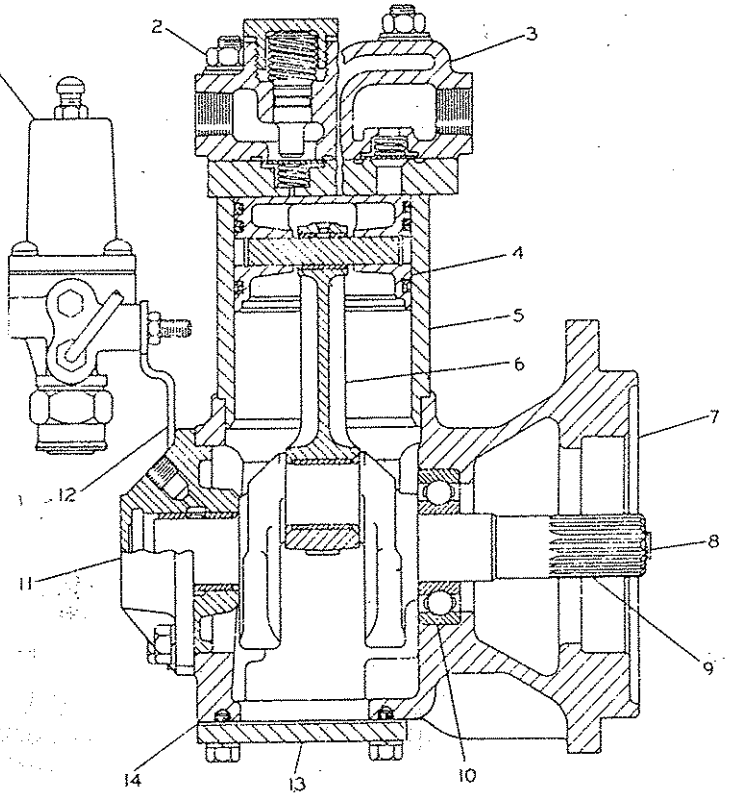

	REF. NO.	PART NUMBER	DESCRIPTION	QTY
	1	2P9615	GOVERNOR ASSEM.	1
	2	1B4203	NUT	4
C	3	7N2833	HEAD ASSEM.	1
	4	8A2252	PISTON ASSEM.	1
	5	8A2251	LINER	1
	6	8A2248	ROD ASSEM.	1
	7	2P7849	CRANKCASE	1
	8	9F2247	PLUG	1
	9	2P7850	CRANKSHAFT	1
	10	2F5721	BEARING	1
	11	1P5480	COVER ASSEM.	1
	12	2P7848	BRACKET	1
	13	4N5224	COVER	1
	14	4N5225	GASKET	1
			THE FOLLOWING REPAIR KITS ARE AVAILABLE:	
		8A2250	KIT----(Includes 5 Piston rings)--	1
C		8A2305	KIT----(Governor-Major Repair)--- (Includes Diaphragms, Followers, Valve, Guide, Plunger, "O" Ring, Spring & Hardware)	1
C		7N2834	KIT----(Compressor-Major Repair)- (Includes Valves, Bearings, Gaskets, Rings, Strap, Springs, Shims, "O" Ring & Hardware)	1
		1P6059	KIT-------(Unloader Valve)------- (Includes Cap, Clip, Washer, Spring, Plunger, & "O" Ring)	1
		4N4027	KIT--------(Governor Lines)----- (Includes Elbow Assem., Pipe, Fitting, & Washer)	1

C INDICATES CHANGE

227968

2P9614 AIR COMPRESSOR GROUP
Engine Serial No. 7Z1 to 7Z2532 inclusive
Part of 2P9613 Air Compressor Group shown on Page 51

1W6754 AIR COMPRESSOR GROUP
Engine Serial No. 7Z2533 to 7Z2552 & 7Z2589 to 7Z2761 inclusive
Part of 2P9613 Air Compressor Group shown on Page 51A

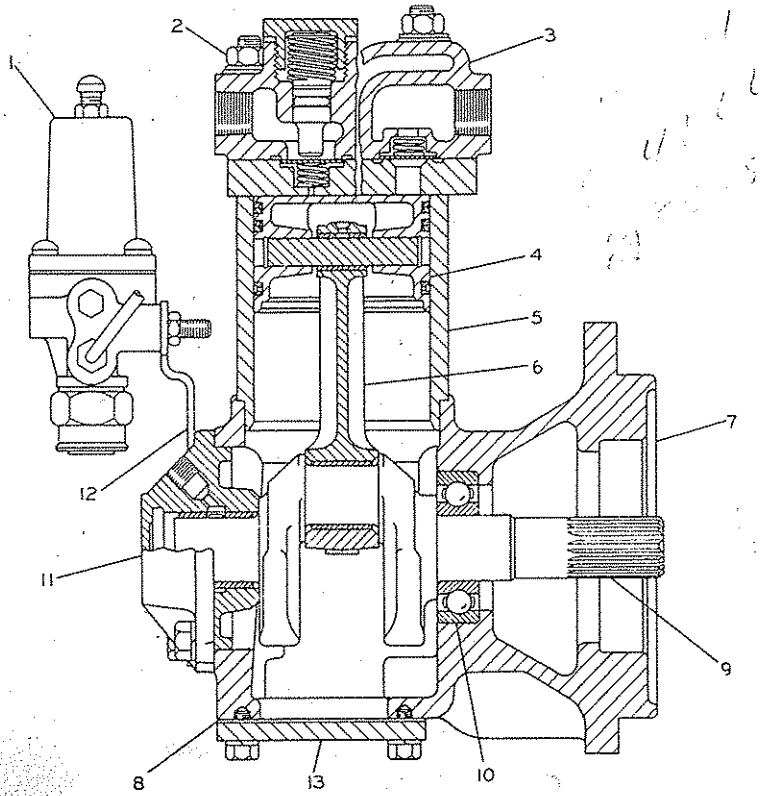

REF. NO.	PART NUMBER	DESCRIPTION	QTY
1	2P9615	GOVERNOR ASSEM.	1
2	1B4203	NUT	4
3	7N2833	HEAD ASSEM.	1
4	8A2252	PISTON ASSEM.	1
5	8A2251	LINER	1
6	8A2248	ROD ASSEM.	1
7	1W6471	CRANKCASE	1
8	4N5225	GASKET	1
9	2P7850	CRANKSHAFT	1
10	2F5721	BEARING	1
11	1P5480	COVER ASSEM.	1
12	2P7848	BRACKET	1
13	4N5224	COVER	1
		THE FOLLOWING REPAIR KITS ARE AVAILABLE:	
	8A2250	KIT----(Includes 5 Piston rings)--	1
	8A2305	KIT----(Governor-Major Repair)--- (Includes Diaphragms, Followers, Valve, Guide, Plunger, "O" Ring, Spring & Hardware)	1
	7N2834	KIT----(Compressor-Major Repair)- (Includes Valves, Bearings, Gaskets, Rings, Strap, Springs, Shims, "O" Ring & Hardware)	1
	1P6059	KIT-------(Unloader Valve)------- (Includes Cap, Clip, Washer, Spring, Plunger, & "O" Ring)	1
	4N4027	KIT--------(Governor Lines)----- (Includes Elbow Assem., Pipe, Fitting, & Washer)	1

182245

INTAKE AND EXHAUST SYSTEM

PARTS MARKED ▲ ARE REQUIRED TO MAKE A COMPLETE BEARING

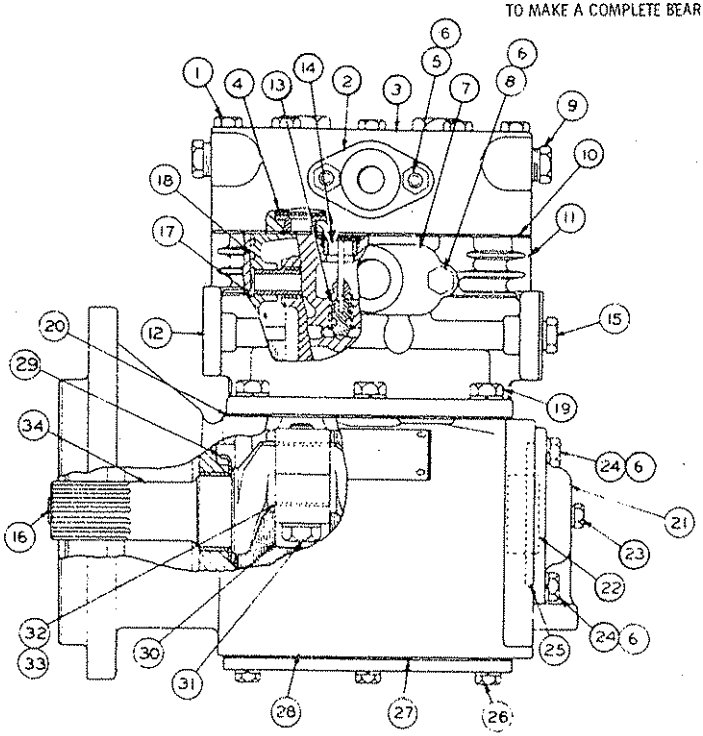

REF. NO.	PART NUMBER	DESCRIPTION	QTY	
1	8S4583	BOLT	8	
2	8S4365	FITTING	1	
	1S7107	GASKET	1	
3	8S4581	HEAD ASSEM.	1	
4	8S7599	SEAT	2	
5	1A2850	STUD	2	
	1B4202	NUT	2	
6	4L7318	LOCKWASHER	8	
7	9M397	FITTING	1	
	9M385	PLATE	1	
	6L1884	GASKET	2	
8	2B2695	BOLT	2	
9	3J5390	PLUG	2	
10	8S1982	GASKET	1	
11	8S4582	BLOCK ASSEM.	1	▲
12	3K5762	PLUG	1	▲
13	9M382	BUSHING	2	▲
14	9M381	SEAT	2	▲
15	5M6213	PLUG	2	
16	9F2247	PLUG	1	
C 17	1W2804	PISTON ASSEM. (Each Includes)	2	
	1W2803	PLUG	2	
18	1S9875	KIT-(piston ring-includes 8 rings)	1	
19	LI351	BOLT	6	
	3B4506	LOCKWASHER	6	
20	1F6	GASKET	1	
21	8S1978	COVER ASSEM.	1	
22	1S9867	BEARING	1	
23	5M6214	PLUG	1	
24	4M61	BOLT	4	
25	5M6509	SEAL	1	
26	4M5281	BOLT	6	
	3B4504	LOCKWASHER	6	
27	3H5175	GASKET	1	
28	1W6472	CRANKCASE	1	
29	9L1518	WASHER	2	
30	1S9873	ROD ASSEM.	2	
31	9M5181	BOLT	2	
	2A5328	LOCK	2	
32	4N3982	BEARING	1	
	4N3983	BEARING---(.010 in. undersize)	1	
33	4N3984	BEARING---(.020 in. undersize)	1	
	4N3985	BEARING---(.030 in. undersize)	1	
34	2P8670	CRANKSHAFT	1	
	1S9874	KIT--(Air Compressor Valve) (Consists of Element, Gaskets Guides, Pistons, Plungers, Saddle, Seal, Seat, Springs, and Valves)	1	

C INDICATES CHANGE

182243

1W6473 AIR COMPRESSOR GROUP
Engine Serial No. 7Z2553 to 7Z2588 & 7Z2762—Up
Part of 7N9912 Air Compressor Group shown on Page 51B

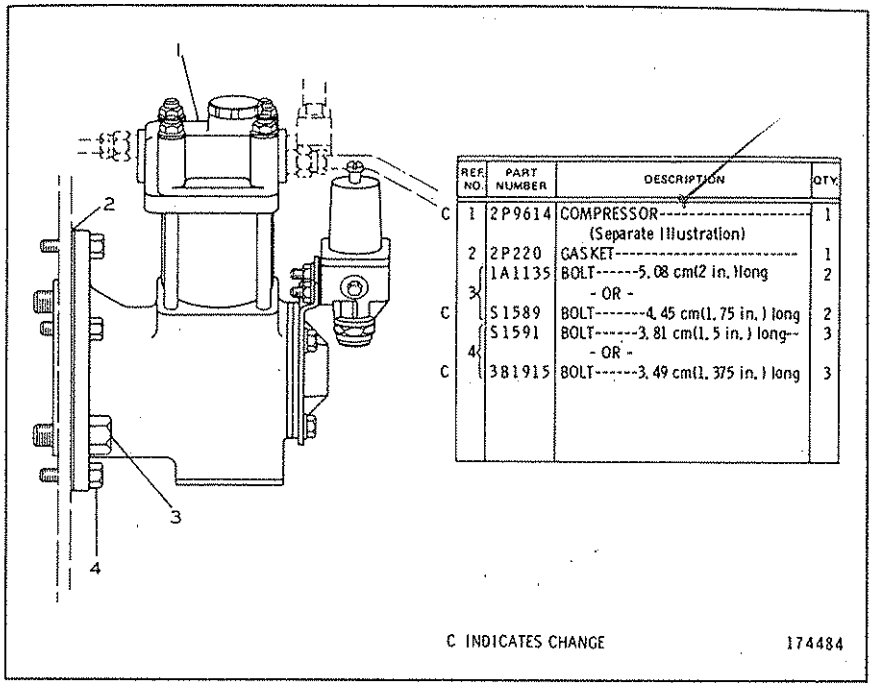

	REF. NO.	PART NUMBER	DESCRIPTION	QTY.
C	1	2P9614	COMPRESSOR---------- (Separate Illustration)	1
	2	2P220	GASKET----------	1
	3	1A1135	BOLT------5.08 cm(2 in.)long - OR -	2
C	3	S1589	BOLT--------4.45 cm(1.75 in.) long	2
	3	S1591	BOLT------3.81 cm(1.5 in.) long- - OR -	3
C	4	381915	BOLT------3.49 cm(1.375 in.) long	3

C INDICATES CHANGE 174484

2P9613 AIR COMPRESSOR GROUP
Engine Serial No. 7Z1 to 7Z2532 inclusive
2P9614 Compressor parts are shown on Page 50

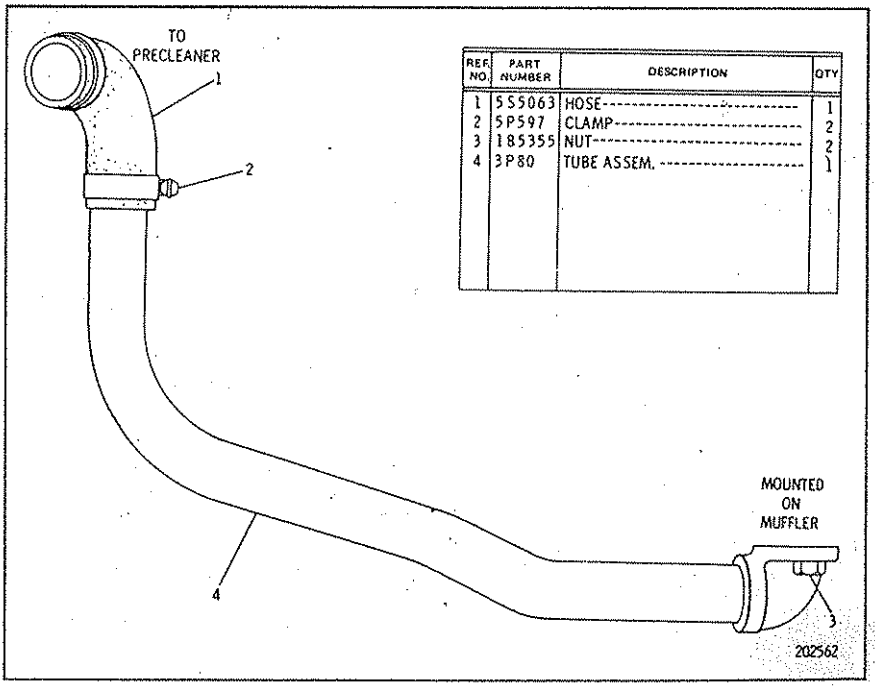

REF. NO.	PART NUMBER	DESCRIPTION	QTY
1	5S5063	HOSE----------	1
2	5P597	CLAMP----------	2
3	185355	NUT----------	2
4	3P80	TUBE ASSEM.----------	1

4N8302 DUST EJECTOR GROUP

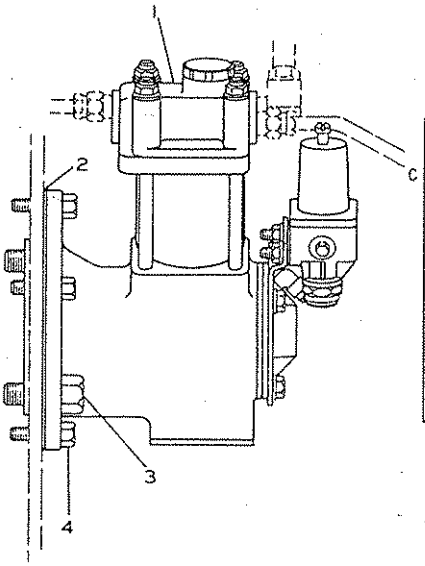

REF. NO.	PART NUMBER	DESCRIPTION	QTY.
C 1	1W6754	COMPRESSOR---------- (Separate Illustration)	1
2	2P220	GASKET----------	1
3	1A1135	BOLT------5.08 cm(2 in.)long	2
		- OR -	
	S1589	BOLT-------4.45 cm(1.75 in.) long	2
4	S1591	BOLT------3.81 cm(1.5 in.) long--	3
		- OR -	
	3B1915	BOLT------3.49 cm(1.375 in.) long	3

C INDICATES CHANGE

182244

2P9613 AIR COMPRESSOR GROUP
Engine Serial No. 7Z2533 to 7Z2552 and 7Z2589 to 7Z2761 inclusive
1W6754 Compressor parts are shown on Page 50A

7N9912 AIR COMPRESSOR GROUP
Engine Serial No. 7Z2553 to 7Z2588 and 7Z2762—Up
1W6473 Compressor parts are shown on Page 50B

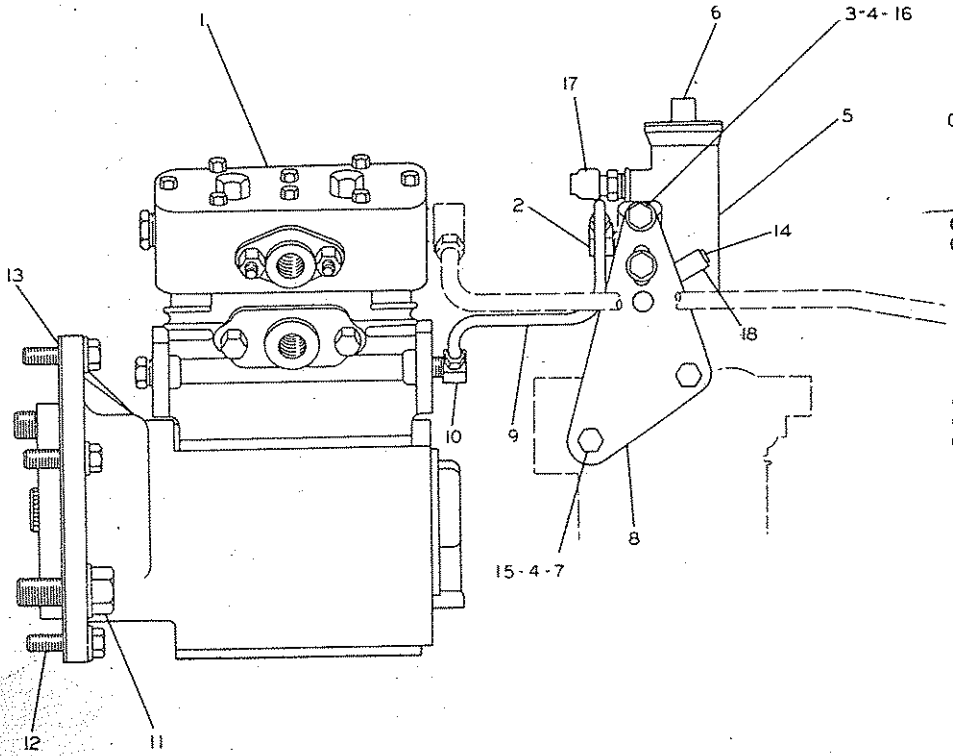

REF. NO.	PART NUMBER	DESCRIPTION	QTY.
1	1W6473	COMPRESSOR GROUP (Separate Illustration)	1
2	5K9243	ELBOW	1
C 3	3H5932	BOLT	2
	1D4716	NUT	2
4	9M1974	WASHER	4
5	7N9195	GOVERNOR ASSEM.	1
6	2S2923	COVER	1
C 7	1D4538	BOLT	2
C 8	2W1088	BRACKET	1
9	5N9111	TUBE ASSEM.	1
10	5K9241	ELBOW	1
11	1A1135	BOLT	2
	4D3704	WASHER	2
12	1S1591	BOLT	3
	5M2894	WASHER	3
13	2P220	GASKET	1
C 14	9F2247	PLUG	5
C 15	7K3377	PIPE	2
C 16	3H4656	SPACER	2
17	5F5434	VENT ASSEM.	1
C 18	3B8822	ELBOW	1
		THE FOLLOWING REPAIR KIT IS AVAILABLE:	
	9M402	KIT-----(Governor Overhaul)----- (Consists of grommets, spring, filter, valve and cover)	1

C INDICATES CHANGE

304339

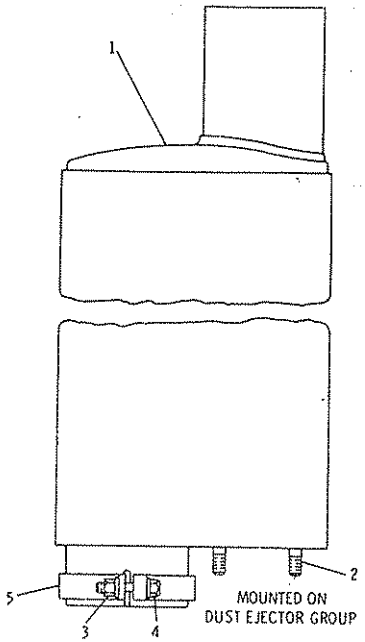

	REF. NO.	PART NUMBER	DESCRIPTION	QTY
	1	4N7870	MUFFLER ASSEM.	1
C	2	S532	STUD	2
	3	1B5355	NUT	1
C	4	S1590	BOLT	1
C		5M2894	WASHER	2
	5	4F4974	CLAMP	1

C INDICATES CHANGE

303041

4N8297 MUFFLER GROUP

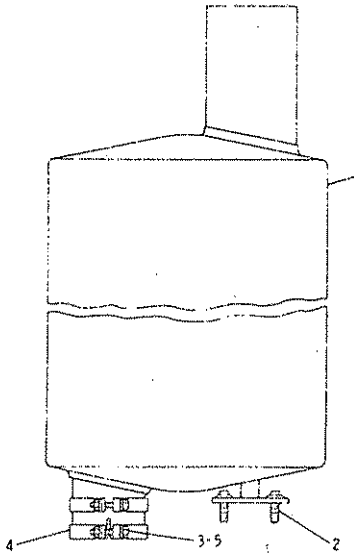

	REF NO	PART NUMBER	DESCRIPTION	QTY
	1	4N8942	MUFFLER ASSEM.	1
C	2	6F7012	STUD	2
C	3	S1590	BOLT	2
		1B5355	NUT	2
C	4	4F4974	CLAMP	2
C	5	5M2894	WASHER	4

C INDICATES CHANGE

209829

4N9197 MUFFLER GROUP

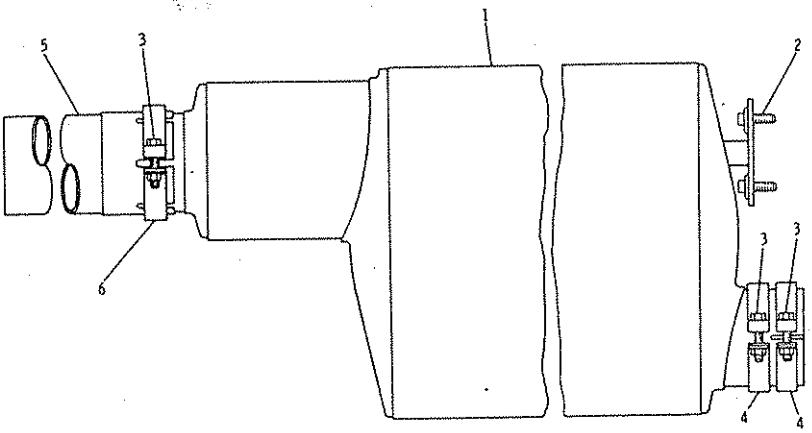

REF. NO.	PART NUMBER	DESCRIPTION	QTY.
1	6N1878	MUFFLER ASSEM.	1
2	2B6296	STUD	2
C	S1590	BOLT	3
3	1B5355	NUT	3
	5M2894	WASHER	3
4	4F4974	CLAMP	2
C 5	8S5120	PIPE	1
C 6	7S8735	CLAMP	1

C INDICATES CHANGE 304388

6N5252 MUFFLER GROUP
Part of 2G2580 Sound Suppression Arrangement listed on Page 168
AN ATTACHMENT

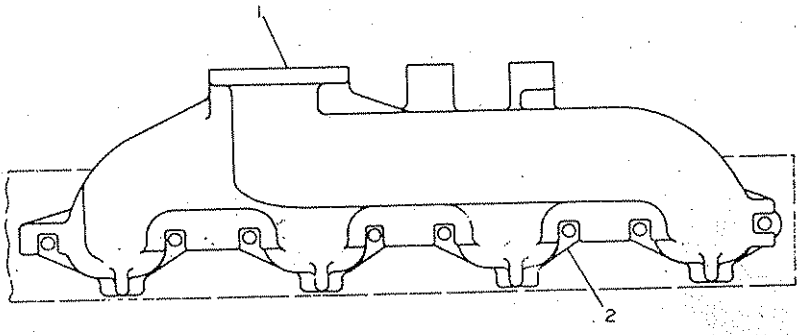

REF. NO.	PART NUMBER	DESCRIPTION	QTY
1	1P1216	MANIFOLD	1
2	8S8258	GASKET	4

117199

2P6571 EXHAUST MANIFOLD GROUP

REF. NO.	PART NUMBER	DESCRIPTION	QTY
1	6B6205	SPACER	1
2	2P1974	STUD	2
	5M2894	WASHER	2
3	4N9587	SHIELD ASSEM.	1
C 4	7S6719	STUD	6
5	1B5355	NUT	8
6	6N508	SPACER	1
7	8M7145	WASHER	7
8	9M6527	WASHER	1

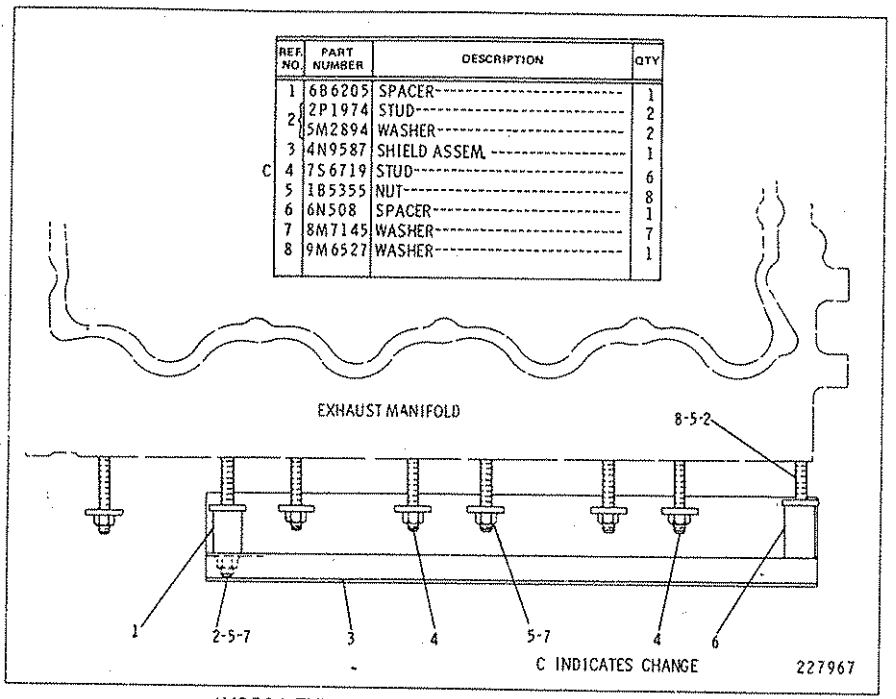

4N9584 EXHAUST MANIFOLD FASTENER GROUP

REF. NO.	PART NUMBER	DESCRIPTION	QTY
1	2P4611	PIPE	1
2	7S8735	CLAMP	1
3	2P3205	BOLT	1
	1B5355	NUT	1

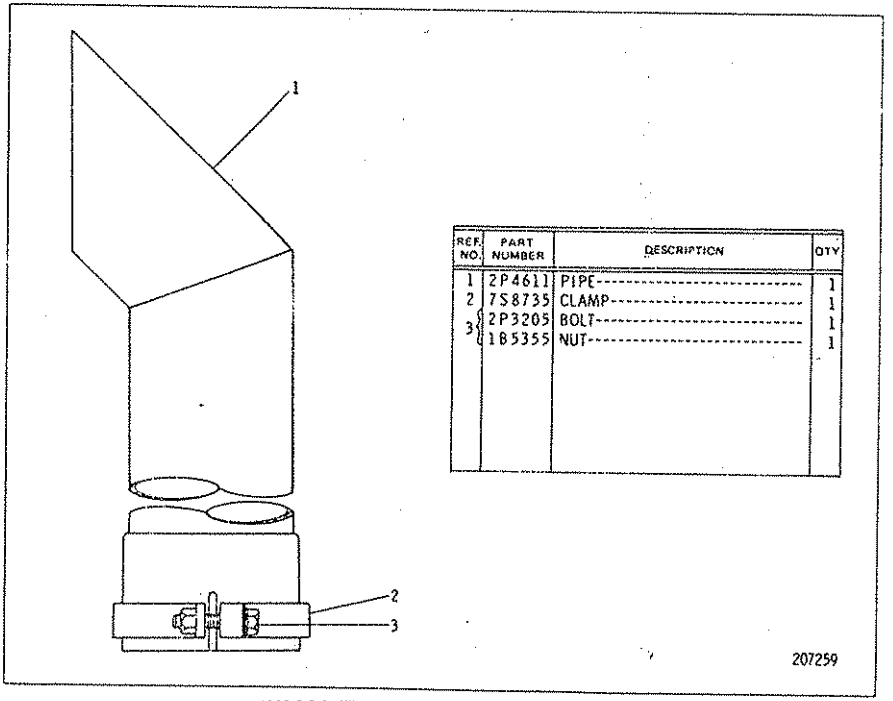

4N8298 EXHAUST EXTENSION GROUP

REF. NO.	PART NUMBER	DESCRIPTION	QTY
1	6B6205	SPACER	1
2	2P1974	STUD	2
	5M2894	WASHER	2
3	6N6110	SHIELD ASSEM.	1
4	7S6719	STUD	6
5	1B5355	NUT	8
6	6N508	SPACER	1
7	8M7145	WASHER	7
8	9M6527	WASHER	1

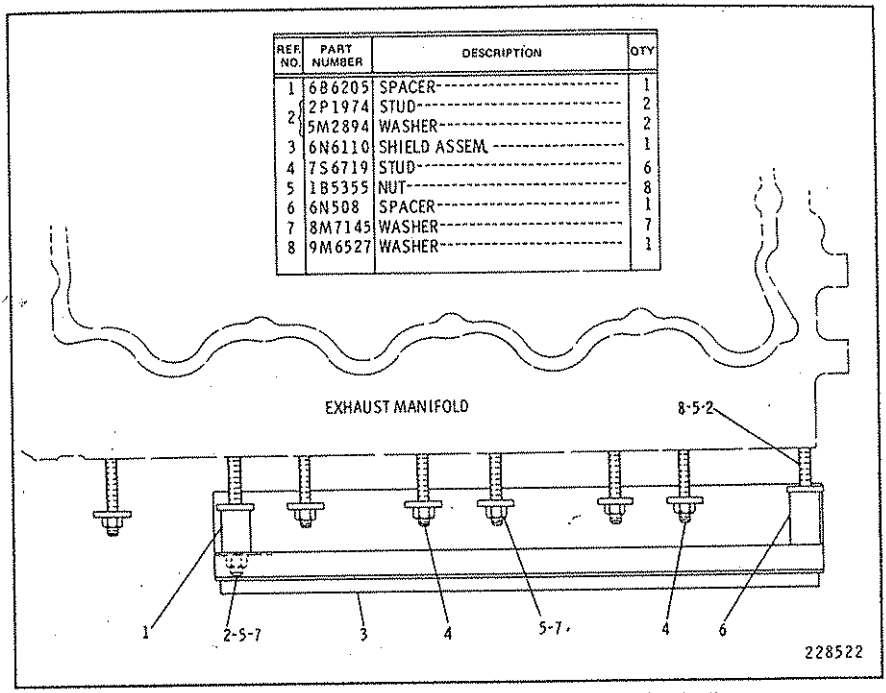

1N4579 EXHAUST MANIFOLD FASTENER GROUP
Also part of 6G6331 Sound Suppression Arrangement listed on Page 168

	REF. NO.	PART NUMBER	DESCRIPTION	QTY
	1	8S6782	ADAPTER	1
C	2	1S1619	BOLT	1
		1B5355	NUT	1
C	3	7N5685	CLAMP	1
C	4	5M2894	WASHER	2

C INDICATES CHANGE

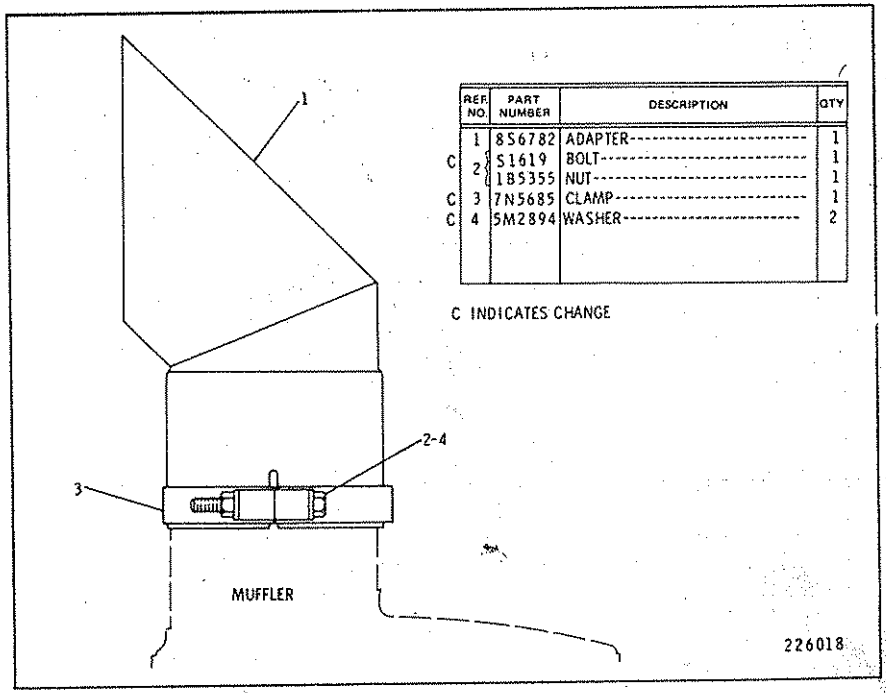

4N4101 EXHAUST EXTENSION GROUP
Also part of 2G4490 Sound Suppression Arrangement listed on Page 169
AN ATTACHMENT

REF NO.	PART NUMBER	DESCRIPTION	QTY
1	2A5546	BOLT	1
	1B4330	NUT	1
2	6D475	LINK ASSEM.	1
3	1S5927	LEVER	1
4	1B676	PIN	2
	3B4615	COTTER PIN	2
5	1F5403	ROD END	1
6	5B9079	NUT	2
7	S1594	BOLT	12
8	9D1973	COVER	1
9	8D9974	GASKET	2

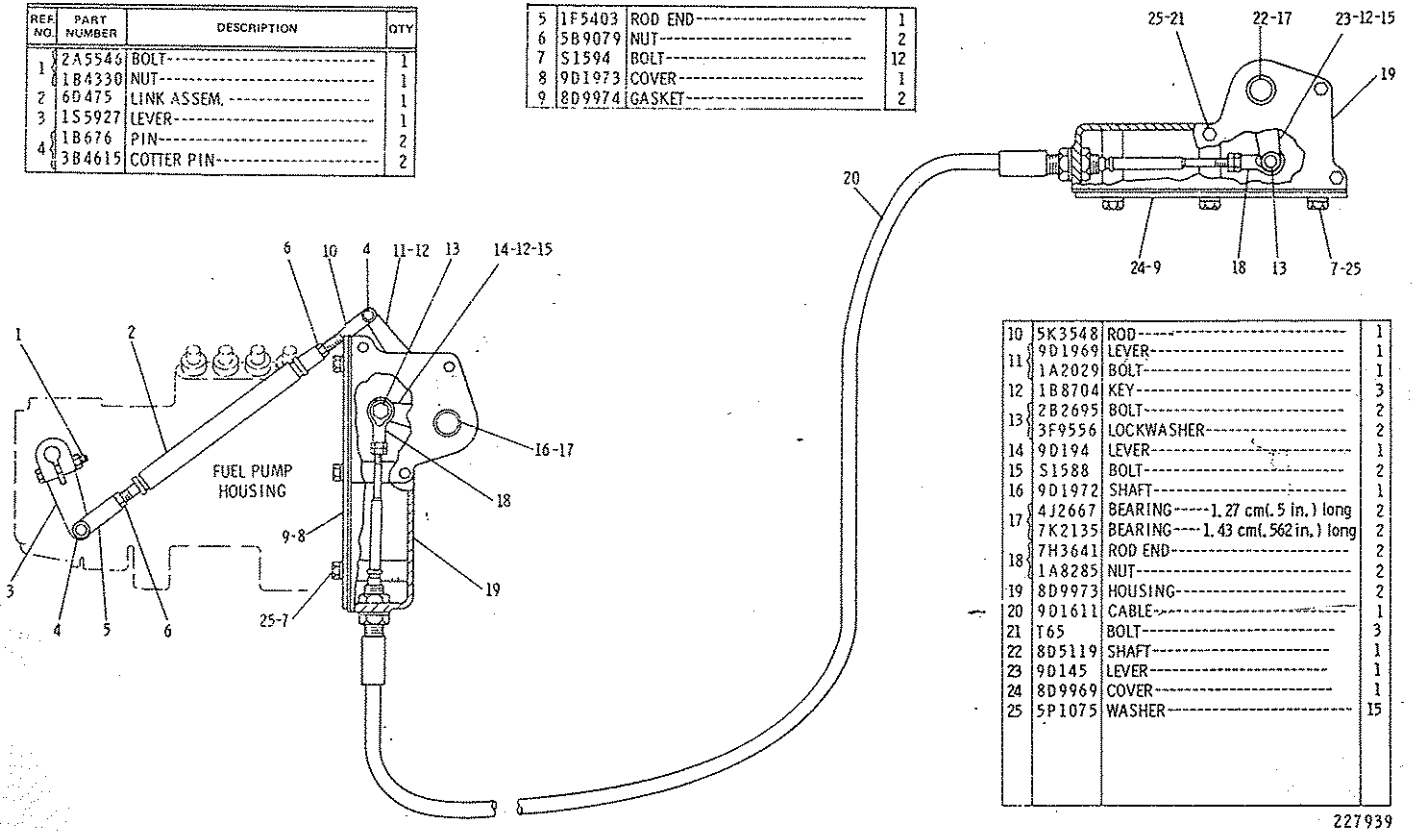

10	5K3548	ROD	1
11	9D1969	LEVER	1
	1A2029	BOLT	1
12	1B8704	KEY	3
13	2B2695	BOLT	2
	3F9556	LOCKWASHER	2
14	9D194	LEVER	1
15	S1588	BOLT	2
16	9D1972	SHAFT	1
17	4J2667	BEARING---1.27 cm(.5 in.) long	2
	7K2135	BEARING---1.43 cm(.562 in.) long	2
18	7H3641	ROD END	2
	1A8285	NUT	2
19	8D9973	HOUSING	2
20	9D1611	CABLE	1
21	T65	BOLT	3
22	8D5119	SHAFT	1
23	9D145	LEVER	1
24	8D9969	COVER	1
25	5P1075	WASHER	15

227939

9D1065 GOVERNOR CONTROL GROUP—Part 1
Serial No. 87V5275 to 87V5733 Inclusive

9D1065 GOVERNOR CONTROL GROUP—Part 2
Serial No. 87V5275 to 87V5733 Inclusive

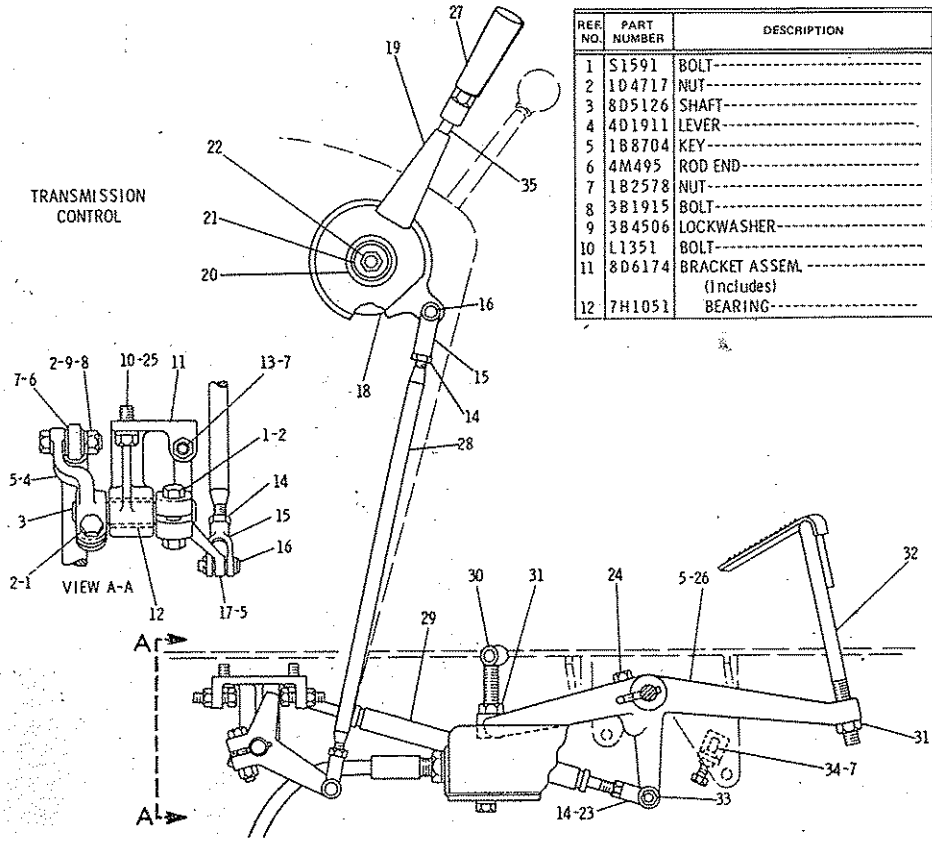

REF. NO.	PART NUMBER	DESCRIPTION	QTY
1	S1591	BOLT	2
2	1D4717	NUT	3
3	8D5126	SHAFT	1
4	4D1911	LEVER	1
5	1B8704	KEY	3
6	4M495	ROD END	1
7	1B2578	NUT	5
8	3B1915	BOLT	1
9	3B4506	LOCKWASHER	1
10	L1351	BOLT	2
11	8D6174	BRACKET ASSEM. (Includes)	1
12	7H1051	BEARING	1
13	V196	BOLT	2
14	1A8285	NUT	3
15	3D9609	ROD END	2
16	1A2457	PIN	2
	3B4607	COTTER PIN	2
17	8D5996	LEVER	1
18	5B2551	DISC	1
C	6G3505	HANDLE ASSEM. (Includes)	1
19	4F8686	BEARING	1
20	4J6580	WASHER	1
21	L821	SEAT	1
	5D998	SPRING	6
22	2K564	LOCKNUT	1
	4B5273	WASHER	1
23	7J3641	ROD END	1
24	S1588	BOLT	1
25	5P1075	WASHER	2
26	8D7081	LEVER	1
27	L829	HANDLE	1
28	2G7761	ROD	1
29	9D8129	LINK ASSEM.	1
30	4H2186	TREADLE ASSEM. (Includes)	1
	3H3244	SPACER	1
31	1D5117	NUT	3
32	6G255	TREADLE ASSEM.	1
	4B3388	BOLT	1
33	1D4716	NUT	1
	3B4505	LOCKWASHER	1
34	2D2285	BOLT	1
C 35	4H9304	STUD	1

C INDICATES CHANGE

227940

REF. NO.	PART NUMBER	DESCRIPTION	QTY
1	2A5546	BOLT	1
	1B4330	NUT	1
2	6D475	LINK ASSEM.	1
3	1S5927	LEVER	1
4	1B676	PIN	2
	3B4615	COTTER PIN	2
5	1F5403	ROD END	1
6	5B9079	NUT	2
7	S1594	BOLT	12
8	9D1973	COVER	1
9	8D9974	GASKET	2

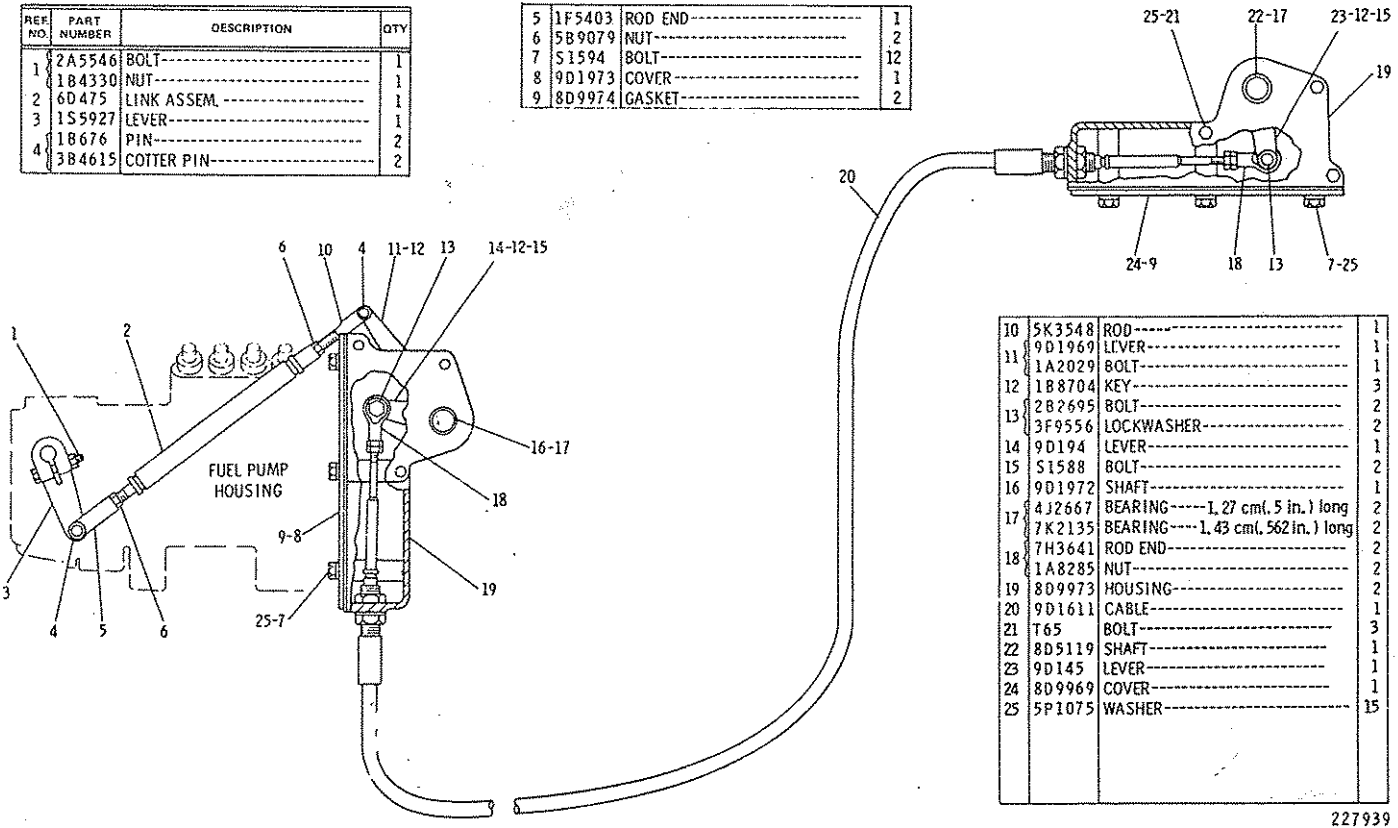

10	5K3548	ROD	1
11	9D1969	LEVER	1
	1A2029	BOLT	1
12	1B8704	KEY	3
13	2B2695	BOLT	2
	3F9556	LOCKWASHER	2
14	9D194	LEVER	1
15	S1588	BOLT	2
16	9D1972	SHAFT	1
17	4J2667	BEARING-----1.27 cm(.5 in.) long	2
	7K2135	BEARING-----1.43 cm(.562 in.) long	2
18	7H3641	ROD END	2
	1A8285	NUT	2
19	8D9973	HOUSING	2
20	9D1611	CABLE	1
21	T65	BOLT	3
22	8D5119	SHAFT	1
23	9D145	LEVER	1
24	8D9969	COVER	1
25	5P1075	WASHER	15

227939

9D1065 GOVERNOR CONTROL GROUP—Part 1
Serial No. 87V5734—Up

9D1065 GOVERNOR CONTROL GROUP—Part 2
Serial No. 87V5734—Up

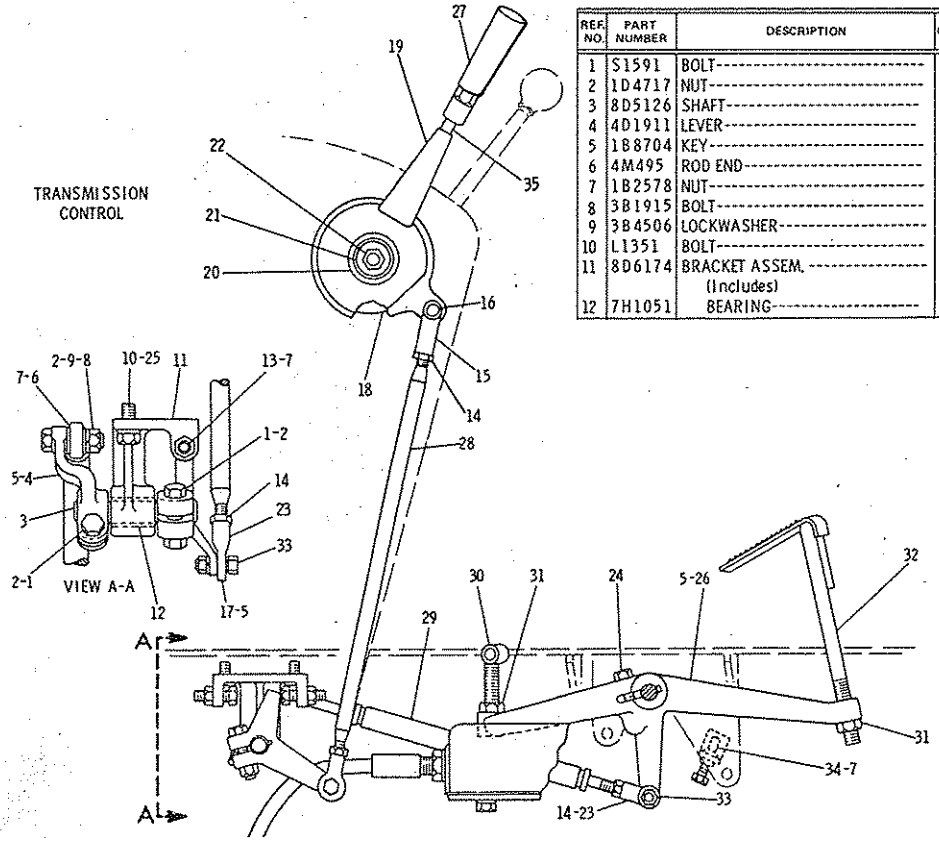

REF. NO.	PART NUMBER	DESCRIPTION	QTY
1	S1591	BOLT	2
2	1D4717	NUT	3
3	8D5126	SHAFT	1
4	4D1911	LEVER	1
5	1B8704	KEY	3
6	4M495	ROD END	1
7	1B2578	NUT	5
8	3B1915	BOLT	1
9	3B4506	LOCKWASHER	1
10	L1351	BOLT	2
11	8D6174	BRACKET ASSEM. (Includes)	1
12	7H1051	BEARING	1
13	V196	BOLT	2
14	1A8285	NUT	3
C 15	3D9609	ROD END	1
C	1A2457	PIN	1
C 16	3B4607	COTTER PIN	1
17	8D5996	LEVER	1
18	5B2551	DISC	1
19	6G3505	HANDLE ASSEM. (Includes)	1
	4F8686	BEARING	1
20	4J6580	WASHER	1
21	L821	SEAT	1
	5D998	SPRING	6
22	2K564	LOCKNUT	1
	4B5273	WASHER	1
C 23	7H3641	ROD END	2
24	S1588	BOLT	1
25	5P1075	WASHER	2
26	8D7081	LEVER	1
27	L829	HANDLE	1
C 28	4V627	ROD	1
29	9D8129	LINK ASSEM.	1
30	4H2186	TREADLE ASSEM. (Includes)	1
	3H3244	SPACER	1
31	1D5117	NUT	3
32	6G255	TREADLE ASSEM.	1
C	4B3388	BOLT	2
C 33	1D4716	NUT	2
C	3B4505	LOCKWASHER	2
34	2D2285	BOLT	1
35	4H9304	STUD	1

C INDICATES CHANGE

233073

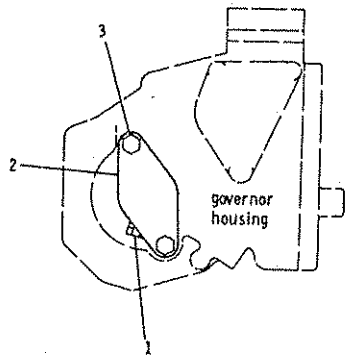

REF. NO.	PART NUMBER	DESCRIPTION	QTY
1	2S7905	PLUG	1
2	4N4508	COVER	1
	4N4509	GASKET	1
3	S1615	BOLT	2

144197

4N4510 GOVERNOR COVER GROUP
Engine Serial No. 7Z1 to 7Z157 Inclusive

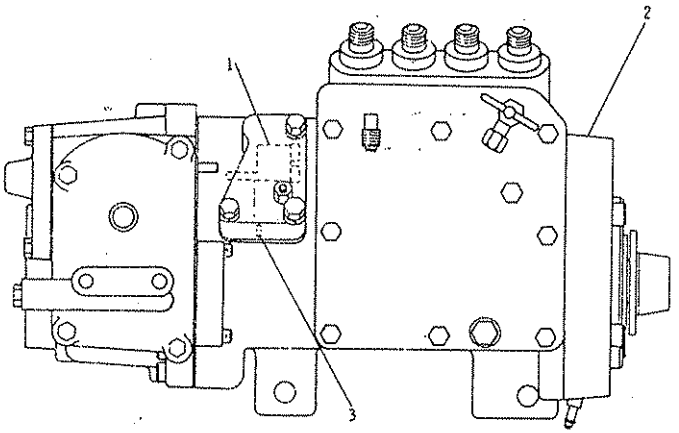

REF. NO.	PART NUMBER	DESCRIPTION	QTY
1	6N599	TORQUE CONTROL	1
2	7N1732	GOVERNOR & FUEL INJECTION PUMP (Separate Illustration)	1

3	4N443	PIN	1

227305

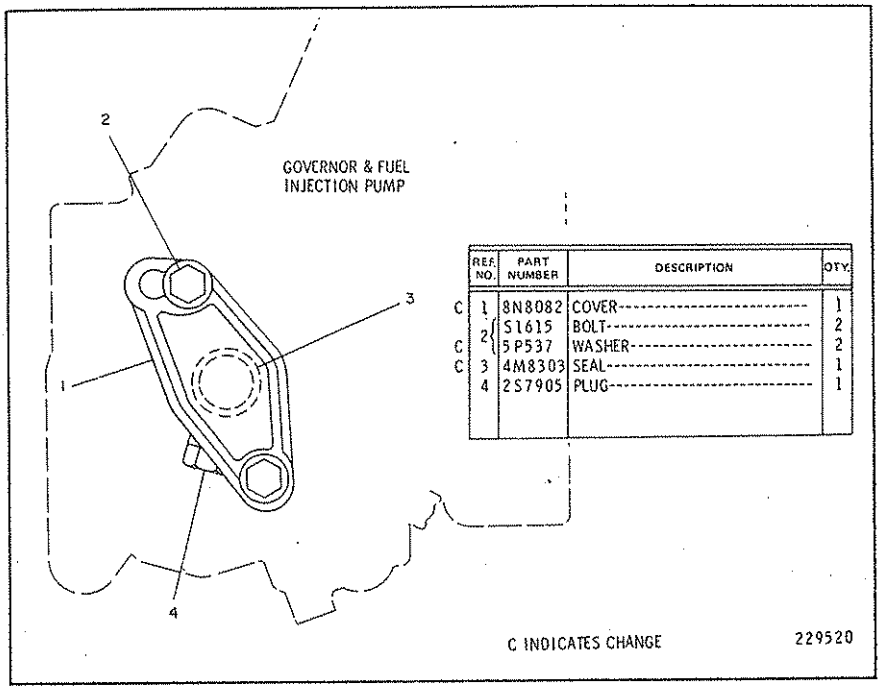

	REF. NO.	PART NUMBER	DESCRIPTION	QTY.
C	1	8N8082	COVER	1
	2	S1615	BOLT	2
C		5P537	WASHER	2
C	3	4M8303	SEAL	1
	4	2S7905	PLUG	1

4N4510 GOVERNOR COVER GROUP
Engine Serial No. 7Z158—Up

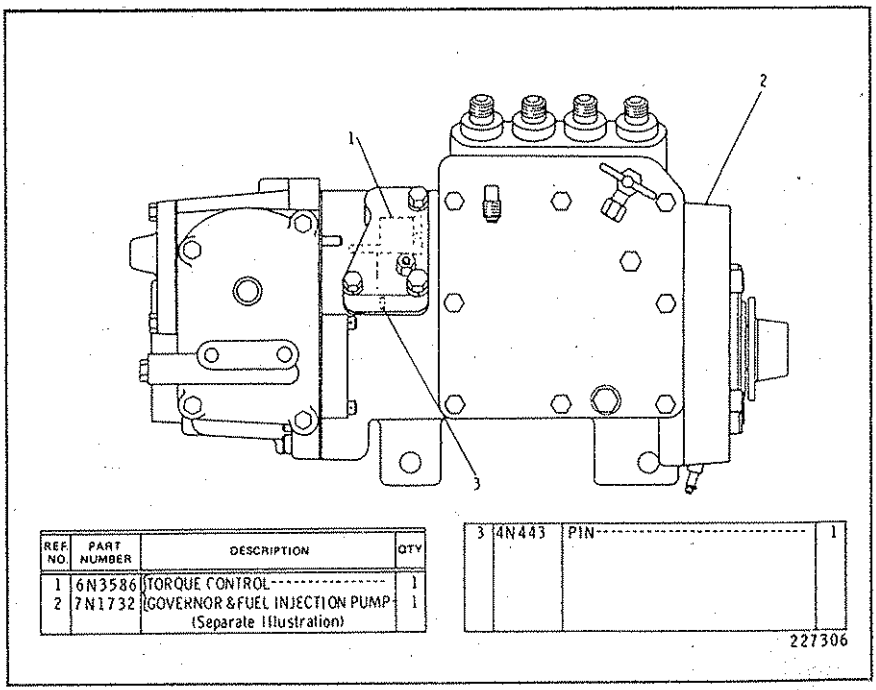

REF. NO.	PART NUMBER	DESCRIPTION	QTY
1	6N3586	TORQUE CONTROL	1
2	7N1732	GOVERNOR & FUEL INJECTION PUMP (Separate Illustration)	1
3	4N443	PIN	1

7N6949 GOVERNOR AND FUEL INJECTION PUMP GROUP—Type 1
Replaced by 7N2178 listed on Page 60. Also part of 6G6331 Sound Suppression Arrangement listed on Page 168. 7N1732 Governor and Fuel Injection Pump and 6N3586 Torque Control parts are shown on Pages 66 & 67

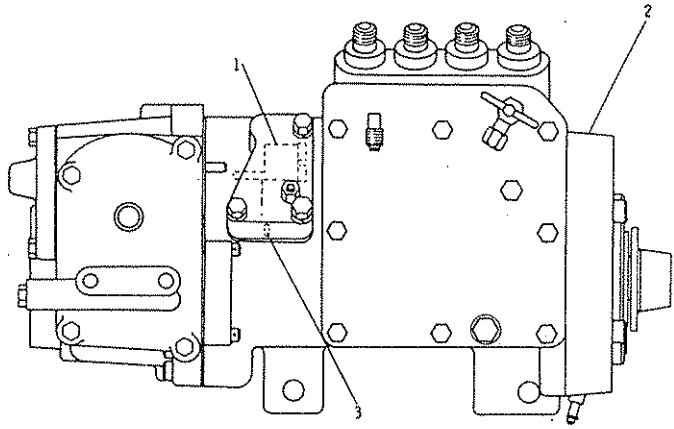

	REF. NO.	PART NUMBER	DESCRIPTION	QTY
C	1	8N1336	TORQUE CONTROL	1
	2	7N1732	GOVERNOR & FUEL INJECTION PUMP (Separate Illustration)	1
	3	4N443	PIN	1

C INDICATES CHANGE 180248

7N6949 GOVERNOR AND FUEL INJECTION PUMP GROUP—Type 2
Replaced by 7N2178 listed on Page 60. Also part of 6G6331 Sound Suppression Arrangement listed on Page 168. 7N1732 Governor & Fuel Injection Pump & 8N1336 Torque Control parts are shown on Pages 66 & 67B

		CONSISTS OF:	PAGE
1	7N2192	GOVERNOR AND FUEL INJECTION PUMP GROUP	61 & 61B
1	.....	FORM SMHS7225	

7N2178 GOVERNOR AND FUEL INJECTION PUMP GROUP
FIELD INSTALLATION

7N2192 GOVERNOR AND FUEL INJECTION PUMP GROUP—Type 1

Part of 7N2178 Governor and Fuel Injection Pump Group listed on Page 60

7N1731 Governor and Fuel Injection Pump and 6N509 Torque Control parts are shown on Pages 62 through 65 & 68

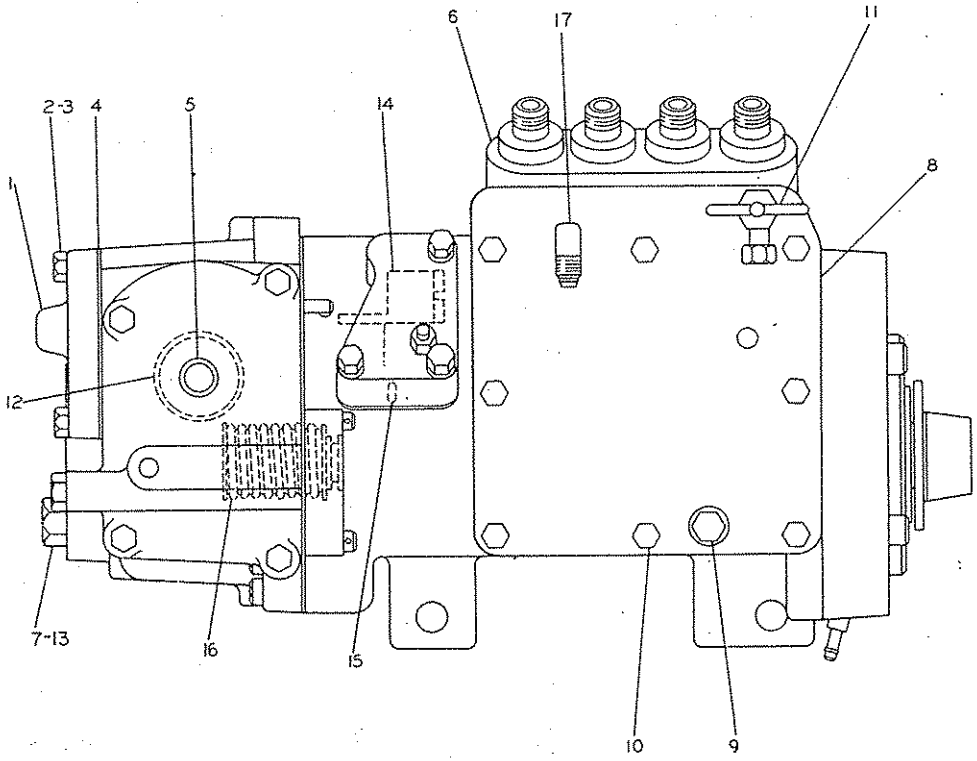

REF. NO.	PART NUMBER	DESCRIPTION	QTY.
1	4N53	COVER	1
2	S1616	BOLT---2.54 cm(1 in.) long	1
3	8S4710	BOLT---10.16 cm(4 in.) long	2
4	4N159	GASKET	1
5	4N4320	SHAFT ASSEM.	1
6	7N1731	GOVERNOR AND FUEL PUMP (Separate Illustration)	1
7	9S4191	PLUG	1
8	7N2057	COVER	1
	4N9056	GASKET	1
9	9S4180	PLUG	1
	4J7533	SEAL	1
10	S1615	BOLT	8
11	7N450	VALVE ASSEM.	1
12	4N4366	SPRING	1
13	3J1907	SEAL	1
14	6N509	TORQUE CONTROL GROUP (Separate Illustration)	1
15	4N443	PIN	1
16	4N4227	SPRING	1
17	4N1828	ELBOW	1

227308

7N2192 GOVERNOR AND FUEL INJECTION PUMP GROUP—Type 2
Part of 7N2178 Governor and Fuel Injection Pump Group listed on Page 60
7N1731 Pump and 6N599 Control parts are shown on Pages 62 through 65 and 67

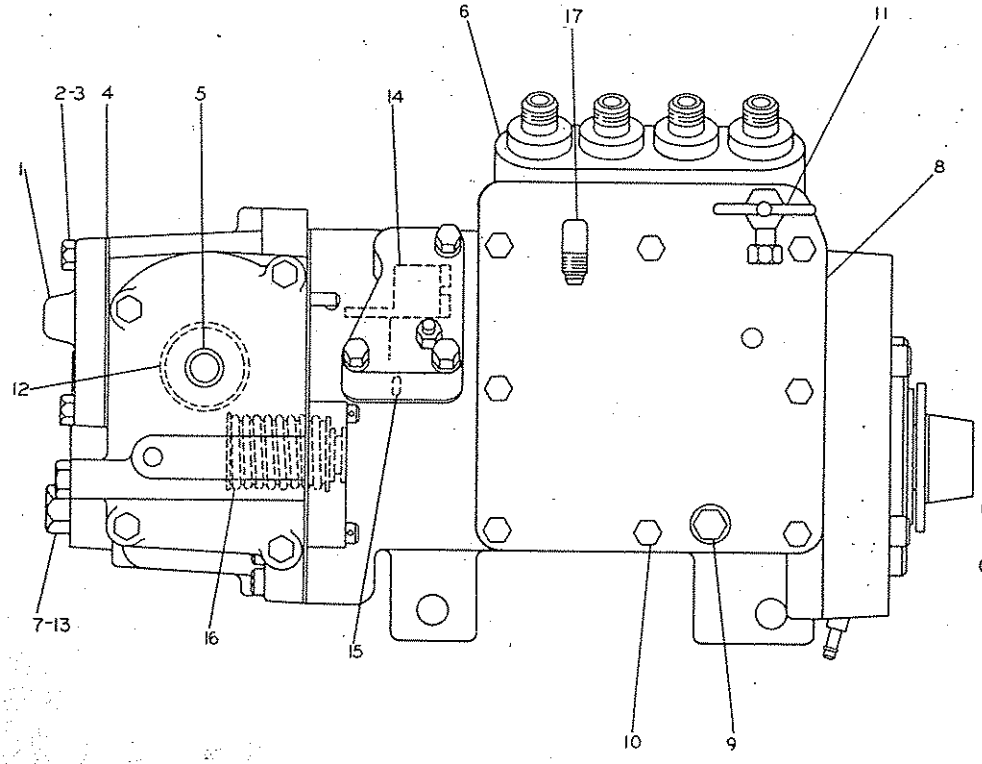

REF. NO.	PART NUMBER	DESCRIPTION	QTY.
1	4N53	COVER	1
2	S1616	BOLT—2.54 cm(1 in.) long	1
3	8S4710	BOLT—10.16 cm(4 in.) long	2
4	4N159	GASKET	1
5	4N4320	SHAFT ASSEM.	1
6	7N1731	GOVERNOR AND FUEL PUMP (Separate Illustration)	1
7	9S4191	PLUG	1
8	7N2057	COVER	1
	4N9056	GASKET	1
9	9S4180	PLUG	1
	4J7533	SEAL	1
10	S1615	BOLT	8
11	7N450	VALVE ASSEM.	1
12	4N4366	SPRING	1
13	3J1907	SEAL	1
C 14	6N599	TORQUE CONTROL GROUP (Separate Illustration)	1
15	4N443	PIN	1
C 16	4N4224	SPRING	1
17	4N1828	ELBOW	1

C INDICATES CHANGE

179512

REF. NO.	PART NUMBER	DESCRIPTION	QTY
1	6N5324	HOUSING ASSEM. (Includes)	1
2	4N2333	PIN----------(spring)----------	1
3	8S6814	DOWEL----------	1
4	4N5050	PLUG----------	1
5	4N260	SEAL----------	2
6	6N2578	BEARING----------	1
7	4N2786	SEAL----------	1
8	9S4180	PLUG----------	1
	4J7533	SEAL----------	1

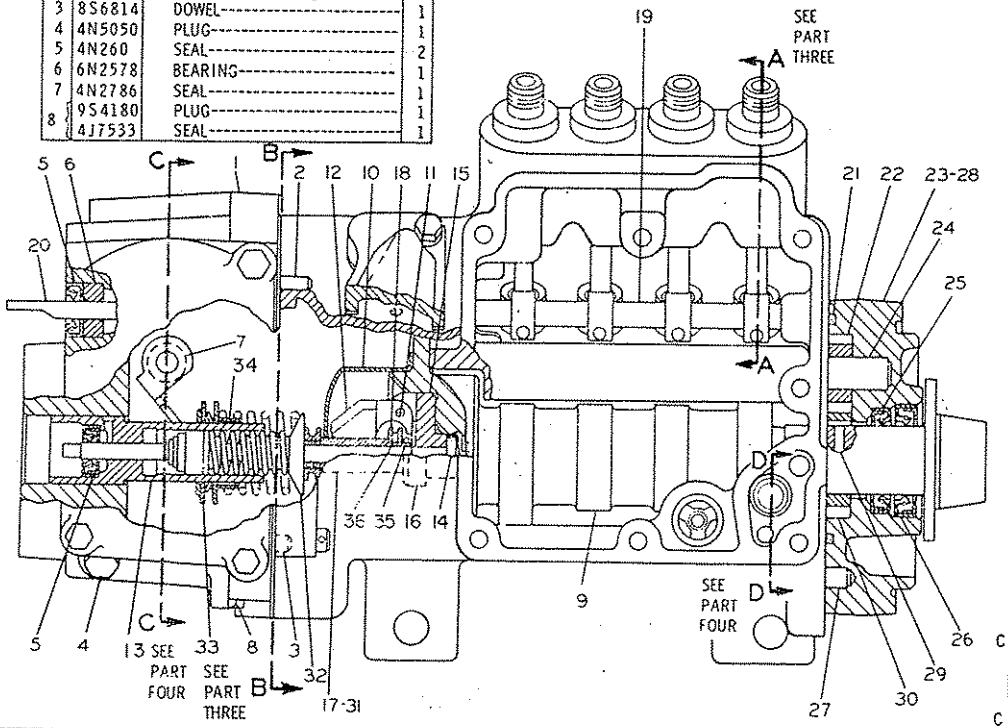

9	7N1773	CAMSHAFT ASSEM. (Includes)	1
10	4N1723	SHIELD----------	1
11	4N511	DOWEL----------	3
12	4N425	WEIGHT----------	3
13	4N9018	SHAFT----------	1
14	4N9019	DOWEL----------	1
15	4N446	CARRIER----------	1
16	4N2955	BOLT----------	3
17	4N434	RISER----------	1
18	4N2927	RACE----------	2
19	4N507	SHAFT ASSEM. ----------	1
20	4N927	SHAFT ASSEM. ----------	1
21	5M6509	SEAL----------	1
22	4N406	GEAR----------(10 teeth)----------	1
23	9L6863	BODY ASSEM. (Includes) ----------	1
24	8H9804	SHAFT----------	1
25	4N636	SEAL----------	1
26	4N1584	SEAL----------	1
27	8S6814	DOWEL----------	1
28	4N5050	PLUG----------	1
29	4N3779	KEY----------	1
30	4N429	GEAR-------(15 teeth)----------	1
31	6N6662	SPRING----------	1
32	6N4655	DASHPOT ASSEM. (Includes) ----------	1
	4N6407	SPOOL----------	1
	4N6406	RING----------(spacer)-----	1
	4N6404	RING----(retaining)----------	1
33	6N2957	WASHER----------	2
	6N2956	WASHER-----(spring)----------	1
34	6N7451	SEAT ----------	1
35	4N2953	RING----------	1
C 36	7M7219	BEARING ----------	1

C INDICATES CHANGE 230285

7N1731 GOVERNOR AND FUEL INJECTION PUMP GROUP—Part 1 of 4

Part of 7N2192 and 7N1732 Governor and Fuel Injection Pump Groups shown on Pages 61 & 66

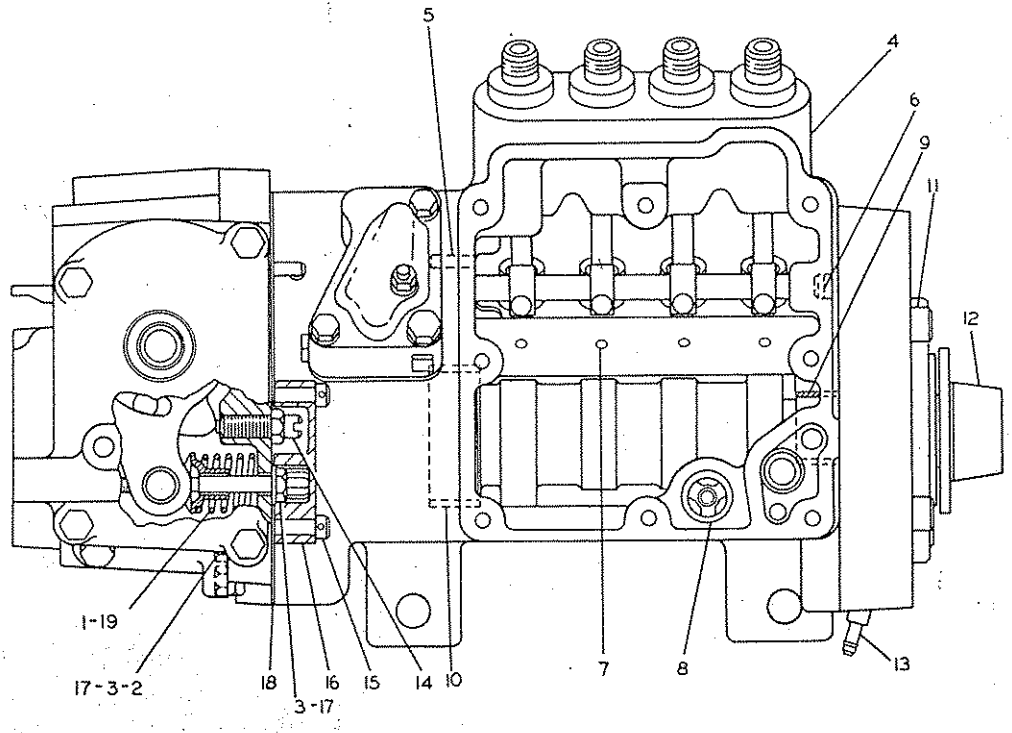

REF. NO.	PART NUMBER	DESCRIPTION	QTY
1	4N116	GUIDE	1
2	3B8695	BOLT--8, 89 cm(3. 5 in.) long	1
	2A4781	BOLT--6, 98 cm(2. 75 in.) long	1
3	1P9925	BOLT--6. 35 cm(2. 5 in.) long	2
4	8N1569	HOUSING ASSEM. (Includes)	1
	4N5481	STUD	1
5	4N2333	PIN--(spring)	1
6	4N1826	DOWEL	1
	2D6392	SEAL	1
7	8N984	PIN	4
8	1P2298	VALVE ASSEM.	1
9	6N1078	BEARING	1
10	8N628	BEARING	1
11	5J5314	BOLT	4
12	4N2954	SLEEVE	1
13	1P4001	FITTING	1
14	4N54	SCREW	1
	5B3180	NUT	1
15	1P2497	BOLT	2
16	4N5578	COVER	1
	4N49	GASKET	1
17	6N7523	WASHER	2
18	4N594	GASKET	1
19	9S8632	SPRING	1

227310

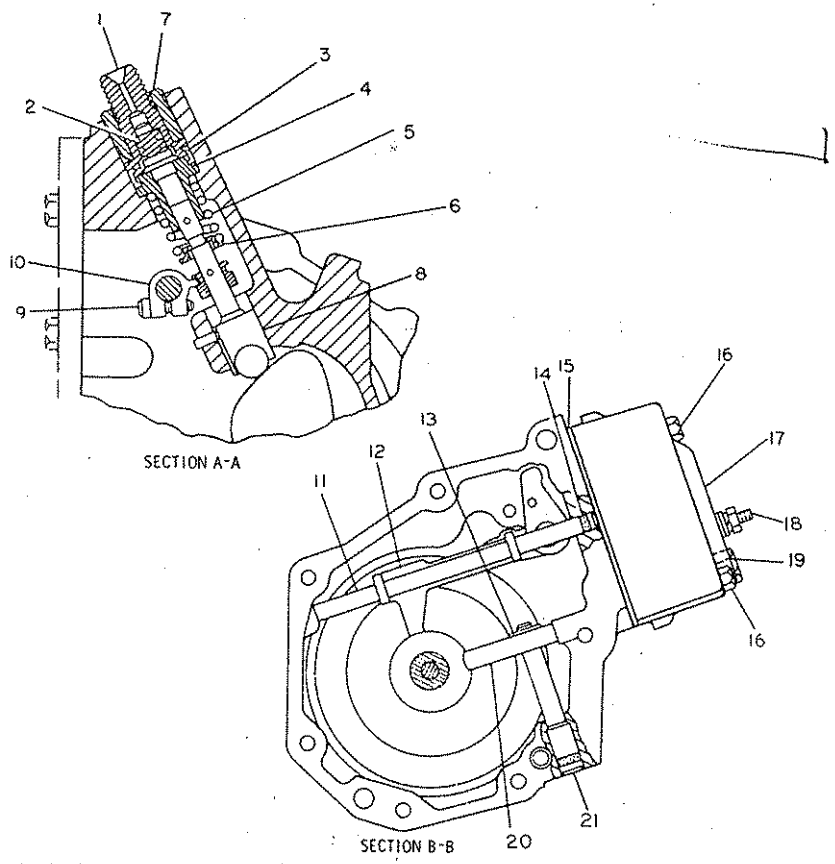

REF. NO.	PART NUMBER	DESCRIPTION	QTY.
1	7N5301	PUMP ASSEM. (Each Includes)	4
	8N1417	BONNET	1
2	8N1415	SPRING	1
3	4N224	RING	1
4	8N1414	CHECK ASSEM.	1
5	9N5862	SPRING	1
6	4N2728	WASHER	1
7	4N218	BUSHING	4
	6F6672	SEAL	4
8	6N6794	LIFTER	4
	4N2685	ROLLER	4
9	2N2658	SCREW	4
10	4N1763	LEVER	4
11	4N528	SHAFT	1
12	4N2677	LEVER ASSEM.	1
13	2M7819	RING	1
14	3H442	SEAL	1
15	4N508	GASKET	1
16	2M5471	BOLT	2
17	4N1591	COVER ASSEM. (Includes)	1
	6N411	COVER	1
18	6N412	MACHINE SCREW ASSEM.	1
	4B2042	NUT	1
	3B4501	LOCKWASHER	1
	1P7326	WASHER-1, 53mm(. 06 in.) thick	1
	8F1326	WASHER-, 82mm(. 032 in.) thick	1
19	2P3200	BOLT	1
	1J9671	SEAL	1
20	4N445	LEVER	1
21	4N523	DOWEL	1
	2D6392	SEAL	1

227311

7N1731 GOVERNOR AND FUEL INJECTION PUMP GROUP—Part 3 of 4
Part of 7N2192 and 7N1732 Governor and Fuel Injection Pump Groups shown on Pages 61 & 66

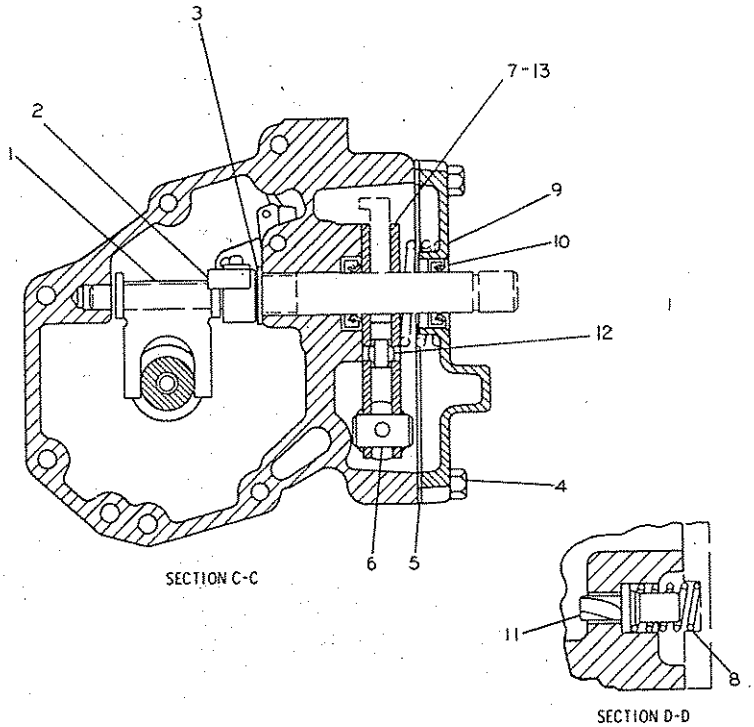

REF. NO.	PART NUMBER	DESCRIPTION	QTY
1	4N1881	LEVER	1
2	4N448	LEVER ASSEM. (Includes)	1
	9L8571	DOWEL	1
3	8F5368	WASHER	1
4	S1616	BOLT	4
5	4N402	GASKET	1
6	9S8601	PIN	1
7	6N5482	PLATE	2
8	4N605	SPRING	1
9	4N687	COVER ASSEM. (Includes)	1
10	4N2786	SEAL	1
11	4N1767	VALVE	1
12	4N8179	PIN	1
13	4N444	SPACER	2

227312

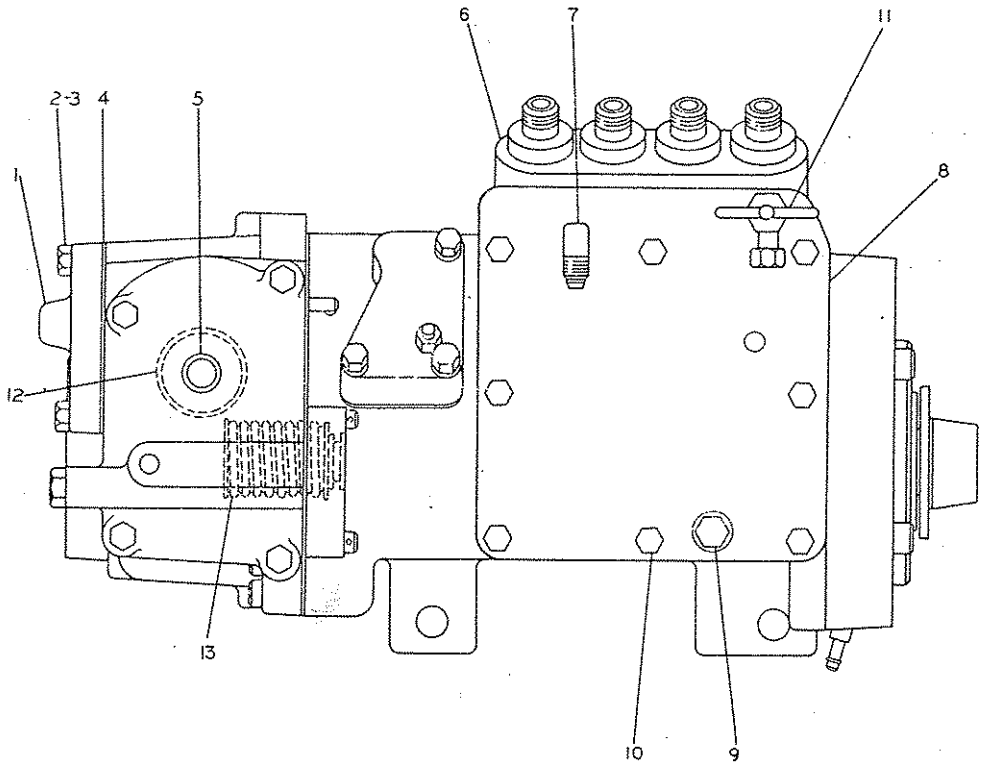

REF. NO.	PART NUMBER	DESCRIPTION	QTY.
1	4N53	COVER	1
2	S1616	BOLT---2.54 cm(1 in.) long	1
3	8S4710	BOLT---10.16 cm(4 in.) long	2
4	4N159	GASKET	1
5	4N4320	SHAFT ASSEM.	1
6	7N1731	GOVERNOR AND FUEL PUMP (Separate Illustration)	1
7	4N1828	ELBOW	1
8	7N2057	COVER	1
	4N9056	GASKET	1
9	9S4180	PLUG	1
	4J7533	SEAL	1
10	S1615	BOLT	8
11	7N450	VALVE ASSEM.	1
12	2P726	SPRING	1
13	4N4224	SPRING	1

7N1732 GOVERNOR AND FUEL INJECTION PUMP GROUP

Part of 7N1733 and 7N6949 Governor and Fuel Injection Pump Groups shown on Pages 58 & 59

7N1731 Governor and Fuel Injection Pump parts are shown on Pages 62 through 65

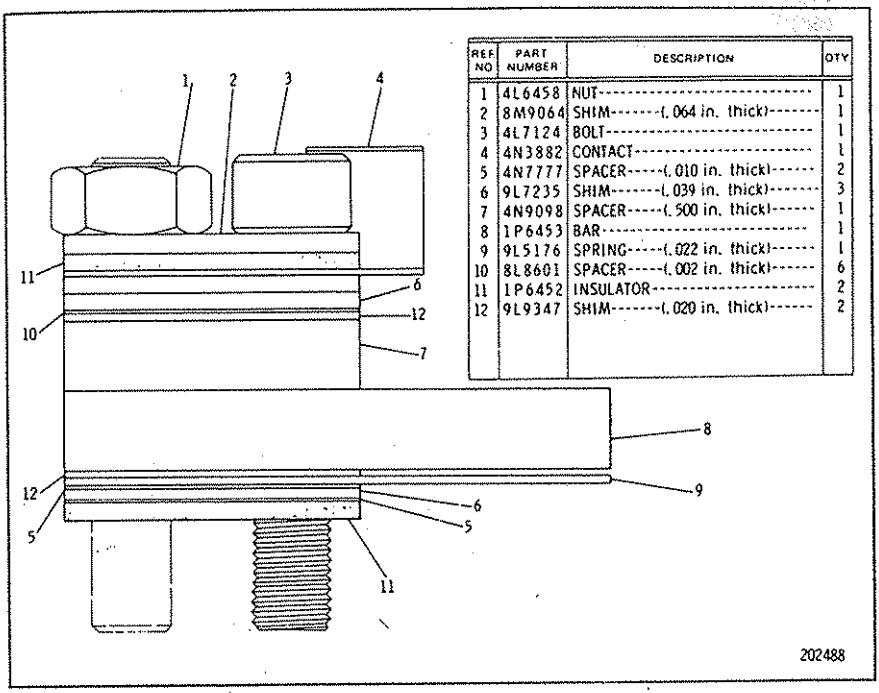

REF NO	PART NUMBER	DESCRIPTION	QTY
1	4L6458	NUT	1
2	8M9064	SHIM-------(.064 in. thick)	1
3	4L7124	BOLT	1
4	4N3882	CONTACT	1
5	4N7777	SPACER-----(.010 in. thick)	2
6	9L7235	SHIM-------(.039 in. thick)	3
7	4N9098	SPACER-----(.500 in. thick)	1
8	1P6453	BAR	1
9	9L5176	SPRING-----(.022 in. thick)	1
10	8L8601	SPACER-----(.002 in. thick)	6
11	1P6452	INSULATOR	2
12	9L9347	SHIM-------(.020 in. thick)	2

6N599 TORQUE CONTROL GROUP
Part of 7N1733 & 7N2192 Governor and Fuel Injection Pump Group shown on Pages 58 & 61B

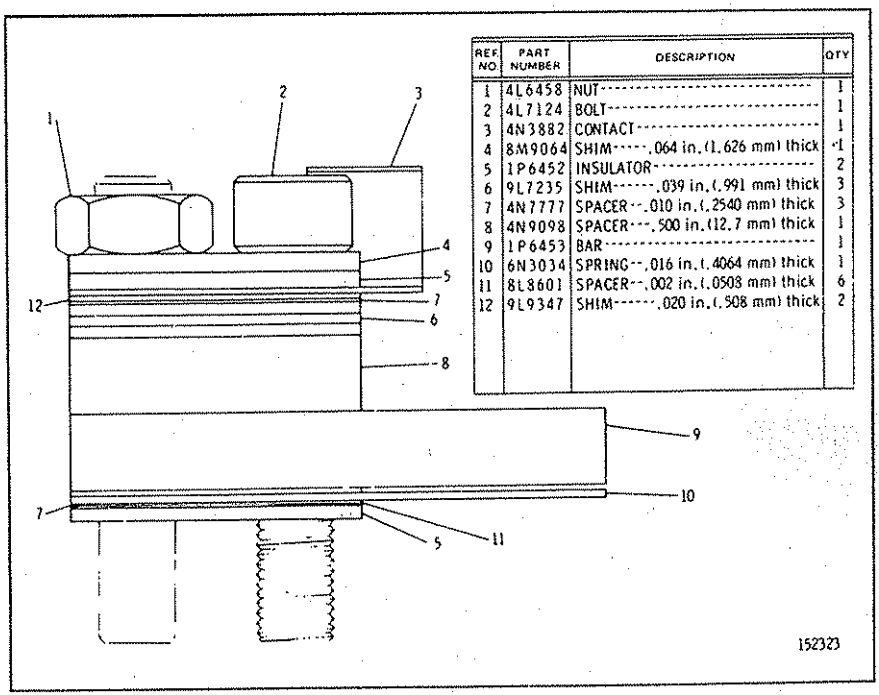

REF NO	PART NUMBER	DESCRIPTION	QTY
1	4L6458	NUT	1
2	4L7124	BOLT	1
3	4N3882	CONTACT	1
4	8M9064	SHIM-----.064 in. (1.626 mm) thick	*1
5	1P6452	INSULATOR	2
6	9L7235	SHIM-------.039 in. (.991 mm) thick	3
7	4N7777	SPACER---.010 in. (.2540 mm) thick	3
8	4N9098	SPACER---.500 in. (12.7 mm) thick	1
9	1P6453	BAR	1
10	6N3034	SPRING---.016 in. (.4064 mm) thick	1
11	8L8601	SPACER---.002 in. (.0508 mm) thick	6
12	9L9347	SHIM-------.020 in. (.508 mm) thick	2

6N3586 TORQUE CONTROL GROUP
Part of 7N6949 Governor and Fuel Injection Pump Group shown on Page 59

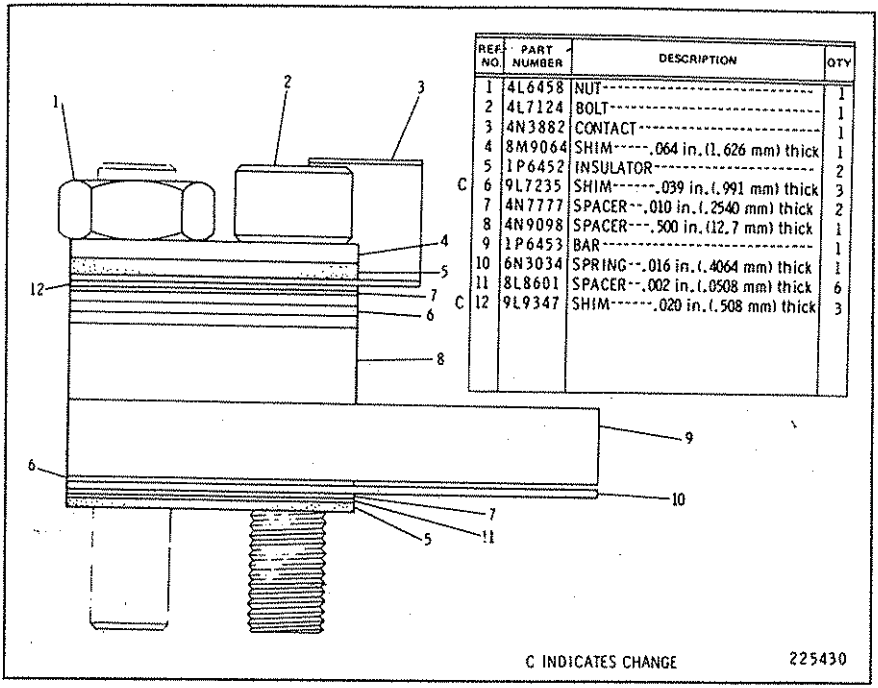

REF. NO.	PART NUMBER	DESCRIPTION	QTY
1	4L6458	NUT	1
2	4L7124	BOLT	1
3	4N3882	CONTACT	1
4	8M9064	SHIM-----.064 in. (1.626 mm) thick	1
5	1P6452	INSULATOR	2
C 6	9L7235	SHIM-----.039 in. (.991 mm) thick	3
7	4N7777	SPACER--.010 in. (.2540 mm) thick	2
8	4N9098	SPACER---.500 in. (12.7 mm) thick	1
9	1P6453	BAR	1
10	6N3034	SPRING--.016 in. (.4064 mm) thick	1
11	8L8601	SPACER--.002 in. (.0508 mm) thick	6
C 12	9L9347	SHIM-----.020 in. (.508 mm) thick	3

8N1336 TORQUE CONTROL GROUP
Part of 7N6949 Pump Group shown on Page 59B

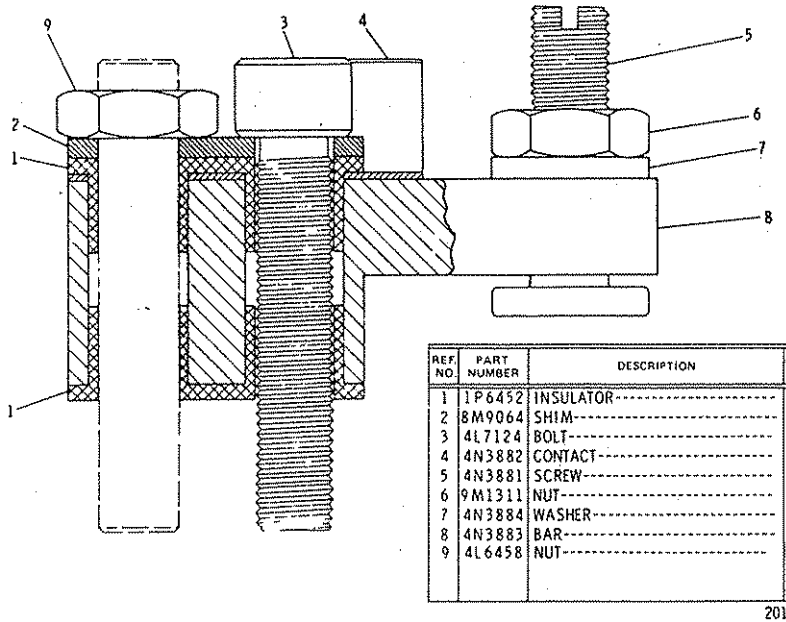

REF. NO.	PART NUMBER	DESCRIPTION	QTY.
1	1P6452	INSULATOR	2
2	8M9064	SHIM	1
3	4L7124	BOLT	1
4	4N3882	CONTACT	1
5	4N3881	SCREW	1
6	9M1311	NUT	1
7	4N3884	WASHER	1
8	4N3883	BAR	1
9	4L6458	NUT	1

201366

6N509 TORQUE CONTROL GROUP
Part of 7N2192 Governor and Fuel Injection Pump Group shown on Page 61

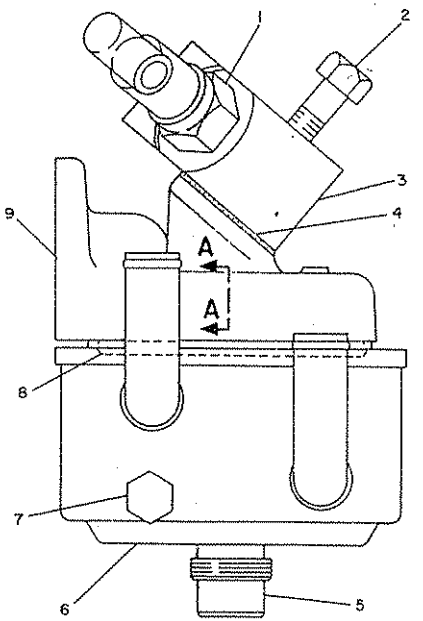

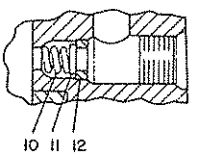

REF. NO.	PART NUMBER	DESCRIPTION	QTY.
1	8N9707	REGULATOR	1
	2M9780	SEAL	1
2	1D4539	BOLT (large)	1
	1B2714	BOLT (small)	1
3	8N9584	ADAPTER	1
4	1P436	GASKET	2
5	8N2100	CONNECTOR	1
6	8N9455	HEATER ASSEM. (Includes)	1
7	5M6214	PLUG	1
8	8N2301	SEAL	1
9	8N9747	BASE ASSEM. (Includes)	1
	8N9800	INSERT	1
10	4N3296	SPRING	1
11	4N3297	DISK	1
12	4N3298	SEAT	1
SEHS7643		FORM-(Installation)	1

226766

8N9751 FUEL HEATER CHANGEOVER GROUP—Field Installation

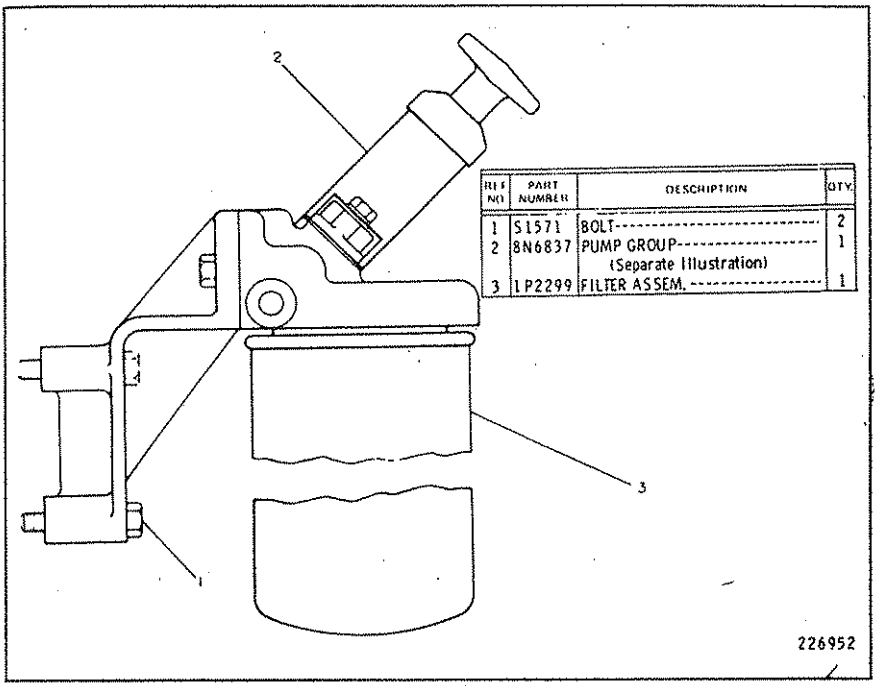

REF NO	PART NUMBER	DESCRIPTION	QTY.
1	S1571	BOLT	2
2	8N6837	PUMP GROUP (Separate Illustration)	1
3	1P2299	FILTER ASSEM.	1

8N6838 FUEL PRIMING PUMP AND FILTER GROUP
Engine Serial No. 7Z1 to 7Z406 Inclusive

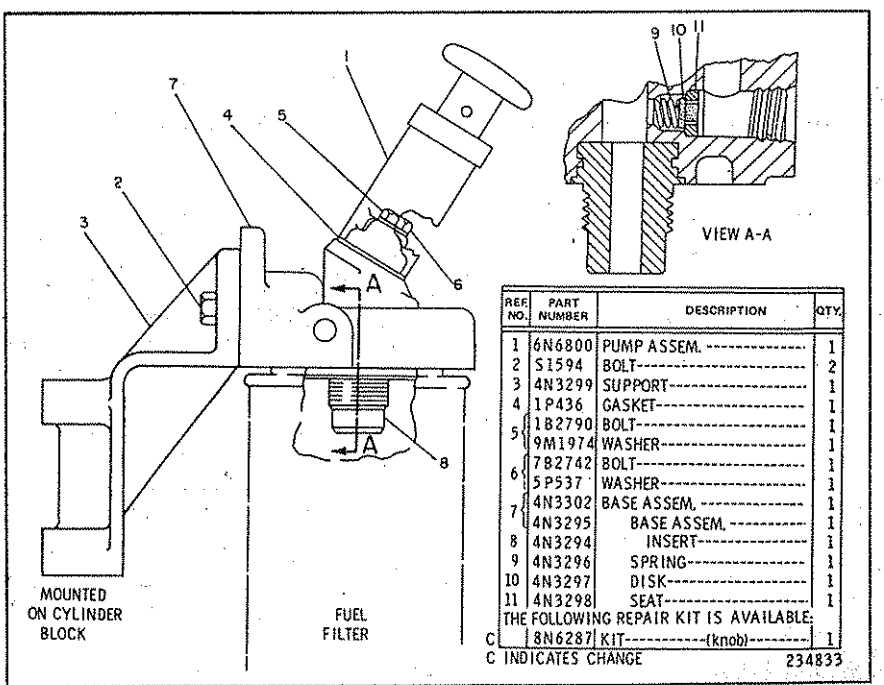

REF NO.	PART NUMBER	DESCRIPTION	QTY.
1	6N6800	PUMP ASSEM.	1
2	S1594	BOLT	2
3	4N3299	SUPPORT	1
4	1P436	GASKET	1
5	1B2790	BOLT	1
	9M1974	WASHER	1
6	7B2742	BOLT	1
	5P537	WASHER	1
7	4N3302	BASE ASSEM.	1
	4N3295	BASE ASSEM.	1
8	4N3294	INSERT	1
9	4N3296	SPRING	1
10	4N3297	DISK	1
11	4N3298	SEAT	1
THE FOLLOWING REPAIR KIT IS AVAILABLE:			
C	8N6287	KIT (knob)	1

C INDICATES CHANGE 234833

8N6837 FUEL PRIMING PUMP GROUP
Engine Serial No. 7Z1 to 7Z406 Inclusive
Part of 8N6838 Fuel Priming Pump and Filter Group

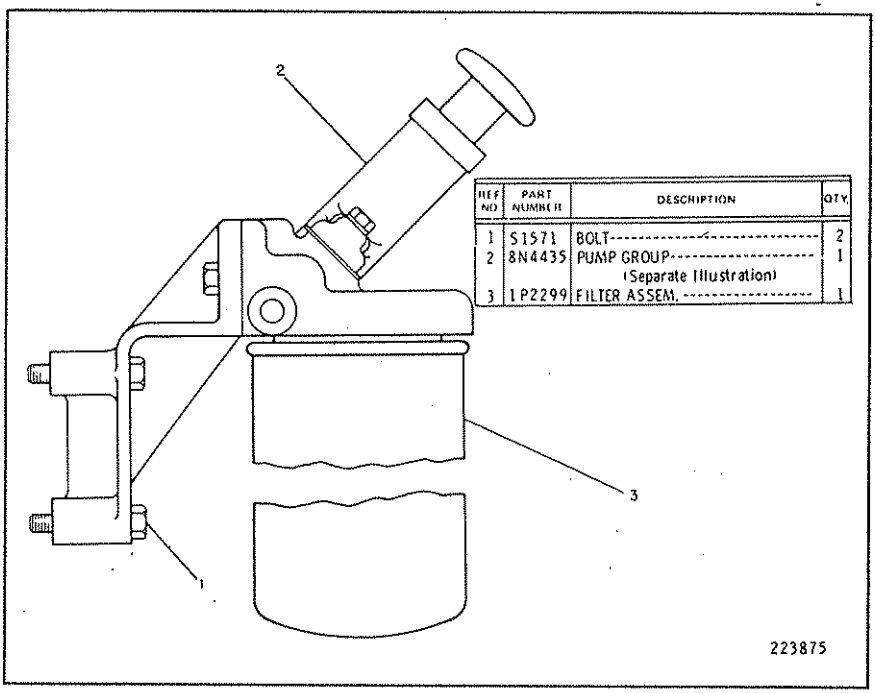

REF NO	PART NUMBER	DESCRIPTION	QTY
1	S1571	BOLT	2
2	8N4435	PUMP GROUP (Separate Illustration)	1
3	1P2299	FILTER ASSEM.	1

8N4454 FUEL PRIMING PUMP AND PRIMARY FILTER GROUP
Engine Serial No. 7Z407—Up

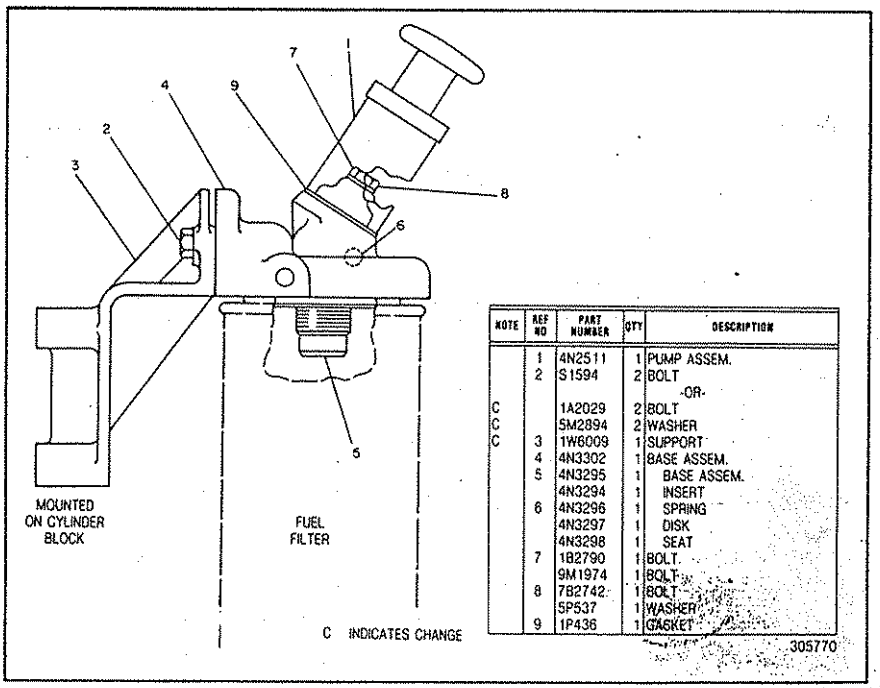

NOTE	REF NO	PART NUMBER	QTY	DESCRIPTION
	1	4N2511	1	PUMP ASSEM.
	2	S1594	2	BOLT
				-OR-
C		1A2029	2	BOLT
C		5M2894	2	WASHER
C	3	1W6009	1	SUPPORT
	4	4N3302	1	BASE ASSEM.
	5	4N3295	1	BASE ASSEM.
		4N3294	1	INSERT
	6	4N3296	1	SPRING
		4N3297	1	DISK
		4N3298	1	SEAT
	7	1B2790	1	BOLT
		9M1974	1	BOLT
	8	7B2742	1	BOLT
		5P537	1	WASHER
	9	1P436	1	GASKET

8N4435 FUEL PRIMING PUMP GROUP
Engine Serial No. 7Z407—Up
Part of 8N4454 Fuel Priming Pump & Primary Filter Group shown on Page 69B

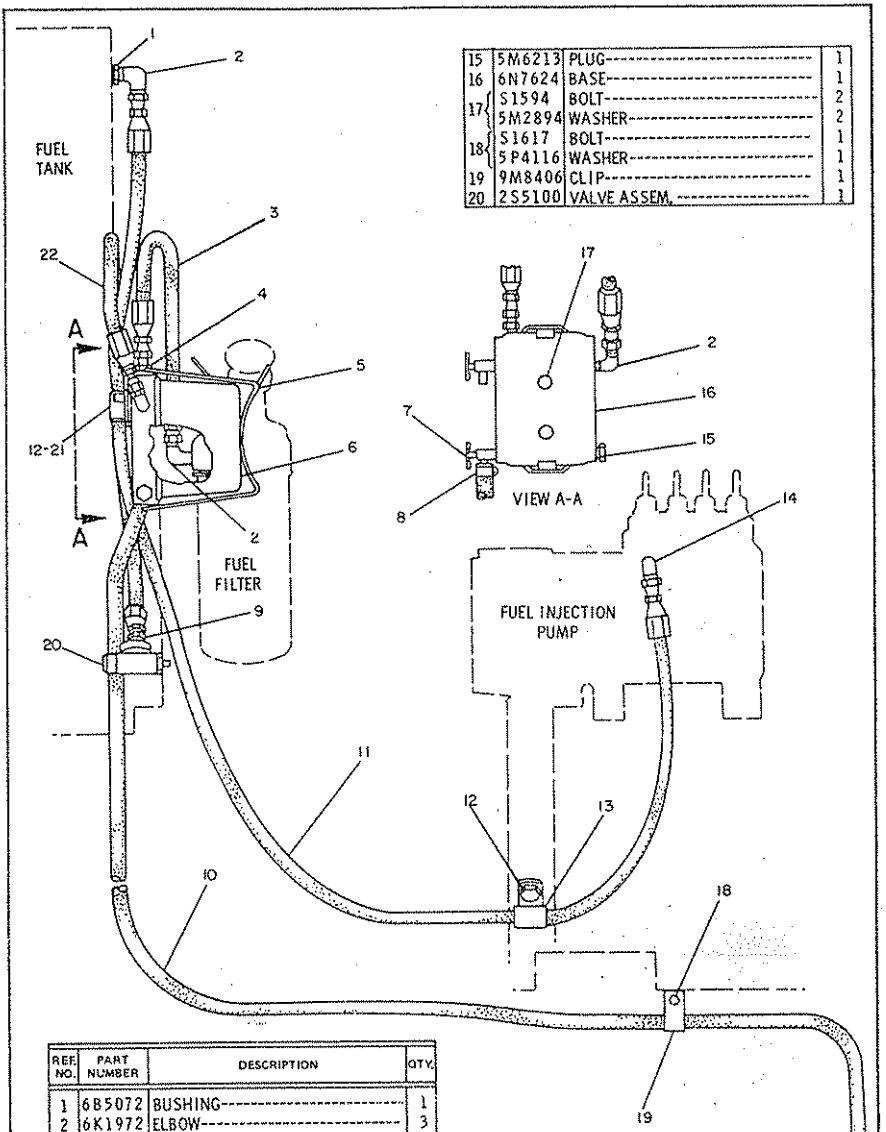

REF. NO.	PART NUMBER	DESCRIPTION	QTY.
1	6B5072	BUSHING	1
2	6K1972	ELBOW	3
3	2G6943	HOSE ASSEM. ---42.6 cm(16.77 in.)	1
4	4S6399	CONNECTOR	1
5	6N7618	CLAMP	1
6	6N7617	ELEMENT	1
7	5P7833	VALVE	2
8	1P4278	CLAMP	1
9	19440	CONNECTOR	1
▲ 10	5P1442	HOSE---------165 cm(64.96 in.)	
C 11	2G4706	HOSE ASSEM. - 147.5 cm(58.07 in.)	1
12	L1351	BOLT	2
	5P1075	WASHER	2
13	6D3479	CLIP	1
14	4N1828	ELBOW	1
15	5M6213	PLUG	1
16	6N7624	BASE	1
17	S1594	BOLT	2
	5M2894	WASHER	2
18	S1617	BOLT	1
	5P4116	WASHER	1
19	9M8406	CLIP	1
20	2S5100	VALVE ASSEM.	1
21	4D6466	CLIP	1
22	2G4507	HOSE ASSEM. ---71.2 cm(28 in.)	1

C INDICATES CHANGE

▲ ORDER BY THE CENTIMETER

228064

6G1600 FUEL LINES GROUP
Serial No. 87V5275 to 87V5307 inclusive

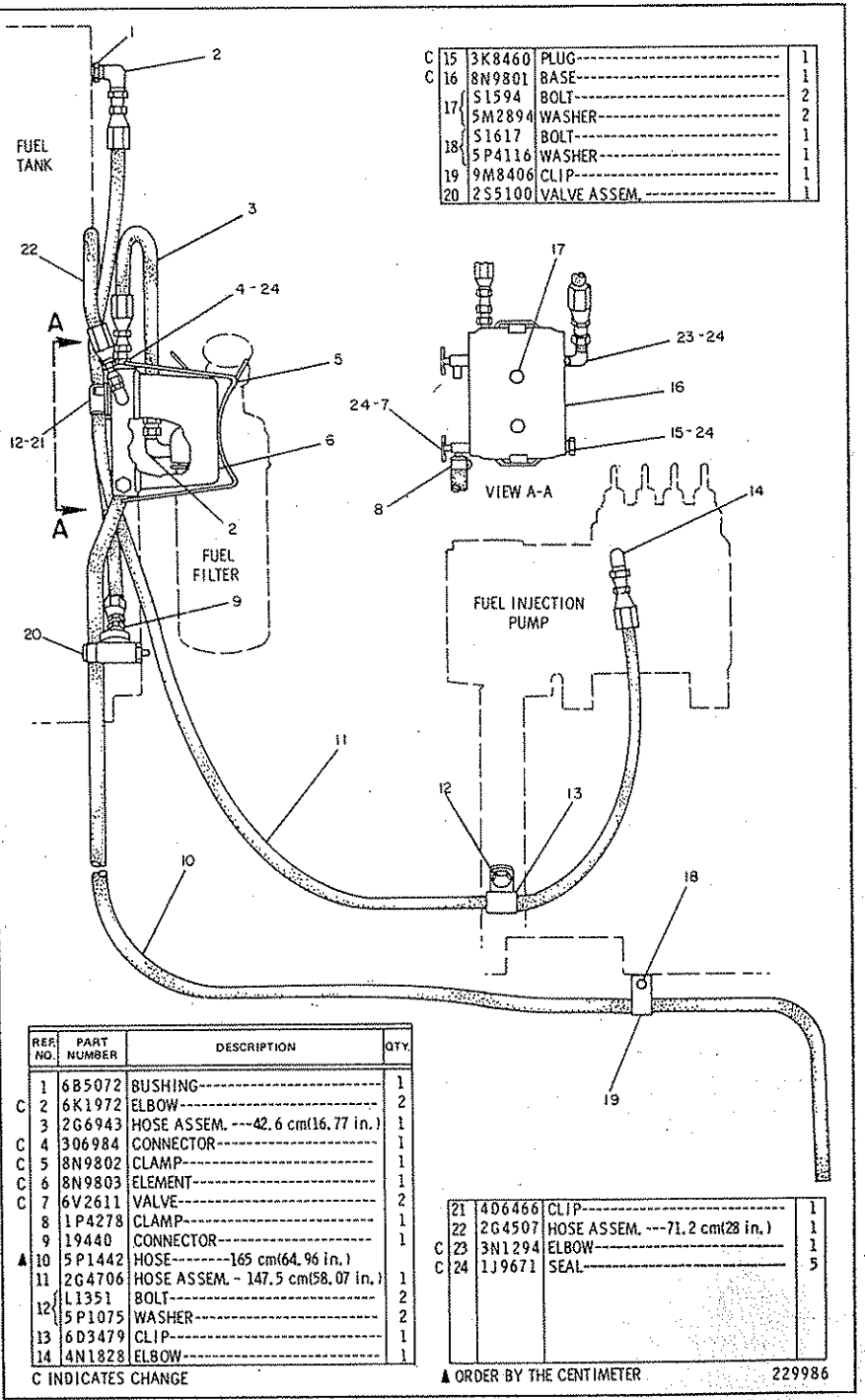

	REF. NO.	PART NUMBER	DESCRIPTION	QTY.
	1	6B5072	BUSHING	1
C	2	6K1972	ELBOW	2
	3	2G6943	HOSE ASSEM. ---42.6 cm(16.77 in.)	1
C	4	306984	CONNECTOR	1
C	5	8N9802	CLAMP	1
C	6	8N9803	ELEMENT	1
C	7	6V2611	VALVE	2
	8	1P4278	CLAMP	1
	9	19440	CONNECTOR	1
▲	10	5P1442	HOSE---------165 cm(64.96 in.)	
	11	2G4706	HOSE ASSEM. - 147.5 cm(58.07 in.)	1
	12	L1351	BOLT	2
		5P1075	WASHER	2
	13	6D3479	CLIP	1
	14	4N1828	ELBOW	1

C	15	3K8460	PLUG	1
C	16	8N9801	BASE	1
	17	S1594	BOLT	2
		5M2894	WASHER	2
	18	S1617	BOLT	1
		5P4116	WASHER	1
	19	9M8406	CLIP	1
	20	2S5100	VALVE ASSEM.	1

	21	4D6466	CLIP	1
	22	2G4507	HOSE ASSEM. ---71.2 cm(28 in.)	1
C	23	3N1294	ELBOW	1
C	24	1J9671	SEAL	5

C INDICATES CHANGE

▲ ORDER BY THE CENTIMETER

229986

6G1600 FUEL LINES GROUP
Serial No. 87V5308—Up

6G1625 FUEL LINES GROUP
Part of 2G2580 Sound Suppression Arrangement listed on Page 168
AN ATTACHMENT

REF. NO.	PART NUMBER	DESCRIPTION	QTY.
1	2G7049	HOSE ASSEM. --1.93m(75.98 in.)	1
2	6D3479	CLIP	1
3	1P436	GASKET	2
4	2G9619	HOSE ASSEM. -----.24 m (9.45 in.)	1
5	S1571	BOLT	2
6	6K1972	ELBOW	2
7	2G4722	PLATE	1
8	L1351	BOLT	3
9	5P1075	WASHER	5
10	1B7182	BOLT	1
	9M1974	WASHER	1
11	6N4414	COVER	1
12	9F6580	BOLT	1
	5P537	WASHER	1
13	2P3200	BOLT	2
14	7J4026	ELBOW	1
15	3J1907	SEAL	2
16	2G4706	HOSE ASSEM. ---1.48 m(58.07 in.)	1
17	4D6466	CLIP	2
18	2P1314	CONNECTOR	1
19	3F2779	COUPLING	1
	5K2408	NIPPLE	1
20	2G4797	BASE	1

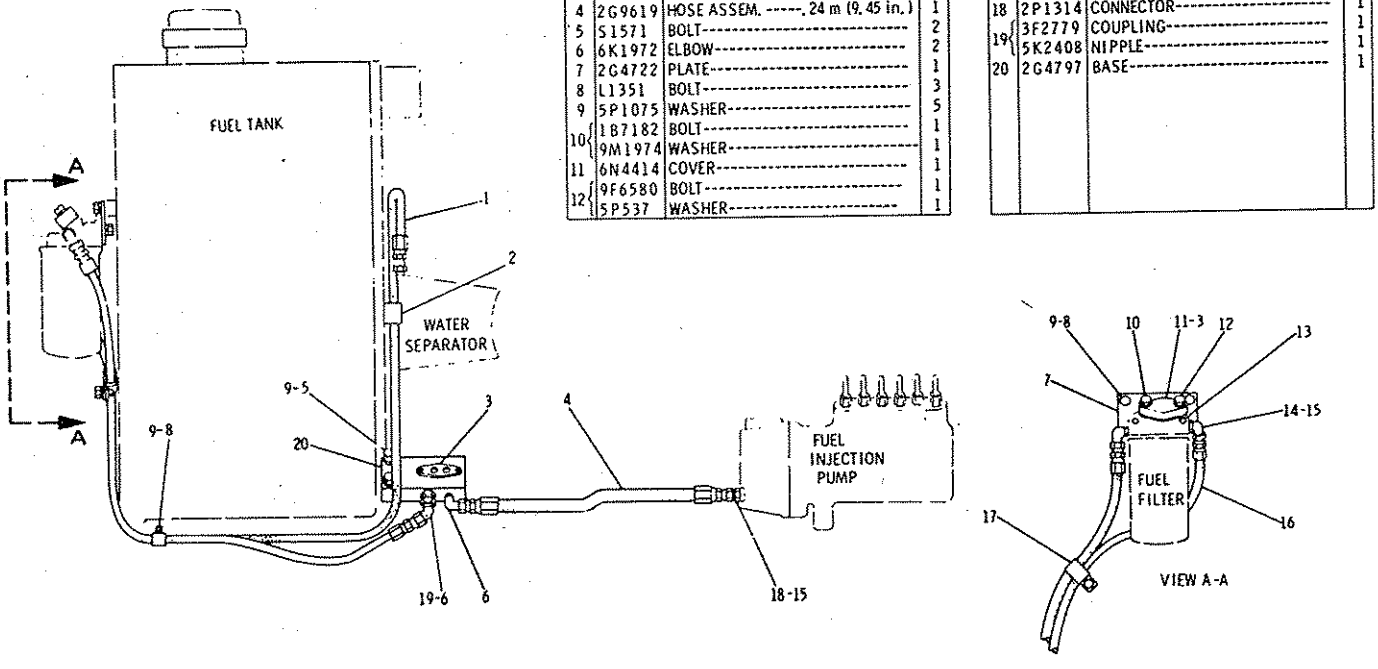

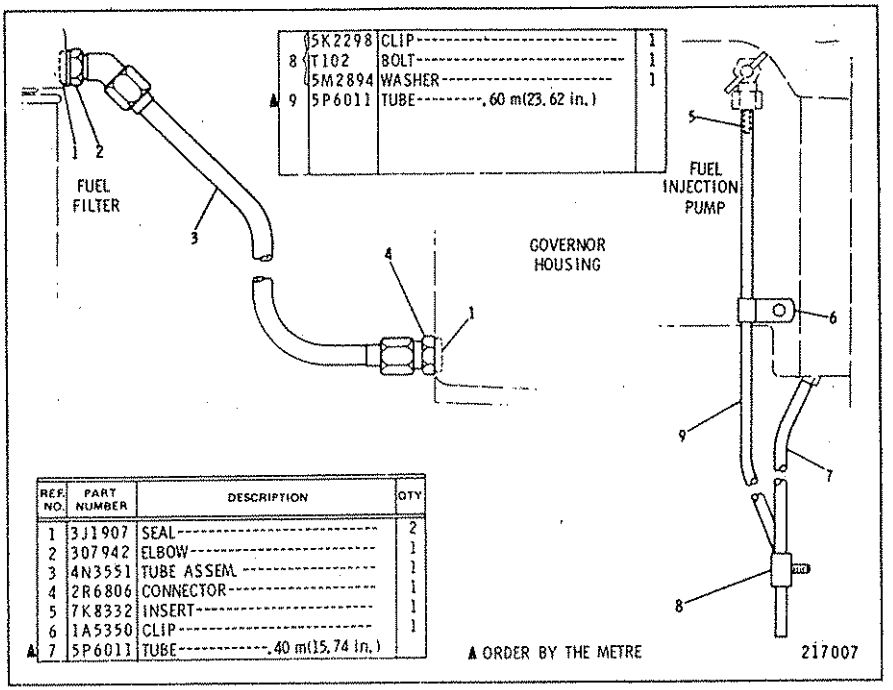

	5K2298	CLIP	1
8	T102	BOLT	1
	5M2894	WASHER	1
▲ 9	5P6011	TUBE---------, 60 m(23.62 in.)	

REF. NO.	PART NUMBER	DESCRIPTION	QTY
1	3J1907	SEAL	2
2	307942	ELBOW	1
3	4N3551	TUBE ASSEM.	1
4	2R6806	CONNECTOR	1
5	7K8332	INSERT	1
6	1A5350	CLIP	1
▲ 7	5P6011	TUBE----------, 40 m(15.74 in.)	

▲ ORDER BY THE METRE

7N3651 DRAIN LINES GROUP
Engine Serial No. 7Z1 to 7Z42 inclusive

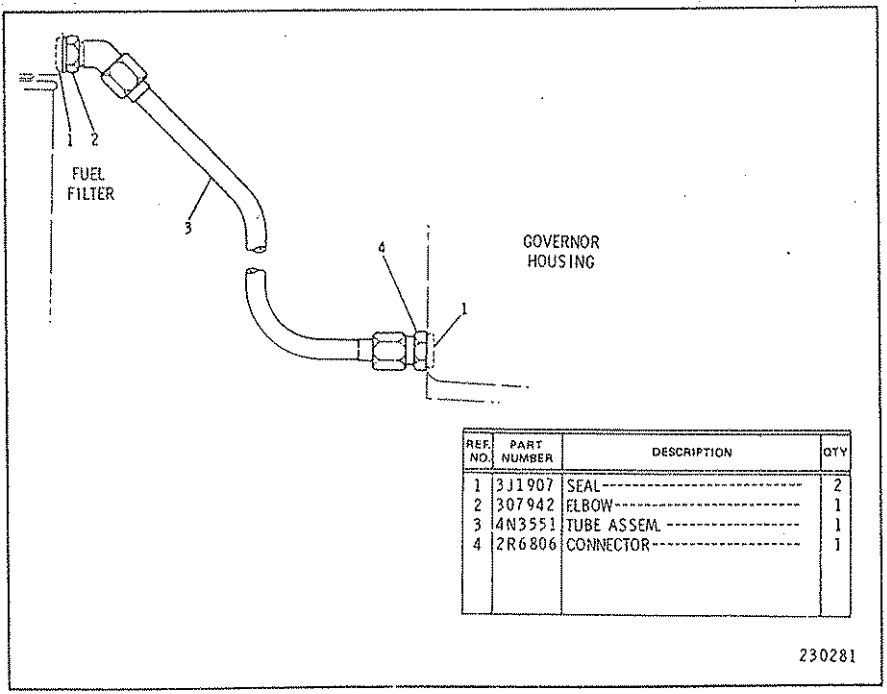

REF. NO.	PART NUMBER	DESCRIPTION	QTY
1	3J1907	SEAL	2
2	307942	ELBOW	1
3	4N3551	TUBE ASSEM.	1
4	2R6806	CONNECTOR	1

7N3651 DRAIN LINES GROUP

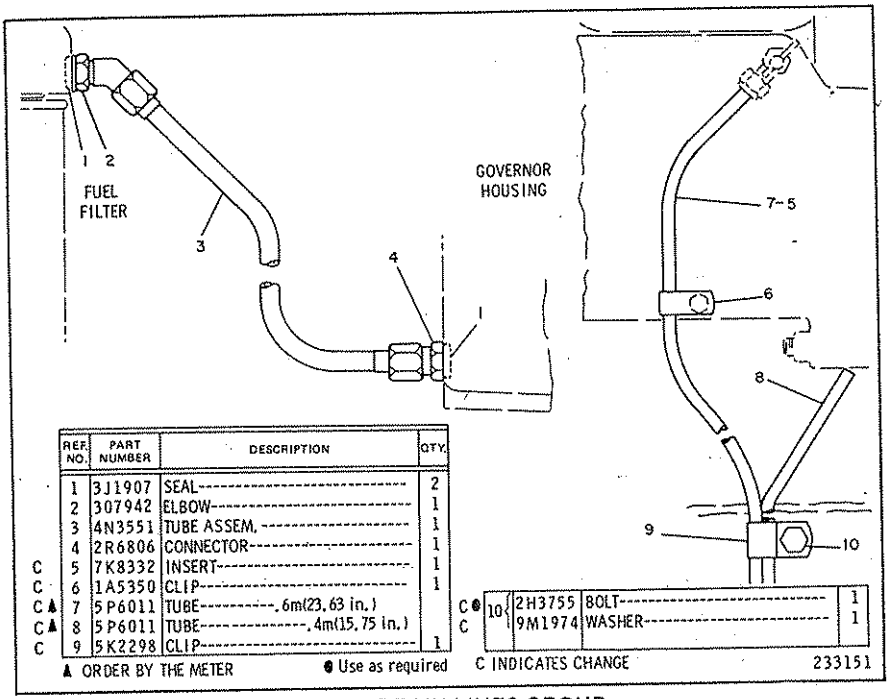

	REF. NO.	PART NUMBER	DESCRIPTION	QTY.
	1	3J1907	SEAL	2
	2	307942	ELBOW	1
	3	4N3551	TUBE ASSEM.	1
	4	2R6806	CONNECTOR	1
C	5	7K8332	INSERT	1
C	6	1A5350	CLIP	1
C ▲	7	5P6011	TUBE-----.6m(23.63 in.)	
C ▲	8	5P6011	TUBE-----.4m(15.75 in.)	
C	9	5K2298	CLIP	1
C ●	10	2H3755	BOLT	1
C		9M1974	WASHER	1

▲ ORDER BY THE METER ● Use as required C INDICATES CHANGE 233151

7N3651 DRAIN LINES GROUP
Engine Serial No. 7Z497—Up

REF NO.	PART NUMBER	DESCRIPTION	QTY.
1	7B3235	BOLT	1
	5P8245	WASHER	1
2	2A5546	BOLT	2
	5P537	WASHER	2
3	2H3934	SEAL	1
4	1B4203	NUT	3
5	8M5248	SEAL	1
6	L1352	BOLT	1
	5M2894	WASHER	1
7	6N3760	BRACKET	1
8	5M6214	PLUG	1
9	4N4021	ADAPTER	1
10	8M5253	SEAL	1
11	8N4224	LINE ASSEM. -----(No. 4)---------	1
12	9L8388	SPACER	4
13	9L8134	CLAMP ASSEM.	4
14	7N449	NOZZLE ASSEM. (Each Includes)	4
	1H1023	SEAL	1
15	9L9099	WASHER	1
16	9L9098	SEAL	1
17	6H9954	MACHINE SCREW ASSEM.	4
18	6N6403	CLAMP--------(tapped)----------	4
	6N6404	CLAMP	4
19	8N4221	LINE ASSEM. ----------(No. 1)	1
20	8N4222	LINE ASSEM. ----------(No. 2)	1
21	8N4223	LINE ASSEM. ----------(No. 3)	1

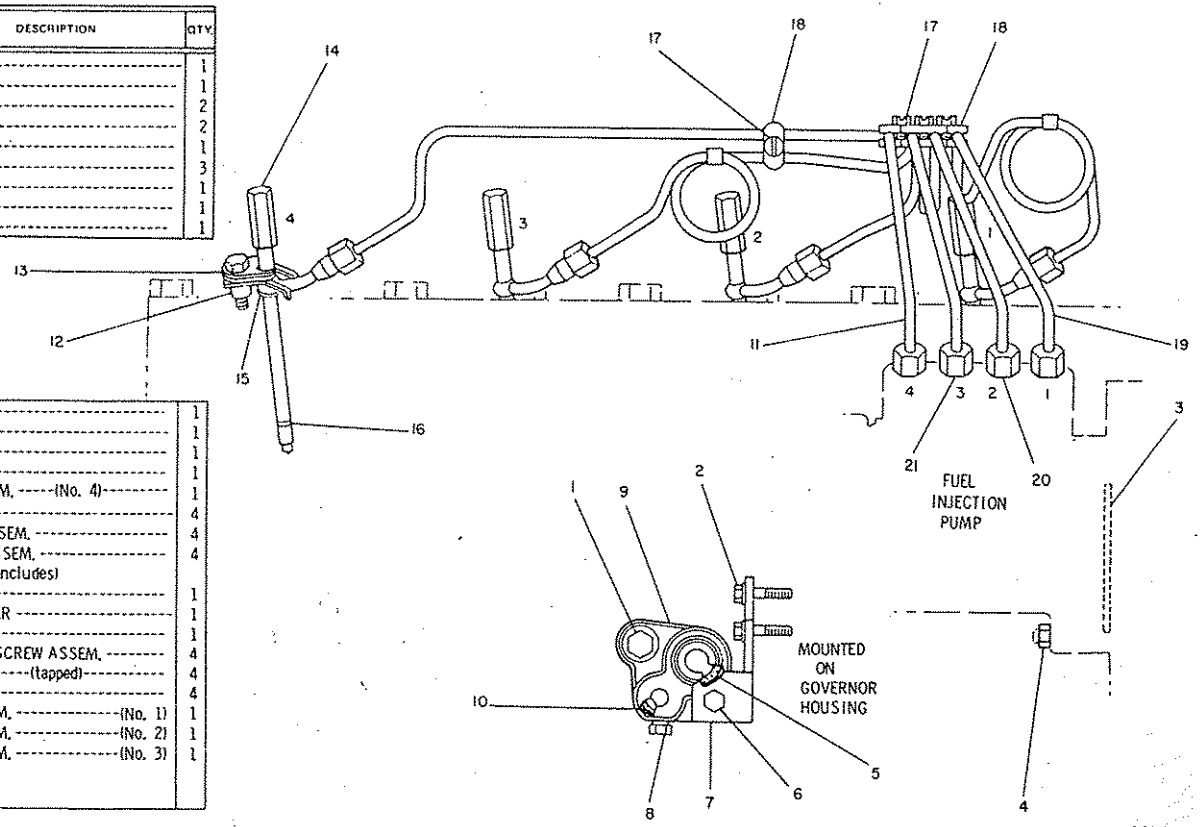

7N1645 FUEL INJECTION LINES GROUP
Engine Serial No. 7Z1 to 7Z4498 inclusive

7N1645 FUEL INJECTION LINES GROUP
Engine Serial No. 7Z4499—Up

REF. NO.	PART NUMBER	DESCRIPTION	QTY.
1	7B3235	BOLT	1
	5P8245	WASHER	1
2	2A5546	BOLT	2
	5P537	WASHER	2
3	2H3934	SEAL	1
4	1B4203	NUT	3
5	8M5248	SEAL	1
6	L1352	BOLT	1
	5M2894	WASHER	1
7	6N3760	BRACKET	1
8	5M6214	PLUG	1
9	4N4021	ADAPTER	1
10	8M5253	SEAL	1
11	8N4224	LINE ASSEM. -----(No. 4)----------	1
12	9L8388	SPACER	4
C 13	1W2459	CLAMP ASSEM.	4
14	7N449	NOZZLE ASSEM. (Each Includes)	4
	1H1023	SEAL	1
15	9L9099	WASHER	1
16	9L9098	SEAL	1
C 17	6H9954	MACHINE SCREW ASSEM.	5
C 18	6N6403	CLAMP---------(tapped)----------	5
C	6N6404	CLAMP	5
C 19	1W8641	LINE ASSEM. ----------(No. 1)	1
20	8N4222	LINE ASSEM. ----------(No. 2)	1
21	8N4223	LINE ASSEM. ----------(No. 3)	1

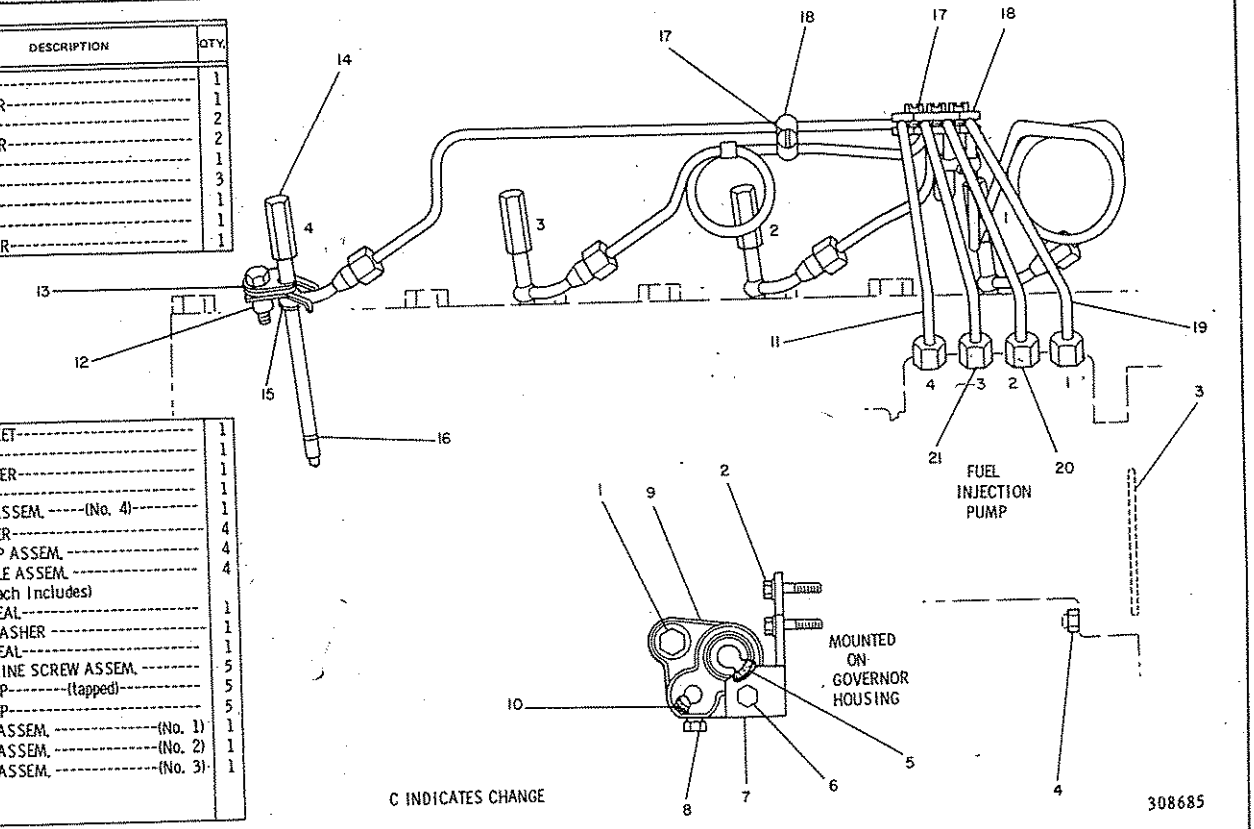

9D540 FUEL TANK GROUP—227 l (60 Gal.)
Serial No. 87V5275 to 87V5733 Inclusive

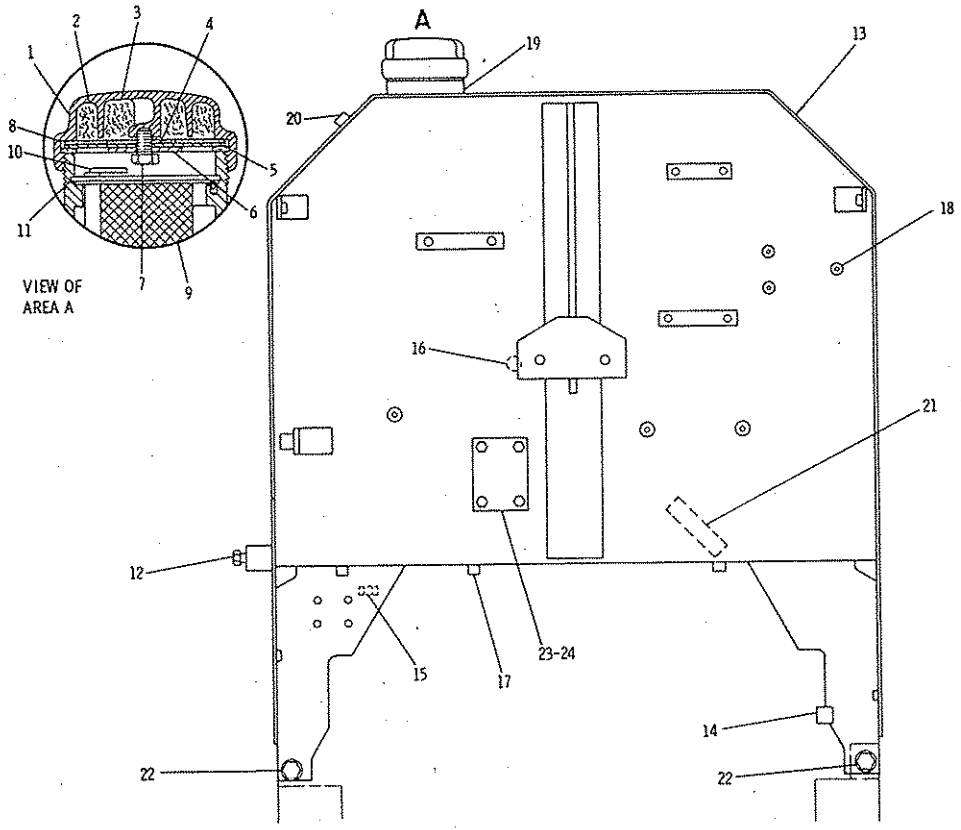

REF. NO.	PART NUMBER	DESCRIPTION	QTY.
1	4B1455	CAP ASSEM. (Includes)	1
2	4B1663	ELEMENT	1
3	4B5949	ELEMENT	1
4	3F4135	BAFFLE	1
5	2B4031	GASKET	1
6	7B2001	WASHER	1
7	7F7461	SCREW	1
8	4B1453	GASKET	1
9	4D1998	STRAINER ASSEM.	1
10	9D4426	PLUNGER	1
11	1A2540	LOCK	1
12	1H8306	SCREW	1
C 13	2G8961	TANK ASSEM. (Includes)	1
14	6B3671	PLATE	1
15	2K7051	BAR	1
16	4D9376	BOSS	1
17	8F9836	LUG	7
18	7J9451	BOSS	3
19	4D8878	TUBE ASSEM.	1
20	3D6751	LUG	1
21	3K1571	PLATE	1
22	1D4616	BOLT	2
	1B4331	NUT	2
	3B4512	LOCKWASHER	2
	2S115	WASHER	4
C 23	6G4248	PLATE	1
C	6G5144	GASKET	1
C 24	2B2695	BOLT	4
C	9M1974	WASHER	4

C INDICATES CHANGE

227947

9D540 FUEL TANK GROUP—227 l (60 Gal.)
Serial No. 87V5734 to 87V5787 & 87V5791 inclusive

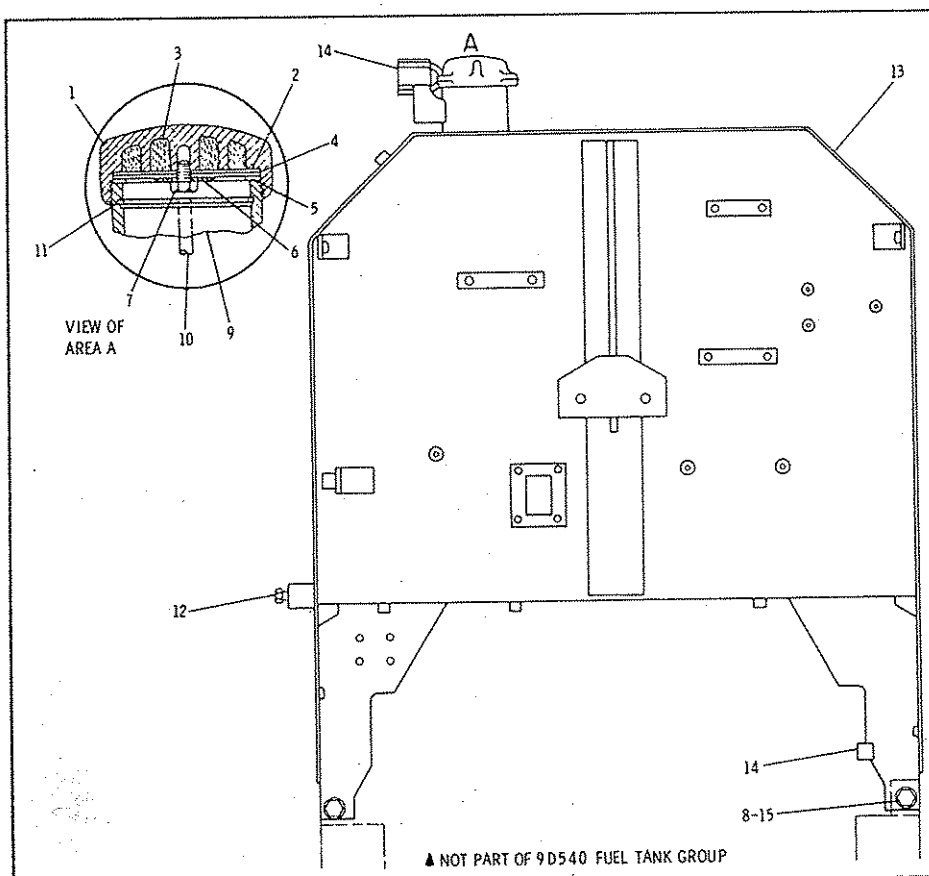

REF. NO.	PART NUMBER	DESCRIPTION	QTY.
C	9G6082	CAP ASSEM.	1
1		(Includes)	
	8P408	CAP	1
2	4B5423	GASKET	1
3	4B5949	ELEMENT	2
4	3F4134	BAFFLE	1
5	2A1763	GASKET	1
6	7B2002	WASHER	1
7	3F8389	SCREW	1
8	2S115	WASHER	4
C 9	9P7121	STRAINER	1
10	9D4426	PLUNGER	1
C 11	8H3497	RING	1
12	1H8306	SCREW	1
C 13	6G6926	TANK ASSEM.	1
C	8S7949	PADLOCK GROUP	1
14		(Includes)	
▲	8M439	KEY	2
15	1D4616	BOLT	2
	1B4331	NUT	2

C INDICATES CHANGE

233110

9D540 FUEL TANK GROUP
Serial No. 87V5788 to 87V5790 and 87V5792—Up

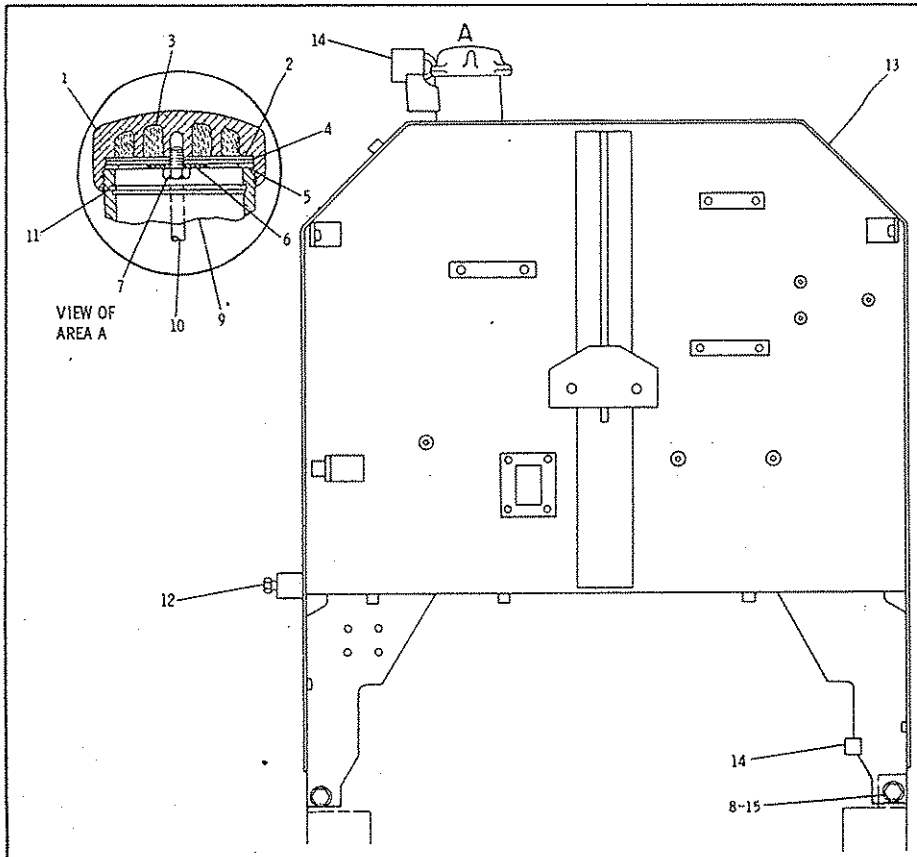

REF NO.	PART NUMBER	DESCRIPTION	QTY.
C	9G6082	CAP ASSEM.	1
1		(Includes)	
	8P408	CAP	1
2	4B5423	GASKET	1
3	4B5949	ELEMENT	2
4	3F4134	BAFFLE	1
5	2A1763	GASKET	1
6	7B2002	WASHER	1
7	3F8389	SCREW	1
8	2S115	WASHER	4
9	9P7121	STRAINER	1
10	9D4426	PLUNGER	1
11	8H3497	RING	1
12	1H8306	SCREW	1
13	6G6926	TANK ASSEM.	1
14	5P8502	PADLOCK GROUP	1
		(Includes)	
▲	5P8500	KEY	2
15	1D4616	BOLT	2
	1B4331	NUT	2

▲ NOT PART OF THIS GROUP
C INDICATES CHANGE

181001

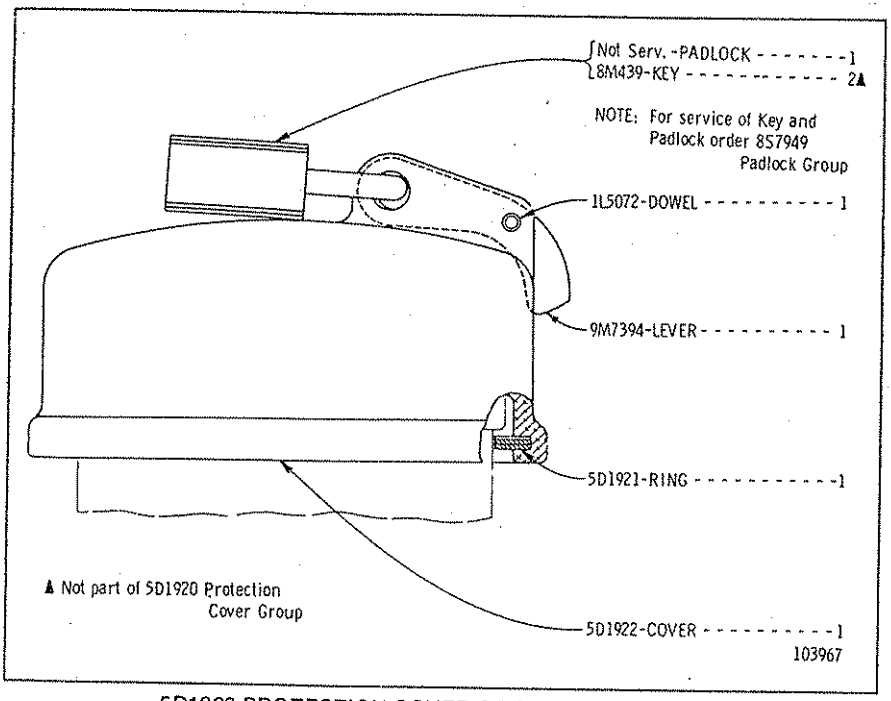

5D1920 PROTECTION COVER GROUP—Fuel Tank Cap
Serial No. 87V5275 to 87V5733 Inclusive
AN ATTACHMENT

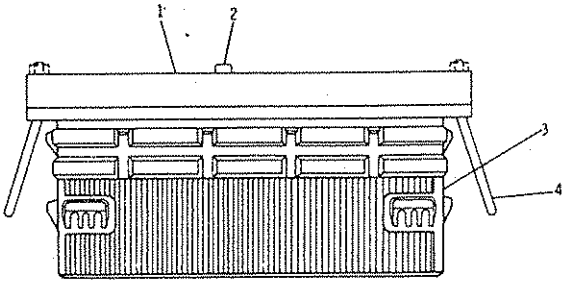

REF. NO.	PART NUMBER	DESCRIPTION	QTY
1	1S8230	HOLDDOWN ASSEM. ---------- (Each Includes)	2
2	9M5617	GROMMET----------	6
3	4S9261	BATTERY----------	2
4	2S1686	U-BOLT----------	4

161820

2G5120 HEAVY DUTY BATTERY GROUP—12 Volt, 172 Ampere Hours
Part of 6N7288 Starting Arrangement & 5T5113 Supplemental Steering Arrangement shown on Pages 77 & 198B. AN ATTACHMENT

CONSISTS OF: PAGE

1	2G5120	HEAVY DUTY BATTERY GROUP	77
1	7S3622	ELECTRIC STARTING MOTOR GROUP	78 & 78A

6N7288 STARTING ARRANGEMENT—For Cold Weather
AN ATTACHMENT

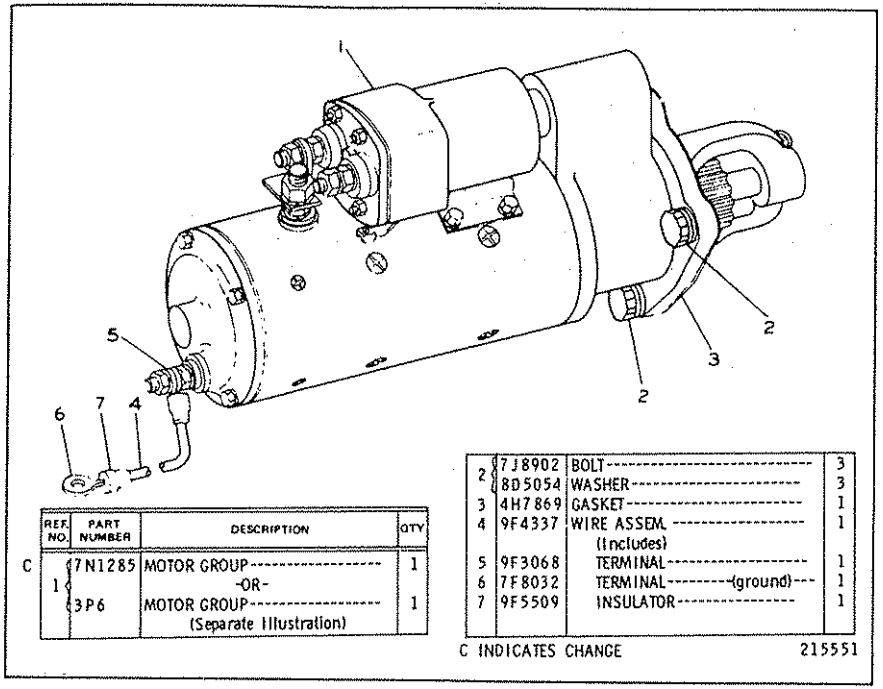

REF. NO.	PART NUMBER	DESCRIPTION	QTY
C 1	7N1285	MOTOR GROUP	1
		-OR-	
	3P6	MOTOR GROUP (Separate Illustration)	1

2	7J8902	BOLT	3
	8D5054	WASHER	3
3	4H7869	GASKET	1
4	9F4337	WIRE ASSEM. (Includes)	1
5	9F3068	TERMINAL	1
6	7F8032	TERMINAL-(ground)	1
7	9F5509	INSULATOR	1

C INDICATES CHANGE 215551

7S4090 ELECTRIC STARTING MOTOR GROUP—24 Volt—Type 1
7N1285 and 3P6 Motor parts are shown on Pages 84 through 87

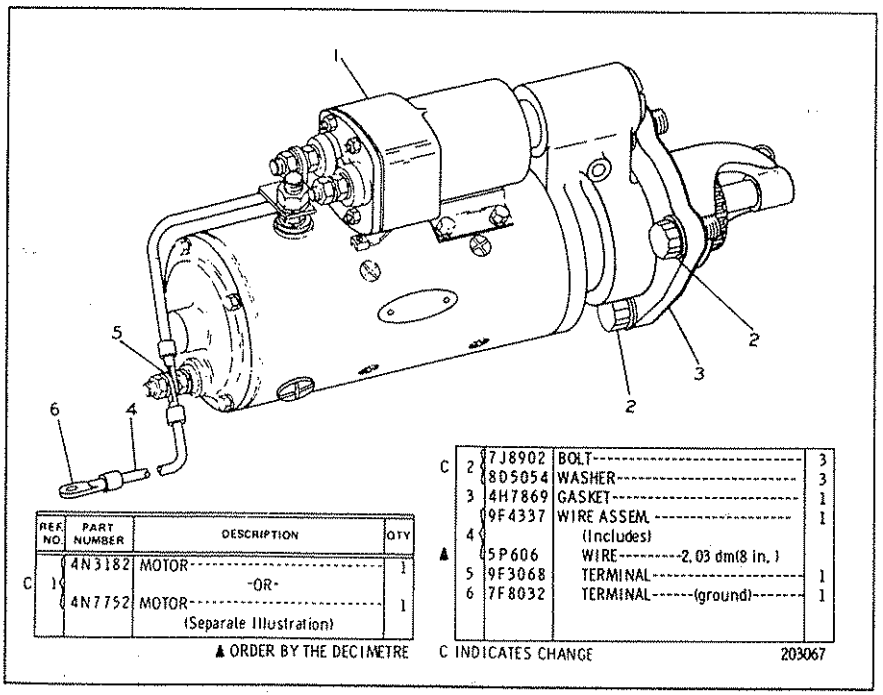

REF. NO.	PART NUMBER	DESCRIPTION	QTY
C 1	4N3182	MOTOR	1
		-OR-	
	4N7752	MOTOR (Separate Illustration)	1

▲ ORDER BY THE DECIMETRE

C	2	7J8902	BOLT	3
		8D5054	WASHER	3
	3	4H7869	GASKET	1
	4	9F4337	WIRE ASSEM. (Includes)	1
▲		5P606	WIRE-2.03 dm(8 in.)	
	5	9F3068	TERMINAL	1
	6	7F8032	TERMINAL-(ground)	1

C INDICATES CHANGE 203067

7S3622 ELECTRIC STARTING MOTOR GROUP—24 Volt—Type 1
Part of 6N7288 Starting Arrangement listed on Page 77
4N3182 and 4N7752 Motor parts are shown on Pages 79 through 83
AN ATTACHMENT

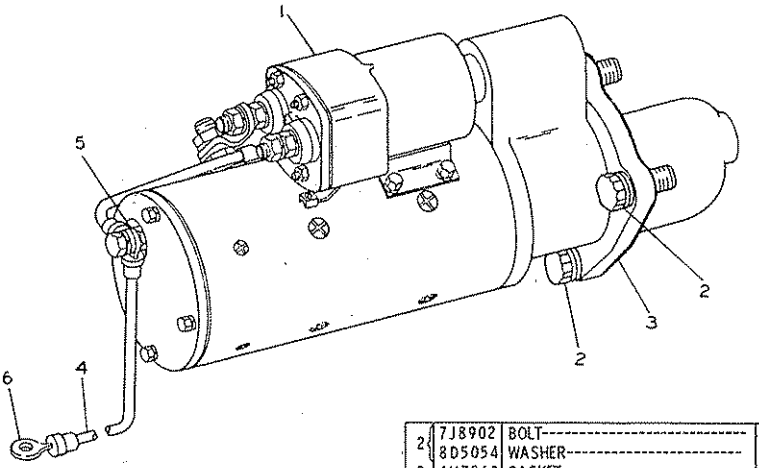

	REF. NO.	PART NUMBER	DESCRIPTION	QTY.
C	1	3P7	MOTOR GROUP---------- (Separate Illustration)	1

	REF. NO.	PART NUMBER	DESCRIPTION	QTY.
	2	7J8902	BOLT----------	3
		8D5054	WASHER----------	3
	3	4H7869	GASKET----------	1
	4	9F4337	WIRE ASSEM. ---------- (Includes)	1
▲		5P6641	WIRE---.228m(9 in.)	
	5	2L8052	TERMINAL----------	1
	6	2L8054	TERMINAL----------	1

▲ ORDER BY THE METER

C INDICATES CHANGE 305402

7S4090 ELECTRIC STARTING MOTOR GROUP—24 Volt—Type 2
3P7 Motor parts are listed on Page 78C

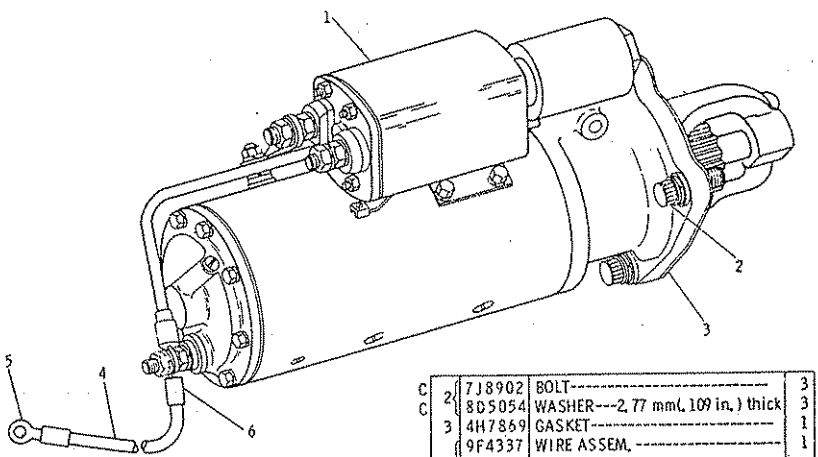

	REF. NO.	PART NUMBER	DESCRIPTION	QTY
	1	4N3181	MOTOR GROUP---------- (Includes)	1
C●		9G4338	MOTOR GROUP---(Prestolite)---- -OR-	1
●		4N3182	MOTOR GROUP---(Delco-Remy)-	1

	REF. NO.	PART NUMBER	DESCRIPTION	QTY
C	2	7J8902	BOLT----------	3
C		8D5054	WASHER---2.77 mm(.109 in.) thick	3
	3	4H7869	GASKET----------	1
	4	9F4337	WIRE ASSEM. ---------- (Includes)	1
▲		5P6641	WIRE---------.23 m (9 in.)	
	5	2L8054	TERMINAL---(ground)--------	1
	6	2L8052	TERMINAL----------	1

C INDICATES CHANGE ● SEPARATE ILLUSTRATION ▲ ORDER BY THE METER 229068

7S3622 ELECTRIC STARTING MOTOR GROUP—24 Volt—Type 2
Part of 6N7288 Starting Arrangement listed on Page 77. 4N3182 & 9G4338 Motor parts are shown on Pages 79, 80, 81 and 83A through 83F. AN ATTACHMENT

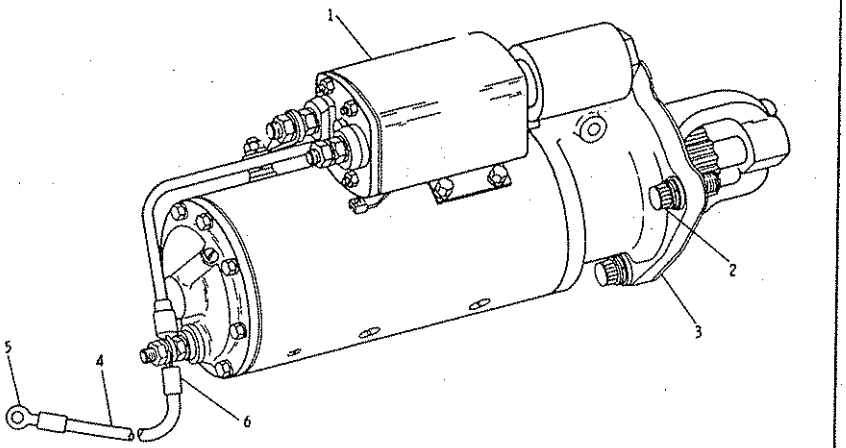

REF. NO.	PART NUMBER	DESCRIPTION	QTY.
1	4N3181	MOTOR GROUP---------- (Separate Illustration)	1
2	7J8902	BOLT----------	3
	8D5054	WASHER--2.77 mm (.109 in.) thick	3
3	4H7869	GASKET----------	1

C INDICATES CHANGE

C▲ 4	9F4337	WIRE ASSEM. ---------- (Includes)	1
	5P5675	WIRE----------.3m(11.8 in.)	
5	2L8054	TERMINAL------(ground)-----	1
6	2L8052	TERMINAL----------	1

▲ ORDER BY THE METER

304575

7S3622 ELECTRIC STARTING MOTOR GROUP—24 Volt—Type 3
Part of 6N7288 Starting Arrangement listed on Page 77
4N3181 Motor parts are shown on Page 78C

	CONSISTS OF:		PAGE
1	3T2772	ELECTRIC STARTING MOTOR GROUP ..... DELCO-REMY	85A
	- OR -		
1	9G4337	ELECTRIC STARTING MOTOR GROUP ..... PRESTOLITE	87A
	- OR -		
1	3T6305	ELECTRIC STARTING MOTOR GROUP	87K

3P7 ELECTRIC STARTING MOTOR GROUP—24 Volt
Part of 7S4090 Motor Group shown on Page 78A

	CONSISTS OF:		PAGE
1	9G4338	ELECTRIC STARTING MOTOR GROUP ..... PRESTOLITE	83A
1	3T2647	ELECTRIC STARTING MOTOR GROUP ..... DELCO-REMY	87G
1	3T6305	ELECTRIC STARTING MOTOR GROUP	87K

4N3181 ELECTRIC STARTING MOTOR GROUP—24 Volt
Part of 7S3622 Motor Group shown on Page 78B

4N3182 ELECTRIC STARTING MOTOR GROUP—Delco-Remy—Part 1 of 3
Part of 7S3622 Electric Starting Motor Group shown on Page 78
4M1812 Switch parts are shown on Page 88. AN ATTACHMENT

REF. NO.	PART NUMBER	DESCRIPTION	QTY
1	7F4556	BOLT	4
2	1L4789	LOCKWASHER	4
3	4M1844	FRAME ASSEM.	1
4	7S9826	PLUG	1
5	3S2398	BUSHING	1
6	2B4602	PLUG	1
7	9F2547	WICK	1
8	2L8166	WASHER	1
9	4M1868	ARMATURE ASSEM.	1
10	3L3380	BUSHING	1
11	4M1839	COIL ASSEM.	1
12	9H3757	WASHER	2
13	7F3494	WASHER	1
14	4M1841	CONNECTOR	1
15	105117	NUT	2

	REF. NO.	PART NUMBER	DESCRIPTION	QTY
C	16	4M1812	SWITCH ASSEM. (Separate Illustration)	1
	17	6H3622	SCREW ASSEM.	4
	18	3B4508	LOCKWASHER	1
	19	3F379	SCREW	8
	20	2N3145	INSULATOR	1
	21	4M1831	PLUG	2
	22	4M1832	GASKET	2
	23	1H2629	STRIP	2
	24	8H1141	SHOE	4

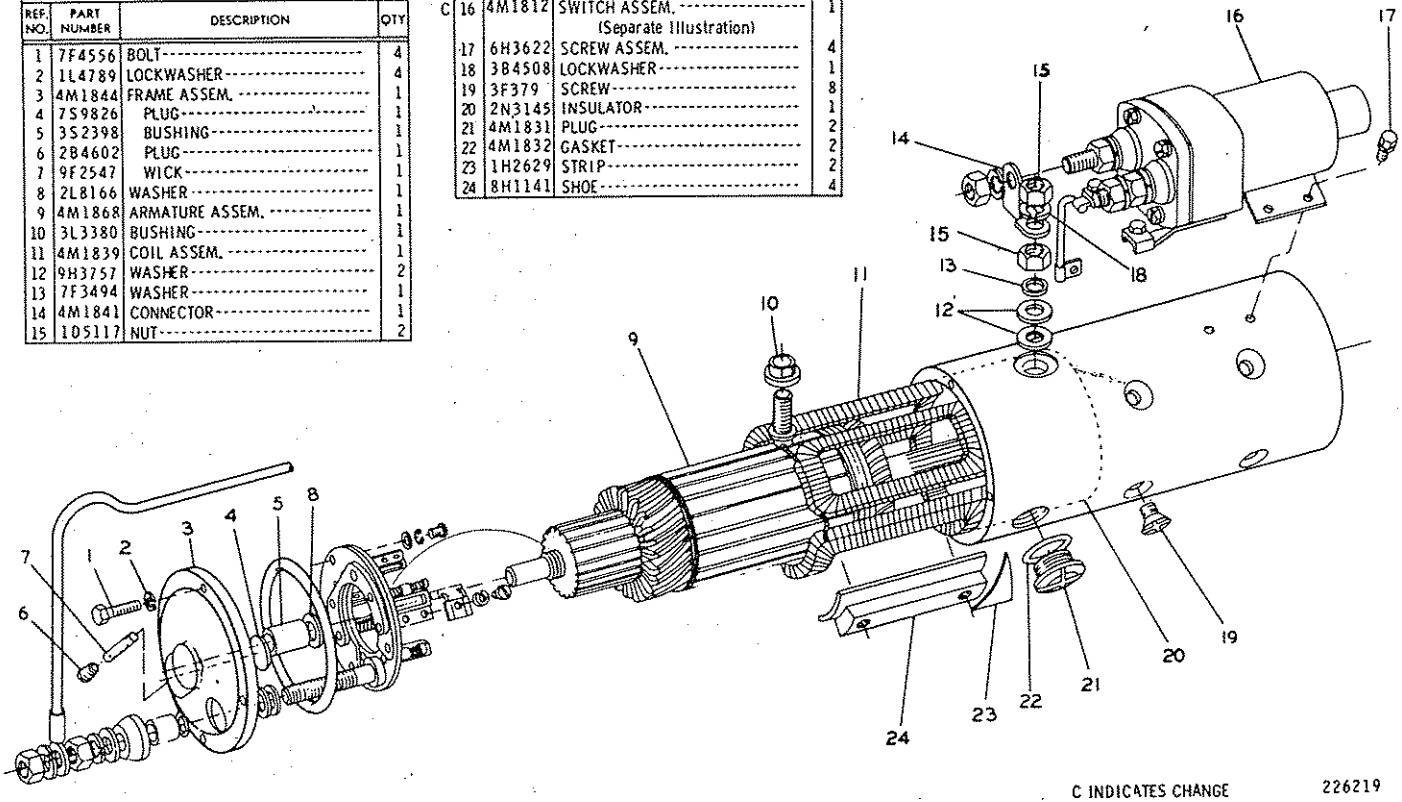

C INDICATES CHANGE

226219

REF. NO.	PART NUMBER	DESCRIPTION	QTY
1	4M1849	LEAD ASSEM.	1
2	4M189	SEAL	1
3	7F3529	WASHER	3
4	8H878	LOCKWASHER	3
5	4B1221	SCREW	3
6	4M1846	PLATE ASSEM.	1
7	7F3525	BUSHING	8
8	7F4550	PLATE	1
9	5H6467	SCREW	2
10	7H2079	LOCKWASHER	8
11	2L6679	PLATE	2
12	7F4546	HOLDER	4
13	7F3522	SCREW	2
14	7F3512	SPRING	8
15	4M1891	PLATE ASSEM.	1
16	7F4549	PLATE	2
17	4B1311	SCREW	2
18	7F4545	PLATE	1
19	3H3697	SCREW	2

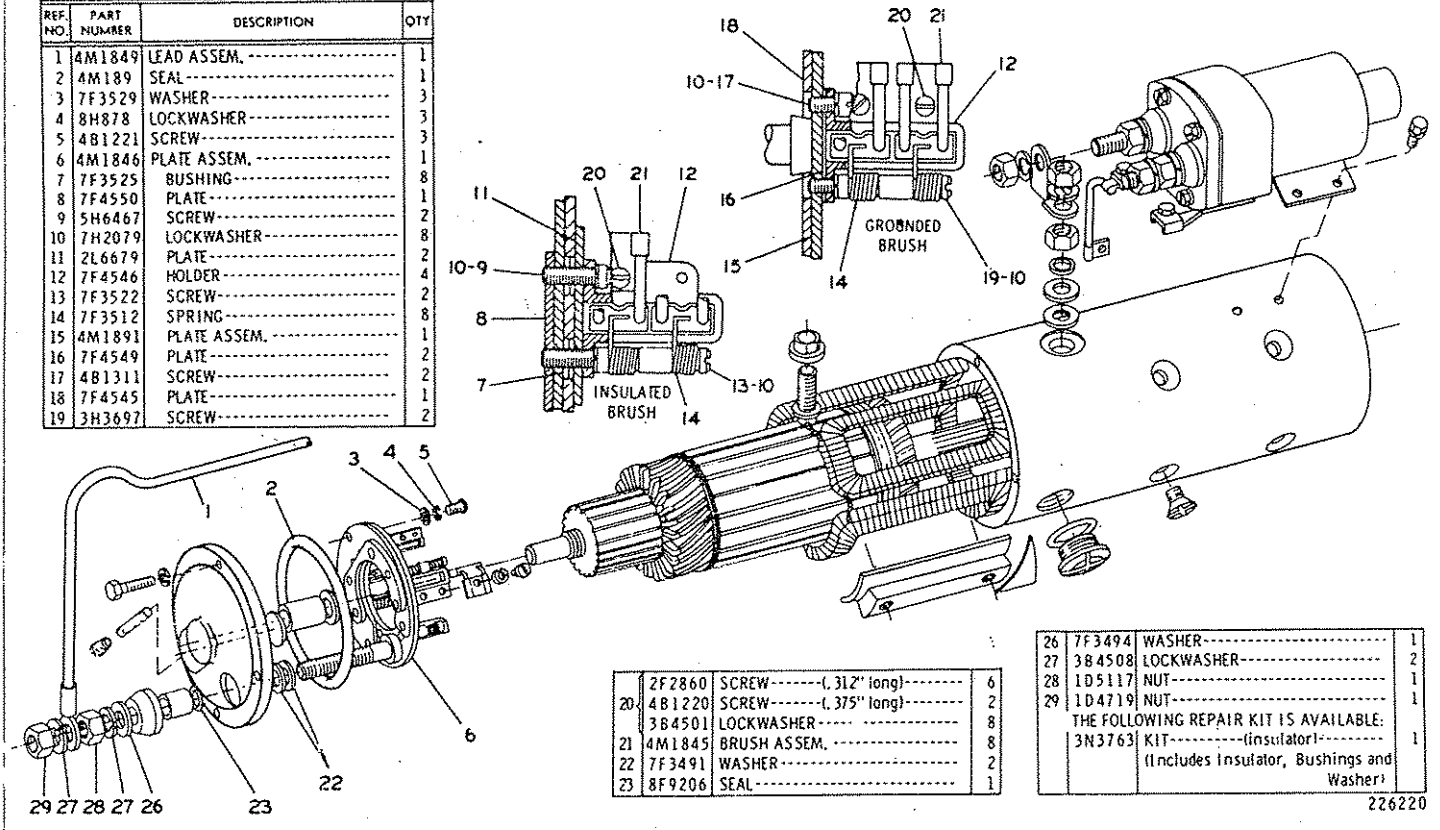

20	2F2860	SCREW-------(.312" long)--------	6
	4B1220	SCREW-------(.375" long)--------	2
	3B4501	LOCKWASHER-----------	8
21	4M1845	BRUSH ASSEM.	8
22	7F3491	WASHER	2
23	8F9206	SEAL	1

26	7F3494	WASHER	1
27	3B4508	LOCKWASHER	2
28	1D5117	NUT	1
29	1D4719	NUT	1
		THE FOLLOWING REPAIR KIT IS AVAILABLE:	
	3N3763	KIT----------(insulator)---------- (Includes Insulator, Bushings and Washer)	1

226220

4N3182 ELECTRIC STARTING MOTOR GROUP—Delco-Remy—Part 2 of 3
Part of 7S3622 Electric Starting Motor Group shown on Page 78
AN ATTACHMENT

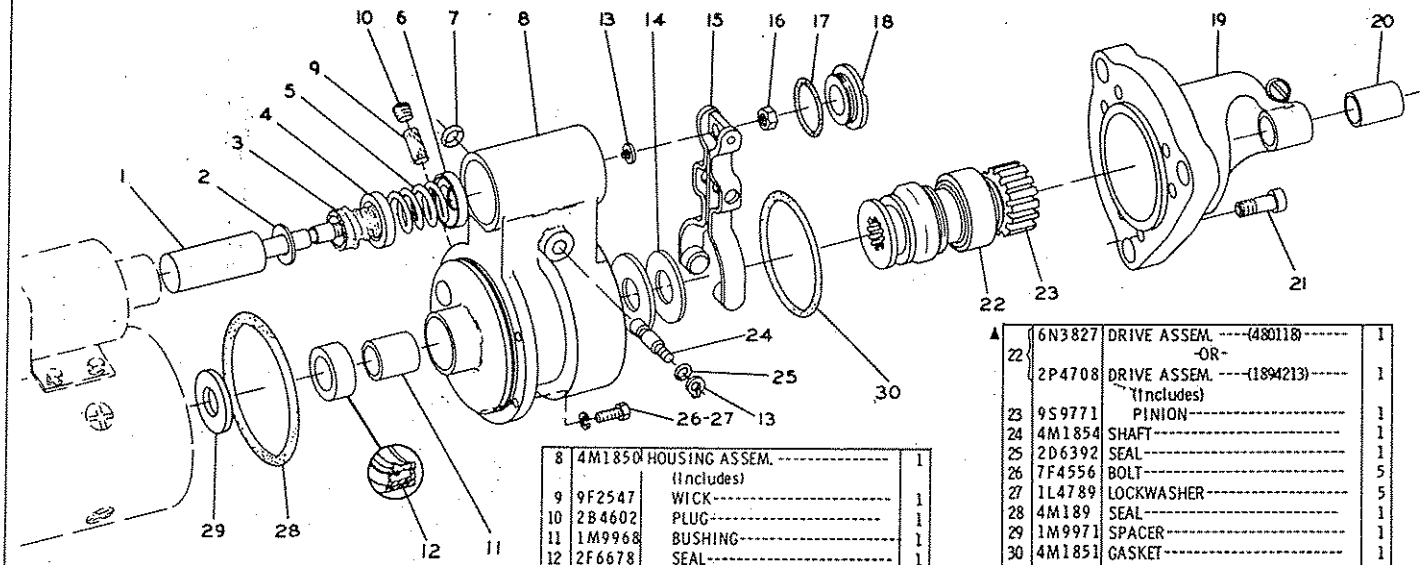

REF. NO.	PART NUMBER	DESCRIPTION	QTY
1	4M1855	PLUNGER ASSEM.	1
	FM055075	FORM----(installation instructions)	1
2	2S4027	WASHER	1
3	4M1829	BOOT	1
4	4M1828	RETAINER	1
5	9M7609	SPRING	1
6	4M1827	RETAINER	1
7	1H1023	SEAL	1
8	4M1850	HOUSING ASSEM.	1
		(Includes)	
9	9F2547	WICK	1
10	2B4602	PLUG	1
11	1M9968	BUSHING	1
12	2F6678	SEAL	1
13	2H3429	RING	2
14	4L2729	WASHER	1
15	4M1853	LEVER ASSEM.	1
16	3F2617	NUT	1
17	4M1832	GASKET	1
18	4M1831	PLUG	1
19	1S297	HOUSING ASSEM.	1
		(Includes)	
20	4M1896	BUSHING	1
21	4M1833	SCREW---1.50 in. (38.10 mm) long	5
	7M336	SCREW---.875 in. (22.23 mm) long	1

▲ 22	6N3827	DRIVE ASSEM. ----(480118)----	1
		-OR-	
	2P4708	DRIVE ASSEM. ----(1894213)----	1
		(Includes)	
23	9S9771	PINION	1
24	4M1854	SHAFT	1
25	2D6392	SEAL	1
26	7F4556	BOLT	5
27	1L4789	LOCKWASHER	5
28	4M189	SEAL	1
29	1M9971	SPACER	1
30	4M1851	GASKET	1
		THE FOLLOWING REPAIR KITS ARE AVAILABLE FOR 2P4708 DRIVE ASSEM.:	
	7N6098	KIT--------(spring)----------	1
		(Includes Cup & Spring)	
	9S9825	KIT---------(cup)----------	1
		(Includes Cup & Washers)	
	4S9459	KIT-------(washer)----------	1
		(Includes Cup & Washers)	
	FM035152	FORM. ------(cup kit installation)--	1

226221

▲ NOT PART OF 4N3182 MOTOR GROUP

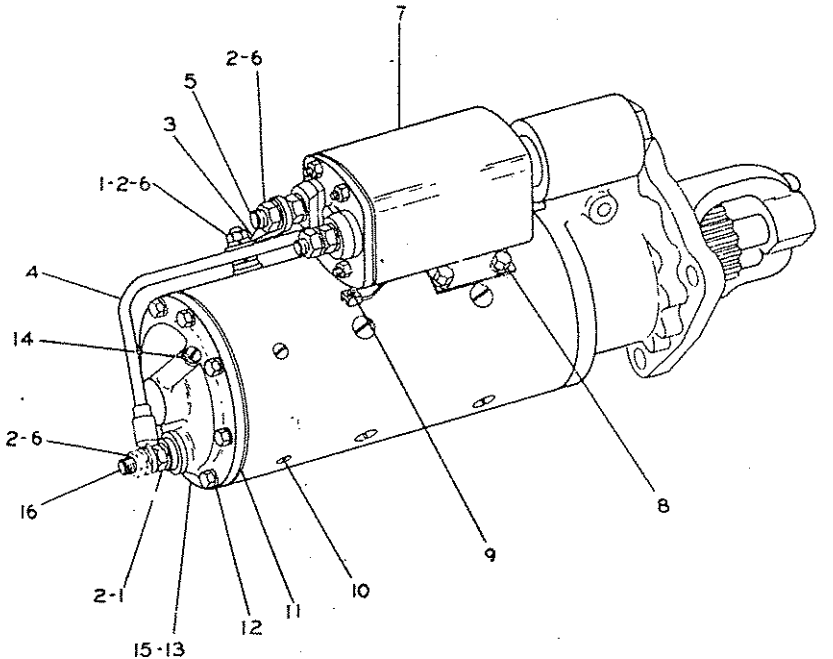

REF. NO.	PART NUMBER	DESCRIPTION	QTY
1	1D5117	NUT---------(jam)----------	2
2	3B4508	LOCKWASHER----------	6
3	4N9405	CONNECTOR----------	1
4	4N9404	LEAD ASSEM. ----------	1
5	2P8819	KIT-----(Field Terminal Stud)----- (Includes Stud, Bushing & Washers)	1
6	1D4719	NUT----------	4
7	9S7976	SOLENOID ASSEM. ---------- (Separate Illustration)	1
8	6H3622	SCREW----------	4
	3B4504	LOCKWASHER----------	4
	3K6116	WASHER----------	4
9	4M3217	SCREW----------	2
10	4B1220	SCREW----------	3
11	8S1553	GASKET----------	1
12	3B4502	LOCKWASHER----------	7
13	1P7831	HEAD ASSEM. --(Commutator End)-	1
14	2B4602	PLUG----------	1
15	1P7832	KIT---------(Bearing & Wick)------	1
16	4N9403	KIT-(Commutator End Terminal Stud) (Includes Stud, Bushing & Washers)	1

200573

4N7752 ELECTRIC STARTING MOTOR GROUP—Prestolite—Part 1
Part of 7S3622 Electric Starting Motor Group shown on Page 78
9S7976 Solenoid parts are shown on Page 88. AN ATTACHMENT

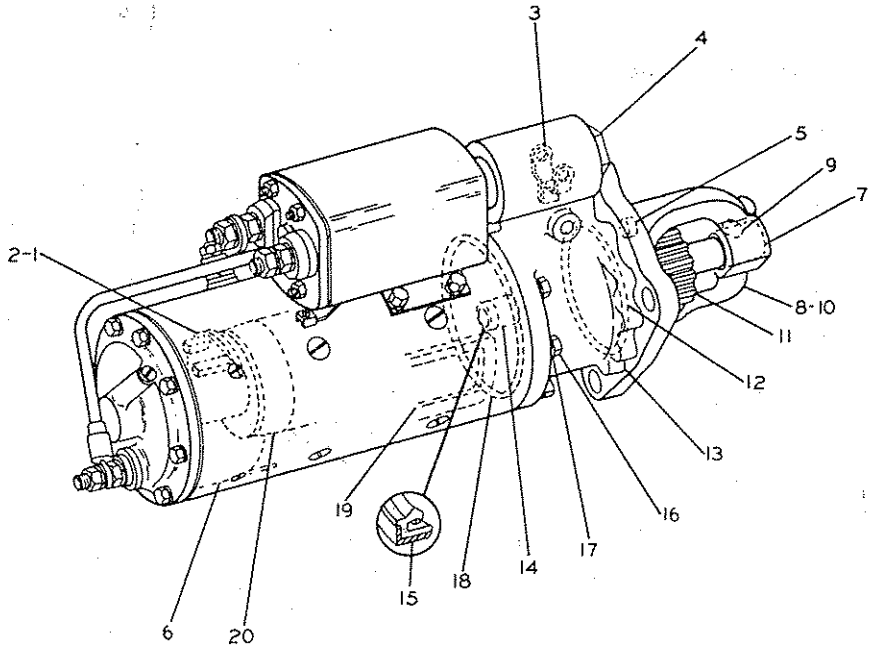

REF. NO.	PART NUMBER	DESCRIPTION	QTY
1	2P8822	PLATE ASSEM.	1
2	4N9401	KIT--(Includes 6 Brushes)	1
	2P8868	KIT--(Includes 8 Springs)	1
3	2P8825	SHIFT YOKE ASSEM.	1
4	2P8817	KIT--(Yoke Adjusting) (Includes Plugs, Pin, Gasket & Nut)	1
5	8S1535	KIT--(Includes 6 Plugs)	1
6	4N9402	KIT--(Includes 10 Insulations)	1
7	8S4684	KIT--(Bearing & Wick)	1
8	8S1543	HOUSING ASSEM.--(Pinion)	1
9	2B4602	PLUG	1
10	8S4680	KIT--(Includes 10 Seals)	1
11	4N4517	DRIVE ASSEM.	1
12	2H3931	SEAL	1
13	2P8824	HOUSING ASSEM.	1
	2B4602	PLUG	1
14	8S2226	BUSHING	1
15	8S2225	SEAL	1
16	L1340	SCREW	7
	2P8816	KIT--(Includes Housing Screws)	1
17	3B4504	LOCKWASHER	7
18	4M189	SEAL	1
19	2P8818	KIT--(Field Coil) (Includes Coils, Gaskets & Screws)	1
20	8S1546	ARMATURE ASSEM.	1
	8S8075	KIT--(Armature Thrust Washers)	1

200574

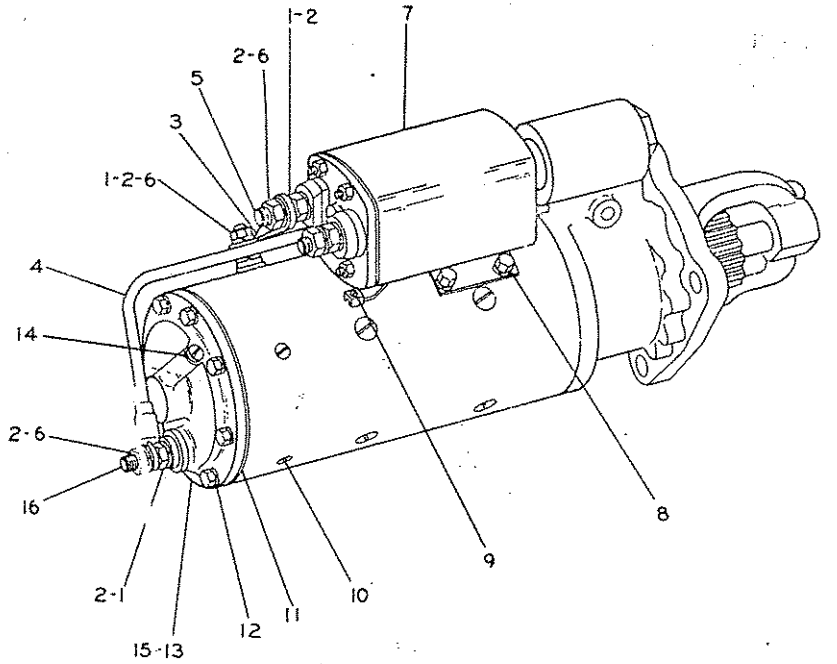

REF. NO.	PART NUMBER	DESCRIPTION	QTY
1	1D5117	NUT---------(jam)----------	4
2	3B4508	LOCKWASHER----------	8
3	4N9405	CONNECTOR----------	1
4	4N9404	LEAD ASSEM.----------	1
5	2P8819	KIT-----(Field Terminal Stud)----- (Includes Stud, Bushing & Washers)	1
6	1D4719	NUT----------	4
7	9S7976	SOLENOID ASSEM.---------- (Separate Illustration)	1
	6H3622	SCREW----------	4
8	3B4504	LOCKWASHER----------	4
	3K6116	WASHER----------	4
9	4M3217	SCREW----------	2
10	4B1220	SCREW----------	3
11	8S1553	GASKET----------	1
12	3B4502	LOCKWASHER----------	7
13	1P7831	HEAD ASSEM.-(Commutator End)- (Includes)	1
14	2B4602	PLUG----------	1
15	1P7832	KIT-----(Bearing & Wick)----------	1
16	4N9403	KIT-(Commutator End Terminal Stud) (Includes Stud, Bushing & Washers)	1

229069

9G4338 ELECTRIC STARTING MOTOR GROUP—Prestolite—24 Volt—Part 1—Type 1
Part of 7S3622 & 4N3181 Electric Starting Motor Groups shown on Pages 78A & 78C
9S7976 Solenoid parts are shown on Page 88. AN ATTACHMENT

9G4338 ELECTRIC STARTING MOTOR GROUP—Prestolite—24 Volt—Part 2—Type 1
Part of 7S3622 & 4N3181 Electric Starting Motor Groups shown on Pages 78A & 78C
AN ATTACHMENT

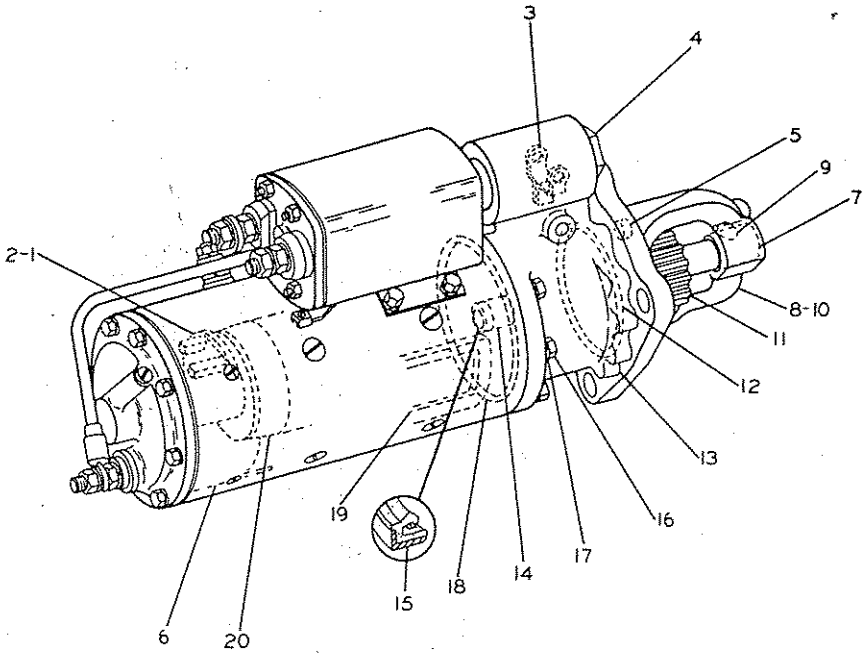

REF. NO.	PART NUMBER	DESCRIPTION	QTY.
1	2P8822	PLATE ASSEM.	1
2	4N9401	KIT—(Includes 6 Brushes)	1
	2P8868	KIT—(Includes 8 Springs)	1
3	2P8825	SHIFT YOKE ASSEM.	1
4	2P8817	KIT—(Yoke Adjusting) (Includes Plugs, Pin, Gasket & Nut)	1
5	8S1535	KIT—(Includes 6 Plugs)	1
6	4N9402	KIT—(Includes 10 Insulations)	1
7	8S4684	KIT—(Bearing & Wick)	1
8	9G5854	HOUSING ASSEM.—(Pinion) (Includes)	1
9	2B4602	PLUG	1
10	8S4680	KIT—(Includes 10 Seals)	1
11	9G5587	DRIVE ASSEM.	1
12	2H3931	SEAL	1
13	2P8824	HOUSING ASSEM. (Includes)	1
	2B4602	PLUG	1
14	8S2226	BUSHING	1
15	8S2225	SEAL	1
16	L1340	SCREW	7
	2P8816	KIT—(Includes Housing Screws)	1
17	3B4504	LOCKWASHER	7
18	4M189	SEAL	1
19	2N8818	KIT—(Field Coil) (Includes Coils, Gaskets & Screws)	1
20	8S1546	ARMATURE ASSEM.	1
	8S8075	KIT—(Armature Thrust Washers)	1

229070

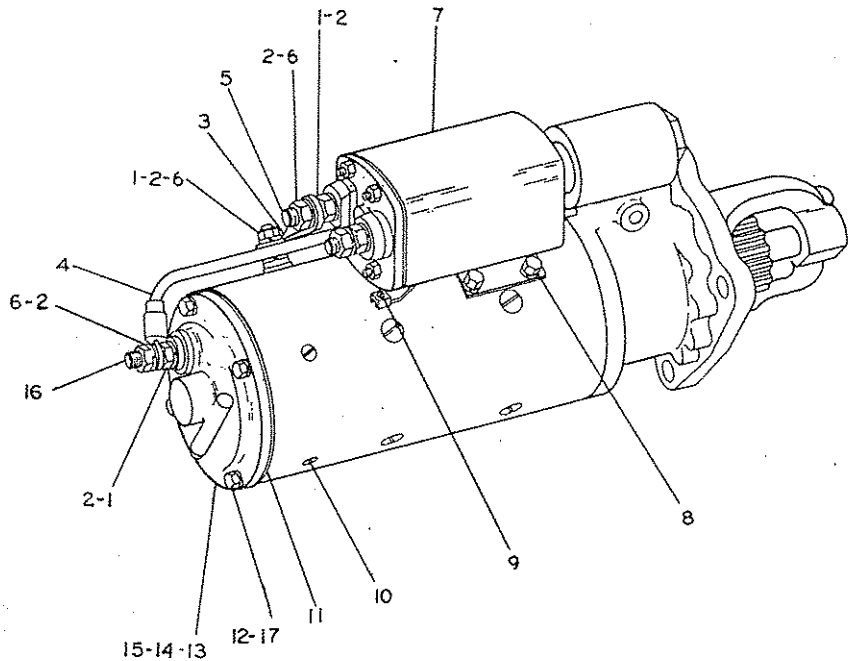

REF. NO.	PART NUMBER	DESCRIPTION	QTY
1	1D5117	NUT---------(jam)----------	4
2	3B4508	LOCKWASHER----------	8
3	4N9405	CONNECTOR----------	1
4	4N9404	LEAD ASSEM.----------	1
5	2P8819	KIT-----(Field Terminal Stud)----- (Includes Stud, Bushing & Washers)	1
6	1D4719	NUT----------	4
C 7	3T3369	SOLENOID ASSEM.---------- (Separate Illustration)	1
	6H3622	SCREW----------	4
8	3B4504	LOCKWASHER----------	4
	3K6116	WASHER----------	4
9	4M3217	SCREW----------	2
10	4B1220	SCREW----------	3
11	8S1553	GASKET----------	1
C 12	3B4502	LOCKWASHER----------	4
13	1P7831	HEAD ASSEM.-(Commutator End)- (Includes)	1
14	2B4602	PLUG----------	1
15	1P7832	KIT-----(Bearing & Wick)----------	1
16	4N9403	KIT-(Commutator End Terminal Stud) (Includes Stud, Bushing & Washers)	1
C 17	9L9850	SCREW----------	4

C INDICATES CHANGE

181283

9G4338 ELECTRIC STARTING MOTOR GROUP—Prestolite—24 Volt—Part 1—Type 2
Part of 7S3622 & 4N3181 Electric Starting Motor Group shown on Pages 78A & 78C
3T3369 Solenoid parts are shown on Page 88A. AN ATTACHMENT

9G4338 ELECTRIC STARTING MOTOR GROUP—Prestolite—24 Volt—Part 2—Type 2
Part of 7S3622 & 4N3181 Electric Starting Motor Group shown on Pages 78A & 78C. AN ATTACHMENT

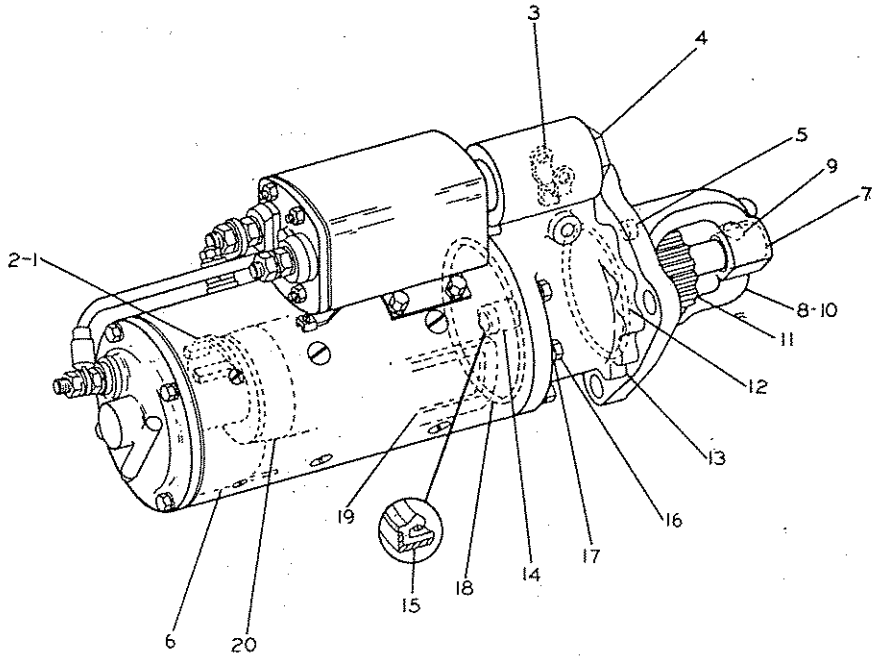

	REF. NO.	PART NUMBER	DESCRIPTION	QTY.
	1	2P8822	PLATE ASSEM.	1
	2	4N9401	KIT-------(Includes 6 Brushes)---	1
		2P8868	KIT---(Includes 8 Springs)--------	1
	3	2P8825	SHIFT YOKE ASSEM. ----------	1
	4	2P8817	KIT-------(Yoke Adjusting)-------- (Includes Plugs, Pin, Gasket & Nut)	1
	5	8S1535	KIT-------(Includes 6 Plugs)------	1
	6	4N9402	KIT----(Includes 10 Insulations)--	1
	7	8S4684	KIT------(Bearing & Wick)---------	1
	8	9G5854	HOUSING ASSEM. ---(Pinion)------ (Includes)	1
	9	2B4602	PLUG----------	1
	10	8S4680	KIT----(Includes 10 Seals)-------	1
C	11	4N4517	DRIVE ASSEM. ----------	1
	12	2H3931	SEAL----------	1
	13	2P8824	HOUSING ASSEM. ---------- (Includes)	1
		2B4602	PLUG----------	1
	14	8S2226	BUSHING----------	1
	15	8S2225	SEAL----------	1
	16	L1340	SCREW----------	7
		2P8816	KIT--(Includes Housing Screws)--	1
	17	3B4504	LOCKWASHER----------	7
	18	4M189	SEAL----------	1
	19	2N8818	KIT-------(Field Coil)---------- (Includes Coils, Gaskets & Screws)	1
	20	8S1546	ARMATURE ASSEM. ----------	1
		8S8075	KIT--(Armature Thrust Washers)--	1

C INDICATES CHANGE

181284

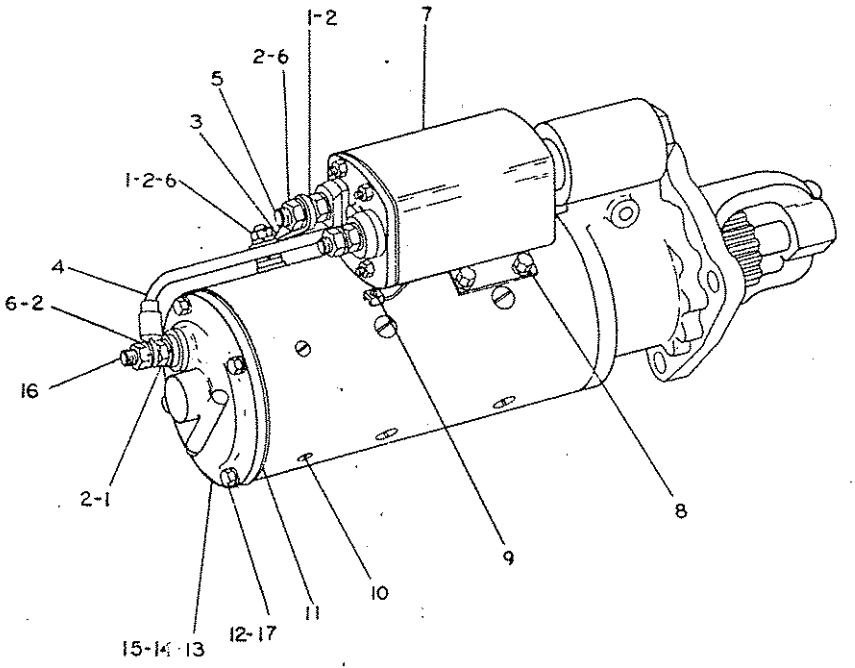

REF. NO.	PART NUMBER	DESCRIPTION	QTY
1	1D5117	NUT---------(Jam)----------	4
2	3B4508	LOCKWASHER----------	8
3	4N9405	CONNECTOR----------	1
4	4N9404	LEAD ASSEM.----------	1
5	2P8819	KIT-----(Field Terminal Stud)----- (Includes Stud, Bushing & Washers)	1
6	1D4719	NUT----------	4
C 7	3T8635	SOLENOID ASSEM.---------- (Separate Illustration)	1
	6H3622	SCREW----------	4
8	3B4504	LOCKWASHER----------	4
	3K6116	WASHER----------	4
9	4M3217	SCREW----------	2
10	4B1220	SCREW----------	3
11	8S1553	GASKET----------	1
12	3B4502	LOCKWASHER----------	4
13	1P7831	HEAD ASSEM.-(Commutator End)- (Includes)	1
14	2B4602	PLUG----------	1
15	1P7832	KIT----(Bearing & Wick)---------	1
16	4N9403	KIT-(Commutator End Terminal Stud) (Includes Stud, Bushing & Washers)	1
17	9L9850	SCREW----------	4

C INDICATES CHANGE

305183

9G4338 ELECTRIC STARTING MOTOR GROUP—Prestolite—24 Volt—Part 1—Type 3
Part of 7S3622 & 4N3181 Starting Motor Groups shown on Pages 78A & 78C
3T8635 Solenoid parts are shown on Page 88A. AN ATTACHMENT

9G4338 ELECTRIC STARTING MOTOR GROUP—Prestolite—24 Volt—Part 2—Type 3
Part of 7S3622 & 4N3181 Starting Motor Group shown on Pages 78A & 78C. AN ATTACHMENT

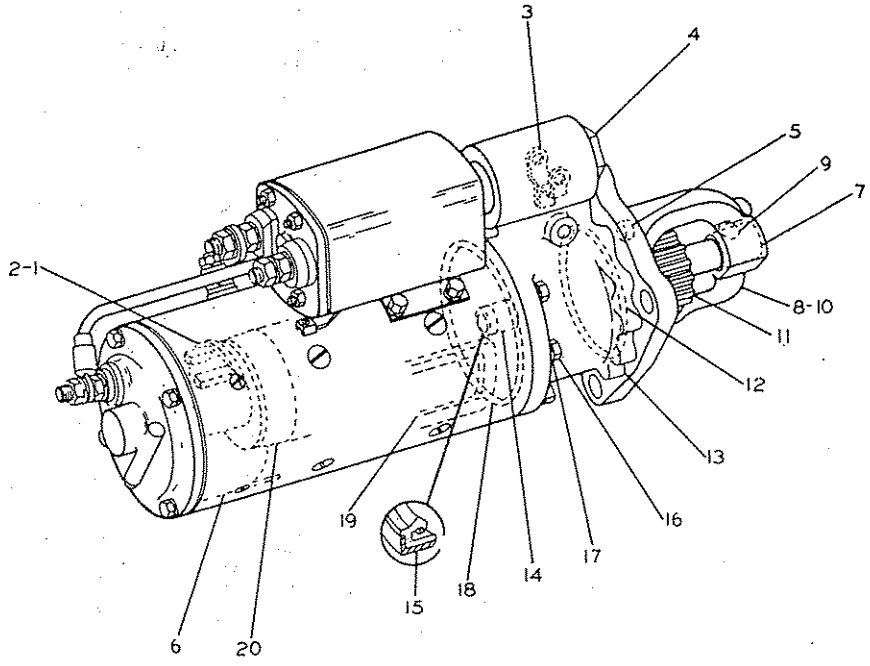

	REF. NO.	PART NUMBER	DESCRIPTION	QTY.
	1	2P8822	PLATE ASSEM.	1
	2	4N9401	KIT-------(Includes 6 Brushes)---	1
		2P8868	KIT---(Includes 8 Springs)--------	1
	3	2P8825	SHIFT YOKE ASSEM.	1
	4	2P8817	KIT-------(Yoke Adjusting)--------- (Includes Plugs, Pin, Gasket & Nut)	1
	5	8S1535	KIT-------(Includes 6 Plugs)-------	1
	6	4N9402	KIT-----(Includes 10 Insulations)--	1
	7	8S4684	KIT------(Bearing & Wick)----------	1
	8	9G5854	HOUSING ASSEM. ---(Pinion)------ (Includes)	1
	9	2B4602	PLUG----------	1
	10	8S4680	KIT-----(Includes 10 Seals)--------	1
C	11	3T8572	DRIVE ASSEM.	1
	12	2H3931	SEAL----------	1
	13	2P8824	HOUSING ASSEM. ---------- (Includes)	1
		2B4602	PLUG----------	1
	14	8S2226	BUSHING----------	1
	15	8S2225	SEAL----------	1
	16	L1340	SCREW----------	7
		2P8816	KIT--(Includes Housing Screws)--	1
	17	3B4504	LOCKWASHER----------	7
	18	4M189	SEAL----------	1
	19	2N8818	KIT-------(Field Coil)---------- (Includes Coils, Gaskets & Screws)	1
	20	8S1546	ARMATURE ASSEM. ----------	1
		8S8075	KIT--(Armature Thrust Washers)---	1

C INDICATES CHANGE

305184

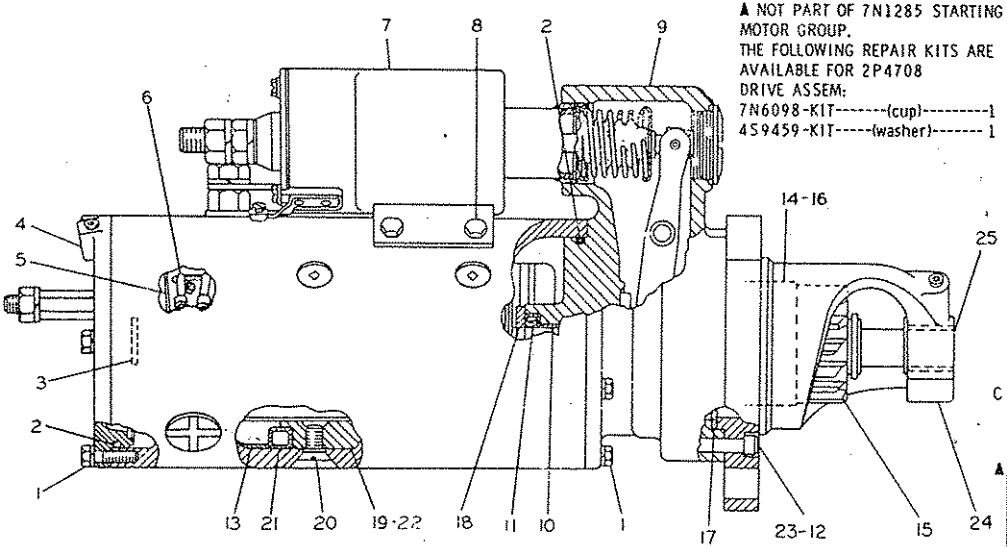

▲ NOT PART OF 7N1285 STARTING MOTOR GROUP.
THE FOLLOWING REPAIR KITS ARE AVAILABLE FOR 2P4708 DRIVE ASSEM:
7N6098-KIT-------(cup)---------1
4S9459-KIT-----(washer)------- 1

REF. NO.	PART NUMBER	DESCRIPTION	QTY
1	7F4556	BOLT	9
	1L4789	LOCKWASHER	9
2	4M189	SEAL	2
3	2L8166	WASHER	1
4	7N1284	FRAME ASSEM.	1
5	7N1282	BRUSH PLATE	1
	6F5829	SCREW ASSEM.	1
	4M1845	BRUSH	4
6	7N1281	SPRING	4
	2F2860	SCREW	4
7	4M1812	SWITCH ASSEM. (Separate Illustration)	1
8	6H3622	SCREW ASSEM.	4
9	4M1850	HOUSING ASSEM. (Includes)	1
	2B4602	PLUG	1
	9F2547	WICK	1
10	1M9968	BUSHING	1
11	2F6678	SEAL	1
12	7M336	SCREW------2.18 cm(.86 in.)long	1
13	7N1280	INSULATOR	1
C 14	2P4708	DRIVE ASSEM.---(1894213)---- (Includes)	1
15	9S9771	PINION	1
		-OR-	
▲ 16	6N3827	DRIVE ASSEM---(480118)-----	1
17	4M1851	GASKET	1
18	1M9971	SPACER	1
19	8H1141	SHOE	4
20	3R8797	SCREW ASSEM.	8
21	7N1283	COIL ASSEM.	1
22	1H2629	STRIP	1
23	4M1833	SCREW-----3.81 cm(1.5 in.) long	5
C 24	1S297	HOUSING ASSEM. (Includes)	1
25	4M1896	BUSHING	1
C	GMG02373	FORM (Installing Electric Starting Motor)	1

C INDICATES CHANGE

228010

7N1285 ELECTRIC STARTING MOTOR GROUP—Delco-Remy—Part 1
Serial No. 87V5275 to 87V5666 inclusive
Part of 7S4090 Electric Starting Motor Group shown on Page 78
4M1812 Switch parts are shown on Page 88

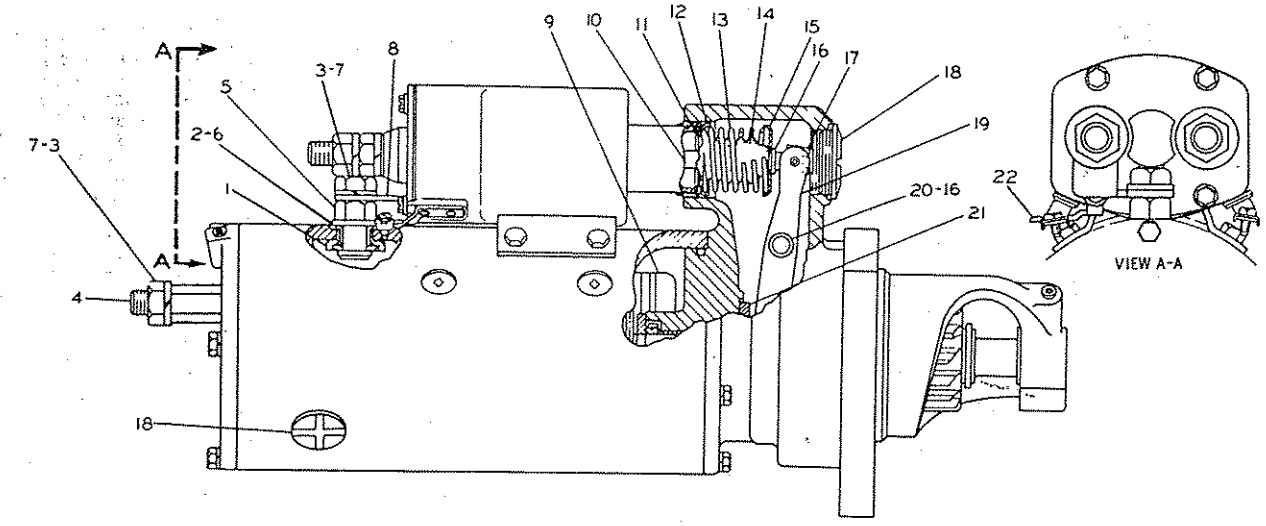

REF. NO.	PART NUMBER	DESCRIPTION	QTY
1	3L3380	BUSHING	1
2	690811	STUD	1
3	3H3680	NUT	1
4	7N1279	STUD ADAPTER	1
5	3H3681	NUT	1
6	9H3757	WASHER—(large)	2
6	7F3494	WASHER—(small)	1
7	9F4976	LOCKWASHER	2
8	4M1841	CONNECTOR	1
9	5L8877	ARMATURE ASSEM.	1
10	9M7606	PLUNGER ASSEM.	1
11	369821	WASHER	1
12	4M1828	RETAINER	1
13	9M7609	SPRING	1
14	4M1829	BOOT	1
15	4M1827	RETAINER	1
16	9M7611	RING	2
17	3F2617	NUT	1
18	4M1831	PLUG	3
18	7L2894	GASKET	3
19	690797	LEVER ASSEM.	1
20	4M1854	SHAFT	1
20	1H1023	SEAL—9.37 mm(. 369 in.) diameter	1
20	2D6392	SEAL—6.07 mm(. 239 in.) diameter	1
21	4L2729	WASHER	1
22	1P3879	LEAD ASSEM.	1
		THE FOLLOWING REPAIR KIT IS AVAILABLE:	
	3N3763	TERMINAL KIT—(insulator)	1

215553

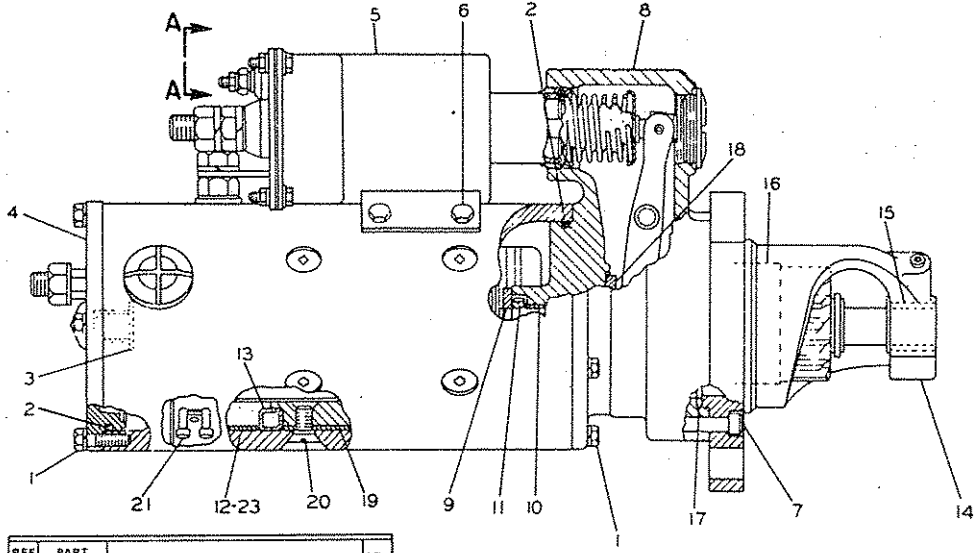

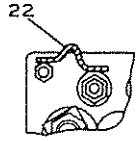

VIEW A-A

REF NO.	PART NUMBER	DESCRIPTION	QTY.
1	369823	BOLT	9
	1L4789	LOCKWASHER	9
2	4M189	SEAL	2
3	2L8166	WASHER	1
4	3P173	FRAME ASSEM.	1
5	3T3421	SOLENOID ASSEM.	1
6	6H3622	SCREW	4
7	4M1833	SCREW—1.5 in. (3.81 cm) long	5
	7M336	SCREW—.86 in. (2.18 cm) long	1

	3T4702	HOUSING ASSEM. (Includes)	1
8	3T3424	PLUG	1
	3T3423	CUP	1
	3T3433	PLUG	1
● 9	4L2729	WASHER	2
10	9G9817	BUSHING	1
11	2F6678	SEAL	1
12	1H2629	STRIP	2
13	7N1283	COIL ASSEM.	1

● PART OF 3T2772 GROUP

	3T4700	HOUSING ASSEM. (Includes)	1
14	3T3424	PLUG	1
	3T3423	CUP	1
15	9G9818	BUSHING	1
16	6N3827	DRIVE ASSEM.	1
17	4M1851	GASKET	1
18	1M9971	SPACER	1
19	8H1141	SHOE	4
20	3F379	SCREW	8
	4M1845	BRUSH ASSEM.	4
	7N1281	SPRING	4
21	7N1282	PLATE ASSEM.	1
	3T3106	SCREW ASSEM.	1
	2F2860	SCREW	4
22	1P3879	LEAD ASSEM.	1
23	7N1280	INSULATOR	1

180041

3T2772 ELECTRIC STARTING MOTOR GROUP—Delco-Remy—24 Volt—Part 1
Serial No. 78V5667—Up. Part of 3P7 Electric Starting Motor Group shown on Page 78C
3T3421 Solenoid parts are shown on Page 88B

3T2772 ELECTRIC STARTING MOTOR GROUP—Delco-Remy—24 Volt—Part 2
Serial No. 87V5667—Up
Part of 3P7 Electric Starting Motor Group shown on Page 78C

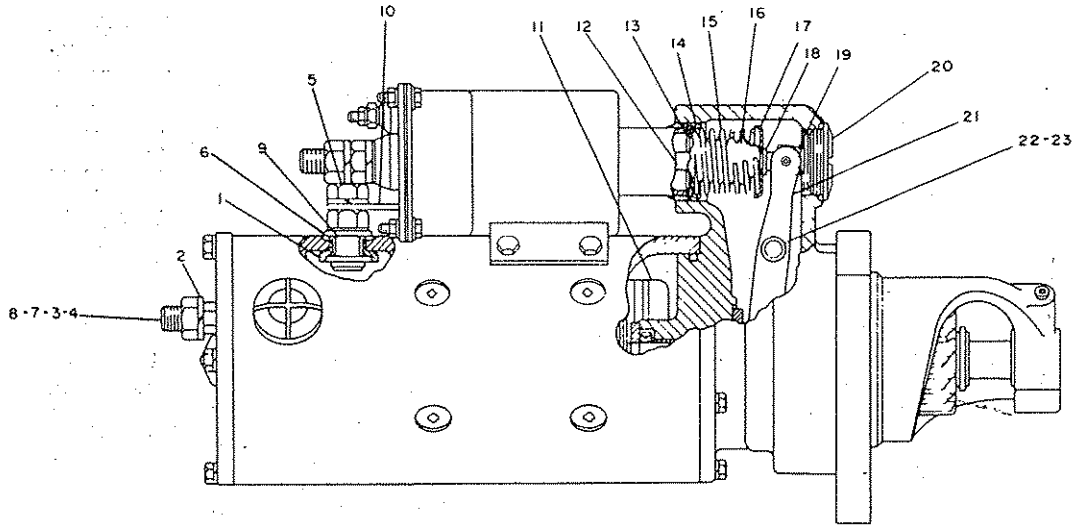

REF. NO.	PART NUMBER	DESCRIPTION	QTY.
1	3L3380	BUSHING	1
2	1H134	LOCKWASHER	1
3	3H3680	NUT	1
4	7N1279	STUD	1
5	1D4719	NUT	1
6	9H3757	WASHER—(large)	2
	7F3494	WASHER—(small)	1
7	335902	WASHER	1
8	9B9144	WASHER	1
9	690811	STUD	1
10	4M1841	CONNECTOR	1
11	5L8877	ARMATURE ASSEM.	1
12	9M7606	PLUNGER ASSEM.	1
13	369821	WASHER	1
14	4M1828	RETAINER	1
15	9M7609	SPRING	1
16	4M1829	BOOT	1
17	4M1827	RETAINER	1
18	9M7611	RING	2
19	5M3034	LOCKNUT	1
20	4M1831	PLUG	3
	7L2894	GASKET	3
21	4M1853	LEVER ASSEM. (Includes)	1
	4M1830	GUIDE	1
	4M1854	SHAFT	1
22	1H1023	SEAL—9.37mm(.369 in.) dia.	1
	2D6392	SEAL—6.07mm(.239 in.) dia.	1
23	4L2729	WASHER	1

180042

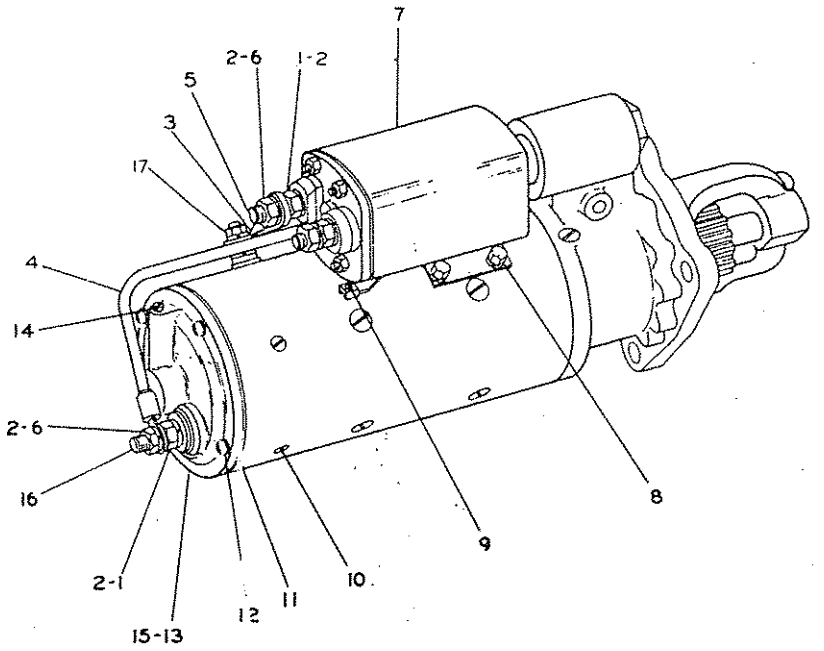

	REF. NO.	PART NUMBER	DESCRIPTION	QTY
	1	1D5117	NUT	3
	2	3B4508	LOCKWASHER	6
	3	8S2771	CONNECTOR	1
C	4	4N9404	LEAD ASSEM.	1
	5	4N4694	KIT-(Field Terminal Stud) (Includes Stud, Bushing & Washers)	1
	6	1D4719	NUT	3
	7	9S7976	SOLENOID ASSEM. (Separate Illustration)	1
		6H3622	SCREW	4
	8	3B4504	LOCKWASHER	4
		3K6116	WASHER	4
	9	4M3217	SCREW	2
	10	4B1220	SCREW	3
	11	8S6035	GASKET	1
	12	3B4502	LOCKWASHER	4
	13	8S2769	HEAD ASSEM.-(Commutator End)	1
	14	2B4602	PLUG	1
	15	8S4682	KIT-(Bearing & Wick)	1
	16	4N4693	KIT-(Commutator End Terminal Stud) (Includes Stud, Bushing & Washers)	1
		1D4717	NUT-(plain)	1
	17	1B2578	NUT-(jam)	1
		3B4506	LOCKWASHER	2

C INDICATES CHANGE

207040

3P6 ELECTRIC STARTING MOTOR GROUP—Prestolite—Part 1
Serial No. 87V5275 to 87V5666 inclusive
Part of 7S4090 Electric Starting Motor Group shown on Page 78. 9S7976 Solenoid parts are shown on Page 88

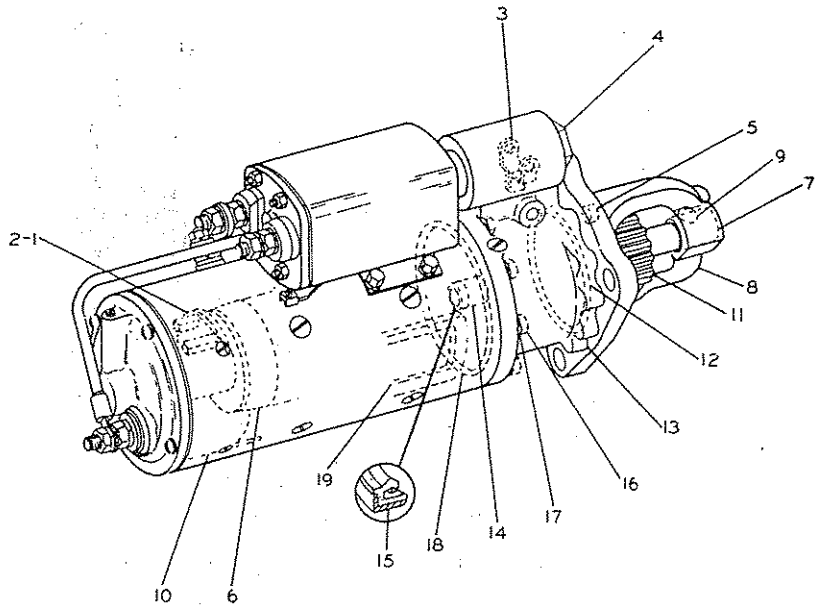

REF. NO.	PART NUMBER	DESCRIPTION	QTY
1	4N4691	PLATE ASSEM.	1
C 2	4N8618	KIT-(Includes 3 Brushes & 1 Clip)	1
	4N4692	KIT-----(Includes 8 Springs)-----	1
C 3	2P8825	SHIFT YOKE ASSEM.	1
4	2P8817	KIT-------(Yoke Adjusting)------- (Includes Plugs, Pin, Gasket & Nut)	1
5	8S1535	KIT-------(Includes 6 Plugs)------	1
6	9S6100	ARMATURE ASSEM.	1
	8S8071	KIT--(Armature Thrust Washers)--	1
7	8S4684	KIT-------(Bearing & Wick)-------	1
8	8S1543	HOUSING ASSEM. ----(Pinion)----	1
9	2B4602	PLUG	1
10	8S2780	KIT--(Includes 10 Insulations)---	1
C 11	4N4517	MOTOR DRIVE ASSEM.	1
12	2H3931	SEAL	1
13	2P8824	HOUSING ASSEM.	1
	2B4602	PLUG	1
14	8S2226	BUSHING	1
15	8S2225	SEAL	1
16	2P8816	KIT--(Includes Housing Screws)--	1
17	3B4504	LOCKWASHER	7
18	4M189	SEAL	1
19	4N4690	KIT---------(Field Coil)---------- (Includes Coils, Gaskets & Screws)	1

C INDICATES CHANGE

215137

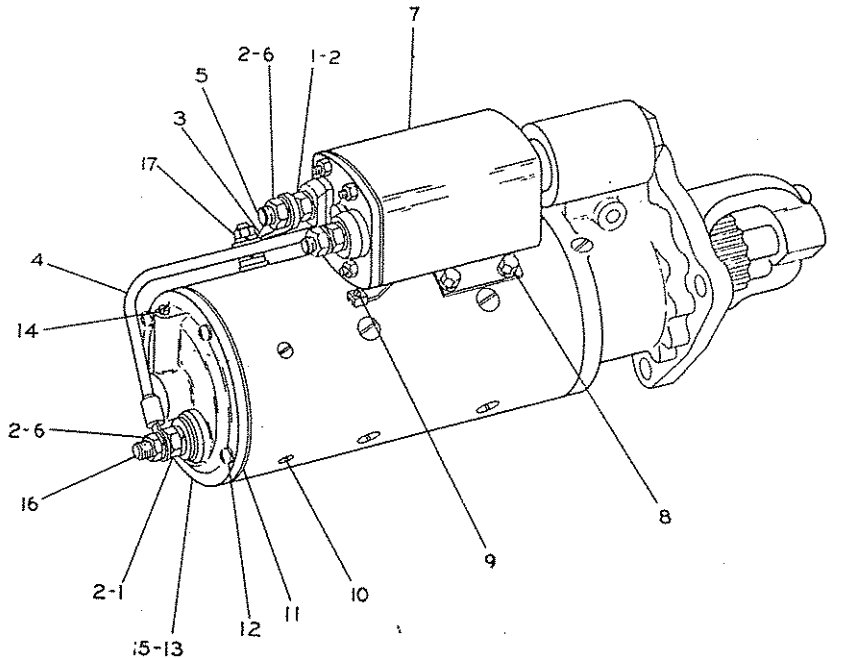

	REF. NO.	PART NUMBER	DESCRIPTION	QTY
	1	1D5117	NUT	3
	2	3B4508	LOCKWASHER	6
	3	8S2771	CONNECTOR	1
C	4	4N9404	LEAD ASSEM.	1
	5	4N4694	KIT-(Field Terminal Stud)(Includes Stud, Bushing & Washers	1
	6	1D4719	NUT	3
	7	9S7976	SOLENOID ASSEM. (Separate Illustration)	1
		6H3622	SCREW	4
	8	3B4504	LOCKWASHER	4
		3K6116	WASHER	4
	9	4M3217	SCREW	2
	10	4B1220	SCREW	3
	11	8S6035	GASKET	1
	12	3B4502	LOCKWASHER	4
	13	8S2769	HEAD ASSEM.-(Commutator End)	1
	14	2B4602	PLUG	1
	15	8S4682	KIT-(Bearing & Wick)	1
	16	4N4693	KIT-(Commutator End Terminal Stud)(Includes Stud, Bushing & Washers)	1
		1D4717	NUT-(plain)	1
	17	1B2578	NUT-(jam)	1
		3B4506	LOCKWASHER	2

C INDICATES CHANGE

230348

9G4337 ELECTRIC STARTING MOTOR GROUP—Prestolite—24 Volt—Part 1
Serial No. 87V5275 to 87V6055 inclusive
Part of 3P7 Electric Starting Motor Group shown on Page 78C. 9S7976 Solenoid Switch parts are shown on Page 88

9G4337 ELECTRIC STARTING MOTOR GROUP—Prestolite—24 Volt—Part 2
Serial No. 87V5275 to 87V6055 inclusive
Part of 3P7 Electric Starting Motor Group shown on Page 78C

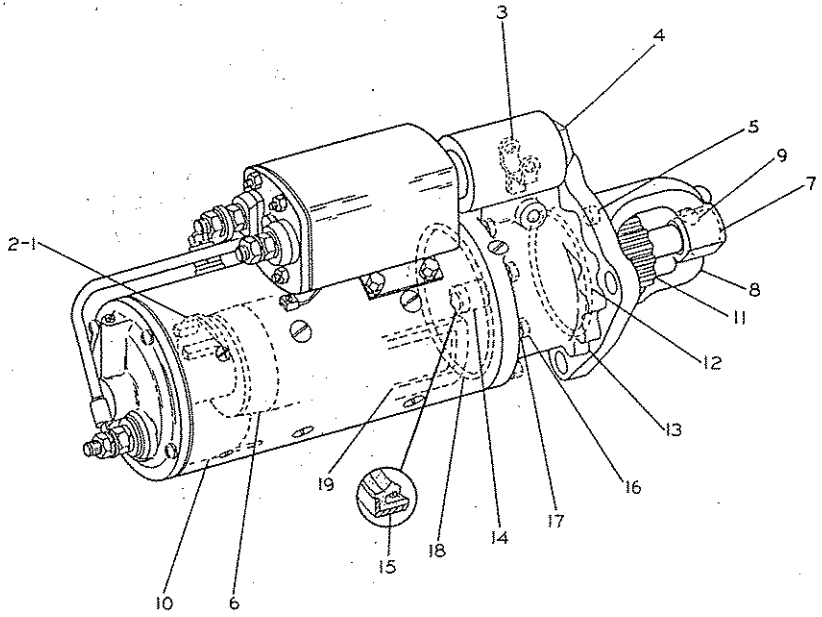

REF. NO.	PART NUMBER	DESCRIPTION	QTY
1	4N4691	PLATE ASSEM.	1
2	4N8618	KIT-(Includes 3 Brushes & 1 Clip)	1
	4N4692	KIT-----(Includes 8 Springs)-----	1
3	2P8825	SHIFT YOKE ASSEM.	1
4	2P8817	KIT--------(Yoke Adjusting)------- (Includes Plugs, Pin, Gasket & Nut)	1
5	8S1535	KIT-------(Includes 6 Plugs)-------	1
6	9S6100	ARMATURE ASSEM.	1
	8S8071	KIT--(Armature Thrust Washers)--	1
7	8S4684	KIT--------(Bearing & Wick)-------	1
8	9G5854	HOUSING ASSEM. -----(Pinion)----	1
9	9F2247	~PLUG	1
10	8S2780	KIT---(Includes 10 Insulations)---	1
11	9G5587	MOTOR DRIVE ASSEM.	1
12	2H3931	SEAL	1
13	2P8824	HOUSING ASSEM.	1
	2B4602	PLUG	1
14	8S2226	BUSHING	1
15	8S2225	SEAL	1
16	2P8816	KIT--(Includes Housing Screws)--	1
17	3B4504	LOCKWASHER	7
18	4M189	SEAL	1
19	4N4690	KIT---------(Field Coil)--------- (Includes Coils, Gaskets & Screws)	1
		THE FOLLOWING REPAIR KIT IS AVAILABLE:	
	8S4684	KIT--(pinion housing repair)------	1

230349

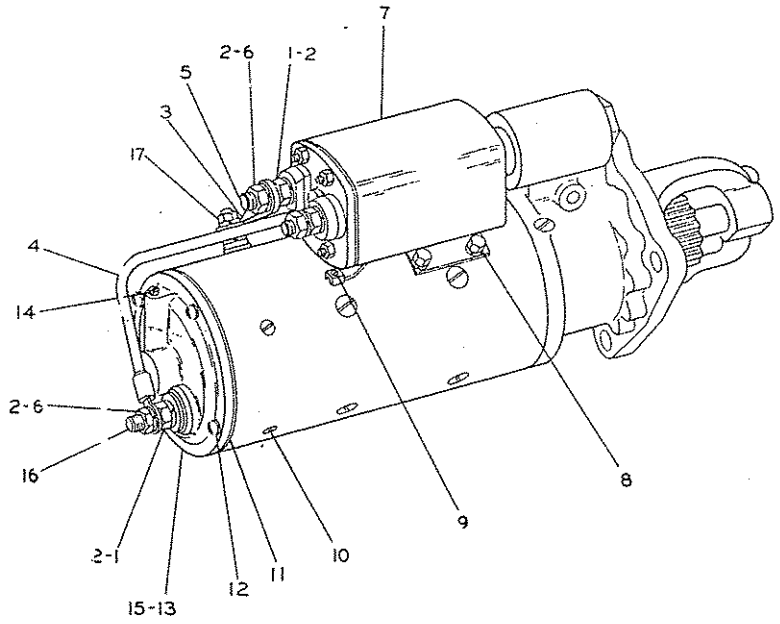

REF. NO.	PART NUMBER	DESCRIPTION	QTY
1	1D5117	NUT	3
2	3B4508	LOCKWASHER	6
3	8S2771	CONNECTOR	1
4	4N9404	LEAD ASSEM.	1
5	4N4694	KIT-----(Field Terminal Stud)----- (Includes Stud, Bushing & Washers	1
6	1D4719	NUT	3
C 7	3T3369	SOLENOID ASSEM. (Separate Illustration)	1
	6H3622	SCREW	4
8	3B4504	LOCKWASHER	4
	3K6116	WASHER	4
9	4M3217	SCREW	2
10	4B1220	SCREW	3
11	8S6035	GASKET	1
12	3B4502	LOCKWASHER	4
13	8S2769	HEAD ASSEM. --(Commutator End)-	1
14	2B4602	PLUG	1
15	8S4682	KIT---- ---(Bearing & Wick)------	1
16	4N4693	KIT-(Commutator End Terminal Stud (Includes Stud, Bushing & Washers)	1
	1D4717	NUT----------(plain)----------	1
17	1B2578	NUT----------(jam)----------	1
	3B4506	LOCKWASHER	2

C INDICATES CHANGE

181281

9G4337 ELECTRIC STARTING MOTOR GROUP—24 Volt—Prestolite—Part 1—Type 1
Serial No. 87V6056—Up
Part of 3P7 Electric Starting Motor Group shown on Page 78C
3T3369 Solenoid parts are shown on Page 88A

9G4337 ELECTRIC STARTING MOTOR GROUP—24 Volt—Prestolite—Part 2—Type 1
Serial No. 87V6056—Up
Part of 3P7 Electric Starting Motor Group shown on Page 78C

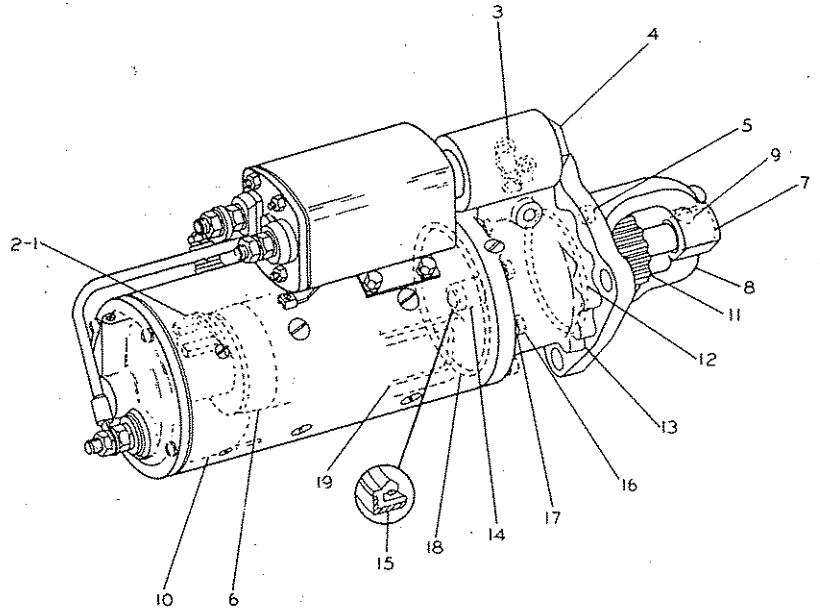

REF. NO.	PART NUMBER	DESCRIPTION	QTY
1	4N4691	PLATE ASSEM.	1
2	4N8618	KIT-(Includes 3 Brushes & 1 Clip)	1
	4N4692	KIT-----(Includes 8 Springs)-----	1
3	2P8825	SHIFT YOKE ASSEM.	1
4	2P8817	KIT--------(Yoke Adjusting)-------- (Includes Plugs, Pin, Gasket & Nut)	1
5	8S1535	KIT------(Includes 6 Plugs)------	1
6	9S6100	ARMATURE ASSEM.	1
	8S8071	KIT--(Armature Thrust Washers)--	1
7	8S4684	KIT--------(Bearing & Wick)--------	1
8	9G5854	HOUSING ASSEM. -----(Pinion)----	1
9	9F2247	PLUG	1
10	8S2780	KIT---(Includes 10 Insulations)---	1
C 11	4N4517	MOTOR DRIVE ASSEM.	1
12	2H3931	SEAL	1
13	2P8824	HOUSING ASSEM.	1
	2B4602	PLUG	1
14	8S2226	BUSHING	1
15	8S2225	SEAL	1
16	2P8816	KIT--(Includes Housing Screws)--	1
17	3B4504	LOCKWASHER	7
18	4M189	SEAL	1
19	4N4690	KIT---------(Field Coil)---------- (Includes Coils, Gaskets & Screws)	1
		THE FOLLOWING REPAIR KIT IS AVAILABLE:	
	8S4684	KIT--(pinion housing repair)------	1

C INDICATES CHANGE

181282

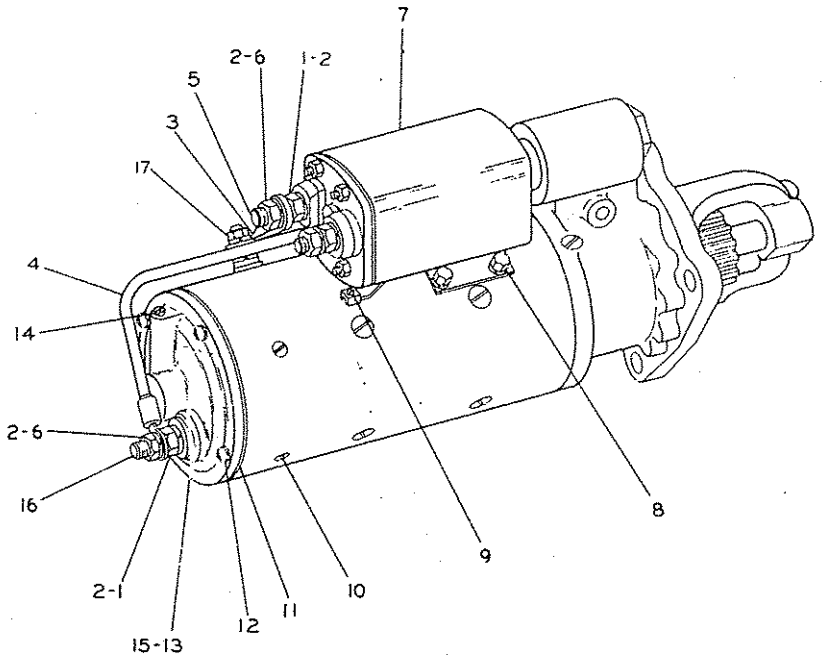

REF. NO.	PART NUMBER	DESCRIPTION	QTY
1	1D5117	NUT	3
2	3B4508	LOCKWASHER	6
3	8S2771	CONNECTOR	1
4	4N9404	LEAD ASSEM.	1
5	4N4694	KIT-(Field Terminal Stud) (Includes Stud, Bushing & Washers	1
6	1D4719	NUT	3
C 7	3T8635	SOLENOID ASSEM. (Separate Illustration)	1
8	6H3622	SCREW	4
	3B4504	LOCKWASHER	4
	3K6116	WASHER	4
9	4M3217	SCREW	2
10	4B1220	SCREW	3
11	8S6035	GASKET	1
12	3B4502	LOCKWASHER	4
13	8S2769	HEAD ASSEM. --(Commutator End)-	1
14	2B4602	PLUG	1
15	8S4682	KIT--------(Bearing & Wick)-	1
16	4N4693	KIT-(Commutator End Terminal Stud (Includes Stud, Bushing & Washers)	1
	1D4717	NUT----------(plain)----------	1
17	1B2578	NUT----------(jam)----------	1
	3B4506	LOCKWASHER	2

C INDICATES CHANGE 306316

9G4337 ELECTRIC STARTING MOTOR GROUP—24 Volt—Prestolite—Part 1—Type 2
Serial No. 87V6056—Up. Part of 3P7 Electric Starting Motor Group shown on Page 78C
3T8635 Solenoid parts are shown on Page 88A

9G4337 ELECTRIC STARTING MOTOR GROUP—24 Volt—Prestolite—Part 2—Type 2
Serial No. 87V6056—Up
Part of 3P7 Electric Starting Motor Group shown on Page 78C

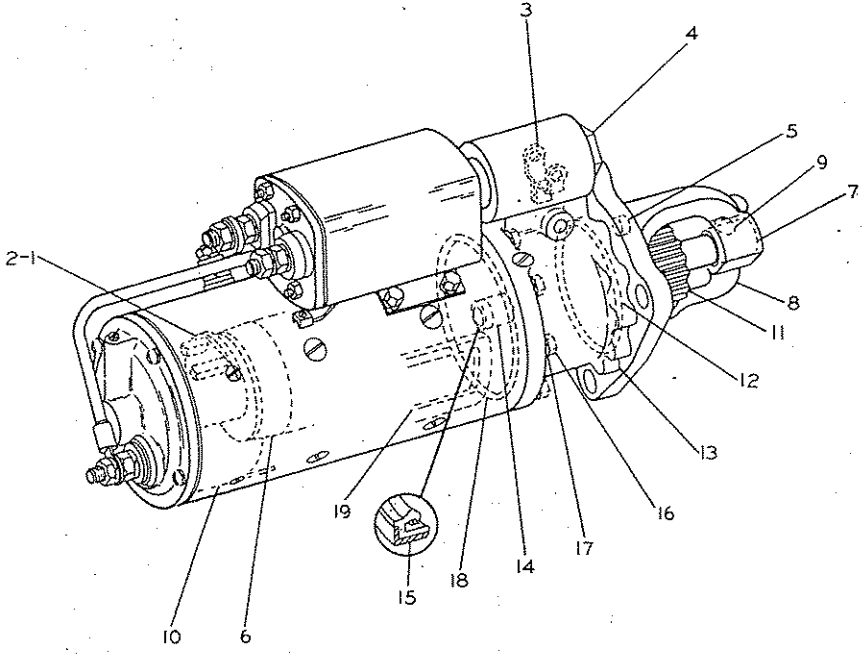

REF. NO.	PART NUMBER	DESCRIPTION	QTY
1	4N4691	PLATE ASSEM.	1
2	4N8618	KIT-(Includes 3 Brushes & 1 Clip)	1
	4N4692	KIT-----(Includes 8 Springs)------	1
3	2P8825	SHIFT YOKE ASSEM.	1
4	2P8817	KIT-------(Yoke Adjusting)------- (Includes Plugs, Pin, Gasket & Nut)	1
5	8S1535	KIT------(Includes 6 Plugs)------	1
6	9S6100	ARMATURE ASSEM.	1
	8S8071	KIT--(Armature Thrust Washers)--	1
7	8S4684	KIT-------(Bearing & Wick)-------	1
8	9G5854	HOUSING ASSEM. ----(Pinion)----	1
9	9F2247	PLUG	1
10	8S2780	KIT--(Includes 10 Insulations)---	1
C 11	4N4517	MOTOR DRIVE ASSEM.	1
12	2H3931	SEAL	1
13	2P8824	HOUSING ASSEM.	1
	2B4602	PLUG	1
14	8S2226	BUSHING	1
15	8S2225	SEAL	1
16	2P8816	KIT--(Includes Housing Screws)--	1
17	3B4504	LOCKWASHER	7
18	4M189	SEAL	1
19	4N4690	KIT---------(Field Coil)--------- (Includes Coils, Gaskets & Screws)	1
		THE FOLLOWING REPAIR KIT IS AVAILABLE:	
	8S4684	KIT--(pinion housing repair)------	1

C INDICATES CHANGE

306317

NOTE	REF NO	PART NUMBER	QTY	DESCRIPTION
	1	3T3422	1	WIRE ASSEM.
D		5P5621		WIRE .23M(9.06IN.)
		2L8071	1	TERMINAL (LARGE)
		2L8066	1	TERMINAL (SMALL)
	2	3H3681	1	NUT
	3	3H3680	3	NUT
	4	7F3494	2	WASHER
	5	369623	4	BOLT
	6	1L4789	4	LOCKWASHER
	7	3T4701	1	FRAME ASSEM.
	8	9G4513	1	BUSHING
	9	3T3424	1	PLUG
	10	3T3423	1	CUP
	11	7F3491	2	WASHER
	12	4M189	1	SEAL
	13	8F5368	1	WASHER
	14	3T3106	3	SCREW ASSEM.
	15	8H1141	4	SHOE
	16	6H3622	4	SCREW
	17	2N3145	1	INSULATOR
	18	4M1839	1	COIL ASSEM.
	19	3F379	8	SCREW
	20	7L2894	2	GASKET
	21	4M1831	2	PLUG
	22	9H3757	2	WASHER
	23	9F4976	3	LOCKWASHER
	24	4M1841	1	CONNECTOR
Y	25	3T3421	1	SOLENOID ASSEM.

D ORDER BY THE METER
Y SEPARATE ILLUSTRATION

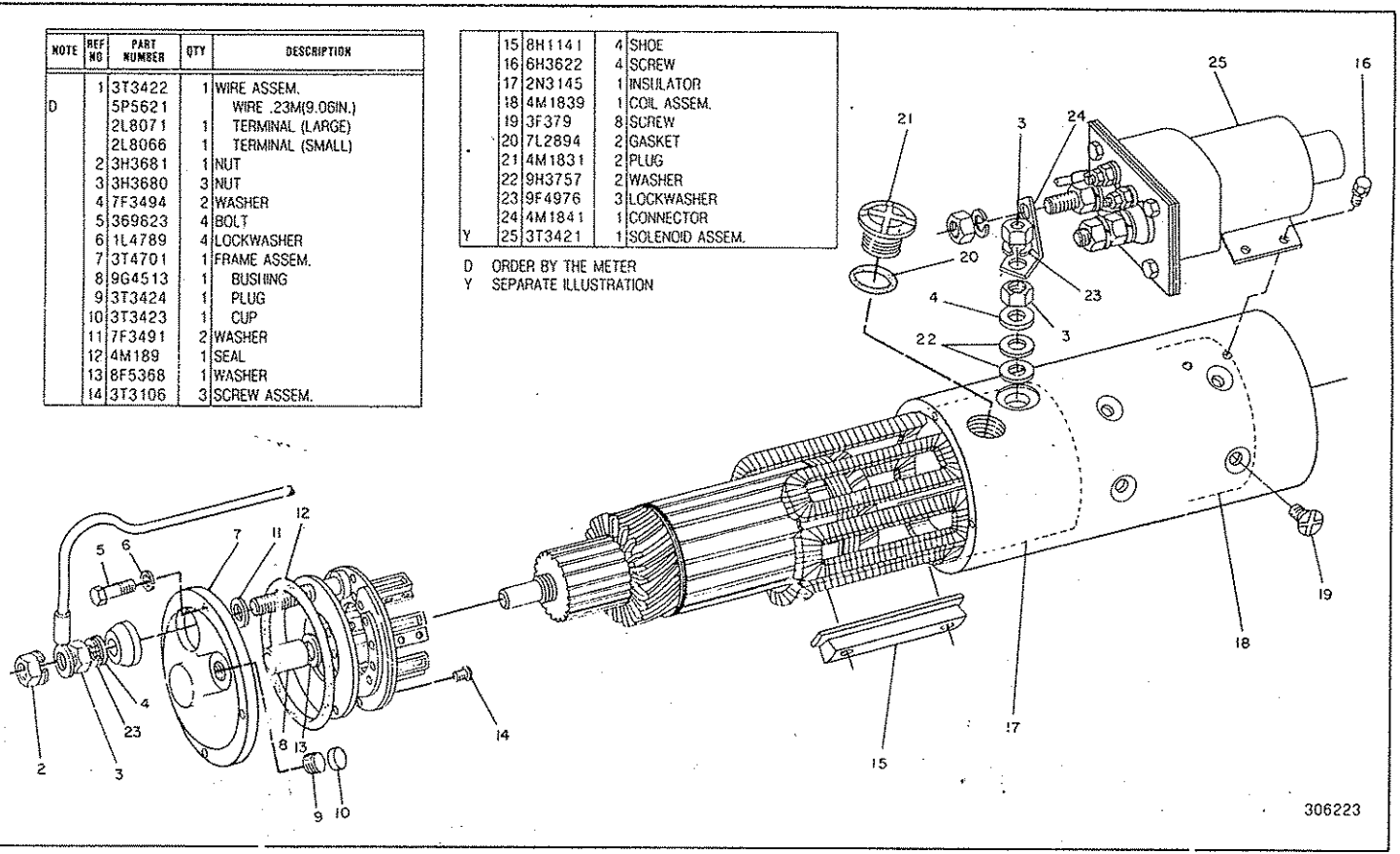

3T2647 ELECTRIC STARTING MOTOR GROUP—Delco-Remy—Part 1 of 3
Part of 4N3181 Starting Motor Group shown on Page 78C
3T3421 Solenoid parts are shown on Page 88B

3T2647 ELECTRIC STARTING MOTOR GROUP—Delco-Remy—Part 2 of 3

Part of 4N3181 Electric Starting Motor Group shown on Page 78C

REF. NO.	PART NUMBER	DESCRIPTION	QTY.
1	4M1868	ARMATURE ASSEM.	1
2	3T4703	BRUSH ASSEM.	4
3	9S2542	SCREW	6
4	3T4705	PLATE ASSEM. (Includes)	1
5	3T4706	INSULATOR	1
6	3T4711	SCREW ASSEM.	8
7	2L6679	PLATE	2
8	3T4712	HOLDER ASSEM.	4
9	3T4710	PLATE	2
10	3T4709	PLATE	2
11	7F3525	WASHER	4

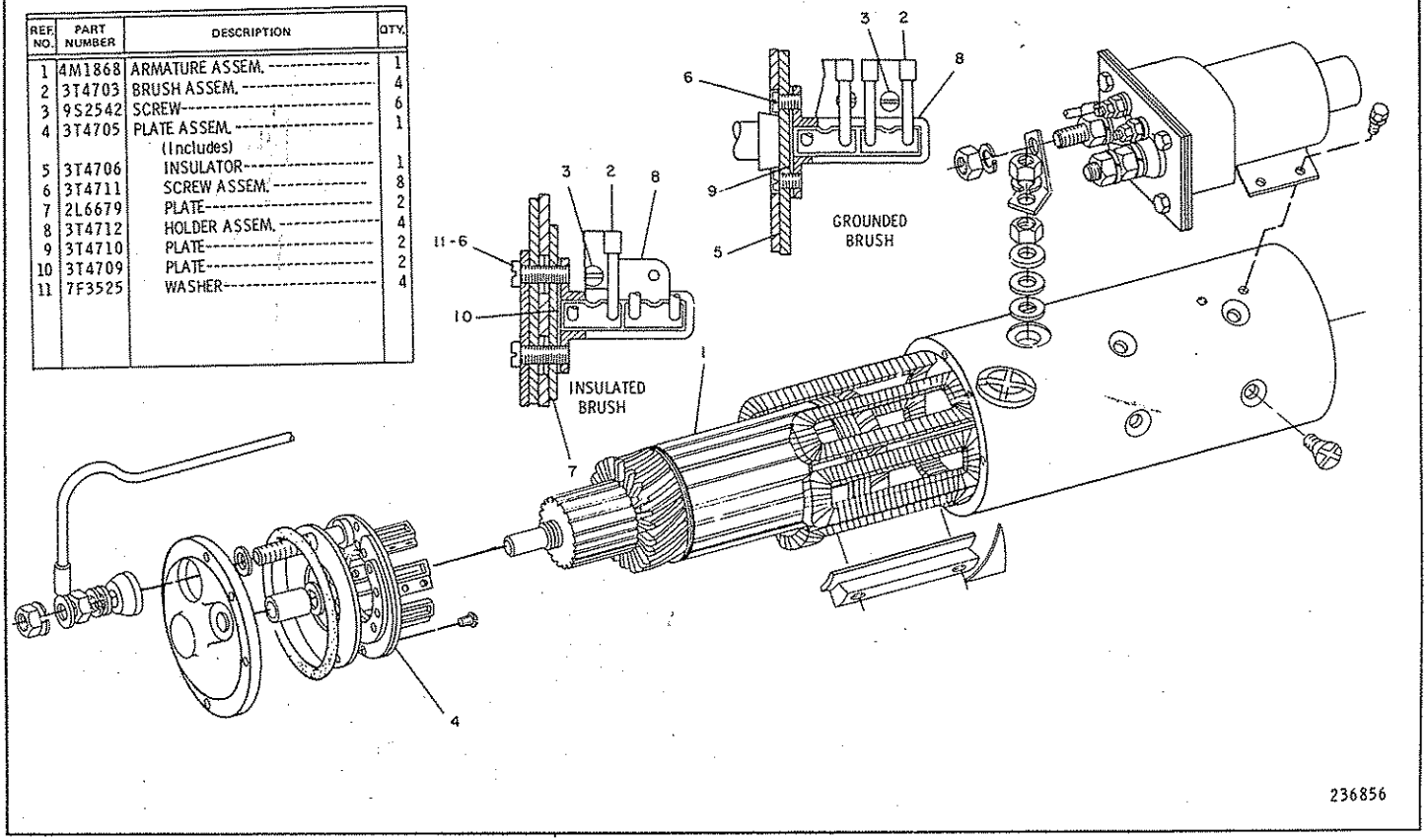

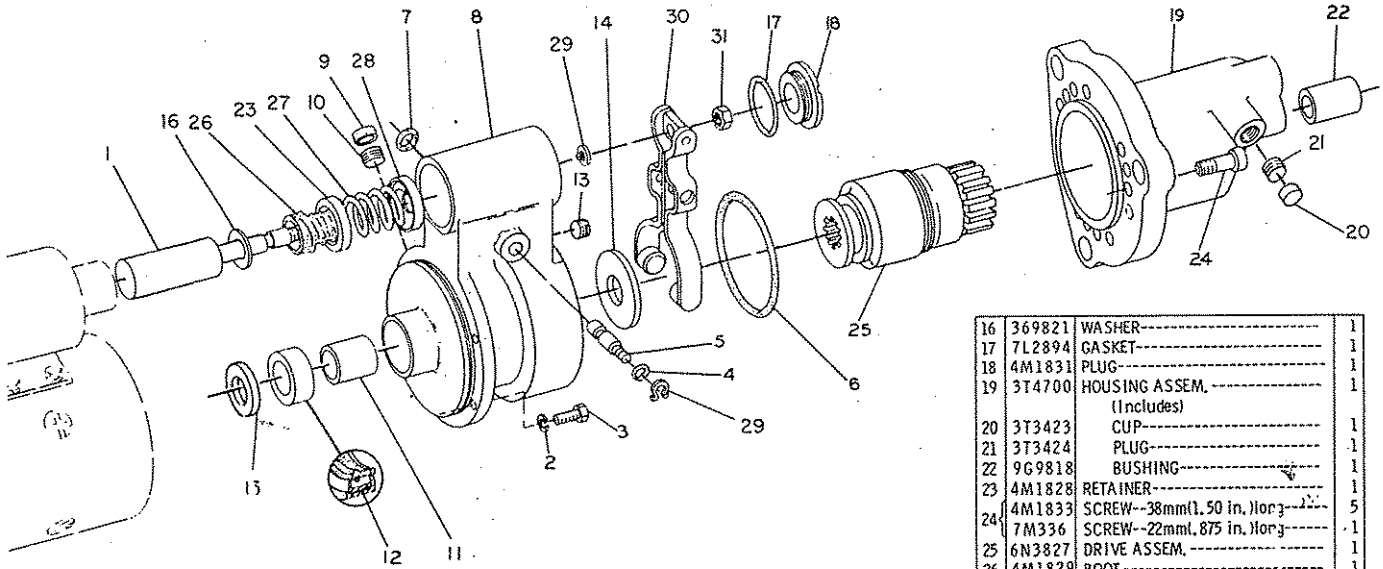

REF. NO.	PART NUMBER	DESCRIPTION	QTY.
1	9M7606	PLUNGER ASSEM.	1
2	1L4789	LOCKWASHER	5
3	369823	BOLT	5
4	2D6392	SEAL	1
5	4M1854	SHAFT	1
6	4M1851	GASKET	1
7	1H1023	SEAL	1
8	3T4702	HOUSING ASSEM. (Includes)	1
9	3T3423	CUP	1
10	3T3424	PLUG	1
11	9G9817	BUSHING	1
12	2F6678	SEAL	1
13	3T3433	PLUG	1
14	4L2729	WASHER	1
15	1M9971	SPACER	1
16	369821	WASHER	1
17	7L2894	GASKET	1
18	4M1831	PLUG	1
19	3T4700	HOUSING ASSEM. (Includes)	1
20	3T3423	CUP	1
21	3T3424	PLUG	1
22	9G9818	BUSHING	1
23	4M1828	RETAINER	1
24	4M1833	SCREW--38mm(1.50 in.)long	5
	7M336	SCREW--22mm(.875 in.)long	1
25	6N3827	DRIVE ASSEM.	1
26	4M1829	BOOT	1
27	9M7609	SPRING	1
28	4M1827	RETAINER	1
29	9M7611	RING	2
30	4M1853	LEVER ASSEM.	1
31	5M3034	LOCKNUT	1

Z36857

3T2647 ELECTRIC STARTING MOTOR GROUP—Delco-Remy—Part 3 of 3
Part of 4N3181 Electric Starting Motor Group shown on Page 78C

3T6305 ELECTRIC STARTING MOTOR GROUP—24 Volt
Part of 3P7 & 4N3181 Electric Starting Motor Groups shown on Page 78C. AN ATTACHMENT

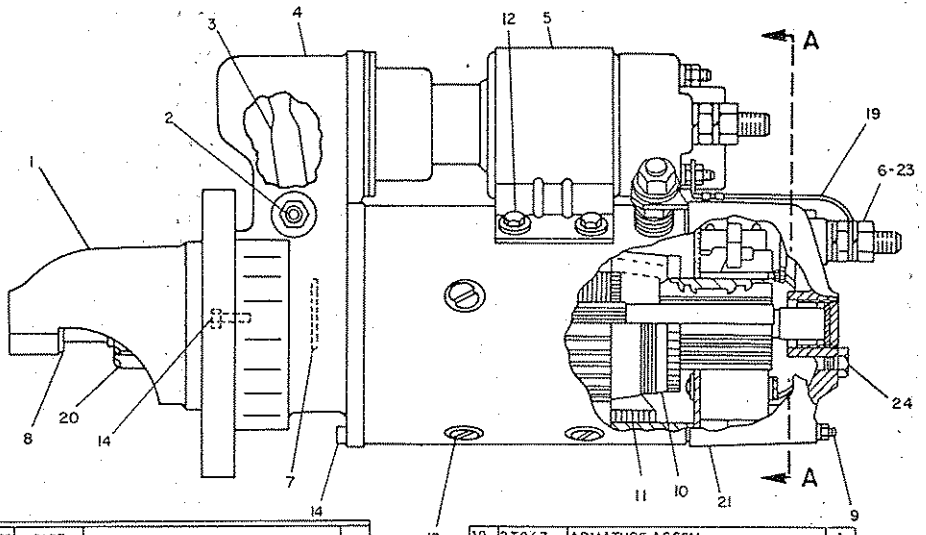

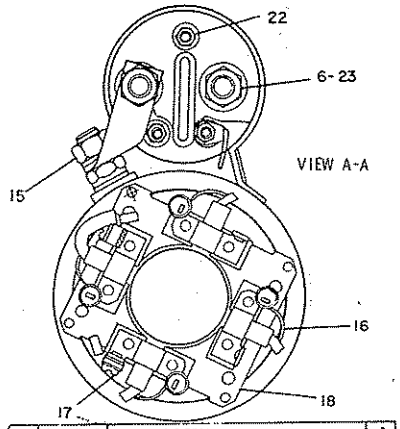

REF. NO.	PART NUMBER	DESCRIPTION	QTY.
1	3T7022	HOUSING ASSEM.	1
2	3T852	NUT	1
	3T861	SCREW	1
3	3T863	LEVER	1
4	3T864	HOUSING ASSEM.	1
	3T842	BEARING ASSEM.	1
5	3T868	SOLENOID ASSEM.	1
6	1D4719	NUT	2
7	3T7021	PLATE	2
8	3T7020	WASHER	1
9	3T847	SCREW	4
	3T851	NUT	4

10	3T867	ARMATURE ASSEM.	1
11	3T865	COIL ASSEM.	1
12	3T7024	SCREW	4
	4B4674	WASHER	4
13	3T850	SCREW	8
14	3T849	SCREW	12
15	3T853	NUT	2
15	3T858	SPRING	4
17	3T848	SCREW	4
18	3T862	PLATE ASSEM.	1
19	3T4716	WIRE ASSEM.	1
	5P5621	WIRE, 2 m(7.87 in.)	1
	2L8071	TERMINAL—(large)	1
	2L8067	TERMINAL—(small)	1

20	4N4517	DRIVE ASSEM.	1
21	3T7025	COVER	1
22	4B2049	NUT	1
	3B4502	LOCKWASHER	1
23	3B4508	LOCKWASHER	2
24	3T7018	PLUG	1
	3T7019	WASHER	1
F	3T5962	NAMEPLATE	1
F	2H3880	SCREW	2

THE FOLLOWING REPAIR KITS ARE AVAILABLE:

3T844	KIT—(Brush-Includes brushes)	1
3T2768	KIT—(Seal-Includes seals & rings)	1
3T2769	KIT—(Hardware-Includes wire assems., nuts, washers, lock-washers, bushing, and bar)	
3T7017	KIT—(Bearing-Includes seal, bearings, & spacers)	1

F-NOT SHOWN

305337

REF. NO.	PART NUMBER	DESCRIPTION	QTY
C 1	7N1269	TERMINAL ASSEM.	1
	4M1834	PLATE	1
2	7F4907	STRIP	1
3	3H3681	NUT	2
4	3B4508	LOCKWASHER	4
5	3H3680	NUT	2
6	7F3494	WASHER	2
7	4M1836	INSULATOR	2
8	4M1837	BUSHING	2
9	7F4906	STUD	1
10	4M2800	TERMINAL	1
11	7N1271	TERMINAL ASSEM.	1
12	4M5274	SCREW--(hex head)	1
		- OR -	
C	5P9132	SCREW--(Truss head)	1
13	1P3877	LEAD ASSEM.	1
14	4M3217	SCREW	2
C 15	9G6770	CONTACT ASSEM.	1
16	4M1813	CASE ASSEM.	1
17	1F73	CLIP	2
18	4M1815	SPRING	1
19	9M7657	NUT	4
		- OR -	
	9S4489	SCREW ASSEM.	4
20	9S4490	GASKET	4

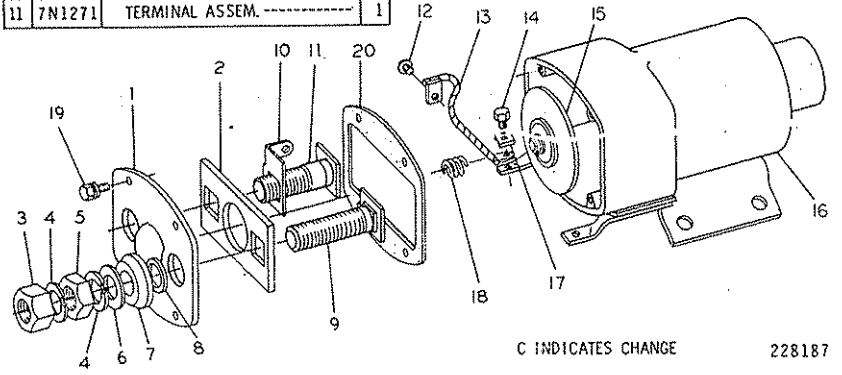

4M1812 SOLENOID SWITCH ASSEMBLY
Part of 4N3182 and 7N1285 Electric Starting Motor Groups shown on Pages 79 & 84

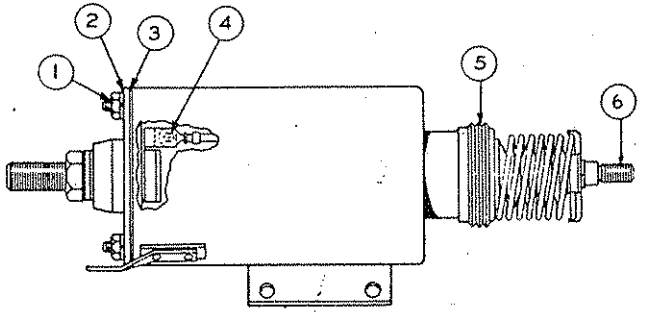

REF. NO.	PART NUMBER	DESCRIPTION	QTY.
C 1	9M7657	NUT	4
2	8S8023	COVER ASSEM.	1
3	8S8024	GASKET	1
		(Part of 8S8023 Cover Assem.)	
4	9B7235	SCREW	1
	9M7233	LOCKWASHER	1
5	8S1528	BOOT	1
6	8S8021	CORE ASSEM.	1

The following Repair Kits are available:
8S1524-KIT---------(Terminal Stud-Battery)--------1
8S1525-KIT---------(Terminal Stud-Motor)--------1
9S8688-KIT----------(Core-Contact End)----------1
8S1527-KIT----------(Core-Yoke End)----------1

C INDICATES CHANGE

115899

9S7976 SOLENOID SWITCH ASSEMBLY

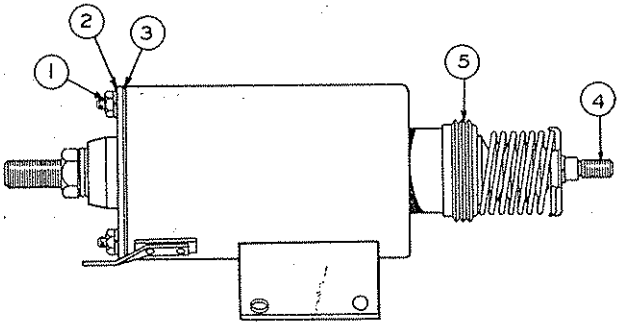

REF. NO.	PART NUMBER	DESCRIPTION	QTY.
1	9M7657	NUT	4
2	8S8023	COVER ASSEM. (Includes)	1
3	8S8024	GASKET	1
4	3T3370	CORE ASSEM.	1
5	8S1528	BOOT	1

The following Repair Kits are available:
8S1524-KIT--------(Terminal Stud-Battery)--------1
8S1525-KIT---------(Terminal Stud-Motor)--------1
9S8688-KIT----------(Core-Contact End)----------1
8S1527-KIT----------(Core-Yoke End)----------1

181240

3T3369 SOLENOID SWITCH ASSEMBLY
Part of 9G4338 & 9G4337 Electric Starting Motor Groups shown on Pages 83C & 87C
AN ATTACHMENT

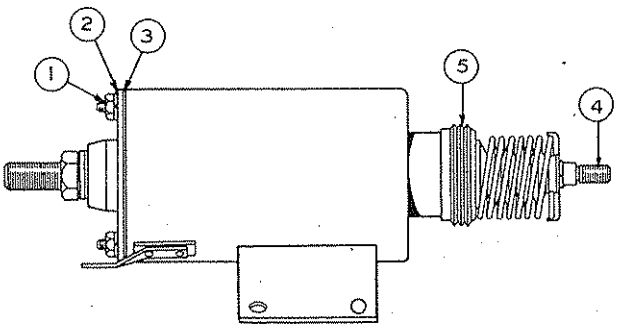

REF. NO.	PART NUMBER	DESCRIPTION	QTY.
1	9M7657	NUT	4
2	8S8023	COVER ASSEM. (Includes)	1
3	8S8024	GASKET	1
4	3T3370	CORE ASSEM.	1
5	8S1528	BOOT	1

THE FOLLOWING REPAIR KITS ARE AVAILABLE:
C 6T3701-KIT---------(Terminal)----------1
9S8688-KIT----------(Core-Contact End)----------1
8S1527-KIT----------(Core-Yoke End)----------1

C INDICATES CHANGE

305791

3T8635 SOLENOID SWITCH ASSEMBLY—24 Volt
Part of 9G4338 & 9G4337 Electric Starting Motor Group shown on Pages 83E & 87E

REF. NO.	PART NUMBER	DESCRIPTION	QTY.
1	9G6770	CONTACT ASSEM.	1
2	4M1815	SPRING	1
3	4M5274	SCREW	3
4	6T1121	GASKET	1
5	454065	SCREW	4
	4B4274	WASHER	8
	4B2049	NUT	4
6	6T1120	BUSHING	1

7	6T1119	TERMINAL ASSEM. (Includes)	1
8	3H3680	NUT	3
	4B4280	WASHER	3
	9F4976	LOCKWASHER	2
9	4B2049	NUT	3
	4B4274	WASHER	3
	3B4502	LOCKWASHER	2
10	6T362	INSULATOR	1
SMHS7843		FORM (Installing Solenoid Assem.)	1

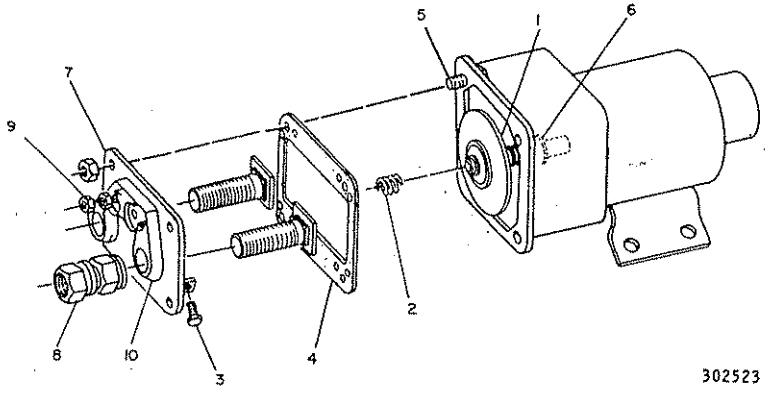

3T3421 SOLENOID ASSEMBLY
Part of 3T2772 & 3T2647 Electric Starting Motor Groups shown on Pages 85A & 87G

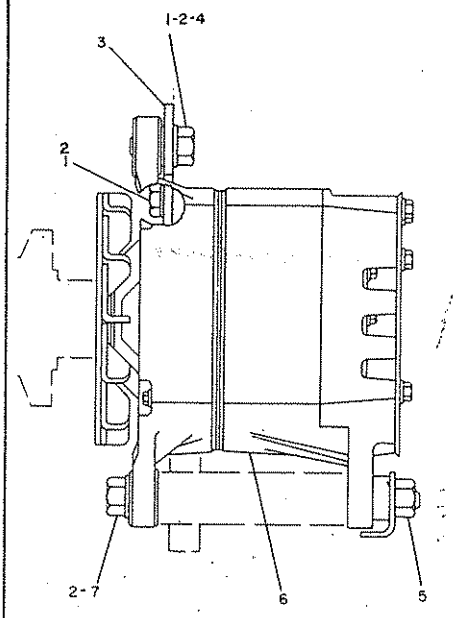

NOTE	REF NO	PART NUMBER	QTY	DESCRIPTION
	1	S1595	2	BOLT 31.7MM(1.25IN.)LONG
C	2	5P8245	3	WASHER 2.38MM(.094IN.)THK
	3	8S4183	1	STRAP
CB	4	T883	3	WASHER 1.65MM(.065IN.)THK
	5	9S1240	1	NUT ASSEM.
Y	6	6N9294	1	ALTERNATOR GROUP
	7	9H8260	1	BOLT

B USE AS REQUIRED
C INDICATES CHANGE
Y SEPARATE ILLUSTRATION

308816

1P9572 ALTERNATOR GROUP—24 Volt, 35 Ampere
6N9294 Alternator parts are shown on Pages 90 & 91

CONSISTS OF: PAGE

1 5S9088 ALTERNATOR GROUP 92

1 6G4417 HARNESS ASSEMBLY

CONSISTING OF:

2	2L8049	TERMINAL
.3M	5P5689	WIRE
1	4L3916	TERMINAL
.4M	5P5623	WIRE

8N9282 ALTERNATOR GROUP—24 Volt, 50 Ampere
Serial No. 87V5275 to 87V5733 inclusive
AN ATTACHMENT

		CONSISTS OF:	PAGE
1	5S9088	ALTERNATOR GROUP	92
1	6G9087	WIRE ASSEMBLY	
		CONSISTS OF:	
	2	6B2864 TERMINAL	
	.3M	5P5622 WIRE	

1W5558 ALTERNATOR GROUP—24 Volt, 50 Ampere
Serial No. 87V5734—Up
AN ATTACHMENT

		CONSISTS OF:	PAGE
1	9G8255	ALTERNATOR GROUP--DELCO-REMY	91A
	- OR -		
1	7N9720	ALTERNATOR GROUP	91

6N9294 ALTERNATOR GROUP—24 Volt, 35 Ampere
Serial No. 87V5275 to 87V6364 inclusive
Part of 1P9572 Alternator Group shown on Page 89

		CONSISTS OF:	PAGE
1	7N9720	ALTERNATOR GROUP	91
	- OR -		
1	3T6352	ALTERNATOR GROUP--DELCO-REMY	91B-1

6N9294 ALTERNATOR GROUP—24 Volt, 35 Ampere

7N9720 ALTERNATOR GROUP—24 Volt, 35 Ampere—Type 1
Part of 6N9294 Alternator Group listed on Page 90

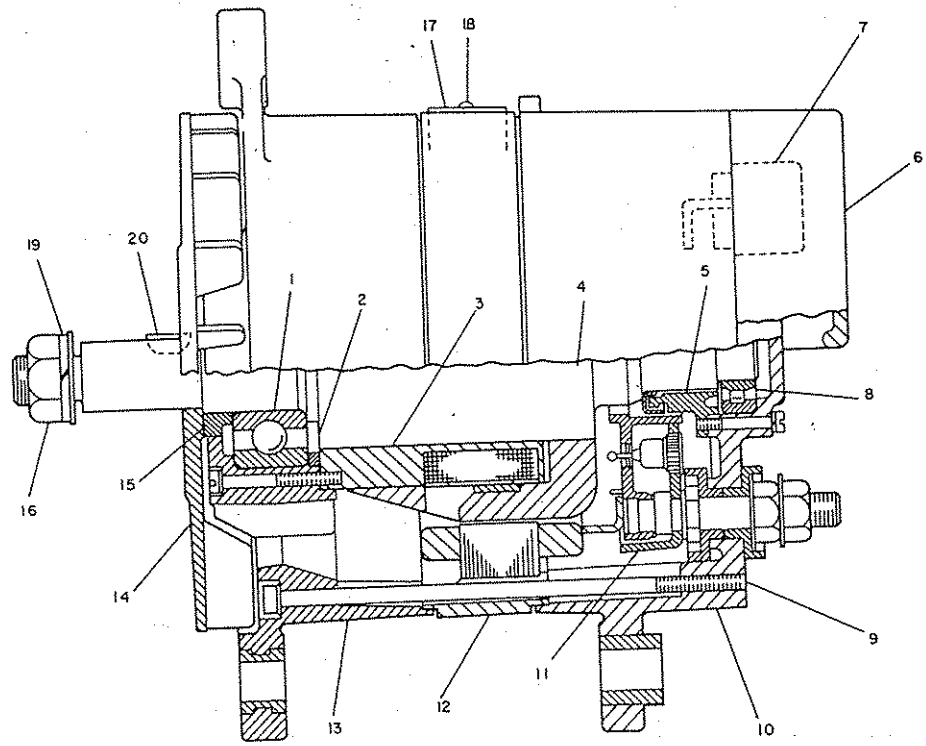

REF. NO.	PART NUMBER	DESCRIPTION	QTY.
1	9G7551	BEARING	1
2	9G7548	RING	1
3	9G7558	COIL ASSEM.	1
4	9G7560	ROTOR ASSEM.	1
5	9G7553	RING	1
6	9G7562	COVER ASSEM.	1
7	9G7567	REGULATOR ASSEM.	1
8	9G7552	BEARING	1
9	9G7557	SCREW ASSEM.	1
10	9G7568	FRAME ASSEM.	1
11	9G7563	DIODE ASSEM.	1
12	9G7561	STATOR ASSEM.	1
13	9G7566	FRAME	1
14	9G7564	FAN	1
15	9G7549	SPACER	1
16	2K4821	LOCKNUT	1
	7K7621	WASHER	1
C 17	3T5962	NAMEPLATE	1
C 18	2H3880	SCREW—(drive)	2
C 19	3B4510	LOCKWASHER	1
C 20	1B8705	KEY	1
		THE FOLLOWING REPAIR KITS ARE AVAILABLE:	
	9G7554	KIT—(ground terminal) (Includes nuts & lockwashers)	1
	9G7555	KIT—(output terminal) (Includes nuts, washers & bushings)	1
	9G7556	KIT—(capacitor) (Includes capacitor, screw, lockwasher & washer)	1
	9G7559	KIT—(relay terminal) (Includes splice, tube, nut, terminal, lockwasher, washers, and bushing)	1
	9G7565	KIT—(regulator terminal) (Includes nuts, lockwashers, washers and bushing)	1

C INDICATES CHANGE

235257

7N9720 ALTERNATOR GROUP—24 Volt, 35 Ampere—Type 2

Part of 6N9294 Alternator Group listed on Page 90

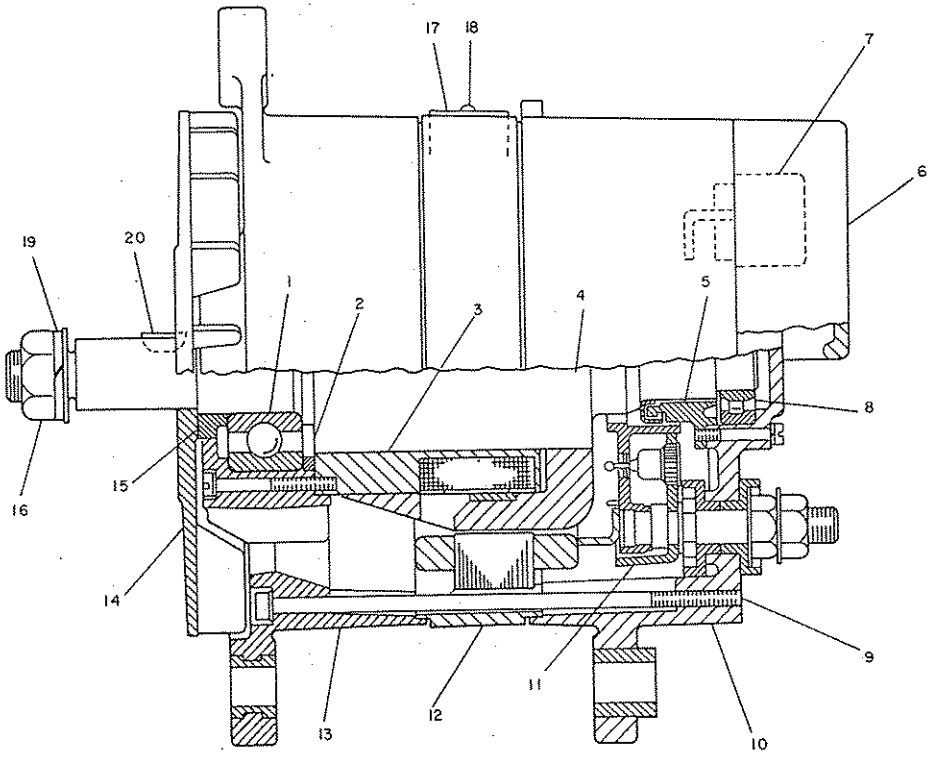

	REF. NO.	PART NUMBER	DESCRIPTION	QTY.
	1	9G7551	BEARING	1
	2	9G7548	RING	1
	3	9G7558	COIL ASSEM.	1
	4	9G7560	ROTOR ASSEM.	1
	5	9G7553	RING	1
	6	9G7562	COVER ASSEM.	1
	7	9G7567	REGULATOR ASSEM.	1
	8	9G7552	BEARING	1
C	9	9G7557	SCREW ASSEM.	4
	10	9G7568	FRAME ASSEM.	1
C	11	3T1887	DIODE ASSEM.	1
	12	9G7561	STATOR ASSEM.	1
	13	9G7566	FRAME	1
	14	9G7564	FAN	1
	15	9G7549	SPACER	1
	16	2K4821	LOCKNUT	1
		7K7621	WASHER	1
	17	3T5962	NAMEPLATE	1
	18	2H3880	SCREW----------(drive)	2
	19	3B4510	LOCKWASHER	1
	20	1B8705	KEY	1
			THE FOLLOWING REPAIR KITS ARE AVAILABLE:	
		9G7554	KIT--------(ground terminal)------- (Includes nuts & lockwashers)	1
		9G7555	KIT------(output terminal)---------- (Includes nuts, washers & bushings)	1
		9G7556	KIT--------(capacitor)------------- (Includes capacitor, screw, lockwasher & washer)	1
		9G7559	KIT------(relay terminal)---------- (Includes splice, tube, nut, terminal, lockwasher, washers, and bushing)	1
		9G7565	KIT-------(regulator terminal)------ (Includes nuts, lockwashers, washers and bushing)	1

C INDICATES CHANGE

235180

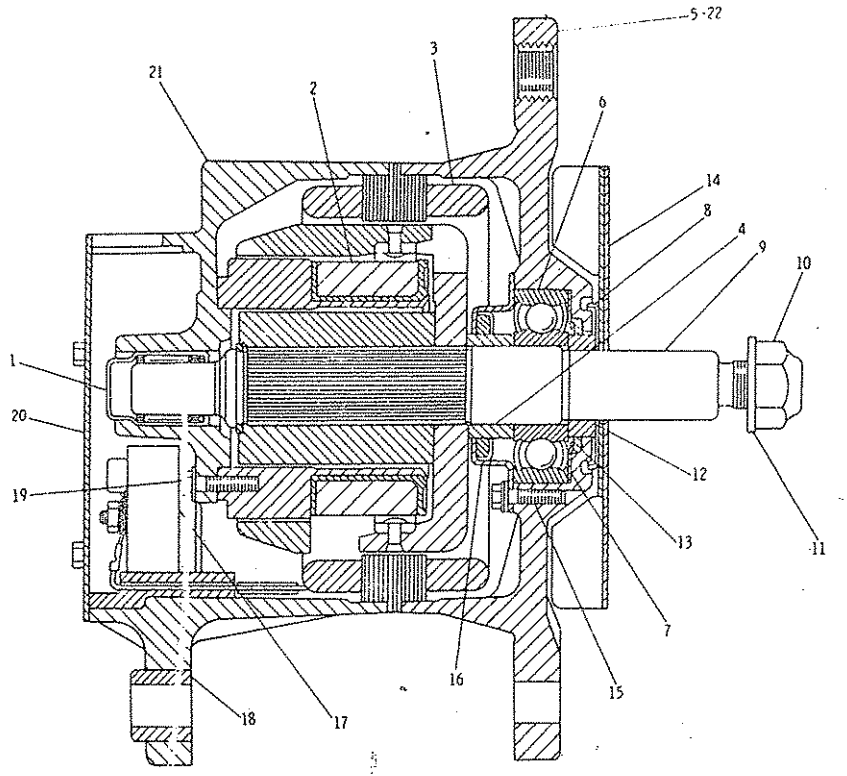

REF. NO.	PART NUMBER	DESCRIPTION	QTY
1	5P6920	BEARING	1
2	7N7806	COIL ASSEM.	1
3	7N7804	STATOR ASSEM.	1
4	7N7795	COLLAR	1
5	7N7810	FRAME ASSEM.	1
6	5P9514	BEARING	1
7	9L2140	PLATE	1
8	9L6782	SHIELD	1
9	7N7800	ROTOR ASSEM.	1
10	2K4821	LOCKNUT	1
11	7F7621	WASHER	1
12	9L6783	COLLAR	1
13	9L2139	WASHER	1
14	9N1210	FAN ASSEM.	1
15	7N9020	SCREW ASSEM.	3
16	9L2137	RETAINER ASSEM.	1
17	7N7122	RECTIFIER ASSEM.	1
18	9S2396	BUSHING	1
19	9S2007	SCREW	4
20	7N7809	PLATE	1
21	7N7805	HOUSING	1
22	7N9024	BOLT	4

228795

9G8255 ALTERNATOR GROUP—Delco-Remy—24 Volt, 35 Ampere—Side View
Serial No. 87V5275 to 87V6364 inclusive
Part of 6N9294 Alternator Group listed on Page 90

9G8255 ALTERNATOR GROUP—Delco-Remy—24 Volt, 35 Ampere—End View
Serial No. 87V5275 to 87V6364 inclusive
Part of 6N9294 Alternator Group listed on Page 90

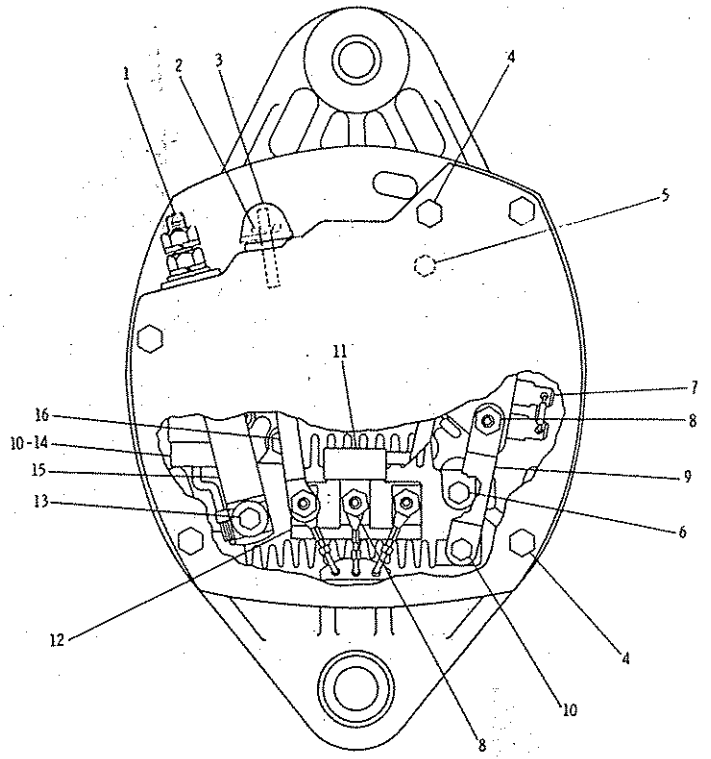

REF. NO.	PART NUMBER	DESCRIPTION	QTY
1	7N7807	TERMINAL KIT-----(output)------ (Includes Insulator, Screw, Washers, Lockwasher, Nut & Adapter)	1
2	7N7808	TERMINAL KIT---------- (Includes Stud, Bushings, Washers & Nut Assem.)	1
3	9L6770	CAP----------	1
4	8N740	SCREW ASSEM.----------	5
5	7N9022	SCREW ASSEM.----------	2
	9N938	WASHER----------	2
6	7N9023	SCREW ASSEM.----------	2
7	7N7799	REGULATOR ASSEM.----------	1
8	6N1869	NUT ASSEM.----------	4
9	7N7811	CONNECTOR----------	1
10	7N9018	SCREW ASSEM.----------	3
11	9N1202	DIODE ASSEM.----------	1
12	7N7797	INSULATOR----------	2
13	7N9021	SCREW ASSEM.----------	1
	7N7796	BUSHING----------	1
14	7N7802	CAPACITOR ASSEM.----------	1
	3N4082	BRACKET----------	1
15	7N7798	CONNECTOR----------	1
16	7N7801	CONNECTOR----------	1

228796

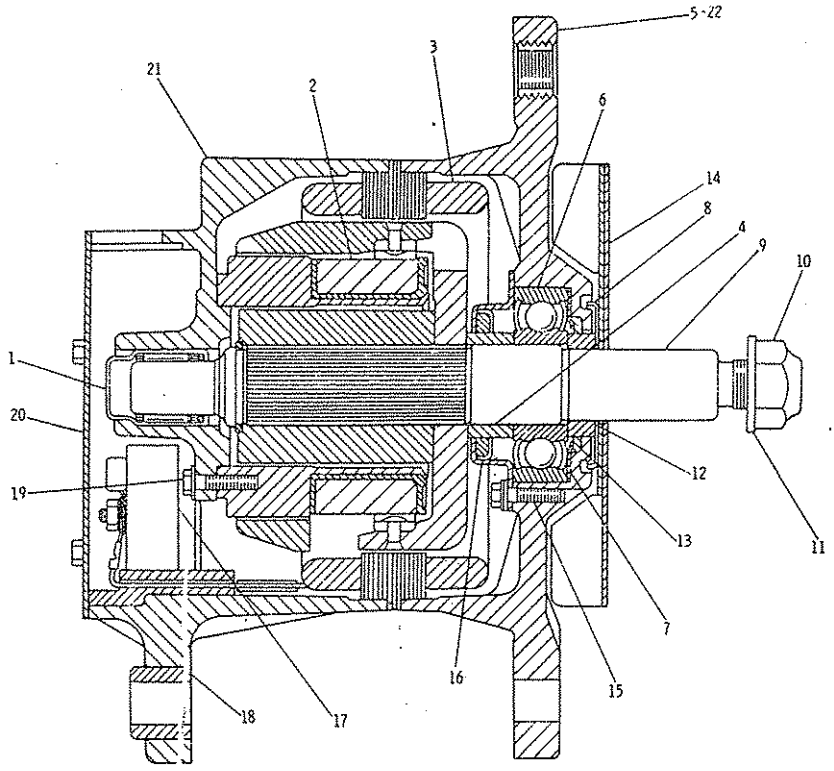

REF. NO.	PART NUMBER	DESCRIPTION	QTY.
1	5P6920	BEARING	1
2	7N7806	COIL ASSEM.	1
3	7N7804	STATOR ASSEM.	1
4	7N7795	COLLAR	1
5	7N7810	FRAME ASSEM.	1
6	5P9514	BEARING	1
7	9L2140	PLATE	1
8	9L6782	SHIELD	1
9	7N7800	ROTOR ASSEM.	1
10	2K4821	LOCKNUT	1
11	7F7621	WASHER	1
12	9L6783	COLLAR	1
13	9L2139	WASHER	1
14	9N1210	FAN ASSEM.	1
15	7N9020	SCREW ASSEM.	3
16	9L2137	RETAINER ASSEM.	1
17	7N7122	RECTIFIER ASSEM.	1
18	9S2396	BUSHING	1
19	9S2007	SCREW	4
20	7N7809	PLATE	1
21	7N7805	HOUSING	1
22	7N9024	BOLT	4

235181

3T6352 ALTERNATOR GROUP—24 Volt, 35 Ampere—Part 1
Serial No. 87V6365—Up
Part of 6N9294 Alternator Group listed on Page 90

3T6352 ALTERNATOR GROUP—24 Volt, 35 Ampere—Part 2
Serial No. 87V6365—Up
Part of 6N9294 Alternator Group listed on Page 90

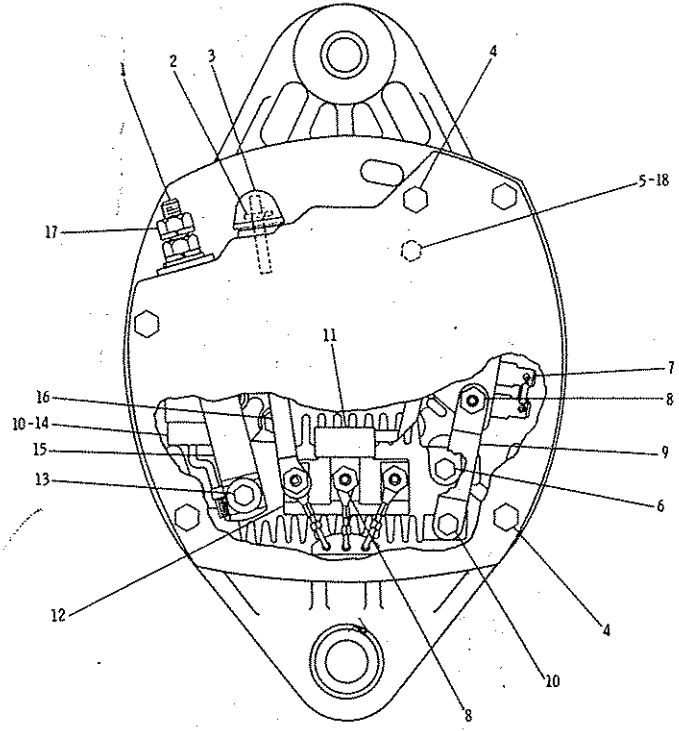

	REF NO.	PART NUMBER	DESCRIPTION	QTY
	1	7N7807	TERMINAL KIT-----(output)------- (Includes Insulator, Screw, Washers, Lockwasher, Nut &Adapter)	1
	2	7N7808	TERMINAL KIT---------- (Includes Stud, Bushings, Washers & Nut Assem.)	1
	3	9L6770	CAP----------	1
	4	8N740	SCREW ASSEM.----------	5
C	5	6N1872	SCREW ASSEM.----------	2
		9N938	WASHER-11.17mm(.44 in.)O.D.---	2
	6	7N9023	SCREW ASSEM.----------	2
	7	3T6353	REGULATOR ASSEM.----------	1
	8	6N1869	NUT ASSEM.----------	4
	9	7N7811	CONNECTOR----------	1
	10	7N9018	SCREW ASSEM.----------	3
	11	9N1202	DIODE ASSEM.----------	1
	12	7N7797	INSULATOR----------	2
	13	7N9021	SCREW ASSEM.----------	1
		7N7796	BUSHING----------	1
	14	7N7802	CAPACITOR ASSEM.----------	1
		3N4082	BRACKET----------	1
	15	7N7798	CONNECTOR----------	1
	16	7N7801	CONNECTOR----------	1
C		5L4426	NUT----------	1
C	17	3B4504	LOCKWASHER----------	1
C		3P9901	WASHER----------	1
C	18	3H240	WASHER-9.65mm(.38 in.)O.D.----	2

C INDICATES CHANGE

304807

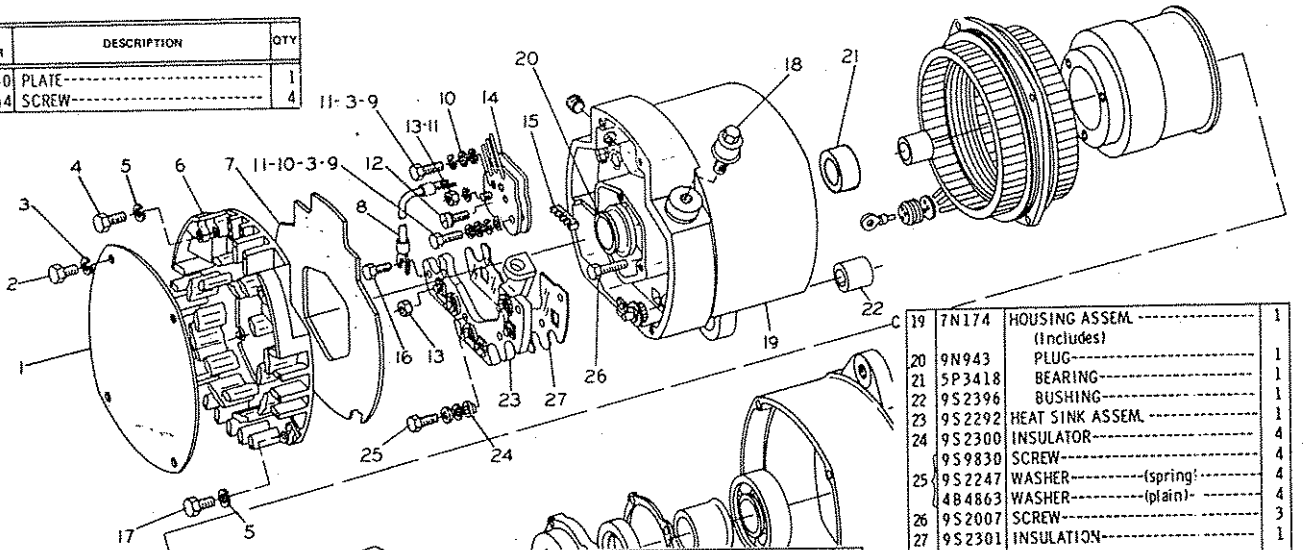

REF. NO.	PART NUMBER	DESCRIPTION	QTY
1	9S2260	PLATE	1
2	9S2544	SCREW	4
3	8H878	LOCKWASHER	6
4	9S2438	SCREW	2
5	7H2079	LOCKWASHER	7
6	9S2255	COVER	1
7	9S2262	GASKET	1
8	9S2246	LEAD ASSEM.	1
9	9S9830	SCREW	1
10	8F1326	WASHER	3
11	9B7233	LOCKWASHER-----(shake proof)----	3
12	9S9829	SCREW ASSEM.	1
13	4B2043	NUT	4
C 14	7N129	REGULATOR ASSEM.	1
15	9S2250	GROMMET	1
16	9S2542	SCREW	1
17	9S2437	SCREW	5
18	9S2389	STUD ASSEM.	1
19	7N174	HOUSING ASSEM. (Includes)	1
20	9N943	PLUG	1
21	5P3418	BEARING	1
22	9S2396	BUSHING	1
23	9S2292	HEAT SINK ASSEM.	1
24	9S2300	INSULATOR	4
	9S9830	SCREW	4
25	9S2247	WASHER----------(spring)--------	4
	4B4863	WASHER----------(plain)--------	4
26	9S2007	SCREW	3
27	9S2301	INSULATION	1
▲	9S2013	KIT----------(terminal relay)-------- (Consists of Bushing, "O" Ring & Hardware)	1
▲	9S2012	KIT----------(terminal output)-------- (Consists of Gaskets, Terminal & Hardware)	1
▲	9S2290	KIT----------(heat sink)---------- (Diode Junction Hardware)	1
▲	9S2291	KIT----------(heat sink)---------- (Positive Diode Hardware)	1

C INDICATES CHANGE

▲ NOT PART OF 5S9088 ALTERNATOR ASSEM. 162528

5S9088 ALTERNATOR ASSEMBLY—Part 1
Part of 8N9282 Alternator Group listed on Page 89
AN ATTACHMENT

5S9088 ALTERNATOR ASSEMBLY—Part 2
Part of 8N9282 Alternator Group listed on Page 89
AN ATTACHMENT

	REF. NO.	PART NUMBER	DESCRIPTION	QTY
C	1	5P3419	RACE	1
	2	9S2248	FIELD COIL AND SUPPORT ASSEM.	1
	3	9S2004	STATOR ASSEM.	1
	4	9S2006	INSULATOR	1
	5	9S2005	GROMMET	1
	6	9S2014	CLIP	3
	7	9S2302	ROTOR ASSEM.	1
	8	9S2390	RETAINER ASSEM.	1
	9	9S2391	SEAL	1
	10	9S2256	GASKET	1
	11	9S2261	COLLAR	1
	12	2F5721	BEARING	1
	13	2P5616	FRAME	1
	14	3B4502	LOCKWASHER	4
	15	9S2009	BOLT	4
	16	9S2391	SEAL	1
	17	9S2254	COLLAR	1
	18	9S2252	SLINGER	1
	19	9S2008	SCREW	4
	20	9S2258	FAN AND BAFFLE ASSEM.	1
	21	7F7621	WASHER	1
	22	2K4821	LOCKNUT	1

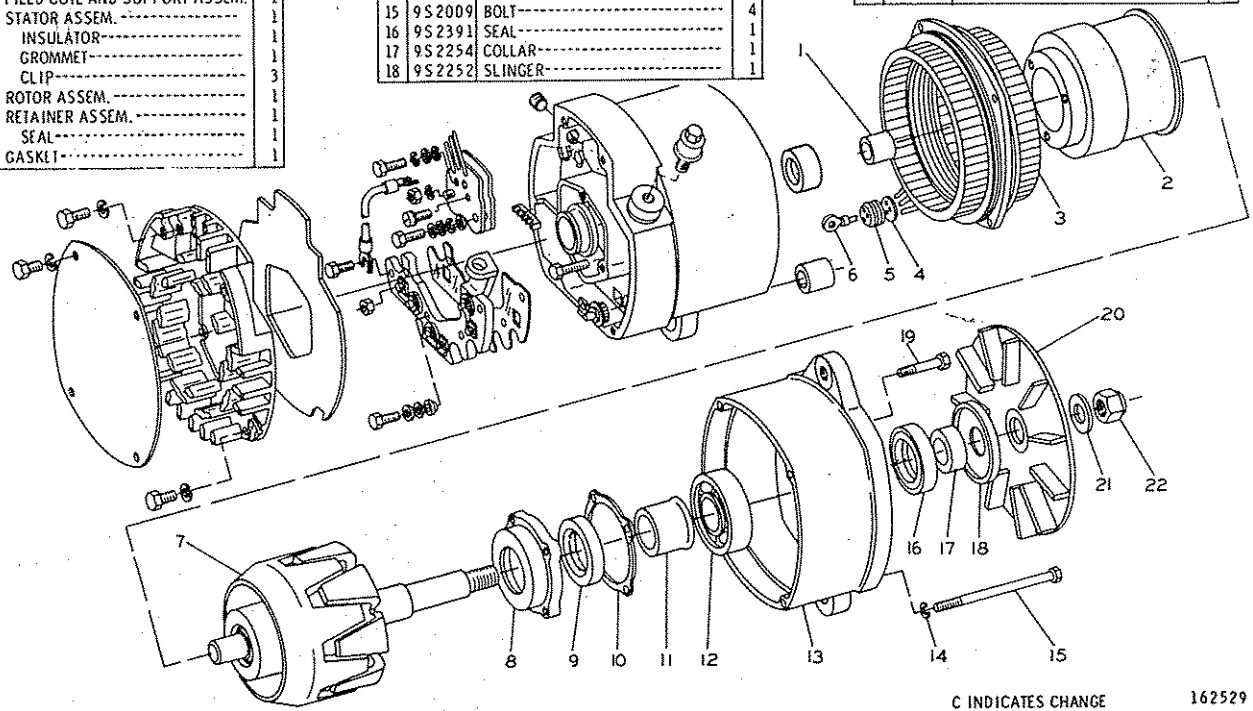

C INDICATES CHANGE

162529

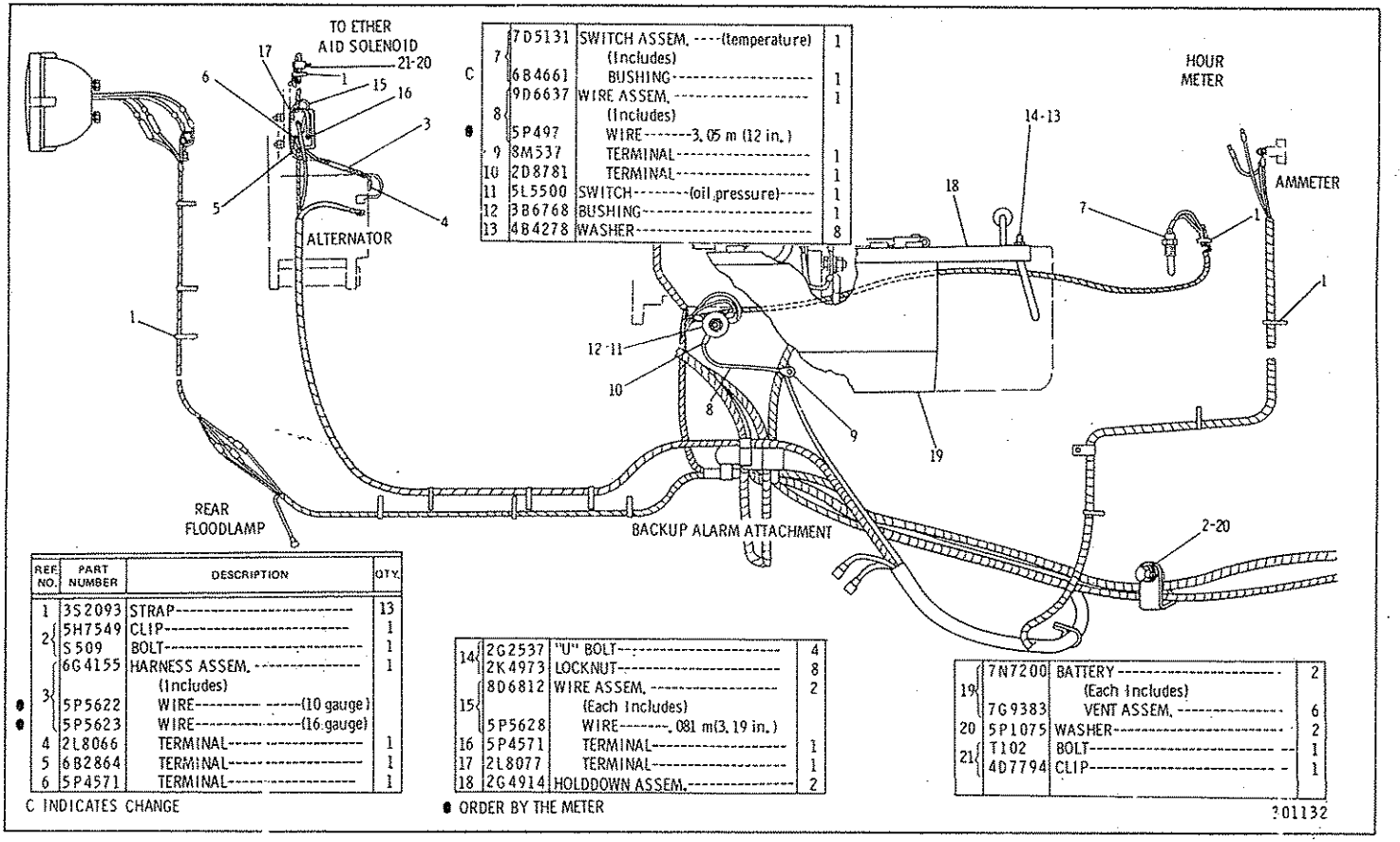

C	7	7D5131	SWITCH ASSEM. ----(temperature) (Includes)	1
		6B4661	BUSHING----------	1
	8	9D6637	WIRE ASSEM. ---------- (Includes)	1
●		5P497	WIRE-------3.05 m (12 in.)	
	9	8M537	TERMINAL----------	1
	10	2D8781	TERMINAL----------	1
	11	5L5500	SWITCH--------(oil pressure)------	1
	12	3B6768	BUSHING----------	1
	13	4B4278	WASHER----------	8

REF. NO.	PART NUMBER	DESCRIPTION	QTY.
1	3S2093	STRAP----------	13
2	5H7549	CLIP----------	1
	S509	BOLT----------	1
3	6G4155	HARNESS ASSEM. ---------- (Includes)	1
●	5P5622	WIRE---------- -----(10 gauge)	
●	5P5623	WIRE----------(16 gauge)	
4	2L8066	TERMINAL----------	1
5	6B2864	TERMINAL----------	1
6	5P4571	TERMINAL----------	1

C INDICATES CHANGE

14	2G2537	"U" BOLT----------	4
	2K4973	LOCKNUT----------	8
15	8D6812	WIRE ASSEM. ---------- (Each Includes)	2
	5P5628	WIRE--------.081 m(3.19 in.)	
16	5P4571	TERMINAL----------	1
17	2L8077	TERMINAL----------	1
18	2G4914	HOLDDOWN ASSEM.----------	2

● ORDER BY THE METER

19	7N7200	BATTERY---------- (Each Includes)	2
	7G9383	VENT ASSEM. ----------	6
20	5P1075	WASHER----------	2
21	T102	BOLT----------	1
	4D7794	CLIP----------	1

?01132

2G7620 BATTERY AND WIRING GROUP—24 Volt—Part 1 of 5
Serial No. 87V5275 to 87V5733 inclusive

2G7620 BATTERY AND WIRING GROUP—24 Volt—Part 2 of 5

Serial No. 87V5275 to 87V5733 Inclusive

8D389 Lamp parts are shown on Page 102

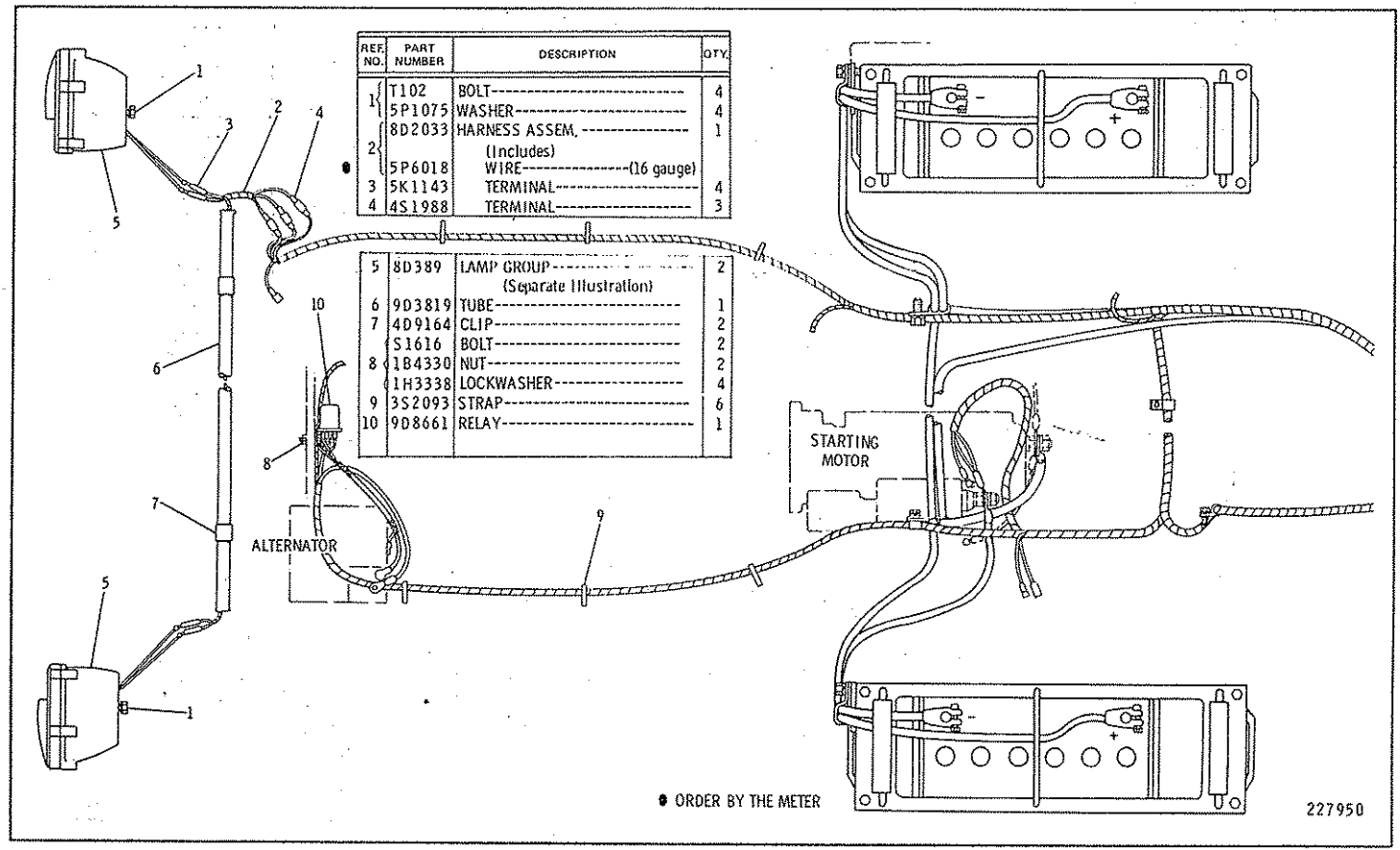

REF. NO.	PART NUMBER	DESCRIPTION	QTY.
1	T102	BOLT	4
	5P1075	WASHER	4
2	8D2033	HARNESS ASSEM. (Includes)	1
	5P6018	WIRE-(16 gauge)	
3	5K1143	TERMINAL	4
4	4S1988	TERMINAL	3
5	8D389	LAMP GROUP (Separate Illustration)	2
6	9D3819	TUBE	1
7	4D9164	CLIP	2
	1S1616	BOLT	2
8	1B4330	NUT	2
	1H3338	LOCKWASHER	4
9	3S2093	STRAP	6
10	9D8661	RELAY	1

● ORDER BY THE METER

REF. NO.	PART NUMBER	DESCRIPTION	QTY
	2G6365	CABLE ASSEM.	1
1		(Includes)	
▲	5P746	CABLE--285 cm(112.20 in.)	
2	3D2098	TERMINAL ASSEM.	2
		(Each Includes)	
3	1M6119	NUT	1
	1M6120	BOLT	1
	9D3822	CABLE ASSEM.	1
		(Includes)	
▲	5P746	CABLE--345.44 cm(136 in.)	
4 ●	1M4986	TERMINAL--13.49 cm(.531 in.)	
●	1S7252	TERMINAL--10.31 cm(.41 in.)	1
	2G5836	CABLE ASSEM.	1
		(Includes)	
▲ 5	5P746	CABLE--127.5 cm(28.94 in.)	
	1M4986	TERMINAL	1
6	3D2098	TERMINAL ASSEM.	1
		(Includes)	
7	1M6119	BOLT	1
	1M6120	NUT	1
8	S509	BOLT	4
	5P1075	WASHER	4
	5M851	CABLE ASSEM.	1
		(Includes)	
▲ 9	5P746	CABLE--325.12 cm(128 in.)	
	1S7252	TERMINAL	1
10	3D2098	TERMINAL ASSEM.	1
		(Includes)	
11	1M6119	BOLT	1
	1M6120	NUT	1
12	4K6177	CLIP--(large)	2
13	8M2770	CLIP--(small)	4
14	1C569	BOLT	1
15	5P4116	WASHER	1
16	2G5009	BUSHING	4
17	2G8279	GUARD	2
18	5K8451	CLIP--(large)	2

▲ ORDER BY THE CENTIMETER

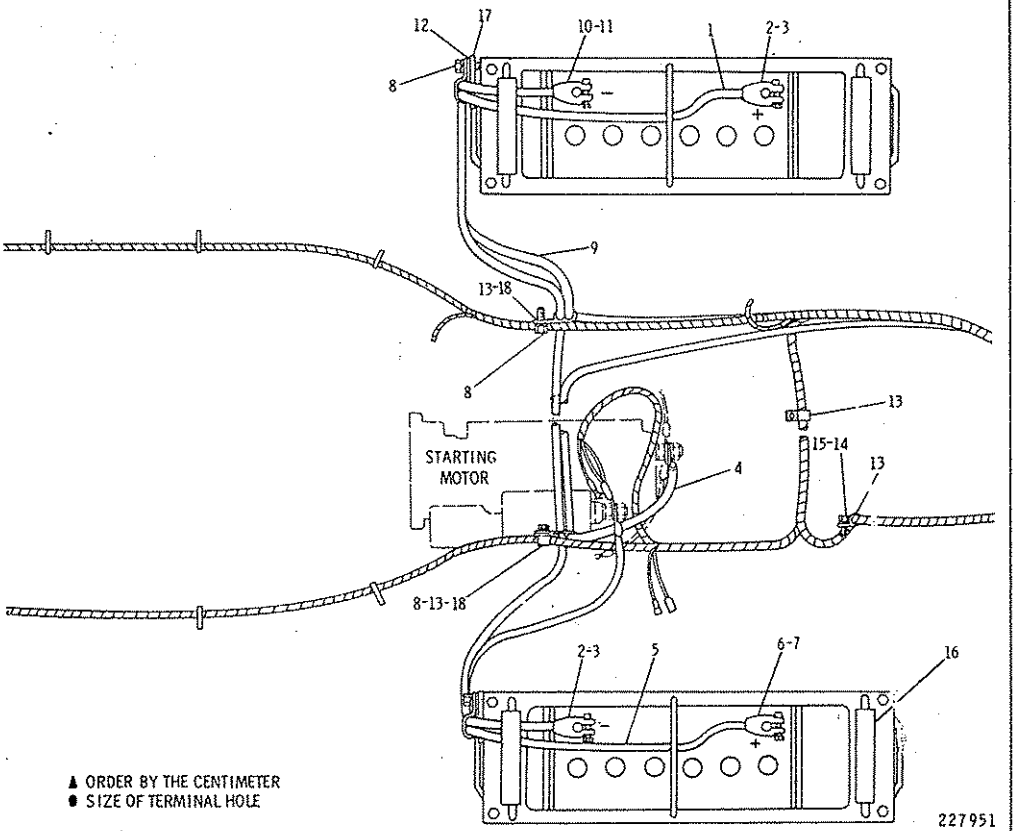

▲ ORDER BY THE CENTIMETER
● SIZE OF TERMINAL HOLE

2G7620 BATTERY AND WIRING GROUP—24 Volt—Part 3 of 5
Serial No. 87V5275 to 87V5733 Inclusive

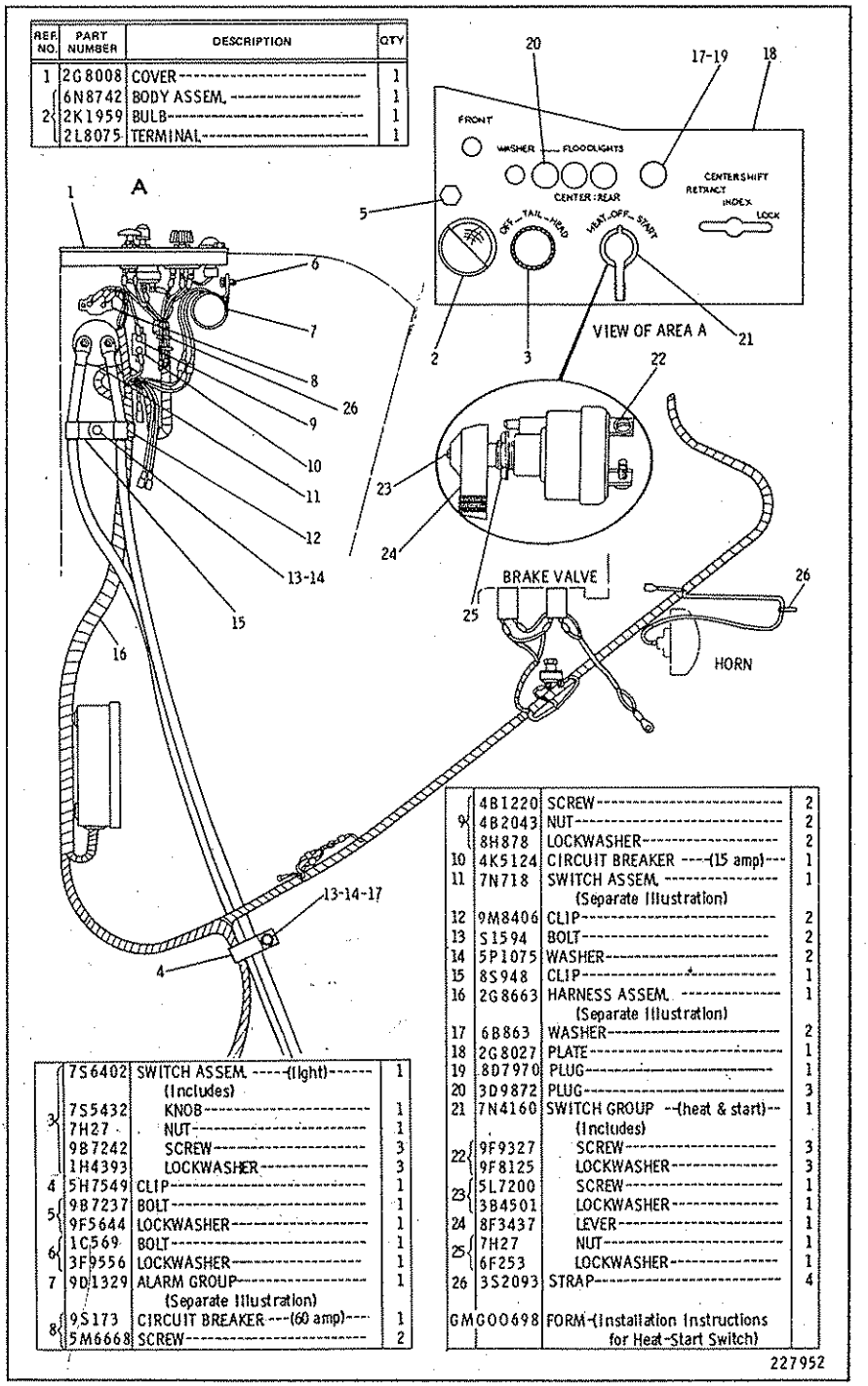

REF. NO.	PART NUMBER	DESCRIPTION	QTY
1	2G8008	COVER	1
2	6N8742	BODY ASSEM.	1
	2K1959	BULB	1
	2L8075	TERMINAL	1
3	7S6402	SWITCH ASSEM. -(light)- (Includes)	1
	7S5432	KNOB	1
	7H27	NUT	1
	9B7242	SCREW	3
	1H4393	LOCKWASHER	3
4	5H7549	CLIP	1
5	9B7237	BOLT	1
	9F5644	LOCKWASHER	1
6	1C569	BOLT	1
	3F9556	LOCKWASHER	1
7	9D1329	ALARM GROUP (Separate Illustration)	1
8	9S173	CIRCUIT BREAKER -(60 amp)	1
	5M6668	SCREW	2
9	4B1220	SCREW	2
	4B2043	NUT	2
	8H878	LOCKWASHER	2
10	4K5124	CIRCUIT BREAKER -(15 amp)	1
11	7N718	SWITCH ASSEM. (Separate Illustration)	1
12	9M8406	CLIP	2
13	S1594	BOLT	2
14	5P1075	WASHER	2
15	8S948	CLIP	1
16	2G8663	HARNESS ASSEM. (Separate Illustration)	1
17	6B863	WASHER	2
18	2G8027	PLATE	1
19	8D7970	PLUG	1
20	3D9872	PLUG	3
21	7N4160	SWITCH GROUP -(heat & start)- (Includes)	1
22	9F9327	SCREW	3
	9F8125	LOCKWASHER	3
23	5L7200	SCREW	1
	3B4501	LOCKWASHER	1
24	8F3437	LEVER	1
25	7H27	NUT	1
	6F253	LOCKWASHER	1
26	3S2093	STRAP	4
GMG00698		FORM -(Installation Instructions for Heat-Start Switch)	

227952

2G7620 BATTERY AND WIRING GROUP—24 Volt—Part 4 of 5
Serial No. 87V5275 to 87V5733 Inclusive. 9D1329 Alarm, 7N718 Switch and 2G8663 Harness parts are shown on Pages 98H, 99, 100 & 101

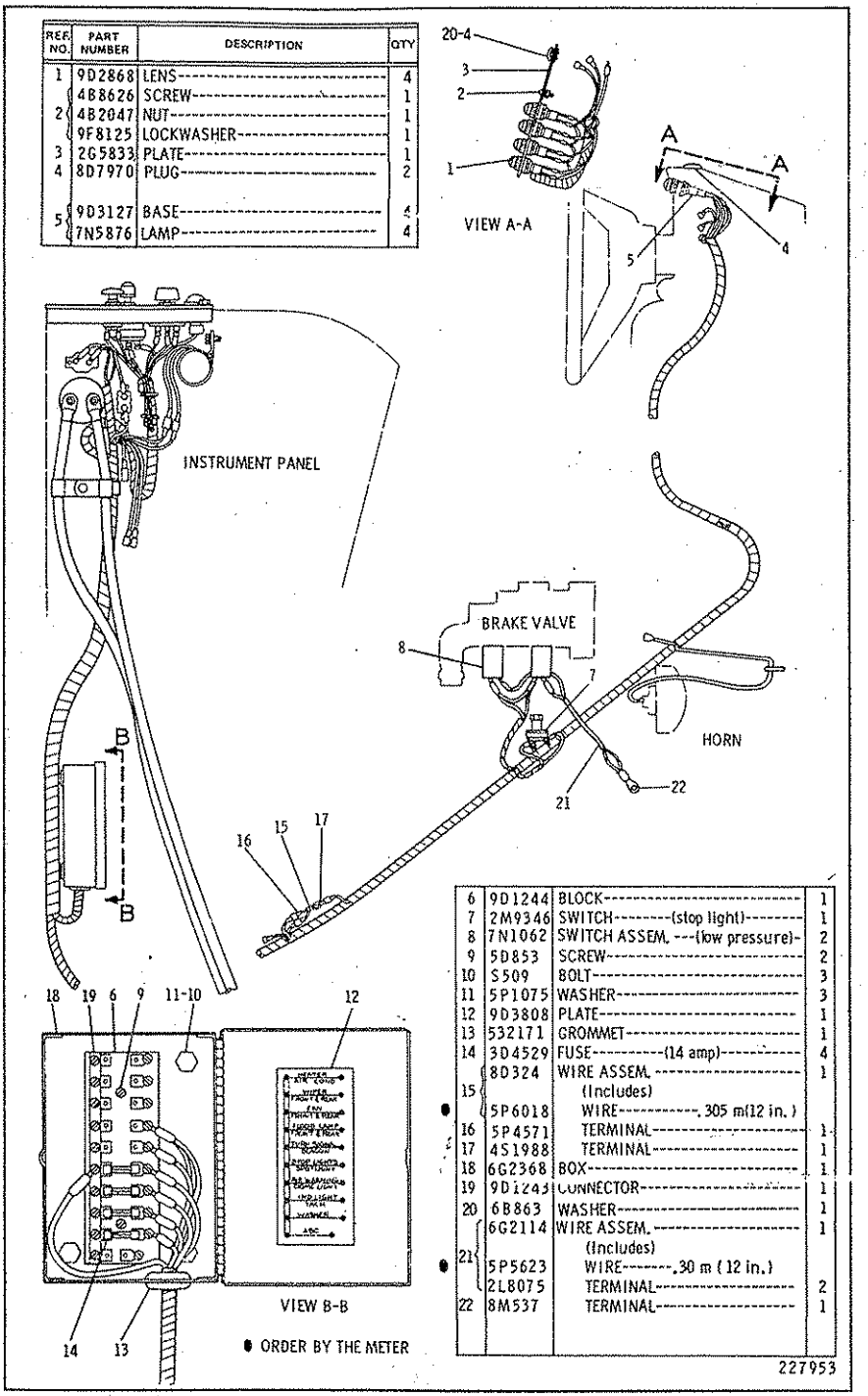

REF. NO.	PART NUMBER	DESCRIPTION	QTY
1	9D2868	LENS	4
	4B8626	SCREW	1
2	4B2047	NUT	1
	9F8125	LOCKWASHER	1
3	2G5833	PLATE	1
4	8D7970	PLUG	2
5	9D3127	BASE	4
	7N5876	LAMP	4

6	9D1244	BLOCK	1
7	2M9346	SWITCH--(stop light)	1
8	7N1062	SWITCH ASSEM. --(low pressure)	2
9	5D853	SCREW	2
10	S509	BOLT	3
11	5P1075	WASHER	3
12	9D3808	PLATE	1
13	532171	GROMMET	1
14	3D4529	FUSE--(14 amp)	4
15	8D324	WIRE ASSEM. (Includes)	1
•	5P6018	WIRE--, 305 m(12 in.)	
16	5P4571	TERMINAL	1
17	4S1988	TERMINAL	1
18	6G2368	BOX	1
19	9D1243	CONNECTOR	1
20	6B863	WASHER	1
21	6G2114	WIRE ASSEM. (Includes)	1
•	5P5623	WIRE--, 30 m (12 in.)	
	2L8075	TERMINAL	2
22	8M537	TERMINAL	1

227953

2G7620 BATTERY AND WIRING GROUP—24 Volt—Part 5 of 5
Serial No. 87V5275 to 87V5733 Inclusive

6G5420 BATTERY AND WIRING GROUP—24 Volt—Part 1 of 5
Serial No. 87V5734—Up

REF NO.	PART NUMBER	DESCRIPTION	QTY.
	2G6365	CABLE ASSEM.	1
1		(Includes)	
●	5P746	CABLE---285 cm(112.20 in.)	
	3D2098	TERMINAL ASSEM.	2
2		(Each Includes)	
	1M6119	BOLT	1
	1M6120	NUT	1
	5M851	CABLE ASSEM.	1
		(Includes)	
● 3	5P746	CABLE---325.12 cm(128 in.)	
	1M4968	TERMINAL	1
	3D2098	TERMINAL ASSEM.	1
4		(Includes)	
	1M6119	BOLT	1
	1M6120	NUT	1
	9D3822	CABLE ASSEM.	1
		(Includes)	
●	5P746	CABLE--345.44 cm(135 in.)	
■ 5	1M4986	TERMINAL--12.7 cm(.50 in.)-	1
■	1S7252	TERMINAL---9.52 cm(.375 in.)-	1
	2G5836	CABLE ASSEM.	1
6		(Includes)	
●	5P746	CABLE--130 cm(51.20 in.)	
7	3D2098	TERMINAL ASSEM.	1
		(Includes)	
	1M6119	BOLT	1
8	1M6120	NUT	1
9	3S2093	STRAP	3
	4K6177	CLIP	2
10	2G8279	GUARD	2
	S509	BOLT	2
11	5M2894	WASHER	2
12	2G5009	BUSHING	4
	9G8010	SWITCH ASSEM. ---(pressure)----	1
13	3B6768	BUSHING	1

● ORDER BY THE CENTIMETER ■ SIZE OF TERMINAL HOLE

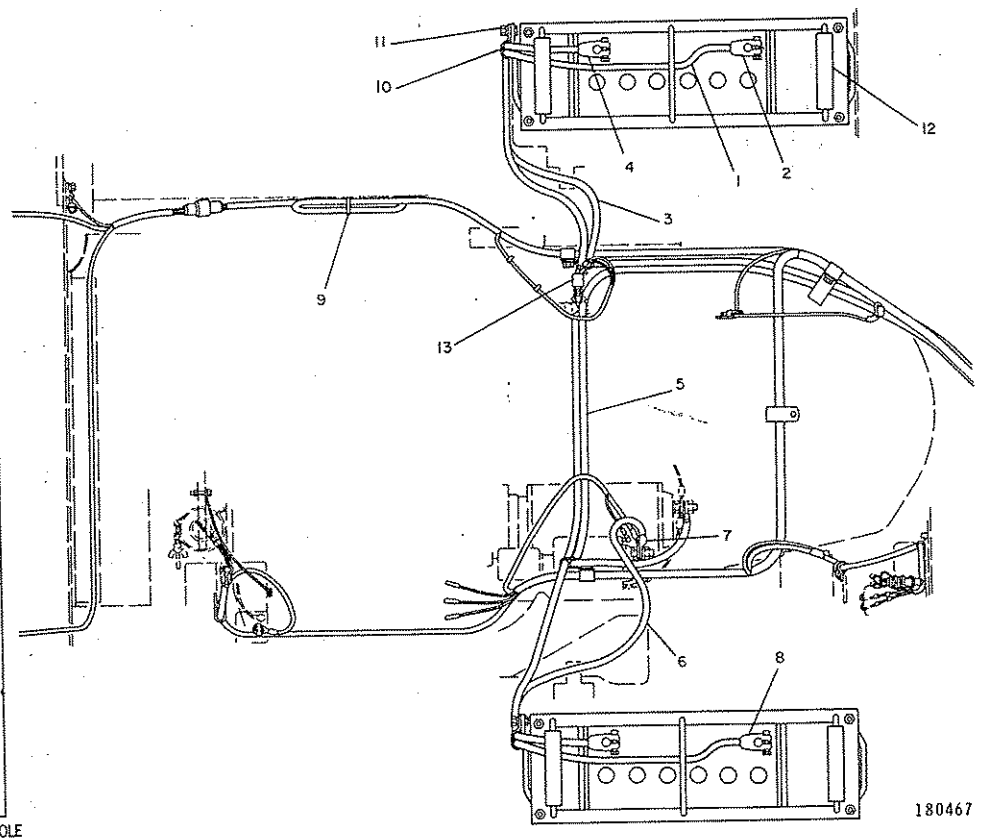

REF. NO.	PART NUMBER	DESCRIPTION	QTY.
1	8M2772	CLIP	1
2	6G3472	HARNESS ASSEM. (Separate Illustration)	1

14	9G4358	LAMP GROUP----(stop & tail)----- (Each Includes)	2
	342535	BULB	1
	7N9738	HOUSING	1
	7N7779	SOCKET	1
	7N7780	PIN	1

3	9M4995	CLIP----1.9 cm(.75 in.)wide	2
4	5K8451	CLIP---2.54 cm(1 in.)wide	3
5	S509	BOLT	2
6	5M2894	WASHER	8
C 7	3S2093	STRAP	2
8	6G3697	PLATE	2
9	6G7021	BRACKET	2
10	6V2687	SCREW	12

C INDICATES CHANGE

11	9F8125	LOCKWASHER	12
12	L1351	BOLT	4
13	9G9150	CLIP	2
	S1588	BOLT	2
	1D4717	NUT	2

	7D8714	THE FOLLOWING REPAIR KIT IS AVAILABLE FOR STOP&TAIL LAMP: KIT------(Lens)------ (Includes Gasket, Screw and Lens)	1

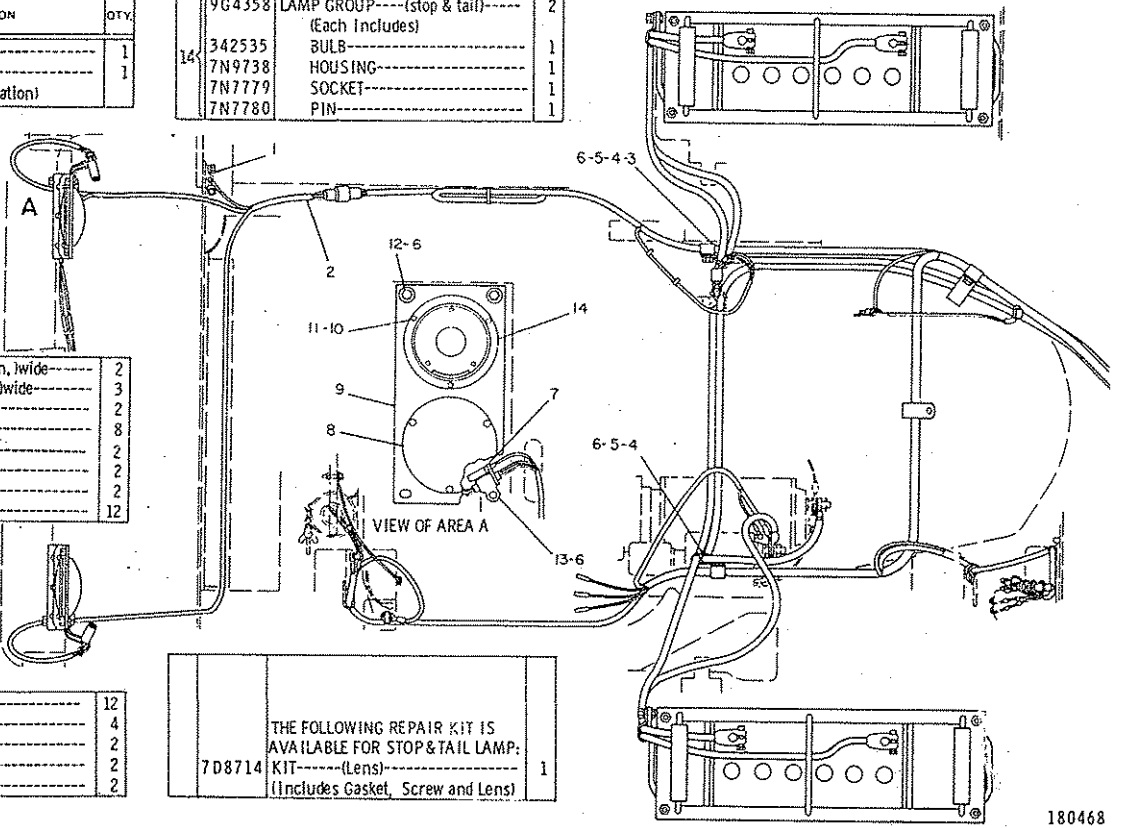

6G5420 BATTERY AND WIRING GROUP—24 Volt—Part 2 of 5
Serial No. 87V5734—Up
6G3472 Harness parts are shown on Page 101C

6G5420 BATTERY AND WIRING GROUP—24 Volt—Part 3 of 5
Serial No. 87V5734—Up

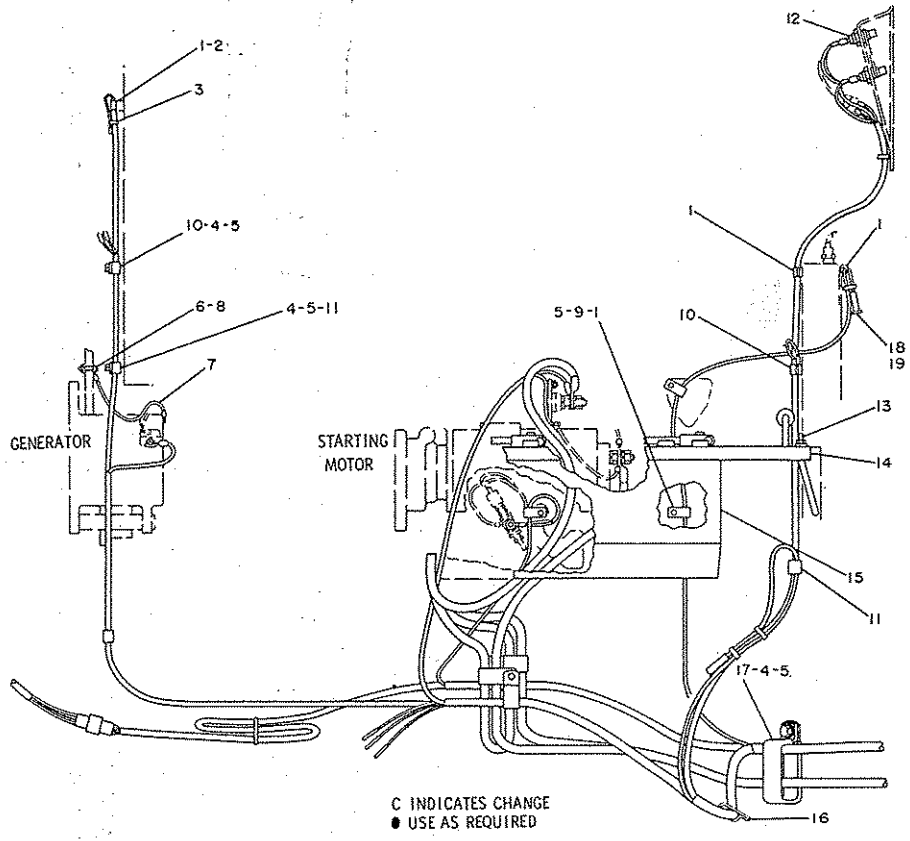

C INDICATES CHANGE
● USE AS REQUIRED

	REF. NO.	PART NUMBER	DESCRIPTION	QTY.
C	1	4D7794	CLIP	4
	2	302135	BOLT	1
		9M1974	WASHER	1
	3	3S2093	STRAP	1
C	4	S509	BOLT	3
C	5	5M2894	WASHER	4
	6	S1616	BOLT	1
		1B4330	NUT	1
		1H3338	LOCKWASHER	1
		5P537	WASHER	1
	7	6G9088	WIRE ASSEM. (Includes)	1
▲		5P5622	WIRE--.33 m(13 in.)	
		2L8066	TERMINAL-----(No. 10 screw)-	1
	8	6B2864	TERMINAL--(No. 25 screw)---	1
	9	T102	BOLT	1
C	10	8M2770	CLIP	2
C	11	9M4995	CLIP	1
	12	7G9730	LAMP ASSEM.	2
		8D1429	BULB	2
		6G7134	SPACER	2
	13	2G2537	U-BOLT	4
		2K4973	LOCKNUT	8
		4B4278	WASHER	8
	14	2G4914	HOLDDOWN ASSEM.	2
	15	7N7200	BATTERY (Each Includes)	2
		9G9383	VENT ASSEM.	6
C	16	5K8451	CLIP	2
C	17	4D6463	CLIP	1
C●	18	5P8133	CAP	1
C●	19	5P8134	CAP	1

▲ ORDER BY THE METER

180469

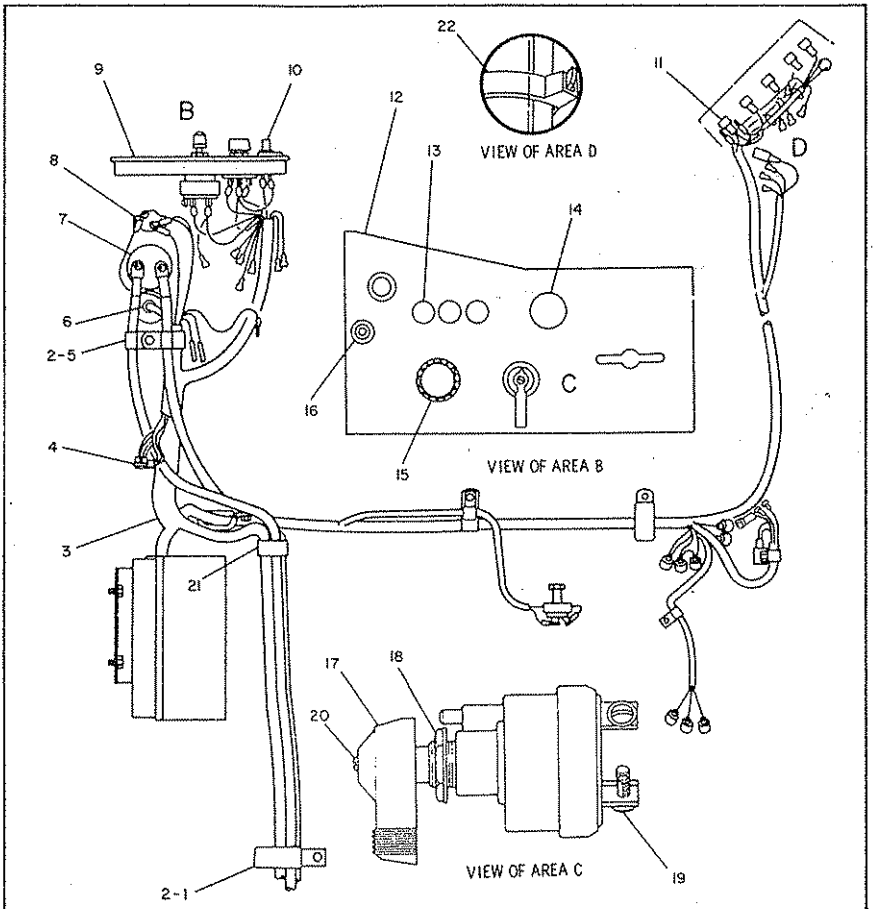

REF NO.	PART NUMBER	DESCRIPTION	QTY.
C	4D6463	CLIP	1
1	1S1590	BOLT	1
	6G2263	SPACER	1
2	5M2894	WASHER	2
3	6G5417	HARNESS ASSEM. (Separate Illustration)	1
4	3K8909	LOCKWASHER	1
5	9M8406	CLIP--(short)	2
	5P7854	CLIP--(long)	1
	1S1594	BOLT	1
C 6	2D388	GROMMET	1
7	7N718	SWITCH ASSEM. --(disconnect) (Separate Illustration)	1
8	9S173	CIRCUIT BREAKER--(60 amp)	1
	5M6668	SCREW	2
9	6G5415	COVER	1
10	7G9730	LAMP ASSEM.	1
	8D1429	BULB	1
	6G7134	SPACER	1
11	6G6394	HOUSING	7
12	6G5413	PLATE	1

13	3D9872	PLUG	3
14	8D7970	PLUG	1
	6B863	WASHER	1
15	7S6402	SWITCH ASSEM. ---(light) (Includes)	1
	7S5432	KNOB	1
	7H27	NUT	1
	9B7242	SCREW	3
	1H4393	LOCKWASHER	3
16	6J488	SCREW	1
17	7N4160	SWITCH GROUP--(heat-start) (Includes)	1
	8F3437	LEVER	1
18	7H27	NUT	1
	6F253	LOCKWASHER	1
19	9F9327	SCREW	3
	9F8125	LOCKWASHER	3
20	5L7200	SCREW	1
	3B4501	LOCKWASHER	1
21	4D6463	CLIP	1
C 22	3S2093	STRAP	2

C INDICATES CHANGE

180470

6G5420 BATTERY AND WIRING GROUP—24 Volt—Part 4 of 5
Serial No. 87V5734—Up. 7N718 Switch and 6G5417 Harness parts are shown on Pages 99, 101A & 101B

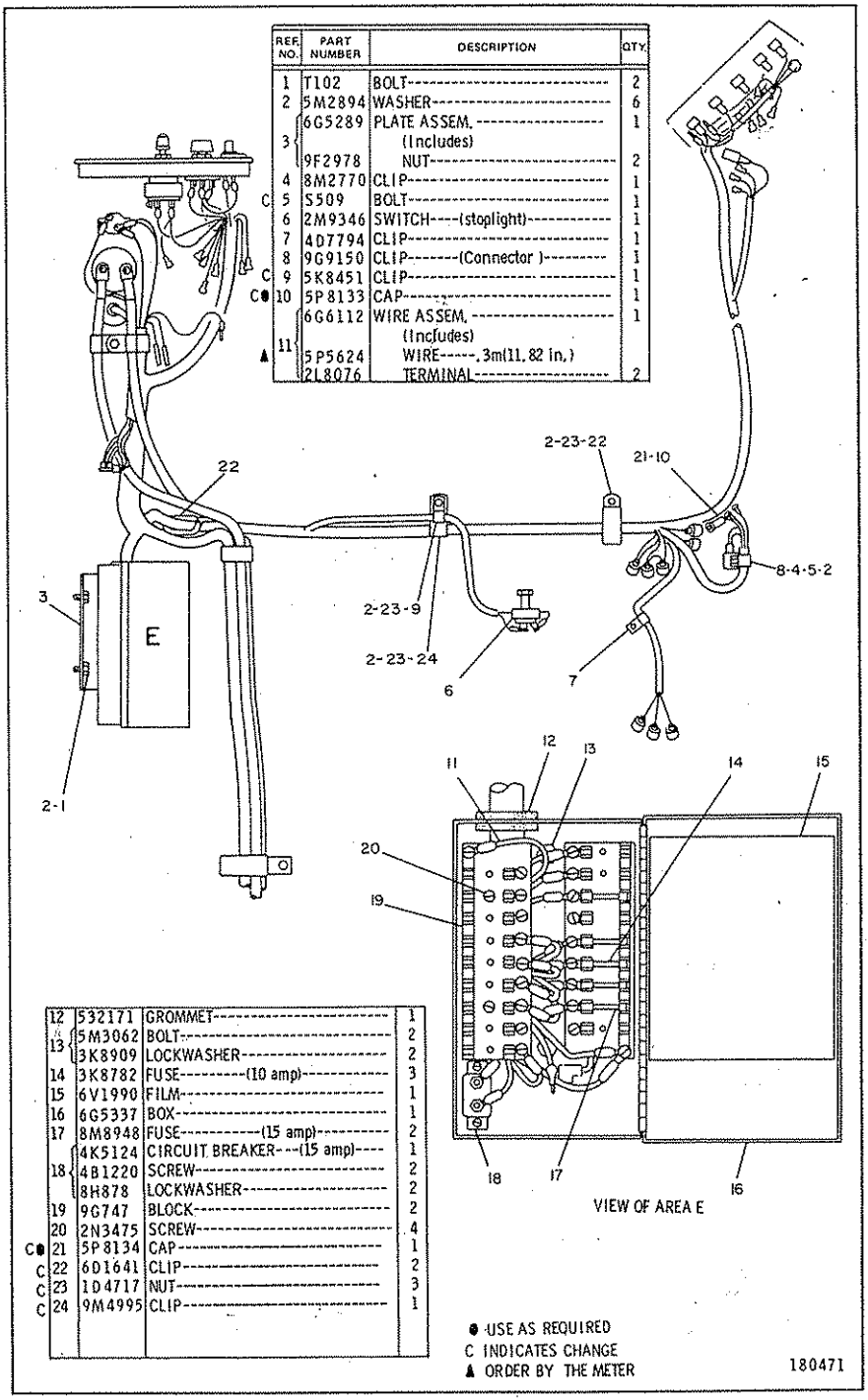

REF. NO.	PART NUMBER	DESCRIPTION	QTY.
1	T102	BOLT	2
2	5M2894	WASHER	6
3	6G5289	PLATE ASSEM. (Includes)	1
	9F2978	NUT	2
4	8M2770	CLIP	1
C 5	S509	BOLT	1
6	2M9346	SWITCH----(stoplight)	1
7	4D7794	CLIP	1
8	9G9150	CLIP-------(Connector)	1
C 9	5K8451	CLIP	1
C● 10	5P8133	CAP	1
▲ 11	6G6112	WIRE ASSEM. (Includes)	1
	5P5624	WIRE-----, 3m(11.82 in.)	
	2L8076	TERMINAL	2

12	5S2171	GROMMET	1
13	5M3062	BOLT	2
	3K8909	LOCKWASHER	2
14	3K8782	FUSE----------(10 amp)	3
15	6V1990	FILM	1
16	6G5337	BOX	1
17	8M8948	FUSE----------(15 amp)	2
	4K5124	CIRCUIT BREAKER---(15 amp)	1
18	4B1220	SCREW	2
	8H878	LOCKWASHER	2
19	9G747	BLOCK	2
20	2N3475	SCREW	4
C● 21	5P8134	CAP	1
C 22	6D1641	CLIP	2
C 23	1D4717	NUT	3
C 24	9M4995	CLIP	1

● USE AS REQUIRED
C INDICATES CHANGE
▲ ORDER BY THE METER

180471

6G5420 BATTERY AND WIRING GROUP—24 Volt—Part 5 of 5
Serial No. 87V5734—Up

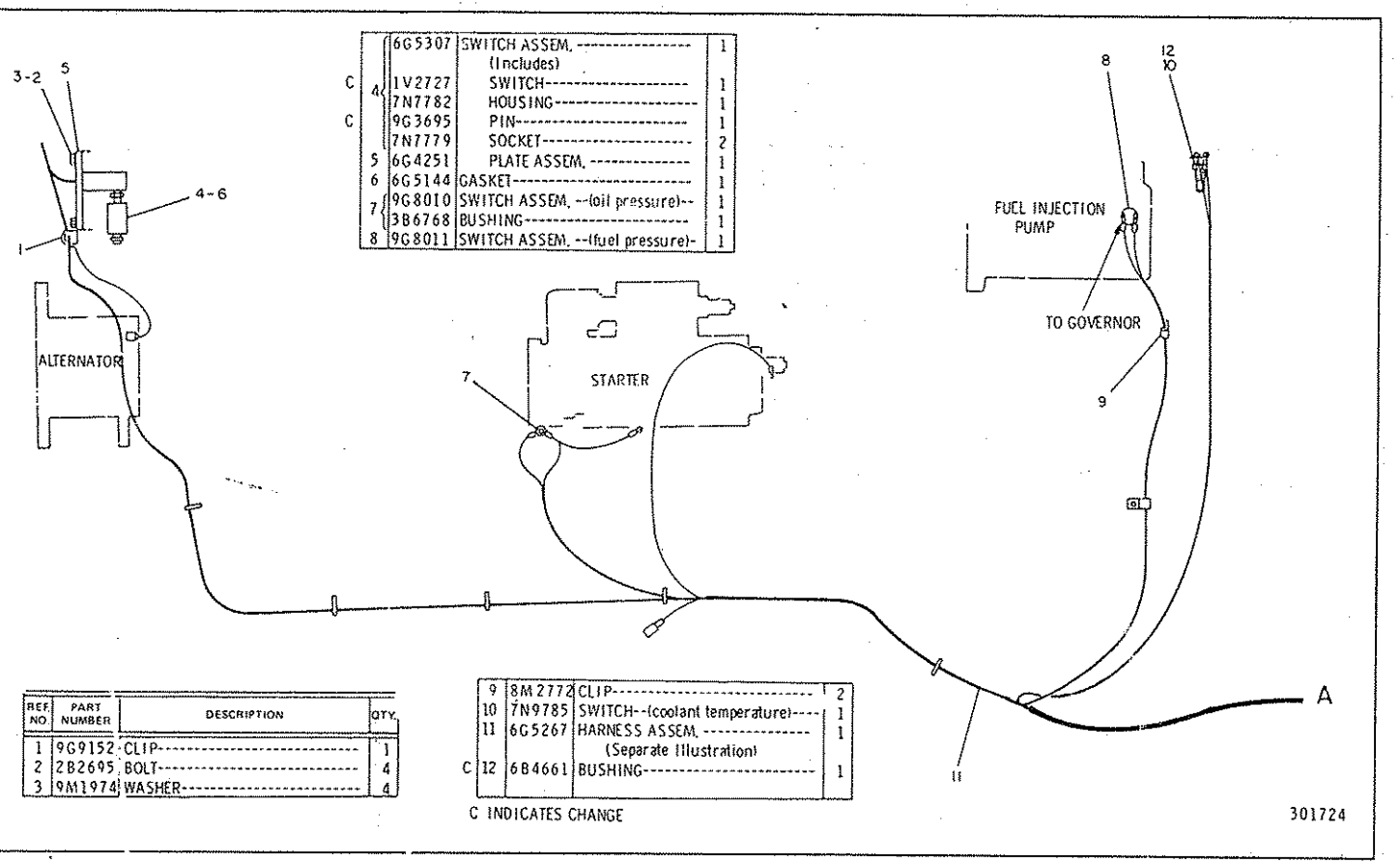

C	4	6G5307	SWITCH ASSEM. (Includes)	1
C		1V2727	SWITCH	1
		7N7782	HOUSING	1
C		9G3695	PIN	1
		7N7779	SOCKET	2
	5	6G4251	PLATE ASSEM.	1
	6	6G5144	GASKET	1
	7	9G8010	SWITCH ASSEM. --(oil pressure)--	1
		3B6768	BUSHING	1
	8	9G8011	SWITCH ASSEM. --(fuel pressure)-	1

REF. NO.	PART NUMBER	DESCRIPTION	QTY.
1	9G9152	CLIP	1
2	2B2695	BOLT	4
3	9M1974	WASHER	4

	9	8M2772	CLIP	2
	10	7N9785	SWITCH--(coolant temperature)--	1
	11	6G5267	HARNESS ASSEM. (Separate Illustration)	1
C	12	6B4661	BUSHING	1

C INDICATES CHANGE

6G5310 MONITOR WIRING GROUP—Part 1
Serial No. 87V5734 to 87V5773 inclusive
6G5267 Harness parts are shown on Page 101D

6G5310 MONITOR WIRING GROUP—Part 2
Serial No. 87V5734 to 87V5773 inclusive
7G8994 Alarm parts are shown on Page 99

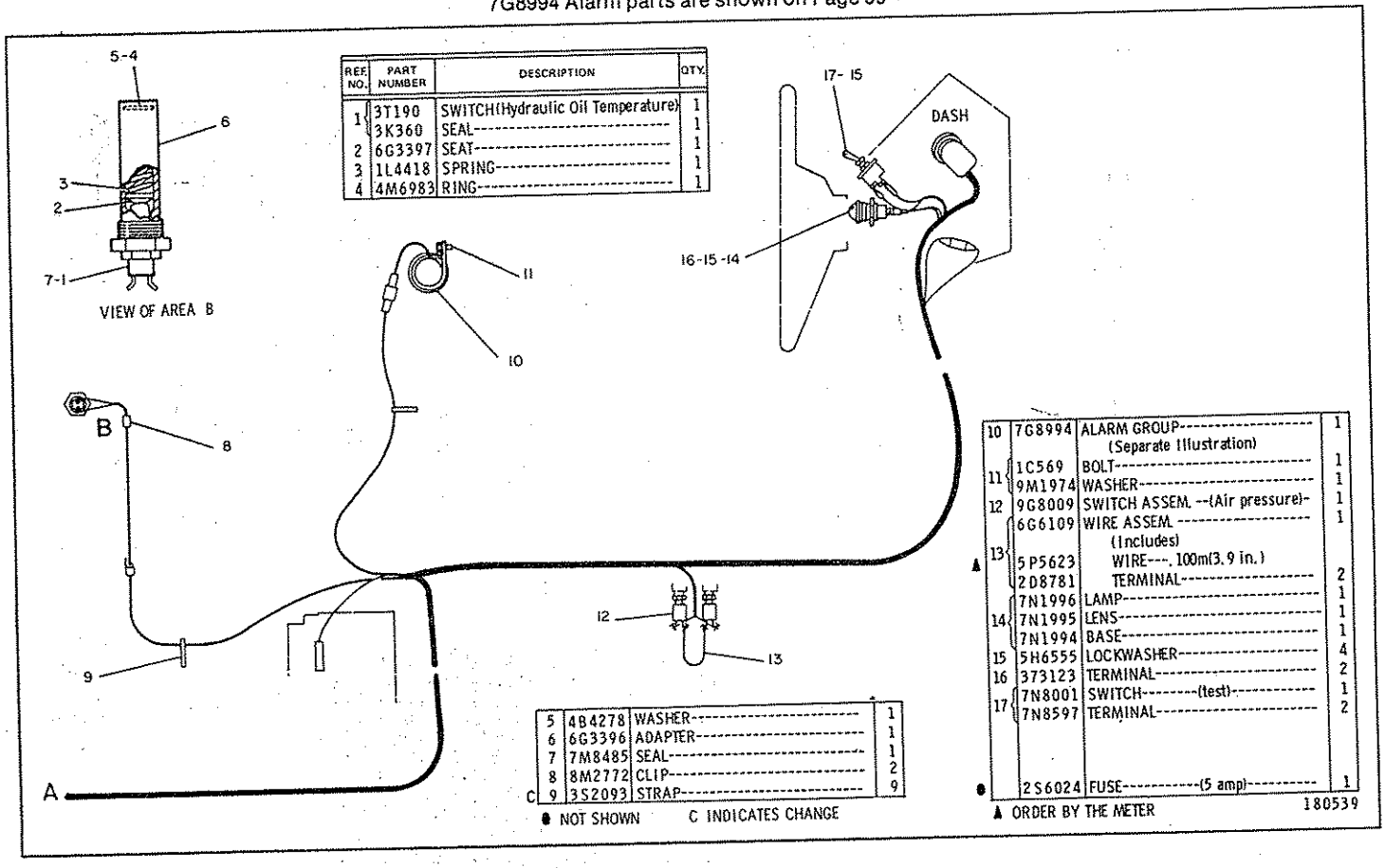

REF. NO.	PART NUMBER	DESCRIPTION	QTY.
1	3T190	SWITCH(Hydraulic Oil Temperature)	1
	3K360	SEAL	1
2	6G3397	SEAT	1
3	1L4418	SPRING	1
4	4M6983	RING	1

5	4B4278	WASHER	1
6	6G3396	ADAPTER	1
7	7M8485	SEAL	1
8	8M2772	CLIP	2
C 9	3S2093	STRAP	9

● NOT SHOWN C INDICATES CHANGE

10	7G8994	ALARM GROUP (Separate Illustration)	1
11	1C569	BOLT	1
	9M1974	WASHER	1
12	9G8009	SWITCH ASSEM. --(Air pressure)-	1
▲ 13	6G6109	WIRE ASSEM. (Includes)	1
	5P5623	WIRE---. 100m(3.9 in.)	
	2D8781	TERMINAL	2
14	7N1996	LAMP	1
	7N1995	LENS	1
	7N1994	BASE	1
15	5H6555	LOCKWASHER	4
16	373123	TERMINAL	2
17	7N8001	SWITCH--------(test)	1
	7N8597	TERMINAL	2
●	2S6024	FUSE----------(5 amp)	1

▲ ORDER BY THE METER

180539

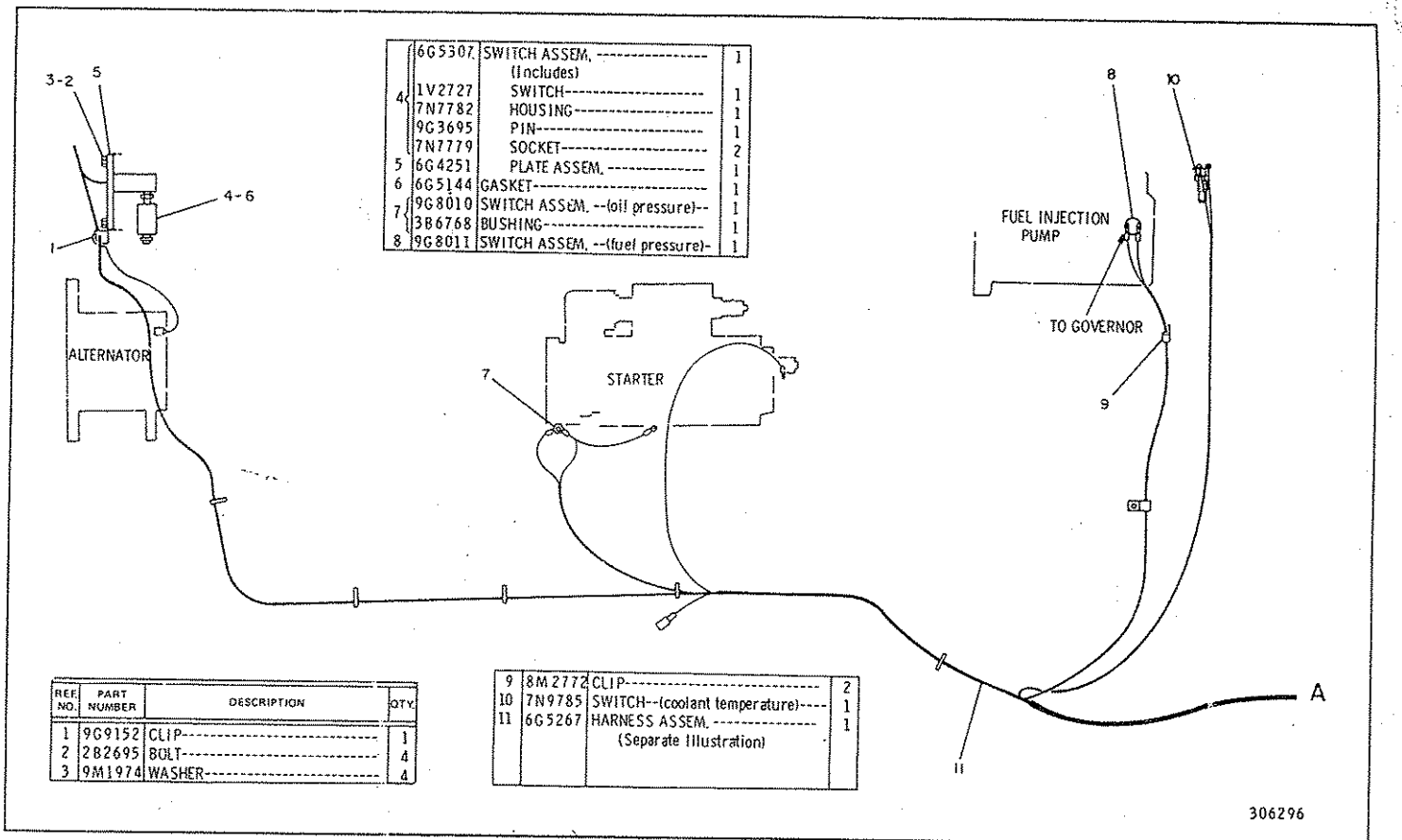

4	6G5307	SWITCH ASSEM. (Includes)	1
	1V2727	SWITCH	1
	7N7782	HOUSING	1
	9G3695	PIN	1
	7N7779	SOCKET	2
5	6G4251	PLATE ASSEM.	1
6	6G5144	GASKET	1
7	9G8010	SWITCH ASSEM. --(oil pressure)--	1
	3B6768	BUSHING	1
8	9G8011	SWITCH ASSEM. --(fuel pressure)-	1

REF. NO.	PART NUMBER	DESCRIPTION	QTY.
1	9G9152	CLIP	1
2	2B2695	BOLT	4
3	9M1974	WASHER	4

9	8M2772	CLIP	2
10	7N9785	SWITCH--(coolant temperature)	1
11	6G5267	HARNESS ASSEM. (Separate Illustration)	1

6G5310 MONITOR WIRING GROUP—Part 1
Serial No. 87V5774 to 87V6730 inclusive
6G5267 Harness parts are shown on Page 101D

6G5310 MONITOR WIRING GROUP—Part 2
Serial No. 87V5774 to 87V6730 inclusive
7G8994 Alarm parts are shown on Page 99

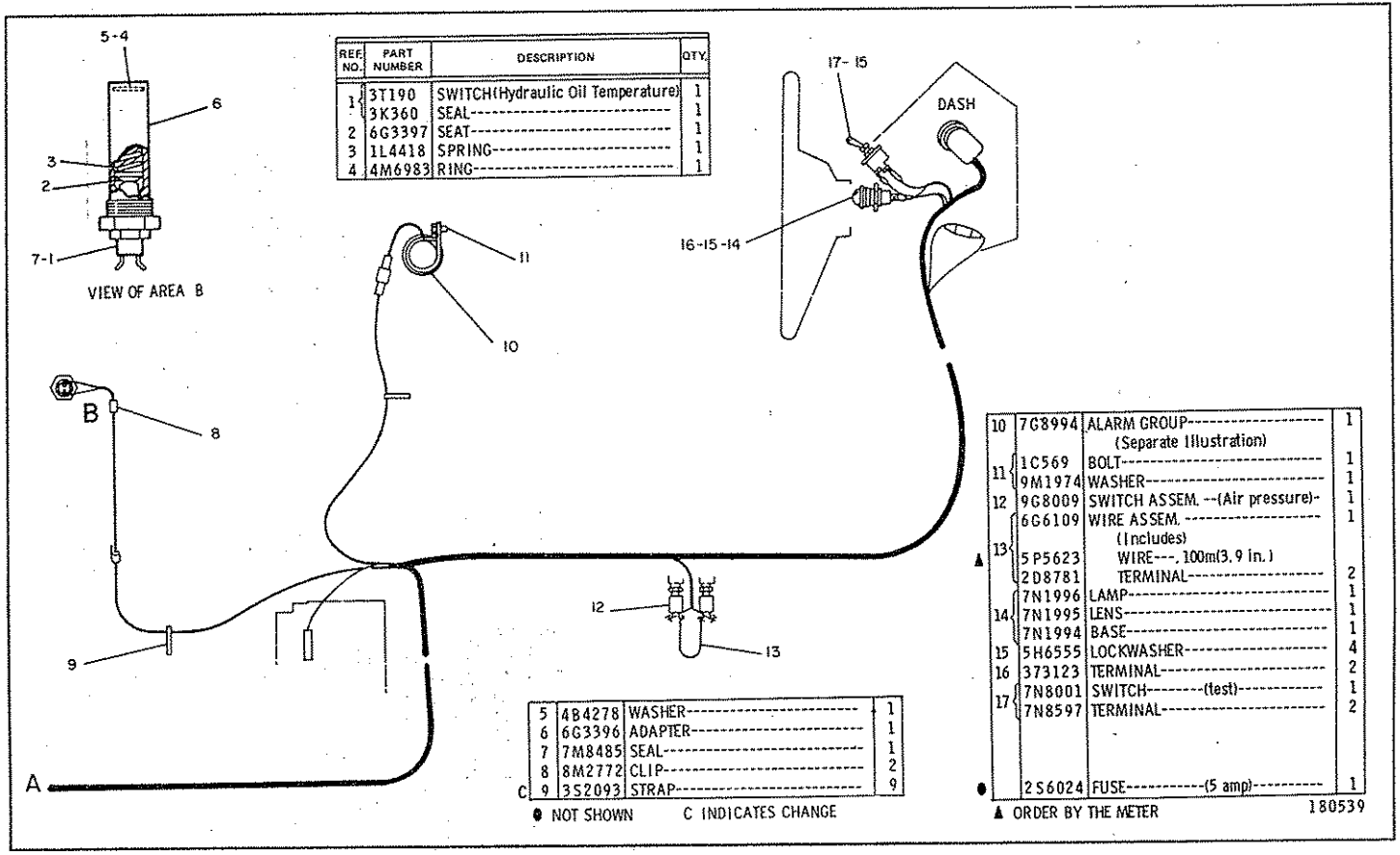

REF. NO.	PART NUMBER	DESCRIPTION	QTY.
1	3T190	SWITCH(Hydraulic Oil Temperature)	1
	3K360	SEAL	1
2	6G3397	SEAT	1
3	1L4418	SPRING	1
4	4M6983	RING	1
5	4B4278	WASHER	1
6	6G3396	ADAPTER	1
7	7M8485	SEAL	1
8	8M2772	CLIP	2
C 9	3S2093	STRAP	9
10	7G8994	ALARM GROUP (Separate Illustration)	1
11	1C569	BOLT	1
	9M1974	WASHER	1
12	9G8009	SWITCH ASSEM. --(Air pressure)-	1
▲ 13	6G6109	WIRE ASSEM. (Includes)	1
	5P5623	WIRE---, 100m(3.9 in.)	
	2D8781	TERMINAL	2
14	7N1996	LAMP	2
	7N1995	LENS	1
	7N1994	BASE	1
15	5H6555	LOCKWASHER	4
16	373123	TERMINAL	2
17	7N8001	SWITCH--------(test)----------	1
	7N8597	TERMINAL	2
●	2S6024	FUSE----------(5 amp)----------	1

● NOT SHOWN C INDICATES CHANGE ▲ ORDER BY THE METER

180539

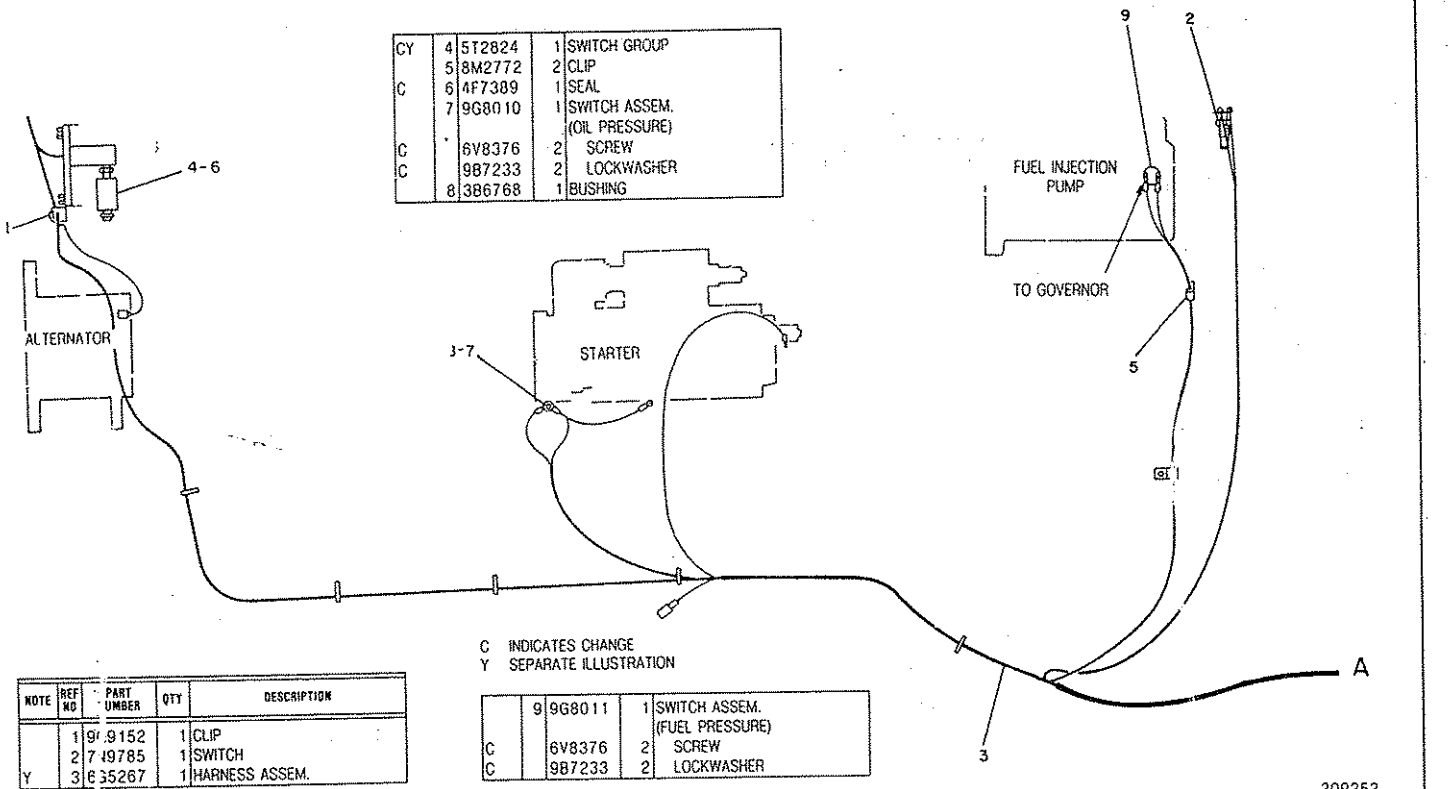

CY	4	5T2824	1	SWITCH GROUP
	5	8M2772	2	CLIP
C	6	4F7389	1	SEAL
	7	9G8010	1	SWITCH ASSEM. (OIL PRESSURE)
C		6V8376	2	SCREW
C		9B7233	2	LOCKWASHER
	8	3B6768	1	BUSHING

C INDICATES CHANGE
Y SEPARATE ILLUSTRATION

NOTE	REF NO	PART NUMBER	QTY	DESCRIPTION
	1	9[illegible]9152	1	CLIP
	2	7[illegible]9785	1	SWITCH
Y	3	6[illegible]5267	1	HARNESS ASSEM.

	9	9G8011	1	SWITCH ASSEM. (FUEL PRESSURE)
C		6V8376	2	SCREW
C		9B7233	2	LOCKWASHER

6G5310 MONITOR WIRING GROUP—Part 1
Serial No. 87V6731 to 87V6870 & 87V6872 to 87V6876 inclusive
5T2824 Switch & 6G5267 Harness parts are shown on Pages 98L & 101D

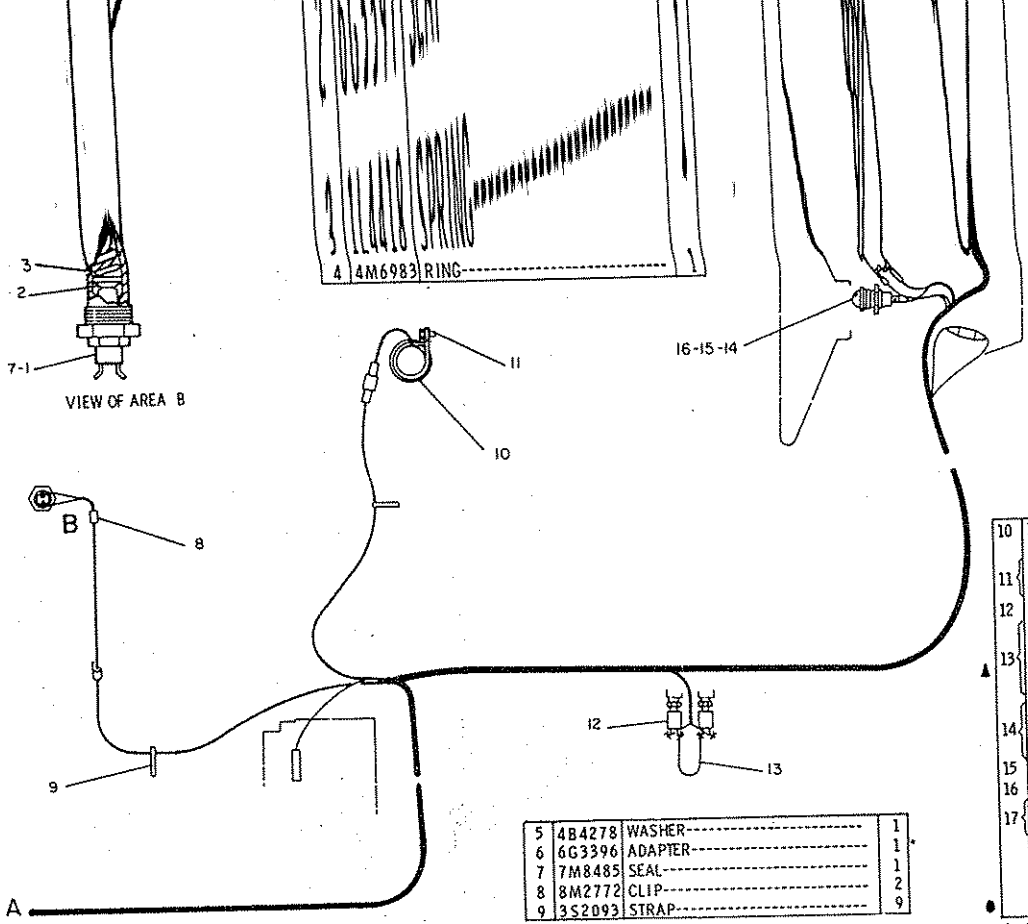

4	4M6983	RING	1

5	4B4278	WASHER	1
6	6G3396	ADAPTER	1
7	7M8485	SEAL	1
8	8M2772	CLIP	2
9	3S2093	STRAP	9

● NOT SHOWN

10	7G8994	ALARM GROUP (Separate Illustration)	1
11	1C569	BOLT	1
	9M1974	WASHER	1
12	9G8009	SWITCH ASSEM. --(Air pressure)-	1
▲ 13	6G6109	WIRE ASSEM. (Includes)	1
	5P5623	WIRE---. 100m(3.9 in.)	
	2D8781	TERMINAL	2
14	7N1996	LAMP	2
	7N1995	LENS	1
	7N1994	BASE	1
15	5H6555	LOCKWASHER	4
16	373123	TERMINAL	2
17	7N8001	SWITCH---------(test)----------	1
	7N8597	TERMINAL	2
●	2S6024	FUSE----------(5 amp)----------	1

▲ ORDER BY THE METER

308898

CATERPILLAR 120G MOTOR GRADER

CY	4	5T2824	1	SWITCH GROUP
	5	8M2772	2	CLIP
	6	4F7389	1	SEAL
	7	9G8010	1	SWITCH ASSEM. (OIL PRESSURE)
		6V8376	2	SCREW
		9B7233	2	LOCKWASHER
	8	3B6768	1	BUSHING

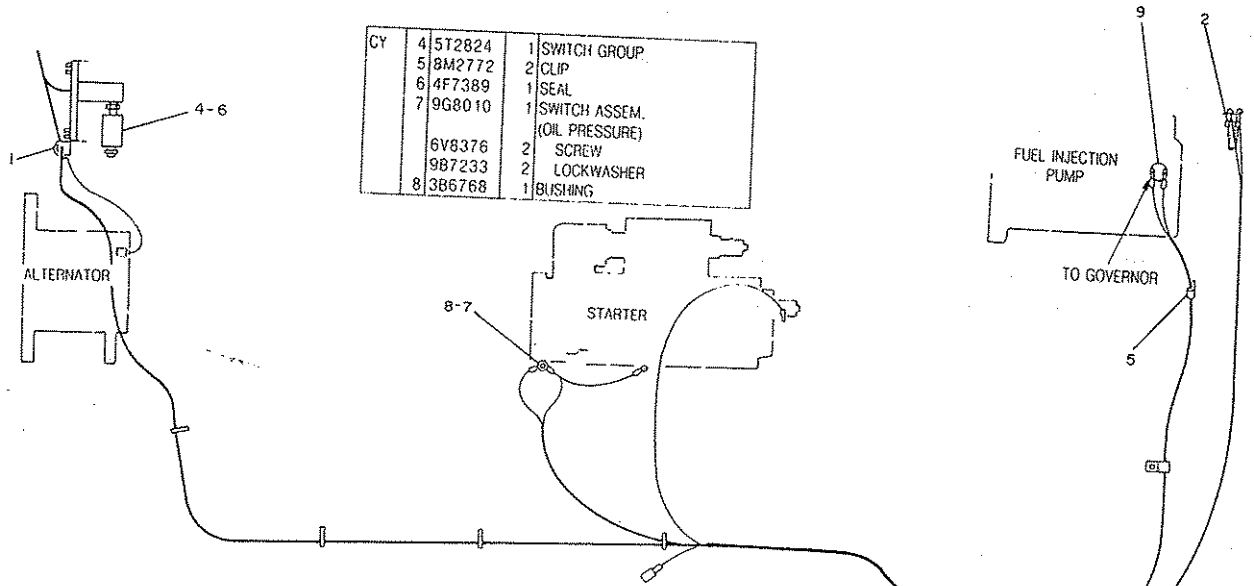

NOTE	REF NO	PART NUMBER	QTY	DESCRIPTION

C INDICATES CHANGE
Y SEPARATE ILLUSTRATION

6G5310 MONITOR WIRING GROUP—Part 2
Serial No. 87V6871 & 87V6877—Up
7G8994 Alarm parts are shown on Page 99

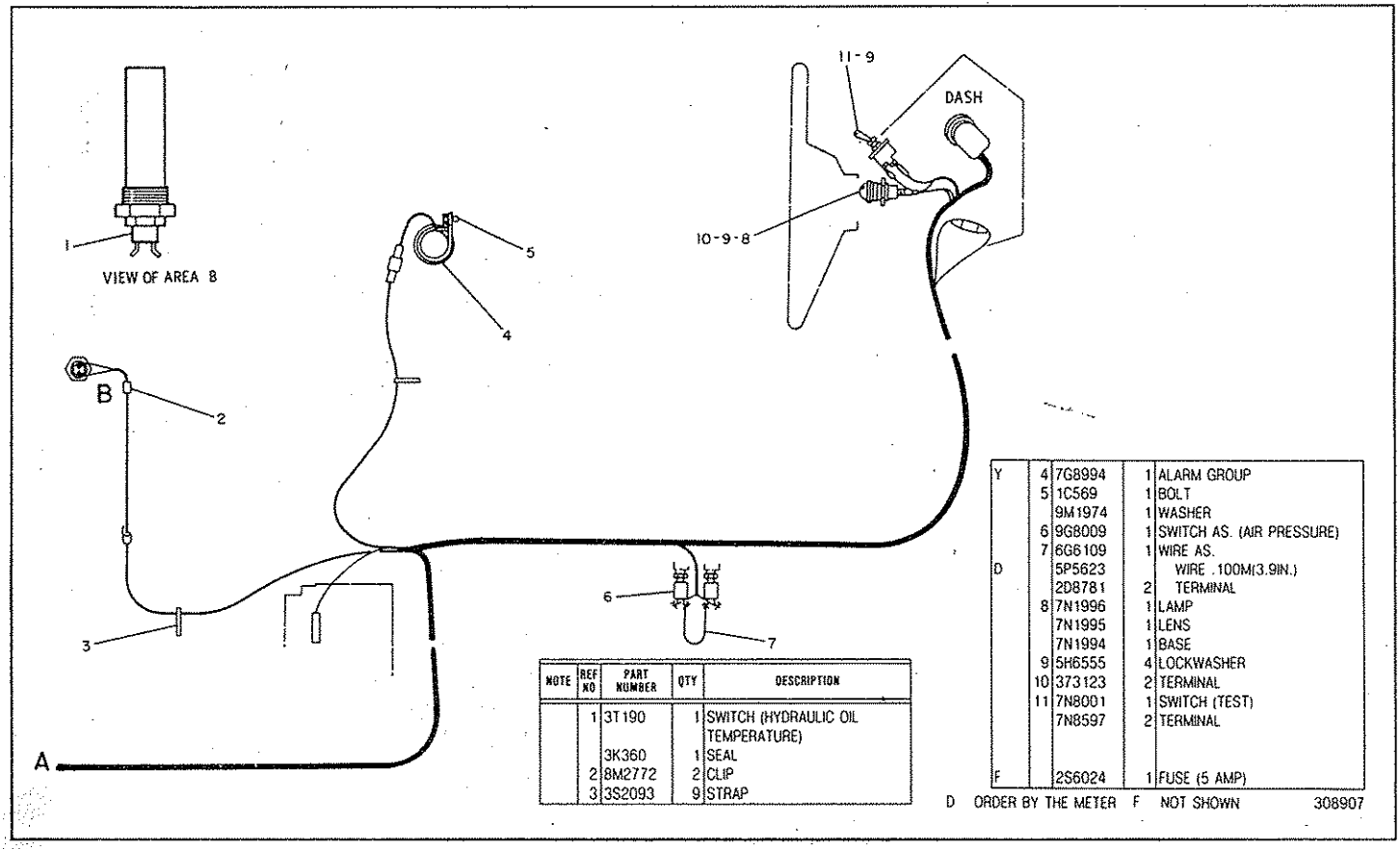

NOTE	REF NO	PART NUMBER	QTY	DESCRIPTION
	1	3T190	1	SWITCH (HYDRAULIC OIL TEMPERATURE)
		3K360	1	SEAL
	2	8M2772	2	CLIP
	3	3S2093	9	STRAP

Y	4	7G8994	1	ALARM GROUP
	5	1C569	1	BOLT
		9M1974	1	WASHER
	6	9G8009	1	SWITCH AS. (AIR PRESSURE)
	7	6G6109	1	WIRE AS.
D		5P5623		WIRE .100M(3.9IN.)
		2D8781	2	TERMINAL
	8	7N1996	1	LAMP
		7N1995	1	LENS
		7N1994	1	BASE
	9	5H6555	4	LOCKWASHER
	10	373123	2	TERMINAL
	11	7N8001	1	SWITCH (TEST)
		7N8597	2	TERMINAL
F		2S6024	1	FUSE (5 AMP)

D ORDER BY THE METER F NOT SHOWN 308907

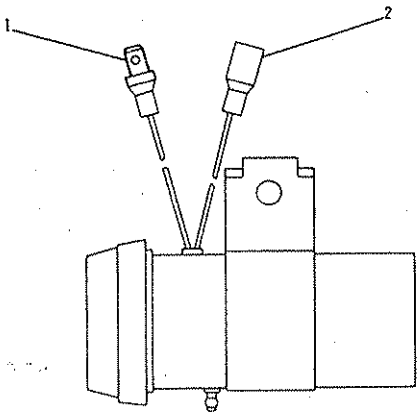

REF. NO	PART NUMBER	DESCRIPTION	QTY
1	4S1988	CONNECTOR-------(male +)--------	1
2	5P4571	TERMINAL---------(female -)------	1

218013

9D1329 ALARM GROUP
Serial No. 87V5275 to 87V5733 inclusive
Part of 2G7620 Battery and Wiring Group shown on Page 97

5T2270 SENSOR WIRING GROUP—Part 1

Serial No. 87V5734—Up. Part of 5T2215, & 5T5113 Supplemental Steering Arrangement listed on Page 198B

7N3621 Switch & 3T3964 Control parts are shown on Pages 98L & 98M

NOTE	REF NO	PART NUMBER	QTY	DESCRIPTION
	1	3T3132	1	SWITCH ASSEM.(PLUNGER)
		3K360	1	SEAL
	2	5T4058	1	COVER
	3	5T4057	1	GASKET
	4	7N1514	1	SCREW
		5B3180	1	NUT
	5	5T4056	1	ACTUATOR
	6	8D9974	1	GASKET
C	7	5D3940	1	CABLE ASSEM.
E		5P746		CABLE 206CM(81IN.)
		3O1707	1	TERMINAL(LARGE)
		1M4986	1	TERMINAL(SMALL)
	8	9M4995	1	CLIP
C	9	2B2695	2	BOLT
C	10	5M2894	8	WASHER
	11	S1617	1	BOLT
	12	3T3048	1	CLIP ASSEM.
	13	8M2770	3	CLIP(LARGE)
	14	5T4265	1	PLATE
	15	3B1915	2	BOLT
	16	5T4055	1	HOUSING
	17	S1619	4	BOLT
C	18	S1588	1	BOLT
	19	1D4717	4	NUT
C	20	5K8451	1	CLIP (SMALL)
	21	4F7957	4	BOLT
		1B4330	4	NUT
		5P537	4	WASHER
Y	22	7N3621	1	SWITCH GROUP
Y	23	3T3964	1	CONTROL GROUP
	24	L1351	2	BOLT
		5P1075	2	WASHER
	25	4M4644	1	CABLE ASSEM.
E		5P746		CABLE 71CM(28IN.)
		1S7252	2	TERMINAL
	26	9G9150	1	CLIP (SMALL)
		3T50	1	CLIP (LARGE)
	27	5T2343	1	HARNESS ASSEM.
D		5P5623		WIRE (16 GAUGE)
	28	2L8076	2	TERMINAL
	29	7N9737	1	HOUSING
		7N7779	1	SOCKET
		7N7780	1	PIN
C	30	3S2093	3	STRAP
	31	3T3049	1	CLIP ASSEM.
	32	9D6153	1	CABLE ASSEM.
E		5P746		CABLE 206CM(81IN.)
		1S7252	1	TERMINAL(LARGE)
		1M4986	1	TERMINAL(SMALL)
	33	4D6466	3	CLIP
C	34	L1351	1	BOLT
C	35	9M8406	1	CLIP
C	36	2R1939	1	CLAMP
C	37	4M6921	2	SPRING
C	38	9M1974	2	WASHER
	39	7H3937	1	LOCKWASHER

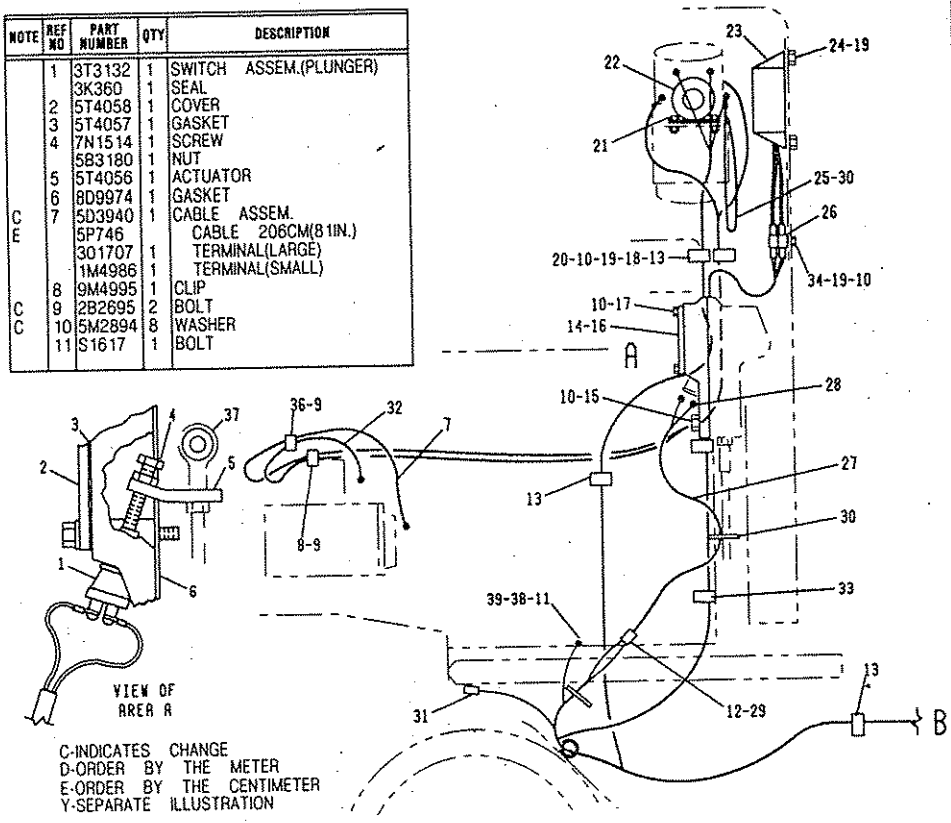

C-INDICATES CHANGE
D-ORDER BY THE METER
E-ORDER BY THE CENTIMETER
Y-SEPARATE ILLUSTRATION

309045

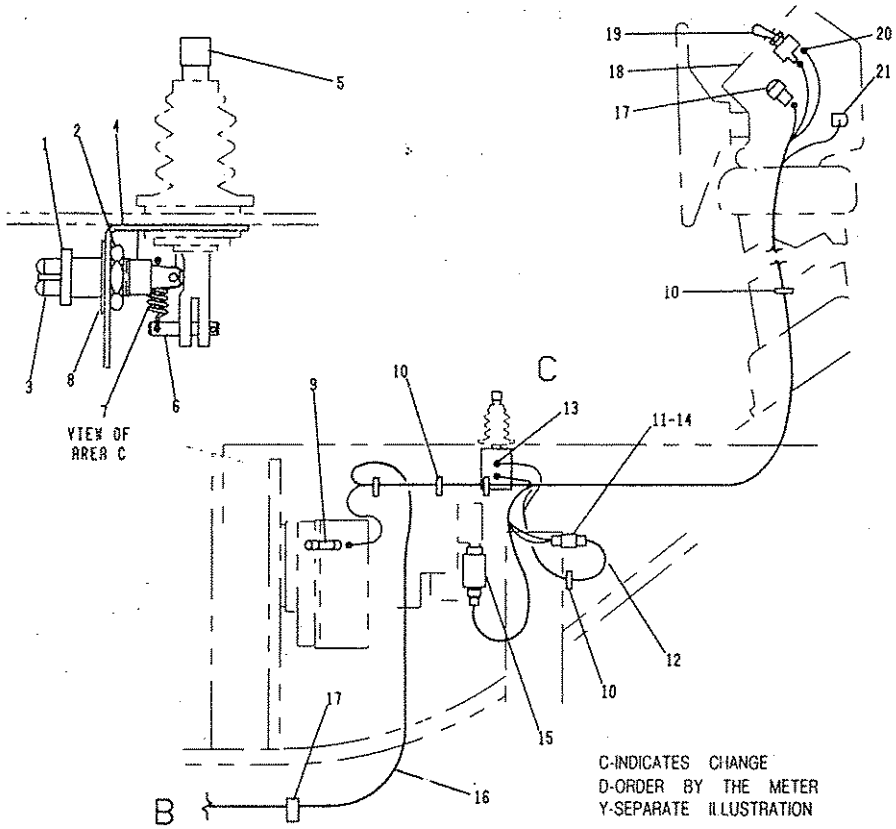

NOTE	REF NO	PART NUMBER	QTY	DESCRIPTION
	1	9G2795	1	SWITCH ASSEM.(ROLLER)
	2	6V8370	1	NUT
	3	6V8363	2	SCREW
		8F1434	2	LOCKWASHER
	4	6G9322	1	BRACKET
	5	6G7487	1	PIN
	6	7H627	1	PIN
	7	1F5198	1	SPRING
	8	5T2329	1	RETAINER
	9	3K8782	1	FUSE (10 AMP)
	10	3S2093	6	STRAP
	11	3T3048	1	CLIP ASSEM.
	12	5T2343	1	HARNESS ASSEM.
D		5P5623		WIRE (16 GAUGE)
	13	2L8076	2	TERMINAL
	14	7N9737	1	HOUSING
		7N7779	1	SOCKET
		7N7780	1	PIN
	15	3T4197	1	SWITCH ASSEM.(PRESSURE)
		3J7354	1	SEAL
Y	16	5T2340	1	HARNESS ASSEM.
	17	8M2770	1	CLIP
		7N5876	1	BULB
		6G6394	1	HOUSING
	18	6V6493	1	FILM
	19	7N8001	1	SWITCH
C	20	7N8597	2	TERMINAL
	21	3T3049	1	CLIP ASSEM.

* 309046

5T2270 SENSOR WIRING GROUP—Part 2
Serial No. 87V5734—Up. Part of 5T2215 & 5T5113 Supplemental Steering Arrangement listed on Page 198B
5T2340 Harness parts are shown on Page 101F

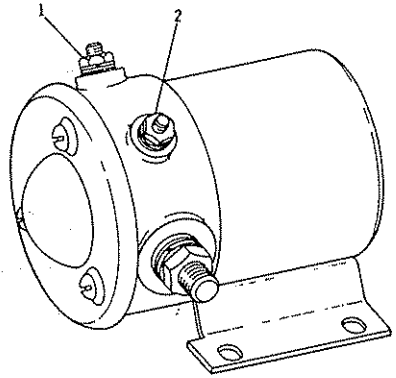

REF NO.	PART NUMBER	DESCRIPTION	QTY
1	7F7622	NUT	2
	7H2079	LOCKWASHER	2

	6H5431	NUT	2
2	6H8351	LOCKWASHER	2
	9B9082	WASHER	2

169025

7N3621 MAGNETIC SWITCH GROUP
Serial No. 87V5734—Up
Part of 5T2270 Sensor Wiring Group shown on Page 98J. AN ATTACHMENT

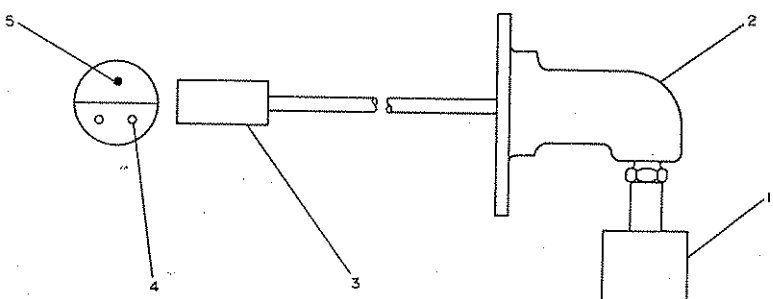

NOTE	REF NO	PART NUMBER	QTY	DESCRIPTION
	1	1V2727	1	SWITCH
	2	6G5519	1	ADAPTER
	3	7N7782	1	HOUSING
	4	7N7779	2	SOCKET
	5	9G3695	1	PLUG

309260

5T2824 LEVEL SWITCH GROUP
Serial No. 87V6731—Up
Part of 6G5310 Monitor Wiring Group shown on Pages 98G-3 & 98G-5

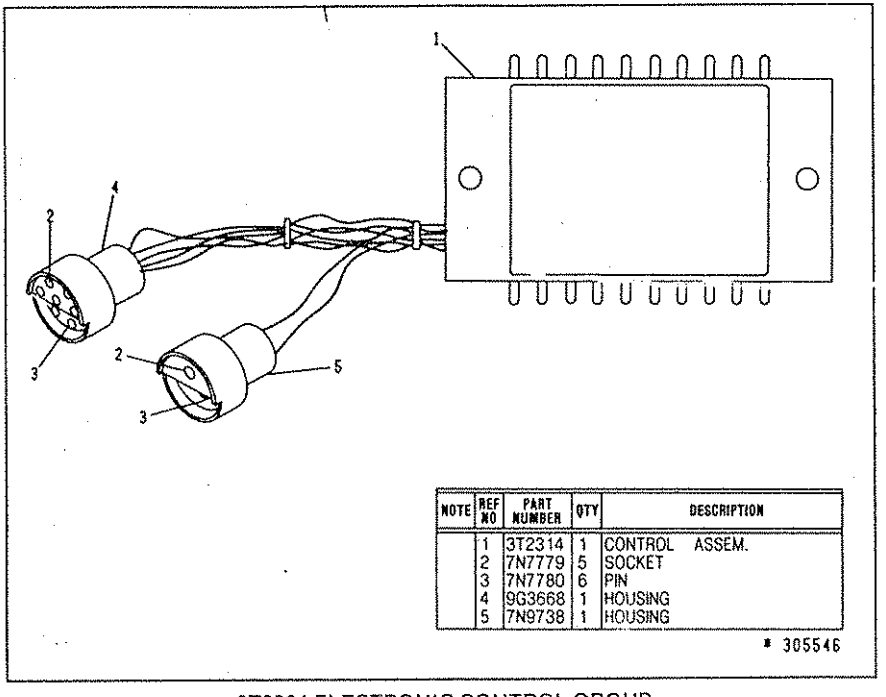

NOTE	REF NO	PART NUMBER	QTY	DESCRIPTION
	1	3T2314	1	CONTROL ASSEM.
	2	7N7779	5	SOCKET
	3	7N7780	6	PIN
	4	9G3668	1	HOUSING
	5	7N9738	1	HOUSING

305546

3T3964 ELECTRONIC CONTROL GROUP
Serial No. 87V5734—Up
Part of 5T2270 Sensor Wiring Group shown on Page 98J. AN ATTACHMENT

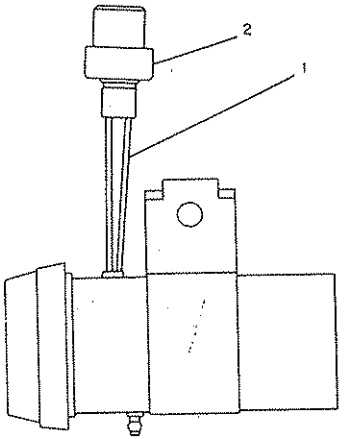

REF NO.	PART NUMBER	DESCRIPTION	QTY
▲ 1	5P5623	WIRE-------2 m(7.8 in.)	
	7N9737	HOUSING----------	1
2	7N7779	SOCKET----------	1
	7N7780	PIN----------	1

228443

▲ ORDER BY THE METER

7G8994 ALARM GROUP
Serial No. 87V5734—Up
Part of 6G5310 Monitor Wiring Group shown on Page 98G

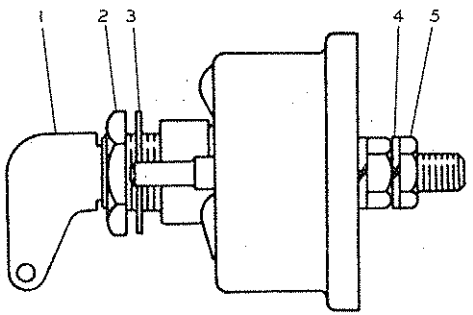

NOTE	REF NO	PART NUMBER	QTY	DESCRIPTION
	1	8H5306	1	KEY
	2	8H5303	1	NUT
	3	2H3922	1	WASHER
C	4	9F5644	2	LOCKWASHER
C	5	6F7045	2	NUT

C INDICATES CHANGE

313370

7N718 DISCONNECT SWITCH ASSEMBLY
Part of 2G7620 and 6G5420 Battery & Wiring Groups shown on Pages 97 & 98D

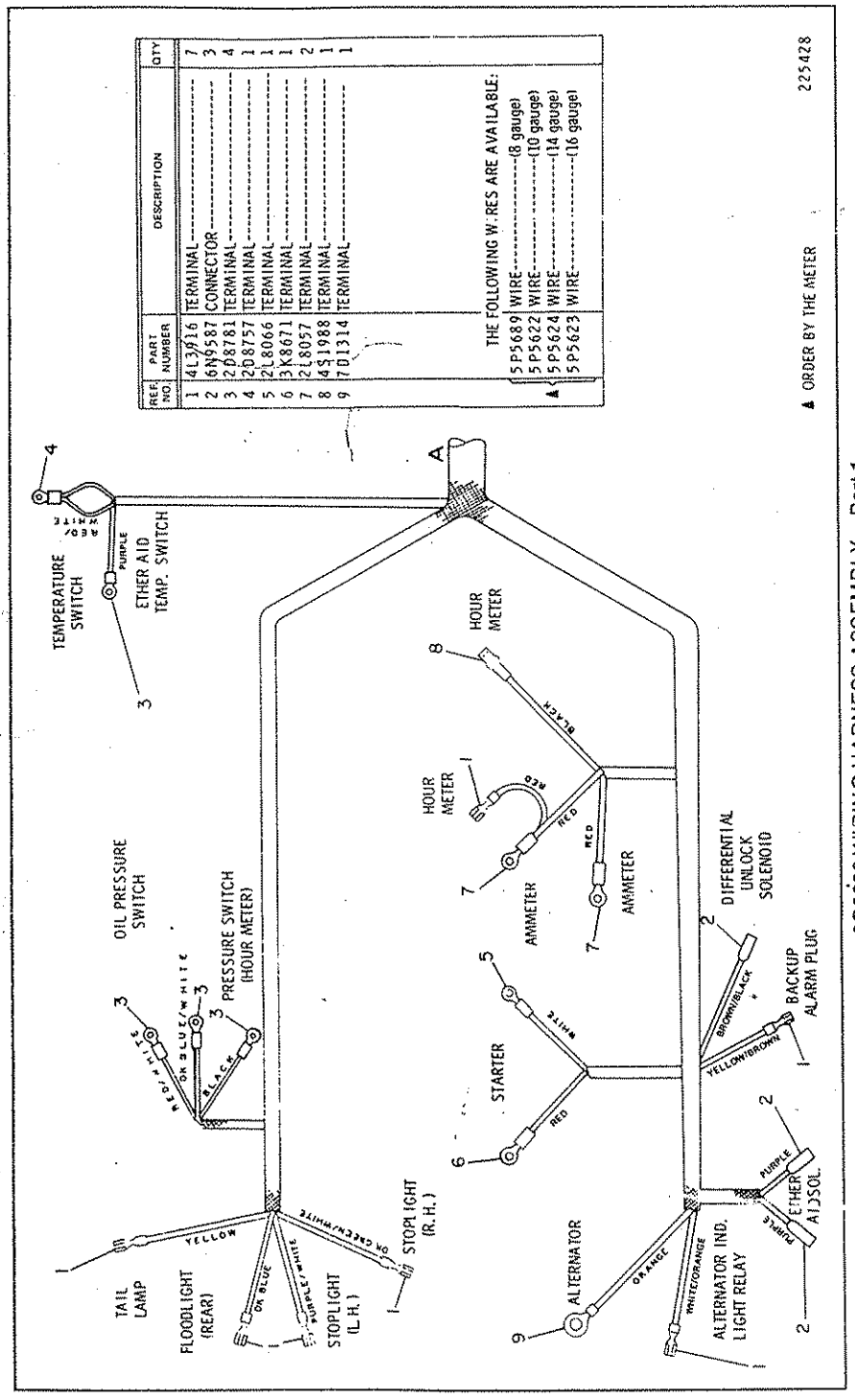

REF. NO	PART NUMBER	DESCRIPTION	QTY
1	4L3916	TERMINAL	7
2	6N9587	CONNECTOR	3
3	2D8781	TERMINAL	4
4	2D8757	TERMINAL	1
5	2L8066	TERMINAL	1
6	3K8671	TERMINAL	1
7	2L8057	TERMINAL	2
8	4S1988	TERMINAL	1
9	7D1314	TERMINAL	1
		THE FOLLOWING W.RES ARE AVAILABLE:	
	5P5689	WIRE----------(8 gauge)	
	5P5622	WIRE----------(10 gauge)	
▲	5P5624	WIRE----------(14 gauge)	
	5P5623	WIRE----------(16 gauge)	

▲ ORDER BY THE METER

225428

2G8663 WIRING HARNESS ASSEMBLY—Part 1
Serial No. 87V5275 to 87V5733 inclusive
Part of 2G7620 Battery and Wiring Group shown on Page 97

2G8663 WIRING HARNESS ASSEMBLY—Part 2
Serial No. 87V5275 to 87V5733 Inclusive
Part of 2G7620 Battery and Wiring Group shown on Page 97

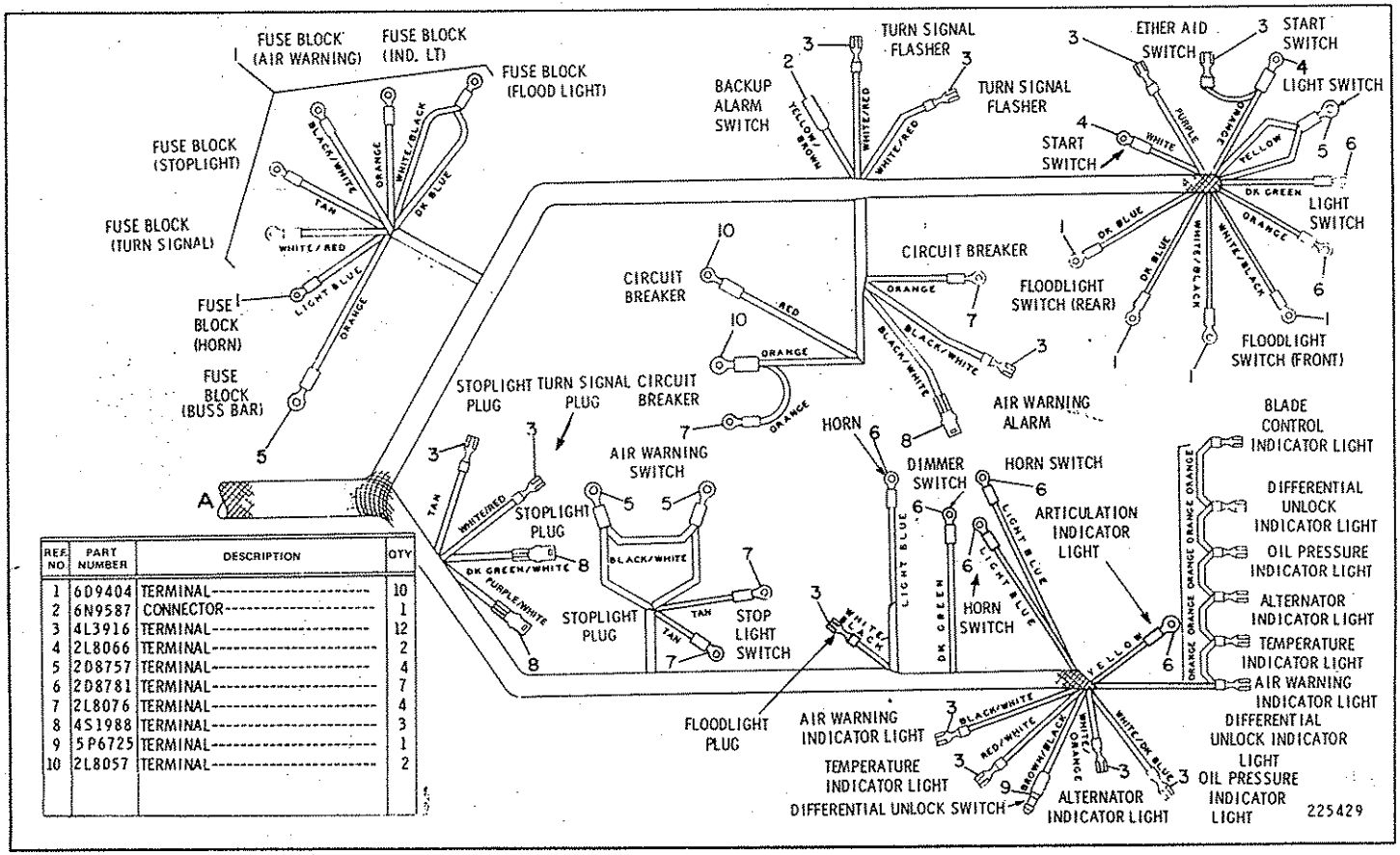

REF. NO	PART NUMBER	DESCRIPTION	QTY
1	6D9404	TERMINAL	10
2	6N9587	CONNECTOR	1
3	4L3916	TERMINAL	12
4	2L8066	TERMINAL	2
5	2D8757	TERMINAL	4
6	2D8781	TERMINAL	7
7	2L8076	TERMINAL	4
8	4S1988	TERMINAL	3
9	5P6725	TERMINAL	1
10	2L8057	TERMINAL	2

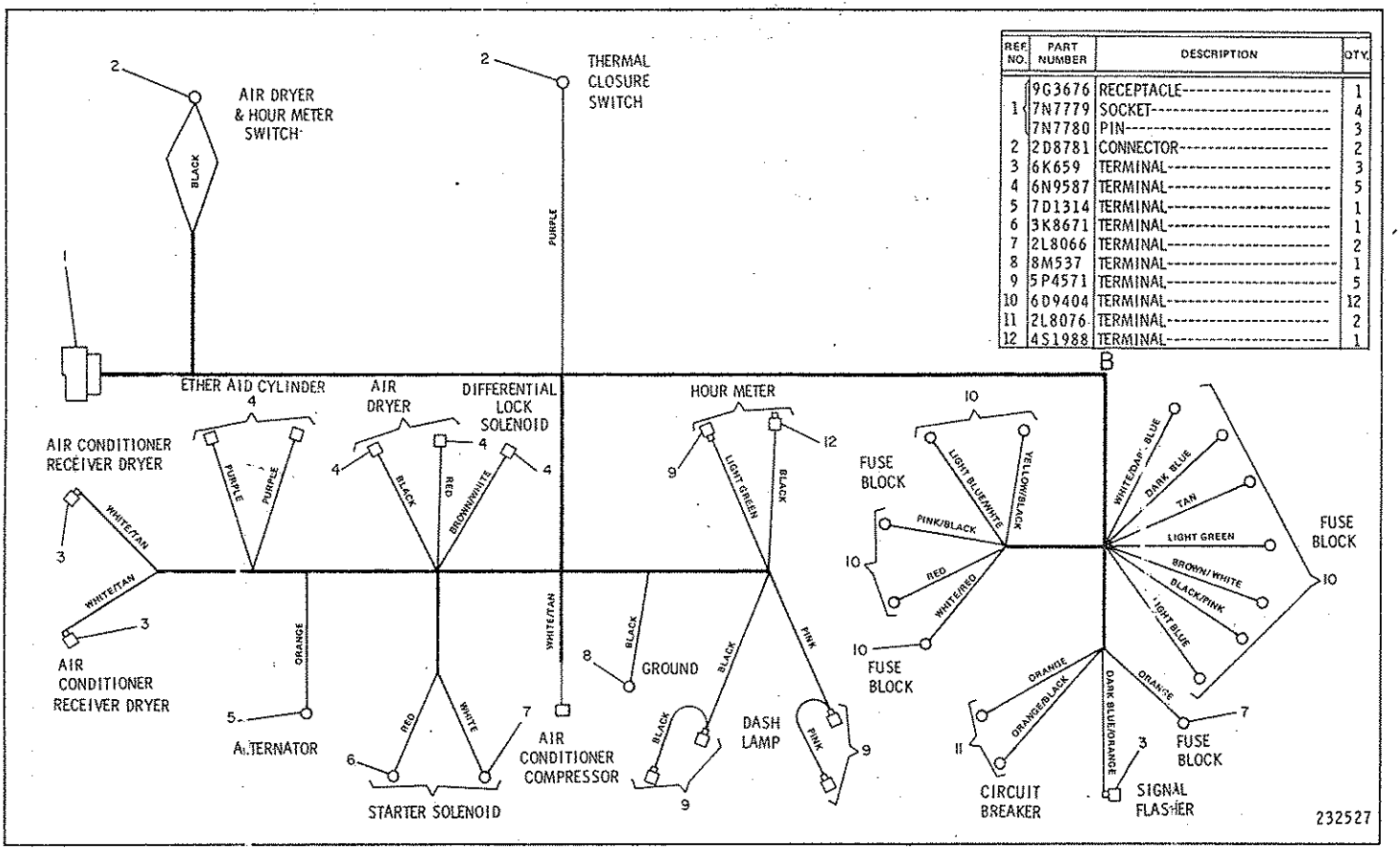

REF. NO.	PART NUMBER	DESCRIPTION	QTY.
1	9G3676	RECEPTACLE	1
	7N7779	SOCKET	4
	7N7780	PIN	3
2	2D8781	CONNECTOR	2
3	6K659	TERMINAL	3
4	6N9587	TERMINAL	5
5	7D1314	TERMINAL	1
6	3K8671	TERMINAL	1
7	2L8066	TERMINAL	2
8	8M537	TERMINAL	1
9	5P4571	TERMINAL	5
10	6D9404	TERMINAL	12
11	2L8076	TERMINAL	2
12	4S1988	TERMINAL	1

6G5417 HARNESS ASSEMBLY—Part 1
Serial No. 87V5734—Up
Part of 6G5420 Battery and Wiring Group shown on Page 98D

6G5417 HARNESS ASSEMBLY—Part 2
Serial No. 87V5734—Up
Part of 6G5420 Battery and Wiring Group shown on Page 98D

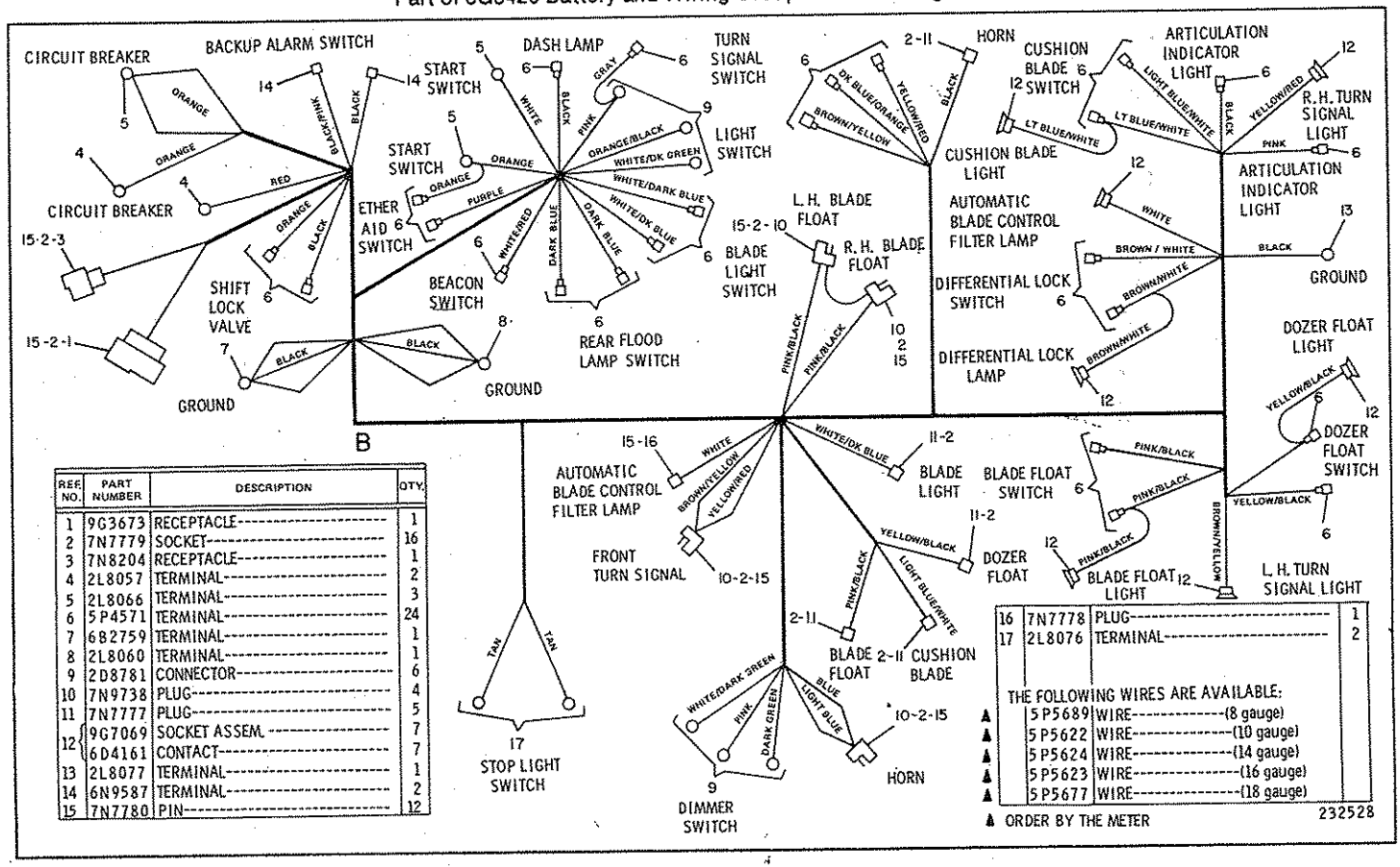

REF. NO.	PART NUMBER	DESCRIPTION	QTY.
1	9G3673	RECEPTACLE	1
2	7N7779	SOCKET	16
3	7N8204	RECEPTACLE	1
4	2L8057	TERMINAL	2
5	2L8066	TERMINAL	3
6	5P4571	TERMINAL	24
7	6B2759	TERMINAL	1
8	2L8060	TERMINAL	1
9	2D8781	CONNECTOR	6
10	7N9738	PLUG	4
11	7N7777	PLUG	5
12	9G7069	SOCKET ASSEM.	7
	6D4161	CONTACT	7
13	2L8077	TERMINAL	1
14	6N9587	TERMINAL	2
15	7N7780	PIN	12
16	7N7778	PLUG	1
17	2L8076	TERMINAL	2

THE FOLLOWING WIRES ARE AVAILABLE:

▲	5P5689	WIRE—(8 gauge)
▲	5P5622	WIRE—(10 gauge)
▲	5P5624	WIRE—(14 gauge)
▲	5P5623	WIRE—(16 gauge)
▲	5P5677	WIRE—(18 gauge)

▲ ORDER BY THE METER

232528

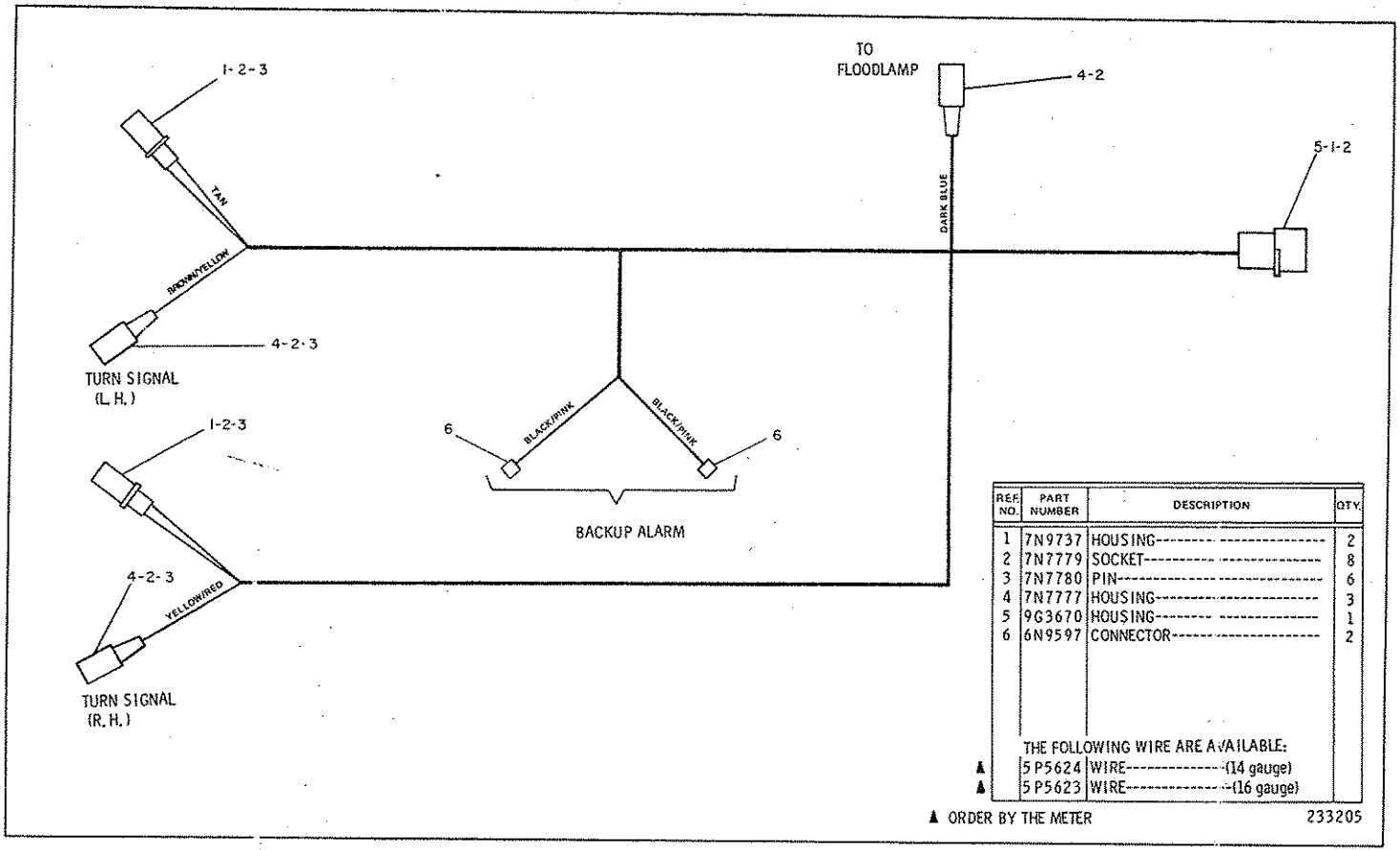

REF. NO.	PART NUMBER	DESCRIPTION	QTY.
1	7N9737	HOUSING	2
2	7N7779	SOCKET	8
3	7N7780	PIN	6
4	7N7777	HOUSING	3
5	9G3670	HOUSING	1
6	6N9597	CONNECTOR	2

THE FOLLOWING WIRE ARE AVAILABLE:

▲	5P5624	WIRE-----(14 gauge)	
▲	5P5623	WIRE-----(16 gauge)	

▲ ORDER BY THE METER

233205

6G3472 HARNESS ASSEMBLY
Serial No. 87V5734—Up
Part of 6G5420 Battery and Wiring Group shown on Page 98B

6G5267 HARNESS ASSEMBLY

Serial No. 87V5734—Up

Part of 6G5310 Monitor Wiring Group shown on Pages 98F, 98G-1, 98G-3 & 98G-5

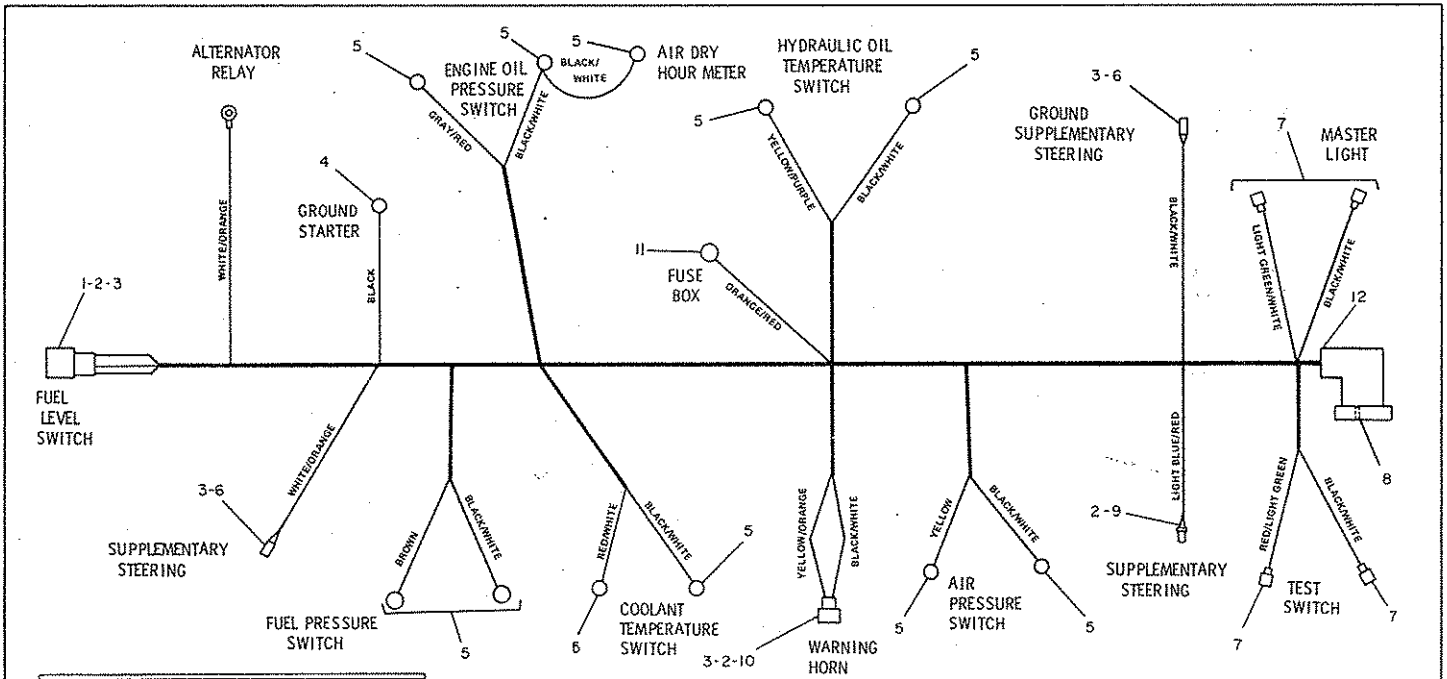

REF. NO.	PART NUMBER	DESCRIPTION	QTY.
1	7N7781	HOUSING	1
2	7N7780	PIN	4
3	7N7779	SOCKET	4
4	2L8071	TERMINAL	1
5	2L8075	TERMINAL	11
6	7N7777	HOUSING	2
7	5P4571	TERMINAL	4
8	8N1539	SOCKET	19
9	7N7778	HOUSING	1
10	7N9738	HOUSING	1
11	6D9404	TERMINAL	1
C 12	8L8413	STRAP	1
▲	5P5622	WIRE—(10 gauge)	
▲	5P5624	WIRE—(14 gauge)	
▲	5P5623	WIRE—(16 gauge)	

THE FOLLOWING WIRES ARE AVAILABLE:

C INDICATES CHANGE

▲ ORDER BY THE METER

181750

5T2340 HARNESS ASSEMBLY
Serial No. 87V5734—Up
Part of 5T2270 Sensor Wiring Group shown on Page 98K. AN ATTACHMENT

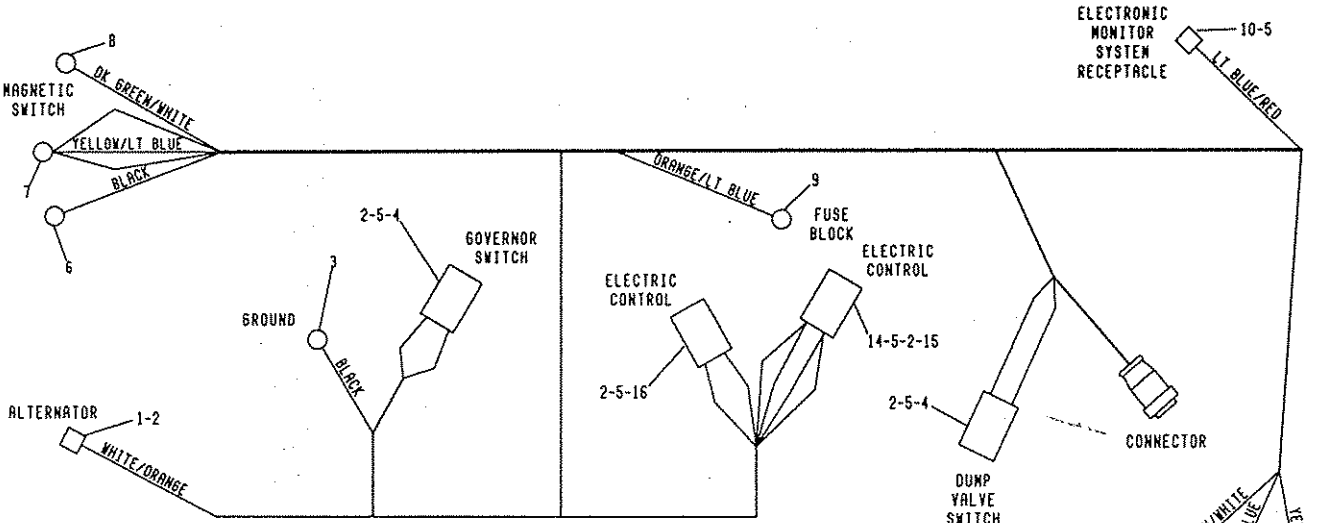

NOTE	REF NO	PART NUMBER	QTY	DESCRIPTION
	1	7N7778	1	HOUSING
	2	7N7780	8	PIN
	3	6B2759	1	TERMINAL
	4	7N9738	2	HOUSING
	5	7N7779	9	SOCKET
	6	2L8076	1	TERMINAL
	7	2L8066	1	TERMINAL
	8	8M537	1	TERMINAL
	9	6D9404	1	TERMINAL
	10	7N7777	1	HOUSING
	11	5P4571	2	TERMINAL
	12	9G7069	1	SOCKET ASSEM.
	13	6D4161	1	CONTACT
	14	9G3674	1	HOUSING
	15	9G3695	1	PLUG
	16	7N9737	1	HOUSING
				THE FOLLOWING WIRE IS AVAILABLE:
D		5P5623		WIRE (16 GAUGE)

D-ORDER BY THE METER

304812

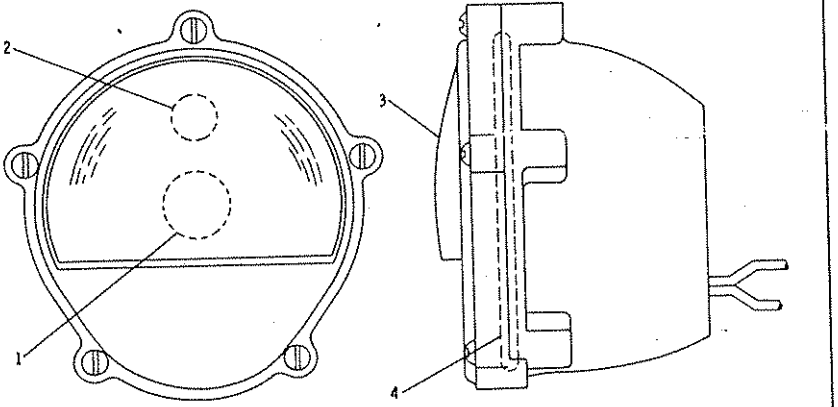

REF. NO.	PART NUMBER	DESCRIPTION	QTY
1	7H2976	BULB	1
2	2D1959	BULB	1
3	9D6113	COVER	1
4	3F5792	SEAL	1

119601

8D389 LAMP GROUP—Tail, Stop and Turn
Serial No. 87V5275 to 87V5733 inclusive
Part of 2G7620 Battery and Wiring Group shown on Page 95

2G5090 BACK-UP WARNING GROUP
Serial No. 87V5275 to 87V5733 Inclusive

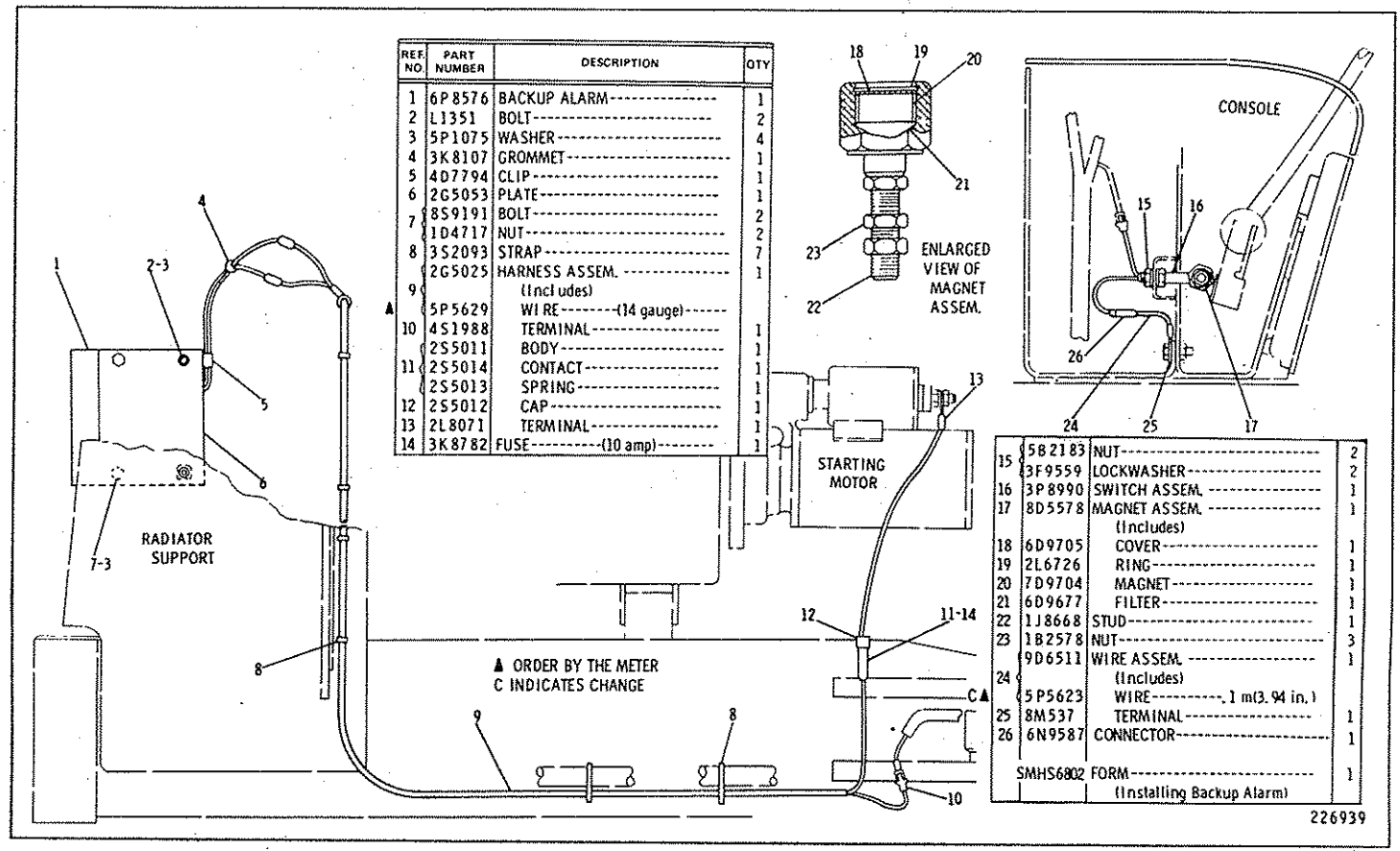

REF. NO.	PART NUMBER	DESCRIPTION	QTY
1	6P8576	BACKUP ALARM	1
2	L1351	BOLT	2
3	5P1075	WASHER	4
4	3K8107	GROMMET	1
5	4D7794	CLIP	1
6	2G5053	PLATE	1
7	8S9191	BOLT	2
	1D4717	NUT	2
8	3S2093	STRAP	7
9	2G5025	HARNESS ASSEM. (Includes)	1
▲	5P5629	WIRE--(14 gauge)	
10	4S1988	TERMINAL	1
	2S5011	BODY	1
11	2S5014	CONTACT	1
	2S5013	SPRING	1
12	2S5012	CAP	1
13	2L8071	TERMINAL	1
14	3K8782	FUSE--(10 amp)	1

15	5B2183	NUT	2
	3F9559	LOCKWASHER	2
16	3P8990	SWITCH ASSEM.	1
17	8D5578	MAGNET ASSEM. (Includes)	1
18	6D9705	COVER	1
19	2L6726	RING	1
20	7D9704	MAGNET	1
21	6D9677	FILTER	1
22	1J8668	STUD	1
23	1B2578	NUT	3
	9D6511	WIRE ASSEM. (Includes)	1
24	5P5623	WIRE--1 m(3.94 in.)	
25	8M537	TERMINAL	1
26	6N9587	CONNECTOR	1
	SMHS6802	FORM (Installing Backup Alarm)	1

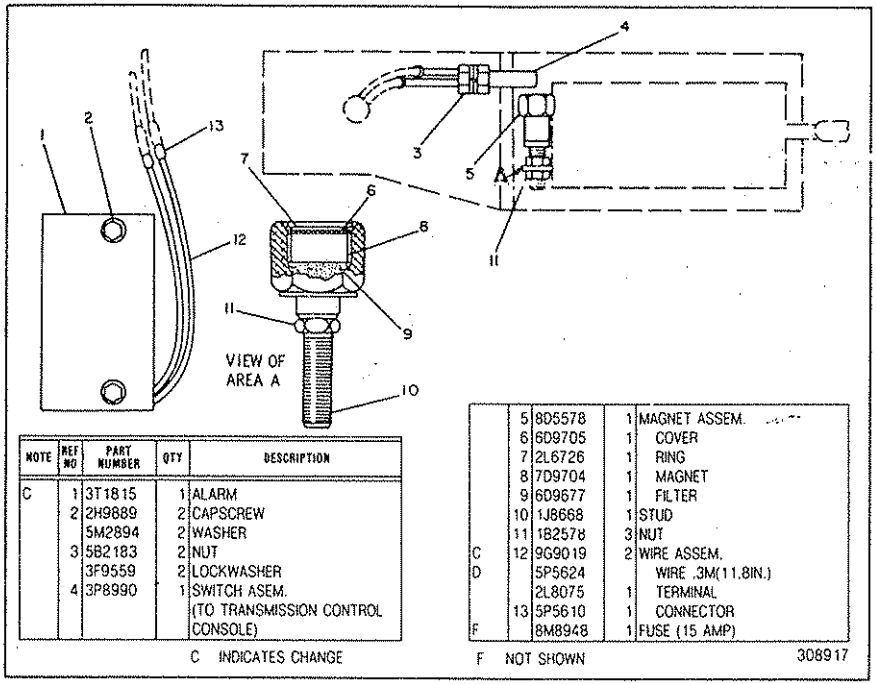

NOTE	REF NO	PART NUMBER	QTY	DESCRIPTION
C	1	3T1815	1	ALARM
	2	2H9889	2	CAPSCREW
		5M2894	2	WASHER
	3	5B2183	2	NUT
		3F9559	2	LOCKWASHER
	4	3P8990	1	SWITCH ASEM. (TO TRANSMISSION CONTROL CONSOLE)
	5	8D5578	1	MAGNET ASSEM.
	6	6D9705	1	COVER
	7	2L6726	1	RING
	8	7D9704	1	MAGNET
	9	6D9677	1	FILTER
	10	1J8668	1	STUD
	11	1B2578	3	NUT
C	12	9G9019	2	WIRE ASSEM.
D		5P5624		WIRE .3M(11.8IN.)
		2L8075	1	TERMINAL
	13	5P5610	1	CONNECTOR
F		8M8948	1	FUSE (15 AMP)

C INDICATES CHANGE F NOT SHOWN 308917

6G6860 BACK-UP WARNING GROUP
Serial No. 87V5734—Up

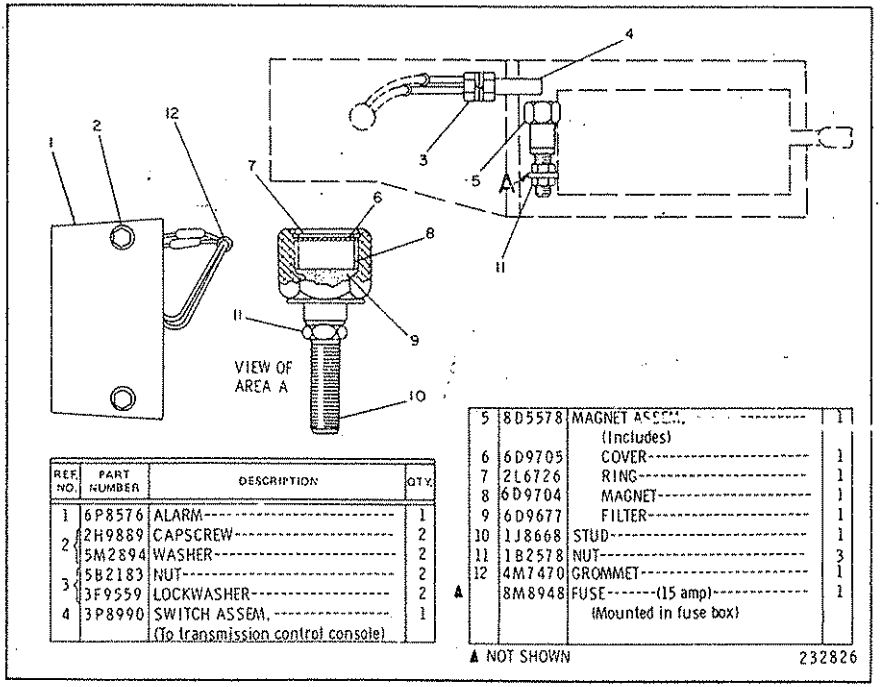

REF. NO.	PART NUMBER	DESCRIPTION	QTY.
1	6P8576	ALARM	1
2	2H9889	CAPSCREW	2
	5M2894	WASHER	2
3	5B2183	NUT	2
	3F9559	LOCKWASHER	2
4	3P8990	SWITCH ASSEM. (To transmission control console)	1
5	8D5578	MAGNET ASSEM. (Includes)	1
6	6D9705	COVER	1
7	2L6726	RING	1
8	6D9704	MAGNET	1
9	6D9677	FILTER	1
10	1J8668	STUD	1
11	1B2578	NUT	3
12	4M7470	GROMMET	1
▲	8M8948	FUSE-------(15 amp)---------- (Mounted in fuse box)	1

▲ NOT SHOWN 232826

6G7250 BACK-UP WARNING GROUP—Sound Suppression
Part of 9G2580 Sound Suppression Arrangement listed on Page 168

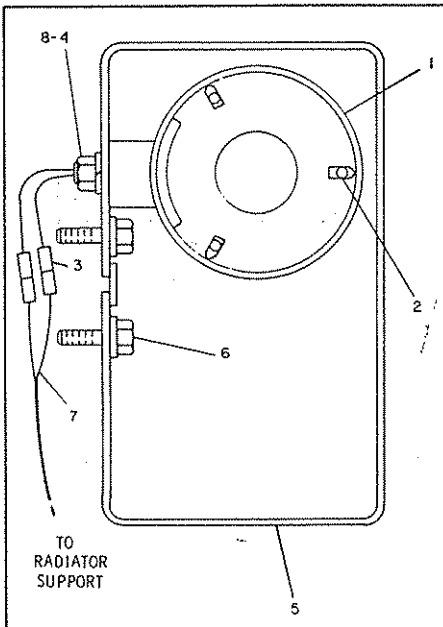

REF. NO.	PART NUMBER	DESCRIPTION	QTY.
1	9G8556	LAMP GROUP	2
		(Each Includes)	
	342535	LAMP	1
2	2S6218	SCREW	3
3	5P5610	CONNECTOR	2
4	1B4430	NUT	1
	3B4508	LOCKWASHER	1
5	6G7792	BRACKET ASSEM.	2
6	L1351	BOLT	4
	5P1075	WASHER	4
7	6G3797	HARNESS ASSEM.	1
		(Separate Illustration)	
C 8	3J4818	LOCKWASHER---(shakeproof)	2
		THE FOLLOWING REPAIR KIT IS AVAILABLE:	
	7D8714	KIT---(lens) (Includes gasket, screws and red lens)	1

C INDICATES CHANGE

301123

6G7380 LIGHTING GROUP—Spectator Sound
Part of 2G2580 Sound Suppression Arrangement listed on Page 168
AN ATTACHMENT

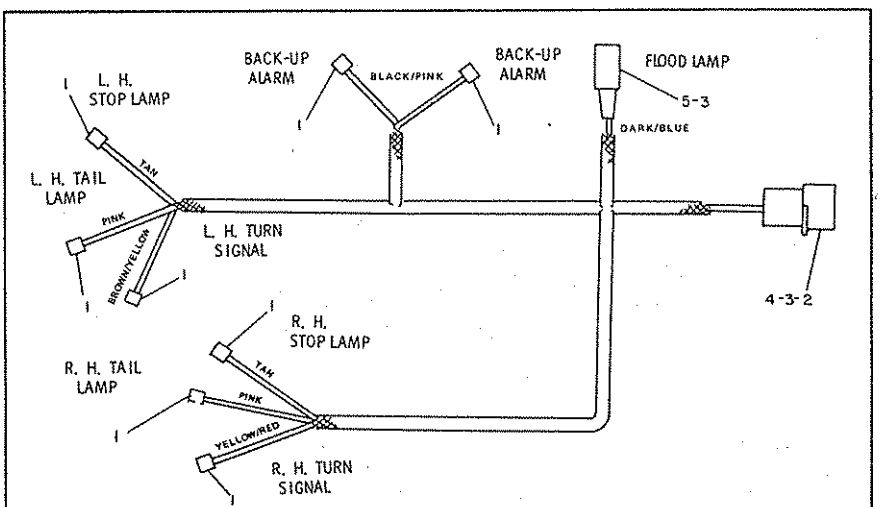

REF. NO.	PART NUMBER	DESCRIPTION	QTY.
C 1	6N9587	CONNECTOR	8
2	9G3670	HOUSING	1
C 3	7N7779	SOCKET	4
C 4	7N7780	PIN	4
5	7N7777	HOUSING	1
▲	5P5623	WIRE (16 gauge)	
▲	5P5624	WIRE (14 gauge)	

C INDICATES CHANGE

▲ USE AS REQUIRED

178614

6G3797 HARNESS ASSEMBLY
Part of 6G7380 Lighting Group. AN ATTACHMENT

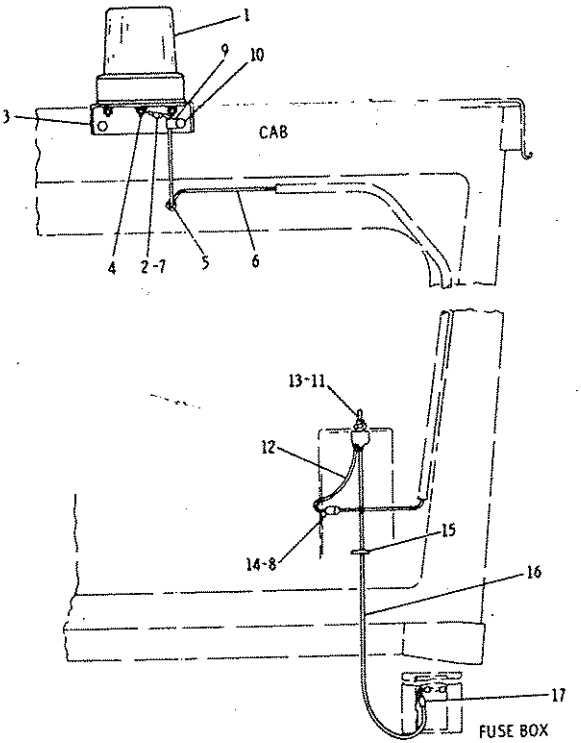

REF. NO.	PART NUMBER	DESCRIPTION	QTY
C	2G7638	LAMP GROUP	1
		(Includes)	
1	7D8855	BULB	1
	7D8783	LENS	1
	2S6218	SCREW	3
2	5P5610	CONNECTOR	1
3	2G645	PLATE	1
	7D8866	SCREW	3
4	4B2047	NUT	3
	9F8125	LOCKWASHER	3
5	2D9535	GROMMET	2
C	2G7637	WIRE ASSEM.	1
6		(Includes)	
▲	5P5629	WIRE --------2.24 m(88.18 in.)	
7	6N9587	TERMINAL	1
8	4S1988	TERMINAL	1
9	6K8179	CLIP	1
	S509	BOLT	2
10	3B4506	LOCKWASHER	2
11	8D2676	SWITCH---------(toggle)----------	1
	2G656	WIRE ASSEM.	1
12		(Includes)	
C▲	5P5629	WIRE----------.55 m(22 in.)	
13	6D9404	TERMINAL	1
14	4L3916	TERMINAL	1
15	3S2093	TIE	2
	9D6082	WIRE ASSEM.	1
16		(Includes)	
C▲	5P5629	WIRE----------1.30 m(50 in.)	
17	2L8074	TERMINAL	2

C INDICATES CHANGE ▲ ORDER BY THE METRE 166539

2G1010 WARNING LIGHTING GROUP—Rotating—Amber Lens
Serial No. 87V5275 to 87V5733 Inclusive
AN ATTACHMENT

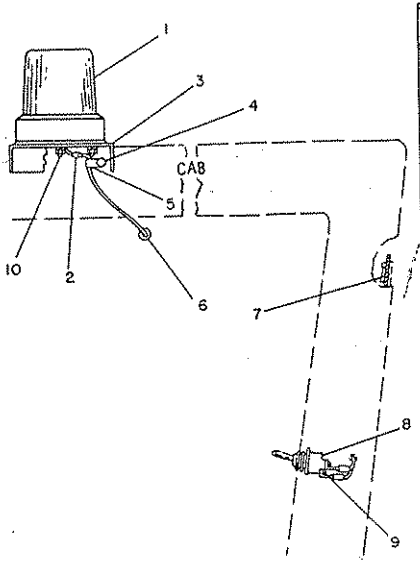

REF. NO.	PART NUMBER	DESCRIPTION	QTY.
	2G7638	LAMP GROUP	1
		(Includes)	
1	7D8855	BULB	1
	7D8783	LENS	1
	2S6218	SCREW	3
2	5P5610	TERMINAL	1
3	2G645	PLATE ASSEM.	1
4	S509	BOLT	2
	5M2894	WASHER	2
5	6K8179	CLIP	1
6	2D9535	GROMMET	2
7	3K8782	FUSE---------(10 amp)	1
8	7N8000	SWITCH-------(warning lamp)	1
9	7N8597	TERMINAL	2
	7D8866	SCREW	3
10	4B2047	NUT	3
	9F8125	LOCKWASHER	3

232835

6G5655 LIGHTING GROUP—Type 1
Serial No. 87V5734—Up. FOR USE WITH ENCLOSED ROPS OR CAB
Provides rotating warning light with amber lens. AN ATTACHMENT

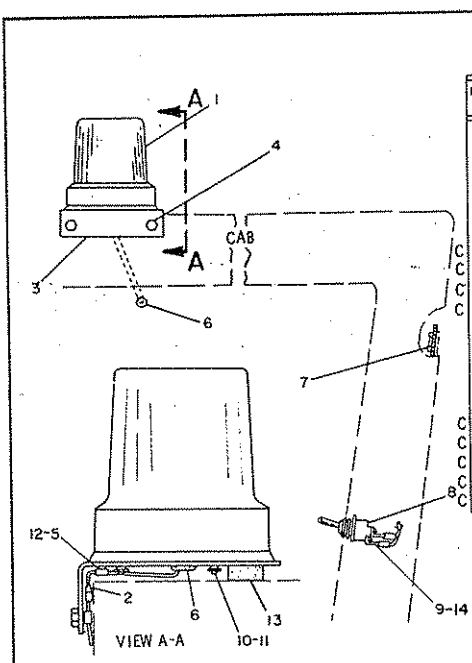

REF. NO.	PART NUMBER	DESCRIPTION	QTY.
	2G7638	LAMP GROUP	1
		(Includes)	
1	7D8855	BULB	1
	7D8783	LENS	1
	2S6218	SCREW	3
2	5P5610	TERMINAL	1
C 3	6G7166	PLATE	1
C	5M6032	BOLT	2
C 4	5P1075	WASHER	2
C 5	1V3113	CLIP	1
6	2D9535	GROMMET	2
7	3K8782	FUSE---------(10 amp)	1
8	7N8000	SWITCH-------(warning lamp)	1
9	7N8597	TERMINAL	2
10	7D8866	SCREW	3
C	4B2047	NUT	3
C 11	9F8125	LOCKWASHER	3
C 12	310243	SCREW	1
C 13	2G7382	BUMPER	1
C 14	5H6555	LOCKWASHER	2

C INDICATES CHANGE

309107

6G5655 LIGHTING GROUP—Type 2
Serial No. 87V5734—Up. FOR USE WITH ENCLOSED ROPS OR CAB
Provides rotating warning light with amber lens. AN ATTACHMENT

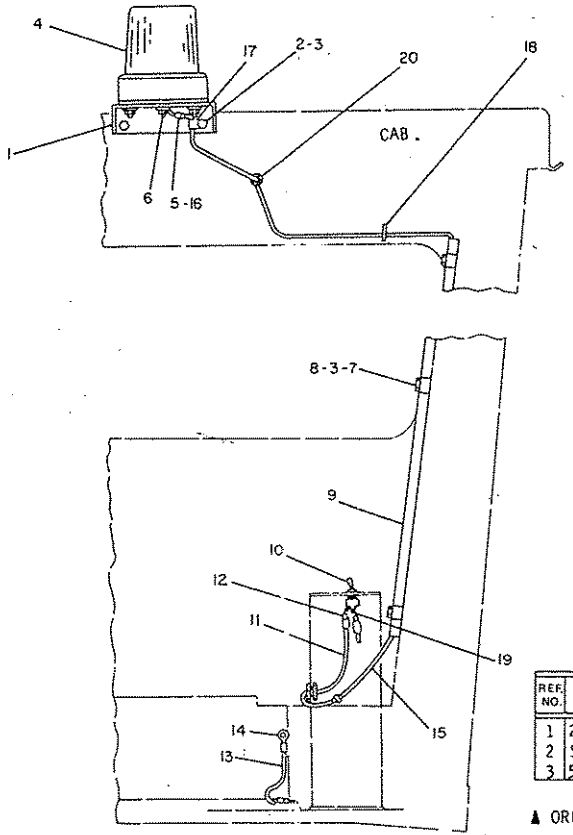

REF. NO.	PART NUMBER	DESCRIPTION	QTY.
1	2G645	PLATE ASSEM.	1
2	S509	BOLT	2
3	5M2894	WASHER	5

		2G7638	LAMP GROUP (Includes)	1
	4	7D8855	BULB	1
		7D8783	LENS	1
		2S6218	SCREW	3
	5	5P5610	CONNECTOR	1
		7D8866	SCREW	3
	6	4B2047	NUT	3
		9F8125	LOCKWASHER	3
	7	T102	BOLT	3
	8	4D9164	CLIP	3
▲	9	5P1203	TUBE--------108 cm(42.5 in.)	
	10	7N8000	SWITCH	1
		6G5772	WIRE ASSEM. (Includes)	1
●	11	5P5629	WIRE------.52 m(20 in.)	
		7N7777	HOUSING	1
		7N7779	SOCKET	1
	12	4L3916	TERMINAL	1
		9M9812	WIRE ASSEM. (Includes)	1
●	13	5P6641	WIRE------.3m(12 in.)	
	14	2L8052	TERMINAL	2
		6G5754	WIRE ASSEM (Includes)	1
●	15	5P5629	WIRE---- 2.24 m(88 in.)	
		7N7778	HOUSING	1
		7N7780	PIN	1
	16	6K1828	TERMINAL	1
	17	6K8179	CLIP	1
	18	3S2093	STRAP	2
	19	7N8597	TERMINAL	2
	20	2D9535	GROMMET	2
■		3K8182	FUSE------(10 amp)	1

▲ ORDER BY THE CENTIMETER ● ORDER BY THE METER ■ NOT SHOWN 232841

6G5775 LIGHTING GROUP—Low Profile—Type 1
Serial No. 87V5734—Up. FOR USE WITH 6G2640 ROPS ARRANGEMENT LISTED ON PAGE 287A
Provides rotating warning light with amber lens. AN ATTACHMENT

6G5775 LIGHTING GROUP—Low Profile—Type 2

Serial No. 87V5734—Up. FOR USE WITH 6G2640 ROPS ARRANGEMENT LISTED ON PAGE 287A

Provides rotating warning light with amber lens. AN ATTACHMENT

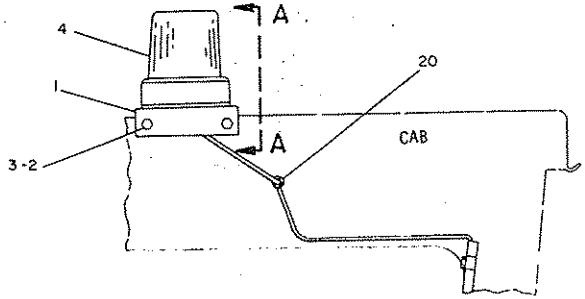

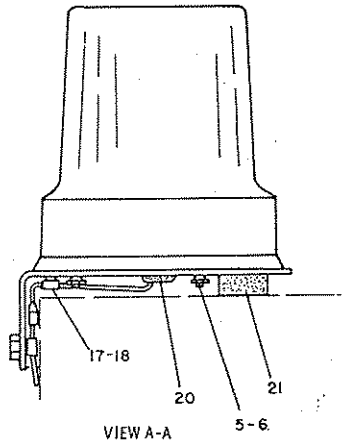

VIEW A-A

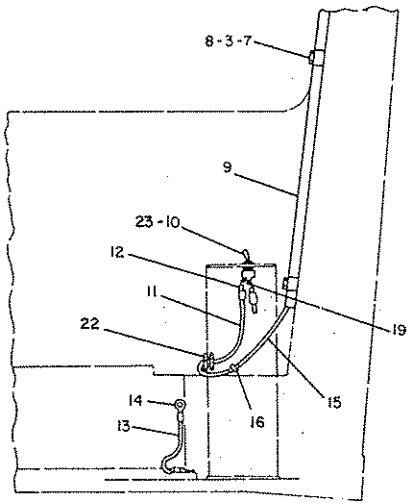

C INDICATES CHANGE

	REF. NO.	PART NUMBER	DESCRIPTION	QTY.
C	1	6G7166	PLATE	1
	2	S509	BOLT	2
	3	5M2894	WASHER	5

		2G7638	LAMP GROUP (Includes)	1
	4	7D8855	BULB	1
		7D8783	LENS	1
		2S6218	SCREW	3
		5P5610	CONNECTOR	1
	5	7D8866	SCREW	3
C	6	4B2047	NUT	3
C		9F8125	LOCKWASHER	3
	7	T102	BOLT	3
	8	4D9164	CLIP	3
▲	9	5P1203	TUBE-------108 cm(42.5 in.)	
	10	7N8000	SWITCH	1
		6G5772	WIRE ASSEM. (Includes)	1
●	11	5P5629	WIRE-----.52 m(20 in.)	
		7N7777	HOUSING	1
		7N7779	SOCKET	1
	12	4L3916	TERMINAL	1
		9M9812	WIRE ASSEM. (Includes)	1
●	13	5P6641	WIRE-----.3m(12 in.)	
	14	2L8052	TERMINAL	2
		6G5754	WIRE ASSEM. (Includes)	1
●	15	5P5629	WIRE-----2.24 m(88 in.)	
		6K1828	TERMINAL	1
		7N7778	HOUSING	1
	16	7N7780	PIN	1
C	17	1V3113	CLIP	1
C	18	89792	SCREW	1
	19	7N8597	TERMINAL	2
	20	2D9535	GROMMET	2
C	21	2G7382	BUMPER	1
C	22	2D388	GROMMET	1
C	23	5H6555	LOCKWASHER	1
■		3K8182	FUSE-----(10 amp)	1

▲ ORDER BY THE CENTIMETER ● ORDER BY THE METER

■ NOT SHOWN

309098

2G995 WARNING LIGHTING GROUP—Rotating—Amber Lens—Type 1
Serial No. 87V5275 to 87V5733 inclusive
FOR USE WITH OPEN ROPS. AN ATTACHMENT

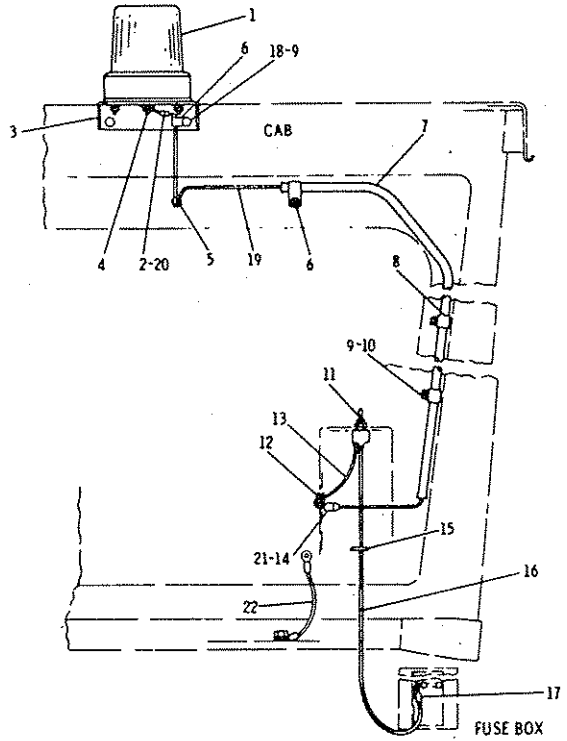

	REF. NO.	PART NUMBER	DESCRIPTION	QTY
C		2G7638	LAMP GROUP	1
			(Includes)	
	1	7D8855	BULB	1
		7D8783	LENS	1
		2S6218	SCREW	3
	2	5P5610	CONNECTOR	1
	3	2G645	PLATE ASSEM.	1
		7D8866	SCREW	3
	4	4B2047	NUT	3
		9F8125	LOCKWASHER	3
	5	2D9535	GROMMET	2
	6	6K8179	CLIP	1
▲	7	5P1203	TUBE---170.56 cm(67.15 in.)	
	8	4D9164	CLIP	3
	9	3B4506	LOCKWASHER	5
	10	T102	BOLT	3
	11	8D2676	SWITCH	1
	12	1A621	GROMMET	1
	13	2G656	WIRE ASSEM.	1
			(Includes)	
C ●		5P5629	WIRE---.55 m(22 in.)	
		6D9404	TERMINAL	1
	14	4L3916	TERMINAL	1
	15	3S2093	TIE	2
	16	9D6082	WIRE ASSEM.	1
			(Includes)	
C ●		5P5629	WIRE---1.3 m(50 in.)	
	17	2L8074	TERMINAL	2
	18	S509	BOLT	2
C		2G7637	WIRE ASSEM.	1
	19		(Includes)	
●		5P5629	WIRE---2.24 m(88.18 in.)	
	20	6N9587	CONNECTOR	1
	21	4S1988	TERMINAL	1
C		9M9812	WIRE ASSEM. ---(ground)---	1
	22		(Includes)	
●		5P6641	WIRE---.3 m(12 in.)	
		2L8052	TERMINAL	2

C INDICATES CHANGE ● ORDER BY THE METRE ▲ ORDER BY THE CENTIMETRE

169210

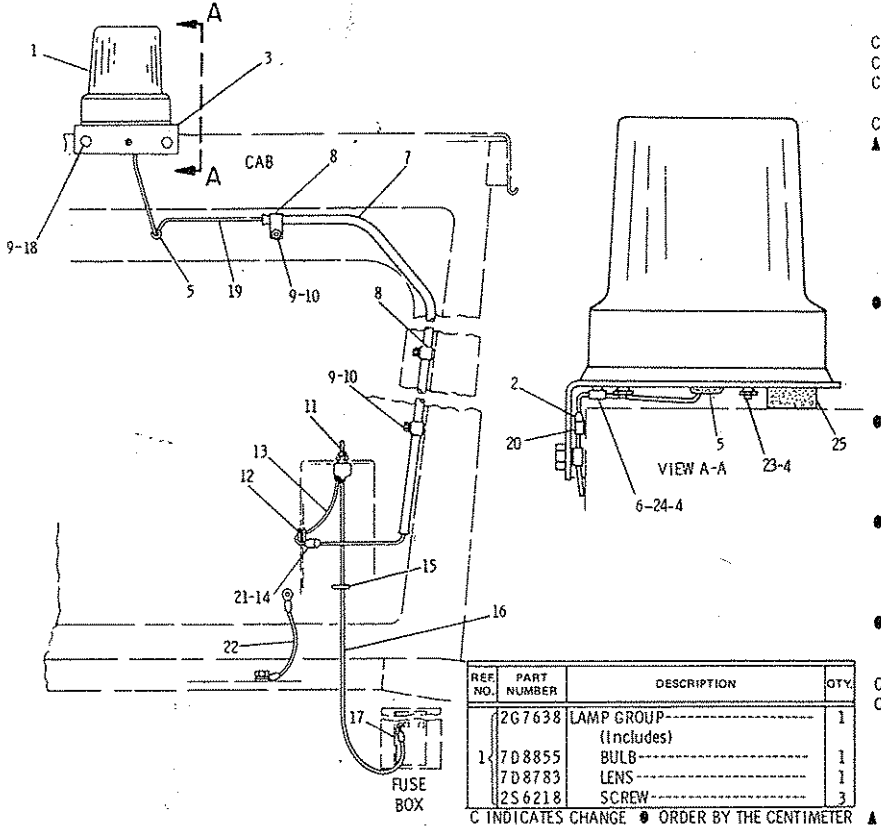

REF NO.	PART NUMBER	DESCRIPTION	QTY.
	2G7638	LAMP GROUP	1
		(Includes)	
1	7D8855	BULB	1
	7D8783	LENS	1
	2S6218	SCREW	3

	REF NO.	PART NUMBER	DESCRIPTION	QTY.
	2	5P5610	CONNECTOR	1
C	3	6G7166	PLATE ASSEM.	1
C	4	4B2047	NUT	5
C		9F8125	LOCKWASHER	5
	5	2D9535	GROMMET	2
C	6	1V3113	CLIP	2
▲	7	5P1203	TUBE---------170.56 cm(67.15 in.)	
	8	4D9164	CLIP	3
	9	3B4506	LOCKWASHER	5
	10	T102	BOLT	3
	11	8D2676	SWITCH	1
	12	1A621	GROMMET	1
	13	2G656	WIRE ASSEM.	1
			(Includes)	
●		5P5629	WIRE----------, 55 m(22 in.)	
		6D9404	TERMINAL	1
	14	4L3916	TERMINAL	1
	15	3S2093	TIE	2
	16	9D6082	WIRE ASSEM.	1
			(Includes)	
●		5P5629	WIRE----------, 3 m(50 in.)	
	17	2L8074	TERMINAL	2
	18	S509	BOLT	2
	19	2G7637	WIRE ASSEM.	1
			(Includes)	
●		5P5629	WIRE---------2.24 m(88.18 in.)	
	20	6N9587	CONNECTOR	1
	21	4S1988	TERMINAL	1
	22	9M9812	WIRE ASSEM. ------(ground)------	1
			(Includes)	
●		5P6641	WIRE-------, 3 m(12 in.)	
		2L8052	TERMINAL	2
	23	7D8866	SCREW	3
C	24	89792	SCREW	2
C	25	2G7382	BUMPER	1

C INDICATES CHANGE ● ORDER BY THE CENTIMETER ▲ ORDER BY THE METER 181204

2G995 WARNING LIGHTING GROUP—Rotating—Amber Lens—Type 2
Serial No. 87V5275 to 87V5733 inclusive
FOR USE WITH OPEN ROPS. AN ATTACHMENT

6G5870 LIGHTING GROUP—(High Profile)—Type 1

Serial No. 87V5734—Up. FOR USE WITH 6G2650 ROPS ARRANGEMENT LISTED ON PAGE 287

Provides rotating warning light with amber lens. AN ATTACHMENT

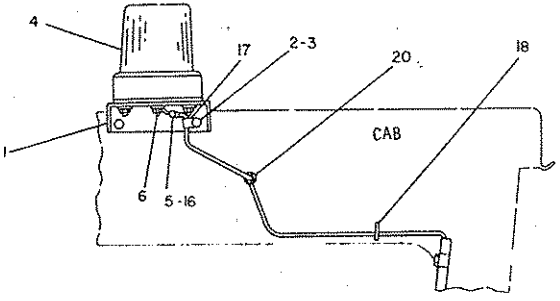

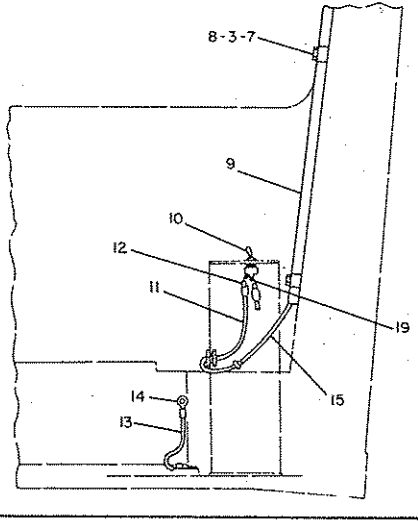

REF NO.	PART NUMBER	DESCRIPTION	QTY.
1	2G645	PLATE ASSEM.	1
2	S509	BOLT	2
3	5M2894	WASHER	5

	REF NO.	PART NUMBER	DESCRIPTION	QTY.
		2G7638	LAMP GROUP (Includes)	1
	4	7D8855	BULB	1
		7D8783	LENS	1
		2S6218	SCREW	3
	5	5P5610	CONNECTOR	1
		7D8866	SCREW	3
	6	4B2047	NUT	3
		9F8125	LOCKWASHER	3
	7	T102	BOLT	3
	8	4D9164	CLIP	3
▲	9	5P1203	TUBE-------108 cm(42.5 in.)	
	10	7N8000	SWITCH---(rotating light)	1
		6G5772	WIRE ASSEM. (Includes)	1
●	11	5P5629	WIRE-----,52 m(20 in.)	
		7N7777	HOUSING	1
		7N7779	SOCKET	1
	12	4L3916	TERMINAL	1
		9M9812	WIRE ASSEM. (Includes)	1
●	13	5P6641	WIRE------.3m(12 in.)	
	14	2L8052	TERMINAL	2
		6G5754	WIRE ASSEM. (Includes)	1
●	15	5P5629	WIRE-----2.24 m(88 in.)	
		7N7778	HOUSING	1
		7N7780	PIN	1
	16	6K1828	TERMINAL	1
	17	6K8179	CLIP	1
	18	3S2093	STRAP	2
	19	7N8597	TERMINAL	2
	20	2D9535	GROMMET	2
■		3K8782	FUSE-------(10amp) (Mounted in fuse box)	1

▲ ORDER BY THE CENTIMETER ● ORDER BY THE METER ■ NOT SHOWN

232840

6G5870 LIGHTING GROUP—High Profile—Type 2
Serial No. 87V5734—Up. FOR USE WITH 6G2650 ROPS ARRANGEMENT LISTED ON PAGE 287
Provides rotating warning light with amber lens. AN ATTACHMENT

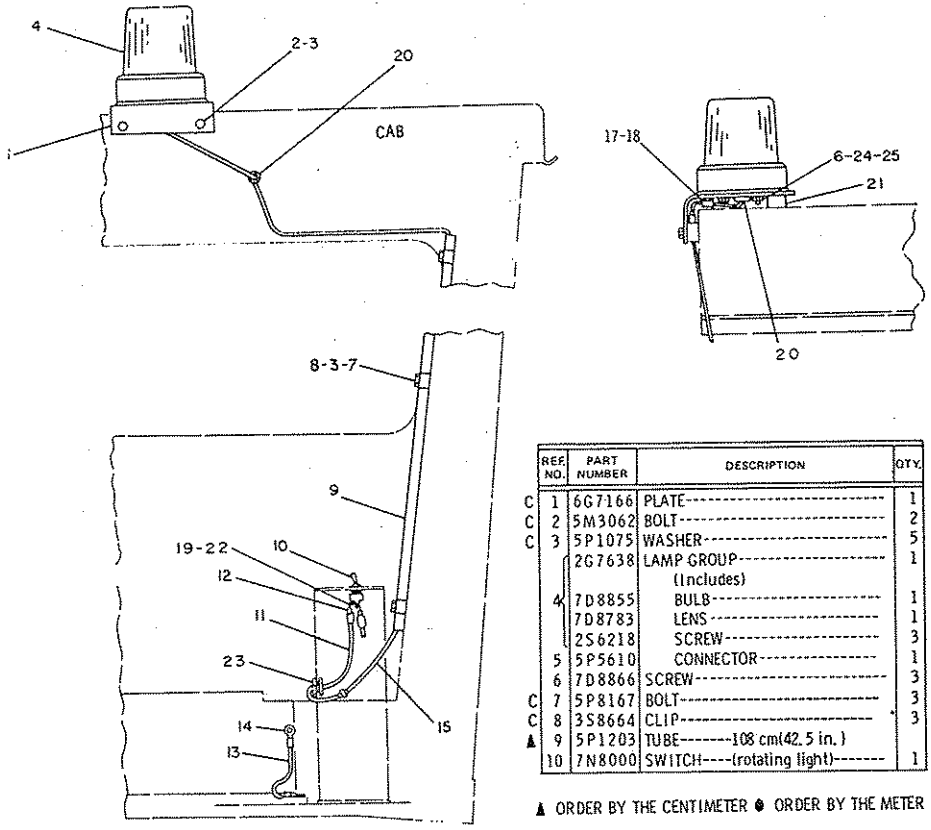

	REF. NO.	PART NUMBER	DESCRIPTION	QTY.
C	1	6G7166	PLATE	1
C	2	5M3062	BOLT	2
C	3	5P1075	WASHER	5
	4	2G7638	LAMP GROUP (Includes)	1
		7D8855	BULB	1
		7D8783	LENS	1
		2S6218	SCREW	3
	5	5P5610	CONNECTOR	1
	6	7D8866	SCREW	3
C	7	5P8167	BOLT	3
C	8	3S8664	CLIP	3
▲	9	5P1203	TUBE—108 cm(42.5 in.)	
	10	7N8000	SWITCH—(rotating light)	1
		6G5772	WIRE ASSEM. (Includes)	1
●	11	5P5629	WIRE—.52 m(20 in.)	
		7N7777	HOUSING	1
		7N7779	SOCKET	1
	12	4L3916	TERMINAL	1
		9M9812	WIRE ASSEM. (Includes)	1
	13			
●		5P6641	WIRE—.3 m(12 in.)	
	14	2L8052	TERMINAL	2
		6G5754	WIRE ASSEM. (Includes)	1
●	15	5P5629	WIRE—2.24 m(88 in.)	
		7N7778	HOUSING	1
		7N7780	PIN	1
	16	6K1828	TERMINAL	1
C	17	310243	SCREW	1
C	18	1V3113	CLIP	1
	19	7N8597	TERMINAL	2
	20	2D9535	GROMMET	2
C	21	2G7382	BUMPER	1
C	22	5H6555	LOCKWASHER	2
C	23	2D388	GROMMET	1
C	24	4B2047	NUT	3
C	25	9F8125	LOCKWASHER	3
■		3K8782	FUSE—(10 amp) (Mounted in fuse box)	1

▲ ORDER BY THE CENTIMETER ● ORDER BY THE METER ■ NOT SHOWN C INDICATES CHANGE 308676

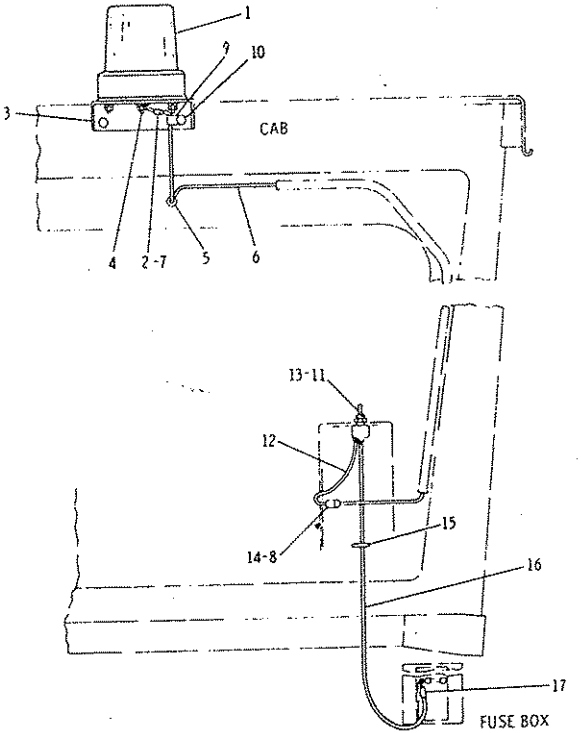

REF NO.	PART NUMBER	DESCRIPTION	QTY
C	2G7639	LAMP GROUP	1
		(Includes)	
1	7D8855	BULB	1
	2G6004	LENS	1
	2S6218	SCREW	3
2	5P5610	TERMINAL	1
3	2G645	PLATE ASSEM.	1
	7D8866	SCREW	3
4	4B2047	NUT	3
	9F8125	LOCKWASHER	3
5	2D9535	GROMMET	2
C	2G7637	WIRE ASSEM.	1
6		(Includes)	
A	5P5629	WIRE---------2.24 m(88.19 in.)	
7	6N9587	CONNECTOR-----(female)------	1
8	4S1988	TERMINAL	1
9	6K8179	CLIP	1
10	S509	BOLT	2
	3B4506	LOCKWASHER	2
C	11 8D2676	SWITCH-------(warning light)-----	1
	2G656	WIRE ASSEM.	1
12		(Includes)	
A	5P5629	WIRE---------.559 m(22 in.)	
13	6D9404	TERMINAL	1
14	4L3916	TERMINAL	1
15	3S2093	TIE	2
	9D6082	WIRE ASSEM.	1
16		(Includes)	
A	5P5629	WIRE--------1.3 m(50.0) in.)	
17	2L8074	TERMINAL	2

A ORDER BY THE METRE C INDICATES CHANGE 166541

2G6115 WARNING LIGHTING GROUP—Rotating—Blue Lens—Type 1
AN ATTACHMENT

2G6115 WARNING LIGHTING GROUP—Rotating—Blue Lens—Type 2
FOR USE WITH CAB
AN ATTACHMENT

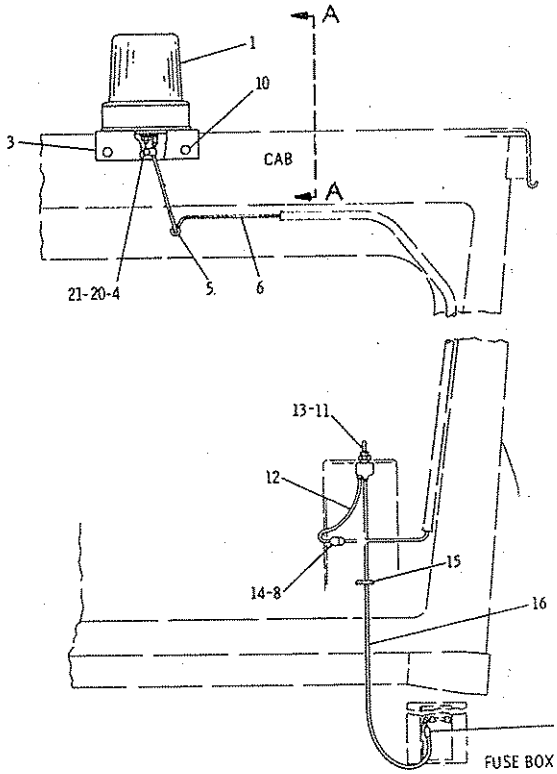

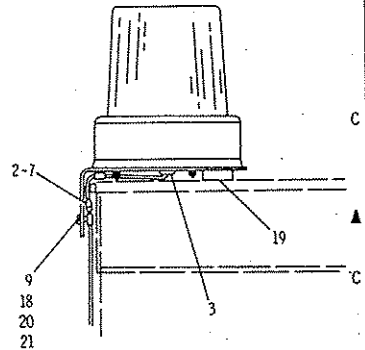

VIEW A-A

REF NO.	PART NUMBER	DESCRIPTION	QTY
	2G7639	LAMP GROUP	1
		(Includes)	
1	7D8855	BULB	1
	2G6004	LENS	1
	2S6218	SCREW	3
2	5P5610	TERMINAL	1
C 3	6G7166	PLATE	1
4	7D8866	SCREW	3
5	2D9535	GROMMET	2
	2G7637	WIRE ASSEM.	1
6		(Includes)	
▲	5P5629	WIRE--------2.24 m(88.19 in.)	
7	6N9587	CONNECTOR-----(female)-----	1
8	4S1988	TERMINAL	1
C 9	1V3113	CLIP	1
	S509	BOLT	2
10	3B4506	LOCKWASHER	2
11	8D2676	SWITCH-----(warning light)------	1
	2G656	WIRE ASSEM.	1
12		(Includes)	
▲	5P5629	WIRE----------.559 m(22 in.)	
13	6D9404	TERMINAL	1
14	4L3916	TERMINAL	1
15	3S2093	TIE	2
	9D6082	WIRE ASSEM.	1
16		(Includes)	
▲	5P5629	WIRE-----1.3 m(50.00 in.)	
17	2L8074	TERMINAL	2
C 18	89792	SCREW	2
C 19	2G7382	BUMPER	1
C 20	4B2047	NUT	5
C 21	9F8125	LOCKWASHER	5

▲ ORDER BY THE METER C INDICATES CHANGE

180452

2G6095 WARNING LIGHTING GROUP—Rotating—Blue Lens
FOR USE WITH OPEN ROPS. AN ATTACHMENT

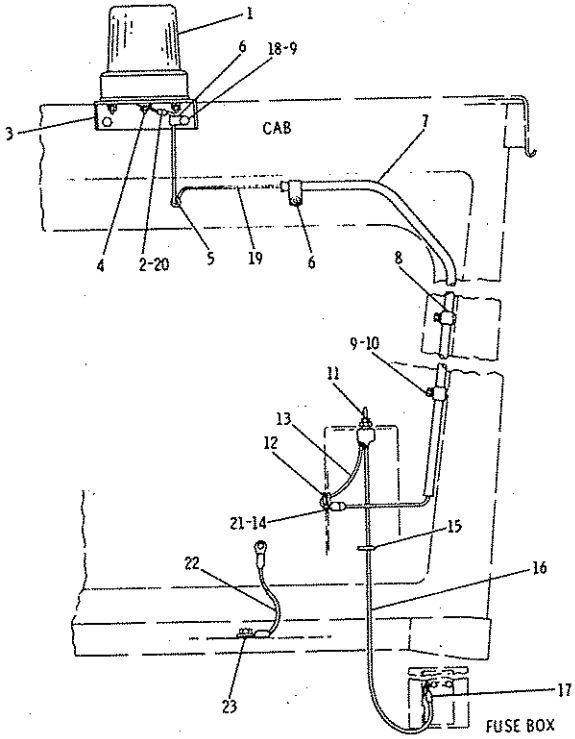

	REF. NO.	PART NUMBER	DESCRIPTION	QTY
C		2G7639	LAMP GROUP	1
			(Includes)	
	1	7D8855	BULB	1
		2G6004	LENS	1
		2S6218	SCREW	3
	2	5P5610	TERMINAL	1
	3	2G645	PLATE ASSEM.	1
		7D8866	SCREW	3
	4	4B2047	NUT	3
		9F8125	LOCKWASHER	3
	5	2D9535	GROMMET	2
	6	6K8179	CLIP	1
▲	7	5P1203	TUBE---------170.56 cm(67.15 in.)	
	8	4D9164	CLIP	3
	9	3B4506	LOCKWASHER	5
	10	T102	BOLT	3
C	11	8D2676	SWITCH-----(warning light)	1
	12	1A621	GROMMET	1
		2G656	WIRE ASSEM.	1
			(Includes)	
●	13	5P5629	WIRE--------.559 m(22 in.)	
		6D9404	TERMINAL	1
	14	4L3916	TERMINAL	1
	15	3S2093	TIE	2
		9D6082	WIRE ASSEM.	1
			(Includes)	
●	16	5P5629	WIRE----------1.3 m(50.00 in.)	
	17	2L8074	TERMINAL	2
	18	S509	BOLT	2
C		2G7637	WIRE ASSEM.	1
			(Includes)	
●	19	5P5629	WIRE---------2.24 m(88.19 in.)	
	20	6N9587	CONNECTOR-----(female)	1
	21	4S1988	TERMINAL	1
C	22	9M9812	WIRE ASSEM.	1
			(Includes)	
	23	2L8052	TERMINAL	2

C INDICATES CHANGE
● ORDER BY THE METRE
▲ ORDER BY THE CENTIMETRE

168920

REF. NO.	PART NUMBER	DESCRIPTION	QTY
	9D2825	LENS	2
1	8M6175	BULB	2
	9D3127	BASE	2
C 2	2S1074	GROMMET	1
3	5H9743	GROMMET	4
4	9D6698	BRACKET-(R. H.)	1
	9D6699	BRACKET-(L. H.)	1
5	5S7379	BOLT	6
	2K4973	NUT	6
6	7D8089	LAMP GROUP-(signal) (Separate Illustration)	2
7	1B4430	NUT	2
C	3J4818	LOCKWASHER	2
	9D5812	HARNESS ASSEM. (Includes)	1
C ▲ 8	5P5623	WIRE-7.2 m (283.5 in.)	
	4L3916	TERMINAL-(signal lamps)	2
9	4S1988	TERMINAL	2
10	4B2047	NUT	1
	9F8125	LOCKWASHER	1
	8D8995	HARNESS ASSEM. (Includes)	1
C ▲ 11	5P5629	WIRE-8.81 m (347 in.)	
12	4L3916	TERMINAL	10
13	4S1988	TERMINAL	2
14	3S2093	TIE	4
	9D2790	WIRE ASSEM. (Includes)	1
C ▲ 15	5P5629	WIRE-.381 m (15 in.)	
16	7F9224	TERMINAL	1
17	9D2824	WIRE ASSEM.	1
18	9D2823	WIRE ASSEM.	1
19	5S7349	BOLT	2
	1L4789	LOCKWASHER	2

	4B1237	SCREW	2
20	4B2049	NUT	2
	7H2079	LOCKWASHER	2
21	8D6946	FLASHER	1
22	9D2792	BRACKET	1
C 23	2V3216	CLIP	4
C 24	5P7162	SCREW	4
C	4B4274	WASHER	4

	8D6947	SWITCH GROUP--(turn signal) (Includes)	1
C 25	5L7200	SCREW	1
C	3B4501	LOCKWASHER	1

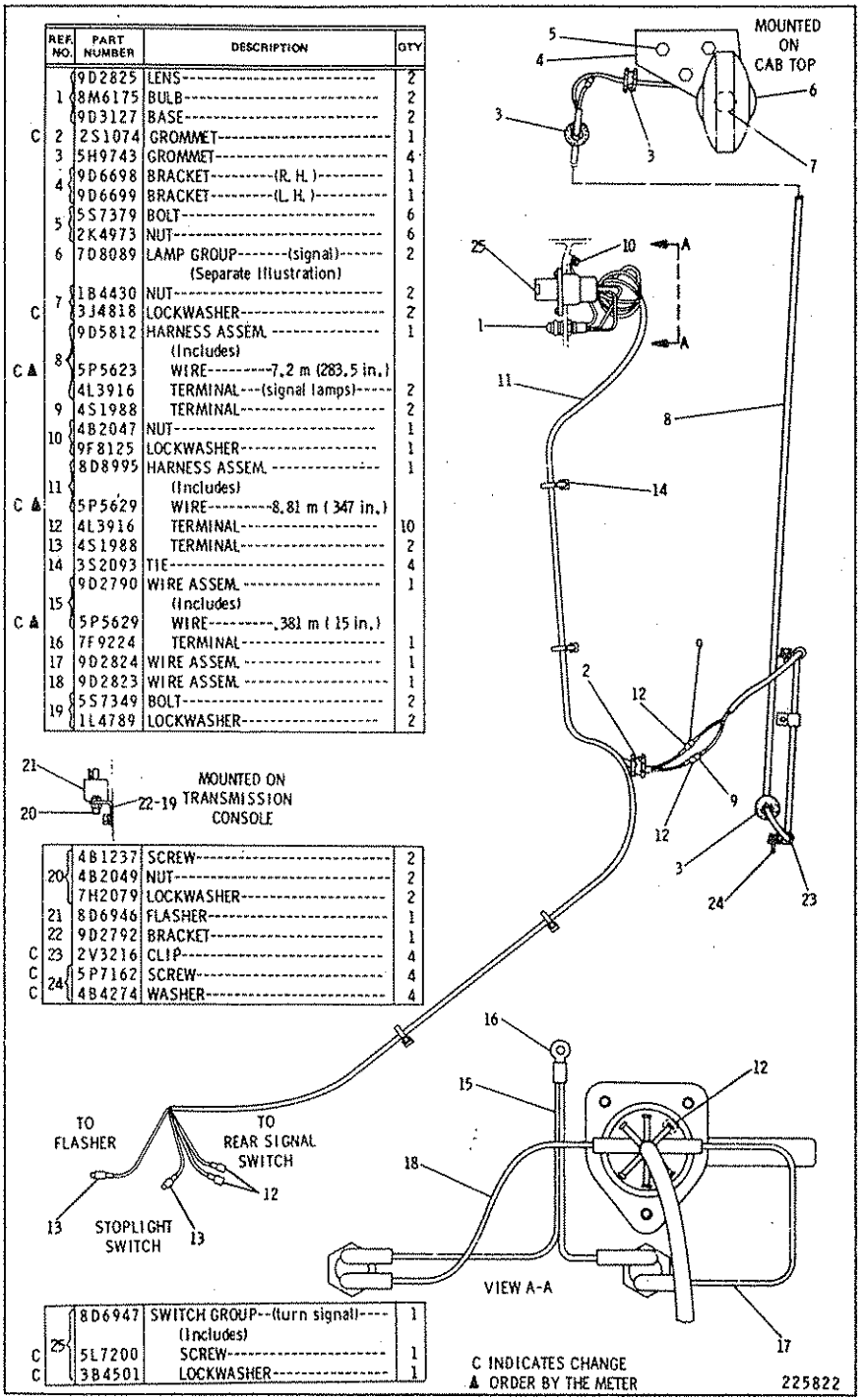

9D5720 TURN SIGNAL LIGHTING GROUP—Type 1
Serial No. 87V5275 to 87V5733 Inclusive. 7D8089 Lamp parts are shown on Page 112B. AN ATTACHMENT

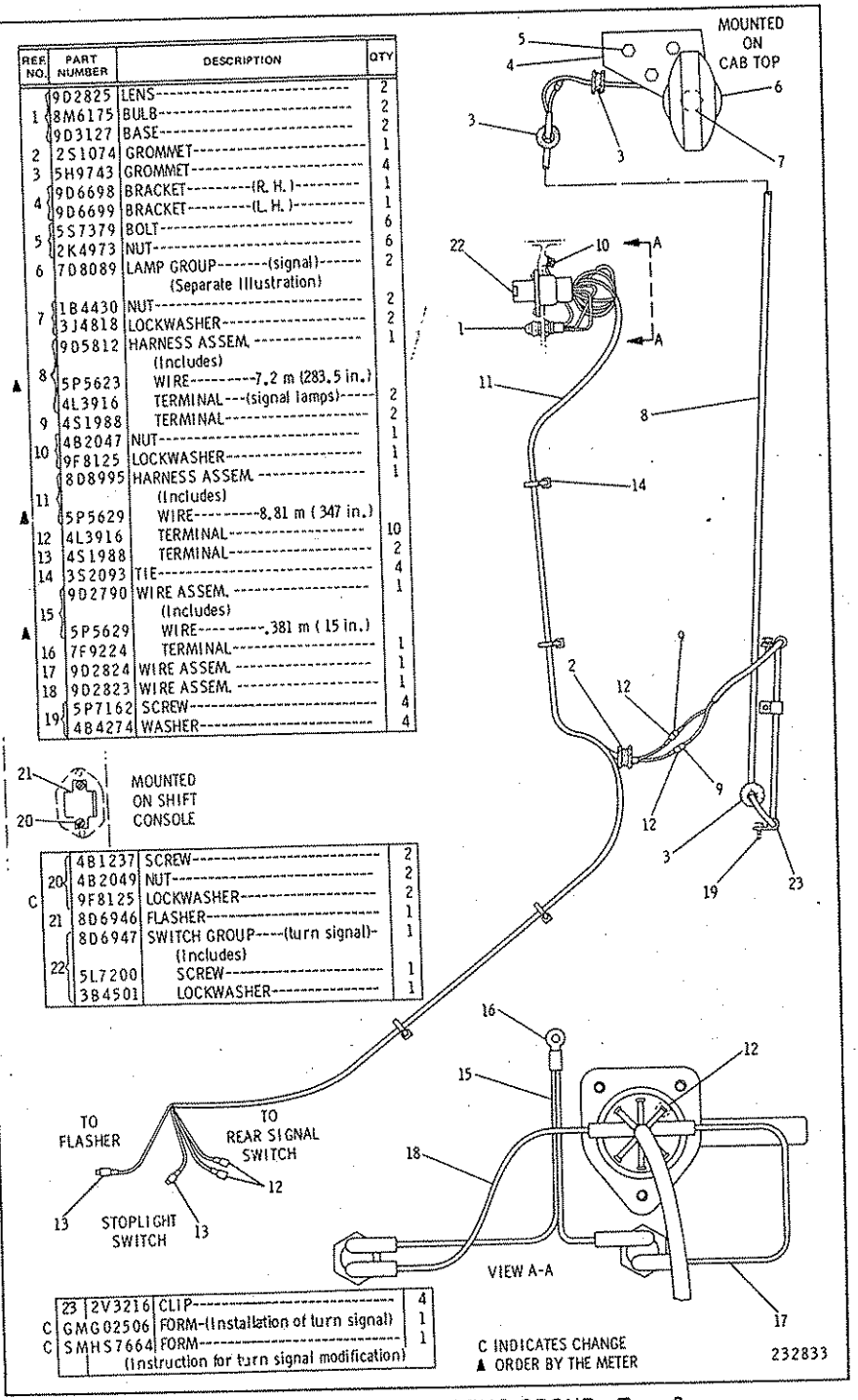

REF NO.	PART NUMBER	DESCRIPTION	QTY
	9D2825	LENS	2
1	8M6175	BULB	2
	9D3127	BASE	2
2	2S1074	GROMMET	1
3	5H9743	GROMMET	4
4	9D6698	BRACKET-(R. H.)	1
	9D6699	BRACKET-(L. H.)	1
5	5S7379	BOLT	6
	2K4973	NUT	6
6	7D8089	LAMP GROUP-(signal) (Separate Illustration)	2
7	1B4430	NUT	2
	3J4818	LOCKWASHER	2
	9D5812	HARNESS ASSEM. (Includes)	1
▲ 8	5P5623	WIRE-7.2 m (283.5 in.)	
	4L3916	TERMINAL-(signal lamps)	2
9	4S1988	TERMINAL	2
10	4B2047	NUT	1
	9F8125	LOCKWASHER	1
11	8D8995	HARNESS ASSEM. (Includes)	1
▲	5P5629	WIRE-8.81 m (347 in.)	
12	4L3916	TERMINAL	10
13	4S1988	TERMINAL	2
14	3S2093	TIE	4
15	9D2790	WIRE ASSEM. (Includes)	1
▲	5P5629	WIRE-.381 m (15 in.)	
16	7F9224	TERMINAL	1
17	9D2824	WIRE ASSEM.	1
18	9D2823	WIRE ASSEM.	1
19	5P7162	SCREW	4
	4B4274	WASHER	4
	4B1237	SCREW	2
20	4B2049	NUT	2
C	9F8125	LOCKWASHER	2
21	8D6946	FLASHER	1
	8D6947	SWITCH GROUP-(turn signal)-(Includes)	1
22	5L7200	SCREW	1
	3B4501	LOCKWASHER	1
23	2V3216	CLIP	4
C	GMG02506	FORM-(Installation of turn signal)	1
C	SMHS7664	FORM-(Instruction for turn signal modification)	1

9D5720 TURN SIGNAL LIGHTING GROUP—Type 2
Serial No. 87V5275 to 87V5733 Inclusive
7D8089 Lamp parts are shown on Page 112B. AN ATTACHMENT

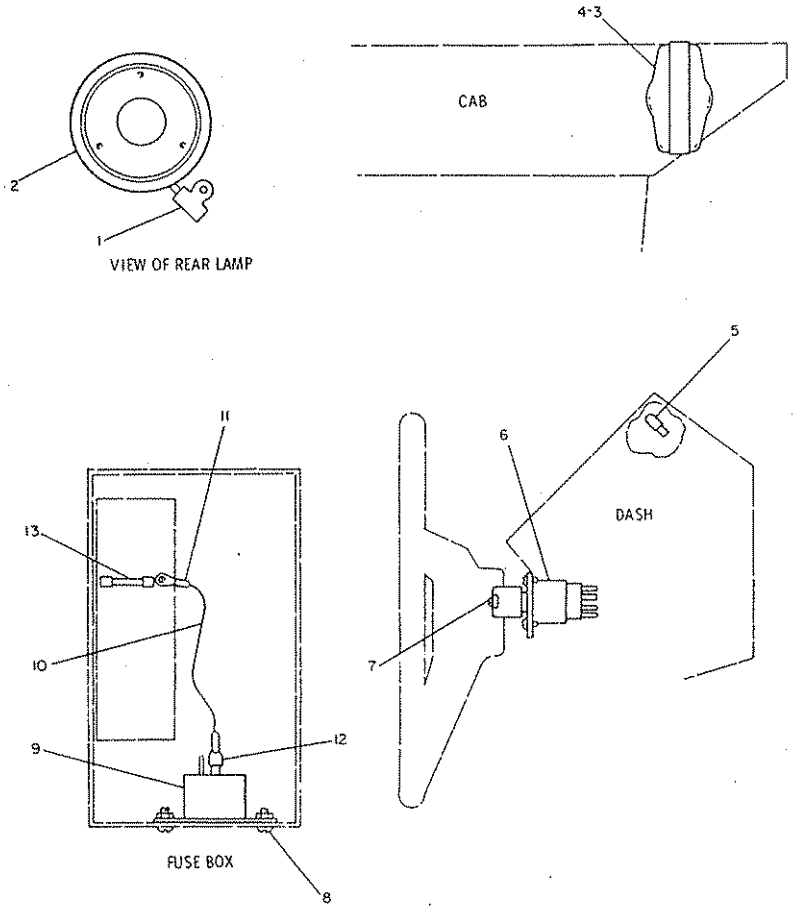

REF. NO.	PART NUMBER	DESCRIPTION	QTY.
1	3T51	CLIP	2
	9G4357	LAMP GROUP---(turn signal)---(Each Includes)	2
2	7H2976	BULB	1
	7N7778	HOUSING	1
	7N7780	PIN	1
3	7G9318	LAMP GROUP (Separate Illustration)	2
	5H9743	GROMMET	2
4	3J4818	LOCKWASHER	2
5	7N5876	LAMP	2
6	8D6947	SWITCH GROUP---(warning)---(Includes)	1
7	5L7200	SCREW	1
	3B4501	LOCKWASHER	1
	4B1237	SCREW	2
8	4B2049	NUT	2
	9F8125	LOCKWASHER	2
9	8D6946	FLASHER UNIT---(24 volt)	1
10	6G6123	WIRE ASSEM. (Includes)	1
▲	5P5623	WIRE------, 23 m (75.50 in.)	
11	2L8076	TERMINAL	1
12	6K659	TERMINAL	1
13	3K8782	FUSE---------(10 amp)	1

THE FOLLOWING REPAIR KIT IS AVAILABLE:

	7D8713	KIT----------(lens)---------- (Includes gasket, screw & lens)	1

▲ ORDER BY THE METER

304259

6G5640 SIGNAL LIGHTING GROUP—Cab
Serial No. 87V5734—Up. 7G9318 Lamp parts are shown on Page 113
AN ATTACHMENT

2G1170 SIGNAL LIGHTING GROUP—Light Bar—Type 1
Serial No. 87V5275 to 87V5733 inclusive
FOR USE WITH 2G1040 SIGNAL LIGHTING GROUP SHOWN ON PAGE 110
7D8089 Lamp parts are shown on Page 112B. AN ATTACHMENT

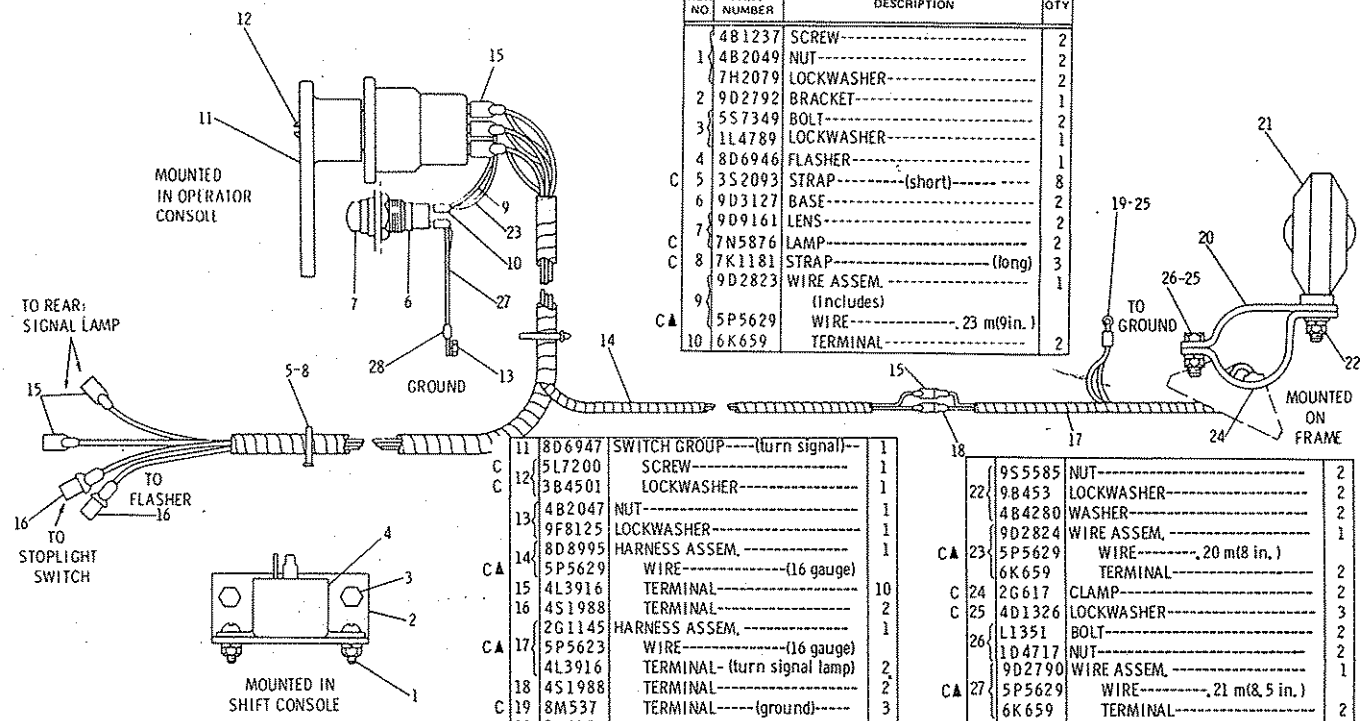

REF. NO.	PART NUMBER	DESCRIPTION	QTY
	4B1237	SCREW	2
1	4B2049	NUT	2
	7H2079	LOCKWASHER	2
2	9D2792	BRACKET	1
3	5S7349	BOLT	2
	1L4789	LOCKWASHER	1
4	8D6946	FLASHER	1
C 5	3S2093	STRAP---(short)	8
6	9D3127	BASE	2
7	9D9161	LENS	2
C	7N5876	LAMP	2
C 8	7K1181	STRAP---(long)	3
9	9D2823	WIRE ASSEM. (Includes)	1
C▲	5P5629	WIRE---.23 m(9in.)	
10	6K659	TERMINAL	2

11	8D6947	SWITCH GROUP---(turn signal)--	1
C 12	5L7200	SCREW	1
C	3B4501	LOCKWASHER	1
13	4B2047	NUT	1
	9F8125	LOCKWASHER	1
14	8D8995	HARNESS ASSEM.	1
C▲	5P5629	WIRE---(16 gauge)	
15	4L3916	TERMINAL	10
16	4S1988	TERMINAL	2
	2G1145	HARNESS ASSEM.	1
C▲ 17	5P5623	WIRE---(16 gauge)	
	4L3916	TERMINAL-(turn signal lamp)	2
18	4S1988	TERMINAL	2
C 19	8M537	TERMINAL---(ground)	3
C 20	2G615	CLAMP	2
21	7D8089	LAMP ASSEM. (Separate Illustration)	2

	9S5585	NUT	2
22	9B453	LOCKWASHER	2
	4B4280	WASHER	2
	9D2824	WIRE ASSEM.	1
C▲ 23	5P5629	WIRE---.20 m(8 in.)	
	6K659	TERMINAL	2
C 24	2G617	CLAMP	2
C 25	4D1326	LOCKWASHER	3
26	L1351	BOLT	2
	1D4717	NUT	2
	9D2790	WIRE ASSEM.	1
C▲ 27	5P5629	WIRE---.21 m(8.5 in.)	
	6K659	TERMINAL	2
28	2L8076	TERMINAL	1

C INDICATES CHANGE ▲ ORDER BY THE METER 228076

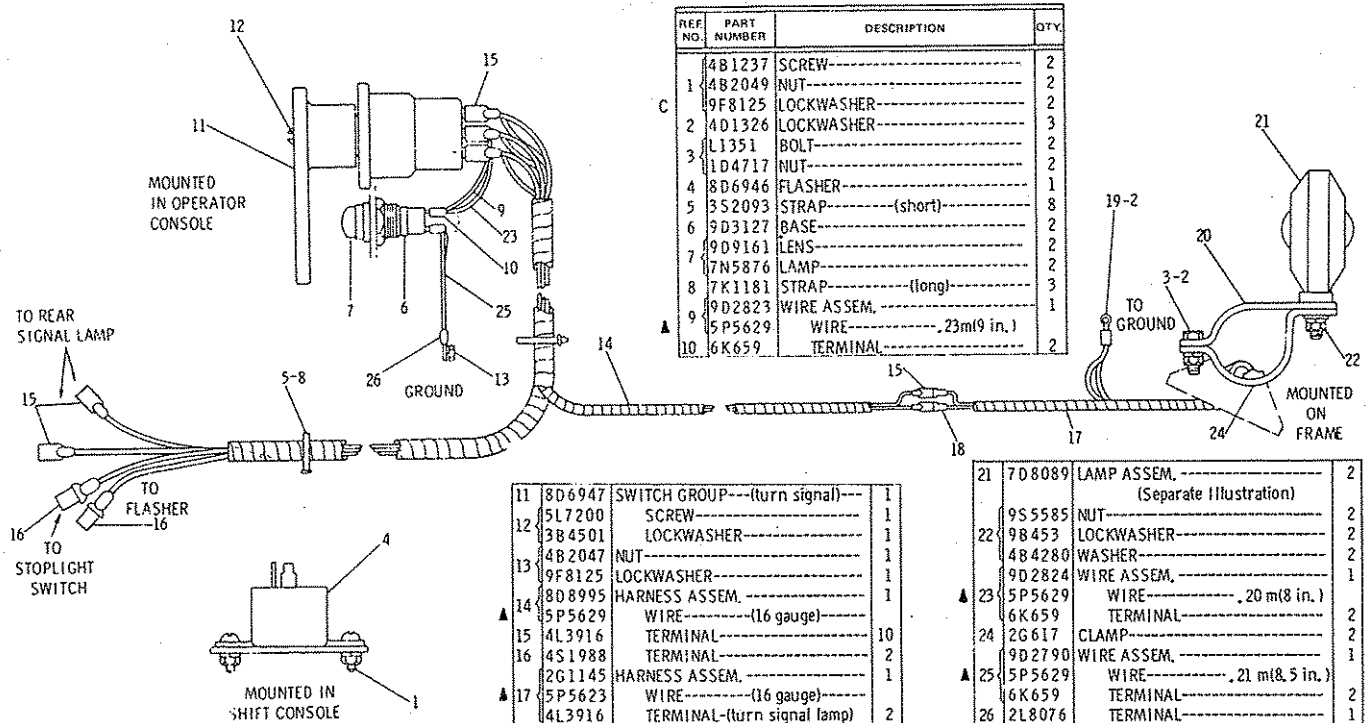

REF. NO.	PART NUMBER	DESCRIPTION	QTY.
C 1	4B1237	SCREW	2
	4B2049	NUT	2
	9F8125	LOCKWASHER	2
2	4D1326	LOCKWASHER	3
3	L1351	BOLT	2
	1D4717	NUT	2
4	8D6946	FLASHER	1
5	3S2093	STRAP---(short)	8
6	9D3127	BASE	2
7	9D9161	LENS	2
	7N5876	LAMP	2
8	7K1181	STRAP---(long)	3
9	9D2823	WIRE ASSEM.	1
▲	5P5629	WIRE---.23m(9 in.)	
10	6K659	TERMINAL	2

11	8D6947	SWITCH GROUP---(turn signal)---	1
12	5L7200	SCREW	1
	3B4501	LOCKWASHER	1
13	4B2047	NUT	1
	9F8125	LOCKWASHER	1
14	8D8995	HARNESS ASSEM.	1
▲	5P5629	WIRE---(16 gauge)	
15	4L3916	TERMINAL	10
16	4S1988	TERMINAL	2
	2G1145	HARNESS ASSEM.	1
▲ 17	5P5623	WIRE---(16 gauge)	
	4L3916	TERMINAL-(turn signal lamp)	2
18	4S1988	TERMINAL	2
19	8M537	TERMINAL---(ground)	3
20	2G615	CLAMP	2

21	7D8089	LAMP ASSEM. (Separate Illustration)	2
	9S5585	NUT	2
22	9B453	LOCKWASHER	2
	4B4280	WASHER	2
	9D2824	WIRE ASSEM.	1
▲ 23	5P5629	WIRE---.20 m(8 in.)	
	6K659	TERMINAL	2
24	2G617	CLAMP	2
	9D2790	WIRE ASSEM.	1
▲ 25	5P5629	WIRE---.21 m(8.5 in.)	
	6K659	TERMINAL	2
26	2L8076	TERMINAL	1
C	SMF-S7664	FORM (Instructions for turn signal modification)	1

C INDICATES CHANGE

▲ ORDER BY THE METER

232831

2G1170 SIGNAL LIGHTING GROUP—Light Bar—Type 2
Serial No. 87V5275 to 87V5733 Inclusive. FOR USE WITH 2G1040 SIGNAL LIGHTING GROUP SHOWN ON PAGE 110
7D8089 Lamp parts are shown on Page 112B. AN ATTACHMENT

6G5900 SIGNAL LIGHTING GROUP

Serial No. 87V5734—Up. FOR USE WITH 6G6955 LIGHTING GROUP SHOWN ON PAGE 110A
7G9318 Lamp parts are shown on Page 113. AN ATTACHMENT

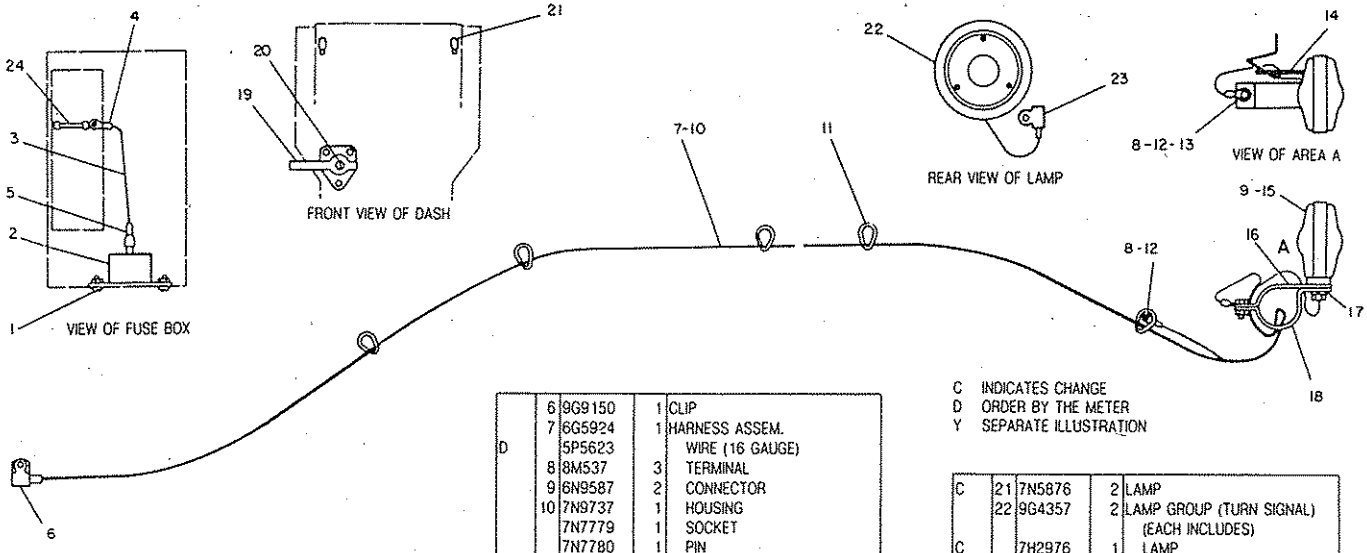

NOTE	REF NO	PART NUMBER	QTY	DESCRIPTION
	1	4B1237	2	SCREW
		4B2049	2	NUT
		9F8125	2	LOCKWASHER
	2	8D6946	1	FLASHER UNIT
	3	6G6123	1	WIRE ASSEM.
D		5P5623		WIRE .23M (9.05 IN.)
	4	2L8076	1	TERMINAL
	5	6K659	1	TERMINAL
	6	9G9150	1	CLIP
	7	6G5924	1	HARNESS ASSEM.
D		5P5623		WIRE (16 GAUGE)
	8	8M537	3	TERMINAL
	9	6N9587	2	CONNECTOR
	10	7N9737	1	HOUSING
		7N7779	1	SOCKET
		7N7780	1	PIN
	11	3S2093	7	STRAP
	12	3K8909	3	WASHER
	13	L1351	2	BOLT
		1D4717	2	NUT
	14	7K1181	3	STRAP
Y	15	7G9318	2	LAMP GROUP
	16	2G615	2	CLAMP
	17	3J4818	2	LOCKWASHER
	18	2G617	2	CLAMP
	19	8D6947	1	SWITCH GROUP (WARNING)
		5L7200	1	SCREW
		3B4501	1	LOCKWASHER

C INDICATES CHANGE
D ORDER BY THE METER
Y SEPARATE ILLUSTRATION

NOTE	REF NO	PART NUMBER	QTY	DESCRIPTION
C	21	7N5876	2	LAMP
	22	9G4357	2	LAMP GROUP (TURN SIGNAL) (EACH INCLUDES)
C		7H2976	1	LAMP
		7N7778	1	HOUSING
		7N7780	1	PIN
	23	3T51	2	CLIP
	24	3K8782	1	FUSE (10 AMP)
				THE FOLLOWING REPAIR KIT IS AVAILABLE:
		7D8713	1	KIT (TURN SIGNAL LAMP LENS) (INCLUDES GASKET, SCREW & LENS)

304298

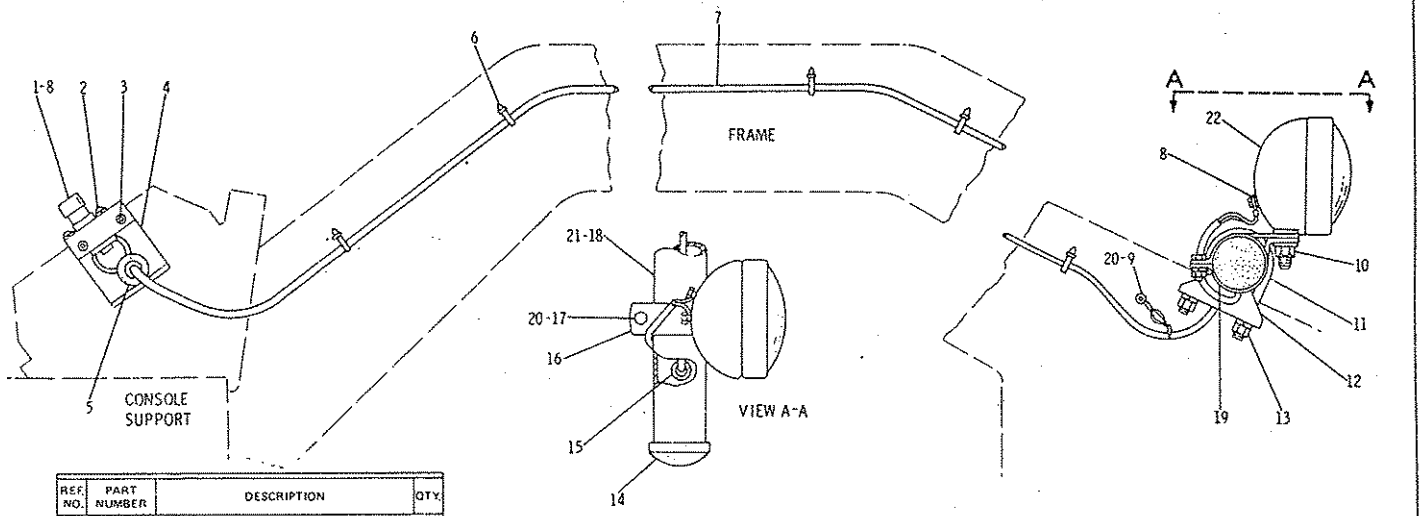

	REF. NO.	PART NUMBER	DESCRIPTION	QTY.
	1	2H1855	DIMMER SWITCH	1
	2	4B1320	SCREW	2
		3B4504	LOCKWASHER	2
	3	S1617	BOLT	2
		3B4505	LOCKWASHER	2
	4	9D1396	BRACKET	1
	5	2S1074	GROMMET	1
C	6	3S2093	STRAP	9
	7	2G1033	HARNESS ASSEM. (Includes)	1
C▲		5P5623	WIRE----(16 gauge)	
		2D8757	TERMINAL--(L.H. headlamp)	2
	8	2D8781	TERMINAL	4
C	9	8M537	TERMINAL	3

C	10	5D3183	NUT	2
		6F253	LOCKWASHER	2
	11	3J1930	"U" BOLT	2
	12	2G659	BRACKET	2
	13	1D4719	NUT	4
		3B4508	LOCKWASHER	4
	14	2G988	CAP	2
C	15	9P719	GROMMET	3

C	16	2G615	CLAMP	2
	17	L1351	BOLT	2
		1D4717	NUT	2
	18	2G658	TUBE	1
C	19	2G617	CLAMP	2
C	20	4D1326	LOCKWASHER	3
C	21	7K1181	STRAP	1
	22	1M6052	LAMP ASSEM. (Separate Illustration)	1

▲ ORDER BY THE METER

C INDICATES CHANGE

178620

2G1040 SIGNAL LIGHTING GROUP—Light Bar

Serial No. (-7V5275 to 87V5733 inclusive. 1M6052 Lamp parts are shown on Page 113. AN ATTACHMENT

6G5955 LIGHTING GROUP—Light Bar
Serial No. 87V5734—Up
1M6052 Lamp parts are shown on Page 113. AN ATTACHMENT

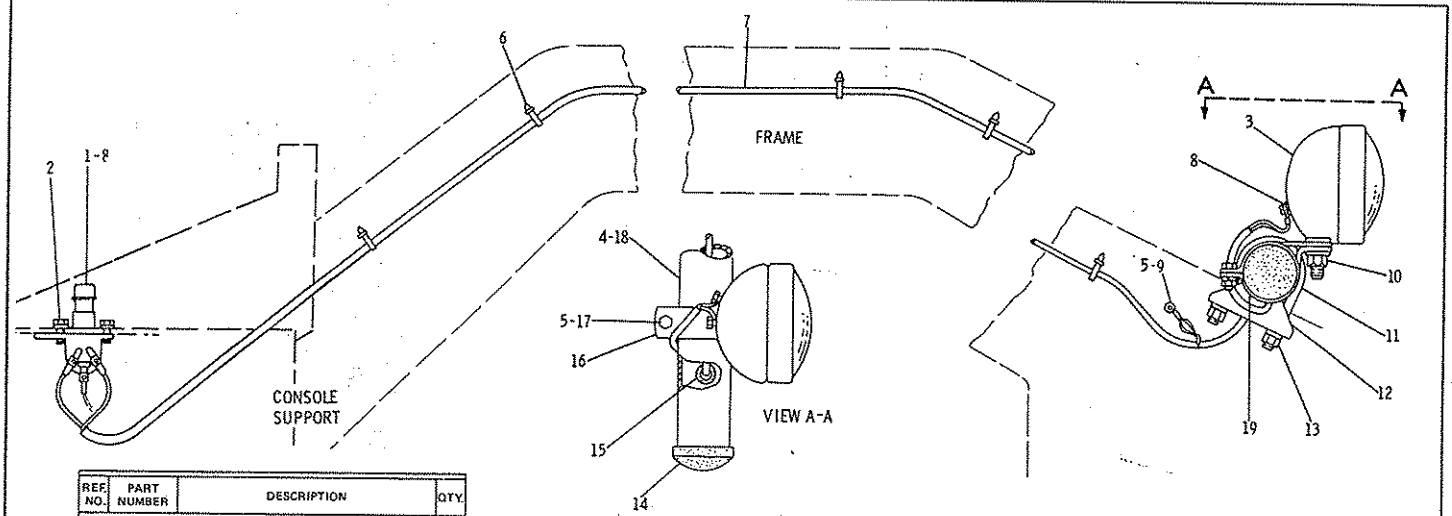

REF. NO.	PART NUMBER	DESCRIPTION	QTY.
1	2H1855	DIMMER SWITCH	1
2	7M320	SCREW	2
	5P537	WASHER	2
3	1M6052	LAMP ASSEM. (Separate Illustration)	2
4	7K1181	STRAP	1
5	3K8909	LOCKWASHER	3
6	3S2093	STRAP	9
7	2G1033	HARNESS ASSEM. (Includes)	1
▲	5P5623	WIRE----------(16 gauge)	
	2D8757	TERMINAL--(L. H. headlamp)--	2
8	2D8781	TERMINAL	4
9	8M537	TERMINAL	3

▲ ORDER BY THE METER

10	5D3183	NUT	2
	6F253	LOCKWASHER	2
11	3J1930	"U" BOLT	2
12	2G659	BRACKET	2
13	1D4719	NUT	4
	5P8245	WASHER	4
14	2G988	CAP	2
15	9D719	GROMMET	3

16	2G615	CLAMP	2
17	1L1351	BOLT	2
	1D4717	NUT	2
18	2G658	TUBE	1
19	2G617	CLAMP	2

232829

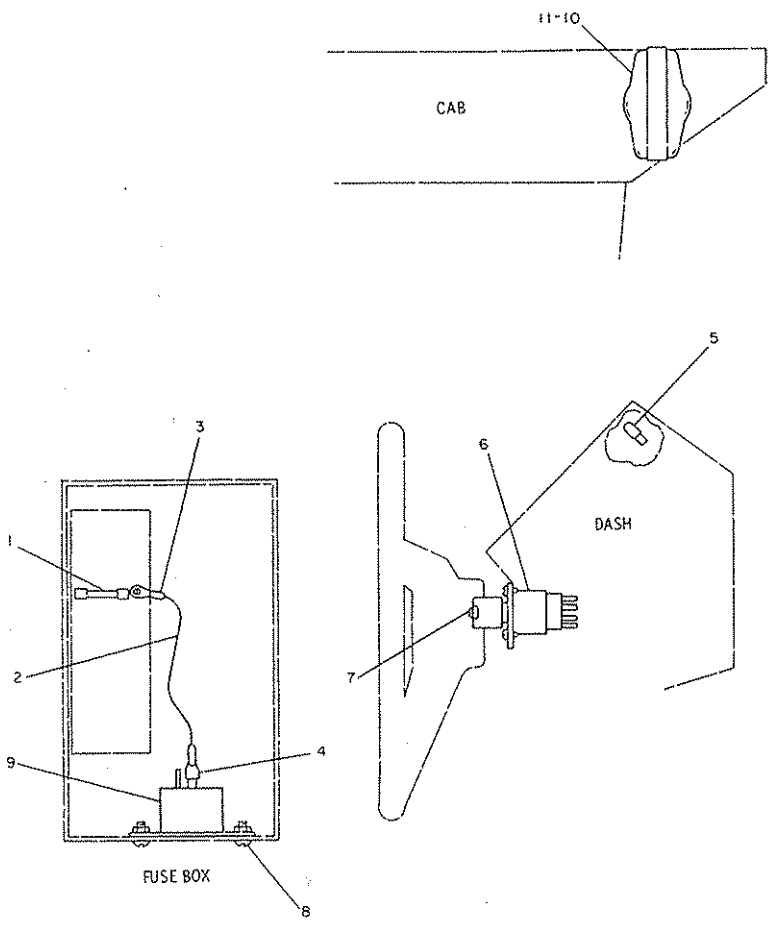

REF NO.	PART NUMBER	DESCRIPTION	QTY.
1	3K8782	FUSE----------(10 amp)----------	1
2	6G6123	WIRE ASSEM.---------- (Includes)	1
▲	5P5623	WIRE-------, 23 m(9.05 in.)	
3	2L8076	TERMINAL----------	1
4	6K659	TERMINAL----------	1
5	7N5876	LAMP----------	2
6	8D6947	SWITCH GROUP---(warning)------- (Includes)	1
7	5L7200	SCREW----------	1
	3B4501	LOCKWASHER----------	1
8	4B1237	SCREW----------	2
	4B2049	NUT----------	2
	9F8125	LOCKWASHER----------	2
9	8D6946	FLASHER UNIT------(24 volt)--------	1
10	7G9318	LAMP GROUP---------- (Separate Illustration)	4
	5H9743	GROMMET----------	2
11	3J4818	LOCKWASHER----------	4

▲ ORDER BY THE METER

181244

6G7730 SIGNAL LIGHTING GROUP—Cab—Spectator Sound
Serial No. 87V5734—Up. FOR USE WITH 6G6331 SOUND SUPPRESSION ARRANGEMENT LISTED ON PAGE 168. 7G9318 Lamp parts are shown on Page 113. AN ATTACHMENT

6G7735 SIGNAL LIGHTING GROUP—Spectator Sound

Serial No. 87V5734—Up. FOR USE WITH 6G6331 SOUND SUPPRESSION ARRANGEMENT LISTED ON PAGE 168

7G9318 Lamp parts are shown on Page 113. AN ATTACHMENT

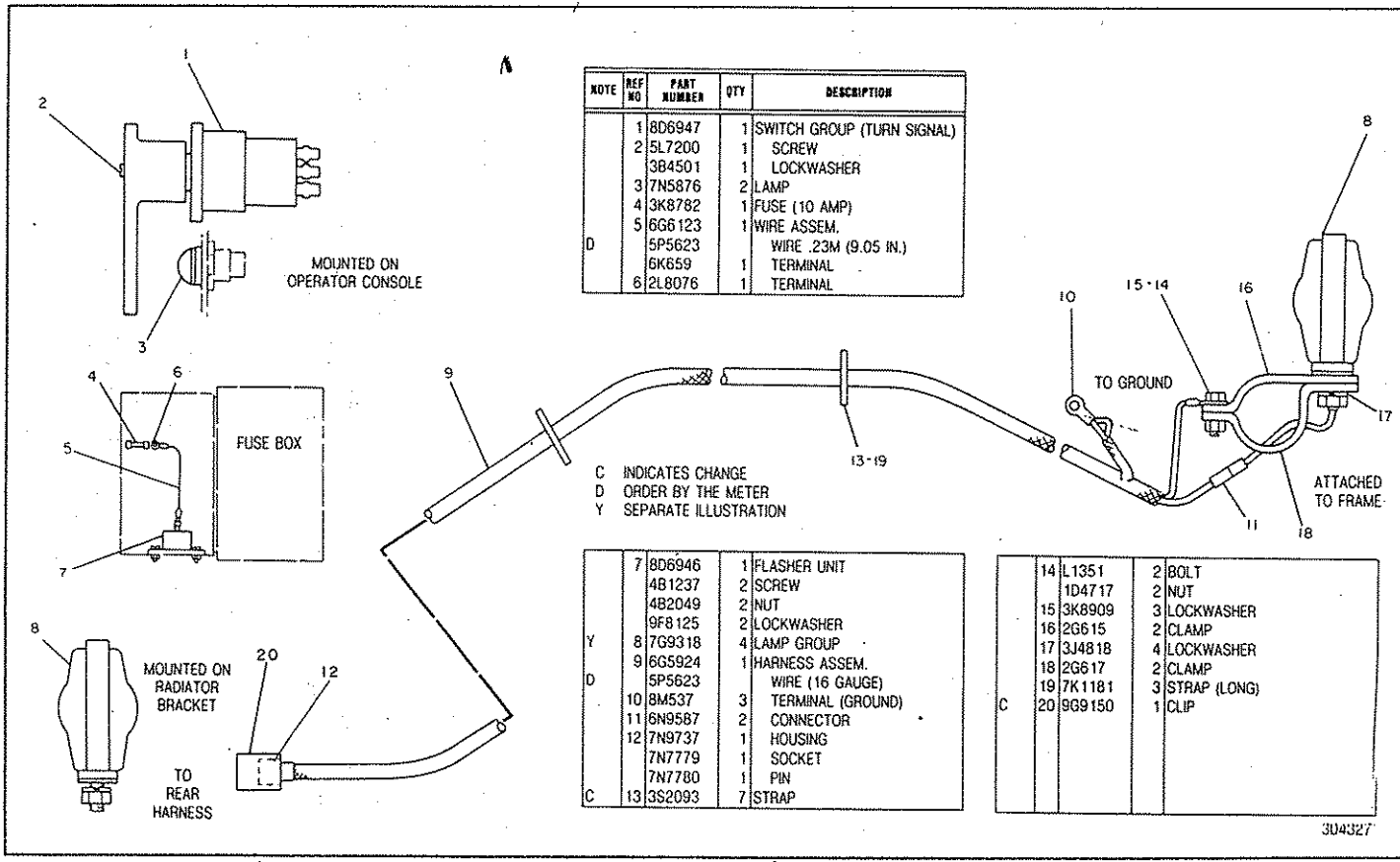

NOTE	REF NO	PART NUMBER	QTY	DESCRIPTION
	1	8D6947	1	SWITCH GROUP (TURN SIGNAL)
	2	5L7200	1	SCREW
		3B4501	1	LOCKWASHER
	3	7N5876	2	LAMP
	4	3K8782	1	FUSE (10 AMP)
	5	6G6123	1	WIRE ASSEM.
D		5P5623		WIRE .23M (9.05 IN.)
		6K659	1	TERMINAL
	6	2L8076	1	TERMINAL
	7	8D6946	1	FLASHER UNIT
		4B1237	2	SCREW
		4B2049	2	NUT
		9F8125	2	LOCKWASHER
Y	8	7G9318	4	LAMP GROUP
	9	6G5924	1	HARNESS ASSEM.
D		5P5623		WIRE (16 GAUGE)
	10	8M537	3	TERMINAL (GROUND)
	11	6N9587	2	CONNECTOR
	12	7N9737	1	HOUSING
		7N7779	1	SOCKET
		7N7780	1	PIN
C	13	3S2093	7	STRAP
	14	L1351	2	BOLT
		1D4717	2	NUT
	15	3K8909	3	LOCKWASHER
	16	2G615	2	CLAMP
	17	3J4818	4	LOCKWASHER
	18	2G617	2	CLAMP
	19	7K1181	3	STRAP (LONG)
C	20	9G9150	1	CLIP

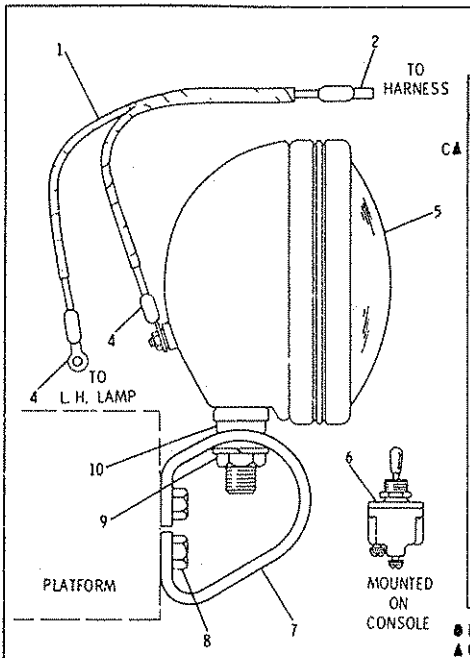

REF. NO.	PART NUMBER	DESCRIPTION	QTY
1	8D8800	WIRE ASSEM.	1
C▲	5P6018	WIRE---2.54 m(100 in.)	
2	4S1988	TERMINAL	1
4	2D8781	TERMINAL	2
5	1M1882	LAMP ASSEM.---(R. H. & L. H.)---(Separate Illustration)	2
6	8D2676	SWITCH---(toggle)	1
7	8D1992	BRACKET	2
	1S1594	BOLT	4
8	1D4717	NUT	4
	3B4506	LOCKWASHER	4
	5D3183	NUT	2
9	5D3184	LOCKWASHER	2
	6D2256	SPACER	2
10	3D7854	SPACER	2
●	3D4529	FUSE---(14 AMP)	1

● NOT SHOWN
▲ ORDER BY THE METRE

210055

8D2045 FLOODLAMP LIGHTING GROUP—Front
Serial No. 87V5275 to 87V5733 inclusive. 1M1882 Lamp parts are shown on Page 114. AN ATTACHMENT

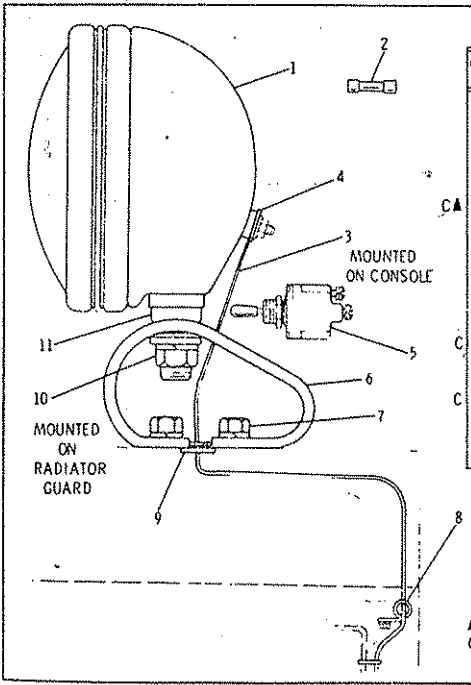

REF. NO.	PART NUMBER	DESCRIPTION	QTY
1	1M1882	LAMP ASSEM.---(Separate Illustration)	1
2	3D4529	FUSE---(14 amp)	1
3	8D8749	WIRE ASSEM.---(Includes)	1
C▲	5P5629	WIRE---2.27 m (89.50 in.)	
	4S1988	TERMINAL	1
4	2D8781	TERMINAL	1
5	8D2676	SWITCH---(toggle)	1
6	8D1992	BRACKET	1
7	1L1351	BOLT	2
	3B4506	LOCKWASHER	2
C 8	3S2093	STRAP	6
9	3K8107	GROMMET	1
	5D3183	NUT	1
C 10	5D3184	LOCKWASHER	1
	6D2256	SPACER	1
11	3D7854	SPACER	1

▲ ORDER BY THE METER
C INDICATES CHANGE

222015

REF. NO.	PART NUMBER	DESCRIPTION	QTY.
1	1M1882	LAMP GROUP (Separate Illustration)	2
2	3D7854	SPACER	2
3	5D3183	NUT	2
	5P8247	WASHER	2
	6D2256	SPACER	2
4	8M2772	CLIP	2
5	8D1992	BRACKET	2
6	8M8948	FUSE-------(15 amp)	1

▲ ORDER BY THE METER

7	S1594	BOLT	4
	1D4717	NUT	4
	5M2894	WASHER	4
8	6G5901	WIRE ASSEM. (Includes)	1
▲	5P5623	WIRE--1.75 m(69.10 in.)	
9	2D8781	TERMINAL	2
10	7N7778	HOUSING	1
	7N7780	PIN	1
11	7N8000	SWITCH----(front floodlamps)	1
12	7N8597	TERMINAL	2
13	5H6555	LOCKWASHER	2

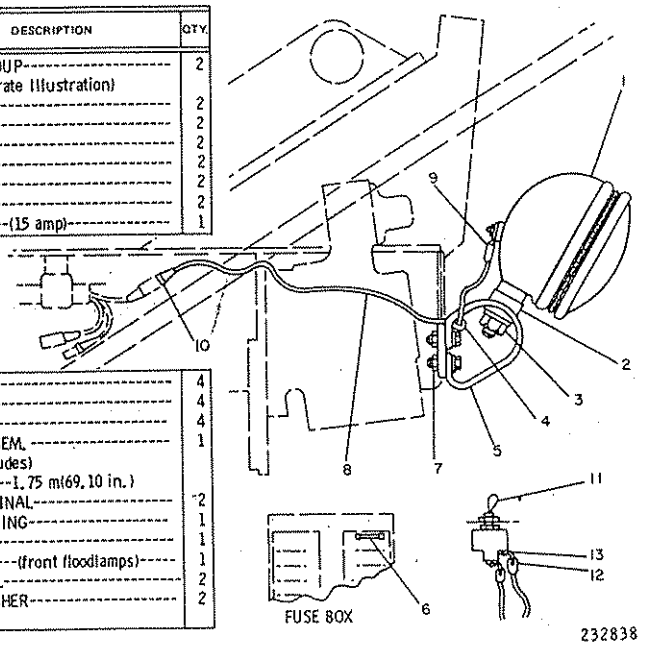

6G5880 FLOOD LAMP LIGHTING GROUP—Front
Serial No. 87V5734—Up. 1M1882 Lamp parts are shown on Page 114
AN ATTACHMENT

REF. NO.	PART NUMBER	DESCRIPTION	QTY.
1	1M1882	LAMP GROUP (Separate Illustration)	1
2	8D1992	BRACKET	1
3	L1351	BOLT	2
	5P1075	WASHER	2
4	6G7335	WIRE ASSEM. (Includes)	1
▲	5P5623	WIRE------1.8m(70.87 in.)	
5	2D8781	TERMINAL	1
6	7N7778	HOUSING	1
	7N7780	PIN	1
7	3P9554	GROMMET	1
C 8	8M2772	CLIP	4
9	7N8597	TERMINAL	2
10	5H6555	LOCKWASHER	2
11	7N8000	SWITCH------(rear floodlamp)	1
12	5D3183	NUT	1
	5D3184	LOCKWASHER	1
	6D2256	SPACER	1
13	3D7854	SPACER	1
●	8M8948	FUSE----------(15 amp)	1
C 14	3S2093	STRAP	1

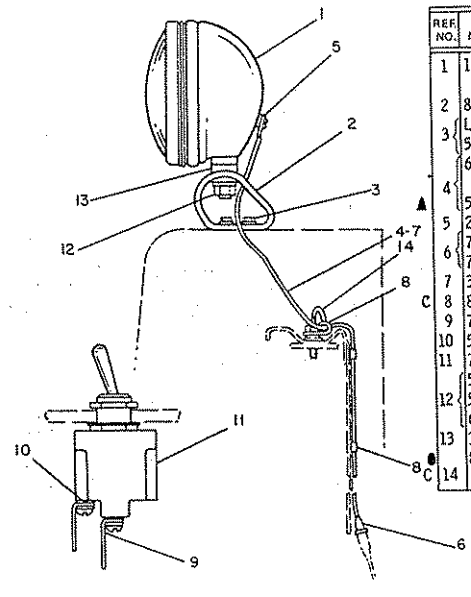

● NOT SHOWN
C INDICATES CHANGE
▲ ORDER BY THE METER
181370

6G7340 FLOOD LAMP LIGHTING GROUP—Rear
Serial No. 87V5734—Up. 1M1882 Lamp parts are shown on Page 114
AN ATTACHMENT

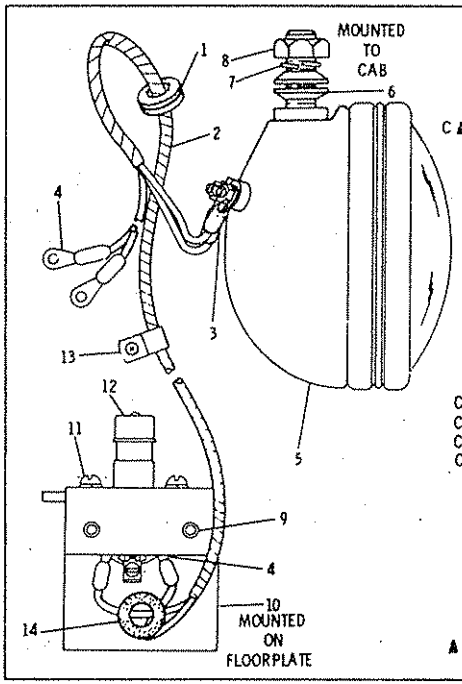

REF. NO.	PART NUMBER	DESCRIPTION	QTY
1	5H9743	GROMMET	4
2	8D2031	HARNESS ASSEM.	1
C ▲	5P5623	WIRE--------(16 gauge)-------	
3	2D8757	TERMINAL	2
4	2D8781	TERMINAL	4
5	4N9303	LAMP GROUP (Separate Illustration)	2
6	2B8352	WASHER	4
7	5D3184	LOCKWASHER	2
8	5D3183	NUT	2
9	S1617	BOLT	2
	3B4505	LOCKWASHER	2
10	9D1396	BRACKET	1
11	4B1320	SCREW	2
	3B4504	LOCKWASHER	2
12	2H1855	SWITCH--------(dimmer)----------	1
C	2V3216	CLIP	4
C 13	5P7162	SCREW	4
C	4B4274	WASHER	4
C 14	2S1074	GROMMET	1

▲ ORDER BY THE METER C INDICATES CHANGE 225821

8D1480 CAB LIGHTING GROUP
Serial No. 87V5275 to 87V5733 inclusive. 4N9303 Lamp parts are shown on Page 114. AN ATTACHMENT

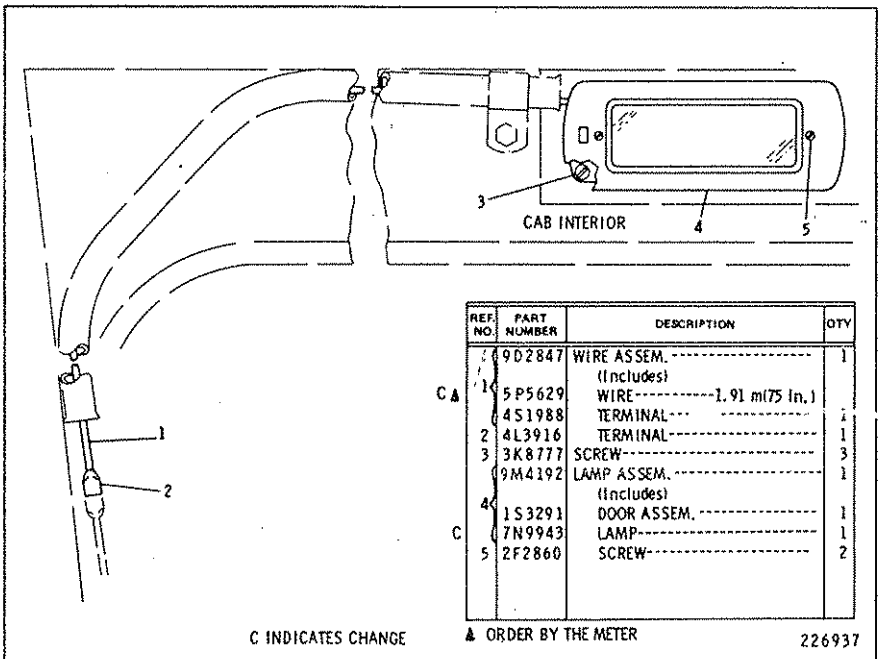

REF. NO.	PART NUMBER	DESCRIPTION	QTY
1	9D2847	WIRE ASSEM.	1
		(Includes)	
C ▲	5P5629	WIRE----------1.91 m(75 in.)	
	4S1988	TERMINAL	1
2	4L3916	TERMINAL	1
3	3K8777	SCREW	3
4	9M4192	LAMP ASSEM.	1
		(Includes)	
	1S3291	DOOR ASSEM.	1
C	7N9943	LAMP	1
5	2F2860	SCREW	2

C INDICATES CHANGE ▲ ORDER BY THE METER 226937

8D8290 DOME LIGHTING GROUP

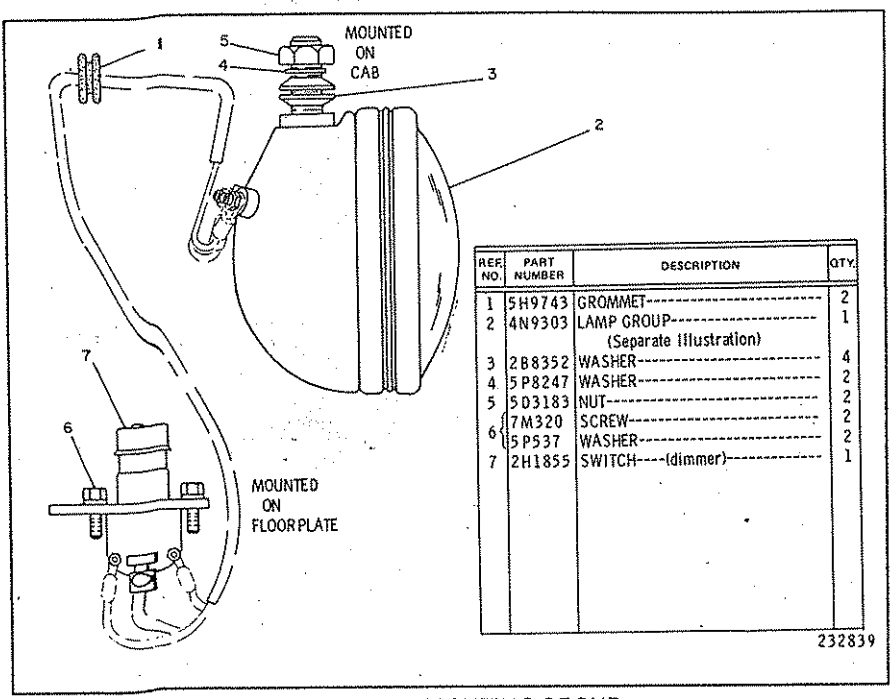

REF. NO.	PART NUMBER	DESCRIPTION	QTY.
1	5H9743	GROMMET	2
2	4N9303	LAMP GROUP (Separate Illustration)	1
3	2B8352	WASHER	4
4	5P8247	WASHER	2
5	5D3183	NUT	2
6	7M320	SCREW	2
	5P537	WASHER	2
7	2H1855	SWITCH----(dimmer)	1

232839

6G5650 CAB LIGHTING GROUP
Serial No. 87V5734—Up
4N 9303 Lamp parts are shown on Page 114. AN ATTACHMENT

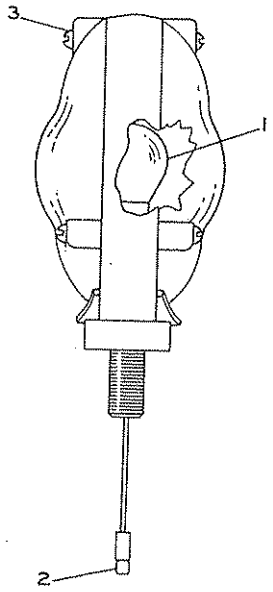

REF. NO.	PART NUMBER	DESCRIPTION	QTY
1	7H2976	BULB	1
2	4S1988	TERMINAL	1
3	2S6218	SCREW	6
		The following repair kits are available:	
	7D8713	KIT--------(Lens - Amber)----------	1
	7D8714	KIT--------(Lens - Red)----------	1

134377

7D8089 SIGNAL LAMP GROUP
Serial No. 87V5275 to 87V5733 inclusive
Part of 9D5720 and 2G1170 Lighting Groups shown on Pages 108, 108A, 109 & 109A. AN ATTACHMENT

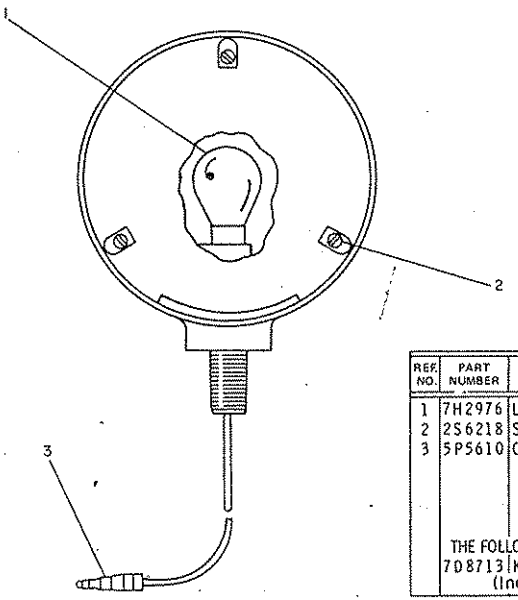

REF. NO.	PART NUMBER	DESCRIPTION	QTY
1	7H2976	LAMP	1
2	2S6218	SCREW	6
3	5P5610	CONNECTOR-------(bullet)----------	1
		THE FOLLOWING REPAIR KIT IS AVAILABLE:	
	7D8713	KIT---------(lens)---------- (Includes Gasket, Screws and Lens)	1

231953

7G9318 SIGNAL LAMP GROUP—24 Volt—Amber Lens
Serial No. 87V5734—Up. Part of 6G5640, 6G5900, 6G7730 & 6G7735 Signal Lighting Groups shown on Pages 108B, 109B, 110B & 110C. AN ATTACHMENT

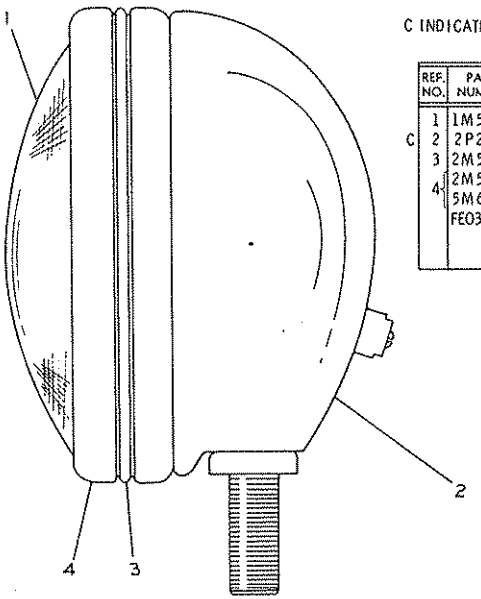

C INDICATES CHANGE

	REF. NO.	PART NUMBER	DESCRIPTION	QTY
	1	1M5899	SEALED UNIT	1
C	2	2P2540	BODY ASSEM.	1
	3	2M5282	RING	1
	4	2M5284	MOULDING ASSEM.	2
		5M6668	SCREW	2
		FE035430	FORM (Instructions For Installing Lamp Assem.)	1

113443

1M6052 HEAD LAMP ASSEMBLY
Part of 2G1040 and 6G5955 Signal Lighting Groups shown on Pages 110 & 110A AN ATTACHMENT

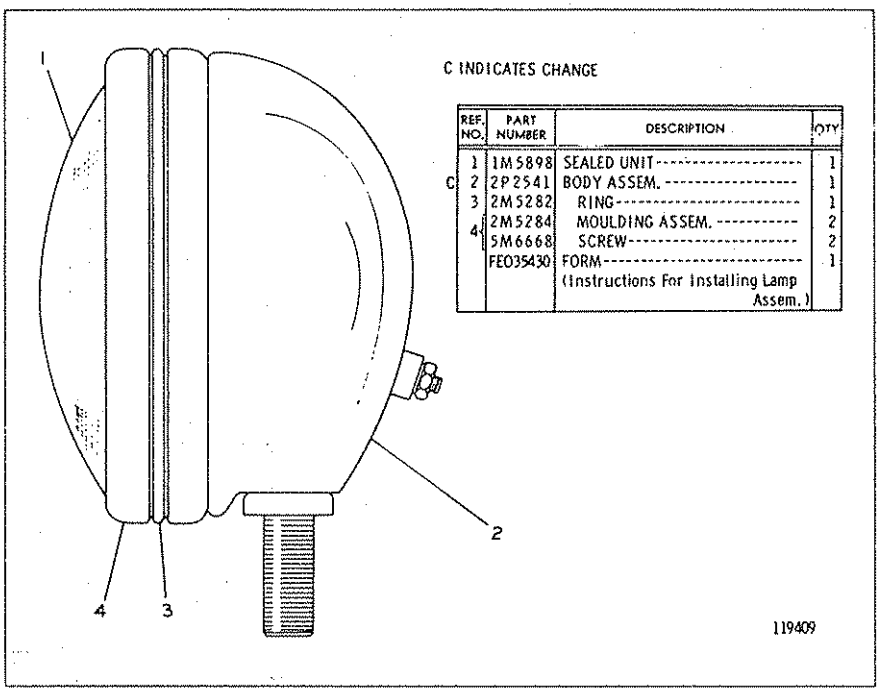

C INDICATES CHANGE

REF. NO.	PART NUMBER	DESCRIPTION	QTY
1	1M5898	SEALED UNIT	1
C 2	2P2541	BODY ASSEM.	1
3	2M5282	RING	1
4	2M5284	MOULDING ASSEM.	2
	5M6668	SCREW	2
	FE035430	FORM (Instructions For Installing Lamp Assem.)	1

1M1882 FLOOD LAMP ASSEMBLY
Part of 8D2045 and 8D2035 Floodlamp Lighting Groups shown on Page 111
AN ATTACHMENT

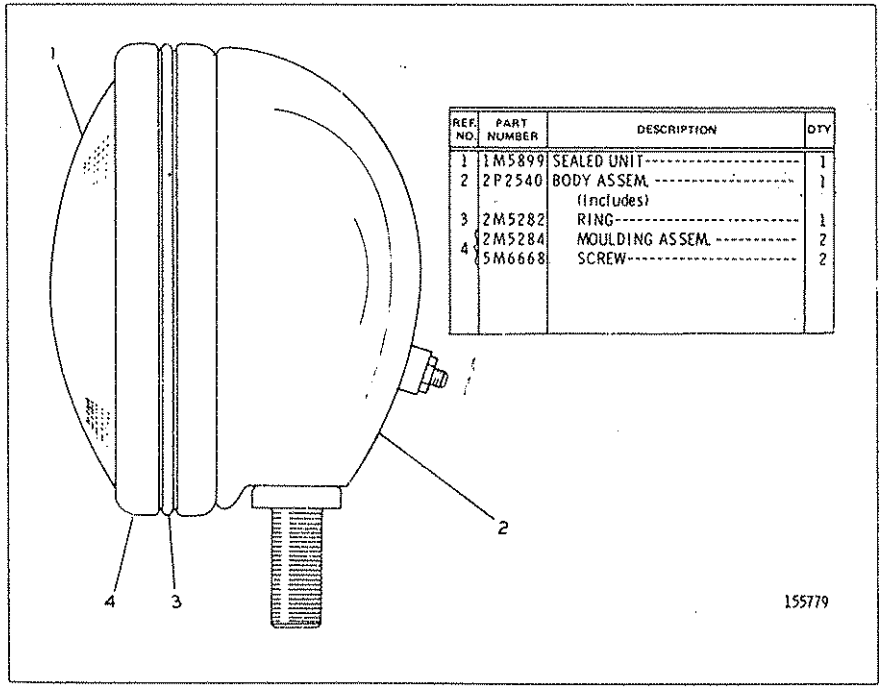

REF. NO.	PART NUMBER	DESCRIPTION	QTY
1	1M5899	SEALED UNIT	1
2	2P2540	BODY ASSEM. (Includes)	1
3	2M5282	RING	1
4	2M5284	MOULDING ASSEM.	2
	5M6668	SCREW	2

4N9303 HEAD LAMP GROUP
Part of 8D1480 Cab Lighting Group shown on Page 112

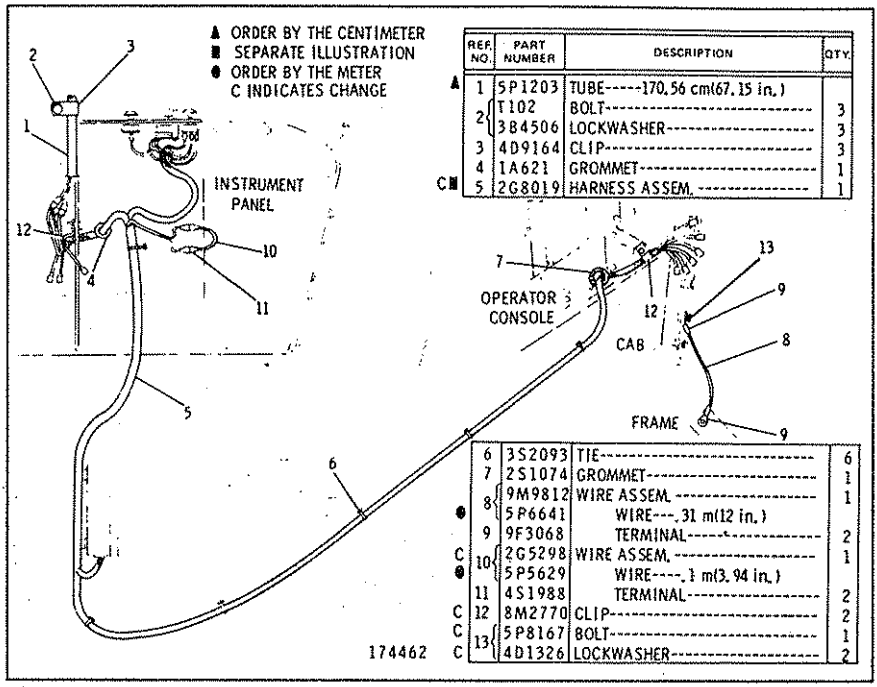

REF. NO.	PART NUMBER	DESCRIPTION	QTY.
▲ 1	5P1203	TUBE-----170.56 cm(67.15 in.)	
2	T102	BOLT----------	3
2	3B4506	LOCKWASHER----------	3
3	4D9164	CLIP----------	3
4	1A621	GROMMET----------	1
C ■ 5	2G8019	HARNESS ASSEM. ----------	1
6	3S2093	TIE----------	6
7	2S1074	GROMMET----------	1
8	9M9812	WIRE ASSEM. ----------	1
●	5P6641	WIRE----.31 m(12 in.)	
9	9F3068	TERMINAL----------	2
C 10	2G5298	WIRE ASSEM. ----------	1
●	5P5629	WIRE----.1 m(3.94 in.)	
11	4S1988	TERMINAL----------	2
C 12	8M2770	CLIP----------	2
C 13	5P8167	BOLT----------	1
C	4D1326	LOCKWASHER----------	2

9D3580 CAB WIRING GROUP
Serial No. 87V5275 to 82V5733 inclusive. Also part of 2C8049 Cab Arrangement listed on Page 286. 2G8019 Harness parts are shown on Page 116

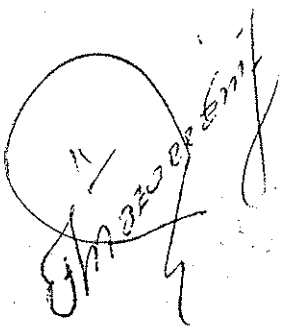

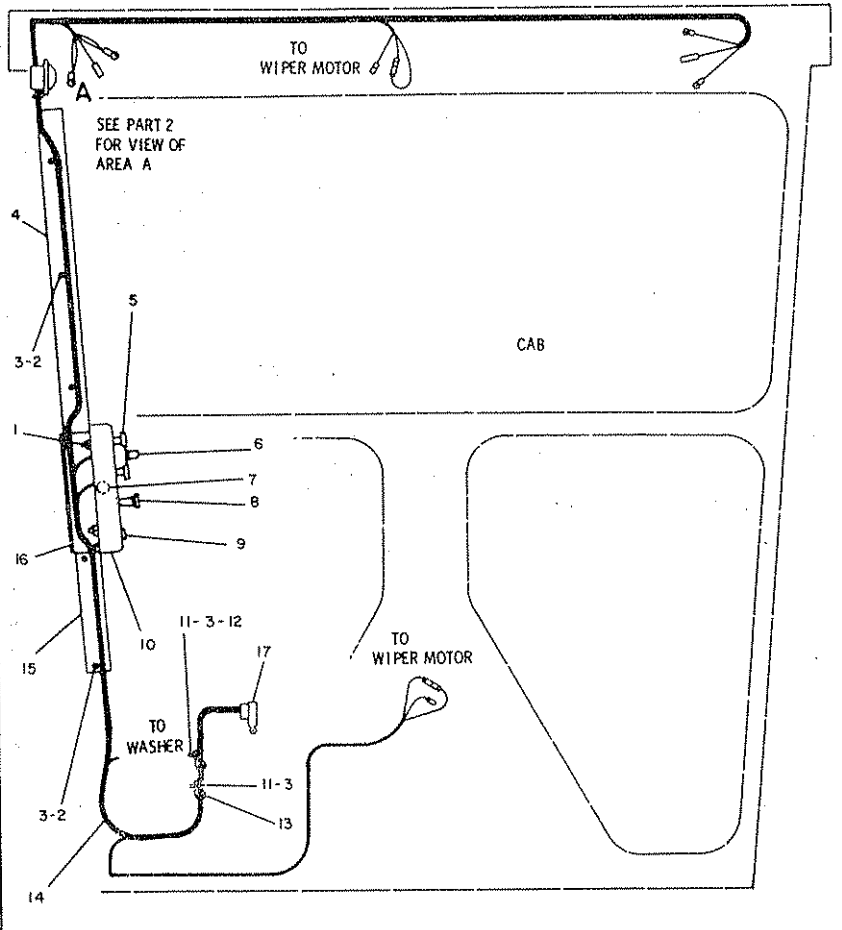

REF. NO.	PART NUMBER	DESCRIPTION	QTY.
1	5K906	BOLT	2
	4M5280	NUT	2
	7H3937	LOCKWASHER	2
2	4L6458	NUT	5
	9P2553	SPACER	5
3	8H5505	WASHER	7
4	6G7721	PLATE	1
5	1V7362	SWITCH--(Rotary Wiper-Washer)--(Each Includes)	2
	7N4033	KNOB	1
6	7G9730	LAMP ASSEM.	1
	8D1429	LAMP	1
7	2S9727	GROMMET	1
8	8N2353	KNOB ASSEM.	1
	8N2354	HOUSING ASSEM.	1
9	3V4694	PLUG	1
10	6G5768	PANEL	1
	4V6981	SCREW	2
C 11	4M5283	BOLT	2
12	1H3338	LOCKWASHER	1
13	8J1256	CLIP	2
14	6G5783	HARNESS ASSEM. (Separate Illustration)	1
15	6G7723	PLATE	1
16	6G5769	BRACKET ASSEM.	1
C 17	3T50	CLIP	1

C INDICATES CHANGE

182589

6G5805 CAB WIRING GROUP—Part 1
Serial No. 87V5734—Up. Also part of 5T567 ROPS Conversion Arrangement listed on Page 287C. 6G5783 Harness parts are shown on Pages 115G & 115H

6G5805 CAB WIRING GROUP—Part 2
Serial No. 87V5734—Up

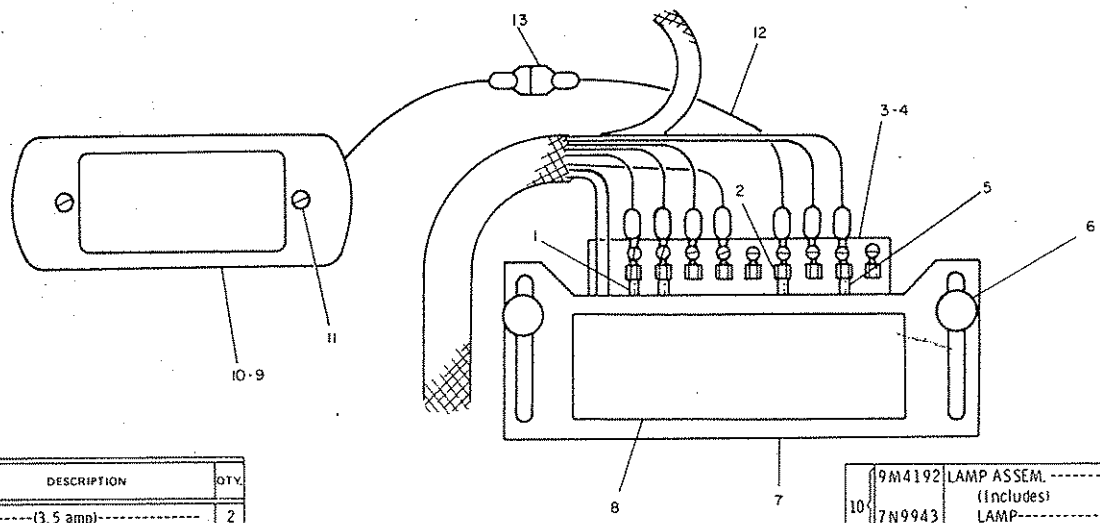

REF. NO.	PART NUMBER	DESCRIPTION	QTY.
1	9K1896	FUSE-----(3.5 amp)----------	2
2	2S6024	FUSE--------(5 amp)----------	1
3	9G747	BLOCK----------	1
4	324000	SCREW----------	2
5	8M8948	FUSE---------(15 amp)----------	1
6	6G3016	KNOB----------	2
	7H8909	LOCKNUT----------	2
7	6G2826	PLATE----------	1
8	6V799	FILM----------	1
C 9	6V2687	SCREW----------	3

C INDICATES CHANGE

10	9M4192	LAMP ASSEM. (Includes)	1
	7N9943	LAMP----------	1
	1S3291	DOOR ASSEM. ----------	1
11	2F2860	SCREW----------	2
12	6G7663	WIRE ASSEM. (Includes)	1
▲	5P5623	WIRE--, 35m(13.78 in.)	
	6D9404	TERMINAL----------	1
13	5P4571	TERMINAL----------	1

▲ ORDER BY THE METER

182590

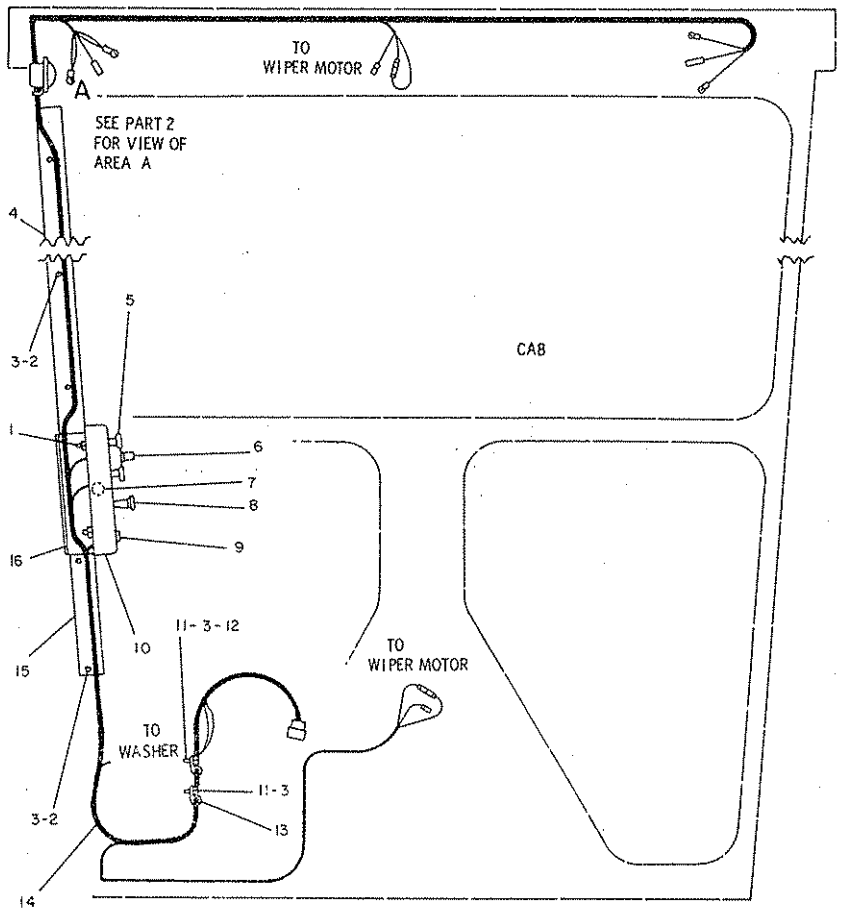

REF NO.	PART NUMBER	DESCRIPTION	QTY.
1	5K906	BOLT	2
	4M5280	NUT	2
	7H3937	LOCKWASHER	2
2	4L6458	NUT	5
	9P2553	SPACER	5
3	8H5505	WASHER	7
4	6G7722	PLATE	1
5	1V7362	SWITCH--(Rotary Wiper-Washer)--(Each Includes)	2
	7N4033	KNOB	1
6	7G9730	LAMP ASSEM.	1
	8D1429	LAMP	1
7	2S9727	GROMMET	1
C 8	8N2353	KNOB ASSEM. ----(lighter)	1
	8N2354	HOUSING ASSEM.	1
9	3V4694	PLUG	1
10	6G5768	PANEL	1
	4V6981	SCREW	2
C 11	4M5283	BOLT	2
12	1H3338	LOCKWASHER	1
13	8J1256	CLIP	2
14	6G5784	HARNESS ASSEM. (Separate Illustration)	1
15	6G7723	PLATE	1
16	6G5769	BRACKET ASSEM.	1

C INDICATES CHANGE 237449

6G5810 CAB WIRING GROUP—Part 1
Serial No. 87V5734—Up. Part of 6G2655 & 5T566 ROPS Arrangements listed on Pages 287A & 287C. 6G5784 Harness parts are shown on Pages 115E & 115F
AN ATTACHMENT

6G5810 CAB WIRING GROUP—Part 2
Serial No. 87V5734—Up
Part of 6G2655 ROPS Arrangement listed on Page 287A. AN ATTACHMENT

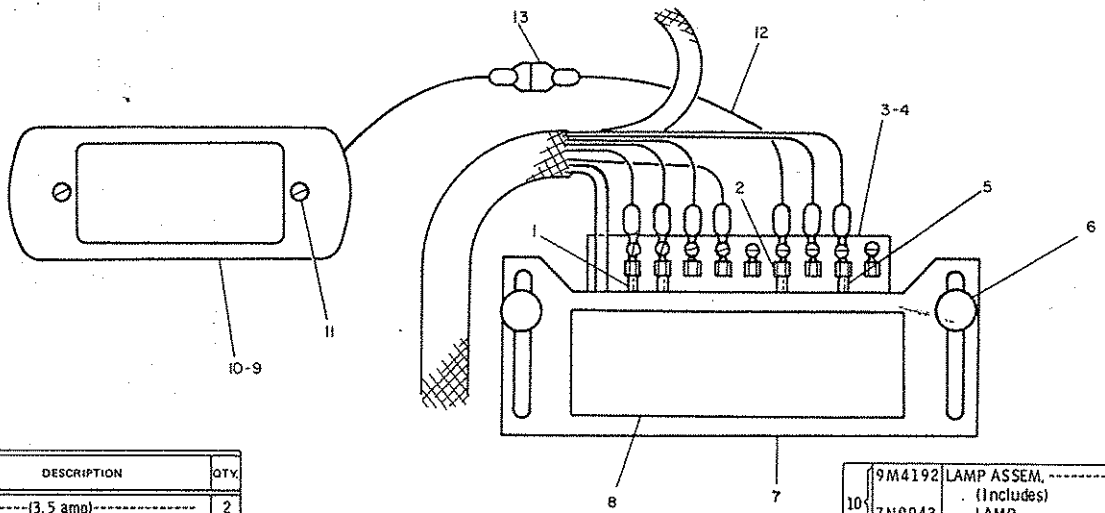

REF. NO.	PART NUMBER	DESCRIPTION	QTY.
1	9K1896	FUSE-----(3.5 amp)----------	2
2	2S6024	FUSE-------(5 amp)----------	1
3	9G747	BLOCK----------	1
4	324000	SCREW----------	2
5	8M8948	FUSE---------(15 amp)----------	1
6	6G3016	KNOB----------	2
	7H8909	LOCKNUT----------	2
7	6G2826	PLATE----------	1
8	6V799	FILM----------	1
9	5P7111	SCREW----------	3

	REF. NO.	PART NUMBER	DESCRIPTION	QTY.
	10	9M4192	LAMP ASSEM. ---------- (Includes)	1
		7N9943	LAMP----------	1
		1S3291	DOOR ASSEM. ----------	1
	11	2F2860	SCREW----------	2
	12	6G7663	WIRE ASSEM. ---------- (Includes)	1
▲		5P5623	WIRE--. 35m(13.78 in.)	
		6D9404	TERMINAL----------	1
	13	5P4571	TERMINAL----------	1

▲ ORDER BY THE METER

233203

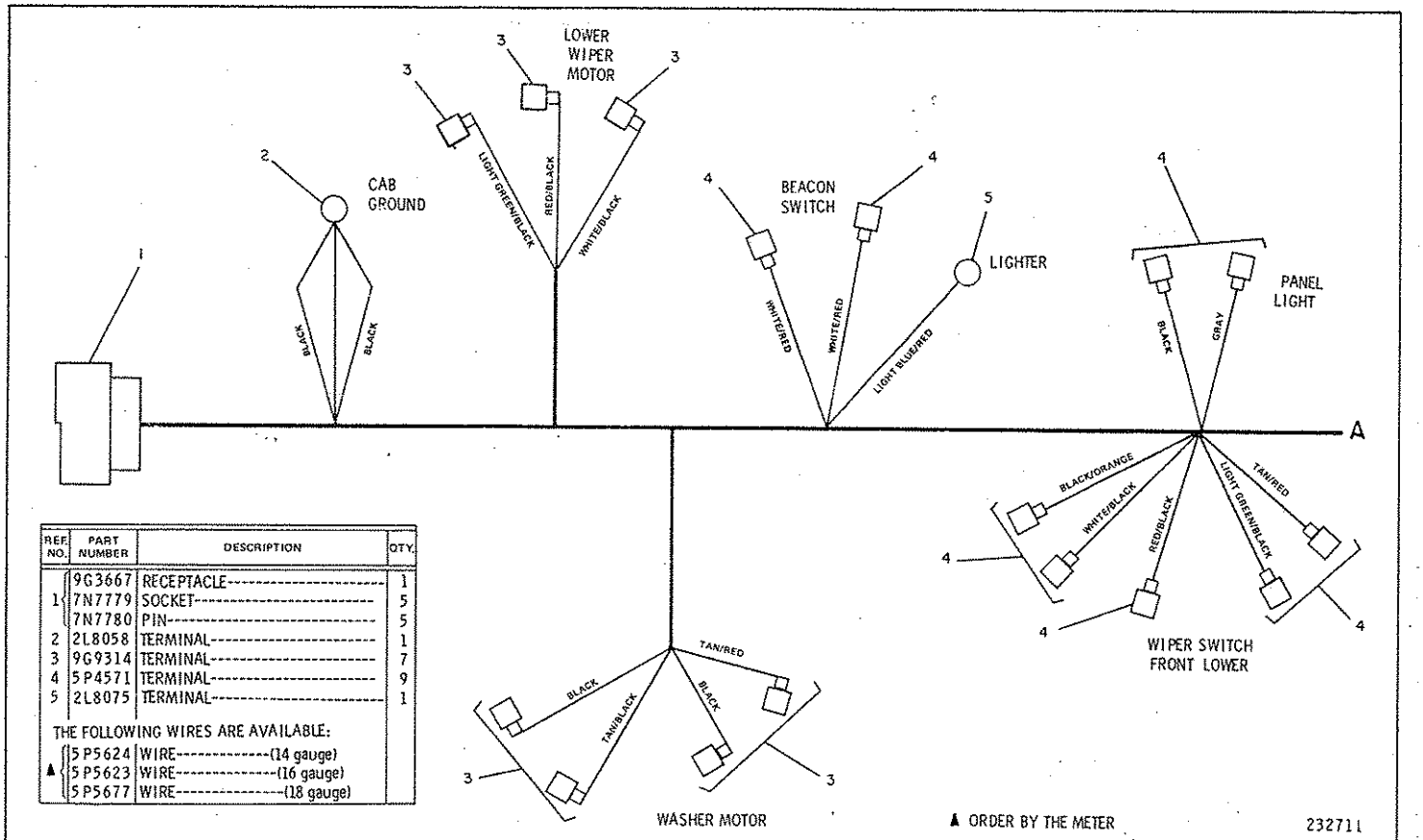

REF. NO.	PART NUMBER	DESCRIPTION	QTY.
1	9G3667	RECEPTACLE	1
	7N7779	SOCKET	5
	7N7780	PIN	5
2	2L8058	TERMINAL	1
3	9G9314	TERMINAL	7
4	5P4571	TERMINAL	9
5	2L8075	TERMINAL	1

THE FOLLOWING WIRES ARE AVAILABLE:

▲	5P5624	WIRE-----(14 gauge)
▲	5P5623	WIRE-----(16 gauge)
▲	5P5677	WIRE-----(18 gauge)

▲ ORDER BY THE METER

6G5784 HARNESS ASSEMBLY—Part 1
Serial No. 87V5734—Up
Part of 6G5810 Cab Wiring Group shown on Page 115C. AN ATTACHMENT

6G5784 HARNESS ASSEMBLY—Part 2
Serial No. 87V5734—Up
Part of 6G5810 Cab Wiring Group shown on Page 115C. AN ATTACHMENT

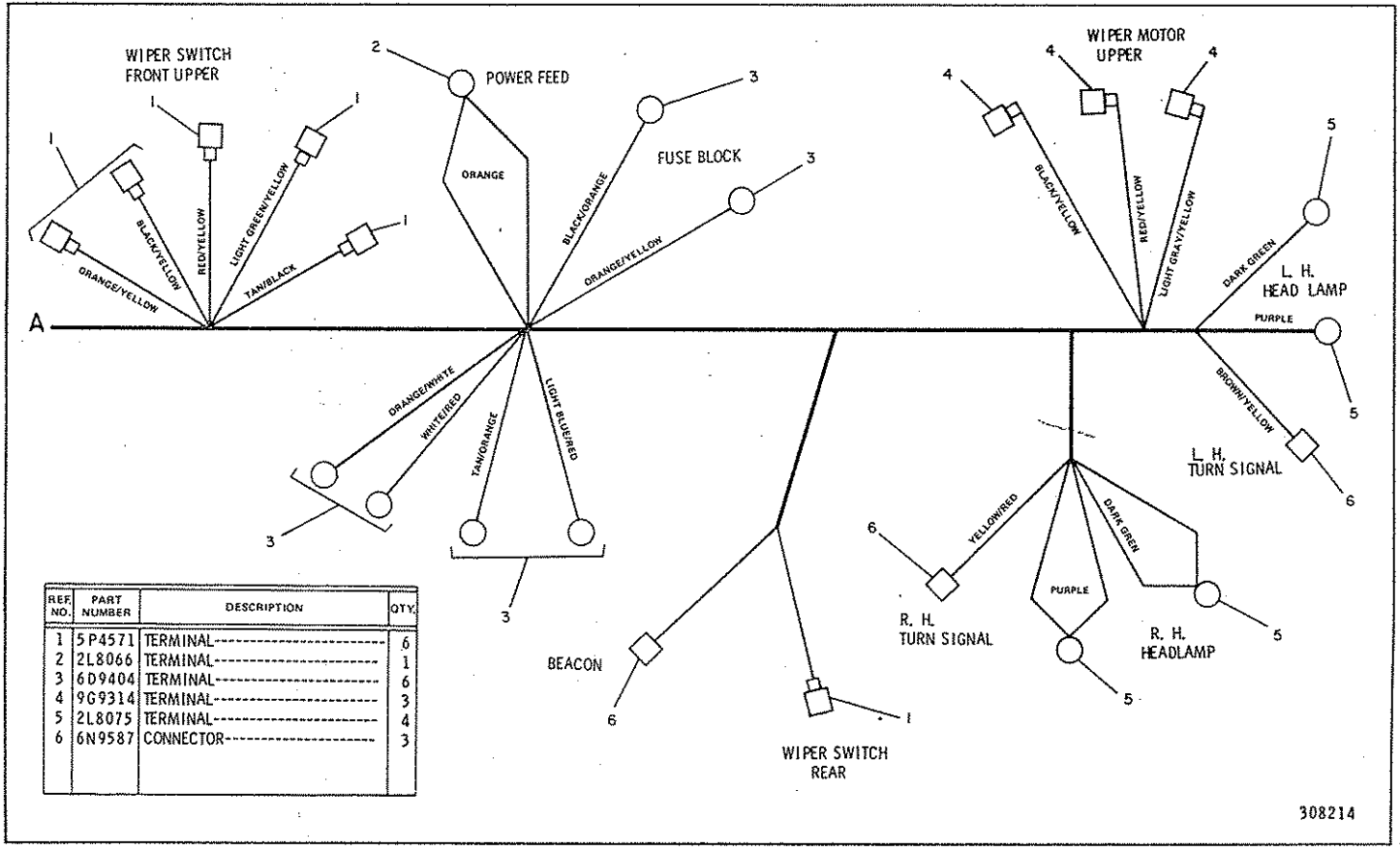

REF. NO.	PART NUMBER	DESCRIPTION	QTY.
1	5P4571	TERMINAL	6
2	2L8066	TERMINAL	1
3	6D9404	TERMINAL	6
4	9G9314	TERMINAL	3
5	2L8075	TERMINAL	4
6	6N9587	CONNECTOR	3

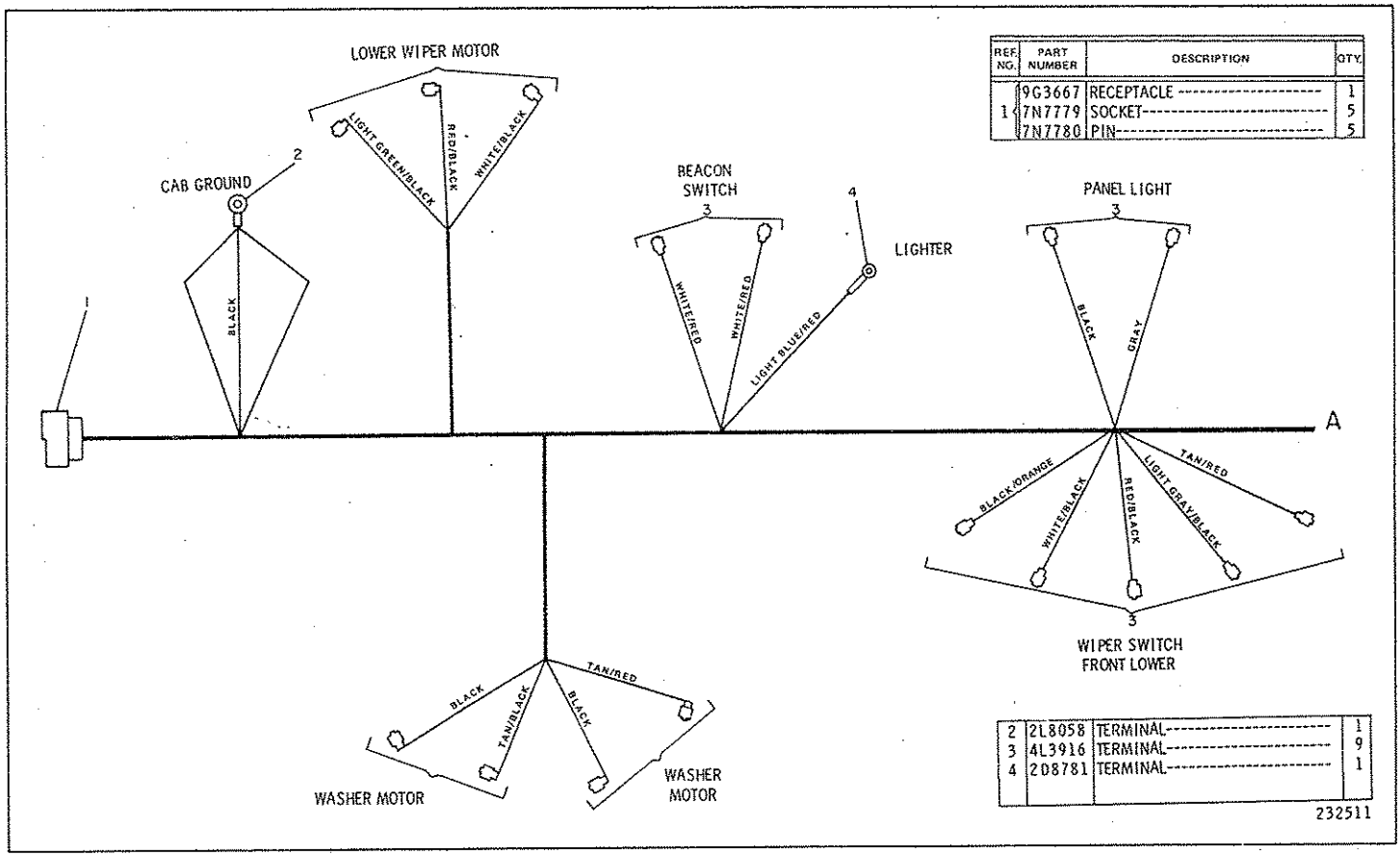

REF. NO.	PART NUMBER	DESCRIPTION	QTY.
1	9G3667	RECEPTACLE	1
	7N7779	SOCKET	5
	7N7780	PIN	5

2	2L8058	TERMINAL	1
3	4L3916	TERMINAL	9
4	2D8781	TERMINAL	1

232511

6G5783 HARNESS ASSEMBLY—Part 1
Serial No. 87V5734—Up
Part of 6G5805 Cab Wiring Group shown on Page 115A

6G5783 HARNESS ASSEMBLY—Part 2
Serial No. 87V5734—Up
Part of 6G5805 Cab Wiring Group shown on Page 115A

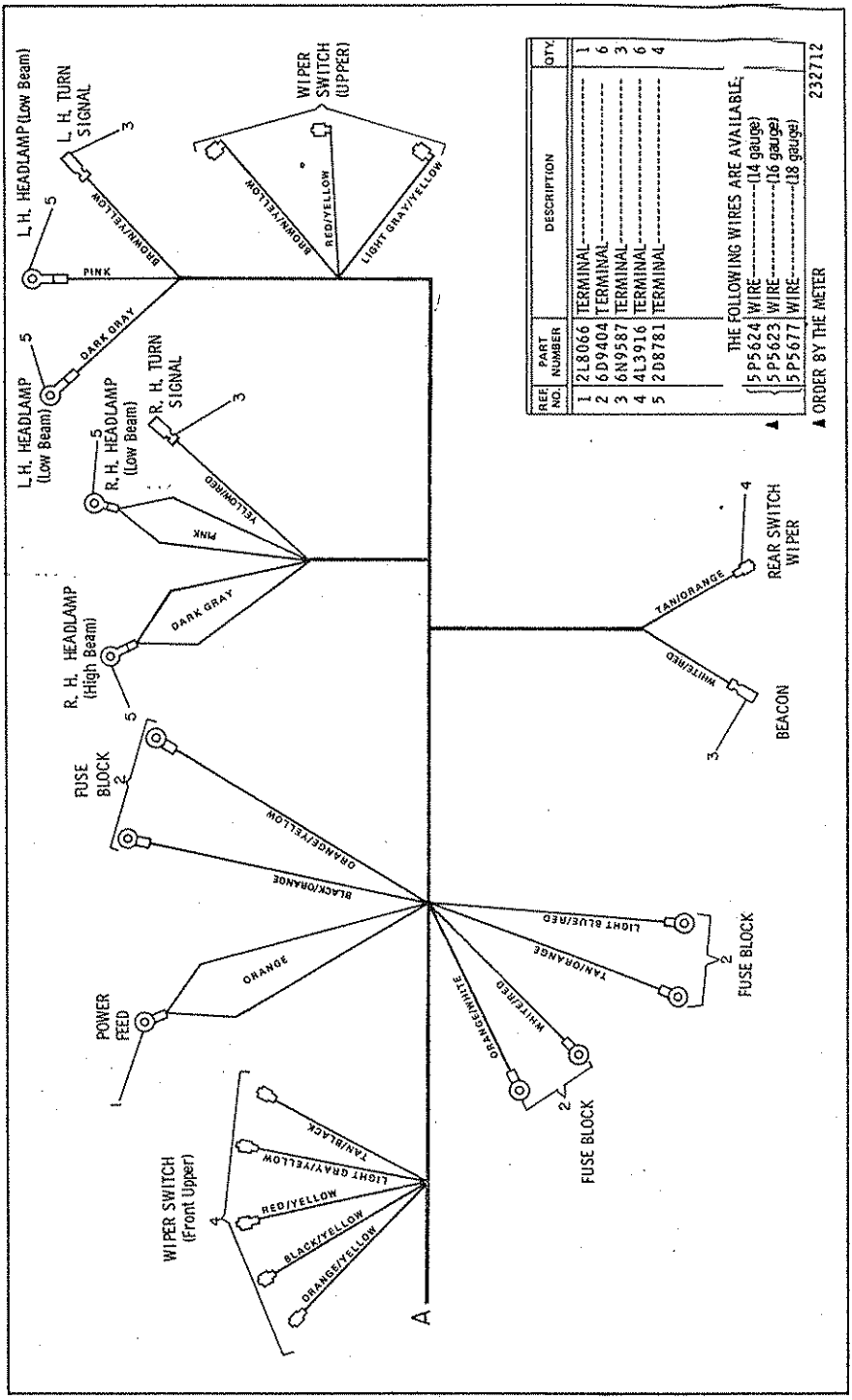

REF. NO.	PART NUMBER	DESCRIPTION	QTY.
1	2L8066	TERMINAL	1
2	6D9404	TERMINAL	6
3	6N9587	TERMINAL	3
4	4L3916	TERMINAL	6
5	2D8781	TERMINAL	4

THE FOLLOWING WIRES ARE AVAILABLE:
5P5624 WIRE——————(14 gauge)
5P5623 WIRE——————(16 gauge)
5P5677 WIRE——————(18 gauge)

▲ ORDER BY THE METER

232712

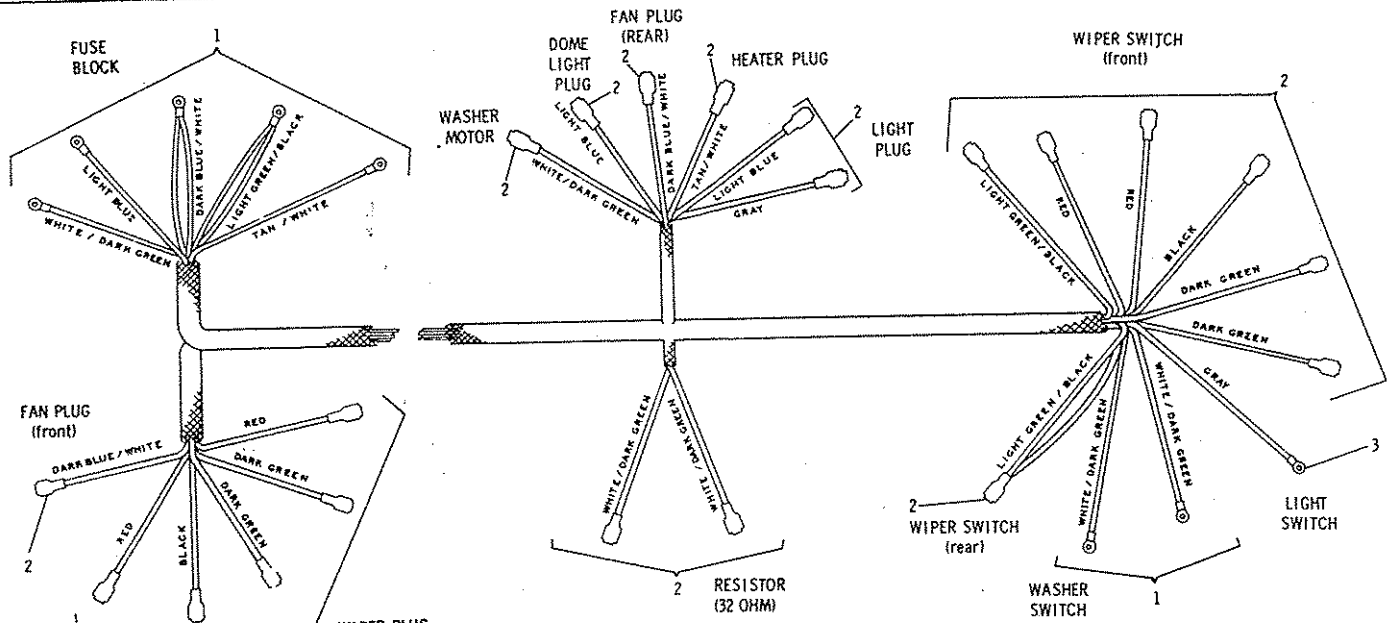

REF. NO.	PART NUMBER	DESCRIPTION	QTY
1	6D9404	TERMINAL	7
2	4L3916	TERMINAL	21
3	2D8781	TERMINAL	1

THE FOLLOWING WIRES ARE AVAILABLE:

▲	5P5629	WIRE	(14 gauge)
C▲	5P5624	WIRE	(14 gauge) (For exposure to extreme temps.)
C▲	5P5623	WIRE	(16 gauge)

C INDICATES CHANGE

▲ ORDER BY THE METER

226956

2G8019 WIRING HARNESS ASSEMBLY
Serial No. 87V5275 to 87V5733 inclusive
Part of 9D3580 Cab Wiring Group shown on Page 115

9D5675 BULLDOZER WIRING GROUP
Serial No. 87V5275 to 87V5733 inclusive
Part of 9D8425, 9D8433, 9D8434 and 9D8435 Hydraulic Control Arrangements listed on Page 252
9D5461 Harness parts are shown on Page 118. AN ATTACHMENT

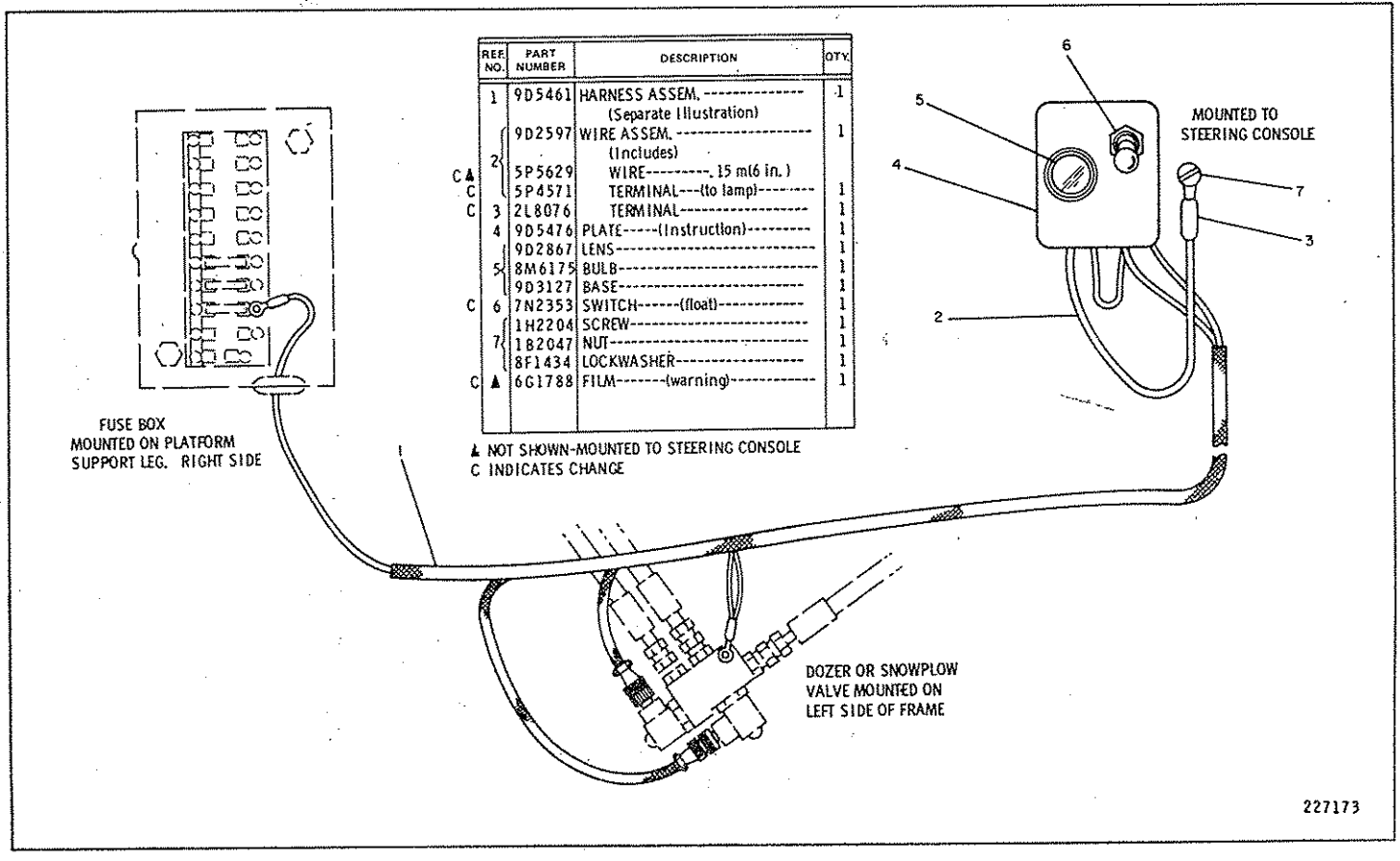

REF. NO.	PART NUMBER	DESCRIPTION	QTY.
1	9D5461	HARNESS ASSEM. ---------- (Separate Illustration)	1
2	9D2597	WIRE ASSEM. ---------- (Includes)	1
C	5P5629	WIRE---------. 15 m(6 in.)	
C	5P4571	TERMINAL---(to lamp)---------	1
C	3 2L8076	TERMINAL----------	1
	4 9D5476	PLATE-----(Instruction)---------	1
	5 9D2867	LENS----------	1
	8M6175	BULB----------	1
	9D3127	BASE----------	1
C	6 7N2353	SWITCH-------(float)----------	1
	7 1H2204	SCREW----------	1
	1B2047	NUT----------	1
	8F1434	LOCKWASHER----------	1
C ▲	6G1788	FILM-------(warning)----------	1

▲ NOT SHOWN-MOUNTED TO STEERING CONSOLE
C INDICATES CHANGE

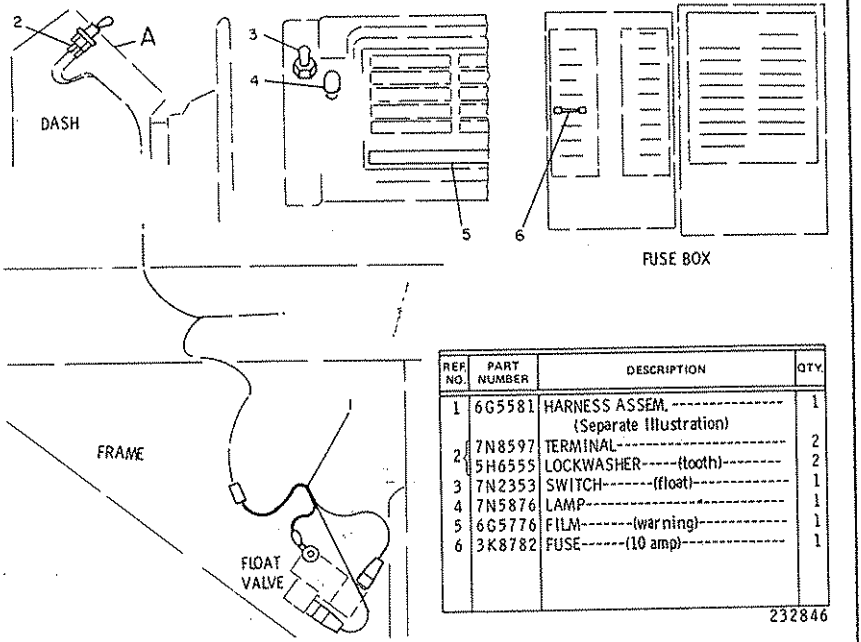

REF. NO.	PART NUMBER	DESCRIPTION	QTY.
1	6G5581	HARNESS ASSEM. (Separate Illustration)	1
2	7N8597	TERMINAL	2
	5H6555	LOCKWASHER-----(tooth)--------	2
3	7N2353	SWITCH-------(float)----------	1
4	7N5876	LAMP----------	1
5	6G5776	FILM-------(warning)----------	1
6	3K8782	FUSE------(10 amp)----------	1

232846

6G5815 BULLDOZER WIRING GROUP
Serial No. 87V5734—Up
Part of 6G6717, 6G6718, 6G6719 and 6G6720 Hydraulic Control Arrangements listed on Page 252A. 6G5581 Harness parts are shown on Page 118A
AN ATTACHMENT

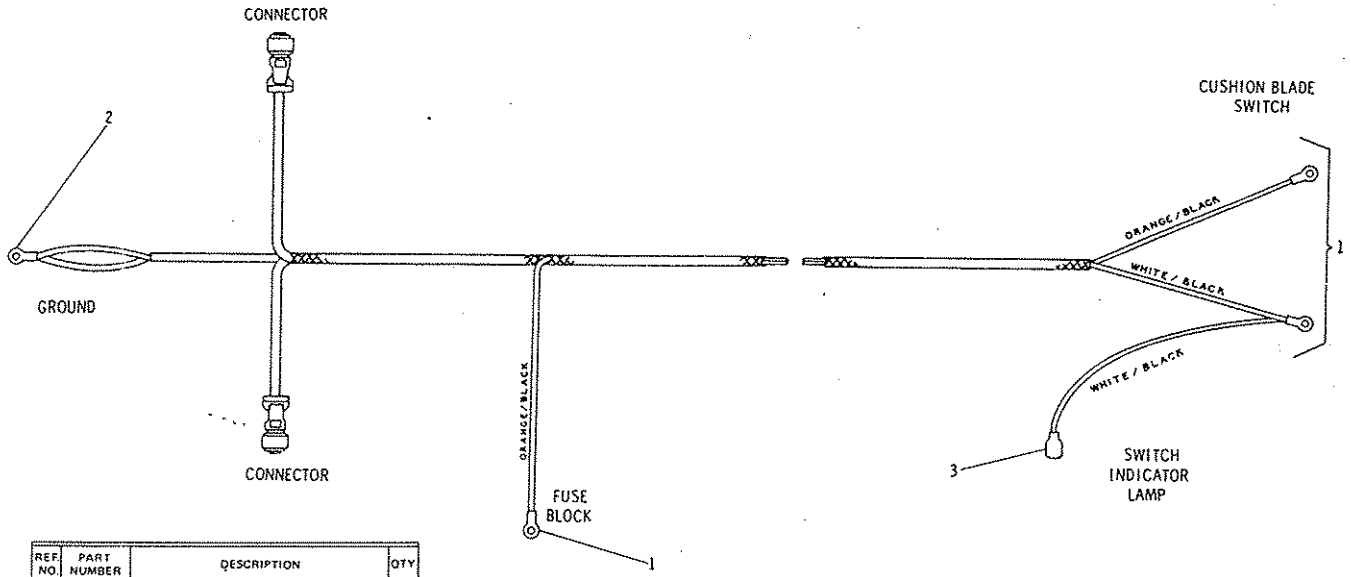

REF. NO.	PART NUMBER	DESCRIPTION	QTY
1	6D9404	TERMINAL	3
2	8M537	TERMINAL	1
3	4L3916	TERMINAL	1
		THE FOLLOWING WIRE IS AVAILABLE:	
C▲	5P5629	WIRE-------(14 gauge)----------	

C INDICATES CHANGE
▲ ORDER BY THE METRE

9D5461 WIRING HARNESS ASSEMBLY
Serial No. 87V5275 to 87V5733 Inclusive
Part of 9D5(75 Bulldozer Wiring and 6G2240 Blade Float Control Wiring Groups shown on Pages 117 & 118B
AN ATTACHMENT

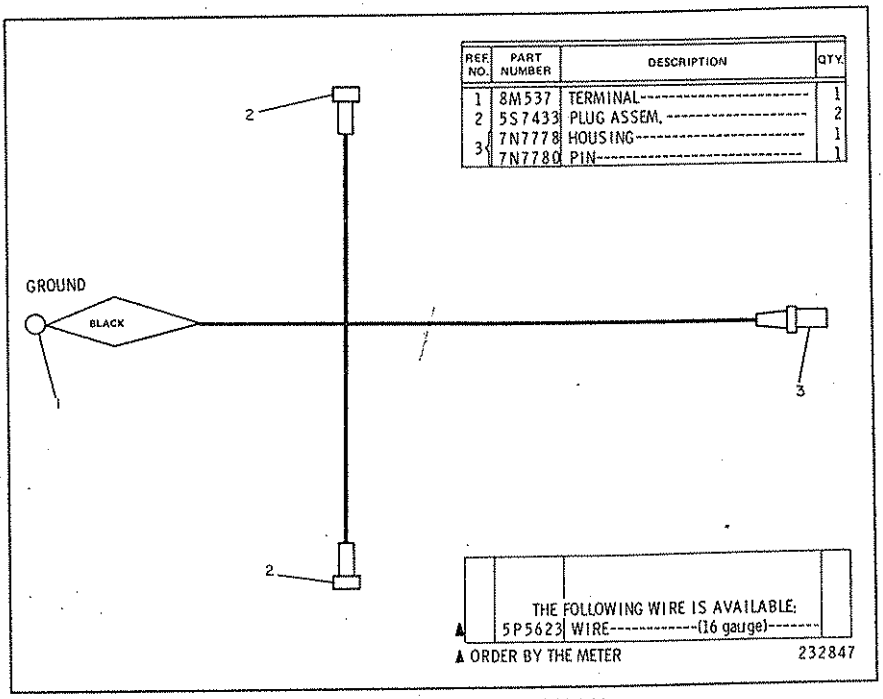

6G5581 HARNESS ASSEMBLY
Serial No. 87V5734—Up. Part of 6G5815 Bulldozer Wiring & 6G5820 Blade Float Control Wiring Groups shown on Pages 117B & 119. AN ATTACHMENT

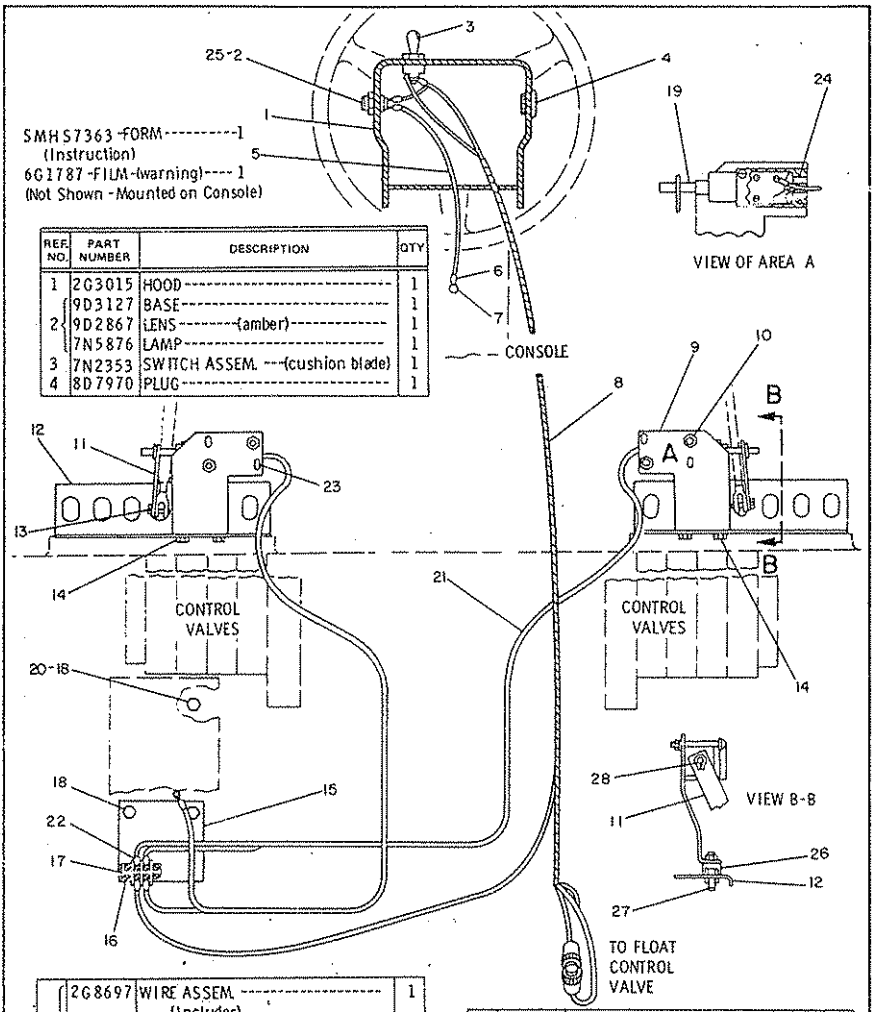

REF. NO.	PART NUMBER	DESCRIPTION	QTY
1	2G3015	HOOD	1
2	9D3127	BASE	1
	9D2867	LENS---(amber)	1
	7N5876	LAMP	1
3	7N2353	SWITCH ASSEM.---(cushion blade)	1
4	8D7970	PLUG	1

	REF. NO.	PART NUMBER	DESCRIPTION	QTY
▲	5	2G8697	WIRE ASSEM. (Includes)	1
		5P5629	WIRE---.55 m(21.5 in.)	
		2L8076	TERMINAL---(switch)	1
	6	4L3916	TERMINAL	1
	7	1H2204	SCREW	1
		4B2047	NUT	1
		8F1434	LOCKWASHER	1
	8	9D5461	HARNESS ASSEM. (Separate Illustration)	1
	9	6G2103	BRACKET	1
	10	328924	SCREW	4
		4B2047	NUT	4
		3B4502	LOCKWASHER	4
		4B4274	WASHER	4
	11	2G7582	PLATE	2
C●	12	6G4247	PLATE ASSEM. (Each Includes)	2
		9F6445	NUT	3
	13	6J2256	PIN	2

	REF. NO.	PART NUMBER	DESCRIPTION	QTY
C	14	51616	BOLT	4
		1B4330	NUT	4
	15	2G8670	PLATE	1
	16	5M6668	SCREW	4
		3B4501	LOCKWASHER	4
	17	2N3810	TERMINAL STRIP	1
	18	L1351	BOLT	3
	19	7N2354	SWITCH---(limit)	2
	20	3K925	WASHER	1
	21	2G8698	HARNESS ASSEM. (Each Includes)	2
	22	6D9404	TERMINAL	4
	23	6G2102	BRACKET	1
	24	6G2367	GROMMET	2
	25	6B863	WASHER	1
C●	26	5L6234	SPACER	4
C●	27	2H3755	BOLT	4
C●		5P4116	WASHER	4
C	28	2H3429	RING	2

▲ ORDER BY THE METER C INDICATES CHANGE ● USE AS REQUIRED 175707

6G2240 BLADE FLOAT CONTROL WIRING GROUP
Serial No. 87V5275 to 87V5733 Inclusive
Part of 2G8085 Blade Float Arrangement listed on Page 230
9D5461 Harness parts are shown on Page 118. AN ATTACHMENT

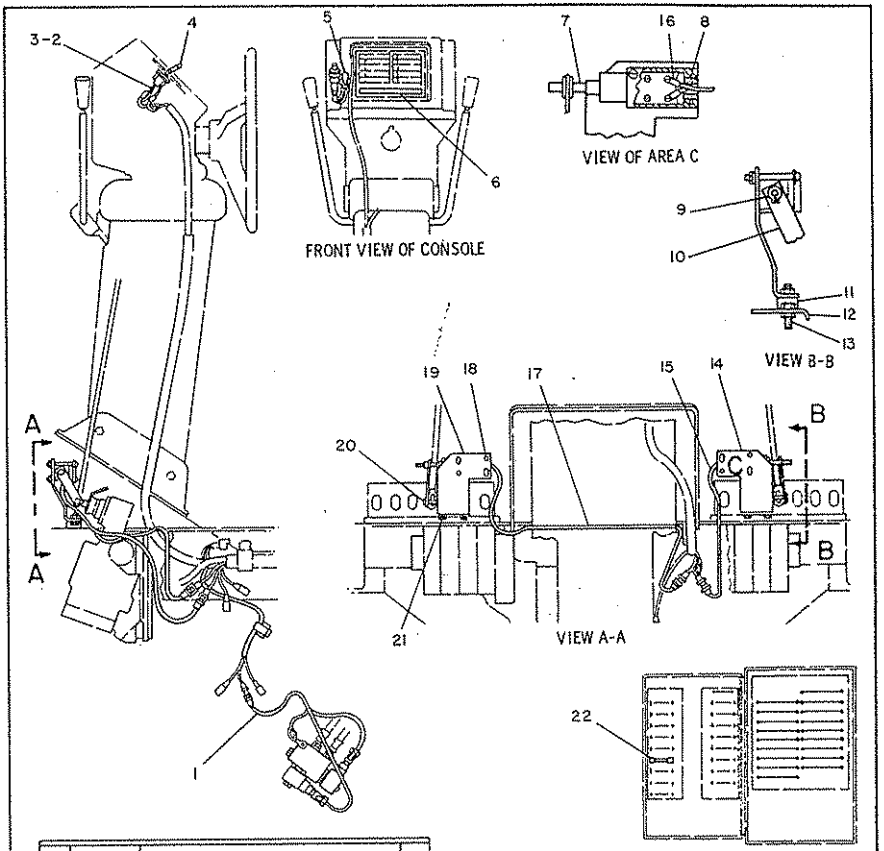

	REF. NO.	PART NUMBER	DESCRIPTION	QTY.
	1	6G5581	HARNESS ASSEM. (Separate Illustration)	1
	2	7N8597	TERMINAL	2
	3	5H6555	LOCKWASHER	2
	4	7H2353	SWITCH ASSEM. --(float)	1
	5	7N5876	LAMP	1
	6	6G5776	FILM--------(warning)	1
	7	7N2354	SWITCH-------(limit)	2
	8	6G2367	GROMMET	2
C	9	2H3429	RING	4
C	10	5T1707	PLATE	2
●	11	5L6234	SPACER	4
●	12	6G4247	PLATE ASSEM. (Each Includes)	2
		9F6445	NUT	3
●	13	2H3755	BOLT	4
●		9M1974	WASHER	4
C	14	5T1705	BRACKET	1
▲	15	6G5582	HARNESS ASSEM. (Includes)	1
		5P5623	WIRE----------(16 gauge)	
		7N9737	HOUSING	1
		7N7779	SOCKET	1
		7N7780	PIN	1
	16	6D9404	TERMINAL----------(switch)-	2
		6G5782	HARNESS ASSEM. (Includes)	1
▲		5P5623	WIRE----------(16 gauge)	
	17	7N9737	HOUSING	1
		7N7779	SOCKET	1
		7N7780	PIN	1
		6D9404	TERMINAL--------(switch)----	2
		328924	SCREW	4
		482047	NUT	4
	18	9F8125	LOCKWASHER	4
		484274	WASHER	4
C	19	5T1706	BRACKET	1
	20	6J2256	PIN	2
	21	S1616	BOLT	4
		1B4330	NUT	4
	22	3K8782	FUSE--------(10 amp)	1
		SMHS7363	FORM (Installation Instructions)	1

▲ ORDER BY THE METER C INDICATES CHANGE ● USE AS REQUIRED 181564

6G5820 BLADE FLOAT CONTROL WIRING GROUP—Type 1
Serial No. 87V5734—Up. Part of 6G6669 Blade Float Arrangement listed on Page 231
6G5581 Harness parts are shown on Page 118A. AN ATTACHMENT

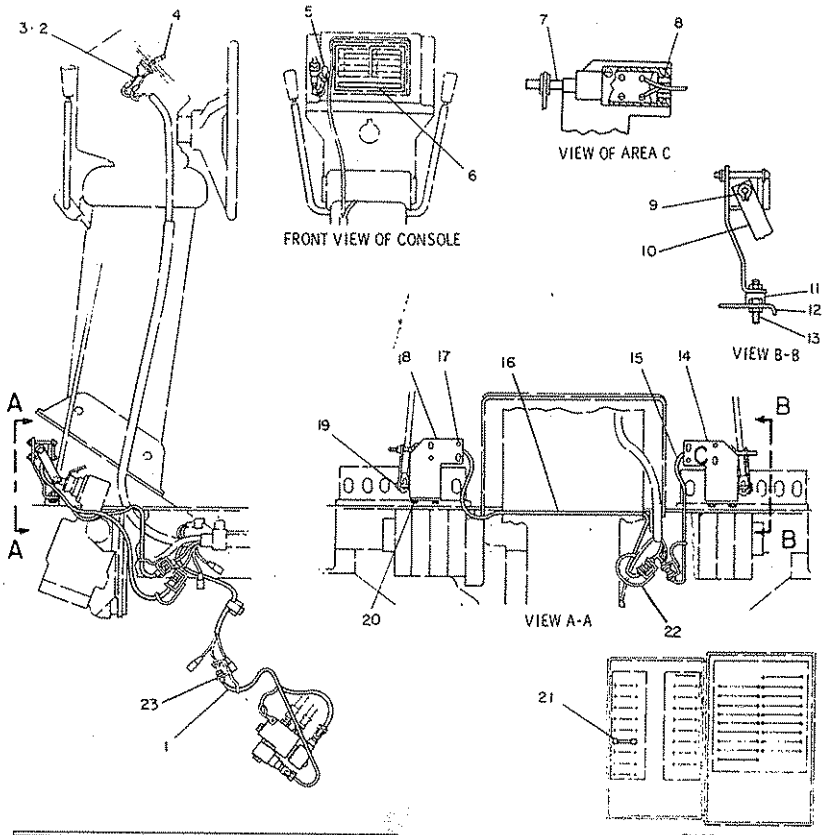

NOTE	REF NO	PART NUMBER	QTY	DESCRIPTION
Y	1	6G5581	1	HARNESS ASSEM.
	2	7N8597	2	TERMINAL
	3	5H6555	2	LOCKWASHER
	4	7H2353	1	SWITCH ASSEM. (FLOAT)
	5	7N5876	1	LAMP
	6	6G5776	1	FILM (WARNING)
	7	7N2354	2	SWITCH (LIMIT)
	8	6G2367	2	GROMMET
C	9	2H3429	4	RING
C	10	5T1707	2	PLATE
B	11	5L6234	4	SPACER
B	12	6G4247	2	PLATE ASSEM. (EACH INCLUDES)
		9F6445	3	NUT
B	13	2H3755	4	BOLT
B		9M1974	4	WASHER
C	14	5T5086	1	BRACKET
C	15	5T5182	1	HARNESS ASSEM.
D		5P5623		WIRE (16 GAUGE)
		7N9737	1	HOUSING
		7N7779	1	SOCKET
		7N7780	1	PIN
		5P6009	1	TUBE (3.9IN.)

Y SEPARATE ILLUSTRATION

C	16	5T5183	1	HARNESS ASSEM.
C		5P5623		WIRE (16 GUAGE)
		7N9737	1	HOUSING
		7N7779	1	SOCKET
		7N7780	1	PIN
D		5P6009	1	TUBE (3.9IN.)
	17	328924	4	SCREW
		4B2047	4	NUT
		9F8125	4	LOCKWASHER
		4B4274	4	WASHER
C	18	5T5085	1	BRACKET
	19	6J2256	2	PIN
	20	S1616	4	BOLT
		1B4330	4	NUT
	21	3K8782	1	FUSE (10 AMP)
C	22	3T3048	2	CLIP AS.
C	23	3T3049	1	CLIP AS.
		SMHS73663	1	FORM (INSTALLATION INSTRUCTIONS)

D ORDER BY THE METER C INDICATES CHANGE B USE AS REQUIRED

308966

6G5820 BLADE FLOAT CONTROL WIRING GROUP—Type 2
Serial No. 87V5734—Up. Part of 6G6669 Blade Float Arrangement listed on Page 231
6G5581 Harness parts are shown on Page 118A. AN ATTACHMENT

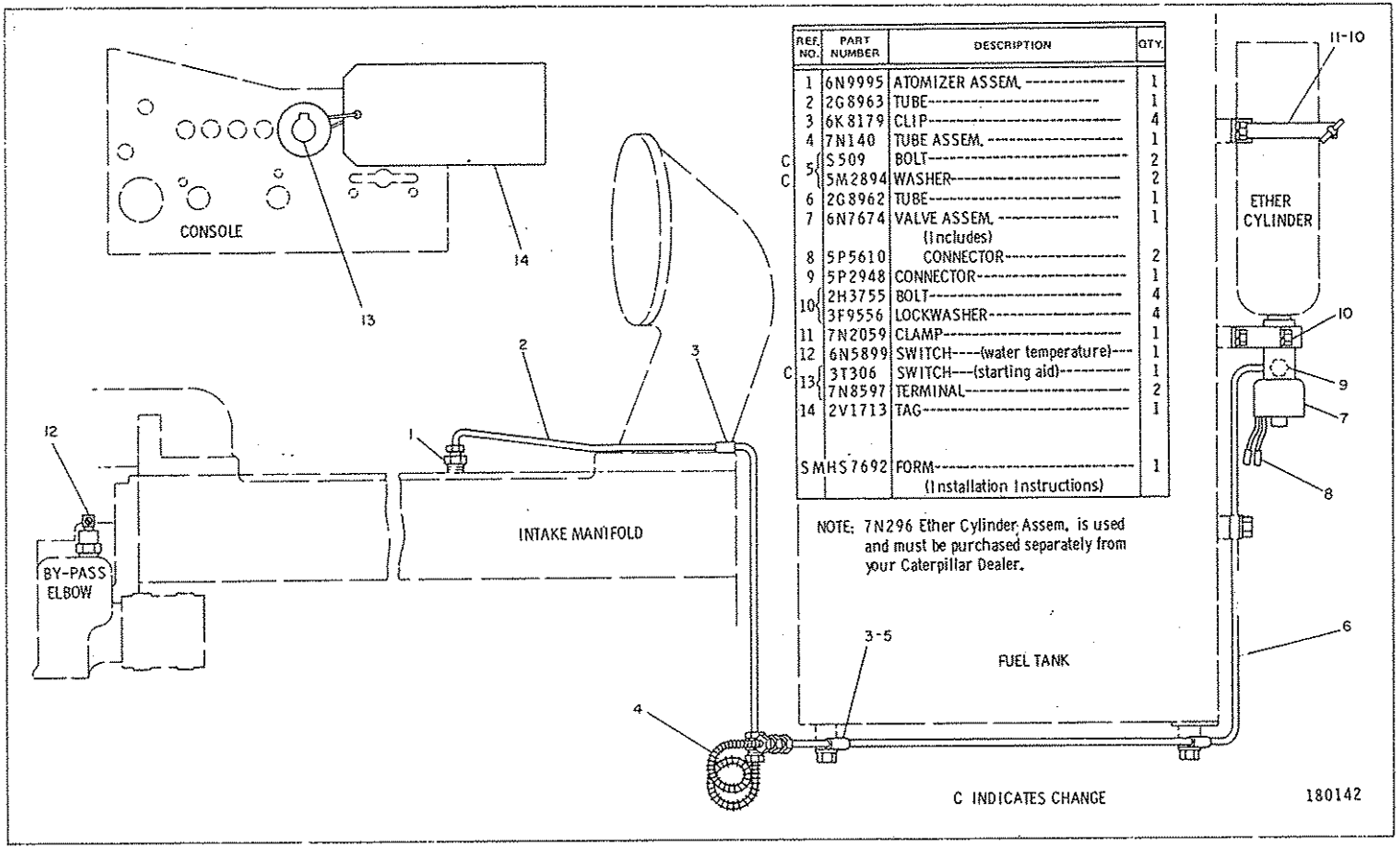

REF. NO.	PART NUMBER	DESCRIPTION	QTY.
1	6N9995	ATOMIZER ASSEM.	1
2	2G8963	TUBE	1
3	6K8179	CLIP	4
4	7N140	TUBE ASSEM.	1
C 5	1S509	BOLT	2
C 5	5M2894	WASHER	2
6	2G8962	TUBE	1
7	6N7674	VALVE ASSEM. (Includes)	1
8	5P5610	CONNECTOR	2
9	5P2948	CONNECTOR	1
10	2H3755	BOLT	4
10	3F9556	LOCKWASHER	4
11	7N2059	CLAMP	1
12	6N5899	SWITCH----(water temperature)----	1
C 13	3T306	SWITCH---(starting aid)----	1
13	7N8597	TERMINAL	2
14	2V1713	TAG	1
SMHS7692		FORM (Installation Instructions)	1

2G8930 ETHER STARTING AID GROUP
AN ATTACHMENT

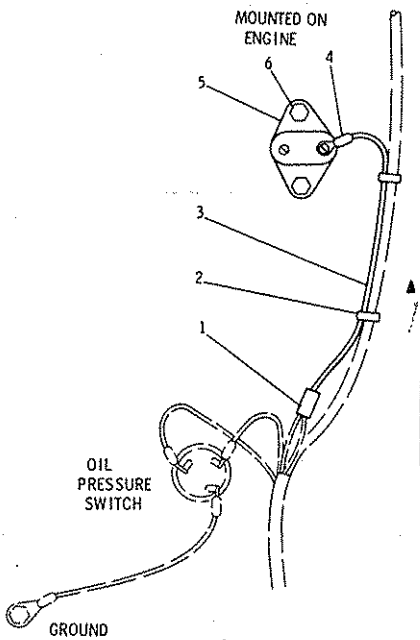

REF. NO.	PART NUMBER	DESCRIPTION	QTY
1	2S1043	SPLICE	1
2	2S2093	STRAP	2
3 ▲	2G7561	WIRE ASSEM. (Includes)	1
	5P5629	WIRE-----.61 m(24.01 in.)	
4	2D8781	TERMINAL	1
5	4N9072	SWITCH	1
	4N3841	GASKET	1
6	2B2695	BOLT	2
	9M1974	WASHER	2

▲ ORDER BY THE METRE

161523

2G7540 COOLANT FLOW SWITCH GROUP
AN ATTACHMENT

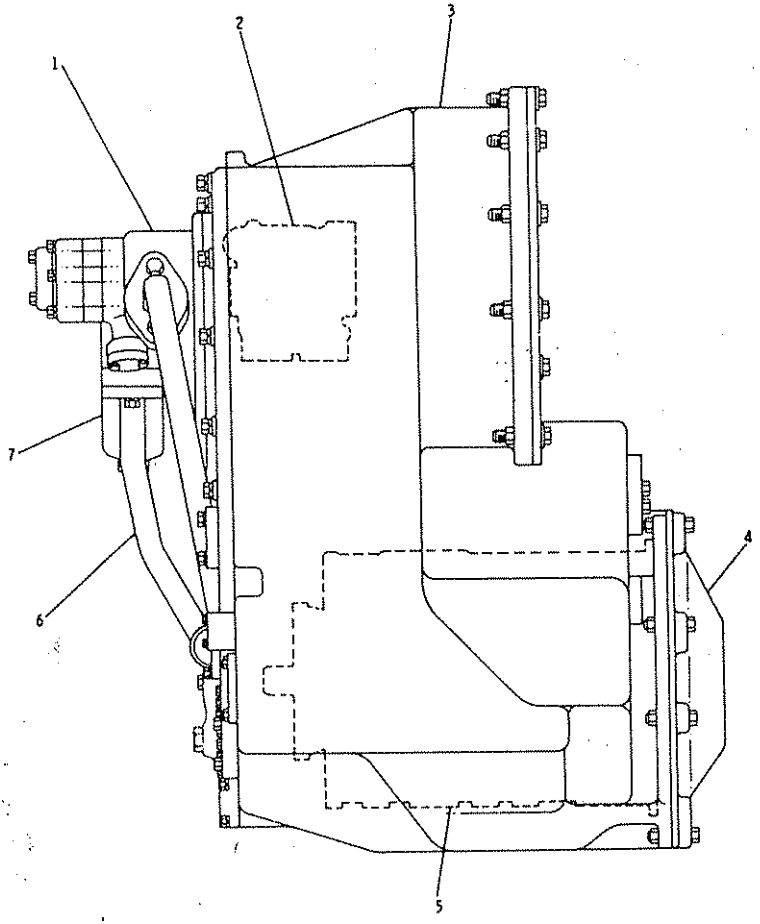

REF. NO.	PART NUMBER	DESCRIPTION	QTY
1	3P892	GEAR PUMP GROUP	1
2	3P2807	HYDRAULIC CONTROL GROUP	1
3	3P1751	TRANSFER GEAR GROUP (Separate Illustration)	1
4	3P5826	COVERS GROUP (Shipping & Storage- Consists of Covers, Gaskets, Plugs, Seals, & Hardware)	1
5	8P5958	PLANETARY TRANSMISSION GRP	1
6	3P2833	OIL LINES GROUP	1
7	6P2091	TRANSMISSION FILTER GROUP (Separate Illustration)	1

211779

8P5957 TRANSMISSION ARRANGEMENT

Transmission Serial No. 2FA1—Up. 3P2833 Oil Lines, 3P892 Gear Pump, 6P2091 Transmission Filter, 3P2807 Hydaulic Control, 3P1751 Transfer Gear and 8P5958 Planetary Transmission parts are shown on Pages 123, 124, 125, 128, 136 through

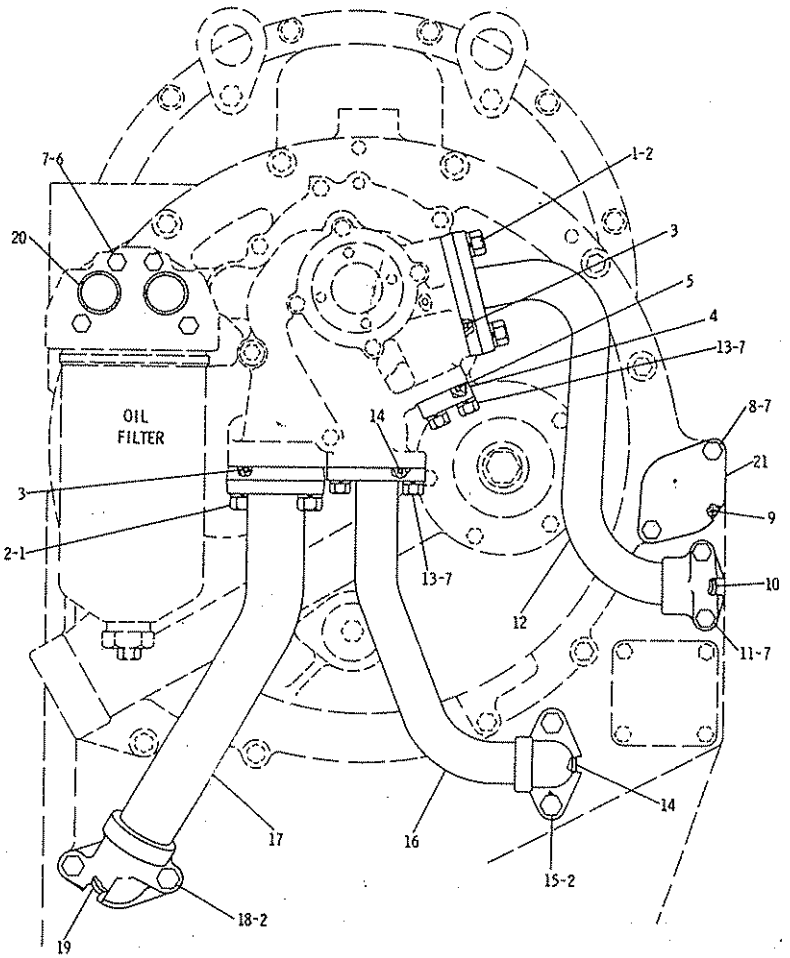

REF. NO.	PART NUMBER	DESCRIPTION	QTY
1	S1587	BOLT	4
2	3B4508	LOCKWASHER	8
3	5F8000	SEAL	2
4	7F7799	COVER	1
5	4F9029	SEAL	1
6	S1594	BOLT	4
7	3B4506	LOCKWASHER	12
8	S1591	BOLT	2
9	4N237	GASKET	1
10	3H1461	SEAL	1
11	L1352	BOLT	2
12	3P1756	TUBE ASSEM.	1
13	1A2029	BOLT	4
14	4F7952	SEAL	2
15	7B3235	BOLT	2
16	3P848	TUBE ASSEM.	1
C 17	8P1256	TUBE ASSEM.	1
C 18	S1573	BOLT	2
19	7F8267	SEAL	1
20	6F6673	SEAL	2
21	5H197	COVER	1

C INDICATES CHANGE 228070

3P2833 TRANSMISSION OIL LINES GROUP
Part of 8P5957 Transmission Arrangement shown on Page 122

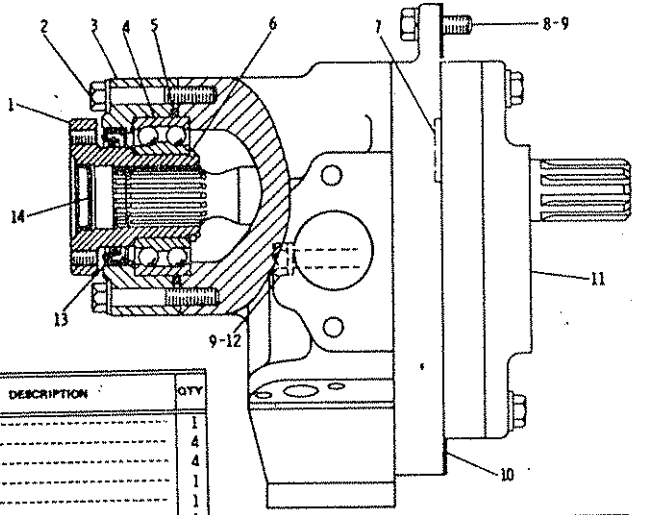

REF. NO.	PART NUMBER	DESCRIPTION	QTY
1	2P5769	COUPLING	1
2	6L2070	BOLT	4
	5M2894	WASHER	4
3	2P5766	CAGE	1
4	1B5675	BEARING	1
5	2H3931	SEAL	1
6	2M3974	RING	1
7	6F6673	SEAL	1
8	1A2029	BOLT	5
9	3B4506	LOCKWASHER	7
10	3P884	GASKET	1
11	3P891	PUMP GROUP (Separate Illustration)	1
12	8S9191	BOLT	2
13	2H3843	SEAL	1
14	5H4279	PLUG	1

200521

3P892 TRANSMISSION GEAR PUMP GROUP
Transmission Serial No. 2FA1 to 2FA1013 inclusive
Part of 8P5957 Transmission Arrangement shown on Page 122

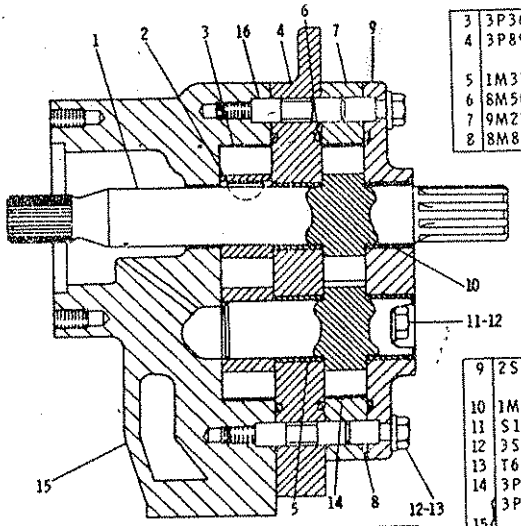

REF. NO.	PART NUMBER	DESCRIPTION	QTY
1	3P881	GEAR (12 teeth)	1
2	1B8736	KEY	1
3	3P3690	GEAR (18 teeth)	2
4	3P890	MANIFOLD ASSEM. (Includes)	1
5	1M3780	BEARING	2
6	8M5007	SEAL	3
7	9M2209	BODY	1
8	8M8489	DOWEL	4
9	2S5838	COVER ASSEM. (Includes)	1
10	1M3780	BEARING	2
11	S1619	BOLT (3.75 in. long)	4
12	3S4	WASHER	6
13	T65	BOLT (4 in. long)	2
14	3P877	GEAR ASSEM. (12 teeth)	1
15	3P883	MANIFOLD ASSEM. (Includes)	1
	4B9880	BALL	1
16	8M8489	DOWEL	2

200531

3P891 GEAR PUMP GROUP

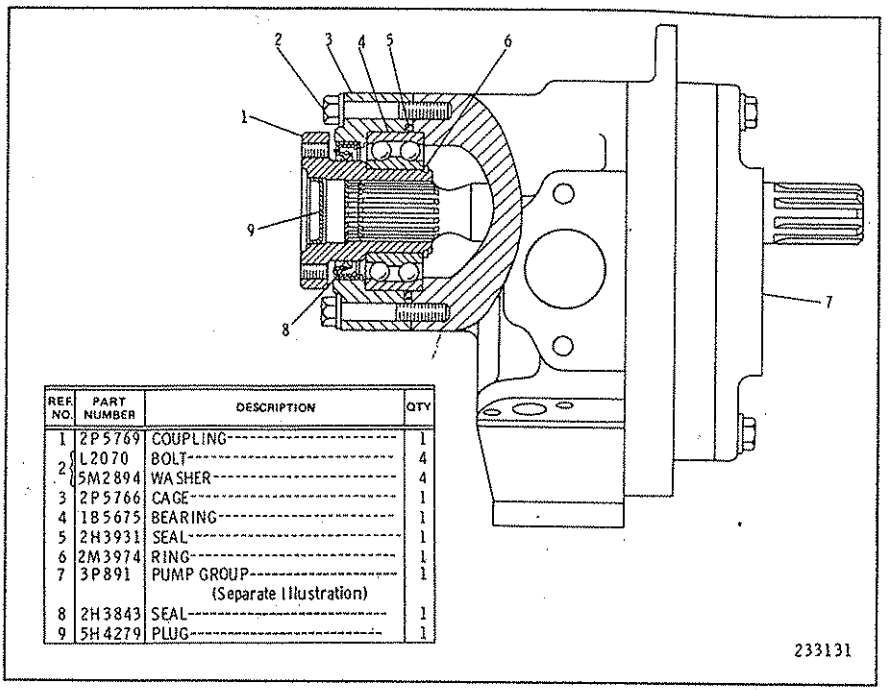

REF. NO.	PART NUMBER	DESCRIPTION	QTY
1	2P5769	COUPLING	1
2	L2070	BOLT	4
	5M2894	WASHER	4
3	2P5766	CAGE	1
4	185675	BEARING	1
5	2H3931	SEAL	1
6	2M3974	RING	1
7	3P891	PUMP GROUP (Separate Illustration)	1
8	2H3843	SEAL	1
9	5H4279	PLUG	1

3P892 TRANSMISSION GEAR PUMP GROUP
Transmission Serial No. 2FA1014—Up. Part of 8P5957 Transmission Arrangement shown on Page 122. 3P891 Pump parts are shown on Page 124

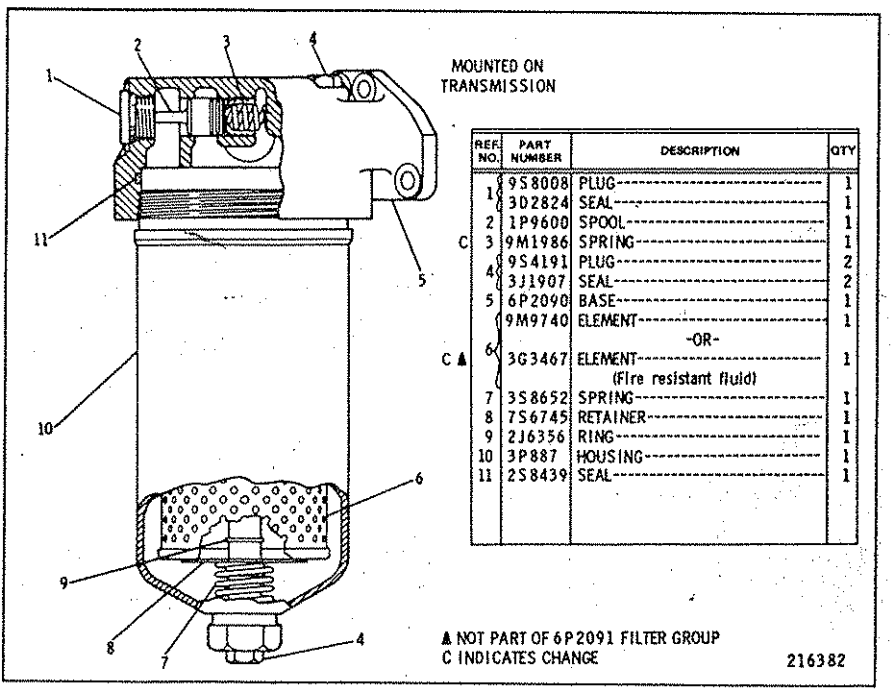

	REF. NO.	PART NUMBER	DESCRIPTION	QTY
	1	9S8008	PLUG	1
		3D2824	SEAL	1
	2	1P9600	SPOOL	1
C	3	9M1986	SPRING	1
	4	9S4191	PLUG	2
		3J1907	SEAL	2
	5	6P2090	BASE	1
	6	9M9740	ELEMENT	1
			-OR-	
C ▲		3G3467	ELEMENT (Fire resistant fluid)	1
	7	3S8652	SPRING	1
	8	7S6745	RETAINER	1
	9	2J6356	RING	1
	10	3P887	HOUSING	1
	11	2S8439	SEAL	1

6P2091 TRANSMISSION FILTER GROUP
Part of 8P5957 Transmission Arrangement shown on Page 122

	REF. NO.	PART NUMBER	DESCRIPTION	QTY
	1	8D5293	RING	4
	2	S1594	BOLT	11
C	3	2G8307	PAD	1
	4	8D5296	COUPLING	1
	5	8D5297	COUPLING	1
	6	3D2992	SEAL	2
	7	8D5284	RETAINER	1
	8	9S1354	NUT	6
	9	9D4634	CABLE	1
	10	8D5295	PIN	2
		8D5294	RING	2
	11	9D5506	ROD END	2
		1B4201	NUT	2
	12	1P8116	SEAL	2
	13	9D4635	CABLE	1
	14	9D793	SUPPORT ASSEM.	1
C	15	S1591	BOLT	2
C	16	L1351	BOLT	20
C	17	5P1075	WASHER	36
C	18	2G8097	MOUNTING	6
	19	9D791	PLATE ASSEM.	1
	20	9D787	PLATE ASSEM. (Includes)	1
		6D6538	STUD	1
	21	9D1106	GATE	1
	22	2G3468	BRACKET	1
	23	1D4717	NUT	4
	24	7M706	KNOB	1
	25	8D5366	COVER	1
		9D5331	GASKET	1
	26	6F253	LOCKWASHER	2
	27	2G3149	HOUSING	1
	28	9D9961	SUPPORT ASSEM.	1
C	29	2G8222	PAD	1
C	30	2G8095	SPACER	6
	31	S1591	BOLT---3.81 cm(1.5 in.)--long	4
			-OR-	
		7F192	BOLT-----5.1 cm(2 in.)-----long--	4
C	32	5M2894	WASHER	1

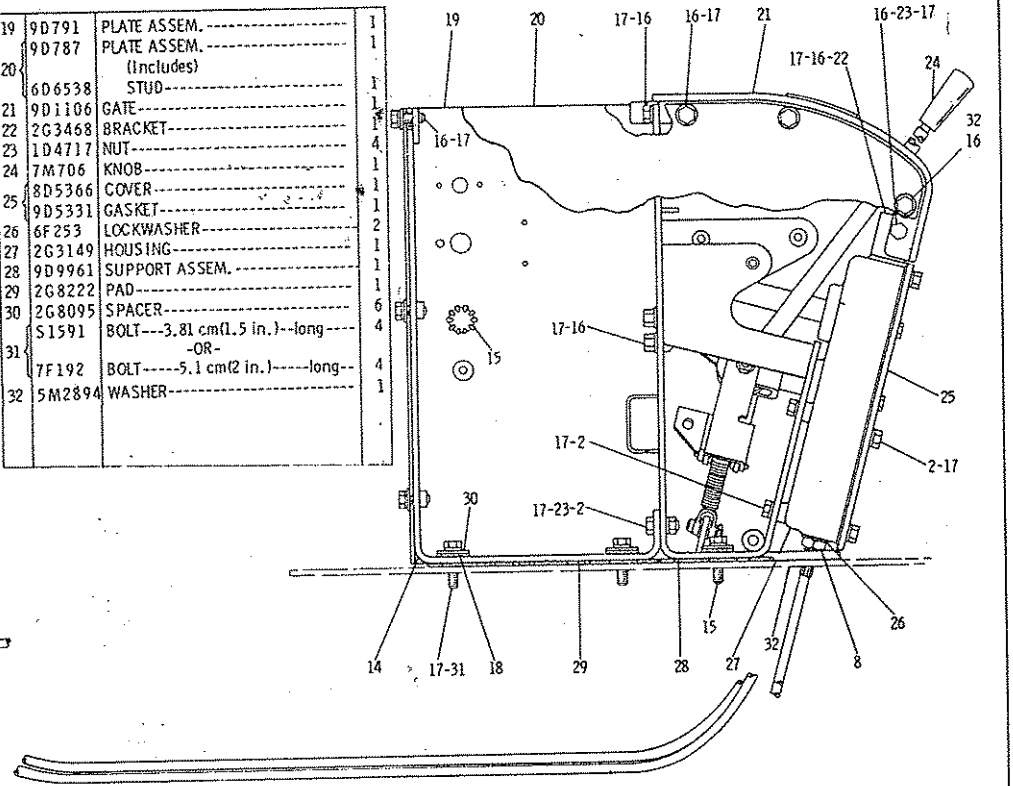

C INDICATES CHANGE

228061

9D5030 TRANSMISSION CONTROL GROUP—Part 1
Serial No. 87V5275 to 87V5650 inclusive

9D5030 TRANSMISSION CONTROL GROUP—Part 2
Serial No. 87V5275 to 87V5650 inclusive

REF. NO.	PART NUMBER	DESCRIPTION	QTY
1	8D5387	LEVER	1
2	7D9327	SHAFT	1
3	7D9251	BEARING	6
4	T65	BOLT	1
	1D4717	NUT	1
C	5P1075	WASHER	1
5	8D5450	SHAFT ASSEM.	1
6	7D87	LEVER	1
7	1B8704	KEY	2
8	6L7751	ROD END	2
	1B4201	NUT	2
9	S1616	BOLT	2
	1H3244	LOCKWASHER	2
10	5H3249	RING	2
11	1B7182	BOLT	2
	9M6527	WASHER	2
12	8D5440	SHAFT ASSEM.	1
13	7D9304	LEVER	1
14	9D8903	PIN	1
	1B676	PIN	1
15	3B4615	COTTER PIN	1
C	4B4278	WASHER	2
16	1H7366	ROD	1
17	4J7490	SPRING	1
18	9D795	PLATE ASSEM.	1
19	7D9368	ROD END	1
20	1B4202	NUT	2
21	3B4505	LOCKWASHER	2
22	9D2343	BRACKET ASSEM. (Includes)	1
	4D2619	BEARING	1
23	7H3641	ROD END	1
24	4B3388	BOLT	1
	1D4716	NUT	1

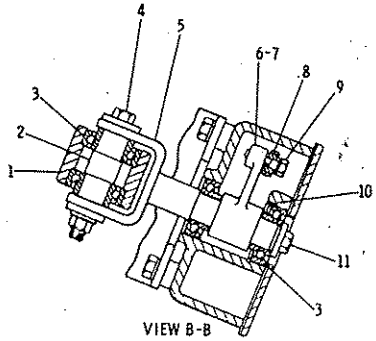

VIEW B-B

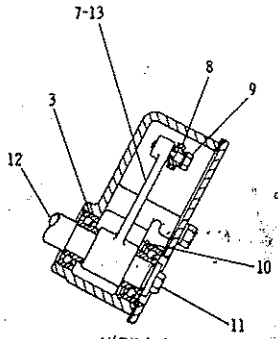

VIEW A-A

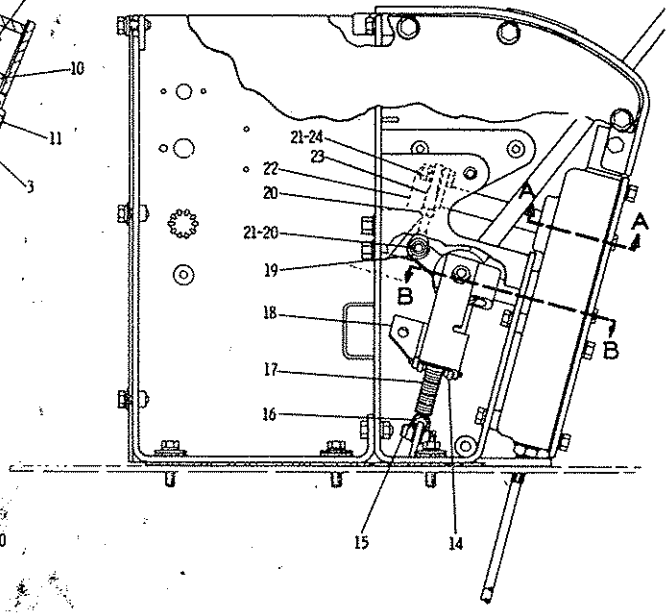

C INDICATES CHANGE

218638

REF. NO.	PART NUMBER	DESCRIPTION	QTY	C
1	8D5293	RING	4	
2	S1594	BOLT	11	
3	2G8307	PAD	1	
4	8D5296	COUPLING	1	
5	8D5297	COUPLING	1	
6	3D2992	SEAL	2	
7	8D5284	RETAINER	1	
8	9S1354	NUT	6	
9	9D4634	CABLE	1	
10	8D5295	PIN	2	
	8D5294	RING	2	
11	9D5506	ROD END	2	
	1B4201	NUT	2	
12	1P8116	SEAL	2	
13	9D4635	CABLE	1	
14	9D793	SUPPORT ASSEM.	1	
15	S1591	BOLT	2	C
16	L1351	BOLT	20	C
17	5P1075	WASHER	36	C
18	2G8097	MOUNTING	6	
19	9D791	PLATE ASSEM.	1	
20	6G6571	PLATE ASSEM. (Includes)	1	
	6D6538	STUD	1	
21	9D1106	GATE	1	
22	2G3468	BRACKET	1	
23	1D4717	NUT	4	
24	7M706	KNOB	1	
25	8D5366	COVER	1	
	9D5331	GASKET	1	
26	6F253	LOCKWASHER	2	
27	2G3149	HOUSING	1	
28	9D9961	SUPPORT ASSEM.	1	
29	2G8222	PAD	1	
30	2G8095	SPACER	6	
31	7F192	BOLT---5.1cm(2 in.)---long	4	
32	5M2894	WASHER	1	
33	6G6538	COVER	1	C
34	2A762	BOLT	2	C
	5P4115	WASHER	2	C

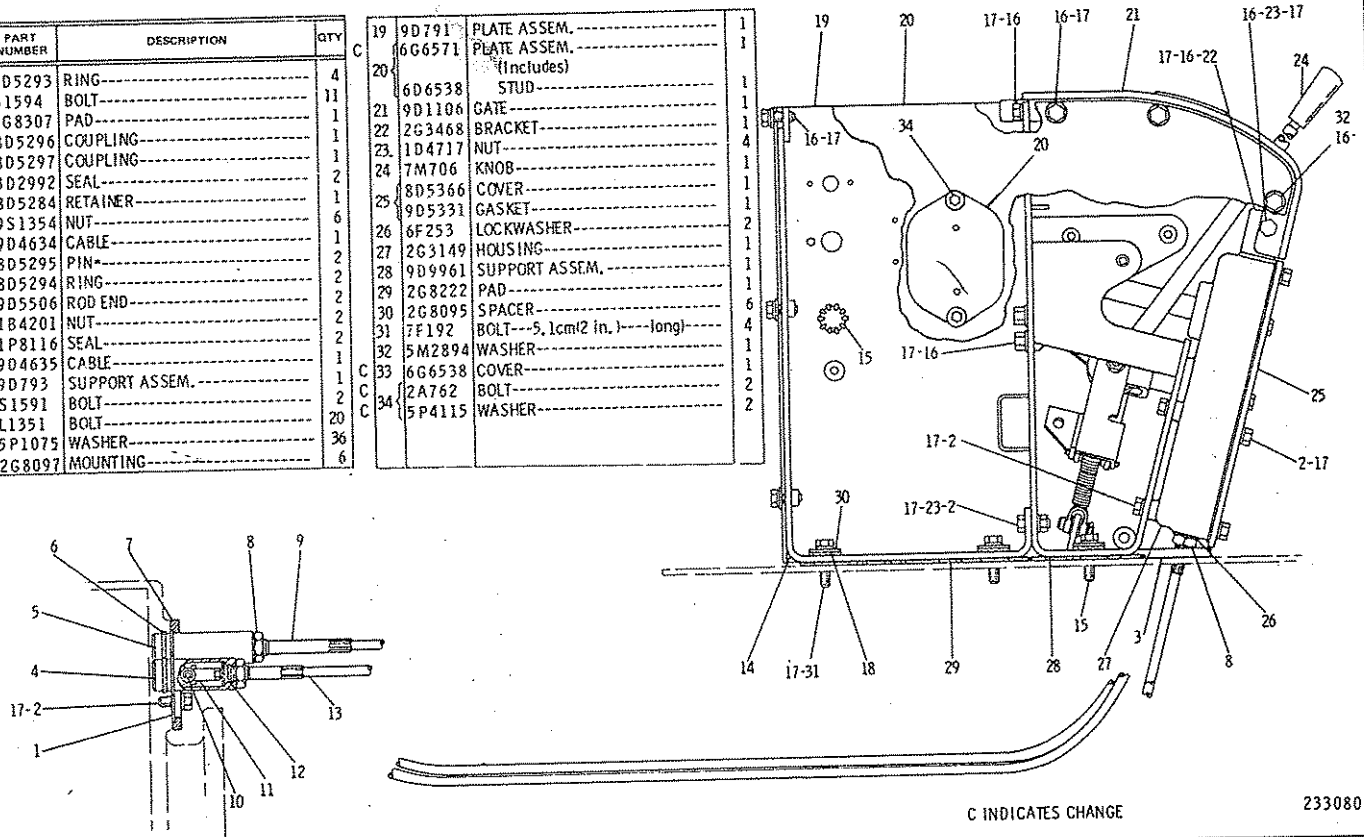

C INDICATES CHANGE

233080

9D5030 TRANSMISSION CONTROL GROUP—Part 1
Serial No. 87V5651 to 87V5733 inclusive

9D5030 TRANSMISSION CONTROL GROUP—Part 2
Serial No. 87V5651 to 87V5733 Inclusive

REF. NO.	PART NUMBER	DESCRIPTION	QTY
1	8D5387	LEVER	1
2	7D9327	SHAFT	1
3	7D9251	BEARING	6
4	T65	BOLT	1
	1D4717	NUT	1
	5P1075	WASHER	1
5	8D5450	SHAFT ASSEM.	1
6	7D87	LEVER	1
7	1B8704	KEY	2
8	6L7751	ROD END	2
	1B4201	NUT	2
9	S1616	BOLT	2
	1H3244	LOCKWASHER	2
10	5H3249	RING	2
11	1B7182	BOLT	2
	9M6527	WASHER	2
12	8D5440	SHAFT ASSEM.	1
13	7D9304	LEVER	1
14	9D8903	PIN	1
15	1B676	PIN	1
	3B4615	COTTER PIN	1
	4B4278	WASHER	2
16	1H7366	ROD	1
17	4J7490	SPRING	1
18	9D795	PLATE ASSEM.	1
19	7D9368	ROD END	1
20	1B4202	NUT	2
21	3B4505	LOCKWASHER	2
22	9D2343	BRACKET ASSEM. (Includes)	1
	4D2619	BEARING	1
23	7H3641	ROD END	1
24	4B3388	BOLT	1
	1D4716	NUT	1

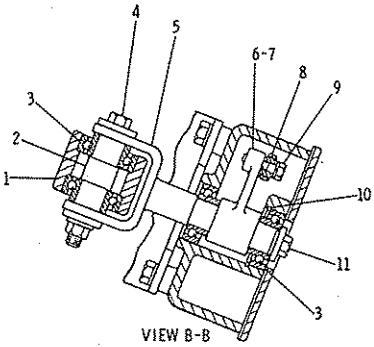

VIEW B-B

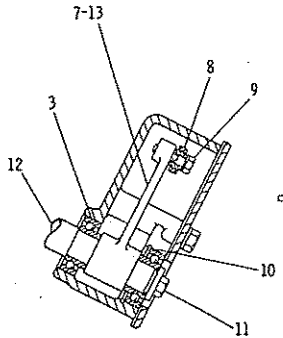

VIEW A-A

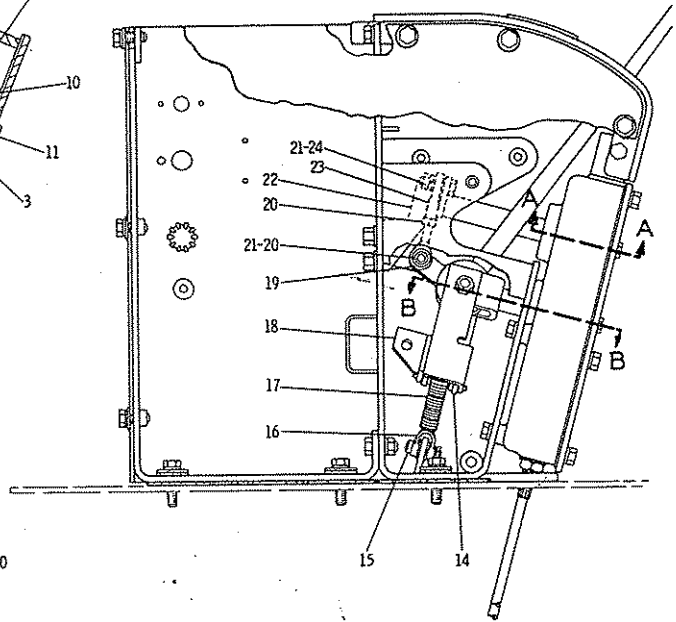

233081

REF. NO.	PART NUMBER	DESCRIPTION	QTY
1	8D5293	RING	4
2	S1594	BOLT	11
3	2G8307	PAD	1
4	8D5296	COUPLING	1
5	8D5297	COUPLING	1
6	3D2992	SEAL	2
7	8D5284	RETAINER	1
8	9S1354	NUT	6
9	9D4634	CABLE	1
10	8D5295	PIN	2
	8D5294	RING	2
11	9D5506	ROD END	2
	1B4201	NUT	2
12	1P8116	SEAL	2
13	9D4635	CABLE	1
14	9D793	SUPPORT ASSEM.	1
15	S1591	BOLT	2
16	L1351	BOLT	20
17	5P1075	WASHER	36
18	2G8097	MOUNTING	6

C	REF. NO.	PART NUMBER	DESCRIPTION	QTY
	19	6G7895	PLATE ASSEM.	1
	20	6G6571	PLATE ASSEM.	1
			(Includes)	
		6D6538	STUD	1
	21	9D1106	GATE	1
	22	2G3468	BRACKET	1
	23	1D4717	NUT	4
	24	7M706	KNOB	1
	25	8D5366	COVER	1
		9D5331	GASKET	1
	26	6F253	LOCKWASHER	2
	27	2G3149	HOUSING	1
	28	9D9961	SUPPORT ASSEM.	1
	29	2G8222	PAD	1
	30	2G8095	SPACER	6
	31	7F192	BOLT---5.1cm(2 in.)----long)	4
	32	5M2894	WASHER	1
	33	6G6538	COVER	1
	34	2A762	BOLT	2
		5P4115	WASHER	2

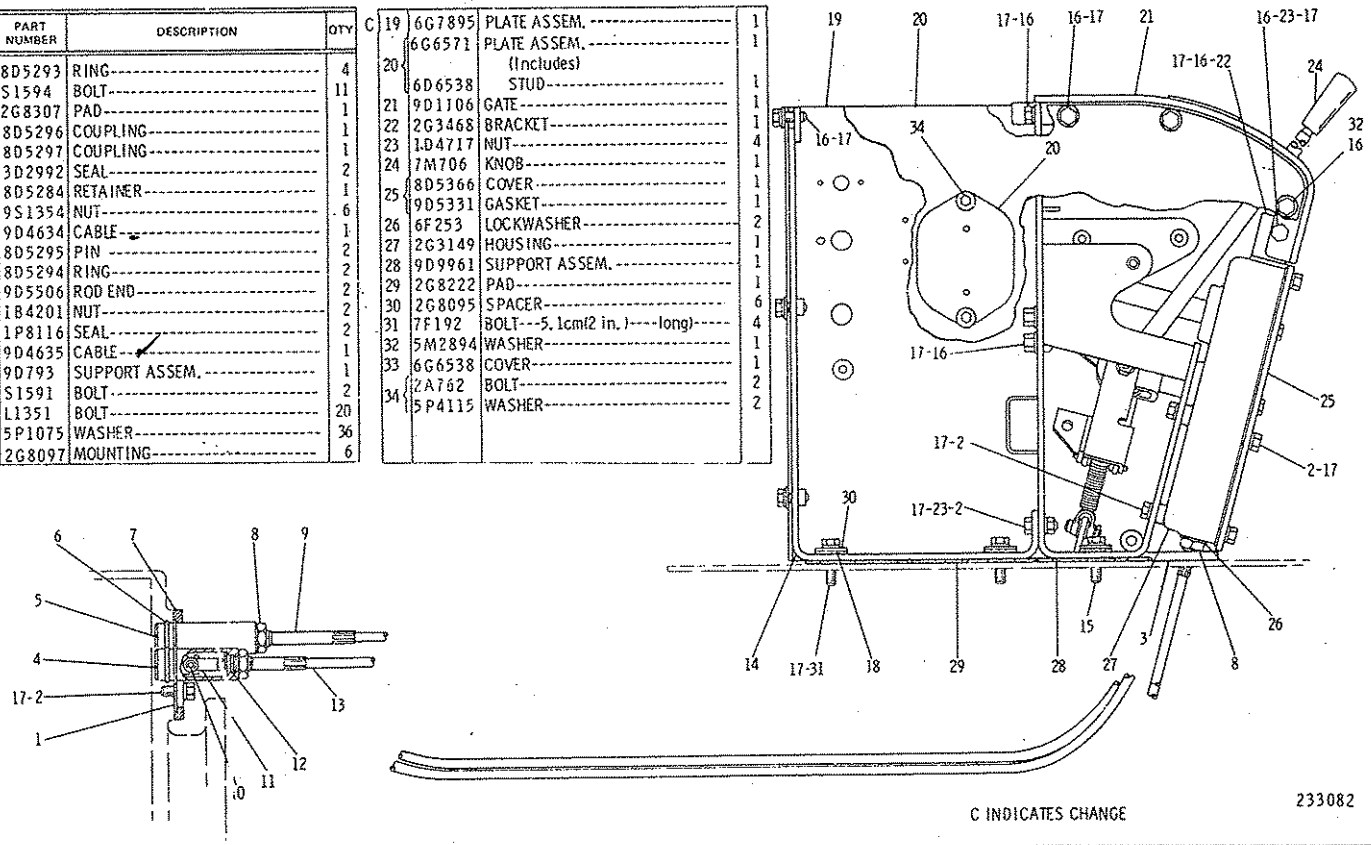

C INDICATES CHANGE

233082

9D5030 TRANSMISSION CONTROL GROUP—Part 1
Serial No. 87V5734—Up

9D5030 TRANSMISSION CONTROL GROUP—Part 2
Serial No. 87V5734—Up

REF. NO.	PART NUMBER	DESCRIPTION	QTY
1	8D5387	LEVER	1
2	7D9327	SHAFT	1
3	7D9251	BEARING	6
4	T65	BOLT	1
	1D4717	NUT	1
	5P1075	WASHER	1
5	8D5450	SHAFT ASSEM.	1
6	7D87	LEVER	1
7	1B8704	KEY	2
8	6L7751	ROD END	2
	1B4201	NUT	2
9	S1616	BOLT	2
	1H3244	LOCKWASHER	2
10	5H3249	RING	2
11	1B7182	BOLT	2
	9M6527	WASHER	2
12	8D5440	SHAFT ASSEM.	1
13	7D9304	LEVER	1
14	9D8903	PIN	1
	1B676	PIN	1
15	3B4615	COTTER PIN	1
	4B4278	WASHER	2
16	1H7366	ROD	1
17	4J7490	SPRING	1
18	9D795	PLATE ASSEM.	1
19	7D9368	ROD END	1
20	1B4202	NUT	2
21	3B4505	LOCKWASHER	2
22	9D2343	BRACKET ASSEM. (Includes)	1
	4D2619	BEARING	1
23	7H3641	ROD END	1
24	4B3388	BOLT	1
	1D4716	NUT	1

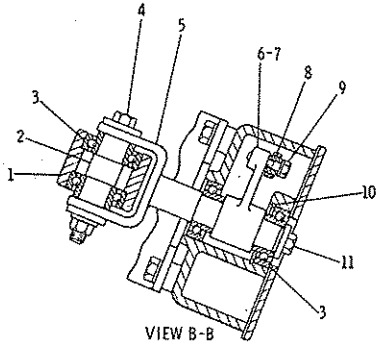

VIEW B-B

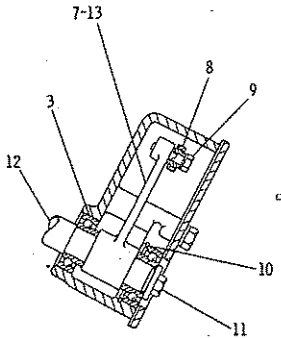

VIEW A-A

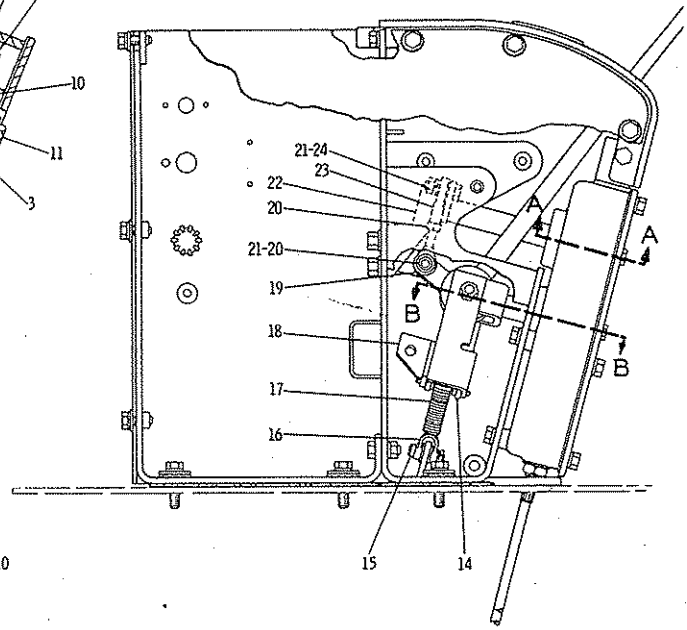

233081

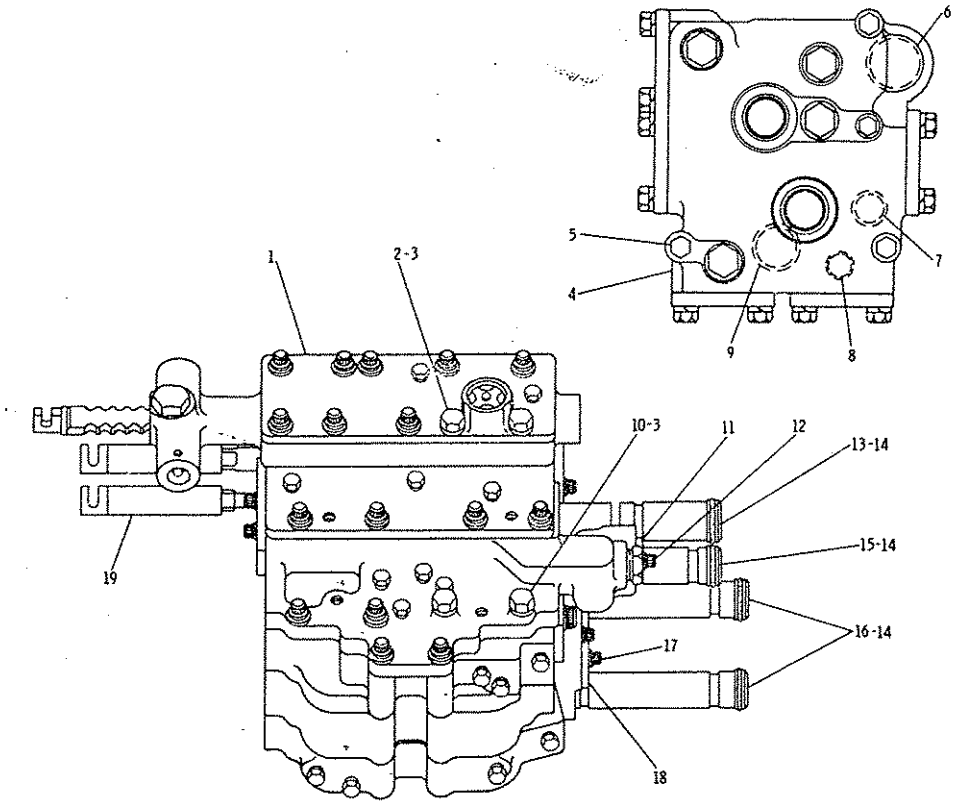

REF NO.	PART NUMBER	DESCRIPTION	QTY
1	3P841	VALVE GROUP (Separate Illustration)	1
2	5F6044	BOLT	2
3	5M2894	WASHER	4
C 4	8P4301	VALVE GROUP (Separate Illustration)	1
5	1L1352	BOLT	4
	3B4506	LOCKWASHER	4
6	6F6673	SEAL	1
7	5F7054	SEAL	1
8	2J157	SEAL	2
9	2H3932	SEAL	3
10	4F411	BOLT	2
11	3P2781	PLATE	1
12	1T416	BOLT	1
13	3P868	SLEEVE	1
14	4M8303	SEAL	8
15	3P869	SLEEVE	1
16	3P870	SLEEVE	2
17	6L4783	BOLT	2
18	3P2777	PLATE	1
19	6P5095	LINK	2

C INDICATES CHANGE

211783

3P2807 TRANSMISSION HYDRAULIC CONTROL GROUP
Part of 8P5957 Transmission Arrangement shown on Page 122
8P4301 and 3P841 Valve parts are shown on Pages 129 & 132

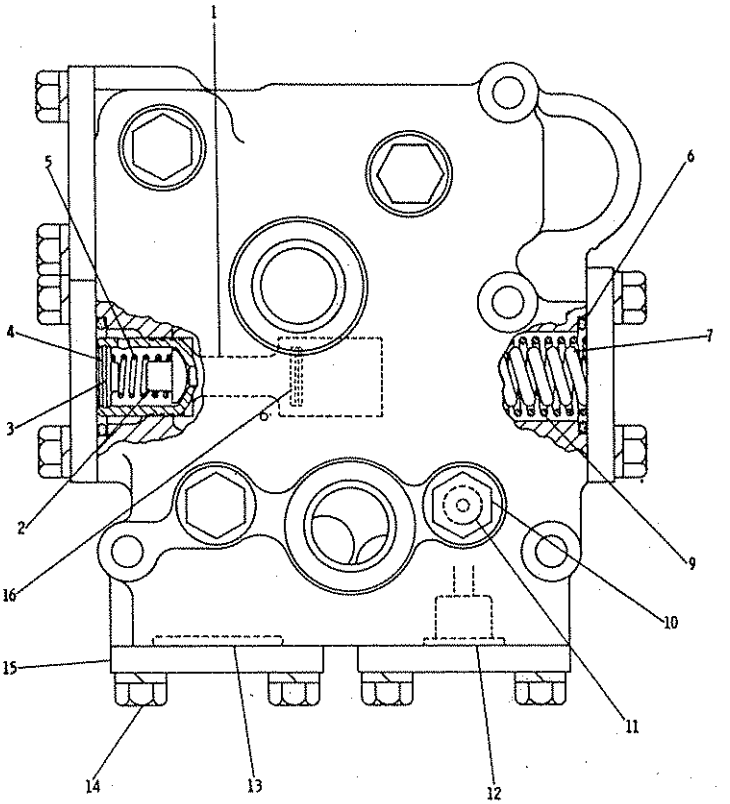

REF. NO.	PART NUMBER	DESCRIPTION	QTY
1	1P562	VALVE ASSEM. -----(relief)------ (Includes)	1
	4S5982	VALVE----------	1
2	9M4313	POPPET----------	1
3	8M2537	RETAINER----------	1
4	1L3162	RING----------	1
5	5M9548	SPRING----------	1
6	6F6673	SEAL----------	3
7	8P2893	SPRING----------	1
9	2P5677	SPRING----------	1
C 10	9S4191	PLUG----------	4
C	3J1907	SEAL----------	4
11	6P4917	PIN----------	2
12	2P4548	VALVE ASSEM. ---------- (Separate Illustration)	2
13	3H1461	SEAL----------	2
14	1A2029	BOLT----------	10
	3B4506	LOCKWASHER----------	10
C 15	2M1656	COVER----------	5
	7M1396	SPACER-1.57mm(.062 in.) thick--	1
16	7M1397	SPACER-.914mm(.036 in.) thick-	1
	5M3492	SPACER-.254mm(.010 in.) thick-	4
	GMG02282	FORM---------- (Installation Instructions for Valve Group)	1

C INDICATES CHANGE 218639

8P4301 RELIEF CONTROL VALVE GROUP—Replaced by 2P5811 shown on Page 130
Part of 3P2807 Transmission Hydraulic Control Group shown on Page 128
2P4548 Valve parts are shown on Page 131

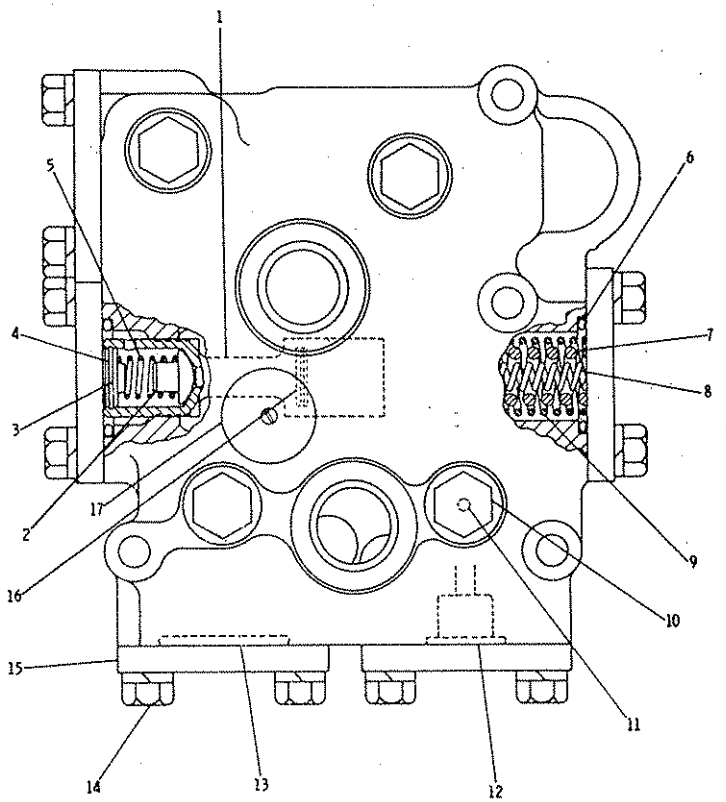

REF. NO.	PART NUMBER	DESCRIPTION	QTY
1	1P562	VALVE ASSEM. (Includes)	1
	4S5982	VALVE	1
2	9M4313	POPPET	1
3	8M2537	RETAINER	1
4	1L3162	RING	1
5	5M9548	SPRING	1
6	6F6673	SEAL	3
C 7	8P2893	SPRING	1
8	2S1413	SPRING	1
9	2P5677	SPRING	1
C 10	9S4191	PLUG	4
C	3J1907	SEAL	4
11	6P4917	PIN	2
12	2P4548	VALVE ASSEM. (Separate Illustration)	2
13	3H1461	SEAL	2
14	1A2029	BOLT	10
	3B4506	LOCKWASHER	10
C 15	2M1656	COVER	5
	7M1396	SPACER---1.57 mm(.062 in.) thick	1
16	7M1397	SPACER---.914 mm(.036 in.) thick	1
	5M3492	SPACER---.254 mm(.01 in.) thick	4
17	3P4566	PLATE------(identification)	1
	7B3028	SCREW	1
	GMG02282	FORM- (Installation Instructions for Valve Group)	1

C INDICATES CHANGE

218977

2P5811 CONTROL VALVE GROUP—Field Installation
2P4548 Valve parts are shown on Page 131

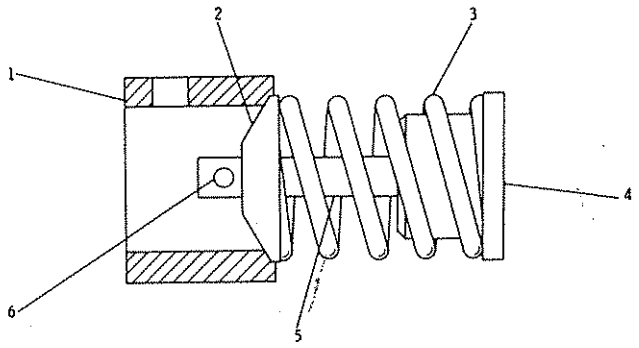

REF. NO.	PART NUMBER	DESCRIPTION	QTY
1	3P7686	COLLAR	1
2	9L672	VALVE	1
3	3P7685	SPRING	1
4	3P8006	RETAINER	1
5	1P5274	PIN	1
6	3H1156	PIN	1

119689

2P4548 VALVE ASSEMBLY
Part of 8P4301 and 2P5811 Relief Control Valve Groups shown on Pages 129 & 130

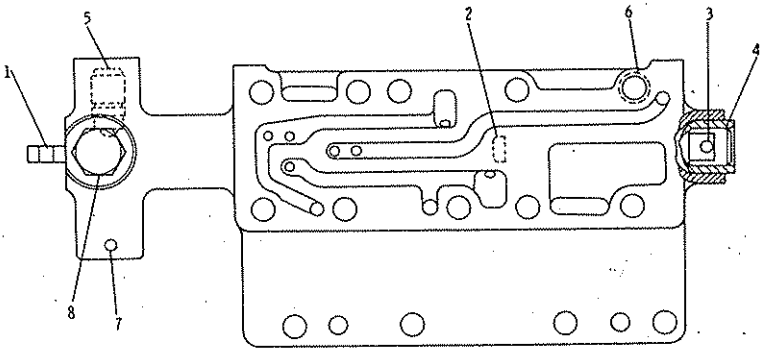

REF. NO.	PART NUMBER	DESCRIPTION	QTY
1	2P7030	SPOOL ASSEM. (Includes)	1
2	2A3746	PLUG	1
3	6H2948	PIN	1
4	2P4503	PLUG	1
5	7S4607	DETENT ASSEM.	2
6	8M8489	DOWEL	2
7	2H6264	PIN	1
8	3P4362	STOP	1
	3K360	SEAL	1

308873

3P842 PILOT VALVE GROUP—Speed Selector
Part of 3P841 Pilot Selector and Pressure Control Valve Group shown on Page 132

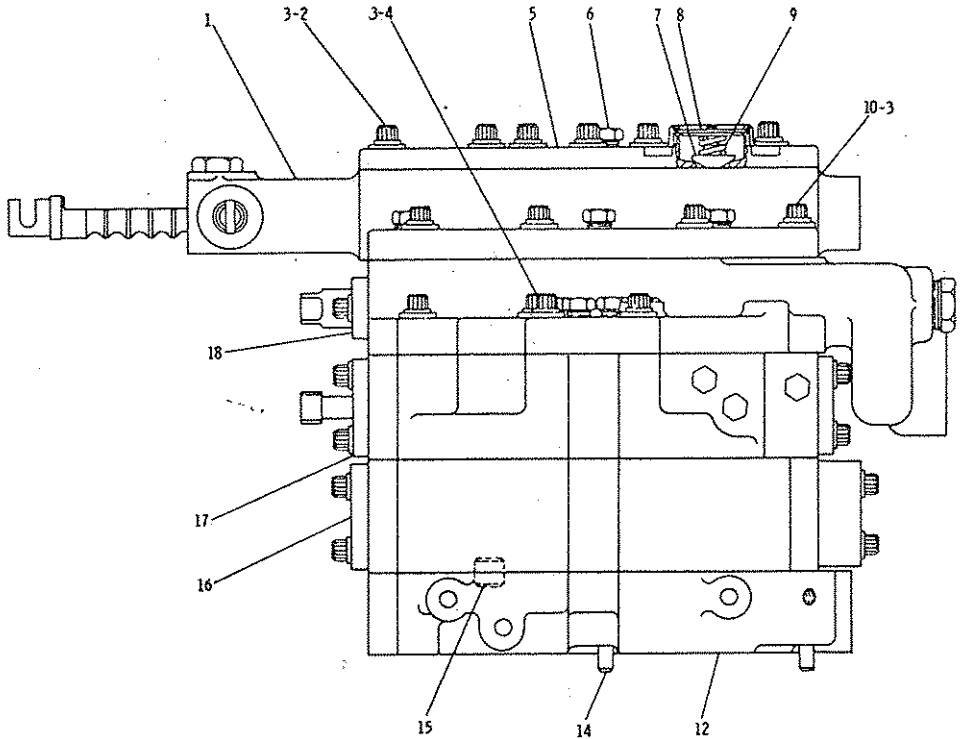

REF. NO.	PART NUMBER	DESCRIPTION	QTY
1	3P842	VALVE GROUP (Separate Illustration)	1
2	3P208	BOLT	8
3	9M1974	WASHER	16
4	9M4289	BOLT	4
5	3P864	COVER ASSEM. (Includes)	1
C 6	5M6214	PLUG	1
7	3P866	POPPET	1
&	3P867	RETAINER	1
&	4D1322	RING	1
9	3J6956	SPRING	1
10	4S5845	BOLT	4
12	3P2870	MANIFOLD ASSEM. (Includes)	1
14	9M6803	DOWEL	2
15	8M8489	DOWEL	2
16	3P843	VALVE GROUP	1
C 17	8P1101	VALVE GROUP	1
18	2P5814	VALVE GROUP (Separate Illustration)	1

C INDICATES CHANGE 212147

3P841 PILOT SELECTOR AND PRESSURE CONTROL VALVE GROUP
Part of 3P2807 Transmission Hydraulic Control Group shown on Page 128
3P842, 3P843, 2P5814 and 8P1101 Valve parts are shown on Pages 131, 133, 134 & 135

3P843 SELECTOR AND PRESSURE CONTROL VALVE GROUP

Part of 3P841 Pilot Selector and Pressure Control Valve Group shown on Page 132

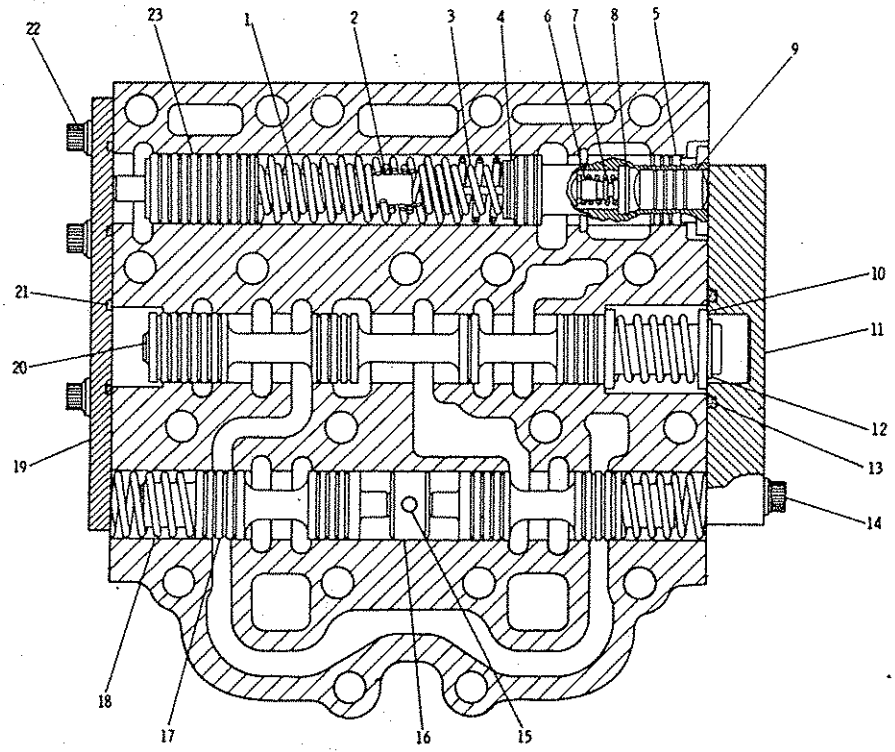

REF. NO.	PART NUMBER	DESCRIPTION	QTY
1	2P4500	SPRING----------(outer)----------	1
2	2P4397	SPACER----------	1
3	2P4499	SPRING----------(inner)----------	1
4	7M1396	SPACER----1.58 mm(.062 in.)thick	1
	7M1397	SPACER----0.92 mm(.036 in.)thick	1
	5M3492	SPACER----0.26 mm(.010 in.)thick	4
		(Use as Required)	
C	6P4700	SPOOL ASSEM.----------	1
5		(Includes)	
	5M8009	PIN----------	1
6	1S2121	PLUNGER----------	1
7	4M2381	SPRING----------	1
8	1S1636	RETAINER----------	1
	1S1638	RING----------	1
9	5M2504	SLUG----------	1
10	2P9186	WASHER----------	2
11	3P1798	COVER----------	1
12	1L3769	RING----------	1
13	6F6673	SEAL----------	1
14	6L4783	BOLT----------	3
15	8H5244	DOWEL----------	1
16	5S7906	STOP----------	1
17	2P4486	SPOOL----------	2
18	2P4501	SPRING----------	3
19	2P4502	COVER----------	1
20	2P4372	SPOOL----------	1
21	3D4245	SEAL----------	2
22	T416	BOLT----------	5
23	2P4396	PISTON----------	1

C INDICATES CHANGE

207455

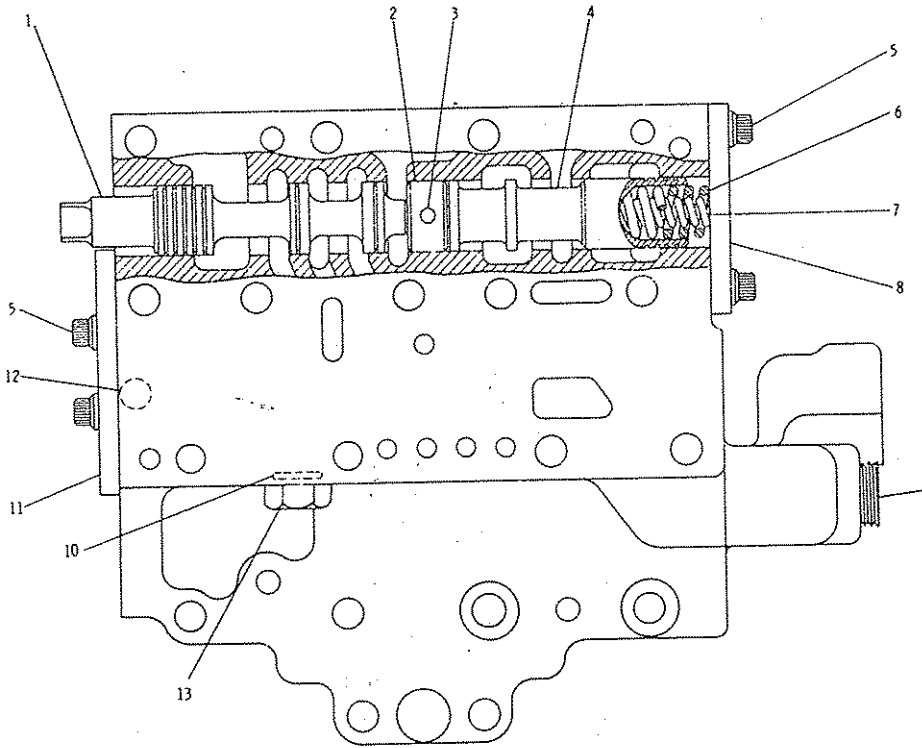

REF. NO.	PART NUMBER	DESCRIPTION	QTY
1	1P9685	SPOOL	1
2	5S7906	STOP	1
3	8H5244	DOWEL	1
4	2P4529	SPOOL	1
5	1T416	BOLT	4
6	2P5700	SPRING-------(outer)----------	1
7	2P5701	SPRING-------(inner)----------	1
8	2P5803	PLATE	1
C 9	2B858	PLUG	1
C 10	3J1907	SEAL	1
11	3P2706	PLATE	1
12	4B9782	BALL	1
C 13	9S4191	PLUG	1

C INDICATES CHANGE

308874

2P5814 SELECTOR AND PRESSURE CONTROL VALVE GROUP
Part of 3P841 Pilot Selector and Pressure Control Valve Group shown on Page 132

8P1101 SELECTOR AND PRESSURE AND REDUCING VALVE GROUP—Type 1

Part of 3P841 Pilot Selector and Pressure Control Valve Group shown on Page 132

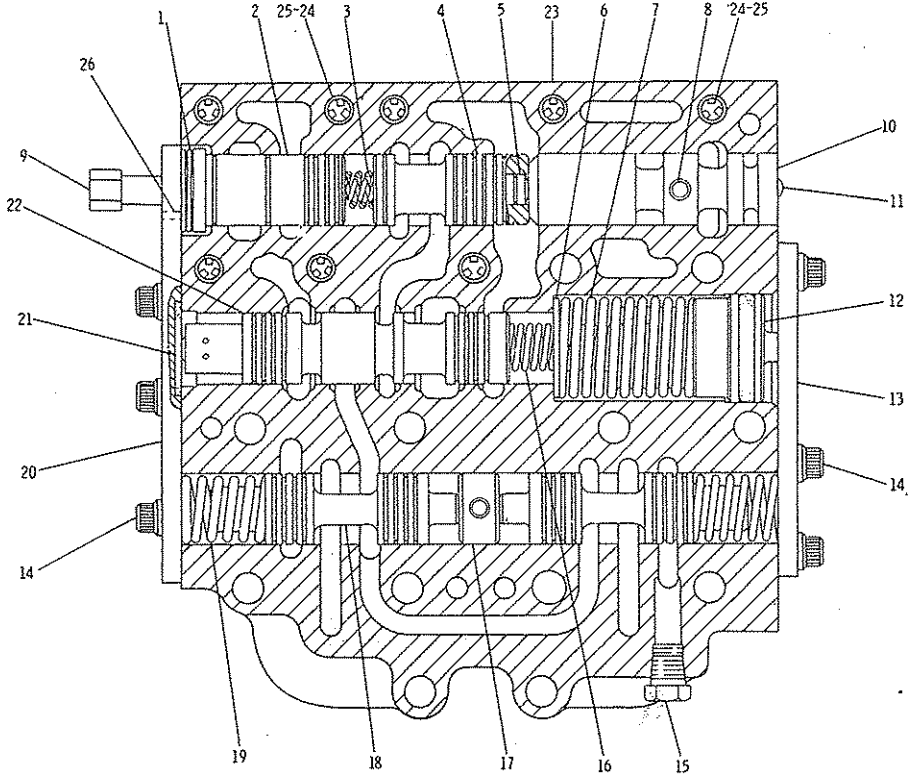

REF. NO.	PART NUMBER	DESCRIPTION	QTY
1	3P8042	SPRING	1
2	8P1097	SLEEVE	1
3	3P812	SPRING (outer)	1
	2P4547	SPRING (inner)	1
4	8P1096	PISTON	1
5	2M1168	SLUG	1
6	3S9951	WASHER	1
7	3P6669	SPRING	1
8	8H5244	DOWEL	2
9	8P1095	SPOOL	1
10	3P7834	STOP ASSEM. (Includes)	1
	2P4484	STOP	1
11	4B9880	BALL	1
12	2P4506	PLUG	1
	2H3932	SEAL	1
13	2P4507	COVER	1
14	1T416	BOLT	7
15	5M6214	PLUG	3
16	3S9949	SPRING	1
17	5S7906	STOP	1
18	2P4486	SPOOL	2
19	2P4501	SPRING	2
20	2P4504	COVER	1
21	3D4245	SEAL	1
22	1P561	SPOOL	1
23	8P1098	BODY SELECTOR (Includes)	1
24	6P3223	DAMPER—28.44mm(1.12in.)long	8
25	8M8489	DOWEL—15 mm(.59 in.)long	4
C 26	3H1118	PIN	1

C INDICATES CHANGE

228072

8P1101 SELECTOR AND PRESSURE REDUCING VALVE GROUP—Type 2

Part of 3P841 Pilot Selector and Pressure Control Valve Group shown on Page 132

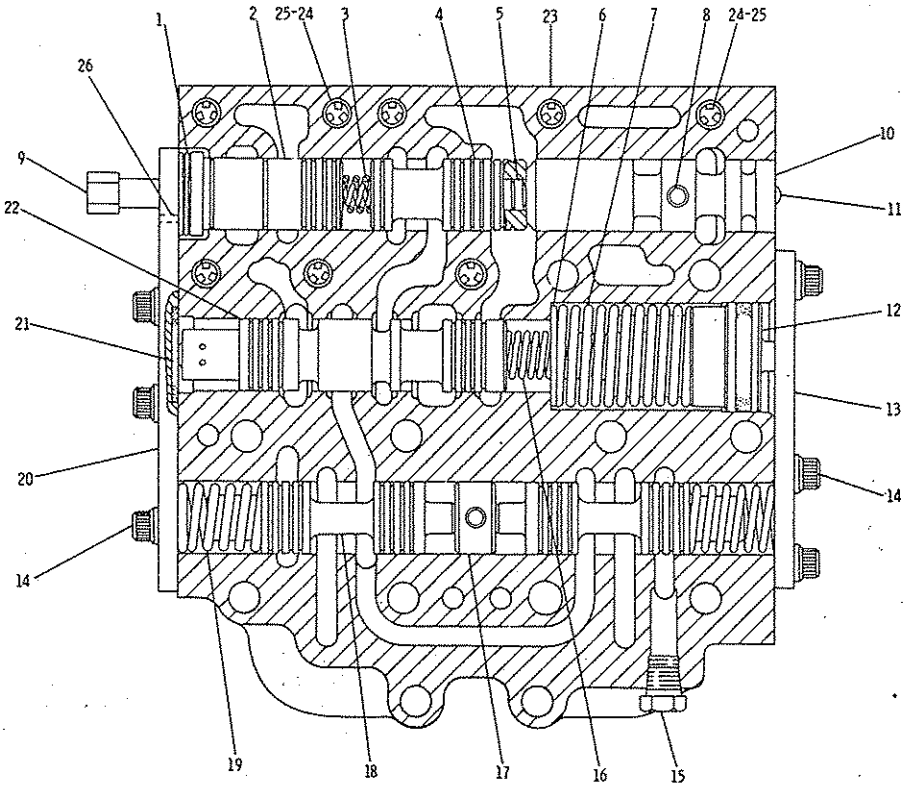

	REF. NO.	PART NUMBER	DESCRIPTION	QTY
	1	3P8042	SPRING	1
C	2	3T2542	SLEEVE	1
	3	3P812	SPRING—(outer)	1
		2P4547	SPRING—(inner)	1
	4	8P1096	PISTON	1
	5	2M1168	SLUG	1
	6	3S9951	WASHER	1
	7	3P6669	SPRING	1
	8	8H5244	DOWEL	2
C	9	3T2543	SPOOL	1
	10	3P7834	STOP ASSEM. (Includes)	1
		2P4484	STOP	1
	11	4B9880	BALL	1
	12	2P4506	PLUG	1
		2H3932	SEAL	1
	13	2P4507	COVER	1
	14	1T416	BOLT	7
C	15	5M6214	PLUG	2
	16	3S9949	SPRING	1
	17	5S7906	STOP	1
	18	2P4486	SPOOL	2
	19	2P4501	SPRING	2
	20	2P4504	COVER	1
	21	3D4245	SEAL	1
	22	1P561	SPOOL	1
	23	8P1098	BODY SELECTOR (Includes)	1
	24	6P3223	DAMPER—28.44mm(1.12in.)long	8
	25	8M8489	DOWEL—15 mm(.59 in.)long	4
	26	3H1118	PIN	1

C INDICATES CHANGE

231367

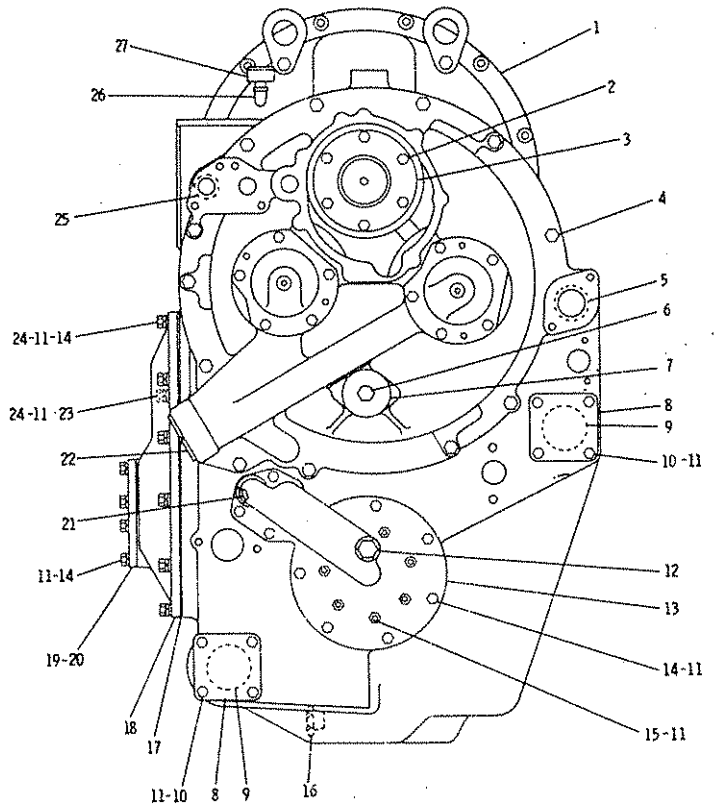

REF. NO.	PART NUMBER	DESCRIPTION	QTY
1	3P1752	CASE ASSEM. (Separate Illustration)	1
2	1A2029	BOLT	6
	5M2894	WASHER	6
3	3P321	CAGE	1
	3P322	SHIM PACK	1
4	S1585	BOLT	12
	3B4508	LOCKWASHER	12
5	7F8268	SEAL	1
6	L2315	BOLT	1
7	4S5824	RETAINER	1
8	4H5440	COVER	2
C	3S7781	GASKET	2
9	8S9130	SCREEN	2
	8S9129	FILTER	2
10	S1594	BOLT	8
11	3B4506	LOCKWASHER	46
12	9S4191	PLUG	1
	3J1907	SEAL	1
13	3P320	COVER	1
14	S1588	BOLT	31
15	1D4717	NUT	6
16	6B5262	PLUG	1
C	2A3398	GASKET	1
17	2P9326	GASKET	1
18	2P9325	COVER	1
19	3P6061	GASKET	1
20	2N822	PLATE	1
21	6F6673	SEAL	1
22	9S8009	PLUG	2
	4K1388	SEAL	2
23	S1591	BOLT	1
24	4B4278	WASHER	19
25	4F9029	SEAL	5
26	3B6553	ELBOW	1
27	8S5820	BREATHER	1

C INDICATES CHANGE 166476

3P1751 TRANSFER GEAR GROUP—Part 1 of 3
Part of 8P5957 Transmission Arrangement shown on Page 122
3P1752 Case parts are shown on Page 139

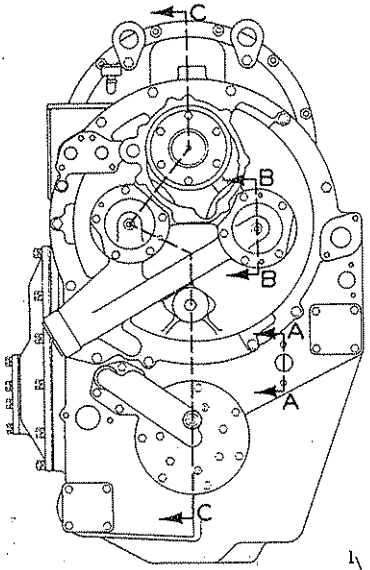

SEE PART 3

	REF. NO.	PART NUMBER	DESCRIPTION	QTY.
	13	8J6322	CUP	2
		1B3953	CONE	2
C	14	1L8497	RING	3
C	15	9P4857	CARRIER	2
C	16	8P492	SEAL	2
	17	3K4897	PIN	2
	18	1T234	RING	2
	19	1S8478	SPRING	6
	20	3P5360	HUB	1
	21	3P5726	RING	1
	22	3P335	PLATE	1
	23	3P5359	PISTON	1
	24	3P5347	PLATE	1
	25	3D2898	SEAL	1
	26	3P327	SHIM PACK	2
C	27	3P326	CAGE	2
	28	6K8088	BEARING	1
	29	3P6159	LEVER	1

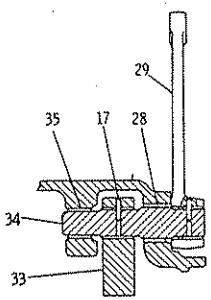

SECTION A-A

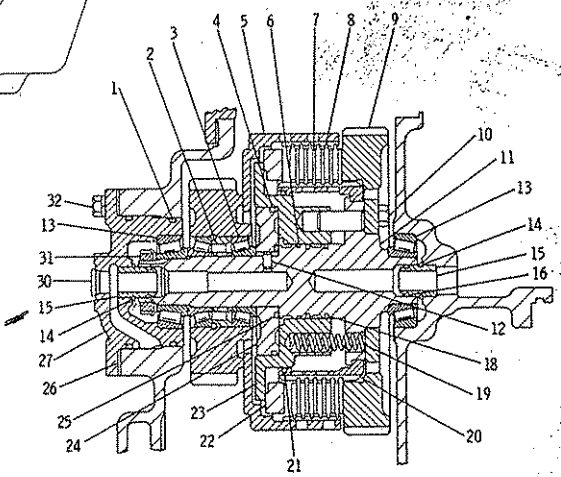

SECTION B-B

REF. NO.	PART NUMBER	DESCRIPTION	QTY.
1	2H3934	SEAL	2
2	3P6599	RING	1
3	1P9341	BEARING ASSEM.	1
4	2P1068	RING	1
5	3P329	DRUM ASSEM.	1
6	3P5728	RING	1
	3P5859	SEAL	1
7	3P337	PLATE (clutch)	6
8	3P340	DISC ASSEM.	6
9	3P341	GEAR (teeth)	1
10	4F8965	BOLT	8
11	3P5737	SHAFT ASSEM. (Includes)	2
	3P7009	PLUG	1
C	1S9292	DOWEL	2
C 12	8H9208	DOWEL	1

30	9S8005	PLUG	2
	3K360	SEAL	2
31	2H3777	NUT	2
	5F8916	LOCK	2
32	1A2029	BOLT	10
	3B4506	LOCKWASHER	10
33	3P3426	LEVER	1
34	3P3424	SHAFT	1
35	2N7609	BEARING	1

C INDICATES CHANGE 228077

3P1751 TRANSFER GEAR GROUP—Part 2 of 3
Part of 8P5957 Transmission Arrangement shown on Page 122

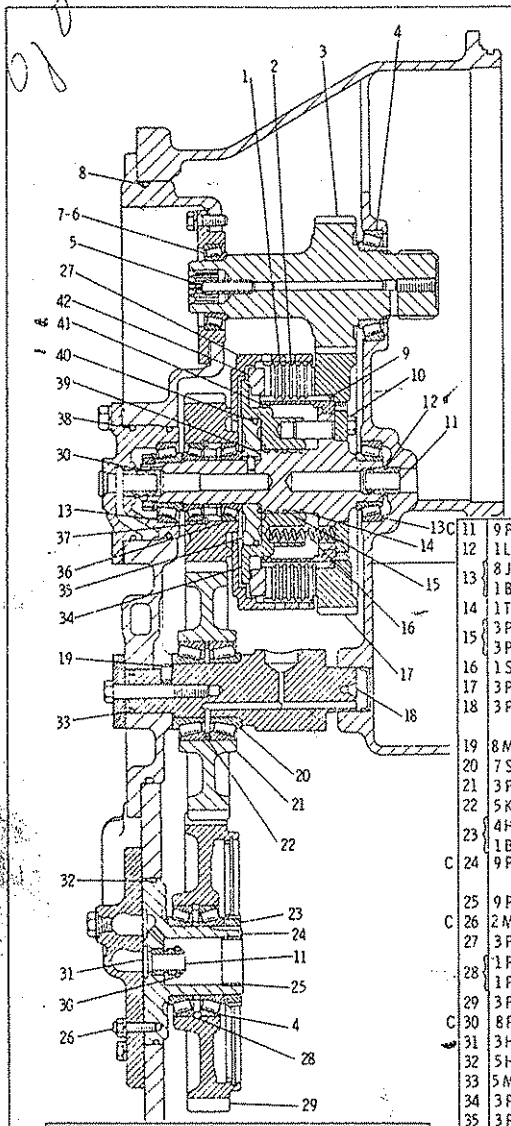

REF. NO.	PART NUMBER	DESCRIPTION	QTY
1	3P340	DISC ASSEM.	6
2	3P337	PLATE-(clutch)	6
3	3P323	GEAR-(47 teeth)	1
4	1P2636	CUP	3
	1P2662	CONE	3
5	4B9530	GUIDE	1
6	9S3582	CONE	1
7	9S3581	CUP	1
8	2R98	SEAL	1
9	3P5360	HUB	1
10	4F8965	BOLT	8
11	9P4857	CARRIER	3
12	1L8497	RING	1
13	8J6322	CUP	2
	1B3953	CONE	2
14	1T234	RING	2
15	3P5728	RING	1
	3P5859	SEAL	1
16	1S8478	SPRING	6
17	3P342	GEAR	1
18	3P754	SHAFT ASSEM. (Includes)	1
19	8M6521	PIN	1
20	7S8576	BEARING ASSEM.	1
21	3P343	GEAR-(idler-62 teeth)	1
22	5K4068	RING	1
23	4H7859	NUT	1
	1B6161	LOCK	1
C 24	9P4859	CAGE ASSEM. (Includes)	1
25	9P6264	BEARING	1
C 26	2M4779	STUD	6
27	3P329	DRUM ASSEM.	1
28	1P9646	RING	1
	1P9645	SPACER	1
29	3P296	GEAR-(73 teeth)	1
C 30	8P492	SEAL	3
31	3H107	SEAL	3
32	5H3252	SEAL	1
33	5M7423	SEAL	1
34	3P5359	PISTON	1
35	3P5347	PLATE	1
36	1P9341	BEARING ASSEM.	1
37	3P6599	RING	1
38	2H3934	SEAL	2
39	3D2898	SEAL	1
40	2P1068	RING	1
41	3P5726	RING	1
42	3P335	PLATE	1

C INDICATES CHANGE 228078

3P1751 TRANSFER GEAR GROUP—Part 3 of 3
Part of 8P5957 Transmission Arrangement shown on Page 122

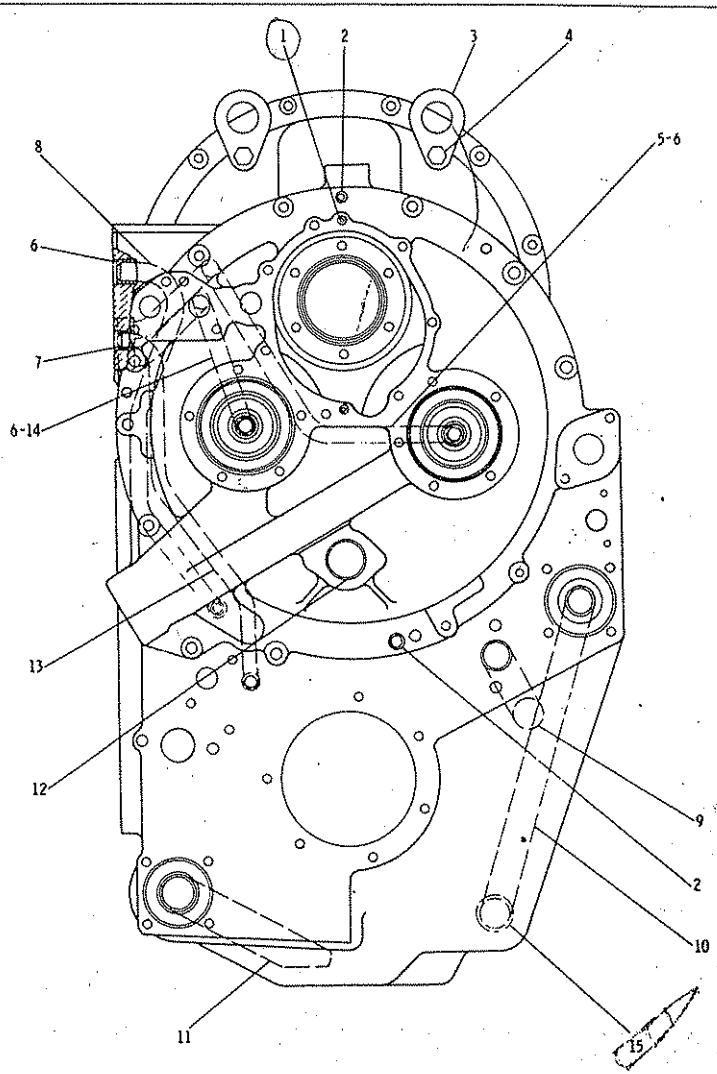

REF. NO.	PART NUMBER	DESCRIPTION	QTY
1	L2061	DOWEL	2
2	9M4007	DOWEL	2
3	1P8654	EYE	2
4	S1589	BOLT	2
	3B4510	LOCKWASHER	2
5	3P852	TUBE	1
6	1P8594	SLEEVE	6
7	2P5780	SLEEVE	2
8	3P854	TUBE	1
9	3P857	TUBE	1
10	3P1749	TUBE	1
11	3P858	TUBE	1
12	5S385	PLUG	1
13	3P853	TUBE	1
14	3P851	TUBE	1
C 15	6P8273	SLEEVE	1

C INDICATES CHANGE

152288

3P1752 TRANSMISSION CASE ASSEMBLY
Part of 3P1751 Transfer Gear Group shown on Page 136

REF. NO.	PART NUMBER	DESCRIPTION	QTY
1	3S8109	PIN	3
2	2S5816	SPRING	30
C 3	7G891	WASHER	6
4	3P1681	DOWEL	9
C 5	7G3450	GEAR--------(21 teeth)--------	3
6	1M3150	DOWEL	5
7	L1351	BOLT	6
8	5M2894	WASHER	6
9	9H5537	SPRING	10

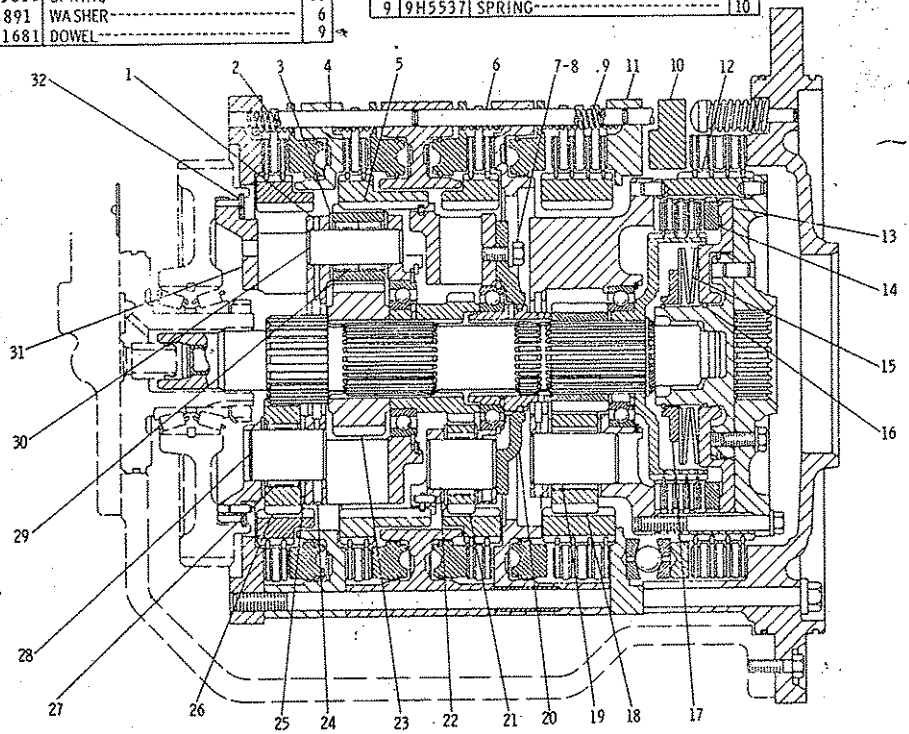

C 10	3P5349	PISTON ASSEM. (Includes)	1
	5H8985	PIN	5
11	3P5210	HOUSING ASSEM. (Includes)	1
	5H8985	PIN	5
12	3P786	GEAR------(32 & 101 teeth)--------	1
13	3P315	PISTON	1
14	3P784	PISTON	1
15	3P817	SPRING	3
16	3P800	RING	1
	3P815	SEAL	1
17	3P787	PLATE	1
C 18	7G3452	GEAR--------(28 teeth)--------	3
	5M6126	ROLLER ASSEM.	3
	7S8631	SHAFT ASSEM.	3
19		(Each Includes)	
	3S36	PLUG	1
20	3P309	CAGE	1
C 21	7G3461	GEAR---------(24 teeth)----------	3
	5M2054	ROLLER ASSEM.	3
	3P726	SHAFT ASSEM.	3
22		(Each Includes)	
	2A3746	PLUG	1
23	3P304	GEAR--------(39 teeth)----------	1
24	3S2708	PIN	9
C 25	7G894	WASHER	18
C 26	7G3451	GEAR---------(30 teeth)----------	3
27	5M5018	ROLLER ASSEM.	3
	3P297	SHAFT ASSEM.	3
28		(Includes)	
	2A3746	PLUG	1
29	2S669	ROLLER ASSEM.	6
	5S7945	SHAFT ASSEM.	3
30		(Each Includes)	
	2A3746	PLUG	1
31	3P298	CARRIER	1
32	3P1608	RING	1

227956

C INDICATES CHANGE

8P5958 PLANETARY TRANSMISSION GROUP—Part 1 of 3
Part of 8P5957 Transmission Arrangement shown on Page 122

8P5958 PLANETARY TRANSMISSION GROUP—Part 2 of 3
Part of 8P5957 Transmission Arrangement shown on Page 122

REF. NO.	PART NUMBER	DESCRIPTION	QTY
1	2P4511	RING	4
2	3P306	CARRIER	1

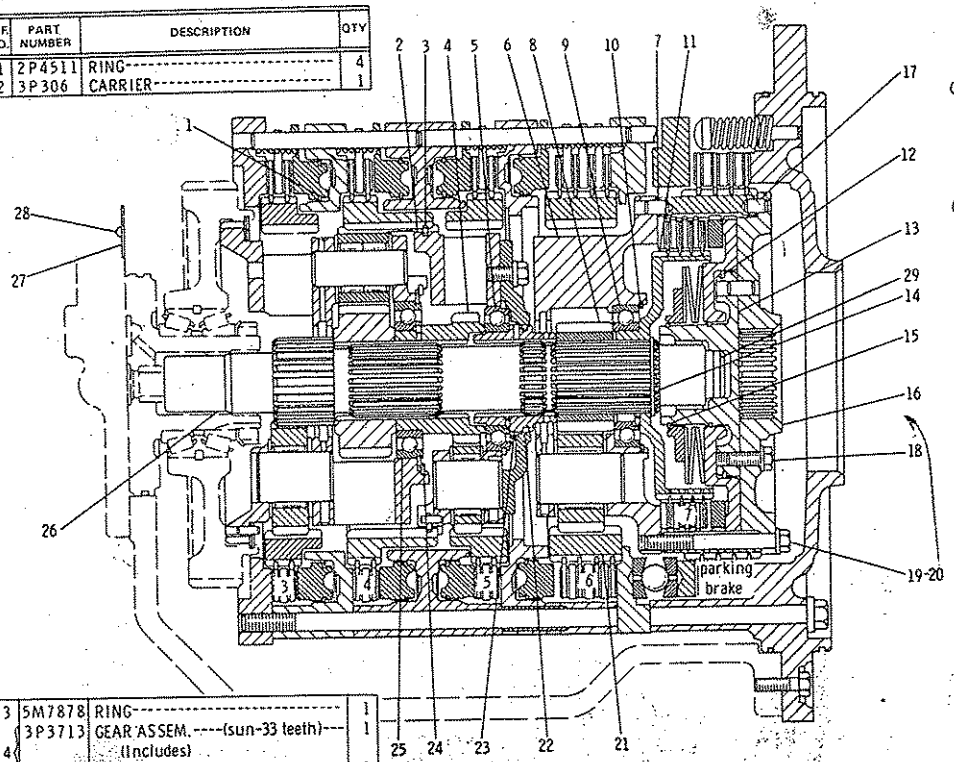

3	5M7878	RING	1
4	3P3713	GEAR ASSEM. (sun-33 teeth) (Includes)	1
	8S3426	DOWEL	1
5	3P951	BEARING	1

6	3P789	CARRIER ASSEM. (Includes)	1
7	8M6521	DOWEL	2
8	8P5959	GEAR (sun-26 teeth)	1
C 9	5P8396	BEARING	1
10	8S9104	RING	1
11	3P785	HUB ASSEM. (Includes)	1
	8S3426	DOWEL	1
12	3P814	RING	1
C 13	9P9742	CAGE ASSEM. (Includes)	1
	9P6264	BEARING	1
14	8L9811	RING	1
15	8H8830	RING	1
16	3P316	HUB ASSEM. (Includes)	1
17	8M6521	DOWEL	4
18	S1594	BOLT	4
	1S8572	LOCK	2
19	S1608	BOLT	14
20	5M2894	WASHER	14
21	8P5961	GEAR (ring-82 teeth)	1
22	3K1432	RING	1
23	3P307	CAGE ASSEM. (Includes)	1
	8S3426	DOWEL	1
24	1M8649	RING	1
25	3P953	BEARING	1
C 26	9P8456	SHAFT ASSEM. (center)	1
C 27	6V1720	PLATE (number)	1
28	7B3028	SCREW (drive)	2
C 29	1P9252	RING	1

C INDICATES CHANGE

227957

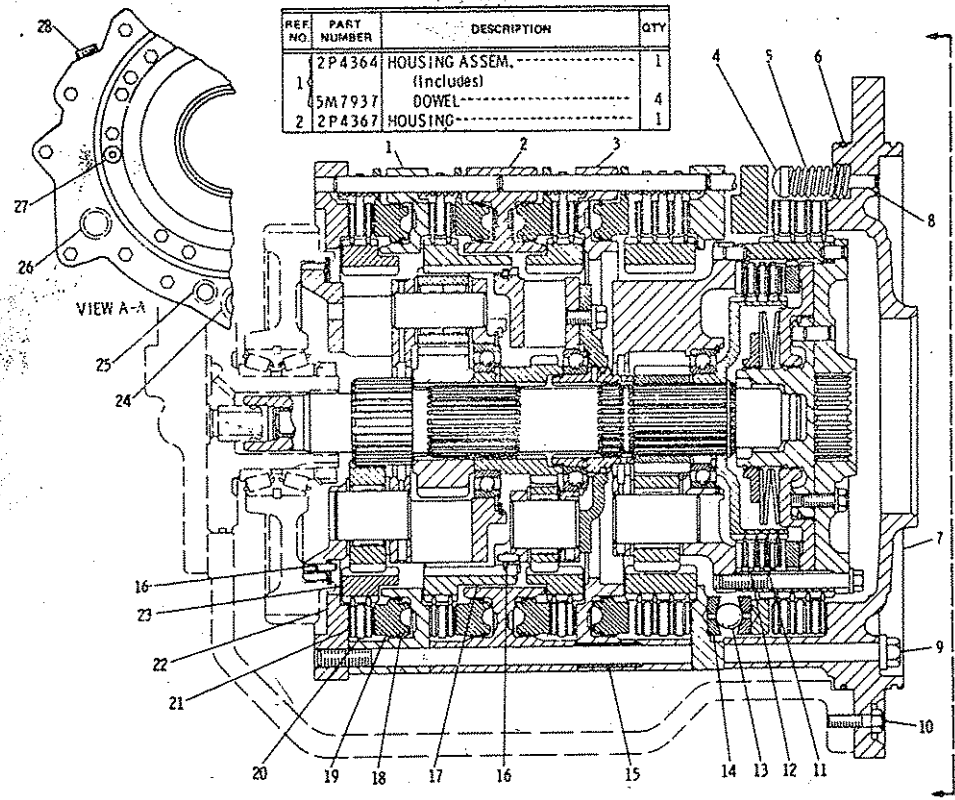

REF. NO.	PART NUMBER	DESCRIPTION	QTY
1	2P4364	HOUSING ASSEM. (Includes)	1
	5M7937	DOWEL	4
2	2P4367	HOUSING	1

	3P312	HOUSING ASSEM. (Includes)	1
3	4B9880	BALL	1
	5F4250	DOWEL-(large)	2
	5M7937	DOWEL-(small)	2
4	3P1601	PLUNGER	4
5	2B2254	SPRING	4
6	4D1577	SEAL	1
7	3P318	HOUSING ASSEM. (Includes)	1
	3F3442	DOWEL	1
8	2K6921	DOWEL	4
9	1M8657	BOLT	12
	2M849	WASHER	12
10	1S1588	BOLT	2
11	3P801	PLATE	4
12	3P805	DISC ASSEM.	4
13	5F6199	BALL	5
14	3P860	INSERT	10
15	9M4355	DAMPER	12
C 16	3S8109	PIN	5
17	2P4432	GEAR-(81 teeth)	1
18	1P9216	RING	4
19	2P4510	PISTON	4
20	8P1656	PLATE-(clutch)	9
C 21	3P5955	DISC ASSEM.	14
22	2P4435	PLATE	1
23	2P4433	GEAR-(81 teeth)	2
24	7F8268	SEAL	1
25	4F8946	SEAL	1
26	4F7952	SEAL	1
27	9S8005	PLUG	1
	3K360	SEAL	1
28	9S8004	PLUG	1
	3J1907	SEAL	1

C INDICATES CHANGE

225862

8P5958 PLANETARY TRANSMISSION GROUP—Part 3 of 3
Part of 8P5957 Transmission Arrangement shown on Page 122

9D5020 CLUTCH CONTROL GROUP
Serial No. 87V5275 to 87V5733 inclusive

REF. NO.	PART NUMBER	DESCRIPTION	QTY
1	1A2029	BOLT	4
2	3B4506	LOCKWASHER	8
3	4F7957	BOLT	1
	1H3244	LOCKWASHER	1
4	9D1	LEVER	1
	3B1915	BOLT	1
5	7D9316	SHAFT	1
6	7K2135	BEARING	1
7	1B8704	KEY	2
8	4J2667	BEARING	1
	8D6751	PEDAL	1
9	S1571	BOLT	1
	1D4717	NUT	1
10	8D9	TREAD	1
11	S1587	BOLT	2
	3B4508	LOCKWASHER	2
C 12	4B3611	SCREW	1
13	1B2578	NUT	1
14	6L7751	END	1
15	1B4201	NUT	2
16	9D669	HOUSING	1
17	S509	BOLT	4
18	9D699	GASKET	1
19	9D698	COVER	1
20	6F253	LOCKWASHER	1
21	9S1354	NUT	3
22	9D5506	END	1

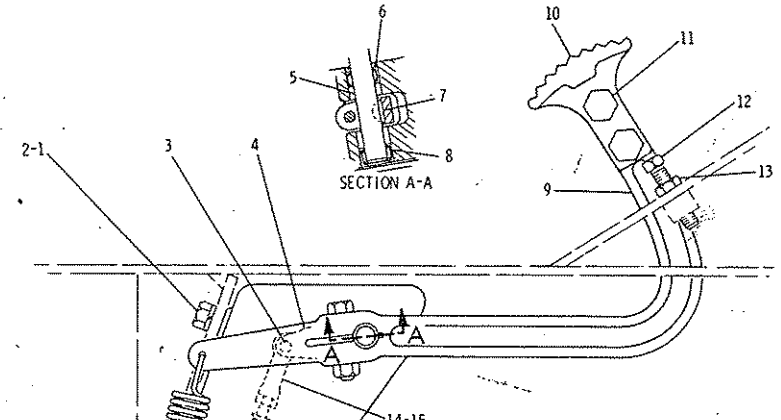

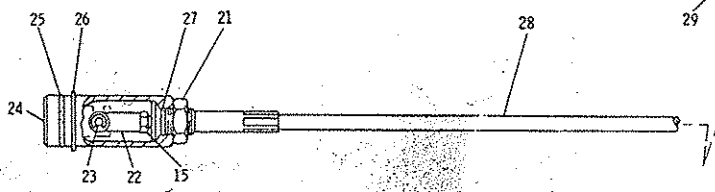

23	8D5295	PIN	1
	8D5294	RING	1
24	8D5296	COUPLING	1
25	3D2992	SEAL	1
26	8D5293	RING	2
27	1P8116	SEAL	1
28	9D4635	CABLE	1
29	S1616	BOLT	1
	1B4330	NUT	2
30	9D2641	SPRING	1

C INDICATES CHANGE

228058

9D5020 CLUTCH CONTROL GROUP
Serial No. 87V5734—Up

REF. NO.	PART NUMBER	DESCRIPTION	QTY
1	1A2029	BOLT	4
C 2	5M2894	WASHER	10
3	4F7957	BOLT	1
	1H3244	LOCKWASHER	1
4	9D1	LEVER	1
	3B1915	BOLT	1
5	7D9316	SHAFT	1
6	7K2135	BEARING	1
7	1B8704	KEY	2
8	4J2667	BEARING	1
C	6G5058	PEDAL	1
9	S1571	BOLT	1
	1D4717	NUT	1
C 10	6G5059	TREAD	1
C 11	S1591	BOLT	2
12	4B3611	SCREW	1
13	1B2578	NUT	1
14	6L7751	END	1
15	1B4201	NUT	2
16	9D669	HOUSING	1
17	S509	BOLT	4
18	9D699	GASKET	1
19	9D698	COVER	1
20	6F253	LOCKWASHER	1
21	9S1354	NUT	3
22	9D5506	END	1

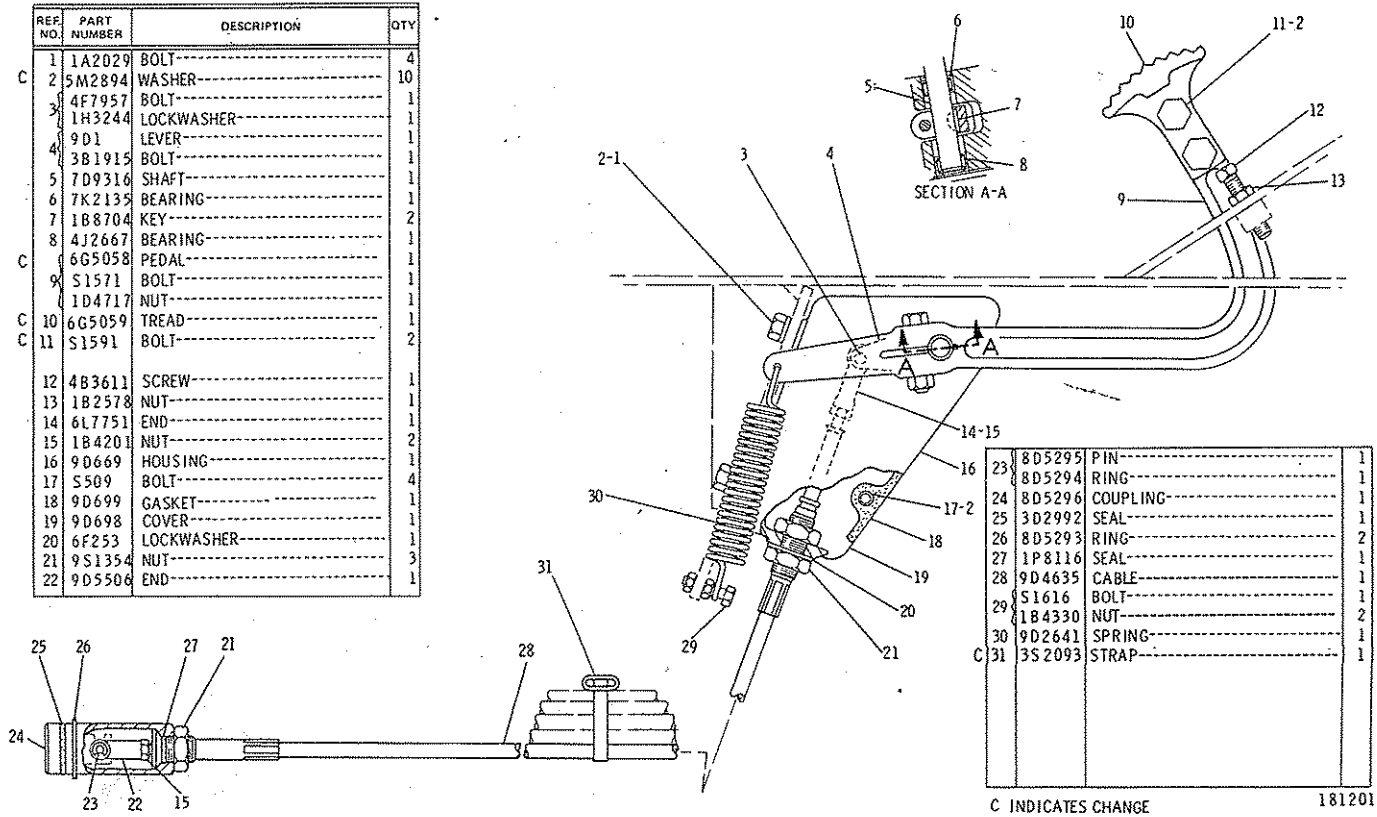

	23	8D5295	PIN	1
		8D5294	RING	1
	24	8D5296	COUPLING	1
	25	3D2992	SEAL	1
	26	8D5293	RING	2
	27	1P8116	SEAL	1
	28	9D4635	CABLE	1
	29	S1616	BOLT	1
		1B4330	NUT	2
	30	9D2641	SPRING	1
C	31	3S2093	STRAP	1

C INDICATES CHANGE

181201

	Consists of:		Page
1	8D9895	Differential and Bevel Gear Group	146
1	2G9012	Differential Lock Control Group	145

2G8969 DIFFERENTIAL LOCK ARRANGEMENT
Serial No. 87V5275 to 87V5733 inclusive. AN ATTACHMENT

	Consists of:		Page
1	8D9895	Differential and Bevel Gear Group	146
1	6G5220	Differential Lock Control Group	145B

6G5446 DIFFERENTIAL LOCK ARRANGEMENT

2G9012 DIFFERENTIAL LOCK CONTROL GROUP

Serial No. 87V5275 to 87V5733 inclusive

Part of 2G8969 Differential Lock Arrangement listed on Page 144. AN ATTACHMENT

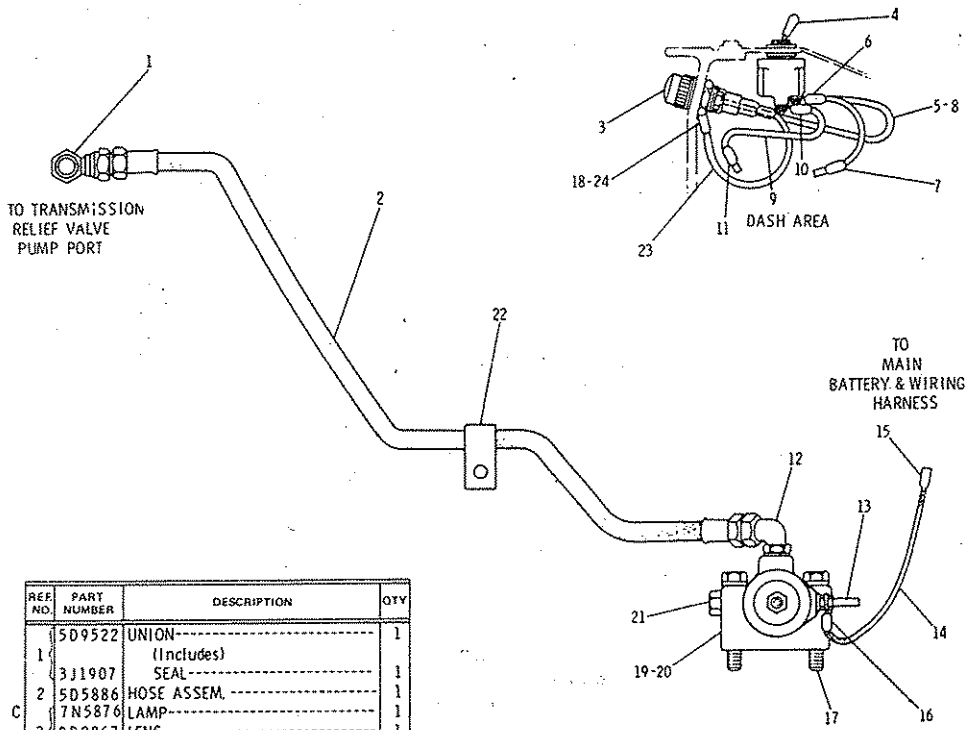

REF. NO.	PART NUMBER	DESCRIPTION	QTY
1	5D9522	UNION	1
		(Includes)	
	3J1907	SEAL	1
2	5D5886	HOSE ASSEM.	1
C	7N5876	LAMP	1
3	9D2867	LENS	1
	9D3127	BASE	1
4	8D2676	SWITCH--(differential)	1

C INDICATES CHANGE

5	2G8929	WIRE ASSEM. (Includes)	1
▲	5P5623	WIRE, 5 m (19.69 in.)	
6	6D9404	TERMINAL--(no. 6 screw)	1
7	6N9587	TERMINAL	1
8	4L3016	TERMINAL	1
9	2G8928	WIRE ASSEM. (Includes)	1
▲	5P5623	WIRE, .25 m (9.842 in.)	
10	6D9404	TERMINAL--(no. 6 screw)	1
11	4S1988	TERMINAL--6.35 mm (.25 in.) tab	
12	5D7377	FITTING (Includes)	1
	3J7354	SEAL	1
13	2G8922	CAP	1
14	2G8931	WIRE ASSEM. (Includes)	1
▲	5P5623	WIRE, .5 m (19.69 in.)	
15	5P5610	CONNECTOR	1
16	2L8075	TERMINAL--(no. 8 screw)	1
C 17	5S1590	BOLT	2
	5M2894	WASHER	2
C	4B2047	NUT	1
C 18	9F8125	LOCKWASHER	1
C 19	8M4438	SEAL	2
20	2G8990	VALVE GROUP (Includes)	1
	2G8921	COIL	1
21	9S4182	PLUG	1
	3J7354	SEAL	1
22	9M8406	CLIP	1
C	2G9512	WIRE ASSEM. (Includes)	1
▲ 23	5P5623	WIRE--.15 m (5.9 in.)	
	4L3916	TERMINAL	1
24	2L8076	TERMINAL	1

▲ ORDER BY THE METER

221888

6G5220 DIFFERENTIAL LOCK CONTROL GROUP
Serial No. 87V5734—Up
Part of 6G5446 Differential Lock Arrangement listed on Page 144. AN ATTACHMENT

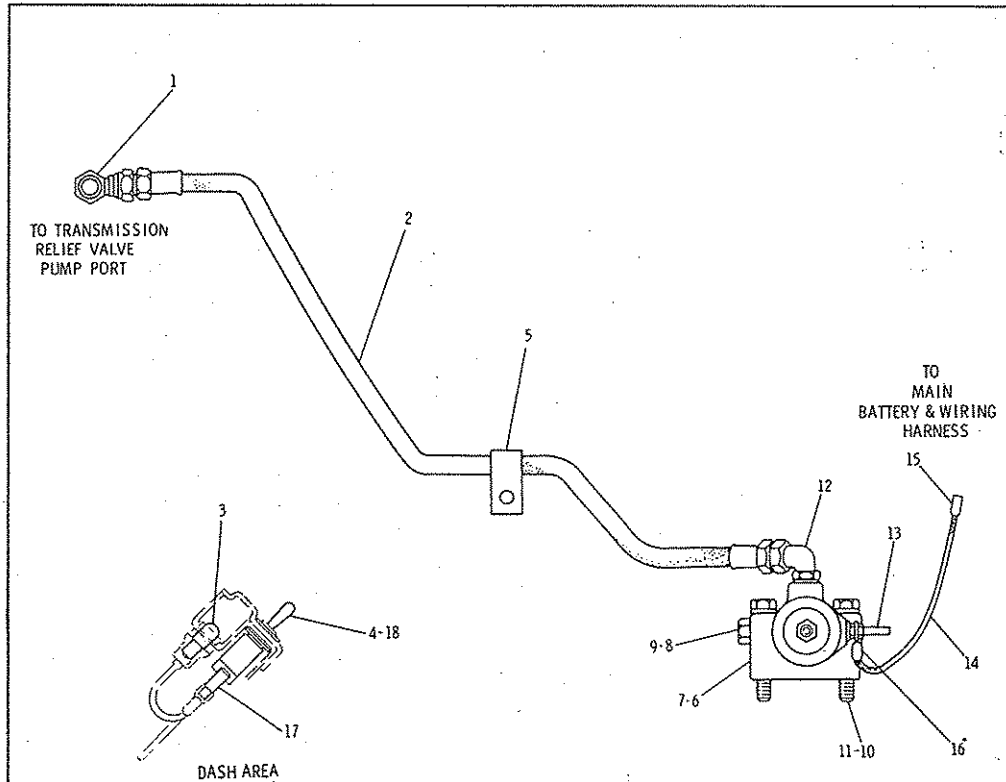

REF. NO.	PART NUMBER	DESCRIPTION	QTY.
1	5D9522	UNION---------- (Includes)	1
	3J1907	SEAL----------	1
2	5D5886	HOSE ASSEM. ----------	1
3	7N5876	LAMP----------	1
4	7N8000	SWITCH------(differential)---------	1
5	9M8406	CLIP----------	1
6	2G8990	VALVE GROUP---------- (Includes)	1
	2G8921	COIL----------	1
7.	8M4438	SEAL----------	2
8	9S4182	PLUG----------	1
9	3J7354	SEAL----------	1
10	S1590	BOLT----------	2
11	5M2894	WASHER----------	2
12	5D7377	FITTING---------- (Includes)	1
	3J7354	SEAL----------	1
13	2G8922	CAP----------	1
14	2G8931	WIRE ASSEM. ---------- (Includes)	1
▲	5P5623	WIRE-----.5m(19.69 in.)	
15	5P5610	CONNECTOR----------	1
16	2L8075	TERMINAL---(No. 8 screw)----	1
17	7N8597	TERMINAL----------	2
18	5H6555	LOCKWASHER----------	2

▲ ORDER BY THE METER

232515

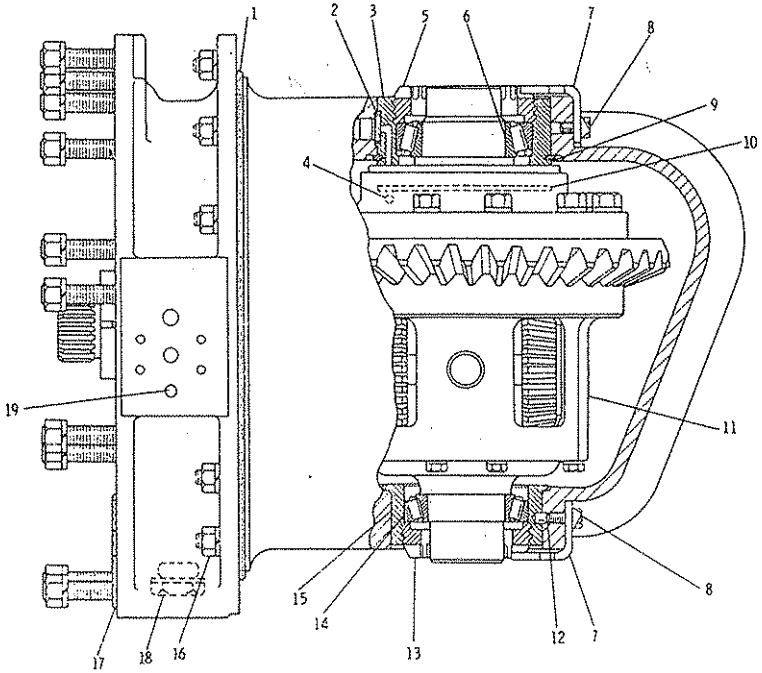

REF. NO.	PART NUMBER	DESCRIPTION	QTY
1	7S4571	SEAL	1
2	9D8799	RING	1
	2S1914	SEAL	1
3	8D9752	CAGE ASSEM. (Includes)	1
4	2D6642	BALL	1
C 5	6G4702	NUT	1
6	2N2139	CONE	1
	2N2138	CUP	1
7	8D9784	LOCK	2
8	S509	BOLT	2
	9D9334	LOCKNUT	2
9	8D9746	RING	1
10	9D2816	RING	2
11	8D9890	DIFFERENTIAL GROUP (Separate Illustration)	1
12	4B8353	DOWEL	1
C 13	6G4701	NUT	1
14	1P2636	CUP	1
	1P2662	CONE	1
15	8D4313	CAGE	1
16	1D4719	NUT	1
	3B4508	LOCKWASHER	11
C	7F8268	SEAL----5.36 cm(2.109 in.) I.D.	1
C 17	4F8946	SEAL----2.66 cm(1.046 in.) I.D.	1
C	4F7952	SEAL----3.77 cm(1.484 in.) I.D.	1
C 18	6B5262	PLUG	1
C	2A3398	GASKET	1
C 19	9F2247	PLUG	1

I.D.-INSIDE DIAMETER
C INDICATES CHANGE

228089

8D9895 DIFFERENTIAL AND BEVEL GEAR GROUP—Part 1
Part of 2G8969 Differential Lock Arrangement listed on Page 144
8D9890 Differential parts are shown on Page 150. AN ATTACHMENT

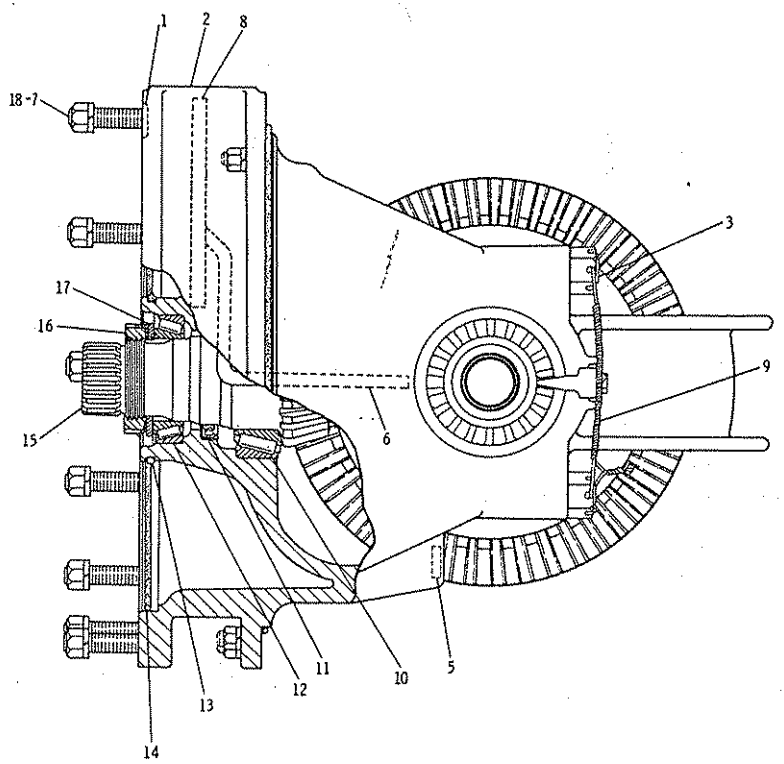

REF. NO.	PART NUMBER	DESCRIPTION	QTY
	1	8M4990	SEAL	1
	2	8D9533	CARRIER ASSEM. (Includes)	1
	3	8D4651	STUD	4
		1B4439	NUT	4
	5	3S8313	PLUG	2
C	6	2G3989	TUBE	1
C		2G1314	SLEEVE	1
	7	3D8439	STUD	10
	8	8D9911	TUBE	1
C▲	9	5P6628	WIRE - 1.06 m(41.74 in.)	
	10	6D1138	CUP	1
		6D1137	CONE	1
	11	1M3003	SEAL	1
	12	7D8348	CUP	1
		7D8349	CONE	1
	13	2S8439	SEAL	1
	14	4D1577	SEAL	1
C	15	2G8872	PINION - (15 teeth)	1
C	16	5P5813	NUT	1
		9B143	LOCK	1
	17	7D8347	WASHER	1
	18	1D4720	NUT	10
		3B4510	LOCKWASHER	10

▲ ORDER BY THE METER
C INDICATES CHANGE

228090

8D9895 DIFFERENTIAL AND BEVEL GEAR GROUP—Part 2
Part of 2G8969 Differential Lock Arrangement listed on Page 144
AN ATTACHMENT

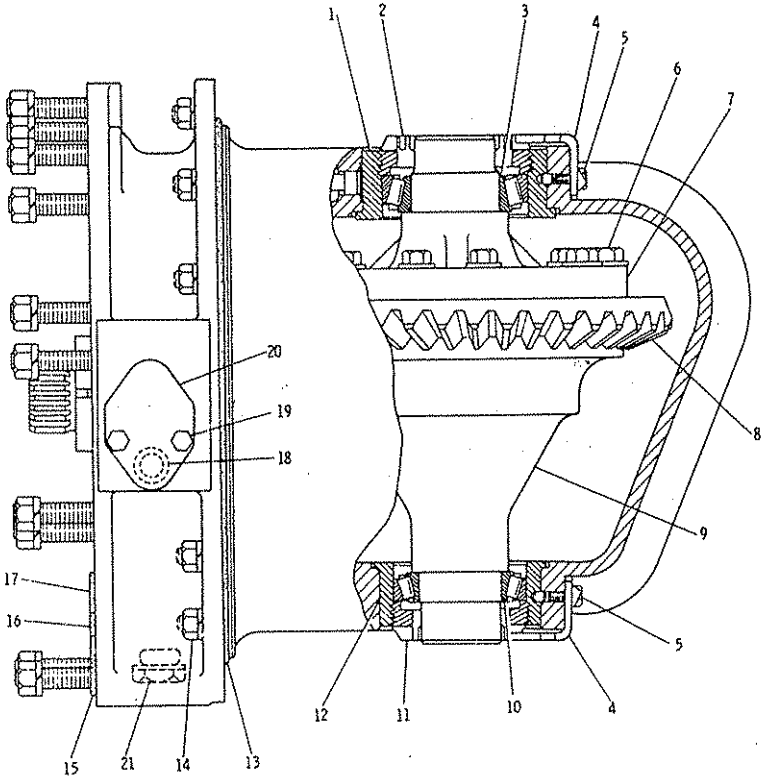

REF. NO.	PART NUMBER	DESCRIPTION	QTY
1	9D3306	CAGE	1
2	9K96	NUT	1
3	2N2139	CONE	1
	2N2138	CUP	1
4	8D9784	LOCK	2
5	S509	BOLT	2
	9D9334	LOCK	2
	4B8353	DOWEL	2
6	1A8537	BOLT	16
	4D3704	WASHER	16
7	9D3307	HUB	1
8	8D6491	GEAR-(53 teeth)	1
9	9D3308	HUB	1
10	1P2662	CONE	1
	1P2636	CUP	1
11	7D8355	NUT	1
12	8D4313	CAGE	1
13	7S4571	SEAL	1
14	1D4719	NUT	11
	3B4508	LOCKWASHER	11
15	4F7952	SEAL-1.484 in. (3.77 cm) I.D.	1
16	4F8946	SEAL-1.046 in. (2.66 cm) I.D.	1
17	7F8268	SEAL-2.109 in. (5.36 cm) I.D.	1
18	8M8283	SEAL	3
19	S1594	BOLT	2
	3B4506	LOCKWASHER	2
20	8D8196	PLATE	1
C	6B5262	PLUG	1
C 21	2A3398	GASKET	1

C INDICATES CHANGE

164859

9D3340 BEVEL GEAR GROUP—Part 1

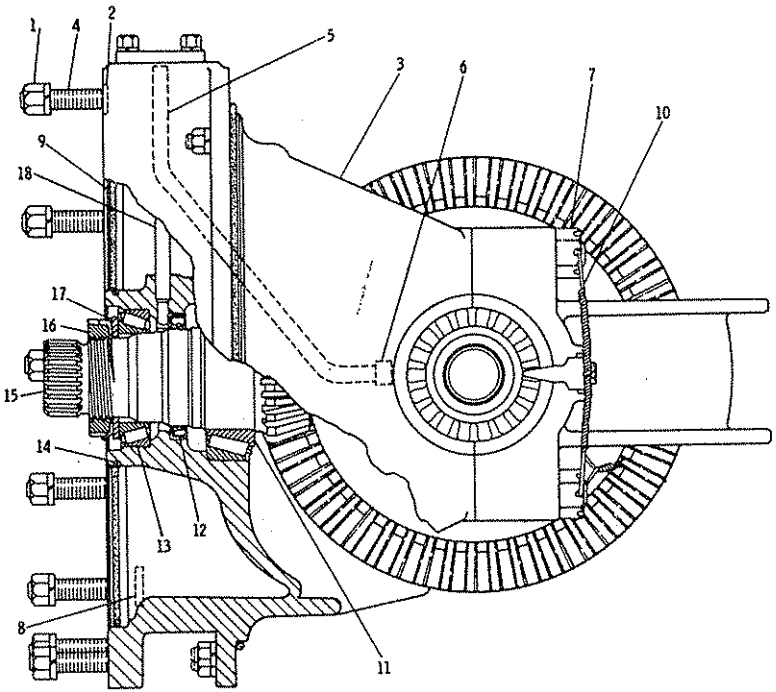

REF. NO.	PART NUMBER	DESCRIPTION	QTY
1	1D4720	NUT	10
	3B4510	LOCKWASHER	10
2	8M4990	SEAL	1
3	8D9533	CARRIER ASSEM. (Includes)	1
4	3D8439	STUD	10
C 5	2G3989	TUBE	1
C 6	2G1314	SLEEVE	1
7	8D4651	STUD	4
	1B4439	NUT	4
8	3S8313	PLUG	2
9	4D1577	SEAL	1
▲ 10	5P6628	LOCKWIRE--------1, 08 m(42. 13 in.)	
11	6D1137	CONE	1
	6D1138	CUP	1
12	1M3003	SEAL	1
13	7D8348	CUP	1
	7D8349	CONE	1
14	2S8439	SEAL	1
15	8D6489	PINION	1
C 16	5P5813	NUT	1
	98143	LOCK	1
17	7D8347	WASHER	1
18	8D9911	TUBE	1

▲ ORDER BY THE METRE

C INDICATES CHANGE

164360

9D3340 BEVEL GEAR GROUP—Part 2

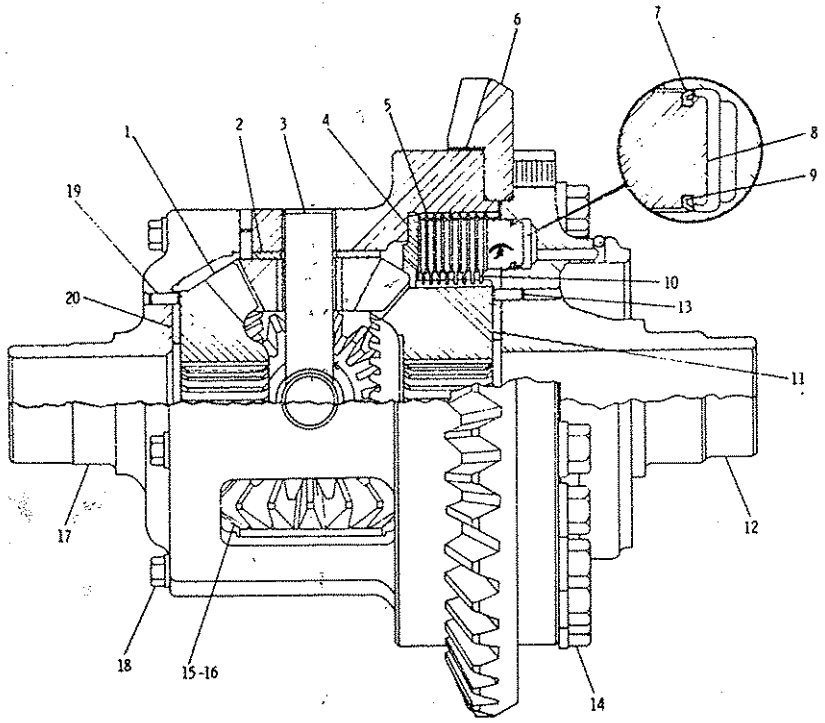

REF. NO.	PART NUMBER	DESCRIPTION	QTY.
1	8D9692	GEAR--------(16 teeth)----------	1
2	8D9754	WASHER----------	4
3	8D9662	SPIDER----------	1
C 4	2G1084	DISC----------	1
5	8D9718	DISC----------	9
6	8D6491	GEAR--------(53 teeth)----------	1
* 7	8D9738	SEAL----------	1
C 8	2G1086	PISTON----------	1
* 9	8D9739	SEAL----------	1
10	8D9719	DISC----------	8
C 11	2G1087	GEAR---------(16 teeth)----------	1
C	2G1083	HOUSING ASSEM. ----------	1
12		(Includes)	
	2D6642	BALL----------	1
13	3D6509	DOWEL----------	2
14	1A8537	BOLT----------	16
	4D3704	WASHER----------	16
15	8D9753	PINION ASSEM. ----------	4
		(Each Includes)	
16	8D9749	BEARING----------	1
C 17	2G1085	HOUSING ASSEM. ----------	1
		(Includes)	
18	S1608	BOLT----------	8
	5M2894	WASHER----------	8
19	3D6509	DOWEL----------	6
20	8D9756	WASHER----------	2

C INDICATES CHANGE 173238

8D9890 DIFFERENTIAL GROUP
Part of 8D9895 Differential and Bevel Gear Group shown on Page 146
AN ATTACHMENT

8D8630 COVERS AND TANDEM GROUP

Note: Quantities shown are those required for both R.H. and L.H. sides

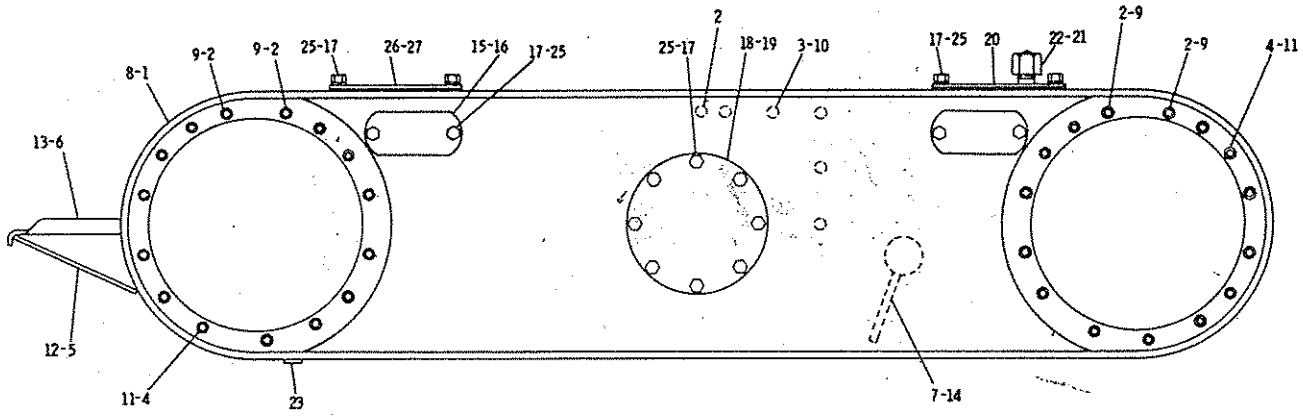

	REF. NO.	PART NUMBER	DESCRIPTION	QTY
C	1	6G580	HOUSING ASSEM. -----(R. H.)---- (Includes)	1
	2	8D8815	STUD----------	6
	3	1A1593	STUD----------	22
	4	9S1338	STUD----------	26
	5	9D566	PLATE----------	1
	6	9D565	STEP----------	1
	7	8D6684	BAR----------	1

C	8	6G579	HOUSING ASSEM. -----(L. H.)----- (Includes)	1
	9	8D8815	STUD----------	6
	10	1A1593	STUD----------	22
	11	9S1338	STUD----------	26
	12	9D566	PLATE----------	1
	13	9D565	STEP----------	1
	14	8D6684	BAR----------	1
	15	2B3148	COVER----------	8
	16	2B3147	GASKET----------	8
	17	6K7917	BOLT----------	48
	18	7D9273	COVER----------	2
C	19	2G9791	GASKET----------	2

	20	8D8823	COVER ASSEM. ---------- (Includes)	2
	21	4F440	NIPPLE----------	1
	22	8D8809	PLUNGER ASSEM. ---------- (Includes)	2
		6D9677	FILTER----------	1
		6D9679	NUT----------	1
	23	1B5174	PLUG----------	2
	25	3B4508	LOCKWASHER----------	48
	26	8D8807	COVER----------	2
C	27	2G9789	GASKET----------	4

C INDICATES CHANGE

168899

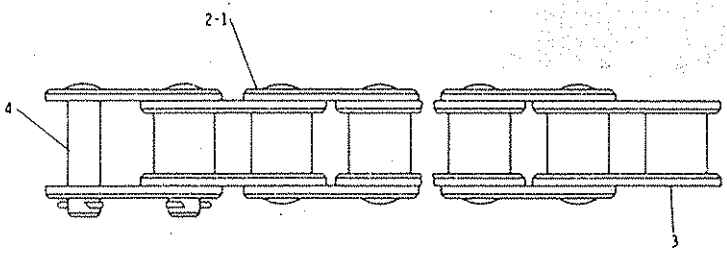

REF. NO.	PART NUMBER	DESCRIPTION	QTY.
1	2G581	CHAIN GROUP---------- (Each Includes)	4
2	2G584	LINK-------(pin)----------	26
3	2G583	LINK-------(roller)----------	27
4	2G582	LINK-------(connecting)-----	1
		THE FOLLOWING REPAIR KIT IS AVAILABLE:	
C	6G5874	KIT-------(cotter)----------	1

C INDICATES CHANGE

228067

2G585 CHAIN GROUP
Serial No. 87V5275 to 87V5965 inclusive

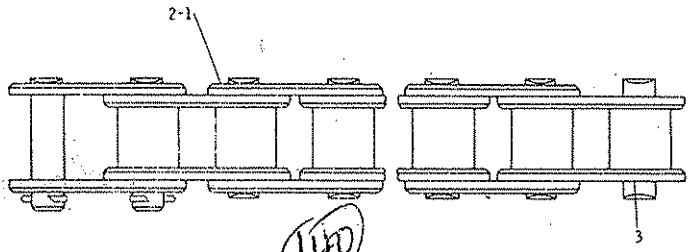

140

REF. NO.	PART NUMBER	DESCRIPTION	QTY.
C 1	5T735	CHAIN GROUP---------- (Each Includes)	4
C 2	5T731	LINK-------(pin)----------	27
C 3	5T729	LINK-----(roller)----------	27
		THE FOLLOWING REPAIR KIT IS AVAILABLE:	
	6G5874	KIT-------(cotter)----------	1

C INDICATES CHANGE

181202

2G585 CHAIN GROUP
Serial No. 87V5966—Up

2G6240 FINAL DRIVE GROUP

Serial No. 87V5275 to 87V5790 inclusive

Note: Quantities shown are those required for both R.H. and L.H. sides

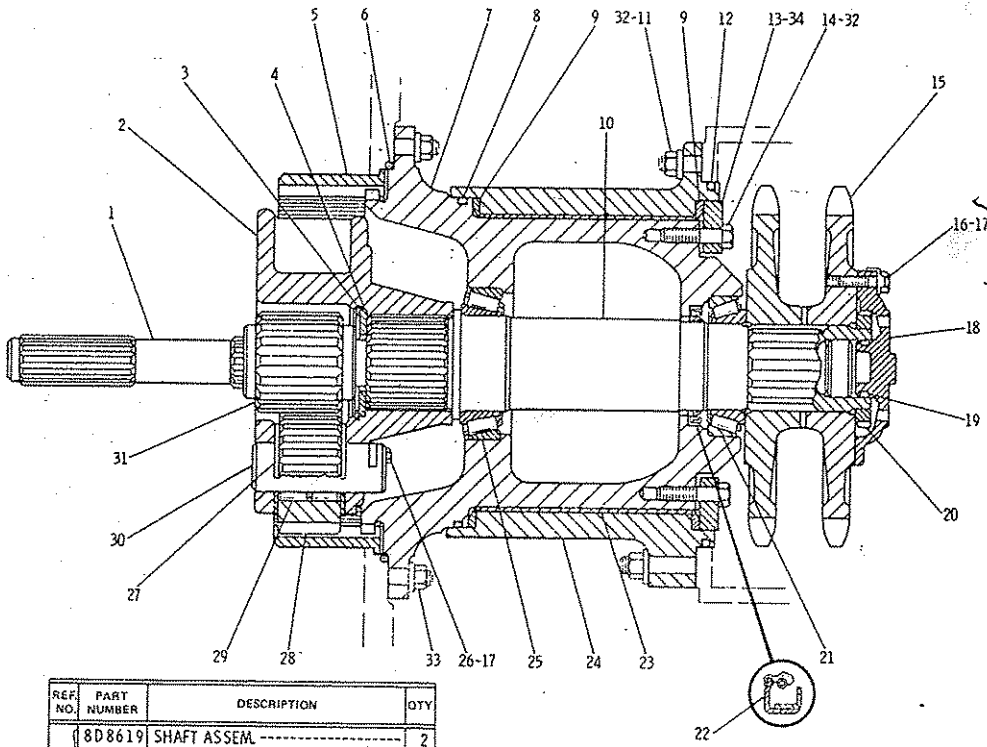

REF. NO.	PART NUMBER	DESCRIPTION	QTY
1	8D8619	SHAFT ASSEM.	2
		(Each Includes)	
	8D3957	WASHER	1

	REF. NO.	PART NUMBER	DESCRIPTION	QTY
	2	6G2295	CARRIER	2
	3	8D8621	RING	2
	4	8D8628	WASHER	2
	5	8D8639	GEAR (67 teeth)	2
	6	5J1086	SEAL	2
C	7	6G4513	HOUSING	2
C	8	6G6240	SEAL (plastic)	2
C	9	6G3205	WASHER	4
	10	2G6375	SHAFT	2
	11	1F7958	NUT	48
	12	5P2545	SEAL	2
	13	6G1952	RETAINER	2
	14	2B947	BOLT	32
	15	2G6377	SPROCKET	4
	16	S1588	BOLT	10
	17	L364	LOCK	22
	18	8D8632	RETAINER	2
	19	1H9696	SEAL	2
	20	2G6396	NUT	2
	21	6F2956	CUP	2
		6K8329	CONE	2
	22	4L9822	SEAL	2
	23	8D8622	RING	4
C	24	6G3284	HOUSING	2
	25	300060	CUP	2
		300061	CONE	2
	26	S1594	BOLT	12
		7D28	RETAINER	6
	27	9D4623	WASHER	12
	28	8D8634	GEAR (24 teeth)	6
	29	2M5685	ROLLER ASSEM.	12
	30	2G6780	SHAFT	6
	31	8D8638	GEAR (17 teeth)	2
	32	2M849	WASHER	80
	33	4K367	NUT	40
		4D3704	WASHER	40
C	34	6G3211	SHIM PACK	2

C INDICATES CHANGE

228069

2G6240 FINAL DRIVE GROUP
Serial No. 87V5791—Up

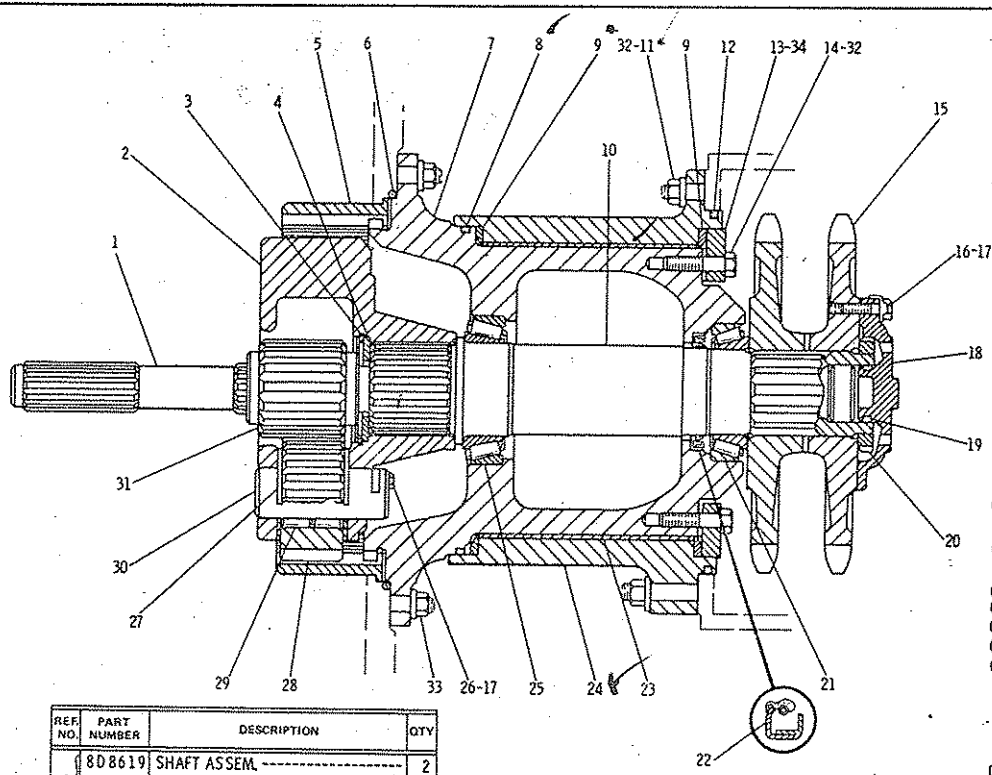

REF. NO.	PART NUMBER	DESCRIPTION	QTY
1	8D8619	SHAFT ASSEM. (Each Includes)	2
	8D3957	WASHER	1

NOTE: QUANTITIES SHOWN ARE THOSE REQUIRED FOR BOTH R.H. AND L.H. SIDES

C	2	2G7213	CARRIER	2
	3	8D8621	RING	2
	4	8D8628	WASHER	2
	5	8D8639	GEAR (67 teeth)	2
	6	5J1086	SEAL	2
C	7	6G4513	HOUSING	2
C	8	6G6240	SEAL (plastic)	2
C	9	6G3205	WASHER	4
	10	2G6375	SHAFT	2
	11	1F7958	NUT	48
	12	5P2545	SEAL	2
	13	6G1952	RETAINER	2
	14	2B947	BOLT	32
	15	2G6377	SPROCKET	4
	16	S1588	BOLT	10
C	17	L364	LOCK	26
	18	8D8632	RETAINER	2
	19	1H9696	SEAL	2
	20	2G6396	NUT	2
	21	6F2956	CUP	2
		6K8329	CONE	2
	22	4L9822	SEAL	2
	23	8D8622	RING	4
C	24	6G3284	HOUSING	2
	25	300060	CUP	2
C		300061	CONE	2
	26	S1594	BOLT	16
C		7D28	RETAINER	8
C	27	9D4623	WASHER	16
C	28	8D8634	GEAR (24 teeth)	8
C	29	2M5685	BEARING	16
C	30	2G6780	SHAFT	8
	31	8D8638	GEAR (17 teeth)	2
	32	2M849	WASHER	80
	33	4K367	NUT	40
		4D3704	WASHER	40
C	34	6G3211	SHIM PACK	2

C INDICATES CHANGE

180391

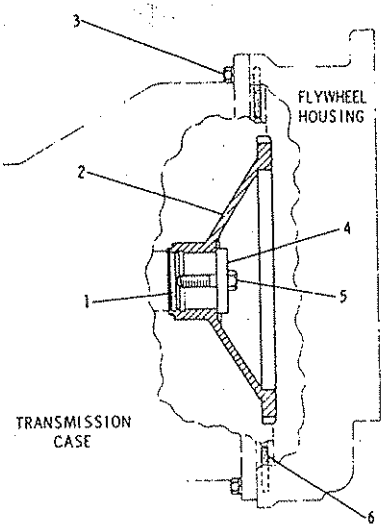

	REF. NO.	PART NUMBER	DESCRIPTION	QTY
	1	8F6711	SEAL	1
	2	3P324	COUPLING	1
	3	3B1915	BOLT	12
		3B4506	LOCKWASHER	12
	4	4S5824	RETAINER	1
	5	S1579	BOLT	1
C	6	5M6200	SEAL	1

C INDICATES CHANGE 155940

9D9850 ENGINE TO TRANSMISSION ADAPTER GROUP
Serial No. 87V5275 to 87V5662 & 87V5664 inclusive

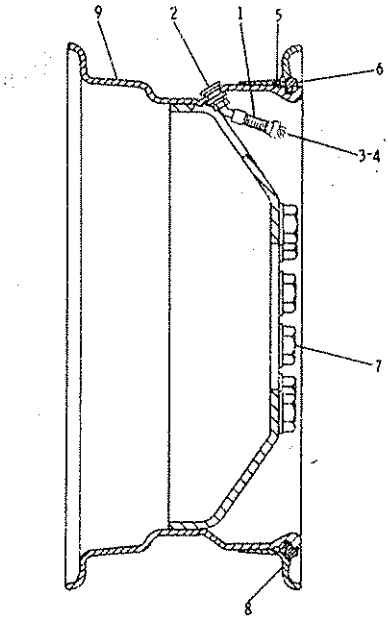

	REF. NO.	PART NUMBER	DESCRIPTION	QTY
C	1	2G6595	VALVE GROUP (Each Includes)	6
	2	2D2507	SPUD	1
		2D2509	NUT	1
		2D2508	GROMMMET	1
	3	9K7951	CAP	1
	4	6F3930	CORE	1
	5	2D2565	SEAL	6
	6	2D2566	RING	6
	7	7D8508	NUT	60
		4M6953	WASHER	60
	8	2D2567	FLANGE	6
C	9	2G5744	WHEEL	6

C INDICATES CHANGE 159933

7D8510 WHEEL GROUP—13.00 x 24 Tubeless Tires

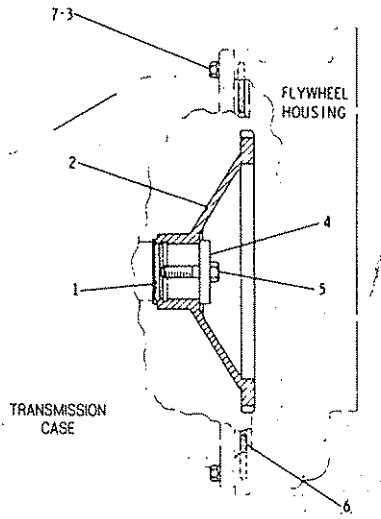

NOTE	REF NO	PART NUMBER	QTY	DESCRIPTION
	1	8F6711	1	SEAL
	2	3P324	1	COUPLING
C	3	3B1915	11	BOLT
		3B4506	12	LOCKWASHER
	4	4S5824	1	RETAINER
	5	S1579	1	BOLT
	6	5M6200	1	SEAL
C	7	1J8668	1	STUD
C		1D4717	1	NUT

C INDICATES CHANGE

306062

9D9850 ENGINE TO TRANSMISSION ADAPTER GROUP
Serial No. 87V5663 and 87V5665 to 87V5670 inclusive

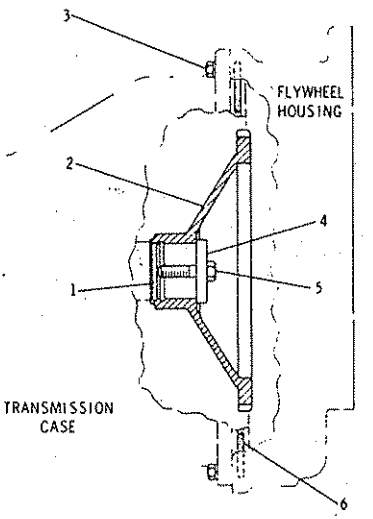

	REF NO	PART NUMBER	DESCRIPTION	QTY
	1	8F6711	SEAL	1
	2	3P324	COUPLING	1
C	3	3B1915	BOLT	12
		3B4506	LOCKWASHER	12
	4	4S5824	RETAINER	1
	5	S1579	BOLT	1
	6	5M6200	SEAL	1

C INDICATES CHANGE

306064

9D9850 ENGINE TO TRANSMISSION ADAPTER GROUP
Serial No. 87V5671—Up

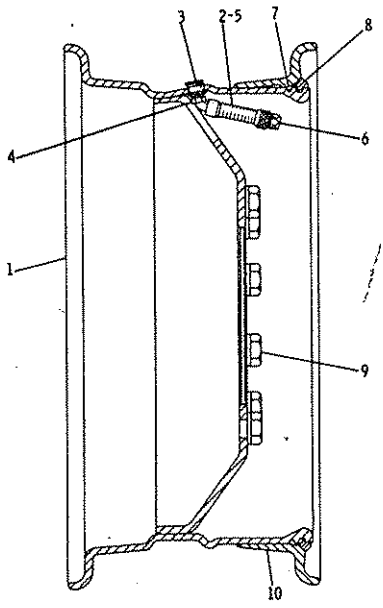

REF NO	PART NUMBER	DESCRIPTION	QTY
C 1	2G5745	WHEEL	6
C 2	2G6595	VALVE GROUP (Each Includes)	6
3	7D5252	SPUD ASSEM. (Includes)	1
4	2D2509	NUT	1
	2D2508	GROMMET	1
5	2G6567	STEM ASSEM. (Includes)	1
6	9K7951	CAP	1
	6F3930	CORE	1
7	2D2565	SEAL	6
8	2D2654	RING	6
9	7D8508	NUT	60
	4M6953	WASHER	60
10	2D2655	FLANGE	6

C INDICATES CHANGE

210284

9D5900 WHEEL GROUP—14.00 x 24 Tubeless Tires
AN ATTACHMENT

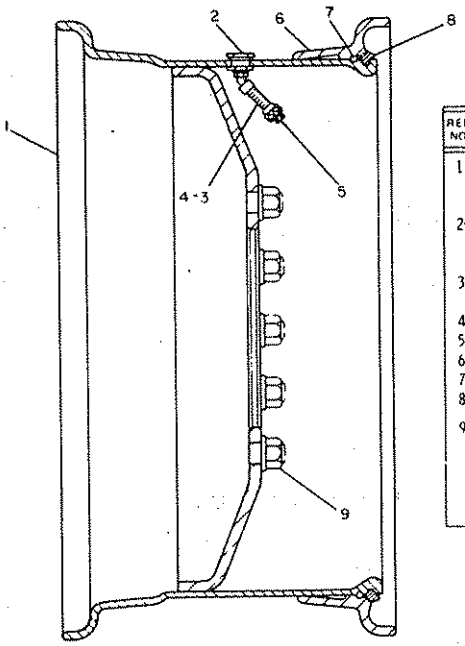

REF NO	PART NUMBER	DESCRIPTION	QTY
1	6G1527	WHEEL	6
2	2G6595	VALVE GROUP (Each Includes)	6
	2D2507	SPUD	1
	2D2508	GROMMET	1
	2D2509	NUT	1
3	2G6567	STEM ASSEM. (Includes)	1
4	6F3930	CORE	1
5	9K7951	CAP	1
6	6G1533	FLANGE	6
7	4K4879	SEAL	6
8	4K4881	RING	6
9	7D8508	NUT	60
	4M6953	WASHER	60

223853

6G1526 WHEEL GROUP—15.50 x 25 Tubeless Tires
AN ATTACHMENT

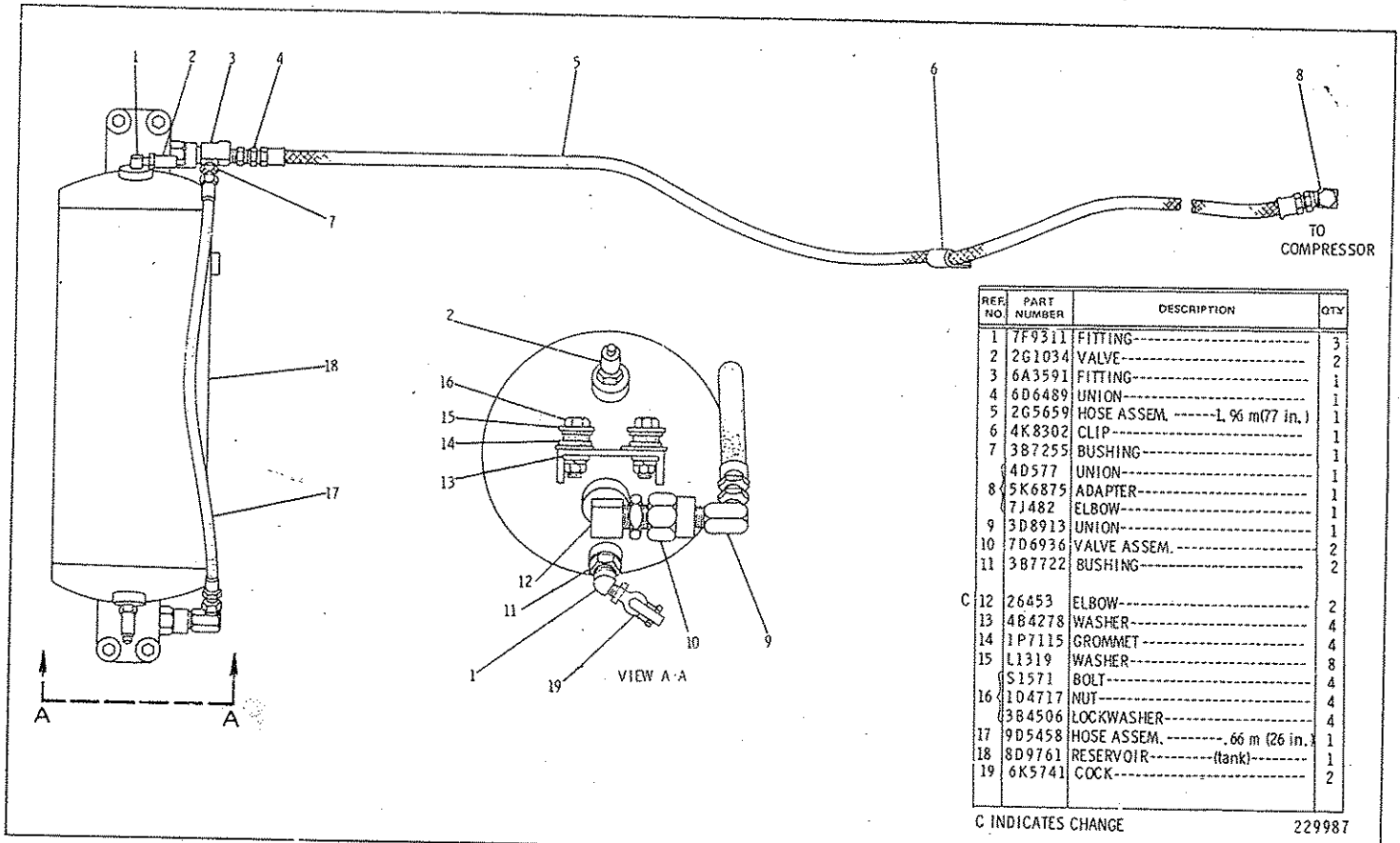

REF NO	PART NUMBER	DESCRIPTION	QTY
1	7F9311	FITTING	3
2	2G1034	VALVE	2
3	6A3591	FITTING	1
4	6D6489	UNION	1
5	2G5659	HOSE ASSEM. -------1,96 m(77 in.)	1
6	4K8302	CLIP	1
7	3B7255	BUSHING	1
8	4D577	UNION	1
	5K6875	ADAPTER	1
	7J482	ELBOW	1
9	3D8913	UNION	1
10	7D6936	VALVE ASSEM.	2
11	3B7722	BUSHING	2
C 12	26453	ELBOW	2
13	4B4278	WASHER	4
14	1P7115	GROMMET	4
15	L1319	WASHER	8
16	S1571	BOLT	4
	1D4717	NUT	4
	3B4506	LOCKWASHER	4
17	9D5458	HOSE ASSEM. --------,66 m (26 in.)	1
18	8D9761	RESERVOIR---------(tank)--------	1
19	6K5741	COCK	2

C INDICATES CHANGE

229987

2G5820 AIR TANK GROUP

Serial No. 87V3790 to 87V6192, 6196, 6197, 6199 to 6201, 6203 to 6215, 6288, 6564, 6582, 6584, 6586, 6590, 6615, 6627, 6630, 6634, 6635, 6637 & 87V6638 inclusive

2G5820 AIR TANK GROUP

Serial No. 87V6193 to 87V6195, 6198, 6202, 6216 to 6287, 6289 to 6563, 6565 to 6581, 6583, 6585, 6587 to 6589, 6591 to 6614, 6616 to 6626, 6628, 6629, 6631 to 6633, 6636 & 87V6639—Up

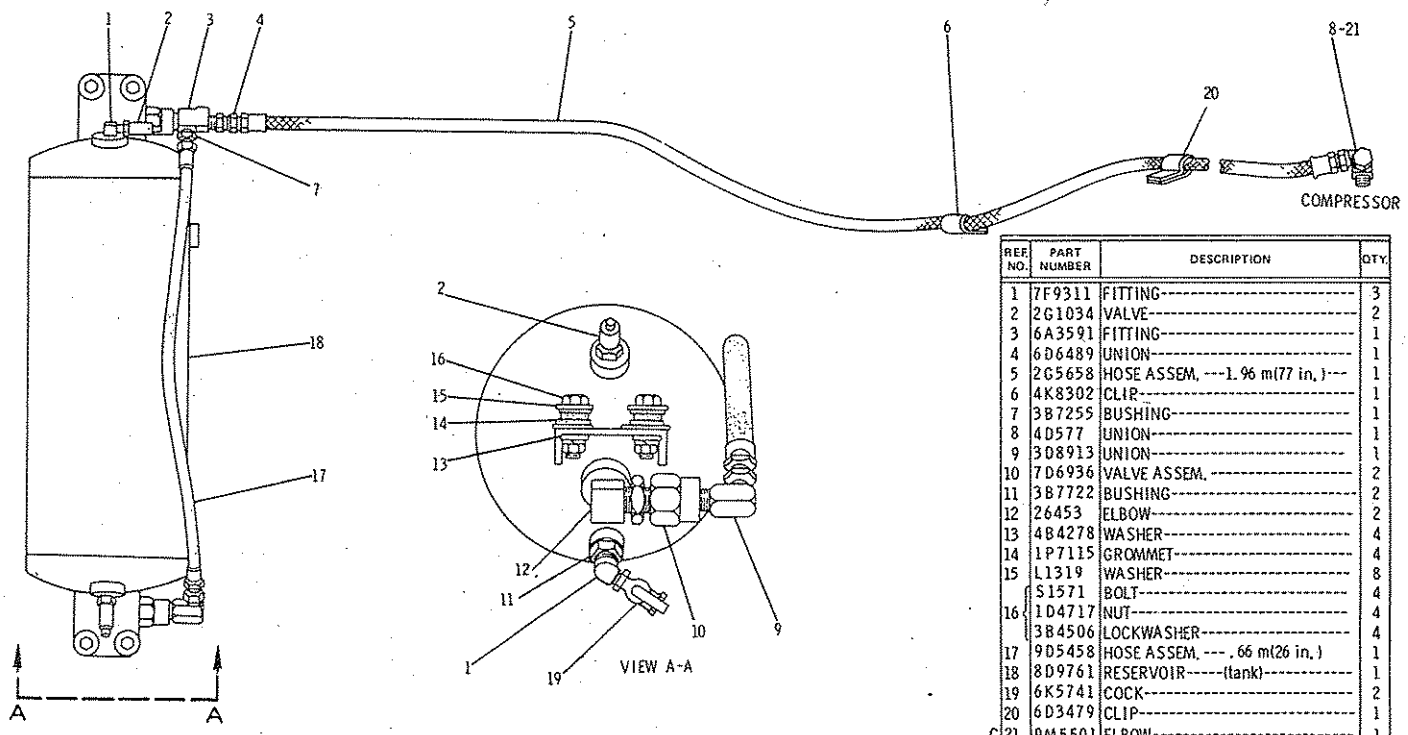

REF. NO.	PART NUMBER	DESCRIPTION	QTY.
1	7F9311	FITTING	3
2	2G1034	VALVE	2
3	6A3591	FITTING	1
4	6D6489	UNION	1
5	2G5658	HOSE ASSEM. ---1.96 m(77 in.)---	1
6	4K8302	CLIP	1
7	3B7255	BUSHING	1
8	4D577	UNION	1
9	3D8913	UNION	1
10	7D6936	VALVE ASSEM.	2
11	3B7722	BUSHING	2
12	26453	ELBOW	2
13	4B4278	WASHER	4
14	1P7115	GROMMET	4
15	L1319	WASHER	8
16	S1571	BOLT	4
	1D4717	NUT	4
	3B4506	LOCKWASHER	4
17	9D5458	HOSE ASSEM. ---.66 m(26 in.)	1
18	8D9761	RESERVOIR-----(tank)	1
19	6K5741	COCK	2
20	6D3479	CLIP	1
C 21	9M5501	ELBOW	1

C INDICATES CHANGE

300640

8D8790 PARKING BRAKE CONTROL GROUP

Serial No. 87V5275 to 87V6260 inclusive

5D470 and 5D4382 Valve parts are shown on Page 158

REF. NO.	PART NUMBER	DESCRIPTION	QTY.
C 1	6G2260	ACTUATOR GROUP (Includes)	1
	8K8467	SPRING	1
C 2	1B4206	NUT	2
3	3B4510	LOCKWASHER	4
4	5K292	ROD END	1
C 5	9S1354	NUT	1
6	4K1540	PIN	1
	7B4617	COTTER PIN	1
7	8D2205	BRACKET	1
8	S1625	BOLT	2
C	1D4720	NUT	2
9	9M8406	CLIP	1
10	5K2408	NIPPLE	1
11	5D470	VALVE ASSEM. -----(relief)----- (Separate Illustration)	1
12	5M6213	PLUG	1

REF. NO.	PART NUMBER	DESCRIPTION	QTY.
13	7D9708	BOLT	2
	T431	WASHER	4
14	5F8494	SPRING	1
15	T883	WASHER	2
16	9D948	BRACKET ASSEM. (Includes)	1
17	9F2978	NUT	1
18	2D2285	BOLT	1
	9F5644	LOCKWASHER	1
19	9D945	LEVER ASSEM. (Includes)	1
20	5H1514	PIN	1
▲ 21	4H6147	UNION -----(straight)-----	2
22	2D7325	TEE	1
23	6D1432	VALVE -----(check)-----	1
24	8H7696	FITTING	1
25	5D4382	VALVE ASSEM. -----(air)----- (Separate Illustration)	1
26	2M8908	KNOB	1
27	2G3765	SPRING	1
28	9D951	PLATE	1
29	4D2560	UNION	1

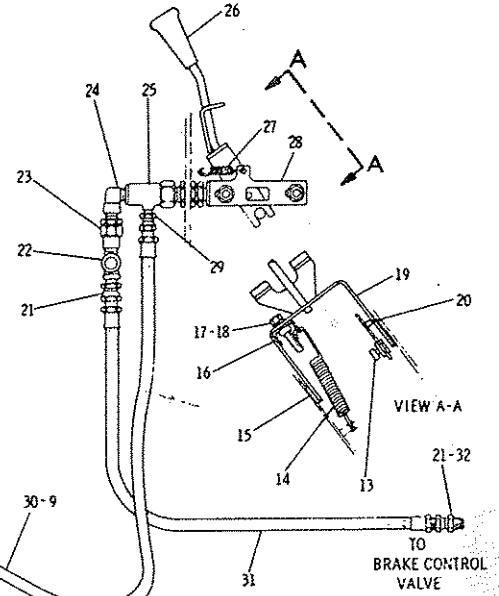

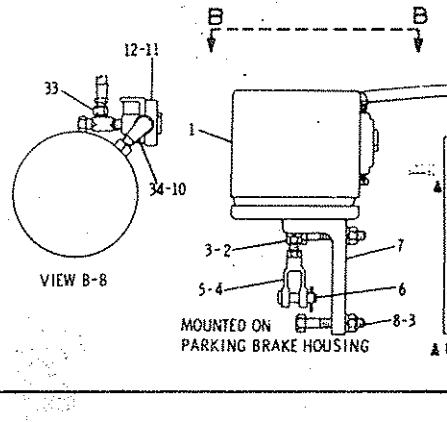

30	7D3024	HOSE ASSEM. ---320.4 cm(126 in.)	1
31	4S7528	HOSE ASSEM. ---81.28 cm(32 in.)	1
▲ 32	5H4778	UNION -----(90°)-----	1
33	4J3914	UNION	1
34	7J8611	ELBOW	1

▲ USE AS REQUIRED

SMHS7417	FORM (Instructions for Installing Actuator Group)	1
	THE FOLLOWING REPAIR KIT IS AVAILABLE:	
6G2527	KIT -----(seal)-----	1

C INDICATES CHANGE

223852

8D8790 PARKING BRAKE CONTROL GROUP

Serial No. 87V6261—Up

5D470 & 5D4382 Valve parts are shown on Page 158

REF. NO.	PART NUMBER	DESCRIPTION	QTY.
C 1	5T925	ACTUATOR GROUP (Includes)	1
	8K8467	SPRING	1
2	1B4206	NUT	2
3	3B4510	LOCKWASHER	4
4	5K292	ROD END	1
5	9S1354	NUT	1
6	4K1540	PIN	1
	3B4617	COTTER PIN	1
7	8D2205	BRACKET	1
8	S1625	BOLT	2
	1D4720	NUT	2
9	9M8406	CLIP	1
10	5K2408	NIPPLE	1
11	5D470	VALVE ASSEM. -----(relief)------ (Separate Illustration)	1
12	5M6213	PLUG	1
13	7D9708	BOLT	2
	T431	WASHER	4
14	5F8494	SPRING	1
15	T883	WASHER	2
16	9D948	BRACKET ASSEM. (Includes)	1
17	9F2978	NUT	1
18	2D2285	BOLT	1
	9F5644	LOCKWASHER	1
19	9D945	LEVER ASSEM. (Includes)	1
20	5H1514	PIN	1
21	4H6147	UNION-------(straight)----------	1
22	2D7325	TEE	1
23	6D1432	VALVE----------(check)----------	1
C 24	6V3342	ELBOW	1
25	5D4382	VALVE ASSEM. ------(air)-------- (Separate Illustration)	1
26	2M8908	KNOB	1
27	2G3765	SPRING	1
28	9D951	PLATE	1
29	4D2560	UNION	1

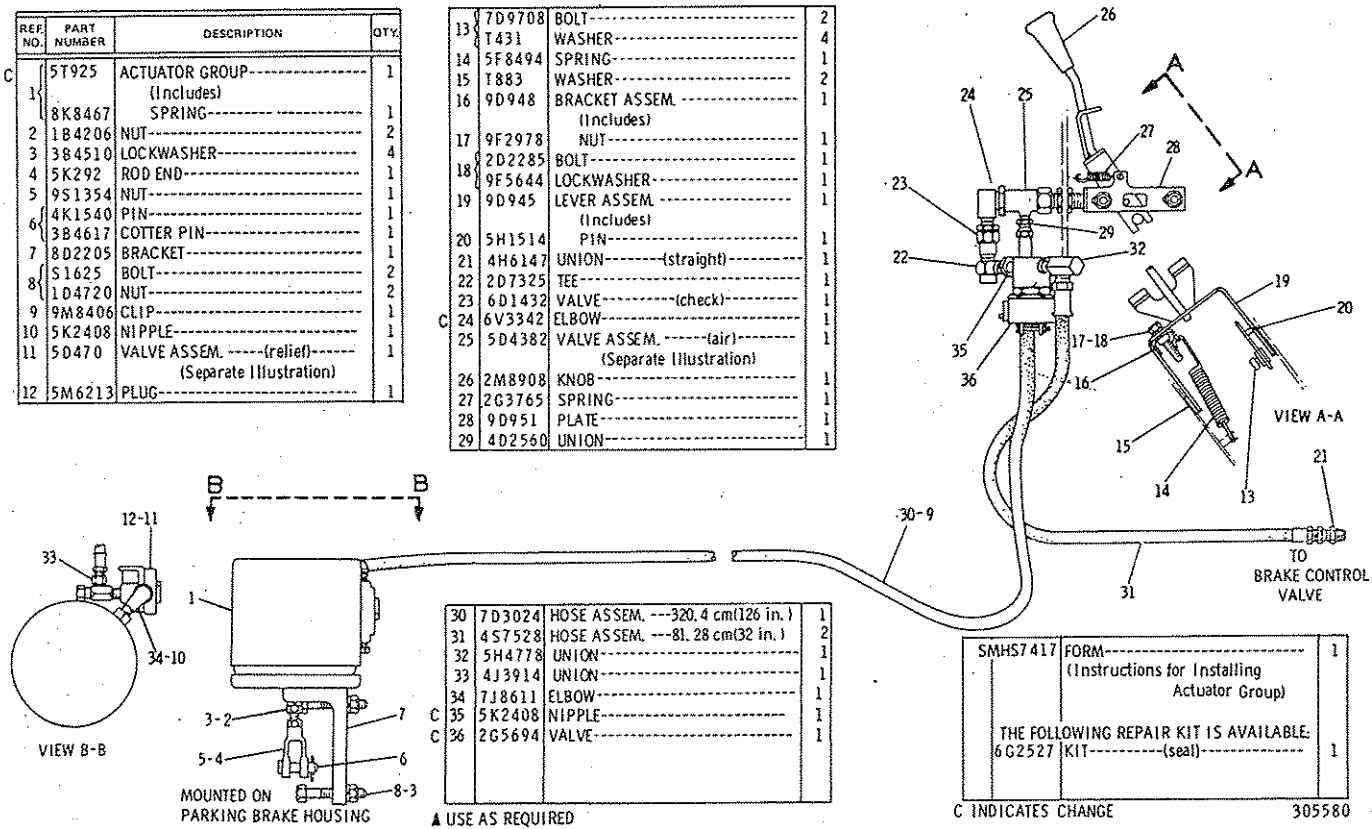

30	7D3024	HOSE ASSEM. ---320.4 cm(126 in.)	1
31	4S7528	HOSE ASSEM. ---81.28 cm(32 in.)	2
32	5H4778	UNION	1
33	4J3914	UNION	1
34	7J8611	ELBOW	1
C 35	5K2408	NIPPLE	1
C 36	2G5694	VALVE	1

▲ USE AS REQUIRED

SMHS7417	FORM (Instructions for Installing Actuator Group)	1
	THE FOLLOWING REPAIR KIT IS AVAILABLE:	
6G2527	KIT----------(seal)----------	1

C INDICATES CHANGE

305580

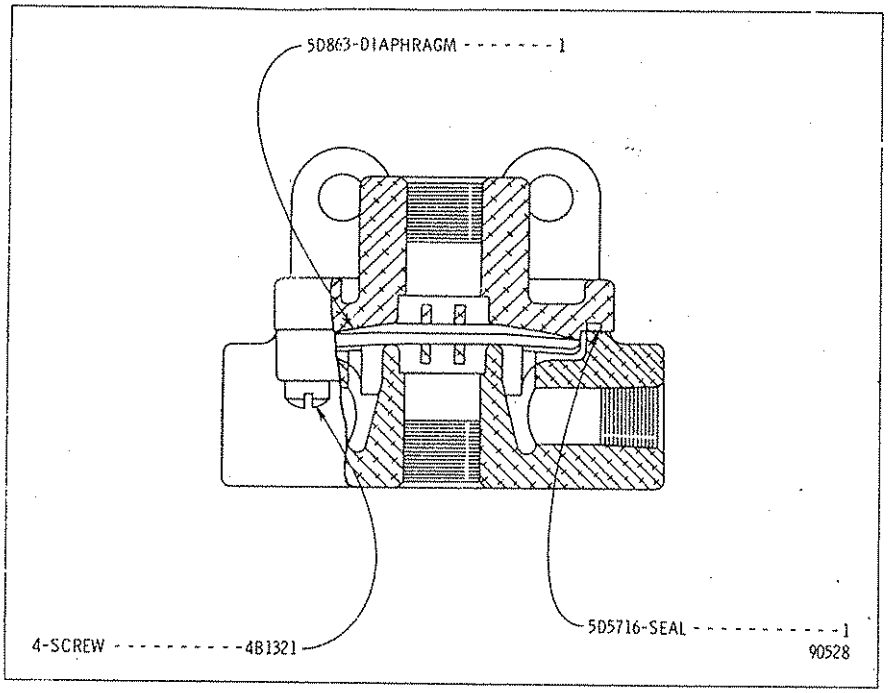

5D470 QUICK RELEASE VALVE ASSEMBLY
Part of 8D8790 Parking Brake Control Group shown on Page 157

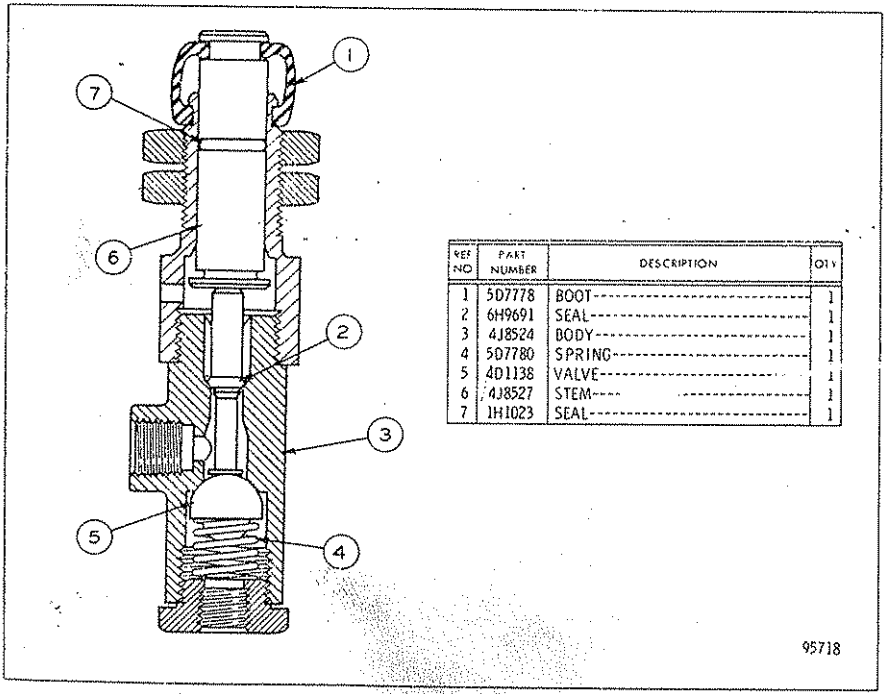

REF NO	PART NUMBER	DESCRIPTION	QTY
1	5D7778	BOOT	1
2	6H9691	SEAL	1
3	4J8524	BODY	1
4	5D7780	SPRING	1
5	4D1138	VALVE	1
6	4J8527	STEM	1
7	1H1023	SEAL	1

5D4382 AIR VALVE ASSEMBLY
Part of 8D8790 Parking Brake Control Group shown on Page 157

9D3480 SERVICE BRAKE GROUP
Serial No. 87V5275 to 87V5971 inclusive

REF. NO.	PART NUMBER	DESCRIPTION	QTY
1	1D4719	NUT	60
2	3B4508	LOCKWASHER	72
3	S1587	BOLT	4

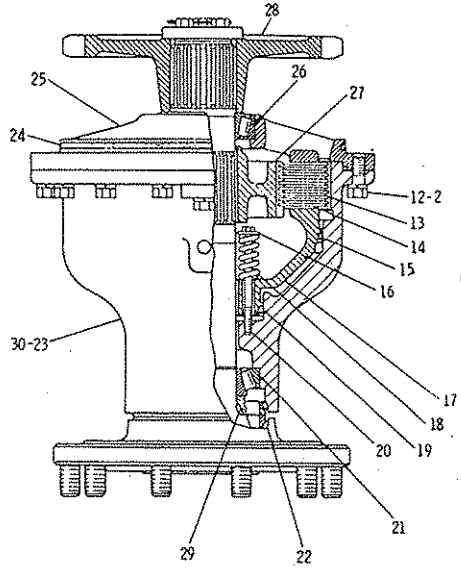

	REF. NO.	PART NUMBER	DESCRIPTION	QTY
	4	8D8806	PLATE	4
		3J4818	LOCKWASHER	4
A	5	5P6628	WIRE-----, 812 m(32 in.)	
	6	333134	BOLT	12
	7	8D8791	SHIM------0. 20 mm(. 007 in.) thick	24
		8D8792	SHIM------0. 13 mm(. 005 in.) thick	24
		9D7085	SHIM------0. 51 mm(. 020 in.) thick	8
	8	2S672	RETAINER	4
	9	8D8787	SPROCKET----(rear mounting)----	2
	10	2G7682	SPINDLE	4
C	11	6V1319	STUD	40
	12	S1595	BOLT-------31. 8 mm(1. 25 in.) long	8
	13	2G9908	DISC ASSEM.	36
	14	8D8794	DISC	40
	15	8D8795	SEAL	4
C	16	4B4279	WASHER	24
	17	2G5369	PISTON	4
C	18	9J5498	SPRING	24
	19	9D7972	SEAL	4
C	20	6G905	BOLT	24
	21	9D3241	CUP	4
		9D3242	CONE	4
	22	3S303	SEAL GROUP	4
			(Each Includes)	
		3S302	RING	2
	23	2G4612	HOUSING	4
	24	5P2545	SEAL	8
	25	8D8805	COVER	4
	26	2N2138	CUP	4
		2N2139	CONE	4
	27	2G6336	HUB	4
	28	8D8787	SPROCKET----(front mounting)----	2
	29	9D4029	SPACER	4
	30	3J5390	PLUG	4

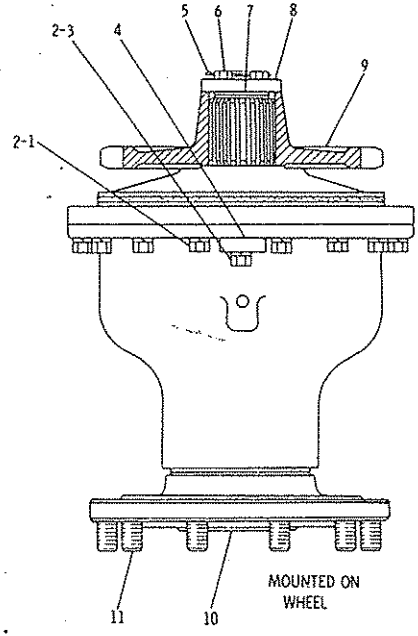

NOTE: QUANTITIES SHOWN ARE THOSE REQUIRED FOR BOTH R.H. & L.H. BRAKES

A ORDER BY THE METER
C INDICATES CHANGE

228066

9D3480 SERVICE BRAKE GROUP
Serial No. 87V5972—Up

REF. NO.	PART NUMBER	DESCRIPTION	QTY
1	1D4719	NUT	60
2	3B4508	LOCKWASHER	72
3	S1587	BOLT	4

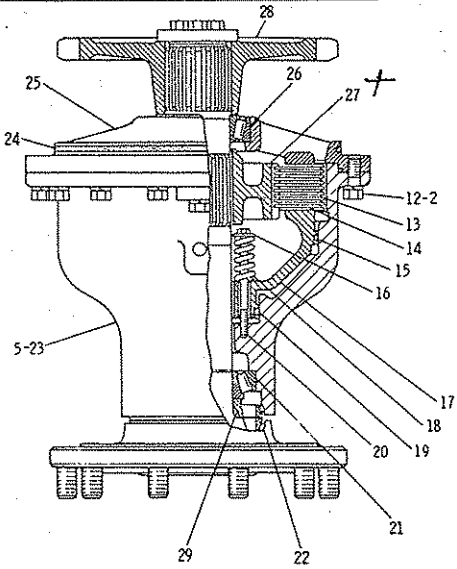

4	8D8806	PLATE	4
	3J4818	LOCKWASHER	4
5	3J5390	PLUG	4
C 6	310223	BOLT	12
	8D8791	SHIM------0.20 mm(.007 in.) thick	24
7	8D8792	SHIM------0.13 mm(.005 in.) thick	24
	9D7085	SHIM------0.51 mm(.020 in.) thick	8
8	2S672	RETAINER	4
9	8D8787	SPROCKET----(rear mounting)----	2
C 10	6G8206	SPINDLE	4
C 11	6V4250	STUD	40
12	S1595	BOLT-------31.8 mm(1.25 in.) long	8
13	2G9908	DISC ASSEM.	36
14	8D8794	DISC	40
15	8D8795	SEAL	4
16	4B4279	WASHER	24
17	2G5369	PISTON	4
18	9J5498	SPRING	24
19	9D7972	SEAL	4
20	6G905	BOLT	24
21	9D3241	CUP	4
	9D3242	CONE	4
22	3S303	SEAL GROUP (Each Includes)	4
	3S302	RING	2
23	2G4612	HOUSING	4
24	5P2545	SEAL	8
25	8D8805	COVER	4
26	2N2138	CUP	4
	2N2139	CONE	4
27	2G6336	HUB	4
28	8D8787	SPROCKET----(front mounting)----	2
29	9D4029	SPACER	4

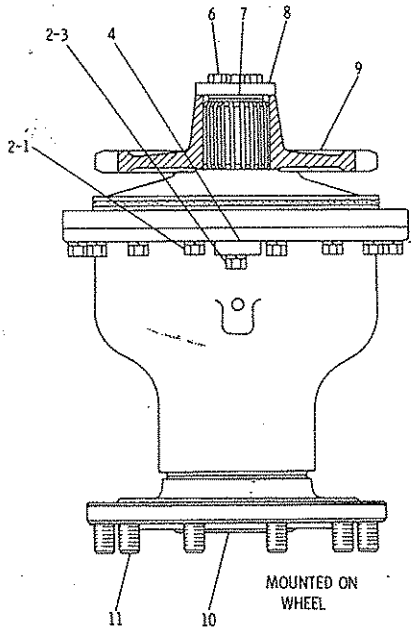

NOTE: QUANTITIES SHOWN ARE THOSE REQUIRED FOR BOTH R.H. & L.H. BRAKES

C INDICATES CHANGE

181584

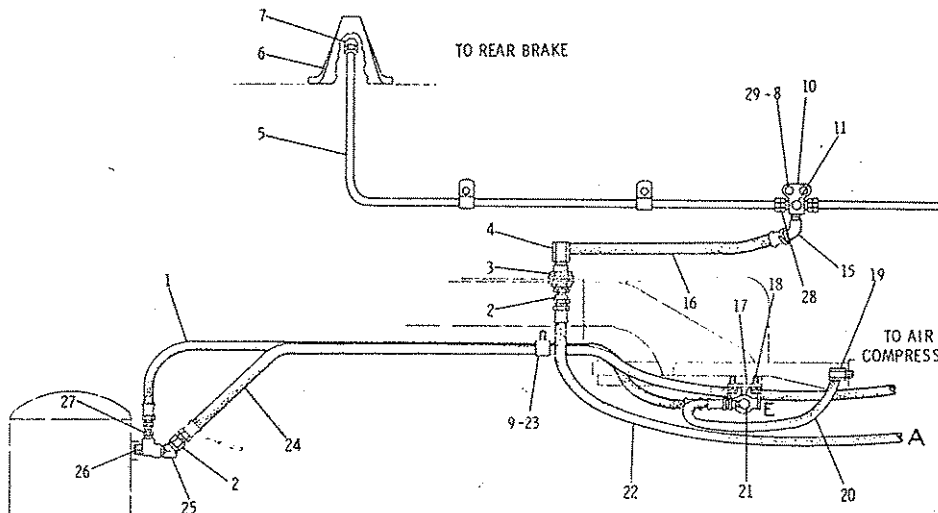

REF. NO.	PART NUMBER	DESCRIPTION	QTY
C 1	3D6388	HOSE ASSEM. ----1.11 m(44 in.)	1
C	4H6147	CONNECTOR----------	1
C 2	2L3331	CONNECTOR----------	3
3	2M1908	FITTING----------	1
	9S1302	WASHER----------	1
C 4	4D577	ELBOW----------	1
5	9D1334	TUBE ASSEM. ----------	1
6	8D8826	GUARD----------	2
7	6K6826	ELBOW----------	2
C 8	S1588	BOLT----------	2
C 9	3B4506	LOCKWASHER----------	1

C 10	6G1415	BLOCK----------	1
11	3J5390	PLUG----------	1
12	S1620	BOLT----------	2
	3B4508	LOCKWASHER----------	2
13	9D1336	TUBE ASSEM. ----------	1
14	1B8471	CLIP----------	4
15	1L2279	ELBOW----------	1
16	8D7495	HOSE ASSEM. ------.83 m(32.5 in.)	1
17	4K2986	TEE----------	1
	5M6213	PLUG----------	1
C 18	S1617	BOLT----------	2
C	9M1974	WASHER----------	2
C 19	4S7606	ELBOW----------	1
C 20	6D4045	HOSE ASSEM. -----.68 m(27 in.)---	1
21	3S6115	TEE----------	1
	3B7722	BUSHING----------	1
22	4J8743	HOSE ASSEM. --2.69 m(105.75 in.)	1
23	5K5338	CLIP----------	1
	S1594	BOLT----------	1
24	6J3596	HOSE ASSEM. ---3.02 m(119 in.)	1
C 25	4D582	ELBOW----------	1
26	7J6740	TEE----------	1
C 27	2D193	CONNECTOR----------	1
C 28	5K9238	CONNECTOR----------	2
C 29	5M2894	WASHER----------	2

C INDICATES CHANGE 228054

2G5780 BRAKE CONTROL GROUP—Part 1 of 3
Serial No. 87V5275 to 87V5589 inclusive

2G5780 BRAKE CONTROL GROUP—Part 2 of 3
Serial No. 87V5275 to 87V5589 Inclusive

REF. NO.	PART NUMBER	DESCRIPTION	QTY
1	7J6740	TEE	1
C 2	2L3331	CONNECTOR	4
3	3D6395	HOSE ASSEM. -----3.35 m(132. in.)	1
4	5K5338	CLIP	1
5	2M1908	FITTING	1
	9S1302	WASHER	1
C 6	4D577	ELBOW	1
7	8D7495	HOSE ASSEM. -----.83 m(32.5 in.)	1
8	1L2279	ELBOW	1
9	1B8471	CLIP	4

REF. NO.	PART NUMBER	DESCRIPTION	QTY
20	S1620	BOLT	2
	3B4508	LOCKWASHER	2
21	3J5390	PLUG	1
C 22	6G1415	BLOCK	1
C 23	S1588	BOLT	2
24	6K6826	ELBOW	2
25	8D8826	GUARD	2
26	9D1336	TUBE ASSEM.	1
27	S1594	BOLT	1
C 28	7D3477	HOSE ASSEM. ---2.71 m(107 in.)	1
C 29	2D193	CONNECTOR	1
C 30	5K9238	CONNECTOR	2
C 31	5M2894	WASHER	2

REF. NO.	PART NUMBER	DESCRIPTION	QTY
10	6J3596	HOSE ASSEM. -----3.02 m(119 in.)	1
11	4S7562	HOSE ASSEM. -----1.93 m(76 in.)	1
12	S509	BOLT	1
	1D4717	NUT	1
C 13	3B4506	LOCKWASHER	2
14	3S2093	STRAP	1
15	8D689	CLIP	1
16	8B4884	ELBOW	2
C 17	4D2560	CONNECTOR	2
18	5K8451	CLIP	1
19	9D1334	TUBE ASSEM.	1

C INDICATES CHANGE

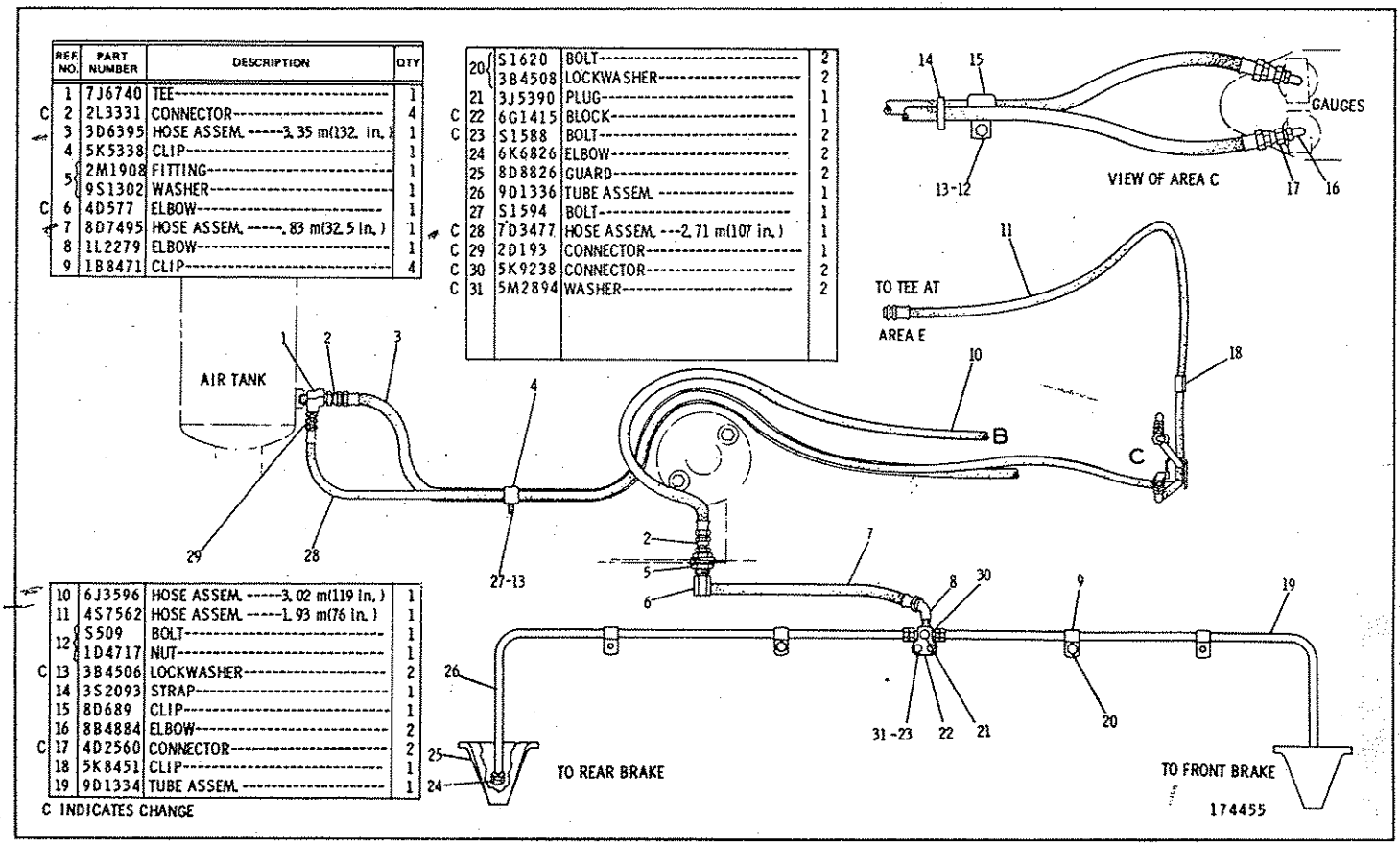

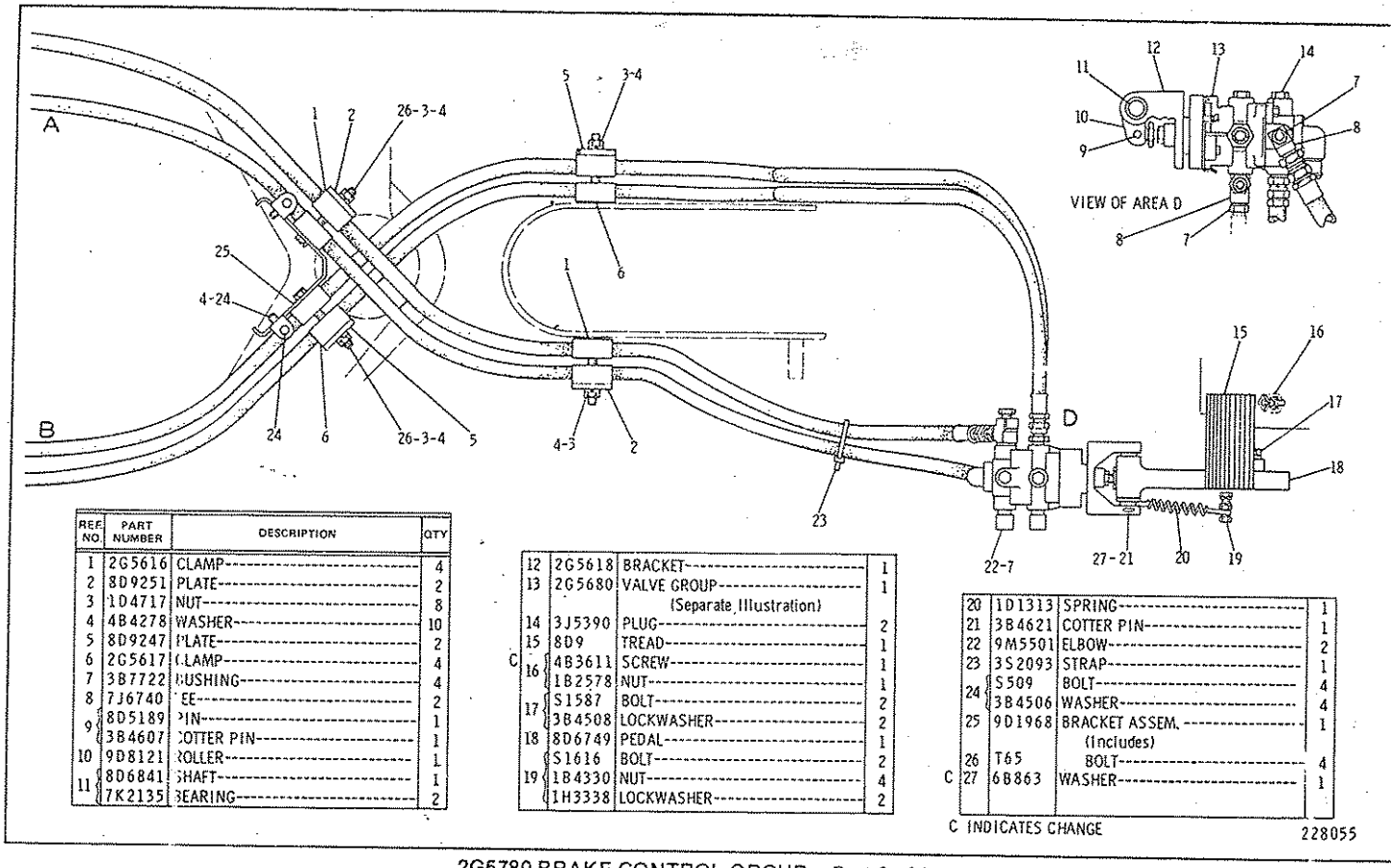

REF NO.	PART NUMBER	DESCRIPTION	QTY
1	2G5616	CLAMP	4
2	8D9251	PLATE	2
3	1D4717	NUT	8
4	4B4278	WASHER	10
5	8D9247	PLATE	2
6	2G5617	CLAMP	4
7	3B7722	BUSHING	4
8	7J6740	TEE	2
9	8D5189	PIN	1
	3B4607	COTTER PIN	1
10	9D8121	ROLLER	1
11	8D6841	SHAFT	1
	7K2135	BEARING	2
12	2G5618	BRACKET	1
13	2G5680	VALVE GROUP (Separate Illustration)	1
14	3J5390	PLUG	2
15	8D9	TREAD	1
C 16	4B3611	SCREW	1
	1B2578	NUT	1
17	S1587	BOLT	2
	3B4508	LOCKWASHER	2
18	8D6749	PEDAL	1
19	S1616	BOLT	2
	1B4330	NUT	4
	1H3338	LOCKWASHER	2
20	1D1313	SPRING	1
21	3B4621	COTTER PIN	1
22	9M5501	ELBOW	2
23	3S2093	STRAP	1
24	S509	BOLT	4
	3B4506	WASHER	4
25	9D1968	BRACKET ASSEM. (Includes)	1
26	T65	BOLT	4
C 27	6B863	WASHER	1

C INDICATES CHANGE

228055

2G5780 BRAKE CONTROL GROUP—Part 3 of 3
Serial No. 87V5275 to 87V5589 Inclusive
2G5680 Valve parts are shown on Page 163

2G5780 BRAKE CONTROL GROUP—Part 1 of 3
Serial No. 87V5590 to 87V5733 inclusive

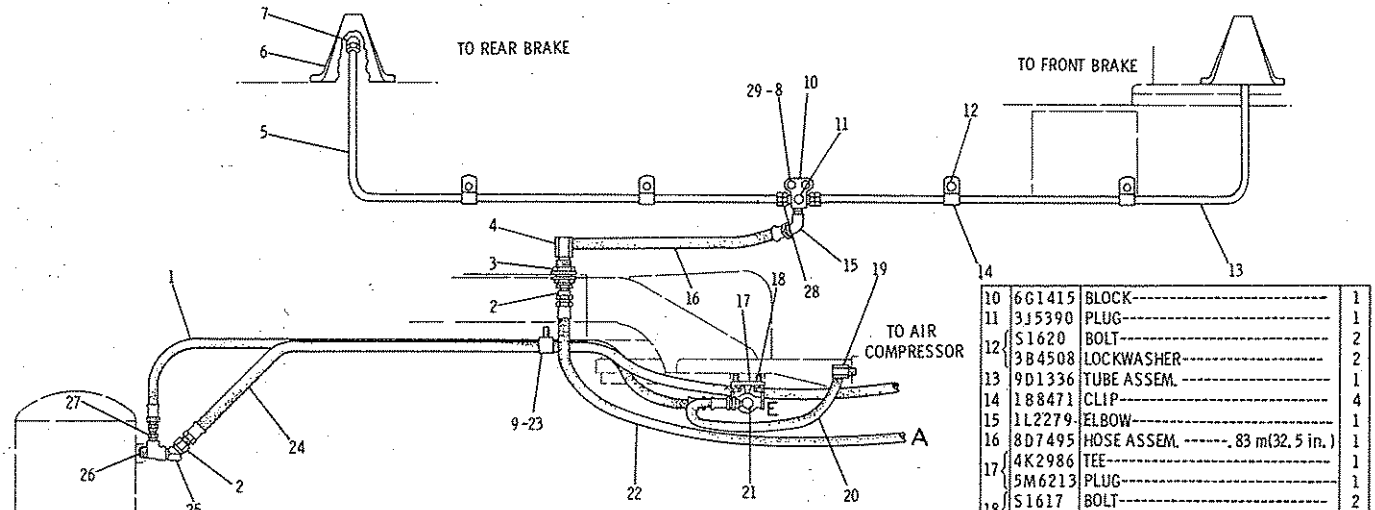

REF. NO.	PART NUMBER	DESCRIPTION	QTY
1	3D6388	HOSE ASSEM. ----1.11 m(44 in.)	1
	4H6147	CONNECTOR----------	1
2	2L3331	CONNECTOR----------	3
3	2M1908	FITTING----------	1
	9S1302	WASHER----------	1
4	4D577	ELBOW----------	1
5	9D1334	TUBE ASSEM.----------	1
6	8D8826	GUARD----------	2
7	6K6826	ELBOW----------	2
8	S1588	BOLT----------	2
9	3B4506	LOCKWASHER----------	1

10	6G1415	BLOCK----------	1
11	3J5390	PLUG----------	1
12	S1620	BOLT----------	2
	3B4508	LOCKWASHER----------	2
13	9D1336	TUBE ASSEM.----------	1
14	1B8471	CLIP----------	4
15	1L2279	ELBOW----------	1
16	8D7495	HOSE ASSEM. ------.83 m(32.5 in.)	1
17	4K2986	TEE----------	1
	5M6213	PLUG----------	1
18	S1617	BOLT----------	2
	9M1974	WASHER----------	2
19	4S7606	ELBOW----------	1
20	6D4045	HOSE ASSEM. ------.68 m(27 in.)---	1
21	3S6115	TEE----------	1
	3B7722	BUSHING----------	1
22	4J8743	HOSE ASSEM. --2.69 m(105.75 in.)	1
23	5K5338	CLIP----------	1
	S1594	BOLT----------	1
24	6J3596	HOSE ASSEM. ---3.02 m(119 in.)	1
25	4D582	ELBOW----------	1
26	7J6740	TEE----------	1
27	2D193	CONNECTOR----------	1
28	5K9238	CONNECTOR----------	2
29	5M2894	WASHER----------	2

233055

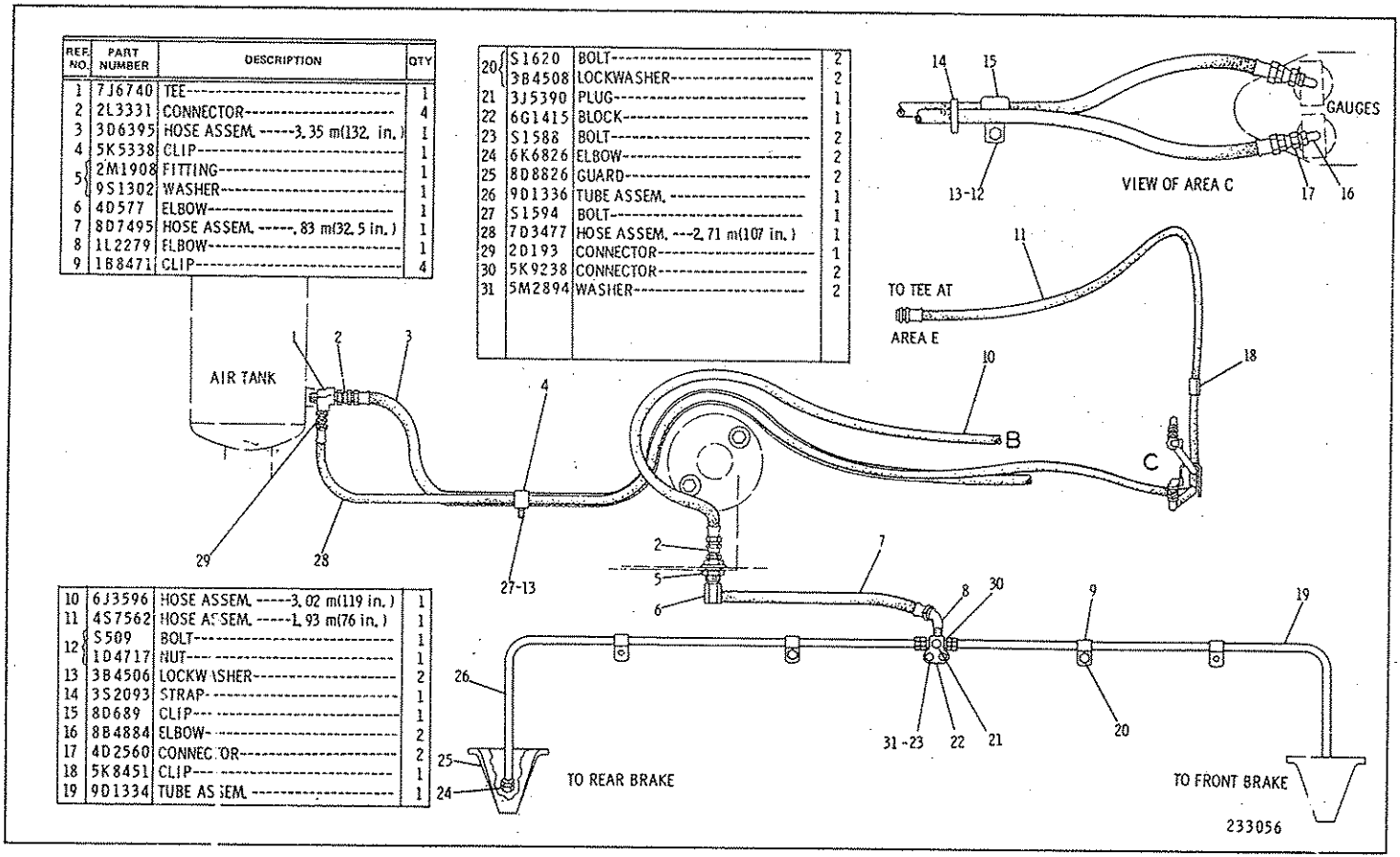

REF NO.	PART NUMBER	DESCRIPTION	QTY
1	7J6740	TEE	1
2	2L3331	CONNECTOR	4
3	3D6395	HOSE ASSEM. -----3.35 m(132. in.)	1
4	5K5338	CLIP	1
5	2M1908	FITTING	1
	9S1302	WASHER	1
6	4D577	ELBOW	1
7	8D7495	HOSE ASSEM. -----.83 m(32.5 in.)	1
8	1L2279	ELBOW	1
9	1B8471	CLIP	4
10	6J3596	HOSE ASSEM. -----3.02 m(119 in.)	1
11	4S7562	HOSE ASSEM. -----1.93 m(76 in.)	1
12	S509	BOLT	1
	1D4717	NUT	1
13	3B4506	LOCKWASHER	2
14	3S2093	STRAP	1
15	8D689	CLIP	1
16	8B4884	ELBOW	2
17	4D2560	CONNECTOR	2
18	5K8451	CLIP	1
19	9D1334	TUBE ASSEM.	1
20	S1620	BOLT	2
	3B4508	LOCKWASHER	2
21	3J5390	PLUG	1
22	6G1415	BLOCK	1
23	S1588	BOLT	2
24	6K6826	ELBOW	2
25	8D8826	GUARD	2
26	9D1336	TUBE ASSEM.	1
27	S1594	BOLT	1
28	7D3477	HOSE ASSEM. ---2.71 m(107 in.)	1
29	2D193	CONNECTOR	1
30	5K9238	CONNECTOR	2
31	5M2894	WASHER	2

2G5780 BRAKE CONTROL GROUP—Part 2 of 3
Serial No. 87V5590 to 87V5733 inclusive

2G5780 BRAKE CONTROL GROUP—Part 3 of 3
Serial No. 87V5590 to 87V5733 inclusive
6G8425 Valve parts are shown on Page 163

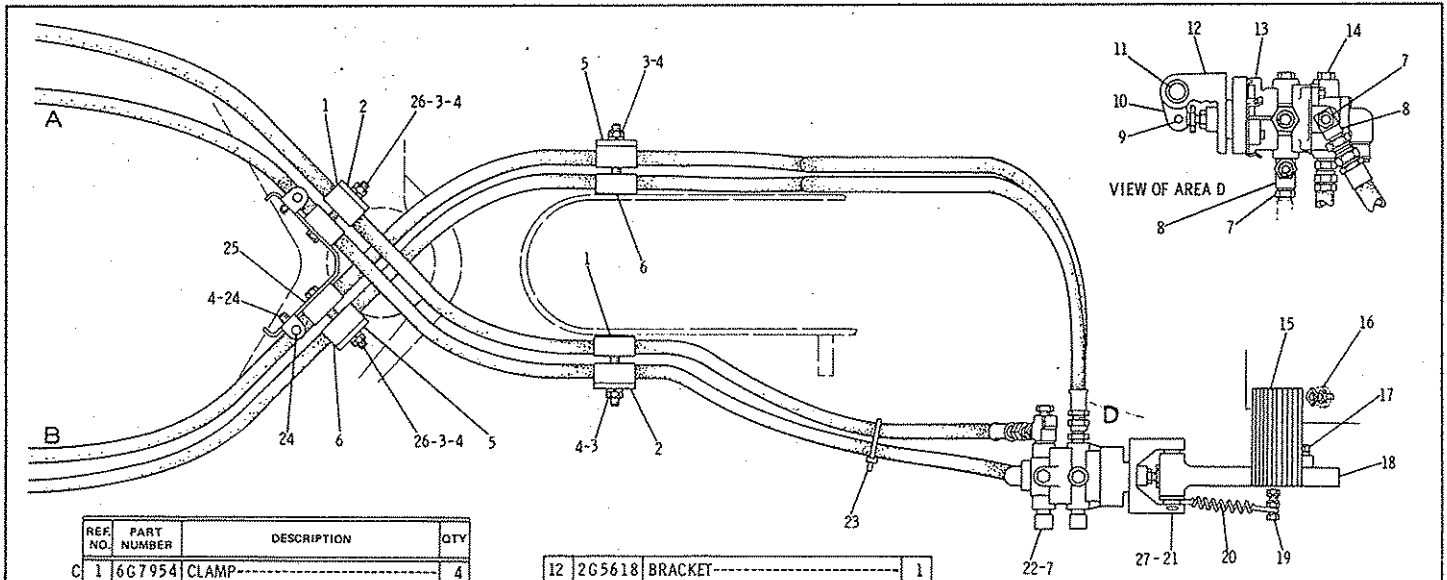

REF. NO.	PART NUMBER	DESCRIPTION	QTY
C 1	6G7954	CLAMP	4
C 2	6G7972	PLATE	2
3	1D4717	NUT	8
4	4B4278	WASHER	10
5	8D9247	PLATE	2
6	2G5617	CLAMP	4
7	3B7722	BUSHING	4
8	7J6740	TEE	2
9	8D5189	PIN	1
	3B4607	COTTER PIN	1
10	9D8121	ROLLER	1
11	8D6841	SHAFT	1
	7K2135	BEARING	2

12	2G5618	BRACKET	1
13	6G8425	VALVE GROUP (Separate Illustration)	1
14	3J5390	PLUG	2
15	8D9	TREAD	1
16	4B3611	SCREW	1
	1B2578	NUT	1
17	S1587	BOLT	2
	3B4508	LOCKWASHER	2
18	8D6749	PEDAL	1
	S1616	BOLT	2
19	1B4330	NUT	4
	1H3338	LOCKWASHER	2

20	1D1313	SPRING	1
21	3B4621	COTTER PIN	1
22	9M5501	ELBOW	2
23	3S2093	STRAP	1
24	S509	BOLT	4
	3B4506	WASHER	4
25	9D1968	BRACKET ASSEM. (Includes)	1
26	T65	BOLT	4
27	6B863	WASHER	1

C INDICATES CHANGE

233057

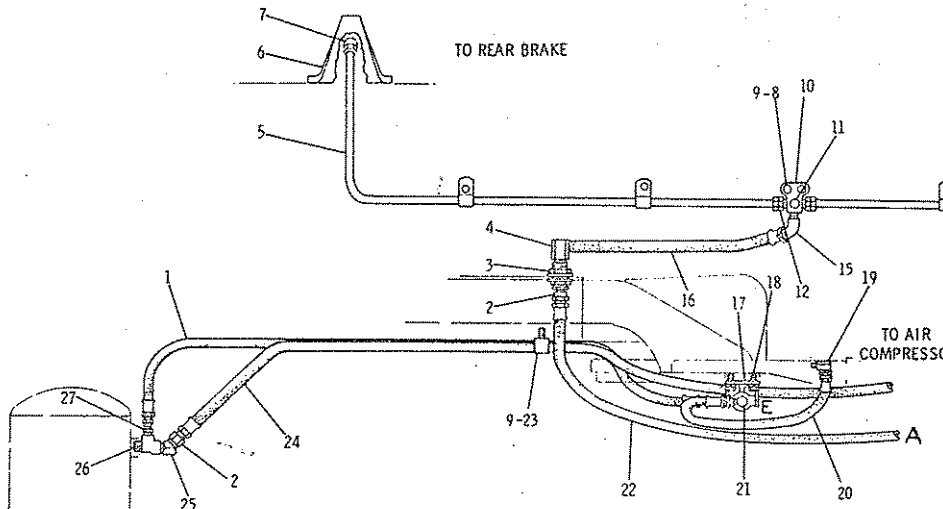

REF. NO.	PART NUMBER	DESCRIPTION	QTY
1	3D6388	HOSE ASSEM. ----1.11 m(44 in.)	1
	4H6147	CONNECTOR----------	1
2	2L3331	CONNECTOR----------	3
3	2M1908	FITTING----------	1
	9S1302	WASHER----------	1
4	4D577	ELBOW----------	1
5	9D1334	TUBE ASSEM. ----------	1
6	8D8826	GUARD----------	2
7	6K6826	ELBOW----------	2
8	S1588	BOLT----------	2
C 9	5M2894	WASHER----------	3
10	6G1415	BLOCK----------	1
11	3J5390	PLUG----------	1
12	5K9238	CONNECTOR----------	2
13	9D1336	TUBE ASSEM. ----------	1
14	1B8471	CLIP----------	4
15	1L2279	ELBOW----------	1
16	8D7495	HOSE ASSEM. ------. 83 m(32.5 in.)	1
17	4K2986	TEE----------	1
	5M6213	PLUG----------	1
18	S1617	BOLT----------	2
	9M1974	WASHER----------	2
19	4S7606	ELBOW----------	1
20	6D4045	HOSE ASSEM. ------. 68 m(27 in.)---	1
21	3S6115	TEE----------	1
	3B7722	BUSHING----------	1
22	4J8743	HOSE ASSEM. --2.69 m(105.75 in.)	1
23	5K5338	CLIP----------	1
	S1594	BOLT----------	1
24	6J3596	HOSE ASSEM. ---3.02 m(119 in.)	1
25	4D582	ELBOW----------	1
26	7J6740	TEE----------	1
27	2D193	CONNECTOR----------	1

C INDICATES CHANGE

180153

2G5780 BRAKE CONTROL GROUP—Part 1 of 3

Serial No. 87V5734 to 6192, 6196, 6197, 6199 to 6201, 6203 to 6215, 6288, 6564, 6582, 6584, 6586, 6590, 6615, 6627, 6630, 6634, 6635, 6637 & 87V6638 Inclusive

2G5780 BRAKE CONTROL GROUP—Part 2 of 3

Serial No. 87V5734 to 6192, 6196, 6197, 6199 to 6201, 6203 to 6215, 6288, 6564, 6582, 6584, 6586, 6590, 6615, 6627, 6630, 6634, 6635, 6637 and 87V6638 inclusive

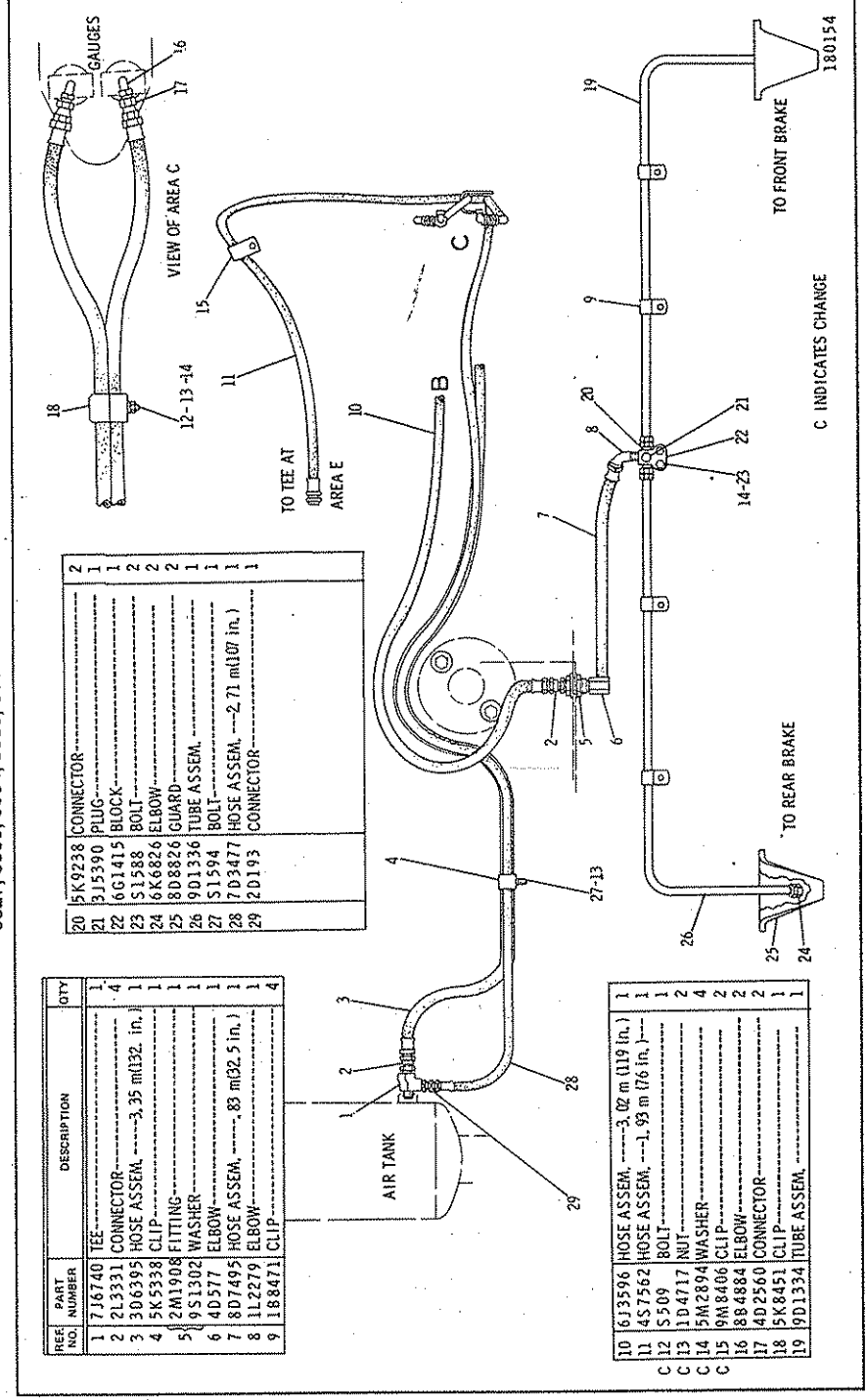

REF. NO.	PART NUMBER	DESCRIPTION	QTY
1	7J6740	TEE	1
2	2L3331	CONNECTOR	4
3	3U6395	HOSE ASSEM., ----3.35 m(132. in.)	1
4	5K5338	CLIP	1
5	2M1908	FITTING	1
	9S1302	WASHER	1
6	4D577	ELBOW	1
7	8D7495	HOSE ASSEM., ----.83 m(32.5 in.)	1
8	1L2279	ELBOW	1
9	1B8471	CLIP	4
10	6J3596	HOSE ASSEM., ----3.02 m (119 in.)	1
11	4S7562	HOSE ASSEM., ---1.93 m (76 in.)---	1
C 12	5509	BOLT	1
C 13	1D4717	NUT	2
C 14	5M2894	WASHER	4
C 15	9M8406	CLIP	2
16	8B4884	ELBOW	2
17	4D2560	CONNECTOR	2
18	5K8451	CLIP	1
19	9D1334	TUBE ASSEM.	1
20	5K9238	CONNECTOR	2
21	3J5390	PLUG	1
22	6G1415	BLOCK	1
23	S1588	BOLT	2
24	6K6826	ELBOW	2
25	8D8826	GUARD	2
26	9D1336	TUBE ASSEM.	1
27	S1594	BOLT	1
28	7D3477	HOSE ASSEM., ---2.71 m(107 in.)	1
29	2D193	CONNECTOR	1

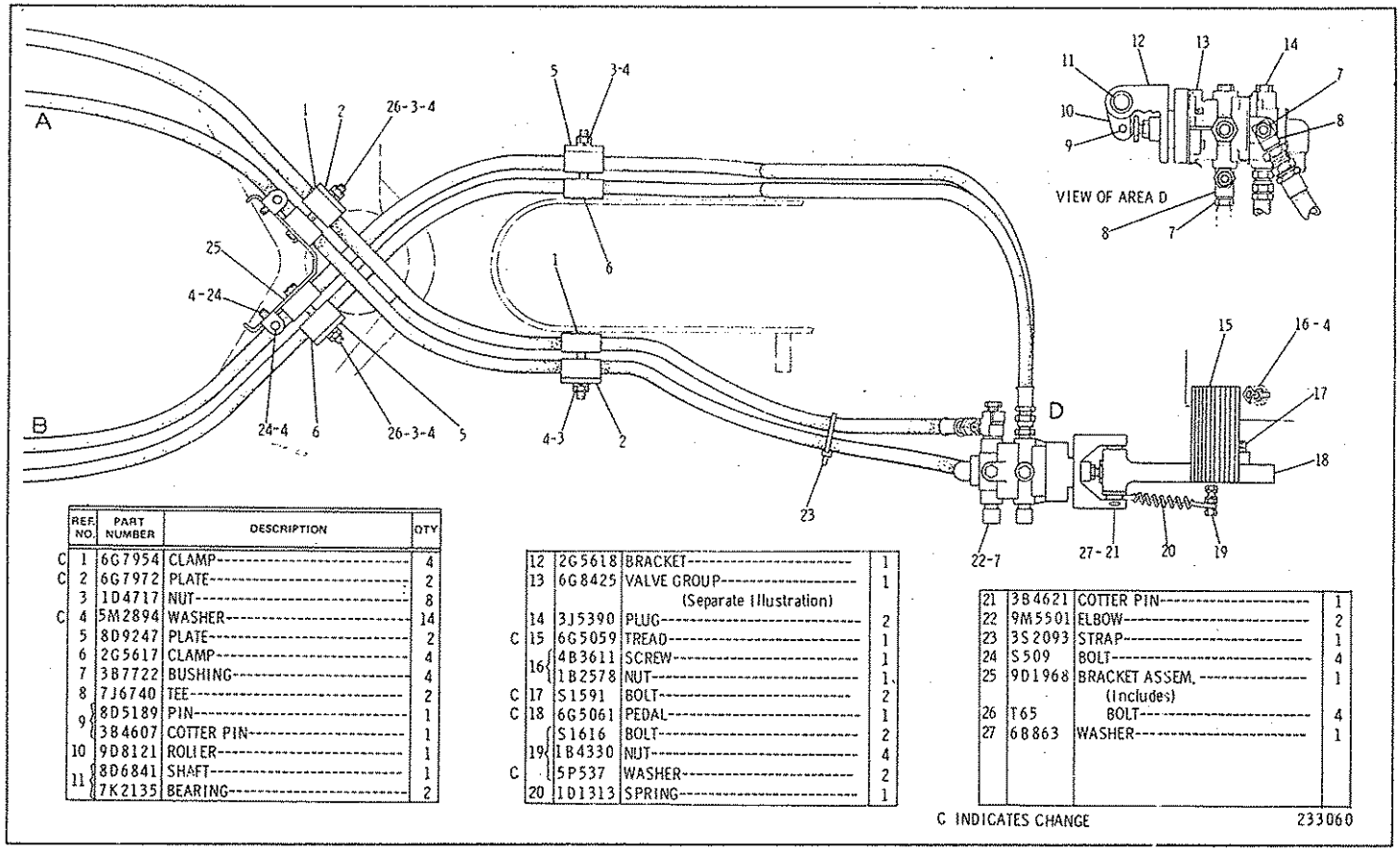

REF. NO.	PART NUMBER	DESCRIPTION	QTY
C 1	6G7954	CLAMP	4
C 2	6G7972	PLATE	2
3	1D4717	NUT	8
C 4	5M2894	WASHER	14
5	8D9247	PLATE	2
6	2G5617	CLAMP	4
7	3B7722	BUSHING	4
8	7J6740	TEE	2
9	8D5189	PIN	1
	3B4607	COTTER PIN	1
10	9D8121	ROLLER	1
11	8D6841	SHAFT	1
	7K2135	BEARING	2
12	2G5618	BRACKET	1
13	6G8425	VALVE GROUP (Separate Illustration)	1
14	3J5390	PLUG	2
C 15	6G5059	TREAD	1
16	4B3611	SCREW	1
	1B2578	NUT	1
C 17	S1591	BOLT	2
C 18	6G5061	PEDAL	1
19	S1616	BOLT	2
	1B4330	NUT	4
C	5P537	WASHER	2
20	1D1313	SPRING	1
21	3B4621	COTTER PIN	1
22	9M5501	ELBOW	2
23	3S2093	STRAP	1
24	S509	BOLT	4
25	9D1968	BRACKET ASSEM. (Includes)	1
26	T65	BOLT	4
27	6B863	WASHER	1

C INDICATES CHANGE 233060

2G5780 BRAKE CONTROL GROUP—Part 3 of 3
Serial No. 87V5734 to 6192, 6196, 6197, 6199 to 6201, 6203 to 6215, 6288, 6564, 6582, 6584, 6586, 6590, 6615, 6627, 6630, 6634, 6635, 6637 and 87V6638 Inclusive. 6G8425 Valve parts are shown on Page 163

2G5780 BRAKE CONTROL GROUP—Part 1 of 3
Serial No. 87V6193 to 6195, 6198, 6202, 6216 to 6287, 6289 to 6563, 6565 to 6581, 6583, 6585, 6587 to 6589, 6591 to 6614, 6616 to 6626, 6628, 6629, 6631 to 6633, 6636 and 87V6639—Up

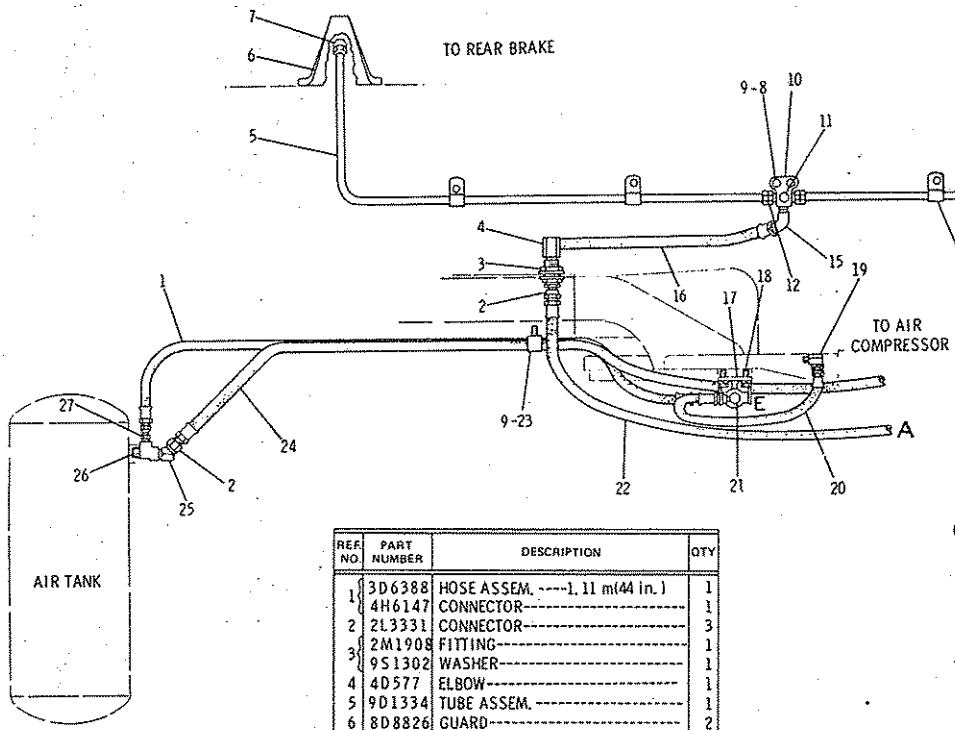

REF. NO.	PART NUMBER	DESCRIPTION	QTY
1	3D6388	HOSE ASSEM. ----1.11 m(44 in.)	1
	4H6147	CONNECTOR----------	1
2	2L3331	CONNECTOR----------	3
3	2M1908	FITTING----------	1
	9S1302	WASHER----------	1
4	4D577	ELBOW----------	1
5	9D1334	TUBE ASSEM.----------	1
6	8D8826	GUARD----------	2
7	6K6826	ELBOW----------	2
8	S1588	BOLT----------	2
C 9	5M2894	WASHER----------	3
10	6G1415	BLOCK----------	1
11	3J5390	PLUG----------	1
12	5K9238	CONNECTOR----------	2
13	9D1336	TUBE ASSEM.----------	1
14	1B8471	CLIP----------	4
15	1L2279	ELBOW----------	1
16	8D7495	HOSE ASSEM. -------.83 m(32.5 in.)	1
17	4K2986	TEE----------	1
	5M6213	PLUG----------	1
18	S1617	BOLT----------	2
	9M1974	WASHER----------	2
C 19	4D2560	CONNECTOR----------	1
20	6D4045	HOSE ASSEM. -----.68 m(27 in.)---	1
21	3S6115	TEE----------	1
	3B7722	BUSHING----------	1
22	4J8743	HOSE ASSEM. --2.69 m(105.75 in.)	1
23	5K5338	CLIP----------	1
	S1594	BOLT----------	1
24	6J3596	HOSE ASSEM. ---3.02 m(119 in.)	1
25	4D582	ELBOW----------	1
26	7J6740	TEE----------	1
27	2D193	CONNECTOR----------	1

C INDICATES CHANGE

304385

REF. NO	PART NUMBER	DESCRIPTION	QTY
1	7J6740	TEE	1
2	2L3331	CONNECTOR	4
3	3D6395	HOSE ASSEM., -----3.35 m(132. in.)	1
4	5K5338	CLIP	1
5	2M1908	FITTING	1
	9S1302	WASHER	1
6	4D577	ELBOW	1
7	8D7495	HOSE ASSEM., -----, 83 m(32, 5 in.)	1
8	1L2279	ELBOW	1
9	1B8471	CLIP	4
10	6J3596	HOSE ASSEM., -----3.02 m (119 in.)	1
11	4S7562	HOSE ASSEM., ---1.93 m (76 in.)	1
C 12	S509	BOLT	1
C 13	1D4717	NUT	2
C 14	5M2894	WASHER	4
C 15	9M8406	CLIP	2
16	8B4884	ELBOW	2
17	4D2560	CONNECTOR	2
18	5K8451	CLIP	1
19	9D1334	TUBE ASSEM.	1
20	5K9238	CONNECTOR	2
21	3J5390	PLUG	1
22	6G1415	BLOCK	1
23	S1588	BOLT	2
24	6K6826	ELBOW	2
25	8D8826	GUARD	2
26	9D1336	TUBE ASSEM.	1
27	S1594	BOLT	1
28	7D3477	HOSE ASSEM., ---2.71 m(107 in.)	1
29	2D193	CONNECTOR	1

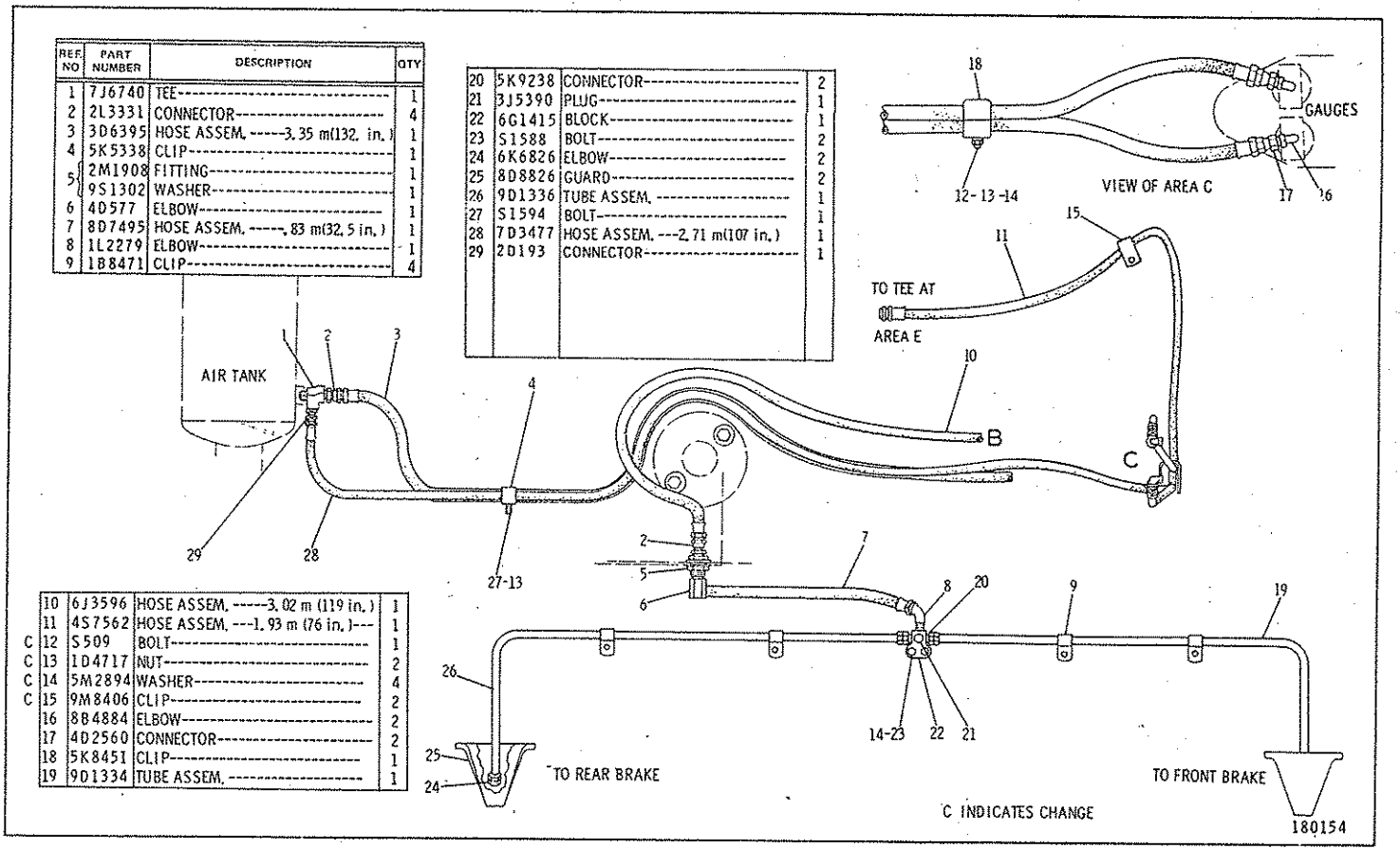

2G5780 BRAKE CONTROL GROUP—Part 2 of 3
Serial No. 87V6193 to 6195, 6198, 6202, 6216 to 6287, 6289 to 6563, 6565 to 6581, 6583, 6585, 6587 to 6589, 6591 to 6614, 6616 to 6626, 6628, 6629, 6631 to 6633, 6636 and 87V6639—Up

2G5780 BRAKE CONTROL GROUP—Part 3 of 3

Serial No. 87V6193 to 6195, 6198, 6202, 6216 to 6287, 6289 to 6563, 6565 to 6581, 6583, 6585, 6587 to 6589, 6591 to 6614, 6616 to 6626, 6628, 6629, 6631 to 6633, 6636 and 87V6639—Up

6G8425 Valve parts are shown on Page 163

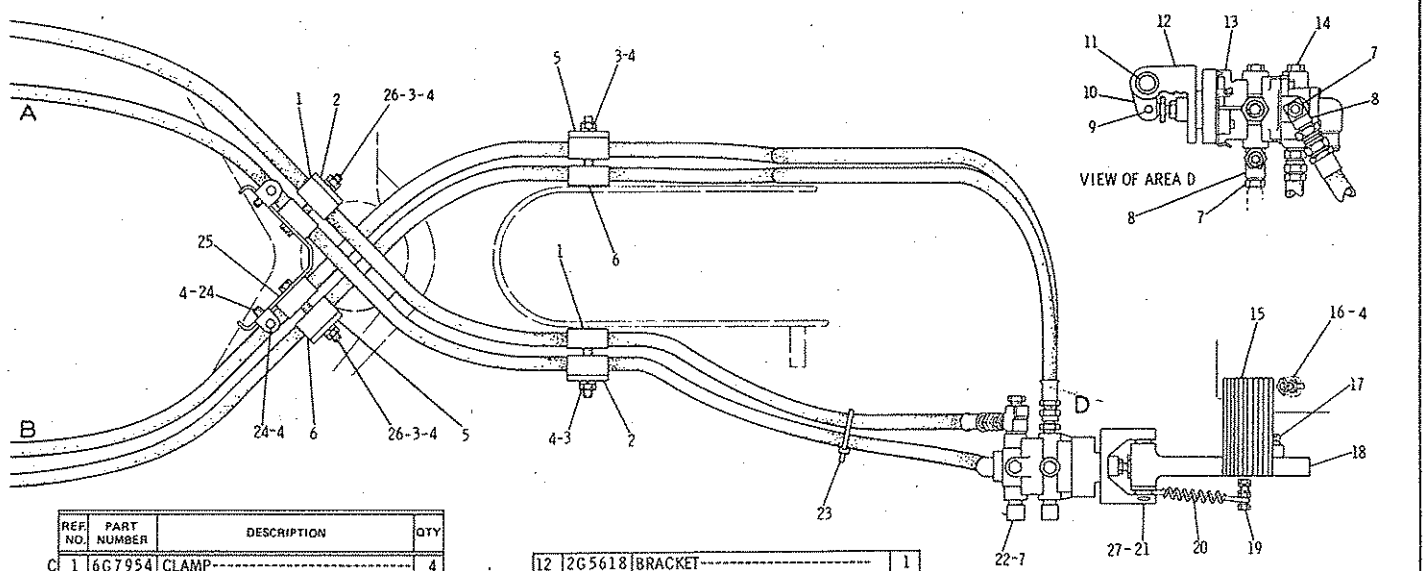

	REF. NO.	PART NUMBER	DESCRIPTION	QTY
C	1	6G7954	CLAMP	4
C	2	6G7972	PLATE	2
	3	1D4717	NUT	8
C	4	5M2894	WASHER	14
	5	8D9247	PLATE	2
	6	2G5617	CLAMP	4
	7	3B7722	BUSHING	4
	8	7J6740	TEE	2
	9	8D5189	PIN	1
		3B4607	COTTER PIN	1
	10	9D8121	ROLLER	1
	11	8D6841	SHAFT	1
		7K2135	BEARING	2
	12	2G5618	BRACKET	1
	13	6G8425	VALVE GROUP (Separate Illustration)	1
	14	3J5390	PLUG	2
C	15	6G5059	TREAD	1
	16	4B3611	SCREW	1
		1B2578	NUT	1
C	17	S1591	BOLT	2
C	18	6G5061	PEDAL	1
	19	S1616	BOLT	2
		1B4330	NUT	4
C		5P537	WASHER	2
	20	1D1313	SPRING	1
	21	3B4621	COTTER PIN	1
	22	9M5501	ELBOW	2
	23	3S2093	STRAP	1
	24	S509	BOLT	4
	25	9D1968	BRACKET ASSEM. (Includes)	1
	26	T65	BOLT	4
	27	6B863	WASHER	1

C INDICATES CHANGE

233060

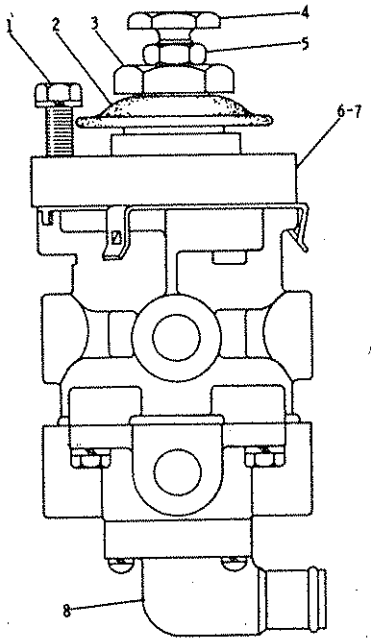

REF. NO.	PART NUMBER	DESCRIPTION	QTY
1	2B2694	BOLT	3
	3B4505	LOCKWASHER	3
C 2	2G8772	BOOT	1
3	2G6284	PLUNGER	1
4	2G6291	SCREW	1
5	5B3254	NUT	1
6	2G6286	SPACER	1
7	5D768	SPRING	1
8	2G6287	COVER	1
		THE FOLLOWING REPAIR KIT IS AVAILABLE:	
	2G6285	VALVE KIT----(air control)---------- (Includes Diaphragm, Filter, Inlet & Exhaust Valve, Locknut, O-Rings, and Springs)	1

C INDICATES CHANGE

216137

2G5680 AIR CONTROL VALVE GROUP
Serial No. 87V5275 to 87V5589 inclusive
Part of 2G5780 Brake Control Group shown on Page 162

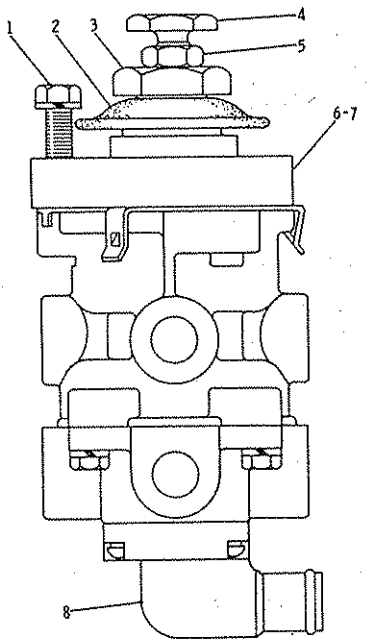

REF. NO.	PART NUMBER	DESCRIPTION	QTY
1	2B2694	BOLT	3
	3B4505	LOCKWASHER	3
2	2G8772	BOOT	1
3	2G6284	PLUNGER	1
4	2G6291	SCREW	1
5	5B3254	NUT	1
6	2G6286	SPACER	1
7	5D768	SPRING	1
8	6G8416	COVER	1
		THE FOLLOWING REPAIR KIT IS AVAILABLE:	
	2G6285	VALVE KIT----(air control)---------- (Includes Diaphragm, Filter, Inlet & Exhaust Valve, Locknut, O-Rings, and Springs)	1

232950

6G8425 CONTROL VALVE GROUP
Serial No. 87V5590—Up
Part of 2G5780 Brake Control Group shown on Pages 162C & 162F

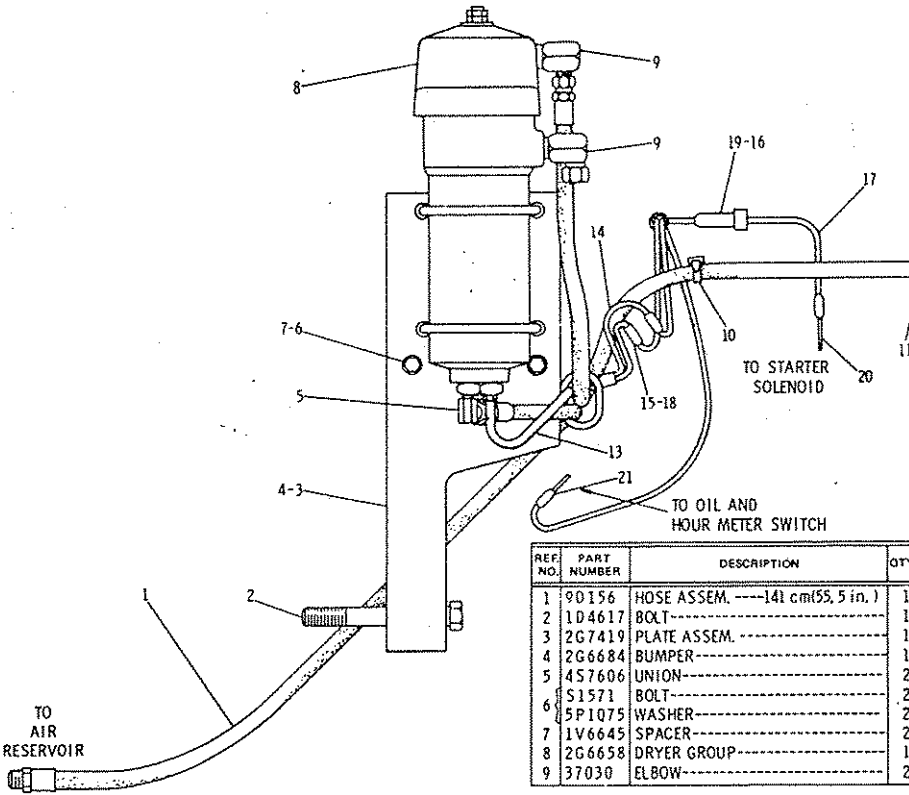

REF. NO.	PART NUMBER	DESCRIPTION	QTY
1	90156	HOSE ASSEM. ----141 cm(55.5 in.)	1
2	1D4617	BOLT	1
3	2G7419	PLATE ASSEM.	1
4	2G6684	BUMPER	1
5	4S7606	UNION	2
6	1S1571	BOLT	2
	5P1075	WASHER	2
7	1V6645	SPACER	2
8	2G6658	DRYER GROUP	1
9	37030	ELBOW	2
10	3S2093	STRAP	1
11	4D7969	HOSE ASSEM. ---152 cm(60 in.)	
12	2G7319	CAP	1
	2G7334	GASKET	1
C	2G8713	ELEMENT GROUP-------(heating)--	1
13		(Includes)	
▲	5P6009	TUBE---------.3 m(11.81 in.)	
▲ 14	5P6001	TUBE---------.2 m(7.88 in.)	
15	5P2866	CONNECTOR	2
C 16	3K8782	FUSE----------(10 amp)------	1
C	2G8714	HARNESS ASSEM. ----------	1
17		(Includes)	
	5P5624	WIRE----------(14 gauge)-----	
	5P5623	WIRE----------(16 gauge)-----	
18	6N9587	CONNECTOR	2
19	2S5011	BODY	1
	2S5014	CONTACT	2
	2S5013	SPRING	1
	2S5012	CAP	1
20	2L8071	TERMINAL	1
21	2D8781	TERMINAL	1

THE FOLLOWING REPAIR KITS ARE AVAILABLE:

2G8053	KIT-------(refill)----------	1
	(Includes filter, gasket, O-rings & desiccant)	
2G8054	KIT----------(valve)----------	1
	(Includes gasket, O-rings, springs u-cup & valves)	
2G8055	KIT---------(cartridge)----------	1
	(Includes cartridge, o-rings, & gasket)	

▲ ORDER BY THE METRE

166573

2G7700 AIR DRYER GROUP
Serial No. 87V5275 to 87V5733 inclusive
Removes moisture and impurities from the air system
AN ATTACHMENT

5T2145 AIR DRYER GROUP
Serial No. 87V5734—Up
AN ATTACHMENT

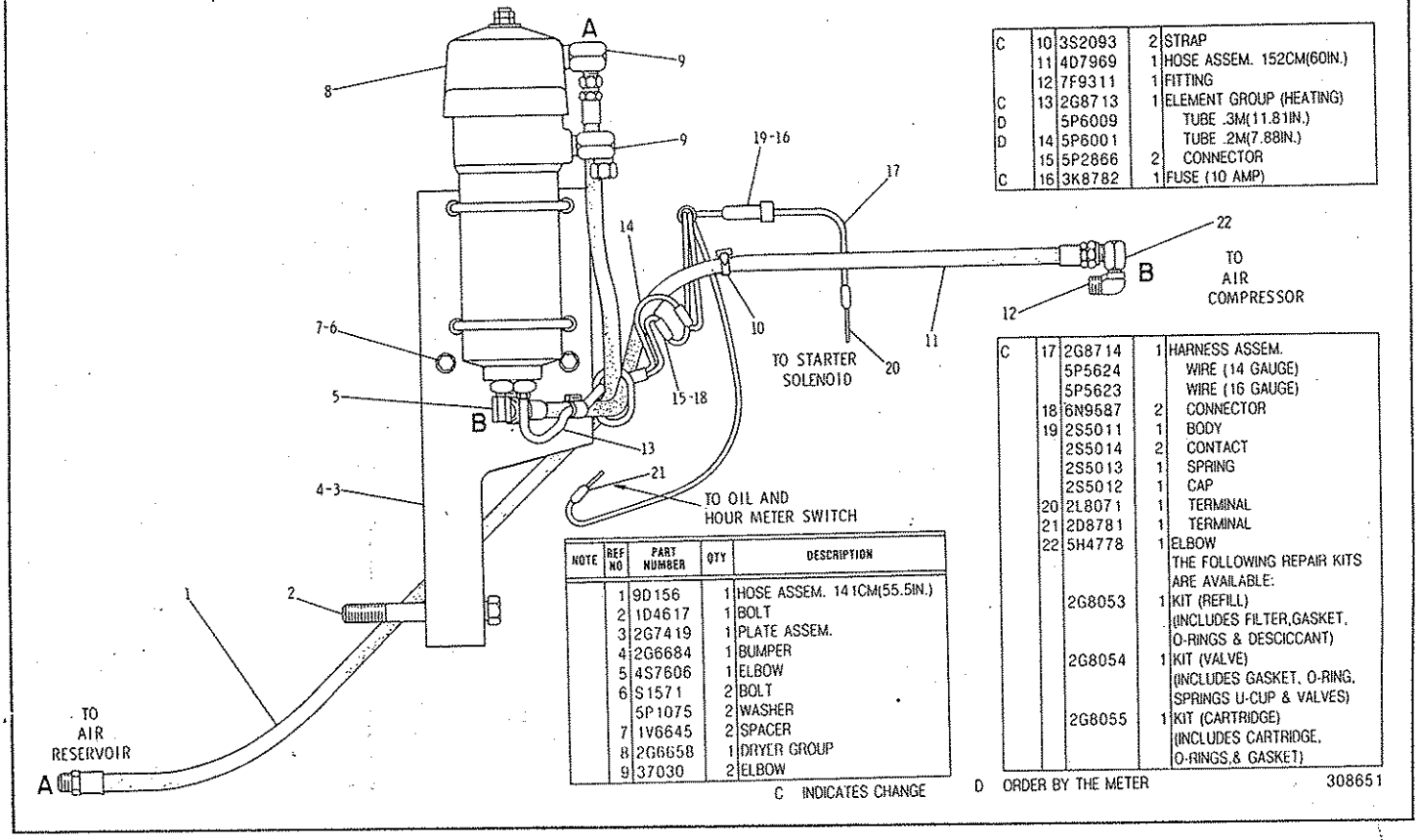

NOTE	REF NO	PART NUMBER	QTY	DESCRIPTION
	1	9D156	1	HOSE ASSEM. 141CM(55.5IN.)
	2	1D4617	1	BOLT
	3	2G7419	1	PLATE ASSEM.
	4	2G6684	1	BUMPER
	5	4S7606	1	ELBOW
	6	S1571	2	BOLT
		5P1075	2	WASHER
	7	1V6645	2	SPACER
	8	2G6658	1	DRYER GROUP
	9	37030	2	ELBOW
C	10	3S2093	2	STRAP
	11	4D7969	1	HOSE ASSEM. 152CM(60IN.)
	12	7F9311	1	FITTING
C	13	2G8713	1	ELEMENT GROUP (HEATING)
D		5P6009		TUBE .3M(11.81IN.)
D	14	5P6001		TUBE .2M(7.88IN.)
	15	5P2866	2	CONNECTOR
C	16	3K8782	1	FUSE (10 AMP)
C	17	2G8714	1	HARNESS ASSEM.
		5P5624		WIRE (14 GAUGE)
		5P5623		WIRE (16 GAUGE)
	18	6N9587	2	CONNECTOR
	19	2S5011	1	BODY
		2S5014	2	CONTACT
		2S5013	1	SPRING
		2S5012	1	CAP
	20	2L8071	1	TERMINAL
	21	2D8781	1	TERMINAL
	22	5H4778	1	ELBOW
				THE FOLLOWING REPAIR KITS ARE AVAILABLE:
		2G8053	1	KIT (REFILL) (INCLUDES FILTER,GASKET, O-RINGS & DESCICCANT)
		2G8054	1	KIT (VALVE) (INCLUDES GASKET, O-RING, SPRINGS U-CUP & VALVES)
		2G8055	1	KIT (CARTRIDGE) (INCLUDES CARTRIDGE, O-RINGS,& GASKET)

C INDICATES CHANGE D ORDER BY THE METER

308651

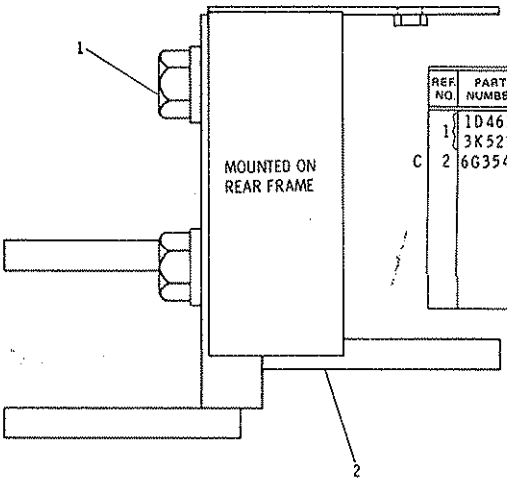

	REF. NO.	PART NUMBER	DESCRIPTION	QTY
	1	1D4637	BOLT	4
		3K5234	WASHER	4
C	2	6G3540	BUMPER ASSEM.	1

C INDICATES CHANGE 229985

2G4510 REAR BUMPER GROUP

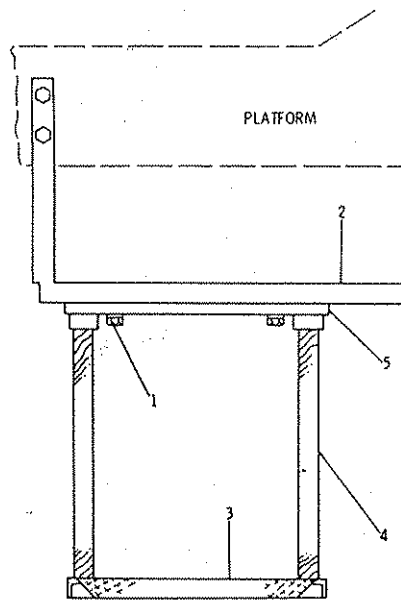

	REF. NO.	PART NUMBER	DESCRIPTION	QTY
C	1	S1585	BOLT	12
C		5P8245	WASHER	12
C	2	2G1640	STEP ASSEM.	2
	3	9D1274	STEP ASSEM. (Each Includes)	2
	4	9D1273	CABLE ASSEM.	1
	5	9D1269	PLATE	1

C INDICATES CHANGE 227984

9D1395 STEP GROUP

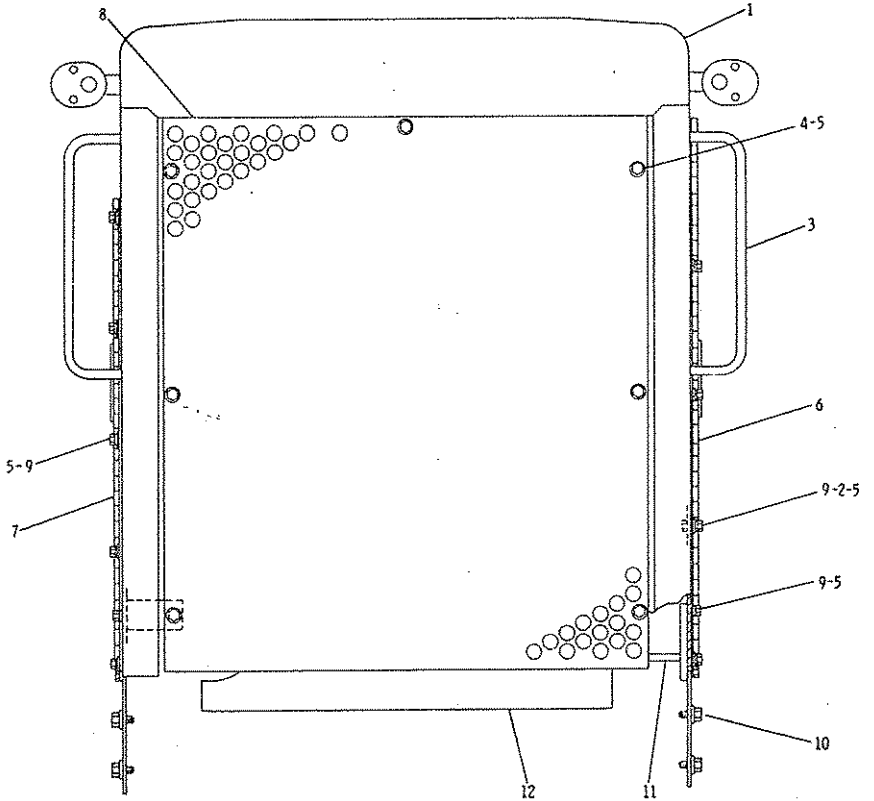

	REF. NO.	PART NUMBER	DESCRIPTION	QTY
C	1	2G5394	SUPPORT ASSEM. (Includes)	1
	2	9F2978	NUT	15
	3	8D7023	GRAB IRON	2
C	4	L1351	BOLT	11
	5	5P1075	WASHER	29
	6	8D3501	SCREEN ASSEM.	1
	7	8D3502	SCREEN ASSEM.	1
	8	7D9821	PLATE	1
C	9	S509	BOLT	18
C	10	6H1717	BOLT	10
		7D1649	WASHER	10
	11	8D1220	BRACKET ASSEM.	4
	12	9D2209	PLATE	1

C INDICATES CHANGE 227985

8D5160 RADIATOR GUARD AND SUPPORT GROUP
Serial No. 87V5275 to 87V5733 Inclusive

8D5160 RADIATOR GUARD AND SUPPORT GROUP
Serial No. 87V5734—Up

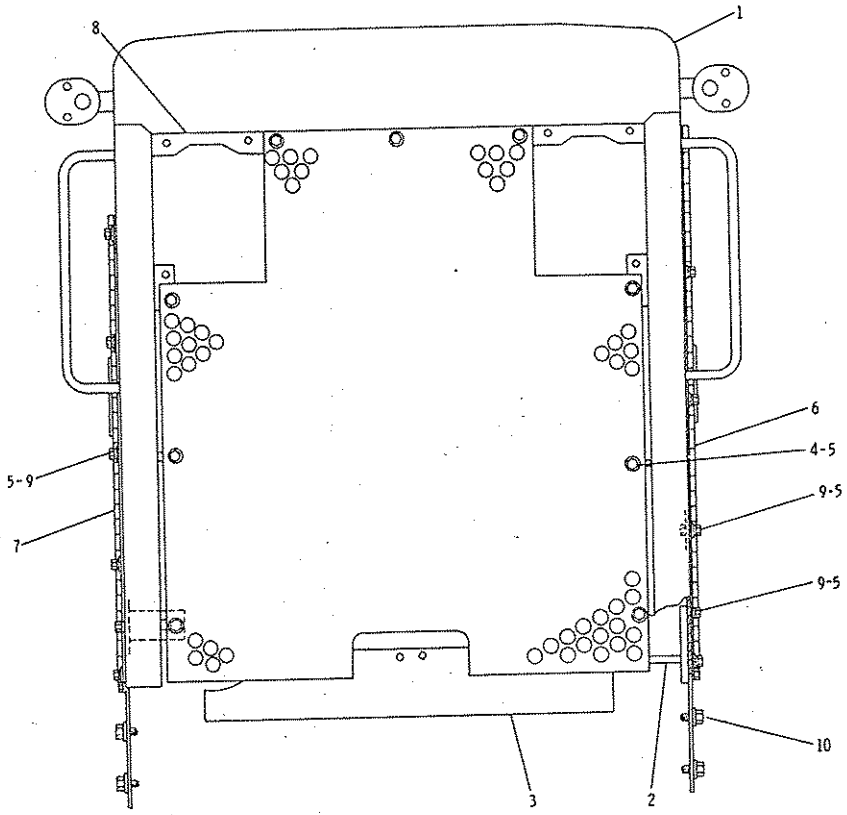

	REF. NO.	PART NUMBER	DESCRIPTION	QTY.
C	1	6G3690	SUPPORT ASSEM.	1
	2	8D1220	BRACKET ASSEM.	4
C	3	6G7449	PLATE ASSEM.	1
C	4	L1351	BOLT	13
C	5	5P1075	WASHER	31
	6	8D3501	SCREEN ASSEM.	1
	7	8D3502	SCREEN ASSEM.	1
C	8	6G3691	PLATE	1
	9	S509	BOLT	18
	10	6H1717	BOLT	10
		7D1649	WASHER	10

C INDICATES CHANGE

233102

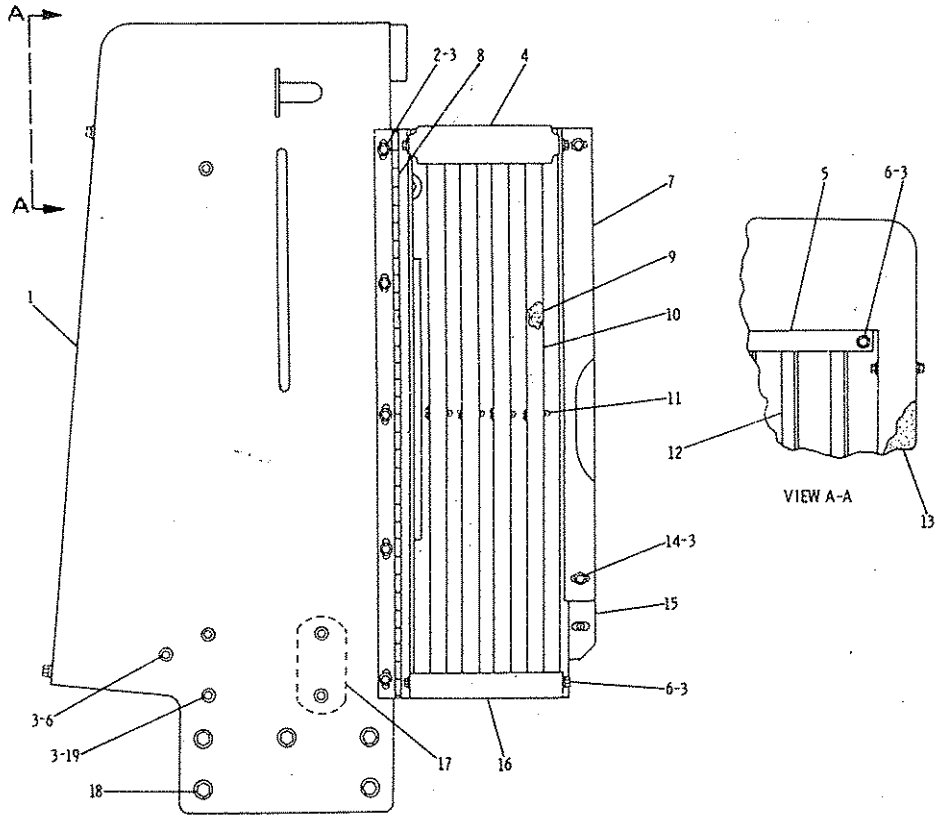

REF. NO.	PART NUMBER	DESCRIPTION	QTY.
1	2G3197	SUPPORT ASSEM. (Includes)	1
	9F2978	NUT---(weld)	24
2	S1590	BOLT	10
3	5P1075	WASHER	48
C 4	2G1591	PLATE	2
5	2G4824	ANGLE	2
6	L1351	BOLT	26
7	2G1593	FRAME ASSEM. ---(R. H.) (Includes)	1
	9F2978	NUT---(weld)	4
8	8D611	HINGE	1
C 9	6G946	LINER	8
10	2G1587	RETAINER	8
11	3B5312	COTTER PIN	8
12	2G4123	RETAINER	10
C	6G945	LINER	10
C	6G944	LINER	2
13	2G3187	RETAINER ASSEM. (Each Includes)	2
C	8J6030	NUT---(weld)	5
14	S1591	BOLT	4
15	2G1594	FRAME ASSEM. ---(L. H.) (Includes)	1
	9F2978	NUT---(weld)	4
	8D611	HINGE	1
16	2G1592	PLATE	2
17	8D1220	BRACKET ASSEM.	4
18	6H1717	BOLT	10
	7D1649	WASHER	10
19	S509	BOLT	8

C INDICATES CHANGE

237587

2G3220 RADIATOR GUARD AND SUPPORT GROUP—Type 1
Part of 2G2580 Sound Suppression Arrangement listed on Page 168
AN ATTACHMENT

2G3220 RADIATOR GUARD AND SUPPORT GROUP—Type 2
Part of 2G2580 Sound Suppression Arrangement listed on Page 168
AN ATTACHMENT

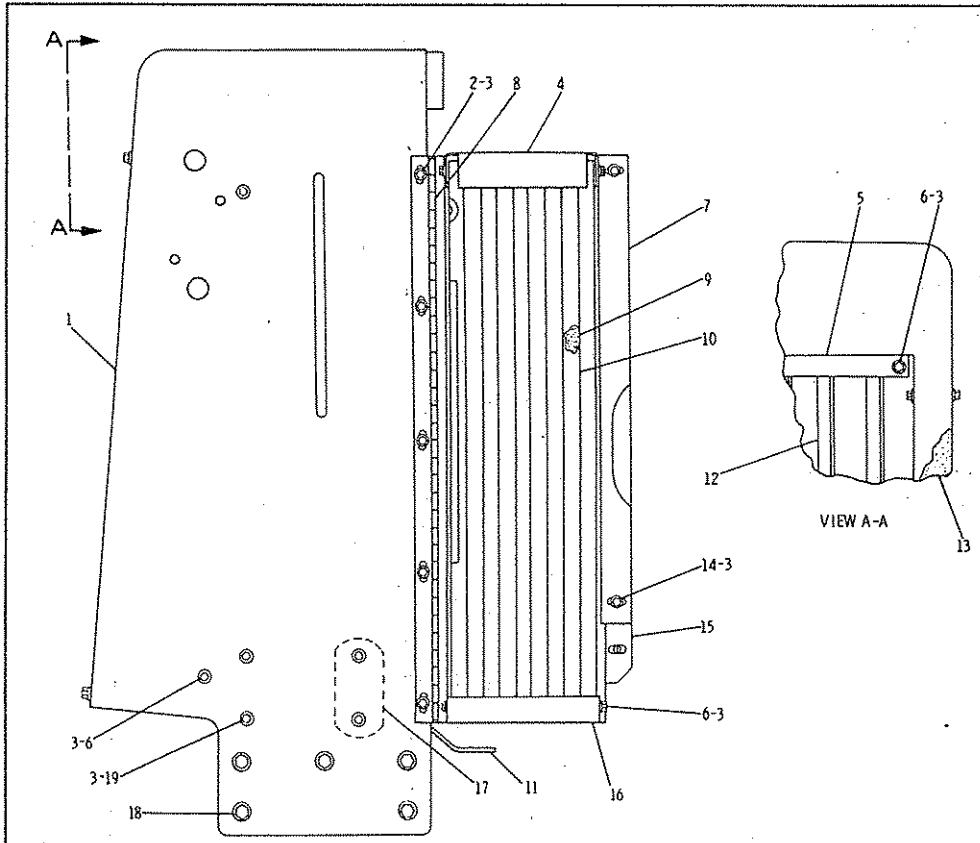

	REF. NO.	PART NUMBER	DESCRIPTION	QTY.
C	1	6G3799	SUPPORT ASSEM.	1
	2	S1590	BOLT	10
	3	5P1075	WASHER	48
C	4	2G1591	PLATE	2
	5	2G4824	ANGLE	2
	6	L1351	BOLT	26
	7	2G1593	FRAME ASSEM. --(R. H.)-- (Includes)	1
		9F2978	NUT------(weld)--	4
	8	8D611	HINGE	1
	9	6G946	LINER	8
	10	2G1587	RETAINER	8
C	11	6G7449	PLATE ASSEM. (Includes)	1
		9D2209	PLATE	1
	12	2G4123	RETAINER	10
		6G945	LINER	10
	13	6G944	LINER	2
		2G3187	RETAINER ASSEM. (Each Includes)	2
		8J6030	NUT--------(weld)--	5
	14	S1591	BOLT	4
	15	2G1594	FRAME ASSEM. ----------(L. H.)--- (Includes)	1
		9F2978	NUT------(weld)--	4
		8D611	HINGE	1
	16	2G1592	PLATE	2
	17	8D1220	BRACKET ASSEM.	4
	18	6H1717	BOLT	10
		7D1649	WASHER	10
	19	S509	BOLT	8

C INDICATES CHANGE

237588

		CONSISTS OF:	PAGE
1	2G2580	SOUND SUPPRESSION ARRANGEMENT	169
1	1N4579	EXHAUST MANIFOLD FASTENER GROUP	55
1	7N6949	GOVERNOR AND FUEL INJECTION PUMP GROUP	59
1	8N9465	SOUND SUPPRESSION PANEL GROUP	9B
	- OR -		
1	1W6524	SOUND SUPPRESSION PANEL GROUP	9A-4

6G6331 SOUND SUPPRESSION ARRANGEMENT—Spectator
80 Decibels at 7 Meters
CANNOT BE USED IN CONJUNCTION WITH CAB AIR CONDITIONING
AN ATTACHMENT

		CONSISTS OF:	PAGE
1	2G3220	SUPPORT GROUP	166B
1	2G4455	HOOD GROUP	172B
1	2G4630	HOOD SIDE DOOR GROUP	176
1	2G9480	BOTTOM GUARD GROUP	170
1	2G9520	FRAME AND CASE GROUP	181
1	6G1625	FUEL OIL LINES GROUP	71
1	6G7250	BACK-UP WARNING GROUP	103A
1	6G7380	LIGHTING GROUP	103B
1	6N4599	FAN DRIVE GROUP	22
1	6N5252	MUFFLER GROUP	53
1	6N5334	PULLEY GROUP	21
1	6G6590	WATER TEMPERATURE GAUGE GROUP	324B
	- OR -		
1	5T2985	GAUGE GROUP	324A-3

2G2580 SOUND SUPPRESSION ARRANGEMENT—Grader Parts

		CONSISTS OF:	PAGE
1	4N4101	EXTENSION GROUP	55
1	4N9197	MUFFLER GROUP	52
1	2G4615	HOOD ASSEMBLY	
		CONSISTING OF:	
	4	7K1400 HANDLE	
	- OR -		
1	6G6982	HOOD ASSEMBLY	
		CONSISTING OF:	
	4	7K1400 HANDLE	
	12	9M5732 RIVET	
	4	2D9335 PLATE	
	4	T537 FASTENER	

2G4490 SOUND SUPPRESSION MUFFLER ARRANGEMENT AN ATTACHMENT

		CONSISTS OF:	PAGE
1	2G9360	BOTTOM GUARD GROUP	170
1	2G9520	FRAME AND CASE GROUP	181

2G9510 BOTTOM GUARD ARRANGEMENT AN ATTACHMENT

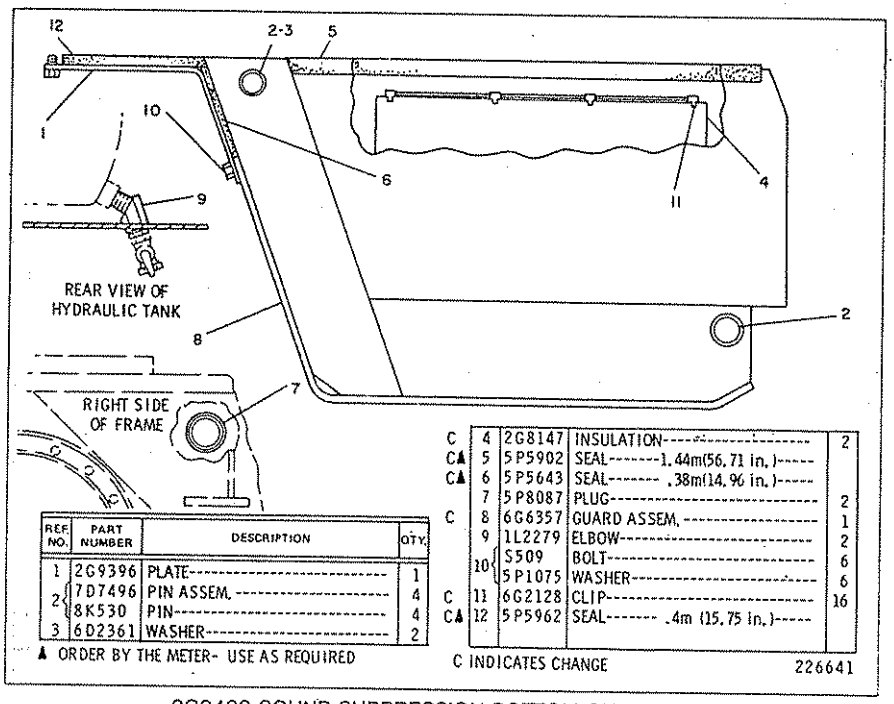

REF NO.	PART NUMBER	DESCRIPTION	QTY.
1	2G9396	PLATE	1
2	7D7496	PIN ASSEM.	4
	8K530	PIN	4
3	6D2361	WASHER	2

	REF NO.	PART NUMBER	DESCRIPTION	QTY.
C	4	2G8147	INSULATION	2
C▲	5	5P5902	SEAL-------1.44m(56.71 in.)-----	
C▲	6	5P5643	SEAL------- .38m(14.96 in.)-----	
	7	5P8087	PLUG	2
C	8	6G6357	GUARD ASSEM.	1
	9	1L2279	ELBOW	2
	10	S509	BOLT	6
		5P1075	WASHER	6
C	11	6G2128	CLIP	16
C▲	12	5P5962	SEAL------- .4m (15.75 in.)-----	

▲ ORDER BY THE METER- USE AS REQUIRED

C INDICATES CHANGE

226641

2G9480 SOUND SUPPRESSION BOTTOM GUARD GROUP
Part of 2G2580 Sound Suppression Arrangement listed on Page 168
AN ATTACHMENT

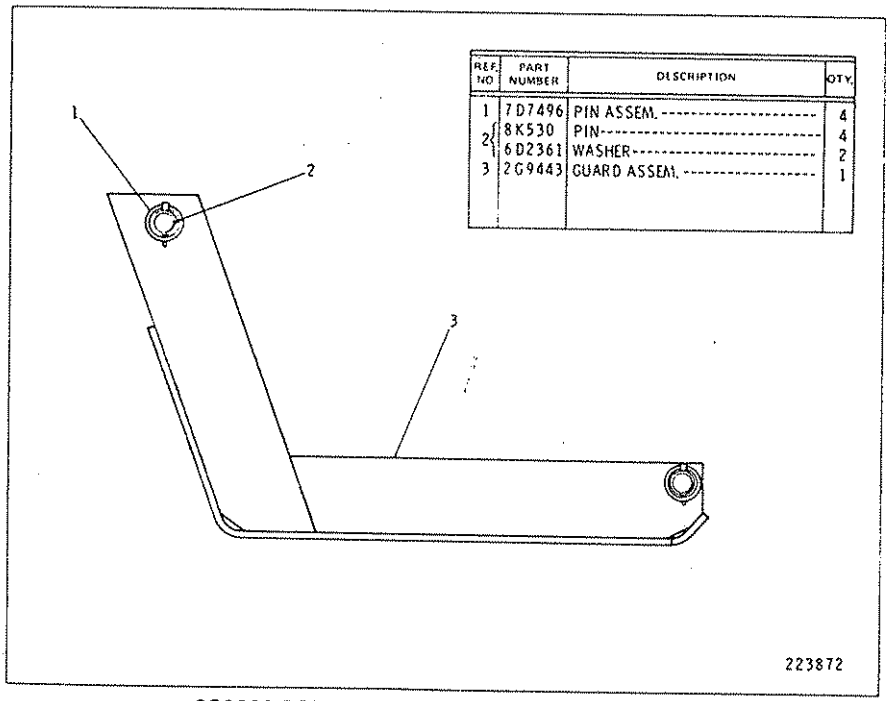

REF NO	PART NUMBER	DESCRIPTION	QTY.
1	7D7496	PIN ASSEM.	4
2	8K530	PIN	4
	6D2361	WASHER	2
3	2G9443	GUARD ASSEM.	1

223872

2G9360 BOTTOM GUARD GROUP—Field Installation

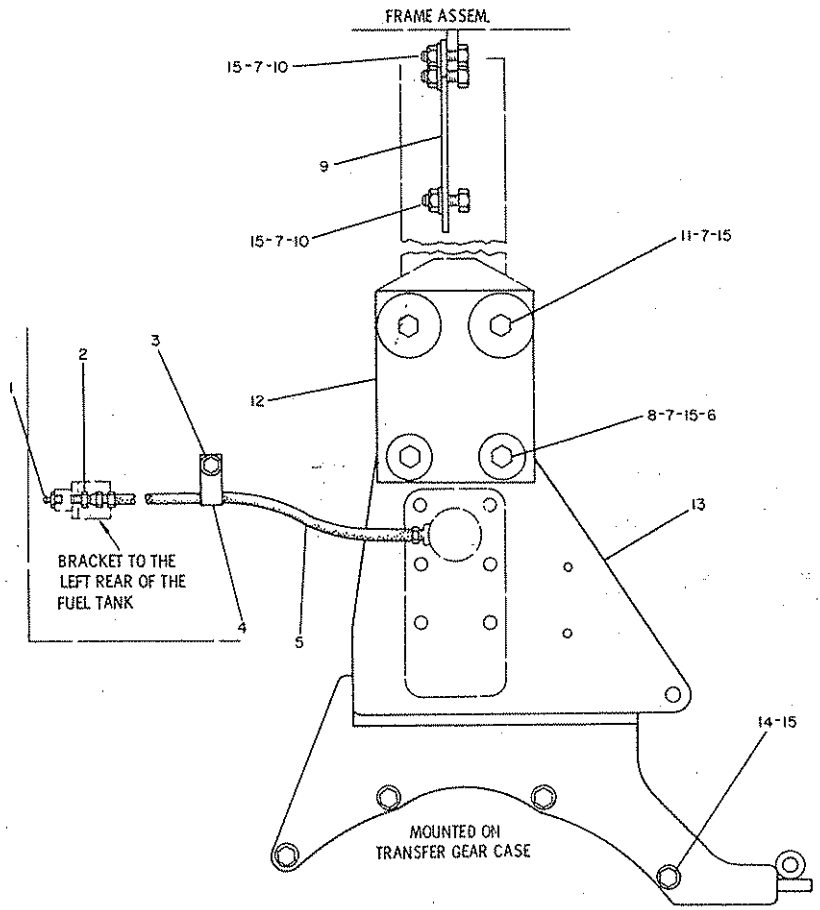

REF. NO.	PART NUMBER	DESCRIPTION	QTY.
1	3B8489	FITTING	1
2	2R1922	UNION	1
3	S509	BOLT	1
	5P1075	WASHER	1
4	4D8123	CLIP	1
5	5K7577	HOSE ASSEM. ---457 mm(18 in.)	1
6	2S1654	WASHER---------44.5 mm(1.75 in.)	2
7	1D4719	NUT	7
C 8	S1587	BOLT	2
9	2G3199	PLATE	1
C 10	7B3235	BOLT	3
11	9S1366	BOLT	2
	1B4287	WASHER------58.74 mm(2.31 in.)	2
	9M1853	MOUNTING	2
12	2G3223	PLATE	1
C 13	6G3879	SUPPORT ASSEM.	1
C 14	1A1460	BOLT	4
C 15	5P8245	WASHER----25.5mm (1 in.)-----	11

C INDICATES CHANGE

175269

6G1070 ALTERNATOR AND FAN SUPPORT GROUP

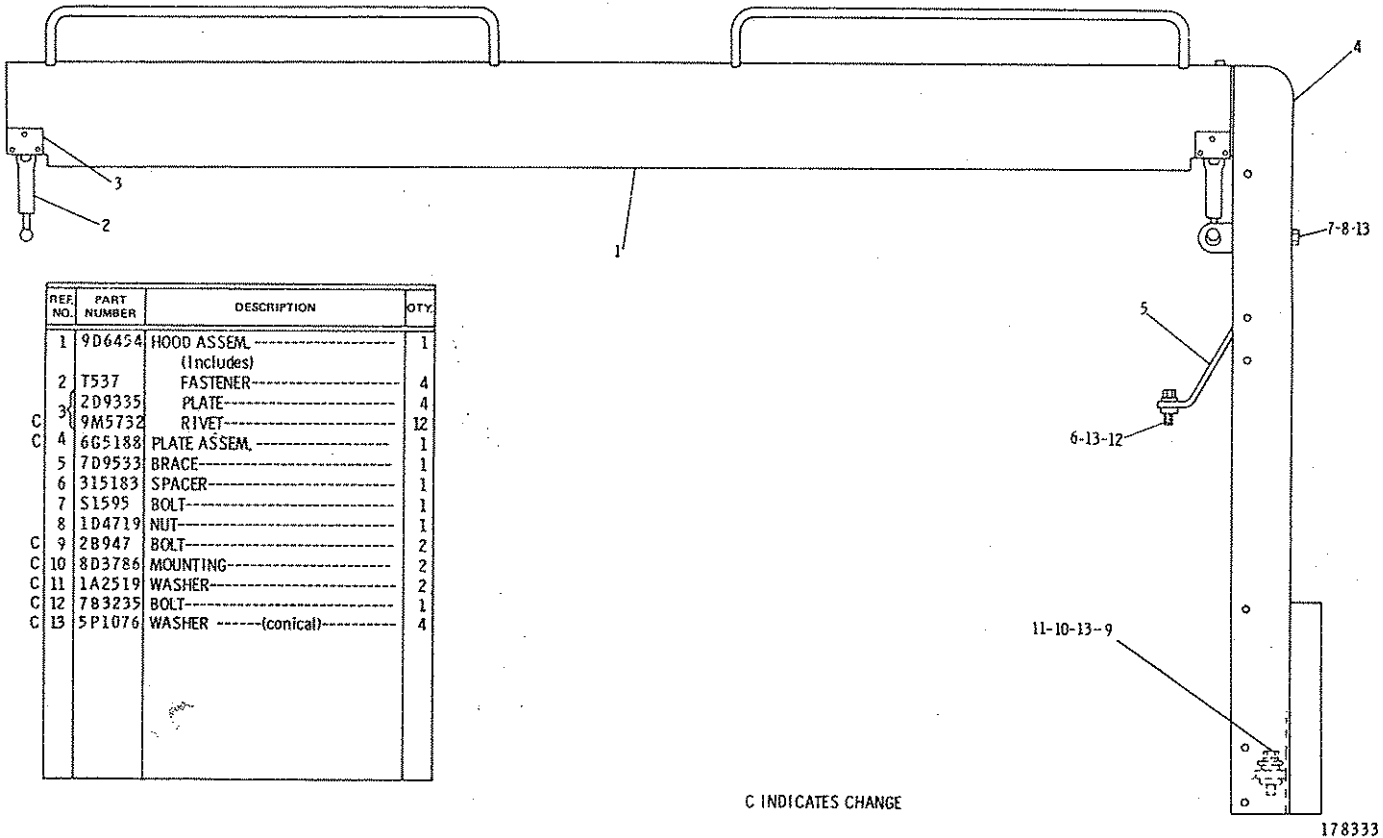

REF. NO.	PART NUMBER	DESCRIPTION	QTY.
1	9D6454	HOOD ASSEM.	1
		(Includes)	
2	T537	FASTENER	4
3	2D9335	PLATE	4
C	9M5732	RIVET	12
C 4	6G5188	PLATE ASSEM.	1
5	7D9533	BRACE	1
6	315183	SPACER	1
7	S1595	BOLT	1
8	1D4719	NUT	1
C 9	2B947	BOLT	2
C 10	8D3786	MOUNTING	2
C 11	1A2519	WASHER	2
C 12	783235	BOLT	1
C 13	5P1076	WASHER ------(conical)	4

C INDICATES CHANGE

2G4460 HOOD GROUP
Serial No. 87V5275 to 87V5733 inclusive

2G4460 HOOD GROUP
Serial No. 87V5734—Up

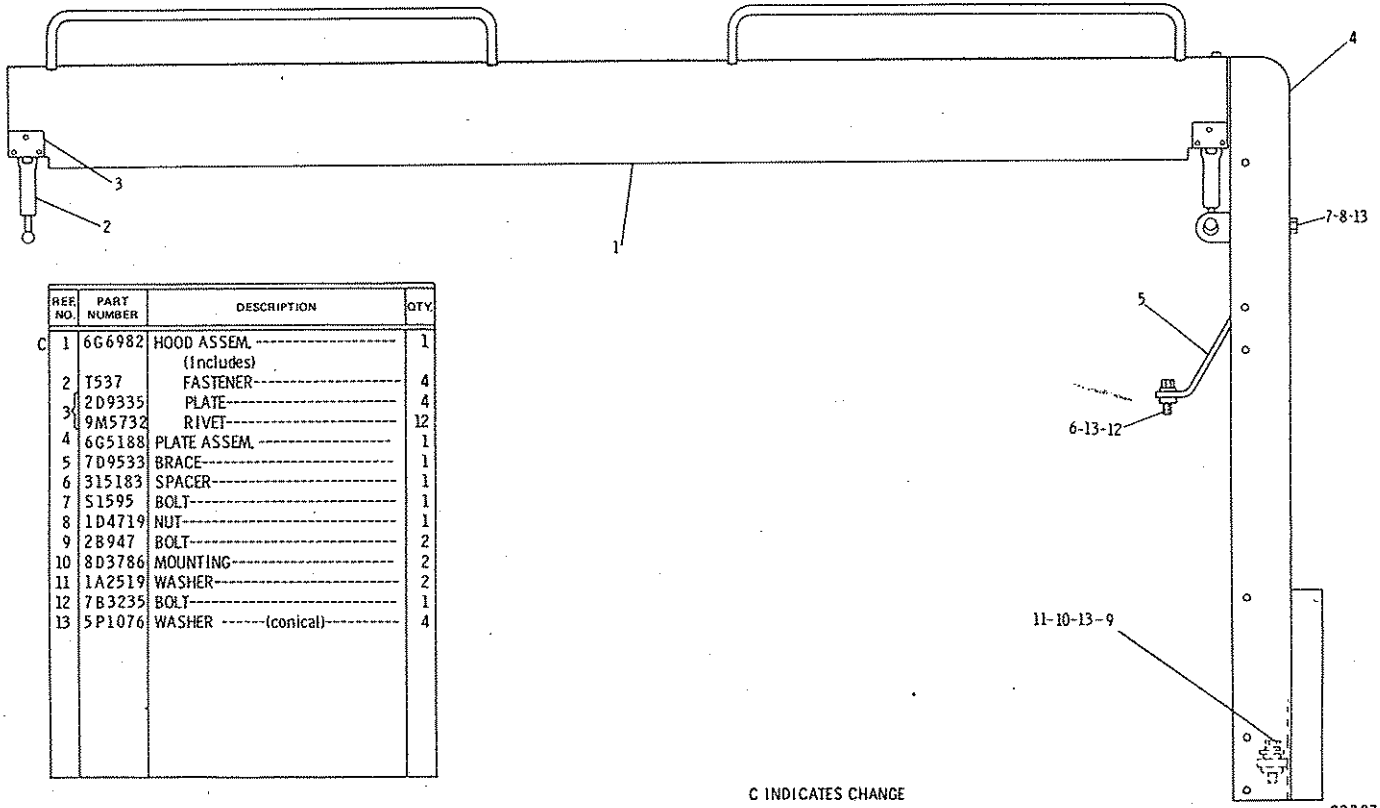

REF. NO.	PART NUMBER	DESCRIPTION	QTY.
C 1	6G6982	HOOD ASSEM.	1
		(Includes)	
2	T537	FASTENER	4
3	2D9335	PLATE	4
	9M5732	RIVET	12
4	6G5188	PLATE ASSEM.	1
5	7D9533	BRACE	1
6	315183	SPACER	1
7	S1595	BOLT	1
8	1D4719	NUT	1
9	2B947	BOLT	2
10	8D3786	MOUNTING	2
11	1A2519	WASHER	2
12	7B3235	BOLT	1
13	5P1076	WASHER (conical)	4

C INDICATES CHANGE

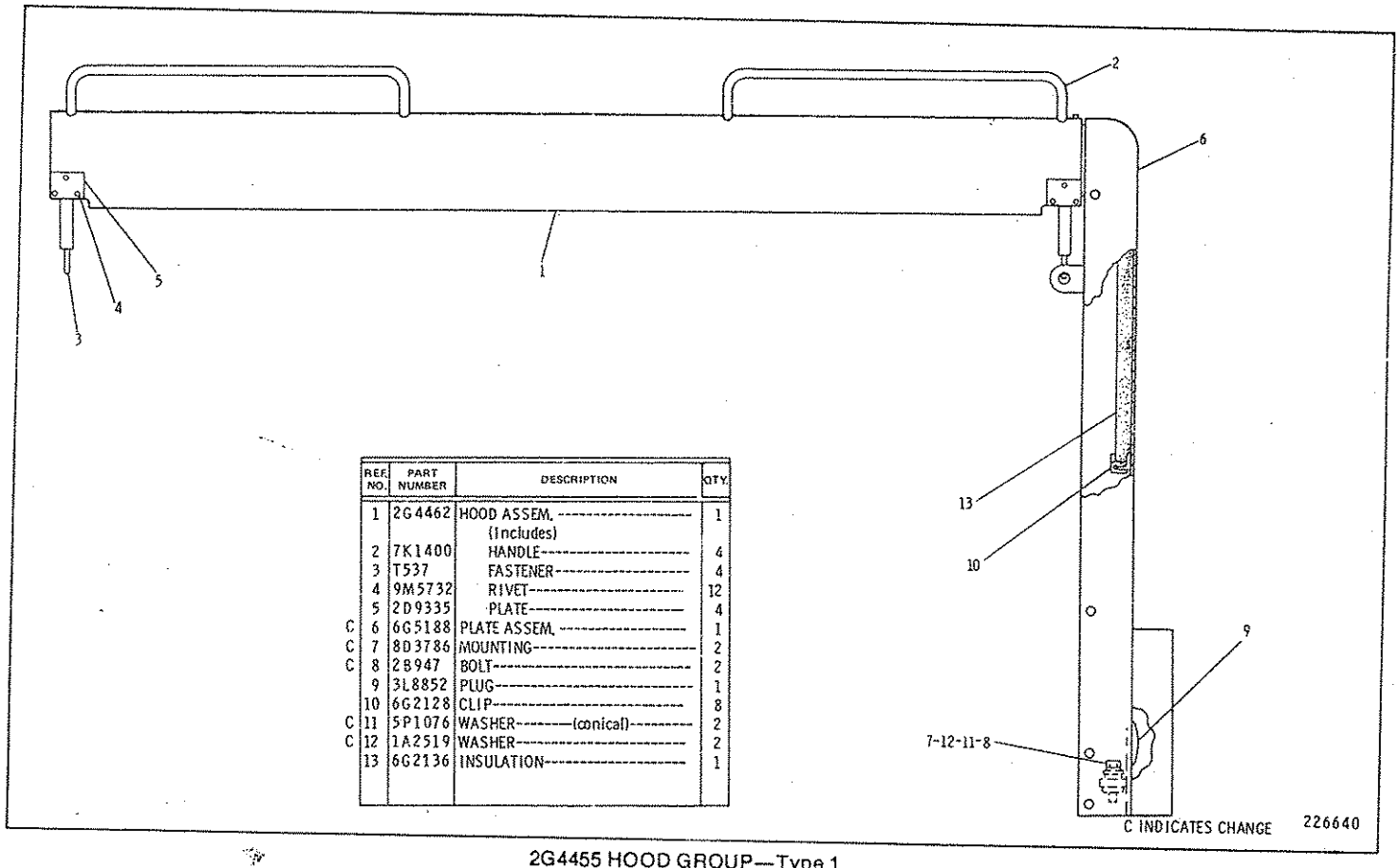

	REF. NO.	PART NUMBER	DESCRIPTION	QTY.
	1	2G4462	HOOD ASSEM. ---------- (Includes)	1
	2	7K1400	HANDLE----------	4
	3	T537	FASTENER----------	4
	4	9M5732	RIVET----------	12
	5	2D9335	PLATE----------	4
C	6	6G5188	PLATE ASSEM. ----------	1
C	7	8D3786	MOUNTING----------	2
C	8	2B947	BOLT----------	2
	9	3L8852	PLUG----------	1
	10	6G2128	CLIP----------	8
C	11	5P1076	WASHER---------(conical)----------	2
C	12	1A2519	WASHER----------	2
	13	6G2136	INSULATION----------	1

C INDICATES CHANGE 226640

2G4455 HOOD GROUP—Type 1
Part of 2G2580 Sound Suppression Arrangement listed on Page 168
AN ATTACHMENT

2G4455 HOOD GROUP—Type 2
Part of 2G2580 Sound Suppression Arrangement Ilsted on Page 168
AN ATTACHMENT

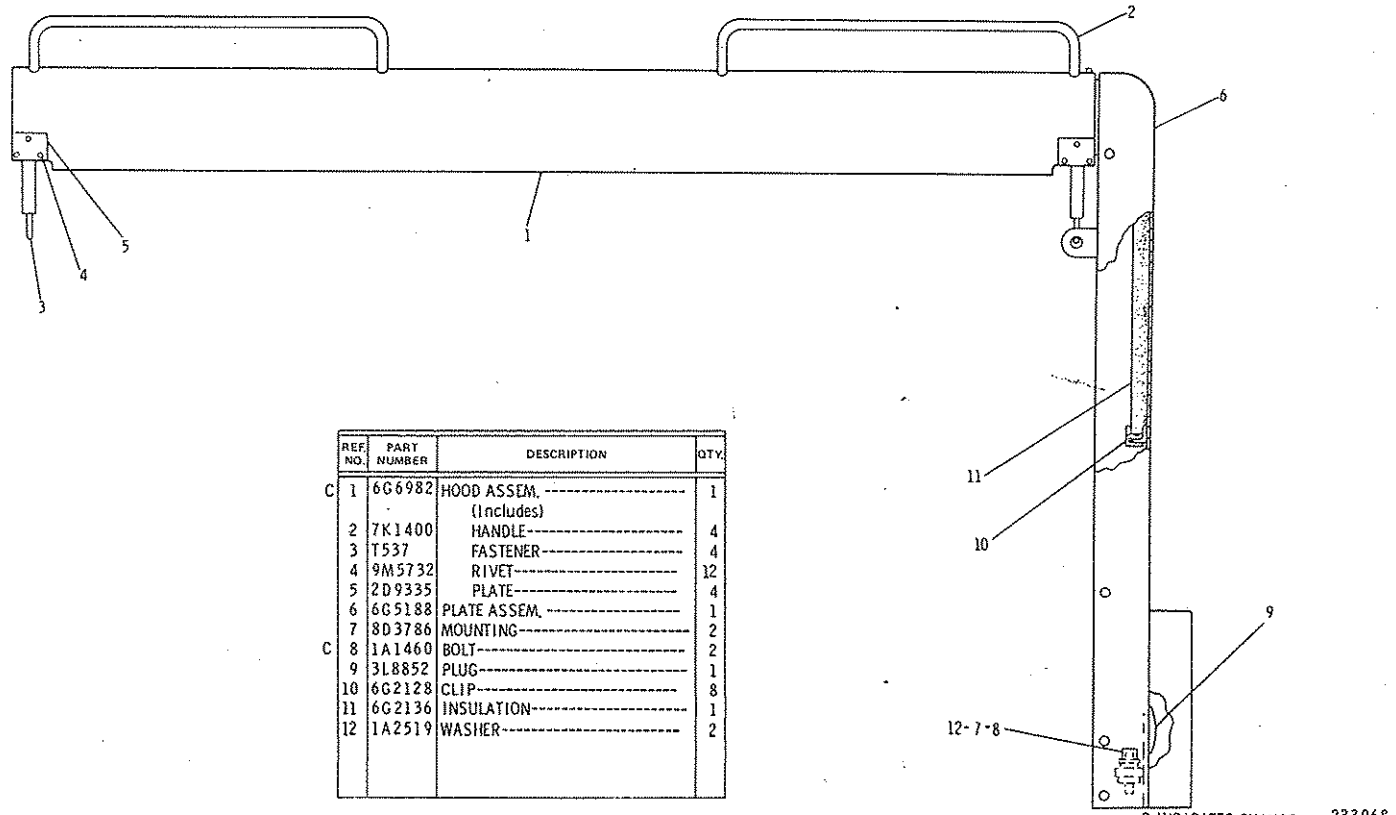

	REF. NO.	PART NUMBER	DESCRIPTION	QTY.
C	1	6G6982	HOOD ASSEM. ---------- (Includes)	1
	2	7K1400	HANDLE----------	4
	3	T537	FASTENER----------	4
	4	9M5732	RIVET----------	12
	5	2D9335	PLATE----------	4
	6	6G5188	PLATE ASSEM. ----------	1
	7	8D3786	MOUNTING----------	2
C	8	1A1460	BOLT----------	2
	9	3L8852	PLUG----------	1
	10	6G2128	CLIP----------	8
	11	6G2136	INSULATION----------	1
	12	1A2519	WASHER----------	2

C INDICATES CHANGE 233068

2G4455 HOOD GROUP—Type 3
Part of 2G2580 Sound Suppression Arrangement listed on Page 168
AN ATTACHMENT

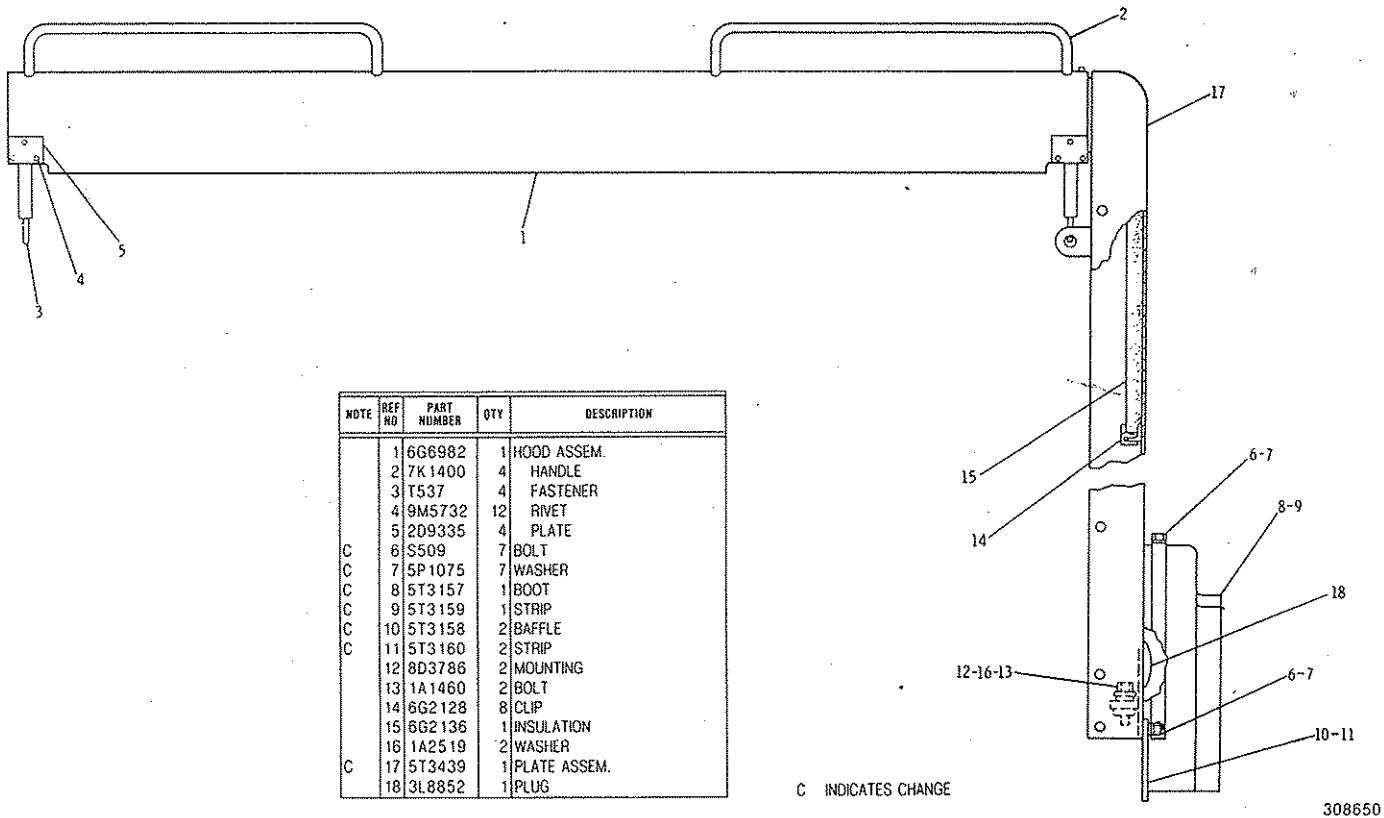

NOTE	REF NO	PART NUMBER	QTY	DESCRIPTION
	1	6G6982	1	HOOD ASSEM.
	2	7K1400	4	HANDLE
	3	T537	4	FASTENER
	4	9M5732	12	RIVET
	5	2D9335	4	PLATE
C	6	S509	7	BOLT
C	7	5P1075	7	WASHER
C	8	5T3157	1	BOOT
C	9	5T3159	1	STRIP
C	10	5T3158	2	BAFFLE
C	11	5T3160	2	STRIP
	12	8D3786	2	MOUNTING
	13	1A1460	2	BOLT
	14	6G2128	8	CLIP
	15	6G2136	1	INSULATION
	16	1A2519	2	WASHER
C	17	5T3439	1	PLATE ASSEM.
	18	3L8852	1	PLUG

C INDICATES CHANGE

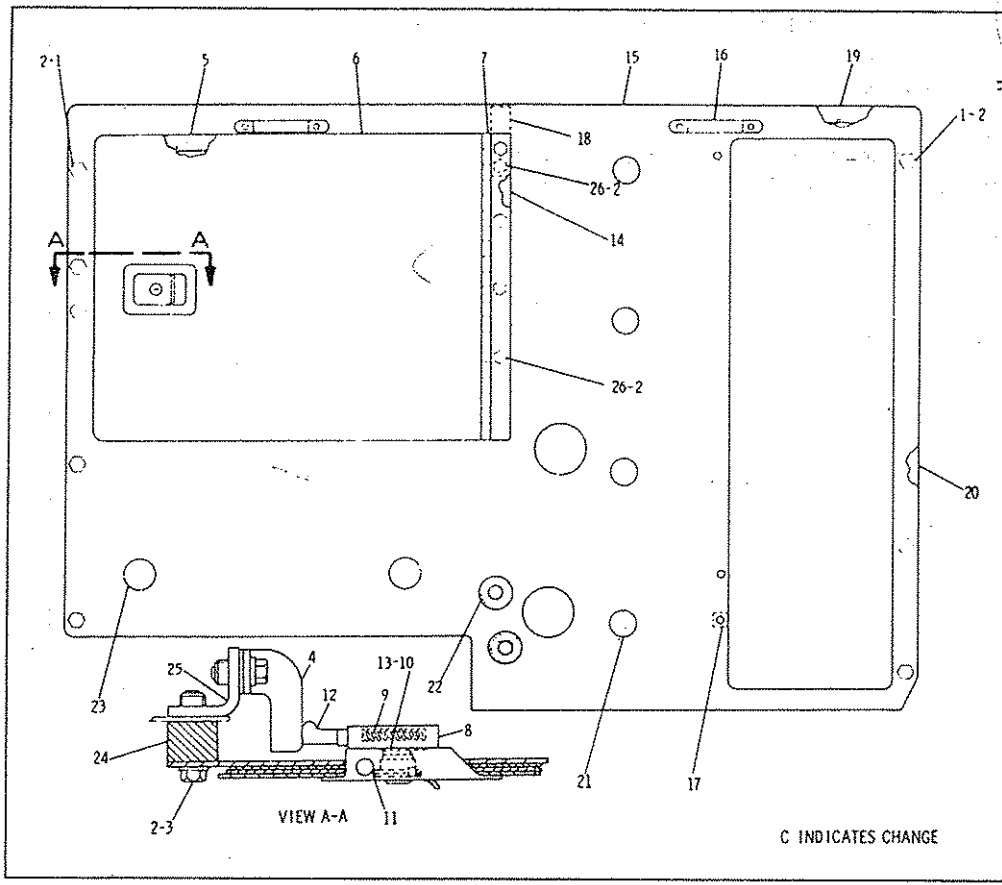

REF NO	PART NUMBER	DESCRIPTION	QTY.
	1 S1590	BOLT	10
C	2 5P1075	WASHER	18
	3 S1594	BOLT	2
	4 2G3184	CATCH	1
	4 8K1077	SHIM	3
▲	5 6V1392	SEAL-----I. 78 m(70. 06 in.)	
C	*6 6G2129	DOOR ASSEM.	1
		(Includes)	
	7 2G4396	HINGE	1
	8 8K1040	LATCH ASSEM.	1
		(Includes)	
	9 2V3457	SPRING	1
	10 3V8655	LOCK ASSEM.	1
		(Lock requires 9K8415 Key)	
	11 2V3461	PIN	1
	11 2V3458	NUT	1
	12 9K6155	BOLT	1
C	13 3V8662	WASHER	1
	14 2G4394	SPACER	1
C	15 6G2125	DOOR ASSEM. ------(L. H.)	1
		(Includes)	
	16 6F7013	HANDLE	2
	17 9F2978	NUT-------(weld)	8
C	18 6G2145	CLIP	1
▲	19 5P5960	SEAL----------I. 38 m(54. 33 in.)	
	20 2G3182	BAR	1
	21 2G1135	BUMPER	4
	22 2G1133	GROMMET	2
	23 2G7382	BUMPER	2
	24 2G4519	BAR	1
	25 2G1519	BRACKET ASSEM.	1
		(Includes)	
	25 9F2978	NUT------(weld)	4
C	26 L1351	BOLT	6

C INDICATES CHANGE

▲ORDER BY THE METER

174457

2G4620 HOOD SIDE DOOR GROUP—Part 1
Replaced by 6G9040 Hood Side Door Group shown on Pages 175A & 175B
AN ATTACHMENT

2G4620 HOOD SIDE DOOR GROUP—Part 2

Replaced by 6G9040 Hood Side Door Group shown on Pages 175A & 175B

AN ATTACHMENT

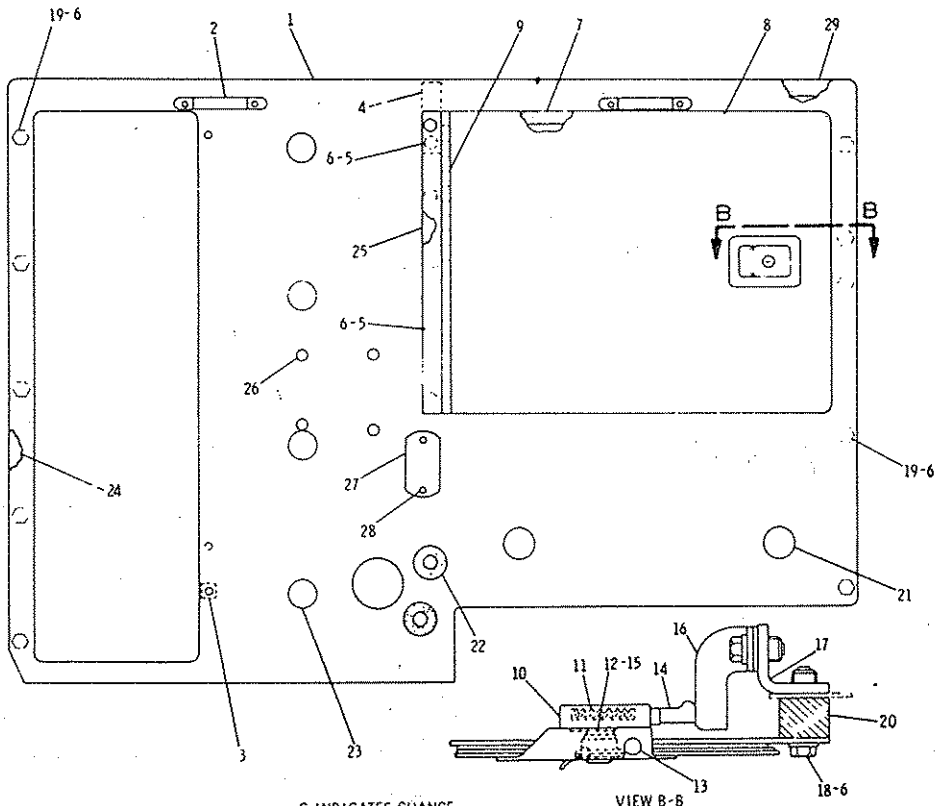

	REF. NO.	PART NUMBER	DESCRIPTION	QTY.
C	1	6G2126	DOOR ASSEM. -----(R. H.)-------- (Includes)	1
	2	6F7013	HANDLE----------	2
	3	9F2978	NUT------(weld)----------	8
C	4	6G2145	CLIP----------	1
C	5	L1351	BOLT----------	6
C	6	5P1075	WASHER----------	18
▲	7	6V1392	SEAL----------1.78 m(70.06 in.)	
C	8	6G2129	DOOR ASSEM. ---------- (Includes)	1
	9	2G4396	HINGE----------	1
	10	8K1040	LATCH ASSEM. ---------- (Includes)	1
	11	2V3457	SPRING----------	1
	12	3V8655	LOCK ASSEM. ---------- (Lock Requires 9K8415 Key)	1
	13	2V3461	PIN----------	1
		2V3458	NUT----------	1
	14	9K6155	BOLT----------	1
	15	3V8662	WASHER----------	1
	16	2G3184	CATCH----------	1
		8K1077	SHIM----------	3
	17	2G1519	BRACKET ASSEM. ---------- (Includes)	1
		9F2978	NUT---------(weld)--------	4
	18	S1594	BOLT----------	2
	19	S1590	BOLT----------	10
	20	2G4519	BAR----------	1
	21	2G7382	BUMPER----------	2
	22	2G1133	GROMMET----------	2
	23	2G1135	BUMPER----------	4
	24	2G3182	BAR----------	1
	25	2G4394	SPACER----------	1
	26	5P7988	PLUG----------	4
	27	2G7484	PLATE----------	1
	28	9M5733	RIVET----------	2
▲	29	5P5960	SEAL--------1.38 m(44.33 in.)	

C INDICATES CHANGE

▲ ORDER BY THE METER

174458

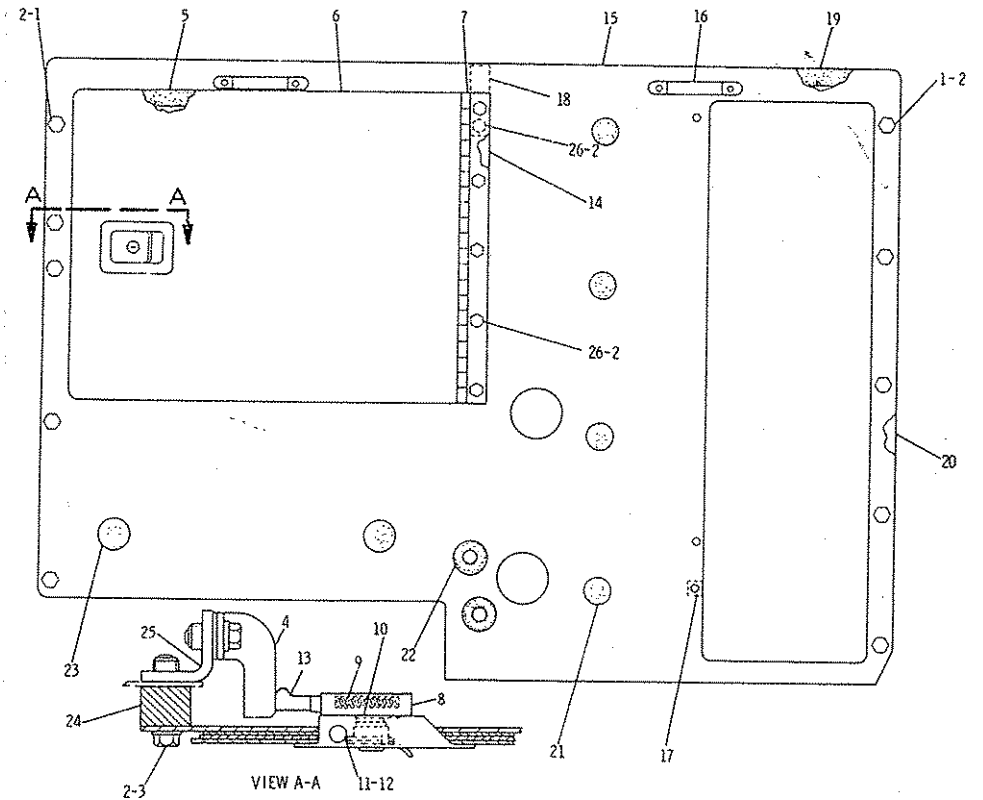

REF NO.	PART NUMBER	DESCRIPTION	QTY.
1	S1590	BOLT	10
2	5P1075	WASHER	18
3	S1594	BOLT	2
4	2G3184	CATCH	1
	8K1077	SHIM	3
▲ 5	6V1392	SEAL--------1.78 m(70.06 in.)	
6	6G8944	DOOR ASSEM. (Includes)	1
7	2G4396	HINGE	1
8	6V1535	LATCH ASSEM. (Includes)	1
9	2V3457	SPRING	1
● 10	6V1536	LOCK ASSEM.	1
11	2V3461	PIN	1
12	2V3458	NUT	1
13	9K6155	BOLT	1
14	2G4394	SPACER	1
15	6G2125	DOOR ASSEM. -----(L. H.)-------- (Includes)	1
	8F9836	LUG	1
16	6F7013	HANDLE	2
17	9F2978	NUT-----(weld)	8
18	6G2145	CLIP	1
▲ 19	5P5960	SEAL--------1.38 m(54.33 in.)	
20	2G3182	BAR	1
21	2G1135	BUMPER	4
22	2G1133	GROMMET	2
23	2G7382	BUMPER	2
24	2G4519	BAR	1
25	2G1519	BRACKET ASSEM. (Includes)	1
	9F2978	NUT-----(weld)	4
26	L1351	BOLT	6

● REQUIRES 5P8500 KEY

▲ORDER BY THE METER

181016

6G9040 HOOD SIDE DOOR GROUP—Part 1
AN ATTACHMENT

6G9040 HOOD SIDE DOOR GROUP—Part 2
AN ATTACHMENT

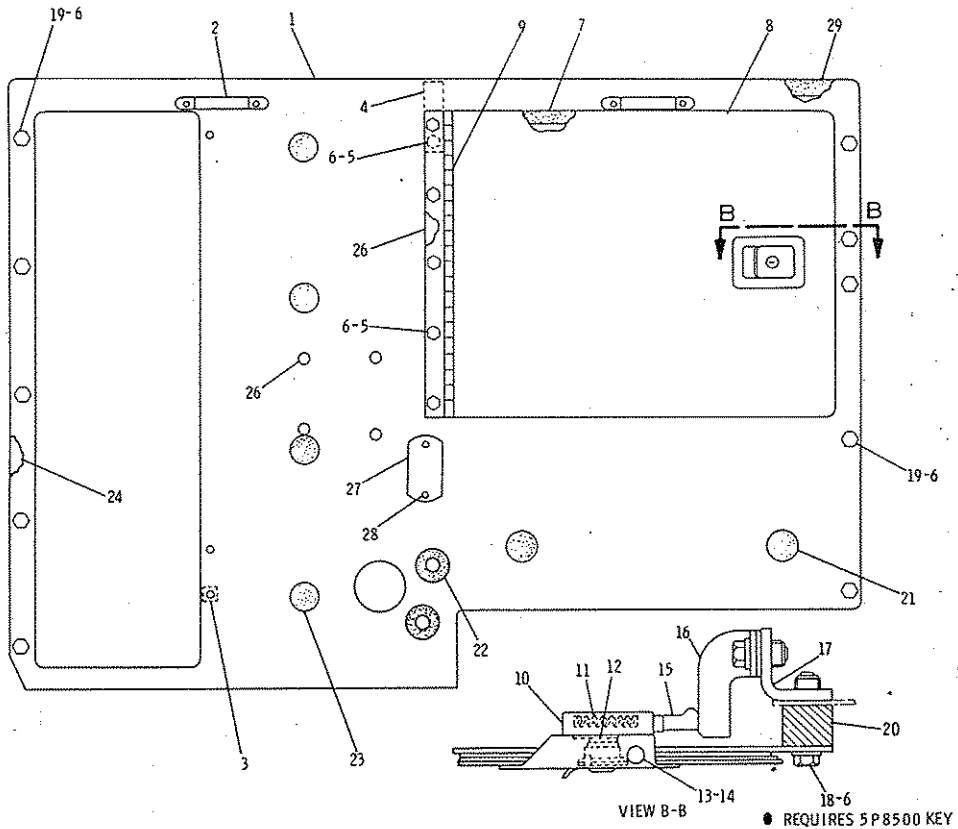

REF. NO.	PART NUMBER	DESCRIPTION	QTY.
1	6G2126	DOOR ASSEM. -----(R. H.)--------	1
		(Includes)	
	8F9836	LUG----------	1
2	6F7013	HANDLE----------	2
3	9F2978	NUT---------(weld)----------	8
4	6G2145	CLIP----------	1
5	L1351	BOLT----------	6
6	5P1075	WASHER----------	18
▲ 7	6V1392	SEAL----------1.78 m(70.06 in.)	
8	6G8944	DOOR ASSEM. ----------	1
		(Includes)	
9	2G4396	HINGE----------	1
10	6V1535	LATCH ASSEM. ----------	1
		(Includes)	
11	2V3457	SPRING----------	1
● 12	6V1536	LOCK ASSEM. ----------	1
13	2V3461	PIN----------	1
14	2V3458	NUT----------	1
15	9K6155	BOLT----------	1
16	2G3184	CATCH----------	1
	8K1077	SHIM----------	3
17	2G1519	BRACKET ASSEM. ----------	1
		(Includes)	
	9F2978	NUT---------(weld)----------	4
18	S1594	BOLT----------	2
19	S1590	BOLT----------	10
20	2G4519	BAR----------	1
21	2G7382	BUMPER----------	2
22	2G1133	GROMMET----------	2
23	2G1135	BUMPER----------	4
24	2G3182	BAR----------	1
25	2G4394	SPACER----------	1
26	5P7988	PLUG----------	4
27	2G7484	PLATE----------	1
28	9M5733	RIVET----------	2
▲ 29	5P5960	SEAL-------1.38 m(44.33 in.)	

● REQUIRES 5P8500 KEY ▲ ORDER BY THE METER

181017

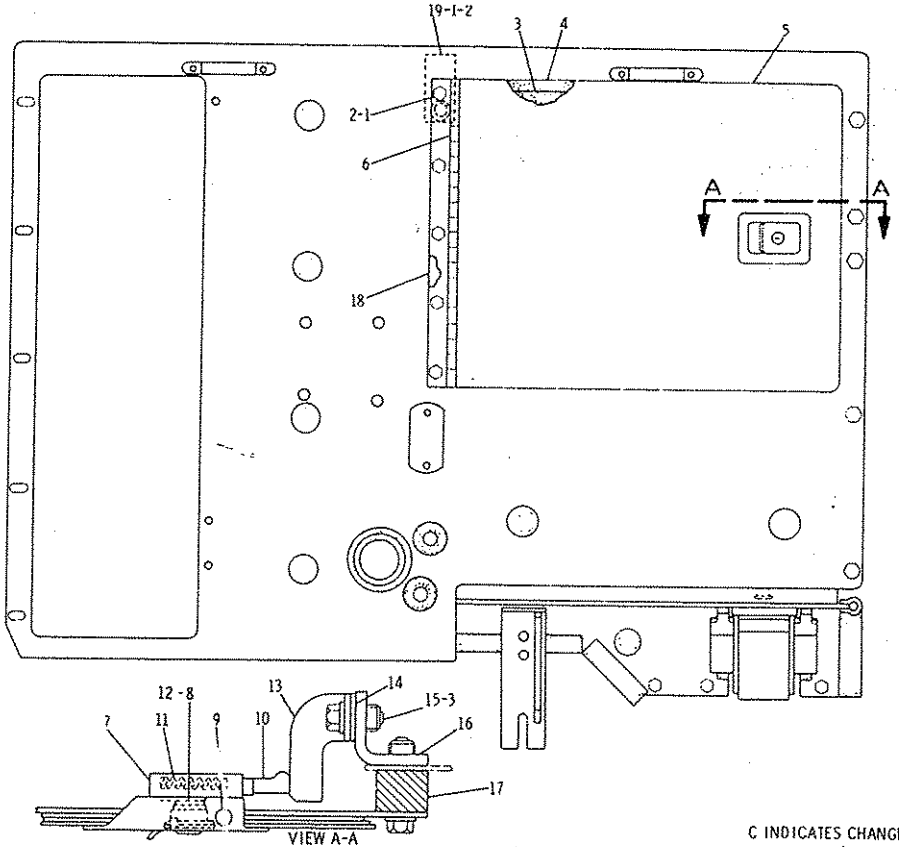

	REF. NO.	PART NUMBER	DESCRIPTION	QTY
C	1	L1351	BOLT	6
C	2	5P1075	WASHER	8
	3	2G4395	INSULATION	1
CA	4	6V1392	SEAL-----1.78 m(70 in.)	
C	5	6G2129	DOOR ASSEM. (Includes)	1
	6	2G4396	HINGE	1
	7	8K1040	LATCH ASSEM. (Includes)	1
	8	3V8655	LOCK ASSEM. (Lock Requires 9K8415 Key)	1
	9	2V3461	PIN	1
		2V3458	NUT	1
	10	9K6155	BOLT	1
	11	2V3457	SPRING	1
	12	3V8662	WASHER	1
	13	2G3184	CATCH	1
	14	8K1077	SHIM	3
	15	S1594	BOLT	2
	16	2G1519	BRACKET ASSEM. (Includes)	1
		9F2978	NUT-------(weld)	4
	17	2G4519	BAR	1
	18	2G4394	SPACER	1
C	19	6G2145	CLIP	1

C INDICATES CHANGE

▲ ORDER BY THE METER-USE AS REQUIRED

176117

2G4630 HOOD SIDE DOOR GROUP—Part 1 of 4—Type 1
Part of 2G2580 Sound Suppression Arrangement listed on Page 168
AN ATTACHMENT

2G4630 HOOD SIDE DOOR GROUP—Part 2 of 4—Type 1
Part of 2G2580 Sound Suppression Arrangement listed on Page 168
AN ATTACHMENT

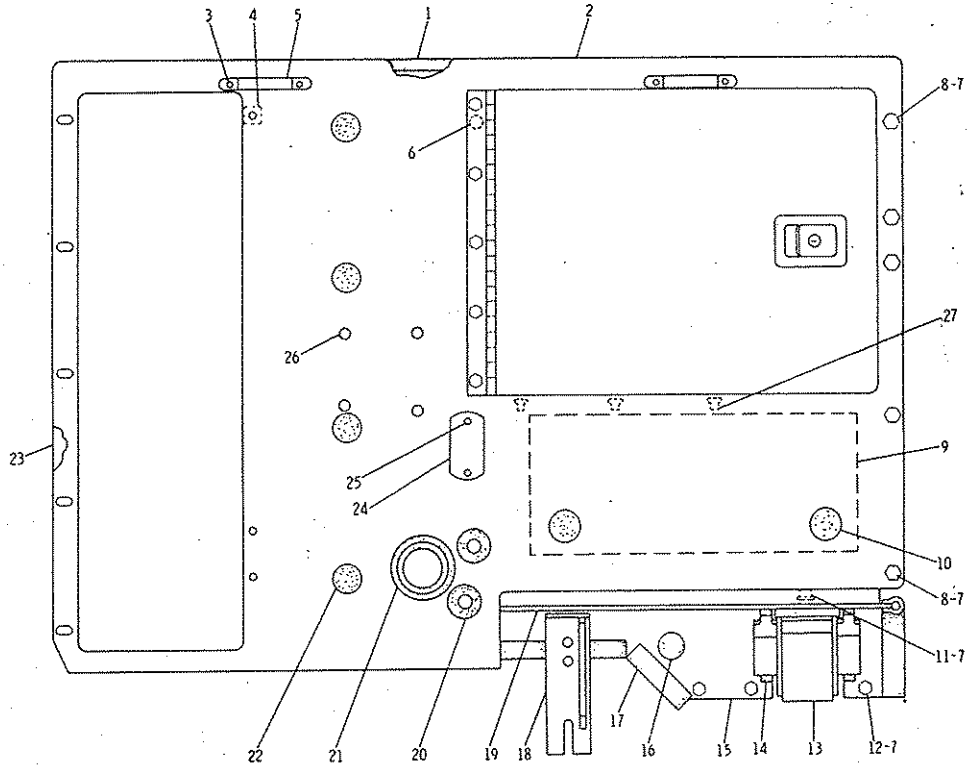

	REF. NO.	PART NUMBER	DESCRIPTION	QTY.
▲	1	5P5960	SEAL------2.88 m(113.38 in.)	
C	2	6G2126	DOOR ASSEM. ---(R. H.)----------	1
			(Includes)	
	3	1F1599	RIVET----------	4
	4	9F2978	NUT-------(weld)----------	8
	5	6F7013	HANDLE----------	2
	6	8P9836	LUG----------	1
C	7	5P1075	WASHER----------	10
C	8	S1590	BOLT----------	5
	9	2G4619	INSULATION----------	1
	10	2G7382	BUMPER----------	2
	11	S1594	BOLT----------	2
	12	L1351	BOLT----------	3
	13	2G4529	BRACKET ASSEM. ----------	1
▲	14	5P5923	SEAL----------.480 m(19.90 in.)	
	15	2G4538	PLATE ASSEM. --------(R. H.)-----	1
	16	8D6542	GROMMET----------	1
▲	17	5P5902	SEAL----------1.26 m(49.60 in.)	
		2G4528	BRACKET ASSEM. ----------	1
	18		(Includes)	
		9F2978	NUT--------(weld)----------	1
	19	2G4532	PLATE----------	1
	20	2G1133	GROMMET----------	2
	21	2G1141	GROMMET----------	1
	22	2G1135	BUMPER----------	2
	23	2G3182	BAR----------	1
	24	2G7484	PLATE----------	1
	25	9M5733	RIVET----------	2
	26	5P7988	PLUG----------	4
C	27	6G2128	CLIP----------	18

C INDICATES CHANGE ▲ ORDER BY THE METER-USE AS REQUIRED 226642

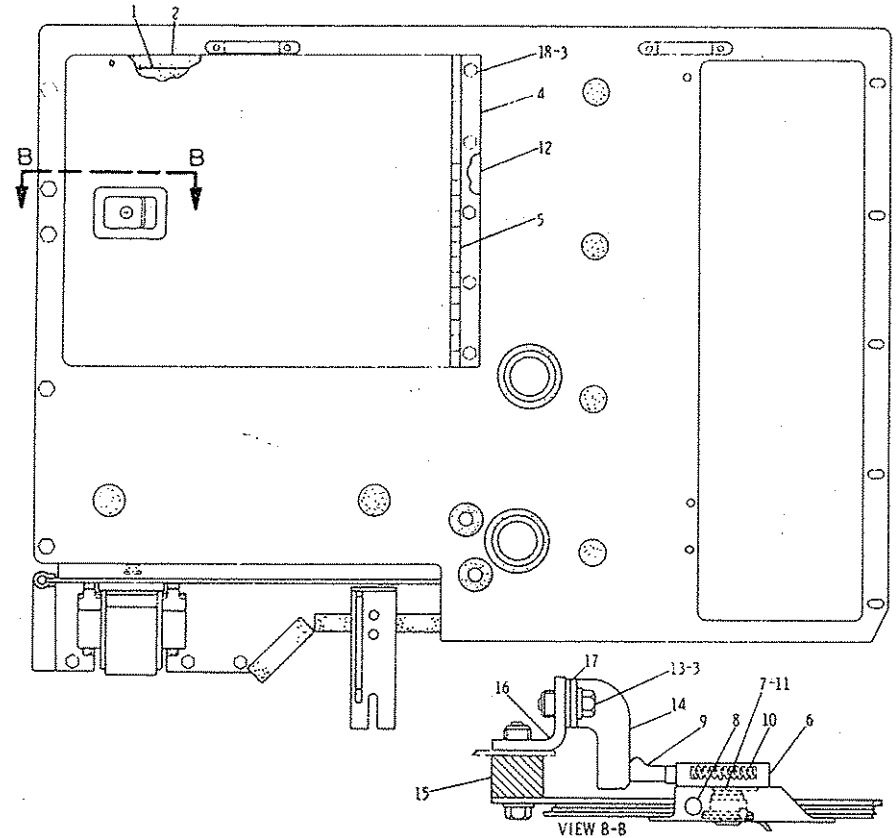

REF NO	PART NUMBER	DESCRIPTION	QTY
1	2G4395	INSULATION	1
CA 2	6V1392	SEAL-----1.78 m (70 in.)	
3	5P1075	WASHER	7
C 4	6G2129	DOOR ASSEM. (Includes)	1
5	2G4396	HINGE	1
6	8K1040	LATCH ASSEM. (Includes)	1
7	3V8655	LOCK ASSEM. (Lock Requires 9K 8415 Key)	1
8	2V3461	PIN	1
	2V3458	NUT	1
9	9K6155	BOLT	1
10	2V3457	SPRING	1
11	3V8662	WASHER	1
12	2G4394	SPACER	1
13	S1594	BOLT	2
14	2G3184	CATCH	1
15	2G4519	BAR	1
16	2G1519	BRACKET ASSEM. (Includes)	1
	9F2978	NUT---(weld)	4
17	8K1077	SHIM	3
18	L1351	BOLT	5

▲ ORDER BY THE METER-USE AS REQUIRED
C INDICATES CHANGE

176118

2G4630 HOOD SIDE DOOR GROUP—Part 3 of 4—Type 1
Part of 2G2580 Sound Suppression Arrangement listed on Page 168
AN ATTACHMENT

2G4630 HOOD SIDE DOOR GROUP—Part 4 of 4—Type 1
Part of 2G2580 Sound Suppression Arrangement listed on Page 168
AN ATTACHMENT

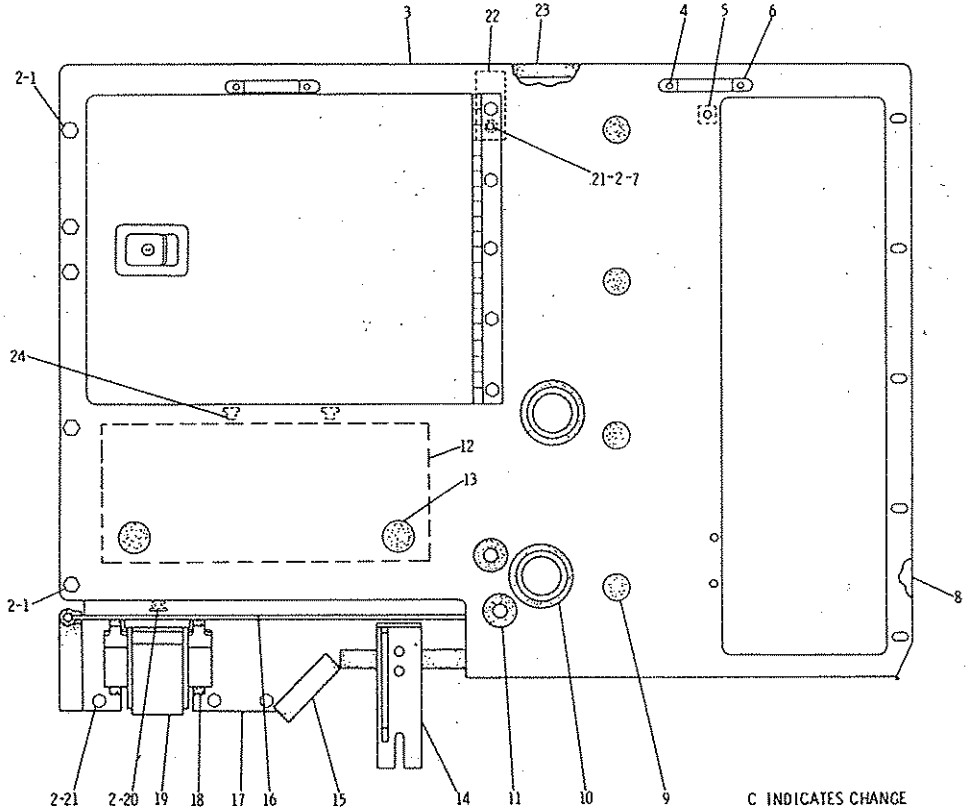

	REF. NO.	PART NUMBER	DESCRIPTION	QTY.
C	1	S1590	BOLT	5
C	2	5P1075	WASHER	11
C	3	6G2125	DOOR ASSEM. -----(L. H.)-------- (Includes)	1
	4	1F1599	RIVET	4
	5	9F2978	NUT-----(weld)--------	8
	6	6F7013	HANDLE	2
	7	8F9836	LUG	1
	8	2G3182	BAR	1
	9	2G1135	BUMPER	4
	10	2G1141	GROMMET	2
	11	2G1133	GROMMET	2
	12	2G4619	INSULATION	1
	13	2G7382	BUMPER	2
	14	2G4528	BRACKET ASSEM. ---------- (Includes)	1
		9F2978	NUT-------(weld)----------	1
▲	15	5P5902	SEAL--------1. 26 m(49. 6 in.)	
	16	2G4532	PLATE	1
	17	2G4537	PLATE ASSEM. ----(L. H.)-------	1
▲	18	5P5923	SEAL----------. 48 m(18. 9 in.)	
	19	2G4529	BRACKET ASSEM. ----------	1
	20	S1594	BOLT	2
C	21	L1351	BOLT	4
C	22	6G2145	CLIP	1
▲	23	5P5960	SEAL----------2. 88 m(113. 38 in.)	
C	24	6G2128	CLIP	18

C INDICATES CHANGE

▲ ORDER BY THE METER-USE AS REQUIRED

226643

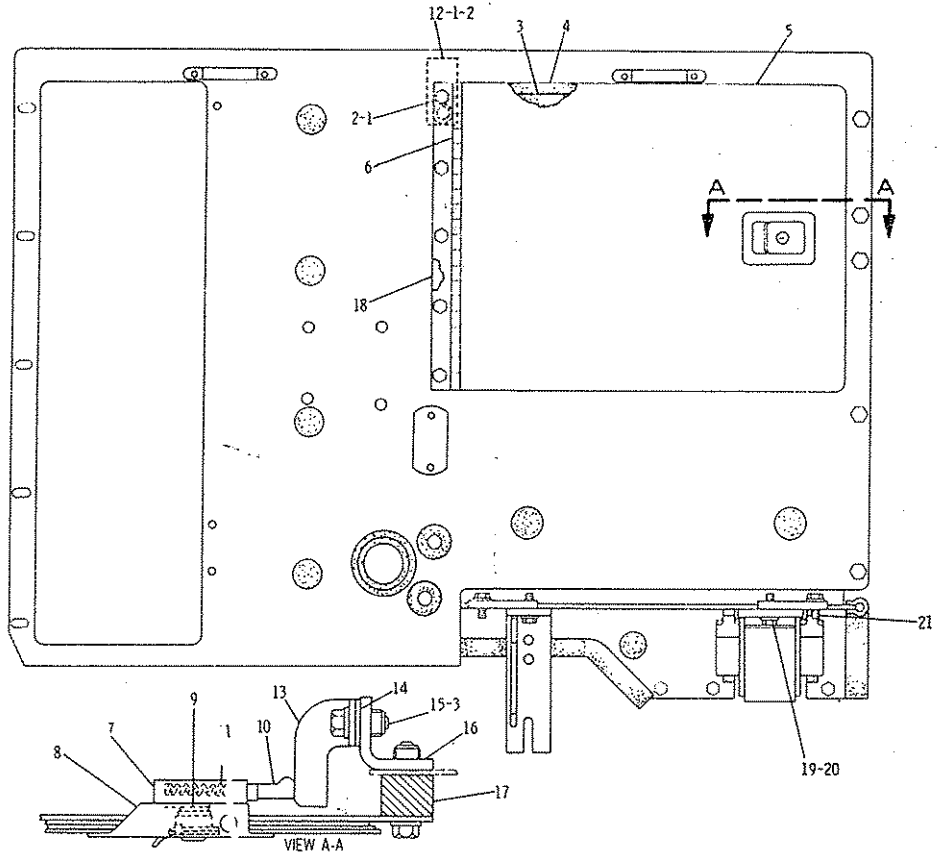

NOTE	REF NO	PART NUMBER	QTY	DESCRIPTION
	1	L1351	6	BOLT
	2	5P1075	8	WASHER
	3	2G4395	1	INSULATION
D	4	6V1392		SEAL 1.78M(70IN.)
C	5	6G8944	1	DOOR ASSEM.
	6	2G4396	1	HINGE
	7	6V1535	1	LATCH ASSEM.
	8	6V1536	1	LOCK ASSEM. (LOCK REQUIRES 5P8500 KEY)
	9	2V3461	1	PIN
		2V3458	1	NUT
	10	9K6155	1	BOLT
	11	2V3457	1	SPRING
	12	6G2145	1	CLIP
	13	2G3184	1	CATCH
	14	8K1077	3	SHIM
	15	S1594	2	BOLT
	16	2G1519	1	BRACKET ASSEM.
		9F2978	4	NUT (WELD)
	17	2G4519	1	BAR
	18	2G4394	1	SPACER
C	19	S1595	4	BOLT
C	20	5P1076	4	WASHER
C	21	S1587	4	BOLT

C INDICATES CHANGE
D ORDER BY THE METER

308426

2G4630 HOOD SIDE DOOR GROUP—Part 1 of 4—Type 2
Part of 2G2580 Sound Suppression Arrangement listed on Page 168
AN ATTACHMENT

2G4630 HOOD SIDE DOOR GROUP—Part 2 of 4—Type 2
Part of 2G2580 Sound Suppression Arrangement listed on Page 168
AN ATTACHMENT

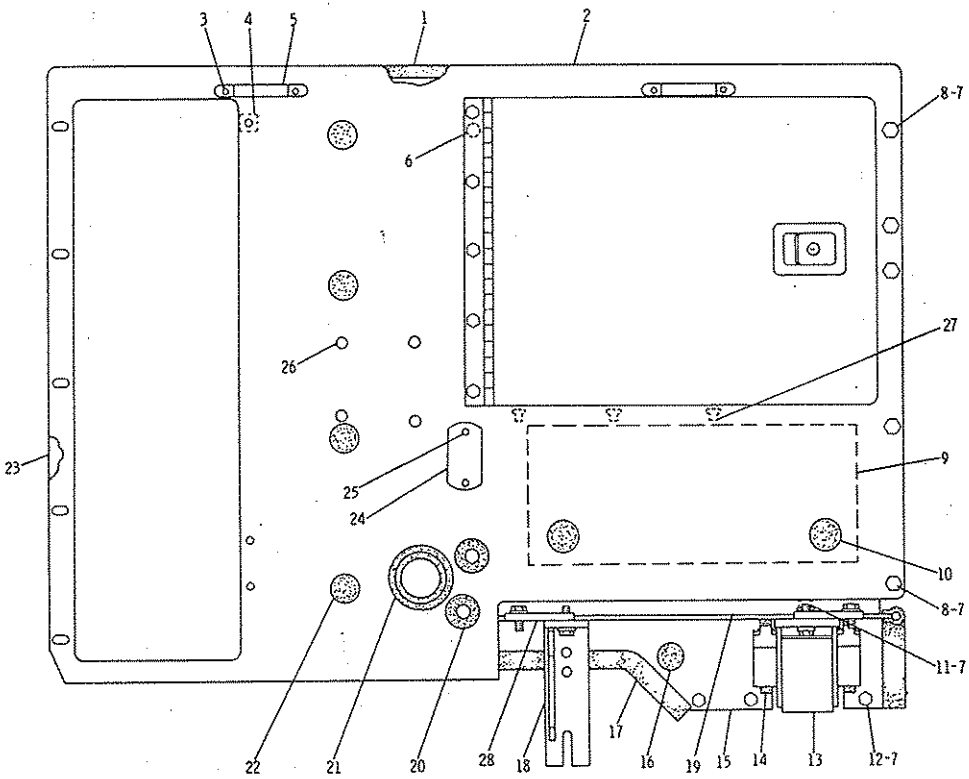

NOTE	REF NO	PART NUMBER	QTY	DESCRIPTION
D	1	5P5960		SEAL 2.88M(113.38IN.)
C	2	6G2126	1	DOOR ASSEM. (R.H.)
	3	1F1599	4	RIVET
	4	9F2978	8	NUT (WELD)
	5	6F7013	2	HANDLE
	6	8P9836	1	LUG
C	7	5P1075	10	WASHER
C	8	S1590	5	BOLT
	9	2G4619	1	INSULATION
	10	2G7382	2	BUMPER
	11	S1594	2	BOLT
	12	L1351	3	BOLT
	13	2G4529	1	BRACKET ASSEM.
D	14	5P5923		SEAL .480M(19.90IN.)
	15	2G4538	1	PLATE ASSEM. (R.H.)
	16	8D6542	1	GROMMET
D	17	5P7211		SEAL 1.26M(49.60IN.)
	18	2G4528	1	BRACKET ASSEM.
		9F2978	1	NUT (WELD)
	19	2G4532	1	PLATE
	20	2G1133	2	GROMMET
	21	2G1141	1	GROMMET
	22	2G1135	2	BUMPER
	23	2G3182	1	BAR
	24	2G7484	1	PLATE
	25	9M5733	2	RIVET
	26	5P7988	4	PLUG
C	27	6G2128	18	CLIP
C	28	2G4466	2	PLATE

C INDICATES CHANGE
D ORDER BY THE METER

308427

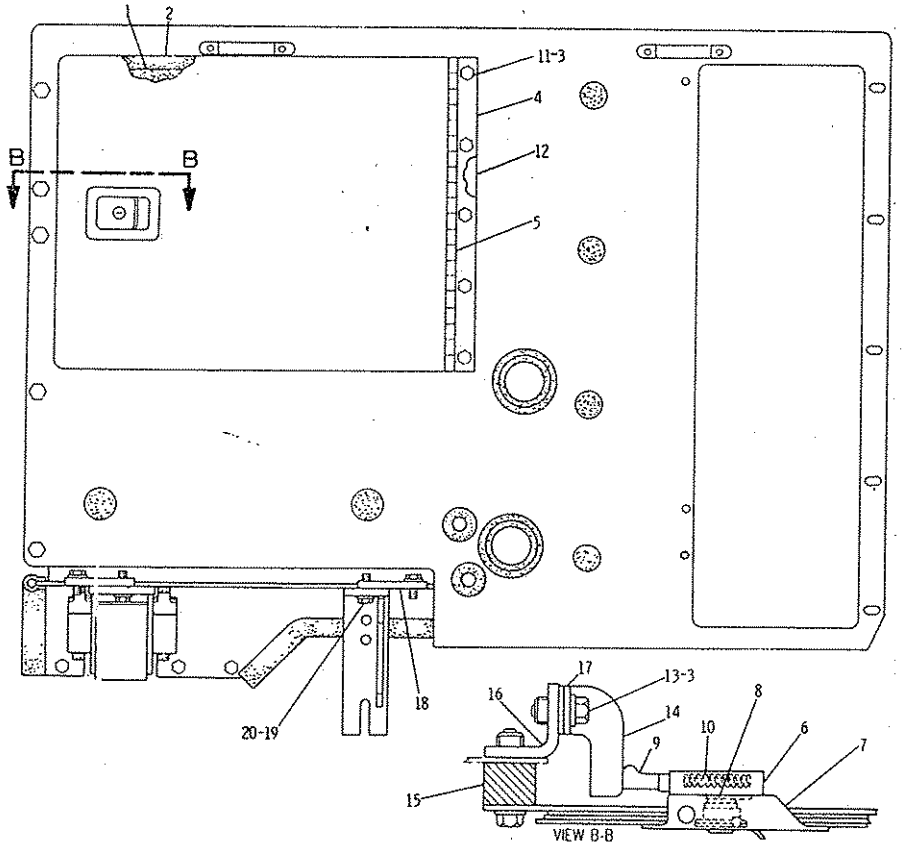

NOTE	REF NO	PART NUMBER	QTY	DESCRIPTION
	1	2G4395	1	INSULATION
D	2	6V1392		SEAL 1.78M(70IN.)
	3	5P1075	7	WASHER
C	4	6G8944	1	DOOR ASSEM.
	5	2G4396	1	HINGE
C	6	6V1535	1	LATCH ASSEM.
C	7	6V1536	1	LOCK ASSEM.
C				(LOCK REQUIRES 5P8500 KEY)
	8	2V3461	1	PIN
		2V3458	1	NUT
	9	9K6155	1	BOLT
	10	2V3457	1	SPRING
	11	L1351	5	BOLT
	12	2G4394	1	SPACER
	13	S1594	2	BOLT
	14	2G3184	1	CATCH
	15	2G4519	1	BAR
	16	2G1519	1	BRACKET ASSEM.
		9F2978	4	NUT (WELD)
	17	8K1077	3	SHIM
C	18	2G4466	2	PLATE
C	19	S1595	4	BOLT
C	20	5P1076	4	WASHER

C INDICATES CHANGE
D ORDER BY THE METER

308428

2G4630 HOOD SIDE DOOR GROUP—Part 3 of 4—Type 2
Part of 2G2580 Sound Suppression Arrangement listed on Page 168
AN ATTACHMENT

2G4630 HOOD SIDE DOOR GROUP—Part 4 of 4—Type 2

Part of 2G2580 Sound Suppression Arrangement listed on Page 168

AN ATTACHMENT

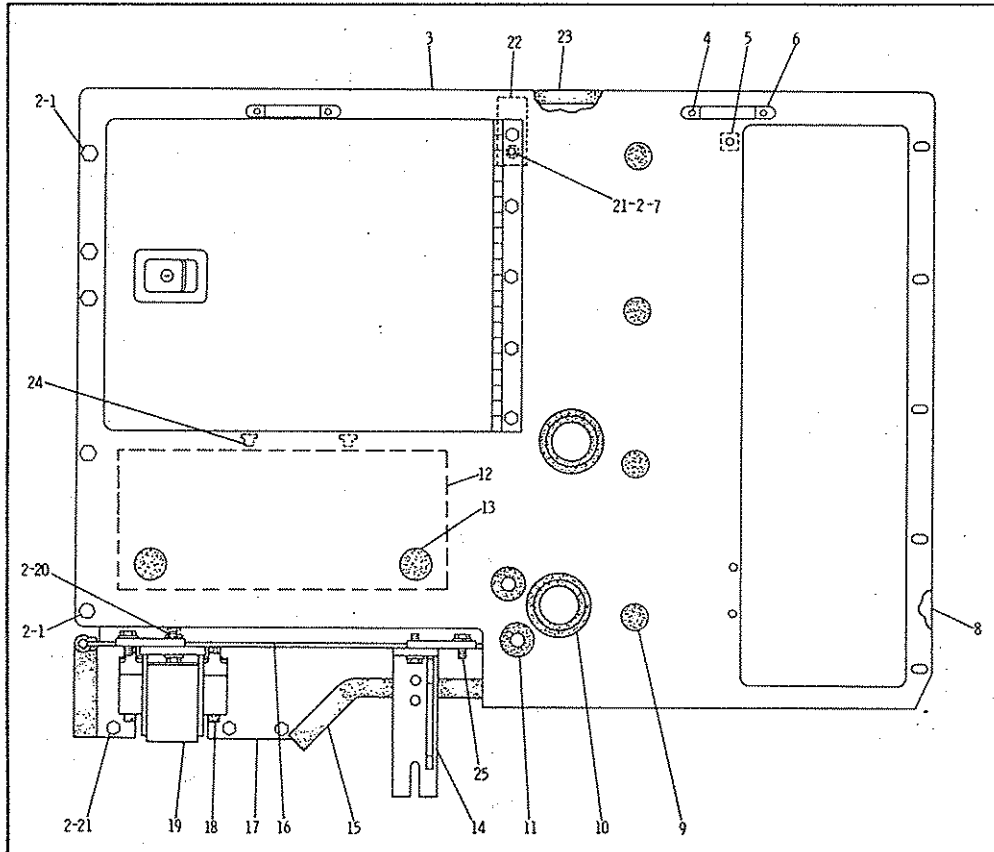

NOTE	REF NO	PART NUMBER	QTY	DESCRIPTION
C	1	S1590	5	BOLT
C	2	5P1075	11	WASHER
C	3	6G2125	1	DOOR ASSEM. (L.H.)
	4	1F1599	4	RIVET
	5	9F2978	8	NUT (WELD)
	6	6F7013	2	HANDLE
	7	8F9836	1	LUG
	8	2G3182	1	BAR
	9	2G1135	4	BUMPER
	10	2G1141	2	GROMMET
	11	2G1133	2	GROMMET
	12	2G4619	1	INSULATION
	13	2G7382	2	BUMPER
	14	2G4528	1	BRACKET ASSEM.
		9F2978	1	NUT (WELD)
D	15	5P7211		SEAL 1.26M(49.6IN.)
	16	2G4532	1	PLATE
	17	2G4537	1	PLATE ASSEM. (L.H.)
D	18	5P5923		SEAL .48M(18.9IN.)
	19	2G4529	1	BRACKET ASSEM.
	20	S1594	2	BOLT
C	21	L1351	4	BOLT
C	22	6G2145	1	CLIP
D	23	5P5960		SEAL 2.88M(113.38IN.)
C	24	6G2128	18	CLIP
C	25	S1587	4	BOLT

C INDICATES CHANGE
D ORDER BY THE METER

308429

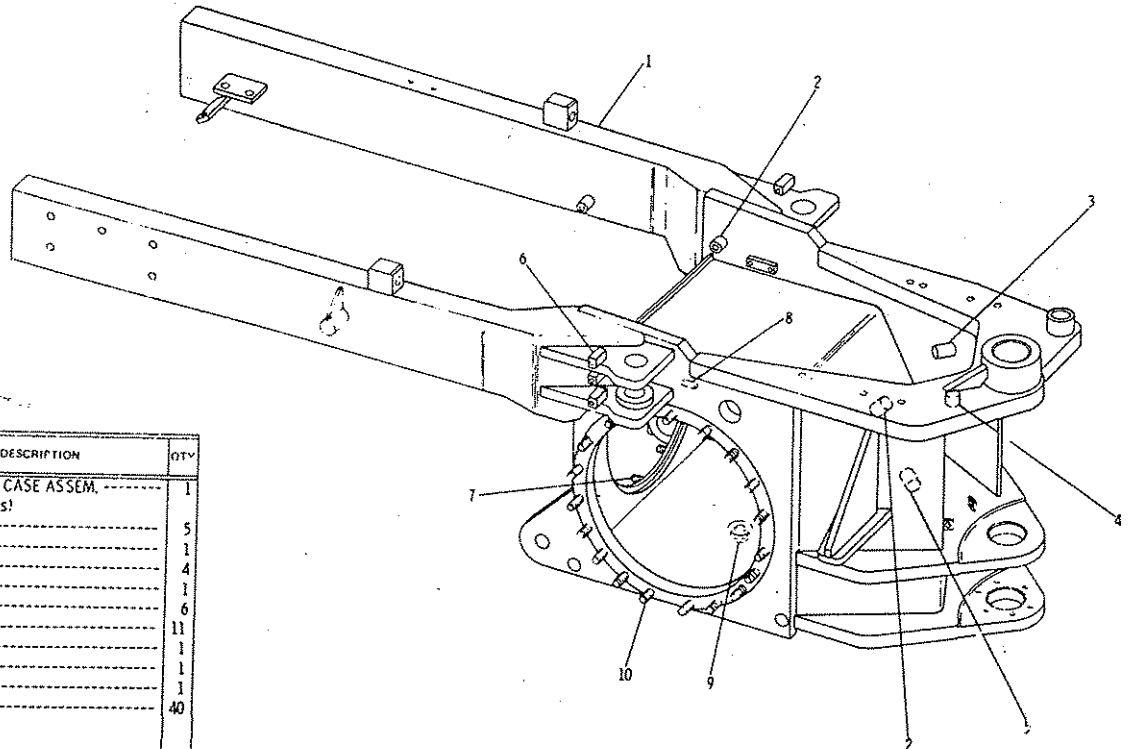

REF. NO.	PART NUMBER	DESCRIPTION	QTY
1	2G9522	FRAME AND CASE ASSEM. (Includes)	1
2	8D3508	BOSS	5
3	5F7845	BOSS	1
4	8F9836	LUG	4
5	5J6304	LUG	1
6	6M7939	LUG	6
7	5M1932	STUD	11
8	4D8148	DOWEL	1
9	6B5262	PLUG	1
	2A3398	GASKET	1
10	2D8822	STUD	40

2G4800 FRAME AND CASE GROUP

2G9520 FRAME AND CASE GROUP

Part of 2G2580 Sound Suppression and 2G9510 Bottom Guard Arrangements listed on Pages 168 & 169
AN ATTACHMENT

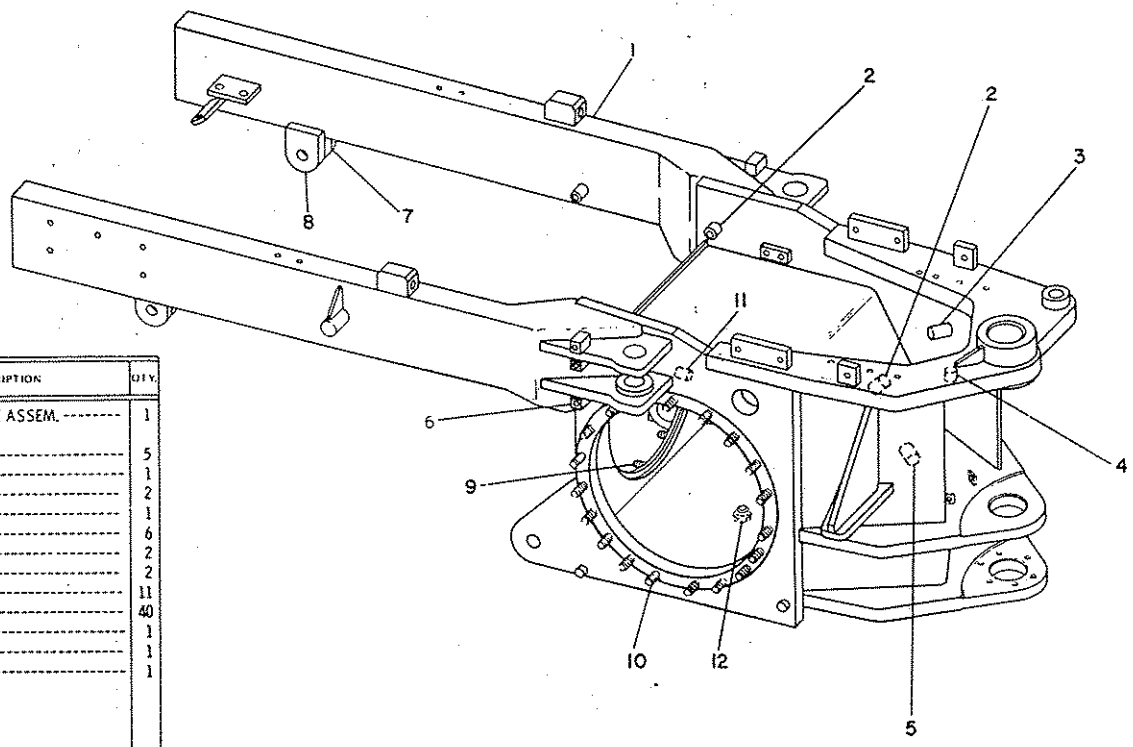

REF. NO.	PART NUMBER	DESCRIPTION	QTY.
1	2G9519	FRAME AND CASE ASSEM. (Includes)	1
2	8D3508	BOSS	5
3	5F7845	BOSS	1
4	8F9836	LUG	2
5	5J6304	LUG	1
6	6M7939	LUG	6
7	2G9077	PLATE	2
8	2G9365	PLATE	2
9	5M1932	STUD	11
10	2D8822	STUD	40
11	4D8148	DOWEL	1
12	6B5262	PLUG	1
	2A3398	GASKET	1

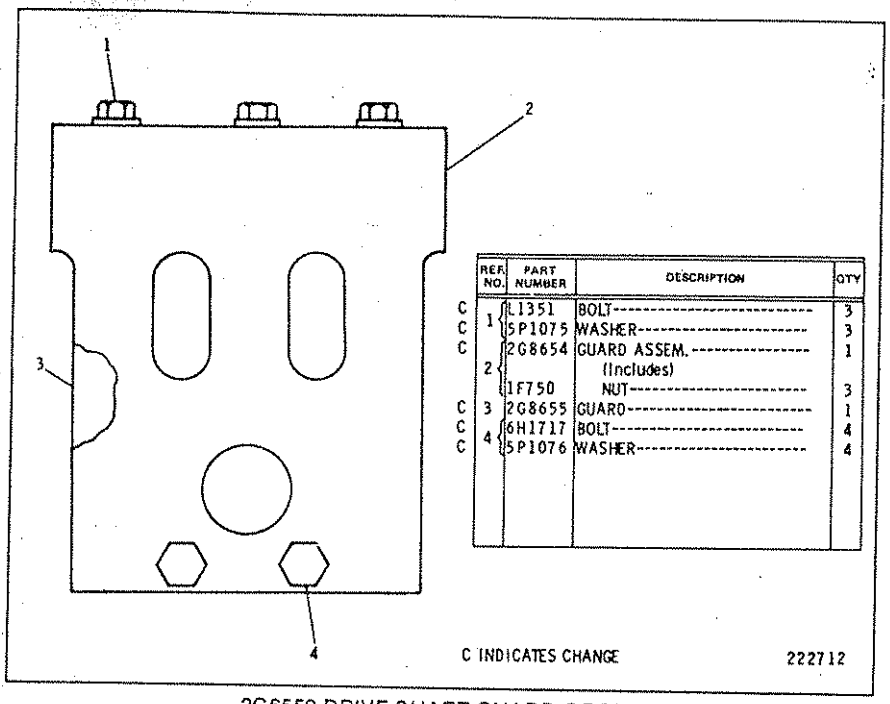

	REF NO.	PART NUMBER	DESCRIPTION	QTY
C	1	1351	BOLT	3
C		5P1075	WASHER	3
C	2	2G8654	GUARD ASSEM. (Includes)	1
		1F750	NUT	3
C	3	2G8655	GUARD	1
C	4	6H1717	BOLT	4
C		5P1076	WASHER	4

C INDICATES CHANGE

222712

2G6550 DRIVE SHAFT GUARD GROUP
Serial No. 87V5275 to 87V5733 inclusive

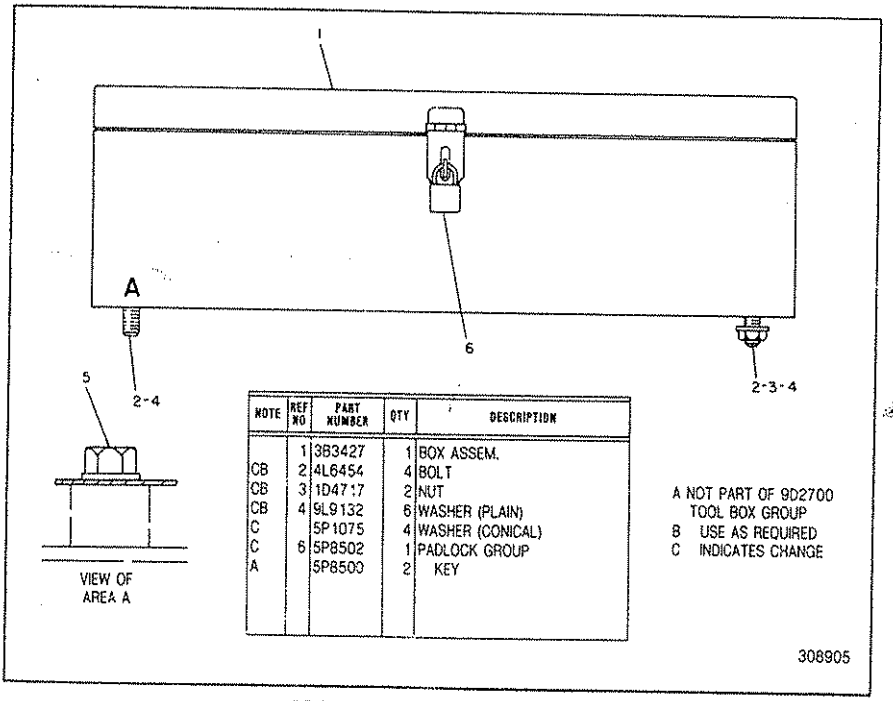

NOTE	REF NO	PART NUMBER	QTY	DESCRIPTION
	1	3B3427	1	BOX ASSEM.
CB	2	4L6454	4	BOLT
CB	3	1D4717	2	NUT
CB	4	9L9132	6	WASHER (PLAIN)
C		5P1075	4	WASHER (CONICAL)
C	6	5P8502	1	PADLOCK GROUP
A		5P8500	2	KEY

A NOT PART OF 9D2700 TOOL BOX GROUP
B USE AS REQUIRED
C INDICATES CHANGE

308905

9D2700 TOOL BOX GROUP

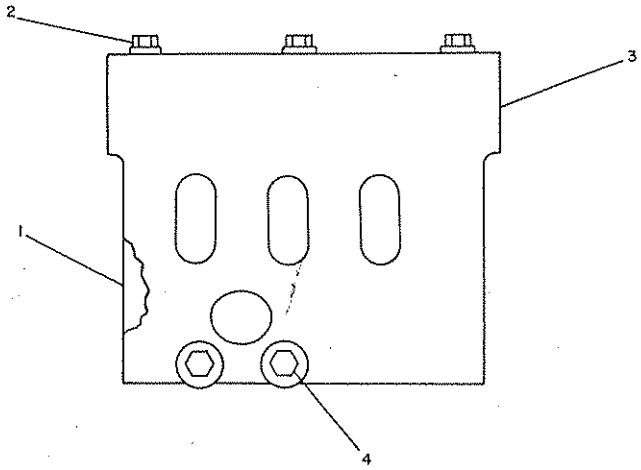

REF. NO.	PART NUMBER	DESCRIPTION	QTY.
1	6G4177	SHIELD	1
2	L1351	BOLT	3
	5P1075	WASHER	3
3	6G4175	SHIELD ASSEM.	1

4	6H1717	BOLT	4
	5P1076	WASHER	4

232532

6G6890 DRIVE SHAFT SHIELD GROUP
Serial No. 87V5734—Up

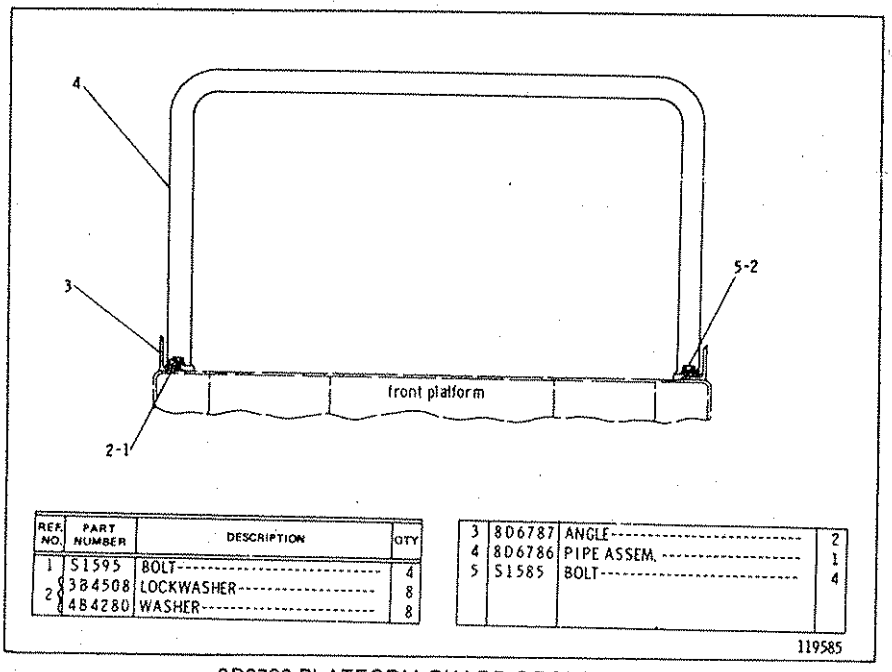

REF. NO.	PART NUMBER	DESCRIPTION	QTY
1	51595	BOLT	4
2	384508	LOCKWASHER	8
	484280	WASHER	8
3	8D6787	ANGLE	2
4	8D6786	PIPE ASSEM.	1
5	51585	BOLT	4

119585

8D6790 PLATFORM GUARD GROUP—Front
Serial No. 87V5734—Up. FOR MACHINES EXPORTED WITHOUT ROPS. Part of 6G8010 Non-ROPS Conversion Arrangement listed on Page 287B
AN ATTACHMENT

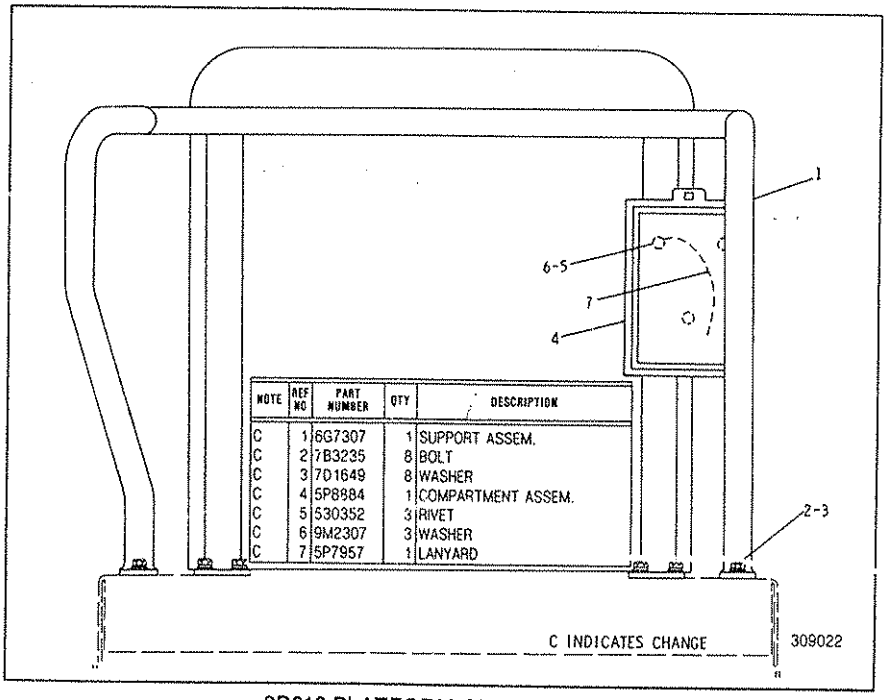

NOTE	REF NO	PART NUMBER	QTY	DESCRIPTION
C	1	6G7307	1	SUPPORT ASSEM.
C	2	7B3235	8	BOLT
C	3	7D1649	8	WASHER
C	4	5P8884	1	COMPARTMENT ASSEM.
C	5	530352	3	RIVET
C	6	9M2307	3	WASHER
C	7	5P7957	1	LANYARD

9D210 PLATFORM GUARD GROUP
Serial No. 87V5734—Up. FOR MACHINES EXPORTED WITHOUT ROPS. Part of 6G8010 Non-ROPS Conversion Arrangement listed on Page 287B

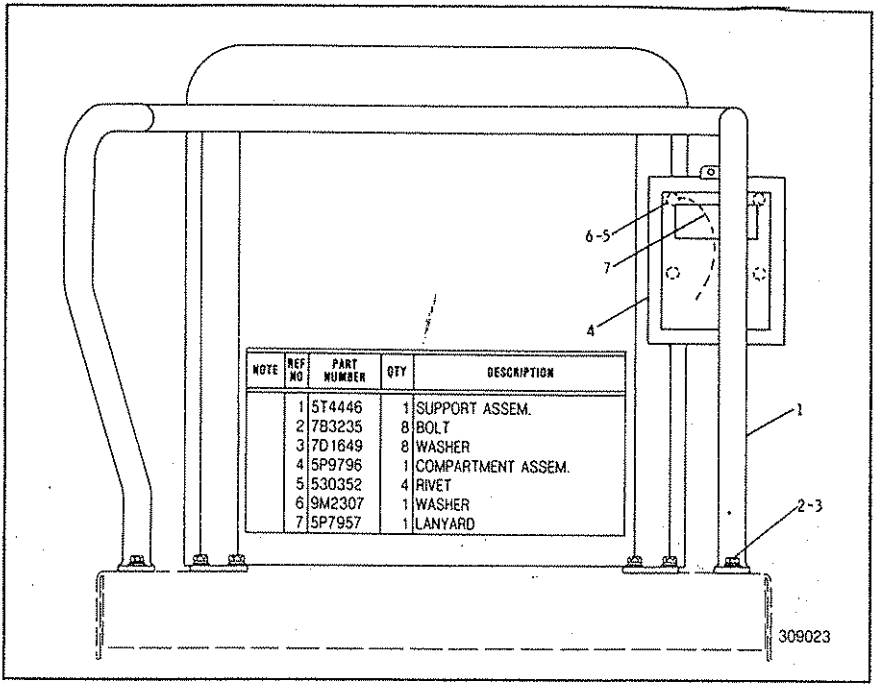

NOTE	REF NO	PART NUMBER	QTY	DESCRIPTION
	1	5T4446	1	SUPPORT ASSEM.
	2	7B3235	8	BOLT
	3	7D1649	8	WASHER
	4	5P9796	1	COMPARTMENT ASSEM.
	5	530352	4	RIVET
	6	9M2307	1	WASHER
	7	5P7957	1	LANYARD

5T4445 PLATFORM GUARD GROUP—Rear
Serial No. 87V5734—Up. Part of 6G8010 Non-ROPS Conversion Arrangement listed on Page 287B. AN ATTACHMENT

2G4500 BATTERY BOX GROUP
Serial No. 87V5275 to 87V6542 inclusive

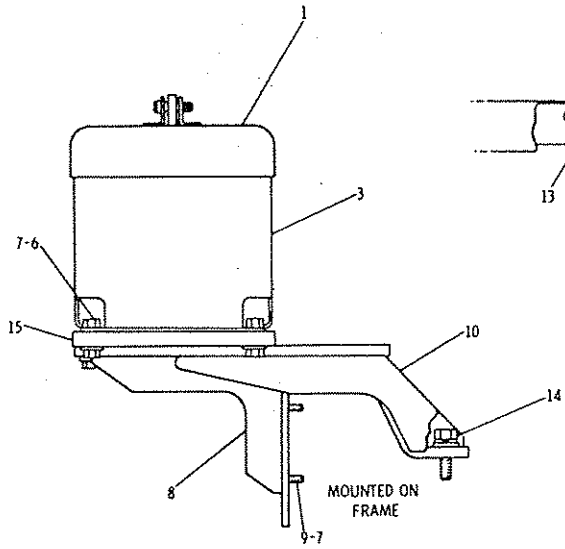

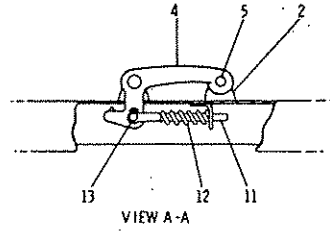

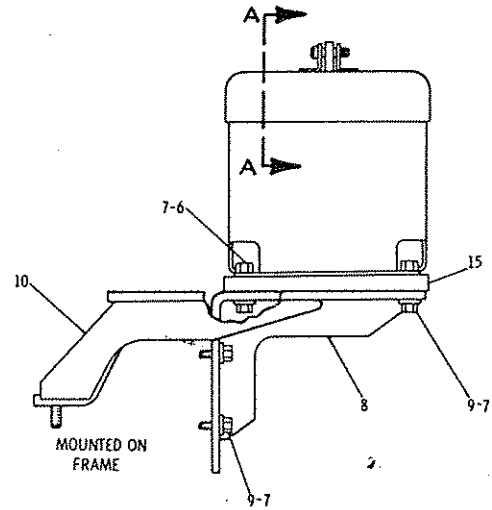

REF. NO.	PART NUMBER	DESCRIPTION	QTY
1	9M737	COVER ASSEM.	2
		(Each Includes)	
2	1S6385	LUG	3
	2G3382	BOX ASSEM.	2
3		(Each Includes)	
	9F2978	NUT	1
4	1H7365	HANDLE	2

	5	2B2938	PIN	2
		3B4617	COTTER PIN	2
	6	S1587	BOLT	8
		104719	NUT	8
C	7	5P1076	WASHER	20
	8	2G1514	BRACKET ASSEM.	2
	9	S1595	BOLT	12
	10	2G1516	BRACKET ASSEM.	2
	11	1H7366	ROD	2

12	1B9920	SPRING	2
13	1J4384	PIN	2
	3B4615	COTTER PIN	2
14	S1566	BOLT	4
	3B4510	LOCKWASHER	4
	4B4281	WASHER	4
15	2G4466	PLATE	4

C INDICATES CHANGE

168824

2G4500 BATTERY BOX GROUP
Serial No. 87V06543—Up

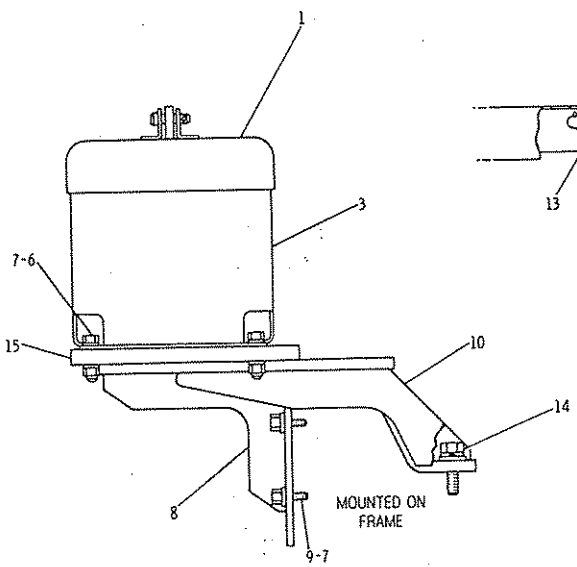

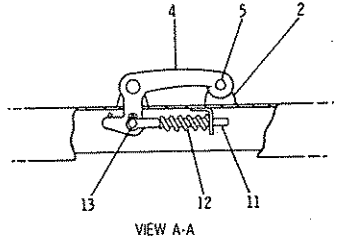

VIEW A-A

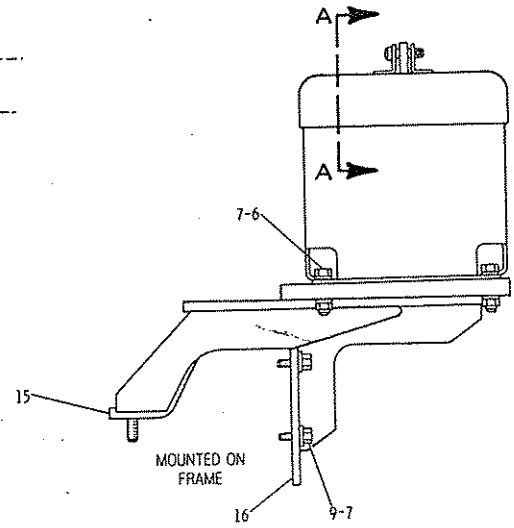

NOTE	REF NO	PART NUMBER	QTY	DESCRIPTION
	1	9M737	2	COVER ASSEM. (EACH INCLUDES)
	2	1S6385	3	LUG
	3	2G3382	2	BOX ASSEM. (EACH INCLUDES)
		9F2978	1	NUT
	4	1H7365	2	HANDLE
	5	2B2938	2	PIN
		3B4617	2	COTTER PIN
C	6	S1585	8	BOLT
		1D4719	8	NUT
	7	5P1076	20	WASHER
C	8	5T1475	1	BRACKET ASSEM.
C	9	S1595	4	BOLT
C	10	5T1456	1	BRACKET ASSEM.
	11	1H7366	2	ROD
	12	1B9920	2	SPRING
	13	1J4384	2	PIN
		3B4615	2	COTTER PIN
	14	S1566	4	BOLT
		3B4510	4	LOCKWASHER
		4B4281	4	WASHER
C	15	5T1434	1	BRACKET ASSEM.
C	16	5T1476	1	BRACKET ASSEM.

C INDICATES CHANGE

308424

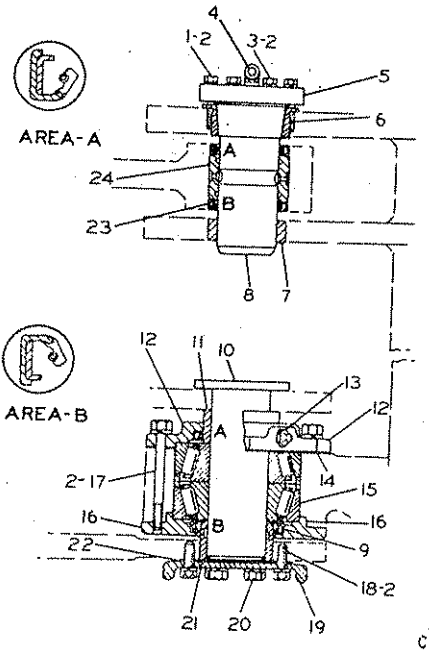

	REF. NO.	PART NUMBER	DESCRIPTION	QTY
	1	1A1460	BOLT	4
	2	3B4508	LOCKWASHER	22
	3	S1587	BOLT	2
C	4	5B9916	FITTING	1
C	5	6G417	COVER	1
C	6	2G4011	COLLAR	1
	7	>K984	BEARING	1
C	8	6G607	PIN	1
	9	6K4186	SEAL	2
C	10	2G6157	PIN	1
	11	6K4185	SPACER	1
	12	6K4191	CAP	1
	13	2D4867	FITTING	1
	14	8D9689	SHIM	1
	15	8D9909	BEARING ASSEM.	1
	16	6K4190	CAP	1
	17	2B2006	BOLT	6
	18	7B3235	BOLT	10
	19	6K4193	PLATE	1
	20	3B4510	LOCKWASHER	4
	21	8D9688	SPACER	1
	22	6K4187	SHIM	1
	23	4K7463	SEAL	2
	24	4K8659	BEARING	1

C INDICATES CHANGE

171437

8D9780 ARTICULATED HITCH GROUP

9D2650 FRONT FRAME GROUP
Serial No. 87V5275 to 87V5733 inclusive

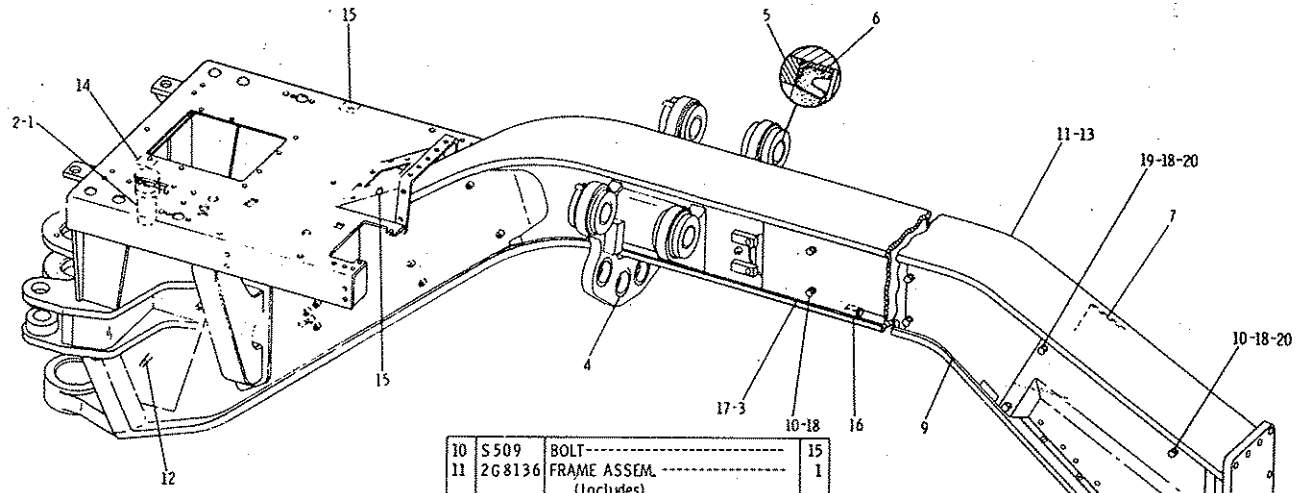

REF. NO.	PART NUMBER	DESCRIPTION	QTY
1	9D9257	PIN	1
2	8D3791	COTTER PIN	1
3	2G8857	COVER ASSEM. ----(R. H.)----	1
4	9D4784	BUSHING	5
5	9D178	BEARING	4
6	9D6584	SEAL	8
C 7	6G1287	COVER ASSEM. ------(L. H.)------	1
C 8	6G1286	COVER ASSEM. --------(R. H.)------	1
9	9D2431	COVER	2
10	S509	BOLT	15
11	2G8136	FRAME ASSEM. (Includes)	1
C 12	8D8879	STUD	4
13	6K2188	PIN	3
14	9F2978	NUT	19
15	1F748	NUT	10
C 16	2M2835	BLOCK	2
17	2G6779	COVER ASSEM. -----(L. H.)-----	1
18	5P1075	WASHER --------(conical)--------	19
19	S1594	BOLT	4
20	7K4743	WASHER	7

C INDICATES CHANGE

223856

6G5365 FRONT FRAME GROUP

Serial No. 87V5734 to 6242, 6244 to 6275, 6277 to 6284, 6288 to 6299, 6301, 6302, 6304 to 6306, 6308 to 6312, 6314, 6315 & 87V6317 to 87V6319 inclusive

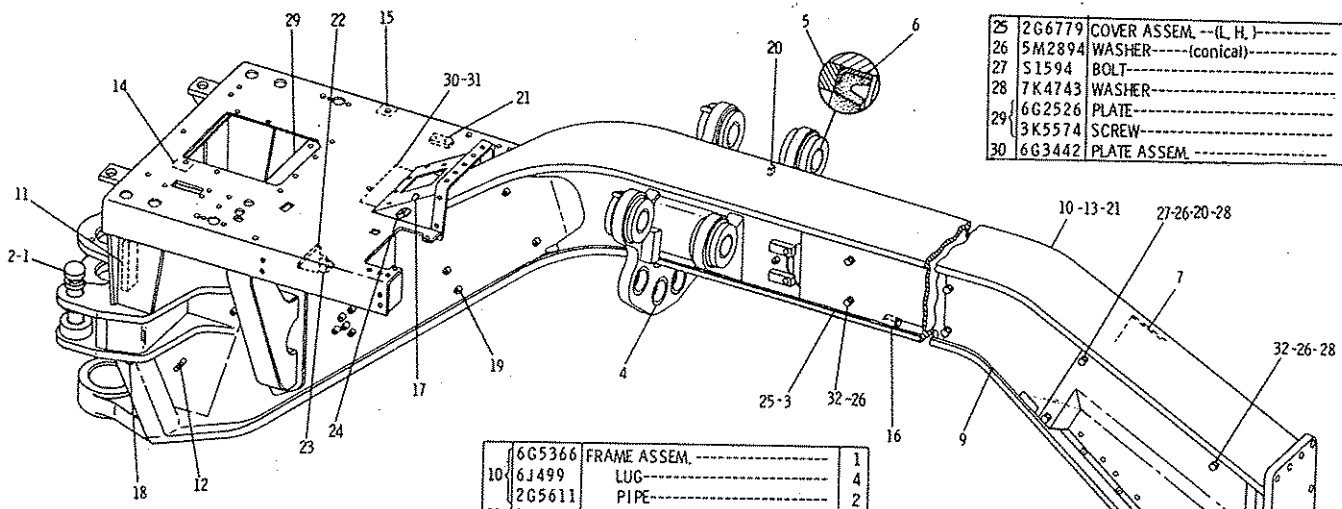

REF. NO.	PART NUMBER	DESCRIPTION	QTY
1	9D9257	PIN	1
2	8D3791	COTTER PIN	1
3	2G8857	COVER ASSEM. ----(R. H.)	1
4	9D4784	BUSHING	5
5	9D178	BEARING	4
6	9D6584	SEAL	8
7	6G1287	COVER ASSEM. ------(L. H.)	1
8	6G1286	COVER ASSEM. -------(R. H.)	1
9	9D2431	COVER	2

	6G5366	FRAME ASSEM.	1
10	6J499	LUG	4
	2G5611	PIPE	2
11	1H8942	PLATE	1
12	8D8879	STUD	4
13	6K2188	PIN	3
14	9F2978	NUT	19
15	1F748	NUT	4
16	2M2835	BLOCK	2
17	9F6445	NUT	16
18	4D9376	BOSS	2
19	9D5659	BOSS	15
20	2K7051	BAR	1
21	5D37	BLOCK	1
	8F9836	LUG	3
22	4M1108	GUSSET	2
23	6G256	BRACKET	1
24	6F3259	LUG	2

25	2G6779	COVER ASSEM. --(L. H.)	1
26	5M2894	WASHER-----(conical)	19
27	S1594	BOLT	4
28	7K4743	WASHER	7
29	6G2526	PLATE	1
	3K5574	SCREW	2
30	6G3442	PLATE ASSEM.	1

31	4F7957	BOLT	2
	5P537	WASHER	2
32	S509	BOLT	15

232599

6G5365 FRONT FRAME GROUP

Serial No. 87V6243, 6276, 6285 to 6287, 6300, 6303, 6307, 6313, 6316 & 87V6320—Up

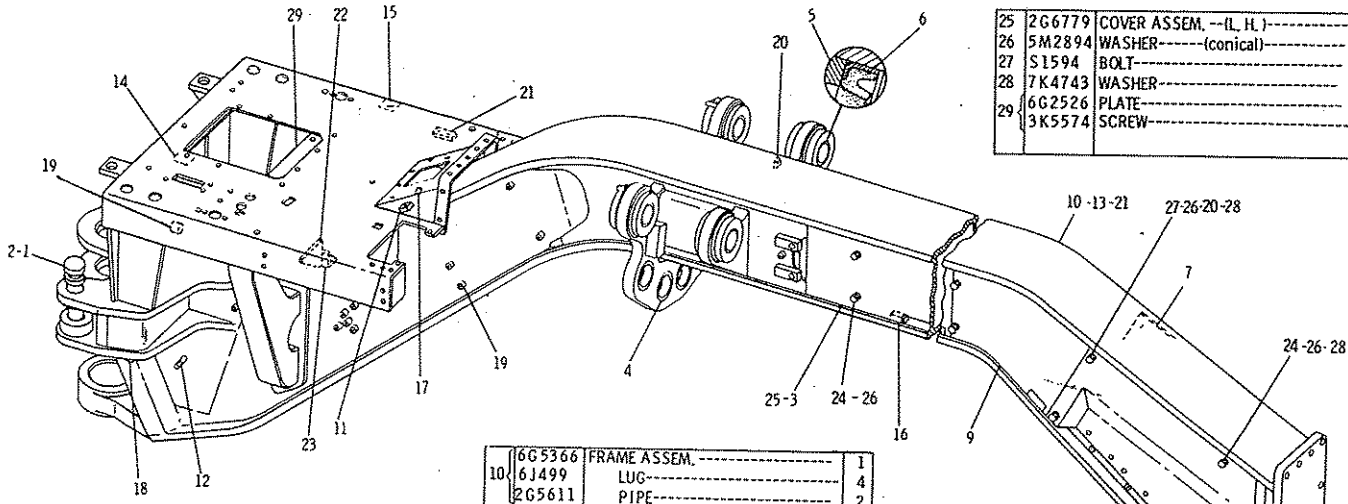

REF. NO.	PART NUMBER	DESCRIPTION	QTY
1	9D9257	PIN	1
2	8D3791	COTTER PIN	1
3	2G8857	COVER ASSEM. ----(R. H.)	1
4	9D4784	BUSHING	5
5	9D178	BEARING	4
6	9D6584	SEAL	8
7	6G1287	COVER ASSEM. ------(L. H.)	1
8	6G1286	COVER ASSEM. -------(R. H.)	1
9	9D2431	COVER	2

	6G5366	FRAME ASSEM.	1
10	6J499	LUG	4
	2G5611	PIPE	2
11	6F3259	LUG	2
12	8D8879	STUD	4
13	6K2188	PIN	3
14	9F2978	NUT	19
15	1F748	NUT	4
16	2M2835	BLOCK	2
17	9F6445	NUT	16
18	4D9376	BOSS	2
18	9D5659	BOSS	17
19	2K7051	BAR	1
21	5D37	BLOCK	1
	8F9836	LUG	3
22	4M1108	GUSSET	2
23	6G256	BRACKET	1
24	S509	BOLT	15

25	2G6779	COVER ASSEM. --(L. H.)	1
26	5M2894	WASHER------(conical)	19
27	S1594	BOLT	4
28	7K4743	WASHER	7
29	6G2526	PLATE	1
	3K5574	SCREW	2

302936

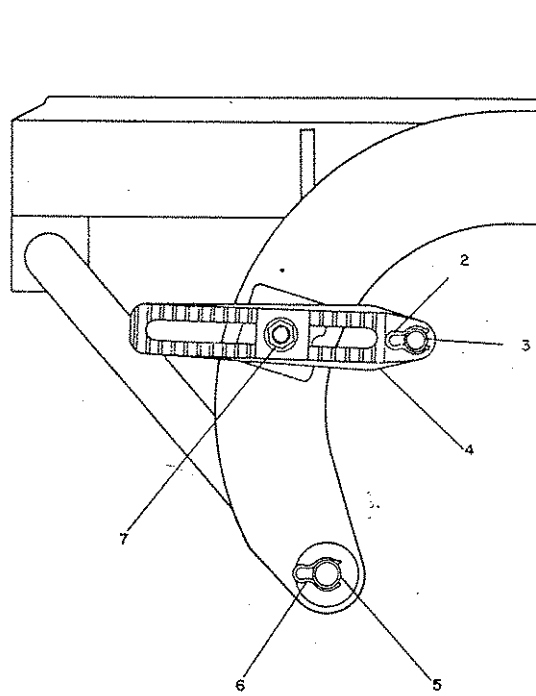

REF. NO.	PART NUMBER	DESCRIPTION	QTY.
1	2G9189	CIRCLE ASSEM. (Separate Illustration)	1
2	7B2500	RING	2
3	7B2504	PIN	2
4	1D4494	LINK	2
5	7B2505	PIN	2
6	7B2501	RING	2
7	T603	BOLT	2
	1B4208	NUT	2
	3B4514	LOCKWASHER	2
	M393	WASHER	2

227971

9D170 CIRCLE GROUP—Side View
2G9189 Circle parts are shown on Page 189

9D2670 CIRCLE GROUP—Rear View—Type 1
Part of 2G6321 & 2G430 Power Blade Arrangements listed on Page 279
6G2941 Circle parts are shown on Page 189. AN ATTACHMENT

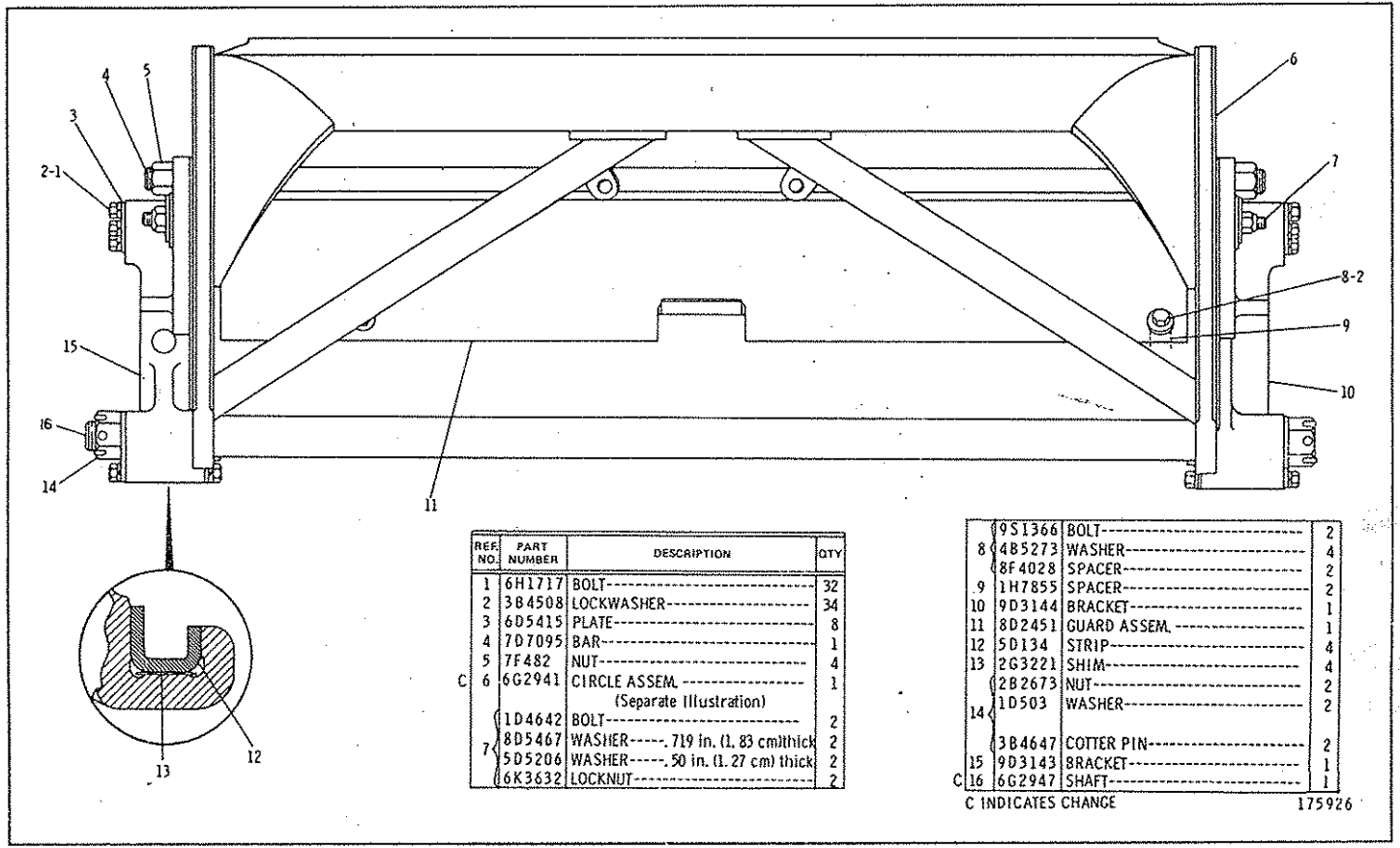

REF. NO.	PART NUMBER	DESCRIPTION	QTY
1	6H1717	BOLT	32
2	3B4508	LOCKWASHER	34
3	6D5415	PLATE	8
4	7D7095	BAR	1
5	7F482	NUT	4
C 6	6G2941	CIRCLE ASSEM. (Separate Illustration)	1
7	1D4642	BOLT	2
	8D5467	WASHER-----.719 in. (1.83 cm)thick	2
	5D5206	WASHER-----.50 in. (1.27 cm) thick	2
	6K3632	LOCKNUT	2

8	9S1366	BOLT	2
	4B5273	WASHER	4
	8F4028	SPACER	2
9	1H7855	SPACER	2
10	9D3144	BRACKET	1
11	8D2451	GUARD ASSEM.	1
12	5D134	STRIP	4
13	2G3221	SHIM	4
14	2B2673	NUT	2
	1D503	WASHER	2
	3B4647	COTTER PIN	2
15	9D3143	BRACKET	1
C 16	6G2947	SHAFT	1

C INDICATES CHANGE

175926

9D2670 CIRCLE GROUP—Rear View—Type 2
Part of 2G6321 & 2G430 Power Blade Arrangement listed on Page 279
6G2941 Circle parts are shown on Page 189. AN ATTACHMENT

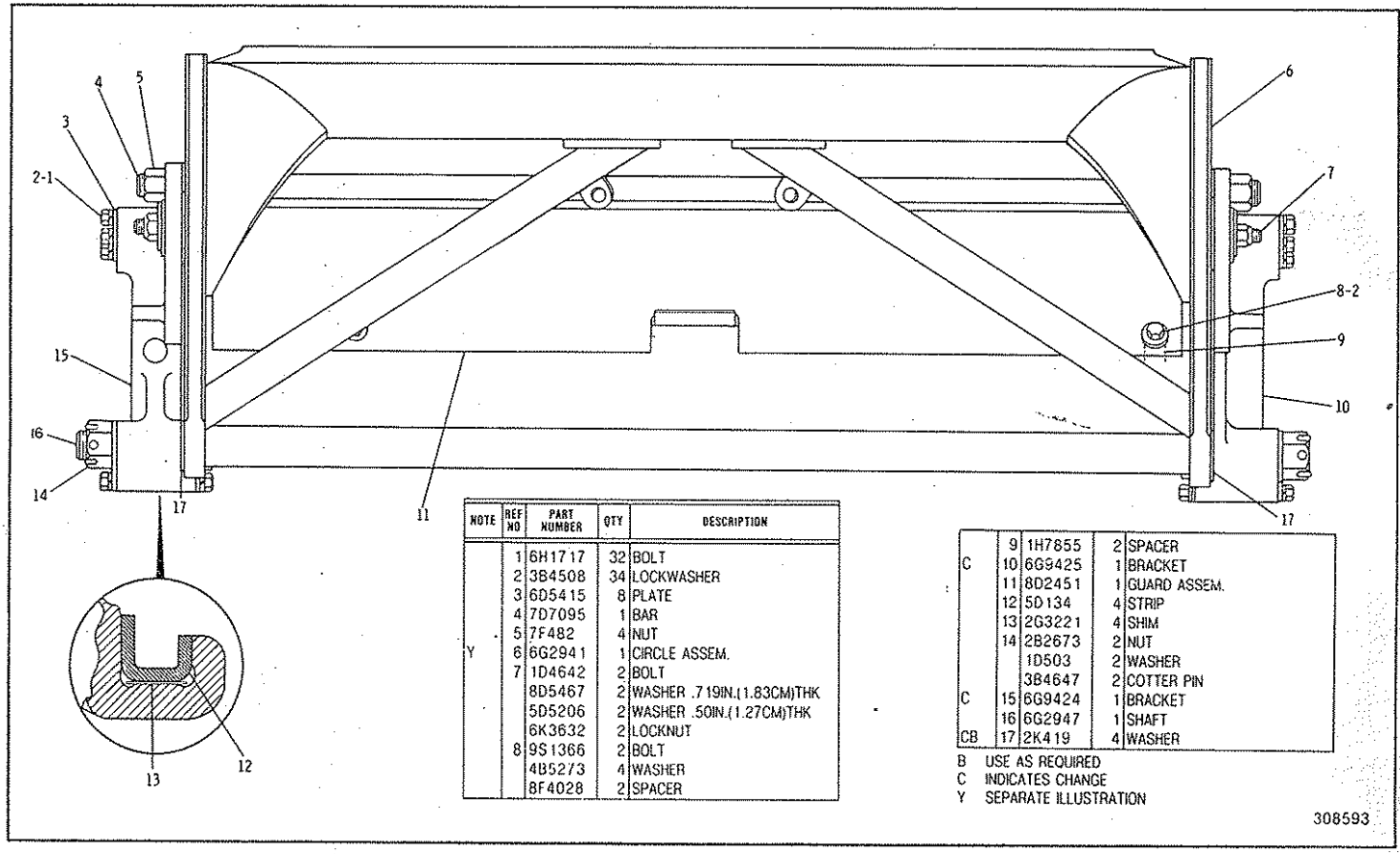

NOTE	REF NO	PART NUMBER	QTY	DESCRIPTION
	1	6H1717	32	BOLT
	2	3B4508	34	LOCKWASHER
	3	6D5415	8	PLATE
	4	7D7095	1	BAR
	5	7F482	4	NUT
Y	6	6G2941	1	CIRCLE ASSEM.
	7	1D4642	2	BOLT
		8D5467	2	WASHER .719IN.(1.83CM)THK
		5D5206	2	WASHER .50IN.(1.27CM)THK
		6K3632	2	LOCKNUT
	8	9S1366	2	BOLT
		4B5273	4	WASHER
		8F4028	2	SPACER
	9	1H7855	2	SPACER
C	10	6G9425	1	BRACKET
	11	8D2451	1	GUARD ASSEM.
	12	5D134	4	STRIP
	13	2G3221	4	SHIM
	14	2B2673	2	NUT
		1D503	2	WASHER
		3B4647	2	COTTER PIN
C	15	6G9424	1	BRACKET
	16	6G2947	1	SHAFT
CB	17	2K419	4	WASHER

B USE AS REQUIRED
C INDICATES CHANGE
Y SEPARATE ILLUSTRATION

308593

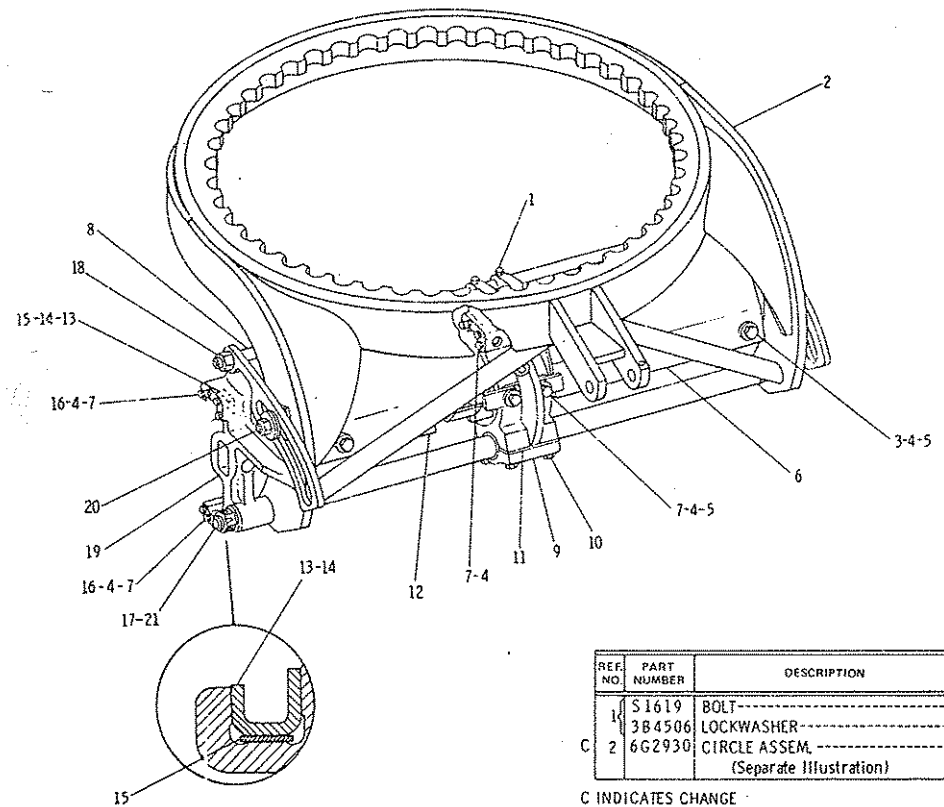

REF. NO.	PART NUMBER	DESCRIPTION	QTY
1	S1619	BOLT	2
	3B4506	LOCKWASHER	2
C 2	6G2930	CIRCLE ASSEM. (Separate Illustration)	1

	9S1366	BOLT	2
3	1H7855	SPACER---3.51 cm(1.38 in.)long	2
	8F4028	SPACER---.64 cm(.25 in.)long	2
4	3B4508	LOCKWASHER	44
5	4B5273	WASHER	6
6	8D5862	GUARD ASSEM.	1
7	6H1717	BOLT	42
8	8D5949	BAR	1
9	2G8786	BRACKET ASSEM. (Includes)	1
	8S9092	BOLT---5.72 cm(2.25 in.)long	2
10	1A8537	BOLT---6.99 cm(2.75 in.)long	2
	4D3704	WASHER	4
11	5D6644	SHIM	10
12	8D5863	GUARD ASSEM.	1
13	5D134	STRIP	4
14	9D6638	STRIP---(center)	1
15	2G3221	SHIM	5
16	6D5415	PLATE	10
	1D503	WASHER	2
17	2B2673	NUT	2
	3B4647	COTTER PIN	2
18	7F482	NUT	4
19	2G8731	BRACKET---(L. H.)	1
	2G8729	BRACKET---(R. H.)	1
	1D4641	BOLT	2
C 20	6K3632	NUT	2
	S1822	WASHER---.64 cm(.25 in.)thick	2
	7D1446	WASHER---.48 cm(.88 in.)thick	2
C 21	6G2947	SHAFT	1

C INDICATES CHANGE

175935

9D3210 CIRCLE GROUP—Type 1
Part of 2G6316 and 2G460 Power Blade and Tip Arrangements listed on Page 279
6G2930 Circle parts are shown on Page 190. AN ATTACHMENT

9D3210 CIRCLE GROUP—Type 2
Part of 2G6316 and 2G460 Power Blade and Tip Arrangements listed on Page 279
6G2930 Circle parts are shown on Page 190. AN ATTACHMENT

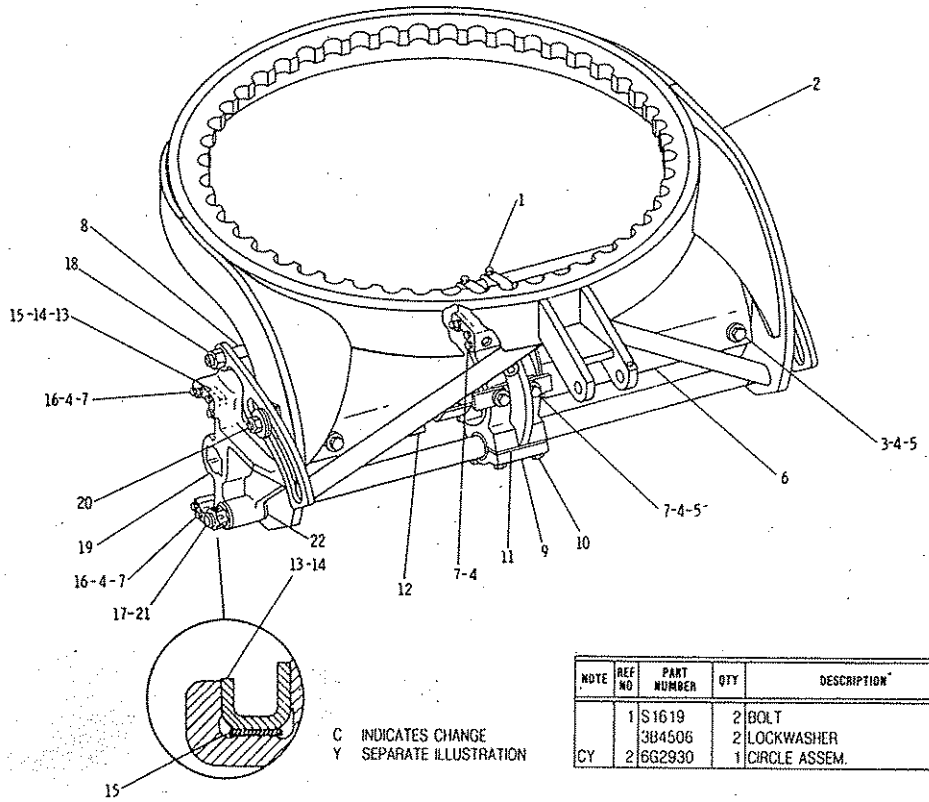

C INDICATES CHANGE
Y SEPARATE ILLUSTRATION

NOTE	REF NO	PART NUMBER	QTY	DESCRIPTION
	1	S1619	2	BOLT
		3B4506	2	LOCKWASHER
CY	2	6G2930	1	CIRCLE ASSEM.

	REF NO	PART NUMBER	QTY	DESCRIPTION
	3	9S1366	2	BOLT
		1H7855	2	SPACER
				3.51CM (1.38 IN.) LONG
		8F4028	2	SPACER
				.64CM (.25 IN.) LONG
	4	3B4508	44	LOCKWASHER
	5	4B5273	6	WASHER
	6	8D5862	1	GUARD ASSEM.
	7	6H1717	42	BOLT
	8	8D5949	1	BAR
	9	2G8786	1	BRACKET ASSEM.
	10	8S9092	2	BOLT
				5.72CM (2.25 IN.) LONG
		1A8537	2	BOLT
				6.99CM (2.75 IN.) LONG
		4D3704	4	WASHER
	11	5D6644	10	SHIM
	12	8D5863	1	GUARD ASSEM.
	13	5D134	4	STRIP
	14	9D6638	1	STRIP (CENTER)
	15	2G3221	5	SHIM
	16	6D5415	10	PLATE
	17	1D503	2	WASHER
		2B2673	2	NUT
		3B4647	2	COTTER PIN
	18	7F482	4	NUT
C	19	6G9427	1	BRACKET (L.H.)
C		6G9426	1	BRACKET (R.H.)
C	20	1D4641	2	BOLT
C		6K3632	2	NUT
C		S1822	2	WASHER .64CM (.25 IN.)THK
		7D1446	2	WASHER
				.48CM (.188 IN.) THK.
C	21	6G2947	1	SHAFT
C	22	2K419	4	WASHER

308594

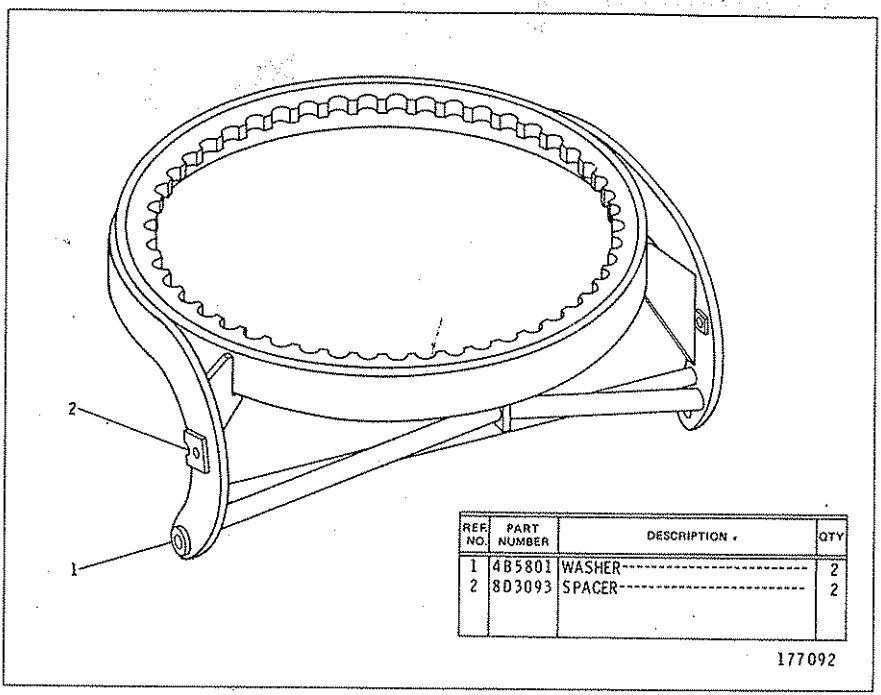

REF. NO.	PART NUMBER	DESCRIPTION	QTY
1	4B5801	WASHER	2
2	8D3093	SPACER	2

2G9189 CIRCLE ASSEMBLY
Part of 9D170 Circle Group shown on Page 186

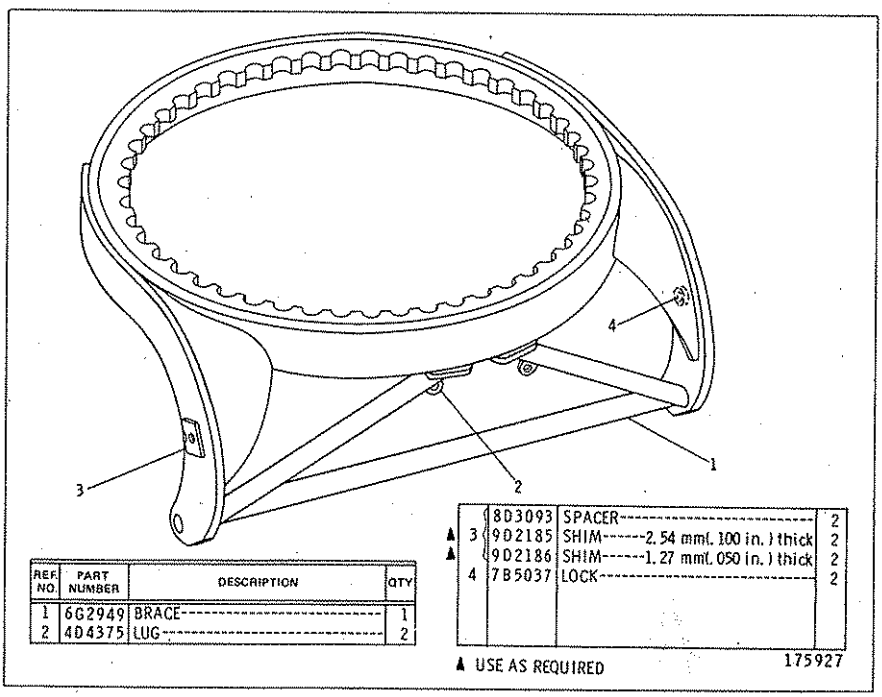

REF. NO.	PART NUMBER	DESCRIPTION	QTY
1	6G2949	BRACE	1
2	4D4375	LUG	2

	REF. NO.	PART NUMBER	DESCRIPTION	QTY
		8D3093	SPACER	2
▲	3	9D2185	SHIM------2.54 mm(.100 in.) thick	2
▲		9D2186	SHIM------1.27 mm(.050 in.) thick	2
	4	7B5037	LOCK	2

▲ USE AS REQUIRED

6G2941 CIRCLE ASSEMBLY
Part of 9D2670 Circle Group shown on Page 187
AN ATTACHMENT

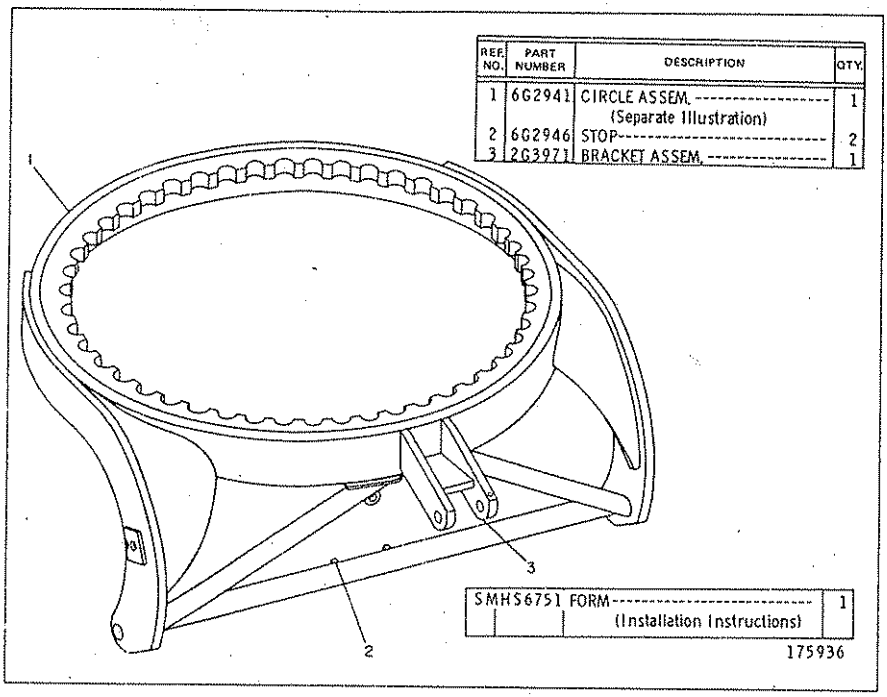

REF. NO.	PART NUMBER	DESCRIPTION	QTY.
1	6G2941	CIRCLE ASSEM. (Separate Illustration)	1
2	6G2946	STOP	2
3	2G3971	BRACKET ASSEM.	1
	SMHS6751	FORM (Installation Instructions)	1

175936

6G2930 CIRCLE ASSEMBLY
Part of 9D3210 Circle Group shown on Page 188
AN ATTACHMENT

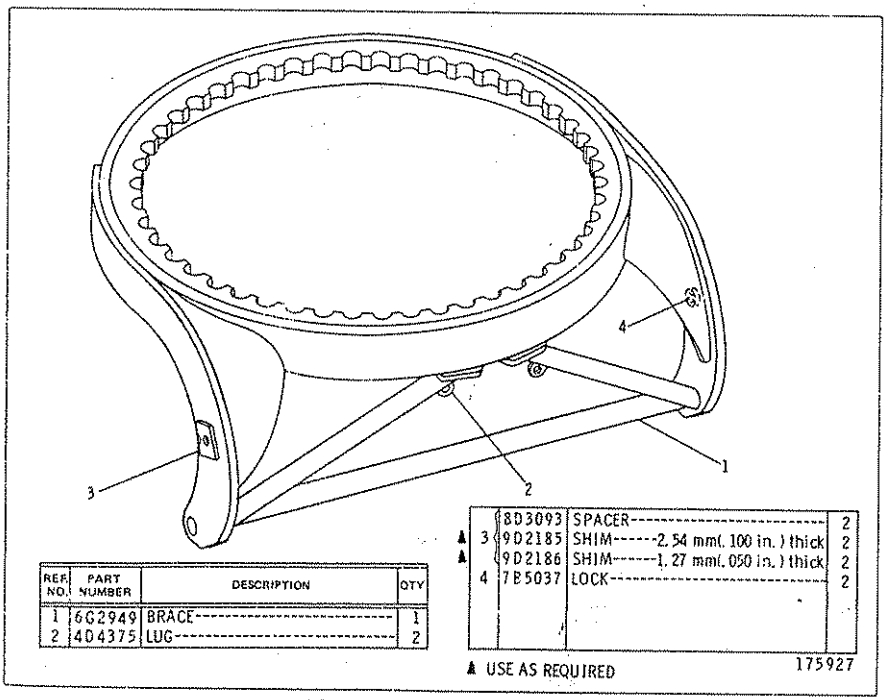

REF. NO.	PART NUMBER	DESCRIPTION	QTY
1	6G2949	BRACE	1
2	4D4375	LUG	2

	8D3093	SPACER	2
▲ 3	9D2185	SHIM-----2.54 mm(.100 in.) thick	2
▲	9D2186	SHIM-----1.27 mm(.050 in.) thick	2
4	7B5037	LOCK	2

▲ USE AS REQUIRED

175927

6G2941 CIRCLE ASSEMBLY

2G6810 DRAWBAR GROUP
Serial No. 87V5275 to 87V5485 Inclusive

REF. NO.	PART NUMBER	DESCRIPTION	QTY
1	4J8622	BOLT	4
	9H1031	WASHER	4
2	2G2858	CAP	1
3	7D5861	ADAPTER	1
4	2B947	BOLT	6
	2M849	WASHER	6
C 5	2H3764	BOLT	2
C 6	4D3907	SHIM-----.762 mm(.03 in.) thick	4
C	6D3133	SHIM-----.254 mm(.01 in.) thick	6
7	2G7464	INSERT	3
8	2G6802	BALL	1
9	2G6795	PLATE	4
10	2G6793	SHIM-----.762 mm(.03 in.) thick	28
	2G6794	SHIM-----.254 mm(.01 in.) thick	16
11	1D4612	BOLT	2
12	5P6652	WASHER	12
13	1K6870	NUT	10

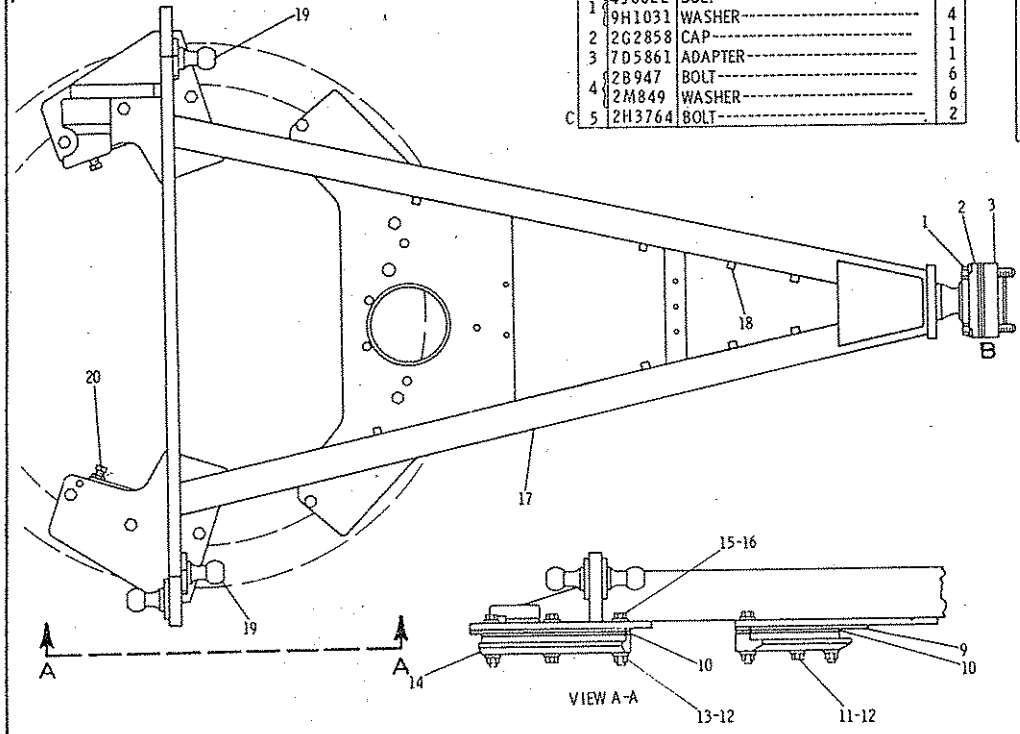

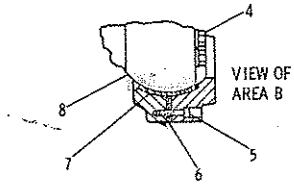

14	2G6703	SHOE	4
15	1D4614	BOLT	10
16	2S115	WASHER	10
17	2G6809	DRAWBAR AND YOKE ASSEM. (Includes)	1
18	8F9836	LUG	10
19	2G5849	PLATE ASSEM. (Includes)	1
	2G5962	BALLSTUD ASSEM. (Each Includes)	3
	2G5689	BALLSTUD	1
20	4B3604	SETSCREW	8
	1D5119	NUT	8

C INDICATES CHANGE

227959

2G6810 DRAWBAR GROUP
Serial No. 87V5486 to 87V6665 inclusive

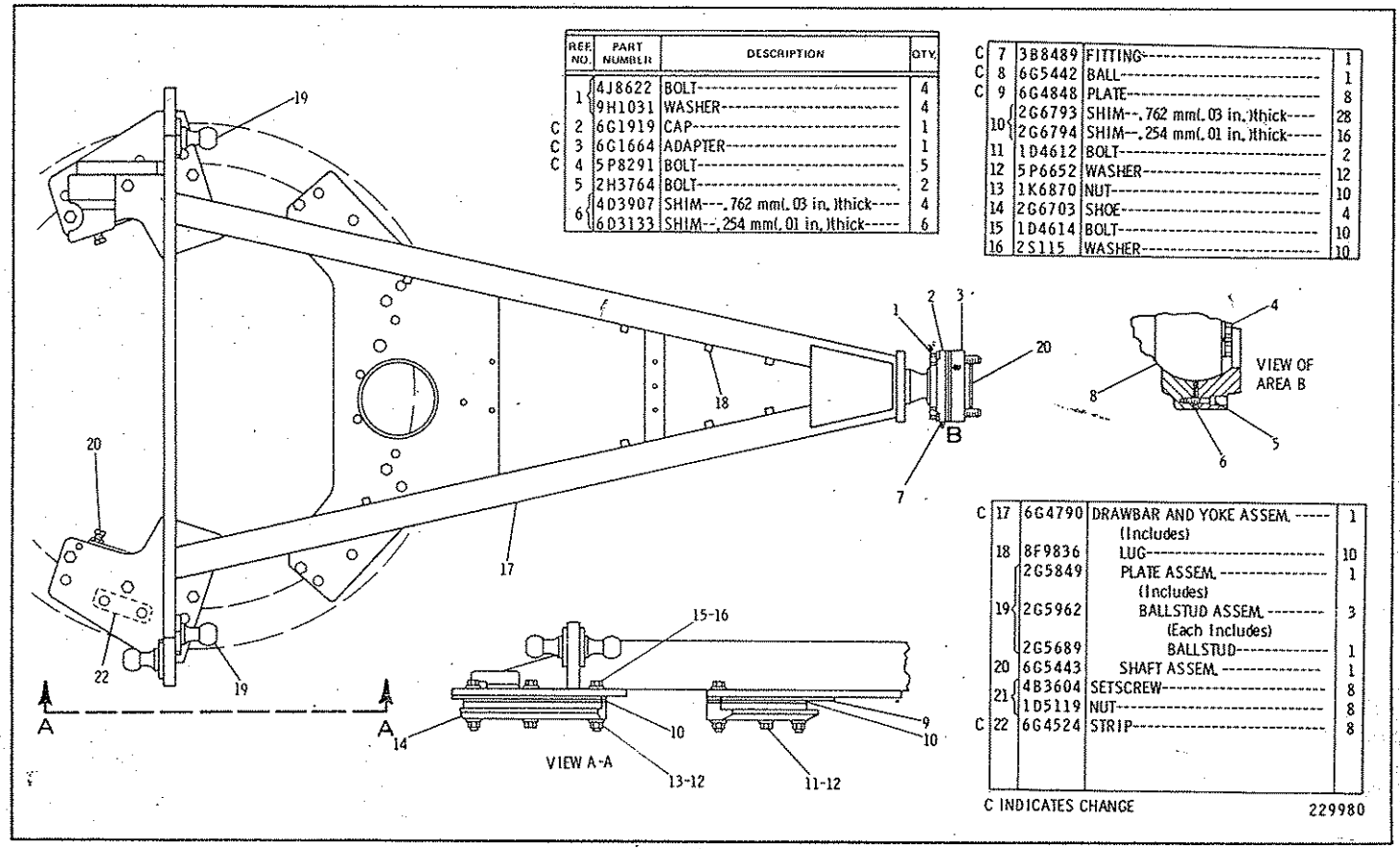

REF. NO.	PART NUMBER	DESCRIPTION	QTY.
1	4J8622	BOLT	4
	9H1031	WASHER	4
C 2	6G1919	CAP	1
C 3	6G1664	ADAPTER	1
C 4	5P8291	BOLT	5
5	2H3764	BOLT	2
6	4D3907	SHIM---.762 mm(.03 in.)thick	4
	6D3133	SHIM--.254 mm(.01 in.)thick	6

C	7	3B8489	FITTING	1
C	8	6G5442	BALL	1
C	9	6G4848	PLATE	8
	10	2G6793	SHIM--.762 mm(.03 in.)thick	28
		2G6794	SHIM--.254 mm(.01 in.)thick	16
	11	1D4612	BOLT	2
	12	5P6652	WASHER	12
	13	1K6870	NUT	10
	14	2G6703	SHOE	4
	15	1D4614	BOLT	10
	16	2S115	WASHER	10

C	17	6G4790	DRAWBAR AND YOKE ASSEM. (Includes)	1
	18	8F9836	LUG	10
	19	2G5849	PLATE ASSEM. (Includes)	1
		2G5962	BALLSTUD ASSEM. (Each Includes)	3
		2G5689	BALLSTUD	1
	20	6G5443	SHAFT ASSEM.	1
	21	4B3604	SETSCREW	8
		1D5119	NUT	8
C	22	6G4524	STRIP	8

C INDICATES CHANGE

229980

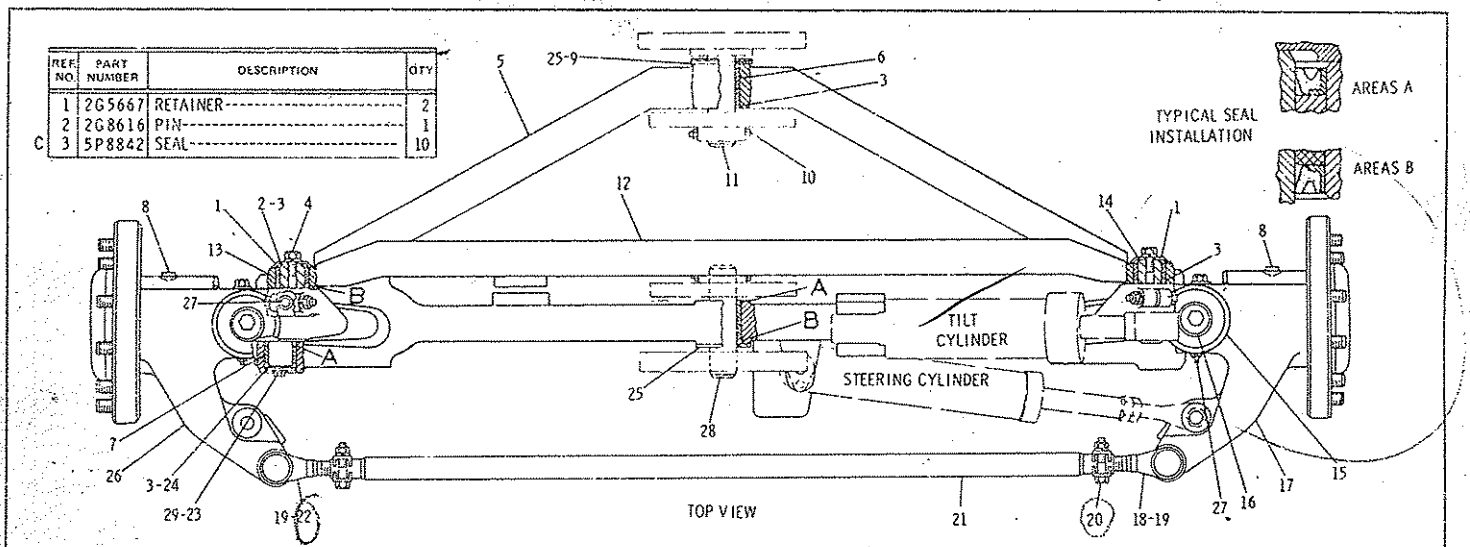

REF NO.	PART NUMBER	DESCRIPTION	QTY
1	2G5667	RETAINER	2
2	2G8616	PIN	1
C 3	5P8842	SEAL	10
4	S1592	BOLT	2
	4D3704	WASHER	2
5	2G8719	AXLE ASSEM.	1
6	2G8661	BEARING	2
7	2G8631	BEARING	4
8	1B5174	PLUG	2
▲ 9	2G5676	WASHER---(1.52 mm(.060 in.) thick	1
10	T65	BOLT	2
	2K4973	LOCKNUT	2
11	2G8628	PIN	2
12	2G8685	BAR ASSEM.	1
13	2G8624	BEARING	2
14	2G8612	PIN	1
15	2G8687	ARM ASSEM.---(R. H.)---(Includes)	1
16	2G8737	BEARING--6.45cm(2.54in.) long	1
	2G8736	BEARING--6.05cm(2.38in.) long	1
17	2G8681	HOUSING---(R. H.)	1
18	9D6523	SOCKET ASSEM.---(Includes)	1
	2F8057	NUT	1
19	8D2811	WASHER	2
	3B4618	COTTER PIN	2
	5D6952	CLAMP	2
20	1B4367	BOLT	2
	3K2889	NUT	2
21	9D6521	ROD	1
22	9D6524	SOCKET ASSEM.---(Includes)	1
	2F8057	NUT	1
23	L1351	BOLT	4
	2G8768	WASHER---(plain)	4
24	2G8633	PIN	2
25	2G5675	WASHER--4.78 mm(.188 in.) thick	2
26	2G8682	HOUSING---(L. H.)	1
27	3B8489	FITTING	12
28	2G8769	PIN	1
29	5P1075	WASHER	4

C INDICATES CHANGE

▲ USE AS REQUIRED

228056

2G8870 FRONT AXLE GROUP---Part 1
Serial No. 87V5275 to 87V6014 inclusive

2G8870 FRONT AXLE GROUP—Part 2
Serial No. 87V5275 to 87V6014 inclusive

REF. NO.	PART NUMBER	DESCRIPTION	QTY
1	2G3866	SHIM	2
2	9D52	RETAINER	2
C 3	L1351	BOLT	4
4	2G8778	SEAL	4
C	4L9564	SEAL-O-RING	4
C 5	5P1075	WASHER	4

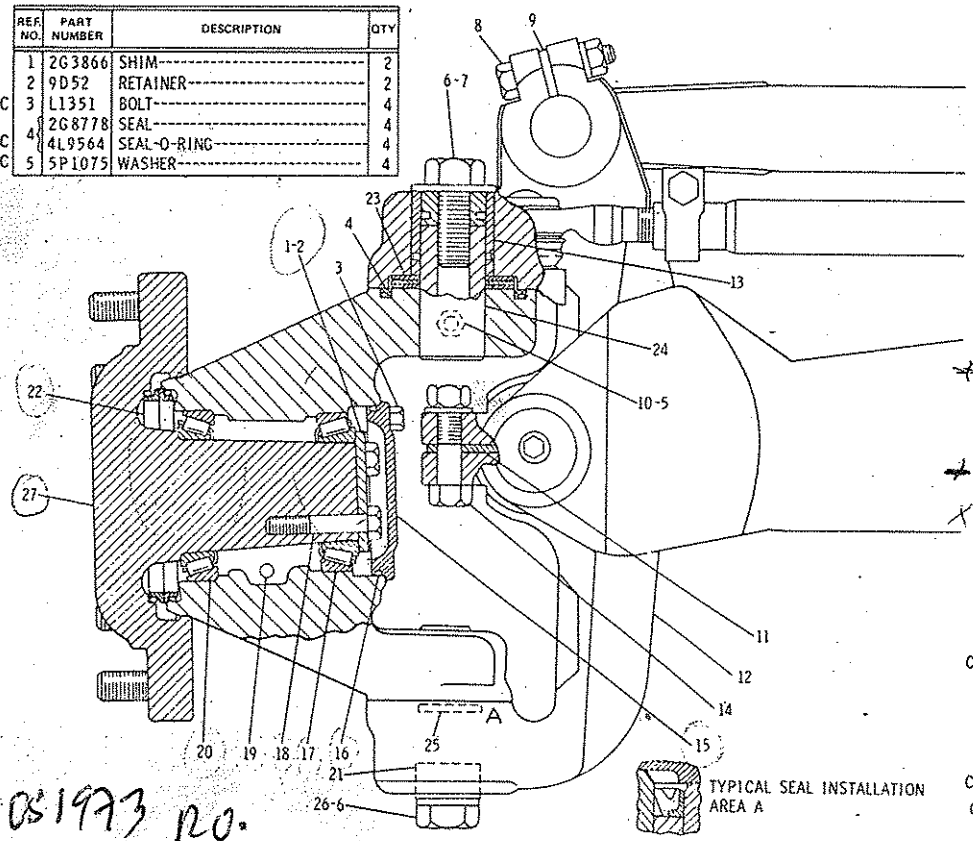

TYPICAL SEAL INSTALLATION AREA A

6	5P8081	BOLT	4
7	2G8742	WASHER	2
8	1B4367	BOLT	2
	4K367	NUT	2
	4D3704	WASHER	2
9	4D925	LOCK	2
10	S1571	BOLT	4
11	9D55	LOCK	2
12	2G8688	ARM ASSEM. -------(L. H.)	1
		(Includes)	
	2G8737	BEARING	1
13	2G8736	BEARING	1
14	1D4608	BOLT	2
	2J3506	NUT	2
	2S115	WASHER	2
15	9D44	COVER	2
16	4H9105	SEAL	2
17	2P8986	CUP	2
	2P8987	CONE	2
18	L1329	BOLT	6
19	2H8829	PLUG	2
	1F7178	GASKET	2
20	2N2138	CUP	2
	2N2139	CONE	2
21	2G8764	RETAINER	4
	2G8760	SEAL RING	4
22	3S303	SEAL GROUP	2
		(Each Includes)	
	3S302	RING	2
23	2G8664	WASHER -------(outer)	4
	2G8665	WASHER -------(inner)	2
24	2G8620	PIN	4
C 25	5P8888	SEAL	2
26	5H1504	WASHER	2
27	9D51	SPINDLE	2
	7D53	BOLT	20
		-OR-	
	2G7679	SPINDLE	2
C	6V1319	STUD	20

C INDICATES CHANGE 228057

OS1973 RO.

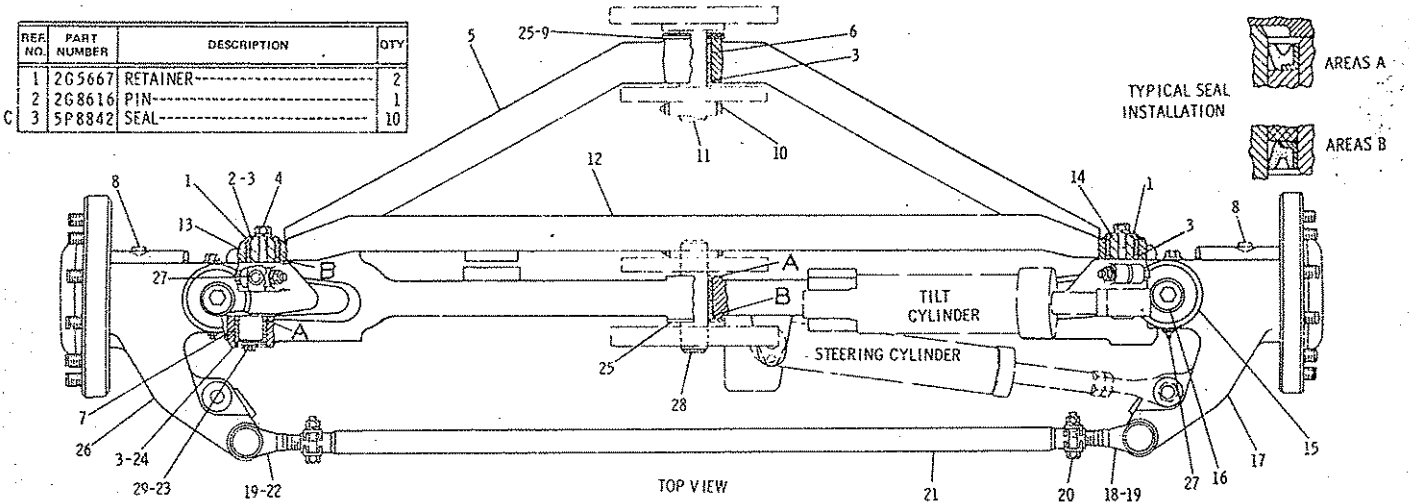

REF. NO.	PART NUMBER	DESCRIPTION	QTY
1	2G5667	RETAINER	2
2	2G8616	PIN	1
C 3	5P8842	SEAL	10
4	S1592	BOLT	2
	4D3704	WASHER	2
5	2G8719	AXLE ASSEM.	1
6	2G8661	BEARING	2
7	2G8631	BEARING	4
8	1B5174	PLUG	2
▲ 9	2G5676	WASHER---(1.52 mm(.060 in.) thick	1
10	T65	BOLT	2
	2K4973	LOCKNUT	2
11	2G8628	PIN	2
12	2G8685	BAR ASSEM.	1
13	2G8624	BEARING	2
14	2G8612	PIN	1
15	2G8687	ARM ASSEM.---(R. H.)--- (Includes)	1
16	2G8737	BEARING---6.45cm(2.54in.) long	1
	2G8736	BEARING---6.05cm(2.38in.) long	1
17	2G8681	HOUSING---(R. H.)	1
18	9D6523	SOCKET ASSEM. (Includes)	1
	2F8057	NUT	1
19	8D2811	WASHER	2
	3B4618	COTTER PIN	2
20	5D6952	CLAMP	2
	1B4367	BOLT	2
	3K2889	NUT	2
21	9D6521	ROD	1
22	9D6524	SOCKET ASSEM. (Includes)	1
	2F8057	NUT	1
23	L1351	BOLT	4
	2G8768	WASHER---(plain)	4
24	2G8633	PIN	2
25	2G5675	WASHER---4.78 mm(.88 in.) thick	2
26	2G8682	HOUSING---(L. H.)	1
27	3B8489	FITTING	12
28	2G8769	PIN	1
29	5P1075	WASHER	4

C INDICATES CHANGE

▲ USE AS REQUIRED

180392

2G8870 FRONT AXLE GROUP—Part 1
Serial No. 87V6015 to 87V6342 inclusive

2G8870 FRONT AXLE GROUP—Part 2
Serial No. 87V6015 to 87V6342 inclusive

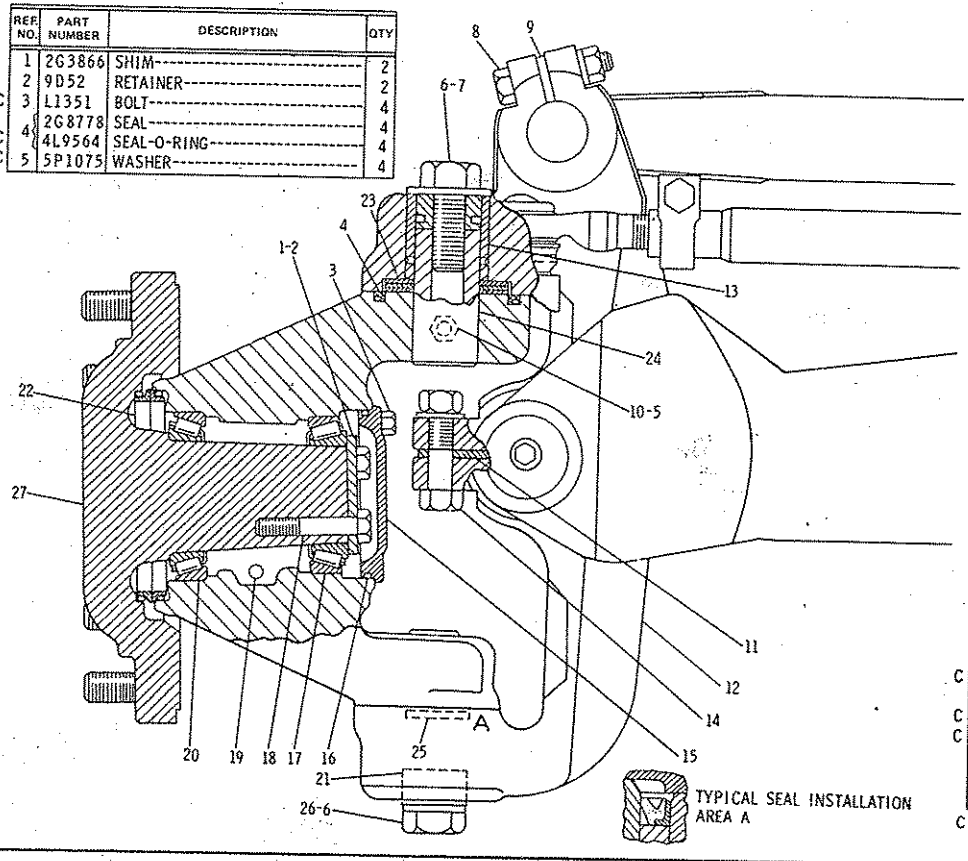

REF. NO.	PART NUMBER	DESCRIPTION	QTY
1	2G3866	SHIM	2
2	9D52	RETAINER	2
C 3	L1351	BOLT	4
4	2G8778	SEAL	4
C	4L9564	SEAL-O-RING	4
C 5	5P1075	WASHER	4
6	5P8081	BOLT	4
7	2G8742	WASHER	2
	1B4367	BOLT	2
8	4K367	NUT	2
	4D3704	WASHER	2
9	4D925	LOCK	2
10	S1571	BOLT	4
11	9D55	LOCK	2
12	2G8688	ARM ASSEM. ------(L. H.) (Includes)	1
	2G8737	BEARING	1
13	2G8736	BEARING	1
	1D4608	BOLT	2
14	2J3506	NUT	2
	2S115	WASHER	2
15	9D44	COVER	2
16	4H9105	SEAL	2
17	2P8986	CUP	2
	2P8987	CONE	2
18	L1329	BOLT	6
19	2H8829	PLUG	2
	1F7178	GASKET	2
20	2N2138	CUP	2
	2N2139	CONE	2
21	2G8764	RETAINER	4
	2G8760	SEAL RING	4
22	3S303	SEAL GROUP (Each Includes)	2
	3S302	RING	2
23	2G8664	WASHER ------(outer)	4
	2G8665	WASHER ------(inner)	2
24	2G8620	PIN	4
C 25	5P8888	SEAL	2
26	5H1504	WASHER	2
C 27	6G9977	SPINDLE	2
C	6V4250	BOLT	20

TYPICAL SEAL INSTALLATION
AREA A

C INDICATES CHANGE

180393

REF. NO.	PART NUMBER	DESCRIPTION	QTY
1	2G5667	RETAINER	2
2	2G8616	PIN	1
3	5P8842	SEAL	10

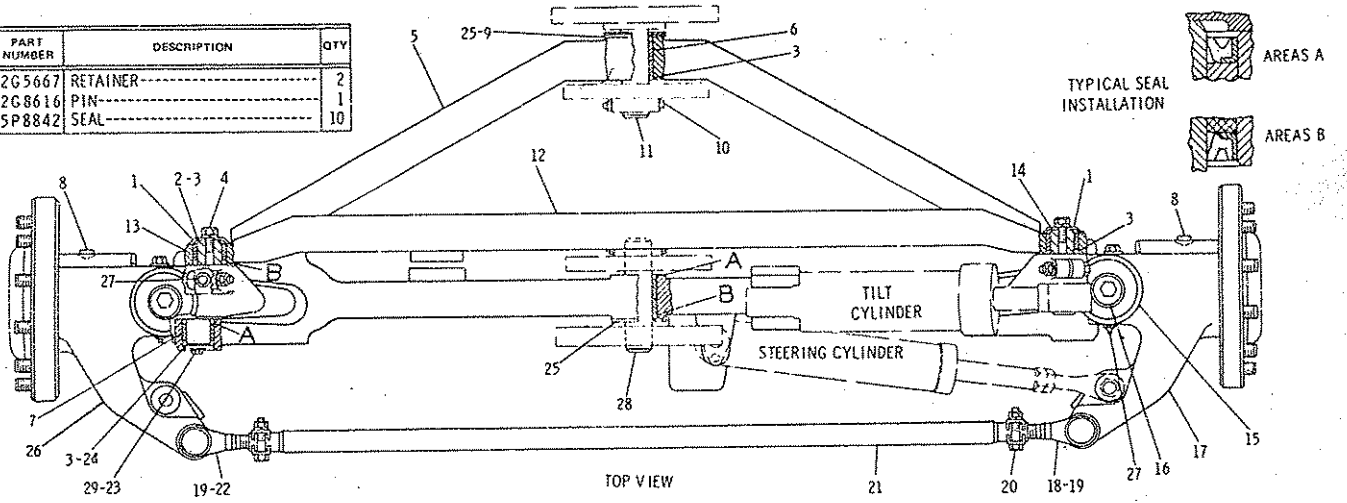

4	S1592	BOLT	2
	4D3704	WASHER	2
5	2G8719	AXLE ASSEM.	1
6	2G8661	BEARING	2
7	2G8631	BEARING	4
8	1B5174	PLUG	2
▲ 9	2G5676	WASHER---1.52 mm(.060 in.) thick	1
10	T65	BOLT	2
	2K4973	LOCKNUT	2
11	2G8628	PIN	2
12	2G8685	BAR ASSEM.	1
13	2G8624	BEARING	2
14	2G8612	PIN	1

15	2G8687	ARM ASSEM.---(R.H.)	1
		(Includes)	
16	2G8737	BEARING--6.45cm(2.54in.) long	1
	2G8736	BEARING--6.05cm(2.38in.) long	1
17	2G8681	HOUSING---(R.H.)	1
18	9D6523	SOCKET ASSEM.	1
		(Includes)	
	2F8057	NUT	1
19	8D2811	WASHER	2
	3B4618	COTTER PIN	2
20	5D6952	CLAMP	2
	1S4367	BOLT	2
	3K2889	NUT	2

21	9D6521	ROD	1
22	9D6524	SOCKET ASSEM.	1
		(Includes)	
	2F8057	NUT	1
23	L1351	BOLT	4
	2G8768	WASHER---(plain)	4
24	2G8633	PIN	2
25	2G5675	WASHER---4.78 mm(.188 in.) thick	2
26	2G8682	HOUSING---(L.H.)	1
27	3B8489	FITTING	12
28	2G8769	PIN	1
29	5P1075	WASHER	4

▲ USE AS REQUIRED

302941

2G8870 FRONT AXLE GROUP—Part 1
Serial No. 87V6343—Up

2G8870 FRONT AXLE GROUP—Part 2
Serial No. 87V6343—Up

REF. NO.	PART NUMBER	DESCRIPTION	QTY
1	2G3866	SHIM	2
2	9D52	RETAINER	2
3	308535	BOLT	4
4	2G8778	SEAL	4
	4L9564	SEAL-O-RING	4
5	5P1075	WASHER	4

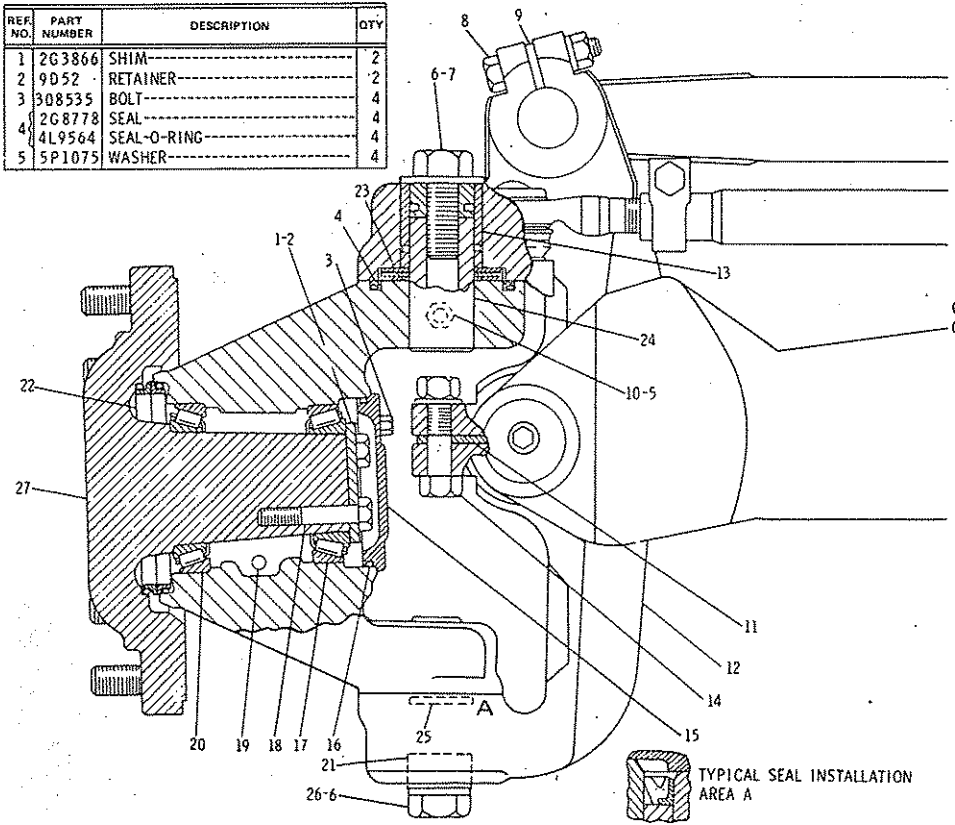

TYPICAL SEAL INSTALLATION
AREA A

REF. NO.	PART NUMBER	DESCRIPTION	QTY
6	5P8081	BOLT	4
7	2G8742	WASHER	2
8	1B4367	BOLT	2
	4K367	NUT	2
	4D3704	WASHER	2
9	4D925	LOCK	2
10	S1571	BOLT	4
11	9D55	LOCK	2
12	2G8688	ARM ASSEM. ------(L. H.)------	1
		(Includes)	
	2G8737	BEARING	1
13	2G8736	BEARING	1
14	1D4608	BOLT	2
	2J3506	NUT	2
	2S115	WASHER	2
C 15	5T905	COVER	2
C 16	2H3928	SEAL	2
17	2P8986	CUP	2
	2P8987	CONE	2
18	L1329	BOLT	6
19	2H8829	PLUG	2
	1F7178	GASKET	2
20	2N2138	CUP	2
	2N2139	CONE	2
21	2G8764	RETAINER	4
	2G8760	SEAL RING	4
22	3S303	SEAL GROUP	2
		(Each Includes)	
	3S302	RING	2
23	2G8664	WASHER-------(outer)	4
	2G8665	WASHER--------(inner)	2
24	2G8620	PIN	4
25	5P8888	SEAL	2
26	5H1504	WASHER	2
27	6G9977	SPINDLE	2
	6V4250	BOLT	20

C INDICATES CHANGE

302942

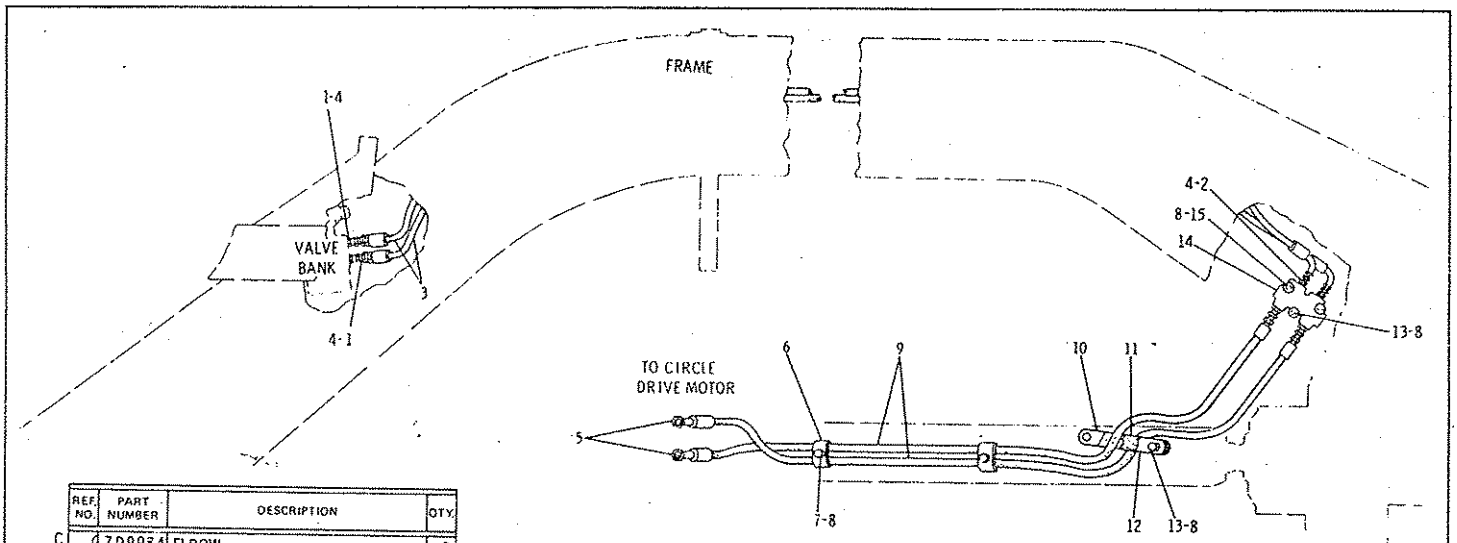

REF. NO.	PART NUMBER	DESCRIPTION	QTY.
C 1	7D9934	ELBOW	2
		- OR -	
	307962	ELBOW--------(swivel)	2
	308188	CONNECTOR	2
2	308188	CONNECTOR	4
C▲ 3	9D5964	HOSE ASSEM. ---(not serv)	2
		For service of each furnish:	
	2P5943	HOSE---151.97 in. (386 cm)	
	8S6417	COUPLING ASSEM. --(straight)	1
	4S5414	SLEEVE	2
	8S6393	COUPLING ASSEM. ---(90°)	1
4	3K360	SEAL	6
5	308194	CONNECTOR	2
	2M9780	SEAL	2

REF. NO.	PART NUMBER	DESCRIPTION	QTY.
6	4J5468	CLAMP	2
7	L1351	BOLT	2
8	5P1075	WASHER--------(conical)	7
C▲ 9	2G3788	HOSE ASSEM. ----(not serv)	2
		For service of each furnish:	
	2P5943	HOSE---86.22 in. (219 cm)	
	8S6417	COUPLING ASSEM. --(straight)	1
	4S5414	SLEEVE	2
	1P9919	COUPLING ASSEM. ----(45°)	1
10	2G2562	CLAMP	1
11	2G2563	CLAMP	1
12	2G2623	PLATE	2

REF. NO.	PART NUMBER	DESCRIPTION	QTY.
C 13	L1143	BOLT	3
14	8J5913	CHECK VALVE GROUP	1
		(Separate Illustration)	
15	L1143	BOLT----63.5 mm(2.5 in.)long	2
		- OR -	
C	T573	BOLT---69.85 mm(2.75 in.)long	2
C	7K4743	WASHER	2

C INDICATES CHANGE

▲ ORDER BY THE INCH

227975

2G3490 CIRCLE DRIVE MOTOR LINES GROUP
Serial No. 87V5275 to 87V5701 inclusive
8J5913 Valve parts are shown on Page 195

2G3490 CIRCLE DRIVE MOTOR LINES GROUP

Serial No. 87V5702 to 87V5725 inclusive

8J5913 Valve parts are shown on Page 195

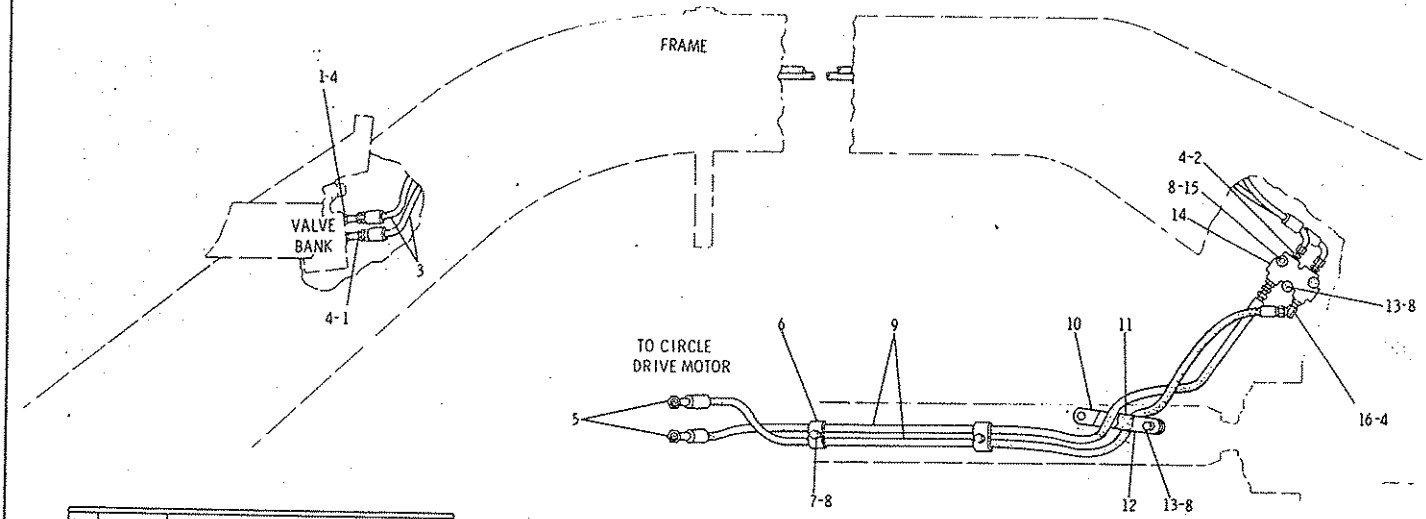

	REF. NO.	PART NUMBER	DESCRIPTION	QTY.
	1	307962	ELBOW----------(swivel)----------	2
		308188	CONNECTOR----------	2
C	2	308188	CONNECTOR----------	3
	3	9D5964	HOSE ASSEM. ---(not serv)---------	2
			For service of each furnish:	
▲		2P5943	HOSE---151.97 in. (386 cm)	
		8S6417	COUPLING ASSEM. --(straight)	1
		4S5414	SLEEVE----------	2
		8S6393	COUPLING ASSEM. ---(90°)----	1
	4	3K360	SEAL----------	6
	5	308194	CONNECTOR----------	2
		2M9780	SEAL----------	2

	6	4J5468	CLAMP----------	2
	7	L1351	BOLT----------	2
	8	5P1075	WASHER---------(conical)---------	7
	9	2G3788	HOSE ASSEM. -----(not serv)-------	2
			For service of each furnish:	
C ▲		2P5943	HOSE---86.22 in. (219 cm)	
		8S6417	COUPLING ASSEM. --(straight)	1
		4S5414	SLEEVE----------	2
		1P9919	COUPLING ASSEM. ----(45°)---	1
	10	2G2562	CLAMP----------	1
	11	2G2563	CLAMP----------	1
	12	2G2623	PLATE----------	2

C	13	L1143	BOLT----------	3
	14	8J5913	CHECK VALVE GROUP----------	1
			(Separate Illustration)	
C	15	T573	BOLT--69.85mm(2.75 in.)long-----	2
C		7K4743	WASHER----------	2
C	16	7D9984	ELBOW----------	1

C INDICATES CHANGE

▲ ORDER BY THE INCH

301274

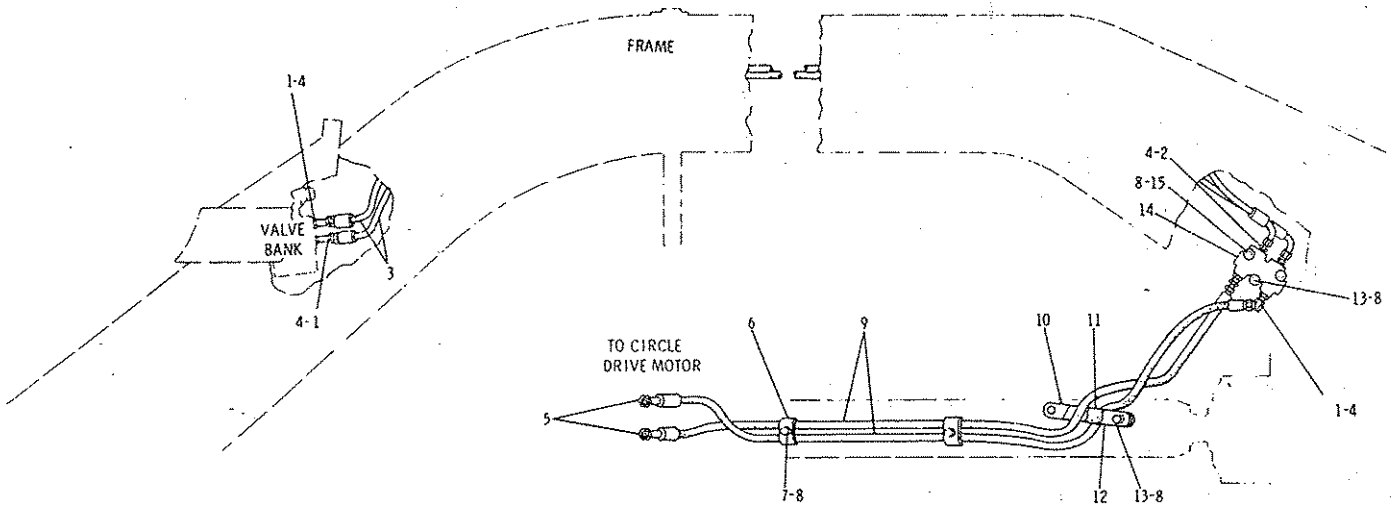

	REF. NO.	PART NUMBER	DESCRIPTION	QTY.
C	1	7D9984	ELBOW	3
	2	308188	CONNECTOR	3
	3	9D5964	HOSE ASSEM. ---(not serv)	2
			For service of each furnish:	
▲		2P5943	HOSE---151.97 in. (386 cm)	
		8S6417	COUPLING ASSEM. --(straight)	1
		4S5414	SLEEVE	2
		8S6393	COUPLING ASSEM. ---(90°)	1
	4	3K360	SEAL	6
	5	308194	CONNECTOR	2
		2M9780	SEAL	2

	6	4J5468	CLAMP	2
	7	L1351	BOLT	2
	8	5P1075	WASHER---------(conical)	7
	9	2G3788	HOSE ASSEM. ----(not serv)	2
			For service of each furnish:	
C ▲		2P5943	HOSE---86.22 in. (219 cm)	
		8S6417	COUPLING ASSEM. --(straight)	1
		4S5414	SLEEVE	2
		1P9919	COUPLING ASSEM. ----(45°)	1
	10	2G2562	CLAMP	1
	11	2G2563	CLAMP	1
	12	2G2623	PLATE	2

C	13	L1143	BOLT	3
	14	8J5913	CHECK VALVE GROUP	1
			(Separate Illustration)	
C	15	T573	BOLT--69.85mm(2.75 in. Hong	2
C		7K4743	WASHER	2

C INDICATES CHANGE

▲ ORDER BY THE INCH

301275

2G3490 CIRCLE DRIVE MOTOR LINES GROUP
Serial No. 87V5726 to 87V6588 inclusive
8J5913 Valve parts are shown on Page 195

2G3490 CIRCLE DRIVE MOTOR LINES GROUP
Serial No. 87V6589—Up
8J5913 Valve parts are shown on Page 195

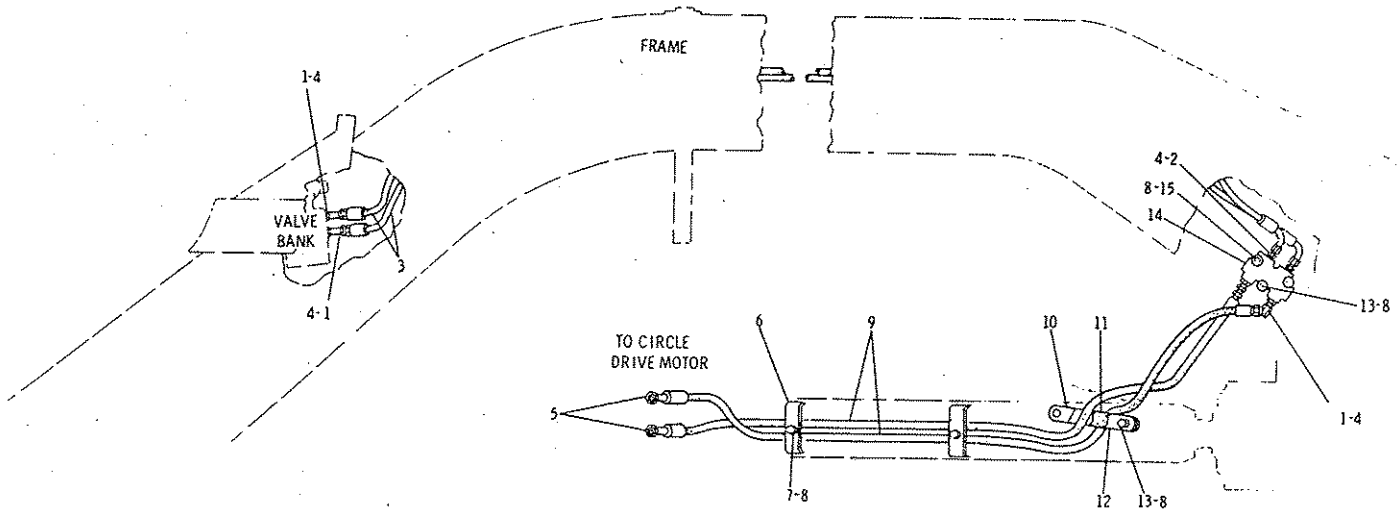

	REF. NO.	PART NUMBER	DESCRIPTION	QTY.
C	1	7D9984	ELBOW	3
	2	308188	CONNECTOR	3
	3	9D5964	HOSE ASSEM. ---(not serv)	2
			For service of each furnish:	
▲		2P5943	HOSE---151.97 in. (386 cm)	
		8S6417	COUPLING ASSEM. --(straight)	1
		4S5414	SLEEVE	2
		8S6393	COUPLING ASSEM. ---(90°)	1
	4	3K360	SEAL	6
	5	308194	CONNECTOR	2
		2M9780	SEAL	2

C	6	5D4988	CLAMP	2
	7	L1351	BOLT	2
	8	5P1075	WASHER---(conical)	7
	9	2G3788	HOSE ASSEM. ----(not serv)	2
			For service of each furnish:	
▲		2P5943	HOSE---86.22 in. (219 cm)	
		8S6417	COUPLING ASSEM. --(straight)	1
		4S5414	SLEEVE	2
		1P9919	COUPLING ASSEM. ----(45°)	1
	10	2G2562	CLAMP	1
	11	2G2563	CLAMP	1
	12	2G2623	PLATE	2

	13	L1143	BOLT	3
	14	8J5913	CHECK VALVE GROUP	1
			(Separate Illustration)	
	15	T573	BOLT--69.85mm(2.75 in.)long	2
		7K4743	WASHER	2

C INDICATES CHANGE

▲ ORDER BY THE INCH

304713

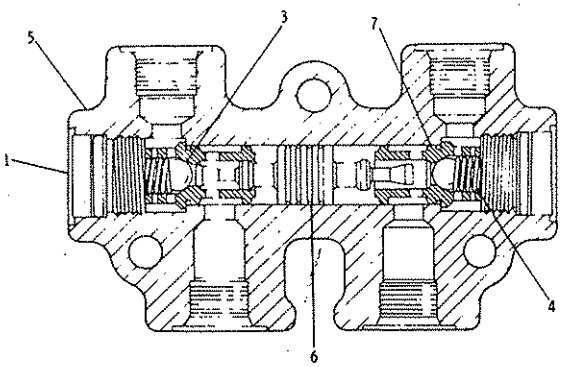

	REF NO	PART NUMBER	DESCRIPTION	QTY
	1	9J404	PLUG	2
C	1	7J9933	SEAL	2
C	3	9J4871	BALL	2
	4	9J403	SPRING	2
C	5	9J8285	BODY ASSEM. (Includes)	1
	6	9J5768	PISTON	1
	7	9J405	SEAT	2

C INDICATES CHANGE 207401

8J5913 CYLINDER LOCK VALVE GROUP—Pilot Operated
Part of 2G3490 Circle Drive Motor Lines and 9D860 Leaning Wheel Lines Groups
shown on Pages 194 & 234

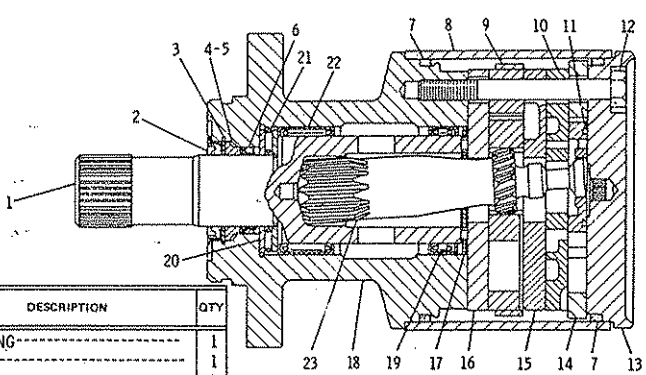

	REF NO.	PART NUMBER	DESCRIPTION	QTY
	1	3G3711	COUPLING	1
	2	9J4957	SEAL	1
	3	5P7604	RING	1
	4	9J4965	SPACER	1
	5	9J4975	WASHER	1
	6	3G3719	SEAL	1
C	7	3G9793	RING	2
	8	3G3724	SLEEVE	1
	9	3G3715	ROTOR	1
	10	3G3712	MANIFOLD	1
	11	9J4963	RING	1
	12	T513	BOLT	7
	13	3G3720	COVER	1
	14	9J7231	PLATE ASSEM.	1
	15	3G3725	PLATE	1
	16	3G3714	PLATE	1
	17	5P3243	BEARING	1
	18	9J4971	HOUSING ASSEM. (Includes)	1
	19	5P3242	BEARING	1
	20	5P3244	RACE	2
	21	5P3240	BEARING	1
	22	5P3241	BEARING	1
	23	3G3702	LINK	1
			THE FOLLOWING REPAIR KIT IS AVAILABLE:	
C		3G9794	KIT (seal)	1

C INDICATES CHANGE 228005

8J5407 GEROTOR MOTOR GROUP
Part of 2G7830 Circle Drive Group shown on Page 197

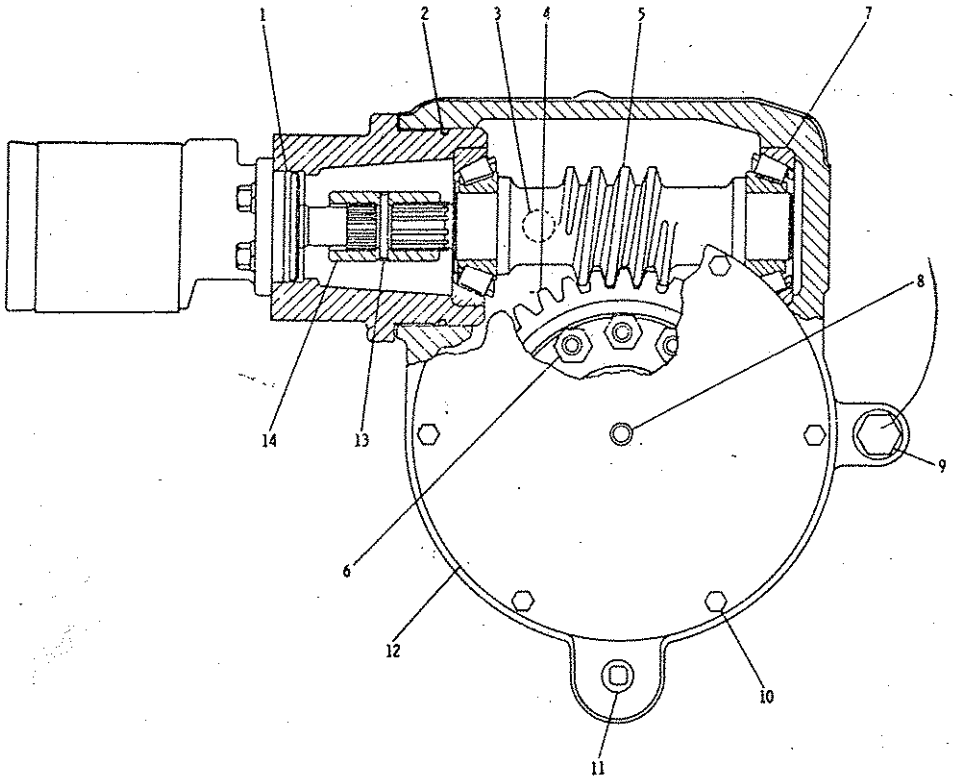

REF. NO.	PART NUMBER	DESCRIPTION	QTY
1	1H7339	SEAL	1
2	2H9247	SEAL	1
3	1B5174	PLUG	1
4	8D5344	GEAR--(36 teeth)	1
5	9D1142	WORM	1
6	1S1625	BOLT	9
	3K2889	LOCKNUT	9
	2S5658	WASHER	9
7	5P885	CONE	2
	2J6232	CUP	2
8	5F5434	VENT ASSEM.	1
9	1D4609	BOLT	1
	7M2360	WASHER	1
10	1S1594	BOLT	4
	5D353	BOLT--(self-locking)	2
	3B4506	LOCKWASHER	6
11	2B7410	PLUG	1
12	9D1492	COVER	1
	5H4909	SEAL	1
13	4H6996	PIN	1
14	9D1491	COUPLING	1

214840

2G7830 CIRCLE DRIVE GROUP—Top View

2G7830 CIRCLE DRIVE GROUP—Side View
8J5407 Motor parts are shown on Page 195

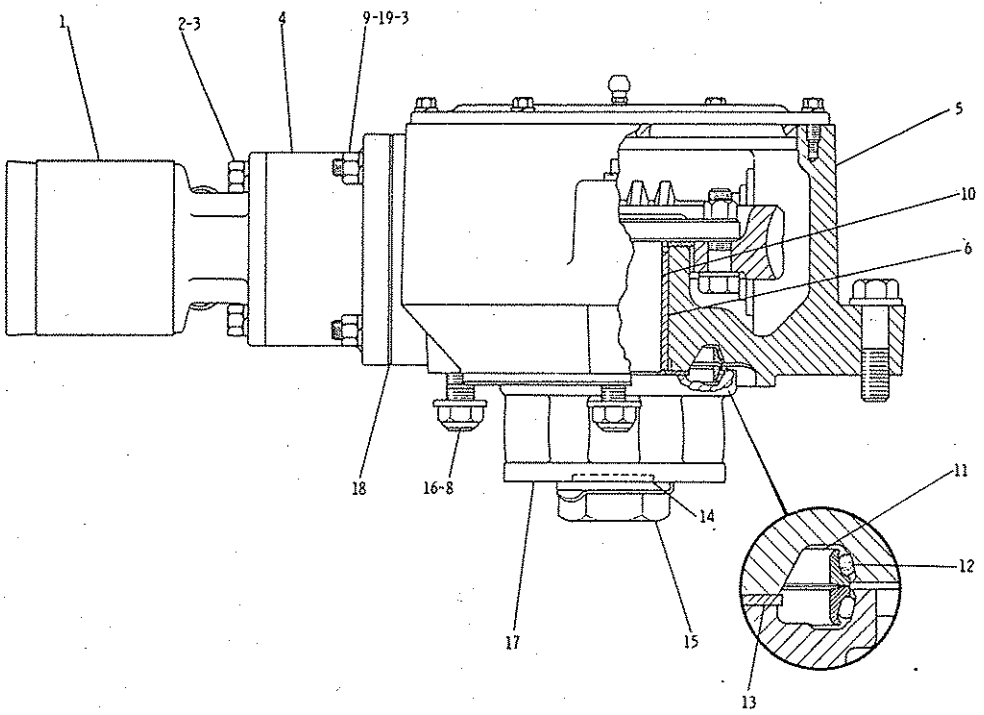

REF. NO.	PART NUMBER	DESCRIPTION	QTY
1	8J5407	MOTOR GROUP (Separate Illustration)	1
2	S1585	BOLT	4
3	3B4508	LOCKWASHER	8
4	2G1714	BRACKET	1
5	2G7829	HOUSING ASSEM. (Includes)	1
6	9D1489	BEARING	1
8	4D6578	STUD	4
9	2D8154	STUD	4
10	9D1177	SHAFT	1
11	5K5288	SEAL GROUP (Includes)	1
12	5K5129	RING	2
13	8D7425	WASHER	2
14	4F9653	SEAL	1
15	1A1415	NUT	1
	8D7423	LOCK	1
	8D7424	SPACER	1
16	1K6870	LOCKNUT	4
	2S115	WASHER	4
C 17	6G5051	PINION	1
18	7D8983	SHIM-----, 1270 mm(.005 in.) thick	10
	7D8984	SHIM-----, 1778 mm(.007 in.) thick	6
19	1D4719	NUT	4

C INDICATES CHANGE

227973

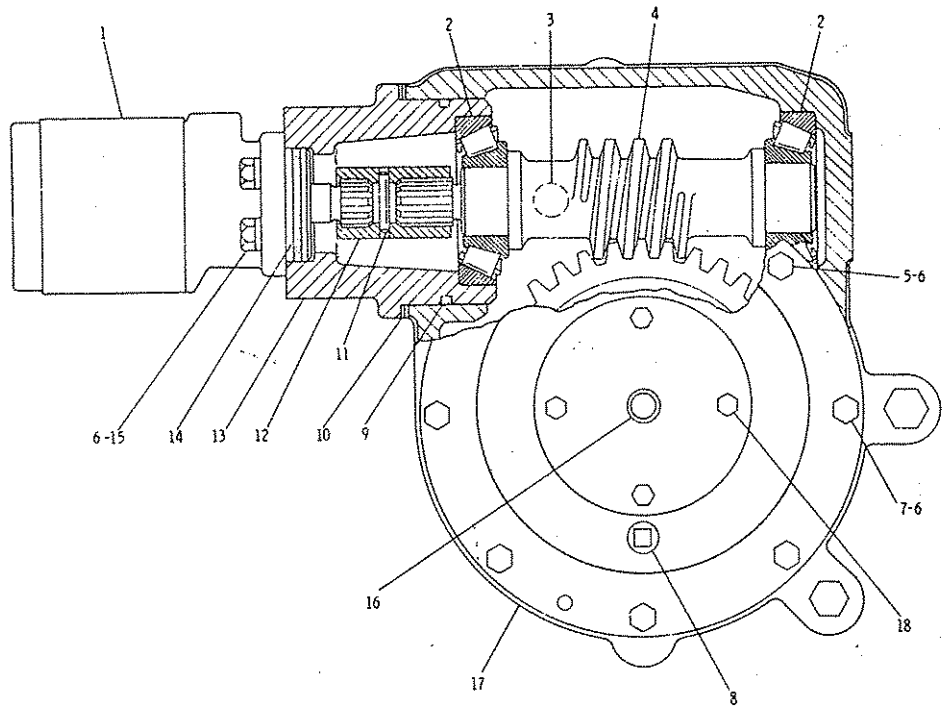

REF. NO.	PART NUMBER	DESCRIPTION	QTY
1	8J5407	MOTOR GROUP (Separate Illustration)	1
2	1B4038	CUP	2
	1B4046	CONE	2
3	1B5174	PLUG	1
4	9D1142	WORM	1
5	5K8454	BOLT	3
6	5P8245	WASHER	12
7	6H1717	BOLT	5
8	2B7410	PLUG	1
9	2H9247	SEAL	1
10	7D8983	SHIM-------.13 mm(.005 in.) thick	10
	7D8984	SHIM-------.18 mm(.007 in.) thick	6
11	4H6996	PIN	1
12	9D1491	COUPLING	1
13	2G6695	BRACKET	1
14	1H7339	SEAL	1
15	S1585	BOLT	4
16	5F5434	VENT ASSEM.	1
17	6G5534	COVER ASSEM. (Includes)	1
	6G5537	BEARING	1
18	L1351	BOLT	4
	5M2894	WASHER	4

181754

6G7130 CIRCLE DRIVE GROUP—Part 1
8J5407 Motor parts are shown on Page 195
AN ATTACHMENT

6G7130 CIRCLE DRIVE GROUP—Part 2
AN ATTACHMENT

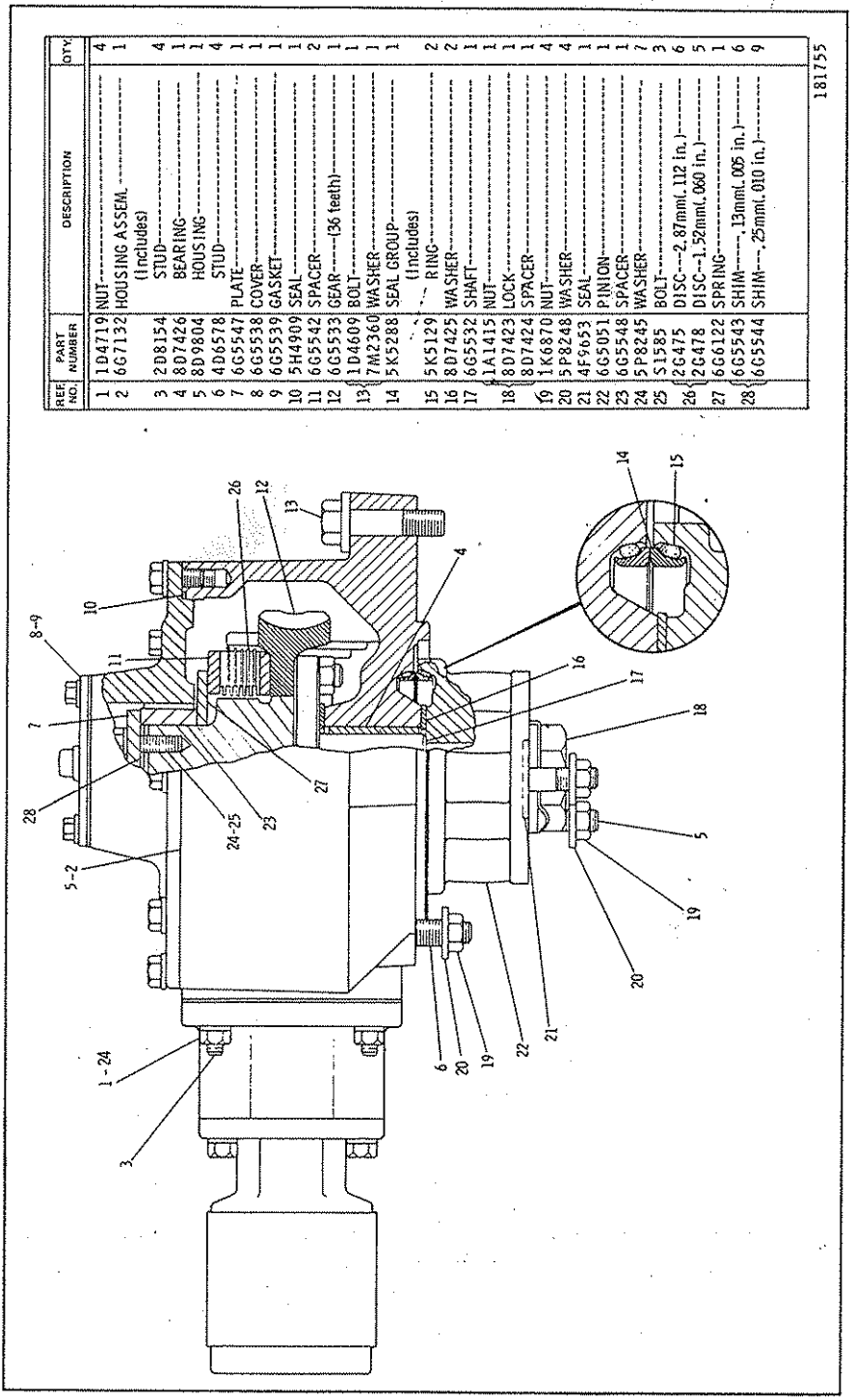

REF. NO.	PART NUMBER	DESCRIPTION	QTY.
1	1D4719	NUT	4
2	6G7132	HOUSING ASSEM. (Includes)	1
3	2D8154	STUD	4
4	8D7426	BEARING	1
5	8D9804	HOUSING	1
6	4D6578	STUD	4
7	6G5547	PLATE	1
8	6G5538	COVER	1
9	6G5539	GASKET	1
10	5H4909	SEAL	1
11	6G5542	SPACER	2
12	6G5533	GEAR (36 teeth)	1
13	1D4609	BOLT	1
	7M2360	WASHER	1
14	5K5288	SEAL GROUP (Includes)	1
15	5K5129	RING	2
16	8D7425	WASHER	2
17	6G5532	SHAFT	1
18	1A1415	NUT	1
	8D7423	LOCK	1
	8D7424	SPACER	1
19	1K6870	NUT	4
20	5P8248	WASHER	4
21	4F9653	SEAL	1
22	6G5051	PINION	1
23	6G5548	SPACER	1
24	5P8245	WASHER	7
25	S1585	BOLT	3
26	2G475	DISC—2.87mm(.112 in.)	6
	2G478	DISC—1.52mm(.060 in.)	5
27	6G6122	SPRING	1
28	6G5543	SHIM—.13mm(.005 in.)	6
	6G5544	SHIM—.25mm(.010 in.)	9

181755

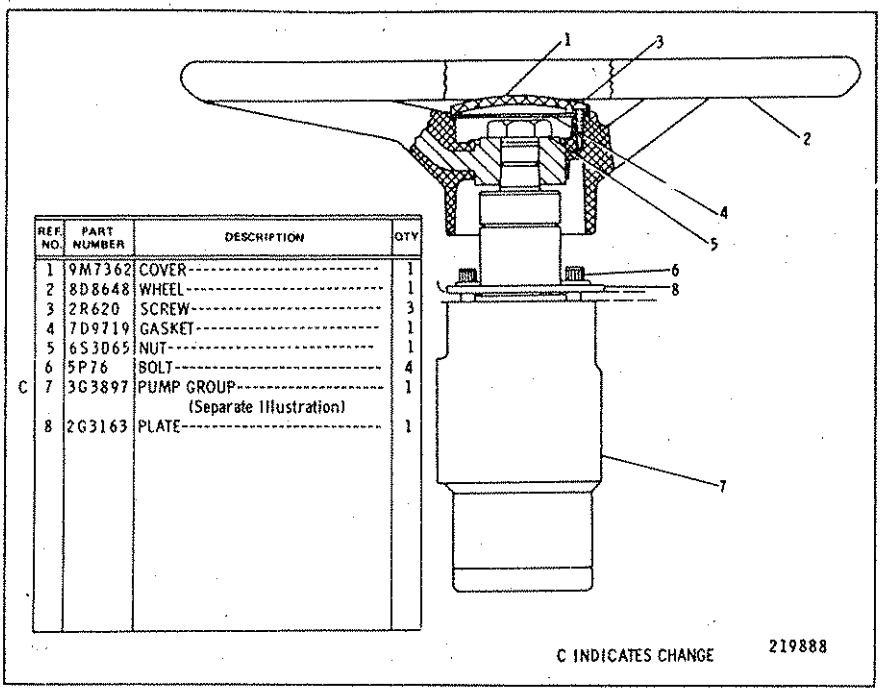

REF. NO.	PART NUMBER	DESCRIPTION	QTY
1	9M7362	COVER	1
2	8D8648	WHEEL	1
3	2R620	SCREW	3
4	7D9719	GASKET	1
5	6S3065	NUT	1
6	5P76	BOLT	4
C 7	3G3897	PUMP GROUP (Separate Illustration)	1
8	2G3163	PLATE	1

C INDICATES CHANGE 219888

8D7530 STEERING CONTROL GROUP
Serial No. 87V5275 to 87V5733 inclusive
3G3897 Pump parts are shown on Page 199

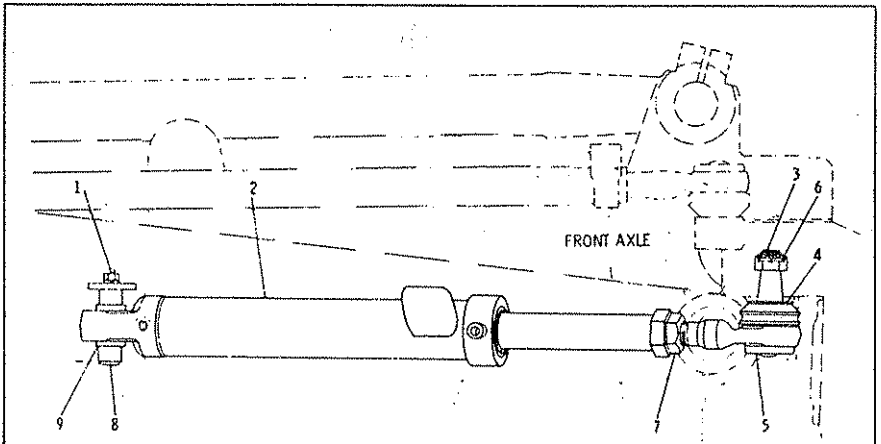

REF. NO.	PART NUMBER	DESCRIPTION	QTY.
1	L1351	BOLT	2
	3B4506	LOCKWASHER	2
C 2	3G8069	CYLINDER GROUP-(R. H.)	1
C	3G8070	CYLINDER GROUP-(L. H.) (Separate Illustration)	1
3	3B4618	PIN	2
4	8D2811	WASHER	2
C 5	6G1780	SOCKET GROUP (Each Includes)	2
6	2F8057	NUT	1
7	2H3786	NUT	2
8	8D2429	PIN ASSEM.	2
9	8D2638	SPACER	4

C INDICATES CHANGE 223866

8D3310 STEERING CYLINDER AND MOUNTING GROUP
3G8069 and 3G8070 Cylinder parts are shown on Pages 200 & 201

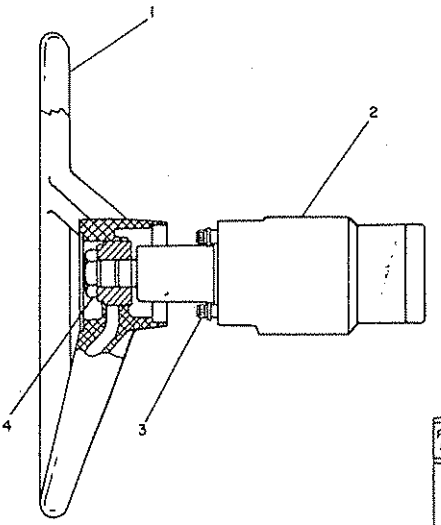

REF. NO.	PART NUMBER	DESCRIPTION	QTY.
1	6G5374	WHEEL	1
2	3G3897	PUMP GROUP (Separate Illustration)	1
3	5P76	BOLT	4
4	6S3065	NUT	1

232529

6G5405 STEERING CONTROL GROUP
Serial No. 87V5734 to 87V6499 inclusive
3G3897 Pump parts are shown on Page 199

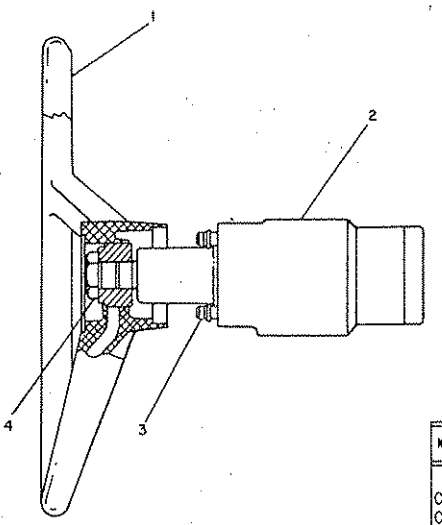

NOTE	REF NO	PART NUMBER	QTY	DESCRIPTION
	1	6G5374	1	WHEEL
CY	2	4T3199	1	PUMP GROUP
C	3	6V7692	4	BOLT
	4	6S3065	1	NUT

C INDICATES CHANGE
Y SEPARATE ILLUSTRATION

308899

6G5405 STEERING CONTROL GROUP
Serial No. 87V6500—Up
4T3199 Pump parts are shown on Page 199B

		Consists of:	Page
1	5T2295	Mounting and Pump Group	211A
1	5T2290	Supplemental Steering Lines Group	198C
1	5T2270	Sensor Wiring Group	198T
1	5T3876	Hydraulic Mounting & Tank Group	207D

5T2215 SUPPLEMENTAL STEERING ARRANGEMENT
Serial No. 87V5734—Up. FOR USE WITH LOW TEMPERATURE STARTING ARRANGEMENT. AN ATTACHMENT

		Consists of:	Page
1	5T2295	Mounting and Pump Group	211A
1	5T2290	Supplemental Steering Lines Group	198C
1	5T2270	Sensor Wiring Group	198J
1	5T3876	Hydraulic Mounting and Tank Group	207D
1	2G5120	Battery Group	77

5T5113 SUPPLEMENTAL STEERING ARRANGEMENT
Serial No. 87V5734—Up. FOR USE WITHOUT LOW TEMPERATURE STARTING

5T2290 SUPPLEMENTAL STEERING LINES GROUP

Serial No. 87V5734—Up

Part of 5T2215 & 5T5113 Supplemental Steering Arrangement listed on Page 198B

4T3088 & 4T5868 Valve parts are shown on Page 198D. AN ATTACHMENT

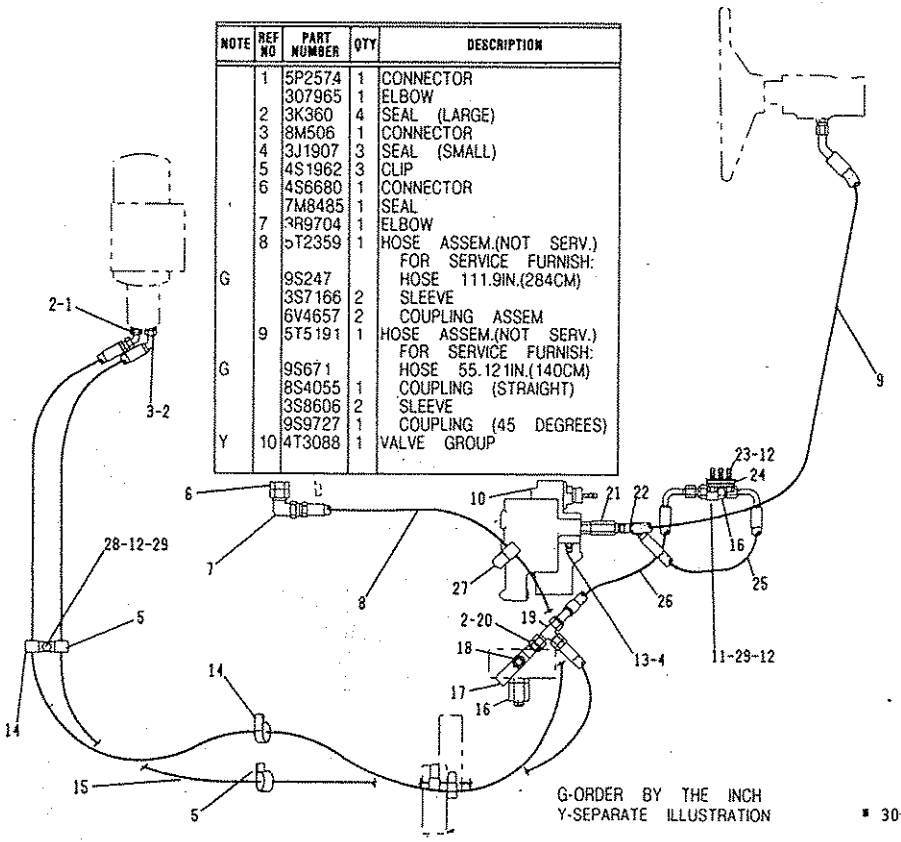

NOTE	REF NO	PART NUMBER	QTY	DESCRIPTION
	1	5P2574	1	CONNECTOR
		307965	1	ELBOW
	2	3K360	4	SEAL (LARGE)
	3	8M506	1	CONNECTOR
	4	3J1907	3	SEAL (SMALL)
	5	4S1962	3	CLIP
	6	4S6680	1	CONNECTOR
		7M8485	1	SEAL
	7	8R9704	1	ELBOW
	8	5T2359	1	HOSE ASSEM.(NOT SERV.) FOR SERVICE FURNISH:
G		9S247		HOSE 111.9IN.(284CM)
		3S7166	2	SLEEVE
		6V4657	2	COUPLING ASSEM
	9	5T5191	1	HOSE ASSEM.(NOT SERV.) FOR SERVICE FURNISH:
G		9S671		HOSE 55.121IN.(140CM)
		8S4055	1	COUPLING (STRAIGHT)
		3S8606	2	SLEEVE
		9S9727	1	COUPLING (45 DEGREES)
Y	10	4T3088	1	VALVE GROUP
	11	5D4204	1	CLIP
	12	5M2894	5	WASHER 18.5MM (.73IN.)O.D.
	13	2P1314	1	CONNECTOR
	14	4S4455	3	CLIP
	15	6G9325	1	HOSE ASSEM.(NOT SERV) FOR SERVICE FURNISH:
G		9S671		HOSE 97.3IN.(247CM)
		8S4055	1	COUPLING (STRAIGHT)
		3S8606	2	SLEEVE
		9S2727	1	COUPLING (45 DEGREES)
	16	4T1057	2	VALVE GROUP (EACH INCLUDES)
		3K360	2	SEAL
	17	4T1056	1	VALVE
	18	5P8874	1	ADAPTER
		6V5320	1	UNION
	19	6S5693	1	TEE
	20	8M505	1	CONNECTOR
Y	21	4T5868	1	VALVE GROUP
	22	5P3166	1	TEE
	23	3B1915	3	BOLT
		L1319	6	WASHER 32MM (1.25IN.)O.D.
		1P7115	3	GROMMET ASSEM.
	24	8D9918	1	PLATE ASSEM.
	25	5T5190	1	HOSE ASSEM.(NOT SERV.) FOR SERVICE FURNISH:
G		9S671		HOSE 18.12IN.(46CM)
		8S6391	2	COUPLING ASSEM.
		3S8606	2	SLEEVE
	26	5T5724	1	HOSE ASSEM.(NOT SERV.) FOR SERVICE FURNISH:
G		9S671		HOSE 18.51IN.(47CM)
		9S9727	1	COUPLING (45 DEGREES)
		3S8606	2	SLEEVE
		8S6391	1	COUPLING (90 DEGREES)
	27	8D9947	1	CLIP
	28	L1351	2	BOLT
	29	8G2613	1	PLATE

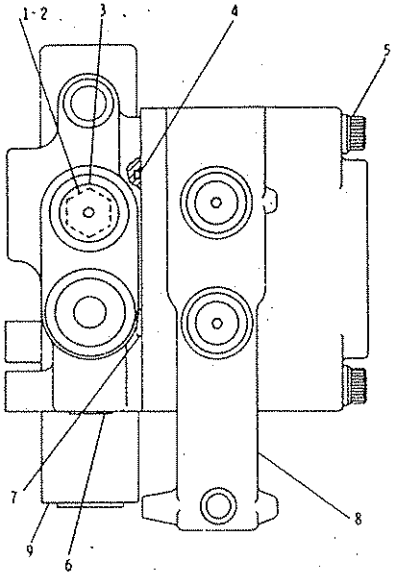

NOTE	REF NO	PART NUMBER	QTY	DESCRIPTION
	1	9S4185	2	PLUG .799 IN.(20.3 MM)
				-OR-
		9S8005	2	PLUG .559 IN.(14.2 MM)
	2	3K360	2	SEAL
	3	9S8008	1	PLUG
		3D2824	1	SEAL
	4	4J519	2	SEAL
	5	5P3628	3	BOLT
	6	1P1669	1	PLUG
	7	6J3134	2	SEAL
Y	8	4T3087	1	VALVE GROUP
Y	9	9J1762	1	VALVE GROUP

Y SEPARATE ILLUSTRATION

304820

4T3088 COMBINATION VALVE GROUP
Serial No. 87V5734—Up. Part of 5T2290 Supplemental Steering Lines Group shown on Page 198C. 4T3087 & 9J1762 Valve parts are shown on Pages 198E & 218A
AN ATTACHMENT

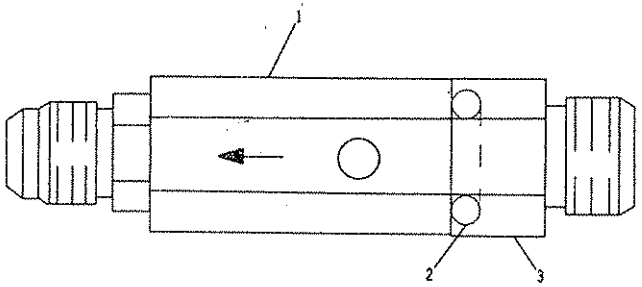

NOTE	REF NO	PART NUMBER	QTY	DESCRIPTION
	1	4T5867	1	VALVE
	2	3K360	1	SEAL
	3	6V7420	1	ADAPTER

* 304804

4T5868 CHECK VALVE GROUP
Serial No. 87V5734—Up. Part of 5T2290 Supplemental Steering Lines Group shown

4T3087 RELIEF VALVE GROUP
Serial No. 87V5734—Up
Part of 4T3088 Valve Group shown on Page 198D. AN ATTACHMENT

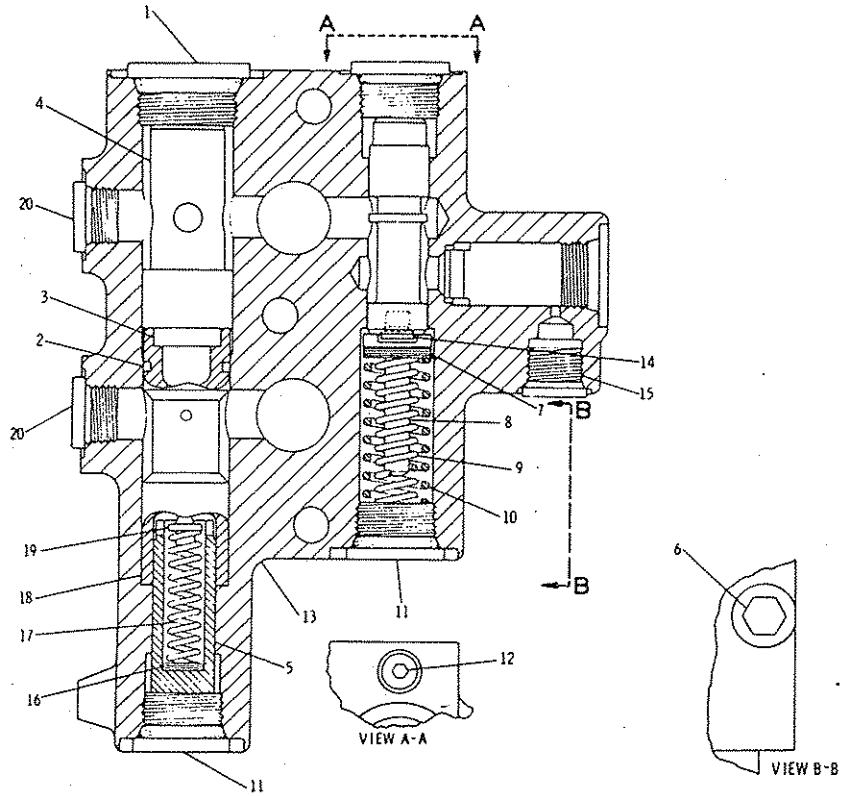

REF. NO.	PART NUMBER	DESCRIPTION	QTY.
1	9S9334	PLUG	1
	7M8485	SEAL	1
2	4J8996	SEAL	1
3	8J6708	SPACER	1
4	4J6714	SPACER	1
5	8J6707	RETAINER	1
6	9S4182	PLUG	1
	3J7354	SEAL	1
7	4L1468	WASHER----.06 in. (1.52 mm)thick	2
B	8J6709	SHIM------.01 in. (.254 mm)thick	5
8	8J6710	STOP	1
9	8J6704	SPRING	1
10	8J6703	SPRING	1
11	9S8008	PLUG	3
	3D2824	SEAL	3
12	9S8001	PLUG	1
	4J7533	SEAL	1
13	9J6458	VALVE GROUP	1
14	9S8001	PLUG	1
	4J7533	SEAL	1
15	9S8004	PLUG	1
	3J1907	SEAL	1
B	3J7473	SHIM---.005 in. (.127 mm) thick	5
B 16	3J7470	SHIM---.048 in. (1.22 mm) thick	1
17	2J6089	SPRING	1
18	8J6752	VALVE GROUP	1
19	8J331	VALVE	1
20	9S8005	PLUG	2
	3K360	SEAL	2

B USE AS REQUIRED

304821

3G3897 METERING PUMP GROUP
Serial No. 87V5275 to 87V6499 inclusive
Part of 8D7530 & 6G5405 Steering Control Group shown on Pages 198 & 198A

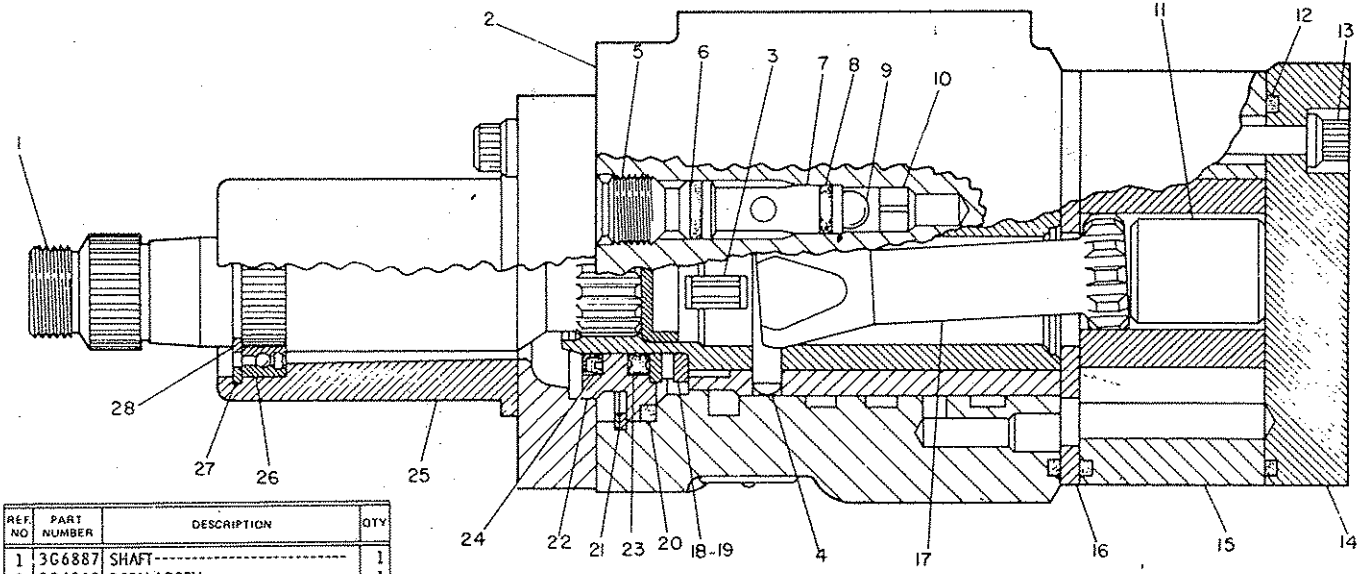

REF. NO	PART NUMBER	DESCRIPTION	QTY
1	3G6887	SHAFT	1
2	3G6892	BODY ASSEM. (Includes)	1
C 3	7J8010	SPRING	6
4	7J8009	PIN	1
5	3G6906	SCREW	1
6	1H1023	SEAL	1
7	3G6907	SEAT	1
8	5F9144	SEAL	1
9	6S7827	BALL	1
10	6S7826	RETAINER	1
11	651176	SPACER	1
12	9J5686	SEAL	3
13	9J4743	BOLT	7
14	3G6889	CAP	1
15	3G6890	GEROTOR ASSEM.	1
16	3G6905	SPACER	1
17	7J6839	DRIVE	1
18	3G6891	RACE	2
19	5L1100	BEARING	1
20	7F8267	SEAL	1
21	9J5442	RING	1
22	9J8076	BUSHING	1
23	7J6833	SEAL	1
24	8F5340	SEAL	1
25	3G2327	HOUSING	1
26	9J2928	BEARING	1
27	9J2935	RING	1
28	651153	RING	1

C INDICATES CHANGE

227597

4T3199 METERING PUMP GROUP
Serial No. 87V6500—Up
Part of 6G5405 Steering Control Group shown on Page 198A

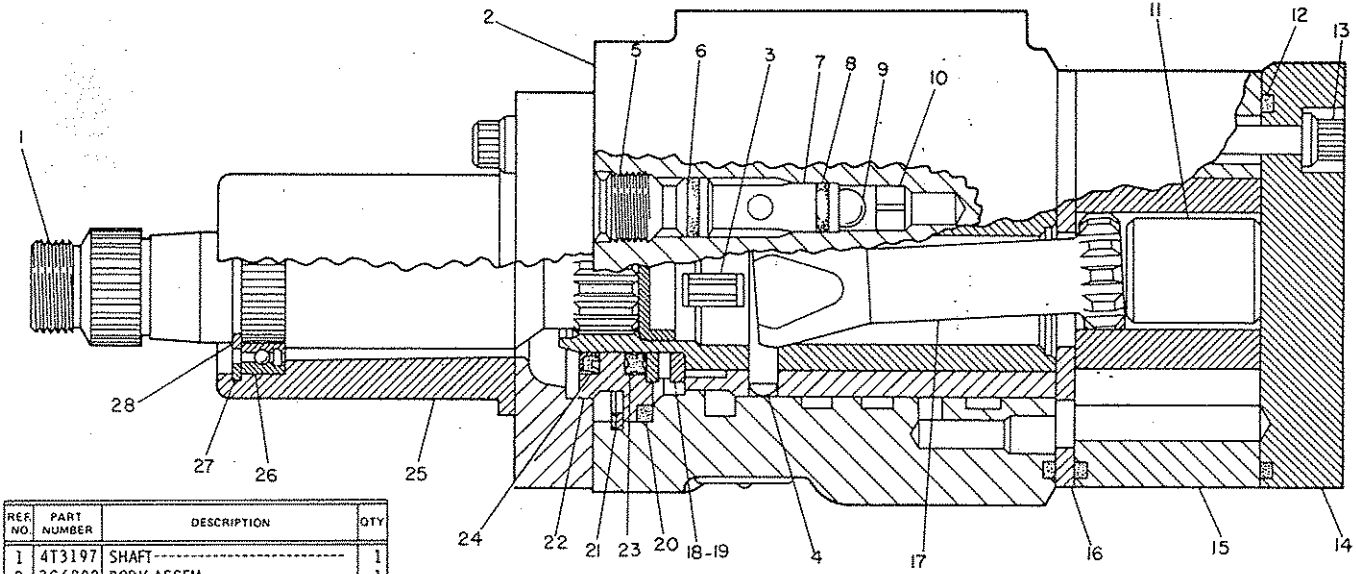

REF. NO.	PART NUMBER	DESCRIPTION	QTY
1	4T3197	SHAFT	1
2	3G6892	BODY ASSEM. (Includes)	1
3	7J8010	SPRING	6
4	7J8009	PIN	1
5	3G6906	SCREW	1
6	1H1023	SEAL	1
7	3G6907	SEAT	1
8	5F9144	SEAL	1
9	6S7827	BALL	1
10	6S7826	RETAINER	1
11	651176	SPACER	1
12	9J5686	SEAL	3
13	9J4743	BOLT	7
14	3G6889	CAP	1
15	3G6890	GEROTOR ASSEM.	1
16	3G6905	SPACER	1
17	7J6839	DRIVE	1
18	3G6891	RACE	2
19	5L1100	BEARING	1
20	7F8267	SEAL	1
21	9J5442	RING	1
22	9J8076	BUSHING	1
23	7J6833	SEAL	1
24	8F5340	SEAL	1
25	3G2327	HOUSING	1
26	9J2928	BEARING	1
27	9J2935	RING	1
28	651153	RING	1

308900

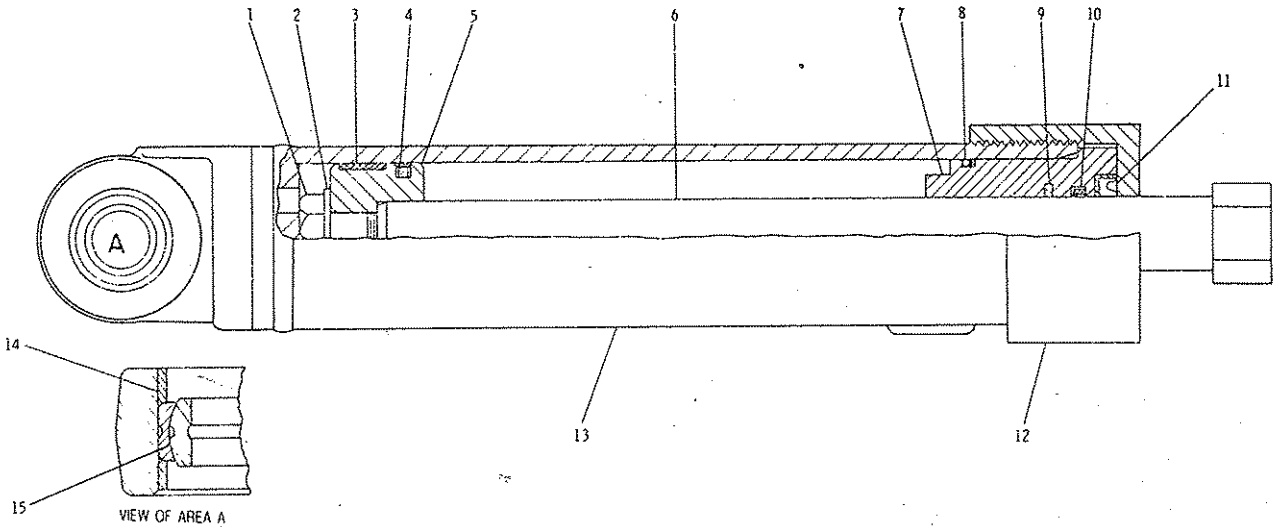

NOTE	REF NO	PART NUMBER	QTY	DESCRIPTION
	1	7J5639	1	BOLT
	2	8J7415	1	WASHER
	3	8J6212	1	RING
	4	8J6213	1	SEAL ASSEM.
	5	3G8076	1	PISTON
	6	3G8427	1	ROD ASSEM.
	7	8J6221	1	HEAD
	8	8F6711	1	SEAL
		303239	1	RING
	9	6J9733	1	SEAL
	10	5J8150	1	SEAL
	11	4J8979	1	SEAL
	12	8J6222	1	CROWN
	13	3G8071	1	CYLINDER ASSEM.
	14	8J6215	2	RING
	15	58639	1	BEARING

308921

3G8069 STEERING CYLINDER GROUP (Change 0-1)—64 mm (2.50") Bore x 267 mm (10.5") Stroke—R.H.

Part of 8D3310 Steering Cylinder and Mounting Group shown on Page 198

3G8070 STEERING CYLINDER GROUP (Change 0-1)—64 mm (2.50") Bore x 267 mm (10.5") Stroke—L.H.
Part of 8D3310 Steering Cylinder and Mounting Group shown on Page 198

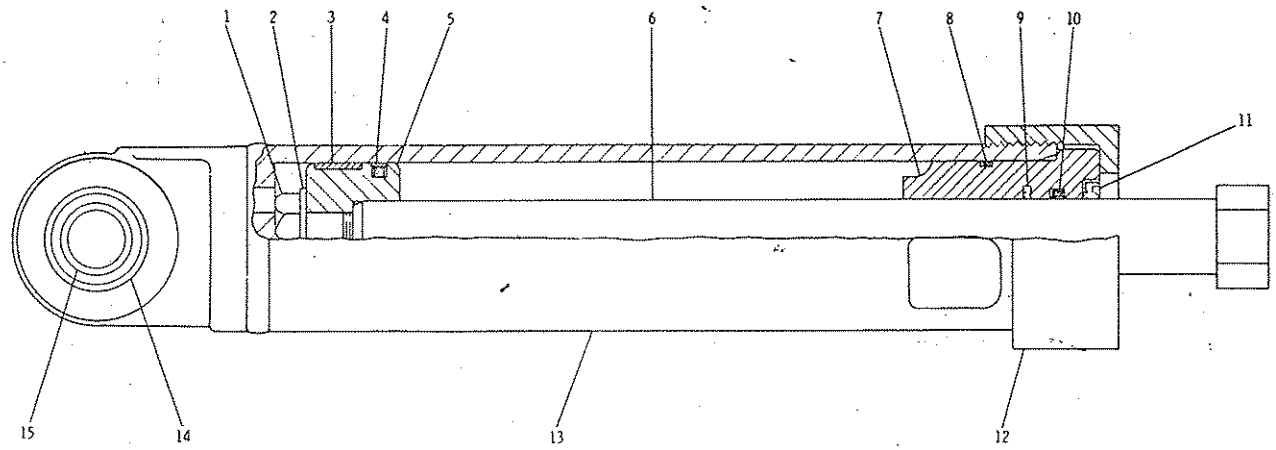

NOTE	REF NO	PART NUMBER	QTY	DESCRIPTION
	1	7J5639	1	BOLT
	2	8J7415	1	WASHER
	3	8J6212	1	RING
	4	8J6213	1	STEM ASSEM.
	5	3G8076	1	PISTON
	6	3G8427	1	ROD ASSEM.
	7	8J6221	1	HEAD
	8	8F6711	1	SEAL
		303239	1	RING
	9	6J9733	1	SEAL
	10	5J8150	1	SEAL
	11	4J8979	1	SEAL
	12	8J6222	1	CROWN
	13	3G8072	1	CYLINDER ASSEM.
	14	8J6215	2	RING
	15	58639	1	BEARING

308922

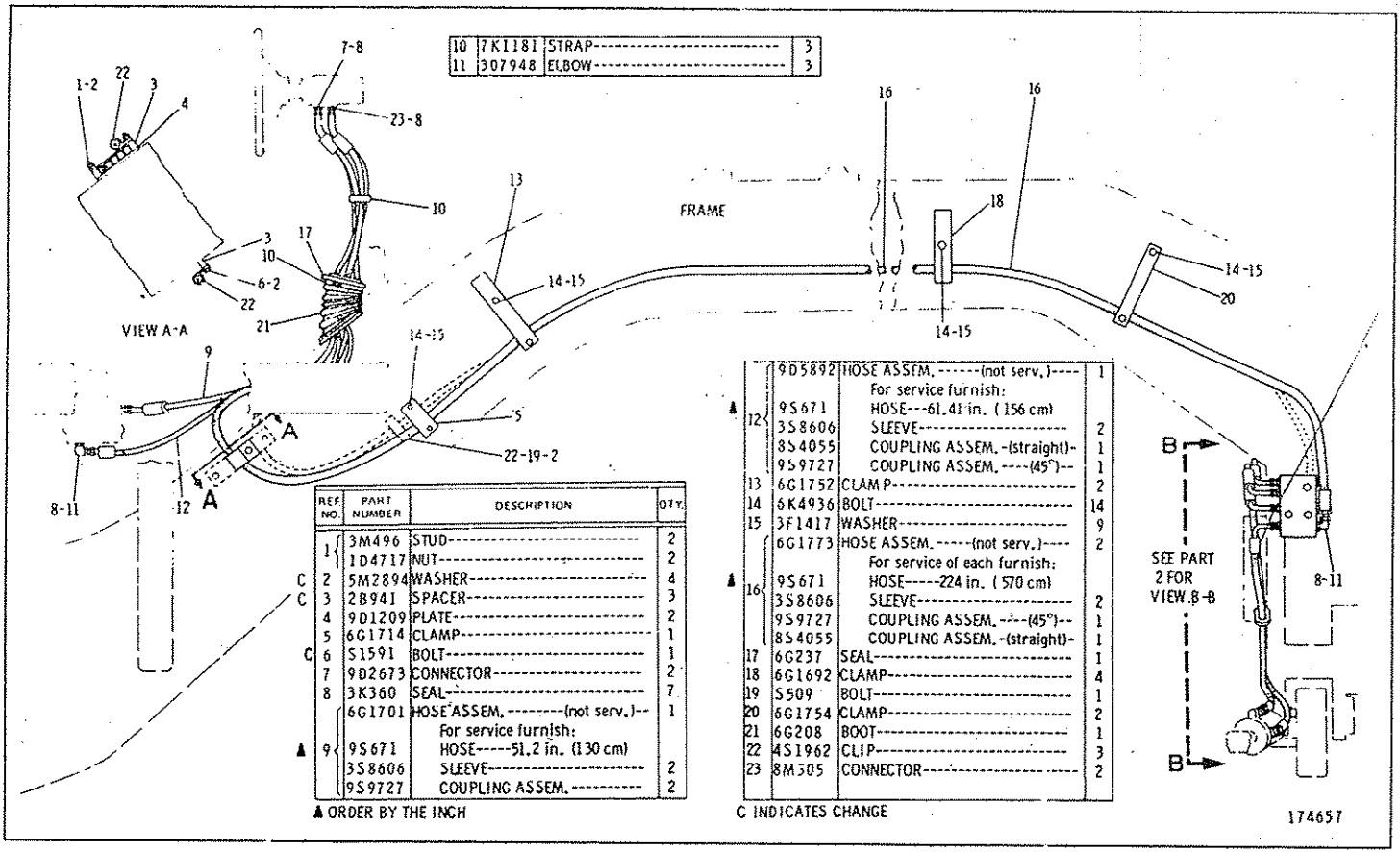

10	7K1181	STRAP	3
11	307948	ELBOW	3

REF NO.	PART NUMBER	DESCRIPTION	QTY.
1	3M496	STUD	2
	1D4717	NUT	2
C 2	5M2894	WASHER	4
C 3	2B941	SPACER	3
4	9D1209	PLATE	2
5	6G1714	CLAMP	1
C 6	S1591	BOLT	1
7	9D2673	CONNECTOR	2
8	3K360	SEAL	7
9	6G1701	HOSE ASSEM. (not serv.)	1
▲		For service furnish:	
	9S671	HOSE 51.2 in. (130 cm)	
	3S8606	SLEEVE	2
	9S9727	COUPLING ASSEM.	2

REF NO.	PART NUMBER	DESCRIPTION	QTY.
	9D5892	HOSE ASSEM. (not serv.)	1
		For service furnish:	
▲ 12	9S671	HOSE 61.41 in. (156 cm)	
	3S8606	SLEEVE	2
	8S4055	COUPLING ASSEM. -(straight)-	1
	9S9727	COUPLING ASSEM. -(45°)-	1
13	6G1752	CLAMP	2
14	6K4936	BOLT	14
15	3F1417	WASHER	9
	6G1773	HOSE ASSEM. (not serv.)	2
		For service of each furnish:	
▲ 16	9S671	HOSE 224 in. (570 cm)	
	3S8606	SLEEVE	2
	9S9727	COUPLING ASSEM. -(45°)-	1
	8S4055	COUPLING ASSEM. -(straight)-	1
17	6G237	SEAL	1
18	6G1692	CLAMP	4
19	S509	BOLT	1
20	6G1754	CLAMP	2
21	6G208	BOOT	1
22	4S1962	CLIP	3
23	8M505	CONNECTOR	2

▲ ORDER BY THE INCH

C INDICATES CHANGE

2G9045 STEERING LINES GROUP—Part 1
Serial No. 87V5275 to 87V6245 inclusive

2G9045 STEERING LINES GROUP—Part 2
Serial No. 87V5275 to 87V6245 inclusive
3G7448 Valve parts are shown on Page 204

REF. NO.	PART NUMBER	DESCRIPTION	QTY.
	1 T65	BOLT	6
C	2 5P1075	WASHER	6
	3 3G7448	VALVE GROUP (Separate Illustration)	2
	4 8D9088	CONNECTOR	2
	5 3K360	SEAL	12
	6G2979	HOSE ASSEM. ----(not serv.)------ For service of each furnish:	2
▲	6 9S671	HOSE-----11.4 in. (29 cm)	
	3S8606	SLEEVE	2
	8S6391	COUPLING ASSEM. ---(90°)---	2
C	7 8M505	CONNECTOR	6
C	8 9D2673	CONNECTOR	2
	9 7K1181	STRAP	2
	6G1772	HOSE ASSEM. ---(not serv)------- For service of each furnish:	2
▲	10 9S671	HOSE------27.2 in. (69 cm)	
	8S6391	COUPLING ASSEM. ---(90°)----	1
	3S8606	SLEEVE	2
	8S4055	COUPLING ASSEM. -(straight)--	1

	11 4S1962	CLIP	2
	12 54362	ELBOW	2
	9D6004	HOSE ASSEM. ---------- For service of each furnish:	2
▲	13 2P5943	HOSE-------32.68 in. (83 cm)	
	4S5414	SLEEVE	2
	8S6417	COUPLING ASSEM. ----------	1
	8S6393	COUPLING ASSEM. ----------	1

▲ ORDER BY THE INCH
C INDICATES CHANGE

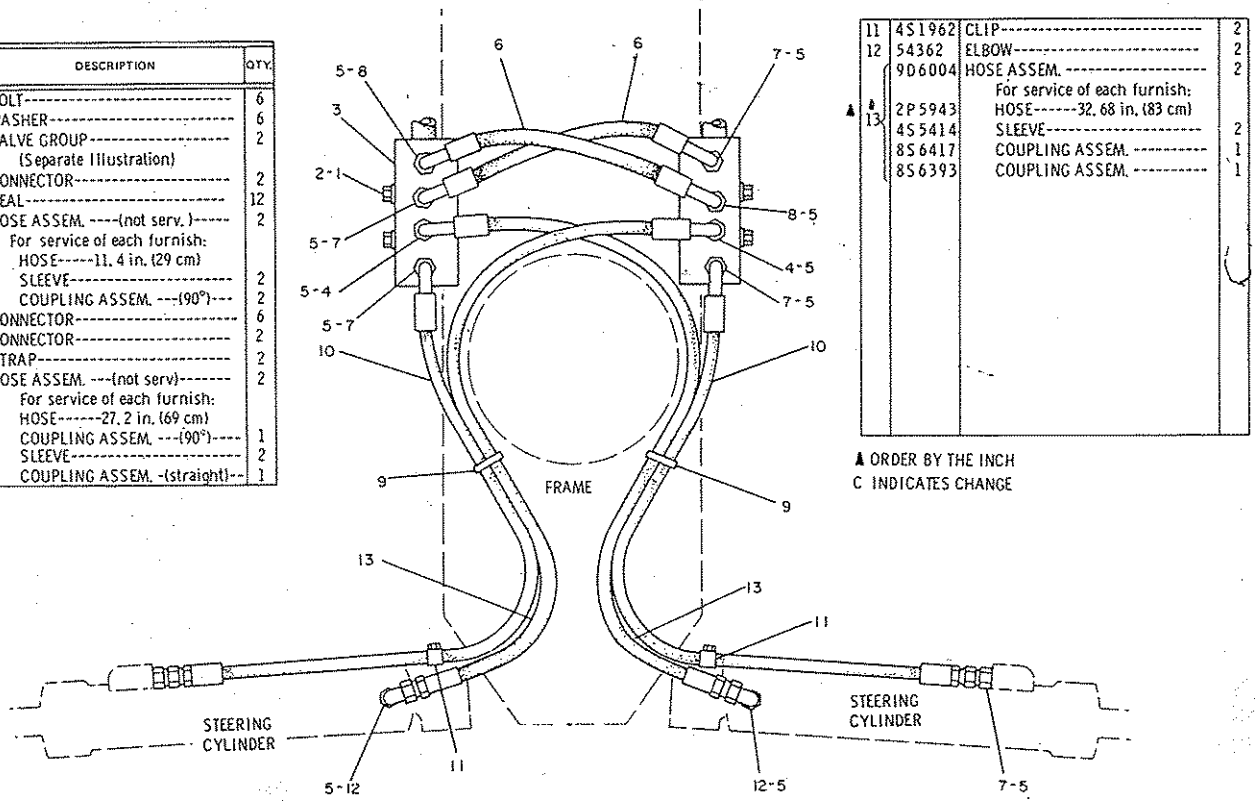

VIEW B-B

228063

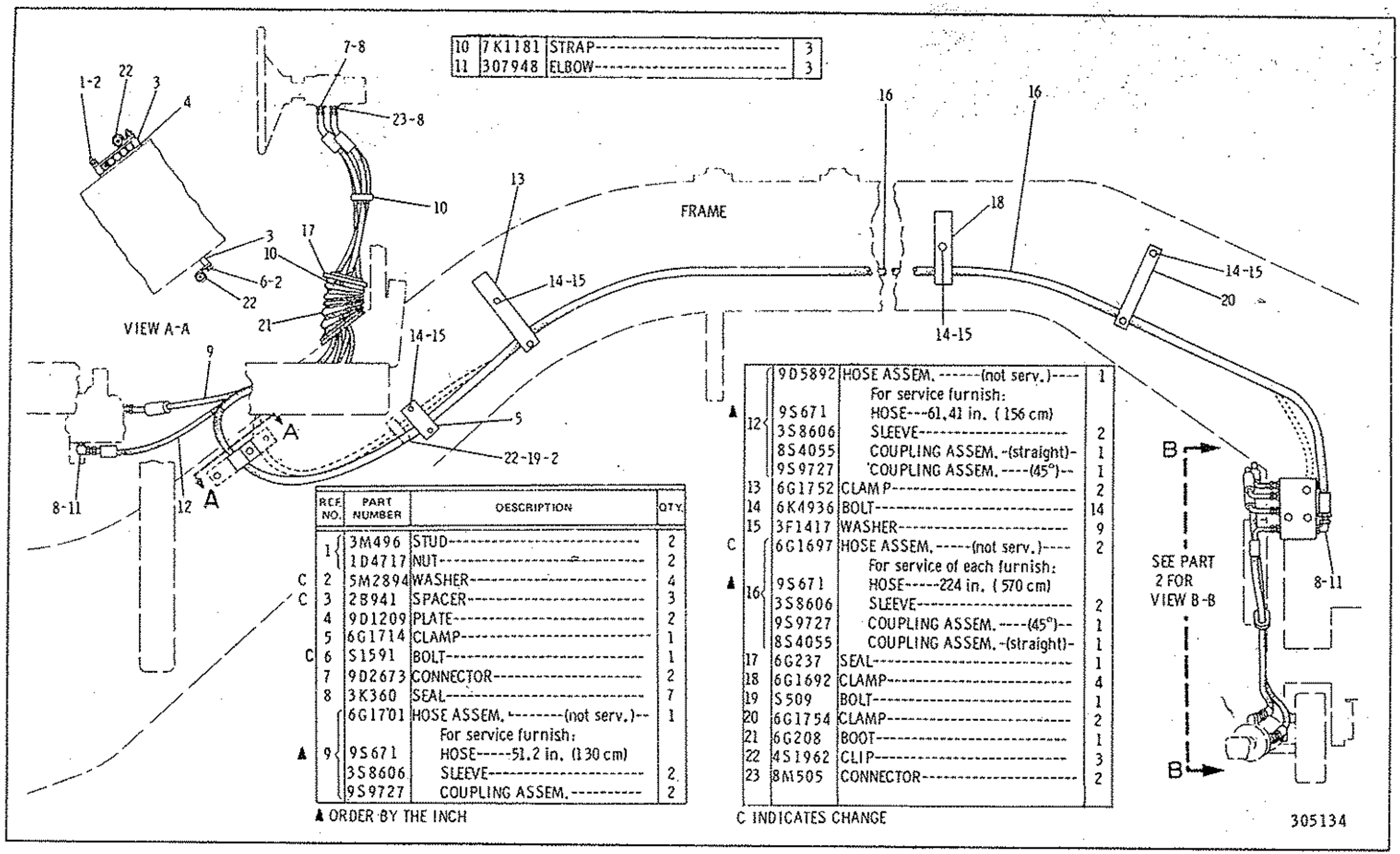

10	7K1181	STRAP	3
11	307948	ELBOW	3

RCE NO.	PART NUMBER	DESCRIPTION	QTY.
1	3M496	STUD	2
1	1D4717	NUT	2
C 2	5M2894	WASHER	4
C 3	2B941	SPACER	3
4	9D1209	PLATE	2
5	6G1714	CLAMP	1
C 6	S1591	BOLT	1
7	9D2673	CONNECTOR	2
8	3K360	SEAL	7
	6G1701	HOSE ASSEM. -------(not serv.)--	1
		For service furnish:	
▲ 9	9S671	HOSE-----51.2 in. (130 cm)	
	3S8606	SLEEVE	2
	9S9727	COUPLING ASSEM.	2

	9D5892	HOSE ASSEM. ------(not serv.)----	1
		For service furnish:	
▲ 12	9S671	HOSE---61.41 in. (156 cm)	
	3S8606	SLEEVE	2
	8S4055	COUPLING ASSEM. -(straight)-	1
	9S9727	COUPLING ASSEM. ----(45°)--	1
13	6G1752	CLAMP	2
14	6K4936	BOLT	14
15	3F1417	WASHER	9
C	6G1697	HOSE ASSEM. -----(not serv.)----	2
		For service of each furnish:	
▲ 16	9S671	HOSE-----224 in. (570 cm)	
	3S8606	SLEEVE	2
	9S9727	COUPLING ASSEM. ----(45°)--	1
	8S4055	COUPLING ASSEM. -(straight)-	1
17	6G237	SEAL	1
18	6G1692	CLAMP	4
19	S509	BOLT	1
20	6G1754	CLAMP	2
21	6G208	BOOT	1
22	4S1962	CLIP	3
23	8M505	CONNECTOR	2

▲ ORDER BY THE INCH

C INDICATES CHANGE

2G9045 STEERING LINES GROUP—Part 1
Serial No. 87V6246 to 87V6514 Inclusive

2G9045 STEERING LINES GROUP—Part 2
Serial No. 87V6246 to 87V6514 inclusive
3G7448 Valve parts are shown on Page 204

REF. NO.	PART NUMBER	DESCRIPTION	QTY.
	1 T65	BOLT	6
C	2 5P1075	WASHER	6
	3 3G7448	VALVE GROUP (Separate Illustration)	2
	4 8D9088	CONNECTOR	2
	5 3K360	SEAL	12
	6G2979	HOSE ASSEM. ----(not serv.)----	2
		For service of each furnish:	
▲	6 9S671	HOSE-----11.4 in. (29 cm)	
	3S8606	SLEEVE	2
	8S6391	COUPLING ASSEM. ---(90°)---	2
C	7 8M505	CONNECTOR	6
C	8 9D2673	CONNECTOR	2
	9 7K1181	STRAP	2
	6G1772	HOSE ASSEM. ---(not serv)----	2
		For service of each furnish:	
▲	10 9S671	HOSE------27.2 in. (69 cm)	
	8S6391	COUPLING ASSEM. ---(90°)----	1
	3S8606	SLEEVE	2
	8S4055	COUPLING ASSEM. -(straight)--	1

	11 4S1962	CLIP	2
	12 54362	ELBOW	2
	9D6004	HOSE ASSEM.	2
		For service of each furnish:	
▲	13 2P5943	HOSE------32.68 in. (83 cm)	
	4S5414	SLEEVE	2
	8S6417	COUPLING ASSEM.	1
	8S6393	COUPLING ASSEM.	1

▲ ORDER BY THE INCH
C INDICATES CHANGE

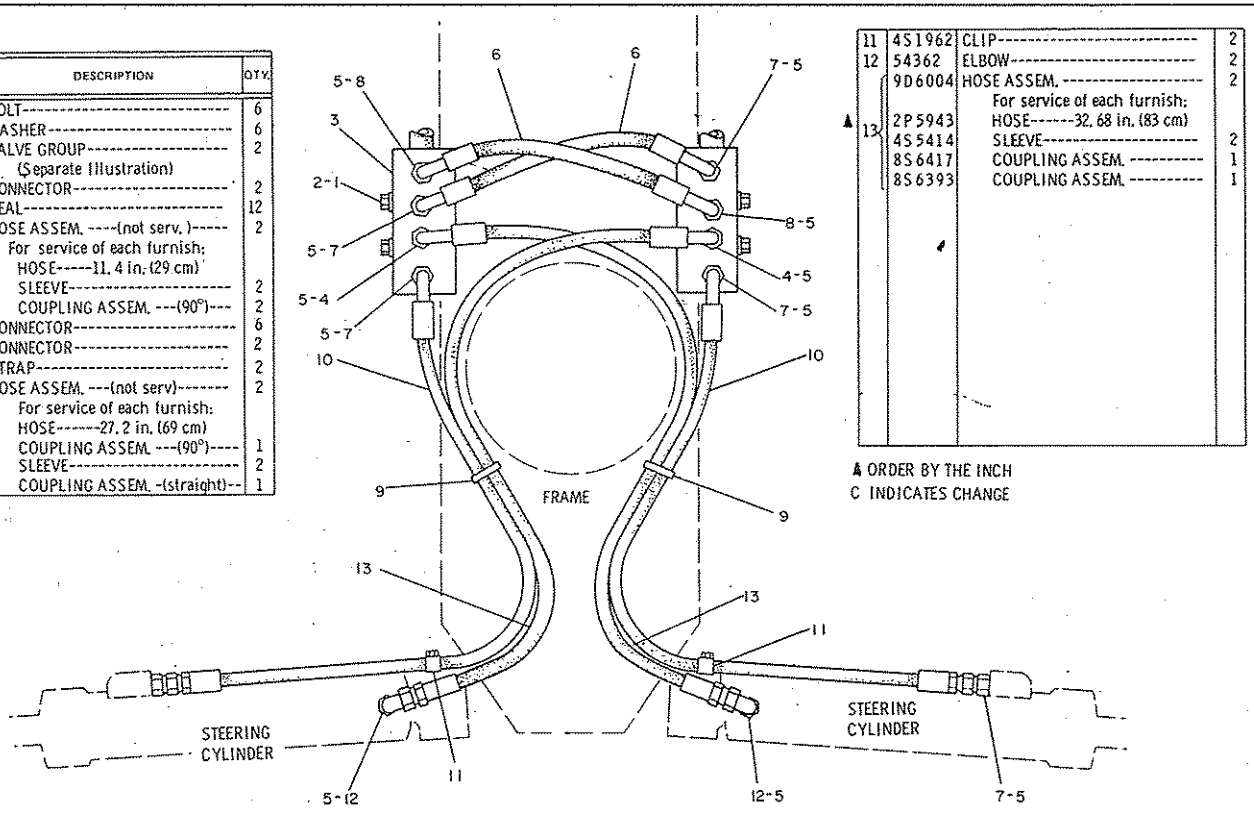

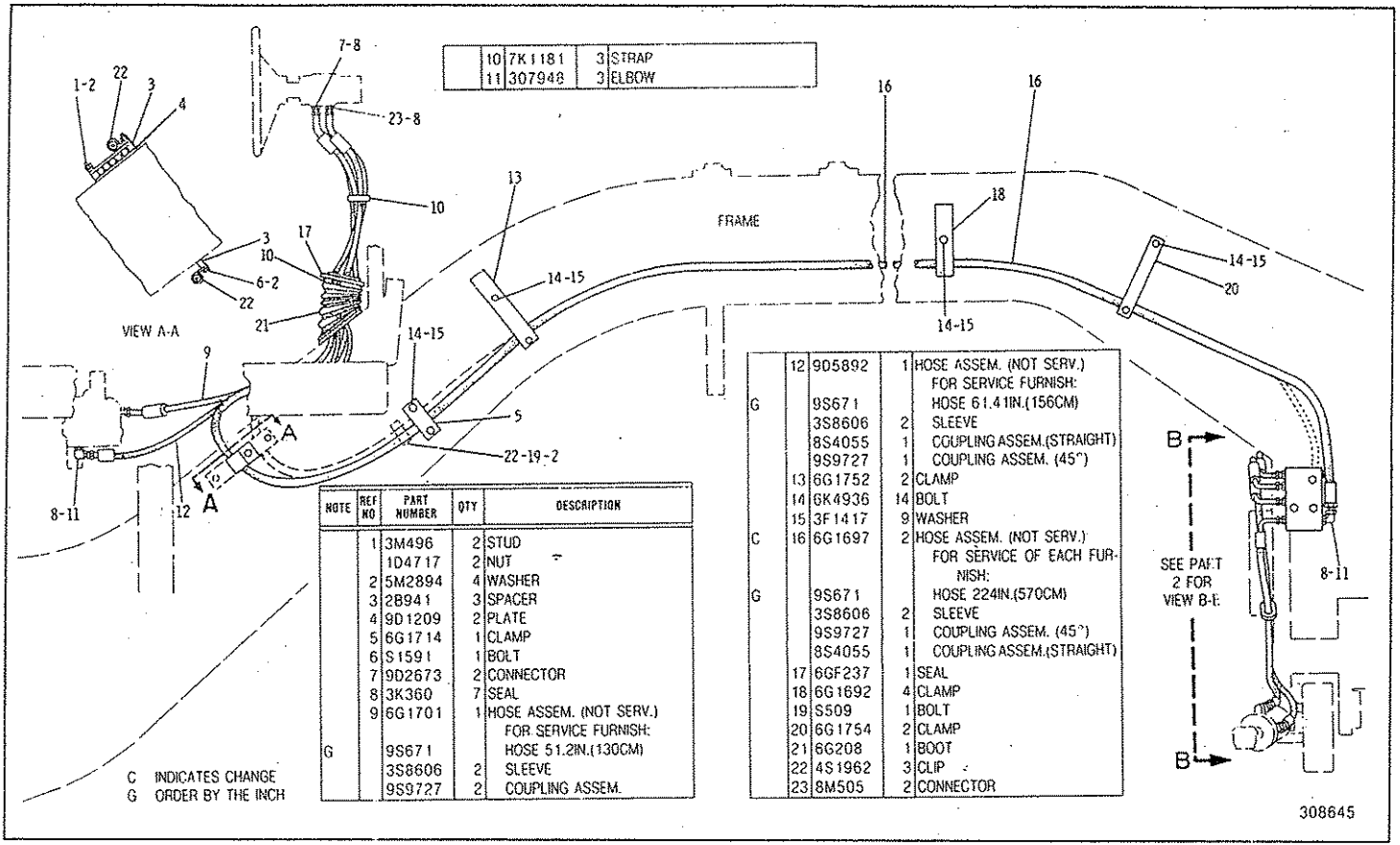

	10	7K1181	3	STRAP
	11	307948	3	ELBOW

NOTE	REF NO	PART NUMBER	QTY	DESCRIPTION
	1	3M496	2	STUD
		1D4717	2	NUT
	2	5M2894	4	WASHER
	3	2B941	3	SPACER
	4	9D1209	2	PLATE
	5	6G1714	1	CLAMP
	6	S1591	1	BOLT
	7	9D2673	2	CONNECTOR
	8	3K360	7	SEAL
	9	6G1701	1	HOSE ASSEM. (NOT SERV.)
				FOR SERVICE FURNISH:
G		9S671		HOSE 51.2IN.(130CM)
		3S8606	2	SLEEVE
		9S9727	2	COUPLING ASSEM.

	12	905892	1	HOSE ASSEM. (NOT SERV.)
				FOR SERVICE FURNISH:
G		9S671		HOSE 61.41IN.(156CM)
		3S8606	2	SLEEVE
		8S4055	1	COUPLING ASSEM.(STRAIGHT)
		9S9727	1	COUPLING ASSEM. (45°)
	13	6G1752	2	CLAMP
	14	6K4936	14	BOLT
	15	3F1417	9	WASHER
C	16	6G1697	2	HOSE ASSEM. (NOT SERV.)
				FOR SERVICE OF EACH FURNISH:
G		9S671		HOSE 224IN.(570CM)
		3S8606	2	SLEEVE
		9S9727	1	COUPLING ASSEM. (45°)
		8S4055	1	COUPLING ASSEM.(STRAIGHT)
	17	6GF237	1	SEAL
	18	6G1692	4	CLAMP
	19	S509	1	BOLT
	20	6G1754	2	CLAMP
	21	6G208	1	BOOT
	22	4S1962	3	CLIP
	23	8M505	2	CONNECTOR

C INDICATES CHANGE
G ORDER BY THE INCH

2G9045 STEERING LINES GROUP—Part 1
Serial No. 87V6515 to 87V6547 Inclusive

2G9045 STEERING LINES GROUP—Part 2
Serial No. 87V6515 to 87V6547 inclusive
3G7448 Valve parts are shown on Page 204

NOTE	REF NO	PART NUMBER	QTY	DESCRIPTION
	1	T65	6	BOLT
	2	5P1075	6	WASHER
Y	3	3G7448	2	VALVE GROUP
	4	8D9088	2	CONNECTOR
	5	3K360	12	SEAL
	6	6G2979	2	HOSE ASSEM. (NOT SERV.)
				FOR SERVICE OF EACH FURNISH:
G		9S671		HOSE 11.4IN.(29CM)
		3S8606	2	SLEEVE
		8S6391	2	COUPLING ASSEM. (90°)
	7	8M505	6	CONNECTOR
	8	9D2673	2	CONNECTOR
	9	7K1181	2	STRAP
	10	6G1772	2	HOSE ASSEM. (NOT SERV)
				FOR SERVICE OF EACH FURNISH:
G		9S671		HOSE 27.2IN.(69CM)
		8S6391	1	COUPLING ASSEM. (90°)
		3S8606	2	SLEEVE
		8S4055	1	COUPLING ASSEM. (STRAIGHT)
	11	4S1962	2	CLIP
	12	54362	2	ELBOW
	13	9D6004	2	HOSE ASSEM.
				FOR SERVICE OF EACH FURNISH:
G		2P5943		HOSE 32.68IN.(83CM)
		4S5414	2	SLEEVE
		8S6417	1	COUPLING ASSEM.
		8S6393	1	COUPLING ASSEM.

G ORDER BY THE INCH

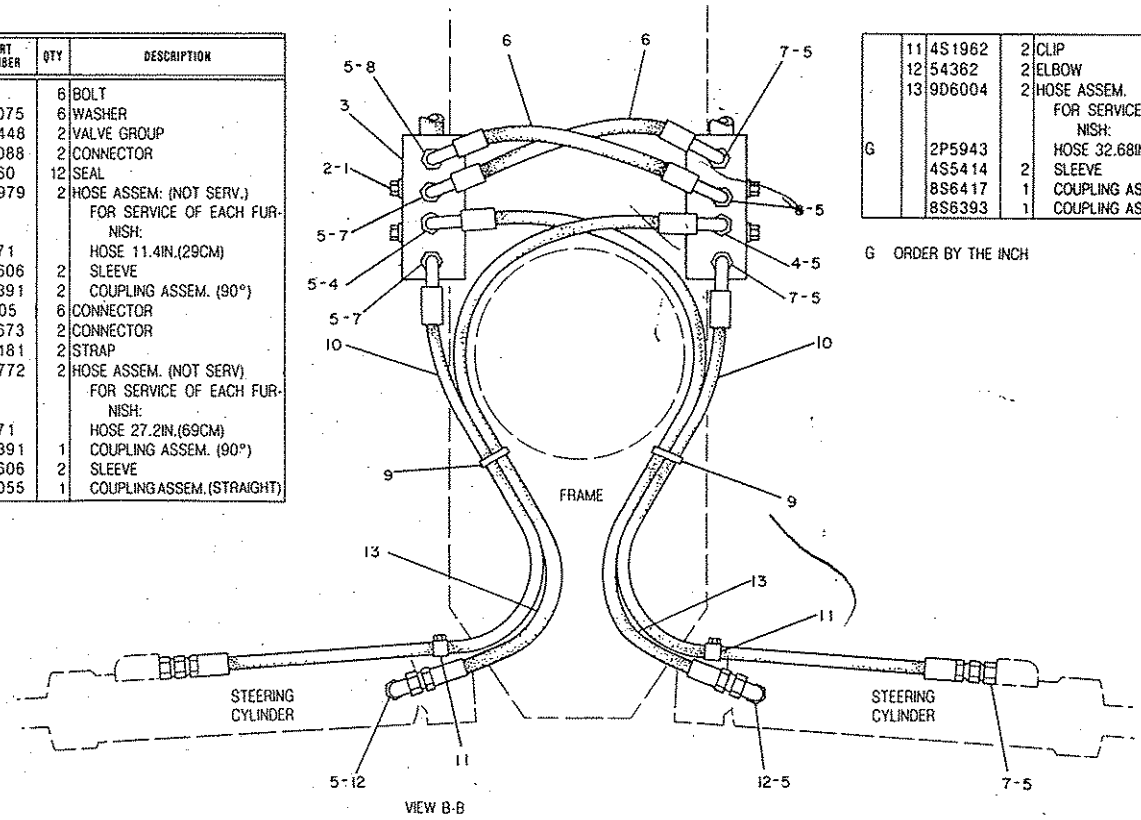

308646

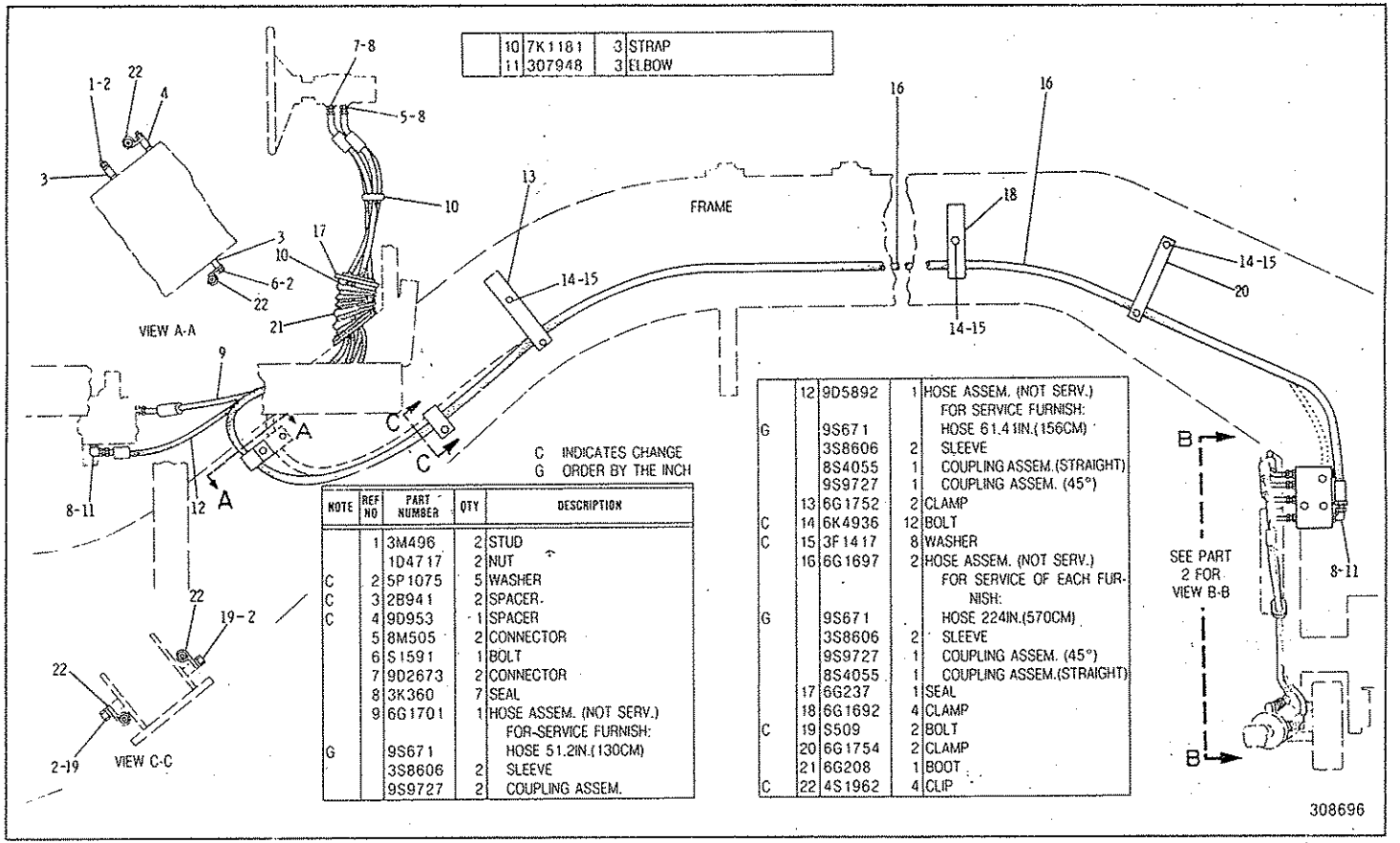

NOTE	REF NO	PART NUMBER	QTY	DESCRIPTION
	1	3M496	2	STUD
		1D4717	2	NUT
C	2	5P1075	5	WASHER
C	3	2B941	2	SPACER
C	4	9D953	1	SPACER
	5	8M505	2	CONNECTOR
	6	S1591	1	BOLT
	7	9D2673	2	CONNECTOR
	8	3K360	7	SEAL
	9	6G1701	1	HOSE ASSEM. (NOT SERV.)
				FOR SERVICE FURNISH:
G		9S671		HOSE 51.2IN.(130CM)
		3S8606	2	SLEEVE
		9S9727	2	COUPLING ASSEM.
	12	9D5892	1	HOSE ASSEM. (NOT SERV.)
				FOR SERVICE FURNISH:
G		9S671		HOSE 61.41IN.(156CM)
		3S8606	2	SLEEVE
		8S4055	1	COUPLING ASSEM.(STRAIGHT)
		9S9727	1	COUPLING ASSEM. (45°)
	13	6G1752	2	CLAMP
C	14	6K4936	12	BOLT
C	15	3F1417	8	WASHER
	16	6G1697	2	HOSE ASSEM. (NOT SERV.)
				FOR SERVICE OF EACH FURNISH:
G		9S671		HOSE 224IN.(570CM)
		3S8606	2	SLEEVE
		9S9727	1	COUPLING ASSEM. (45°)
		8S4055	1	COUPLING ASSEM.(STRAIGHT)
	17	6G237	1	SEAL
	18	6G1692	4	CLAMP
C	19	S509	2	BOLT
	20	6G1754	2	CLAMP
	21	6G208	1	BOOT
C	22	4S1962	4	CLIP

2G9045 STEERING LINES GROUP—Part 1
Serial No. 87V6548—Up

2G9045 STEERING LINES GROUP—Part 2
Serial No. 87V6548—Up
3G7448 Valve parts are shown on Page 204

NOTE	REF NO	PART NUMBER	QTY	DESCRIPTION
	1	T65	6	BOLT
	2	5P1075	6	WASHER
Y	3	3G7448	2	VALVE GROUP
	4	8D9088	2	CONNECTOR
	5	3K360	12	SEAL
	6	6G2979	2	HOSE ASSEM. (NOT SERV.)
				FOR SERVICE OF EACH FURNISH:
G		9S671		HOSE 11.4IN.(29CM)
		3S8606	2	SLEEVE
		8S6391	2	COUPLING ASSEM. (90°)
	7	8M505	6	CONNECTOR
	8	9D2673	2	CONNECTOR
	9	7K1181	2	STRAP
	10	6G1772	2	HOSE ASSEM. (NOT SERV)
				FOR SERVICE OF EACH FURNISH:
G		9S671		HOSE 27.2IN.(69CM)
		8S6391	1	COUPLING ASSEM. (90°)
		3S8606	2	SLEEVE
		8S4055	1	COUPLING ASSEM.(STRAIGHT)
	11	4S1962	2	CLIP
	12	54362	2	ELBOW
	13	9D6004	2	HOSE ASSEM.
				FOR SERVICE OF EACH FURNISH:
G		2P5943		HOSE 32.68IN.(83CM)
		4S5414	2	SLEEVE
		8S6417	1	COUPLING ASSEM.
		8S6393	1	COUPLING ASSEM.

G ORDER BY THE INCH
Y SEPARATE ILLUSTRATION

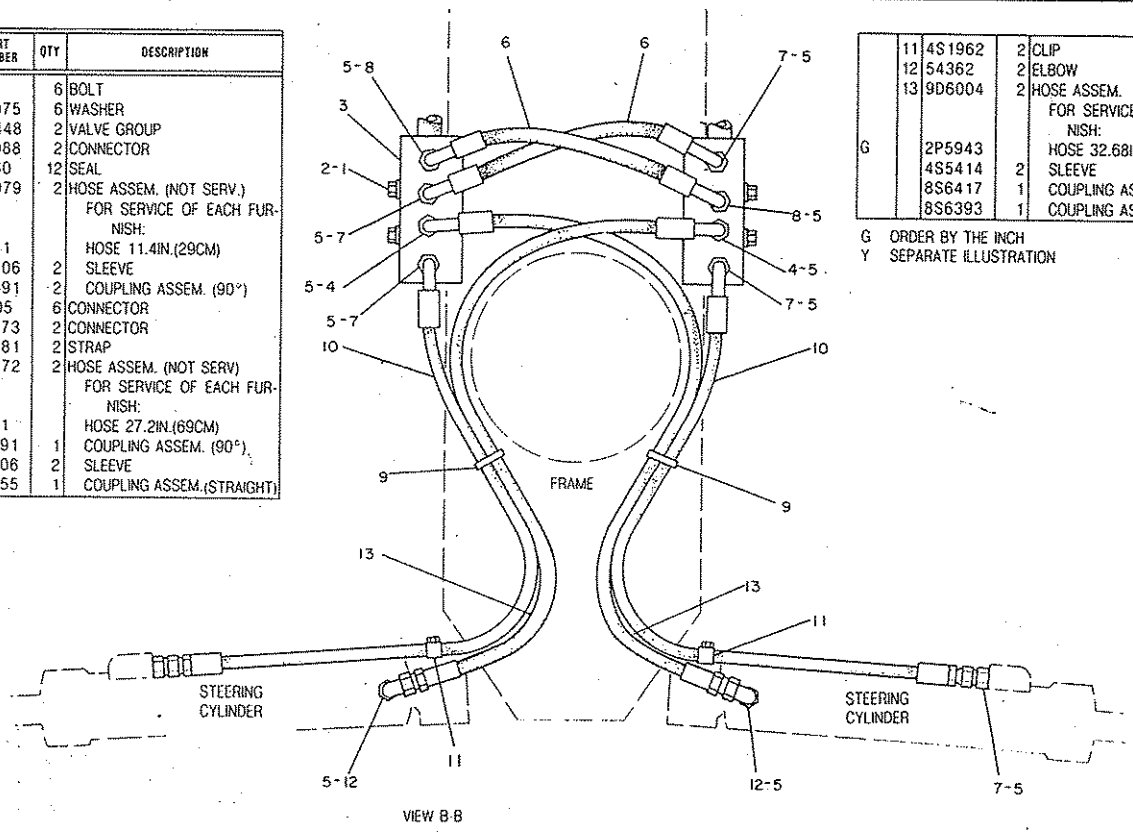

VIEW B-B

308697

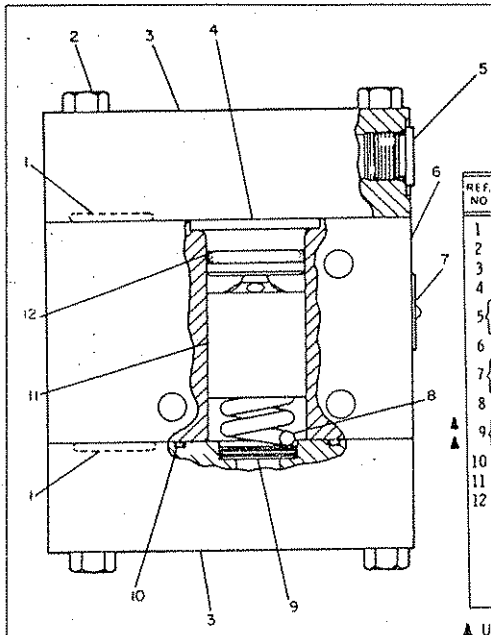

REF. NO	PART NUMBER	DESCRIPTION	QTY
1	4J5267	SEAL	2
2	9S1366	BOLT	8
3	3G7446	COVER	2
4	3G7445	SEAT	1
5	9S8005	PLUG	1
	3K360	SEAL	1
6	3G7447	BODY	1
7	3G8593	PLATE	1
	4B4158	SCREW	1
8	5J9631	SPRING	1
▲ 9	5J4857	SHIM-----.254 mm(.01 in.) thick	15
▲	3G85-92	SHIM-----.13 mm(.005 in.) thick	1
10	4J527	SEAL	2
11	3G7444	VALVE	1
12	4J519	SEAL	1

▲ USE AS REQUIRED 173624

3G7448 RELIEF VALVE GROUP—Direct Operated
Part of 2G9045 Steering Lines Group shown on Page 203

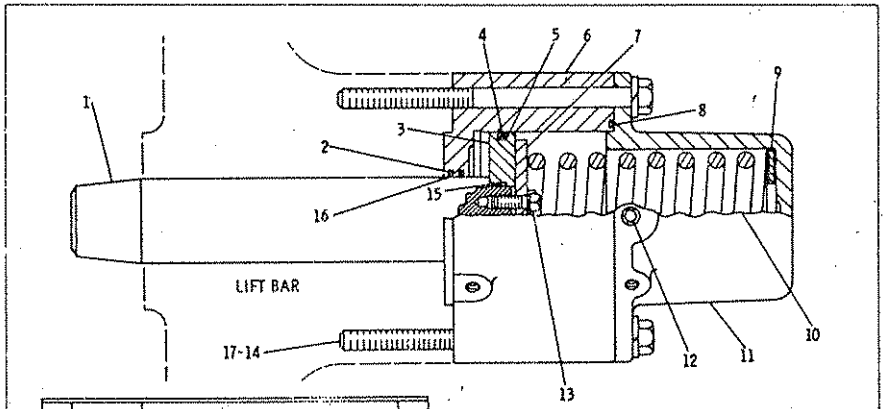

REF. NO.	PART NUMBER	DESCRIPTION	QTY
1	9D735	PIN	1
2	5J1808	SEAL	2
3	9D4447	PISTON	1
4	9D5064	SEAL	1
5	9F7283	SEAL	1
6	9D4448	HOUSING	1
7	9D4443	CAP	1
8	2H9247	SEAL	1
9	8D1777	WASHER---1.905 mm(.075 In.) thick	2
	8D1776	WASHER---2.388 mm(.094 In.) thick	1
10	1D4573	SPRING	1
11	9D4442	HOUSING	1
12	7H3171	PLUG	1
13	S1571	BOLT	2
	T329	LOCK	1
14	5P1895	BOLT	2
15	6F711	SEAL	1
C 16	9D736	SEAL	2
	3B4510	LOCKWASHER	2
17		-OR-	
C	2S5658	WASHER	2

C INDICATES CHANGE 164856

9D1275 CENTERSHIFT LOCK GROUP

9D5000 CENTERSHIFT LOCK CONTROL GROUP
Serial No. 87V5275 to 87V5733 inclusive
2G8020 Valve parts are shown on Page 208

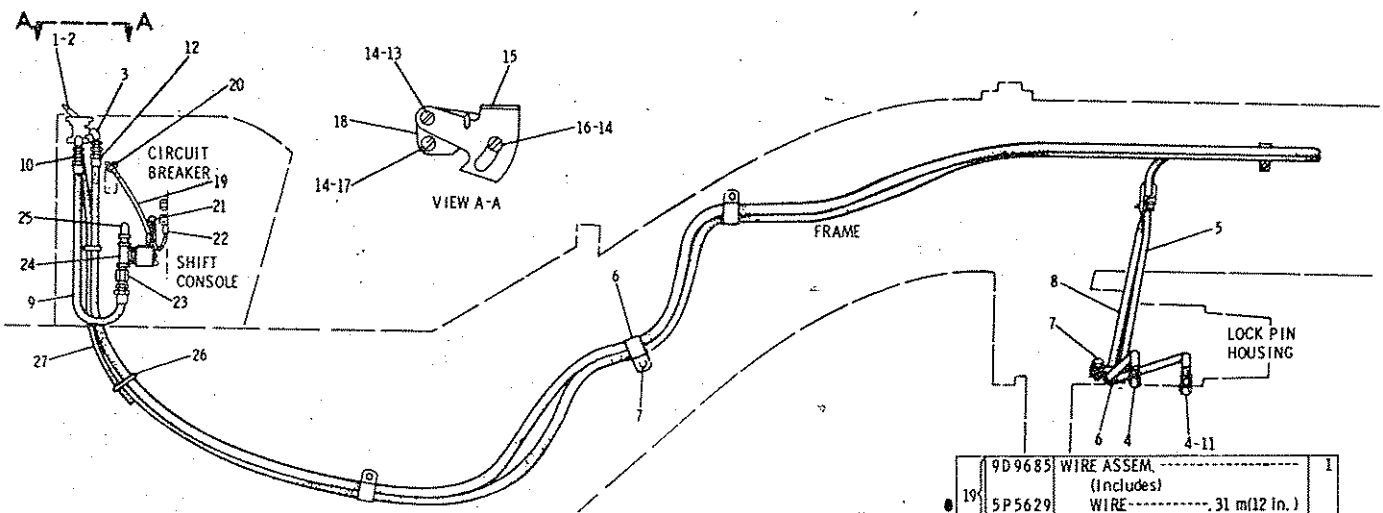

REF. NO.	PART NUMBER	DESCRIPTION	QTY
1	2G8020	VALVE GROUP	1
C		(Separate Illustration)	
2	5M6214	PLUG	1
3	3B8822	ELBOW	3
4	5H4778	UNION	2
▲ 5	5P720	HOSE----------508 cm(200 in.)	
6	5K8451	CLIP	6

	7	1S509	BOLT	3
		3B4506	LOCKWASHER	3
▲	8	5P720	HOSE-------508 cm(200 in.)	
	9	4S7560	HOSE ASSEM. ---55.9 cm(22 in.)	1
	10	4D2560	UNION	3
	11	5P4478	ADAPTER	1
	12	4H6146	CONNECTOR	4
	13	4B1227	SCREW	1
	14	4B4274	WASHER	3
	15	2G1537	BRACKET	1
		2G1536	SPRING	1
	16	4B8626	SCREW	1
	17	4B1232	SCREW	1
	18	2G1535	BASE	1

	19	9D9685	WIRE ASSEM. (Includes)	1
●		5P5629	WIRE----------.31 m(12 in.)	
		4L3916	TERMINAL------(female)-----	1
	20	2L8076	TERMINAL	1
	21	9D4210	WIRE ASSEM. (Includes)	1
●		5P5629	WIRE----------.20 m(8 in.)	
		4L3916	TERMINAL---- ---(female)------	1
	22	8M537	TERMINAL	1
	23	4H6147	UNION	1
	24	2G5694	VALVE	1
	25	7J8611	ELBOW	1
C		5K2408	NIPPLE	1
C	26	3S2093	STRAP	3
●	27	5P5636	HOSE----------.6m (24 in.)	

● ORDER BY THE METRE C INDICATES CHANGE ▲ ORDER BY THE CENTIMETRE 170078

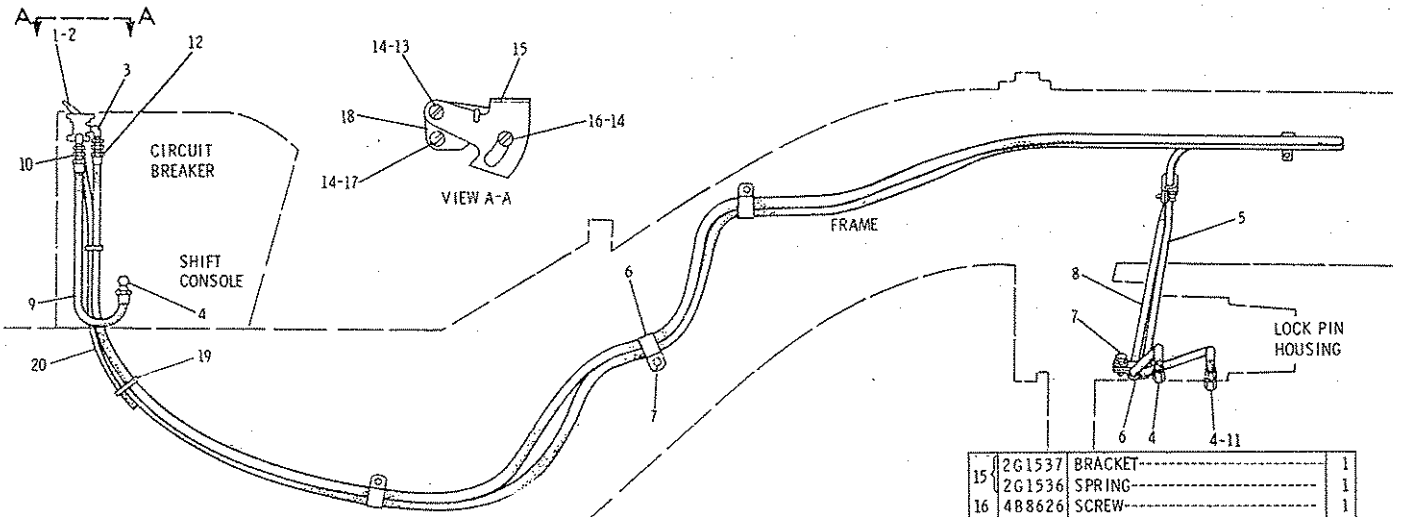

REF. NO.	PART NUMBER	DESCRIPTION	QTY
1	2G8020	VALVE GROUP (Separate Illustration)	1
2	5M6214	PLUG	1
3	3B8822	ELBOW	3
C 4	5H4778	ELBOW	3
▲ 5	5P720	HOSE---508 cm(200 in.)	
6	5K8451	CLIP	6
7	S509	BOLT	3
	3B4506	LOCKWASHER	3
▲ 8	5P720	HOSE---508cm(200 in.)	
9	4S7560	HOSE ASSEM. ---55.9 cm(22 in.)	1
10	4D2560	UNION	3
11	5P4478	ADAPTER	1
12	4H6146	CONNECTOR	4
13	4B1227	SCREW	1
14	4B4274	WASHER	3
15	2G1537	BRACKET	1
	2G1536	SPRING	1
16	4B8626	SCREW	1
17	4B1232	SCREW	1
18	2G1535	BASE	1
C 19	3S2093	STRAP	3
● 20	5P5636	HOSE---.6m(24 in.)	

● ORDER BY THE METER C INDICATES CHANGE ▲ ORDER BY THE CENTIMETER 233724

9D5000 CENTERSHIFT LOCK CONTROL GROUP
Serial No. 87V5734 to 87V6260 inclusive
2G8020 Valve parts are shown on Page 208

9D5000 CENTERSHIFT LOCK CONTROL GROUP

Serial No. 87V6261—Up

2G8020 Valve parts are shown on Page 208

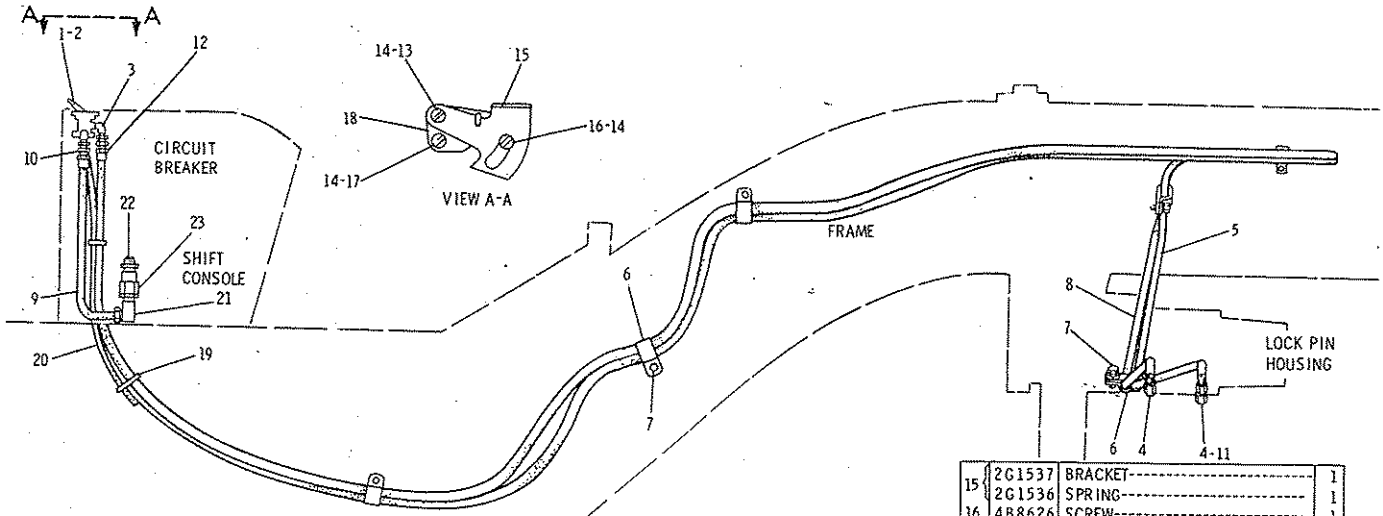

REF. NO.	PART NUMBER	DESCRIPTION	QTY
1	2G8020	VALVE GROUP (Separate Illustration)	1
2	5M6214	PLUG	1
3	3B8822	ELBOW	3
C 4	5H4778	ELBOW	2
▲ 5	5P720	HOSE---508 cm(200 in.)	1
6	5K8451	CLIP	6
7	S509	BOLT	3
	3B4506	LOCKWASHER	3
▲ 8	5P720	HOSE---508cm(200 in.)	
C 9	4D2847	HOSE ASSEM.---45 cm(17.75 in.)	1
10	4D2560	UNION	3
11	5P4478	ADAPTER	1
12	4H6146	CONNECTOR	4
13	4B1227	SCREW	1
14	4B4274	WASHER	3
15	2G1537	BRACKET	1
	2G1536	SPRING	1
16	4B8626	SCREW	1
17	4B1232	SCREW	1
18	2G1535	BASE	1
19	3S2093	STRAP	3
● 20	5P5636	HOSE---.6m(24 in.)	
C 21	4D4267	ELBOW	1
C 22	5K2408	NIPPLE	1
C 23	6D1432	VALVE	1

● ORDER BY THE METER

C INDICATES CHANGE

▲ ORDER BY THE CENTIMETER

305584

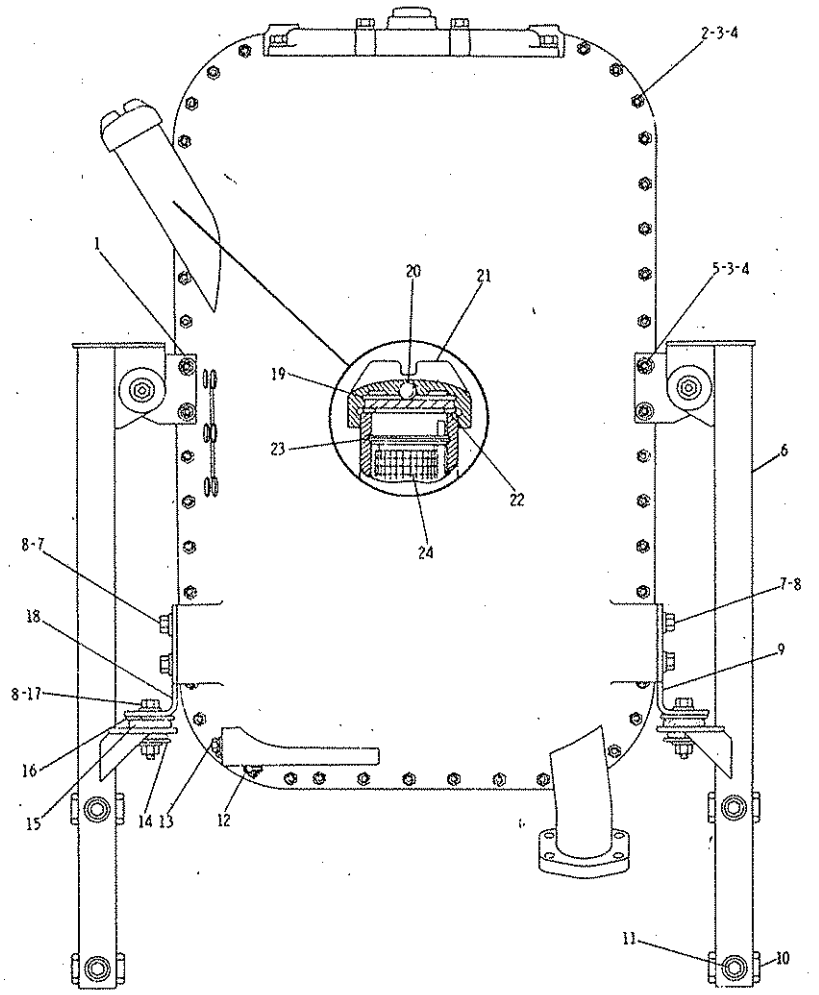

REF. NO.	PART NUMBER	DESCRIPTION	QTY
1	2G7171	PLATE	2
2	S1594	BOLT	38
3	1D4717	NUT	48
4	5P1075	WASHER	52
5	3B1915	BOLT	4
6	2G7175	SUPPORT ASSEM.	2
7	S1595	BOLT	4
8	5P1076	WASHER	8
9	2G7172	BRACKET	1
10	2G7936	BLOCK	4
11	2H6488	BOLT	4
	8M4791	WASHER	4
	2G8212	SPACER	4

12	1B5174	PLUG	1
13	4B7739	PLUG	1
14	8F6437	WASHER	4
15	9M1853	MOUNTING	4
16	1B4287	WASHER	4
	1A5822	BOLT	4
17	1D4719	NUT	4
	4B4280	WASHER	4
18	2G7173	BRACKET	1
19	6H5139	PLATE	1
20	4B9782	BALL	1
21	7H1447	CAP	1
22	9H6454	GASKET	1
23	6H9361	RING	1
24	1J9575	STRAINER ASSEM.	1

227390

2G8220 HYDRAULIC TANK GROUP—Part 1
Serial No. 87V5275 to 87V5733 Inclusive

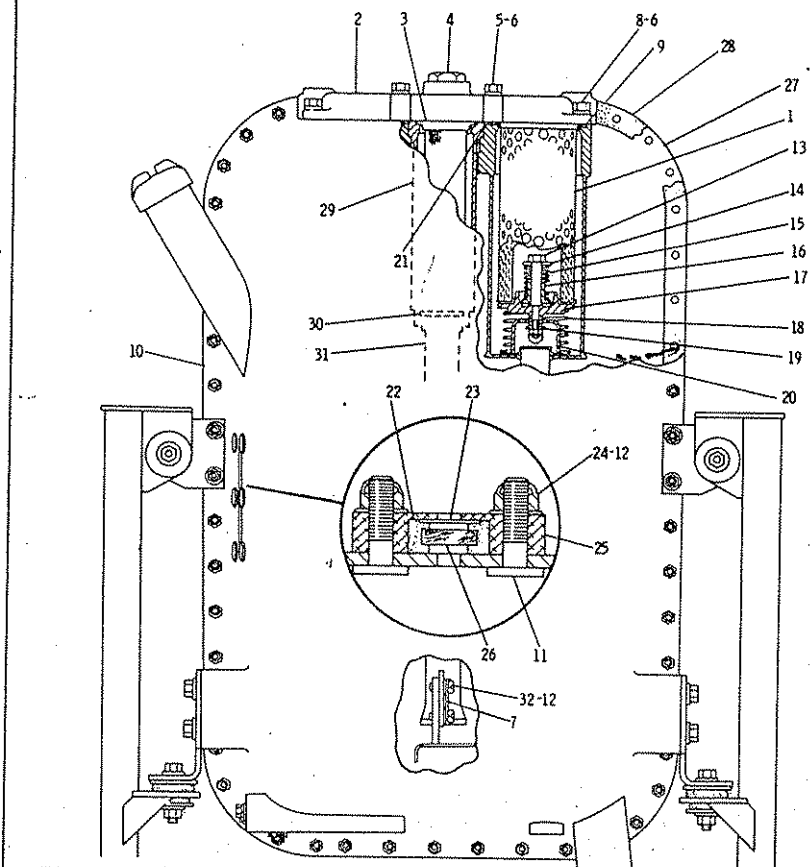

REF. NO.	PART NUMBER	DESCRIPTION	QTY.
	9M9740	ELEMENT	2
		-OR-	
CA 1	1U2093	ELEMENT (For use with fire resistant Hydraulic systems)	2
C 2	6G5118	MANIFOLD	1
3	8D5489	SCREEN ASSEM.	1
4	9S6130	PLUG	1
	2S4078	SEAL	1
5	2B947	BOLT	4
6	2M849	WASHER	8
7	3H3451	LOCK	1
8	7B3235	BOLT	4
9	5H6734	SEAL	2
10	9D8316	TANK ASSEM.	1
11	5J96	STUD	6
12	4B4278	WASHER	8
13	8D5388	BOLT	2
	2K4973	NUT	2
14	8D5401	RETAINER	2
15	6J8391	SPRING	2
16	9D8538	VALVE	2
17	8D4595	SEAT	2
18	2J6133	SPRING	2
19	8D6354	SPACER	2
20	8D8372	RETAINER ASSEM.	2
21	2H3928	SEAL	1
22	6J1080	GROMMET	1
23	8D5016	PLATE	1
24	4J8265	NUT	6
25	6J1079	RETAINER	1
26	6J1081	GLASS	1
27	2G1359	COVER	1
28	2D5383	GASKET	1
29	9D8312	TUBE ASSEM.	1
30	4F8824	SEAL	1
31	9D8315	TUBE ASSEM.	1
32	L1351	BOLT	2

C INDICATES CHANGE

▲ NOT PART OF 2G8220 GROUP

178803

2G8220 HYDRAULIC TANK GROUP—Part 2
Serial No. 87V5275 to 87V5733 Inclusive

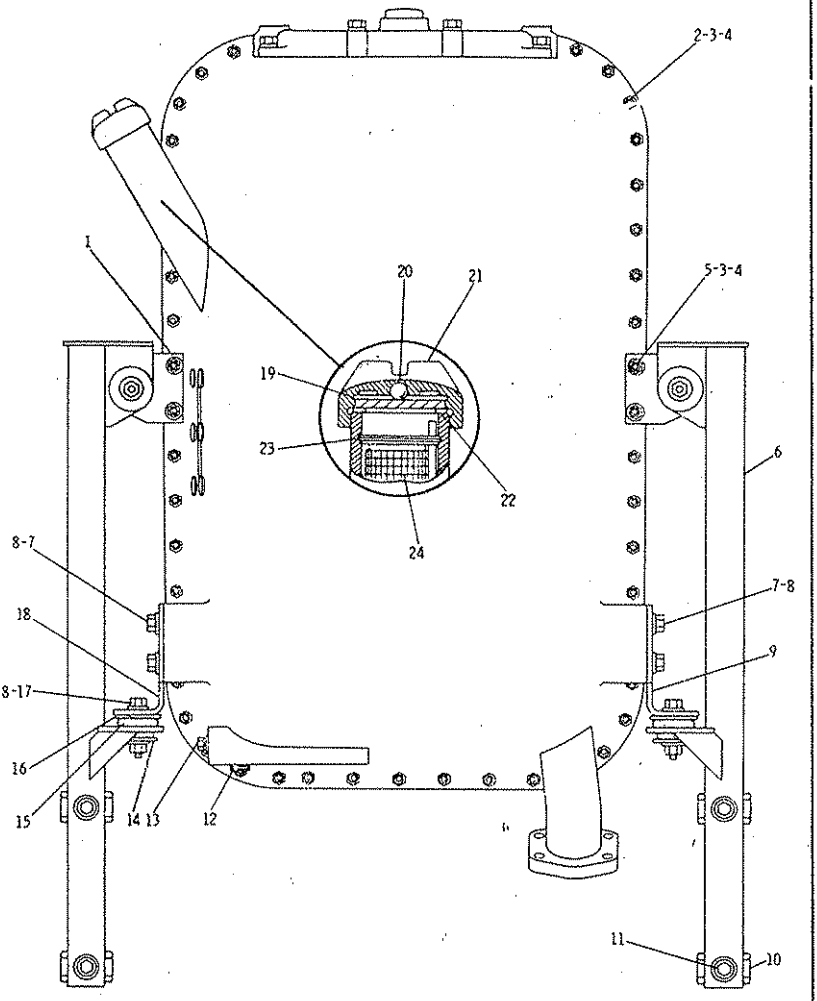

REF. NO.	PART NUMBER	DESCRIPTION	QTY
1	2G7171	PLATE	2
C 2	1D4677	BOLT	48
3	1D4717	NUT	48
C 4	5M2894	WASHER	54
C 5	1D4678	BOLT	4
6	2G7175	SUPPORT ASSEM.	2
7	S1595	BOLT	4
C 8	5P8245	WASHER	12
9	2G7172	BRACKET	1
C 10	6G5279	BLOCK	4
C	6F5282	BOLT	4
11	8M4791	WASHER	4
	2G8212	SPACER	4
12	1B5174	PLUG	1
13	4B7739	PLUG	1
14	8F6437	WASHER	4
15	9M1853	MOUNTING	4
16	1B4287	WASHER	4
17	1A5822	BOLT	4
	1D4719	NUT	4
18	2G7173	BRACKET	1
19	6H5139	PLATE	1
20	4B9782	BALL	1
21	7H1447	CAP	1
22	9H6454	GASKET	1
23	6H9361	RING	1
24	1J9575	STRAINER ASSEM.	1

C INDICATES CHANGE

232942

2G8220 HYDRAULIC TANK GROUP—Part 1
Serial No. 87V5734—Up

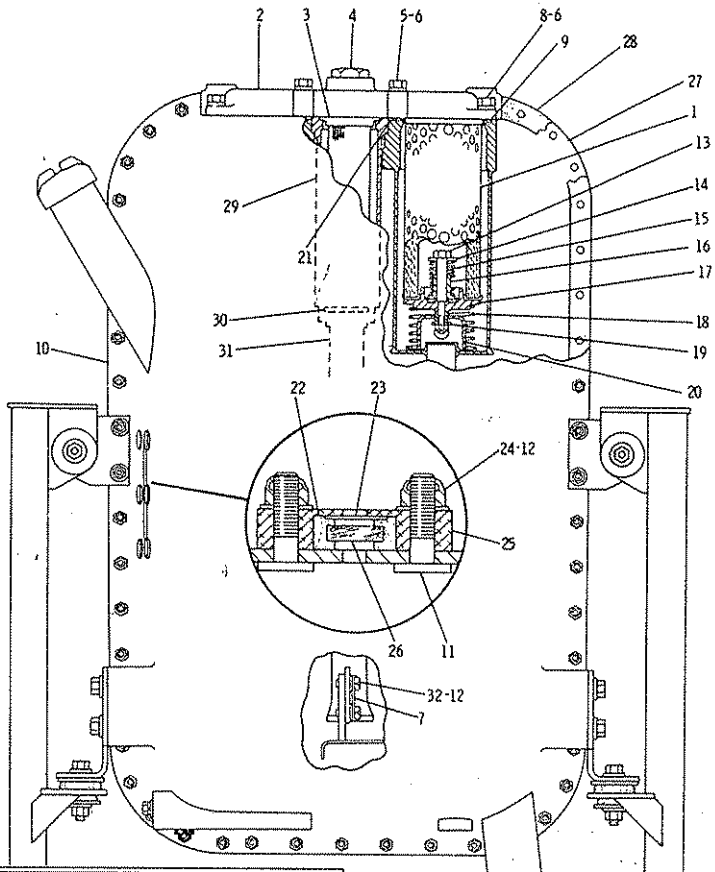

REF. NO.	PART NUMBER	DESCRIPTION	QTY.
	9M9740	ELEMENT	2
		-OR-	
CA▲ 1	1U2093	ELEMENT (For use with fire resistant Hydraulic systems)	2
2	6G5118	MANIFOLD	1
3	8D5489	SCREEN ASSEM.	1
4	9S6130	PLUG	1
	2S4078	SEAL	1
5	2B947	BOLT	4
C 6	5P8245	WASHER	8
7	3H3451	LOCK	1
8	7B3235	BOLT	4
9	5H6734	SEAL	2
C 10	6G5281	TANK ASSEM.	1
11	5J96	STUD	6
C 12	5M2894	WASHER	6
13	8D5388	BOLT	2
	2K4973	NUT	2
14	8D5401	RETAINER	2
15	6J8391	SPRING	2
16	9D8538	VALVE	2
17	8D4595	SEAT	2
18	2J6133	SPRING	2
19	8D6354	SPACER	2
20	8D8372	RETAINER ASSEM.	2
21	2H3928	SEAL	1
22	6J1080	GROMMET	1
23	8D5016	PLATE	1
24	4J8265	NUT	6
25	6J1079	RETAINER	1
26	6J1081	GLASS	1
C 27	6G5277	COVER	1
28	2D5383	GASKET	1
29	9D8312	TUBE ASSEM.	1
30	4F8824	SEAL	1
31	9D8315	TUBE ASSEM.	1
32	L1351	BOLT	2

C INDICATES CHANGE

▲ NOT PART OF 2G8220 GROUP

178804

2G8220 HYDRAULIC TANK GROUP—Part 2
Serial No. 87V5734—Up

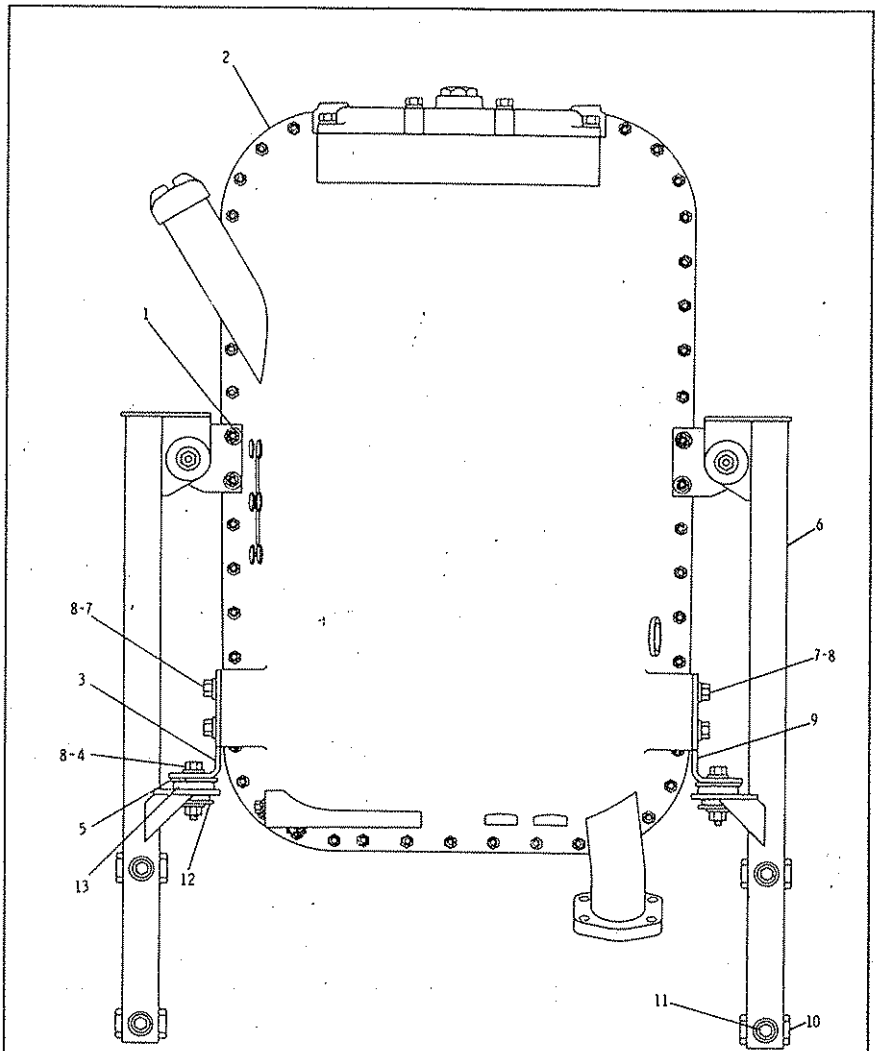

NOTE	REF NO	PART NUMBER	QTY	DESCRIPTION
	1	2G7171	2	PLATE
Y	2	5T3877	1	TANK ASSEM.
	3	2G7173	1	BRACKET
	4	1A5822	4	BOLT
		1D4719	4	NUT
	5	1B4287	4	WASHER
	6	2G7175	2	SUPPORT ASSEM.
	7	S1595	4	BOLT
C	8	5P8245	12	WASHER
	9	2G7172	1	BRACKET
C	10	8G5279	4	BLOCK

C	11	6F5282	4	BOLT
		8M4791	4	WASHER
		2G8212	4	SPACER
	12	8F6437	4	WASHER
	13	9M1853	4	MOUNTING

C INDICATES CHANGE

Y SEPARATE ILLUSTRATION

304814

5T3876 HYDRAULIC MOUNTING AND TANK GROUP
Serial No. 87V5734—Up. Part of 5T2215 & 5T5113 Supplemental Steering Arrangements listed on Page 198B. 5T3877 Tank parts are shown on Pages 207E & 207F
AN ATTACHMENT

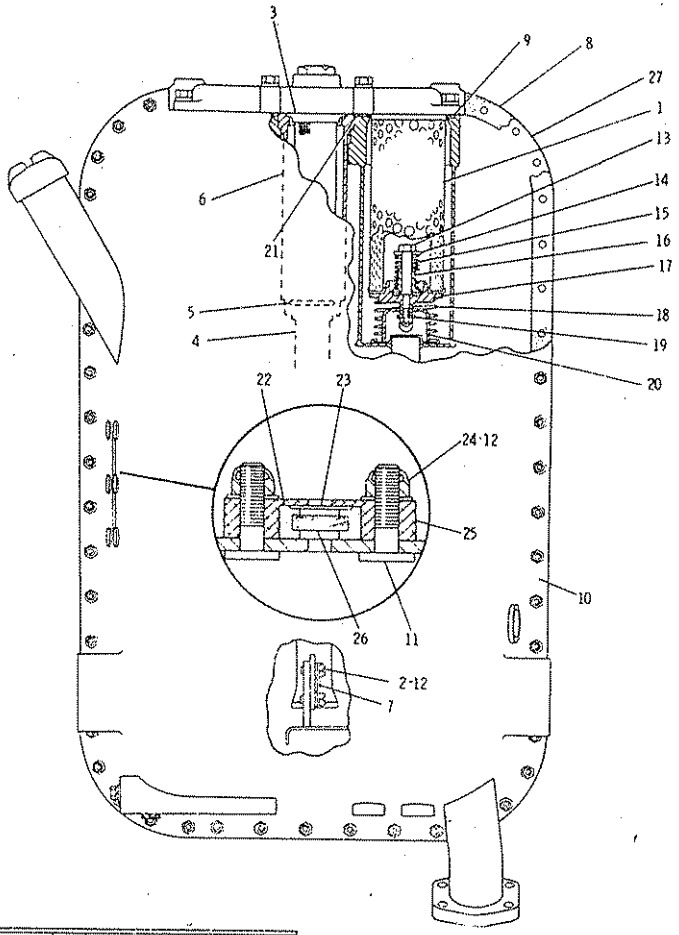

NOTE	REF NO	PART NUMBER	QTY	DESCRIPTION
	1	9M9740	2	ELEMENT
				-OR-
A		1U2093	2	ELEMENT (FOR USE WITH FIRE RESISTANT HYDRAULIC SYS.)
	2	L1351	2	BOLT
	3	8D5489	1	SCREEN ASSEM.
	4	5T3885	1	TUBE ASSEM.
	5	4F8624	1	SEAL
	6	9D8312	1	TUBE ASSEM.
	7	3H3451	1	LOCK
	8	2D5383	1	GASKET
	9	5H6734	2	SEAL
	10	5T5101	1	TANK ASSEM.
	11	5J96	6	STUD
	12	5M2894	8	WASHER
	13	8D5388	2	BOLT
		2K4973	2	NUT
	14	8D5401	2	RETAINER
	15	6J8391	2	SPRING
	16	9D8538	2	VALVE
	17	8D4595	2	SEAT
	18	2J6133	2	SPRING
	19	8D5403	2	SPACER
	20	8D8372	2	RETAINER ASSEM.
	21	2H3928	1	SEAL
	22	6J1080	1	GROMMET
	23	8D5016	1	PLATE
	24	4J8265	6	NUT
	25	5J1079	1	RETAINER
	26	6J1081	1	GLASS
	27	6G5277	1	COVER

A NOT PART OF THIS GROUP

C INDICATES CHANGE

309049

5T3877 HYDRAULIC TANK GROUP—Part 1
Serial No. 8V5734—Up. Part of 5T3876 Hydraulic Mounting & Tank Group shown on Page 207D. AN ATTACHMENT

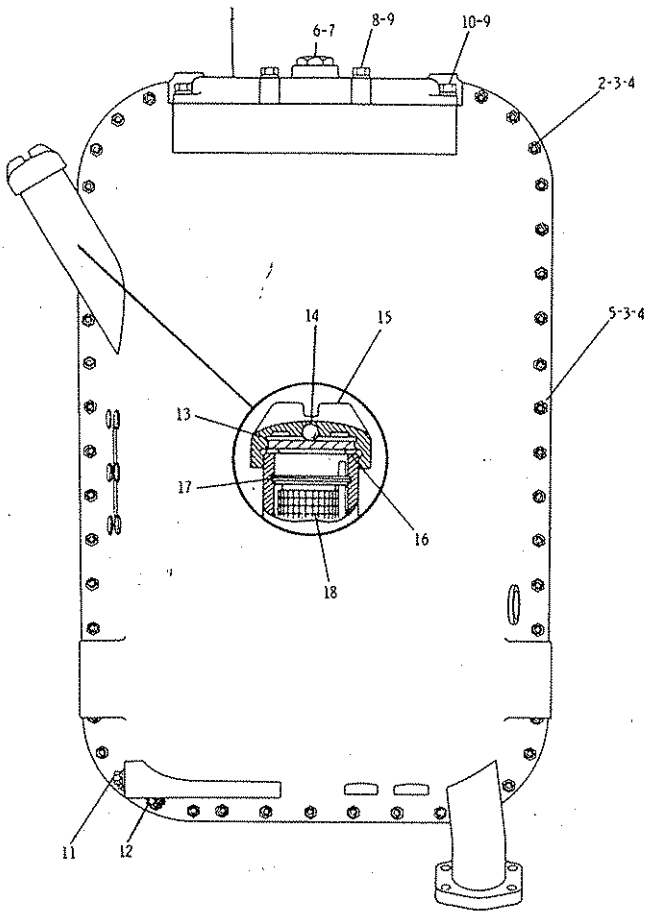

NOTE	REF NO	PART NUMBER	QTY	DESCRIPTION
	1	6G5118	1	MANIFOLD
	2	104677	48	BOLT
	3	104717	52	NUT
	4	5M2894	52	WASHER
	5	104678	4	BOLT
	6	9S6130	1	PLUG
	7	2S4078	1	SEAL
	8	28947	4	BOLT
	9	5P8245	8	WASHER
	10	783235	4	BOLT
	11	4B7739	1	PLUG
	12	1B5174	1	PLUG
	13	6H5139	1	PLATE
	14	4B9782	1	BALL
	15	7H1447	1	CAP
	16	9H6454	1	GASKET
	17	6H9361	1	RING
	18	1J9575	1	STRAINER ASSEM.

304816

5T3877 HYDRAULIC TANK GROUP—Part 2
Serial No. 87V5734—Up. Part of 5T3876 Hydraulic Mounting & Tank Group shown on Page 207D. AN ATTACHMENT

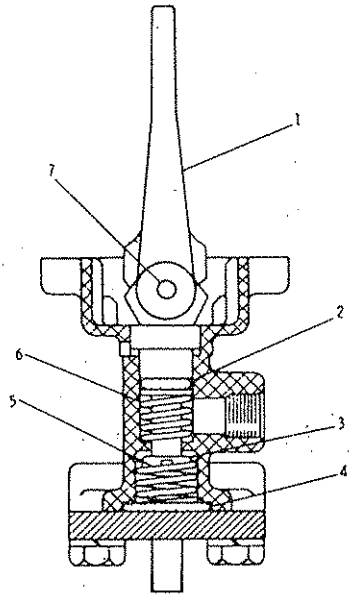

REF. NO	PART NUMBER	DESCRIPTION	QTY
1	6G1148	LEVER	1
2	5F9144	SEAL	2
3	9D1289	VALVE	2
4	2S4663	SEAL	2
5	4J3957	SPRING	2
6	4J3961	SPRING	2
7	6G1149	PIN	1

170075

2G8020 AIR CONTROL VALVE GROUP
Part of 9D5000 Centershift Lock Control Group shown on Page 205

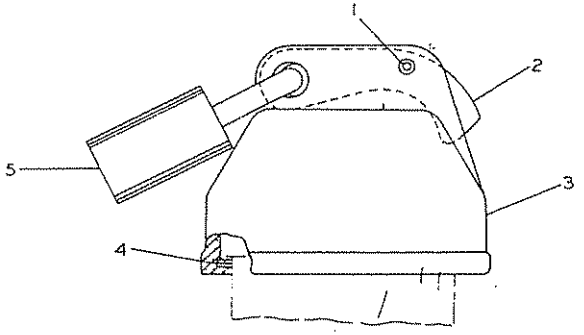

▲ Not Part of Protection Cover Group 5D1910

REF. NO.	PART NUMBER	DESCRIPTION	QTY
1	1L5072	DOWEL	1
2	9M7394	LEVER	1
3	5D1911	COVER	1
4	2J7761	RING	1

	5	Not Serv	PADLOCK (For Service of Padlock & Key Order 8S7949 Padlock Group)	1
▲		8M439	KEY (NOT SHOWN)	2

113719

5D1910 PROTECTION COVER GROUP—Hydraulic Tank Cap—Replaced by 9G9288
AN ATTACHMENT

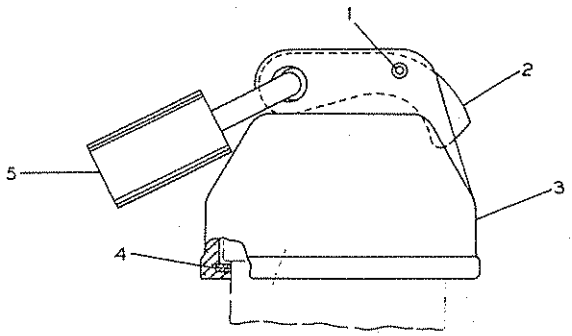

REF. NO.	PART NUMBER	DESCRIPTION	QTY
1	1L5072	DOWEL	1
2	9M7394	LEVER	1
3	5D1911	COVER	1
4	2J7761	RING	1

▲	5	5P8502	PADLOCK GROUP (Includes)	1
		5P8500	KEY	2

▲ NOT PART OF 9G9288 PROTECTION COVER GROUP

228813

9G9288 PROTECTION COVER GROUP—Hydraulic Tank Cap
AN ATTACHMENT

7D9600 HYDRAULIC PUMP DRIVE GROUP
Serial No. 87V5275 to 87V5416 inclusive
7D9268 Joint parts are shown on Page 210

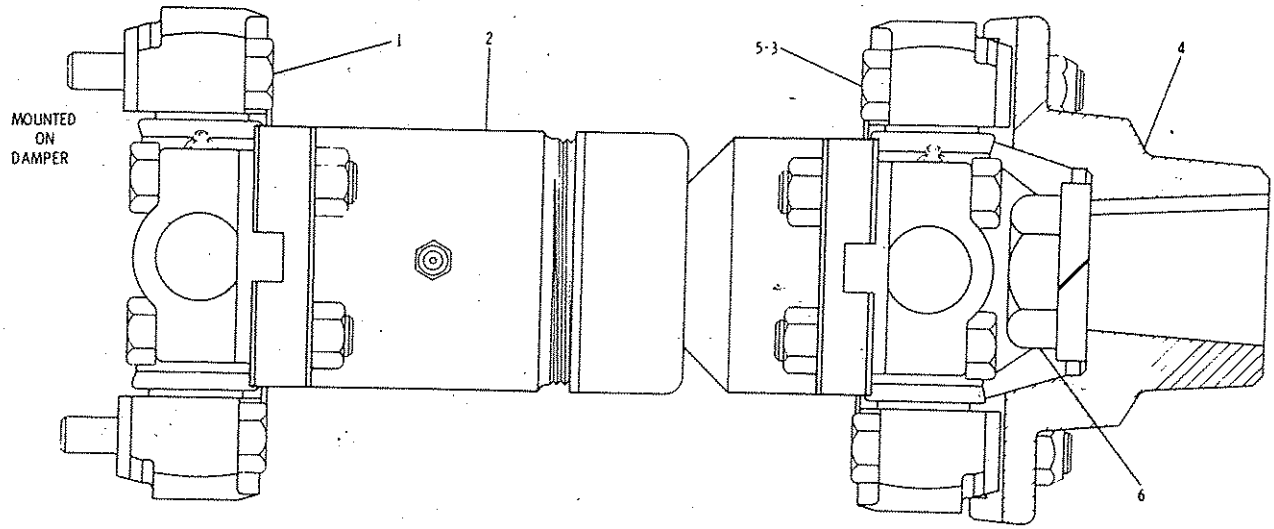

REF NO	PART NUMBER	DESCRIPTION	QTY
1	1C2251	BOLT	4
2	7D9268	JOINT GROUP (Separate Illustration)	1
3	S1748	BOLT	4
4	7D9267	YOKE	1

5	2L6267	LOCKNUT	4
6	1D5120	NUT	1
6	3B4512	LOCKWASHER	1

207384

7D9600 HYDRAULIC PUMP DRIVE GROUP

Serial No. 87V5417—Up

6G4240 Joint parts are shown on Page 210

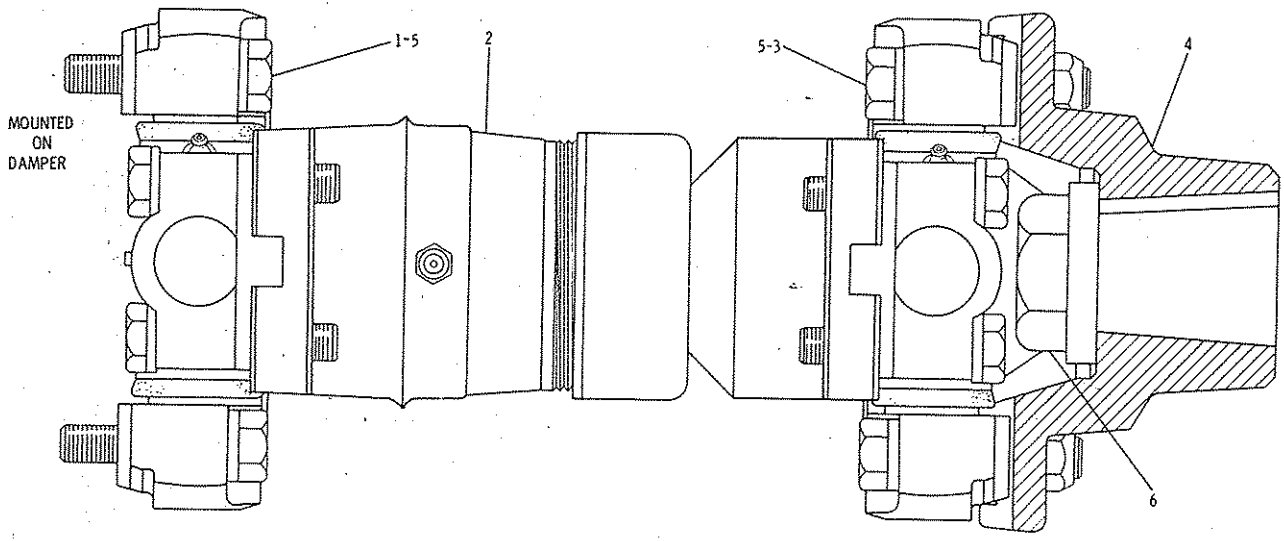

	REF. NO.	PART NUMBER	DESCRIPTION	QTY.
	1	1C2251	BOLT	4
C	2	6G4240	JOINT GROUP (Separate Illustration)	1
C	3	L478	BOLT	4
	4	7D9267	YOKE	1

C	5	3V2431	WASHER	8
	6	1D5120	NUT	1
C		5P8248	WASHER	1

C INDICATES CHANGE

229759

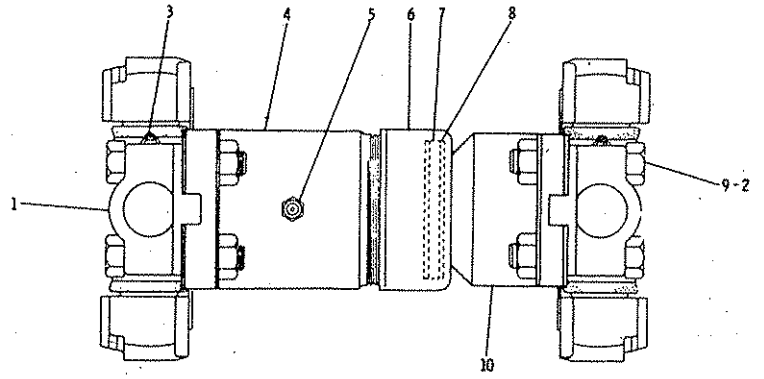

REF. NO.	PART NUMBER	DESCRIPTION	QTY
1	8D537	SPIDER & BEARING ASSEM.	2
2	5B9079	NUT	8
3	8D538	FITTING	2
4	8D3149	YOKE ASSEM.	1
5	3B8489	FITTING	1
6	5H3593	RETAINER	1
C 7	641156	SEAL	1
8	643631	WASHER	2
9	S1748	BOLT	8
10	8D3148	YOKE	1

C INDICATES CHANGE

208423

7D9268 UNIVERSAL JOINT GROUP
Serial No. 87V5275 to 87V5416 inclusive
Part of 7D9600 Hydraulic Pump Drive Group shown on Page 209

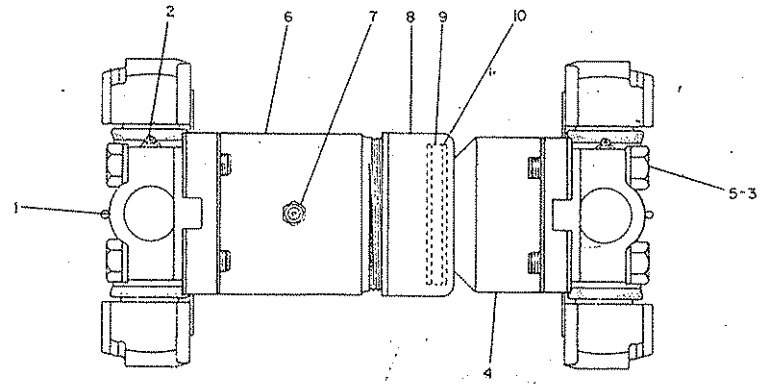

REF. NO.	PART NUMBER	DESCRIPTION	QTY.
1	6G4356	SPIDER & BEARING ASSEM. (Each Includes)	2
2	8D538	FITTING	1
3	3V2431	WASHER	8
4	6G4358	YOKE	1
5	L478	BOLT	8
6	6G4357	YOKE ASSEM. (Includes)	1
7	271287	FITTING	1
8	5H3593	RETAINER	1
9	6G6623	SEAL	1
10	9K2721	WASHER	2

229760

6G4240 UNIVERSAL JOINT GROUP 1125495
Serial No. 87V5417—Up

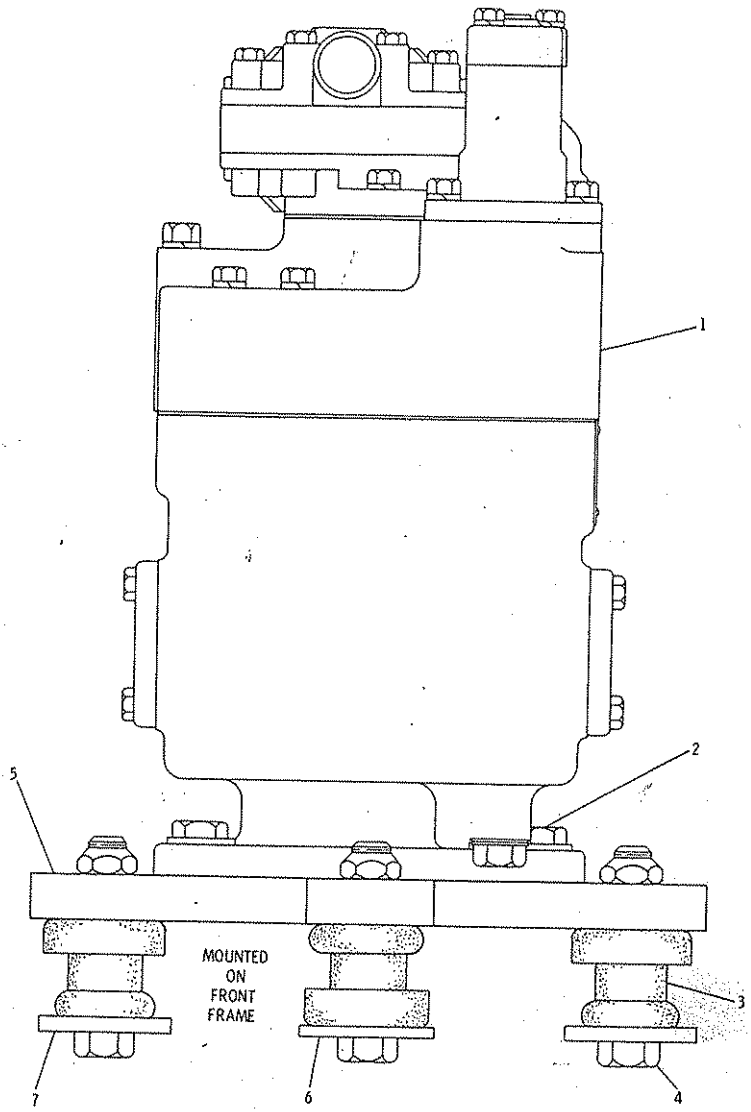

	REF. NO.	PART NUMBER	DESCRIPTION	QTY.
C	1	8J6731	PUMP GROUP---------- (Separate Illustration)	1
C	2	1A1135	BOLT----------	2
C	2	5P8247	WASHER----------	2
C	3	2G1769	MOUNTING----------	3

C	4	5I1569	BOLT----------	3
C	4	3K2889	NUT----------	3
C	5	8D9057	PLATE----------	1
	6	302179	WASHER----------	1
	7	7D734	WASHER----------	2

C INDICATES CHANGE

228060

9D950 IMPLEMENT PUMP AND MOUNTING GROUP
Serial No. 87V5275 to 87V5733 inclusive
8J6731 Pump parts are shown on Page 212

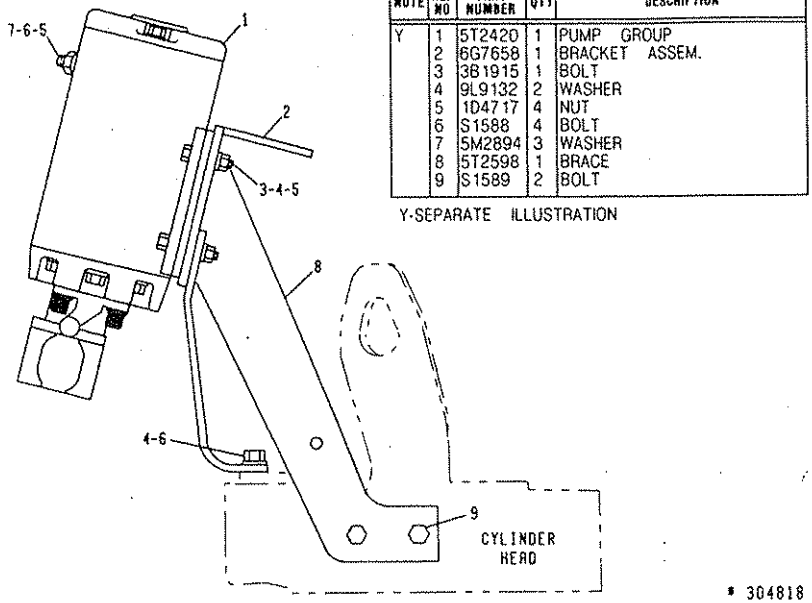

NOTE	REF NO	PART NUMBER	QTY	DESCRIPTION
Y	1	5T2420	1	PUMP GROUP
	2	6G7658	1	BRACKET ASSEM.
	3	3B1915	1	BOLT
	4	9L9132	2	WASHER
	5	1D4717	4	NUT
	6	S1588	4	BOLT
	7	5M2894	3	WASHER
	8	5T2598	1	BRACE
	9	S1589	2	BOLT

Y-SEPARATE ILLUSTRATION

* 304818

5T2295 MOUNTING AND PUMP GROUP—Supplemental Steering
Serial No. 87V5734—Up. Part of 5T2215 & 5T5113 Supplemental Steering
Arrangements listed on Page 198B. 5T2420 Pump parts are shown on Page 211A
AN ATTACHMENT

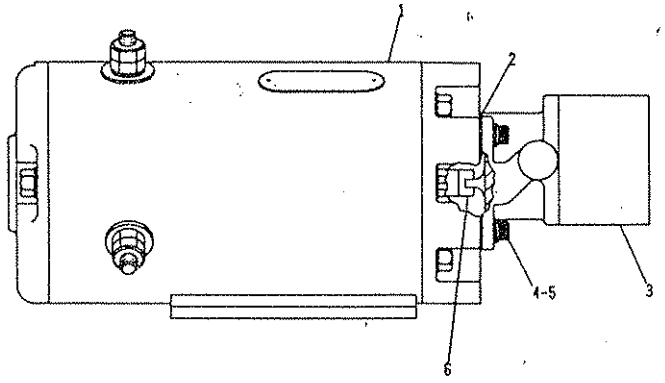

NOTE	REF NO	PART NUMBER	QTY	DESCRIPTION
	1	2G5515	1	MOTOR
	2	1V8796	1	GASKET
	3	5T2421	1	PUMP
	4	1T416	4	BOLT
	5	3B4505	4	LOCKWASHER
	6	1V8795	1	COUPLING

* 304806

5T2420 ELECTRIC DRIVE PUMP GROUP

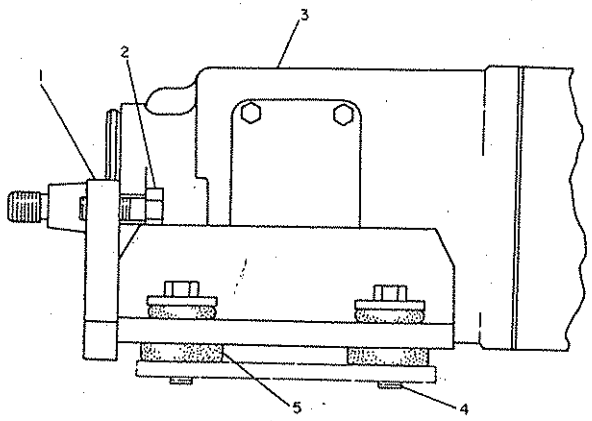

REF. NO.	PART NUMBER	DESCRIPTION	QTY.
1	6G4174	PLATE ASSEM.	1
2	1A1135	BOLT	2
	5P8247	WASHER	2
3	8J6731	PUMP GROUP (Separate Illustration)	1
4	2B947	BOLT	4
	8K8517	WASHER	4
5	643274	MOUNT	4

232606

6G6880 IMPLEMENT PUMP AND MOUNTING GROUP
Serial No. 87V5734—Up
8J6731 Pump parts are shown on Page 212

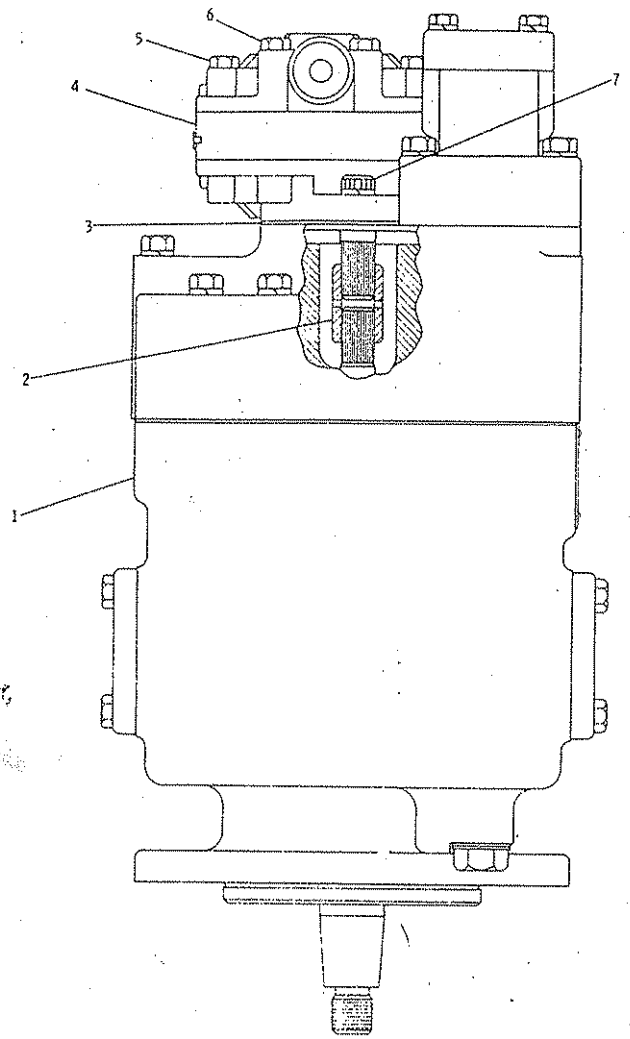

REF. NO.	PART NUMBER	DESCRIPTION	QTY
1	8J6730	PUMP GROUP (Separate Illustration)	1
2	8J5834	COUPLING	1
3	6D1004	GASKET	1
4	8J5846	PUMP GROUP (Includes)	1
	2S5818	BOLT--(12 point head)	2
5	1D4539	BOLT	4
6	1D4541	BOLT	2
7	5P2546	BOLT	2
	3B4507	LOCKWASHER	2

THE FOLLOWING REPAIR KIT IS AVAILABLE:			
329717	KIT--(gear pump seal) (Includes such parts as Diaphragm, Ball, Seals, Spring and Gasket)		1

228085

8J6731 PISTON AND GEAR PUMP GROUP—Slipper—Type 1
Part of 9D960 Implement Pump and Mounting Group shown on Page 211
8J6730 Pump parts are shown on Pages 214 & 215

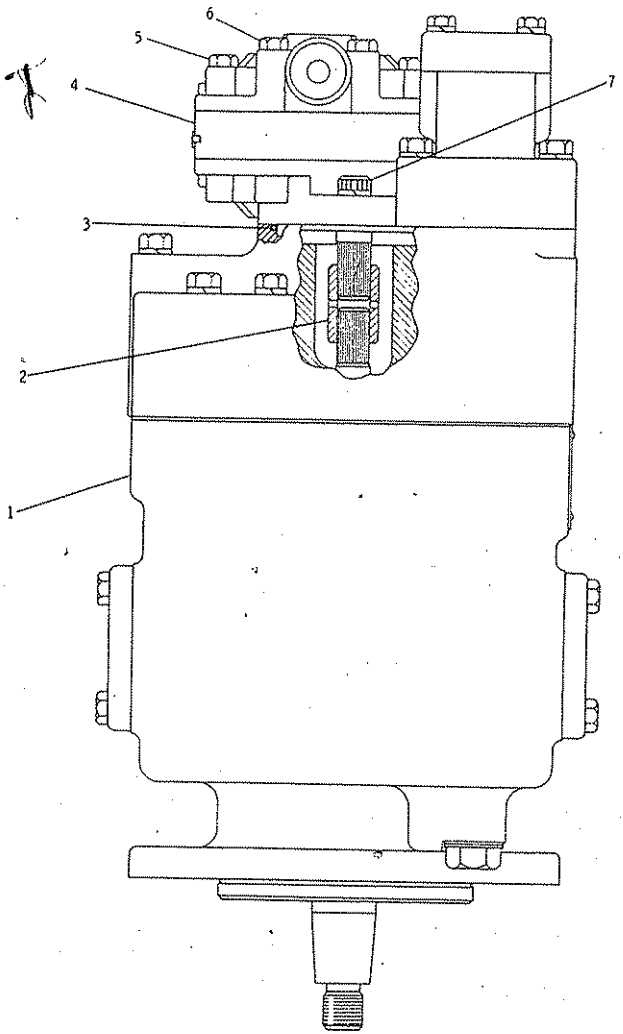

NOTE	REF NO	PART NUMBER	QTY	DESCRIPTION
Y	1	8J6730	1	PUMP GROUP
	2	8J5834	1	COUPLING
C	3	6V5778	1	SEAL
	4	8J5846	1	PUMP GROUP
		2S5818	2	BOLT (12 POINT HEAD)
	5	1D4539	4	BOLT
	6	1D4541	2	BOLT
	7	5P2546	2	BOLT
		3B4507	2	LOCKWASHER

C INDICATES CHANGE
Y SEPARATE ILLUSTRATION

		329717	1	THE FOLLOWING REPAIR KIT IS AVAILABLE: KIT (GEAR PUMP SEAL) (INCLUDES SUCH PARTS AS DIAPHRAGM, BALL, SEALS, SPRING AND GASKET)

308647

8J6731 PISTON AND GEAR PUMP GROUP—Slipper—Type 2
Part of 9D950 Implement Pump and Mounting Group shown on Page 211
8J6730 Pump parts are shown on Pages 214 & 215

8J6729 PUMP CONTROL HEAD GROUP
Part of 8J6730 Slipper Pump Group shown on Page 214
3G3921 and 8J6103 Valve parts are shown on Pages 216 & 217

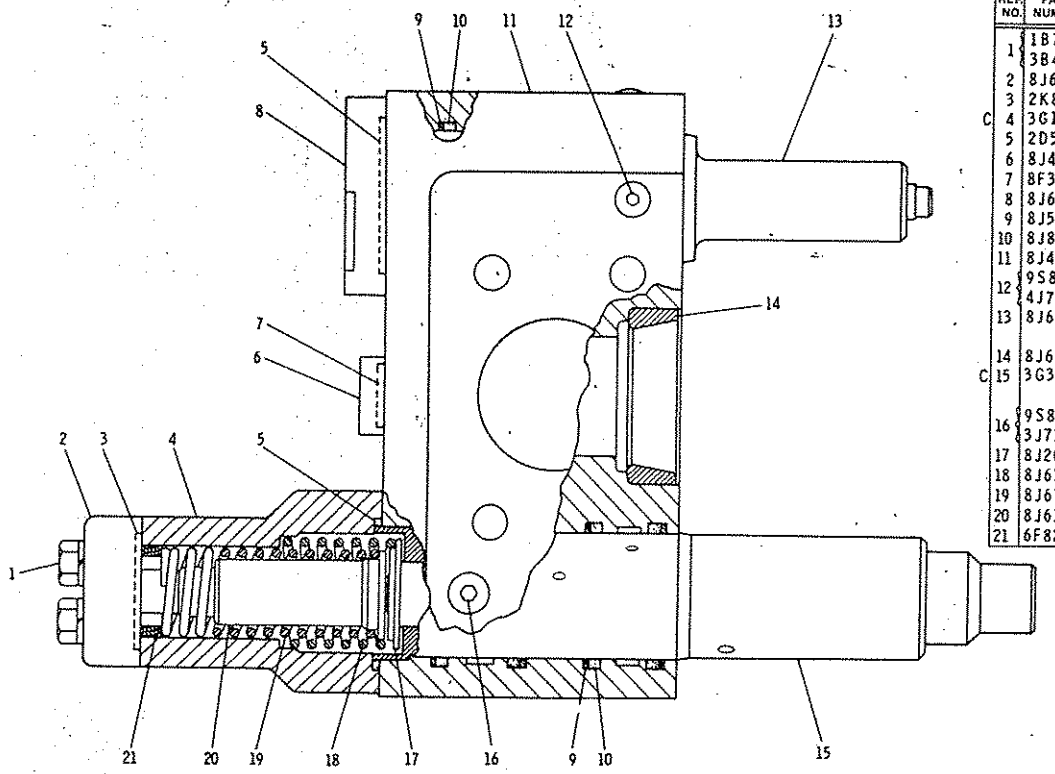

REF. NO.	PART NUMBER	DESCRIPTION	QTY
1	1B7182	BOLT	2
	3B4505	LOCKWASHER	2
2	8J6726	COVER	1
3	2K8198	SEAL	1
C 4	3G1763	HOUSING	1
5	2D598	SEAL	2
6	8J445	PLUG	1
7	8F3469	SEAL	1
8	8J6066	COVER	1
9	8J5472	RING	7
10	8J8725	SEAL	7
11	8J415	HEAD	1
12	9S8001	PLUG	2
	4J7533	SEAL	2
13	8J6103	VALVE GROUP (Separate Illustration)	1
14	8J6314	CUP	1
C 15	3G3921	VALVE GROUP (Separate Illustration)	1
16	9S8002	PLUG	3
	3J7354	SEAL	3
17	8J2028	SPACER	1
18	8J6305	SPRING	1
19	8J6728	SPRING	1
20	8J6303	SEAT	1
21	6F8205	SPACER	6

C INDICATES CHANGE

171386

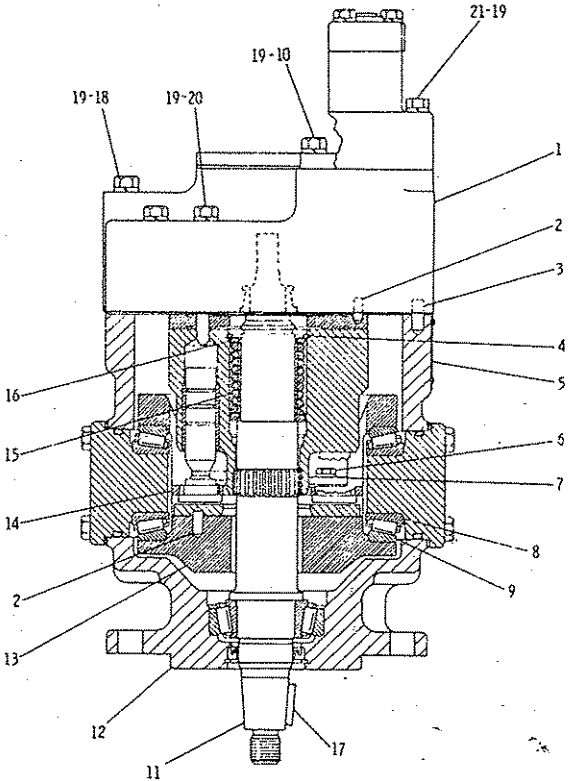

REF. NO.	PART NUMBER	DESCRIPTION	QTY.
1	8J6729	HEAD GROUP---------- (Separate Illustration)	1
2	2H1190	DOWEL----------	3
3	9F2083	DOWEL----------	2
4	83214	RING----------	2
5	2P9703	PLATE--------(warning)----------	1
	4B4158	SCREW----------	4
6	310216	BOLT----------	4
	5P537	WASHER----------	4
7	3G3156	BEARING----------	2
	8J6283	SHIM------.002 in. (.06 mm)thick-	6
	8J6284	SHIM------.005 in. (.13 mm)thick-	6
8	1B3953	CONE----------	3
9	8J6322	CUP----------	3
10	1A5183	BOLT----------	2
11	8J6296	SHAFT----------	1
	8J6315	CONE----------	1
12	9J728	BODY----------	1
13	9J7138	SWASHPLATE----------	1
14	9J7858	PLATE----------	1
15	8J6298	SPRING----------	1
C 16	8J6300	SPACER----------	2
17	1B8737	KEY----------	1
18	S1608	BOLT----------	2
19	3B4506	LOCKWASHER----------	10
20	S1619	BOLT----------	4
21	7F3425	BOLT----------	2

C INDICATES CHANGE 228086

8J6730 SLIPPER PUMP GROUP—Part 1
Part of 8J6731 Piston and Gear Pump Group shown on Page 212
8J6729 Head parts are shown on Page 213

8J6730 SLIPPER PUMP GROUP—Part 2
Part of 8J6731 Piston and Gear Pump Group shown on Page 212

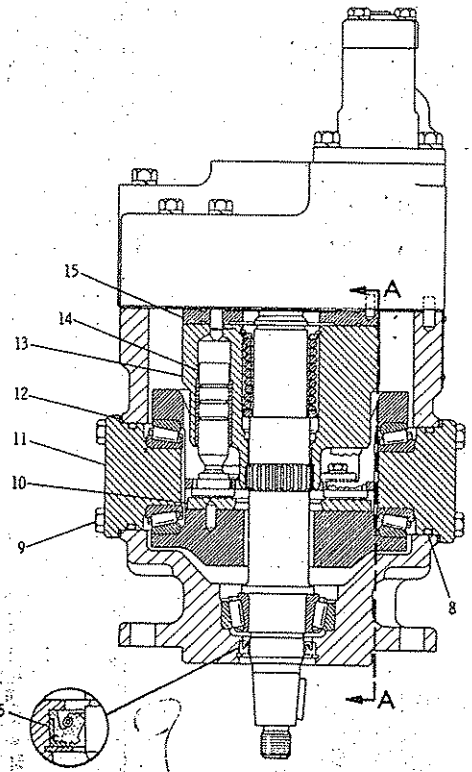

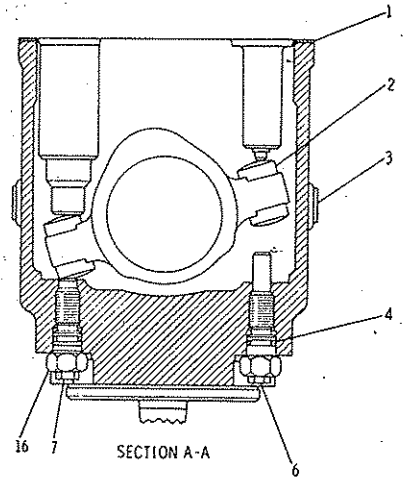

SECTION A-A

REF. NO.	PART NUMBER	DESCRIPTION	QTY.
▲	1 8J6347	GASKET	1
	2 8J6321	STOP	2
	3 9S8005	PLUG	2
▲	3K360	SEAL	2
▲	4 6F4855	SEAL	2
▲	5 9J7814	SEAL	1
	6 3G6441	BOLT	1
	7 9J7758	BOLT	1
▲	8 1H5728	SEAL	2
	9 L1351	BOLT	8
	3B4506	LOCKWASHER	8
C	10 1U406	PLATE	1
	11 8J6229	COVER	2
	12 8J6302	SHIM-----.005 in. (.13 mm) thick-	12
	8J6301	SHIM-----.002 in. (.06 mm) thick-	3
	13 9J8660	BARREL ASSEM.	1
	14 8J2022	PISTON ASSEM.	9
	15 9J5758	PLATE	1
	16 1D5120	NUT	2
	THE FOLLOWING REPAIR KIT IS AVAILABLE:		
	3G1708	KIT---------(seal)---------- (Includes parts marked ▲)	1

C INDICATES CHANGE

228087

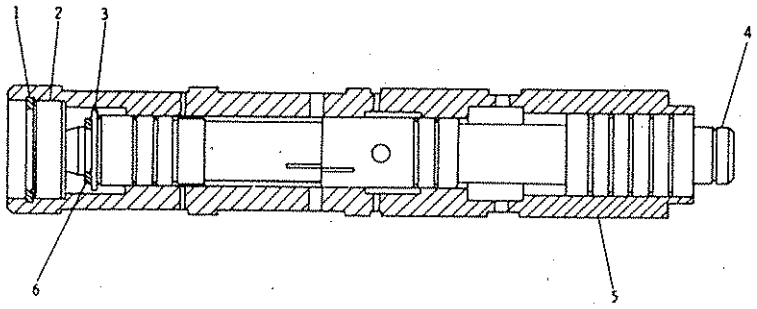

REF. NO	PART NUMBER	DESCRIPTION	QTY
1	3D8317	RING	1
2	8J2027	SPACER	1
3	3G3917	STOP	1
4	3G3909	SPOOL	1
5	3G3919	SLEEVE	1
6	3G3916	RING	1

217077

3G3929 FOLLOWER VALVE GROUP
Provides Field Replacement for 3G3909 Spool and 3G3919 Sleeve shown on Page 216

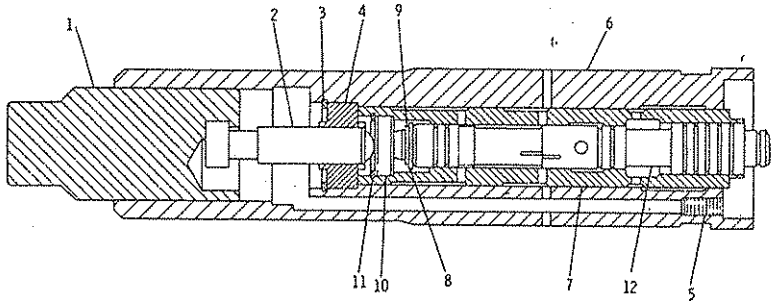

REF. NO.	PART NUMBER	DESCRIPTION	QTY
1	8J4574	PISTON	1
2	8J2032	PISTON	1
3	2L6726	RING	1
4	8J2040	INSERT	1
C 5	8S3159	SETSCREW	1
6	8J8345	CARTRIDGE	1
7	3G3919	SLEEVE	1
8	3G3917	STOP	1
9	3G3916	RING	1
10	8J2027	SPACER	1
11	3D8317	RING	1
12	3G3909	SPOOL	1

C INDICATES CHANGE

228012

3G3921 SERVO VALVE GROUP
Part of 8J6729 Pump Control Head Group shown on Page 213

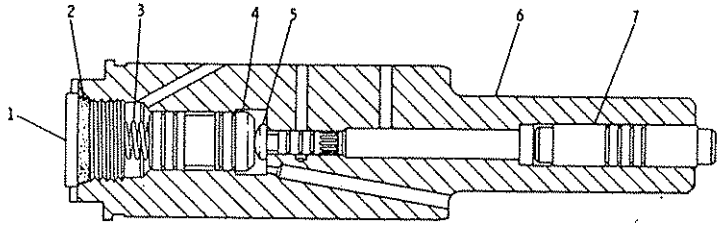

REF. NO.	PART NUMBER	DESCRIPTION	QTY
1	9S8006	PLUG	1
2	2M9780	SEAL	1
3	9S4982	SPRING	1
4	8J6076	PISTON	1
5	8J2030	PISTON	1
6	8J6075	CARTRIDGE	1
7	8J6100	PISTON	1

200162

8J6103 PRESSURE REDUCING VALVE GROUP
Part of 8J6729 Pump Control Head Group shown on Page 213

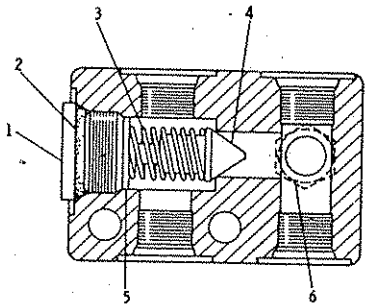

	REF. NO.	PART NUMBER	DESCRIPTION	QTY
	1	9S8003	PLUG	1
	2	3D2824	SEAL	1
C	3	7J271	SPRING	1
	4	7J272	VALVE	1
	5	8J2013	RETAINER	1
C	6	9S4191	PLUG	2
		3J1907	SEAL	2

C INDICATES CHANGE

202451

8J2011 DIRECT OPERATED COOLER RELIEF VALVE GROUP
Part of 9D1130 Pump Lines Group shown on Page 220

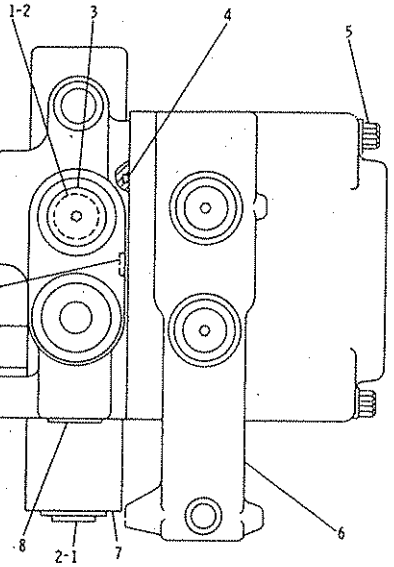

REF. NO.	PART NUMBER	DESCRIPTION	QTY.
C 1	9S4185	PLUG----------(hex head)----	2
		- OR -	
	9S8005	PLUG---(internal hex head)------	2
2	3K360	SEAL----------	2
3	9S8008	PLUG----------	1
	3D2824	SEAL----------	1
4	4J519	SEAL----------	2
5	5P3628	BOLT----------	3
6	3G8437	VALVE GROUP----------	1
7	9J1762	VALVE GROUP----------	1
		(Separate Illustration)	
8	1P1669	PLUG----------	1
9	6J3134	SEAL----------	2

C INDICATES CHANGE

180453

3G8438 COMBINATION VALVE GROUP
Part of 9D1130 Pump Lines Group shown on Page 220
9J1762 and 3G8437 Valve parts are shown on Pages 218 & 219

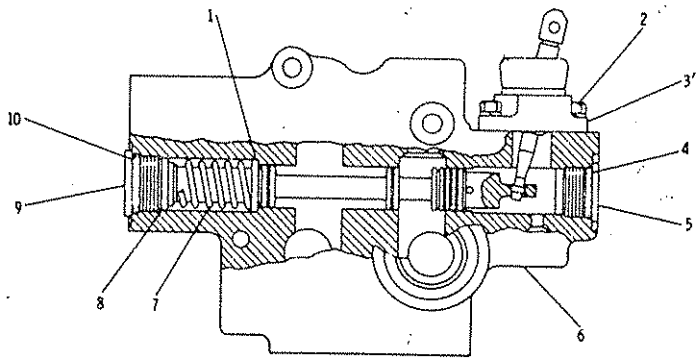

REF. NO.	PART NUMBER	DESCRIPTION	QTY
1	9J2089	WASHER----------	1
2	S1615	BOLT----------	2
	384504	LOCKWASHER----------	2
3	9J2012	LEVER GROUP----------	1
		(Separate Illustration)	
4	3D2824	SEAL----------	1
5	9S8008	PLUG----------	1
6	9J1761	VALVE GROUP----------	1
7	2J75	SPRING----------	1
8	8J6114	RETAINER----------	2
9	9S8009	PLUG----------	1
10	4K1388	SEAL----------	1

200250

9J1762 UNLOADING VALVE GROUP—Type 1
Part of 3G8438 Combination Valve Group
9J2012 Lever parts are shown on Page 253

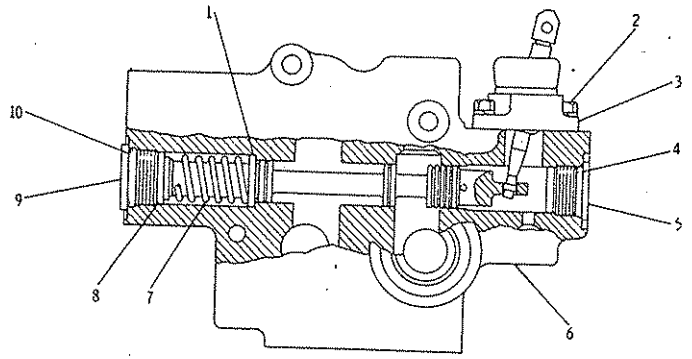

	REF. NO.	PART NUMBER	DESCRIPTION	QTY
	1	9J2089	WASHER	1
	2	S1615	BOLT	2
C		5P537	WASHER	2
C	3	1U4661	LEVER GROUP (Separate Illustration)	1
	4	3D2824	SEAL	1
	5	9S8008	PLUG	1
	6	9J1761	VALVE GROUP	1
	7	2J75	SPRING	1
	8	8J6114	RETAINER	2
	9	9S8009	PLUG	1
	10	4K1388	SEAL	1

C INDICATES CHANGE

302235

9J1762 UNLOADING VALVE GROUP—Type 2
Part of 3G8438 Combination Valve Group shown on Page 218
1U4661 Lever parts are shown on Page 253

3G8437 RELIEF VALVE GROUP—Pilot Operated
Part of 3G8438 Combination Valve Group shown on Page 218

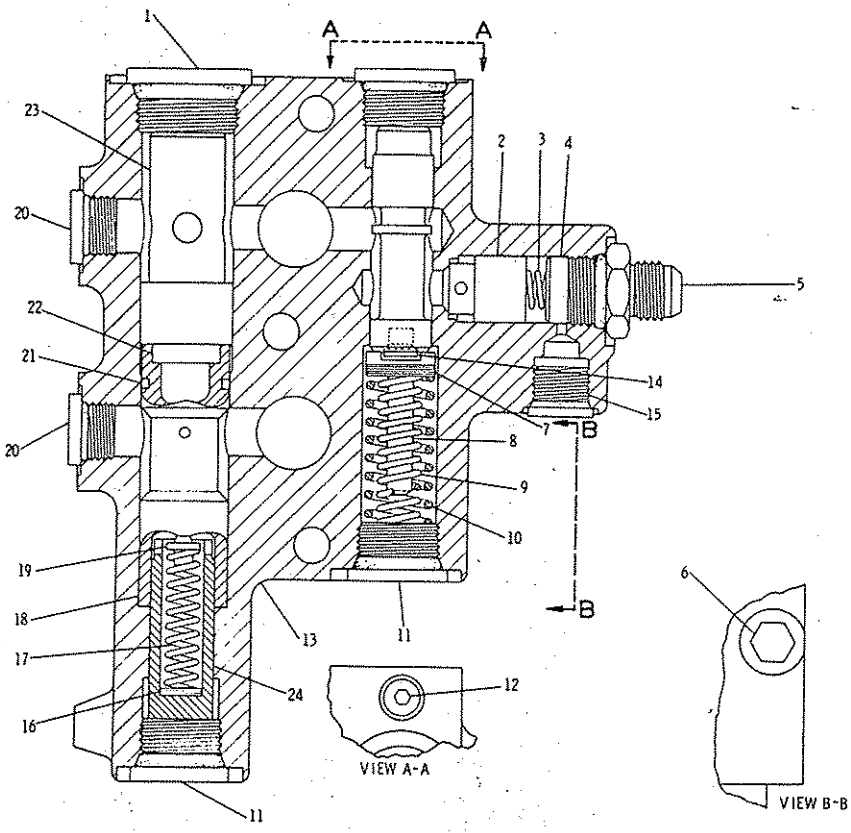

REF. NO.	PART NUMBER	DESCRIPTION	QTY
1	9S9334	PLUG	1
	7M8485	SEAL	1
2	1H337	VALVE	1
3	9F6705	SPRING	1
4	8J8753	RETAINER	1
5	6K3607	CONNECTOR	1
	2M9780	SEAL	1
6	9S4182	PLUG	1
	3J7354	SEAL	1
7	4L1468	WASHER----.06 in. (1.52 mm)thick	2
	8J6709	SHIM------.01 in. (.254 mm)thick	5
8	8J6710	STOP	1
9	8J6704	SPRING----------(inner)----------	1
10	8J6703	SPRING----------(outer)----------	1
11	9S8008	PLUG	3
	3D2824	SEAL	3
12	9S8001	PLUG	1
	4J7533	SEAL	1
13	9J6458	VALVE GROUP	1
14	9S8001	PLUG	1
	4J7533	SEAL	1
C 15	9S8004	PLUG	1
C	3J1907	SEAL	1
16	3J7473	SHIM---.005 in. (.127 mm) thick	5
	3J7470	SHIM---.048 in. (1.22 mm) thick	1
17	2J6089	SPRING	1
18	8J6752	VALVE GROUP	1
19	8J331	VALVE	1
20	9S8005	PLUG	2
	3K360	SEAL	2
21	4J8996	SEAL	1
22	8J6708	SPACER	1
23	4J6714	SPACER	1
24	8J6707	RETAINER	1

C INDICATES CHANGE

304150

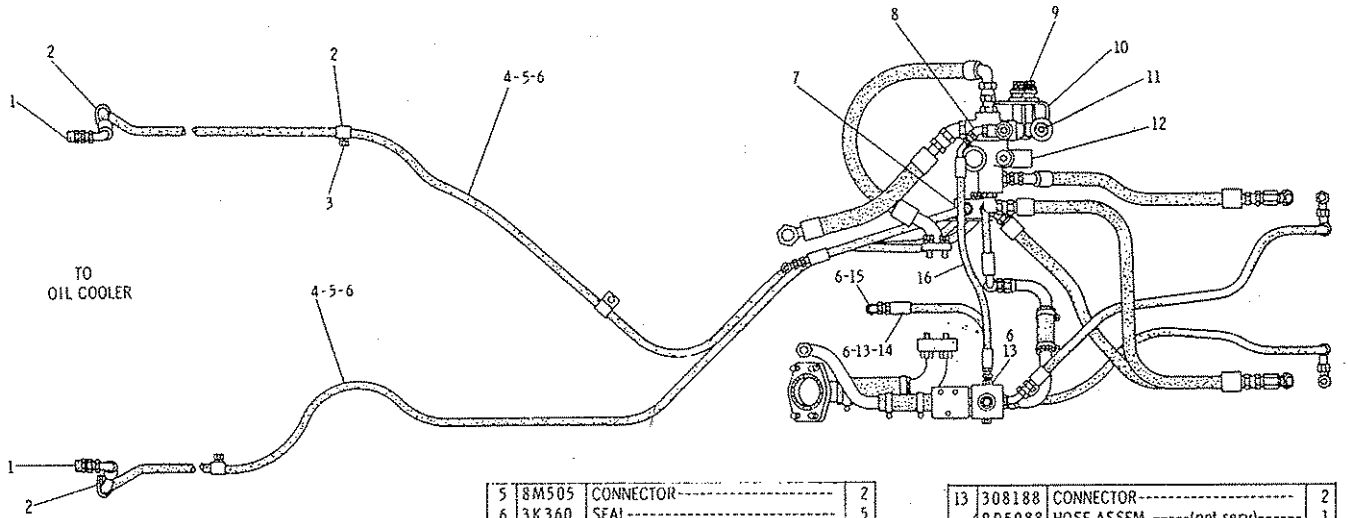

REF. NO.	PART NUMBER	DESCRIPTION	QTY
1	6K3607	CONNECTOR	2
	2M9780	SEAL	2
2	4S1962	CLIP	7
3	S509	BOLT	3
	3B4506	LOCKWASHER	3
	9D6275	HOSE ASSEM. -----(not serv)----	2
		For service of each furnish:	
▲ 4	9S671	HOSE--------139.37 in. (354 cm)	
	3S8606	SLEEVE	2
	8S4055	COUPLING ASSEM. --(straight)-	1
	8S6391	COUPLING ASSEM. ---(90°)---	1

5	8M505	CONNECTOR	2
6	3K360	SEAL	5
7	8J2011	VALVE GROUP	1
		(Separate Illustration)	
8	307942	ELBOW	1
	3J1907	SEAL	1
	T319	BOLT	3
9	2H3920	LOCKWASHER	3
	8D7185	WASHER	3
	8D983	MOUNTING	3
10	9D6361	PLATE ASSEM.	1
	9D9284	PIN----------(large)----------	1
11	4J5325	PIN----------(small)----------	1
	3B4607	COTTER PIN	1
12	3G8438	VALVE GROUP	1
		(Separate Illustration)	

13	308188	CONNECTOR	2
	9D5988	HOSE ASSEM. -----(not serv)------	1
		For service furnish:	
▲ 14	2P5943	HOSE-------- 11.42 in. (29 cm)	
	4S5414	SLEEVE	2
	8S6417	COUPLING ASSEM. ----------	2
15	54362	ELBOW	1
	9D5992	HOSE ASSEM. -----(not serv)------	1
		For service furnish:	
▲ 16	2P5943	HOSE------ 21.65 in. (55 cm)	
	4S5414	SLEEVE	2
	8S6417	COUPLING ASSEM. --(straight)-	1
	1P9919	COUPLING ASSEM. ---(45°)----	1

▲ ORDER BY THE INCH

227943

9D1130 PUMP LINES GROUP—Part 1 of 3
Serial No. 87V5275 to 87V5733 Inclusive
8J2011 and 3G8438 Valve parts are shown on Pages 217 & 218

9D1130 PUMP LINES GROUP—Part 2 of 3
Serial No. 87V5275 to 87V5733 inclusive

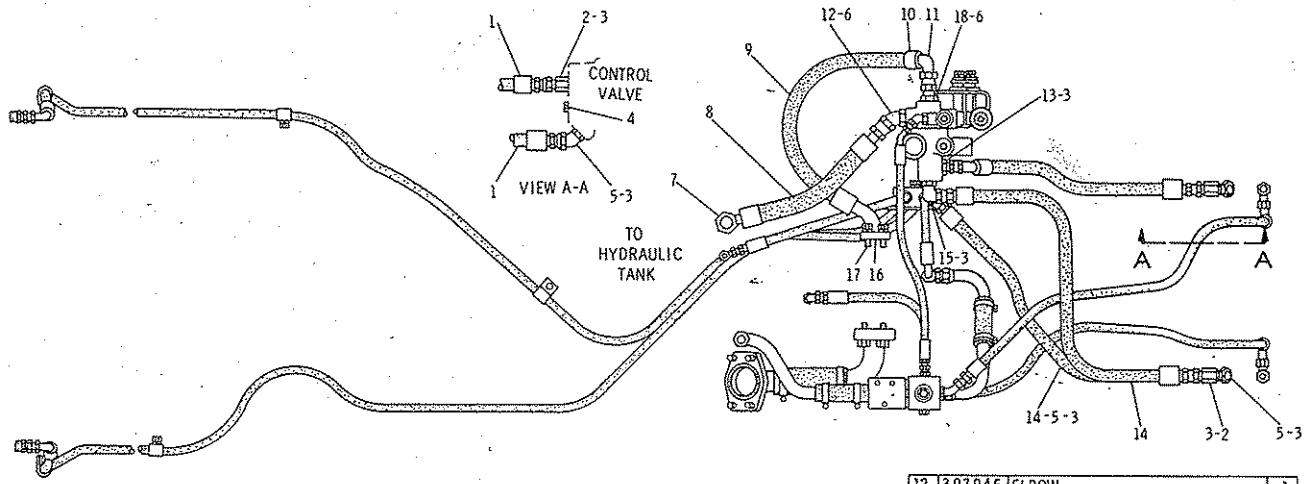

REF. NO.	PART NUMBER	DESCRIPTION	QTY
	9D8557	HOSE ASSEM.-----(not serv)-----	2
		For service of each furnish:	
▲ 1	9S247	HOSE------21.65 in. (55 cm)	
	3S7166	SLEEVE----------	2
	9S9726	COUPLING ASSEM.---(45°)---	1
	8S3759	COUPLING ASSEM.--(straight)	1
2	9D884	CONNECTOR----------	2
3	3D2824	SEAL----------	8
4	9D8004	PLUG----------	1
	3J1907	SEAL----------	1
5	307944	ELBOW----------	3

6	7M8485	SEAL----------	2
7	4S6797	CONNECTOR----------	1
	2S4078	SEAL----------	1
	9D5993	HOSE ASSEM.-----(not serv)-----	1
		For service furnish:	
▲ 8	8S9355	HOSE------14.57 in. (37 cm)	
	3S7252	SLEEVE----------	2
	8S3918	COUPLING ASSEM.-(straight)-	1
	1P9589	COUPLING ASSEM.----(90°)--	1
	9D6277	HOSE ASSEM.----------	1
		(Includes)	
▲ 9	8S9355	HOSE----24.41 in. (62 cm)	
	7S574	STEM ASSEM.-----(60°)-----	1
10	3S7252	SLEEVE----------	2
11	8K5114	COUPLING ASSEM.---(90°)---	1

12	307945	ELBOW----------	1
13	2R6276	CONNECTOR----------	2
	6G1693	HOSE ASSEM.----(not serv)------	2
		For service of each furnish:	
▲ 14	9S247	HOSE---- 30.3 in. (76.96 cm)	
	3S7166	SLEEVE----------	2
	8S3759	COUPLING ASSEM.----------	2
15	307950	ELBOW----------	1
16	1P4578	FLANGE----------	2
	4J522	SEAL----------	1
17	T772	BOLT----------	4
	4D6433	WASHER----------	4
18	307935	CONNECTOR----------	1

▲ ORDER BY THE INCH

227944

REF NO.	PART NUMBER	DESCRIPTION	QTY
	9D6060	HOSE ASSEM. ------(not serv)----	1
		For service Furnish:	
▲ 1	9S671	HOSE---------22.44 in. (57 cm)	
	3S8606	SLEEVE----------	2
	8S6391	COUPLING ASSEM. ----(90°)----	1
	8S4055	COUPLING ASSEM. --(straight)-	1
2	8M505	CONNECTOR----------	3
3	3K360	SEAL----------	7
4	5P2230	CLAMP----------	4
5	7K4975	HOSE----------	2
6	8D6774	TUBE ASSEM. ----------	1
7	S1594	BOLT----------	3
	4B4278	WASHER----------	3
8	3B4506	LOCKWASHER----------	11
	3B1915	BOLT----------	6
9	L1319	WASHER----------	9
	1P7115	GROMMET ASSEM. ----------	6
10	8D6811	PLATE----------	1
11	9S8008	PLUG----------	1
12	3D2824	SEAL----------	3
13	9S4185	PLUG----------	2
14	9D6669	BLOCK----------	1
	9D6274	HOSE ASSEM. ------(not serv)----	1
		For service furnish:	
▲	9S671	HOSE---------13.39 in. (34 cm)	
	3S8606	SLEEVE----------	2
15	8S6391	COUPLING ASSEM. -----(90°)--	1
	8S4055	COUPLING ASSEM. ---(straight)	1
	6K3607	CONNECTOR----------	1
	2M9780	SEAL----------	1
	9D6272	HOSE ASSEM. -----(not serv)------	2
		For service of each furnish:	
▲	2P5943	HOSE---------36.61 in. (93 cm)	
16	4S5414	SLEEVE----------	2
	8S6417	COUPLING ASSEM. --(straight)-	1
	8S6393	COUPLING ASSEM. ----(90°)----	1
17	54362	ELBOW----------	1

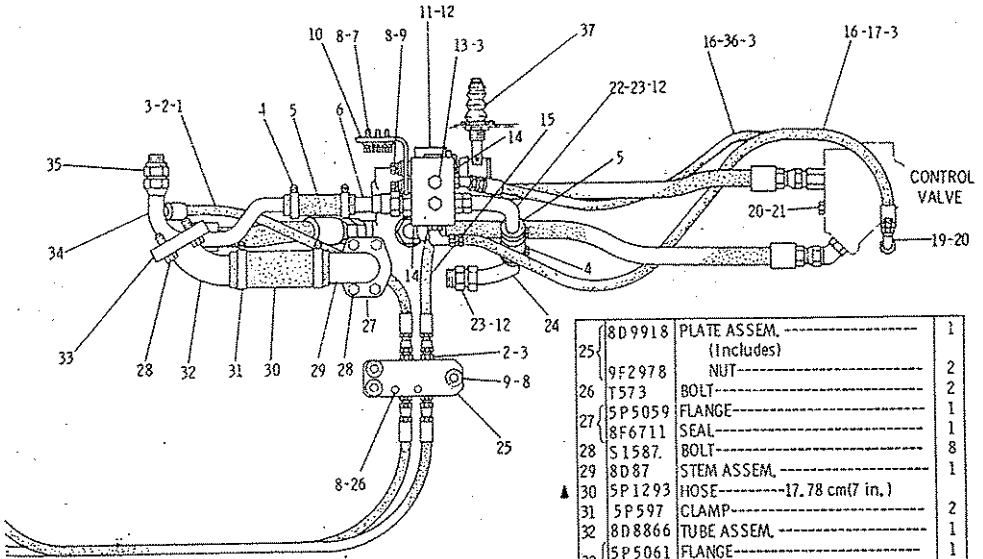

19	6K9194	ELBOW----------	2
	2R6806	CONNECTOR----------	2
20	3J1907	SEAL----------	3
21	9S8004	PLUG----------	1
22	8D407	TUBE ASSEM. ----------	1
23	2R6276	CONNECTOR----------	2
24	9D7275	TUBE ASSEM. ----------	1

C INDICATES CHANGE

	8D9918	PLATE ASSEM. ----------	1
25		(Includes)	
	9F2978	NUT----------	2
26	T573	BOLT----------	2
27	5P5059	FLANGE----------	1
	8F6711	SEAL----------	1
28	S1587	BOLT----------	8
29	8D87	STEM ASSEM. ----------	1
▲ 30	5P1293	HOSE---------17.78 cm(7 in.)	
31	5P597	CLAMP----------	2
32	8D8866	TUBE ASSEM. ----------	1
33	5P5061	FLANGE----------	1
	5H8848	SEAL----------	1
34	8D6775	TUBE ASSEM. ----------	1
35	307935	CONNECTOR----------	2
	7M8485	SEAL----------	2
36	7D9984	ELBOW----------	1
C	2F7964	SEAL----------	1
C	6G3099	BUSHING----------	1
C 37	3B7329	NUT----------	1
C	4B4285	WASHER----------	1

▲ ORDER BY THE INCH

227945

9D1130 PUMP LINES GROUP—Part 3 of 3
Serial No. 87V5275 to 87V5733 Inclusive

9D1130 PUMP LINES GROUP—Part 1 of 3
Serial No. 87V5734—Up
8J2011 and 3G8438 Valve parts are shown on Pages 217 & 218

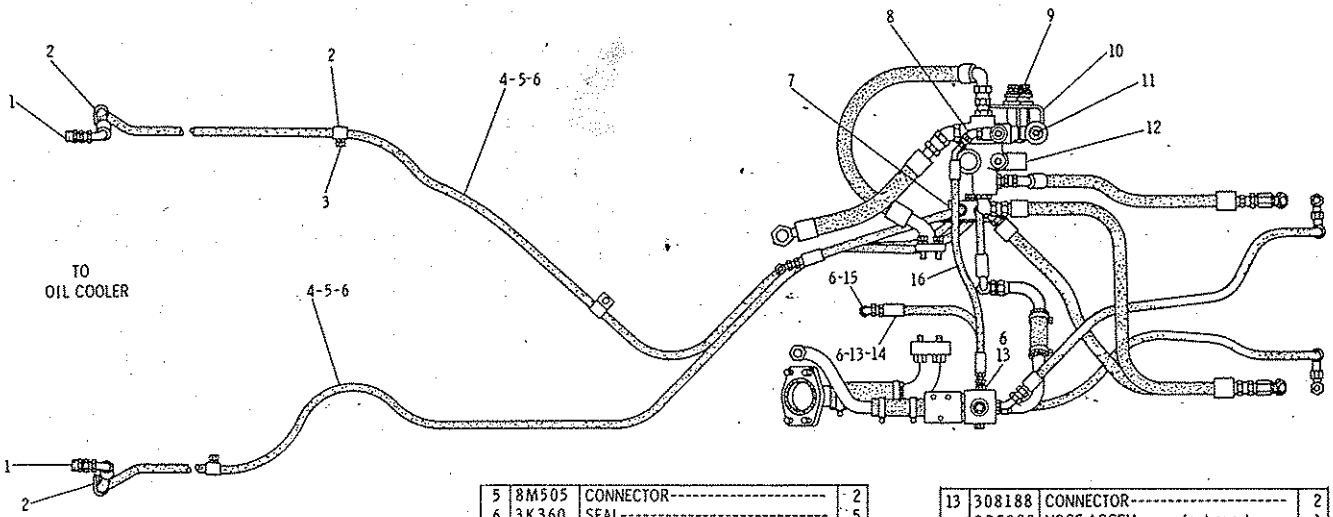

REF. NO.	PART NUMBER	DESCRIPTION	QTY
1	6K3607	CONNECTOR	2
	2M9780	SEAL	2
2	4S1962	CLIP	7
3	S509	BOLT	3
	3B4506	LOCKWASHER	3
4	9D6275	HOSE ASSEM. -----(not serv)----	2
		For service of each furnish:	
▲	9S671	HOSE--------139.37 in. (354 cm)	
	3S8606	SLEEVE	2
	8S4055	COUPLING ASSEM. --(straight)-	1
	8S6391	COUPLING ASSEM. ---(90°)---	1

5	8M505	CONNECTOR	2
6	3K360	SEAL	5
7	8J2011	VALVE GROUP	1
		(Separate Illustration)	
8	307942	ELBOW	1
	3J1907	SEAL	1
	T319	BOLT	3
9	2H3920	LOCKWASHER	3
	8D7185	WASHER	3
	8D983	MOUNTING	3
10	9D6361	PLATE ASSEM.	1
	9D9284	PIN---------(large)----------	1
11	4J5325	PIN---------(small)----------	1
	3B4607	COTTER PIN	1
12	3G8438	VALVE GROUP	1
		(Separate Illustration)	

13	308188	CONNECTOR	2
	9D5988	HOSE ASSEM. -----(not serv)------	1
		For service furnish:	
▲ 14	2P5943	HOSE--------- 11.42 in. (29 cm)	
	4S5414	SLEEVE	2
	8S6417	COUPLING ASSEM.	2
15	54362	ELBOW	1
	9D5992	HOSE ASSEM. -----(not serv)------	1
		For service furnish:	
▲ 16	2P5943	HOSE------- 21.65 in. (55 cm)	
	4S5414	SLEEVE	2
	8S6417	COUPLING ASSEM. --(straight)-	1
	1P9919	COUPLING ASSEM. ---(45°)----	1

▲ ORDER BY THE INCH

227943

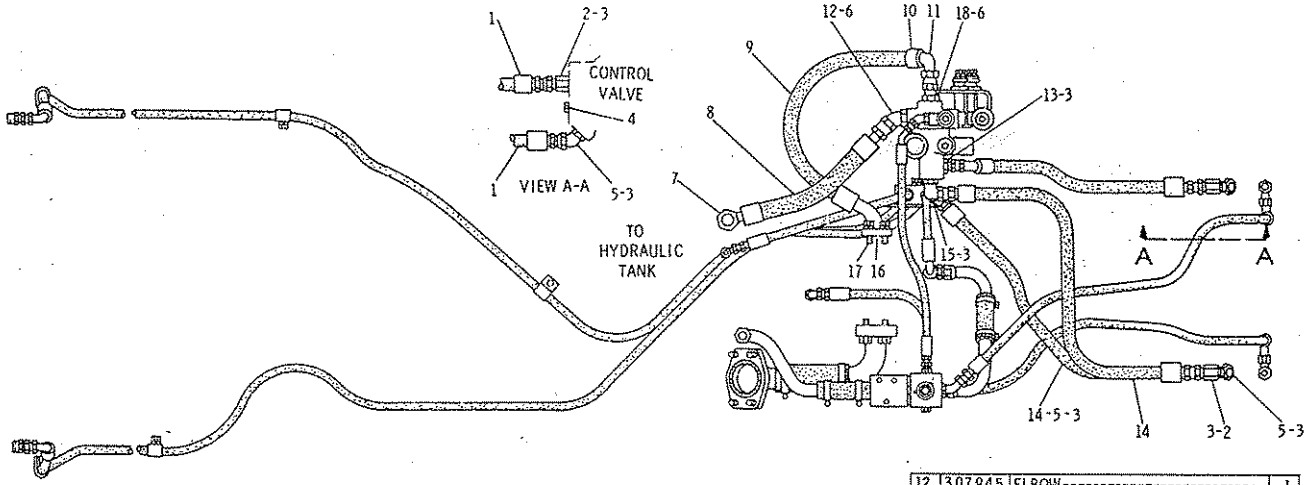

REF. NO.	PART NUMBER	DESCRIPTION	QTY
	9D8557	HOSE ASSEM. -----(not serv)-----	2
		For service of each furnish:	
▲ 1	9S247	HOSE------21.65 in. (55 cm)	
	3S7166	SLEEVE----------	2
	9S9726	COUPLING ASSEM. ---(45°)---	1
	8S3759	COUPLING ASSEM. --(straight)	1
2	9D884	CONNECTOR----------	2
3	3D2824	SEAL----------	8
4	9D8004	PLUG----------	1
	3J1907	SEAL----------	1
5	307944	ELBOW----------	3

6	7M8485	SEAL----------	2
7	4S6797	CONNECTOR----------	1
	2S4078	SEAL----------	1
	9D5993	HOSE ASSEM. -----(not serv)-----	1
		For service furnish:	
▲ 8	8S9355	HOSE------14.57 in. (37 cm)	
	3S7252	SLEEVE----------	2
	8S3918	COUPLING ASSEM. -(straight)-	1
	1P9589	COUPLING ASSEM. ----(90°)--	1
	9D6277	HOSE ASSEM. ----------	1
		(Includes)	
▲ 9	8S9355	HOSE----24.41 in. (62 cm)	
	7S574	STEM ASSEM. -----(60°)-----	1
10	3S7252	SLEEVE----------	2
11	8K5114	COUPLING ASSEM. ---(90°)---	1

12	307945	ELBOW----------	1
13	2R6276	CONNECTOR----------	2
	6G1693	HOSE ASSEM. ----(not serv)------	2
		For service of each furnish:	
▲ 14	9S247	HOSE---- 30.3 in. (76.96 cm)	
	3S7166	SLEEVE----------	2
	8S3759	COUPLING ASSEM. ----------	2
15	307950	ELBOW----------	1
16	1P4578	FLANGE----------	2
	4J522	SEAL----------	1
17	T772	BOLT----------	4
	4D6433	WASHER----------	4
18	307935	CONNECTOR----------	1

▲ ORDER BY THE INCH

227944

9D1130 PUMP LINES GROUP—Part 2 of 3
Serial No. 87V5734—Up

9D1130 PUMP LINES GROUP—Part 3 of 3
Serial No. 87V5734—Up

REF. NO.	PART NUMBER	DESCRIPTION	QTY.
	9D6060	HOSE ASSEM. ------(not serv)------	1
		For service furnish:	
▲ 1	9S671	HOSE------22.44 in. (57 cm)	
	3S8606	SLEEVE----------	2
	8S6391	COUPLING ASSEM. ----(90°)--	1
	8S4055	COUPLING ASSEM. -(straight)-	1
2	8M505	CONNECTOR----------	3
3	3K360	SEAL----------	7
4	5P2230	CLAMP----------	4
5	7K4975	HOSE----------	2
6	8D6774	TUBE ASSEM. ----------	1
C 7	S1594	BOLT----------	2
C 8	3B4506	LOCKWASHER----------	5
9	L1319	WASHER----------	9
	1P7115	GROMMET ASSEM. ----------	6
10	8D6811	PLATE----------	1
11	9S8008	PLUG----------	1
12	3D2824	SEAL----------	3
13	9S4185	PLUG----------	2
14	9D6669	BLOCK----------	1
	9D6274	HOSE ASSEM. ----(not serv)------	1
		For service furnish:	
▲	9S671	HOSE------13.39 in. (34 cm)	
15	3S8606	SLEEVE----------	2
	8S6391	COUPLING ASSEM. -----((0°)---	1
	8S4055	COUPLING ASSEM. -(straight)-	1
	6K3607	CONNECTOR----------	1
	2M9780	SEAL----------	1
C	9D6272	HOSE ASSEM. ----(not serv)------	1
		For service furnish:	
▲	2P5943	HOSE------36.61 in. (93 cm)	
16	4S5414	SLEEVE----------	2
	8S6417	COUPLING ASSEM. --(straight)	1
	8S6393	COUPLING ASSEM. ---(90°)---	1
17	54362	ELBOW----------	1
C 18	5P1075	WASHER----------	3

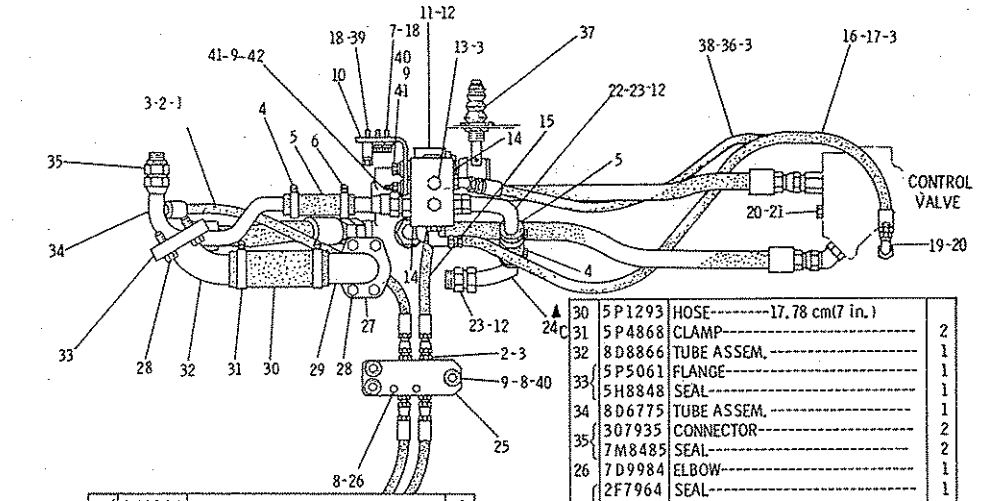

19	6K9194	ELBOW----------	2
	2R6806	CONNECTOR----------	2
20	3J1907	SEAL----------	3
21	9S8004	PLUG----------	1
22	8D407	TUBE ASSEM. ----------	1
23	2R6276	CONNECTOR----------	2
24	9D7275	TUBE ASSEM. ----------	1
25	8D9918	PLATE ASSEM. ----------	1
		(Includes)	
	9F2978	NUT----------	2
26	T573	BOLT----------	2
27	5P5059	FLANGE----------	1
	8F6711	SEAL----------	1
28	S1587	BOLT----------	8
29	8D87	STEM ASSEM. ----------	1

30	5P1293	HOSE---------17.78 cm(7 in.)	
C 31	5P4868	CLAMP----------	2
32	8D8866	TUBE ASSEM. ----------	1
33	5P5061	FLANGE----------	1
	5H8848	SEAL----------	1
34	8D6775	TUBE ASSEM. ----------	1
35	307935	CONNECTOR----------	2
	7M8485	SEAL----------	2
26	7D9984	ELBOW----------	1
	2F7964	SEAL----------	1
	6G3099	BUSHING----------	1
37	3B7329	NUT----------	1
C	4B4285	WASHER----------	2
C	9D6053	HOSE ASSEM. ----(not serviced)---	1
		For service furnish:	
▲	2P5943	HOSE----38.59 in. (98 cm)	
38	4S5414	SLEEVE----------	2
	8S6393	COUPLING ASSEM. -----(90°)---	1
	8S6417	COUPLING ASSEM. --(straight)	1
C	S1590	BOLT----------	1
C 39	6G2263	SPACER----------	1
C 40	3B1915	BOLT----------	5
C 41	5M2894	WASHER----------	3
C 42	1D4717	NUT----------	1
C	3M496	STUD----------	1

▲ ORDER BY THE INCH

C INDICATES CHANGE

180128

2G3500 CENTERSHIFT LINES GROUP—Single Circuit

8J9974 Check Valve parts are shown on Page 226

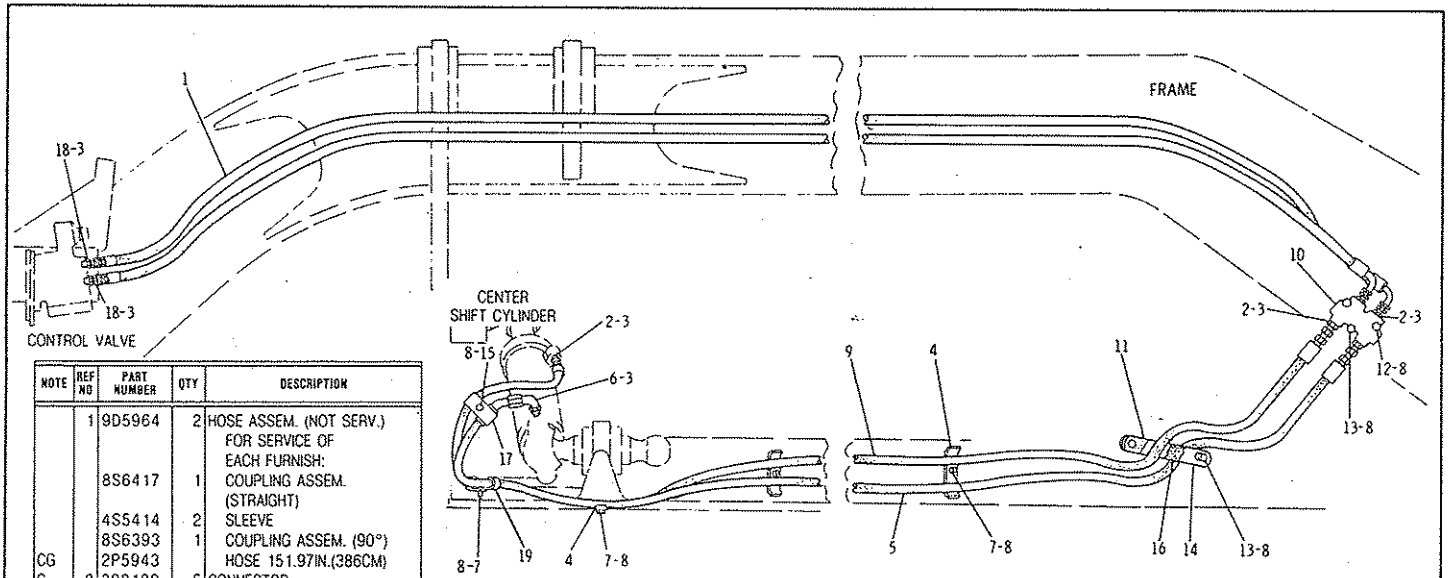

NOTE	REF NO	PART NUMBER	QTY	DESCRIPTION
	1	9D5964	2	HOSE ASSEM. (NOT SERV.)
				FOR SERVICE OF
				EACH FURNISH:
		8S6417	1	COUPLING ASSEM.
				(STRAIGHT)
		4S5414	2	SLEEVE
		8S6393	1	COUPLING ASSEM. (90°)
CG		2P5943		HOSE 151.97IN.(386CM)
C	2	308188	5	CONNECTOR
	3	3K360	8	SEAL
C	4	4J5468	3	CLAMP
	5	2G3789	1	HOSE ASSEM. (NOT SERV.)
				FOR SERVICE FURNISH
CG		2P5943		HOSE 127.56IN.(324CM)
		4S5414	2	SLEEVE
		8S6417	1	COUPLING ASSEM.
				(STRAIGHT)
		1P9919	1	COUPLING ASSEM. (45°)
	6	54362	1	ELBOW
	7	L1351	4	BOLT
	8	5P1075	10	WASHER (CONICAL)

C INDICATES CHANGE

	9	2G3792	1	HOSE ASSEM. (NOT SERV.)
				FOR SERVICE FURNISH
CG		2P5943		HOSE 155.91IN.(396CM)
		4S5414	2	SLEEVE
		8S6417	2	COUPLING ASSEM.
Y	10	8J9974	1	CHECK VALVE GROUP
	11	2G2562	1	CLAMP
C	12	L1143	2	BOLT 63.5MM(2.5IN.)LONG
				-OR-
C		T573	2	BOLT 69.85MM(2.75IN.)LONG
C		7K4743	2	WASHER

G ORDER BY THE INCH

C	13	L1143	3	BOLT
	14	2G2623	2	PLATE
	15	S1594	1	BOLT
		1D4717	1	NUT
	16	2G2563	1	CLAMP
	17	4H9454	2	CLAMP
C	18	7D9984	2	ELBOW
				-OR-
C		307962	2	ELBOW (SWIVEL)
C		308188	2	CONNECTOR
C	19	1S994	2	CLIP

Y SEPARATE ILLUSTRATION

308501

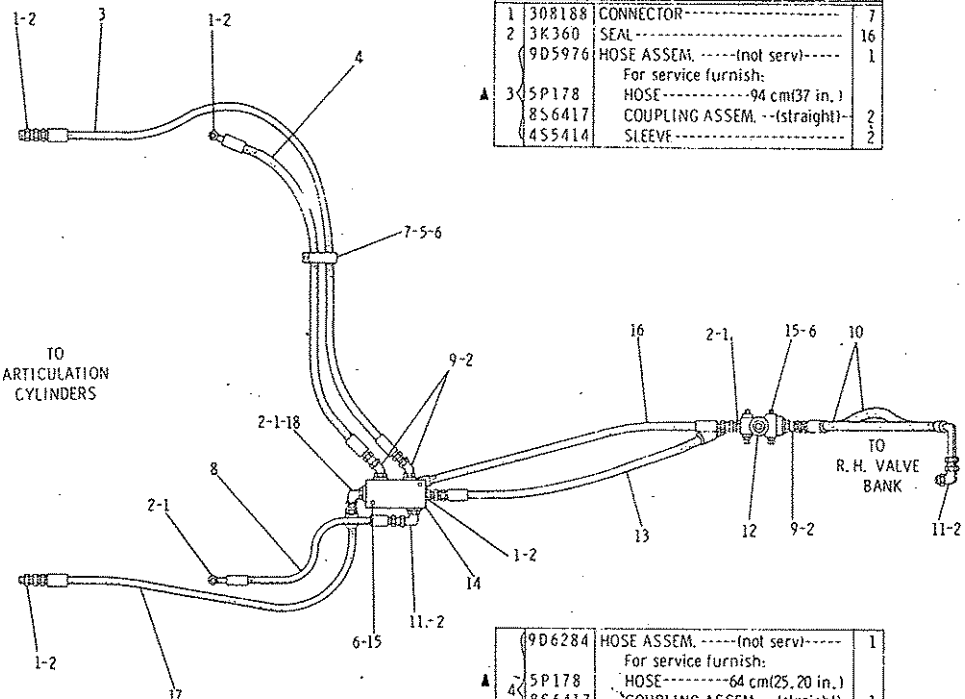

REF NO	PART NUMBER	DESCRIPTION	QTY
1	3O8188	CONNECTOR	7
2	3K360	SEAL	16
	9D5976	HOSE ASSEM. -----(not serv)-----	1
		For service furnish:	
▲ 3	5P178	HOSE----------94 cm(37 in.)	
	8S6417	COUPLING ASSEM. --(straight)-	2
	4S5414	SLEEVE	2

	9D6284	HOSE ASSEM. -----(not serv)-----	1
		For service furnish:	
▲ 4	5P178	HOSE---------64 cm(25.20 in.)	
	8S6417	COUPLING ASSEM. --(straight)-	1
	8S6393	COUPLING ASSEM. ----(90°)----	1
	4S5414	SLEEVE	2

C INDICATES CHANGE

C	5	T102	BOLT	1
C	6	5P1075	WASHER	6
C	7	6D4247	CLIP	1
		9D5974	HOSE ASSEM. ------(not serv)----	1
			For service furnish:	
▲	8	5P178	HOSE----------32 cm(12.6 in.)	
		8S6417	COUPLING ASSEM. --(straight)-	1
		8S6393	COUPLING ASSEM. ----(90°)----	1
		4S5414	SLEEVE	2
	9	7D9984	ELBOW	5
		9D6282	HOSE ASSEM. -----(not serv)------	2
			For service of each furnish:	
▲	10	5P178	HOSE---------50 cm(19.70 in.)	
		8S6417	COUPLING ASSEM. --(straight)-	1
		8S6392	COUPLING ASSEM. ----(90°)---	1
		4S5414	SLEEVE	2
	11	54362	ELBOW	4
	12	8J9974	VALVE GROUP	1
			(Separate Illustration)	
		9D5972	HOSE ASSEM. -----(not serv)-----	1
			For service furnish:	
▲	13	5P178	HOSE----------67 cm(26.4 in.)	
		8S6417	COUPLING ASSEM. --(straight)-	2
		4S5414	SLEEVE	2
	14	8D1691	BLOCK	1
	15	L1143	BOLT	5
		9D6255	HOSE ASSEM. -----(not serv)-----	1
			For service furnish:	
▲	16	5P178	HOSE---------74 cm(29.14 in.)	
		8S6417	COUPLING ASSEM. --(straight)-	2
		4S5414	SLEEVE	2
		9D5862	HOSE ASSEM. ------(not serv)-----	1
			For service furnish:	
▲	17	5P178	HOSE---------54cm(21.26 in.)	
		8S6417	COUPLING ASSEM. --(straight)-	2
		4S5414	SLEEVE	2
	18	6K9194	ELBOW	1

▲ ORDER BY THE CENTIMETER

228059

9D900 ARTICULATION LINES GROUP—Single Circuit
Serial No. 87V5275 to 87V5986 inclusive
8J9974 Check Valve parts are shown on Page 226

9D900 ARTICULTAION LINES GROUP—Single Circuit
Serial No. 87V5987—Up
8J9974 Check Valve parts are shown on Page 226

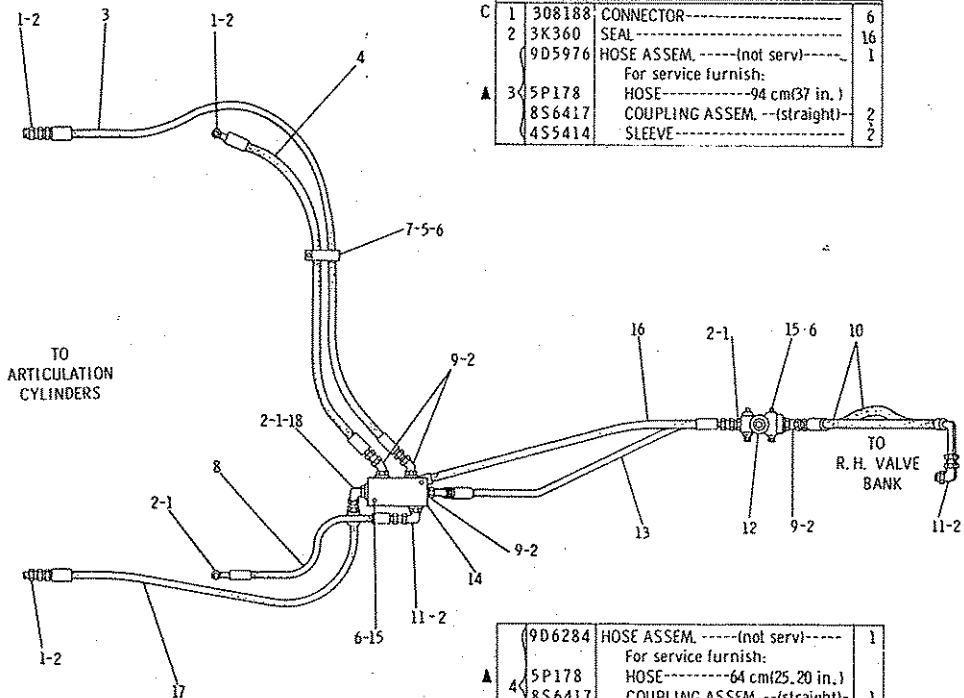

	REF NO.	PART NUMBER	DESCRIPTION	QTY
C	1	308188	CONNECTOR	6
	2	3K360	SEAL	16
		9D5976	HOSE ASSEM. -----(not serv)-----	1
			For service furnish:	
▲	3	5P178	HOSE----------94 cm(37 in.)	
		8S6417	COUPLING ASSEM. --(straight)-	2
		4S5414	SLEEVE	2

		9D6284	HOSE ASSEM. -----(not serv)-----	1
			For service furnish:	
▲	4	5P178	HOSE---------64 cm(25.20 in.)	
		8S6417	COUPLING ASSEM. --(straight)-	1
		8S6393	COUPLING ASSEM. ----(90°)----	1
		4S5414	SLEEVE	2

C INDICATES CHANGE

C	5	T102	BOLT	1
C	6	5P1075	WASHER	6
C	7	6D4247	CLIP	1
		9D5974	HOSE ASSEM. ------(not serv)----	1
			For service furnish:	
▲	8	5P178	HOSE----------32 cm(12.6 in.)	
		8S6417	COUPLING ASSEM. --(straight)-	1
		8S6393	COUPLING ASSEM. ----(90°)----	1
		4S5414	SLEEVE	2
C	9	7D9984	ELBOW	8
		9D6282	HOSE ASSEM. -----(not serv)-----	2
			For service of each furnish:	
▲	10	5P178	HOSE---------50 cm(19.70 in.)	
		8S6417	COUPLING ASSEM. --(straight)-	1
		8S6392	COUPLING ASSEM. ----(90°)---	1
		4S5414	SLEEVE	2
	11	54362	ELBOW	4
	12	8J9974	VALVE GROUP	1
			(Separate Illustration)	
C		9D5857	HOSE ASSEM. -----(not serv)-----	1
			For service furnish:	
C ▲	13	5P178	HOSE---------72 cm(28.34 in.)	
		8S6417	COUPLING ASSEM. --(straight)-	2
		4S5414	SLEEVE	2
	14	8D1691	BLOCK	1
	15	L1143	BOLT	5
		9D6255	HOSE ASSEM. -----(not serv)-----	1
			For service furnish:	
▲	16	5P178	HOSE---------74 cm(29.14 in.)	
		8S6417	COUPLING ASSEM. --(straight)-	2
		4S5414	SLEEVE	2
		9D5862	HOSE ASSEM. ------(not serv)-----	1
			For service furnish:	
▲	17	5P178	HOSE----------54cm(21.26 in.)	
		8S6417	COUPLING ASSEM. --(straight)-	2
		4S5414	SLEEVE	2
	18	6K9194	ELBOW	1

▲ ORDER BY THE CENTIMETER

300357

9D930 LIFT CYLINDER LINES GROUP

8J9974 and 8J9975 Valve parts are shown on Page 226

	REF NO.	PART NUMBER	DESCRIPTION	QTY
	1	8D9088	CONNECTOR	4
C	2	3K360	SEAL	16
	3	9D6266	HOSE ASSEM. -----(not serv)-----	4
			For service of each furnish:	
C ▲		2P5943	HOSE------59.06 in. (150 cm)	
		1P9919	COUPLING ASSEM. ----(45°)--	1
		8S6393	COUPLING ASSEM. ---(90°)---	1
		4S5414	SLEEVE	2
C	4	54362	ELBOW	8
C		2G9989	HOSE ASSEM. -----(not serv)-----	2
	5		For service of each furnish:	
C ▲		2P5943	HOSE------50.79 in. (129 cm)	
		8S6417	COUPLING ASSEM. --(straight)	1
		1P9919	COUPLING ASSEM. (str. 45.0)-	1
		4S5414	SLEEVE	2
C	6	2G5493	CLAMP	2
C	7	1S994	CLIP	4
C	8	5P1075	WASHER	6
C	9	2H9889	CAPSCREW	2
C		1D4717	NUT	2
C		3H3244	SPACER	2
C	10	7D9984	ELBOW	2
C	11	308188	CONNECTOR	2
	12	2G9991	HOSE ASSEM. ----(not serv)-------	1
			For service furnish:	
C ▲		2P5943	HOSE------47.24 in. (120 cm)	
		1P9919	COUPLING ASSEM. ---(45°)---	1
		4S5414	SLEEVE	2
		8S6477	COUPLING ASSEM. --(straight)	1
	13	L1143	BOLT	6
	14	8J9974	VALVE GROUP-----(R. H. -check)---	1
		8J9975	VALVE GROUP----(L. H. -check)----	1
			(Separate Illustration)	
C	15	4B4278	WASHER	4

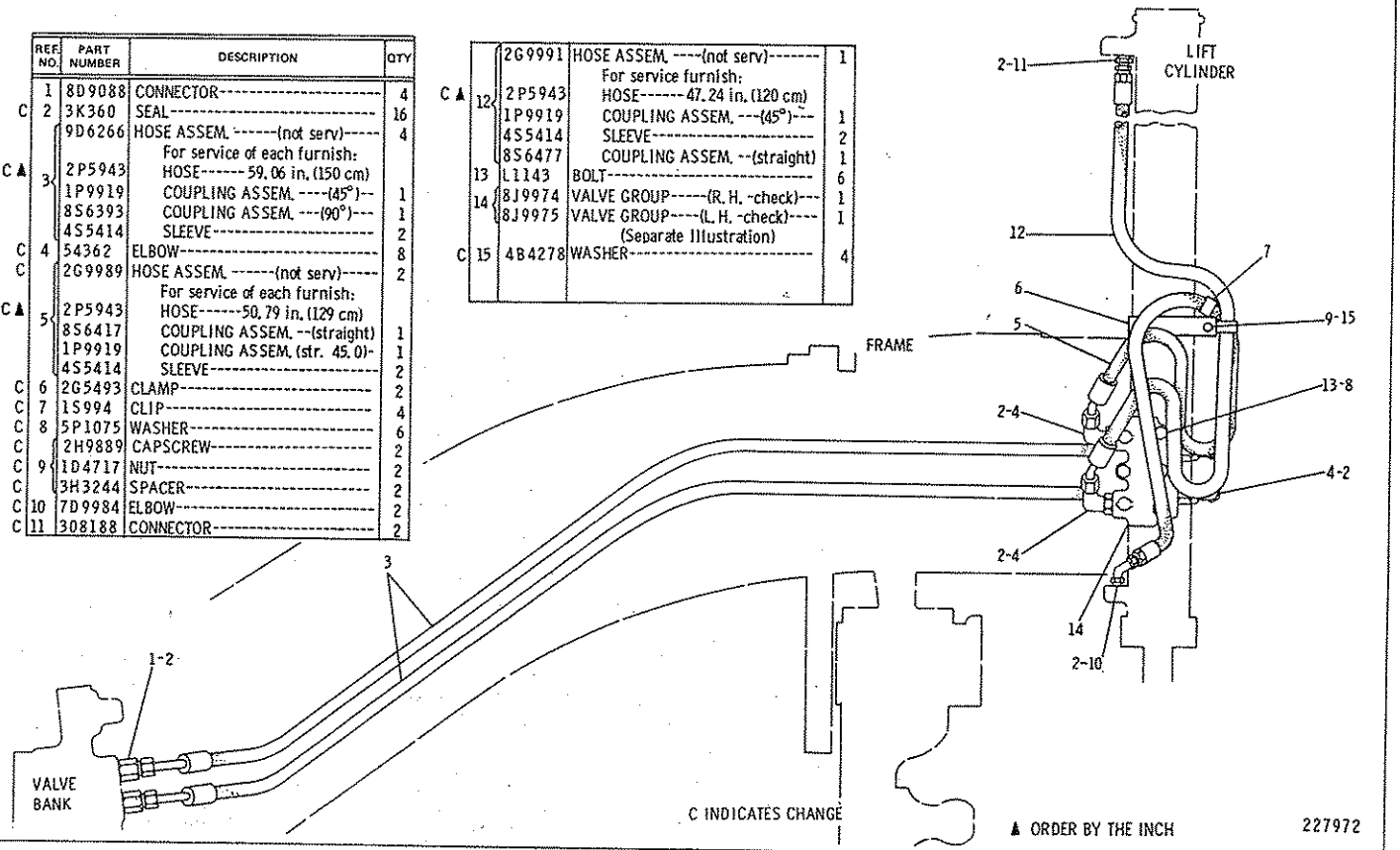

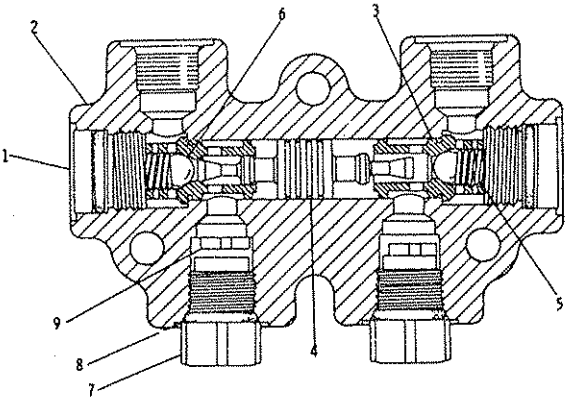

	REF. NO.	PART NUMBER	DESCRIPTION	QTY
	1	9J404	PLUG	2
		7J9933	SEAL	2
C	2	9J8253	BODY ASSEM. (Includes)	1
	3	9J405	SEAT	2
	4	9J5768	PISTON	1
	5	9J403	SPRING	2
C	6	9J4871	BALL	2
	7	8J5456	ADAPTER	2
	8	3D2824	SEAL	2
	9	8J9979	CHOKE	2

C INDICATES CHANGE 207408

8J9974 CHECK VALVE GROUP—Pilot Operated
Part of 2G3500 Centershift Lines, 9D900 Articulation Lines and 9D930 Lift Cylinder Lines Groups shown on Pages 223, 224 & 225

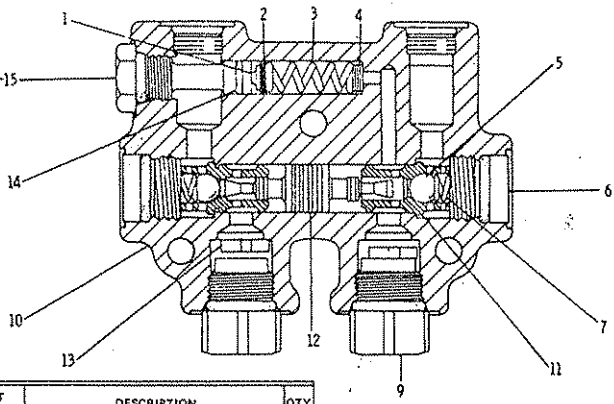

	REF. NO.	PART NUMBER	DESCRIPTION	QTY
	1	8J331	VALVE	1
	2	6J8696	SHIM ----- t. 22 mm (.048 in.) thick	1
		5J6153	SHIM ---- 0.19 mm (.0076 in.) thick	4
	3	2J6089	SPRING	1
C	4	3K6116	WASHER	4
C	5	9J4871	BALL	2
	6	9J404	PLUG	2
		7J9933	SEAL	2
	7	9J403	SPRING	2
	8	3K360	SEAL	1
	9	8J5456	ADAPTER	2
		3D2824	SEAL	2
C	10	9J8274	BODY ASSEM. (Includes)	1
	11	9J405	SEAT	2
	12	9J5768	PISTON	1
	13	8J9979	CHOKE	2
	14	4J5309	SEAL	1
	15	8J9250	PLUG	1

C INDICATES CHANGE 228006

8J9975 CHECK AND RELIEF VALVE GROUP
Part of 9D930 Lift Cylinder Lines Group shown on Page 225

2G3510 BLADE TIP LINES GROUP—Single Circuit—Type 1

Part of 2G6316 and 2G460 Power Blade and Tip Arrangements listed on Page 279
3G5832 Valve and 8J384 Swivel parts are shown on Page 229. AN ATTACHMENT

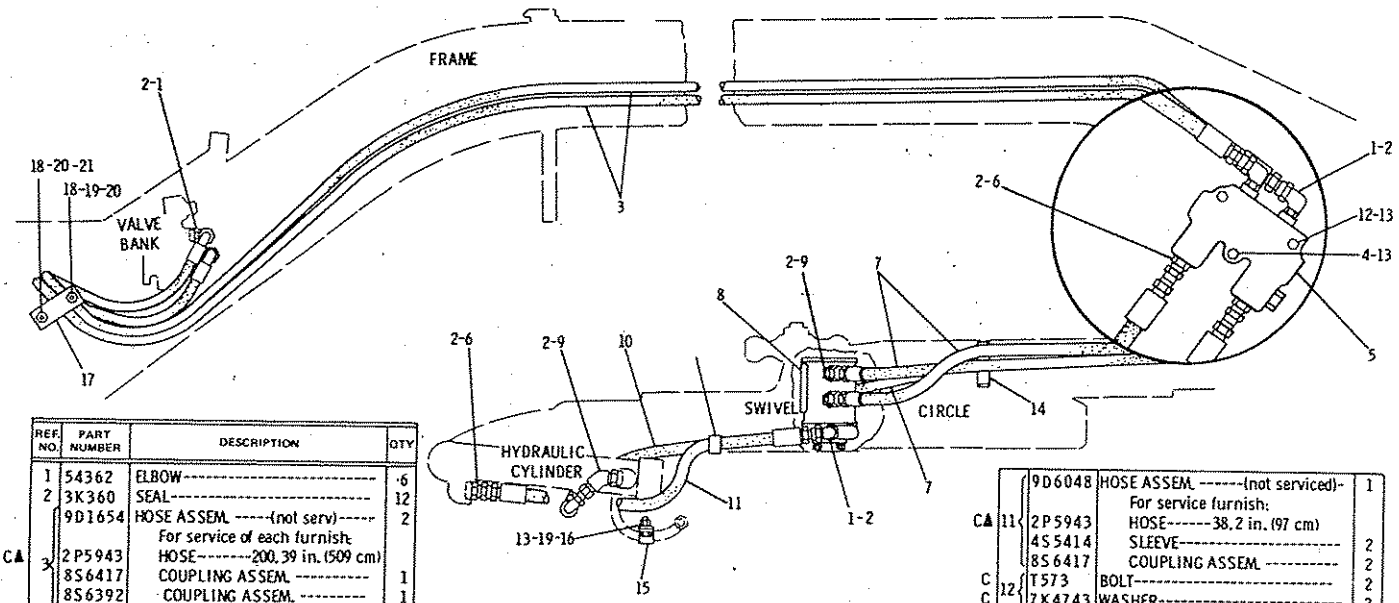

REF. NO.	PART NUMBER	DESCRIPTION	QTY
1	5K362	ELBOW	6
2	3K360	SEAL	12
	9D1654	HOSE ASSEM. -----(not serv)-----	2
		For service of each furnish:	
CA 3	2P5943	HOSE--------200.39 in. (509 cm)	
	8S6417	COUPLING ASSEM. ----------	1
	8S6392	COUPLING ASSEM. ----------	1
	4S5414	SLEEVE----------	2
C 4	L1143	BOLT	1
C 5	3G5832	VALVE GROUP----------	1
		(Separate Illustration)	
6	308188	CONNECTOR----------	3
	2G3791	HOSE ASSEM. -----(not serv)------	3
		For service of each furnish:	
CA 7	2P5943	HOSE----99.20 in. (251.96 cm)	
	8S6417	COUPLING ASSEM. ----------	2
	4S5414	SLEEVE----------	2

C INDICATES CHANGE

8	8J384	SWIVEL GROUP----------	1
		(Separate Illustration)	
9	7D9984	ELBOW----------	3
	9D5970	HOSE ASSEM. ---(not serv)------	1
		For service furnish:	
CA 10	2P5943	HOSE----30.32 in. (77 cm)	
	4S5414	SLEEVE----------	2
	8S6417	COUPLING ASSEM. ----------	1
	8S6392	COUPLING ASSEM. ----------	1

	9D6048	HOSE ASSEM. ------(not serviced)-	1
		For service furnish:	
CA 11	2P5943	HOSE------38.2 in. (97 cm)	
	4S5414	SLEEVE----------	2
	8S6417	COUPLING ASSEM. ----------	2
C 12	T573	BOLT----------	2
C	7K4743	WASHER----------	2
C 13	5P1075	WASHER----------	5
14	5D4988	CLAMP----------	2
C 15	1S994	CLIP----------	4
16	S1594	BOLT----------	2
C 17	6D3386	SHIM----------	2
C 18	3M496	STUD----------	2
C 19	5M2894	WASHER----------	1
C 20	1D4717	NUT----------	4
C 21	2B941	SPACER----------	1

A ORDER BY THE INCH

174659

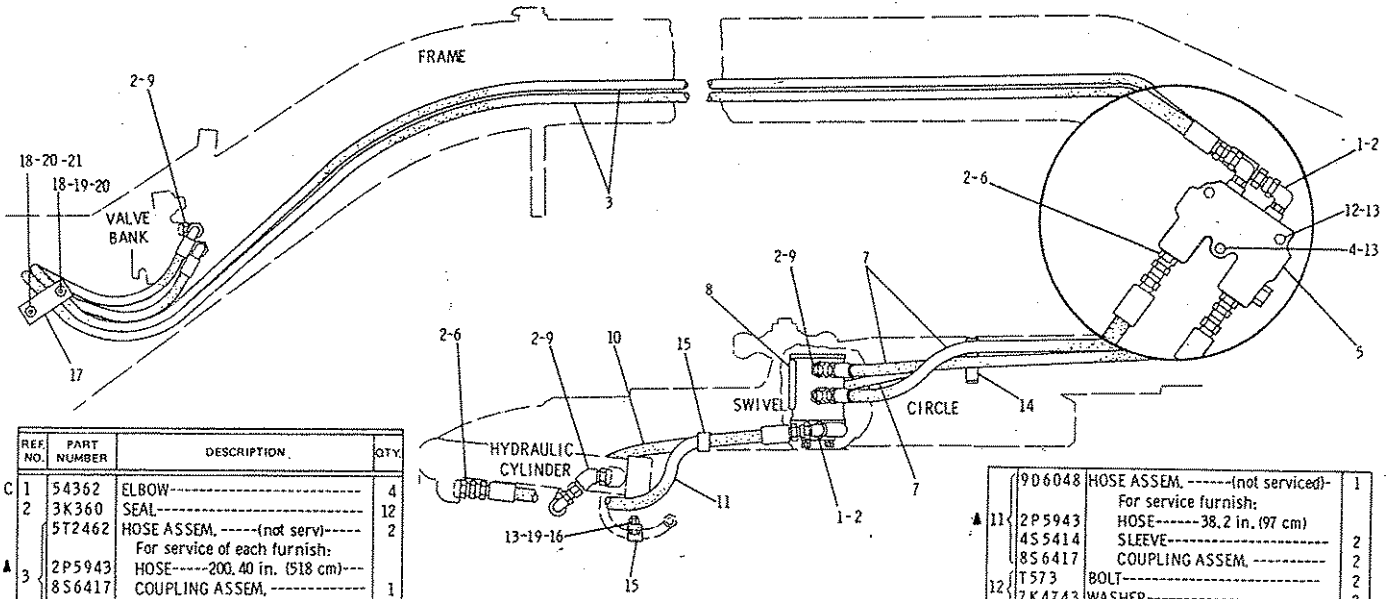

	REF. NO.	PART NUMBER	DESCRIPTION	QTY.
C	1	5K362	ELBOW	4
	2	3K360	SEAL	12
		5T2462	HOSE ASSEM. -----(not serv)-----	2
			For service of each furnish:	
▲	3	2P5943	HOSE------200.40 in. (518 cm)---	
		8S6417	COUPLING ASSEM. ----------	1
		8S6393	COUPLING ASSEM. ----------	1
		4S5414	SLEEVE----------	2
C	5	3G5832	VALVE GROUP----------	1
			(Separate Illustration)	
	6	308188	CONNECTOR----------	3
		2G3791	HOSE ASSEM. ----(not serv)------	3
			For service of each furnish:	
▲	7	2P5943	HOSE ----99.20 in. (251.96 cm)	
		8S6417	COUPLING ASSEM. ----------	2
		4S5414	SLEEVE----------	2

C INDICATES CHANGE

	8	8J384	SWIVEL GROUP----------	1
			(Separate Illustration)	
C	9	7D9984	ELBOW----------	5
		9D5970	HOSE ASSEM. ---(not serv)------	1
			For service furnish:	
▲	10	2P5943	HOSE----30.32 in. (77 cm)	
		4S5414	SLEEVE----------	2
		8S6417	COUPLING ASSEM. ----------	1
		8S6392	COUPLING ASSEM. ----------	1

		9D6048	HOSE ASSEM. ------(not serviced)-	1
			For service furnish:	
▲	11	2P5943	HOSE-------38.2 in. (97 cm)	
		4S5414	SLEEVE----------	2
		8S6417	COUPLING ASSEM. ----------	2
	12	T573	BOLT----------	2
		7K4743	WASHER----------	2
	13	5P1075	WASHER----------	5
	14	5D4988	CLAMP----------	2
	15	1S994	CLIP----------	4
	16	S1594	BOLT----------	2
	17	6D3386	SHIM----------	2
	18	3M496	STUD----------	2
	19	5M2894	WASHER----------	1
	20	1D4717	NUT----------	4
	21	2B941	SPACER----------	1

▲ ORDER BY THE INCH

306271

2G3510 BLADE TIP LINES GROUP—Single Circuit—Type 2
Part of 2G6316 & 2G460 Power Blade and Tip Arrangements listed on Page 279
3G5832 Valve & 8J384 Swivel parts are shown on Page 229. AN ATTACHMENT

2G3510 BLADE TIP LINES GROUP—Single Circuit—Type 3

Part of 2G6316 & 2G460 Power Blade and Tip Arrangements listed on Page 279
3G5832 Valve & 8J384 Swivel parts are shown on Page 229. AN ATTACHMENT

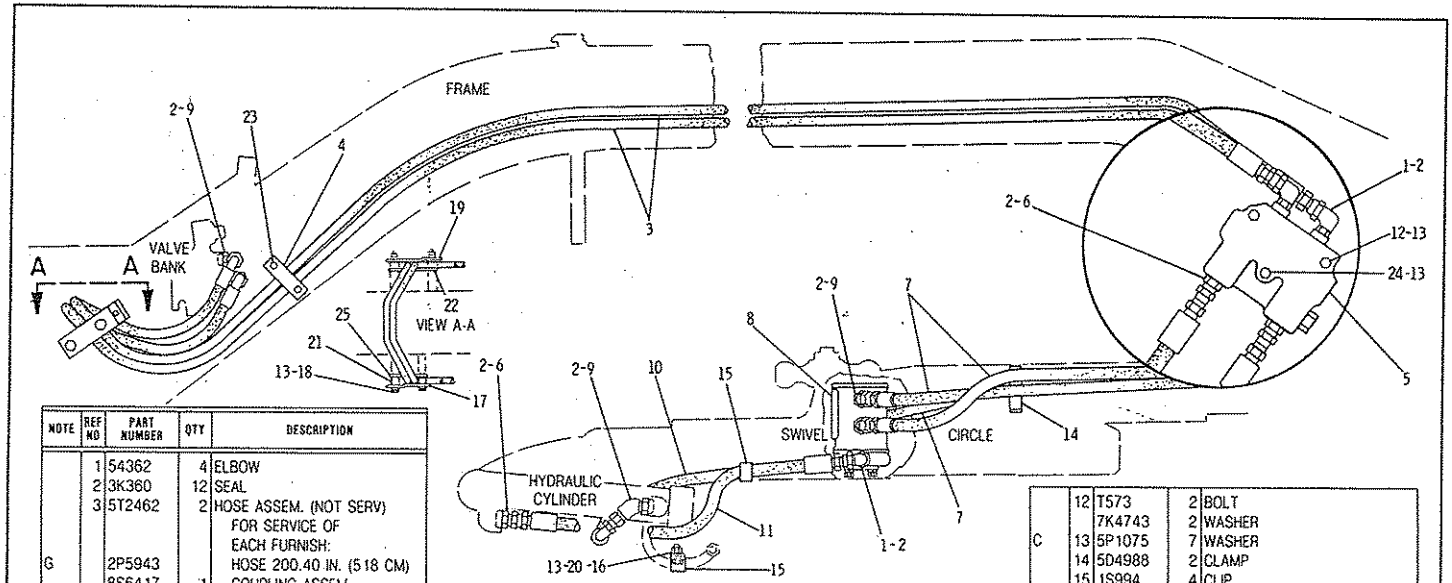

NOTE	REF NO	PART NUMBER	QTY	DESCRIPTION
	1	54362	4	ELBOW
	2	3K360	12	SEAL
	3	5T2462	2	HOSE ASSEM. (NOT SERV)
				FOR SERVICE OF
				EACH FURNISH:
G		2P5943		HOSE 200.40 IN. (518 CM)
		8S6417	1	COUPLING ASSEM.
		8S6393	1	COUPLING ASSEM.
		4S5414	2	SLEEVE
C	4	6G1714	1	CLAMP
Y	5	3G5832	1	VALVE GROUP
	6	308188	3	CONNECTOR
	7	2G3791	3	HOSE ASSEM. (NOT SERV)
				FOR SERVICE OF
				EACH FURNISH:
G		2P5943		HOSE 99.20IN.(251.96CM)
		8S6417	2	COUPLING ASSEM.
		4S5414	2	SLEEVE
Y	8	8J384	1	SWIVEL GROUP

	9	7D9984	5	ELBOW
	10	9D5970	1	HOSE ASSEM. (NOT SERV)
				FOR SERVICE FURNISH:
G		2P5943		HOSE 30.32IN.(77CM)
		4S5414	2	SLEEVE
		8S6417	1	COUPLING ASSEM.
		8S6392	1	COUPLING ASSEM.
	11	9D6048	1	HOSE ASSEM. (NOT SERV)
				FOR SERVICE FURNISH:
G		2P5943		HOSE 38.2IN.(97CM)
		4S5414	2	SLEEVE
		8S6417	2	COUPLING ASSEM.

	12	T573	2	BOLT
		7K4743	2	WASHER
C	13	5P1075	7	WASHER
	14	5D4988	2	CLAMP
	15	1S994	4	CLIP
	16	S1594	2	BOLT
C	17	6G1715	1	CLAMP
C	18	S1590	2	BOLT
C	19	6G1716	1	CLAMP
C	20	1D4717	2	NUT
C	21	9D953	1	SPACER
C	22	9D1209	1	PLATE
C	23	6K4936	2	BOLT
C		3F1417	1	WASHER
	24	L1143	1	BOLT
C	25	6D3386	1	SHIM

C INDICATES CHANGE
G ORDER BY THE INCH
Y SEPARATE ILLUSTRATION

308597

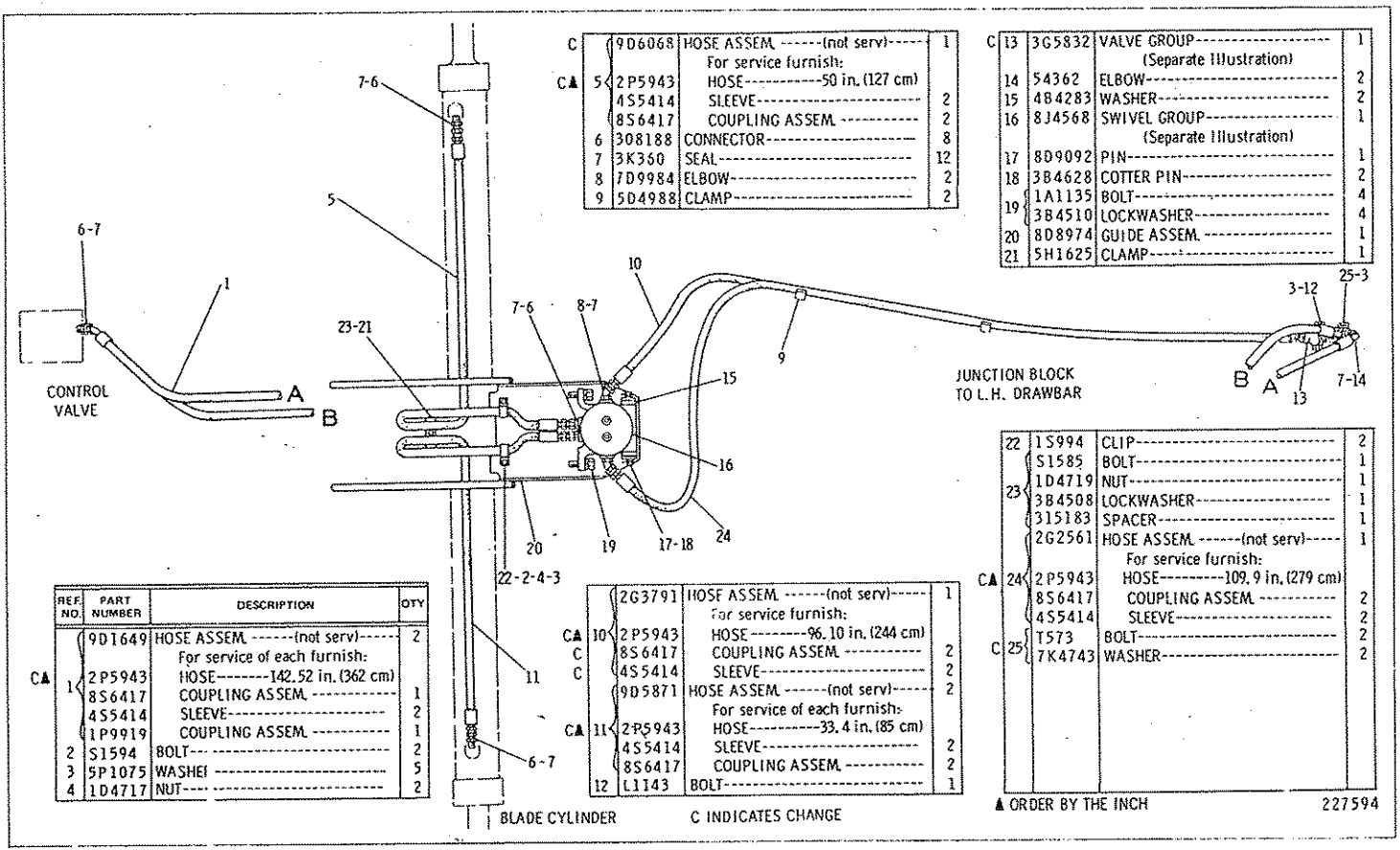

C				
		9D6068	HOSE ASSEM. ------(not serv)------	1
			For service furnish:	
CA	5	2P5943	HOSE----------50 in. (127 cm)	
		4S5414	SLEEVE----------	2
		8S6417	COUPLING ASSEM. ----------	2
	6	308188	CONNECTOR----------	8
	7	3K360	SEAL----------	12
	8	7D9984	ELBOW----------	2
	9	5D4988	CLAMP----------	2

C				
	13	3G5832	VALVE GROUP----------	1
			(Separate Illustration)	
	14	54362	ELBOW----------	2
	15	4B4283	WASHER----------	2
	16	8J4568	SWIVEL GROUP----------	1
			(Separate Illustration)	
	17	8D9092	PIN----------	1
	18	3B4628	COTTER PIN----------	2
	19	1A1135	BOLT----------	4
		3B4510	LOCKWASHER----------	4
	20	8D8974	GUIDE ASSEM. ----------	1
	21	5H1625	CLAMP----------	1

REF. NO.	PART NUMBER	DESCRIPTION	QTY
	9D1649	HOSE ASSEM. ------(not serv)------	2
		For service of each furnish:	
CA 1	2P5943	HOSE--------142.52 in. (362 cm)	
	8S6417	COUPLING ASSEM. ----------	1
	4S5414	SLEEVE----------	2
	1P9919	COUPLING ASSEM. ----------	1
2	S1594	BOLT----------	2
3	5P1075	WASHER----------	5
4	1D4717	NUT----------	2

C				
		2G3791	HOSE ASSEM. ------(not serv)------	1
			For service furnish:	
CA	10	2P5943	HOSE---------96.10 in. (244 cm)	
C		8S6417	COUPLING ASSEM. ----------	2
C		4S5414	SLEEVE----------	2
		9D5871	HOSE ASSEM. ------(not serv)------	2
			For service of each furnish:	
CA	11	2P5943	HOSE----------33.4 in. (85 cm)	
		4S5414	SLEEVE----------	2
		8S6417	COUPLING ASSEM. ----------	2
	12	L1143	BOLT----------	1

	22	1S994	CLIP----------	2
	23	S1585	BOLT----------	1
		1D4719	NUT----------	1
		3B4508	LOCKWASHER----------	1
		315183	SPACER----------	1
		2G2561	HOSE ASSEM. ------(not serv)------	1
			For service furnish:	
CA	24	2P5943	HOSE----------109.9 in. (279 cm)	
		8S6417	COUPLING ASSEM. ----------	2
		4S5414	SLEEVE----------	2
C	25	T573	BOLT----------	2
		7K4743	WASHER----------	2

▲ ORDER BY THE INCH 227594

C INDICATES CHANGE

2G3520 BLADE SHIFT LINES GROUP—Single Circuit

Part of 2G6321 and 2G430 Power Blade, 2G6316 and 2G460 Power Blade and Tip Arrangements listed on Page 279

3G5832 Valve and 8J4568 Swivel parts are shown on Pages 229 & 230. AN ATTACHMENT

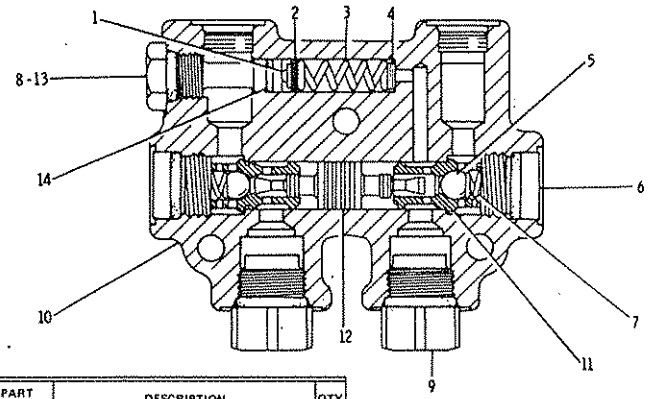

	REF. NO.	PART NUMBER	DESCRIPTION	QTY
▲	2	6J8696	SHIM -----I. 22 mm(. 048 in.) thick	1
▲		5J6153	SHIM ----0. 19 mm(. 0076 in.) thick	4
	3	2J6089	SPRING----------	1
C	4	3K6116	WASHER----------	4
	5	9J4871	BALL----------	2
	6	9J404	PLUG----------	2
		7J9933	SEAL----------	2
	7	9J403	SPRING----------	2
	8	3K360	SEAL----------	1
	9	8J5456	ADAPTER----------	2
		3D2824	SEAL----------	2
	10	9J8274	BODY ASSEM. ----------	1
			(Includes)	
	11	9J405	SEAT----------	2
	12	9J5768	PISTON----------	1
	13	8J9250	PLUG----------	1
	14	4J5309	SEAL----------	1

C INDICATES CHANGE

▲ USE AS REQUIRED

227178

3G5832 CHECK AND RELIEF VALVE GROUP
Part of 2G3510 Blade Tip Lines and 2G3520 Blade Shift Lines Groups shown on Pages 227 & 228. AN ATTACHMENT

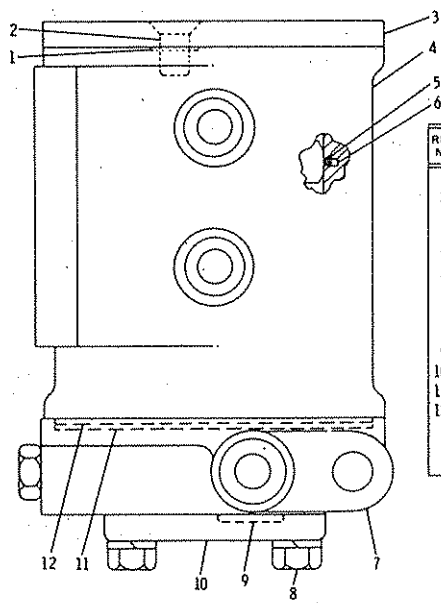

REF. NO.	PART NUMBER	DESCRIPTION	QTY
1	5J1246	SHIM----------	6
2	4K1493	SCREW----------	2
3	8J380	RETAINER----------	1
4	8J385	BODY----------	1
5	8J2331	SEAL----------	7
6	2H3928	SEAL----------	7
7	8J386	ROTOR----------	1
8	5J1585	BOLT----------	4
	3B4508	LOCKWASHER----------	4
9	3H107	SEAL----------	4
10	8J377	COVER----------	1
11	4J9964	SEAL----------	2
12	8J2330	SEAL----------	2

119661

8J384 SWIVEL GROUP
Part of 2G3510 Blade Tip Lines Group shown on Page 227
AN ATTACHMENT

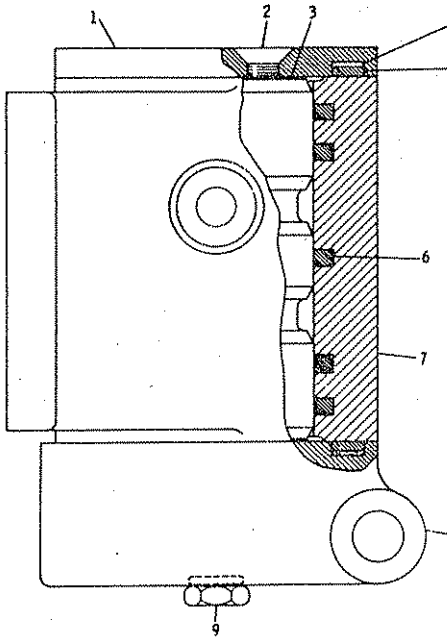

REF. NO.	PART NUMBER	DESCRIPTION	QTY.
1	8J4564	RETAINER	1
2	4K1493	SCREW	2
3	8J5512	SHIM	6
4	8J4562	SEAL	2
5	8J4561	SEAL	2
6	8J5863	SEAL ASSEM.	5
7	8J4567	BODY	1
8	8J4566	ROTOR	1
9	9S4185	PLUG	2
	3K360	SEAL	2

8J4568 SWIVEL JOINT GROUP
Part of 2G3520 Blade Shift Lines Group shown on Page 228
AN ATTACHMENT

		CONSISTS OF:	PAGE
1	2G8090	HYDRAULIC LINES GROUP	232
1	6G2240	BLADE FLOAT CONTROL WIRING GROUP	1188
1	.....	FORM SMHS7363	

		CONSISTS OF:	PAGE
1	2G8090	HYDRAULIC LINES GROUP	232
1	6G5820	BLADE FLOAT CONTROL WIRING GROUP	119
1	.....	FORM SMHS7363	

6G6669 BLADE FLOAT ARRANGEMENT
Serial No. 87V5734—Up
AN ATTACHMENT

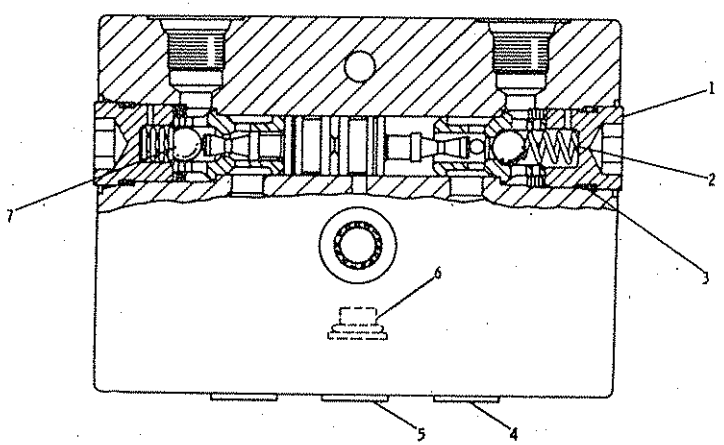

REF. NO.	PART NUMBER	DESCRIPTION	QTY
1	9J404	PLUG	2
2	9J403	SPRING	2
3	7J9933	SEAL	2
4	9S8005	PLUG	2
	3K360	SEAL	2
5	9S8006	PLUG	1
	2M9780	SEAL	1
6	9S8001	PLUG	1
	4J7533	SEAL	1
7	9J4871	BALL	2

215567

8J5996 CHECK VALVE GROUP—Pilot Operated
Part of 2G8090 Hydraulic Lines Group shown on Page 232. AN ATTACHMENT

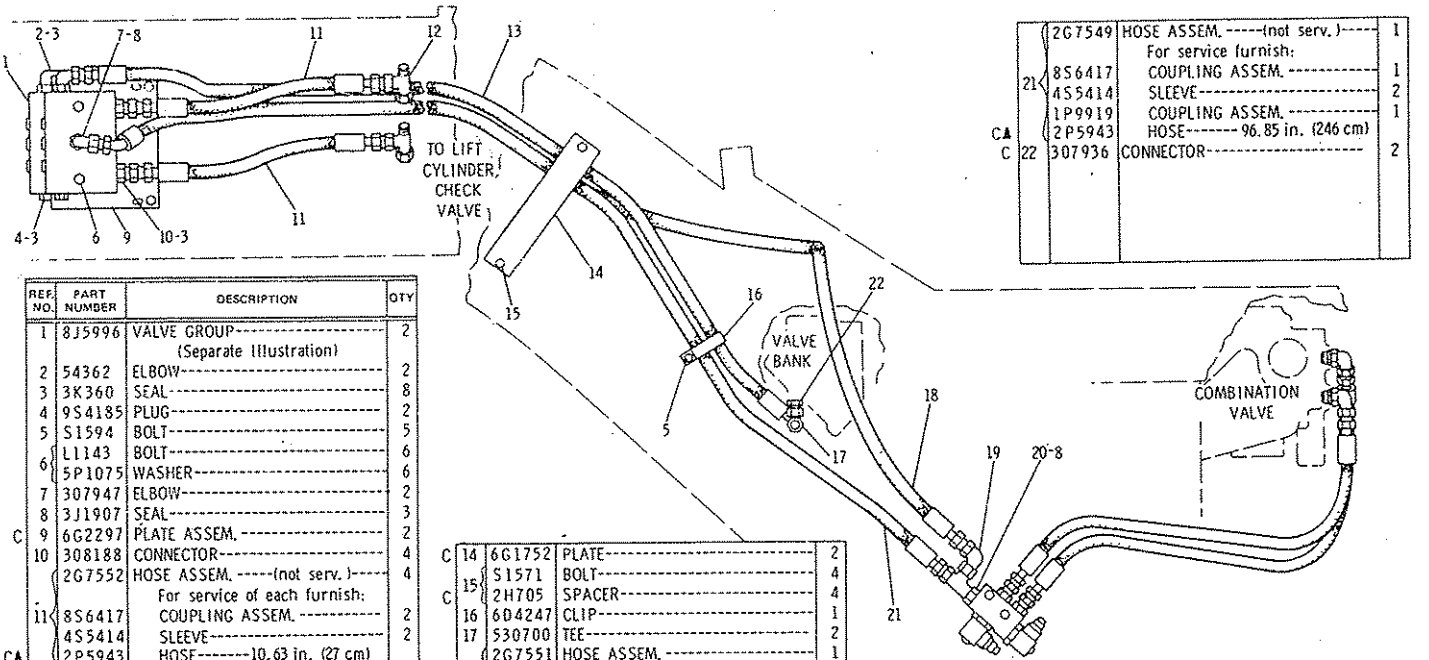

		2G7549	HOSE ASSEM. -----(not serv.)-----	1
			For service furnish:	
	21	8S6417	COUPLING ASSEM. ----------	1
		4S5414	SLEEVE----------	2
		1P9919	COUPLING ASSEM. ----------	1
CA		2P5943	HOSE-------- 96.85 in. (246 cm)	
C	22	307936	CONNECTOR----------	2

REF. NO.	PART NUMBER	DESCRIPTION	QTY
1	8J5996	VALVE GROUP---------- (Separate Illustration)	2
2	54362	ELBOW----------	2
3	3K360	SEAL----------	8
4	9S4185	PLUG----------	2
5	S1594	BOLT----------	5
6	L1143	BOLT----------	6
	5P1075	WASHER----------	6
7	307947	ELBOW----------	2
8	3J1907	SEAL----------	3
C 9	6G2297	PLATE ASSEM. ----------	2
10	308188	CONNECTOR----------	4
	2G7552	HOSE ASSEM. -----(not serv.)-----	4
		For service of each furnish:	
11	8S6417	COUPLING ASSEM. ----------	2
	4S5414	SLEEVE----------	2
CA	2P5943	HOSE-------10.63 in. (27 cm)	
12	619258	TEE----------	4
	2G7548	HOSE ASSEM. -----(not serv.)-----	2
		For service of each furnish:	
13	8S6417	COUPLING ASSEM. ----------	1
	4S5414	SLEEVE----------	2
	8S6393	COUPLING ASSEM. ----------	1
CA	2P5943	HOSE--------81.89 in. (208 cm)	

C	14	6G1752	PLATE----------	2
	15	S1571	BOLT----------	4
C		2H705	SPACER----------	4
	16	6D4247	CLIP----------	1
	17	530700	TEE----------	2
		2G7551	HOSE ASSEM. ----------	1
			For service furnish:	
	18	8S6417	COUPLING ASSEM. ----------	1
		4S5414	SLEEVE----------	2
		1P9919	COUPLING ASSEM. ----------	1
CA		2P5943	HOSE-------113.78 in. (289 cm)	
	19	6K9194	ELBOW----------	1
	20	6M6853	TEE----------	1

C INDICATES CHANGE

▲ ORDER BY THE INCH

301278

2G8090 HYDRAULIC LINES GROUP—Single Circuit—Part 1
Part of 2G8085 Blade Float Arrangement listed on Page 230
8J5996 Valve parts are shown on Page 231. AN ATTACHMENT

2G8090 HYDRAULIC LINES GROUP—Single Circuit—Part 2
Part of 2G8085 Blade Float Arrangement listed on Page 230
AN ATTACHMENT

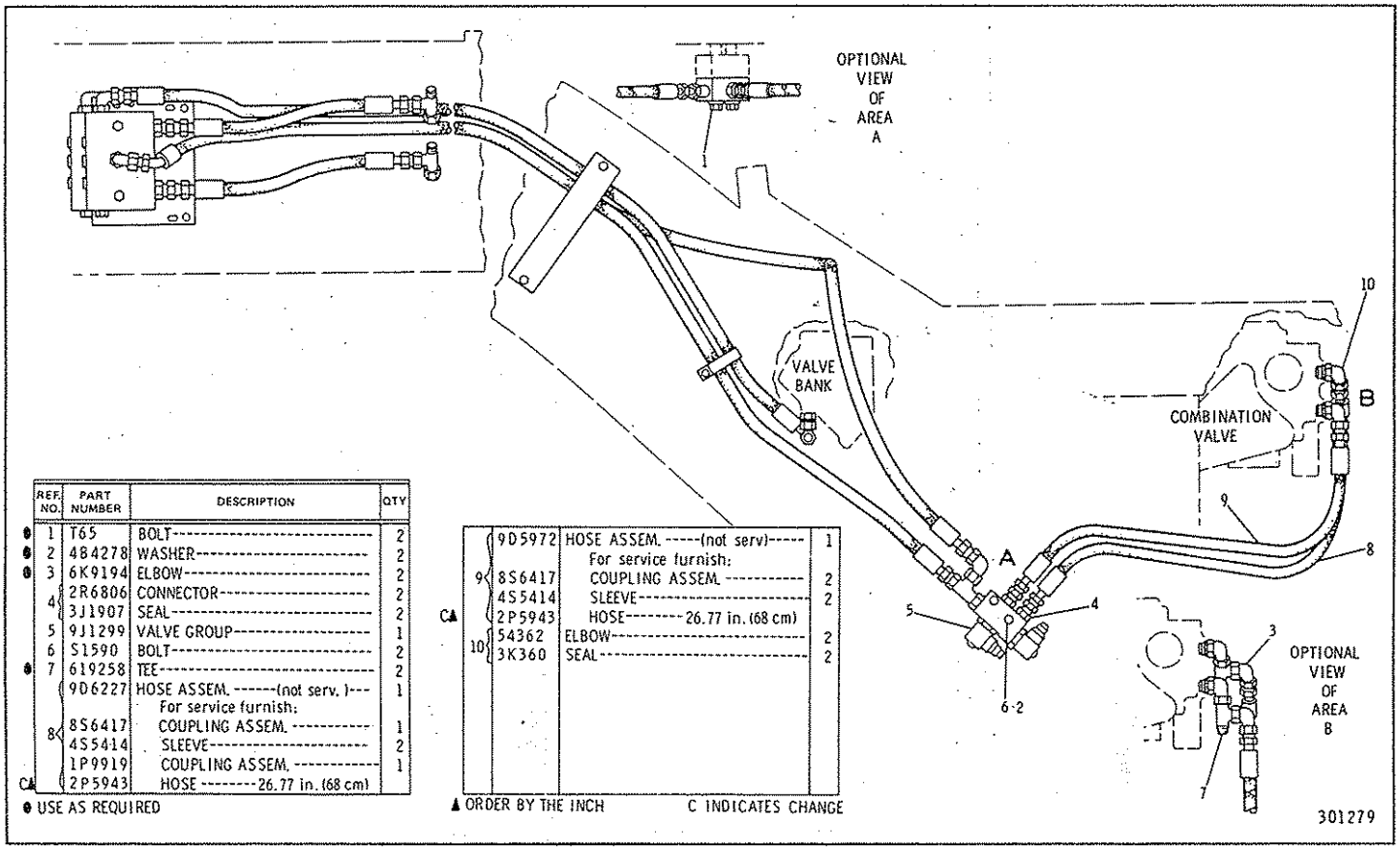

REF. NO.	PART NUMBER	DESCRIPTION	QTY
● 1	T65	BOLT	2
● 2	4B4278	WASHER	2
● 3	6K9194	ELBOW	2
4	2R6806	CONNECTOR	2
	3J1907	SEAL	2
5	9J1299	VALVE GROUP	1
6	S1590	BOLT	2
● 7	619258	TEE	2
	9D6227	HOSE ASSEM. ------(not serv.)---	1
		For service furnish:	
8	8S6417	COUPLING ASSEM. ----------	1
	4S5414	SLEEVE ----------	2
	1P9919	COUPLING ASSEM. ----------	1
C▲	2P5943	HOSE --------26.77 in. (68 cm)	

	9D5972	HOSE ASSEM. -----(not serv)-----	1
		For service furnish:	
9	8S6417	COUPLING ASSEM. ----------	2
	4S5414	SLEEVE ----------	2
C▲	2P5943	HOSE--------26.77 in. (68 cm)	
10	54362	ELBOW ----------	2
	3K360	SEAL ----------	2

● USE AS REQUIRED
▲ ORDER BY THE INCH
C INDICATES CHANGE

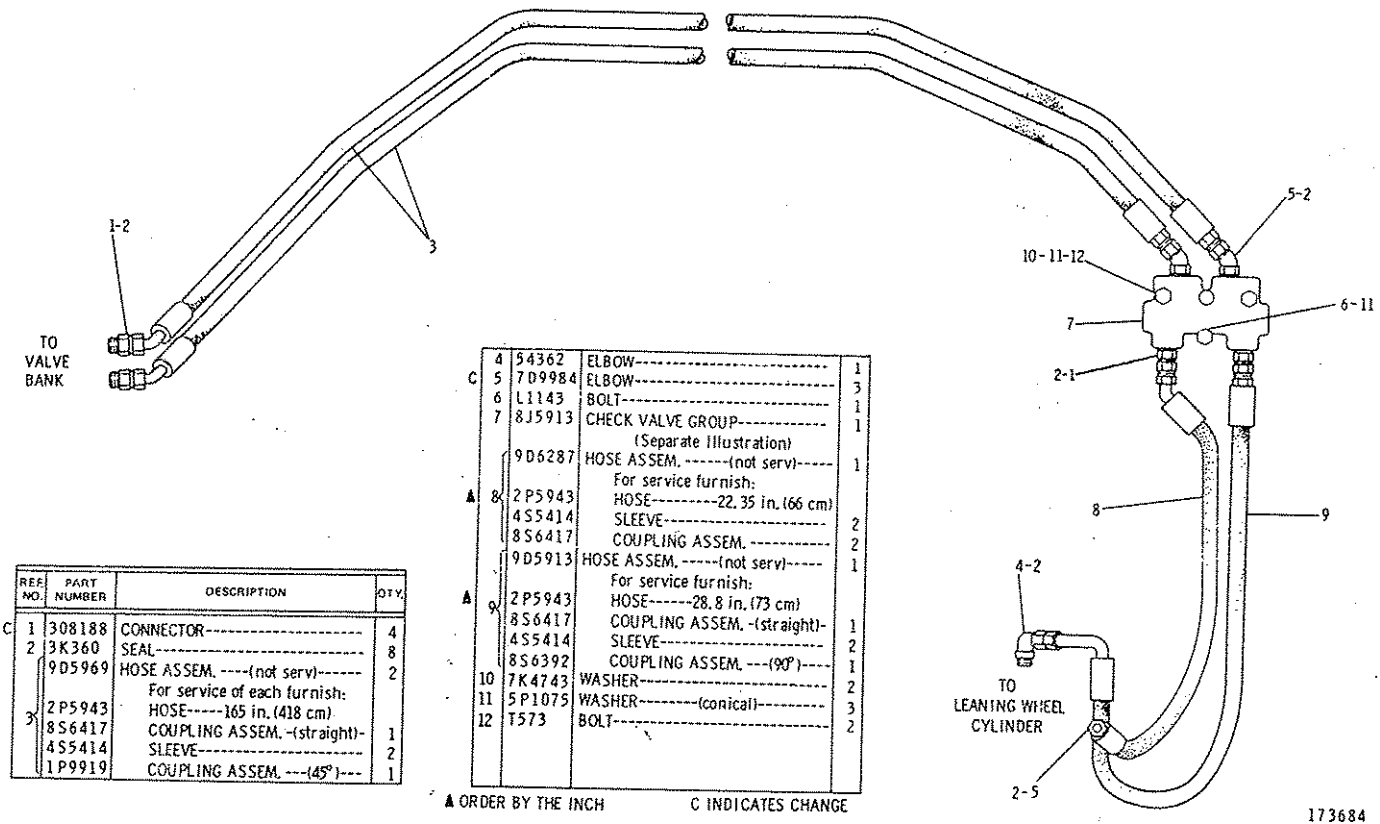

REF NO.	PART NUMBER	DESCRIPTION	QTY.
C 1	3O8188	CONNECTOR	4
2	3K360	SEAL	8
	9D5969	HOSE ASSEM. ----(not serv)------	2
		For service of each furnish:	
3	2P5943	HOSE------165 in. (418 cm)	
	8S6417	COUPLING ASSEM. -(straight)-	1
	4S5414	SLEEVE	2
	1P9919	COUPLING ASSEM. ---(45°)---	1

	4	54362	ELBOW	1
C	5	7D9984	ELBOW	3
	6	L1143	BOLT	1
	7	8J5913	CHECK VALVE GROUP	1
			(Separate Illustration)	
		9D6287	HOSE ASSEM. -------(not serv)-----	1
			For service furnish:	
A	8	2P5943	HOSE---------22.35 in. (66 cm)	
		4S5414	SLEEVE	2
		8S6417	COUPLING ASSEM.	2
		9D5913	HOSE ASSEM. -----(not serv)-----	1
			For service furnish:	
A	9	2P5943	HOSE------28.8 in. (73 cm)	
		8S6417	COUPLING ASSEM. -(straight)-	1
		4S5414	SLEEVE	2
		8S6392	COUPLING ASSEM. ---(90°)----	1
	10	7K4743	WASHER	2
	11	5P1075	WASHER---------(conical)---------	3
	12	T573	BOLT	2

A ORDER BY THE INCH C INDICATES CHANGE

9D860 LEANING WHEEL LINES GROUP—Single Circuit
8J5913 Valve parts are shown on Page 195

2G230 FRONT ATTACHMENT LINES GROUP

Part of 9D8425, 9D8433, 9D8434 and 9D8435 Hydraulic Control Arrangement listed on Page 252
9J1735, 9J1736 and 9J4932 Valve parts are shown on Pages 236 & 237. AN ATTACHMENT

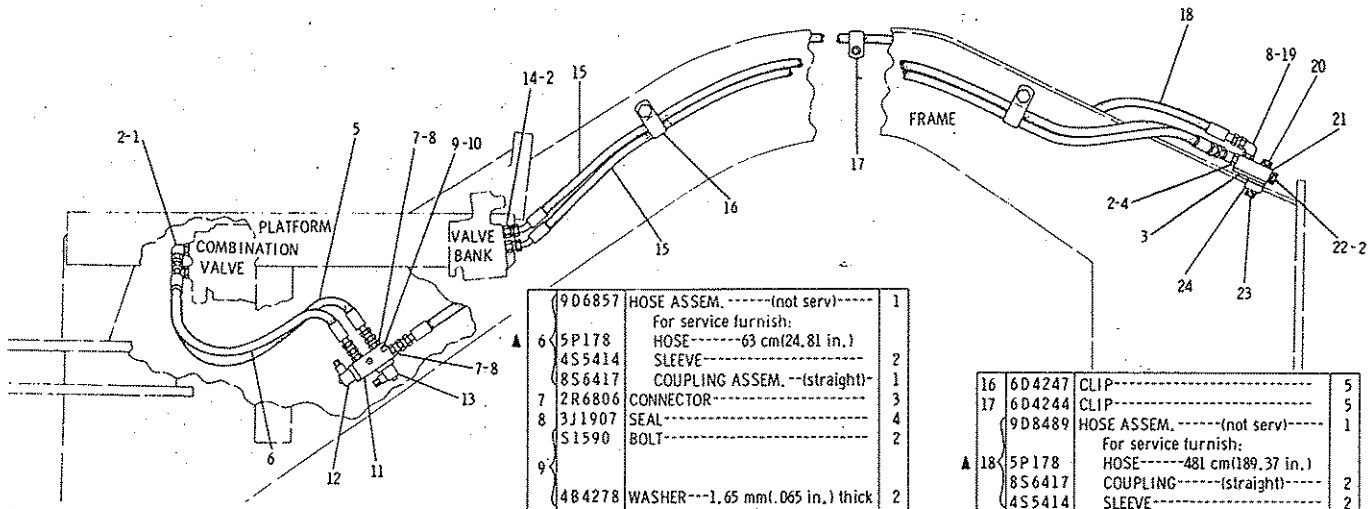

REF. NO.	PART NUMBER	DESCRIPTION	QTY
1	54362	ELBOW	2
2	3K360	SEAL	8
3	9D8498	PLATE ASSEM.	1
4	7D9984	ELBOW	2
▲ 5	9D6856	HOSE ASSEM. ------(not serv)----- For service furnish:	1
	5P178	HOSE--------63 cm(24.81 in.)	
	8S6417	COUPLING ASSEM. ---(straight)	1
	4S5414	SLEEVE	2
	1P9919	COUPLING ASSEM. ----(45°)----	1
▲ 6	9D6857	HOSE ASSEM. ------(not serv)----- For service furnish:	1
	5P178	HOSE-------63 cm(24.81 in.)	
	4S5414	SLEEVE	2
	8S6417	COUPLING ASSEM. --(straight)-	1
7	2R6806	CONNECTOR	3
8	3J1907	SEAL	4
9	S1590	BOLT	2
	4B4278	WASHER---1.65 mm(.065 in.) thick	2
10	T431	WASHER--2.66 mm(.1046 in.) thick	1
11	9J1299	VALVE GROUP------(pilot)-------- (Includes)	1
12	9J1735	VALVE GROUP	1
13	9J1736	VALVE GROUP (Separate Illustration)	1
14	8D9088	CONNECTOR	2
▲ 15	9D8488	HOSE ASSEM. -----(not serv)----- For service of each furnish:	2
	5P178	HOSE------424 cm(166.93 in.)	
	8S6417	COUPLING ASSEM. --(straight)-	1
	4S5414	SLEEVE	2
	1P9919	COUPLING	1
16	6D4247	CLIP	5
17	6D4244	CLIP	5
▲ 18	9D8489	HOSE ASSEM. ------(not serv)----- For service furnish:	1
	5P178	HOSE------481 cm(189.37 in.)	
	8S6417	COUPLING------(straight)-----	2
	4S5414	SLEEVE	2
19	307947	ELBOW	1
20	L1143	BOLT	3
	3B4506	LOCKWASHER	3
21	9J4932	CHECK VALVE GROUP (Separate Illustration)	1
22	9S4185	PLUG	2
23	1A1460	BOLT	2
	3B4508	LOCKWASHER	2
C 24	9D1767	BRACKET	2

C INDICATES CHANGE

▲ ORDER BY THE CENTIMETRE

207362

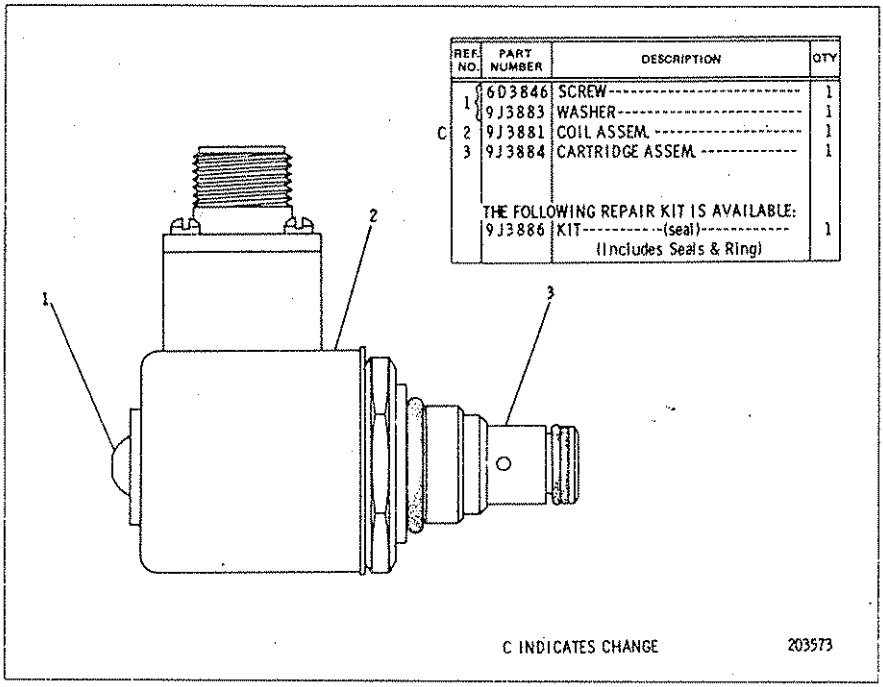

REF. NO.	PART NUMBER	DESCRIPTION	QTY
1	6D3846	SCREW	1
	9J3883	WASHER	1
C 2	9J3881	COIL ASSEM.	1
3	9J3884	CARTRIDGE ASSEM.	1
		THE FOLLOWING REPAIR KIT IS AVAILABLE:	
	9J3886	KIT-----(seal)----- (Includes Seals & Ring)	1

C INDICATES CHANGE 203573

9J1735 PILOT VALVE GROUP
Part of 2G230 Front Attachment Lines Group shown on Page 235
AN ATTACHMENT

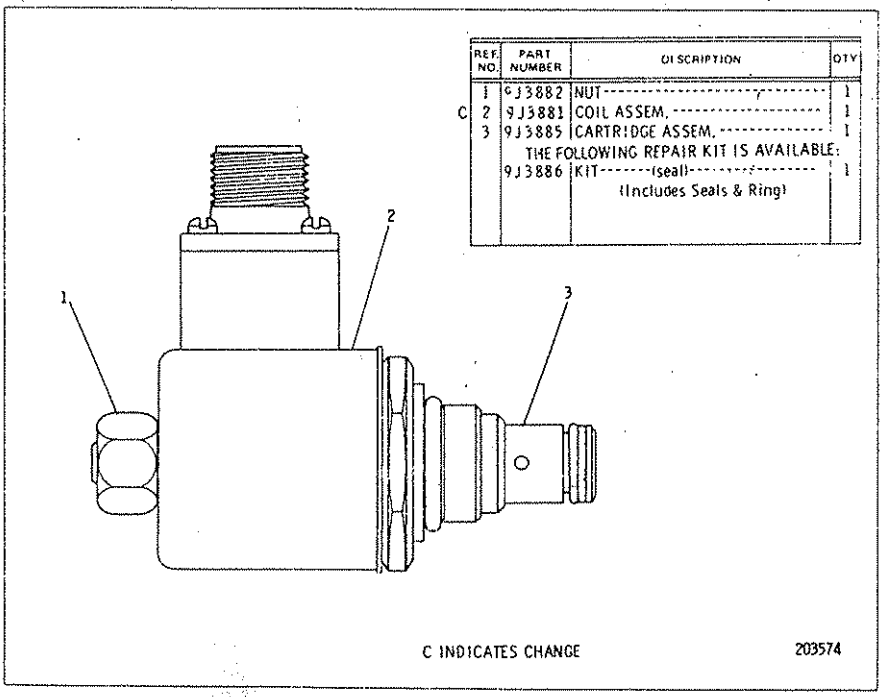

REF. NO.	PART NUMBER	DESCRIPTION	QTY
1	9J3882	NUT	1
C 2	9J3881	COIL ASSEM.	1
3	9J3885	CARTRIDGE ASSEM.	1
		THE FOLLOWING REPAIR KIT IS AVAILABLE:	
	9J3886	KIT-----(seal)----- (Includes Seals & Ring)	1

C INDICATES CHANGE 203574

9J1736 PILOT VALVE GROUP

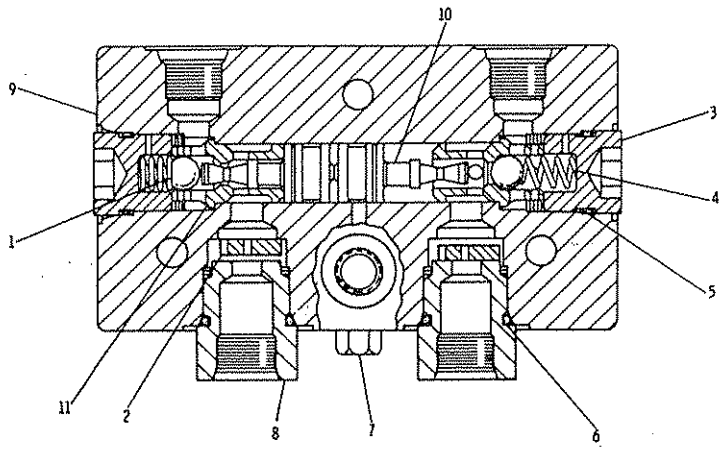

REF. NO.	PART NUMBER	DESCRIPTION	QTY
1	9J4871	BALL	2
2	8J9979	CHOKE	2
3	9J404	PLUG	2
4	9J403	SPRING	2
5	7J9933	SEAL	2
6	3D2824	SEAL	2
7	9S4180	PLUG	1
	4J7533	SEAL	1
8	8J5456	ADAPTER	2
C 9	9J9339	VALVE GROUP (Includes)	1
10	8J8739	PISTON	2
11	9J405	SEAT	2

C INDICATES CHANGE 207360

9J4932 CHECK VALVE GROUP—Pilot Operated
Part of 2G230 Front Attachment Lines Group shown on Page 235
AN ATTACHMENT

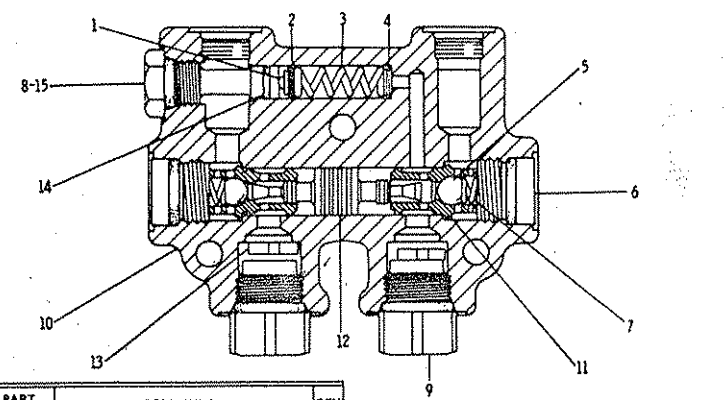

REF. NO.	PART NUMBER	DESCRIPTION	QTY
1	8J331	VALVE	1
▲ 2	6J8696	SHIM ----1.22 mm(.048 In.) thick	1
▲	5J6153	SHIM ----0.19 mm(.0076 In.) thick	4
3	4F7115	SPRING	1
▲ 4	3K6116	WASHER	3
5	9J4871	BALL	2
6	9J404	PLUG	2
	7J9933	SEAL	2
7	9J403	SPRING	2
8	3K360	SEAL	1
9	8J5456	ADAPTER	2
	3D2824	SEAL	2
10	9J8274	BODY ASSEM. (Includes)	1
11	9J405	SEAT	2
12	9J5768	PISTON	1
13	8J9979	CHOKE	2
14	4J5309	SEAL	1
15	8J9250	PLUG	1

▲ USE AS REQUIRED 162630

8J5798 CHECK AND RELIEF VALVE GROUP
Part of 2G6545 Scarifier Lines Group shown on Page 238
AN ATTACHMENT

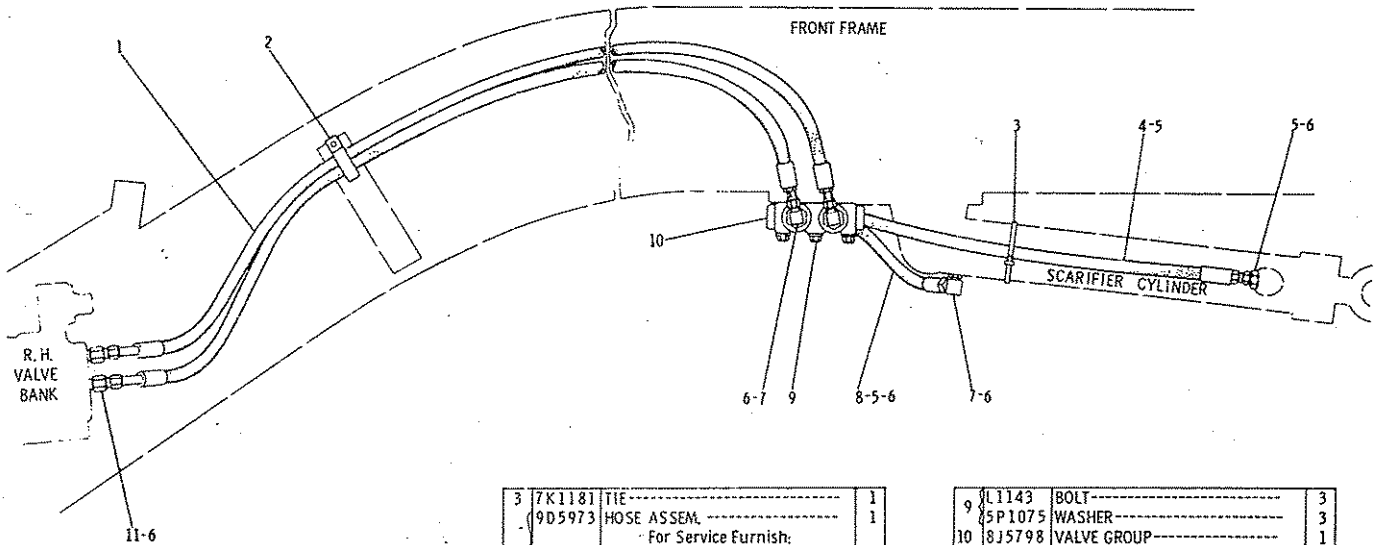

REF. NO.	PART NUMBER	DESCRIPTION	QTY
1	2G8255	HOSE ASSEM.	2
		For Service Furnish:	
	5P178	HOSE--------211 cm(83.07 in.)	
	4S5414	SLEEVE----------	2
	8S6417	COUPLING ASSEM. ----------	1
	1P9919	COUPLINGASSEM. ----------	1
2	6D4247	CLIP----------	1

3	7K1181	TIE----------	1
	9D5973	HOSE ASSEM. ----------	1
		For Service Furnish:	
4	5P178	HOSE--------- 79 cm(31.10 in.)	
	4S5414	SLEEVE----------	2
	8S6417	COUPLING ASSEM. ----------	2
5	308188	CONNECTOR----------	3
6	3K360	SEAL----------	8
7	54362	ELBOW----------	3
	2G6532	HOSE ASSEM. ----------	1
		For Service Furnish:	
8	5P178	HOSE--------38 cm(14.96 in.)	
	4S5414	SLEEVE----------	2
	8S6417	COUPLING ASSEM. ----------	2

9	1L1143	BOLT----------	3
	5P1075	WASHER----------	3
10	8J5798	VALVE GROUP----------	1
		(Separate Illustration)	
11	8D9088	CONNECTOR----------	2

216721

2G6545 SCARIFIER LINES GROUP
Part of 2G6845 Vee Scarifier Arrangement listed on Page 281
8J5798 Valve parts are shown on Page 237. AN ATTACHMENT

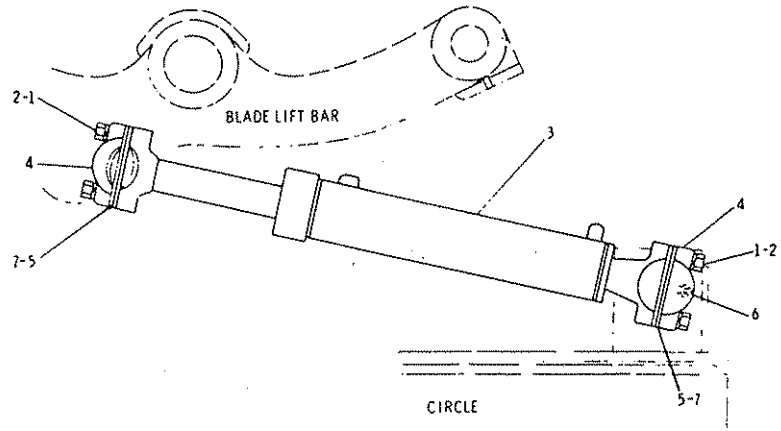

	REF NO	PART NUMBER	DESCRIPTION	QTY
	1	1A8063	BOLT	4
	2	3B4512	LOCKWASHER	4
C	3	3G5226	CYLINDER GROUP (Separate Illustration)	1
C	4	2G9097	CAP	2
	5	9D2756	INSERT	4
	6	3B8485	FITTING	2
C	7	2G9102	SHIM	8

C INDICATES CHANGE

223864

9D1360 CENTERSHIFT CYLINDER AND MOUNTING GROUP
3G5226 Cylinder parts are shown on Page 240

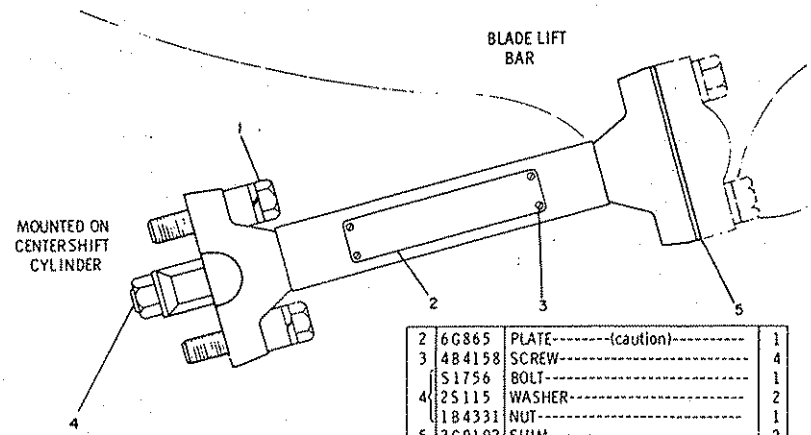

	REF NO.	PART NUMBER	DESCRIPTION	QTY.
1		104610	BOLT	2
		3B4512	LOCKWASHER	2
		6S8008	SPACER	2
2		6G865	PLATE---------(caution)----------	1
3		4B4158	SCREW	4
4		S1756	BOLT	1
		2S115	WASHER	2
		184331	NUT	1
5		2G9102	SHIM	2
		SMHS6961	FORM (Installing Sideshift Extension)	1

223848

6G1555 CENTERSHIFT EXTENSION GROUP
AN ATTACHMENT

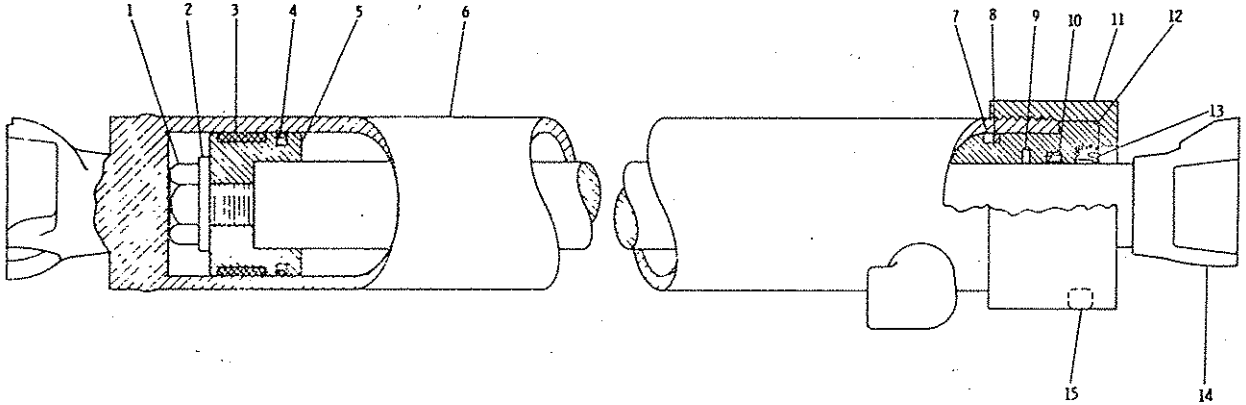

REF. NO.	PART NUMBER	DESCRIPTION	QTY
1	7J5639	BOLT	1
2	3K5234	WASHER	1
3	6J5733	RING	1
4	6J1972	SEAL ASSEM.	1
5	7J5682	PISTON	1
6	3G5689	CYLINDER ASSEM.	1
7	5H8848	SEAL	1
8	6J5731	RING	1
9	6J9178	SEAL	1
10	5J8175	SEAL	1
11	8J5911	CROWN	1
12	7J3351	HEAD	1
13	4J8980	SEAL	1
14	3G5687	ROD ASSEM.	1
15	8J5912	SET SCREW	1

223865

3G5226 CENTERSHIFT CYLINDER GROUP (Change 0)—76 mm (3") Bore x 457 mm (18") Stroke
Part of 9D1360 Centershift Cylinder and Mounting Group shown on Page 239

REF. NO.	PART NUMBER	DESCRIPTION	QTY.
1	3B4897	SPACER------(use as required)---	10
2	8D9815	PIN----------	4
3	8J8590	CYLINDER GROUP---------- (Separate Illustration)	2
C 4	2B947	BOLT----------	2
5	3B4508	LOCKWASHER----------	4
6	7K6128	WASHER----------	4
7	9D6581	SEAL----------	8
8	8D9814	BEARING----------	4
9	S1585	BOLT----------	2

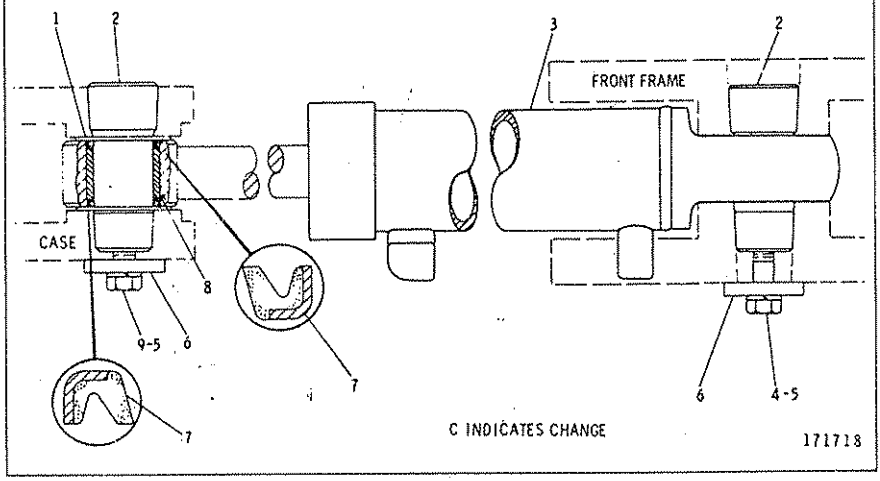

9D180 ARTICULATION CYLINDER AND MOUNTING GROUP
8J8590 Cylinder parts are shown on Page 242

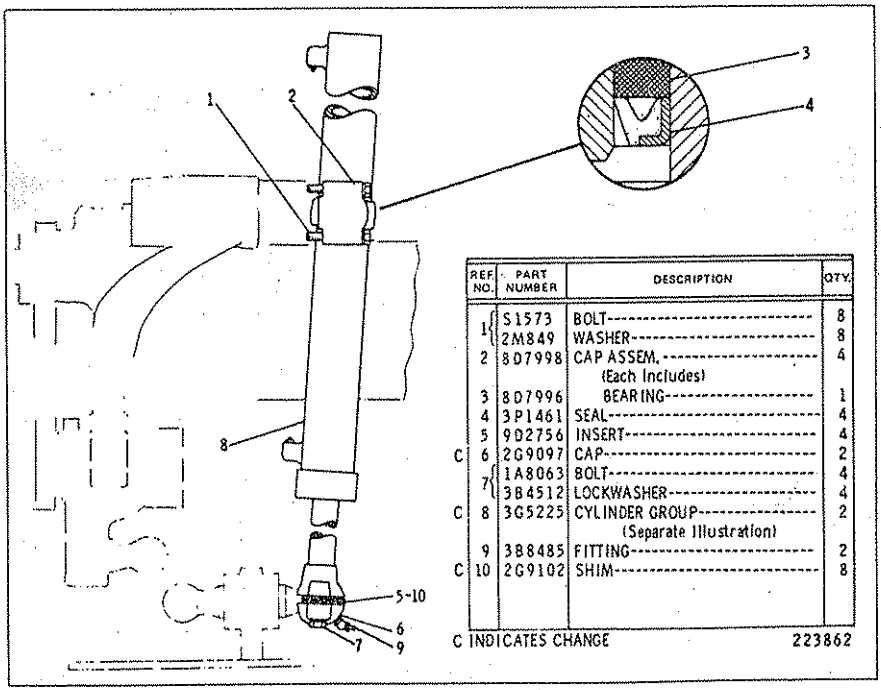

REF. NO.	PART NUMBER	DESCRIPTION	QTY.
1	S1573	BOLT----------	8
	2M849	WASHER----------	8
2	8D7998	CAP ASSEM.---------- (Each Includes)	4
3	8D7996	BEARING----------	1
4	3P1461	SEAL----------	4
5	9D2756	INSERT----------	4
C 6	2G9097	CAP----------	2
7	1A8063	BOLT----------	4
	3B4512	LOCKWASHER----------	4
C 8	3G5225	CYLINDER GROUP---------- (Separate Illustration)	2
9	3B8485	FITTING----------	2
C 10	2G9102	SHIM----------	8

C INDICATES CHANGE 223862

9D1350 BLADE LIFT CYLINDER AND MOUNTING GROUP
3G5225 Cylinder parts are shown on Page 243

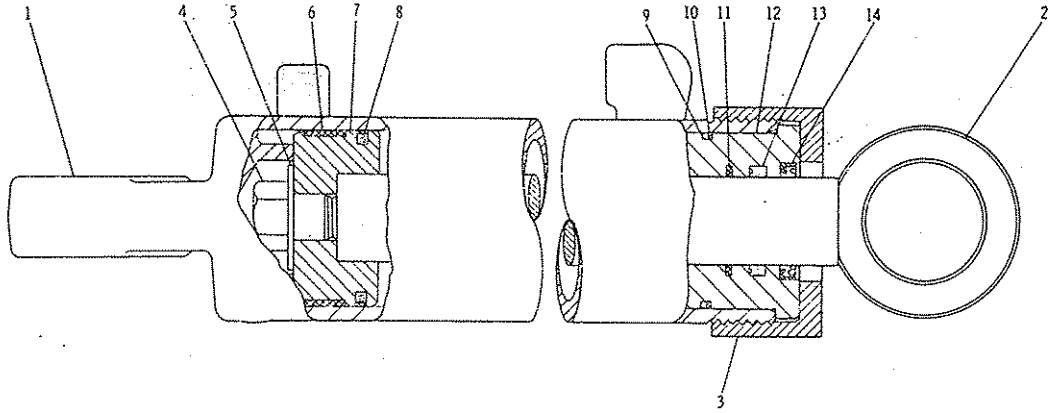

NOTE	REF NO	PART NUMBER	QTY	DESCRIPTION
	1	8J8697	1	CYLINDEF ASSEM.
	2	8J8696	1	ROD ASSI M.
	3	8J5911	1	CROWN
	4	7J5639	1	BOLT
	5	8J7415	1	WASHER
	6	6J5733	1	RING
	7	7J5682	1	PISTON
	8	6J1972	1	SEAL ASSEM.
	9	5H8848	1	SEAL
	10	6J5731	1	RING
	11	6J9178	1	SEAL
	12	7J3351	1	HEAD
	13	5J8175	1	SEAL
	14	4J8980	1	SEAL

308668

8J8590 ARTICULATION CYLINDER GROUP (Change 0-2)—76 mm (3") Bore x 286 mm (11.25") Stroke
Part of 9D180 Articulation Cylinder and Mounting Group shown on Page 241

3G5225 BLADE LIFT CYLINDER GROUP (Change 0)—76 mm (3") Bore x 927 mm (36.50") Stroke
Part of 9D1350 Blade Lift Cylinder and Mounting Group shown on Page 241

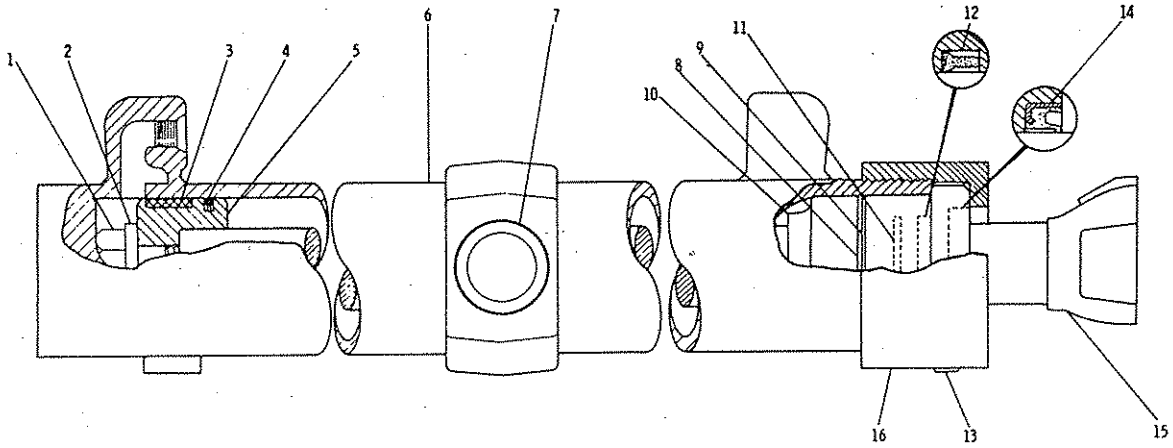

REF. NO.	PART NUMBER	DESCRIPTION	QTY.
1	7J5639	BOLT	1
2	8J7415	WASHER	1
3	6J5733	RING	1
4	6J1972	SEAL ASSEM.	1
5	7J5682	PISTON	1
6	8J8693	CYLINDER ASSEM. (Includes)	1
7	8J6384	BEARING	2

8	5H8848	SEAL	1
9	6J5731	RING	1
10	7J3351	HEAD	1
11	6J9178	SEAL	1
12	5J8175	SEAL	1
13	8J5912	SCREW	1
14	4J8980	SEAL	1

15	3G5688	ROD ASSEM.	1
16	8J5911	CROWN	1

223863

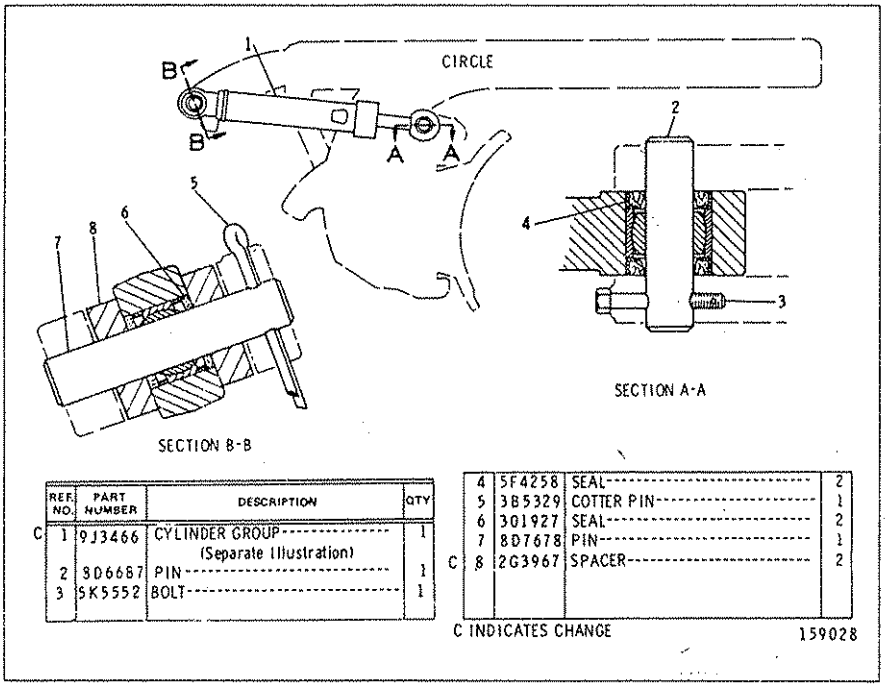

	REF. NO.	PART NUMBER	DESCRIPTION	QTY
C	1	9J3466	CYLINDER GROUP (Separate Illustration)	1
	2	8D6687	PIN	1
	3	5K5552	BOLT	1
	4	5F4258	SEAL	2
	5	3B5329	COTTER PIN	1
	6	3D1927	SEAL	2
	7	8D7678	PIN	1
C	8	2G3967	SPACER	2

C INDICATES CHANGE

159028

7D9955 BLADE TIP CYLINDER AND MOUNTING GROUP
Part of 2G6316 and 2G460 Power Blade and Tip Arrangements listed on Page 279
9J3466 Cylinder parts are shown on Page 245. AN ATTACHMENT

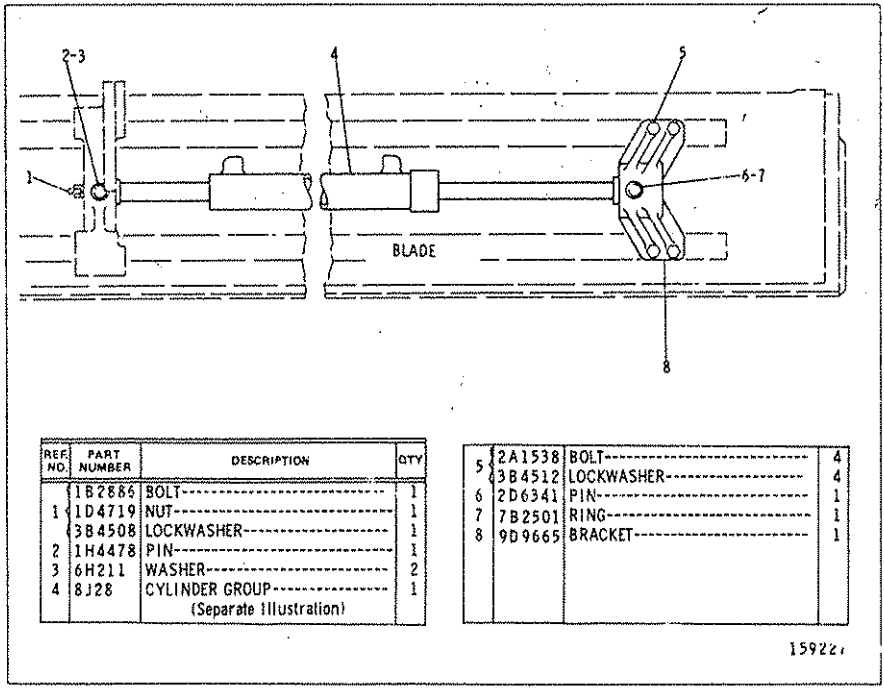

REF. NO.	PART NUMBER	DESCRIPTION	QTY
1	1B2886	BOLT	1
	1D4719	NUT	1
	3B4508	LOCKWASHER	1
2	1H4478	PIN	1
3	6H211	WASHER	2
4	8J28	CYLINDER GROUP (Separate Illustration)	1
5	2A1538	BOLT	4
	3B4512	LOCKWASHER	4
6	2D6341	PIN	1
7	7B2501	RING	1
8	9D9665	BRACKET	1

159221

9D9830 BLADE SHIFT CYLINDER AND MOUNTING GROUP
Part of 2G6321 and 2G430 Power Blade, 2G6316 and 2G460 Power Blade and Tip

9J3466 BLADE TIP CYLINDER GROUP (Change 0-1)—70 mm (2.75") Bore x 307 mm (12.10") Stroke
Part of 7D9955 Blade Tip Cylinder and Mounting Group shown on Page 244. AN ATTACHMENT

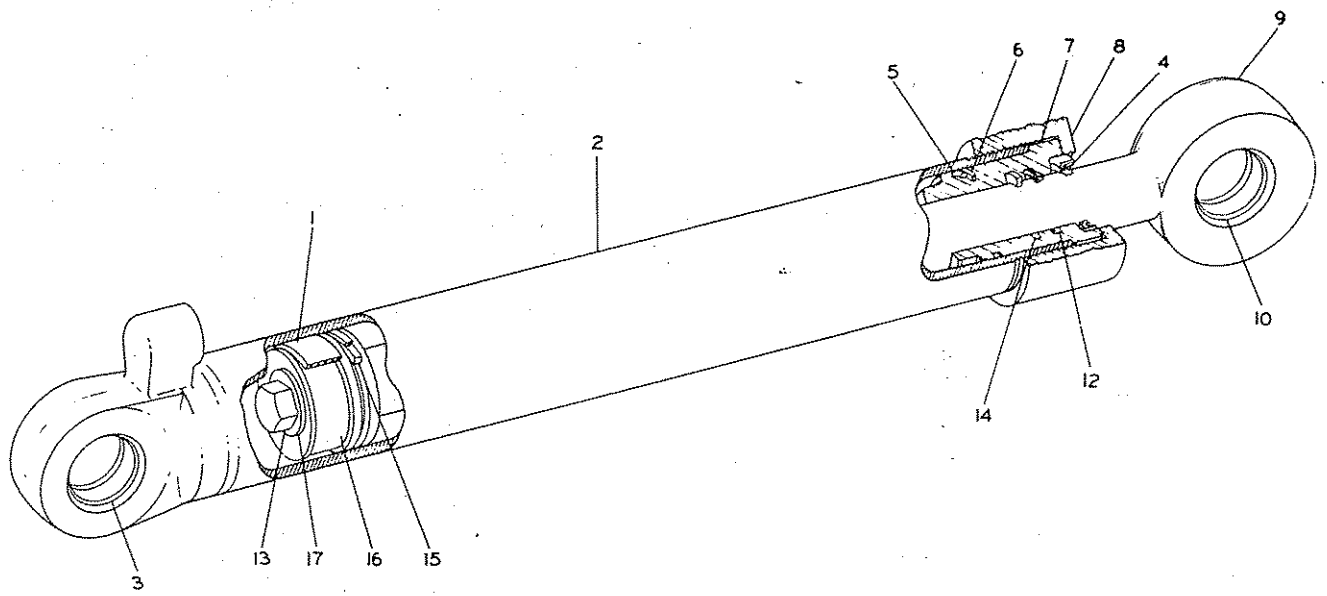

REF NO	PART NUMBER	DESCRIPTION	QTY
1	8J112	RING	1
2	9J3465	CYLINDER ASSEM.	1
3	2D8652	BEARING	1
	8J3774	RING	2
4	4J8979	SEAL	1
5	1H5728	SEAL	1
6	4J9225	RING	1
7	8J119	HEAD	1
8	8J118	CROWN	1
9	8J6901	ROD ASSEM.	1
10	2D8652	BEARING	1
	8J3774	RING	2
11	8J7415	WASHER	1
12	5J8150	SEAL	1
13	7J5639	BOLT	1
14	6J9733	SEAL	1
15	5J7010	SEAL ASSEM.	1
16	8J113	PISTON	1

308679

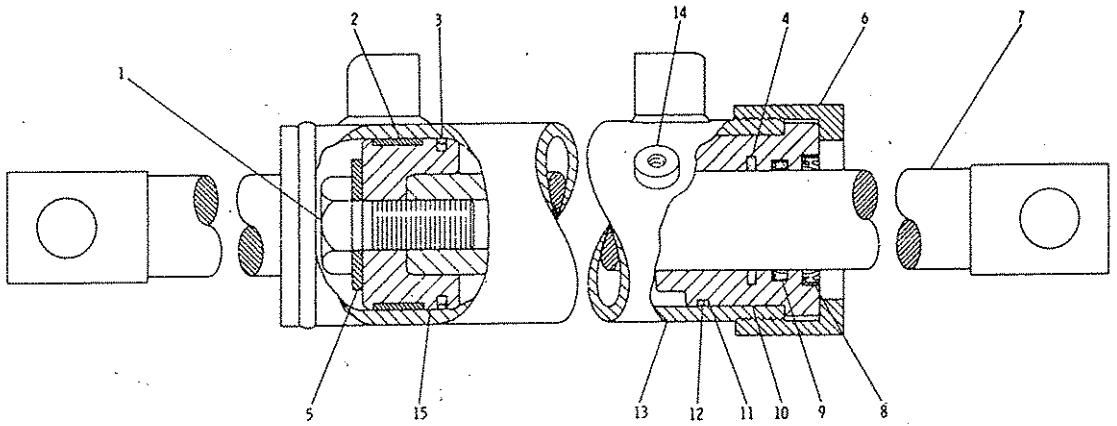

REF. NO	PART NUMBER	DESCRIPTION	QTY
1	7J5639	BOLT	1
2	6J5733	RING	1
3	6J1972	SEAL ASSEM	1
4	6J9178	SEAL	1
C 5	8J7415	WASHER	1
6	8J5911	CROWN	1
7	8J6681	ROD ASSEM.	1
8	4J8980	SEAL	1
9	5J8175	SEAL	1
10	7J3351	HEAD	1
11	6J5731	RING	1
12	5H8848	SEAL	1
13	8J27	CYLINDER ASSEM. (Includes)	1
14	6J499	LUG	2
15	7J5682	PISTON	1

C INDICATES CHANGE

308560

8J28 BLADE SHIFT CYLINDER GROUP (Change 0-3)—76 mm (3") Bore x 1194 mm (47") Stroke
Part of 9D9830 Blade Shift Cylinder and Mounting Group shown on Page 244. AN ATTACHMENT

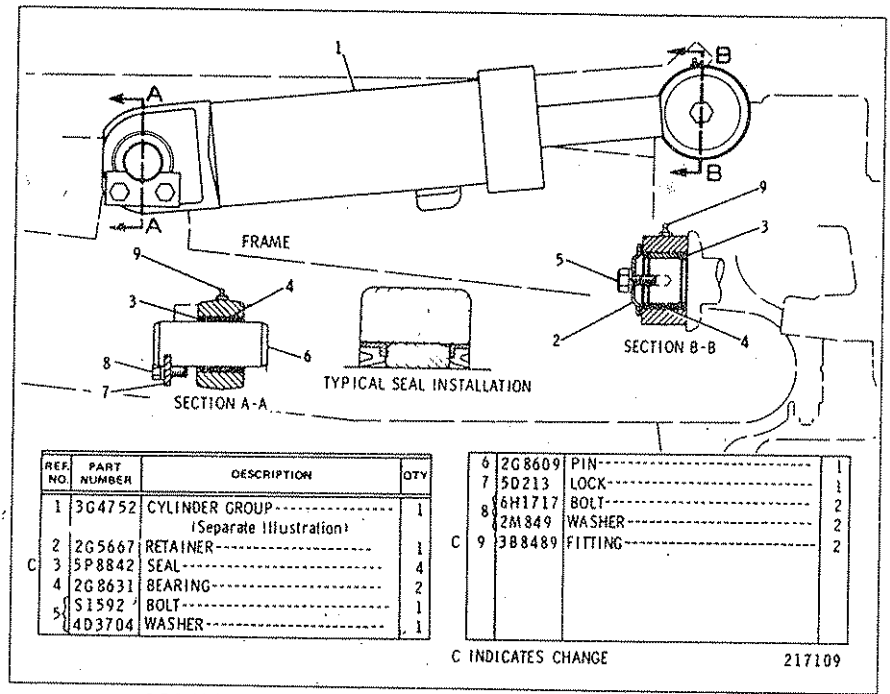

REF. NO.	PART NUMBER	DESCRIPTION	QTY
1	3G4752	CYLINDER GROUP (Separate Illustration)	1
2	2G5667	RETAINER	1
C 3	5P8842	SEAL	4
4	2G8631	BEARING	2
5	S1592	BOLT	1
	4D3704	WASHER	1
6	2G8609	PIN	1
7	5D213	LOCK	1
8	6H1717	BOLT	2
	2M849	WASHER	2
C 9	3B8489	FITTING	2

C INDICATES CHANGE 217109

2G8580 LEANING WHEEL CYLINDER AND MOUNTING GROUP
3G4752 Cylinder parts are shown on Page 248

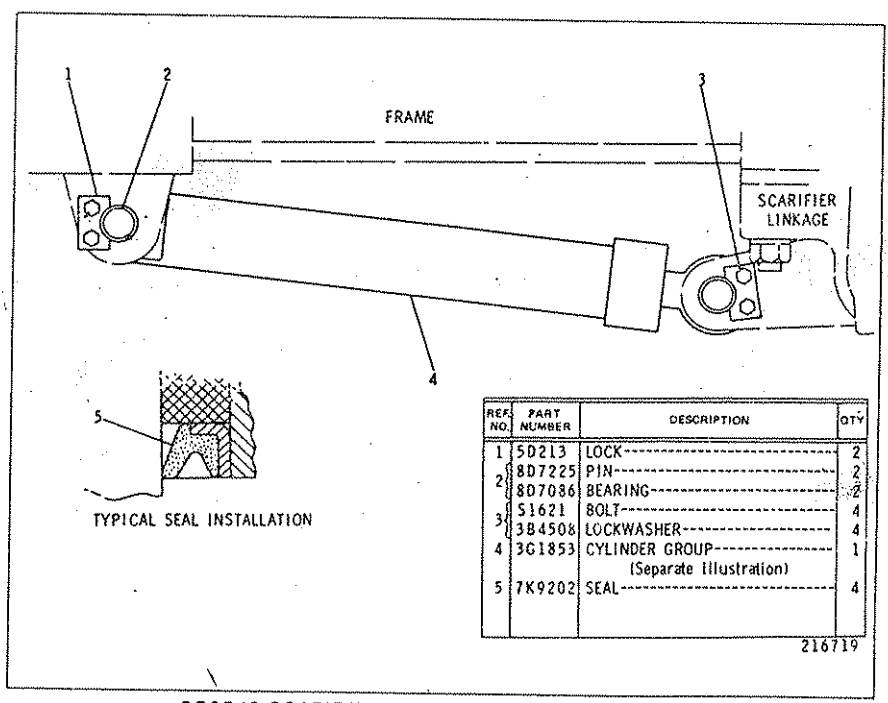

REF. NO.	PART NUMBER	DESCRIPTION	QTY
1	5D213	LOCK	2
2	8D7225	PIN	2
	8D7086	BEARING	2
3	S1621	BOLT	4
	3B4508	LOCKWASHER	4
4	3G1853	CYLINDER GROUP (Separate Illustration)	1
5	7K9202	SEAL	4

216719

2G6540 SCARIFIER CYLINDER AND MOUNTING GROUP
Part of 2G6845 Vee Scarifier Arrangement listed on Page 281
3G1853 Cylinder parts are shown on Page 249. AN ATTACHMENT

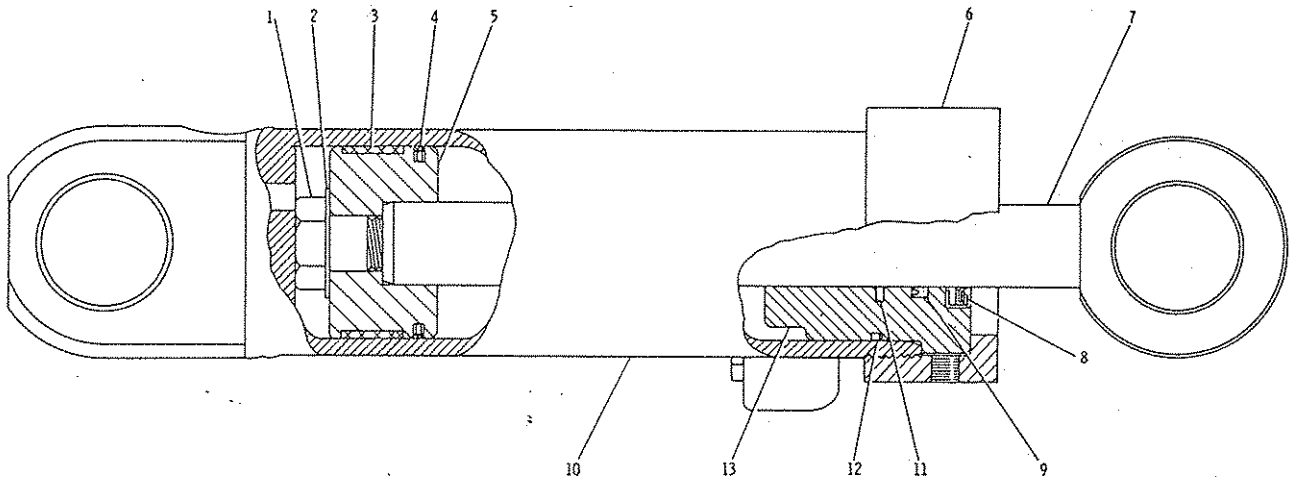

REF. NO.	PART NUMBER	DESCRIPTION	QTY
1	7J5639	BOLT	1
2	8J7415	WASHER	1
3	7J9885	RING	1
4	5J7013	SEAL ASSEM.	1
5	7J9886	PISTON	1
6	7J9887	CROWN	1
7	3G4761	ROD ASSEM.	1
8	4J8979	SEAL	1
9	5J8150	SEAL	1
10	3G4754	CYLINDER ASSEM.	1
11	6J9733	SEAL	1
12	2H3931	SEAL	1
	4J9224	RING	1
13	7J9888	HEAD	1

304264

3G4762 WHEEL LEAN CYLINDER GROUP (Change 0-1)—89 mm (3.50") Bore x 150 mm (5.90") Stroke
Part of 2G8580 Leaning Wheel Cylinder and Mounting Group shown on Page 247

3G1853 SCARIFIER CYLINDER GROUP (Change 0-1)—76 mm (3") Bore x 406 mm (16") Stroke
Part of 2G6540 Scarifier Cylinder and Mounting Group shown on Page 247. AN ATTACHMENT

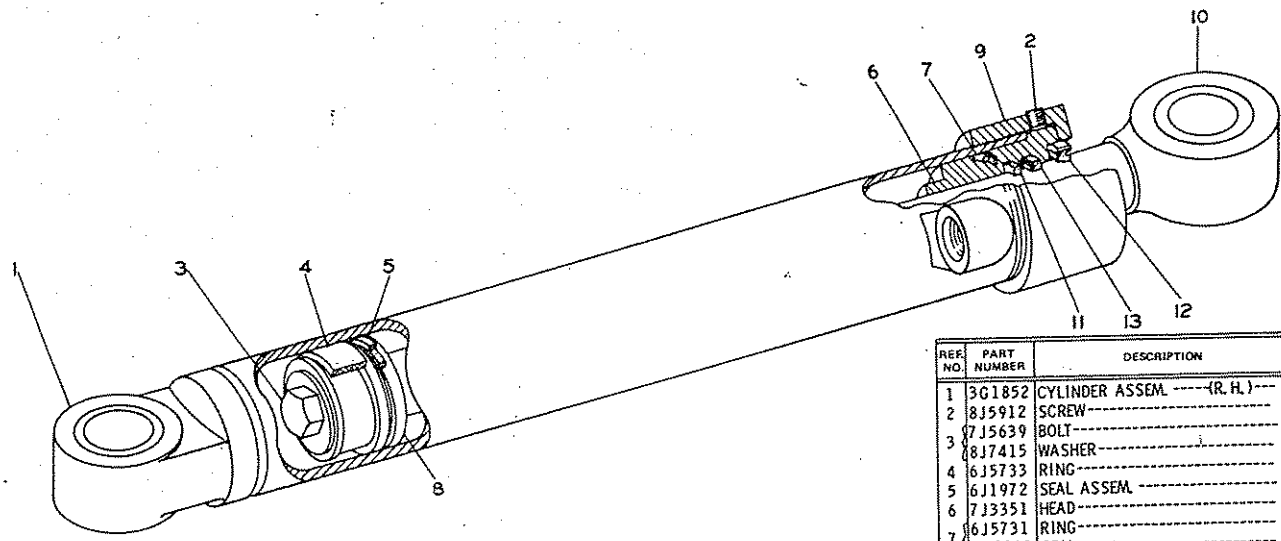

REF. NO.	PART NUMBER	DESCRIPTION	QTY
1	3G1852	CYLINDER ASSEM. -----(R. H.)---	1
2	8J5912	SCREW----------	1
3	7J5639	BOLT----------	1
	8J7415	WASHER----------	1
4	6J5733	RING----------	1
5	6J1972	SEAL ASSEM. ----------	1
6	7J3351	HEAD----------	1
7	6J5731	RING----------	1
	5H8848	SEAL----------	1
8	7J5682	PISTON----------	1
9	8J5911	CROWN----------	1
10	3G1849	ROD ASSEM. ----------	1
11	6J9178	SEAL----------	1
12	4J8980	SEAL----------	1
13	5J8175	SEAL----------	1

216720

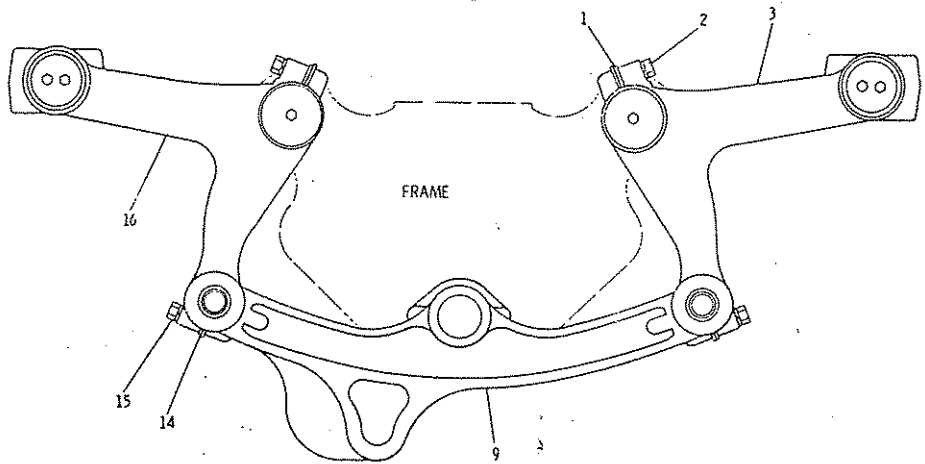

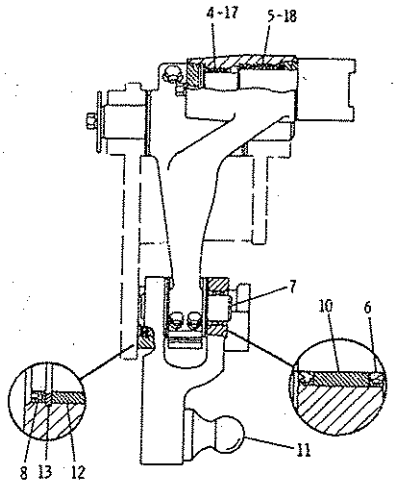

REF. NO.	PART NUMBER	DESCRIPTION	QTY.
C 1	2G7917	LOCK ASSEM.	2
2	7F5227	BOLT	4
	3B4512	LOCKWASHER	4
3	9D1510	ARM ASSEM. (Includes)	1
4	9D1511	BEARING	1
5	9D1512	BEARING	1
6	9D6582	SEAL	8
7	9D1532	PIN	2
8	9D6583	SEAL	1
C 9	2G5853	BAR ASSEM. (Includes)	1
10	8D9296	BEARING	4
11	2G5689	BALLSTUD	1
12	9D733	BEARING	2
	9D6546	SPACER	1
13	9D6538	RING	1
C 14	2G7935	LOCK ASSEM.	2
15	S1573	BOLT	4
	3B4508	LOCKWASHER	4
16	9D1509	ARM ASSEM. (Includes)	1
17	9D1511	BEARING	1
18	9D1512	BEARING	1

C INDICATES CHANGE

227969

9D1905 BLADE LIFT GROUP—Part 1

9D1905 BLADE LIFT GROUP—Part 2

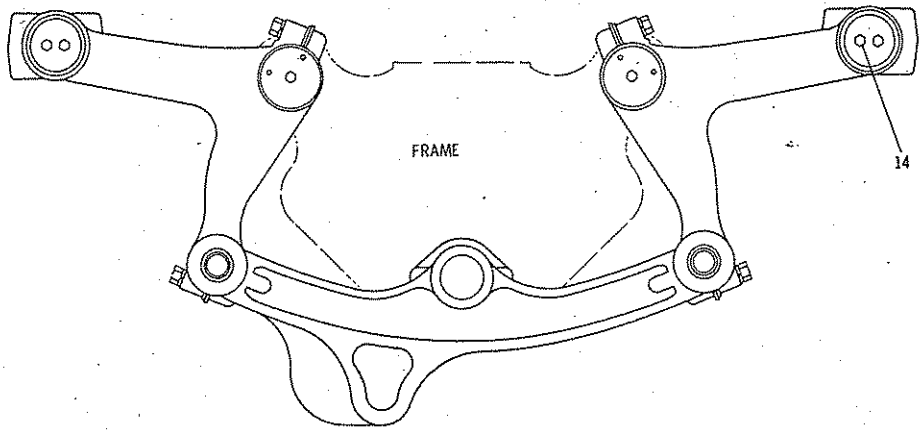

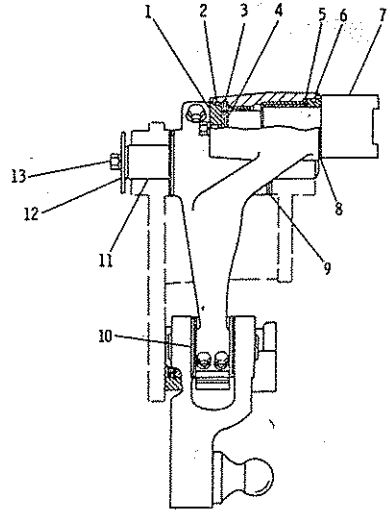

REF. NO.	PART NUMBER	DESCRIPTION	QTY
1	9D1519	RETAINER	2
2	9D1521	SEAL-------(plastic)	2
	5F3092	SEAL--------(rubber)	2
3	9D1524	WASHER--. 094 in. (2. 39 mm) thick	2
	9D1525	WASHER--. 075 in. (1. 91 mm) thick	4
	9D1526	SHIM----. 005 in. (. 127 mm) thick	8
4	9D1527	SHIM----. 010 in. (. 254 mm) thick	6
	9D1528	SHIM----. 020 in. (. 508 mm) thick	2

	REF. NO.	PART NUMBER	DESCRIPTION	QTY
	5	9D1522	WASHER---. 094 in. (2. 39 mm) thick	2
		9D1523	WASHER---. 075 in. (1. 91 mm) thick	4
	6	9D1520	SEAL--------(plastic)	2
		1H474	SEAL--------(rubber)	2
C	7	2G8239	YOKE ASSEM.	2
			(Each Includes)	
	8	2G8236	RING	1
	9	9D1530	WASHER--. 075 in. (1. 91 mm) thick	8
		9D1529	WASHER--. 094 in. (2. 39 mm) thick	4

	REF. NO.	PART NUMBER	DESCRIPTION	QTY
		9D1533	WASHER--. 094 in. (2. 39 mm) thick	4
	10	9D1535	WASHER--. 048 in. (1. 22 mm) thick	10
		9D1534	WASHER--. 030 in. (. 762 mm) thick	10
	11	9D1531	PIN	2
C	12	2G3986	PLATE	2
	13	9S1366	BOLT	2
		2M849	WASHER	2
	14	S1587	BOLT	4
		3B4508	LOCKWASHER	4

C INDICATES CHANGE

227970

9D8425 ARRANGEMENT

For use with Auxiliary Equipment Manufacturer's Implements when this Grader is equipped with a Bulldozer or Snow Plow, Power Blade, Tip and Scarifier

Consists of:

			Page
1	9D5675	Wiring Group	117
1	9D8524	Linkage and Valve Group	260
1	2G230	Lines Group--Front	235

9D8433 ARRANGEMENT

For use with Auxiliary Equipment Manufacturer's Implements when this Grader is equipped with a Bulldozer or Snow Plow, Snow Wing, Power Blade, Tip and Scarifier

Consists of:

1	9D5675	Wiring Group	117
1	9D8525	Linkage and Valve Group	261
1	2G230	Lines Group--Front	235

9D8434 ARRANGEMENT

For use with Auxiliary Equipment Manufacturer's Implements when this Grader is equipped with a Bulldozer or Snow Plow, Snow Wing, Power Blade and Tip

Consists of:

1	9D5675	Wiring Group	117
1	9D8515	Linkage and Valve Group	262
1	2G230	Lines Group--Front	235

9D8435 ARRANGEMENT

For use with Auxiliary Equipment Manufacturer's Implements when this Grader is equipped with a Bulldozer or Snow Plow, Snow Wing & Power Blade

Consists of:

1	9D5270	Linkage and Valve Group	263
1	9D5675	Wiring Group	117
1	2G230	Lines Group--Front	235

6G6717 ARRANGEMENT
FOR USE WITH BULLDOZER OR SNOW PLOW, POWER BLADE, TIP AND SCARIFIER

		Consists of:	Page
1	9D8524	Linkage and Valve Group	260
1	2G230	Front Lines Group	235
1	6G5815	Bulldozer Wiring Group	1178

6G6718 ARRANGEMENT
FOR USE WITH BULLDOZER OR SNOW PLOW, WING, POWER BLADE, TIP AND SCARIFIER

Consists of:

1	9D8525	Linkage and Valve Group	261
1	2G230	Front Lines Group	235
1	6G5815	Bulldozer Wiring Group	1178

6G6719 ARRANGEMENT
FOR USE WITH BULLDOZER OR SNOW PLOW, WING, POWER BLADE AND TIP

Consists of:

1	9D8515	Linkage and Valve Group	262
1	2G230	Front Lines Group	235
1	6G5815	Bulldozer Wiring Group	1178

6G6720 ARRANGEMENT
FOR USE WITH BULLDOZER OR SNOW PLOW, WING AND POWER BLADE

Consists of:

1	9D5270	Linkage and Valve Group	263
1	2G230	Front Lines Group	235
1	6G5815	Bulldozer Wiring Group	1178

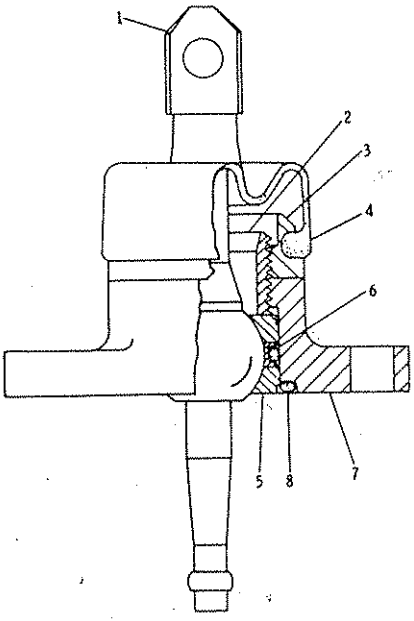

REF. NO.	PART NUMBER	DESCRIPTION	QTY
1	8J1616	LEVER ASSEM.	1
2	8J1621	SCREW	1
3	8J1622	NUT	1
4	8J1623	BOOT	1
5	8J1620	BEARING	2
6	7F8607	SEAL	1
	8J6264	RING	1
7	8J1619	HOUSING	1
8	3D4245	SEAL	1

9J2012 LEVER GROUP
Part of 9J1762, 8J5961, 8J5903, 8J5906, 8J5907, 8J5908 and 8J5902 Valve Groups shown on Pages 218, 265, 266, 267, 268, 274 & 275

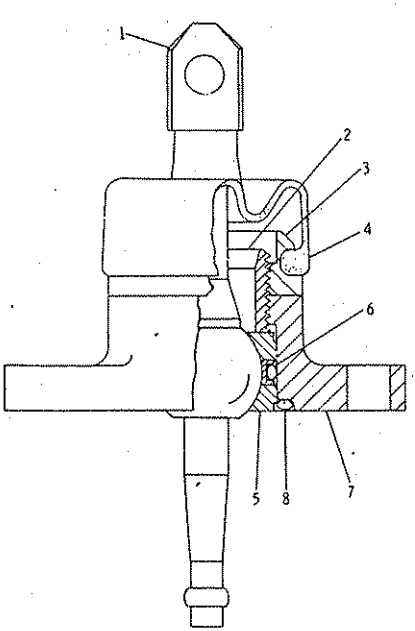

REF. NO.	PART NUMBER	DESCRIPTION	QTY
1	8J1616	LEVER ASSEM.	1
2	8J1621	SCREW	1
3	8J1622	NUT	1
4	8J1623	BOOT	1
5	8J1620	BEARING	2
6	7F8607	SEAL	1
	8J6264	RING	1
7	1U3389	HOUSING	1
8	3D4245	SEAL	1

1U4661 LEVER GROUP
Part of 9J1762, 8J5961, 8J5903, 8J5906, 8J5907, 8J5908 & 8J5902 shown on Pages 218A, 265B, 266A, 267B, 268A, 274A & 275B

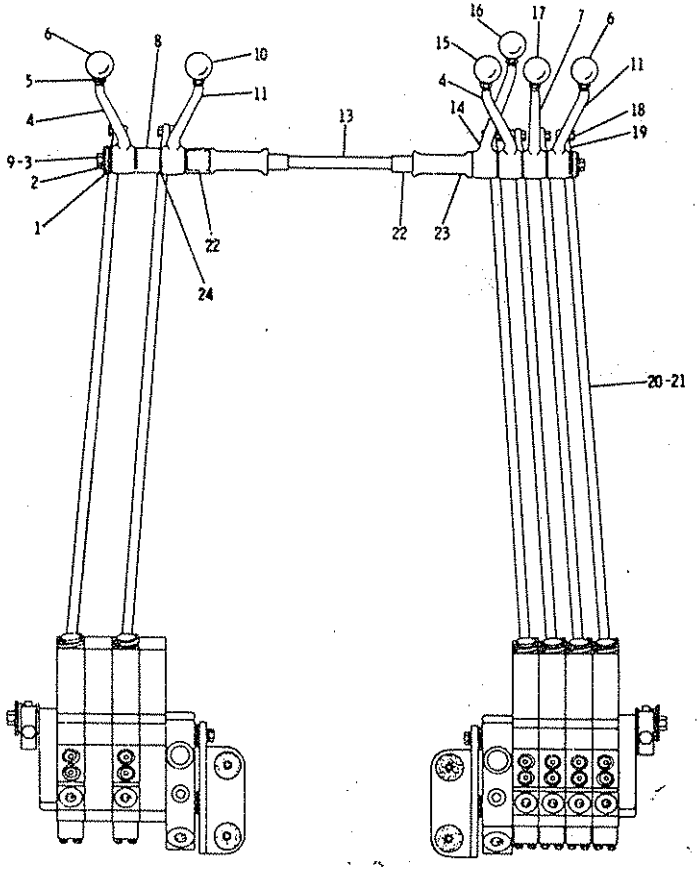

REF. NO.	PART NUMBER	DESCRIPTION	QTY
1	8D5636	SHIM-------.26mm(.010 in.) thick	4
	8D5637	SHIM-------.77 mm(.030 in.) thick	4
2	8D5639	RETAINER----------	2
3	S1591	BOLT----------	2
4	8D5634	LEVER----------	2
5	6L1962	NUT----------	6
6	8D8849	KNOB----------	2
7	8D5633	LEVER----------	2
8	8D8852	SPACER----------	2
9	4B4278	WASHER----------	2
10	8D8851	KNOB----------	1
11	8D5632	LEVER----------	2
13	8D6157	SHAFT----------	1
14	8D5631	LEVER----------	1
15	8D8846	KNOB----------	1
16	8D8844	KNOB----------	1
17	8D8847	KNOB----------	1
18	2B2695	BOLT----------	6
	3F9556	LOCKWASHER----------	6
19	7H3641	END----------	6
20	8D5629	ROD----------	6
	1B4202	NUT----------	12
21	3D5878	END----------	6
	4J5325	PIN----------	6
	3B4607	COTTER PIN----------	6
22	8D5640	BEARING----------	8
23	2G5059	SPACER----------	2
24	8D5641	BEARING----------	8

164181

9D1580 LINKAGE AND VALVE GROUP—Part 1
Blade Lift, Articulation, Centershift, Circle and Wheel Lean
Serial No. 87V5275 to 87V5733 inclusive

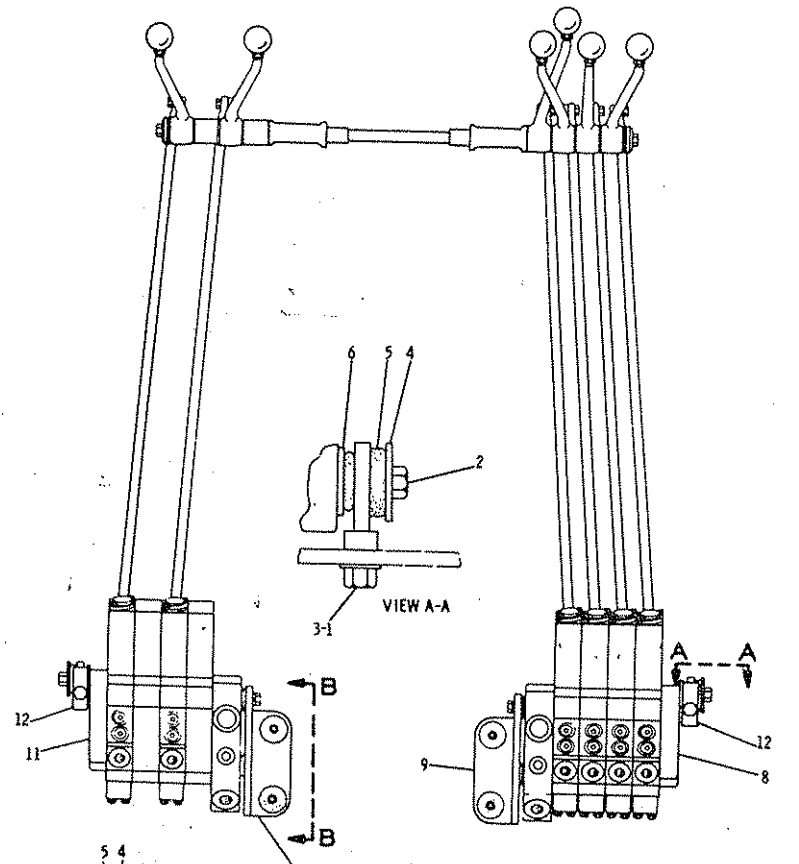

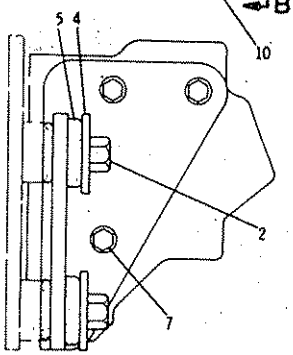

VIEW B-B

	REF. NO.	PART NUMBER	DESCRIPTION	QTY
	1	S1595	BOLT	2
C	2	1A1460	BOLT	6

C	3	5P1076	WASHER	2
C	4	8F6437	WASHER	6
C	5	8D3786	MOUNTING	6
C	6	1A2519	WASHER	2
C	7	S1594	BOLT	6
C		5P1075	WASHER	6
	8	8J5989	VALVE GROUP (Separate Illustration)	1
C	9	2G5443	BRACKET ASSEM.	1
C	10	2G5444	BRACKET ASSEM.	1
	11	8J8595	VALVE GROUP (Separate Illustration)	1
C	12	2G5446	PLATE ASSEM.	2

C INDICATES CHANGE

214517

9D1580 LINKAGE AND VALVE GROUP—Part 2
Blade Lift, Articulation, Centershift, Circle and Wheel Lean
Serial No. 87V5275 to 87V5733 inclusive
8J8595 and 8J5989 Valve parts are shown on Page 264

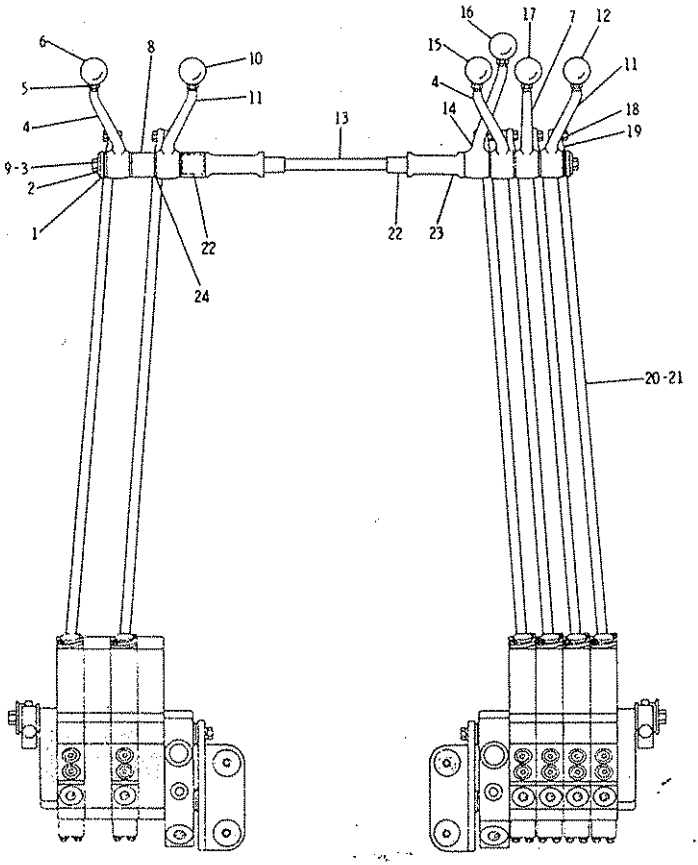

REF NO	PART NUMBER	DESCRIPTION	QTY
1	8D5636	SHIM------, 26mm(.010 in.) thick	4
	8D5637	SHIM------, 77 mm(.030 in.) thick	4
2	8D5639	RETAINER	2
3	S1591	BOLT	2
4	8D5634	LEVER	2
5	6L1962	NUT	6
C 6	2G6757	KNOB	1
7	8D5633	LEVER	2
8	8D8852	SPACER	2
9	4B4278	WASHER	2
C 10	2G6751	KNOB	1
11	8D5632	LEVER	2
C 12	2G6748	KNOB	1
13	8D6157	SHAFT	1
14	8D5631	LEVER	1
C 15	2G6755	KNOB	1
C 16	2G6752	KNOB	1
C 17	2G6756	KNOB	1
18	2B2695	BOLT	6
	3F9556	LOCKWASHER	6
19	7H3641	END	6
C 20	6G6513	ROD	6
	1B4202	NUT	6
21	4J5325	PIN	6
	3B4607	COTTER PIN	6
22	8D5640	BEARING	8
C 23	6G4936	SPACER	2
24	8D5641	BEARING	8

C INDICATES CHANGE

232957

9D1580 LINKAGE AND VALVE GROUP—Part 1
Blade Lift, Articulation, Centershift, Circle and Wheel Lean
Serial No. 87V5734 to 87V6777 inclusive

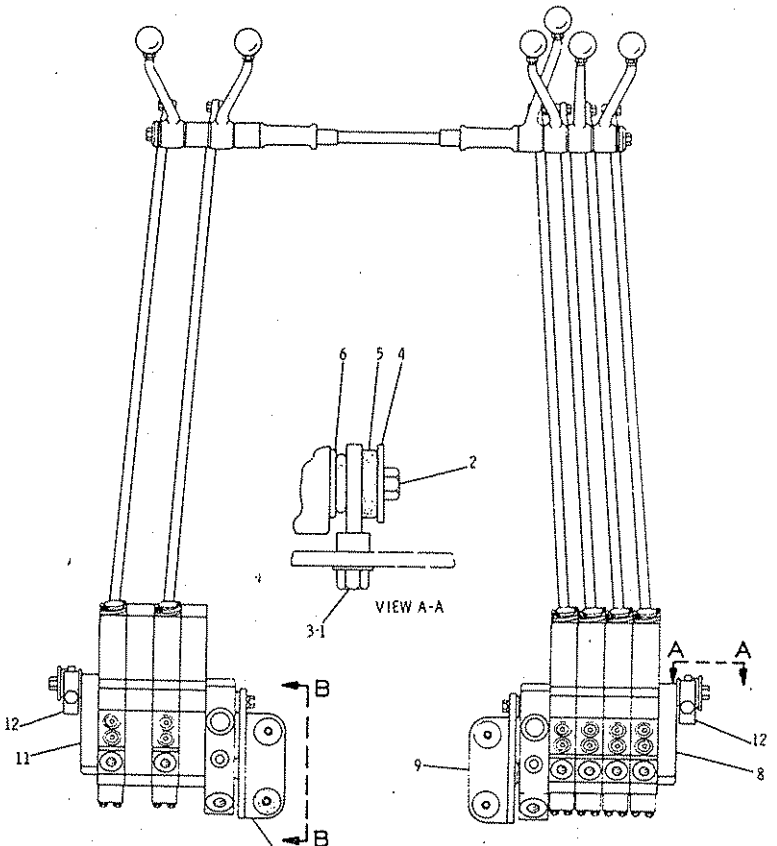

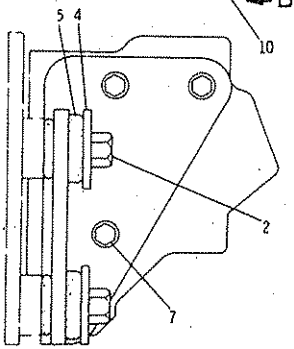

VIEW B-B

REF. NO.	PART NUMBER	DESCRIPTION	QTY
1	S1595	BOLT	2
2	1A1460	BOLT	6

3	5P1076	WASHER	2
4	8F6437	WASHER	6
5	8D3786	MOUNTING	6
6	1A2519	WASHER	2
7	S1594	BOLT	6
	5P1075	WASHER	6
8	8J5989	VALVE GROUP (Separate Illustration)	1
9	2G5443	BRACKET ASSEM.	1
10	2G5444	BRACKET ASSEM.	1
11	8J8595	VALVE GROUP (Separate Illustration)	1
12	2G5446	PLATE ASSEM.	2

232958

9D1580 LINKAGE AND VALVE GROUP—Part 2
Blade Lift, Articulation, Centershift, Circle and Wheel Lean. Serial No. 87V5734 to 87V6777 Inclusive. 8J8595 and 8J5989 Valve parts are shown on Page 264

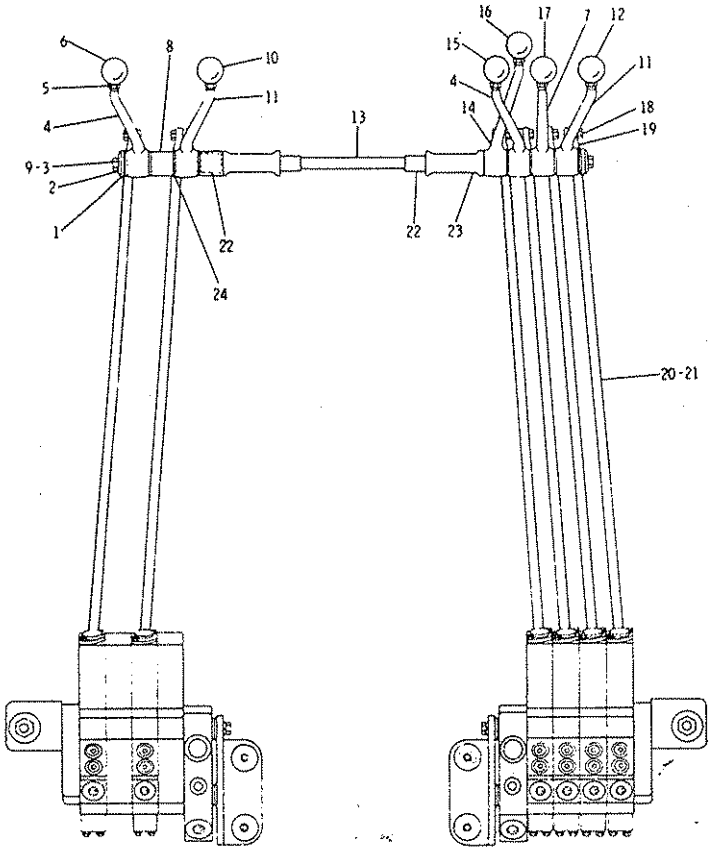

REF NO	PART NUMBER	DESCRIPTION	QTY
1	8D5636	SHIM------.26mm(.010 in.) thick	4
	8D5637	SHIM------.77 mm(.030 in.) thick	4
2	8D5639	RETAINER	2
3	51591	BOLT	2
4	8D5634	LEVER	2
5	6L1962	NUT	6
6	2G6757	KNOB	1
7	8D5633	LEVER	2
8	8D8852	SPACER	2
9	4B4278	WASHER	2
10	2G6751	KNOB	1
11	8D5632	LEVER	2
12	2G6748	KNOB	1
13	8D6157	SHAFT	1
14	8D5631	LEVER	1
15	2G6755	KNOB	1
16	2G6752	KNOB	1
17	2G6756	KNOB	1
18	2B2695	BOLT	6
	3F9556	LOCKWASHER	6
19	7H3641	END	6
20	6G6513	ROD	6
	1BA202	NUT	6
21	4J5325	PIN	6
	3B4607	COTTER PIN	6
22	8D5640	BEARING	8
23	6G4936	SPACER	2
24	8D5641	BEARING	8

308837

9D1580 LINKAGE AND VALVE GROUP—Part 1
Blade Lift, Articulation, Centershift, Circle and Wheel Lean
Serial No. 87V6778—Up

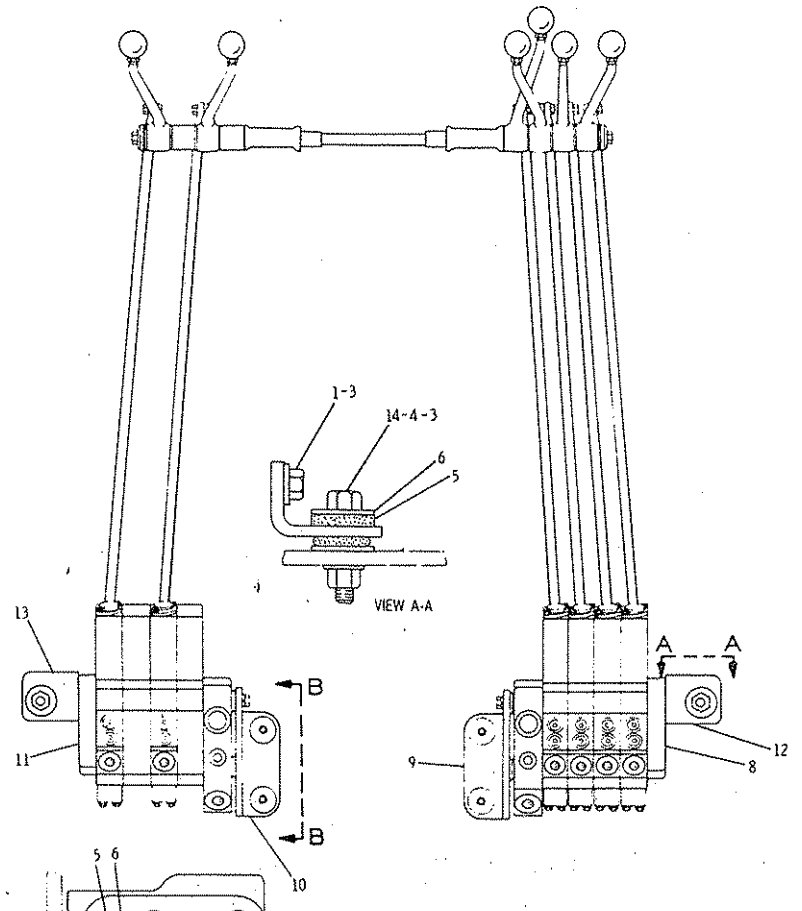

C INDICATES CHANGE
Y SEPARATE ILLUSTRATION

NOTE	REF NO	PART NUMBER	QTY	DESCRIPTION
	1	S1595	2	BOLT
C	2	1A1460	4	BOLT

C	3	5P1076	4	WASHER
C	4	1K6872	2	LOCKNUT
	5	8D3786	6	MOUNTING
C	6	1A2519	8	WASHER
	7	S1594	6	BOLT
		5P1075	6	WASHER
Y	8	8J5989	1	VALVE GROUP
	9	2G5443	1	BRACKET ASSEM.
	10	2G5444	1	BRACKET ASSEM.
Y	11	8J8595	1	VALVE GROUP
C	12	5T5179	1	BRACKET
C	13	5T5180	1	BRACKET
C	14	9S1366	2	BOLT

308838

9D1580 LINKAGE AND VALVE GROUP—Part 2
Blade Lift, Articulation, Centershift, Circle and Wheel Lean
Serial No. 87V6778—Up. 8J8595 and 8N5989 Valve parts are shown on Page 264

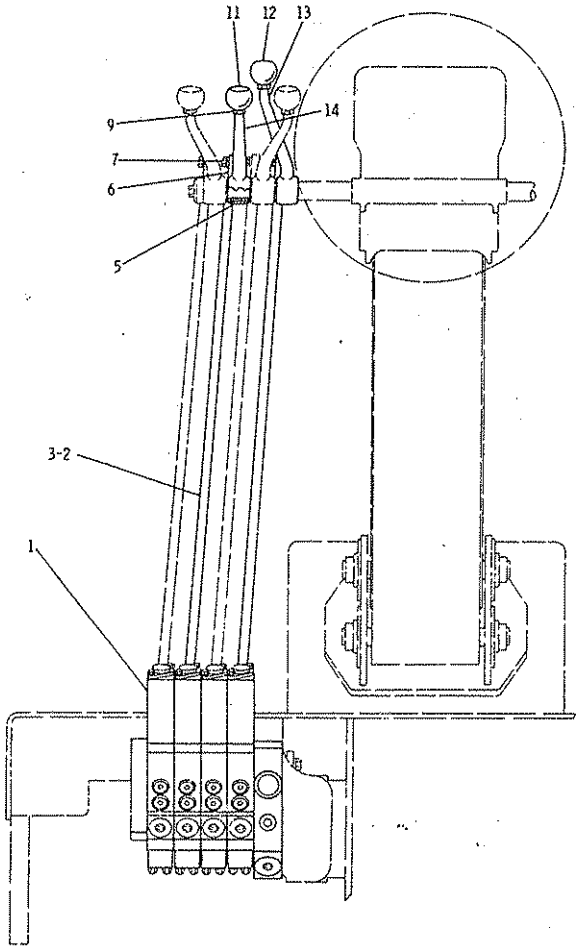

REF. NO.	PART NUMBER	DESCRIPTION	QTY
1	8J6172	VALVE GROUP (Separate Illustration)	1
2	8D5629	ROD	2
	1B4202	NUT	4
	3D5878	END	2
3	4J5325	PIN	2
	3B4607	COTTER PIN	2
5	8D5640	BEARING	2
6	7H3641	END	2
7	2B2695	BOLT	2
	3F9556	LOCKWASHER	2
9	6L1962	NUT	2
C 11	2G6749	KNOB	1
C 12	2G6747	KNOB	1
13	8D5635	LEVER	1
14	8D5633	LEVER	1

C INDICATES CHANGE

228081

9D6910 LINKAGE AND VALVE GROUP—Type 1—Power Blade and Tip
8J6172 Valve parts are shown on Page 269. AN ATTACHMENT

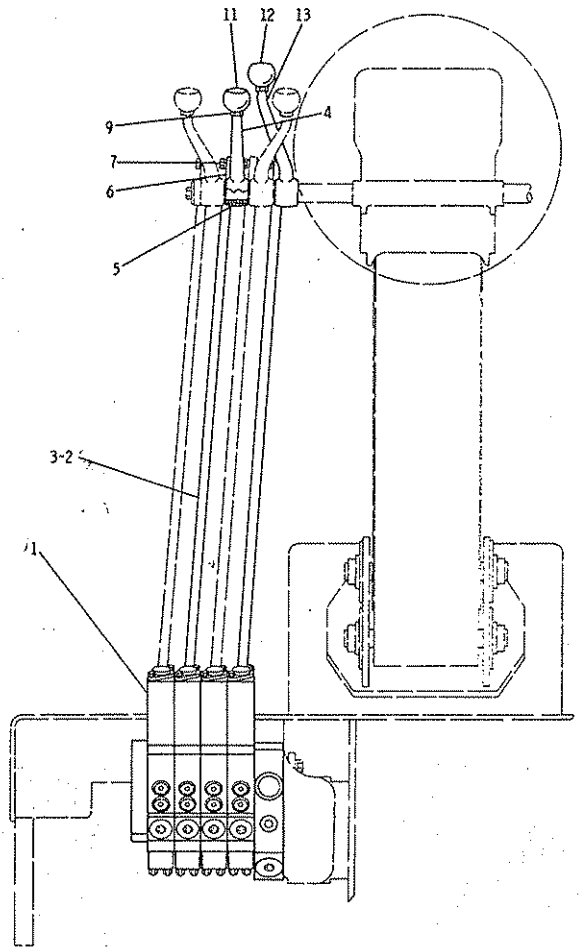

REF. NO.	PART NUMBER	DESCRIPTION	QTY.
1	8J6172	VALVE GROUP---------- (Separate Illustration)	1
C 2	6G6513	ROD----------	2
C	1B4202	NUT----------	2
3	4J5325	PIN----------	2
	3B4607	COTTER PIN----------	2
4	8D5633	LEVER----------	1
5	8D5640	BEARING----------	2
6	7H3641	END----------	2
7	2B2695	BOLT----------	2
	3F9556	LOCKWASHER----------	2
9	6L1962	NUT----------	2
11	2G6749	KNOB----------	1
12	2G6747	KNOB----------	1
13	8D5635	LEVER----------	1

C INDICATES CHANGE

233097

9D6910 LINKAGE AND VALVE GROUP—Power Blade and Tip—Type 2
8J6172 Valve parts are shown on Page 269. AN ATTACHMENT

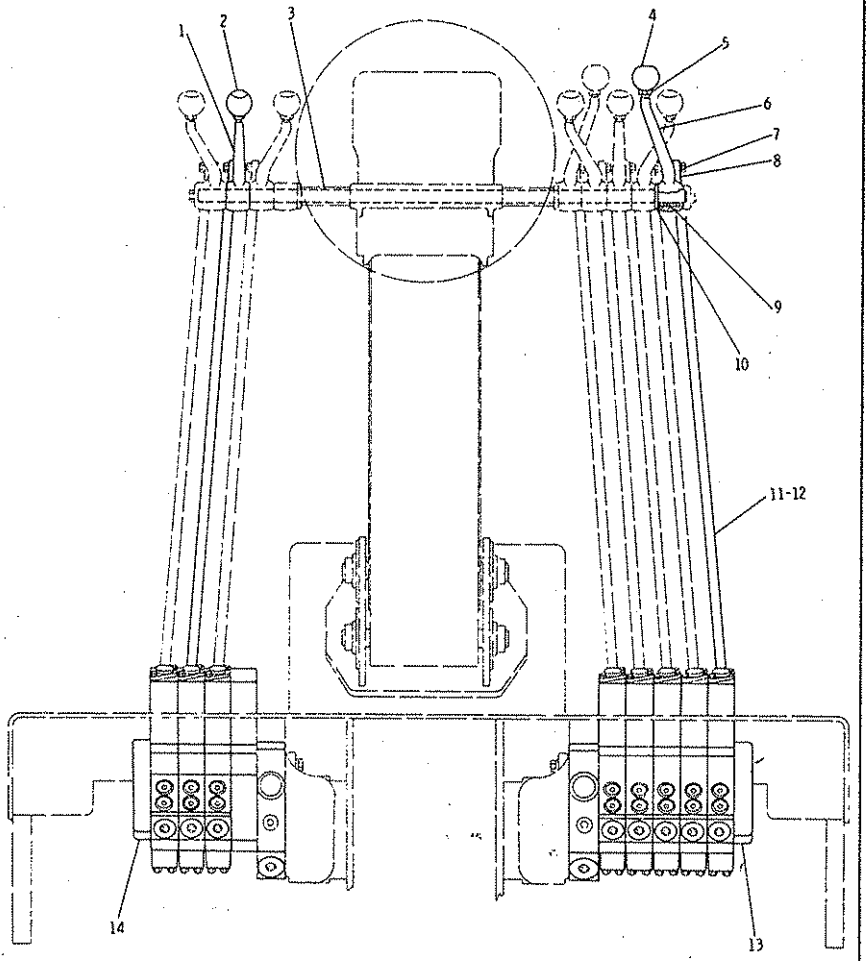

	REF. NO	PART NUMBER	DESCRIPTION	QTY
	1	8D5633	LEVER	1
C	2	2G6749	KNOB	1
	3	8D5642	SHAFT	1
C	4	2G6753	KNOB	1
	5	6L1962	NUT	2
	6	8D5635	LEVER	1
	7	2B2695	BOLT	2
		3F9556	LOCKWASHER	2
	8	7H3641	END	2
	9	8D5640	BEARING	2
	10	8D5641	BEARING	1
	11	8D5629	ROD	2
		1B4202	NUT	4
		3D5878	END	2
	12	4J5325	PIN	2
		3B4607	COTTER PIN	2
	13	8J9289	VALVE GROUP	1
	14	9J1226	VALVE GROUP (Separate Illustration)	1

C INDICATES CHANGE

228082

9D6920 LINKAGE AND VALVE GROUP—Type 1—Power Blade and Scarifier
9J1226 and 8J9289 Valve parts are shown on Pages 269 & 270
AN ATTACHMENT

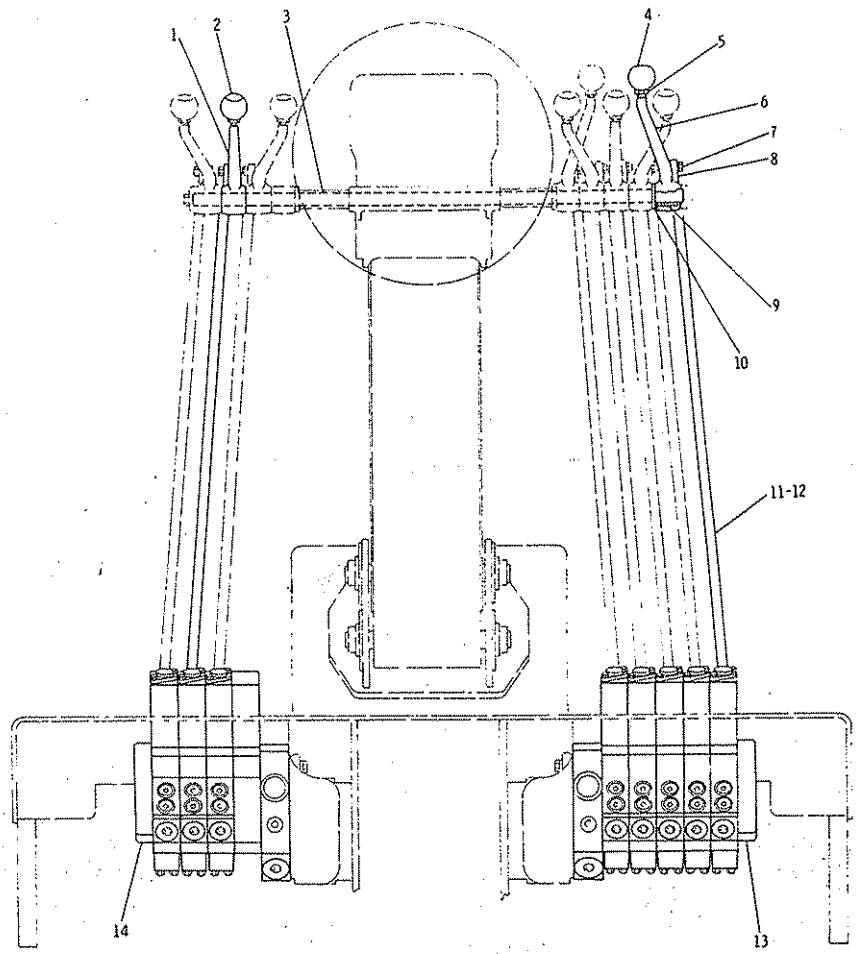

REF. NO.	PART NUMBER	DESCRIPTION	QTY
1	8D5633	LEVER	1
2	2G6749	KNOB	1
3	8D5642	SHAFT	1
4	2G6753	KNOB	1
5	6L1962	NUT	2
6	8D5635	LEVER	1
7	2B2695	BOLT	2
	3F9556	LOCKWASHER	2
8	7H3641	END	2
9	8D5640	BEARING	2

	10	8D5641	BEARING	1
C	11	6G6513	ROD	2
C		1B4202	NUT	2
	12	4J5325	PIN	2
		3B4607	COTTER PIN	2
	13	8J9289	VALVE GROUP	1
	14	9J1226	VALVE GROUP	1
			(Separate Illustration)	

C INDICATES CHANGE 233096

9D6920 LINKAGE AND VALVE GROUP—Type 2—Power Blade and Scarifier
9J1226 and 8J9289 Valve parts are shown on Pages 269 & 270. AN ATTACHMENT

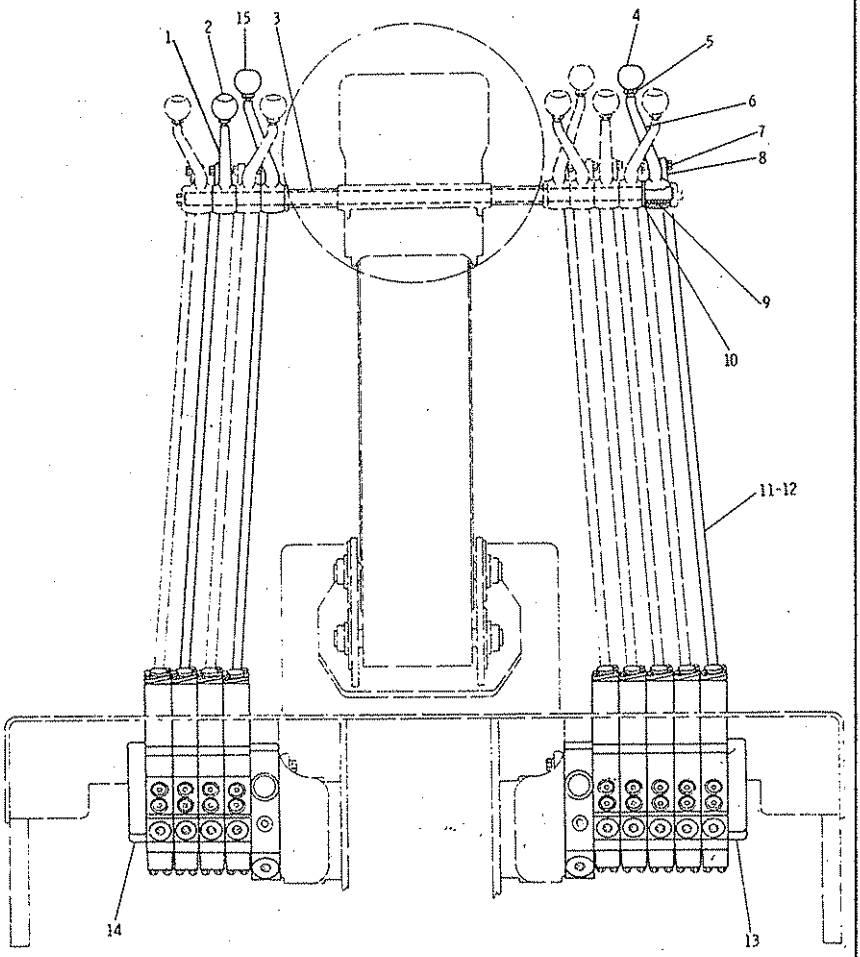

	REF. NO.	PART NUMBER	DESCRIPTION	QTY
	1	8D5633	LEVER	1
C	2	2G6749	KNOB	1
	3	8D5642	SHAFT	1
C	4	2G6753	KNOB	1
	5	6L1962	NUT	3
	6	8D5635	LEVER	2
	7	2B2695	BOLT	3
		3F9556	LOCKWASHER	3
	8	7H3641	END	3
	9	8D5640	BEARING	3
	10	8D5641	BEARING	1
	11	8D5629	ROD	3
		1B4202	NUT	6
		3D5878	END	3
	12	4J5325	PIN	3
		3B4607	COTTER PIN	3
	13	8J9289	VALVE GROUP	1
	14	8J6172	VALVE GROUP	1
			(Separate Illustration)	
C	15	2G6747	KNOB	1

C INDICATES CHANGE 228083

9D6930 LINKAGE AND VALVE GROUP—Type 1—Power Blade, Tip and Scarifier
8J6172 and 8J9289 Valve parts are shown on Pages 269 & 270
AN ATTACHMENT

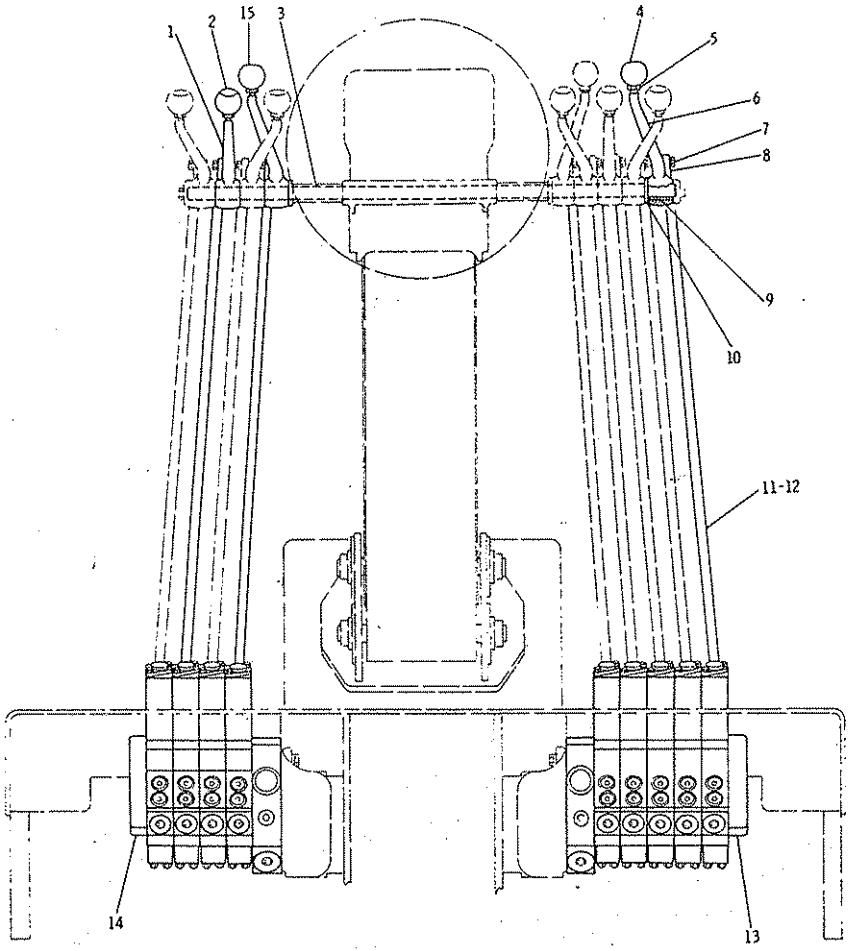

REF. NO.	PART NUMBER	DESCRIPTION	QTY
1	8D5633	LEVER	1
2	2G6749	KNOB	1
3	8D5642	SHAFT	1
4	2G6753	KNOB	1
5	6L1962	NUT	3
6	8D5635	LEVER	2
7	2B2695	BOLT	3
	3F9556	LOCKWASHER	3
8	7H3641	END	3
9	8D5640	BEARING	3
10	8D5641	BEARING	1
C 11	6G6513	ROD	3
C	1B4202	NUT	3
12	4J5325	PIN	3
	3B4607	COTTER PIN	3
13	8J9289	VALVE GROUP	1
14	8J6172	VALVE GROUP (Separate Illustration)	1
15	2G6747	KNOB	1

C INDICATES CHANGE

233093

9D6930 LINKAGE AND VALVE GROUP—Type 2
Power Blade, Tip and Scarifier
8J6172 and 8J9289 Valve parts are shown on Pages 269 & 270. AN ATTACHMENT

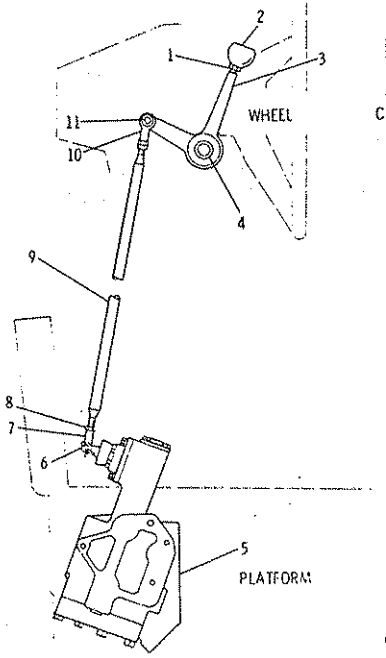

REF. NO.	PART NUMBER	DESCRIPTION	QTY
1	6L1962	NUT	1
C 2	2G6749	KNOB	1
3	8D5633	LEVER	1
4	8D5640	BEARING	1
5	9J1226	VALVE GROUP (Separate Illustration)	1
6	4J5325	PIN	1
	3B4607	COTTER PIN	1
7	3D5878	END	1
8	1B4202	NUT	2
9	8D5629	ROD	1
10	7H3641	END	1
11	2B2695	BOLT	1
	3F9556	LOCKWASHER	1

C INDICATES CHANGE 228080

9D5250 LINKAGE AND VALVE GROUP—Type 1—Power Blade
9J1226 Valve parts are shown on Page 269
AN ATTACHMENT

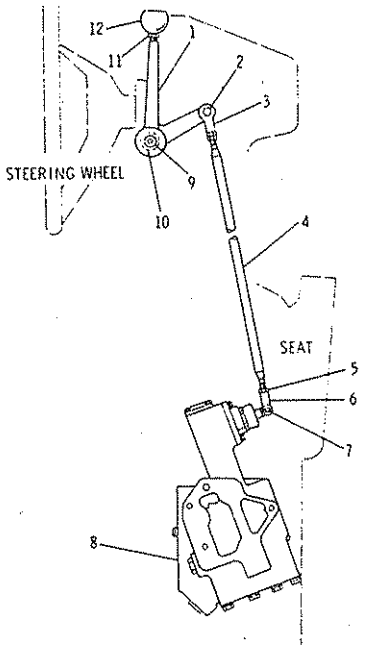

REF. NO.	PART NUMBER	DESCRIPTION	QTY
1	8D5635	LEVER	1
	8D5640	BEARING	1
2	2B2695	BOLT	1
	3F9556	LOCKWASHER	1
3	7H3641	END	1
4	8D5629	ROD	1
5	1B4202	NUT	2
6	3D5878	END	1
7	4J5325	PIN	1
	3B4607	COTTER PIN	1
8	8J9289	VALVE GROUP (Separate Illustration)	1
9	8D5642	SHAFT	1
10	8D5641	BEARING	1
11	6L1962	NUT	1
C 12	2G6753	KNOB	1

C INDICATES CHANGE 228079

9D2880 LINKAGE AND VALVE GROUP—Type 1—Scarifier
8J9289 Valve parts are shown on Page 270

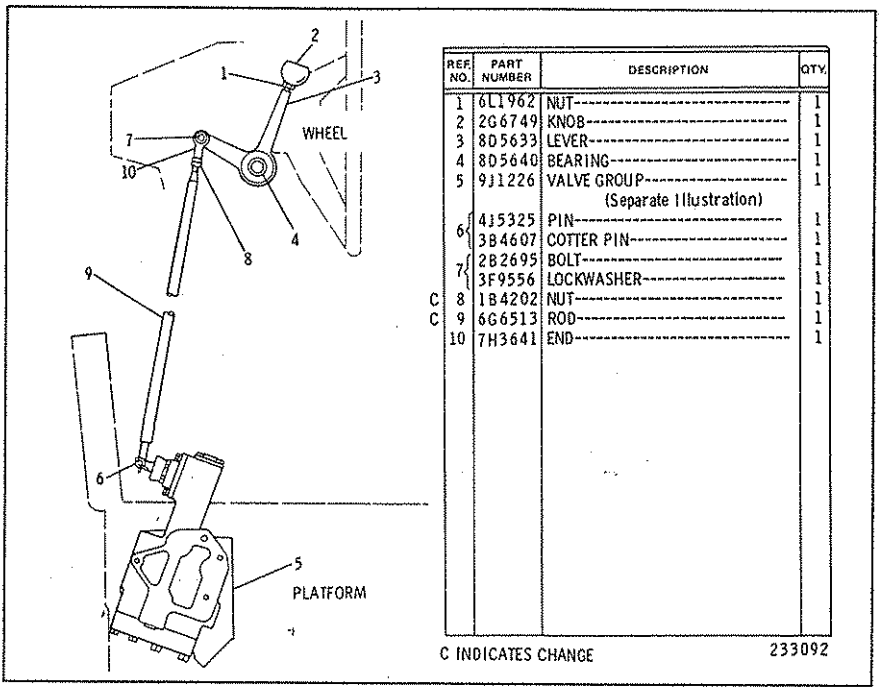

REF. NO.	PART NUMBER	DESCRIPTION	QTY.
1	6L1962	NUT	1
2	2G6749	KNOB	1
3	8D5633	LEVER	1
4	8D5640	BEARING	1
5	9J1226	VALVE GROUP (Separate Illustration)	1
6	4J5325	PIN	1
	3B4607	COTTER PIN	1
7	2B2695	BOLT	1
	3F9556	LOCKWASHER	1
C 8	1B4202	NUT	1
C 9	6G6513	ROD	1
10	7H3641	END	1

C INDICATES CHANGE 233092

9D5250 LINKAGE AND VALVE GROUP—Type 2—Power Blade
9J1226 Valve parts are shown on Page 269. AN ATTACHMENT

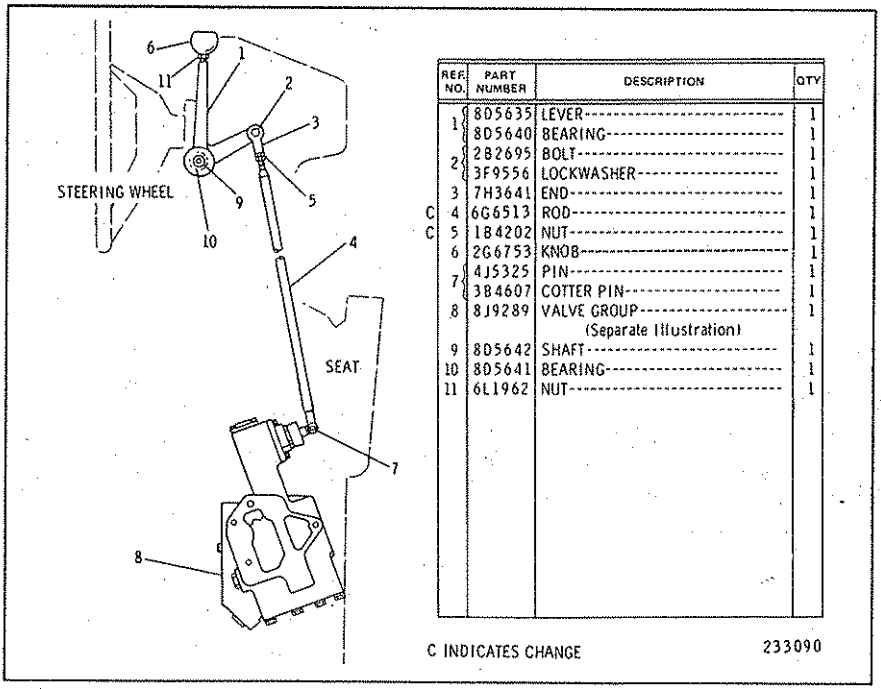

REF. NO.	PART NUMBER	DESCRIPTION	QTY
1	8D5635	LEVER	1
	8D5640	BEARING	1
2	2B2695	BOLT	1
	3F9556	LOCKWASHER	1
3	7H3641	END	1
C 4	6G6513	ROD	1
C 5	1B4202	NUT	1
6	2G6753	KNOB	1
7	4J5325	PIN	1
	3B4607	COTTER PIN	1
8	8J9289	VALVE GROUP (Separate Illustration)	1
9	8D5642	SHAFT	1
10	8D5641	BEARING	1
11	6L1962	NUT	1

C INDICATES CHANGE 233090

9D2880 LINKAGE AND VALVE GROUP—Type 2—Scarifier
8J9289 Valve parts are shown on Page 270. AN ATTACHMENT

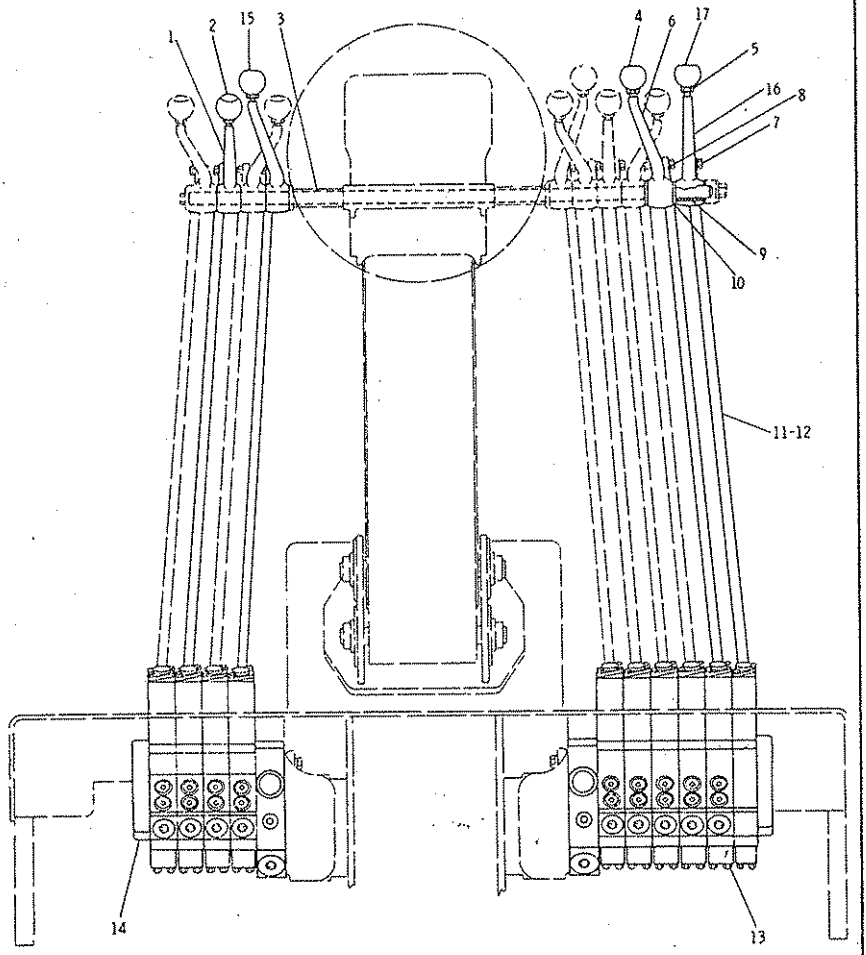

REF NO	PART NUMBER	DESCRIPTION	QTY
1	8D5633	LEVER	1
C 2	2G6749	KNOB	1
3	9D2804	SHAFT	1
C 4	2G6753	KNOB	1
5	6L1962	NUT	4
6	8D5635	LEVER	2
7	2B2695	BOLT	3
	3F9556	LOCKWASHER	3
8	7H3641	END	4
9	8D5640	BEARING	4
10	8D5641	BEARING	2
11	8D5629	ROD	4
	1B4202	NUT	8
12	3D5878	END	4
	4J5325	PIN	4
	3B4607	COTTER PIN	4
13	9J1219	VALVE GROUP	1
14	8J6172	VALVE GROUP (Separate Illustration)	1
C 15	2G6747	KNOB	1
16	9D2877	LEVER	1
C 17	2G6754	KNOB	1

C INDICATES CHANGE 228091

9D8524 LINKAGE AND VALVE GROUP—Type 1
Blade Shift, Blade Tip, Bulldozer, Snowplow and Scarifier
Part of 9D8425 & 6G6717 Hydraulic Control Arrangements listed on Pages 252 & 252A. 8J6172 and 9J1219 Valve parts are shown on Pages 269 & 271

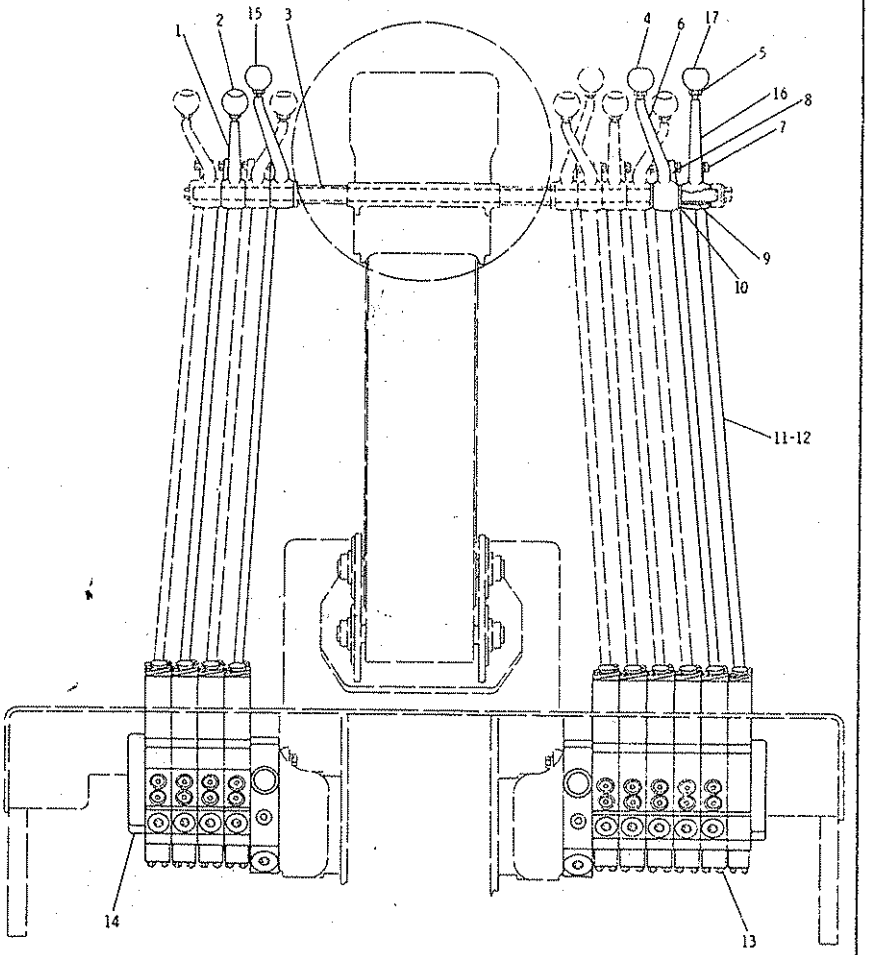

REF NO	PART NUMBER	DESCRIPTION	QTY
1	8D5633	LEVER	1
2	2G6749	KNOB	1
3	9D2804	SHAFT	1
4	2G6753	KNOB	1
5	6L1962	NUT	4
6	8D5635	LEVER	2
7	282695	BOLT	3
	3F9556	LOCKWASHER	3
8	7H3641	END	4
9	8D5640	BEARING	4
10	8D5641	BEARING	2
C 11	6G6513	ROD	4
C	1B4202	NUT	4
12	4J5325	PIN	4
	3B4607	COTTER PIN	4
13	9J1219	VALVE GROUP	1
14	8J6172	VALVE GROUP (Separate Illustration)	1
15	2G6747	KNOB	1
16	9D2877	LEVER	1
17	2G6754	KNOB	1

C INDICATES CHANGE 233063

9D8524 LINKAGE AND VALVE GROUP—Type 2
Blade Shift, Blade Tip, Bulldozer, Snowplow and Scarifier. Part of 9D8425 & 6G6717 Hydraulic Control Arrangements listed on Pages 252 & 252A. 8J6172 & 9J1219 Valve parts are shown on Pages 269 & 271. AN ATTACHMENT

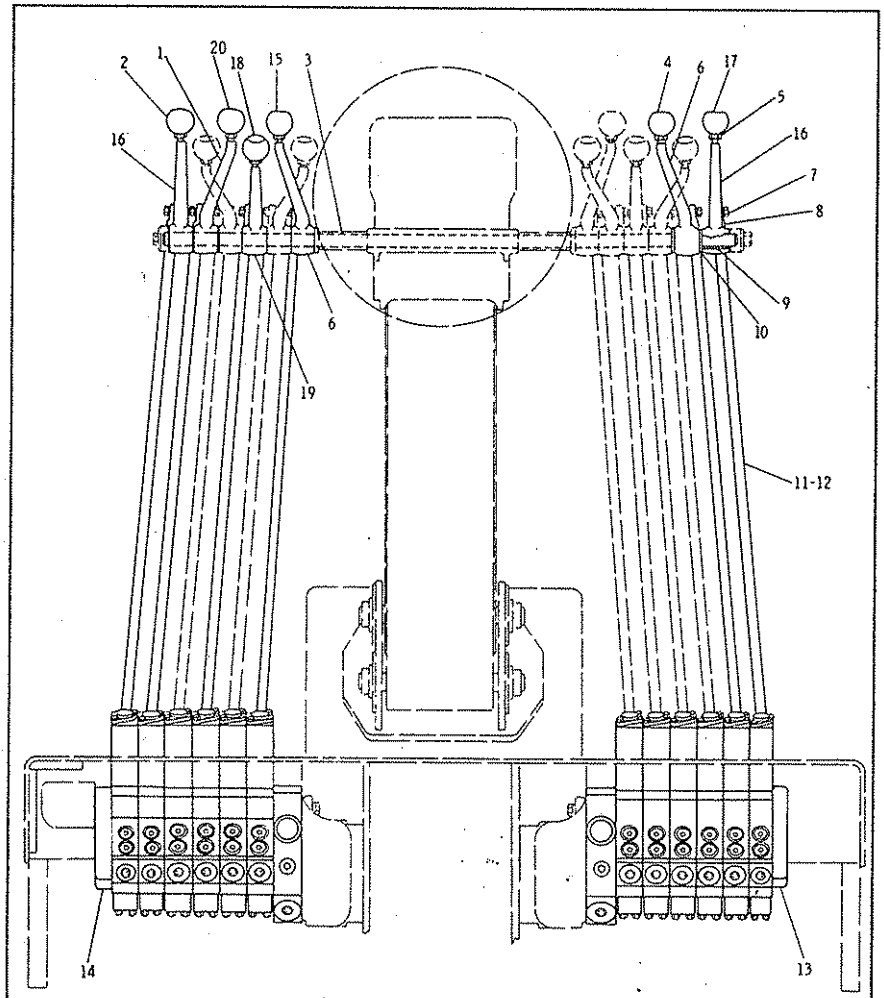

	REF. NO.	PART NUMBER	DESCRIPTION	QTY
	1	8D5631	LEVER	1
C	2	2G7107	KNOB---------(wing)	1
	3	9D2834	SHAFT	1
C	4	2G6753	KNOB---------(scarifier)	1
	5	6L1962	NUT	6
	6	8D5635	LEVER	2
	7	2B2695	BOLT	6
		3F9556	LOCKWASHER	6
	8	7H3641	END	6
	9	8D5640	BEARING	6
	10	8D5641	BEARING	6
	11	8D5629	ROD	6
		1B4202	NUT	12
	12	3D5878	END	6
		4J5325	PIN	6
		3B4607	COTTER PIN	6
	13	9J1219	VALVE GROUP	1
	14	9J1216	VALVE GROUP	1
			(Separate Illustration)	
C	15	2G6747	KNOB-------(blade tip)	1
	16	9D2877	LEVER	2
C	17	2G6754	KNOB-------(plow dozer)	1
C	18	2G6749	KNOB-------(side shift)	1
	19	8D5633	LEVER	1
C	20	2G7108	KNOB	1

C INDICATES CHANGE 228092

9D8525 LINKAGE AND VALVE GROUP—Type 1
Bulldozer, Blade Shift, Blade Tip, Scarifier, Snowplow and Wing. Part of 9D8433 & 6G6718 Hydraulic Control Arrangements listed on Pages 252 & 252A. 9J1219 and 9J1216 Valve parts are shown on Pages 271 & 272. AN ATTACHMENT

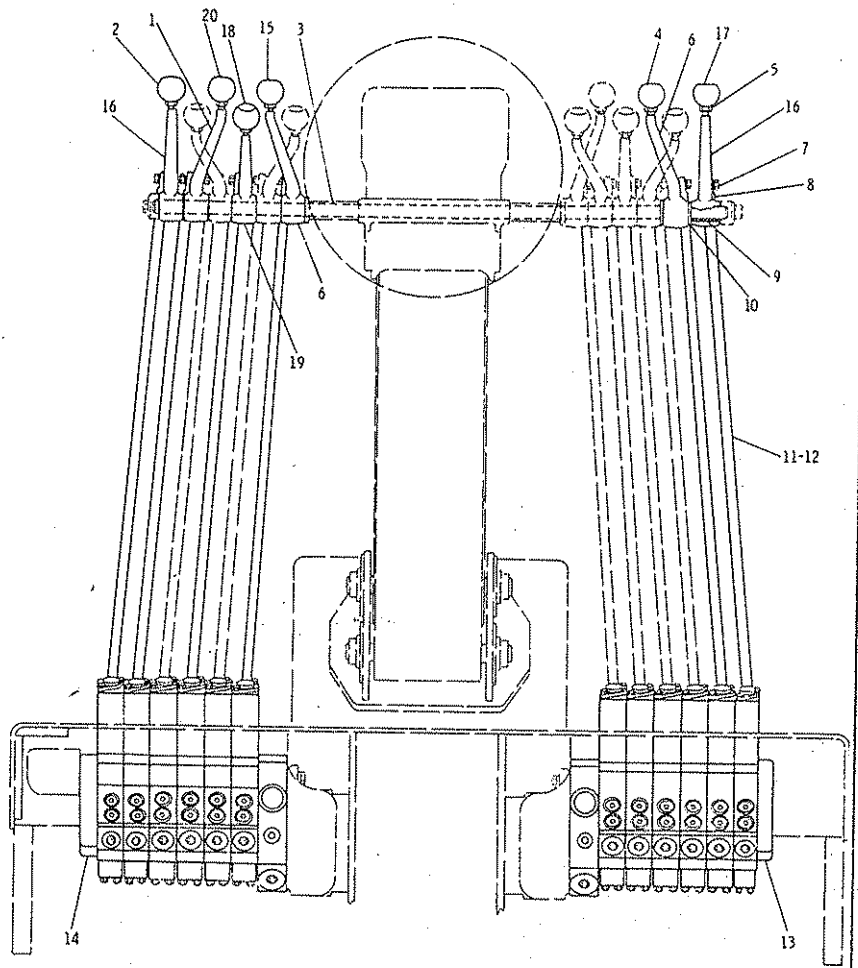

REF. NO.	PART NUMBER	DESCRIPTION	QTY
1	8D5631	LEVER	1
2	2G7107	KNOB--(wing)	1
3	9D2834	SHAFT	1
4	2G6753	KNOB--(scarifier)	1
5	6L1962	NUT	6
6	8D5635	LEVER	2
7	2B2695	BOLT	6
	3F9556	LOCKWASHER	6
8	7H3641	END	6
9	8D5640	BEARING	6
10	8D5641	BEARING	6
C 11	6G6513	ROD	6
C	1B4202	NUT	6
12	4J5325	PIN	6
	3B4607	COTTER PIN	6
13	9J1219	VALVE GROUP	1
14	9J1216	VALVE GROUP (Separate Illustration)	1
15	2G6747	KNOB--(blade tip)	1
16	9D2877	LEVER	2
17	2G6754	KNOB--(plow dozer)	1
18	2G6749	KNOB--(side shift)	1
19	8D5633	LEVER	1
20	2G7108	KNOB	1

C INDICATES CHANGE 233062

9D8525 LINKAGE AND VALVE GROUP—Type 2
Bulldozer, Blade Shift, Blade Tip, Scarifier, Snowplow and Wing. Part of 9D8433 & 6G6718 Hydraulic Control Arrangements listed on Pages 252 & 252A. 9J1219 & 9J1216 Valve parts are shown on Pages 271 & 272. AN ATTACHMENT

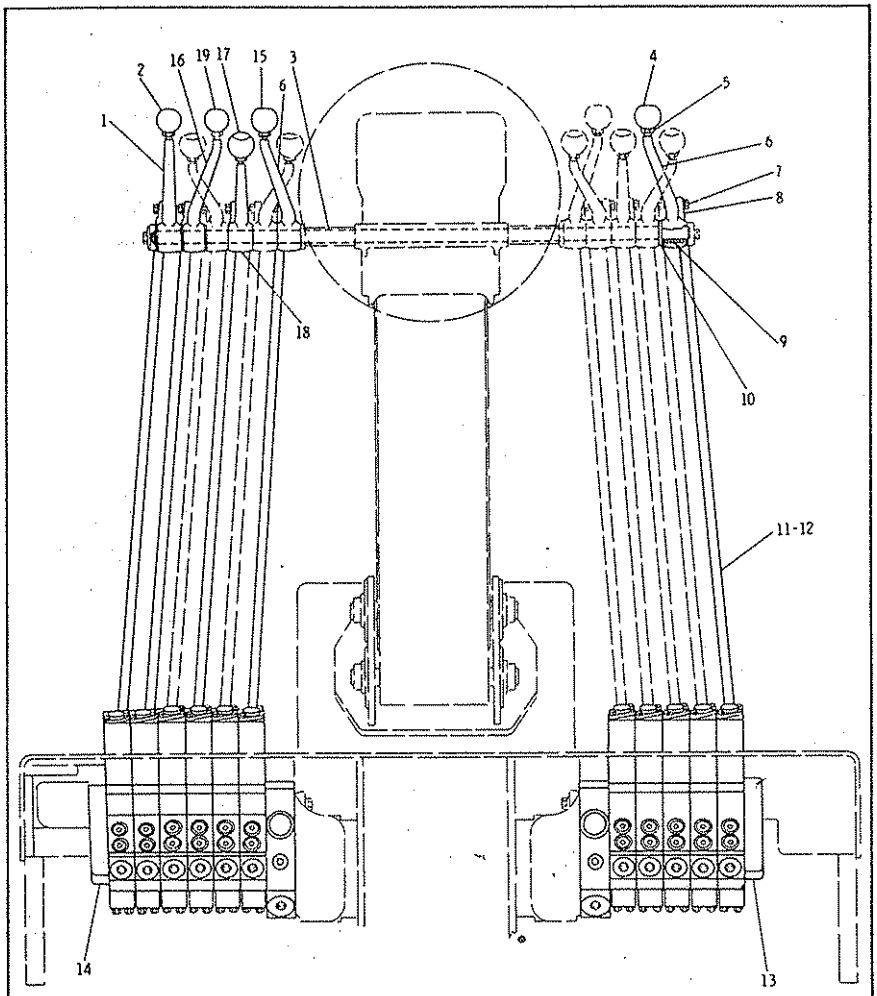

	REF. NO.	PART NUMBER	DESCRIPTION	QTY
	1	9D2877	LEVER	1
C	2	2G7107	KNOB	1
	3	9D2833	SHAFT	1
C	4	2G6754	KNOB	1
	5	6L1962	NUT	5
	6	8D5635	LEVER	2
	7	2B2695	BOLT	5
		3F9556	LOCKWASHER	5
	8	7H3641	END	5
	9	8D5640	BEARING	5
	10	8D5641	BEARING	5
	11	8D5629	ROD	5
		1B4202	NUT	10
	12	3D5878	END	5
		4J5325	PIN	5
		3B4607	COTTER PIN	5
	13	8J9289	VALVE GROUP	1
	14	9J1216	VALVE GROUP	1
			(Separate Illustration)	
C	15	2G6747	KNOB	1
	16	8D5631	LEVER	1
C	17	2G6749	KNOB	1
	18	8D5633	LEVER	1
C	19	2G7108	KNOB	1

C INDICATES CHANGE 227389

9D8515 LINKAGE AND VALVE GROUP—Type 1
Blade Lift, Wheel Lean, Centershift and Scarifier. Part of 9D8434 & 6G6719
Hydraulic Control Arrangements listed on Pages 252 & 252A. 8J9289 and 9J1216
Valve parts are shown on Pages 270 & 272. AN ATTACHMENT

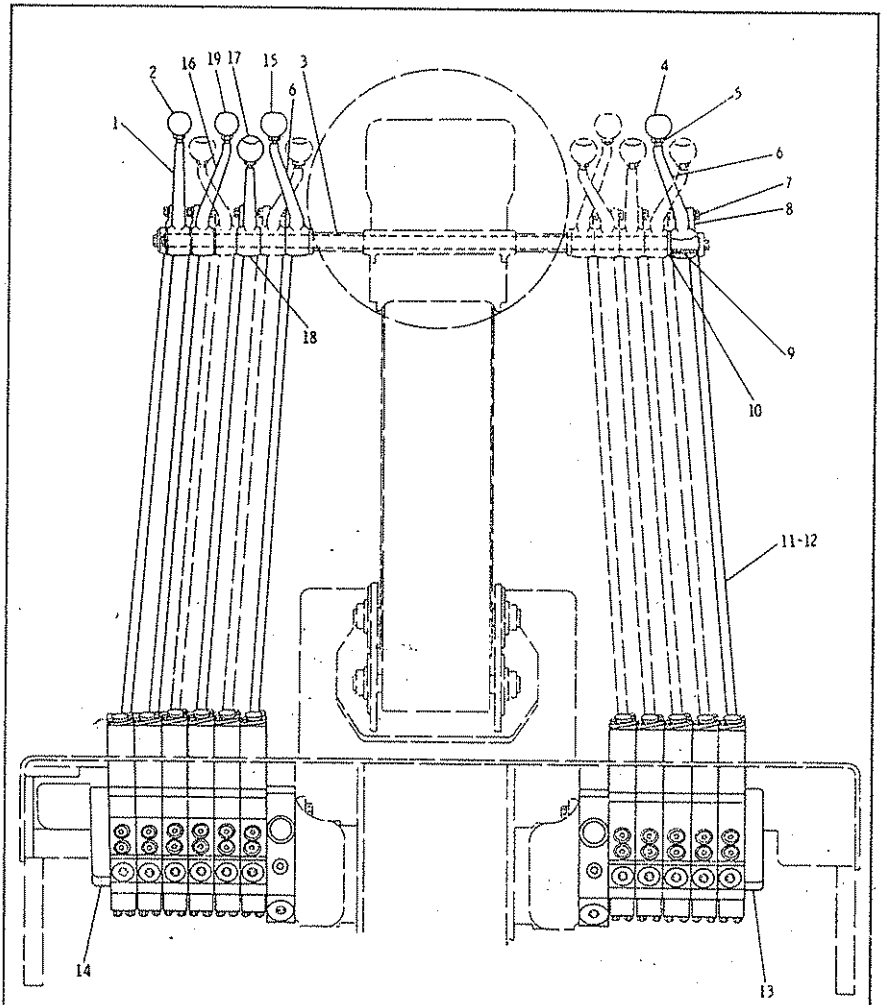

REF. NO.	PART NUMBER	DESCRIPTION	QTY
1	9D2877	LEVER	1
2	2G7107	KNOB	1
3	9D2833	SHAFT	1
4	2G6754	KNOB	1
5	6L1962	NUT	5
6	8D5635	LEVER	2
7	2B2695	BOLT	5
	3F9556	LOCKWASHER	5
8	7H3641	END	5
9	8D5640	BEARING	5
10	8D5641	BEARING	5
C 11	6G6513	ROD	5
C	1B4202	NUT	5
12	4J5325	PIN	5
	3B4607	COTTER PIN	5
13	8J9289	VALVE GROUP	1
14	9J1216	VALVE GROUP (Separate Illustration)	1
15	2G6747	KNOB	1
16	8D5631	LEVER	1
17	2G6749	KNOB	1
18	8D5633	LEVER	1
19	2G7108	KNOB	1

C INDICATES CHANGE 233061

9D8515 LINKAGE AND VALVE GROUP—Type 2
Blade Lift, Wheel Lean Centershift and Scarifier. Part of 9D8434 & 6G6719
Hydraulic Control Arrangements listed on Pages 252 & 252A. 8J9289 & 9J1216
Valve parts are shown on Pages 270 & 272. AN ATTACHMENT

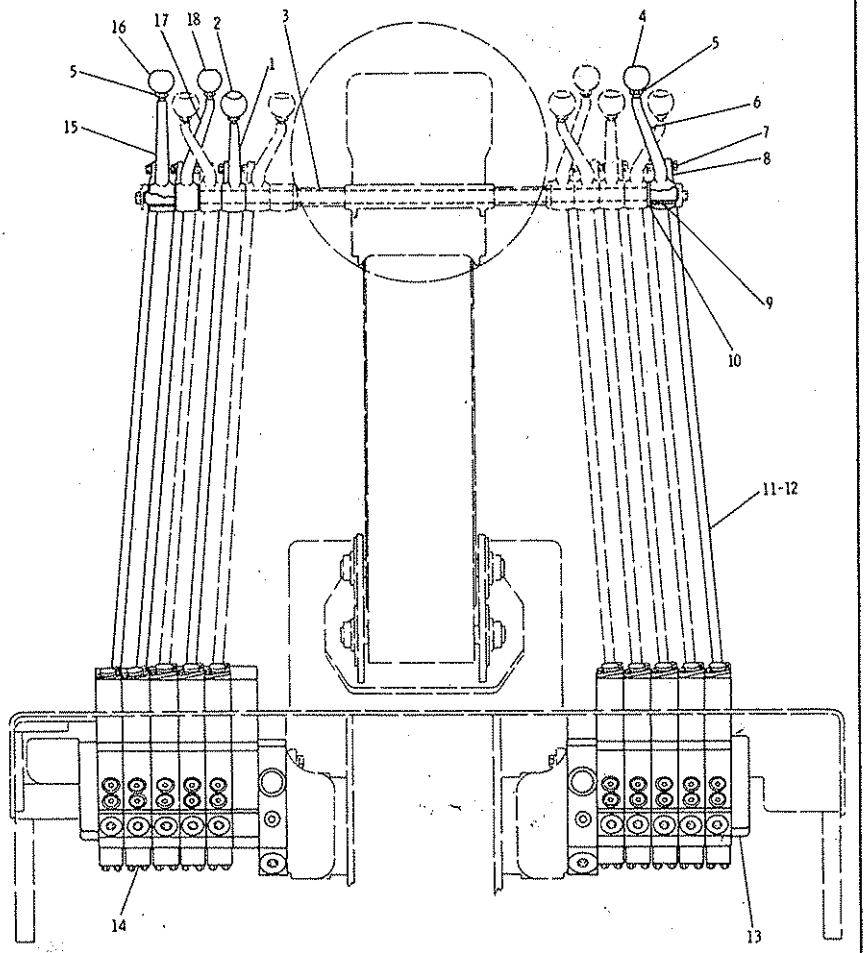

REF. NO.	PART NUMBER	DESCRIPTION	QTY.
1	8D5633	LEVER	1
C 2	2G6749	KNOB	1
3	9D2833	SHAFT	1
C 4	2G6754	KNOB	1
5	6L1962	NUT	4
6	8D5635	LEVER	1
7	2B2695	BOLT	4
	3F9556	LOCKWASHER	4
8	7H3641	END	4
9	8D5640	BEARING	4
10	8D5641	BEARING	4
11	8D5629	ROD	4
	1B4202	NUT	8
12	3D5878	END	4
	4J5325	PIN	4
	3B4607	COTTER PIN	4
13	8J9289	VALVE GROUP	1
14	9J1224	VALVE GROUP (Separate Illustration)	1
15	9D2877	LEVER	1
C 16	2G7107	KNOB	1
17	8D5631	LEVER	1
C 18	2G7108	KNOB	1

C INDICATES CHANGE 227388

9D5270 LINKAGE AND VALVE GROUP—Type 1
Blade Shift, Bulldozer, Snowplow and Wing. Part of 9D8435 & 6G6720 Hydraulic Control Arrangements listed on Pages 252 & 252A. 8J9289 and 9J1224 Valve parts are shown on Pages 270 & 272. AN ATTACHMENT

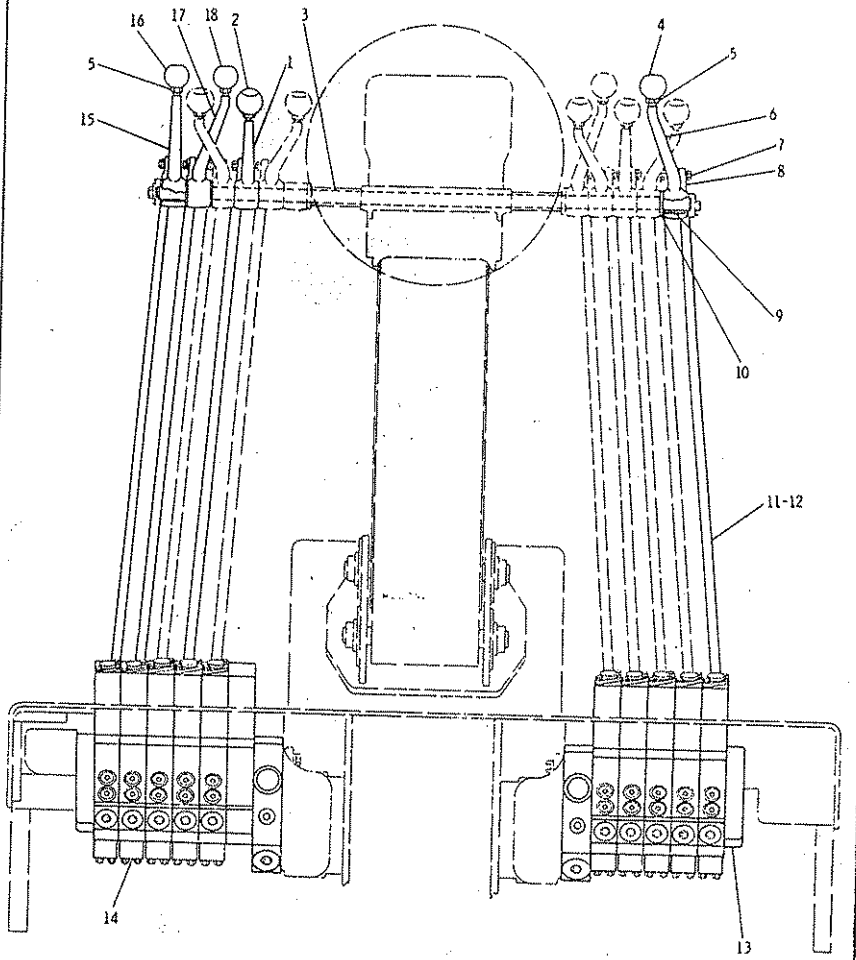

REF. NO.	PART NUMBER	DESCRIPTION	QTY.
1	8D5633	LEVER	1
2	2G6749	KNOB	1
3	9D2833	SHAFT	1
4	2G6754	KNOB	1
5	6L1962	NUT	4
6	8D5635	LEVER	1
7	2B2695	BOLT	4
	3F9556	LOCKWASHER	4
8	7H3641	END	4
9	8D5640	BEARING	4
10	8D5641	BEARING	4
C 11	6G6513	ROD	4
C	1B4202	NUT	4
12	4J5325	PIN	4
	3B4607	COTTER PIN	4
13	8J9289	VALVE GROUP	1
14	9J1224	VALVE GROUP (Separate Illustration)	1
15	9D2877	LEVER	1
16	2G7107	KNOB	1
17	8D5631	LEVER	1
18	2G7108	KNOB	1

C INDICATES CHANGE 233135

9D5270 LINKAGE AND VALVE GROUP—Type 2
Blade Shift, Bulldozer, Snowplow and Wing. Part of 9D8435 & 6G6720 Hydraulic Control Arrangements listed on Pages 252 & 252A. 8J9289 & 9J1224 Valve parts are shown on Pages 270 & 273. AN ATTACHMENT

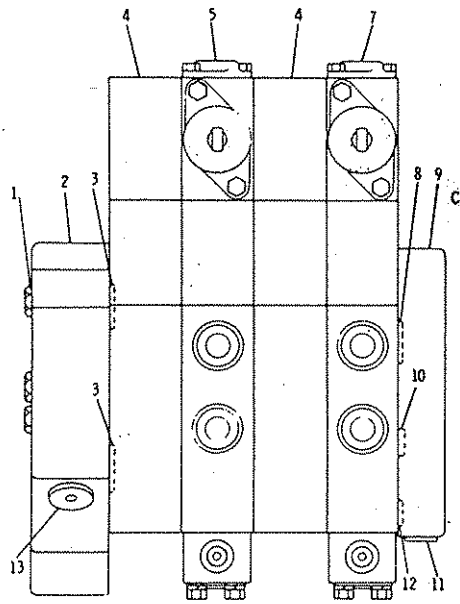

REF. NO.	PART NUMBER	DESCRIPTION	QTY
1	8F6350	BOLT	3
	3B4506	LOCKWASHER	3
2	8J5918	MANIFOLD	1
3	4M8303	SEAL	10
4	9D6598	SPACER	2
5	8J5903	VALVE GROUP--(circle drive)	1
7	8J5961	VALVE GROUP--(blade lift) (Separate Illustration)	1
8	4J5351	SEAL	5
9	8J7268	MANIFOLD	1
10	8J1699	SEAL	5
11	9S8004	PLUG	1
	3J1907	SEAL	1
12	6J3134	SEAL	5
13	9S8005	PLUG	1
	3K360	SEAL	1

C INDICATES CHANGE

156441

8J8595 CONTROL VALVE GROUP—Blade Lift and Circle Drive—L.H.
Part of 9D1580 Linkage and Valve Group shown on Page 255
8J5961 and 8J5903 Valve parts are shown on Pages 265 and 266

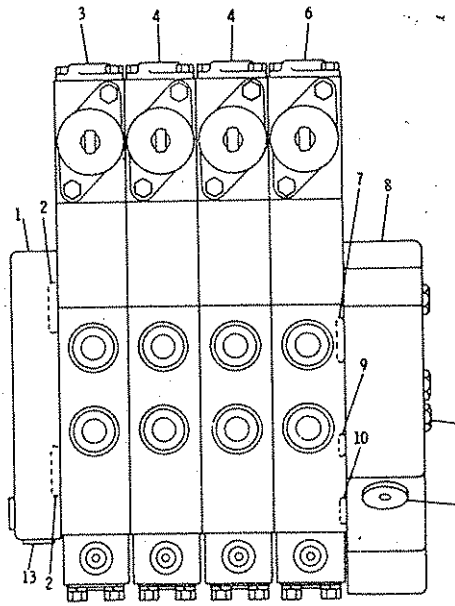

REF. NO.	PART NUMBER	DESCRIPTION	QTY
1	8J7267	MANIFOLD	1
2	4M8303	SEAL	10
3	8J5961	VALVE GROUP--(blade lift)	1
4	8J5906	VALVE GROUP (Wheel Lean & Center Shift)	2
6	8J5907	VALVE GROUP--(articulation) (Separate Illustration)	1
7	4J5351	SEAL	5
8	8J5917	MANIFOLD	1
9	8J1699	SEAL	5
10	6J3134	SEAL	5
11	8F6350	BOLT	3
	3B4506	LOCKWASHER	3
12	9S8005	PLUG	1
	3K360	SEAL	1
13	9S8004	PLUG	2
	3J1907	SEAL	2

200405

8J5989 CONTROL VALVE GROUP—Articulation, Blade Lift, Centershift and Wheel Lean—R.H.

8J5961 CONTROL VALVE GROUP—Blade Lift, Dozer, Snowplow and Scarifier—Type 1
Part of 8J8595, 8J5989, 8J6172, 9J1226, 8J9289, 9J1219, 9J1216 and 9J1224
Control Valve Groups shown on Pages 264, 269, 270, 271, 272 & 273
9J2012 Lever parts are shown on Page 253

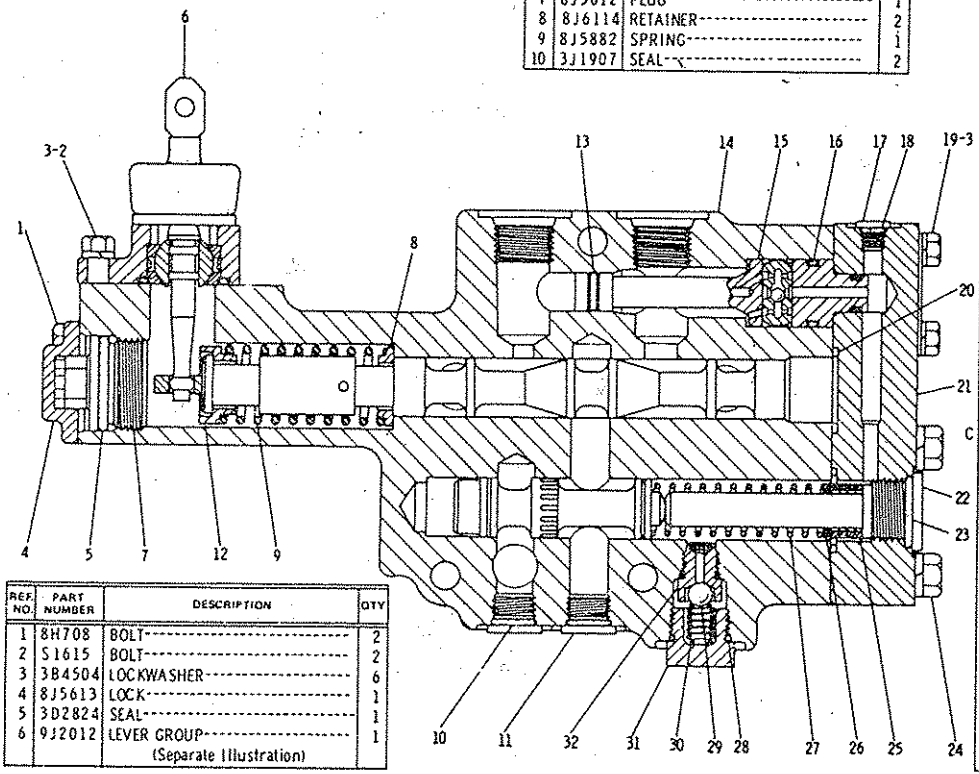

REF. NO.	PART NUMBER	DESCRIPTION	QTY
1	8H708	BOLT	2
2	S1615	BOLT	2
3	3B4504	LOCKWASHER	6
4	8J5613	LOCK	1
5	3D2824	SEAL	1
6	9J2012	LEVER GROUP (Separate Illustration)	1
7	8J5612	PLUG	1
8	8J6114	RETAINER	2
9	8J5882	SPRING	1
10	3J1907	SEAL	2
11	9S8004	PLUG	2
12	8J1612	RETAINER	2
13	6J3134	SEAL	2
14	8J5884	VALVE GROUP	1
15	8J1624	VALVE ASSEM.	1
16	4J5351	SEAL	1
17	9S8001	PLUG	1
18	4J7533	SEAL	1
19	9F7022	BOLT	4
20	7J9933	SEAL	2
21	8J1627	COVER	1
22	8J1628	PLUG	1
23	2M9780	SEAL	1
24	1H5514	BOLT	4
	3B4505	LOCKWASHER	4
25	8J6263	SPACER	4
26	8J1629	SHIM	5
27	8J1630	SPRING	1
28	3K366	SEAL	1
29	4B9880	BALL	1
30	8J1632	SPRING	1
31	8J5576	PLUG	1
32	9J7157	SEAT ASSEM.	1
	3J7354	SEAL	1

C INDICATES CHANGE

207403

8J5961 CONTROL VALVE GROUP—Blade Lift, Dozer, Snowplow and Scarifier—Type 2
Part of 8J8595, 8J5989, 8J6172, 9J1226, 8J9289, 9J1219, 9J1216 and 9J1224 Control
Valve Groups shown on Pages 264, 269, 270, 271, 272 and 273. 1U4661 Lever parts are shown on Page 253

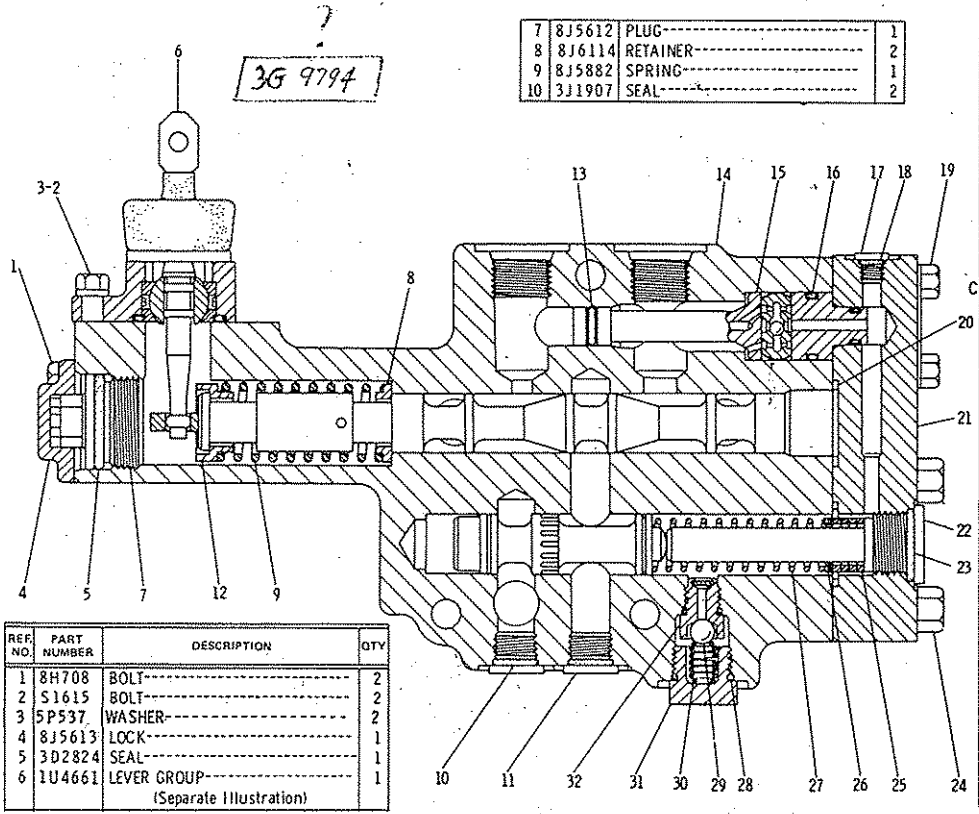

REF. NO.	PART NUMBER	DESCRIPTION	QTY
1	8H708	BOLT	2
2	S1615	BOLT	2
C 3	5P537	WASHER	2
4	8J5613	LOCK	1
5	3D2824	SEAL	1
C 6	1U4661	LEVER GROUP (Separate Illustration)	1
7	8J5612	PLUG	1
8	8J6114	RETAINER	2
9	8J5882	SPRING	1
10	3J1907	SEAL	2
11	9S8004	PLUG	2
12	8J1612	RETAINER	2
13	6J3134	SEAL	2
14	8J5884	VALVE GROUP	1
15	8J1624	VALVE ASSEM.	1
16	4J5351	SEAL	1
17	9S8001	PLUG	1
18	4J7533	SEAL	1
19	9F7022	BOLT	4
20	7J9933	SEAL	2
21	8J1627	COVER	1
22	8J1628	PLUG	1
23	2M9780	SEAL	1
C 24	1A9579	BOLT	4
25	8J6263	SPACER	4
26	8J1629	SHIM	5
27	8J1630	SPRING	1
28	3K360	SEAL	1
29	489880	BALL	1
30	8J1632	SPRING	1
31	8J5576	PLUG	1
32	9J7157	SEAT ASSEM.	1
	3J7354	SEAL	1

C INDICATES CHANGE

308842

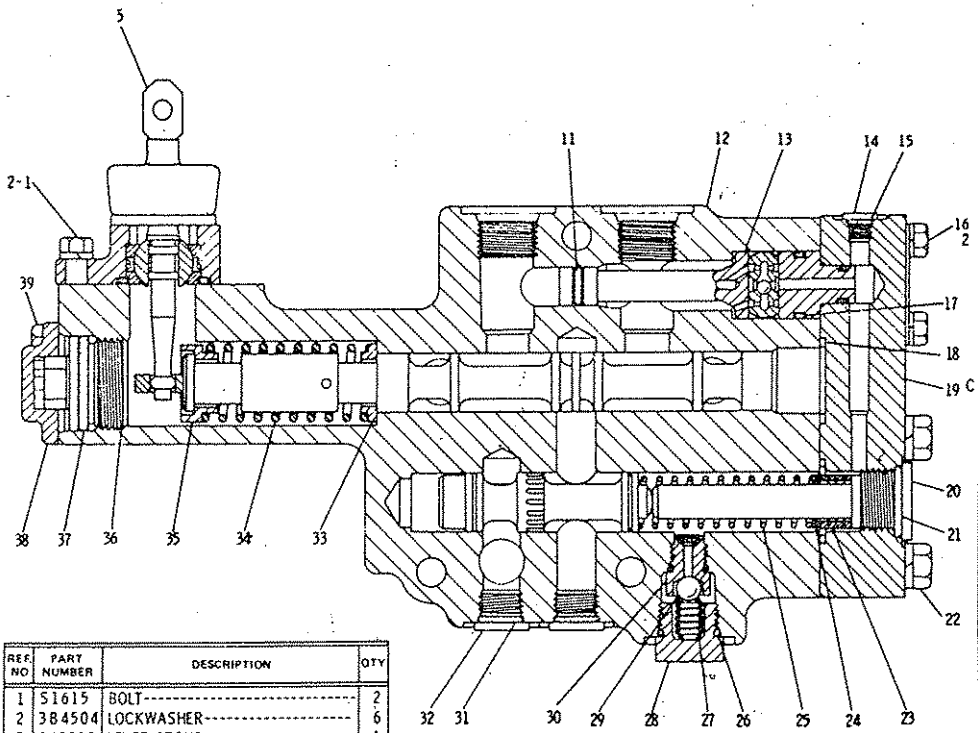

REF NO	PART NUMBER	DESCRIPTION	QTY
1	51615	BOLT	2
2	3B4504	LOCKWASHER	6
5	9J2012	LEVER GROUP (Separate Illustration)	1

11	6J3134	SEAL	2
12	8J8385	VALVE GROUP	1
13	8J1624	VALVE ASSEM.	1
14	9S8001	PLUG	1
15	4J7533	SEAL	1
16	9F7022	BOLT	4
17	4J5351	SEAL	1
18	7J9933	SEAL	2
19	8J1627	COVER	1
20	8J1628	PLUG	1
21	2M9780	SEAL	1
22	1H5514	BOLT	4
	3B4505	LOCKWASHER	4
23	8J6263	SPACER	3
24	8J1629	SHIM	1
25	8J8384	SPRING	1
26	3K360	SEAL	1
27	8J1632	SPRING	1
28	8J5576	PLUG	1
29	4B9880	BALL	1
30	9J7157	SEAT ASSEM.	1
	3J7354	SEAL	1
31	3J1907	SEAL	2
32	9S8004	PLUG	2
33	8J6114	RETAINER	2
34	8J5882	SPRING	1
35	8J1612	RETAINER	2
36	8J5612	PLUG	1
37	3D2824	SEAL	1
38	8J5613	LOCK	1
39	8H708	BOLT	2

C INDICATES CHANGE

207402

8J5903 CONTROL VALVE GROUP—Circle Drive—Type 1
Part of 8J8595, 8J6172, 9J1226, 9J1216 and 9J1224 Control Valve Groups shown on Pages 264, 269, 272 & 273
9J2012 Lever parts are shown on Page 253

8J5903 CONTROL VALVE GROUP—Circle Drive—Type 2
Part of 8J8595, 8J6172, 9J1226, 9J1216 & 9J1224 Control Valve Groups shown on Pages 264, 269, 272 & 273
1U4661 Lever parts are shown on Page 253

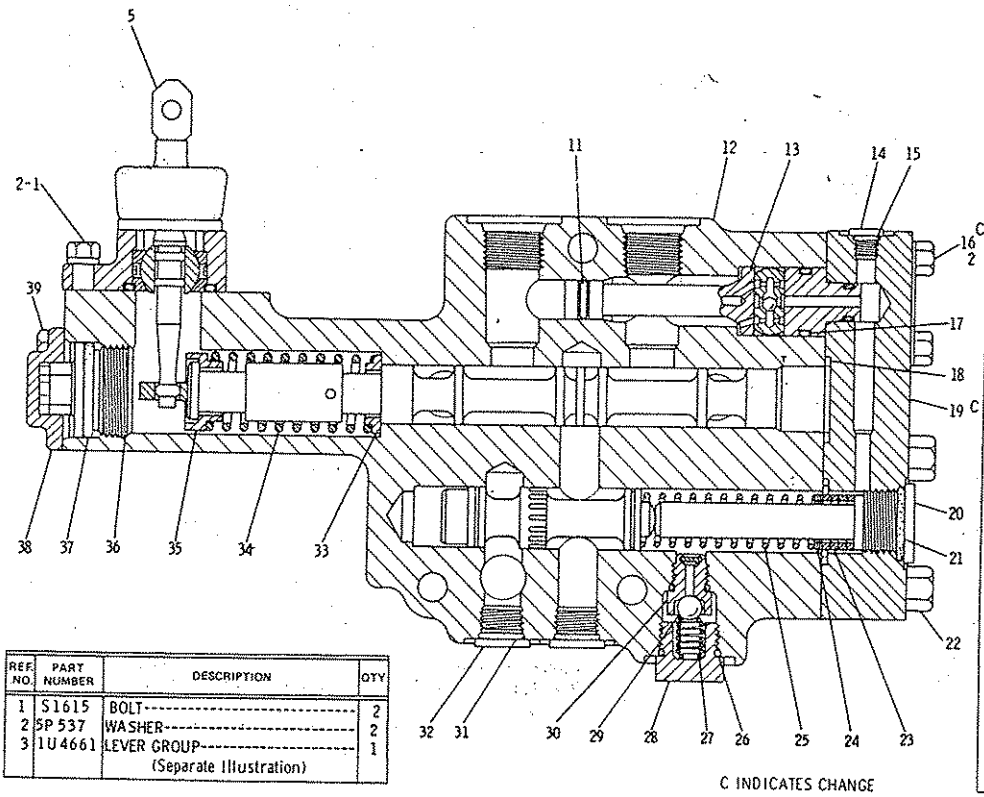

REF. NO.	PART NUMBER	DESCRIPTION	QTY.
1	S1615	BOLT	2
C 2	5P537	WASHER	2
C 3	1U4661	LEVER GROUP (Separate Illustration)	1

11	6J3134	SEAL	2
12	8J8385	VALVE GROUP	1
13	8J1624	VALVE ASSEM.	1
14	9S8001	PLUG	1
15	4J7533	SEAL	1
16	9F7022	BOLT	4
17	4J5351	SEAL	1
18	7J9933	SEAL	2
19	8J1627	COVER	1
20	8J1628	PLUG	1
21	2M9780	SEAL	1
C 22	1A9579	BOLT	4
23	8J6263	SPACER	3
24	8J1629	SHIM	1
25	8J8384	SPRING	1
26	3K360	SEAL	1
27	8J1632	SPRING	1
28	8J5576	PLUG	1
29	4B9880	BALL	1
30	9J7157	SEAT ASSEM.	1
	3J7354	SEAL	1
31	3J1907	SEAL	2
32	9S8004	PLUG	2
33	8J6114	RETAINER	2
34	8J5882	SPRING	1
35	8J1612	RETAINER	2
36	8J5612	PLUG	1
37	3D2824	SEAL	1
38	8J5613	LOCK	1
39	8H708	BOLT	2

C INDICATES CHANGE

308840

8J5906 CONTROL VALVE GROUP—Wingstrut, Centershift and Wheel Lean—Type 1

Part of 8J5989, 8J9289 and 9J1219 Control Valve Groups shown on Pages 264, 270 & 271

9J2012 Lever parts are shown on Page 253

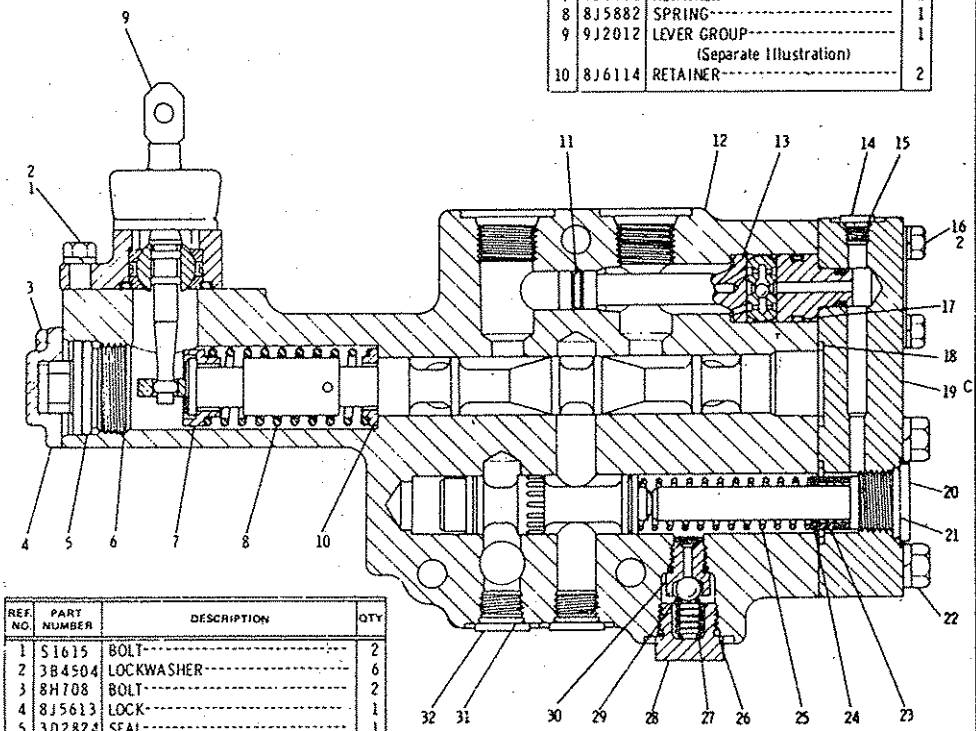

REF. NO.	PART NUMBER	DESCRIPTION	QTY
1	S1615	BOLT	2
2	3B4504	LOCKWASHER	6
3	8H708	BOLT	2
4	8J5613	LOCK	1
5	3D2824	SEAL	1
6	8J5612	PLUG	1
7	8J1612	RETAINER	2
8	8J5882	SPRING	1
9	9J2012	LEVER GROUP (Separate Illustration)	1
10	8J6114	RETAINER	2
11	6J3134	SEAL	2
12	8J5886	VALVE GROUP	1
13	8J1624	VALVE ASSEM.	1
14	9S8001	PLUG	1
15	4J7533	SEAL	1
16	9F7022	BOLT	4
17	4J5351	SEAL	1
18	7J9933	SEAL	2
19	8J1627	COVER	1
20	8J1628	PLUG	1
21	2M9780	SEAL	1
22	1H5514	BOLT	4
	3B4505	LOCKWASHER	4
23	8J6263	SPACER	3
24	8J1629	SHIM	6
25	8J1630	SPRING	1
26	3K360	SEAL	1
27	8J1632	SPRING	1
28	8J5576	PLUG	1
29	4B9880	BALL	1
30	9J7157	SEAT ASSEM.	1
	3J7354	SEAL	1
31	3J1907	SEAL	2
32	9S8004	PLUG	2

C INDICATES CHANGE

207397

8J5906 CONTROL VALVE GROUP—Wingstrut, Centershift and Wheel Lean—Type 2

Part of 8J5989, 8J9289 & 9J1219 Control Valve Groups shown on Pages 264, 270 & 271

1U4661 Lever parts are shown on Page 253

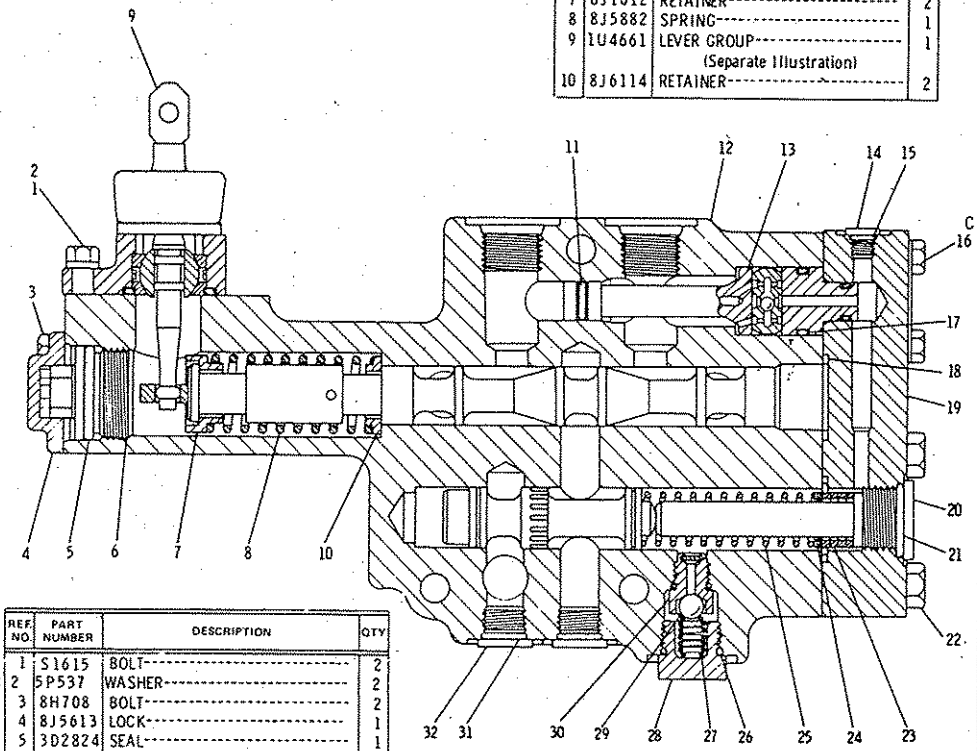

REF. NO.	PART NUMBER	DESCRIPTION	QTY
	1 S1615	BOLT	2
C	2 5P537	WASHER	2
	3 8H708	BOLT	2
	4 8J5613	LOCK	1
	5 3D2824	SEAL	1
	6 8J5612	PLUG	1
	7 8J1612	RETAINER	2
	8 8J5882	SPRING	1
	9 1U4661	LEVER GROUP (Separate Illustration)	1
	10 8J6114	RETAINER	2
	11 6J3134	SEAL	2
	12 8J5886	VALVE GROUP	1
	13 8J1624	VALVE ASSEM.	1
	14 9S8001	PLUG	1
	15 4J7533	SEAL	1
	16 9F7022	BOLT	4
	17 4J5351	SEAL	1
	18 7J9933	SEAL	2
	19 8J1627	COVER	1
	20 8J1628	PLUG	1
	21 2M9780	SEAL	1
	22 1A9579	BOLT	4
	23 8J6263	SPACER	3
	24 8J1629	SHIM	6
	25 8J1630	SPRING	1
	26 3K360	SEAL	1
	27 8J1632	SPRING	1
	28 8J5576	PLUG	1
	29 4B9880	BALL	1
	30 9J7157	SEAT ASSEM.	1
	3J7354	SEAL	1
	31 3J1907	SEAL	2
	32 9S8004	PLUG	2

C INDICATES CHANGE

308844

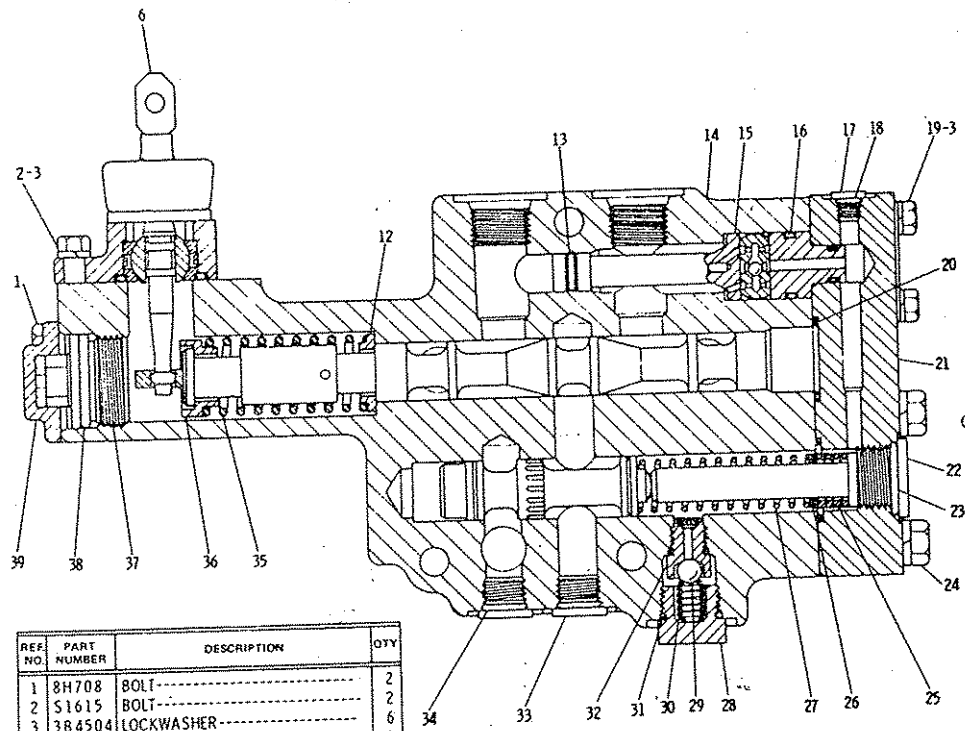

REF NO.	PART NUMBER	DESCRIPTION	QTY
1	8H708	BOLT	2
2	S1615	BOLT	2
3	3B4504	LOCKWASHER	6
6	9J2012	LEVER GROUP (Separate Illustration)	1

12	8J6114	RETAINER	2
13	6J3134	SEAL	2
14	8J5885	VALVE GROUP	1
15	8J1624	VALVE ASSEM.	1
16	4J5351	SEAL	1
17	9S8001	PLUG	1
18	4J7533	SEAL	1
19	9F7022	BOLT	4
20	7J9933	SEAL	2
21	8J1627	COVER	1
22	8J1628	PLUG	1
23	2M9780	SEAL	1
24	1H5514	BOLT	4
	3B4505	LOCKWASHER	4
25	8J6263	SPACER	4
26	8J1629	SHIM	2
27	8J1630	SPRING	1
28	8J5576	PLUG	1
29	4B9880	BALL	1
30	8J1632	SPRING	1
31	3K360	SEAL	1
C 32	9J7157	SEAT ASSEM.	1
	3J7354	SEAL	1
33	9S8004	PLUG	2
34	3J1907	SEAL	2
35	8J5882	SPRING	1
36	8J1612	RETAINER	2
37	8J5612	PLUG	1
38	3D2824	SEAL	1
39	8J5613	LOCK	1

C INDICATES CHANGE

207398

8J5907 CONTROL VALVE GROUP—Articulation—Type 1
Part of 8J5989, 8J9289 and 9J1219 Control Valve Groups shown on Pages 264, 270 & 271
9J2012 Lever parts are shown on Page 253

8J5907 CONTROL VALVE GROUP—Articulation—Type 2

Part of 8J5989, 8J9289 and 9J1219 Control Valve Groups shown on Pages 264, 270 & 271

1U4661 Lever parts are shown on Page 253

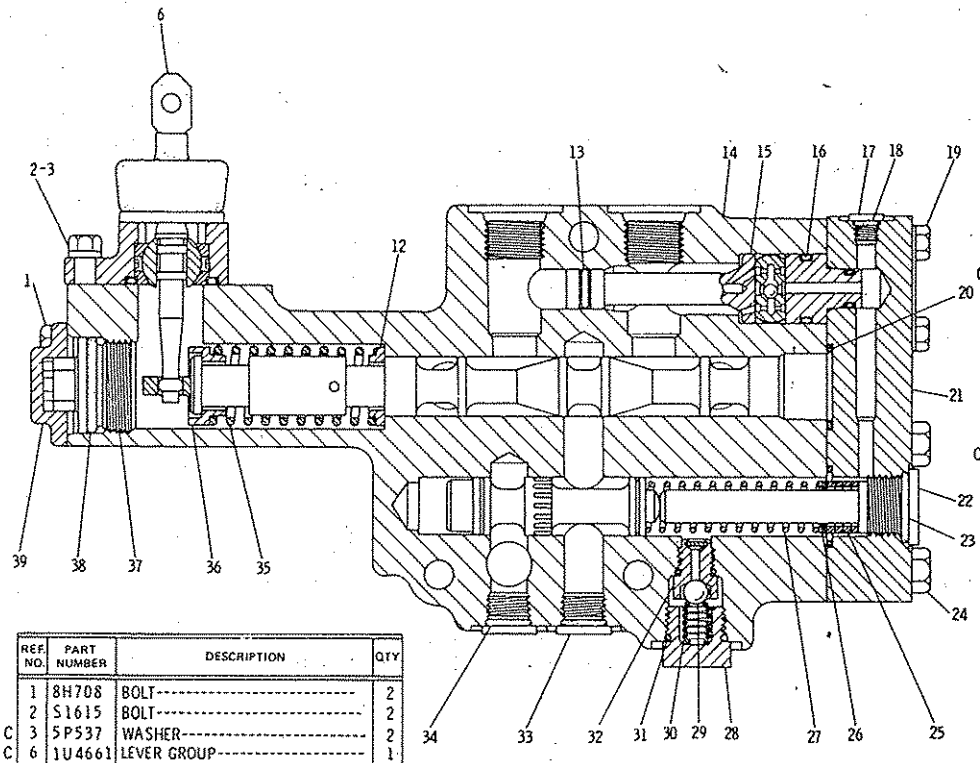

REF. NO.	PART NUMBER	DESCRIPTION	QTY
1	8H708	BOLT	2
2	S1615	BOLT	2
C 3	5P537	WASHER	2
C 6	1U4661	LEVER GROUP (Separate Illustration)	1
12	8J6114	RETAINER	2
13	6J3134	SEAL	2
14	8J5885	VALVE GROUP	1
15	8J1624	VALVE ASSEM.	1
16	4J5351	SEAL	1
17	9S8001	PLUG	1
18	4J7533	SEAL	1
19	9F7022	BOLT	4
20	7J9933	SEAL	2
21	8J1627	COVER	1
22	8J1628	PLUG	1
23	2M9780	SEAL	1
C 24	1A9579	BOLT	4
25	8J6263	SPACER	4
26	8J1629	SHIM	2
27	8J1630	SPRING	1
28	8J5576	PLUG	1
29	4B9880	BALL	1
30	8J1632	SPRING	1
31	3K360	SEAL	1
C 32	9J7157	SEAT ASSEM.	1
	3J7354	SEAL	1
33	9S8004	PLUG	2
34	3J1907	SEAL	2
35	8J5882	SPRING	1
36	8J1612	RETAINER	2
37	8J5612	PLUG	1
38	3D2824	SEAL	1
39	8J5613	LOCK	1

C INDICATES CHANGE

308850

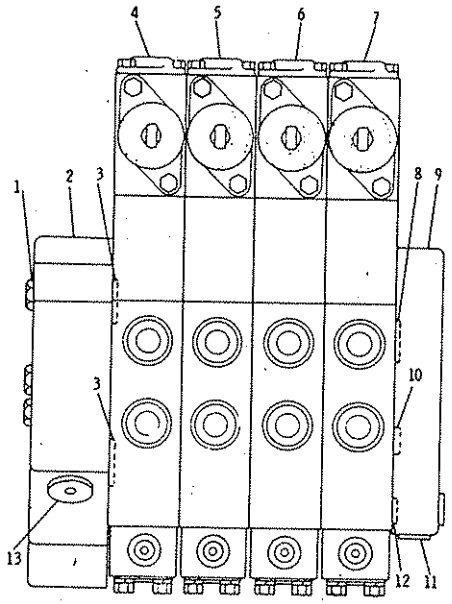

REF. NO.	PART NUMBER	DESCRIPTION	QTY
1	8F6350	BOLT	3
	3B4506	LOCKWASHER	3
2	8J5918	MANIFOLD	1
3	4M8303	SEAL	10
4	8J5908	VALVE GROUP----(blade tip)---	1
5	8J5903	VALVE GROUP----(circle drive)	1
6	8J5902	VALVE GROUP----(side shift)--	1
7	8J5961	VALVE GROUP----(blade lift)--- (Separate Illustration)	1
8	4J5351	SEAL	5
9	8J7268	MANIFOLD	1
10	8J1699	SEAL	5
11	9S8004	PLUG	1
	3J1907	SEAL	1
12	6J3134	SEAL	5
13	9S8005	PLUG	1
	3K360	SEAL	1

156445

8J6172 CONTROL VALVE GROUP—Blade Lift, Blade Tip, Circle Drive and Side Shift
Part of 9D6910, 9D6930 and 9D8524 Linkage and Valve Groups shown on Pages 256, 258 & 260. 8J5961, 8J5903, 8J5908 and 8J5902 Valve parts are shown on Pages 265, 266, 274 & 275. AN ATTACHMENT

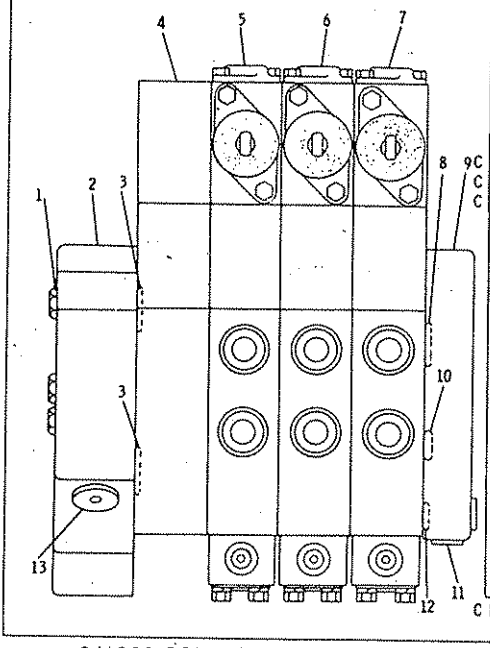

REF. NO.	PART NUMBER	DESCRIPTION	QTY
1	8F6350	BOLT	3
	3B4506	LOCKWASHER	3
2	8J5918	MANIFOLD	1
3	4M8303	SEAL	10
4	9D6598	SPACER	1
5	8J5903	VALVE GROUP---(circle drive)-	1
6	8J5902	VALVE GROUP---(side shift)---	1
7	8J5961	VALVE GROUP---(blade lift)---- (Separate Illustration)	1
8	4J5351	SEAL	5
9	8J7268	MANIFOLD	1
10	8J1699	SEAL	5
11	9S8004	PLUG	1
	3J1907	SEAL	1
12	6J3134	SEAL	5
13	9S8005	PLUG	1
	3K360	SEAL	1

C INDICATES CHANGE

156442

9J1226 CONTROL VALVE GROUP—Blade Lift, Circle Drive and Side Shift
Part of 9D6920 and 9D5250 Linkage and Valve Groups shown on Pages 257 & 259
8J5961, 8J5903 and 8J5902 Valve parts are shown on Pages 265, 266 & 275
AN ATTACHMENT

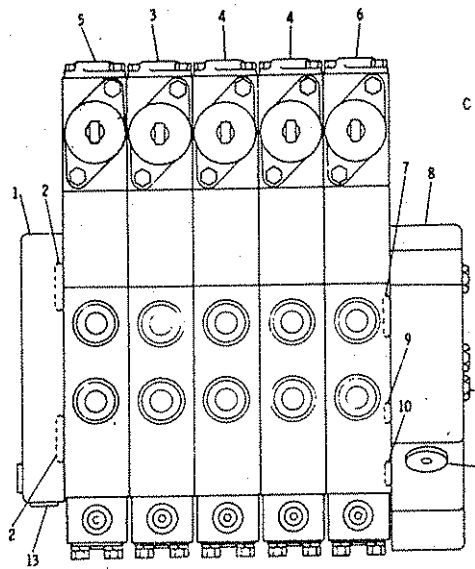

REF. NO.	PART NUMBER	DESCRIPTION	QTY
1	8J7267	MANIFOLD	1
2	4M8303	SEAL	12
3	8J5961	VALVE GROUP—(Blade Lift)	1
4	8J5906	VALVE GROUP—(Wheel Lean & Center Shift)	2
C 5	8J5961	VALVE GROUP—(Dozer or Snowplow or Scarifier)	1
6	8J5907	VALVE GROUP—(Articulation)—(Separate Illustration)	1
7	4J5351	SEAL	6
8	8J5917	MANIFOLD	1
9	8J1699	SEAL	6
10	6J3134	SEAL	6
11	4H3283	BOLT	3
	3B4506	LOCKWASHER	3
12	9S8005	PLUG	1
	3K360	SEAL	1
13	9S8004	PLUG	2
	3J1907	SEAL	2

C INDICATES CHANGE 173348

8J9289 CONTROL VALVE GROUP—Blade Lift, Centershift, Scarifier, Wheel Lean and Articulation

Part of 9D6920, 9D6930, 9D2880, 9D8515 and 9D5270 Linkage and Valve Groups shown on Pages 257, 258, 259, 262 & 263. 8J5961, 8J5906 and 8J5907 Valve parts are shown on Pages 265, 267 & 268. AN ATTACHMENT

9J1219 CONTROL VALVE GROUP—Articulation, Blade Lift, Bulldozer, Centershift, Scarifier and Wheel Lean
Part of 9D8524 and 9D8525 Linkage and Valve Groups shown on Pages 260 & 261
8J5961, 8J5906 and 8J5907 Valve parts are shown on Pages 265, 267 & 268. AN ATTACHMENT

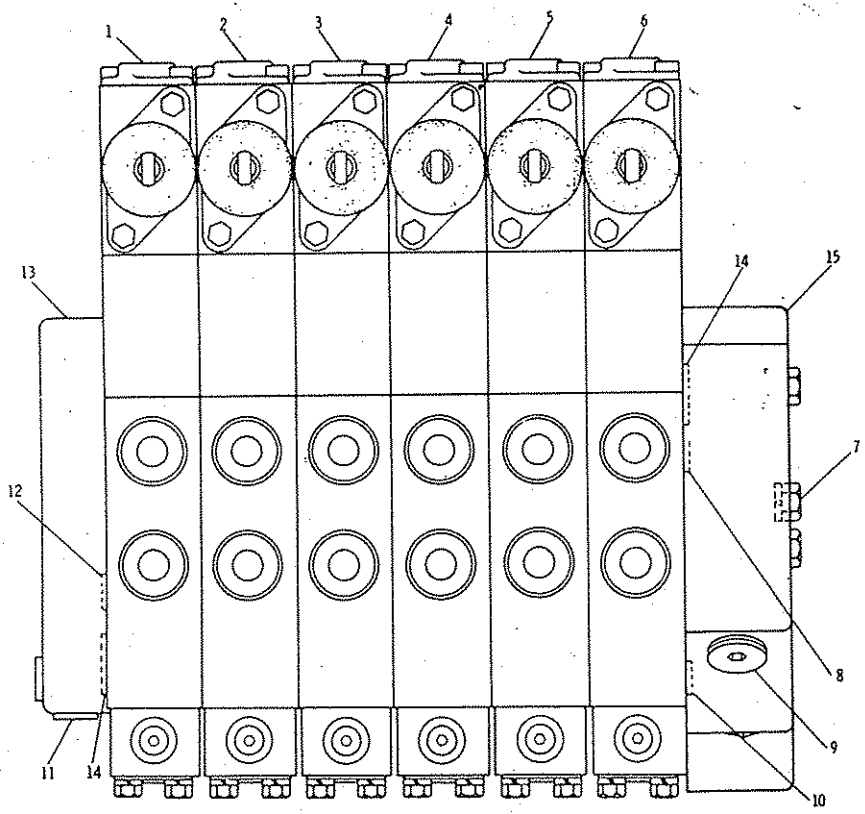

	REF. NO.	PART NUMBER	DESCRIPTION	QTY
C	1	8J5961	VALVE GROUP----(dozer)----------	1
C	2	8J5961	VALVE GROUP----(scarifier)------	1
	3	8J5961	VALVE GROUP----(blade lift)------	1
	4	8J5906	VALVE GROUP----(wheel lean)----	1
	5	8J5906	VALVE GROUP----(center shift)----	1
	6	8J5907	VALVE GROUP----(articulation)----	1
			(Separate Illustration)	
	7	5P1415	BOLT----------	3
		3B4506	LOCKWASHER----------	3
	8	4J5351	SEAL----------	7
	9	9S8005	PLUG----------	1
		3K360	SEAL----------	1
	10	6J3134	SEAL----------	7
	11	9S8004	PLUG----------	2
		3J1907	SEAL----------	2
	12	8J1699	SEAL----------	7
	13	8J7267	MANIFOLD----------	1
	14	4M8303	SEAL----------	14
	15	8J5917	MANIFOLD----------	1

C INDICATES CHANGE

173349

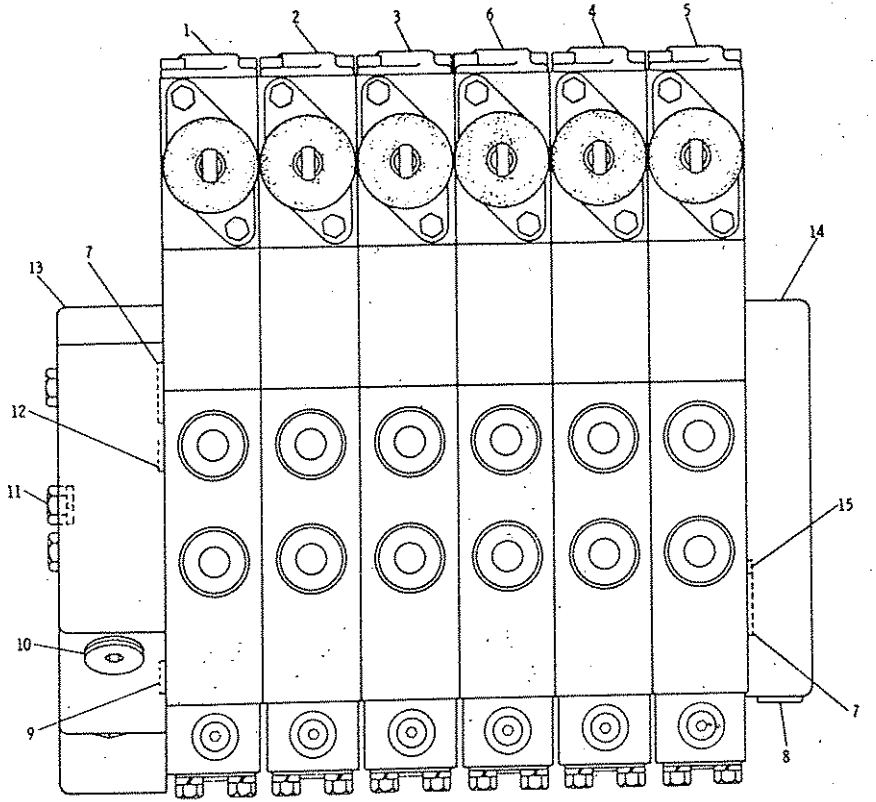

REF. NO.	PART NUMBER	DESCRIPTION	QTY
1	8J5908	VALVE GROUP----(blade tip)----	1
2	8J5903	VALVE GROUP----(circle drive)----	1
3	8J5902	VALVE GROUP----(side shift)----	1
4	8J5902	VALVE GROUP----(wing tip)----	1
5	8J5902	VALVE GROUP----(wing slide)----	1
6	8J5961	VALVE GROUP----(blade lift)----	1
		(Separate Illustration)	
7	4M8303	SEAL----	14
8	9S8004	PLUG----	1
	3J1907	SEAL----	1
9	6J3134	SEAL----	1
10	9S8005	PLUG----	1
	3K360	SEAL----	1
11	5P1415	BOLT----	3
	3B4506	LOCKWASHER----	3
12	4J5351	SEAL----	7
13	8J5918	MANIFOLD----	1
14	8J7268	MANIFOLD----	1
15	8J1699	SEAL----	7

9J1216 CONTROL VALVE GROUP—Blade Lift, Blade Tip, Circle Drive, Side Shift, Wing Tip & Slide
Part of 9D8525 and 9D8515 Linkage and Valve Groups shown on Pages 261 & 262
8J5961, 8J5903, 8J5908 and 8J5902 Valve parts are shown on Pages 265, 266, 274 & 275
AN ATTACHMENT

9J1224 CONTROL VALVE GROUP—Circle Drive, Side Shift, Blade Lift, Wing Tip and Slide
Part of 9D5270 Linkage and Valve Group shown on Page 263
8J5961, 8J5903 and 8J5902 Valve parts are shown on Pages 265, 266 & 275
AN ATTACHMENT

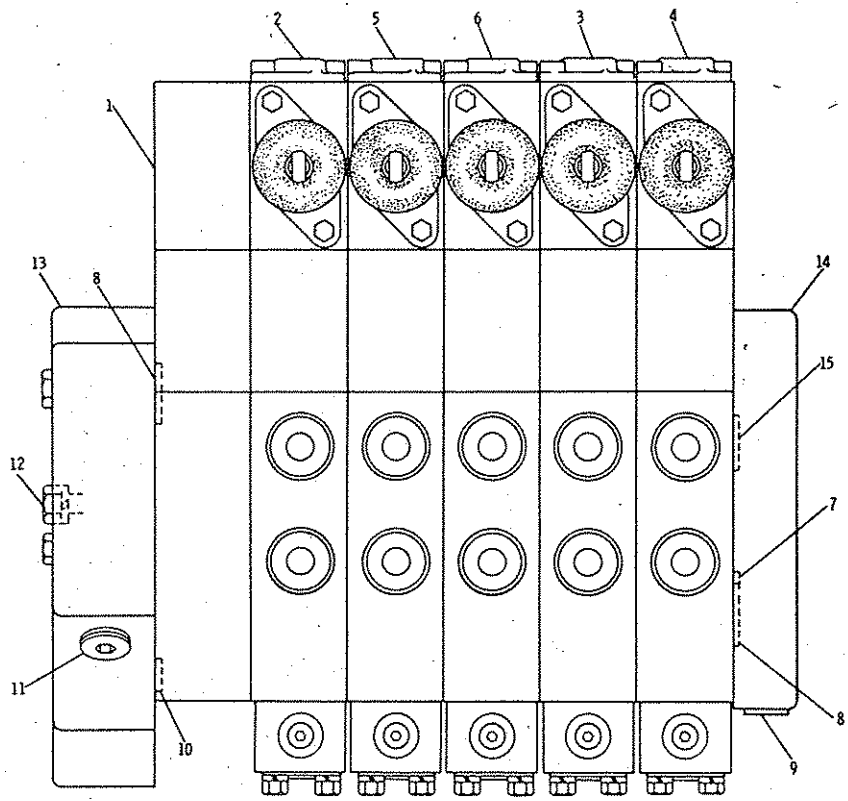

REF. NO.	PART NUMBER	DESCRIPTION	QTY
1	9D6598	SPACER	1
2	8J5903	VALVE GROUP—(circle drive)	1
3	8J5902	VALVE GROUP—(wing tip)	1
4	8J5902	VALVE GROUP—(wing slide)	1
5	8J5902	VALVE GROUP—(side shift)	1
6	8J5961	VALVE GROUP—(blade lift) (Separate Illustration)	1
7	8J1699	SEAL	7
8	4M8303	SEAL	14
9	9S8004	PLUG	1
	3J1907	SEAL	1
10	6J3134	SEAL	7
11	9S8005	PLUG	1
	3K360	SEAL	1
12	5P1415	BOLT	3
	3B4506	LOCKWASHER	3
13	5J5918	MANIFOLD	1
14	8J7268	MANIFOLD	1
15	4J5351	SEAL	7

156450

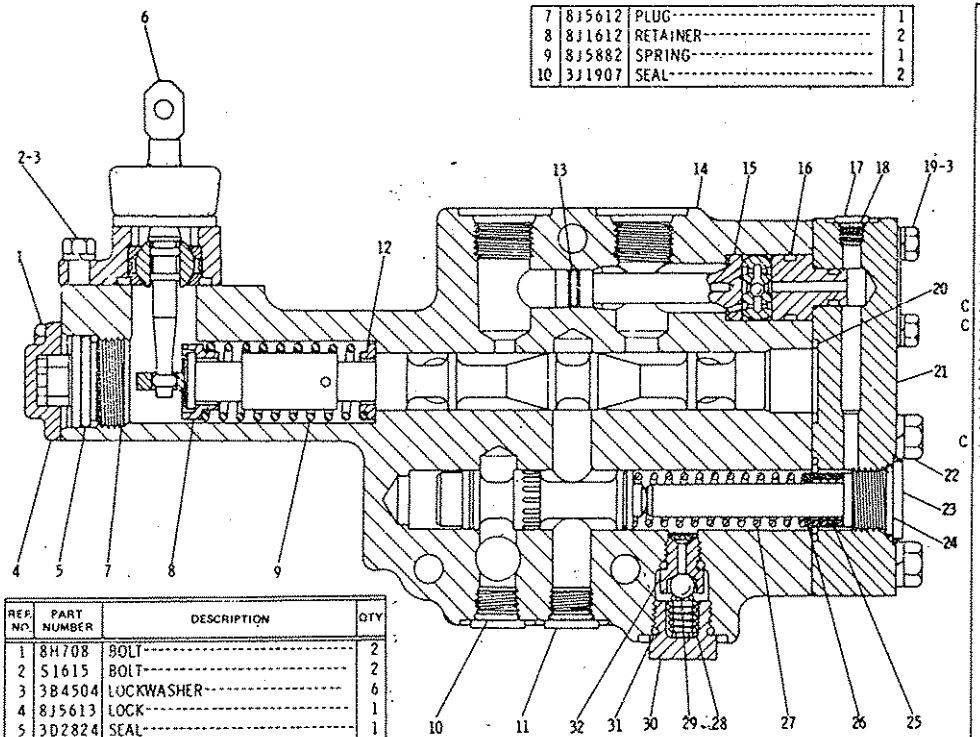

REF. NO.	PART NUMBER	DESCRIPTION	QTY
1	8H708	BOLT	2
2	S1615	BOLT	2
3	3B4504	LOCKWASHER	6
4	8J5613	LOCK	1
5	3D2824	SEAL	1
6	9J2012	LEVER GROUP (Separate Illustration)	1
7	8J5612	PLUG	1
8	8J1612	RETAINER	2
9	8J5882	SPRING	1
10	3J1907	SEAL	2
11	9S8004	SEAL	2
12	8J6114	RETAINER	2
13	6J3134	SEAL	2
14	8J5884	VALVE GROUP	1
15	8J1624	VALVE ASSEM.	1
16	4J5351	SEAL	1
17	9S8001	PLUG	1
18	4J7533	SEAL	1
19	9F7022	BOLT	4
20	7J9933	SEAL	2
21	8J1627	COVER	1
22	1H5514	BOLT	4
	3B4505	LOCKWASHER	4
23	8J1628	PLUG	1
24	2M9780	SEAL	1
C 25	8J6263	SPACER	3
C 26	8J1629	SHIM	5
27	8J1630	SPRING	1
28	8J1632	SPRING	1
29	4B9880	BALL	1
30	8J5576	PLUG	1
31	3K360	SEAL	1
C 32	9J7157	SEAT ASSEM.	1
	3J7354	SEAL	1

C INDICATES CHANGE

155493

8J5908 CONTROL VALVE GROUP—Scarifier, Bulldozer, Snowplow and Blade Tip—Type 1
Part of 8J6172 and 9J1216 Control Valve Groups shown on Pages 269 & 272
9J2012 Lever parts are shown on Page 253. AN ATTACHMENT

8J5908 CONTROL VALVE GROUP—Scarifier, Bulldozer, Snowplow and Blade Tip—Type 2

Part of 8J6172 and 9J1216 Control Valve Groups shown on Pages 269 and 272

1U4661 Lever parts are shown on Page 253

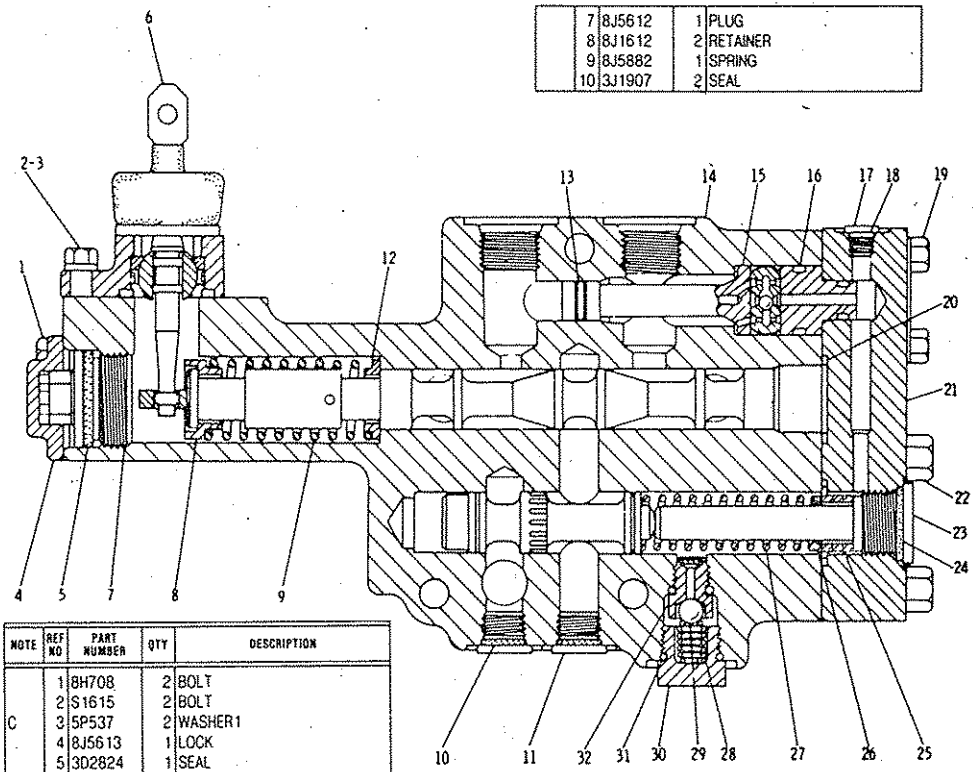

	7	8J5612	1	PLUG
	8	8J1612	2	RETAINER
	9	8J5882	1	SPRING
	10	3J1907	2	SEAL

	11	9S8004	2	SEAL
	12	8J6114	2	RETAINER
	13	6J3134	2	SEAL
	14	8J5884	1	VALVE GROUP
	15	8J1624	1	VALVE ASSEM.
	16	4J5351	1	SEAL
	17	9S8001	1	PLUG
	18	4J7533	1	SEAL
	19	9F7022	4	BOLT
	20	7J9933	2	SEAL
	21	8J1627	1	COVER
C	22	1A9579	4	BOLT
	23	8J1628	1	PLUG
	24	2M9780	1	SEAL
	25	8J6263	3	SPACER
	26	8J1629	5	SHIM
	27	8J1630	1	SPRING
	28	8J1632	1	SPRING
	29	4B9880	1	BALL
	30	8J5576	1	PLUG
	31	3K360	1	SEAL
	32	9J7157	1	SEAT ASSEM.
		3J7354	1	SEAL

NOTE	REF NO	PART NUMBER	QTY	DESCRIPTION
	1	8H708	2	BOLT
	2	S1615	2	BOLT
C	3	5P537	2	WASHER1
	4	8J5613	1	LOCK
	5	3D2824	1	SEAL
CY	6	1U4661	1	LEVER GROUP

C INDICATES CHANGE
Y SEPARATE ILLUSTRATION

309014

8J5902 CONTROL VALVE GRQUP—Wing Tip, Wing Slide and Side Shift—Type 1
Part of 8J6172, 9J1226, 9J1216 and 9J1224 Control Valve Groups shown on Pages 269, 272 & 273
9J2012 Lever parts shown on Page 253. AN ATTACHMENT

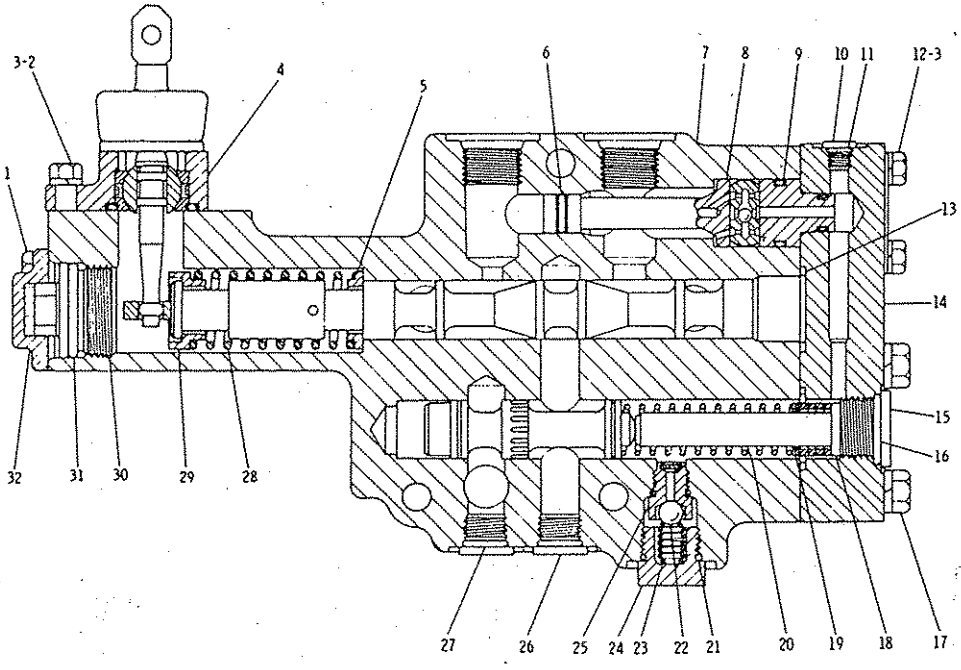

REF. NO.	PART NUMBER	DESCRIPTION	QTY
1	8H708	BOLT	2
2	S1615	BOLT	2
3	3B4504	LOCKWASHER	6
C 4	9J2012	LEVER GROUP (Separate Illustration)	1
5	8J6114	RETAINER	2
6	6J3134	SEAL	2
7	8J5886	VALVE GROUP	1
8	8J1624	VALVE ASSEM.	1
9	4J5351	SEAL	1
10	9S8001	PLUG	1
11	4J7533	SEAL	1
12	9F7022	BOLT	4
13	7J9933	SEAL	2
14	8J1627	COVER	1
15	8J1628	PLUG	1
16	2M9780	SEAL	1
17	1H5514	BOLT	4
	3B4505	LOCKWASHER	4
18	8J6263	SPACER	4
C 19	8J1629	SHIM	5
20	8J1630	SPRING	1
21	3K360	SEAL	1
22	4B9880	BALL	1
23	8J1632	SPRING	1
24	8J5576	PLUG	1
C 25	9J7157	SEAT ASSEM.	1
	3J7354	SEAL	1
26	9S8004	PLUG	2
27	3J1907	SEAL	2
28	8J5882	SPRING	1
29	8J1612	RETAINER	2
30	8J5612	PLUG	1
31	3D2824	SEAL	1
32	8J5613	LOCK	1

C INDICATES CHANGE 207396

8J5902 CONTROL VALVE GROUP—Wing Tip, Wing Slide & Side Shift—Type 2

Part of 8J6172, 9J1226, 9J1216 and 9J1224 Control Valve Groups shown on Pages 269, 272 & 273

1U4661 Lever parts are shown on Page 253

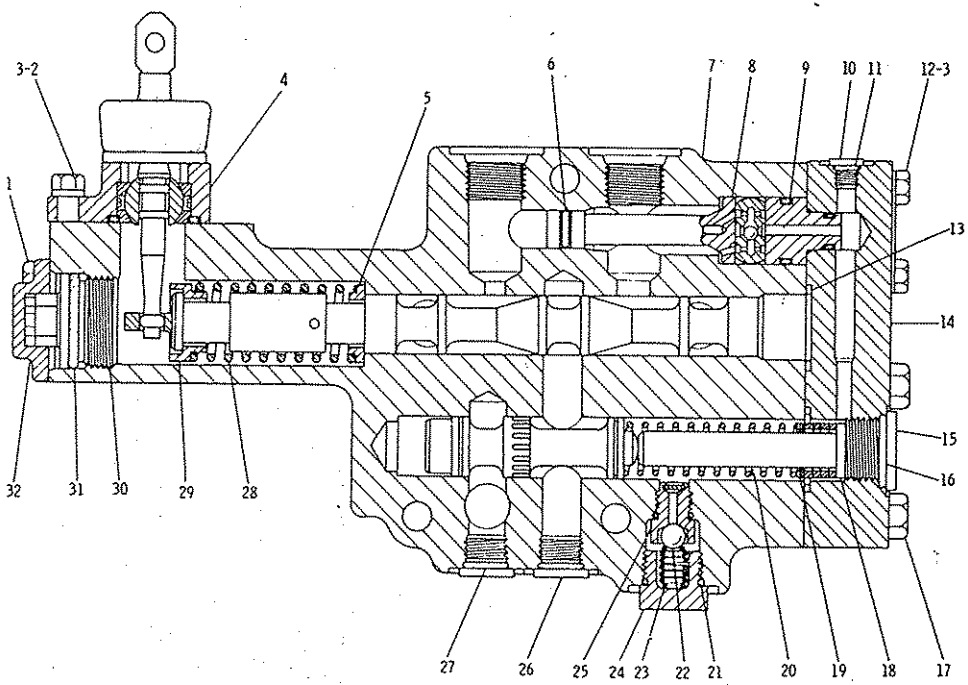

C	REF. NO.	PART NUMBER	DESCRIPTION	QTY
	1	8H708	BOLT	2
	2	S1615	BOLT	2
C	3	5P537	WASHER	2
C	4	1U4661	LEVER GROUP (Separate Illustration)	1
	5	8J6114	RETAINER	2
	6	6J3134	SEAL	2
	7	8J5886	VALVE GROUP	1
	8	8J1624	VALVE ASSEM.	1
	9	4J5351	SEAL	1
	10	9S8001	PLUG	1
	11	4J7533	SEAL	1
	12	9F7022	BOLT	4
	13	7J9933	SEAL	2
	14	8J1627	COVER	1
	15	8J1628	PLUG	1
	16	2M9780	SEAL	1
C	17	1A9579	BOLT	4
	18	8J6263	SPACER	4
	19	8J1629	SHIM	5
	20	8J1630	SPRING	1
	21	3K360	SEAL	1
	22	4B9880	BALL	1
	23	8J1632	SPRING	1
	24	8J5576	PLUG	1
	25	9J7157	SEAT ASSEM.	1
		3J7354	SEAL	1
	26	9S8004	PLUG	2
	27	3J1907	SEAL	2
	28	8J5882	SPRING	1
	29	8J1612	RETAINER	2
	30	8J5612	PLUG	1
	31	3D2824	SEAL	1
	32	8J5613	LOCK	1

C INDICATES CHANGE

309012

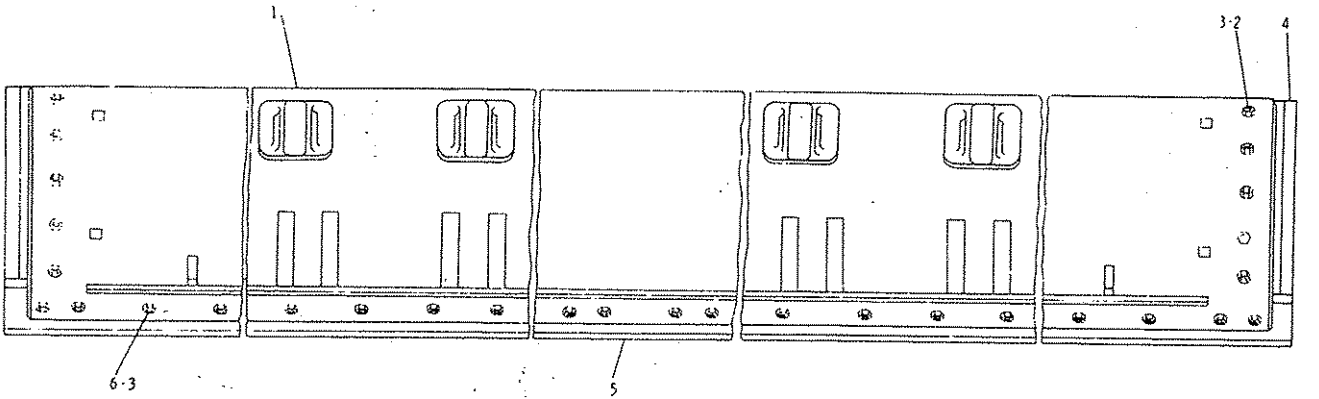

REF NO.	PART NUMBER	DESCRIPTION	QTY
1	5D2219	MOLDBOARD ASSEM.	1
2	4F3654	BOLT	10
3	4K367	NUT	36
4	7D2052	BIT	2

5	5D9553	CUTTING EDGE	2
6	3F5108	BOLT	26

202563

9D740 BLADE GROUP—3.66 m (12 Ft.)

2G6059 BLADE GROUP—3.66 m (12 Ft.)
Part of 2G6321 Power Blade and 2G6316 Power Blade and Tip Arrangements listed on Page 279
AN ATTACHMENT

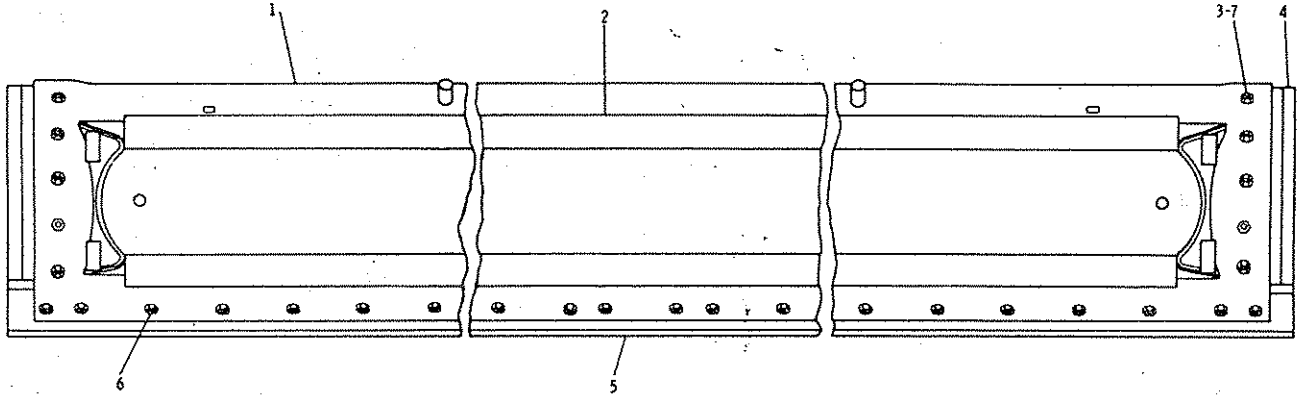

REF. NO.	PART NUMBER	DESCRIPTION	QTY
1	2G6063	MOLDBOARD ASSEM. (Includes)	1
2	7B5030	RAIL	2
3	4K367	NUT	36
4	7D2052	BIT	2
5	5D9553	CUTTING EDGE	2
6	3F5108	BOLT	26
7	4F3654	BOLT	10

162064

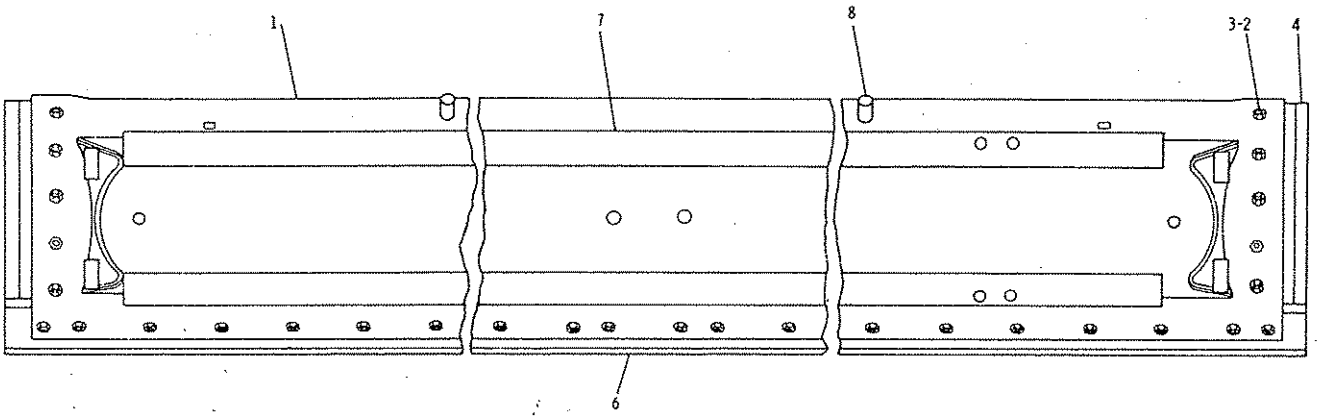

	REF. NO.	PART NUMBER	DESCRIPTION	QTY
	1	9D9796	MOLDBOARD ASSEM.	1
	2	3F5108	BOLT	40
	3	4K367	NUT	40
	4	7D2052	BIT	2
	6	5D9554	CUTTING EDGE	2
C	7	883401	RAIL	2
C	8	5T279	BOSS	2

C INDICATES CHANGE

182364

9D9780 BLADE GROUP—4.27 m (14 Ft.)
Part of 2G430 Power Blade and 2G460 Power Blade and Tip Arrangements listed on Page 279
AN ATTACHMENT

2G6321 ARRANGEMENT--3.66 M (12 FT.)

		Consists of:	Page
1	9D2670	Circle Group	187
1	9D9830	Blade Shift Cylinder and Mounting Group.	244
1	2G3520	Blade Shift Lines Group	228
1	2G6059	Blade Group	277

2G430 ARRANGEMENT--4.27 M (14 FT.)

		Consists of:	
1	9D2670	Circle Group	187
1	9D9780	Blade Group	278
1	9D9830	Blade Shift Cylinder and Mounting Group.	244
1	2G3520	Blade Shift Lines Group	228

POWER BLADE ARRANGEMENTS
AN ATTACHMENT

2G6316 ARRANGEMENT--3.66 M (12 FT.)

		Consists of:	Page
1	7D9955	Blade Tip Cylinder and Mounting Group...	244
1	9D3210	Circle Group	188
1	9D9830	Blade Shift Cylinder and Mounting Group.	244
1	2G3510	Blade Tip Lines Group	227
1	2G3520	Blade Shift Lines Group	228
1	2G6059	Blade Group	277

2G460 ARRANGEMENT--4.27 M (14 FT.)

		Consists of:	
1	7D9955	Blade Tip Cylinder and Mounting Group ..	244
1	9D3210	Circle Group	188
1	9D9780	Blade Group	278
1	9D9830	Blade Shift Cylinder and Mounting Group.	244
1	2G3510	Blade Tip Lines Group	227
1	2G3520	Blade Shift Lines Group	228

POWER BLADE AND TIP ARRANGEMENTS
AN ATTACHMENT

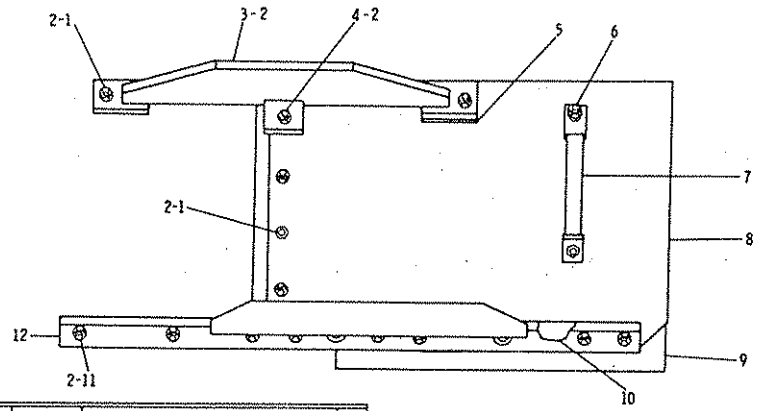

REF. NO.	PART NUMBER	DESCRIPTION	QTY
1	3F5108	BOLT	5
2	4K367	NUT	15
3	9D5576	PLATE ASSEM.	1
4	4F3658	BOLT	2
5	9D5596	PLATE	1
6	4F3664	BOLT	2
	1D4720	NUT	2
	3B4510	LOCKWASHER	2
7	4B7769	SOCKET ASSEM.	1
8	3B6197	EXTENSION	1
9	1D5728	CUTTING EDGE	1
10	9B1565	SPACER	3
11	4F3657	BOLT	8
12	6D7563	ANGLE ASSEM.	1

200570

9D4924 BLADE EXTENSION GROUP—.61 m (2 Ft.)—R.H.
FOR USE WITH POWER BLADE. AN ATTACHMENT

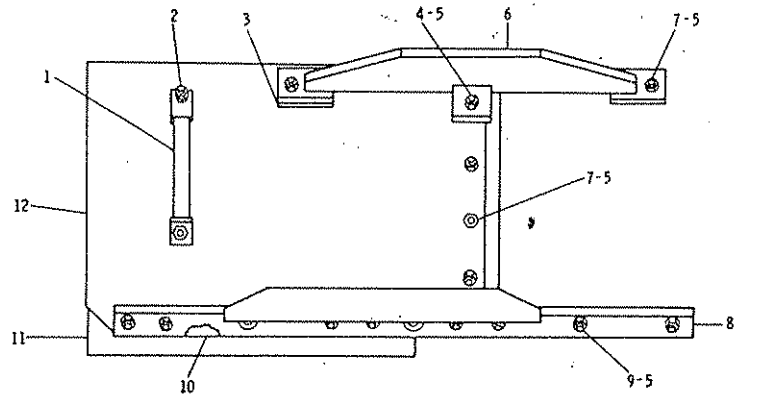

REF. NO.	PART NUMBER	DESCRIPTION	QTY
1	4B7769	SOCKET ASSEM.	1
2	4F3664	BOLT	2
	1D4720	NUT	2
	3B4510	LOCKWASHER	2
3	9D5596	PLATE	1
4	4F3658	BOLT	2
5	4K367	NUT	15
6	9D6034	PLATE ASSEM.	1
7	3F5108	BOLT	5
8	6D7564	ANGLE ASSEM.	1
9	4F3657	BOLT	8
10	9B1566	SPACER	3
11	1D5728	CUTTING EDGE	1
12	3B6198	EXTENSION	1

200571

9D4925 BLADE EXTENSION GROUP—.61 m (2 Ft.)—L.H.
FOR USE WITH POWER BLADE. AN ATTACHMENT

		Consists of:	Page
1	2G6540	Scarifier Cylinder and Mounting Group ..	247
1	2G6545	Scarifier Hydraulic Lines Group	238
1	2G6585	Hydraulic Scarifier Group	282

2G6845 VEE SCARIFIER ARRANGEMENT
AN ATTACHMENT

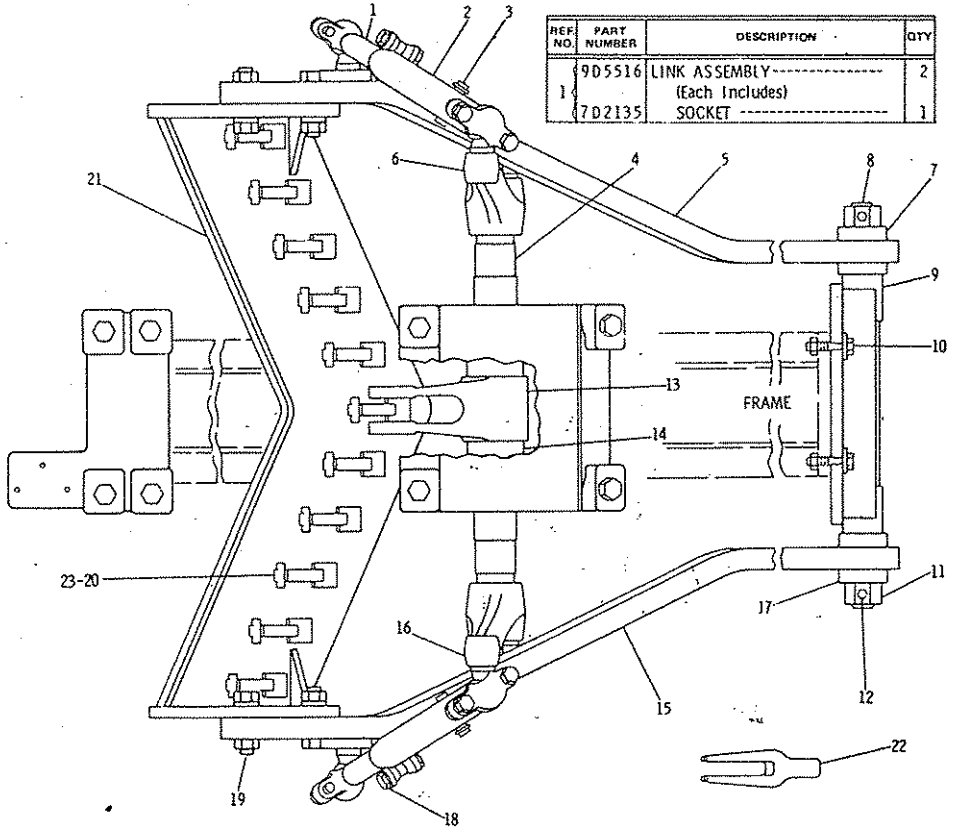

REF. NO.	PART NUMBER	DESCRIPTION	QTY
1	9D5516	LINK ASSEMBLY	2
		(Each Includes)	
	7D2135	SOCKET	1

2	7D2196	SLEEVE ASSEM.	2
		(Each Includes)	
	7D2136	SOCKET	1
3	5D8161	PIN	2
	5D8159	PIN ASSEM.	2
4	2G1257	SHAFT	1
5	2G4334	DRAWBAR ASSEM.	1
		(Includes)	
6	2G6561	BALLSTUD ASSEM.	1
		(Includes)	
	7D8245	BALLSTUD	1
7	2G7728	COLLAR	2
8	2G7309	SHAFT	1
9	2G4348	BOLSTER ASSEM.	1
10	1D4610	BOLT	4
	1B4331	NUT	4
	2V936	WASHER	4
11	5B577	COLLAR	2
12	L2315	BOLT	2
	1B4205	NUT	2
C	5P8245	WASHER	2
13	8D8239	ARM	1
14	2G5729	SPACER	2
15	2G4336	DRAWBAR ASSEM.	1
		(Includes)	
16	2G6561	BALLSTUD ASSEM.	1
		(Includes)	
	7D8245	BALLSTUD	1
17	2G7728	COLLAR	2
18	1A224	BOLT	2
	1B4208	NUT	2
	8H4040	BOLT	4
19	3D4904	LOCKNUT	4
	3S1349	WASHER	4
C 20	5K1459	PIN	11
21	2G4332	BLOCK ASSEM.	1
22	6B3260	TOOL	1
C 23	5K1458	GROMMET	11

C INDICATES CHANGE 175733

2G6585 SCARIFIER GROUP—Top View—Type 1
Part of 2G6845 Vee Scarifier Arrangement listed on Page 281
AN ATTACHMENT

2G6585 SCARIFIER GROUP—Side View—Type 1

Part of 2G6845 Vee Scarifier Arrangement listed on Page 281

AN ATTACHMENT

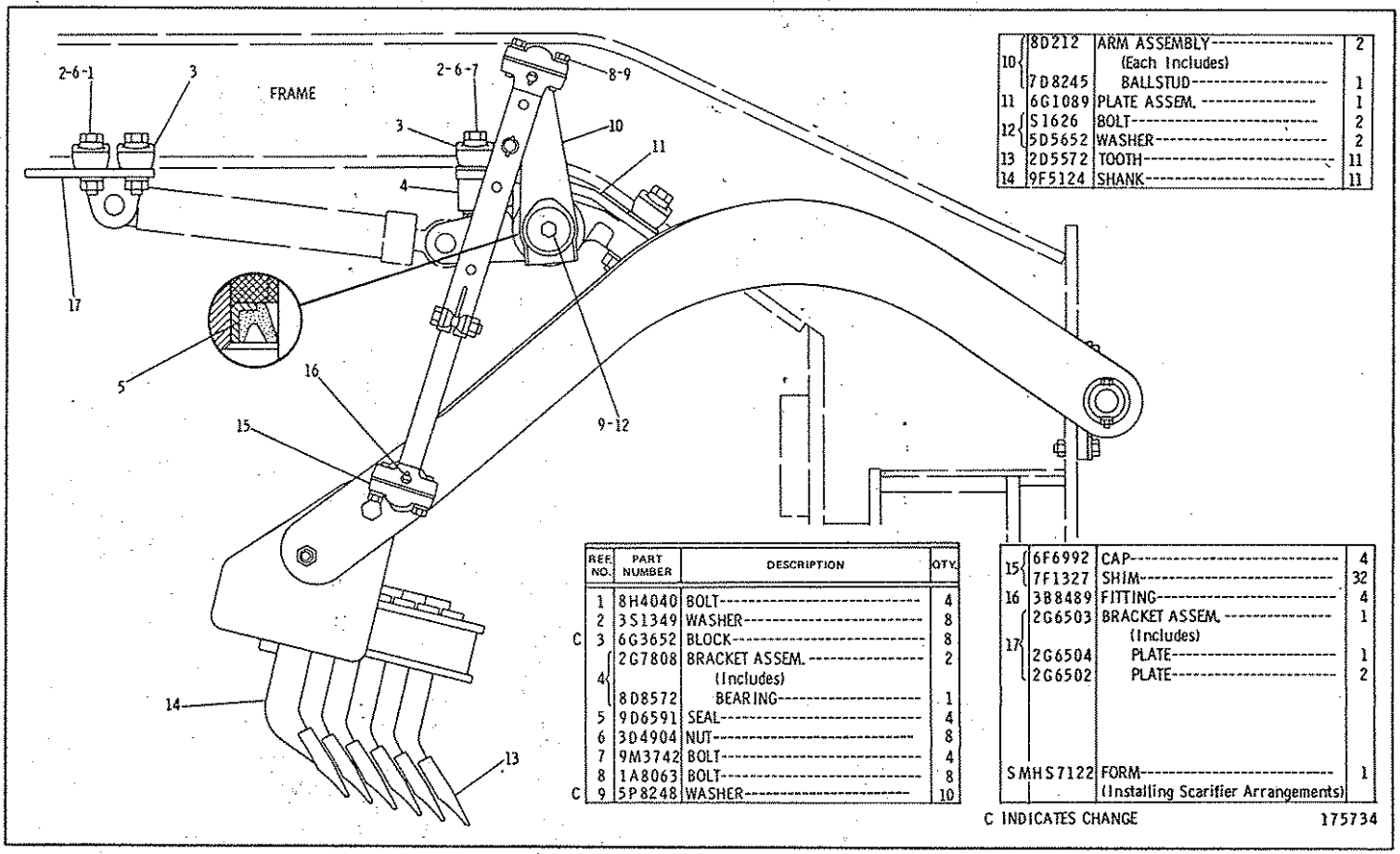

10	8D212	ARM ASSEMBLY (Each Includes)	2
	7D8245	BALLSTUD	1
11	6G1089	PLATE ASSEM.	1
12	S1626	BOLT	2
	5D5652	WASHER	2
13	2D5572	TOOTH	11
14	9F5124	SHANK	11

	REF. NO.	PART NUMBER	DESCRIPTION	QTY.
	1	8H4040	BOLT	4
	2	3S1349	WASHER	8
C	3	6G3652	BLOCK	8
	4	2G7808	BRACKET ASSEM. (Includes)	2
		8D8572	BEARING	1
	5	9D6591	SEAL	4
	6	3D4904	NUT	8
	7	9M3742	BOLT	4
	8	1A8063	BOLT	8
C	9	5P8248	WASHER	10

15	6F6992	CAP	4
	7F1327	SHIM	32
16	3B8489	FITTING	4
17	2G6503	BRACKET ASSEM. (Includes)	1
	2G6504	PLATE	1
	2G6502	PLATE	2
	SMHS7122	FORM (Installing Scarifier Arrangements)	1

C INDICATES CHANGE

175734

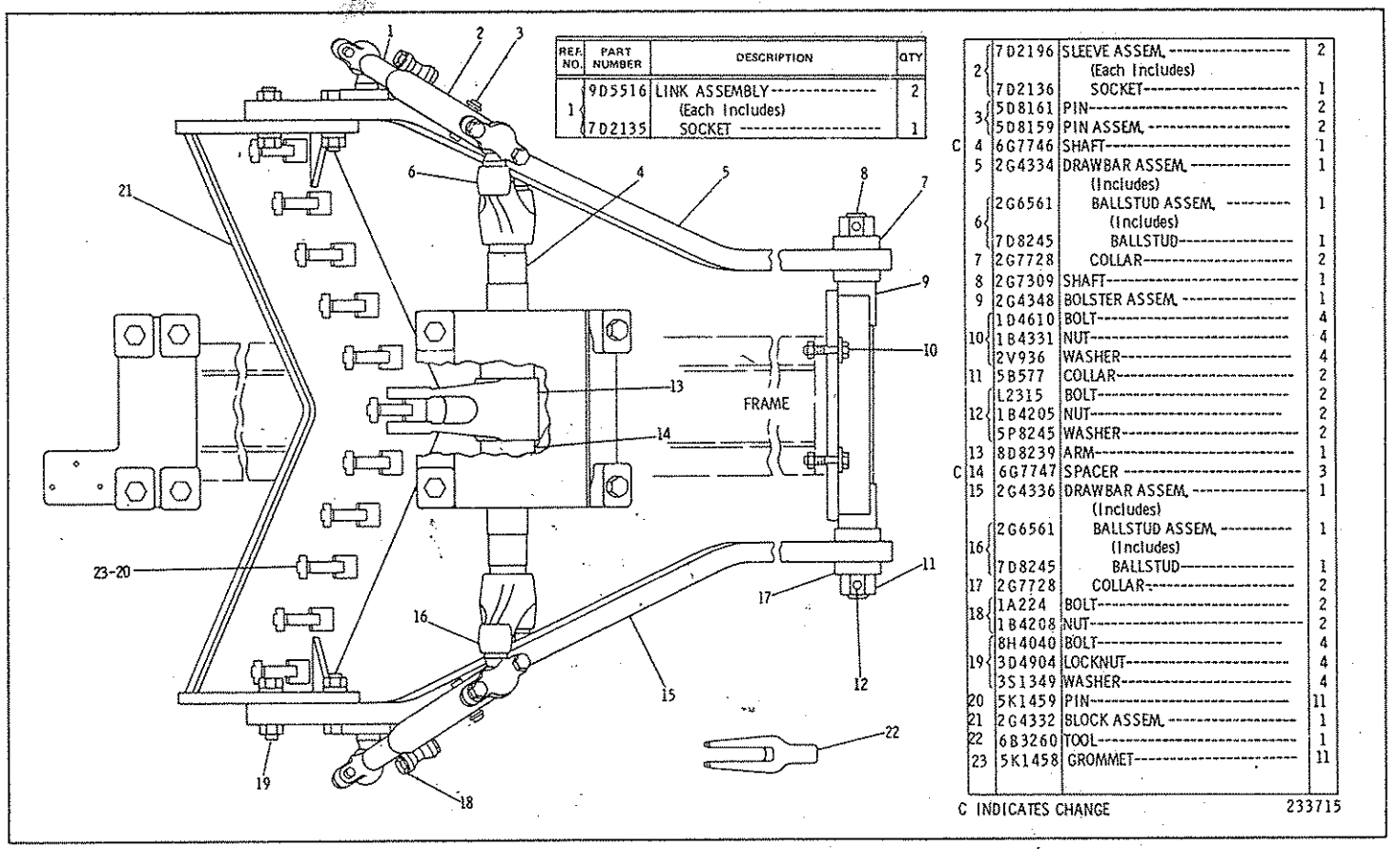

2	7D2196	SLEEVE ASSEM.	2
		(Each Includes)	
	7D2136	SOCKET	1
3	5D8161	PIN	2
3	5D8159	PIN ASSEM.	2
C 4	6G7746	SHAFT	1
5	2G4334	DRAWBAR ASSEM.	1
		(Includes)	
6	2G6561	BALLSTUD ASSEM.	1
		(Includes)	
	7D8245	BALLSTUD	1
7	2G7728	COLLAR	2
8	2G7309	SHAFT	1
9	2G4348	BOLSTER ASSEM.	1
10	1D4610	BOLT	4
	1B4331	NUT	4
	2V936	WASHER	4
11	5B577	COLLAR	2
12	L2315	BOLT	2
	1B4205	NUT	2
	5P8245	WASHER	2
13	8D8239	ARM	1
C 14	6G7747	SPACER	3
15	2G4336	DRAWBAR ASSEM.	1
		(Includes)	
16	2G6561	BALLSTUD ASSEM.	1
		(Includes)	
	7D8245	BALLSTUD	1
17	2G7728	COLLAR	2
18	1A224	BOLT	2
	1B4208	NUT	2
19	8H4040	BOLT	4
	3D4904	LOCKNUT	4
	3S1349	WASHER	4
20	5K1459	PIN	11
21	2G4332	BLOCK ASSEM.	1
22	6B3260	TOOL	1
23	5K1458	GROMMET	11

C INDICATES CHANGE 233715

2G6585 SCARIFIER GROUP—Top View—Type 2
Part of 2G6845 Vee Scarifier Arrangement listed on Page 281
AN ATTACHMENT

2G6585 SCARIFIER GROUP—Side View—Type 2
Part of 2G6845 Vee Scarifier Arrangement listed on Page 281
AN ATTACHMENT

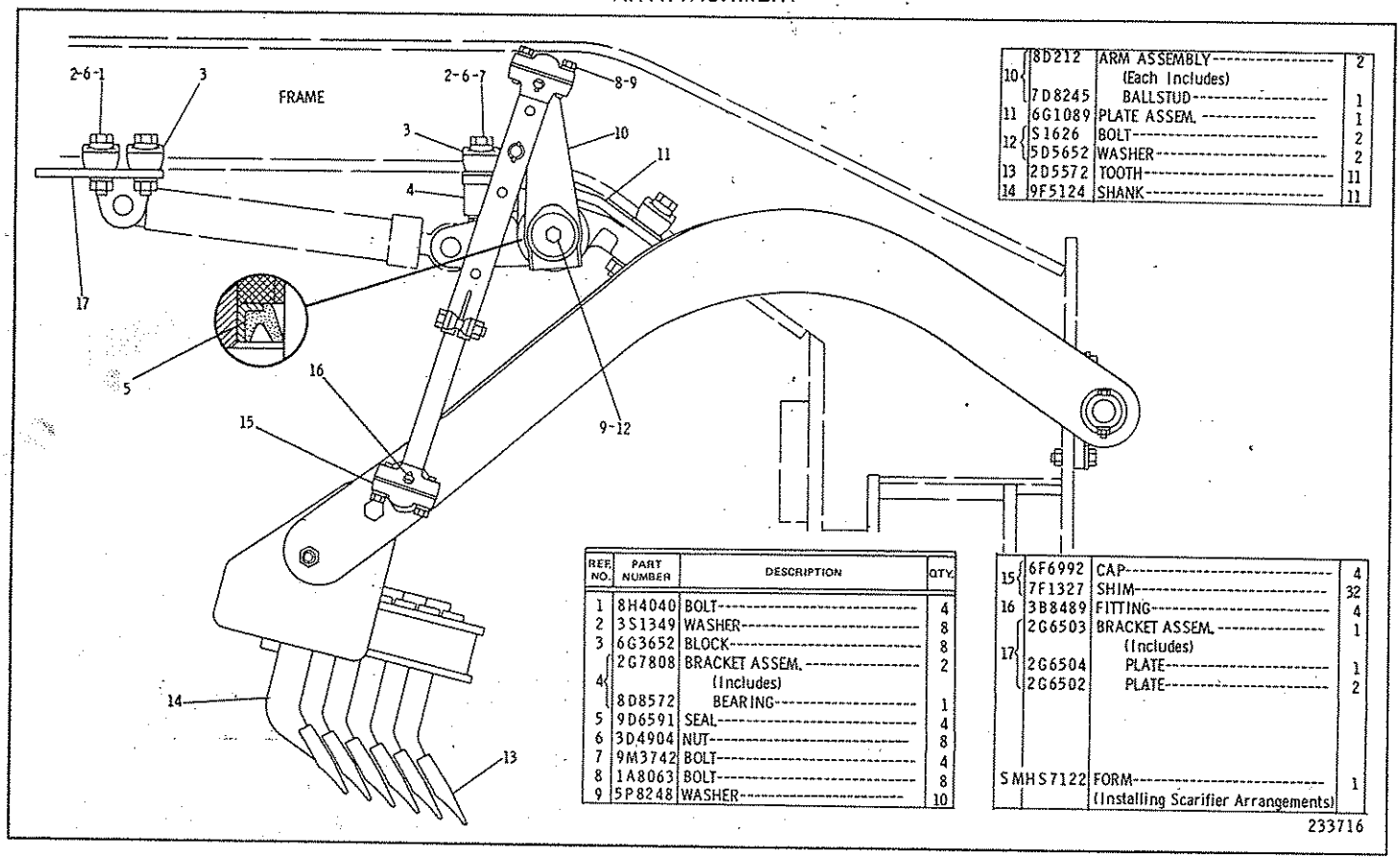

REF. NO.	PART NUMBER	DESCRIPTION	QTY.
1	8H4040	BOLT	4
2	3S1349	WASHER	8
3	6G3652	BLOCK	8
4	2G7808	BRACKET ASSEM. (Includes)	2
	8D8572	BEARING	1
5	9D6591	SEAL	4
6	3D4904	NUT	8
7	9M3742	BOLT	4
8	1A8063	BOLT	8
9	5P8248	WASHER	10

10	8D212	ARM ASSEMBLY (Each Includes)	2
	7D8245	BALLSTUD	1
11	6G1089	PLATE ASSEM.	1
12	S1626	BOLT	2
	5D5652	WASHER	2
13	2D5572	TOOTH	11
14	9F5124	SHANK	11

15	6F6992	CAP	4
	7F1327	SHIM	32
16	3B8489	FITTING	4
17	2G6503	BRACKET ASSEM. (Includes)	1
	2G6504	PLATE	1
	2G6502	PLATE	2
	SMHS7122	FORM (Installing Scarifier Arrangements)	1

233716

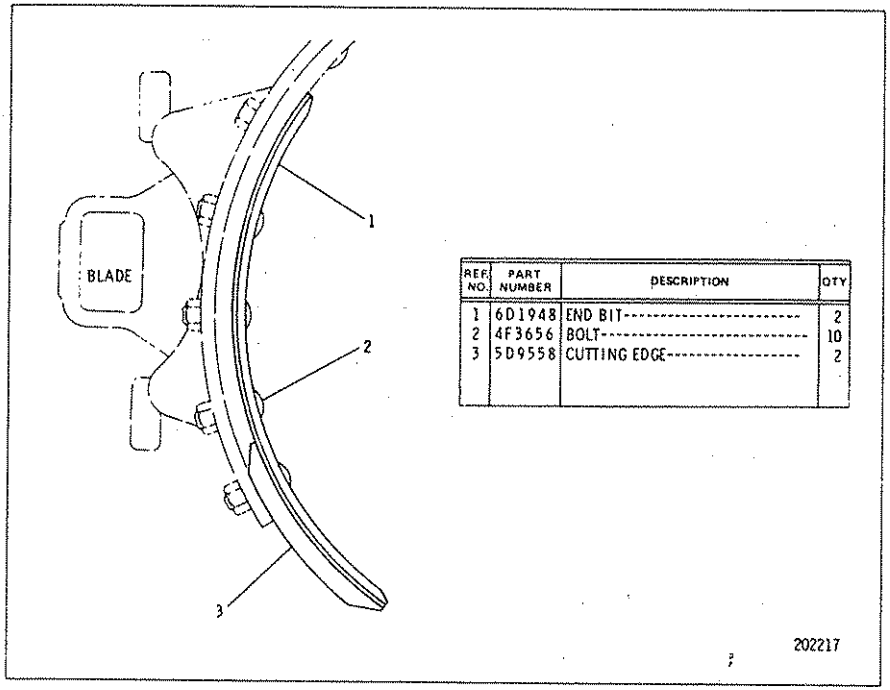

REF. NO.	PART NUMBER	DESCRIPTION	QTY
1	6D1948	END BIT	2
2	4F3656	BOLT	10
3	5D9558	CUTTING EDGE	2

9D6780 CUTTING EDGE AND END BIT GROUP—3.66 m (12 Ft.)

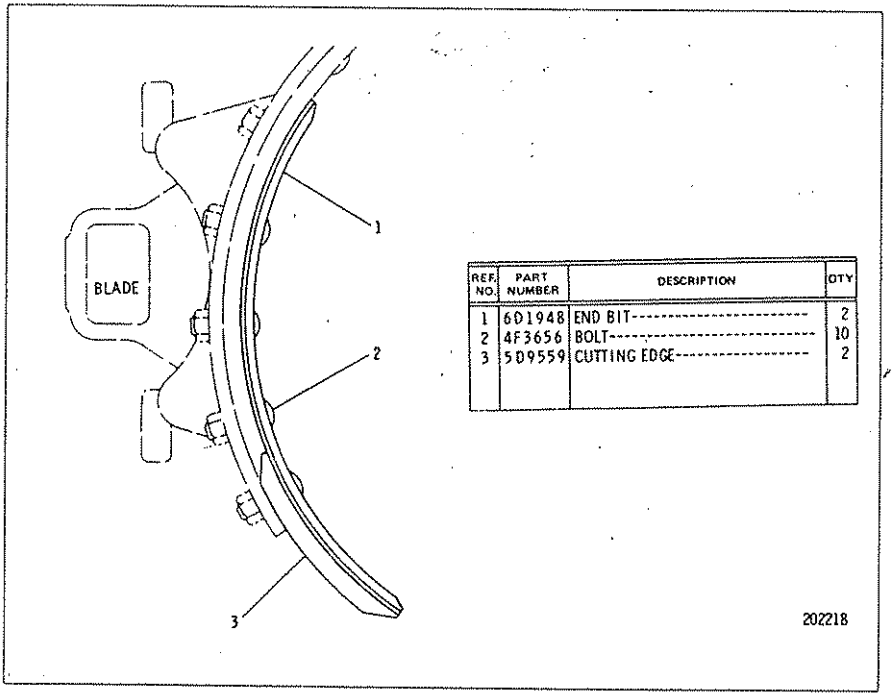

REF. NO.	PART NUMBER	DESCRIPTION	QTY
1	6D1948	END BIT	2
2	4F3656	BOLT	10
3	5D9559	CUTTING EDGE	2

9D6770 CUTTING EDGE AND END BIT GROUP—4.27 m (14 Ft.)

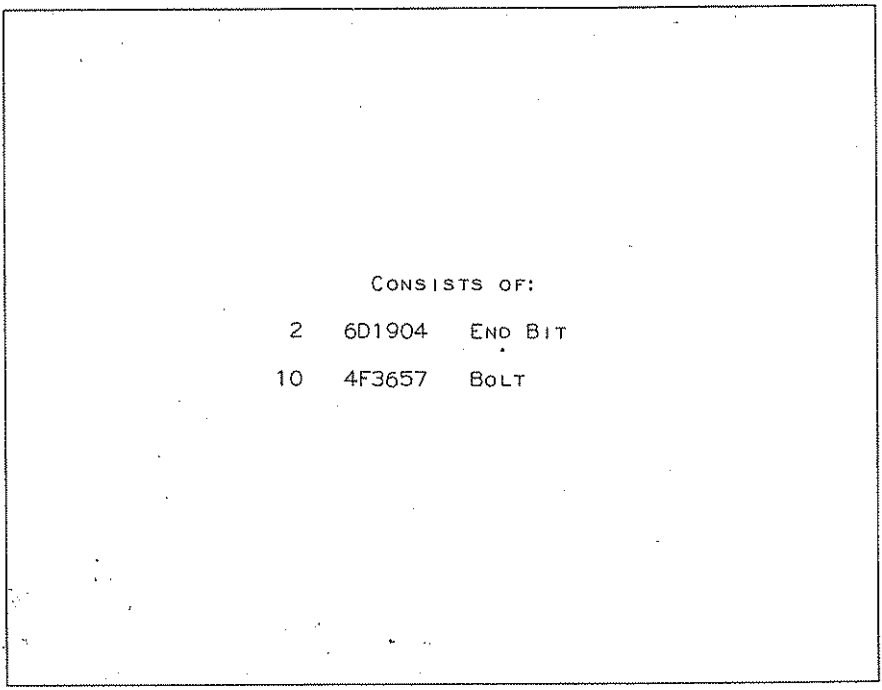

CONSISTS OF:

2	6D1904	END BIT
10	4F3657	BOLT

7D6671 END BIT OVERLAY GROUP
FOR USE WITH 6 INCH CUTTING EDGE
AN ATTACHMENT

CONSISTS OF:

2	4T2243	CUTTING EDGE--STRAIGHT--1.83 M (6 FT.)-- 203.2 MM (8 IN.) WIDE & 25.4 MM (1 IN.) THICK
2	4T2244	CUTTING EDGE--CURVED--1.83 M (6 FT.)-- 203.2 MM (8 IN.) WIDE & 25.4 MM (1 IN.) THICK
2	4T2231	CUTTING EDGE--CURVED--1.83 M (6 FT.)-- 203.2 MM (8 IN.) WIDE & 25.4 MM (1 IN.) THICK
2	4T2232	CUTTING EDGE--STRAIGHT--1.83 M (6 FT.)-- 203.2 MM (8 IN.) WIDE & 25.4 MM (1 IN.) THICK

CUTTING EDGE REPLACEMENT—Field Installation
FOR USE WITH 3.66 m (12 Ft.) BLADE GROUP

CONSISTS OF:

2	4T2241	CUTTING EDGE--STRAIGHT--2.13 M (7 FT.)-- 203.2 MM (8 IN.) WIDE & 25.4 MM (1 IN.) THICK
2	4T2242	CUTTING EDGE--CURVED--2.13 M (7 FT.)-- 203.2 MM (8 IN.) WIDE & 25.4 MM (1 IN.) THICK

CUTTING EDGE REPLACEMENT—Field Installation
FOR USE WITH 4.27 m (14 Ft.) BLADE GROUP

CONSISTS OF:

2	4T3509	CUTTING EDGE (SERRATED) FLAT 1219 MM (48 IN.) LONG X 203.2 MM (8 IN.) WIDE
2	4T3510	CUTTING EDGE (SERRATED) FLAT 1524 MM (60 IN.) LONG X 203.2 MM (8 IN.) WIDE
2	4T3511	CUTTING EDGE (SERRATED) CURVED 1524 MM (60 IN.) LONG X 203.2 MM (8 IN.) WIDE
2	4T3512	CUTTING EDGE (SERRATED) CURVED 1219 MM (48 IN.) LONG X 203.2 MM (8 IN.) WIDE

CUTTING EDGE REPLACEMENT—Heavy Duty—Serrated
FIELD INSTALLATION

		CONSISTS OF:	PAGE
1	2C8096	CAB GROUP	290
	- OR -		
1	2C8298	CAB GROUP	291A
1	8D7690	WIPER GROUP	302
1	8D8290	DOME LIGHTING GROUP	112
1	2C7946	WASHER GROUP	201
1	9D3580	CAB WIRING GROUP	115
1	2C8294	MIRROR GROUP	308
1	6G270	INSULATION GROUP	293B
2	2G8010	WIPER GROUP--REAR	304
4	7D3019	WASHER	
4	1D4643	BOLT	
2	7D734	WASHER	
1	2G8642	PAD	
2	2G8641	PAD	
2	2G8643	PAD	
2	2G7098	PAD	
2	2G7097	PAD	
4	8D8264	MOUNTING	
2	9D1589	MOUNTING	
1	3S2093	STRAP	
1	2C8124	LAMP ASSEMBLY	
		CONSISTING OF:	
	1	2C8123 GLOBE	
2	2C8279	LAMP ASSEMBLY	
1	2C8069	PLATE	
2	S509	BOLT	
2	3B4506	LOCKWASHER	
1	3D4467	TERMINAL	
1	9D2847	WIRE ASSEMBLY	
		CONSISTING OF:	
	1	5P4571 TERMINAL	
	1	4S1988 TERMINAL	
	▲	5P5629 WIRE--1905 MM (75.00")	
2	L1169	BOLT	
2	5P8247	WASHER	
2	1D4720	NUT	

▲ ORDER BY THE METER

2C8049 CAB ARRANGEMENT—Non ROPS
AUSTRALIAN ONLY. AN ATTACHMENT

		Consists of:	Page
1	9D570	Panel Group	300
1	2G5985	Liner Group	293
1	2G5995	Roll-Over Group	289
1	2G8245	Mirror Group	306
1	6G5237	Floormat	
1	2D3406	Plug--To Transmission Control Group	
1	3D9871	Button--To Switch Panel on Shift Console	
1	3D9872	Button--To Switch Panel on Shift Console	
1	7D4786	Plug--To Console Group	
1	.....	Form GMG02468	

2G6210 ROLL-OVER PROTECTIVE STRUCTURE ARRANGEMENT—Open
Replaced by 5T563 or 5T568 ROPS Conversion Arrangements listed on Page 287-2
Serial No. 87V5275 to 87V5733 inclusive. AN ATTACHMENT

		Consists of:	Page
1	2G8245	Mirror Group	306
1	6G2170	ROPS Group	289A
1	6G5237	Floormat	
1	6V292	Plug--To Transmission Control Console	
1	5P8501	Padlock	
1	.....	Form SMHS7838	

6G2650 ROLL-OVER PROTECTIVE SYSTEM ARRANGEMENT—Open
High Profile
Serial No. 87V5734—Up. AN ATTACHMENT

	CONSISTS OF:		PAGE
1	5T1995	ROLLOVER PROTECTIVE SYSTEM	289-1
1	2G8245	MIRROR GROUP--REAR VIEW	306
1	6G5237	FLOORMAT	
1	.....	FORM SMHS7838	
1	.....	FORM SMHS7850	

5T563 ROPS CONVERSION ARRANGEMENT—Open—Low Profile—Field Installation
Serial No. 87V5275 to 87V5733 inclusive

	CONSISTS OF:		PAGE
1	5T1990	ROLLOVER PROTECTIVE SYSTEM GROUP	289-3
1	2G8245	MIRROR--REAR VIEW	306
1	5T5256	FLOORMAT	
1	.....	FORM SMHS7838	
1	.....	FORM SMHS7850	

5T568 ROPS CONVERSION ARRANGEMENT—Open—High Profile—Field Installation
Serial No. 87V5275 to 87V5733 inclusive

	CONSISTS OF:		PAGE
1	2G8245	MIRROR GROUP	306
1	6G2150	ROPS GROUP	289C
1	6G5237	FLOORMAT	
1	6V292	PLUG--TO TRANSMISSION CONTROL CONSOLE	
1	5P8501	PADLOCK	
1	.....	FORM SMHS7838	

6G2640 ROLL-OVER PROTECTIVE SYSTEM ARRANGEMENT—Open Low Profile
Serial No. 87V5734---Up. AN ATTACHMENT

	CONSISTS OF:		PAGE
1	2G8245	MIRROR GROUP	306
1	6G2210	ROPS GROUP	288B
1	6G2565	CAB PANEL GROUP	300A
1	6G2570	WINDSHIELD WASHER GROUP	300B
1	6G2575	WINDSHIELD WIPER GROUP	303B
1	6G2595	CAB DOOR GROUP	295B
1	6G2600	WEATHER INSULATION GROUP	294
1	6G2615	CAB LINER GROUP	293A
1	6G5810	CAB WIRING GROUP	115C
1	.....	FORM SMHS7838	

6G2655 ROLL-OVER PROTECTIVE SYSTEM ARRANGEMENT—Enclosed

		Consists of:	Page
1	8D6790	Platform Guard Group--Front	182B
1	9D210	Platform Guard Group--Rear	182B
	- OR -		
1	5T4445	Platform Guard Group--Rear	182C
1	5T5256	Floormat	
1	6V292	Plug--To Transmission Control Console	
1	5P8501	Padlock	

6G8010 NON-ROPS CONVERSION ARRANGEMENT
Serial No. 87V5734—Up
AN ATTACHMENT

		CONSISTS OF:	PAGE
1	6G2210	ROLLOVER PROTECTIVE SYSTEM GROUP--ENCLOSED	288B
1	6G2595	CAB DOOR GROUP	295B
1	6G2615	CAB LINER--SOUND SUPPRESSION	293A
1	6G2575	WINDSHIELD WIPER GROUP	303B
1	6G2570	WINDSHIELD WASHER GROUP	300B
1	5T2005	CAB PANEL GROUP--TINTED	300A
1	2G8245	MIRROR GROUP--REAR VIEW	306
1	6G5810	CAB WIRING GROUP	115C
1	6G6751	FLOORMAT	
1	5T819	WIRING ASSEMBLY--CAB RETROFIT	287D
1	.....	FORM SMHS7838	
1	.....	FORM SMHS7850	

5T566 ROPS CONVERSION ARRANGEMENT—Enclosed—High Profile—
Field Installation
Serial No. 87V5275 to 87V5733 inclusive

		CONSISTS OF:	PAGE
1	6G2190	ROLL-OVER PROTECTIVE SYSTEM GROUP--ENCLOSED	288A
1	6G2590	CAB DOOR GROUP	295A
1	6G2620	CAB LINER--SOUND SUPPRESSION	291C
1	6G2580	WINDSHIELD WIPER GROUP	303A
1	6G2570	WINDSHIELD WASHER GROUP	300B
1	5T2000	CAB PANEL GROUP	298A
1	2G8245	MIRROR--REAR VIEW	306
1	6G5805	CAB WIRING GROUP	115A
1	6G6751	FLOORMAT	
1	5T819	HARNESS ASSEMBLY--CAB RETROFIT	287D
1	.....	FORM SMHS7838	
1	.....	FORM SMHS7850	

5T567 ROPS CONVERSION ARRANGEMENT—Enclosed—Low Profile—
Field Installation

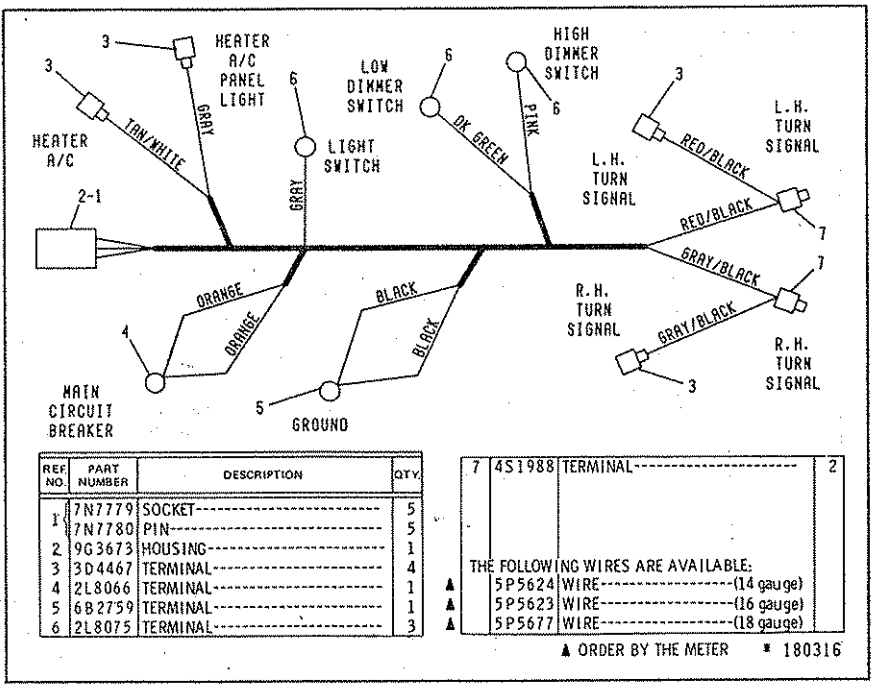

REF. NO.	PART NUMBER	DESCRIPTION	QTY.
1	7N7779	SOCKET	5
	7N7780	PIN	5
2	9G3673	HOUSING	1
3	3D4467	TERMINAL	4
4	2L8066	TERMINAL	1
5	6B2759	TERMINAL	1
6	2L8075	TERMINAL	3
7	4S1988	TERMINAL	2

THE FOLLOWING WIRES ARE AVAILABLE:

▲	5P5624	WIRE	(14 gauge)
▲	5P5623	WIRE	(16 gauge)
▲	5P5677	WIRE	(18 gauge)

▲ ORDER BY THE METER * 180316

5T819 HARNESS ASSEMBLY—Cab Retrofit
Serial No. 87V5275 to 87V5733 inclusive
Part of 5T566 & 5T567 ROPS Conversion Arrangements listed on Page 287C

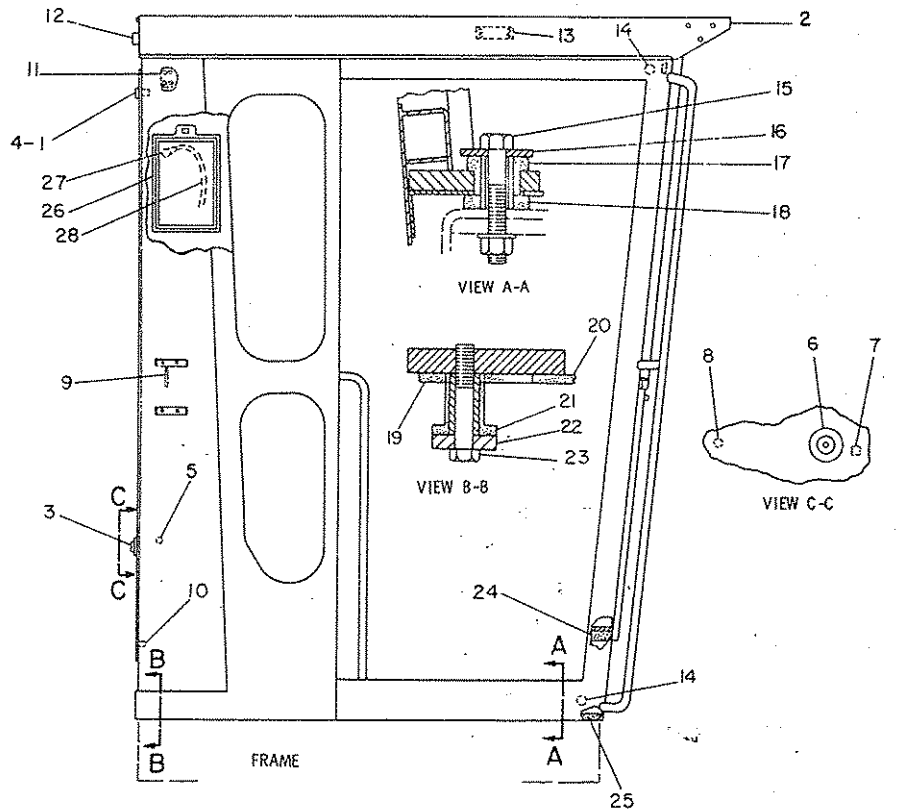

REF NO.	PART NUMBER	DESCRIPTION	QTY
1	5P7803	PLUG----------(small)----------	2
	5K3546	PLUG----------(large)----------	1
2	9D976	R.O.P.S ASSEM. ----------	1
		(Includes)	
3	8D5382	BOSS----------	2
4	4D9376	BOSS----------	1
5	8F9836	LUG----------	2
6	9D3523	WASHER----------	2
7	9F2978	NUT----------	4
8	3P3604	STUD----------	11
9	5K1790	BAR----------	2
10	8D3508	BOSS----------	4
11	9D2726	PLATE----------	1
12	5K863	BAR----------	1
13	9D8236	PLATE----------(warning)----------	1
	4B4158	SCREW----------	4
14	5H4871	PLUG----------	4
15	L1169	BOLT-----95.3 mm(3.75 in.)long--	2
	1D4720	NUT----------	2
	5P8247	WASHER----------	2
16	7D734	WASHER----------	2
17	9D1589	MOUNTING----------	2
18	2G8641	PAD----------	2
19	2G8643	PAD----------	2
20	2G8642	PAD----------	1
21	8D8264	MOUNTING----------	6
22	8D8263	WASHER----------	6
23	1D4643	BOLT----------	6
24	2G7097	PAD----------	1
25	2G7098	PAD----------	2
C 26	5P8884	COMPARTMENT ASSEM. ----------	1
C 27	530352	RIVET----------	3
C	9M2307	WASHER----------	3
C 28	5P7957	LANYARD----------	1

C INDICATES CHANGE 227954

2G9890 ROLL-OVER PROTECTIVE STRUCTURE GROUP—Enclosed
Serial No. 87V5275 to 87V5733 inclusive

6G2190 ROLL-OVER PROTECTIVE STRUCTURE GROUP—Enclosed—High Profile

Serial No. 87V5734 to 6425, 6427 to 6496, 6498 to 6501, 6503, 6506 to 6522, 6527 to 6532, 6535 to 6538, 6540 to 6544, 6546, 6548 to 6559, 6561 to 6570, 6574, 6575, 6577 to 6584, 6586 to 6588, 6590 to 6592, 6594, 6597, 6603, 6605, 6615 to 6620, 6625 to 6677, 6682, 6696, 6697 and 87V6718 inclusive. Also part of 5T567 ROPS Conversion Arrangement listed on Page 287C

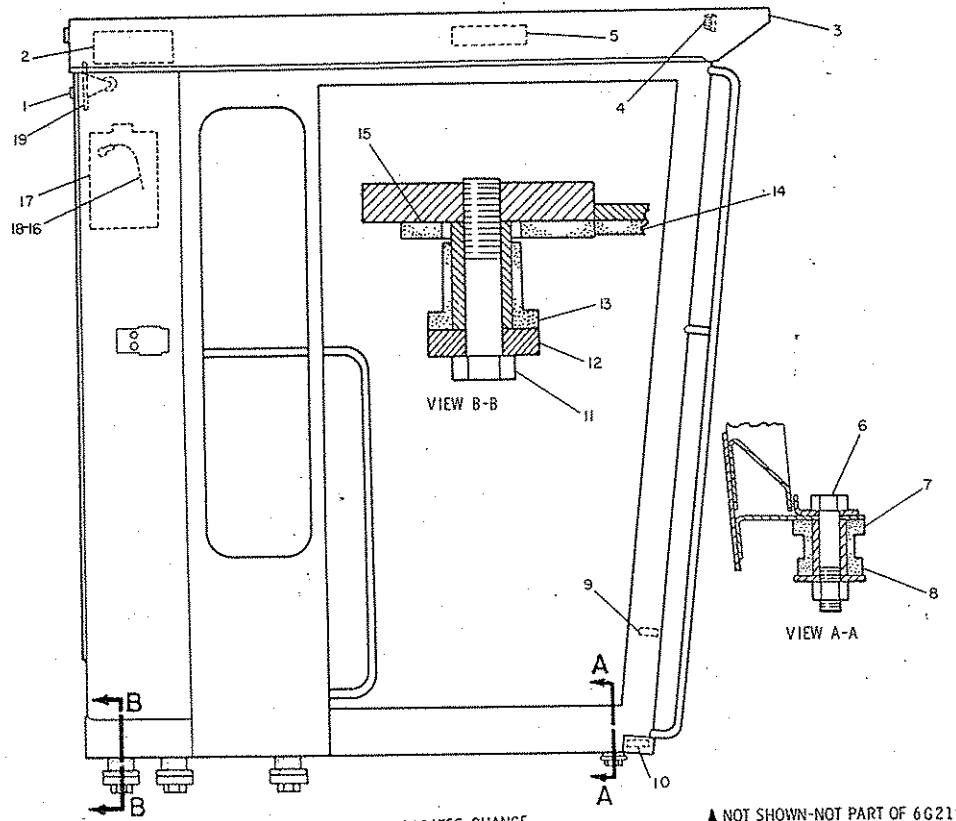

REF. NO.	PART NUMBER	DESCRIPTION	QTY.
1	5K3546	PLUG	1
2	6G8424	COVER	2
3	6F2110	R.O.P.S ASSEM.	1
4	5H4871	PLUG	2
5	6V3328	PLATE-(warning)	1
	4B4158	SCREW	4
6	1D4585	BOLT	2
	1D4720	NUT	2
C	383987	WASHER	2
7	2G8641	PAD	2
8	9D1589	MOUNTING	2
9	2G7097	PAD	1
10	2G7098	PAD	2
11	4B5219	BOLT	6
12	6G6206	RETAINER	6
13	6G5159	MOUNTING	6
14	2G8642	PAD	1
15	6G5231	PAD	1
	6G5229	PAD	1
16	5P7957	LANYARD	1
17	5P8884	COMPARTMENT ASSEM.	1
18	530352	RIVET	3
	9M2307	WASHER	3
19	6G2395	DOOR GROUP	2
	6G2396	GASKET	2
C	3G3265	RIVET	24
C▲	SMHS7838	FORM (Provides instructions for Dealer or Field Installation of ROPS)	1
C▲	5P7958	SLEEVE-(cable slice)	1

C INDICATES CHANGE

▲ NOT SHOWN-NOT PART OF 6G2190 R.O.P.S. GROUP

180789

6G2190 ROLL-OVER PROTECTIVE STRUCTURE GROUP—Enclosed—High Profile

Serial No. 87V6426, 6497, 6502, 6504, 6505, 6523 to 6526, 6533, 6534, 6539, 6545, 6547, 6560, 6571 to 6573, 6576, 6585, 6589, 6593, 6595, 6596, 6598 to 6602, 6604, 6606 to 6614, 6621 to 6624, 6678 to 6681, 6683 to 6695, 6698 to 6717 and 87V6719—Up. Also part of 5T567 ROPS

Conversion Arrangement listed on Page 287C

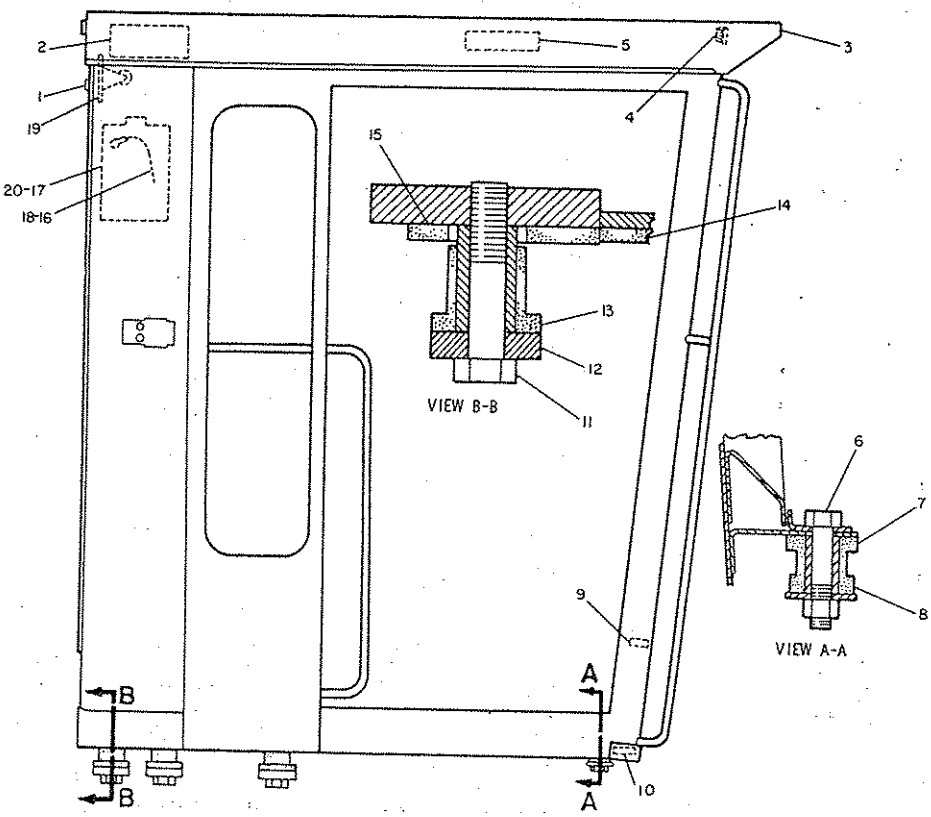

REF. NO.	PART NUMBER	DESCRIPTION	QTY.
1	5K3546	PLUG	1
2	6G8424	COVER	2
3	6F2110	R.O.P.S ASSEM.	1
4	5H4871	PLUG	2
5	6V3328	PLATE (warning)	1
	4B4158	SCREW	4
6	1D4585	BOLT	2
	1D4720	NUT	2
	383987	WASHER	2
7	2G8641	PAD	2
8	9D1589	MOUNTING	2
9	2G7097	PAD	1
10	2G7098	PAD	2
11	4B5219	BOLT	6
12	6G6206	RETAINER	6
13	6G5159	MOUNTING	6
14	2G8642	PAD	1
15	6G5231	PAD	1
	6G5229	PAD	1
16	5P7957	LANYARD	1
C 17	5P9796	COMPARTMENT ASSEM.	1
18	530352	RIVET	7
C	9M2307	WASHER	1
19	6G2395	DOOR GROUP	2
	6G2396	GASKET	2
	3G3265	RIVET	24
C 20	5T5515	PLATE	1
▲	SMHS7838	FORM (Provides Instructions for Dealer or Field Installation of ROPS)	1
▲	5P7958	SLEEVE (cable slice)	1

C INDICATES CHANGE

▲ NOT SHOWN-NOT PART OF 6G2190 R.O.P.S. GROUP

308869

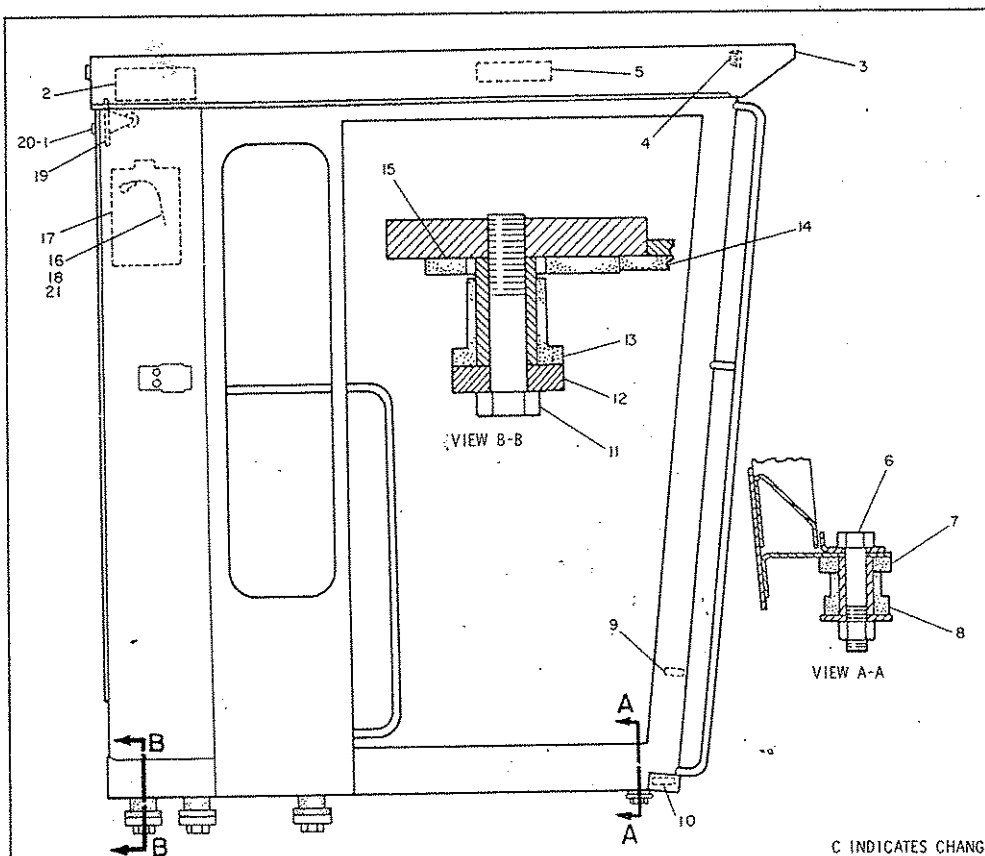

REF. NO.	PART NUMBER	DESCRIPTION	QTY.
1	5K3546	PLUG----------(large)----------	1
2	6G8424	COVER----------	2
3	6G2130	ROPS ASSEM. ----------	1
4	5H4871	PLUG----------	2
5	6V3328	PLATE---------(warning)----------	1
	4B4158	SCREW----------	4
6	1D4585	BOLT----------	2
	1D4720	NUT----------	2
C	383987	WASHER----------	2
7	2G8641	PAD----------	2
8	9D1589	MOUNTING----------	2
9	2G7097	PAD----------	1
10	2G7098	PAD----------	2
11	4B5219	BOLT----------	6
12	6G6206	RETAINER----------	6
13	6G5159	MOUNTING----------	6
14	2G8642	PAD----------(center)----------	1
15	6G5229	PAD----------(R. H.)----------	1
	6G5231	PAD----------(L. H.)----------	1
16	5P7957	LANYARD----------	1
17	5P8884	COMPARTMENT ASSEM. ----------	1
18	530352	RIVET----------	3
	9M2307	WASHER----------	3
19	6G2395	DOOR GROUP----------	2
	6G2396	GASKET----------	2
C	3G3265	RIVET----------	24
20	5P7803	PLUG----------(small)----------	2
▲ 21	5P7958	SLEEVE------(cable splice)----------	1

C INDICATES CHANGE

▲ NOT PART OF 6G2210 ROPS GROUP

180788

6G2210 ROLL-OVER PROTECTIVE STRUCTURE GROUP—Enclosed—High Profile
Serial No. 87V5734—Up
Part of 6G2655 & 5T566 ROPS Arrangement listed on Pages 287A & 287C. AN ATTACHMENT

2G5995 ROLL-OVER PROTECTIVE STRUCTURE GROUP—Open

Serial No. 87V5275 to 87V5733 Inclusive

Part of 2G6210 Roll-Over Protective Structure Arrangement listed on Page 287. AN ATTACHMENT

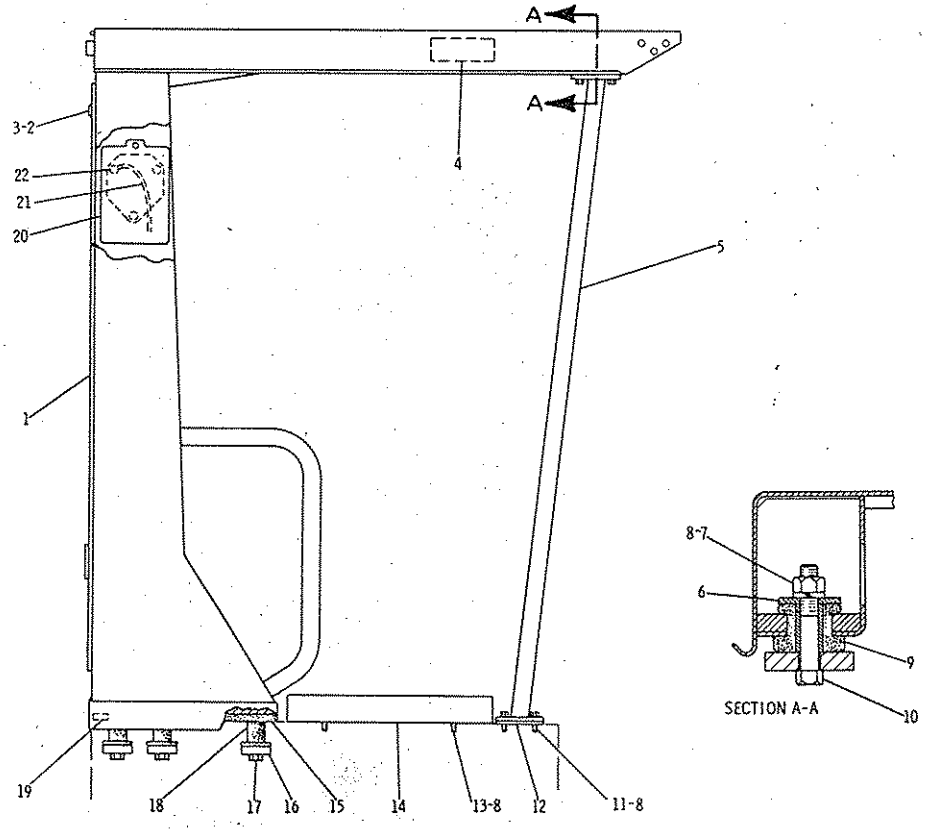

SECTION A-A

REF. NO.	PART NUMBER	DESCRIPTION	QTY.
1	2G6056	ROPS ASSEM.	1
2	5P7803	PLUG-(button) 8 mm(.315 in.) dia. hole	2
3	5K3546	PLUG-(button) 19.05 mm (.750 in.) dia. hole	1
4	9D8236	PLATE-(warning)	1
	4B4158	SCREW	4
5	9D3177	SUPPORT ASSEM.	2
6	1A2519	WASHER	4
7	1D4719	NUT	4
8	3B4508	LOCKWASHER	12
9	643274	MOUNTING	4
10	L1329	BOLT	4
11	S1585	BOLT	4
12	9D424	PLATE	4
13	S1595	BOLT	4
	4B4280	WASHER	4
14	8D6787	ANGLE	2
15	2G8643	PAD	2
16	8D8263	WASHER	6
17	1D4643	BOLT	6
18	8D8264	MOUNTING	6
19	2G8642	PAD	1
C 20	5P8884	COMPARTMENT ASSEM.	1
C 21	5P7957	LANYARD	1
C 22	530352	RIVET	3
C	9M2307	WASHER	3

C INDICATES CHANGE

226009

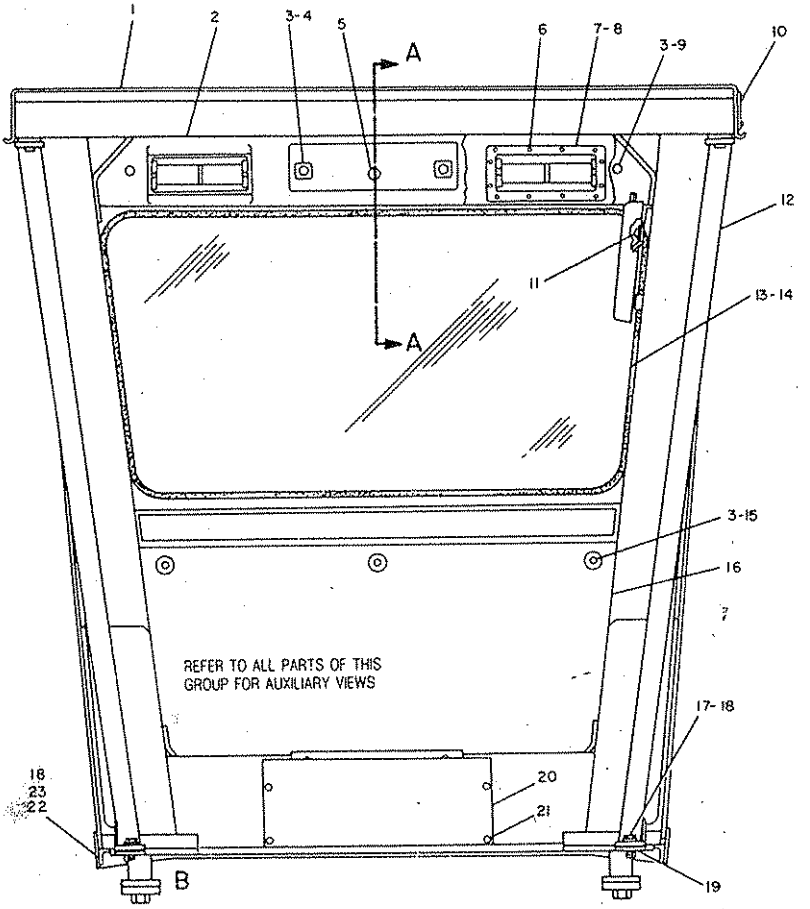

NOTE	REF NO	PART NUMBER	QTY	DESCRIPTION
	1	6G1940	1	ROPS ASSEM.
	2	6G2759	1	PANEL
	3	9D3868	7	SCREW
	4	3P9901	2	WASHER
	5	5K3546	1	PLUG
	6	3G3265	24	RIVET
	7	6G2395	2	DOOR GROUP (EACH INCLUDES)
		6G7222	2	ROLLER
	8	6G2396	2	GASKET
	9	4B4276	2	WASHER
	10	6V3328	1	PLATE
		4B4158	4	SCREW
	11	530352	3	RIVET
		9M2307	3	WASHER
	12	6G2222	2	SUPPORT ASSEM.
	13	5T1247	1	GLASS
D	14	5P5906		SEAL 3.44M (135.5IN.)
	15	6G5214	3	WASHER
	16	6G2743	1	INSULATION
	17	S1585	4	BOLT
	18	5P8245	8	WASHER
B	19	9D424	4	PLATE
	20	6G2847	1	PLATE
	21	4V6981	6	SCREW
	22	8D6787	2	ANGLE
	23	S1595	4	BOLT

B USE AS REQUIRED

D ORDER BY THE METER

308660

5T1995 ROLL-OVER PROTECTIVE SYSTEM GROUP—Part 1—
Open—Conversion—Field Installation
Serial No. 87V5275 to 87V5733 inclusive
Part of 5T563 ROPS Conversion Arrangement listed on Page 287-2

5T1995 ROLL-OVER PROTECTIVE SYSTEM GROUP—Part 2—Open Conversion—Field Installation
Serial No. 87V5275 to 87V5733 inclusive
Part of 5T563 ROPS Conversion Arrangement listed on Page 287-2

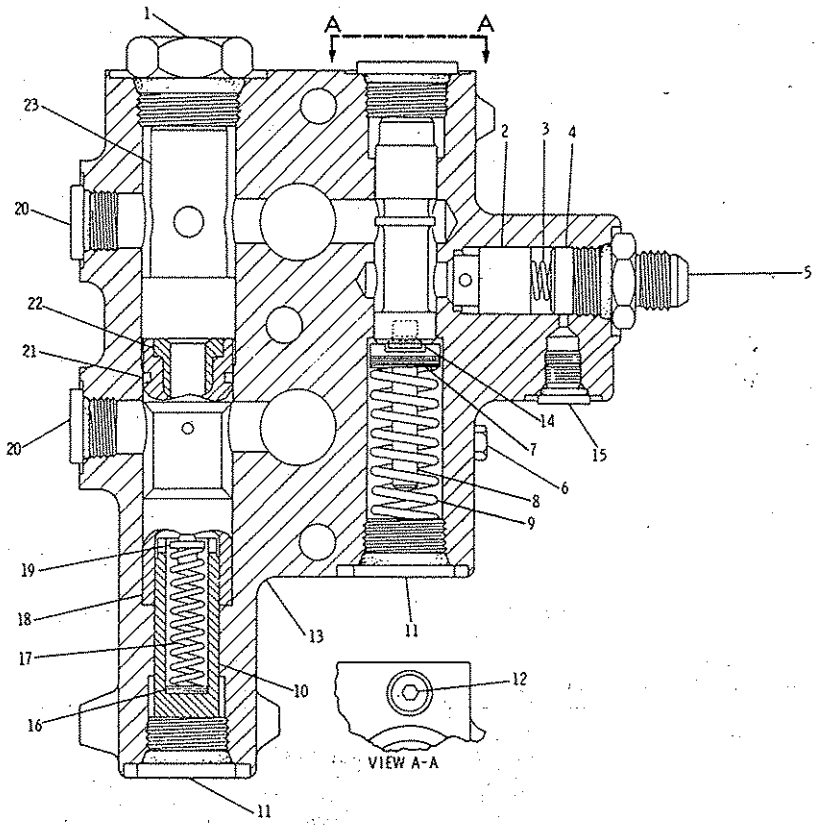

	REF. NO.	PART NUMBER	DESCRIPTION	QTY
	1	9S4181	PLUG	1
		7M8485	SEAL	1
	2	1H337	VALVE	1
	3	9F6705	SPRING	1
	4	8J8753	RETAINER	1
	5	308194	CONNECTOR	1
		2M9780	SEAL	1
	6	9S4182	PLUG	1
		3J7354	SEAL	1
C	7	4L1468	WASHER---1.52 mm(.06 in.) thick	2
		8J6709	SHIM-----.026 mm(.010 in.) thick	5
	8	8J6710	STOP	1
	9	8J6703	SPRING	1
	10	8J6707	RETAINER	1
	11	9S8008	PLUG	3
		3D2824	SEAL	3
	12	9S8001	PLUG	1
		4J7533	SEAL	1
	13	9J6458	VALVE GROUP	1
			(Includes)	
	14	9S8001	PLUG	1
		4J7533	SEAL	1
C	15	9S8004	PLUG	1
C		3J1907	SEAL	1
	16	3J7473	SHIM-----0.13 mm(.005 in.) thick	7
		3J7470	SHIM-----1.22 mm(.048 in.) thick	3
	17	2J6089	SPRING	1
	18	8J6752	VALVE GROUP	1
	19	8J331	VALVE	1
	20	9S8005	PLUG	2
		3K360	SEAL	2
	21	4J8996	SEAL	1
	22	8J6708	SPACER	1
	23	8J6714	SPACER	1

C INDICATES CHANGE

308681

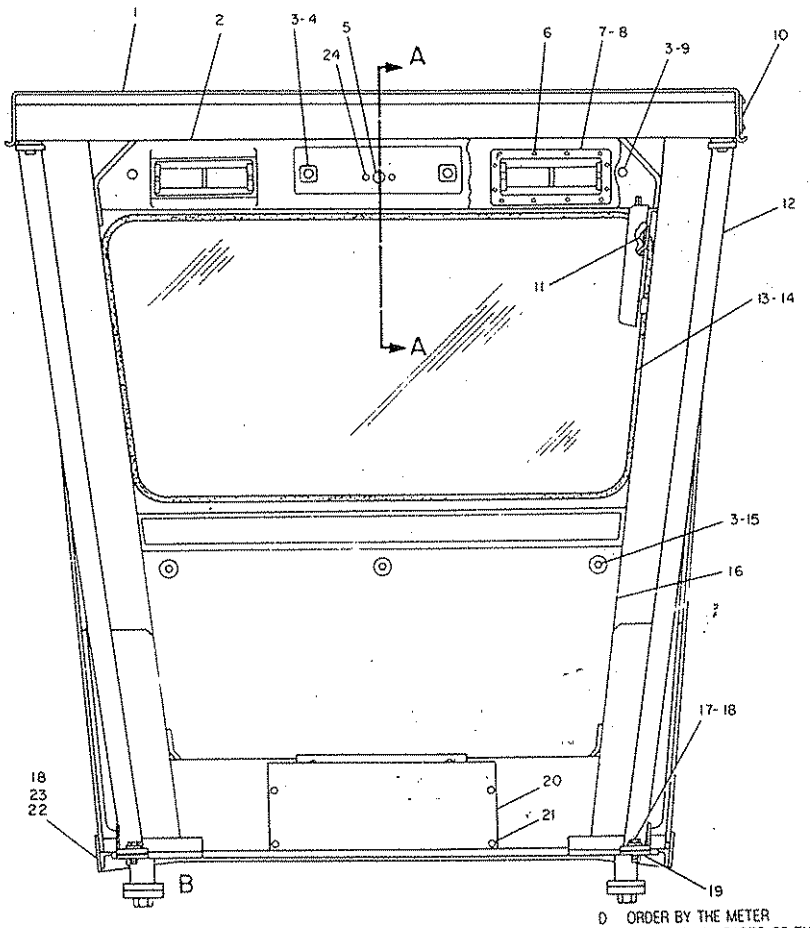

D ORDER BY THE METER REFER TO ALL PARTS OF THIS GROUP FOR AUXILIARY VIEWS

B USE AS REQUIRED

NOTE	REF NO	PART NUMBER	QTY	DESCRIPTION
	1	6G1960	1	ROPS ASSEM.
	2	6G2762	1	PANEL
	3	9D3868	7	SCREW
	4	3P9901	2	WASHER
	5	5K3546	1	PLUG
	6	3G3265	24	RIVET
	7	6G2395	2	DOOR GROUP
				(EACH INCLUDES)
		6G7722	2	ROLLER
	8	6G2396	2	GASKET
	9	4B4276	2	WASHER
	10	6V3328	1	PLATE
		4B4158	4	SCREW
	11	5S0352	3	RIVET
		9M2307	3	WASHER
	12	6G2223	2	SUPPORT ASSEM.
	13	5T1248	1	GLASS
BD	14	5P5906		SEAL 3.95M (155.5IN.)
	15	6G5214	3	WASHER
	16	6G2743	1	INSULATION
	17	S1585	4	BOLT
	18	5P8245	8	WASHER
B	19	9D424	8	PLATE
	20	6G2847	1	PLATE
	21	4V6981	6	SCREW
	22	8D6787	2	ANGLE
	23	S1595	4	BOLT
	24	5P7803	2	PLUG

308639

5T1990 ROLL-OVER PROTECTIVE SYSTEM GROUP—Part 1—
Open Conversion—Field Installation
Serial No. 87V5275 to 87V5733 inclusive
Part of 5T568 ROPS Conversion Arrangement listed on Page 287-2

5T1990 ROLL-OVER PROTECTIVE SYSTEM GROUP—Part 2—Open Conversion—Field Installation
Serial No. 87V5275 to 87V5733 Inclusive
Part of 5T568 ROPS Conversion Arrangement listed on Page 287-2

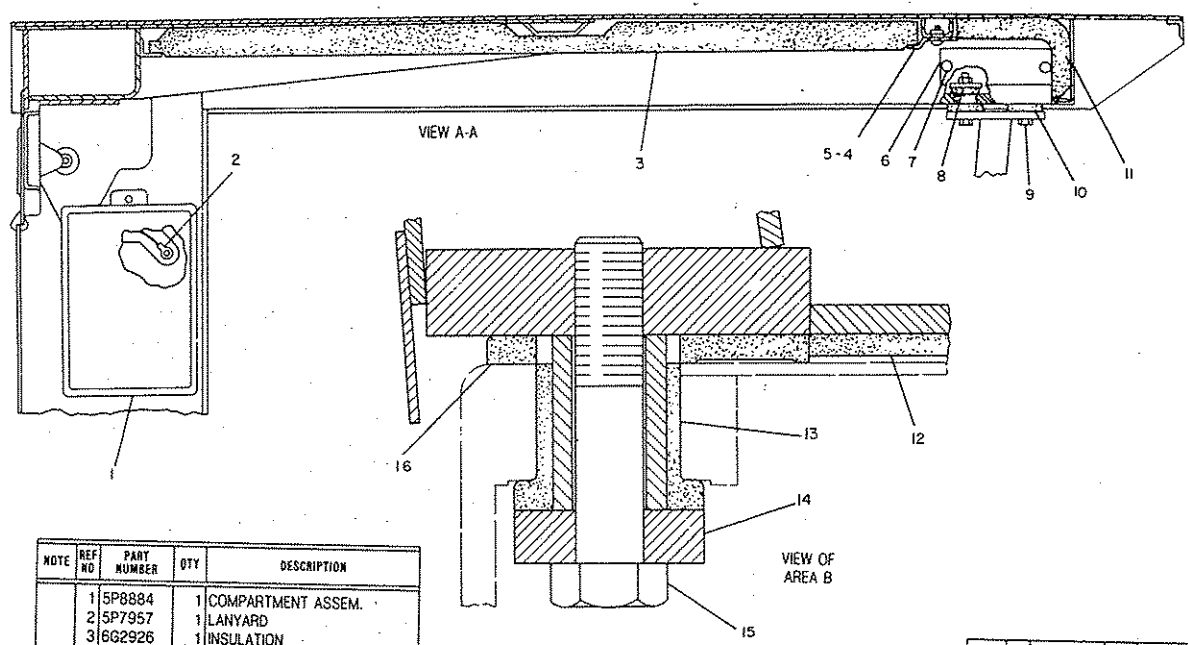

NOTE	REF NO	PART NUMBER	QTY	DESCRIPTION
	1	5P8884	1	COMPARTMENT ASSEM.
	2	5P7957	1	LANYARD
	3	6G2926	1	INSULATION
	4	6G3314	1	PLATE
	5	4V6981	8	SCREW
	6	6G2422	2	PLATE
	7	6V2687	4	SCREW
	8	2S1654	4	WASHER
	9	L1329	4	BOLT
		1D4719	4	NUT
	10	643274	4	MOUNTING
	11	6G3312	1	INSULATION
	12	2G8642	1	PAD
	13	6G5159	6	MOUNTING
	14	6G6206	6	RETAINER
	15	4B5219	6	BOLT
	16	6G5231	1	PAD (R.H.)
		6G5229	1	PAD (L.H.)

308640

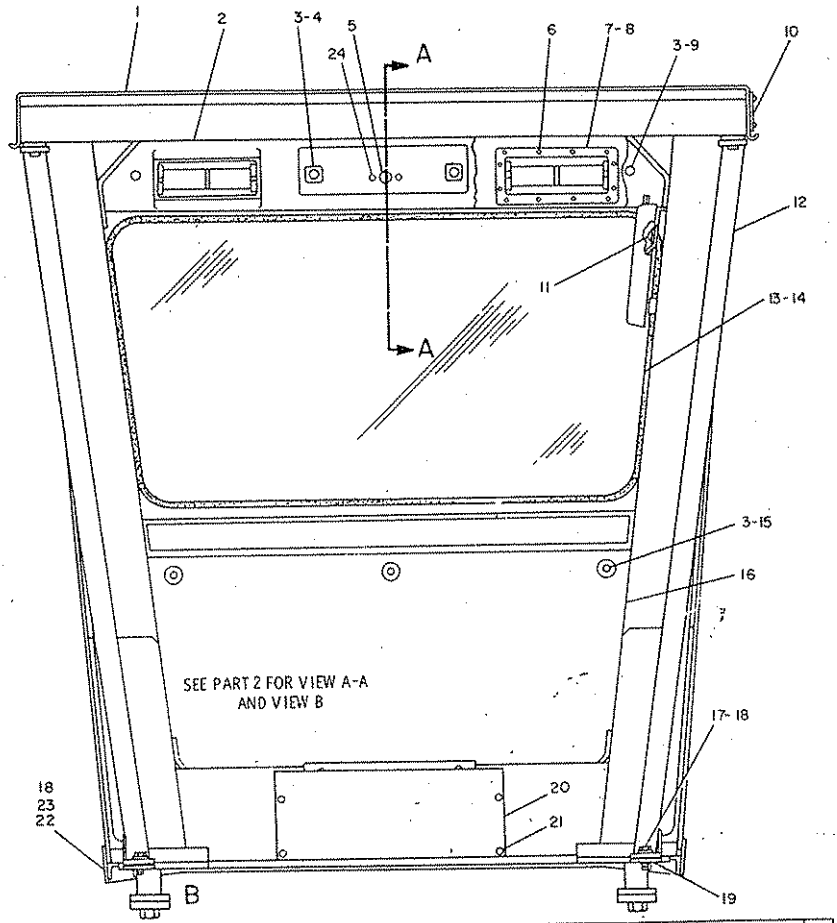

REF. NO.	PART NUMBER	DESCRIPTION	QTY.
1	6G1960	ROPS ASSEM.	1
2	6G2762	PANEL	1
3	9D3868	SCREW	7
4	3P9901	WASHER	2
5	5K3546	PLUG	1
C 6	3G3265	RIVET	24
7	6G2395	DOOR GROUP (Each Includes)	2
	6G7222	ROLLER	2
8	6G2396	GASKET	2
9	4B4276	WASHER	2
10	6V3328	PLATE	1
	4B4158	SCREW	4
11	530352	RIVET	3
	9M2307	WASHER	3
12	6G2223	SUPPORT ASSEM.	2
13	6G2062	GLASS	1
▲ 14	5P5768	SEAL-----3.95m(155.5 in.)	
15	6G5214	WASHER	3
16	6G2743	INSULATION	1
C 17	S1587	BOLT	4
18	5P8245	WASHER	8
C 19	9D424	PLATE-----(Use as required)	8
20	6G2847	PLATE	1
21	4V6981	SCREW	6
22	8D6787	ANGLE	2
23	S1595	BOLT	2
24	5P7803	PLUG	4

C INDICATES CHANGE

▲ ORDER BY THE METER

177186

6G2170 ROLL-OVER PROTECTIVE STRUCTURE GROUP—Part 1—Open—High Profile
Serial No. 87V5734—Up. Part of 6G2650 ROPS Arrangement listed on Page 287
AN ATTACHMENT

6G2170 ROLL-OVER PROTECTIVE STRUCTURE GROUP—Part 2—Open—High Profile
Serial No. 87V5734—Up
Part of 6G2650 ROPS Arrangement listed on Page 287. AN ATTACHMENT

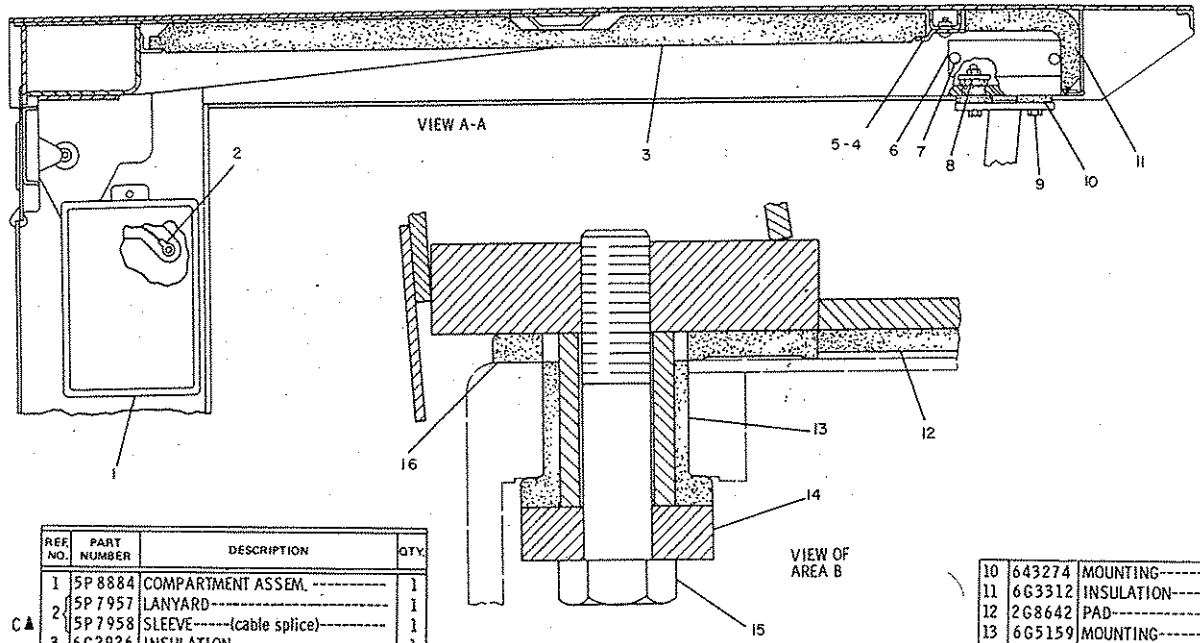

	REF. NO.	PART NUMBER	DESCRIPTION	QTY.
	1	5P8884	COMPARTMENT ASSEM.	1
	2	5P7957	LANYARD	1
C▲		5P7958	SLEEVE------(cable splice)	1
	3	6G2926	INSULATION	1
	4	6G3314	PLATE	1
	5	4V6981	SCREW	8
	6	6G2422	PLATE	2
C	7	6V2687	SCREW	4
	8	2S1654	WASHER	4
	9	L1329	BOLT	4
		1D4719	NUT	4

C INDICATES CHANGE

▲ NOT SHOWN - NOT PART OF 6G2170 ROPS GROUP

10	643274	MOUNTING	4
11	6G3312	INSULATION	1
12	2G8642	PAD	1
13	6G5159	MOUNTING	6
14	6G6206	RETAINER	6
15	4B5219	BOLT	6
16	6G5231	PAD---------(R.H.)	1
	6G5229	PAD---------(L.H.)	1

177187

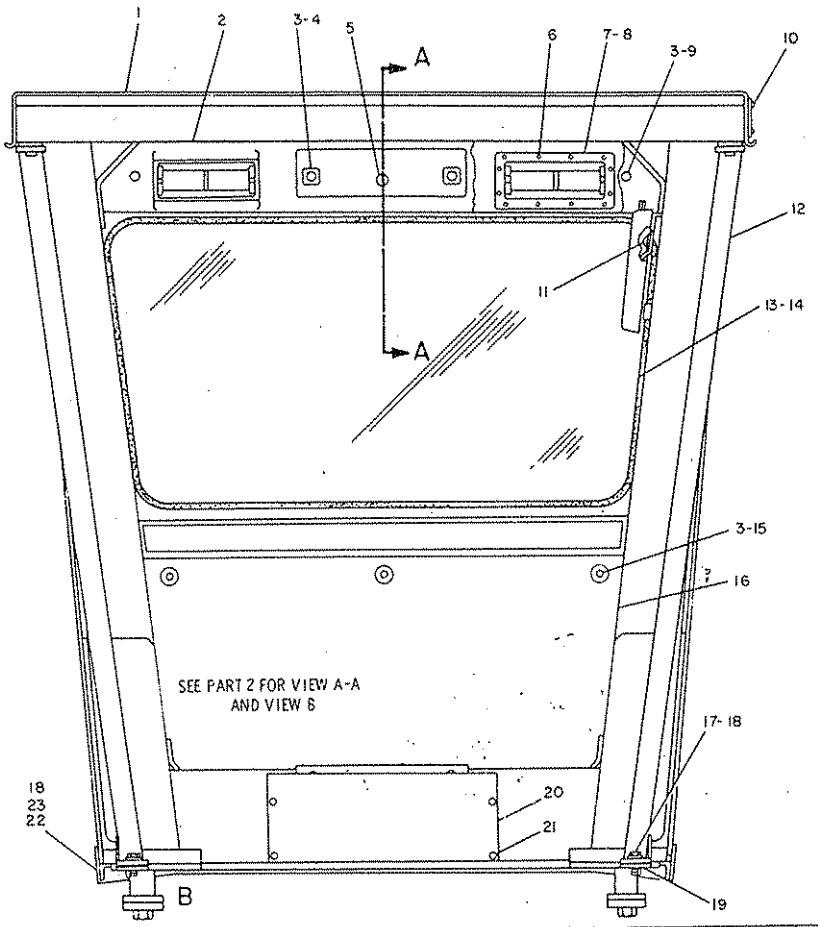

REF. NO.	PART NUMBER	DESCRIPTION	QTY.
1	6G1940	ROPS ASSEM.	1
2	6G2759	PANEL	1
3	9D3868	SCREW	7
4	3P9901	WASHER	2
5	5K3546	PLUG	1
C 6	3G3265	RIVET	24
7	6G2395	DOOR GROUP (Each Includes)	2
	6G7222	ROLLER	2
8	6G2396	GASKET	2
9	4B4276	WASHER	2
10	6V3328	PLATE	1
	4B4158	SCREW	4
11	530352	RIVET	3
	9M2307	WASHER	3
12	6G2222	SUPPORT ASSEM.	2
13	6G2061	GLASS	1
A 14	5P5768	SEAL-----3.44m(135.5 in.)	
15	6G5214	WASHER	3
16	6G2743	INSULATION	1
C 17	S1587	BOLT	4
18	5P8245	WASHER	8
C 19	9D424	PLATE---------(Use as required)---	8
20	6G2847	PLATE	1
21	4V6981	SCREW	6
22	8D6787	ANGLE	2
23	S1595	BOLT	4

C INDICATES CHANGE

A ORDER BY THE METER

177194

6G2150 ROLL-OVER PROTECTIVE STRUCTURE GROUP—Part 1—Open—Low Profile
Serial No. 87V5734—Up. Part of 6G2640 ROPS Arrangement listed on Page 287A
AN ATTACHMENT

6G2150 ROLL-OVER PROTECTIVE STRUCTURE GROUP—Part 2—Open—Low Profile
Serial No. 87V5734—Up
Part of 6G2640 ROPS Arrangement listed on Page 287A. AN ATTACHMENT

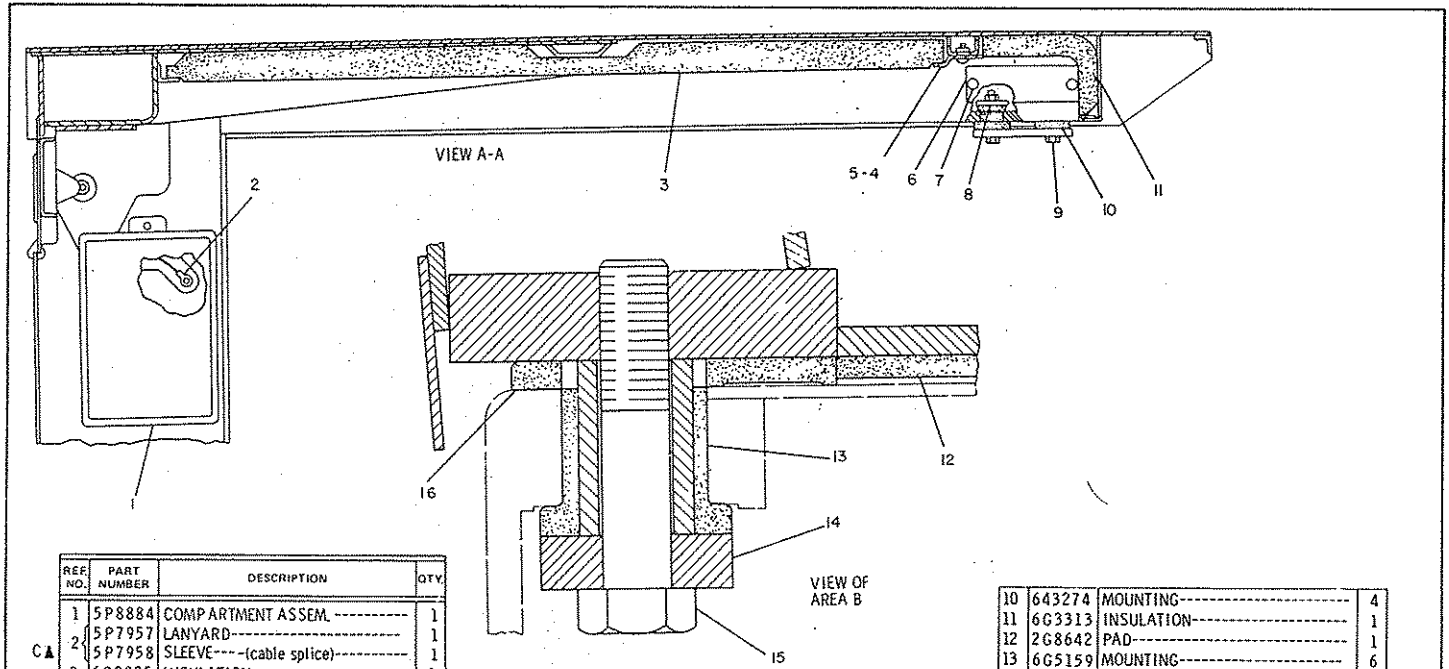

REF. NO.	PART NUMBER	DESCRIPTION	QTY.
1	5P8884	COMPARTMENT ASSEM.	1
2	5P7957	LANYARD	1
C▲ 2	5P7958	SLEEVE----(cable splice)	1
3	6G2925	INSULATION	1
4	6G3315	PLATE	1
5	4V6981	SCREW	8
6	6G2422	PLATE	2
C 7	6V2687	SCREW	4
8	2S1654	WASHER	4
9	L1329	BOLT	4
	1D4719	NUT	4
10	6G3274	MOUNTING	4
11	6G3313	INSULATION	1
12	2G8642	PAD	1
13	6G5159	MOUNTING	6
14	6G6206	RETAINER	6
15	4B5219	BOLT	6
16	6G5231	PAD---------(R.H.)	1
	6G5229	PAD---------(L.H.)	1

▲ NOT SHOWN-NOT PART OF 6G2150 GROUP

C INDICATES CHANGE

177195

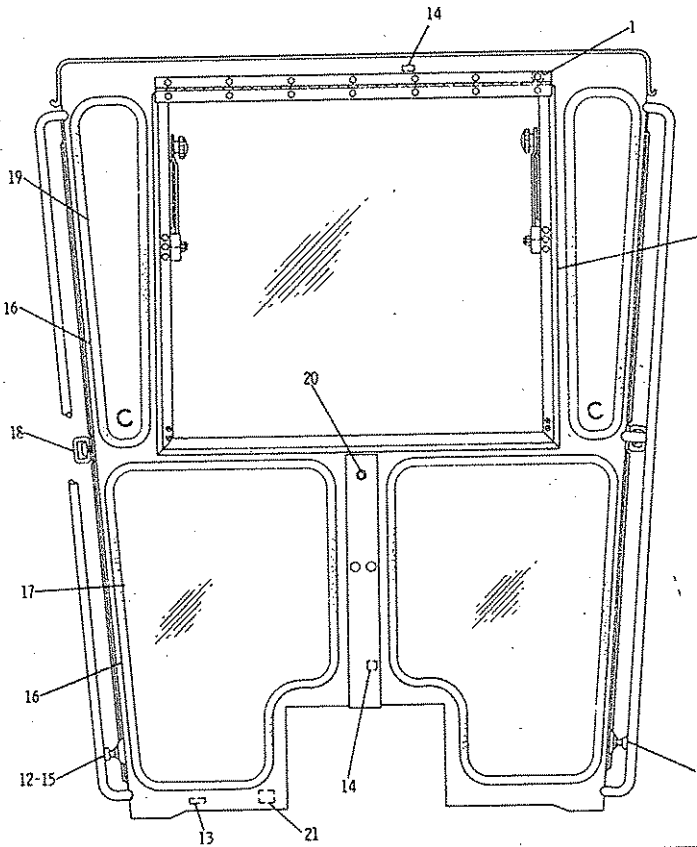

2C8097 CAB ASSEM. INCLUDES PARTS MARKED A IN BOTH PARTS ONE AND TWO.

● ORDER BY THE METER

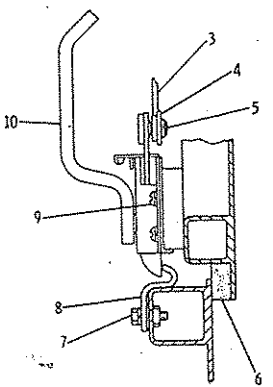

VIEW OF AREAS C

REF. NO.	PART NUMBER	DESCRIPTION	QTY
A 1	4K9097	NUT	7
2	8D7550	WINDSHIELD GROUP (Separate Illustration)	1
3	9D4967	LINK ASSEM. -----(L. H.)-----	1
	9D4968	LINK ASSEM. -----(R. H.)-----	1
4	4L6499	WASHER---------(plain)---------	2
	5D2751	WASHER---------(spring)-------	2
5	3B4609	COTTER PIN	2
6	8D2078	SEAL	2
	S1615	BOLT	4
7	3B4504	LOCKWASHER	4
	5B2903	SHIM	6
8	9D1548	PLATE	2
9	4B1243	SCREW	8
	3B4503	LOCKWASHER	8
10	9D8849	LATCH---------(L. H.)----------	1
	9D8848	LATCH---------(R. H.)----------	1
11	9D4966	HANDLE ASSEM. --(L. H.)-------- (Includes)	1
	2G1674	KEY	2
12	4B1273	SCREW	4
C A 13	7D9595	NUT	4
C A 14	9F6445	NUT	7
15	9D4964	HANDLE----(R. H. -non-locking)--	1
● 16	5P7233	SEAL-----(use as required)------	
17	2C8131	GLASS	2
	9D5177	PLATE ASSEM.	2
18	L1351	BOLT	4
	3B4506	LOCKWASHER	4
19	2C8076	GLASS	2
A 20	6B9625	LUG	1
C A 21	9F2978	NUT	1

C INDICATES CHANGE

226645

2C8096 CAB GROUP—Non ROPS—Part 1—Replaced by 2C8298 shown on Pages 291A & 291B
Part of 2C8049 Cab Arrangement listed on Page 286. 8D7550 Windshield parts are shown on Page 299
AN ATTACHMENT

2C8096 CAB GROUP—Non ROPS—Part 2—Replaced by 2C8298 shown on Pages 291A & 291B
Part of 2C8049 Cab Arrangement listed on page 286. AN ATTACHMENT

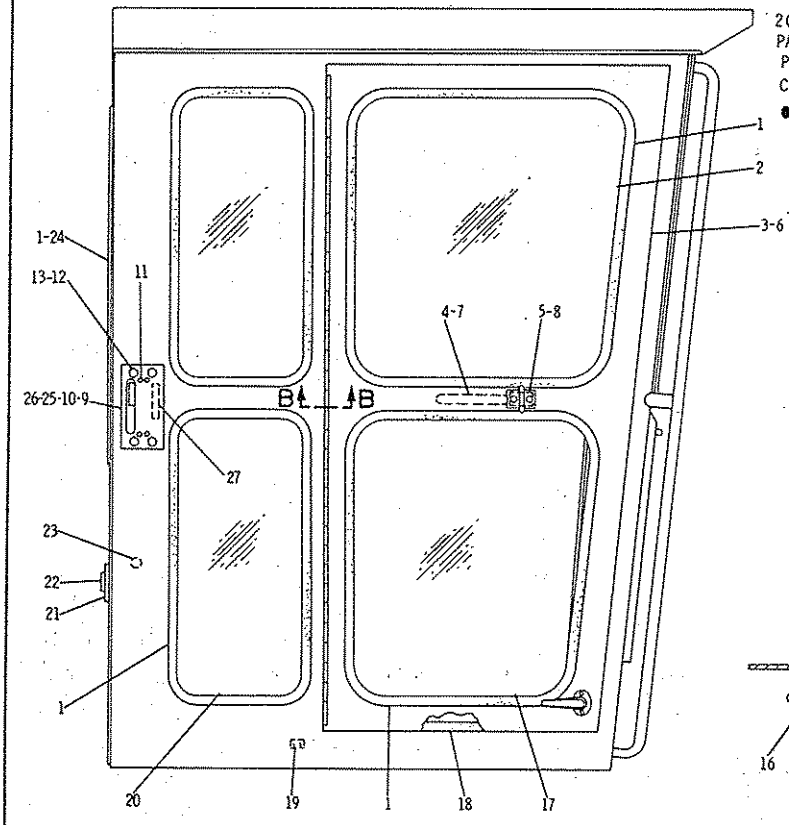

2C8097 CAB ASSEM. INCLUDES PARTS MARKED ▲ IN BOTH PARTS TWO AND ONE.
C INDICATES CHANGE
● ORDER BY THE METER

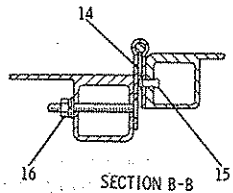

SECTION B-B

226646

	REF. NO.	PART NUMBER	DESCRIPTION	QTY.
●	1	5P7233	SEAL----------(use as required)--	
	2	9D1587	GLASS----------	2
	3	9D1646	DOOR ASSEM. -----(R. H.)---------	1
	4	1F4910	GRAB IRON----------	1
	5	7K3001	BAR----------	1
	6	9D1647	DOOR ASSEM. ------(L. H.)--------	1
	7	1F4910	GRAB IRON----------	1
	8	7K3001	BAR----------	1
C	9	9D5178	BRACKET----------	2
C	10	9D5193	LATCH----------(R. H.)--------	1
C		9D5194	LATCH----------(L. H.)--------	1
C	11	4B1244	SCREW----------	8
C	12	S1617	BOLT----------	8
C		5P4116	WASHER----------	8
C	13	4B2051	NUT----------	8
C		3B4503	LOCKWASHER----------	8
	14	9D1542	HINGE----------	2
		9D4606	SEAL----------	2
	15	6D6581	RIVET----------	32
	16	1H8299	SCREW----------	32
		1B4330	NUT----------	32
		3B4504	LOCKWASHER----------	32
		4B4276	WASHER----------	32
	17	9D1588	GLASS----------	2
	18	8D2079	SEAL----------	4
C▲	19	1B4332	NUT----------	4
	20	2C7902	GLASS----------	4
▲	21	9D3523	WASHER----------	2
▲	22	8D5382	BOSS----------	2
▲	23	8F9836	LUG----------	3
	24	9D469	GLASS----------	1
C	25	2G7801	HANDLE----------	2
C		9D5182	STRIP----------	2
C		2G7842	RETAINER----------	2
C		2G7843	BALL----------	2
C	26	6P6256	RETAINER----------	2
C		4B5271	WASHER----------	2
C▲	27	5K1790	BAR----------	2

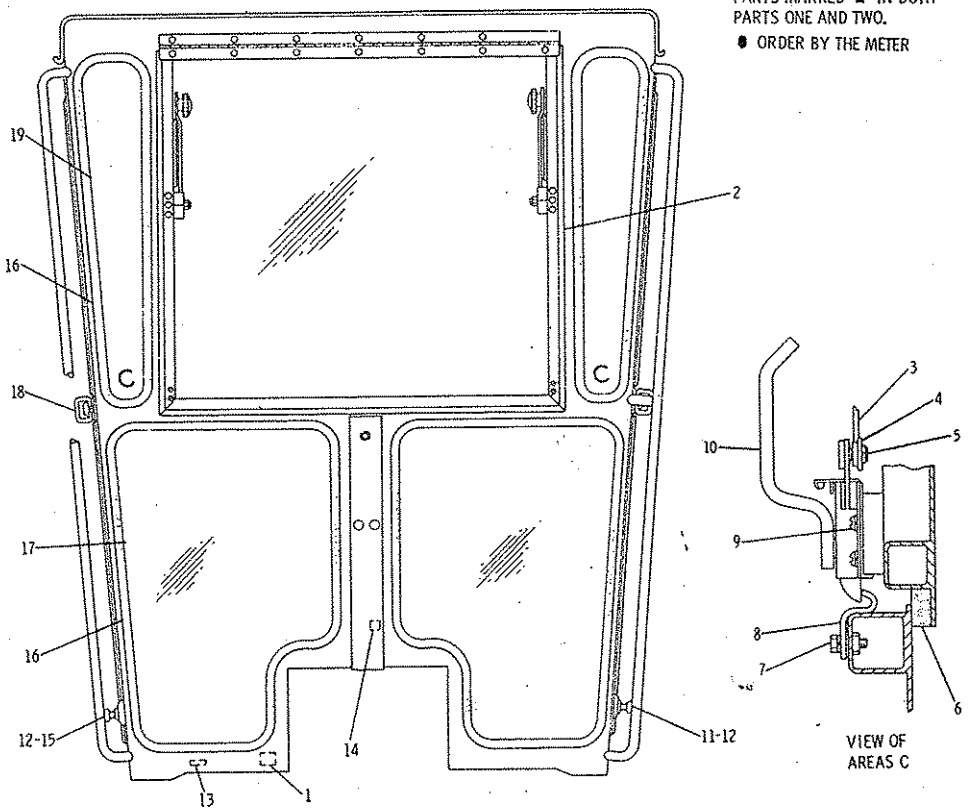

2C8295 CAB ASSEM. INCLUDES PARTS MARKED ▲ IN BOTH PARTS ONE AND TWO.

● ORDER BY THE METER

VIEW OF AREAS C

REF. NO.	PART NUMBER	DESCRIPTION	QTY
▲ 1	9F2978	NUT	1
2	8D7550	WINDSHIELD GROUP (Separate Illustration)	1
3	6G5367	LINK ASSEM. -------(L. H.)-------	1
	6G5368	LINK ASSEM. -------(R. H.)-------	1
4	4L6499	WASHER----------(plain)----------	2
	5D2751	WASHER----------(spring)-------	2
5	3B4609	COTTER PIN	2
6	8D2078	SEAL	2
7	S1615	BOLT	4
	3B4504	LOCKWASHER	4
	5B2903	SHIM	6
8	9D1548	PLATE	2
9	4B1243	SCREW	8
	3B4503	LOCKWASHER	8
10	6G5369	LATCH----------(L. H.)----------	1
	9D8848	LATCH----------(R. H.)----------	1
11	9D4966	HANDLE ASSEM. --(L. H.)-------- (Includes)	1
	2G1674	KEY	2
12	4B1273	SCREW	4
▲ 13	7D9595	NUT	2
▲ 14	9F6445	NUT	2
15	9D4964	HANDLE-----(R. H. -non-locking)--	1
● 16	5P5906	SEAL-----(use as required)------	
17	2C8131	GLASS	2
18	9D5177	PLATE ASSEM.	2
	L1351	BOLT	4
	3B4506	LOCKWASHER	4
19	2C8076	GLASS	2

229766

2C8298 CAB GROUP—Non ROPS—Part 1
Part of 2C8049 Cab Arrangement listed on Page 286
8D7550 Windshield parts are shown on Page 299. AN ATTACHMENT

2C8298 CAB GROUP—Non ROPS—Part 2
Part of 2C8049 Cab Arrangement listed on Page 286. AN ATTACHMENT

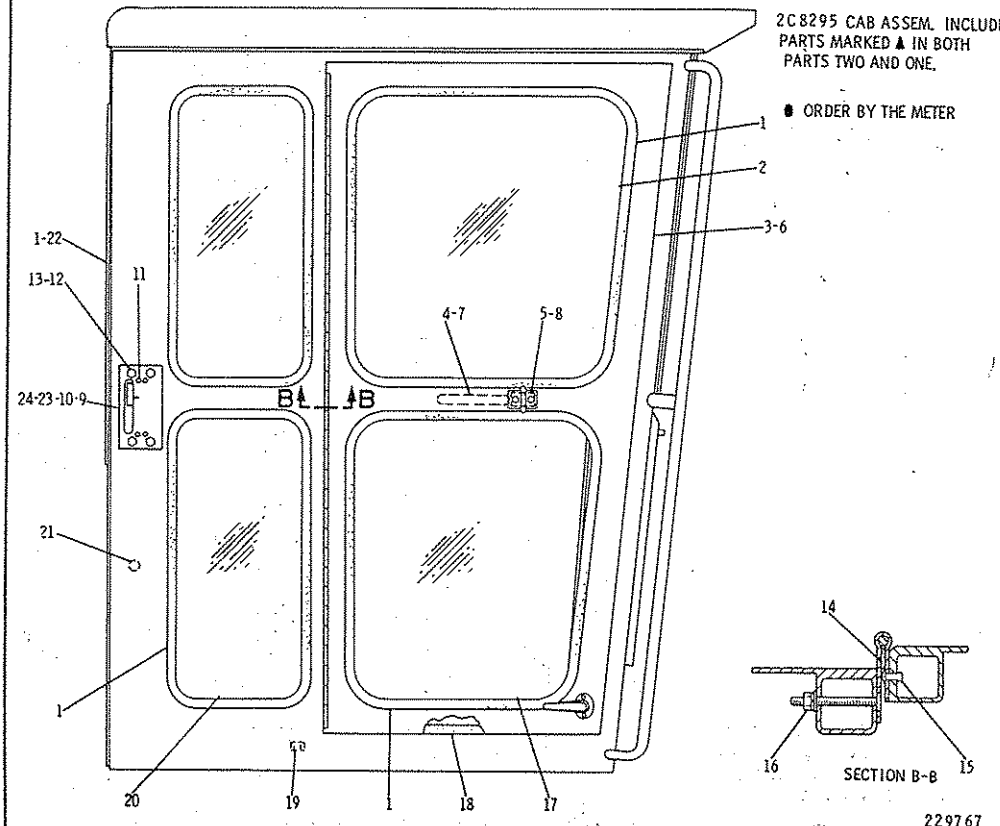

REF. NO.	PART NUMBER	DESCRIPTION	QTY.
● 1	5P5906	SEAL----------(use as required)--	
2	9D1587	GLASS----------	2
3	9D1646	DOOR ASSEM. -----(R. H.)---------	1
4	1F4910	GRAB IRON----------	1
5	7K3001	BAR----------	1
6	9D1647	DOOR ASSEM. -------(L. H.)-------	1
7	1F4910	GRAB IRON----------	1
8	7K3001	BAR----------	1
9	9D5178	BRACKET----------	2
10	9D5193	LATCH----------(R. H.)--------	1
	9D5194	LATCH----------(L. H.)--------	1
11	4B1244	SCREW----------	8
12	S1617	BOLT----------	8
	5P4116	WASHER----------	8
13	4B2051	NUT----------	8
	3B4503	LOCKWASHER----------	8
14	9D1542	HINGE----------	2
	9D4606	SEAL----------	2
15	6D6581	RIVET----------	32
16	1H8299	SCREW----------	32
	1B4330	NUT----------	32
	3B4504	LOCKWASHER----------	32
	4B4276	WASHER----------	32
17	9D1588	GLASS----------	2
18	8D2079	SEAL----------	4
▲ 19	1B4332	NUT----------	4
20	2C7902	GLASS----------	4
▲ 21	8F9836	LUG----------	3
22	9D469	GLASS----------	1
23	2G7801	HANDLE----------	2
	9D5182	STRIP----------	2
	2G7842	RETAINER----------	2
	2G7843	BALL----------	2
24	6P6256	RETAINER----------	2
	4B5271	WASHER----------	2

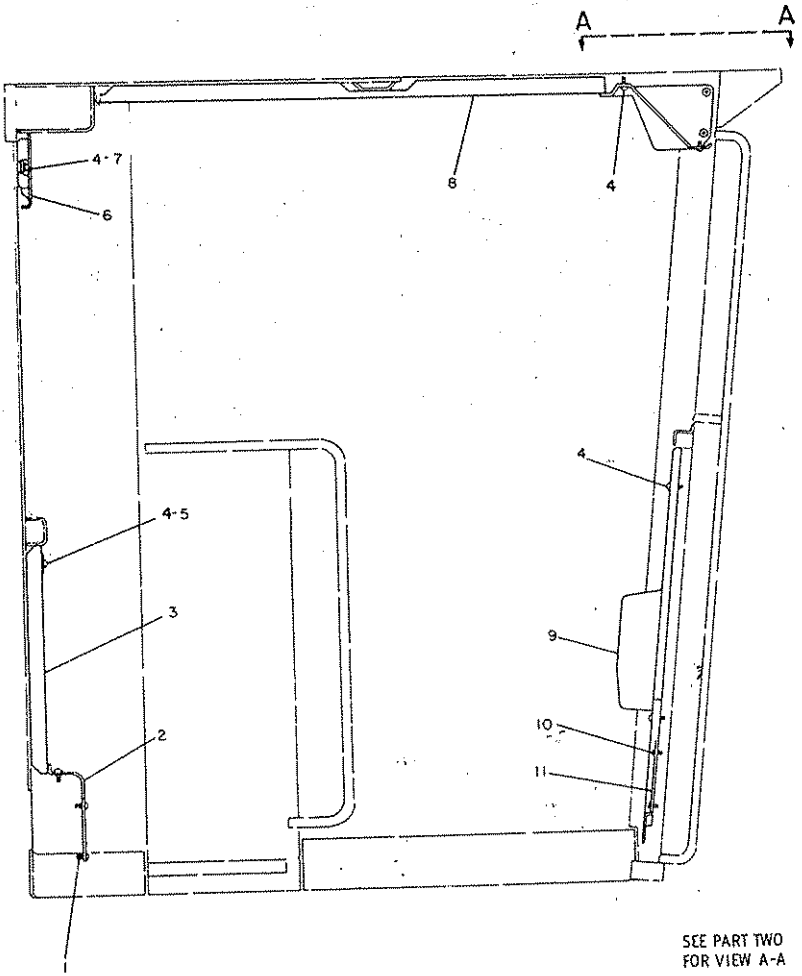

SEE PART TWO
FOR VIEW A-A

	REF. NO.	PART NUMBER	DESCRIPTION	QTY.
C	1	4V6981	SCREW	6
	2	6G2847	PLATE	1
	3	6G2743	INSULATION	1
C	4	6V3884	SCREW	27
	5	6G5214	WASHER	3
	6	6G2759	PANEL	1
	7	3P9901	WASHER--, 875mm(, 034 in.)dia.	2
	8	6G2925	INSULATION	1
	9	6G3499	PANEL	1
	10	2N3478	SCREW	4
	11	6G2644	COVER-------(R. H.)	1
		6G2643	COVER-------(L. H.)	1

C INDICATES CHANGE

308889

6G2620 CAB LINER GROUP—Sound Suppression—Part 1
Serial No. 87V5734—Up
Also part of 5T567 listed on Page 287C

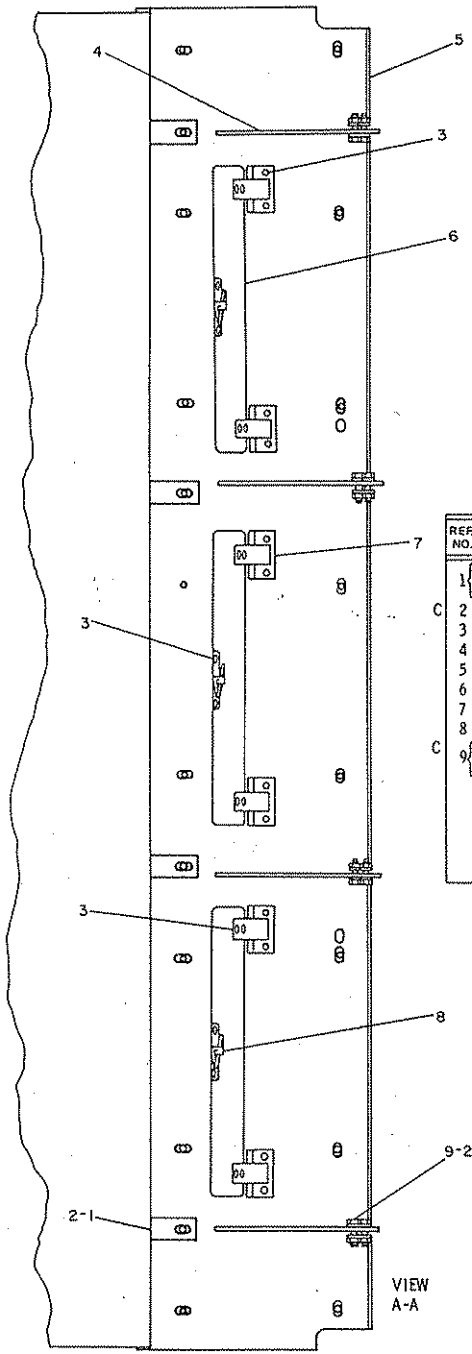

	REF. NO.	PART NUMBER	DESCRIPTION	QTY.
	1	6G2877	PLATE	4
		4M5283	BOLT	4
C	2	5P4115	WASHER	20
	3	7K6536	RIVET	30
	4	6G2843	PLATE	4
	5	6G2729	PANEL	1
	6	6G2728	DOOR	3
	7	6G2751	HINGE	6
	8	6G2914	LATCH	3
C	9	4M5283	BOLT	8
		1B4330	NUT	8

C INDICATES CHANGE 181742

6G2620 CAB LINER GROUP—Sound Suppression—Part 2
Serial No. 87V5734—Up
Also part of 5T567 listed on Page 287C

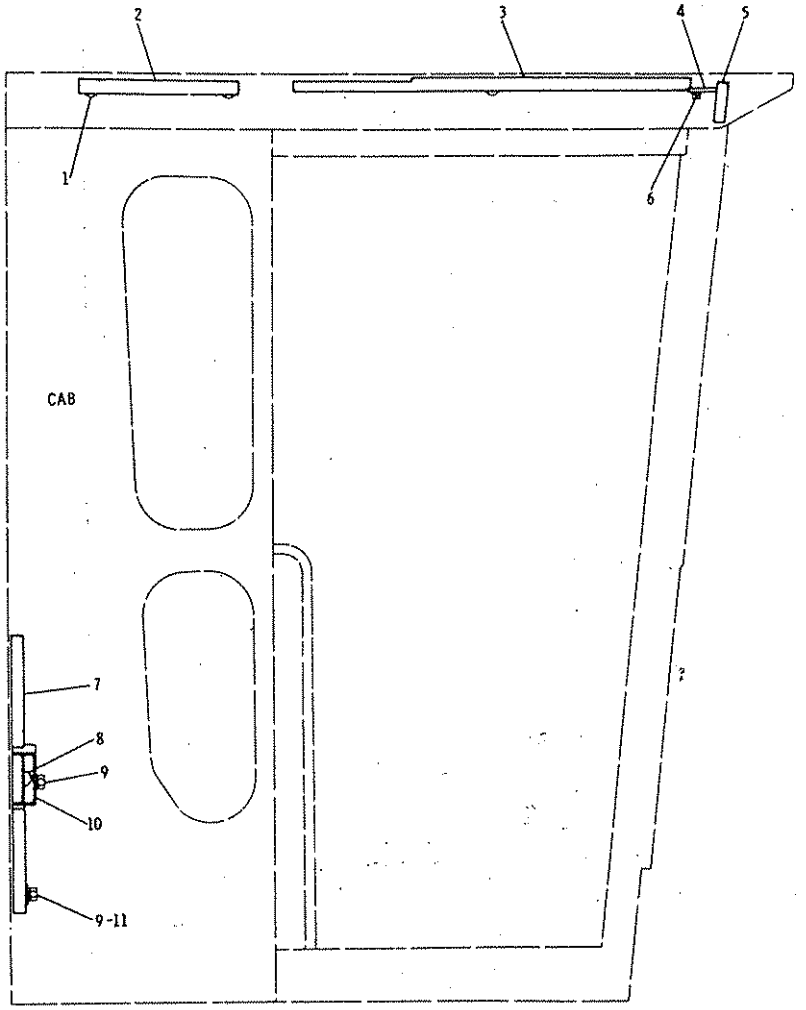

REF. NO.	PART NUMBER	DESCRIPTION	QTY
1	6P815	BUTTON	10
2	2G5739	LINER	2
3	2G5746	LINER	1
4	9D5338	PLATE	1
5	2G5743	LINER	1
	2G5741	LINER	1
C 6	4M5283	BOLT	10
C	1L4789	LOCKWASHER	10
7	2G5742	LINER	1
8	6P863	BUTTON	1
9	5M3062	BOLT	6
	6H8351	LOCKWASHER	6
10	8D1554	PLATE	2
11	7K3222	WASHER	2

C INDICATES CHANGE 216138

2G6050 CAB LINER GROUP—Sound Suppression
Serial No. 87V5275 to 87V5733 Inclusive

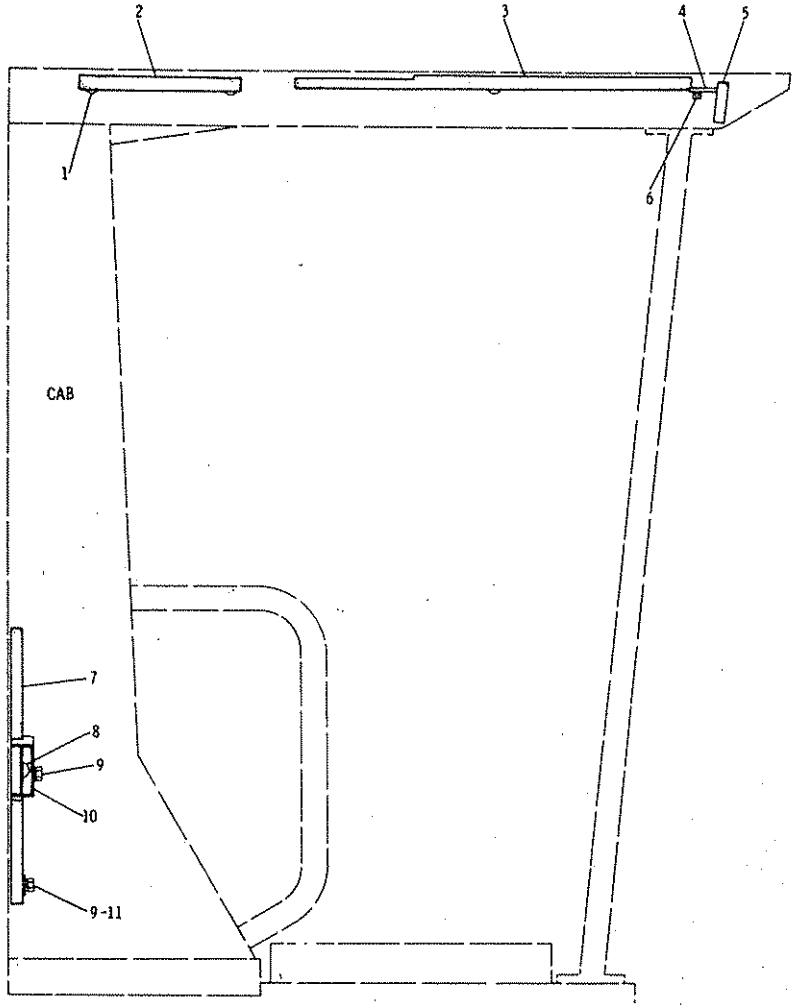

	REF NO.	PART NUMBER	DESCRIPTION	QTY
	1	6P815	BUTTON	10
	2	2G5739	INSULATION	2
	3	2G5746	INSULATION	1
	4	9D5338	PLATE	1
	5	2G6256	LINER	1
C	6	4M5283	BOLT	10
C		1L4789	LOCKWASHER	10
	7	2G5742	LINER	1
	8	6P863	BUTTON	1
	9	5M3062	BOLT	6
		6H8351	LOCKWASHER	6
	10	8D1554	PLATE	2
	11	7K3222	WASHER	2

C INDICATES CHANGE 216107

2G5985 CAB LINER GROUP—Sound Suppression
Serial No. 87V5275 to 87V5733 Inclusive
Part of 2G6210 Roll-Over Protective Structure Arrangement listed on Page 287
AN ATTACHMENT

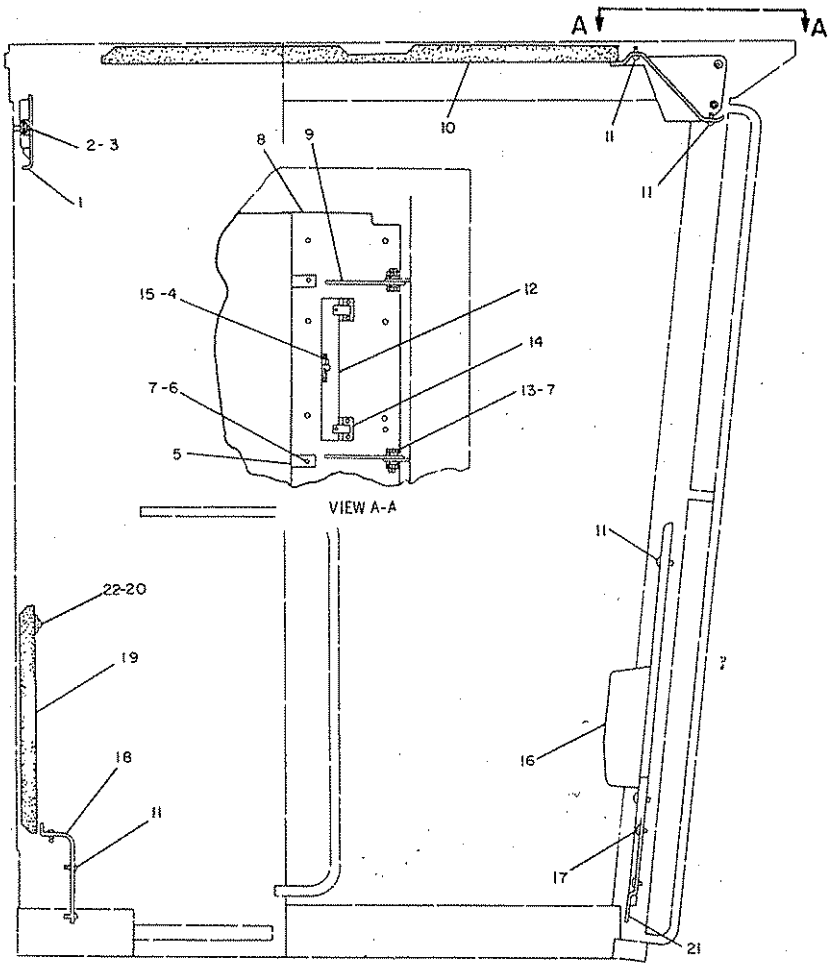

REF NO.		PART NUMBER	DESCRIPTION	QTY.
	1	6G2762	PANEL	1
C	2	9D3868	SCREW	4
	3	3P9901	WASHER-(small)	2
		4B4276	WASHER-(large)	2
	4	7K6536	RIVET	30
	5	6G2877	PLATE	4
	6	4M5283	BOLT	4
C	7	5P4115	WASHER	20
	8	6G2746	PANEL	1
	9	6G2843	PLATE	4
	10	6G2926	INSULATION	1
	11	4V6981	SCREW	26
	12	6G2728	DOOR	3
C	13	4M5283	BOLT	8
		1B4330	NUT	8
	14	7G2751	HINGE	6
	15	6G2914	LATCH	3
	16	6G3499	PANEL	1
	17	2N3478	SCREW	4
	18	6G2847	PLATE	1
	19	6G2743	INSULATION	1
	20	6G5214	WASHER	3
	21	6G2644	COVER-(R. H.)	1
		6G2643	COVER-(L. H.)	1
C	22	6V3884	SCREW	3

C INDICATES CHANGE

181615

6G2615 CAB LINER GROUP—Sound Suppression—High Profile
Serial No. 87V5734—Up. Part of 6G2655 & 5T566 ROPS Arrangement listed on Pages 287A & 287C. AN ATTACHMENT

6G270 WEATHER INSULATION GROUP
Serial No. 87V5275 to 87V5733 Inclusive
Also part of 2C8049 Cab Arrangement listed on Page 286

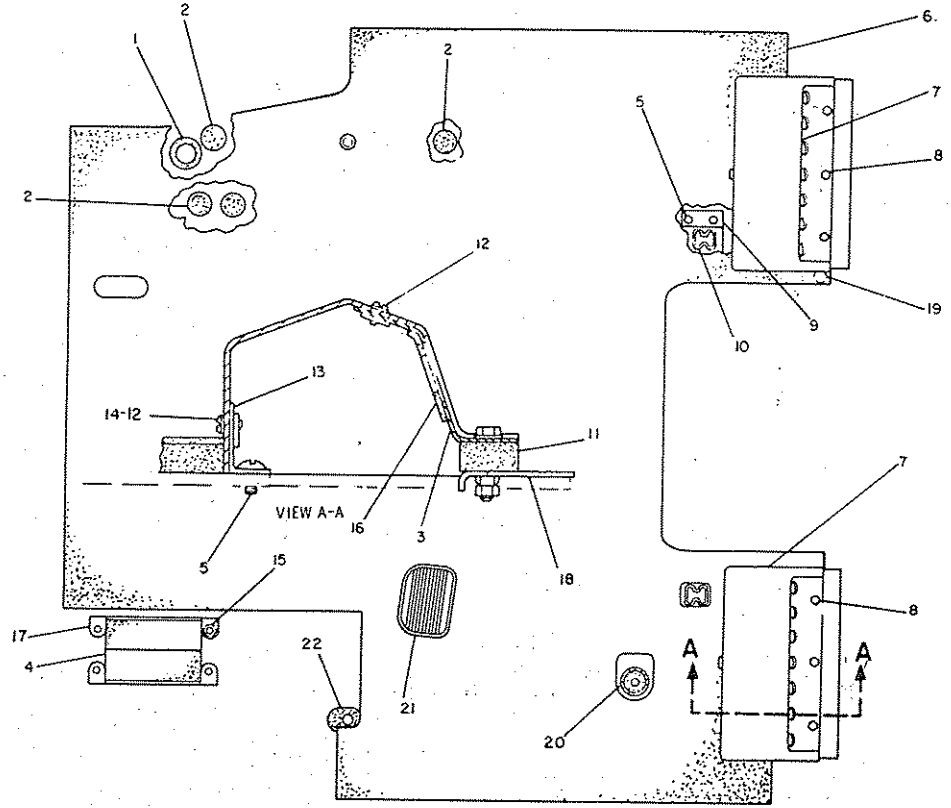

	REF. NO.	PART NUMBER	DESCRIPTION	QTY.
	1	6P5560	GROMMET	1
C	2	5P9212	PLUG	4
C	3	6G2104	PLATE ASSEM.	2
	4	6G222	SEAL	2
C	5	5P2669	SCREW	12
	6	6G265	FLOORMAT	1
	7	6G207	COVER	2
	8	7B2742	BOLT	6
		1B4330	NUT	6
		4B4276	WASHER	6
C	9	7G4326	PLATE	4
	10	6G266	SEAL	2
	11	6G203	SEAL	2
C	12	5P7162	SCREW	6
		4B4274	WASHER	6
	13	6G239	BRACKET ASSEM.	2
			(Each Includes)	
	14	7D9595	NUT	1
	15	1D4717	NUT	4
	16	6G204	SEAL	2
	17	6G223	BRACKET	2
C	18	6G4247	PLATE ASSEM.	2
C	19	3J6627	BOLT	4
	20	6G233	BOOT	1
	21	6G1955	BOOT	1
		6G1956	PAD	1
	22	5P9261	GROMMET	1

C INDICATES CHANGE

225815

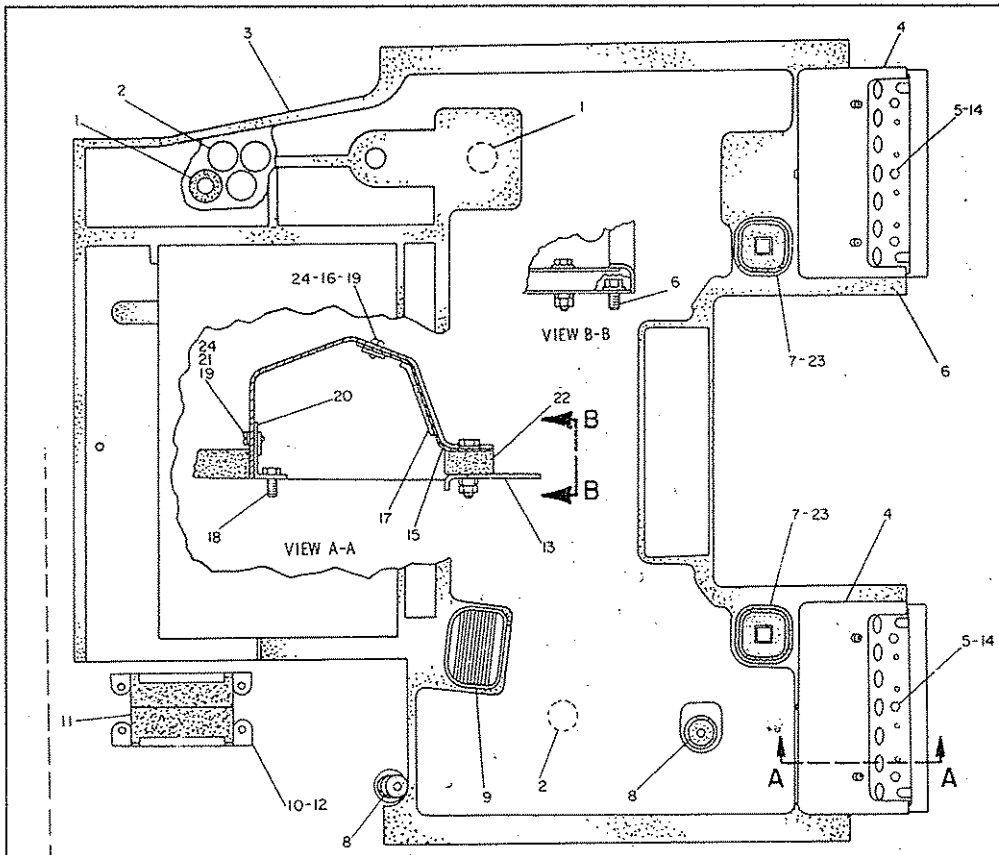

	REF NO.	PART NUMBER	DESCRIPTION	QTY
C	1	6P5560	GROMMET	2
C	2	5P9212	PLUG	4
C	3	5T5257	FLOORMAT	1
	4	6G207	COVER	2
	5	7B2742	BOLT	6
		1B4330	NUT	6
		4B4276	WASHER	6
	6	3J6627	SCREW	4
			- OR -	
C		2H3755	BOLT	4
C		9M1974	WASHER	4
	7	6G4969	BOOT	2
	8	6G233	BOOT	2
	9	6G1955	BOOT	1
		6G1956	PAD	1
	10	3K925	SPACER	4
	11	6G222	SEAL	2
	12	6G223	BRACKET	2
	13	6G4247	PLATE ASSEM. (Each Includes)	2
	14	9F6445	NUT	3
	15	6G2104	PLATE ASSEM. (Each Includes)	2
	16	7D9595	NUT	2
	17	6G204	SEAL	2
C	18	S1614	BOLT	4
	19	5P7162	SCREW	6
	20	6G239	BRACKET ASSEM. (Each Includes)	2
	21	7D9595	NUT	2
	22	6G203	SEAL	2
C	23	7D8875	WASHER	2
C	24	4B4274	WASHER	6

C INDICATES CHANGE

308881

6G2600 WEATHER INSULATION GROUP
Serial No. 87V5734—Up
Also part of 6G2655 ROPS Arrangement listed on Page 287A

9D1365 CAB DOOR GROUP—Tinted Glass
Serial No. 87V5275 to 87V5733 inclusive
9D1831 and 9D1832 Door parts are shown on Pages 296 & 297

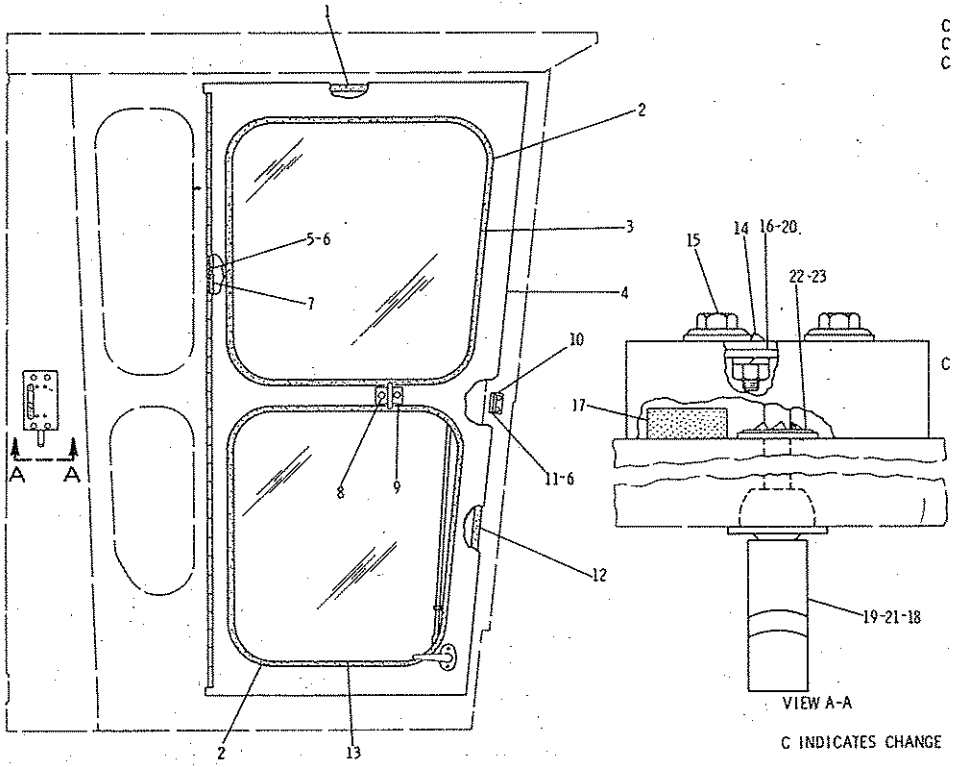

	REF. NO.	PART NUMBER	DESCRIPTION	QTY
C▲	1	5P5643	SEAL----------3.6 m(140 in.)	
C▲	2	5P5642	SEAL----------11.17 m(440 in.)	
C	3	9D1587	GLASS----------	2
	4	9D1831	DOOR GROUP---------(R. H.)------	1
		9D1832	DOOR GROUP---------(L. H.)------	1
			(Separate Illustration)	
	5	4B1282	SCREW----------	32
		1B4330	NUT----------	32
C	6	5P4115	WASHER----------	36
	7	9D4606	SEAL----------	2
	8	L1351	BOLT----------	4
C		5P1075	WASHER----------	4
	9	9D5177	PLATE ASSEM.----------	2
	10	5B2903	SHIM----------	6
	11	9D1548	PLATE----------	2
		S1615	BOLT----------	4
C▲	12	5P5643	SEAL----------3.4 m(132 in.)	
	13	9D1588	GLASS----------	2
	14	4B1244	SCREW----------	8
		4B2051	NUT----------	8
		3B4503	LOCKWASHER----------	8
	15	S1617	BOLT----------	8
C		5P4116	WASHER----------	8
	16	9D5193	LATCH ASSEM.--------(L. H.)------	1
		9D5194	LATCH ASSEM.--------(R. H.)------	1
	17	9D5182	STRIP----------	2
C	18	2G7843	BALL----------	2
C	19	2G7801	HANDLE----------	2
	20	9D5178	BRACKET----------	2
C	21	2G7842	RETAINER----------	2
C	22	6P6256	RETAINER----------	2
C	23	4B5271	WASHER----------	2

C INDICATES CHANGE

▲ ORDER BY THE METER

237925

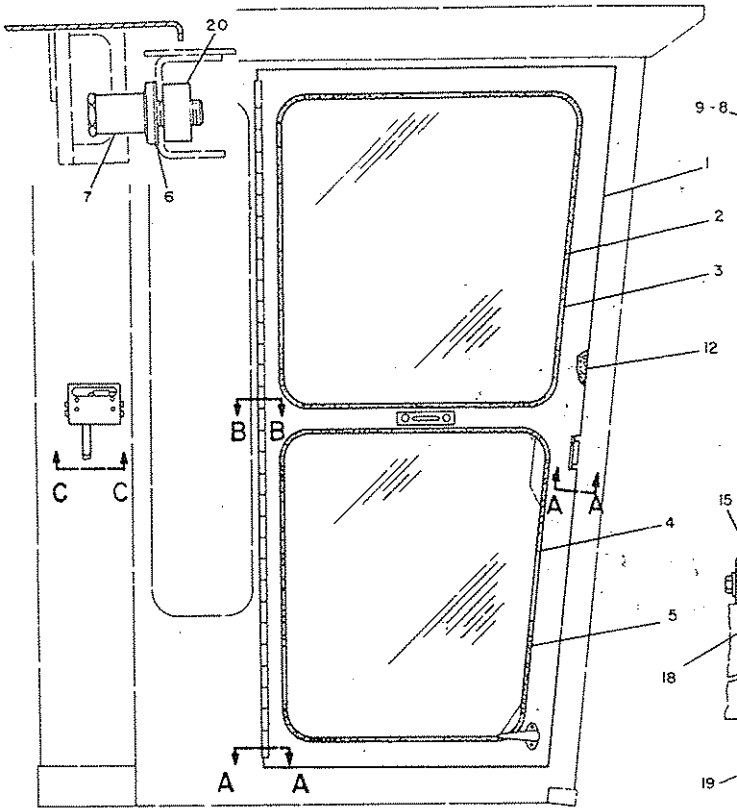

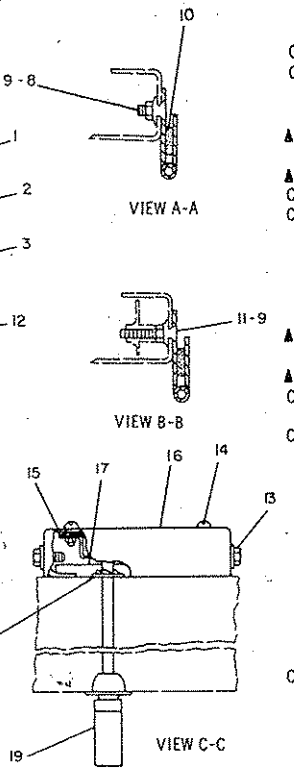

REF. NO.	PART NUMBER	DESCRIPTION	QTY.
C 1	6G2300	DOOR ASSEM. ----------(R. H.)--	1
C	6G2310	DOOR ASSEM. ----------(L. H.)-- (Separate Illustration)	1
2	6G2394	GLASS----------	2
▲ 3	5P5768	SEAL----------5.74 m(225.9 in.)	
4	6G2393	GLASS----------	2
▲ 5	5P5768	SEAL----------5.40 m(212.5 in.)	
C 6	4J3915	SHIM----------	6
C 7	6V5158	STRIKER ASSEM. ---------- (Each Includes)	2
	6V4270	WASHER----------	1
8	4B1282	SCREW----------	23
9	1B4330	NUT----------	28
	5P4115	WASHER----------	28
▲ 10	6V5164	SEAL----------3 m(118 in.)	
11	1H8294	SCREW----------	5
▲ 12	5P5648	SEAL----------6.20 m(244 in.)	
C 13	4M5283	BOLT----------	8
	4B4276	WASHER----------	8
C	4B1244	SCREW----------	8
14	4B2051	NUT----------	8
	3B4503	LOCKWASHER----------	8
15	9D5193	LATCH---------(R. H.)----------	1
	9D5194	LATCH---------(L. H.)----------	1
16	6G1623	BRACKET----------	2
17	9D5182	STRIP----------	2
18	6P6256	RETAINER----------	2
	4B5271	WASHER----------	2
19	2G7801	HANDLE----------	2
	2G7842	RETAINER----------	2
	2G7843	BALL----------	2
C 20	9G2858	PLATE----------	2

C INDICATES CHANGE

▲ ORDER BY THE METER

182947

6G2590 CAB DOOR GROUP—Low Profile
Serial No. 87V5734—Up
Also part of 5T567 ROPS Conversion Arrangement listed on Page 287C
6G2300 & 6G2310 Door parts are shown on Pages 297A & 297B

6G2595 CAB DOOR GROUP—High Profile
Part of 6G2655 & 5T566 ROPS Arrangement listed on Pages 287A & 287C
6G3265 & 6G3270 Door parts are shown on Pages 297C & 297D
AN ATTACHMENT

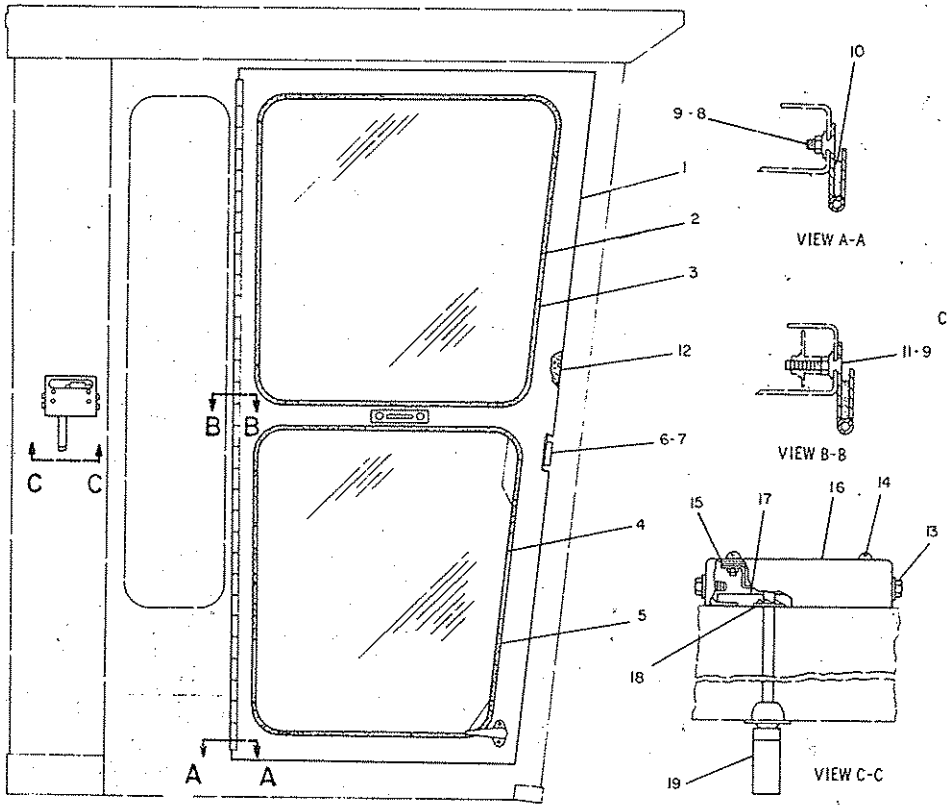

REF. NO.	PART NUMBER	DESCRIPTION	QTY.
1	6G3265	DOOR ASSEM. ----------(R. H.)---	1
	6G3270	DOOR ASSEM. ----------(L. H.)---	1
		(Separate Illustration)	
2	6G2558	GLASS----------	2
▲ 3	5P5768	SEAL------5. 74 m(225. 9 in.)	
4	6G2393	GLASS----------	2
▲ 5	5P5768	SEAL-----5. 40 m(212. 5 in.)	
C 6	9G2858	PLATE----------	2
C	4J3915	SHIM----------	6
C 7	6V5158	STRIKER ASSEM. ----------	2
8	4B1282	SCREW----------	27
9	1B4330	NUT----------	32
	5P4115	WASHER----------	32
C▲ 10	6V5163	SEAL---------3. 4 m(133. 8 in.)	
11	1H8294	SCREW----------	5
▲ 12	5P5648	SEAL--------6. 60 m(259. 8 in.)	
C 13	4M5283	BOLT----------	8
	4B4276	WASHER----------	8
C	4B1244	SCREW----------	8
14	4B2051	NUT----------	8
	3B4503	LOCKWASHER----------	8
15	9D5193	LATCH----------(R. H.)-----	1
	9D5194	LATCH----------(L. H.)-----	1
16	6G1623	BRACKET----------	2
17	9D5182	STRIP----------	2
18	6P6256	RETAINER----------	2
	4B5271	WASHER----------	2
	2G7801	HANDLE----------	2
19	2G7842	RETAINER----------	2
	2G7843	BALL----------	2

C INDICATES CHANGE

▲ ORDER BY THE METER

180969

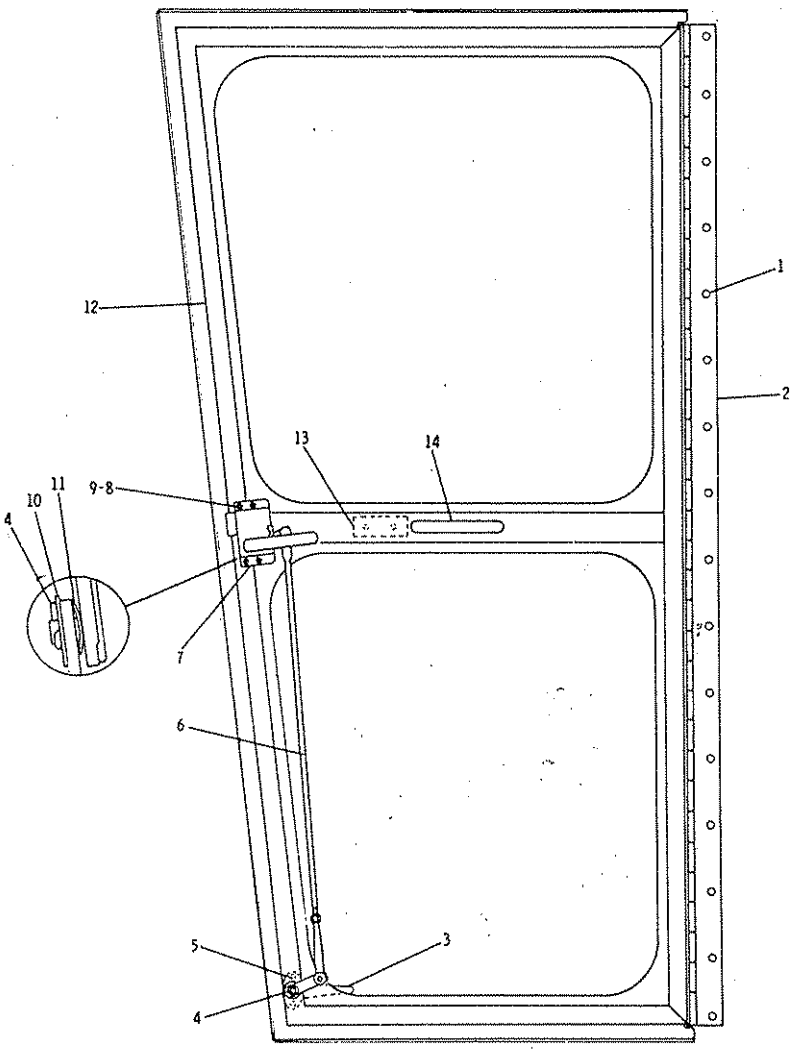

	REF. NO.	PART NUMBER	DESCRIPTION	QTY.
	1	6D6581	RIVET	16
	2	9D1542	HINGE	1
C	3	9D4966	HANDLE GROUP (Includes)	1
		2G1674	KEY	2
	4	3B4609	COTTER PIN	2
	5	4B1273	SCREW	2
C	6	6G5367	LINK ASSEM.	1
C	7	6G5369	LATCH	1
	8	4B1243	SCREW	4
	9	3B4503	LOCKWASHER	4
	10	4L6499	WASHER	1
	11	5D2751	WASHER	1
	12	9D1646	DOOR ASSEM. (Includes)	1
	13	7K3001	BAR	1
	14	1F4910	GRAB IRON	1

C INDICATES CHANGE

227170

9D1831 DOOR GROUP—R.H.
Serial No. 87V5275 to 87V5733 Inclusive
Part of 9D1365 Cab Door Group shown on Page 295

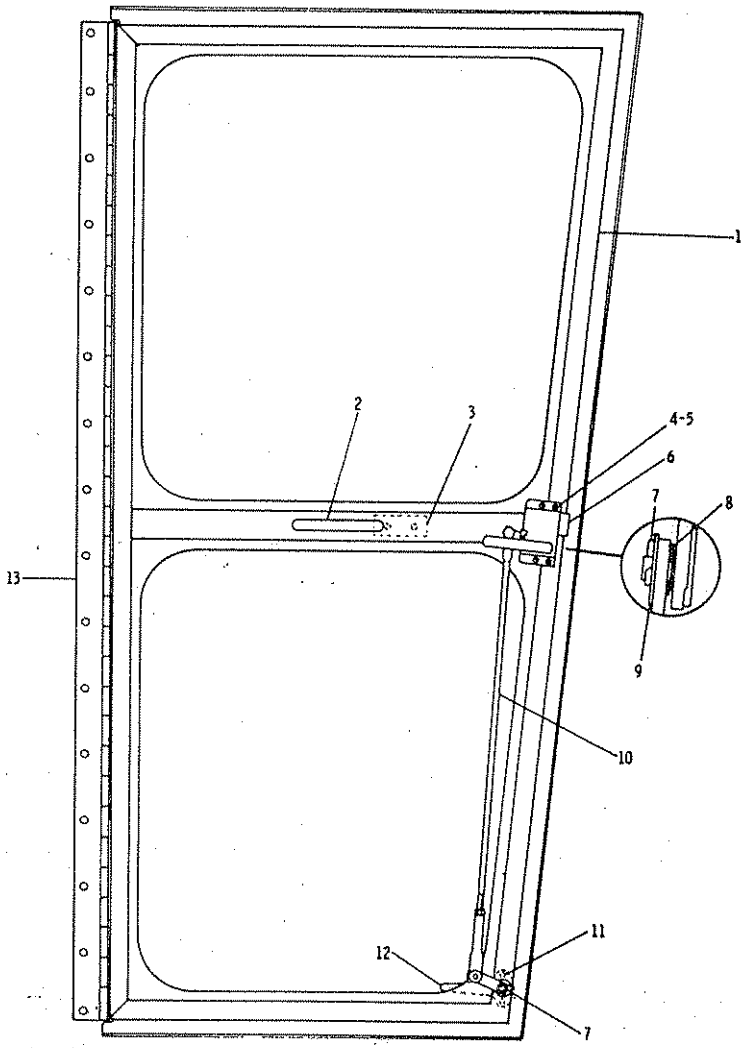

	REF. NO.	PART NUMBER	DESCRIPTION	QTY.
	1	9D1647	DOOR ASSEM. ---------- (Includes)	1
	2	1F4910	GRAB IRON----------	1
	3	7K3001	BAR----------	1
	4	4B1243	SCREW----------	4
	5	3B4503	LOCKWASHER----------	4
C	6	9D8848	LATCH----------	1
	7	3B4609	COTTER PIN----------	2
	8	4L6499	WASHER----------	1
	9	5D2751	WASHER----------	1
C	10	6G5368	LINK ASSEM. ----------	1
	11	4B1273	SCREW----------	2
	12	9D4966	HANDLE GROUP------(door)------- (Includes)	1
C		2G1674	KEY----------	2
	13	9D1542	HINGE----------	1
	14	6D6581	RIVET----------	16

C INDICATES CHANGE 227171

9D1832 DOOR GROUP—L.H.
Serial No. 87V5275 to 87V5733 inclusive
Part of 9D1365 Cab Door Group shown on Page 295

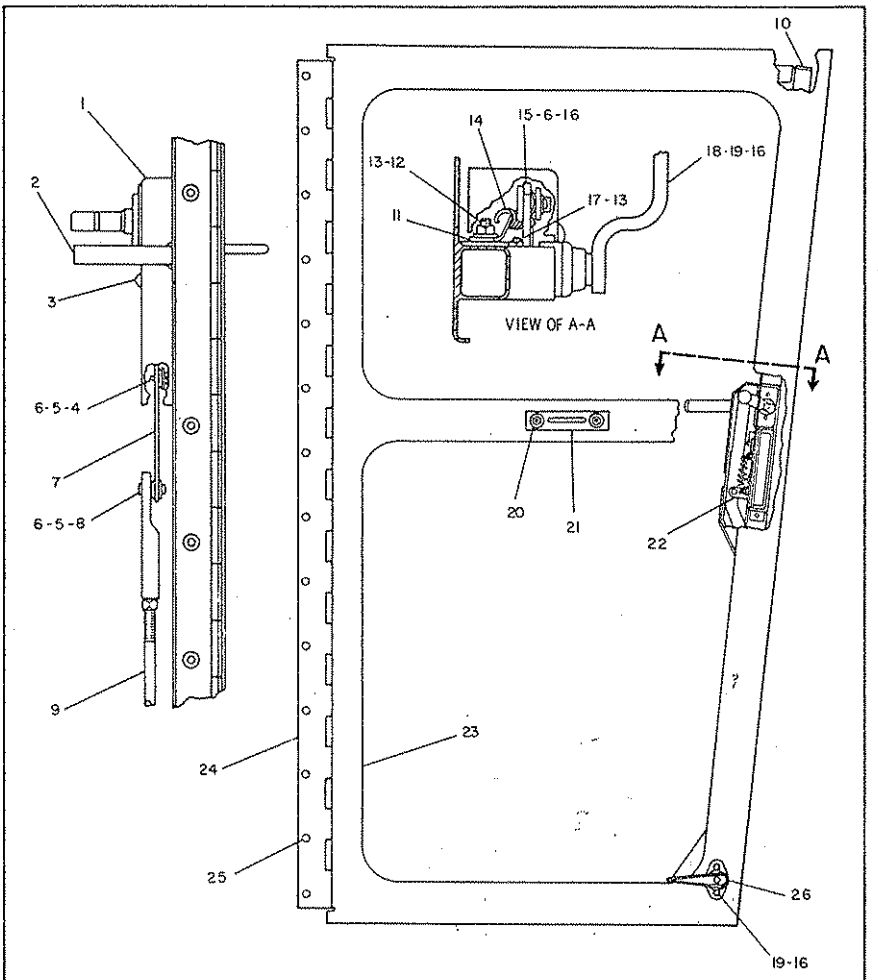

REF. NO.	PART NUMBER	DESCRIPTION	QTY.
1	6G6686	COVER ASSEM.	1
C 2	6G8679	HANDLE	1
3	4V6981	SCREW	3
4	9P6895	PIN	1
5	3B4604	COTTER	2
6	5D2751	WASHER---3.17mm(.125 in.)	3
7	6G6432	LINK	1
8	6B8193	PIN	1
	4B4277	WASHER---1.6mm(.065 in.)-	1
9	6G6415	LINK ASSEM.	1
10	6V2773	PLUG	1
11	9P441	PLATE	1
12	1B2713	BOLT	2
	8M2337	WASHER---3.04mm(.120 in.)	2
13	1B4330	NUT	4
	4B4276	WASHER---1.6mm(.065 in.)-	4
14	4H3521	SPRING	1

REF. NO.	PART NUMBER	DESCRIPTION	QTY.
15	6G6423	ARM	1
	4L6499	WASHER---1.5mm(.06 in.)--	1
16	3B4610	COTTER	3
17	7B2742	BOLT	2
18	6G6427	HANDLE	1
19	4B1273	SCREW	4
20	3B730	BOLT	2
	9L9814	NUT	2
21	6G2323	PLATE ASSEM.	1
22	6V3296	LATCH	1
23	6G2284	DOOR ASSEM. (Includes)	1
24	6G2296	HINGE	1
25	6D6581	RIVET	14
26	9D4966	HANDLE GROUP (Includes)	1
	2G1674	KEY	2

C INDICATES CHANGE

180970

6G2300 DOOR GROUP—R.H.
Serial No. 87V5734—Up
Part of 6G2590 Cab Door Group shown on Page 295A

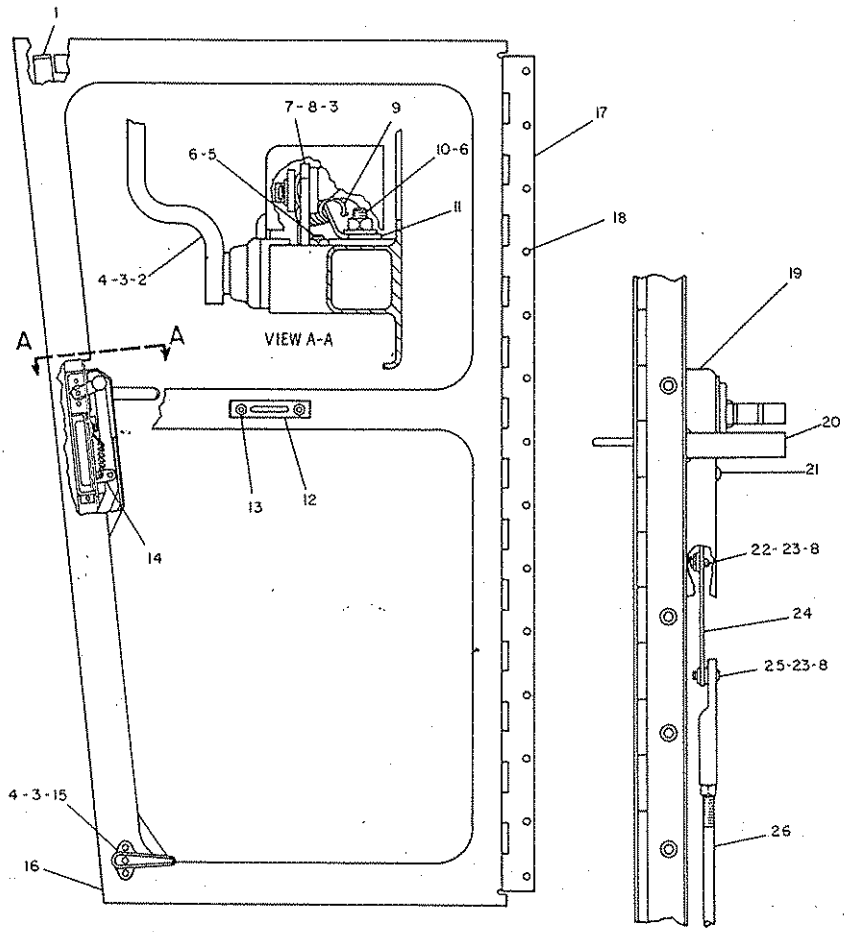

REF. NO.	PART NUMBER	DESCRIPTION	QTY.
1	6V2773	PLUG	1
2	6G6427	HANDLE	1
3	4B1273	SCREW	4
4	3B4610	COTTER	3
5	7B2742	BOLT	2
6	1B4330	NUT	4
	4B4276	WASHER---1.65mm(.065 in.)	4
7	6G6424	ARM	1
	4L6499	WASHER---1.52mm(.06 in.)	1
8	5D2751	WASHER---3.17mm(.125 in.)	3
9	4H3521	SPRING	1
10	1B2713	BOLT	2
	8M2337	WASHER---3.04mm(.12 in.)	2
11	9P441	PLATE	1
12	6G2323	PLATE ASSEM.	1
13	3B730	BOLT	2
	9L9814	NUT	2
14	6V3295	LATCH	1
15	9D4966	HANDLE GROUP (Includes)	1
	2G1674	KEY	2
16	6G2285	DOOR ASSEM. (Includes)	1
	6P3928	BOSS	1
17	6G2296	HINGE	1
18	6D6581	RIVET	14
19	6G6680	COVER ASSEM.	1
C 20	6G8679	HANDLE	1
21	4V6981	SCREW	3
22	9P6895	PIN	1
23	3B4604	COTTER	2
24	6G6432	LINK	1
25	6B8193	PIN	1
	4B4277	WASHER---1.65mm(.065 in.)	1
26	6G6420	LINK ASSEM.	1

C INDICATES CHANGE 180971

6G2310 DOOR GROUP—L.H.
Serial No. 87V5734—Up
Part of 6G2590 Cab Door Group shown on Page 295A

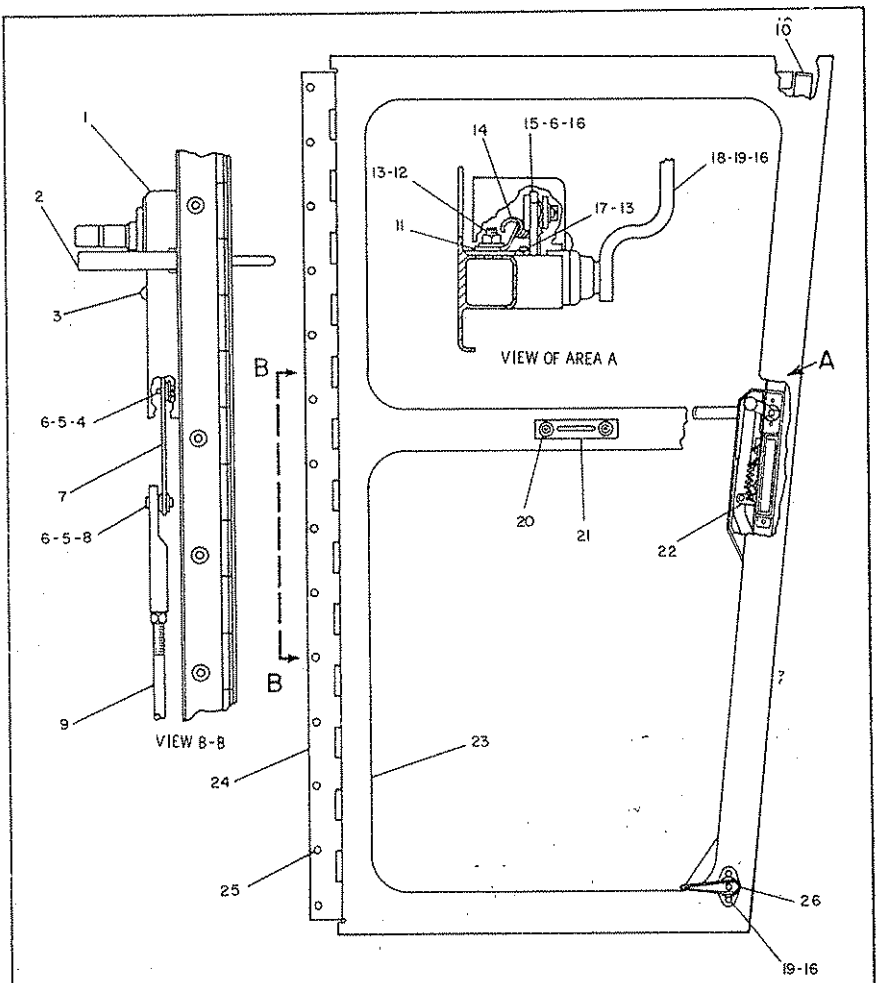

REF. NO.	PART NUMBER	DESCRIPTION	QTY.
1	6G6686	COVER ASSEM.	1
C 2	6G8679	HANDLE	1
3	4V6981	SCREW	3
4	9P6895	PIN	1
5	3B4604	COTTER	2
6	5D2751	WASHER-3.17mm(.125 in.)	3
7	6G6432	LINK	1
8	6B8193	PIN	1
	4B4277	WASHER-1.6mm(.065 in.)	1
9	6G6415	LINK ASSEM.	1
10	6V2773	PLUG	1
11	9P441	PLATE	1
12	1B2713	BOLT	2
	8M2337	WASHER-3.04mm(.120 in.)	2
13	1B4330	NUT	4
	4B4276	WASHER-1.6mm(.065 in.)	4
14	4H3521	SPRING	1
15	6G6423	ARM	1
	4L6499	WASHER-1.5mm(.06 in.)	1
16	3B4610	COTTER	3
17	7B2742	BOLT	2
18	6G6427	HANDLE	1
19	4B1273	SCREW	4
20	3B730	BOLT	2
	9L9814	NUT	2
21	6G2323	PLATE ASSEM.	1
22	6V3296	LATCH	1
23	6G2726	DOOR ASSEM. (Includes)	1
24	6G2699	HINGE	1
25	6D6581	RIVET	16
26	9D4966	HANDLE GROUP (Includes)	1
	2G1674	KEY	2

C INDICATES CHANGE

180972

6G3265 DOOR GROUP—R.H.
Serial No. 87V5734—Up
Part of 6G2595 Cab Door Group shown on Page 295B. AN ATTACHMENT

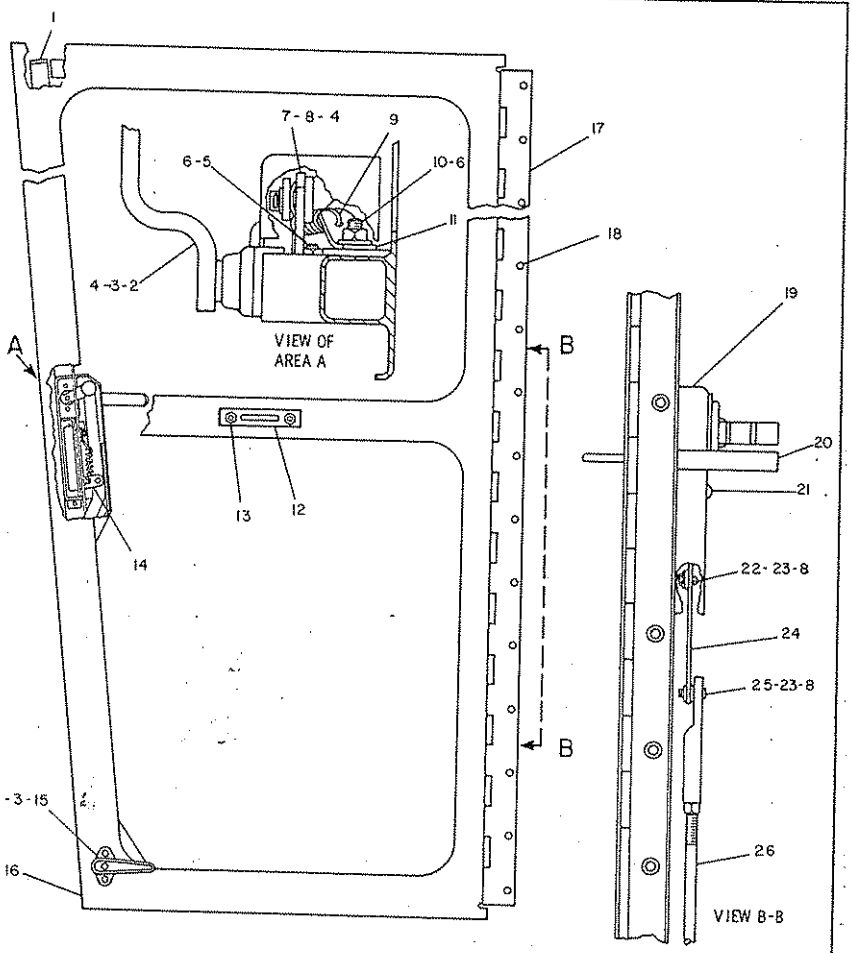

REF. NO.	PART NUMBER	DESCRIPTION	QTY.
1	6V2773	PLUG	1
2	6G6427	HANDLE	1
3	4B1273	SCREW	4
4	3B4610	COTTER	3
5	7B2742	BOLT	2
6	1B4330	NUT	4
	4B4276	WASHER---1.65mm(.065 in.) thick	4
7	6G6424	ARM	1
	4L6499	WASHER---1.52mm(.06 in.) thick	1
8	5D2751	WASHER---3.17mm(.125 in.) thick	3
9	4H3521	SPRING	1
10	1B2713	BOLT	2
	8M2337	WASHER--3.04mm(.12 in.) thick	2
11	9P441	PLATE	1
12	6G2323	PLATE ASSEM.	1
13	3B730	BOLT	2
	9L9814	NUT	2

14	6V3295	LATCH	1
15	9D4966	HANDLE GROUP (Includes)	1
	2G1674	KEY	2
16	6G2727	DOOR ASSEM. (Includes)	1
17	6G2699	HINGE	1
18	6D6581	RIVET	16
19	6G6680	COVER ASSEM.	1
C 20	6G8679	HANDLE	1
21	4V6981	SCREW	3
22	9P6895	PIN	1
23	3B4604	COTTER	2
24	6G6432	LINK	1
25	6B8193	PIN	1
	4B4277	WASHER--1.65mm(.065 in.) thick	1
26	6G6420	LINK ASSEM.	1

C INDICATES CHANGE 180973

6G3270 DOOR GROUP—L.H.
Serial No. 87V5734—Up. Part of 6G2595 Cab Door Group shown on Page 295B
AN ATTACHMENT

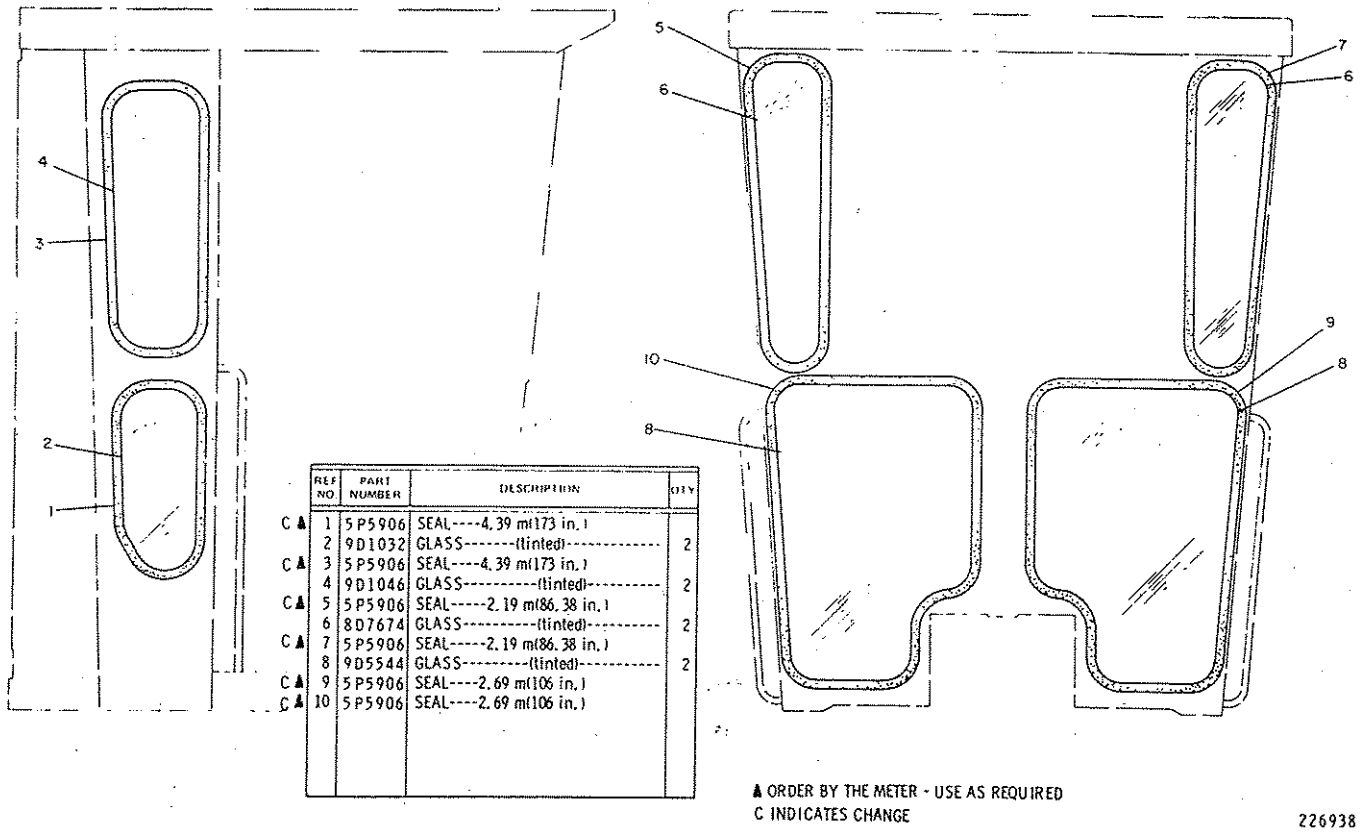

	REF NO	PART NUMBER	DESCRIPTION	QTY
C ▲	1	5P5906	SEAL----4.39 m(173 in.)	
	2	9D1032	GLASS--------(tinted)----------	2
C ▲	3	5P5906	SEAL----4.39 m(173 in.)	
	4	9D1046	GLASS----------(tinted)----------	2
C ▲	5	5P5906	SEAL-----2.19 m(86.38 in.)	
	6	8D7674	GLASS----------(tinted)----------	2
C ▲	7	5P5906	SEAL-----2.19 m(86.38 in.)	
	8	9D5544	GLASS---------(tinted)----------	2
C ▲	9	5P5906	SEAL----2.69 m(106 in.)	
C ▲	10	5P5906	SEAL----2.69 m(106 in.)	

▲ ORDER BY THE METER - USE AS REQUIRED
C INDICATES CHANGE

9D1385 CAB PANEL GROUP—Tinted Glass
Serial No. 87V5275 to 87V5733 Inclusive

5T2000 CAB PANEL GROUP—Field Installation
Serial No. 87V5275 to 87V5733 inclusive
Part of 5T567 ROPS Conversion Arrangement listed on Page 287C
6G2880 & 6G2890 Panel parts are shown on Pages 298C & 298D

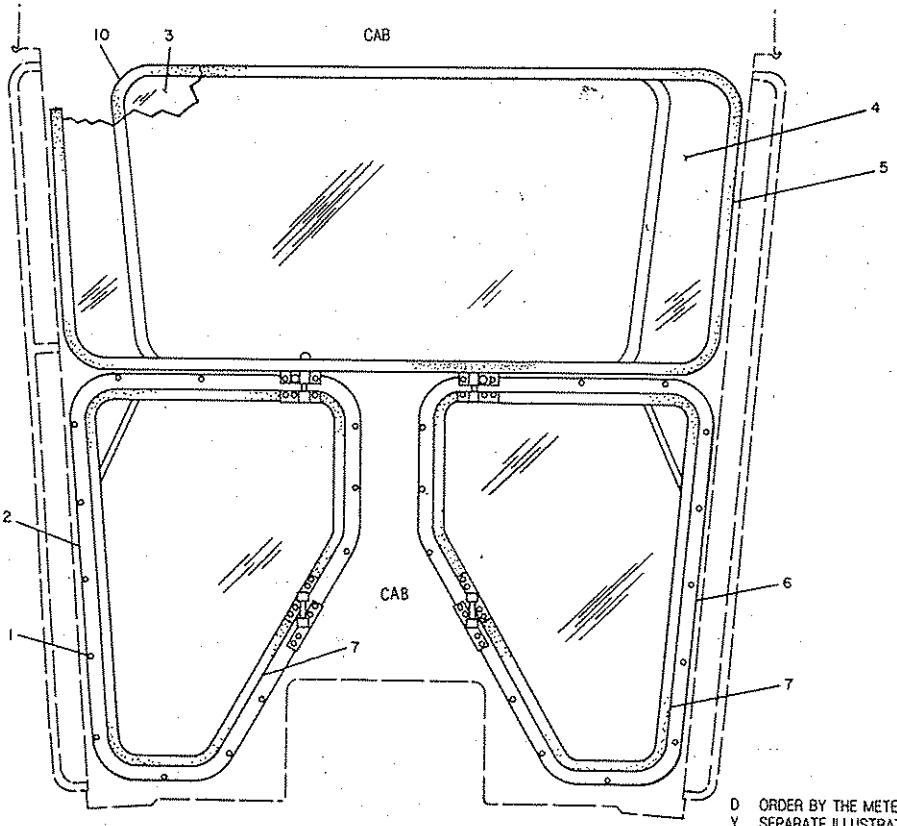

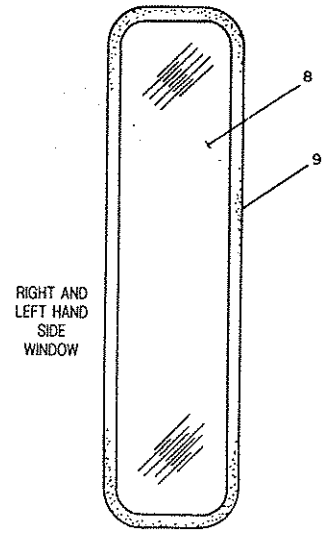

NOTE	REF NO	PART NUMBER	QTY	DESCRIPTION
	1	6V1051	26	SCREW
Y	2	6G2890	1	PANEL GROUP
	3	5T1247	1	GLASS
	4	6G2583	1	GLASS
D	5	5P5768		SEAL 3.98M (156.6 IN.)
Y	6	6G2880	1	PANEL GROUP
D	7	5P5969		SEAL 5.07M (199.6 IN.)
	8	6G2581	2	GLASS
D	9	5P5768		SEAL 5.10M (200.7 IN.)
D	10	5P5906		SEAL 3.44M (135 IN.)

D ORDER BY THE METER
Y SEPARATE ILLUSTRATION

308633

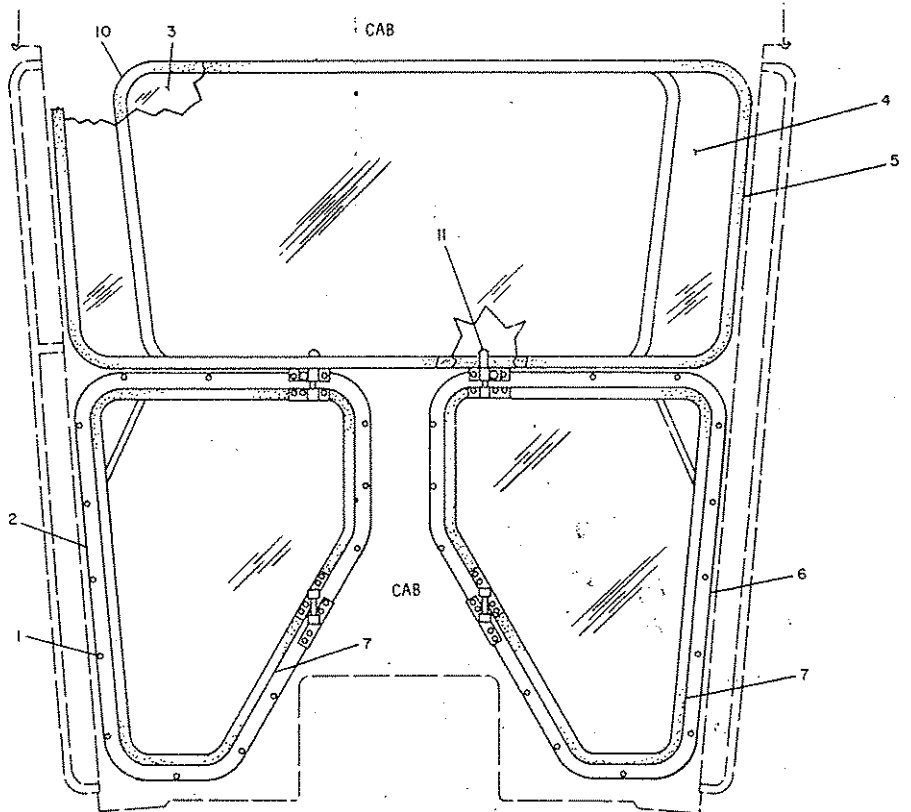

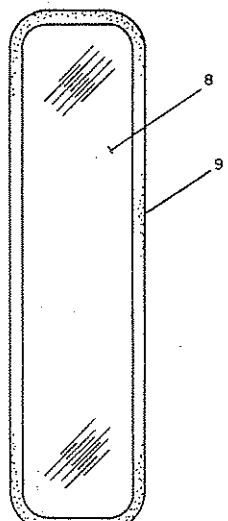

	REF. NO.	PART NUMBER	DESCRIPTION	QTY.
	1	6V1051	SCREW	26
●	2	6G2890	PANEL GROUP	1
	3	6G2061	GLASS	1
	4	6G2583	GLASS	1
▲	5	5P5760	SEAL---3.98 m(156.6 in.)	
●	6	6G2880	PANEL GROUP	1
▲	7	5P5969	SEAL-----5.07m(199.6 in.)	
	8	6G2581	GLASS	2
▲	9	5P5760	SEAL---------5.10m(200.7 in.)	
▲	10	5P5760	SEAL-----3.44m(135 in.)	
C	11	5T3093	HANDLE ASSEM.	2

C INDICATES CHANGE ● SEPARATE ILLUSTRATION ▲ ORDER BY THE METER 181616

6G2560 CAB PANEL GROUP—Tinted
Serial No. 87V5734—Up
6G2880 & 6G2890 Panel parts are shown on Pages 298C & 298D

6G2880 PANEL GROUP—L.H.
Serial No. 87V5734—Up
Part of 5T2000, 6G2560 & 6G2565 Panel Groups shown on Pages 298A, 298B & 300A

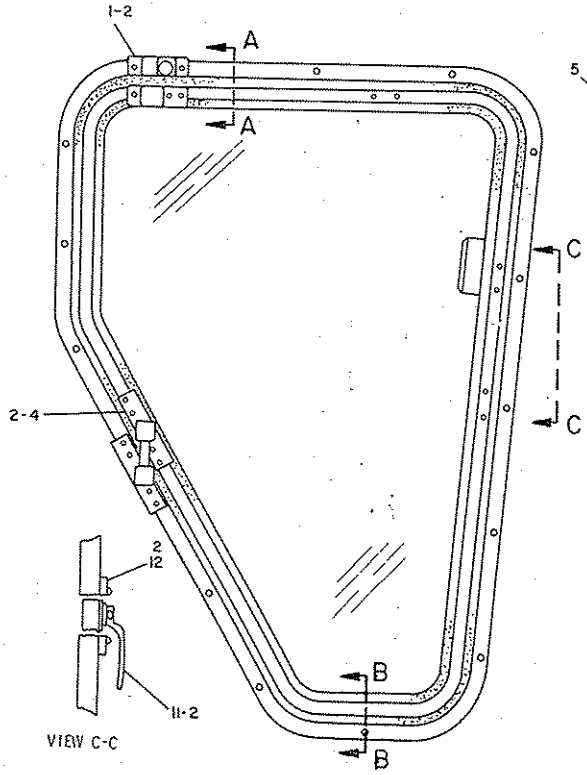

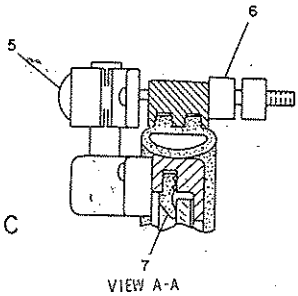

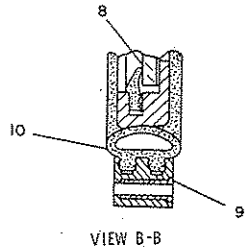

NOTE	REF NO	PART NUMBER	QTY	DESCRIPTION
J	1	5T1962	1	CLUTCH ASSEM.
C		5T3613	1	PIVOT
C	2	1H3340	17	BOLT
C	3	5T5126	1	HANDLE
K	4	5T1959	1	IDER ASSEM.
C		5T3145	1	PIVOT ASSEM.
	5	5T1988	1	BOLT
	6	5T1966	2	SPACER
D	7	5P5680		SEAL 2.29M(90.2IN.)
	8	5T1967	1	GLASS
	9	5Y1972	34	1INSERT
	10	5T1964	1	SEAL
	11	6G2959	1	HANDLE
	12	5T1968	1	CATCH
		1H8456	2	SCREW
				THE FOLLOWING REPAIR KITS ARE AVALILBLE:
CJ		5T3577	1	HOUSING KIT (CLUTCH)
CK		5T3147	1	HOUSING KIT (IDLER)(L.H.)

C INDICATES CHANGE
D ORDER BY THE METER

308511

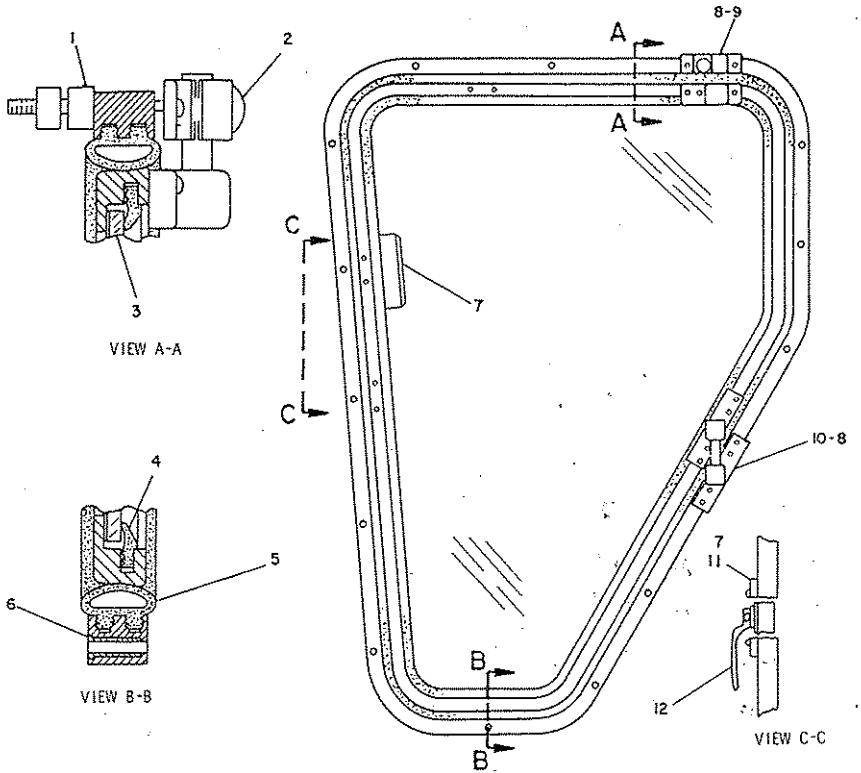

NOTE	REF NO	PART NUMBER	QTY	DESCRIPTION
	1	5T1966	2	SPACER
	2	5T1988	1	BOLT
	3	5T1967	1	GLASS
	4	5P5680		SEAL 2.29M(90.2IN.)
	5	5T1964	1	SEAL
	6	5T1972	34	INSERT
C	7	5T5126	1	HANDLE
C	8	1H3340	17	BOLT
J	9	5T1963	1	CLUTCH ASSEM.
C		5T3612	1	PIVOT
K	10	5T1958	1	IDLER ASSEM.
C		5T3144	1	PIVOT ASSEM.
	11	5T1968	1	CATCH
	12	5T1969	1	HANDLE
		1H8456	2	SCREW
				THE FOLLOWING REPAIR KITS ARE AVAILABLE:
CJ		5T3577	1	KIT - CLUTCH HOUSING
CK		5T3146	1	KIT - IDLER HOUSING (R.H.)

C INDICATES CHANGE

308510

6G2890 PANEL GROUP—R.H.
Serial No. 87V5734—Up
Part of 5T2000, 6G2560 & 6G2565 Panel Groups shown on Pages 298A, 298B & 300A

8D7550 WINDSHIELD GROUP—Tinted Glass
Serial No. 87V5275 to 87V5733 Inclusive
Also part of 2C8096 & 2C8298 Cab Groups shown on Pages 290 & 291A

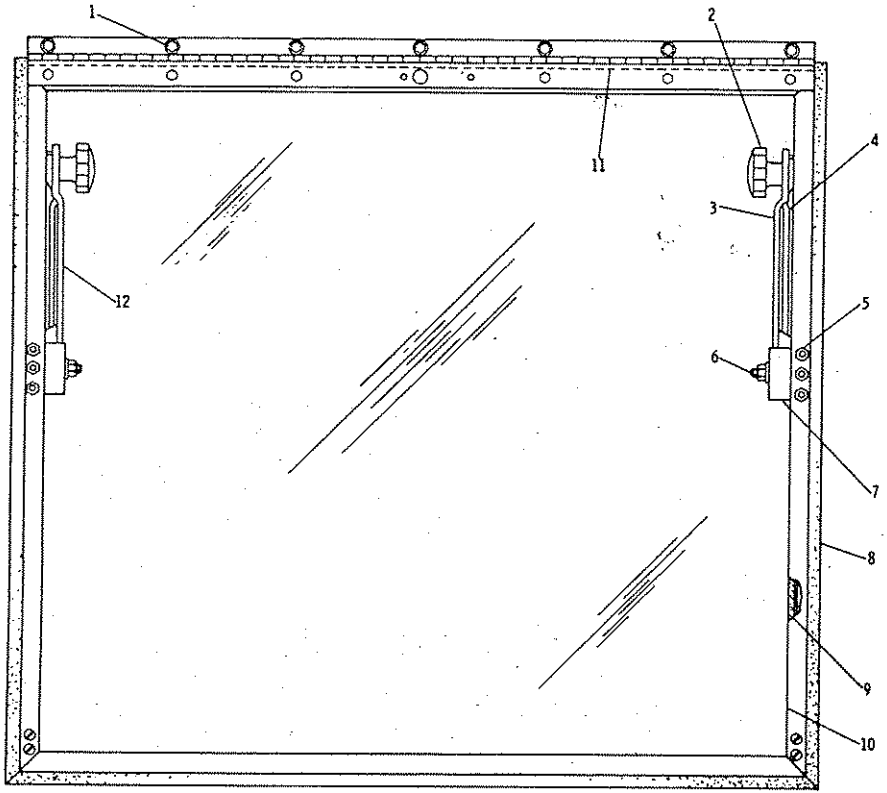

REF NO.	PART NUMBER	DESCRIPTION	QTY
	5K906	BOLT	7
1	5S7384	LOCKWASHER	7
	4B4277	WASHER	7
2	6D6416	KNOB ASSEM.	2
3	5D1344	ARM ASSEM. (L. H.)	1
4	2D5318	ARM ASSEM. (male)	2
	4B1285	MACHINE SCREW	6
5	4L6458	NUT	6
	1L4789	LOCKWASHER	6
	2K4973	LOCKNUT	4
6	4B4278	WASHER	8
7	8D7393	BRACKET	2
	8D7298	WINDOW ASSEM.	1
8		(Includes)	
▲	5P1447	SEAL -------29.3 dm(115.35 in.)	
▲ 9	5P1448	SEAL -------37.0 dm(145.66 in.)	
10	8D7297	GLASS--------(tinted)	1
▲ 11	5P805	SEAL-------10.2 dm(40.16 in.)	
12	5D1343	ARM ASSEM.	1

▲ ORDER BY THE DECIMETRE

207456

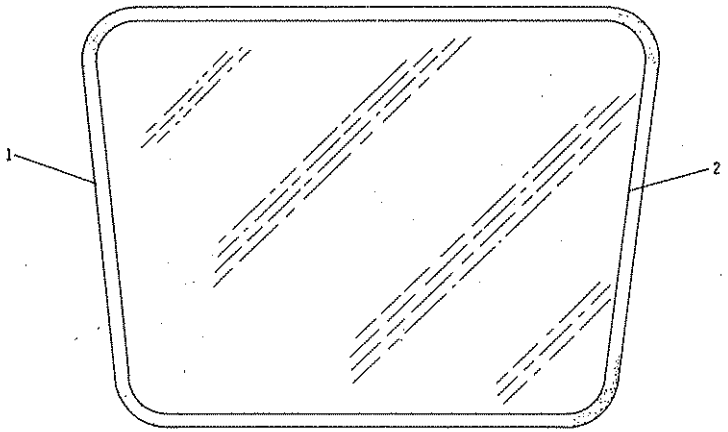

	REF. NO.	PART NUMBER	DESCRIPTION	QTY
C	1	6D735	SEAL	1
	2	9D469	GLASS	1

C INDICATES CHANGE

202486

9D570 REAR CAB PANEL GROUP—Tinted Glass
Serial No. 87V5275 to 87V5733 inclusive
Also part of 2G6210 Roll-Over Protective Structure Arrangement listed on Page 287

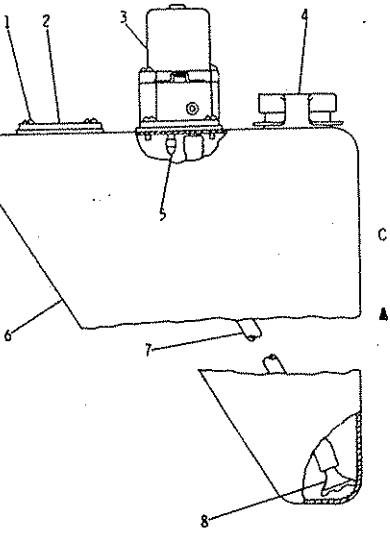

	REF. NO.	PART NUMBER	DESCRIPTION	QTY
	1	7K3434	SCREW	8
	2	3V3176	COVER	1
C	3	2G6948	PUMP	1
	4	2G6949	COVER	1
	5	2G6947	NOZZLE	1
	6	2G6951	RESERVOIR	1
▲	7	5P5992	HOSE, 28 m(11 in.)	
	8	9D6896	STRAINER	1

C INDICATES CHANGE
▲ ORDER BY THE METRE

164800

2G5050 WINDSHIELD WASHER GROUP
Part of 2G5350 and 2C7946 Windshield Washer Groups shown on Page 301

6G2565 CAB PANEL GROUP—Tinted

Serial No. 87V5734—Up

Part of 6G2655 ROPS Arrangement listed on Page 287A. 6G2880 & 6G2890 Panel parts are shown on Pages 298C & 298D. AN ATTACHMENT

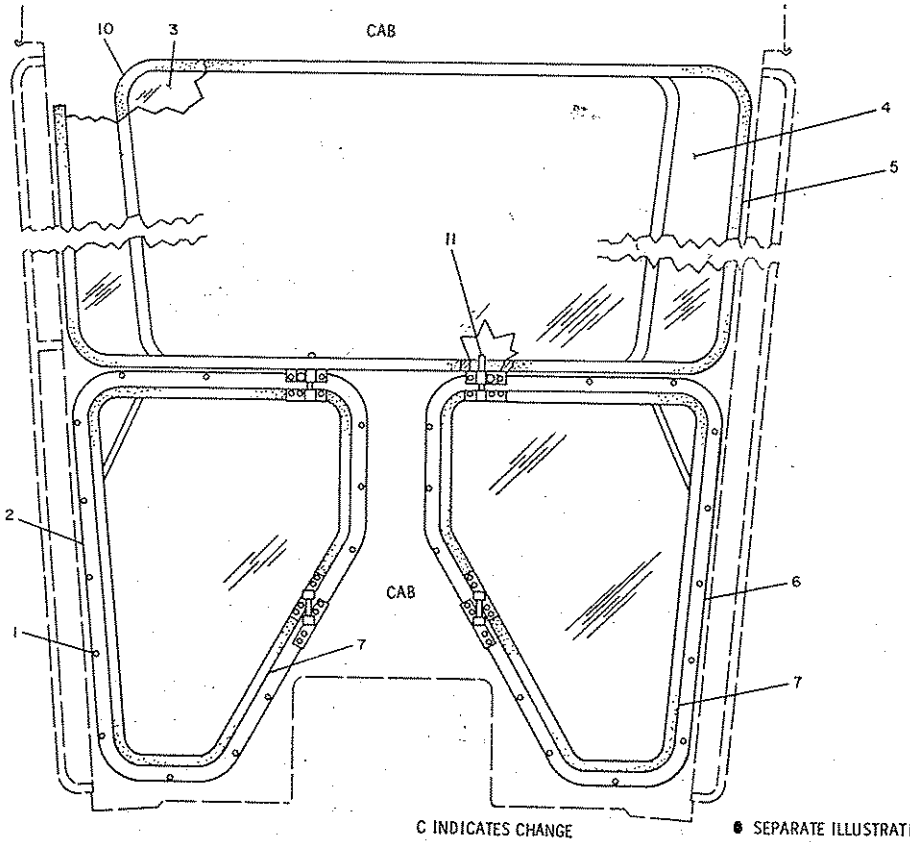

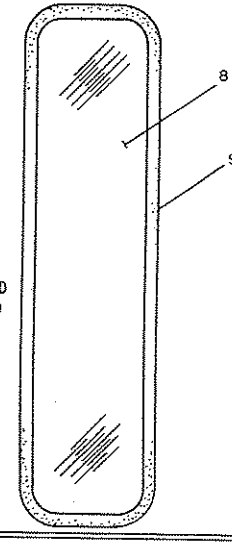

REF. NO.	PART NUMBER	DESCRIPTION	QTY.
1	6V1051	SCREW	26
● 2	6G2890	PANEL GROUP	1
3	6G2062	GLASS	1
4	6G2578	GLASS	1
▲ 5	5P5768	SEAL----4.48m(176 in.)	
● 6	6G2880	PANEL GROUP	1
▲ 7	5P5969	SEAL----5.07 m(199.6 in.)	
8	6G2582	GLASS	2
▲ 9	5P5768	SEAL-------6m(236 in.)	
▲ 10	5P5768	SEAL----------3.95 m(155.5 in.)	
C 11	5T3093	HANDLE ASSEM.	2

C INDICATES CHANGE ● SEPARATE ILLUSTRATION ▲ ORDER BY THE METER

181743

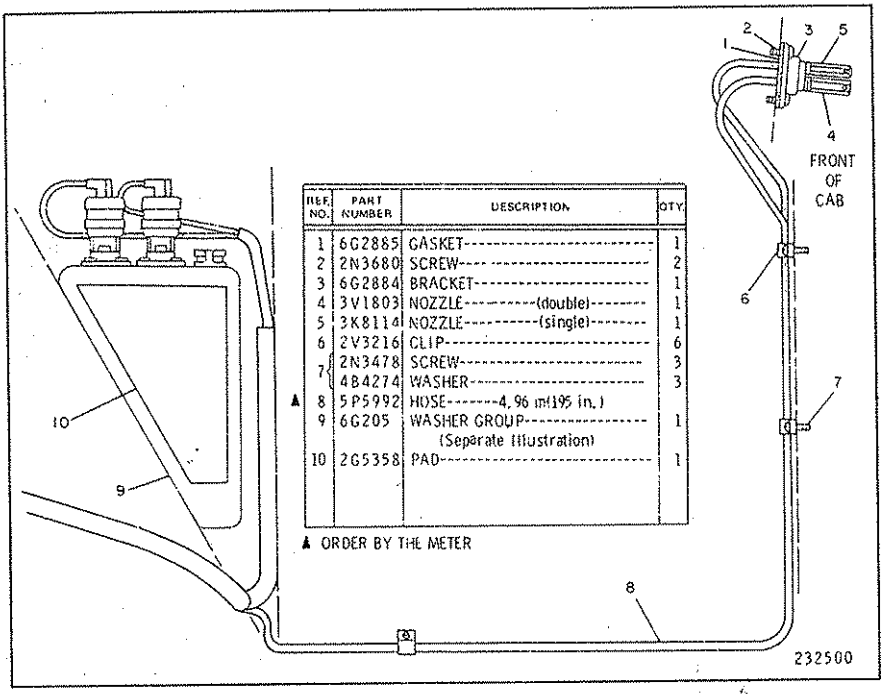

REF. NO.	PART NUMBER	DESCRIPTION	QTY.
1	6G2885	GASKET	1
2	2N3680	SCREW	2
3	6G2884	BRACKET	1
4	3V1803	NOZZLE----------(double)	1
5	3K8114	NOZZLE----------(single)	1
6	2V3216	CLIP	6
7	2N3478	SCREW	3
	4B4274	WASHER	3
▲ 8	5P5992	HOSE--------4.96 m(195 in.)	
9	6G205	WASHER GROUP (Separate Illustration)	1
10	2G5358	PAD	1

▲ ORDER BY THE METER

6G2570 WINDSHIELD WASHER GROUP
Serial No. 87V5734—Up
Also part of 6G2655, 5T567 & 5T566 ROPS Arrangement listed on Pages 287A & 287C

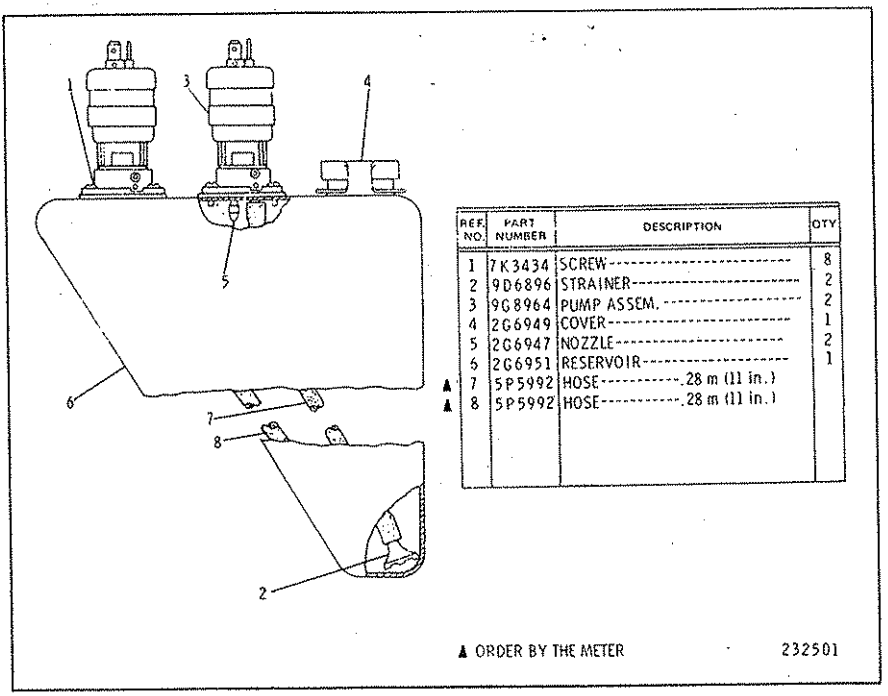

REF. NO.	PART NUMBER	DESCRIPTION	QTY.
1	7K3434	SCREW	8
2	9D6896	STRAINER	2
3	9G8964	PUMP ASSEM.	2
4	2G6949	COVER	1
5	2G6947	NOZZLE	2
6	2G6951	RESERVOIR	1
▲ 7	5P5992	HOSE----------.28 m (11 in.)	
▲ 8	5P5992	HOSE----------.28 m (11 in.)	

6G205 WINDSHIELD WASHER GROUP—24 Volt
Serial No. 87V5734—Up

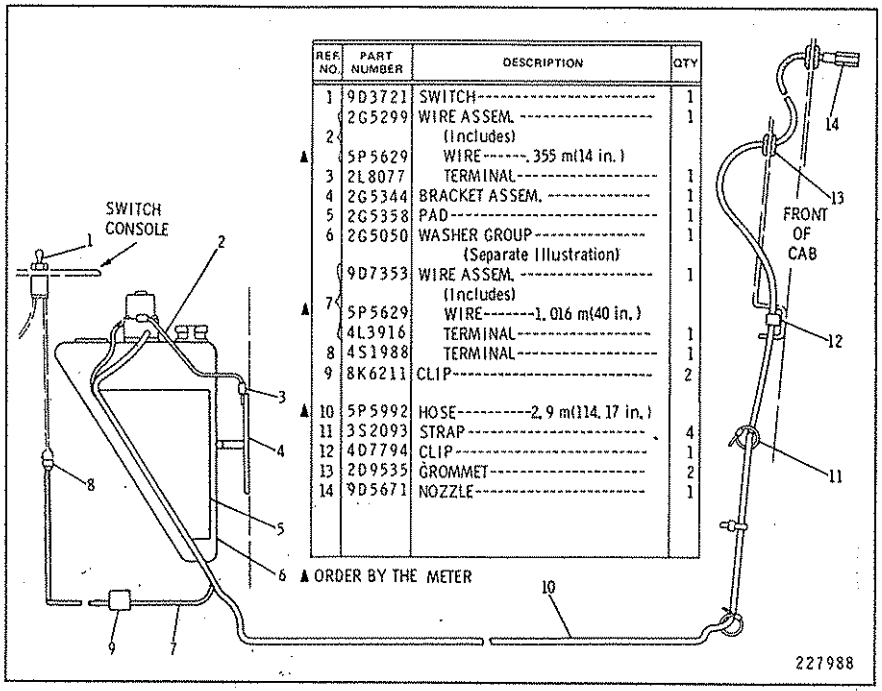

REF. NO.	PART NUMBER	DESCRIPTION	QTY
1	9D3721	SWITCH	1
2	2G5299	WIRE ASSEM. (Includes)	1
▲	5P5629	WIRE-----.355 m(14 in.)	
3	2L8077	TERMINAL	1
4	2G5344	BRACKET ASSEM.	1
5	2G5358	PAD	1
6	2G5050	WASHER GROUP (Separate Illustration)	1
7	9D7353	WIRE ASSEM. (Includes)	1
▲	5P5629	WIRE-------1.016 m(40 in.)	
	4L3916	TERMINAL	1
8	4S1988	TERMINAL	1
9	8K6211	CLIP	2
▲ 10	5P5992	HOSE----------2.9 m(114.17 in.)	
11	3S2093	STRAP	4
12	4D7794	CLIP	1
13	2D9535	GROMMET	2
14	9D5671	NOZZLE	1

2G5350 WINDSHIELD WASHER GROUP
Serial No. 87V5275 to 87V5733 inclusive
2G5050 Washer parts are shown on Page 300

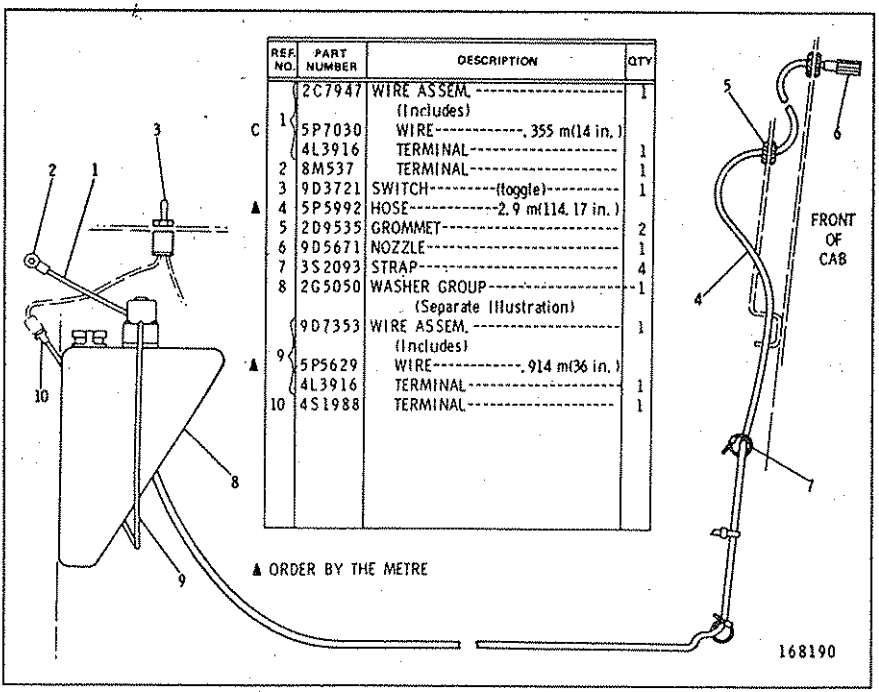

REF. NO.	PART NUMBER	DESCRIPTION	QTY
	2C7947	WIRE ASSEM. (Includes)	1
C 1	5P7030	WIRE----------.355 m(14 in.)	
	4L3916	TERMINAL	1
2	8M537	TERMINAL	1
3	9D3721	SWITCH----------(toggle)----------	1
▲ 4	5P5992	HOSE----------2.9 m(114.17 in.)	
5	2D9535	GROMMET	2
6	9D5671	NOZZLE	1
7	3S2093	STRAP	4
8	2G5050	WASHER GROUP (Separate Illustration)	1
	9D7353	WIRE ASSEM. (Includes)	1
▲ 9	5P5629	WIRE----------.914 m(36 in.)	
	4L3916	TERMINAL	1
10	4S1988	TERMINAL	1

2C7946 WINDSHIELD WASHER GROUP
Part of 2C8049 Cab Arrangement Listed on Page 286
2G5050 Washer parts are shown on Page 300. AN ATTACHMENT

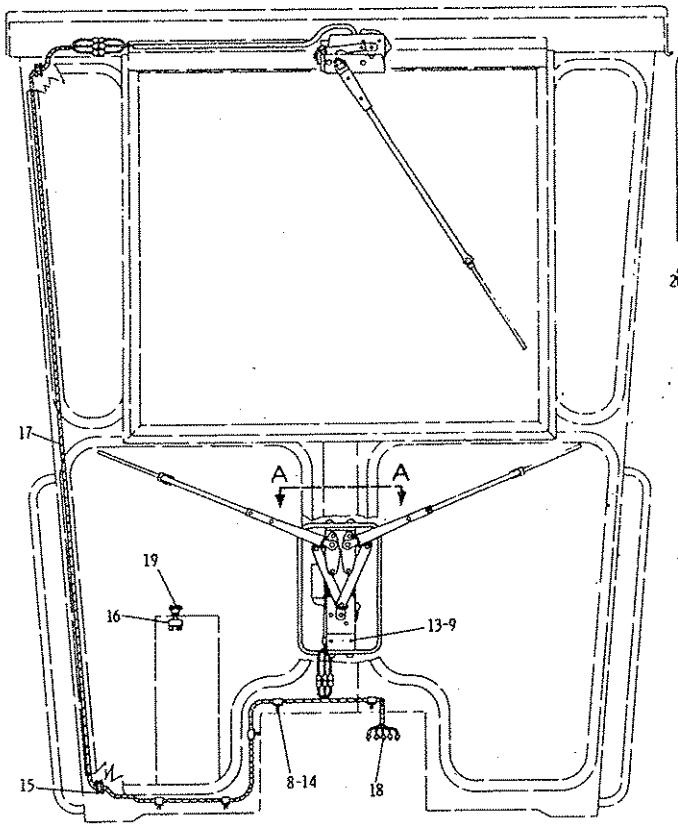

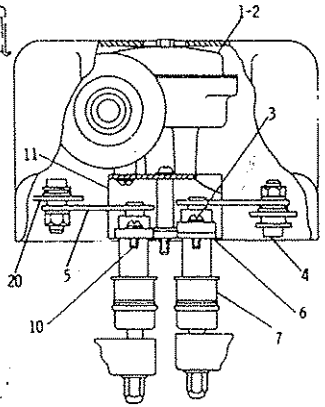

VIEW A-A

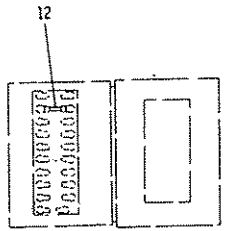

▲ ORDER BY THE METER
C INDICATES CHANGE

REF. NO.	PART NUMBER	DESCRIPTION	QTY
	2G1346	WIPER ASSEM. (Includes)	1
	2G1345	ARM	1
1	1B4201	NUT	1
	7F9223	LOCKWASHER	1
	4D7421	WASHER	1
	7K4475	TERMINAL	3
	4B1264	SCREW	3
2	1H3338	LOCKWASHER	3
3	6F6642	SCREW ASSEM.	2
4	4J7411	CLIP	2
4	4D7416	WASHER	2
5	9D4510	SHAFT ASSEM. (Separate Illustration)	2
6	9D5533	SPACER	1
7	2G8339	SPACER	2
C	5P7162	SCREW	5
8	4B4274	WASHER	5
9	1H3244	LOCKWASHER	2
10	2H4093	SCREW ASSEM.	2
	9D9931	BRACKET ASSEM. (Includes)	1
11	9F6445	NUT	4
12	3D4529	FUSE (14 amp)	1
	4B1254	SCREW	2
13	2S4652	WASHER	2
14	2V3216	CLIP	6
15	5H9743	GROMMET	2
16	9D8683	SWITCH (wiper group)	1
C	9D8706	HARNESS ASSEM. (Includes)	1
17			
▲	5P5629	WIRE (14 gauge)	
18	4S1988	TERMINAL	11
19	9D9083	KNOB	1
	9D9338	LINK ASSEM. (Each Includes)	2
20	9D9335	BUSHING	2

225818

8D7690 WINDSHIELD WIPER GROUP—Front—Part 1
Serial No. 87V5275 to 87V5733 inclusive. Also part of 2C8049 Cab Arrangement listed on Page 286
9D4510 Shaft parts are shown on Page 305

8D7690 WINDSHIELD WIPER GROUP—Front—Part 2
Serial No. 87V5275 to 87V5733 inclusive
Also part of 2C8049 Cab Arrangement listed on Page 286
2G7510 Wiper parts are shown on Page 304

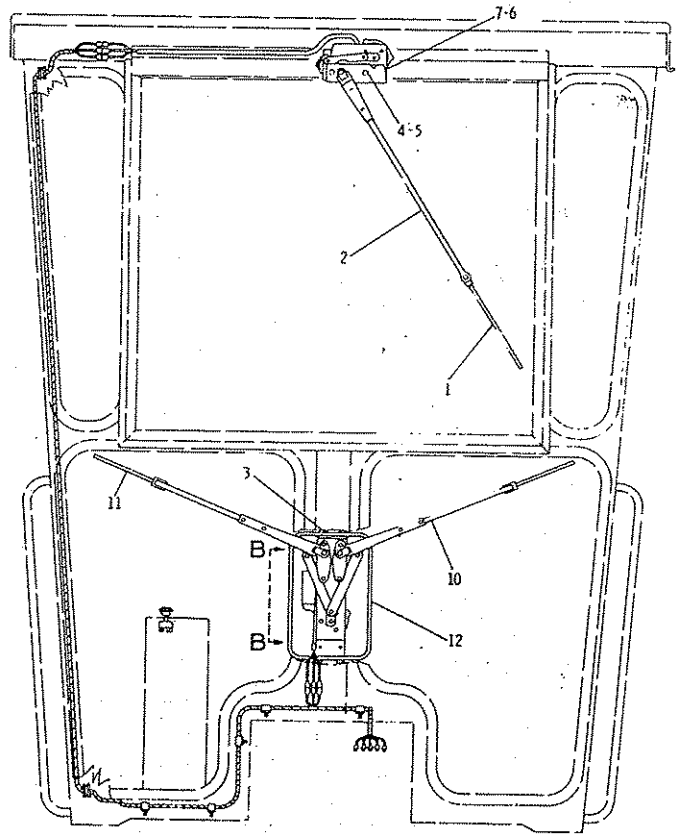

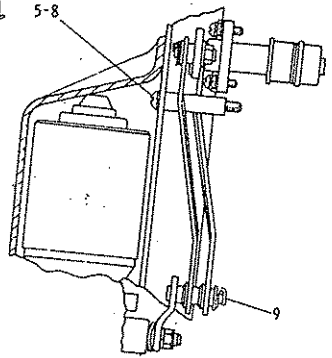

VIEW B-B

REF. NO.	PART NUMBER	DESCRIPTION	QTY
1	5K1028	BLADE ASSEM.	1
		(Includes)	
	5K5659	CLIP	1
2	2G8306	ARM	1
3	5P2669	SCREW	4
4	4B2152	BOLT	2
5	1H3244	LOCKWASHER	3
6	2G8339	SPACER---10 mm(3.94 in.) thick	1
	8D7728	SPACER---6.35 mm(.25 in.) thick	1
7	2G7510	WIPER GROUP	1
		(Separate Illustration)	
8	4B1260	SCREW	1
	9D9337	SPACER	1
9	4D7411	CLIP	1
	4D7416	WASHER	1
10	2R519	ARM ASSEM.	2
11	9D1242	BLADE	2
12	9D9932	COVER	1
	GMG02579	FORM	1
		(Installing Windshield Wipers)	

225819

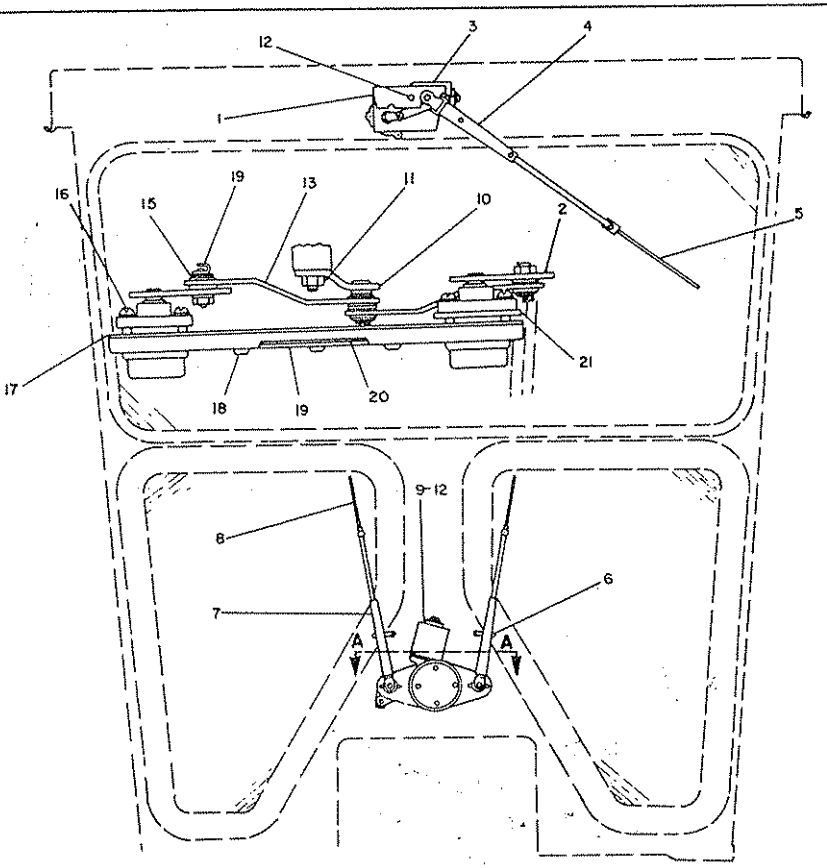

NOTE	REF NO	PART NUMBER	QTY	DESCRIPTION
	1	6G2874	1	PLATE
Y	2	6G2785	2	LINKAGE GROUP
Y	3	3T175	1	WIPER GROUP
	4	2R519	1	ARM ASSEM.
		2A5926	1	SCREW
		3K9089	1	NUT
	5	4K1077	1	BLADE
	6	6G2966	2	STOP
		4B2051	4	NUT
		4B4674	4	WASHER
	7	6G2938	2	ARM ASSEM.
				(EACH INCLUDES)
C		3K9089	1	NUT
C		3K9073	1	SCREW
	8	5P5345	2	BLADE ASSEM.
				(EACH INCLUDES)
		5K5695	1	CLIP
	9	7G8454	1	WIPER GROUP
	10	2G1345	1	ARM
	11	1B4201	1	NUT
		7F9223	1	LOCKWASHER
		4D7421	1	WASHER
	12	S1570	3	BOLT 15.88MM(.625IN.)LONG
		6F7027	2	BOLT 12.7MM(.51IN.)LONG
		5P537	2	WASHER
				-OR-
C		6L1569	5	BOLT 12.7MM.5IN.)LONG
C		1H3338	5	LOCKWASHER
	13	6G2819	2	LINK ASSEM.
				(EACH INCLUDES)
		9D9335	2	BUSHING
	14	4D7411	3	CLIP
	15	4D7416	3	WASHER
	16	2S6895	4	SCREW
		9F8125	4	LOCKWASHER
	17	6G2821	1	GASKET
	18	6D3846	4	SCREW
		6G2818	1	FLANGE
	19	6G2822	1	COVER
	20	6G2846	1	GASKET
	21	9D5533	1	SPACER

Y SEPARATE ILLUSTRATION

C INDICATES CHANGE

308875

6G2580 WINDSHIELD WIPER GROUP—24 Volt
Serial No. 87V5734—Up
Also part of 5T567 listed on Pages 287C
3T175 Wiper and 6G2785 Linkage parts are shown on Page 304B

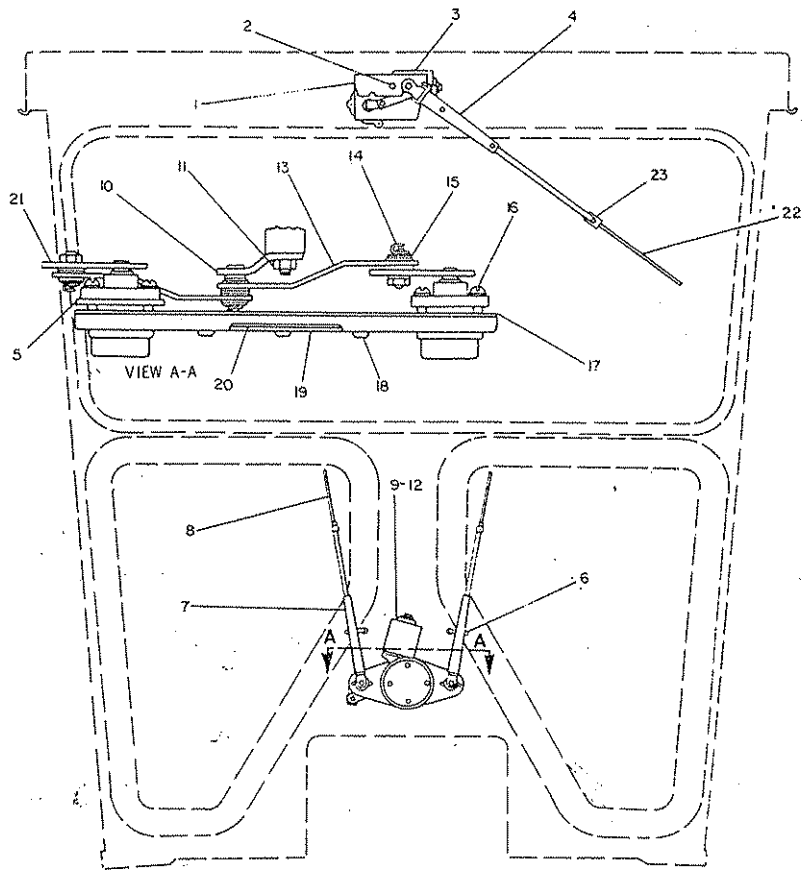

REF. NO.	PART NUMBER	DESCRIPTION	QTY.
1	6G2874	PLATE	1
2	6F7027	BOLT	2
	5P537	WASHER	2
3	3T175	WIPER GROUP (Separate Illustration)	1
4	2G8306	ARM ASSEM.	1
5	9D5533	SPACER	1
6	6G2968	STOP	2
	4B2051	NUT	4
	4B4674	WASHER	4
7	6G2938	ARM ASSEM.	2
8	5P5345	BLADE	2
9	7G8454	WIPER GROUP (Includes)	1
10	2G1345	ARM	1
11	1B4201	NUT	1
	7F9223	LOCKWASHER	1
	4D7421	WASHER	1

12	S1570	BOLT	3
	1H3338	LOCKWASHER	3
13	6G2819	LINK ASSEM. (Each Includes)	2
	9D9335	BUSHING	2
14	4D7411	CLIP	3
15	4D7416	WASHER	3
16	2S6895	SCREW	4
	9F8125	LOCKWASHER	4
17	6G2821	GASKET	1
18	6D3846	SCREW	4
	6G2818	FLANGE	1
19	6G2822	COVER	1
20	6G2846	GASKET	1
21	6G2785	LINKAGE GROUP (Separate Illustration)	2
22	5K1028	BLADE ASSEM. (Includes)	1
23	5K5695	CLIP	1

232703

6G2575 WINDSHIELD WIPER GROUP—Type 1
Serial No. 87V5734—Up. Part of 6G2655 ROPS Arrangement listed on Page 287A
3T175 Washer and 6G2785 Linkage parts are shown on Page 304B
AN ATTACHMENT

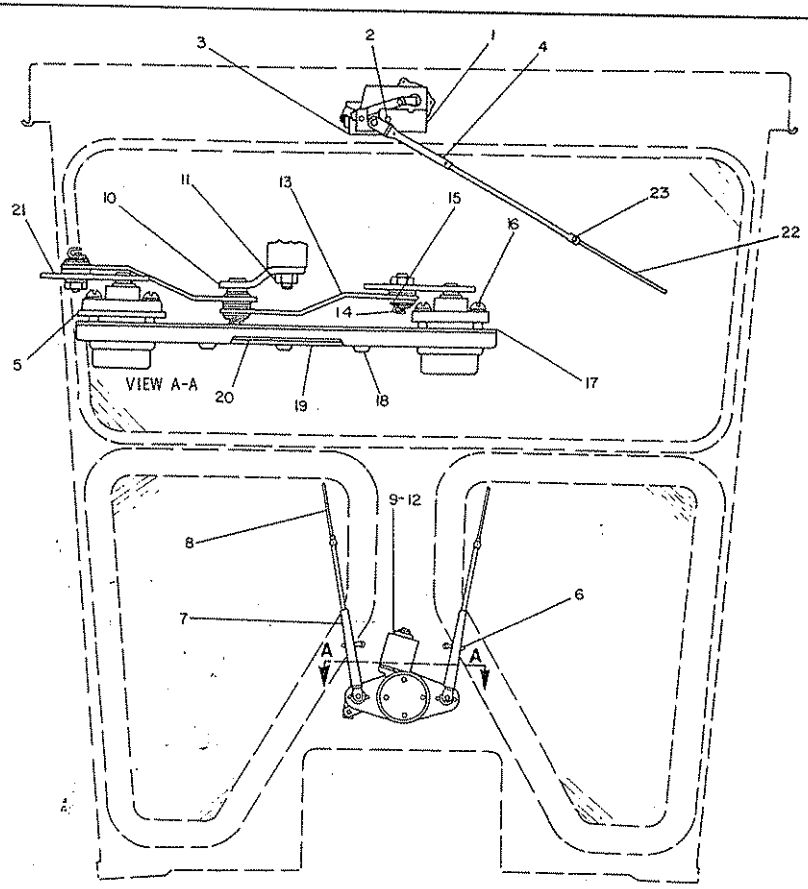

C	REF. NO.	PART NUMBER	DESCRIPTION	QTY.
	1	6G2874	PLATE	1
C	2	6L1569	BOLT	2
C		1H3338	LOCKWASHER	2
	3	3T175	WIPER GROUP (Separate Illustration)	1
	4	2G8306	ARM ASSEM.	1
	5	9D5533	SPACER	1
	6	6G2968	STOP	2
		4B2051	NUT	4
		4B4674	WASHER	4
	7	6G2938	ARM ASSEM.	2
	8	5P5345	BLADE	2
	9	7G8454	WIPER GROUP (Includes)	1
	10	2G1345	ARM	1
	11	1B4201	NUT	1
		7F9223	LOCKWASHER	1
		4D7421	WASHER	1

C	REF. NO.	PART NUMBER	DESCRIPTION	QTY.
C	12	6L1569	BOLT	3
		1H3338	LOCKWASHER	3
	13	6G2819	LINK ASSEM. (Each Includes)	2
		9D9335	BUSHING	2
	14	4D7411	CLIP	3
	15	4D7416	WASHER	3
	16	2S6895	SCREW	4
		9F8125	LOCKWASHER	4
	17	6G2821	GASKET	1
	18	6D3846	SCREW	4
		6G2818	FLANGE	1
	19	6G2822	COVER	1
	20	6G2846	GASKET	1
	21	6G2785	LINKAGE GROUP (Separate Illustration)	2
C	22	4K1077	BLADE ASSEM. (Includes)	1
	23	5K5695	CLIP	1

C INDICATES CHANGE 181080

6G2575 WINDSHIELD WIPER GROUP—Type 2
Serial No. 87V5734—Up. Part of 6G2655 & 5T566 ROPS Arrangement listed on Page 287A & 287C. 3T175 Washer & 6G2785 Linkage parts are shown on Page 304B
AN ATTACHMENT

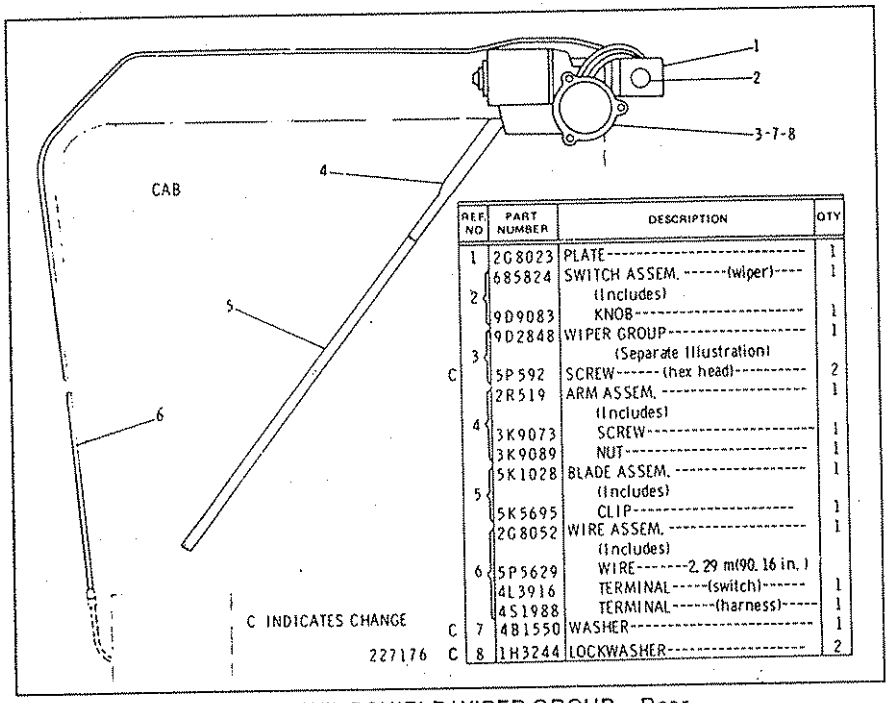

REF NO	PART NUMBER	DESCRIPTION	QTY
1	2G8023	PLATE	1
2	685824	SWITCH ASSEM. -----(wiper)---- (Includes)	1
	9D9083	KNOB	1
3	9D2848	WIPER GROUP (Separate Illustration)	1
C	5P592	SCREW------ (hex head)----------	2
4	2R519	ARM ASSEM. (Includes)	1
	3K9073	SCREW	1
	3K9089	NUT	1
5	5K1028	BLADE ASSEM. (Includes)	1
	5K5695	CLIP	1
6	2G8052	WIRE ASSEM. (Includes)	1
	5P5629	WIRE-------2.29 m(90.16 in.)	
	4L3916	TERMINAL-----(switch)------	1
	4S1988	TERMINAL------(harness)-----	1
C 7	4B1550	WASHER	1
C 8	1H3244	LOCKWASHER	2

2G8010 WINDSHIELD WIPER GROUP—Rear
Serial No. 87V5275 to 87V5733 inclusive. Also part of 2C8049 Cab Arrangement listed on Page 286. 9D2848 Wiper parts are shown on Page 305. AN ATTACHMENT

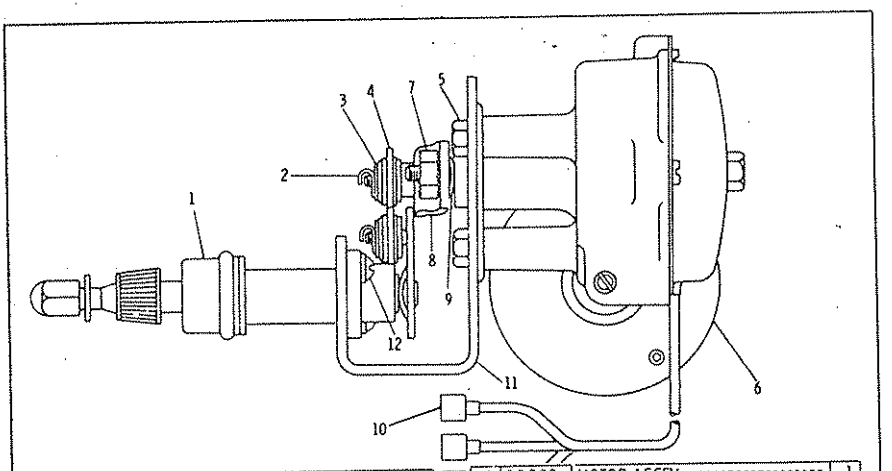

REF NO	PART NUMBER	DESCRIPTION	QTY
1	9D4510	SHAFT & LINK ASSEM. (Separate Illustration)	1
2	4D7411	CLIP	2
3	4D7416	SPACER	2
4	4D7408	LINK	1
C 5	S1570	BOLT	3
	1H3338	LOCKWASHER	3
6	9D202	MOTOR ASSEM.	1
7	1B4201	NUT	1
	7F9223	LOCKWASHER	1
8	6K5499	ARM	1
9	4D7421	WASHER	1
C 10	7K4475	TERMINAL	3
11	4D7417	BRACKET	1
12	8F1315	SCREW ASSEM.	2

2G7510 WIPER GROUP
Serial No. 87V5275 to 87V5733 inclusive

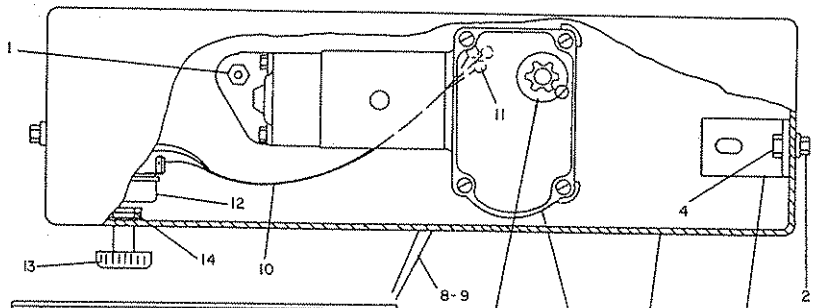

	REF. NO.	PART NUMBER	DESCRIPTION	QTY.
C	1	4D7468	NUT	1
		4B4281	WASHER	1
	2	5S7349	BOLT	2
		5P4115	WASHER	2
	3	6G2748	BRACKET ASSEM. (Each Includes)	2
	4	9F6445	NUT	1
	5	6G2752	COVER	1
	6	9G155	MOTOR ASSEM. (Includes)	1
	7	4D7468	NUT	1
		4D7464	WASHER (16.28mm(.641 in.) I. D.	1
		1K502	WASHER-16.28mm(.641 in.) I. D.	1
	8	5P5346	ARM	1
	9	8K6289	BLADE	1
	10	6G5509	HARNESS ASSEM. (Includes)	1
▲		5P5629	WIRE---, 4m(15.7 in.)	
		4L3916	TERMINAL	3
	11	6D9404	TERMINAL	3
	12	685824	SWITCH------(Wiper)---------- (Includes)	1
	13	9D9083	KNOB	1
	14	2P4339	NUT	2
C	15	6V3884	SCREW	2
C ♦		9K1896	FUSE------(4 amp)----------	1

♦ NOT SHOWN C INDICATES CHANGE ▲ ORDER BY THE METER 181373

6G5560 WINDSHIELD WIPER GROUP—Rear—Type 1
Serial No. 87V5734—Up. FOR USE WITH LOW PROFILE CAB
AN ATTACHMENT

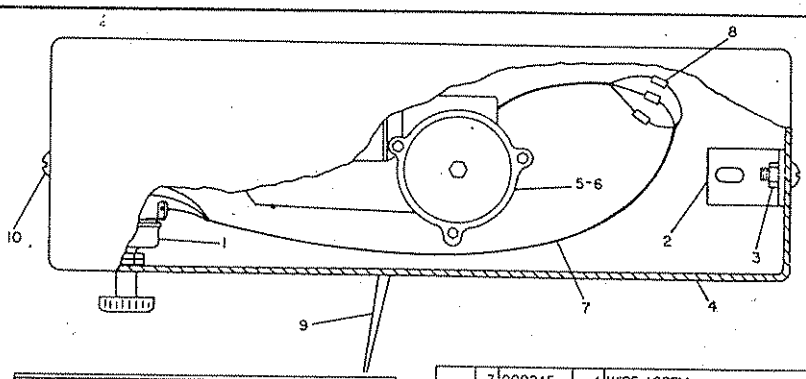

NOTE	REF NO	PART NUMBER	QTY	DESCRIPTION
	1	685824	1	SWITCH (WIPER)
		2P4339	2	NUT
		9D9083	1	KNOB
	2	6G2748	2	BRACKET ASSEM. (EACH INCLUDES)
	3	9F6445	1	NUT
	4	6G2753	1	COVER
Y	5	3T175	1	WIPER GROUP
C	6	6L1569	2	BOLT
C		1H3338	2	LOCKWASHER
	7	9G9315	1	WIRE ASSEM.
D		5P5623		WIRE .6M(23.63IN.)
		9G9314	3	TERMINAL
	8	7K4475	3	TERMINAL
	9	2R519	1	ARM ASSEM.
		2A5926	1	SCREW
		3K9089	1	NUT
C		4K1077	1	BLADE ASSEM.
		5K5695	1	CLIP
	10	6V3884	2	SCREW
F		9K1896	1	FUSE (4 AMP)

C INDICATES CHANGE D ORDER BY THE METER F NOT SHOWN Y SEPARATE ILLUSTRATION 305532

6G5555 WINDSHIELD WIPER GROUP—Rear
Serial No. 87V5734—Up. FOR USE WITH HIGH PROFILE CAB
3T175 Wiper parts are shown on Page 304B. AN ATTACHMENT

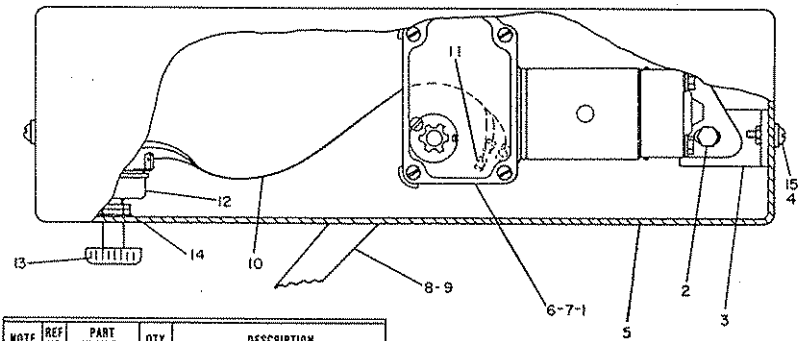

NOTE	REF NO	PART NUMBER	QTY	DESCRIPTION
	1	4D7468	1	NUT
		4B4281	1	WASHER
C	2	5S7349	1	BOLT
	3	6G2748	2	BRACKET ASSEM. (EACH INCLUDES)
	4	9F6445	1	NUT
	5	6G2752	1	COVER
C	6	6T620	1	MOTOR ASSEM.
	7	4D7468	1	NUT
		4D7464	1	WASHER (LEATHER)
		1K502	1	WASHER (STEEL)
	8	5P5346	1	ARM
	9	8K6289	1	BLADE ASSEM.
		5K5695	1	CLIP
C	10	9G9315	1	WIRE ASSEM.
D		5P5629		WIRE 1.8M (70.9IN.)
		9G9314	3	TERMINAL
	11	7K4475	3	TERMINAL
	12	6B5824	1	SWITCH (WIPER)
	13	9D9083	1	KNOB
	14	2P4339	2	NUT
	15	6V3884	2	SCREW
F		9K1896	1	FUSE (4 AMP)

F NOT SHOWN C INDICATES CHANGE D ORDER BY THE METER 309094

6G5560 WINDSHIELD WIPER GROUP—Rear—Type 2
Serial No. 87V5734—Up. FOR USE WITH LOW PROFILE CAB AN ATTACHMENT

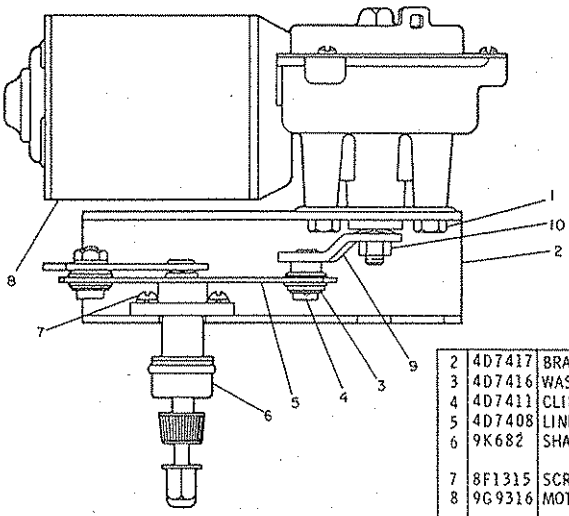

REF. NO.	PART NUMBER	DESCRIPTION	QTY.
1	S1570	BOLT	3
	1H3338	LOCKWASHER	3
2	4D7417	BRACKET	1
3	4D7416	WASHER	2
4	4D7411	CLIP	2
5	4D7408	LINK	1
6	9K682	SHAFT & LINK ASSEM. (Separate Illustration)	1
7	8F1315	SCREW ASSEM.	2
8	9G9316	MOTOR ASSEM. (Includes)	1
9	2G1345	ARM	1
	1B4201	NUT	1
10	7F9223	LOCKWASHER	1
	4D7421	WASHER	1

231295

3T175 WIPER GROUP
Serial No. 87V5734—Up. Part of 6G2580, 6G2575 & 6G5555 Windshield Wiper Groups shown on Pages 303A, 303B & 304A. 9K682 Shaft and Link parts are shown on Page 306

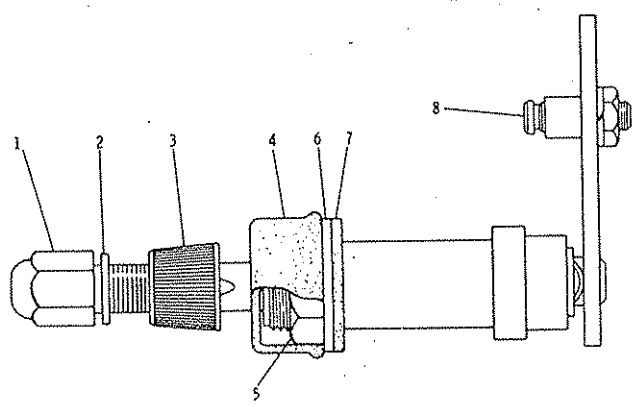

REF. NO.	PART NUMBER	DESCRIPTION	QTY
1	8D237	NUT	1
2	9F5644	LOCKWASHER	1
3	1V3658	DRIVER	1
4	1V3657	CAP	1
5	1V3656	NUT	1
6	4B1550	WASHER	1
7	9S8016	GASKET	1
8	1V3655	STUD	1
	9M1311	NUT	1
	1H3244	LOCKWASHER	1

232704

6G2785 WIPER LINKAGE GROUP
Serial No. 87V5734—Up. Part of 6G2580 and 6G2575 Windshield Wiper Groups

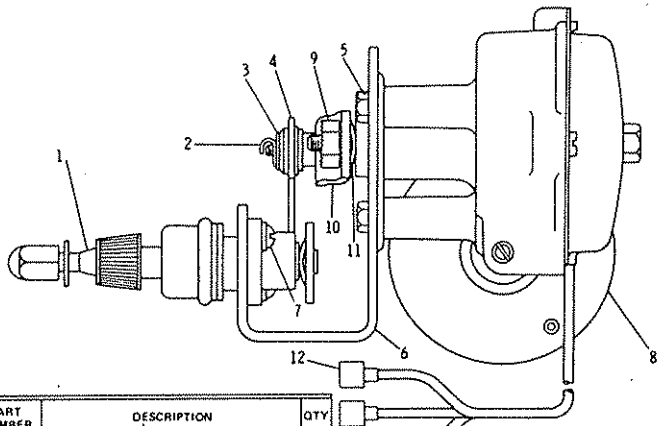

REF. NO.	PART NUMBER	DESCRIPTION	QTY
1	9K682	SHAFT & PIVOT ASSEM. (Separate Illustration)	1
2	4D7411	CLIP	2
3	4D7416	SPACER	2
4	4D7408	LINK	1
C 5	S1570	BOLT	3
5	1H3338	LOCKWASHER	3
6	4D7417	BRACKET	1
7	8F1315	SCREW ASSEM.	2
8	9D202	MOTOR ASSEM.	1
9	1B4201	NUT	1
	7F9223	LOCKWASHER	1
10	6K5499	ARM	1
11	4D7421	WASHER	1
C 12	7K4475	CONNECTOR ASSEM. (Each Includes)	3
▲	5P5621	WIRE-------, 20 m(7. 87 in.)	

C INDICATES CHANGE ▲ ORDER BY THE METER 227180

9D2848 WIPER GROUP
Serial No. 87V5275 to 87V5733 Inclusive. Part of 2G8010 Windshield Wiper Group shown on Page 304. 9K682 Shaft and Link parts are shown on Page 306
AN ATTACHMENT

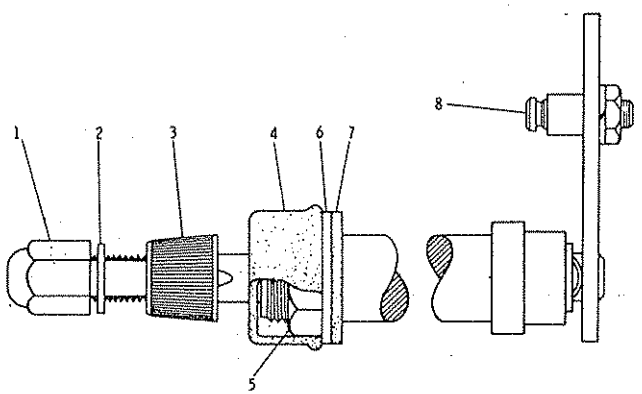

REF. NO.	PART NUMBER	DESCRIPTION	QTY
1	8D237	NUT	1
2	9F5644	LOCKWASHER	1
3	1V3658	DRIVER	1
4	1V3657	CAP	1
5	1V3656	NUT	1
6	4B1550	WASHER	1
7	9S8016	GASKET	1
	1V3655	STUD	1
8	9M1311	NUT	1
	1H3244	LOCKWASHER	1

119887

9D4510 SHAFT AND LINK ASSEMBLY
Serial No. 87V5275 to 87V5733 Inclusive
Part of 8D7690 and 2G7510 Wiper Groups shown on Pages 302 & 304

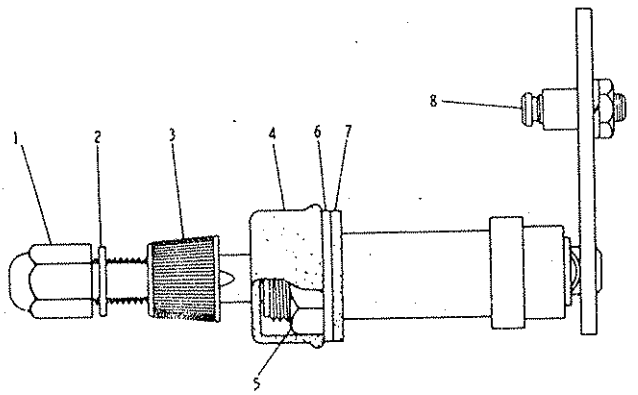

REF NO	PART NUMBER	DESCRIPTION	QTY
1	8D237	NUT	1
2	9F5644	LOCKWASHER	1
3	1V3658	DRIVER	1
4	1V3657	CAP	1
5	1V3656	NUT	1
6	4B1550	WASHER	1
7	9S8016	GASKET	1
	1V3655	STUD	1
8	9M1311	NUT	1
	1H3244	LOCKWASHER	1

119884

9K682 SHAFT AND LINK ASSEMBLY
Part of 3T175 & 9D2848 Wiper Groups shown on Pages 304B and 305

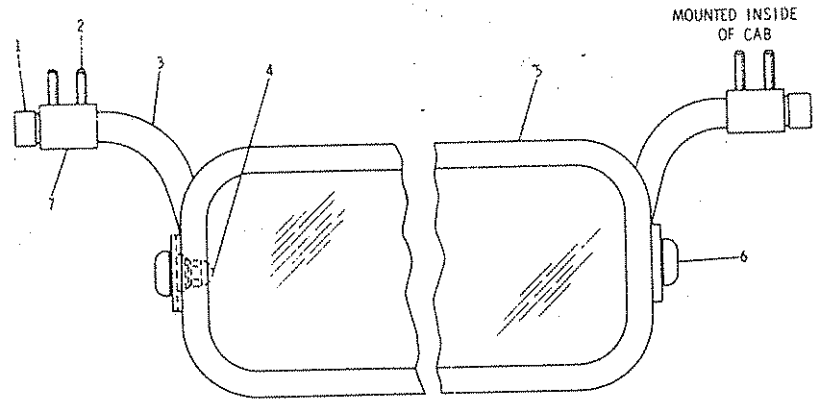

REF NO.	PART NUMBER	DESCRIPTION	QTY
1	1P2378	PLUG	2
2	6D2928	BOLT	4
	1H3244	LOCKWASHER	4
3	2G8242	ARM	2
4	5S7379	BOLT	2
	8H1728	NUT	2
	5P1075	LOCKWASHER	2
5	5P6871	MIRROR	1
6	2G8573	CAP	2
	2G8572	WASHER	2
7	2G8241	CLAMP	2

215988

2G8245 REAR VIEW MIRROR GROUP—Inside—With Convex Glass
Also part of 2G6210, 6G2650, 5T563, 5T568, 6G2640, 6G2655, 5T566 & 5T567 Roll-Over Protective Structure Arrangements listed on Pages 287, 287-2, 287A and 287C

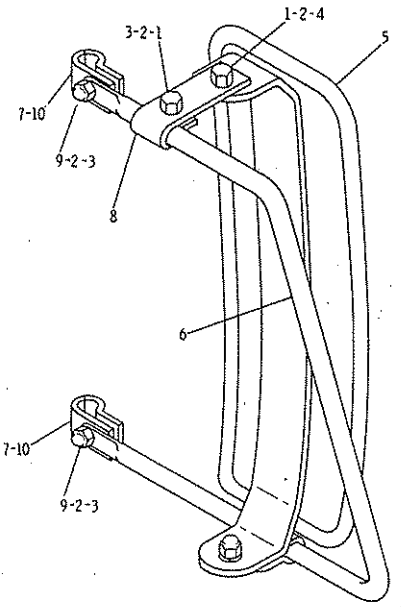

	REF. NO.	PART NUMBER	DESCRIPTION	QTY.
C	1	5M3062	BOLT	8
	2	8H1728	NUT	12
	3	9F5644	WASHER	4
C	4	5P1075	LOCKWASHER	12
	5	5P6871	MIRROR	2
	6	2G8265	BOW ARM	2
C	7	2G8696	STRIP	4
C	8	6G8831	CLAMP (long)	4
	9	5S7379	BOLT	4
C	10	6G8829	CLAMP	4

C INDICATES CHANGE 180274

2G8450 REAR VIEW MIRROR GROUP—Outside—Convex Glass
FOR USE WITH ENCLOSED ROPS. AN ATTACHMENT

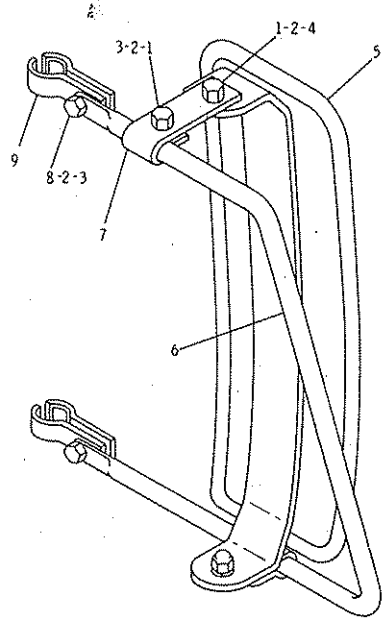

	REF. NO.	PART NUMBER	DESCRIPTION	QTY.
C	1	5M3062	BOLT	8
	2	8H1728	NUT	12
C	3	9F5644	LOCKWASHER	4
C	4	5P1075	WASHER	12
	5	5P6871	MIRROR	2
	6	2G8265	BOW ARM	2
C	7	6G8831	CLAMP	4
	8	4L6454	BOLT	4
	9	4D7054	CLAMP	8
		2G8696	STRIP	8

C INDICATES CHANGE

180273

2G8420 REAR VIEW MIRROR GROUP—Outside—Convex Glass
FOR USE WITH OPEN ROPS. AN ATTACHMENT

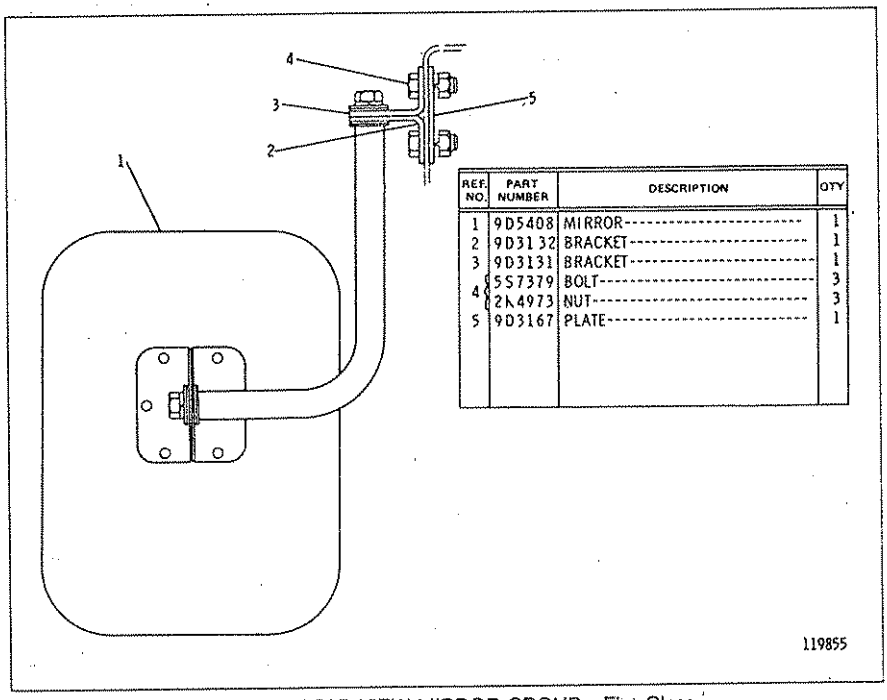

REF. NO.	PART NUMBER	DESCRIPTION	QTY
1	9D5408	MIRROR	1
2	9D3132	BRACKET	1
3	9D3131	BRACKET	1
4	5S7379	BOLT	3
	2K4973	NUT	3
5	9D3167	PLATE	1

9D3160 REAR VIEW MIRROR GROUP—Flat Glass
AN ATTACHMENT

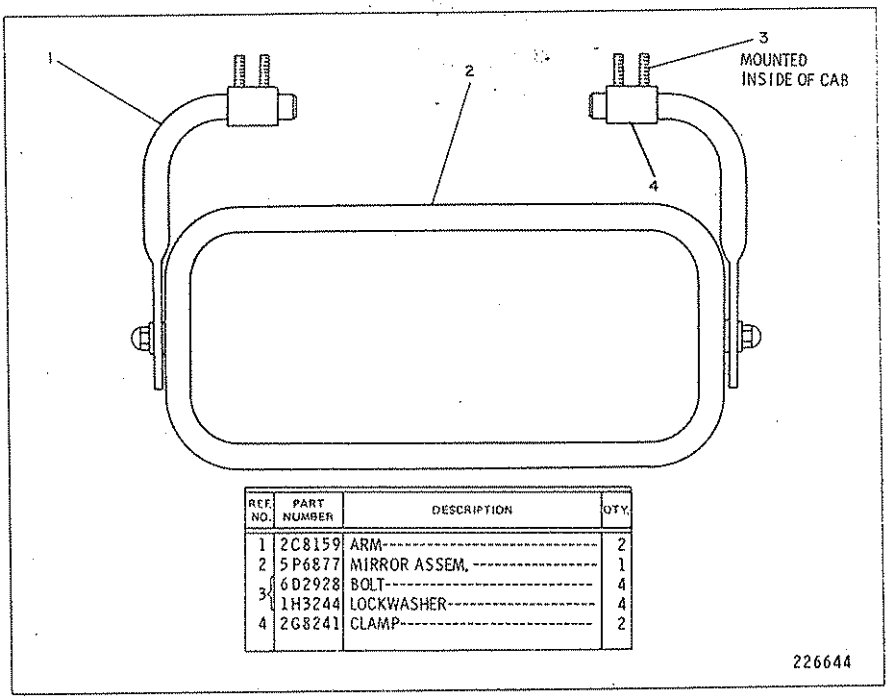

REF. NO.	PART NUMBER	DESCRIPTION	QTY.
1	2C8159	ARM	2
2	5P6877	MIRROR ASSEM.	1
3	6D2928	BOLT	4
	1H3244	LOCKWASHER	4
4	2G8241	CLAMP	2

2C8294 REAR VIEW MIRROR GROUP—Inside
Part of 2C8049 Cab Arrangement listed on Page 286
AN ATTACHMENT

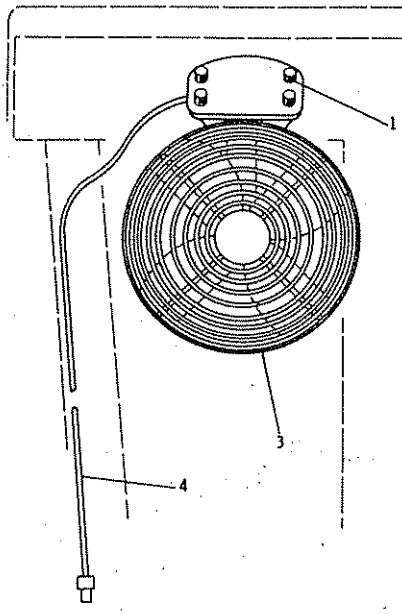

REF. NO.	PART NUMBER	DESCRIPTION	QTY
1	4M61	BOLT	4
	5S7384	LOCKWASHER	4
2	3D4529	FUSE	1
3	5D2856	FAN ASSEM. (Separate Illustration)	1
4	9D3321	WIRE ASSEM.	1

119870

9D3330 DEFROSTER FAN GROUP—Front
Serial No. 87V5275 to 87V5733 inclusive. 5D2856 Fan parts are shown on Pages 309 & 309A

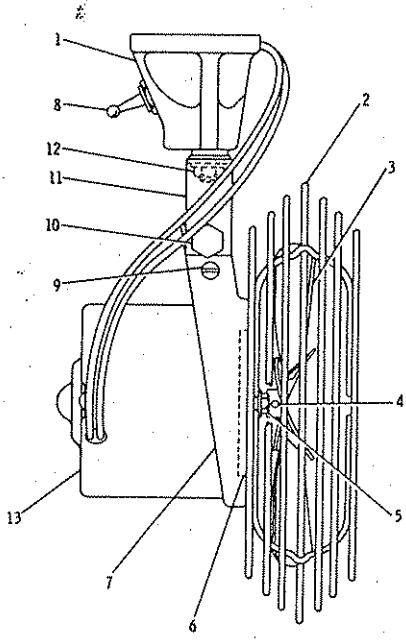

	REF. NO.	PART NUMBER	DESCRIPTION	QTY
	1	3D8743	BASE ASSEM.	1
	2	3D8749	GUARD	1
	3	3D8748	FAN ASSEM.	1
	4	7L8316	SETSCREW	1
	5	1M1230	NUT AND LOCK ASSEM.	2
C		4B4274	WASHER	2
	6	4D6624	WASHER	1
	7	3D8745	BRACKET	1
	8	3D8754	SWITCH ASSEM.	1
	9	4D128	SCREW	1
	10	3D8761	BOLT	1
		2L9038	NUT	1
		4B4276	WASHER	4
	11	3D8747	BRACKET	1
	12	3D8752	NUT	1
		4B4277	WASHER	2
	13	6D5716	MOTOR ASSEM. (Includes)	1
C		2L8076	TERMINAL	2

C INDICATES CHANGE 215232

5D2856 DEFROSTER FAN GROUP—Type 1
Part of 9D3330, 2G1025 & 6G5660 Defroster Fan Groups shown on Pages 309, 309B & 310

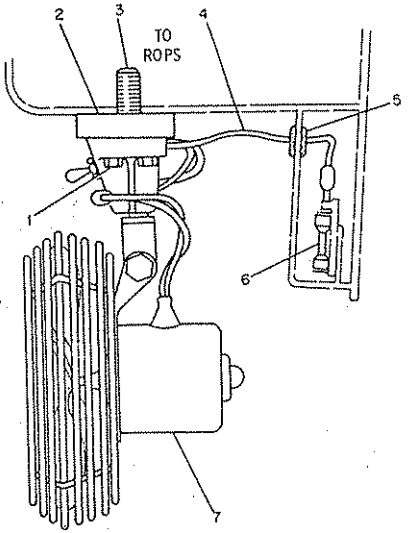

REF. NO.	PART NUMBER	DESCRIPTION	QTY.
1	4M61	BOLT	4
	3F9556	LOCKWASHER	4
2	6G5774	PLATE	1
3	5K7143	BOLT	1
	T883	WASHER	1
	6G5607	WIRE ASSEM. (Includes)	1
▲ 4	5P5623	WIRE----,31m(12.2 in.)	
	6D9404	TERMINAL	2
5	2D9535	GROMMET	1
6	8M8948	FUSE----------(15 amp)----------	1
7	5D2856	FAN GROUP (Separate Illustration)	1

▲ ORDER BY THE METER

232929

6G5660 DEFROSTING FAN GROUP—Rear
Serial No. 87V5734—Up. FOR USE WITH HIGH AND LOW PROFILE ROPS
5D2856 Fan parts are shown on Pages 309 & 309A. AN ATTACHMENT

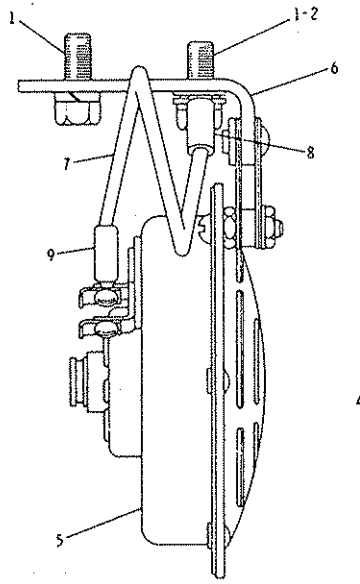

REF. NO.	PART NUMBER	DESCRIPTION	QTY.
1	2B2695	BOLT	2
	3B4505	LOCKWASHER	2
2	4B4277	WASHER	3
3	5M5722	ADAPTER	1
4	3F1006	SWITCH	1
5	5D3570	HORN ASSEM. (Includes)	1
6	2D6856	BRACKET ASSEM.	1
7	1H5839	WIRE ASSEM. (Includes)	1
▲	5P5622	WIRE----------1.80 m(7.08 in.)	
8	2L8069	TERMINAL	1
9	2L8066	TERMINAL-----(No. 10 screws)-	1

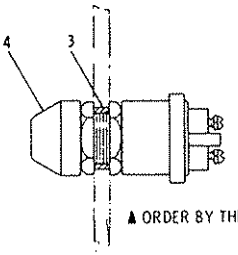

▲ ORDER BY THE METRE

210400

9D4945 ELECTRIC HORN GROUP
Serial No. 87V5275 to 87V5733 inclusive

6G5285 ELECTRIC HORN GROUP
Serial No. 87V5734 to 87V6525 Inclusive

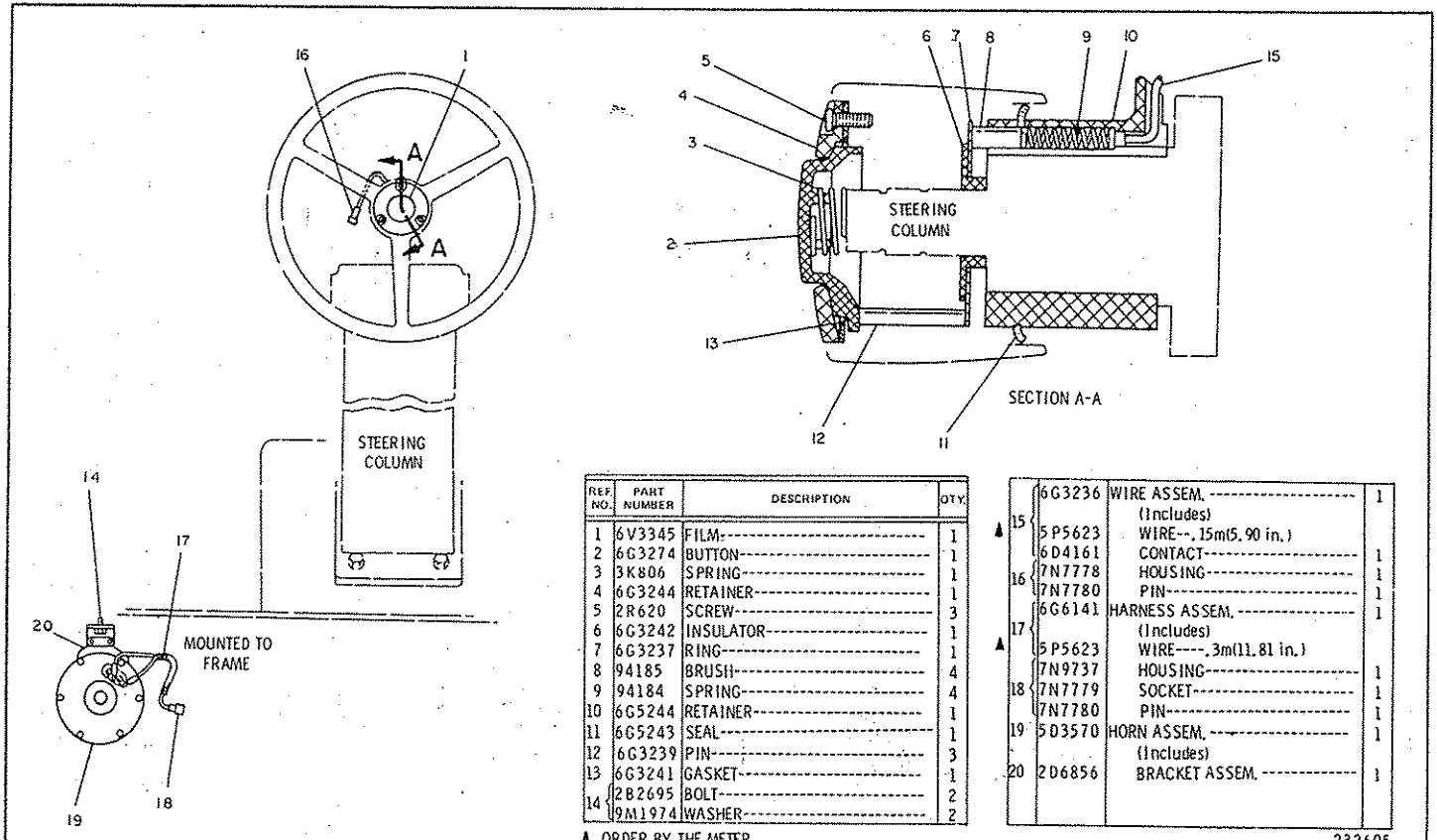

REF. NO.	PART NUMBER	DESCRIPTION	QTY.
1	6V3345	FILM	1
2	6G3274	BUTTON	1
3	3K806	SPRING	1
4	6G3244	RETAINER	1
5	2R620	SCREW	3
6	6G3242	INSULATOR	1
7	6G3237	RING	1
8	94185	BRUSH	4
9	94184	SPRING	4
10	6G5244	RETAINER	1
11	6G5243	SEAL	1
12	6G3239	PIN	3
13	6G3241	GASKET	1
14	2B2695	BOLT	2
	9M1974	WASHER	2

▲ ORDER BY THE METER

15	6G3236	WIRE ASSEM. (Includes)	1
▲	5P5623	WIRE--.15m(5.90 in.)	
	6D4161	CONTACT	1
16	7N7778	HOUSING	1
	7N7780	PIN	1
17	6G6141	HARNESS ASSEM. (Includes)	1
▲	5P5623	WIRE----.3m(11.81 in.)	
	7N9737	HOUSING	1
18	7N7779	SOCKET	1
	7N7780	PIN	1
19	5D3570	HORN ASSEM. (Includes)	1
20	2D6856	BRACKET ASSEM.	1

232605

6G5285 ELECTRIC HORN GROUP
Serial No. 87V6526—Up

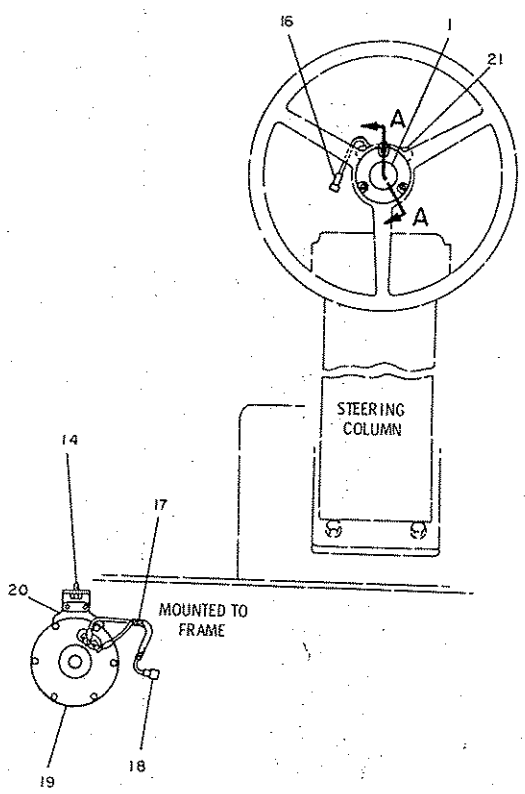

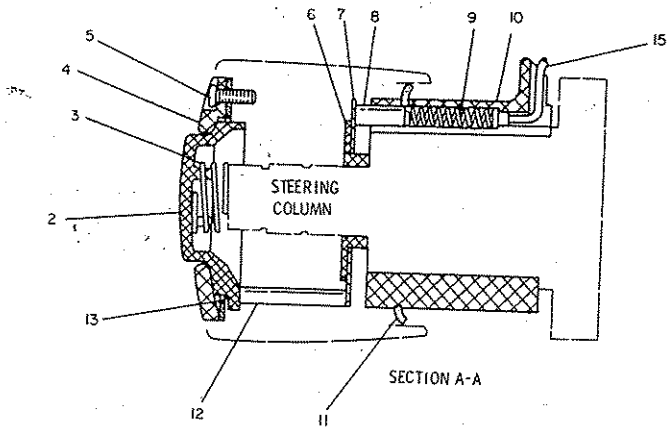

	REF NO.	PART NUMBER	DESCRIPTION	QTY
	1	6V3345	FILM	1
	2	6G3274	BUTTON	1
	3	3K806	SPRING	1
	4	6G3244	RETAINER	1
C	5	6V5834	SCREW	3
	6	6G3242	INSULATOR	1
	7	6G3237	RING	1
	8	94185	BRUSH	4
	9	94184	SPRING	4
	10	6G5244	RETAINER	1
	11	6G5243	SEAL	1
	12	6G3239	PIN	3
	13	6G3241	GASKET	1
	14	2B2695	BOLT	2
		9M1974	WASHER	2

▲ ORDER BY THE METER

		6G3236	WIRE ASSEM. (Includes)	1
▲	15	5P5623	WIRE--, 15m(5.90 in.)	
		6D4161	CONTACT	1
	16	7N7778	HOUSING	1
		7N7780	PIN	1
		6G6141	HARNESS ASSEM. (Includes)	1
▲	17	5P5623	WIRE----, 3m(11.81 in.)	
		7N9737	HOUSING	1
	18	7N7779	SOCKET	1
		7N7780	PIN	1
	19	5D3570	HORN ASSEM. (Includes)	1
	20	2D6856	BRACKET ASSEM.	1
C	21	5T4030	BRACKET	1

308535

		CONSISTS OF:	PAGE
1	6G5320	HEATER AND MOUNTING GROUP	312B
1	6G5565	HEATER LINES GROUP	316B
1	6G5610	CONTROL AND DUCT GROUP	315H
1	6G5403	FLOORMAT	
1	.....	FORM SMHS7661	

6G3180 CAB HEATER ARRANGEMENT
Serial No. 87V5734—Up. AN ATTACHMENT

		CONSISTS OF:	PAGE
1	6G5580	PRESSURIZER AND MOUNTING GROUP	312C
1	6G5585	CONTROL AND DUCT GROUP	312D
1	6G5403	FLOORMAT	
1	.....	FORM SMHS7661	

6G5545 CAB PRESSURIZER ARRANGEMENT
Serial No. 87V5734—Up. AN ATTACHMENT

9D6400 CAB HEATER GROUP

Serial No. 87V5275 to 87V5733 inclusive

9D3180 Heater parts are shown on Pages 312 & 312A. AN ATTACHMENT

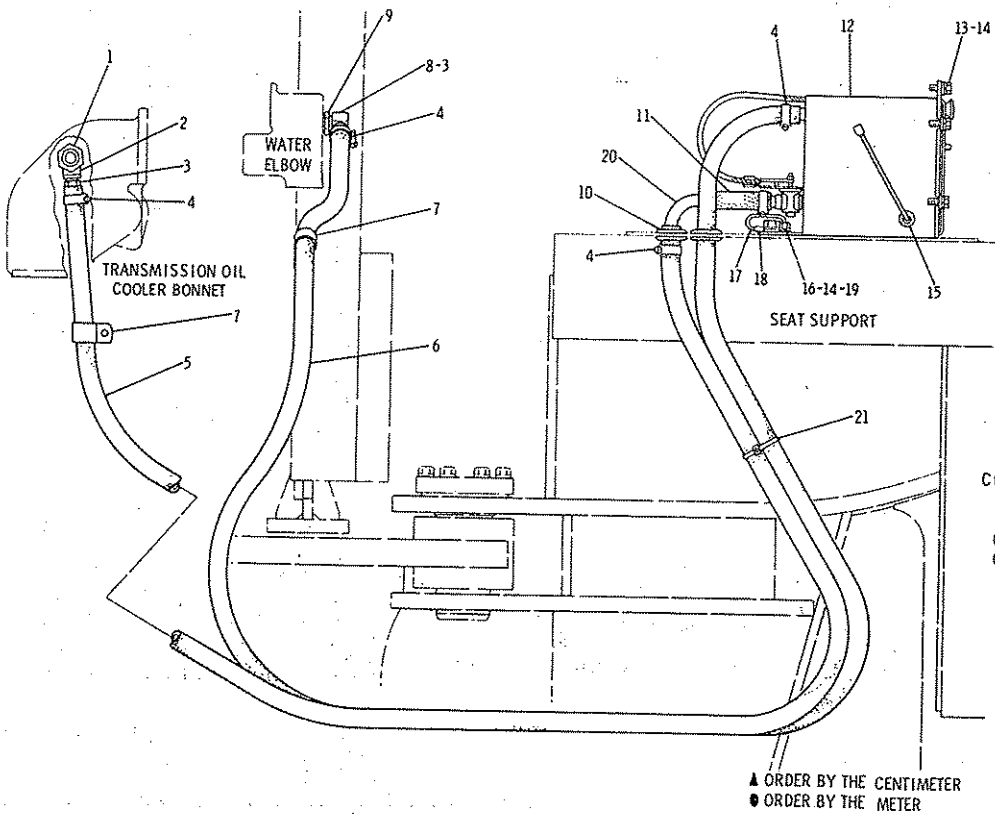

	REF. NO.	PART NUMBER	DESCRIPTION	QTY
C	1	5B4855	BUSHING	1
C		3B7272	NIPPLE	1
C	2	5B8279	ELBOW	1
C	3	7D7026	CONNECTOR	2
C	4	5D1026	CLAMP	5
▲	5	5P767	HOSE-------294.5 cm(115.44 in.)	
▲ C	6	5P767	HOSE-------294.5 cm(115.44 in.)	
C	7	4S1962	CLIP	2
	8	9M5501	ELBOW	1
	9	6B4661	BUSHING	1
	10	7M3361	GROMMET	2
▲	11	5P767	HOSE----------11.4 cm(4.49 in.)	
	12	9D3180	HEATER GROUP (Separate Illustration)	1
	13	2B2695	BOLT	6
	14	3B4505	LOCKWASHER	8
		4B4277	WASHER	8
	15	2D9535	GROMMET	1
	16	2H3755	BOLT	2
	17	9D4547	WIRE ASSEM. (Includes)	1
C ●		5P5629	WIRE----------2 m(7.88 in.)	
	18	8M537	TERMINAL	1
	19	6H6755	TERMINAL	1
C	20	1P3956	TUBE	1
C	21	7K1181	STRAP	1

C INDICATES CHANGE

228074

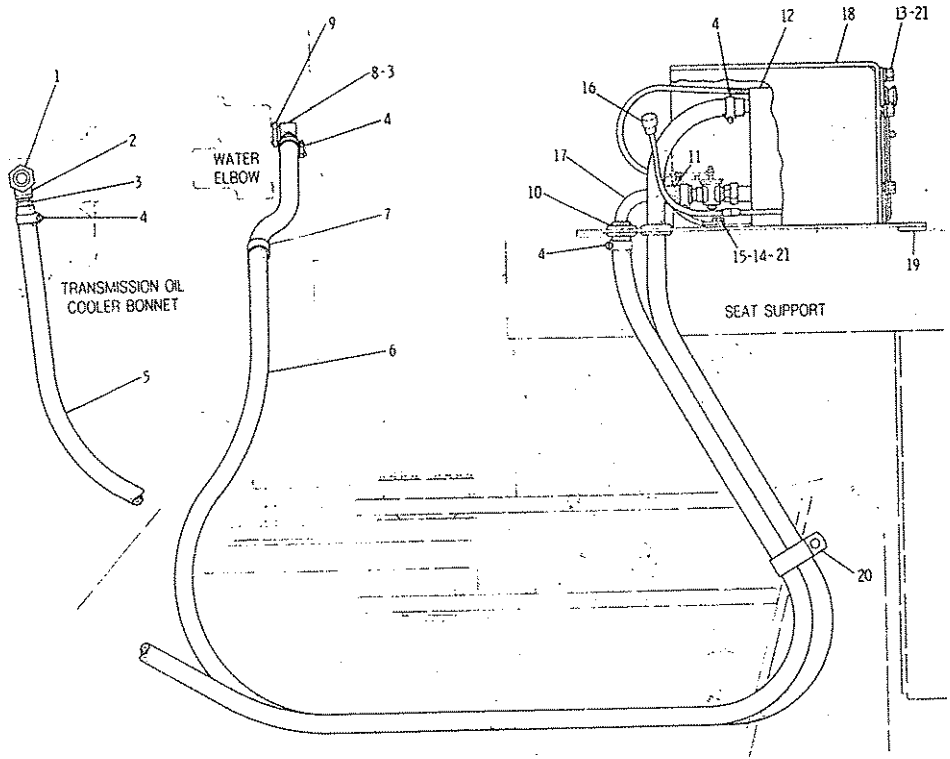

NOTE	REF NO	PART NUMBER	QTY	DESCRIPTION
	1	5B4855	1	BUSHING
		3B7284	1	NIPPLE
	2	5B8279	1	ELBOW
	3	7D7026	2	CONNECTOR
	4	5D1026	6	CLAMP
E	5	5P767		HOSE 280CM (110.23 IN.)
E	6	5P767		HOSE 280CM (110.23 IN.)
	7	4S1962	1	CLIP
	8	9M5501	1	ELBOW
	9	6B4661	1	BUSHING
	10	7M3361	2	GROMMET
E	11	5P767		HOSE 8CM (3.14 IN.)
Y	12	9D3180	1	HEATER GROUP
	13	2B2695	6	BOLT
	14	7H3937	1	LOCKWASHER
	15	2H3755	2	BOLT
Y	16	5T1929	1	HARNESS ASSEM.
	17	1P3956	1	TUBE
	18	5T1925	1	SUPPORT ASSEM.
	19	6G2641	1	PAD
	20	6D1641	1	CLIP
	21	5P4116	8	WASHER
F		8M456	1	FUSE

E ORDER BY THE CENTIMETER
F NOT SHOWN
Y SEPARATE ILLUSTRATION

5T2012 MOUNTING AND HEATER GROUP
Serial No. 87V5734—Up
5T1929 Harness & 9D3180 Heater parts are shown on Pages 311B, 312 & 312A

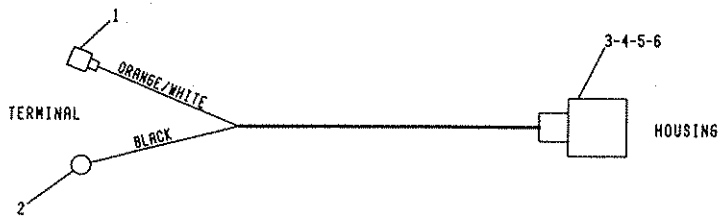

NOTE	REF NO	PART NUMBER	QTY	DESCRIPTION
	1	4L3916	1	TERMINAL
	2	8M537	1	TERMINAL
	3	7N8205	1	HOUSING
	4	9G3695	2	PLUG
	5	7N7780	1	PIN
	6	7N7779	1	SOCKET
				THE FOLLOWING WIRE IS AVAILABLE:
D		5P5624		WIRE (14 GAUGE)

D-ORDER BY THE METER

* 304400

5T1929 HARNESS ASSEMBLY
Part of 5T2012 Mounting and Heater Group shown on Page 311A
AN ATTACHMENT

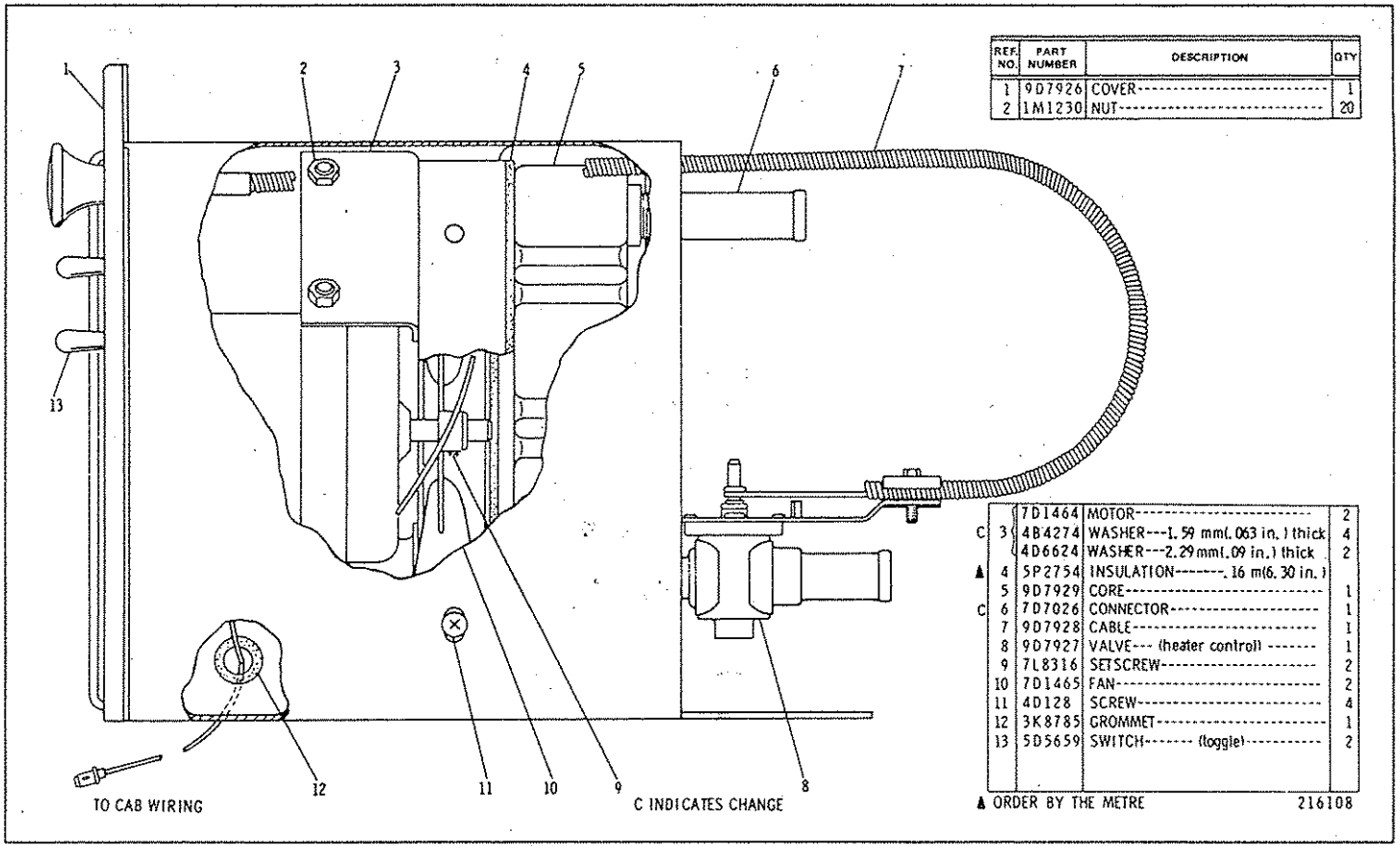

REF. NO.	PART NUMBER	DESCRIPTION	QTY
1	9D7926	COVER	1
2	1M1230	NUT	20
	7D1464	MOTOR	2
C 3	4B4274	WASHER---1.59 mm(.063 in.) thick	4
	4D6624	WASHER---2.29 mm(.09 in.) thick	2
▲ 4	5P2754	INSULATION-------.16 m(6.30 in.)	
5	9D7929	CORE	1
C 6	7D7026	CONNECTOR	1
7	9D7928	CABLE	1
8	9D7927	VALVE--- (heater control)	1
9	7L8316	SETSCREW	2
10	7D1465	FAN	2
11	4D128	SCREW	4
12	3K8785	GROMMET	1
13	5D5659	SWITCH-------- (toggle)	2

9D3180 HEATER GROUP—Type 1
Serial No. 87V5275 to 87V5733 inclusive
Part of 9D6400 Cab Heater Group & 5T2012 Mounting & Heater Group shown on Pages 311 & 311A
AN ATTACHMENT

9D3180 HEATER GROUP—Type 2
Serial No. 87V5275 to 87V5733 inclusive
Part of 9D6400 Cab Heater Group & 5T2012 Mounting & Heater Group shown on Pages 311 & 311A
AN ATTACHMENT

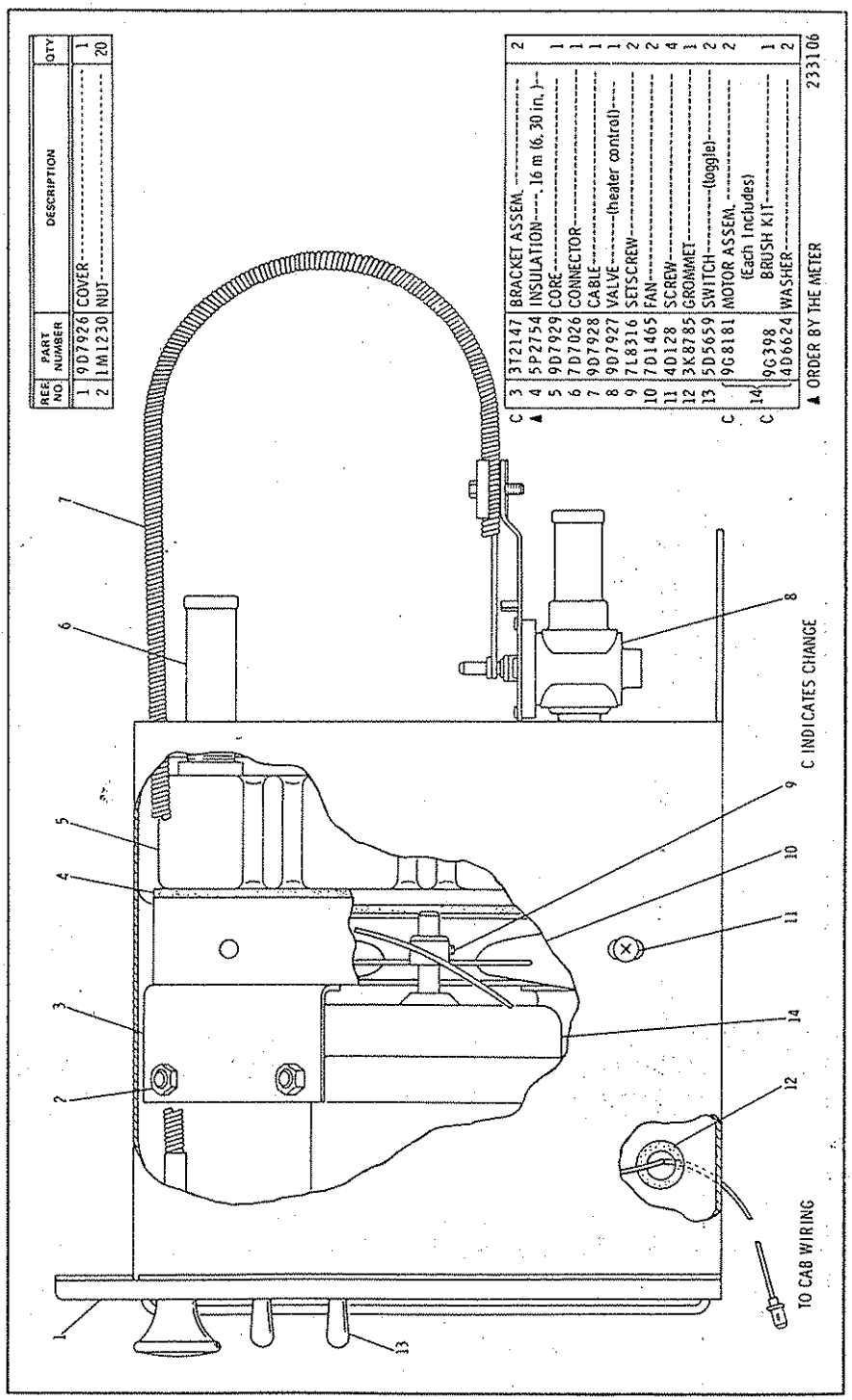

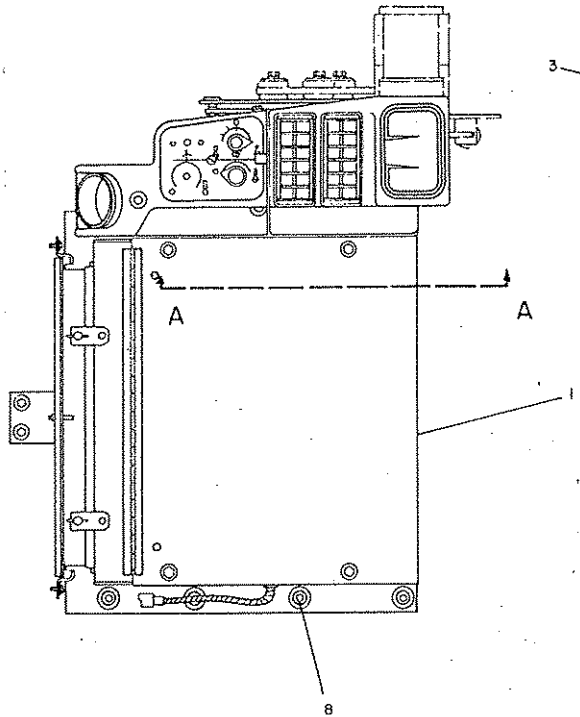

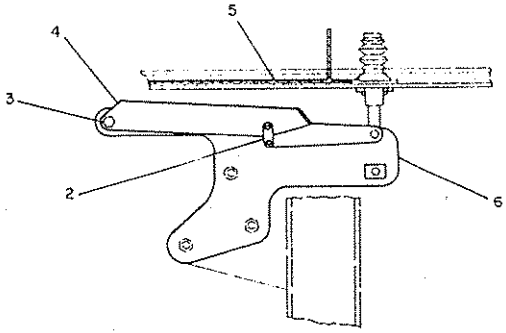

SECTION A-A

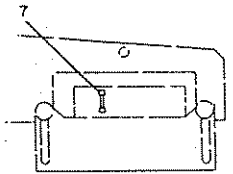

DETAIL OF CAB FUSE PANEL

REF NO.	PART NUMBER	DESCRIPTION	QTY.
1	7G7817	HEATER GROUP (Separate Illustration)	1
2	7J5263	LINK	2
	4J5325	PIN	2
	3B4607	COTTER PIN	2
3	6A7423	BOLT	1
4	3G3164	LEVER ASSEM.	1
5	6G2641	PAD	1
6	6G3173	PLATE ASSEM.	1
7	8M8948	FUSE (15 amp)	1
8	3B1915	BOLT	3
	5M2894	WASHER	3
	2G8093	SPACER	3
	2G8096	MOUNTING	3

232716

6G5320 HEATER AND MOUNTING GROUP—Type 1
Serial No. 87V5734—Up. Part of 6G3180 Cab Heater Arrangement listed on Page 310B
7G7817 Heater parts are shown on Page 315B. AN ATTACHMENT

6G5320 HEATER AND MOUNTING GROUP—Type 2

Serial No. 87V5734—Up. Part of 6G3180 Cab Heater Arrangement listed on Page 310B
7G7817 Heater & 9G8078 Filter parts are shown on Pages 315B & 315G
AN ATTACHMENT

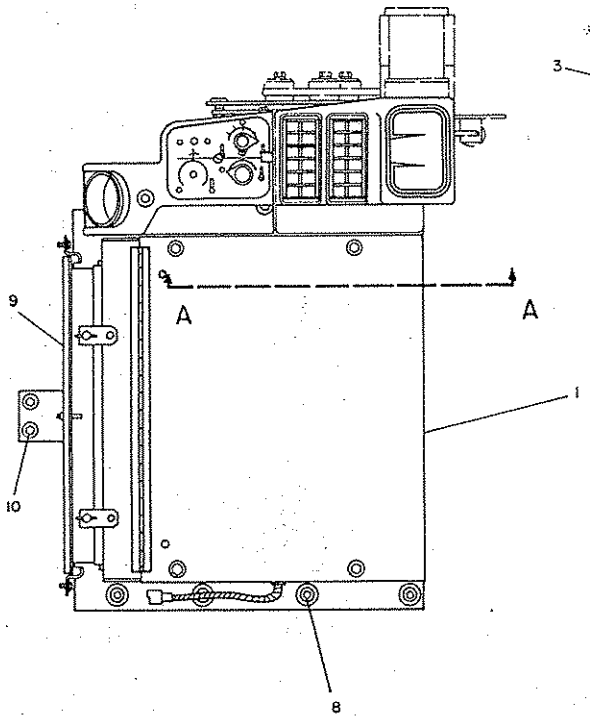

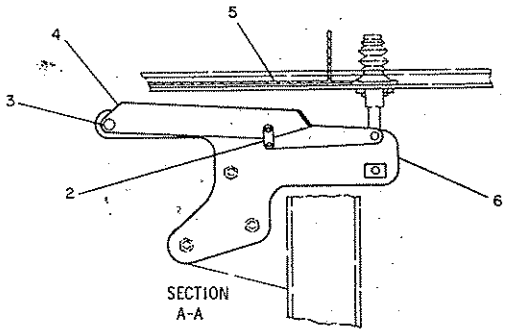

SECTION
A-A

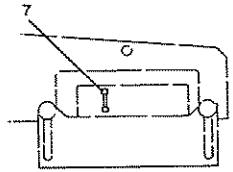

DETAIL OF CAB FUSE PANEL

REF. NO.	PART NUMBER	DESCRIPTION	QTY.
1	7G7817	HEATER GROUP (Separate Illustration)	1
2	7J5263	LINK	2
	4J5325	PIN	2
	3B4607	COTTER PIN	2
3	6A7423	BOLT	1
4	3G3164	LEVER ASSEM.	1
5	6G2641	PAD	1
6	6G3173	PLATE ASSEM.	1
C 7	8M456	FUSE—(20 amp)	1
8	3B1915	BOLT	3
	5M2894	WASHER	3
	2G8093	SPACER	3
	2G8096	MOUNTING	3
C 9	9G8078	FILTER GROUP (Separate Illustration)	1
C 10	1H3337	BOLT	6
C	5P4115	WASHER	6

C INDICATES CHANGE

181368

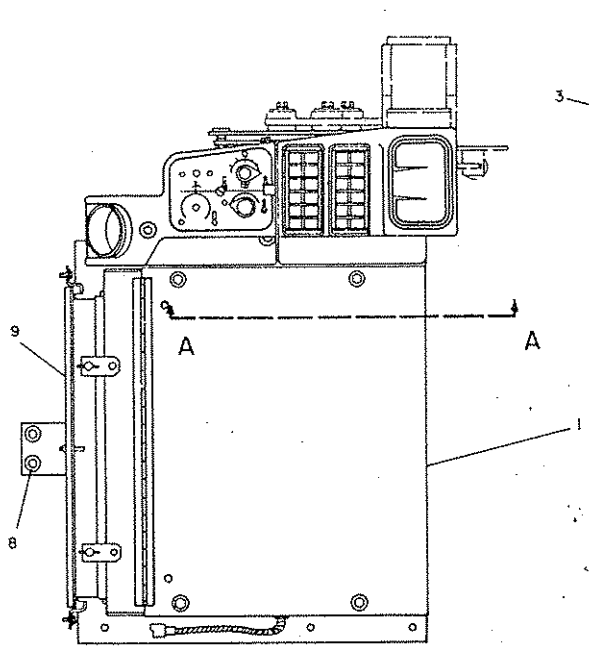

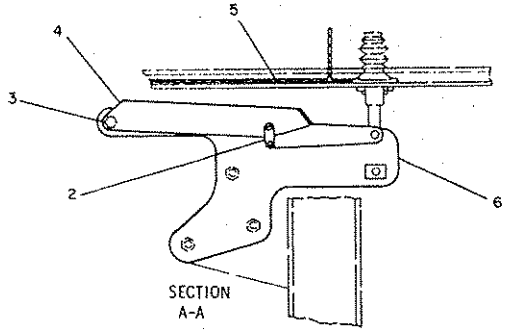

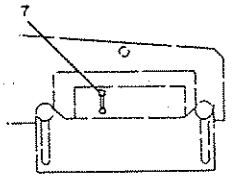

	REF. NO.	PART NUMBER	DESCRIPTION	QTY.
	1	7G7817	HEATER GROUP (Separate Illustration)	1
	2	7J5263	LINK	2
		4J5325	PIN	2
		3B4607	COTTER PIN	2
	3	647423	BOLT	1
	4	3G3164	LEVER ASSEM.	1
	5	6G2641	PAD	1
	6	6G3173	PLATE ASSEM.	1
C	7	8M456	FUSE (20 amp)	1
	8	1H3337	BOLT	6
		5P4115	WASHER	6
	9	9G8078	FILTER GROUP (Separate Illustration)	1

C INDICATES CHANGE

309563

6G5320 HEATER AND MOUNTING GROUP—Type 3
Serial No. 87V5734—Up. Part of 6G3180 Cab Heater Arrangement listed on Page 310B
7G7817 Heater & 9G8078 Filter parts are shown on Pages 315B & 315G. AN ATTACHMENT

6G5580 PRESSURIZER AND MOUNTING GROUP—Type 1

Serial No. 87V5734—Up. Part of 6G5545 Cab Pressurizer Arrangement listed on Page 310B

7G7818 Pressurizer parts are shown on Pages 315C, 315D & 315E. AN ATTACHMENT

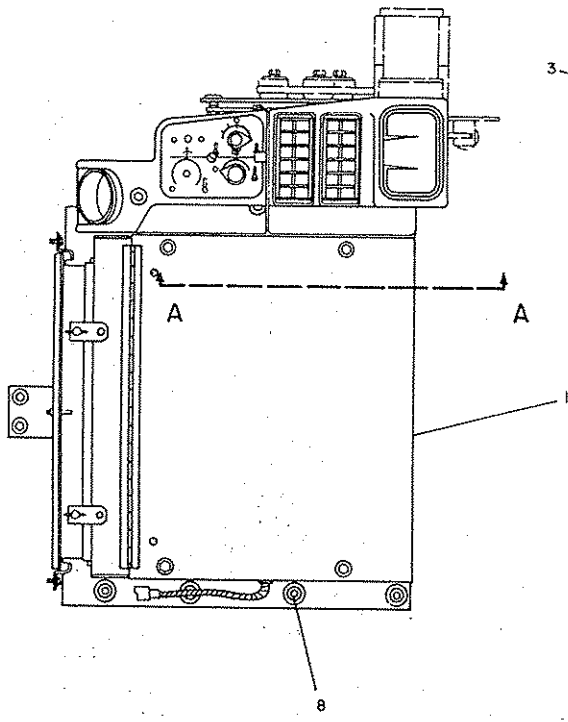

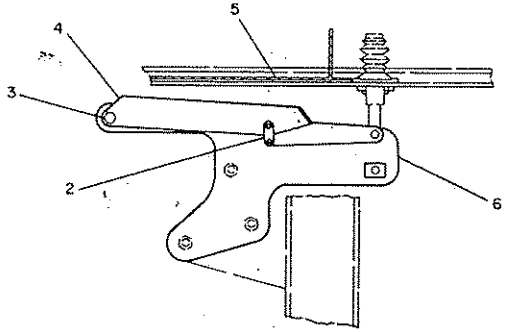

SECTION A-A

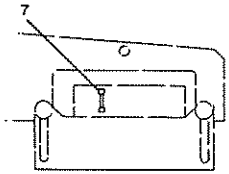

DETAIL OF CAB FUSE PANEL

REF. NO.	PART NUMBER	DESCRIPTION	QTY.
1	7G7818	PRESSURIZER GROUP---------- (Separate Illustration)	1
2	7J5263	LINK----------	2
	4J5325	PIN----------	2
	3B4607	COTTER PIN----------	2
3	6G7423	BOLT----------	1
4	6G3164	LEVER ASSEM. ----------	1
5	6G2641	PAD----------	1
6	6G3173	PLATE ASSEM. ----------	1
7	8M8948	FUSE----------(15 amp)----------	1
8	3B1915	BOLT----------	3
	5M2894	WASHER----------	3
	2G8093	SPACER----------	3
	2G8096	MOUNTING----------	3

232812

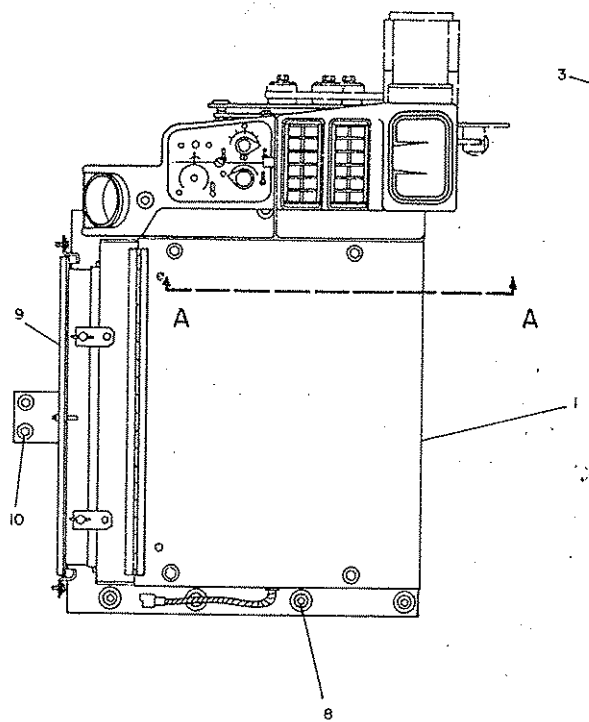

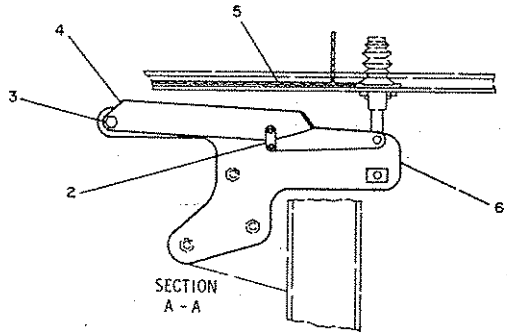

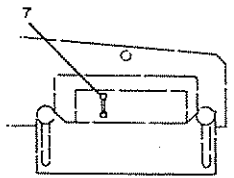

DETAIL OF CAB FUSE PANEL

	REF. NO.	PART NUMBER	DESCRIPTION	QTY.
	1	7G7818	PRESSURIZER GROUP---------- (Separate Illustration)	1
	2	7J5263	LINK----------	2
		4J5325	PIN----------	2
		3B4607	COTTER PIN----------	2
	3	647423	BOLT----------	1
	4	6G3164	LEVER ASSEM.----------	1
	5	6G2641	PAD----------	1
	6	6G3173	PLATE ASSEM.----------	1
C	7	8M456	FUSE---------- (20 amp) --------	1
	8	3B1915	BOLT----------	3
C		5M2894	WASHER----------	3
		2G8093	SPACER----------	3
		2G8096	MOUNTING----------	3
C	9	9G8078	FILTER GROUP---------- (Separate Illustration)	1
C	10	4H3337	BOLT----------	6
C		5P4115	WASHER----------	6

C INDICATES CHANGE

181372

6G5580 PRESSURIZER AND MOUNTING GROUP—Type 2
Serial No. 87V5734—Up. Part of 6G5545 Cab Pressurizer Arrangement listed on Page 310B
7G7818 Pressurizer & 9G8078 Filter parts are shown on Pages 315C, 315D, 315E, 315E-1, 315E-2, 315E-3 & 315G
AN ATTACHMENT

6G5580 PRESSURIZER AND MOUNTING GROUP—Type 3

Serial No. 87V5734—Up. Part of 6G5545 Cab Pressurizer Arrangement listed on Page 310B

7G7818 Pressurizer & 9G8078 Filter parts are shown on Pages 315C, 315D, 315E, 315E-1, 315E-2, 315E-3 & 315G

AN ATTACHMENT

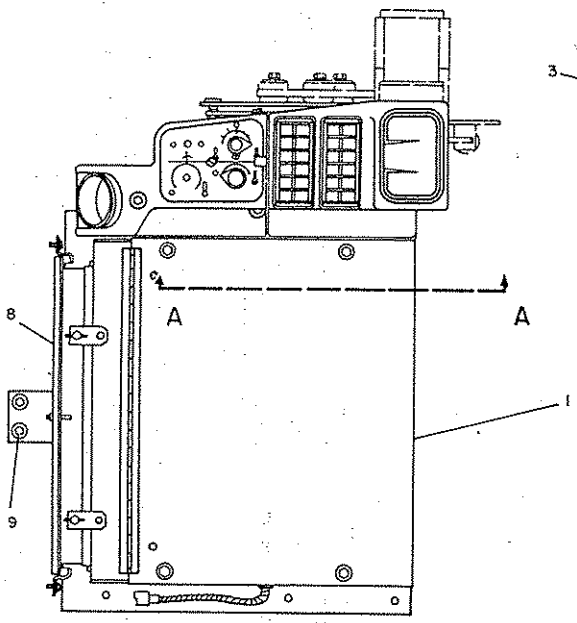

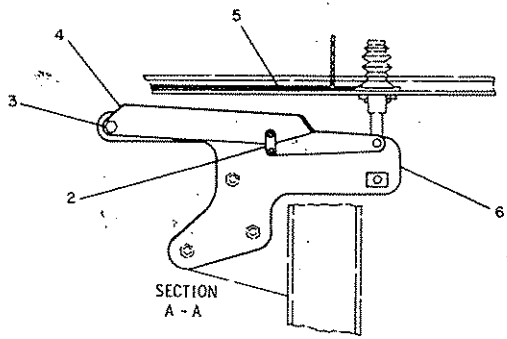

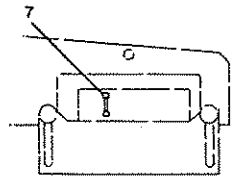

DETAIL OF CAB FUSE PANEL

REF. NO.	PART NUMBER	DESCRIPTION	QTY.
1	7G7818	PRESSURIZER GROUP---------- (Separate Illustration)	1
2	7J5263	LINK----------	2
	4J5325	PIN----------	2
	3B4607	COTTER PIN----------	2
3	647423	BOLT----------	1
4	6G3164	LEVER ASSEM.----------	1
5	6G2641	PAD----------	1
6	6G3173	PLATE ASSEM.----------	1
7	8M456	FUSE---------- (20 amp) ---------	1
8	9G8078	FILTER GROUP---------- (Separate Illustration)	1
9	4H3337	BOLT----------	6
	5P4115	WASHER----------	6

302955

REF. NO.	PART NUMBER	DESCRIPTION	QTY.
1	7G2172	LOUVER ASSEM.	6
2	6G2350	PANEL ASSEM.	1
3	6G2653	BRACKET	1
4	4V6981	SCREW	16
5	6G2647	DUCT	1
6	6G2638	DUCT	1
7	6G2659	PANEL	2
8	5P5774	PLUG	1
9	6G5438	DUCT	1
▲ 10	5P5643	SEAL, 6m(23.63 in.)	
11	6G2730	BRACKET	2
12	1A2029	BOLT	2
	2K4973	NUT	2
13	5M2894	WASHER	8
14	L1351	BOLT	4
15	6G2642	COVER	1

▲ ORDER BY THE METER

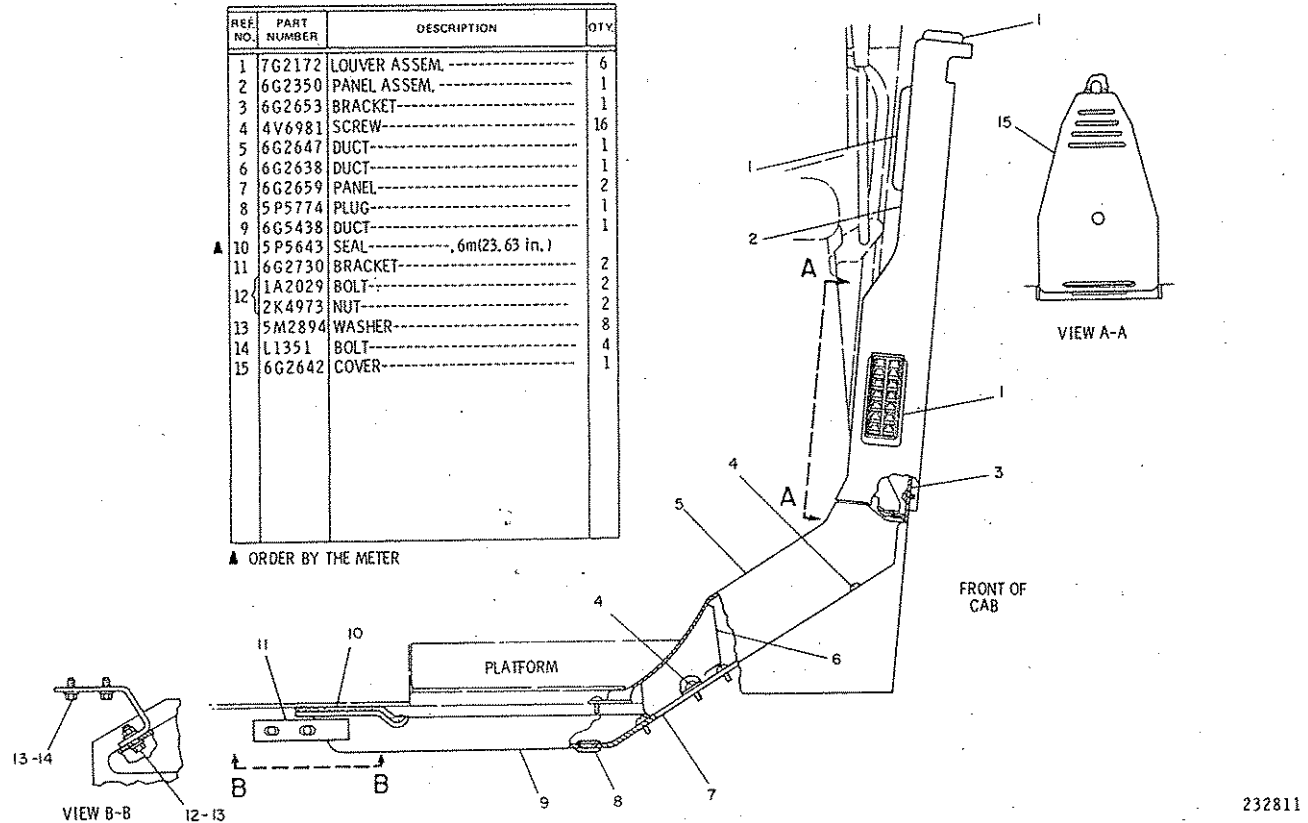

6G5585 CONTROL AND DUCT GROUP—Pressurizer
Serial No. 87V5734—Up. Part of 6G5545 Cab Pressurizer Arrangement listed on Page 310B. AN ATTACHMENT

		CONSISTS OF:	PAGE
1	9D1650	CONDENSER AND MOUNTING GROUP	313
1	9D2500	AIR CONDITIONER WIRING GROUP	318
1	2G7160	AIR CONDITIONER LINES GROUP	317
1	6G5825	AIR CONDITIONER AND MOUNTING GROUP	316
1	1P9983	REFRIGERANT COMPRESSOR GROUP	319

9D3740 AIR CONDITIONER ARRANGEMENT
Serial No. 87V5275 to 87V5733 inclusive. AN ATTACHMENT

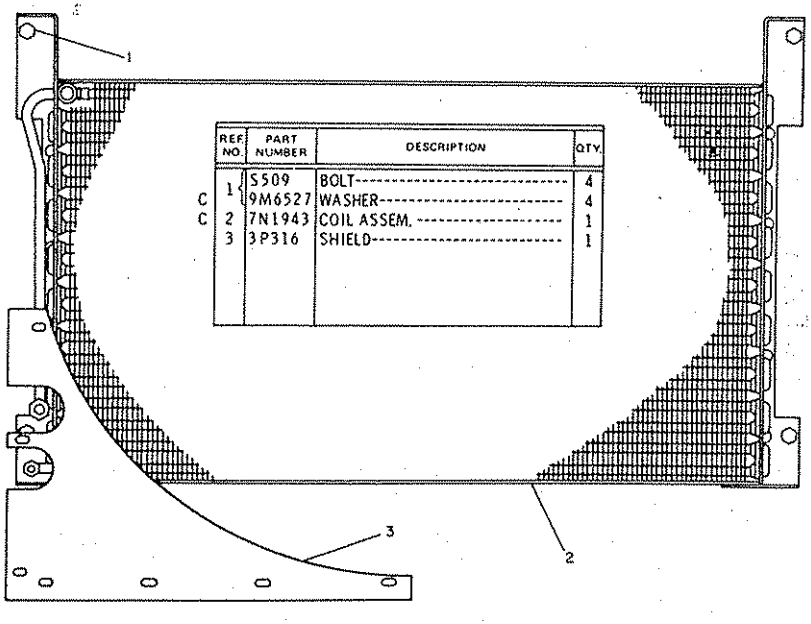

REF. NO.	PART NUMBER	DESCRIPTION	QTY.
1	S509	BOLT	4
C	9M6527	WASHER	4
C 2	7N1943	COIL ASSEM.	1
3	3P316	SHIELD	1

C INDICATES CHANGE 227172

9D1650 CONDENSER AND MOUNTING GROUP
Part of 9D3740 & 6G5590 Air Conditioner Arrangements listed on Pages 313 & 313B. AN ATTACHMENT

		Consists of:	Page
1	9D1650	Condenser and Mounting Group	313
1	6G3160	Air Conditioner and Mounting Group	316A
1	6G5610	Control and Duct Group	315H
1	6G5630	Air Conditioner Lines Group	317C
1	1P9983	Refrigerant Compressor Group	319
1	6G5403	Floormat	
1	.....	Form SMHS7661	

6G5590 AIR CONDITIONER ARRANGEMENT
Serial No. 87V5734—Up. AN ATTACHMENT

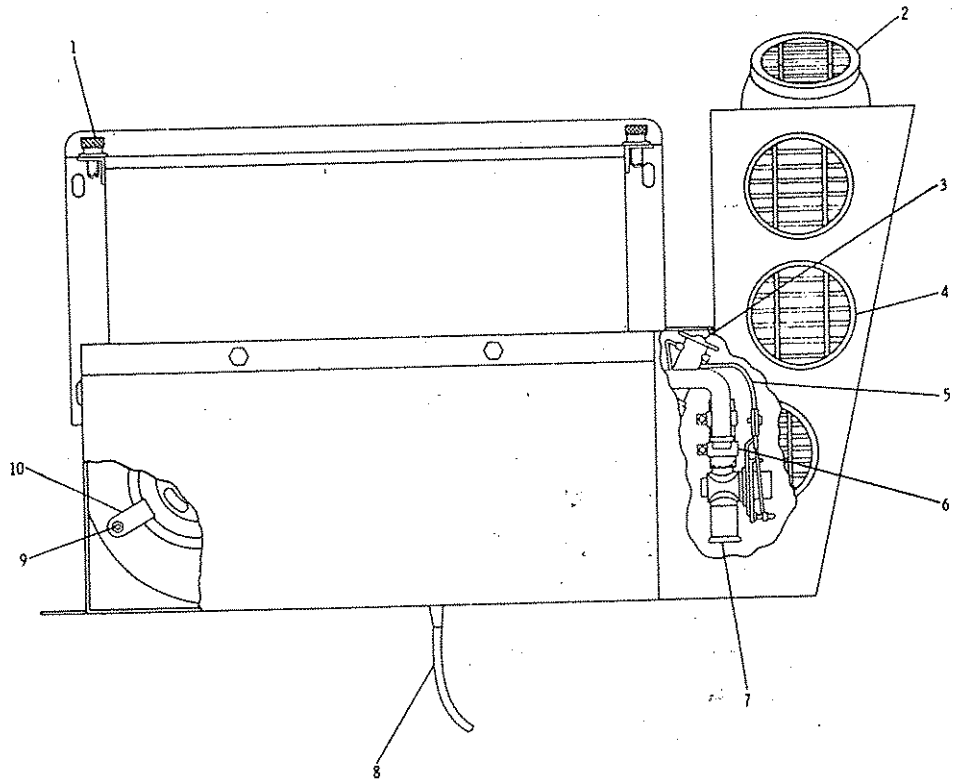

REF. NO.	PART NUMBER	DESCRIPTION	QTY
1	2G391	SCREW	3
2	8D5880	DIFFUSER	1
3	2G401	VALVE	1
4	2G404	DIFFUSER	5
5	2G392	CABLE	2
6	5D1026	CLAMP	2
7	2G397	VALVE	1
8	2G395	TUBE	1
9	1B4330	NUT	8
	1H3338	LOCKWASHER	8
10	6G698	BRACKET	2
	2G416	BRACKET	2

9D1960 AIR CONDITIONER GROUP—Part 1
Serial No. 87V5275 to 87V5733 Inclusive
Part of 6G5825 Air Conditioner and Mounting Group shown on Page 316. AN ATTACHMENT

9D1960 AIR CONDITIONER GROUP—Part 2
Serial No. 87V5275 to 87V5733 Inclusive
Part of 6G5825 Air Conditioner and Mounting Group shown on Page 316
AN ATTACHMENT

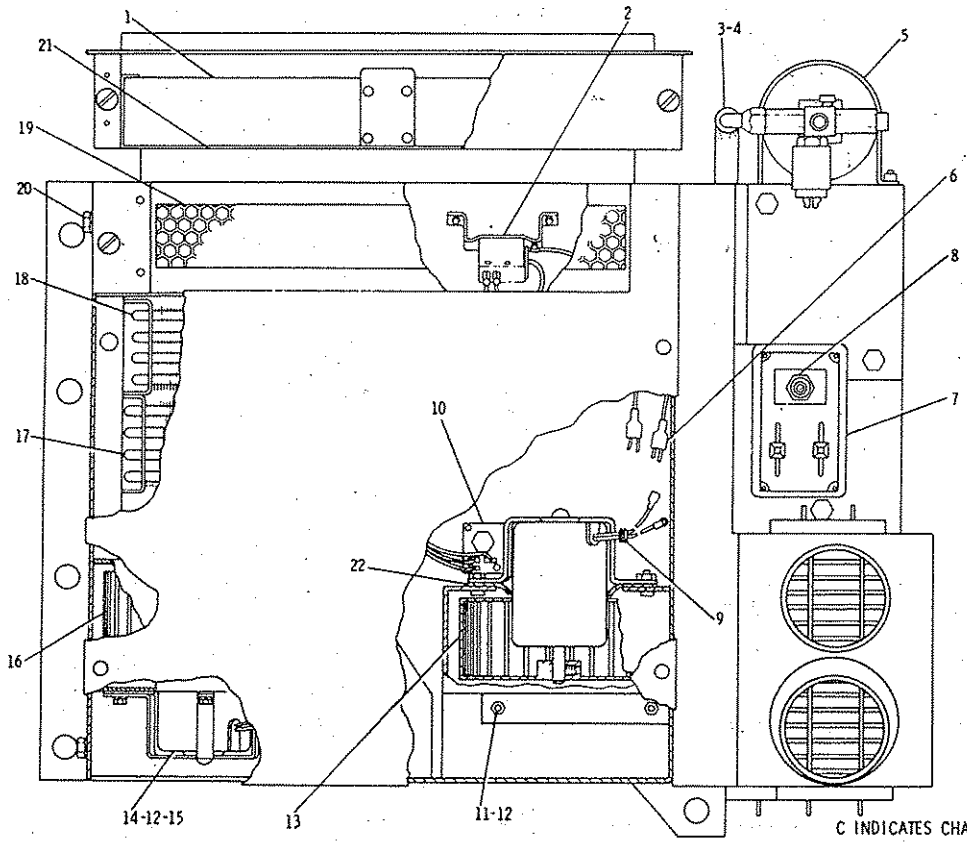

REF. NO.	PART NUMBER	DESCRIPTION	QTY
1	2G403	FILTER	1
2	2G396	THERMOSTAT	1
3	2G408	HOSE ASSEM. --33.65 cm(85.98 in.)	1
		(Includes)	
4	5F9144	SEAL	2
5	9D6888	DRIER	1
6	5D1603	CONNECTOR	2
7	2G414	CONTROL ASSEM.	1
		(Includes)	
8	5D5659	SWITCH	1
	2G394	HOLDER	1
	2G393	COVER	1
	8D1429	BULB	1
9	2G412	GROMMET	2
10	2G413	RESISTOR	2
11	1M1230	NUT	13
12	9F9831	WASHER----(steel)----	14
13	7G660	BLOWER----(wheel)----	1
		(Includes)	
	3B9191	SCREW	1
C	9G397	MOTOR ASSEM.	2
		(Each Includes)	
14	9G398	BRUSH KIT	1
		(Includes Brush & Brush Cap)	
15	4D6624	WASHER----(rubber)----	2
16	2G398	BLOWER ASSEM.	1
		(Includes)	
	3B9191	SCREW	1
17	2G407	CORE	1
18	2G429	COIL	1
19	2G406	FILTER	1
20	S1594	BOLT	19
	3K8909	LOCKWASHER	19
▲ 21	5P5687	SEAL----2.20 m(85.98 in.)	
22	7G942	PLATE	1

C INDICATES CHANGE ▲ ORDER BY THE METER 226910

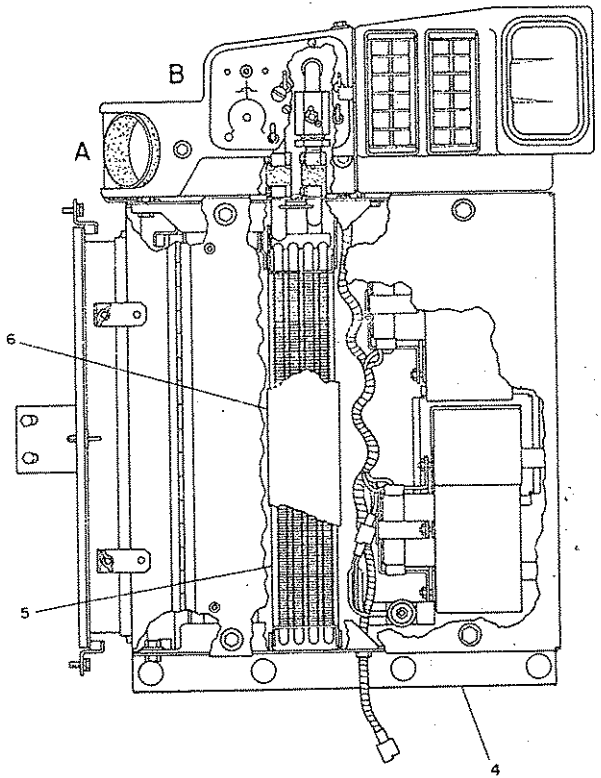

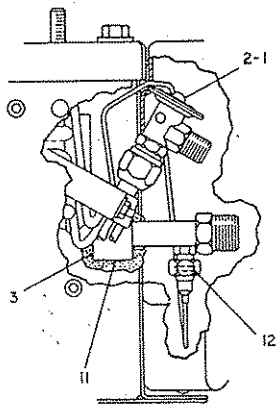

VIEW OF AREA B

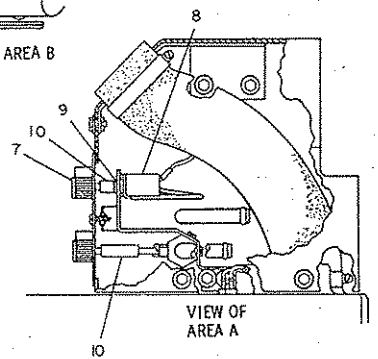

VIEW OF AREA A

REF. NO.	PART NUMBER	DESCRIPTION	QTY.
1	6M5062	SEAL	1
2	2G401	VALVE	1
3	8P6355	CLIP	1
4	7G7817	HEATER GROUP (Separate Illustration)	1
5	2G429	COIL	1
▲ 6	5P8758	SEAL-----,5m(19.69 in.)	1
7	2V99	KNOB	1
8	9P3498	SWITCH	1
9	2P4339	NUT	1
10	9G2845	ROD ASSEM. (Includes)	1
C	3H1118	PIN	1
▲ 11	5P7070	INSULATION---,3m(11.8 in.)	1
12	5P6458	SEAL	1
	SMHS7000	FORM (Switch Installation)	1

C INDICATES CHANGE

▲ ORDER BY THE METER

181562

7G4802 AIR CONDITIONER GROUP
Serial No. 87V5734—Up
Part of 6G3160 Air Conditioner and Mounting Group shown on Page 316A
7G7817 Heater parts are shown on Page 315B. AN ATTACHMENT

7G7817 HEATER GROUP

Serial No. 87V5734—Up. Part of 6G5320 Heater and Mounting & 7G4802 Air Conditioner Groups shown on Pages 312B & 315A
7G7818 Pressurizer parts are shown on Pages 315C, 315D & 315E. AN ATTACHMENT

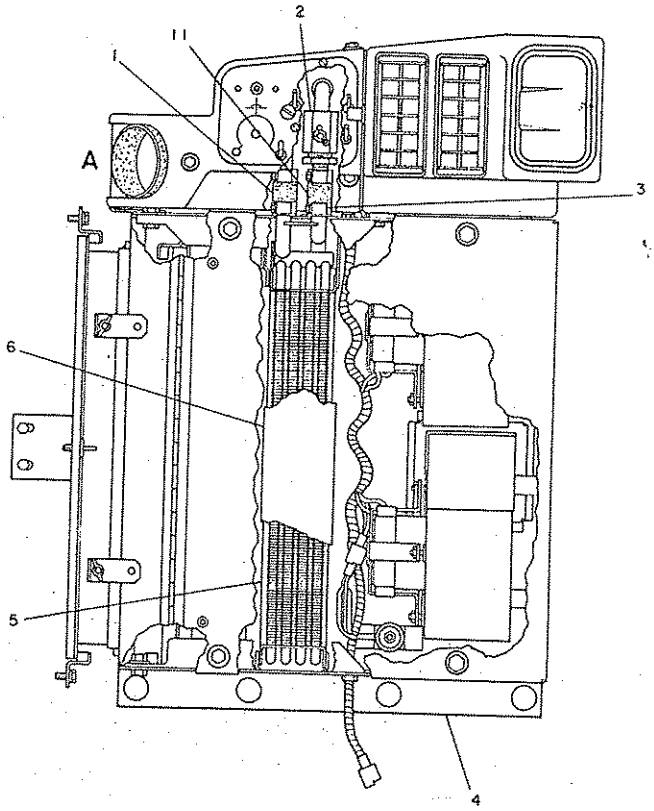

REF. NO.	PART NUMBER	DESCRIPTION	QTY.
● 1	5P767	HOSE---------5 cm(1.97 in.)	
2	9G3795	VALVE----------	1
3	5D1026	CLAMP----------	4
4	7G7818	PRESSURIZER GROUP---------- (Separate Illustration)	1
5	7G4188	COIL----------	1
▲ 6	5P8758	SEAL----.5m(19.69 in.)	
7	2V99	KNOB----------	1
8	1P3956	TUBE----------	1
9	2L5317	SCREW----------	2
	8F1434	WASHER----------	2
10	7G4964	ROD ASSEM.----------	1
● 11	5P767	HOSE---------5 cm(1.97 in.)	

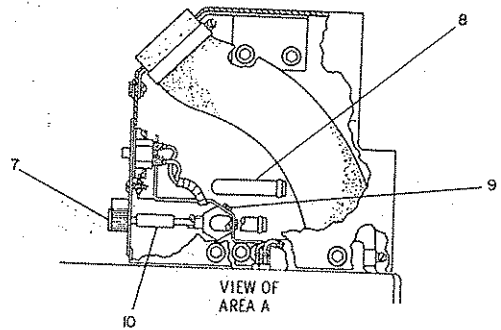

● ORDER BY THE CENTIMETER
▲ ORDER BY THE METER

232717

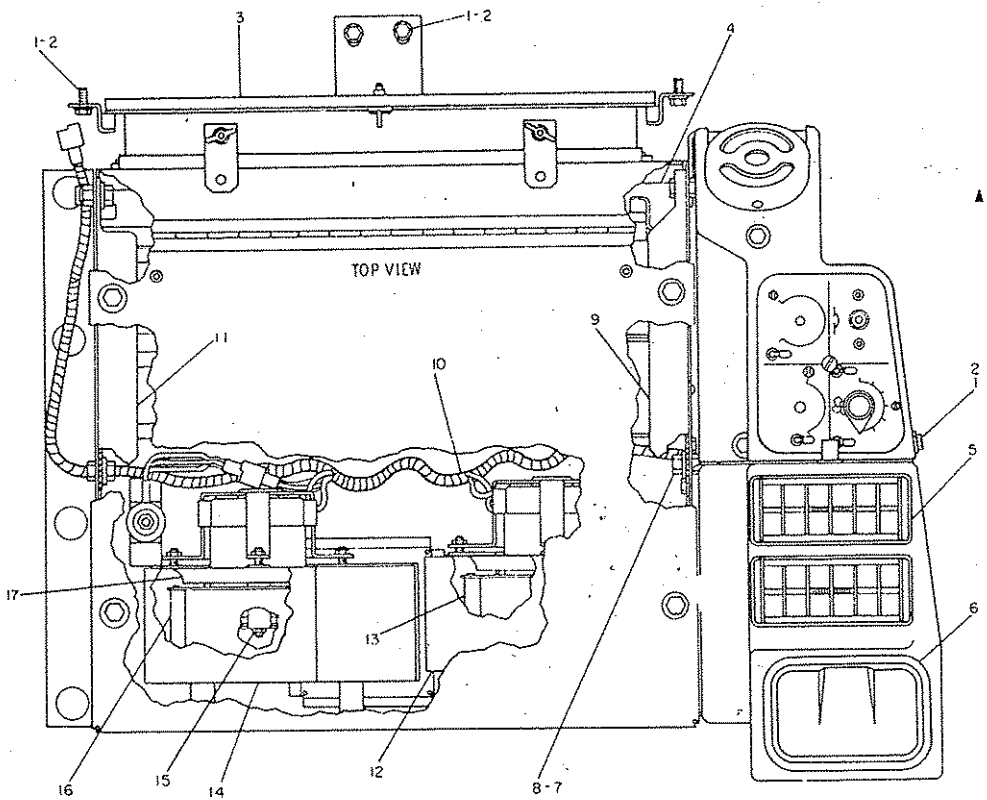

REF NO.	PART NUMBER	DESCRIPTION	QTY.
1	2A762	BOLT	10
2	5P4115	WASHER	10
3	9G8078	FILTER GROUP (Separate Illustration)	1
▲ 4	5P5640	SEAL, 48 m(18.8 in.)	
5	7G2172	LOUVER ASSEM.	4
6	5P5824	HOLDER	1
	5P5454	ASHTRAY	1
7	5P1075	WASHER	3
8	4F4879	BOLT	3
9	7G4951	BRACKET ASSEM. (Includes)	1
	9F2978	NUT	1
10	7G7579	HARNESS ASSEM. (Separate Illustration)	1
11	7G4953	BRACKET ASSEM.	1
12	9G7542	HOUSING ASSEM.	1
13	7G661	WHEEL	1
14	9G7541	HOUSING ASSEM.	1
15	1M1230	NUT	4
	4B4274	WASHER	4
	2G415	BRACKET	2
16	7G660	WHEEL	1
17	7G942	PLATE	2

▲ ORDER BY THE METER

232718

7G7818 PRESSURIZER GROUP—Part 1 of 3—Type 1
Serial No. 87V5734—Up
Part of 6G5580 Pressurizer and Mounting & 7G7817 Heater Groups shown on Pages 312C & 315B
7G7579 Harness & 9G8078 Filter parts are shown on Pages 315F & 315G. AN ATTACHMENT

7G7818 PRESSURIZER GROUP—Part 2 of 3—Type 1
Serial No. 87V5734—Up. Part of 6G5580 Pressurizer and Mounting & 7G7817 Heater Groups shown on Pages 312C & 315B
AN ATTACHMENT

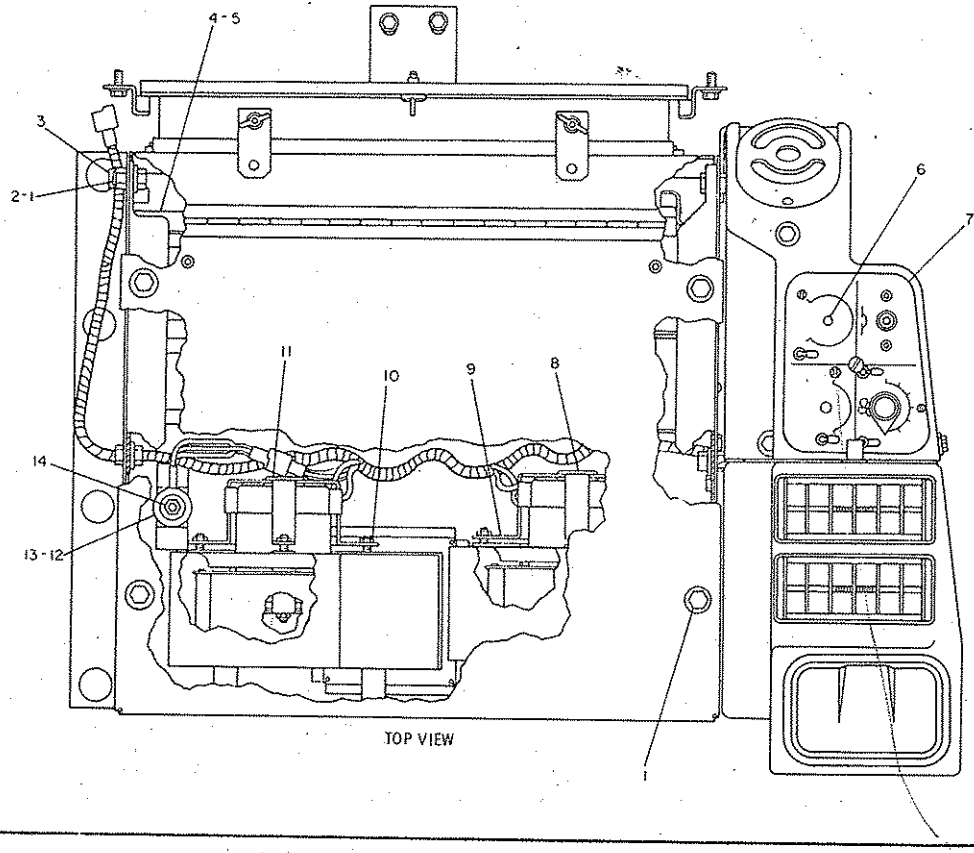

TOP VIEW

REF. NO.	PART NUMBER	DESCRIPTION	QTY.
1	S509	BOLT	5
	5P1075	WASHER	5
2	1D4717	NUT	1
3	4D7794	CLIP	1
4	7G6599	FILTER	1
5	7G6601	SEAL	1
6	5N3175	PLUG	2
7	7G6604	PLATE	1
8	9G8697	MOTOR ASSEM. (Includes)	1
	9G398	BRUSH KIT	1
9	2G416	BRACKET ASSEM.	2
10	1B4330	NUT	6
	1H3338	WASHER	6
11	9G8693	MOTOR ASSEM. (Includes)	1
	9G398	BRUSH KIT	1
12	9G8696	RESISTOR ASSEM. (Includes)	1
	7N7782	PLUG	1
	7N7780	PIN	1
	7N7779	SOCKET	2
	5P5624	WIRE---.51 m(20 in.)	▲
13	8G901	INSULATOR	2
14	7H8909	NUT	1
	6V1668	WASHER---------(small)---------	2
	4D2303	WASHER-------(large)----------	1

▲ ORDER BY THE METER

232719

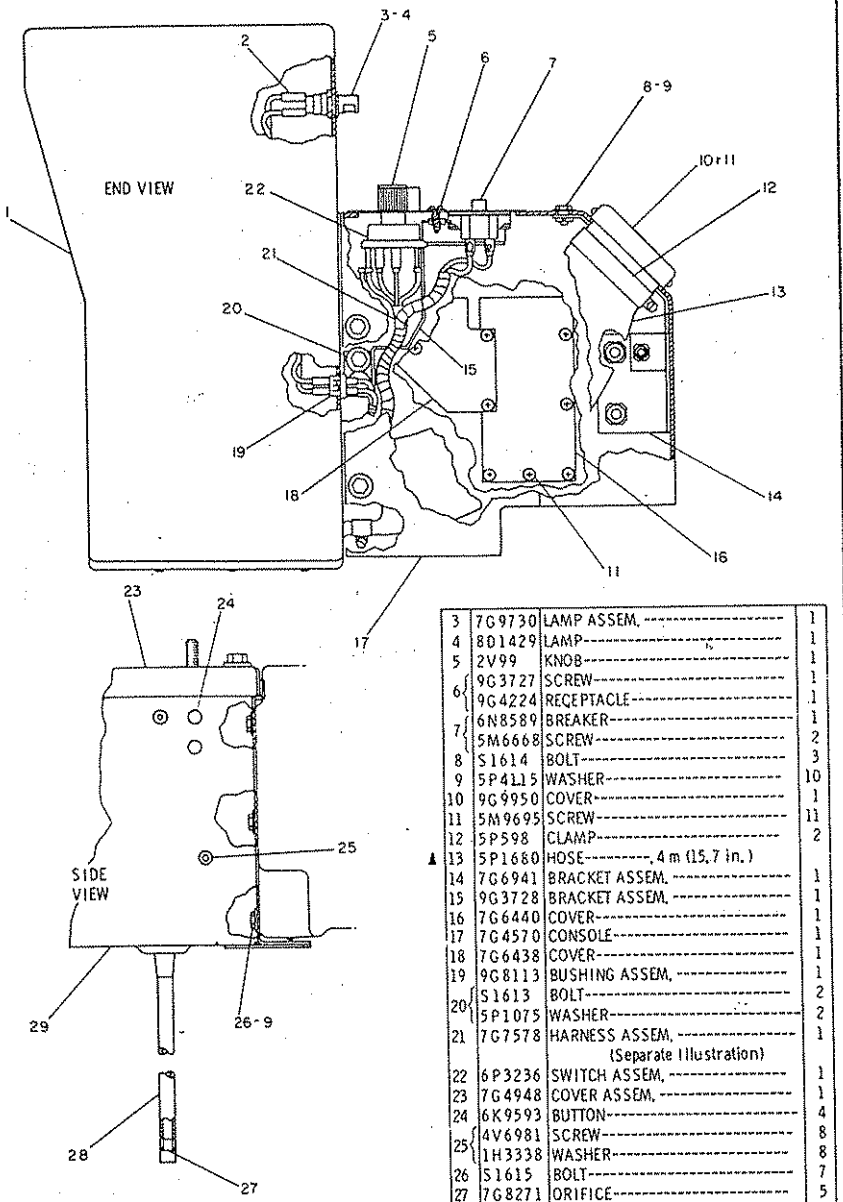

REF NO.	PART NUMBER	DESCRIPTION	QTY.
1	7G6161	DUCT ASSEM.	1
2	9G9537	WIRE ASSEM. (Includes)	1
▲	5P5624	WIRE---, 56 m(22 in.)	
	5P4571	TERMINAL	1

3	7G9730	LAMP ASSEM.	1
4	8D1429	LAMP	1
5	2V99	KNOB	1
6	9G3727	SCREW	1
	9G4224	RECEPTACLE	1
7	6N8589	BREAKER	1
	5M6668	SCREW	2
8	S1614	BOLT	3
9	5P4115	WASHER	10
10	9G9950	COVER	1
11	5M9695	SCREW	11
12	5P598	CLAMP	2
▲ 13	5P1680	HOSE----------, 4 m (15,7 in.)	
14	7G6941	BRACKET ASSEM.	1
15	9G3728	BRACKET ASSEM.	1
16	7G6440	COVER	1
17	7G4570	CONSOLE	1
18	7G6438	COVER	1
19	9G8113	BUSHING ASSEM.	1
20	S1613	BOLT	2
	5P1075	WASHER	2
21	7G7578	HARNESS ASSEM. (Separate Illustration)	1
22	6P3236	SWITCH ASSEM.	1
23	7G4948	COVER ASSEM.	1
24	6K9593	BUTTON	4
25	4V6981	SCREW	8
	1H3338	WASHER	8
26	S1615	BOLT	7
27	7G8271	ORIFICE	5
28	3T2511	TUBE	5
29	7G4592	CASE ASSEM.	1

▲ ORDER BY THE METER 233202

7G7818 PRESSURIZER GROUP—Part 3 of 3—Type 1
Serial No. 87V5734—Up. Part of 6G5580 Pressurizer and Mounting & 7G7817 Heater Groups shown on Pages 312C & 315B. 7G7578 Harness parts are shown on Page 315F. AN ATTACHMENT

7G7818 PRESSURIZER GROUP—Part 1 of 3—Type 2
Serial No. 87V5734—Up
Part of 6G5580 Pressurizer & Mounting and 7G7817 Heater Groups shown on Pages 312C & 315B
7G7579 Harness parts are shown on Page 315F. AN ATTACHMENT

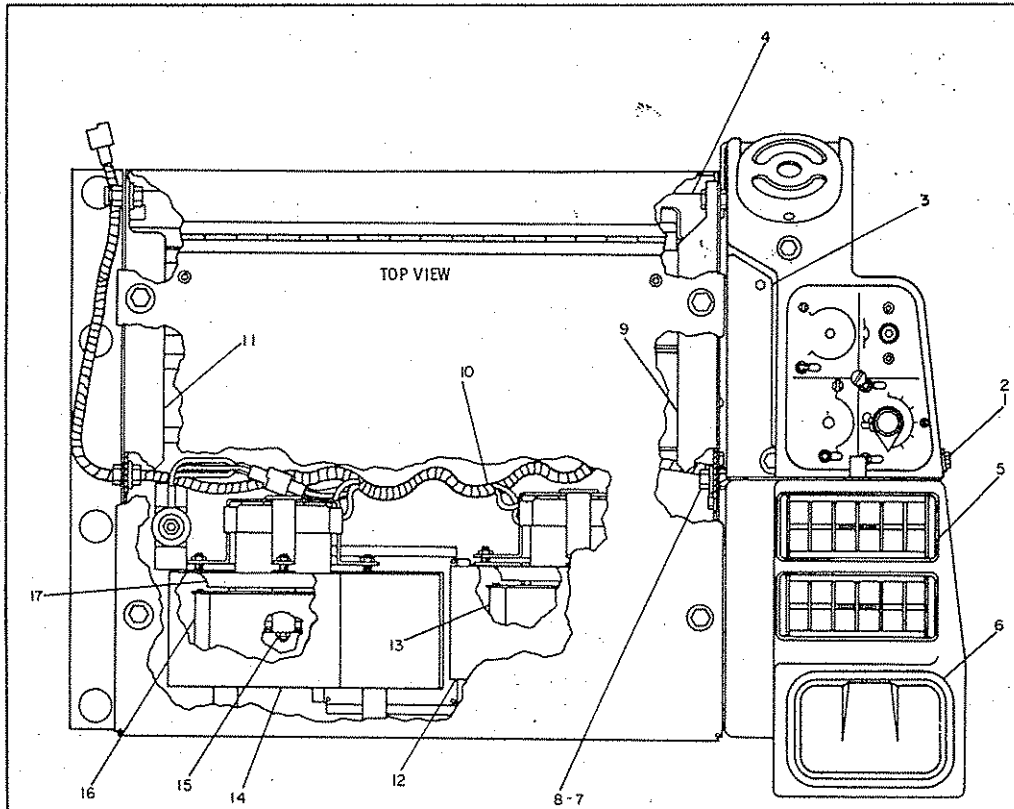

	REF. NO.	PART NUMBER	DESCRIPTION	QTY.
C	1	2A762	BOLT	4
C	2	5P4115	WASHER	4
C	3	3T6169	PLATE	1
C	3	5M9695	SCREW	1
▲	4	5P5640	SEAL-------, .48 m(18, 8 in.)	
	5	7G2172	LOUVER ASSEM.	4
	6	5P5824	HOLDER	1
	6	5P5454	ASHTRAY	1
	7	5P1075	WASHER	3
	8	4F4879	BOLT	3
	9	7G4951	BRACKET ASSEM. (Includes)	1
	9	9F2978	NUT	1
	10	7G7579	HARNESS ASSEM. (Separate Illustration)	1
	11	7G4953	BRACKET ASSEM.	1
	12	9G7542	HOUSING ASSEM.	1
	13	7G661	WHEEL	1
	14	9G7541	HOUSING ASSEM.	1
	15	1M1230	NUT	4
	15	4B4274	WASHER	4
	15	2G415	BRACKET	2
	16	7G660	WHEEL	1
	17	7G942	PLATE	2

▲ ORDER BY THE METER
C INDICATES CHANGE

301252

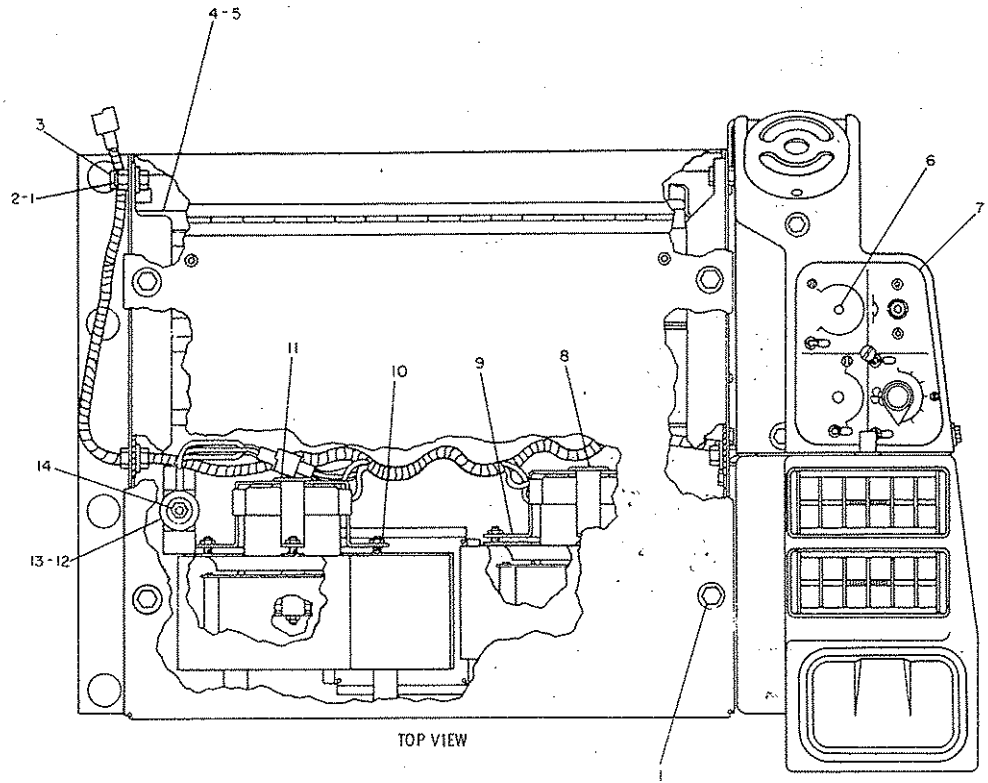

REF. NO.	PART NUMBER	DESCRIPTION	QTY.
1	S509	BOLT	5
	5P1075	WASHER	5
2	1D4717	NUT	1
3	4D7794	CLIP	1
4	7G6599	FILTER	1
5	7G6601	SEAL	1
6	5N3175	PLUG	2
7	7G6604	PLATE	1
8	9G8697	MOTOR ASSEM. (Includes)	1
	9G398	BRUSH KIT	1
9	2G416	BRACKET ASSEM.	2
10	1B4330	NUT	6
	1H3338	WASHER	6
11	9G8693	MOTOR ASSEM. (Includes)	1
	9G398	BRUSH KIT	1
12	9G8696	RESISTOR ASSEM. (Includes)	1
	7N7782	PLUG	1
	7N7780	PIN	1
	7N7779	SOCKET	2
▲	5P5624	WIRE---.51 m(20 in.)	
13	8G901	INSULATOR	2
14	7H8909	NUT	1
	6V1668	WASHER---------(small)---------	2
	4D2303	WASHER------(large)----------	1

▲ ORDER BY THE METER

302291

7G7818 PRESSURIZER GROUP—Part 2 of 3—Type 2
Serial No. 87V5734—Up
Part of 6G5580 Pressurizer & Mounting and 7G7817 Heater Groups shown on Pages 312C.& 315B
AN ATTACHMENT

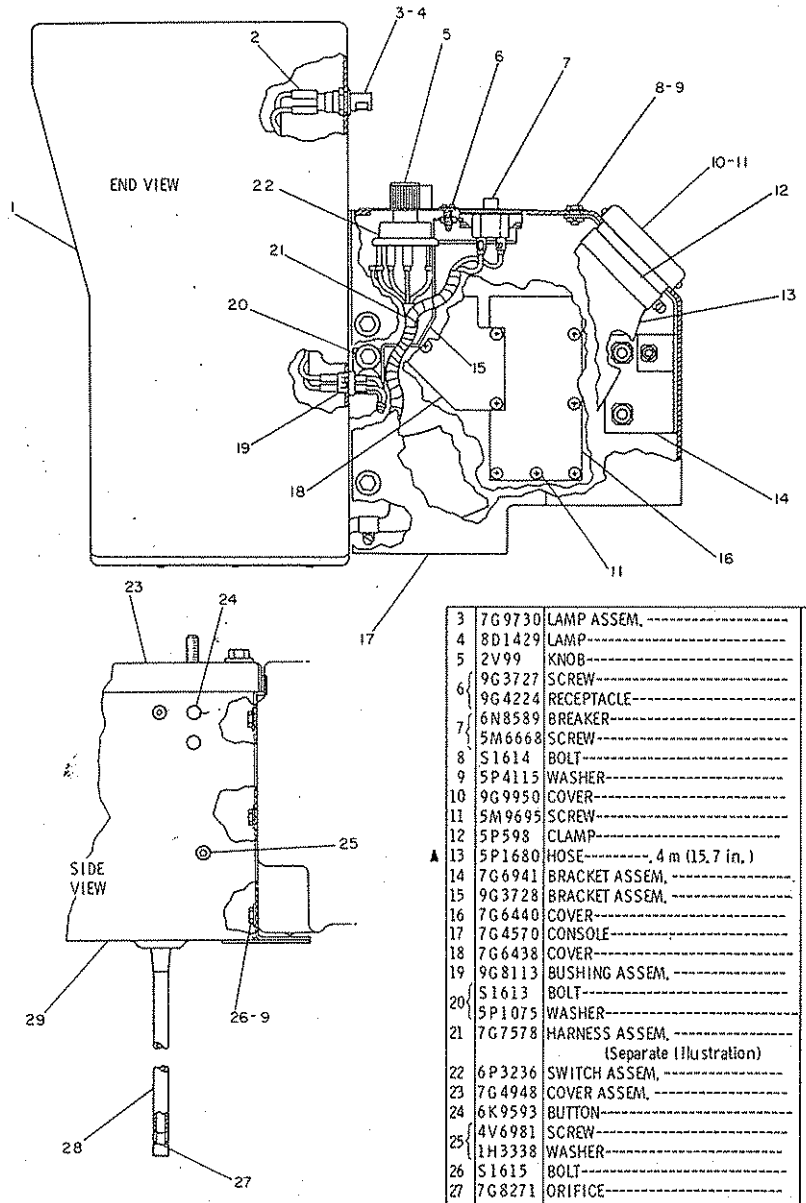

REF. NO.	PART NUMBER	DESCRIPTION	QTY.
1	7G6161	DUCT ASSEM.	1
2	9G9537	WIRE ASSEM. (Includes)	1
▲	5P5624	WIRE---.56 m(22 in.)	
	5P4571	TERMINAL	1

3	7G9730	LAMP ASSEM.	1
4	8D1429	LAMP	1
5	2V99	KNOB	1
6	9G3727	SCREW	1
	9G4224	RECEPTACLE	1
7	6N8589	BREAKER	1
	5M6668	SCREW	2
8	S1614	BOLT	3
9	5P4115	WASHER	10
10	9G9950	COVER	1
11	5M9695	SCREW	11
12	5P598	CLAMP	2
▲ 13	5P1680	HOSE---.4 m (15.7 in.)	
14	7G6941	BRACKET ASSEM.	1
15	9G3728	BRACKET ASSEM.	1
16	7G6440	COVER	1
17	7G4570	CONSOLE	1
18	7G6438	COVER	1
19	9G8113	BUSHING ASSEM.	1
20	S1613	BOLT	2
	5P1075	WASHER	2
21	7G7578	HARNESS ASSEM. (Separate Illustration)	1
22	6P3236	SWITCH ASSEM.	1
23	7G4948	COVER ASSEM.	1
24	6K9593	BUTTON	4
25	4V6981	SCREW	8
	1H3338	WASHER	8
26	S1615	BOLT	7
27	7G8271	ORIFICE	5
28	3T2511	TUBE	5
29	7G4592	CASE ASSEM.	1

▲ ORDER BY THE METER

233202

7G7818 PRESSURIZER GROUP—Part 3 of 3—Type 2
Serial No. 87V5734—Up. Part of 6G5580 Pressurizer & Mounting and 7G7817 Heater Groups shown on Pages 312C & 315B. 7G7578 Harness parts are shown on Page 312F. AN ATTACHMENT

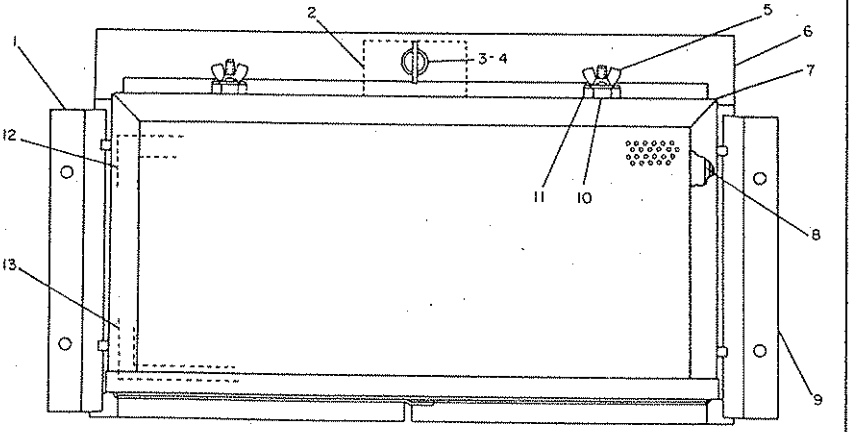

REF. NO.	PART NUMBER	DESCRIPTION	QTY.
1	9G2706	PLATE	1
2	9G9400	BRACKET ASSEM.	1
3	2R2376	WASHER	1
4	3R5742	THUMBSCREW	2
5	1F1739	NUT	1
6	9G8077	CASE ASSEM.	1
7	9G8071	COVER ASSEM.	1
8	5G1913	FILTER	1
9	9G2705	PLATE	1
10	2V2569	BUMPER	2
11	9G2707	PLATE	2
12	7G6603	SEAL	1
13	3T2510	SEAL	1

232720

9G8078 CAB AIR FILTER GROUP
Serial No. 87V5734—Up
Part of 7G7818 Pressurizer Group shown on Page 315C. AN ATTACHMENT

6G5610 CONTROL AND DUCT GROUP—Heater & Air Conditioner

Serial No. 87V5734—Up. Part of 6G3180 Cab Heater Arrangement & 6G5590 Air Conditioner Arrangement listed on Pages 310B & 313B. AN ATTACHMENT

REF. NO.	PART NUMBER	DESCRIPTION	QTY.
1	7G2172	LOUVER ASSEM.	8
2	6G2350	PANEL ASSEM.	1
3	6G2653	BRACKET	1
4	4V6981	SCREW	16
5	6G2647	DUCT	1
6	6G2638	DUCT	1
7	6G2659	PANEL	2
8	5P5774	PLUG	1
9	6G5438	DUCT	1
▲ 10	5P5643	SEAL-----, 6m(23.63 in.)	
11	6G2730	BRACKET	2
12	1A2029	BOLT	2
	2K4973	NUT	2
13	5M2894	WASHER	8
14	L1351	BOLT	4
15	6G5436	SEAL	1
16	9D3868	SCREW	2
17	6G2340	PANEL ASSEM.	1
▲ 18	5P5931	SEAL--------1.06m(41.74 in.)	1
19	6G2642	COVER	1

▲ ORDER BY THE METER

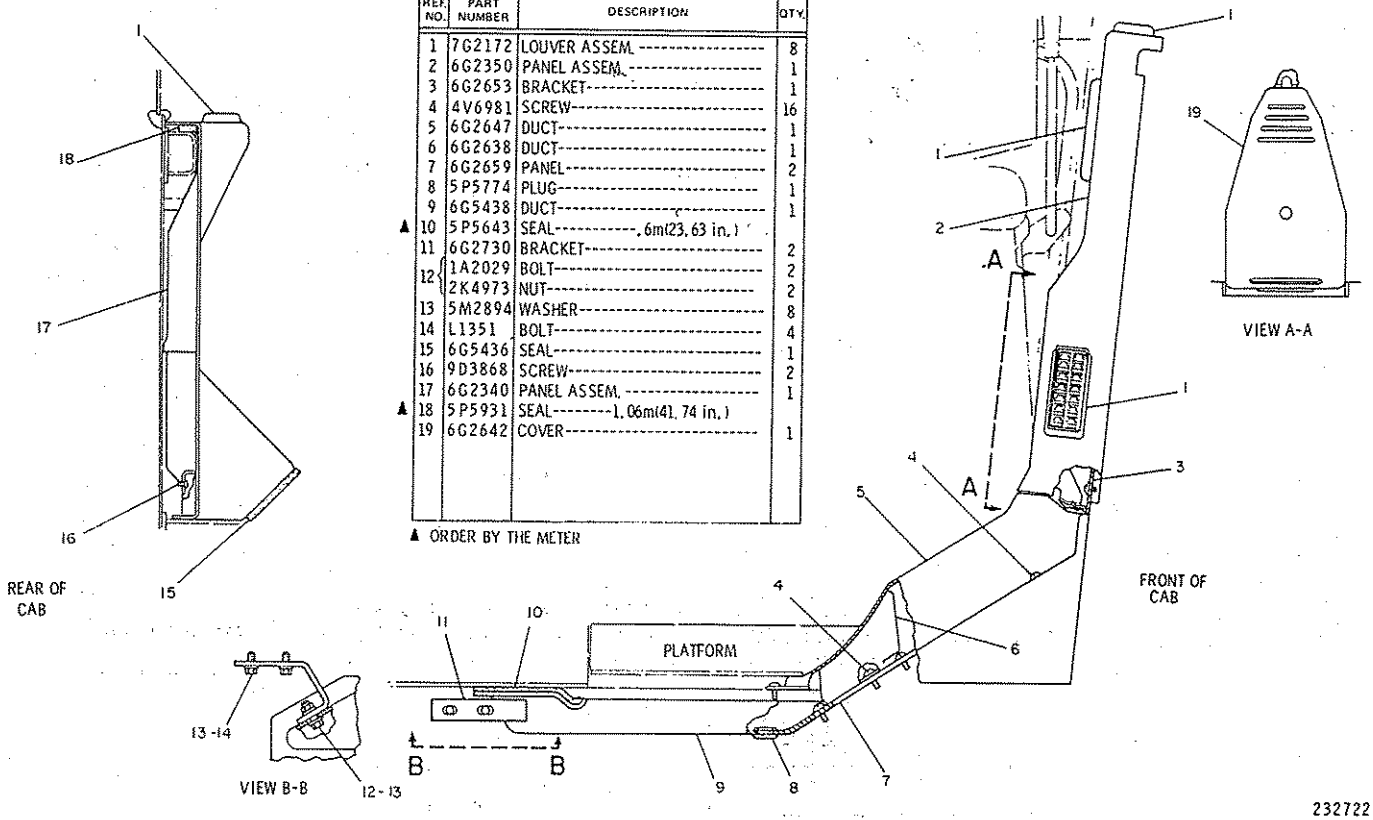

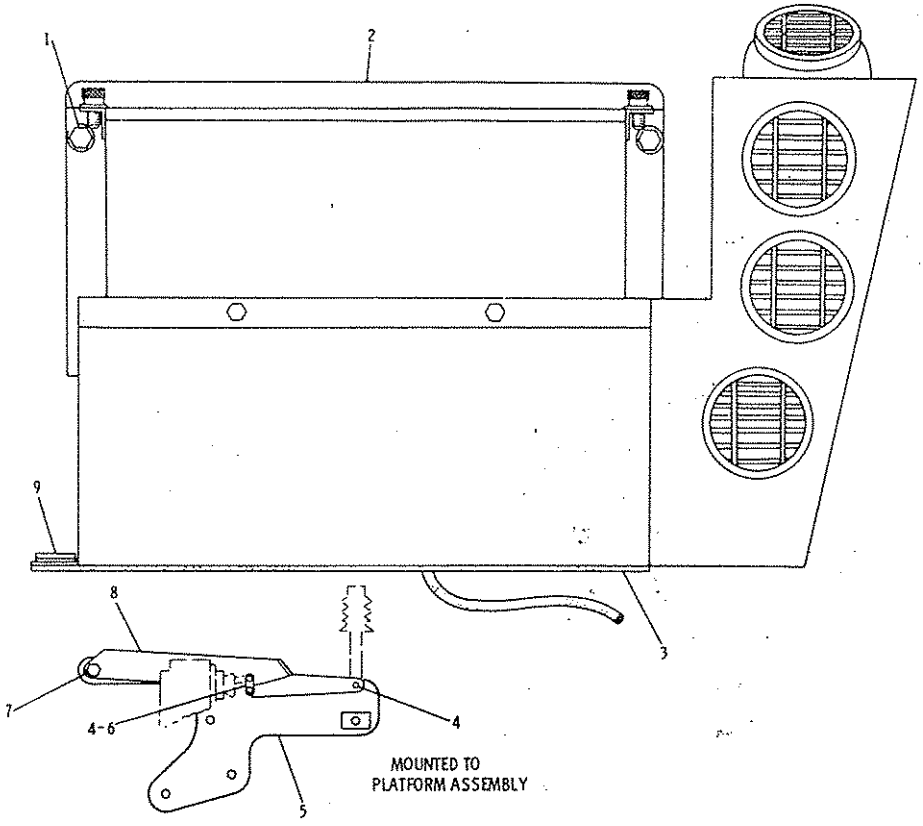

REF. NO.	PART NUMBER	DESCRIPTION	QTY.
1	5M3062	BOLT	2
	5M2894	WASHER	4
2	9D1960	AIR CONDITIONER GROUP (Separate Illustration)	1
3	9D5526	PAD	1
4	4J5325	PIN	3
	3B4607	COTTER PIN	3
5	6G3173	PLATE ASSEM.	1
6	7J5263	LINK	2
7	647423	BOLT	1
8	6G3164	LEVER ASSEM.	1
9	8D6085	SPACER------(steel)	7
	8D9813	WASHER------(rubber)	7

226907

6G5825 AIR CONDITIONER AND MOUNTING GROUP
Serial No. 87V5275 to 87V5733 inclusive
Part of 9D3740 Air Conditioner Arrangement listed on Page 313
9D1960 Air Conditioner parts are shown on Pages 314 & 315. AN ATTACHMENT

6G3160 AIR CONDITIONER AND MOUNTING GROUP

Serial No. 87V5734—Up. Part of 6G5590 Air Conditioner Arrangement listed on Page 313B
7G4802 Air Conditioner parts are shown on Page 315A. AN ATTACHMENT

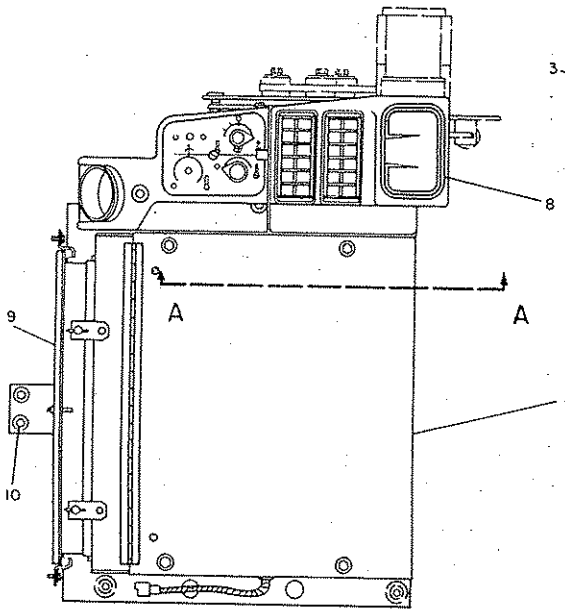

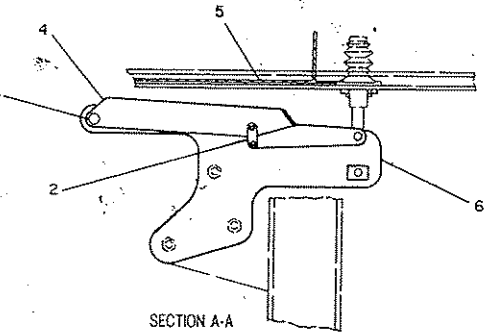

SECTION A-A

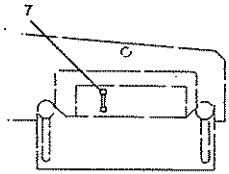

DETAIL OF CAB FUSE PANEL

NOTE	REF NO	PART NUMBER	QTY	DESCRIPTION
Y	1	7G4802	1	CONDITIONER GROUP
	2	7J5263	2	LINK
		4J5325	2	PIN
		3B4607	2	COTTER PIN
	3	6J7423	1	BOLT
	4	6G3164	L	LEVER ASSEM.
	5	6G2641	1	PAD
	6	6G3173	1	PLATE ASSEM.
C	7	8M456	1	FUSE (20 AMP)
C	8	5P5454	1	ASH TRAY
C		5P5824	1	HOLDER
CY	9	9G8078	1	FILTER GROUP
C	10	1H3337	6	BOLT
C		5P4115	6	WASHER

C INDICATES CHANGE
Y SEPARATE ILLUSTRATION

309099

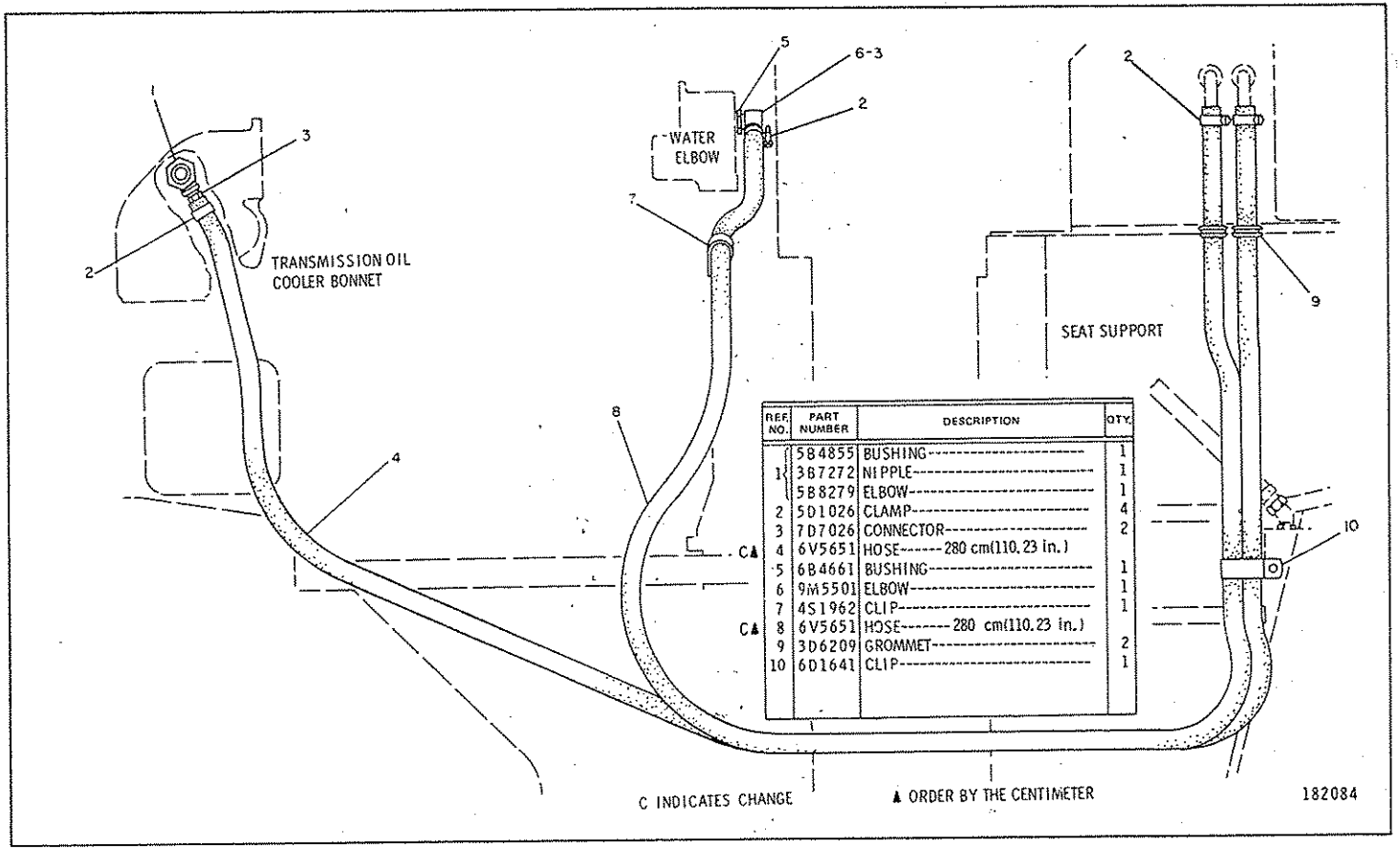

REF. NO.	PART NUMBER	DESCRIPTION	QTY.
1	5B4855	BUSHING	1
	3B7272	NIPPLE	1
	5B8279	ELBOW	1
2	5D1026	CLAMP	4
3	7D7026	CONNECTOR	2
4	6V5651	HOSE-------280 cm(110.23 in.)	
5	6B4661	BUSHING	1
6	9M5501	ELBOW	1
7	4S1962	CLIP	1
C▲ 8	6V5651	HOSE-------280 cm(110.23 in.)	
9	3D6209	GROMMET	2
10	6D1641	CLIP	1

6G5565 HEATER LINES GROUP—Type 1
Serial No. 87V5734—Up
Part of 6G3180 Cab Heater Arrangement listed on Page 310B
AN ATTACHMENT

6G5565 HEATER LINES GROUP—Type 2
Serial No. 87V5734—Up
Part of 6G3180 Cab Heater Arrangement listed on Page 310B
AN ATTACHMENT

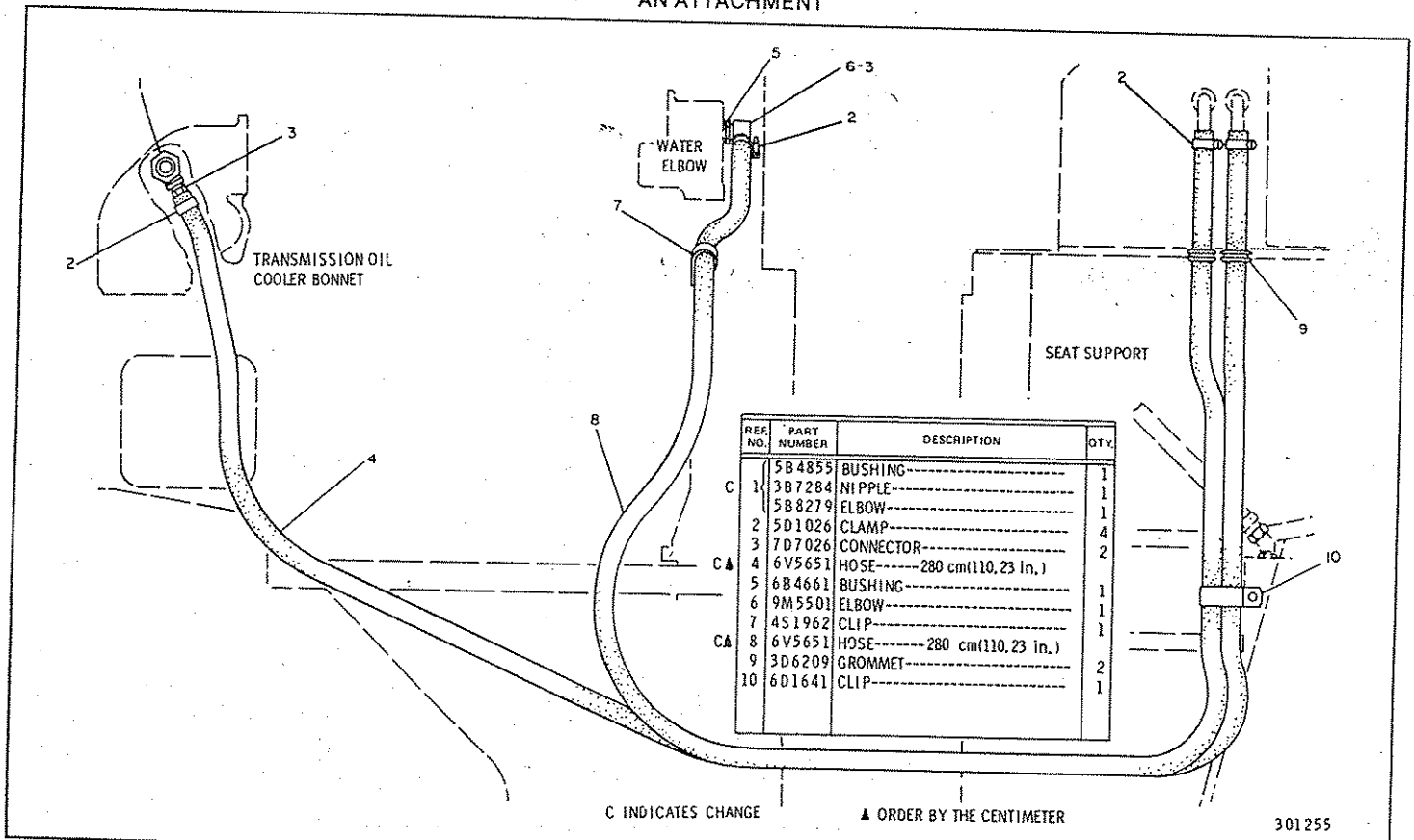

REF. NO.		PART NUMBER	DESCRIPTION	QTY.
		5B4855	BUSHING	1
C	1	3B7284	NIPPLE	1
		5B8279	ELBOW	1
	2	5D1026	CLAMP	4
	3	7D7026	CONNECTOR	2
C▲	4	6V5651	HOSE-------280 cm(110.23 in.)	
	5	6B4661	BUSHING	1
	6	9M5501	ELBOW	1
	7	4S1962	CLIP	1
C▲	8	6V5651	HOSE--------280 cm(110.23 in.)	
	9	3D6209	GROMMET	2
	10	6D1641	CLIP	1

2G7160 AIR CONDITIONER LINES GROUP—Type 1

Serial No. 87V5275 to 87V5733 inclusive

Part of 9D3740 Air Conditioner Arrangement listed on Page 313. AN ATTACHMENT

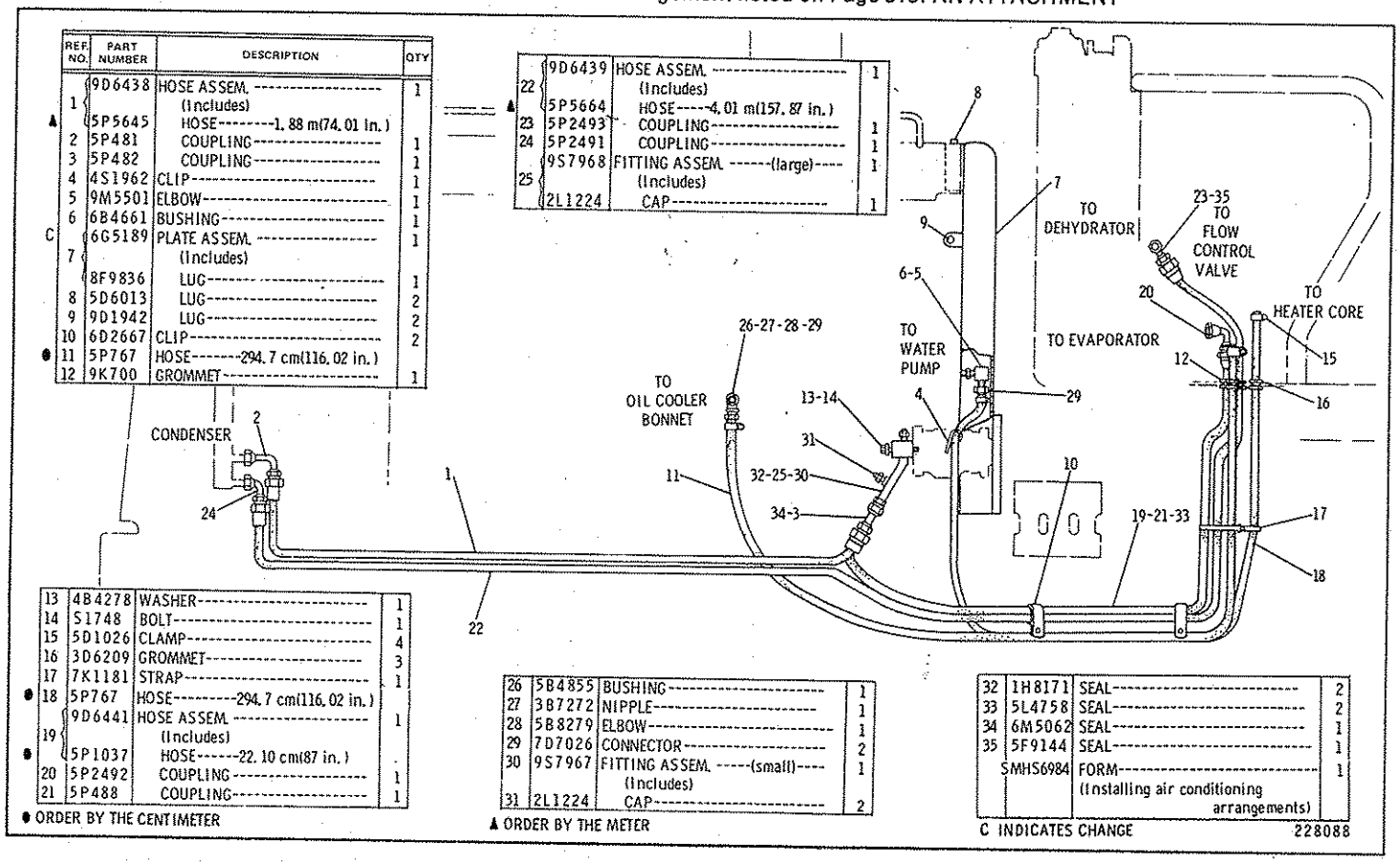

REF. NO.	PART NUMBER	DESCRIPTION	QTY
1	9D6438	HOSE ASSEM. (Includes)	1
▲	5P5645	HOSE---------1.88 m(74.01 in.)	
2	5P481	COUPLING	1
3	5P482	COUPLING	1
4	4S1962	CLIP	1
5	9M5501	ELBOW	1
6	6B4661	BUSHING	1
C	6G5189	PLATE ASSEM.	1
7		(Includes)	
	8F9836	LUG	1
8	5D6013	LUG	2
9	9D1942	LUG	2
10	6D2667	CLIP	2
● 11	5P767	HOSE--------294.7 cm(116.02 in.)	
12	9K700	GROMMET	1

22	9D6439	HOSE ASSEM. (Includes)	1
▲	5P5664	HOSE-----4.01 m(157.87 in.)	
23	5P2493	COUPLING	1
24	5P2491	COUPLING	1
25	9S7968	FITTING ASSEM. ------(large)---- (Includes)	1
	2L1224	CAP	1

13	4B4278	WASHER	1
14	S1748	BOLT	1
15	5D1026	CLAMP	4
16	3D6209	GROMMET	3
17	7K1181	STRAP	1
● 18	5P767	HOSE---------294.7 cm(116.02 in.)	
19	9D6441	HOSE ASSEM. (Includes)	1
●	5P1037	HOSE------22.10 cm(87 in.)	
20	5P2492	COUPLING	1
21	5P488	COUPLING	1

● ORDER BY THE CENTIMETER

26	5B4855	BUSHING	1
27	3B7272	NIPPLE	1
28	5B8279	ELBOW	1
29	7D7026	CONNECTOR	2
30	9S7967	FITTING ASSEM. -----(small)---- (Includes)	1
31	2L1224	CAP	2

▲ ORDER BY THE METER

32	1H8171	SEAL	2
33	5L4758	SEAL	2
34	6M5062	SEAL	1
35	5F9144	SEAL	1
	SMHS6984	FORM (Installing air conditioning arrangements)	1

C INDICATES CHANGE

228088

2G7160 AIR CONDITIONER LINES GROUP—Type 2
Serial No. 87V5275 to 87V5733 Inclusive
Part of 9D3740 Air Conditioner Arrangement listed on Page 313. AN ATTACHMENT

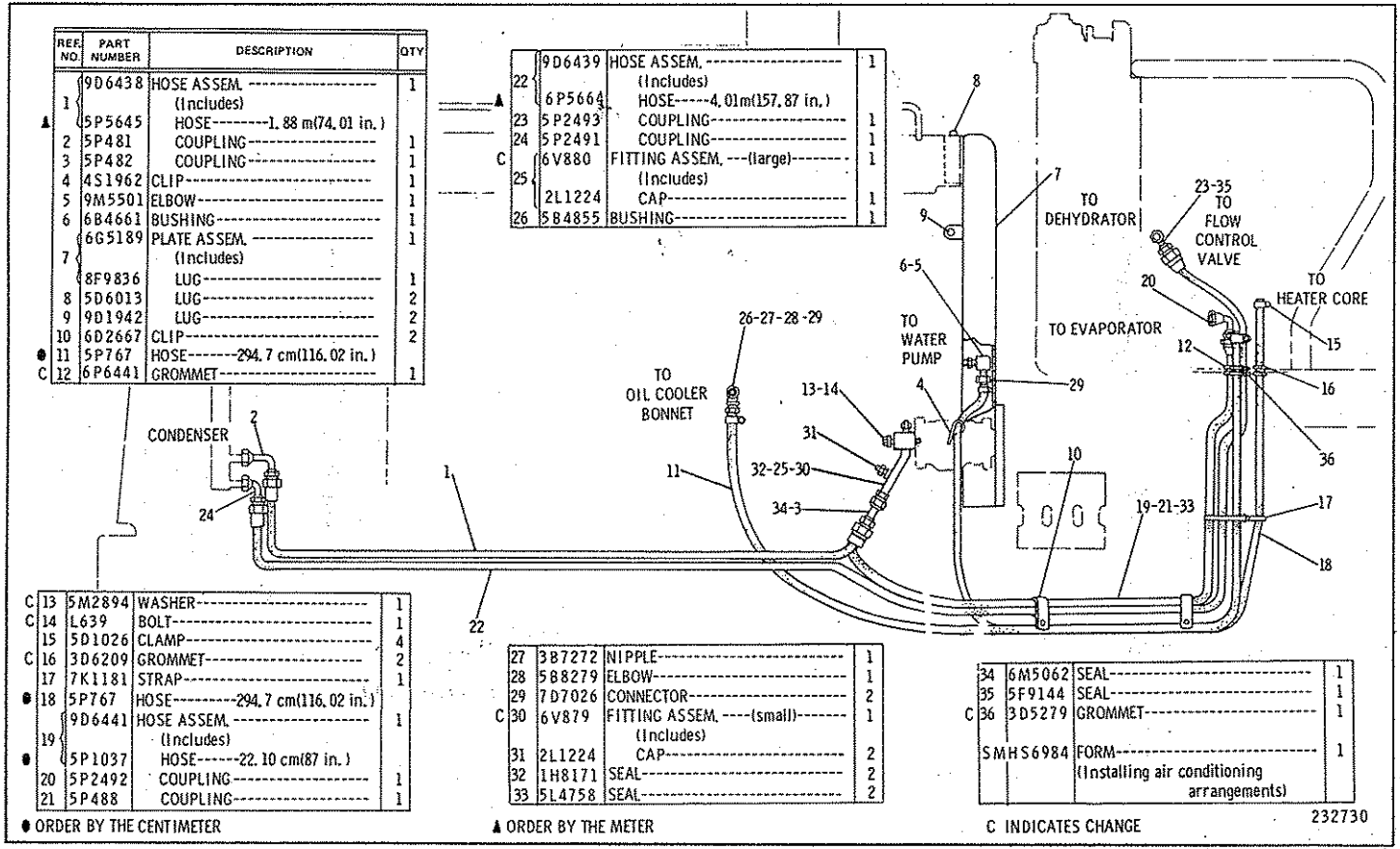

REF. NO.	PART NUMBER	DESCRIPTION	QTY
	9D6438	HOSE ASSEM. ----------	1
1		(Includes)	
▲	5P5645	HOSE---------1.88 m(74.01 in.)	
2	5P481	COUPLING----------	1
3	5P482	COUPLING----------	1
4	4S1962	CLIP----------	1
5	9M5501	ELBOW----------	1
6	6B4661	BUSHING----------	1
	6G5189	PLATE ASSEM. ----------	1
7		(Includes)	
	8F9836	LUG----------	1
8	5D6013	LUG----------	2
9	9D1942	LUG----------	2
10	6D2667	CLIP----------	2
● 11	5P767	HOSE-------294.7 cm(116.02 in.)	
C 12	6P6441	GROMMET----------	1

	9D6439	HOSE ASSEM. ----------	1
22		(Includes)	
▲	6P5664	HOSE-----4.01m(157.87 in.)	
23	5P2493	COUPLING----------	1
24	5P2491	COUPLING----------	1
C	6V880	FITTING ASSEM. ---(large)--------	1
25		(Includes)	
	2L1224	CAP----------	1
26	5B4855	BUSHING----------	1

C 13	5M2894	WASHER----------	1
C 14	L639	BOLT----------	1
15	5D1026	CLAMP----------	4
C 16	3D6209	GROMMET----------	2
17	7K1181	STRAP----------	1
● 18	5P767	HOSE---------294.7 cm(116.02 in.)	
	9D6441	HOSE ASSEM. ----------	1
19		(Includes)	
●	5P1037	HOSE------22.10 cm(87 in.)	
20	5P2492	COUPLING----------	1
21	5P488	COUPLING----------	1

27	3B7272	NIPPLE----------	1
28	5B8279	ELBOW----------	1
29	7D7026	CONNECTOR----------	2
C 30	6V879	FITTING ASSEM. ----(small)-------	1
		(Includes)	
31	2L1224	CAP----------	2
32	1H8171	SEAL----------	2
33	5L4758	SEAL----------	2

34	6M5062	SEAL----------	1
35	5F9144	SEAL----------	1
C 36	3D5279	GROMMET----------	1
	SMHS6984	FORM----------	1
		(Installing air conditioning arrangements)	

● ORDER BY THE CENTIMETER

▲ ORDER BY THE METER

C INDICATES CHANGE

232730

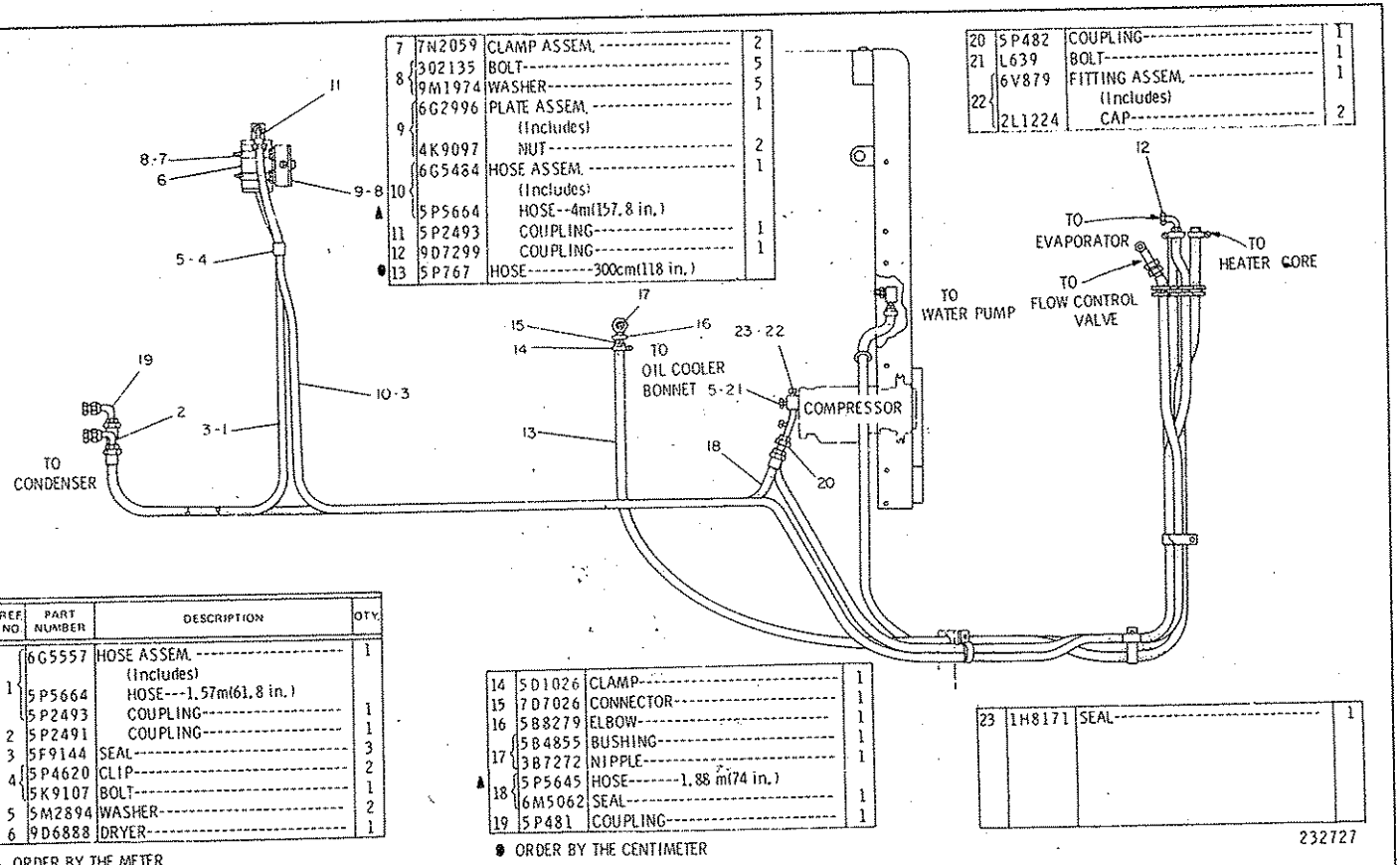

REF NO.	PART NUMBER	DESCRIPTION	QTY.
▲ 1	6G5557	HOSE ASSEM. (Includes)	1
	5P5664	HOSE---1.57m(61.8 in.)	
	5P2493	COUPLING	1
2	5P2491	COUPLING	1
3	5F9144	SEAL	3
4	5P4620	CLIP	2
	5K9107	BOLT	1
5	5M2894	WASHER	2
6	9D6888	DRYER	1

▲ ORDER BY THE METER

REF NO.	PART NUMBER	DESCRIPTION	QTY.
7	7N2059	CLAMP ASSEM.	2
8	302135	BOLT	5
	9M1974	WASHER	5
9	6G2996	PLATE ASSEM. (Includes)	1
	4K9097	NUT	2
10	6G5484	HOSE ASSEM. (Includes)	1
▲	5P5664	HOSE--4m(157.8 in.)	
11	5P2493	COUPLING	1
12	9D7299	COUPLING	1
● 13	5P767	HOSE---------300cm(118 in.)	

REF NO.	PART NUMBER	DESCRIPTION	QTY.
14	5D1026	CLAMP	1
15	7D7026	CONNECTOR	1
16	5B8279	ELBOW	1
17	5B4855	BUSHING	1
	3B7272	NIPPLE	1
▲ 18	5P5645	HOSE-------1.88 m(74 in.)	
	6M5062	SEAL	1
19	5P481	COUPLING	1

● ORDER BY THE CENTIMETER

REF NO.	PART NUMBER	DESCRIPTION	QTY.
20	5P482	COUPLING	1
21	L639	BOLT	1
22	6V879	FITTING ASSEM. (Includes)	1
	2L1224	CAP	2

REF NO.	PART NUMBER	DESCRIPTION	QTY.
23	1H8171	SEAL	1

232727

6G5630 AIR CONDITIONER LINES GROUP—Part 1—Type 1
Serial No. 87V5734—Up
Part of 6G5590 Air Conditioner Arrangement listed on Page 313B. AN ATTACHMENT

6G5630 AIR CONDITIONER LINES GROUP—Part 2—Type 1
Serial No. 87V5734—Up
Part of 6G5590 Air Conditioner Arrangement listed on Page 313B. AN ATTACHMENT

REF. NO.	PART NUMBER	DESCRIPTION	QTY.
1	6G5189	PLATE ASSEM.	1
		(Includes)	
	8F9836	LUG	1
2	5D6013	LUG	2
3	9D1942	LUG	2
4	9F2978	NUT	6
5	2G5255	GUARD	1
6	9M5501	ELBOW	1
	6B4661	BUSHING	1
7	7D7026	CONNECTOR	1
8	5D1026	CLAMP	3
● 9	5P767	HOSE--------300 cm(118 in.)	1
10	4S1962	CLIP	1
11	6P6641	GROMMET	1
12	3D6209	GROMMET	2
13	3D5279	GROMMET	1
14	6D2667	CLIP	2
15	6D1641	CLIP	2
▲ 16	5P5646	HOSE-------2.21 m(87 in.)	1
	5P488	COUPLING	1
17	5P2492	COUPLING	1
18	5L4758	SEAL	2
19	6V880	FITTING ASSEM.	1
		(Includes)	
	2L1224	CAP	1
20	1H8171	SEAL	1

▲ ORDER BY THE METER ● ORDER BY THE CENTIMETER

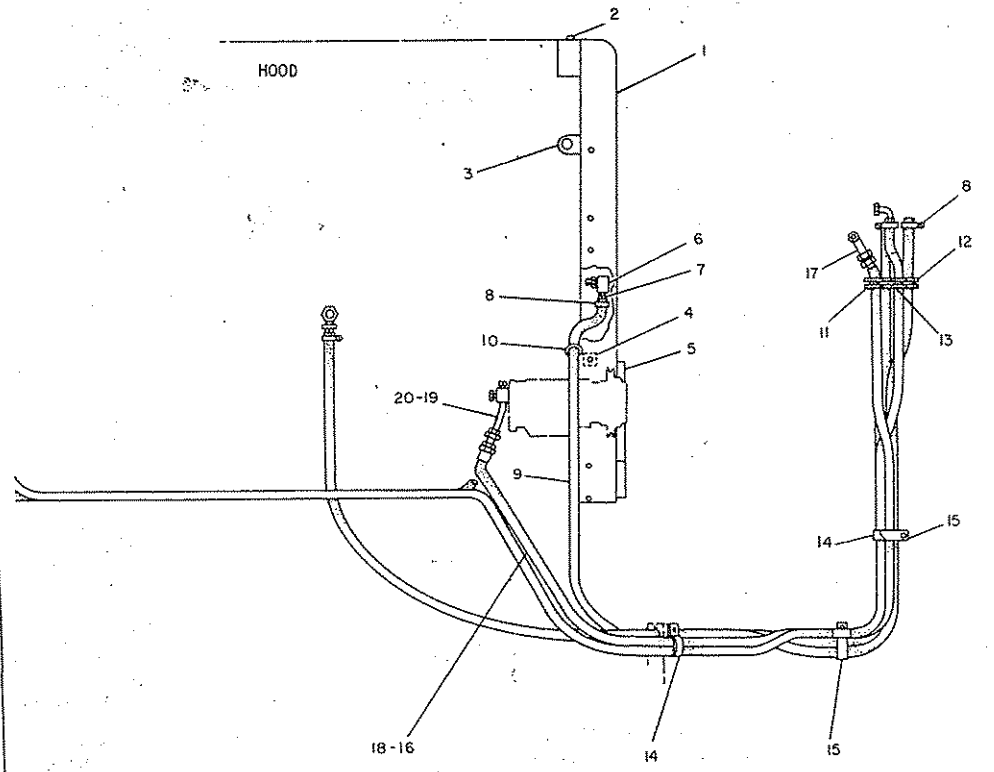

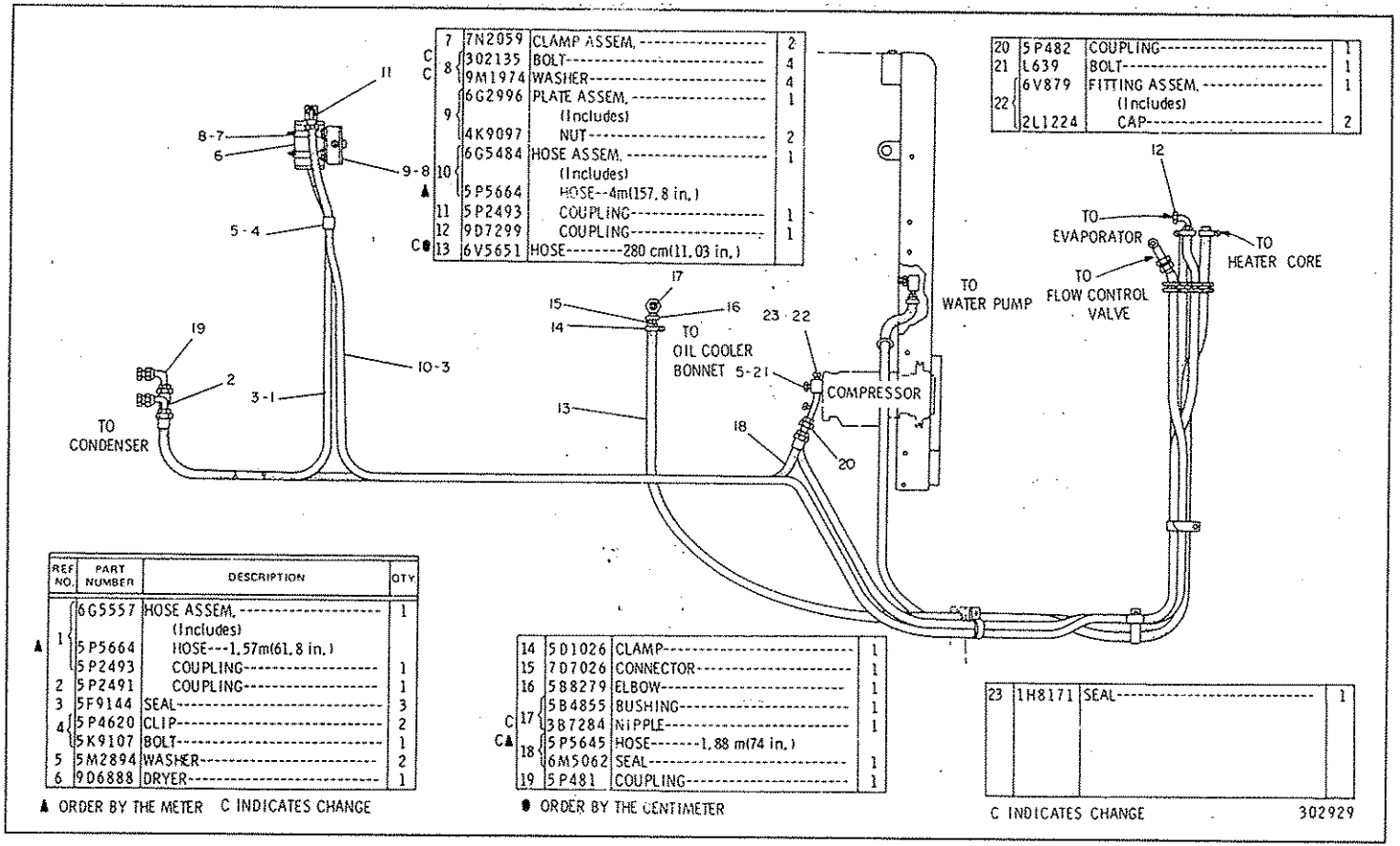

	7	7N2059	CLAMP ASSEM.	2
C	8	302135	BOLT	4
C		9M1974	WASHER	4
	9	6G2996	PLATE ASSEM. (Includes)	1
		4K9097	NUT	2
	10	6G5484	HOSE ASSEM. (Includes)	1
▲		5P5664	HOSE--4m(157.8 in.)	
	11	5P2493	COUPLING	1
	12	9D7299	COUPLING	1
C●	13	6V5651	HOSE--280 cm(11.03 in.)	

	20	5P482	COUPLING	1
	21	L639	BOLT	1
	22	6V879	FITTING ASSEM. (Includes)	1
		2L1224	CAP	2

REF NO.	PART NUMBER	DESCRIPTION	QTY
	6G5557	HOSE ASSEM. (Includes)	1
▲ 1	5P5664	HOSE---1.57m(61.8 in.)	
	5P2493	COUPLING	1
2	5P2491	COUPLING	1
3	5F9144	SEAL	3
4	5P4620	CLIP	2
	5K9107	BOLT	1
5	5M2894	WASHER	2
6	9D6888	DRYER	1

▲ ORDER BY THE METER C INDICATES CHANGE

	14	5D1026	CLAMP	1
	15	7D7026	CONNECTOR	1
	16	5B8279	ELBOW	1
	17	5B4855	BUSHING	1
C		3B7284	NIPPLE	1
C▲	18	5P5645	HOSE--1.88 m(74 in.)	
		6M5062	SEAL	1
	19	5P481	COUPLING	1

● ORDER BY THE CENTIMETER

	23	1H8171	SEAL	1

C INDICATES CHANGE 302929

6G5630 AIR CONDITIONER LINES GROUP—Part 1
Serial No. 87V5734—Up
Part of 6G5590 Air Conditioner Arrangement listed on Page 313B
AN ATTACHMENT

6G5630 AIR CONDITIONER LINES GROUP—Part 2
Serial No. 87V5734—Up
Part of 6G5590 Air Conditioner Arrangement listed on Page 313B
AN ATTACHMENT

	REF. NO.	PART NUMBER	DESCRIPTION	QTY.
	1	6G5189	PLATE ASSEM.	1
	2	5D6013	LUG	2
	3	9D1942	LUG	2
	4	9F2978	NUT	6
	5	2G5255	GUARD	1
	6	9M5501	ELBOW	1
		6B4661	BUSHING	1
	7	7D7026	CONNECTOR	1
	8	5D1026	CLAMP	3
C●	9	6V5651	HOSE---------280 cm(11.03 in.)	
	10	4S1962	CLIP	1
	11	6P6641	GROMMET	1
	12	3D6209	GROMMET	2
	13	3D5279	GROMMET	1
	14	6D2667	CLIP	2
	15	6D1641	CLIP	2
▲	16	5P5646	HOSE--------2.21 m(87 in.)	
		5P488	COUPLING	1
	17	5P2492	COUPLING	1
	18	5L4758	SEAL	2
	19	6V880	FITTING ASSEM.	1
			(Includes)	
		2L1224	CAP	1
	20	1H8171	SEAL	1

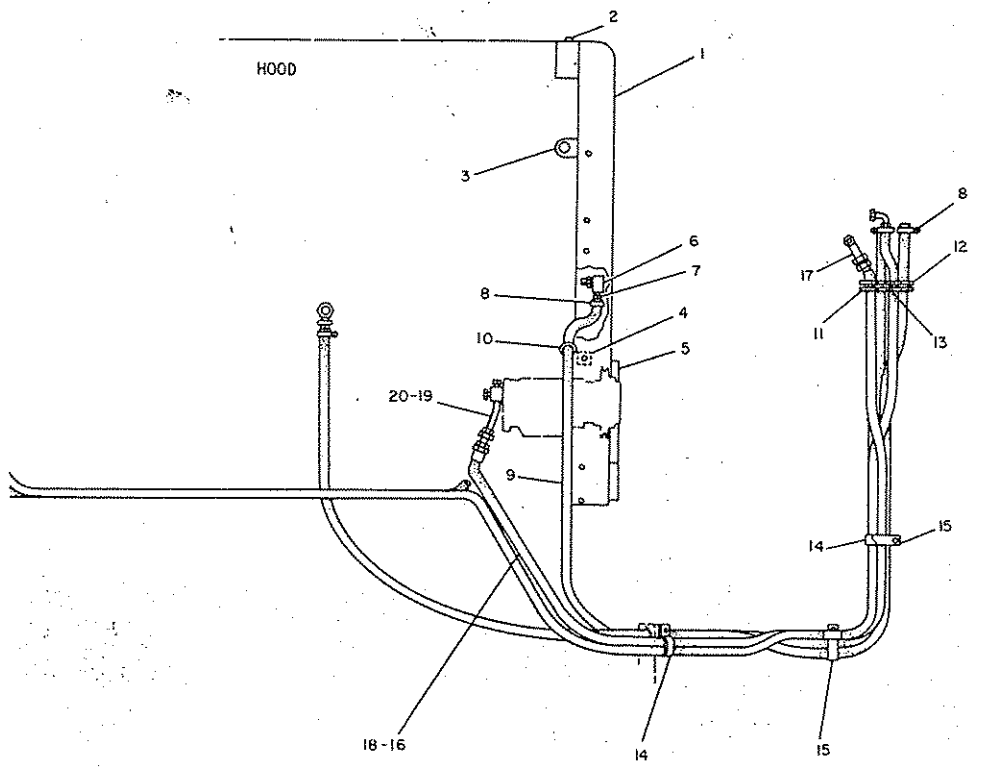

▲ ORDER BY THE METER ● ORDER BY THE CENTIMETER C INDICATES CHANGE

302930

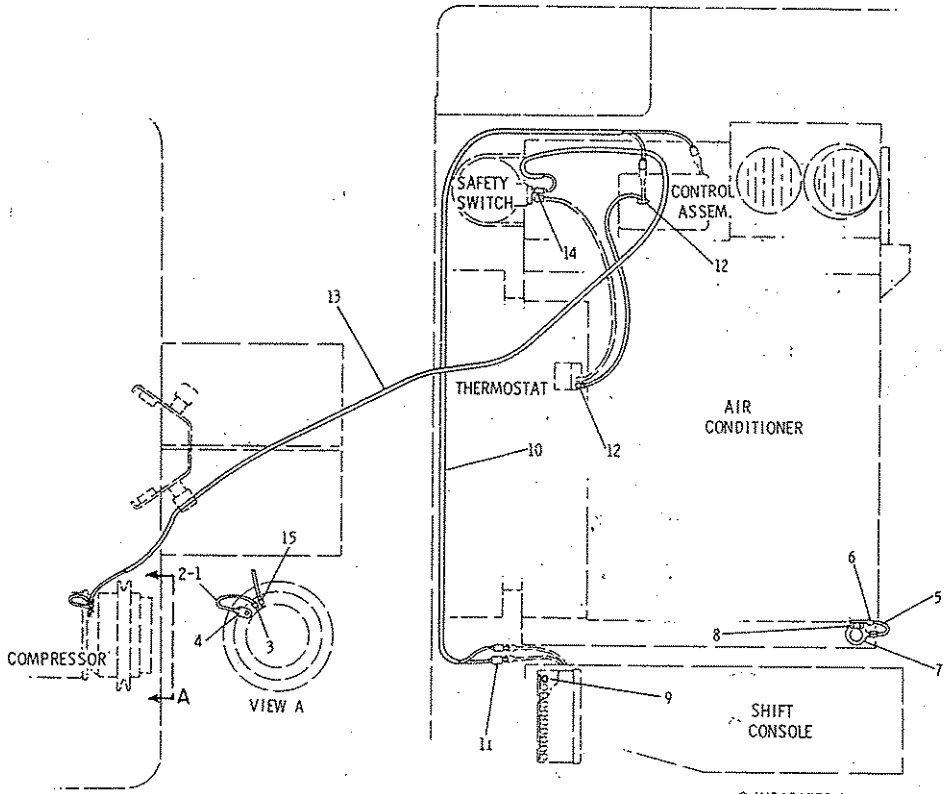

	REF. NO.	PART NUMBER	DESCRIPTION	QTY
	1	9D5541	WIRE ASSEM. (Includes)	1
C▲	2	5P5629	WIRE, 152 m(6 in.)	
C	3	5P6271	CONNECTOR ASSEM.	1
	4	6H6755	TERMINAL-(ground)	1
	5	9D4547	WIRE ASSEM. (Includes)	1
C▲		5P5629	WIRE, 127 m(5 in.)	
	6	6H6755	TERMINAL	1
	7	8M537	TERMINAL	1
	8	S1617	BOLT	1
C	9	3T4425	FUSE-(25 amp)	1
	10	9D5543	WIRE ASSEM. (Includes)	1
C▲		5P5629	WIRE-2.21 m(87 in.)	
	11	4S1988	TERMINAL	2
	12	4L3916	TERMINAL	2
	13	9D5542	WIRE ASSEM. (Includes)	1
C▲		5P5629	WIRE-3.25 m(128 in.)	
C	14	5P6271	CONNECTOR ASSEM.	1
	15	4L3916	TERMINAL	1

▲ ORDER BY THE METER-Use As Required

C INDICATES CHANGE

180396

9D2500 AIR CONDITIONER WIRING GROUP
Serial No. 87V5275 to 87V5733 inclusive
Part of 9D3740 Air Conditioner Arrangement listed on Page 313
AN ATTACHMENT

1P9983 REFRIGERANT COMPRESSOR GROUP

Also part of 9D3740 Air Conditioner Arrangement listed on Page 313
7N4297 Compressor parts are shown on Page 320. AN ATTACHMENT

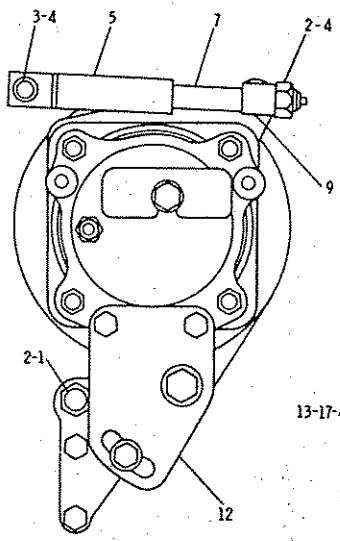

REAR VIEW

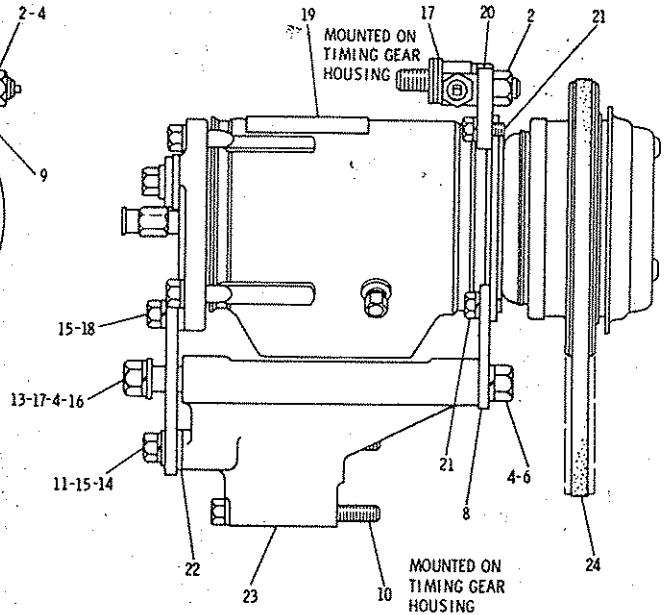

SIDE VIEW

	REF. NO.	PART NUMBER	DESCRIPTION	QTY
	1	2B2006	BOLT	1
	2	1D4719	NUT	3
	3	2B947	BOLT	1
	4	3B4508	LOCKWASHER	4
	5	1P9742	END	1
	6	6H1717	BOLT	1
	7	1P2236	ROD ASSEM. (Includes)	1
		1D5117	NUT	1
	8	1P9741	BRACKET	1
	9	1P2237	SWIVEL	1
	10	2P7557	BOLT	2
	11	4B4278	WASHER	1
	12	2P143	BRACKET ASSEM. (Includes)	1
C	13	8N3525	SPACER	1
	14	1A2029	BOLT	1
	15	3B4506	LOCKWASHER	3
	16	S1587	BOLT	1
	17	4B4280	WASHER	8
	18	S1594	BOLT	2
C	19	7N4297	COMPRESSOR GROUP (Separate Illustration)	1
	20	1P2249	BRACKET	1
	21	1A2343	BOLT	4
		3B4505	LOCKWASHER	4
	22	3K925	SPACER	1
	23	1P9745	BRACKET	1
	24	1P9744	VEE BELT	1

C INDICATES CHANGE

227177

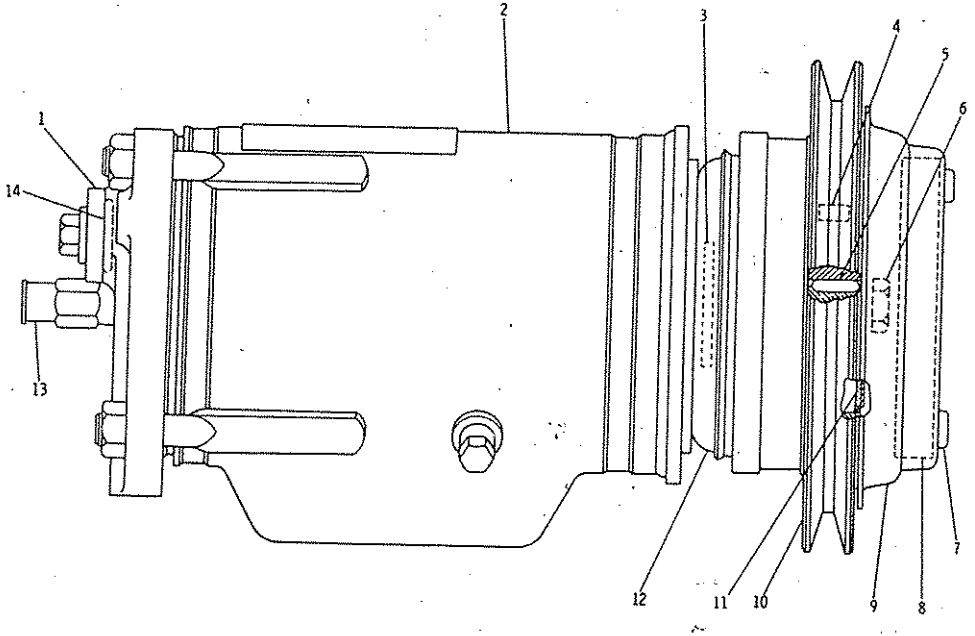

C INDICATES CHANGE

NOTE	REF NO	PART NUMBER	QTY	DESCRIPTION
	1	1P6356	1	PLATE
	2	1P6416	1	COMPRESSOR ASSEM.
C	3	1P6357	1	SEAL KIT (REFRIGERANT) (INCLUDES RETAINER, RINGS & SEALS)
C	4	1P6360	1	BEARING KIT
	5	7N809	1	KEY
C	6	9P8750	1	NUT
	7	145111	3	SCREW
C	8	1P6361	1	DRIVE CLUTCH KIT
	9	6N1116	1	COVER KIT (DUST) (INCLUDES COVER AND SCREWS).
C	10	7N4300	1	PULLEY KIT (REFRIGERANT COMP.)
	11	7N4291	1	SEAL KIT (DUST) (INCLUDES SHIELD GROUP, SEALS, KEY, NUT, RINGS AND SLEEVE)
C	12	7N4287	1	COIL KIT (CLUTCH)
	13	1P6355	1	VALVE ASSEM.
	14	1H8171	2	SEAL

306020

7N4297 CLUTCH AND REFRIGERANT COMPRESSOR GROUP
Part of 1P9983 Refrigerant Compressor Group shown on Page 319
AN ATTACHMENT

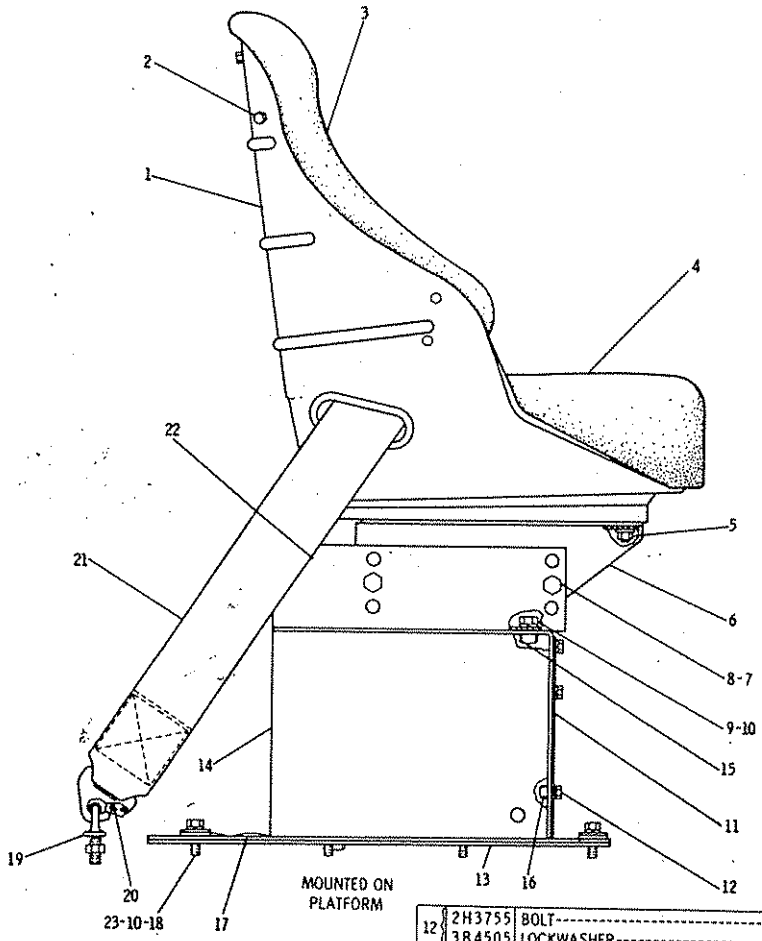

REF. NO.	PART NUMBER	DESCRIPTION	QTY
1	9D4249	SEAT GROUP (Includes)	1
2	9L8398	BOLT	11
3	9D6897	CUSHION-(back)	1
4	9D6898	CUSHION-(seat)	1
5	4M5280	NUT	4
	5S7384	WASHER	4
6	9D4250	SUPPORT ASSEM. (Includes)	1
7	1F748	NUT-(weld)	4
8	S1621	BOLT	4
	3B4508	LOCKWASHER	4
9	L1351	BOLT	4
10	3B4506	LOCKWASHER	4
11	9D1985	PLATE	1
12	2H3755	BOLT	6
	3B4505	LOCKWASHER	6
13	2G8223	PAD	1
14	2G7405	SUPPORT ASSEM. (Includes)	1
15	9F2978	NUT-(weld)	4
16	4K9097	NUT-(weld)	8
17	4F8711	PLUG	2
C	S1591	BOLT	8
18	9F5664	LOCKWASHER	8
	2G8093	SPACER	8
19	8S933	BOLT	2
	5B3254	NUT	2
C 20	3B5311	COTTER PIN	2
C 21	6G1606	BELT	1
22	9D4252	BRACKET-(R.H.)	1
	9D4253	BRACKET-(L.H.)	1
23	2G8096	MOUNTING	8

C INDICATES CHANGE

219433

9D3360 SEAT GROUP—Type 1
Serial No. 87V5275 to 87V5733 inclusive

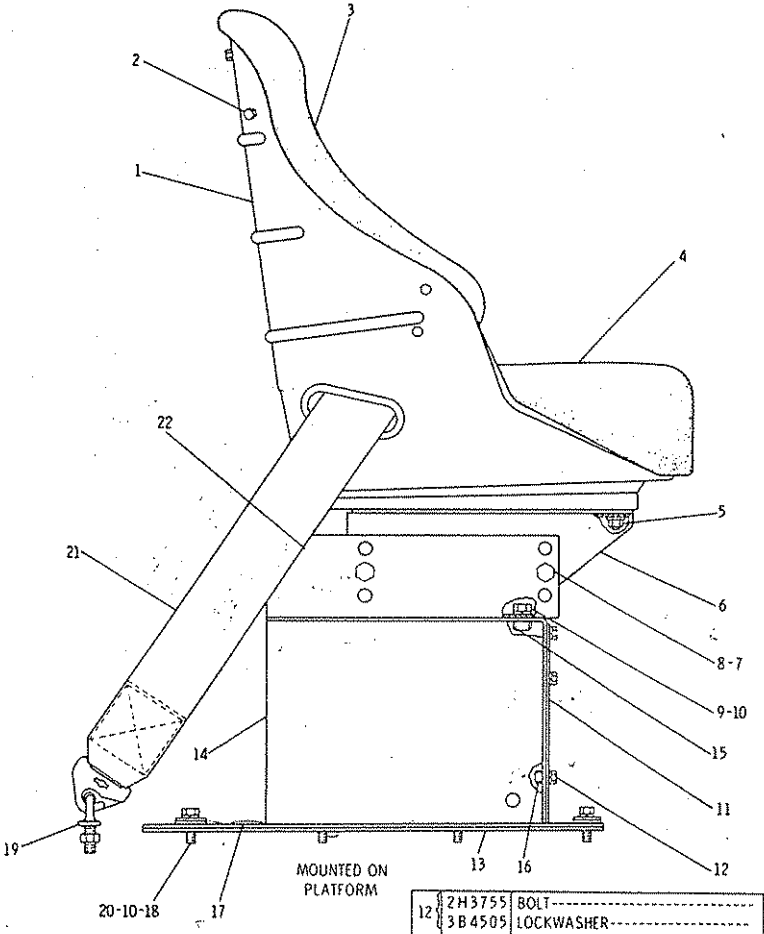

REF. NO.	PART NUMBER	DESCRIPTION	QTY
1	9D4249	SEAT GROUP (Includes)	1
2	9L8398	BOLT	11
3	9D6897	CUSHION-(back)	1
4	9D6898	CUSHION-(seat)	1
5	4M5280	NUT	4
	5S7384	WASHER	4
6	9D4250	SUPPORT ASSEM. (Includes)	1
7	1F748	NUT-(weld)	4
8	S1621	BOLT	4
	3B4508	LOCKWASHER	4
9	L1351	BOLT	4
10	3B4506	LOCKWASHER	4
11	9D1985	PLATE	1
12	2H3755	BOLT	6
	3B4505	LOCKWASHER	6
13	2G8223	PAD	1
14	2G7405	SUPPORT ASSEM. (Includes)	1
15	9F2978	NUT-(weld)	4
16	4K9097	NUT-(weld)	8
17	4F8711	PLUG	2
18	S1591	BOLT	8
	9F5664	LOCKWASHER	8
	2G8093	SPACER	8
19	8S933	BOLT	2
	5B3254	NUT	2
20	2G8096	MOUNTING	8
C 21	7V9512	BELT GROUP (Separate Illustration)	1
22	9D4252	BRACKET-(R. H.)	1
	9D4253	BRACKET-(L. H.)	1

C INDICATES CHANGE

180313

9D3360 SEAT GROUP—Type 2
Serial No. 87V5275 to 87V5733 inclusive
7V9512 Belt parts are shown on Page 323B

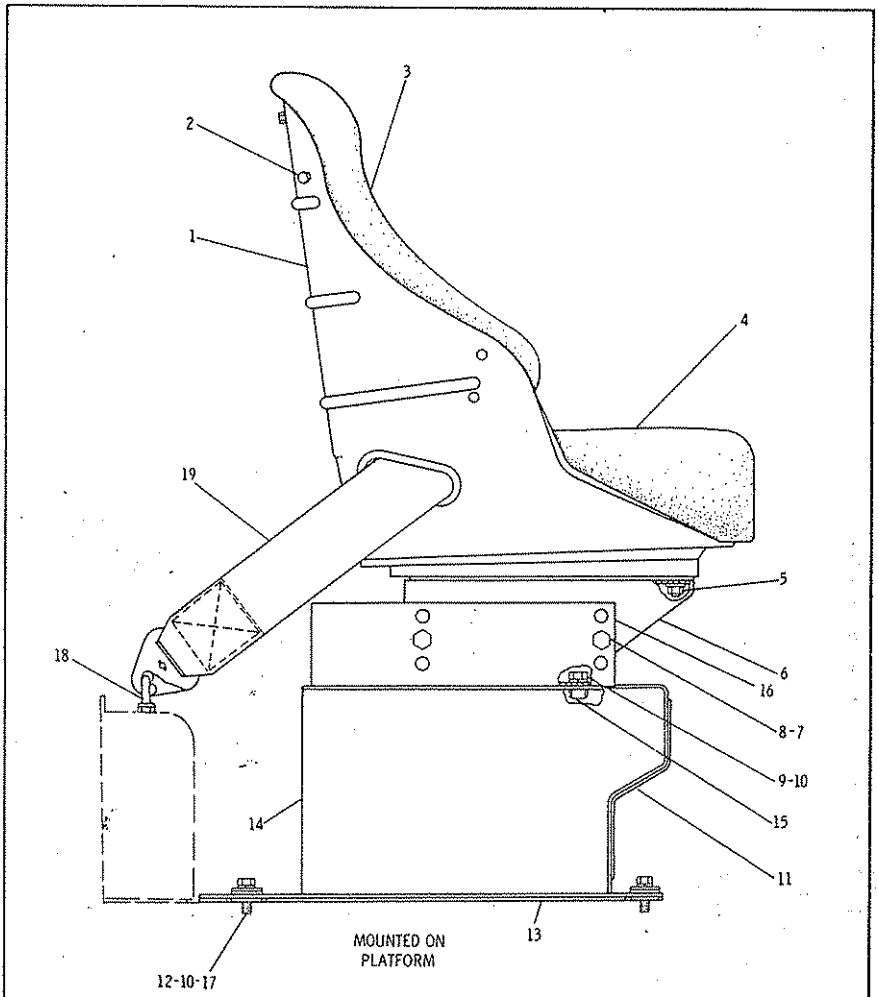

REF. NO.	PART NUMBER	DESCRIPTION	QTY.
1	9D4249	SEAT GROUP---------- (Includes)	1
2	9L8398	BOLT----------	11
3	9D6897	CUSHION-----(back)----------	1
4	9D6898	CUSHION-----(seat)----------	1
5	4M5280	NUT----------	4
	5S7384	WASHER----------	4
6	9D4250	SUPPORT ASSEM. ---------- (Includes)	1
7	1F748	NUT-------(weld)----------	4
8	S1621	BOLT----------	4
	5P8245	WASHER----------	4
9	L1351	BOLT----------	4
10	5M2894	WASHER----------	8
▲ 11	5P5644	TRIM---- 1m(39.38 in.)	

▲ ORDER BY THE METER

12	2G8096	MOUNTING----------	4
13	6G2641	PAD----------	1
14	6G3498	SUPPORT ASSEM. ---------- (Includes)	1
15	9F2978	NUT---------(weld)----------	6
16	9D4252	BRACKET---------(R. H.)----------	1
	9D4253	BRACKET-------(L. H.)----------	1
17	3B1915	BOLT----------	4
	2G8093	SPACER----------	4
18	8S933	EYEBOLT----------	2
	5B3254	NUT----------	2
C 19	7V9512	BELT GROUP---------- (Separate Illustration)	1

C INDICATES CHANGE 180314

6G3510 SEAT GROUP
Serial No. 87V5734—Up
7V9512 Belt parts are shown on Page 323B

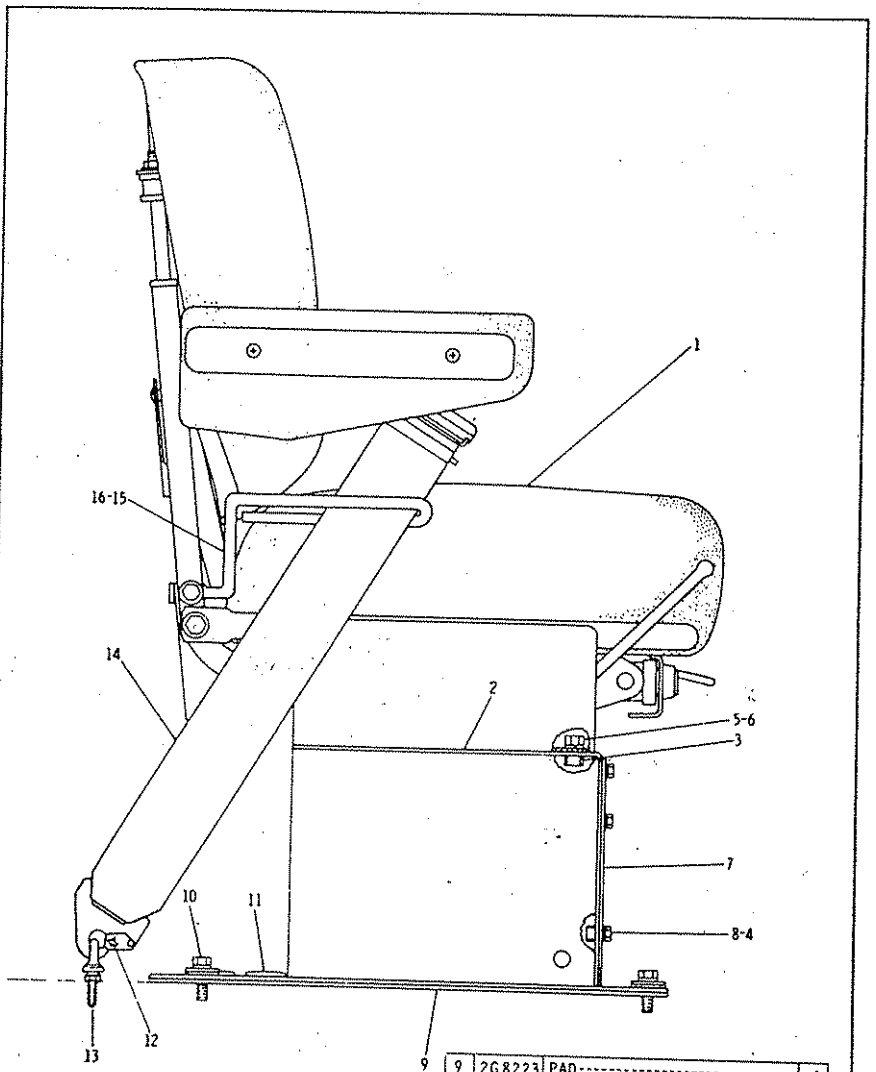

REF NO	PART NUMBER	DESCRIPTION	QTY
1	2G7110	SEAT GROUP (Separate Illustration)	1
2	2G7405	SUPPORT ASSEM. (Includes)	1
3	9F2978	NUT (weld)	4
4	4K9097	NUT (weld)	8
5	L1351	BOLT	4
6	3B4506	LOCKWASHER	4
7	9D1985	PLATE	1
8	2H3755	BOLT	6
	3B4505	LOCKWASHER	6
9	2G8223	PAD	1
C	S1591	BOLT	8
10	9F5644	LOCKWASHER	8
	2G8093	SPACER	8
	2G8096	MOUNTING	8
11	4F8711	PLUG	2
C 12	3B5311	COTTER PIN	2
13	8S933	EYE BOLT	2
	5B3254	NUT	2
C 14	6G1606	BELT	1
15	9D8899	GUIDE (R. H.)	1
	9D8901	GUIDE (L. H.)	1
16	4B4278	WASHER	2

C INDICATES CHANGE

218987

8D7820 SEAT GROUP—Type 1
Serial No. 87V5275 to 87V5733 inclusive
2G7110 Seat parts are shown on Page 323. AN ATTACHMENT

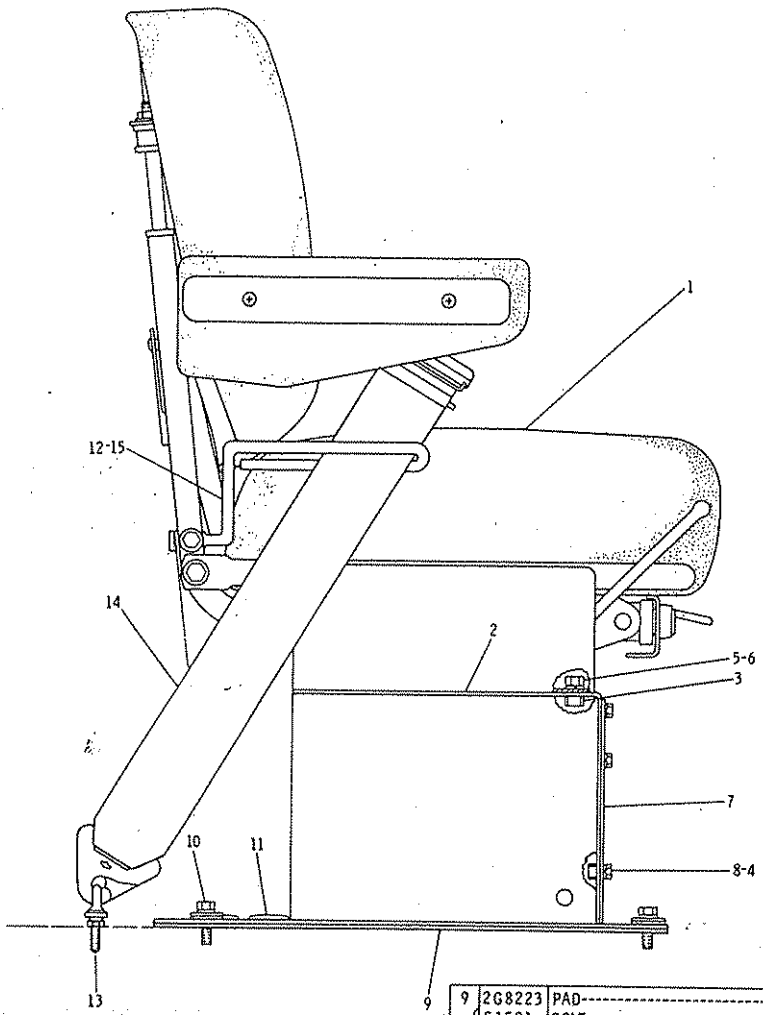

REF. NO.	PART NUMBER	DESCRIPTION	QTY
1	2G7110	SEAT GROUP (Separate Illustration)	1
2	2G7405	SUPPORT ASSEM. (Includes)	1
3	9F2978	NUT-----(weld)-----	4
4	4K9097	NUT-----(weld)-----	8
5	L1351	BOLT-----	4
6	3B4506	LOCKWASHER-----	4
7	9D1985	PLATE-----	1
8	2H3755	BOLT-----	6
	3B4505	LOCKWASHER-----	6
9	2G8223	PAD-----	1
10	S1591	BOLT-----	8
	9F5644	LOCKWASHER-----	8
	2G8093	SPACER-----	8
	2G8096	MOUNTING-----	8
11	4F8711	PLUG-----	2
12	4B4278	WASHER-----	2
13	8S933	EYE BOLT-----	2
	5B3254	NUT-----	2
C 14	7V9512	BELT GROUP (Separate Illustration)	1
15	9D8899	GUIDE-----(R. H.)-----	1
	9D8901	GUIDE-----(L. H.)-----	1

C INDICATES CHANGE

180315

8D7820 SEAT GROUP—Type 2
Serial No. 87V5275 to 87V5733 inclusive. 2G7110 Seat & 7V9512 Belt parts are shown on Pages 323 & 323B. AN ATTACHMENT

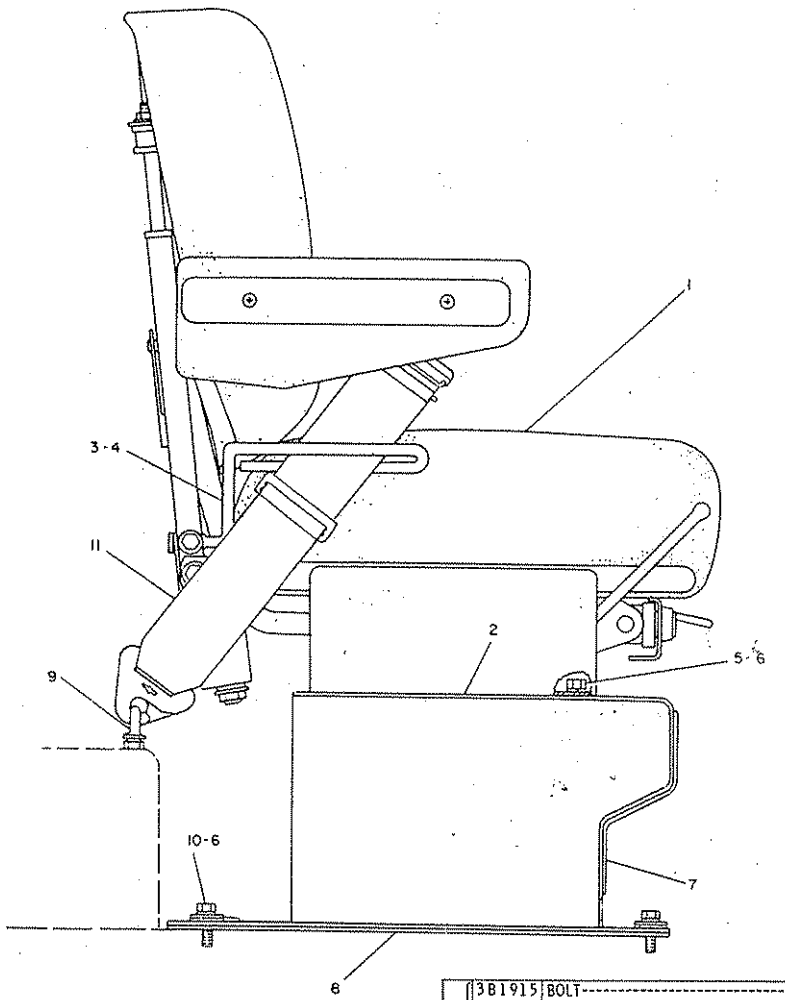

	REF. NO.	PART NUMBER	DESCRIPTION	QTY.
C	1	6G7650	SEAT GROUP---------- (Separate Illustration)	1
	2	6G3498	SUPPORT ASSEM.----------	1
	3	4B4278	WASHER----------	2
	4	9D8899	GUIDE--------(R. H.)----------	1
		9D8901	GUIDE--------(L. H.)----------	1
	5	L1351	BOLT----------	4
	6	5M2894	WASHER----------	8
A	7	5P5644	TRIM--------1m(39 in.)	
	8	6G2641	PAD----------	1
	9	8S933	EYE BOLT----------	2
		5B3254	NUT----------	2

A ORDER BY THE METER

		3B1915	BOLT----------	4
	10	2G8093	SPACER----------	4
		2G8096	MOUNTING----------	4
C	11	7V9512	BELT GROUP---------- (Separate Illustration)	1

THE FOLLOWING REPAIR KITS ARE AVAILABLE:

7G1692	KIT----(Seat & Back Cushion) (Includes Washers & Cotter Pins)	1
9P2038	KIT--(Bearing, Wiper & Seal) (Includes Wipers, Bearings, & Bushings)	1
6G7186	KIT---------(Lever)---------- (Includes Handle & Pin)	1
9G7409	KIT---(Shock Absorber)---------- (Includes Shock Absorber, Washers, Spacers & Locknuts)	1

C INDICATES CHANGE

301577

6G3520 SEAT GROUP
Serial No. 87V5734—Up
6G7650 Seat & 7V9512 Belt parts are shown on Pages 323A & 323B
AN ATTACHMENT

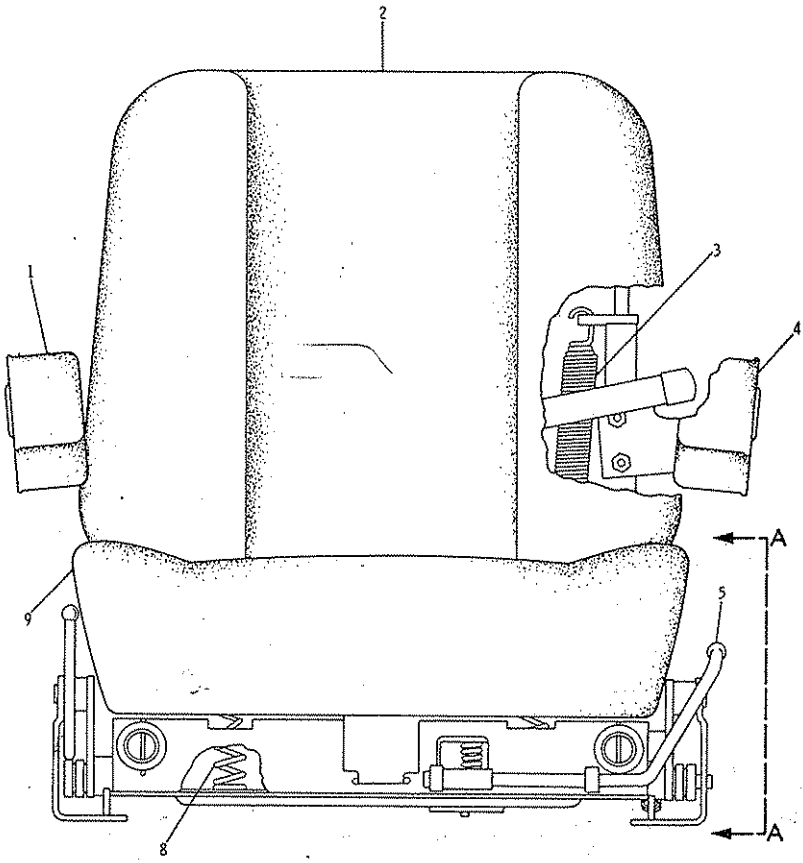

VIEW A-A

REF. NO.	PART NUMBER	DESCRIPTION	QTY.
1	2G3931	CUSHION	1
2	2G3933	CUSHION	1
3	7S4294	SPRING	2
4	2G3932	CUSHION	1
5	2G7889	LEVER	1
6	2P6694	SHOCK ABSORBER	1
7	2P6689	SPRING	2
8	2P6690	SPRING	2
9	2G3929	CUSHION	1
		THE FOLLOWING REPAIR KITS ARE AVAILABLE:	
C	7G1692	KIT--(Seat & Back Cushion) (Includes Washers and Cotter Pin)	1
C	9P2038	KIT--(Bearing, Wiper & Seal) (Includes Wiper, Bushing, and Bearings)	1
C▲	9G7409	KIT--(shock absorber) (Includes shock absorber, locknuts, spacers, & washers.)	1

▲ NOT PART OF 2G7110 SEAT GROUP
C INDICATES CHANGE

225739

2G7110 SEAT GROUP
Serial No. 87V5275 to 87V5733 inclusive
Part of 8D7820 Suspension Seat Group shown on Pages 322 & 322A
AN ATTACHMENT

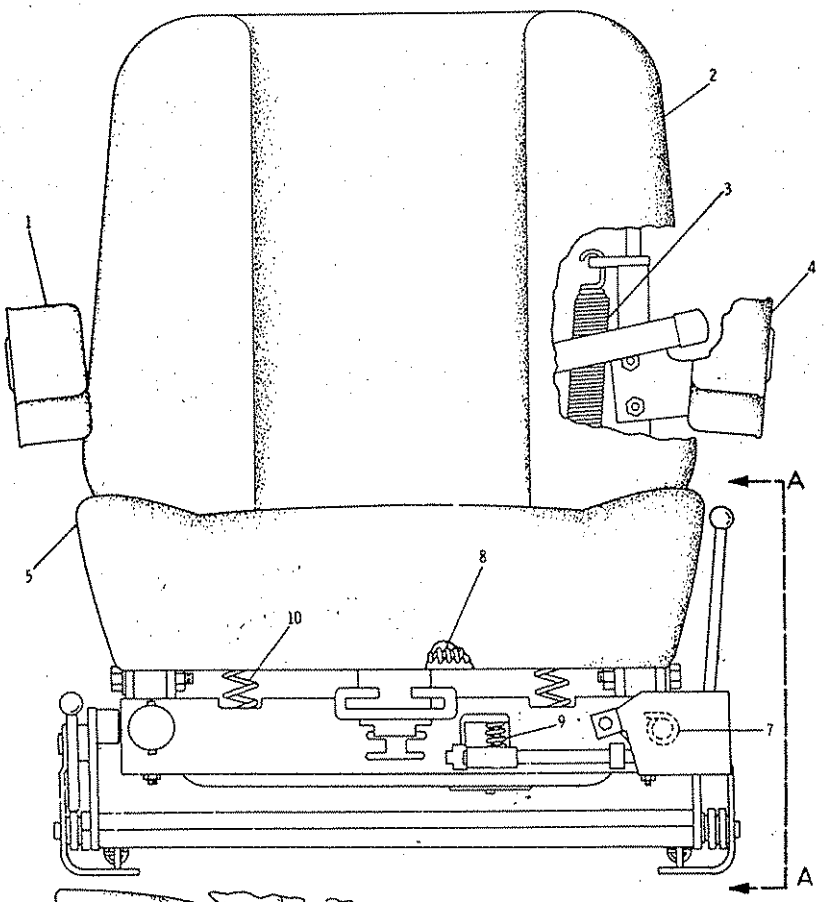

REF. NO.	PART NUMBER	DESCRIPTION	QTY.
1	2G3931	CUSHION	1
2	2G3933	CUSHION	1
3	7S4294	SPRING	2
4	2G3932	CUSHION	1
5	5T2933	CUSHION	1
6	2P6689	SPRING	2
7	2P6691	SPRING	1
8	2P6693	SPRING	1
9	8P5098	SPRING	1
10	2P6690	SPRING	2

301578

6G7650 SEAT GROUP
Serial No. 87V5734—Up
Part of 6G3520 Seat Group shown on Page 322B
AN ATTACHMENT

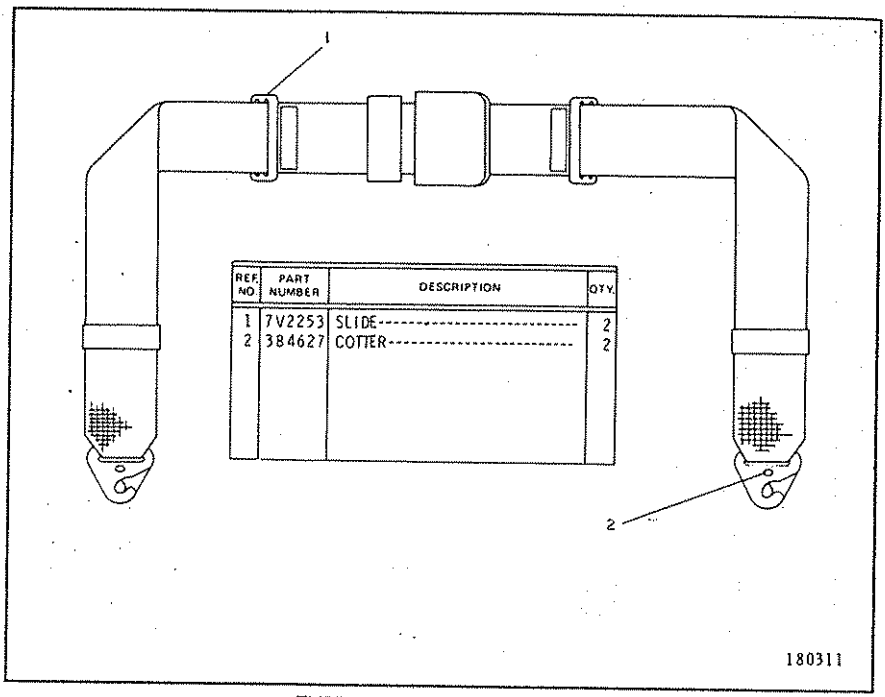

REF NO	PART NUMBER	DESCRIPTION	QTY
1	7V2253	SLIDE	2
2	384627	COTTER	2

7V9512 SEAT BELT GROUP
Serial No. 87V5275 to 87V6048 inclusive. Part of 9D3360, 6G3510, 8D7820 and 6G3520 shown on Pages 321A, 321B, 322A and 322B

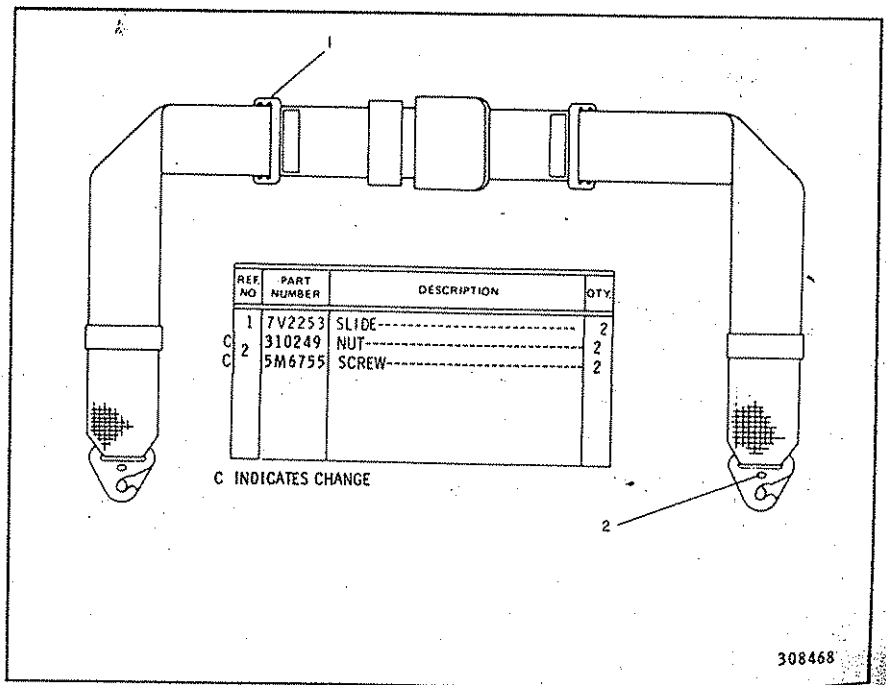

REF NO	PART NUMBER	DESCRIPTION	QTY
1	7V2253	SLIDE	2
C 2	310249	NUT	2
C	5M6755	SCREW	2

C INDICATES CHANGE

7V9512 SEAT BELT GROUP
Serial No. 87V6049—Up. Part of 9D3360, 6G3510, 8D7820 and 6G3520 shown on Pages 321A, 321B, 322A and 322B

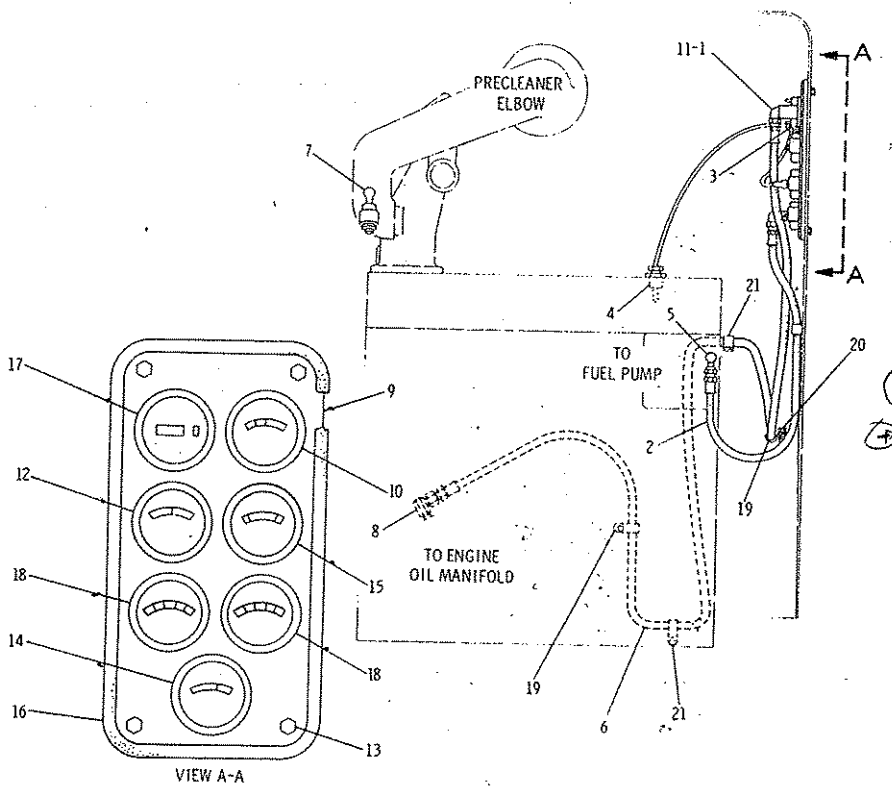

REF. NO.	PART NUMBER	DESCRIPTION	QTY
1	3B9406	ELBOW	2
2	9D2161	HOSE ASSEM. ---.76 m(30 in.)	1
3	4D8948	CLIP	1
4	6H6699	ADAPTER	1
5	4S7606	UNION	1
6	4D5881	HOSE ASSEM. ----2.54 m(110 in.)	1
7	8S2541	INDICATOR (Separate Illustration)	1
8	5H4778	UNION	1
9	8D6693	PANEL	1
10	5M1065	GAUGE-----(oil pressure)--------	1
11	3B6487	COUPLING	2
12	8M7892	GAUGE----------(ammeter)-------	1
13	4F7957	BOLT	4
	3D5074	NUT	4
14	6N3272	INDICATOR----(fuel pressure)----	1
15	9H1486	INDICATOR---------(heat)--------	1
16	9D2681	SEAL	1
C 17	6N5906	HOUR METER	1
C 18	7N8515	GAUGE------(air pressure)-------	2
C 19	9M8406	CLIP	2
C 20	5509	BOLT	1
C	3B4506	LOCKWASHER	1
21	5K8451	CLIP	2

C INDICATES CHANGE 228073

9D5430 GAUGE GROUP
Serial No. 87V5275 to 87V5733 inclusive
8S2541 Indicator parts are shown on Page 325

6G5315 GAUGE GROUP
Serial No. 87V5734 to 87V6594 inclusive

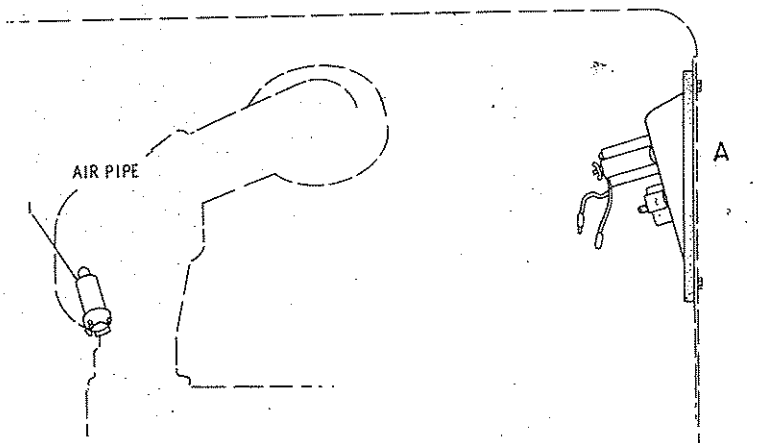

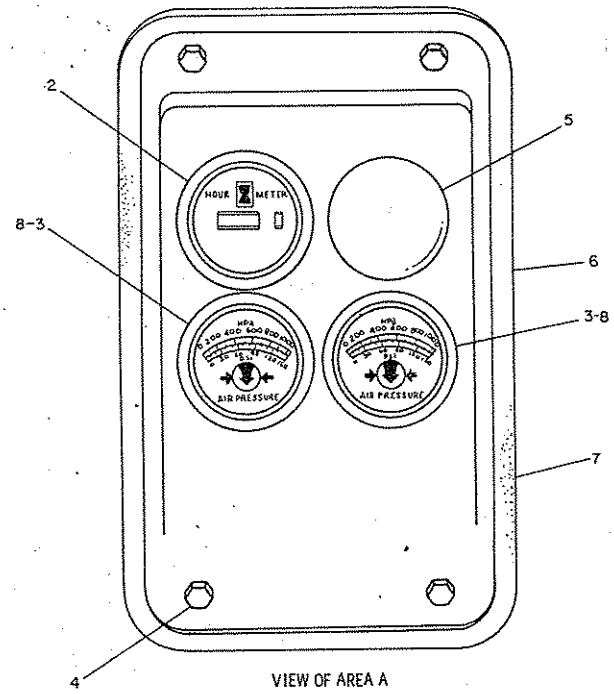

VIEW OF AREA A

	REF. NO.	PART NUMBER	DESCRIPTION	QTY.
		1W613	INDICATOR	1
	1	3B7264	NIPPLE	1
C		3B8822	ELBOW	1
	2	6N5906	METER--(hour)	1
	3	7N8515	GAUGE--(air pressure)	2
	4	4F7957	BOLT	4
		3D5074	NUT	4
	5	2Y2671	PLUG	1
	6	6G6624	PANEL	1
	7	6G6643	SEAL	1
C	8	384741	RING	2

C INDICATES CHANGE

181367

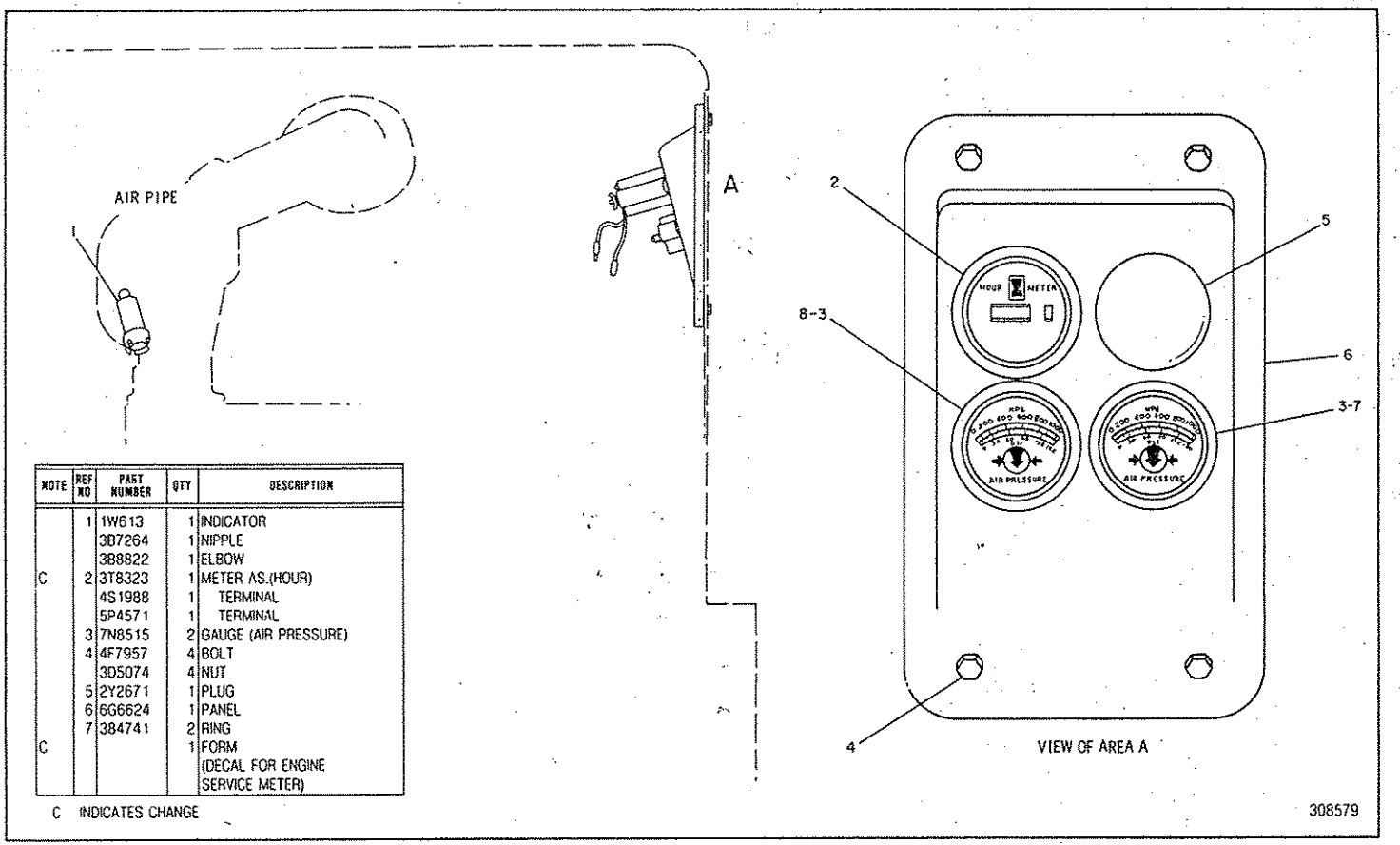

NOTE	REF NO	PART NUMBER	QTY	DESCRIPTION
	1	1W613	1	INDICATOR
		3B7264	1	NIPPLE
		3B8822	1	ELBOW
C	2	3T8323	1	METER AS.(HOUR)
		4S1988	1	TERMINAL
		5P4571	1	TERMINAL
	3	7N8515	2	GAUGE (AIR PRESSURE)
	4	4F7957	4	BOLT
		3D5074	4	NUT
	5	2Y2671	1	PLUG
	6	6G6624	1	PANEL
	7	3B4741	2	RING
C			1	FORM (DECAL FOR ENGINE SERVICE METER)

C INDICATES CHANGE

6G5315 GAUGE GROUP
Serial No. 87V6595—Up

6G5315 GAUGE GROUP
Serial No. 87V6679—Up

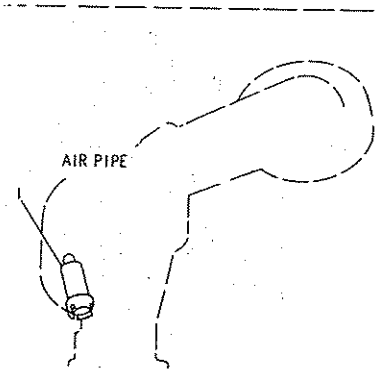

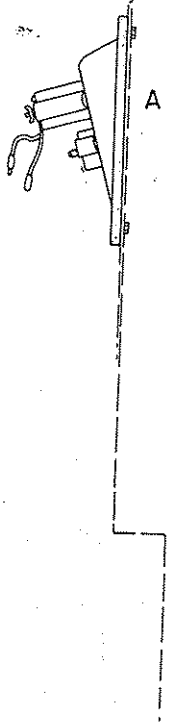

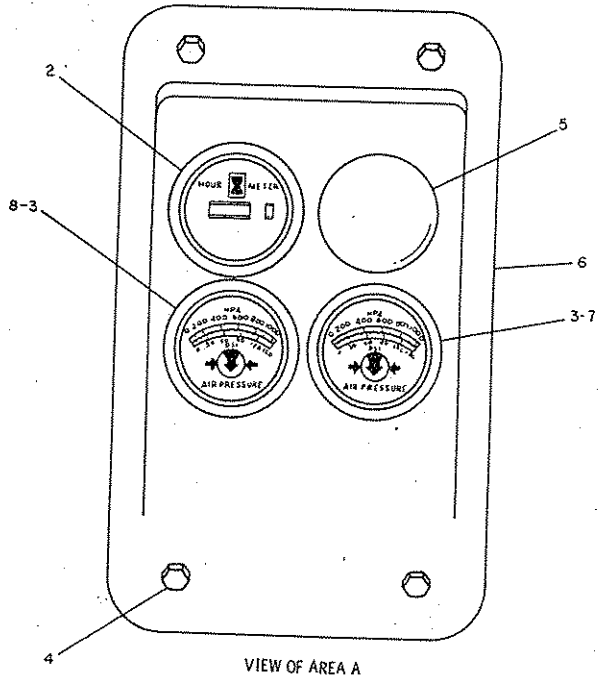

VIEW OF AREA A

NOTE	REF NO	PART NUMBER	QTY	DESCRIPTION
	1	1W613	1	INDICATOR
		3B7264	1	NIPPLE
		3B8822	1	ELBOW
	2	3T8323	1	METER AS. (HOUR)
		4S1988	1	TERMINAL
		5P4571	1	TERMINAL
C	3	1W708	2	INDICATOR
C		6V3507	2	SEAL
	4	4F7957	4	BOLT
		3D5074	4	NUT
	5	2Y2671	1	PLUG
	6	6G6624	1	PANEL
	7	6G6643	1	SEAL
	8	384741	2	RING
			1	FORM (DECAL FOR ENGINE SERVICE METER)

C INDICATES CHANGE

308678

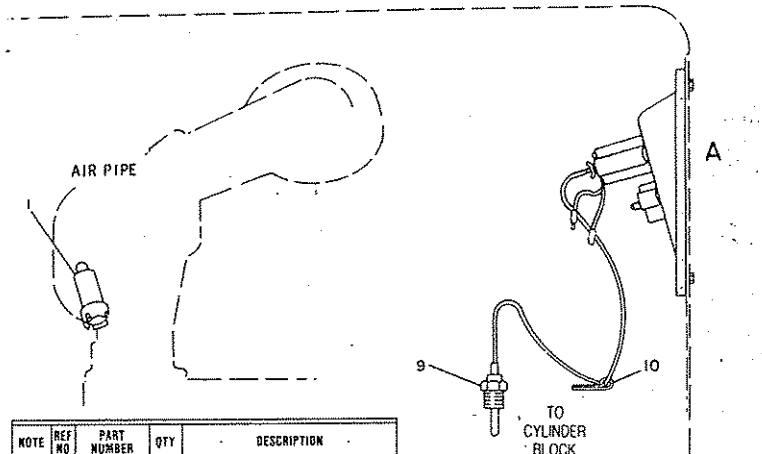

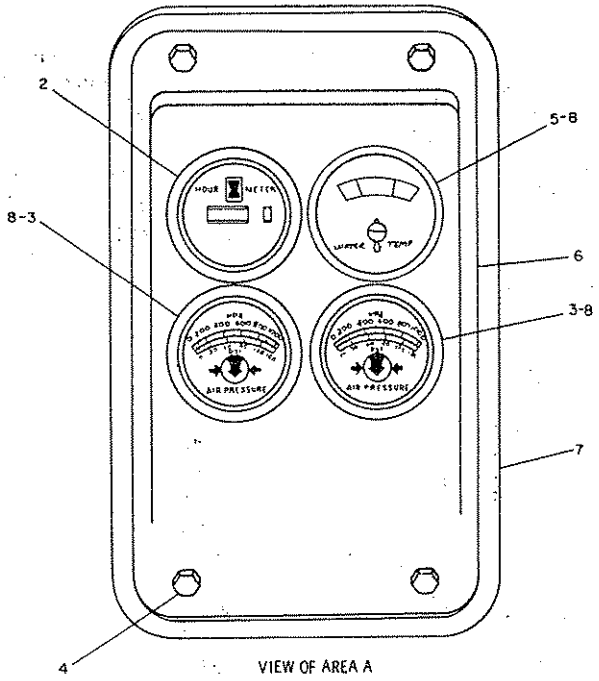

NOTE	REF NO	PART NUMBER	QTY	DESCRIPTION
	1	1W613	1	INDICATOR (AIR FILTER)
		3B7264	1	NIPPLE
		3B8822	1	ELBOW
	2	3T8323	1	SERVICE METER ASSEM.
		4S1988	1	TERMINAL (MALE)
		5P4571	1	TERMINAL (FEMALE)
		SEES 5549	1	DECAL
	3	7N8515	2	GAUGE (AIR PRESSURE)
	4	4F7957	4	BOLT
		3D5074	4	NUT
	5	9H1486	1	INDICATOR (WATER TEMP.)
	6	6G6624	1	PANEL
	7	6G6643	1	SEAL
	8	3B4741	3	RING
	9	6H6699	1	ADAPTER
	10	4D8948	1	CLIP

C INDICATES CHANGE

308582

5T2985 GAUGE GROUP—Spectator Sound—Type 1
Part of 2G2580 Sound Suppression Arrangement listed on Page 168
AN ATTACHMENT

5T2985 GAUGE GROUP—Spectator Sound—Type 2
Part of 2G2580 Sound Suppression Arrangement listed on Page 168
AN ATTACHMENT

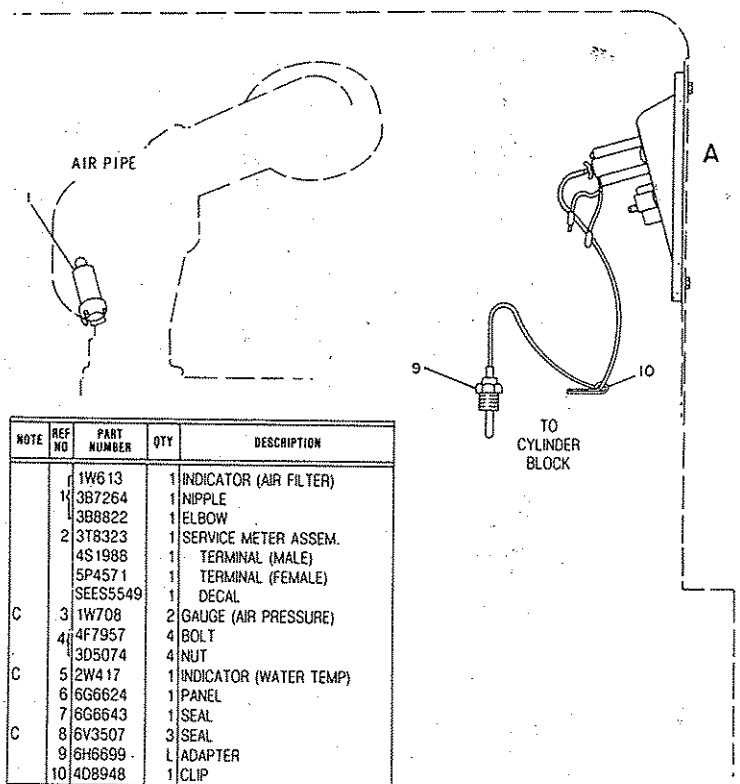

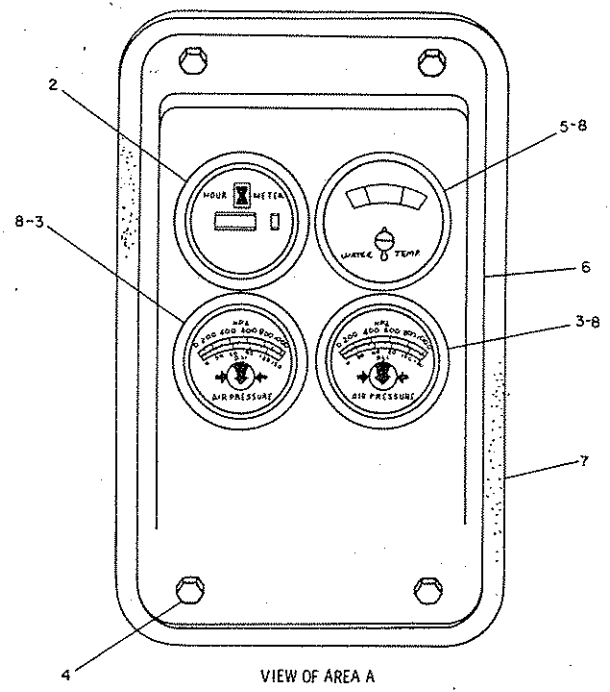

VIEW OF AREA A

NOTE	REF NO	PART NUMBER	QTY	DESCRIPTION
	1	1W613	1	INDICATOR (AIR FILTER)
		3B7264	1	NIPPLE
		3B8822	1	ELBOW
	2	3T8323	1	SERVICE METER ASSEM.
		4S1988	1	TERMINAL (MALE)
		5P4571	1	TERMINAL (FEMALE)
		SEES5549	1	DECAL
C	3	1W708	2	GAUGE (AIR PRESSURE)
	4	4F7957	4	BOLT
		3D5074	4	NUT
C	5	2W417	1	INDICATOR (WATER TEMP)
	6	6G6624	1	PANEL
	7	6G6643	1	SEAL
C	8	6V3507	3	SEAL
	9	6H6699	1	ADAPTER
	10	4D8948	1	CLIP

C INDICATES CHANGE

309064

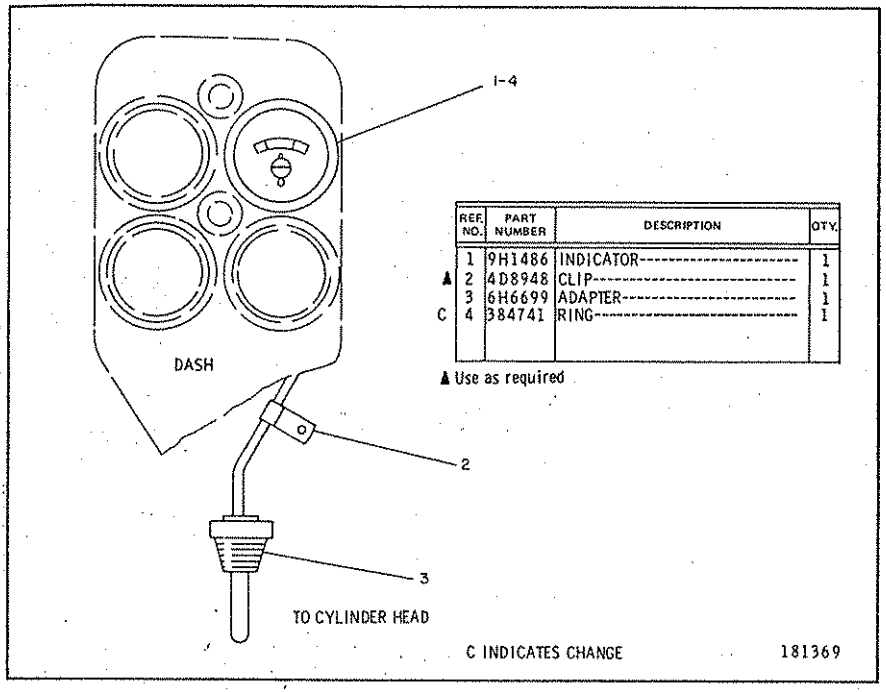

	REF. NO.	PART NUMBER	DESCRIPTION	QTY.
	1	9H1486	INDICATOR	1
▲	2	4D8948	CLIP	1
	3	6H6699	ADAPTER	1
C	4	384741	RING	1

▲ Use as required

C INDICATES CHANGE

181369

6G6590 WATER TEMPERATURE GAUGE GROUP—Type 1
Also part of 2G2580 Sound Suppression Arrangement listed on Page 168
AN ATTACHMENT

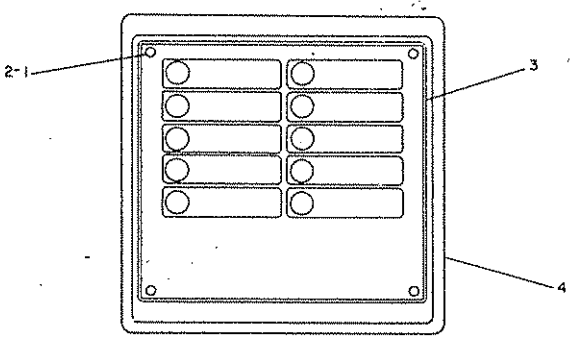

	REF. NO.	PART NUMBER	DESCRIPTION	QTY.
1		5P9596	SCREW	4
		1B4330	NUT	4
		5P537	WASHER	4

REF. NO.	PART NUMBER	DESCRIPTION	QTY.
2	6G4957	BRACKET	2
3	6V798	PLATE	1
4	3T3136	MONITOR GROUP	1

232517

6G5300 MOUNTING AND MONITOR GROUP
Serial No. 87V5734 to 87V6972 Inclusive

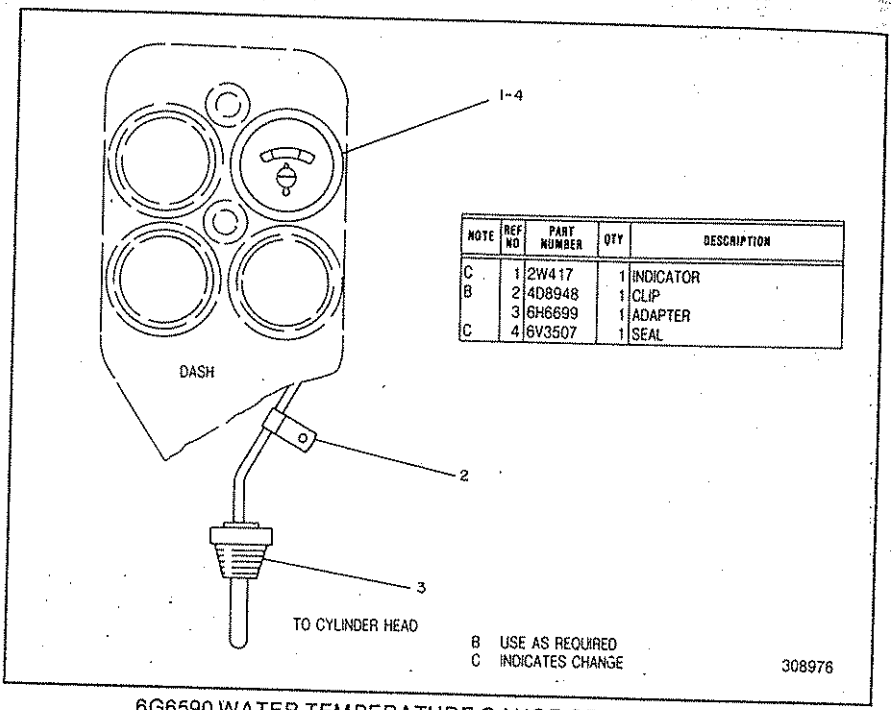

NOTE	REF NO	PART NUMBER	QTY	DESCRIPTION
C	1	2W417	1	INDICATOR
B	2	4D8948	1	CLIP
	3	6H6699	1	ADAPTER
C	4	6V3507	1	SEAL

B USE AS REQUIRED
C INDICATES CHANGE

308976

6G6590 WATER TEMPERATURE GAUGE GROUP—Type 2
Also part of 2G2580 Sound Suppression Arrangement listed on Page 168
AN ATTACHMENT

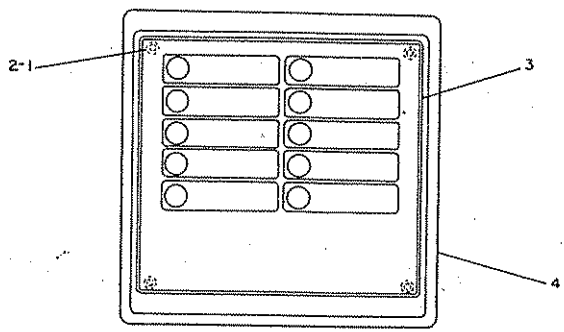

NOTE	REF NO	PART NUMBER	QTY	DESCRIPTION
	1	1B4330	4	NUT
		5P537	4	WASHER
	2	6G4957	2	BRACKET
C	3	6V6475	1	FILM
C	4	3T9200	1	CONTROL

C INDICATES CHANGE

308891

6G5300 MOUNTING AND MONITOR GROUP
Serial No. 87V6973—Up

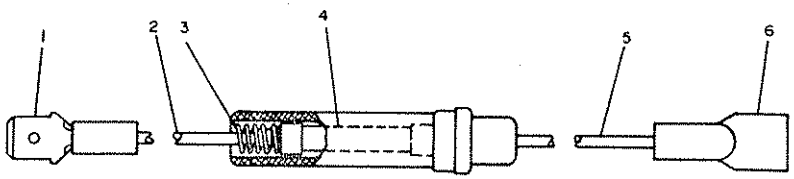

REF. NO.	PART NUMBER	DESCRIPTION	QTY.
1	4S1988	TERMINAL	1
▲ 2	5P5624	WIRE-.08m (3.15 in.)	
3	2S5013	SPRING	1
4	2S6024	FUSE-(5 amp)	1
	2S8708	CONTACT	2
▲ 5	5P5624	WIRE-.06 m (2.36 in.)	
6	5P4571	TERMINAL	1

▲ ORDER BY THE METER

174551

7N8292 FUSE HOLDER, FUSE AND WIRE KIT—Field Installation
Provides protection from overload failure of 6N5906 Hour Meter without sealed vent holes. Those hour meters with vent holes have a white dash mark under two central figures

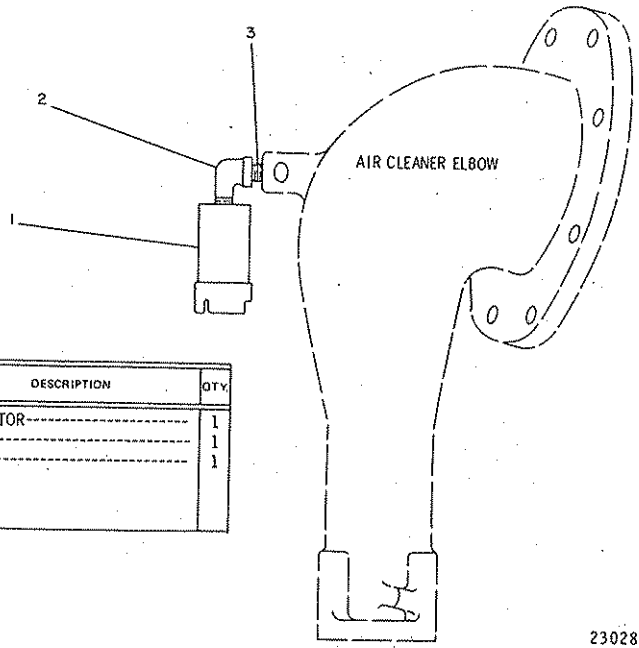

	REF. NO.	PART NUMBER	DESCRIPTION	QTY.
C	1	1W613	INDICATOR	1
	2	3B6552	ELBOW	1
	3	3B7264	NIPPLE	1

C INDICATES CHANGE

230282

8S2541 AIR FILTER SERVICE INDICATOR GROUP
Serial No. 87V5275 to 87V5733 inclusive
Part of 9D5430 Gauge Group shown on Page 324

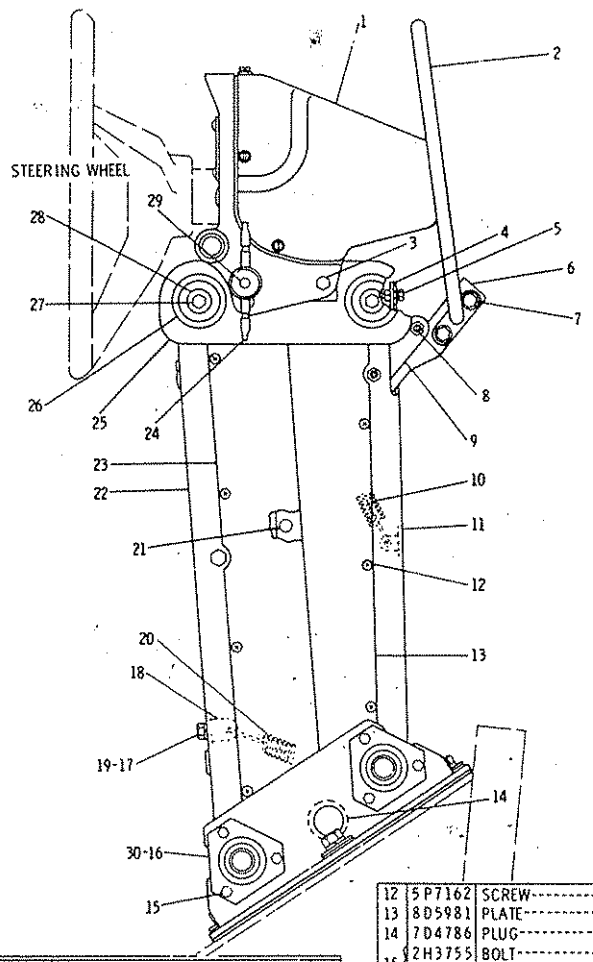

	REF. NO.	PART NUMBER	DESCRIPTION	QTY
C	1	2G8899	HOOD	1
	2	8D5889	HANDLE ASSEM.	1
		1A9579	BOLT	2
	3	7D9801	NUT	2
		7H3937	LOCKWASHER	2
	4	7D9706	STOP ASSEM.	1
	5	S1614	BOLT	2
		3B4504	LOCKWASHER	2
	6	8D1571	PLATE ASSEM.	1
		8D1561	PLATE ASSEM.	1
	7	S1571	BOLT	4
		5M2894	WASHER	4
		8D5897	SHAFT	2
C	8	346681	BOLT	2
		1D4716	NUT	2
	9	2G3175	PLATE	2
	10	7D9722	SPRING	2
	11	2G2874	CHANNEL ASSEM.	1
	12	5P7162	SCREW	14
	13	8D5981	PLATE	2
	14	7D4786	PLUG	1
	15	2H3755	BOLT	12
		3B4505	LOCKWASHER	12
	16	2G2876	BEARING GROUP	4
	17	3B1915	BOLT	2
		3B4506	LOCKWASHER	2
	18	7D9657	BRACKET ASSEM.	1
	19	9F2978	NUT	2
	20	1H2348	SPRING	2
	21	6D4054	FASTENER	6
	22	2G2873	CHANNEL ASSEM.	1
	23	8D5982	PLATE	2
	24	9D9329	HANDLE ASSEM.	1
	25	2G496	COVER ASSEM.	1
		9M4256	BEARING	2
	26	7D9251	BEARING	4
	27	S1591	BOLT	4
		9M6527	WASHER	4
	28	8D5896	SHAFT	2
	29	9D612	SHAFT	1
		4H9981	WASHER	1
	30	2G2875	SPACER	4

C INDICATES CHANGE

225816

8D5990 OPERATOR CONSOLE GROUP—Part 1
Serial No. 87V5275 to 87V5733 inclusive

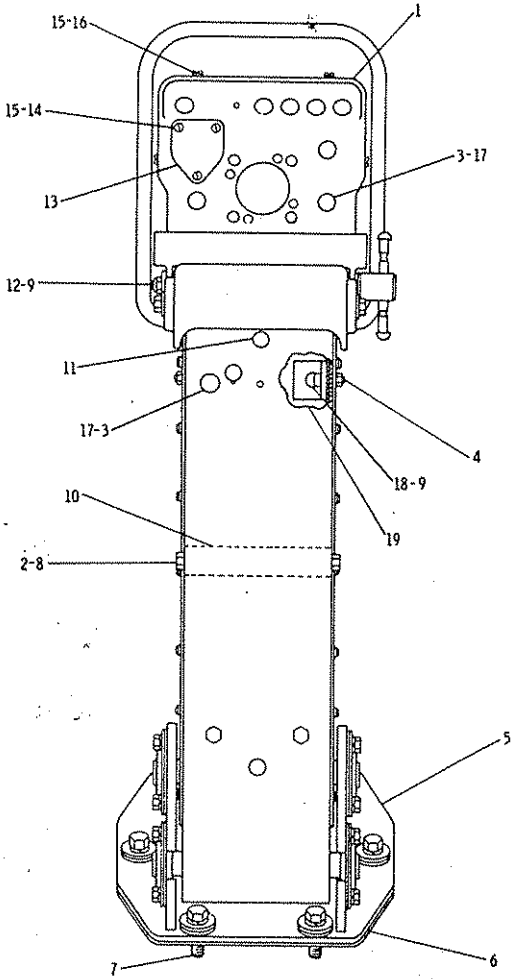

REF NO.	PART NUMBER	DESCRIPTION	QTY
1	2G3165	CONSOLE	1
2	5M2894	WASHER	2
3	8D7970	PLUG	4
4	9D8831	BOLT	2
	314155	NUT	2
5	8D6237	SUPPORT ASSEM.	1
C 6	2G8221	PAD	1
	S1587	BOLT	6
C	3J4818	LOCKWASHER	6
C 7	2G8098	MOUNTING	6
C	2G8094	SPACER	6
	S1571	BOLT	2
8	8D5898	SPACER	2
9	2K4973	LOCKNUT	3
10	9D8852	SHAFT	1
11	3D9872	BUTTON	4
12	4H9981	WASHER	1
13	8D7960	PLATE	1
14	4B1230	SCREW	3
	4B2047	NUT	3
15	9F8125	LOCKWASHER	9
C	684208	SCREW	6
16	9D608	NUT	6
	4B4274	WASHER	6
17	6B863	WASHER	4
18	1D4677	BOLT	2
	9M6527	WASHER	2
19	9D8829	ANGLE	2

C INDICATES CHANGE

225817

8D5990 OPERATOR CONSOLE GROUP—Part 2
Serial No. 87V5275 to 87V5733 inclusive

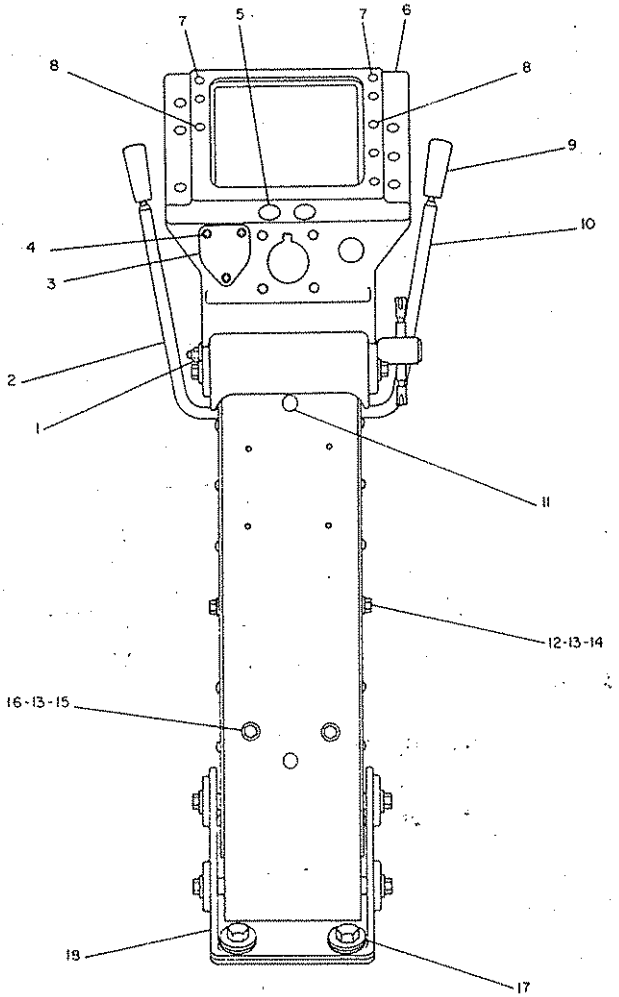

REF NO	PART NUMBER	DESCRIPTION	QTY
1	2K4973	LOCKNUT	1
	4H9981	WASHER	1
2	6G7599	ROD ASSEM.	1
3	8D7960	PLATE	1
4	684208	SCREW	3
	4B2049	NUT	3
	9F8125	LOCKWASHER	3
5	6G4030	CLIP	2
6	6G4956	COVER ASSEM. (Includes)	1
7	6G6342	LENS	2
8	6G6341	LENS	6
9	7M706	KNOB	2
10	6G7598	ROD ASSEM.	1

11	3D9872	BUTTON	2
12	S1571	BOLT	2
13	5M2894	WASHER	4
14	8D5898	SPACER	2
	9D8852	SHAFT	1
15	3B1915	BOLT	2
16	7D9657	BRACKET ASSEM. (Includes)	1
	9F2978	NUT	2
	1H2348	SPRING	2
17	6K5718	BOLT	4
	9H4257	WASHER	4
	2G8098	MOUNTING	4
18	6G4968	BASE	1
	6G4954	PAD	1

232512

6G4990 OPERATOR CONSOLE GROUP—Part 1
Serial No. 87V5734 to 87V6342 inclusive

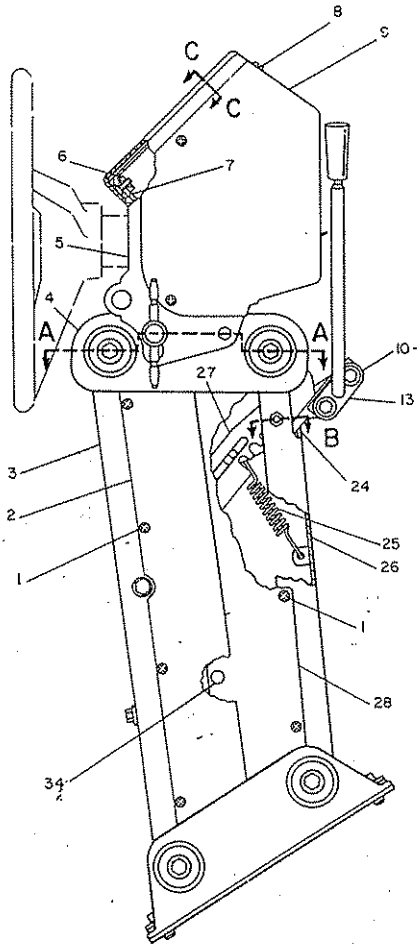

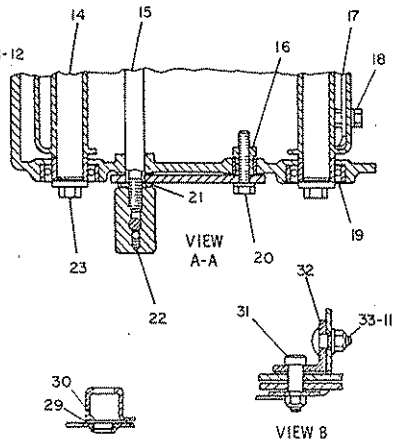

REF NO.	PART NUMBER	DESCRIPTION	QTY.
1	6V2687	SCREW	14
2	6G4946	PLATE	2
3	6G4942	CHANNEL ASSEM.	1
4	2G496	COVER ASSEM. (Includes)	1
	9M4256	BEARING	2
5	6G4966	CONSOLE	1
6	4B1282	SCREW	3
	6G6809	PLATE	1
7	6G4964	PANEL	1
8	684208	SCREW	6
	9D608	NUT	6
9	6G4967	HOOD	1
10	S1571	BOLT	4
C 11	5M2894	WASHER	8
12	8D5897	SHAFT	2
13	6G4938	PLATE	2
14	8D5896	SHAFT	4
15	9D612	SHAFT	1
16	7K9801	NUT	2
17	7K9706	STOP ASSEM. (Includes)	1
	9F6445	NUT	2
18	S1614	BOLT	2
	5P537	WASHER	2
19	7D9251	BEARING	8
20	1A9579	BOLT	2
	9M1974	WASHER	2
21	4H9981	WASHER	1
22	9D9329	HANDLE ASSEM.	1
23	S1591	BOLT	8
	9M6527	WASHER	8
24	6G4939	PLATE ASSEM. -----(R. H.)----------	1
	6G4941	PLATE ASSEM. ----(L. H.)----------	1
25	8D8456	SPRING	2
26	6G4943	CHANNEL ASSEM.	1
27	6G4947	PLATE	2
28	6G4944	PLATE	2
29	6G6338	PLATE	2
C▲ 30	5P5926	SEAL----------.1m(3.94 in.)	
31	9D8831	BOLT	2
	314155	NUT	2
32	9D8829	ANGLE	2
33	1D4675	BOLT	2
	2K4973	LOCKNUT	2
34	6D4054	FASTENER	6

C INDICATES CHANGE

▲ ORDER BY THE METER

180974

6G4990 OPERATOR CONSOLE GROUP—Part 2
Serial No. 87V5734 to 87V6342 inclusive

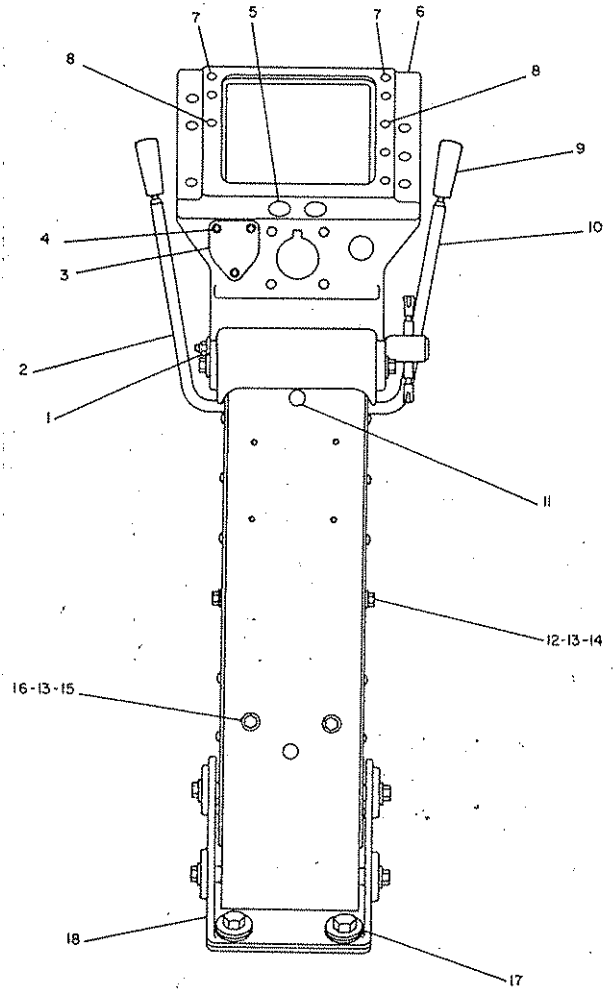

REF. NO.	PART NUMBER	DESCRIPTION	QTY.
1	2K4973	LOCKNUT	1
	4H9981	WASHER	1
2	6G7599	ROD ASSEM.	1
3	8D7960	PLATE	1
4	6B4208	SCREW	3
	4B2049	NUT	3
	9F8125	LOCKWASHER	3
5	6G4030	CLIP	2
6	6G4956	COVER ASSEM. (Includes)	1
7	6G6342	LENS	2
8	6G6341	LENS	6
9	7M706	KNOB	2
10	6G7598	ROD ASSEM.	1
11	3D9872	BUTTON	2
12	S1571	BOLT	2
13	5M2894	WASHER	4
14	8D5898	SPACER	2
	9D8852	SHAFT	1
15	3B1915	BOLT	2
16	7D9657	BRACKET ASSEM. (Includes)	1
	9F2978	NUT	2
	1H2348	SPRING	2
17	6K5718	BOLT	4
	9H4257	WASHER	4
	2G8098	MOUNTING	4
18	6G4968	BASE	1
	6G4954	PAD	1

304124

6G4990 OPERATOR CONSOLE GROUP—Part 1
Serial No. 87V6343 to 87V6632 inclusive

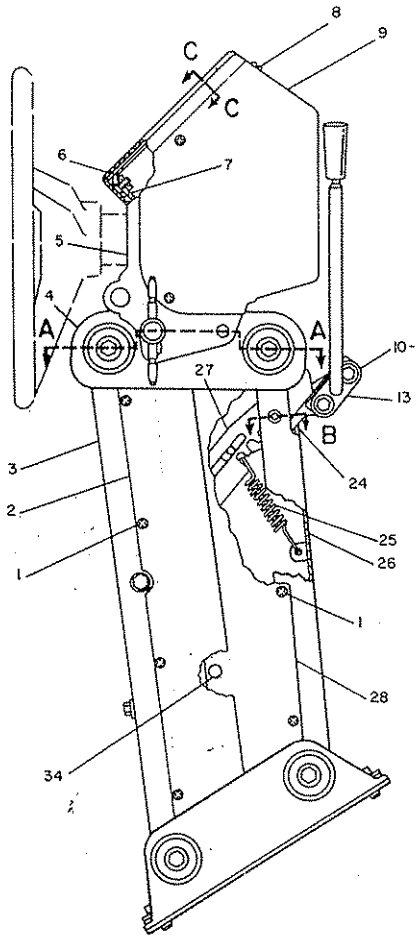

REF. NO.	PART NUMBER	DESCRIPTION	QTY.
1	6V2687	SCREW	14
2	6G4946	PLATE	2
3	6G4942	CHANNEL ASSEM.	1
4	2G496	COVER ASSEM. (Includes)	1
	9M4256	BEARING	2
5	6G4966	CONSOLE	1
6	4B1282	SCREW	3
	6G6809	PLATE	1
7	6G4964	PANEL	1
8	684208	SCREW	6
	9D608	NUT	6

C INDICATES CHANGE

REF. NO.	PART NUMBER	DESCRIPTION	QTY.
9	6G4967	HOOD	1
10	S1571	BOLT	4
C 11	5M2894	WASHER	4
12	8D5897	SHAFT	2
13	6G4938	PLATE	2
14	8D5896	SHAFT	4
15	9D612	SHAFT	1
16	7K9801	NUT	2
17	7K9706	STOP ASSEM. (Includes)	1
	9F6445	NUT	2
18	S1614	BOLT	2
	5P537	WASHER	2
19	7D9251	BEARING	8

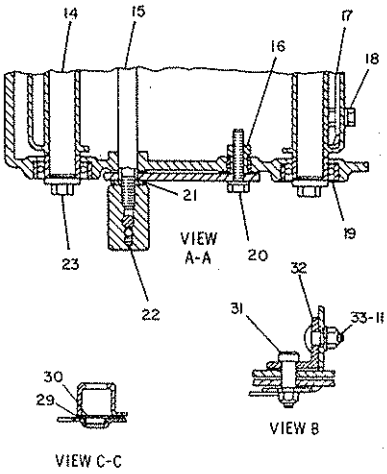

REF. NO.	PART NUMBER	DESCRIPTION	QTY.
20	1A9579	BOLT	2
	9M1974	WASHER	2
21	4H9981	WASHER	1
22	9D9329	HANDLE ASSEM.	1
23	S1591	BOLT	8
	9M6527	WASHER	8
24	6G4939	PLATE ASSEM. -----(R. H.)	1
	6G4941	PLATE ASSEM. ----(L. H.)	1
25	8D8456	SPRING	2
26	6G4943	CHANNEL ASSEM.	1
27	6G4947	PLATE	2
28	6G4944	PLATE	2
29	6G6338	PLATE	2
▲ 30	5P5926	SEAL----------. 1m(3.94 in.)	
31	9D8831	BOLT	2
	314155	NUT	2
32	9D8829	ANGLE	2
33	1D4675	BOLT	2
	2K4973	LOCKNUT	2
34	6D4054	FASTENER	6

▲ ORDER BY THE METER

304125

6G4990 OPERATOR CONSOLE GROUP—Part 2
Serial No. 87V6343 to 87V6632 inclusive

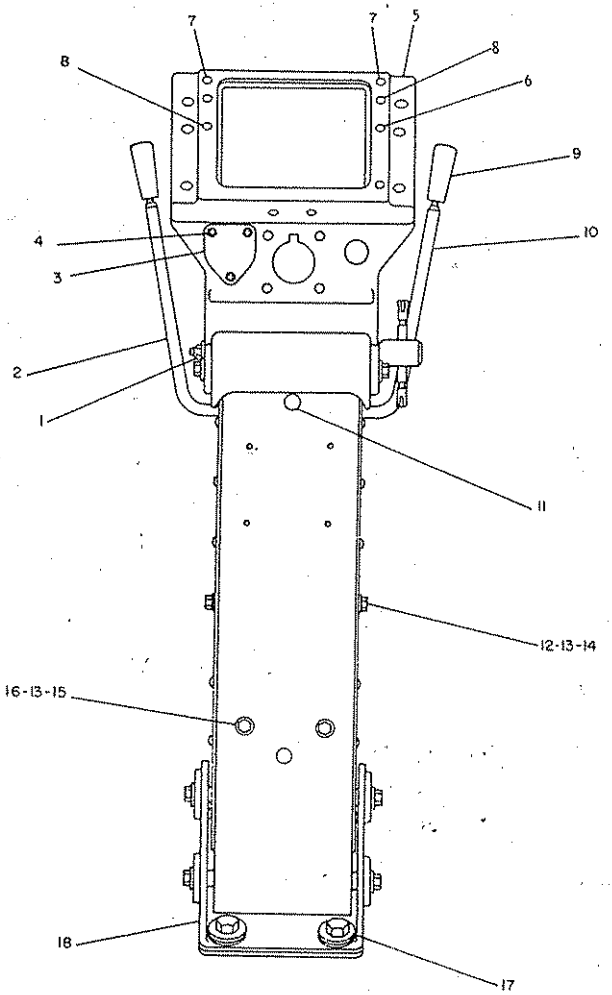

NOTE	REF NO	PART NUMBER	QTY	DESCRIPTION
	1	2K4973	1	LOCKNUT
		4H9981	1	WASHER
	2	6G7599	1	ROD ASSEM.
	3	8D7960	1	PLATE
	4	6B4208	3	SCREW
		4B2049	3	NUT
		9F8125	3	LOCKWASHER
C	5	5T2346	1	COVER ASSEM.
C	6	5T4122	1	LENS
C	7	5T4123	2	LENS
C	8	5T4124	4	LENS
	9	7M706	2	KNOB
	10	6G7598	1	ROD ASSEM.
	11	3D9872	2	BUTTON
	12	S1571	2	BOLT
	13	5M2894	4	WASHER
	14	8D5898	2	SPACER
		9D8852	1	SHAFT
	15	3B1915	2	BOLT
	16	7D9657	1	BRACKET ASSEM.
		9F2978	2	NUT
		1H2348	2	SPRING
	17	6K5718	4	BOLT
		9H4257	4	WASHER
		2G8098	4	MOUNTING
	18	6G4968	1	BASE
		6G4954	1	PAD

C INDICATES CHANGE

304847

6G4990 OPERATOR CONSOLE GROUP—Part 1
Serial No. 87V6633—Up

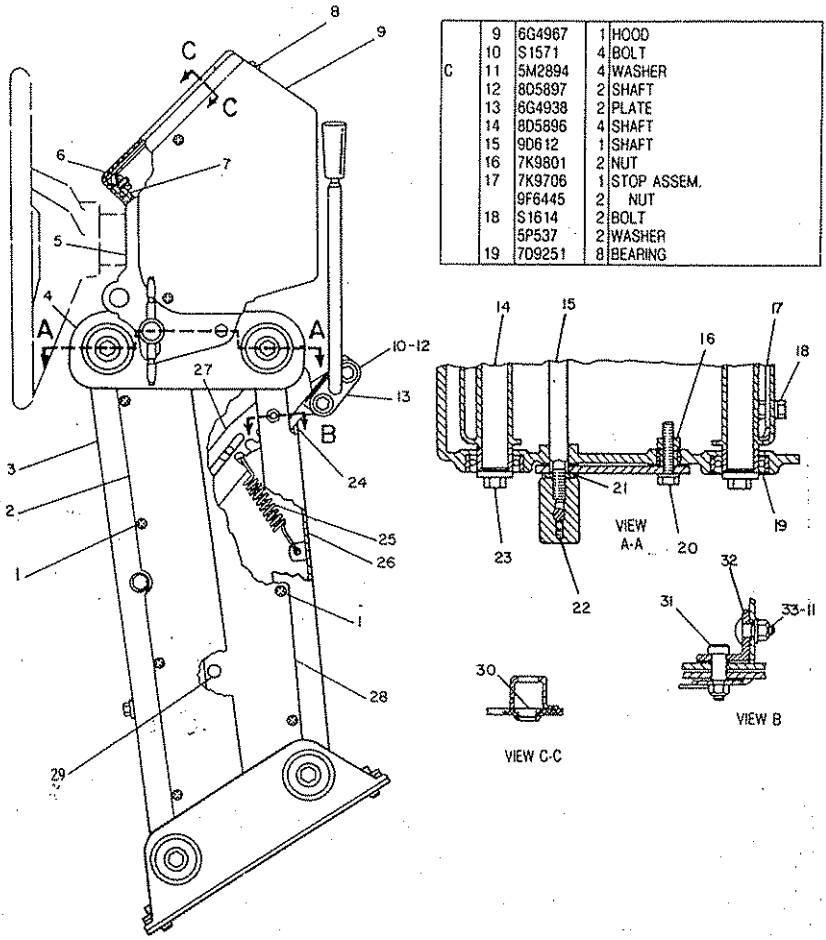

	9	6G4967	1	HOOD
	10	S1571	4	BOLT
C	11	5M2894	4	WASHER
	12	8D5897	2	SHAFT
	13	6G4938	2	PLATE
	14	8D5896	4	SHAFT
	15	9D612	1	SHAFT
	16	7K9801	2	NUT
	17	7K9706	1	STOP ASSEM.
		9F6445	2	NUT
	18	S1614	2	BOLT
		5P537	2	WASHER
	19	7D9251	8	BEARING

NOTE	REF NO	PART NUMBER	QTY	DESCRIPTION
	1	6V2687	14	SCREW
	2	6G4946	2	PLATE
	3	6G4942	1	CHANNEL ASSEM.
	4	2G496	1	COVER ASSEM.
		9M4256	2	BEARING
	5	6G4966	1	CONSOLE
	6	4B1282	3	SCREW
		6G6809	1	PLATE
	7	6G4964	1	PANEL
	8	6B4208	6	SCREW
		9D608	6	NUT

D ORDER BY THE METER

	20	1A9579	2	BOLT
		9M1974	2	WASHER
	21	4H9981	1	WASHER
	22	9D9329	1	HANDLE ASSEM.
	23	S1591	8	BOLT
		9M6527	8	WASHER
	24	6G4939	1	PLATE ASSEM. (R.H.)
		6G4941	1	PLATE ASSEM. (L.H.)
	25	8D8456	2	SPRING
	26	6G4943	1	CHANNEL ASSEM.
	27	6G4947	2	PLATE
	28	6G4944	2	PLATE
C	29	6D4054	6	FASTENER
D	30	5P5926		SEAL .1M (3.94 IN.)
	31	9D8831	2	BOLT
		3H4155	2	NUT
	32	9D8829	2	ANGLE
	33	1D4675	2	BOLT
		2K4973	2	LOCKNUT

C INDICATES CHANGE

304848

6G4990 OPERATOR CONSOLE GROUP—Part 2
Serial No. 87V6633—Up

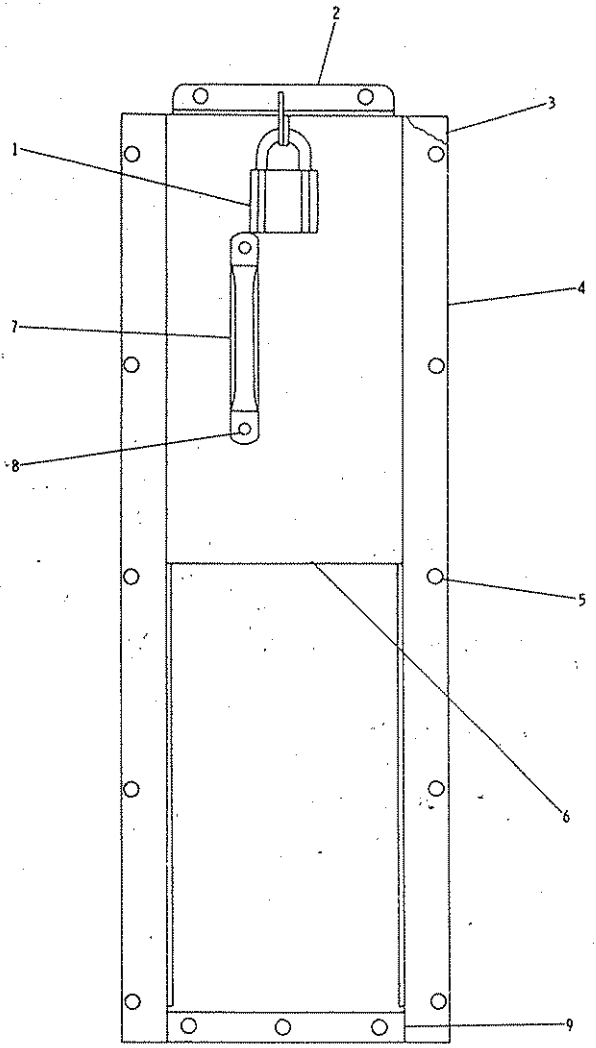

REF NO.	PART NUMBER	DESCRIPTION	QTY
1	8S7949	PADLOCK GROUP (Includes)	1
	8M439	KEY	1
2	9D6494	PLATE ASSEM.	1
3	9D6499	STRIP	2
4	9D6498	PLATE	2
5	9M5732	RIVET	15
6	9D6493	COVER ASSEM. (Includes)	1
7	6F7013	HANDLE	1
8	4B4311	RIVET	2
9	9D6497	STRIP	1
	SMHS6736	FORM (Installing vandalism guard)	1

159805

VANDALISM GUARD GROUP—Replaced by 6G8990 shown on Page 328-1
AN ATTACHMENT

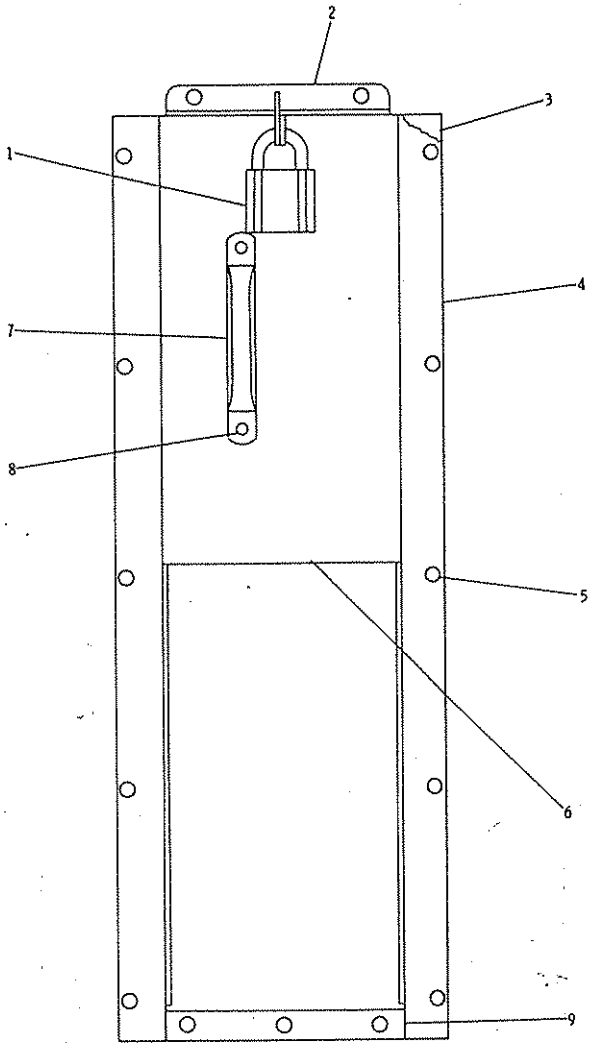

REF. NO.	PART NUMBER	DESCRIPTION	QTY
1	5P8502	PADLOCK GROUP (Includes)	1
	5P8500	KEY	1
2	9D6494	PLATE ASSEM.	1
3	9D6499	STRIP	2
4	9D6498	PLATE	2
5	9M5732	RIVET	15
6	9D6493	COVER ASSEM. (Includes)	1
7	6F7013	HANDLE	1
8	4B4311	RIVET	2
9	9D6497	STRIP	1
SMHS	6736	FORM (Installing vandalism guard)	1

234195

6G8990 VANDALISM GUARD GROUP
AN ATTACHMENT

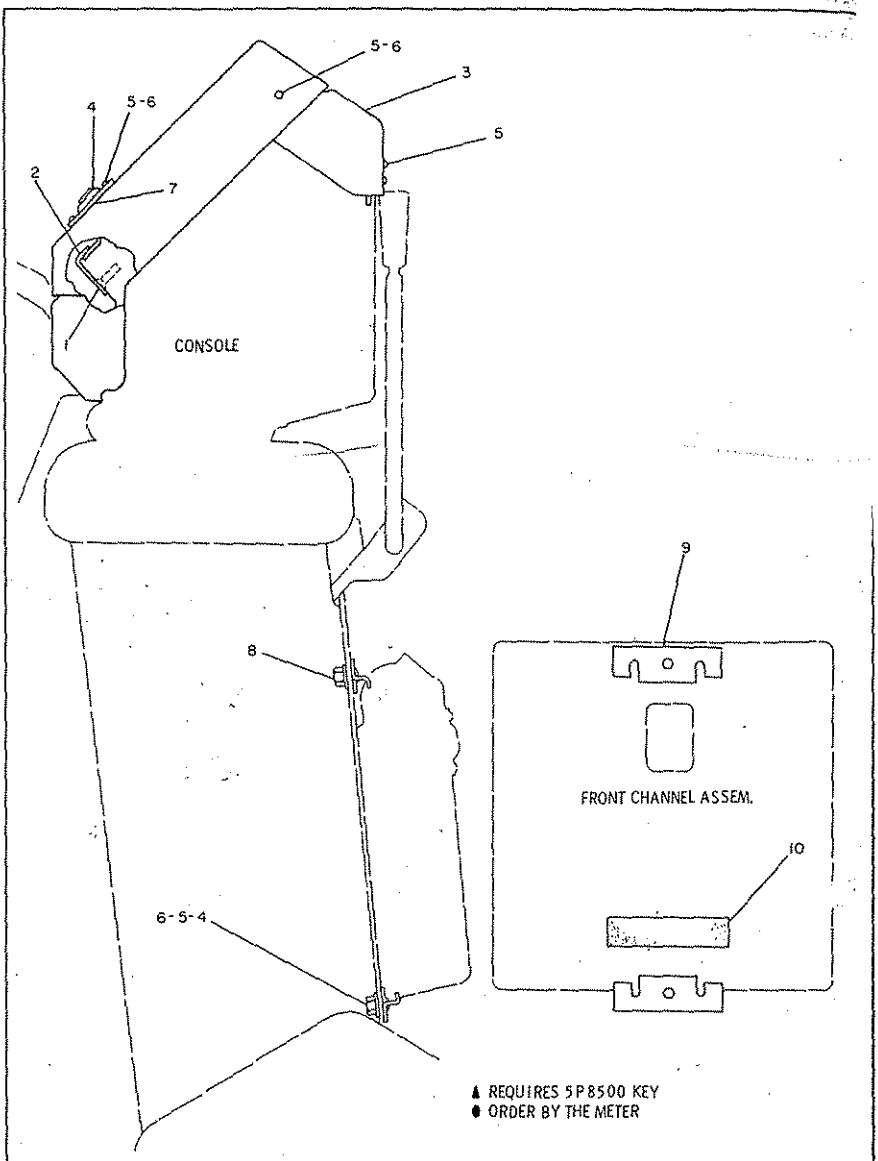

REF. NO.	PART NUMBER	DESCRIPTION	QTY
1	7D6921	SCREW	2
2	6G6057	PLATE	1
3	6G6701	COVER ASSEM. (Includes)	1
▲ 4	5P8507	LOCK ASSEM.	1
5	4K2089	RIVET	12
6	3H240	WASHER	8
7	6V1527	PLATE	1
8	6V1193	SCREW	2
	1D4717	NUT	2
	5M2894	WASHER	2
9	6G6175	BRACKET	2
● 10	5P5931	SEAL, 1 m (3.94 in.)	

233138

6G6810 VANDALISM GUARD GROUP—Steering Console
Serial No. 87V5734—Up
AN ATTACHMENT

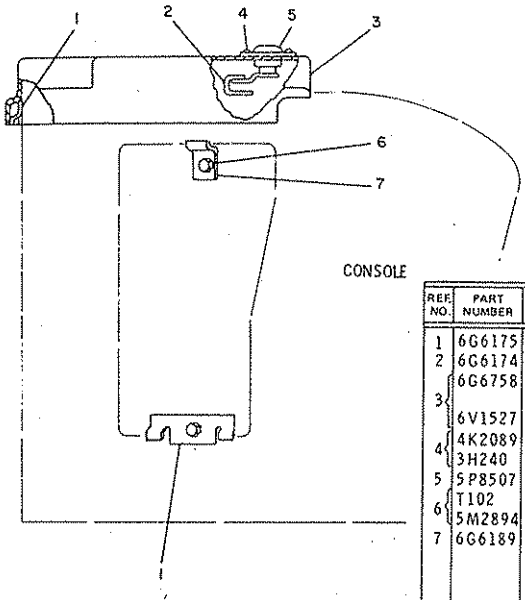

REF. NO.	PART NUMBER	DESCRIPTION	QTY.
1	6G6175	BRACKET	2
2	6G6174	BRACKET	1
3	6G6758	COVER ASSEM.	1
		(Includes)	
	6V1527	PLATE	1
4	4K2089	RIVET	4
	3H240	WASHER	4
5	5P8507	LOCK ASSEM.	1
6	T102	BOLT	2
	5M2894	WASHER	2
7	6G6189	BRACKET	1

233137

6G6820 VANDALISM GUARD GROUP—Shift Console
Serial No. 87V5734—Up
AN ATTACHMENT

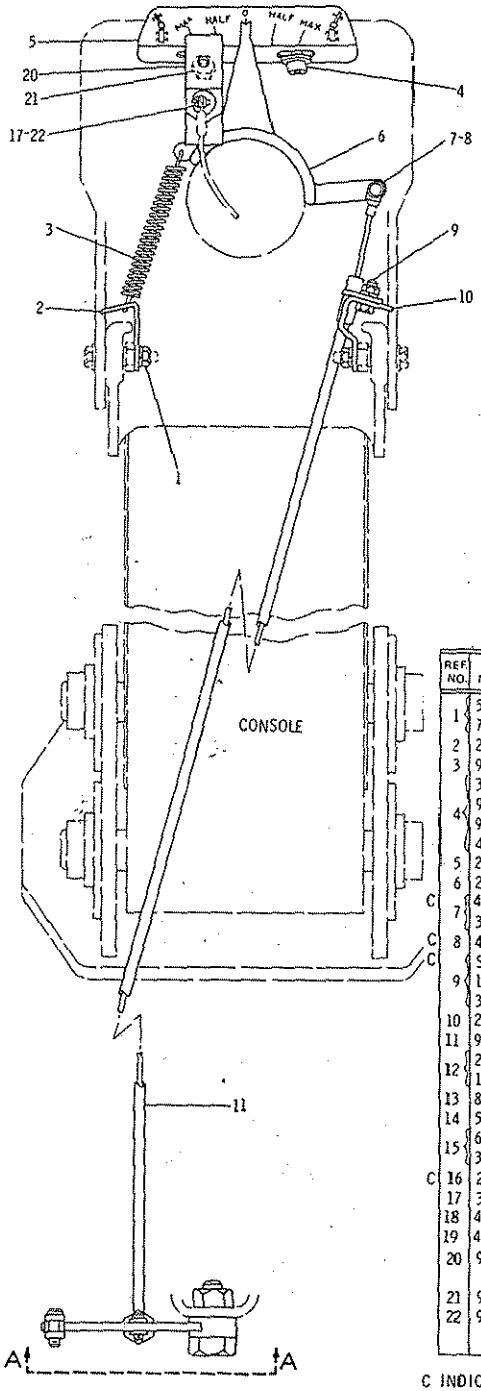

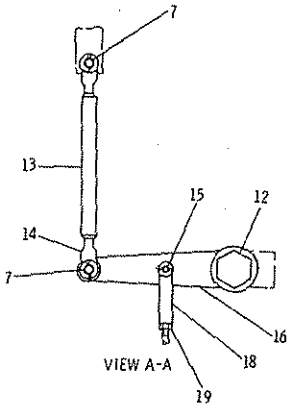

REF NO.	PART NUMBER	DESCRIPTION	QTY
1	5B3180	NUT	2
	7H3937	LOCKWASHER	2
2	2G2969	BRACKET	1
3	9D1058	SPRING	1
4	301193	SCREW	2
	9D608	NUT	2
	9F8125	LOCKWASHER	2
	4B4274	WASHER	2
5	2G2966	INDICATOR	1
6	2G2967	POINTER	1
C 7	4J5325	PIN	3
	3B4607	COTTER PIN	3
C 8	4B4276	WASHER	1
C	S1615	BOLT	1
9	1B4330	NUT	1
	3B4504	LOCKWASHER	1
10	2G2968	BRACKET	1
11	9D2141	CABLE	1
12	2K2882	BOLT	1
	1K6872	NUT	1
13	8D222	ROD ASSEM.	1
14	5B2279	ROD END	2
15	6D3908	PIN	1
	3B4605	COTTER PIN	1
C 16	2G5909	LEVER	1
17	3H2691	BULB	1
18	4H2792	ROD END	1
19	4B2049	NUT	1
20	9D2283	BRACKET ASSEM. (Includes)	1
21	9D6621	NUT	1
22	9D1343	SOCKET ASSEM.	1

C INDICATES CHANGE

228075

2G3360 ARTICULATION INDICATOR GROUP—Type 1
Serial No. 87V5275 to 87V5733 Inclusive
AN ATTACHMENT

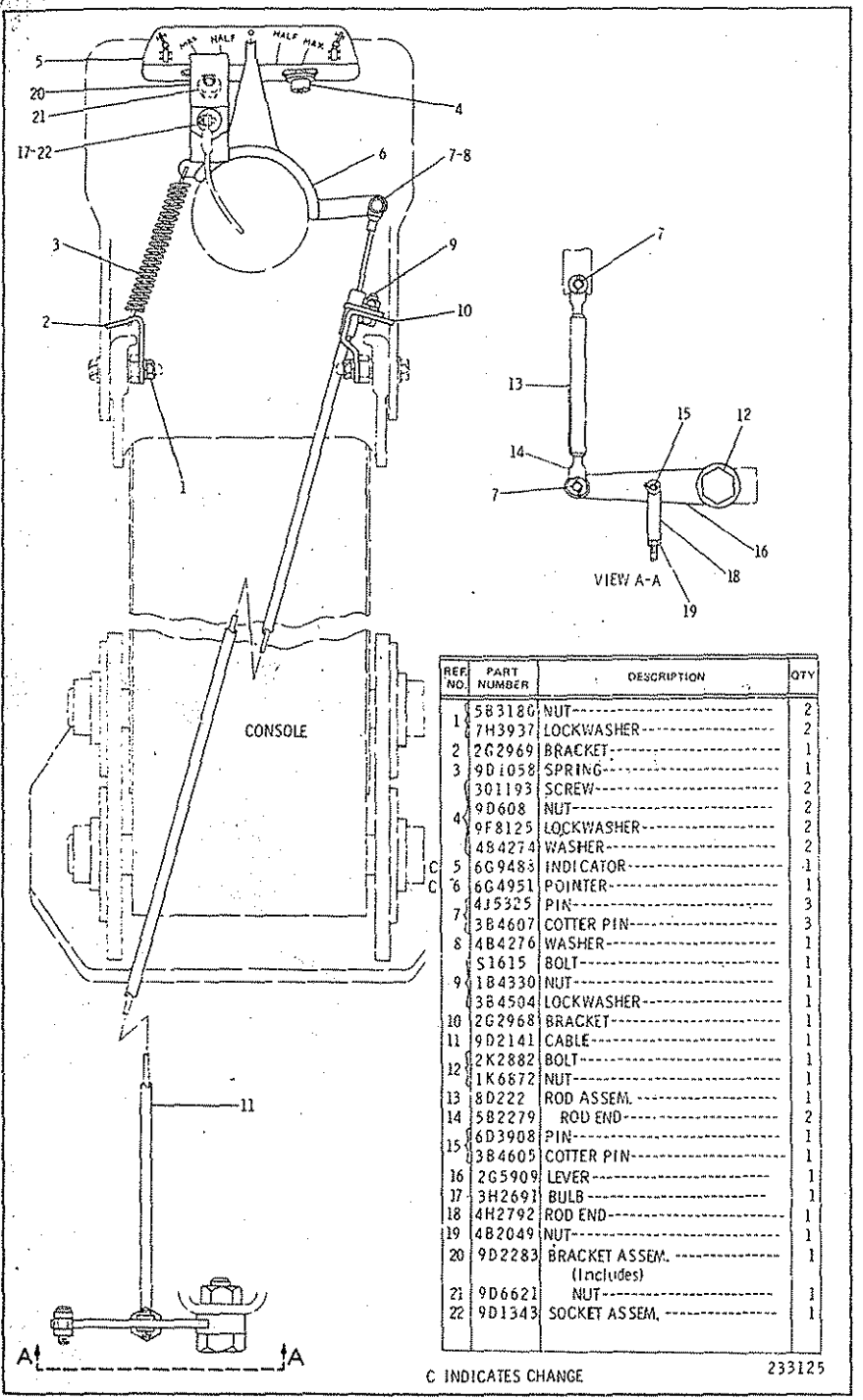

REF. NO.	PART NUMBER	DESCRIPTION	QTY
1	5B3180	NUT	2
	7H3937	LOCKWASHER	2
2	2G2969	BRACKET	1
3	9D1058	SPRING	1
4	301193	SCREW	2
	9D608	NUT	2
	9F8125	LOCKWASHER	2
	4B4274	WASHER	2
5	6G9483	INDICATOR	1
C 6	6G4951	POINTER	1
7	4J5325	PIN	3
	3B4607	COTTER PIN	3
8	4B4276	WASHER	1
9	S1615	BOLT	1
	1B4330	NUT	1
	3B4504	LOCKWASHER	1
10	2G2968	BRACKET	1
11	9D2141	CABLE	1
12	2K2882	BOLT	1
	1K6872	NUT	1
13	8D222	ROD ASSEM.	1
14	5B2279	ROD END	2
15	6D3908	PIN	1
	3B4605	COTTER PIN	1
16	2G5909	LEVER	1
17	3H2691	BULB	1
18	4H2792	ROD END	1
19	4B2049	NUT	1
20	9D2283	BRACKET ASSEM. (Includes)	1
21	9D6621	NUT	1
22	9D1343	SOCKET ASSEM.	1

C INDICATES CHANGE

233125

2G3360 ARTICULATION INDICATOR GROUP—Type 2
Serial No. 87V5275 to 87V5733 inclusive. AN ATTACHMENT

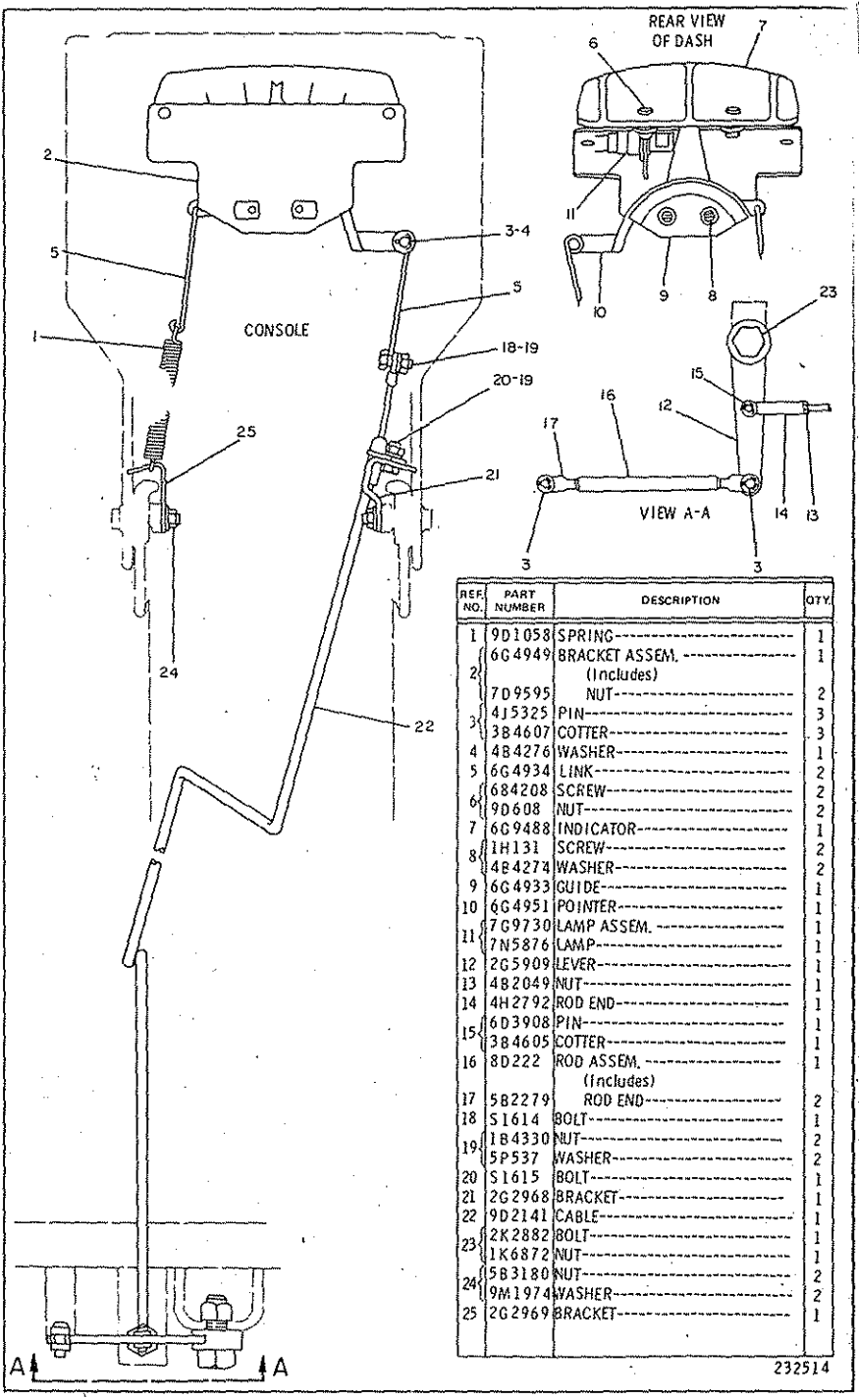

REF. NO.	PART NUMBER	DESCRIPTION	QTY.
1	9D1058	SPRING	1
2	6G4949	BRACKET ASSEM. (Includes)	1
	7D9595	NUT	2
3	4J5325	PIN	3
	3B4607	COTTER	3
4	4B4276	WASHER	1
5	6G4934	LINK	2
6	684208	SCREW	2
	9D608	NUT	2
7	6G9488	INDICATOR	1
8	1H131	SCREW	2
	4B4274	WASHER	2
9	6G4933	GUIDE	1
10	6G4951	POINTER	1
11	7G9730	LAMP ASSEM.	1
	7N5876	LAMP	1
12	2G5909	LEVER	1
13	4B2049	NUT	1
14	4H2792	ROD END	1
15	6D3908	PIN	1
	3B4605	COTTER	1
16	8D222	ROD ASSEM. (Includes)	1
17	5B2279	ROD END	2
18	S1614	BOLT	1
19	1B4330	NUT	2
	5P537	WASHER	2
20	S1615	BOLT	1
21	2G2968	BRACKET	1
22	9D2141	CABLE	1
23	2K2882	BOLT	1
	1K6872	NUT	1
24	5B3180	NUT	2
	9M1974	WASHER	2
25	2G2969	BRACKET	1

6G5000 ARTICULATION INDICATOR GROUP
Serial No. 87V5734—Up
AN ATTACHMENT

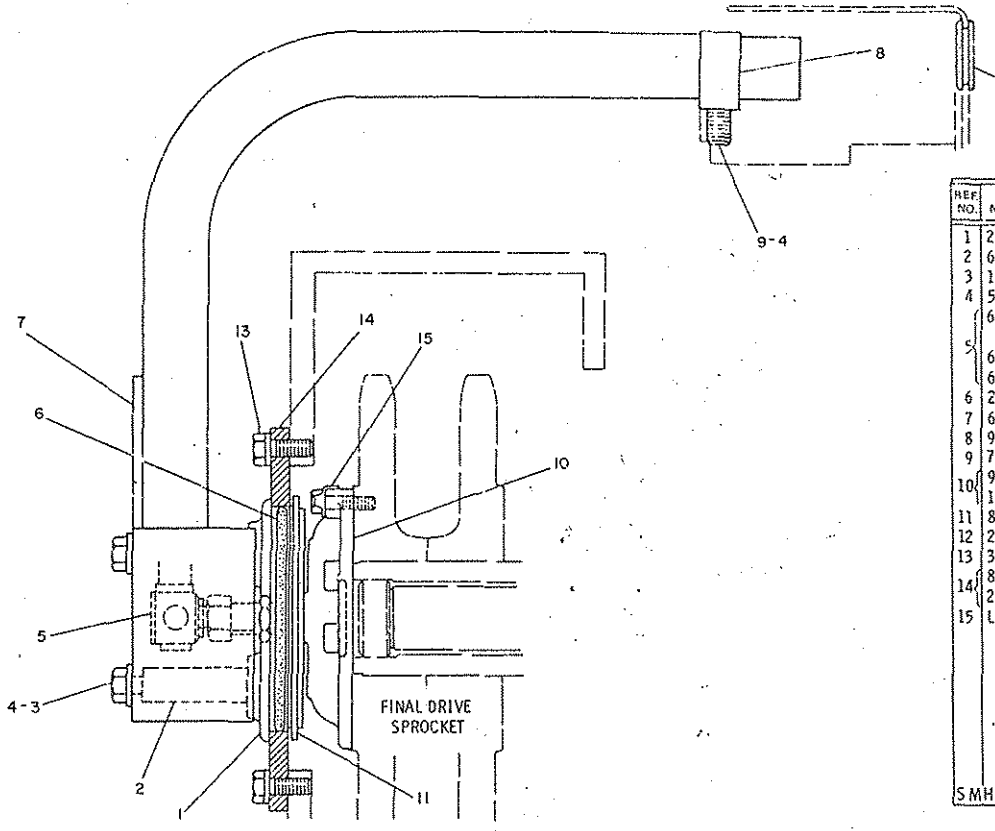

REF. NO.	PART NUMBER	DESCRIPTION	QTY.
1	2G2302	BUSHING	1
2	6G5827	SPACER	2
3	1B2886	BOLT	2
4	5P8245	WASHER	3
5	6G5770	ADAPTER GROUP	1
		(Includes)	
	6G5744	CONNECTOR	1
	6G5743	NUT	1
6	2H9247	SEAL	1
7	6G5936	COVER ASSEM.	1
8	9D5952	CLIP	1
9	7B3235	BOLT	1
10	9D8904	RETAINER	1
	1H9696	SEAL	1
11	8H4291	LOCK	1
12	2G1136	GROMMET	1
13	308538	BOLT	8
14	8D3133	COVER	1
	2G9791	GASKET	1
15	L364	LOCK	5
	SMHS7719	FORM---(Installation Instructions)	1

227960

6G5855 TACHOGRAPH DRIVE GROUP
AN ATTACHMENT

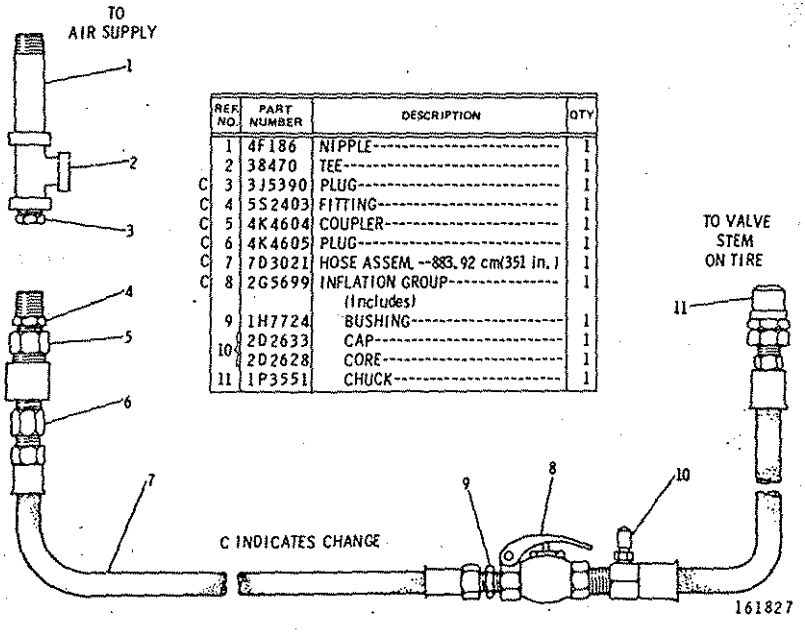

REF NO.	PART NUMBER	DESCRIPTION	QTY
1	4F186	NIPPLE	1
2	38470	TEE	1
C 3	3J5390	PLUG	1
C 4	5S2403	FITTING	1
C 5	4K4604	COUPLER	1
C 6	4K4605	PLUG	1
C 7	7D3021	HOSE ASSEM. --883.92 cm(351 in.)	1
C 8	2G5699	INFLATION GROUP (Includes)	1
9	1H7724	BUSHING	1
10	2D2633	CAP	1
	2D2628	CORE	1
11	1P3551	CHUCK	1

2G1616 AIR INFLATION GROUP
AN ATTACHMENT

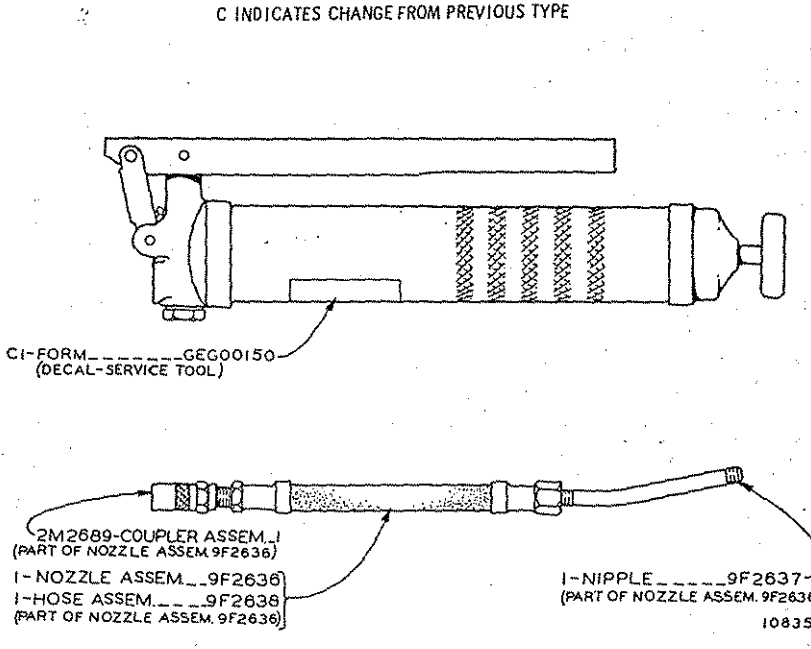

8F9866 GREASE GUN
Part of 9S7978 Hand Tool Group shown on Page 332
AN ATTACHMENT

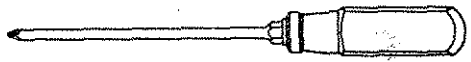

9S1738 SCREWDRIVER
NO. 2 PHILLIPS

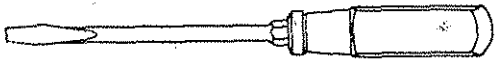

1F1157 SCREWDRIVER

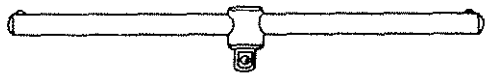

5S9566 WRENCH

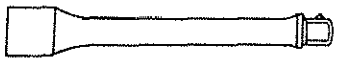

5S9567 EXTENSION

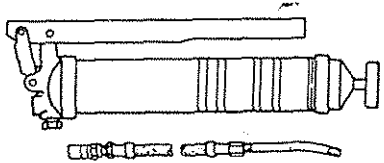

8F9866 GREASE GUN (Lever)
(Separate Illustration)

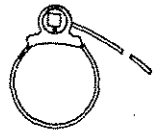

2P8250 STRAP WRENCH ASSEM.

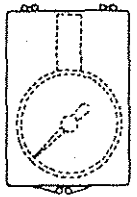

1P545 GAUGE GROUP



5S9568 SOCKET

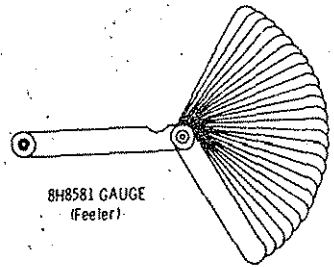

8H8581 GAUGE
(Feeler)

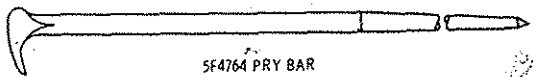

5F4764 PRY BAR

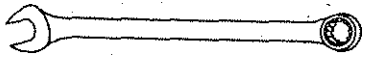

8H8503	WRENCH	(5/16" Opening)
8H8505	WRENCH	(3/8" Opening)
8H8507	WRENCH	(1/2" Opening)
8H8508	WRENCH	(9/16" Opening)
8H8509	WRENCH	(5/8" Opening)
8H8511	WRENCH	(3/4" Opening)
C 5P6224	WRENCH	(11/16" Opening)



5P1763 SOCKET



8H8551	SOCKET	(11/16" Opening)
8H8552	SOCKET	(3/4" Opening)
8H8553	SOCKET	(13/16" Opening)
8H8554	SOCKET	(7/8" Opening)
8H8555	SOCKET	(15/16" Opening)
9S1730	SOCKET	(1 1/8" Opening)
9S1731	SOCKET	(1 1/4" Opening)
8H8536	SOCKET	(1 5/16" Opening)
8H8537	SOCKET	(1 1/2" Opening)
8H8541	SOCKET	(1 7/8" Opening)
C 5P6226	SOCKET	(1 5/8" Opening)
C 5P6227	SOCKET	(1/2" Opening)
C 1P5530	SOCKET	(9/16" Opening)

C INDICATES CHANGE

208786

9S7978 HAND TOOL GROUP

8F9866 Grease Gun parts are shown on Page 331

Note: 2B9886 Jack is available. AN ATTACHMENT

ENGINE GASKET KITS

6V2934	VALVE GRINDING
6V2935	CENTRAL AND LOWER STRUCTURE
5P8768	SINGLE CYLINDER LINER
6V2248	FRONT STRUCTURE
6V1550	REAR STRUCTURE
5P9898	WATER PUMP
6V616	TURBOCHARGER MOUNTING
5P9461	FUEL SYSTEM
6V2515	OIL COOLER AND LINES
6V1682	AIR COMPRESSOR

OTHER GASKET KITS

5P3763	TRANSFER GEAR
5P3764	TRANSMISSION OVERHAUL

QUANTITY USED	PART NUMBER	DESCRIPTION
1	9D1538	PLATE--LOCK PIN INDICATOR ON R.H. BLADE LIFT PIN
1	9D1539	PLATE--LOCK PIN INDICATOR ON L.H. BLADE LIFT PIN
1	8H8648	PLATE--DISCONNECT SWITCH ON REAR OF SHIFT CONSOLE
1	4M4716	PLATE--SERIAL NUMBER (MOTOR GRADER) ON R.H. SIDE OF FRONT FRAME OUTERMOST PLATE
1	3N3790	PLATE--SERIAL NUMBER (ENGINE) ON UPPER L.H. SIDE OF CYLINDER BLOCK
1	5P3999	PLATE--MAIN FRAME BELOW SERIAL NO. PLATE ON R.H. SIDE OF FRONT FRAME
1	5P8197	PLATE--WARNING (UNIVERSAL) ON REAR OF OPERATOR STEERING CONSOLE
1	6V1721	PLATE--SERIAL NUMBER (MASTER) IN VISIBLE POSITION IN OPERATOR COMPARTMENT
16	4B4158	DRIVE SCREW
4	2H4337	DRIVE SCREW
1	5P1175	FILM--ENGINE OIL FILL ON ENGINE OIL FILLER CAP
1	5P8277	FILM--LUBRICATION INSTRUCTIONS ON SIDE OF BATTERY BOX
1	5P868	TRANSFER GROUP CONSISTING OF:
2	2P931	FILM--CAT ON EACH SIDE OF CAB
3	5P379	FILM--120G ON EACH SIDE OF RADIATOR GUARD AND ON NOSE CENTERED VERTICALLY WITH CORPORATE SYMBOL
2	5P1426	FILM--WARNING ON EACH SIDE OF ENGINE DASH
2	5P1436	FILM--WARNING ON EACH RADIATOR ACCESS DOOR
1	5P4077	FILM--WARNING--CENTERSHIFT LOCK ON SHIFT CONSOLE INSTRUCTION PLATE ABOVE WORD CENTERSHIFT
1	5P4114	FILM--WARNING--CENTERSHIFT PIN ON THE END OF THE CENTERSHIFT LOCK PIN HOUSING
1	5P4320	FILM--WARNING ON REAR OF OPERATOR STEERING CONSOLE
3	8S3923	FILM--CORPORATE SYMBOL ON EACH SIDE OF RADIATOR GUARD AND ON NOSE, CENTERED VERTICALLY
1	8S3942	FILM--CATERPILLAR ON REAR OF MACHINE ON RADIATOR ABOVE GRILL
2	8S8958	FILM--CATERPILLAR ON EACH SIDE OF MAIN FRAME

NAME PLATES AND FILMS

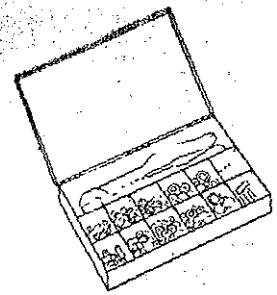

1P2305 ELECTRIC TERMINAL KIT

(Insulated)
(Includes terminals, wire joints and crimping tool)

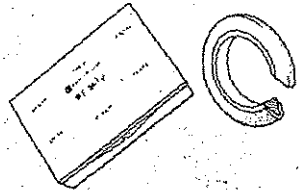

9S3138 SEAL KIT

(Includes 28 metal - backed seals)

Qty.	Nominal Size	Part No.
2	1/2 inch (1, 27 cm)	5J1583
6	3/4 inch (1, 905 cm)	6J3575
6	1 inch (2, 54 cm)	6J3600
6	1 1/4 inch (3, 175 cm)	6J3625
4	1 1/2 inch (3, 81 cm)	6J3650
4	2 inches (5, 08 cm)	6J3800

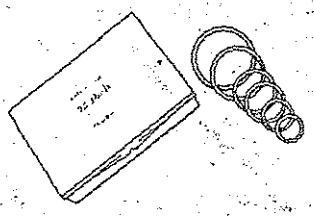

9S3135 SEAL KIT

(Includes 60 rubber O-ring seals)

Qty.	Nominal Size	Part No.
10	1/2 inch (1, 27 cm)	4J5140
10	3/4 inch (1, 905 cm)	4J5267
10	1 inch (2, 54 cm)	4J0520
10	1 1/4 inch (3, 175 cm)	4J0522
10	1 1/2 inch (3, 81 cm)	4J0524
10	2 inches (5, 08 cm)	4J0527

THREADED INSERTS KITS

Master (Includes inserts and tools)

Coarse	Fine	Size
9S3700	9S3500	Assorted

Repair (Includes inserts and tools)

9S3510	9S3509	#10
9S3512	9S3511	1/4
9S3514	9S3513	5/16
9S3618	9S3515	3/8
9S3620	9S3619	7/16
9S3622	9S3621	1/2
9S3624	9S3623	9/16
9S3626	9S3625	5/8
9S3628	9S3627	3/4
9S3630	9S3629	7/8
9S3632	9S3631	1
9S3633		1 1/8
9S3635		1 1/4
9S3637		1 1/2

Refill (Includes inserts)

9S3674	9S3673	#10
9S3649	9S3639	1/4
9S3650	9S3640	5/16
9S3651	9S3641	3/8
9S3652	9S3642	7/16
9S3653	9S3643	1/2
9S3654	9S3644	9/16
9S3655	9S3645	5/8
9S3656	9S3646	3/4
9S3657	9S3647	7/8
9S3658	9S3648	1
9S3675		1 1/8
9S3677		1 1/4
9S3679		1 1/2

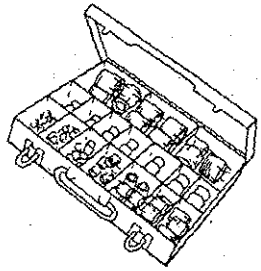

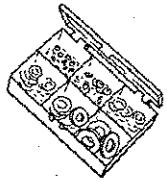

HARDWARE ASSORTMENT KITS

8S7198 Course Thread Hex Nut
8S7197 Fine Thread Hex Nut
8S7196 Lockwasher Assortment
8S7195 Flatwasher Assortment
8S7193 Woodruff Key Assortment

SPECIFICATIONS

(SUBJECT TO CHANGE WITHOUT NOTICE)

Weight, shipping (approximate)		
with 10% fuel	11 360 kg	(25,050 lbs.)
Weight carried by front wheels	3 040 kg	(6,710 lbs.)
Weight carried by rear wheels	8 320 kg	(18,340 lbs.)

DIMENSIONS

Wheelbase	5 690 mm	(18' 8")
Tread:		
Front (center to center of tires)	1 980 mm	6' 5.75")
Rear (center to center of tires)	2 010 mm	(6' 7.25")
Overall:		
Length	7 920 mm	(26' 0")
Width	2 410 mm	(7' 11")
Height (without cab and muffler)	2 520 mm	(8' 3.5")
Height (with cab)	3 330 mm	(10' 11")
Blade Length	3 660 mm	(12')

REFILL CAPACITIES

(approximate)

Compartment or System	Liters	U.S. Gallons	Imperial Gallons
Circle Drive Housing	6	1.5	1.2
Cooling System	38	10	8.3
Engine Crankcase	19	5	4.2
Front Wheel Spindle Bearing Housing (each side)	.5	.125	.1
Fuel Tank	227	60	50
Hydraulic Tank	30	8	6.7
Tandem Drive Housing (each side)	49	13	10.8
Transmission and Differential Housing	68	18	15

MACHINE SERIAL NUMBER PLATE LOCATION

MASTER PLATE — In operator compartment.
VEHICLE PLATE — On R. H. side of front frame outermost plate.
ENGINE PLATE — On upper L. H. side of cylinder block.
TRANSMISSION PLATE — On transmission.

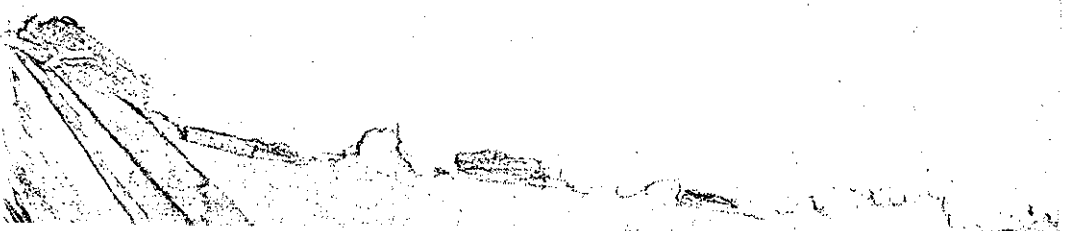

CARACTÉRISTIQUES

(PEUVENT ÊTRE MODIFIÉES SANS PRÉAVIS)

Poids (approx.), en ordre d'expédition (10% du plein de carburant)	11 360 k
Poids sur les roues avant	3 040 k
Poids sur les roues arrière	8 320 k

DIMENSIONS

Empattement	5 690 mm
Voie :	
AV (entre centres de pneus)	1 980 mm
AR (entre centres de pneus)	2 010 mm
Hors-tout :	
Longueur	7 920 mm
Largeur	2 410 mm
Hauteur (sans cabine et silencieux d'échappement)	2 520 mm
Hauteur (avec cabine)	3 330 mm

LAME

Longueur	3 660 mm
Hauteur de relevage	410 mm
Déport latéral du cercle :	
A droite	500 mm
A gauche	570 mm
Angle de talutage maximal	90°
Portée maximale sur accotement*	
(mesurée en dehors des roues, côté droit)	1 520 mm
Déport latéral de la lame (commande hydraulique), en option :	
A droite	670 mm
A gauche	520 mm

*Position en ligne. Pour la position en crabe, ajouter 940 mm (déport mécanique).

DÉMARRAGE

Démarrage électrique direct 24 volts. Toutes commandes de départ groupées sur poste de conduite.

ÉQUIPEMENTS

Les équipements tels que scarificateurs, éclairages, compteurs de distance, etc., sont facultatifs et facturés en sus. Consulter le concessionnaire Caterpillar.

MARQUAGE DU NUMÉRO DE SÉRIE

PLAQUE PRINCIPALE — Dans le poste de conduite.
VÉHICULE — Sur le côté droit de la plaque extrême du châssis avant.
MOTEUR — Sur le côté supérieur gauche du bloc-cylindres.
TRANSMISSION — Sur la transmission.

ESPECIFICACIONES

(SUJETAS A CAMBIO SIN PREVIO AVISO)

Peso de embarque aproximado con 10% de combustible	11 360 kg
Peso soportado por las ruedas delanteras	3040 kg
Peso soportado por las ruedas traseras	9320 kg

DIMENSIONES

Distancia entre ruedas	5990 mm
Trocha:	
Delantera (distancia entre centros de los neumáticos)	1980 mm
Trasera (distancia entre centros de los neumáticos)	2010 mm
Generales:	
Longitud	7920 mm
Ancho	2410 mm
Alto (sin cabina)	2520 mm
Alto (con cabina)	3330 mm

HOJA

Longitud	3660 mm
Levantamiento sobre el suelo	410 mm
Cremallera curvada:	
Hacia la derecha	500 mm
Hacia la izquierda	570 mm
Angulo máximo de corte de talud	90°
Alcance máximo en espaldón (medido en el exterior de las ruedas en el lado derecho)*	1520 mm
Desplazamiento lateral hidráulico de la hoja:	
Hacia la derecha	670 mm
Hacia la izquierda	520 mm

*Bastidor recto — para posición articulada, agregar 940 mm

METODO DE ARRANQUE

Arranque eléctrico directo de 24 voltios. Todos los controles de arranque en el compartimiento del operador, contiguos al asiento.

ACCESORIOS

Equipo adicional, tales como escarificadores, sistema de luces, odómetros, etc., se suministra a costo extra. Consulte al distribuidor de Caterpillar.

UBICACION DE LA PLACA CON EL NUMERO DE SERIE DE LA MAQUINA

PLACA PRINCIPAL — En el compartimiento del operador.
PLACA DEL VEHICULO — En el lado derecho del bastidor delantero.
PLACA DEL MOTOR — En la parte superior del lado izquierdo del bloque del motor.
PLACA DE LA TRANSMISION — En la transmisión.

ESPECIFICAÇÕES

(SUJEITAS A ALTERAÇÕES SEM AVISO PRÉVIO)

Peso de embarque com 10 % do combustível	11 360 kg
Sobre as rodas dianteiras	3 040 kg
Sobre as rodas traseiras	8 320 kg

DIMENSÕES

Distância entre os eixos	5 690 mm
Bitola (centro a centro dos pneus):	
Nas rodas dianteiras	1 980 mm
Nas rodas traseiras	2 010 mm
Dimensões gerais:	
Comprimento	7 920 mm
Largura	2 410 mm
Altura (sem cabine e silenciador)	2 520 mm
Altura (com cabine)	3 330 mm

LÂMINA

Comprimento	3 660 mm
Levantamento acima do solo	410 mm
Deslocamento lateral:	
Para a direita	500 mm
Para a esquerda	570 mm
Ângulo máximo para corte de taludes	90°
Alcance lateral máximo (por fora das rodas traseiras, no lado direito):	
Chassi reto	1 520 mm
Chassi articulado	2 460 mm
Deslizamento hidráulico da lâmina optativa:	
Para a direita	670 mm
Para a esquerda	520 mm

MÉTODO DE PARTIDA

Sistema de arranque elétrico de 24 volts. Todos os controles de partida estão na plataforma de operação, próximos ao assento.

ACESSÓRIOS

Existem disponíveis equipamentos extras tais como escarificador, sistema de ilumi- dômetro, ect. Consulte o seu Revendedor Caterpillar.

SITUAÇÃO DO NÚMERO DE SÉRIE

E: no compartimento do operador.
NA: no lado direito do chassi dianteiro.
: no lado esquerdo superior do bloco do motor, atrás.
MISSÃO: na caixa de mudanças.

TECHNISCHE DATEN

(UNVERBINDLICH, ÄNDERUNGEN VORBEHALTEN)

Versandgewicht, etwa (mit 10% Kraftstoff)	11 360 kg
Vorderachslast	3 040 kg
Hinterachslast	8 320 kg

ABMESSUNGEN

Radstand	5 690 mm
Spurweite:	
Vorderräder	1 980 mm
Hinterräder	2 010 mm
Gesamtabmessungen:	
Länge	7 920 mm
Breite	2 410 mm
Höhe (ohne Fahrerhaus und Auspuff)	2 520 mm
Höhe (mit Fahrerhaus)	3 330 mm

SCHAR

Länge	3 660 mm
Hub über Niveau	410 mm
Seitenschub:	
Rechts	500 mm
Links	570 mm
Max. Böschungsschneidwinkel	90°
Max. Ausladung* (über die rechten Hinterräder hinaus gemssen)	1 520 mm
Hydr. Scharseitenverstellung (Sonderausrüstung):	
Rechts	670 mm
Links	520 mm

*Bei voller Rahmenknickung zusätzlich 940 mm (mech. Scharseitenverstellung)

STARTANLAGEN

24 Volt elektrischer Direktanlasser. Alle Bedienungen der Startanlagen befinden sich im Fahrerstand neben dem Fahrersitz.

ZUBEHÖR

Zusätzliche Ausrüstung wie leichte Aufreißer, Beleuchtungsanlagen, Kilometerzähler usw. sind gegen Aufpreis erhältlich. Fragen Sie Ihren Caterpillar-Händler.

LAGE DER SERIENNUMMERNSCHILDER

SAMMELSCHILD – Im Fahrerhaus.
MASCHINE – Rechts am Vorderrahmen.
MOTOR – Oben links am Motorblock.
GETRIEBE – Am Getriebegehäuse.