CATERPILLAR®

SEBP3617
December 2002

RUTHZIL TRATOR COMERCIAL DE PEÇAS LTDA 11 97083-6812 ROLANDO

Parts Manual

SIS

See "General Information" for New Parts Manual Features.

120H Motor Grader

BMA1-Up (Engine)
CAF1-Up (Machine)
BJN1-Up (Transmission)

Powered By 3126B Engine
This Parts Manual is also Available in .PDF Format on Compact Disc(CD-ROM)-Caterpillar Form No. SERP3617

Product and Dealer Information

Note: For product identification plate locations, see the section “Product Identification Information” in the Operation and Maintenance Manual.

Delivery Date: _____

Product Information

Model: _____

Product Identification Number: _____

Engine Serial Number: _____

Transmission Serial Number: _____

Generator Serial Number: _____

Attachment Serial Numbers: _____

Attachment Information: _____

Customer Equipment Number: _____

Dealer Equipment Number: _____

Dealer Information

Name: _____ Branch: _____

Address: _____

_____

_____

	Dealer Contact	Phone Number	Hours
Sales:	_____	_____	_____
Parts:	_____	_____	_____
Service:	_____	_____	_____

Información del Producto/Distribuidor

Nota: Para saber la ubicación de las placas de identificación del producto, ver la sección “Información sobre identificación del producto” en el Manual de Operación y Mantenimiento.

Fecha de entrega: _____

Información del producto

Modelo: _____

Número de identificación del producto: _____

Número de serie del motor: _____

Número de serie de la transmisión: _____

Número de serie del generador: _____

Números de serie de los accesorios: _____

Información sobre los accesorios: _____

Número del equipo del cliente: _____

Número del equipo del distribuidor: _____

Información del distribuidor

Nombre: _____ Sucursal: _____

Dirección: _____

_____

_____

	Comunicación con el distribuidor	Número de teléfono	Horas
Ventas:	_____	_____	_____
Piezas:	_____	_____	_____
Servicio:	_____	_____	_____

Informações Sobre Produto e Revendedor

Nota: Para localizações da placa de identificação do produto, consulte a seção, “Informações Sobre Identificação do Produto” no Manual de Operação e Manutenção.

Data de Entrega: _____

Informações Sobre o Produto

Modelo: _____

Número de Identificação do Produto: _____

Número de Série do Motor: _____

Número de Série da Transmissão: _____

Número de Série do Gerador: _____

Números de Série de Acessórios: _____

Informações Sobre Acessórios: _____

Número do Equipamento do Cliente: _____

Número do Equipamento do Revendedor: _____

Informações Sobre o Revendedor

Nome: _____ Filial: _____

Endereço: _____

_____

_____

	Contato do Revendedor	Telefone	Horas
Vendas:	_____	_____	_____
Peças:	_____	_____	_____
Serviço:	_____	_____	_____

MEMORANDA

TABLE OF CONTENTS

Name	Page
GENERAL INFORMATION	A15
REPAIR ALTERNATIVES	A26
SUPPLEMENTAL COOLANT ADDITIVES	A29
ENGLISH-PORTUGUESE PARTS NOMENCLATURE	A32
MAINTENANCE PARTS	A40
INDEX	A64
MACHINE ARRANGEMENT	1
CONVERSION AR-CERTIFICATION	1
GENERAL AR	2
ROADING AR	4
ENGINE ARRANGEMENT	5
ENGINE AR-COMPLETE	5
ENGINE AR-CORE	6
BASIC ENGINE	7
AIR COMPRESSOR GP	7
CAMSHAFT GP	10
CARRIER GP-SEAL	11
COVER GP-CYLINDER BLOCK	12
COVER GP-FLYWHEEL HOUSING	14
COVER GP-FRONT HOUSING	15
COVER GP-VALVE MECHANISM	16
CRANKSHAFT GP	17
CYLINDER BLOCK GP	18
CYLINDER HEAD AS	21
CYLINDER HEAD GP	26
DAMPER & PULLEY GP	36
FLYWHEEL GP	37
GEAR GP-FRONT	38
HOUSING GP-FLYWHEEL	39
HOUSING GP-FRONT	40
LIFTER GP-VALVE	41
LIFTING GP-ENGINE	42
MOUNTING GP-ENGINE & TMSN	44
PAN GP-OIL	46
PISTON & ROD GP	47
PLUG GP-FLYWHEEL HOUSING	48
PULLEY GP-IDLER	49
SEAL GP-CRANKSHAFT	50
SEAL GP-FLYWHEEL HOUSING	51
SUPPORT GP-ENGINE	52
VALVE MECHANISM GP	53
LUBRICATION SYSTEM	56
ADAPTER GP-ENGINE OIL LINE	56
BREATHER GP	57
FILTER GP-ENGINE OIL	58
FUMES DISPOSAL GP	60
GAUGE GP-OIL LEVEL (DIPSTICK)	61
LINES GP-ENGINE OIL	62
LINES GP-TURBOCHARGER OIL	64
PUMP GP-ENGINE OIL	65
VALVE GP-FLUID SAMPLING	67
COOLING SYSTEM	68
COOLER GP-ENGINE OIL	68
COOLING AR	69
FAN & MOTOR GP	70
LINES GP-WATER	72
PUMP GP-WATER	76
RADIATOR & OIL COOLER GP	80
AIR INLET AND EXHAUST SYSTEM	81
ADAPTER GP-TURBOCHARGER	81
AFTERCOOLER & MOUNTING GP	82
AIR CLEANER GP	83
COVER GP-AIR INLET	87
ELBOW GP-AIR INLET	88
LINES GP-AIR	90
MANIFOLD GP-EXHAUST	94
MUFFLER GP	95
TURBOCHARGER GP	96
FUEL SYSTEM	98
CONTROL GP-GOVERNOR	98
FILTER GP-FUEL	100
FILTER GP-WATER SEP & FUEL	102
LINES GP-DRAIN	103
LINES GP-FUEL	104
PUMP & MTG GP-UNIT INJ HYD	109
PUMP GP-FUEL	110
PUMP GP-UNIT INJECTION	112
PUMP GP-UNIT INJECTOR HYD	114
SEAL GP-FUEL INJECTOR	115
TANK GP-FUEL	116
VALVE GP-SOLENOID	122
WATER SEP & FUEL PRM PUMP GP	123
ELECTRICAL AND STARTING SYSTEM	124
ALARM GP	124
ALTERNATOR GP-CHARGING	126
BATTERY GP	134
BLOCK GP-JUNCTION	137
CIRCUIT BREAKER GP	138
CONTROL & MTG GP-ENGINE ELEK	140
CONTROL GP-ENGINE ELECTRONIC	141
CONTROL GP-SECONDARY STEERING	143
CONTROL GP-UNPROGRAMMED	144
CONVERTER AR-ELECTRICAL	145
CONVERTER GP-ELECTRICAL	146

TABLE OF CONTENTS

Name	Page
ELECTRONICS GP-MONITOR	149
ELECTRONICS GP-POWER TRAIN	150
FASTENER GP-GROUND STUD	151
LAMP GP-DOME	152
LAMP GP-FLOOD	153
LAMP GP-HEAD	154
LAMP GP-HEAD & SIGNAL	160
LAMP GP-MARKER	164
LAMP GP-REGISTRATION PLATE	165
LAMP GP-SIGNAL	166
LAMP GP-WARNING BEACON	168
LIGHTING AR-FLOOD	169
LIGHTING AR-FLOOD & SIGNAL	170
LIGHTING GP-BACKUP	172
LIGHTING GP-FLOOD	176
LIGHTING GP-ROADING	196
LIGHTING GP-SIGNAL	197
LIGHTING GP-WARNING	198
MOTOR GP-ELECTRIC	202
RECEPTACLE GP-AUXILIARY START	203
SENSOR GP-ENGINE	204
SENSOR GP-POSITION	206
SENSOR GP-PRESSURE	208
SENSOR GP-SPEED	213
SENSOR GP-TEMPERATURE	216
STARTING MOTOR GP-ELECTRIC	218
SWITCH GP-BYPASS	222
SWITCH GP-DISCONNECT	223
SWITCH GP-LIGHT	224
SWITCH GP-MAGNETIC	226
SWITCH GP-WIPER	228
WARNING GP-BACKUP	229
WIRING GP-BLADE CUSHION	230
WIRING GP-CAB	232
WIRING GP-ENGINE	242
WIRING GP-FRONT	244
WIRING GP-HEATER	252
WIRING GP-REAR	254
WIRING GP-SECONDARY STEERING	280
WIRING GP-SHIFT CONSOLE	282
WIRING GP-STEERING CONSOLE	288
POWER TRAIN	296
CASE & PARTS GP-TRANSMISSION	296
CHAIN GP-DRIVE	300
CLUTCH GP-TRANSMISSION	302
CONTROL GP-CLUTCH	314
CONTROL GP-DIFFERENTIAL LOCK	316
CONTROL GP-TRANSMISSION	318
CONTROL GP-TRANSMISSION HYD	320
COUPLING GP-TORSIONAL	321
DIFFERENTIAL & BEVEL GEAR GP	322
DIFFERENTIAL GP	324
FILLER GP-POWER TRAIN OIL	326
FILTER & MTG GP-OIL	328
FILTER GP-OIL	330
FINAL DRIVE GP	332
LINES GP-TRANSMISSION OIL	334
MOUNTING GP-WHEEL	337
PUMP GP-GEAR	338
SCREEN GP-MAGNETIC	340
SHAFT GP-DRIVE	341
SHAFT GP-INPUT	342
TANDEM & COVER GP	343
TRANSMISSION AR	344
UNIVERSAL JOINT GP	345
VALVE & MTG GP-DIFF LOCK	346
VALVE GP-SELECTOR & PRESS CONT	348
VALVE GP-SOLENOID	355
VALVE GP-TRANSMISSION CONTROL	358
WHEEL & TIRE AR	360
WHEEL & TIRE GP	376
WHEEL AR	409
WHEEL GP	410
FRAME AND BODY	414
AXLE GP-FRONT	414
BAFFLE GP-RADIATOR	417
CASE & FRAME GP	418
COVER GP-PROTECTION	419
ENCLOSURE GP-ENGINE	420
FRAME GP-FRONT	424
GUARD & SUPPORT GP-RADIATOR	428
GUARD GP-BOTTOM	431
GUARD GP-FUEL TANK	432
GUARD GP-PLATFORM	434
HITCH GP-ARTICULATING	438
HITCH GP-TOWING	440
LINES GP-GREASE	441
LINK GP-STEERING	442
MOUNTING GP-REGISTRATION	443
SHIELD GP-DRIVE SHAFT	444
SHIELD GP-HEAT	445
STEP GP	446
SUPPORT AR-REAR CHASSIS	447
SUPPORT GP-FUEL TANK	448
SUPPORT GP-PLATFORM	449
BRAKING SYSTEM	450
AIR DRYER GP	450
BRAKE GP-PARKING	460
BRAKE GP-SERVICE	462
CONTROL GP-PARKING BRAKE	464
CONTROL GP-SERVICE BRAKE	466
LINES GP-AIR TANK	471
TANK GP-AIR	472
VALVE GP-AIR CONTROL	474
VALVE GP-SOLENOID	478

TABLE OF CONTENTS

Name	Page
HYDRAULIC SYSTEM	479
ACCUMULATOR & MTG GP-HYDRAULIC	479
ACCUMULATOR AR-BLADE CUSHION	480
ACCUMULATOR GP	480
ACCUMULATOR GP-BLADE CUSHION	482
CONTROL AR-HYDRAULIC	484
CONTROL GP-STEERING	485
CYLINDER & LINES GP-RIPPER	486
CYLINDER & MTG GP-ARTICULATION	487
CYLINDER & MTG GP-BLADE LIFT	488
CYLINDER & MTG GP-BLADE TIP	489
CYLINDER & MTG GP-CENTERSHIFT	490
CYLINDER & MTG GP-SCARIFIER	491
CYLINDER & MTG GP-SIDESHIFT	492
CYLINDER & MTG GP-STEERING	493
CYLINDER & MTG GP-WHEEL LEAN	494
CYLINDER GP-ARTICULATION	495
CYLINDER GP-BLADE LIFT	496
CYLINDER GP-BLADE TIP	498
CYLINDER GP-CENTERSHIFT	500
CYLINDER GP-HYDRAULIC	502
CYLINDER GP-SCARIFIER	504
CYLINDER GP-SIDESHIFT	506
CYLINDER GP-STEERING	508
CYLINDER GP-WHEEL LEAN	512
DETENT GP-CONTROL VALVE	513
DRIVE GP-CIRCLE	516
DRIVE GP-PUMP	519
LINES GP-ACCUMULATOR	520
LINES GP-HYDRAULIC	522
LINES GP-HYDRAULIC FAN	536
LINES GP-PUMP	540
LINES GP-RIPPER	548
LINES GP-SECONDARY STEERING	550
LINES GP-STEERING	552
LOCK GP-CENTERSHIFT	556
LOCK GP-HYDRAULIC HAND CONTROL	557
MOTOR GP-GEAR	558
MOTOR GP-GEROTOR	560
PUMP & MOTOR GP-SEC STEERING	562
PUMP & MTG GP-PISTON	563
PUMP & MTG GP-SECONDARY STEER	565
PUMP GP-METERING	566
PUMP GP-PISTON	568
ROTATING GP-PUMP	574
STEERING AR-SECONDARY	577
SWASHPLATE GP	578
SWIVEL GP	579
TANK & FILTER GP-HYDRAULIC	580
TANK & MTG GP-HYDRAULIC	582
VALVE & LINKAGE GP	584
VALVE GP-BANK 4	608
VALVE GP-BANK 5	612
VALVE GP-COMBINATION	618
VALVE GP-CONTROL	620
VALVE GP-PRESS & FLOW CMPNSTR	652
VALVE GP-PURGE	656
VALVE GP-RELIEF	658
VALVE GP-SHUTTLE	670
VALVE GP-SOLENOID	671
VALVE GP-SOLENOID & MANIFOLD	673
IMPLEMENTS	676
CIRCLE GP	676
DRAWBAR GP	680
LINK GP-LOWER	682
LINK GP-UPPER	683
PLATE GP-PUSH	684
WORK TOOLS	685
BIT AS	685
BIT GP	686
BIT GP-END	688
BLADE GP	689
BRACKET GP-SCARIFIER	691
EDGE GP-CUTTING	692
EXTENSION GP-BLADE	693
LIFT GP-BLADE	696
MOUNTING GP-RIPPER	698
RIPPER AR	700
RIPPER GP	701
SCARIFIER AR	702
SCARIFIER GP	704
TOOTH GP-RIPPER	711
OPERATOR STATION	712
ACCESSORY GP-CAB	712
ADJUSTER GP-SEAT	714
AIR CONDITIONER & MOUNTING GP	716
AIR CONDITIONER AR	716
AIR CONDITIONER GP	718
APPLICATION GP-MONITOR	722
ARMREST GP	723
CAB AR-HIGH PROFILE	725
CAB AR-NON-ROPS	725
CAB GP	725
COMPRESSOR GP-REFRIGERANT	727
CONDENSER & MTG GP-REFRIGERANT	729
CONSOLE GP-OPERATOR	730
CONVERSION AR-NON-ROPS	733
DOOR GP	734
DOOR GP-CAB	738
DUCT & CONTROL GP	746

TABLE OF CONTENTS

Name	Page
DUCT GP	747
EXTENSION GP-BACKREST	748
FAN GP-CIRCULATING	750
FILTER GP-CAB AIR	756
HAMMER & MOUNTING GP	757
HEATER & MTG GP-CAB	759
HEATER AR-CAB	759
HEATER GP-CAB	762
HORN GP-AIR	770
HOUSING GP-SEAT SUSPENSION	774
INSTALLATION AR-RADIO	777
INSTALLATION GP-RADIO	778
INSULATION GP-WEATHER	780
LINER GP-CAB	782
LINES GP-HEATER	798
LITERATURE GP	800
LOUVER GP-CAB	801
MIRROR GP-REAR VIEW	802
MODULE GP-QUAD GAUGE	808
MODULE GP-SPEEDOMETER & TACH	809
MOUNTING GP-CAB	811
MOUNTING GP-ROPS	812
PAN GP-BACKREST	815
PAN GP-SEAT	816
PANEL GP-CAB	818
PANEL GP-INSTRUMENT	822
PANEL GP-WINDOW	830
ROPS AR-ENCLOSED	834
ROPS AR-OPEN	835
ROPS GP-ENCLOSED	835
ROPS GP-OPEN	838
SCREEN GP-SUN	839
SEAT BELT GP	840
SEAT GP	844
SEAT GP-STATIC	852
SEAT GP-SUSPENSION	858
SUPPORT GP-SEAT	866
SUPPRESSION GP-SOUND	868
SUSPENSION GP-SEAT	870
WASHER GP-WINDOW	874
WINDOW GP	880
WIPER AR-WINDOW	885
WIPER GP-WINDOW	886
SERVICE EQUIPMENT AND SUPPLIES	899
TOOL BOX GP	899
FILM GP	900
JACK-HYDRAULIC	900
PLATE & FILM GP	900
PART NUMBER INDEX	B1

CONTENIDO

Nombre	Página
INFORMACIÓN GENERAL	A18
ALTERNATIVAS DE REPARACIÓN	A27
ADITIVOS DE REFRIGERANTE SUPLEMENTARIOS	A30
PIEZAS DE MANTENIMIENTO	A47
INDICE	A80
CONFIGURACIÓN DE MÁQUINA	1
CONFIGURACIÓN DE TRANSFORMACIÓN PARA CERTIFICACIÓN	1
CONFIGURACIÓN GENERAL	2
CONFIGURACIÓN PARA CARRETERA	4
CONFIGURACIÓN DE MOTOR	5
MOTOR COMPLETO (CONFIG)	5
MOTOR - NÚCLEO (CONFIG)	6
MOTOR BÁSICO	7
COMPRESOR DE AIRE (GR)	7
ÁRBOL DE LEVAS (GR)	10
SELLO DEL PORTADOR (GR)	11
TAPA DEL BLOQUE MOTOR (GR)	12
TAPA DE LA CAJA DE VOLANTE (GR)	14
TAPA DE LA CAJA DELANTERA (GR)	15
TAPA DEL MECANISMO DE VÁLVULAS (GR)	16
CIGÜEÑAL (GR)	17
BLOQUE MOTOR (GR)	18
CULATA DE CILINDROS (CONJ)	21
CULATA DE CILINDROS (GR)	26
AMORTIGUADOR Y POLEA (GR)	36
VOLANTE (GR)	37
ENGRANAJE DELANTERO (GR)	38
VOLANTE - CAJA DE (GR)	39
CAJA DELANTERA (GR)	40
VÁLVULA DE LEVANTAMIENTO (GR)	41
CÁNCAMOS DE LEVANTAMIENTO DEL MOTOR (GR)	42
MONTAJE DEL MOTOR Y LA TRANSMISIÓN (GR)	44
CÁRTER - COLECTOR DEL (GR)	46
PISTÓN Y BIELA (GR)	47
GRUPO DE TAPON, CAJA DEL VOLANTE	48
POLEA LOCA (GR)	49
SELLO DE CIGÜEÑAL (GR)	50
SELLO DE LA CAJA DE VOLANTE (GR)	51
MOTOR - SOPORTE DEL (GR)	52
MECANISMO DE VÁLVULAS (GR)	53
SISTEMA DE LUBRICACIÓN	56
ADAPTADOR DE TUBERIA DE ACEITE DE MOTOR (GR)	56
RESPIRADERO (GR)	57
FILTRO DE ACEITE DEL MOTOR (GR)	58
ESCAPE DE GASES (GR)	60
INDICADOR DEL NIVEL DE ACEITE (VARILLA) (GR)	61
TUBERÍAS DE ACEITE DEL MOTOR (GR)	62
TURBOCOMPRESOR - TUBERÍAS DE ACEITE DEL (GR)	64
BOMBA DE ACEITE DEL MOTOR (GR)	65
VÁLVULA DE MUESTREO (GR)	67
SISTEMA DE ENFRIAMIENTO	68
ENFRIADOR DE ACEITE DEL MOTOR (GR)	68
CONFIGURACIÓN DE ENFRIAMIENTO	69
MOTOR Y VENTILADOR (GR)	70
TUBERÍAS DEL AGUA (GR)	72
BOMBA DE AGUA (GR)	76
RADIADOR Y ENFRIADOR DE ACEITE (GR)	80
SISTEMA DE ADMISIÓN Y ESCAPE DE AIRE	81
ADAPTADOR DEL TURBOCOMPRESOR (GR)	81
GRUPO DE POSTENFRIAMIENTO Y MONTAJE	82
FILTRO DE AIRE (GR)	83
TAPA DE ADMISIÓN DE AIRE (GR)	87
CODO DE ADMISIÓN DE AIRE (GR)	88
AIRE - TUBERÍAS DE (GR)	90
MÚLTIPLE DE ESCAPE (GR)	94
SILENCIADOR (GR)	95
TURBOCOMPRESOR (GR)	96
SISTEMA DE COMBUSTIBLE	98
CONTROL DE REGULADOR (GR)	98
FILTRO DE COMBUSTIBLE (GR)	100
FILTRO DE COMBUSTIBLE Y SEPARADOR DE AGUA (GR)	102
TUBERÍAS DE DRENAJE (GR)	103
TUBERÍAS DE COMBUSTIBLE (GR)	104
BOMBA HIDRÁULICA DEL INYECTOR UNITARIO Y MONTAJE	109
BOMBA DE COMBUSTIBLE (GR)	110

* NO HAY TRADUCCION DISPONIBLE EN EL MOMENTO DE LA IMPRESION

CONTENIDO

Nombre	Página
BOMBA DE INYECCIÓN UNITARIA (GR)	112
BOMBA HIDRÁULICA DEL INYECTOR UNITARIO (GR)	114
SELLO DEL INYECTOR DEL COMBUSTIBLE (GR)	115
COMBUSTIBLE - TANQUE DE (GR)	116
VÁLVULA DE SOLENOIDE (GR)	122
SEPARADOR DE AGUA Y BOMBA DE CEBADO DE COMBUSTIBLE (GR)	123
SISTEMA ELÉCTRICO Y DE ARRANQUE	124
ALARMA (GR)	124
CARGA - ALTERNADOR DE (GR)	126
BATERÍA (GR)	134
BLOQUE DE EMPALME (GR)	137
DISYUNTOR DE CIRCUITO (GR)	138
CONTROL ELECTRÓNICO DEL MOTOR Y MONTAJE	140
CONTROL ELECTRÓNICO DEL MOTOR (GR)	141
CONTROL DE LA DIRECCION SECUNDARIA (GR)	143
CONTROL NO PROGRAMADO (GR)	144
CONVERTIDOR ELÉCTRICO (CONFIG)	145
CONVERTIDOR ELÉCTRICO (GR)	146
ELECTRONICA DE MONITOR (GR)	149
TREN DE FUERZA-GRUPO ELECTRÓNICO	150
GRUPO DE AJUSTADORES, PRISIONERO TIERRA	151
LÁMPARA DEL TECHO (GR)	152
REFLECTOR (GR)	153
LÁMPARA DE FARO DELANTERO (GR)	154
LÁMPARA DE LUZ DELANTERA Y DE SEÑAL (GR)	160
LAMPARA MARCADORA (GR)	164
LAMPARA DE PLACA DE REGISTRO (GR)	165
LUZ DE SEÑAL DE GIRO (GR)	166
LÁMPARA DE BALIZA DE ADVERTENCIA (GR)	168
REFLECTORES (CONFIG)	169
LUCES DE REFLECTOR Y SEÑAL (CONFIG)	170
LUCES DE RETROCESO (GR)	172
LUCES DE REFLECTOR (GR)	176
LUCES DE DESPLAZAMIENTO (GR)	196
LUCES DE GIRO (GR)	197
LUCES DE ADVERTENCIA (GR)	198
MOTOR ELÉCTRICO (GR)	202
ENCHUFE DE ARRANQUE AUXILIAR (GR)	203
SENSOR DEL MOTOR (GR)	204
DETECTOR DE POSICIÓN (SISTEMA DE COMBUST.) (GR)	206
SENSOR DE PRESIÓN (GR)	208
SENSOR DE VELOCIDAD (GR)	213
SENSOR DE TEMPERATURA (GR)	216
MOTOR DE ARRANQUE ELÉCTRICO (GR)	218
INTERRUPTOR DE DERIVACIÓN	222
DISYUNTOR (GR)	223
INTERRUPTOR DE LUZ (GR)	224
INTERRUPTOR MAGNÉTICO (GR)	226
INTERRUPTOR DEL LIMPIADOR (GR)	228
RETROCESO - ALARMA DE (GR)	229
GRUPO DE CABLES, HOJA AMORTIGUADORA	230
CABLES DE LA CABINA (GR)	232
CABLES DEL MOTOR (GR)	242
CABLES DELANTEROS (GR)	244
CABLES DE CALEFACCIÓN (GR)	252
CABLES POSTERIORES (GR)	254
CABLES DE LA DIRECCIÓN SECUNDARIA	280
CABLES DE LA CONSOLA DE CAMBIOS (GR)	282
CABLES DE LA CONSOLA DE DIRECCIÓN (GR)	288
TREN DE FUERZA	296
CAJA Y PIEZAS DE LA TRANSMISIÓN (GR)	296
CADENA DE IMPULSIÓN (GR)	300
EMBRAGUE DE LA TRANSMISIÓN (GR)	302
CONTROL DEL EMBRAGUE (GR)	314
CONTROL DE TRABA DEL DIFERENCIAL (GR)	316
CONTROL DE LA TRANSMISIÓN (GR)	318
CONTROL HIDRÁULICO DE LA TRANSMISIÓN (GR)	320
ACOPLAMIENTO TORSIONAL (GR)	321
DIFERENCIAL Y CORONA (GR)	322
DIFERENCIAL (GR)	324
TUBO DE LLENADO DE ACEITE DE LA TRANSMISIÓN (GR)	326
FILTRO DE ACEITE Y MONTAJE (GR)	328
FILTRO DE ACEITE (GR)	330
MANDO FINAL (GR)	332
TUBERÍAS DE ACEITE DE LA TRANSMISIÓN (GR)	334

* NO HAY TRADUCCION DISPONIBLE EN EL MOMENTO DE LA IMPRESION

CONTENIDO

Nombre	Página
MONTAJE DE RUEDA (GR)	337
BOMBA DE ENGRANAJES (GR)	338
REJILLA MAGNÉTICA (GR)	340
EJE DE MANDO (GR)	341
EJE DE ENTRADA (GR)	342
TÁNDEM Y CUBIERTA (GR)	343
TRANSMISION (CONFIG)	344
JUNTA UNIVERSAL (GR)	345
VÁLVULA DE LA TRABA DEL DIFERENCIAL Y MONTAJE (GR)	346
VÁLVULA SELECTORA Y DE CONTROL DE PRESIÓN (GR)	348
VÁLVULA DE SOLENOIDE (GR)	355
VÁLVULA DE CONTROL DE LA TRANSMISIÓN (GR)	358
RUEDA Y LLANTA (CONFIG)	360
RUEDA Y NEUMÁTICO (GR)	376
RUEDA (CONFIG)	409
RUEDA (GR)	410
BASTIDOR Y CAJA	414
EJE DELANTERO (GR)	414
DEFLECTOR DEL RADIADOR	417
CAJA Y BASTIDOR (GR)	418
CUBIERTA PROTECTORA (GR)	419
COMPARTIMIENTO DEL MOTOR (GR)	420
BASTIDOR DELANTERO (GR)	424
PROTECTOR Y SOPORTE DEL RADIADOR (GR)	428
PROTECTOR INFERIOR (GR)	431
PROTECTOR DEL TANQUE DE COMBUSTIBLE (GR)	432
PROTECTOR DE LA PLATAFORMA (GR)	434
ENGANCHE ARTICULADO (GR)	438
ENGANCHE DE REMOLQUE (GR)	440
TUBERÍAS DE ENGRASE (GR)	441
TIRANTE DE DIRECCIÓN (GR)	442
MONTAJE-REGISTRO (GR)	443
PROTECTOR TÉRMICO DEL EJE DE MANDO (GR)	444
PROTECTOR TÉRMICO (GR)	445
ESTRIBO DEL OPERADOR (GR)	446
CONFIGURACIÓN DE SOPORTE DE CHASIS TRASERO	447
SOPORTE DEL TANQUE DE COMBUSTIBLE (GR)	448
SOPORTE DE PLATAFORMA (GR)	449
SISTEMA DE FRENOS	450
DESHIDRATADOR (GR)	450
FRENO DE ESTACIONAMIENTO (GR)	460
FRENO DE SERVICIO (GR)	462
CONTROL DEL FRENO DE ESTACIONAMIENTO	464
FRENO DE SERVICIO - CONTROL (GR)	466
TUBERÍAS DEL TANQUE DE AIRE (GR)	471
TANQUE DE AIRE (GR)	472
CONTROL DE AIRE-VÁLVULA	474
VÁLVULA DE SOLENOIDE (GR)	478
SISTEMA HIDRÁULICO	479
ACUMULADOR HIDRAULICO Y MONTAJE (GR)	479
ACUMULADOR DE AMORTIGUACIÓN DE LA HOJA (CONFIG)	480
ACUMULADOR (GR)	480
GRUPO DE ACUMULADOR DE AMORTIGUACIÓN DE LA HOJA	482
CONTROL HIDRÁULICO (CONFIG)	484
CONTROL DE DIRECCIÓN (GR)	485
CILINDRO DE DESGARRADOR Y TUBERÍAS (GR)	486
CILINDRO DE ARTICULACIÓN Y MONTAJE (GR)	487
CILINDRO DE LEVANTAMIENTO DE HOJA Y MONTAJE (GR)	488
CILINDRO DE LA PUNTA DE LA HOJA Y MONTAJE (GR)	489
CILINDRO DE DESPLAZAMIENTO DEL CÍRCULO Y MONTAJE (GR)	490
CILINDRO DE ESCARIFICADOR Y MONTAJE (GR)	491
CILINDRO DE DESPLAZAMIENTO LATERAL Y MONTAJE (GR)	492
CILINDRO DE DIRECCIÓN Y MONTAJE (GR)	493
CILINDRO DE INCLINACIÓN DE RUEDA Y MONTAJE (GR)	494
ARTICULACIÓN DE CILINDRO (GR)	495
CILINDRO DE LEVANTAMIENTO DE LA HOJA (GR)	496
CILINDRO DE INCLINACIÓN DE LA HOJA (GR)	498
CILINDRO DE DESPLAZAMIENTO DEL CÍRCULO (GR)	500
CILINDRO HIDRÁULICO (GRUPO)	502
CILINDRO DE ESCARIFICADOR (GR)	504
CILINDRO DE DESPLAZAMIENTO LATERAL (GR)	506
CILINDRO DE DIRECCIÓN (GR)	508
CILINDRO DE INCLINACIÓN DE LAS RUEDAS (GR)	512

* NO HAY TRADUCCION DISPONIBLE EN EL MOMENTO DE LA IMPRESION

CONTENIDO

Nombre	Página
TOPE DE VÁLVULA DE CONTROL (GR)	513
MANDO DEL CIRCULO (GR)	516
MANDO DE BOMBA (GR)	519
TUBERÍAS DEL ACUMULADOR (GR)	520
TUBERÍAS HIDRÁULICAS (GR)	522
TUBERÍAS HIDRÁULICAS DEL VENTILADOR (GR)	536
BOMBA - TUBERÍAS DE (GR)	540
TUBERÍAS DEL DESGARRADOR (GR)	548
TUBERÍAS DE LA DIRECCIÓN SECUNDARIA (GR)	550
TUBERÍAS DE DIRECCIÓN (GR)	552
TRABA DE DESPLAZAMIENTO DEL CIRCULO (GR)	556
TRABA DE CONTROL HIDRÁULICO MANUAL (GR)	557
MOTOR DE ENGRANAJES (GR)	558
MOTOR HIDRÁULICO DE ENGRANAJES (GR)	560
BOMBA Y MOTOR DE DIRECCION SECUNDARIA (GR)	562
BOMBA Y MONTAJE DEL PISTÓN (GR)	563
BOMBA Y MONTAJE DE LA DIRECCIÓN SECUNDARIA (GR)	565
DOSIFICACIÓN - BOMBA DE (GR)	566
BOMBA DE PISTONES (GR)	568
GRUPO GIRATORIO DE BOMBA	574
DIRECCIÓN SECUNDARIA (CONFIG)	577
PLATO OSCILANTE (GR)	578
UNIÓN GIRATORIA (GR)	579
TANQUE Y FILTRO HIDRÁULICOS (GR)	580
TANQUE HIDRÁULICO Y MONTAJE (GR)	582
VÁLVULA Y VARILLAJE (GR)	584
GRUPO DE 4 VÁLVULAS HIDRÁULICAS	608
BANCADA 5 (GR)	612
VÁLVULA DE COMBINACIÓN (GR)	618
VÁLVULA DE CONTROL (GR)	620
VÁLVULA COMPENSADORA DE FLUJO Y PRESIÓN (GR)	652
VALVULA DE PURGA (GR)	656
VÁLVULA DE ALIVIO (GR)	658
VÁLVULA DE LANZADERA (GR)	670
VÁLVULA DE SOLENOIDE (GR)	671
VÁLVULA DE SOLENOIDE Y MÚLTIPLE (GR)	673
IMPLEMENTOS	676
CÍRCULO (GR)	676
BARRA DE TIRO (GR)	680
TIRANTE INFERIOR (GR)	682
TIRANTE SUPERIOR (GR)	683
PLANCHA DE EMPUJE (GR)	684
HERRAMIENTAS	685
CANTONERA (CONJ)	685
CANTONERA (GR)	686
CANTONERA DE EXTREMO (GR)	688
HOJA (GR)	689
SOPORTE DEL ESCARIFICADOR (GR)	691
CUCHILLA (GR)	692
EXTENSIÓN DE LA HOJA (GR)	693
LEVANTAMIENTO - HOJA DE (GR)	696
MONTAJE DEL DESGARRADOR (GR)	698
DESGARRADOR (CONFIG)	700
DESGARRADOR (GR)	701
ESCARIFICADOR (CONFIG)	702
GRUPO ESCARIFICADOR	704
DIENTE DE DESGARRADOR (GR)	711
PUESTO DEL OPERADOR	712
ACCESORIOS DE LA CABINA (GR)	712
AJUSTADOR DEL ASIENTO (GR)	714
ACONDICIONADOR DE AIRE Y MONTAJE (GR)	716
ACONDICIONADOR DE AIRE (CONFIG)	716
ACONDICIONADOR DE AIRE (GR)	718
APLICACION DE MONITOR (GR)	722
POSABRAZOS (GR)	723
CABINA DE PERFIL ALTO (CONFIG)	725
CABINA SIN ROPS (CONFIG)	725
CABINA (GR)	725
COMPRESOR DE REFRIGERANTE (GR)	727
CONDENSADOR DEL REFRIGERANTE Y MONTAJE (GR)	729
CONSOLA DEL OPERADOR (GR)	730
CONJUNTO DE MODIFICACIÓN (SIN ROPS)	733
PUERTA (GR)	734
PUERTA DE CABINA	738
CONDUCTO Y CONTROL (GR)	746
CONDUCTO (GR)	747
EXTENSIÓN DEL RESPALDO (GR)	748
VENTILADOR DE CIRCULACION	750
FILTRO DE AIRE DE LA CABINA (GR)	756
MARTILLO Y MONTAJE (GR)	757

* NO HAY TRADUCCION DISPONIBLE EN EL MOMENTO DE LA IMPRESION

CONTENIDO

Nombre	Página
CALEFACCIÓN Y MONTAJE DE LA CABINA (GR)	759
CALEFACCIÓN DE LA CABINA (CONFIG)	759
CALEFACCIÓN DE LA CABINA (GR)	762
BOCINA DE AIRE (GR)	770
CAJA DE LA SUSPENSIÓN DEL ASIENTO (GR)	774
INSTALACIÓN DE RADIO (CONFIG)	777
INSTALACIÓN DE RADIO (GR)	778
GRUPO DE AISLAMIENTO DE LA CABINA	780
REVESTIMIENTO DE LA CABINA (GR)	782
TUBERÍAS DE LA CALEFACCIÓN (GR)	798
PUBLICACIONES (GR)	800
PERSIANAS DE LA CABINA (GR)	801
RETROVISOR (GR)	802
MODULO ELECTRÓNICO DE CUATRO INDICADORES (GR)	808
MÓDULO DEL TACÓMETRO Y DEL VELOCÍMETRO (GR)	809
GRUPO DE MONTAJE DE LA CABINA	811
MONTAJE DE LA ESTRUCTURA ROPS (GR)	812
GRUPO DE SOPORTE DEL RESPALDO	815
CUBIERTA INFERIOR DEL ASIENTO DEL OPERADOR (GR)	816
PANEL DE LA CABINA (GR)	818
TABLERO DE INSTRUMENTOS (GR)	822
PANEL DE LA VENTANA (GR)	830
INCLUYE ROPS (CONFIG)	834
ESTRUCTURA ROPS ABIERTA	835
CABINA ROPS CERRADA (GR)	835
ESTRUCTURA ROPS ABIERTA (GR)	838
PERSIANA PARA EL SOL (GR)	839
CINTURÓN DE SEGURIDAD (GR)	840
ASIENTO (GR)	844
ASIENTO FIJO (GR)	852
SUSPENSIÓN - ASIENTO CON (GR)	858
SOPORTE DEL ASIENTO (GR)	866
INSONORIZADOR (GR)	868
ASIENTO CON SUSPENSIÓN (GR)	870
LAVAPARABRISAS DE LA VENTANA (GR)	874
VENTANA (GR)	880
LIMPIAPARABRISAS (CONFIG)	885
LIMPIAPARABRISAS DE LA VENTANA (GR)	886
EQUIPO Y SUMINISTRO DE SERVICIOS	899
*TOOL BOX GP	899
ETIQUETA DE ADVERTENCIA (GR)	900
GATO HIDRÁULICO	900
CALCOMANÍAS Y PLACAS DE IDENTIFICACIÓN (GR)	900
INDICE DE NUMEROS DE PIEZA	B1

* NO HAY TRADUCCION DISPONIBLE EN EL MOMENTO DE LA IMPRESION

ÍNDICE

Designação	Página
INFORMAÇÃO GERAL	A22
ALTERNATIVAS DE REPARO	A28
ADITIVOS SUPLEMENTARES DO LÍQUIDO ARREFECEDOR	A31
NOMENCLATURA DE PEÇAS INGLÊS-PORTUGUÊS	A32
PEÇAS DE MANUTENÇÃO	A56
ÍNDICE	A98
MÁQUINA - ARRANJO	1
GR. DE CONVERSÃO - CERTIFICADO	1
ARRANJO GERAL	2
ARRANJO RODOVIÁRIO	4
MOTOR - ARRANJO	5
MOTOR COMPLETO	5
MOTOR - NÚCLEO	6
MOTOR BÁSICO	7
COMPRESSOR DE AR	7
EIXO-COMANDO DE VÁLVULA	10
SUPORTE DO RETENTOR	11
TAMPA - BLOCO DO MOTOR	12
TAMPA - CAIXA DO VOLANTE	14
TAMPA - CAIXA DIANTEIRA	15
TAMPA - MECANISMO DAS VÁLVULAS	16
VIRABREQUIM	17
BLOCO DO MOTOR	18
CABEÇOTE DO MOTOR	21
AMORTECEDOR DE VIBRAÇÕES E POLIA	36
VOLANTE DO MOTOR	37
ENGRENAGENS DE DISTRIBUIÇÃO	38
CAIXA DO VOLANTE DO MOTOR	39
CAIXA DIANTEIRA	40
TUCHO DA VÁLVULA	41
LEVANTAMENTO DO MOTOR	42
MONTAGEM - MOTOR E TRANSMISSÃO	44
CÁRTER DO ÓLEO DO MOTOR	46
PISTÃO E BIELA	47
BUJÃO - CAIXA DO VOLANTE DO MOTOR	48
POLIA DA RODA-GUIA	49
RETENTOR DO VIRABREQUIM	50
RETENTOR - CAIXA DO VOLANTE	51
SUPORTE DO MOTOR	52
MECANISMO DAS VÁLVULAS	53
SISTEMA DE LUBRIFICAÇÃO	56
ADAPTADOR-TUBO DE ÓLEO DO MOTOR	56
RESPIRO	57
FILTRO - ÓLEO DO MOTOR	58
ELIMINAÇÃO DE VAPORES DO CÁRTER	60
INDICADOR - NÍVEL DO ÓLEO (VARETA)	61
TUBOS - ÓLEO DO MOTOR	62
TUBOS - ÓLEO DO TURBOALIMENTADOR	64
BOMBA DE ÓLEO - MOTOR	65
VÁLVULA PARA TIRAR AMOSTRAS DE FLUIDOS	67
SISTEMA DE ARREFECIMENTO	68
ARREFECEDOR - ÓLEO DO MOTOR	68
ARREFECIMENTO	69
MOTOR E VENTILADOR	70
TUBOS - ÁGUA	72
BOMBA DE ÁGUA	76
RADIADOR E ARREFECEDOR DE ÓLEO	80
SISTEMA DE ADMISSÃO DE AR E DE ESCAPE	81
ADAPTADOR DO TURBOALIMENTADOR	81
PÓS-ARREFECEDOR E MONTAGEM	82
PURIFICADOR DE AR	83
TAMPA - ADMISSÃO DE AR	87
COTOVELO DE ADMISSÃO DE AR	88
TUBOS - AR	90
COLETOR DE ESCAPE	94
SILENCIADOR	95
TURBOALIMENTADOR	96
SISTEMA DE COMBUSTÍVEL	98
CONTROLE DO GOVERNADOR	98
FILTRO - COMBUSTÍVEL	100
FILTRO DE COMBUSTÍVEL E SEPARADOR DE ÁGUA	102
TUBOS - DRENAGEM	103
TUBOS - COMBUSTÍVEL	104
BOMBA HIDRÁULICA E MONTAGEM - UNIDADE INJETORA	109
BOMBA DE COMBUSTÍVEL	110
BOMBA DA UNIDADE INJETORA	112
BOMBA HIDRÁULICA - UNIDADE INJETORA	114

* TRADUÇÃO NÃO DISPONÍVEL NO MOMENTO DA IMPRESSÃO

ÍNDICE

Designação	Página
RETENTOR - INJETOR DE COMBUSTÍVEL	115
TANQUE DE COMBUSTÍVEL	116
VÁLVULA SOLENÓIDE	122
SEPARADOR DE ÁGUA E BOMBA DE ESCORVA DE COMBUSTÍVEL	123
SISTEMA ELÉTRICO E DE PARTIDA	124
ALARME	124
ALTERNADOR DE CORRENTE	126
BATERIA	134
BLOCO DE JUNÇÃO	137
INTERRUPTOR - CIRCUITO	138
CONTROLE ELETRÔNICO E MONTAGEM - MOTOR	140
CONTROLE ELETRÔNICO - MOTOR	141
CONTROLE DA DIREÇÃO SECUNDÁRIA	143
CONTROLE - NÃO PROGRAMADO	144
CONVERSOR ELÉTRICO	145
SISTEMA ELETRÔNICO - MONITOR	149
SISTEMA ELETRÔNICO - TREM DE FORÇA	150
FIXADORES - PRISIONEIRO TERRA	151
LÂMPADA - TETO	152
LÂMPADA - FAROL	153
FAROL DIANTEIRO	154
LÂMPADA DIANTEIRA E DE SINAL	160
LÀMPADA - MARCADORA	164
LAMPADA-PLACA DE REGISTRO	165
LÂMPADA - SINALIZAÇÃO	166
LUZ GIRATÓRIA DE ALARME	168
SISTEMA DE ILUMINAÇÃO - FARÓIS	169
ILUMINAÇÃO - FAROL E SINALIZAÇÃO	170
ILUMINAÇÃO - MARCHA A RÉ	172
SISTEMA DE ILUMINAÇÃO - FARÓIS	176
ILUMINAÇÃO - RODOVIÁRIA	196
ILUMINAÇÃO - SINALIZAÇÃO	197
SISTEMA DE ILUMINAÇÃO - ADVERTÊNCIA	198
MOTOR ELÉTRICO	202
RECEPTÁCULO-PARTIDA AUXILIAR	203
SENSOR DO MOTOR	204
EMISSOR - POSIÇÃO	206
SENSOR - PRESSÃO	208
SENSOR DE VELOCIDADE	213
SENSOR - TEMPERATURA	216
MOTOR ELÉTRICO DE PARTIDA	218
INTERRUPTOR DE DERIVAÇÃO	222
CHAVE GERAL	223
INTERRUPTOR - LUZES	224
INTERRUPTOR - MAGNÉTICO	226
INTERRUPTOR - LIMPADOR DO PÁRA-BRISA	228
ALARME DE MARCHA À RÉ	229
FIAÇÃO - AMORTECEDOR DA LÂMINA	230
CABOS/FIOS ELÉTRICOS - CABINE	232
CABOS/FIOS ELÉTRICOS - MOTOR	242
CABOS/FIOS ELÉTRICOS - DIANTEIROS	244
CABOS/FIOS ELÉTRICOS - AQUECEDOR	252
CABOS/FIOS ELÉTRICOS - TRASEIROS	254
CABOS/FIOS ELÉTRICOS - DIREÇÃO SECUNDÁRIA	280
CABOS/FIOS ELÉTRICOS - CONSOLE DA TRANSMISSÃO	282
CABOS/FIOS ELÉTRICOS - CONSOLE DA DIREÇÃO	288
TREM DE FORÇA	296
CAIXA E COMPONENTES - TRANSMISSÃO	296
CORRENTE - COMANDO	300
EMBREAGEM DA TRANSMISSÃO	302
CONTROLE DA EMBREAGEM	314
CONTROLE DA TRAVA DO DIFERENCIAL	316
CONTROLE DA TRANSMISSÃO	318
CONTROLE HIDRÁULICO DA TRANSMISSÃO	320
ACOPLAMENTO TORSIONAL	321
DIFERENCIAL E COROA	322
DIFERENCIAL	324
BOCAL DE ENCHIMENTO DE ÓLEO DO TREM DE FORÇA	326
FILTRO DO ÓLEO E MONTAGEM	328
FILTRO - ÓLEO	330
COMANDO FINAL	332
TUBOS - ÓLEO DA TRANSMISSÃO	334
MONTAGEM - RODA	337
BOMBA DE ENGRENAGENS	338
FILTRO - MAGNÉTICO	340
EIXO DE TRANSMISSÃO	341
EIXO DE ENTRADA	342
TANDEM E TAMPA	343
TRANSMISSÃO	344
JUNTA UNIVERSAL	345
VÁLVULA E MONTAGEM - TRAVA DO DIFERENCIAL	346
VÁLVULA SELETORA E CONTROLE DE PRESSÃO	348
VÁLVULA SOLENÓIDE	355

* TRADUÇÃO NÃO DISPONÍVEL NO MOMENTO DA IMPRESSÃO

ÍNDICE

Designação	Página
VÁLVULA DE CONTROLE - TRANSMISSÃO	358
RODA E PNEU	360
RODA	409
CHASSI E CARROCERIA	414
EIXO DIANTEIRO	414
DEFLETOR DO RADIADOR	417
CAIXA E CHASSI	418
TAMPA - PROTEÇÃO	419
COBERTURA DO MOTOR	420
CHASSI DIANTEIRO	424
PROTETOR E SUPORTE DO RADIADOR	428
PROTETOR INFERIOR	431
PROTETOR - TANQUE DE COMBUSTÍVEL	432
PROTETOR - PLATAFORMA	434
ENGATE - ARTICULAÇÃO	438
ENGATE DO REBOQUE	440
TUBOS - GRAXA	441
ELO - DIREÇÃO	442
MONTAGEM DA PLACA DE REGISTRO	443
BLINDAGEM DO EIXO DA TRANSMISSÃO	444
DEFLETOR TÉRMICO DE CALOR	445
DEGRAU	446
SUPORTE - CHASSI TRASEIRO	447
SUPORTE DO TANQUE DE COMBUSTÍVEL	448
SUPORTE - PLATAFORMA	449
SISTEMA DE FREIO	450
SECADOR DE AR	450
FREIO DE ESTACIONAMENTO	460
FREIO DE SERVIÇO	462
CONTROLE DO FREIO DE ESTACIONAMENTO	464
CONTROLE DO FREIO DE SERVIÇO	466
TUBOS - TANQUE DE AR	471
TANQUE DE AR	472
VÁLVULA DE CONTROLE DO AR	474
VÁLVULA SOLENÓIDE	478
SISTEMA HIDRÁULICO	479
ACUMULADOR HIDRÁULICO E MONTAGEM	479
ACUMULADOR DO AMORTECEDOR DA LÂMINA	480
ACUMULADOR	480
ACUMULADOR - AMORTECEDOR DA LÂMINA	482
CONTROLE HIDRÁULICO	484
CONTROLE DE DIREÇÃO	485
CILINDROS E TUBOS - RÍPER	486
CILINDRO E MONTAGEM - ARTICULAÇÃO	487
CILINDRO E MONTAGEM - LEVANTAMENTO DA LÂMINA	488
CILINDRO E MONTAGEM - TOMBAMENTO DA LÂMINA	489
CILINDRO E MONTAGEM - DESLOCAMENTO DO CÍRCULO	490
CILINDRO E MONTAGEM - ESCARIFICADOR	491
CILINDRO E MONTAGEM - DESLOCAMENTO DA LÂMINA	492
CILINDRO DE DIREÇÃO E MONTAGEM	493
CILINDRO E MONTAGEM - INCLINAÇÃO DAS RODAS	494
CILINDRO DE ARTICULAÇÃO	495
CILINDRO DE LEVANTAMENTO DA LÂMINA	496
CILINDRO DE TOMBAMENTO DA LÂMINA	498
CILINDRO DE DESLOCAMENTO LATERAL	500
CILINDRO HIDRÁULICO	502
CILINDRO DO ESCARIFICADOR	504
CILINDRO DE DESLIZAMENTO LONGITUDINAL	506
CILINDRO DA DIREÇÃO	508
CILINDRO DE INCLINAÇÃO LATERAL DAS RODAS	512
RETEM DA VÁLVULA DE CONTROLE	513
MOTOR DE REVERSÃO DO CÍRCULO	516
COMANDO DA BOMBA	519
TUBOS - ACUMULADOR	520
TUBOS - ÓLEO HIDRÁULICO	522
TUBOS - VENTILADOR HIDRÁULICOS	536
TUBOS - BOMBA	540
TUBOS - RIPER	548
TUBOS - DIREÇÃO SECUNDÁRIA	550
TUBOS - DIREÇÃO	552
TRAVA - DESLOCAMENTO LATERAL	556
TRAVA - CONTROLE MANUAL HIDRÁULICO	557
MOTOR - ENGRENAGENS	558
MOTOR HIDRÁULICO DO GEROTOR	560
BOMBA DE DIREÇÃO SECUNDÁRIA E MOTOR	562
BOMBA E MONTAGEM - PISTÃO	563

* TRADUÇÃO NÃO DISPONÍVEL NO MOMENTO DA IMPRESSÃO

ÍNDICE

Designação	Página
BOMBA DA DIREÇÃO SECUNDÁRIA E MONTAGEM	565
BOMBA REGULADORA	566
BOMBA DE PISTÃO	568
GRUPO ROTATIVO DA BOMBA	574
DIREÇÃO SECUNDÁRIA	577
PLACA BASCULANTE	578
ARTICULAÇÃO GIRATÓRIA	579
TANQUE HIDRÁULICO E FILTRO	580
TANQUE DE ÓLEO HIDRÁULICO E MONTAGEM	582
VÁLVULA E ARTICULAÇÕES	584
GRUPO DE VÁLVULAS DE CONTROLE - QUÁDRUPLO	608
GRUPO DE VÁLVULAS DE CONTROLE - CINCO	612
VÁLVULA COMBINADA	618
VÁLVULA DE CONTROLE	620
VÁLVULA DE CONTROLE - PRESSÃO E COMPENSAÇÃO DE FLUXO	652
VÁLVULA DE PURIFICAÇÃO	656
VÁLVULA DE ALÍVIO	658
VÁLVULA DE SEPARAÇÃO	670
VÁLVULA SOLENÓIDE	671
VÁLVULA - COLETOR E SOLENÓIDE	673
ACESSÓRIOS	676
CÍRCULO	676
BARRA DE TRAÇÃO	680
ELO - INFERIOR	682
ELO - SUPERIOR	683
CHAPA DE EMPUXO	684
FERRAMENTAS DE TRABALHO	685
CANTO DE LÂMINA	685
LÂMINA	689
SUPORTE DO ESCARIFICADOR	691
BORDA CORTANTE	692
EXTENSÃO DA LÂMINA	693
LEVANTAMENTO DA LÂMINA	696
MONTAGEM - RIPER	698
RIPER	700
ESCARIFICADOR	702
DENTE DO RÍPER	711
ESTAÇÃO DO OPERADOR	712
ACESSÓRIO - CABINE	712
AJUSTADOR DO ASSENTO	714
CONDICIONADOR DE AR E MONTAGEM	716
CONDICIONADOR DE AR	716
APLICAÇÃO - MONITOR	722
BRAÇO DO ASSENTO	723
CABINE - PERFIL ALTO	725
CABINE OPERADOR - SEM ROPS	725
CABINE	725
COMPRESSOR DE REFRIGERANTE	727
CONDENSADOR DO REFRIGERANTE E MONTAGEM	729
CONSOLE DO OPERADOR	730
CONVERSÃO PARA ESTRUTURA NÃO ROPS	733
PORTA	734
PORTA DA CABINE	738
DUCTO E CONTROLE	746
DUCTO	747
EXTENSÃO - ENCOSTO	748
VENTILADOR DE CIRCULAÇÃO DE AR DA CABINE	750
FILTRO - AR DA CABINE	756
MARTELO E MONTAGEM	757
AQUECEDOR DA CABINE E MONTAGEM	759
AQUECEDOR DA CABINE	759
BUZINA DE AR	770
CAIXA - SUSPENSÃO DO ASSENTO	774
INSTALAÇÃO DO RÁDIO - ARRANJO	777
INSTALAÇÃO DO RÁDIO	778
ISOLADOR - TEMPO	780
REVESTIMENTO DA CABINE	782
TUBOS - AQUECEDOR	798
PUBLICAÇÃO	800
PERSIANA	801
ESPELHO RETROVISOR	802
MÓDULO ELETRÔNICO DE QUATRO INDICADORES	808
MÓDULO - VELOCÍMETRO E TACÔMETRO	809
MONTAGEM - CABINE	811
MONTAGEM - ESTRUTURA ROPS	812
FUNDO - ENCOSTO	815
ASSENTO - FUNDO	816
PAINEL - CABINE	818
PAINEL DE INSTRUMENTOS	822
PAINEL - JANELA	830
ESTRUTURA ROPS FECHADA	834
ESTRUTURA ROPS ABERTA	835
ROPS FECHADA	835
ROPS ABERTA	838
TELA PÁRA-SOL	839
CINTO DE SEGURANÇA	840
ASSENTO	844
ASSENTO ESTÁTICO	852
ASSENTO COM SUSPENSÃO	858
SUPORTE - ASSENTO	866
REDUÇÃO DE RUÍDO	868

* TRADUÇÃO NÃO DISPONÍVEL NO MOMENTO DA IMPRESSÃO

ÍNDICE

Designação	Página	Designação	Página
SUSPENSÃO - ASSENTO	870		
LAVADOR DO VIDRO	874		
VIDRO	880		
LIMPADOR DO VIDRO	885		
EQUIPAMENTOS DE SERVIÇO E SUPRIMENTOS	899		
*TOOL BOX GP	899		
DECALQUE	900		
CILINDRO HIDRÁULICO - MACACO	900		
PLACA E DECALQUE	900		
ÍNDICE DE NÚMERO DE PEÇA	B1		

* TRADUÇÃO NÃO DISPONÍVEL NO MOMENTO DA IMPRESSÃO

1. MACHINE IDENTIFICATION

Caterpillar machines are identified by Product Identification Numbers (PIN). Some components included in a machine may be identified by Serial Numbers (S/N). Typical components that will be serialized include engines, transmissions, bulldozers, and rippers. The machine and engine are further identified by arrangement numbers and in some cases modification numbers. These numbers are shown on the product identification plate(s) and on the master plate in the operator's compartment.

Caterpillar dealers need all of these numbers to determine accurate parts identification.

SIS ***New Feature***

Effective First Quarter 2001 the Caterpillar Product Identification Number (PIN) will change from 8 to 17 characters. In an effort to provide uniform equipment identification, Caterpillar and other construction equipment manufacturers are moving to comply with the latest version of the product identification numbering standard. Non-road machine PINs are defined by ISO 10261. The new PIN format will apply to all Caterpillar machines and generator sets. The PIN plates and frame marking will display the 17 character PIN. The new format will look like the following:

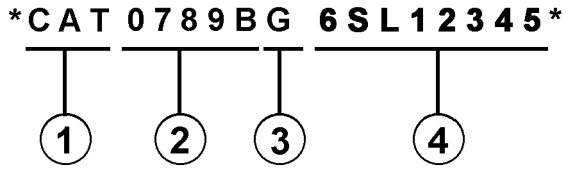

Where:

1. Caterpillar's World Manufacturing Code (characters 1-3)

2. Machine Descriptor (characters 4-8)

3. Check Character (character 9)

4. Machine Indicator Section (MIS) or Product Sequence Number (characters 10-17). These were previously referred to as the Serial Number.

Machines and generator sets produced before First Quarter 2001 will maintain their 8 character PIN format.

Components such as engines, transmissions, axles, etc. and work tools will continue to use an 8 character Serial Number (S/N).

2. ORDERING PARTS

⚠ WARNING

When replacement parts are required for this product Caterpillar recommends using Caterpillar replacement parts or parts with equivalent specifications including, but not limited to, physical dimensions, type, strength and material.

Failure to heed this warning can lead to premature failures, product damage, personal injury or death.

Quality Caterpillar replacement parts are available from Caterpillar dealers throughout the world. Their parts inventories are up to date and include all parts normally required to protect your investment in Caterpillar machines. Dealers may offer repair kits or remanufactured parts to allow selection of the most effective repair alternative for a particular situation. When ordering parts, your order should specify the quantity, part number, part name, and the serial number/product identification number of the machine for which the parts are needed.

3. PARTS MANUAL ORGANIZATION

Product information in this manual is presented as "information elements" that represent all of the components for the specific model. Engine Arrangement and Seat Group are examples of information elements. The information elements are organized alphabetically by part name and secondarily by part number within each major section of the manual.

4. TABLE OF CONTENTS

SIS ***New Feature***

A table of contents (TOC) is found at the beginning of the manual. The TOC lists each section of the manual with a complete list of all information elements organized as they appear in the manual. Page numbers are provided for quick reference to detailed parts identification illustrations and serviceable consist lists.

5. MAINTENANCE PARTS INDEX

The Maintenance Parts Index, located near the beginning of the manual, references most frequently used maintenance part numbers, providing description, quantity, usage and page number. This information is organized alphabetically by part description.

6. INDEX

The index located near the front of the manual is an alphabetical listing of all information elements included in the manual. Page numbers are provided for quick reference to detailed parts identification illustrations and serviceable consist lists.

7. PART NUMBER INDEX

A numerical index listing all part numbers and the corresponding page number(s) appears at the back of the manual.

8. CAPTIONS

Captions located at the top of each page of an information element identify the part number and part name along with additional descriptive information. PIN and S/N information found in each caption should be used to select correct information for a specific machine. Field replacement options, identification of optional attachment components, and where used ("part of") information is also provided.

SIS ***New Feature***

The first line of a caption is shown in larger type font to indicate the beginning of an information element. Captions for additional pages that may be required to illustrate an information element will be shown in standard type font and will include the term *(contd.)* .

9. NON-SERVICED PARTS

SIS ***New Feature***

In some instances it is necessary to display non-serviced parts that are a link to a lower level serviceable consist lists. These non-serviced part numbers are shown in *italic* type indicating that they are not available.

10. PARTS LIST REFERENCE NUMBERS

SIS ***New Feature***

Numbers shown in the Ref No column correspond to numbers used in the associated graphic(s). An alphabetic suffix may be added to a reference number to identify lower level consist items. Numbers shown in the Graphic Ref column refer to the graphic number identifier displayed in the lower left corner of each illustration. The Graphic Ref number may be used in combination with the item Ref No to determine the correct part number. There may be intentional omission of a Ref No in a consist list as information is updated to reflect the latest serviceable part numbers.

11. INDENTED PART NAMES

When a part name is indented in a parts list, it is part of (included in) the group or assembly under which it is indented.

12. ILLUSTRATION REFERENCE LETTERS

When necessary, illustrations contain reference letters (A, B, C etc.) that are intended to track lines and harnesses from one point to another. They are also used to show where to reconnect illustrations that have been separated.

13. ABBREVIATIONS AND SYMBOLS

O.D. – Outside Diameter
I.D. – Inside Diameter
A – Not Part Of This Group
B – Use As Required
C – Change From Previous Type
D – Order By The Meter
E – Order By The Centimeter
F – Not Shown
G – Order By The Inch
I – See Hose Fabrication Guide
M – Metric Part
R – Remfg Part May Be Available
Y – Separate Illustration
Z – Not Serviced Separately

NOTE:

Continuing improvement and advancement of product design may cause changes to your machine which may not be included in this publication. Whenever a question arises regarding your Caterpillar product or this publication, please consult your Caterpillar dealer for the latest available information.

FRAME AND BODY

8E-3299 PLATFORM GP-CAB

PIN 3SK1-09999

SMCS-7253 100090751

NOTE	REF NO	GRAPHIC REF	PART NUMBER	QTY	PART NAME (1 2 3 4 5 6 PRODUCT LEVEL)	SEE PAGE
	1	1	3T-3953	1	PLATE AS	
	2	1	5B-2992	25	BOLT (3/8-16X.750IN)	
	3	1	5P-1075	41	WASHER-HARD (3MM THK)	
	4	1	9P-1444	2	SUPPORT AS-FOOT	
	5	1	9P-2229	19	BOLT (1/2-13X1IN)	
		1	5P-[illegible]4	19	WASHER-HARD (4MM THK)	
	6	1	9E-9136	1	COVER AS-LH	
		1	9F-2979	6	NUT-WELD (3/8-16 THD)	
		1	1P-0188	1	CLIP	
	7	1	7S-3411	4	COVER	
	8	1	6J-0488	18	SCREW-HEAD (3/8-16X.875IN)	
	9	1	[illegible]-4474	1	COVER	
		1	9E-9[illegible]7		GASKET	
	10	1	9E-3249	1	[illegible]	
		1	9E-3250	1	GASKET	
	11	1	3T-3935	1	HANDHOLD	
	12	1	9E-9078	1	COVER AS	
		1	9F-2979	8	NUT-WELD (3/8-16 THD)	
		1	9E-9079	1	GASKET	
	13	1	7T-0131	1	FLOORPLATE AS	
		1	1F-0748	4	NUT-WELD (1/2-13 THD)	
	14	1	7Y-9087	1	PLUG-BUTTON	
	15	1	7T-0136	1	PLATE AS	
		1	9F-2979	6	NUT-WELD (3/8-16 THD)	
	16	1	7T-9096	1	COVER	
		1	7T-9779	1	GASKET	
	17	1	3T-3981	1	PLATE AS	
	18	1	6T-9364	4	BOLT (1/4-20X.625IN)	
M		1	6T-4205	4	WASHER-HARD (2MM THK)	
	19	1	6L-9484	1	FLOOR MAT	
	20	1	9E-9946	1	MODULE AS-OPERATOR	
	21	1	3T-3934	1	HANDHOLD	
	22	1	9P-8571	2	PLUG	
	23	2	6T-9364	4	BOLT (1/4-20X.625IN)	
M		2	6T-4205	4	WASHER-HARD (2MM THK)	
	24	2	5B-3062	17	BOLT (3/8-16X.750IN)	
	26	2	5F-1075	21	WASHER-HARD (3MM THK)	
	26	2	7T-0135	1	SEAL	
	27	2	7X-0378	2	BOLT (3/4-10X5IN)	
		2	7X-0682	2	WASHER-HARD (6MM THK)	
	28	2	3T-3482	2	PLATE	
	29	2	3T-5290	1	PLATE AS	
		2	7S-0038	8	SPACER	
	30	2	3T-5281	1	SEAL	
	31	2	7S-0017	1	GASKET	
	32	2	7S-9016	1	COVER AS	
		2	2R-2276	2	WASHER	
		2	6P-9028	2	SCREW-KNURLED	
	33	2	9W-3429	1	COVER	
	34	2	9E-9097	1	COVER	
	35	2	9D-3031	8	SCREW-SOCKET HEAD	
	36	2	9W-3142	8	MOUNTING	
	37	2	9W-9027	2	PLATE	
	38	2	7X-0390	2	BOLT (7/8-9X5IN)	
		2	7X-0672	2	WASHER-HARD	
	39	2	4L-9454	4	BOLT (3/8-16X1.0IN)	
	40	2	3T-4788	1	COVER	

12 FRAME AND BODY 1 of 4 SELP4570-01

FRAME AND BODY

8E-3299 PLATFORM GP-CAB (contd.)

100090751

NOTE	REF NO	GRAPHIC REF	PART NUMBER	QTY	PART NAME (1 2 3 4 5 6 PRODUCT LEVEL)	SEE PAGE
	41	2	8E-3515	1	COVER	
	42	2	7T-0134	1	PLATE	
	43	2	7T-0139	1	GASKET	
	44	2	7S-9724	1	GASKET	
	45	2	7S-9723	1	COVER	
	46	2	6V-1969	2	PLUG-BUTTON	

M-METRIC PART

SELP4570-01 2 of 4 FRAME AND BODY 13

FRAME AND BODY

8E-3299 PLATFORM GP-CAB (contd.)

100090751

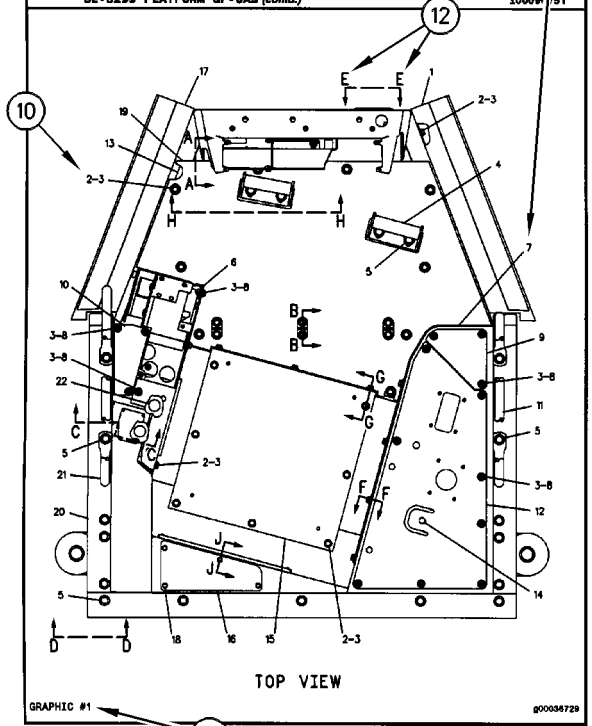

GRAPHIC #1 g00036729

14 FRAME AND BODY 3 of 4 SELP4570-01

FRAME AND BODY

8E-3299 PLATFORM GP-CAB (contd.)

100090751

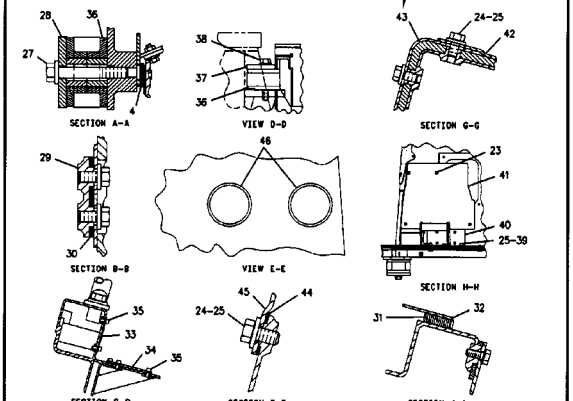

GRAPHIC #2 g00105874

SELP4570-01 4 of 4 FRAME AND BODY 15

1. MÁQUINAS

Las máquinas Caterpillar se identifican con Números de Identificación del Producto (PIN). Algunos componentes incluídos en la máquina pueden estar identificados con Números de Serie (N/S). Los componentes que tienen típicamente esta identificación incluyen motores, transmisiones, hojas topadoras y desgarradores. La máquina y el motor se identifican además con Números de Configuración y en algunos casos, Números de Modificación. Estos números están en las placas de identificación del producto o en la placa principal en la cabina del operador.

Los distribuidores Caterpillar necesitan estos números para identificar con exactitud los números de piezas de repuesto.

SIS *Nueva Característica*

A partir del primer trimestre del 2001, el Número de Identificación de Producto (PIN) de Caterpillar cambiará de 8 a 17 caracteres. Para hacer más uniforme el método de identificación de equipos, Caterpillar y otros fabricantes de equipo de construcción han tomado medidas para cumplir con la versión más reciente de la norma de numeración de identificación de productos. Los Números de Identificación de Producto para máquinas que no se operan en carreteras son definidos por la norma ISO 10261. El nuevo formato PIN corresponderá a todas las máquinas y grupos electrógenos Caterpillar. Las placas y los caracteres PIN estampados en el bastidor mostrarán el PIN de 17 caracteres. El nuevo formato tendrá la apariencia siguiente:

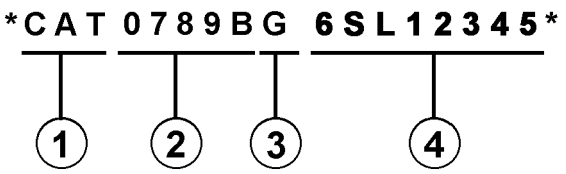

Significado de los caracteres:

1. Código de Fabricación Mundial de Caterpillar (caracteres 1-3)

2. Sección Descriptor de la Máquina (caracteres 4-8)

3. Carácter de Verificación (carácter 9)

4. Sección Indicador de la Máquina (MIS) o Número de Secuencia de Producto (caracteres 10-17). Anteriormente, estos caracteres constituían el Número de Serie.

Las máquinas y grupos electrógenos producidos antes del primer semestre del 2001 mantendrán su formato PIN de 8 caracteres.

Los componentes como motores, transmisiones, ejes, herramientas de trabajo, etc., continuarán usando un Número de Serie (S/N) de 8 caracteres.

2. COMO PEDIR REPUESTOS

⚠ ADVERTENCIA

Cuando se necesiten piezas de repuesto para este producto, Caterpillar recomienda usar piezas de repuesto Caterpillar o piezas que tengan especificaciones equivalentes incluyendo, pero sin estar limitadas a, dimensiones físicas, tipo, fortaleza y material.

El no hacer caso de esta advertencia puede llevar a fallas prematuras, daños al producto y lesiones graves o mortales.

Las piezas de repuesto Caterpillar de calidad están a la disposición de los distribuidores Caterpillar en todo el mundo. Sus existencias actualizadas incluyen todas las piezas normalmente requeridas para proteger su inversión en máquinas Caterpillar. Los distribuidores pueden tener juegos de reparación o piezas remanufacturadas para permitir la selección de la mejor alternativa de reparación en un caso en particular. Al pedir piezas de repuesto, especifique en su pedido la cantidad, el número de pieza, el nombre de la pieza y el número de serie/número de identificación del producto, de la máquina para la cual se necesitan estas piezas.

3. ORGANIZACION DEL MANUAL DE PIEZAS

La información sobre el producto, se presenta en este manual, como "elementos de información" que representan todos los componentes de un modelo específico. Las configuraciones de motores y los grupos de asientos son ejemplos de elementos de información. Los elementos de información están organizados primeramente por nombres de piezas en orden alfabético y en segundo lugar, por el número de pieza dentro de cada sección principal del manual.

4. CONTENIDO

SIS *Nueva Característica*

La página de Contenido se encuentra al principio del manual. El Contenido indica cada sección del manual con una lista completa de todos los elementos de información organizados en el orden que aparecen en el manual. Los números de página proporcionan una referencia rápida a las ilustraciones detalladas de identificación de piezas y a las listas de componentes de repuesto de dichas piezas.

5. ÍNDICE DE PIEZAS DE MANTENIMIENTO

Al principio de este catálogo se encuentra un índice de los números de piezas utilizadas más frecuentemente para el mantenimiento, que incluye descripción, cantidad necesaria, lugar de utilización y número de página. Esta información está organizada alfabéticamente, por descripción de la pieza.

6. ÍNDICE

El Índice, ubicado cerca del principio del manual, es una lista en orden alfabético de todos los elementos de información incluídos en el manual. Los números de página proporcionan una referencia rápida a las ilustraciones detalladas de identificación de piezas y a las listas de componentes de repuesto de dichas piezas.

7. INDICE NUMÉRICO DE PIEZAS

Un índice numérico de piezas con el correspondiente número de página aparece al final de este catálogo.

8. TÍTULOS

Los títulos ubicados en la parte superior de cada página de elementos de información identifican el número y el nombre de la pieza junto con información descriptiva adicional para ayudar al usuario a determinar las piezas necesarias para una máquina en particular. También se suministra información sobre las opciones de reparación en el campo, la identificación de componentes de accesorios optativos y el lugar de ubicación de la pieza ("es parte de").

SIS *Nueva Característica*

La primera línea del título se muestra con un tipo de letra más grande para indicar el comienzo de un elemento de información. Si se requieren páginas adicionales para ilustrar un elemento de información, los títulos se muestran con un tipo de letra normal y la continuación se indica entre paréntesis.

9. PIEZAS QUE NO SE SUMINISTRAN COMO REPUESTO

SIS *Nueva Característica*

En algunos casos es necesario indicar piezas que no se suministran como repuesto pero que pueden estar conectadas a listas de componentes de otras piezas de repuesto. En tal caso, dichas piezas se muestran en cursiva para indicar que no son piezas disponibles.

10. NÚMEROS DE REFERENCIA

SIS *Nueva Característica*

Los números en la columna de No. de Referencia corresponden a los números indicados en la ilustración que pertenece a ese número de pieza. Los números que tienen un sufijo alfabético identifican artículos de las listas de componentes de piezas. Los números en la columna de Referencia de la ilustración se identifican en la esquina inferior izquierda de cada ilustración. Para determinar el número de pieza correcto se puede utilizar tanto el No. de Referencia de la ilustración como el No. de Referencia del artículo. A medida que se actualiza la información para indicar los más recientes números de piezas de repuesto, puede omitirse intencionalmente un No. de Referencia en una lista de componentes de piezas.

11. NOMBRES DE PIEZA SANGRADOS

Cuando el nombre de una pieza está sangrado en una lista, significa que esta pieza forma parte del grupo o conjunto del renglón inmediatamente superior.

12. LETRAS DE REFERENCIA DE ILUSTRACIONES

Las ilustraciones contienen algunas veces letras de referencia (A, B, C etc.) cuyo propósito es seguir el trayecto de líneas y mazos de cables de un punto a otro. También se utilizan para mostrar dónde volver a unir ilustraciones que se habían separado.

13. ABREVIATURAS Y SIMBOLOS

O.D. – Diámetro exterior
I.D. – Diámetro interior
A – No es pieza de este grupo
B – Utilizado según la demanda
C – Indica cambio
D – Se pide por metro
E – Se pide por centímetro
F – No se muestra
G – Se pide por pulgada
I – Ver "Hose Fabrication Guide"
M – Pieza métrica
R – Puede estar disponible como pieza remanufacturada
Y – Ilustración separada
Z – No se suministra por separado

NOTA:

Las contínuas mejoras y adelantos en diseño podrían originar cambios a su máquina que no se incluyen en esta publicación. Cuando tenga alguna pregunta acerca de su producto Caterpillar o de esta publicación, consulte al distribuidor Caterpillar para obtener la información más reciente.

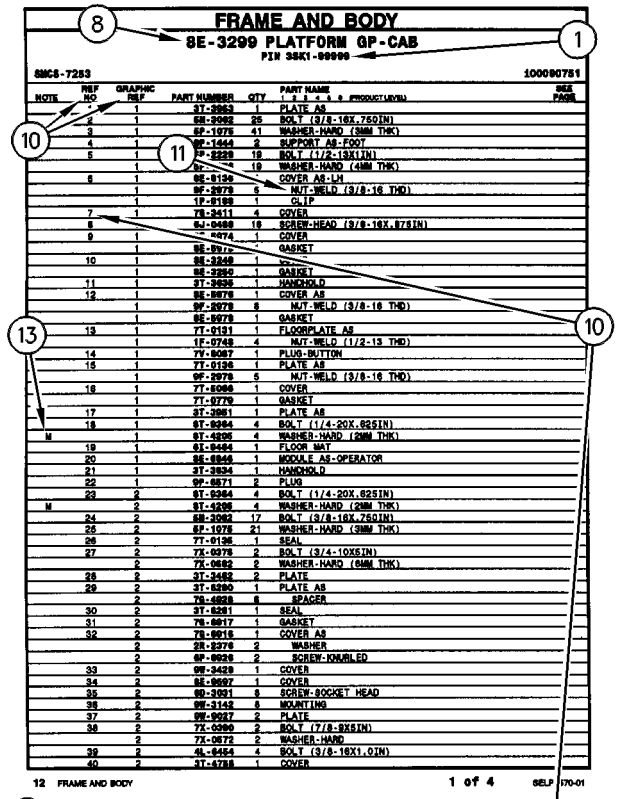

FRAME AND BODY

8E-3299 PLATFORM GP-CAB

PIN 38K1-09999

SMCS-7253 — 100090751

NOTE	REF NO	GRAPHIC REF	PART NUMBER	QTY	PART NAME (1 2 3 4 5 6 PRODUCT LEVEL)	SEE PAGE
	1	1	3T-3953	1	PLATE AS	
	2	1	5B-2992	25	BOLT (3/8-16X.750IN)	
	3	1	6P-1075	41	WASHER-HARD (3MM THK)	
	4	1	9P-1444	2	SUPPORT AS-FOOT	
	5	1	9P-2228	19	BOLT (1/2-13X1IN)	
		1	6P-[illegible]4	19	WASHER-HARD (4MM THK)	
	6	1	9E-9136		COVER AS-LH	
		1	9F-2979	6	NUT-WELD (3/8-16 THD)	
		1	1P-0188	1	CLIP	
	7	1	7S-3411	4	COVER	
	8	1	6J-0488	18	SCREW-HEAD (3/8-16X.875IN)	
	9	1	[illegible]-4474	1	COVER	
		1	9E-9[illegible]		GASKET	
	10	1	9E-3249	1	[illegible]	
		1	9E-3250	1	GASKET	
	11	1	3T-3935	1	HANDHOLD	
	12	1	9E-9878	1	COVER AS	
		1	9F-2979	8	NUT-WELD (3/8-16 THD)	
		1	9E-9078	1	GASKET	
	13	1	7T-0131	1	FLOORPLATE AS	
		1	1F-0748	4	NUT-WELD (1/2-13 THD)	
	14	1	7Y-9087	1	PLUG-BUTTON	
	15	1	7T-0136	1	PLATE AS	
		1	9F-2978	6	NUT-WELD (3/8-16 THD)	
	16	1	7T-9096	1	COVER	
		1	7T-9779	1	GASKET	
	17	1	3T-3981	1	PLATE AS	
	18	1	6T-9364	4	BOLT (1/4-20X.625IN)	
M		1	6T-4205	4	WASHER-HARD (2MM THK)	
	19	1	6L-9484	1	FLOOR MAT	
	20	1	9E-9946	1	MODULE AS-OPERATOR	
	21	1	3T-3934	1	HANDHOLD	
	22	1	9P-8571	2	PLUG	
	23	2	6T-9364	4	BOLT (1/4-20X.625IN)	
M		2	6T-4205	4	WASHER-HARD (2MM THK)	
	24	2	5B-2992	17	BOLT (3/8-16X.750IN)	
	26	2	6F-1075	21	WASHER-HARD (3MM THK)	
	26	2	7T-9126	1	SEAL	
	27	2	7X-9378	2	BOLT (3/4-10X5IN)	
		2	7X-0682	2	WASHER-HARD (6MM THK)	
	28	2	3T-3482	2	PLATE	
	29	2	3T-5290	1	PLATE AS	
		2	7S-0028	6	SPACER	
	30	2	3T-5281	1	SEAL	
	31	2	7S-0017	1	GASKET	
	32	2	7S-9018	1	COVER AS	
		2	2R-2276	2	WASHER	
		2	6P-9028	2	SCREW-KNURLED	
	33	2	9W-3429	1	COVER	
	34	2	9E-9697	1	COVER	
	35	2	9D-3031	8	SCREW-SOCKET HEAD	
	36	2	9W-3142	8	MOUNTING	
	37	2	9W-9027	2	PLATE	
	38	2	7X-0390	2	BOLT (7/8-9X5IN)	
		2	7X-0672	2	WASHER-HARD	
	39	2	4L-9454	4	BOLT (3/8-16X1.0IN)	
	40	2	3T-4788	1	COVER	

12 FRAME AND BODY — 1 of 4 — SELP4570-01

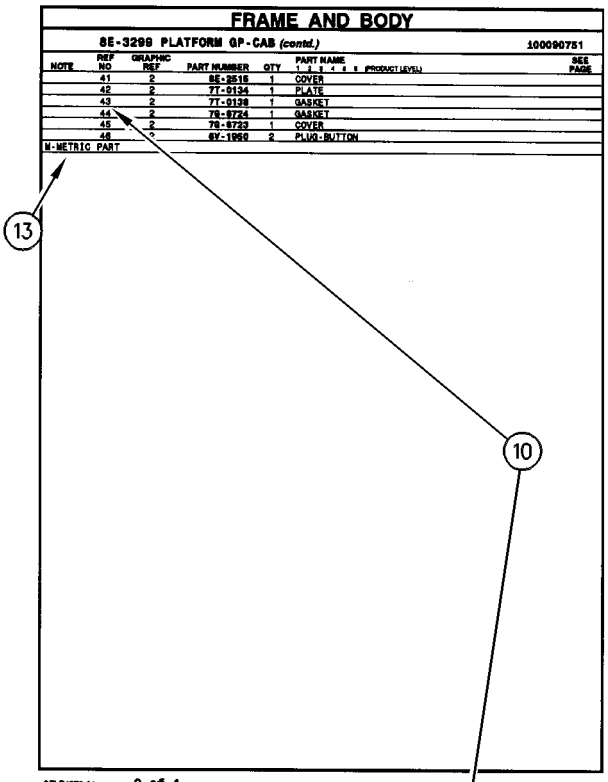

FRAME AND BODY

8E-3299 PLATFORM GP-CAB (contd.) — 100090751

NOTE	REF NO	GRAPHIC REF	PART NUMBER	QTY	PART NAME (1 2 3 4 5 6 PRODUCT LEVEL)	SEE PAGE
	41	2	8E-3515	1	COVER	
	42	2	7T-0134	1	PLATE	
	43	2	7T-0139	1	GASKET	
	44	2	7S-9724	1	GASKET	
	45	2	7S-9723	1	COVER	
	46	2	6V-1969	2	PLUG-BUTTON	

M-METRIC PART

SELP4570-01 — 2 of 4 — FRAME AND BODY 13

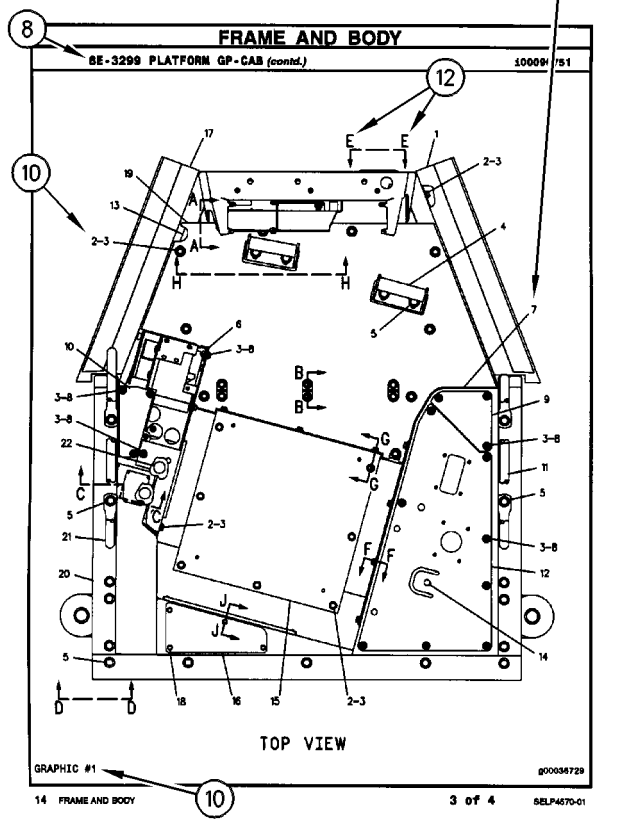

FRAME AND BODY

8E-3299 PLATFORM GP-CAB (contd.) — 100090751

TOP VIEW

GRAPHIC #1 — g00036729

14 FRAME AND BODY — 3 of 4 — SELP4570-01

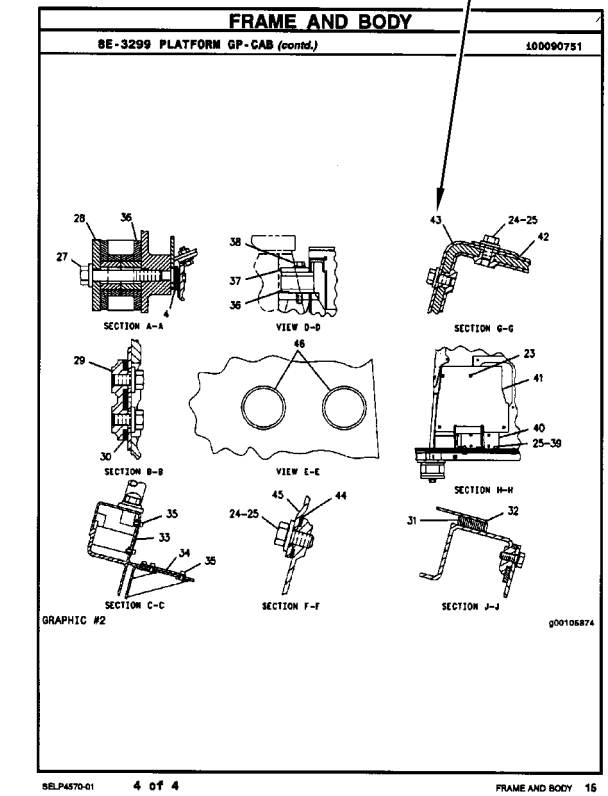

FRAME AND BODY

8E-3299 PLATFORM GP-CAB (contd.) — 100090751

SECTION A-A — VIEW D-D — SECTION G-G — SECTION B-B — VIEW E-E — SECTION H-H — SECTION C-C — SECTION F-F — SECTION J-J

GRAPHIC #2 — g00105874

SELP4570-01 — 4 of 4 — FRAME AND BODY 15

INFORMAÇÃO GERAL

1. IDENTIFICAÇÃO DA MÁQUINA

As máquinas Caterpillar são identificadas pelos Números de Informação do Produto (PIN). Alguns componentes incluídos numa máquina podem ser identificados por Números de Série (S/N). Componentes típicos que serão enumerados com números de série incluem motores, transmissões, lâminas e ríperes. Além do número de série, a máquina e o motor são ainda identificados por números de arranjo e, em alguns casos, números de modificações. Tais números encontram-se na(s) placa(s) de identificação do produto e na placa mestre no compartimento do operador.

SIS ***Novidades***

A partir do primeiro trimestre de 2001 o Número de Identificação de Produto da Caterpillar (PIN) vai mudar de 8 para 17 caracteres. Esforçando-se para fornecer uma identificação uniforme de equipamentos, a Caterpillar e outros fabricantes de equipamento de construção estão mudando para atender a versão mais atualizada do padrão de identificação de produtos. Os números de PIN para produtos de aplicações não rodoviárias são definidos pela ISO 10261. O novo formato de número PIN será adotado em todas as máquinas e grupos geradores Caterpillar. As placas e as marcações do chassi mostrarão os 17 dígitos de PIN. O novo formato terá a seguinte disposição:

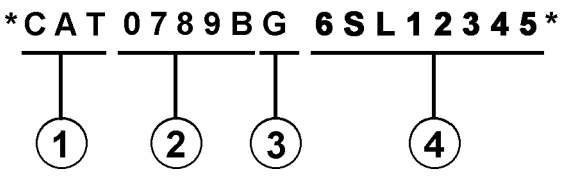

Onde:

1. Código de Fabricação Mundial da Caterpillar (dígitos 1-3)

2. Descrição da Máquina (dígitos 4-8)

3. Dígito de Verificação (dígito 9)

4. Seção de Indicador da Máquina (MIS) ou Número de Seqüência de Produto (dígitos 10-17). Estes eram anteriormente chamados de Número de Série.

Máquinas e grupos geradores produzidos antes do primeiro trimestre de 2001 manterão o formato de 8 caracteres de PIN.

Componentes como motores, transmissões, eixos, ferramentas de trabalho, etc. continuarão a usar Número de Série (S/N) com oito caracteres.

2. COMO OBTER PEÇAS

⚠ CUIDADO

Quando peças de substituição são exigidas para este produto, a Caterpillar recomenda a utilização de peças de substituição Caterpillar ou peças com as especificações equivalentes incluindo, mas não limitadas, à dimensões físicas, tipos, resistência e materiais.

A inobservância desta advertência poderá resultar em falhas prematuras, danos ao produto, ferimentos ou morte.

As Peças de Reposição de Qualidade Caterpillar encontram-se disponíveis nos revendedores Caterpillar no mundo inteiro. Seus estoques de peças são atualizados e incluem todas as peças normalmente necessárias para proteger seu investimento em máquinas Caterpillar. Alguns revendedores podem oferecer jogos de reparo ou peças de troca/remanufaturadas disponíveis como uma opção da alternativa de reparo mais eficaz para uma situação específica. Ao encomendar peças, seu pedido deve especificar a quantidade, o número e o nome da peça e o número de série/número de identificação do produto referentes à máquina para a qual as peças se destinam.

3. ORGANIZAÇÃO DO MANUAL DE PEÇAS

A informação do produto neste manual é apresentada em forma de "elementos de informação" que representam todos os componentes para o modelo específico. Arranjo de Motor e Grupo de Assento são exemplos de elementos de informação. Os elementos de informação são organizados em ordem alfabética por nome de peça ou secundariamente, por número de peça incluído em cada seção principal do manual.

4. LISTA DE CONTEÚDOS

SIS ***Novidades***

A Lista de Conteúdos (TOC) se encontra no princípio do manual. A Lista de Conteúdos (TOC) relaciona em cada seção do manual uma lista completa com todos os elementos de informação organizados conforme aparecem no manual. Números de página são fornecidos para que se tenha referência rápida de ilustrações de peças detalhadas e listas de conteúdos que podem receber serviço de manutenção.

5. ÍNDICE DE PEÇAS DE MANUTENÇÃO

O Índice de Peças de Manutenção, localizado perto do princípio do manual, faz referência aos números de peça de manutenção usados com maior frequência, fornecendo uma descrição, a quantidade, o uso e o número de página. Esta informação é organizada com a descrição da peça em ordem alfabética.

6. ÍNDICE

O Índice localizado perto do princípio do manual, consiste de uma lista em ordem alfabética de todos os elementos de informação incluídos no manual. Números de página são fornecidos para que se tenha referência rápida de ilustrações de peças detalhadas e listas de conteúdos que podem receber serviço de manutenção.

7. ÍNDICE DE NÚMERO DE PEÇA

Um índice numérico relacionando todos os números de peça e a(s) página(s) correspondentes, aparece no final do manual.

8. LEGENDAS

As legendas localizadas na parte de cima de cada página de um elemento de informação identifica o número de peça e o nome da peça, juntamente com informação descritiva adicional. Informações sobre o Número de Informação do Produto (PIN) e o Número de Série (S/N) encontradas em cada legenda devem ser usadas para selecionar a informação correta sobre uma máquina específica. Opções de substituição no campo, identificação de componentes de acessórios opcionais e informações sobre onde são utilizados ("parte de") são também fornecidas.

SIS ***Novidades***

A primeira linha de uma legenda é indicada em tipo maior para indicar o princípio de um elemento de informação. Legendas para páginas adicionais que podem ser necessárias para ilustrar um elemento de informação serão apresentadas em tipo padrão e incluirão o termo *(continua)* .

9. NÃO DISPONÍVEL SEPARADAMENTE

SIS ***Novidades***

Em alguns casos, é necessário mostrar peças não disponíveis separadamente que têm uma ligação com listas de conteúdos de nível inferior que podem receber serviço de manutenção. Os números de peça destes componentes não disponíveis aparecerão em *itálico* , a fim de indicar que não estão disponíveis.

10. NÙMEROS DE REFERÊNCIA À LISTA DE PEÇAS

SIS ***Novidades***

Os números indicados na coluna Ref No (No. de Referência) correspondem-se aos números usados no(s) gráfico(s) correspondente(s). Um sufixo com letras pode ser acrescentado a um número de referência para identificar itens de conteúdo de nível inferior. Os números indicados na coluna Graphic Ref (Referência de Gráfico) referem-se ao identificador de número de gráfico presente no canto esquerdo inferior de cada ilustração. O número de Referência de Gráfico pode ser usado em combinação com o item Ref No para determinar-se o número de peça correto. Poderá haver omissão intencional de um número de referência (Ref No) de uma lista de conteúdos uma vez que as informações são atualizadas para refletir os números de peça mais recentes que podem receber serviço de manutenção.

11. NOMES DE PEÇAS DESALINHADOS

Quando um nome de peça encontra-se desalinhado numa lista de peças, significa que tal item faz parte do (está incluído no) grupo ou conjunto sob o qual está relacionado.

12. LETRAS DE REFERÊNCIA NAS ILUSTRAÇÕES

Quando necessário, as ilustrações contêm letras de referência (A, B, C, etc.) que são utilizadas para seguir tubulações e cabos elétricos de um ponto a outro. Também foram utilizadas para indicar onde se pode reconectar as ilustrações que foram separadas.

13. ABREVIAÇÕES E SÍMBOLOS

O.D. – "Outside Diameter" (Diâmetro Externo)
I.D. – "Inside Diameter" (Diâmetro Interno)
A – Não faz parte deste grupo
B – Use conforme necessário
C – Indica modificação
D – Vendido por metro
E – Vendido por centímetro
F – Não ilustrado
G – Vendido por polegada
I – Consulte o seu revendedor quanto a mangueira
M – Peça métrica
R – Peça remanufaturada pode estar disponível; consulte o seu revendedor Cat
Y – Ilustração separada
Z – Não disponível separadamente

NOTA:

Os contínuos aperfeiçoamentos e avanços no projeto do produto podem ocasionar modificações em sua máquina que talvez ainda não estejam incluídas nesta publicação. Sempre que surgirem dúvidas quanto a um produto Caterpillar ou quanto à presente publicação, consulte o seu revendedor Caterpillar para obter as informações mais recentes disponíveis.

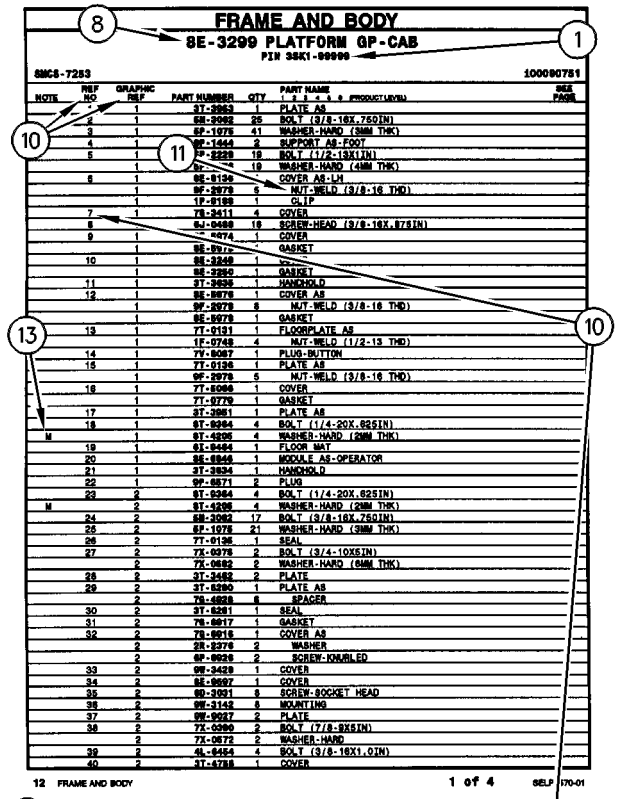

FRAME AND BODY

8E-3299 PLATFORM GP-CAB

PIN 38K1-09999

SMCS-7253 100090751

NOTE	REF NO	GRAPHIC REF	PART NUMBER	QTY	PART NAME (1 2 3 4 5 6 PRODUCT LEVEL)	SEE PAGE
	1	1	3T-3963	1	PLATE AS	
	2	1	5B-3992	25	BOLT (3/8-16X.750IN)	
	3	1	6P-1075	41	WASHER-HARD (38MM THK)	
	4	1	8P-1444	2	SUPPORT AS-FOOT	
	5	1	8P-2228	19	BOLT (1/2-13X1IN)	
		1	8P-[illegible]4	19	WASHER-HARD (41MM THK)	
	6	1	9E-8136	1	COVER AS-LH	
		1	9F-2979	6	NUT-WELD (3/8-16 THD)	
		1	1P-8188	1	CLIP	
	7	1	7S-3411	4	COVER	
	8	1	6J-0488	18	SCREW-HEAD (3/8-16X.875IN)	
	9	1	[illegible]-4474	1	COVER	
		1	9E-8[illegible]7		GASKET	
	10	1	9E-3248	1	[illegible]	
		1	9E-3250	1	GASKET	
	11	1	3T-3935	1	HANDHOLD	
	12	1	9E-8078	1	COVER AS	
		1	9F-2979	8	NUT-WELD (3/8-16 THD)	
		1	9E-8078	1	GASKET	
	13	1	7T-0131	1	FLOORPLATE AS	
		1	1F-0748	4	NUT-WELD (1/2-13 THD)	
	14	1	7Y-8087	1	PLUG-BUTTON	
	15	1	7T-0136	1	PLATE AS	
		1	9F-2978	6	NUT-WELD (3/8-16 THD)	
	16	1	7T-8086	1	COVER	
		1	7T-8779	1	GASKET	
	17	1	3T-3981	1	PLATE AS	
	18	1	6T-9364	4	BOLT (1/4-20X.625IN)	
M		1	6T-4205	4	WASHER-HARD (2MM THK)	
	19	1	6L-8484	1	FLOOR MAT	
	20	1	9E-8946	1	MODULE AS-OPERATOR	
	21	1	3T-3934	1	HANDHOLD	
	22	1	9P-8571	2	PLUG	
	23	2	6T-9364	4	BOLT (1/4-20X.625IN)	
M		2	6T-4205	4	WASHER-HARD (2MM THK)	
	24	2	5B-3982	17	BOLT (3/8-16X.750IN)	
	26	2	6F-1075	21	WASHER-HARD (38MM THK)	
	26	2	7T-0135	1	SEAL	
	27	2	7X-0378	2	BOLT (3/4-10X5IN)	
		2	7X-0682	2	WASHER-HARD (64MM THK)	
	28	2	3T-3482	2	PLATE	
	29	2	3T-8280	1	PLATE AS	
		2	7S-8038	8	SPACER	
	30	2	3T-8281	1	SEAL	
	31	2	7S-8017	1	GASKET	
	32	2	7S-8018	1	COVER AS	
		2	2R-2276	2	WASHER	
		2	6P-8028	2	SCREW-KNURLED	
	33	2	9W-3429	1	COVER	
	34	2	9E-8697	1	COVER	
	35	2	9D-3031	8	SCREW-SOCKET HEAD	
	36	2	9W-3142	8	MOUNTING	
	37	2	9W-9027	2	PLATE	
	38	2	7X-0390	2	BOLT (7/8-9X5IN)	
		2	7X-0672	2	WASHER-HARD	
	39	2	4L-8454	4	BOLT (3/8-16X1.0IN)	
	40	2	3T-4788	1	COVER	

12 FRAME AND BODY 1 of 4 SELP4570-01

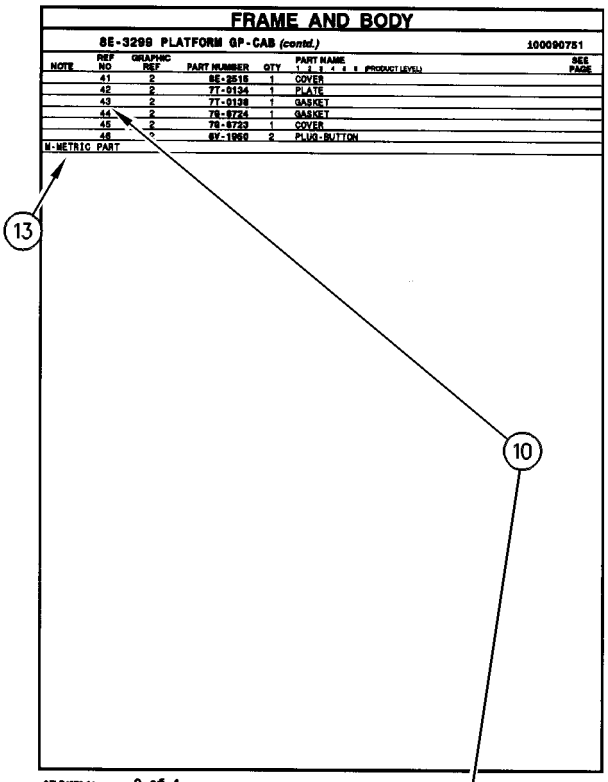

FRAME AND BODY

8E-3299 PLATFORM GP-CAB (contd.) 100090751

NOTE	REF NO	GRAPHIC REF	PART NUMBER	QTY	PART NAME (1 2 3 4 5 6 PRODUCT LEVEL)	SEE PAGE
	41	2	8E-3515	1	COVER	
	42	2	7T-0134	1	PLATE	
	43	2	7T-0139	1	GASKET	
	44	2	7S-8724	1	GASKET	
	45	2	7S-8723	1	COVER	
	46	2	6Y-1969	2	PLUG-BUTTON	

M-METRIC PART

SELP4570-01 2 of 4 FRAME AND BODY 13

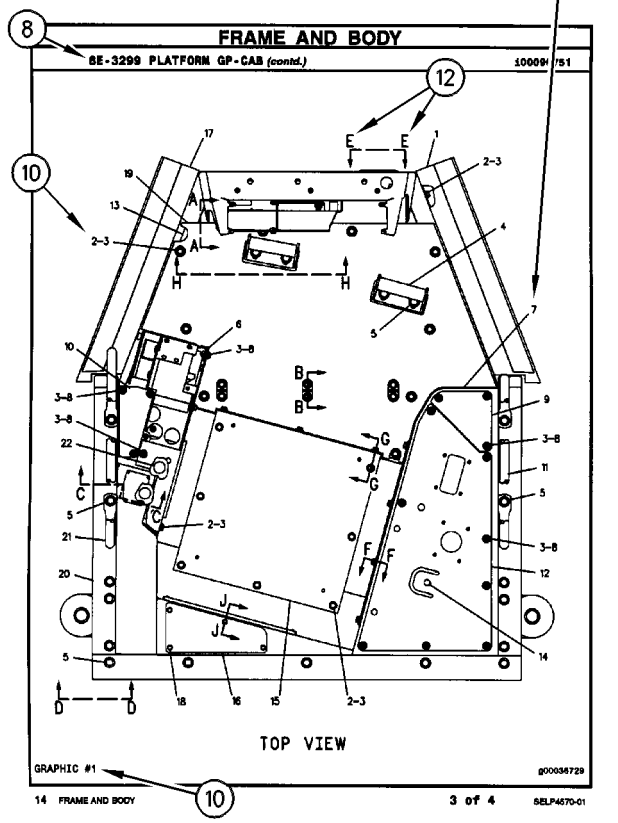

FRAME AND BODY

8E-3299 PLATFORM GP-CAB (contd.) 100090751

TOP VIEW

GRAPHIC #1 g00036729

14 FRAME AND BODY 3 of 4 SELP4570-01

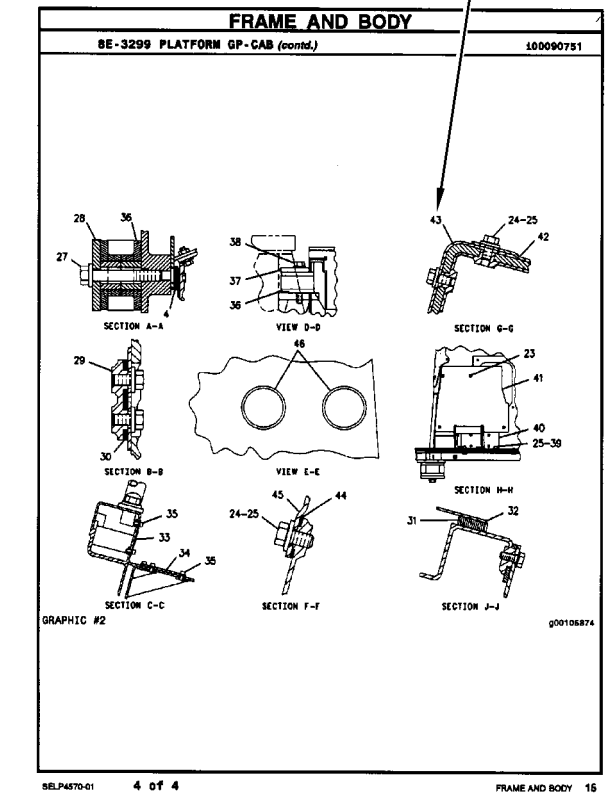

FRAME AND BODY

8E-3299 PLATFORM GP-CAB (contd.) 100090751

SECTION A-A VIEW D-D SECTION G-G

SECTION B-B VIEW E-E SECTION H-H

SECTION C-C SECTION F-F SECTION J-J

GRAPHIC #2 g00105874

SELP4570-01 4 of 4 FRAME AND BODY 15

REMANUFACTURED COMPONENTS

As an option when making repairs consider Caterpillar Remanufactured Components. Components that are available through the Caterpillar Remanufactured Program are identified three ways in the parts book:

- with the letter R in the note field of the parts list
- with an R* at the beginning of the first line of the caption
- with an *R at the end of the first line of the caption

Typical components included in the Remanufacturing Program include:

ALTERNATORS
CONNECTING RODS
CRANKSHAFTS - UNDERSIZE
CRANKSHAFTS - UPGRADE TO NEW
CYLINDER HEADS
ELECTRONIC CONTROL MODULES (ECM)
ELECTRONIC SENSORS
FUEL INJECTORS
FUEL NOZZLES
FUEL PUMPS
GOVERNORS
OIL PUMPS
PISTONS
SHORT BLOCKS
STARTERS
TURBOCHARGERS - COMPLETE
TURBOCHARGER CARTRIDGES
WATER PUMPS

Caterpillar Remanufactured engines for many engine arrangements are also available.

COMPONENTES REMANUFACTURADOS

Al hacer reparaciones, tenga en cuenta la opción de Componentes Remanufacturados Caterpillar. Los componentes que están disponibles por medio del programa de Productos Remanufacturados Caterpillar se identifican de tres maneras en el manual de piezas:

- con la letra R en el espacio de Nota de la lista de piezas
- con una R* al comienzo de la primera línea de la leyenda
- con una *R al final de la primera línea de la leyenda

Los componentes que se incluyen típicamente en el Programa de Productos Remanufacturados son:

ALTERNADORES
BIELAS
CIGÜEÑALES - BAJOMEDIDA
CIGÜEÑALES - REMANUFACTURADOS A NUEVO
CULATAS
MÓDULOS DE CONTROL ELECTRÓNICO (ECM)
SENSORES ELECTRONICOS
INYECTORES
BOQUILLAS
BOMBAS DE COMBUSTIBLE
REGULADORES
BOMBAS DE ACEITE
PISTONES
MONOBLOQUES
MOTORES DE ARRANQUE
TURBOCOMPRESORES - COMPLETOS
NÚCLEOS DE TURBOCOMPRESOR
BOMBAS DE AGUA

También hay disponibles motores Remanufacturados Caterpillar para muchas de las configuraciones de motores.

ALTERNATIVAS DE REPARO

COMPONENTES REMANUFATURADOS

Considere o uso de Componentes Remanufaturados Caterpillar ao efetuar reparos. Os componentes disponíveis através do Programa de Remanufatura Caterpillar são identificados de três formas no manual de peças:

- com um R na área da nota da lista de peças
- com um R* no princípio da primeira linha da legenda
- com um *R no final da primeira linha da legenda

Os componentes típicos que constam no Programa de Remanufatura incluem:

ALTERNADORES
BIELAS
VIRABREQUINS - SUBMEDIDAS
VIRABREQUINS - ATUALIZAÇÃO
CABEÇOTES
MÓDULOS DE CONTROLE ELETRÔNICO (ECM)
SENSORES ELETRÔNICOS
INJETORES DE COMBUSTÍVEL
BICOS DE ABASTECIMENTO DE COMBUSTÍVEL
BOMBAS DE COMBUSTÍVEL
GOVERNADORES
BOMBAS DE ÓLEO
PISTÕES
BLOCOS BÁSICOS DO MOTOR
MOTORES DE PARTIDA
TURBOALIMENTADORES - COMPLETOS
CARTUCHOS DE TURBOALIMENTADORES
BOMBAS D'ÁGUA

Motores Remanufaturados Caterpillar também encontram-se disponíveis para diversos arranjos de motor.

SUPPLEMENTAL COOLANT ADDITIVES

CUSTOMER BENEFITS:

Protects against cavitation, foam, erosion, corrosion, and scale buildup in cooling systems.

- Provides measured coolant conditioner.

DESCRIPTION:

Additives deplete from the coolant with normal operation. For this reason, Supplemental Coolant Additives (SCA) must be added to all heavy duty coolants at regular intervals. In addition, when not using a fully formulated, pre-charged antifreeze, like Caterpillar's DEAC, an initial charge of SCA must be added to the cooling system. The amount of SCA added to the system is dependent on the capacity of the system.

The SCA for initial fill is provided as a liquid. SCA's for maintenance intervals are available in liquid form and as a spin-on element. (No Spin-on available for 3600 Family of Engines)

NOTE:

The amount of SCA added at initial fill is not the same as the amount added at maintenance intervals.

The coolant additive elements can be used with any ethylene or propylene glycol type antifreeze which meets ASTM D4985 or ASTM D5345 Specifications.

NOTE:

For use with standard heavy duty coolant only, not for use with Extended Life Coolant.

PARTS NEEDED:

Cooling System Capacity		Liquid SCA at Initial Fill	Liquid SCA at Maintenance*	Spin-on SCA Maintenance Element*
Liters	Gallons			
22-30	(6-8)	3P-2044 (1)	6V-3542 (1)	111-2370 (1)
30-38	(8-10)	3P-2044 (1) 6V-3542 (1)	111-2372 (1)	111-2369 (1)
38-49	(10-13)	3P-2044 (1) 8T-1589 (1)	111-2372 (1)	111-2369 (1)
49-64	(13-17)	3P-2044 (2)	8T-1589 (1)	9N-3368 (1)
64-83	(17-22)	3P-2044 (2) 8T-1589 (1)	111-2372 (1) 6V-3542 (1)	111-2371 (1)
83-114	(22-30)	3P-2044 (3) 8T-1589 (1)	3P-2044 (1)	9N-3718 (1)
114-163	(30-43)	3P-2044 (5)	3P-2044 (1) 6V-3542 (1)	111-2371 (2)
163-242	(43-64)	3P-2044 (8)	3P-2044 (2)	9N-3718 (2)

** Normal maintenance period is 250 hrs. See your Operation and Maintenance Manual for complete coolant maintenance instructions.*

( ) Indicates quantity required.

ADITIVOS DE REFRIGERANTE SUPLEMENTARIOS

VENTAJAS PARA EL USUARIO:

Protegen contra la cavitación, la formación de espuma, la corrosión y la acumulación de escamas en los sistemas de enfriamiento.

- Suministra un acondicionador dosificado de refrigerante.

DESCRIPCIÓN:

Los aditivos en el refrigerante se agotan con la operación normal. Por esta razón, se debe agregar Aditivo de refrigerante suplementario (SCA) a todos los refrigerantes para servicio pesado, a intervalos regulares. Además, cuando no se usa un anticongelante de precarga completo, tal como el DEAC de Caterpillar, es necesario agregar una cantidad de aditivo de refrigerante suplementario inicial al sistema de enfriamiento. La cantidad de aditivo que se debe agregar depende de la capacidad del sistema.

El SCA de llenado inicial es líquido. El que se usa para el mantenimiento está disponible tanto en líquido como en un elemento enroscable. (No hay elemento enroscable disponible para la Familia de Motores 3600).

NOTA:

La cantidad de aditivo de llenado inicial no es la misma que se agrega en los intervalos de mantenimiento.

Los elementos de aditivo de refrigerante se pueden usar con cualquier anticongelante de tipo glicol etilénico o propílico que esté de acuerdo con las especificaciones de las normas ASTM D4985 o ASTM D5345.

NOTA:

Se debe utilizar únicamente con refrigerante estándar para servicio pesado; no se debe usar con Refrigerante de Larga Duración.

PIEZAS NECESARIAS:

Capacidad del Sistema de Enfriamiento		SCA líquido de llenado inicial	SCA líquido de mantenimiento*	Elemento de mantenimiento enroscable*
litros	gal EE.UU.			
22-30	6-8	3P-2044 (1)	6V-3542 (1)	111-2370 (1)
30-38	8-10	3P-2044 (1) 6V-3542 (1)	111-2372 (1)	111-2369 (1)
38-49	10-13	3P-2044 (1) 8T-1589 (1)	111-2372 (1)	111-2369 (1)
49-64	13-17	3P-2044 (2)	8T-1589 (1)	9N-3368 (1)
64-83	17-22	3P-2044 (2) 8T-1589 (1)	111-2372 (1) 6V-3542 (1)	111-2371 (1)
83-114	22-30	3P-2044 (3) 8T-1589 (1)	3P-2044 (1)	9N-3718 (1)
114-163	30-43	3P-2044 (5)	3P-2044 (1) 6V-3542 (1)	111-2371 (2)
163-242	43-64	3P-2044 (8)	3P-2044 (2)	9N-3718 (2)

** El período normal de mantenimiento es de 250 horas. Para ver las instrucciones completas sobre el mantenimiento del refrigerante, consulte el Manual de Operación y Mantenimiento.*

( ) Indica la cantidad necesaria.

ADITIVOS SUPLEMENTARES DO LÍQUIDO ARREFECEDOR

BENEFÍCIOS PARA O CLIENTE:

Protege contra cavitação, espuma, erosão, corrosão e acúmulo de crostas nos sistemas de arrefecimento.

- Fornece uma quantidade pré-determinada de condicionador de arrefecimento.

DESCRIÇÃO:

Com a operação normal, os aditivos se esgotam do líquido arrefecedor. Por isso, Aditivos Suplementares do Líquido Arrefecedor (SCA) devem ser acrescentados a todos os líquidos arrefecedores para serviço pesado em intervalos regulares. Além disso, quando um anticongelante pré-carregado, totalmente formulado não for usado, como o DEAC Caterpillar, uma carga inicial de SCA deve ser acrescentada ao sistema de arrefecimento. A quantidade de SCA acrescentada ao sistema depende da capacidade do sistema.

O SCA para abastecimento inicial é fornecido em forma de líquido. Os aditivos suplementares (SCA) para intervalos de manutenção estão à disposição em forma líquida e como um elemento com roscas. (Exceto os Motores da Família 3600)

NOTA:

A quantidade de SCA adicionada no abastecimento inicial não é a mesma que a acrescentada nos intervalos de manutenção.

Os elementos do aditivo do líquido arrefecedor podem ser usados com qualquer tipo de anticongelante etileno ou propileno que satisfaz as Especificações ASTM D4985 ou ASTM D5345.

NOTA:

Para uso apenas com líquido arrefecedor para serviço pesado padrão, não deve ser usado com Líquido Arrefecedor de Vida Longa.

PEÇAS NECESSÁRIAS:

Capacidade do Sistema de Arrefecimento		Líquido SCA Durante Abastecimento Inicial	Líquido SCA Durante Manutenção*	Elemento de Manutenção de SCA com Roscas*
Litros	Galões			
22-30	6-8	3P-2044 (1)	6V-3542 (1)	111-2370 (1)
30-38	8-10	3P-2044 (1) 6V-3542 (1)	111-2372 (1)	111-2369 (1)
38-49	10-13	3P-2044 (1) 8T-1589 (1)	111-2372 (1)	111-2369 (1)
49-64	13-17	3P-2044 (2)	8T-1589 (1)	9N-3368 (1)
64-83	17-22	3P-2044 (2) 8T-1589 (1)	111-2372 (1) 6V-3542 (1)	111-2371 (1)
83-114	22-30	3P-2044 (3) 8T-1589 (1)	3P-2044 (1)	9N-3718 (1)
114-163	30-43	3P-2044 (5)	3P-2044 (1) 6V-3542 (1)	111-2371 (2)
163-242	43-64	3P-2044 (8)	3P-2044 (2)	9N-3718 (2)

** O período normal de manutenção é de 250 horas. Consulte o Manual de Operação e Manutenção para obter instruções completas quanto à manutenção do líquido arrefecedor.*

( ) Indica a quantidade exigida.

NOMENCLATURA DE PEÇAS INGLÊS-PORTUGUÊS

INGLÊS	PORTUGUÊS
ABOVE	Acima
ABSORBER	Amortecedor
ACCESSORY	Acessório
ACTUATOR	Acionador
ADAPTER	Adaptador
ADHESIVE	Adesivo
ADJUSTER	Adjustador
AFTERCOOLER	Pós-resfriador
AIR	Ar
AIR CLEANER	Purificador de ar
AIR SYSTEM	Sistema de ar
ALARM	Alarme
ALTERNATOR	Alternador
AMMETER	Amperímetro
ANCHOR	Âncora, fixador
ANGLE	Ângulo, canto
ANVIL A.	Bigorna conj.
ARBOR	Mandril, eixo
ARM	Braço
ARMATURE	Armadura, Induzida
ARM REST	Apoio para braço
ARRESTER	Detentor
ASSEM. = ASSEMBLY	Conjunto
ATTACHMENT	Acessório
AVAILABLE	Disponível
AXLE	Eixo
AXLE SHAFT	Semi-eixo, ponta
BACK-UP ALARM	Alarme de marcha à ré
BACK-UP LIGHT	Luz da marcha à ré
BACK-UP SWITCH	Interruptor de marcha à ré
BACKBOARD	Prancha traseira
BACK CUSHION	Encosto
BACKHOE	Retroescavadeira
BAFFLE	Defletor
BAG	Saco, sacola
BAIL	Alça
BALANCER	Balanceador
BALL	Esfera
BALLCHECK ASSEMBLY	Conjunto de (válvula) de esfera de retenção
BALL JOINT	Junta esférica
BALLSTUD	Munhão esférica
BAND	Banda, cinta, tira
BAND & LINING	Banda e revestimento
BAR	Barra
BARREL	Cilindro
BARRIER	Barreira
BASE	Base
BASIN	Bacia, coletor
BATTERY	Bateria
BEAM	Barra, viga, trave
BEARING	Mancal, rolamento
BEARING BALL	Rolamento de esferas
BEARING-SLEEVE	Mancal tipo luva
BEARING-NEEDLE	Rolamento de agulha
BEARING-ROLLER	Rolamento tipo roletes
BELL	Campânula
BELLCRANK	Alavanca angular
BELLOWS	Fole
BELOW	Abaixo
BELT	Correia, cinto
BELT TIGHTENER	Ajustador de correia
BEVEL GEAR	Coroa
BIT-CUTTER	Broca, fresa
BLACK	Preto
BLADE	Lâmina
BLEEDER	Sangrador
BLOCK	Bloco, calço
BLOWER	Ventilador
BLUE	Azul
BOARD	Prancha, tábua
BODY	Corpo
BOLT	Parafuso
BONNET	Tampa
BOOM	Lança
BOOSTER	Reforçador
BOOT	Protetor contra poeira
BORE	Furo
BOSS	Ressalto
BOTH	Ambos (as)
BOTTOM	Fundo
BOWL	Caçamba
BOX	Caixa
BRACE	Tirante
BRACKET	Suporte
BRAKE	Freio
BREAKER	Interruptor
BREATHER	Respiro
BRIDGE	Braço
BROWN	Marrom
BRUSH	Escova
BUCKET	Caçamba
BULB	Bulbo
BULLDOZER	Bulldozer
BUMPER	Pára-choque
BUSHING	Bucha
BUTTON	Botão
BUZZER WARNING	Alarme sonoro
C = CHANGE	Alteração
CAB	Cabina
CABINET	Gabinete
CABLE	Cabo
CAGE	Alojamento
CALIPER	Calibrador
CAM	Excêntrico, ressalto
CAMSHAFT	Eixo-comando-de-válvulas
CANOPY	Coberta, toldo

NOMENCLATURA DE PEÇAS INGLÊS-PORTUGUÊS

INGLÊS	PORTUGUÊS
CAP	Tampa
CAPACITOR	Capacitor, condensador
CARBURETOR	Caburador
CARCASS	Carcaça
CARRIER	Suporte
CARTON	Caixa de papelão
CARTRIDGE	Cartucho
CASE	Caixa, alojamento
CASING	Invólucro, revestimento
CASTER	Rolete, roldana
CAST IRON	Ferro fundido
CATWALK	Passadiço
CENTER	Centro
CHAIN	Corrente
CHAMBER	Câmara
CHANGEOVER	Modificação
CHANNEL	Canal
CHASSIS	Chassi, armação
CHECK-VALVE	Válvula de retenção
CIRCUIT	Circuito
CIRCUIT BREAKER	Interruptor de circuito
CLAMP	Braçadeira
CLASP	Fecho, grampo
CLEANER	Purificador
CLEVIS	Forquilha, garfo
CLIP	Clipe, presilha, grampo
CLOSURE	Fecho
CLUTCH	Embreagem
COARSE	Grosso, áspero
COATING	Capa, revestimento
COCK	Torneira
COIL	Bobina, serpentina
COLLAR	Colar
COLLECTOR	Coletor
COLLET	Mandril
COLUMN	Coluna
COMPACTOR	Compactador
COMPARTMENT	Compartimento
COMPLETE	Completo
COMPOUND	Composto
COMPRESSOR	Compressor
CONCAVE	Côncavo
CONDITIONER	Condicionador
CONDUIT	Conduite, eletroduto
CONE	Cone
CONNECTING	Ligação
CONNECTED ROD	Biela
CONNECTION	Conexão
CONNECTOR	Conetor
CONSISTS OF	Consiste de
CONSOLE	Consolo
CONTACT	Contato, platinado
CONTACTOR	Contactador
CONTINUED FROM	Continuação de
CONTROL	Controle
CONVERSION	Conversão
CONVERTER	Conversor
COOLER	Arrefecedor
COOLING	Arrefecimento
CORK	Cortiça
CORE	Núcleo
CORNER	Canto
COTTER PIN	Contrapino
COUNTER	Contador, tacômetro
COUNTERWEIGHT	Contrapeso
COUPLER	Acoplador, engate
COUPLING	Acoplamento, conexão
COVER	Tampa
COWL	Capota
COWLING	Capota
CRADLE	Armação, suporte
CRANK	Manivela
CRANKCASE	Cárter
CRANKSHAFT	Virabrequim
CROSS UNION	Junta transversal
CROSSBAR	Barra transversal
CUP	Capa, anel externa
CURTAIN	Cortina
CUSHION	Almofada, amortecedor
CUTTER	Fresa, cortador
CUTTING EDGE	Borda cortante
CYLINDER	Cilindro
CYLINDER BLOCK	Bloco do motor
CYLINDER HEAD	Cabeçote
DAMPER	Amortecedor
DARK GREEN	Verde escuro
DASH	Painel
DASH PANEL	Painel de Instrumento
DECELERATOR	Desacelerador
DEFLECTOR	Defletor
DETENT	Retém, pino de trava
DIAGRAM-WIRING	Diagrama dos circuitos elétricos
DIAL	Medidor de dial
DIAPHRAGM	Diafragma
DIESEL ENGINE COMPLETE	Motor diesel completo
DIFFERENTIAL	Diferencial
DIFFUSER	Difusor
DIMMER	Redutor de luminosidade
DIODE	Diodo
DIRECTOR	Diretor
DISC	Disco
DISCONNECT	Desligar
DISPOSABLE	Disponível, substituível
DISSIPATOR	Dissipador de calor
DISTRIBUTOR	Distribuidor
DM = DECIMETER	dm = decímetro

NOMENCLATURA DE PEÇAS INGLÊS-PORTUGUÊS

INGLÊS	PORTUGUÊS
DOME LIGHT	Lâmpada do teto
DOOR	Porta
DOWEL	Pino-guia, cavilha
DOWNSHIFT	Mudança para marcha mais baixa
DOZER	Bulldozer (lâmina)
DRAIN	Dreno
DRAWBAR	Barra de tração
DRILL	Broca
DRILLED	Broqueado, perturado
DRIVE	Comando, acionamento, propulsão
DRIVER	Acionador, mecanismo propulsor
DRIVESHAFT	Eixo acionador, eixo de transmissão
DRUM	Tambor
DUCT	Conduto, canal
EACH	Cada
EDGE	Borda, canto
EFFECTIVE WITH	Efetivo a partir de
EJECTOR	Ejetor
ELBOW	Cotovelo
ELEMENT	Elemento
ENCLOSURE	Cobertura
END	Extremidade
END BIT	Canto de lâmina
END VIEW	Vista traseira
ENGINE	Motor
ENGINE ARRANGEMENT	Arranjo do motor
EXCEPT	Exceto
EXHAUST	Escape
EXHAUST PIPE	Cano de escape
EXPANDER	Expansor
EXPANSION PLUG	Bujão de expansão
EXTENSION	Extensão
EXTINGUISHER	Extintor
EXTRACTOR	Extrator
EYE	Olhal
EYEBOLT	Parafuso de olhal
FABRIC	Tecido, tela textura
FACING	Revestimento, forro
FAN	Ventilador
FASTENED	Fixo, preso
FASTENER	Fixador, prendedor
FENDER	Pára-lamas
FERRULE	Virola
FIELD COIL	Bobina indutora, ou de campo
FIELD REPLACEMENT	Reposicão ou substituicão no campo
FILLER	Bocal de enchimento
FILM	Película
FILTER	Filtro
FINAL DRIVE	Comando final
FINGER	Dedo
FIREWALL	Parede contra fogo
FITTING	Graxeira, conexão
FIXTURE	Dispositivo, Aparelho
FLANGE	Flange
FLASHER	Luz intermitente
FLOAT	Flutuar, livre
FLOOD-LAMP	Farol
FLOOR	Piso
FLOORMAT	Tapete
FLOORPLATE	Chapa do piso
FLYWEIGHT	Peso volante
FLYWHEEL	Volante
FOLLOWER	Seguidor
FOOT	Pé
FORK	Garfo
FOR USE WITH	Para usar com
FOUNDATION	Assentamento, alicerce
FRAME	Armacão, chassi
FRONT	Frente, dianteiro
FT = FOOT	Pé
FUEL INJECTION	Injecão de combustível
FUEL PUMP	Bomba de combustível
FUEL RATIO	Limitador de combustível
FUEL SYSTEM	Sistema do combustível
FUEL TANK	Tanque do combustível
FUMES DISPOSAL	Eliminação de vapores do cárter
FUSE	Fusível
G = GROUP	Grupo
GAGE	Indicador, manômetro
GAP	Folga, lacuna, intervalo
GASKET	Junta
GASKET KIT	Jogo de junta
GATE	Entrada, trava
GAUGE	Indicador, manômetro
GEAR	Engrenagem, marcha
GEAR BOX	Caixa de engrenagem
GEAR PUMP	Bomba de engrenagem
GENERATOR	Gerador
GLAND	Junta, gaxeta, vedacão sobreposta
GLASS	Vidro
GLOW PLUG	Vela incandescente
GOVERNOR	Governador
GRAB IRON	Balaústre corrimão
GRATE	Grade, grelha
GRAY	Cinza
GRID	Grade, grelha
GRILL	Grade, grelha
GRIP	Pega, garra, cabo

NOMENCLATURA DE PEÇAS INGLÊS-PORTUGUÊS

INGLÊS	PORTUGUÊS
GROMMET	Ilhós
GROUND BRUSH	Escova-terra
GROUND (ELECTRIC)	Terra (eletricidade)
GROUSER	Garra (de sapata)
GUARD	Protetor
GUIDE	Guia
GUSSET	Cantoneira
HACKSAW	Serra para metais
HALF	Metade, meio (a)
HALF LINK	Semi-elo
HAMMER	Martelo
HAND CONTROL	Controle manual
HANDLE	Cabo, alça
HANDRAIL	Corrimão, balaústre
HANGER	Suporte, dispositivo de suspensão
HARDWARE	Ferragem
HARDWARE KIT	Jogo de ferragem
HARNESS	Chicote
HEAD = HD	Cabeça
HEADER	Coletor
HEADLAMP	Farol dianteiro
HEADLIGHT	Farol dianteiro
HEAT SINK	Difusor de calor
HEATER	Aquecedor
HIGH-IDLE	Marcha acelerada em vazio
HINGE	Dobradiça, articulacão
HITCH	Engate
HOIST	Guincho, talha
HOLD	Suporte, fixador
HOLD DOWN	Fixar, reter, manter abaixado
HOLDER	Fixador, suporte
HOLE	Furo, buraco
HOOD	Capô
HOOD & DASH	Capô e painel
HOOK	Gancho
HORN	Buzina
HOSE	Mangueira
HOUSING	Alojamento
HUB	Cubo
HYDRAULIC	Hidráulico
ID = INSIDE DIAMETER	Diâmetro interno
IDLER	Roda-guia
IDLER & SHAFT	Roda-guia e eixo
IDLER GEAR	Engrenagem intermediária
IDLER PULLEY	Polia intermediária
IMPELLER	Impulsor, rotor
IN = INCH	Polegada
INCLUDES	Inclui
INDICATE	Indicam
INDICATOR	Indicador
INLAY	Incrustação
INLET	Admissão, entrada
INPUT	Entrada
INSERT	Inserção
INSTALLATION	Instalação
INSTALLED ON MODEL	Instalação no modelo
INSTRUCTION	Instrução
INSTRUMENT	Instrumento
INSULATED BRUSH	Escova isolada
INSULATION	Isolação, isolamento
INSULATOR	Isolante, isolador
INTAKE	Admissão
INTERLOCK	Trava interna
INTERMEDIATE	Intermediário
INTERNAL	Interno
INVERTER	Inversor
IRON	Ferro
JACK	Macaco
JAW	Mandíbula, garra
JET	Jato, vaporizador
JOINT	Junta, articulação
JUNCTION	Junção
KEY	Chaveta
KINGBOLT	Pino de engate
KNIFE	Faca, lâmina
KNOB	Maçaneta, botão
LADDER	Escada
LAMP	Lâmpada
LARGE	Grande
LATCH	Trinco, lingüeta
LEAD	Condutor, cabo
LEG	Perna
LENS	Lente
LEVEL	Nível
LEVER	Alavanca
L.H. = LEFT HAND	Lado esquerdo
LID	Placa, tampa
LIFT	Levantar
LIFT CYLINDER	Cilindro de levantamento
LIFTER	Tucho
LIFTING EYE	Olhal de levantamento
LIGHT GREEN	Verde claro
LIGHTING	Sistema de iluminação
LINE	Tubulação
LINER	Camisa
LINES & PUMP	Tubulação e bomba
LINES & VALVE	Tubulação e válvula
LINING	Revestimento, lona
LINK	Elo
LINKAGE	Articulação
LIP	Lábio, borda
LISTED	Relacionamento
LITERATURE	Literatura
LOCATED	Localizado

NOMENCLATURA DE PEÇAS INGLÊS-PORTUGUÊS

INGLÊS	PORTUGUÊS
LOCATOR	Localizador
LOCK	Trava
LOCKNUT	Contraporca
LOCKWASHER	Arruela de pressão
LOCKWIRE	Arame de trava
LONG	Longo
LOOM	Tubo isolador
LOW IDLE	Marcha lenta
LOUVER	Persiana
LOWER	Abaixar, inferior
LUBRICANT	Lubrificante
LUG	Ressalto, orelha
MACHINE SCREW	Parafuso de fenda
MAGNET	Imã magneto
MAIN	Principal
MAINTENANCE	Manutenção
MANIFOLD	Coletor
MARKED	Marcado (a)
MARKER	Marcador
MASTER PIN	Pino mestre
MAT	Capacho, esteira
METER	Medidor, contador
MINOR	Menor
MIRROR	Espelho
MISCELLANEOUS	Miscelânea
MODIFICATION	Modificação
MOLDBOARD	Armação da lâmina
MOTOR	Motor
MOULDING	Moldura
MOUNT	Montar
MOUNTED	Montado (a)
MOUNTING	Montagem
MUFFLER	Silenciador
NAMEPLATE	Plaqueta de identificação
N.C. (THREAD)	Rosca grossa
NEEDLE	Agulha
N.F. (THREAD)	Rosca fina
NIB	Ponta, bico
NIPPLE	Conexão
NONE	Nenhum (a)
NORMALIZING	Normalização
NOT PART OF	Não faz parte de
NOZZLE	Bocal, bico injetor
N/S = NOT SERVICED	Não vendável
NUMBER (No)	Número (No)
NUT	Porca
NUT-WING	Porca borboleta
NUT-CASTLE	Porca acastelada
NUT-WELD	Porca-soldada
NUT-CAP	Porca cega
NUT-HEX	Porca sextavada
NUT-LOCK	Contraporca
NUT-IMPERIAL	Porca imperial
NUT-JAM	Porca de trava, contraporca
NUT-LOW CROWN	Porca de meia coroa
NUT-RETAINING	Porca de retenção
NUT-SELF LOCK	Porca de autotravamento
NUT-SLOTTED	Porca fendada
NUT-SPANNER	Porca para chaves
O.D. = OUTSIDE DIAMETER	Diâmetro externo
O-RING	Anel "O"
OIL	Óleo
OILPAN	Cárter
OIL PUMP	Bomba de óleo
OIL SYSTEM	Sistema de lubrificação
OILER	Almotolia, lubrificador
ORANGE	Laranja
TO ORDER	Para pedir
ORIFICE	Orifício
OUTER	Externo
OUTER RACE	Anel externo
OUTPUT	Saída
OVERALL	Geral, total
OVERHAUL	Revisão
OVER SIZE	Sobremedida
PACKING	Embalagem, gaxeta
PAD	Coxim, calço
PADLOCK	Cadeado
PAINT	Pintura
PAN	Cárter
PANEL	Painel
PARKING BRAKE	Freio de estacionamento
PARTITION	Separacão
PARTS G	Grupo de peças
PARTS OF	Peça de
PARTS OF ALL ENGINE ARRANGEMENTS	Peças de todos os arranjos do motor exceto
PAWL	Garra
PEDAL	Pedal
PEDESTAL	Pedestal
PERFORMANCE	Desempenho
PILOT	Piloto
PIN	Pino
PIN & BUSHING	Pino e bucha
PIN-COTTER	Contrapino
PINCH BAR	Pé de cabra
PINION	Pinhão
PIPE	Tubo
PISTON	Pistão
PIVOT	Articulação, pivô
PLANETARY	Planetário
PLATE	Placa
PLATFORM	Plataforma
PLUG	Bujão
PLUNGER	Pistão, êmbolo
POINT	Ponta, ponto

NOMENCLATURA DE PEÇAS INGLÊS-PORTUGUÊS

INGLÊS	PORTUGUÊS
POINTER	Ponteiro
POLE & COIL	Polo e bobina
POLE	Polo, lança, vara
POPPET	Gatilho
POST	Poste, coluna
POTENTIOMETER	Potenciômetro
POWER TAKE OFF	Tomada de força
POWER TRAIN	Trem de força
PRE-SCREENER	Tela protetora
PRECHAMBER	Câmara de pré-combustão
PRECLEANER	Pré-purificador
PRECOMBUSTION	Pré-combustão
PRESS	Prensa
PRESS = PRESSURE	Pressão
PREVIOUS	Prévio, anterior
PRIMARY	Primário, principal
PROBE	Prova
PROJECTOR	Projeter
PROTECTION	Proteção
PROTECTOR	Proteter
PULLER	Extrator, sacador
PULLEY	Polia
PUMP	Bomba
PURPLE	Roxo
PUSHROD	Haste de empuxo
QTY = QUANTITY	Quantidade
RACE	Pista
RACE & ROLLER	Pista e rolete
RACK	Cremalheira
RADIATOR	Radiador
RAIL	Trilho, guia
RANGE TRANSM	Transmissão manual
RATCHET	Catraca
REAR	Traseiro (a)
REBORED	Escareado, alargado
REBUILD KIT	Jogo de recondicionamento
RECEPTACLE	Recipiente
RECTIFIER	Retificador
RED	Vermelho
REDUCER	Redutor
REFER	Referir
REGULATOR	Regulador
RELATED REPAIR ITEMS	Itens de reparos relacionados
RELAY	Relé
RELIEF VALVE	Válvula de alívio
REPAIR G	Grupo de reparo
REPAIR KIT	Jogo de reparo
REPAIR ITEMS	Itens de reparo
REPLACEMENT	Reposição, substituição
REQUIRED	Necessário
RESERVOIR A	Reservatôrio
RESIN	Resina
RESISTOR	Resistência
RETAINER	Fixador
RETARDER	Retardador
REVERSIBLE	Reversível
R.H. = RIGHT HAND	Lado direito
RIM	Aro
RIM & TIRE	Aro e pneu
RING	Anel
RIVET	Rebite
ROCKET	Balancim
ROD	Haste
ROD END	Extremidade da haste
ROLLER	Rolete
ROPE-STARTING	Partida à corda
ROTATOR	Girador
ROTOCHAMBER	Càmara pneumática
ROTOCOIL	Girador de válvula
ROTOR	Rotor
RUST INHIBITOR	Antioxidante
SADDLE	Sela, assento
SAFETY	Segurança
SAFETY TREAD	Tiras antiderrapante
SCRAPER	Tampa
SCREEN	Tela
SCREW	Parafuso
SCREW-HEX HD	Parafuso de cabeça hexagonal
SCREW-KIT	Jogos de parafuso
SCREW-MACHINE	Parafuso de fenda
SCREW-ROUND HD	Parafuso de cabeça redonda
SCREW-FLANGED	Parafuso com flange
SCREW-LOCKING	Parafuso de trava
SCREW-THUMB	Parafuso de orelhas
SCREWDRIVER	Chave de fenda
SEAL	Retentor
SEALED UNIT	Unidade vedada
SEALER	Vedador isolante
SEAT	Assento
SECONDARY	Secundário
SECTION	Seção
SEGMENT	Segmento
SENDER	Emissor
SENSOR	Sensor
SEPARATE	Separar, separado
SEPARATOR	Separador
SERIAL NUMBER PLATE	Placa de número de série
SERVICE	Serviço, manutenção
SERVICE KIT	Jogo de manutenção
SERVICE METER	Horômetro
SETSCREW	Parafuso de fixação
SHACKLE	Grilheto, anel, manilha
SHAFT	Eixo
SHANK	Porta-ponta do escarificador

NOMENCLATURA DE PEÇAS INGLÊS-PORTUGUÊS

INGLÊS	PORTUGUÊS
SHEAVE	Polia, roldana
SHEET	Folha, lâmina
SHELL	Invólucro, cápsula, casquilho
SHIELD	Blindagem, protetor
SHIFT	Mudança
SHIM	Calço
SHIPPING	Embarque
SHOCK ABSORBER	Amortecedor de choques
SHOCKMOUNT	Montagem a prova de choques
SHOE	Sapata
SHORT	Curto
SHOWN	Ilustrado, mostrado
SHROUD	Tampa de proteção
SHUNT	Derivação
SHUT OFF	Desligar, parada
SHUTTLE	Pistão de vaivém
SIDE	Lateral
SIDE VIEW	Vista lateral
SILICONE	Silicone
SINK	Absorvente de calor
SKIVING	Desbaste
SLACK ADJUSTER	Adjustador de folga
SLEEVE	Luva, manga, camisa
SLIDER	Cursor, deslizador
SLIDE RAIL	Trilho deslizante
SLING	Cabos, amarras, linga
SLINGER	Defletor
SLUG	Pistão de reação, pistãozinho
SMALL	Pequeno
SNAP RING	Anel de retenção, anel de pressão
SNUBBER	Amortecedor
SOCKET	Soquete, tomada
SOLENOID	Solenóide
SPACER	Espaçador
SPARE	Sobressalente
SPARK PLUG	Vela de ignição
SPECIAL	Especial
SPEEDOMETER	Velocimetro
SPIDER	Cruzeta
SPINDLE	Ponta de eixo
SPLINE	Estria
SPOOL	Carretel
SPOUT	Calha, tubo
SPRING	Mola
SPROCKET	Roda motriz, roda dentada
STABILIZER	Estabilizador
STACK	Chaminé, cano de escapamento
STAND	Suporte, cavalete
STANDPIPE	Suporte vertical de sucção
STAPLE	Grampo
STARTER	Arranque motor de partida
STATOR	Estator
STEERING	Direção
STEM	Haste
STEP	Degrau
STICK	Vareta
STOP	Parar
STORAGE	Armazenagem
STRAINER	Tela filtrante
STRAP	Tira, cinta, suporte de fixação
STREET ELL	Conexão cotovelo
STRIP	Tira, fita, listra
STROKE	Curso do pistão
STUD	Prisioneiro
SUMP	Tanque, reservatório
SUPPLY VALVE	Válvula de suprimento
SUPPORT	Suporte
SUSPENSION	Suspensão
SWITCH	Interruptor
SWIVEL	Articulação giratória
TAB	Tira, aba, lingüeta
TABLE	Mesa
TACHOGRAPH	Tacógrafo
TACHOMETER	Tacômetro
TAG	Etiqueta
TAIL LAMP	Farol traseiro
TAN	Castanho
TANG	Lingüeta
TANK	Tanque
TAP	Macho
TAPE	Fita
TAPPET	Tucho
TEE	Conexão em "T"
TEMP. = TEMPERATURE	Temperatura
TERMINAL	Terminal
TEST UNIT	Unidade de teste
TESTER	Aparelho de teste
THERMISTOR	Termistor
THERMOCOUPLE	Termopar
THERMOMETER	Termômetro
THERMOSTAT	Termostato
THERMOSWITCH	Interruptor térmico
THICK	Grosso (a) espesso (a)
TIE	Ligação, tirante
THREAD (OF NUT)	Rosca (de porca)
THROTTLE	Acelerador de
THROWER	Defletor
THRU = THROUGH	Através de
TIGHTENER	Tensor
TILT CYLINDER	Cilindro de inclinação
TIMING	Sincronização, Distribuição
TIP	Ponta

NOMENCLATURA DE PEÇAS INGLÊS-PORTUGUÊS

INGLÊS	PORTUGUÊS
TIRE	Pneu
TIRE & RIM	Pneu e aro
TONGUE	Língua, lingueta
TOOL	Ferramenta
TOOLCABINET	Armário para ferramenta
TOOTH/TEETH	Dente/dentes
TOP	Topo, parte superior
TORQUE	Torque
TORQ. CONV.	Conversor de torque
TORQ. DIVIDER	Divisor de torque
TOWER	Torre
TRACK	Esteira
TRACK PIN	Pino de esteira
TRACTOR	Trator
TRAILING UNIT	Unidade rebocada
TRANSFER	Decalcomania
TRANSFORMER	Transformador
TRANSISTOR	Transistor
TRANSMISSION	Transmissão
TRANSMISSION OVERHAUL	Revisão da transmissão
TREAD	Piso, banda de rodagem
TREADLE	Pedal
TROLLY	Carrinho
TRUCK	Caminhão
TRUNNION	Munhão
TUBE	Tubo, cano
TUBING	Tubulagem canalização
TURBINE	Turbina
TURBOCHARGER	Turboalimentador
U-BOLT	Parafuso em "U"
U-JOINT	Junta universal
UNDERSIZE	Submedida
UNION	União
UPPER	Superior
USE AS REQUIRED	Usar conforme necessitar
VALUE	Valor
VALVE	Válvula
VALVE GRINDING	Retificação das válvulas
VEE BELT	Correia "V"
VEE BELT SET	Jogo de correia em "V"
VENT	Respiro
VIEW	Vista
VISE	Morsa, torno
VISOR	Pára-sol
WALKWAY	Passadiço, corredor
WARNING G.	Grupo de alarma
WASHER	Arruela
WATER PUMP	Bomba d'água
WEARPLATE	Placa de desgaste
WEDGE	Cunha
WEIGHT	Peso
WELD	Solda
WELDNUT	Porca soldada
WHEEL	Roda
WHITE	Branco
WICK	Mecha, pavio
WINCH	Guincho
WINDOW	Janela
WINDSHIELD	Pára-brisa
WIPER	Limpador
WIRE	Fio
WIRING	Sistema elétrico
WIRING DIAGRAM	Diagrama do sistema elétrico
WITH	Com
WRAPPER	Invólucro, envoltório
WRENCH	Chave
YELLOW	Amarelo
YOKE	Garfo

MAINTENANCE PARTS

DESCRIPTION	PART NUMBER	QTY	WHERE USED	PAGE
AIR INLET AND EXHAUST SYSTEM				
ELEMENT AS-PRIMARY	6I-0273	1	AIR CLEANER GP	86
ELEMENT AS-SECONDARY	6I-0274	1	AIR CLEANER GP	86
INDICATOR-AIR FILTER SERVICE	8N-2694	1	AIR CLEANER GP	83
BASIC ENGINE				
CAP-CRANKSHAFT BEARING	7E-2968	7	CYLINDER BLOCK GP	18
CAP-FILLER	4W-3087	1	COVER GP-FRONT HOUSING	15
PLUG	9S-4183	1	HOUSING GP-FLYWHEEL	39
PLUG-DRAIN	5F-0304	1	PLUG GP-FLYWHEEL HOUSING	48
SEAL (INTEGRAL)	135-9819	1	AIR COMPRESSOR GP	8
SEAL (2M)	5P-5678		COVER GP-VALVE MECHANISM	16
BRAKING SYSTEM				
CARTRIDGE-DESICCANT (AIR DRYER)	203-2389	1	AIR DRYER GP	454
ELEMENT-HEATING (AIR DRYER)(24 VOLT)	203-2423	1	AIR DRYER GP	454
FUSE (10 AMP) (AIR DRYER)	9W-1442	1	AIR DRYER GP	450
COOLING SYSTEM				
CAP-DUST	157-0670	1	LINES GP-WATER	72
CAP-RADIATOR	6L-8617	1	RADIATOR & OIL COOLER GP	80
FILTER-WATER	119-3025	1	PUMP GP-WATER	78
REGULATOR-WATER TEMPERATURE	126-5869	1	LINES GP-WATER	72
ELECTRICAL AND STARTING SYSTEM				
BATTERY (MAINTENANCE FREE)(12 VOLT)	153-5700	2	BATTERY GP	134
		2	BATTERY GP	135
BATTERY (750 AMP)(12 VOLT)	3T-5760	2	BATTERY GP	136
BELT-DRIVE (WARNING BEACON)	9X-8139	1	LAMP GP-WARNING BEACON	168
CIRCUIT BREAKER AS (15 AMP) (ENGINE CONTROL)	6T-3643	1	WIRING GP-REAR	261
		1	WIRING GP-REAR	271
CIRCUIT BREAKER AS (15 AMP) (HEADLAMPS)	3T-2662	1	CIRCUIT BREAKER GP	138
		1	CIRCUIT BREAKER GP	139
CIRCUIT BREAKER AS (15 AMP) (HEAD/RH POSITION LAMPS)	3T-2662	1	WIRING GP-REAR	271
CIRCUIT BREAKER AS (15 AMP) (LIGHTBAR WORKLAMPS)	3T-2662	1	CIRCUIT BREAKER GP	138
CIRCUIT BREAKER AS (15 AMP) (TURN/HAZARD/LH POSITION/PANEL)	3T-2662	1	WIRING GP-REAR	271
CIRCUIT BREAKER AS (80 AMP) (ALTERNATOR)	171-2210	1	WIRING GP-REAR	260
		2	WIRING GP-REAR	270
CIRCUIT BREAKER AS (80 AMP) (MAIN)	171-2210	1	WIRING GP-REAR	260
		2	WIRING GP-REAR	270
FLASHER AS-ELECTRONIC (12/24 VOLT) (TURN SIGNAL/HAZARD)	108-0358	1	LIGHTING GP-FLOOD	186
FUSE (10 AMP)	9W-1442	1	CONVERTER GP-ELECTRICAL	146
FUSE (10 AMP) (AUXILARY BACK-UP ALARM)	9W-1442	1	LIGHTING GP-BACKUP	174
FUSE (10 AMP) (BLADE FLOOD LAMP)	9W-1442	2	LIGHTING GP-FLOOD	181

MAINTENANCE PARTS

DESCRIPTION	PART NUMBER	QTY	WHERE USED	PAGE
FUSE (10 AMP) (BLADE/FRONT FLOODLAMP)	9W-1442	2	LIGHTING GP-FLOOD	180
FUSE (10 AMP) (DOME LAMP)	3K-8782	2	WIRING GP-CAB	240
FUSE (10 AMP) (MOLDBOARD LAMP)	9W-1442	1	WIRING GP-CAB	238
FUSE (10 AMP) (POWER CONVERTER)	9W-1442	1	CONVERTER GP-ELECTRICAL	148
FUSE (10 AMP) (SECONDARY STEERING)	9W-1442	2	WIRING GP-SECONDARY STEERING	280
FUSE (10 AMP) (TURN SIGNAL/HAZARD)	9W-1442	1	LIGHTING GP-FLOOD	188
FUSE (10 AMP) (TURN SIGNAL/HAZARD LAMPS)	9W-1442	1	LIGHTING GP-FLOOD	182
		1	LIGHTING GP-FLOOD	186
FUSE (10 AMP) (TURN SIGNALS)	9W-1442	1	SWITCH GP-LIGHT	224
FUSE (10 AMP) (WARNING BEACON)	9W-1442	1	LIGHTING GP-WARNING	198
		1	LIGHTING GP-WARNING	200
FUSE (15 AMP) (TRANSMISSION)	9W-1441	1	WIRING GP-STEERING CONSOLE	288
		1	WIRING GP-STEERING CONSOLE	292
FUSE (15 AMP) (UPPER/LOWER FRONT WIPERS)	9W-1441	1	WIRING GP-CAB	232
FUSE (15 AMP) (WINDOW WIPER/WASHERS)	9W-1441	1	WIRING GP-CAB	234
FUSE (30 AMP) (CONVERTER-POWER)	8T-9636	2	CONVERTER GP-ELECTRICAL	147
KEY (BATTERY DISCONNECT)	8H-5306	1	SWITCH GP-DISCONNECT	223
LAMP AS-LH (TURN)	6C-0110	1	WIRING GP-REAR	266
LAMP AS-RH (TURN)	6C-0109	1	WIRING GP-REAR	266
LAMP GP-SIGNAL (24 VOLT) (STOP/TAIL)	135-0426	2	WIRING GP-REAR	264
LAMP-HEAD (24 VOLT) (HIGH BEAM)	9X-3463	1	LIGHTING GP-FLOOD	178
		1	LAMP GP-HEAD	155
LAMP-HEAD (24 VOLT) (LOW BEAM)	9X-3463	1	LIGHTING GP-FLOOD	178
LAMP-HEAD (24 VOLT)(65 WATT) (LOW BEAM)	9X-3463	1	LAMP GP-HEAD	154
LAMP (REGISTRATION PLATE)	5C-9583	1	LAMP GP-REGISTRATION PLATE	165
LAMP (WARNING BEACON)	9X-7849	1	LAMP GP-WARNING BEACON	168
LAMP (24 VOLT)	9X-3465	1	LAMP GP-HEAD & SIGNAL	160
	100-3245	2	LAMP GP-HEAD & SIGNAL	160
LAMP (24 VOLT) (AUXILARY BACK-UP ALARM)	3E-8825	1	LIGHTING GP-BACKUP	174
LAMP (24 VOLT) (AUXILIARY BACKUP LAMP)	3E-8825	2	LIGHTING GP-BACKUP	172
LAMP (24 VOLT) (BLADE CUSHION SWITCH)	3E-8825	1	WIRING GP-BLADE CUSHION	230
LAMP (24 VOLT) (BLADE)(FRONT FLOODLAMP)	3E-8825	2	LIGHTING GP-FLOOD	180
LAMP (24 VOLT) (CAB POSITION)	9X-4494	1	LAMP GP-MARKER	164
LAMP (24 VOLT) (CENTERSHIFT PIN INDICATOR)	7N-5876	1	WIRING GP-SHIFT CONSOLE	282
LAMP (24 VOLT) (CENTERSHIFT PIN PULLER)	3E-8825	1	WIRING GP-SHIFT CONSOLE	282
		1	WIRING GP-SHIFT CONSOLE	285
LAMP (24 VOLT) (DIFF LOCK SWITCH INDICATOR)	3E-8825	2	WIRING GP-STEERING CONSOLE	292
LAMP (24 VOLT) (DIFFERENTIAL LOCK INDICATOR)	3E-8825	2	WIRING GP-STEERING CONSOLE	288

MAINTENANCE PARTS

DESCRIPTION	PART NUMBER	QTY	WHERE USED	PAGE
LAMP (24 VOLT) (DOME)	7N-9943	1	LAMP GP-DOME	152
LAMP (24 VOLT) (HEAD)	9X-3465	1	LAMP GP-HEAD & SIGNAL	162
LAMP (24 VOLT) (HEADLAMP/TAIL INDICATOR)	3E-8825	2	LIGHTING GP-FLOOD	186
		2	LIGHTING GP-FLOOD	182
		2	LIGHTING GP-FLOOD	188
LAMP (24 VOLT) (HEADLAMP/TAIL/INDICATOR)	3E-8825	2	SWITCH GP-LIGHT	224
LAMP (24 VOLT) (HIGH/LOW BEAM)	9X-3465	1	LAMP GP-HEAD	158
		1	LAMP GP-HEAD	156
LAMP (24 VOLT) (LIGHTBAR LOW BEAM)	3E-8825	1	LIGHTING GP-FLOOD	186
		1	LIGHTING GP-FLOOD	189
LAMP (24 VOLT) (MOLDBOARD)	3E-8825	1	WIRING GP-CAB	238
LAMP (24 VOLT) (MOLDBOARD INDICATOR)	3E-8825	1	WIRING GP-CAB	236
LAMP (24 VOLT) (PANEL DIMMER SWITCH INDICATOR)	3E-8825	1	WIRING GP-STEERING CONSOLE	292
LAMP (24 VOLT) (PANEL LAMP DIMMER INDICATOR)	3E-8825	1	WIRING GP-STEERING CONSOLE	288
LAMP (24 VOLT) (POSITION)	100-3245	1	LAMP GP-HEAD	156
		1	LAMP GP-HEAD	158
LAMP (24 VOLT) (SECONDARY STEERING)	3E-8825	2	WIRING GP-SHIFT CONSOLE	285
LAMP (24 VOLT) (SECONDARY STEERING INDICATOR)	3E-8825	2	WIRING GP-SECONDARY STEERING	280
LAMP (24 VOLT) (SHIFT CONSOLE)	7N-5876	1	WIRING GP-SHIFT CONSOLE	284
LAMP (24 VOLT) (SIGNAL)	100-3245	2	LAMP GP-HEAD & SIGNAL	162
LAMP (24 VOLT) (TAIL LAMP INDICATOR)	3E-8825	1	WIRING GP-STEERING CONSOLE	288
LAMP (24 VOLT) (TAIL LAMP SWITCH INDICATOR)	3E-8825	2	WIRING GP-STEERING CONSOLE	292
LAMP (24 VOLT) (THROTTLE HOLD AUTO/MAN)	3E-8825	2	WIRING GP-SHIFT CONSOLE	284
LAMP (24 VOLT) (THROTTLE HOLD MODE)	3E-8825	2	WIRING GP-SHIFT CONSOLE	282
LAMP (24 VOLT) (THROTTLE SPEED SET)	3E-8825	2	WIRING GP-SHIFT CONSOLE	282
LAMP (24 VOLT) (TURN)	100-3245	1	LAMP GP-HEAD	156
		1	LAMP GP-HEAD	158
LAMP (24 VOLT) (WARNING BEACON)	3E-8825	1	LIGHTING GP-WARNING	198
		1	LIGHTING GP-WARNING	200
LAMP (24 VOLT)(21 WATT) (BRAKE)	5C-9584	2	WIRING GP-REAR	266
		2	WIRING GP-REAR	266
LAMP (24 VOLT/21 WATT) (SIGNAL)	9X-4493	1	LAMP GP-HEAD & SIGNAL	160
		1	LAMP GP-HEAD & SIGNAL	162
LAMP (24 VOLT/21 WATT) (TURN)	9X-4493	1	LAMP GP-HEAD	156
		1	LAMP GP-HEAD	158
LAMP (24 VOLT)(5 WATT) (TAIL)	4V-8116	1	WIRING GP-REAR	266
		1	WIRING GP-REAR	266
LAMP (24 VOLT)(65 WATT) (FLOOD)	9X-3463	1	LAMP GP-FLOOD	153
LENS (AMBER) (SIGNAL)	100-3250	1	LAMP GP-HEAD & SIGNAL	160
		1	LAMP GP-HEAD & SIGNAL	162
LENS (AMBER) (TURN)	100-3250	1	LAMP GP-HEAD	156
		1	LAMP GP-HEAD	158

MAINTENANCE PARTS

DESCRIPTION	PART NUMBER	QTY	WHERE USED	PAGE
LENS-AMBER (WARNING BEACON)	9X-8121	1	LAMP GP-WARNING BEACON	168
LENS AS (AMBER)(SIGNAL)	136-3848	1	LAMP GP-HEAD & SIGNAL	162
LENS AS-FLOODLAMP	158-0248	1	LAMP GP-FLOOD	153
LENS AS (HEADLAMP)	100-3248	1	LAMP GP-HEAD & SIGNAL	160
		1	LAMP GP-HEAD & SIGNAL	162
LENS AS (HEADLAMP)(LOW BEAM)	162-2077	1	LAMP GP-HEAD	154
LENS AS (HIGH BEAM)	158-0249	1	LIGHTING GP-FLOOD	178
		1	LAMP GP-HEAD	155
LENS AS (LOW BEAM)	162-2077	1	LIGHTING GP-FLOOD	178
LENS AS (SIGNAL)	136-3848	1	LAMP GP-HEAD & SIGNAL	160
LENS AS (TURN)	136-3848	1	LAMP GP-HEAD	156
		1	LAMP GP-HEAD	158
LENS (DOME LAMP)	7T-0020	1	LAMP GP-DOME	152
LENS (REGISTRATION PLATE)	134-6751	1	LAMP GP-REGISTRATION PLATE	165
SWITCH AS (AUXILLARY BACKUP)	161-1418	1	LIGHTING GP-BACKUP	172
FRAME AND BODY				
FITTING-GREASE (ARTICULATION HITCH)	3B-8489	2	LINES GP-GREASE	441
FITTING-GREASE (1/8-27 THD) (STEERING CYLINDER)	3B-8489	4	AXLE GP-FRONT	414
FITTING-GREASE (1/8-27 THD) (WHEEL LEAN CYLINDER)	3B-8489	7	AXLE GP-FRONT	414
PLUG-MAGNETIC (TRANSMISSION OIL)	8M-3837	1	CASE & FRAME GP	418
VALVE-DRAIN (RADIATOR)	1P-7297	1	GUARD & SUPPORT GP-RADIATOR	428
FUEL SYSTEM				
CAP-DUST	6V-0852	1	FILTER GP-FUEL	100
FILTER AS-FUEL	1R-0762	1	FILTER GP-FUEL	100
FILTER AS-WATER SEP & FUEL	1R-0770	1	FILTER GP-WATER SEP & FUEL	102
REGULATOR AS	196-6840	1	LINES GP-FUEL	104
SEAL	220-8678	1	FILTER GP-WATER SEP & FUEL	102
HYDRAULIC SYSTEM				
CAP-DUST	6V-0852	1	LINES GP-PUMP	544
		1	VALVE GP-COMBINATION	618
	8C-3451	1	LINES GP-STEERING	552
CAP-DUST (HYDRAULIC OIL)	6V-0852	1	LINES GP-HYDRAULIC FAN	536
		1	LINES GP-PUMP	540
CAP-FILLER (HYDRAULIC OIL TANK)	7H-1447	1	TANK & FILTER GP-HYDRAULIC	580
FILTER ELEMENT AS-OIL (HYDRAULIC) (REVERSE FLOW)	1R-0774	1	TANK & FILTER GP-HYDRAULIC	580
FITTING-GREASE (WHEEL LEAN)	3B-8489	2	CYLINDER & MTG GP-WHEEL LEAN	494
KEY	5P-8500	1	TANK & MTG GP-HYDRAULIC	582
STRAINER (HYDRAULIC OIL FILLER)	9J-3047	1	TANK & FILTER GP-HYDRAULIC	580
IMPLEMENTS				
FITTING-GREASE (DRAW BAR)	3B-8489	1	DRAWBAR GP	680
LUBRICATION SYSTEM				
BREATHER AS	183-6848	1	BREATHER GP	57
CAP-DUST	8C-3445	1	VALVE GP-FLUID SAMPLING	67
FILTER AS-ENGINE OIL	1R-0716	1	FILTER GP-ENGINE OIL	58

MAINTENANCE PARTS

DESCRIPTION	PART NUMBER	QTY	WHERE USED	PAGE
OPERATOR STATION				
BELT (AIR CONDITIONER)	197-4567	1	COMPRESSOR GP-REFRIGERANT	728
BLADE AS-WIPER	6V-5853	1	WIPER GP-WINDOW	897
		1	WIPER GP-WINDOW	898
BLADE AS-WIPER (FRONT)	6V-5853	1	WIPER GP-WINDOW	890
BLADE AS-WIPER (HIGH PROFILE REAR)	6V-5853	1	WIPER GP-WINDOW	894
BLADE AS-WIPER (LOW PROFILE FRONT LOWER)	6V-5853	1	WIPER GP-WINDOW	888
BLADE AS-WIPER (LOW PROFILE REAR)	6V-5849	1	WIPER GP-WINDOW	892
FILTER-AIR (CAB AIR)	7T-7358	1	FILTER GP-CAB AIR	756
FILTER (CAB AIR)	9X-4986	2	FILTER GP-CAB AIR	756
FUSE (10 AMP) (FRONT DEFROSTER)	9W-1442	1	FAN GP-CIRCULATING	754
FUSE (10 AMP) (OUTSIDE HEATED MIRROR)	9W-1442	1	MIRROR GP-REAR VIEW	804
FUSE (10 AMP) (REAR DEFROSTER)	9W-1442	1	FAN GP-CIRCULATING	755
FUSE (10 AMP) (WIPER)	9W-1442	1	WIPER GP-WINDOW	892
		1	WIPER GP-WINDOW	894
FUSE (15 AMP) (AIR CONDITIONER)	9W-1441	1	AIR CONDITIONER & MOUNTING GP	716
FUSE (15 AMP) (HEATER)	9W-1441	1	HEATER & MTG GP-CAB	759
GAUGE GP-AIR PRESSURE (LH & RH TANK)	1W-3306	2	PANEL GP-INSTRUMENT	826
GAUGE GP-AIR PRESSURE (LH TANK)	1W-3306	1	PANEL GP-INSTRUMENT	824
GAUGE GP-AIR PRESSURE (RH & LH TANKS)	1W-3306	2	PANEL GP-INSTRUMENT	822
GAUGE GP-AIR PRESSURE (RH TANK)	1W-3306	1	PANEL GP-INSTRUMENT	824
KEY	5P-8500	2	LITERATURE GP	800
		1	ROPS AR-OPEN	835
LAMP (24 VOLT) (A/C & HEATER CONTROL PANEL)	8D-1429	1	HEATER GP-CAB	762
LAMP (24 VOLT) (ACTION INDICATOR)	115-1748	11	PANEL GP-INSTRUMENT	826
LAMP (24 VOLT) (EMS MASTER ACTION INDICATOR)	107-1983	1	PANEL GP-INSTRUMENT	822
		1	PANEL GP-INSTRUMENT	824
		1	PANEL GP-INSTRUMENT	826
LAMP (24 VOLT) (FAN SPEED/TEMP CONTROL)	8D-1429	1	AIR CONDITIONER GP	718
LAMP (24 VOLT) (FRONT DEFROSTER)	3E-8825	1	FAN GP-CIRCULATING	754
LAMP (24 VOLT) (HEATED MIRROR INDICATOR)	3E-8825	1	MIRROR GP-REAR VIEW	804
LAMP (24 VOLT) (INDICATOR)	7N-5876	4	PANEL GP-INSTRUMENT	822
		6	PANEL GP-INSTRUMENT	826
LAMP (24 VOLT) (INSTRUMENT PANEL)	115-1748	10	PANEL GP-INSTRUMENT	822
		10	PANEL GP-INSTRUMENT	824
LAMP (24 VOLT) (LH AIR TANK GAUGE)	7N-5876	1	PANEL GP-INSTRUMENT	824
LAMP (24 VOLT) (QUAD GAUGE)	7N-5876	2	PANEL GP-INSTRUMENT	824
LAMP (24 VOLT) (REAR DEFROSTER)	3E-8825	1	FAN GP-CIRCULATING	755
LAMP (24 VOLT) (RH AIR TANK GAUGE)	7N-5876	1	PANEL GP-INSTRUMENT	824
LAMP (24 VOLT) (SPEEDOMETER & TACH)	7N-5876	2	MODULE GP-SPEEDOMETER & TACH	810
LAMP (24 VOLT) (TEMP/FAN SPEED)	8D-1429	1	HEATER GP-CAB	766
PADLOCK GP	5P-8502	1	CAB AR-HIGH PROFILE	725
		1	CONVERSION AR-NON-ROPS	733

MAINTENANCE PARTS

DESCRIPTION	PART NUMBER	QTY	WHERE USED	PAGE
POWER TRAIN				
BREATHER AS (TANDEM)	1F-8488	2	TANDEM & COVER GP	343
BREATHER (POWER TRAIN)	9G-5127	1	FILLER GP-POWER TRAIN OIL	326
CAP-DUST	6V-0852	1	CONTROL GP-DIFFERENTIAL LOCK	316
	8C-3447	1	FILTER & MTG GP-OIL	328
CAP-DUST (TRANS OIL)	6V-0852	1	FILTER GP-OIL	330
CAP-DUST (TRANSMISSION OIL)	6V-0852	8	VALVE GP-TRANSMISSION CONTROL	358
CAP-VALVE (STEM)	9K-7951	1	WHEEL & TIRE GP	376
		1	WHEEL & TIRE GP	377
		1	WHEEL & TIRE GP	378
		1	WHEEL & TIRE GP	379
		1	WHEEL & TIRE GP	380
		1	WHEEL & TIRE GP	381
		1	WHEEL & TIRE GP	382
		1	WHEEL & TIRE GP	383
		1	WHEEL & TIRE GP	384
		1	WHEEL & TIRE GP	385
		1	WHEEL & TIRE GP	386
		1	WHEEL & TIRE GP	387
		1	WHEEL & TIRE GP	388
		1	WHEEL & TIRE GP	389
		1	WHEEL & TIRE GP	390
		1	WHEEL & TIRE GP	391
		1	WHEEL & TIRE GP	392
		1	WHEEL & TIRE GP	393
		1	WHEEL & TIRE GP	394
		1	WHEEL & TIRE GP	395
		1	WHEEL & TIRE GP	396
		1	WHEEL & TIRE GP	397
		1	WHEEL & TIRE GP	398
		1	WHEEL & TIRE GP	399
		1	WHEEL & TIRE GP	400
		1	WHEEL & TIRE GP	401
		1	WHEEL & TIRE GP	402
		1	WHEEL & TIRE GP	403
		1	WHEEL & TIRE GP	404
		1	WHEEL & TIRE GP	405
		1	WHEEL & TIRE GP	406
		1	WHEEL & TIRE GP	407
		1	WHEEL & TIRE GP	408
		1	WHEEL & TIRE GP	409
		1	WHEEL GP	411
		1	WHEEL GP	412
FILTER ELEMENT AS-OIL	132-8875	1	FILTER GP-OIL	330
FILTER-MAGNETIC (TMSN OIL)	8S-9129	1	CASE & PARTS GP-TRANSMISSION	296
FILTER-MAGNETIC (TRANSMISSION)	8S-9129	1	SCREEN GP-MAGNETIC	340
SCREEN-SUCTION (TMSN OIL)	8S-9130	1	CASE & PARTS GP-TRANSMISSION	296
SCREEN-SUCTION (TRANSMISSION)	8S-9130	1	SCREEN GP-MAGNETIC	340
SCREEN (TRANSMISSION OIL FILTER)	6I-9395	1	VALVE GP-TRANSMISSION CONTROL	358
SERVICE EQUIPMENT AND SUPPLIES				
KEY (TOOL BOX)	5P-8500	1	TOOL BOX GP	899
PADLOCK GP (TOOL BOX)	5P-8502	1	TOOL BOX GP	899

MAINTENANCE PARTS

DESCRIPTION	PART NUMBER	QTY	WHERE USED	PAGE
WORK TOOLS				
FITTING-GREASE (SCARIFIER)	3B-8489	1	SCARIFIER GP	704
FITTING-GREASE (SCARIFIER LIFT LINK SOCKET)	3B-8489	4	SCARIFIER GP	704
		4	SCARIFIER GP	708
FITTING-GREASE (TRUNNION)	3B-8489	1	SCARIFIER GP	708

PIEZAS DE MANTENIMIENTO

DESCRIPCION	NUMERO DE PIEZA	CANT	SE UTILIZA EN	PAGINA
BASTIDOR Y CAJA				
CONEXIÓN DE ENGRASE (ENGANCHE DE ARTICULACION)	3B-8489	2	TUBERÍAS DE ENGRASE (GR)	441
CONEXIÓN DE ENGRASE (ROSCA DE 1/8-27) (CILINDRO DE DIRECCION)	3B-8489	4	EJE DELANTERO (GR)	414
CONEXIÓN DE ENGRASE (ROSCA DE 1/8-27) (CILINDRO DE INCLINACION DE RUEDA)	3B-8489	7	EJE DELANTERO (GR)	414
TAPÓN MAGNÉTICO (ACEITE DE LA TRANSMISIÓN)	8M-3837	1	CAJA Y BASTIDOR (GR)	418
VÁLVULA DE DRENAJE (RADIADOR)	1P-7297	1	PROTECTOR Y SOPORTE DEL RADIADOR (GR)	428
EQUIPO Y SUMINISTRO DE SERVICIOS				
CANDADO (GR) (CAJA DE HERRAMIENTAS)	5P-8502	1	*TOOL BOX GP	899
LLAVE (CAJA DE HERRAMIENTAS)	5P-8500	1	*TOOL BOX GP	899
HERRAMIENTAS				
CONEXIÓN DE ENGRASE (ESCARIFICADOR)	3B-8489	1	GRUPO ESCARIFICADOR	704
CONEXIÓN DE ENGRASE (MUÑON)	3B-8489	1	GRUPO ESCARIFICADOR	708
CONEXIÓN DE ENGRASE (RECEPTACULO DE ESLABON DE LEVANT. DE ESCARIFICADOR)	3B-8489	4	GRUPO ESCARIFICADOR	704
		4	GRUPO ESCARIFICADOR	708
IMPLEMENTOS				
CONEXIÓN DE ENGRASE (BARRA DE TIRO)	3B-8489	1	BARRA DE TIRO (GR)	680
MOTOR BÁSICO				
SELLO (INTEGRAL)	135-9819	1	COMPRESOR DE AIRE (GR)	8
SELLO (2M)	5P-5678		TAPA DEL MECANISMO DE VÁLVULAS (GR)	16
TAPA DE COJINETE DE BANCADA DE CIG ÜEÑAL	7E-2968	7	BLOQUE MOTOR (GR)	18
TAPA DEL TUBO DE LLENADO	4W-3087	1	TAPA DE LA CAJA DELANTERA (GR)	15
TAPÓN	9S-4183	1	VOLANTE - CAJA DE (GR)	39
TAPÓN DE DRENAJE	5F-0304	1	GRUPO DE TAPON, CAJA DEL VOLANTE	48
PUESTO DEL OPERADOR				
CANDADO (GR)	5P-8502	1	CABINA DE PERFIL ALTO (CONFIG)	725
		1	CONJUNTO DE MODIFICACIÓN (SIN ROPS)	733
CINTURON DE SEGURIDAD (AIRE ACONDICIONADO)	197-4567	1	COMPRESOR DE REFRIGERANTE (GR)	728
FILTRO (AIRE DE LA CABINA)	9X-4986	2	FILTRO DE AIRE DE LA CABINA (GR)	756
FILTRO DE AIRE (AIRE DE LA CABINA)	7T-7358	1	FILTRO DE AIRE DE LA CABINA (GR)	756
FUSIBLE (10 A) (DESCONGELADOR DELANTERO)	9W-1442	1	VENTILADOR DE CIRCULACION	754

PIEZAS DE MANTENIMIENTO

DESCRIPCION	NUMERO DE PIEZA	CANT	SE UTILIZA EN	PAGINA
FUSIBLE (10 A) (DESCONGELADOR TRASERO)	9W-1442	1	VENTILADOR DE CIRCULACION	755
FUSIBLE (10 A) (LIMPIADOR)	9W-1442	1	LIMPIAPARABRISAS DE LA VENTANA (GR)	892
		1	LIMPIAPARABRISAS DE LA VENTANA (GR)	894
FUSIBLE (10 A) (RETROVISOR EXTERIOR DELANTERO)	9W-1442	1	RETROVISOR (GR)	804
FUSIBLE (15 A) (AIRE ACONDICIONADO)	9W-1441	1	ACONDICIONADOR DE AIRE Y MONTAJE (GR)	716
FUSIBLE (15 A) (CALEFACTOR)	9W-1441	1	CALEFACCIÓN Y MONTAJE DE LA CABINA (GR)	759
HOJA DE LIMPIAPARABRISAS (CONJ)	6V-5853	1	LIMPIAPARABRISAS DE LA VENTANA (GR)	897
		1	LIMPIAPARABRISAS DE LA VENTANA (GR)	898
HOJA DE LIMPIAPARABRISAS (CONJ) (DELANTERO DE BAJO PERFIL)	6V-5853	1	LIMPIAPARABRISAS DE LA VENTANA (GR)	888
HOJA DE LIMPIAPARABRISAS (CONJ) (FRENTE)	6V-5853	1	LIMPIAPARABRISAS DE LA VENTANA (GR)	890
HOJA DE LIMPIAPARABRISAS (CONJ) (TRASERO DE ALTO PARFIL)	6V-5853	1	LIMPIAPARABRISAS DE LA VENTANA (GR)	894
HOJA DE LIMPIAPARABRISAS (CONJ) (TRSERO DE BAJO PERFIL)	6V-5849	1	LIMPIAPARABRISAS DE LA VENTANA (GR)	892
INDICADOR DE PRESION DE AIRE (GR) (TANQUE DEL LADO DERECHO)	1W-3306	1	TABLERO DE INSTRUMENTOS (GR)	824
INDICADOR DE PRESION DE AIRE (GR) (TANQUE DEL LADO IZQUIERDO)	1W-3306	1	TABLERO DE INSTRUMENTOS (GR)	824
INDICADOR DE PRESION DE AIRE (GR) (TANQUE DERECHO E IZQUIERDO)	1W-3306	2	TABLERO DE INSTRUMENTOS (GR)	826
INDICADOR DE PRESION DE AIRE (GR) (TANQUES, LADOS DERECHO E IZQUIERDO)	1W-3306	2	TABLERO DE INSTRUMENTOS (GR)	822
LÁMPARA (24 VOLTIOS) (ACONDICIONADOR DE AIRE Y TABLERO DE CONTROL DE CALEFACCIÓN)	8D-1429	1	CALEFACCIÓN DE LA CABINA (GR)	762
LÁMPARA (24 VOLTIOS) (CONTROL DE TEMPERATURA/VELOCIDAD DEL VENTILADOR)	8D-1429	1	ACONDICIONADOR DE AIRE (GR)	718
LÁMPARA (24 VOLTIOS) (DE CUATRO MEDIDORES)	7N-5876	2	TABLERO DE INSTRUMENTOS (GR)	824
LÁMPARA (24 VOLTIOS) (DESCONGELADOR DELANTERO)	3E-8825	1	VENTILADOR DE CIRCULACION	754
LÁMPARA (24 VOLTIOS) (DESCONGELADOR TRASERO)	3E-8825	1	VENTILADOR DE CIRCULACION	755
LÁMPARA (24 VOLTIOS) (INDICADOR)	7N-5876	4	TABLERO DE INSTRUMENTOS (GR)	822
		6	TABLERO DE INSTRUMENTOS (GR)	826
LÁMPARA (24 VOLTIOS) (INDICADOR DE ACCION)	115-1748	11	TABLERO DE INSTRUMENTOS (GR)	826
LÁMPARA (24 VOLTIOS) (INDICADOR DE TANQUE DE AIRE DE LA PARTE IZQUIERDA)	7N-5876	1	TABLERO DE INSTRUMENTOS (GR)	824

PIEZAS DE MANTENIMIENTO

DESCRIPCION	NUMERO DE PIEZA	CANT	SE UTILIZA EN	PAGINA
LÁMPARA (24 VOLTIOS) (INDICADOR DEL TANQUE DE AIRE DE LA PARTE DERECHA)	7N-5876	1	TABLERO DE INSTRUMENTOS (GR)	824
LÁMPARA (24 VOLTIOS) (LUZ INDIC. DE ACCION MAESTRA DE EMS)	107-1983	1	TABLERO DE INSTRUMENTOS (GR)	824
		1	TABLERO DE INSTRUMENTOS (GR)	822
		1	TABLERO DE INSTRUMENTOS (GR)	826
LÁMPARA (24 VOLTIOS) (RETROVISOR INDICADOR DELANTERO)	3E-8825	1	RETROVISOR (GR)	804
LÁMPARA (24 VOLTIOS) (TABLERO DE INSTRUMENTOS)	115-1748	10	TABLERO DE INSTRUMENTOS (GR)	822
		10	TABLERO DE INSTRUMENTOS (GR)	824
LÁMPARA (24 VOLTIOS) (TEMP/VELOCIDAD DE VENTILADOR)	8D-1429	1	CALEFACCIÓN DE LA CABINA (GR)	766
LÁMPARA (24 VOLTIOS) (VELOCÍMETRO, TACÓMETRO)	7N-5876	2	MÓDULO DEL TACÓMETRO Y DEL VELOCÍMETRO (GR)	810
LLAVE	5P-8500	1	ESTRUCTURA ROPS ABIERTA	835
		2	PUBLICACIONES (GR)	800
SISTEMA DE ADMISIÓN Y ESCAPE DE AIRE				
ELEMENTO PRIMARIO (CONJ)	6I-0273	1	FILTRO DE AIRE (GR)	86
ELEMENTO SECUNDARIO (CONJ)	6I-0274	1	FILTRO DE AIRE (GR)	86
INDICADOR DE SERVICIO DEL FILTRO DE AIRE	8N-2694	1	FILTRO DE AIRE (GR)	83
SISTEMA DE COMBUSTIBLE				
FILTRO DE COMBUSTIBLE (CONJ)	1R-0762	1	FILTRO DE COMBUSTIBLE (GR)	100
FILTRO DE COMBUSTIBLE Y SEPARADOR DE AGUA (CONJ)	1R-0770	1	FILTRO DE COMBUSTIBLE Y SEPARADOR DE AGUA (GR)	102
REGULADOR (CONJ)	196-6840	1	TUBERÍAS DE COMBUSTIBLE (GR)	104
SELLO	220-8678	1	FILTRO DE COMBUSTIBLE Y SEPARADOR DE AGUA (GR)	102
TAPA CONTRA EL POLVO	6V-0852	1	FILTRO DE COMBUSTIBLE (GR)	100
SISTEMA DE ENFRIAMIENTO				
FILTRO DE AGUA	119-3025	1	BOMBA DE AGUA (GR)	78
REGULADOR DE TEMPERATURA DEL AGUA	126-5869	1	TUBERÍAS DEL AGUA (GR)	72
TAPA CONTRA EL POLVO	157-0670	1	TUBERÍAS DEL AGUA (GR)	72
TAPA DEL RADIADOR	6L-8617	1	RADIADOR Y ENFRIADOR DE ACEITE (GR)	80
SISTEMA DE FRENOS				
CARATUCHO-DESECANTE (SECADOR DE AIRE)	203-2389	1	DESHIDRATADOR (GR)	454
ELEMENTO DE CALEFACCION (SECADOR DE AIRE, 24 VOLTIOS)	203-2423	1	DESHIDRATADOR (GR)	454
FUSIBLE (10 A) (SECADOR DE AIRE)	9W-1442	1	DESHIDRATADOR (GR)	450
SISTEMA DE LUBRICACIÓN				
FILTRO DE ACEITE DEL MOTOR (CONJ)	1R-0716	1	FILTRO DE ACEITE DEL MOTOR (GR)	58
RESPIRADERO (CONJ)	183-6848	1	RESPIRADERO (GR)	57
TAPA CONTRA EL POLVO	8C-3445	1	VÁLVULA DE MUESTREO (GR)	67

PIEZAS DE MANTENIMIENTO

DESCRIPCION	NUMERO DE PIEZA	CANT	SE UTILIZA EN	PAGINA
SISTEMA ELÉCTRICO Y DE ARRANQUE				
BATERÍA (LIBRE DE MANTENIMIENTO)(12 VOLTIOS)	153-5700	2	BATERÍA (GR)	134
		2	BATERÍA (GR)	135
BATERÍA (750 AMPERES, 12 VOLTIOS)	3T-5760	2	BATERÍA (GR)	136
CRISTAL (AMBAR) (DE GIRO)	100-3250	1	LÁMPARA DE FARO DELANTERO (GR)	156
		1	LÁMPARA DE FARO DELANTERO (GR)	158
CRISTAL (AMBAR) (SEÑAL)	100-3250	1	LÁMPARA DE LUZ DELANTERA Y DE SEÑAL (GR)	160
		1	LÁMPARA DE LUZ DELANTERA Y DE SEÑAL (GR)	162
CRISTAL (LUZ DE TECHO)	7T-0020	1	LÁMPARA DEL TECHO (GR)	152
CRISTAL (PLACA DE REGISTRACIÓN)	134-6751	1	LAMPARA DE PLACA DE REGISTRO (GR)	165
DESTELLADOR ELECTRONICO (CONJ) (12/24 VOLTIOS) (LUZ DE GIRO/PELIGRO)	108-0358	1	LUCES DE REFLECTOR (GR)	186
DISYUNTOR (CONJ) (15 A) (BARRA DE LUCES DE TRABAJO)	3T-2662	1	DISYUNTOR DE CIRCUITO (GR)	138
DISYUNTOR (CONJ) (15 A) (CONTROL DEL MOTOR)	6T-3643	1	CABLES POSTERIORES (GR)	261
		1	CABLES POSTERIORES (GR)	271
DISYUNTOR (CONJ) (15 A) (FAROS)	3T-2662	1	DISYUNTOR DE CIRCUITO (GR)	138
		1	DISYUNTOR DE CIRCUITO (GR)	139
DISYUNTOR (CONJ) (15 A) (GIRO/PELIGRO/POSICIÓN DE IZQUIERDA/TABLERO)	3T-2662	1	CABLES POSTERIORES (GR)	271
DISYUNTOR (CONJ) (15 A) (LUCES DE POSICIÓN DEL LADO DERECHO, DELANTERAS)	3T-2662	1	CABLES POSTERIORES (GR)	271
DISYUNTOR (CONJ) (80 AMP) (ALTERNADOR)	171-2210	1	CABLES POSTERIORES (GR)	260
		2	CABLES POSTERIORES (GR)	270
DISYUNTOR (CONJ) (80 AMP) (PRINCIPAL)	171-2210	1	CABLES POSTERIORES (GR)	260
		2	CABLES POSTERIORES (GR)	270
FUSIBLE (10 A)	9W-1442	1	CONVERTIDOR ELÉCTRICO (GR)	146
FUSIBLE (10 A) (ALARM AUXILIAR DE RETROCESO)	9W-1442	1	LUCES DE RETROCESO (GR)	174
FUSIBLE (10 A) (BALIZA GIRATORIA DE ADVERTENCIA)	9W-1442	1	LUCES DE ADVERTENCIA (GR)	198
		1	LUCES DE ADVERTENCIA (GR)	200
FUSIBLE (10 A) (DIRECCIÓN SECUNDARIA)	9W-1442	2	CABLES DE LA DIRECCIÓN SECUNDARIA	280
FUSIBLE (10 A) (HOJA/FARO DELANTERO)	9W-1442	2	LUCES DE REFLECTOR (GR)	180
FUSIBLE (10 A) (LÁMPARA DEL TECHO)	3K-8782	2	CABLES DE LA CABINA (GR)	240
FUSIBLE (10 A) (LAMPARA, VERTEDERA)	9W-1442	1	CABLES DE LA CABINA (GR)	238
FUSIBLE (10 A) (LUCES DE GIRO/PELIGRO)	9W-1442	1	LUCES DE REFLECTOR (GR)	182
		1	LUCES DE REFLECTOR (GR)	186
FUSIBLE (10 A) (LUZ DE GIRO/PELIGRO)	9W-1442	1	LUCES DE REFLECTOR (GR)	188

PIEZAS DE MANTENIMIENTO

DESCRIPCION	NUMERO DE PIEZA	CANT	SE UTILIZA EN	PAGINA
FUSIBLE (10 A) (REFLECTOR DE LA HOJA)	9W-1442	2	LUCES DE REFLECTOR (GR)	181
FUSIBLE (10 A) (SEÑALES DE GIRO)	9W-1442	1	INTERRUPTOR DE LUZ (GR)	224
FUSIBLE (10 A) (TRANSFORMADOR DE CORRIENTE)	9W-1442	1	CONVERTIDOR ELÉCTRICO (GR)	148
FUSIBLE (15 A) (ESCOBILLAS FRONTALES SUPERIOR/INFERIOR)	9W-1441	1	CABLES DE LA CABINA (GR)	232
FUSIBLE (15 A) (LAVAPARABRISAS, VENTANILLAS)	9W-1441	1	CABLES DE LA CABINA (GR)	234
FUSIBLE (15 A) (TRANSMISION)	9W-1441	1	CABLES DE LA CONSOLA DE DIRECCIÓN (GR)	288
		1	CABLES DE LA CONSOLA DE DIRECCIÓN (GR)	292
FUSIBLE (30 A) (TRANSFORMADOR DE CORRIENTE)	8T-9636	2	CONVERTIDOR ELÉCTRICO (GR)	147
INTERRUPTOR (CONJ) (RETROCESO, AUXILIAR)	161-1418	1	LUCES DE RETROCESO (GR)	172
LÁMPARA (BALIZA GIRATORIA DE ADVERTENCIA)	9X-7849	1	LÁMPARA DE BALIZA DE ADVERTENCIA (GR)	168
LÁMPARA DE FARO DELANTERO (24 VOLTIOS) (LUZ BAJA)	9X-3463	1	LUCES DE REFLECTOR (GR)	178
LÁMPARA DE FARO DELANTERO (24 VOLTIOS) (VIGA ALTA)	9X-3463	1	LUCES DE REFLECTOR (GR)	178
		1	LÁMPARA DE FARO DELANTERO (GR)	155
LÁMPARA DE FARO DELANTERO (24 VOLTIOS)(65 VATIOS) (LUZ BAJA)	9X-3463	1	LÁMPARA DE FARO DELANTERO (GR)	154
LAMPARA DERECHA (CONJ) (DE GIRO)	6C-0109	1	CABLES POSTERIORES (GR)	266
LAMPARA IZQUIERDA (CONJ) (DE GIRO)	6C-0110	1	CABLES POSTERIORES (GR)	266
LÁMPARA (PLACA DE REGISTRACIÓN)	5C-9583	1	LAMPARA DE PLACA DE REGISTRO (GR)	165
LÁMPARA (24 VOLTIOS)	9X-3465	1	LÁMPARA DE LUZ DELANTERA Y DE SEÑAL (GR)	160
	100-3245	2	LÁMPARA DE LUZ DELANTERA Y DE SEÑAL (GR)	160
LÁMPARA (24 VOLTIOS) (ACELERACIÓN SOSTENIDA AUTOMÁTICA/MANUAL)	3E-8825	2	CABLES DE LA CONSOLA DE CAMBIOS (GR)	284
LÁMPARA (24 VOLTIOS) (ALARM AUXILIAR DE RETROCESO)	3E-8825	1	LUCES DE RETROCESO (GR)	174
LÁMPARA (24 VOLTIOS) (BALIZA GIRATORIA DE ADVERTENCIA)	3E-8825	1	LUCES DE ADVERTENCIA (GR)	198
		1	LUCES DE ADVERTENCIA (GR)	200
LÁMPARA (24 VOLTIOS) (CONSOLA DE CAMBIOS)	7N-5876	1	CABLES DE LA CONSOLA DE CAMBIOS (GR)	284
LÁMPARA (24 VOLTIOS) (CÚPULA)	7N-9943	1	LÁMPARA DEL TECHO (GR)	152
LÁMPARA (24 VOLTIOS) (DE GIRO)	100-3245	1	LÁMPARA DE FARO DELANTERO (GR)	156
		1	LÁMPARA DE FARO DELANTERO (GR)	158
LÁMPARA (24 VOLTIOS) (DELANTERA)	9X-3465	1	LÁMPARA DE LUZ DELANTERA Y DE SEÑAL (GR)	162
LÁMPARA (24 VOLTIOS) (DIRECCIÓN SECUNDARIA)	3E-8825	2	CABLES DE LA CONSOLA DE CAMBIOS (GR)	285

PIEZAS DE MANTENIMIENTO

DESCRIPCION	NUMERO DE PIEZA	CANT	SE UTILIZA EN	PAGINA
LÁMPARA (24 VOLTIOS) (EXTRACTOR DE PASADOR DE DESPLAZADOR DEL CÍRCULO)	3E-8825	1	CABLES DE LA CONSOLA DE CAMBIOS (GR)	282
		1	CABLES DE LA CONSOLA DE CAMBIOS (GR)	285
LÁMPARA (24 VOLTIOS) (HOJA)(FARO DELANTERO)	3E-8825	2	LUCES DE REFLECTOR (GR)	180
LÁMPARA (24 VOLTIOS) (INDICADOR DE CLAVIJA DEL DESPLAZAMIENTO DEL CIRCULO)	7N-5876	1	CABLES DE LA CONSOLA DE CAMBIOS (GR)	282
LÁMPARA (24 VOLTIOS) (INDICADOR DE LA VERTEDERA)	3E-8825	1	CABLES DE LA CABINA (GR)	236
LÁMPARA (24 VOLTIOS) (INDICADOR DE TRABA DE DIFERENCIAL)	3E-8825	2	CABLES DE LA CONSOLA DE DIRECCIÓN (GR)	288
LÁMPARA (24 VOLTIOS) (INDICADOR SECUNDARIO DE DIRECCION)	3E-8825	2	CABLES DE LA DIRECCIÓN SECUNDARIA	280
LÁMPARA (24 VOLTIOS) (INTERRUPTOR DE LUZ DE TABLERO)	3E-8825	1	CABLES DE LA CONSOLA DE DIRECCIÓN (GR)	292
LÁMPARA (24 VOLTIOS) (INTERRUPTOR DEL AMORTIGUADOR DE LA HOJA)	3E-8825	1	GRUPO DE CABLES, HOJA AMORTIGUADORA	230
LÁMPARA (24 VOLTIOS) (JUEGO DE ACELERACIÓN, VELOCIDAD)	3E-8825	2	CABLES DE LA CONSOLA DE CAMBIOS (GR)	282
LÁMPARA (24 VOLTIOS) (LUZ ALTA/BAJA)	9X-3465	1	LÁMPARA DE FARO DELANTERO (GR)	156
		1	LÁMPARA DE FARO DELANTERO (GR)	158
LÁMPARA (24 VOLTIOS) (LUZ AUXILIAR DE RETROCESO)	3E-8825	2	LUCES DE RETROCESO (GR)	172
LÁMPARA (24 VOLTIOS) (LUZ BAJA DE BARRA DE LUCES)	3E-8825	1	LUCES DE REFLECTOR (GR)	186
		1	LUCES DE REFLECTOR (GR)	189
LÁMPARA (24 VOLTIOS) (LUZ DELANTERA/TRASERA/INDICADOR)	3E-8825	2	INTERRUPTOR DE LUZ (GR)	224
LÁMPARA (24 VOLTIOS) (LUZ INDICADORA DE LAMPARA DE COLA)	3E-8825	1	CABLES DE LA CONSOLA DE DIRECCIÓN (GR)	288
LÁMPARA (24 VOLTIOS) (LUZ INDICADORA DE LAMPARA DELANTERA/TRASERA)	3E-8825	2	LUCES DE REFLECTOR (GR)	186
		2	LUCES DE REFLECTOR (GR)	188
		2	LUCES DE REFLECTOR (GR)	182
LÁMPARA (24 VOLTIOS) (MÓDULO DE ACELERACIÓN)	3E-8825	2	CABLES DE LA CONSOLA DE CAMBIOS (GR)	282
LÁMPARA (24 VOLTIOS) (NDICADOR DEL INTERRUPTOR DE LUCES DE COLA)	3E-8825	2	CABLES DE LA CONSOLA DE DIRECCIÓN (GR)	292
LÁMPARA (24 VOLTIOS) (POSICION)	100-3245	1	LÁMPARA DE FARO DELANTERO (GR)	156
		1	LÁMPARA DE FARO DELANTERO (GR)	158
LÁMPARA (24 VOLTIOS) (POSICIÓN DE LA CABINA)	9X-4494	1	LAMPARA MARCADORA (GR)	164
LÁMPARA (24 VOLTIOS) (SEÑAL)	100-3245	2	LÁMPARA DE LUZ DELANTERA Y DE SEÑAL (GR)	162
LÁMPARA (24 VOLTIOS) (TABLERO, INTENCIDAD DE LUCES INDICADORAS)	3E-8825	1	CABLES DE LA CONSOLA DE DIRECCIÓN (GR)	288

PIEZAS DE MANTENIMIENTO

DESCRIPCION	NUMERO DE PIEZA	CANT	SE UTILIZA EN	PAGINA
LÁMPARA (24 VOLTIOS) (TRABA DEL DIFERENCIAL DEL INDICADOR DEL INTERRUPTOR)	3E-8825	2	CABLES DE LA CONSOLA DE DIRECCIÓN (GR)	292
LÁMPARA (24 VOLTIOS) (VERTEDERA)	3E-8825	1	CABLES DE LA CABINA (GR)	238
LÁMPARA (24 VOLTIOS, 21 VATIOS) (DE GIRO)	9X-4493	1	LÁMPARA DE FARO DELANTERO (GR)	156
		1	LÁMPARA DE FARO DELANTERO (GR)	158
LÁMPARA (24 VOLTIOS, 21 VATIOS) (FRENO)	5C-9584	2	CABLES POSTERIORES (GR)	266
LÁMPARA (24 VOLTIOS, 21 VATIOS) (SEÑAL)	9X-4493	1	LÁMPARA DE LUZ DELANTERA Y DE SEÑAL (GR)	160
		1	LÁMPARA DE LUZ DELANTERA Y DE SEÑAL (GR)	162
LÁMPARA (24 VOLTIOS, 5 VATIOS) (TRASERA)	4V-8116	1	CABLES POSTERIORES (GR)	266
		1	CABLES POSTERIORES (GR)	266
LÁMPARA (24 VOLTIOS)(65 VATIOS) (REFLECTOR)	9X-3463	1	REFLECTOR (GR)	153
LENTE AMBAR (BALIZA GIRATORIA DE ADVERTENCIA)	9X-8121	1	LÁMPARA DE BALIZA DE ADVERTENCIA (GR)	168
LENTE DE REFLECTOR (CONJ)	158-0248	1	REFLECTOR (GR)	153
LLAVE (DESCONECTAR BATERIA)	8H-5306	1	DISYUNTOR (GR)	223
LUZ DE SEÑAL DE GIRO (GR) (24 VOLTIOS) (LUZ DE SEÑAL DE PARADA/COLA)	135-0426	2	CABLES POSTERIORES (GR)	264
MANDO DE CORREA (BALIZA GIRATORIA DE ADVERTENCIA)	9X-8139	1	LÁMPARA DE BALIZA DE ADVERTENCIA (GR)	168
VIDRIO (CONJ) (DE GIRO)	136-3848	1	LÁMPARA DE FARO DELANTERO (GR)	156
		1	LÁMPARA DE FARO DELANTERO (GR)	158
VIDRIO (CONJ) (FARO DELANTERO - LÁMPARA DE)	100-3248	1	LÁMPARA DE LUZ DELANTERA Y DE SEÑAL (GR)	160
		1	LÁMPARA DE LUZ DELANTERA Y DE SEÑAL (GR)	162
VIDRIO (CONJ) (LAMPARA-LUZ BAJA)	162-2077	1	LÁMPARA DE FARO DELANTERO (GR)	154
VIDRIO (CONJ) (LUZ BAJA)	162-2077	1	LUCES DE REFLECTOR (GR)	178
VIDRIO (CONJ) (SEÑAL)	136-3848	1	LÁMPARA DE LUZ DELANTERA Y DE SEÑAL (GR)	160
VIDRIO (CONJ) (SEÑAL AMBAR)	136-3848	1	LÁMPARA DE LUZ DELANTERA Y DE SEÑAL (GR)	162
VIDRIO (CONJ) (VIGA ALTA)	158-0249	1	LUCES DE REFLECTOR (GR)	178
		1	LÁMPARA DE FARO DELANTERO (GR)	155

PIEZAS DE MANTENIMIENTO

DESCRIPCION	NUMERO DE PIEZA	CANT	SE UTILIZA EN	PAGINA
SISTEMA HIDRÁULICO				
COLADOR (LLENADOR DE ACEITE HIDRAULICO)	9J-3047	1	TANQUE Y FILTRO HIDRÁULICOS (GR)	580
CONEXIÓN DE ENGRASE (INCLINACION DE RUEDA)	3B-8489	2	CILINDRO DE INCLINACIÓN DE RUEDA Y MONTAJE (GR)	494
ELEMENTO DE FILTRO DE ACEITE (CONJ) (HIDRAULICO) (FLUJO INVERSO)	1R-0774	1	TANQUE Y FILTRO HIDRÁULICOS (GR)	580
LLAVE	5P-8500	1	TANQUE HIDRÁULICO Y MONTAJE (GR)	582
TAPA CONTRA EL POLVO	6V-0852	1	BOMBA - TUBERÍAS DE (GR)	544
		1	VÁLVULA DE COMBINACIÓN (GR)	618
	8C-3451	1	TUBERÍAS DE DIRECCIÓN (GR)	552
TAPA CONTRA EL POLVO (ACEITE HIDRÁULICO)	6V-0852	1	BOMBA - TUBERÍAS DE (GR)	540
		1	TUBERÍAS HIDRÁULICAS DEL VENTILADOR (GR)	536
TAPA DEL TUBO DE LLENADO (TANQUE DE ACEITE HIDRÁULICO)	7H-1447	1	TANQUE Y FILTRO HIDRÁULICOS (GR)	580
TREN DE FUERZA				
ELEMENTO DE FILTRO DE ACEITE (CONJ)	132-8875	1	FILTRO DE ACEITE (GR)	330
FILTRO MAGNÉTICO (ACEITE DE TRANSMISIÓN)	8S-9129	1	CAJA Y PIEZAS DE LA TRANSMISIÓN (GR)	296
FILTRO MAGNÉTICO (TRANSMISION)	8S-9129	1	REJILLA MAGNÉTICA (GR)	340
REJILLA DE SUCCIÓN (ACEITE DE TRANSMISIÓN)	8S-9130	1	CAJA Y PIEZAS DE LA TRANSMISIÓN (GR)	296
REJILLA DE SUCCIÓN (TRANSMISION)	8S-9130	1	REJILLA MAGNÉTICA (GR)	340
REJILLA (FILTRO DEL ACEITE DE TRANSMISION)	6I-9395	1	VÁLVULA DE CONTROL DE LA TRANSMISIÓN (GR)	358
RESPIRADERO (CONJ) (TANDEM)	1F-8488	2	TÁNDEM Y CUBIERTA (GR)	343
RESPIRADERO (TREN DE FUERZA)	9G-5127	1	TUBO DE LLENADO DE ACEITE DE LA TRANSMISIÓN (GR)	326
TAPA CONTRA EL POLVO	6V-0852	1	CONTROL DE TRABA DEL DIFERENCIAL (GR)	316
	8C-3447	1	FILTRO DE ACEITE Y MONTAJE (GR)	328
TAPA CONTRA EL POLVO (ACEITE DE LA TRANSMISIÓN)	6V-0852	1	FILTRO DE ACEITE (GR)	330
		8	VÁLVULA DE CONTROL DE LA TRANSMISIÓN (GR)	358
TAPA (VASTAGO)	9K-7951	1	RUEDA (GR)	411
		1	RUEDA (GR)	412
		1	RUEDA Y NEUMÁTICO (GR)	376
		1	RUEDA Y NEUMÁTICO (GR)	377
		1	RUEDA Y NEUMÁTICO (GR)	378
		1	RUEDA Y NEUMÁTICO (GR)	379
		1	RUEDA Y NEUMÁTICO (GR)	380
		1	RUEDA Y NEUMÁTICO (GR)	381
		1	RUEDA Y NEUMÁTICO (GR)	382
		1	RUEDA Y NEUMÁTICO (GR)	383
		1	RUEDA Y NEUMÁTICO (GR)	384
		1	RUEDA Y NEUMÁTICO (GR)	385
		1	RUEDA Y NEUMÁTICO (GR)	386

PIEZAS DE MANTENIMIENTO

DESCRIPCION	NUMERO DE PIEZA	CANT	SE UTILIZA EN	PAGINA
		1	RUEDA Y NEUMÁTICO (GR)	387
		1	RUEDA Y NEUMÁTICO (GR)	388
		1	RUEDA Y NEUMÁTICO (GR)	389
		1	RUEDA Y NEUMÁTICO (GR)	390
		1	RUEDA Y NEUMÁTICO (GR)	391
		1	RUEDA Y NEUMÁTICO (GR)	392
		1	RUEDA Y NEUMÁTICO (GR)	393
		1	RUEDA Y NEUMÁTICO (GR)	394
		1	RUEDA Y NEUMÁTICO (GR)	395
		1	RUEDA Y NEUMÁTICO (GR)	396
		1	RUEDA Y NEUMÁTICO (GR)	397
		1	RUEDA Y NEUMÁTICO (GR)	398
		1	RUEDA Y NEUMÁTICO (GR)	399
		1	RUEDA Y NEUMÁTICO (GR)	400
		1	RUEDA Y NEUMÁTICO (GR)	401
		1	RUEDA Y NEUMÁTICO (GR)	402
		1	RUEDA Y NEUMÁTICO (GR)	403
		1	RUEDA Y NEUMÁTICO (GR)	404
		1	RUEDA Y NEUMÁTICO (GR)	405
		1	RUEDA Y NEUMÁTICO (GR)	406
		1	RUEDA Y NEUMÁTICO (GR)	407
		1	RUEDA Y NEUMÁTICO (GR)	408
		1	RUEDA Y NEUMÁTICO (GR)	409

PEÇAS DE MANUTENÇÃO

DESCRIÇÃO	NÚMERO DE PEÇA	QUANT	UTILIZADA EM	PÁGINA
ACESSÓRIOS				
GRAXEIRA (BARRA DE TRAÇÃO)	3B-8489	1	BARRA DE TRAÇÃO	680
CHASSI E CARROCERIA				
BUJÃO MAGNÉTICO (ÓLEO DA TRANSMISSÃO)	8M-3837	1	CAIXA E CHASSI	418
GRAXEIRA (ENGATE DA ARTICULAÇÃO)	3B-8489	2	TUBOS - GRAXA	441
GRAXEIRA (ROSCA 1/8-27 POL) (CILINDRO DA DIREÇÃO)	3B-8489	4	EIXO DIANTEIRO	414
GRAXEIRA (ROSCA 1/8-27 POL) (CILINDRO DA INCLINAÇÃO DA RODA)	3B-8489	7	EIXO DIANTEIRO	414
VÁLVULA DE DRENAGEM (RADIADOR)	1P-7297	1	PROTETOR E SUPORTE DO RADIADOR	428
EQUIPAMENTOS DE SERVIÇO E SUPRIMENTOS				
CADEADO (CAIXA DE FERRAMENTAS)	5P-8502	1	*TOOL BOX GP	899
CHAVE (CAIXA DE FERRAMENTAS)	5P-8500	1	*TOOL BOX GP	899
ESTAÇÃO DO OPERADOR				
CADEADO	5P-8502	1	CABINE - PERFIL ALTO	725
		1	CONVERSÃO PARA ESTRUTURA NÃO ROPS	733
CHAVE	5P-8500	1	ESTRUTURA ROPS ABERTA	835
		2	PUBLICAÇÃO	800
CORREIA (AR CONDICIONADO)	197-4567	1	COMPRESSOR DE REFRIGERANTE	728
FILTRO - AR (AR DA CABINE)	7T-7358	1	FILTRO - AR DA CABINE	756
FILTRO (AR DA CABINE)	9X-4986	2	FILTRO - AR DA CABINE	756
FUSÍVEL (10 A) (DESCONGELADOR DIANTEIRO)	9W-1442	1	VENTILADOR DE CIRCULAÇÃO DE AR DA CABINE	754
FUSÍVEL (10 A) (DESCONGELADOR TRASEIRO)	9W-1442	1	VENTILADOR DE CIRCULAÇÃO DE AR DA CABINE	755
FUSÍVEL (10 A) (ESPELHO AQUECIDO DO LADO EXTERNO)	9W-1442	1	ESPELHO RETROVISOR	804
FUSÍVEL (10 A) (LIMPADOR)	9W-1442	1	LIMPADOR DO VIDRO	892
		1	LIMPADOR DO VIDRO	894
FUSÍVEL (15 A) (AQUECEDOR)	9W-1441	1	AQUECEDOR DA CABINE E MONTAGEM	759
FUSÍVEL (15 A) (AR CONDICIONADO)	9W-1441	1	CONDICIONADOR DE AR E MONTAGEM	716
INDICADOR - PRESSÃO DO AR (TANQUE DO LADO DIREITO)	1W-3306	1	PAINEL DE INSTRUMENTOS	824
INDICADOR - PRESSÃO DO AR (TANQUE DO LADO ESQUERDO)	1W-3306	1	PAINEL DE INSTRUMENTOS	824
INDICADOR - PRESSÃO DO AR (TANQUE DO LADO ESQUERDO E DO LADO DIREITO)	1W-3306	2	PAINEL DE INSTRUMENTOS	826
INDICADOR - PRESSÃO DO AR (TANQUES DO LADO ESQUERDO E DIREITO)	1W-3306	2	PAINEL DE INSTRUMENTOS	822
LÂMINA DO LIMPADOR DE PÁRA-BRISA	6V-5853	1	LIMPADOR DO VIDRO	897
		1	LIMPADOR DO VIDRO	898
LÂMINA DO LIMPADOR DE PÁRA-BRISA (DIANTEIRO)	6V-5853	1	LIMPADOR DO VIDRO	890

PEÇAS DE MANUTENÇÃO

DESCRIÇÃO	NÚMERO DE PEÇA	QUANT	UTILIZADA EM	PÁGINA
LÂMINA DO LIMPADOR DE PÁRA-BRISA (PERFIL ALTO - TRASEIRO)	6V-5853	1	LIMPADOR DO VIDRO	894
LÂMINA DO LIMPADOR DE PÁRA-BRISA (PERFIL BAIXO - INFERIOR DIANTEIRO)	6V-5853	1	LIMPADOR DO VIDRO	888
LÂMINA DO LIMPADOR DE PÁRA-BRISA (PERFIL BAIXO - TRASEIRO)	6V-5849	1	LIMPADOR DO VIDRO	892
LÂMPADA (24 V) (DESCONGELADOR DIANTEIRO)	3E-8825	1	VENTILADOR DE CIRCULAÇÃO DE AR DA CABINE	754
LÂMPADA (24 V) (DESCONGELADOR TRASEIRO)	3E-8825	1	VENTILADOR DE CIRCULAÇÃO DE AR DA CABINE	755
LÂMPADA (24 V) (GRUPO DE QUATRO MEDIDORES)	7N-5876	2	PAINEL DE INSTRUMENTOS	824
LÂMPADA (24 V) (INDICADOR)	7N-5876	4	PAINEL DE INSTRUMENTOS	822
		6	PAINEL DE INSTRUMENTOS	826
LÂMPADA (24 V) (INDICADOR DA AÇÃO PRINCIPAL DO EMS)	107-1983	1	PAINEL DE INSTRUMENTOS	822
		1	PAINEL DE INSTRUMENTOS	824
		1	PAINEL DE INSTRUMENTOS	826
LÂMPADA (24 V) (INDICADOR DE AÇÃO)	115-1748	11	PAINEL DE INSTRUMENTOS	826
LÂMPADA (24 V) (INDICADOR DE ESPELHO AQUECIDO)	3E-8825	1	ESPELHO RETROVISOR	804
LÂMPADA (24 V) (MEDIDOR DO TANQUE DE AR DO LADO DIREITO)	7N-5876	1	PAINEL DE INSTRUMENTOS	824
LÂMPADA (24 V) (MEDIDOR DO TANQUE DE AR DO LADO ESQUERDO)	7N-5876	1	PAINEL DE INSTRUMENTOS	824
LÂMPADA (24 V) (PAINEL DE CONTROLE DO AQUECEDOR E AR CONDICIONADO)	8D-1429	1	AQUECEDOR DA CABINE	762
LÂMPADA (24 V) (PAINEL DE INSTRUMENTOS)	115-1748	10	PAINEL DE INSTRUMENTOS	822
		10	PAINEL DE INSTRUMENTOS	824
LÂMPADA (24 V) (TEMPERATURA/VELOCIDADE DO VENTILADOR)	8D-1429	1	AQUECEDOR DA CABINE	766
LÂMPADA (24 V) (VELOCIDADE DO VENTILADOR - CONTROLE DA TEMPERATURA)	8D-1429	1	CONDICIONADOR DE AR	718
LÂMPADA (24 V) (VELOCÍMETRO E TACÔMETRO)	7N-5876	2	MÓDULO - VELOCÍMETRO E TACÔMETRO	810
FERRAMENTAS DE TRABALHO				
GRAXEIRA (ESCARIFICADOR)	3B-8489	1	ESCARIFICADOR	704
GRAXEIRA (MUNHÃO)	3B-8489	1	ESCARIFICADOR	708
GRAXEIRA (SOQUETE DO BRAÇO DE LEVAMENTO DE ESCARIFICADOR)	3B-8489	4	ESCARIFICADOR	704
		4	ESCARIFICADOR	708

PEÇAS DE MANUTENÇÃO

DESCRIÇÃO	NÚMERO DE PEÇA	QUANT	UTILIZADA EM	PÁGINA
MOTOR BÁSICO				
BUJÃO DO DRENO	5F-0304	1	BUJÃO - CAIXA DO VOLANTE DO MOTOR	48
RETENTOR (INTEGRAL)	135-9819	1	COMPRESSOR DE AR	8
RETENTOR (2M)	5P-5678		TAMPA - MECANISMO DAS VÁLVULAS	16
TAMPA - BOCAL DE ENCHIMENTO	4W-3087	1	TAMPA - CAIXA DIANTEIRA	15
TAMPA - MANCAIS PRINCIPAIS DO MOTOR	7E-2968	7	BLOCO DO MOTOR	18
TAMPÃO	9S-4183	1	CAIXA DO VOLANTE DO MOTOR	39
SISTEMA DE ADMISSÃO DE AR E DE ESCAPE				
ELEMENTO - PRIMÁRIO	6I-0273	1	PURIFICADOR DE AR	86
ELEMENTO - SECUNDÁRIO	6I-0274	1	PURIFICADOR DE AR	86
INDICADOR - LIMPEZA DO FILTRO DE AR	8N-2694	1	PURIFICADOR DE AR	83
SISTEMA DE ARREFECIMENTO				
FILTRO - ÁGUA	119-3025	1	BOMBA DE ÁGUA	78
REGULADOR DE TEMPERATURA DA ÁGUA	126-5869	1	TUBOS - ÁGUA	72
TAMPA - RADIADOR	6L-8617	1	RADIADOR E ARREFECEDOR DE ÓLEO	80
TAMPA CONTRA POEIRA	157-0670	1	TUBOS - ÁGUA	72
SISTEMA DE COMBUSTÍVEL				
FILTRO - COMBUSTÍVEL	1R-0762	1	FILTRO - COMBUSTÍVEL	100
FILTRO - SEPARADOR DE ÁGUA E COMBUSTÍVEL	1R-0770	1	FILTRO DE COMBUSTÍVEL E SEPARADOR DE ÁGUA	102
REGULADOR	196-6840	1	TUBOS - COMBUSTÍVEL	104
RETENTOR	220-8678	1	FILTRO DE COMBUSTÍVEL E SEPARADOR DE ÁGUA	102
TAMPA CONTRA POEIRA	6V-0852	1	FILTRO - COMBUSTÍVEL	100
SISTEMA DE FREIO				
CARTUCHO-DESSECANTE (SECADOR A AR)	203-2389	1	SECADOR DE AR	454
ELEMENTO-AQUECEDOR (SECADOR DE AR)(24 VOLTS)	203-2423	1	SECADOR DE AR	454
FUSÍVEL (10 A) (SECADOR A AR)	9W-1442	1	SECADOR DE AR	450
SISTEMA DE LUBRIFICAÇÃO				
FILTRO - ÓLEO DO MOTOR	1R-0716	1	FILTRO - ÓLEO DO MOTOR	58
RESPIRO	183-6848	1	RESPIRO	57
TAMPA CONTRA POEIRA	8C-3445	1	VÁLVULA PARA TIRAR AMOSTRAS DE FLUIDOS	67
SISTEMA ELÉTRICO E DE PARTIDA				
BATERIA (LIVRE DE MANUTENÇÃO)(12 VOLT)	153-5700	2	BATERIA	134
		2	BATERIA	135
BATERIA (750 AMP)(12 VOLTS)	3T-5760	2	BATERIA	136
CHAVE (DESCONECTAR A BATERIA)	8H-5306	1	CHAVE GERAL	223
CORREIA DE COMANDO (PISCA-PISCA DE ADVERTÊNCIA)	9X-8139	1	LUZ GIRATÓRIA DE ALARME	168

PEÇAS DE MANUTENÇÃO

DESCRIÇÃO	NÚMERO DE PEÇA	QUANT	UTILIZADA EM	PÁGINA
DISJUNTOR AUTOMÁTICO DE CIRCUITO (15 A) (CONTROLE DO MOTOR)	6T-3643	1	CABOS/FIOS ELÉTRICOS - TRASEIROS	261
		1	CABOS/FIOS ELÉTRICOS - TRASEIROS	271
DISJUNTOR AUTOMÁTICO DE CIRCUITO (15 A) (DIANTEIRA - LÂMPADAS NA POSIÇÃO DIREITA)	3T-2662	1	CABOS/FIOS ELÉTRICOS - TRASEIROS	271
DISJUNTOR AUTOMÁTICO DE CIRCUITO (15 A) (FARÓIS)	3T-2662	1	INTERRUPTOR - CIRCUITO	138
		1	INTERRUPTOR - CIRCUITO	139
DISJUNTOR AUTOMÁTICO DE CIRCUITO (15 A) (LÂMPADAS DE TRABALHO - BARRA)	3T-2662	1	INTERRUPTOR - CIRCUITO	138
DISJUNTOR AUTOMÁTICO DE CIRCUITO (15 A) (VIRADA - PISCA ALERTA - POSIÇÃO ESQUERDA - PAINEL)	3T-2662	1	CABOS/FIOS ELÉTRICOS - TRASEIROS	271
DISJUNTOR AUTOMÁTICO DE CIRCUITO (80 A) (ALTERNADOR)	171-2210	1	CABOS/FIOS ELÉTRICOS - TRASEIROS	260
		2	CABOS/FIOS ELÉTRICOS - TRASEIROS	270
DISJUNTOR AUTOMÁTICO DE CIRCUITO (80 A) (PRINCIPAL)	171-2210	1	CABOS/FIOS ELÉTRICOS - TRASEIROS	260
		2	CABOS/FIOS ELÉTRICOS - TRASEIROS	270
FAROL DIANTEIRO (24 V) (FAROL BAIXO)	9X-3463	1	SISTEMA DE ILUMINAÇÃO - FARÓIS	178
FAROL DIANTEIRO (24 V) (LUZ ALTA)	9X-3463	1	FAROL DIANTEIRO	155
		1	SISTEMA DE ILUMINAÇÃO - FARÓIS	178
FAROL DIANTEIRO (24 VOLTS)(65 WATTS) (FAROL BAIXO)	9X-3463	1	FAROL DIANTEIRO	154
FUSÍVEL (10 A)	9W-1442	1	CONVERSOR ELÉTRICO	146
FUSÍVEL (10 A) (ALARME DE MARCHA À RÉ AUXILIAR)	9W-1442	1	ILUMINAÇÃO - MARCHA A RÉ	174
FUSÍVEL (10 A) (CONVERSOR DE ENERGIA)	9W-1442	1	CONVERSOR ELÉTRICO	148
FUSÍVEL (10 A) (DIREÇÃO SECUNDÁRIA)	9W-1442	2	CABOS/FIOS ELÉTRICOS - DIREÇÃO SECUNDÁRIA	280
FUSÍVEL (10 A) (FARÓIS DA LÂMINA)	9W-1442	2	SISTEMA DE ILUMINAÇÃO - FARÓIS	181
FUSÍVEL (10 A) (FAROL DA LÂMINA - DIANTEIRO)	9W-1442	2	SISTEMA DE ILUMINAÇÃO - FARÓIS	180
FUSÍVEL (10 A) (LÂMPADA DA ARMAÇÃO DA LÂMPADA)	9W-1442	1	CABOS/FIOS ELÉTRICOS - CABINE	238
FUSÍVEL (10 A) (LUZ DE TETO)	3K-8782	2	CABOS/FIOS ELÉTRICOS - CABINE	240
FUSÍVEL (10 A) (PISCA-PISCA DE ADVERTÊNCIA)	9W-1442	1	SISTEMA DE ILUMINAÇÃO - ADVERTÊNCIA	198
		1	SISTEMA DE ILUMINAÇÃO - ADVERTÊNCIA	200
FUSÍVEL (10 A) (SETA DE DIREÇÃO - PISCA)	9W-1442	1	SISTEMA DE ILUMINAÇÃO - FARÓIS	188
FUSÍVEL (10 A) (SETA DE DIREÇÃO - PISCA-PISCA)	9W-1442	1	SISTEMA DE ILUMINAÇÃO - FARÓIS	182
		1	SISTEMA DE ILUMINAÇÃO - FARÓIS	186

PEÇAS DE MANUTENÇÃO

DESCRIÇÃO	NÚMERO DE PEÇA	QUANT	UTILIZADA EM	PÁGINA
FUSÍVEL (10 A) (SETAS DE DIREÇÃO)	9W-1442	1	INTERRUPTOR - LUZES	224
FUSÍVEL (15 A) (LIMPADOR - LAVADORES DE VIDROS)	9W-1441	1	CABOS/FIOS ELÉTRICOS - CABINE	234
FUSÍVEL (15 A) (LIMPADORES DIANTEIROS SUPERIOR E INFERIOR)	9W-1441	1	CABOS/FIOS ELÉTRICOS - CABINE	232
FUSÍVEL (15 A) (TRANSMISSÃO)	9W-1441	1	CABOS/FIOS ELÉTRICOS - CONSOLE DA DIREÇÃO	288
		1	CABOS/FIOS ELÉTRICOS - CONSOLE DA DIREÇÃO	292
FUSÍVEL (30 A) (CONVERSOR - FORÇA)	8T-9636	2	CONVERSOR ELÉTRICO	147
INTERRUPTOR (MARCHA A RÉ AUXILIAR)	161-1418	1	ILUMINAÇÃO - MARCHA A RÉ	172
LÂMPADA - LADO DIREITO (VIRADA)	6C-0109	1	CABOS/FIOS ELÉTRICOS - TRASEIROS	266
LÂMPADA - LADO ESQUERDO (VIRADA)	6C-0110	1	CABOS/FIOS ELÉTRICOS - TRASEIROS	266
LÂMPADA - SINALIZAÇÃO (24 V) (PARADA/TRASEIRA)	135-0426	2	CABOS/FIOS ELÉTRICOS - TRASEIROS	264
LÂMPADA (PISCA-PISCA DE ADVERTÊNCIA)	9X-7849	1	LUZ GIRATÓRIA DE ALARME	168
LÂMPADA (PLACA DE REGISTRO)	5C-9583	1	LAMPADA-PLACA DE REGISTRO	165
LÂMPADA (24 V)	9X-3465	1	LÂMPADA DIANTEIRA E DE SINAL	160
	100-3245	2	LÂMPADA DIANTEIRA E DE SINAL	160
LÂMPADA (24 V) (AJUSTE DE VELOCIDADE DO ACELERADOR)	3E-8825	2	CABOS/FIOS ELÉTRICOS - CONSOLE DA TRANSMISSÃO	282
LÂMPADA (24 V) (ALARME DE MARCHA À RÉ AUXILIAR)	3E-8825	1	ILUMINAÇÃO - MARCHA A RÉ	174
LÂMPADA (24 V) (ARMAÇÃO DA LÂMINA)	3E-8825	1	CABOS/FIOS ELÉTRICOS - CABINE	238
LÂMPADA (24 V) (BARRA DE LUZ BAIXA)	3E-8825	1	SISTEMA DE ILUMINAÇÃO - FARÓIS	186
		1	SISTEMA DE ILUMINAÇÃO - FARÓIS	189
LÂMPADA (24 V) (CABEÇA)	9X-3465	1	LÂMPADA DIANTEIRA E DE SINAL	162
LÂMPADA (24 V) (CONSOLE DO EIXO)	7N-5876	1	CABOS/FIOS ELÉTRICOS - CONSOLE DA TRANSMISSÃO	284
LÂMPADA (24 V) (DIREÇÃO SECUNDÁRIA)	3E-8825	2	CABOS/FIOS ELÉTRICOS - CONSOLE DA TRANSMISSÃO	285
LÂMPADA (24 V) (FAROL DIANTEIRO - FAROL TRASEIRO - INDICADOR)	3E-8825	2	INTERRUPTOR - LUZES	224
LÂMPADA (24 V) (INDICADOR DA ARMAÇÃO DA LÂMINA)	3E-8825	1	CABOS/FIOS ELÉTRICOS - CABINE	236
LÂMPADA (24 V) (INDICADOR DA DIREÇÃO SECUNDÁRIA)	3E-8825	2	CABOS/FIOS ELÉTRICOS - DIREÇÃO SECUNDÁRIA	280
LÂMPADA (24 V) (INDICADOR DA LUMINOSIDADE DA LÂMPADA DO PAINEL)	3E-8825	1	CABOS/FIOS ELÉTRICOS - CONSOLE DA DIREÇÃO	288
LÂMPADA (24 V) (INDICADOR DA TRAVA DO DIFERENCIAL)	3E-8825	2	CABOS/FIOS ELÉTRICOS - CONSOLE DA DIREÇÃO	288
LÂMPADA (24 V) (INDICADOR DE FAROL DIANTEIRO/TRASEIRO)	3E-8825	2	SISTEMA DE ILUMINAÇÃO - FARÓIS	186
		2	SISTEMA DE ILUMINAÇÃO - FARÓIS	188
		2	SISTEMA DE ILUMINAÇÃO - FARÓIS	182
LÂMPADA (24 V) (INDICADOR DE FAROL TRASEIRO)	3E-8825	1	CABOS/FIOS ELÉTRICOS - CONSOLE DA DIREÇÃO	288

PEÇAS DE MANUTENÇÃO

DESCRIÇÃO	NÚMERO DE PEÇA	QUANT	UTILIZADA EM	PÁGINA
LÂMPADA (24 V) (INDICADOR DO INTERRUPTOR DA LÂMPADA TRASEIRA)	3E-8825	2	CABOS/FIOS ELÉTRICOS - CONSOLE DA DIREÇÃO	292
LÂMPADA (24 V) (INDICADOR DO INTERRUPTOR DE REDUTOR DE LUMINOSIDADE DO PAINEL)	3E-8825	1	CABOS/FIOS ELÉTRICOS - CONSOLE DA DIREÇÃO	292
LÂMPADA (24 V) (INDICADOR DO INTERRUPTOR DE TRAVA DO DIFERENCIAL)	3E-8825	2	CABOS/FIOS ELÉTRICOS - CONSOLE DA DIREÇÃO	292
LÂMPADA (24 V) (INDICADOR DO PINO DE DESLOCAMENTO LATERAL)	7N-5876	1	CABOS/FIOS ELÉTRICOS - CONSOLE DA TRANSMISSÃO	282
LÂMPADA (24 V) (INTERRUPTOR DO AMORTECEDOR DA LÂMINA)	3E-8825	1	FIAÇÃO - AMORTECEDOR DA LÂMINA	230
LÂMPADA (24 V) (LÂMINA)(LÂMPADA DIANTEIRA)	3E-8825	2	SISTEMA DE ILUMINAÇÃO - FARÓIS	180
LÂMPADA (24 V) (LÂMPADA DE MARCHA À RÉ AUXILIAR)	3E-8825	2	ILUMINAÇÃO - MARCHA A RÉ	172
LÂMPADA (24 V) (LUZ ALTA/BAIXA)	9X-3465	1	FAROL DIANTEIRO	156
		1	FAROL DIANTEIRO	158
LÂMPADA (24 V) (MODO DE RETENÇÃO DO ACLERADOR)	3E-8825	2	CABOS/FIOS ELÉTRICOS - CONSOLE DA TRANSMISSÃO	282
LÂMPADA (24 V) (PISCA-PISCA DE ADVERTÊNCIA)	3E-8825	1	SISTEMA DE ILUMINAÇÃO - ADVERTÊNCIA	198
		1	SISTEMA DE ILUMINAÇÃO - ADVERTÊNCIA	200
LÂMPADA (24 V) (POSIÇÃO)	100-3245	1	FAROL DIANTEIRO	156
		1	FAROL DIANTEIRO	158
LÂMPADA (24 V) (POSIÇÃO DA CABINE)	9X-4494	1	LÀMPADA - MARCADORA	164
LÂMPADA (24 V) (RETENÇÃO DO ACELERADOR AUTOMÁTICA - MANUSL)	3E-8825	2	CABOS/FIOS ELÉTRICOS - CONSOLE DA TRANSMISSÃO	284
LÂMPADA (24 V) (SACA-PINO DE DESLOCAMENTO LATERAL)	3E-8825	1	CABOS/FIOS ELÉTRICOS - CONSOLE DA TRANSMISSÃO	282
		1	CABOS/FIOS ELÉTRICOS - CONSOLE DA TRANSMISSÃO	285
LÂMPADA (24 V) (SINAL)	100-3245	2	LÂMPADA DIANTEIRA E DE SINAL	162
LÂMPADA (24 V) (TETO)	7N-9943	1	LÂMPADA - TETO	152
LÂMPADA (24 V) (VIRADA)	100-3245	1	FAROL DIANTEIRO	156
		1	FAROL DIANTEIRO	158
LÂMPADA (24 VOLTS)(21 WATTS) (FREIO)	5C-9584	2	CABOS/FIOS ELÉTRICOS - TRASEIROS	266
LÂMPADA (24 VOLTS/21 WATTS) (SINAL)	9X-4493	1	LÂMPADA DIANTEIRA E DE SINAL	160
		1	LÂMPADA DIANTEIRA E DE SINAL	162
LÂMPADA (24 VOLTS/21 WATTS) (VIRADA)	9X-4493	1	FAROL DIANTEIRO	156
		1	FAROL DIANTEIRO	158
LÂMPADA (24 VOLTS)(5 WATTS) (TRASEIRA)	4V-8116	1	CABOS/FIOS ELÉTRICOS - TRASEIROS	266
		1	CABOS/FIOS ELÉTRICOS - TRASEIROS	266
LÂMPADA (24 VOLTS)(65 WATTS) (FAROL)	9X-3463	1	LÂMPADA - FAROL	153
LENTE - FAROL	158-0248	1	LÂMPADA - FAROL	153

PEÇAS DE MANUTENÇÃO

DESCRIÇÃO	NÚMERO DE PEÇA	QUANT	UTILIZADA EM	PÁGINA
LENTE ÂMBAR (PISCA-PISCA DE ADVERTÊNCIA)	9X-8121	1	LUZ GIRATÓRIA DE ALARME	168
LENTE (ÂMBAR)(SINAL)	136-3848	1	LÂMPADA DIANTEIRA E DE SINAL	162
LENTE (ÂMBER) (SINAL)	100-3250	1	LÂMPADA DIANTEIRA E DE SINAL	160
		1	LÂMPADA DIANTEIRA E DE SINAL	162
LENTE (ÂMBER) (VIRADA)	100-3250	1	FAROL DIANTEIRO	156
		1	FAROL DIANTEIRO	158
LENTE (FAROL BAIXO)	162-2077	1	SISTEMA DE ILUMINAÇÃO - FARÓIS	178
LENTE (FAROL DIANTEIRO)	100-3248	1	LÂMPADA DIANTEIRA E DE SINAL	160
		1	LÂMPADA DIANTEIRA E DE SINAL	162
LENTE (FAROL) (FAIXA BAIXA)	162-2077	1	FAROL DIANTEIRO	154
LENTE (LÂMPADA DO TETO)	7T-0020	1	LÂMPADA - TETO	152
LENTE (LUZ ALTA)	158-0249	1	FAROL DIANTEIRO	155
		1	SISTEMA DE ILUMINAÇÃO - FARÓIS	178
LENTE (PLACA DE REGISTRO)	134-6751	1	LAMPADA-PLACA DE REGISTRO	165
LENTE (SINAL)	136-3848	1	LÂMPADA DIANTEIRA E DE SINAL	160
LENTE (VIRADA)	136-3848	1	FAROL DIANTEIRO	156
		1	FAROL DIANTEIRO	158
PISCA-PISCA ELETRÔNICO (12-24 VOLTS) (SETA DE DIREÇÃO - PISCA)	108-0358	1	SISTEMA DE ILUMINAÇÃO - FARÓIS	186
SISTEMA HIDRÁULICO				
CHAVE	5P-8500	1	TANQUE DE ÓLEO HIDRÁULICO E MONTAGEM	582
ELEMENTO FILTRANTE - ÓLEO (HIDRÁULICO) (FLUXO INVERSO)	1R-0774	1	TANQUE HIDRÁULICO E FILTRO	580
GRAXEIRA (INCLINAÇÃO DA RODA)	3B-8489	2	CILINDRO E MONTAGEM - INCLINAÇÃO DAS RODAS	494
TAMPA - BOCAL DE ENCHIMENTO (TANQUE DE ÓLEO HIDRÁULICO)	7H-1447	1	TANQUE HIDRÁULICO E FILTRO	580
TAMPA CONTRA POEIRA	6V-0852	1	TUBOS - BOMBA	544
		1	VÁLVULA COMBINADA	618
	8C-3451	1	TUBOS - DIREÇÃO	552
TAMPA CONTRA POEIRA (ÓLEO HIDRÁULICO)	6V-0852	1	TUBOS - BOMBA	540
		1	TUBOS - VENTILADOR HIDRÁULICOS	536
TELA FILTRANTE (BOCAL DE ENCHIMENTO DO ÓLEO HIDRÁULICO)	9J-3047	1	TANQUE HIDRÁULICO E FILTRO	580
TREM DE FORÇA				
ELEMENTO FILTRANTE - ÓLEO	132-8875	1	FILTRO - ÓLEO	330
FILTRO - MAGNÉTICO (ÓLEO DA TRANSMISSÃO)	8S-9129	1	CAIXA E COMPONENTES - TRANSMISSÃO	296
FILTRO - MAGNÉTICO (TRANSMISSÃO)	8S-9129	1	FILTRO - MAGNÉTICO	340
RESPIRO (TANDEM)	1F-8488	2	TANDEM E TAMPA	343
RESPIRO (TREM DE FORÇA)	9G-5127	1	BOCAL DE ENCHIMENTO DE ÓLEO DO TREM DE FORÇA	326
TAMPA CONTRA POEIRA	6V-0852	1	CONTROLE DA TRAVA DO DIFERENCIAL	316
	8C-3447	1	FILTRO DO ÓLEO E MONTAGEM	328
TAMPA CONTRA POEIRA (ÓLEO DA TRANSMISSÃO)	6V-0852	1	FILTRO - ÓLEO	330

PEÇAS DE MANUTENÇÃO

DESCRIÇÃO	NÚMERO DE PEÇA	QUANT	UTILIZADA EM	PÁGINA
		8	VÁLVULA DE CONTROLE - TRANSMISSÃO	358
TAMPA DA VÁLVULA (HASTE)	9K-7951	1	RODA	411
		1	RODA	412
		1	RODA E PNEU	376
		1	RODA E PNEU	377
		1	RODA E PNEU	378
		1	RODA E PNEU	379
		1	RODA E PNEU	380
		1	RODA E PNEU	381
		1	RODA E PNEU	382
		1	RODA E PNEU	383
		1	RODA E PNEU	384
		1	RODA E PNEU	385
		1	RODA E PNEU	386
		1	RODA E PNEU	387
		1	RODA E PNEU	388
		1	RODA E PNEU	389
		1	RODA E PNEU	390
		1	RODA E PNEU	391
		1	RODA E PNEU	392
		1	RODA E PNEU	393
		1	RODA E PNEU	394
		1	RODA E PNEU	395
		1	RODA E PNEU	396
		1	RODA E PNEU	397
		1	RODA E PNEU	398
		1	RODA E PNEU	399
		1	RODA E PNEU	400
		1	RODA E PNEU	401
		1	RODA E PNEU	402
		1	RODA E PNEU	403
		1	RODA E PNEU	404
		1	RODA E PNEU	405
		1	RODA E PNEU	406
		1	RODA E PNEU	407
		1	RODA E PNEU	408
		1	RODA E PNEU	409
TELA DE SUCÇÃO (ÓLEO DA TRANSMISSÃO)	8S-9130	1	CAIXA E COMPONENTES - TRANSMISSÃO	296
TELA DE SUCÇÃO (TRANSMISSÃO)	8S-9130	1	FILTRO - MAGNÉTICO	340
TELA FILTRANTE (FILTRO DO ÓLEO DA TRANSMISSÃO)	6I-9395	1	VÁLVULA DE CONTROLE - TRANSMISSÃO	358

INDEX

Name	Page
A	
ACCESSORY GP-CAB–HIGH PROFILE–12V POWER PORT	713
ACCESSORY GP-CAB–12V POWER PORT–LOW PROFILE	712
ACCUMULATOR & MTG GP-HYDRAULIC	479
ACCUMULATOR AR-BLADE CUSHION	480
ACCUMULATOR GP	480
	481
ACCUMULATOR GP-BLADE CUSHION	482
	483
ADAPTER GP-ENGINE OIL LINE	56
ADAPTER GP-TURBOCHARGER	81
ADJUSTER GP-SEAT	714
AFTERCOOLER & MOUNTING GP	82
AIR CLEANER GP	83
	84
	86
AIR COMPRESSOR GP	7
	8
AIR CONDITIONER & MOUNTING GP	716
AIR CONDITIONER AR	716
AIR CONDITIONER GP	718
AIR DRYER GP	450
	452
	454
	456
	458
ALARM GP–ACTION	124
ALTERNATOR GP-CHARGING	126
	128
	130
	132
ANTI-REACTION VALVE GP	662
APPLICATION GP-MONITOR	722
ARMREST GP–LH	723
ARMREST GP–RH	724
ASHTRAY	784
	788
AXLE GP-FRONT	414
B	
BAFFLE GP-RADIATOR	417
BATTERY GP–EU	135
BATTERY GP–HEAVY DUTY	134
BATTERY GP–MAINTENANCE FREE	136
BATTERY (MAINTENANCE FREE)(12 VOLT)	134
	135
BATTERY (750 AMP)(12 VOLT)	136
BEARING-SLEEVE (CAMSHAFT)	19
BELT (AIR CONDITIONER)	728
BELT-DRIVE (WARNING BEACON)	168
BIT AS	685
BIT GP	686
	687
BIT GP-END	688
BLADE AS-WIPER	897
	898
BLADE AS-WIPER (FRONT)	890
BLADE AS-WIPER (HIGH PROFILE REAR)	894
BLADE AS-WIPER (LOW PROFILE FRONT LOWER)	888
BLADE AS-WIPER (LOW PROFILE REAR)	892
BLADE GP–12 FT	689
BLADE GP–14 FT	690
BLOCK GP-JUNCTION	137
BRACKET GP-SCARIFIER	691
BRAKE GP-PARKING	460
BRAKE GP-SERVICE	462
BREATHER AS	57
BREATHER AS (TANDEM)	343
BREATHER GP	57
BREATHER (POWER TRAIN)	326
C	
CAB AR-HIGH PROFILE	725
CAB AR-NON-ROPS	725
CAB GP	725
	726
CAMSHAFT GP	10
CAP-CRANKSHAFT BEARING	18
CAP-DUST	67
	72
	100
	316
	328
	544
	552
	618
CAP-DUST (HYDRAULIC OIL)	536
	540
CAP-DUST (TRANS OIL)	330
CAP-DUST (TRANSMISSION OIL)	358
CAP-FILLER	15
CAP-FILLER (HYDRAULIC OIL TANK)	580
CAP GP-FUEL TANK (LOCKABLE)	120
CAP-RADIATOR	80
CAP-VALVE (STEM)	376
	377
	378
	379
	380
	381
	382
	383
	384
	385

INDEX

Name	Page
	386
	387
	388
	389
	390
	391
	392
	393
	394
	395
	396
	397
	398
	399
	400
	401
	402
	403
	404
	405
	406
	407
	408
	409
	411
	412
CARRIER GP-SEAL	11
CARTRIDGE-DESICCANT (AIR DRYER)	454
CASE & FRAME GP	418
CASE & PARTS GP-TRANSMISSION	296
CHAIN GP-DRIVE	300
CIRCLE GP	676
	678
CIRCUIT BREAKER AS (15 AMP) (ENGINE CONTROL)	261
	271
CIRCUIT BREAKER AS (15 AMP) (HEADLAMPS)	138
	139
CIRCUIT BREAKER AS (15 AMP) (HEAD/RH POSITION LAMPS)	271
CIRCUIT BREAKER AS (15 AMP) (LIGHTBAR WORKLAMPS)	138
CIRCUIT BREAKER AS (15 AMP) (TURN/HAZARD/LH POSITION/PANEL)	271
CIRCUIT BREAKER AS (80 AMP) (ALTERNATOR)	260
	270
CIRCUIT BREAKER AS (80 AMP) (MAIN)	260
	270
CIRCUIT BREAKER GP–DUEL	138
CIRCUIT BREAKER GP–SINGLE	139
CLUTCH GP-TRANSMISSION	302
	306
	310
	312
COMPRESSOR GP-REFRIGERANT	727
	728
CONDENSER & MTG GP-REFRIGERANT	729
CONSOLE GP-OPERATOR	730
CONTROL & MTG GP-ENGINE ELEK	140
CONTROL AR-HYDRAULIC	484
CONTROL GP-CLUTCH	314
CONTROL GP-DIFFERENTIAL LOCK	316
CONTROL GP-ENGINE ELECTRONIC	141
	142
CONTROL GP-GOVERNOR	98
CONTROL GP-MONITOR (CATERPILLAR MONITORING SYSTEM)	722
CONTROL GP-PARKING BRAKE	464
CONTROL GP-SECONDARY STEERING	143
CONTROL GP-SERVICE BRAKE	466
CONTROL GP-STEERING	485
CONTROL GP-TRANSMISSION	318
CONTROL GP-TRANSMISSION HYD	320
CONTROL GP-UNPROGRAMMED–POWER TRAIN	144
CONVERSION AR-CERTIFICATION–AIR CONDITIONER–EU	2
CONVERSION AR-CERTIFICATION–HEATER–EU	1
CONVERSION AR-NON-ROPS	733
CONVERTER AR-ELECTRICAL–12V POWER PORT–HIGH	145
CONVERTER AR-ELECTRICAL–12V POWER PORT–LOW	145
CONVERTER GP-ELECTRICAL–12V POWER PORT	148
CONVERTER GP-ELECTRICAL–25 AMP	147
CONVERTER GP-ELECTRICAL–5/7.5 AMP	146
CONVERTER GP-ELECTRICAL (24 VOLT TO 12 VOLT)	148
COOLER GP-ENGINE OIL	68
COOLING AR	69
COOLING AR–EU	69
COUPLING GP-TORSIONAL	321
COVER GP-AIR INLET	87
COVER GP-CYLINDER BLOCK	12
COVER GP-FLYWHEEL HOUSING	14
COVER GP-FRONT HOUSING	15
COVER GP-PROTECTION	419
COVER GP-VALVE MECHANISM	16
CRANKSHAFT GP	17
CYLINDER & LINES GP-RIPPER	486
CYLINDER & MTG GP-ARTICULATION	487
CYLINDER & MTG GP-BLADE LIFT	488
CYLINDER & MTG GP-BLADE TIP	489
CYLINDER & MTG GP-CENTERSHIFT	490
CYLINDER & MTG GP-SCARIFIER	491
CYLINDER & MTG GP-SIDESHIFT	492

INDEX

Name	Page
CYLINDER & MTG GP-STEERING	493
CYLINDER & MTG GP-WHEEL LEAN	494
CYLINDER BLOCK GP	18
	19
	20
CYLINDER GP-ARTICULATION	495
CYLINDER GP-BLADE LIFT	496
CYLINDER GP-BLADE TIP	498
CYLINDER GP-CENTERSHIFT	500
CYLINDER GP-HYDRAULIC	502
CYLINDER GP-SCARIFIER	504
CYLINDER GP-SIDESHIFT	506
CYLINDER GP-STEERING–LH	508
CYLINDER GP-STEERING–RH	510
CYLINDER GP-WHEEL LEAN	512
CYLINDER HEAD AS	21
	22
	24
CYLINDER HEAD GP	26
	27
	28
	30
	32
	34

D

Name	Page
DAMPER & PULLEY GP	36
DETENT GP-CONTROL VALVE	513
	514
DIFFERENTIAL & BEVEL GEAR GP	322
DIFFERENTIAL GP	324
DOOR GP–HIGH PROFILE–LH	736
DOOR GP–HIGH PROFILE–RH	734
DOOR GP-CAB–HIGH PROFILE	738
DOOR GP-CAB–LH	742
DOOR GP-CAB–LOW PROFILE	744
DOOR GP-CAB–RH	740
DRAWBAR GP	680
DRIVE GP-CIRCLE	516
DRIVE GP-PUMP	519
DUCT & CONTROL GP–HEATER–AIR CONDITIONER	746
DUCT GP	747

E

Name	Page
EDGE GP-CUTTING–7 FT	692
EDGE GP-CUTTING–8 FT	692
ELBOW GP-AIR INLET	88
ELECTRONICS GP-MONITOR	149
ELECTRONICS GP-POWER TRAIN–MOTOR GRADER	150
ELEMENT AS-PRIMARY	86
ELEMENT AS-SECONDARY	86
ELEMENT-HEATING (AIR DRYER)(24 VOLT)	454
ENCLOSURE GP-ENGINE	420
ENGINE AR-COMPLETE	5
ENGINE AR-CORE	6
EXTENSION GP-BACKREST	749
	859
EXTENSION GP-BACKREST–CLOTH	748
EXTENSION GP-BLADE–LH–2 FT	694
EXTENSION GP-BLADE–RH–2 FT	693

F

Name	Page
FAN & MOTOR GP	70
FAN GP-CIRCULATING–FRONT	752
FAN GP-CIRCULATING–FRONT DEFROSTER	754
FAN GP-CIRCULATING–REAR	750
FAN GP-CIRCULATING–REAR DEFROSTER	755
FASTENER GP-GROUND STUD	151
FILLER GP-POWER TRAIN OIL	326
FILM-CONTROL (FAN SPEED/TEMP)	762
FILM (DOME LIGHT)	240
FILM-FACE (HEADLIGHTS HIGH/LOW BEAM)	292
FILM-FACE (TURN SIGNAL/HAZARD)	292
FILM-FUSE (LH)	288
	292
FILM-FUSE (RH)	288
FILM GP–NON VHP	900
FILM GP–VHP	900
FILM-IDENTIFICATION (GROUP & SEQUENCE NO.)	718
FILM-IDENTIFICATION (GROUP & SEQUENCE NO.)	762
	766
FILM-INSTRUCTION (ALT EXIT/REMOVE WINDOW)	757
	758
FILM-INSTRUCTION (DO NOT DRILL/WELD ROPS)	834
	835
	836
	838
FILM-INSTRUCTION (ENGINE SHUTDOWN)	255
	275
FILM-INSTRUCTION (SEAT ADJUSTMENT)	872
FILM-INSTRUCTION (WASHER FILL)	901
FILM-MONITOR (CATERPILLAR MONITORING SYSTEM)	826
FILM-MONITOR (EMS-III)	822
FILM-MONITOR (SMART EMS)	824
FILM-PANEL (ACTION INDICATOR LH)	826
FILM-PANEL (ACTION INDICATOR RH)	826
FILM-PANEL (LH ACTION INDICATORS)	822
FILM-PANEL (LH INSTRUMENT)	824

INDEX

Name	Page
FILM-PANEL (RH ACTION INDICATORS)	822
FILM-PANEL (RH INSTRUMENT)	824
FILM-REFLECTOR (RED)	903
FILM (SUNSHADE-CATERPILLAR)	818
	819
FILM-WARNING (CABLE CONNECTION)	901
FILM-WARNING (HIGH PRESSURE CYLINDER)	901
FILM (WINDOW WASHER)	240
FILTER & MTG GP-OIL	328
FILTER-AIR (CAB AIR)	756
FILTER AS-ENGINE OIL	58
FILTER AS-FUEL	100
FILTER AS-WATER SEP & FUEL	102
FILTER (CAB AIR)	756
FILTER ELEMENT AS-OIL	330
FILTER ELEMENT AS-OIL (HYDRAULIC) (REVERSE FLOW)	580
FILTER GP-CAB AIR	756
FILTER GP-ENGINE OIL	58
FILTER GP-FUEL	100
FILTER GP-OIL	330
FILTER GP-WATER SEP & FUEL	102
	123
FILTER-MAGNETIC (TMSN OIL)	296
FILTER-MAGNETIC (TRANSMISSION)	340
FILTER-WATER	78
FINAL DRIVE GP	332
FITTING AS (QUICK DISCONNECT) (DIAGNOSTIC)	330
FITTING AS (QUICK DISCONNECT)(DIAGNOSTIC)	618
FITTING-GREASE (ARTICULATION HITCH)	441
FITTING-GREASE (DRAW BAR)	680
FITTING-GREASE (SCARIFIER)	704
FITTING-GREASE (SCARIFIER LIFT LINK SOCKET)	704
	708
FITTING-GREASE (TRUNNION)	708
FITTING-GREASE (WHEEL LEAN)	494
FITTING-GREASE (1/8-27 THD) (STEERING CYLINDER)	414
FITTING-GREASE (1/8-27 THD) (WHEEL LEAN CYLINDER)	414
FLASHER AS-ELECTRONIC (12/24 VOLT) (TURN SIGNAL/HAZARD)	186
FLASHER AS-ELECTRONIC (12/24 VOLT) (TURN SIGNAL/HAZARD)	188
FLASHER AS-ELECTRONIC (12/24 VOLT) (TURN SIGNAL/HAZARD LAMPS)	182
FLASHER AS (24 VOLT)	292
FLOOR MAT (CAB)	780
FLYWHEEL GP	37
FRAME GP-FRONT	424
FUMES DISPOSAL GP	60
FUSE (10 AMP)	146
FUSE (10 AMP) (AIR DRYER)	450
FUSE (10 AMP) (AUXILARY BACK-UP ALARM)	174
FUSE (10 AMP) (BLADE FLOOD LAMP)	181
FUSE (10 AMP) (BLADE/FRONT FLOODLAMP)	180
FUSE (10 AMP) (DOME LAMP)	240
FUSE (10 AMP) (FRONT DEFROSTER)	754
FUSE (10 AMP) (MOLDBOARD LAMP)	238
FUSE (10 AMP) (OUTSIDE HEATED MIRROR)	804
FUSE (10 AMP) (POWER CONVERTER)	148
FUSE (10 AMP) (REAR DEFROSTER)	755
FUSE (10 AMP) (SECONDARY STEERING)	280
FUSE (10 AMP) (TURN SIGNAL/HAZARD)	188
FUSE (10 AMP) (TURN SIGNAL/HAZARD LAMPS)	182
	186
FUSE (10 AMP) (TURN SIGNALS)	224
FUSE (10 AMP) (WARNING BEACON)	198
	200
FUSE (10 AMP) (WIPER)	894
FUSE (10 AMP) (WIPER)	892
FUSE (15 AMP) (AIR CONDITIONER)	716
FUSE (15 AMP) (HEATER)	759
FUSE (15 AMP) (TRANSMISSION)	288
	292
FUSE (15 AMP) (UPPER/LOWER FRONT WIPERS)	232
FUSE (15 AMP) (WINDOW WIPER/WASHERS)	234
FUSE (30 AMP) (CONVERTER-POWER)	147

G

GAUGE GP-AIR PRESSURE (LH & RH TANK)	826
GAUGE GP-AIR PRESSURE (LH TANK)	824
GAUGE GP-AIR PRESSURE (RH & LH TANKS)	822
GAUGE GP-AIR PRESSURE (RH TANK)	824
GAUGE GP-OIL LEVEL (DIPSTICK)	61
GEAR GP-FRONT	38
GENERAL AR	2
GUARD & SUPPORT GP-RADIATOR	428
GUARD GP-BOTTOM	431
GUARD GP-FUEL TANK	432
GUARD GP-PLATFORM–NON-ROPS	436
GUARD GP-PLATFORM–OPEN–HIGH PROFILE	434

H

HAMMER & MOUNTING GP–HIGH PROFILE	758
HAMMER & MOUNTING GP–LOW PROFILE	757

INDEX

Name	Page
HARNESS AS-CONSOLE	292
HARNESS AS-REAR CHASSIS	254
HARNESS AS-REAR LIGHTING	275
HARNESS AS-SENSOR (14 AWG)	208
HARNESS AS (SOCKET) (16-18 GA WIRE)	217
HARNESS AS (14 GA WIRE)	217
HEATER & MTG GP-CAB	759
HEATER AR-CAB	760
HEATER AR-CAB–EU	759
HEATER GP-CAB	762
HEATER GP-CAB–LIGHT DUTY	766
HITCH GP-ARTICULATING	438
HITCH GP-TOWING	440
HORN GP-AIR	770
	772
HOUSING GP-FLYWHEEL	39
HOUSING GP-FRONT	40
HOUSING GP-SEAT SUSPENSION	774

I

INDICATOR-AIR FILTER SERVICE	83
INSTALLATION AR-RADIO	777
INSTALLATION GP-RADIO	778
INSULATION GP-WEATHER	780

J

JACK-HYDRAULIC	900

K

KEY	582
	800
	835
KEY (BATTERY DISCONNECT)	223
KEY (TOOL BOX)	899
KIT-ADJUSTER	816
KIT-AIR CLEANER CLAMP	86
KIT-ALTERNATOR TERMINAL	132
KIT-BEARING	775
KIT-BEARING (ALTERNATOR)	126
KIT-BELT TETHER	870
KIT-BIAS PISTON	568
	572
KIT-BRUSH (STARTER)	220
KIT-BUMPER (WEIGHT ADJUSTMENT)	775
KIT-CARTRIDGE SEAL (DIFFERENTIAL LOCK)	346
KIT-CONNECTING PLUG	216
KIT-CONNECTING PLUG (12 PIN)	172
	174
	186
	188
	232
	234
	238
	242
	244
	248
	254
	255
	275
	282
	284
	288
	292
	434
	436
	804
	822
	824
	826
KIT-CONNECTING PLUG (12 PIN)	232
	234
	275
	282
	284
KIT-CONNECTING PLUG (12 PIN) (MAIN CHASIS HI/LO TURN LAMPS)	248
KIT-CONNECTING PLUG (12 PIN) (TMSN CONTROL)	296
KIT-CONNECTING PLUG (12 PIN) (WIPRS/DEFRSTR/PNL LMPS/SNW WNG)	236
KIT-CONNECTING PLUG (2 PIN)	110
	172
	182
	188
	192
	217
	230
	232
	234
	242
	244
	248
	254
	255
	260
	264
	266
	275
	284
	292
	443
	824
KIT-CONNECTING PLUG (2 PIN)	90
	270
KIT-CONNECTING PLUG (2 PIN) (A/C & THERMOSTAT SWITCH)	90

INDEX

Name	Page
KIT-CONNECTING PLUG (2 PIN) (ACTION ALARM)	282
KIT-CONNECTING PLUG (2 PIN) (BEACON LIGHT)	200
KIT-CONNECTING PLUG (2 PIN) (CLUTCHES 1-8)	320
KIT-CONNECTING PLUG (2 PIN) (FLOOD LAMP SIDE)	238
KIT-CONNECTING PLUG (2 PIN) (FLOOD LAMP SIDE & AUX CKT)	804
KIT-CONNECTING PLUG (2 PIN) (HEADLAMP)	182
KIT-CONNECTING PLUG (2 PIN) (LIGHTBAR WORKLAMPS)	186
KIT-CONNECTING PLUG (2 PIN) (MAIN POWER RELAY SWITCH)	227
KIT-CONNECTING PLUG (2 PIN) (MOTOR)	719
	762
	766
KIT-CONNECTING PLUG (2 PIN) (OPERATOR MODE SWITCH)	826
KIT-CONNECTING PLUG (2 PIN) (OPERATOR MODE SWITCH & RETURN)	822
KIT-CONNECTING PLUG (2 PIN) (PANEL LAMP/HORN)	288
KIT-CONNECTING PLUG (2 PIN) (SIDE FLOOD LAMP)	174
KIT-CONNECTING PLUG (2 PIN) (SNOW WING LAMP)	236
KIT-CONNECTING PLUG (2 PIN) (TMSN BYPASS FILTER SWITCH)	270
KIT-CONNECTING PLUG (2 PIN) (TMSN SPEED SENSOR)	296
KIT-CONNECTING PLUG (3 PIN)	208
	209
	211
	212
	232
	240
	242
	244
	248
	264
	275
	288
	292
KIT-CONNECTING PLUG (3 PIN) (MAIN CHASSIS)	234
KIT-CONNECTING PLUG (3 PIN) (TURN SIGNAL)	182
KIT-CONNECTING PLUG (4 PIN)	172
	174
	234
	238
	244
	260
	270
	275
	284
	288
	292
	824
KIT-CONNECTING PLUG (4 PIN) (AUX BACKUP LAMP)	236
KIT-CONNECTING PLUG (4 PIN) (LAMP INDICATOR)	248
KIT-CONNECTING PLUG (4 PIN) (OPEN ROPS BEACON/KEY SWITCH)	282
KIT-CONNECTING PLUG (6 PIN)	232
	234
	240
	244
	249
	260
	282
	284
	292
	822
KIT-CONNECTING PLUG (6 PIN)	270
KIT-CONNECTING PLUG (6 PIN) (MAIN CHASIS & HI/LO TURN LAMPS)	249
KIT-CONNECTING PLUG (6 PIN) (QUAD GAUGE/SPEEDOMETER)	826
KIT-CONNECTING PLUG (6 PIN) (REAR WIPER)	234
KIT-CONNECTING PLUG (8 PIN)	172
	174
	232
	234
	238
	240
	244
	248
	804
	826
KIT-CONNECTING PLUG (8 PIN) (WIPERS/WASHER/BCON LAMP/DEFRST)	236
KIT-CONTROL PISTON	568
KIT-CUSHION	748
	749
KIT-DIAPHRAGM	770
KIT-FASTENER (SEAT)	872
KIT-FOLLOWER	774
	775
KIT-GOVERNOR OVERHAUL (AIR TANK)	472
KIT-HAMMER	757
	758
KIT-HARDWARE	132
KIT-HARDWARE (ALTERNATOR)	126

INDEX

Name	Page
KIT-INDICATOR (SEAT)	872
KIT-INDICATOR (WEIGHT ADJUSTMENT)	775
KIT-INSULATOR (STARTING MOTOR)	220
KIT-LEVER	220
KIT-PISTON CONTROL	572
KIT-RECEPTACLE (12 PIN)	143
	182
	186
	188
	282
KIT-RECEPTACLE (12 PIN)	172
	174
	232
	234
	238
	240
	242
	244
	249
	254
	260
	266
	270
	275
	282
	284
	288
	292
	434
	436
	804
	822
	824
	826
KIT-RECEPTACLE (12 PIN) (BACKUP ALARM/WIPER/WASH/BECON)	236
KIT-RECEPTACLE (12 PIN) (LIGHTBAR WORKLAMPS)	186
KIT-RECEPTACLE (12 PIN) (MAIN CHASIS & HI/LO TURN LAMPS)	249
KIT-RECEPTACLE (12 PIN) (MAIN CHASIS HI/LO TURN LAMPS)	248
KIT-RECEPTACLE (12 PIN) (TMSN CONTROL)	320
KIT-RECEPTACLE (2 PIN)	90
	100
	110
	124
	168
	172
	174
	192
	194
	215
	222
	230
	232
	234
	236
	238
	242
	244
	248
	249
	254
	255
	260
	266
	270
	274
	275
	280
	292
	355
	356
	671
	672
	718
	727
	750
	752
	762
	766
	772
	804
	824
	826
KIT-RECEPTACLE (2 PIN)	288
KIT-RECEPTACLE (2 PIN)	164
KIT-RECEPTACLE (2 PIN) (A/C & THERMOSTAT SWITCH)	90
KIT-RECEPTACLE (2 PIN) (AIR BRAKE)	244
	245
KIT-RECEPTACLE (2 PIN) (BACK UP ALARM)	229
KIT-RECEPTACLE (2 PIN) (BACK-UP ALARM/AIR DRYER)	270
KIT-RECEPTACLE (2 PIN) (HYDRAULIC OIL TEMP SWITCH)	244
KIT-RECEPTACLE (2 PIN) (IGNITION/RADIO CONVERTER)	147
KIT-RECEPTACLE (2 PIN) (OPERATOR MODE SWITCH)	822
KIT-RECEPTACLE (2 PIN) (OPERATOR MODE SWITCH)	826
KIT-RECEPTACLE (2 PIN) (REGISTRATION PLATE LAMP)	165
KIT-RECEPTACLE (2 PIN) (SOLENOID VALVE)	478
KIT-RECEPTACLE (2 PIN) (STOP LAMP)	244

INDEX

Name	Page
KIT-RECEPTACLE (2 PIN) (12V POWER PORT)	712
	713
KIT-RECEPTACLE (3 PIN)	194
	204
	206
	207
	210
	230
	232
	242
	244
	248
	249
	254
	264
	274
	275
	280
	288
	292
KIT-RECEPTACLE (3 PIN)	167
KIT-RECEPTACLE (3 PIN)	152
KIT-RECEPTACLE (3 PIN) (ENGINE SHUTDOWN)	254
KIT-RECEPTACLE (3 PIN) (STOP/TAIL LAMP)	166
KIT-RECEPTACLE (3 PIN) (TURN/PARK)	178
KIT-RECEPTACLE (4 PIN)	172
	174
	232
	234
	238
	248
	260
	267
	270
	282
	284
	288
	292
	804
KIT-RECEPTACLE (4 PIN)	282
	284
KIT-RECEPTACLE (4 PIN) (BEACON SWITCH)	200
KIT-RECEPTACLE (4 PIN) (CENTERSHIFT INDICATOR)	244
KIT-RECEPTACLE (4 PIN) (KEY SWITCH)	282
KIT-RECEPTACLE (4 PIN) (MOLDBOARD LAMPS/HEATED MIRRORS)	236
KIT-RECEPTACLE (6 PIN)	232
	234
	244
	249
	255
	260
	264
	270
	275
	284
	434
	436
	763
	809
	822
	824
	826
	886
KIT-RECEPTACLE (6 PIN)	282
KIT-RECEPTACLE (6 PIN)	156
	158
	162
KIT-RECEPTACLE (6 PIN)	160
KIT-RECEPTACLE (6 PIN) (A/C BREAK/DRYER/THERMO/LIT TRM)	767
KIT-RECEPTACLE (6 PIN) (DRYER/THERMO/LT TERM/A/C BREAK)	719
KIT-RECEPTACLE (6 PIN) (QUAD GAGE MODULE)	808
KIT-RECEPTACLE (6 PIN) (SPEEDOMETER & TACH)	810
KIT-RECEPTACLE (6 PIN) (WINDOW WIPER MOTOR)	888
	890
KIT-RECEPTACLE (8 PIN)	172
	174
	228
	232
	234
	236
	238
	240
	804
	822
	824
	826
KIT-RECEPTACLE (8 PIN) (FRONT WIPER SWITCHES)	232
KIT-RECEPTACLE (8 PIN) (REAR WIPER SWITCH)	892
	894
KIT-RETAINING BOLT	144
	150
KIT-ROLLER (SEAT)	872
KIT-SEAL	122
	355
	356
	480
	481
	498

INDEX

Name	Page
	504
	506
	671
	672
	674
KIT-SEAL (BLADE CUSHION ACCUMULATOR)	482
KIT-SEAL (STEERING METERING)	566
KIT-SEAT CUSHION	848
KIT-SEAT CUSHION (VINYL)	850
KIT-SHAFT SHIM (INCLUDES 17 SHIMS)	572
KIT-SHIM (INCLUDES 17 SHIMS)	568
KIT-SLIDER BLOCK	863
KIT-SLIDER BLOCK (INCLUDES BLOCKS AND BOLT)	859
KIT-SLIDER BLOCK (INCLUDES 4 BLOCKS)	860
KIT-SPRING	775
KIT-SPRING (HEIGHT ADJUSTMENT)	775
KIT-SUSPENSION BOOT	870
KIT-SUSPENSION ROLLER	870
KIT-TERMINAL (ALTERNATOR)	126
KIT-TETHER (SEAT)	872
KIT-TILT PAN	848
	850
KIT-WIPER BLADE (REAR)	892
KNOB AS-WEIGHT	774
KNOB-DAMPER (SEAT)	872

L

LAMP AS-LH (TURN)	266
LAMP AS-RH (TURN)	266
LAMP GP-DOME	152
LAMP GP-FLOOD	153
LAMP GP-HEAD–HIGH BEAM	155
LAMP GP-HEAD–LH–EU	156
LAMP GP-HEAD–LOW BEAM	154
LAMP GP-HEAD–RH–EU	158
LAMP GP-HEAD & SIGNAL–LH	160
LAMP GP-HEAD & SIGNAL–RH	162
LAMP GP-HEAD (24 VOLT) (LOW BEAM)	182
	186
LAMP GP-MARKER	164
LAMP GP-REGISTRATION PLATE–EU	165
LAMP GP-SIGNAL–STOP/TAIL	166
LAMP GP-SIGNAL–TURN/PARK	167
LAMP GP-SIGNAL (24 VOLT) (STOP/TAIL)	264
LAMP GP-WARNING BEACON	168
LAMP-HEAD (24 VOLT) (HIGH BEAM)	155
	178
LAMP-HEAD (24 VOLT) (LOW BEAM)	178
LAMP-HEAD (24 VOLT)(65 WATT) (LOW BEAM)	154
LAMP (REGISTRATION PLATE)	165
LAMP (WARNING BEACON)	168
LAMP (24 VOLT)	160
LAMP (24 VOLT) (A/C & HEATER CONTROL PANEL)	762
LAMP (24 VOLT) (ACTION INDICATOR)	826
LAMP (24 VOLT) (AUXILARY BACK-UP ALARM)	174
LAMP (24 VOLT) (AUXILIARY BACKUP LAMP)	172
LAMP (24 VOLT) (BLADE CUSHION SWITCH)	230
LAMP (24 VOLT) (BLADE)(FRONT FLOODLAMP)	180
LAMP (24 VOLT) (CAB POSITION)	164
LAMP (24 VOLT) (CENTERSHIFT PIN INDICATOR)	282
LAMP (24 VOLT) (CENTERSHIFT PIN PULLER)	282
	285
LAMP (24 VOLT) (DIFF LOCK SWITCH INDICATOR)	292
LAMP (24 VOLT) (DIFFERENTIAL LOCK INDICATOR)	288
LAMP (24 VOLT) (DOME)	152
LAMP (24 VOLT) (EMS MASTER ACTION INDICATOR)	822
	824
	826
LAMP (24 VOLT) (FAN SPEED/TEMP CONTROL)	718
LAMP (24 VOLT) (FRONT DEFROSTER)	754
LAMP (24 VOLT) (HEAD)	162
LAMP (24 VOLT) (HEADLAMP/TAIL INDICATOR)	182
	186
	188
LAMP (24 VOLT) (HEADLAMP/TAIL/INDICATOR)	224
LAMP (24 VOLT) (HEATED MIRROR INDICATOR)	804
LAMP (24 VOLT) (HIGH/LOW BEAM)	158
LAMP (24 VOLT) (HIGH/LOW BEAM)	156
LAMP (24 VOLT) (INDICATOR)	822
	826
LAMP (24 VOLT) (INSTRUMENT PANEL)	822
	824
LAMP (24 VOLT) (LH AIR TANK GAUGE)	824
LAMP (24 VOLT) (LIGHTBAR LOW BEAM)	186
	189
LAMP (24 VOLT) (MOLDBOARD)	238
LAMP (24 VOLT) (MOLDBOARD INDICATOR)	236
LAMP (24 VOLT) (PANEL DIMMER SWITCH INDICATOR)	292
LAMP (24 VOLT) (PANEL LAMP DIMMER INDICATOR)	288
LAMP (24 VOLT) (POSITION)	156
	158
LAMP (24 VOLT) (QUAD GAUGE)	824

INDEX

Name	Page
LAMP (24 VOLT) (REAR DEFROSTER)	755
LAMP (24 VOLT) (RH AIR TANK GAUGE)	824
LAMP (24 VOLT) (SECONDARY STEERING)	285
LAMP (24 VOLT) (SECONDARY STEERING INDICATOR)	280
LAMP (24 VOLT) (SHIFT CONSOLE)	284
LAMP (24 VOLT) (SIGNAL)	162
LAMP (24 VOLT) (SPEEDOMETER & TACH)	810
LAMP (24 VOLT) (TAIL LAMP INDICATOR)	288
LAMP (24 VOLT) (TAIL LAMP SWITCH INDICATOR)	292
LAMP (24 VOLT) (TEMP/FAN SPEED)	766
LAMP (24 VOLT) (THROTTLE HOLD AUTO/MAN)	284
LAMP (24 VOLT) (THROTTLE HOLD MODE)	282
LAMP (24 VOLT) (THROTTLE SPEED SET)	282
LAMP (24 VOLT) (TURN)	156 158
LAMP (24 VOLT) (WARNING BEACON)	200
LAMP (24 VOLT) (WARNING BEACON)	198
LAMP (24 VOLT)(21 WATT) (BRAKE)	266
LAMP (24 VOLT/21 WATT) (SIGNAL)	160
LAMP (24 VOLT/21 WATT) (SIGNAL)	162
LAMP (24 VOLT/21 WATT) (TURN)	156 158
LAMP (24 VOLT)(5 WATT) (TAIL)	266
LAMP (24 VOLT)(65 WATT) (FLOOD)	153
LENS (AMBER) (SIGNAL)	160 162
LENS (AMBER) (TURN)	156 158
LENS-AMBER (WARNING BEACON)	168
LENS AS (AMBER)(SIGNAL)	162
LENS AS-FLOODLAMP	153
LENS AS (HEADLAMP)	160 162
LENS AS (HEADLAMP)(LOW BEAM)	154
LENS AS (HIGH BEAM)	155 178
LENS AS (LOW BEAM)	178
LENS AS (SIGNAL)	160
LENS AS (TURN)	156 158
LENS (DOME LAMP)	152
LENS (REGISTRATION PLATE)	165
LIFT GP-BLADE	696
LIFTER GP-VALVE	41
LIFTING GP-ENGINE	42
LIGHTING AR-FLOOD	169
LIGHTING AR-FLOOD–BOLSTER–TURN	169
LIGHTING AR-FLOOD–FRONT & REAR	169
LIGHTING AR-FLOOD–MOLDBOARD	169 170
LIGHTING AR-FLOOD & SIGNAL	170
LIGHTING AR-FLOOD & SIGNAL–EXTENDED BOLSTER	170
LIGHTING AR-FLOOD & SIGNAL–HEAD–TURN–BOLSTER	170
LIGHTING GP-BACKUP	172
LIGHTING GP-BACKUP–EU	174
LIGHTING GP-FLOOD–BLADE	180 181
LIGHTING GP-FLOOD–BOLSTER	186 195
LIGHTING GP-FLOOD–BOLSTER–DOUBLE WORKLAMPS	182
LIGHTING GP-FLOOD–CAB	176
LIGHTING GP-FLOOD–CAB–TURN	178
LIGHTING GP-FLOOD–EXTENDED BOLSTER	188
LIGHTING GP-FLOOD–MOLDBOARD	194
LIGHTING GP-FLOOD–REAR	192
LIGHTING GP-ROADING–CAB POSITION LAMP–EU	196
LIGHTING GP-SIGNAL–REAR TURN LAMPS	197
LIGHTING GP-WARNING–ROTATING	198 200
LINER GP-CAB–ENCLOSED – HIGH PROFILE	788
LINER GP-CAB–ENCLOSED–HIGH PROFILE	796
LINER GP-CAB–HIGH PROFILE	782
LINER GP-CAB–LOW PROFILE	784
LINER GP-CAB–OPEN–HIGH PROFILE	794
LINES GP-ACCUMULATOR	520
LINES GP-AIR	90
LINES GP-AIR–AFTERCOOLER	93
LINES GP-AIR TANK	471
LINES GP-DRAIN	103
LINES GP-ENGINE OIL	62 63
LINES GP-FUEL	104 106
LINES GP-FUEL–REAR	108
LINES GP-GREASE	441
LINES GP-HEATER	798
LINES GP-HYDRAULIC–CENTERSHIFT LOCK	532
LINES GP-HYDRAULIC–LH BANK	526
LINES GP-HYDRAULIC–PLOW/DOZER ANGLE–RH	534
LINES GP-HYDRAULIC–PLOW/DOZER LIFT	524
LINES GP-HYDRAULIC–PLOW/DOZER LIFT–LH	525
LINES GP-HYDRAULIC–RH	530
LINES GP-HYDRAULIC–SCARIFIER	522
LINES GP-HYDRAULIC FAN	536
LINES GP-HYDRAULIC FAN–RADIATOR	538
LINES GP-PUMP	540 544

INDEX

Name	Page
	547
LINES GP-RIPPER	548
LINES GP-SECONDARY STEERING	550
LINES GP-STEERING	552
LINES GP-TRANSMISSION OIL	334
LINES GP-TURBOCHARGER OIL	64
LINES GP-WATER	72
	74
LINK GP-LOWER	682
LINK GP-STEERING	442
LINK GP-UPPER	683
LITERATURE GP	800
LOCK GP-CENTERSHIFT	556
LOCK GP-HYDRAULIC HAND CONTROL	557
LOUVER GP-CAB	801

M

MANIFOLD GP-EXHAUST	94
MIRROR GP-REAR VIEW	802
	803
MIRROR GP-REAR VIEW–INSIDE–DUAL–EU	807
MIRROR GP-REAR VIEW–OUTSIDE–EU	806
MIRROR GP-REAR VIEW–OUTSIDE–HEATED–EU	804
MODULE GP-QUAD GAUGE	808
MODULE GP-SPEEDOMETER & TACH	809
MODULE GP-SPEEDOMETER & TACH–SNOW	810
MOTOR GP-ELECTRIC	202
MOTOR GP-ELECTRIC (27 VOLT)	718
	762
	766
MOTOR GP-GEAR	558
MOTOR GP-GEROTOR	560
MOUNTING GP-CAB–NON-ROPS, ENCLOSED	811
MOUNTING GP-ENGINE & TMSN	44
MOUNTING GP-REGISTRATION–EU	443
MOUNTING GP-RIPPER	698
MOUNTING GP-ROPS	812
MOUNTING GP-ROPS–OPEN–HIGH PROFILE	814
MOUNTING GP-WHEEL	337
MUFFLER GP	95

P

PADLOCK GP	725
	733
PADLOCK GP (TOOL BOX)	899
PAN GP-BACKREST	815
PAN GP-OIL	46
PAN GP-SEAT	816
PANEL GP-CAB	819
PANEL GP-CAB–HIGH PROFILE	820
PANEL GP-CAB–LOW PROFILE	818
PANEL GP-INSTRUMENT	822
PANEL GP-INSTRUMENT–EU	826
PANEL GP-INSTRUMENT–HIGH PROFILE	824
PANEL GP-WINDOW–LH	832
PANEL GP-WINDOW–RH	830
PISTON & ROD GP	47
PLATE & FILM GP	900
	901
	906
PLATE & FILM GP–EU	903
PLATE & FILM GP–FRENCH	904
PLATE & FILM GP–GERMAN	905
PLATE & FILM GP–PORTUGUESE	905
PLATE & FILM GP–SPANISH	904
PLATE & FILM GP (ENGINE)	900
PLATE GP-PUSH	684
PLATE-INSTRUCTION (BATTERY)	260
	270
PLATE-SERIAL NUMBER (ENGINE)	902
PLATE-WARNING (NO CLEARANCE)	419
PLATE-WARNING (NO CLEARANCE)	902
PLUG	39
PLUG AS-CONNECTOR (4 PIN)	804
PLUG-DRAIN	48
PLUG GP-FLYWHEEL HOUSING	48
PLUG-MAGNETIC (TRANSMISSION OIL)	418
PULLEY GP-IDLER	49
PUMP & MOTOR GP-SEC STEERING	562
PUMP & MTG GP-PISTON	563
	564
PUMP & MTG GP-SECONDARY STEER	565
PUMP & MTG GP-UNIT INJ HYD	109
PUMP GP-ENGINE OIL	65
	66
PUMP GP-FUEL	110
PUMP GP-FUEL PRM & WATER SEP	123
PUMP GP-GEAR–TRANSMISSION	338
	339
PUMP GP-METERING–STEERING	566
PUMP GP-PISTON	568
PUMP GP-PISTON–HYDRAULIC & STEERING	572
PUMP GP-PISTON–HYDRAULIC FAN	570
PUMP GP-UNIT INJECTION	112
	113
PUMP GP-UNIT INJECTOR HYD	114
PUMP GP-WATER	76
	78

R

RADIATOR & OIL COOLER GP	80

INDEX

Name	Page
RECEIVER-DRYER GP (AIR CONDITIONER)	90
RECEPTACLE GP-AUXILIARY START	203
REGULATOR AS	104
REGULATOR-WATER TEMPERATURE	72
RELAY AS (24 VOLT) (TAIL/PANEL LAMPS)	288
	292
RIPPER AR	700
RIPPER GP	701
ROADING AR	4
ROPS AR-ENCLOSED–ENCLOSED–HIGH PROFILE–EU	834
ROPS AR-ENCLOSED–HIGH PROFILE	834
ROPS AR-ENCLOSED–LOW PROFILE	834
ROPS AR-ENCLOSED–LOW PROFILE–EU	835
ROPS AR-OPEN–HIGH PROFILE	835
ROPS GP-ENCLOSED–HIGH PROFILE	836
ROPS GP-ENCLOSED–HIGH PROFILE–EU	836
ROPS GP-ENCLOSED–LOW PROFILE	835
ROPS GP-ENCLOSED–LOW PROFILE–EU	837
ROPS GP-OPEN–HIGH PROFILE	838
ROTATING GP-PUMP	574
ROTATING GP-PUMP–HYDRAULIC FAN	576
ROTATING GP-PUMP–STEERING	575

S

Name	Page
SCARIFIER AR	702
SCARIFIER GP–STRAIGHT	708
SCARIFIER GP–VEE	704
SCREEN GP-MAGNETIC–TRANSMISSION	340
SCREEN GP-SUN	839
SCREEN-SUCTION (TMSN OIL)	296
SCREEN-SUCTION (TRANSMISSION)	340
SCREEN (TRANSMISSION OIL FILTER)	358
SEAL	102
SEAL GP-CRANKSHAFT	50
SEAL GP-FLYWHEEL HOUSING	51
SEAL GP-FUEL INJECTOR	115
SEAL (INTEGRAL)	8
SEAL (2M)	16
SEAT BELT GP	840
	841
	864
SEAT BELT GP–RETRACTABLE	842
SEAT BELT GP (RETRACTABLE)	859
SEAT GP	850
SEAT GP–CLOTH	844
	848
SEAT GP–VINYL	846
SEAT GP-STATIC–CLOTH	852
	854
SEAT GP-STATIC–VINYL	852
	856
SEAT GP-SUSPENSION	858
	860
	861
	862
SEAT GP-SUSPENSION–CLOTH	859
	863
	864
	865
SENDER AS-POSITION (ARTICULATION ANGLE)	254
SENDER AS-POSITION (ENGINE SHUTDOWN)	274
SENSOR GP-ENGINE	204
SENSOR GP-POSITION–LEFT BRAKE PEDAL–CLUTCH	206
SENSOR GP-POSITION–TRHOTTLE	207
SENSOR GP-PRESSURE–ATMOSPHERIC	209
SENSOR GP-PRESSURE–ENGINE	211
SENSOR GP-PRESSURE–HYDRAULIC FAN	208
SENSOR GP-PRESSURE–INJECTION ACTUATION	212
SENSOR GP-PRESSURE–TURBO OUTLET	210
SENSOR GP-PRESSURE (ENGINE OIL)	204
SENSOR GP-PRESSURE (FUEL)	204
SENSOR GP-PRESSURE (INJECTION ACTUATION)	204
SENSOR GP-PRESSURE (RADIATOR FAN)	538
SENSOR GP-SPEED–HIGH OUTPUT	215
SENSOR GP-SPEED–TIMING	213
	214
SENSOR GP-SPEED (TIMING)	204
SENSOR GP-TEMPERATURE–ENGINE OIL	217
SENSOR GP-TEMPERATURE–TRANSMISSION OIL	216
SENSOR GP-TEMPERATURE (COOLANT)	204
SENSOR GP-TEMPERATURE (INTAKE AIR)	204
SENSOR GP-TEMPERATURE (TMSN OIL)	297
SHAFT GP-DRIVE	341
SHAFT GP-INPUT	342
SHIELD GP-DRIVE SHAFT	444
SHIELD GP-HEAT	445
SLEEVE-OIL SEAL	17
SOFTWARE GP-MONITOR	149
SOFTWARE GP-POWER TRAIN	150
SPRING	640
STARTING MOTOR GP-ELECTRIC	218
	220
STEERING AR-SECONDARY	577
STEP GP	446
STRAINER (HYDRAULIC OIL FILLER)	580
SUPPORT AR-REAR CHASSIS	447
SUPPORT AR-REAR CHASSIS–EU	447
SUPPORT GP-ENGINE	52
SUPPORT GP-FUEL TANK	448
SUPPORT GP-PLATFORM–REAR	449
SUPPORT GP-SEAT	866
SUPPRESSION GP-SOUND	868

INDEX

Name	Page
SUSPENSION GP-SEAT	870
SUSPENSION GP-SEAT–AIR	872
SWASHPLATE GP	578
SWITCH AS (AUXILARY BACK-UP ALARM)	174
SWITCH AS (AUXILLARY BACKUP)	172
SWITCH AS-BALL (CENTERSHIFT INDICATOR)	244, 248
SWITCH AS (BLADE CUSHION)	230
SWITCH AS (CENTERSHIFT PIN PULLER)	282, 285
SWITCH AS (DIFFERENTIAL LOCK)	288, 292
SWITCH AS (HEATED MIRROR)	804
SWITCH AS (LIGHTBAR LOW BEAM)	188
SWITCH AS-LIMIT (BRAKE PEDAL)	293
SWITCH AS-LIMIT (BRAKE/INCHING PEDALS)	288
SWITCH AS-LIMIT (INCHING PEDAL)	292
SWITCH AS-MAGNETIC (24 VOLT) (AIR INLET HEATER)	252
SWITCH AS (MOLDBOARD)	236
SWITCH AS (MOLDBOARD)	238
SWITCH AS (ON/OFF) (FRONT DEFROSTER)	754
SWITCH AS (ON/OFF) (REAR DEFROSTER)	755
SWITCH AS (PANEL LAMP DIMMER)	288, 292
SWITCH AS-PRESSURE (AIR CONDITIONER)	90
SWITCH AS-PRESSURE (PRIMARY STEERING)	248
SWITCH AS-PRESSURE (SECONDARY STEERING)	280
SWITCH AS-PRESSURE (STOP LAMP)	244, 248
SWITCH AS-PUSH BUTTON (MACHINE INFORMATION SELECTOR)	824
SWITCH AS-PUSH BUTTON (OPERATOR MODE)	822
SWITCH AS-PUSH BUTTON (OPERATOR MODE)	826
SWITCH AS-ROCKER (BLADE FLOOD LAMP)	181
SWITCH AS-ROCKER (BLADE)(FRONT FLOODLAMP)	180
SWITCH AS-ROCKER (HEADLAMP/TAIL)	182, 186, 188, 224
SWITCH AS-ROCKER (LIGHTBAR LOW BEAM)	186
SWITCH AS-ROCKER (SECONDARY STEERING)	280
SWITCH AS-ROCKER (SECONDARY STEERING)	285
SWITCH AS-ROCKER (TAIL LAMP)	292
SWITCH AS-ROCKER (THROTTLE HOLD SET/RESUME)	284
SWITCH AS-ROTARY (AIR CONDITIONER/HEATER)	762, 766
SWITCH AS-ROTARY (FAN SPEED)	718
SWITCH AS-ROTARY (HEADLIGHTS HIGH/LOW BEAM)	292
SWITCH AS-ROTARY (HIGH/LOW BEAM)	182, 186, 188
SWITCH AS-ROTARY (TURN SIGNAL)	224
SWITCH AS-ROTARY (UPPER/LOWER FRONT WIPERS)	232
SWITCH AS-ROTARY (WIPER/WASHER)	240
SWITCH AS (TAIL LAMP)	288
SWITCH AS-THERMOSTAT	718
SWITCH AS (THROTTLE HOLD MODE)	282
SWITCH AS-TOGGLE (ENGINE SHUTDOWN)	254, 274
SWITCH AS-TURN SIG & WARNING	182, 186, 188, 224, 292
SWITCH AS-WIPER (REAR)	892, 894
SWITCH GP-BYPASS	222
SWITCH GP-DISCONNECT–BATTERY	223
SWITCH GP-LIGHT–TURN	224
SWITCH GP-MAGNETIC–MAIN RELAY	227
SWITCH GP-MAGNETIC–SECONDARY STEERING	226
SWITCH GP-MAGNETIC (ENGINE SHUTDOWN)	274
SWITCH GP-MAGNETIC (SECONDARY STEERING)	280
SWITCH GP-MAGNETIC (24V) (CRANKING RELAY)	260
SWITCH GP-MAGNETIC (24V) (STARTING)	270
SWITCH GP-START (KEY)	282, 284
SWITCH GP-WIPER	228, 896
SWITCH GP-WIPER (INTERMITTENT)	234
SWIVEL GP	579

T

Name	Page
TANDEM & COVER GP	343
TANK & FILTER GP-HYDRAULIC	580

INDEX

Name	Page
TANK & MTG GP-HYDRAULIC	582
TANK GP-AIR	472
TANK GP-FUEL	116
TANK GP-FUEL–LH	120
TANK GP-FUEL–RH	118
TOOL BOX GP	899
TOOTH GP-RIPPER	711
TRANSMISSION AR	344
TURBOCHARGER GP	96
	97

U

UNIVERSAL JOINT GP	345

V

VALVE & LINKAGE GP	600
VALVE & LINKAGE GP– BANK 4-LH, BANK 5-RH	604
	606
VALVE & LINKAGE GP–BANK 4 LH-RH	590
	594
VALVE & LINKAGE GP–BANK 4 (RH)– BANK 5 (LH)	586
	588
VALVE & LINKAGE GP–BANK 5–LH–RH	602
VALVE & LINKAGE GP–BANK 5 LH-RH	584
	592
	596
VALVE & MTG GP-DIFF LOCK	346
VALVE-AIR RELIEF (AIR TANK)	472
VALVE AS (SEAT)	872
VALVE-BYPASS	58
VALVE-DRAIN (RADIATOR)	428
VALVE-FLUID SAMPLING	67
VALVE GP-AIR CONTROL	476
VALVE GP-AIR CONTROL–PARKING BRAKE	474
VALVE GP-BANK 4	608
VALVE GP-BANK 4–LH	609
	611
VALVE GP-BANK 4–RH	610
VALVE GP-BANK 5–LH	612
	615
	616
VALVE GP-BANK 5–RH	613
	614
	617
VALVE GP-COMBINATION	618
VALVE GP-CONTROL–ARTICULATION	620
VALVE GP-CONTROL–BLADE LIFT	626
	634
VALVE GP-CONTROL–BLADE LIFT (LH)	648
VALVE GP-CONTROL–BLADE LIFT (RH)	646
VALVE GP-CONTROL–BLADE TIP	628
VALVE GP-CONTROL–CENTERSHIFT	622
VALVE GP-CONTROL–CIRCLE DRIVE	630
VALVE GP-CONTROL–PLOW/DOZER LIFT	640
	650
VALVE GP-CONTROL–RIPPER	638
	644
VALVE GP-CONTROL–SCARIFIER	636
	642
VALVE GP-CONTROL–SIDESHIFT	632
VALVE GP-CONTROL–WHEEL LEAN	624
VALVE GP-CONTROL (BLADE LIFT)	609
VALVE GP-CONTROL (BLADE LIFT)	612
	613
VALVE GP-CONTROL (BLADE TIP)	609
	611
	612
	613
	615
	616
VALVE GP-CONTROL (CIRCLE DRIVE)	609
	611
	612
	613
	615
	616
VALVE GP-CONTROL (SCARIFIER)	613
VALVE GP-CONTROL (SIDESHIFT)	609
	611
	612
	613
	615
	616
VALVE GP-FLUID SAMPLING	67
	100
VALVE GP-FLUID SAMPLING (STEERING)	552
VALVE GP-PRESS & FLOW CMPNSTR	652
VALVE GP-PRESS & FLOW CMPNSTR– HYDRAULIC FAN	654
VALVE GP-PURGE	656
VALVE GP-PURGE–IMPLEMENT SIGNAL	657
VALVE GP-RELIEF	659
	662
	663
	665
	666
VALVE GP-RELIEF–HYDRAULIC	664
VALVE GP-RELIEF–IMPLEMENT	660
VALVE GP-RELIEF–MAIN	658
VALVE GP-RELIEF–RIPPER	667
VALVE GP-RELIEF–SCARIFIER	668
	669
VALVE GP-RELIEF–STEERING	661
VALVE GP-RELIEF (IMPLEMENT SIGNAL)	618
VALVE GP-RELIEF (MAIN)	618

INDEX

Name	Page
VALVE GP-SELECTOR & PRESS CONT–DIRECTION & RANGE	348
VALVE GP-SELECTOR & PRESS CONT–SPEED & RANGE	352
VALVE GP-SHUTTLE	670
VALVE GP-SHUTTLE (BALL RESOLVER) (SIGNAL)	618
VALVE GP-SOLENOID	122
	355
	478
VALVE GP-SOLENOID–BLADE CUSHION	671
VALVE GP-SOLENOID–CENTERSHIFT	672
VALVE GP-SOLENOID–DIRECTION–SPEED	356
VALVE GP-SOLENOID & MANIFOLD–BLADE CUSHION	673
VALVE GP-SOLENOID & MANIFOLD–FAN SPEED	674
VALVE GP-TIRE	408
	410
VALVE GP-TRANSMISSION CONTROL	358
VALVE MECHANISM GP	53
	54
VALVE-RELIEF	296

W

Name	Page
WARNING GP-BACKUP	229
WASHER GP-WINDOW	876
	878
WASHER GP-WINDOW–FRONT	874
WATER SEP & FUEL PRM PUMP GP	123
WHEEL & TIRE AR	360
	361
	362
	363
	364
	365
	366
	367
	368
	369
	370
	371
	372
	373
	374
	375
	376
WHEEL & TIRE GP	376
	377
	378
	379
	380
	381
	382
	383
	384
	385
	386
	387
	388
	389
	390
	391
	392
	393
	394
	395
	396
	397
	398
	399
	400
	401
	402
	403
	404
	405
	406
	407
	408
	409
WHEEL AR	409
	410
WHEEL GP	410
	411
	412
WINDOW GP–SIDE SLIDING–HIGH PROFILE	881
WINDOW GP–SIDE SLIDING–LOW PROFILE	882
WINDOW GP–SIDE SLIDING HP	884
WINDOW GP–SIDE SLIDING LP	883
WINDOW GP–VENT–CAB	880
WIPER AR-WINDOW–REAR–HIGH PROFILE	885
WIPER AR-WINDOW–REAR–LOW PROFILE	885
WIPER GP-WINDOW	886
WIPER GP-WINDOW–FRONT	896
WIPER GP-WINDOW–FRONT–HIGH PROFILE	890
	897
WIPER GP-WINDOW–FRONT–LOW PROFILE	888
WIPER GP-WINDOW–HIGH PROFILE	898
WIPER GP-WINDOW–REAR–HIGH PROFILE	894
WIPER GP-WINDOW–REAR–LOW PROFILE	892
WIRING GP-BLADE CUSHION	230
WIRING GP-CAB	232
	240
WIRING GP-CAB–EU	234
WIRING GP-CAB–MOLDBOARD	236

INDEX

Name	Page	Name	Page
	238		
WIRING GP-ENGINE	242		
WIRING GP-FRONT	244		
WIRING GP-FRONT–EU	248		
WIRING GP-HEATER	252		
WIRING GP-REAR	254		
	274		
WIRING GP-REAR–EU	266		
	270		
WIRING GP-REAR–RADIATOR	264		
WIRING GP-REAR–SERVICE CENTER	260		
WIRING GP-SECONDARY STEERING–EU	280		
WIRING GP-SHIFT CONSOLE	282		
	284		
WIRING GP-STEERING CONSOLE	288		
WIRING GP-STEERING CONSOLE–EU	292		

INDICE

Nombre	Página

A

ACCESORIOS DE LA CABINA (GR) 712
713
ACONDICIONADOR DE AIRE (CONFIG) 716
ACONDICIONADOR DE AIRE (GR) 718
ACONDICIONADOR DE AIRE Y MONTAJE (GR) 716
ACOPLAMIENTO TORSIONAL (GR) 321
ACUMULADOR DE AMORTIGUACIÓN DE LA HOJA (CONFIG) 480
ACUMULADOR (GR) 480
481
ACUMULADOR HIDRAULICO Y MONTAJE (GR) 479
ADAPTADOR DE TUBERIA DE ACEITE DE MOTOR (GR) 56
ADAPTADOR DEL TURBOCOMPRESOR (GR) 81
AIRE - TUBERÍAS DE (GR) 90
93
AJUSTADOR DEL ASIENTO (GR) 714
ALARMA (GR) 124
ALFOMBRILLA DEL PISO (CABINA) 780
AMORTIGUADOR Y POLEA (GR) 36
APLICACION DE MONITOR (GR) 722
ÁRBOL DE LEVAS (GR) 10
ARRANQUE - INTERRUPTOR DE (GR) (LLAVE) 282
284
ARTICULACIÓN DE CILINDRO (GR) 495
ASIENTO CON SUSPENSIÓN (GR) 870
872
ASIENTO FIJO (GR) 852
854
856
ASIENTO (GR) 844
846
848
850

B

BANCADA 5 (GR) 612
613
614
615
616
617
BARRA DE TIRO (GR) 680
BASTIDOR DELANTERO (GR) 424
BATERÍA (GR) 134
135
136
BATERÍA (LIBRE DE MANTENIMIENTO)(12 VOLTIOS) 134
135
BATERÍA (750 AMPERES, 12 VOLTIOS) 136
BLOQUE DE EMPALME (GR) 137
BLOQUE DESLIZANTE-JUEGO 863
BLOQUE DESLIZANTE-JUEGO (INCLUYE BLOQUES Y PERNO) 859
BLOQUE DESLIZANTE-JUEGO (INCLUYE 4 BLOQUES) 860
BLOQUE MOTOR (GR) 18
19
20
BOCINA DE AIRE (GR) 770
772
BOMBA - TUBERÍAS DE (GR) 540
544
547
BOMBA DE ACEITE DEL MOTOR (GR) 65
66
BOMBA DE AGUA (GR) 76
78
BOMBA DE COMBUSTIBLE (GR) 110
BOMBA DE ENGRANAJES (GR) 338
339
BOMBA DE INYECCIÓN UNITARIA (GR) 112
113
BOMBA DE PISTONES (GR) 568
570
572
BOMBA DE SEPARADOR DE AGUA Y CEBADO DE COMBUSTIBLE (GR) 123
BOMBA HIDRÁULICA DEL INYECTOR UNITARIO (GR) 114
BOMBA HIDRÁULICA DEL INYECTOR UNITARIO Y MONTAJE 109
BOMBA Y MONTAJE DE LA DIRECCIÓN SECUNDARIA (GR) 565
BOMBA Y MONTAJE DEL PISTÓN (GR) 563
564
BOMBA Y MOTOR DE DIRECCION SECUNDARIA (GR) 562

C

CABINA DE PERFIL ALTO (CONFIG) 725
CABINA (GR) 725
726
CABINA ROPS CERRADA (GR) 835
836
837
CABINA SIN ROPS (CONFIG) 725
CABLES DE CALEFACCIÓN (GR) 252

* NO HAY TRADUCCION DISPONIBLE EN EL MOMENTO DE LA IMPRESION

INDICE

Nombre	Página
CABLES DE LA CABINA (GR)	234, 236
CABLES DE LA CABINA (GR)	232, 238, 240
CABLES DE LA CONSOLA DE CAMBIOS (GR)	282, 284
CABLES DE LA CONSOLA DE DIRECCIÓN (GR)	288, 292
CABLES DE LA DIRECCIÓN SECUNDARIA	280
CABLES DEL MOTOR (GR)	242
CABLES DELANTEROS (GR)	248
CABLES DELANTEROS (GR)	244
CABLES POSTERIORES (GR)	260, 264, 266, 270, 274
CABLES POSTERIORES (GR)	254
CADENA DE IMPULSIÓN (GR)	300
CAJA DE LA SUSPENSIÓN DEL ASIENTO (GR)	774
CAJA DELANTERA (GR)	40
CAJA Y BASTIDOR (GR)	418
CAJA Y PIEZAS DE LA TRANSMISIÓN (GR)	296
CALCOMANÍA DE ADVERTENCIA (ASIENTO AJUSTABLE)	872
CALCOMANÍA DE ADVERTENCIA (CILINDRO PARA ALTA PRESION)	901
CALCOMANÍA DE ADVERTENCIA (CONEXION DE CABLE)	901
CALCOMANÍA DE ADVERTENCIA (LLENADO DEL DEPÓSITO DEL LAVAPARABRISAS)	901
CALCOMANÍA DE ADVERTENCIA (NO TALADRE/SUELDE ROPS)	834, 835, 836, 838
CALCOMANÍA DE ADVERTENCIA (PARADA DE MOTOR)	255, 275
CALCOMANÍA DE ADVERTENCIA (SALIDA ALTERNATIVA/QUITE VENTANA)	757, 758
CALCOMANIA DE FUSIBLE (LADO DERECHO)	288
CALCOMANIA DE FUSIBLE (LADO IZQUIERDO)	292
CALCOMANIA DE FUSIBLE (LADO IZQUIERDO)	288
CALCOMANÍA DE IDENTIFICACIÓN (NUMERO DE GRUPO Y SECUENCIA)	718, 762, 766
CALCOMANIA DEL TABLERO DE INSTRUMENTOS (LUCES ALTAS/BAJAS DELANTERAS)	292
CALCOMANIA DEL TABLERO DE INSTRUMENTOS (LUCES DE GIRO/PELIGRO)	292
CALCOMANÍA (LAVAPARABRISAS)	240
CALCOMANÍA (LUZ DEL TECHO)	240
CALCOMANÍA (VISERA CATERPILLAR)	818, 819
CALCOMANÍAS Y PLACAS DE IDENTIFICACIÓN (GR)	900, 901, 903, 904, 905, 906
CALCOMANÍAS Y PLACAS DE IDENTIFICACIÓN (GR) (MOTOR)	900
CALEFACCIÓN DE LA CABINA (CONFIG)	759, 760
CALEFACCIÓN DE LA CABINA (GR)	762, 766
CALEFACCIÓN Y MONTAJE DE LA CABINA (GR)	759
CÁNCAMOS DE LEVANTAMIENTO DEL MOTOR (GR)	42
CANDADO (GR)	725, 733
CANDADO (GR) (CAJA DE HERRAMIENTAS)	899
CANTONERA (CONJ)	685
CANTONERA DE EXTREMO (GR)	688
CANTONERA (GR)	686, 687
CARATUCHO-DESECANTE (SECADOR DE AIRE)	454
CARGA - ALTERNADOR DE (GR)	126, 128, 130, 132
CÁRTER - COLECTOR DEL (GR)	46
CENICERO	784, 788
CIGÜEÑAL (GR)	17
CILINDRO DE ARTICULACIÓN Y MONTAJE (GR)	487
CILINDRO DE DESGARRADOR Y TUBERÍAS (GR)	486

* NO HAY TRADUCCION DISPONIBLE EN EL MOMENTO DE LA IMPRESION

INDICE

Nombre	Página
CILINDRO DE DESPLAZAMIENTO DEL CÍRCULO (GR)	500
CILINDRO DE DESPLAZAMIENTO DEL CÍRCULO Y MONTAJE (GR)	490
CILINDRO DE DESPLAZAMIENTO LATERAL (GR)	506
CILINDRO DE DESPLAZAMIENTO LATERAL Y MONTAJE (GR)	492
CILINDRO DE DIRECCIÓN (GR)	508
	510
CILINDRO DE DIRECCIÓN Y MONTAJE (GR)	493
CILINDRO DE ESCARIFICADOR (GR)	504
CILINDRO DE ESCARIFICADOR Y MONTAJE (GR)	491
CILINDRO DE INCLINACIÓN DE LA HOJA (GR)	498
CILINDRO DE INCLINACIÓN DE LAS RUEDAS (GR)	512
CILINDRO DE INCLINACIÓN DE RUEDA Y MONTAJE (GR)	494
CILINDRO DE LA PUNTA DE LA HOJA Y MONTAJE (GR)	489
CILINDRO DE LEVANTAMIENTO DE HOJA Y MONTAJE (GR)	488
CILINDRO DE LEVANTAMIENTO DE LA HOJA (GR)	496
CILINDRO HIDRÁULICO (GRUPO)	502
CINTURON DE SEGURIDAD (AIRE ACONDICIONADO)	728
CINTURÓN DE SEGURIDAD (GR)	864
CINTURÓN DE SEGURIDAD (GR)	840
	841
	842
CINTURÓN DE SEGURIDAD (GR) (RETRACTIL)	859
CÍRCULO (GR)	676
	678
CODO DE ADMISIÓN DE AIRE (GR)	88
COJINETE (LEVA)	19
COLADOR (LLENADOR DE ACEITE HIDRAULICO)	580
COMBUSTIBLE - TANQUE DE (GR)	116
	118
	120
COMPARTIMIENTO DEL MOTOR (GR)	420
COMPRESOR DE AIRE (GR)	7
	8
COMPRESOR DE REFRIGERANTE (GR)	727
	728
CONDENSADOR DEL REFRIGERANTE Y MONTAJE (GR)	729
CONDUCTO (GR)	747
CONDUCTO Y CONTROL (GR)	746
CONEXION (CONJ) (DESCONEXIÓN RÁPIDA, DIAGNOSTICO)	330
CONEXION (CONJ) (DESCONEXIÓN RÁPIDA, DIAGNÓSTICO)	618
CONEXIÓN DE ENGRASE (BARRA DE TIRO)	680
CONEXIÓN DE ENGRASE (ENGANCHE DE ARTICULACION)	441
CONEXIÓN DE ENGRASE (ESCARIFICADOR)	704
CONEXIÓN DE ENGRASE (INCLINACION DE RUEDA)	494
CONEXIÓN DE ENGRASE (MUÑON)	708
CONEXIÓN DE ENGRASE (RECEPTACULO DE ESLABON DE LEVANT. DE ESCARIFICADOR)	704
	708
CONEXIÓN DE ENGRASE (ROSCA DE 1/8-27) (CILINDRO DE DIRECCION)	414
CONEXIÓN DE ENGRASE (ROSCA DE 1/8-27) (CILINDRO DE INCLINACION DE RUEDA)	414
CONFIGURACIÓN DE ENFRIAMIENTO	69
CONFIGURACIÓN DE SOPORTE DE CHASIS TRASERO	447
CONFIGURACIÓN DE TRANSFORMACIÓN PARA CERTIFICACIÓN	1
	2
CONFIGURACIÓN GENERAL	2
CONFIGURACIÓN PARA CARRETERA	4
CONJUNTO DE CABLERIA, CHASIS TRASERO	254
CONJUNTO DE DESTELLADOR (24 VOLTIOS)	292
CONJUNTO DE MODIFICACIÓN (SIN ROPS)	733
CONSOLA DEL OPERADOR (GR)	730
CONTROL DE AIRE-VÁLVULA	474
	476
CONTROL DE DIRECCIÓN (GR)	485
CONTROL DE LA DIRECCION SECUNDARIA (GR)	143
CONTROL DE LA TRANSMISIÓN (GR)	318
CONTROL DE MONITOR (GR) (SISTEMA MONITOR CATERPILLAR)	722
CONTROL DE REGULADOR (GR)	98
CONTROL DE TRABA DEL DIFERENCIAL (GR)	316
CONTROL DEL EMBRAGUE (GR)	314
CONTROL DEL FRENO DE ESTACIONAMIENTO	464
CONTROL ELECTRÓNICO DEL MOTOR (GR)	141
	142
CONTROL ELECTRÓNICO DEL MOTOR Y MONTAJE	140

* NO HAY TRADUCCION DISPONIBLE EN EL MOMENTO DE LA IMPRESION

INDICE

Nombre	Página
CONTROL HIDRÁULICO (CONFIG)	484
CONTROL HIDRÁULICO DE LA TRANSMISIÓN (GR)	320
CONTROL NO PROGRAMADO (GR)	144
CONVERTIDOR ELÉCTRICO (CONFIG)	145
CONVERTIDOR ELÉCTRICO (GR)	146
	147
CONVERTIDOR ELÉCTRICO (GR)	148
CONVERTIDOR ELÉCTRICO (GR) (24 VOLTIOS A 12 VOLTIOS)	148
CRISTAL (AMBAR) (DE GIRO)	156
	158
CRISTAL (AMBAR) (SEÑAL)	162
CRISTAL (AMBAR) (SEÑAL)	160
CRISTAL (LUZ DE TECHO)	152
CRISTAL (PLACA DE REGISTRACIÓN)	165
CUBIERTA INFERIOR DEL ASIENTO DEL OPERADOR (GR)	816
CUBIERTA PROTECTORA (GR)	419
CUCHILLA (GR)	692
CULATA DE CILINDROS (CONJ)	21
	22
	24
CULATA DE CILINDROS (GR)	26
	27
	28
	30
	32
	34

D

DEFLECTOR DEL RADIADOR	417
DESGARRADOR (CONFIG)	700
DESGARRADOR (GR)	701
DESHIDRATADOR (GR)	450
	456
	458
DESHIDRATADOR (GR)	452
	454
DESTELLADOR ELECTRONICO (CONJ) (12/24 VOLTIOS) (LUCES DE GIRO/PELIGRO)	182
DESTELLADOR ELECTRONICO (CONJ) (12/24 VOLTIOS) (LUZ DE GIRO/PELIGRO)	186
DESTELLADOR ELECTRONICO (CONJ) (12/24 VOLTIOS) (LUZ DE GIRO/PELIGRO)	188
DETECTOR DE POSICIÓN (SISTEMA DE COMBUST.) (GR)	206
	207
DIENTE DE DESGARRADOR (GR)	711
DIFERENCIAL (GR)	324
DIFERENCIAL Y CORONA (GR)	322
DIRECCIÓN SECUNDARIA (CONFIG)	577
DISYUNTOR (CONJ) (15 A) (BARRA DE LUCES DE TRABAJO)	138
DISYUNTOR (CONJ) (15 A) (CONTROL DEL MOTOR)	261
	271
DISYUNTOR (CONJ) (15 A) (FAROS)	138
	139
DISYUNTOR (CONJ) (15 A) (GIRO/PELIGRO/POSICIÓN DE IZQUIERDA/TABLERO)	271
DISYUNTOR (CONJ) (15 A) (LUCES DE POSICIÓN DEL LADO DERECHO, DELANTERAS)	271
DISYUNTOR (CONJ) (80 AMP) (ALTERNADOR)	270
DISYUNTOR (CONJ) (80 AMP) (ALTERNADOR)	260
DISYUNTOR (CONJ) (80 AMP) (PRINCIPAL)	270
DISYUNTOR (CONJ) (80 AMP) (PRINCIPAL)	260
DISYUNTOR DE CIRCUITO (GR)	139
DISYUNTOR DE CIRCUITO (GR)	138
DISYUNTOR (GR)	223
DOSIFICACIÓN - BOMBA DE (GR)	566

E

EJE DE ENTRADA (GR)	342
EJE DE MANDO (GR)	341
EJE DELANTERO (GR)	414
ELECTRONICA DE MONITOR (GR)	149
ELEMENTO DE CALEFACCION (SECADOR DE AIRE, 24 VOLTIOS)	454
ELEMENTO DE FILTRO DE ACEITE (CONJ)	330
ELEMENTO DE FILTRO DE ACEITE (CONJ) (HIDRAULICO) (FLUJO INVERSO)	580
ELEMENTO PRIMARIO (CONJ)	86
ELEMENTO SECUNDARIO (CONJ)	86
EMBRAGUE DE LA TRANSMISIÓN (GR)	302
	306
	310
	312
EMISOR DE POSICION (CONJ) (ANGULO DE ARTICULACION)	254
EMISOR DE POSICION (CONJ) (PARADA DEL MOTOR)	274
ENCHUFE CONECTOR (CONJ) (4 CLAVIJAS)	804
ENCHUFE DE ARRANQUE AUXILIAR (GR)	203
ENFRIADOR DE ACEITE DEL MOTOR (GR)	68
ENGANCHE ARTICULADO (GR)	438
ENGANCHE DE REMOLQUE (GR)	440
ENGRANAJE DELANTERO (GR)	38
ESCAPE DE GASES (GR)	60

* NO HAY TRADUCCION DISPONIBLE EN EL MOMENTO DE LA IMPRESION

INDICE

Nombre	Página
ESCARIFICADOR (CONFIG)	702
ESTRIBO DEL OPERADOR (GR)	446
ESTRUCTURA ROPS ABIERTA	835
ESTRUCTURA ROPS ABIERTA (GR)	838
ETIQUETA DE ADVERTENCIA (GR)	900
ETIQUETA REFLECTORA (ROJO)	903
EXTENSIÓN DE LA HOJA (GR)	693
	694
EXTENSIÓN DEL RESPALDO (GR)	748
	749
	859

F

FILTRO (AIRE DE LA CABINA)	756
FILTRO DE ACEITE DEL MOTOR (CONJ)	58
FILTRO DE ACEITE DEL MOTOR (GR)	58
FILTRO DE ACEITE (GR)	330
FILTRO DE ACEITE Y MONTAJE (GR)	328
FILTRO DE AGUA	78
FILTRO DE AIRE (AIRE DE LA CABINA)	756
FILTRO DE AIRE DE LA CABINA (GR)	756
FILTRO DE AIRE (GR)	83
	84
	86
FILTRO DE COMBUSTIBLE (CONJ)	100
FILTRO DE COMBUSTIBLE (GR)	100
FILTRO DE COMBUSTIBLE Y SEPARADOR DE AGUA (CONJ)	102
FILTRO DE COMBUSTIBLE Y SEPARADOR DE AGUA (GR)	102
	123
FILTRO MAGNÉTICO (ACEITE DE TRANSMISIÓN)	296
FILTRO MAGNÉTICO (TRANSMISION)	340
FRENO DE ESTACIONAMIENTO (GR)	460
FRENO DE SERVICIO - CONTROL (GR)	466
FRENO DE SERVICIO (GR)	462
FUSIBLE (10 A)	146
FUSIBLE (10 A) (ALARM AUXILIAR DE RETROCESO)	174
FUSIBLE (10 A) (BALIZA GIRATORIA DE ADVERTENCIA)	198
	200
FUSIBLE (10 A) (DESCONGELADOR DELANTERO)	754
FUSIBLE (10 A) (DESCONGELADOR TRASERO)	755
FUSIBLE (10 A) (DIRECCIÓN SECUNDARIA)	280
FUSIBLE (10 A) (HOJA/FARO DELANTERO)	180
FUSIBLE (10 A) (LÁMPARA DEL TECHO)	240
FUSIBLE (10 A) (LAMPARA, VERTEDERA)	238
FUSIBLE (10 A) (LIMPIADOR)	892
	894
FUSIBLE (10 A) (LUCES DE GIRO/PELIGRO)	182
	186
FUSIBLE (10 A) (LUZ DE GIRO/PELIGRO)	188
FUSIBLE (10 A) (REFLECTOR DE LA HOJA)	181
FUSIBLE (10 A) (RETROVISOR EXTERIOR DELANTERO)	804
FUSIBLE (10 A) (SECADOR DE AIRE)	450
FUSIBLE (10 A) (SEÑALES DE GIRO)	224
FUSIBLE (10 A) (TRANSFORMADOR DE CORRIENTE)	148
FUSIBLE (15 A) (AIRE ACONDICIONADO)	716
FUSIBLE (15 A) (CALEFACTOR)	759
FUSIBLE (15 A) (ESCOBILLAS FRONTALES SUPERIOR/INFERIOR)	232
FUSIBLE (15 A) (LAVAPARABRISAS, VENTANILLAS)	234
FUSIBLE (15 A) (TRANSMISION)	292
FUSIBLE (15 A) (TRANSMISION)	288
FUSIBLE (30 A) (TRANSFORMADOR DE CORRIENTE)	147

G

GATO HIDRÁULICO	900
GRUPO DE ACUMULADOR DE AMORTIGUACIÓN DE LA HOJA	482
	483
GRUPO DE AISLAMIENTO DE LA CABINA	780
GRUPO DE AJUSTADORES, PRISIONERO TIERRA	151
GRUPO DE CABLES, HOJA AMORTIGUADORA	230
GRUPO DE MONTAJE DE LA CABINA	811
GRUPO DE POSTENFRIAMIENTO Y MONTAJE	82
GRUPO DE SOPORTE DEL RESPALDO	815
GRUPO DE TAPON, CAJA DEL VOLANTE	48
GRUPO DE 4 VÁLVULAS HIDRÁULICAS	608
	609
	610
	611
GRUPO ESCARIFICADOR	704
	708
GRUPO GIRATORIO DE BOMBA	574
	575
	576

H

HOJA DE LIMPIAPARABRISAS (CONJ)	897
	898

* NO HAY TRADUCCION DISPONIBLE EN EL MOMENTO DE LA IMPRESION

INDICE

Nombre	Página
HOJA DE LIMPIAPARABRISAS (CONJ) (DELANTERO DE BAJO PERFIL)	888
HOJA DE LIMPIAPARABRISAS (CONJ) (FRENTE)	890
HOJA DE LIMPIAPARABRISAS (CONJ) (TRASERO DE ALTO PARFIL)	894
HOJA DE LIMPIAPARABRISAS (CONJ) (TRSERO DE BAJO PERFIL)	892
HOJA (GR)	689
	690
I	
INCLUYE ROPS (CONFIG)	835
INCLUYE ROPS (CONFIG)	834
INDICADOR DE PRESION DE AIRE (GR) (TANQUE DEL LADO DERECHO)	824
INDICADOR DE PRESION DE AIRE (GR) (TANQUE DEL LADO IZQUIERDO)	824
INDICADOR DE PRESION DE AIRE (GR) (TANQUE DERECHO E IZQUIERDO)	826
INDICADOR DE PRESION DE AIRE (GR) (TANQUES, LADOS DERECHO E IZQUIERDO)	822
INDICADOR DE SERVICIO DEL FILTRO DE AIRE	83
INDICADOR DEL NIVEL DE ACEITE (VARILLA) (GR)	61
INSONORIZADOR (GR)	868
INSTALACIÓN DE RADIO (CONFIG)	777
INSTALACIÓN DE RADIO (GR)	778
INTERRUPTOR (CONJ) (ALARM AUXILIAR DE RETROCESO)	174
INTERRUPTOR (CONJ) (AMORTIGUADOR DE LA HOJA)	230
INTERRUPTOR (CONJ) (ENCENDIDO/APAGADO) (DESCONGELADOR DELANTERO)	754
INTERRUPTOR (CONJ) (ENCENDIDO/APAGADO) (DESCONGELADOR TRASERO)	755
INTERRUPTOR (CONJ) (EXTRACTOR DE PASADOR DE DESPLAZADOR DEL CÍRCULO)	282
	285
INTERRUPTOR (CONJ) (LUZ BAJA DE BARRA DE LUCES)	188
INTERRUPTOR (CONJ) (LUZ DE COLA)	288
INTERRUPTOR (CONJ) (MÓDULO DE ACELERACIÓN)	282
INTERRUPTOR (CONJ) (REDUCTOR DE LUCES DEL TABLERO)	288
	292
INTERRUPTOR (CONJ) (RETROCESO, AUXILIAR)	172
INTERRUPTOR (CONJ) (RETROVISOR DELANTERO)	804
INTERRUPTOR (CONJ) (TRABA DE DIFERENCIAL)	288
	292
INTERRUPTOR (CONJ) (VERTEDERA)	236
INTERRUPTOR (CONJ) (VERTEDERA)	238
INTERRUPTOR DE BOLA (CONJ) (INDICADOR DEL DESPLAZADOR DEL CÍRCULO)	244
	248
INTERRUPTOR DE DERIVACIÓN	222
INTERRUPTOR DE LÍMITE (CONJ) (FRENO, MOVIMIENTO ULTRALENTO DE PEDAL)	288
INTERRUPTOR DE LÍMITE (CONJ) (PEDAL DE FRENO)	293
INTERRUPTOR DE LÍMITE (CONJ) (PEDAL DE MOVIMIENTO ULTRALENTO)	292
INTERRUPTOR DE LUZ (GR)	224
INTERRUPTOR DE PRESIÓN (CONJ) (AIRE ACONDICIONADO)	90
INTERRUPTOR DE PRESIÓN (CONJ) (DIRECCION PRINCIPAL)	248
INTERRUPTOR DE PRESIÓN (CONJ) (DIRECCIÓN SECUNDARIA)	280
INTERRUPTOR DE PRESIÓN (CONJ) (LUZ DE PARADA)	244
	248
INTERRUPTOR DE SEÑAL DE GIRO Y ADVERTENCIA (CONJ)	182
	186
	188
	224
	292
INTERRUPTOR DE VOLQUETE (CONJ) (ACELERACIÓN SOSTENIDA AJUSTE/REANUDAR)	284
INTERRUPTOR DE VOLQUETE (CONJ) (DIRECCIÓN SECUNDARIA)	280
INTERRUPTOR DE VOLQUETE (CONJ) (DIRECCIÓN SECUNDARIA)	285
INTERRUPTOR DE VOLQUETE (CONJ) (FARO DELANTERO/COLA)	188
	224
INTERRUPTOR DE VOLQUETE (CONJ) (FARO DELANTERO/COLA)	182
	186
INTERRUPTOR DE VOLQUETE (CONJ) (HOJA)(FARO DELANTERO)	180
INTERRUPTOR DE VOLQUETE (CONJ) (LUZ BAJA DE BARRA DE LUCES)	186

* NO HAY TRADUCCION DISPONIBLE EN EL MOMENTO DE LA IMPRESION

INDICE

Nombre	Página
INTERRUPTOR DE VOLQUETE (CONJ) (LUZ DE COLA)	292
INTERRUPTOR DE VOLQUETE (CONJ) (PARADA DEL MOTOR)	254, 274
INTERRUPTOR DE VOLQUETE (CONJ) (REFLECTOR DE LA HOJA)	181
INTERRUPTOR DEL LIMPIADOR (GR)	896
INTERRUPTOR DEL LIMPIADOR (GR)	228
INTERRUPTOR DEL LIMPIADOR (GR) (INTERMITENTE)	234
INTERRUPTOR DEL LIMPIAPARABRISAS (CONJ) (PARTE TRASERA)	892, 894
INTERRUPTOR DEL TERMOSTATO (CONJ)	718
INTERRUPTOR MAGNÉTICO (CONJ) (24 VOLTIOS) (AIRE DE ADMISIÓN DE LA CALEFACCIÓN)	252
INTERRUPTOR MAGNÉTICO (GR)	226, 227
INTERRUPTOR MAGNÉTICO (GR) (DIRECCIÓN SECUNDARIA)	280
INTERRUPTOR MAGNÉTICO (GR) (PARADA DEL MOTOR)	274
INTERRUPTOR MAGNÉTICO (GR) (24V) (ARRANQUE)	270
INTERRUPTOR MAGNÉTICO (GR) (24V) (RELE DE MOTOR DE ARRANQUE)	260
INTERRUPTOR PULSADOR (CONJ) (MODALIDAD DE OPERADOR)	822, 826
INTERRUPTOR PULSADOR (CONJ) (SELECTOR DE INFORMACION DE LA MÁQUINA)	824
INTERRUPTOR ROTATIVO (CONJ) (CALEFACCIÓN/AIRE ACONDICIONADO)	762
INTERRUPTOR ROTATIVO (CONJ) (CALEFACCIÓN/AIRE ACONDICIONADO)	766
INTERRUPTOR ROTATIVO (CONJ) (ESCOBILLAS FRONTALES SUPERIOR/INFERIOR)	232
INTERRUPTOR ROTATIVO (CONJ) (LIMPIA/LAVAPARABRISAS)	240
INTERRUPTOR ROTATIVO (CONJ) (LUCES DELANTERAS, ALTA/BAJA)	292
INTERRUPTOR ROTATIVO (CONJ) (LUZ ALTA/BAJA)	182, 186
INTERRUPTOR ROTATIVO (CONJ) (LUZ ALTA/BAJA)	188
INTERRUPTOR ROTATIVO (CONJ) (SEÑAL DE VIRAJE)	224
INTERRUPTOR ROTATIVO (CONJ) (VELOCIDAD DEL VENTILADOR)	718

J

Nombre	Página
JUEGO (AISLADOR) (MOTOR DE ARRANQUE)	220
JUEGO DE ABRAZADERA DEL FILTRO DE AIRE	86
JUEGO DE AJUSTE DEL ASIENTO	816
JUEGO DE AMORTIGUADOR	748, 749
JUEGO DE ATADURA (ASIENTO)	872
JUEGO DE CALCE DE EJE (INCLUYE 17 CALCES)	572
JUEGO DE CALCES (INCLUYE 17 CALCES)	568
JUEGO DE COJÍN DEL ASIENTO	848
JUEGO DE COJÍN DEL ASIENTO (VINILO)	850
JUEGO DE COJINETES	775
JUEGO DE COJINETES (ALTERNADOR)	126
JUEGO DE CONTROL DE PISTÓN	568, 572
JUEGO DE DIAFRAGMA	770
JUEGO DE ENCHUFE	216
JUEGO DE ENCHUFE (12 CLAVIJAS)	172, 174, 186, 188, 232, 234, 238, 242, 244, 248, 254, 255, 275, 282, 284, 288, 434, 436, 804, 822, 824, 826
JUEGO DE ENCHUFE (12 CLAVIJAS)	292
JUEGO DE ENCHUFE (12 CLAVIJAS) (CONTROL DE TRANSMISION)	296
JUEGO DE ENCHUFE (12 CLAVIJAS) (LIMPIAPARABRISAS/ DESCONGELADOR/LUCES DEL TABLERO/ALA DE NIEVE)	236

* NO HAY TRADUCCION DISPONIBLE EN EL MOMENTO DE LA IMPRESION

INDICE

Nombre	Página
JUEGO DE ENCHUFE (12 CLAVIJAS) (LUCES DE GIRO ALTAS/BAJAS DEL CHASIS PRINCIPAL)	248
JUEGO DE ENCHUFE (2 CLAVIJAS)	90
	110
	172
	182
	188
	192
	217
	230
	232
	234
	242
	244
	248
	254
	255
	260
	264
	266
	270
	275
	284
	292
	443
	824
JUEGO DE ENCHUFE (2 CLAVIJAS) (ALARMA DE ACCION)	282
JUEGO DE ENCHUFE (2 CLAVIJAS) (BALIZA GIRATORIA)	200
JUEGO DE ENCHUFE (2 CLAVIJAS) (BARRA DE LUCES DE TRABAJO)	186
JUEGO DE ENCHUFE (2 CLAVIJAS) (CIRCUITO AUXILIAR Y DEL REFLECTOR LATERAL)	804
JUEGO DE ENCHUFE (2 CLAVIJAS) (EMBRAGUES 1-8)	320
JUEGO DE ENCHUFE (2 CLAVIJAS) (FARO DELANTERO - LÁMPARA DE)	182
JUEGO DE ENCHUFE (2 CLAVIJAS) (INTERRUPTOR DE FILTRO DE DERIVACION DE TRANSM.)	270
JUEGO DE ENCHUFE (2 CLAVIJAS) (INTERRUPTOR DE MODALIDAD DE OPERADOR)	826
JUEGO DE ENCHUFE (2 CLAVIJAS) (INTERRUPTOR DE MODALIDAD DE OPERADOR Y RETORNO)	822
JUEGO DE ENCHUFE (2 CLAVIJAS) (INTERRUPTOR DE RELE DE POTENCIA PRINCIPAL)	227
JUEGO DE ENCHUFE (2 CLAVIJAS) (INTERRUPTOR DEL TERMOSTATO Y DEL AIRE ACONDICIONADO)	90
JUEGO DE ENCHUFE (2 CLAVIJAS) (LUZ DE ALA PARA NIEVE)	236
JUEGO DE ENCHUFE (2 CLAVIJAS) (LUZ DEL TABLERO/BOCINA)	288
JUEGO DE ENCHUFE (2 CLAVIJAS) (MOTOR)	719
	762
	766
JUEGO DE ENCHUFE (2 CLAVIJAS) (REFLECTOR LATERAL)	174
	238
JUEGO DE ENCHUFE (2 CLAVIJAS) (SENSOR DE VELOCIDAD, TRANSMISION)	296
JUEGO DE ENCHUFE (3 CLAVIJAS)	208
	209
	211
	212
	232
	240
	242
	244
	248
	264
	275
	288
	292
JUEGO DE ENCHUFE (3 CLAVIJAS) (CHASIS PRINCIPAL)	234
JUEGO DE ENCHUFE (3 CLAVIJAS) (SEÑAL DE VIRAJE)	182
JUEGO DE ENCHUFE (4 CLAVIJAS)	172
	174
	234
	238
	244
	260
	270
	275
	284
	288
	292
	824
JUEGO DE ENCHUFE (4 CLAVIJAS) (BALIZA DE ROPS ABIERTOS, INTERRUPTOR DE LLAVE)	282
JUEGO DE ENCHUFE (4 CLAVIJAS) (LUZ DE RETROCESO AUXILIAR)	236
JUEGO DE ENCHUFE (4 CLAVIJAS) (LUZ INDICADORA)	248
JUEGO DE ENCHUFE (6 CLAVIJAS)	232

* NO HAY TRADUCCION DISPONIBLE EN EL MOMENTO DE LA IMPRESION

INDICE

Nombre	Página
	234
	240
	244
	249
	260
	270
	282
	284
	292
	822
JUEGO DE ENCHUFE (6 CLAVIJAS) (DE 4 INDICADORES/VELOCIMETRO)	826
JUEGO DE ENCHUFE (6 CLAVIJAS) (LIMPIAPARABRISAS TRASERO)	234
JUEGO DE ENCHUFE (6 CLAVIJAS) (LUCES DE GIRO ALTAS/BAJAS Y DELCHASIS PRINCIPAL)	249
JUEGO DE ENCHUFE (8 CLAVIJAS)	172
	174
	232
	234
	238
	240
	244
	248
	804
	826
JUEGO DE ENCHUFE (8 CLAVIJAS) (LIMPIA/LAVAPARABRISAS/ BALIZA/DESCONGELADOR)	236
JUEGO DE ESCOBILLAS (MOTOR DE ARRANQUE)	220
JUEGO DE FUNDA DE LA SUSPENSIÓN DEL ASIENTO	870
JUEGO DE HOJA DE LIMPIAPARABRISAS (PARTE TRASERA)	892
JUEGO DE INDICADOR (AJUSTE DE PESO)	775
JUEGO DE INDICADOR (ASIENTO)	872
JUEGO DE MARTILLO	757
	758
JUEGO DE PALANCA	220
JUEGO DE PANEL DEL RESPALDO DEL ASIENTO	848
	850
JUEGO DE PARAGOLPES (AJUSTE DE PESO)	775
JUEGO DE PERNO RETENEDOR	144
	150
JUEGO DE PISTÓN	568
	572
JUEGO DE REACONDICIONAMIENTO DEL REGULADOR (TANQUE DE AIRE)	472
JUEGO DE RECEPTÁCULO (12 CLAVIJAS)	143
	182
	186
	188
	282
JUEGO DE RECEPTÁCULO (12 CLAVIJAS)	172
	174
	232
	234
	238
	240
	242
	249
	254
	260
	266
	270
	275
	282
	284
	288
	292
	434
	436
	804
	822
	824
	826
JUEGO DE RECEPTÁCULO (12 CLAVIJAS)	244
JUEGO DE RECEPTÁCULO (12 CLAVIJAS) (ALARMA DE RETROCESO/LIMPIA/ LAVAPARABRISAS/BALIZA)	236
JUEGO DE RECEPTÁCULO (12 CLAVIJAS) (BARRA DE LUCES DE TRABAJO)	186
JUEGO DE RECEPTÁCULO (12 CLAVIJAS) (CONTROL DE TRANSMISION)	320
JUEGO DE RECEPTÁCULO (12 CLAVIJAS) (LUCES DE GIRO ALTAS/BAJAS DEL CHASIS PRINCIPAL)	248
JUEGO DE RECEPTÁCULO (12 CLAVIJAS) (LUCES DE GIRO ALTAS/BAJAS Y DELCHASIS PRINCIPAL)	249
JUEGO DE RECEPTÁCULO (2 CLAVIJAS)	90
	110
	124
	168
	172
	192
	194
	222
	230
	232
	238
	242

* NO HAY TRADUCCION DISPONIBLE EN EL MOMENTO DE LA IMPRESION

INDICE

Nombre	Página
	249
	254
	255
	260
	266
	270
	274
	275
	288
	292
	355
	356
	671
	672
	727
	750
	752
	804
JUEGO DE RECEPTÁCULO (2 CLAVIJAS)	174
	234
	236
	248
	249
	280
	772
JUEGO DE RECEPTÁCULO (2 CLAVIJAS)	164
JUEGO DE RECEPTÁCULO (2 CLAVIJAS)	215
	244
JUEGO DE RECEPTÁCULO (2 CLAVIJAS)	100
JUEGO DE RECEPTÁCULO (2 CLAVIJAS)	718
	762
	766
	824
	826
JUEGO DE RECEPTÁCULO (2 CLAVIJAS)	254
JUEGO DE RECEPTÁCULO (2 CLAVIJAS) (ALARMA DE RETROCESO)	229
JUEGO DE RECEPTÁCULO (2 CLAVIJAS) (ALARMA DE RETROCESO/SECADOR DE AIRE)	270
JUEGO DE RECEPTÁCULO (2 CLAVIJAS) (ENCENDIDO/CONVERTIDOR RADIAL)	147
JUEGO DE RECEPTÁCULO (2 CLAVIJAS) (ENTRADA DE CORRIENTE DE 12 VOLTIOS)	712
	713
JUEGO DE RECEPTÁCULO (2 CLAVIJAS) (FRENO DE AIRE)	245
JUEGO DE RECEPTÁCULO (2 CLAVIJAS) (FRENO DE AIRE)	244
JUEGO DE RECEPTÁCULO (2 CLAVIJAS) (INTERRUPTOR DE MODALIDAD DE OPERADOR)	822
	826
JUEGO DE RECEPTÁCULO (2 CLAVIJAS) (INTERRUPTOR DE TEMPERATURA DE ACEITE HIDRAULICO)	244
JUEGO DE RECEPTÁCULO (2 CLAVIJAS) (INTERRUPTOR DEL TERMOSTATO Y DEL AIRE ACONDICIONADO)	90
JUEGO DE RECEPTÁCULO (2 CLAVIJAS) (LUZ DE PARADA)	244
JUEGO DE RECEPTÁCULO (2 CLAVIJAS) (PLACA DE REGISTRACIÓN DE LAS LUCES)	165
JUEGO DE RECEPTÁCULO (2 CLAVIJAS) (VALVULA DE SOLENOIDE)	478
JUEGO DE RECEPTÁCULO (3 CLAVIJAS)	167
	194
	210
	230
	232
	242
	254
	264
	274
	275
	292
JUEGO DE RECEPTÁCULO (3 CLAVIJAS)	248
	249
	280
	288
JUEGO DE RECEPTÁCULO (3 CLAVIJAS)	204
	206
	207
	244
JUEGO DE RECEPTÁCULO (3 CLAVIJAS)	152
JUEGO DE RECEPTÁCULO (3 CLAVIJAS) (LUCES TRASERAS DE FRENOS)	166
JUEGO DE RECEPTÁCULO (3 CLAVIJAS) (LUZ DE SEÑAL DE GIRO/ESTACIONAMIENTO)	178
JUEGO DE RECEPTÁCULO (3 CLAVIJAS) (PARADA DEL MOTOR)	254
JUEGO DE RECEPTÁCULO (4 CLAVIJAS)	172
	174
	232
	238
	260
	267
	282
	284
	292
	804
JUEGO DE RECEPTÁCULO (4 CLAVIJAS)	174
	234
	270

* NO HAY TRADUCCION DISPONIBLE EN EL MOMENTO DE LA IMPRESION

INDICE

Nombre	Página
	288
JUEGO DE RECEPTÁCULO (4 CLAVIJAS)	248
JUEGO DE RECEPTÁCULO (4 CLAVIJAS) (INDICADOR DEL DESPLAZADOR DEL CÍRCULO)	244
JUEGO DE RECEPTÁCULO (4 CLAVIJAS) (INTERRUPTOR DE BALIZA)	200
JUEGO DE RECEPTÁCULO (4 CLAVIJAS) (INTERRUPTOR DE LLAVE)	282
JUEGO DE RECEPTÁCULO (4 CLAVIJAS) (LUCES DE LA VERTEDERA/RETROVISORES CALENTADOS)	236
JUEGO DE RECEPTÁCULO (6 CLAVIJAS)	156
	162
	232
	255
	260
	264
	275
	282
	284
	434
	436
	809
	824
	886
JUEGO DE RECEPTÁCULO (6 CLAVIJAS)	234
	249
	270
	763
	822
	826
JUEGO DE RECEPTÁCULO (6 CLAVIJAS)	158
	160
JUEGO DE RECEPTÁCULO (6 CLAVIJAS)	244
JUEGO DE RECEPTÁCULO (6 CLAVIJAS) (DISYUNTOR DE AIRE ACONDICIONADO/SECADOR/ TERMOSTATO/LT TERM)	719
JUEGO DE RECEPTÁCULO (6 CLAVIJAS) (DISYUNTOR DE AIRE ACONDICIONADO/SECADOR/ TERMSOTATO/LIT TRM)	767
JUEGO DE RECEPTÁCULO (6 CLAVIJAS) (MODULO DE CUATRO MEDIDORES)	808
JUEGO DE RECEPTÁCULO (6 CLAVIJAS) (MOTOR DE LAVAPARABRISA)	888
	890
JUEGO DE RECEPTÁCULO (6 CLAVIJAS) (VELOCÍMETRO, TACÓMETRO)	810
JUEGO DE RECEPTÁCULO (8 CLAVIJAS)	172
	232
	234
	238
	240
	804
	824
JUEGO DE RECEPTÁCULO (8 CLAVIJAS)	174
	228
	234
	236
	822
	826
JUEGO DE RECEPTÁCULO (8 CLAVIJAS) (INTERRUPTOR DE LIMPIAPARABRISA TRASERO)	892
	894
JUEGO DE RECEPTÁCULO (8 CLAVIJAS) (INTERRUPTORES DE ESCOBILLAS FRONTALES)	232
JUEGO DE RESORTES	775
JUEGO DE RESORTES (AJUSTE DE ALTURA)	775
JUEGO DE RESTRICCIÓN DEL CINTURÓN	870
JUEGO DE RODILLO	870
JUEGO DE RODILLO (ASIENTO)	872
JUEGO DE SEGUIDOR	774
	775
JUEGO DE SELLO DE CARTUCHO (TRABA DE DIFERENCIAL)	346
JUEGO DE SELLOS	122
	355
	356
	480
	481
	498
	504
	506
	671
	672
	674
JUEGO DE SELLOS (ACUMULADOR DE AMORTIGUADOR DE LA HOJA)	482
JUEGO DE SELLOS (DOSIFICACIÓN DE DIRECCIÓN)	566
JUEGO DE TERMINAL (ALTERNADOR)	126
JUEGO DE TERMINAL DE ALTERNADOR	132
JUEGO DE TORNILLERÍA	132
JUEGO DE TORNILLERÍA (ALTERNADOR)	126
JUEGO DE TORNILLERÍA (ASIENTO)	872
JUNTA UNIVERSAL (GR)	345

* NO HAY TRADUCCION DISPONIBLE EN EL MOMENTO DE LA IMPRESION

INDICE

Nombre	Página
L	
LÁMPARA (BALIZA GIRATORIA DE ADVERTENCIA)	168
LÁMPARA DE BALIZA DE ADVERTENCIA (GR)	168
LÁMPARA DE FARO DELANTERO (GR)	155, 156, 158
LÁMPARA DE FARO DELANTERO (GR)	154
LÁMPARA DE FARO DELANTERO (GR) (24 VOLTIOS) (LUZ BAJA)	182, 186
LÁMPARA DE FARO DELANTERO (24 VOLTIOS) (LUZ BAJA)	178
LÁMPARA DE FARO DELANTERO (24 VOLTIOS) (VIGA ALTA)	178
LÁMPARA DE FARO DELANTERO (24 VOLTIOS) (VIGA ALTA)	155
LÁMPARA DE FARO DELANTERO (24 VOLTIOS)(65 VATIOS) (LUZ BAJA)	154
LÁMPARA DE LUZ DELANTERA Y DE SEÑAL (GR)	160, 162
LAMPARA DE PLACA DE REGISTRO (GR)	165
LÁMPARA DEL TECHO (GR)	152
LAMPARA DERECHA (CONJ) (DE GIRO)	266
LAMPARA IZQUIERDA (CONJ) (DE GIRO)	266
LAMPARA MARCADORA (GR)	164
LÁMPARA (PLACA DE REGISTRACIÓN)	165
LÁMPARA (24 VOLTIOS)	160
LÁMPARA (24 VOLTIOS) (ACELERACIÓN SOSTENIDA AUTOMÁTICA/MANUAL)	284
LÁMPARA (24 VOLTIOS) (ACONDICIONADOR DE AIRE Y TABLERO DE CONTROL DE CALEFACCIÓN)	762
LÁMPARA (24 VOLTIOS) (ALARM AUXILIAR DE RETROCESO)	174
LÁMPARA (24 VOLTIOS) (BALIZA GIRATORIA DE ADVERTENCIA)	198, 200
LÁMPARA (24 VOLTIOS) (CONSOLA DE CAMBIOS)	284
LÁMPARA (24 VOLTIOS) (CONTROL DE TEMPERATURA/VELOCIDAD DEL VENTILADOR)	718
LÁMPARA (24 VOLTIOS) (CÚPULA)	152
LÁMPARA (24 VOLTIOS) (DE CUATRO MEDIDORES)	824
LÁMPARA (24 VOLTIOS) (DE GIRO)	156, 158
LÁMPARA (24 VOLTIOS) (DELANTERA)	162
LÁMPARA (24 VOLTIOS) (DESCONGELADOR DELANTERO)	754
LÁMPARA (24 VOLTIOS) (DESCONGELADOR TRASERO)	755
LÁMPARA (24 VOLTIOS) (DIRECCIÓN SECUNDARIA)	285
LÁMPARA (24 VOLTIOS) (EXTRACTOR DE PASADOR DE DESPLAZADOR DEL CÍRCULO)	282, 285
LÁMPARA (24 VOLTIOS) (HOJA)(FARO DELANTERO)	180
LÁMPARA (24 VOLTIOS) (INDICADOR)	822, 826
LÁMPARA (24 VOLTIOS) (INDICADOR DE ACCION)	826
LÁMPARA (24 VOLTIOS) (INDICADOR DE CLAVIJA DEL DESPLAZAMIENTO DEL CIRCULO)	282
LÁMPARA (24 VOLTIOS) (INDICADOR DE LA VERTEDERA)	236
LÁMPARA (24 VOLTIOS) (INDICADOR DE TANQUE DE AIRE DE LA PARTE IZQUIERDA)	824
LÁMPARA (24 VOLTIOS) (INDICADOR DE TRABA DE DIFERENCIAL)	288
LÁMPARA (24 VOLTIOS) (INDICADOR DEL TANQUE DE AIRE DE LA PARTE DERECHA)	824
LÁMPARA (24 VOLTIOS) (INDICADOR SECUNDARIO DE DIRECCION)	280
LÁMPARA (24 VOLTIOS) (INTERRUPTOR DE LUZ DE TABLERO)	292
LÁMPARA (24 VOLTIOS) (INTERRUPTOR DEL AMORTIGUADOR DE LA HOJA)	230
LÁMPARA (24 VOLTIOS) (JUEGO DE ACELERACIÓN, VELOCIDAD)	282
LÁMPARA (24 VOLTIOS) (LUZ ALTA/BAJA)	156
LÁMPARA (24 VOLTIOS) (LUZ ALTA/BAJA)	158
LÁMPARA (24 VOLTIOS) (LUZ AUXILIAR DE RETROCESO)	172
LÁMPARA (24 VOLTIOS) (LUZ BAJA DE BARRA DE LUCES)	186, 189
LÁMPARA (24 VOLTIOS) (LUZ DELANTERA/TRASERA/INDICADOR)	224
LÁMPARA (24 VOLTIOS) (LUZ INDIC. DE ACCION MAESTRA DE EMS)	822, 824, 826
LÁMPARA (24 VOLTIOS) (LUZ INDICADORA DE LAMPARA DE COLA)	288
LÁMPARA (24 VOLTIOS) (LUZ INDICADORA DE LAMPARA DELANTERA/TRASERA)	182, 186

* NO HAY TRADUCCION DISPONIBLE EN EL MOMENTO DE LA IMPRESION

INDICE

Nombre	Página
	188
LÁMPARA (24 VOLTIOS) (MÓDULO DE ACELERACIÓN)	282
LÁMPARA (24 VOLTIOS) (NDICADOR DEL INTERRUPTOR DE LUCES DE COLA)	292
LÁMPARA (24 VOLTIOS) (POSICION)	156
LÁMPARA (24 VOLTIOS) (POSICION)	158
LÁMPARA (24 VOLTIOS) (POSICIÓN DE LA CABINA)	164
LÁMPARA (24 VOLTIOS) (RETROVISOR INDICADOR DELANTERO)	804
LÁMPARA (24 VOLTIOS) (SEÑAL)	162
LÁMPARA (24 VOLTIOS) (TABLERO DE INSTRUMENTOS)	822
	824
LÁMPARA (24 VOLTIOS) (TABLERO, INTENCIDAD DE LUCES INDICADORAS)	288
LÁMPARA (24 VOLTIOS) (TEMP/VELOCIDAD DE VENTILADOR)	766
LÁMPARA (24 VOLTIOS) (TRABA DEL DIFERENCIAL DEL INDICADOR DEL INTERRUPTOR)	292
LÁMPARA (24 VOLTIOS) (VELOCÍMETRO, TACÓMETRO)	810
LÁMPARA (24 VOLTIOS) (VERTEDERA)	238
LÁMPARA (24 VOLTIOS, 21 VATIOS) (DE GIRO)	156
	158
LÁMPARA (24 VOLTIOS, 21 VATIOS) (FRENO)	266
LÁMPARA (24 VOLTIOS, 21 VATIOS) (FRENO)	266
LÁMPARA (24 VOLTIOS, 21 VATIOS) (SEÑAL)	162
LÁMPARA (24 VOLTIOS, 21 VATIOS) (SEÑAL)	160
LÁMPARA (24 VOLTIOS, 5 VATIOS) (TRASERA)	266
LÁMPARA (24 VOLTIOS, 5 VATIOS) (TRASERA)	266
LÁMPARA (24 VOLTIOS)(65 VATIOS) (REFLECTOR)	153
LAVAPARABRISAS DE LA VENTANA (GR)	874
	876
	878
LENTE AMBAR (BALIZA GIRATORIA DE ADVERTENCIA)	168
LENTE DE REFLECTOR (CONJ)	153
LEVANTAMIENTO - HOJA DE (GR)	696
LIMPIAPARABRISAS (CONFIG)	885
LIMPIAPARABRISAS DE LA VENTANA (GR)	886
	888
	894
	896
LIMPIAPARABRISAS DE LA VENTANA (GR)	890
	892
LIMPIAPARABRISAS DE LA VENTANA (GR)	897
	898
LLAVE	582
	800
	835
LLAVE (CAJA DE HERRAMIENTAS)	899
LLAVE (DESCONECTAR BATERIA)	223
LUCES DE ADVERTENCIA (GR)	198
LUCES DE ADVERTENCIA (GR)	200
LUCES DE DESPLAZAMIENTO (GR)	196
LUCES DE GIRO (GR)	197
LUCES DE REFLECTOR (GR)	176
	178
	180
	181
	182
	186
	188
	192
	194
	195
LUCES DE REFLECTOR Y SEÑAL (CONFIG)	170
LUCES DE RETROCESO (GR)	172
	174
LUZ DE SEÑAL DE GIRO (GR)	166
	167
LUZ DE SEÑAL DE GIRO (GR) (24 VOLTIOS) (LUZ DE SEÑAL DE PARADA/COLA)	264

M

MANDO DE BOMBA (GR)	519
MANDO DE CORREA (BALIZA GIRATORIA DE ADVERTENCIA)	168
MANDO DEL CIRCULO (GR)	516
MANDO FINAL (GR)	332
MANGUITO-SELLO DE ACEITE	17
MARTILLO Y MONTAJE (GR)	757
	758
MAZO DE CABLES (CABLE CALIBRE 14)	217
MAZO DE CABLES DE LA CONSOLA (CONJ)	292
MAZO DE CABLES DE LUCES TRASERAS (CONJ)	275
MAZO DE CABLES DE SENSOR (CONJ) (CALIBRE 14)	208
MAZO DE CABLES (RECEPTÁCULO) (CABLE CALIBRE 16-18)	217
MECANISMO DE VÁLVULAS (GR)	53
	54
MÓDULO DEL TACÓMETRO Y DEL VELOCÍMETRO (GR)	809
	810

* NO HAY TRADUCCION DISPONIBLE EN EL MOMENTO DE LA IMPRESION

INDICE

Nombre	Página
MODULO ELECTRÓNICO DE CUATRO INDICADORES (GR)	808
MONTAJE DE LA ESTRUCTURA ROPS (GR)	812, 814
MONTAJE DE RUEDA (GR)	337
MONTAJE DEL DESGARRADOR (GR)	698
MONTAJE DEL MOTOR Y LA TRANSMISIÓN (GR)	44
MONTAJE-REGISTRO (GR)	443
MOTOR - NÚCLEO (CONFIG)	6
MOTOR - SOPORTE DEL (GR)	52
MOTOR COMPLETO (CONFIG)	5
MOTOR DE ARRANQUE ELÉCTRICO (GR)	218, 220
MOTOR DE ENGRANAJES (GR)	558
MOTOR ELÉCTRICO (GR)	202
MOTOR ELÉCTRICO (GR) (27 VOLTIOS)	718, 762, 766
MOTOR HIDRÁULICO DE ENGRANAJES (GR)	560
MOTOR Y VENTILADOR (GR)	70
MÚLTIPLE DE ESCAPE (GR)	94

P

Nombre	Página
PANEL DE LA CABINA (GR)	818, 819, 820
PANEL DE LA VENTANA (GR)	830, 832
PERILLA DE AMORTIGUADOR (ASIENTO)	872
PERSIANA PARA EL SOL (GR)	839
PERSIANAS DE LA CABINA (GR)	801
PESO-PERILLA (CONJ)	774
PISTÓN Y BIELA (GR)	47
PLACA DE ADVERTENCIA (NO ESPACIO LIBRE)	902
PLACA DE ADVERTENCIA (NO ESPACIO LIBRE)	419
PLACA DE CONTROL (EMS-III)	822
PLACA DE CONTROL (EMS INTELIGENTE)	824
PLACA DE CONTROL (SISTEMA MONITOR CATERPILLAR)	826
PLACA DE CONTROL (VENTILADOR VELOCIDAD/TEMPERATURA)	762
PLACA DE INSTRUCCIONES (BATERÍA)	260, 270
PLACA DEL NÚMERO DE SERIE (MOTOR)	902
PLACA DEL TABLERO (INDICADOR ACCIÓN, LADO DERECHO)	826
PLACA DEL TABLERO (INDICADOR DE ACCIÓN, LADO IZQUIERDO)	826
PLACA DEL TABLERO (INSTRUMENTO DE PARTE DERECHA)	824
PLACA DEL TABLERO (INSTRUMENTO DE PARTE IZQUIERDA)	824
PLACA DEL TABLERO (SEÑALES DE ACCIÓN, PARTE DERECHA)	822
PLACA DEL TABLERO (SEÑALES DE ACCIÓN, PARTE IZQUIERDA)	822
PLANCHA DE EMPUJE (GR)	684
PLATO OSCILANTE (GR)	578
POLEA LOCA (GR)	49
POSABRAZOS (GR)	723, 724
PROTECTOR DE LA PLATAFORMA (GR)	434, 436
PROTECTOR DEL TANQUE DE COMBUSTIBLE (GR)	432
PROTECTOR INFERIOR (GR)	431
PROTECTOR TÉRMICO DEL EJE DE MANDO (GR)	444
PROTECTOR TÉRMICO (GR)	445
PROTECTOR Y SOPORTE DEL RADIADOR (GR)	428
PUBLICACIONES (GR)	800
PUERTA DE CABINA	738, 740, 742, 744
PUERTA (GR)	734, 736

R

Nombre	Página
RADIADOR Y ENFRIADOR DE ACEITE (GR)	80
RECEPTOR-SECADOR (GR) (ACONDICIONADOR DE AIRE)	90
REFLECTOR (GR)	153
REFLECTORES (CONFIG)	169, 170
REGULADOR (CONJ)	104
REGULADOR DE TEMPERATURA DEL AGUA	72
REJILLA DE SUCCIÓN (ACEITE DE TRANSMISIÓN)	296
REJILLA DE SUCCIÓN (TRANSMISION)	340
REJILLA (FILTRO DEL ACEITE DE TRANSMISION)	358
REJILLA MAGNÉTICA (GR)	340
RELÉ (CONJ) (24 VOLTIOS) (COLA, LUCES DE PANEL)	288, 292
RESORTE	640
RESPIRADERO (CONJ)	57

* NO HAY TRADUCCION DISPONIBLE EN EL MOMENTO DE LA IMPRESION

INDICE

Nombre	Página
RESPIRADERO (CONJ) (TANDEM)	343
RESPIRADERO (GR)	57
RESPIRADERO (TREN DE FUERZA)	326
RETROCESO - ALARMA DE (GR)	229
RETROVISOR (GR)	802
	803
	804
	806
	807
REVESTIMIENTO DE LA CABINA (GR)	782
	784
	788
	794
	796
RUEDA (CONFIG)	409
	410
RUEDA (GR)	411
RUEDA (GR)	410
	412
RUEDA Y LLANTA (CONFIG)	360
	361
	362
	363
	364
	365
	366
	367
	368
	369
	370
	371
	372
	373
	374
	375
	376
RUEDA Y NEUMÁTICO (GR)	376
	377
	378
	379
	380
	381
	382
	383
	384
	385
	386
	387
	388
	389
	390
	391
	392
	393
	394
	395
	396
	397
	398
	399
	400
	401
	402
	403
	404
	405
	406
	407
	408
	409

S

Nombre	Página
SELLO	102
SELLO DE CIGÜEÑAL (GR)	50
SELLO DE LA CAJA DE VOLANTE (GR)	51
SELLO DEL INYECTOR DEL COMBUSTIBLE (GR)	115
SELLO DEL PORTADOR (GR)	11
SELLO (INTEGRAL)	8
SELLO (2M)	16
SENSOR DE PRESIÓN (GR)	209
SENSOR DE PRESIÓN (GR)	208
	211
SENSOR DE PRESIÓN (GR)	210
	212
SENSOR DE PRESIÓN (GR) (ACCIONAMIENTO DE INYECCIÓN)	204
SENSOR DE PRESIÓN (GR) (ACEITE DEL MOTOR)	204
SENSOR DE PRESIÓN (GR) (COMBUSTIBLE)	204
SENSOR DE PRESIÓN (GR) (VENTILADOR DE REDIADOR)	538
SENSOR DE TEMPERATURA (GR)	216
	217
SENSOR DE TEMPERATURA (GR) (ACEITE DE TRANSMISIÓN)	297
SENSOR DE TEMPERATURA (GR) (AIRE DE ADMISION)	204
SENSOR DE TEMPERATURA (GR) (REFRIGERANTE)	204
SENSOR DE VELOCIDAD (GR)	213
	214
	215

* NO HAY TRADUCCION DISPONIBLE EN EL MOMENTO DE LA IMPRESION

INDICE

Nombre	Página
SENSOR DE VELOCIDAD (GR) (SINCRONIZACIÓN)	204
SENSOR DEL MOTOR (GR)	204
SEPARADOR DE AGUA Y BOMBA DE CEBADO DE COMBUSTIBLE (GR)	123
SILENCIADOR (GR)	95
SOFTWARE DE MONITOR (GR)	149
SOFTWARE DEL TREN DE FUERZA (GR)	150
SOPORTE DE PLATAFORMA (GR)	449
SOPORTE DEL ASIENTO (GR)	866
SOPORTE DEL ESCARIFICADOR (GR)	691
SOPORTE DEL TANQUE DE COMBUSTIBLE (GR)	448
SUSPENSIÓN - ASIENTO CON (GR)	858
	859
	865
SUSPENSIÓN - ASIENTO CON (GR)	860
	861
	862
	863
	864

T

TABLERO DE INSTRUMENTOS (GR)	824
	826
TABLERO DE INSTRUMENTOS (GR)	822
TÁNDEM Y CUBIERTA (GR)	343
TANQUE DE AIRE (GR)	472
TANQUE HIDRÁULICO Y MONTAJE (GR)	582
TANQUE Y FILTRO HIDRÁULICOS (GR)	580
TAPA CONTRA EL POLVO	67
	72
	100
	316
	328
	544
	552
	618
TAPA CONTRA EL POLVO (ACEITE DE LA TRANSMISIÓN)	330
TAPA CONTRA EL POLVO (ACEITE DE LA TRANSMISIÓN)	358
TAPA CONTRA EL POLVO (ACEITE HIDRÁULICO)	536
TAPA CONTRA EL POLVO (ACEITE HIDRÁULICO)	540
TAPA DE ADMISIÓN DE AIRE (GR)	87
TAPA DE COJINETE DE BANCADA DE CIG ÜEÑAL	18
TAPA DE LA CAJA DE VOLANTE (GR)	14
TAPA DE LA CAJA DELANTERA (GR)	15
TAPA DEL BLOQUE MOTOR (GR)	12
TAPA DEL MECANISMO DE VÁLVULAS (GR)	16
TAPA DEL RADIADOR	80
TAPA DEL TUBO DE LLENADO	15
TAPA DEL TUBO DE LLENADO (TANQUE DE ACEITE HIDRÁULICO)	580
TAPA, TANQUE DE COMBUSTIBLE (GR) (TRABABLE)	120
TAPA (VASTAGO)	376
	377
	378
	379
	380
	381
	382
	383
	384
	385
	386
	387
	388
	389
	390
	391
	392
	393
	394
	395
	396
	397
	398
	399
	400
	401
	402
	403
	404
	405
	406
	407
	408
	409
	411
	412
TAPÓN	39
TAPÓN DE DRENAJE	48
TAPÓN MAGNÉTICO (ACEITE DE LA TRANSMISIÓN)	418
TIRANTE DE DIRECCIÓN (GR)	442
TIRANTE INFERIOR (GR)	682
TIRANTE SUPERIOR (GR)	683
*TOOL BOX GP	899
TOPE DE VÁLVULA DE CONTROL (GR)	513
	514

* NO HAY TRADUCCION DISPONIBLE EN EL MOMENTO DE LA IMPRESION

INDICE

Nombre	Página
TRABA DE CONTROL HIDRÁULICO MANUAL (GR)	557
TRABA DE DESPLAZAMIENTO DEL CIRCULO (GR)	556
TRANSMISION (CONFIG)	344
TREN DE FUERZA-GRUPO ELECTRÓNICO	150
TUBERÍAS DE ACEITE DE LA TRANSMISIÓN (GR)	334
TUBERÍAS DE ACEITE DEL MOTOR (GR)	62
	63
TUBERÍAS DE COMBUSTIBLE (GR)	104
	106
	108
TUBERÍAS DE DIRECCIÓN (GR)	552
TUBERÍAS DE DRENAJE (GR)	103
TUBERÍAS DE ENGRASE (GR)	441
TUBERÍAS DE LA CALEFACCIÓN (GR)	798
TUBERÍAS DE LA DIRECCIÓN SECUNDARIA (GR)	550
TUBERÍAS DEL ACUMULADOR (GR)	520
TUBERÍAS DEL AGUA (GR)	72
	74
TUBERÍAS DEL DESGARRADOR (GR)	548
TUBERÍAS DEL TANQUE DE AIRE (GR)	471
TUBERÍAS HIDRÁULICAS DEL VENTILADOR (GR)	536
	538
TUBERÍAS HIDRÁULICAS (GR)	522
	524
	525
	526
	530
	532
	534
TUBO DE LLENADO DE ACEITE DE LA TRANSMISIÓN (GR)	326
TURBOCOMPRESOR - TUBERÍAS DE ACEITE DEL (GR)	64
TURBOCOMPRESOR (GR)	96
	97

U

UNIÓN GIRATORIA (GR)	579

V

VALVULA-ALIVIO DE AIRE (TANQUE DE AIRE)	472
VALVULA ANTIREACCION (GR)	662
VÁLVULA COMPENSADORA DE FLUJO Y PRESIÓN (GR)	652
	654
VÁLVULA (CONJ) (ASIENTO)	872
VALVULA DE ALIVIO	296
VÁLVULA DE ALIVIO (GR)	663
	664
	665
	666
	667
	668
	669
VÁLVULA DE ALIVIO (GR)	658
	659
	660
	661
	662
VÁLVULA DE ALIVIO (GR) (PRINCIPAL)	618
VÁLVULA DE ALIVIO (GR) (SEÑAL DEL IMPLEMENTO)	618
VÁLVULA DE COMBINACIÓN (GR)	618
VÁLVULA DE CONTROL DE LA TRANSMISIÓN (GR)	358
VÁLVULA DE CONTROL (GR)	620
	622
	624
	626
	628
	630
	632
	634
	636
	638
	640
	642
	644
	646
	648
	650
VÁLVULA DE CONTROL (GR) (DESPLAZADOR LATERAL)	609
	611
	612
	613
	615
	616
VÁLVULA DE CONTROL (GR) (ESCARIFICADOR)	613
VÁLVULA DE CONTROL (GR) (HOJA DE LEVANTAMIENTO)	612
	613
VÁLVULA DE CONTROL (GR) (LEVANTAMIENTO DE LA HOJA)	609
VÁLVULA DE CONTROL (GR) (MANDO DEL CÍRCULO)	609
	611

* NO HAY TRADUCCION DISPONIBLE EN EL MOMENTO DE LA IMPRESION

INDICE

Nombre	Página
	612
	613
	615
	616
VÁLVULA DE CONTROL (GR) (PUNTA DE HOJA)	609
	611
	612
	613
	615
	616
VALVULA DE DERIVACION	58
VÁLVULA DE DRENAJE (RADIADOR)	428
VÁLVULA DE LA TRABA DEL DIFERENCIAL Y MONTAJE (GR)	346
VÁLVULA DE LANZADERA (GR)	670
VÁLVULA DE LANZADERA (GR) (RESOLVEDOR DE BOLA) (SEÑAL)	618
VÁLVULA DE LEVANTAMIENTO (GR)	41
VÁLVULA DE MUESTREO	67
VÁLVULA DE MUESTREO (GR)	67
	100
VÁLVULA DE MUESTREO (GR) (DIRECCIÓN)	552
VALVULA DE PURGA (GR)	656
	657
VÁLVULA DE SOLENOIDE (GR)	122
	355
	356
	478
	671
	672
VÁLVULA DE SOLENOIDE Y MÚLTIPLE (GR)	673
	674
VÁLVULA DEL NEUMÁTICO (GR)	408
	410
VÁLVULA SELECTORA Y DE CONTROL DE PRESIÓN (GR)	348
	352
VÁLVULA Y VARILLAJE (GR)	584
	586
	588
	590
	592
	594
	596
	600
	602
	604
	606
VENTANA (GR)	880
	881
	882
	883
	884
VENTILADOR DE CIRCULACION	750
	752
	754
	755
VIDRIO (CONJ) (DE GIRO)	156
	158
VIDRIO (CONJ) (FARO DELANTERO - LÁMPARA DE)	160
	162
VIDRIO (CONJ) (LAMPARA-LUZ BAJA)	154
VIDRIO (CONJ) (LUZ BAJA)	178
VIDRIO (CONJ) (SEÑAL)	160
VIDRIO (CONJ) (SEÑAL AMBAR)	162
VIDRIO (CONJ) (VIGA ALTA)	178
VIDRIO (CONJ) (VIGA ALTA)	155
VOLANTE - CAJA DE (GR)	39
VOLANTE (GR)	37

* NO HAY TRADUCCION DISPONIBLE EN EL MOMENTO DE LA IMPRESION

ÍNDICE

Designação	Página

A

ACESSÓRIO - CABINE	712 713
ACOPLAMENTO TORSIONAL	321
ACUMULADOR	480 481
ACUMULADOR - AMORTECEDOR DA LÂMINA	482 483
ACUMULADOR DO AMORTECEDOR DA LÂMINA	480
ACUMULADOR HIDRÁULICO E MONTAGEM	479
ADAPTADOR DO TURBOALIMENTADOR	81
ADAPTADOR-TUBO DE ÓLEO DO MOTOR	56
AJUSTADOR DO ASSENTO	714
ALARME	124
ALARME DE MARCHA À RÉ	229
ALTERNADOR DE CORRENTE	126 128 130 132
AMORTECEDOR DE VIBRAÇÕES E POLIA	36
APLICAÇÃO - MONITOR	722
AQUECEDOR DA CABINE	759 760 762 766
AQUECEDOR DA CABINE E MONTAGEM	759
ARRANJO GERAL	2
ARRANJO RODOVIÁRIO	4
ARREFECEDOR - ÓLEO DO MOTOR	68
ARREFECIMENTO	69
ARTICULAÇÃO GIRATÓRIA	579
ASSENTO	844 846 848 850
ASSENTO - FUNDO	816
ASSENTO COM SUSPENSÃO	858 859 860 861 862 863 864 865
ASSENTO ESTÁTICO	852 854 856

B

BARRA DE TRAÇÃO	680
BATERIA	134 135 136
BATERIA (LIVRE DE MANUTENÇÃO)(12 VOLT)	134 135
BATERIA (750 AMP)(12 VOLTS)	136
BLINDAGEM DO EIXO DA TRANSMISSÃO	444
BLOCO DE JUNÇÃO	137
BLOCO DO MOTOR	18 19 20
BOCAL DE ENCHIMENTO DE ÓLEO DO TREM DE FORÇA	326
BOMBA - ESCORVA DE COMBUSTÍVEL E SEPARADOR DE ÁGUA	123
BOMBA DA DIREÇÃO SECUNDÁRIA E MONTAGEM	565
BOMBA DA UNIDADE INJETORA	112 113
BOMBA DE ÁGUA	76 78
BOMBA DE COMBUSTÍVEL	110
BOMBA DE DIREÇÃO SECUNDÁRIA E MOTOR	562
BOMBA DE ENGRENAGENS	338 339
BOMBA DE ÓLEO - MOTOR	65 66
BOMBA DE PISTÃO	568 570 572
BOMBA E MONTAGEM - PISTÃO	563 564
BOMBA HIDRÁULICA - UNIDADE INJETORA	114
BOMBA HIDRÁULICA E MONTAGEM - UNIDADE INJETORA	109
BOMBA REGULADORA	566
BORDA CORTANTE	692
BOTÃO - PESO	774
BRAÇO DO ASSENTO	723 724
BRONZINA TIPO LUVA (EIXO-COMANDO DE VÁLVULAS)	19
BUJÃO - CAIXA DO VOLANTE DO MOTOR	48
BUJÃO DO DRENO	48
BUJÃO MAGNÉTICO (ÓLEO DA TRANSMISSÃO)	418
BUZINA DE AR	770 772

* TRADUÇÃO NÃO DISPONÍVEL NO MOMENTO DA IMPRESSÃO

ÍNDICE

Designação	Página

C

CABEÇOTE DO MOTOR 21, 22, 24, 26, 27, 28, 30, 32, 34
CABINE 725, 726
CABINE - PERFIL ALTO 725
CABINE OPERADOR - SEM ROPS 725
CABOS/FIOS ELÉTRICOS - AQUECEDOR 252
CABOS/FIOS ELÉTRICOS - CABINE 232, 234, 236, 238, 240
CABOS/FIOS ELÉTRICOS - CONSOLE DA DIREÇÃO 288, 292
CABOS/FIOS ELÉTRICOS - CONSOLE DA TRANSMISSÃO 282, 284
CABOS/FIOS ELÉTRICOS - DIANTEIROS 244, 248
CABOS/FIOS ELÉTRICOS - DIREÇÃO SECUNDÁRIA 280
CABOS/FIOS ELÉTRICOS - MOTOR 242
CABOS/FIOS ELÉTRICOS - TRASEIROS 254, 260, 264, 266, 270, 274
CADEADO 725, 733
CADEADO (CAIXA DE FERRAMENTAS) 899
CAIXA - SUSPENSÃO DO ASSENTO 774
CAIXA DIANTEIRA 40
CAIXA DO VOLANTE DO MOTOR 39
CAIXA E CHASSI 418
CAIXA E COMPONENTES - TRANSMISSÃO . . . 296
CANTO DE LÂMINA 685, 686, 687, 688
CÁRTER DO ÓLEO DO MOTOR 46
CARTUCHO-DESSECANTE (SECADOR A AR) 454
CHAPA DE EMPUXO 684
CHASSI DIANTEIRO 424
CHAVE 582, 800, 835
CHAVE (CAIXA DE FERRAMENTAS) 899
CHAVE (DESCONECTAR A BATERIA) 223
CHAVE GERAL 223
CHICOTE - CONSOLE 292
CHICOTE - SENSOR (14 AWG) 208
CHICOTE-CHASSI TRASEIRO 254
CHICOTE (FIO DE BITOLA 14) 217
CHICOTE (TOMADA) (FIO DE BITOLA 16-18) . . . 217
CILINDRO DA DIREÇÃO 508, 510
CILINDRO DE ARTICULAÇÃO 495
CILINDRO DE DESLIZAMENTO LONGITUDINAL 506
CILINDRO DE DESLOCAMENTO LATERAL 500
CILINDRO DE DIREÇÃO E MONTAGEM 493
CILINDRO DE INCLINAÇÃO LATERAL DAS RODAS 512
CILINDRO DE LEVANTAMENTO DA LÂMINA . . . 496
CILINDRO DE TOMBAMENTO DA LÂMINA 498
CILINDRO DO ESCARIFICADOR 504
CILINDRO E MONTAGEM - ARTICULAÇÃO 487
CILINDRO E MONTAGEM - DESLOCAMENTO DA LÂMINA 492
CILINDRO E MONTAGEM - DESLOCAMENTO DO CÍRCULO 490
CILINDRO E MONTAGEM - ESCARIFICADOR . . . 491
CILINDRO E MONTAGEM - INCLINAÇÃO DAS RODAS 494
CILINDRO E MONTAGEM - LEVANTAMENTO DA LÂMINA 488
CILINDRO E MONTAGEM - TOMBAMENTO DA LÂMINA 489
CILINDRO HIDRÁULICO 502
CILINDRO HIDRÁULICO - MACACO 900
CILINDROS E TUBOS - RÍPER 486
CINTO DE SEGURANÇA 840, 841, 842, 864
CINTO DE SEGURANÇA (RETRÁTIL) 859
CINZEIRO 784, 788
CÍRCULO 676, 678
COBERTURA DO MOTOR 420
COLETOR DE ESCAPE 94
COMANDO DA BOMBA 519
COMANDO FINAL 332
COMPRESSOR DE AR 7

* TRADUÇÃO NÃO DISPONÍVEL NO MOMENTO DA IMPRESSÃO

ÍNDICE

Designação	Página
	8
COMPRESSOR DE REFRIGERANTE	727
	728
CONDENSADOR DO REFRIGERANTE E MONTAGEM	729
CONDICIONADOR DE AR	716
	718
CONDICIONADOR DE AR E MONTAGEM	716
CONEXÃO (DESCONEXÃO RÁPIDA) (DIAGNÓSTICO)	330
CONEXÃO (DESCONEXÃO RÁPIDA)(DIAGNÓSTICO)	618
CONSOLE DO OPERADOR	730
CONTROLE - NÃO PROGRAMADO	144
CONTROLE DA DIREÇÃO SECUNDÁRIA	143
CONTROLE DA EMBREAGEM	314
CONTROLE DA TRANSMISSÃO	318
CONTROLE DA TRAVA DO DIFERENCIAL	316
CONTROLE DE DIREÇÃO	485
CONTROLE DO FREIO DE ESTACIONAMENTO	464
CONTROLE DO FREIO DE SERVIÇO	466
CONTROLE DO GOVERNADOR	98
CONTROLE DO PAINEL MONITOR (SISTEMA DE MONITORIZAÇÃO CATERPILLAR)	722
CONTROLE ELETRÔNICO - MOTOR	141
	142
CONTROLE ELETRÔNICO E MONTAGEM - MOTOR	140
CONTROLE HIDRÁULICO	484
CONTROLE HIDRÁULICO DA TRANSMISSÃO	320
CONVERSÃO PARA ESTRUTURA NÃO ROPS	733
CONVERSOR ELÉTRICO	145
	146
	147
	148
CONVERSOR ELÉTRICO (24 VOLTS A 12 VOLTS)	148
CORREIA (AR CONDICIONADO)	728
CORREIA DE COMANDO (PISCA-PISCA DE ADVERTÊNCIA)	168
CORRENTE - COMANDO	300
COTOVELO DE ADMISSÃO DE AR	88

D

Designação	Página
DECALCOMANIA - FACIAL (FACHO ALTO - BAIXO DOS FARÓIS DIANTEIROS)	292
DECALCOMANIA - FACIAL (PISCA-PISCA - PIISCA ALERTA)	292
DECALQUE	900
DECALQUE - ADVERTÊNCIA (CILINDRO DE ALTA PRESSÃO)	901
DECALQUE - ADVERTÊNCIA (CONEXÃO DE CABO)	901
DECALQUE - CONTROLE (VELOCIDADE DO VENTILADOR - TEMPERATURA)	762
DECALQUE - FUSÍVEL (DIREITO)	288
DECALQUE - FUSÍVEL (ESQUERDO)	288
	292
DECALQUE - IDENTIFICAÇÃO (NO. DE SEQÜÊNCIA E GRUPO)	718
	762
	766
DECALQUE - INSTRUÇÃO (AJUSTE DO ASSENTO)	872
DECALQUE - INSTRUÇÃO (ENCHIMENTO DO LAVADOR DE PÁRA-BRISA)	901
DECALQUE - INSTRUÇÃO (NÃO FURE OU SOLDE A ESTRUTURA ROPS)	834
	835
	836
	838
DECALQUE - INSTRUÇÃO (PARADA DO MOTOR)	255
DECALQUE - INSTRUÇÃO (PARADA DO MOTOR)	275
DECALQUE - INSTRUÇÃO (VIDRO DE SAÍDA EMERG./REMOVÍVEL)	757
	758
DECALQUE - PAINEL (INDICADOR DE AÇÃO - LADO DIREITO)	826
DECALQUE - PAINEL (INDICADOR DE AÇÃO - LADO ESQUERDO)	826
DECALQUE - PAINEL (INDICADORES DE AÇÃO DO LADO DIREITO)	822
DECALQUE - PAINEL (INDICADORES DE AÇÃO DO LADO ESQUERDO)	822
DECALQUE - PAINEL (INSTRUMENTO DO LADO DIREITO)	824
DECALQUE - PAINEL (INSTRUMENTO DO LADO ESQUERDO)	824
DECALQUE (LAVADOR DE VIDROS)	240
DECALQUE (LUZ DO TETO)	240
DECALQUE MONITOR (EMS-III)	822
DECALQUE MONITOR (SISTEMA DE MONITORIZAÇÃO CATERPILLAR)	826
DECALQUE MONITOR (SISTEMA INTELIGENTE DE MONITORIZAÇÃO DE MOTORES)	824
DECALQUE (PÁRA-SOL - CATERPILLAR)	818
	819
DECALQUE-REFLETOR (COR VERMELHA)	903
DEFLETOR DO RADIADOR	417
DEFLETOR TÉRMICO DE CALOR	445

* TRADUÇÃO NÃO DISPONÍVEL NO MOMENTO DA IMPRESSÃO

ÍNDICE

Designação	Página
DEGRAU	446
DENTE DO RÍPER	711
DIFERENCIAL	324
DIFERENCIAL E COROA	322
DIREÇÃO SECUNDÁRIA	577
DISJUNTOR AUTOMÁTICO DE CIRCUITO (15 A) (CONTROLE DO MOTOR)	261
DISJUNTOR AUTOMÁTICO DE CIRCUITO (15 A) (CONTROLE DO MOTOR)	271
DISJUNTOR AUTOMÁTICO DE CIRCUITO (15 A) (DIANTEIRA - LÂMPADAS NA POSIÇÃO DIREITA)	271
DISJUNTOR AUTOMÁTICO DE CIRCUITO (15 A) (FARÓIS)	138 139
DISJUNTOR AUTOMÁTICO DE CIRCUITO (15 A) (LÂMPADAS DE TRABALHO - BARRA)	138
DISJUNTOR AUTOMÁTICO DE CIRCUITO (15 A) (VIRADA - PISCA ALERTA - POSIÇÃO ESQUERDA - PAINEL)	271
DISJUNTOR AUTOMÁTICO DE CIRCUITO (80 A) (ALTERNADOR)	260
DISJUNTOR AUTOMÁTICO DE CIRCUITO (80 A) (ALTERNADOR)	270
DISJUNTOR AUTOMÁTICO DE CIRCUITO (80 A) (PRINCIPAL)	260
DISJUNTOR AUTOMÁTICO DE CIRCUITO (80 A) (PRINCIPAL)	270
DUCTO	747
DUCTO E CONTROLE	746

E

Designação	Página
EIXO-COMANDO DE VÁLVULA	10
EIXO DE ENTRADA	342
EIXO DE TRANSMISSÃO	341
EIXO DIANTEIRO	414
ELEMENTO - PRIMÁRIO	86
ELEMENTO - SECUNDÁRIO	86
ELEMENTO-AQUECEDOR (SECADOR DE AR)(24 VOLTS)	454
ELEMENTO FILTRANTE - ÓLEO	330
ELEMENTO FILTRANTE - ÓLEO (HIDRÁULICO) (FLUXO INVERSO)	580
ELIMINAÇÃO DE VAPORES DO CÁRTER	60
ELO - DIREÇÃO	442
ELO - INFERIOR	682
ELO - SUPERIOR	683
EMBREAGEM DA TRANSMISSÃO	302 306 310 312
EMISSOR - POSIÇÃO	206 207
EMISSOR - POSIÇÃO (ÂNGULO DE ARTICULAÇÃO)	254
EMISSOR - POSIÇÃO (PARADA DO MOTOR)	274
ENGATE - ARTICULAÇÃO	438
ENGATE DO REBOQUE	440
ENGRENAGENS DE DISTRIBUIÇÃO	38
ESCARIFICADOR	702 704 708
ESPELHO RETROVISOR	802 803 804 806 807
ESTRUTURA ROPS ABERTA	835
ESTRUTURA ROPS FECHADA	834 835
EXTENSÃO - ENCOSTO	748 749 859
EXTENSÃO DA LÂMINA	693 694

F

Designação	Página
FAROL DIANTEIRO	154 155 156 158
FAROL DIANTEIRO (24 V) (FAROL BAIXO)	178
FAROL DIANTEIRO (24 V) (FAROL BAIXO)	182 186
FAROL DIANTEIRO (24 V) (LUZ ALTA)	155 178
FAROL DIANTEIRO (24 VOLTS)(65 WATTS) (FAROL BAIXO)	154
FIAÇÃO - AMORTECEDOR DA LÂMINA	230
FIAÇÃO - LUZES TRASEIRAS	275
FILTRO - ÁGUA	78
FILTRO - AR (AR DA CABINE)	756
FILTRO - AR DA CABINE	756
FILTRO - COMBUSTÍVEL	100
FILTRO - MAGNÉTICO	340
FILTRO - MAGNÉTICO (ÓLEO DA TRANSMISSÃO)	296
FILTRO - MAGNÉTICO (TRANSMISSÃO)	340
FILTRO - ÓLEO	330
FILTRO - ÓLEO DO MOTOR	58
FILTRO - SEPARADOR DE ÁGUA E COMBUSTÍVEL	102
FILTRO (AR DA CABINE)	756

* TRADUÇÃO NÃO DISPONÍVEL NO MOMENTO DA IMPRESSÃO

ÍNDICE

Designação	Página
FILTRO DE COMBUSTÍVEL E SEPARADOR DE ÁGUA	102 123
FILTRO DO ÓLEO E MONTAGEM	328
FIXADORES - PRISIONEIRO TERRA	151
FREIO DE ESTACIONAMENTO	460
FREIO DE SERVIÇO	462
FUNDO - ENCOSTO	815
FUSÍVEL (10 A)	146
FUSÍVEL (10 A) (ALARME DE MARCHA À RÉ AUXILIAR)	174
FUSÍVEL (10 A) (CONVERSOR DE ENERGIA)	148
FUSÍVEL (10 A) (DESCONGELADOR DIANTEIRO)	754
FUSÍVEL (10 A) (DESCONGELADOR TRASEIRO)	755
FUSÍVEL (10 A) (DIREÇÃO SECUNDÁRIA)	280
FUSÍVEL (10 A) (ESPELHO AQUECIDO DO LADO EXTERNO)	804
FUSÍVEL (10 A) (FARÓIS DA LÂMINA)	181
FUSÍVEL (10 A) (FAROL DA LÂMINA - DIANTEIRO)	180
FUSÍVEL (10 A) (LÂMPADA DA ARMAÇÃO DA LÂMPADA)	238
FUSÍVEL (10 A) (LIMPADOR)	892 894
FUSÍVEL (10 A) (LUZ DE TETO)	240
FUSÍVEL (10 A) (PISCA-PISCA DE ADVERTÊNCIA)	198 200
FUSÍVEL (10 A) (SECADOR A AR)	450
FUSÍVEL (10 A) (SETA DE DIREÇÃO - PISCA)	188
FUSÍVEL (10 A) (SETA DE DIREÇÃO - PISCA-PISCA)	182
FUSÍVEL (10 A) (SETA DE DIREÇÃO - PISCA-PISCA)	186
FUSÍVEL (10 A) (SETAS DE DIREÇÃO)	224
FUSÍVEL (15 A) (AQUECEDOR)	759
FUSÍVEL (15 A) (AR CONDICIONADO)	716
FUSÍVEL (15 A) (LIMPADOR - LAVADORES DE VIDROS)	234
FUSÍVEL (15 A) (LIMPADORES DIANTEIROS SUPERIOR E INFERIOR)	232
FUSÍVEL (15 A) (TRANSMISSÃO)	288 292
FUSÍVEL (30 A) (CONVERSOR - FORÇA)	147

G

Designação	Página
GR. DE CONVERSÃO - CERTIFICADO	1 2
GRAXEIRA (BARRA DE TRAÇÃO)	680
GRAXEIRA (ENGATE DA ARTICULAÇÃO)	441
GRAXEIRA (ESCARIFICADOR)	704
GRAXEIRA (INCLINAÇÃO DA RODA)	494
GRAXEIRA (MUNHÃO)	708
GRAXEIRA (ROSCA 1/8-27 POL) (CILINDRO DA DIREÇÃO)	414
GRAXEIRA (ROSCA 1/8-27 POL) (CILINDRO DA INCLINAÇÃO DA RODA)	414
GRAXEIRA (SOQUETE DO BRAÇO DE LEVAMENTO DE ESCARIFICADOR)	704 708
GRUPO DE VÁLVULAS DE CONTROLE - CINCO	612 613 614 615 616 617
GRUPO DE VÁLVULAS DE CONTROLE - QUÁDRUPLO	608 609 610 611
GRUPO ROTATIVO DA BOMBA	574 575 576

I

Designação	Página
ILUMINAÇÃO - FAROL E SINALIZAÇÃO	170
ILUMINAÇÃO - MARCHA A RÉ	172 174
ILUMINAÇÃO - RODOVIÁRIA	196
ILUMINAÇÃO - SINALIZAÇÃO	197
INDICADOR - LIMPEZA DO FILTRO DE AR	83
INDICADOR - NÍVEL DO ÓLEO (VARETA)	61
INDICADOR - PRESSÃO DO AR (TANQUE DO LADO DIREITO)	824
INDICADOR - PRESSÃO DO AR (TANQUE DO LADO ESQUERDO)	824
INDICADOR - PRESSÃO DO AR (TANQUE DO LADO ESQUERDO E DO LADO DIREITO)	826
INDICADOR - PRESSÃO DO AR (TANQUES DO LADO ESQUERDO E DIREITO)	822
INSTALAÇÃO DO RÁDIO	778
INSTALAÇÃO DO RÁDIO - ARRANJO	777
INTERRUPTOR - BALANCIM (BARRA DE LUZ BAIXA)	186
INTERRUPTOR - BALANCIM (DIREÇÃO SECUNDÁRIA)	280 285
INTERRUPTOR - BALANCIM (FARÓIS DA LÂMINA)	181

* TRADUÇÃO NÃO DISPONÍVEL NO MOMENTO DA IMPRESSÃO

ÍNDICE

Designação	Página
INTERRUPTOR - BALANCIM (LÂMINA)(LÂMPADA DIANTEIRA)	180
INTERRUPTOR - BALANCIM (LUZ DIANTEIRA / TRASEIRA)	188 224
INTERRUPTOR - BALANCIM (LUZ DIANTEIRA / TRASEIRA)	182 186
INTERRUPTOR - BALANCIM (LUZ TRASEIRA)	292
INTERRUPTOR - BALANCIM (PARADA DO MOTOR)	254 274
INTERRUPTOR - BALANCIM (REGULAR - CONTINUAR RETENÇÃO DO ACELERADOR)	284
INTERRUPTOR - BOTÃO (MODO DO OPERADOR)	822 826
INTERRUPTOR - BOTÃO (SELETOR DE INFORMAÇÕES DA MÁQUINA)	824
INTERRUPTOR - CIRCUITO	138 139
INTERRUPTOR - ESFERA (INDICADOR DE DESLOCAMENTO LATERAL)	244 248
INTERRUPTOR - LIMITADOR (FREIO E PEDAIS)	288
INTERRUPTOR - LIMITADOR (PEDAL - MOVIMENTO GRADUAL)	292
INTERRUPTOR - LIMITADOR (PEDAL DO FREIO)	293
INTERRUPTOR - LIMPADOR DO PÁRA-BRISA	228 896
INTERRUPTOR - LIMPADOR DO PÁRA-BRISA (INTERMITENTE)	234
INTERRUPTOR - LIMPADOR (TRASEIRO)	892
INTERRUPTOR - LIMPADOR (TRASEIRO)	894
INTERRUPTOR - LUZES	224
INTERRUPTOR - MAGNÉTICO	226 227
INTERRUPTOR - MAGNÉTICO (DIREÇÃO SECUNDÁRIA)	280
INTERRUPTOR - MAGNÉTICO (PARADA DO MOTOR)	274
INTERRUPTOR - MAGNÉTICO (24 V) (AQUECEDOR DE ADMISSÃO DE AR)	252
INTERRUPTOR - MAGNÉTICO (24 V) (PARTIDA)	270
INTERRUPTOR - MAGNÉTICO (24 V) (RELÉ DE ARRANQUE)	260
INTERRUPTOR - PARTIDA (CHAVE)	282
	284
INTERRUPTOR - PRESSÃO (AR CONDICIONADO)	90
INTERRUPTOR - PRESSÃO (DIREÇÃO PRIMÁRIA)	248
INTERRUPTOR - PRESSÃO (DIREÇÃO SECUNDÁRIA)	280
INTERRUPTOR - PRESSÃO (LUZ DO FREIO)	248
INTERRUPTOR - PRESSÃO (LUZ DO FREIO)	244
INTERRUPTOR - ROTATIVO (AR CONDICIONADO - AQUECEDOR)	762 766
INTERRUPTOR - ROTATIVO (LÂMPADAS - FAROL ALTO E BAIXO)	292
INTERRUPTOR - ROTATIVO (LIMPADOR / LAVADOR)	240
INTERRUPTOR - ROTATIVO (LIMPADORES DIANTEIROS SUPERIOR E INFERIOR)	232
INTERRUPTOR - ROTATIVO (LUZ ALTA/BAIXA)	182 186 188
INTERRUPTOR - ROTATIVO (SETA DE DIREÇÃO)	224
INTERRUPTOR - ROTATIVO (VELOCIDADE DO VENTILADOR)	718
INTERRUPTOR - SINALIZAÇÃO DE DIREÇÃO / LUZ DE ALERTA	182 186 224 292
INTERRUPTOR - SINALIZAÇÃO DE DIREÇÃO / LUZ DE ALERTA	188
INTERRUPTOR - TERMOSTATO	718
INTERRUPTOR (ALARME DE MARCHA À RÉ AUXILIAR)	174
INTERRUPTOR (AMORTECEDOR DA LÂMINA)	230
INTERRUPTOR (ARMAÇÃO DA LÂMINA)	238
INTERRUPTOR (ARMAÇÃO DA LÂMINA)	236
INTERRUPTOR (BARRA DE LUZ BAIXA)	188
INTERRUPTOR DE DERIVAÇÃO	222
INTERRUPTOR (ESPELHO AQUECIDO)	804
INTERRUPTOR (LIGA/DESLIGA) (DESCONGELADOR DIANTEIRO)	754
INTERRUPTOR (LIGA/DESLIGA) (DESCONGELADOR TRASEIRO)	755
INTERRUPTOR (LUZ TRASEIRA)	288
INTERRUPTOR (MARCHA A RÉ AUXILIAR)	172
INTERRUPTOR (MODO DE RETENÇÃO DO ACLERADOR)	282
INTERRUPTOR (REDUTOR DE LUMINOSIDADE DO PAINEL)	288

* TRADUÇÃO NÃO DISPONÍVEL NO MOMENTO DA IMPRESSÃO

ÍNDICE

Designação	Página
	292
INTERRUPTOR (SACA-PINO DE DESLOCAMENTO LATERAL)	282
	285
INTERRUPTOR (TRAVA DO DIFERENCIAL)	288
	292
ISOLADOR - TEMPO	780

J

JOGO DE ABRAÇADEIRA DO PURIFICADOR DE AR	86
JOGO DE AJUSTADOR	816
JOGO DE ALAVANCA	220
JOGO DE ALMOFADA	748
	749
JOGO DE ALMOFADA DO ASSENTO	848
JOGO DE ALMOFADA DO ASSENTO (VINIL)	850
JOGO DE BLOCO DESLIZADOR	863
JOGO DE BLOCO DESLIZADOR (INCLUI BLOCOS E PARARUSOS)	859
JOGO DE BLOCO DESLIZADOR (INCLUI 4 BLOCOS)	860
JOGO DE CALÇO (INCLUI 17 CALÇOS)	572
JOGO DE CALÇOS (INCLUI 17 CALÇOS)	568
JOGO DE CÁRTER DE INCLINAÇÃO	848
	850
JOGO DE COIFA DE SUSPENSÃO	870
JOGO DE CONTROLE DE PISTÃO	572
JOGO DE CORDÃO (ASSENTO)	872
JOGO DE DIAFRAGMA	770
JOGO DE ESCOVA (MOTOR DE PARTIDA)	220
JOGO DE FIXADOR DE CORREIA	870
JOGO DE FIXADORES	132
JOGO DE FIXADORES (ALTERNADOR)	126
JOGO DE FIXADORES (ASSENTO)	872
JOGO DE INDICADOR (AJUSTAGEM DO PESO)	775
JOGO DE INDICADOR (ASSENTO)	872
JOGO DE ISOLADOR (MOTOR DE PARTIDA)	220
JOGO DE LÂMINA DO LIMPADOR DE PÁRA-BRISA (TRASEIRO)	892
JOGO DE MANCAL	775
JOGO DE MANCAL (ALTERNADOR)	126
JOGO DE MARTELO	757
	758
JOGO DE MOLA	775
JOGO DE MOLA (AJUSTE DE ALTURA)	775
JOGO DE PÁRA-CHOQUE (AJUSTAGEM DO PESO)	775
JOGO DE PARAFUSO DE RETENÇÃO	144
	150
JOGO DE PISTÃO	568
	572
JOGO DE PISTÃO DE CONTROLE	568
JOGO DE RECEPTÁCULO (12 PINOS)	143
	182
	186
	188
	282
JOGO DE RECEPTÁCULO (12 PINOS)	172
	174
	232
	234
	238
	240
	242
	244
	249
	254
	260
	266
	270
	275
	282
	284
	288
	292
	434
	436
	804
	822
	824
	826
JOGO DE RECEPTÁCULO (12 PINOS) (ALARME DE MARCHA À RÉ - LIMPADOR - LAVADOR - PISCA-PISCA)	236
JOGO DE RECEPTÁCULO (12 PINOS) (CHASSI PRINCIPAL E PISCAS-PISCAS ALTO E BAIXO)	249
JOGO DE RECEPTÁCULO (12 PINOS) (CONTROLE DA TRANSMISSÃO)	320
JOGO DE RECEPTÁCULO (12 PINOS) (LÂMPADAS DE TRABALHO - BARRA)	186
JOGO DE RECEPTÁCULO (12 PINOS) (PISCA-PISCA ALTO - BAIXO DO CHASSI PRINCIPAL)	248
JOGO DE RECEPTÁCULO (2 PINOS)	100
	110
	124
	172
	174
	192
	194
	215
	222

* TRADUÇÃO NÃO DISPONÍVEL NO MOMENTO DA IMPRESSÃO

ÍNDICE

Designação	Página
	230
	232
	234
	236
	238
	242
	244
	248
	249
	254
	255
	260
	266
	270
	274
	275
	280
	292
	355
	356
	671
	672
	718
	727
	750
	752
	762
	766
	772
	804
	824
	826
JOGO DE RECEPTÁCULO (2 PINOS)	164
JOGO DE RECEPTÁCULO (2 PINOS)	90
	168
JOGO DE RECEPTÁCULO (2 PINOS)	288
JOGO DE RECEPTÁCULO (2 PINOS) (ALARME DE MARCHA À RÉ)	229
JOGO DE RECEPTÁCULO (2 PINOS) (ALARME DE MARCHA À RÉ/SECADOR DE AR)	270
JOGO DE RECEPTÁCULO (2 PINOS) (CONVERSOR DE IGNIÇÃO - RAIO)	147
JOGO DE RECEPTÁCULO (2 PINOS) (FREIO A AR)	244
	245
JOGO DE RECEPTÁCULO (2 PINOS) (INTERRUPTOR DE MODO DE OPERADOR)	822
	826
JOGO DE RECEPTÁCULO (2 PINOS) (INTERRUPTOR DE TEMP. DE ÓLEO HIDRÁULICO)	244
JOGO DE RECEPTÁCULO (2 PINOS) (INTERRUPTOR DO AR CONDICIONADO E DO TERMOSTATO)	90
JOGO DE RECEPTÁCULO (2 PINOS) (LÂMPADA DA PLACA DE REGISTRO)	165
JOGO DE RECEPTÁCULO (2 PINOS) (LUZ DO FREIO)	244
JOGO DE RECEPTÁCULO (2 PINOS) (TOMADA DE FORÇA DE 12 VOLTS)	712
	713
JOGO DE RECEPTÁCULO (2 PINOS) (VÁLVULA SOLENÓIDE)	478
JOGO DE RECEPTÁCULO (3 PINOS)	152
	167
	194
	204
	206
	207
	210
	230
	232
	242
	244
	248
	249
	254
	264
	274
	275
	280
	288
	292
JOGO DE RECEPTÁCULO (3 PINOS) (LÂMPADA PARAR - TRASEIRA)	166
JOGO DE RECEPTÁCULO (3 PINOS) (PARADA DO MOTOR)	254
JOGO DE RECEPTÁCULO (3 PINOS) (VIRAR/ESTACIONAR)	178
JOGO DE RECEPTÁCULO (4 PINOS)	172
	174
	232
	234
	238
	248
	260
	267
	270
	282
	284
	288
	292
	804

* TRADUÇÃO NÃO DISPONÍVEL NO MOMENTO DA IMPRESSÃO

ÍNDICE

Designação	Página
JOGO DE RECEPTÁCULO (4 PINOS) (CHAVE INTERRUPTORA)	282
JOGO DE RECEPTÁCULO (4 PINOS) (INDICADOR DE DESLOCAMENTO LATERAL)	244
JOGO DE RECEPTÁCULO (4 PINOS) (INTERRUPTOR DA PISCA ALERTA)	200
JOGO DE RECEPTÁCULO (4 PINOS) (LÂMPADAS DA ARMAÇÃO DA LÂMINA - ESPELHOS AQUECIDOS)	236
JOGO DE RECEPTÁCULO (6 PINOS)	156
	158
	232
	234
	244
	249
	255
	260
	264
	270
	275
	282
	284
	434
	436
	763
	809
	822
	824
	826
	886
JOGO DE RECEPTÁCULO (6 PINOS)	160
	162
JOGO DE RECEPTÁCULO (6 PINOS) (MÓDULO DE QUATRO MEDIDORES)	808
JOGO DE RECEPTÁCULO (6 PINOS) (MOTOR DO LIMPADOR DE VIDROS)	888
	890
JOGO DE RECEPTÁCULO (6 PINOS) (SECADOR - TERMOSTATO - TERMOSTATO LT - DISJUNTOR DO AR CONDICIONADO)	719
JOGO DE RECEPTÁCULO (6 PINOS) (TRANSMISSÃO DISJUNTOR DO AR CONDICIONALDO - SECADOR - TERMOSTATO - LIT)	767
JOGO DE RECEPTÁCULO (6 PINOS) (VELOCÍMETRO E TACÔMETRO)	810
JOGO DE RECEPTÁCULO (8 PINOS)	172
	174
	228
	232
	234
	236
	238
	240
	804
	822
	824
	826
JOGO DE RECEPTÁCULO (8 PINOS) (INTERRUPTOR DO LIMPADOR TRASEIRO)	892
	894
JOGO DE RECEPTÁCULO (8 PINOS) (INTERRUPTORES DO LIMPADOR DIANTEIRO)	232
JOGO DE RETENTOR	122
	355
	356
	480
	481
	498
	504
	506
	671
	672
	674
JOGO DE RETENTOR (ACUMULADOR DA LÂMINA AMORTECEDORA)	482
JOGO DE RETENTOR (BOMBA REGULADORA DE DIREÇÃO)	566
JOGO DE REVISÃO - GOVERNADOR (TANQUE DE AR)	472
JOGO DE ROLETE DE SUSPENSÃO	870
JOGO DE ROLO (ASSENTO)	872
JOGO DE SEGUIDOR	774
	775
JOGO DE TERMINAL ALTERNADOR	132
JOGO DE TERMINAL (ALTERNADOR)	126
JOGO DE TOMADA DE CONEXÃO	216
JOGO DE TOMADA DE CONEXÃO (12 PINOS)	172
	174
	186
	188
	232
	234
	238
	242
	244
	248
	254
	255
	282
	284
	288

* TRADUÇÃO NÃO DISPONÍVEL NO MOMENTO DA IMPRESSÃO

ÍNDICE

Designação	Página
	292
	434
	436
	804
	822
	824
	826
JOGO DE TOMADA DE CONEXÃO (12 PINOS)	232
	234
	275
	282
	284
JOGO DE TOMADA DE CONEXÃO (12 PINOS) (CONTROLE DA TRANSMISSÃO)	296
JOGO DE TOMADA DE CONEXÃO (12 PINOS) (LIMPADORES - DESEMBAÇADOR - LÂMPADAS DO PAINEL - REMOVEDOR DE NEVE)	236
JOGO DE TOMADA DE CONEXÃO (12 PINOS) (PISCA-PISCA ALTO - BAIXO DO CHASSI PRINCIPAL)	248
JOGO DE TOMADA DE CONEXÃO (2 PINOS)	90
	110
	172
	182
	188
	192
	217
	230
	232
	234
	242
	244
	248
	254
	255
	260
	264
	266
	270
	275
	284
	292
	443
	824
JOGO DE TOMADA DE CONEXÃO (2 PINOS) (ALARME DE AÇÃO)	282
JOGO DE TOMADA DE CONEXÃO (2 PINOS) (EMBREAGENS 1 - 8)	320
JOGO DE TOMADA DE CONEXÃO (2 PINOS) (FAROL DIANTEIRO)	182
JOGO DE TOMADA DE CONEXÃO (2 PINOS) (FAROL LATERAL)	174
JOGO DE TOMADA DE CONEXÃO (2 PINOS) (INTERRUPTOR DE FILTRO DE DERIVAÇÃO DE TRANSMISSÃO)	270
JOGO DE TOMADA DE CONEXÃO (2 PINOS) (INTERRUPTOR DE MODO DE OPERADOR)	826
JOGO DE TOMADA DE CONEXÃO (2 PINOS) (INTERRUPTOR DE RELÉ DE FORÇA PRINCIPAL)	227
JOGO DE TOMADA DE CONEXÃO (2 PINOS) (INTERRUPTOR DO AR CONDICIONADO E DO TERMOSTATO)	90
JOGO DE TOMADA DE CONEXÃO (2 PINOS) (INTERRUPTOR DO MODO DO OPERADOR E RETORNO)	822
JOGO DE TOMADA DE CONEXÃO (2 PINOS) (INTERRUPTOR PISCA ALERTA)	200
JOGO DE TOMADA DE CONEXÃO (2 PINOS) (LADO DO FAROL)	238
JOGO DE TOMADA DE CONEXÃO (2 PINOS) (LÂMPADA DO PAINEL - BUZINA)	288
JOGO DE TOMADA DE CONEXÃO (2 PINOS) (LÂMPADA DO REMOVEDOR DE NEVE)	236
JOGO DE TOMADA DE CONEXÃO (2 PINOS) (LÂMPADAS DE TRABALHO - BARRA)	186
JOGO DE TOMADA DE CONEXÃO (2 PINOS) (LATERAL DO FAROL E CONTROLE AUXILIAR)	804
JOGO DE TOMADA DE CONEXÃO (2 PINOS) (MOTOR)	719
	762
	766
JOGO DE TOMADA DE CONEXÃO (2 PINOS) (SENSOR DE VELOCIDADE DA TRANSMISSÃO)	296
JOGO DE TOMADA DE CONEXÃO (3 PINOS)	208
	211
	212
	232
	240
	242
	244
	248
	264
	275
	288
	292
JOGO DE TOMADA DE CONEXÃO (3 PINOS)	209
JOGO DE TOMADA DE CONEXÃO (3 PINOS) (CHASSI PRINCIPAL)	234

* TRADUÇÃO NÃO DISPONÍVEL NO MOMENTO DA IMPRESSÃO

ÍNDICE

Designação	Página
JOGO DE TOMADA DE CONEXÃO (3 PINOS) (SETA DE DIREÇÃO)	182
JOGO DE TOMADA DE CONEXÃO (4 PINOS)	172 174 234 238 244 260 270 275 284 288 292 824
JOGO DE TOMADA DE CONEXÃO (4 PINOS) (INDICADOR DE LÂMPADA)	248
JOGO DE TOMADA DE CONEXÃO (4 PINOS) (LÂMPADA DE MARCHA À RÉ AUXILIAR)	236
JOGO DE TOMADA DE CONEXÃO (4 PINOS) (PISCA DE ROPS ABERTA - CHAVE INTERRUPTORA)	282
JOGO DE TOMADA DE CONEXÃO (6 PINOS)	232 234 240 244 249 260 270 282 284 292 822
JOGO DE TOMADA DE CONEXÃO (6 PINOS) (CHASSI PRINCIPAL E PISCAS-PISCAS ALTO E BAIXO)	249
JOGO DE TOMADA DE CONEXÃO (6 PINOS) (DE 4 INDICADORES/VELOCÍMETRO)	826
JOGO DE TOMADA DE CONEXÃO (6 PINOS) (LIMPADOR TRASEIRO)	234
JOGO DE TOMADA DE CONEXÃO (8 PINOS)	172 174 232 234 238 240 244 248 804 826
JOGO DE TOMADA DE CONEXÃO (8 PINOS) (LIMPADORES - LAVADOR - LÂMPADA DO PISCA-PISCA - DESEMBAÇADOR)	236
JOGO-VEDADOR TIPO CARTUCHO (TRAVA DO DIFERENCIAL)	346
JUNTA UNIVERSAL	345

L

Designação	Página
LÂMINA	689 690
LÂMINA DO LIMPADOR DE PÁRA-BRISA	897 898
LÂMINA DO LIMPADOR DE PÁRA-BRISA (DIANTEIRO)	890
LÂMINA DO LIMPADOR DE PÁRA-BRISA (PERFIL ALTO - TRASEIRO)	894
LÂMINA DO LIMPADOR DE PÁRA-BRISA (PERFIL BAIXO - INFERIOR DIANTEIRO)	888
LÂMINA DO LIMPADOR DE PÁRA-BRISA (PERFIL BAIXO - TRASEIRO)	892
LÂMPADA - FAROL	153
LÂMPADA - LADO DIREITO (VIRADA)	266
LÂMPADA - LADO ESQUERDO (VIRADA)	266
LÀMPADA - MARCADORA	164
LÂMPADA - SINALIZAÇÃO	166 167
LÂMPADA - SINALIZAÇÃO (24 V) (PARADA/TRASEIRA)	264
LÂMPADA - TETO	152
LÂMPADA DIANTEIRA E DE SINAL	160 162
LÂMPADA (PISCA-PISCA DE ADVERTÊNCIA)	168
LAMPADA-PLACA DE REGISTRO	165
LÂMPADA (PLACA DE REGISTRO)	165
LÂMPADA (24 V)	160
LÂMPADA (24 V)	160
LÂMPADA (24 V) (AJUSTE DE VELOCIDADE DO ACELERADOR)	282
LÂMPADA (24 V) (ALARME DE MARCHA À RÉ AUXILIAR)	174
LÂMPADA (24 V) (ARMAÇÃO DA LÂMINA)	238
LÂMPADA (24 V) (BARRA DE LUZ BAIXA)	186 189
LÂMPADA (24 V) (CABEÇA)	162
LÂMPADA (24 V) (CONSOLE DO EIXO)	284
LÂMPADA (24 V) (DESCONGELADOR DIANTEIRO)	754
LÂMPADA (24 V) (DESCONGELADOR TRASEIRO)	755
LÂMPADA (24 V) (DIREÇÃO SECUNDÁRIA)	285
LÂMPADA (24 V) (FAROL DIANTEIRO - FAROL TRASEIRO - INDICADOR)	224
LÂMPADA (24 V) (GRUPO DE QUATRO MEDIDORES)	824

* TRADUÇÃO NÃO DISPONÍVEL NO MOMENTO DA IMPRESSÃO

ÍNDICE

Designação	Página
LÂMPADA (24 V) (INDICADOR)	822, 826
LÂMPADA (24 V) (INDICADOR DA AÇÃO PRINCIPAL DO EMS)	822, 824, 826
LÂMPADA (24 V) (INDICADOR DA ARMAÇÃO DA LÂMINA)	236
LÂMPADA (24 V) (INDICADOR DA DIREÇÃO SECUNDÁRIA)	280
LÂMPADA (24 V) (INDICADOR DA LUMINOSIDADE DA LÂMPADA DO PAINEL)	288
LÂMPADA (24 V) (INDICADOR DA TRAVA DO DIFERENCIAL)	288
LÂMPADA (24 V) (INDICADOR DE AÇÃO)	826
LÂMPADA (24 V) (INDICADOR DE ESPELHO AQUECIDO)	804
LÂMPADA (24 V) (INDICADOR DE FAROL DIANTEIRO/TRASEIRO)	182, 186, 188
LÂMPADA (24 V) (INDICADOR DE FAROL TRASEIRO)	288
LÂMPADA (24 V) (INDICADOR DO INTERRUPTOR DA LÂMPADA TRASEIRA)	292
LÂMPADA (24 V) (INDICADOR DO INTERRUPTOR DE REDUTOR DE LUMINOSIDADE DO PAINEL)	292
LÂMPADA (24 V) (INDICADOR DO INTERRUPTOR DE TRAVA DO DIFERENCIAL)	292
LÂMPADA (24 V) (INDICADOR DO PINO DE DESLOCAMENTO LATERAL)	282
LÂMPADA (24 V) (INTERRUPTOR DO AMORTECEDOR DA LÂMINA)	230
LÂMPADA (24 V) (LÂMINA)(LÂMPADA DIANTEIRA)	180
LÂMPADA (24 V) (LÂMPADA DE MARCHA À RÉ AUXILIAR)	172
LÂMPADA (24 V) (LUZ ALTA/BAIXA)	158
LÂMPADA (24 V) (LUZ ALTA/BAIXA)	156
LÂMPADA (24 V) (MEDIDOR DO TANQUE DE AR DO LADO DIREITO)	824
LÂMPADA (24 V) (MEDIDOR DO TANQUE DE AR DO LADO ESQUERDO)	824
LÂMPADA (24 V) (MODO DE RETENÇÃO DO ACLERADOR)	282
LÂMPADA (24 V) (PAINEL DE CONTROLE DO AQUECEDOR E AR CONDICIONADO)	762
LÂMPADA (24 V) (PAINEL DE INSTRUMENTOS)	822, 824
LÂMPADA (24 V) (PISCA-PISCA DE ADVERTÊNCIA)	198, 200
LÂMPADA (24 V) (POSIÇÃO)	156, 158
LÂMPADA (24 V) (POSIÇÃO DA CABINE)	164
LÂMPADA (24 V) (RETENÇÃO DO ACELERADOR AUTOMÁTICA - MANUSL)	284
LÂMPADA (24 V) (SACA-PINO DE DESLOCAMENTO LATERAL)	282, 285
LÂMPADA (24 V) (SINAL)	162
LÂMPADA (24 V) (TEMPERATURA/VELOCIDADE DO VENTILADOR)	766
LÂMPADA (24 V) (TETO)	152
LÂMPADA (24 V) (VELOCIDADE DO VENTILADOR - CONTROLE DA TEMPERATURA)	718
LÂMPADA (24 V) (VELOCÍMETRO E TACÔMETRO)	810
LÂMPADA (24 V) (VIRADA)	156, 158
LÂMPADA (24 VOLTS)(21 WATTS) (FREIO)	266
LÂMPADA (24 VOLTS/21 WATTS) (SINAL)	160
LÂMPADA (24 VOLTS/21 WATTS) (SINAL)	162
LÂMPADA (24 VOLTS/21 WATTS) (VIRADA)	156, 158
LÂMPADA (24 VOLTS)(5 WATTS) (TRASEIRA)	266
LÂMPADA (24 VOLTS)(5 WATTS) (TRASEIRA)	266
LÂMPADA (24 VOLTS)(65 WATTS) (FAROL)	153
LAVADOR DO VIDRO	874, 876, 878
LENTE - FAROL	153
LENTE ÂMBAR (PISCA-PISCA DE ADVERTÊNCIA)	168
LENTE (ÂMBAR)(SINAL)	162
LENTE (ÂMBER) (SINAL)	160, 162
LENTE (ÂMBER) (VIRADA)	156, 158
LENTE (FAROL BAIXO)	178
LENTE (FAROL DIANTEIRO)	160, 162
LENTE (FAROL) (FAIXA BAIXA)	154
LENTE (LÂMPADA DO TETO)	152
LENTE (LUZ ALTA)	155, 178
LENTE (PLACA DE REGISTRO)	165
LENTE (SINAL)	160
LENTE (VIRADA)	156, 158
LEVANTAMENTO DA LÂMINA	696

* TRADUÇÃO NÃO DISPONÍVEL NO MOMENTO DA IMPRESSÃO

ÍNDICE

Designação	Página
LEVANTAMENTO DO MOTOR	42
LIMPADOR DO VIDRO	885 886 888 890 892 894 896 897 898
LUZ GIRATÓRIA DE ALARME	168
LUZ INTERMITENTE (24 V)	292

M

MARTELO E MONTAGEM	757 758
MECANISMO DAS VÁLVULAS	53 54
MÓDULO - VELOCÍMETRO E TACÔMETRO	809 810
MÓDULO ELETRÔNICO DE QUATRO INDICADORES	808
MOLA	640
MONITOR - SOFTWARE	149
MONTAGEM - CABINE	811
MONTAGEM - ESTRUTURA ROPS	812 814
MONTAGEM - MOTOR E TRANSMISSÃO	44
MONTAGEM - RIPER	698
MONTAGEM - RODA	337
MONTAGEM DA PLACA DE REGISTRO	443
MOTOR - ENGRENAGENS	558
MOTOR - NÚCLEO	6
MOTOR COMPLETO	5
MOTOR DE REVERSÃO DO CÍRCULO	516
MOTOR E VENTILADOR	70
MOTOR ELÉTRICO	202
MOTOR ELÉTRICO DE PARTIDA	218 220
MOTOR ELÉTRICO (27 VOLT)	718 762 766
MOTOR HIDRÁULICO DO GEROTOR	560

P

PAINEL - CABINE	818 819 820
PAINEL - JANELA	830 832
PAINEL DE INSTRUMENTOS	822 824 826
PERSIANA	801
PISCA-PISCA ELETRÔNICO (12-24 VOLTS) (SETA DE DIREÇÃO - PISCA)	186
PISCA-PISCA ELETRÔNICO (12-24 VOLTS) (SETA DE DIREÇÃO - PISCA)	188
PISCA-PISCA ELETRÔNICO (12-24 VOLTS) (SETA DE DIREÇÃO - PISCA-PISCA)	182
PISTÃO E BIELA	47
PLACA - NÚMERO DE SÉRIE (MOTOR)	902
PLACA BASCULANTE	578
PLACA DE ADVERTÊNCIA (SEM ESPAÇO LIVRE)	419 902
PLACA DE INSTRUÇÃO (BATERIA)	260 270
PLACA E DECALQUE	900 901 903 904 905 906
PLACA E DECALQUE (MOTOR)	900
POLIA DA RODA-GUIA	49
PORTA	734 736
PORTA DA CABINE	738 740 742 744
PÓS-ARREFECEDOR E MONTAGEM	82
PROTETOR - PLATAFORMA	434 436
PROTETOR - TANQUE DE COMBUSTÍVEL	432
PROTETOR E SUPORTE DO RADIADOR	428
PROTETOR INFERIOR	431
PUBLICAÇÃO	800
PURIFICADOR DE AR	83 84 86
PUXADOR-AMORTECEDOR (ASSENTO)	872

R

RADIADOR E ARREFECEDOR DE ÓLEO	80
RECEPTÁCULO-PARTIDA AUXILIAR	203
RECEPTOR - SECADOR (CONDICIONADOR DE AR)	90
REDUÇÃO DE RUÍDO	868
REGULADOR	104
REGULADOR DE TEMPERATURA DA ÁGUA	72

* TRADUÇÃO NÃO DISPONÍVEL NO MOMENTO DA IMPRESSÃO

ÍNDICE

Designação	Página
RELÉ (CONJ) (24 V)	
(LÂMPADAS TRASEIRAS/PAINEL)	288
	292
RESPIRO	57
RESPIRO (TANDEM)	343
RESPIRO (TREM DE FORÇA)	326
RETEM DA VÁLVULA DE CONTROLE	513
	514
RETENTOR	102
RETENTOR - CAIXA DO VOLANTE	51
RETENTOR - INJETOR DE COMBUSTÍVEL	115
RETENTOR - ÓLEO DA CAMISA	17
RETENTOR DO VIRABREQUIM	50
RETENTOR (INTEGRAL)	8
RETENTOR (2M)	16
REVESTIMENTO DA CABINE	782
	784
	788
	794
	796
RIPER	700
	701
RODA	409
	410
	411
	412
RODA E PNEU	360
	361
	362
	363
	364
	365
	366
	367
	368
	369
	370
	371
	372
	373
	374
	375
	376
	377
	378
	379
	380
	381
	382
	383
	384
	385
	386
	387
	388
	389
	390
	391
	392
	393
	394
	395
	396
	397
	398
	399
	400
	401
	402
	403
	404
	405
	406
	407
	408
	409
ROPS ABERTA	838
ROPS FECHADA	835
	836
	837

S

SECADOR DE AR	450
	452
	454
	456
	458
SENSOR - PRESSÃO	208
	209
	210
	211
	212
SENSOR - PRESSÃO	
(ACIONAMENTO DA INJEÇÃO)	204
SENSOR - PRESSÃO (COMBUSTÍVEL)	204
SENSOR - PRESSÃO (ÓLEO DO MOTOR)	204
SENSOR - PRESSÃO	
(VENTILADOR DO RADIADOR)	538
SENSOR - TEMPERATURA	216
	217
SENSOR - TEMPERATURA	
(AR DE ADMISSÃO)	204
SENSOR - TEMPERATURA	
(LÍQUIDO ARREFECEDOR)	204

* TRADUÇÃO NÃO DISPONÍVEL NO MOMENTO DA IMPRESSÃO

ÍNDICE

Designação	Página
SENSOR - TEMPERATURA (ÓLEO DA TRANSMISSÃO)	297
SENSOR DE VELOCIDADE	213
	214
	215
SENSOR DE VELOCIDADE (REGULAGEM DE INJEÇÃO OU IGNIÇÃO)	204
SENSOR DO MOTOR	204
SEPARADOR DE ÁGUA E BOMBA DE ESCORVA DE COMBUSTÍVEL	123
SILENCIADOR	95
SISTEMA DE ILUMINAÇÃO - ADVERTÊNCIA	198
	200
SISTEMA DE ILUMINAÇÃO - FARÓIS	169
	170
	176
	178
	180
	181
	182
	186
	188
	192
	194
	195
SISTEMA ELETRÔNICO - MONITOR	149
SISTEMA ELETRÔNICO - TREM DE FORÇA	150
SOFTWARE - TREM DE FORÇA	150
SUPORTE - ASSENTO	866
SUPORTE - CHASSI TRASEIRO	447
SUPORTE - PLATAFORMA	449
SUPORTE DO ESCARIFICADOR	691
SUPORTE DO MOTOR	52
SUPORTE DO RETENTOR	11
SUPORTE DO TANQUE DE COMBUSTÍVEL	448
SUSPENSÃO - ASSENTO	870
	872

T

Designação	Página
TAMPA - ADMISSÃO DE AR	87
TAMPA - BLOCO DO MOTOR	12
TAMPA - BOCAL DE ENCHIMENTO	15
TAMPA - BOCAL DE ENCHIMENTO (TANQUE DE ÓLEO HIDRÁULICO)	580
TAMPA - CAIXA DIANTEIRA	15
TAMPA - CAIXA DO VOLANTE	14
TAMPA - MANCAIS PRINCIPAIS DO MOTOR	18
TAMPA - MECANISMO DAS VÁLVULAS	16
TAMPA - PROTEÇÃO	419
TAMPA - RADIADOR	80
TAMPA - TANQUE DE COMBUSTÍVEL (PODE SER TRANCADO)	120
TAMPA CONTRA POEIRA	67
	72
	100
	316
	328
	544
	552
	618
TAMPA CONTRA POEIRA (ÓLEO DA TRANSMISSÃO)	330
	358
TAMPA CONTRA POEIRA (ÓLEO HIDRÁULICO)	536
	540
TAMPA DA VÁLVULA (HASTE)	376
	377
	378
	379
	380
	381
	382
	383
	384
	385
	386
	387
	388
	389
	390
	391
	392
	393
	394
	395
	396
	397
	398
	399
	400
	401
	402
	403
	404
	405
	406
	407
	408
	409
	411
	412
TAMPÃO	39
TANDEM E TAMPA	343
TANQUE DE AR	472

* TRADUÇÃO NÃO DISPONÍVEL NO MOMENTO DA IMPRESSÃO

ÍNDICE

Designação	Página
TANQUE DE COMBUSTÍVEL	116
	118
	120
TANQUE DE ÓLEO HIDRÁULICO E MONTAGEM	582
TANQUE HIDRÁULICO E FILTRO	580
TAPETE (CABINE)	780
TELA DE SUCÇÃO (ÓLEO DA TRANSMISSÃO)	296
TELA DE SUCÇÃO (TRANSMISSÃO)	340
TELA FILTRANTE (BOCAL DE ENCHIMENTO DO ÓLEO HIDRÁULICO)	580
TELA FILTRANTE (FILTRO DO ÓLEO DA TRANSMISSÃO)	358
TELA PÁRA-SOL	839
TOMADA (4 PINOS)	804
*TOOL BOX GP	899
TRANSMISSÃO	344
TRAVA - CONTROLE MANUAL HIDRÁULICO	557
TRAVA - DESLOCAMENTO LATERAL	556
TUBOS - ACUMULADOR	520
TUBOS - ÁGUA	72
	74
TUBOS - AQUECEDOR	798
TUBOS - AR	90
	93
TUBOS - BOMBA	540
	544
	547
TUBOS - COMBUSTÍVEL	104
	106
	108
TUBOS - DIREÇÃO	552
TUBOS - DIREÇÃO SECUNDÁRIA	550
TUBOS - DRENAGEM	103
TUBOS - GRAXA	441
TUBOS - ÓLEO DA TRANSMISSÃO	334
TUBOS - ÓLEO DO MOTOR	62
	63
TUBOS - ÓLEO DO TURBOALIMENTADOR	64
TUBOS - ÓLEO HIDRÁULICO	522
	524
	525
	526
	530
	532
	534
TUBOS - RIPER	548
TUBOS - TANQUE DE AR	471
TUBOS - VENTILADOR HIDRÁULICOS	536
	538
TUCHO DA VÁLVULA	41
TURBOALIMENTADOR	96
	97

V

Designação	Página
VÁLVULA - COLETOR E SOLENÓIDE	673
	674
VÁLVULA - OBTENÇÃO DE AMOSTRAS DE FLUIDOS	67
VÁLVULA ANTI-REAÇÃO	662
VÁLVULA (ASSENTO)	872
VÁLVULA COMBINADA	618
VÁLVULA DE ALÍVIO	296
	658
	659
	660
	661
	662
	663
	664
	665
	666
	667
	668
	669
VÁLVULA DE ALÍVIO DE AR (TANQUE DE AR)	472
VÁLVULA DE ALÍVIO (PRINCIPAL)	618
VÁLVULA DE ALÍVIO (SINAL DO IMPLEMENTO)	618
VÁLVULA DE CONTROLE	620
	622
	624
	626
	628
	630
	632
	634
	636
	638
	640
	642
	644
	646
	648
	650
VÁLVULA DE CONTROLE - PRESSÃO E COMPENSAÇÃO DE FLUXO	652
	654
VÁLVULA DE CONTROLE - TRANSMISSÃO	358
VÁLVULA DE CONTROLE (COMANDO DO CÍRCULO)	609
	611
	612
	613

* TRADUÇÃO NÃO DISPONÍVEL NO MOMENTO DA IMPRESSÃO

ÍNDICE

Designação	Página
	615
	616
VÁLVULA DE CONTROLE (DESLOCAMENTO LATERAL)	609
	611
	612
	613
	615
	616
VÁLVULA DE CONTROLE DO AR	474
	476
VÁLVULA DE CONTROLE (ESCARIFICADOR)	613
VÁLVULA DE CONTROLE (LEVANTAMENTO DA LÂMINA)	609
	612
	613
VÁLVULA DE CONTROLE (TOMBAMENTO DA LÂMINA)	609
	611
	612
	613
	615
	616
VÁLVULA DE DESVIO	58
VÁLVULA DE DRENAGEM (RADIADOR)	428
VÁLVULA DE PNEU	408
	410
VÁLVULA DE PURIFICAÇÃO	656
	657
VÁLVULA DE SEPARAÇÃO	670
VÁLVULA DE SEPARAÇÃO (RESOLVEDOR DA ESFERA) (SINAL)	618
VÁLVULA E ARTICULAÇÕES	584
	586
	588
	590
	592
	594
	596
	600
	602
	604
	606
VÁLVULA E MONTAGEM - TRAVA DO DIFERENCIAL	346
VÁLVULA PARA TIRAR AMOSTRAS DE FLUIDOS	67
	100
VÁLVULA PARA TIRAR AMOSTRAS DE FLUIDOS (DIREÇÃO)	552
VÁLVULA SELETORA E CONTROLE DE PRESSÃO	348
	352
VÁLVULA SOLENÓIDE	122
	355
	356
	478
	671
	672
VENTILADOR DE CIRCULAÇÃO DE AR DA CABINE	750
	752
	754
	755
VIDRO	880
	881
	882
	883
	884
VIRABREQUIM	17
VOLANTE DO MOTOR	37

* TRADUÇÃO NÃO DISPONÍVEL NO MOMENTO DA IMPRESSÃO

MACHINE ARRANGEMENT

207-3665 CONVERSION AR-CERTIFICATION—HEATER—EU

S/N: CAF1-UP

AN ATTACHMENT

SMCS-7000 **i01684125**

NOTE	PART NUMBER	QTY	PART NAME 1 2 3 4 5 6 (PRODUCT LEVEL)	SEE PAGE
Y	*198-4836*	1	ALTERNATOR GP-CHARGING	130
Y	*194-2912*	1	COOLING AR	69
Y	*126-6933*	1	COVER GP-PROTECTION (PLATFORM)	419
	205-3235	1	FILM (EXTERIOR SOUND)	
Y	*203-2260*	1	GUARD GP-BOTTOM	431
Y	*167-8389*	1	HEATER AR-CAB	759
Y	*171-6458*	1	LINES GP-SECONDARY STEERING	550
Y	*152-7903*	1	LOCK GP-HYDRAULIC HAND CONTROL	557
Y	**197-2066**	1	MIRROR GP-REAR VIEW (DUAL)	807
Y	*196-4909*	1	PANEL GP-INSTRUMENT	826
Y	*192-1434*	1	PLATE & FILM GP	903
Y	*8X-9751*	1	PUMP & MTG GP-SECONDARY STEER	565
Y	*218-4760*	1	ROPS AR-ENCLOSED	835
Y	*8Y-4194*	1	SEAT GP-SUSPENSION	858
Y	*194-2870*	1	SUPPORT AR-REAR CHASSIS	447
Y	*200-2969*	1	SUPPRESSION GP-SOUND	868
Y	*159-5865*	1	WIRING GP-FRONT	248
Y	*200-6207*	1	WIRING GP-REAR	274
Y	*159-5841*	1	WIRING GP-SHIFT CONSOLE	284
Y	*159-5853*	1	WIRING GP-STEERING CONSOLE	292

Y-SEPARATE ILLUSTRATION

<END>

MACHINE ARRANGEMENT

210-2042 CONVERSION AR-CERTIFICATION–AIR CONDITIONER–EU

S/N: CAF1-UP

AN ATTACHMENT

SMCS-7000 **i01684326**

NOTE	PART NUMBER	QTY	PART NAME 1 2 3 4 5 6 (PRODUCT LEVEL)	SEE PAGE
Y	*167-8066*	1	AIR CONDITIONER AR	716
Y	*198-4836*	1	ALTERNATOR GP-CHARGING	130
Y	*194-2912*	1	COOLING AR	69
Y	*126-6933*	1	COVER GP-PROTECTION (PLATFORM)	419
Y	*203-2260*	1	GUARD GP-BOTTOM	431
Y	*171-6458*	1	LINES GP-SECONDARY STEERING	550
Y	*152-7903*	1	LOCK GP-HYDRAULIC HAND CONTROL	557
Y	**197-2066**	1	MIRROR GP-REAR VIEW (INSIDE DUAL)	807
Y	*196-4909*	1	PANEL GP-INSTRUMENT	826
Y	*192-1434*	1	PLATE & FILM GP (REFLECTOR)	903
Y	*8X-9751*	1	PUMP & MTG GP-SECONDARY STEER	565
Y	*218-4760*	1	ROPS AR-ENCLOSED (LOW PROFILE)	835
Y	*8Y-4194*	1	SEAT GP-SUSPENSION (CLOTH)	858
Y	*194-2870*	1	SUPPORT AR-REAR CHASSIS	447
Y	*200-2969*	1	SUPPRESSION GP-SOUND (ENGINE ENCLOSURE)	868
Y	*159-5865*	1	WIRING GP-FRONT	248
Y	*200-6207*	1	WIRING GP-REAR	274
Y	*159-5841*	1	WIRING GP-SHIFT CONSOLE	284
Y	*159-5853*	1	WIRING GP-STEERING CONSOLE	292

Y-SEPARATE ILLUSTRATION

<END>

162-5603 GENERAL AR

S/N: CAF1-UP

SMCS-7000 **i01861726**

NOTE	PART NUMBER	QTY	PART NAME 1 2 3 4 5 6 (PRODUCT LEVEL)	SEE PAGE
Y	*194-2911*	1	COOLING AR	69
Y	*161-2326*	1	AIR CLEANER GP	84
Y	*196-0251*	1	ALTERNATOR GP-CHARGING	128
Y	*134-1080*	1	AXLE GP-FRONT	414
Y	*8X-8011*	1	BLADE GP	689
Y	*111-1719*	1	BOX GP-TOOL	899
Y	*218-2307*	1	BRAKE GP-SERVICE	462
Y	*162-1513*	1	CASE & FRAME GP	418
Y	*2G-0585*	1	CHAIN GP-DRIVE	300
Y	*8X-1965*	1	CIRCLE GP	676
Y	*167-8053*	1	CONSOLE GP-OPERATOR	730
Y	*159-5933*	1	CONTROL GP-CLUTCH	314
Y	*173-5305*	1	CONTROL GP-DIFFERENTIAL LOCK	316
Y	*159-5935*	1	CONTROL GP-GOVERNOR	98
Y	*160-7753*	1	CONTROL GP-PARKING BRAKE	464
Y	*171-2863*	1	CONTROL GP-SERVICE BRAKE	466
Y	*7I-4718*	1	CONTROL GP-STEERING	485
Y	*167-9002*	1	CONTROL GP-TRANSMISSION	318
Y	*6Y-3978*	1	COUPLING GP-TORSIONAL	321
Y	*193-1475*	1	CYLINDER & MTG GP-ARTICULATION	487
Y	*8X-1948*	1	CYLINDER & MTG GP-BLADE LIFT	488
Y	*8X-1943*	1	CYLINDER & MTG GP-BLADE TIP	489
Y	*8X-1946*	1	CYLINDER & MTG GP-CENTERSHIFT	490
Y	*112-7463*	1	CYLINDER & MTG GP-SIDESHIFT	492
Y	*8W-2290*	1	CYLINDER & MTG GP-STEERING	493
Y	*8W-2737*	1	CYLINDER & MTG GP-WHEEL LEAN	494

MACHINE ARRANGEMENT

162-5603 **GENERAL AR** ***(contd.)*** **i01861726**

NOTE	PART NUMBER	QTY	PART NAME 1 2 3 4 5 6 (PRODUCT LEVEL)	SEE PAGE
Y	*8W-5575*	1	DIFFERENTIAL & BEVEL GEAR GP	322
Y	*8X-2373*	1	DRAWBAR GP	680
Y	*194-6773*	1	FINAL DRIVE GP	332
Y	**5T-0570**	1	DRIVE GP-CIRCLE	516
Y	*178-9582*	1	DRIVE GP-PUMP	519
Y	*162-1511*	1	ENCLOSURE GP-ENGINE	420
Y	*199-5055*	1	ENGINE AR-COMPLETE	5
Y	*198-4822*	1	FILLER GP-POWER TRAIN OIL	326
Y	*212-1522*	1	FILM GP	900
Y	*162-1508*	1	FRAME GP-FRONT	424
Y	*106-4883*	1	HITCH GP-ARTICULATING	438
Y	*168-7960*	1	HITCH GP-TOWING	440
Y	*160-7758*	1	HORN GP-AIR	772
Y	*8X-1940*	1	LIFT GP-BLADE	696
Y	*194-6748*	1	LINES GP-AIR	93
Y	*212-7523*	1	LINES GP-AIR TANK	471
Y	*198-6000*	1	LINES GP-DRAIN	103
Y	*198-5452*	1	LINES GP-FUEL	106
Y	*220-0768*	1	LINES GP-FUEL	108
Y	*7I-4610*	1	LINES GP-GREASE	441
Y	*159-4730*	1	LINES GP-HYDRAULIC (LH)	526
Y	*159-4731*	1	LINES GP-HYDRAULIC (RH)	530
Y	*171-6421*	1	LINES GP-HYDRAULIC	532
Y	*175-6979*	1	LINES GP-HYDRAULIC FAN	536
Y	*171-6431*	1	LINES GP-PUMP	544
Y	*171-6442*	1	LINES GP-STEERING	552
Y	*194-4078*	1	LINES GP-TRANSMISSION OIL	334
Y	*194-4055*	1	LINES GP-WATER	74
Y	*6V-1970*	1	LITERATURE GP	800
Y	*164-8462*	1	LOCK GP-CENTERSHIFT	556
Y	**8X-2795**	1	MIRROR GP-REAR VIEW	802
Y	*174-3428*	1	MOUNTING GP-ENGINE & TMSN	44
Y	*142-6203*	1	MOUNTING GP-WHEEL	337
Y	*161-2335*	1	MUFFLER GP	95
Y	*159-5812*	1	PANEL GP-INSTRUMENT	822
Y	*171-5826*	1	PLATE & FILM GP	901
Y	*159-4739*	1	PUMP & MTG GP-PISTON	563
Y	*179-3581*	1	ROPS AR-ENCLOSED	834
Y	*8X-8940*	1	SEAT GP-STATIC	852
Y	*8W-5621*	1	SHAFT GP-DRIVE	341
Y	*8W-5870*	1	SHIELD GP-DRIVE SHAFT	444
Y	*8X-1030*	1	STEP GP	446
Y	*194-2869*	1	SUPPORT AR-REAR CHASSIS	447
Y	*162-1515*	1	SUPPORT GP-FUEL TANK	448
Y	*174-4546*	1	SUPPORT GP-SEAT	866
Y	*193-1721*	1	TANDEM & COVER GP	343
Y	*207-2409*	1	TANK & MTG GP-HYDRAULIC	582
Y	*162-1514*	1	TANK GP-FUEL	116
Y	**160-2196**	1	TRANSMISSION AR	344
Y	*8X-1949*	1	VALVE & LINKAGE GP	590
Y	*159-5878*	1	WIRING GP-CAB	232
Y	*159-5856*	1	WIRING GP-FRONT	244
Y	*159-5869*	1	WIRING GP-REAR	254
Y	*159-5839*	1	WIRING GP-SHIFT CONSOLE	282
Y	*159-5845*	1	WIRING GP-STEERING CONSOLE	288

Y-SEPARATE ILLUSTRATION

<END>

MACHINE ARRANGEMENT

197-5572 ROADING AR

S/N: CAF1-UP

AN ATTACHMENT

SMCS-7000 **i01719342**

NOTE	PART NUMBER	QTY	PART NAME 1 2 3 4 5 6 (PRODUCT LEVEL)	SEE PAGE
Z		1	ELECTRONICS GP-POWER TRAIN (MOTOR GRADER) (ROAD SPEED LIMITING)	
Y	*211-1520*	1	LIGHTING GP-ROADING (CAB POSITION) (EU)	196
Y	**197-2064**	1	MIRROR GP-REAR VIEW (CLOSED ROPS OUTSIDE)	806
Y	*211-1519*	1	MOUNTING GP-REGISTRATION	443
	159-7342	1	PLATE-IDENTIFICATION	

Y-SEPARATE ILLUSTRATION
Z-NOT SERVICED SEPARATELY

<END>

ENGINE ARRANGEMENT

199-5055 ENGINE AR-COMPLETE

S/N: BMA1-UP

PART OF 162-5603 GENERAL AR

SMCS-1000 **i01844250**

NOTE	PART NUMBER	QTY	PART NAME 1 2 3 4 5 6 (PRODUCT LEVEL)	SEE PAGE
Y	*194-5122*	1	ADAPTER GP-TURBOCHARGER	81
Y	*194-5132*	1	AIR COMPRESSOR GP	8
Y	*4W-3462*	1	CARRIER GP-SEAL	11
Y	*183-1195*	1	CONTROL & MTG GP-ENGINE ELEK	140
Y	*197-4561*	1	COVER GP-AIR INLET	87
Y	*197-4564*	1	COVER GP-CYLINDER BLOCK	12
Y	*121-0798*	1	COVER GP-FLYWHEEL HOUSING	14
Y	*205-3081*	1	COVER GP-FRONT HOUSING	15
Y	*167-8355*	1	COVER GP-VALVE MECHANISM	16
Y	*194-5128*	1	DAMPER & PULLEY GP	36
Y	*212-8135*	1	ELBOW GP-AIR INLET	88
Y	*199-5056*	1	ENGINE AR-CORE	6
Y	*142-8333*	1	FASTENER GP-GROUND STUD	151
Y	*194-5126*	1	FILTER GP-ENGINE OIL	58
Y	*194-5139*	1	FILTER GP-FUEL	100
Y	*185-9375*	1	FLYWHEEL GP	37
Y	*194-5134*	1	FUMES DISPOSAL GP	60
Y	*194-5123*	1	GAUGE GP-OIL LEVEL (DIPSTICK)	61
Y	*117-5118*	1	HOUSING GP-FLYWHEEL	39
Y	*196-1912*	1	LIFTING GP-ENGINE	42
Y	*7C-2475*	1	LINES GP-ENGINE OIL	62
Y	*194-5129*	1	LINES GP-FUEL	104
Y	*194-5120*	1	LINES GP-TURBOCHARGER OIL	64
Y	*192-9972*	1	LINES GP-WATER	72
Y	*183-6845*	1	MANIFOLD GP-EXHAUST	94
Y	*180-2993*	1	PAN GP-OIL	46
Y	*135-8015*	1	PLUG GP-FLYWHEEL HOUSING	48
Y	*213-5158*	1	PULLEY GP-IDLER (BELT TENSIONER)	49
Y	*196-1907*	1	PUMP GP-FUEL	110
Y	*193-9237*	1	PUMP GP-WATER	76
Y	*115-4210*	1	SEAL GP-CRANKSHAFT	50
Y	*7C-1770*	1	SEAL GP-FLYWHEEL HOUSING	51
Y	*195-7335*	1	SENSOR GP-ENGINE	204
Y	*111-4275*	1	STARTING MOTOR GP-ELECTRIC	218
Y	*172-0961*	1	SUPPORT GP-ENGINE	52
Y	*190-5038*	1	WIRING GP-ENGINE	242
Y	*204-2162*	1	WIRING GP-HEATER	252
			GASKET KITS WILL BE PROVIDED WHEN AVAILABLE	

Y-SEPARATE ILLUSTRATION

ENGINE ARRANGEMENT

199-5056 ENGINE AR-CORE

S/N: BMA1-UP

PART OF 199-5055 ENGINE AR-COMPLETE

SMCS-1000 **i01838181**

NOTE	PART NUMBER	QTY	PART NAME 1 2 3 4 5 6 (PRODUCT LEVEL)	SEE PAGE
Y	*156-0233*	1	BREATHER GP	57
Y	*216-7922*	1	CAMSHAFT GP	10
Y	*117-3643*	1	COOLER GP-ENGINE OIL	68
Y	*113-6087*	1	CRANKSHAFT GP	17
YR	*129-1165*	1	CYLINDER BLOCK GP	20
Y	*133-3742*	1	CYLINDER HEAD GP	26
	199-4433	1	ELECTRONICS GP-ENGINE RATINGS	
Y	*205-1321*	1	GEAR GP-FRONT	38
Y	*133-5055*	1	HOUSING GP-FRONT	40
Y	*176-1387*	1	LINES GP-ENGINE OIL	63
YR	*161-8420*	6	PISTON & ROD GP	47
Y	*183-2859*	1	PUMP & MTG GP-UNIT INJ HYD	109
Y	*212-2270*	1	PUMP GP-ENGINE OIL	66
Y	*178-6343*	6	PUMP GP-UNIT INJECTION	113
Y	*194-5136*	1	TURBOCHARGER GP	97
Y	*135-2969*	1	VALVE MECHANISM GP	53

R-REMFG PART MAY BE AVAILABLE
Y-SEPARATE ILLUSTRATION

BASIC ENGINE

193-3940 AIR COMPRESSOR GP

S/N: BMA1-UP

PART OF 194-5132 AIR COMPRESSOR GP

SMCS-1803 **i01695070**

NOTE	REF NO	GRAPHIC REF	PART NUMBER	QTY	PART NAME 1 2 3 4 5 6 (PRODUCT LEVEL)	SEE PAGE
	1	1	**2P-4358**	1	FLANGE	
	2	1	**179-7383**	1	SEAL-O-RING	
	3	1	**190-3974**	1	GEAR (50 TEETH)	
	4	1	**3K-0360**	1	SEAL-O-RING	
	5	1	**6D-1004**	1	GASKET	
M	6	1	**6V-1820**	2	BOLT (M10X1.50X30MM)	
M	7	1	**6V-5221**	4	BOLT (M8X1.25X80MM)	
	8	1	**6V-5839**	2	WASHER (11X21X2.5MM THK)	
M	9	1	**8T-2396**	2	BOLT (M6X1.0X60MM)	
	10	1	**9M-1974**	4	WASHER-HARD (8.8X16X2MM THK)	
	11	1	**9S-8005**	1	PLUG	
	12	1	**9X-8267**	2	WASHER (6.6X12X2MM THK)	

M-METRIC PART

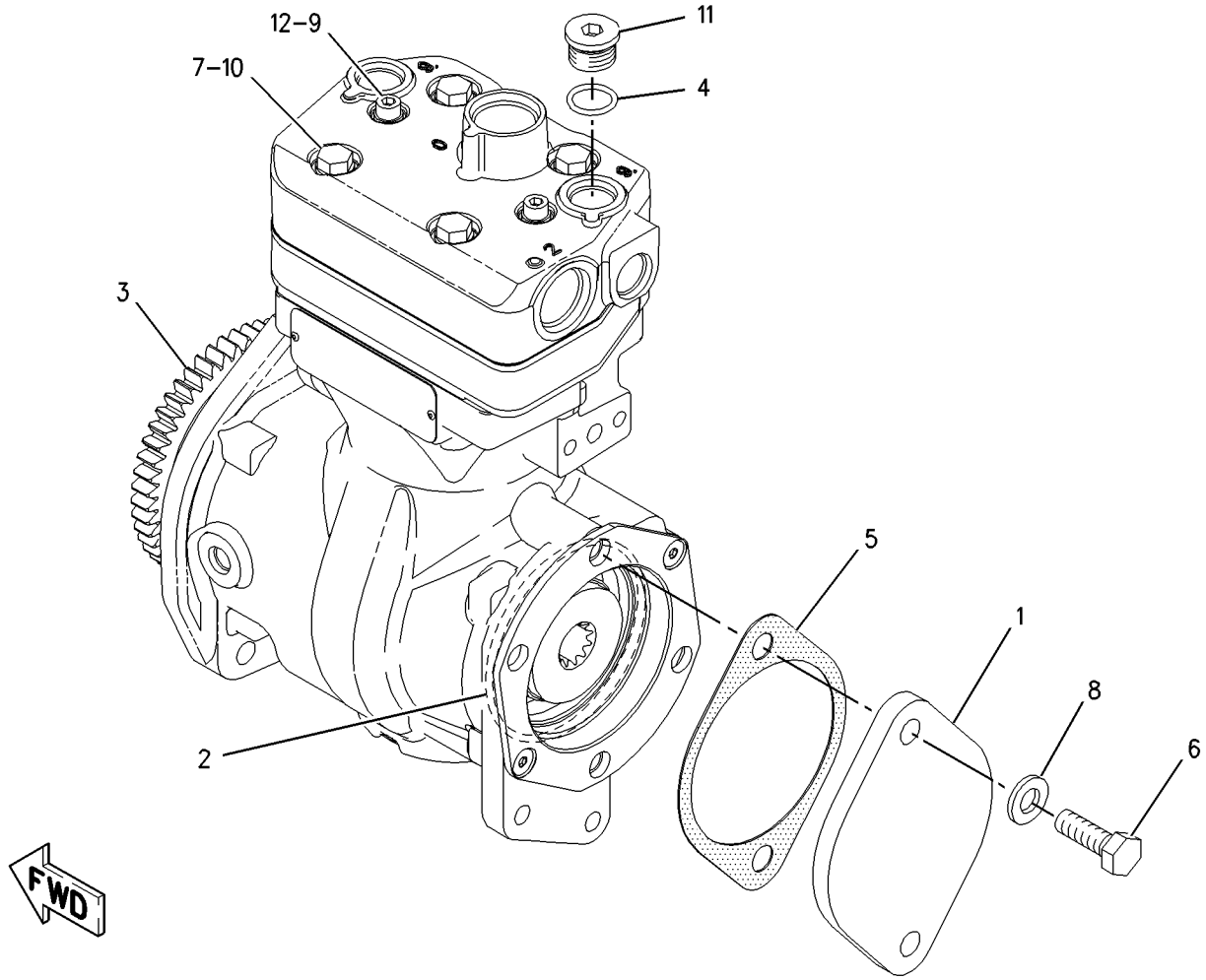

GRAPHIC #1 g00874269

BASIC ENGINE

194-5132 AIR COMPRESSOR GP

S/N: BMA1-UP

PART OF 199-5055 ENGINE AR-COMPLETE

SMCS-1803 **i01810091**

NOTE	REF NO	GRAPHIC REF	PART NUMBER	QTY	PART NAME 1 2 3 4 5 6 (PRODUCT LEVEL)	SEE PAGE
	1	1	**6V-9002**	1	ELBOW (45 DEG)	
I	2	1	**090-7055**	1	HOSE AS	
I	3	1	**142-0367**	1	HOSE AS-END	
	4	1	**135-9819**	1	SEAL (INTEGRAL)	
I	5	1	**180-0385**	1	HOSE AS	
Y	6	1	**193-3940**	1	AIR COMPRESSOR GP	7
	7	1	**030-7946**	1	ELBOW (90 DEG)	
	9	1	**3D-2824**	1	SEAL-O-RING	
	10	1	**3J-1907**	1	SEAL-O-RING	
	11	1	**3K-0360**	4	SEAL-O-RING	
	12	1	**4P-8525**	1	SPACER (30MM LG)	
M	13	1	**5P-7970**	1	NUT (M8X1.25 THD)	
	14	1	**5P-8245**	2	WASHER-HARD (13.5X25.5X3MM THK)	
	15	1	**6D-3479**	1	CLIP	
	16	1	**6D-4246**	2	CLIP	
	17	1	**6V-1722**	1	ADAPTER-O-RING	
	18	1	**6V-5048**	1	SEAL-O-RING	
M	19	1	**6V-8336**	2	BOLT (M12X1.75X70MM)	
	20	1	**6V-8398**	1	SEAL-O-RING	
	21	1	**6V-8625**	1	ELBOW (90 DEG)	
	22	1	**7J-4026**	1	ELBOW (90 DEG)	
M	24	1	**8T-0276**	1	BOLT (M8X1.25X45MM)	
	25	1	**9M-1974**	2	WASHER-HARD (8.8X16X2MM THK)	
	26	1	**030-7943**	2	ELBOW (37 DEG)	

I-SEE HOSE FABRICATION GUIDE
M-METRIC PART
Y-SEPARATE ILLUSTRATION

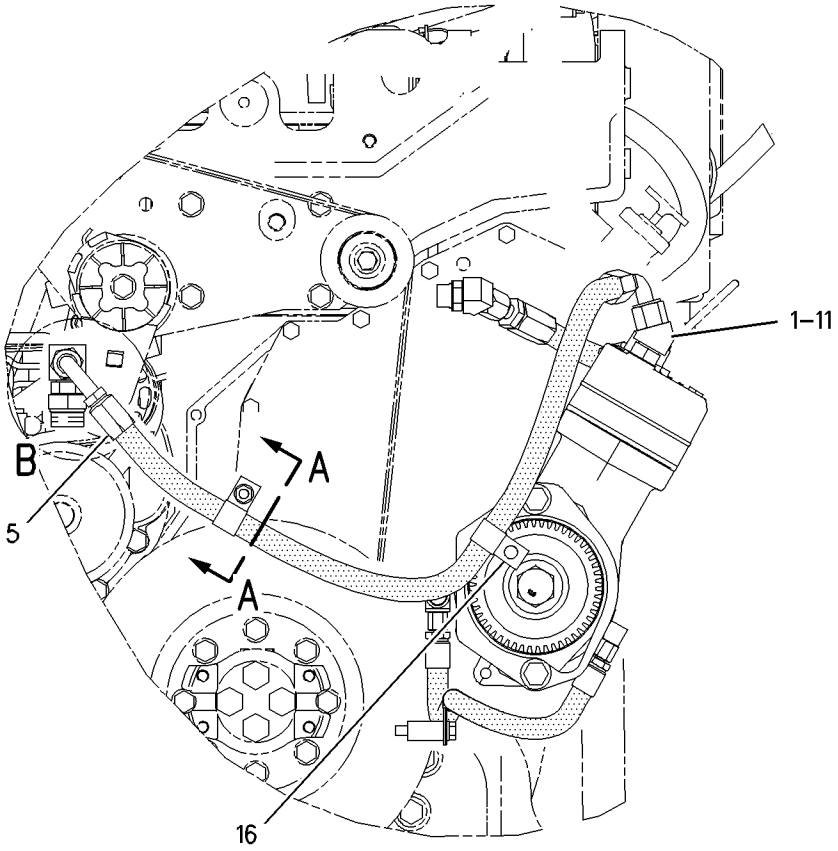

FRONT VIEW

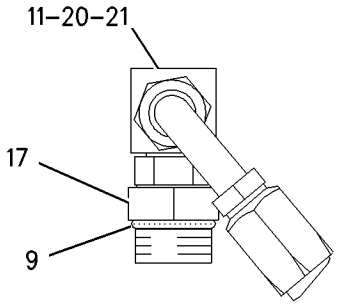

VIEW OF AREA B

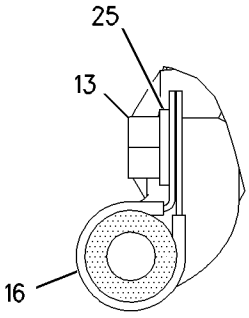

SECTION A-A

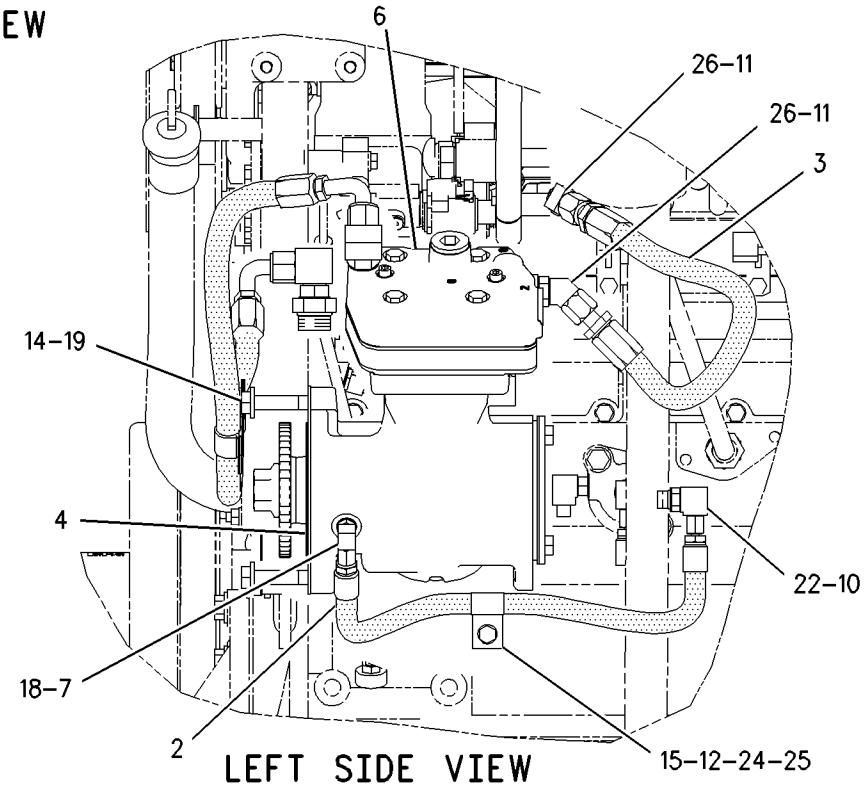

LEFT SIDE VIEW

GRAPHIC #1

g00934164

BASIC ENGINE

216-7922 CAMSHAFT GP

S/N: BMA1-UP

PART OF 199-5056 ENGINE AR-CORE

SMCS-1210 **i01743088**

NOTE	REF NO	GRAPHIC REF	PART NUMBER	QTY	PART NAME 1 2 3 4 5 6 (PRODUCT LEVEL)	SEE PAGE
	1	1	**107-7694**	1	PLATE-THRUST	
	2	1	**216-7921**	1	CAMSHAFT AS	
	2A	1	**1B-8705**	1	KEY-WOODRUFF	
	2B	1	**205-1322**	1	GEAR (100 TEETH)	
M	3	1	**6V-3940**	2	BOLT (M8X1.25X25MM)	

M-METRIC PART

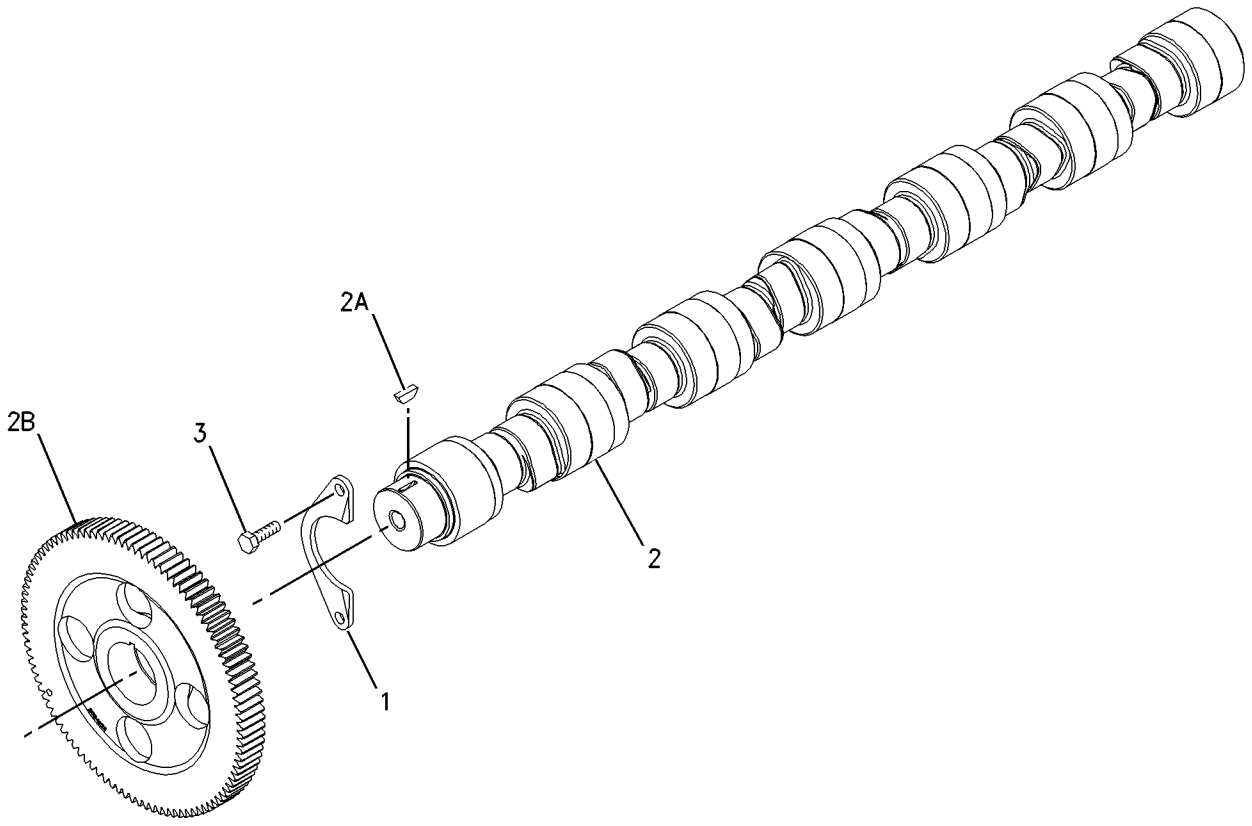

GRAPHIC #1 g00869530

4W-3462 CARRIER GP-SEAL

S/N: BMA1-UP

PART OF 199-5055 ENGINE AR-COMPLETE

SMCS-1161 **i01205472**

NOTE	REF NO	GRAPHIC REF	PART NUMBER	QTY	PART NAME 1 2 3 4 5 6 (PRODUCT LEVEL)	SEE PAGE
M	1	1	**6V-3940**	8	BOLT (M8X1.25X25MM)	
	2	1	**9M-1974**	8	WASHER-HARD (2MM THK)	
	3	1	**2W-6546**	1	COVER	
B	4	1	**1U-8846**		SEALANT	
	5	1	**6V-3538**	2	DOWEL (20MM OAL)	
	6	1	**8C-3091**	1	SEAL-O-RING	

B-USE AS REQUIRED
M-METRIC PART

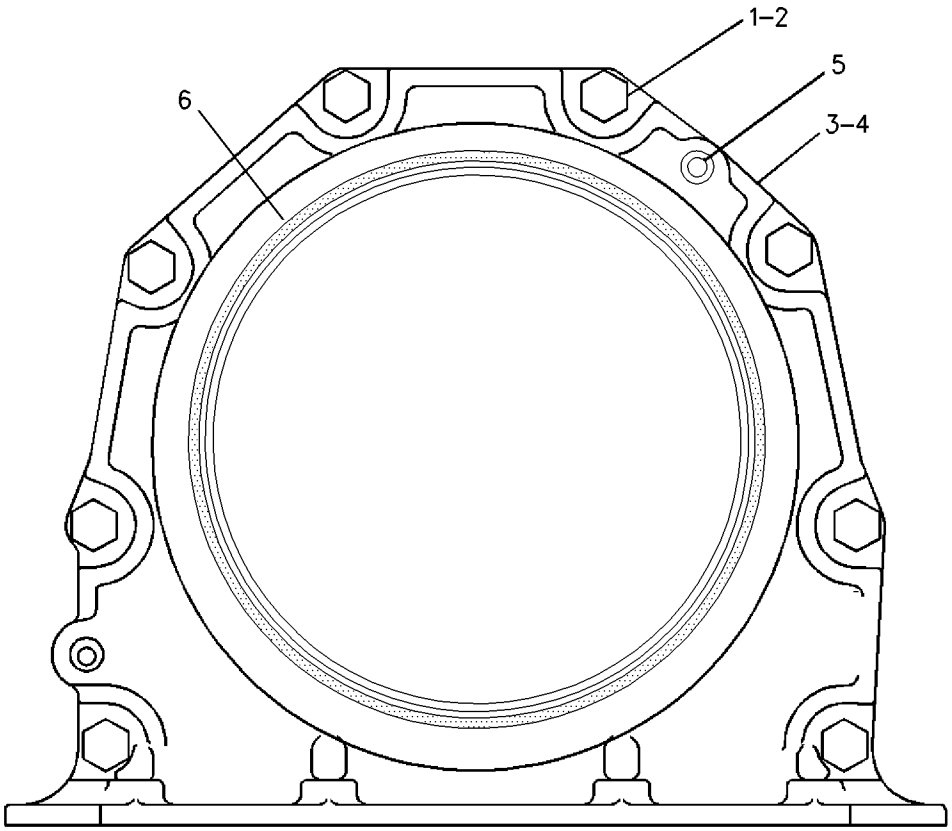

MOUNTED ON REAR OF CYLINDER BLOCK

GRAPHIC #1 g00644756

BASIC ENGINE

197-4564 COVER GP-CYLINDER BLOCK

S/N: BMA1-UP

PART OF 199-5055 ENGINE AR-COMPLETE

SMCS-1201 **i01810133**

NOTE	REF NO	GRAPHIC REF	PART NUMBER	QTY	PART NAME 1 2 3 4 5 6 (PRODUCT LEVEL)	SEE PAGE
	1	1	**2W-6544**	1	COVER	
	2	1	**4P-5918**	3	CLIP	
	3	1	**4Y-9652**	3	GASKET	
	4	1	**7W-3871**	3	COVER-SIDE	
	5	1	**7W-3872**	6	SLEEVE	
	6	1	**9Y-0747**	1	MANIFOLD-OIL	
	7	1	**110-7618**	4	BOLT AS	
	8	1	**175-1367**	12	SPACER (8.8X16X10MM THK)	
	9	1	**210-3321**	1	STUD	
	10	1	**3D-2824**	1	SEAL-O-RING	
	11	1	**3J-1907**	1	SEAL-O-RING	
	12	1	**4F-9653**	1	SEAL-O-RING	
M	13	1	**5C-7261**	1	NUT (M8X1.25 THD)	
M	14	1	**6V-2317**	23	BOLT (M8X1.25X30MM)	
	15	1	**6V-5839**	2	WASHER (11X21X2.5MM THK)	
M	16	1	**6V-5843**	2	BOLT (M10X1.50X45MM)	
	17	1	**8T-4224**	2	WASHER-HARD (8.8X16X2MM THK)	
	18	1	**9M-1974**	21	WASHER-HARD (8.8X16X2MM THK)	
	19	1	**9S-8004**	1	PLUG (9/16-18 THD)	
	20	1	**9S-8008**	1	PLUG	
B	21	1	**1U-8846**		SEALANT-GASKET	

B-USE AS REQUIRED
M-METRIC PART

197-4564 **COVER GP-CYLINDER BLOCK** ***(contd.)*** **i01810133**

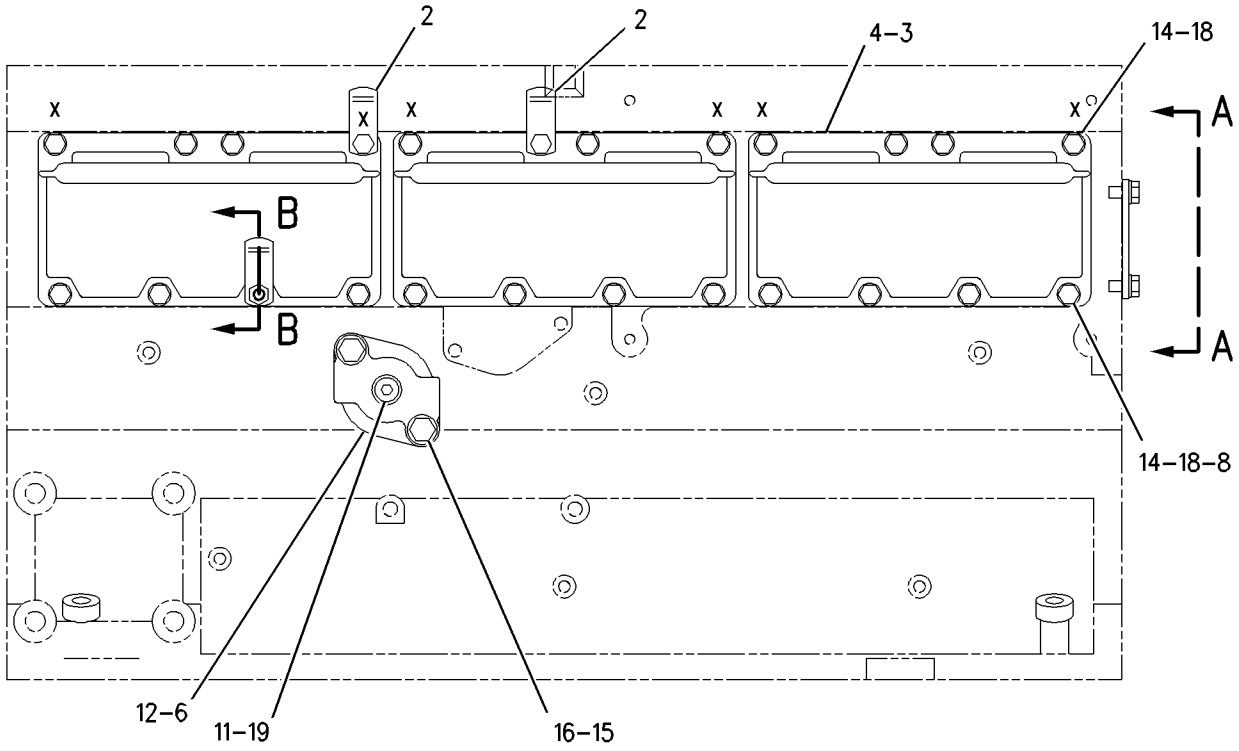

LEFT SIDE VIEW

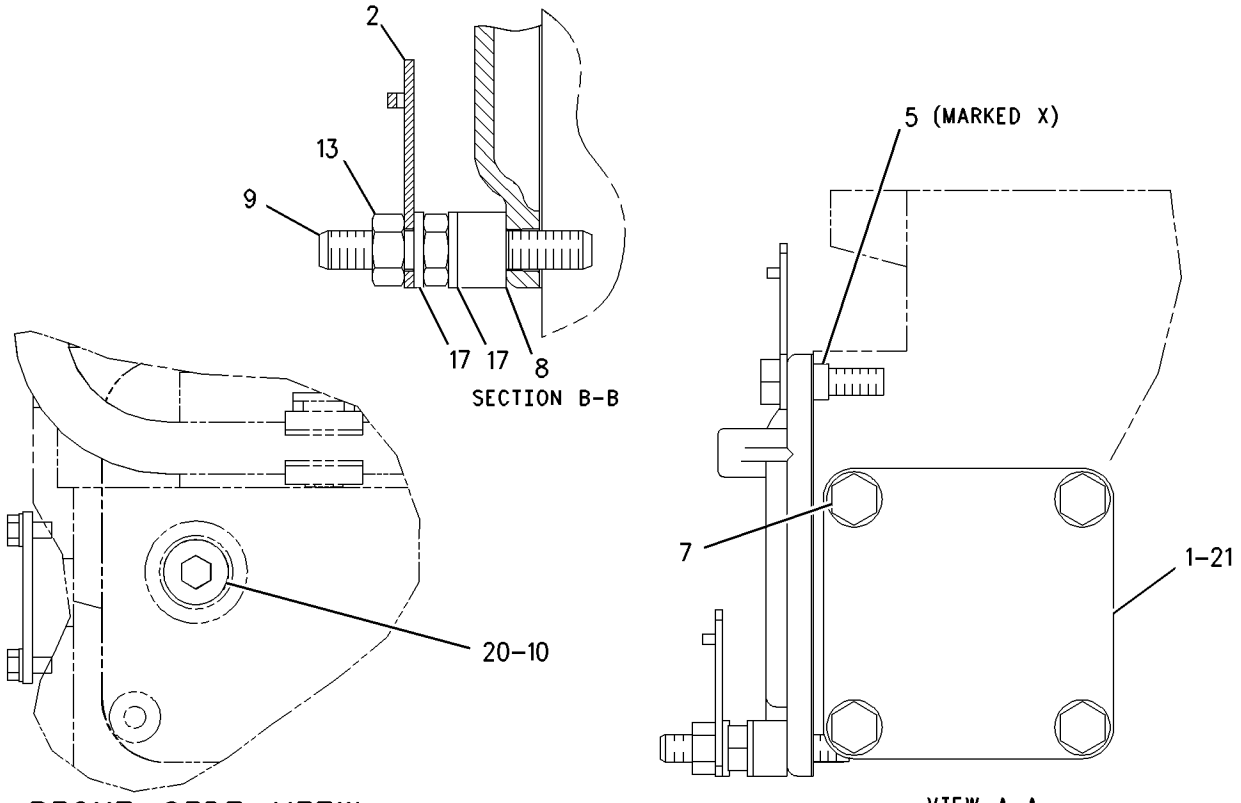

RIGHT SIDE VIEW

GRAPHIC #1 g00941016

BASIC ENGINE

121-0798 COVER GP-FLYWHEEL HOUSING

S/N: BMA1-UP
PART OF 199-5055 ENGINE AR-COMPLETE
FOR USE WITH 117-5118—PAGE 39

SMCS-1157 **i01695914**

NOTE	REF NO	GRAPHIC REF	PART NUMBER	QTY	PART NAME 1 2 3 4 5 6 (PRODUCT LEVEL)	SEE PAGE
					(INDIVIDUAL PARTS ARE	
					NOT SERVICED SEPARATELY)	

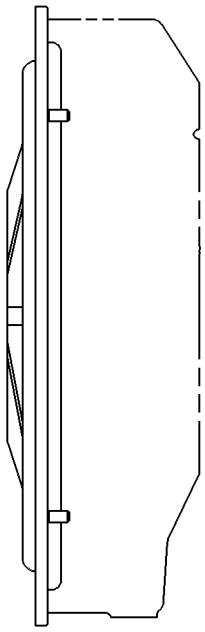

GRAPHIC #1 g00272075

BASIC ENGINE

205-3081 COVER GP-FRONT HOUSING

S/N: BMA1-UP

PART OF 199-5055 ENGINE AR-COMPLETE

SMCS-1151, 1166 **i01839109**

NOTE	REF NO	GRAPHIC REF	PART NUMBER	QTY	PART NAME 1 2 3 4 5 6 (PRODUCT LEVEL)	SEE PAGE
M	1	1	**9X-2099**	1	STUD	
	2	1	**002-3448**	1	CLIP	
	3	1	**4W-3087**	1	CAP-FILLER	
	4	1	**108-3612**	1	SPACER (11.13X19.05X53MM THK)	
	5	1	**136-0823**	1	COVER AS-FRONT	
		1	**126-1757**	2	WASHER	
		1	**136-0822**	2	STUD	
	6	1	**139-3526**	1	GASKET	
	7	1	**159-0286**	1	TUBE AS-FILLER	
	8	1	**061-9455**	1	SEAL-O-RING (47.22MM ID)	
M	9	1	**5C-7261**	2	NUT (M8X1.25 THD)	
M	10	1	**6V-2317**	11	BOLT (M8X1.25X30MM)	
	11	1	**6V-5839**	1	WASHER (11X21X2.5MM THK)	
M	12	1	**8T-0100**	2	BOLT (M8X1.25X60MM)	
M	13	1	**8T-0643**	1	BOLT (M10X1.50X80MM)	
	14	1	**8T-4224**	2	WASHER-HARD (8.8X16X2MM THK)	

M-METRIC PART

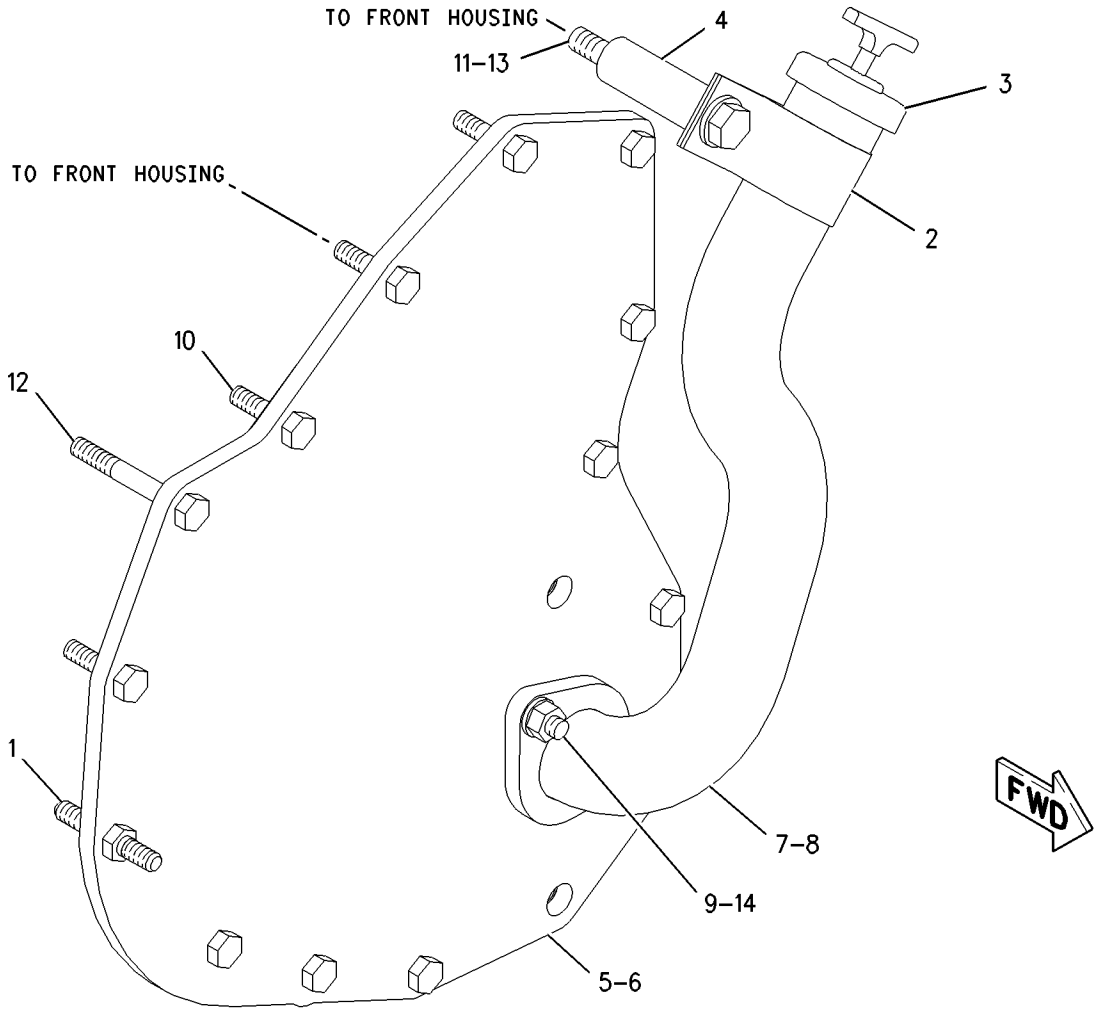

GRAPHIC #1 g00933487

167-8355 COVER GP-VALVE MECHANISM

S/N: BMA1-UP

PART OF 199-5055 ENGINE AR-COMPLETE

SMCS-1107, 1120 **i01695031**

NOTE	REF NO	GRAPHIC REF	PART NUMBER	QTY	PART NAME 1 2 3 4 5 6 (PRODUCT LEVEL)	SEE PAGE
	1	1	**167-8361**	1	COVER AS-BASE	
D		1	**5P-5678**		SEAL (2M)	
M	2	1	**6V-2315**	14	BOLT (M6X1X35MM)	
	3	1	**167-8354**	1	COVER	
		1	**5P-5678**		SEAL (2M)	
	4	1	**5P-0537**	28	WASHER-HARD (7.2X14.5X2MM THK)	
M	5	1	**6V-7728**	14	BOLT (M6X1.0X45MM)	

D-ORDER BY THE METER
M-METRIC PART

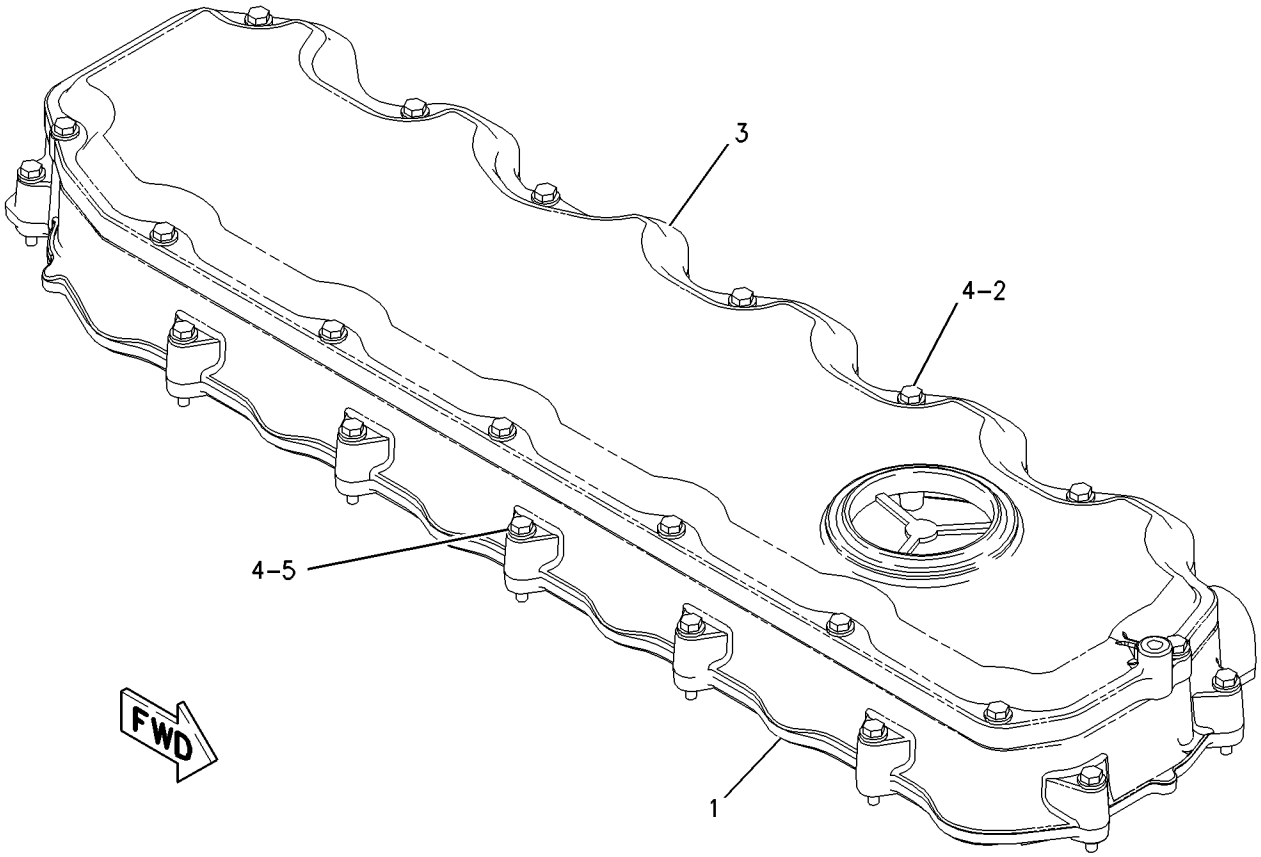

GRAPHIC #1 g00874149

BASIC ENGINE

113-6087 CRANKSHAFT GP

S/N: BMA1-UP

PART OF 199-5056 ENGINE AR-CORE

SMCS-1202, 1203, 1204, 1232 **i01807351**

NOTE	REF NO	GRAPHIC REF	PART NUMBER	QTY	PART NAME 1 2 3 4 5 6 (PRODUCT LEVEL)	SEE PAGE
R	1	1	**105-1725**	1	CRANKSHAFT AS	
	2	1	**1B-8705**	1	KEY-WOODRUFF	
	3	1	**2W-8147**	1	GEAR (50 TEETH)	
J	4	1	**212-4893**	1	BEARING-THRUST	
J	5	1	**107-7708**	6	BEARING-MAIN	
AB		1	**145-0168**		BEARING-MAIN (0.5MM OS)	
AB		1	**145-0170**		BEARING-MAIN (0.5MM US - 0.5MM OS)	
AB		1	**145-0162**		BEARING-MAIN (0.25MM US)	
AB		1	**145-0164**		BEARING-MAIN (0.5MM US)	
ABF		1	**7C-7980**	1	SLEEVE-OIL SEAL	
					(THIS WEAR SLEEVE IS USED ONLY TO SALVAGE (REPAIR) THE REAR SEAL SURFACE OF THE CRANKSHAFT)	
					AVAILABLE REPAIR KIT(S):	
J			**196-9519**		KIT-MAIN BEARING	

A-NOT PART OF THIS GROUP
B-USE AS REQUIRED
F-NOT SHOWN
J-KIT MARKED J SERVICES PARTS MARKED J
R-REMFG PART MAY BE AVAILABLE

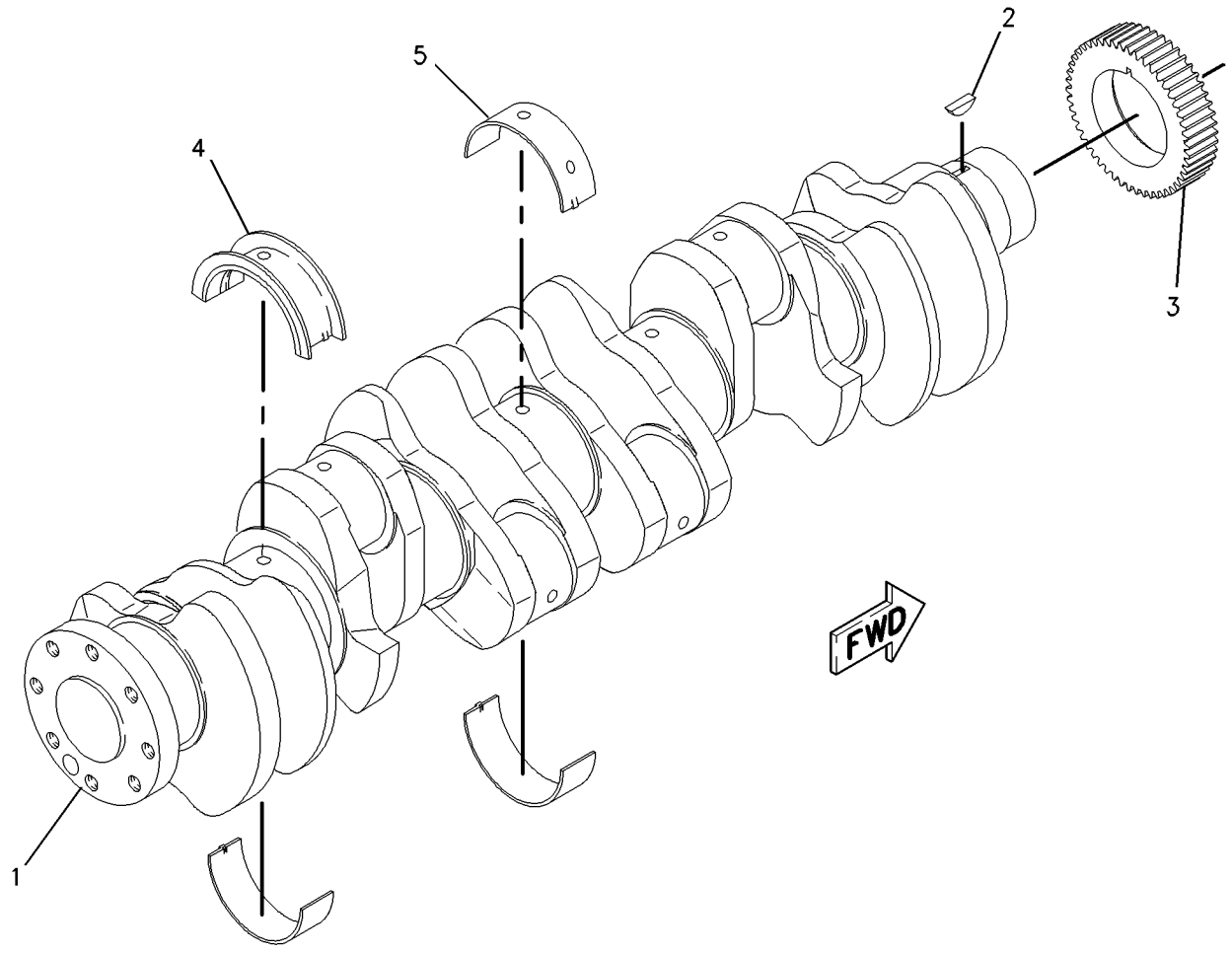

GRAPHIC #1 g00785631

129-1163 CYLINDER BLOCK GP

S/N: BMA1-UP

PART OF 129-1164 CYLINDER BLOCK GP

SMCS-1201 **i00746597**

NOTE	REF NO	GRAPHIC REF	PART NUMBER	QTY	PART NAME 1 2 3 4 5 6 (PRODUCT LEVEL)	SEE PAGE
	1	1	**5P-8247**	14	WASHER-HARD (3.5MM THK)	
	2	1	**7E-2968**	7	CAP-CRANKSHAFT BEARING	
M	3	1	**9X-8916**	14	BOLT	

M-METRIC PART

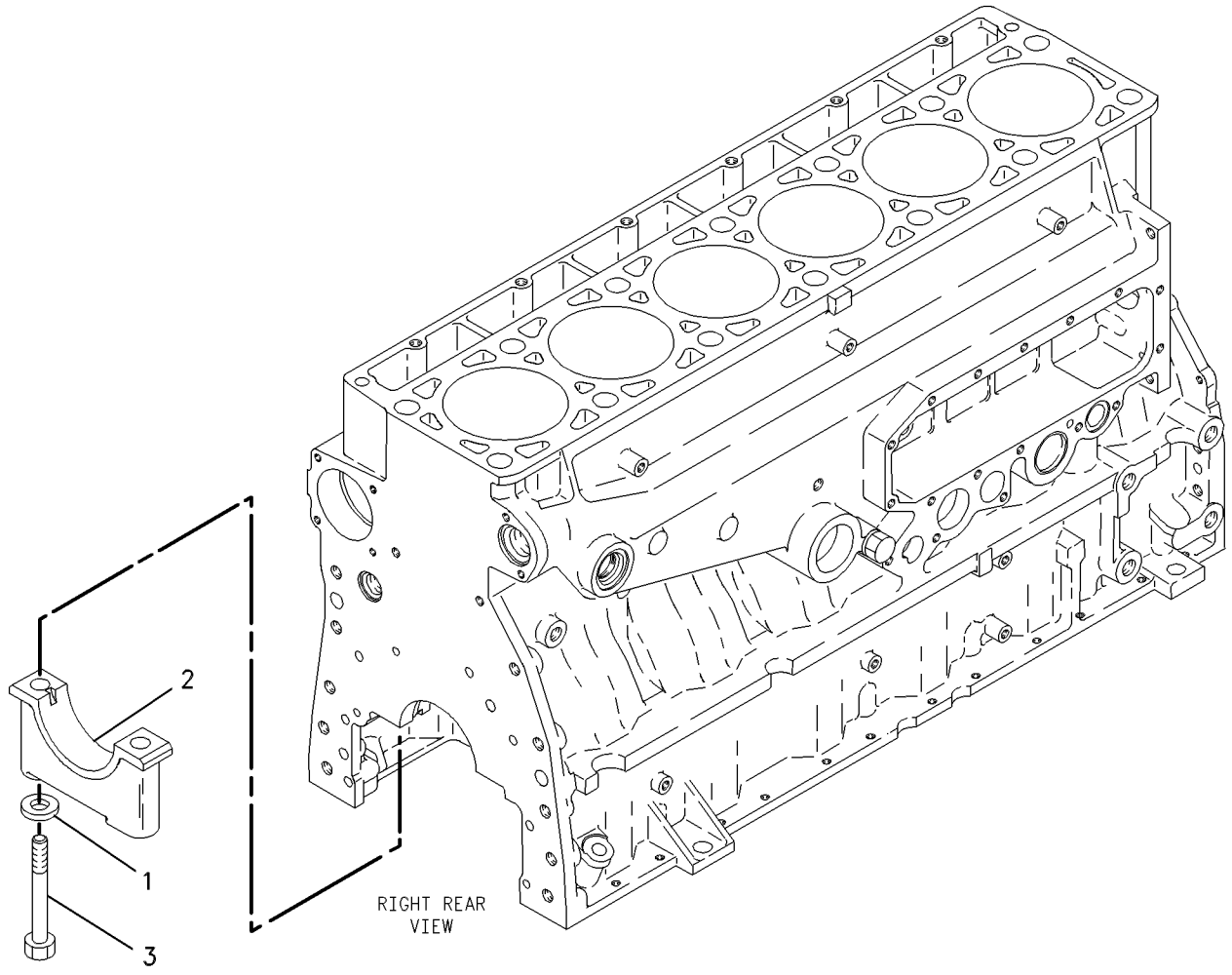

GRAPHIC #1 g00284455

129-1164 CYLINDER BLOCK GP*R

S/N: BMA1-UP

PART OF 129-1165 CYLINDER BLOCK GP

SMCS-1201 **i01818558**

NOTE	REF NO	GRAPHIC REF	PART NUMBER	QTY	PART NAME 1 2 3 4 5 6 (PRODUCT LEVEL)	SEE PAGE
Y	1	1	*129-1163*	1	CYLINDER BLOCK GP	18
	2	1	**2M-6471**	2	PLUG-CUP	
	3	1	**3H-5552**	1	PLUG-CUP	
	4	1	**9S-8006**	1	PLUG	
	5	1	**2M-9780**	1	SEAL-O-RING	
	6	1	**216-5586**	1	BEARING-SLEEVE (CAMSHAFT)	
	7	1	**2W-7213**	6	BEARING-SLEEVE (CAMSHAFT)	

Y-SEPARATE ILLUSTRATION

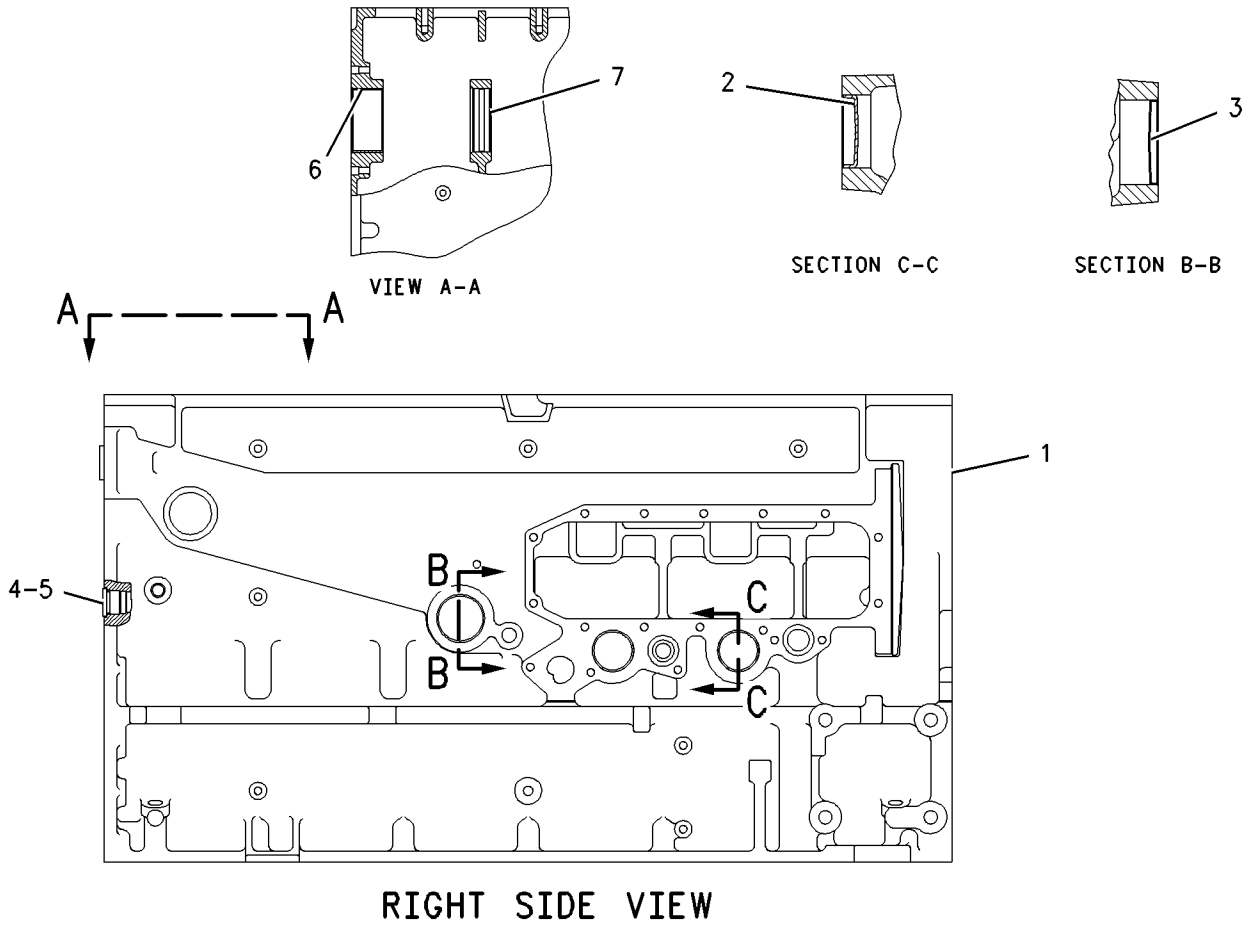

RIGHT SIDE VIEW

GRAPHIC #1 g00892412

BASIC ENGINE

129-1165 CYLINDER BLOCK GP

S/N: BMA1-UP

PART OF 199-5056 ENGINE AR-CORE

SMCS-1201 **i01298139**

NOTE	REF NO	GRAPHIC REF	PART NUMBER	QTY	PART NAME 1 2 3 4 5 6 (PRODUCT LEVEL)	SEE PAGE
YR	1	1	**129-1164**	1	CYLINDER BLOCK GP	19
	3	1	**1W-8407**	2	SLEEVE	
	4	1	**6V-3538**	2	DOWEL (20MM OAL)	
	6	1	**7N-5683**	2	DOWEL (20MM OAL)	

R-REMFG PART MAY BE AVAILABLE
Y-SEPARATE ILLUSTRATION

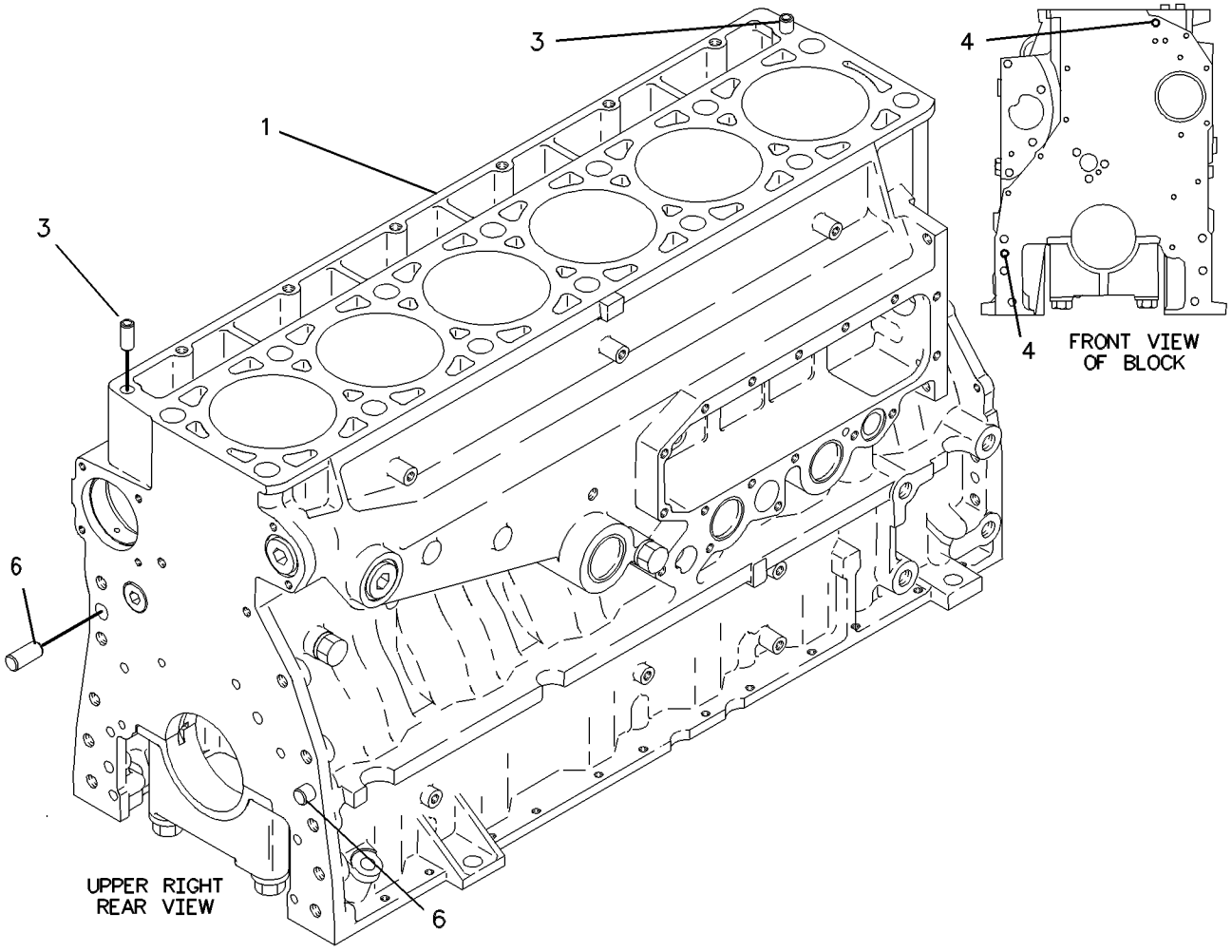

GRAPHIC #1 g00588544

BASIC ENGINE

183-6832 CYLINDER HEAD AS

S/N: BMA1-UP

PART OF 183-6833 CYLINDER HEAD GP

SMCS-1100 **i01615411**

NOTE	REF NO	GRAPHIC REF	PART NUMBER	QTY	PART NAME 1 2 3 4 5 6 (PRODUCT LEVEL)	SEE PAGE
	1	1	*183-6831*	1	CYLINDER HEAD	
	2	1	**8M-5860**	12	PLUG-CUP	
	3	1	**4F-5695**	2	PLUG-CUP	
	4	1	**159-0300**	6	SLEEVE-INJECTOR	
	5	1	**155-9504**	12	INSERT-VALVE SEAT (INLET)	
	6	1	**147-8218**	6	INSERT-VALVE SEAT (EXHAUST)	
	7	1	**8C-0563**	12	SEAL-O-RING	
	8	1	**154-8025**	6	SETSCREW-SOCKET	
	9	1	**9S-9334**	1	PLUG	
	10	1	**9X-7712**	1	SEAL-O-RING	

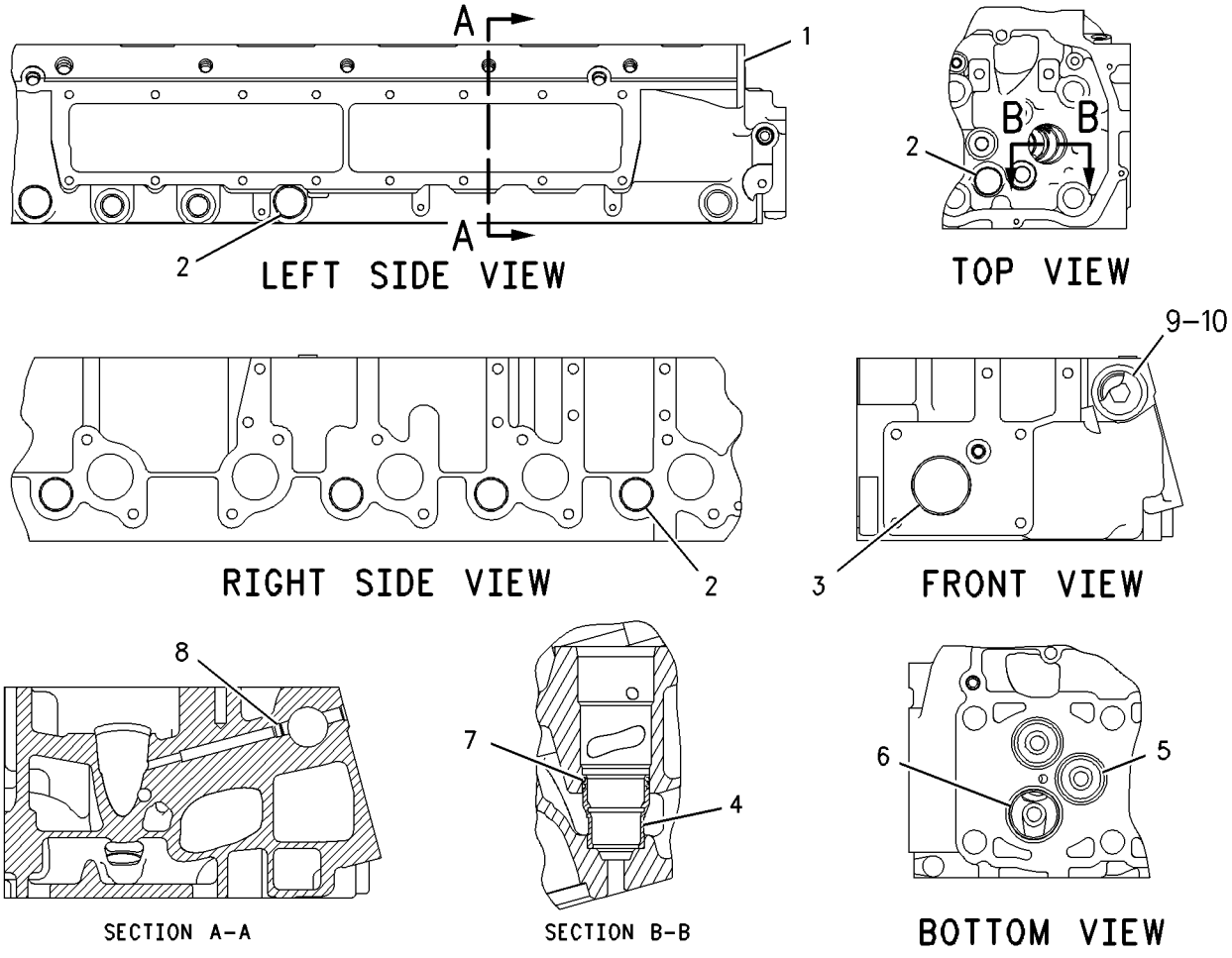

GRAPHIC #1 g00741546

205-1271 CYLINDER HEAD AS

S/N: BMA1-UP

PART OF 205-1272 CYLINDER HEAD AS, 205-1273 CYLINDER HEAD GP

SMCS-1100 **i01693167**

NOTE	REF NO	GRAPHIC REF	PART NUMBER	QTY	PART NAME 1 2 3 4 5 6 (PRODUCT LEVEL)	SEE PAGE
	2	1	**8M-5860**	12	PLUG-CUP	
	3	1	**4F-5695**	2	PLUG-CUP	
	4	1	**159-0300**	6	SLEEVE-INJECTOR	
	5	1	**155-9504**	12	INSERT-VALVE SEAT (INLET)	
	6	1	**147-8218**	6	INSERT-VALVE SEAT (EXHAUST)	
	7	1	**8C-0563**	12	SEAL-O-RING	
	8	1	**154-8025**	6	SETSCREW-SOCKET	
	9	1	**9S-9334**	1	PLUG	
	10	1	**9X-7712**	1	SEAL-O-RING	

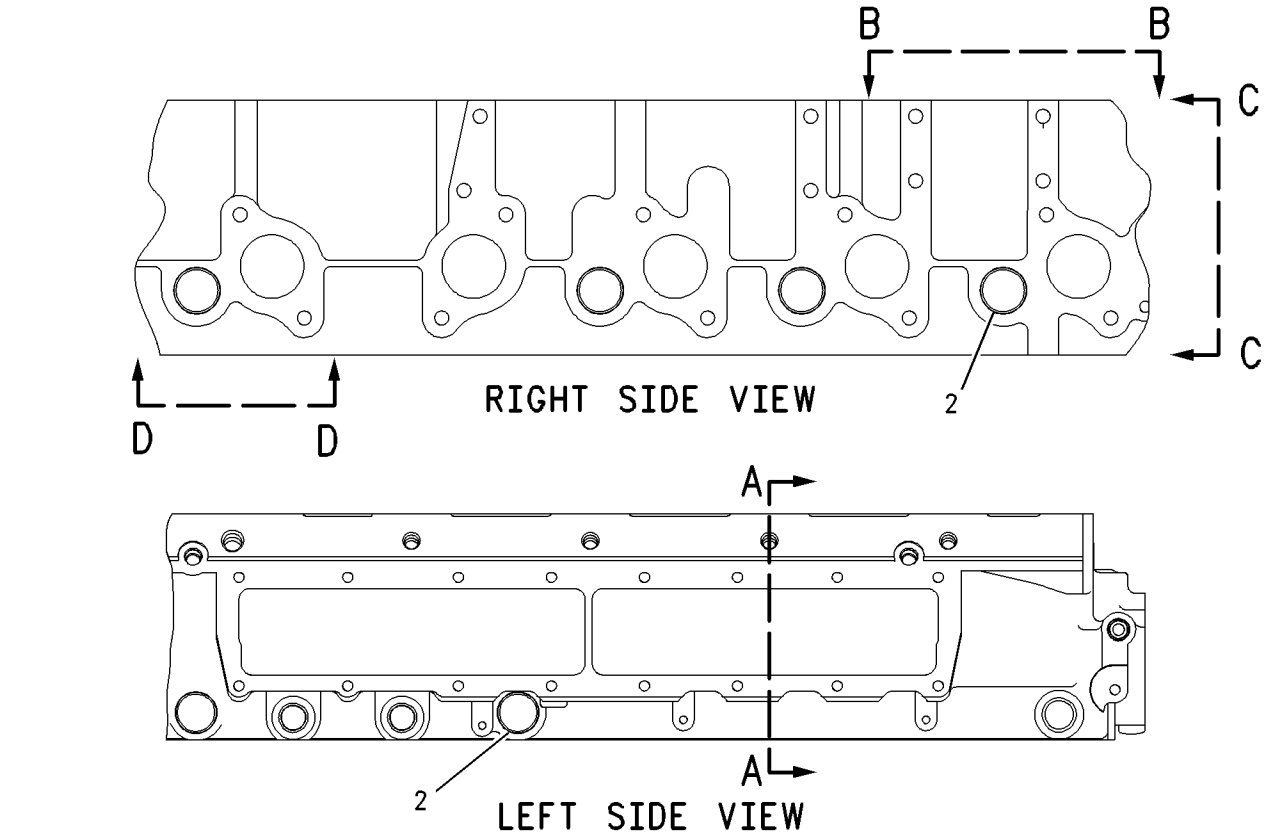

GRAPHIC #1

g00826091

BASIC ENGINE

205-1272 CYLINDER HEAD AS

S/N: BMA1-UP

FIELD REPLACEMENT FOR 205-1271—PAGE 22

SMCS-1100 **i01693212**

NOTE	REF NO	GRAPHIC REF	PART NUMBER	QTY	PART NAME 1 2 3 4 5 6 (PRODUCT LEVEL)	SEE PAGE
Y	1	1	*205-1271*	1	CYLINDER HEAD AS	22
	2	1	**9S-8002**	6	PLUG-O-RING	
	3	1	**6V-5048**	6	SEAL-O-RING	
	4	1	**9S-8004**	4	PLUG	
	5	1	**3J-1907**	4	SEAL-O-RING	
	6	1	**147-8214**	12	SEAL-VALVE STEM	
	7	1	**140-9670**	12	GUIDE-VALVE	
	8	1	**9S-8006**	1	PLUG	
	9	1	**2M-9780**	1	SEAL-O-RING	
	10	1	**9S-9334**	1	PLUG	
	11	1	**9X-7712**	1	SEAL-O-RING	
	12	1	**147-8220**	6	GUIDE-VALVE	
	13	1	**102-6229**	6	SEAL-VALVE STEM	
	14	1	**137-6715**	6	SEAT-VALVE SPRING	
	15	1	**9S-8005**	1	PLUG-O-RING	
	16	1	**3K-0360**	1	SEAL-O-RING	
	17	1	**1N-5999**	2	PLUG	
	18	1	**7J-0204**	2	SEAL-O-RING	
	19	1	**9S-8003**	1	PLUG-O-RING	
	20	1	**1J-9671**	1	SEAL-O-RING	

Y-SEPARATE ILLUSTRATION

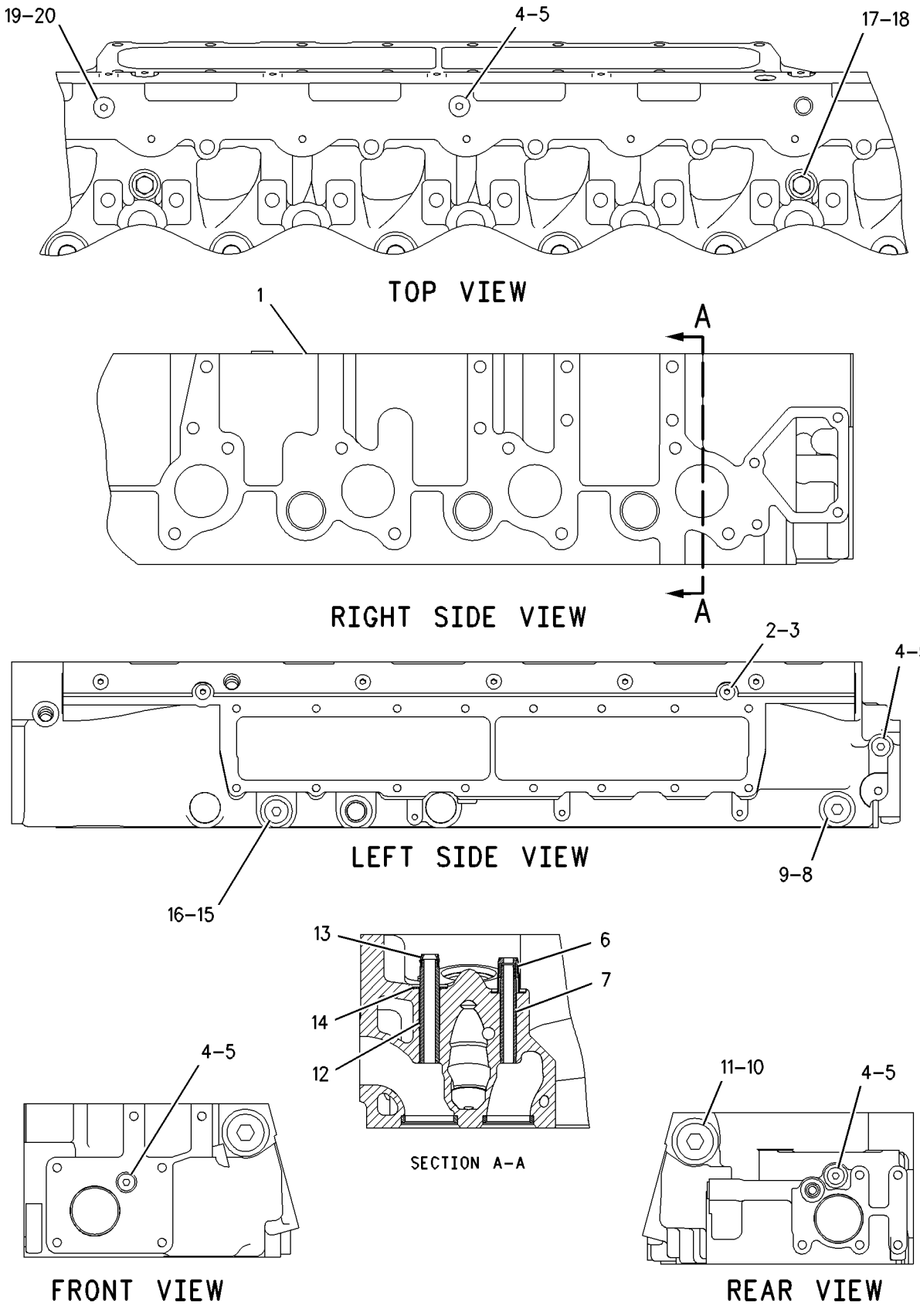

GRAPHIC #1

g00847258

133-3742 CYLINDER HEAD GP

S/N: BMA1-UP

PART OF 199-5056 ENGINE AR-CORE

SMCS-1100 **i01696098**

NOTE	REF NO	GRAPHIC REF	PART NUMBER	QTY	PART NAME 1 2 3 4 5 6 (PRODUCT LEVEL)	SEE PAGE
Y	1	1	*205-1274*	1	CYLINDER HEAD GP	32
	2	1	**133-4995**	1	GASKET-CYLINDER HEAD	
	3	1	**8T-3282**	14	WASHER-HARD (22X35X3.5MM THK)	
		1	**138-3252**	14	BOLT-12 POINT HEAD	
M	4	1	**8T-7950**	6	BOLT (M10X1.5X180MM)	
	5	1	**6V-5839**	6	WASHER (11X21X2.5MM THK)	

M-METRIC PART
Y-SEPARATE ILLUSTRATION

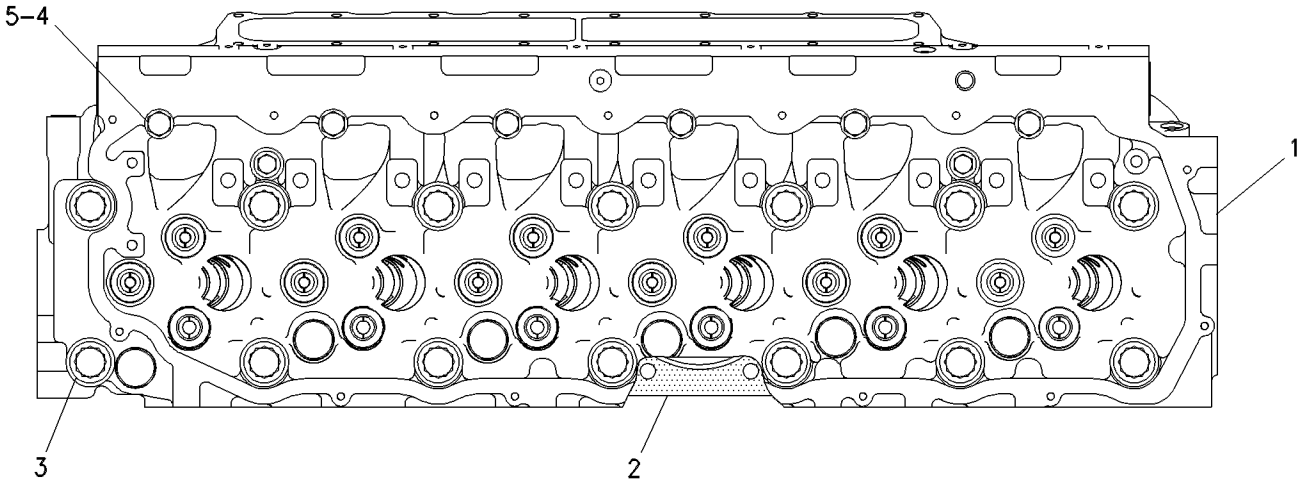

TOP VIEW

GRAPHIC #1 g00334554

BASIC ENGINE

183-6833 CYLINDER HEAD GP

S/N: BMA1-UP

PART OF 183-6835 CYLINDER HEAD GP

SMCS-1100 **i01615409**

NOTE	REF NO	GRAPHIC REF	PART NUMBER	QTY	PART NAME 1 2 3 4 5 6 (PRODUCT LEVEL)	SEE PAGE
Y	1	1	*183-6832*	1	CYLINDER HEAD AS	21
	2	1	**145-7390**	12	VALVE-INLET	
	3	1	**147-8211**	6	VALVE-EXHAUST	
	4	1	**1W-2715**	24	LOCK-RETAINER	
	5	1	**7E-7779**	12	RETAINER-SPRING	
	6	1	**147-8214**	12	SEAL-VALVE STEM	
	7	1	**140-9670**	12	GUIDE-VALVE	
	8	1	**137-6718**	6	SPRING-VALVE	
	9	1	**140-6188**	12	SPRING-VALVE	
	10	1	**2A-4429**	12	LOCK-RETAINER	
	11	1	**134-4483**	6	RETAINER-SPRING	
	12	1	**147-8220**	6	GUIDE-VALVE	
	13	1	**102-6229**	6	SEAL-VALVE STEM	
	14	1	**137-6715**	6	SEAT-VALVE SPRING	

Y-SEPARATE ILLUSTRATION

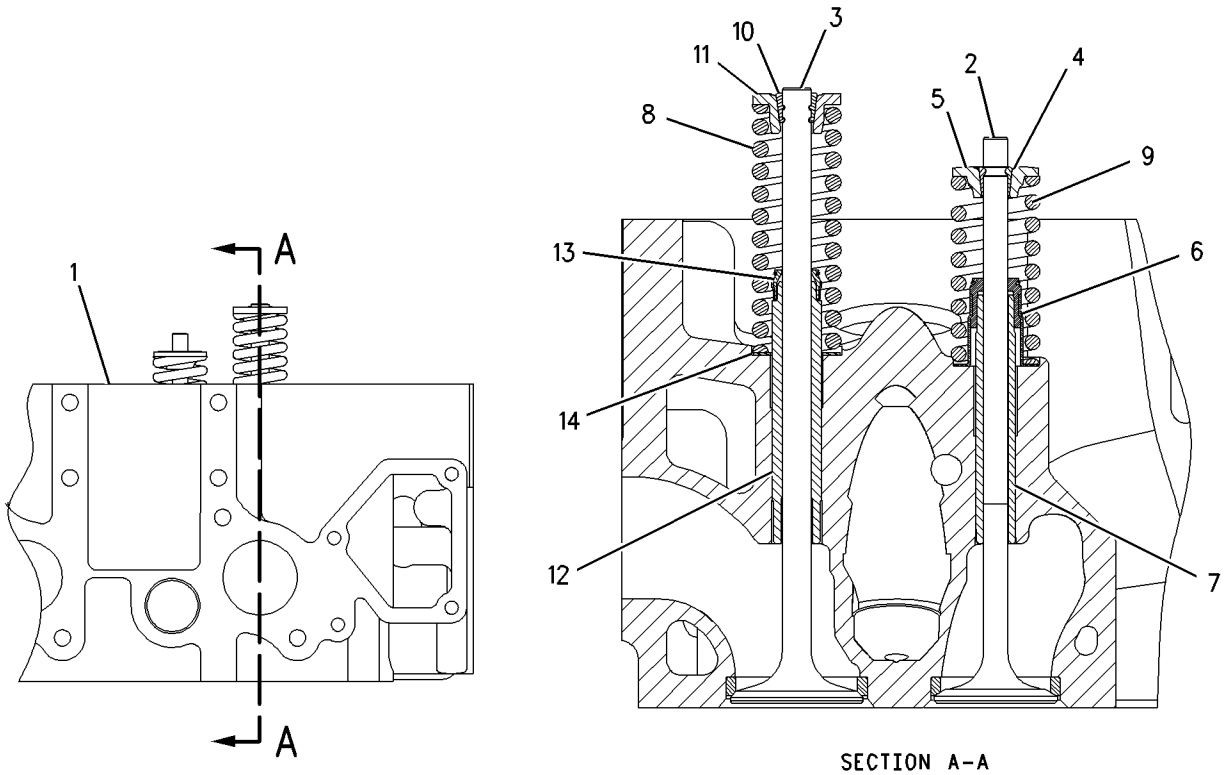

SECTION A-A

GRAPHIC #1 g00769840

BASIC ENGINE

183-6835 CYLINDER HEAD GP

S/N: BMA1-UP

FIELD REPLACEMENT FOR 133-3742—PAGE 26

SMCS-1100 **i01626459**

NOTE	REF NO	GRAPHIC REF	PART NUMBER	QTY	PART NAME 1 2 3 4 5 6 (PRODUCT LEVEL)	SEE PAGE
Y	1	1	*183-6833*	1	CYLINDER HEAD GP	27
	2	1	**1N-5999**	2	PLUG	
	3	1	**7J-0204**	2	SEAL-O-RING	
	4	1	**9S-8002**	7	PLUG-O-RING	
	5	1	**6V-5048**	7	SEAL-O-RING	
	6	1	**9S-8004**	4	PLUG	
	7	1	**3J-1907**	4	SEAL-O-RING	
	8	1	**9S-8006**	1	PLUG	
	9	1	**2M-9780**	1	SEAL-O-RING	
	10	1	**9S-9334**	1	PLUG	
	11	1	**9X-7712**	1	SEAL-O-RING	
	12	1	**9S-8005**	1	PLUG-O-RING	
	13	1	**3K-0360**	1	SEAL-O-RING	
	14	1	**9S-8003**	1	PLUG-O-RING	
	15	1	**1J-9671**	1	SEAL-O-RING	

Y-SEPARATE ILLUSTRATION

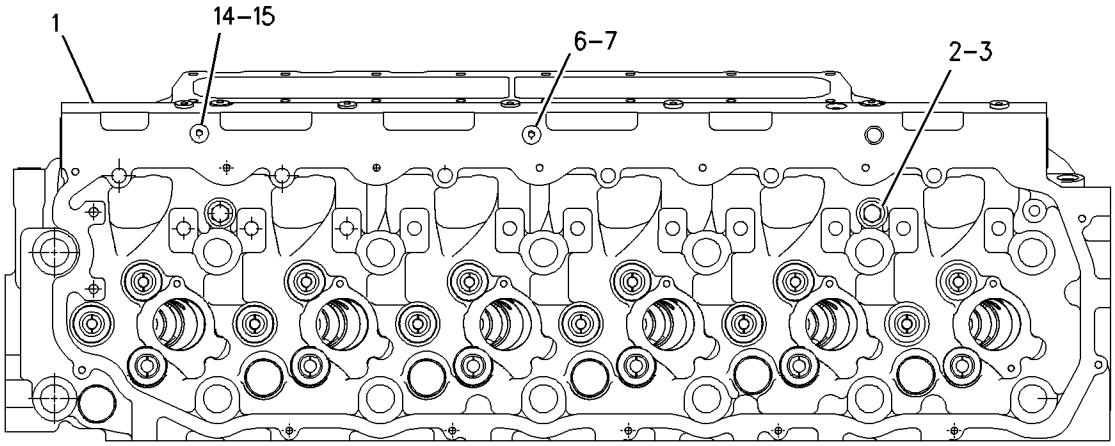

TOP VIEW

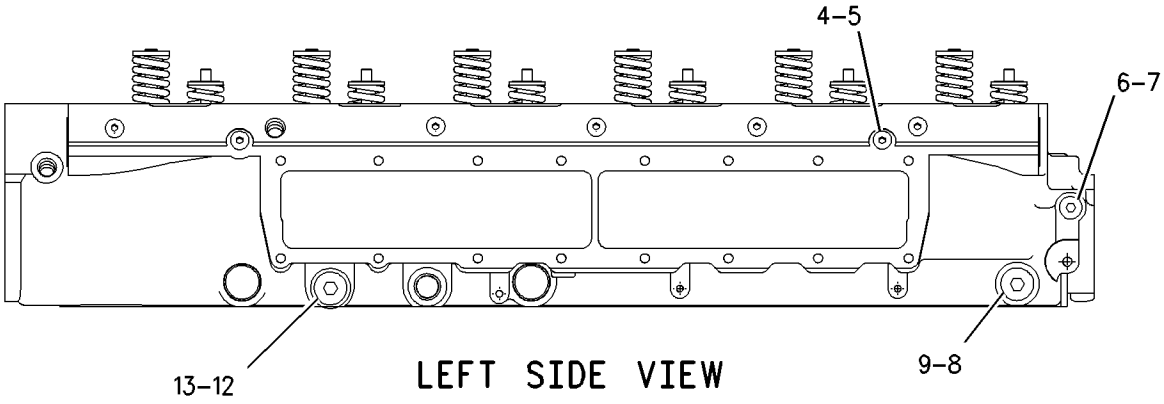

LEFT SIDE VIEW

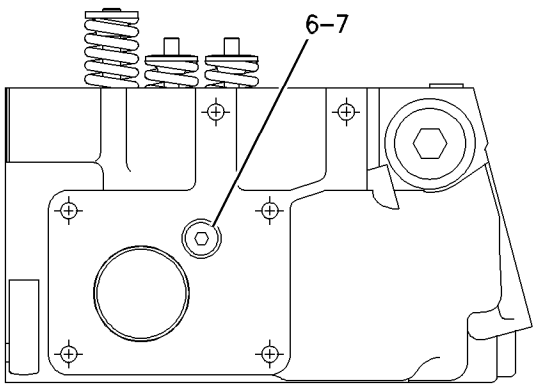

FRONT VIEW

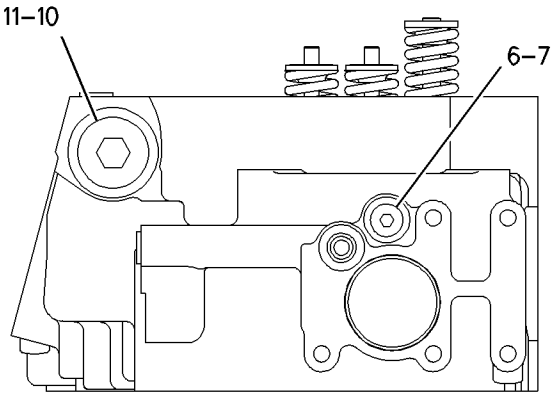

REAR VIEW

GRAPHIC #1 g00829053

BASIC ENGINE

205-1273 CYLINDER HEAD GP

S/N: BMA1-UP

PART OF 205-1274, 205-1275 CYLINDER HEAD GP

SMCS-1100 **i01696313**

NOTE	REF NO	GRAPHIC REF	PART NUMBER	QTY	PART NAME 1 2 3 4 5 6 (PRODUCT LEVEL)	SEE PAGE
Y	1	1	*205-1271*	1	CYLINDER HEAD AS	22
	2	1	**145-7390**	12	VALVE-INLET	
	3	1	**147-8211**	6	VALVE-EXHAUST	
	4	1	**1W-2715**	24	LOCK-RETAINER	
	5	1	**7E-7779**	12	RETAINER-SPRING	
	6	1	**147-8214**	12	SEAL-VALVE STEM	
	7	1	**140-9670**	12	GUIDE-VALVE	
	8	1	**137-6718**	6	SPRING-VALVE	
	9	1	**140-6188**	12	SPRING-VALVE	
	10	1	**2A-4429**	12	LOCK-RETAINER	
	11	1	**134-4483**	6	RETAINER-SPRING	
	12	1	**147-8220**	6	GUIDE-VALVE	
	13	1	**102-6229**	6	SEAL-VALVE STEM	
	14	1	**137-6715**	6	SEAT-VALVE SPRING	

Y-SEPARATE ILLUSTRATION

205-1273 **CYLINDER HEAD GP** ***(contd.)*** **i01696313**

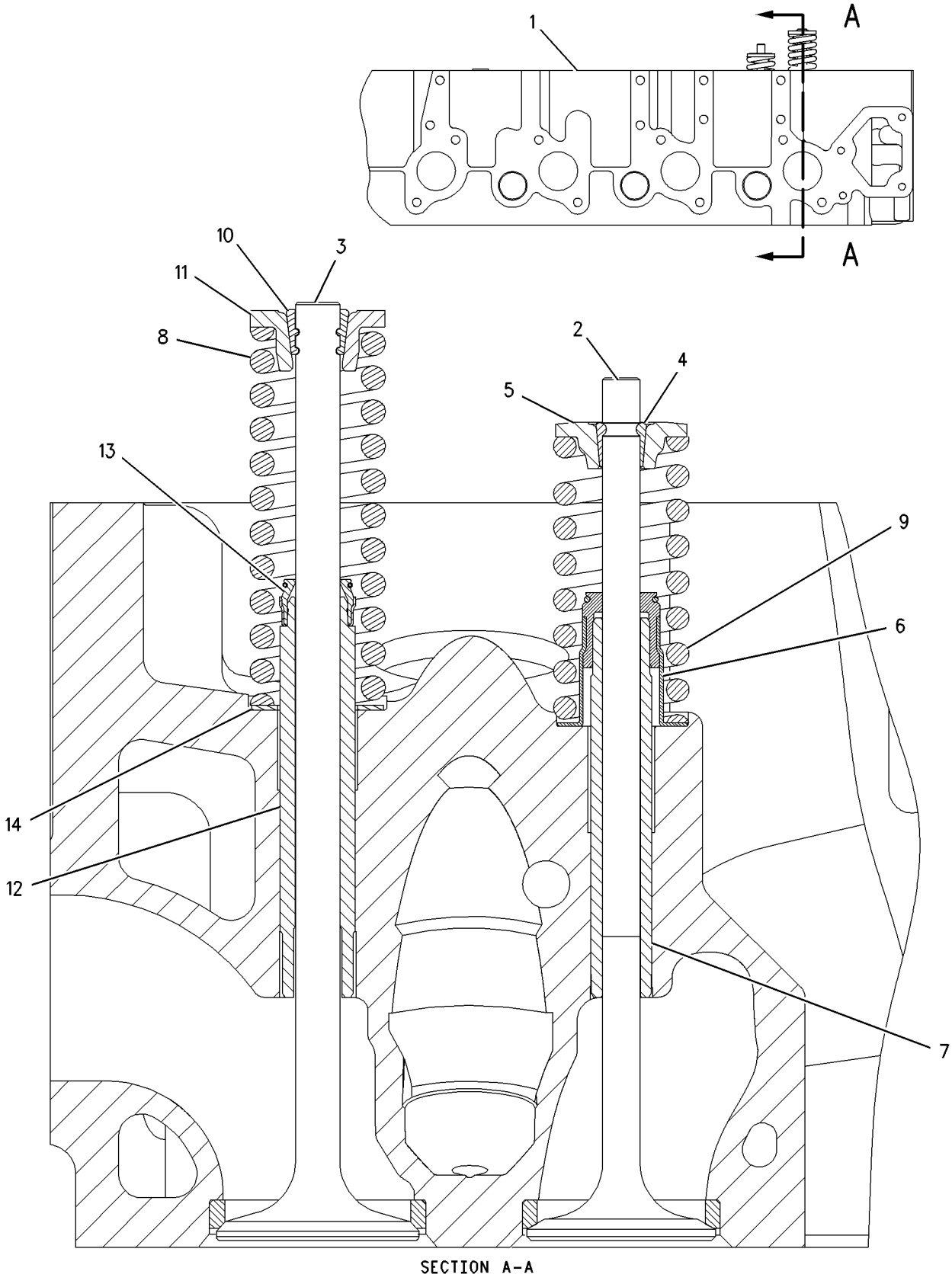

SECTION A-A

GRAPHIC #1 g00808330

BASIC ENGINE

205-1274 CYLINDER HEAD GP

S/N: BMA1-UP

PART OF 133-3742 CYLINDER HEAD GP

SMCS-1100 **i01696325**

NOTE	REF NO	GRAPHIC REF	PART NUMBER	QTY	PART NAME 1 2 3 4 5 6 (PRODUCT LEVEL)	SEE PAGE
Y	1	1	*205-1273*	1	CYLINDER HEAD GP	30
	2	1	**1N-5999**	2	PLUG	
	3	1	**7J-0204**	2	SEAL-O-RING	
	4	1	**9S-8002**	6	PLUG-O-RING	
	5	1	**6V-5048**	6	SEAL-O-RING	
	6	1	**9S-8004**	3	PLUG	
	7	1	**3J-1907**	3	SEAL-O-RING	
	8	1	**9S-8006**	1	PLUG	
	9	1	**2M-9780**	1	SEAL-O-RING	
	10	1	**9S-9334**	1	PLUG	
	11	1	**9X-7712**	1	SEAL-O-RING	

Y-SEPARATE ILLUSTRATION

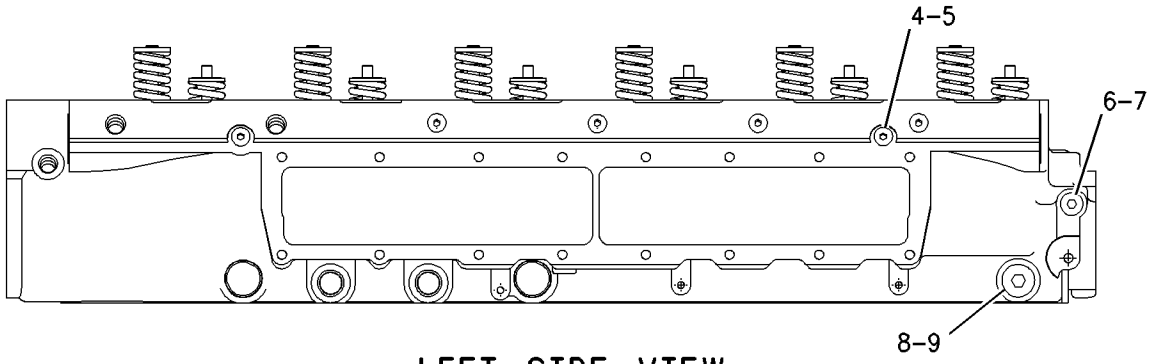

LEFT SIDE VIEW

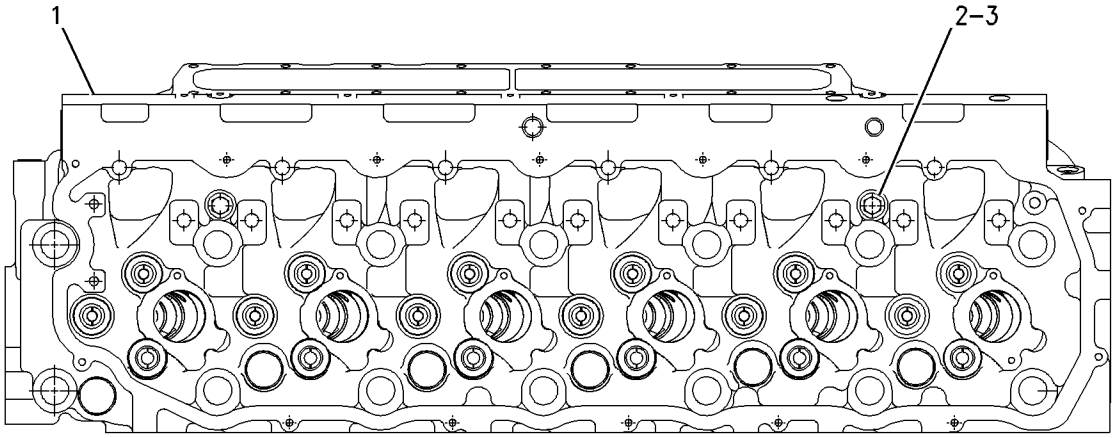

TOP VIEW

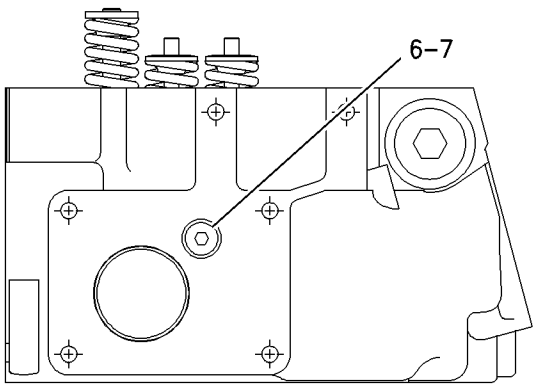

FRONT VIEW

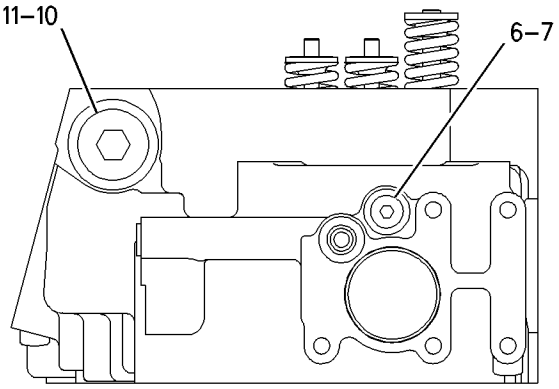

REAR VIEW

GRAPHIC #1 g00808348

BASIC ENGINE

205-1275 CYLINDER HEAD GP

S/N: BMA1-UP

FIELD REPLACEMENT FOR 205-1274—PAGE 32

SMCS-1100 **i01698531**

NOTE	REF NO	GRAPHIC REF	PART NUMBER	QTY	PART NAME 1 2 3 4 5 6 (PRODUCT LEVEL)	SEE PAGE
Y	1	1	*205-1273*	1	CYLINDER HEAD GP	30
	2	1	**1N-5999**	2	PLUG	
	3	1	**7J-0204**	2	SEAL-O-RING	
	4	1	**9S-8002**	6	PLUG	
	5	1	**6V-5048**	6	SEAL-O-RING	
	6	1	**9S-8004**	4	PLUG	
	7	1	**3J-1907**	4	SEAL-O-RING	
	8	1	**9S-8006**	1	PLUG	
	9	1	**2M-9780**	1	SEAL-O-RING	
	10	1	**9S-9334**	1	PLUG	
	11	1	**9X-7712**	1	SEAL-O-RING	
	12	1	**9S-8005**	1	PLUG	
	13	1	**3K-0360**	1	SEAL-O-RING	
	14	1	**9S-8003**	1	PLUG (1/2-20 THD)	
	15	1	**1J-9671**	1	SEAL-O-RING	
	16	1	**9S-4191**	1	PLUG	
		1	**3J-1907**	1	SEAL-O-RING	

Y-SEPARATE ILLUSTRATION

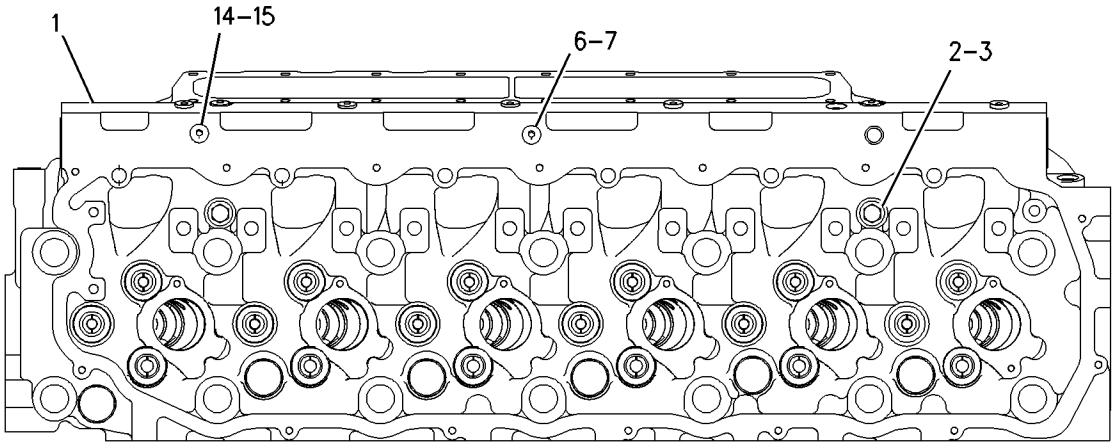

TOP VIEW

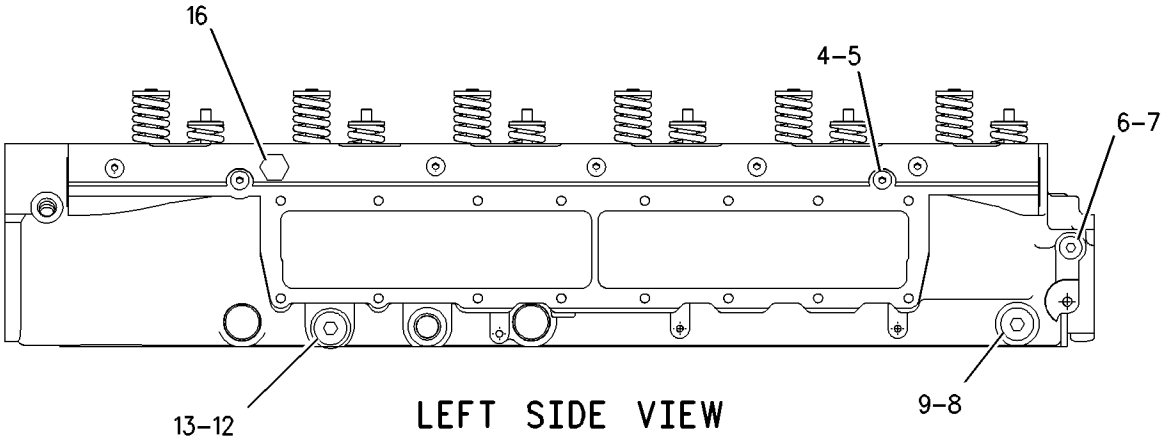

LEFT SIDE VIEW

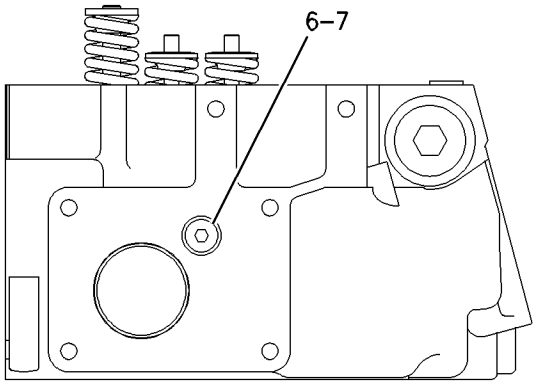

FRONT VIEW

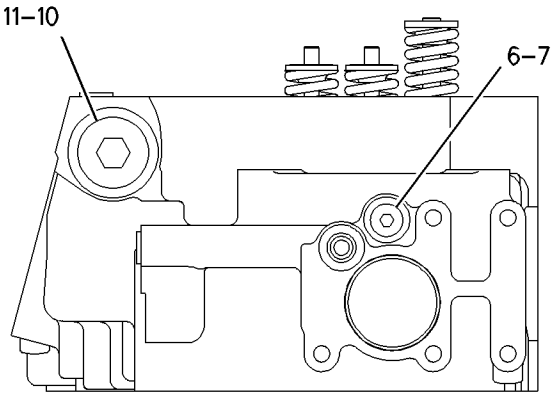

REAR VIEW

GRAPHIC #1 g00867459

194-5128 DAMPER & PULLEY GP

S/N: BMA1-UP

PART OF 199-5055 ENGINE AR-COMPLETE

SMCS-1205 **i01695045**

NOTE	REF NO	GRAPHIC REF	PART NUMBER	QTY	PART NAME 1 2 3 4 5 6 (PRODUCT LEVEL)	SEE PAGE
	1	1	**194-5127**	1	YOKE	
	2	1	**2W-7381**	1	WASHER	
	3	1	**167-8121**	1	DAMPER AS	
	4	1	**172-9367**	1	PULLEY-CRANKSHAFT	
	5	1	**6V-5839**	8	WASHER (11X21X2.5MM THK)	
M	6	1	**6V-7981**	8	BOLT (M10X1.50X70MM)	
M	7	1	**8T-3666**	4	BOLT (M14X60MM)	

M-METRIC PART

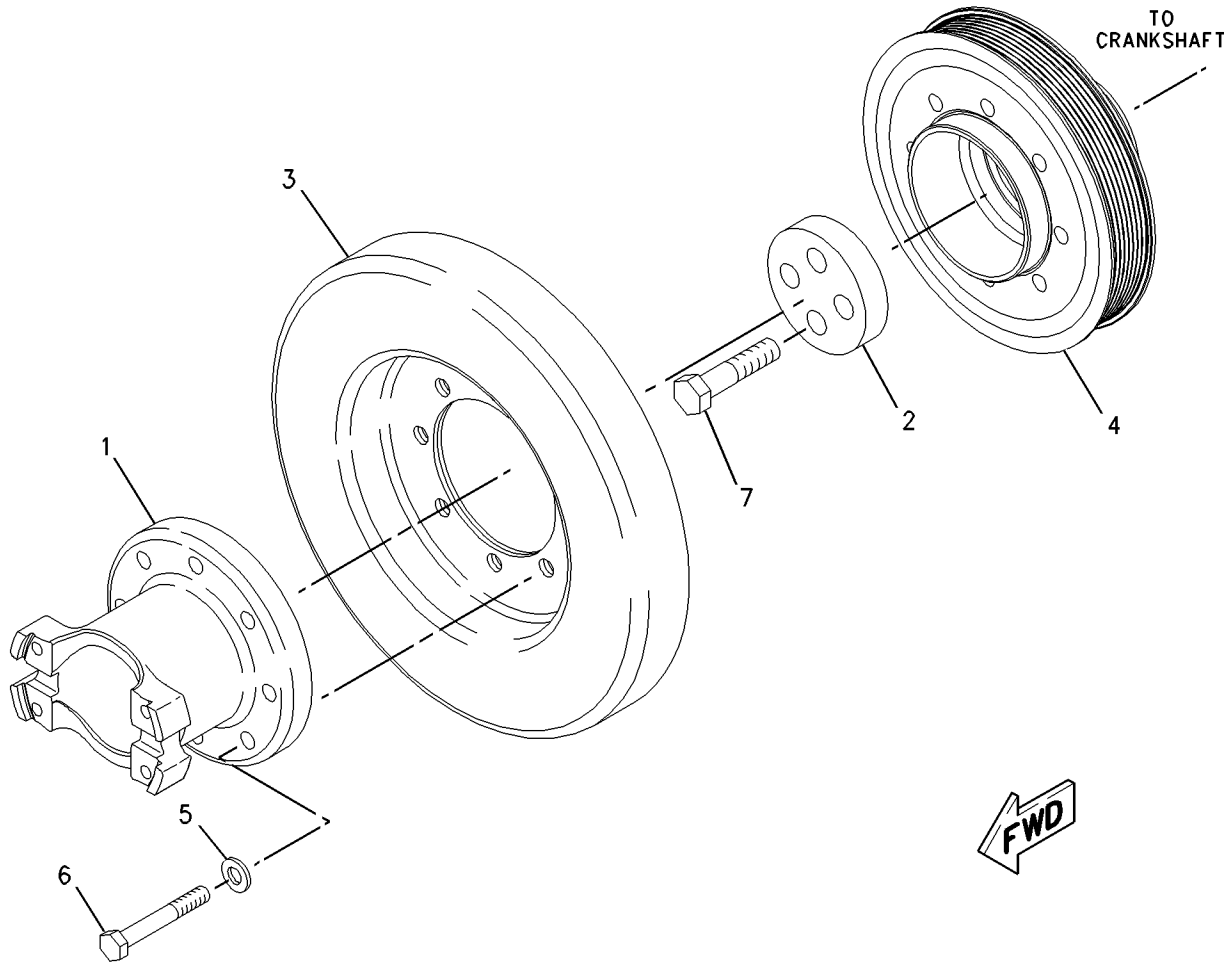

GRAPHIC #1 g00873893

BASIC ENGINE

185-9375 FLYWHEEL GP

S/N: BMA1-UP

PART OF 199-5055 ENGINE AR-COMPLETE

SMCS-1156, 1158 **i01695059**

NOTE	REF NO	GRAPHIC REF	PART NUMBER	QTY	PART NAME 1 2 3 4 5 6 (PRODUCT LEVEL)	SEE PAGE
M	1	1	**7X-7961**	8	BOLT	
	2	1	**160-8225**	1	FLYWHEEL AS	
	2A	1	**7W-5095**	1	GEAR-FLYWHEEL (134 TEETH)	
	3	1	**3E-3213**	1	PIN-SPRING	
	4	1	**5P-8245**	8	WASHER-HARD (13.5X25.5X3MM THK)	

M-METRIC PART

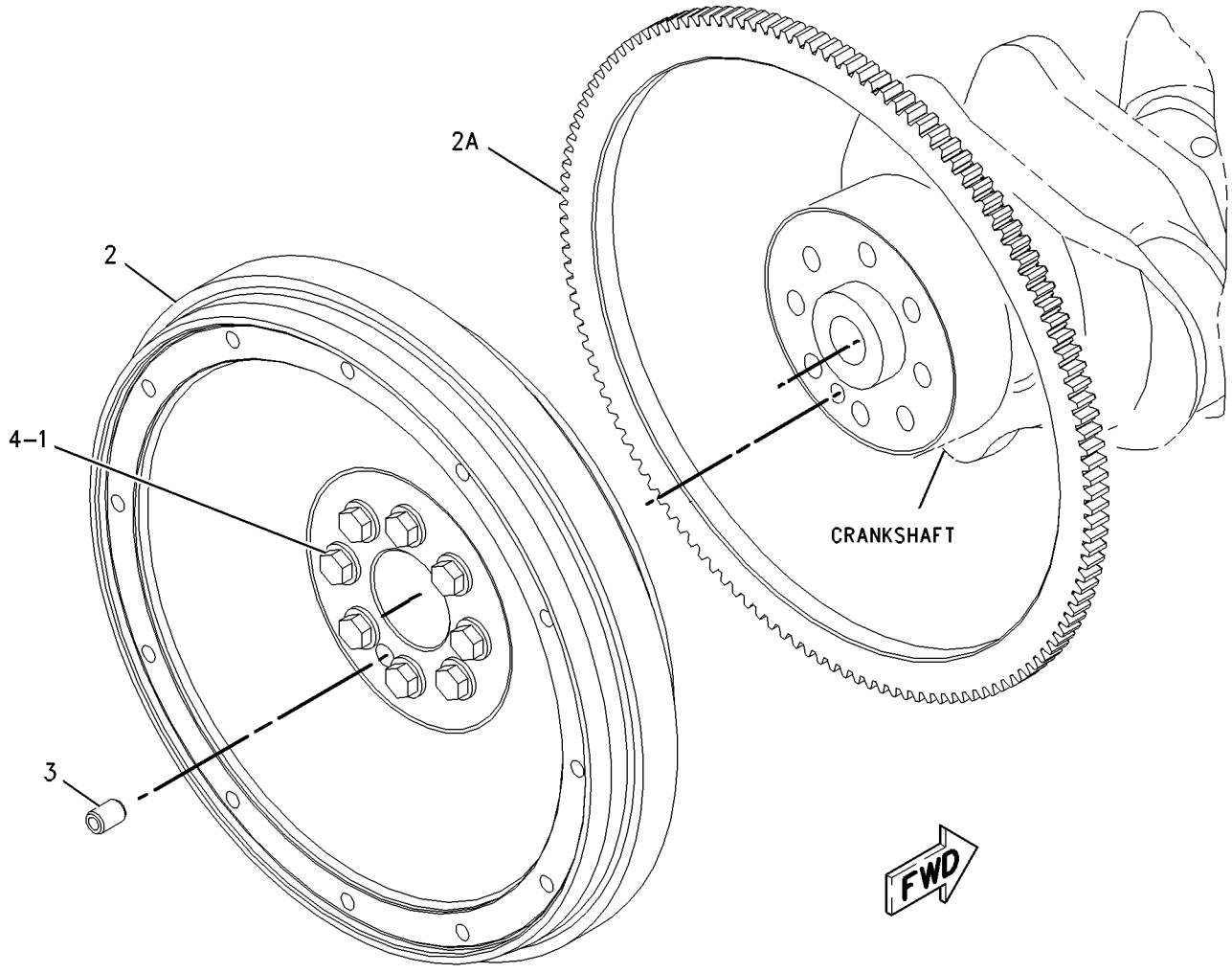

GRAPHIC #1 g00880816

BASIC ENGINE

205-1321 GEAR GP-FRONT

S/N: BMA1-UP

PART OF 199-5056 ENGINE AR-CORE

SMCS-1206 **i01696307**

NOTE	REF NO	GRAPHIC REF	PART NUMBER	QTY	PART NAME 1 2 3 4 5 6 (PRODUCT LEVEL)	SEE PAGE
	1	1	**113-6069**	1	PLATE-THRUST	
	2	1	**115-4219**	1	PLATE-RETAINING	
	3	1	**200-4495**	1	SHAFT-IDLER	
	4	1	**205-1320**	1	GEAR AS-IDLER (50 TEETH)	
	4A	1	**115-4072**	1	BEARING	
M	5	1	**136-4183**	1	BOLT-12 POINT HEAD (M10X1.5X30MM)	
M	6	1	**6V-5843**	2	BOLT (M10X1.50X45MM)	

M-METRIC PART

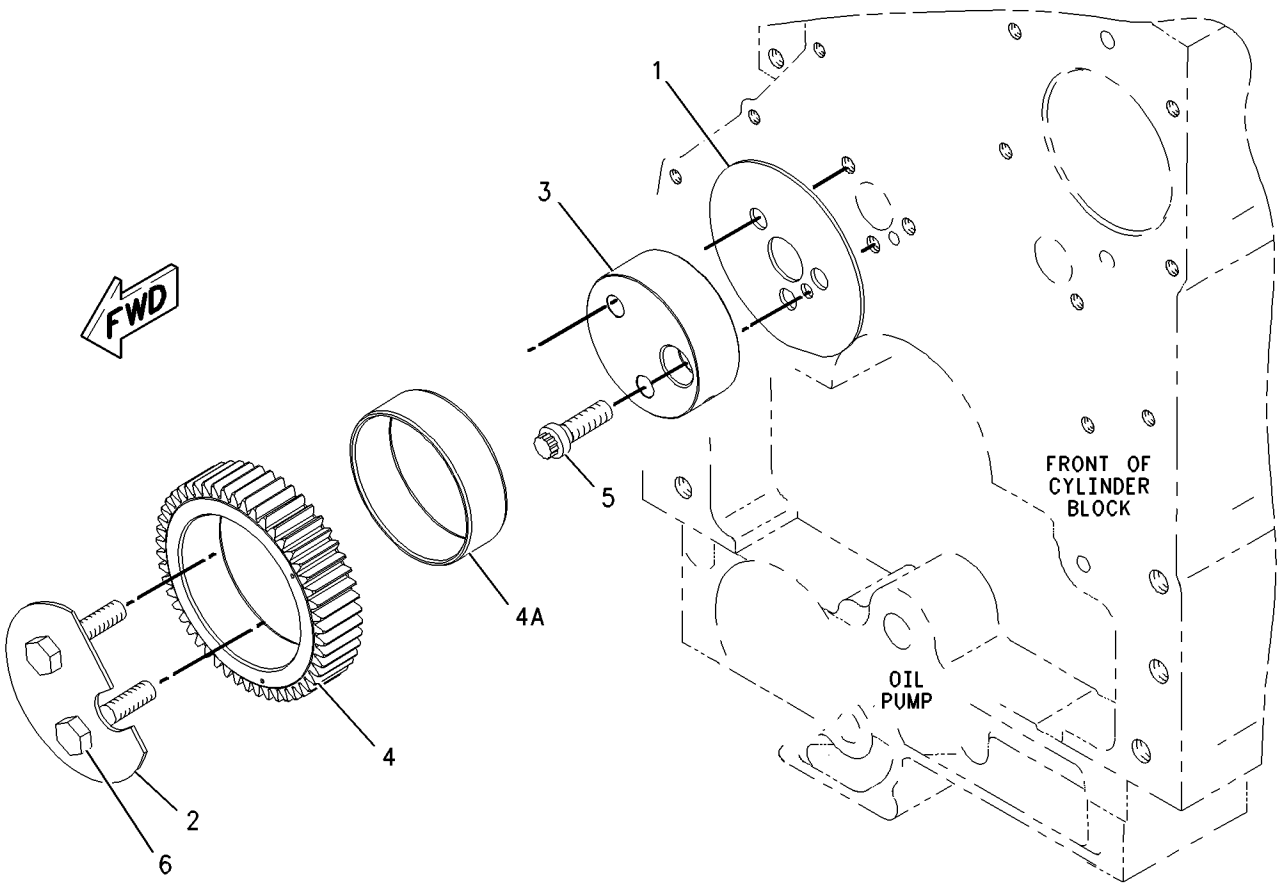

GRAPHIC #1 g00873940

BASIC ENGINE

117-5118 HOUSING GP-FLYWHEEL

S/N: BMA1-UP

PART OF 199-5055 ENGINE AR-COMPLETE

SMCS-1157 **i01746908**

NOTE	REF NO	GRAPHIC REF	PART NUMBER	QTY	PART NAME 1 2 3 4 5 6 (PRODUCT LEVEL)	SEE PAGE
	1	1	**100-6550**	1	HOUSING-FLYWHEEL	
M	2	1	**8T-0226**	10	BOLT (M14X2X45 MM)	
M	3	1	**6V-5842**	2	BOLT (M10X1.50X40MM)	
	4	1	**9S-4183**	1	PLUG	
	5	1	**9S-4182**	1	PLUG	

M-METRIC PART

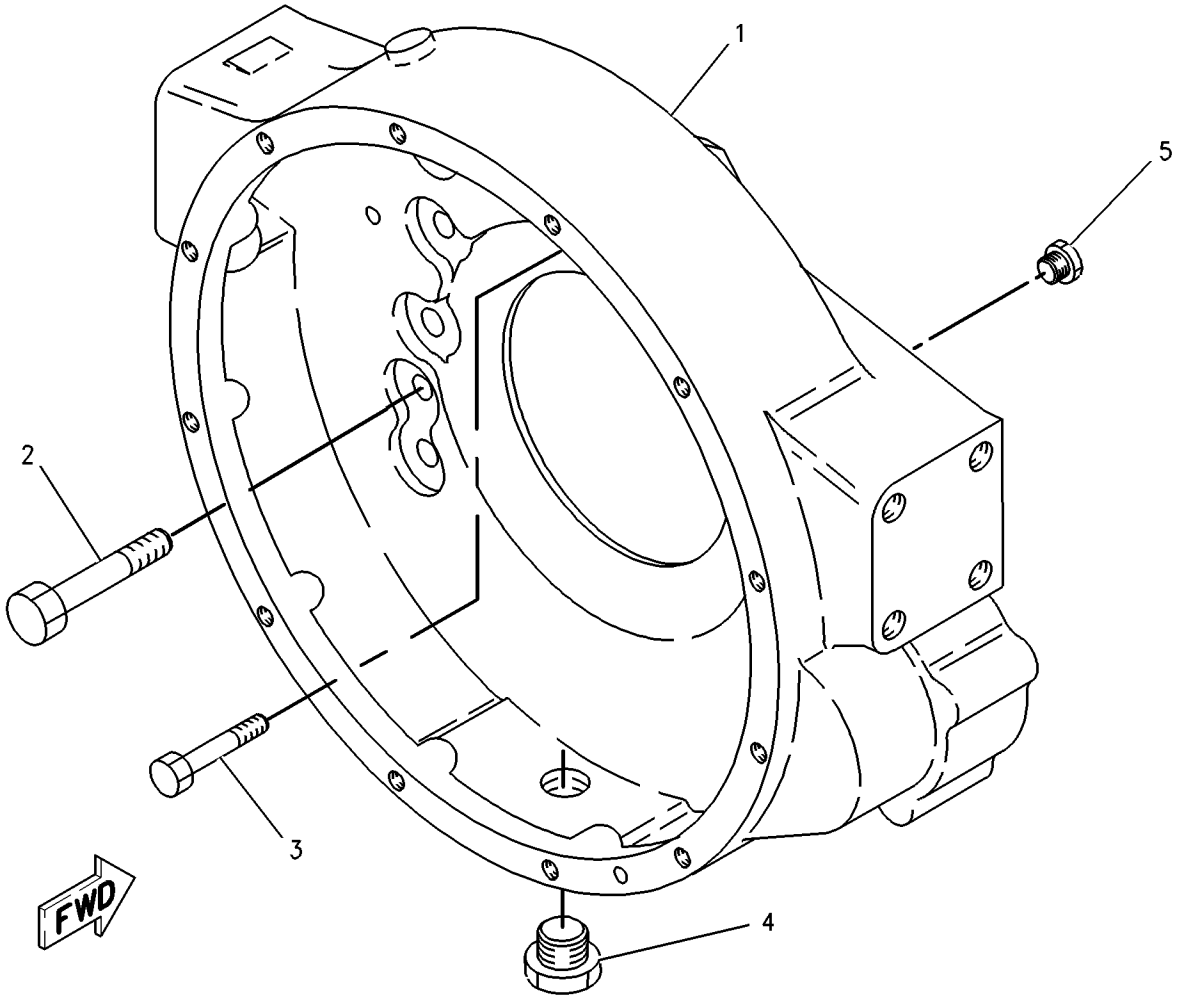

GRAPHIC #1 g00785435

133-5055 HOUSING GP-FRONT

S/N: BMA1-UP

PART OF 199-5056 ENGINE AR-CORE

SMCS-1151, 1162 **i01615429**

NOTE	REF NO	GRAPHIC REF	PART NUMBER	QTY	PART NAME 1 2 3 4 5 6 (PRODUCT LEVEL)	SEE PAGE
	1	1	**128-3883**	1	HOUSING-FRONT	
M	2	1	**6V-5217**	8	BOLT (M8X1.25X20MM)	
	3	1	**9M-1974**	12	WASHER-HARD (8.8X16X2MM THK)	
M	4	1	**6V-3918**	4	BOLT (M8X1.25X50MM)	
B	5	1	**1U-8846**		SEALANT-GASKET	

B-USE AS REQUIRED
M-METRIC PART

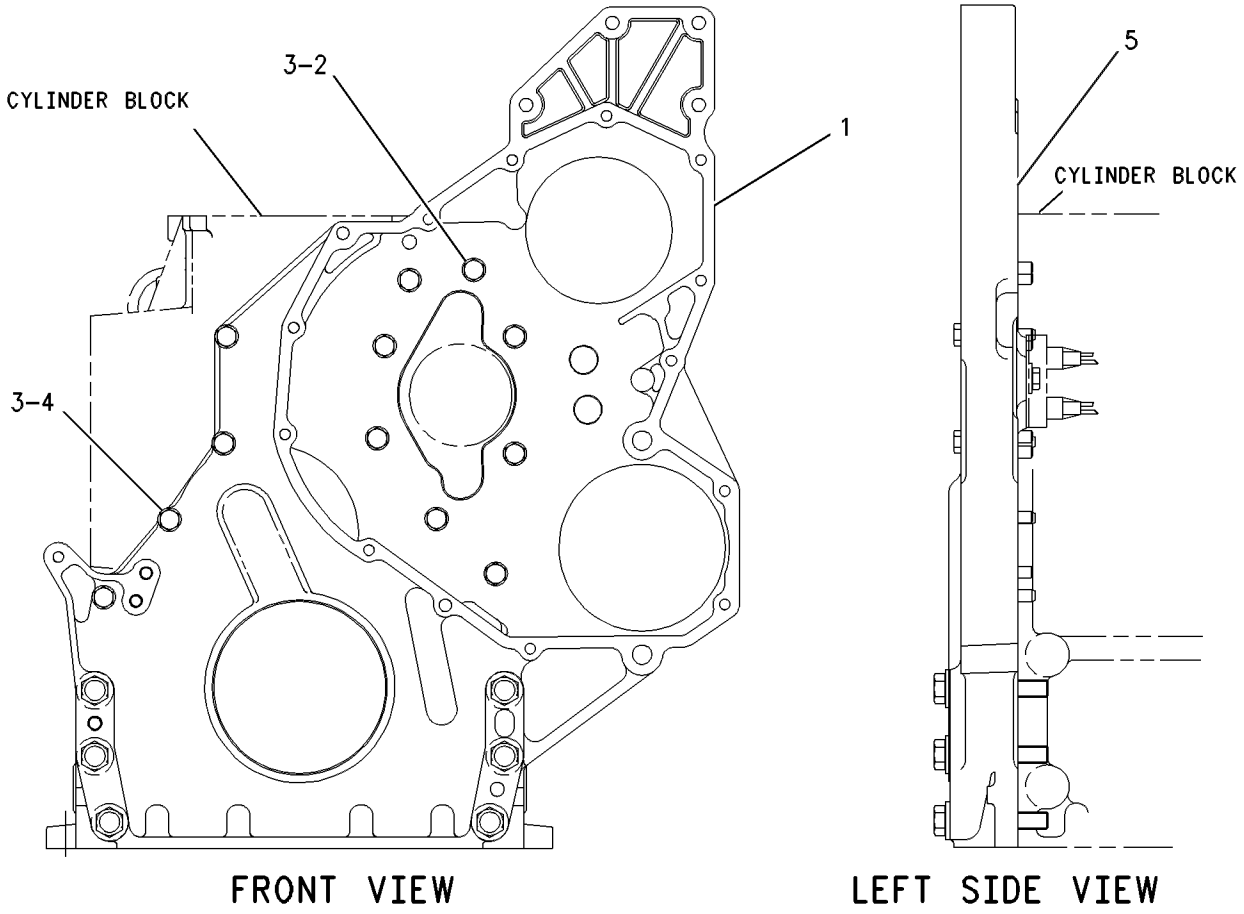

GRAPHIC #1 g00285827

139-4081 LIFTER GP-VALVE

S/N: BMA1-UP

PART OF 135-2969 VALVE MECHANISM GP

SMCS-1209 **i01615435**

NOTE	REF NO	GRAPHIC REF	PART NUMBER	QTY	PART NAME 1 2 3 4 5 6 (PRODUCT LEVEL)	SEE PAGE
	1	1	**139-9476**	1	SHAFT AS-LIFTER	
		1	**2D-6642**	2	BALL	
	2	1	**7E-6794**	4	ARM AS-INJECTOR	
	3	1	**139-4084**	2	SPACER-FOLLOWER	

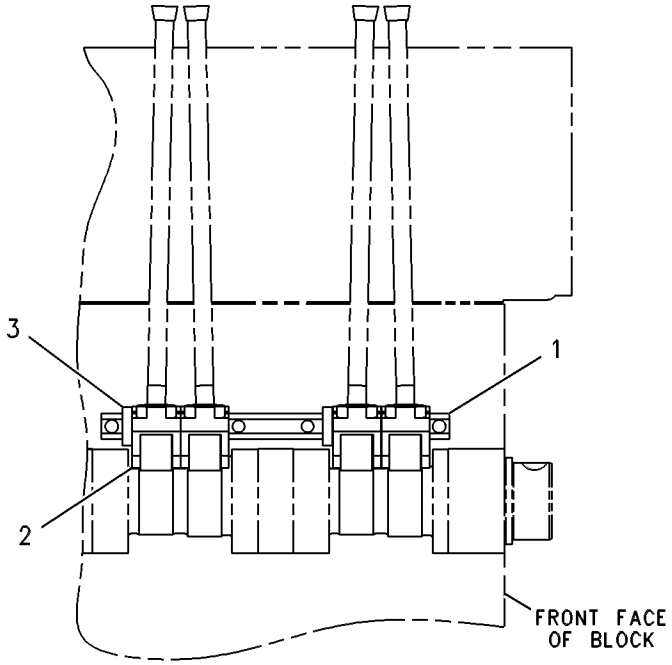

RIGHT SIDE VIEW

GRAPHIC #1 g00288708

196-1912 LIFTING GP-ENGINE

S/N: BMA1-UP

PART OF 199-5055 ENGINE AR-COMPLETE

SMCS-1122 **i01695052**

NOTE	REF NO	GRAPHIC REF	PART NUMBER	QTY	PART NAME 1 2 3 4 5 6 (PRODUCT LEVEL)	SEE PAGE
M	1	1	**8T-4136**	4	BOLT (M10X1.5X25MM)	
	2	1	**8T-4121**	4	WASHER-HARD (11X21X2.5MM THK)	
	3	1	**196-1914**	1	PLATE	

M-METRIC PART

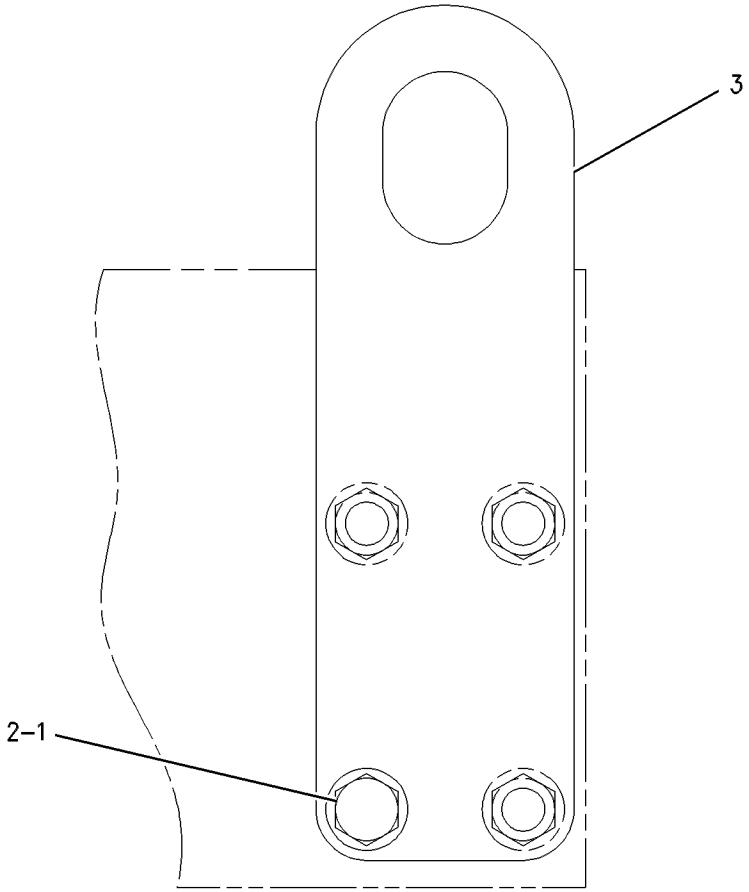

REAR VIEW

GRAPHIC #1 g00441547

MEMORANDA

174-3428 MOUNTING GP-ENGINE & TMSN

S/N: CAF1-UP

PART OF 162-5603 GENERAL AR

SMCS-1152, 1153, 1154 **i01674551**

NOTE	REF NO	GRAPHIC REF	PART NUMBER	QTY	PART NAME 1 2 3 4 5 6 (PRODUCT LEVEL)	SEE PAGE
	1	1	**174-9529**	2	MOUNT AS	
					(EACH INCLUDES)	
		1	**9W-7385**	1	SLEEVE	
		1	**9W-7388**	2	WASHER (26X144X12MM THK)	
	2	1	**192-7357**	2	MOUNT AS	
					(EACH INCLUDES)	
		1	**9W-6582**	1	SLEEVE	
		1	**9W-6584**	1	WASHER (20.5X114X10MM THK)	
	3	1	**211-9274**	1	SUPPORT (RH)	
	4	1	**211-9275**	1	SUPPORT (LH)	
	5	1	**1J-5929**	2	BOLT (1-8X6 IN)	
	6	1	**8T-4123**	8	WASHER-PLATED (22X35X3.5MM THK)	
	7	1	**8T-4896**	12	WASHER-HARD (10.2X18.5X2.5MM THK)	
	8	1	**8T-4994**	2	WASHER-HARD (20X36.5X3.5MM THK)	
	9	1	**8T-5361**	2	WASHER-HARD (28X49X5MM THK)	
M	10	1	**8T-6430**	8	BOLT (M20X2.5X50MM)	
	11	1	**8T-9311**	2	BOLT (3/4-10X4.50 IN)	
	12	1	**9B-7237**	12	BOLT (3/8-16X1.25 IN)	

M-METRIC PART

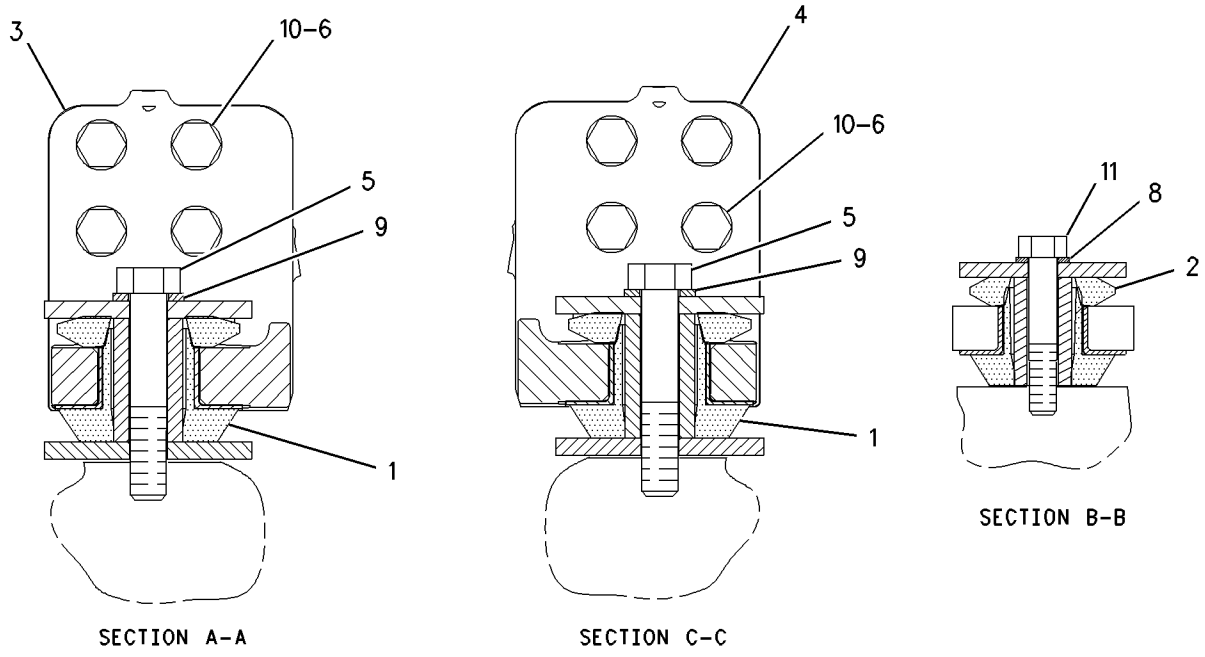

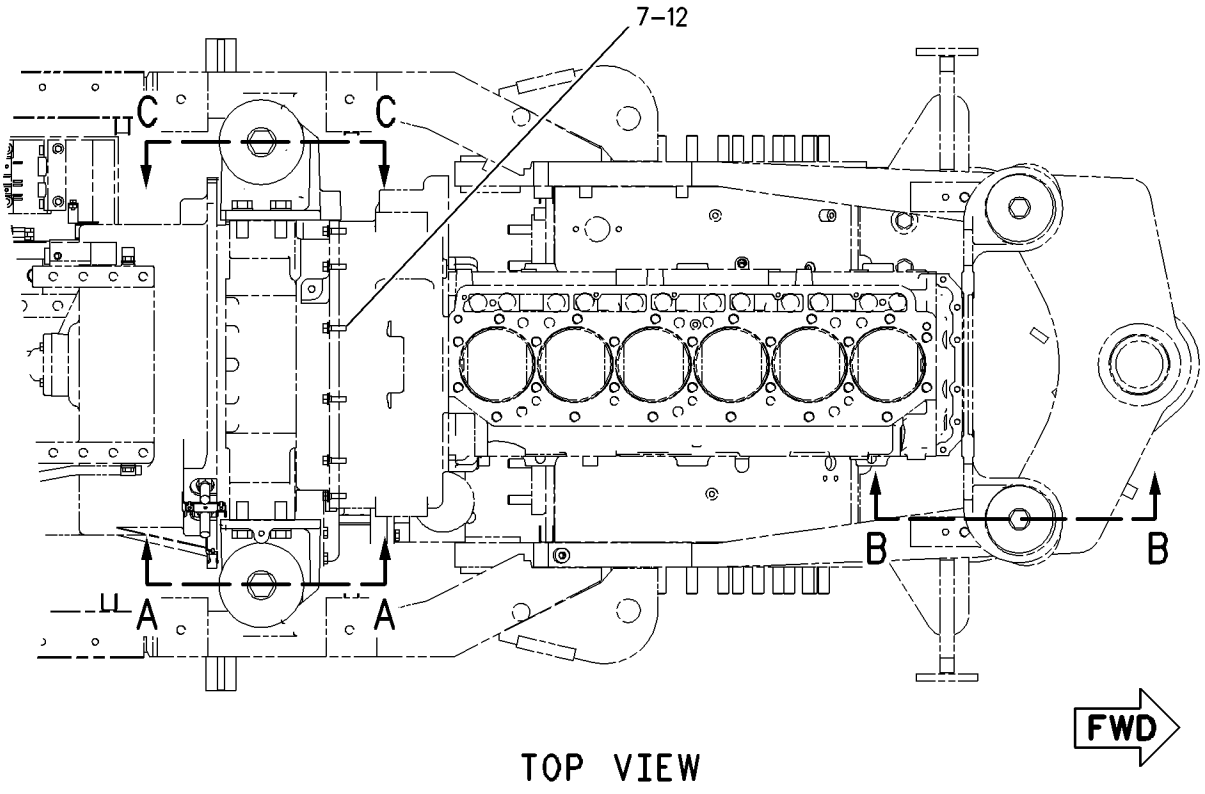

TOP VIEW

GRAPHIC #1 g00863464

180-2993 PAN GP-OIL

S/N: BMA1-UP

PART OF 199-5055 ENGINE AR-COMPLETE

SMCS-1302 **i01809869**

NOTE	REF NO	GRAPHIC REF	PART NUMBER	QTY	PART NAME 1 2 3 4 5 6 (PRODUCT LEVEL)	SEE PAGE
	1	1	*180-2992*	1	PAN GP-OIL	
	1A	1	**9S-8008**	1	PLUG	
	1B	1	**3D-2824**	1	SEAL-O-RING	
M	2	1	**175-3676**	36	BOLT-HEX HEAD	
	3	1	**166-2905**	1	SEAL-INTEGRAL	

M-METRIC PART

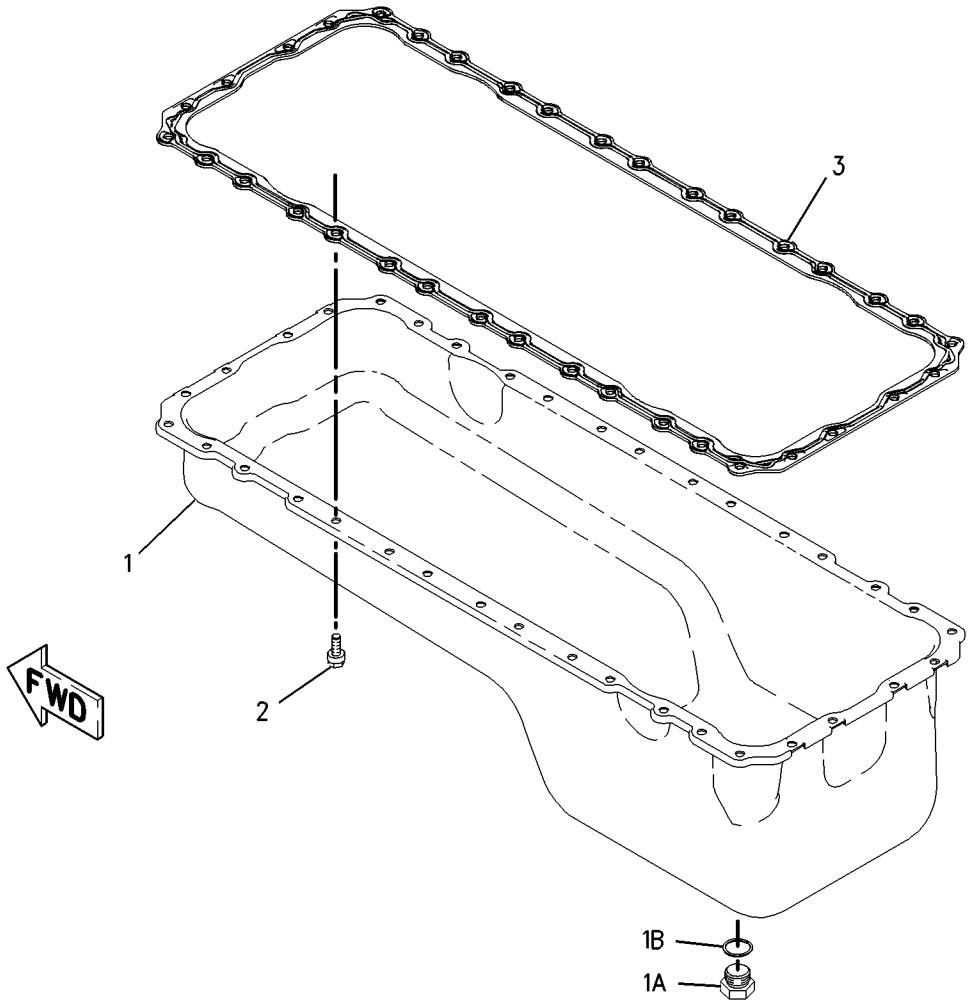

GRAPHIC #1 g00928502

161-8420 PISTON & ROD GP*R

S/N: BMA1-UP
16:1 RATIO
PART OF 199-5056 ENGINE AR-CORE

SMCS-1225 **i01746930**

NOTE	REF NO	GRAPHIC REF	PART NUMBER	QTY	PART NAME 1 2 3 4 5 6 (PRODUCT LEVEL)	SEE PAGE
	1	1	**150-4621**	1	CROWN AS-PISTON	
	2	1	**132-5246**	1	RING-PISTON (TOP)	
	3	1	**197-9277**	1	RING-PISTON (INTERMEDIATE)	
	4	1	**107-7566**	1	RING-PISTON (OIL CONTROL)	
	5	1	**7C-0111**	2	RETAINER-PIN	
	6	1	**168-7226**	1	PIN-PISTON	
	7	1	**213-3193**	1	ROD AS-CONNECTING (NON-DRILLED)	
	7A	1	**2W-0027**	1	BEARING (EYE END)	
	7B	1	**195-0321**	2	BOLT	
	8	1	**7W-9415**	1	BEARING-CONNECTING ROD (STANDARD)	
A		1	**7C-6976**	1	BEARING (.25MM US)	
A		1	**7C-6977**	1	BEARING (.5MM US)	
	9	1	**187-1513**	1	SKIRT-PISTON	
	10	1	**135-5970**	1	TUBE AS-PISTON COOLING JET	
M	11	1	**6V-3940**	1	BOLT (M8X1.25X25MM)	

A-NOT PART OF THIS GROUP
M-METRIC PART

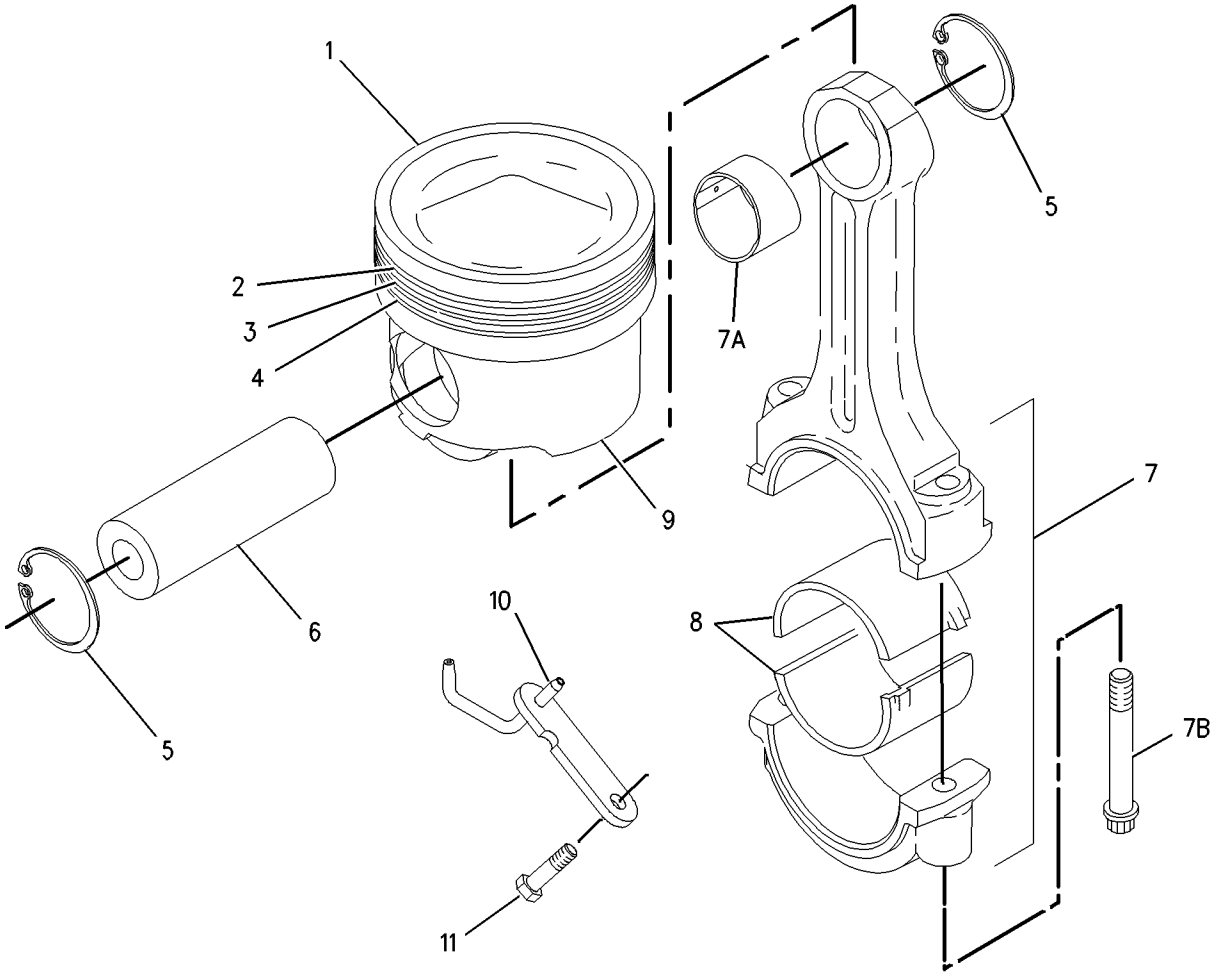

GRAPHIC #1 g00878306

135-8015 PLUG GP-FLYWHEEL HOUSING

S/N: BMA1-UP

PART OF 199-5055 ENGINE AR-COMPLETE

SMCS-1157 **i01695923**

NOTE	REF NO	GRAPHIC REF	PART NUMBER	QTY	PART NAME 1 2 3 4 5 6 (PRODUCT LEVEL)	SEE PAGE
	1	1	**5F-0304**	1	PLUG-DRAIN	
	2	1	**2A-1162**	1	GASKET	

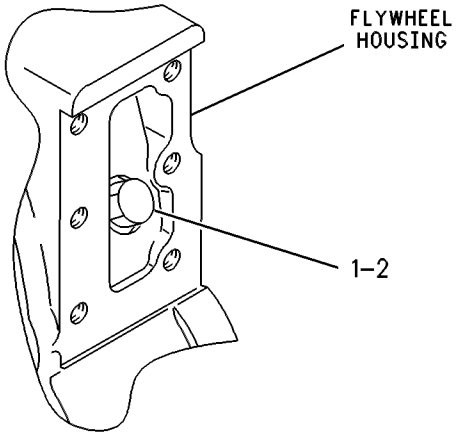

GRAPHIC #1 g00269049

BASIC ENGINE

213-5158 PULLEY GP-IDLER

S/N: BMA1-UP

PART OF 199-5055 ENGINE AR-COMPLETE

SMCS-1358 **i01696073**

NOTE	REF NO	GRAPHIC REF	PART NUMBER	QTY	PART NAME 1 2 3 4 5 6 (PRODUCT LEVEL)	SEE PAGE
	1	1	**144-1102**	1	BELT TIGHTENER	
	2	1	**173-1498**	1	PULLEY AS-IDLER	
		1	**151-2900**	1	BOLT	
		1	**166-6358**	1	COVER-DUST	
		1	**173-1500**	1	SPACER-IDLER	
	3	1	**212-3246**	1	BRACKET	
	4	1	**8T-4121**	5	WASHER-HARD (11X21X2.5MM THK)	
M	5	1	**8T-4137**	1	BOLT (M10X1.5X20MM)	
M	6	1	**8T-4172**	1	BOLT (M10X1.50X80MM)	
M	7	1	**8T-4196**	4	BOLT (M10X1.5X35MM)	
	8	1	**8T-4226**	1	WASHER-PLATED (10.5X45X3MM THK)	

M-METRIC PART

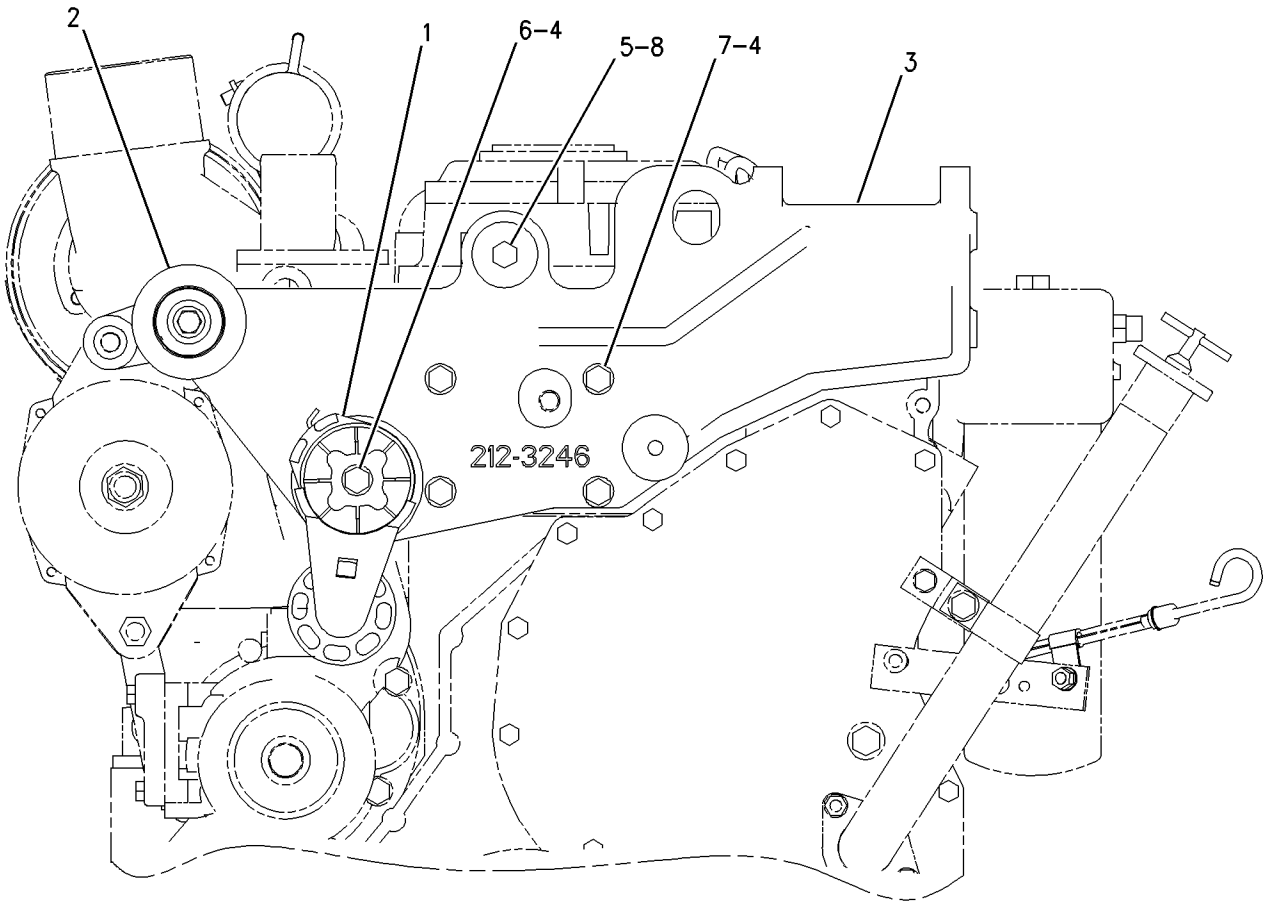

FRONT VIEW

GRAPHIC #1 g00873564

BASIC ENGINE

115-4210 SEAL GP-CRANKSHAFT

S/N: BMA1-UP

PART OF 199-5055 ENGINE AR-COMPLETE

SMCS-1160, 1161 **i01146413**

NOTE	REF NO	GRAPHIC REF	PART NUMBER	QTY	PART NAME 1 2 3 4 5 6 (PRODUCT LEVEL)	SEE PAGE
	1	1	**7E-7589**	1	SEAL GP-CRANKSHAFT	
	2	1	**119-2921**	1	SEAL GP-CRANKSHAFT	
	3	1	**4R-9999**	1	EXCLUDER-CRANKSHAFT SEAL	

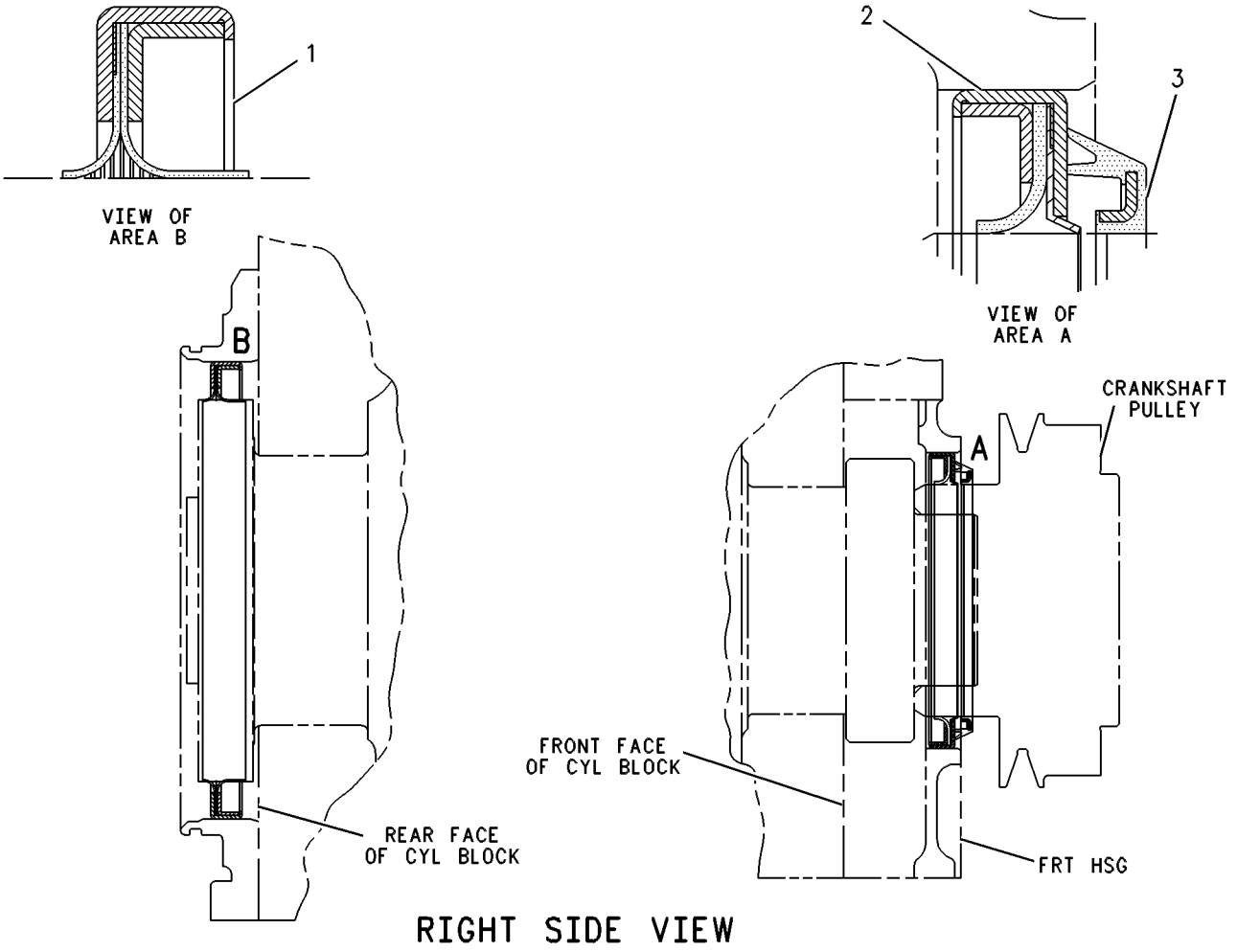

RIGHT SIDE VIEW

GRAPHIC #1 g00109240

7C-1770 SEAL GP-FLYWHEEL HOUSING

S/N: BMA1-UP

PART OF 199-5055 ENGINE AR-COMPLETE

SMCS-1157, 1161 **i01746891**

NOTE	REF NO	GRAPHIC REF	PART NUMBER	QTY	PART NAME 1 2 3 4 5 6 (PRODUCT LEVEL)	SEE PAGE
B	1	1	**1U-8846**		SEALANT-GASKET	
	2	1	**3J-7354**	1	SEAL-O-RING (8.92MM ID)	
B	3	1	**3D-2824**	1	SEAL-O-RING (23.47MM ID)	

B-USE AS REQUIRED

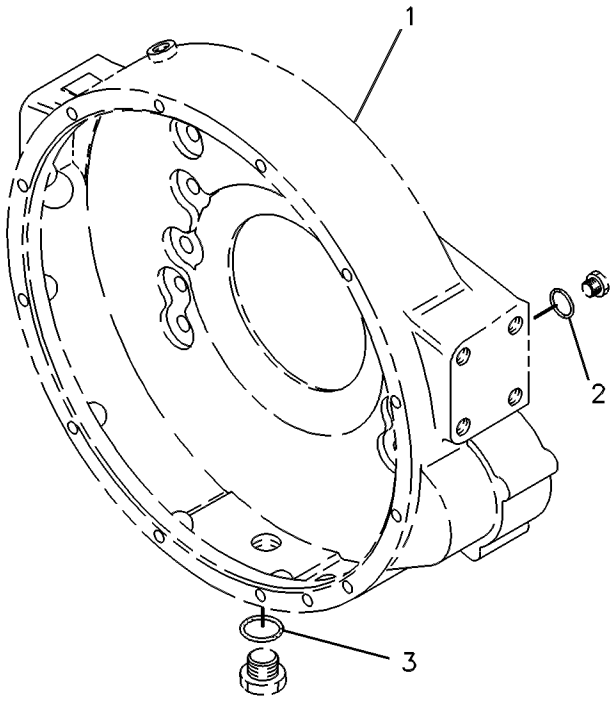

GRAPHIC #1 g00108872

172-0961 SUPPORT GP-ENGINE

S/N: BMA1-UP

PART OF 199-5055 ENGINE AR-COMPLETE

SMCS-1154 **i01695952**

NOTE	REF NO	GRAPHIC REF	PART NUMBER	QTY	PART NAME 1 2 3 4 5 6 (PRODUCT LEVEL)	SEE PAGE
	1	1	**172-1001**	1	SUPPORT-FRONT	
	2	1	**5P-8245**	6	WASHER-HARD (13.5X25.5X3MM THK)	
M	3	1	**6V-5696**	1	BOLT (M12X1.75X80MM)	
M	4	1	**8T-0372**	5	BOLT (M12X1.75X90MM)	

M-METRIC PART

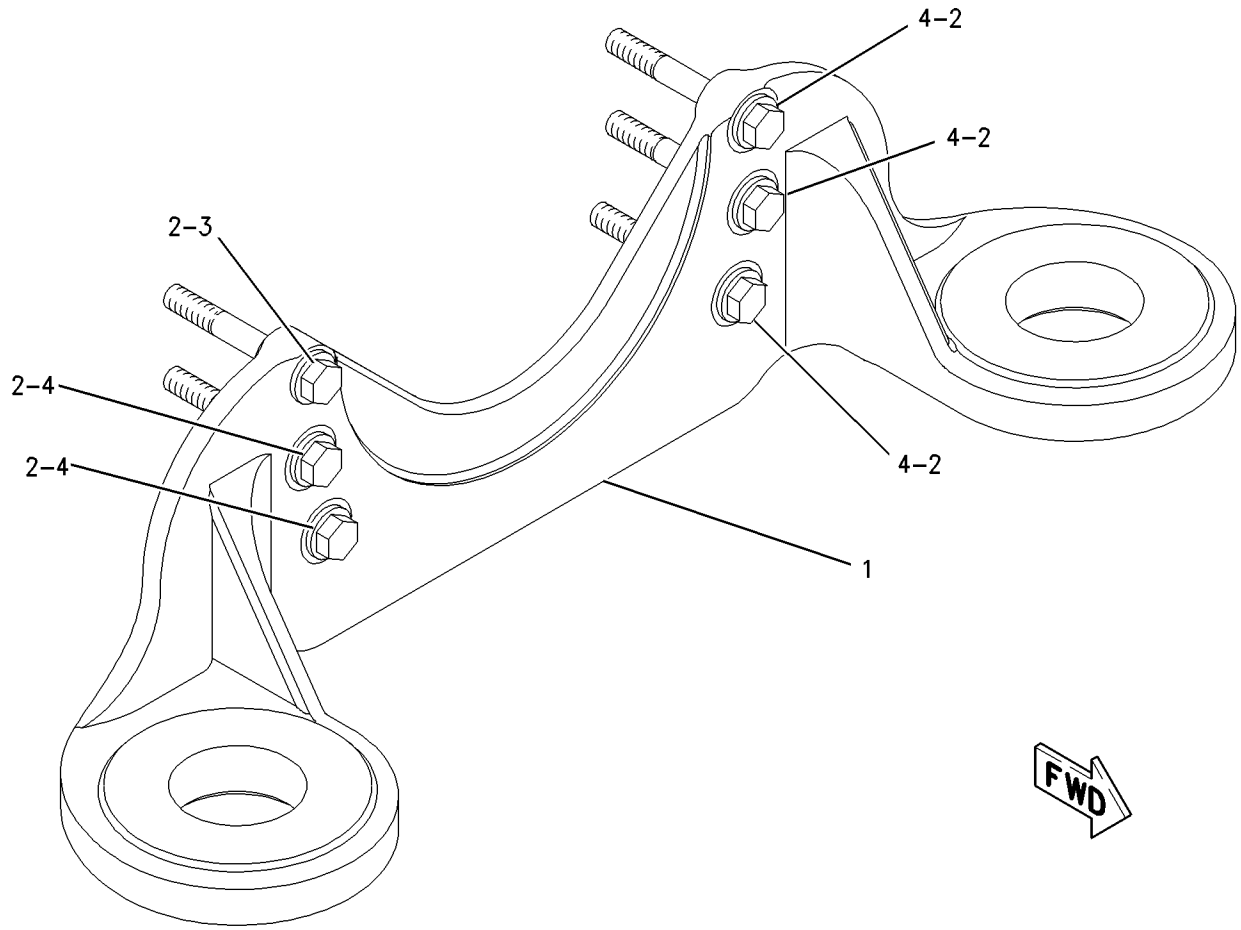

GRAPHIC #1 g00859115

135-2969 VALVE MECHANISM GP

S/N: BMA1-UP

PART OF 199-5056 ENGINE AR-CORE

SMCS-1102 **i01719781**

NOTE	REF NO	GRAPHIC REF	PART NUMBER	QTY	PART NAME 1 2 3 4 5 6 (PRODUCT LEVEL)	SEE PAGE
	1	1	**133-6379**	12	ROD-VALVE PUSH	
	2	1	**220-6366**	6	BRIDGE-VALVE	
Y	3	1	*139-4081*	3	LIFTER GP-VALVE	41
M	4	1	**8T-8442**	12	BOLT-SOCKET HEAD (M6X1X30MM)	
	5	1	**3E-9412**	6	DOWEL-BUSHING	
Y	6	1	*155-4773*	1	VALVE MECHANISM GP	54
M	7	1	**6V-5696**	11	BOLT (M12X1.75X80MM)	
	8	1	**9M-1974**	2	WASHER-HARD (8.8X16X2MM THK)	
	9	1	**5P-8245**	11	WASHER-HARD (13.5X25.5X3MM THK)	
M	10	1	**8T-0100**	2	BOLT (M8X1.25X60MM)	

M-METRIC PART
Y-SEPARATE ILLUSTRATION

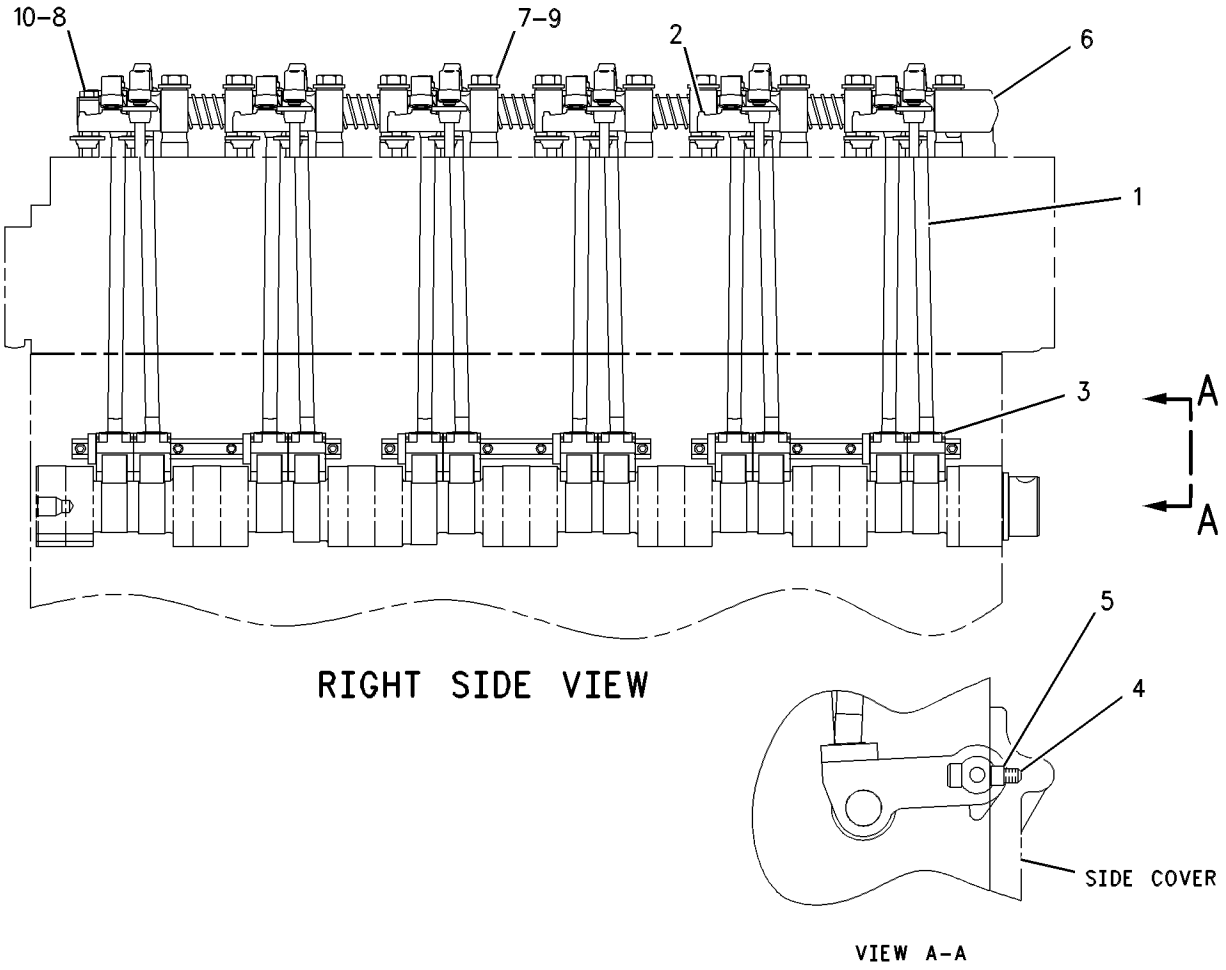

RIGHT SIDE VIEW

VIEW A–A

GRAPHIC #1 g00286874

155-4773 VALVE MECHANISM GP

S/N: BMA1-UP

PART OF 135-2969 VALVE MECHANISM GP

SMCS-1102 **i01761332**

NOTE	REF NO	GRAPHIC REF	PART NUMBER	QTY	PART NAME 1 2 3 4 5 6 (PRODUCT LEVEL)	SEE PAGE
	1	1	**137-6717**	5	SPRING	
	2	1	*222-1185*	6	ROCKER ARM GP (INTAKE)	
					(EACH INCLUDES)	
M	2A	1	**2Y-5829**	1	NUT (M10X1.5 THD)	
M		1	**183-4365**	1	SCREW-ADJUSTING (M10X1.5 THD)	
	2B	1	**153-8467**	1	ROCKER ARM AS	
	2C	1	**173-5549**	1	SEAL-O-RING	
	2D	1	**145-7376**	1	BUTTON-ROCKER ARM	
	2E	1	**145-7385**	1	SOCKET-ROCKER ARM	
	3	1	**138-8403**	1	STAND	
	4	1	*222-1186*	6	ROCKER ARM GP (EXHAUST)	
					(EACH INCLUDES)	
M	4A	1	**2Y-5829**	1	NUT (M10X1.5 THD)	
M		1	**183-4365**	1	SCREW-ADJUSTING (M10X1.5 THD)	
	4B	1	**153-8470**	1	ROCKER ARM AS	
	4C	1	**173-5549**	1	SEAL-O-RING	
	4D	1	**145-7376**	1	BUTTON-ROCKER ARM	
	4E	1	**145-7385**	1	SOCKET-ROCKER ARM	
	5	1	**138-8401**	10	STAND	
	6	1	**138-8402**	1	STAND	
	7	1	**138-9868**	1	RING-RETAINING	
	8	1	**8H-5244**	1	DOWEL	
	9	1	**138-7198**	1	SHAFT AS	
		1	**5B-1866**	1	PLUG-CUP	

M-METRIC PART

155-4773 **VALVE MECHANISM GP** *(contd.)* **i01761332**

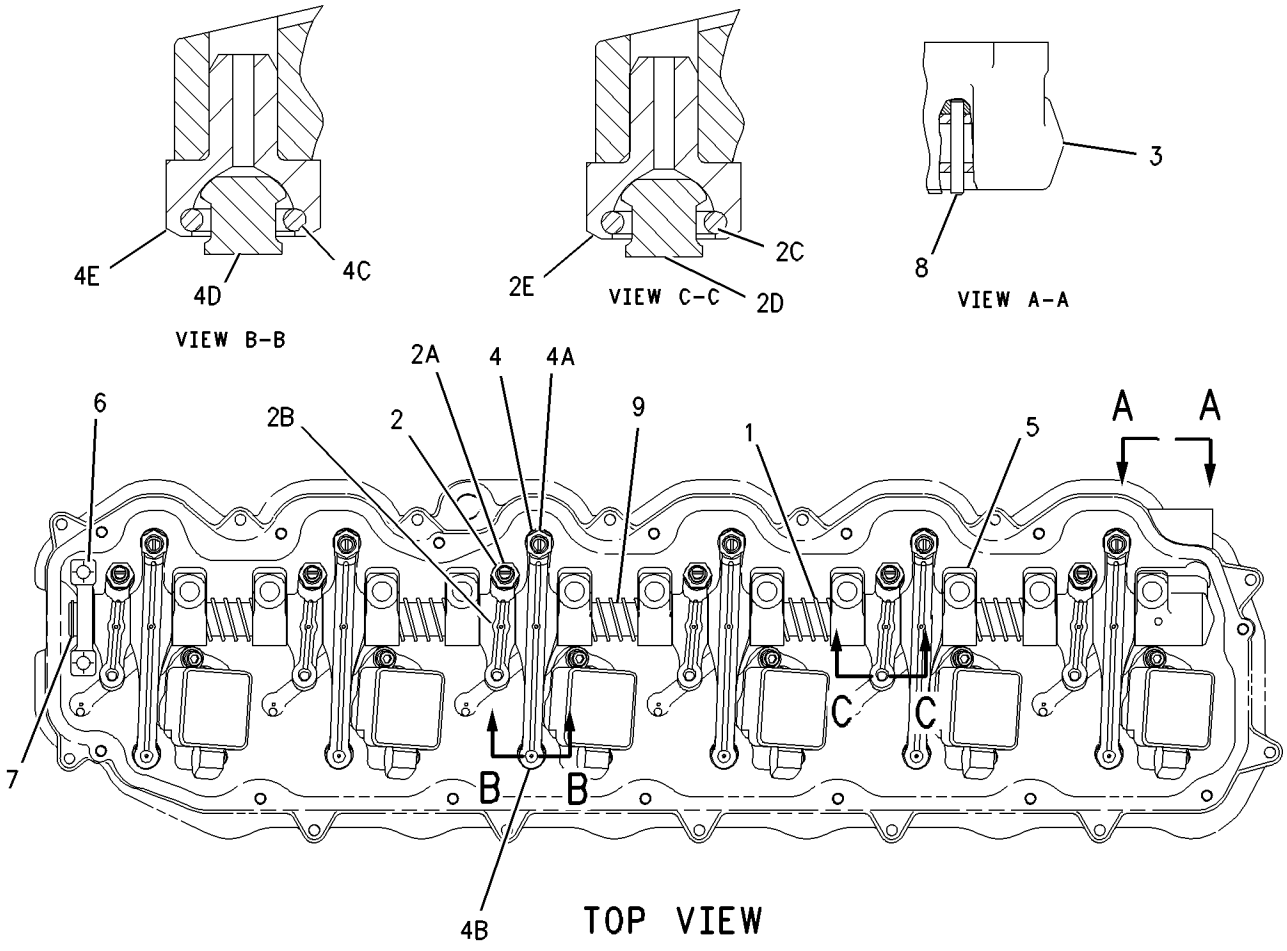

GRAPHIC #1 g00901133

179-7001 ADAPTER GP-ENGINE OIL LINE

S/N: BMA1-UP

PART OF 183-2859 PUMP & MTG GP-UNIT INJ HYD

SMCS-1307 **i01836714**

NOTE	REF NO	GRAPHIC REF	PART NUMBER	QTY	PART NAME 1 2 3 4 5 6 (PRODUCT LEVEL)	SEE PAGE
	1	1	**179-7002**	1	ADAPTER AS	
	2	1	**214-7568**	1	SEAL-O-RING (11.89MM ID)	

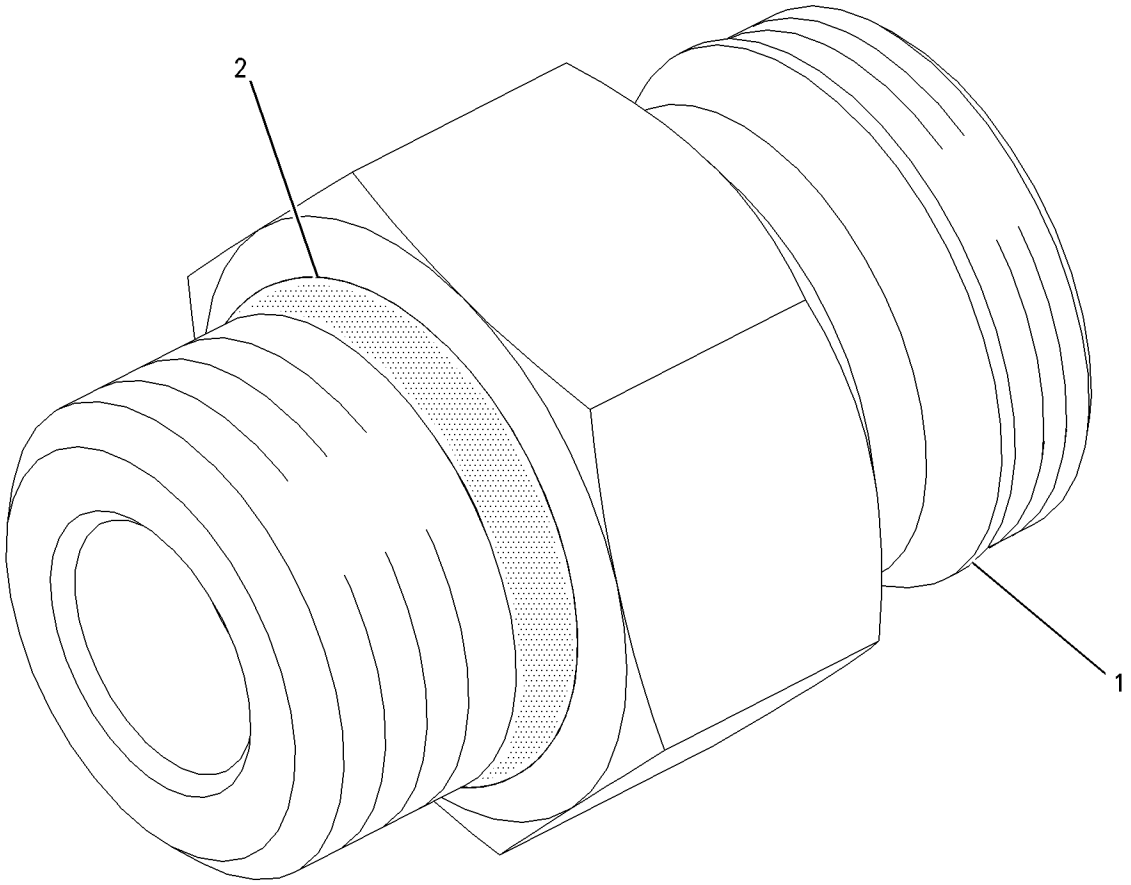

GRAPHIC #1 g00938522

LUBRICATION SYSTEM

156-0233 BREATHER GP

S/N: BMA1-UP

PART OF 199-5056 ENGINE AR-CORE

SMCS-1317 **i01696271**

NOTE	REF NO	GRAPHIC REF	PART NUMBER	QTY	PART NAME 1 2 3 4 5 6 (PRODUCT LEVEL)	SEE PAGE
	1	1	**183-6848**	1	BREATHER AS	
M	2	1	**8T-6870**	1	BOLT (M8X1.25X70MM)	
	3	1	**8T-4224**	1	WASHER-HARD (8.8X16X2MM THK)	
	4	1	**4L-9564**	1	SEAL-O-RING	

M-METRIC PART

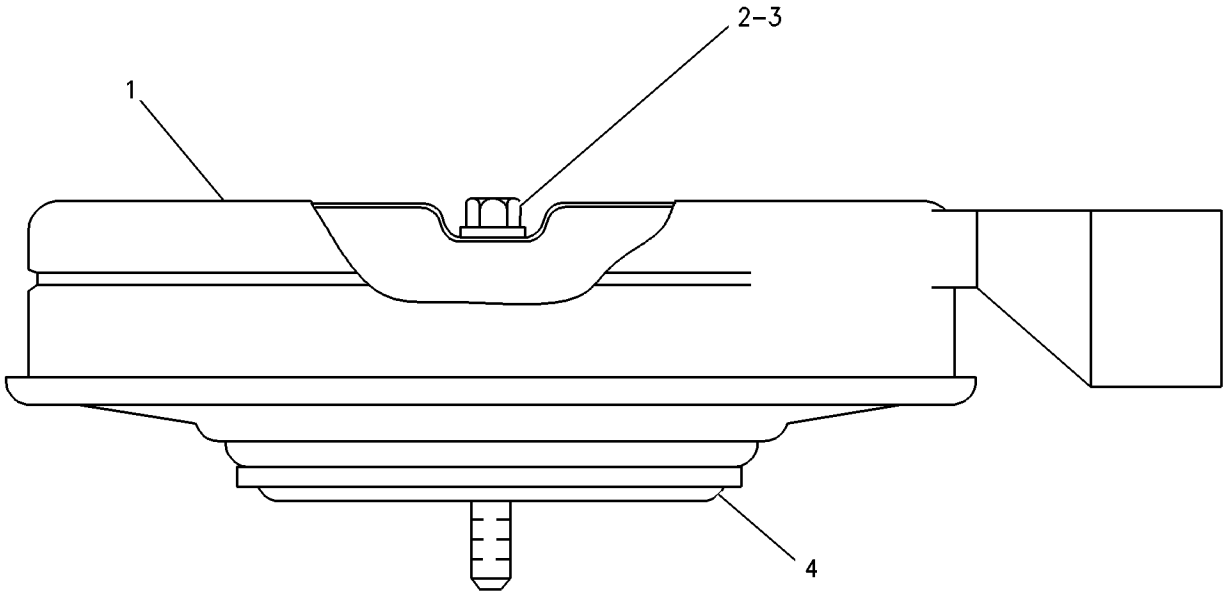

GRAPHIC #1 g00648415

LUBRICATION SYSTEM

194-5126 FILTER GP-ENGINE OIL

S/N: BMA1-UP

PART OF 199-5055 ENGINE AR-COMPLETE

SMCS-1308 **i01695043**

NOTE	REF NO	GRAPHIC REF	PART NUMBER	QTY	PART NAME 1 2 3 4 5 6 (PRODUCT LEVEL)	SEE PAGE
M	1	1	**9X-2099**	3	STUD	
	2	1	**1R-0716**	1	FILTER AS-ENGINE OIL	
Y	3	1	**2T-2951**	1	VALVE GP-FLUID SAMPLING	67
	4	1	**4P-9103**	1	ADAPTER-BASE	
	5	1	**7C-1493**	2	VALVE-BYPASS	
	6	1	**7F-0216**	1	NUT-JAM	
	7	1	**9L-9188**	2	SPRING-VALVE	
	8	1	**160-5140**	1	BASE AS-OIL FILTER	
		1	**4P-9107**	1	STUD-HOLLOW	
	9	1	**190-1106**	1	BASE AS-OIL FILTER	
		1	**2P-4304**	1	STUD-TAPERLOCK	
	10	1	**196-0246**	1	TUBE AS	
	11	1	**196-0248**	1	TUBE AS	
	12	1	**196-0253**	1	BRACKET AS	
		1	**101-9080**	1	BOSS (13MM THK)	
	13	1	**106-9586**	4	SEAL-O-RING	
	14	1	**187-8592**	1	GASKET	
	15	1	**2M-9780**	2	SEAL-O-RING	
	16	1	**3D-2824**	1	SEAL-O-RING	
	17	1	**5M-7087**	2	CLAMP-TUBE	
	18	1	**5P-7701**	3	SEAL-O-RING	
	19	1	**5P-8066**	1	SEAL-O-RING	
M	20	1	**5P-8196**	2	PLUG	
M	21	1	**6V-2317**	7	BOLT (M8X1.25X30MM)	
M	22	1	**6V-3940**	1	BOLT (M8X1.25X25MM)	
	23	1	**6V-9005**	1	ELBOW	
	24	1	**6V-9008**	2	ELBOW	
	25	1	**7M-8485**	1	SEAL-O-RING	
	26	1	**8H-7521**	1	SEAL-O-RING	
	27	1	**8J-0426**	1	PLUG	
M	28	1	**8T-0276**	5	BOLT (M8X1.25X45MM)	
	29	1	**8T-4121**	5	WASHER-HARD (11X21X2.5MM THK)	
M	30	1	**8T-4195**	4	BOLT (M10X1.5X30MM)	
M	31	1	**8T-4196**	1	BOLT (M10X1.5X35MM)	
	32	1	**8T-6684**	1	ELBOW	
	33	1	**9M-1974**	16	WASHER-HARD (8.8X16X2MM THK)	

M-METRIC PART
Y-SEPARATE ILLUSTRATION

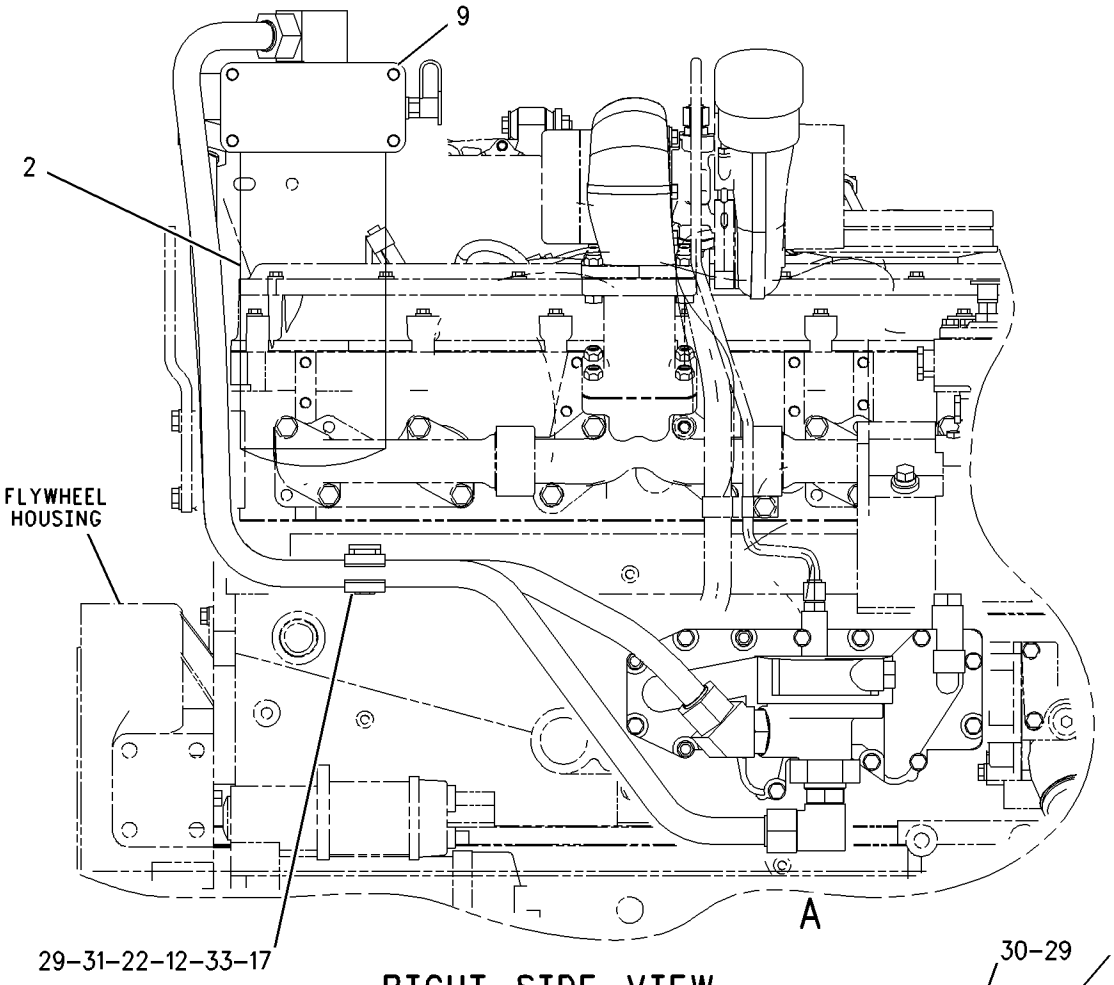

RIGHT SIDE VIEW

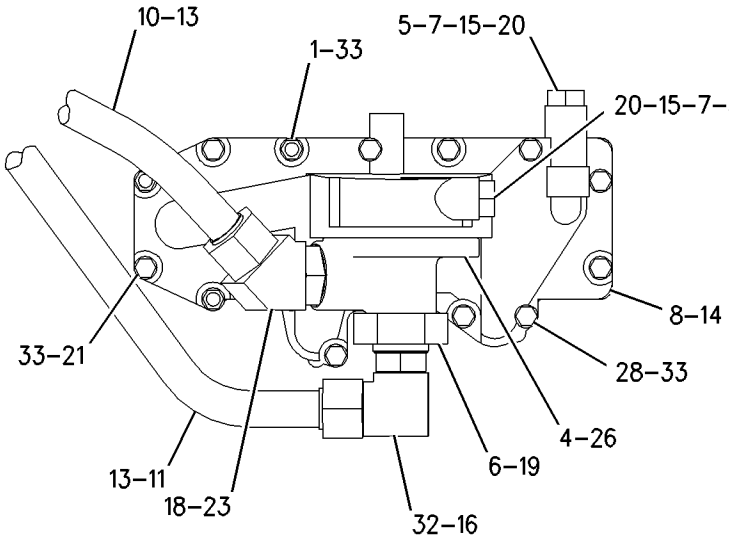

VIEW OF AREA A

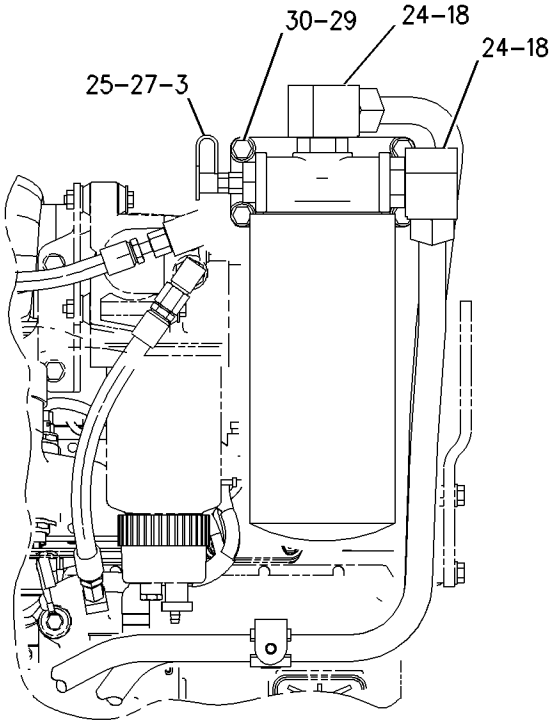

LEFT SIDE VIEW

GRAPHIC #1

g00874395

LUBRICATION SYSTEM

194-5134 FUMES DISPOSAL GP

S/N: BMA1-UP

PART OF 199-5055 ENGINE AR-COMPLETE

SMCS-1317 **i01695049**

NOTE	REF NO	GRAPHIC REF	PART NUMBER	QTY	PART NAME 1 2 3 4 5 6 (PRODUCT LEVEL)	SEE PAGE
	1	1	**9M-2904**	1	CLAMP-HOSE	
	2	1	**196-1913**	1	HOSE-DISPOSAL	
	3	1	**197-4566**	1	BRACKET AS	
M		1	**8T-3490**	1	NUT-WELD (M10X1.5 THD)	
	4	1	**7D-7233**	1	CLIP	
	5	1	**8T-4121**	2	WASHER-HARD (11X21X2.5MM THK)	
M	6	1	**8T-4137**	2	BOLT (M10X1.5X20MM)	

M-METRIC PART

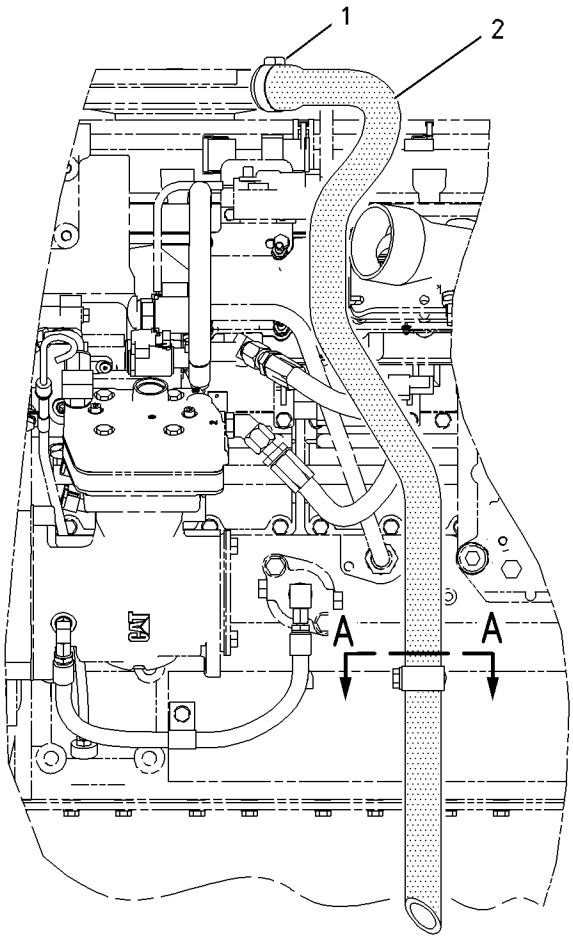

LEFT SIDE VIEW

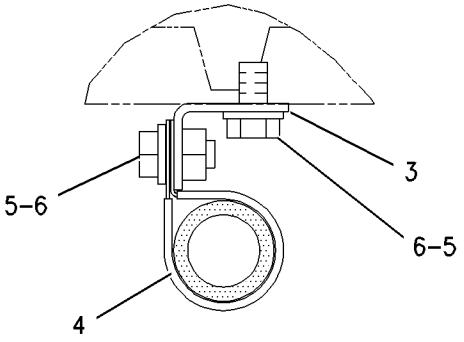

SECTION A-A

GRAPHIC #1 g00873176

LUBRICATION SYSTEM

194-5123 GAUGE GP-OIL LEVEL (DIPSTICK)

S/N: BMA1-UP

PART OF 199-5055 ENGINE AR-COMPLETE

SMCS-1326 **i01695042**

NOTE	REF NO	GRAPHIC REF	PART NUMBER	QTY	PART NAME 1 2 3 4 5 6 (PRODUCT LEVEL)	SEE PAGE
	1	1	**1S-2563**	3	PLUG	
	2	1	**139-2380**	1	GAUGE-OIL LEVEL	
	3	1	**194-5130**	1	TUBE AS	
	4	1	**194-5131**	1	CLIP	
	5	1	**1F-7567**	1	CLIP	
M	6	1	**5P-7970**	1	NUT (M8X1.25 THD)	
M	7	1	**6V-2317**	1	BOLT (M8X1.25X30MM)	
M	8	1	**6V-5217**	1	BOLT (M8X1.25X20MM)	
	9	1	**8T-4224**	2	WASHER-HARD (8.8X16X2MM THK)	

M-METRIC PART

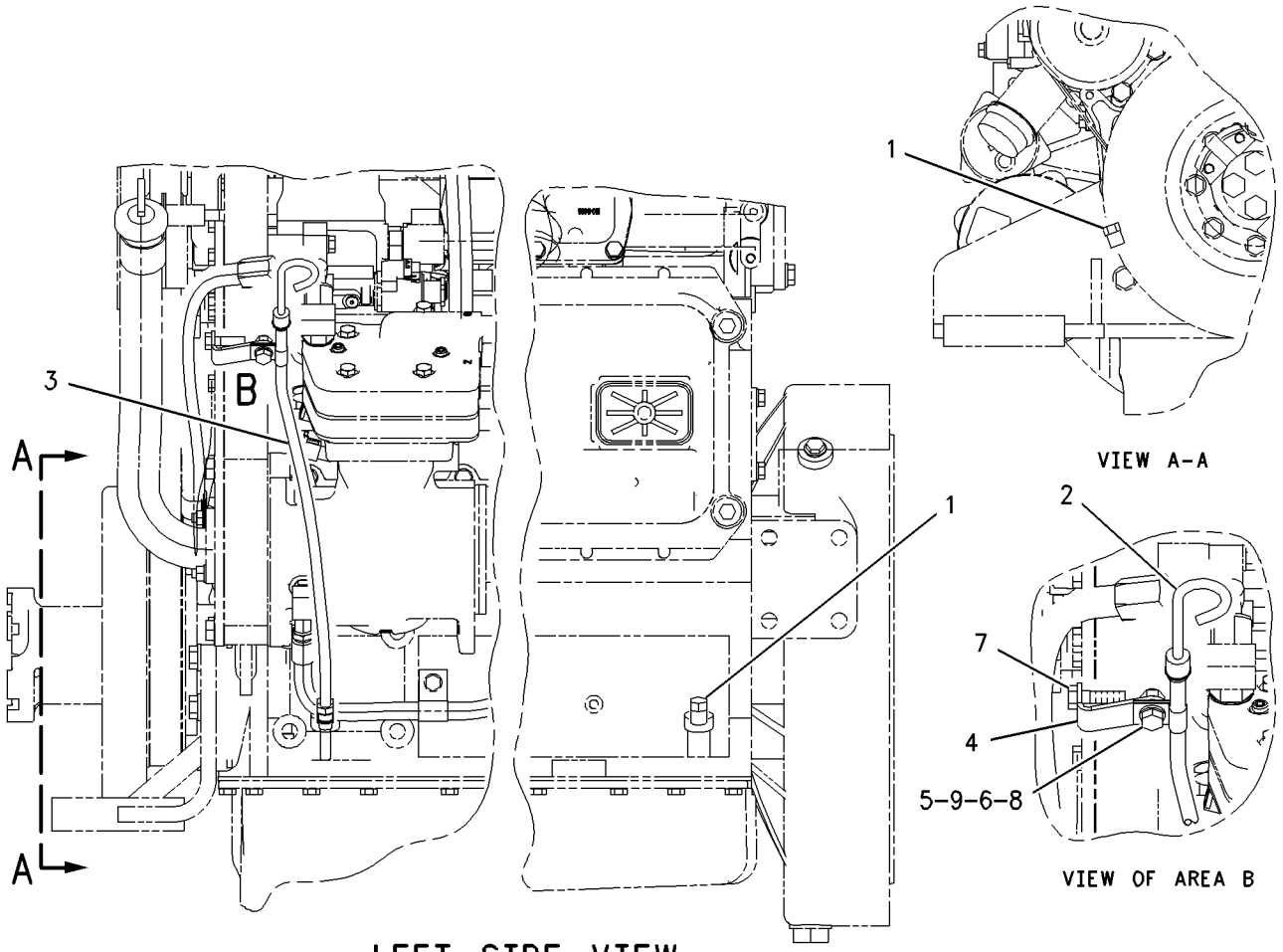

LEFT SIDE VIEW

GRAPHIC #1 g00874289

LUBRICATION SYSTEM

7C-2475 LINES GP-ENGINE OIL

S/N: BMA1-UP

PART OF 199-5055 ENGINE AR-COMPLETE

SMCS-1307 **i01743145**

NOTE	REF NO	GRAPHIC REF	PART NUMBER	QTY	PART NAME 1 2 3 4 5 6 (PRODUCT LEVEL)	SEE PAGE
	1	1	**7C-5403**	1	TUBE AS	
	2	1	**7W-5340**	1	GASKET	
	3	1	**9M-1974**	2	WASHER-HARD (8.8X16X2MM THK)	
M	4	1	**6V-3940**	4	BOLT (M8X1.25X25MM)	
	5	1	**4W-2232**	1	ELBOW-OUTLET	
	6	1	**3P-1156**	2	SEAL-O-RING	

M-METRIC PART

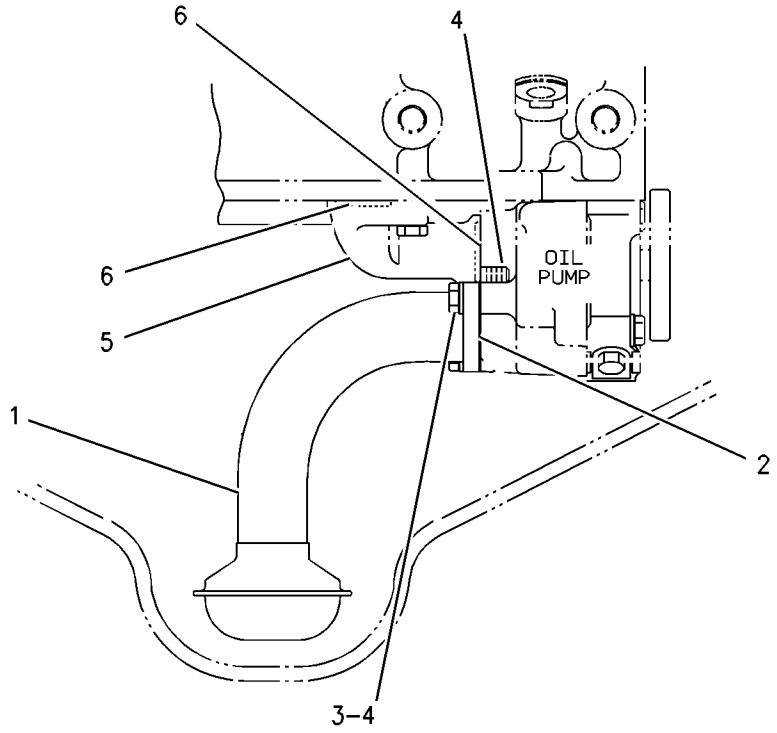

RIGHT SIDE VIEW

GRAPHIC #1 g00891413

LUBRICATION SYSTEM

176-1387 LINES GP-ENGINE OIL

S/N: BMA1-UP

PART OF 199-5056 ENGINE AR-CORE

SMCS-1307 **i01615194**

NOTE	REF NO	GRAPHIC REF	PART NUMBER	QTY	PART NAME 1 2 3 4 5 6 (PRODUCT LEVEL)	SEE PAGE
	1	1	**176-1388**	1	TUBE AS-OIL SUPPLY	
	2	1	**2M-9780**	1	SEAL-O-RING	
	3	1	**3K-0360**	1	SEAL-O-RING	
	4	1	**6V-8632**	1	CONNECTOR	
	5	1	**6V-8642**	1	CONNECTOR	
	6	1	**7J-9108**	2	SEAL-O-RING	

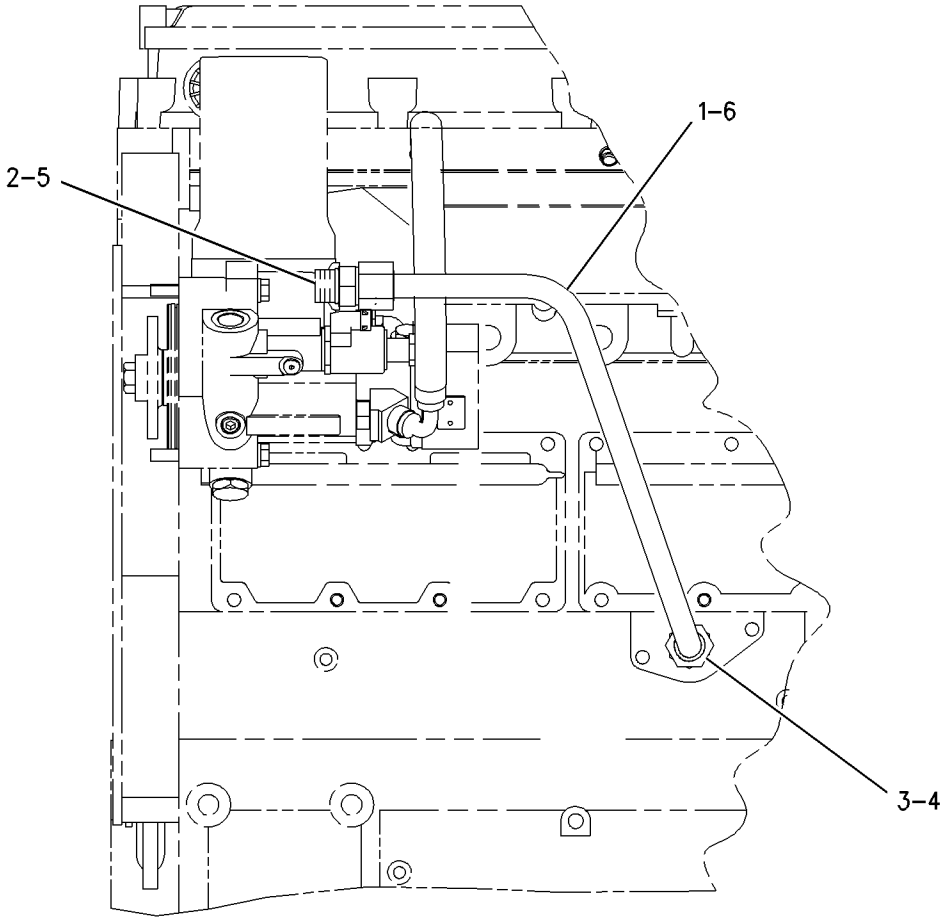

LEFT SIDE VIEW

GRAPHIC #1 g00776034

LUBRICATION SYSTEM

194-5120 LINES GP-TURBOCHARGER OIL

S/N: BMA1-UP

PART OF 199-5055 ENGINE AR-COMPLETE

SMCS-1052, 1307 **i01809991**

NOTE	REF NO	GRAPHIC REF	PART NUMBER	QTY	PART NAME 1 2 3 4 5 6 (PRODUCT LEVEL)	SEE PAGE
	1	1	**7W-2398**	1	GASKET	
	2	1	**119-2942**	1	ADAPTER	
	3	1	**193-2354**	1	TUBE AS	
	4	1	**193-2355**	1	TUBE AS	
	5	1	**114-2687**	1	SEAL-O-RING	
	6	1	**1F-7567**	1	CLIP	
M	7	1	**2Y-5829**	1	NUT (M10X1.5 THD)	
	8	1	**3J-1907**	2	SEAL-O-RING	
	9	1	**4L-3641**	1	CLIP	
	10	1	**5P-8066**	1	SEAL-O-RING	
M	11	1	**6V-4248**	1	BOLT (M10X1.50X25MM)	
M	12	1	**6V-5217**	2	BOLT (M8X1.25X20MM)	
	13	1	**6V-5839**	2	WASHER (11X21X2.5MM THK)	
M	14	1	**8T-0276**	2	BOLT (M8X1.25X45MM)	
	15	1	**6V-8397**	2	SEAL-O-RING	
	16	1	**6V-8636**	2	CONNECTOR	
	17	1	**9M-1974**	4	WASHER-HARD (8.8X16X2MM THK)	

M-METRIC PART

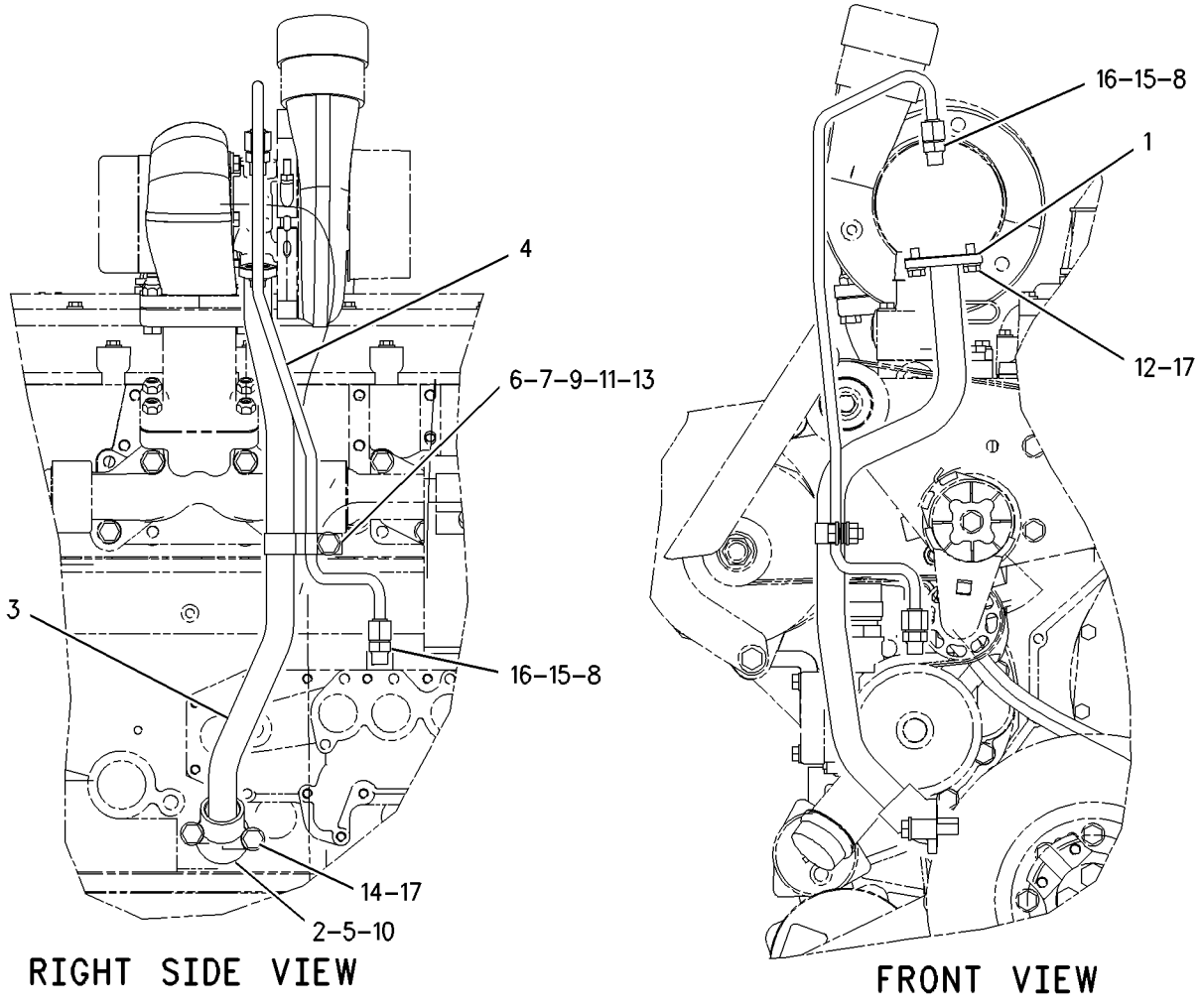

GRAPHIC #1 g00928304

LUBRICATION SYSTEM

212-2269 PUMP GP-ENGINE OIL

S/N: BMA1-UP

PART OF 212-2270 PUMP GP-ENGINE OIL

SMCS-1304 **i01697514**

NOTE	REF NO	GRAPHIC REF	PART NUMBER	QTY	PART NAME 1 2 3 4 5 6 (PRODUCT LEVEL)	SEE PAGE
	1	1	**7W-9737**	1	SHAFT-OIL PUMP	
	2	1	**7W-9738**	1	WASHER (10.5X38X1.6MM THK)	
	3	1	**7W-9740**	1	GEAR AS-IDLER (43 TEETH)	
		1	**7W-9930**	1	BEARING-SLEEVE	
M	4	1	**9X-2305**	1	BOLT-LOCKING (M10X1.5 THD)	
	5	1	**210-5559**	1	PUMP AS-GEROTOR	

M-METRIC PART

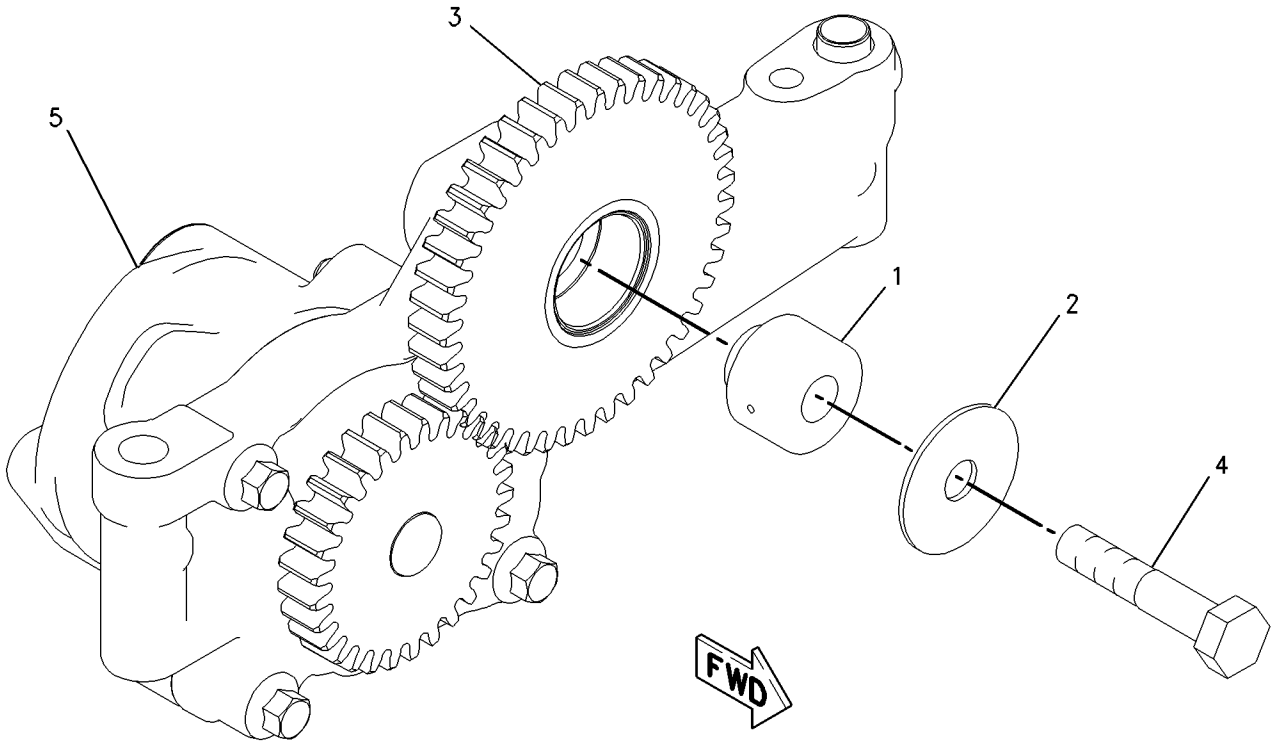

GRAPHIC #1 g00849418

LUBRICATION SYSTEM

212-2270 PUMP GP-ENGINE OIL

S/N: BMA1-UP

PART OF 199-5056 ENGINE AR-CORE

SMCS-1304 **i01697510**

NOTE	REF NO	GRAPHIC REF	PART NUMBER	QTY	PART NAME 1 2 3 4 5 6 (PRODUCT LEVEL)	SEE PAGE
Y	1	1	**212-2269**	1	PUMP GP-ENGINE OIL	65
M	2	1	**6V-5815**	2	BOLT (M10X1.5X75MM)	
	3	1	**6V-5839**	2	WASHER (11X21X2.5MM THK)	

M-METRIC PART
Y-SEPARATE ILLUSTRATION

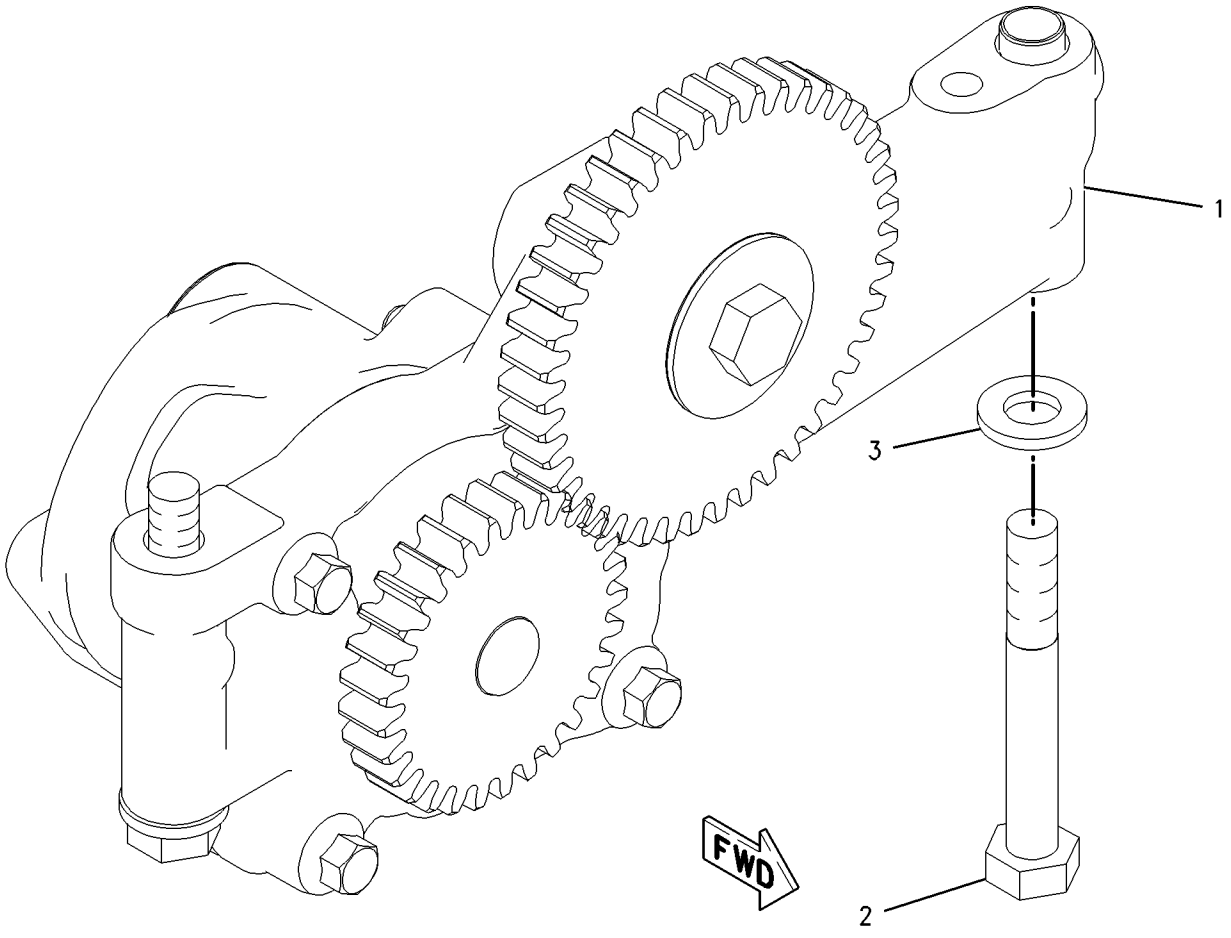

GRAPHIC #1 g00849437

LUBRICATION SYSTEM

2T-2951 VALVE GP-FLUID SAMPLING

S/N: BMA1-UP

PART OF 194-5126 FILTER GP-ENGINE OIL

SMCS-1318, 7542 **i01266147**

NOTE	REF NO	GRAPHIC REF	PART NUMBER	QTY	PART NAME 1 2 3 4 5 6 (PRODUCT LEVEL)	SEE PAGE
	1	1	**3J-7354**	1	SEAL-O-RING (8.92MM ID)	
	2	1	**3J-1907**	1	SEAL-O-RING (11.89MM ID)	
	3	1	**5P-9617**	1	ADAPTER (9/16-18-2A TO 7/16-20-2B THD)	
	4	1	**8C-3445**	1	CAP-DUST	
	5	1	**8C-3446**	1	VALVE-FLUID SAMPLING	

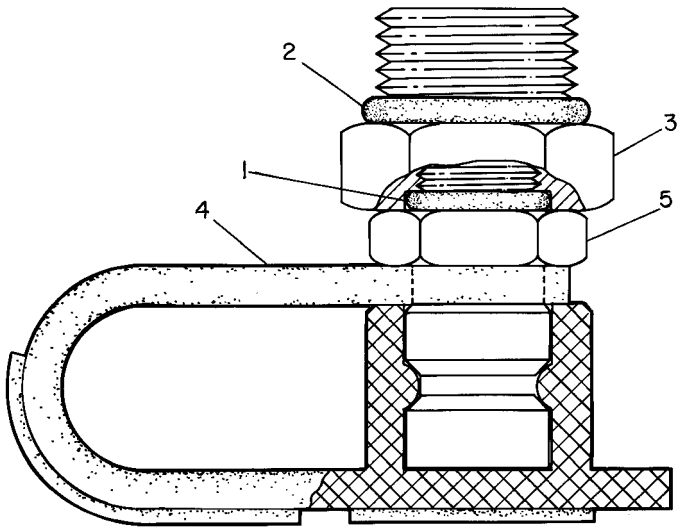

GRAPHIC #1 g00116597

117-3643 COOLER GP-ENGINE OIL

S/N: BMA1-UP

PART OF 199-5056 ENGINE AR-CORE

SMCS-1378 **i01858175**

NOTE	REF NO	GRAPHIC REF	PART NUMBER	QTY	PART NAME 1 2 3 4 5 6 (PRODUCT LEVEL)	SEE PAGE
R	1	1	**187-8595**	1	CORE AS-ENGINE OIL COOLER	
	2	1	**7C-1160**	1	GASKET	
M	3	1	**8M-4445**	2	SEAL-O-RING	

M-METRIC PART
R-REMFG PART MAY BE AVAILABLE

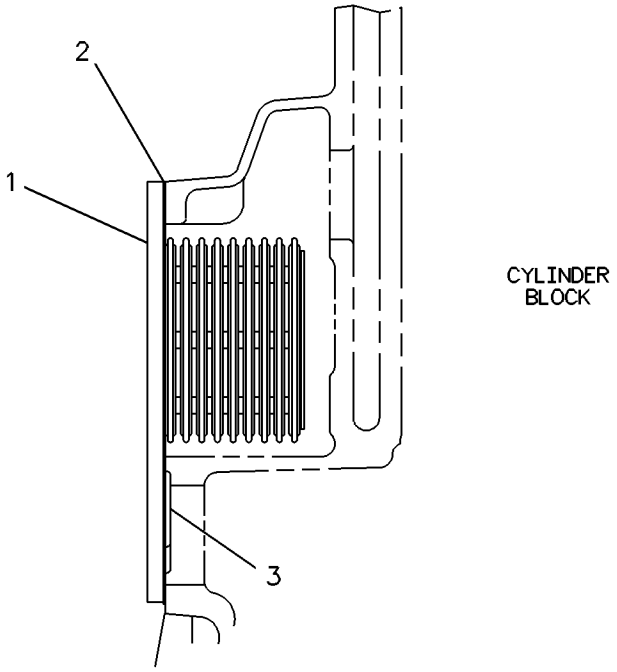

GRAPHIC #1 g00117316

COOLING SYSTEM

194-2911 COOLING AR

S/N: CAF1-UP

PART OF 162-5603 GENERAL AR

SMCS-1350 **i01673405**

NOTE	PART NUMBER	QTY	PART NAME 1 2 3 4 5 6 (PRODUCT LEVEL)	SEE PAGE
Y	*196-6984*	1	AFTERCOOLER & MOUNTING GP	82
Y	*201-2547*	1	GUARD & SUPPORT GP-RADIATOR	428
Y	*175-6981*	1	LINES GP-HYDRAULIC FAN	538
Y	*196-6985*	1	FAN & MOTOR GP	70
Y	*201-4836*	1	BAFFLE GP-RADIATOR	417
Y	*196-6983*	1	RADIATOR & OIL COOLER GP	80
Y	*184-1299*	1	WIRING GP-REAR	264
Y-SEPARATE ILLUSTRATION				

<END>

194-2912 COOLING AR–EU

S/N: CAF1-UP

PART OF 207-3665, 210-2042 CONVERSION AR-CERTIFICATION AN ATTACHMENT

SMCS-1350 **i01684453**

NOTE	PART NUMBER	QTY	PART NAME 1 2 3 4 5 6 (PRODUCT LEVEL)	SEE PAGE
Y	*196-6984*	1	AFTERCOOLER & MOUNTING GP	82
Y	*201-2547*	1	GUARD & SUPPORT GP-RADIATOR	428
Y	*175-6981*	1	LINES GP-HYDRAULIC FAN	538
Y	*196-6985*	1	FAN & MOTOR GP	70
Y	*201-4836*	1	BAFFLE GP-RADIATOR	417
Y	*196-6983*	1	RADIATOR & OIL COOLER GP	80
Y	*193-8253*	1	WIRING GP-REAR	266
Y-SEPARATE ILLUSTRATION				

<END>

COOLING SYSTEM

196-6985 FAN & MOTOR GP

S/N: CAF1-UP
PART OF 194-2911, 194-2912 COOLING AR
ALSO AN ATTACHMENT

SMCS-1356, 1386 **i01831887**

NOTE	REF NO	GRAPHIC REF	PART NUMBER	QTY	PART NAME 1 2 3 4 5 6 (PRODUCT LEVEL)	SEE PAGE
	1	1	**119-7864**	1	SPIDER AS-FAN (6 BLADES)	
Y	2	1	**224-7040**	1	MOTOR GP-GEAR	558
	3	1	**174-2104**	1	BRACKET AS	
	4	1	**179-2509**	4	BRACKET AS	
	5	1	**200-8027**	1	ADAPTER	
M	6	1	**105-3484**	2	BOLT-HEX SOCKET (M10X1.5X25MM)	
	7	1	*153-6237*	2	ELBOW GP	
					(EACH INCLUDES)	
		1	**6V-9004**	1	ELBOW	
		1	**3D-2824**	1	SEAL-O-RING	
		1	**6V-9746**	1	SEAL-O-RING	
	8	1	**5P-1076**	4	WASHER-HARD (13.5X30X4MM THK)	
	9	1	**5P-8245**	1	WASHER-HARD (13.5X25.5X3MM THK)	
	10	1	**6B-6684**	1	NUT-FULL (1/2-20 THD)	
M	11	1	**6V-7687**	4	LOCKNUT (M12X1.75 THD)	
M	12	1	**6V-8336**	4	BOLT (M12X1.75X70MM)	
	13	1	**8T-4121**	8	WASHER-HARD (11X21X2.5MM THK)	
M	14	1	**8T-4183**	4	BOLT (M12X1.75X40MM)	
M	15	1	**8T-4195**	6	BOLT (M10X1.5X30MM)	
	16	1	**8T-4223**	8	WASHER-HARD (13.5X25.5X3MM THK)	

M-METRIC PART
Y-SEPARATE ILLUSTRATION

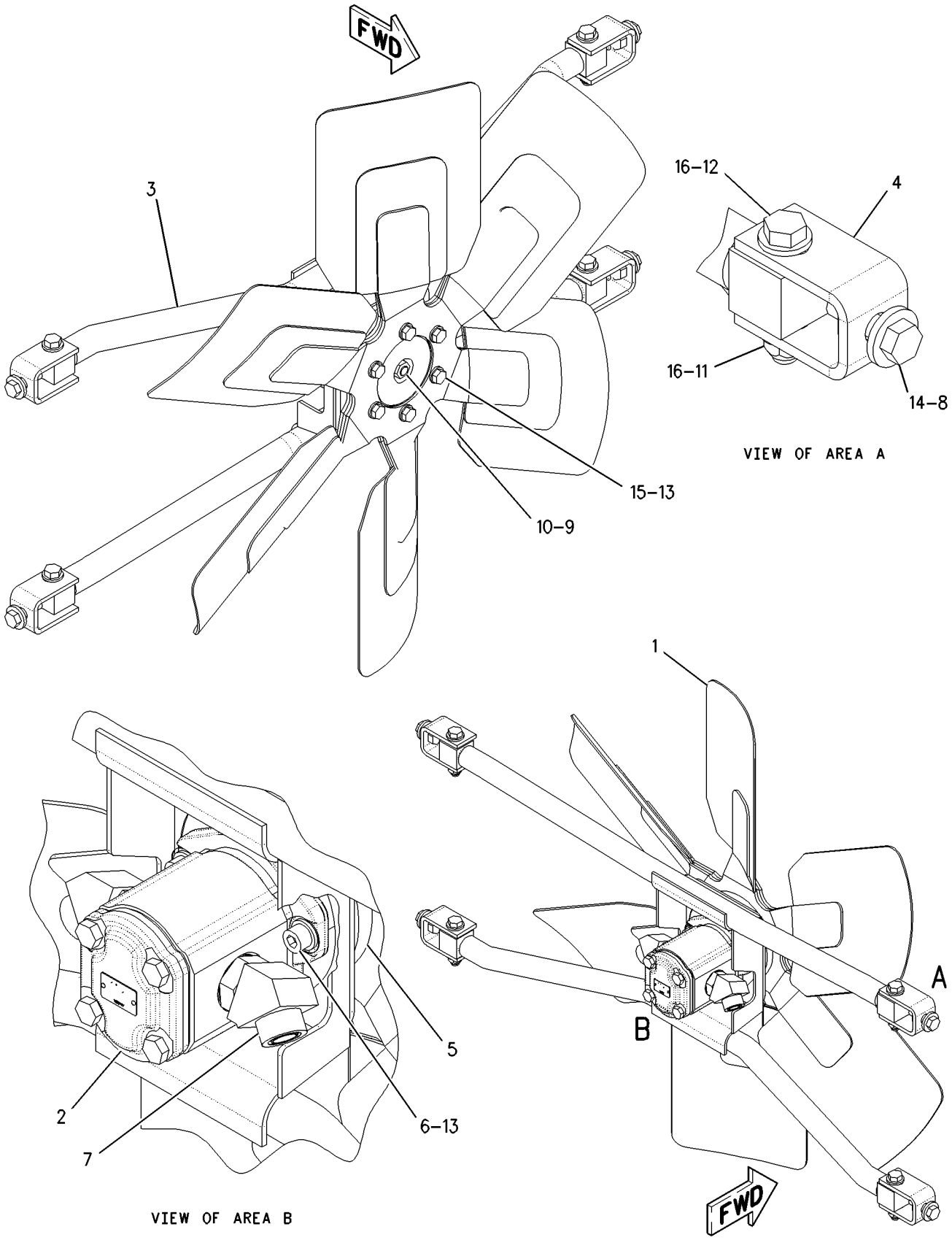

GRAPHIC #1 g00890880

COOLING SYSTEM

192-9972 LINES GP-WATER

S/N: BMA1-UP

PART OF 199-5055 ENGINE AR-COMPLETE

SMCS-1355, 1380, 1393 **i01695968**

NOTE	REF NO	GRAPHIC REF	PART NUMBER	QTY	PART NAME 1 2 3 4 5 6 (PRODUCT LEVEL)	SEE PAGE
E	1	1	**5P-0763**		HOSE (38.1MM ID) (76CM)	
	3	1	**8T-4983**	2	CLAMP-HOSE	
	4	1	**126-5869**	1	REGULATOR-WATER TEMPERATURE	
	5	1	**133-3730**	1	HOUSING-WATER REGULATOR	
	6	1	**136-0812**	1	GASKET-WATER REGULATOR	
	7	1	**154-9023**	1	VALVE-SAMPLING	
	8	1	**157-0670**	1	CAP-DUST	
	9	1	**192-9971**	1	PIPE	
	10	1	**126-5466**	1	GASKET	
	11	1	**3J-7354**	1	SEAL-O-RING	
	12	1	**3K-0360**	3	SEAL-O-RING	
	13	1	**3P-1932**	1	ADAPTER	
M	14	1	**5P-8347**	2	BOLT (M8X1.25X70MM)	
M	15	1	**6V-3940**	5	BOLT (M8X1.25X25MM)	
M	16	1	**6V-5223**	1	BOLT (M8X1.25X100MM)	
	17	1	**7W-6492**	3	PLUG-PIPE	
	18	1	**7X-7731**	1	PLUG-PIPE (3/4-14 NPTF THD)	
M	19	1	**8T-0100**	1	BOLT (M8X1.25X60MM)	
	20	1	**8T-6767**	1	PLUG-PIPE	
	21	1	**9M-1974**	6	WASHER-HARD (8.8X16X2MM THK)	
	22	1	**9S-8005**	2	PLUG	

E-ORDER BY THE CENTIMETER
M-METRIC PART

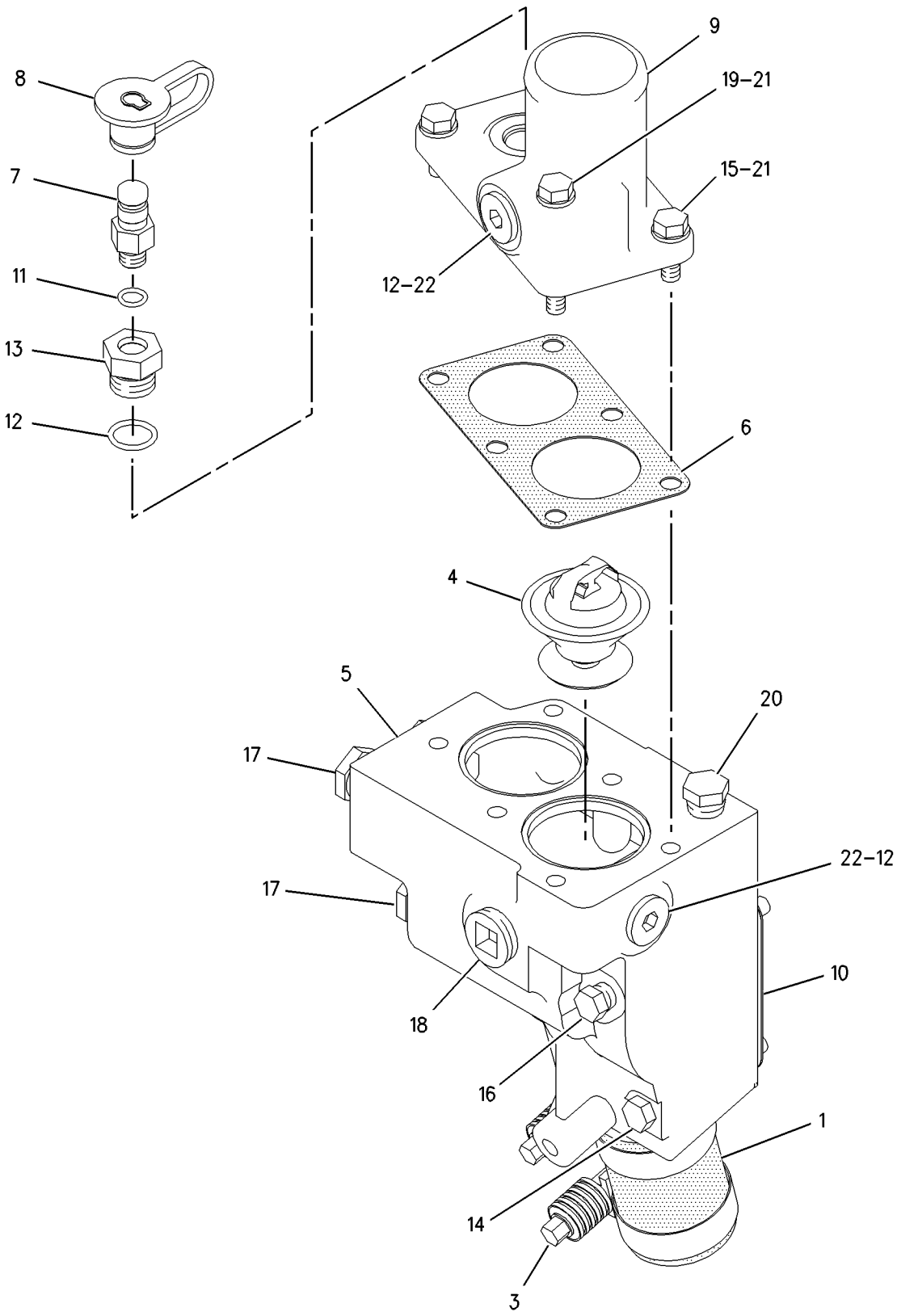

GRAPHIC #1

g00777637

COOLING SYSTEM

194-4055 LINES GP-WATER

S/N: CAF1-UP

PART OF 162-5603 GENERAL AR

SMCS-1355, 1380, 1393 **i01819474**

NOTE	REF NO	GRAPHIC REF	PART NUMBER	QTY	PART NAME 1 2 3 4 5 6 (PRODUCT LEVEL)	SEE PAGE
	1	1	**5D-1026**	1	CLAMP-HOSE	
E	2	1	**5P-1293**		HOSE	
	3	1	**6V-1520**	1	VALVE-DRAIN (SEDIMENT)	
	4	1	**8N-9071**	1	VALVE AS (PURGE)	
		1	**7N-7688**	1	FERRULE	
		1	**8N-9072**	1	BODY-VALVE	
		1	**9M-5590**	1	BALL	
	5	1	**111-7092**	1	HOSE	
	6	1	**196-9810**	1	HOSE AS	
	7	1	**198-3891**	1	TUBE AS	
	8	1	**198-3892**	1	TUBE AS	
	9	1	**198-3893**	1	HOSE	
	10	1	**198-3894**	1	HOSE	
	11	1	**208-6054**	2	CLAMP	
	12	1	**217-5241**	1	BRACKET AS	
	13	1	**217-6885**	2	CLAMP	
	14	1	**031-9746**	1	ELBOW	
	15	1	**1L-2279**	1	ELBOW	
	16	1	**212-6933**	4	CLAMP	
	17	1	**130-3374**	1	CLIP	
	18	1	**8T-4121**	2	WASHER-HARD (11X21X2.5MM THK)	
M	19	1	**8T-4189**	2	BOLT (M8X1.25X20MM)	
M	20	1	**8T-4195**	2	BOLT (M10X1.5X30MM)	
	21	1	**8T-4224**	2	WASHER-HARD (8.8X16X2MM THK)	
	22	1	**8T-6767**	1	PLUG-PIPE	
	23	1	**9D-6196**	2	CLIP (SLOT)	
	24	1	**9D-6197**	2	CLIP (TAB)	
G	25	1	**9X-2389**		HOSE (34 IN)	

E-ORDER BY THE CENTIMETER
G-ORDER BY THE INCH
M-METRIC PART

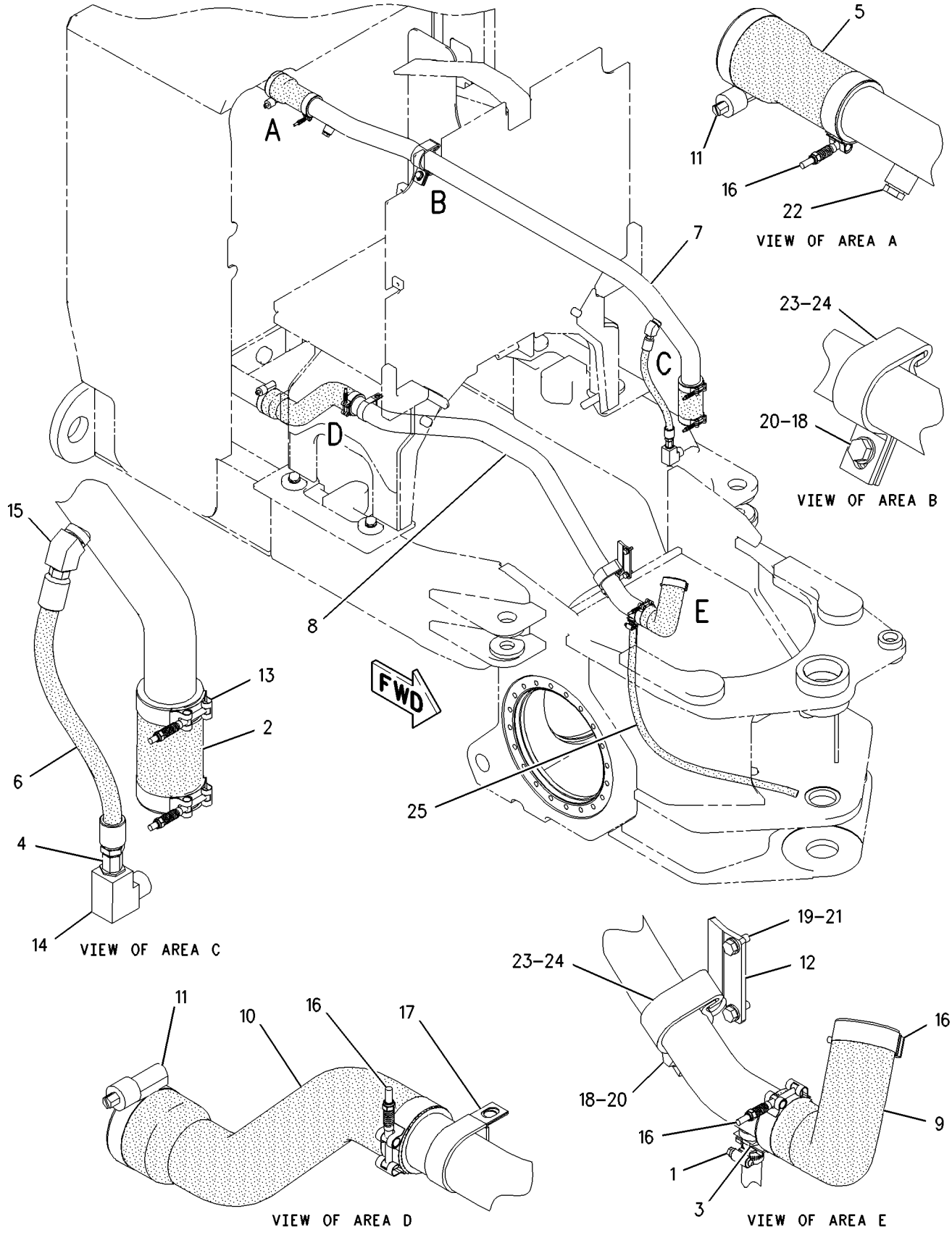

GRAPHIC #1 g00890631

COOLING SYSTEM

193-9237 PUMP GP-WATER

S/N: BMA1-UP

PART OF 199-5055 ENGINE AR-COMPLETE

SMCS-1361 **i01483815**

NOTE	REF NO	GRAPHIC REF	PART NUMBER	QTY	PART NAME 1 2 3 4 5 6 (PRODUCT LEVEL)	SEE PAGE
Y	1	1	*193-9238*	1	PUMP GP-WATER	78
M	2	1	**8T-0644**	4	BOLT (M10X1.50X90MM)	
	3	1	**2M-4453**	1	SEAL-O-RING	
	4	1	**7F-8267**	1	SEAL-O-RING	

M-METRIC PART
Y-SEPARATE ILLUSTRATION

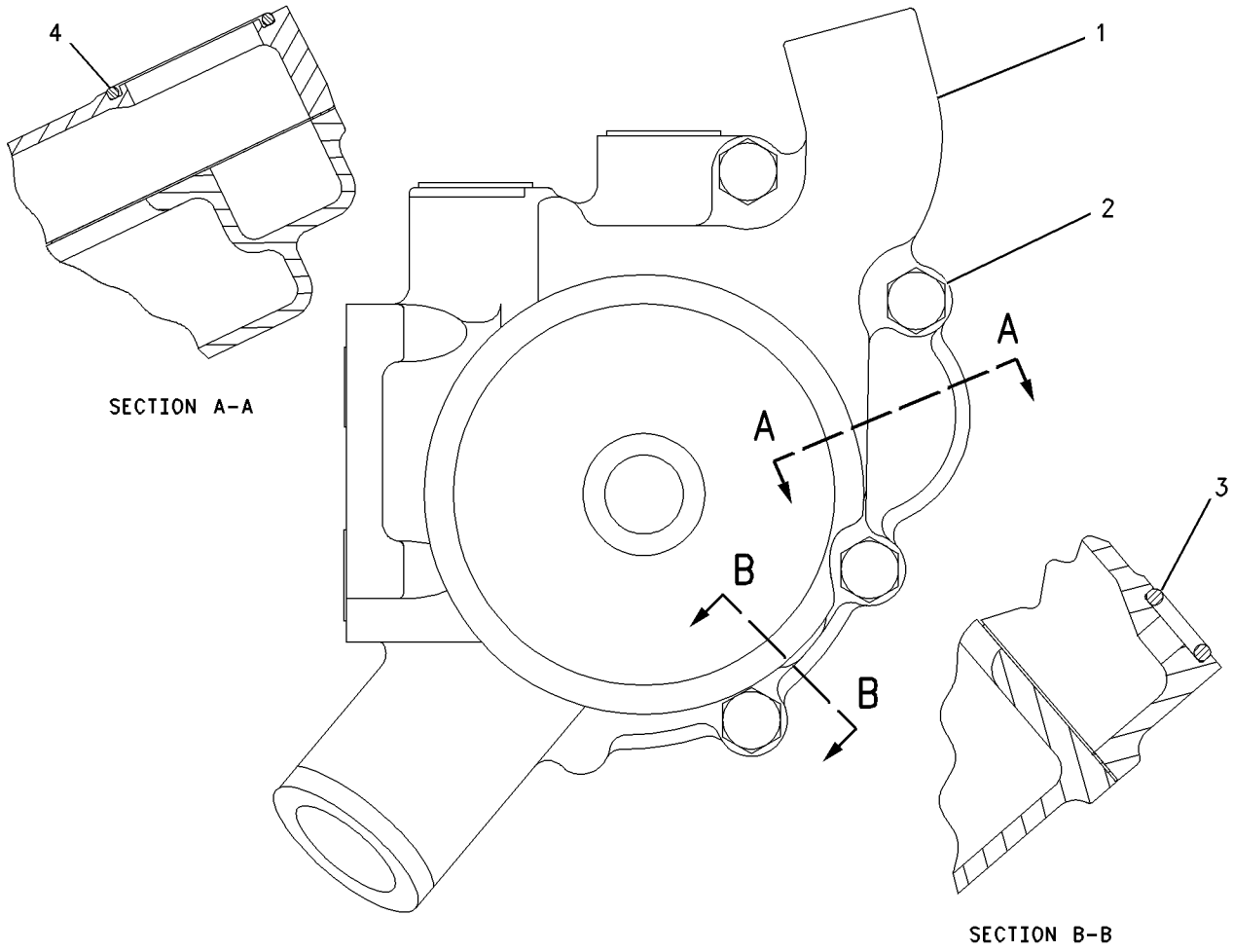

GRAPHIC #1 g00772077

MEMORANDA

COOLING SYSTEM

193-9238 PUMP GP-WATER

S/N: BMA1-UP

PART OF 193-9237 PUMP GP-WATER

SMCS-1361 **i01743135**

NOTE	REF NO	GRAPHIC REF	PART NUMBER	QTY	PART NAME 1 2 3 4 5 6 (PRODUCT LEVEL)	SEE PAGE
	1	1	**193-9239**	1	PUMP AS-WATER	
	1A	1	**117-3437**	1	PULLEY (8 GROOVE)	
	1B	1	**119-3025**	1	FILTER-WATER	
	1C	1	**129-1170**	1	SHAFT AS	
	1D	1	**147-5088**	1	SEAL AS-WATER PUMP	
	1E	1	**152-3952**	1	IMPELLER-PUMP	
	1F	1	**193-9240**	1	HOUSING-PUMP	
	2	1	**4W-7592**	1	GASKET	
	3	1	**4W-0253**	1	COVER	
M	4	1	**6V-3918**	4	BOLT (M8X1.25X50MM)	
	5	1	**9M-1974**	4	WASHER-HARD (8.8X16X2MM THK)	
	6	1	**9S-8003**	1	PLUG	
	7	1	**1J-9671**	1	SEAL-O-RING	
	8	1	**9S-8005**	2	PLUG	
	9	1	**3K-0360**	2	SEAL-O-RING	
	10	1	**9S-8008**	2	PLUG	
	11	1	**3D-2824**	2	SEAL-O-RING	
	12	1	**9S-8006**	1	PLUG	
	13	1	**2M-9780**	1	SEAL-O-RING	

M-METRIC PART

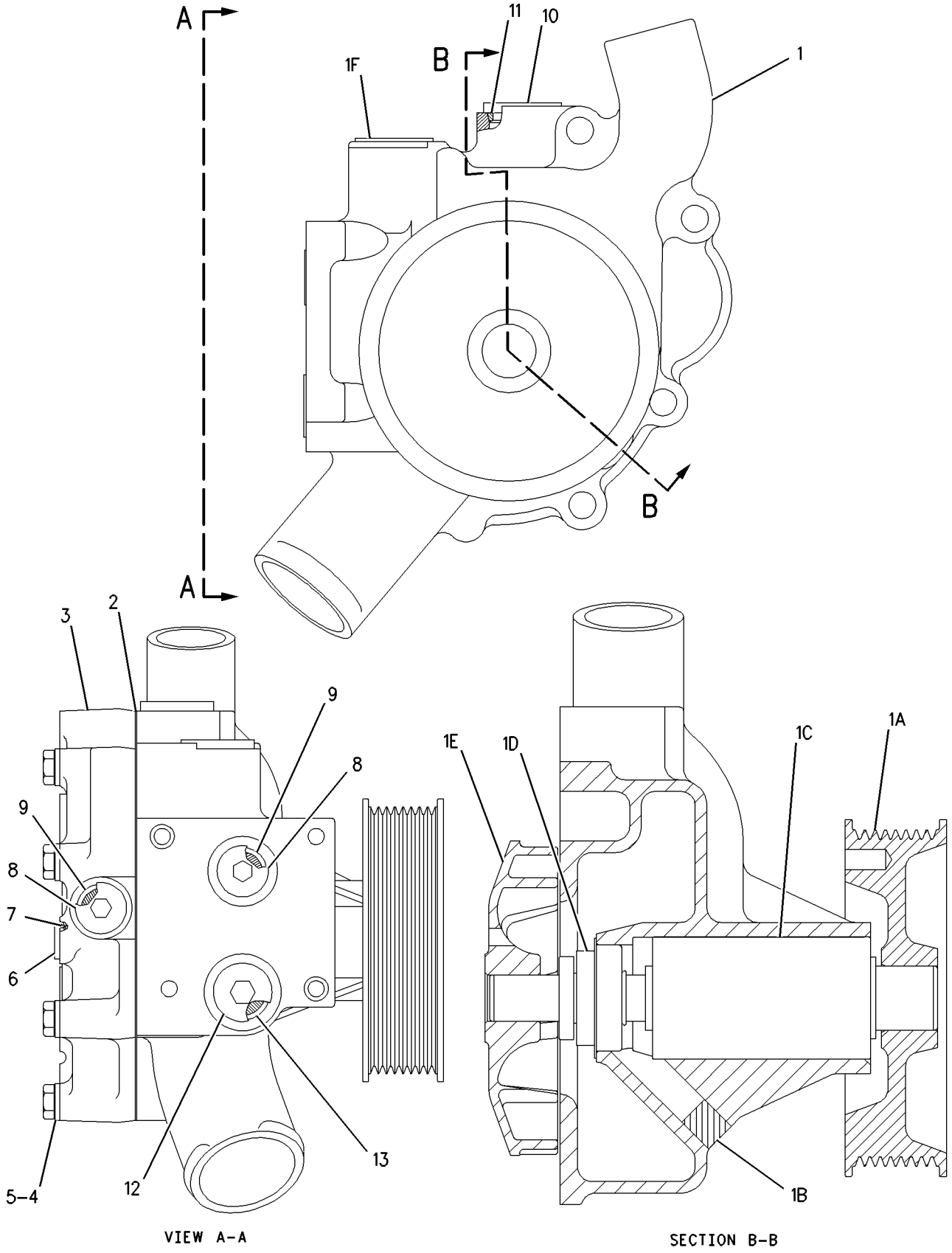

GRAPHIC #1 g00772119

COOLING SYSTEM

196-6983 RADIATOR & OIL COOLER GP

S/N: CAF1-UP
PART OF 194-2911, 194-2912 COOLING AR
ALSO AN ATTACHMENT

SMCS-1351 **i01679187**

NOTE	REF NO	GRAPHIC REF	PART NUMBER	QTY	PART NAME 1 2 3 4 5 6 (PRODUCT LEVEL)	SEE PAGE
	2	1	**6L-8617**	1	CAP-RADIATOR	
	3	1	**8N-8846**	1	NECK-FILLER	
	4	1	**9Y-9236**	1	BODY AS-GAUGE	
B	5	1	**9X-2388**		HOSE	
	6	1	**4H-2633**	4	CLIP	

B-USE AS REQUIRED

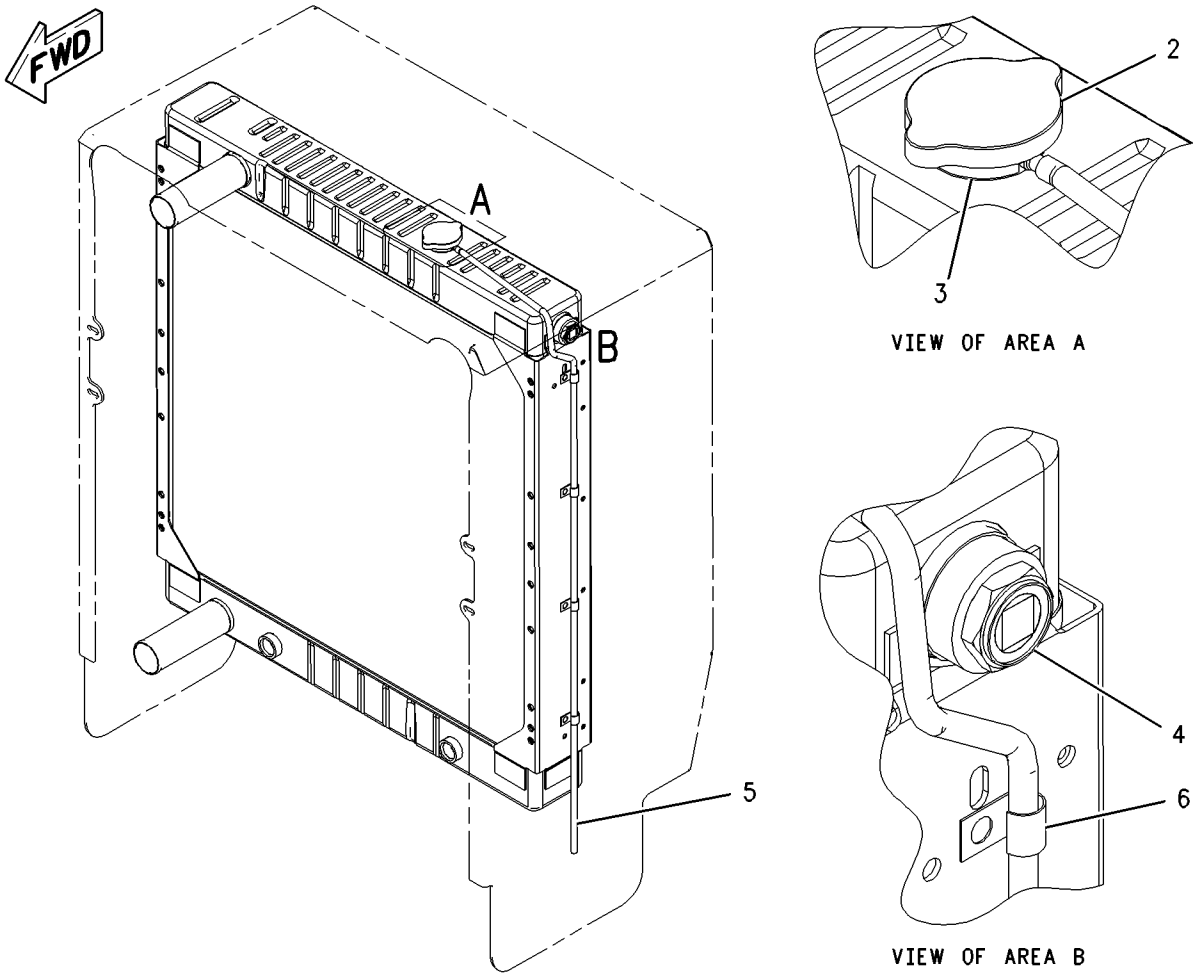

GRAPHIC #1 g00890087

AIR INLET AND EXHAUST SYSTEM

194-5122 ADAPTER GP-TURBOCHARGER

S/N: BMA1-UP

PART OF 199-5055 ENGINE AR-COMPLETE

SMCS-1052 **i01695040**

NOTE	REF NO	GRAPHIC REF	PART NUMBER	QTY	PART NAME 1 2 3 4 5 6 (PRODUCT LEVEL)	SEE PAGE
	1	1	**189-9989**	1	ELBOW-TURBOCHARGER	
M	2	1	**3E-8017**	4	LOCKNUT (M10X1.5)	
	3	1	**7C-7431**	1	GASKET-TURBOCHARGER	

M-METRIC PART

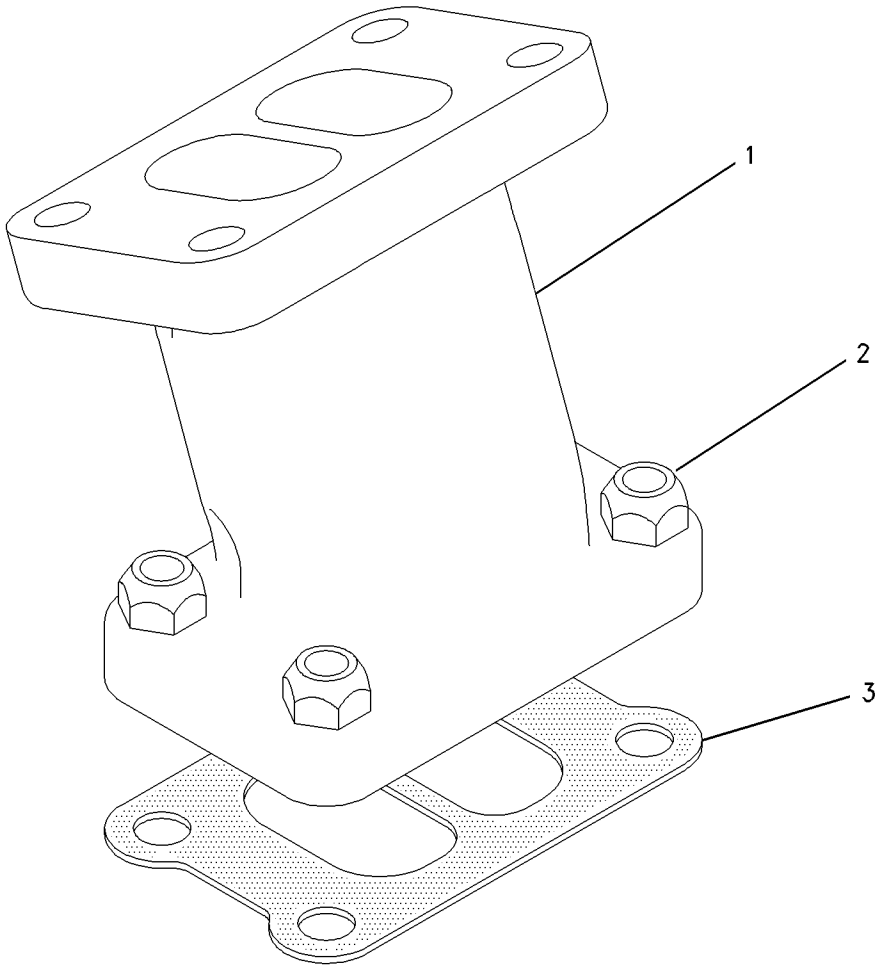

GRAPHIC #1 g00718921

AIR INLET AND EXHAUST SYSTEM

196-6984 AFTERCOOLER & MOUNTING GP

S/N: CAF1-UP
PART OF 194-2911, 194-2912 COOLING AR
ALSO AN ATTACHMENT

SMCS-1063 **i01679195**

NOTE	REF NO	GRAPHIC REF	PART NUMBER	QTY	PART NAME 1 2 3 4 5 6 (PRODUCT LEVEL)	SEE PAGE
	1	1	**198-1533**	1	CORE AS	
	2	1	**199-2711**	2	SPACER (7.82X26.67X75MM THK)	
	3	1	**4S-9191**	4	WASHER (12X22.5X5MM THK)	
M	4	1	**6V-1820**	4	BOLT (M10X1.50X30MM)	
	5	1	**7X-7729**	2	WASHER (11X25X3MM THK)	
M	6	1	**8T-5436**	2	BOLT (M10X1.50X130MM)	
E	7	1	**123-3827**		SEAL (30 CM EACH)	

E-ORDER BY THE CENTIMETER
M-METRIC PART

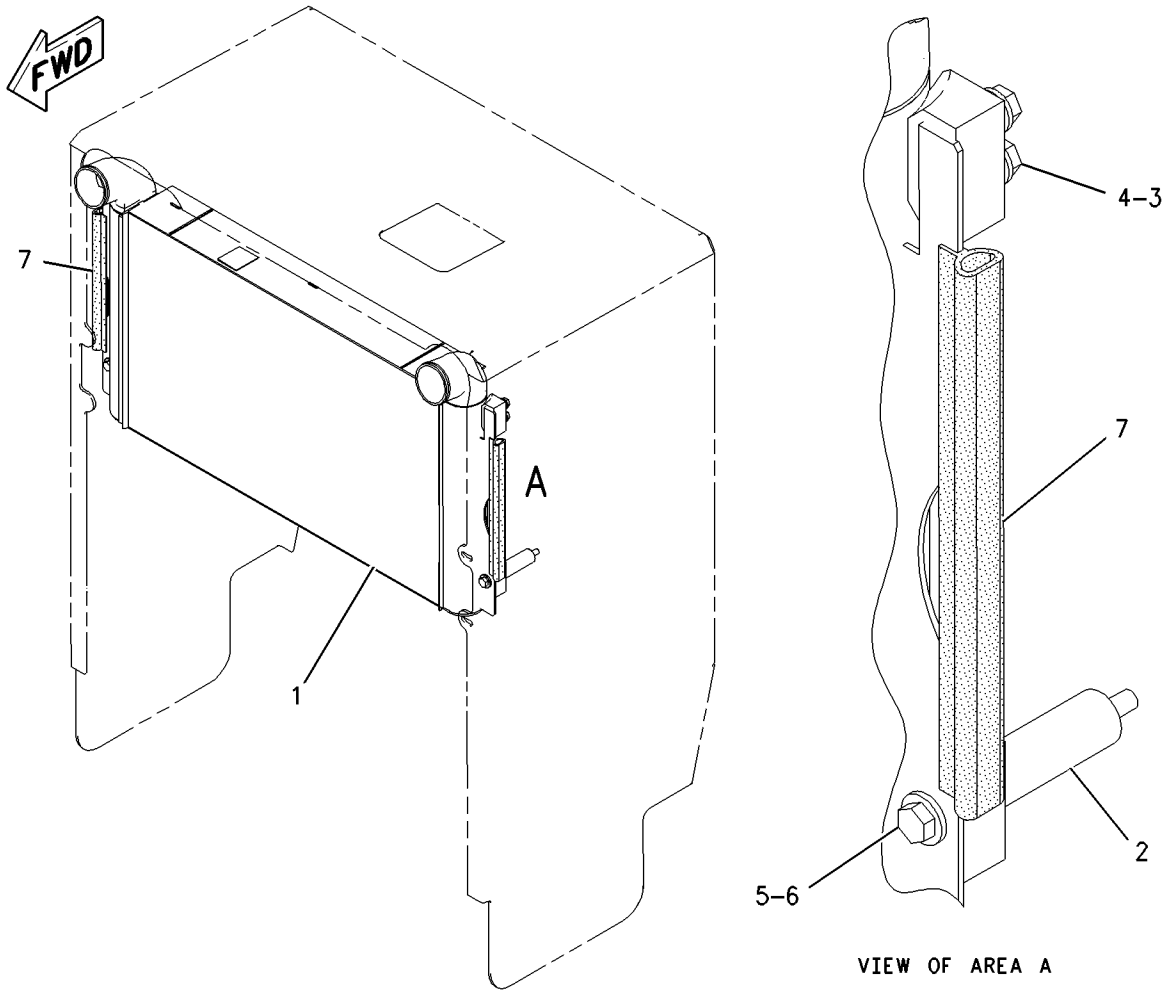

GRAPHIC #1 g00890174

AIR INLET AND EXHAUST SYSTEM

7E-5677 AIR CLEANER GP

S/N: CAF1-UP

PART OF 161-2326 AIR CLEANER GP

SMCS-1051, 1054, 7452 **i01061950**

NOTE	REF NO	GRAPHIC REF	PART NUMBER	QTY	PART NAME 1 2 3 4 5 6 (PRODUCT LEVEL)	SEE PAGE
CY	1	1	**163-1850**	1	AIR CLEANER GP	86
	2	1	**9S-6147**	1	BODY AS	
	3	1	**7S-9396**	1	PRESCREENER AS	
		1	**0S-1591**	1	BOLT (3/8-16X1.5IN)	
		1	**1D-4717**	1	NUT (3/8-16 THD)	
	4	1	**7S-7680**	1	CLAMP	
	5	1	**8N-2694**	1	INDICATOR-AIR FILTER SERVICE	
	6	1	**5K-5068**	1	NIPPLE	
	7	1	**7X-0492**	1	ELBOW-90 DEGREE	
	8	1	**106-7657**	1	TUBE AS	
	9	1	**4J-5477**	2	SEAL-O-RING (8.61MM ID)	
	10	1	**8T-4128**	1	ADAPTER-ORFS	
	11	1	**2K-4973**	1	LOCKNUT (3/8-16 THD)	
	12	1	**8T-9377**	1	BOLT (3/8-16X2.25IN)	
	13	1	**8T-4896**	2	WASHER-HARD (2.5MM THK)	
	14	1	**5S-7382**	4	BOLT (3/8-16X34.92)	
	15	1	**5P-1075**	4	WASHER-HARD (3MM THK)	

C-CHANGE FROM PREVIOUS TYPE
Y-SEPARATE ILLUSTRATION

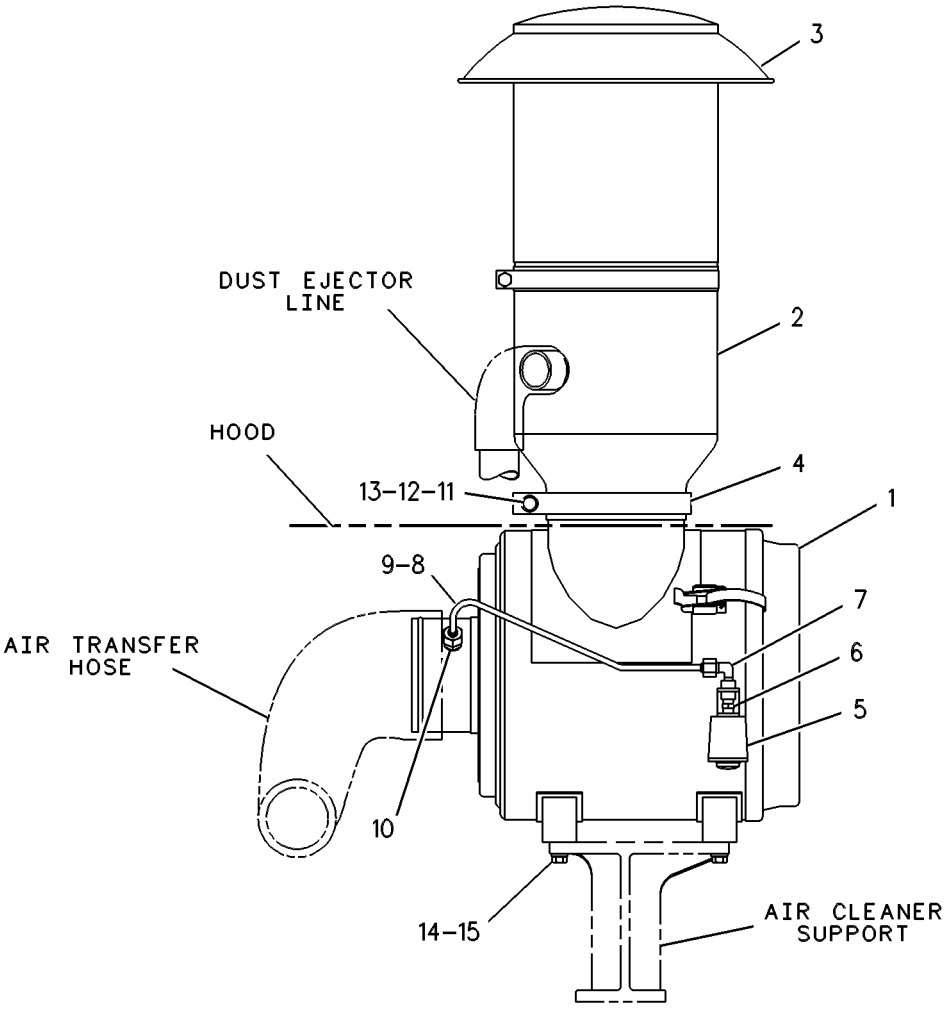

GRAPHIC #1 g00108854

AIR INLET AND EXHAUST SYSTEM

161-2326 AIR CLEANER GP

S/N: CAF1-UP

PART OF 162-5603 GENERAL AR

SMCS-1051, 1054, 7452 **i01850297**

NOTE	REF NO	GRAPHIC REF	PART NUMBER	QTY	PART NAME 1 2 3 4 5 6 (PRODUCT LEVEL)	SEE PAGE
	1	1	**198-1220**	1	PLATE AS	
M		1	**8T-3490**	2	NUT-WELD (M10X1.5 THD)	
	2	1	**7X-7958**	1	CLAMP-HOSE	
	3	1	**8T-4986**	1	CLAMP-HOSE	
	4	1	**8T-4987**	1	CLAMP-HOSE	
	5	1	**9M-0164**	2	CLAMP-HOSE	
	6	1	**190-8940**	1	HOSE	
	7	1	**195-0434**	1	BRACKET	
	8	1	**198-1219**	1	PLATE	
	9	1	**198-1221**	1	HOSE	
	10	1	**198-4777**	6	WASHER-HARD (11X25X10MM THK)	
	11	1	**199-7123**	1	TUBE AS	
	12	1	*148-8317*	1	CONNECTOR GP	
		1	**6V-8714**	1	CONNECTOR	
		1	**3D-2824**	1	SEAL-O-RING	
		1	**5K-9090**	1	SEAL-O-RING	
	13	1	**7C-4354**	1	CLIP	
Y	14	1	*7E-5677*	1	AIR CLEANER GP	83
M	15	1	**8T-0389**	2	LOCKNUT (M10X1.5 THD)	
	16	1	**8T-4121**	7	WASHER-HARD (11X21X2.5MM THK)	
M	17	1	**8T-4133**	1	NUT (M10X1.5 THD)	
M	18	1	**8T-4136**	5	BOLT (M10X1.5X25MM)	
M	19	1	**8T-4137**	1	BOLT (M10X1.5X20MM)	
M	20	1	**8T-4182**	2	BOLT (M10X1.5X45MM)	
M	21	1	**8T-4196**	2	BOLT (M10X1.5X35MM)	

M-METRIC PART
Y-SEPARATE ILLUSTRATION

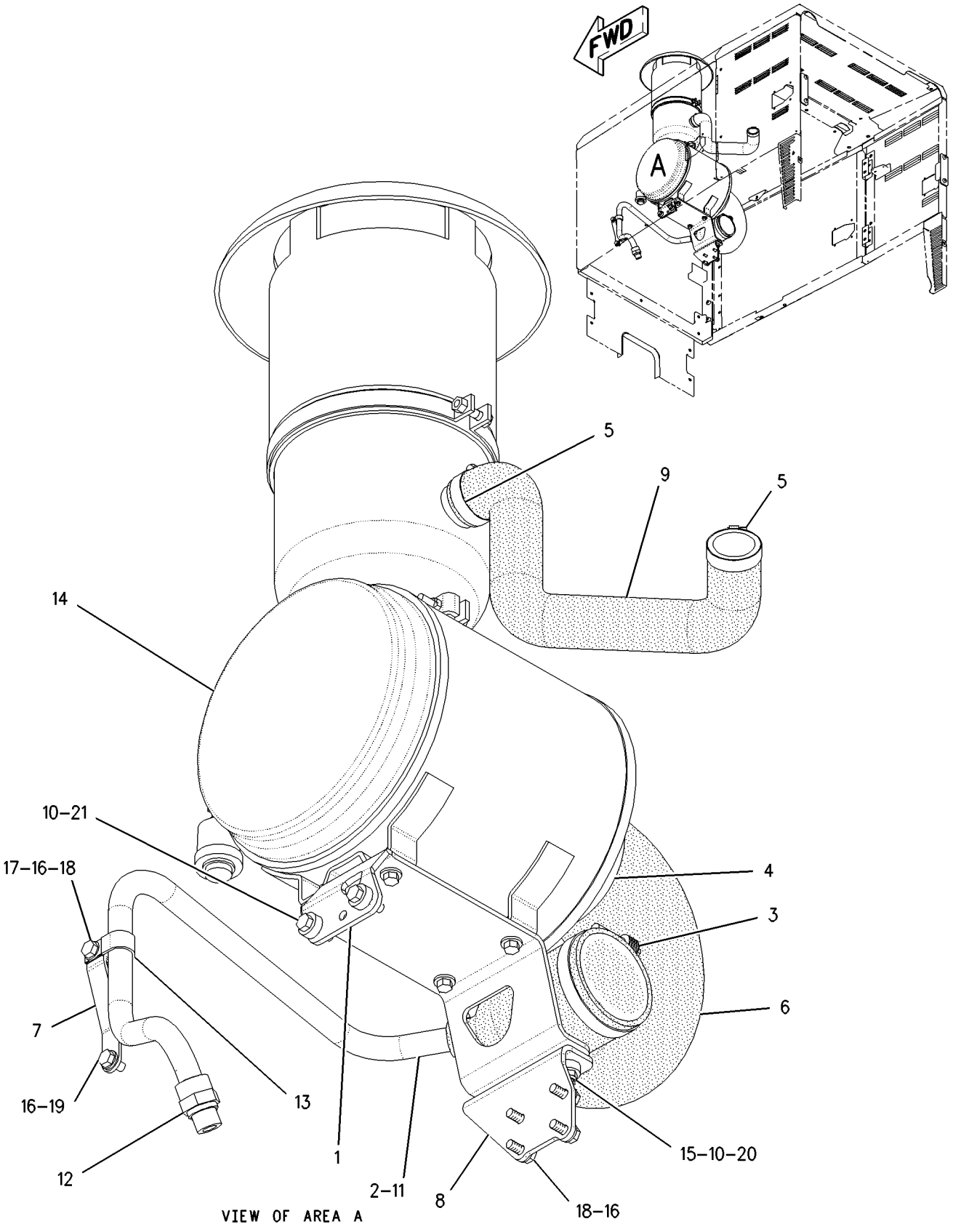

GRAPHIC #1 g00890337

AIR INLET AND EXHAUST SYSTEM

163-1850 AIR CLEANER GP

S/N: CAF1-UP

PART OF 7E-5677 AIR CLEANER GP

SMCS-1051, 1054, 7452 **i01068288**

NOTE	REF NO	GRAPHIC REF	PART NUMBER	QTY	PART NAME 1 2 3 4 5 6 (PRODUCT LEVEL)	SEE PAGE
	1	1	**6I-0273**	1	ELEMENT AS-PRIMARY	
	2	1	**6I-0274**	1	ELEMENT AS-SECONDARY	
	3	1	**6I-0275**	1	COVER AS-AIR CLEANER	
		1	**4P-5524**	1	SEAL-O-RING (313MM ID)	
	4	1	**8N-4617**	2	KIT-AIR CLEANER CLAMP	
					(EACH KIT INCLUDES CLIP ASSEMBLY AND RIVET)	

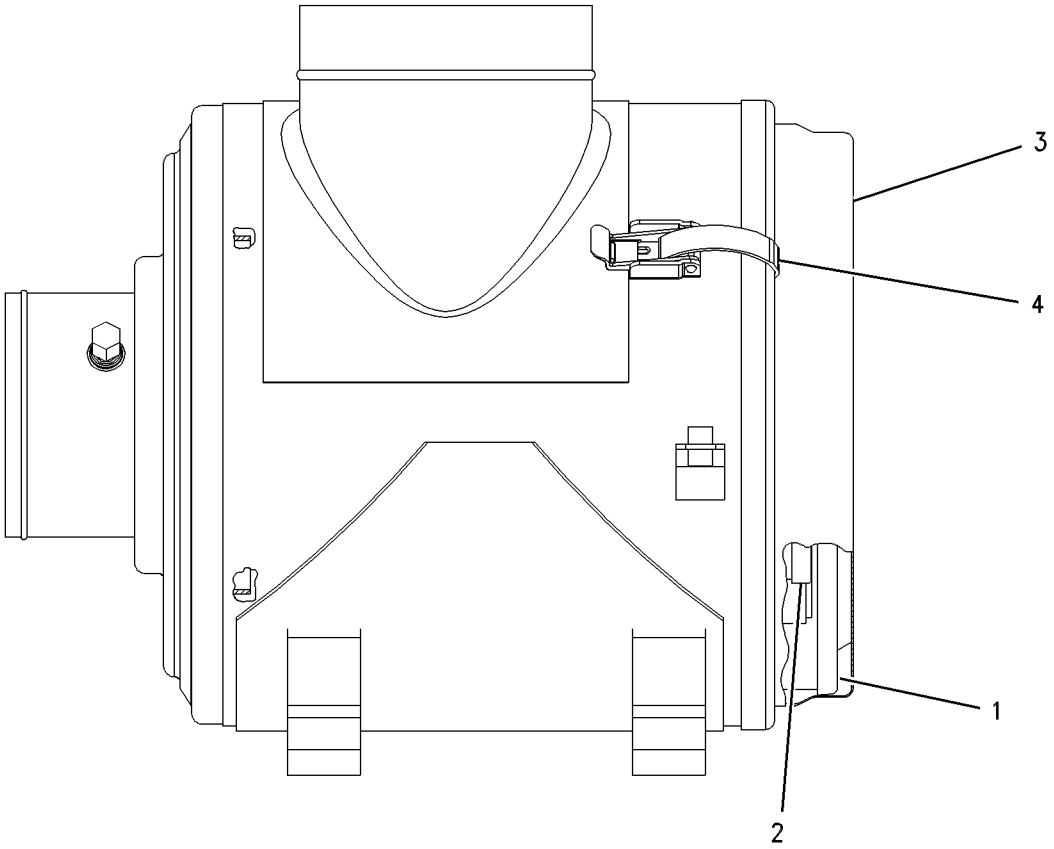

GRAPHIC #1 g00497362

AIR INLET AND EXHAUST SYSTEM

197-4561 COVER GP-AIR INLET

S/N: BMA1-UP

PART OF 199-5055 ENGINE AR-COMPLETE

SMCS-1087 **i01808111**

NOTE	REF NO	GRAPHIC REF	PART NUMBER	QTY	PART NAME 1 2 3 4 5 6 (PRODUCT LEVEL)	SEE PAGE
M	1	1	**9X-2099**	7	STUD	
	2	1	**144-3472**	1	GASKET	
	3	1	**189-8779**	1	COVER & HEATER GP-AIR INLET	
	3A	1	**9S-4191**	2	PLUG	
	3B	1	**3J-1907**	2	SEAL-O-RING	
	4	1	**9M-1974**	8	WASHER-HARD (8.8X16X2MM THK)	
M	5	1	**6V-2317**	1	BOLT (M8X1.25X30MM)	

M-METRIC PART

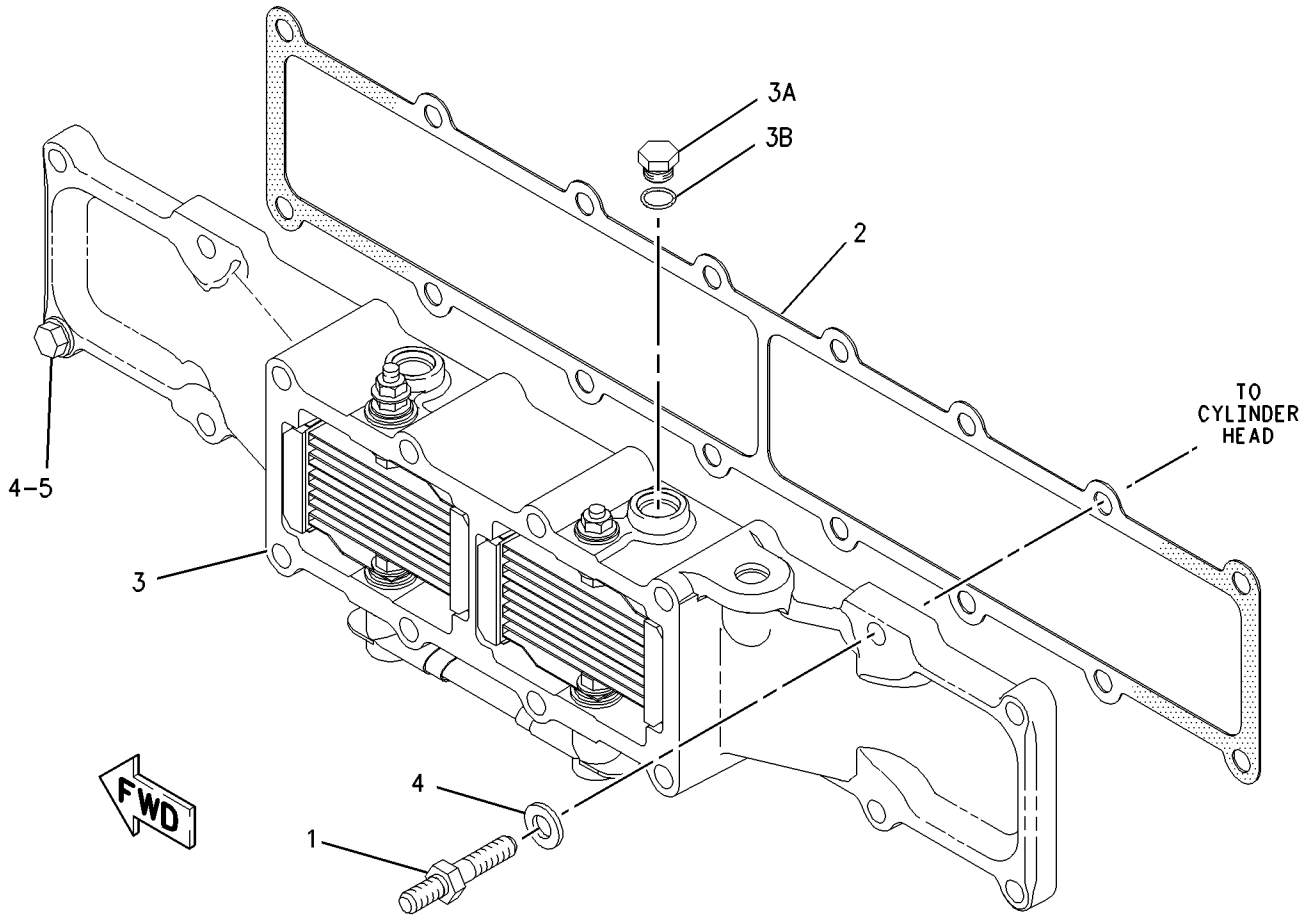

GRAPHIC #1 g00928355

AIR INLET AND EXHAUST SYSTEM

212-8135 ELBOW GP-AIR INLET

S/N: BMA1-UP

PART OF 199-5055 ENGINE AR-COMPLETE

SMCS-1087 **i01696069**

NOTE	REF NO	GRAPHIC REF	PART NUMBER	QTY	PART NAME 1 2 3 4 5 6 (PRODUCT LEVEL)	SEE PAGE
	1	1	**116-4663**	1	ELBOW-AIR INLET	
		1	**3K-0360**	2	SEAL-O-RING	
		1	**9S-8005**	2	PLUG	
M	2	1	**123-4511**	2	STUD	
	3	1	**3K-0360**	1	SEAL-O-RING	
	4	1	**8M-3175**	8	WASHER-HARD (10.2X16X3MM THK)	
M	5	1	**8T-0292**	6	BOLT (M8X1.25X90MM)	
	6	1	**9S-8005**	1	PLUG	
B	7	1	**1U-8846**		SEALANT-GASKET	

B-USE AS REQUIRED
M-METRIC PART

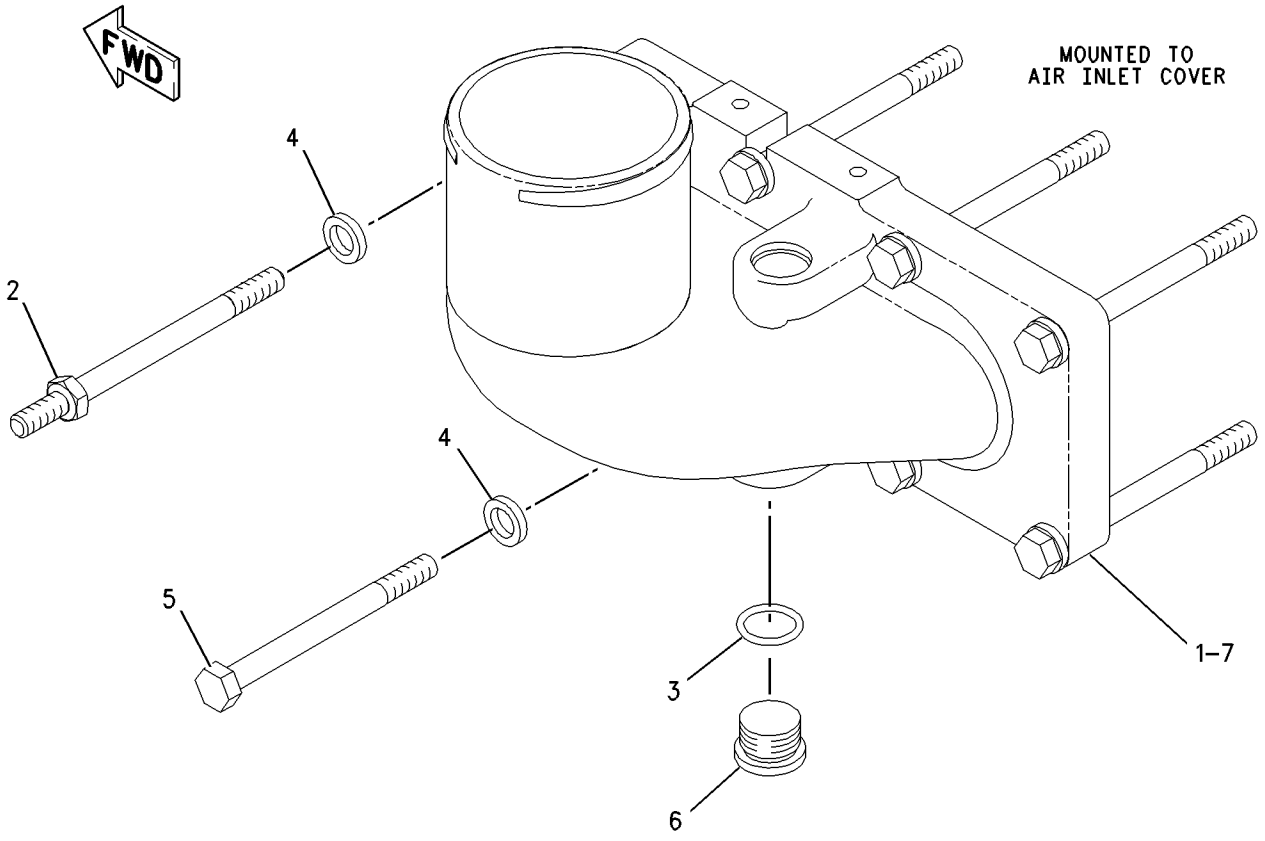

GRAPHIC #1 g00873716

MEMORANDA

AIR INLET AND EXHAUST SYSTEM

167-8100 LINES GP-AIR

S/N: CAF1-UP
PART OF 167-8066 AIR CONDITIONER AR
AN ATTACHMENT

SMCS-1071 **i01689399**

NOTE	REF NO	GRAPHIC REF	PART NUMBER	QTY	PART NAME 1 2 3 4 5 6 (PRODUCT LEVEL)	SEE PAGE
	1	1	**1P-6356**	1	PLATE	
	2	1	**175-7162**	1	RECEIVER-DRYER GP (AIR CONDITIONER)	
		1	**7X-2049**	1	TUBE AS-REFRIGERANT ORIFICE	
	3	1	**3S-2093**	2	STRAP-CABLE	
	4	1	**4W-7627**	1	SPACER (11X19X37MM THK)	
	5	1	**8W-8528**	4	SLEEVE	
	6	1	**103-6100**	2	COUPLER AS-QUICK	
					(EACH INCLUDES)	
		1	**9X-7382**	2	SEAL-O-RING	
	7	1	**106-8704**	1	SUPPRESSOR AS-ARC	
		1	**102-8802**	1	KIT-RECEPTACLE (2 PIN)	
					(INCLUDES RECEPTACLE AS & WEDGE)	
		1	**186-3735**	2	PIN-CONNECTOR	
	8	1	**180-5462**	1	SWITCH AS-PRESSURE (AIR CONDITIONER)	
		1	**186-3736**	2	SOCKET-CONNECTOR	
		1	**155-2270**	1	KIT-CONNECTING PLUG (2 PIN)	
					(INCLUDES PLUG AS & WEDGE)	
	9	1	**193-1502**	1	HARNESS AS-THERMOSTAT	
		1	**155-2270**	3	KIT-CONNECTING PLUG (2 PIN) (A/C & THERMOSTAT SWITCH)	
					(EACH INCLUDES PLUG AS & WEDGE)	
		1	**102-8802**	1	KIT-RECEPTACLE (2 PIN) (A/C & THERMOSTAT SWITCH)	
					(INCLUDES RECEPTACLE AS & WEDGE)	
	10	1	**197-6218**	1	ACCUMULATOR	
I	11	1	**198-1942**	1	HOSE AS	
I	12	1	**198-1943**	1	HOSE AS	
I	13	1	**198-1944**	1	HOSE AS	
	14	1	**198-1945**	1	BRACKET	
	15	1	**199-1020**	1	TUBE AS	
	16	1	**199-1021**	1	TUBE AS	
	17	1	**101-3625**	1	CLIP	
	18	1	**128-5924**	1	CLAMP	
	19	1	**130-5300**	2	CLIP	
	20	1	**4B-9302**	1	CLIP	
	21	1	**4D-7794**	3	CLIP	
	22	1	**4H-2633**	1	CLIP	
	23	1	**4S-1962**	1	CLIP	
	24	1	**5K-9660**	3	CLIP	
	25	1	**5M-3062**	2	BOLT (3/8-16X0.75 IN)	
	26	1	**5P-1075**	4	WASHER-HARD (10.2X22.5X3MM THK)	
	27	1	**6V-3265**	1	CLIP	
M	28	1	**7X-2541**	1	BOLT (M8X1.25X140MM)	
	29	1	**8R-3393**	1	STRAP	
	30	1	**8R-3652**	1	SPACER (13.86X21.34X37MM THK)	
	31	1	**8S-6109**	1	CLIP (SLOT)	
	32	1	**8S-6110**	1	CLIP (TAB)	
	33	1	**8T-4121**	7	WASHER-HARD (11X21X2.5MM THK)	
M	34	1	**8T-4133**	1	NUT (M10X1.5 THD)	
M	35	1	**8T-4136**	2	BOLT (M10X1.5X25MM)	
M	36	1	**8T-4137**	3	BOLT (M10X1.5X20MM)	
	37	1	**8T-4224**	1	WASHER-HARD (8.8X16X2MM THK)	
M	38	1	**8T-6466**	1	BOLT (M10X1.50X60MM)	
	39	1	**9B-7237**	2	BOLT (3/8-16X1.25 IN)	
	40	1	**9X-7378**	1	SEAL-O-RING	

167-8100 **LINES GP-AIR** *(contd.)* **i01689399**

NOTE	REF NO	GRAPHIC REF	PART NUMBER	QTY	PART NAME 1 2 3 4 5 6 (PRODUCT LEVEL)	SEE PAGE
	41	1	**9X-7380**	3	SEAL-O-RING	
	42	1	**9X-7381**	2	SEAL-O-RING	
	43	1	**9X-7383**	2	SEAL-O-RING	
	44	1	**9X-7385**	2	SEAL-O-RING	

I-SEE HOSE FABRICATION GUIDE
M-METRIC PART

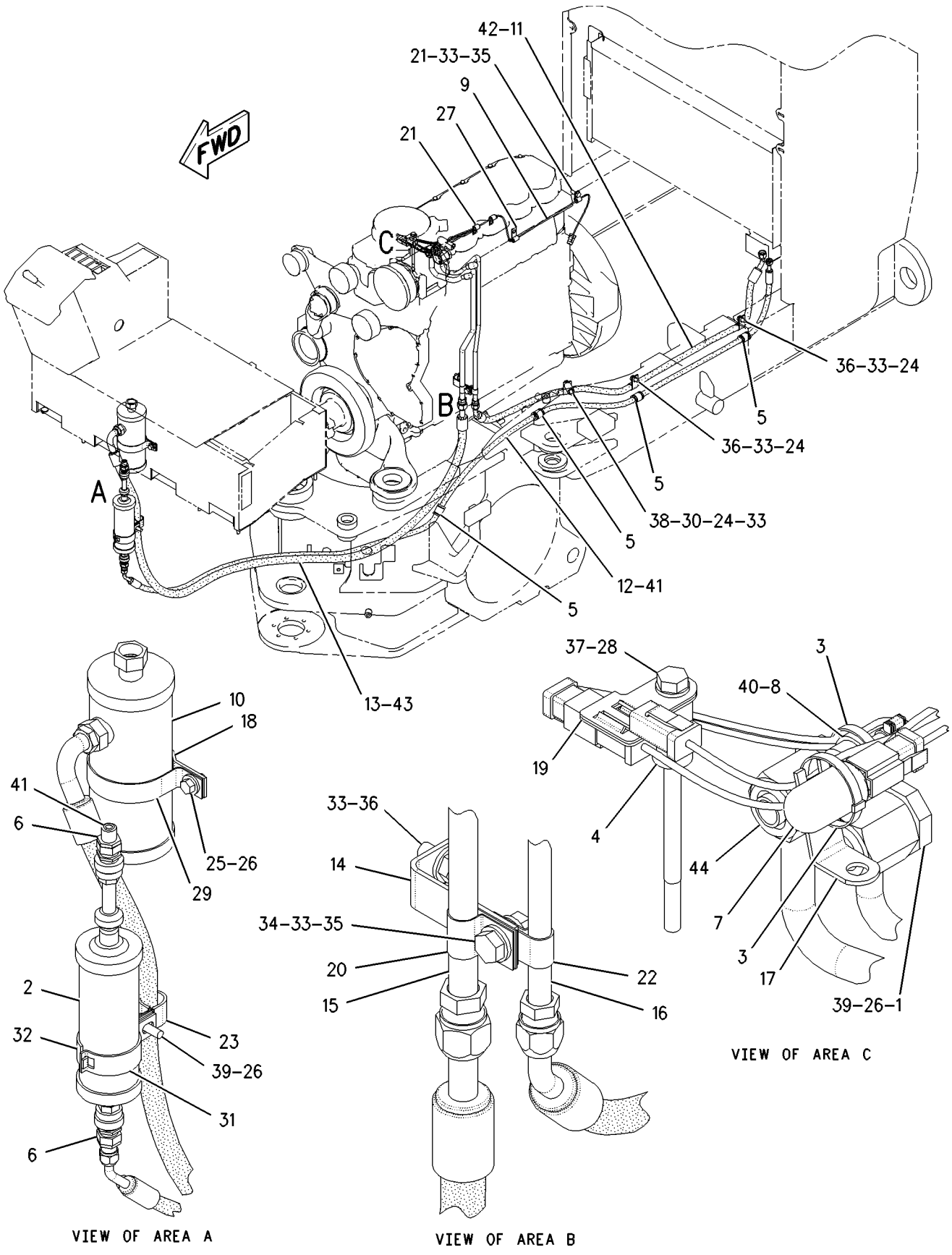

GRAPHIC #1 g00939010

AIR INLET AND EXHAUST SYSTEM

194-6748 LINES GP-AIR–AFTERCOOLER

S/N: CAF1-UP

PART OF 162-5603 GENERAL AR

SMCS-1071 **i01819709**

NOTE	REF NO	GRAPHIC REF	PART NUMBER	QTY	PART NAME 1 2 3 4 5 6 (PRODUCT LEVEL)	SEE PAGE
	1	1	**177-0581**	4	HOSE	
	2	1	**199-1322**	1	TUBE	
	3	1	**199-1325**	1	TUBE	
	4	1	**208-6055**	8	CLAMP	
	5	1	**7X-7729**	2	WASHER (11X25X3MM THK)	
M	6	1	**8T-4195**	2	BOLT (M10X1.5X30MM)	
	7	1	**9X-2646**	2	CLIP (SLOT)	
	8	1	**9X-2647**	2	CLIP (TAB)	

M-METRIC PART

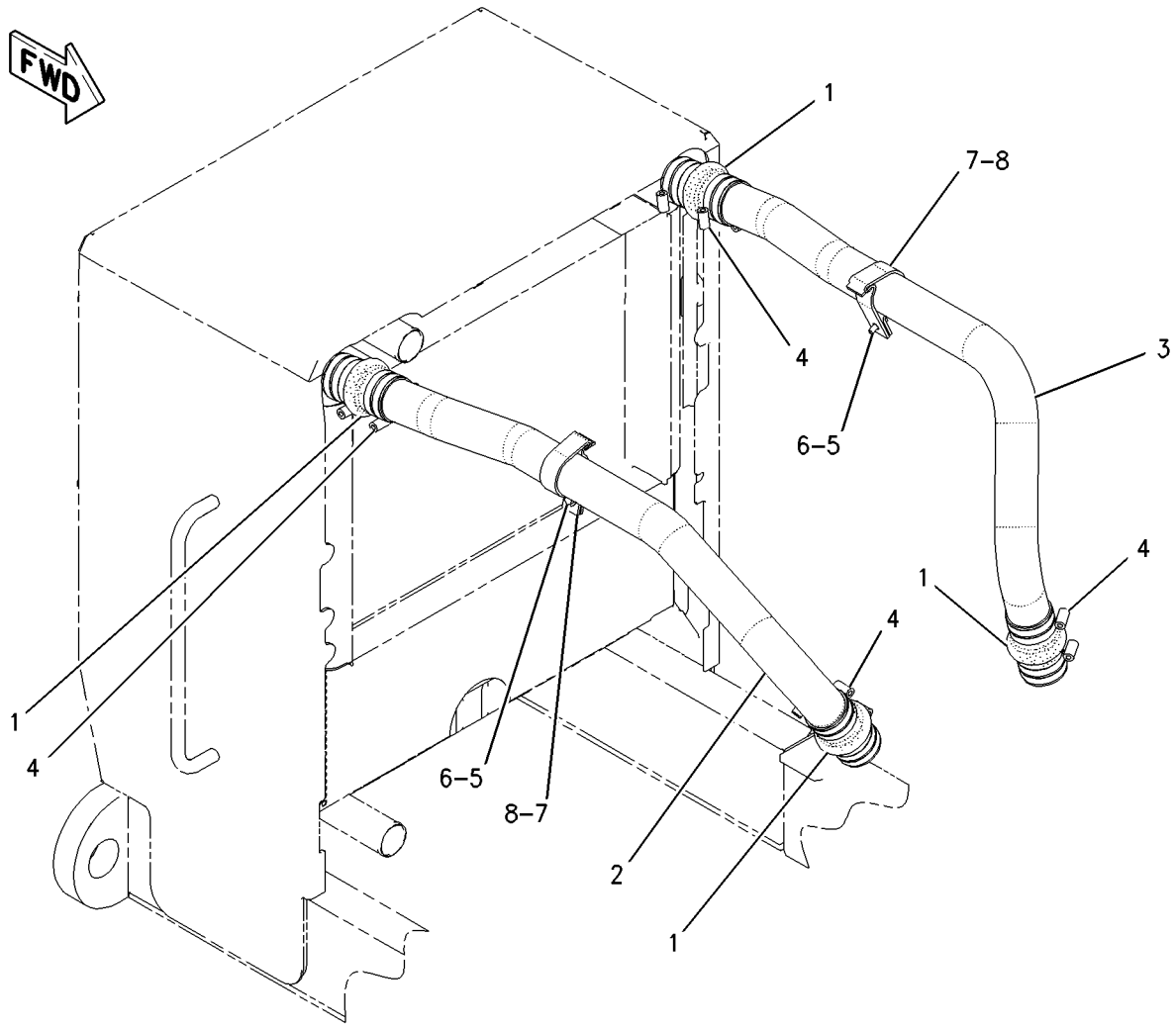

GRAPHIC #1 g00880617

AIR INLET AND EXHAUST SYSTEM

183-6845 MANIFOLD GP-EXHAUST

S/N: BMA1-UP

PART OF 199-5055 ENGINE AR-COMPLETE

SMCS-1059 **i01600108**

NOTE	REF NO	GRAPHIC REF	PART NUMBER	QTY	PART NAME 1 2 3 4 5 6 (PRODUCT LEVEL)	SEE PAGE
M	1	1	**8T-7044**	4	STUD-TAPERLOCK	
	2	1	**172-6284**	3	GASKET	
M	3	1	**172-6298**	10	BOLT-FLANGE HEAD (M10)	
	4	1	**183-6854**	1	MANIFOLD-EXHAUST	
	5	1	**183-6856**	2	MANIFOLD-EXHAUST	
	6	1	**189-8772**	10	SPACER	
	7	1	**203-3768**	2	SPACER	
	8	1	**210-7722**	2	BOLT	

M-METRIC PART

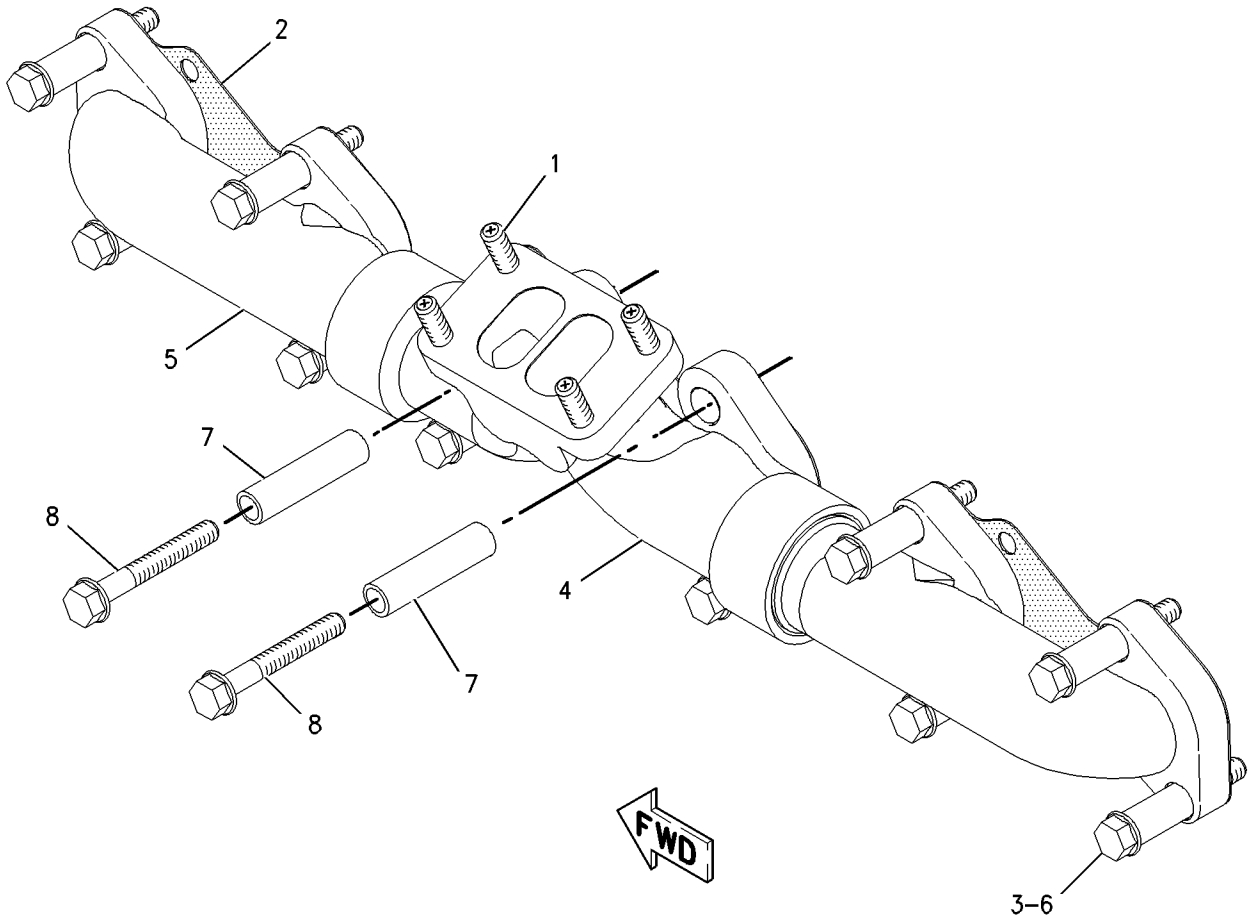

GRAPHIC #1 g00829483

AIR INLET AND EXHAUST SYSTEM

161-2335 MUFFLER GP

S/N: CAF1-UP

PART OF 162-5603 GENERAL AR

SMCS-1062 **i01674555**

NOTE	REF NO	GRAPHIC REF	PART NUMBER	QTY	PART NAME 1 2 3 4 5 6 (PRODUCT LEVEL)	SEE PAGE
	1	1	**7C-0752**	1	CLAMP	
	2	1	**141-1480**	1	CLAMP AS	
	3	1	**192-7352**	2	PLATE	
	4	1	**198-4747**	1	PLATE AS	
	5	1	**198-4748**	1	PLATE AS	
	6	1	**198-4777**	10	WASHER-HARD (11X25X10MM THK)	
	7	1	**201-0346**	1	MUFFLER AS	
	8	1	**216-9746**	1	EJECTOR AS	
		1	**141-1480**	1	CLAMP AS	
	9	1	**8T-4121**	3	WASHER-HARD (11X21X2.5MM THK)	
M	10	1	**8T-4133**	2	NUT (M10X1.5 THD)	
M	11	1	**8T-4136**	3	BOLT (M10X1.5X25MM)	
M	12	1	**8T-4185**	2	BOLT (M10X1.5X50MM)	
M	13	1	**8T-4196**	6	BOLT (M10X1.5X35MM)	

M-METRIC PART

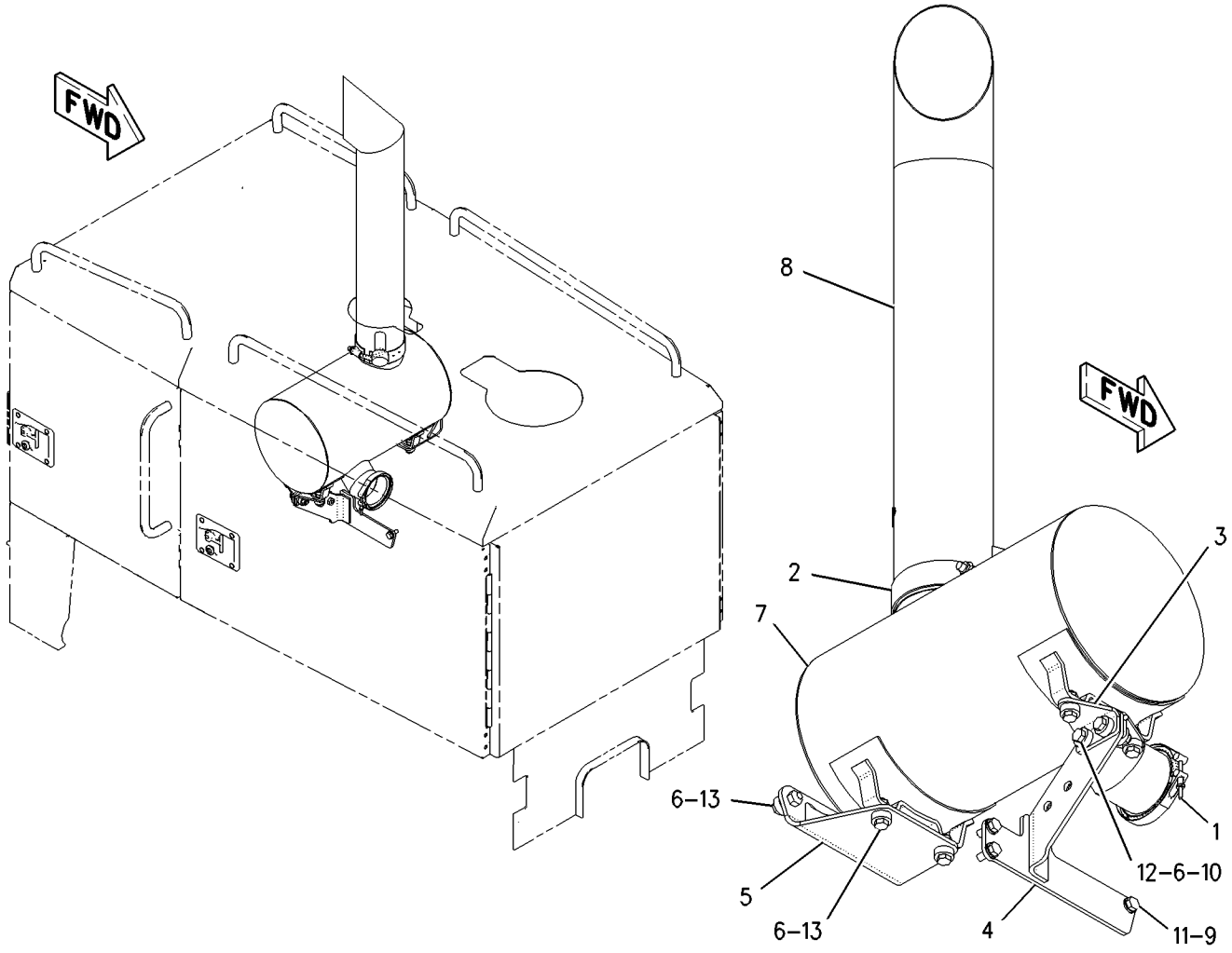

GRAPHIC #1

g00879802

AIR INLET AND EXHAUST SYSTEM

187-1603 TURBOCHARGER GP

S/N: BMA1-UP

PART OF 194-5136 TURBOCHARGER GP

SMCS-1052 **i01696296**

NOTE	REF NO	GRAPHIC REF	PART NUMBER	QTY	PART NAME 1 2 3 4 5 6 (PRODUCT LEVEL)	SEE PAGE
M	1	1	**7C-6670**	4	BOLT (M8X12.5MM)	
	2	1	**7C-6672**	2	PLATE-CLAMP	
	3	1	**7M-9918**	1	LOCKNUT (1/4-28 THD)	
	4	1	**158-6072**	1	CLAMP AS	
	5	1	**196-0265**	1	HOUSING-TURBINE	
	6	1	**196-0267**	1	COVER-COMPRESSOR	
	7	1	**196-0268**	1	CARTRIDGE GP-TURBOCHARGER	

M-METRIC PART

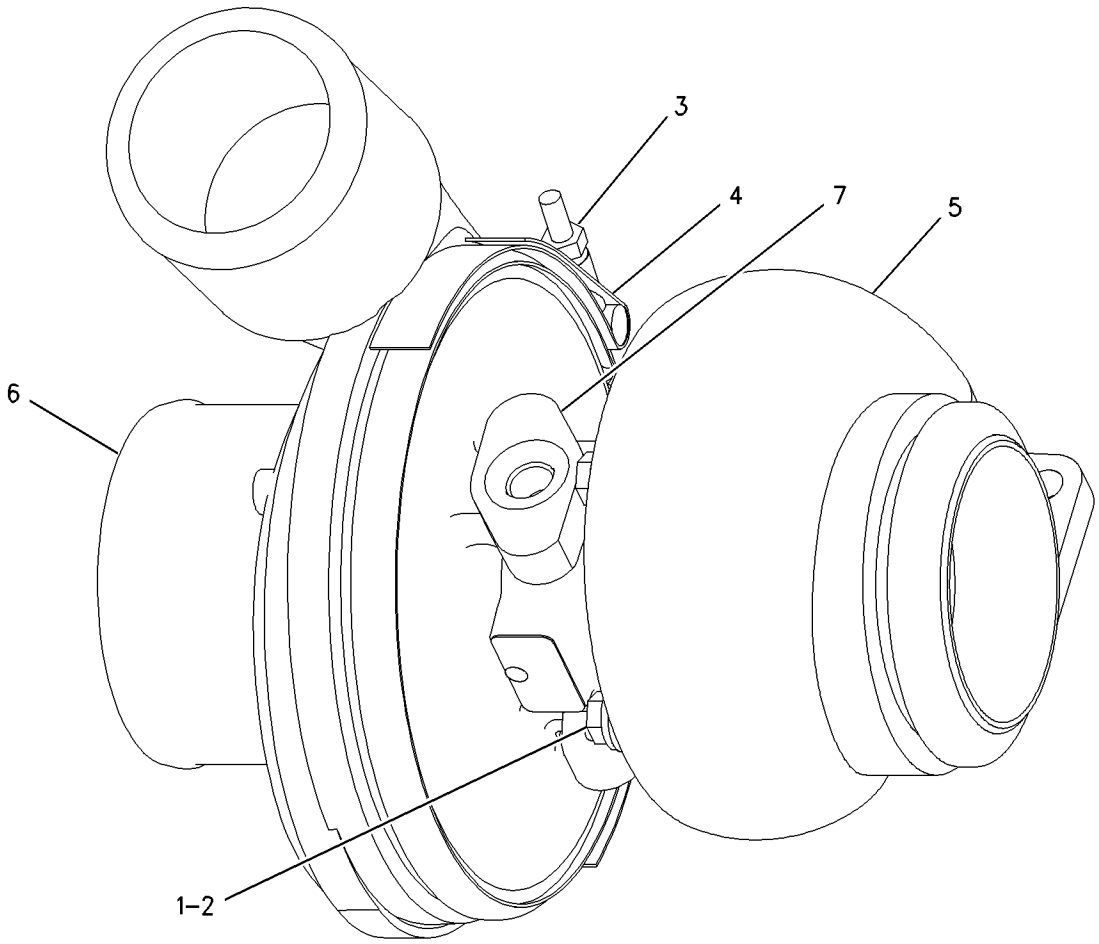

GRAPHIC #1 g00759808

AIR INLET AND EXHAUST SYSTEM

194-5136 TURBOCHARGER GP

S/N: BMA1-UP

PART OF 199-5056 ENGINE AR-CORE

SMCS-1052 **i01810108**

NOTE	REF NO	GRAPHIC REF	PART NUMBER	QTY	PART NAME 1 2 3 4 5 6 (PRODUCT LEVEL)	SEE PAGE
Y	1	1	**187-1603**	1	TURBOCHARGER GP	96
	2	1	**8T-4121**	4	WASHER-HARD (11X21X2.5MM THK)	
	3	1	**225-0947**	4	BOLT (M10X1.5X40MM)	
M	4	1	**3E-8017**	4	LOCKNUT	
	5	1	**7C-7431**	1	GASKET-TURBOCHARGER	

M-METRIC PART
Y-SEPARATE ILLUSTRATION

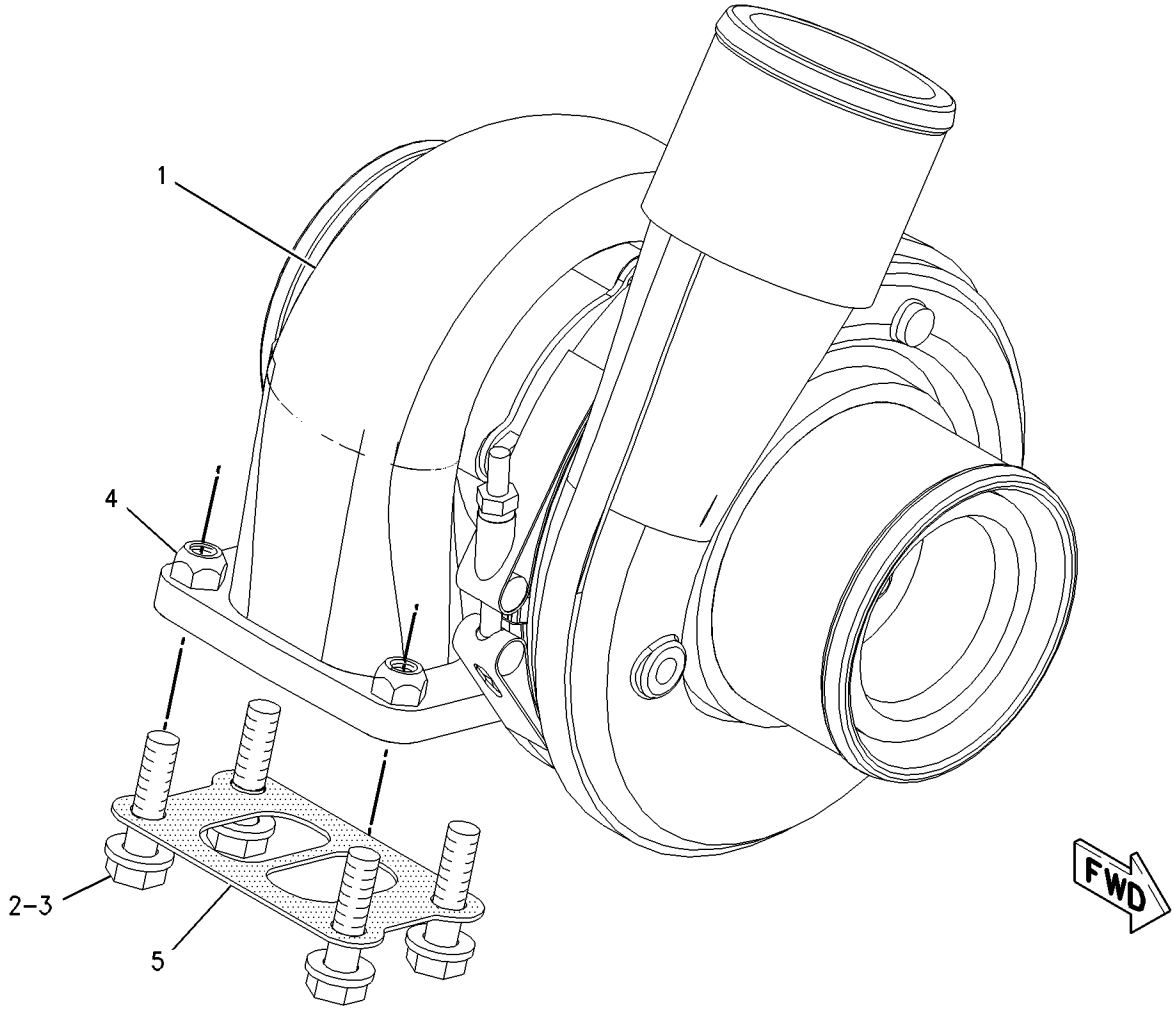

GRAPHIC #1 g00873932

FUEL SYSTEM

159-5935 CONTROL GP-GOVERNOR

S/N: CAF1-UP

PART OF 162-5603 GENERAL AR

SMCS-1265, 1276 **i01673334**

NOTE	REF NO	GRAPHIC REF	PART NUMBER	QTY	PART NAME 1 2 3 4 5 6 (PRODUCT LEVEL)	SEE PAGE
	1	1	**1B-2578**	1	NUT (3/8-16 THD)	
	2	1	**141-6343**	1	SPRING	
	3	1	**4D-4064**	1	ROD END	
	4	1	**5P-9209**	2	BEARING-ROLLER	
	5	1	**206-3599**	1	LEVER	
	6	1	**7F-0192**	1	BOLT (3/8-16X2 IN)	
	7	1	**7V-0446**	1	CLIP	
	8	1	**207-4927**	1	PEDAL-GOVERNOR CONTROL	
	9	1	**8X-3261**	1	LEVER	
	10	1	**116-5710**	1	GROMMET	
	11	1	**130-5300**	1	CLIP	
Y	12	1	**160-2443**	1	SENSOR GP-POSITION (THROTTLE)	207
	13	1	**161-7062**	1	HOUSING	
	14	1	**162-8218**	1	GASKET	
	15	1	**162-8219**	1	COVER	
	16	1	**168-8683**	1	SHAFT	
	17	1	**169-0921**	1	ROD END (INTERNAL THREAD)	
	18	1	**169-0922**	1	ROD	
	19	1	**172-0165**	1	SHAFT	
	20	1	**172-4211**	1	SPACER (10.5X22X50.8MM THK)	
	21	1	**009-0008**	1	SETSCREW-SOCKET (3/8-16X0.5 IN)	
	22	1	**206-3600**	1	LEVER	
	23	1	**129-3173**	1	BOLT-12 POINT HEAD (3/8-16X31.75MM)	
	24	1	**1B-0676**	1	PIN	
	25	1	**1B-8704**	3	KEY-WOODRUFF	
B	26	1	**2N-9421**	2	SPRING-DISC	
	27	1	**5P-1075**	2	WASHER-HARD (10.2X22.5X3MM THK)	
	28	1	**5P-1076**	1	WASHER-HARD (13.5X30X4MM THK)	
	29	1	**5S-7382**	2	BOLT (3/8-16X1.375 IN)	
M	30	1	**6V-2313**	2	BOLT (M5X0.8X30MM)	
	31	1	**6V-8801**	2	NUT (3/8-16 THD)	
	32	1	**8T-0328**	2	WASHER-HARD (5.5X10X1MM THK)	
	33	1	**8T-4121**	3	WASHER-HARD (11X21X2.5MM THK)	
M	34	1	**8T-4133**	2	NUT (M10X1.5 THD)	
M	35	1	**8T-4136**	3	BOLT (M10X1.5X25MM)	
M	36	1	**8T-4182**	2	BOLT (M10X1.5X45MM)	
	37	1	**8T-4226**	1	WASHER-PLATED (10.5X45X3MM THK)	
	38	1	**8T-5390**	1	BOLT (3/8-16X88.9MM)	
	39	1	**6V-0894**	1	SEAL-O-RING	
	40	1	**6V-8183**	1	NUT-FULL (3/8-24 THD)	

B-USE AS REQUIRED
M-METRIC PART
Y-SEPARATE ILLUSTRATION

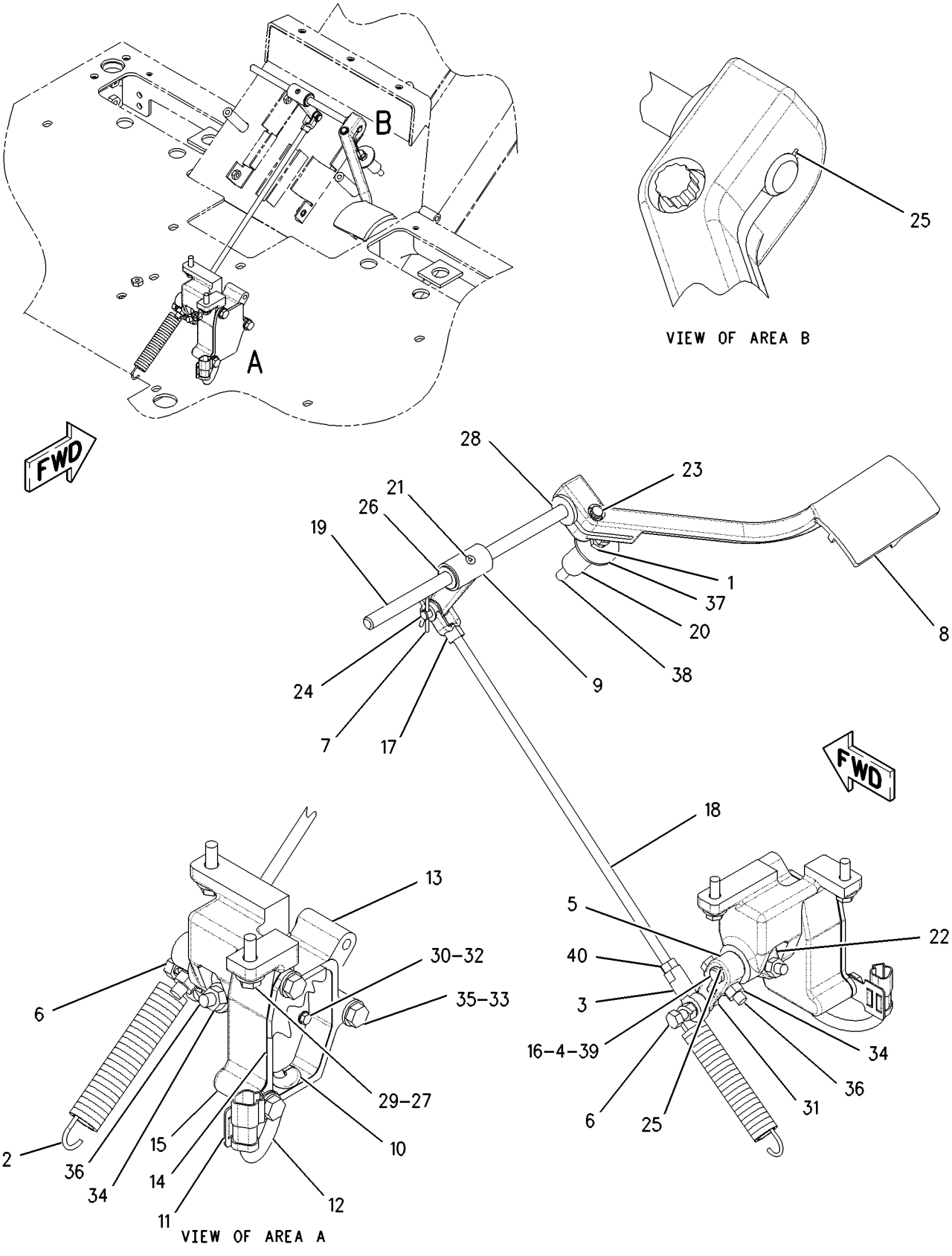

GRAPHIC #1 g00906785

194-5139 FILTER GP-FUEL

S/N: BMA1-UP

PART OF 199-5055 ENGINE AR-COMPLETE

SMCS-1261 **i01695050**

NOTE	REF NO	GRAPHIC REF	PART NUMBER	QTY	PART NAME 1 2 3 4 5 6 (PRODUCT LEVEL)	SEE PAGE
	1	1	**1R-0762**	1	FILTER AS-FUEL	
	2	1	**8C-3446**	1	VALVE GP-FLUID SAMPLING	
	3	1	**183-3405**	1	TEE AS	
		1	**6V-5049**	1	SEAL-O-RING	
		1	**7X-2459**	1	TEE-O-RING	
		1	**8L-2779**	1	SEAL-O-RING	
	4	1	**212-2768**	1	SWITCH AS-PRESSURE	
		1	**102-8802**	1	KIT-RECEPTACLE (2 PIN)	
					(INCLUDES RECEPTACLE AS AND WEDGE)	
		1	**3E-3365**	1	WEDGE-RECEPTACLE LOCK (2 PIN)	
		1	**2M-9780**	1	SEAL-O-RING	
		1	**6V-3922**	1	SEAL-O-RING	
		1	**186-3735**	2	PIN-CONNECTOR	
E		1	**9X-1813**		SLEEVE (14CM)	
	5	1	**213-0064**	1	BASE AS	
		1	**9S-4167**	1	STUD-HOLLOW	
	6	1	**122-4026**	4	SPACER (13X25X25MM THK)	
	7	1	*148-8407*	4	PLUG GP	
					(EACH INCLUDES)	
		1	**3J-1907**	1	SEAL-O-RING	
		1	**9S-4191**	1	PLUG	
	8	1	**3E-4353**	4	WASHER-HARD (11X25X3MM THK)	
	9	1	**3J-1907**	1	SEAL-O-RING	
	10	1	**3J-7354**	1	SEAL-O-RING	
	11	1	**5P-9617**	1	ADAPTER	
	12	1	**6V-0852**	1	CAP-DUST	
M	13	1	**6V-5230**	4	BOLT (M10X1.5X60MM)	

E-ORDER BY THE CENTIMETER
M-METRIC PART

194-5139 **FILTER GP-FUEL** ***(contd.)*** **i01695050**

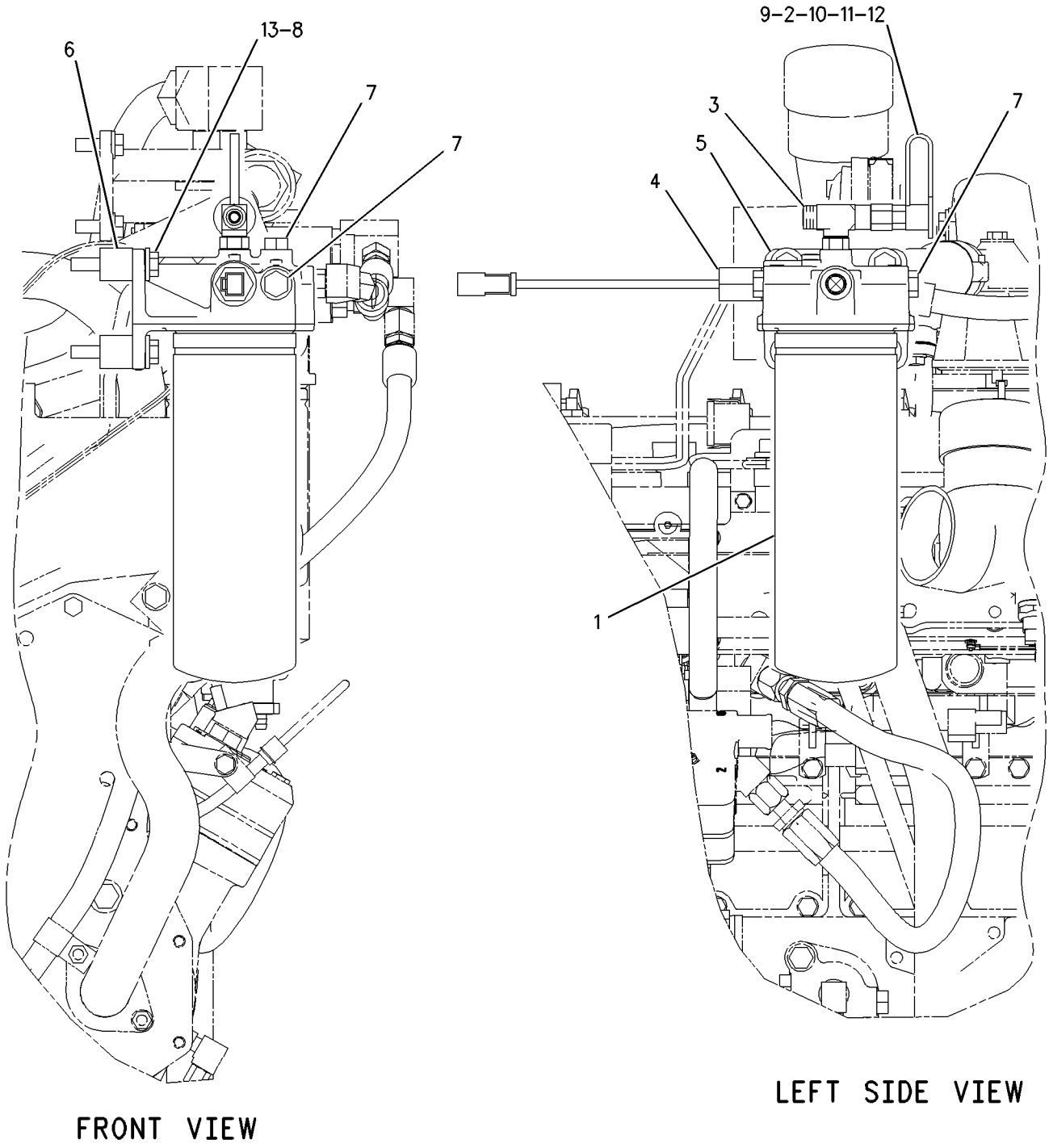

GRAPHIC #1 g00873545

174-9570 FILTER GP-WATER SEP & FUEL

S/N: BMA1-UP

PART OF 190-8977 WATER SEP & FUEL PRM PUMP GP

SMCS-1261, 1263 **i01830302**

NOTE	REF NO	GRAPHIC REF	PART NUMBER	QTY	PART NAME 1 2 3 4 5 6 (PRODUCT LEVEL)	SEE PAGE
	1	1	**173-7126**	1	BOWL AS	
	2	1	**1R-0770**	1	FILTER AS-WATER SEP & FUEL	
		1	**220-8678**	1	SEAL	

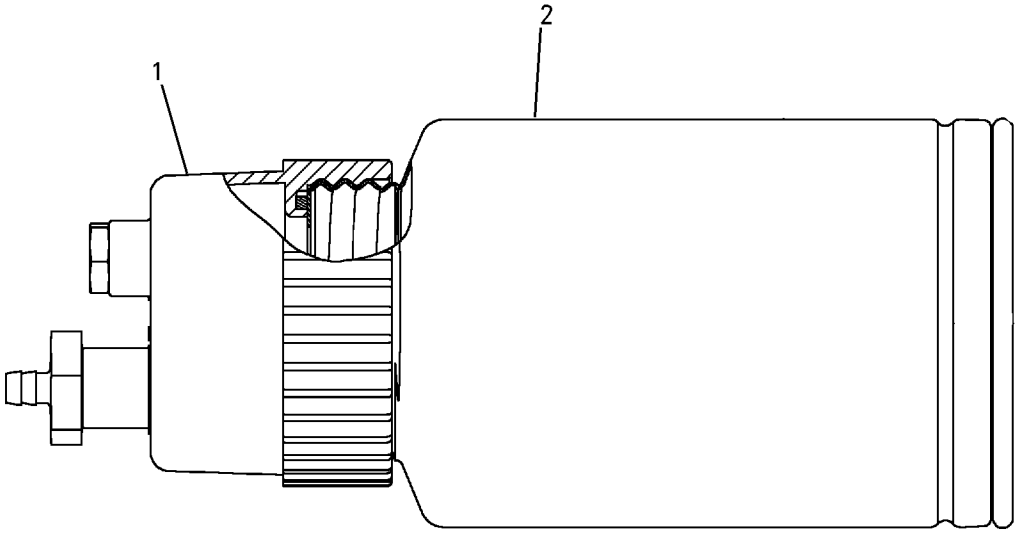

GRAPHIC #1 g00787237

FUEL SYSTEM

198-6000 LINES GP-DRAIN

S/N: CAF1-UP

PART OF 162-5603 GENERAL AR

SMCS-1274 **i01690281**

NOTE	REF NO	GRAPHIC REF	PART NUMBER	QTY	PART NAME 1 2 3 4 5 6 (PRODUCT LEVEL)	SEE PAGE
	1	1	**7X-7958**	1	CLAMP-HOSE	
I	2	1	**200-5153**	1	HOSE AS	
	3	1	**206-4669**	1	VALVE-DRAIN (OIL)	
	4	1	**212-4174**	1	LOCKWASHER	
	5	1	*153-6237*	1	ELBOW GP	
		1	**6V-9004**	1	ELBOW	
		1	**3D-2834**	1	SEAL	
		1	**6V-9746**	1	SEAL-O-RING	
	6	1	**2S-2053**	1	CLIP	
	7	1	**8T-4121**	1	WASHER-HARD (11X21X2.5MM THK)	
M	8	1	**8T-4137**	1	BOLT (M10X1.5X20MM)	
E	9	1	**146-7453**		HOSE (37 CM)	

E-ORDER BY THE CENTIMETER
I-SEE HOSE FABRICATION GUIDE
M-METRIC PART

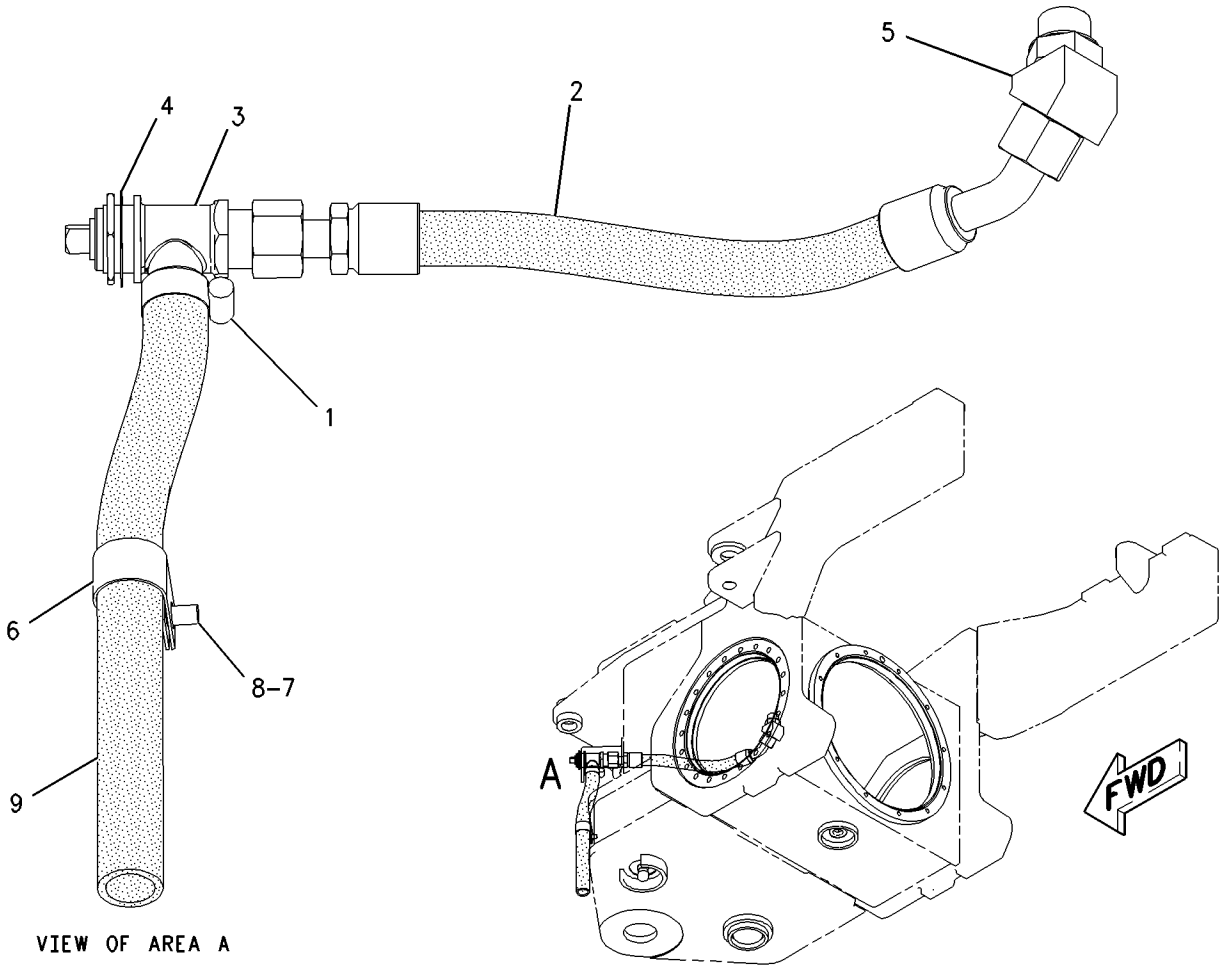

GRAPHIC #1 g00890689

FUEL SYSTEM

194-5129 LINES GP-FUEL

S/N: BMA1-UP

PART OF 199-5055 ENGINE AR-COMPLETE

SMCS-1274 **i01695046**

NOTE	REF NO	GRAPHIC REF	PART NUMBER	QTY	PART NAME 1 2 3 4 5 6 (PRODUCT LEVEL)	SEE PAGE
	1	1	**196-1908**	1	TUBE AS	
I	2	1	**196-1909**	1	HOSE AS	
I	3	1	**196-1910**	1	HOSE AS	
	4	1	**196-6840**	1	REGULATOR AS	
	5	1	**005-4173**	1	ELBOW	
	6	1	**030-7942**	1	ELBOW	
	7	1	**030-7962**	1	ELBOW	
	8	1	**2M-9780**	2	SEAL-O-RING	
	9	1	**3J-1907**	2	SEAL-O-RING	
	10	1	**6K-3607**	1	CONNECTOR-FLARED	
	11	1	**6V-5049**	1	SEAL-O-RING	
	12	1	**6V-8397**	1	SEAL-O-RING	
	13	1	**6V-8636**	1	CONNECTOR	
	14	1	**8M-0547**	1	ELBOW	

I-SEE HOSE FABRICATION GUIDE

194-5129 **LINES GP-FUEL** ***(contd.)*** **i01695046**

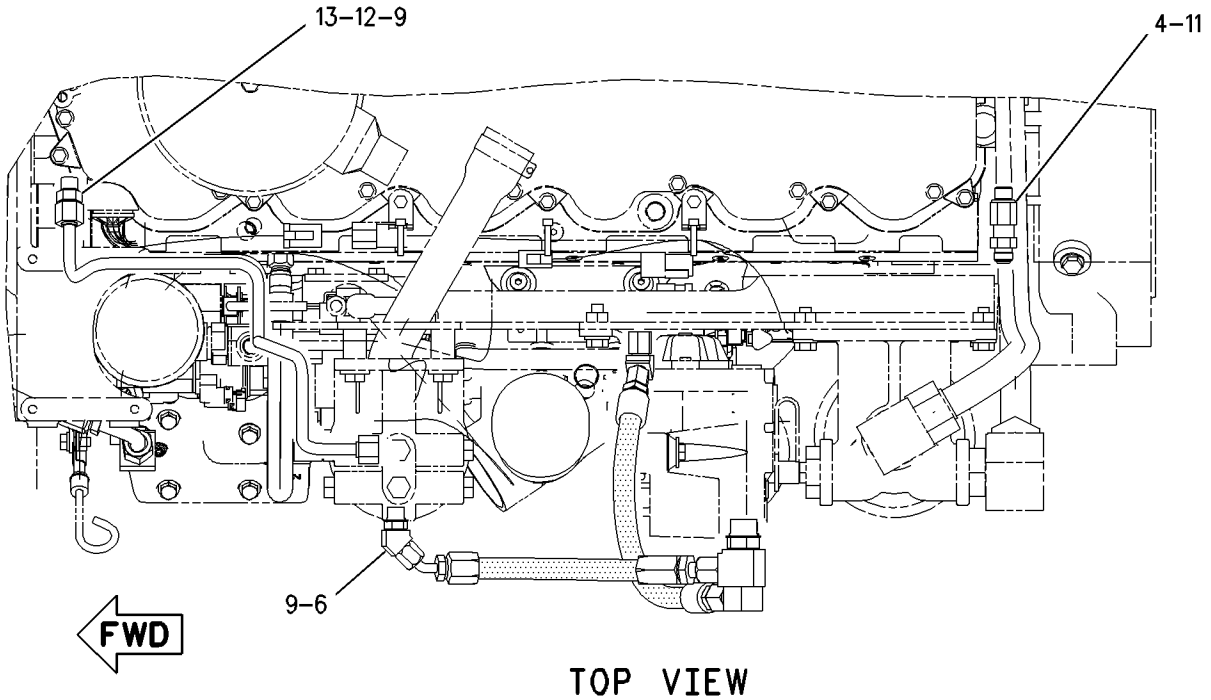

TOP VIEW

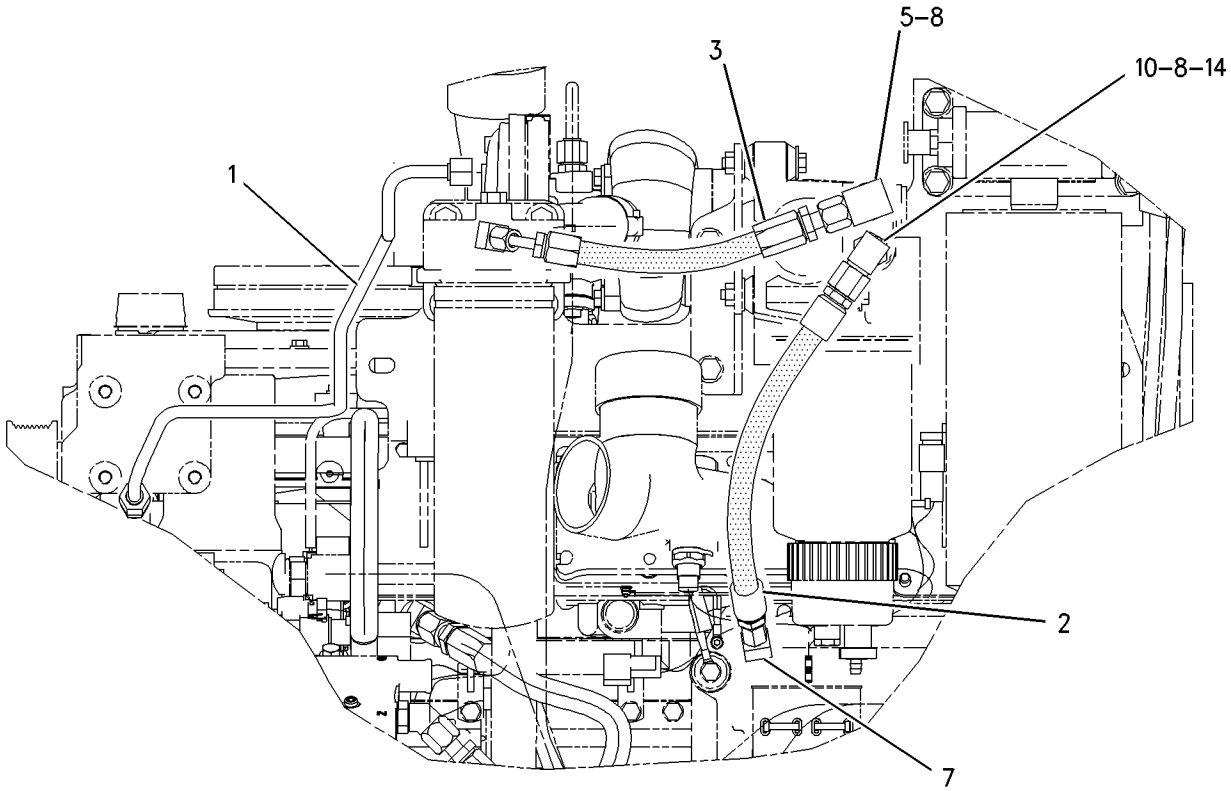

LEFT SIDE VIEW

GRAPHIC #1 g00873931

FUEL SYSTEM

198-5452 LINES GP-FUEL

S/N: CAF1-UP

PART OF 162-5603 GENERAL AR

SMCS-1274 **i01820187**

NOTE	REF NO	GRAPHIC REF	PART NUMBER	QTY	PART NAME 1 2 3 4 5 6 (PRODUCT LEVEL)	SEE PAGE
	1	1	**3T-0050**	1	CLIP	
	2	1	**5P-4961**	2	CLAMP-HOSE	
	3	1	**6V-6934**	1	CLIP	
	4	1	**8W-8527**	3	SLEEVE	
I	5	1	**103-1743**	2	HOSE AS	
	6	1	**124-0178**	1	PLATE	
	7	1	**194-2615**	2	FITTING (QUICK COUPLING)	
	8	1	**195-0852**	1	HOSE AS	
I	9	1	**198-5456**	1	HOSE AS	
I	10	1	**198-5457**	1	HOSE AS	
	11	1	**112-4387**	1	ELBOW	
	12	1	*148-8340*	1	CONNECTOR GP	
		1	**6V-8639**	1	CONNECTOR	
		1	**3K-0360**	1	SEAL-O-RING	
		1	**6V-8398**	1	SEAL-O-RING	
	13	1	**148-8354**	2	ELBOW GP	
					(EACH INCLUDES)	
		1	**6V-9002**	1	ELBOW	
		1	**3K-0360**	1	SEAL-O-RING	
		1	**6V-8398**	1	SEAL-O-RING	
	14	1	*148-8363*	1	ELBOW GP	
		1	**6V-9876**	1	ELBOW	
		1	**3K-0360**	1	SEAL-O-RING	
		1	**6V-8397**	1	SEAL-O-RING	
	15	1	*164-5605*	1	CONNECTOR AS	
		1	**8T-0076**	1	CONNECTOR	
		1	**3K-0360**	1	SEAL-O-RING	
		1	**6V-8397**	1	SEAL-O-RING	
	16	1	*169-4279*	2	CONNECTOR GP	
					(EACH INCLUDES)	
		1	**8C-6872**	1	CONNECTOR	
		1	**6V-8398**	1	SEAL-O-RING	
	17	1	**3S-8665**	3	CLIP	
	18	1	**4K-8864**	1	CLIP	
	19	1	**5M-3062**	1	BOLT (3/8-16X0.75 IN)	
	20	1	**6V-8801**	1	NUT (3/8-16 THD)	
M	21	1	**7X-2552**	1	BOLT (M16X2X30MM)	
	22	1	**8T-4121**	3	WASHER-HARD (11X21X2.5MM THK)	
M	23	1	**8T-4137**	3	BOLT (M10X1.5X20MM)	
	24	1	**8T-4896**	1	WASHER-HARD (10.2X18.5X2.5MM THK)	
	25	1	**9X-8257**	1	WASHER (17.5X30X3.5MM THK)	
E	26	1	**8C-6959**		HOSE (60CM)	

E-ORDER BY THE CENTIMETER
I-SEE HOSE FABRICATION GUIDE
M-METRIC PART

198-5452 **LINES GP-FUEL** ***(contd.)*** **i01820187**

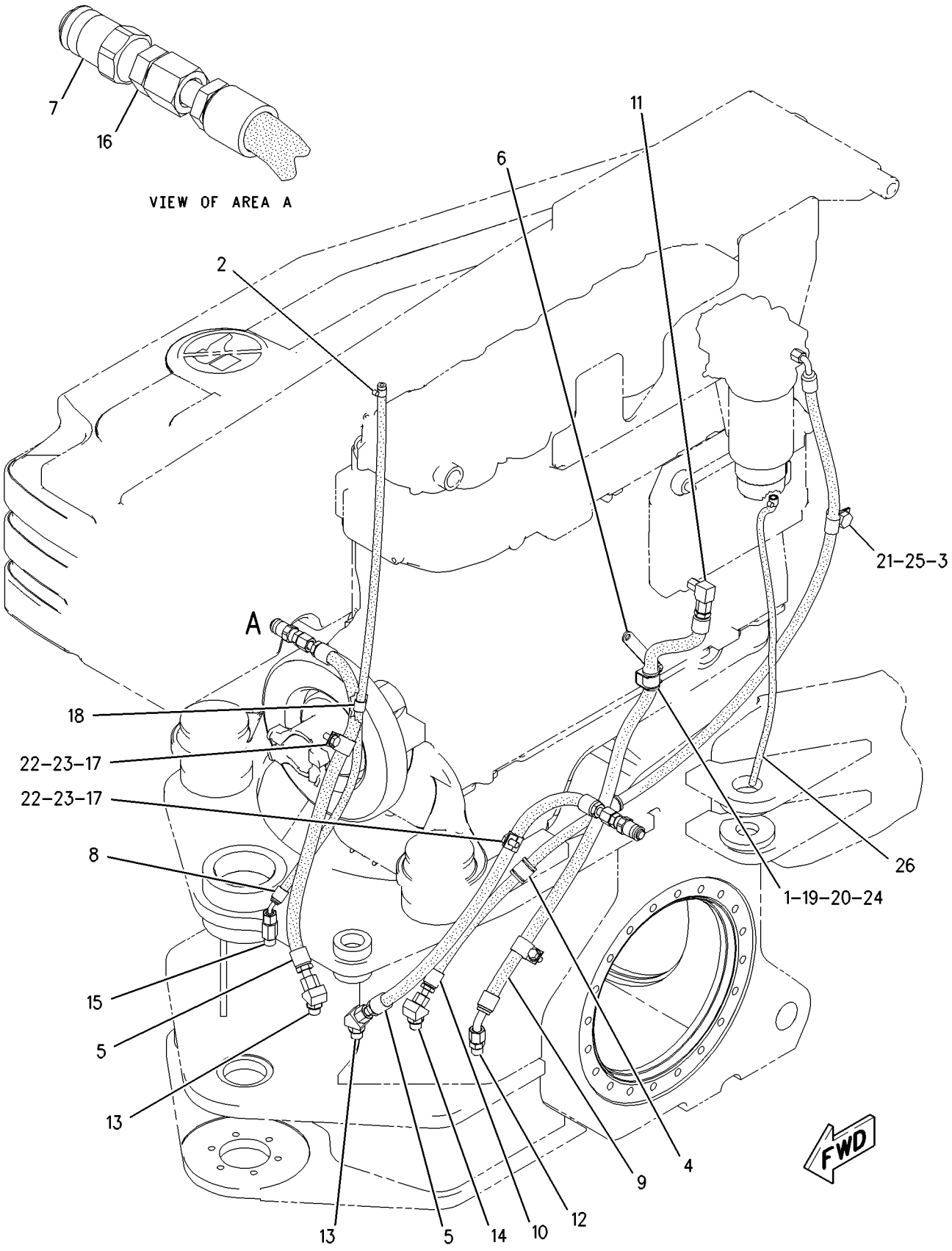

GRAPHIC #1 g00943721

FUEL SYSTEM

220-0768 LINES GP-FUEL–REAR

S/N: CAF1-UP

PART OF 162-5603 GENERAL AR

SMCS-1274 **i01814711**

NOTE	REF NO	GRAPHIC REF	PART NUMBER	QTY	PART NAME 1 2 3 4 5 6 (PRODUCT LEVEL)	SEE PAGE
	1	1	**8T-4984**	4	CLAMP-HOSE	
	2	1	**197-0949**	1	HOSE (RH)	
	3	1	**197-0951**	1	HOSE (LH)	
	4	1	**197-4637**	1	FITTING	
	5	1	**197-4638**	1	COUPLER	
	6	1	**162-9523**	2	GROMMET	
	7	1	**6V-1572**	2	CLIP (SLOT)	
	8	1	**6V-1573**	2	CLIP (TAB)	
	9	1	**8T-4121**	2	WASHER-HARD (11X21X2.5MM THK)	
M	10	1	**8T-4195**	2	BOLT (M10X1.5X30MM)	

M-METRIC PART

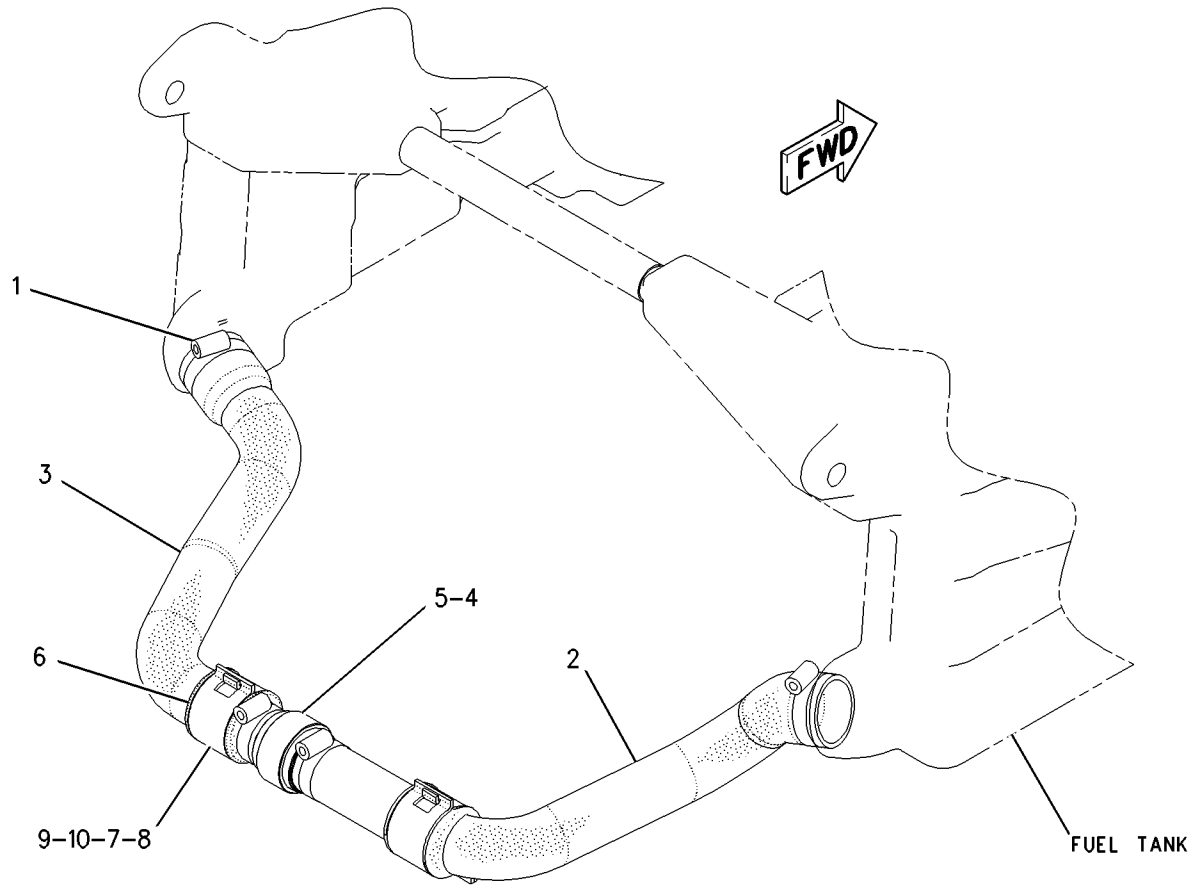

GRAPHIC #1 g00876793

183-2859 PUMP & MTG GP-UNIT INJ HYD

S/N: BMA1-UP

PART OF 199-5056 ENGINE AR-CORE

SMCS-1714 **i01839577**

NOTE	REF NO	GRAPHIC REF	PART NUMBER	QTY	PART NAME 1 2 3 4 5 6 (PRODUCT LEVEL)	SEE PAGE
	1	1	**185-3241**	1	SEAL-O-RING	
	2	1	**175-3236**	1	HOSE AS	
Y	3	1	*179-7001*	2	ADAPTER GP-ENGINE OIL LINE	56
Y	4	1	**186-3410**	1	PUMP GP-UNIT INJECTOR HYD	114
	5	1	**6V-5049**	1	SEAL-O-RING	
M	6	1	**6V-5219**	1	BOLT (M8X1.25X40MM)	
M	7	1	**6V-9804**	2	BOLT (M8X75MM)	
	8	1	**9M-1974**	3	WASHER-HARD (8.8X16X2MM THK)	
	9	1	**9S-8004**	1	PLUG (9/16-18 THD)	

M-METRIC PART
Y-SEPARATE ILLUSTRATION

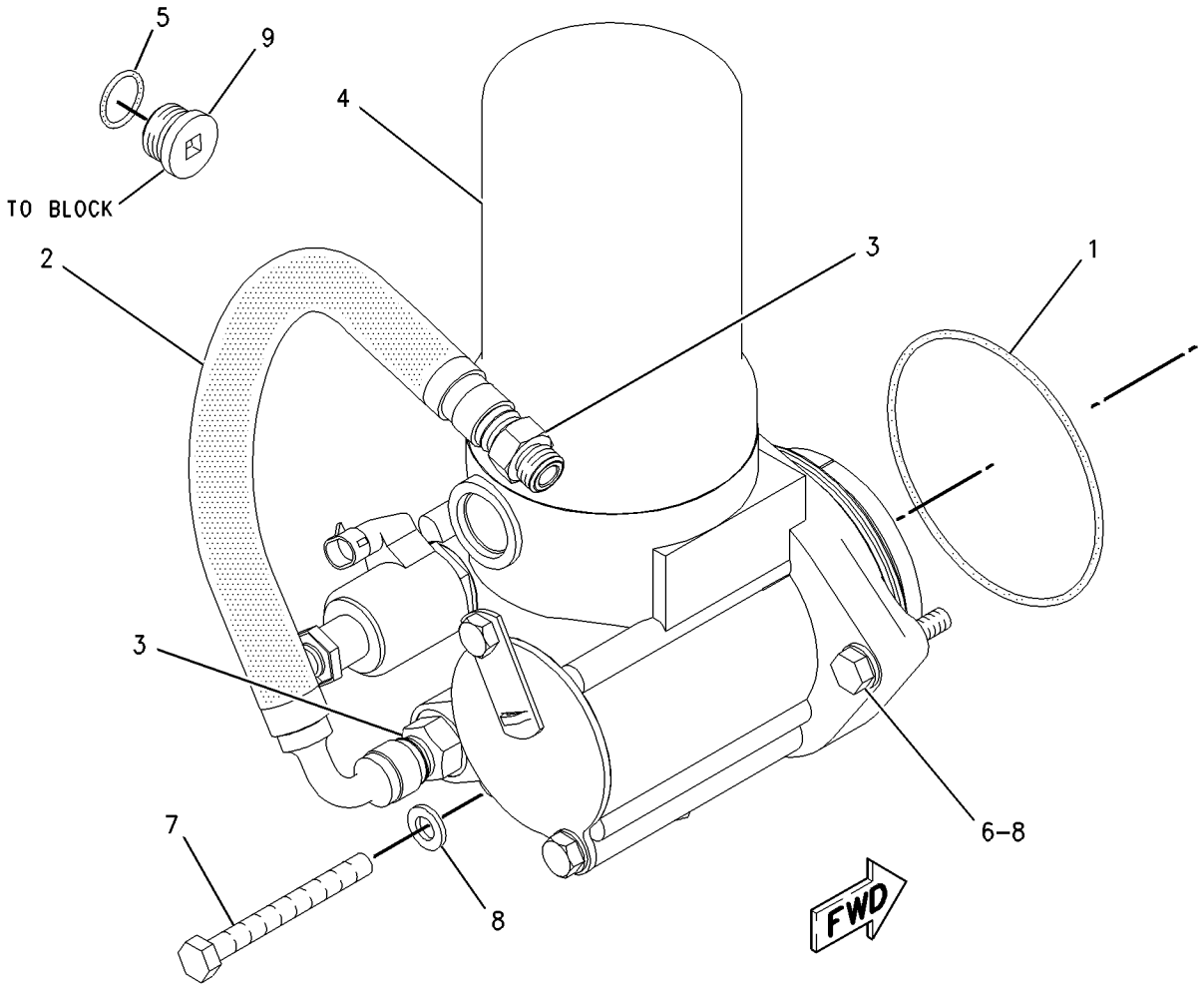

GRAPHIC #1 g00866101

196-1907 PUMP GP-FUEL

S/N: BMA1-UP

PART OF 199-5055 ENGINE AR-COMPLETE

SMCS-1256 **i01846707**

NOTE	REF NO	GRAPHIC REF	PART NUMBER	QTY	PART NAME 1 2 3 4 5 6 (PRODUCT LEVEL)	SEE PAGE
	1	1	**8T-9655**	6	MOUNT (ISOLATION)	
Y	2	1	**190-8977**	1	WATER SEP & FUEL PRM PUMP GP	123
	3	1	**191-1782**	1	SPACER (8.5X12.7X38.2MM THK)	
	4	1	**191-1783**	2	SPACER (8.5X12.7X87.3MM THK)	
	5	1	**194-5124**	1	BRACKET AS	
M		1	**6V-9632**	2	NUT-WELD (M6X1 THD)	
M		1	**8T-3490**	11	NUT-WELD (M10X1.5 THD)	
	6	1	**196-1911**	1	BRACKET AS	
M		1	**8T-3612**	3	NUT-WELD (M8X1.25 THD)	
M	7	1	**5C-7261**	7	NUT (M8X1.25 THD)	
	9	1	**6V-4589**	2	SEAL-O-RING	
	10	1	**6V-5839**	2	WASHER (11X21X2.5MM THK)	
M	11	1	**6V-5843**	2	BOLT (M10X1.50X45MM)	
M	12	1	**7X-2539**	2	BOLT (M8X1.25X110MM)	
	13	1	**8T-4224**	7	WASHER-HARD (8.8X16X2MM THK)	
M	14	1	**8T-6869**	1	BOLT (M8X1.25X60MM)	
	15	1	**9N-0869**	6	WASHER-HARD (8.8X25.5X2MM THK)	
	16	1	**9S-8006**	2	PLUG	
	17	1	**189-9108**	1	HARNESS AS	
		1	**102-8802**	1	KIT-RECEPTACLE (2 PIN)	
					(INCLUDES RECEPTACLE AS AND WEDGE)	
		1	**155-2270**	1	KIT-CONNECTING PLUG (2 PIN)	
					(INCLUDES PLUG AS AND WEDGE)	

M-METRIC PART
Y-SEPARATE ILLUSTRATION

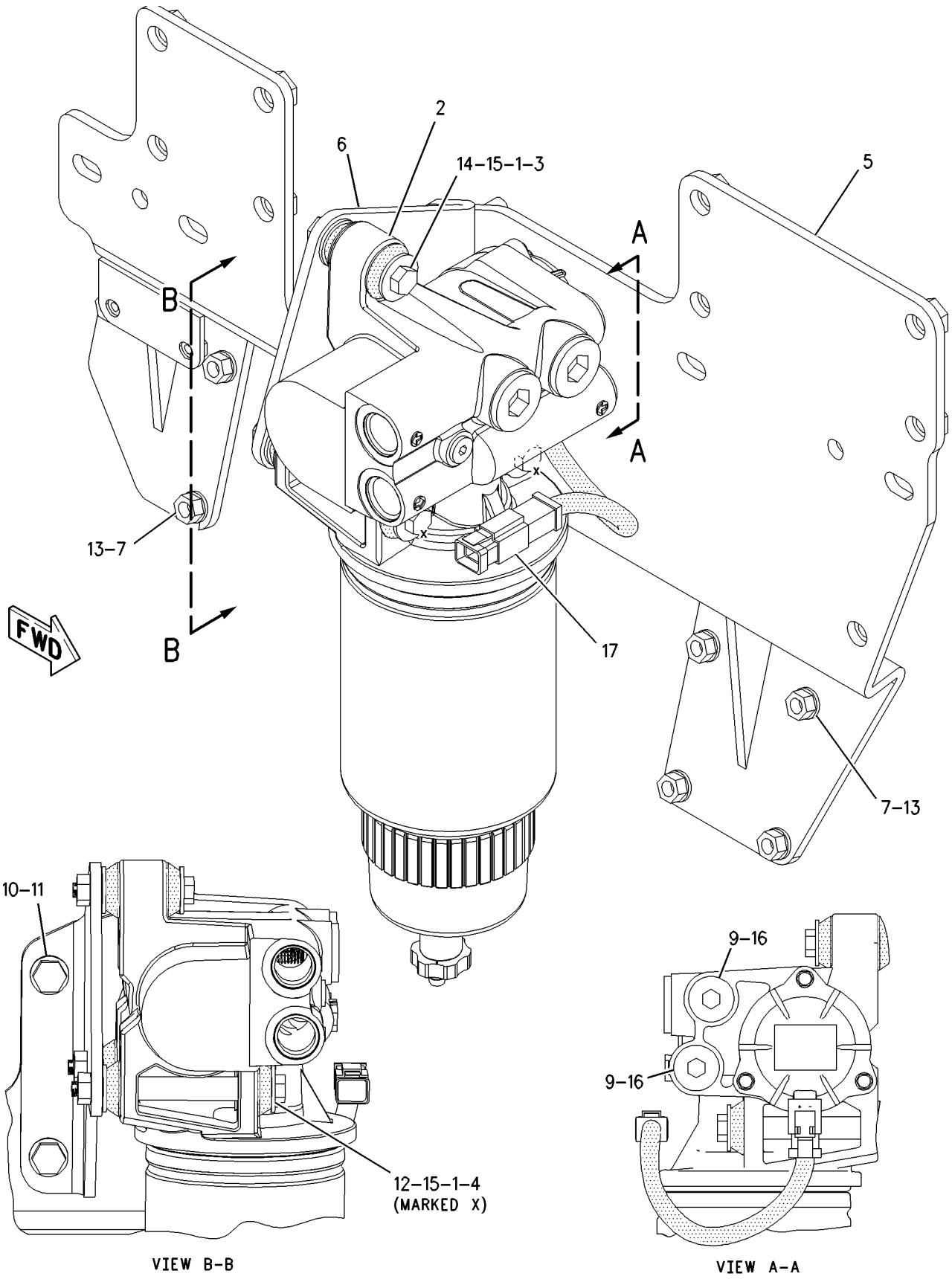

GRAPHIC #1 g00941619

178-6342 PUMP GP-UNIT INJECTION

S/N: BMA1-UP

PART OF 178-6343 PUMP GP-UNIT INJECTION

SMCS-1251, 1290 **i01696290**

NOTE	REF NO	GRAPHIC REF	PART NUMBER	QTY	PART NAME 1 2 3 4 5 6 (PRODUCT LEVEL)	SEE PAGE
	1	1	**177-4752**	1	INJECTOR GP-FUEL	
Y	2	1	*154-8016*	1	SEAL GP-FUEL INJECTOR	115

Y-SEPARATE ILLUSTRATION

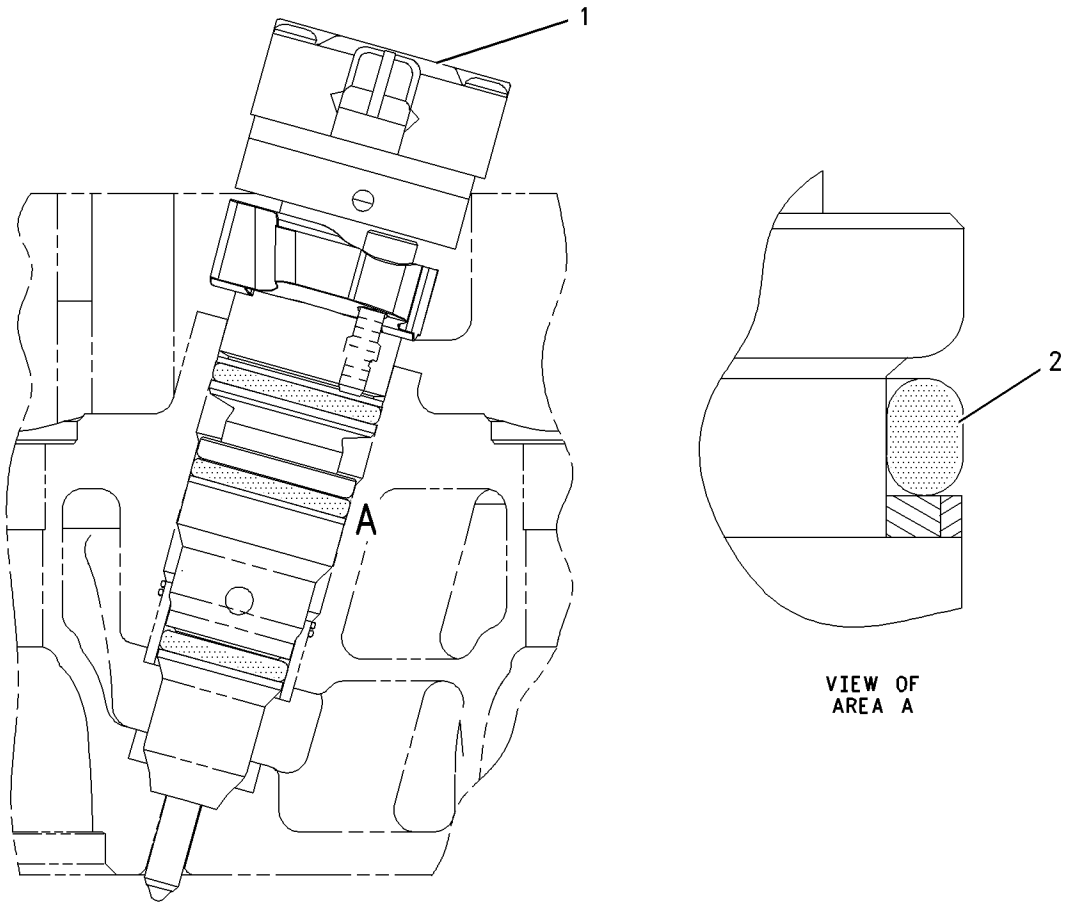

GRAPHIC #1 g00717469

FUEL SYSTEM

178-6343 PUMP GP-UNIT INJECTION

S/N: BMA1-UP

PART OF 199-5056 ENGINE AR-CORE

SMCS-1251, 1290 **i01696289**

NOTE	REF NO	GRAPHIC REF	PART NUMBER	QTY	PART NAME 1 2 3 4 5 6 (PRODUCT LEVEL)	SEE PAGE
Y	1	1	*178-6342*	1	PUMP GP-UNIT INJECTION	112
	2	1	**199-6103**	1	BOLT-SHOULDER	
	3	1	**159-0288**	1	DEFLECTOR	
M	4	1	**8T-2396**	1	BOLT (M6X1.0X60MM)	

M-METRIC PART
Y-SEPARATE ILLUSTRATION

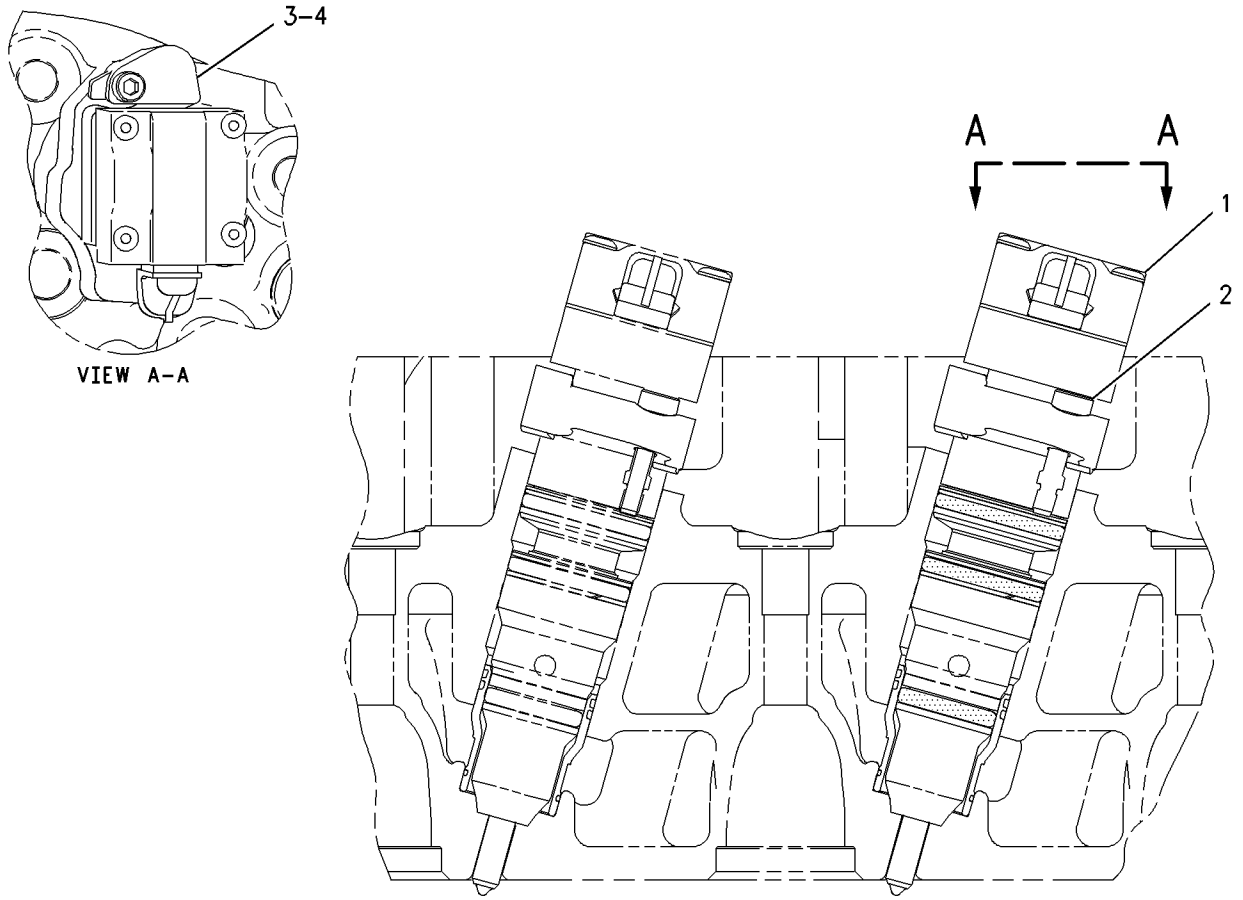

GRAPHIC #1 g00718221

186-3410 PUMP GP-UNIT INJECTOR HYD

S/N: BMA1-UP

PART OF 183-2859 PUMP & MTG GP-UNIT INJ HYD

SMCS-1714 **i01839620**

NOTE	REF NO	GRAPHIC REF	PART NUMBER	QTY	PART NAME 1 2 3 4 5 6 (PRODUCT LEVEL)	SEE PAGE
Y	1	1	**122-5053**	1	VALVE GP-SOLENOID	122
	2	1	**128-3473**	1	GEAR-PUMP DRIVE (36 TEETH)	
	4	1	**4P-5918**	1	CLIP	
M	5	1	**8T-4200**	2	BOLT (M8X1.25X16MM)	
	6	1	**8T-4224**	1	WASHER-HARD (8.8X16X2MM THK)	
	7	1	**118-0275**	1	WASHER	
	8	1	**131-1845**	1	PLUG-HEX SOCKET	
	9	1	**144-7339**	1	SEAL-O-RING	
M	10	1	**8T-4139**	1	BOLT (M12X1.75X30MM)	

M-METRIC PART
Y-SEPARATE ILLUSTRATION

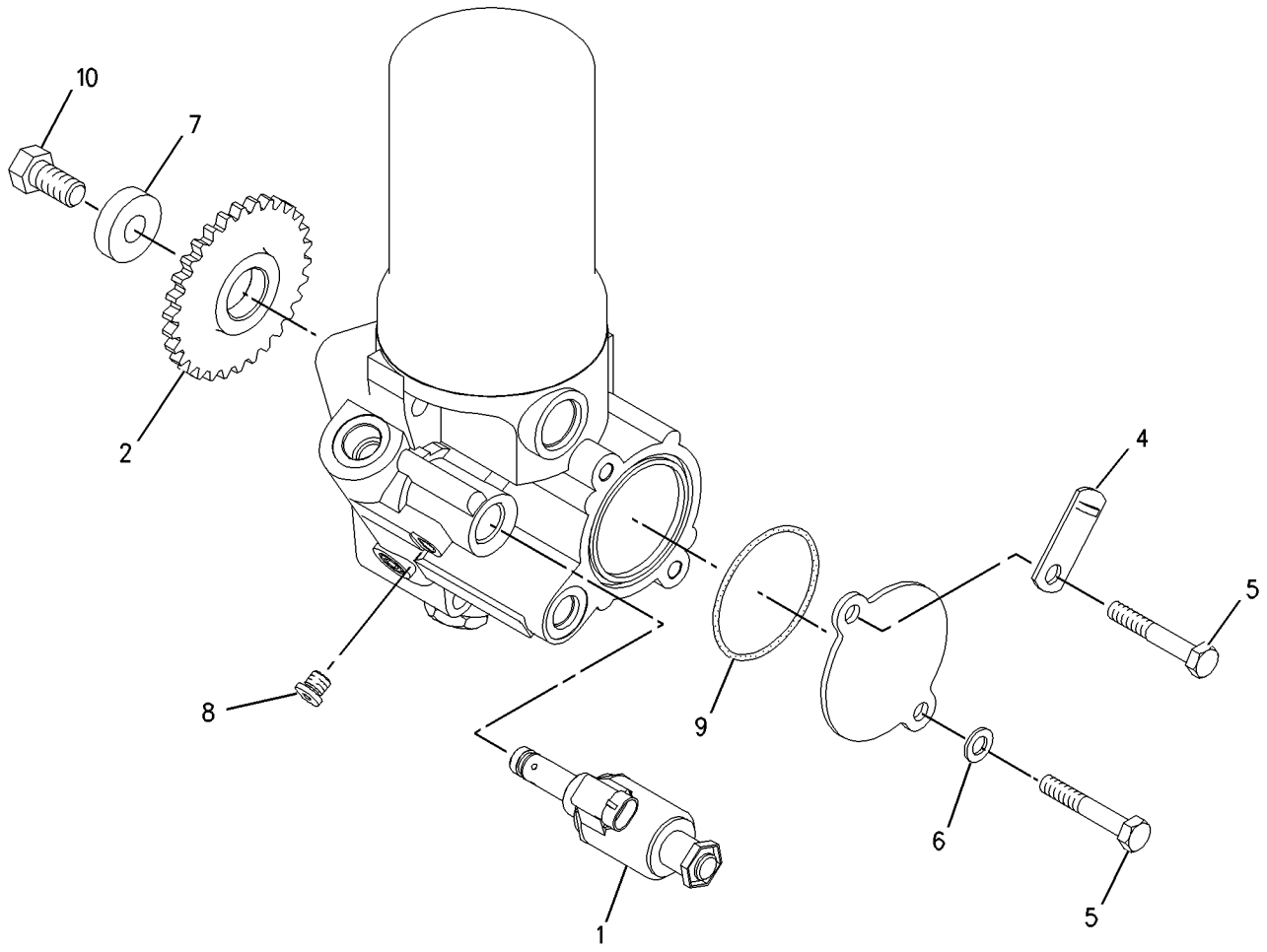

GRAPHIC #1 g00828979

154-8016 SEAL GP-FUEL INJECTOR

S/N: BMA1-UP

PART OF 178-6342 PUMP GP-UNIT INJECTION

SMCS-1290 **i01615418**

NOTE	REF NO	GRAPHIC REF	PART NUMBER	QTY	PART NAME 1 2 3 4 5 6 (PRODUCT LEVEL)	SEE PAGE
	1	1	**150-4105**	1	RING-BACKUP	
	2	1	**9X-7557**	1	SEAL-O-RING (32.92MM ID)	
	3	1	**148-2903**	1	SEAL-O-RING (31.34MM ID)	
	4	1	**149-5240**	1	RING-BACKUP	
	5	1	**109-3207**	1	SEAL-O-RING (23.39MM ID)	
	6	1	**133-3715**	1	RING-BACKUP	

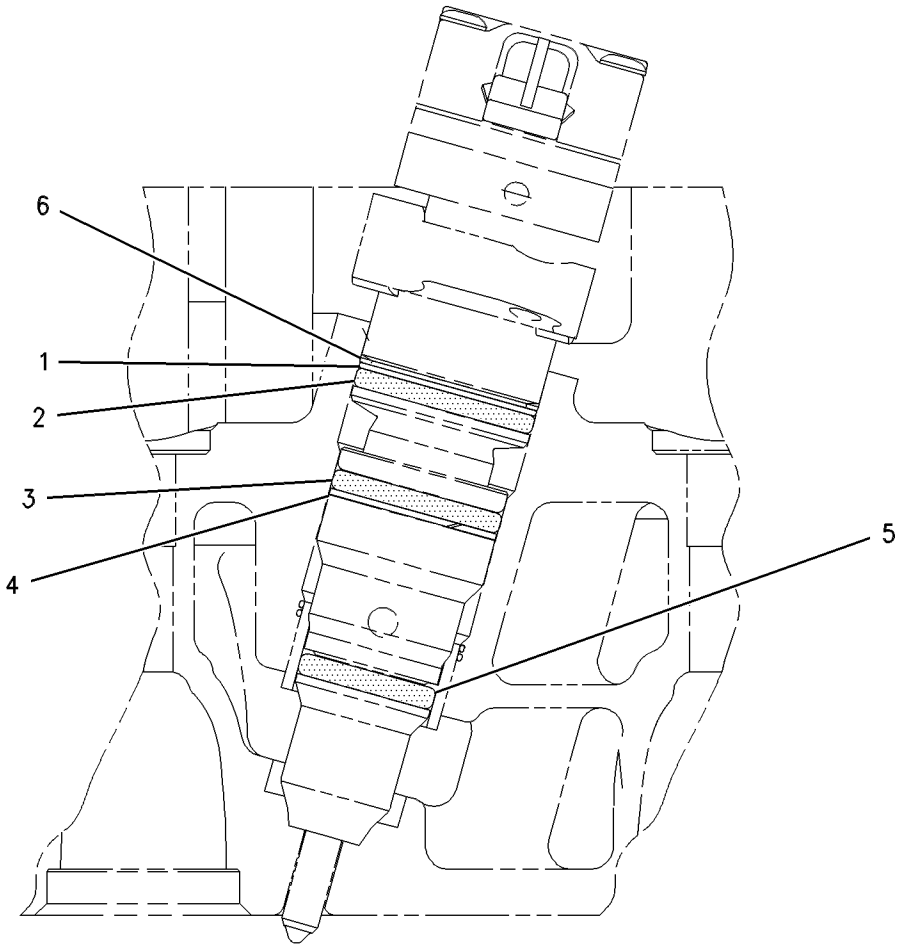

GRAPHIC #1 g00433901

162-1514 TANK GP-FUEL

S/N: CAF1-UP

PART OF 162-5603 GENERAL AR

SMCS-1273 **i01820998**

NOTE	REF NO	GRAPHIC REF	PART NUMBER	QTY	PART NAME 1 2 3 4 5 6 (PRODUCT LEVEL)	SEE PAGE
	1	1	**7X-1387**	4	WASHER (10.26X22.22X1.9MM THK)	
	2	1	**8T-6703**	2	CLAMP-HOSE	
	3	1	**174-5692**	4	SPACER (13.87X21.33X28MM THK)	
	4	1	**199-9890**	2	ROD	
Y	5	1	*199-9998*	1	TANK GP-FUEL (RH)	118
Y	6	1	*199-9999*	1	TANK GP-FUEL (LH)	120
	7	1	**3B-4615**	4	PIN-COTTER	
	8	1	**5P-1076**	4	WASHER-HARD (13.5X30X4MM THK)	
	9	1	**5P-8439**	2	GROMMET	
M	10	1	**8T-4910**	4	BOLT (M12X1.75X60MM)	
E	11	1	**5P-1291**		HOSE (34CM)	

E-ORDER BY THE CENTIMETER
M-METRIC PART
Y-SEPARATE ILLUSTRATION

162-1514 **TANK GP-FUEL** ***(contd.)*** **i01820998**

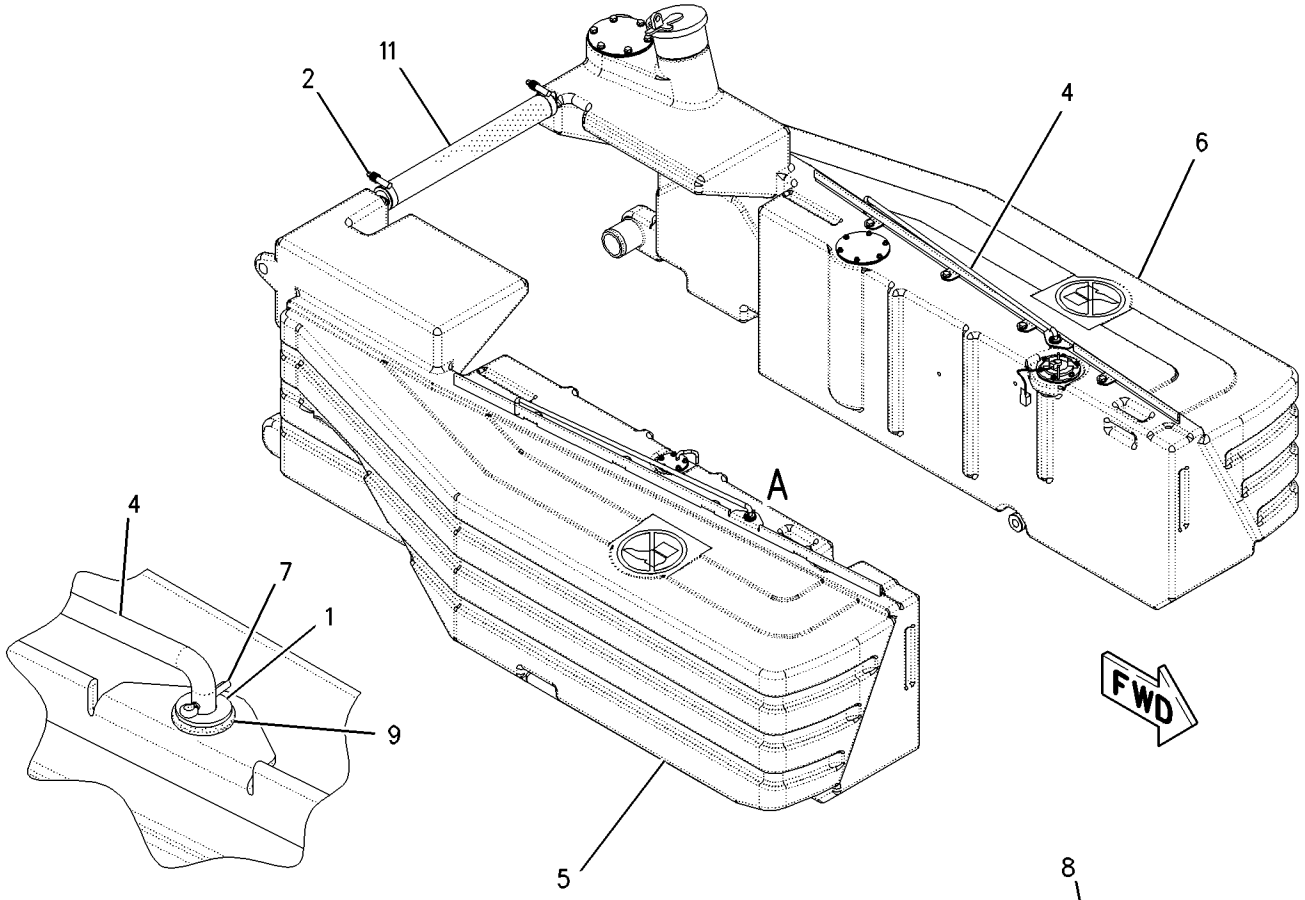

VIEW OF AREA A

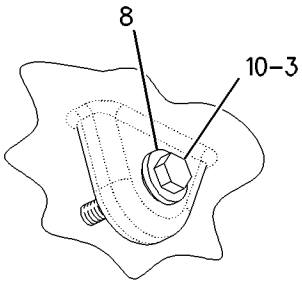

VIEW OF AREA B

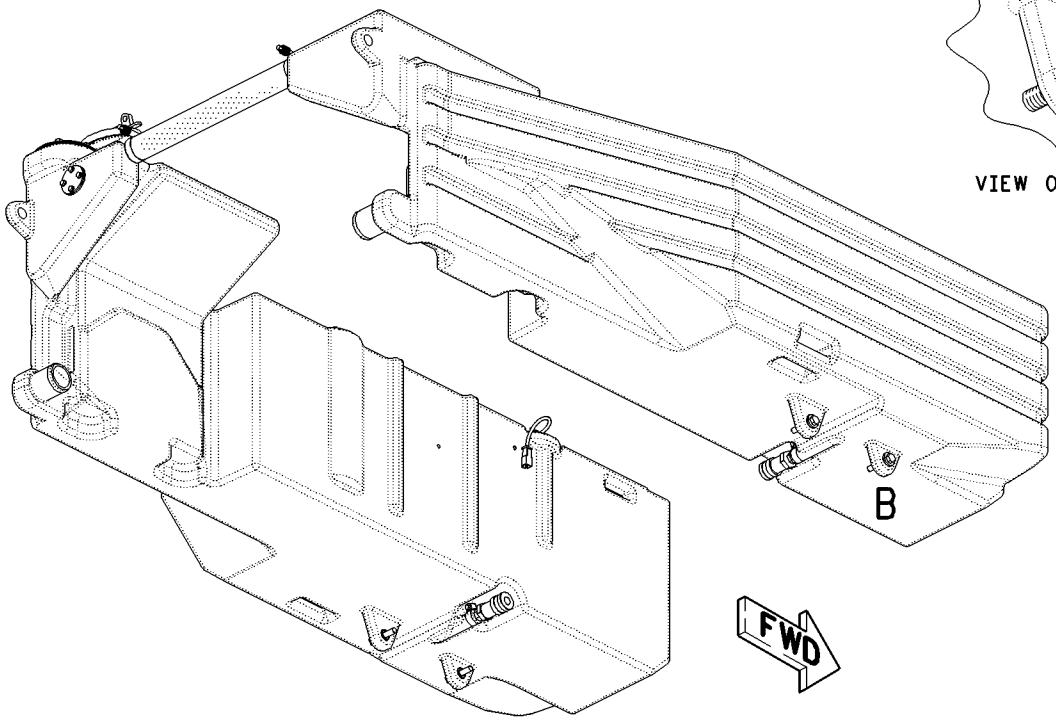

GRAPHIC #1 g00934073

FUEL SYSTEM

199-9998 TANK GP-FUEL—RH

S/N: CAF1-UP

PART OF 162-1514 TANK GP-FUEL

SMCS-1273 **i01688845**

NOTE	REF NO	GRAPHIC REF	PART NUMBER	QTY	PART NAME 1 2 3 4 5 6 (PRODUCT LEVEL)	SEE PAGE
	1	1	**199-5564**	1	TANK AS-FUEL	
		1	**002-6454**	1	NIPPLE-PIPE	
		1	**110-2445**	1	CLAMP-HOSE	
		1	**190-6535**	1	FILM-WARNING (NO STEP)	
		1	**214-6598**	1	FILM (NO-STEP)	
	2	1	**6V-6959**	5	BOLT-SOCKET HEAD (8-32X0.625IN)	
	3	1	**194-2612**	1	COUPLER	
	4	1	**197-1708**	1	VENT AS	
	5	1	**199-9729**	1	BRACKET	
	6	1	**4B-4863**	5	WASHER (4.7X11X1.2MM THK)	
	7	1	**7X-0579**	3	WASHER-HARD (8.8X25.5X2MM THK)	
M	8	1	**8T-4189**	3	BOLT (M8X1.25X20MM)	
	9	1	**9R-7240**	1	GASKET	

M-METRIC PART

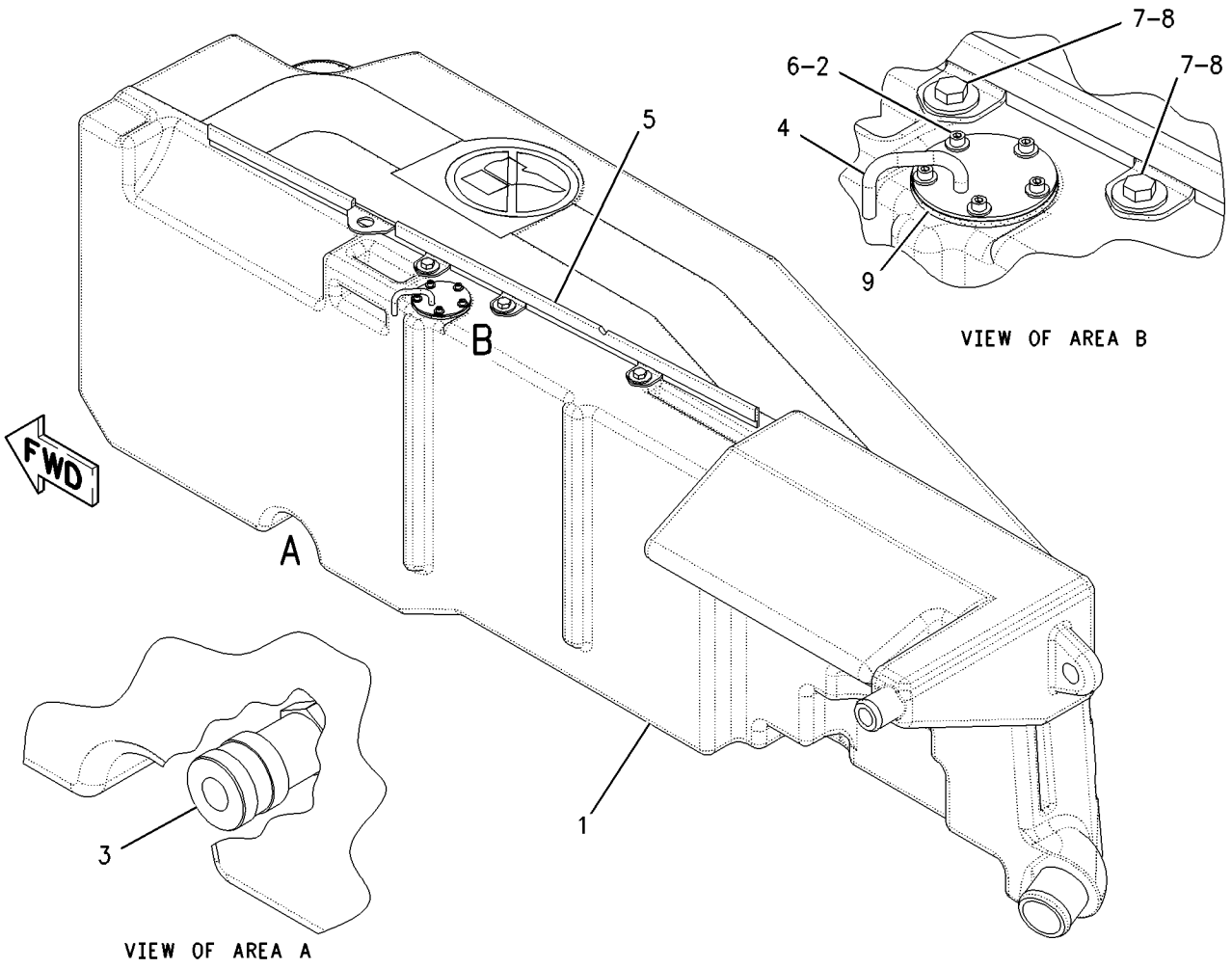

GRAPHIC #1 g00890103

MEMORANDA

FUEL SYSTEM

199-9999 TANK GP-FUEL—LH

S/N: CAF1-UP

PART OF 162-1514 TANK GP-FUEL

SMCS-1273 **i01688846**

NOTE	REF NO	GRAPHIC REF	PART NUMBER	QTY	PART NAME 1 2 3 4 5 6 (PRODUCT LEVEL)	SEE PAGE
	1	1	**6V-6959**	6	BOLT-SOCKET HEAD (8-32X0.625IN)	
	2	1	**164-4858**	1	CAP GP-FUEL TANK (LOCKABLE)	
		1	**190-9775**	1	COVER AS-FILTER	
		1	**9X-8600**	1	SEAL-O-RING	
	3	1	**173-2018**	1	SENDER AS-FUEL LEVEL	
		1	**194-8535**	1	KIT-SENSOR (FUEL LEVEL)	
					(INCLUDES SENSOR ASSEMBLY, SCREWS, RECEPTACLE KIT, PINS, AND WEDGE)	
	4	1	**194-2612**	1	COUPLER	
	5	1	**199-5565**	1	TANK AS-FUEL	
		1	**002-6454**	1	NIPPLE-PIPE	
		1	**110-2445**	1	CLAMP-HOSE	
		1	**190-6535**	1	FILM-WARNING (NO STEP)	
		1	**214-6598**	1	FILM (NO-STEP)	
	6	1	**199-9730**	1	BRACKET	
	7	1	**199-9907**	1	STRAINER-FUEL	
	8	1	**208-0800**	1	GASKET	
	9	1	**103-2006**	1	SCREW-PAN HEAD	
	10	1	**194-6523**	1	ADAPTER	
	11	1	**4B-4863**	6	WASHER (4.7X11X1.2MM THK)	
	12	1	**7X-0579**	3	WASHER-HARD (8.8X25.5X2MM THK)	
M	13	1	**8T-4189**	3	BOLT (M8X1.25X20MM)	

M-METRIC PART

199-9999 **TANK GP-FUEL** ***(contd.)*** **i01688846**

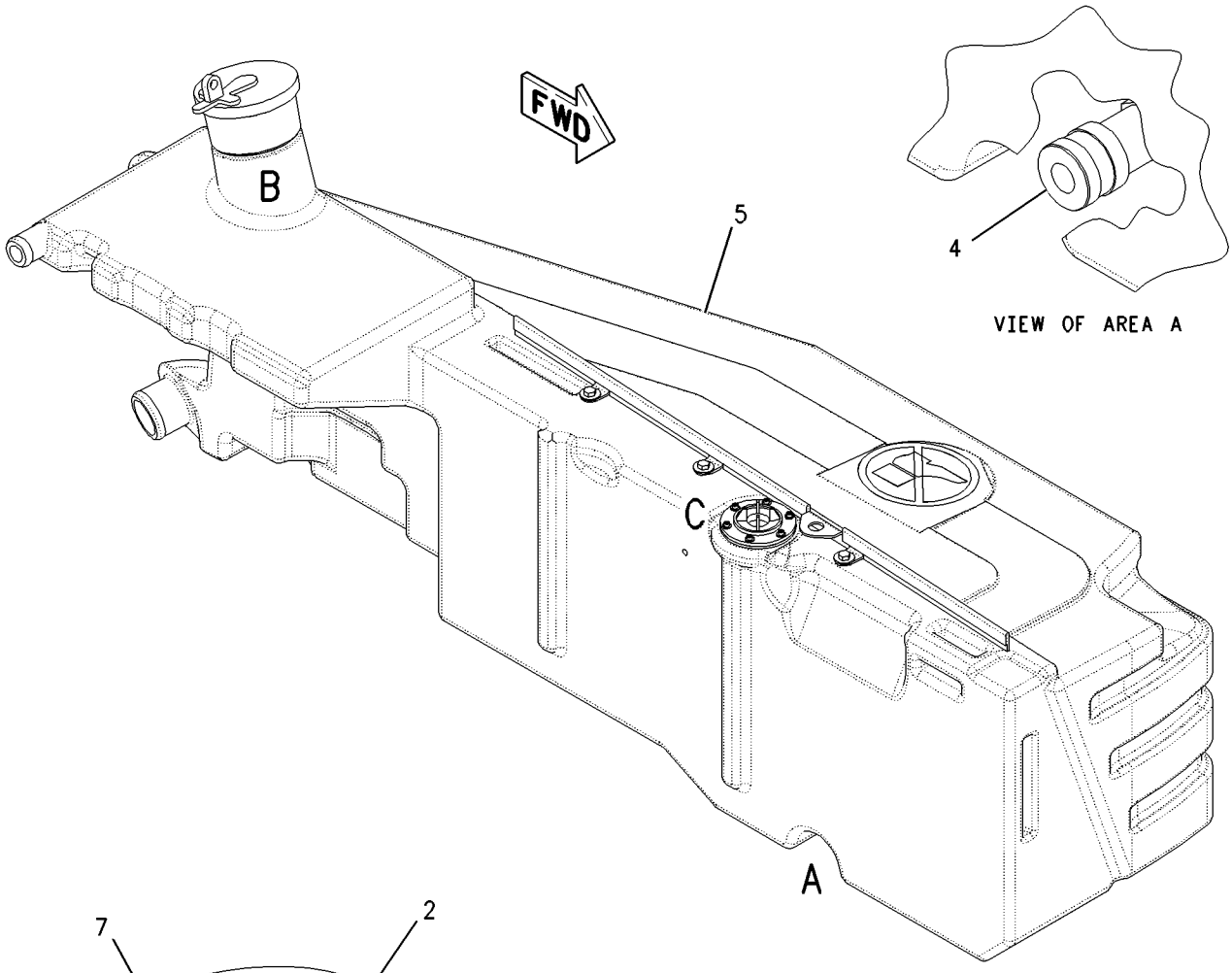

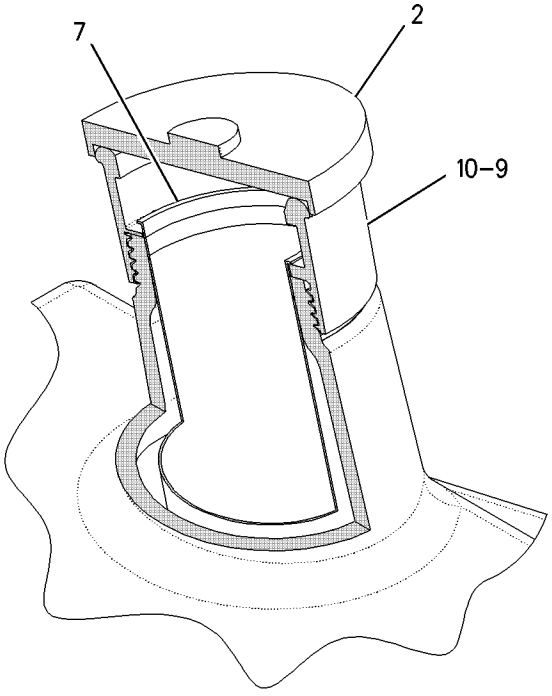

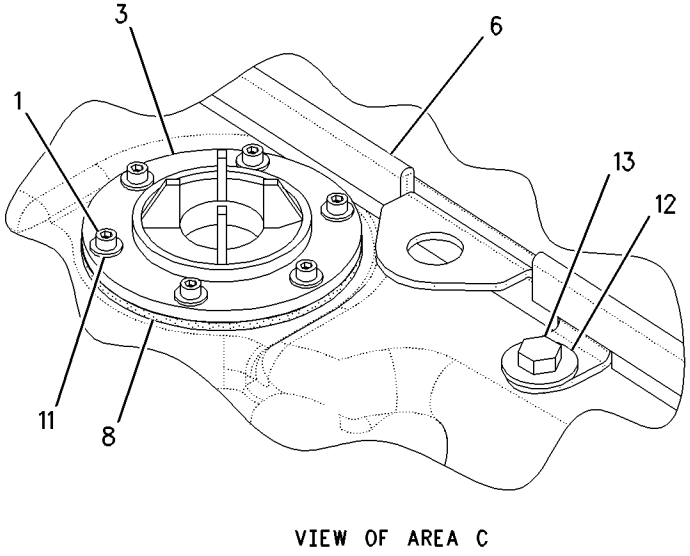

GRAPHIC #1 g00880677

122-5053 VALVE GP-SOLENOID

S/N: BMA1-UP

PART OF 186-3410 PUMP GP-UNIT INJECTOR HYD

SMCS-1259, 1909 **i01857155**

NOTE	REF NO	GRAPHIC REF	PART NUMBER	QTY	PART NAME 1 2 3 4 5 6 (PRODUCT LEVEL)	SEE PAGE
JZ	1	1		1	SEAL-O-RING	
JZ	2	1		1	RING-BACKUP	
JZ	3	1		1	SPACER	
JZ	4	1		1	NUT-RETAINER (1/2-20 THD)	
JZ	5	1		1	SEAL-O-RING	
					AVAILABLE REPAIR KIT(S):	
J			**9X-1484**	1	KIT-SEAL	

J-KIT MARKED J INCLUDES PARTS MARKED J
Z-NOT SERVICED SEPARATELY

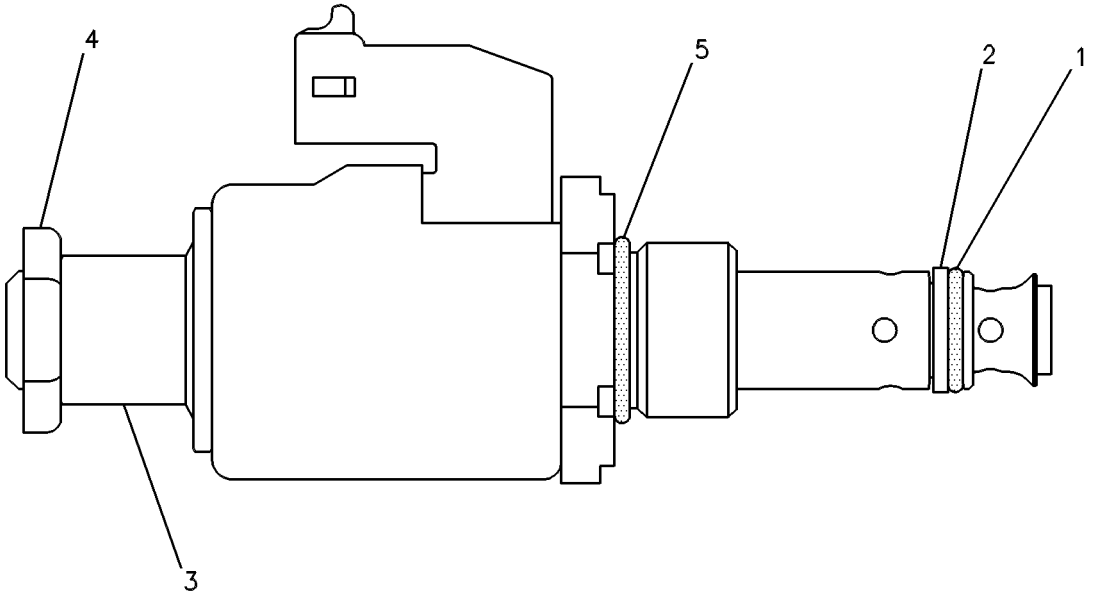

GRAPHIC #1 g00085024

190-8977 WATER SEP & FUEL PRM PUMP GP

S/N: BMA1-UP

PART OF 196-1907 PUMP GP-FUEL

SMCS-1258, 1263 **i01836795**

NOTE	REF NO	GRAPHIC REF	PART NUMBER	QTY	PART NAME 1 2 3 4 5 6 (PRODUCT LEVEL)	SEE PAGE
Y	1	1	*174-9570*	2	FILTER GP-WATER SEP & FUEL	102
	2	1	**190-8970**	2	BASE AS	

Y-SEPARATE ILLUSTRATION

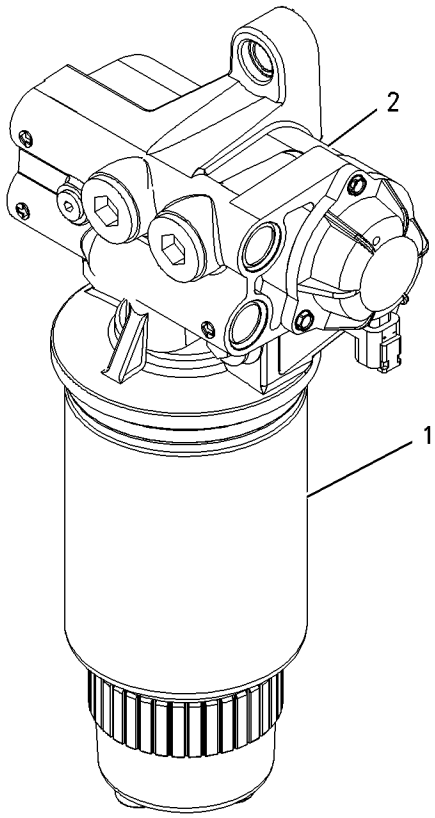

GRAPHIC #1 g00938183

3E-6328 ALARM GP–ACTION

S/N: CAF1-UP
24 VOLT
PART OF 159-5839, 159-5841 WIRING GP-SHIFT CONSOLE
ALSO AN ATTACHMENT

SMCS-7407 **i01487980**

NOTE	REF NO	GRAPHIC REF	PART NUMBER	QTY	PART NAME 1 2 3 4 5 6 (PRODUCT LEVEL)	SEE PAGE
	1	1	**102-8802**	1	KIT-RECEPTACLE (2 PIN)	
					(INCLUDES RECEPTACLE AS & WEDGE)	
	2	1	**186-3735**	2	PIN-CONNECTOR	

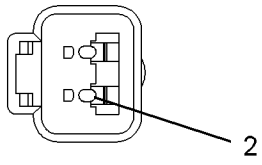

VIEW A–A

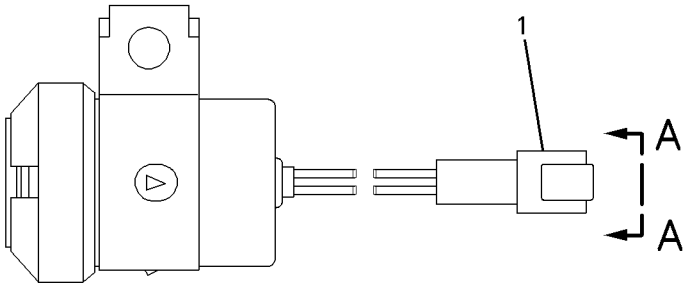

GRAPHIC #1 g00697818

MEMORANDA

169-3345 ALTERNATOR GP-CHARGING

S/N: CAF1-UP
24 VOLT-50 AMPERE
PART OF 196-0251 ALTERNATOR GP-CHARGING

SMCS-1405 **i01589423**

NOTE	REF NO	GRAPHIC REF	PART NUMBER	QTY	PART NAME 1 2 3 4 5 6 (PRODUCT LEVEL)	SEE PAGE
	1	1	**185-2653**	1	FRAME	
	2	1	**185-2652**	1	FRAME AS	
	3	1	**185-2639**	1	FAN AS	
	4	1	**185-2640**	1	FRAME AS	
	5	1	**185-2645**	1	FRAME	
	6	1	**2K-4821**	1	LOCKNUT (5/8-18 THD)	
	7	1	**5P-8247**	1	WASHER-HARD (17X32X3.5MM THK)	
	8	1	**185-2651**	1	COVER	
	9	1	**185-2646**	1	BUSHING	
	10	1	**185-2647**	1	GROMMET	
	11	1	**9L-6770**	1	CAP	
	12	1	**190-0065**	1	STATOR AS-ALTERNATOR	
	13	1	**185-2638**	2	COLLAR	
	14	1	**185-2654**	1	PLATE	
	15	1	**185-2650**	1	ROTOR AS	
	16	1	**185-2644**	1	COIL AS	
	17	1	**185-2648**	1	REGULATOR AS	
	18	1	**6V-8189**	1	NUT (5/16-18 THD)	
	19	1	**8T-4224**	1	WASHER-HARD (8.8X16X2MM THK)	
	20	1	**3F-9556**	1	LOCKWASHER	
	21	1	**5S-7349**	1	BOLT (1/4-20X0.5 IN)	
	22	1	**8T-4205**	1	WASHER-HARD (7.2X14.5X2MM THK)	
	23	1	**1H-3244**	1	LOCKWASHER	
					AVAILABLE REPAIR KIT(S):	
			185-2655	1	KIT-BEARING (ALTERNATOR)	
					(INCLUDES 2 BEARINGS)	
			185-2656	1	KIT-TERMINAL (ALTERNATOR)	
					(INCLUDES HOLDER AS, PLATE, INSULATOR, PIN, BOLT KITS, GROMMET AND NUT)	
			185-2657	1	KIT-TERMINAL (ALTERNATOR)	
					(INCLUDES INSULATORS, WASHERS AND NUTS)	
			185-2658	1	KIT-HARDWARE (ALTERNATOR)	
					(INCLUDES BOLT KITS)	

169-3345 ALTERNATOR GP-CHARGING *(contd.)* i01589423

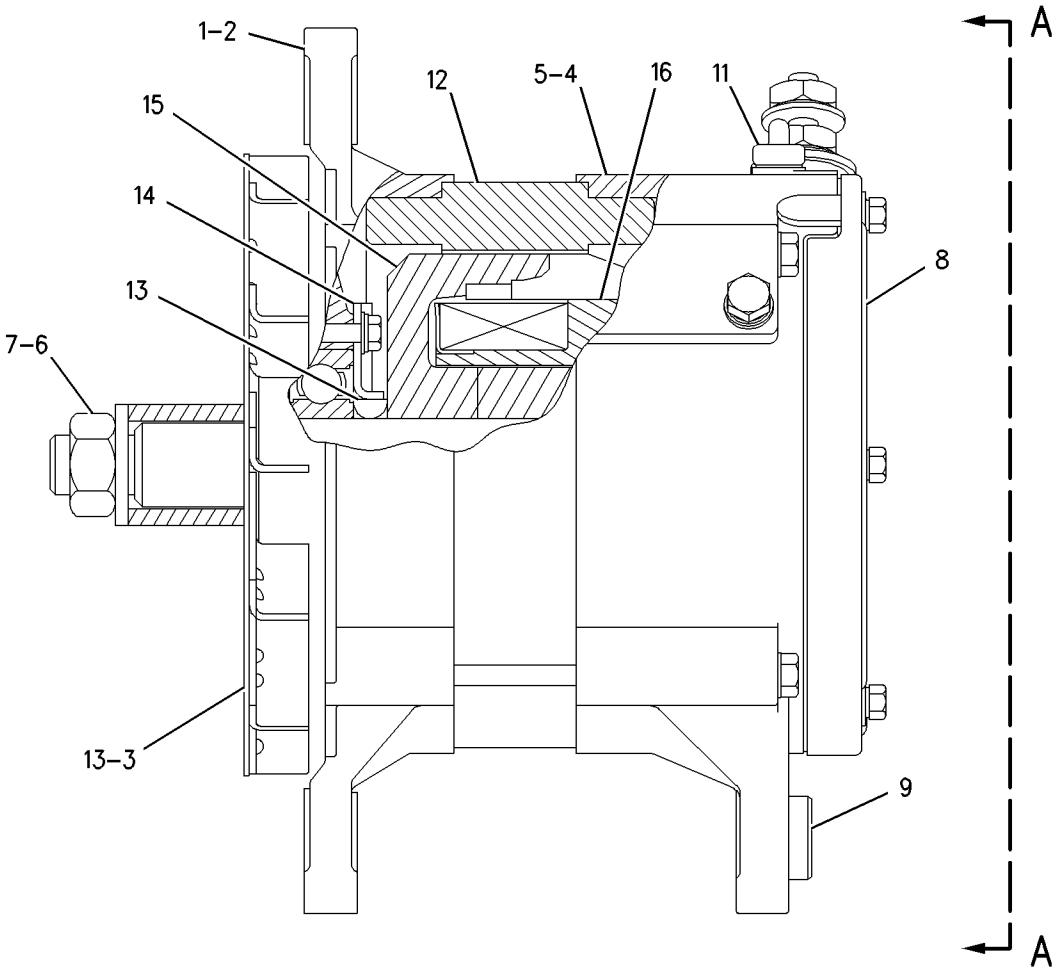

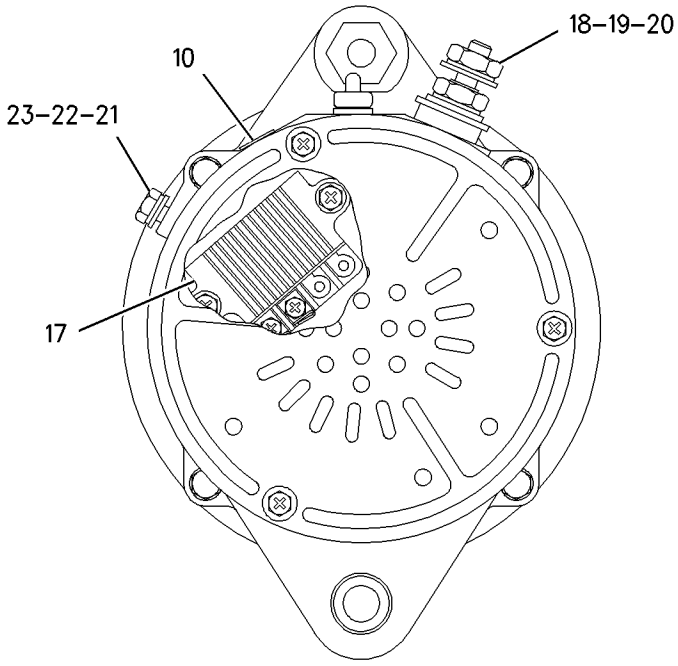

VIEW A-A

GRAPHIC #1 g00724069

196-0251 ALTERNATOR GP-CHARGING

S/N: CAF1-UP
55 AMP
PART OF 162-5603 GENERAL AR

SMCS-1405 **i01673275**

NOTE	REF NO	GRAPHIC REF	PART NUMBER	QTY	PART NAME 1 2 3 4 5 6 (PRODUCT LEVEL)	SEE PAGE
	1	1	**7W-3872**	2	SLEEVE	
	2	1	**129-5096**	1	PULLEY-ALTERNATOR	
Y	3	1	**169-3345**	1	ALTERNATOR GP-CHARGING	126
	4	1	**172-6484**	1	SUPPORT	
	5	1	**173-1498**	1	PULLEY AS-IDLER	
		1	**151-2900**	1	BOLT (M10X1.5X54.25MM)	
		1	**166-6358**	1	COVER-DUST	
		1	**173-1500**	1	SPACER-IDLER	
	6	1	**192-5429**	1	BELT (ALTERNATOR)	
	7	1	**194-5135**	1	GUARD AS-ALTERNATOR	
		1	**1V-6256**	1	SPACER (.493X.675X.85 IN THK)	
	8	1	**194-5142**	1	LINK	
M	9	1	**7X-2537**	4	BOLT (M8X1.25X35MM)	
M	10	1	**8T-4183**	1	BOLT (M12X1.75X40MM)	
M	11	1	**8T-4194**	1	BOLT (M12X1.75X50MM)	
	12	1	**8T-4223**	5	WASHER-HARD (13.5X25.5X3MM THK)	
	13	1	**8T-4224**	4	WASHER-HARD (8.8X16X2MM THK)	
M	14	1	**8T-4244**	1	NUT (M12X1.75 THD)	
M	15	1	**8T-4910**	1	BOLT (M12X1.75X60MM)	
	16	1	**8T-8917**	1	BOLT (1/2-13X1.25 IN)	
	17	1	**9S-2396**	1	BUSHING-TERMINAL	

M-METRIC PART
Y-SEPARATE ILLUSTRATION

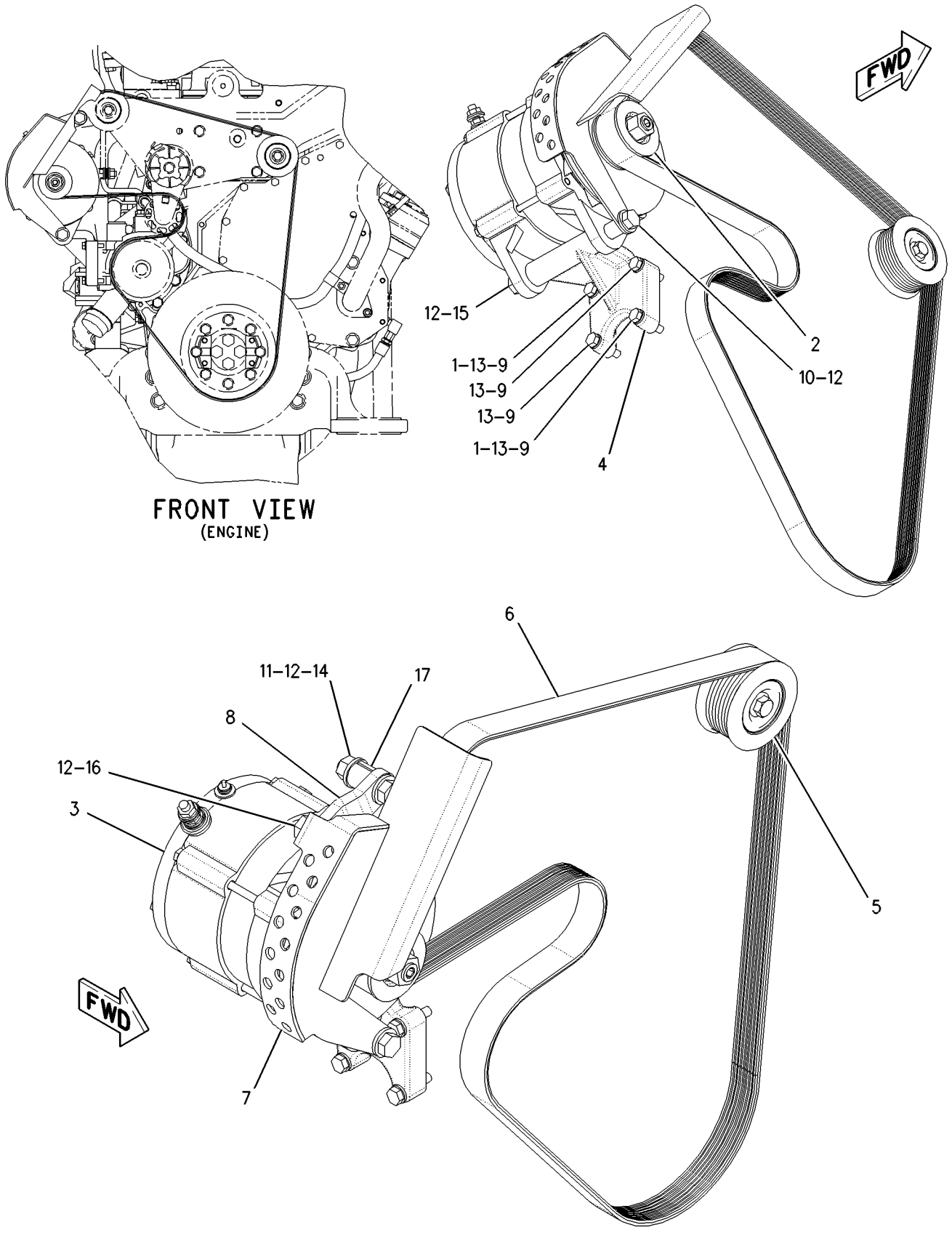

GRAPHIC #1 g00890504

ELECTRICAL AND STARTING SYSTEM

198-4836 ALTERNATOR GP-CHARGING

S/N: CAF1-UP
75 AMP
PART OF 207-3665, 210-2042 CONVERSION AR-CERTIFICATION
AN ATTACHMENT

SMCS-1405 **i01683563**

NOTE	PART NUMBER	QTY	PART NAME 1 2 3 4 5 6 (PRODUCT LEVEL)	SEE PAGE
YR	**200-8281**	1	ALTERNATOR GP-CHARGING	132

R-REMFG PART MAY BE AVAILABLE
Y-SEPARATE ILLUSTRATION

<END>

MEMORANDA

200-8281 ALTERNATOR GP-CHARGING*R

S/N: CAF1-UP
24VOLT-75AMP
PART OF 198-4836 ALTERNATOR GP-CHARGING
AN ATTACHMENT

SMCS-1405 **i01683565**

NOTE	REF NO	GRAPHIC REF	PART NUMBER	QTY	PART NAME 1 2 3 4 5 6 (PRODUCT LEVEL)	SEE PAGE
	1	1	**8T-4205**	2	WASHER-HARD (7.2X14.5X2MM THK)	
	2	1	**1H-3244**	2	LOCKWASHER	
	3	1	**6V-8187**	1	NUT (1/4-28 THD)	
	4	1	**5S-7349**	1	BOLT (1/4-20X0.5 IN)	
	5	1	**9L-6770**	1	CAP	
	6	1	**9N-0943**	1	PLUG-BEARING WELL	
	7	1	**5P-3418**	1	BEARING-ROLLER	
	8	1	**5P-3419**	1	RACE-BEARING INNER	
	9	1	**132-1225**	1	RECTIFIER AS-ALTERNATOR	
	10	1	**202-2708**	1	DIODE AS	
	11	1	**3T-6354**	1	REGULATOR AS (24 VOLT)	
	12	1	**3E-5458**	1	CAPACITOR AS-ALTERNATOR	
	13	1	**202-9897**	1	BEARING-SPECIAL BALL	
	14	1	**100-6531**	1	FAN-ALTERNATOR	
	15	1	**187-2034**	1	NUT-FLANGE (5/8-18 THD)	
	16	1	**202-2783**	1	PLATE	
	17	1	**202-2699**	1	HOUSING AS	
	18	1	**202-2700**	1	FRAME	
	19	1	**202-8647**	1	STATOR AS	
	20	1	**202-2703**	1	COIL AS	
	21	1	**9S-2390**	1	RETAINER	
	22	1	**9S-2302**	1	ROTOR AS	
	23	1	**4B-2047**	1	NUT (10-24 THD)	
	24	1	**8T-0328**	1	WASHER-HARD (5.5X10X1MM THK)	
	25	1	**8F-1434**	1	LOCKWASHER	
	26	1	**202-2784**	1	KIT-ALTERNATOR TERMINAL	
					(INCLUDES ADAPTER, CONNECTOR, INSULATOR, LOCKWASHER, NUT, SCREW, AND WASHER)	
	27	1	**202-2785**	1	KIT-ALTERNATOR TERMINAL	
					(INCLUDES BUSHING, CONNECTOR, NUT, STUD, AND WASHER)	
	28	1	**202-2786**	1	KIT-ALTERNATOR TERMINAL	
					(INCLUDES BUSHING, CONNECTOR, LOCKWASHER, NUT, STUD, AND WASHER)	
					AVAILABLE REPAIR KIT(S):	
			202-2787	1	KIT-HARDWARE	
					(INCLUDES BOLT, BOOT, COLLAR, CONNECTOR, LOCKWASHER, NUT, PLUG, AND SCREW)	

200-8281 **ALTERNATOR GP-CHARGING** ***(contd.)*** **i01683565**

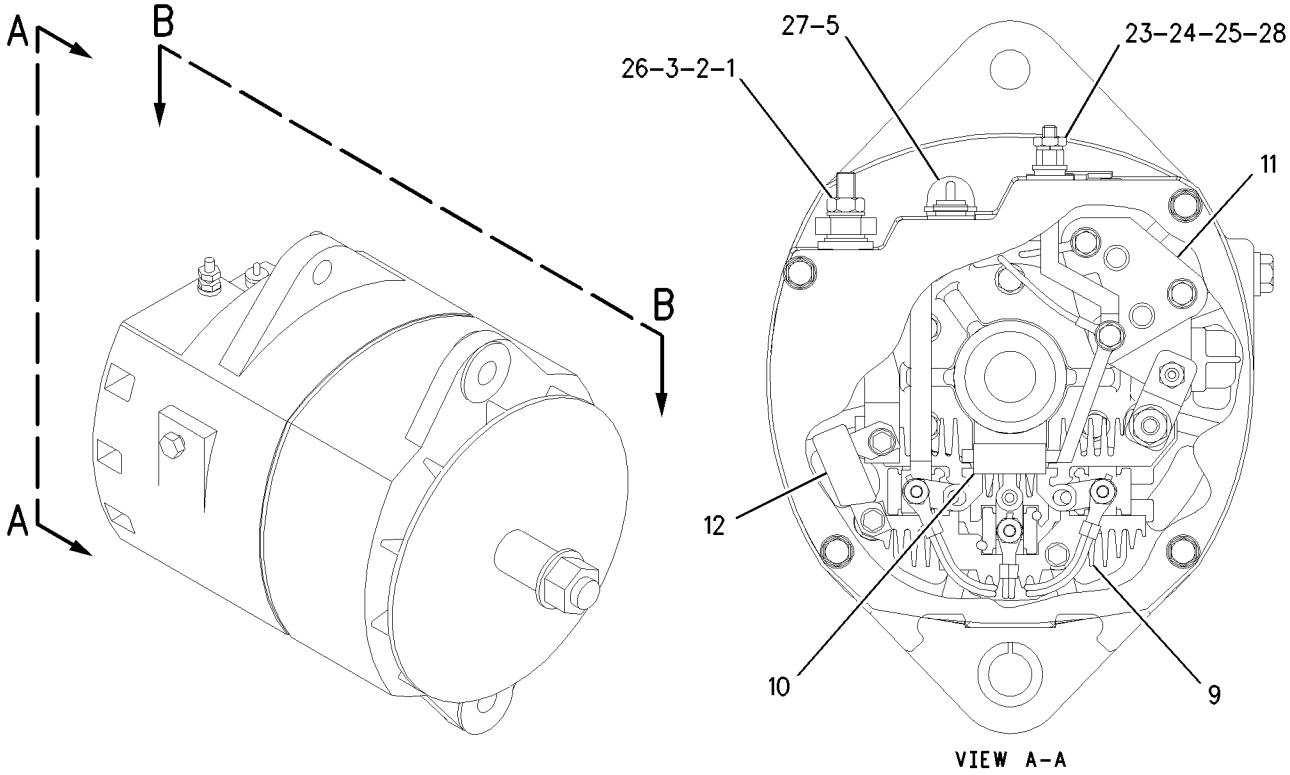

VIEW A-A

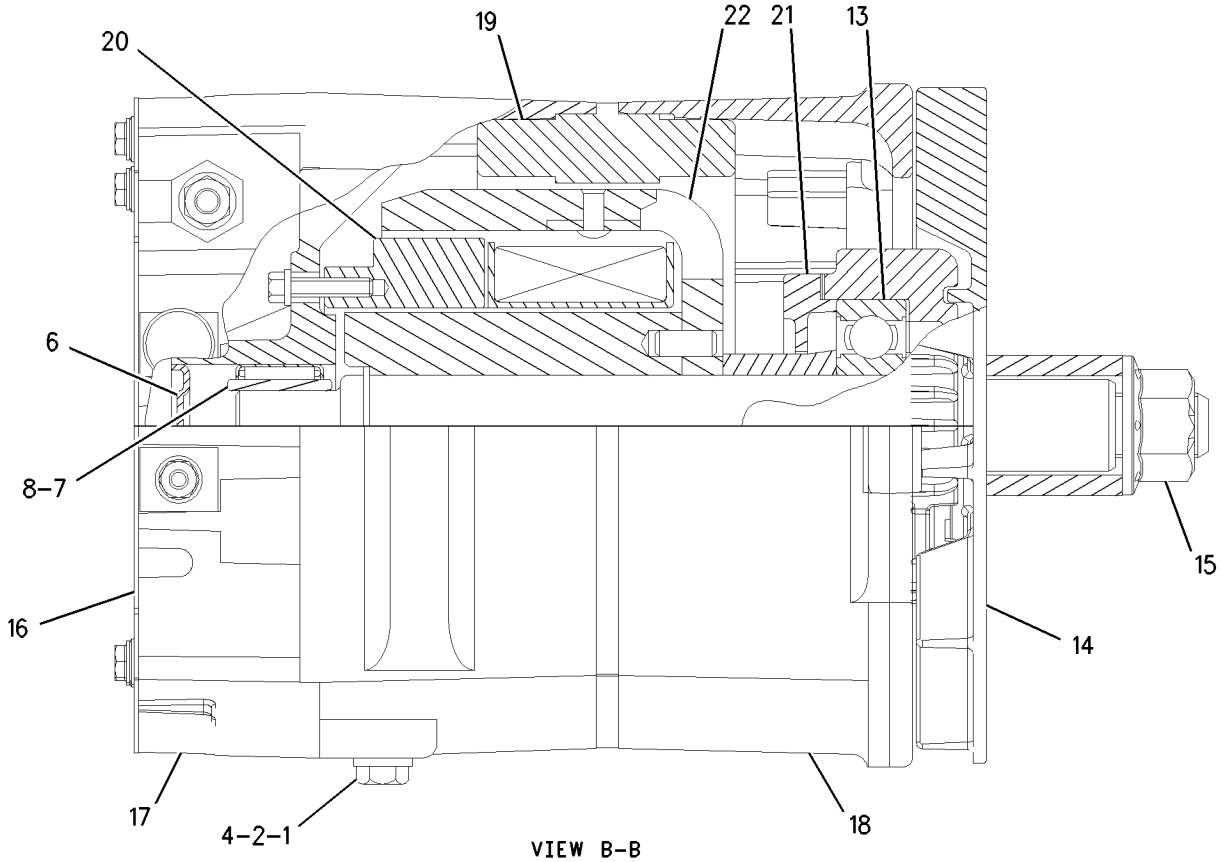

VIEW B-B

GRAPHIC #1

g00938759

ELECTRICAL AND STARTING SYSTEM

177-9548 BATTERY GP–HEAVY DUTY

S/N: CAF1-UP
AN ATTACHMENT

SMCS-1401 **i01680682**

NOTE	REF NO	GRAPHIC REF	PART NUMBER	QTY	PART NAME 1 2 3 4 5 6 (PRODUCT LEVEL)	SEE PAGE
	1	1	**8V-0622**	1	CABLE AS	
		1	**8C-5917**	1	TERMINAL AS-BATTERY (POSITIVE)	
		1	**1M-6119**	2	BOLT-BATTERY TERMINAL (5/16-18X1.375 IN)	
		1	**1M-6120**	2	NUT-BATTERY TERMINAL (5/16-18 THD)	
		1	**5P-0761**	14	CABLE (00GA)(RED)	
		1	**8T-9757**	1	TERMINAL AS-BATTERY (NEGATIVE)	
		1	**9G-0003**	1	COVER-TERMINAL (BLACK)	
		1	**9G-0004**	1	COVER-TERMINAL (RED)	
	2	1	**153-5700**	2	BATTERY (MAINTENANCE FREE)(12 VOLT)	
	3	1	**188-3958**	1	BAR	
	4	1	**189-0146**	1	HOLD-DOWN	
M	5	1	**8C-0573**	2	STUD-TAPERLOCK	
M	6	1	**8T-0389**	2	LOCKNUT (M10X1.5 THD)	
	7	1	**8T-4121**	2	WASHER-HARD (11X21X2.5MM THK)	
M	8	1	**8T-4182**	2	BOLT (M10X1.5X45MM)	

M-METRIC PART

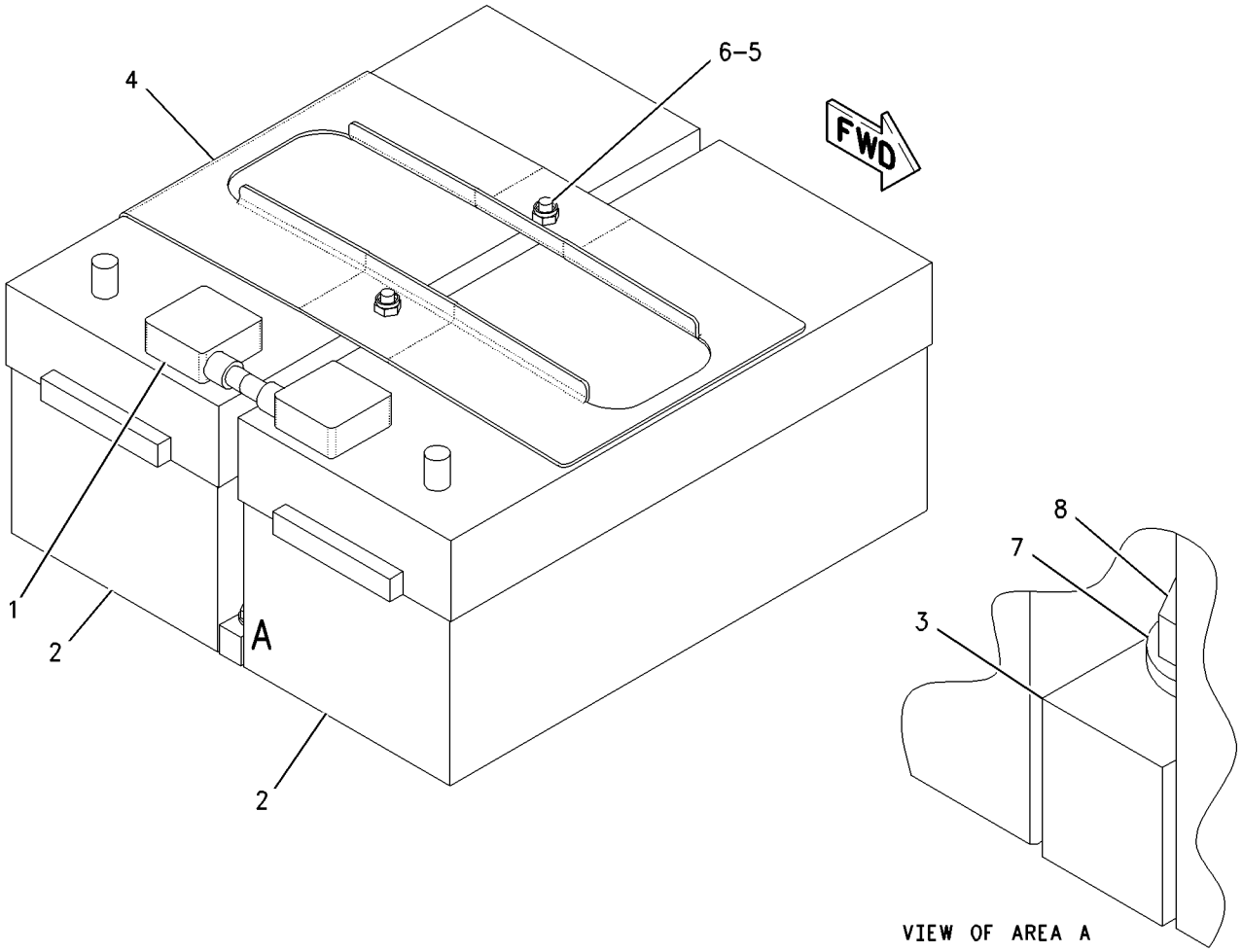

GRAPHIC #1 g00844140

187-8028 BATTERY GP–EU

S/N: CAF1-UP
PART OF 194-2870 SUPPORT AR-REAR CHASSIS
AN ATTACHMENT

SMCS-1401 **i01705577**

NOTE	REF NO	GRAPHIC REF	PART NUMBER	QTY	PART NAME 1 2 3 4 5 6 (PRODUCT LEVEL)	SEE PAGE
	1	1	**8V-0622**	1	CABLE AS	
		1	**8C-5917**	1	TERMINAL AS-BATTERY (POSITIVE)	
		1	**1M-6119**	2	BOLT-BATTERY TERMINAL (5/16-18X1.375 IN)	
		1	**1M-6120**	2	NUT-BATTERY TERMINAL (5/16-18 THD)	
E		1	**5P-0761**		CABLE (00GA)(RED) (14 CM)	
		1	**8T-9757**	1	TERMINAL AS-BATTERY (NEGATIVE)	
		1	**9G-0003**	1	COVER-TERMINAL (BLACK)	
		1	**9G-0004**	1	COVER-TERMINAL (RED)	
	2	1	**153-5700**	2	BATTERY (MAINTENANCE FREE)(12 VOLT)	
	3	1	**188-3958**	1	BAR	
	4	1	**189-0146**	1	HOLD-DOWN	
M	5	1	**8C-0573**	2	STUD-TAPERLOCK	
M	6	1	**8T-0389**	2	LOCKNUT (M10X1.5 THD)	
	7	1	**8T-4121**	2	WASHER-HARD (11X21X2.5MM THK)	
M	8	1	**8T-4182**	2	BOLT (M10X1.5X45MM)	

E-ORDER BY THE CENTIMETER
M-METRIC PART

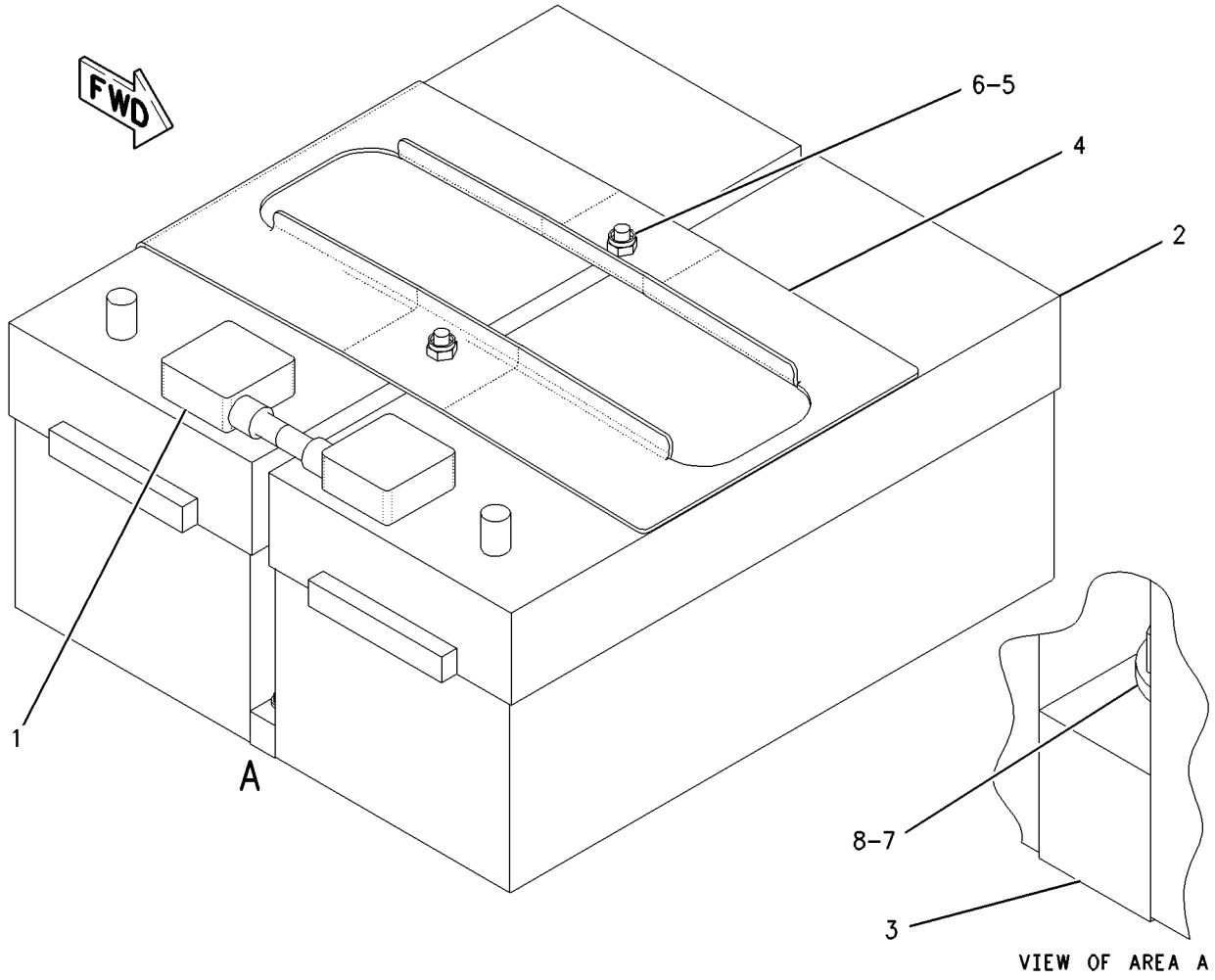

GRAPHIC #1 g00880118

188-3951 BATTERY GP—MAINTENANCE FREE

S/N: CAF1-UP

PART OF 194-2869 SUPPORT AR-REAR CHASSIS

SMCS-1401 **i01679008**

NOTE	REF NO	GRAPHIC REF	PART NUMBER	QTY	PART NAME 1 2 3 4 5 6 (PRODUCT LEVEL)	SEE PAGE
	1	1	**111-7978**	1	HOLD-DOWN AS	
	2	1	**128-0314**	1	CABLE AS	
		1	**9G-0002**	1	COVER-TERMINAL (RED) (LH POS)	
		1	**9G-0005**	1	COVER-TERMINAL (BLACK)(RH NEG)	
		1	**1M-4982**	1	TERMINAL-BATTERY (RH NEG)	
		1	**1M-6119**	1	BOLT-BATTERY TERMINAL (5/16-18X1.375 IN)	
		1	**1M-6120**	1	NUT-BATTERY TERMINAL (5/16-18 THD)	
		1	**8K-8854**	1	TERMINAL-BATTERY (LH POS)	
		1	**1M-6119**	1	BOLT-BATTERY TERMINAL (5/16-18X1.375 IN)	
		1	**1M-6120**	1	NUT-BATTERY TERMINAL (5/16-18 THD)	
	3	1	**188-3958**	1	BAR	
	4	1	**188-3959**	1	BRACKET	
	5	1	**3T-5760**	2	BATTERY (750 AMP)(12 VOLT)	
M	6	1	**8C-0573**	2	STUD-TAPERLOCK	
M	7	1	**8T-0389**	2	LOCKNUT (M10X1.5 THD)	
	8	1	**8T-4121**	3	WASHER-HARD (11X21X2.5MM THK)	
M	9	1	**8T-4182**	2	BOLT (M10X1.5X45MM)	
M	10	1	**8T-4195**	1	BOLT (M10X1.5X30MM)	

M-METRIC PART

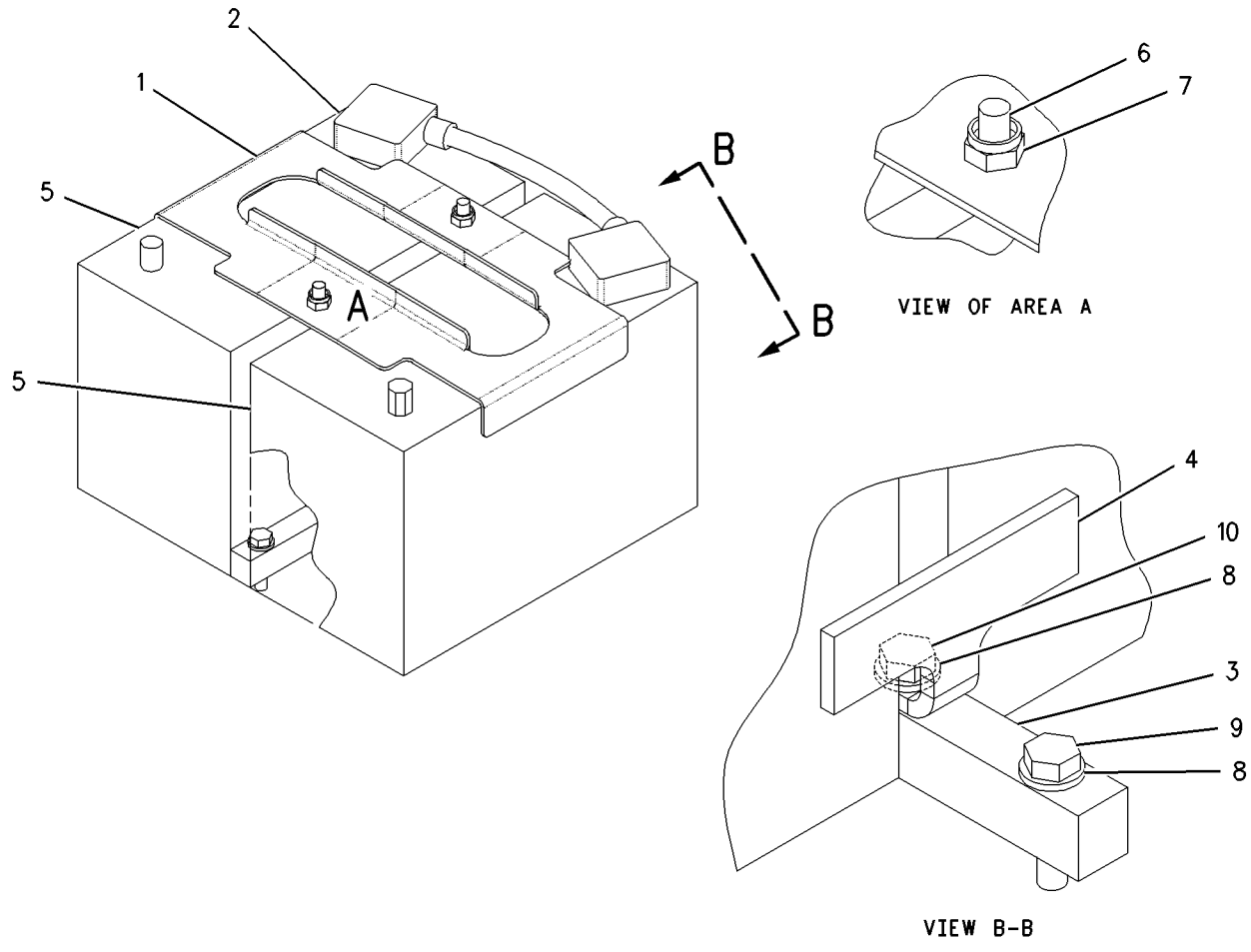

GRAPHIC #1 g00788967

9W-0742 BLOCK GP-JUNCTION

S/N: CAF1-UP
PART OF 178-0163, 199-1398 WIRING GP-REAR
ALSO AN ATTACHMENT

SMCS-1408 **i00571914**

NOTE	REF NO	GRAPHIC REF	PART NUMBER	QTY	PART NAME 1 2 3 4 5 6 (PRODUCT LEVEL)	SEE PAGE
	1	1	**8C-6358**	1	JUNCTION BLOCK AS	
	2	1	**8T-3519**	3	BOLT-BRONZE	
	3	1	**8C-6921**	3	NUT-SPACER (1/2-13 THD)	
	4	1	**8T-3518**	6	NUT-FULL	
	5	1	**7F-0560**	6	WASHER (2.57MM THK)	
BD	6	1	**6V-2722**		TUBE-SHRINKABLE	

B-USE AS REQUIRED
D-ORDER BY THE METER

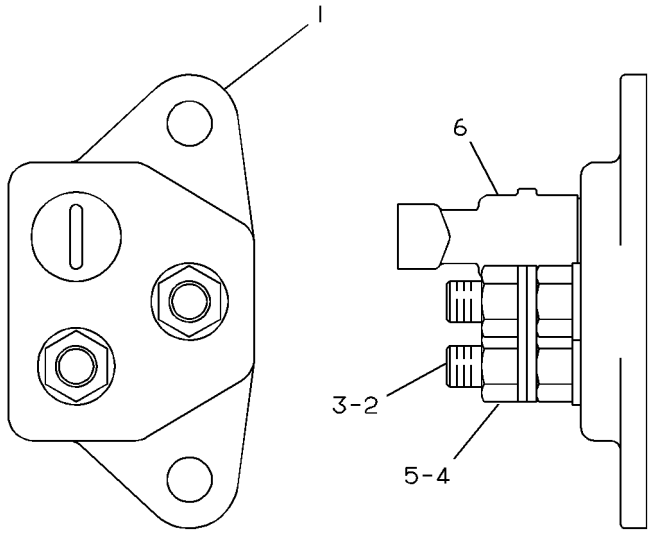

GRAPHIC #1 g00082186

201-1036 CIRCUIT BREAKER GP–DUEL

S/N: CAF1-UP
PART OF 161-0771, 179-1548 LIGHTING AR-FLOOD & SIGNAL
AN ATTACHMENT

SMCS-1420 **i01681114**

NOTE	REF NO	GRAPHIC REF	PART NUMBER	QTY	PART NAME 1 2 3 4 5 6 (PRODUCT LEVEL)	SEE PAGE
	1	1	**195-2097**	1	WIRE AS	
	2	1	**201-8424**	1	STRAP	
	3	1	**3K-8106**	4	SCREW-MACHINE (8-32 X 1 IN)	
	4	1	**3T-2662**	1	CIRCUIT BREAKER AS (15 AMP) (LIGHTBAR WORKLAMPS)	
	4A	1	**3T-2662**	1	CIRCUIT BREAKER AS (15 AMP) (HEADLAMPS)	
					(EACH CIRCUIT BREAKER AS INCLUDES)	
		1	**6V-8376**	2	SCREW-MACHINE (8-32X0.25 IN)	
		1	**9B-7233**	2	LOCKWASHER	
	5	1	**9B-7233**	4	LOCKWASHER	

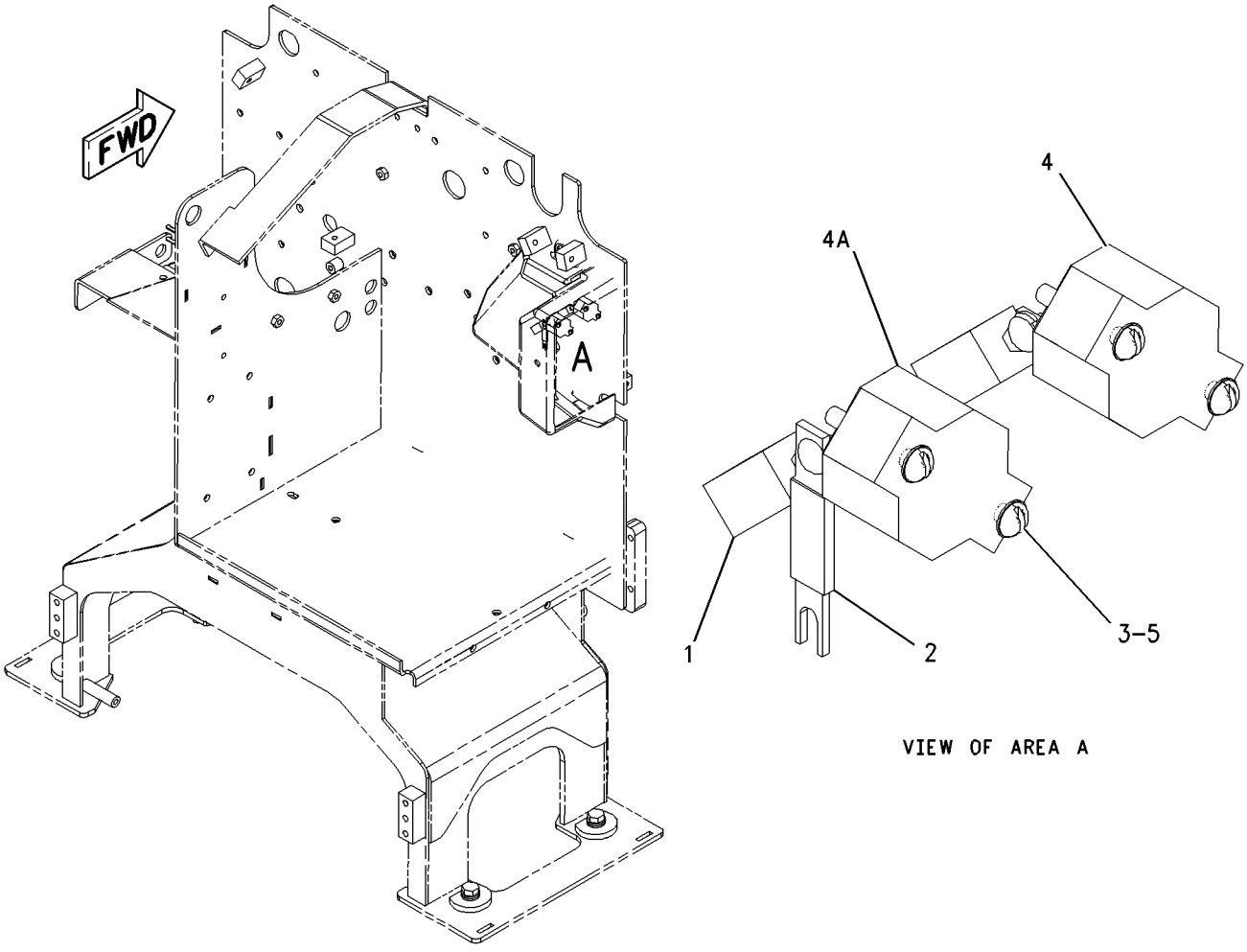

GRAPHIC #1 g00844651

201-1038 CIRCUIT BREAKER GP–SINGLE

S/N: CAF1-UP

PART OF 188-9328 LIGHTING AR-FLOOD, 161-0770 LIGHTING AR-FLOOD & SIGNAL AN ATTACHMENT

SMCS-1420 **i01682136**

NOTE	REF NO	GRAPHIC REF	PART NUMBER	QTY	PART NAME 1 2 3 4 5 6 (PRODUCT LEVEL)	SEE PAGE
	1	1	**201-8424**	1	STRAP	
	2	1	**3K-8106**	2	SCREW-MACHINE (8-32 X 1 IN)	
	3	1	**3T-2662**	1	CIRCUIT BREAKER AS (15 AMP) (HEADLAMPS)	
		1	**6V-8376**	2	SCREW-MACHINE (8-32X0.25 IN)	
		1	**9B-7233**	2	LOCKWASHER	
	4	1	**9B-7233**	2	LOCKWASHER	

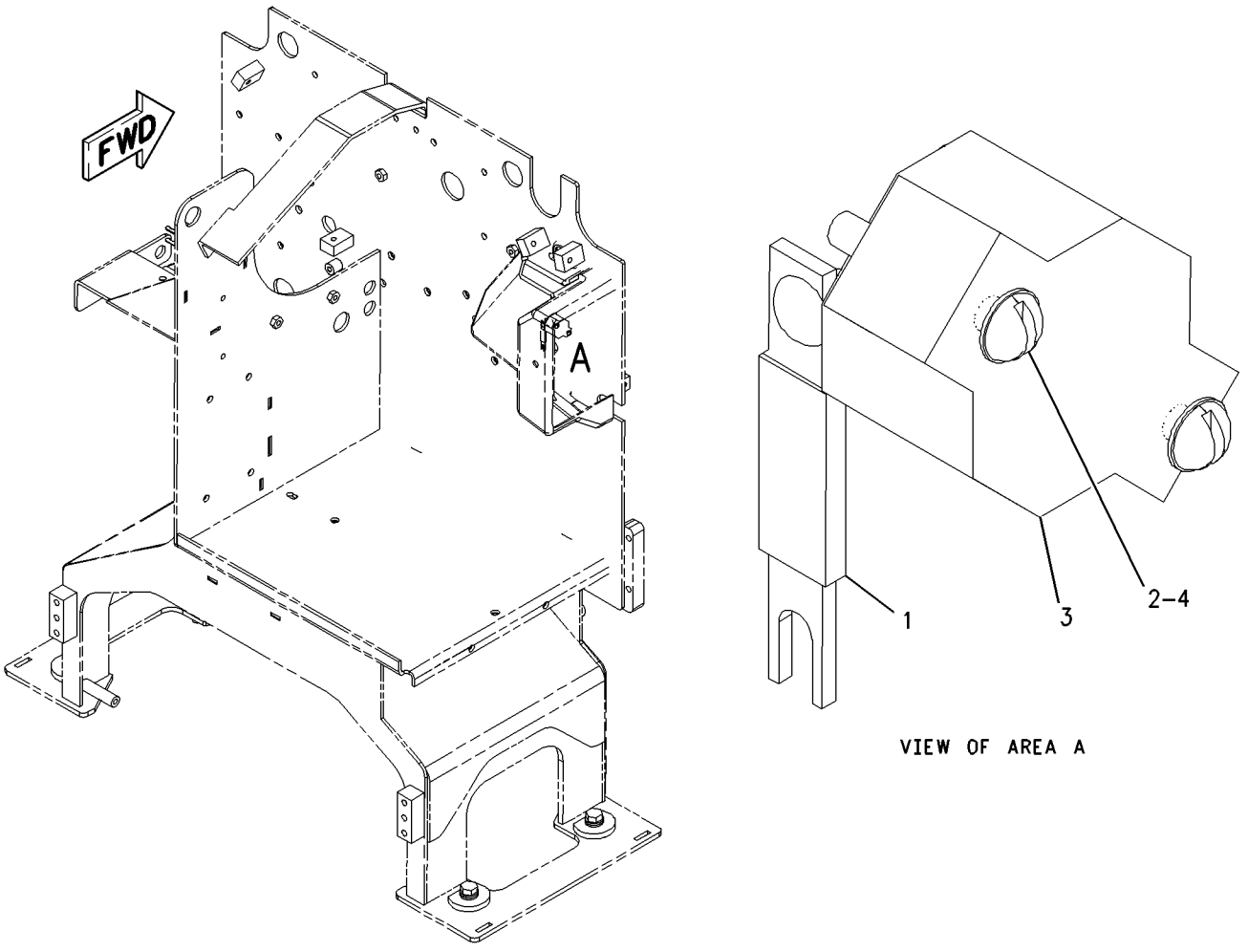

GRAPHIC #1 g00844652

183-1195 CONTROL & MTG GP-ENGINE ELEK

S/N: BMA1-UP

PART OF 199-5055 ENGINE AR-COMPLETE

SMCS-1901 **i01809902**

NOTE	REF NO	GRAPHIC REF	PART NUMBER	QTY	PART NAME 1 2 3 4 5 6 (PRODUCT LEVEL)	SEE PAGE
	1	1	**8S-4950**	1	CAP (37 DEGREE FLARED)	
	2	1	**8T-9655**	8	MOUNT (ISOLATION)	
	3	1	**101-3128**	2	SPACER	
	4	1	**169-3111**	2	SPACER	
CY	5	1	*210-0849*	1	CONTROL GP-ENGINE ELECTRONIC	142
M	6	1	**5P-8347**	2	BOLT (M8X1.25X70MM)	
M	7	1	**6V-5223**	2	BOLT (M8X1.25X100MM)	
	8	1	**9M-1974**	1	WASHER-HARD (8.8X16X2MM THK)	
	9	1	**9N-0869**	4	WASHER-HARD (8.8X25.5X2MM THK)	

C-CHANGE FROM PREVIOUS TYPE
M-METRIC PART
Y-SEPARATE ILLUSTRATION

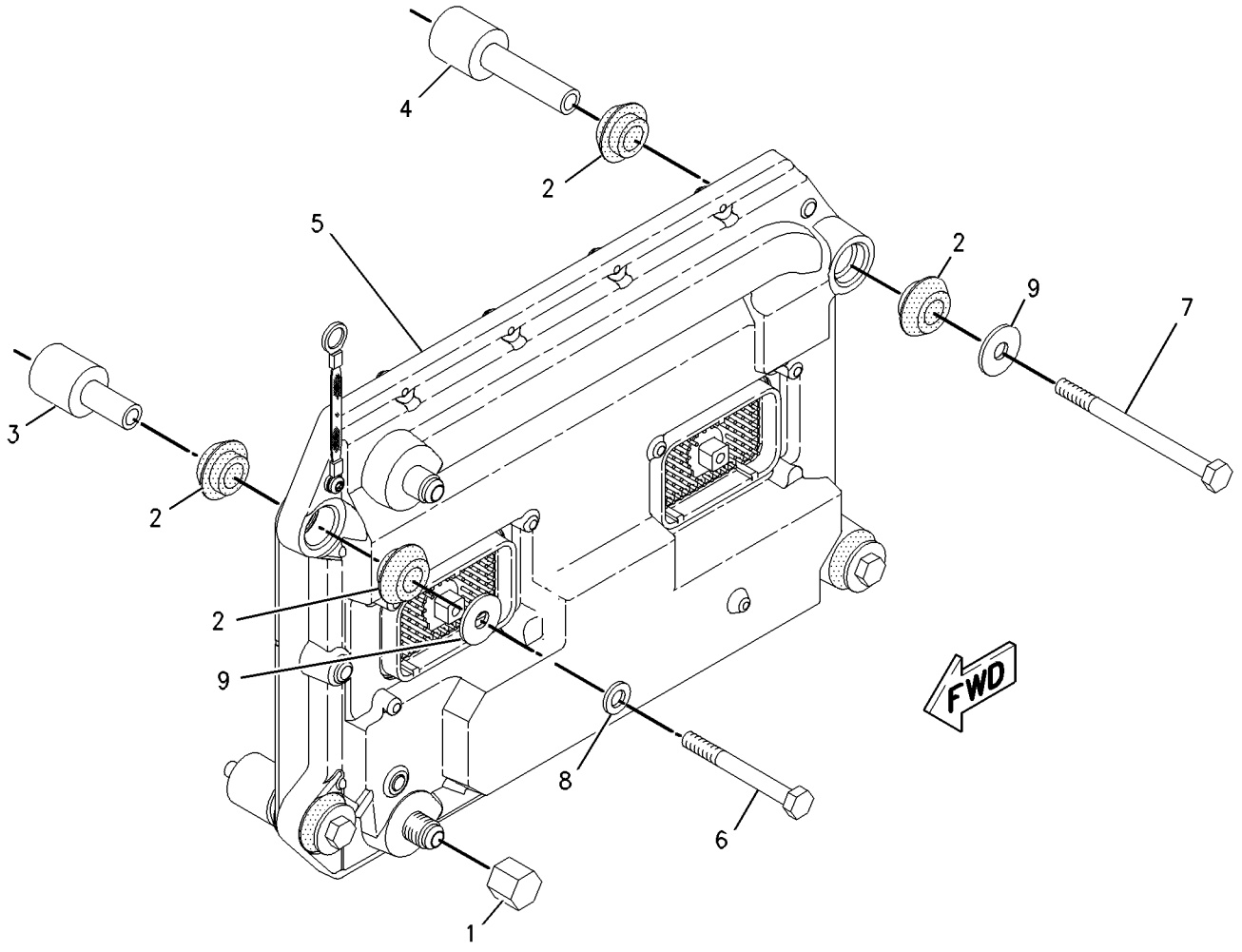

GRAPHIC #1 g00907225

ELECTRICAL AND STARTING SYSTEM

210-0848 CONTROL GP-ENGINE ELECTRONIC

S/N: BMA1-UP

PART OF 210-0849 CONTROL GP-ENGINE ELECTRONIC

SMCS-1901 **i01810067**

NOTE	REF NO	GRAPHIC REF	PART NUMBER	QTY	PART NAME 1 2 3 4 5 6 (PRODUCT LEVEL)	SEE PAGE
	1	1	**7X-6315**	1	STRAP AS-GROUND	
	2	1	**184-2472**	1	SCREW-PAN HEAD (LUBRICATED)	

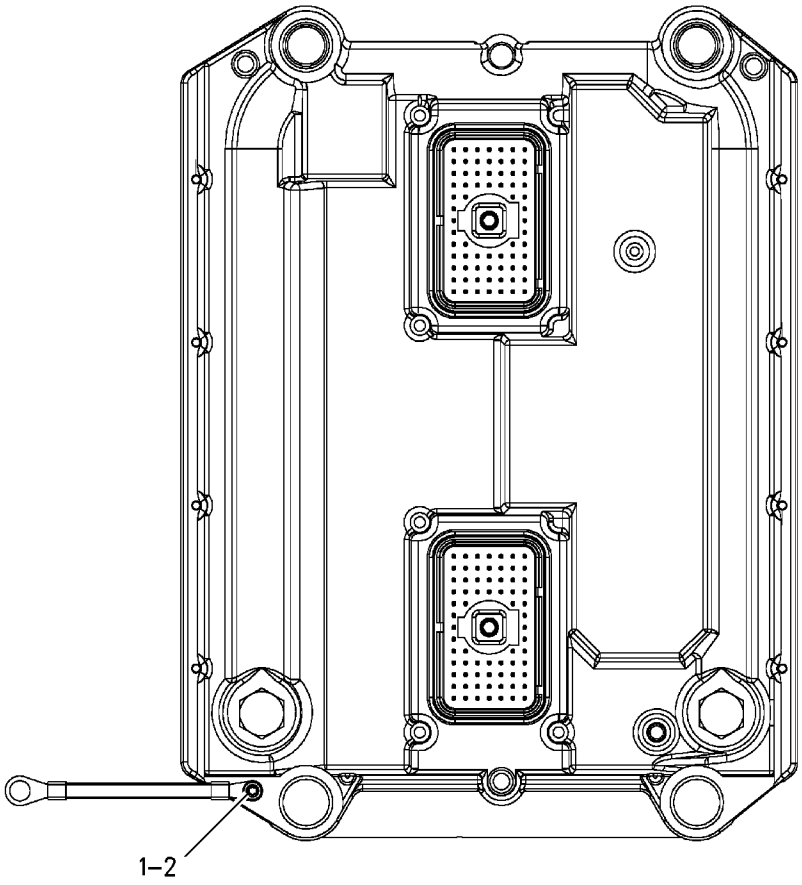

GRAPHIC #1 g00907978

ELECTRICAL AND STARTING SYSTEM

210-0849 CONTROL GP-ENGINE ELECTRONIC

S/N: BMA1-UP

PART OF 183-1195 CONTROL & MTG GP-ENGINE ELEK

SMCS-1901 **i01809905**

NOTE	REF NO	GRAPHIC REF	PART NUMBER	QTY	PART NAME 1 2 3 4 5 6 (PRODUCT LEVEL)	SEE PAGE
Y	1	1	**210-0848**	1	CONTROL GP-ENGINE ELECTRONIC	141

Y-SEPARATE ILLUSTRATION

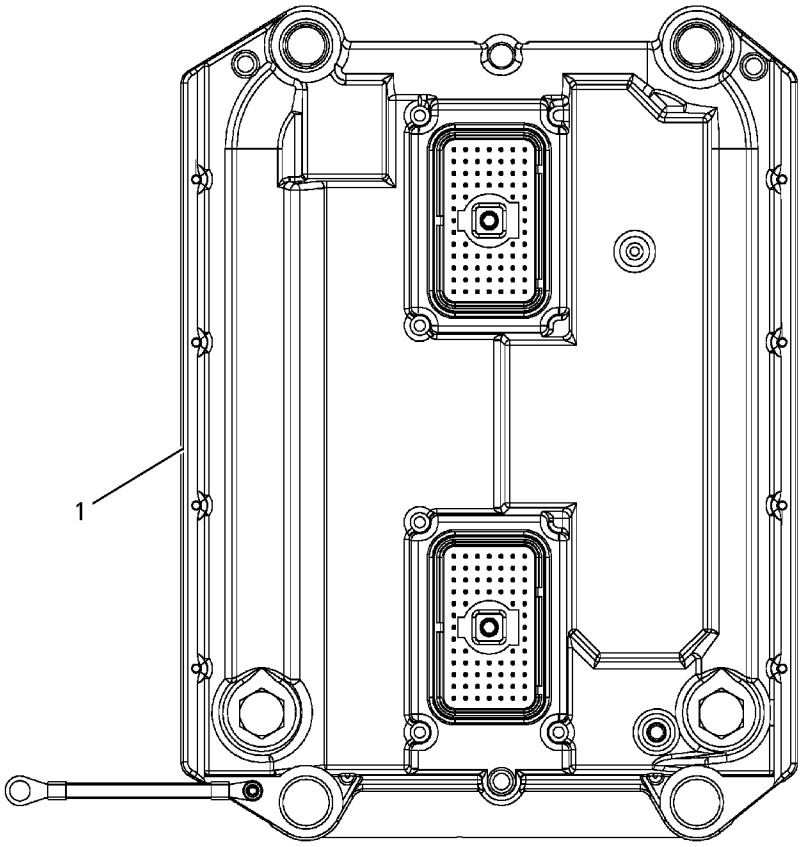

GRAPHIC #1 g00907973

132-6640 CONTROL GP-SECONDARY STEERING

S/N: CAF1-UP

PART OF 188-1041 WIRING GP-SECONDARY STEERING, 159-5841 WIRING GP-SHIFT CONSOLE AN ATTACHMENT

SMCS-4343 **i01701309**

NOTE	REF NO	GRAPHIC REF	PART NUMBER	QTY	PART NAME 1 2 3 4 5 6 (PRODUCT LEVEL)	SEE PAGE
Z	1	1		1	CONTROL AS-STEERING	
	2	1	**102-8801**	1	KIT-RECEPTACLE (12 PIN)	
					(INCLUDES RECEPTACLE AS & WEDGE)	
	3	1	**3E-5180**	1	WEDGE-RECEPTACLE LOCK	
	4	1	**186-3735**	11	PIN-CONNECTOR	
	5	1	**8T-8737**	1	PLUG-SEAL	
	6	1	**1S-9593**	4	STRAP-CABLE	

Z-NOT SERVICED SEPARATELY

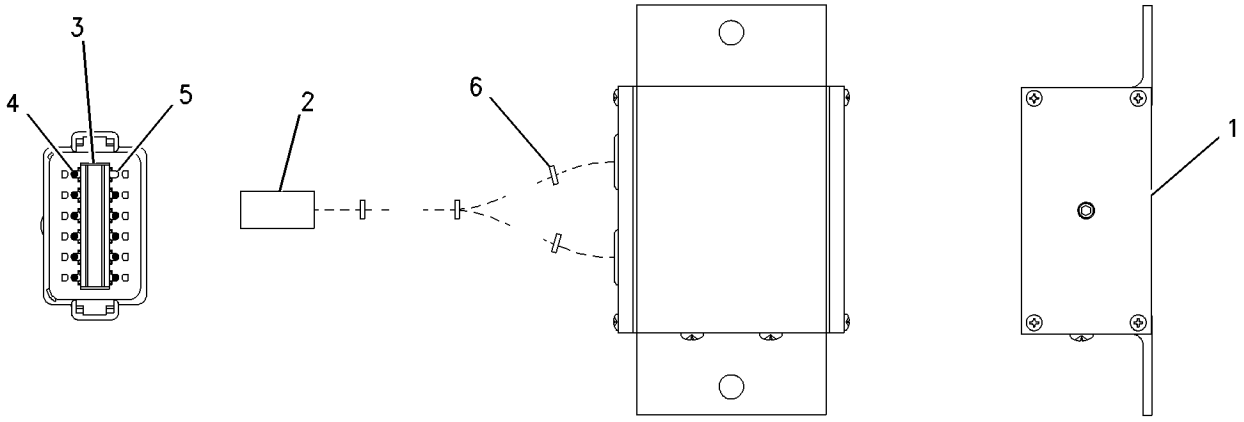

GRAPHIC #1 g00672584

172-9389 CONTROL GP-UNPROGRAMMED–POWER TRAIN

S/N: CAF1-UP

PART OF 159-5856, 159-5865 WIRING GP-FRONT

ALSO AN ATTACHMENT

SMCS-7610 **i01310423**

NOTE	REF NO	GRAPHIC REF	PART NUMBER	QTY	PART NAME 1 2 3 4 5 6 (PRODUCT LEVEL)	SEE PAGE
	1	1	**7X-6315**	1	STRAP-GROUNDING	
	2	1	**101-0852**	1	SCREW-PAN HEAD (NO 8 X 3/8 IN)	
M	3	1	**6V-6703**	2	KIT-RETAINING BOLT	
					(EACH INCLUDES BOLT, RING, AND SEALS)	
					FOR SOFTWARE, SEE ELECTRONICS GP	

M-METRIC PART

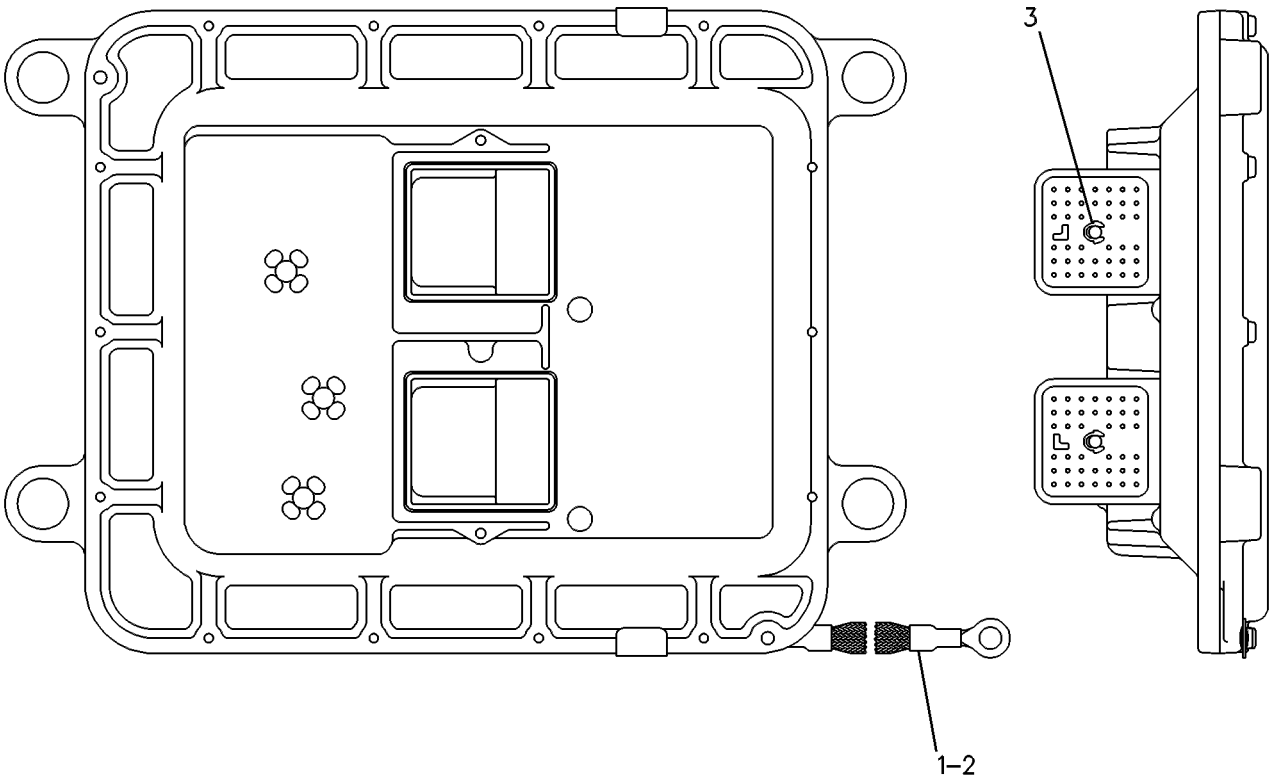

GRAPHIC #1 g00087166

161-0776 CONVERTER AR-ELECTRICAL–12V POWER PORT–LOW

S/N: CAF1-UP
AN ATTACHMENT

SMCS-1421 **i01825605**

NOTE	PART NUMBER	QTY	PART NAME 1 2 3 4 5 6 (PRODUCT LEVEL)	SEE PAGE
Y	*171-7185*	1	ACCESSORY GP-CAB	712
Y	*180-4643*	1	CONVERTER GP-ELECTRICAL	148

Y-SEPARATE ILLUSTRATION

<END>

161-0777 CONVERTER AR-ELECTRICAL–12V POWER PORT–HIGH

S/N: CAF1-UP
AN ATTACHMENT

SMCS-1421 **i01677940**

NOTE	PART NUMBER	QTY	PART NAME 1 2 3 4 5 6 (PRODUCT LEVEL)	SEE PAGE
Y	*171-7186*	1	ACCESSORY GP-CAB	713
Y	*180-4643*	1	CONVERTER GP-ELECTRICAL	148

Y-SEPARATE ILLUSTRATION

<END>

145-1297 CONVERTER GP-ELECTRICAL–5/7.5 AMP

S/N: CAF1-UP
PART OF 145-1300 INSTALLATION AR-RADIO
AN ATTACHMENT

SMCS-1421 **i01832832**

NOTE	REF NO	GRAPHIC REF	PART NUMBER	QTY	PART NAME 1 2 3 4 5 6 (PRODUCT LEVEL)	SEE PAGE
	1	1	**8X-1853**	2	SPACER (10.3X15.9X30MM THK)	
	2	1	**9W-1442**	1	FUSE (10 AMP)	
	3	1	**205-4285**	1	CONVERTER GP-ELECTRICAL (24 VOLT TO 12 VOLT)	
	4	1	**208-7782**	1	PLATE AS	
	5	1	**096-6166**	2	WASHER-HARD (4.5X9X1MM THK)	
M	6	1	**8T-0285**	2	SCREW-MACHINE (M4X0.7X12MM)	
	7	1	**8T-2501**	2	BOLT (3/8-16X2 IN)	
	8	1	**8T-4896**	2	WASHER-HARD (10.2X18.5X2.5MM THK)	

M-METRIC PART

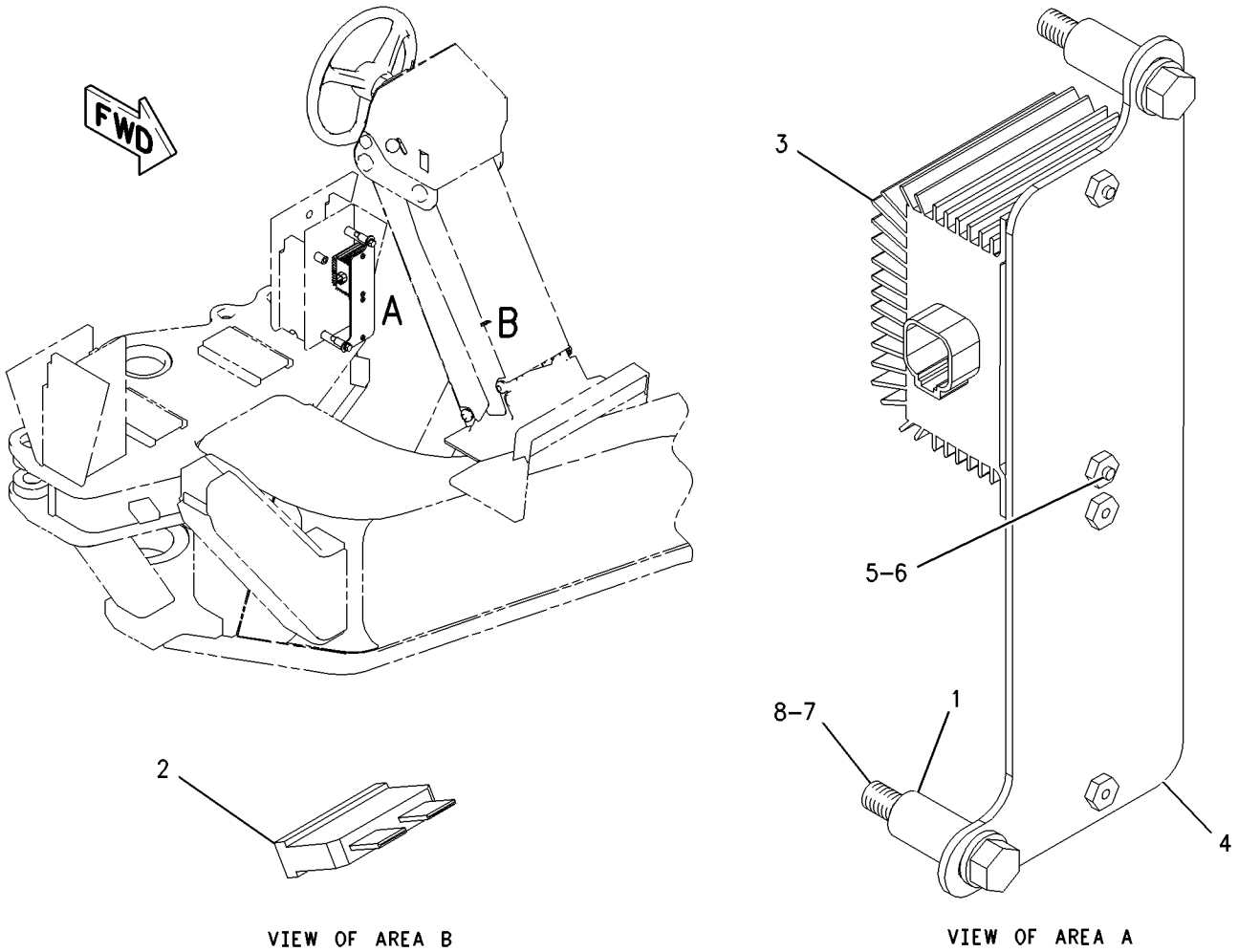

GRAPHIC #1 g00918329

ELECTRICAL AND STARTING SYSTEM

167-8382 CONVERTER GP-ELECTRICAL–25 AMP

S/N: CAF1-UP
AN ATTACHMENT

SMCS-1421 **i01755291**

NOTE	REF NO	GRAPHIC REF	PART NUMBER	QTY	PART NAME 1 2 3 4 5 6 (PRODUCT LEVEL)	SEE PAGE
	1	1	**3E-8646**	1	CONVERTER-POWER (24 VOLT TO 12 VOLT)(25 AMP)	
		1	**8T-9636**	2	FUSE (30 AMP) (CONVERTER-POWER)	
	2	1	**3S-2093**	3	STRAP-CABLE	
	3	1	**168-8233**	1	PLATE	
	4	1	**168-8235**	1	PLATE AS	
M		1	**6V-9632**	2	NUT-WELD (M6X1 THD)	
	5	1	**169-3523**	1	HARNESS AS-RADIO	
		1	**102-8802**	1	KIT-RECEPTACLE (2 PIN) (IGNITION/RADIO CONVERTER)	
	6	1	**6V-8801**	1	NUT (3/8-16 THD)	
	7	1	**8T-4121**	2	WASHER-HARD (11X21X2.5MM THK)	
M	8	1	**8T-4137**	2	BOLT (M10X1.5X20MM)	
	9	1	**8T-4896**	1	WASHER-HARD (10.2X18.5X2.5MM THK)	
M	10	1	**9X-2042**	2	SCREW-TRUSS HEAD (M6X1X12MM)	
E	11	1	**7X-7877**		STRIP-EDGING (106 CM)	

E-ORDER BY THE CENTIMETER
M-METRIC PART

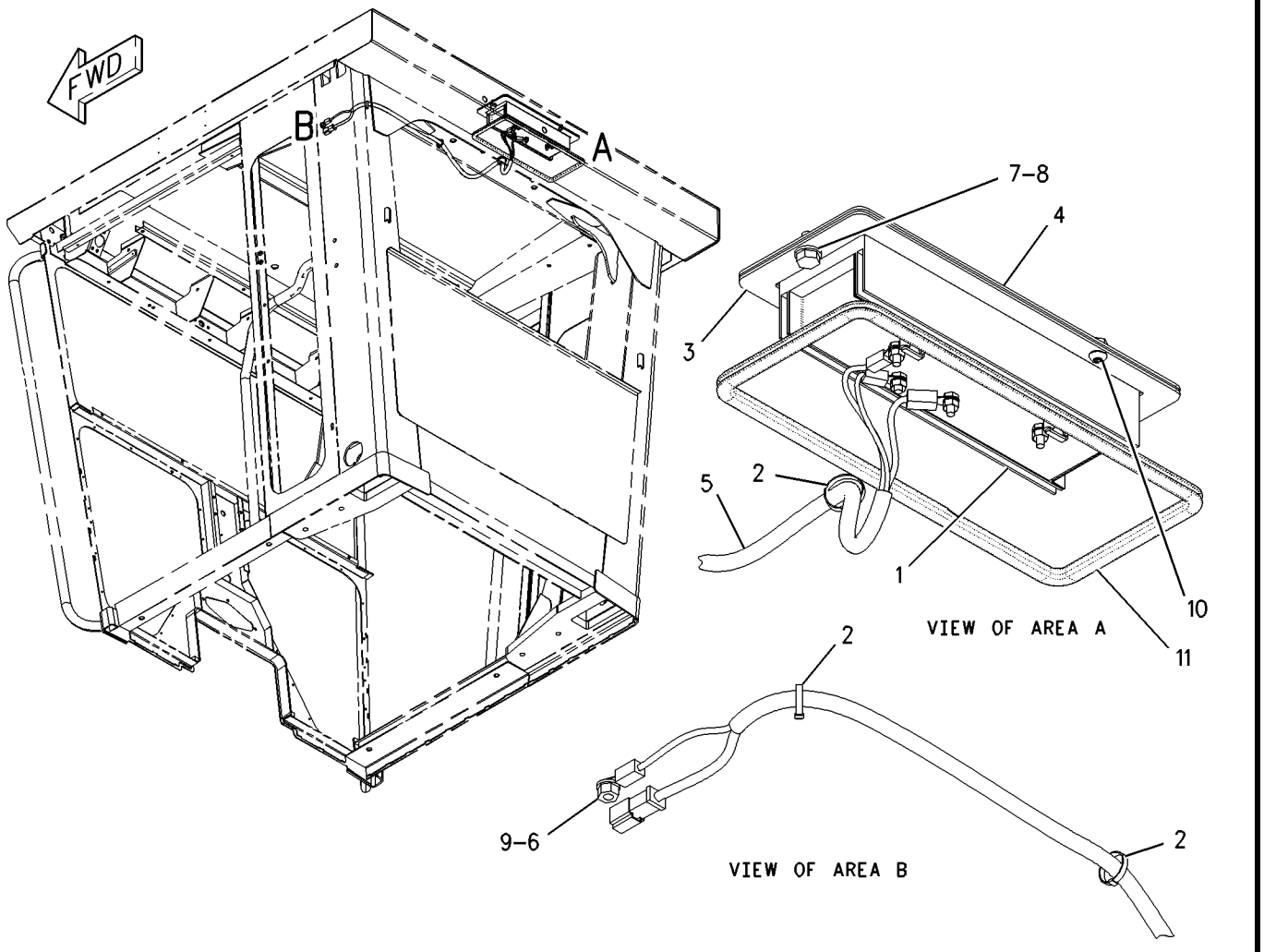

GRAPHIC #1 g00847577

180-4643 CONVERTER GP-ELECTRICAL–12V POWER PORT

S/N: CAF1-UP

PART OF 161-0776, 161-0777 CONVERTER AR-ELECTRICAL

AN ATTACHMENT

SMCS-1421 **i01683338**

NOTE	REF NO	GRAPHIC REF	PART NUMBER	QTY	PART NAME 1 2 3 4 5 6 (PRODUCT LEVEL)	SEE PAGE
	1	1	**9W-1442**	1	FUSE (10 AMP) (POWER CONVERTER)	
	2	1	**205-4285**	1	CONVERTER GP-ELECTRICAL (24 VOLT TO 12 VOLT)	
	3	1	**208-7782**	2	PLATE AS	
	4	1	**096-6166**	2	WASHER-HARD (4.5X9X1MM THK)	
	5	1	**5M-3062**	2	BOLT (3/8-16X0.75 IN)	
M	6	1	**8T-0285**	2	SCREW-MACHINE (M4X0.7X12MM)	
	7	1	**8T-4896**	2	WASHER-HARD (10.2X18.5X2.5MM THK)	

M-METRIC PART

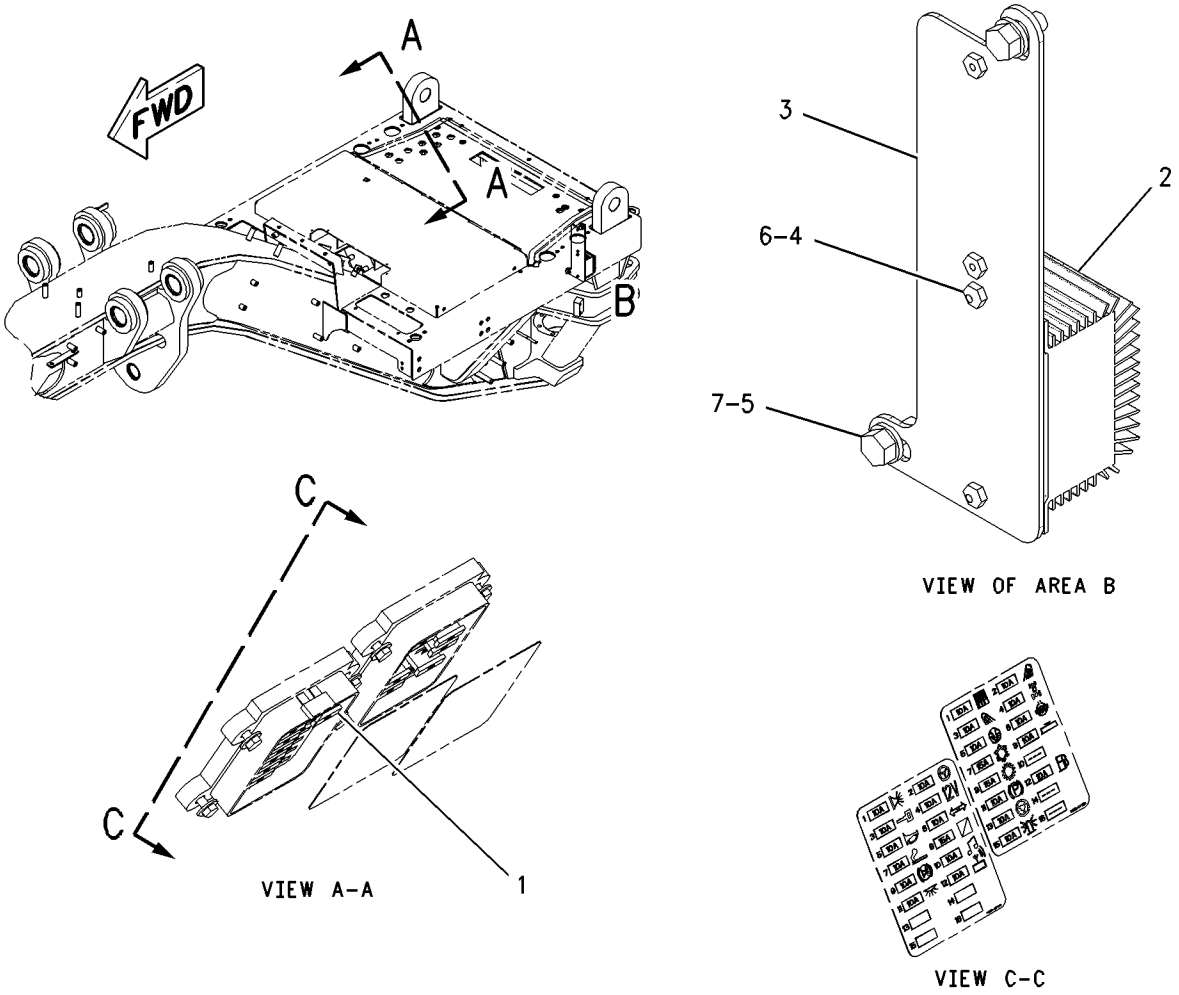

GRAPHIC #1 g00843830

198-7332 ELECTRONICS GP-MONITOR

S/N: CAF1-UP
PART OF 159-5856, 159-5865 WIRING GP-FRONT
ALSO AN ATTACHMENT

SMCS-7490, 7620 **i01677912**

NOTE	PART NUMBER	QTY	PART NAME 1 2 3 4 5 6 (PRODUCT LEVEL)	SEE PAGE
	195-7616	1	SOFTWARE GP-MONITOR (CATERPILLAR MONITORING SYSTEM)	
			—OR—	
	195-7617	1	SERVICE GP-MONITOR (CATERPILLAR MONITORING SYSTEM)	
			(INCLUDES CONTROL GP & SOFTWARE GP)	
			(OPTIONAL SERVICE REPLACEMENT)	

<END>

171-5941 ELECTRONICS GP-POWER TRAIN–MOTOR GRADER

S/N: CAF1-UP

PART OF 159-5856, 159-5865 WIRING GP-FRONT

ALSO AN ATTACHMENT

SMCS-4808, 7610, 7620 **i01857584**

NOTE	REF NO	GRAPHIC REF	PART NUMBER	QTY	PART NAME 1 2 3 4 5 6 (PRODUCT LEVEL)	SEE PAGE
	1	1	**225-5404**	1	SOFTWARE GP-POWER TRAIN (MOTOR GRADER)	
					–OR–	
	2	1	**225-5405**	1	SERVICE GP-POWER TRAIN (MOTOR GRADER)	
					(OPTIONAL SERVICE REPLACEMENT)	
		1	**225-5404**	1	SOFTWARE GP-POWER TRAIN (MOTOR GRADER)	
		1	**172-9389**	1	CONTROL GP-UNPROGRAMMED	
	2A	1	**101-0852**	1	SCREW-PAN HEAD (NO 8 X 3/8 IN)	
	2B	1	**7X-6315**	1	STRAP AS-GROUND	
M	2C	1	**6V-6703**	2	KIT-RETAINING BOLT	
					(EACH INCLUDES BOLT, RING, AND SEAL)	

M-METRIC PART

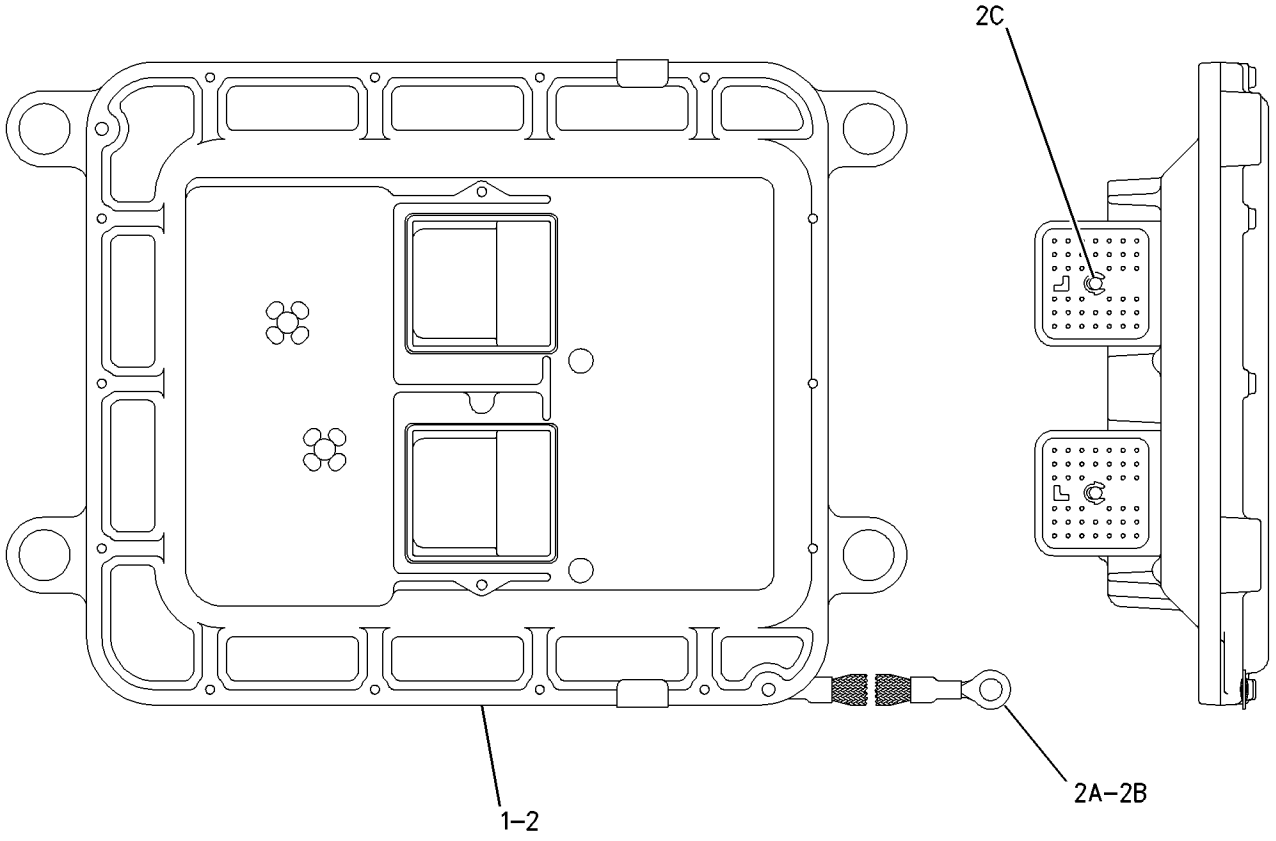

GRAPHIC #1 g00914782

142-8333 FASTENER GP-GROUND STUD

S/N: BMA1-UP

PART OF 199-5055 ENGINE AR-COMPLETE

SMCS-1408 **i01695928**

NOTE	REF NO	GRAPHIC REF	PART NUMBER	QTY	PART NAME 1 2 3 4 5 6 (PRODUCT LEVEL)	SEE PAGE
	1	1	**9M-1974**	2	WASHER-HARD (8.8X16X2MM THK)	
M	2	1	**5P-7970**	1	NUT (M8X1.25 THD)	
	3	1	**6V-3964**	1	WASHER-HARD (8.8X25.5X5MM THK)	
M	4	1	**9X-2097**	1	STUDBOLT (M8X1.25 THD)	

M-METRIC PART

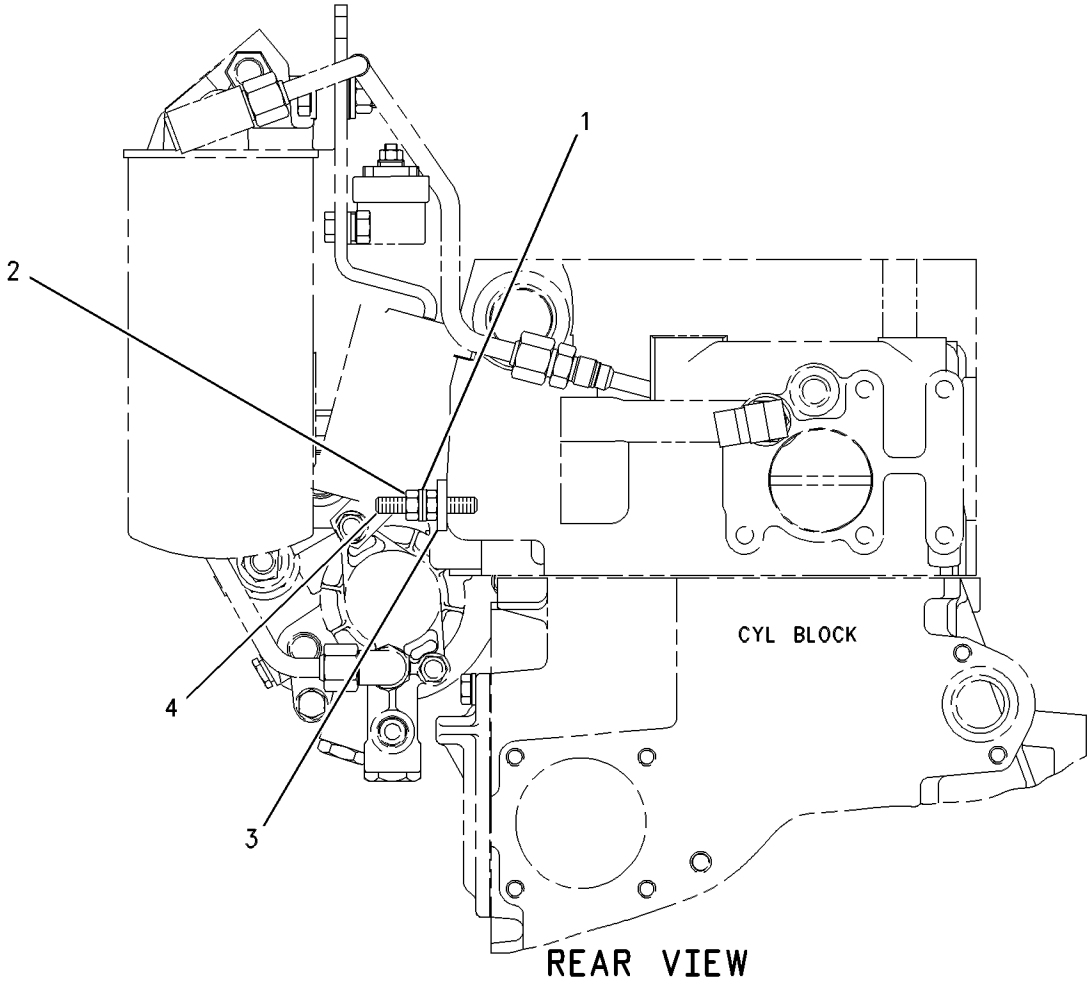

GRAPHIC #1 g00286441

3E-6389 LAMP GP-DOME

S/N: CAF1-UP
24 VOLT. WITH SWITCH
PART OF 159-5878, 193-7359, 223-3941 WIRING GP-CAB
ALSO AN ATTACHMENT

SMCS-1433 **i01855896**

NOTE	REF NO	GRAPHIC REF	PART NUMBER	QTY	PART NAME 1 2 3 4 5 6 (PRODUCT LEVEL)	SEE PAGE
	1	1	**7N-9943**	1	LAMP (24 VOLT) (DOME)	
	2	1	**102-8803**	1	KIT-RECEPTACLE (3 PIN)	
					(INCLUDES RECEPTACLE AS & WEDGE)	
		1	**3E-3371**	1	WEDGE-RECEPTACLE LOCK (3 PIN)	
		1	**8T-8729**	3	PIN-CONNECTOR	
	3	1	**7T-0020**	1	LENS (DOME LAMP)	

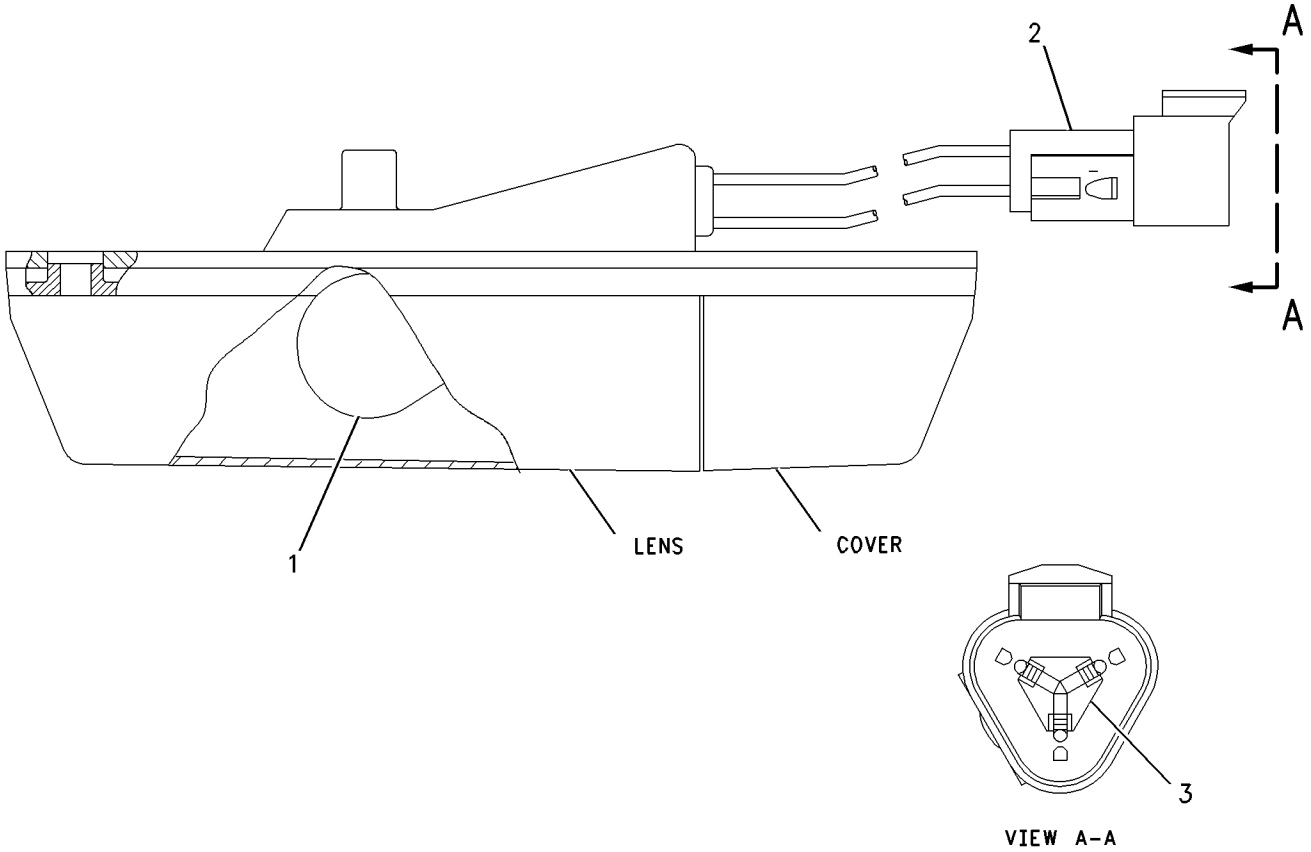

GRAPHIC #1 g00892785

153-2073 LAMP GP-FLOOD

S/N: CAF1-UP
24 VOLT. VERTICAL
PART OF 161-0769, 161-0778, 161-0779, 183-4069, 188-9324, 196-8532 LIGHTING GP-FLOOD
AN ATTACHMENT

SMCS-1434 **i01447088**

NOTE	REF NO	GRAPHIC REF	PART NUMBER	QTY	PART NAME 1 2 3 4 5 6 (PRODUCT LEVEL)	SEE PAGE
	1	1	**9X-3463**	1	LAMP (24 VOLT)(65 WATT) (FLOOD)	
	2	1	**158-0250**	1	BODY AS-LAMP	
	3	1	**158-0248**	1	LENS AS-FLOODLAMP	
	4	1	**158-0252**	1	BEZEL	
	5	1	**188-8849**	2	CLAMP	

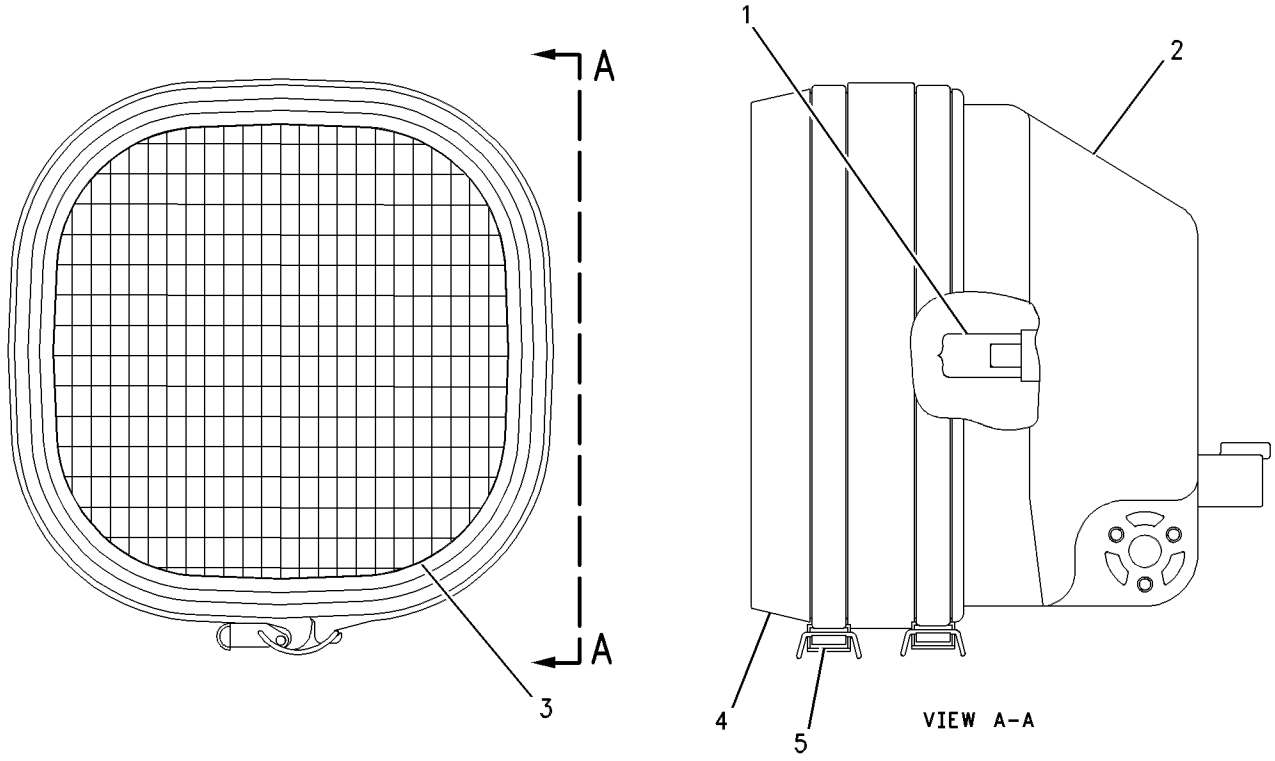

GRAPHIC #1 g00449633

161-3509 LAMP GP-HEAD–LOW BEAM

S/N: CAF1-UP
PART OF 161-1015, 161-1017 LIGHTING GP-FLOOD
AN ATTACHMENT

SMCS-1429 **i01755148**

NOTE	REF NO	GRAPHIC REF	PART NUMBER	QTY	PART NAME 1 2 3 4 5 6 (PRODUCT LEVEL)	SEE PAGE
	1	1	**9X-3463**	1	LAMP-HEAD (24 VOLT)(65 WATT) (LOW BEAM)	
	2	1	**158-0250**	1	BODY AS-LAMP	
	3	1	**162-2077**	1	LENS AS (HEADLAMP)(LOW BEAM)	
	4	1	**158-0252**	1	BEZEL	
	5	1	**188-8849**	2	CLAMP	

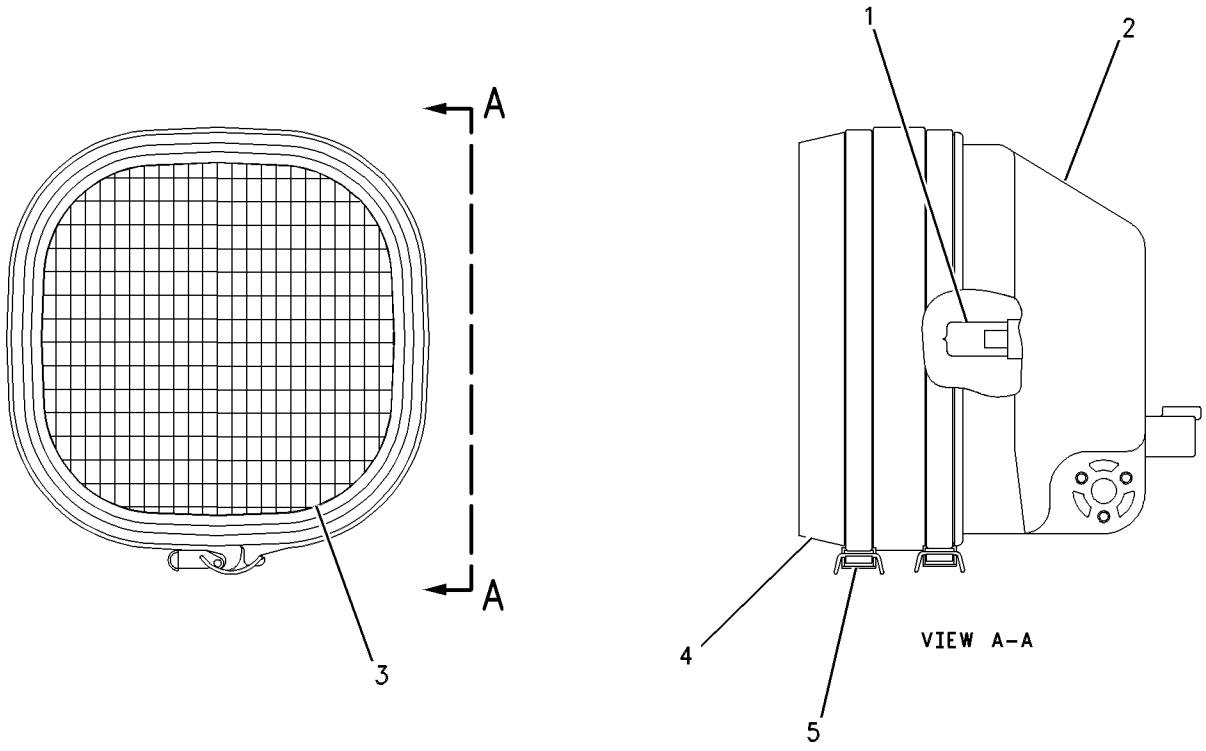

GRAPHIC #1 g00514339

180-1300 LAMP GP-HEAD—HIGH BEAM

S/N: CAF1-UP
PART OF 161-1015 LIGHTING GP-FLOOD
AN ATTACHMENT

SMCS-1429 **i01687557**

NOTE	REF NO	GRAPHIC REF	PART NUMBER	QTY	PART NAME 1 2 3 4 5 6 (PRODUCT LEVEL)	SEE PAGE
	1	1	**9X-3463**	1	LAMP-HEAD (24 VOLT) (HIGH BEAM)	
	2	1	**158-0250**	1	BODY AS-LAMP	
	3	1	**158-0249**	1	LENS AS (HIGH BEAM)	
	4	1	**158-0252**	1	BEZEL	
	5	1	**188-8849**	2	CLAMP	

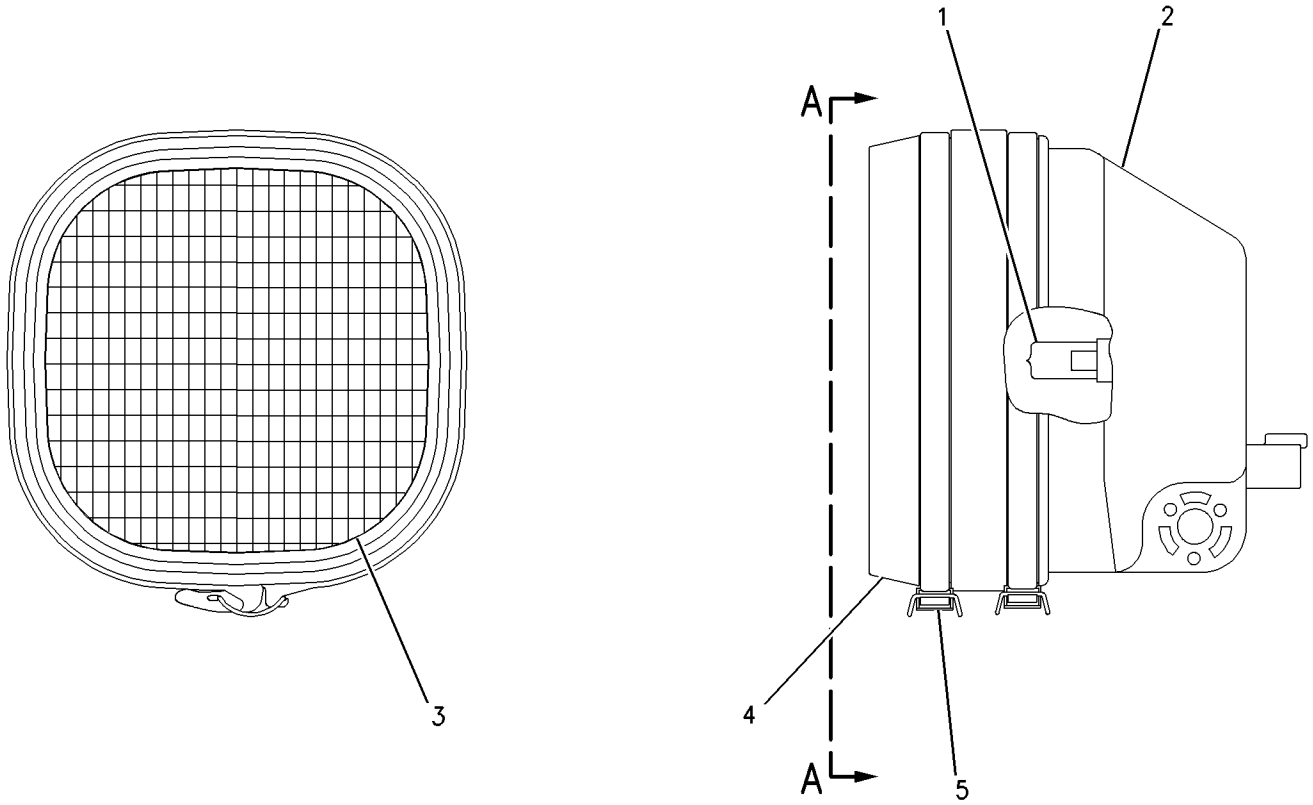

GRAPHIC #1 g00703486

203-7625 LAMP GP-HEAD–LH–EU

S/N: CAF1-UP
24 VOLT
PART OF 203-7620 LIGHTING GP-FLOOD
AN ATTACHMENT

SMCS-1429 **i01862078**

NOTE	REF NO	GRAPHIC REF	PART NUMBER	QTY	PART NAME 1 2 3 4 5 6 (PRODUCT LEVEL)	SEE PAGE
	1	1	**9X-4244**	4	SCREW	
	2	1	**100-3251**	2	SCREW-LENS	
	3	1	**9X-9865**	1	SEAL	
	4	1	**100-3249**	1	LENS AS (HEAD)	
	5	1	**9X-3465**	1	LAMP (24 VOLT) (HIGH/LOW BEAM)	
	6	1	**136-3848**	1	LENS AS (TURN)	
M	7	1	**8T-5005**	1	BOLT (M10X1.50X70MM)	
M	8	1	**8T-0389**	1	LOCKNUT (M10X1.5 THD)	
	9	1	**100-3253**	1	SPACER	
	10	1	**100-3254**	1	SPACER	
	11	1	**100-3255**	1	WASHER	
	12	1	**102-8805**	1	KIT-RECEPTACLE (6 PIN)	
					(INCLUDES RECEPTACLE AS & WEDGE)	
	13	1	**186-3735**	5	PIN-CONNECTOR	
	14	1	**3E-3383**	1	WEDGE-RECEPTACLE LOCK	
	15	1	**8T-8737**	1	PLUG-SEAL	
	16	1	**100-3245**	1	LAMP (24 VOLT) (POSITION)	
	16A	1	**100-3245**	1	LAMP (24 VOLT) (TURN)	
	17	1	**9X-4493**	1	LAMP (24 VOLT/21 WATT) (TURN)	
	18	1	**100-3250**	1	LENS (AMBER) (TURN)	
	19	1	**136-3845**	1	BODY AS-LAMP	

M-METRIC PART

203-7625 LAMP GP-HEAD *(contd.)* **i01862078**

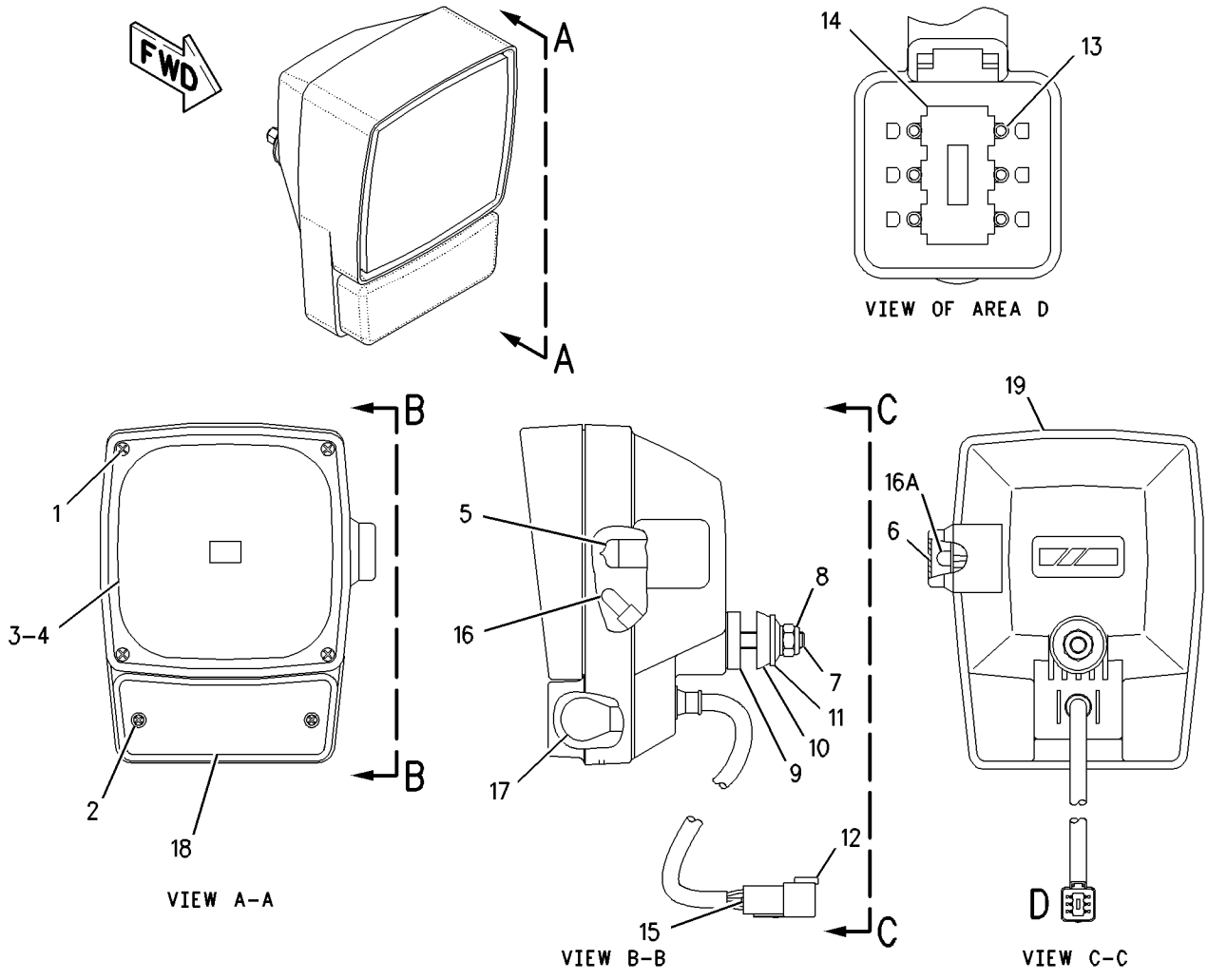

GRAPHIC #1

g00892357

203-7626 LAMP GP-HEAD–RH–EU

S/N: CAF1-UP
24 VOLT
PART OF 203-7620 LIGHTING GP-FLOOD
AN ATTACHMENT

SMCS-1429 **i01862084**

NOTE	REF NO	GRAPHIC REF	PART NUMBER	QTY	PART NAME 1 2 3 4 5 6 (PRODUCT LEVEL)	SEE PAGE
	1	1	**9X-4244**	4	SCREW	
	2	1	**100-3251**	2	SCREW-LENS	
	3	1	**9X-9865**	1	SEAL	
	4	1	**100-3249**	1	LENS AS (HEAD)	
	5	1	**9X-3465**	1	LAMP (24 VOLT) (HIGH/LOW BEAM)	
	6	1	**136-3848**	1	LENS AS (TURN)	
M	7	1	**8T-5005**	1	BOLT (M10X1.50X70MM)	
M	8	1	**8T-0389**	1	LOCKNUT (M10X1.5 THD)	
	9	1	**100-3253**	1	SPACER	
	10	1	**100-3254**	1	SPACER	
	11	1	**100-3255**	1	WASHER	
	12	1	**102-8805**	1	KIT-RECEPTACLE (6 PIN)	
					(INCLUDES RECEPTACLE AS & WEDGE)	
	13	1	**186-3735**	5	PIN-CONNECTOR	
	14	1	**3E-3383**	1	WEDGE-RECEPTACLE LOCK	
	15	1	**8T-8737**	1	PLUG-SEAL	
	16	1	**100-3245**	1	LAMP (24 VOLT) (POSITION)	
	16A	1	**100-3245**	1	LAMP (24 VOLT) (TURN)	
	17	1	**9X-4493**	1	LAMP (24 VOLT/21 WATT) (TURN)	
	18	1	**100-3250**	1	LENS (AMBER) (TURN)	
	19	1	**136-3846**	1	BODY AS-LAMP	

M-METRIC PART

203-7626 LAMP GP-HEAD ***(contd.)*** **i01862084**

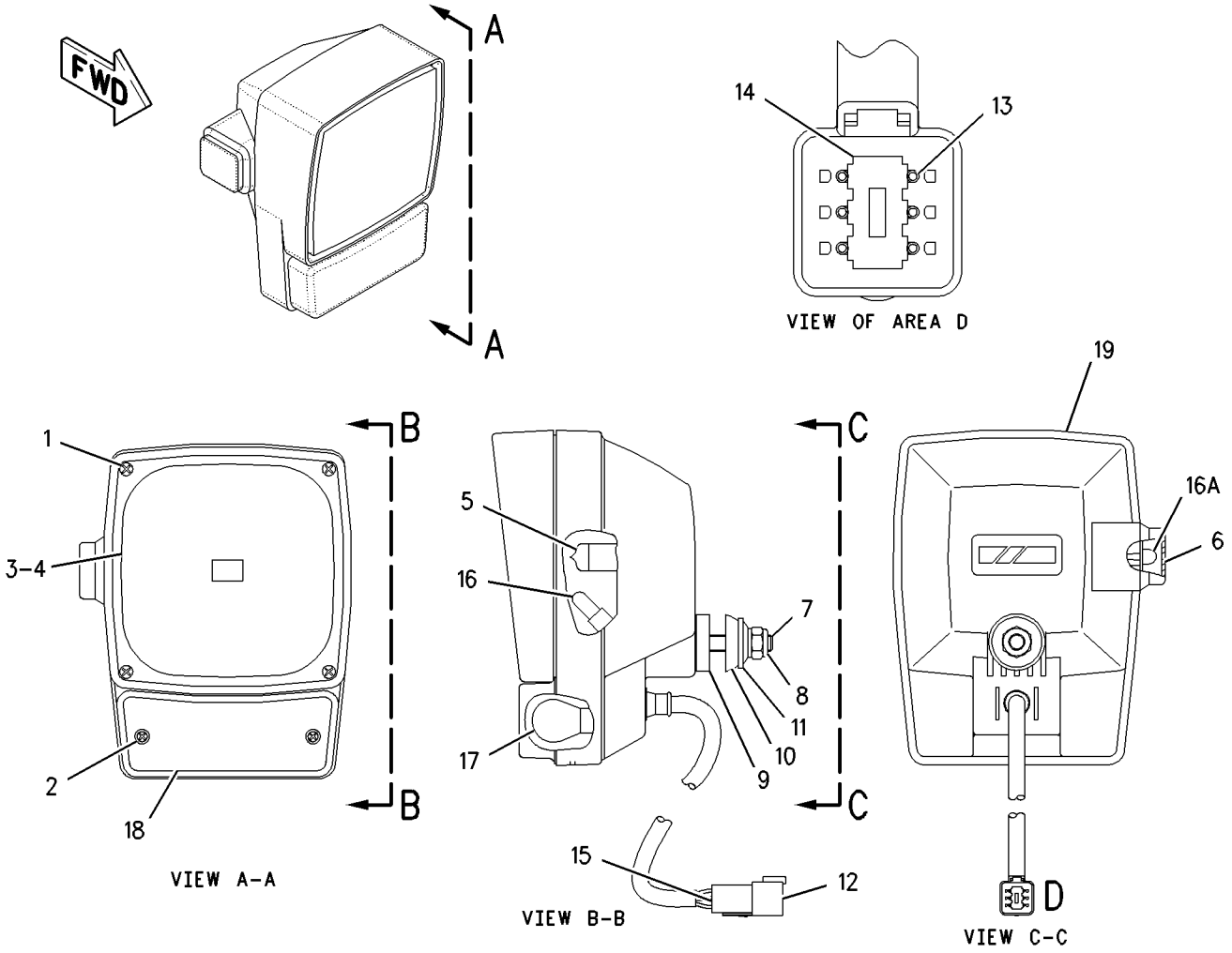

GRAPHIC #1

g00892432

105-4849 LAMP GP-HEAD & SIGNAL–LH

S/N: CAF1-UP
PART OF 159-5865 WIRING GP-FRONT
AN ATTACHMENT

SMCS-1429, 1430 **i01862089**

NOTE	REF NO	GRAPHIC REF	PART NUMBER	QTY	PART NAME 1 2 3 4 5 6 (PRODUCT LEVEL)	SEE PAGE
	1	1	**9X-4244**	4	SCREW	
	2	1	**100-3251**	2	SCREW-LENS	
	3	1	**9X-9865**	1	SEAL	
	4	1	**100-3248**	1	LENS AS (HEADLAMP)	
	5	1	**9X-3465**	1	LAMP (24 VOLT)	
	6	1	**136-3848**	1	LENS AS (SIGNAL)	
M	7	1	**8T-5005**	1	BOLT (M10X1.50X70MM)	
M	8	1	**8T-0389**	1	LOCKNUT (M10X1.5 THD)	
	9	1	**100-3253**	1	SPACER	
	10	1	**100-3254**	1	SPACER	
	11	1	**100-3255**	1	WASHER	
	13	1	**8T-8729**	5	PIN-CONNECTOR	
	14	1	**3E-3383**	1	WEDGE-RECEPTACLE LOCK	
	15	1	**8T-8737**	1	PLUG-SEAL	
	16	1	**100-3245**	2	LAMP (24 VOLT)	
	17	1	**9X-4493**	1	LAMP (24 VOLT/21 WATT) (SIGNAL)	
	18	1	**100-3250**	1	LENS (AMBER) (SIGNAL)	
	19	1	**136-3845**	1	BODY AS-LAMP	
	20	1	**102-8805**	1	KIT-RECEPTACLE (6 PIN)	
					(INCLUDES RECEPTACLE AS & WEDGE)	

M-METRIC PART

105-4849 LAMP GP-HEAD & SIGNAL *(contd.)* **i01862089**

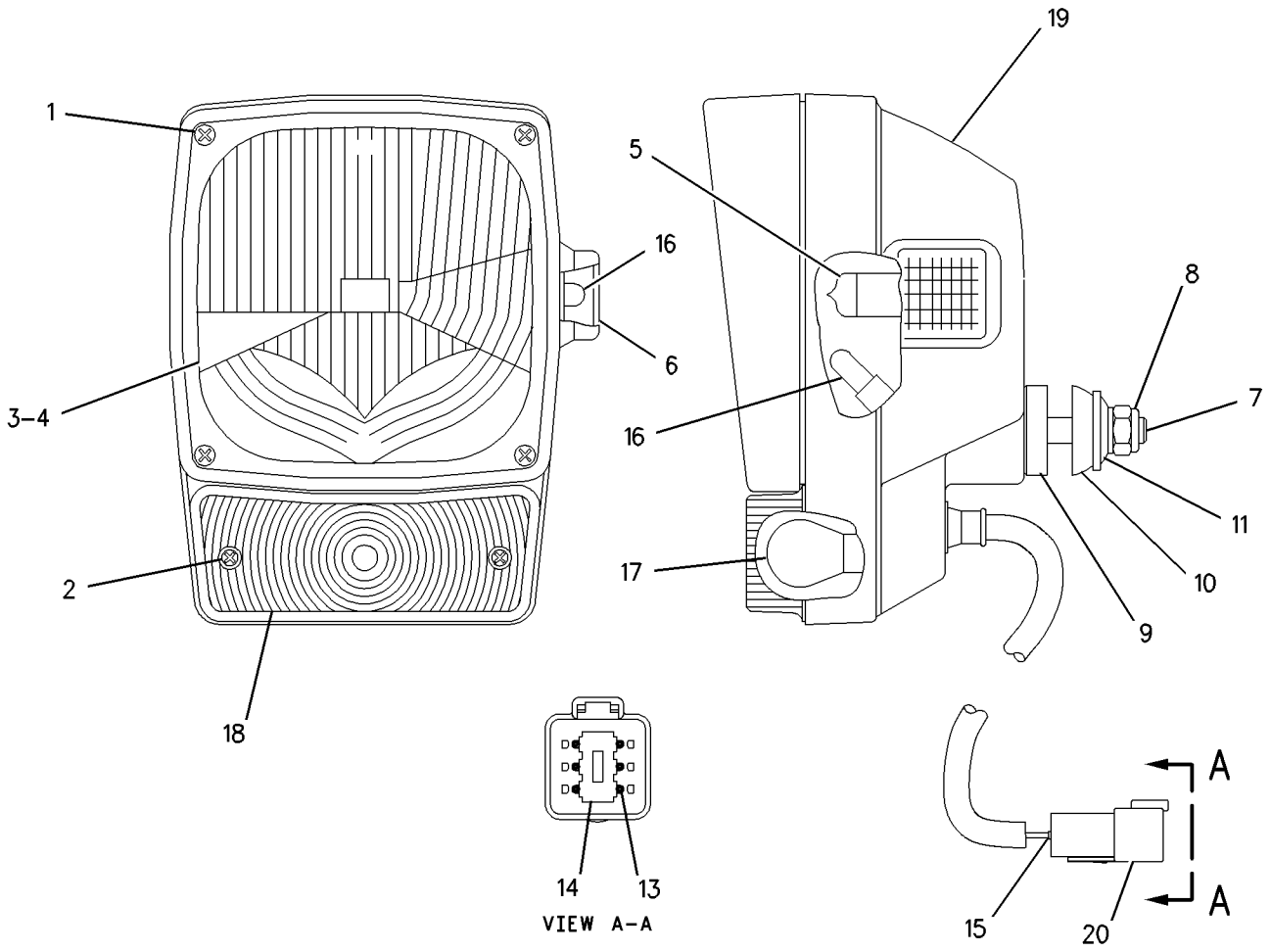

GRAPHIC #1 g00661265

105-4850 LAMP GP-HEAD & SIGNAL—RH

S/N: CAF1-UP
PART OF 159-5865 WIRING GP-FRONT
AN ATTACHMENT

SMCS-1429, 1430 **i01862093**

NOTE	REF NO	GRAPHIC REF	PART NUMBER	QTY	PART NAME 1 2 3 4 5 6 (PRODUCT LEVEL)	SEE PAGE
	1	1	**9X-4244**	4	SCREW	
	2	1	**100-3251**	2	SCREW-LENS	
	3	1	**9X-9865**	1	SEAL	
	4	1	**100-3248**	1	LENS AS (HEADLAMP)	
	5	1	**9X-3465**	1	LAMP (24 VOLT) (HEAD)	
	6	1	**136-3848**	1	LENS AS (AMBER)(SIGNAL)	
M	7	1	**8T-5005**	1	BOLT (M10X1.50X70MM)	
M	8	1	**8T-0389**	1	LOCKNUT (M10X1.5 THD)	
	9	1	**100-3253**	1	SPACER	
	10	1	**100-3254**	1	SPACER	
	11	1	**100-3255**	1	WASHER	
	12	1	**102-8805**	1	KIT-RECEPTACLE (6 PIN)	
					(INCLUDES RECEPTACLE AS & WEDGE)	
	13	1	**186-3735**	5	PIN-CONNECTOR	
	14	1	**3E-3383**	1	WEDGE-RECEPTACLE LOCK	
	15	1	**8T-8737**	1	PLUG-SEAL	
	16	1	**100-3245**	2	LAMP (24 VOLT) (SIGNAL)	
	17	1	**9X-4493**	1	LAMP (24 VOLT/21 WATT) (SIGNAL)	
	18	1	**100-3250**	1	LENS (AMBER) (SIGNAL)	
	19	1	**136-3846**	1	BODY AS-LAMP	

M-METRIC PART

105-4850 LAMP GP-HEAD & SIGNAL *(contd.)* **i01862093**

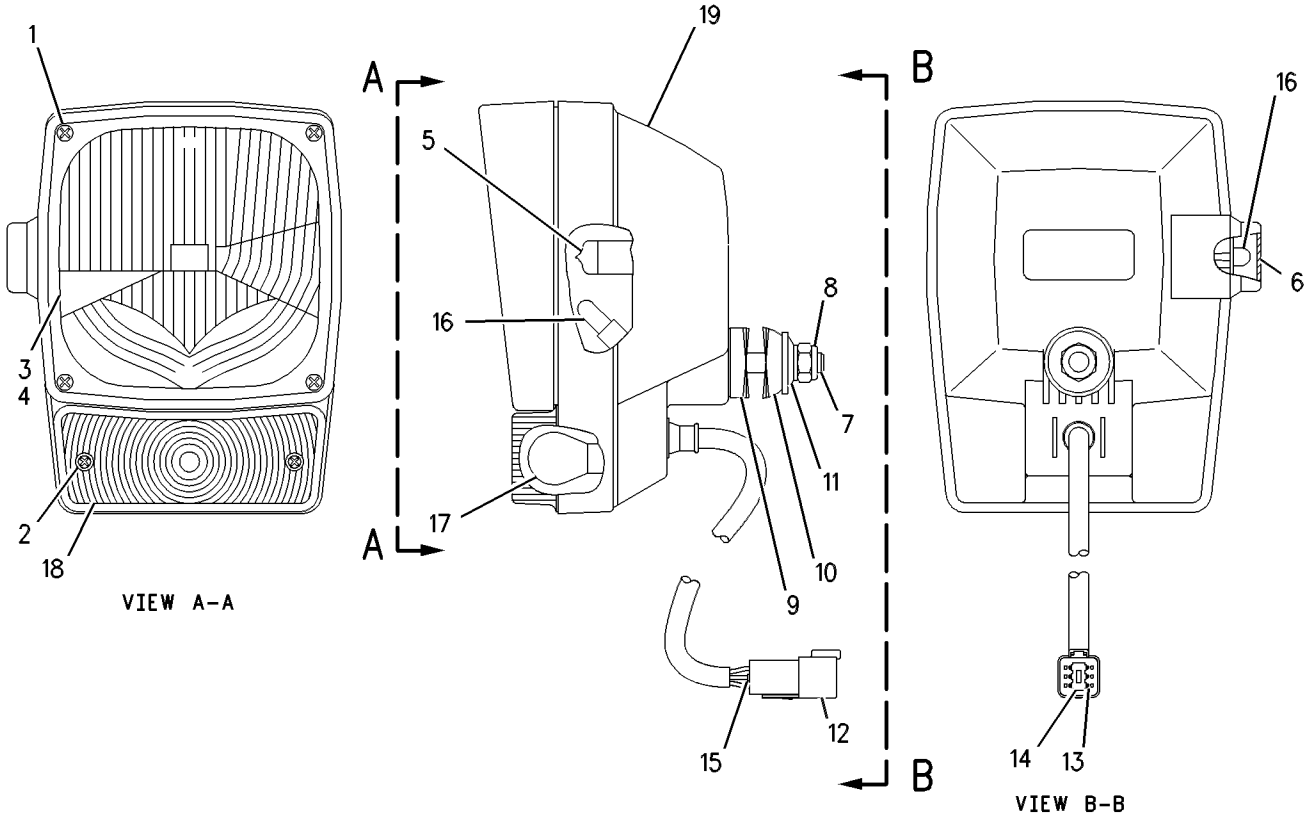

GRAPHIC #1 g00610742

212-3924 LAMP GP-MARKER

S/N: CAF1-UP
PART OF 211-1520 LIGHTING GP-ROADING
AN ATTACHMENT

SMCS-1429 **i01745446**

NOTE	REF NO	GRAPHIC REF	PART NUMBER	QTY	PART NAME 1 2 3 4 5 6 (PRODUCT LEVEL)	SEE PAGE
	1	1	**102-8802**	1	KIT-RECEPTACLE (2 PIN)	
					(INCLUDES RECEPTACLE AS. & WEDGE)	
	2	1	**3E-3365**	1	WEDGE-RECEPTACLE LOCK (2 PIN)	
	3	1	**186-3735**	2	PIN-CONNECTOR	
	4	1	**9X-4494**	1	LAMP (24 VOLT) (CAB POSITION)	
M	5	1	**104-3601**	2	SCREW-MACHINE (M5X0.8X25MM)	
	6	1	**8H-3481**	2	LOCKWASHER	

M-METRIC PART

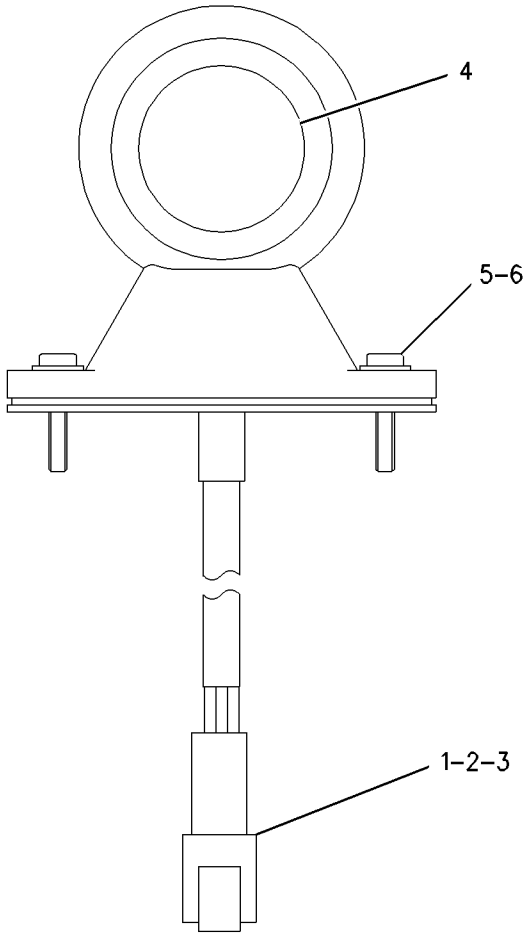

GRAPHIC #1 g00939448

117-8319 LAMP GP-REGISTRATION PLATE–EU

S/N: CAF1-UP
PART OF 211-1519 MOUNTING GP-REGISTRATION
AN ATTACHMENT

SMCS-1429 **i01683490**

NOTE	REF NO	GRAPHIC REF	PART NUMBER	QTY	PART NAME 1 2 3 4 5 6 (PRODUCT LEVEL)	SEE PAGE
	1	1	**8T-8729**	2	PIN-CONNECTOR	
	2	1	**102-8802**	1	KIT-RECEPTACLE (2 PIN) (REGISTRATION PLATE LAMP)	
	3	1	**5C-9583**	1	LAMP (REGISTRATION PLATE)	
	4	1	**134-6751**	1	LENS (REGISTRATION PLATE)	
M	5	1	**5C-2874**	2	NUT (M5X.8 THD)	
	6	1	**8F-1434**	2	LOCKWASHER	
	7	1	**134-6749**	2	SCREW-LENS	

M-METRIC PART

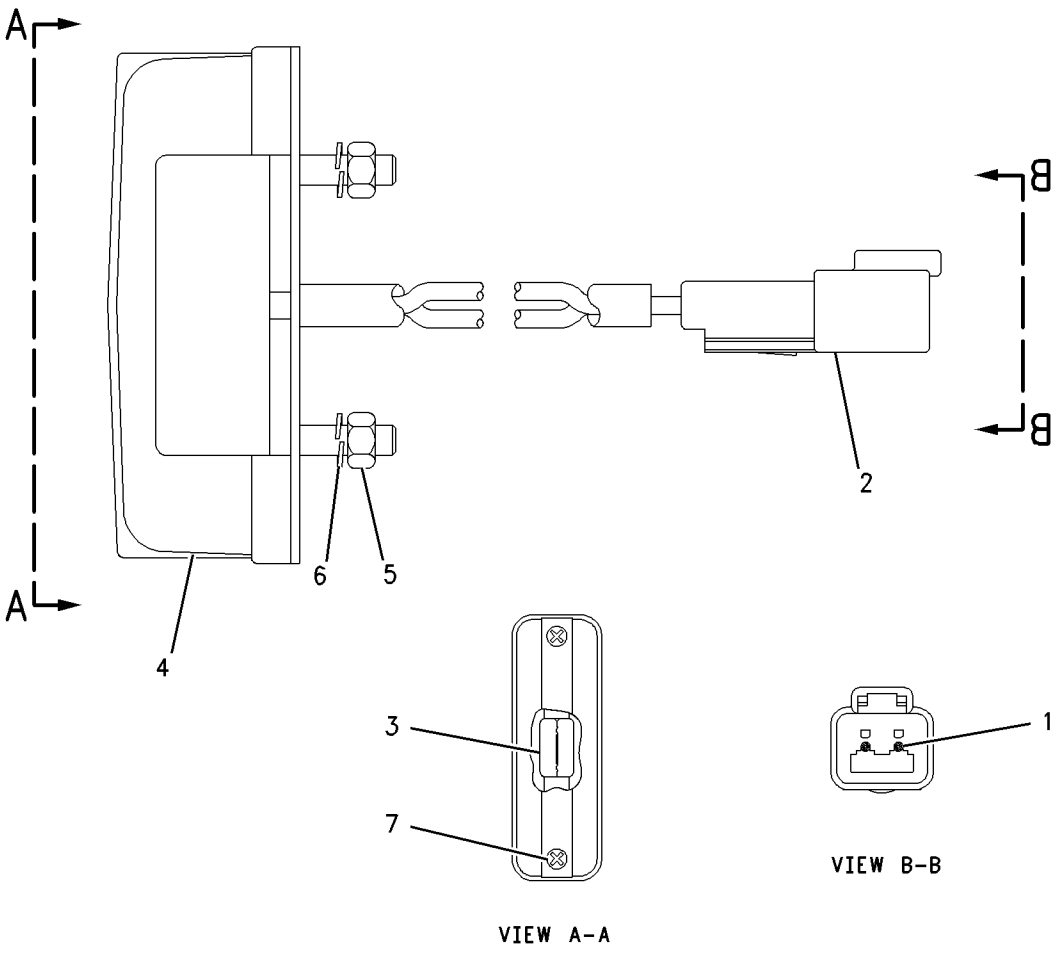

GRAPHIC #1 g00711234

135-0426 LAMP GP-SIGNAL–STOP/TAIL

S/N: CAF1-UP
24 VOLT
PART OF 184-1299 WIRING GP-REAR

SMCS-1430 **i01638052**

NOTE	REF NO	GRAPHIC REF	PART NUMBER	QTY	PART NAME 1 2 3 4 5 6 (PRODUCT LEVEL)	SEE PAGE
	1	1	**102-8803**	1	KIT-RECEPTACLE (3 PIN) (STOP/TAIL LAMP)	
	2	1	**3E-3371**	1	WEDGE-RECEPTACLE LOCK (3 PIN)	
	3	1	**186-3735**	3	PIN-CONNECTOR	

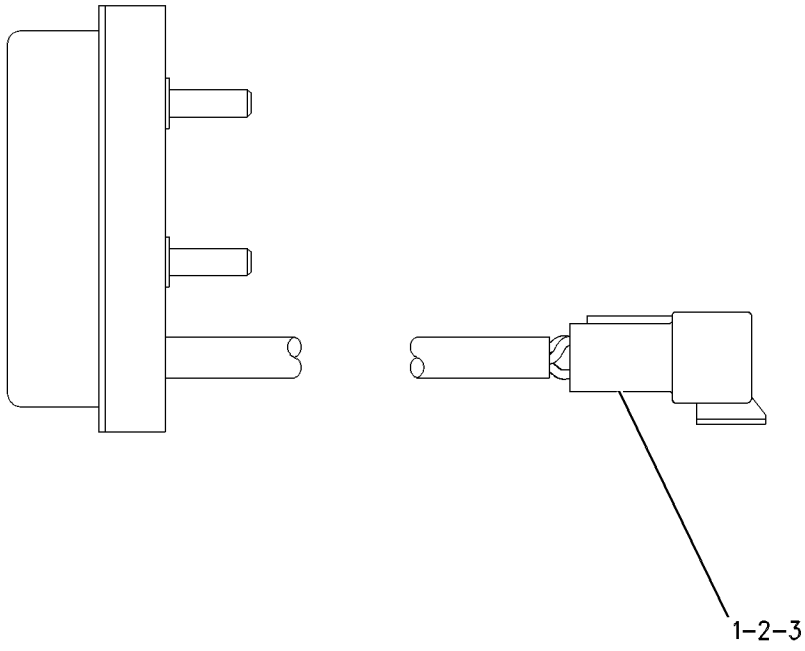

GRAPHIC #1 g00305543

135-0427 LAMP GP-SIGNAL–TURN/PARK

S/N: CAF1-UP

PART OF 161-1015 LIGHTING GP-FLOOD, 188-9331 LIGHTING GP-SIGNAL AN ATTACHMENT

SMCS-1430 **i01687561**

NOTE	REF NO	GRAPHIC REF	PART NUMBER	QTY	PART NAME 1 2 3 4 5 6 (PRODUCT LEVEL)	SEE PAGE
	1	1	**102-8803**	1	KIT-RECEPTACLE (3 PIN)	
					(INCLUDES RECEPTACLE AS & WEDGE)	
	2	1	**3E-3371**	1	WEDGE-RECEPTACLE LOCK (3 PIN)	
	3	1	**186-3735**	3	PIN-CONNECTOR	

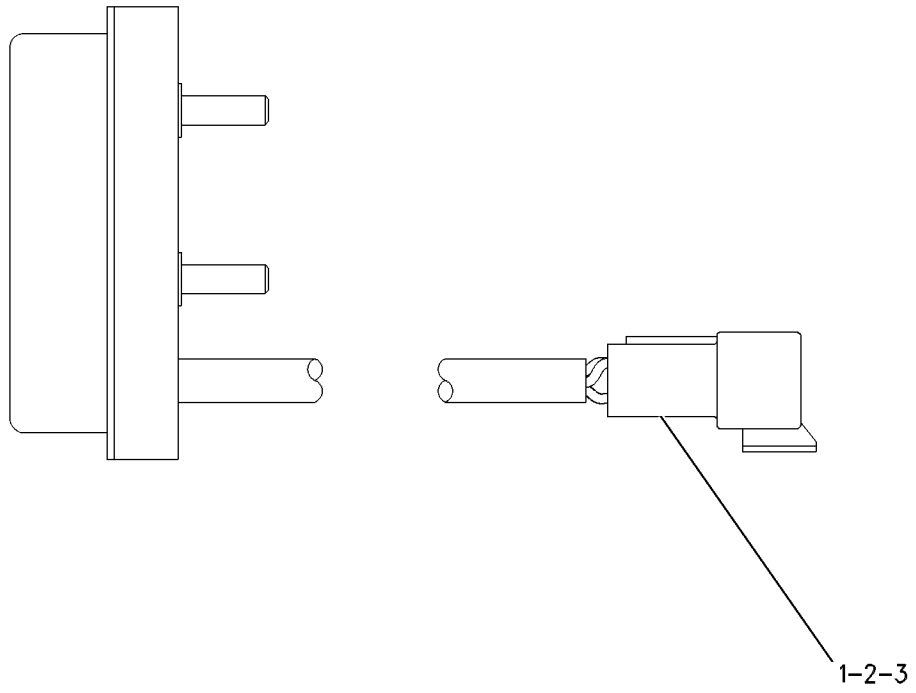

GRAPHIC #1 g00305583

128-6983 LAMP GP-WARNING BEACON

S/N: CAF1-UP
24 VOLT
PART OF 161-0773, 161-0774 LIGHTING GP-WARNING
AN ATTACHMENT

SMCS-1431 **i01455902**

NOTE	REF NO	GRAPHIC REF	PART NUMBER	QTY	PART NAME 1 2 3 4 5 6 (PRODUCT LEVEL)	SEE PAGE
	1	1	**9X-8121**	1	LENS-AMBER (WARNING BEACON)	
	2	1	**9X-7849**	1	LAMP (WARNING BEACON)	
	3	1	**9X-8139**	1	BELT-DRIVE (WARNING BEACON)	
M	4	1	**6V-8225**	3	NUT (M6X1 THD)	
	5	1	**5P-0537**	3	WASHER-HARD (7.2X14.5X2MM THK)	
J	6	1	**102-8802**	1	KIT-RECEPTACLE (2 PIN)	
					(INCLUDES RECEPTACLE AS & PART MARKED J)	
J	7	1	**3E-3365**	1	WEDGE-RECEPTACLE LOCK (2 PIN)	
	8	1	**8T-8729**	2	PIN-CONNECTOR	

J-KIT MARKED J INCLUDES PART MARKED J
M-METRIC PART

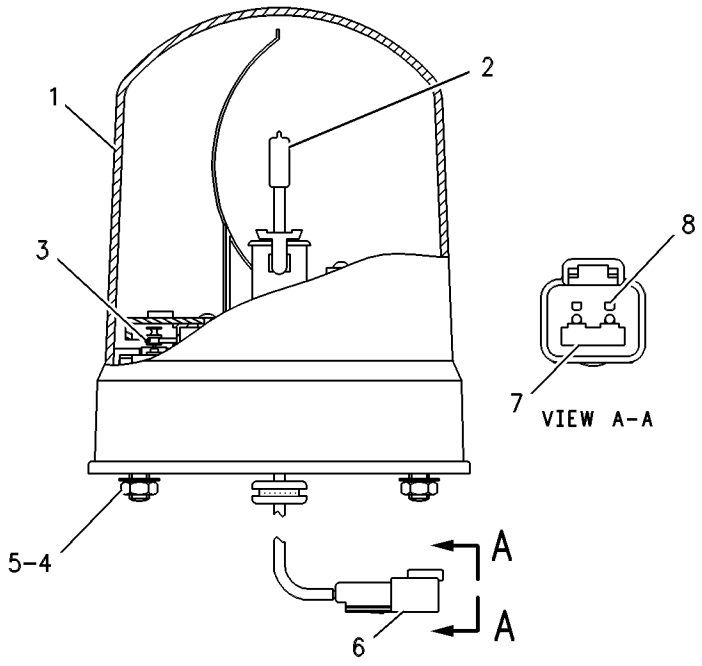

GRAPHIC #1 g00109215

161-0768 LIGHTING AR-FLOOD

S/N: CAF1-UP
AN ATTACHMENT

SMCS-1434 **i01861305**

NOTE	PART NUMBER	QTY	PART NAME 1 2 3 4 5 6 (PRODUCT LEVEL)	SEE PAGE
Y	*161-0769*	1	LIGHTING GP-FLOOD (CAB)	176
Y	*161-0779*	1	LIGHTING GP-FLOOD (BLADE)	181
Y	*188-9324*	1	LIGHTING GP-FLOOD (REAR)	192

Y-SEPARATE ILLUSTRATION

<END>

188-9321 LIGHTING AR-FLOOD–FRONT & REAR

S/N: CAF1-UP
AN ATTACHMENT

SMCS-1434 **i01861307**

NOTE	PART NUMBER	QTY	PART NAME 1 2 3 4 5 6 (PRODUCT LEVEL)	SEE PAGE
Y	*161-0778*	1	LIGHTING GP-FLOOD (BLADE)	180
Y	*188-9324*	1	LIGHTING GP-FLOOD (REAR)	192

Y-SEPARATE ILLUSTRATION

<END>

188-9328 LIGHTING AR-FLOOD–BOLSTER–TURN

S/N: CAF1-UP
AN ATTACHMENT

SMCS-1434 **i01861309**

NOTE	PART NUMBER	QTY	PART NAME 1 2 3 4 5 6 (PRODUCT LEVEL)	SEE PAGE
Y	*201-1038*	1	CIRCUIT BREAKER GP (SINGLE)	139
Y	*161-1015*	1	LIGHTING GP-FLOOD (DOUBLE BOLSTER)	182
Y	*188-9331*	1	LIGHTING GP-SIGNAL (TURN)	197

Y-SEPARATE ILLUSTRATION

<END>

203-6536 LIGHTING AR-FLOOD–MOLDBOARD

S/N: CAF1-UP
AN ATTACHMENT

SMCS-1434 **i01683936**

NOTE	PART NUMBER	QTY	PART NAME 1 2 3 4 5 6 (PRODUCT LEVEL)	SEE PAGE
Y	*196-8532*	1	LIGHTING GP-FLOOD (MOLDBOARD)	194
Y	*203-6551*	1	WIRING GP-CAB (MOLDBOARD)	236

Y-SEPARATE ILLUSTRATION

<END>

204-6109 LIGHTING AR-FLOOD—MOLDBOARD

S/N: CAF1-UP
AN ATTACHMENT

SMCS-1434 **i01684024**

NOTE	PART NUMBER	QTY	PART NAME 1 2 3 4 5 6 (PRODUCT LEVEL)	SEE PAGE
Y	*196-8532*	1	LIGHTING GP-FLOOD (MOLDBOARD)	194
Y	*204-6127*	1	WIRING GP-CAB (MOLDBOARD)	238
Y-SEPARATE ILLUSTRATION				

<END>

161-0770 LIGHTING AR-FLOOD & SIGNAL

S/N: CAF1-UP
AN ATTACHMENT

SMCS-1430, 1434 **i01861314**

NOTE	PART NUMBER	QTY	PART NAME 1 2 3 4 5 6 (PRODUCT LEVEL)	SEE PAGE
Y	*201-1038*	1	CIRCUIT BREAKER GP (SINGLE)	139
Y	*161-0772*	1	LIGHTING GP-FLOOD (FRONT)(TURN)	178
Y	*188-9331*	1	LIGHTING GP-SIGNAL (REAR)	197
Y	*161-1018*	1	SWITCH GP-LIGHT (TURN)	224
Y-SEPARATE ILLUSTRATION				

<END>

161-0771 LIGHTING AR-FLOOD & SIGNAL—HEAD—TURN—BOLSTER

S/N: CAF1-UP
AN ATTACHMENT

SMCS-1430, 1434 **i01861316**

NOTE	PART NUMBER	QTY	PART NAME 1 2 3 4 5 6 (PRODUCT LEVEL)	SEE PAGE
Y	*201-1036*	1	CIRCUIT BREAKER GP (DUEL)	138
Y	*161-0772*	1	LIGHTING GP-FLOOD (FRONT)	178
Y	*161-1017*	1	LIGHTING GP-FLOOD (BOLSTER)	186
Y	*188-9331*	1	LIGHTING GP-SIGNAL (REAR)	197
Y-SEPARATE ILLUSTRATION				

<END>

179-1548 LIGHTING AR-FLOOD & SIGNAL—EXTENDED BOLSTER

S/N: CAF1-UP
AN ATTACHMENT

SMCS-1430, 1434 **i01861330**

NOTE	PART NUMBER	QTY	PART NAME 1 2 3 4 5 6 (PRODUCT LEVEL)	SEE PAGE
Y	*201-1036*	1	CIRCUIT BREAKER GP (DUEL)	138
Y	*161-0772*	1	LIGHTING GP-FLOOD (TURN)	178
Y	*183-4069*	1	LIGHTING GP-FLOOD (BOLSTER AND TURN)(ELEVATED)	188
Y	*188-9331*	1	LIGHTING GP-SIGNAL (TURN)	197
Y-SEPARATE ILLUSTRATION				

<END>

MEMORANDA

ELECTRICAL AND STARTING SYSTEM

171-7096 LIGHTING GP-BACKUP

S/N: CAF1-UP
AN ATTACHMENT

SMCS-1408 **i01861834**

NOTE	REF NO	GRAPHIC REF	PART NUMBER	QTY	PART NAME 1 2 3 4 5 6 (PRODUCT LEVEL)	SEE PAGE
	1	1	**3E-0109**	5	PLUG-ROCKER SWITCH	
	2	1	**3E-5239**	1	RELAY AS (24 VOLT) (AUXILIARY BACKUP LAMP)	
	3	1	**3S-2093**	5	STRAP-CABLE	
	4	1	**9W-1442**	1	FUSE (10 AMP) (BACKUP LAMP)	
	5	1	**145-3350**	1	PLATE	
	6	1	**153-2147**	1	PLATE	
	7	1	**168-8243**	1	HARNESS AS-PANEL	
		1	**102-8802**	1	KIT-RECEPTACLE (2 PIN)	
		1	**102-8804**	2	KIT-RECEPTACLE (4 PIN)	
		1	**102-8806**	1	KIT-RECEPTACLE (8 PIN)	
		1	**102-8801**	1	KIT-RECEPTACLE (12 PIN)	
					(INCLUDES RECEPTACLE AS & WEDGE)	
		1	**155-2255**	1	KIT-CONNECTING PLUG (12 PIN)	
		1	**155-2265**	4	KIT-CONNECTING PLUG (8 PIN)	
		1	**155-2270**	1	KIT-CONNECTING PLUG (2 PIN)	
		1	**155-2271**	1	KIT-CONNECTING PLUG (4 PIN)	
					(INCLUDES PLUG AS & WEDGE)	
	8	1	**172-6556**	1	PANEL (UPPER SWITCH)	
	9	1	**178-6267**	1	HARNESS AS-ALARM	
		1	**102-8804**	1	KIT-RECEPTACLE (4 PIN)	
					(INCLUDES RECEPTACLE AS & WEDGE)	
		1	**9X-1054**	1	PLUG AS-CONNECTOR (4 PIN)	
	10	1	**188-3862**	1	BRACKET AS	
	11	1	**161-1418**	1	SWITCH AS (AUXILLARY BACKUP)	
		1	**3E-8825**	2	LAMP (24 VOLT) (AUXILIARY BACKUP LAMP)	
		1	**161-1417**	1	ACTUATOR-ROCKER	
M	12	1	**9X-2043**	7	SCREW-TRUSS HEAD (M6X1X14MM)	
	13	1	**9X-8256**	1	WASHER (6.6X12X2MM THK)	

M-METRIC PART

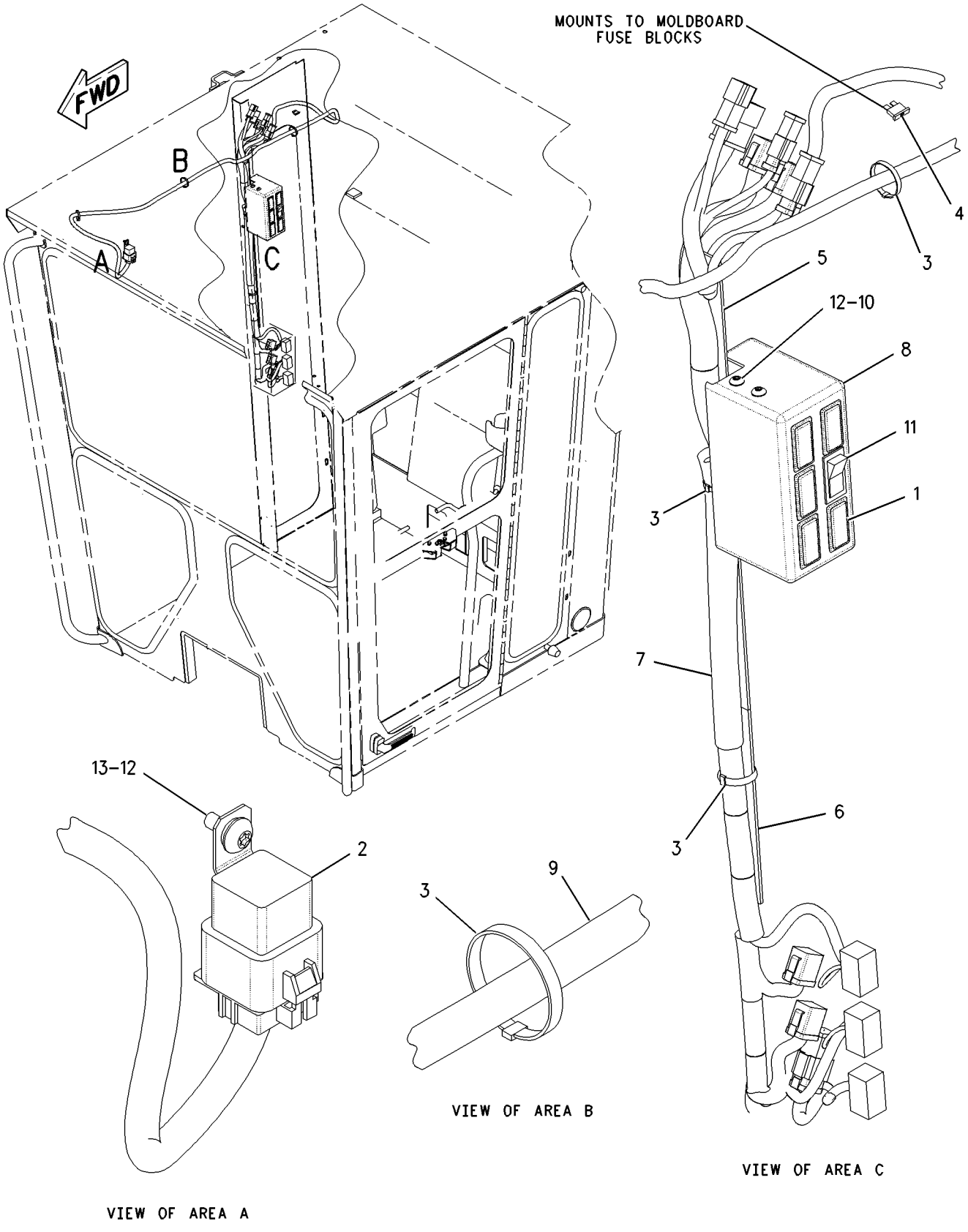

GRAPHIC #1 g00846331

197-1744 LIGHTING GP-BACKUP–EU

S/N: CAF1-UP

AN ATTACHMENT

SMCS-1408 **i01683410**

NOTE	REF NO	GRAPHIC REF	PART NUMBER	QTY	PART NAME 1 2 3 4 5 6 (PRODUCT LEVEL)	SEE PAGE
	1	1	**3E-0109**	5	PLUG-ROCKER SWITCH	
	2	1	**3E-5239**	1	RELAY AS (24 VOLT)	
	3	1	**3S-2093**	5	STRAP-CABLE	
	4	1	**9W-1442**	1	FUSE (10 AMP) (AUXILARY BACK-UP ALARM)	
	5	1	**145-3350**	1	PLATE	
	6	1	**153-2147**	1	PLATE	
	7	1	**172-6556**	1	PANEL	
	8	1	**178-6267**	1	HARNESS AS-ALARM	
		1	**9X-1054**	1	PLUG AS-CONNECTOR (4 PIN)	
		1	**102-8804**	1	KIT-RECEPTACLE (4 PIN)	
	9	1	**188-3862**	1	BRACKET AS	
	10	1	**196-8557**	1	HARNESS AS-CAB	
		1	**155-2255**	1	KIT-CONNECTING PLUG (12 PIN)	
		1	**155-2265**	4	KIT-CONNECTING PLUG (8 PIN)	
		1	**155-2270**	1	KIT-CONNECTING PLUG (2 PIN) (SIDE FLOOD LAMP)	
		1	**155-2271**	1	KIT-CONNECTING PLUG (4 PIN)	
		1	**102-8802**	1	KIT-RECEPTACLE (2 PIN)	
		1	**102-8804**	2	KIT-RECEPTACLE (4 PIN)	
		1	**102-8806**	1	KIT-RECEPTACLE (8 PIN)	
		1	**102-8801**	1	KIT-RECEPTACLE (12 PIN)	
	11	1	**3E-8770**	1	SWITCH AS (AUXILARY BACK-UP ALARM)	
		1	**141-2325**	1	ACTUATOR-ROCKER	
		1	**3E-8825**	1	LAMP (24 VOLT) (AUXILARY BACK-UP ALARM)	
M	12	1	**9X-2043**	7	SCREW-TRUSS HEAD (M6X1X14MM)	
	13	1	**9X-8256**	1	WASHER (6.6X12X2MM THK)	

M-METRIC PART

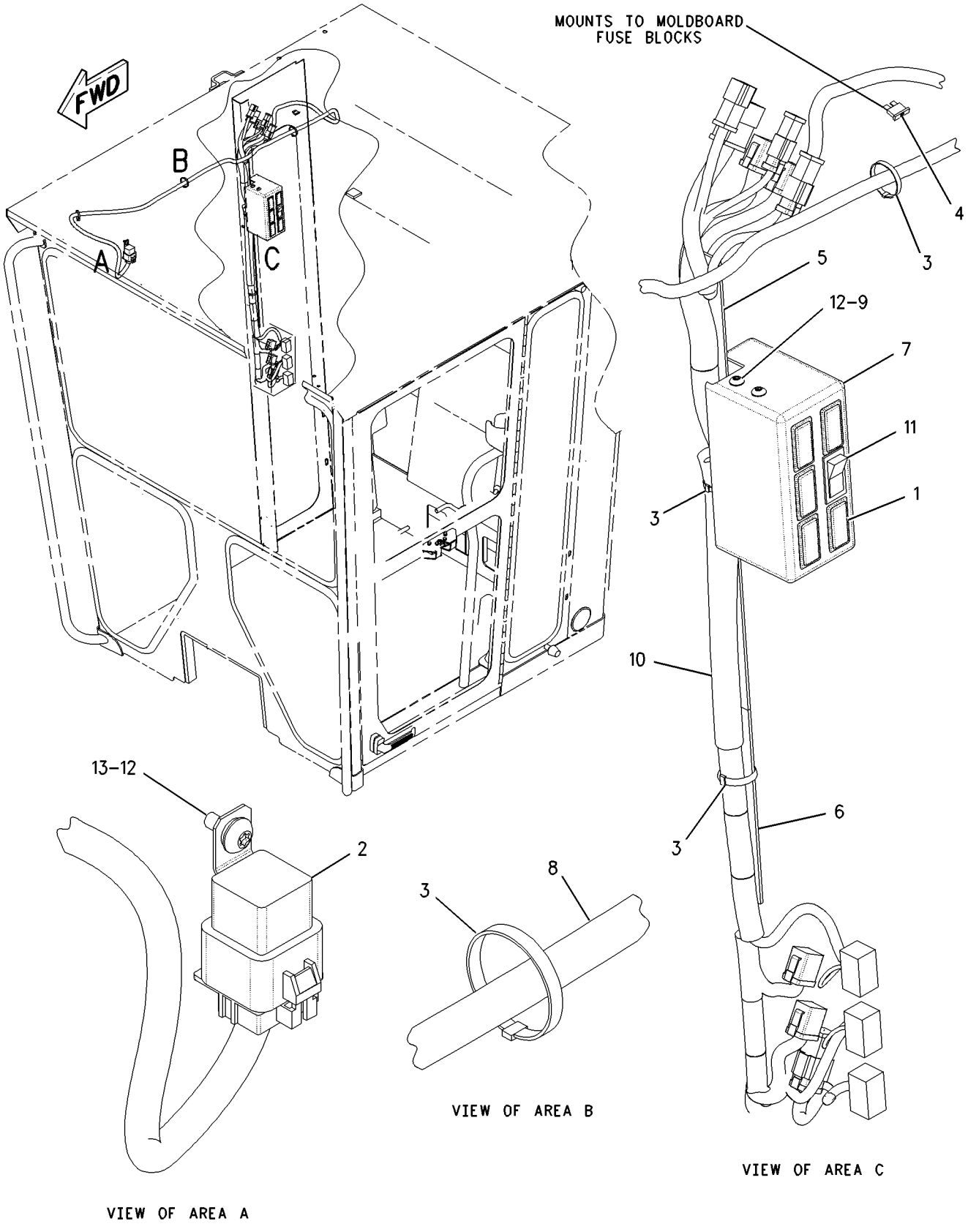

GRAPHIC #1 g00849513

161-0769 LIGHTING GP-FLOOD–CAB

S/N: CAF1-UP
PART OF 161-0768 LIGHTING AR-FLOOD
AN ATTACHMENT

SMCS-1434 **i01683223**

NOTE	REF NO	GRAPHIC REF	PART NUMBER	QTY	PART NAME 1 2 3 4 5 6 (PRODUCT LEVEL)	SEE PAGE
	1	1	**184-0903**	4	BRACKET AS	
					(EACH INCLUDES)	
M		1	**8T-3490**	1	NUT-WELD (M10X1.5 THD)	
Y	2	1	**153-2073**	4	LAMP GP-FLOOD (24 VOLT) (VERTICAL)	153
	3	1	**3P-9554**	2	GROMMET	
M	4	1	**5C-7261**	4	NUT (M8X1.25 THD)	
	5	1	**8T-4121**	4	WASHER-HARD (11X21X2.5MM THK)	
M	6	1	**8T-4137**	4	BOLT (M10X1.5X20MM)	
	7	1	**8T-4224**	4	WASHER-HARD (8.8X16X2MM THK)	
M	8	1	**8T-6869**	4	BOLT (M8X1.25X60MM)	

M-METRIC PART
Y-SEPARATE ILLUSTRATION

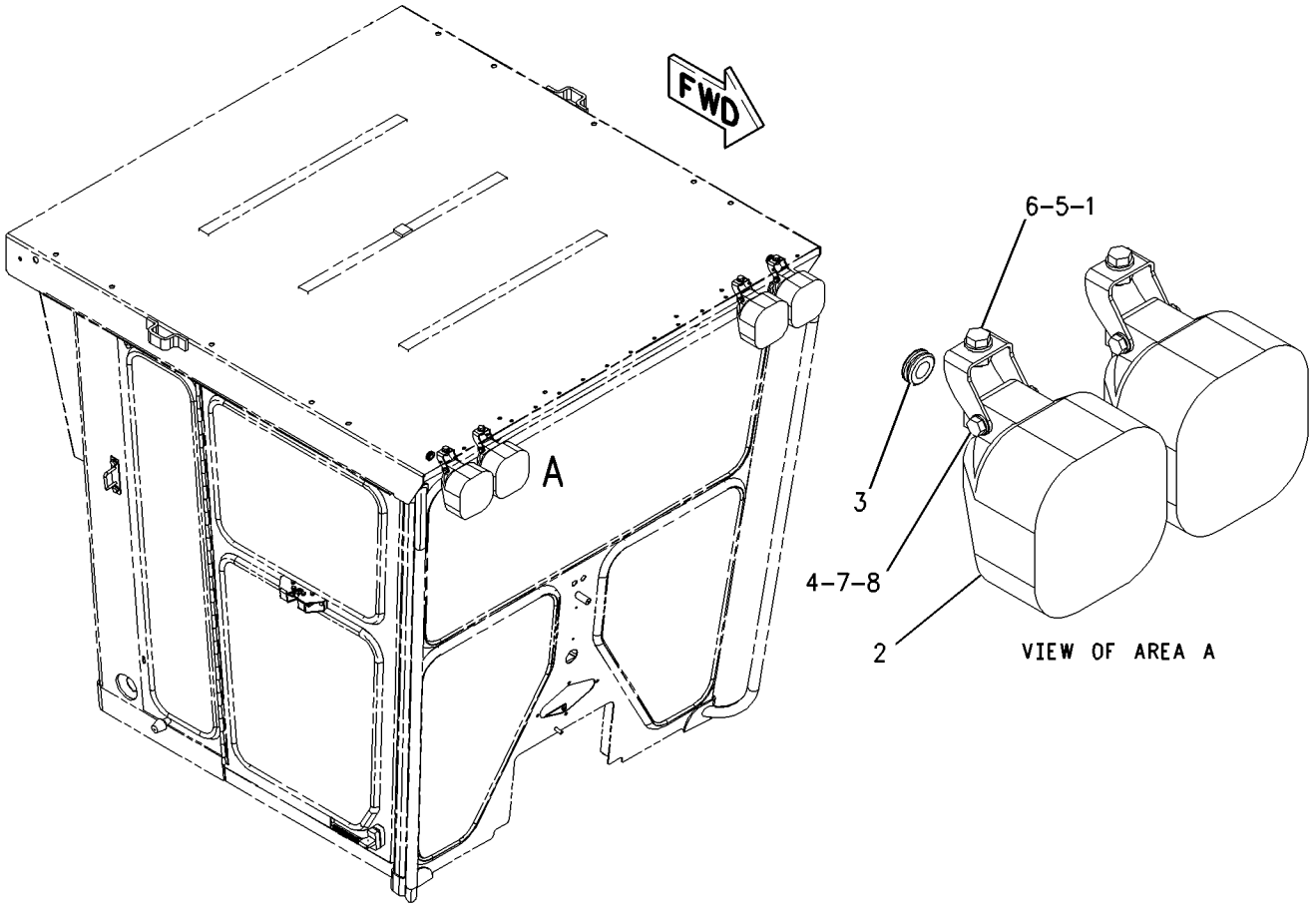

GRAPHIC #1 g00843667

MEMORANDA

161-0772 LIGHTING GP-FLOOD—CAB—TURN

S/N: CAF1-UP

PART OF 161-0770, 161-0771, 179-1548 LIGHTING AR-FLOOD & SIGNAL

AN ATTACHMENT

SMCS-1434 **i01681106**

NOTE	REF NO	GRAPHIC REF	PART NUMBER	QTY	PART NAME 1 2 3 4 5 6 (PRODUCT LEVEL)	SEE PAGE
	1	1	**116-5710**	2	GROMMET	
	2	1	**135-0427**	1	LAMP GP-SIGNAL (24 VOLT) (LH)	
	2A	1	**135-0427**	1	LAMP GP-SIGNAL (24 VOLT) (RH)	
					(EACH LAMP GP INCLUDES)	
		1	**102-8803**	1	KIT-RECEPTACLE (3 PIN) (TURN/PARK)	
		1	**3E-3371**	1	WEDGE-RECEPTACLE LOCK (3 PIN)	
		1	**186-3735**	3	PIN-CONNECTOR	
	3	1	**184-0903**	4	BRACKET AS	
					(EACH INCLUDES)	
		1	**183-9606**	1	BRACKET	
M		1	**8T-3490**	1	NUT-WELD (M10X1.5 THD)	
	4	1	**193-7416**	2	PLATE AS	
	5	1	**130-5300**	2	CLIP	
	6	1	**157-0305**	2	LAMP GP-HEAD (HIGH BEAM)	
					(EACH INCLUDES)	
		1	**158-0249**	1	LENS AS (HIGH BEAM)	
		1	**158-0250**	1	BODY AS-LAMP	
		1	**158-0252**	1	BEZEL	
		1	**9X-3463**	1	LAMP-HEAD (24 VOLT) (HIGH BEAM)	
		1	**188-8849**	2	CLAMP	
	7	1	**161-0908**	2	LAMP GP-HEAD (LOW BEAM)	
					(EACH INCLUDES)	
		1	**162-2077**	1	LENS AS (LOW BEAM)	
		1	**158-0250**	1	BODY AS-LAMP	
		1	**158-0252**	1	BEZEL	
		1	**9X-3463**	1	LAMP-HEAD (24 VOLT) (LOW BEAM)	
		1	**188-8849**	2	CLAMP	
	8	1	**3P-9554**	2	GROMMET	
M	9	1	**5C-2890**	6	NUT (M6X1 THD)	
M	10	1	**5C-7261**	4	NUT (M8X1.25 THD)	
	11	1	**8T-4121**	8	WASHER-HARD (11X21X2.5MM THK)	
M	12	1	**8T-4137**	8	BOLT (M10X1.5X20MM)	
	13	1	**8T-4224**	8	WASHER-HARD (8.8X16X2MM THK)	
M	14	1	**8T-6869**	4	BOLT (M8X1.25X60MM)	
	15	1	**9X-8256**	6	WASHER (6.6X12X2MM THK)	

M-METRIC PART

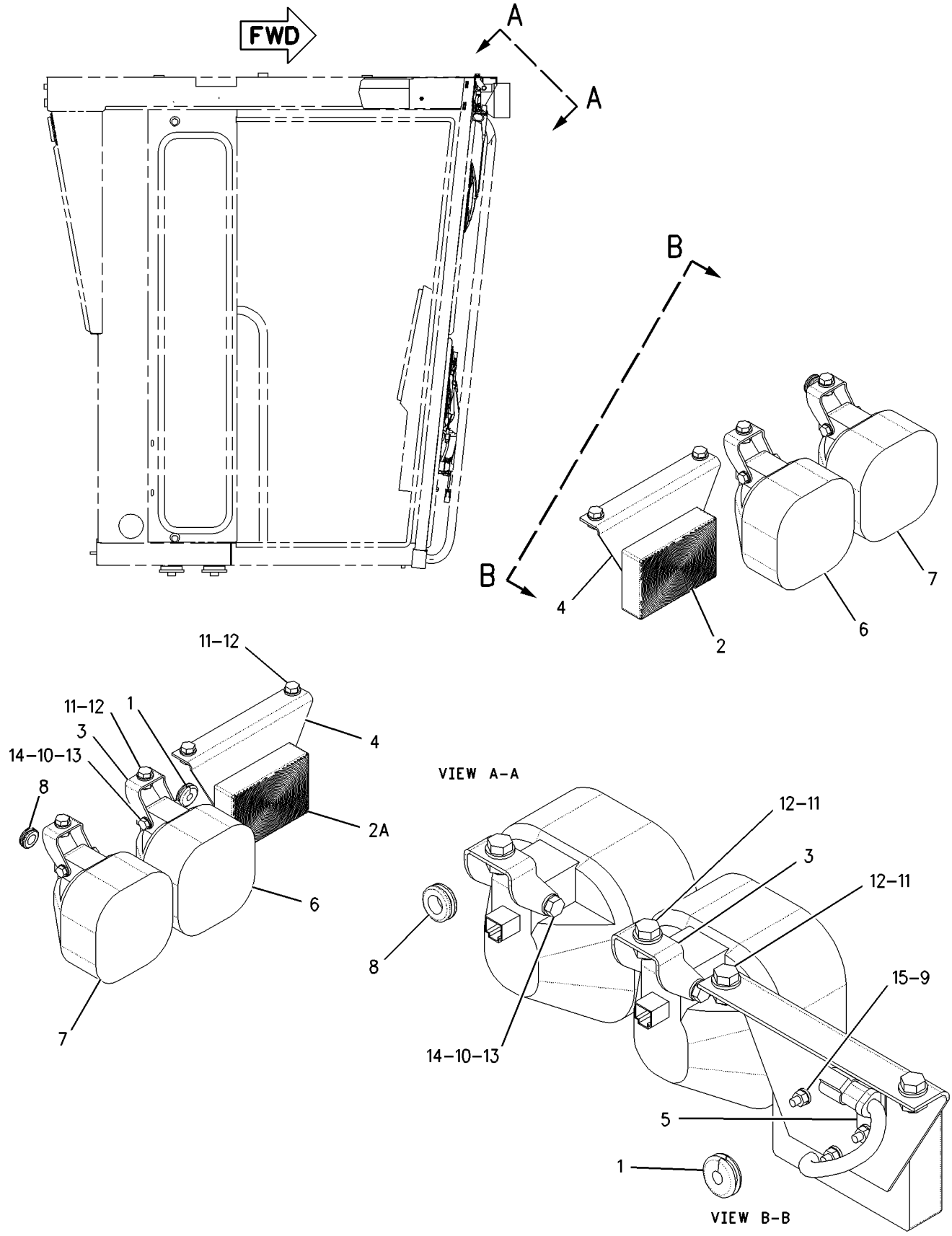

GRAPHIC #1

g00844108

161-0778 LIGHTING GP-FLOOD–BLADE

S/N: CAF1-UP
PART OF 188-9321 LIGHTING AR-FLOOD
AN ATTACHMENT

SMCS-1434 **i01825015**

NOTE	REF NO	GRAPHIC REF	PART NUMBER	QTY	PART NAME 1 2 3 4 5 6 (PRODUCT LEVEL)	SEE PAGE
	1	1	**9W-1442**	2	FUSE (10 AMP) (BLADE/FRONT FLOODLAMP)	
	2	1	**178-8067**	2	BRACKET AS	
Y	3	1	**153-2073**	2	LAMP GP-FLOOD (24 VOLT) (BLADE)	153
M	4	1	**5C-7261**	2	NUT (M8X1.25 THD)	
	5	1	**119-5708**	2	CLIP	
	8	1	**8T-4224**	2	WASHER-HARD (8.8X16X2MM THK)	
M	9	1	**8T-6869**	2	BOLT (M8X1.25X60MM)	
	10	1	**3E-8772**	1	SWITCH AS-ROCKER (BLADE)(FRONT FLOODLAMP)	
		1	**3E-8815**	1	ACTUATOR-ROCKER	
		1	**3E-8825**	2	LAMP (24 VOLT) (BLADE)(FRONT FLOODLAMP)	

M-METRIC PART
Y-SEPARATE ILLUSTRATION

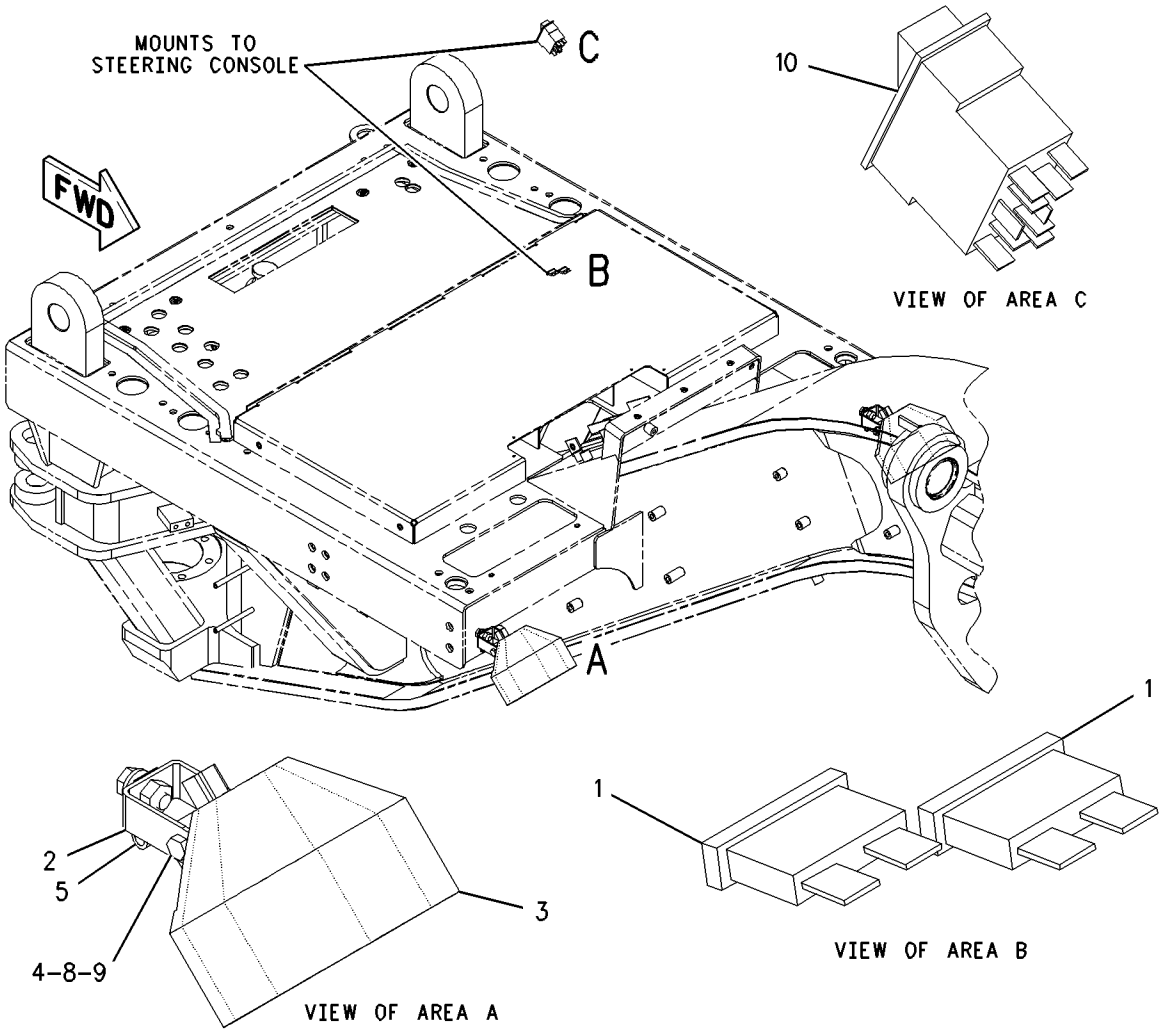

GRAPHIC #1 g00931705

161-0779 LIGHTING GP-FLOOD–BLADE

S/N: CAF1-UP
PART OF 161-0768 LIGHTING AR-FLOOD
AN ATTACHMENT

SMCS-1434 **i01683225**

NOTE	REF NO	GRAPHIC REF	PART NUMBER	QTY	PART NAME 1 2 3 4 5 6 (PRODUCT LEVEL)	SEE PAGE
	1	1	**3E-6477**	1	RELAY AS (24 VOLT)	
	2	1	**9W-1442**	2	FUSE (10 AMP) (BLADE FLOOD LAMP)	
	3	1	**178-8067**	2	BRACKET AS	
					(EACH INCLUDES)	
M		1	**8T-3490**	1	NUT-WELD (M10X1.5 THD)	
Y	4	1	**153-2073**	2	LAMP GP-FLOOD (24 VOLT) (VERTICAL)	153
M	5	1	**5C-7261**	2	NUT (M8X1.25 THD)	
	6	1	**6V-3265**	2	CLIP	
	7	1	**8T-4121**	2	WASHER-HARD (11X21X2.5MM THK)	
M	8	1	**8T-4136**	2	BOLT (M10X1.5X25MM)	
	9	1	**8T-4224**	2	WASHER-HARD (8.8X16X2MM THK)	
M	10	1	**8T-6869**	2	BOLT (M8X1.25X60MM)	
	11	1	**9X-9632**	1	SWITCH AS-ROCKER (BLADE FLOOD LAMP)	

M-METRIC PART
Y-SEPARATE ILLUSTRATION

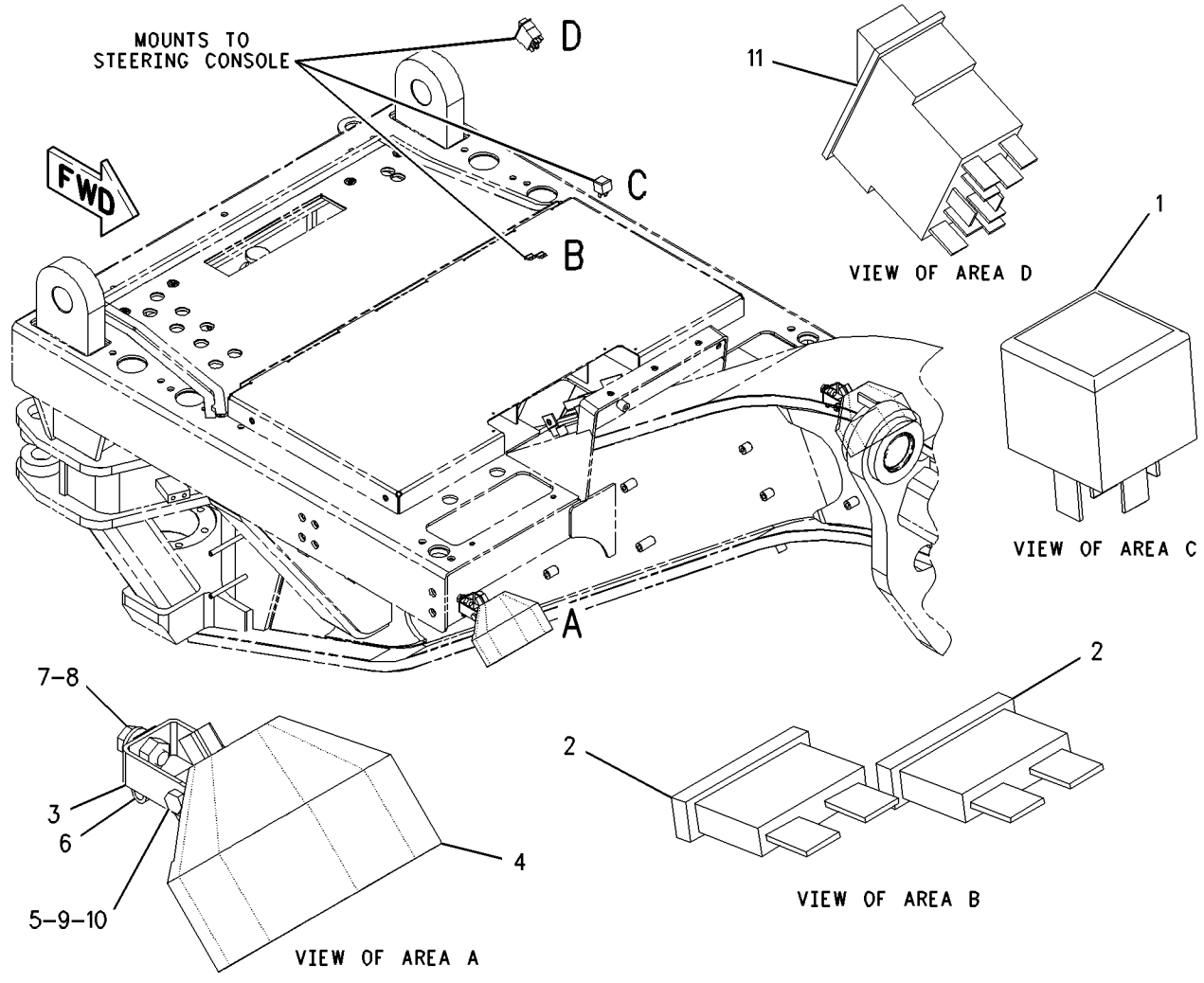

GRAPHIC #1 g00844318

ELECTRICAL AND STARTING SYSTEM

161-1015 LIGHTING GP-FLOOD—BOLSTER—DOUBLE WORKLAMPS

S/N: CAF1-UP

PART OF 188-9328 LIGHTING AR-FLOOD

AN ATTACHMENT

SMCS-1434 **i01755261**

NOTE	REF NO	GRAPHIC REF	PART NUMBER	QTY	PART NAME 1 2 3 4 5 6 (PRODUCT LEVEL)	SEE PAGE
	1	1	**2G-0617**	4	CLAMP	
	2	1	**2G-0988**	2	CAP	
	3	1	**3K-9520**	3	GROMMET	
	4	1	**3S-2093**	4	STRAP-CABLE	
	5	1	**5T-9313**	1	TUBE	
	6	1	**8X-5153**	1	FILM-FACE (TURN SIGNAL/HAZARD)	
	7	1	**8X-5154**	1	FILM-FACE (HEADLIGHTS HIGH/LOW BEAM)	
	8	1	**9W-1442**	1	FUSE (10 AMP) (TURN SIGNAL/HAZARD LAMPS)	
	9	1	**103-1592**	2	PLATE	
	10	1	**103-5678**	1	SWITCH AS-ROTARY (HIGH/LOW BEAM)	
		1	**5L-7200**	1	SCREW (8-32X0.375 IN)	
		1	**9B-7233**	1	LOCKWASHER	
	11	1	**108-0358**	1	FLASHER AS-ELECTRONIC (12/24 VOLT) (TURN SIGNAL/HAZARD LAMPS)	
Y	12	1	**135-0427**	2	LAMP GP-SIGNAL (24 VOLT) (TURN/PARK)	167
	13	1	**137-9410**	4	CLAMP	
	14	1	**169-3176**	1	HARNESS AS-LIGHTING	
		1	**155-2260**	2	KIT-CONNECTING PLUG (3 PIN) (TURN SIGNAL)	
		1	**155-2270**	4	KIT-CONNECTING PLUG (2 PIN) (HEADLAMP)	
		1	**102-8801**	1	KIT-RECEPTACLE (12 PIN)	
	15	1	**173-3064**	1	SWITCH AS-TURN SIG & WARNING	
		1	**5L-7200**	1	SCREW (8-32X0.375 IN)	
		1	**9B-7233**	1	LOCKWASHER	
	16	1	**178-8067**	4	BRACKET AS	
M		1	**8T-3490**	1	NUT-WELD (M10X1.5 THD)	
	17	1	**179-8700**	1	HARNESS AS-FRONT CHASSIS	
		1	**155-2270**	2	KIT-CONNECTING PLUG (2 PIN)	
		1	**102-8801**	1	KIT-RECEPTACLE (12 PIN)	
Y	18	1	**180-1300**	2	LAMP GP-HEAD (24 VOLT) (HIGH BEAM)	155
	19	1	**108-3519**	4	CLAMP	
	20	1	**130-5300**	2	CLIP	
Y	21	1	**161-3509**	2	LAMP GP-HEAD (24 VOLT) (LOW BEAM)	154
	22	1	**3E-8772**	1	SWITCH AS-ROCKER (HEADLAMP/TAIL)	
		1	**3E-8825**	2	LAMP (24 VOLT) (HEADLAMP/TAIL INDICATOR)	
		1	**3E-9326**	1	ACTUATOR-ROCKER	
	23	1	**4D-7794**	4	CLIP	
	24	1	**4K-8864**	2	CLIP	
	25	1	**4L-6454**	4	BOLT (3/8-16X1 IN)	
M	26	1	**5C-2890**	8	NUT (M6X1 THD)	
M	27	1	**5C-7261**	4	NUT (M8X1.25 THD)	
	28	1	**5M-3062**	1	BOLT (3/8-16X0.75 IN)	
	29	1	**5S-7379**	4	BOLT (3/8-16X0.875 IN)	
	30	1	**6V-8801**	4	NUT (3/8-16 THD)	
	31	1	**8T-4121**	4	WASHER-HARD (11X21X2.5MM THK)	
M	32	1	**8T-4136**	4	BOLT (M10X1.5X25MM)	
	33	1	**8T-4205**	2	WASHER-HARD (7.2X14.5X2MM THK)	
	34	1	**8T-4224**	4	WASHER-HARD (8.8X16X2MM THK)	
	35	1	**8T-4896**	9	WASHER-HARD (10.2X18.5X2.5MM THK)	
M	36	1	**8T-6869**	4	BOLT (M8X1.25X60MM)	
	37	1	**8X-6296**	1	LEVER (HIGH/LOW BEAM)	
	37A	1	**8X-6296**	1	LEVER (TURN SIGNAL)	
	38	1	**9D-6164**	4	BOSS (3/8-16 THD)	
M	39	1	**9X-2043**	2	SCREW-TRUSS HEAD (M6X1X14MM)	
	40	1	**9X-8256**	6	WASHER (6.6X12X2MM THK)	

M-METRIC PART
Y-SEPARATE ILLUSTRATION

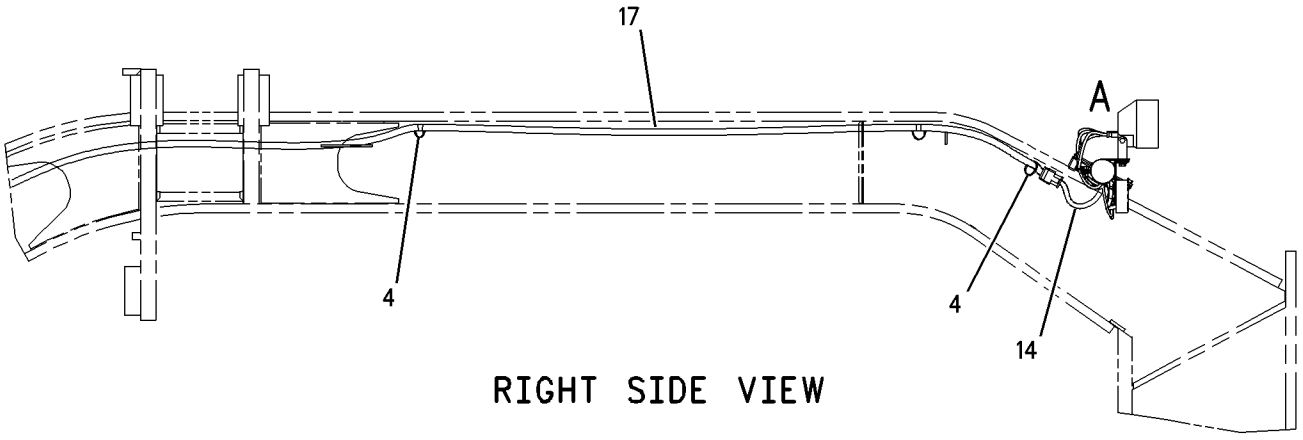

RIGHT SIDE VIEW

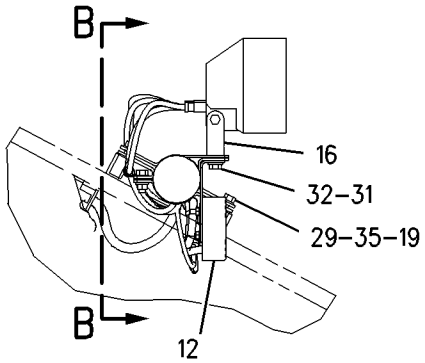

VIEW OF AREA A

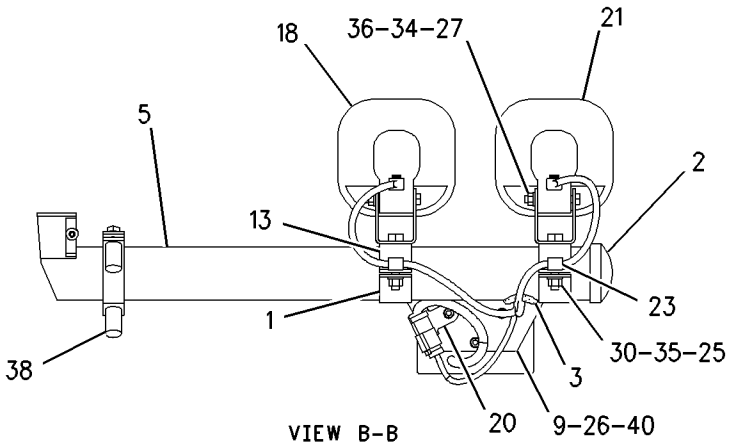

VIEW B-B

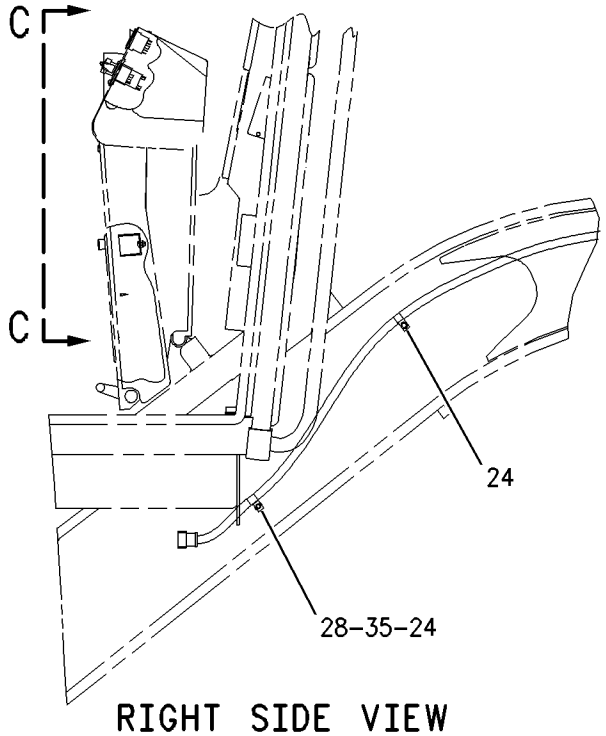

RIGHT SIDE VIEW

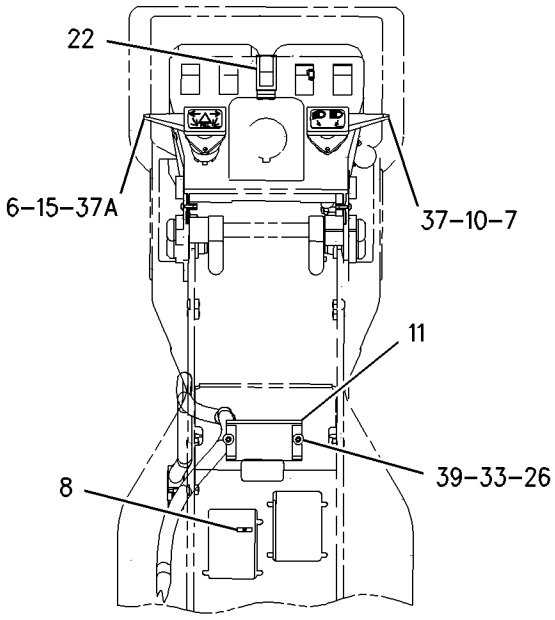

VIEW C-C

GRAPHIC #1 g00845105

MEMORANDA

ELECTRICAL AND STARTING SYSTEM

161-1017 LIGHTING GP-FLOOD—BOLSTER

S/N: CAF1-UP

PART OF 161-0771 LIGHTING AR-FLOOD & SIGNAL

AN ATTACHMENT

SMCS-1434 **i01755348**

NOTE	REF NO	GRAPHIC REF	PART NUMBER	QTY	PART NAME 1 2 3 4 5 6 (PRODUCT LEVEL)	SEE PAGE
	1	1	**2G-0617**	2	CLAMP	
	2	1	**2G-0988**	2	CAP	
	3	1	**3K-9520**	3	GROMMET	
	4	1	**3S-2093**	4	STRAP-CABLE	
	5	1	**5T-9313**	1	TUBE	
	6	1	**8X-5153**	1	FILM-FACE (TURN SIGNAL/HAZARD)	
	7	1	**8X-5154**	1	FILM-FACE (HEADLIGHTS HIGH/LOW BEAM)	
	8	1	**9W-1442**	1	FUSE (10 AMP) (TURN SIGNAL/HAZARD LAMPS)	
	9	1	**103-5678**	1	SWITCH AS-ROTARY (HIGH/LOW BEAM)	
		1	**5L-7200**	1	SCREW (8-32X0.375 IN)	
		1	**9B-7233**	1	LOCKWASHER	
	10	1	**108-0358**	1	FLASHER AS-ELECTRONIC (12/24 VOLT) (TURN SIGNAL/HAZARD)	
	11	1	**137-9410**	2	CLAMP	
	12	1	**169-3181**	1	HARNESS AS-LIGHTING	
		1	**155-2270**	2	KIT-CONNECTING PLUG (2 PIN) (LIGHTBAR WORKLAMPS)	
		1	**102-8801**	1	KIT-RECEPTACLE (12 PIN) (LIGHTBAR WORKLAMPS)	
	13	1	**173-3064**	1	SWITCH AS-TURN SIG & WARNING	
		1	**5L-7200**	1	SCREW (8-32X0.375 IN)	
		1	**9B-7233**	1	LOCKWASHER	
	14	1	**178-8067**	2	BRACKET AS	
M		1	**8T-3490**	1	NUT-WELD (M10X1.5 THD)	
	15	1	**179-8700**	1	HARNESS AS-FRONT CHASSIS	
		1	**155-2255**	2	KIT-CONNECTING PLUG (12 PIN)	
		1	**102-8801**	1	KIT-RECEPTACLE (12 PIN)	
	16	1	**108-3519**	4	CLAMP	
Y	17	1	**161-3509**	2	LAMP GP-HEAD (24 VOLT) (LOW BEAM)	154
	18	1	**3E-8772**	1	SWITCH AS-ROCKER (HEADLAMP/TAIL)	
		1	**3E-8825**	2	LAMP (24 VOLT) (HEADLAMP/TAIL INDICATOR)	
		1	**3E-9326**	1	ACTUATOR-ROCKER	
	19	1	**4D-7794**	4	CLIP	
	20	1	**4L-6454**	2	BOLT (3/8-16X1 IN)	
M	21	1	**5C-2890**	2	NUT (M6X1 THD)	
M	22	1	**5C-7261**	2	NUT (M8X1.25 THD)	
	23	1	**5M-3062**	1	BOLT (3/8-16X0.75 IN)	
	24	1	**5S-7379**	4	BOLT (3/8-16X0.875 IN)	
	25	1	**6V-8801**	2	NUT (3/8-16 THD)	
	26	1	**8T-4121**	2	WASHER-HARD (11X21X2.5MM THK)	
M	27	1	**8T-4136**	2	BOLT (M10X1.5X25MM)	
	28	1	**8T-4205**	2	WASHER-HARD (7.2X14.5X2MM THK)	
	29	1	**8T-4224**	2	WASHER-HARD (8.8X16X2MM THK)	
	30	1	**8T-4896**	7	WASHER-HARD (10.2X18.5X2.5MM THK)	
M	31	1	**8T-6869**	2	BOLT (M8X1.25X60MM)	
	32	1	**8X-6296**	1	LEVER (TURN SIGNAL)	
	32A	1	**8X-6296**	1	LEVER (HIGH/LOW BEAM)	
	33	1	**9D-6164**	4	BOSS (3/8-16 THD)	
M	34	1	**9X-2043**	2	SCREW-TRUSS HEAD (M6X1X14MM)	
	35	1	**9X-9631**	1	SWITCH AS-ROCKER (LIGHTBAR LOW BEAM)	
		1	**3E-8814**	1	ACTUATOR-ROCKER	
		1	**3E-8825**	1	LAMP (24 VOLT) (LIGHTBAR LOW BEAM)	

M-METRIC PART
Y-SEPARATE ILLUSTRATION

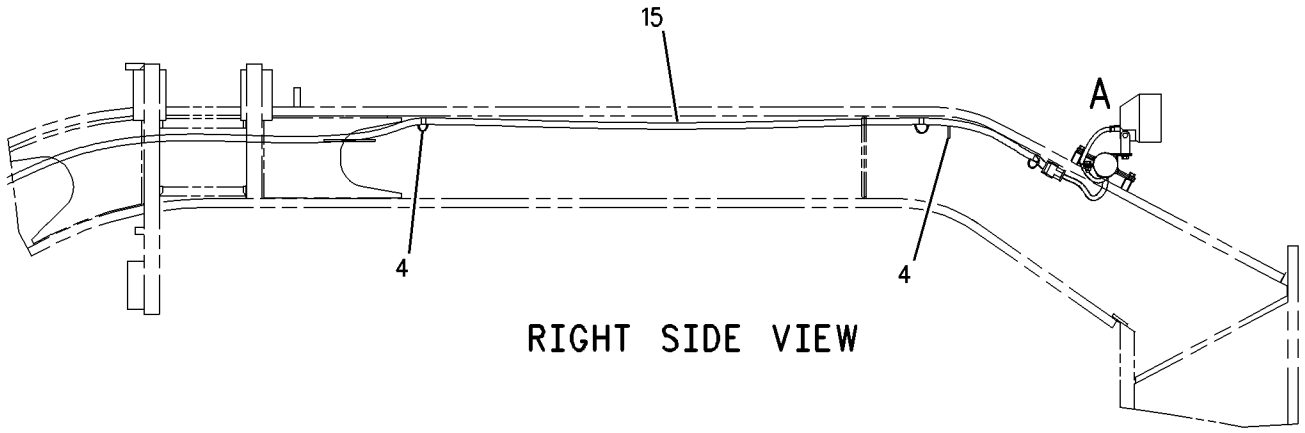

RIGHT SIDE VIEW

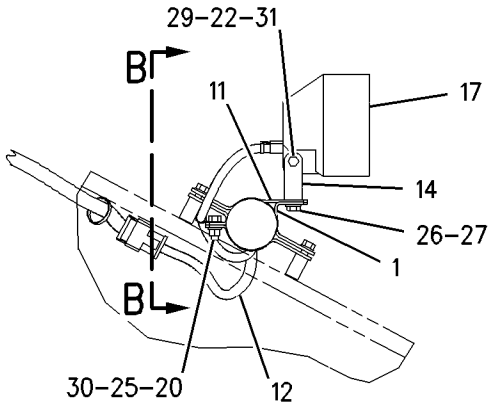

VIEW OF AREA A

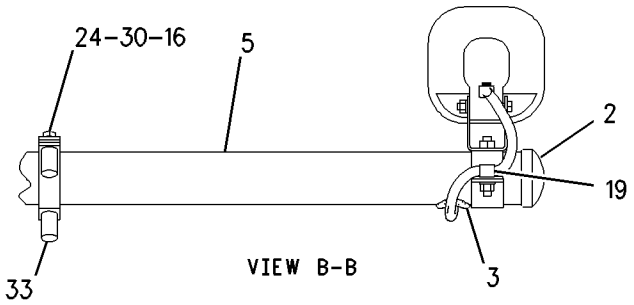

VIEW B-B

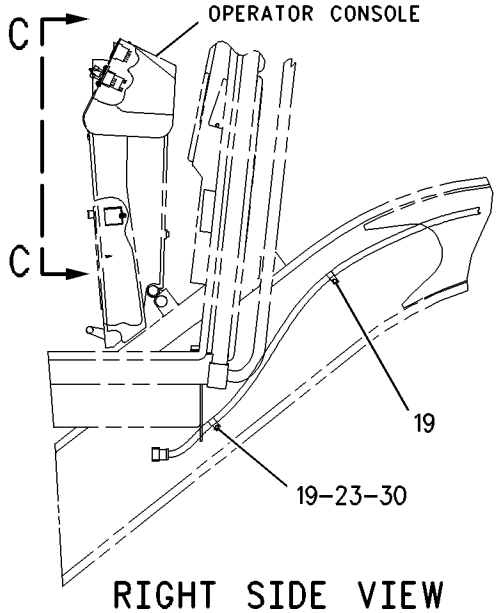

RIGHT SIDE VIEW

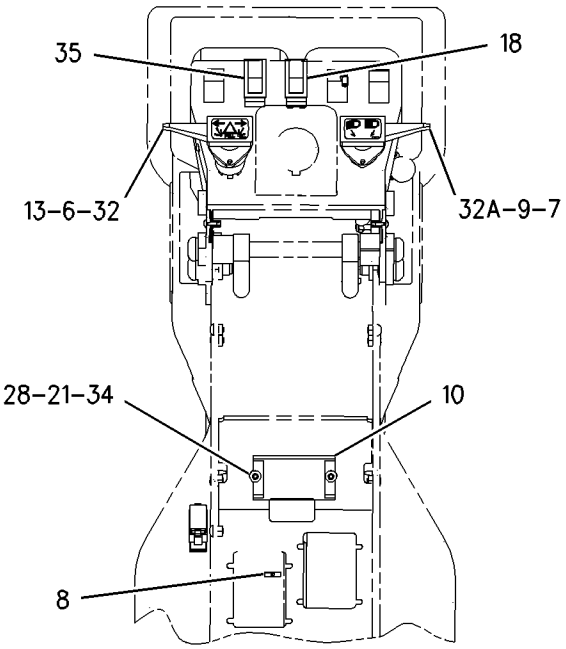

VIEW C-C

GRAPHIC #1 g00845150

183-4069 LIGHTING GP-FLOOD—EXTENDED BOLSTER

S/N: CAF1-UP

PART OF 179-1548 LIGHTING AR-FLOOD & SIGNAL

AN ATTACHMENT

SMCS-1434 **i01755277**

NOTE	REF NO	GRAPHIC REF	PART NUMBER	QTY	PART NAME 1 2 3 4 5 6 (PRODUCT LEVEL)	SEE PAGE
	1	1	**2G-0617**	2	CLAMP	
	2	1	**2G-0659**	2	BRACKET	
	3	1	**2G-0988**	2	CAP	
	4	1	**3K-9520**	3	GROMMET	
	5	1	**3S-2093**	4	STRAP-CABLE	
	6	1	**8X-5153**	1	FILM-FACE (TURN SIGNAL/HAZARD)	
	7	1	**8X-5154**	1	FILM-FACE (HEADLIGHTS HIGH/LOW BEAM)	
	8	1	**9W-1442**	1	FUSE (10 AMP) (TURN SIGNAL/HAZARD)	
	9	1	**103-5678**	1	SWITCH AS-ROTARY (HIGH/LOW BEAM)	
		1	**5L-7200**	1	SCREW (8-32X0.375 IN)	
		1	**9B-7233**	1	LOCKWASHER	
	10	1	**108-0358**	1	FLASHER AS-ELECTRONIC (12/24 VOLT) (TURN SIGNAL/HAZARD)	
	11	1	**137-9410**	2	CLAMP	
	12	1	**173-3064**	1	SWITCH AS-TURN SIG & WARNING	
		1	**5L-7200**	1	SCREW (8-32X0.375 IN)	
		1	**9B-7233**	1	LOCKWASHER	
	13	1	**178-8067**	2	BRACKET AS	
M		1	**8T-3490**	1	NUT-WELD (M10X1.5 THD)	
	14	1	**179-1549**	1	TUBE	
	15	1	**179-1550**	2	CLAMP	
	16	1	**179-8700**	1	HARNESS AS-FRONT CHASSIS	
		1	**155-2255**	1	KIT-CONNECTING PLUG (12 PIN)	
					(INCLUDES PLUG ASSEMBLY AND WEDGE)	
		1	**102-8801**	1	KIT-RECEPTACLE (12 PIN)	
					(INCLUDES RECEPTACLE ASSEMBLY AND WEDGE)	
	17	1	**179-8701**	1	HARNESS AS-FRONT LIGHTING	
		1	**155-2270**	2	KIT-CONNECTING PLUG (2 PIN)	
					(INCLUDES PLUG ASSEMBLY AND WEDGE)	
		1	**102-8801**	1	KIT-RECEPTACLE (12 PIN)	
					(INCLUDES RECEPTACLE ASSEMBLY AND WEDGE)	
Y	18	1	**153-2073**	2	LAMP GP-FLOOD (24 VOLT)	153
	19	1	**3E-8772**	1	SWITCH AS-ROCKER (HEADLAMP/TAIL)	
		1	**3E-8825**	2	LAMP (24 VOLT) (HEADLAMP/TAIL INDICATOR)	
		1	**3E-9326**	1	ACTUATOR-ROCKER	
	20	1	**4D-7794**	2	CLIP	
M	21	1	**5C-2890**	2	NUT (M6X1 THD)	
M	22	1	**5C-7261**	2	NUT (M8X1.25 THD)	
	23	1	**5M-3062**	1	BOLT (3/8-16X0.75 IN)	
	24	1	**8M-2770**	2	CLIP	
	25	1	**8T-4121**	4	WASHER-HARD (11X21X2.5MM THK)	
M	26	1	**8T-4133**	2	NUT (M10X1.5 THD)	
M	27	1	**8T-4136**	4	BOLT (M10X1.5X25MM)	
	28	1	**8T-4205**	2	WASHER-HARD (7.2X14.5X2MM THK)	
	29	1	**8T-4223**	4	WASHER-HARD (13.5X25.5X3MM THK)	
	30	1	**8T-4224**	2	WASHER-HARD (8.8X16X2MM THK)	
M	31	1	**8T-4244**	4	NUT (M12X1.75 THD)	
	32	1	**8T-4896**	1	WASHER-HARD (10.2X18.5X2.5MM THK)	
M	33	1	**8T-5412**	4	BOLT (M12X1.75X140MM)	
M	34	1	**8T-6869**	2	BOLT (M8X1.25X60MM)	
	35	1	**8X-6296**	1	LEVER (TURN SIGNAL)	
	35A	1	**8X-6296**	1	LEVER (HIGH/LOW BEAM)	
M	36	1	**9X-2043**	2	SCREW-TRUSS HEAD (M6X1X14MM)	
	37	1	**3E-8764**	1	SWITCH AS (LIGHTBAR LOW BEAM)	
		1	**3E-8814**	1	ACTUATOR-ROCKER	

183-4069 **LIGHTING GP-FLOOD** ***(contd.)*** **i01755277**

NOTE	REF NO	GRAPHIC REF	PART NUMBER	QTY	PART NAME 1 2 3 4 5 6 (PRODUCT LEVEL)	SEE PAGE
		1	**3E-8825**	1	LAMP (24 VOLT) (LIGHTBAR LOW BEAM)	

M-METRIC PART
Y-SEPARATE ILLUSTRATION

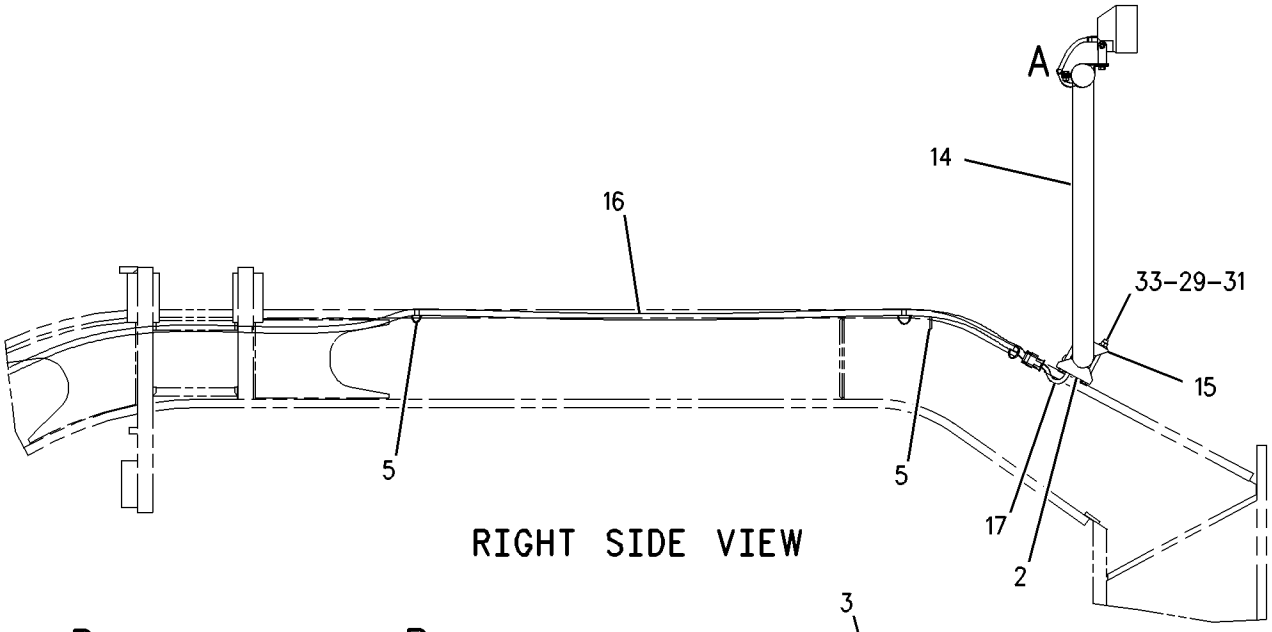

RIGHT SIDE VIEW

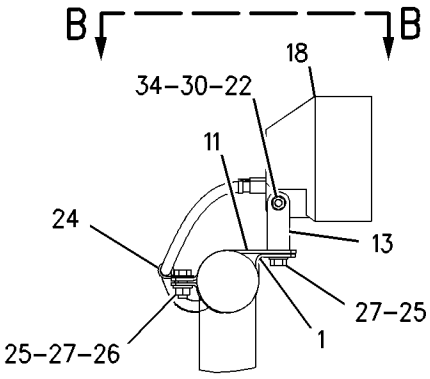

VIEW OF AREA A

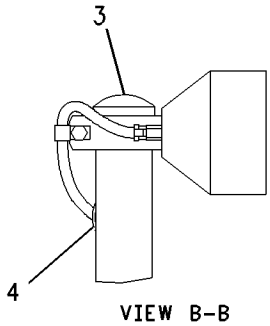

VIEW B-B

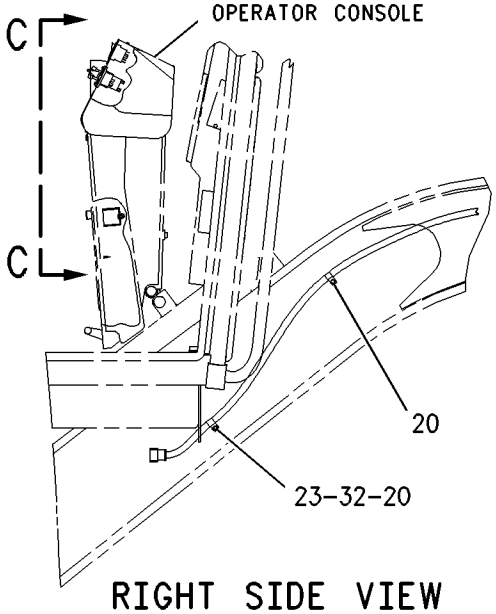

RIGHT SIDE VIEW

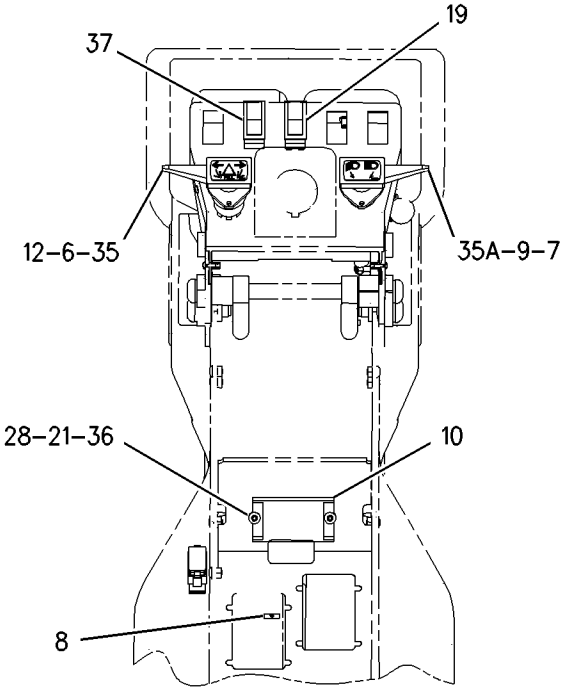

VIEW C-C

GRAPHIC #1

g00845039

MEMORANDA

188-9324 LIGHTING GP-FLOOD–REAR

S/N: CAF1-UP

PART OF 161-0768, 188-9321 LIGHTING AR-FLOOD

AN ATTACHMENT

SMCS-1434 **i01682095**

NOTE	REF NO	GRAPHIC REF	PART NUMBER	QTY	PART NAME 1 2 3 4 5 6 (PRODUCT LEVEL)	SEE PAGE
	1	1	**9X-9365**	2	BRACKET	
	2	1	**116-5710**	2	GROMMET	
	3	1	**169-3520**	1	HARNESS AS-REAR LIGHTING	
		1	**155-2270**	2	KIT-CONNECTING PLUG (2 PIN)	
					(INCLUDES PLUG ASSEMBLY AND WEDGE)	
		1	**102-8802**	1	KIT-RECEPTACLE (2 PIN)	
					(INCLUDES RECEPTACLE ASSEMBLY AND WEDGE)	
	4	1	**178-8067**	2	BRACKET AS	
Y	5	1	**153-2073**	2	LAMP GP-FLOOD (24 VOLT) (VERTICAL)	153
M	6	1	**5C-7261**	2	NUT (M8X1.25 THD)	
	7	1	**5K-3294**	4	CLIP	
	8	1	**6V-3265**	6	CLIP	
	9	1	**8T-4121**	12	WASHER-HARD (11X21X2.5MM THK)	
M	10	1	**8T-4136**	2	BOLT (M10X1.5X25MM)	
M	11	1	**8T-4137**	10	BOLT (M10X1.5X20MM)	
	12	1	**8T-4224**	4	WASHER-HARD (8.8X16X2MM THK)	
M	13	1	**8T-6869**	2	BOLT (M8X1.25X60MM)	

M-METRIC PART
Y-SEPARATE ILLUSTRATION

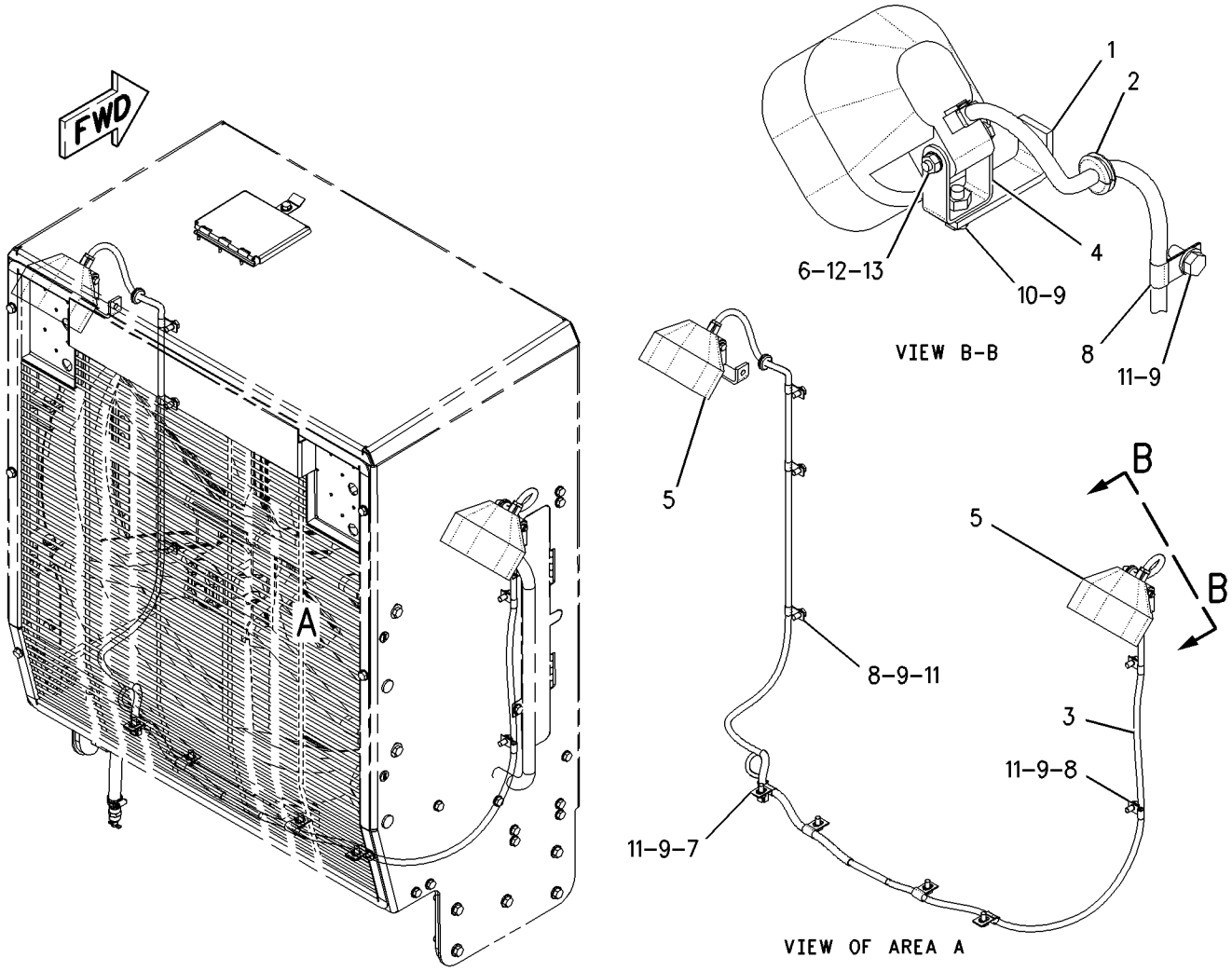

GRAPHIC #1

g00844562

196-8532 LIGHTING GP-FLOOD—MOLDBOARD

S/N: CAF1-UP

PART OF 203-6536, 204-6109 LIGHTING AR-FLOOD

AN ATTACHMENT

SMCS-1434 **i01683944**

NOTE	REF NO	GRAPHIC REF	PART NUMBER	QTY	PART NAME 1 2 3 4 5 6 (PRODUCT LEVEL)	SEE PAGE
	2	1	**169-3147**	1	HARNESS AS-CHASSIS	
		1	**102-8802**	4	KIT-RECEPTACLE (2 PIN)	
		1	**102-8803**	1	KIT-RECEPTACLE (3 PIN)	
					(EACH INCLUDES RECEPTACLES AS & WEDGE)	
	3	1	**183-9606**	2	BRACKET	
	4	1	**033-8248**	5	CLIP	
Y	5	1	**153-2073**	2	LAMP GP-FLOOD (24 VOLT) (VERTICAL)	153
	6	1	**4D-9517**	1	CLIP	
M	7	1	**5C-7261**	2	NUT (M8X1.25 THD)	
	8	1	**5P-8167**	3	BOLT (3/8-16X0.625 IN)	
	9	1	**8M-2770**	1	CLIP	
	10	1	**8T-4224**	2	WASHER-HARD (8.8X16X2MM THK)	
	11	1	**8T-4896**	3	WASHER-HARD (10.2X18.5X2.5MM THK)	
M	12	1	**8T-6869**	2	BOLT (M8X1.25X60MM)	

M-METRIC PART
Y-SEPARATE ILLUSTRATION

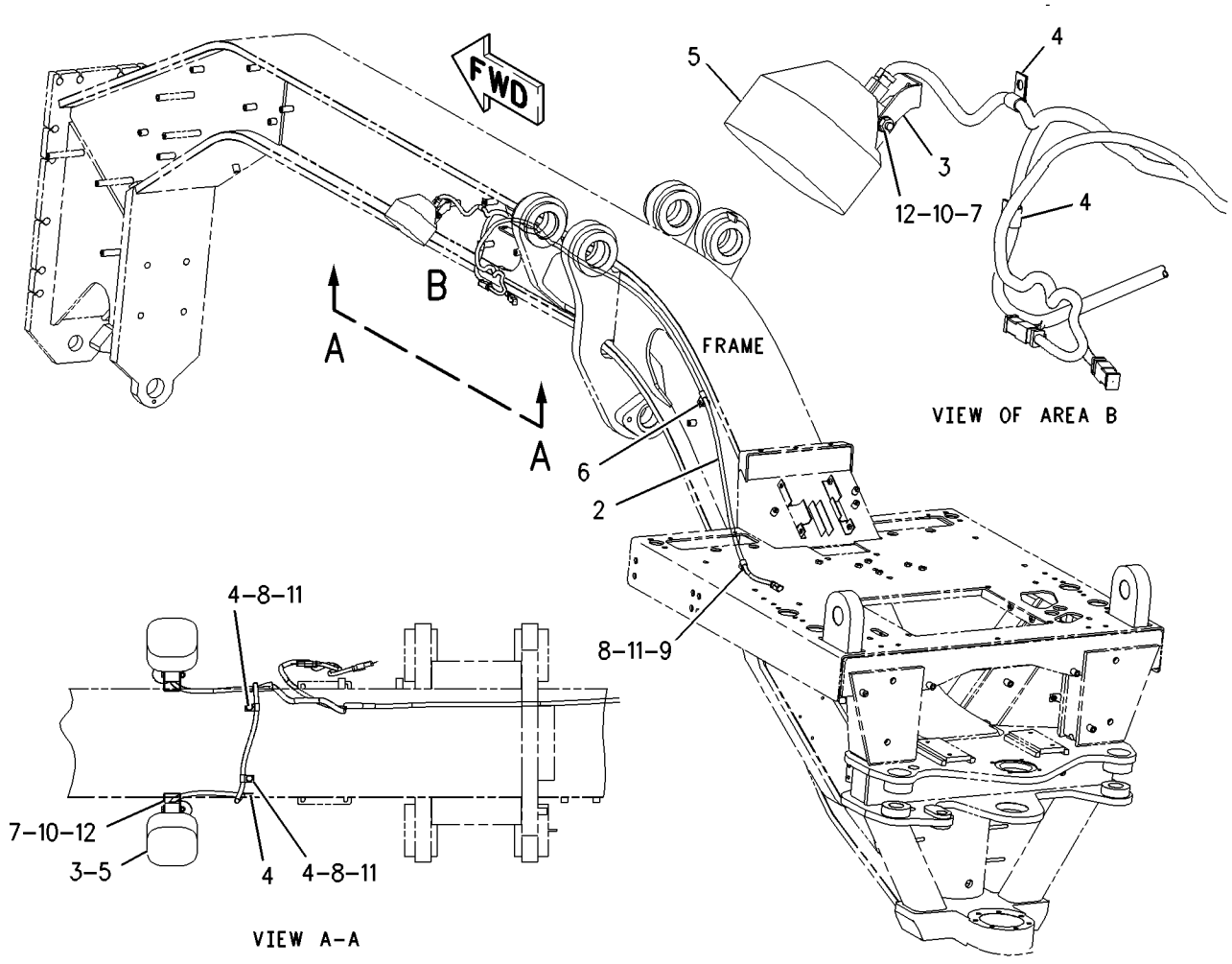

GRAPHIC #1 g00890532

ELECTRICAL AND STARTING SYSTEM

203-7620 LIGHTING GP-FLOOD–BOLSTER

S/N: CAF1-UP

AN ATTACHMENT

SMCS-1434 **i01683969**

NOTE	PART NUMBER	QTY	PART NAME 1 2 3 4 5 6 (PRODUCT LEVEL)	SEE PAGE
Y	**203-7625**	1	LAMP GP-HEAD (LH)	156
Y	**203-7626**	1	LAMP GP-HEAD (RH)	158

Y-SEPARATE ILLUSTRATION

<END>

211-1520 LIGHTING GP-ROADING—CAB POSITION LAMP—EU

S/N: CAF1-UP
PART OF 197-5572 ROADING AR
AN ATTACHMENT

SMCS-1429 **i01683493**

NOTE	REF NO	GRAPHIC REF	PART NUMBER	QTY	PART NAME 1 2 3 4 5 6 (PRODUCT LEVEL)	SEE PAGE
Y	1	1	**212-3924**	2	LAMP GP-MARKER (CAB POSITION)	164
	2	1	**130-5300**	2	CLIP	
M	3	1	**5C-2874**	4	NUT (M5X.8 THD)	
	4	1	**8T-4121**	2	WASHER-HARD (11X21X2.5MM THK)	
M	5	1	**8T-4137**	2	BOLT (M10X1.5X20MM)	
	6	1	**8T-4205**	4	WASHER-HARD (7.2X14.5X2MM THK)	

M-METRIC PART
Y-SEPARATE ILLUSTRATION

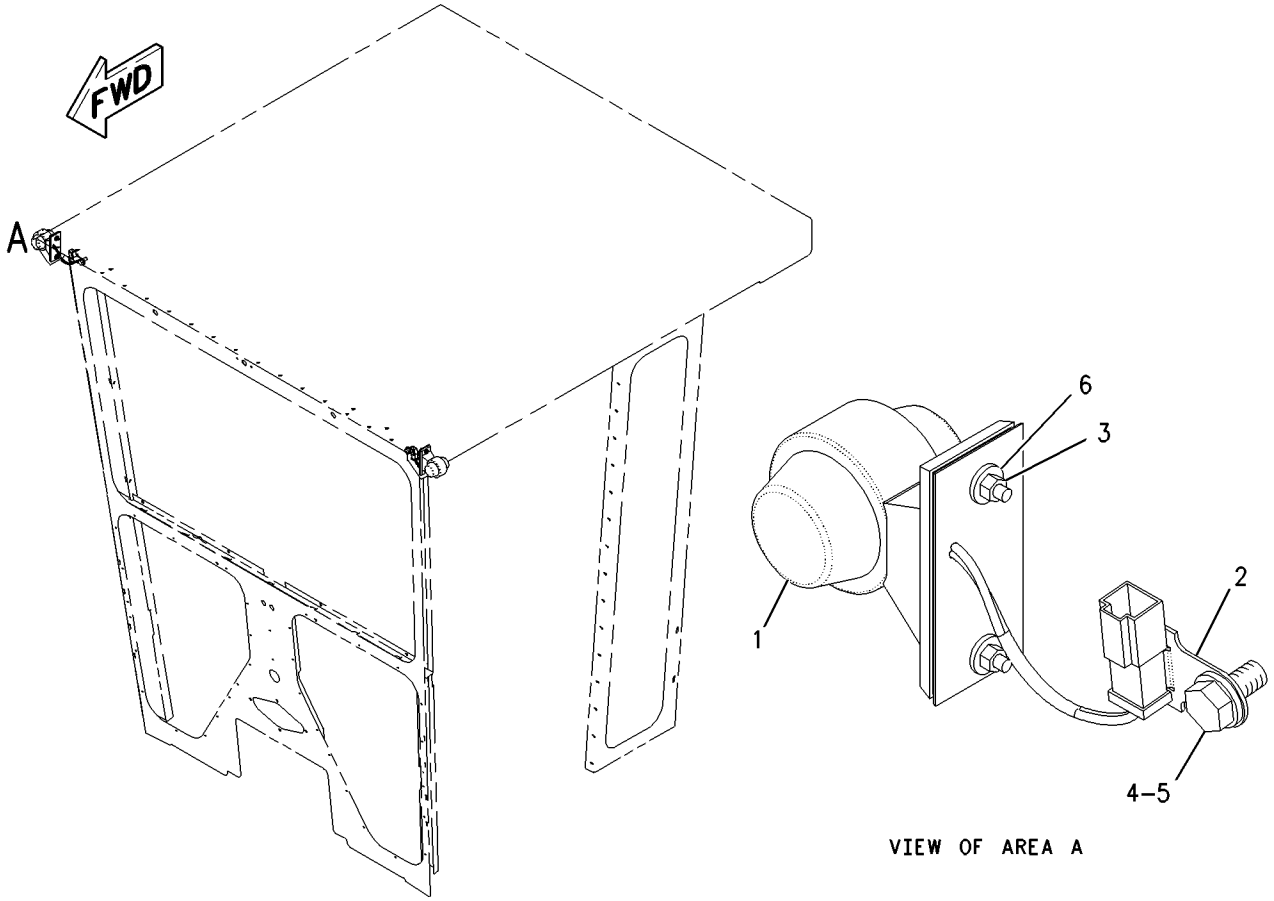

GRAPHIC #1 g00892028

188-9331 LIGHTING GP-SIGNAL–REAR TURN LAMPS

S/N: CAF1-UP

PART OF 188-9328 LIGHTING AR-FLOOD, 161-0770, 161-0771, 179-1548 LIGHTING AR-FLOOD & SIGNAL AN ATTACHMENT

SMCS-1430 **i01681112**

NOTE	REF NO	GRAPHIC REF	PART NUMBER	QTY	PART NAME 1 2 3 4 5 6 (PRODUCT LEVEL)	SEE PAGE
Y	1	1	**135-0427**	2	LAMP GP-SIGNAL (24 VOLT) (TURN/PARK)	167
M	2	1	**5C-2890**	6	NUT (M6X1 THD)	
	3	1	**8T-4224**	6	WASHER-HARD (8.8X16X2MM THK)	

M-METRIC PART
Y-SEPARATE ILLUSTRATION

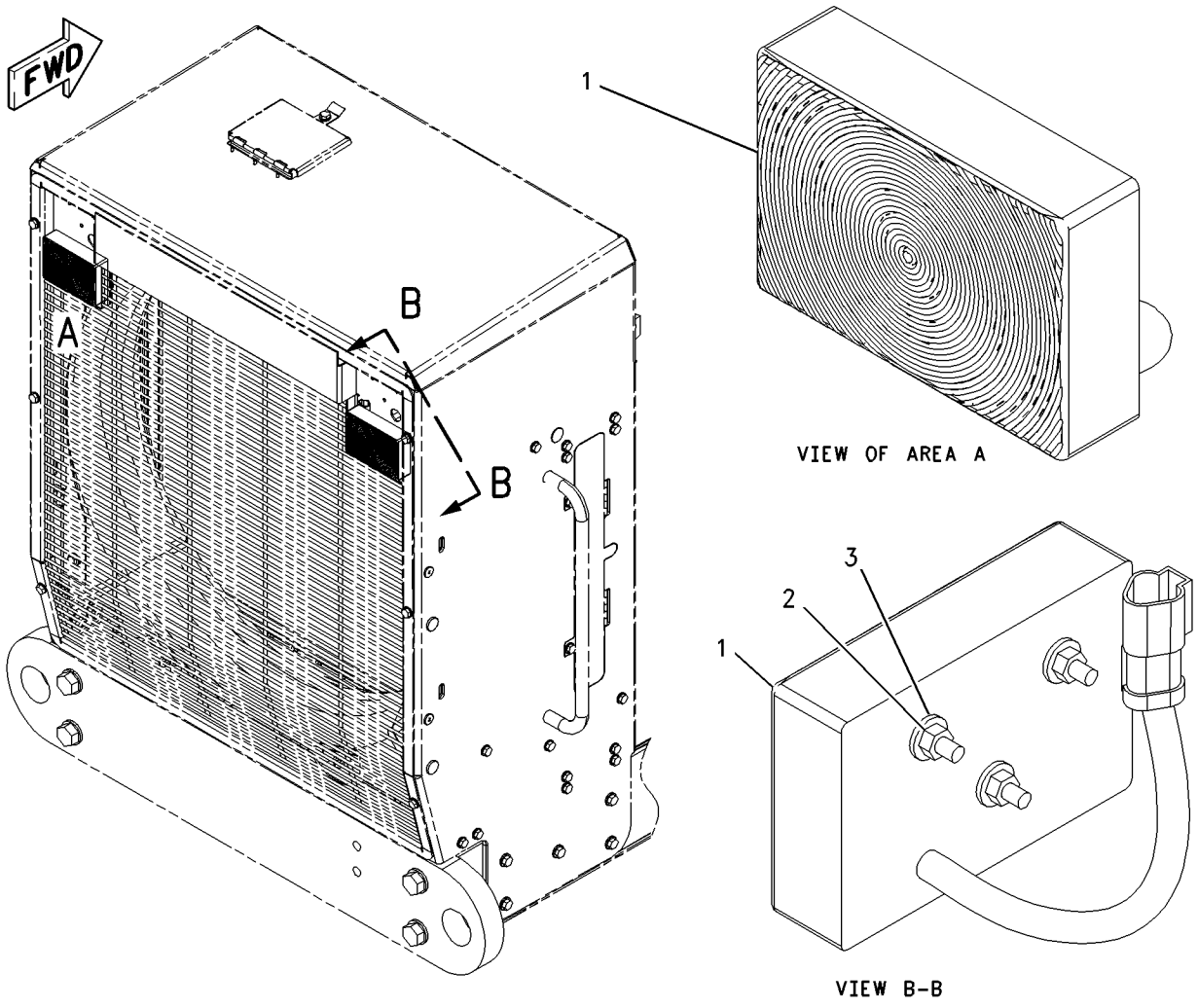

GRAPHIC #1 g00843802

161-0773 LIGHTING GP-WARNING–ROTATING

S/N: CAF1-UP
AN ATTACHMENT

SMCS-1429, 1431 **i01825970**

NOTE	REF NO	GRAPHIC REF	PART NUMBER	QTY	PART NAME 1 2 3 4 5 6 (PRODUCT LEVEL)	SEE PAGE
	1	1	**3S-2093**	1	STRAP-CABLE	
	2	1	**9W-1442**	1	FUSE (10 AMP) (WARNING BEACON)	
	3	1	**107-4932**	1	PLATE AS	
Y	4	1	**128-6983**	1	LAMP GP-WARNING BEACON (AMBER)	168
	5	1	**130-5300**	1	CLIP	
	6	1	**5P-8525**	1	GROMMET	
	7	1	**8T-4121**	2	WASHER-HARD (11X21X2.5MM THK)	
M	8	1	**8T-4136**	2	BOLT (M10X1.5X25MM)	
	9	1	**102-9862**	1	SWITCH AS (WARNING BEACON)	
		1	**3E-8822**	1	ACTUATOR-ROCKER	
		1	**3E-8825**	1	LAMP (24 VOLT) (WARNING BEACON)	

M-METRIC PART
Y-SEPARATE ILLUSTRATION

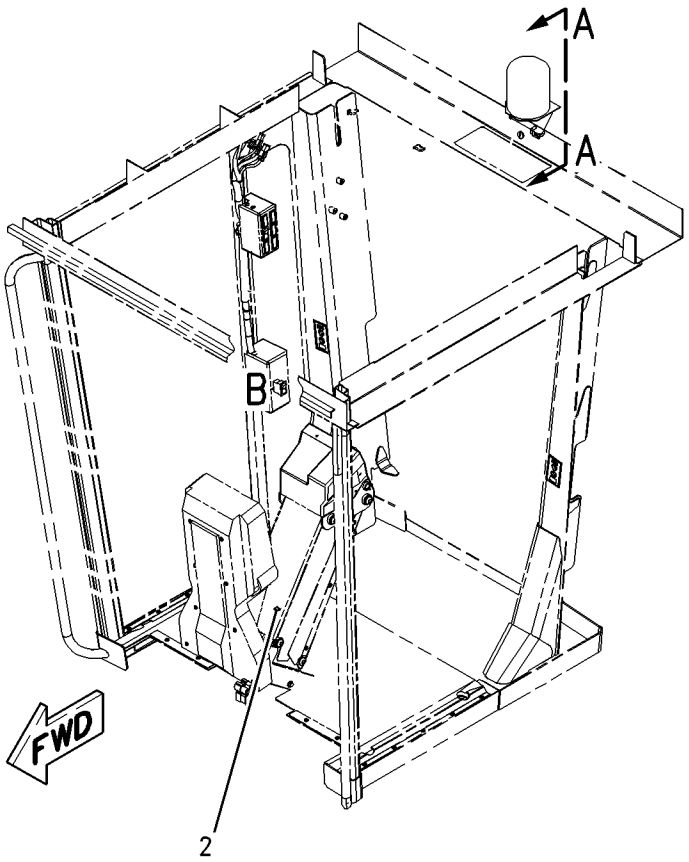

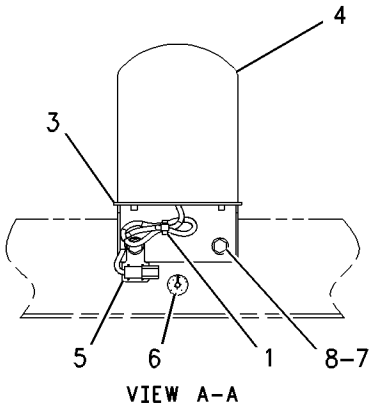

VIEW A–A

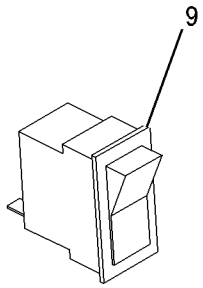

VIEW OF AREA B

GRAPHIC #1 g00847973

MEMORANDA

ELECTRICAL AND STARTING SYSTEM

161-0774 LIGHTING GP-WARNING–ROTATING

S/N: CAF1-UP
AN ATTACHMENT

SMCS-1429, 1431 **i01825809**

NOTE	REF NO	GRAPHIC REF	PART NUMBER	QTY	PART NAME 1 2 3 4 5 6 (PRODUCT LEVEL)	SEE PAGE
	1	1	**3S-2093**	6	STRAP-CABLE	
	2	1	**9W-1442**	1	FUSE (10 AMP) (WARNING BEACON)	
	3	1	**107-4932**	1	PLATE AS	
Y	4	1	**128-6983**	1	LAMP GP-WARNING BEACON (AMBER)	168
	5	1	**169-3230**	1	HARNESS AS-FRONT LIGHTING	
		1	**102-8804**	1	KIT-RECEPTACLE (4 PIN) (BEACON SWITCH)	
					(INCLUDES RECEPTACLE ASSEMBLY AND WEDGE)	
		1	**155-2270**	1	KIT-CONNECTING PLUG (2 PIN) (BEACON LIGHT)	
					(INCLUDES PLUG ASSEMBLY AND WEDGE)	
	6	1	**173-1885**	1	COVER	
	7	1	**115-3070**	1	CLIP AS-CONNECT	
	8	1	**130-5300**	1	CLIP	
	9	1	**5P-8525**	1	GROMMET	
	10	1	**8T-4121**	2	WASHER-HARD (11X21X2.5MM THK)	
M	11	1	**8T-4136**	2	BOLT (M10X1.5X25MM)	
	12	1	**9D-8508**	1	GROMMET	
M	13	1	**9X-2043**	2	SCREW-TRUSS HEAD (M6X1X14MM)	
	14	1	**102-9862**	1	SWITCH AS (WARNING BEACON)	
		1	**3E-8822**	1	ACTUATOR-ROCKER	
		1	**3E-8825**	1	LAMP (24 VOLT) (WARNING BEACON)	

M-METRIC PART
Y-SEPARATE ILLUSTRATION

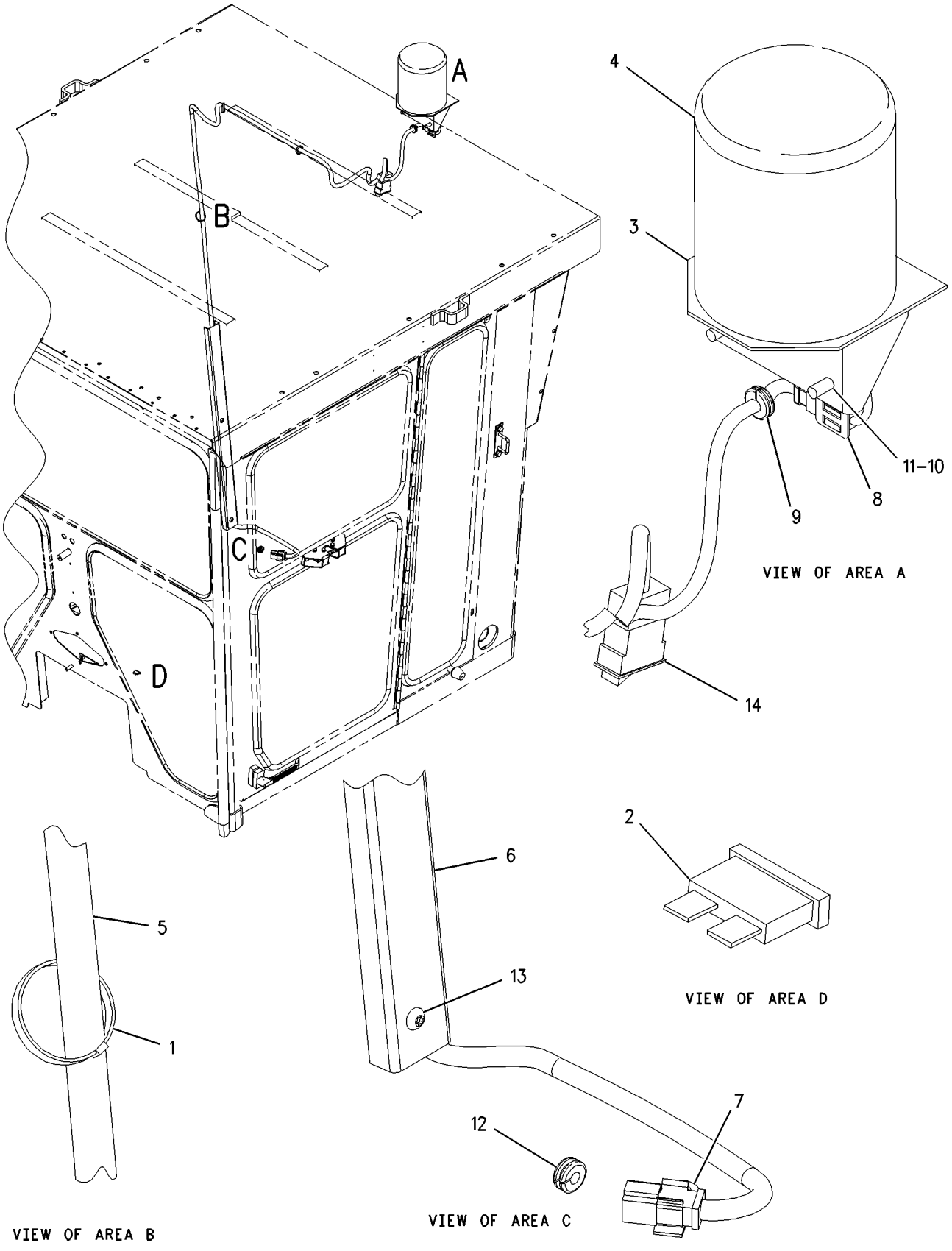

GRAPHIC #1

g00843959

117-3915 MOTOR GP-ELECTRIC

S/N: CAF1-UP
PART OF 123-8867 PUMP & MOTOR GP-SEC STEERING
AN ATTACHMENT

SMCS-5927 **i00138924**

NOTE	REF NO	GRAPHIC REF	PART NUMBER	QTY	PART NAME 1 2 3 4 5 6 (PRODUCT LEVEL)	SEE PAGE
	1	1	**6V-8801**	2	NUT (3/8-16 THD)	
	2	1	**7X-0608**	2	WASHER-HARD (2.0MM THK)	

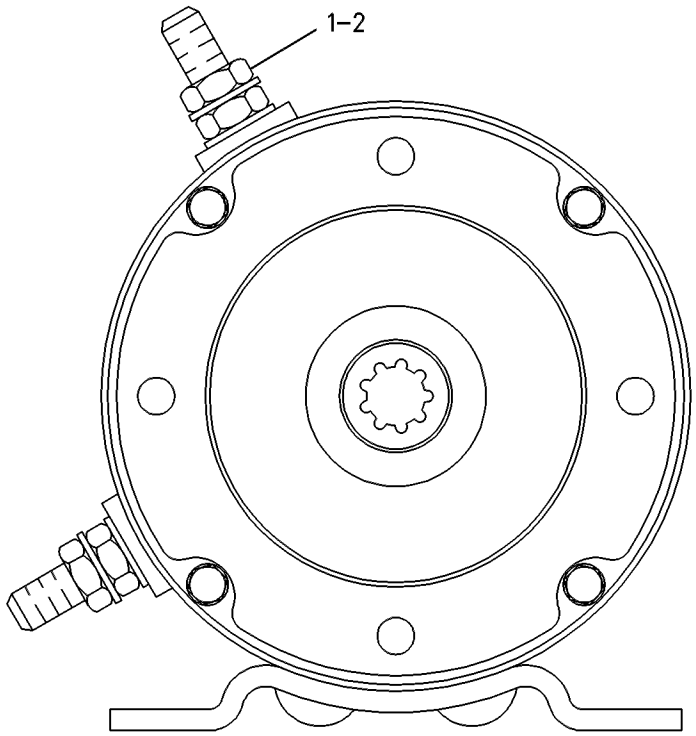

GRAPHIC #1 g00085784

183-6189 RECEPTACLE GP-AUXILIARY START

S/N: CAF1-UP
AN ATTACHMENT

SMCS-1463 **i01681216**

NOTE	REF NO	GRAPHIC REF	PART NUMBER	QTY	PART NAME 1 2 3 4 5 6 (PRODUCT LEVEL)	SEE PAGE
	1	1	**184-4467**	1	RECEPTACLE AS	
		1	**1S-7251**	2	TERMINAL-RING (FOR 1/2 IN BOLT)	
E		1	**5P-0747**		CABLE (00GA)(BLACK) (23CM)	
E		1	**5P-0761**		CABLE (00GA)(RED) (65CM)	
		1	**8N-0869**	1	COVER-TERMINAL (RED)	
	2	1	**4H-2558**	1	GROMMET	
	3	1	**4L-6454**	4	BOLT (3/8-16X1 IN)	
	4	1	**6V-8801**	4	NUT (3/8-16 THD)	
	5	1	**8S-2634**	1	COVER AS	
		1	**2P-2975**	2	SEAL-O-RING	
	6	1	**8T-4896**	4	WASHER-HARD (10.2X18.5X2.5MM THK)	
	7	1	**9M-8406**	1	CLIP	

E-ORDER BY THE CENTIMETER

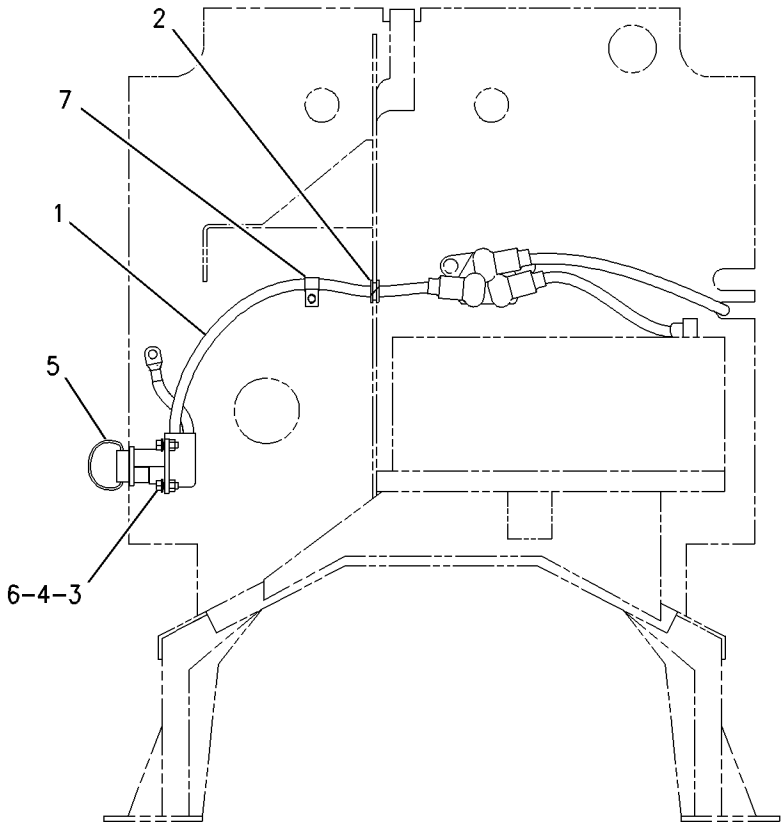

REAR VIEW

GRAPHIC #1 g00846677

195-7335 SENSOR GP-ENGINE

S/N: BMA1-UP

PART OF 199-5055 ENGINE AR-COMPLETE

SMCS-1718, 1906, 1912, 1923, 1924, 1925, 1929 **i01696011**

NOTE	REF NO	GRAPHIC REF	PART NUMBER	QTY	PART NAME 1 2 3 4 5 6 (PRODUCT LEVEL)	SEE PAGE
	1	1	**3E-2332**	2	ELBOW	
	2	1	**9X-0262**	1	ADAPTER	
	3	1	**130-9811**	1	SENSOR GP-TEMPERATURE (COOLANT)	
	3A	1	**130-9811**	1	SENSOR GP-TEMPERATURE (INTAKE AIR)	
Y	4	1	**191-6587**	1	SENSOR GP-TEMPERATURE (ENGINE OIL)	217
Y	5	1	**194-6722**	1	SENSOR GP-PRESSURE (ATMOSPHERIC)	209
Y	6	1	**194-6723**	1	SENSOR GP-PRESSURE (TURBO OUTLET)	210
Y	7	1	**194-6725**	1	SENSOR GP-PRESSURE (ENGINE OIL)	211
Y	7A	1	**194-6725**	1	SENSOR GP-PRESSURE (FUEL)	211
Y	8	1	**194-6726**	1	SENSOR GP-PRESSURE (INJECTION ACTUATION)	212
	9	1	**117-1385**	2	SEAL-O-RING	
Y	10	1	*169-3300*	1	SENSOR GP-SPEED (TIMING)	214
	11	1	*169-5861*	1	PLUG AS	
		1	**3K-8460**	1	PLUG	
		1	**5P-7814**	1	SEAL-O-RING	
	12	1	**3E-4352**	1	WASHER-HARD (8.8X20.5X2.5MM THK)	
	13	1	**3J-1907**	2	SEAL-O-RING	
	14	1	**3J-7354**	2	SEAL-O-RING	
	15	1	**5P-7814**	1	SEAL-O-RING	
M	16	1	**6V-3940**	1	BOLT (M8X1.25X25MM)	
	17	1	**6V-5048**	2	SEAL-O-RING	
	18	1	**6V-5049**	2	SEAL-O-RING	
	19	1	**6V-6609**	2	SEAL-O-RING	
	20	1	**102-8803**	1	KIT-RECEPTACLE (3 PIN)	
					(INCLUDES RECEPTACLE AS AND WEDGE)	
		1	**3E-3371**	1	WEDGE-RECEPTACLE LOCK (3 PIN)	
		1	**8T-8737**	3	PLUG-SEAL	

M-METRIC PART
Y-SEPARATE ILLUSTRATION

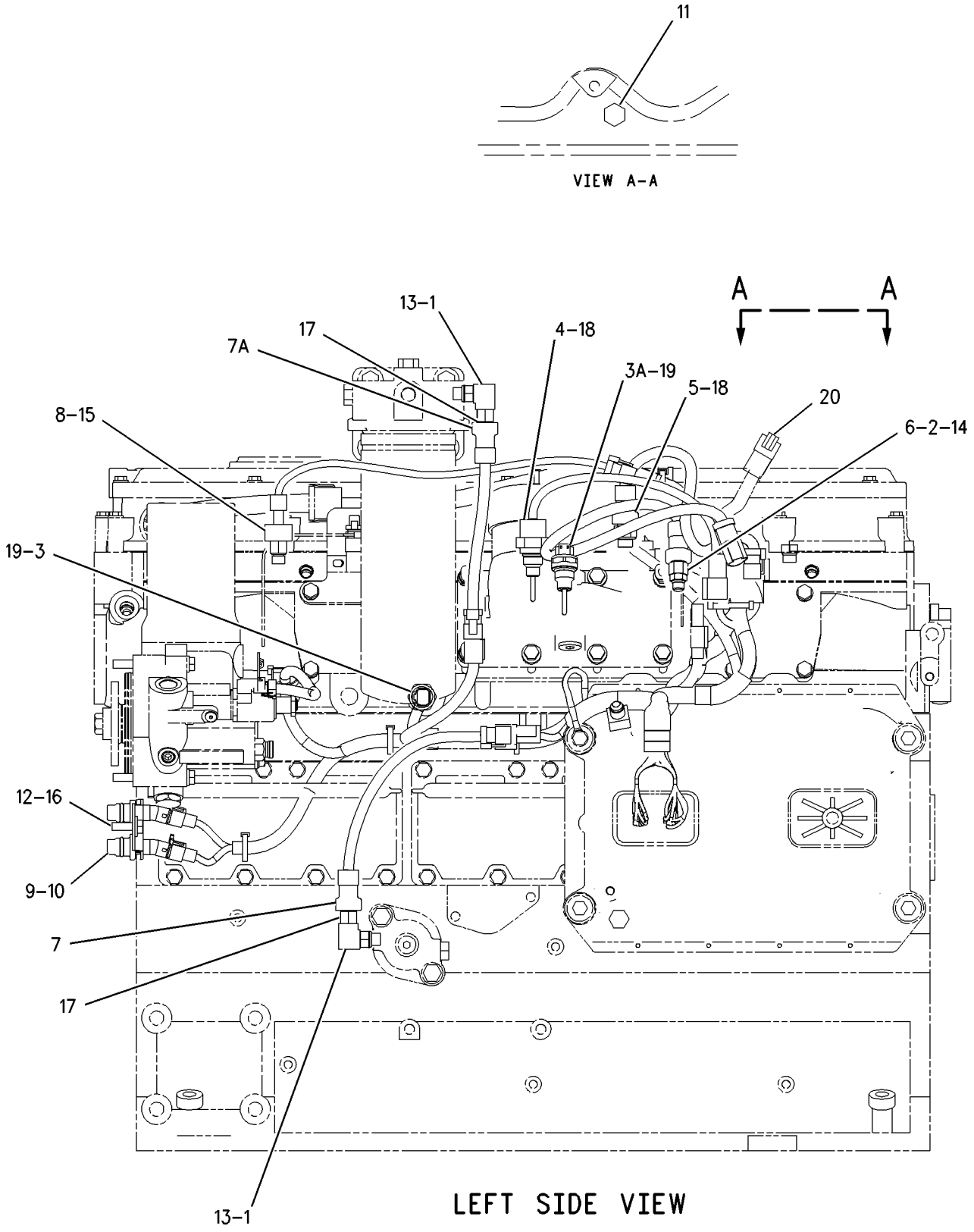

GRAPHIC #1 g00873650

147-1680 SENSOR GP-POSITION–LEFT BRAKE PEDAL–CLUTCH

S/N: CAF1-UP

PART OF 159-5933 CONTROL GP-CLUTCH

SMCS-1408, 1905 **i01814786**

NOTE	REF NO	GRAPHIC REF	PART NUMBER	QTY	PART NAME 1 2 3 4 5 6 (PRODUCT LEVEL)	SEE PAGE
	1	1	**102-8803**	1	KIT-RECEPTACLE (3 PIN)	
					(INCLUDES RECEPTACLE AS & WEDGE)	
	2	1	**8T-8729**	3	PIN-CONNECTOR	

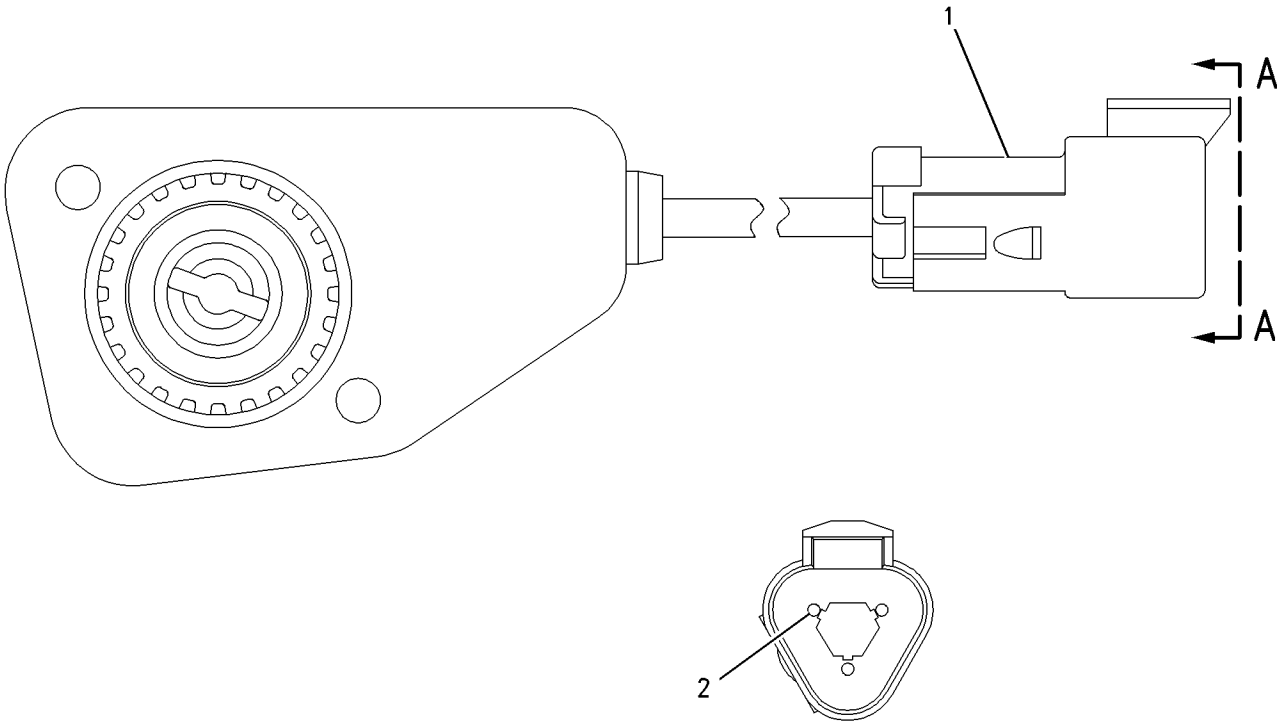

VIEW A-A

GRAPHIC #1 g00711081

160-2443 SENSOR GP-POSITION–TRHOTTLE

S/N: CAF1-UP
ROTARY
PART OF 159-5935 CONTROL GP-GOVERNOR

SMCS-1408, 1905 **i01431988**

NOTE	REF NO	GRAPHIC REF	PART NUMBER	QTY	PART NAME 1 2 3 4 5 6 (PRODUCT LEVEL)	SEE PAGE
	1	1	**102-8803**	1	KIT-RECEPTACLE (3 PIN)	
					(INCLUDES RECEPTACLE AS & WEDGE)	
	2	1	**8T-8729**	3	PIN-CONNECTOR	
	3	1	**3E-3371**	1	WEDGE-RECEPTACLE LOCK (3 PIN)	

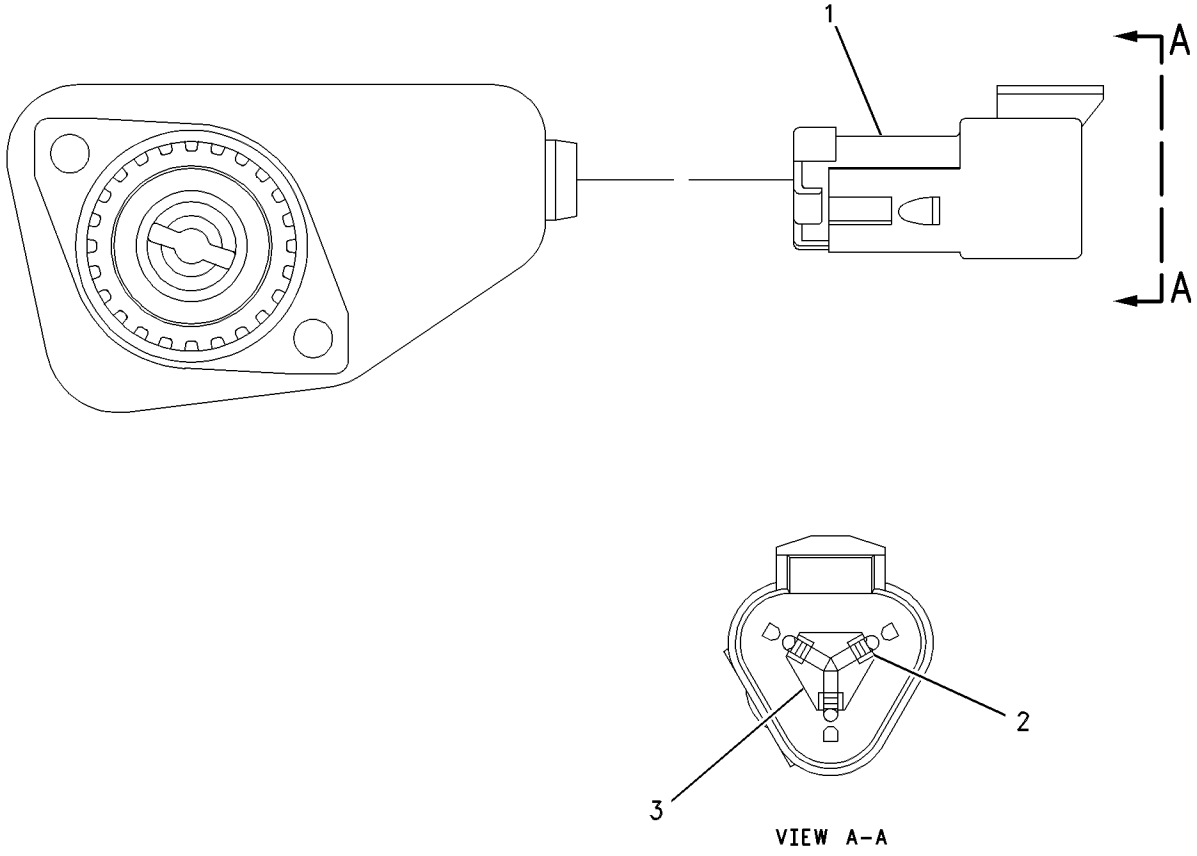

GRAPHIC #1 g00637818

167-1709 SENSOR GP-PRESSURE–HYDRAULIC FAN

S/N: CAF1-UP
PART OF 175-6981 LINES GP-HYDRAULIC FAN
ALSO AN ATTACHMENT

SMCS-4351, 4352 **i01679159**

NOTE	REF NO	GRAPHIC REF	PART NUMBER	QTY	PART NAME 1 2 3 4 5 6 (PRODUCT LEVEL)	SEE PAGE
E	1	1	**9X-1813**		SLEEVE (34 CM)	
	2	1	**155-2260**	1	KIT-CONNECTING PLUG (3 PIN)	
					(KIT INCLUDES PLUG AS & WEDGE)	
	3	1	**194-5226**	3	HARNESS AS-SENSOR (18-16 AWG)	
					–OR–	
		1	**194-5227**	3	HARNESS AS-SENSOR (14 AWG)	
	4	1	**3E-3368**	1	WEDGE-PLUG LOCK	

E-ORDER BY THE CENTIMETER

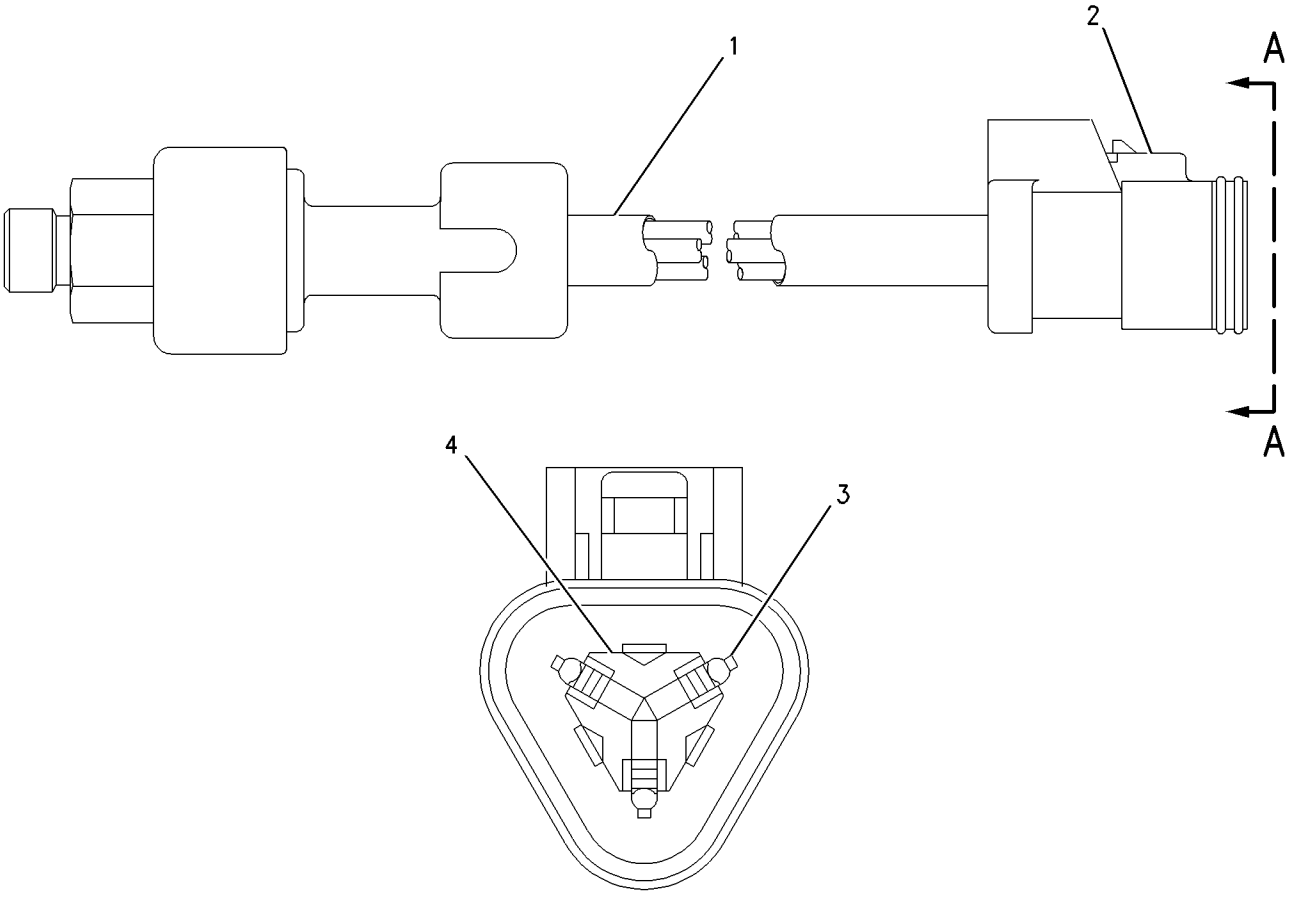

VIEW A-A

GRAPHIC #1 g00888413

194-6722 SENSOR GP-PRESSURE–ATMOSPHERIC

S/N: BMA1-UP

PART OF 195-7335 SENSOR GP-ENGINE

SMCS-4351, 4352 **i01821083**

NOTE	REF NO	GRAPHIC REF	PART NUMBER	QTY	PART NAME 1 2 3 4 5 6 (PRODUCT LEVEL)	SEE PAGE
E	1	1	**9X-1813**		SLEEVE (34CM)	
	2	1	**155-2260**	1	KIT-CONNECTING PLUG (3 PIN)	
					(INCLUDES PLUG AS AND WEDGE)	
	3	1	*180-9340*	3	SOCKET-CONNECTOR	
	4	1	**3E-3368**	1	WEDGE-PLUG LOCK	

E-ORDER BY THE CENTIMETER

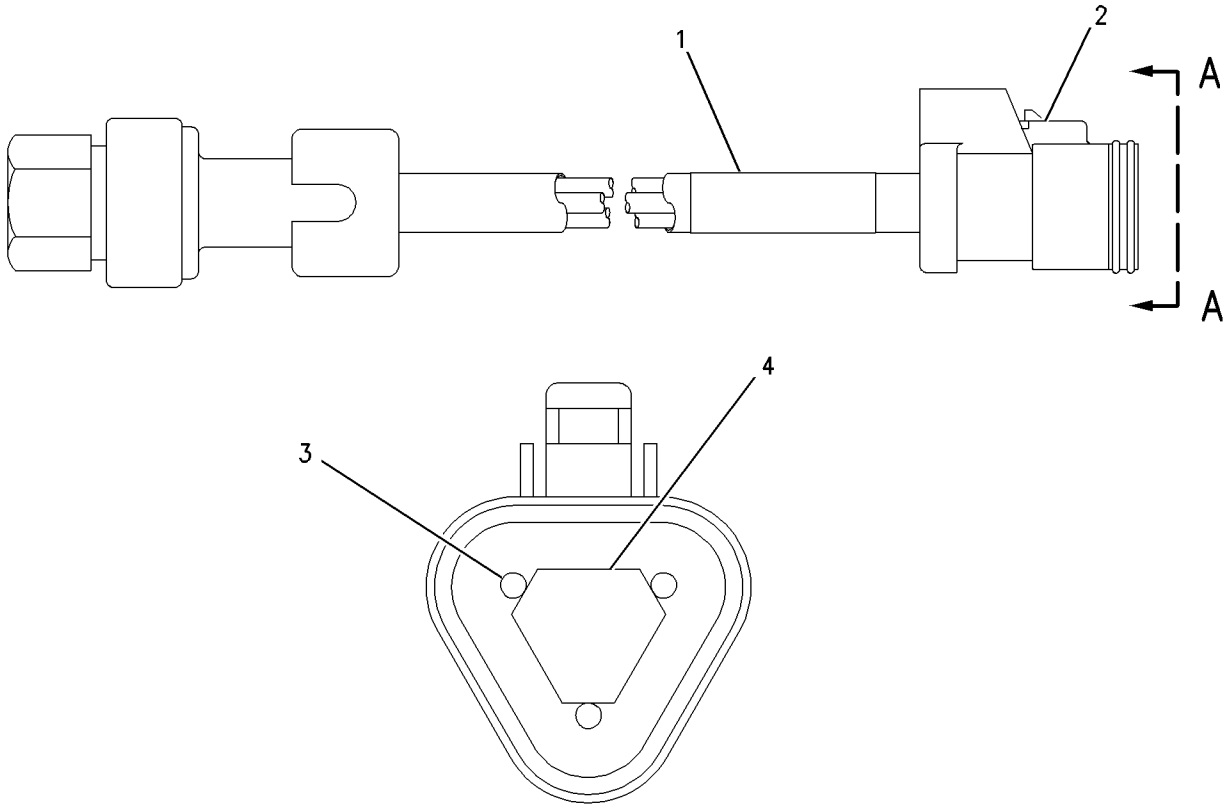

VIEW A-A

GRAPHIC #1 g00851220

194-6723 SENSOR GP-PRESSURE–TURBO OUTLET

S/N: BMA1-UP

PART OF 195-7335 SENSOR GP-ENGINE

SMCS-4351, 4352 **i01682010**

NOTE	REF NO	GRAPHIC REF	PART NUMBER	QTY	PART NAME 1 2 3 4 5 6 (PRODUCT LEVEL)	SEE PAGE
BE	1	1	**9X-1813**		SLEEVE (34 CM)	
	2	1	**102-8803**	1	KIT-RECEPTACLE (3 PIN)	
					(INCLUDES RECEPTACLE AS & WEDGE)	
	3	1	**180-9339**	3	PIN-CONNECTOR (FOR 14 GAUGE WIRE)	
	4	1	**3E-3371**	1	WEDGE-RECEPTACLE LOCK (3 PIN)	

B-USE AS REQUIRED
E-ORDER BY THE CENTIMETER

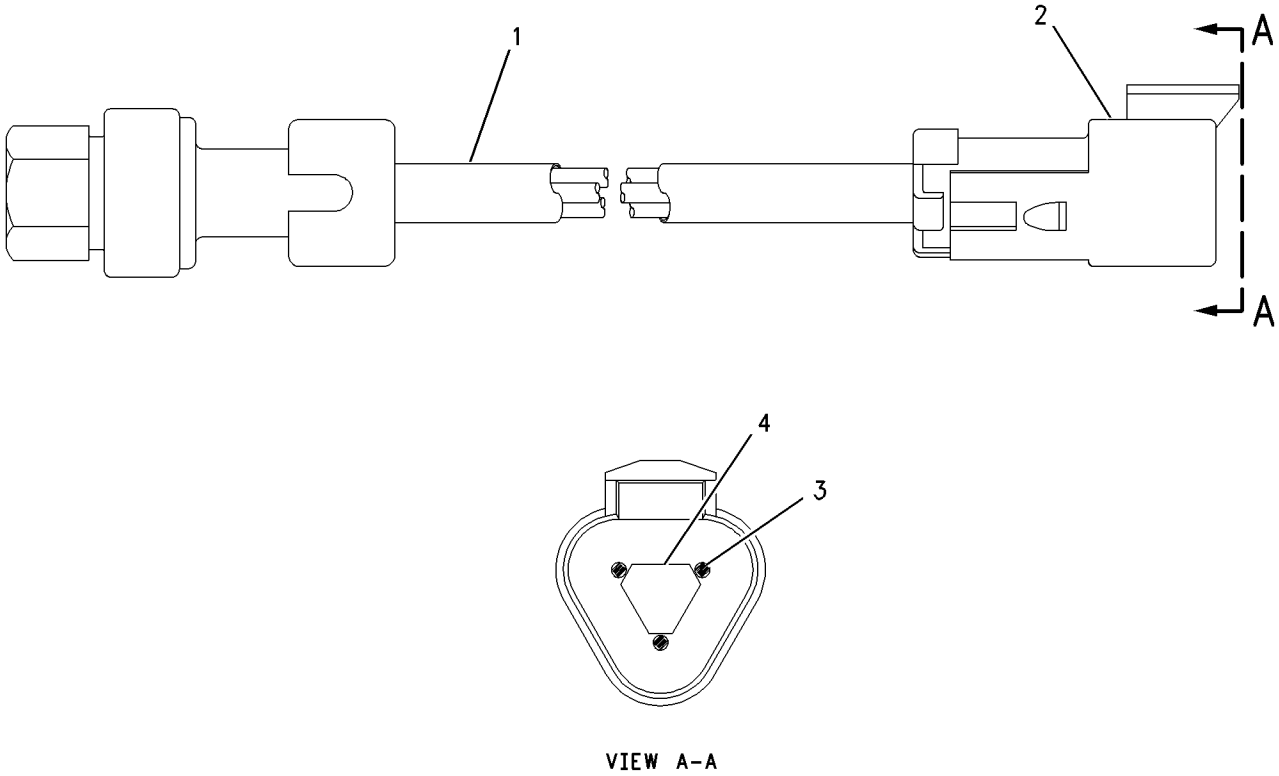

GRAPHIC #1 g00865974

194-6725 SENSOR GP-PRESSURE–ENGINE

S/N: BMA1-UP

PART OF 195-7335 SENSOR GP-ENGINE

SMCS-4351, 4352 **i01681907**

NOTE	REF NO	GRAPHIC REF	PART NUMBER	QTY	PART NAME 1 2 3 4 5 6 (PRODUCT LEVEL)	SEE PAGE
BE	1	1	**9X-1813**		SLEEVE (34 CM)	
	2	1	**155-2260**	1	KIT-CONNECTING PLUG (3 PIN)	
					(INCLUDES PLUG AS AND WEDGE)	
	3	1	**180-9340**	3	SOCKET-CONNECTOR	
	4	1	**3E-3368**	1	WEDGE-PLUG LOCK	

B-USE AS REQUIRED
E-ORDER BY THE CENTIMETER

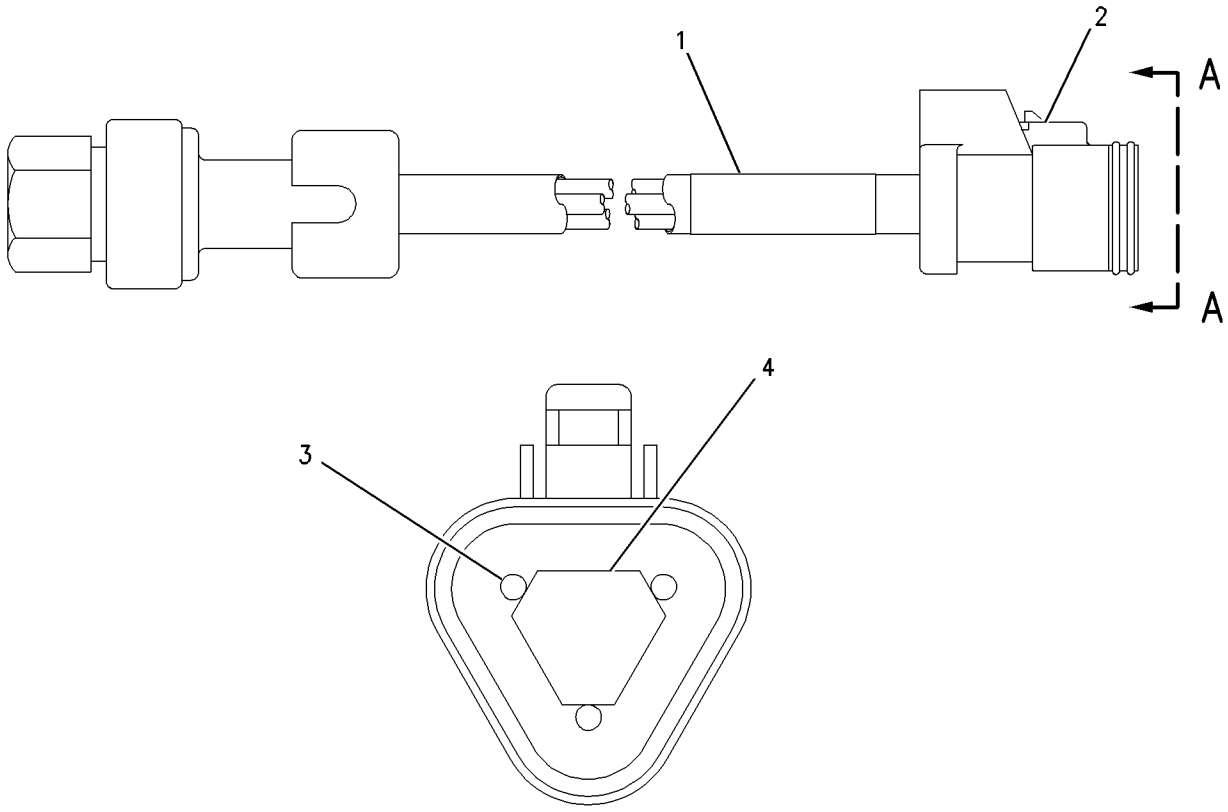

VIEW A-A

GRAPHIC #1 g00851220

194-6726 SENSOR GP-PRESSURE—INJECTION ACTUATION

S/N: BMA1-UP

PART OF 195-7335 SENSOR GP-ENGINE

SMCS-4351, 4352 **i01694644**

NOTE	REF NO	GRAPHIC REF	PART NUMBER	QTY	PART NAME 1 2 3 4 5 6 (PRODUCT LEVEL)	SEE PAGE
E	1	1	**9X-1813**		SLEEVE (34 CM)	
	2	1	**155-2260**	1	KIT-CONNECTING PLUG (3 PIN)	
					(INCLUDES PLUG AS & WEDGE)	
	3	1	**180-9340**	3	SOCKET-CONNECTOR (FOR 16-18 GA WIRE)	
	4	1	**3E-3368**	1	WEDGE-PLUG LOCK	

E-ORDER BY THE CENTIMETER

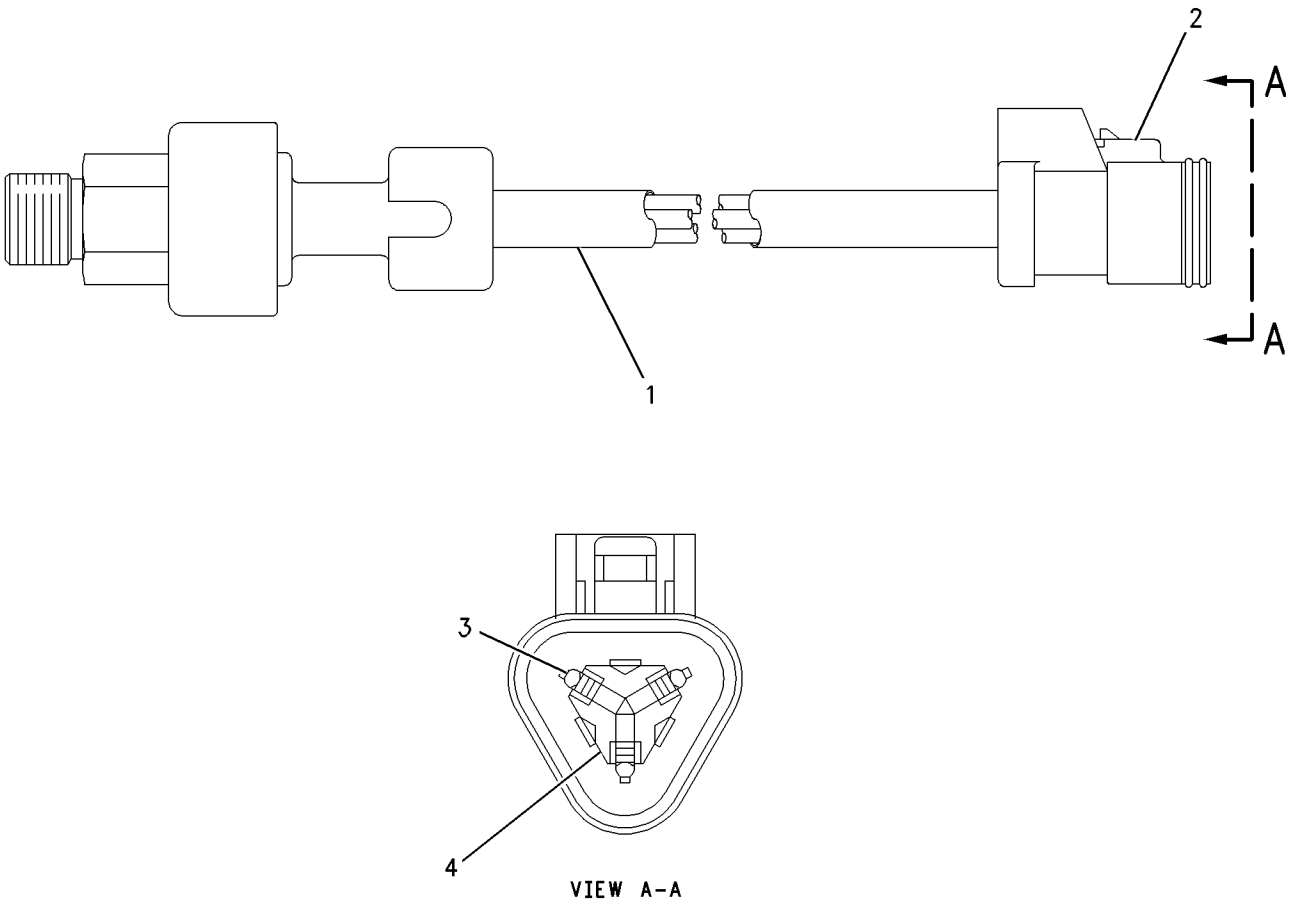

GRAPHIC #1 g00851235

119-4142 SENSOR GP-SPEED–TIMING

S/N: BMA1-UP

PART OF 195-7335 SENSOR GP-ENGINE

FIELD REPLACEMENT FOR 169-3300 SENSOR GP-SPEED

SMCS-1907, 3175 **i01633524**

NOTE	REF NO	GRAPHIC REF	PART NUMBER	QTY	PART NAME 1 2 3 4 5 6 (PRODUCT LEVEL)	SEE PAGE
	1	1	**117-1385**	2	SEAL-O-RING	

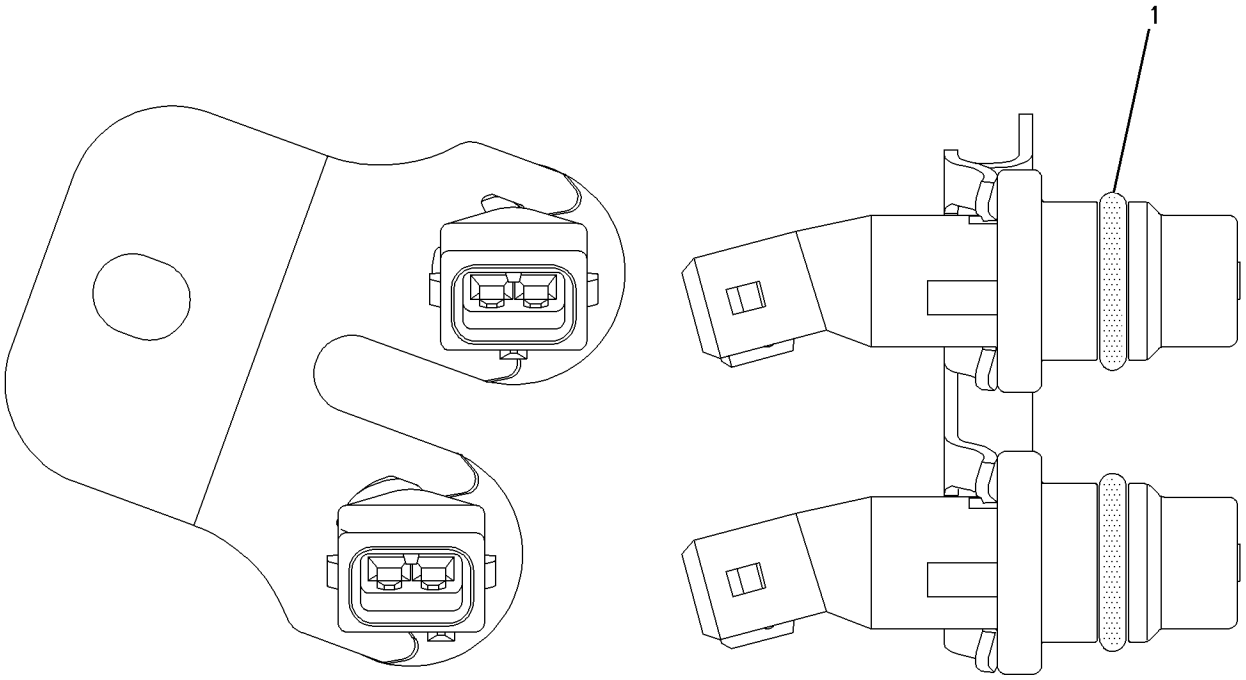

GRAPHIC #1 g00825060

169-3300 SENSOR GP-SPEED–TIMING

S/N: BMA1-UP

PART OF 195-7335 SENSOR GP-ENGINE

SMCS-1907, 3175 **i01850940**

NOTE	REF NO	GRAPHIC REF	PART NUMBER	QTY	PART NAME 1 2 3 4 5 6 (PRODUCT LEVEL)	SEE PAGE
	1	1	**109-7194**	1	PICKUP AS-MAGNETIC (LOW SPEED/TIMING)	
	2	1	**109-7195**	1	PICKUP AS-MAGNETIC (HIGH SPEED/TIMING)	
	3	1	**137-8752**	1	BRACKET	

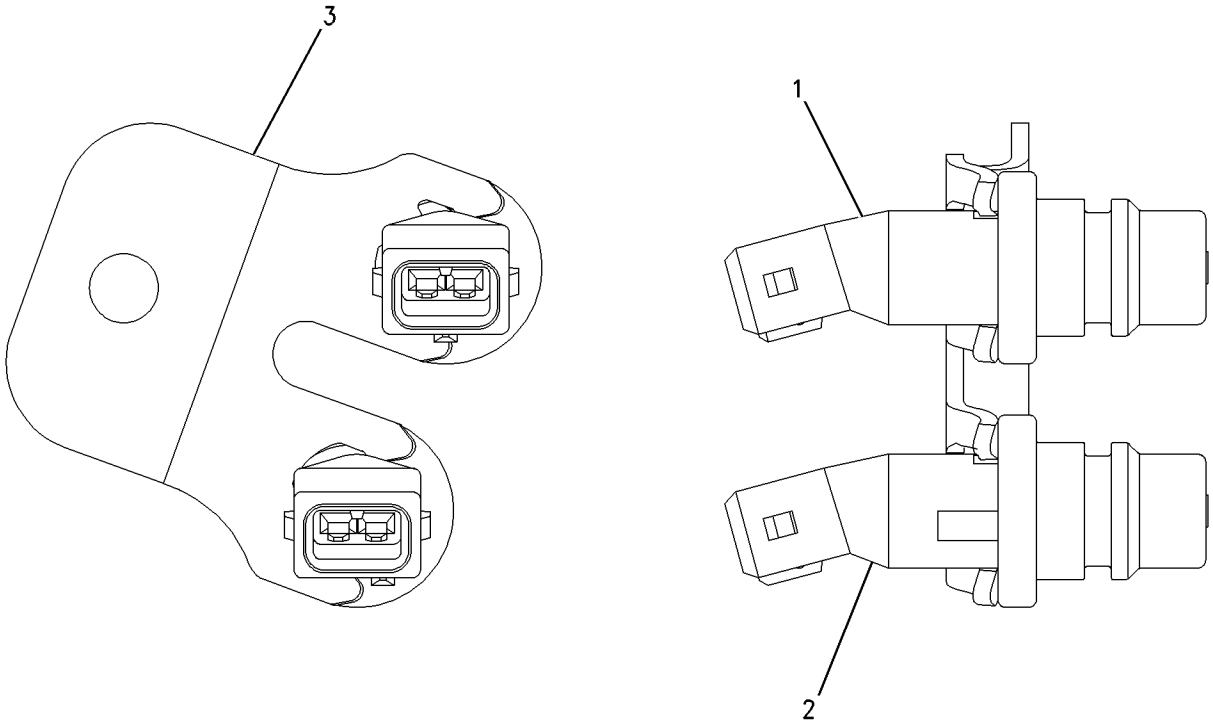

GRAPHIC #1 g00673510

183-8597 SENSOR GP-SPEED–HIGH OUTPUT

S/N: BJN1-UP

PART OF 180-9146 CASE & PARTS GP-TRANSMISSION

SMCS-1907, 3175 **i01696433**

NOTE	REF NO	GRAPHIC REF	PART NUMBER	QTY	PART NAME 1 2 3 4 5 6 (PRODUCT LEVEL)	SEE PAGE
	1	1	**171-5349**	1	STRAP-MARKER	
	2	1	**102-8802**	1	KIT-RECEPTACLE (2 PIN)	
					(INCLUDES RECEPTACLE AS & WEDGE)	
	3	1	**186-3735**	2	PIN-CONNECTOR	
	4	1	**3E-3365**	1	WEDGE-RECEPTACLE LOCK (2 PIN)	
E	5	1	**9X-1813**		SLEEVE (14CM)	

E-ORDER BY THE CENTIMETER

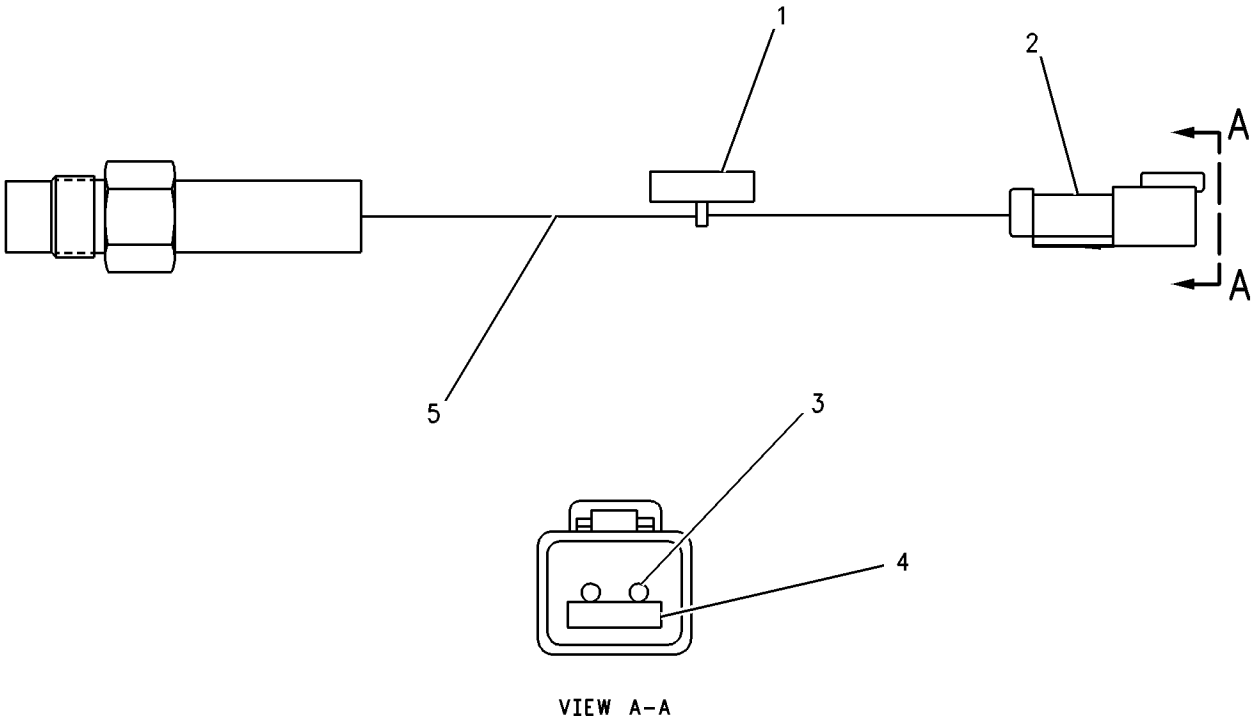

GRAPHIC #1 g00680294

3E-8700 SENSOR GP-TEMPERATURE–TRANSMISSION OIL

S/N: BJN1-UP

PART OF 180-9146 CASE & PARTS GP-TRANSMISSION

SMCS-1330 **i00676749**

NOTE	REF NO	GRAPHIC REF	PART NUMBER	QTY	PART NAME 1 2 3 4 5 6 (PRODUCT LEVEL)	SEE PAGE
	1	1	**8T-8730**	3	SOCKET-CONNECTOR	
	2	1	**102-8813**	1	SEAL-INTERFACE	
	3	1	**102-8808**	1	KIT-CONNECTING PLUG	
E	4	1	**9X-1813**		SLEEVE (31 CM)	
	5	1	**3E-3368**	1	WEDGE-PLUG LOCK	

E-ORDER BY THE CENTIMETER

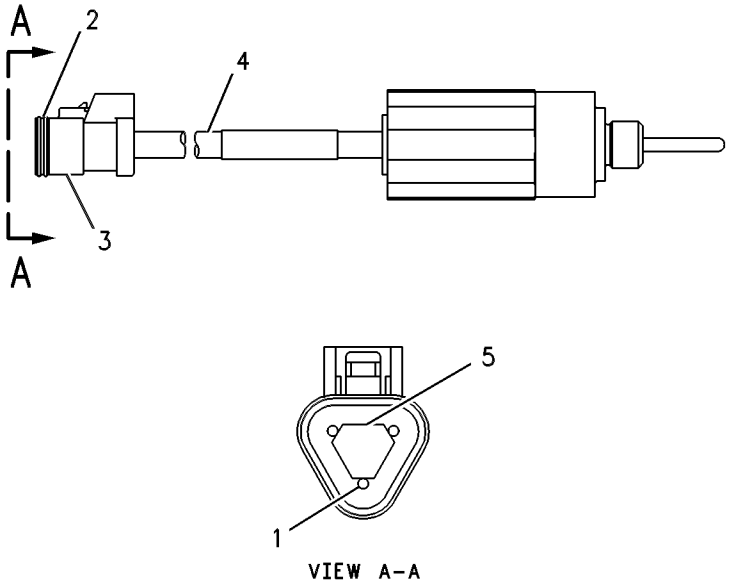

GRAPHIC #1 g00248316

191-6587 SENSOR GP-TEMPERATURE–ENGINE OIL

S/N: BMA1-UP

PART OF 195-7335 SENSOR GP-ENGINE

SMCS-1330 **i01676674**

NOTE	REF NO	GRAPHIC REF	PART NUMBER	QTY	PART NAME 1 2 3 4 5 6 (PRODUCT LEVEL)	SEE PAGE
J	1	1	**153-5043**		SLEEVE (1.3DM)	
	2	1	**155-2270**	1	KIT-CONNECTING PLUG (2 PIN)	
					(INCLUDES PLUG AS & WEDGE)	
	3	1	**194-5226**	2	HARNESS AS (SOCKET) (16-18 GA WIRE)	
					–OR–	
		1	**194-5227**	2	HARNESS AS (14 GA WIRE)	
	4	1	**155-2261**	1	WEDGE-PLUG LOCK (2 PIN)	

J-ORDER BY THE DECIMETER

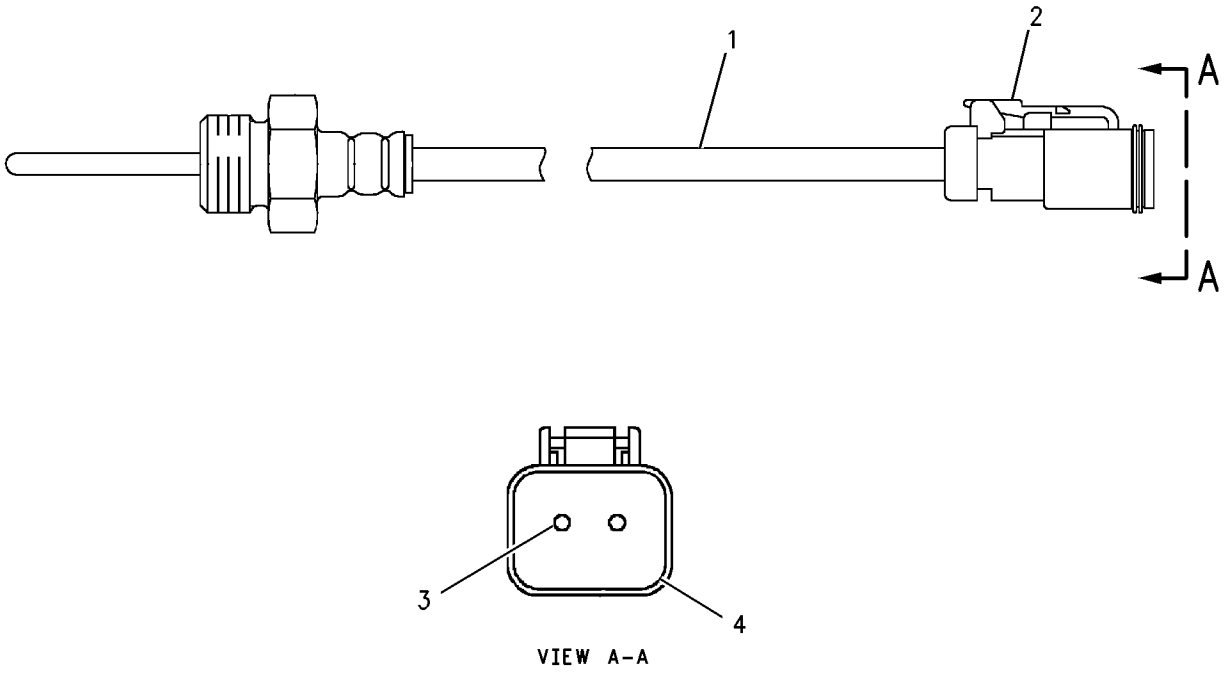

GRAPHIC #1 g00865978

111-4275 STARTING MOTOR GP-ELECTRIC

S/N: BMA1-UP
24 VOLT
PART OF 199-5055 ENGINE AR-COMPLETE

SMCS-1453 **i01635526**

NOTE	REF NO	GRAPHIC REF	PART NUMBER	QTY	PART NAME 1 2 3 4 5 6 (PRODUCT LEVEL)	SEE PAGE
	1	1	**118-9573**	3	BOLT-12 POINT HEAD	
CY	2	1	**207-1517**	1	STARTING MOTOR GP-ELECTRIC	220
	3	1	**3K-3257**	1	GASKET	
M	4	1	**8T-4191**	1	BOLT (M10X1.5X16MM)	
	5	1	**8Y-9603**	1	CABLE AS-STARTING	
		1	**1S-7251**	1	TERMINAL-RING (FOR 1/2 IN BOLT)	
		1	**1S-7252**	1	TERMINAL-RING (FOR 3/8 IN BOLT)	
E		1	**5P-0747**		CABLE (00GA)(BLACK) (28CM)	
	6	1	**8T-4121**	4	WASHER-HARD (11X21X2.5MM THK)	

C-CHANGE FROM PREVIOUS TYPE
E-ORDER BY THE CENTIMETER
M-METRIC PART
Y-SEPARATE ILLUSTRATION

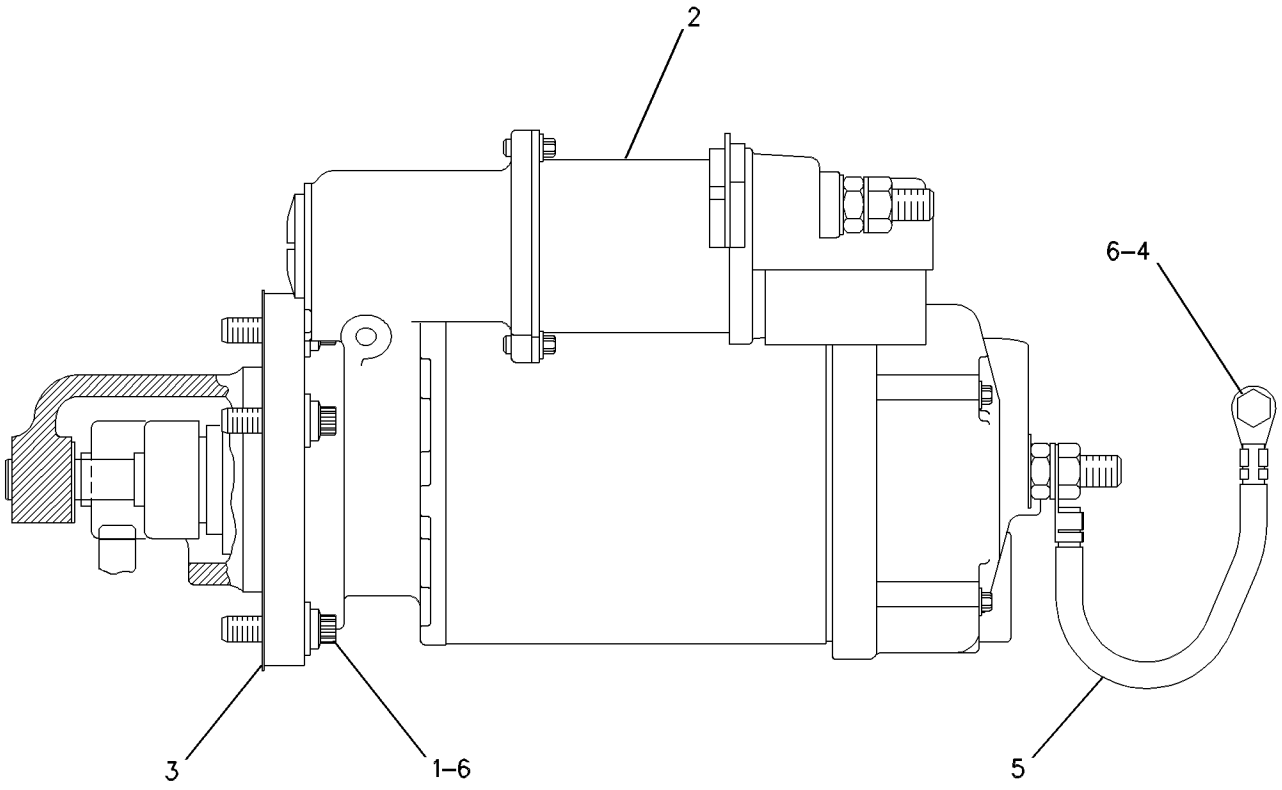

GRAPHIC #1 g00613782

MEMORANDA

207-1517 STARTING MOTOR GP-ELECTRIC

S/N: BMA1-UP

24 VOLT

PART OF 111-4275 STARTING MOTOR GP-ELECTRIC

SMCS-1453 **i01618270**

NOTE	REF NO	GRAPHIC REF	PART NUMBER	QTY	PART NAME 1 2 3 4 5 6 (PRODUCT LEVEL)	SEE PAGE
	1	1	**8T-9884**	1	KIT-INSULATOR (STARTING MOTOR)	
					(INCLUDES INSULATORS AND BUSHING)	
	2	1	**106-7149**	1	HOUSING AS-STARTER	
	3	1	**102-9863**	1	TERMINAL AS-STARTER	
	4	1	**6V-8188**	4	NUT (1/2-13 THD)	
	5	1	**7X-0562**	4	WASHER-HARD (13.5X19X0.8MM THK)	
	6	1	**3E-7853**	1	TERMINAL-STARTING MOTOR	
	7	1	**9X-4821**	1	PLATE AS	
	8	1	**3E-7852**	1	COIL-STARTING MOTOR	
	9	1	**7T-3454**	1	INSULATOR	
	10	1	**9X-4271**	1	CONNECTOR	
	11	1	**7T-3451**	1	INSULATOR-TERMINAL	
	12	1	**8T-8569**	1	INSULATOR-TERMINAL	
	13	1	**5S-7349**	4	BOLT (1/4-20X0.5 IN)	
	14	1	**8T-4205**	4	WASHER-HARD (7.2X14.5X2MM THK)	
	15	1	**7X-1950**	4	SHOE-POLE	
	16	1	**3E-7861**	1	KIT-LEVER	
					(INCLUDES LEVER AS, SHAFT AS, GASKET, O-RINGS, RING, AND NUT)	
	17	1	**3F-0379**	8	SCREW-POLE SHOE	
	18	1	**3E-7855**	1	ARMATURE AS-STARTER (24 VOLT)	
	19	1	**7X-1952**	1	HOUSING AS-LEVER	
	20	1	**4M-1831**	1	PLUG-LEVER HOUSING	
	21	1	**7L-2894**	1	GASKET	
	22	1	**036-9823**	5	BOLT	
	23	1	**3E-7857**	1	DRIVE AS-STARTING MOTOR	
	24	1	**3E-7858**	1	HOUSING AS-STARTER	
	25	1	**7X-3373**	6	BOLT (5/16-18X0.88 IN)	
	26	1	**206-8784**	1	KIT-SOLENOID	
					(INCLUDES SOLENOID AS, BOLT, AND NUTS)	
	27	1	**6V-8378**	2	NUT (10-32 THD)	
	28	1	**8F-1434**	1	LOCKWASHER	
	29	1	**8T-0328**	2	WASHER-HARD (5.5X10X1MM THK)	
	30	1	**9X-4824**	1	COVER-STARTING MOTOR	
	31	1	**9X-4825**	1	KIT-BRUSH (STARTER)	
					(INCLUDES O-RING, SCREWS, BRUSH, AND SPRING)	
					AVAILABLE REPAIR KIT(S):	
			3E-7860	1	KIT-BUSHING	
					(INCLUDES BUSHINGS, PLUG, CUP, SEALS, NUT, O-RINGS, GASKET, SPACERS, WASHERS, AND SCREWS)	

207-1517 STARTING MOTOR GP-ELECTRIC *(contd.)* i01618270

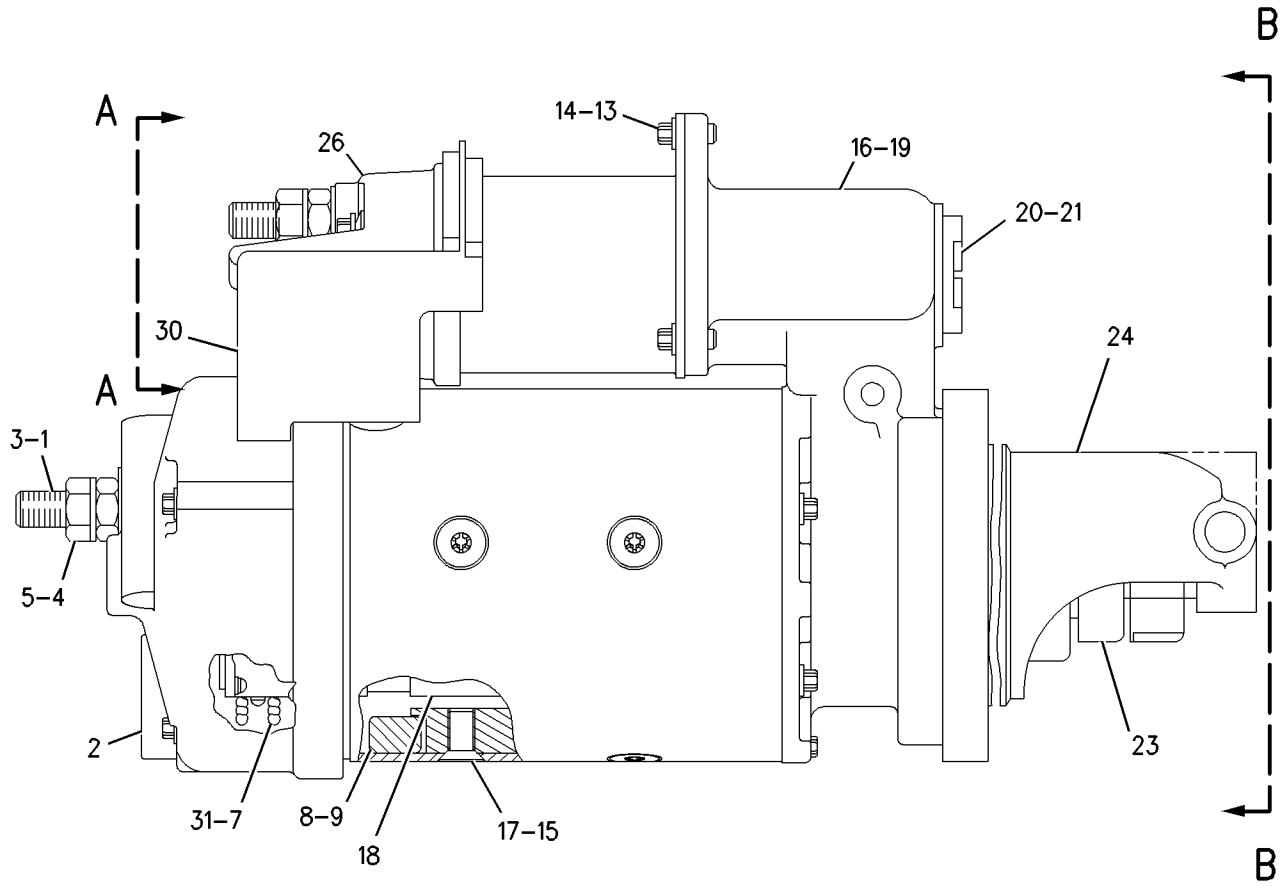

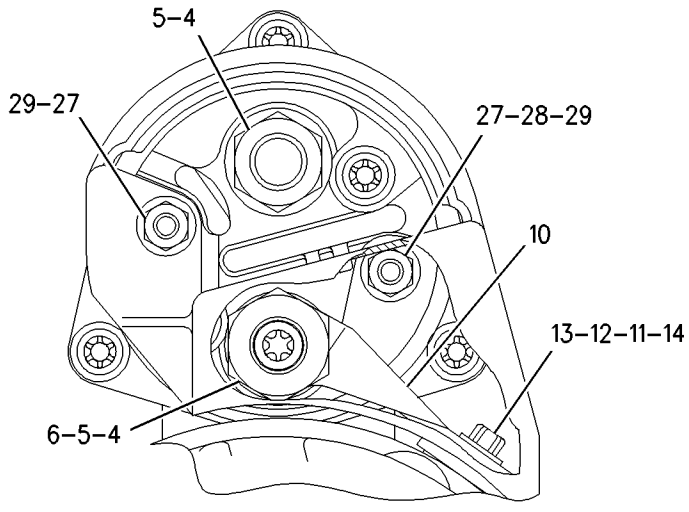

VIEW A-A

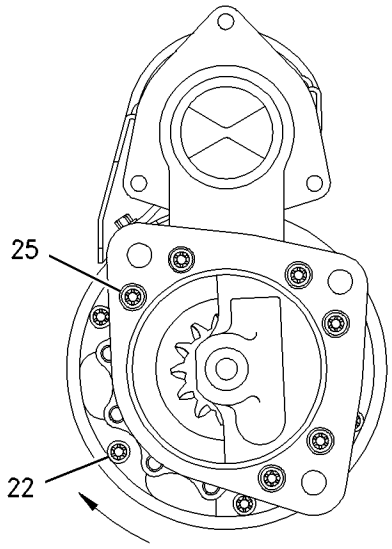

VIEW B-B

GRAPHIC #1 g00839695

164-7577 SWITCH GP-BYPASS

S/N: CAF1-UP
PART OF 207-3819 FILTER GP-OIL
ALSO AN ATTACHMENT

SMCS-1408, 1435 **i01431493**

NOTE	REF NO	GRAPHIC REF	PART NUMBER	QTY	PART NAME 1 2 3 4 5 6 (PRODUCT LEVEL)	SEE PAGE
BE	1	1	**9X-1813**		SLEEVE	
	2	1	**102-8802**	1	KIT-RECEPTACLE (2 PIN)	
					(INCLUDES RECEPTACLE AS & WEDGE)	
	3	1	**186-3735**	2	PIN-CONNECTOR	
	4	1	**3E-3365**	1	WEDGE-RECEPTACLE LOCK (2 PIN)	
	5	1	**3D-2824**	1	SEAL-O-RING (23.47MM ID)	
Z	6	1		1	SWITCH AS	

B-USE AS REQUIRED
E-ORDER BY THE CENTIMETER
Z-NOT SERVICED SEPARATELY

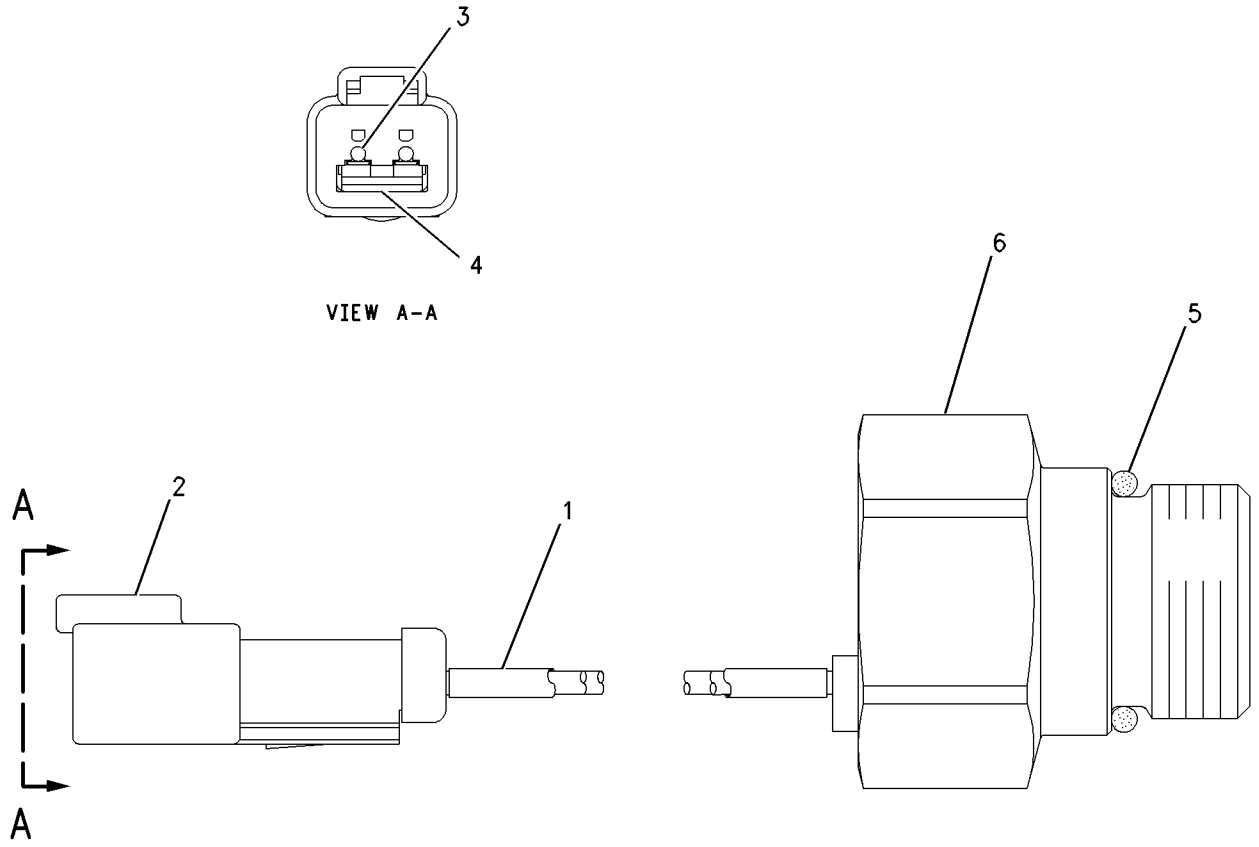

GRAPHIC #1 g00750019

7N-0718 SWITCH GP-DISCONNECT–BATTERY

S/N: CAF1-UP

PART OF 178-0163, 199-1398 WIRING GP-REAR

ALSO AN ATTACHMENT

SMCS-1411 **i01810002**

NOTE	REF NO	GRAPHIC REF	PART NUMBER	QTY	PART NAME 1 2 3 4 5 6 (PRODUCT LEVEL)	SEE PAGE
	1	1	**8H-5306**	1	KEY (BATTERY DISCONNECT)	
	2	1	**8H-5303**	1	NUT (3/4-16 THD)	
	3	1	**2H-3922**	2	LOCKWASHER	
	4	1	**9F-5644**	2	LOCKWASHER	
	5	1	**6F-7045**	2	NUT-FULL (3/8X24 THD)	

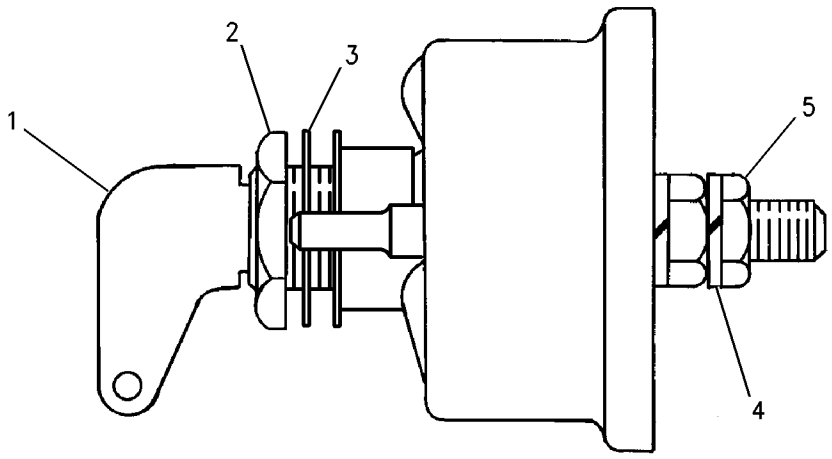

GRAPHIC #1 g00715584

161-1018 SWITCH GP-LIGHT–TURN

S/N: CAF1-UP

PART OF 161-0770 LIGHTING AR-FLOOD & SIGNAL

AN ATTACHMENT

SMCS-1429, 1435, 7332 **i01683219**

NOTE	REF NO	GRAPHIC REF	PART NUMBER	QTY	PART NAME 1 2 3 4 5 6 (PRODUCT LEVEL)	SEE PAGE
	1	1	**8X-5153**	1	FILM-FACE (TURN SIGNAL/HAZARD)	
	2	1	**8X-5154**	1	FILM-FACE (HEADLIGHTS HIGH/LOW BEAM)	
	3	1	**9W-1442**	1	FUSE (10 AMP) (TURN SIGNALS)	
	4	1	**103-5678**	1	SWITCH AS-ROTARY (TURN SIGNAL)	
		1	**5L-7200**	1	SCREW (8-32X0.375 IN)	
		1	**9B-7233**	1	LOCKWASHER	
	5	1	**108-0358**	1	FLASHER AS-ELECTRONIC (12/24 VOLT) (TURN SIGNALS/HAZARDS)	
	6	1	**173-3064**	1	SWITCH AS-TURN SIG & WARNING	
		1	**5L-7200**	1	SCREW (8-32X0.375 IN)	
		1	**9B-7233**	1	LOCKWASHER	
	7	1	**3E-8772**	1	SWITCH AS-ROCKER (HEADLAMP/TAIL)	
		1	**3E-8825**	2	LAMP (24 VOLT) (HEADLAMP/TAIL/INDICATOR)	
		1	**3E-9326**	1	ACTUATOR-ROCKER	
M	8	1	**5C-2890**	2	NUT (M6X1 THD)	
	9	1	**8X-6296**	1	LEVER (TURN SIGNAL)	
	9A	1	**8X-6296**	1	LEVER (HIGH/LOW BEAM)	
M	10	1	**9X-2043**	2	SCREW-TRUSS HEAD (M6X1X14MM)	
	11	1	**9X-8256**	2	WASHER (6.6X12X2MM THK)	

M-METRIC PART

161-1018 **SWITCH GP-LIGHT** ***(contd.)*** **i01683219**

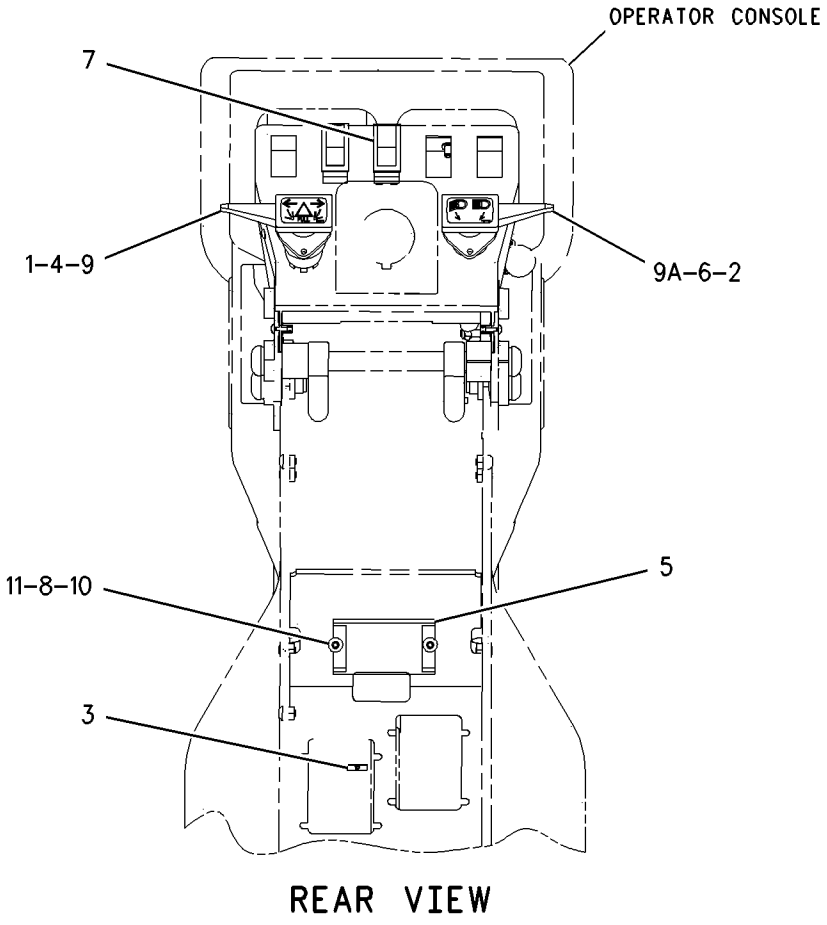

GRAPHIC #1 g00846541

3E-0154 SWITCH GP-MAGNETIC—SECONDARY STEERING

S/N: CAF1-UP

PART OF 188-1041 WIRING GP-SECONDARY STEERING

AN ATTACHMENT

SMCS-7499 **i01676990**

NOTE	REF NO	GRAPHIC REF	PART NUMBER	QTY	PART NAME 1 2 3 4 5 6 (PRODUCT LEVEL)	SEE PAGE
	1	1	**7X-0620**	2	WASHER-HARD (5.5X13X1.6MM THK)	
	2	1	**8F-1434**	2	LOCKWASHER	
	3	1	**6V-8378**	2	NUT (10-32 THD)	
	4	1	**6V-8801**	2	NUT (3/8-16 THD)	
	5	1	**7X-0608**	2	WASHER-HARD (10.2X16X2.0MM THK)	
	6	1	**4D-1326**	2	LOCKWASHER	

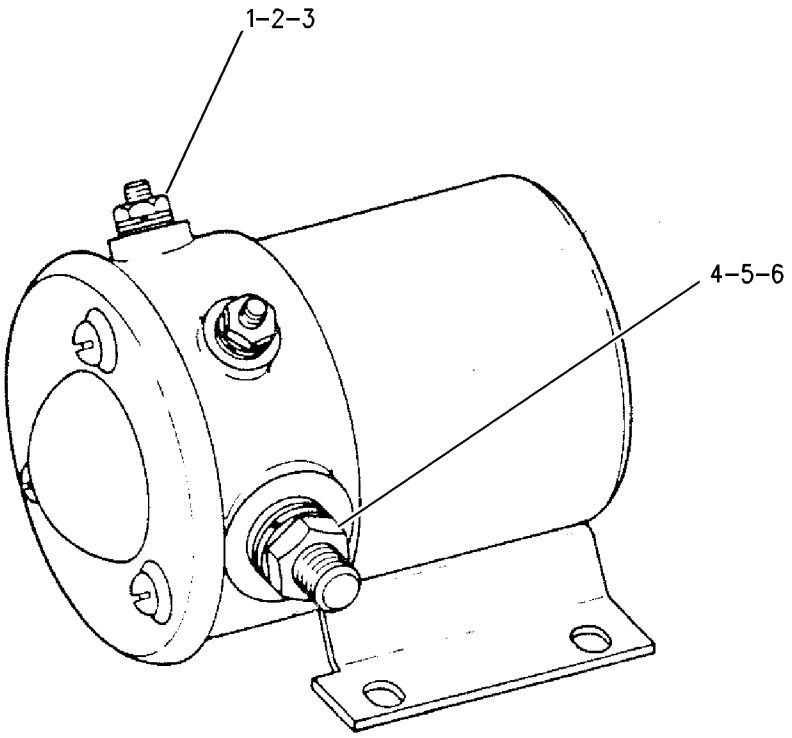

GRAPHIC #1 g00726410

167-0138 SWITCH GP-MAGNETIC—MAIN RELAY

S/N: CAF1-UP
24V
PART OF 178-0163, 199-1398 WIRING GP-REAR
ALSO AN ATTACHMENT

SMCS-7499 **i01589032**

NOTE	REF NO	GRAPHIC REF	PART NUMBER	QTY	PART NAME 1 2 3 4 5 6 (PRODUCT LEVEL)	SEE PAGE
	1	1	**4F-2294**	2	NUT-JAM (5/16-24 THD)	
	2	1	**6V-8186**	2	NUT-FULL (5/16-24 THD)	
	3	1	**155-2270**	1	KIT-CONNECTING PLUG (2 PIN) (MAIN POWER RELAY SWITCH)	
	4	1	**8T-8730**	2	SOCKET-CONNECTOR	
	5	1	**155-2261**	1	WEDGE-PLUG LOCK (2 PIN)	

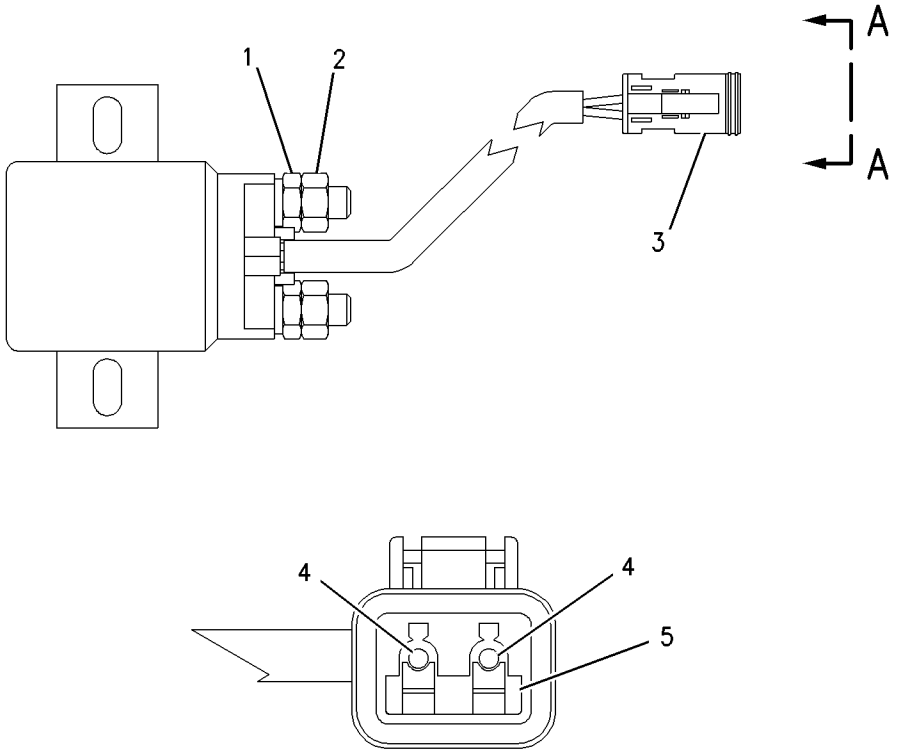

VIEW A-A

GRAPHIC #1 g00823979

3E-0155 SWITCH GP-WIPER

S/N: CAF1-UP
PART OF 177-8784 WIPER GP-WINDOW, 193-7359 WIRING GP-CAB
AN ATTACHMENT

SMCS-7305, 7332 **i01178383**

NOTE	REF NO	GRAPHIC REF	PART NUMBER	QTY	PART NAME 1 2 3 4 5 6 (PRODUCT LEVEL)	SEE PAGE
C	1	1	**102-8806**	1	KIT-RECEPTACLE (8 PIN)	
					(INCLUDES WEDGE)	
	2	1	**7T-9302**	1	KNOB-WIPER SWITCH	
		1	**014-0816**	1	SETSCREW	
	3	1	**8T-8737**	1	PLUG-SEAL	
	4	1	**3E-3389**	1	WEDGE-RECEPTACLE LOCK	
C	5	1	**8T-8729**	3	PIN-CONNECTOR	
	6	1	**6V-8369**	1	NUT (7/16-28 THD)	
	7	1	**2H-3920**	1	LOCKWASHER (11.38MM ID)	
C	8	1	**9W-0852**	4	PIN-CONNECTOR	

C-CHANGE FROM PREVIOUS TYPE

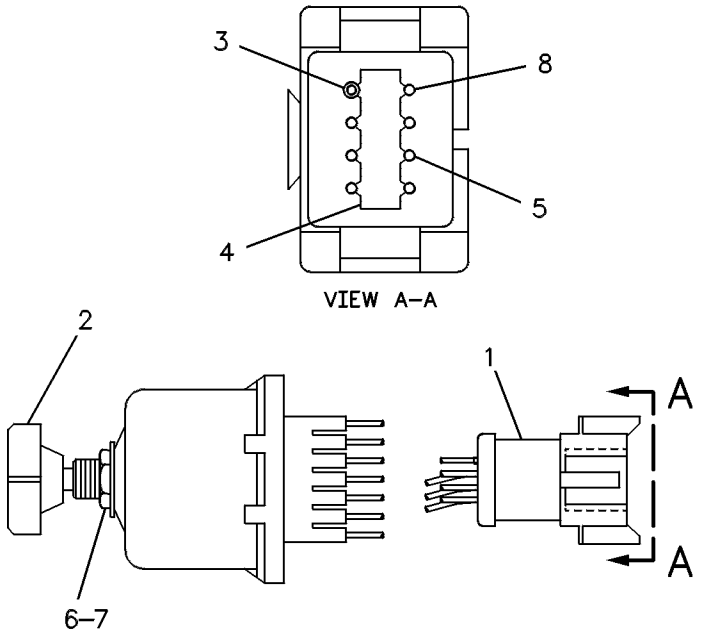

GRAPHIC #1 g00120668

123-6449 WARNING GP-BACKUP

S/N: CAF1-UP
PART OF 184-1299, 193-8253 WIRING GP-REAR
ALSO AN ATTACHMENT

SMCS-7406 **i01850990**

NOTE	REF NO	GRAPHIC REF	PART NUMBER	QTY	PART NAME 1 2 3 4 5 6 (PRODUCT LEVEL)	SEE PAGE
	1	1	**102-8802**	1	KIT-RECEPTACLE (2 PIN) (BACK UP ALARM)	
					(INCLUDES RECEPTACLE AS & WEDGE)	
E	2	1	**9X-1813**		SLEEVE (28CM)	
	3	1	**186-3735**	2	PIN-CONNECTOR	
B	4	1	**5P-5677**		WIRE-ELECTRICAL (18 GA)	

B-USE AS REQUIRED
E-ORDER BY THE CENTIMETER

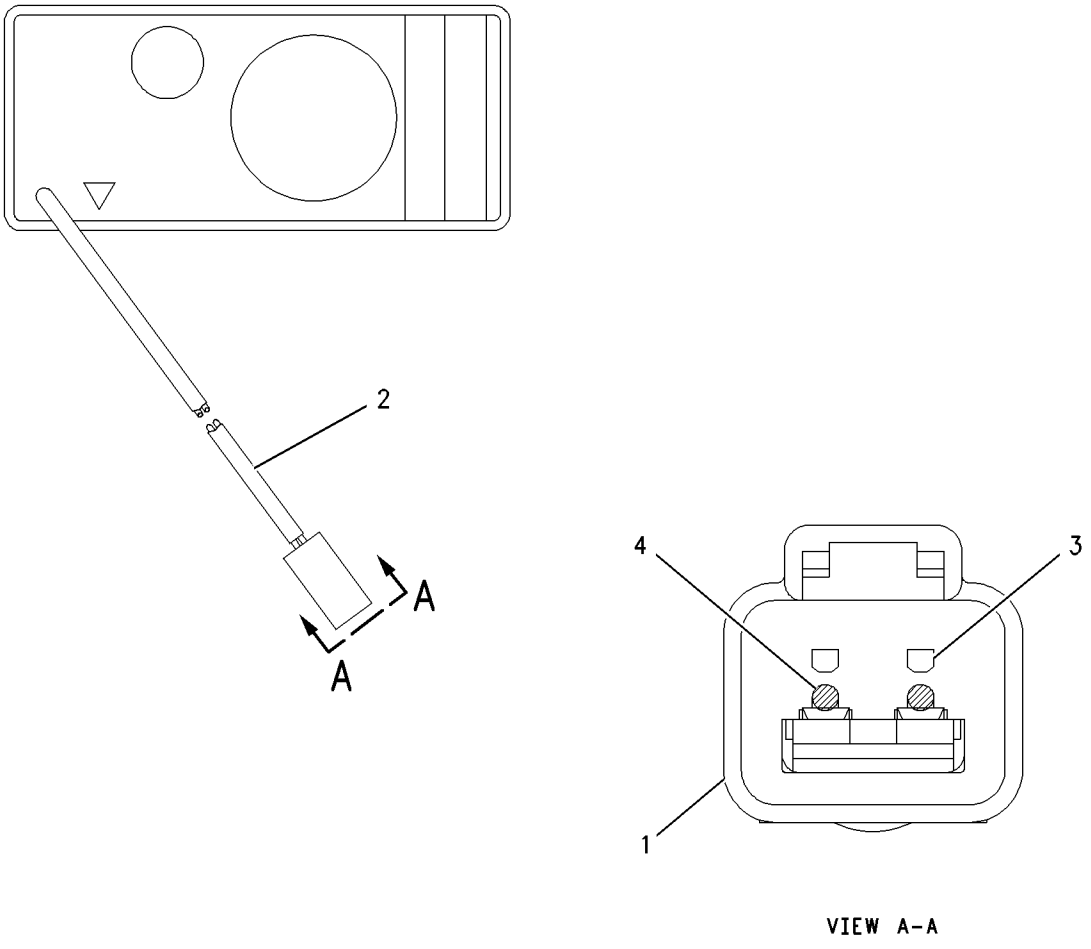

GRAPHIC #1 g00942858

161-1022 WIRING GP-BLADE CUSHION

S/N: CAF1-UP

PART OF 166-3337, 221-2961 ACCUMULATOR AR-BLADE CUSHION

AN ATTACHMENT

SMCS-1408 **i01826426**

NOTE	REF NO	GRAPHIC REF	PART NUMBER	QTY	PART NAME 1 2 3 4 5 6 (PRODUCT LEVEL)	SEE PAGE
	1	1	**3S-2093**	2	STRAP-CABLE	
	2	1	**130-5300**	2	CLIP	
	3	1	**169-3147**	1	HARNESS AS-CHASSIS	
		1	**102-8802**	4	KIT-RECEPTACLE (2 PIN)	
		1	**102-8803**	1	KIT-RECEPTACLE (3 PIN)	
					(EACH INCLUDES RECEPTACLE AS & WEDGE)	
		1	**155-2270**	4	KIT-CONNECTING PLUG (2 PIN)	
					(EACH INCLUDES PLUG AS & WEDGE)	
	4	1	**033-8248**	1	CLIP	
	5	1	**4D-7794**	1	CLIP	
	6	1	**4D-9517**	1	CLIP	
	7	1	**4L-6459**	2	BOLT (3/8-16X2.5 IN)	
	8	1	**5P-8167**	1	BOLT (3/8-16X0.625 IN)	
	9	1	**6V-8801**	2	NUT (3/8-16 THD)	
	10	1	**8T-4896**	5	WASHER-HARD (10.2X18.5X2.5MM THK)	
	11	1	**3E-8763**	1	SWITCH AS (BLADE CUSHION)	
		1	**3E-8812**	1	ACTUATOR-ROCKER	
		1	**3E-8825**	1	LAMP (24 VOLT) (BLADE CUSHION SWITCH)	

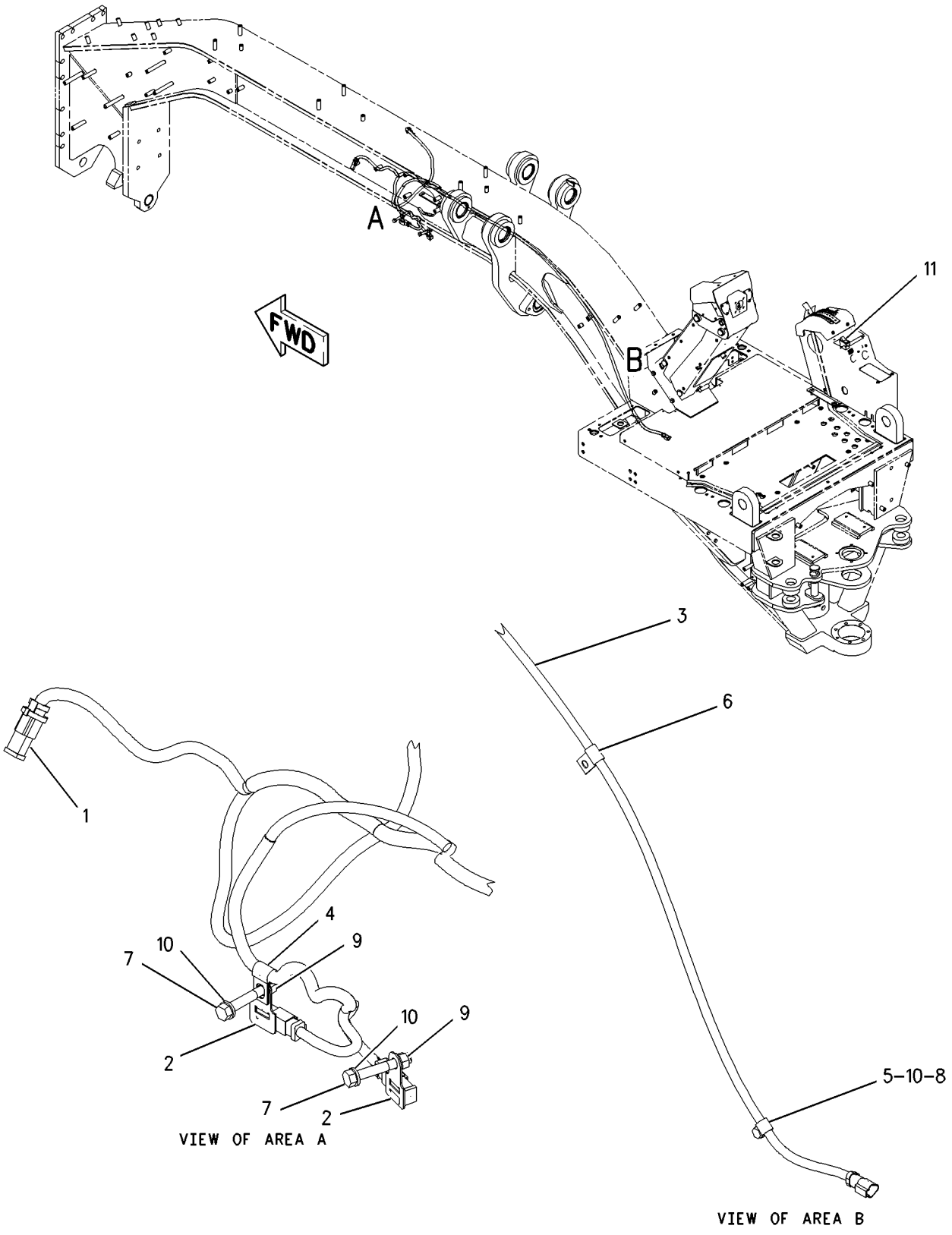

GRAPHIC #1 g00931852

159-5878 WIRING GP-CAB

S/N: CAF1-UP

PART OF 162-5603 GENERAL AR

SMCS-1408, 7301 **i01755246**

NOTE	REF NO	GRAPHIC REF	PART NUMBER	QTY	PART NAME 1 2 3 4 5 6 (PRODUCT LEVEL)	SEE PAGE
	1	1	**3E-0109**	3	PLUG-ROCKER SWITCH	
Y	2	1	**3E-6389**	1	LAMP GP-DOME (24 VOLT, WITH SWITCH)	152
	3	1	**3S-2093**	23	STRAP-CABLE	
	4	1	**4E-4454**	1	PLUG	
	5	1	**6V-6578**	2	RIVET-BLIND	
	6	1	**7T-9302**	2	KNOB (UPPER/LOWER FRONT WIPERS)	
	7	1	**9W-1441**	1	FUSE (15 AMP) (UPPER/LOWER FRONT WIPERS)	
	8	1	**112-6174**	2	SWITCH AS-ROTARY (UPPER/LOWER FRONT WIPERS)	
					(EACH INCLUDES)	
		1	**2H-3920**	1	LOCKWASHER	
		1	**3E-3389**	1	WEDGE-RECEPTACLE LOCK	
		1	**6V-8369**	1	NUT (7/16-28 THD)	
		1	**186-3735**	6	PIN-CONNECTOR	
		1	**8T-8737**	2	PLUG-SEAL	
		1	**102-8806**	1	KIT-RECEPTACLE (8 PIN) (FRONT WIPER SWITCHES)	
	9	1	**160-6382**	1	GROMMET	
	10	1	**167-7504**	1	HARNESS AS-CAB	
		1	**102-8806**	1	KIT-RECEPTACLE (8 PIN)	
		1	**102-8801**	1	KIT-RECEPTACLE (12 PIN)	
		1	**155-2255**	1	KIT-CONNECTING PLUG (12 PIN)	
		1	**155-2265**	4	KIT-CONNECTING PLUG (8 PIN)	
	11	1	**167-7505**	1	HARNESS AS-CAB	
		1	**102-8802**	2	KIT-RECEPTACLE (2 PIN)	
		1	**102-8805**	1	KIT-RECEPTACLE (6 PIN)	
		1	**102-8806**	1	KIT-RECEPTACLE (8 PIN)	
		1	**155-2270**	2	KIT-CONNECTING PLUG (2 PIN)	
		1	**155-2274**	1	KIT-CONNECTING PLUG (6 PIN)	
	12	1	**168-8248**	1	HARNESS AS-CAB	
		1	**102-8802**	9	KIT-RECEPTACLE (2 PIN)	
		1	**102-8803**	2	KIT-RECEPTACLE (3 PIN)	
		1	**102-8804**	1	KIT-RECEPTACLE (4 PIN)	
		1	**102-8806**	1	KIT-RECEPTACLE (8 PIN)	
		1	**102-8801**	2	KIT-RECEPTACLE (12 PIN)	
		1	**155-2255**	2	KIT-CONNECTING PLUG (12 PIN)	
		1	**155-2265**	1	KIT-CONNECTING PLUG (8 PIN)	
		1	**155-2260**	3	KIT-CONNECTING PLUG (3 PIN)	
		1	**155-2270**	9	KIT-CONNECTING PLUG (2 PIN)	
		1	**155-2274**	1	KIT-CONNECTING PLUG (6 PIN)	
	13	1	**169-8938**	1	PLATE AS	
	14	1	**172-6555**	1	PANEL	
	15	1	**172-8641**	1	PLATE	
	16	1	**172-9316**	1	FILM-FUSE (LIGHTS, WASHER, WIPER, DEFROST)	
	17	1	**096-6166**	3	WASHER-HARD (4.5X9X1MM THK)	
M	18	1	**5C-8312**	3	NUT (M4X0.7 THD)	
	19	1	**6V-5645**	4	SCREW-MACHINE (10-32X0.87 IN)	
	20	1	**6V-8801**	1	NUT (3/8-16 THD)	
	21	1	**8T-4896**	1	WASHER-HARD (10.2X18.5X2.5MM THK)	
M	22	1	**9X-1046**	3	SCREW (M4X0.7X18MM)	
M	23	1	**9X-2042**	4	SCREW-TRUSS HEAD (M6X1X12MM)	
E	24	1	**7X-7877**		STRIP-EDGING (10CM)	

E-ORDER BY THE CENTIMETER
M-METRIC PART
Y-SEPARATE ILLUSTRATION

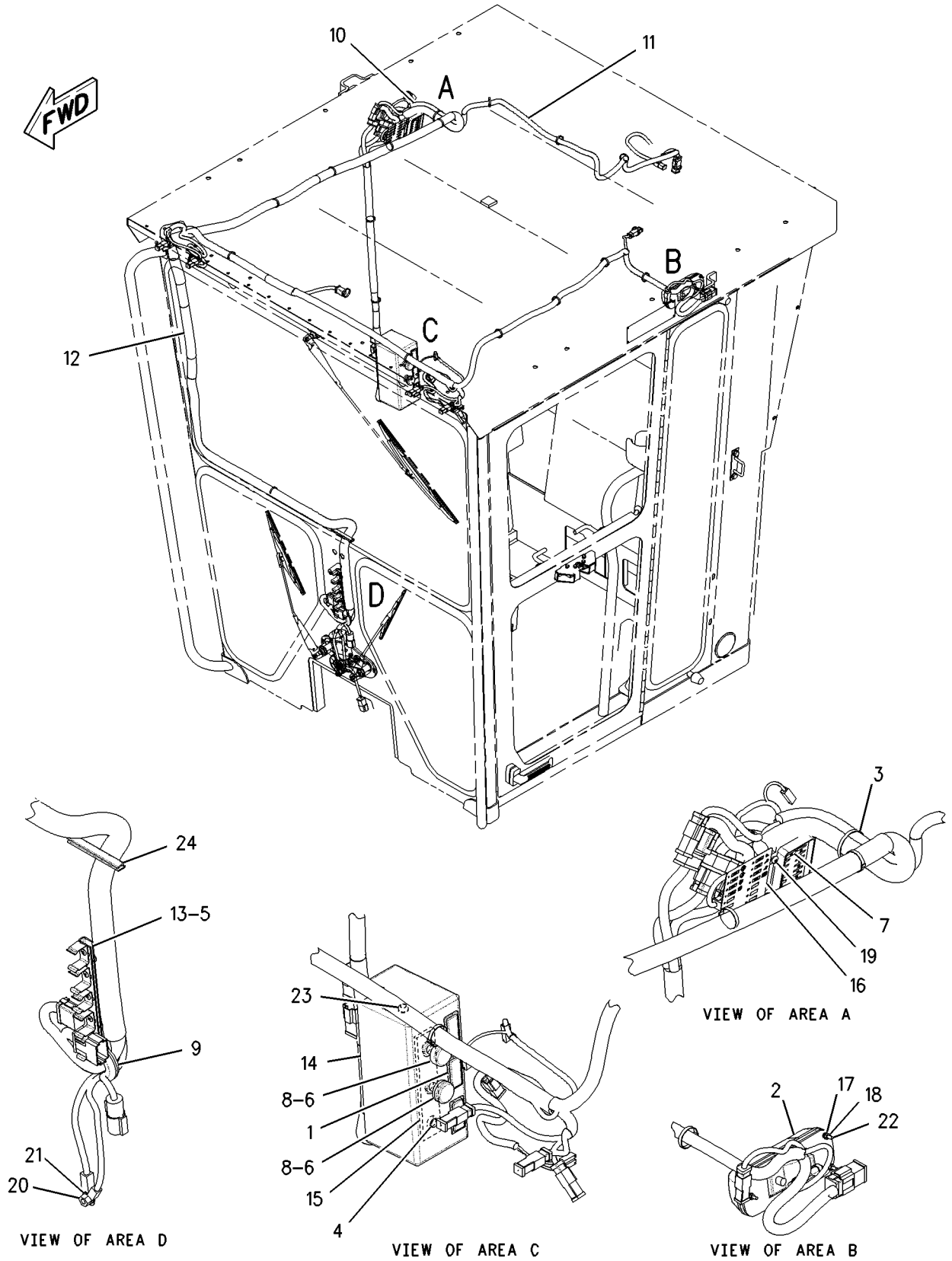

GRAPHIC #1 g00808291

ELECTRICAL AND STARTING SYSTEM

193-7359 WIRING GP-CAB–EU

S/N: CAF1-UP
PART OF 218-4759, 218-4761 ROPS GP-ENCLOSED
AN ATTACHMENT

SMCS-1408, 7301 **i01718936**

NOTE	REF NO	GRAPHIC REF	PART NUMBER	QTY	PART NAME 1 2 3 4 5 6 (PRODUCT LEVEL)	SEE PAGE
	1	1	**3E-0109**	3	PLUG-ROCKER SWITCH	
Y	2	1	**3E-0155**	2	SWITCH GP-WIPER (INTERMITTENT)	228
Y	3	1	**3E-6389**	1	LAMP GP-DOME (24 VOLT, WITH SWITCH)	152
	4	1	**3S-2093**	23	STRAP-CABLE	
	5	1	**4E-4454**	1	PLUG	
	6	1	**6V-6578**	2	RIVET-BLIND	
	7	1	**7T-9302**	2	KNOB (FRONT WIPER/WASHER SWITCH)	
	8	1	**9W-1441**	1	FUSE (15 AMP) (WINDOW WIPER/WASHERS)	
	9	1	**160-6382**	1	GROMMET	
	10	1	**167-7504**	1	HARNESS AS-CAB	
		1	**155-2255**	1	KIT-CONNECTING PLUG (12 PIN)	
		1	**155-2265**	4	KIT-CONNECTING PLUG (8 PIN)	
					(KIT INCLUDES PLUG AS & WEDGE)	
		1	**102-8806**	1	KIT-RECEPTACLE (8 PIN)	
		1	**102-8801**	1	KIT-RECEPTACLE (12 PIN)	
					(KIT INCLUDES RECEPTACLE AS & WEDGE)	
	11	1	**167-7505**	1	HARNESS AS-CAB	
		1	**155-2270**	2	KIT-CONNECTING PLUG (2 PIN)	
		1	**155-2274**	1	KIT-CONNECTING PLUG (6 PIN) (REAR WIPER)	
					(KIT INCLUDES PLUG AS & WEDGE)	
		1	**102-8802**	2	KIT-RECEPTACLE (2 PIN)	
		1	**102-8805**	1	KIT-RECEPTACLE (6 PIN)	
		1	**102-8806**	1	KIT-RECEPTACLE (8 PIN)	
					(KIT INCLUDES RECEPTACLE AS & WEDGE)	
	12	1	**169-8938**	1	PLATE AS	
	13	1	**172-6555**	1	PANEL	
	14	1	**172-8641**	1	PLATE	
	15	1	**172-9316**	1	FILM-FUSE	
	16	1	**196-9373**	1	HARNESS AS-CAB	
		1	**155-2255**	2	KIT-CONNECTING PLUG (12 PIN)	
		1	**155-2265**	1	KIT-CONNECTING PLUG (8 PIN)	
		1	**155-2260**	1	KIT-CONNECTING PLUG (3 PIN) (MAIN CHASSIS)	
		1	**155-2270**	9	KIT-CONNECTING PLUG (2 PIN)	
		1	**155-2271**	1	KIT-CONNECTING PLUG (4 PIN)	
		1	**155-2274**	1	KIT-CONNECTING PLUG (6 PIN)	
					(KITS INCLUDE PLUG AS & WEDGE)	
		1	**127-5484**	1	RECEPTACLE AS (1 PIN) (MAIN POWER RELAY OUTPUT)	
		1	**102-8802**	9	KIT-RECEPTACLE (2 PIN)	
		1	**102-8804**	1	KIT-RECEPTACLE (4 PIN)	
		1	**102-8806**	1	KIT-RECEPTACLE (8 PIN)	
		1	**102-8801**	2	KIT-RECEPTACLE (12 PIN)	
					(KITS INCLUDE RECEPTACLE AS & WEDGE)	
	17	1	**096-6166**	3	WASHER-HARD (4.5X9X1MM THK)	
M	18	1	**5C-8312**	3	NUT (M4X0.7 THD)	
	19	1	**6V-5645**	4	SCREW-MACHINE (10-32X0.87 IN)	
	20	1	**6V-8801**	1	NUT (3/8-16 THD)	
	21	1	**8T-4896**	1	WASHER-HARD (10.2X18.5X2.5MM THK)	
M	22	1	**9X-1046**	3	SCREW (M4X0.7X18MM)	
M	23	1	**9X-2042**	4	SCREW-TRUSS HEAD (M6X1X12MM)	
E	24	1	**7X-7877**		STRIP-EDGING (10CM)	

E-ORDER BY THE CENTIMETER
M-METRIC PART
Y-SEPARATE ILLUSTRATION

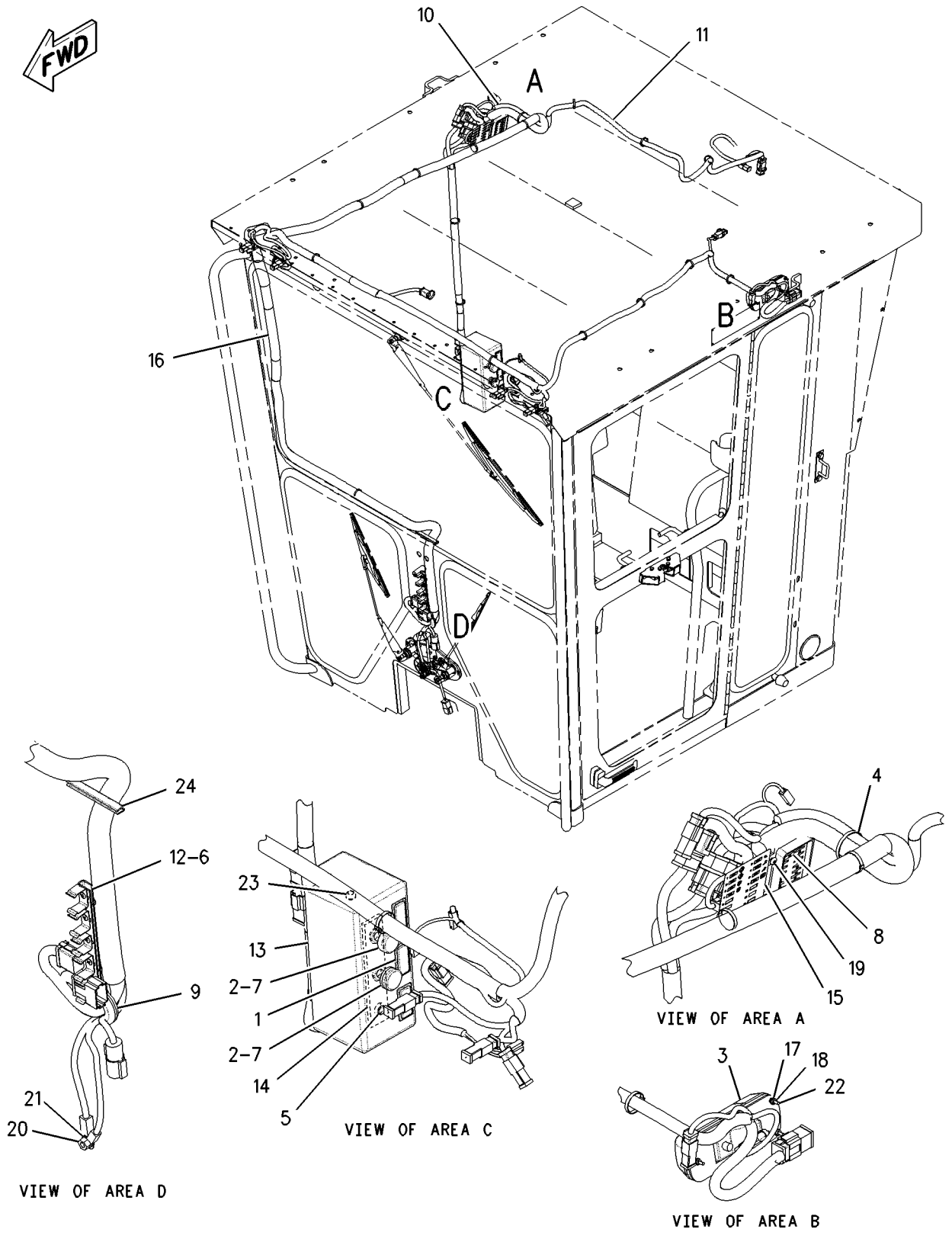

GRAPHIC #1 g00794761

203-6551 WIRING GP-CAB–MOLDBOARD

S/N: CAF1-UP
PART OF 203-6536 LIGHTING AR-FLOOD
AN ATTACHMENT

SMCS-1408, 7301 **i01862626**

NOTE	REF NO	GRAPHIC REF	PART NUMBER	QTY	PART NAME 1 2 3 4 5 6 (PRODUCT LEVEL)	SEE PAGE
	1	1	**3E-0109**	5	PLUG-ROCKER SWITCH	
	2	1	**3S-2093**	2	STRAP-CABLE	
	3	1	**9W-1442**	1	FUSE (10 AMP) (MOLDBOARD)	
	4	1	**145-3350**	1	PLATE	
	5	1	**153-2147**	1	PLATE	
	6	1	**168-8243**	1	HARNESS AS-PANEL	
		1	**155-2255**	1	KIT-CONNECTING PLUG (12 PIN) (WIPRS/DEFRSTR/PNL LMPS/SNW WNG)	
		1	**155-2265**	4	KIT-CONNECTING PLUG (8 PIN) (WIPERS/WASHER/BCON LAMP/DEFRST)	
		1	**155-2270**	1	KIT-CONNECTING PLUG (2 PIN) (SNOW WING LAMP)	
		1	**155-2271**	1	KIT-CONNECTING PLUG (4 PIN) (AUX BACKUP LAMP)	
					(EACH INCLUDES A PLUG AS & WEDGE)	
		1	**102-8802**	1	KIT-RECEPTACLE (2 PIN)	
		1	**102-8804**	2	KIT-RECEPTACLE (4 PIN) (MOLDBOARD LAMPS/HEATED MIRRORS)	
		1	**102-8806**	1	KIT-RECEPTACLE (8 PIN)	
		1	**102-8801**	1	KIT-RECEPTACLE (12 PIN) (BACKUP ALARM/WIPER/WASH/BECON)	
					(EACH INCLUDES A RECEPTACLE AS & WEDGE)	
	7	1	**172-6556**	1	PANEL	
	8	1	**188-3862**	1	BRACKET AS	
	9	1	**3E-8766**	1	SWITCH AS (MOLDBOARD)	
		1	**3E-8782**	1	ACTUATOR-ROCKER	
		1	**3E-8825**	1	LAMP (24 VOLT) (MOLDBOARD INDICATOR)	
M	10	1	**9X-2043**	6	SCREW-TRUSS HEAD (M6X1X14MM)	

M-METRIC PART

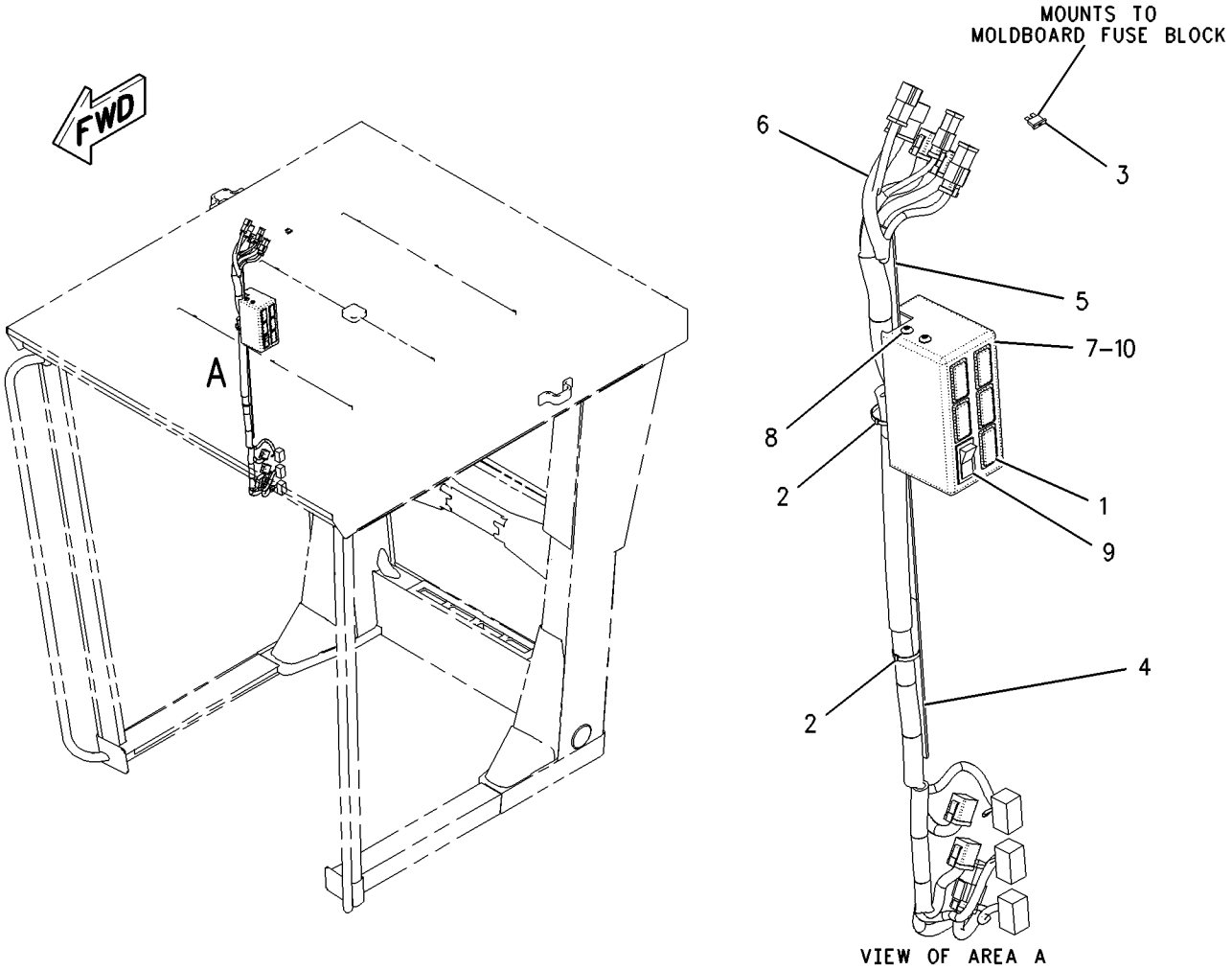

GRAPHIC #1

g00941003

204-6127 WIRING GP-CAB–MOLDBOARD

S/N: CAF1-UP
PART OF 204-6109 LIGHTING AR-FLOOD
AN ATTACHMENT

SMCS-1408, 7301 **i01684026**

NOTE	REF NO	GRAPHIC REF	PART NUMBER	QTY	PART NAME 1 2 3 4 5 6 (PRODUCT LEVEL)	SEE PAGE
	1	1	**3E-0109**	5	PLUG-ROCKER SWITCH	
	2	1	**3S-2093**	2	STRAP-CABLE	
	3	1	**9W-1442**	1	FUSE (10 AMP) (MOLDBOARD LAMP)	
	4	1	**145-3350**	1	PLATE	
	5	1	**153-2147**	1	PLATE	
	6	1	**172-6556**	1	PANEL	
	7	1	**188-3862**	1	BRACKET AS	
	8	1	**196-8557**	1	HARNESS AS-CAB	
		1	**102-8802**	1	KIT-RECEPTACLE (2 PIN)	
		1	**102-8804**	2	KIT-RECEPTACLE (4 PIN)	
		1	**102-8806**	1	KIT-RECEPTACLE (8 PIN)	
		1	**102-8801**	1	KIT-RECEPTACLE (12 PIN)	
		1	**155-2255**	1	KIT-CONNECTING PLUG (12 PIN)	
		1	**155-2265**	4	KIT-CONNECTING PLUG (8 PIN)	
		1	**155-2270**	1	KIT-CONNECTING PLUG (2 PIN) (FLOOD LAMP SIDE)	
		1	**155-2271**	1	KIT-CONNECTING PLUG (4 PIN)	
	9	1	**3E-8766**	1	SWITCH AS (MOLDBOARD)	
		1	**3E-8782**	1	ACTUATOR-ROCKER	
		1	**3E-8825**	1	LAMP (24 VOLT) (MOLDBOARD)	
M	10	1	**9X-2043**	6	SCREW-TRUSS HEAD (M6X1X14MM)	

M-METRIC PART

204-6127 **WIRING GP-CAB** ***(contd.)*** **i01684026**

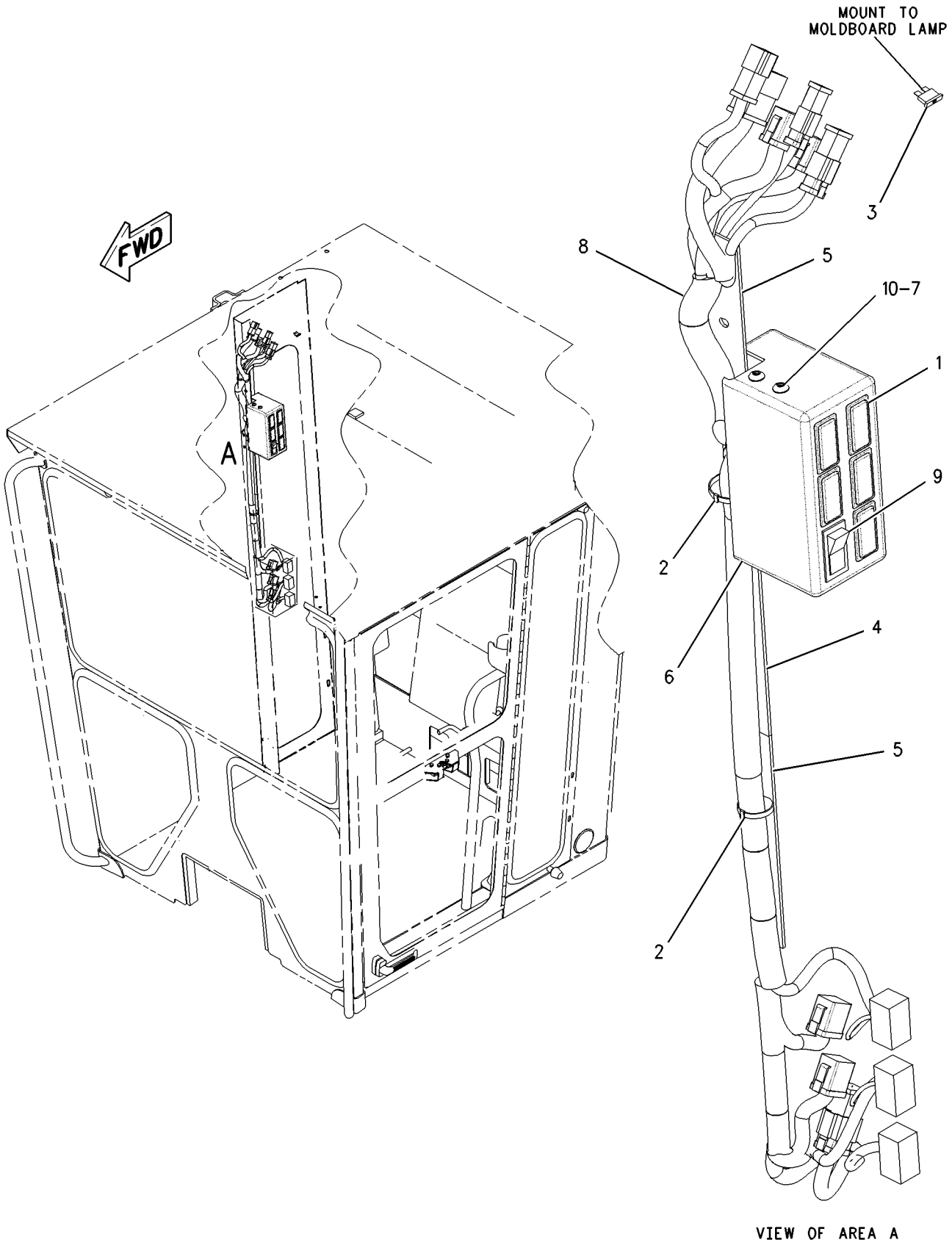

GRAPHIC #1 g00843569

223-3941 WIRING GP-CAB

S/N: CAF1-UP
PART OF 223-3937 CAB GP
AN ATTACHMENT

SMCS-1408, 7301 **i01822007**

NOTE	PART NUMBER	QTY	PART NAME 1 2 3 4 5 6 (PRODUCT LEVEL)	SEE PAGE
	5M-3062	1	BOLT (3/8-16X0.75 IN)	
	4D-7794	4	CLIP	
	9G-2265	1	CLIP	
	130-1396	1	FILM (DOME LIGHT)	
	171-6561	1	FILM (WINDOW WASHER)	
	3K-8782	2	FUSE (10 AMP) (DOME LAMP)	
	223-3939	1	HARNESS AS-WINDOW WIPER	
	155-2265	2	KIT-CONNECTING PLUG (8 PIN)	
			(EACH INCLUDES PLUG AS & WEDGE)	
	223-3940	1	HARNESS AS-WINDOW WIPER	
	102-8806	1	KIT-RECEPTACLE (8 PIN)	
	102-8801	1	KIT-RECEPTACLE (12 PIN)	
			(EACH INCLUDES RECEPTACLE AS & WEDGE)	
	127-5484	1	RECEPTACLE AS (1 PIN)	
	155-2260	1	KIT-CONNECTING PLUG (3 PIN)	
	155-2274	1	KIT-CONNECTING PLUG (6 PIN)	
	4K-5122	2	HOLDER AS-FUSE	
			(EACH INCLUDES)	
	6T-8115	1	NUT (1/2-24 THD)	
	139-0178	1	CAP	
	7T-9302	1	KNOB (WIPER)	
	014-0816	1	SETSCREW (8-32X.5 IN)	
Y	**3E-6389**	1	LAMP GP-DOME (24 VOLT)	152
M	**5C-8312**	3	NUT (M4X0.7 THD)	
	129-4647	1	PLATE	
	169-8938	1	PLATE AS	
	6V-6578	2	RIVET-BLIND	
M	**9X-1046**	3	SCREW (M4X0.7X18MM)	
M	**9X-2043**	2	SCREW-TRUSS HEAD (M6X1X14MM)	
	3S-2093	6	STRAP-CABLE	
E	**7X-7877**		STRIP-EDGING (10CM)	
	112-6174	1	SWITCH AS-ROTARY (WIPER/WASHER)	
	2H-3920	1	LOCKWASHER	
	3E-3389	1	WEDGE-RECEPTACLE LOCK	
	6V-8369	1	NUT (7/16-28 THD)	
	186-3735	6	PIN-CONNECTOR	
	8T-8737	2	PLUG-SEAL	
	102-8806	1	KIT-RECEPTACLE (8 PIN)	
			(INCLUDES RECEPTACLE AS & WEDGE)	
	8T-4896	1	WASHER-HARD (10.2X18.5X2.5MM THK)	
	096-6166	3	WASHER-HARD (4.5X9X1MM THK)	

E-ORDER BY THE CENTIMETER
M-METRIC PART
Y-SEPARATE ILLUSTRATION

<END>

MEMORANDA

190-5038 WIRING GP-ENGINE

S/N: BMA1-UP

HIGH SIDE ACTIVATION OF AIR INLET HEATER RELAY

PART OF 199-5055 ENGINE AR-COMPLETE

SMCS-1408 **i01488511**

NOTE	REF NO	GRAPHIC REF	PART NUMBER	QTY	PART NAME 1 2 3 4 5 6 (PRODUCT LEVEL)	SEE PAGE
	1	1	**3S-2093**	14	STRAP-CABLE	
	2	1	**105-1797**	6	MOUNT-WIRE TIE	
	3	1	**153-8920**	1	HARNESS AS-ENGINE (UNIT INJECTOR)	
		1	**155-2255**	1	KIT-CONNECTING PLUG (12 PIN)	
					(INCLUDES PLUG AS AND WEDGE)	
	4	1	**156-6175**	2	CLIP	
	5	1	**195-7336**	1	HARNESS AS-ENGINE (ELECTRONIC CONTROL)	
		1	**102-8802**	2	KIT-RECEPTACLE (2 PIN)	
					(INCLUDES RECEPTACLE AS AND WEDGE)	
		1	**102-8803**	4	KIT-RECEPTACLE (3 PIN)	
					(INCLUDES RECEPTACLE AS AND WEDGE)	
		1	**102-8801**	1	KIT-RECEPTACLE (12 PIN)	
					(INCLUDES RECEPTACLE AS AND WEDGE)	
		1	**100-3320**	1	PLUG AS-CONNECTOR	
		1	**126-5011**	1	SEAL-CONNECTOR	
		1	**111-2416**	1	PLUG AS-CONNECTOR	
		1	**126-5011**	1	SEAL-CONNECTOR	
		1	**155-2260**	1	KIT-CONNECTING PLUG (3 PIN)	
					(INCLUDES PLUG AS AND WEDGE)	
		1	**155-2270**	4	KIT-CONNECTING PLUG (2 PIN)	
					(INCLUDES PLUG AS AND WEDGE)	
		1	**160-7690**	1	PLUG AS-CONNECTOR	
		1	**159-9322**	1	SEAL-O-RING	

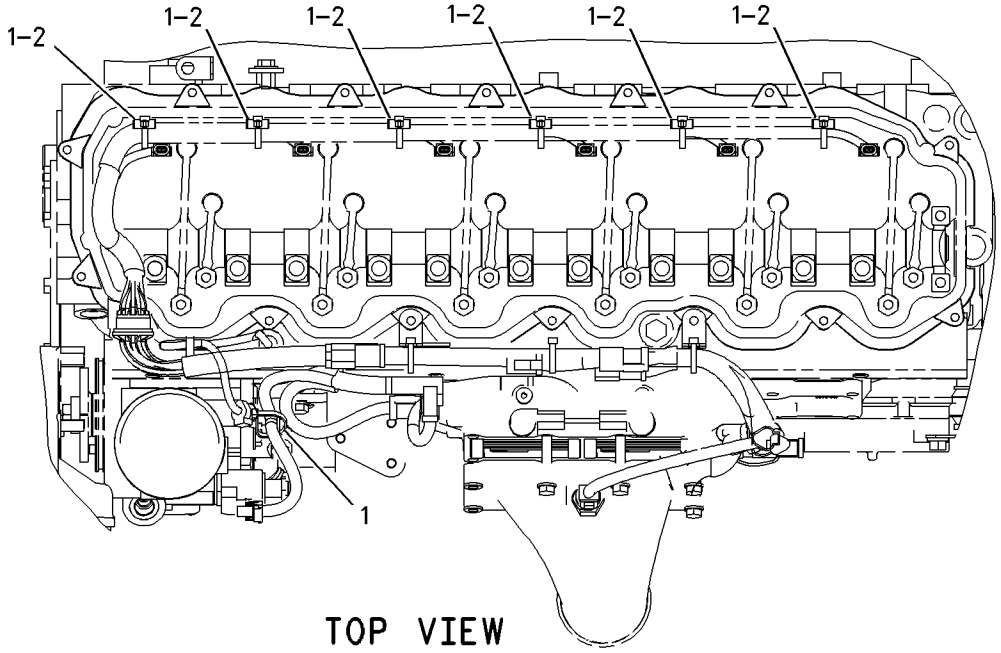

TOP VIEW

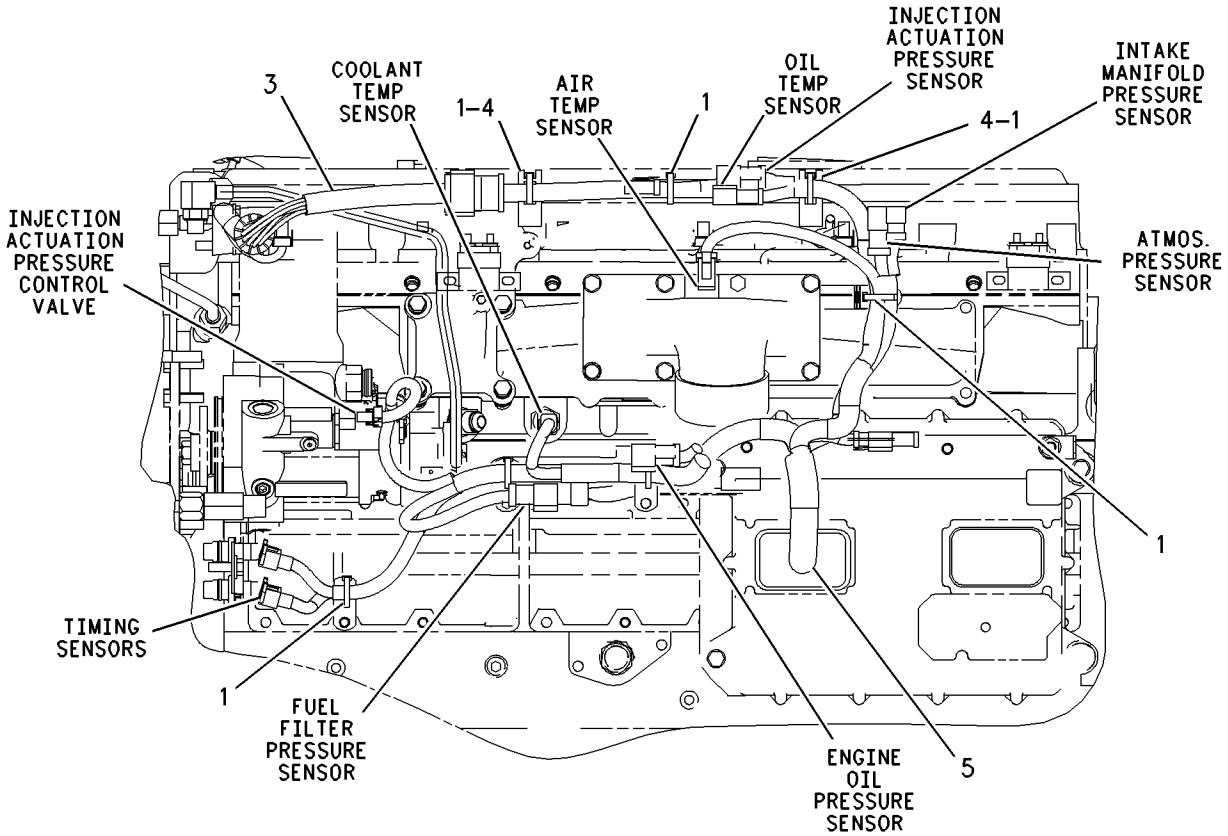

LEFT SIDE VIEW

GRAPHIC #1 g00777749

ELECTRICAL AND STARTING SYSTEM

159-5856 WIRING GP-FRONT

S/N: CAF1-UP

PART OF 162-5603 GENERAL AR

SMCS-1408 **i01862164**

NOTE	REF NO	GRAPHIC REF	PART NUMBER	QTY	PART NAME 1 2 3 4 5 6 (PRODUCT LEVEL)	SEE PAGE
	1	1	**1S-2342**	1	STRAP AS-GROUND	
	2	1	**3E-2026**	1	SWITCH AS-PRESSURE (STOP LAMP)	
		1	**186-3735**	2	PIN-CONNECTOR	
		1	**102-8802**	1	KIT-RECEPTACLE (2 PIN) (STOP LAMP)	
					(INCLUDES RECEPTACLE AS & WEDGE)	
	3	1	**3E-3636**	1	SWITCH AS-BALL (CENTERSHIFT INDICATOR)	
		1	**186-3735**	4	PIN-CONNECTOR	
		1	**102-8804**	1	KIT-RECEPTACLE (4 PIN) (CENTERSHIFT INDICATOR)	
					(INCLUDES RECEPTACLE AS & WEDGE)	
	4	1,2	**3S-2093**	15	STRAP-CABLE	
	5	2	**6I-1418**	4	SPACER (8.2X12.7X28.7MM THK)	
	6	1,2	**7K-1181**	5	STRAP-CABLE	
	7	2	**8T-9655**	8	MOUNT (ISOLATION)	
	8	1,2	**9L-1566**	3	SUPPORT-TUBE	
	9	1	**9L-6331**	1	BRACKET	
	10	1	**114-9281**	2	SWITCH AS-PRESSURE (AIR BRAKES)	
					(EACH INCLUDES)	
		1	**186-3735**	2	PIN-CONNECTOR	
		1	**102-8802**	1	KIT-RECEPTACLE (2 PIN) (AIR BRAKE)	
					(INCLUDES RECEPTACLE AS & WEDGE)	
	11	1	**131-4135**	1	SWITCH AS-TEMPERATURE (HYDRAULIC OIL)	
		1	**186-3735**	2	PIN-CONNECTOR	
		1	**102-8802**	1	KIT-RECEPTACLE (2 PIN) (HYDRAULIC OIL TEMP SWITCH)	
					(INCLUDES RECEPTACLE AS & WEDGE)	
	12	1,2	**169-5414**	5	CLIP	
Y	13	2	*171-5941*	1	ELECTRONICS GP-POWER TRAIN (MOTOR GRADER)	150
Y	14	2	**172-9389**	1	CONTROL GP-UNPROGRAMMED (POWER TRAIN)	144
	15	1	**185-4076**	1	HARNESS AS-PLATFORM	
		1	**9X-1343**	1	RECEPTACLE AS (40 PIN)	
		1	**127-5484**	3	RECEPTACLE AS (1 PIN)	
		1	**127-5486**	1	RECEPTACLE AS (1 PIN)	
		1	**129-7164**	1	RECEPTACLE AS (1 PIN)	
		1	**102-8802**	2	KIT-RECEPTACLE (2 PIN)	
		1	**102-8803**	2	KIT-RECEPTACLE (3 PIN)	
		1	**102-8805**	4	KIT-RECEPTACLE (6 PIN)	
		1	**102-8801**	8	KIT-RECEPTACLE (12 PIN)	
					(EACH INCLUDES RECEPTACLE AS & WEDGE)	
		1	**127-5483**	3	PLUG AS-CONNECTOR (1 PIN)	
		1	**127-5485**	1	PLUG AS-CONNECTOR (1 PIN)	
		1	**129-7163**	1	PLUG AS-CONNECTOR (1 PIN)	
		1	**155-2255**	6	KIT-CONNECTING PLUG (12 PIN)	
		1	**155-2265**	1	KIT-CONNECTING PLUG (8 PIN)	
		1	**155-2260**	4	KIT-CONNECTING PLUG (3 PIN)	
		1	**155-2270**	11	KIT-CONNECTING PLUG (2 PIN)	
		1	**155-2271**	1	KIT-CONNECTING PLUG (4 PIN)	
		1	**155-2274**	4	KIT-CONNECTING PLUG (6 PIN)	
					(EACH INCLUDES PLUG AS & WEDGE)	
	16	2	**201-5244**	1	PLATE AS	
	17	1	**6V-1889**	1	CLIP	
	18	2	**096-6166**	4	WASHER-HARD (4.5X9X1MM THK)	
	19	1,2	**130-5300**	8	CLIP	
	20	1	**3J-1907**	1	SEAL-O-RING	
	21	1	**3K-0360**	1	SEAL-O-RING	
	22	1	**4D-7388**	2	CLIP	
	23	1,2	**4D-7794**	11	CLIP	

159-5856 **WIRING GP-FRONT** ***(contd.)*** **i01862164**

NOTE	REF NO	GRAPHIC REF	PART NUMBER	QTY	PART NAME 1 2 3 4 5 6 (PRODUCT LEVEL)	SEE PAGE
	24	1	**4K-8864**	1	CLIP	
	25	1,2	**4L-6454**	4	BOLT (3/8-16X1 IN)	
	26	1,2	**4P-8134**	2	CLIP	
	27	1	**4S-4455**	1	CLIP	
	28	1,2	**5M-3062**	31	BOLT (3/8-16X0.75 IN)	
	29	1	**5S-7379**	1	BOLT (3/8-16X0.875 IN)	
	30	1	**6D-4246**	1	CLIP	
	31	1,2	**6V-3265**	3	CLIP	
	32	2	**6V-3964**	4	WASHER-HARD (8.8X25.5X5MM THK)	
	33	1,2	**6V-8801**	4	NUT (3/8-16 THD)	
	34	1	**7C-4354**	1	CLIP	
	35	2	**7X-0440**	4	BOLT (5/16-18X1.75 IN)	
B	36	1	**8F-1974**	10	SHIM (.13MM THK)	
	37	2	**8M-2770**	1	CLIP	
	38	1,2	**8T-4121**	5	WASHER-HARD (11X21X2.5MM THK)	
M	39	1	**8T-4137**	1	BOLT (M10X1.5X20MM)	
M	40	2	**8T-4647**	4	SCREW-MACHINE (M4X0.7X20MM)	
	41	1,2	**8T-4896**	40	WASHER-HARD (10.2X18.5X2.5MM THK)	
	42	1	**174-5907**	2	CLIP	
M	43	1,2	**8T-4195**	2	BOLT (M10X1.5X30MM)	
M	44	1,2	**8T-4133**	2	NUT (M10X1.5 THD)	
	45	1,2	**7D-7233**	2	CLIP	
	46	1	**8M-2773**	1	CLIP	
	47	1	**114-9281**	1	SWITCH AS-PRESSURE (PARKING BRAKE)	
		1	**186-3735**	2	PIN-CONNECTOR	
		1	**102-8802**	1	KIT-RECEPTACLE (2 PIN) (AIR BRAKE) (INCLUDES RECEPTACLE AS & WEDGE)	
FY			*198-7332*	1	ELECTRONICS GP-MONITOR (CATERPILLAR MONITORING SYSTEM)	149

B-USE AS REQUIRED
F-NOT SHOWN
M-METRIC PART
Y-SEPARATE ILLUSTRATION

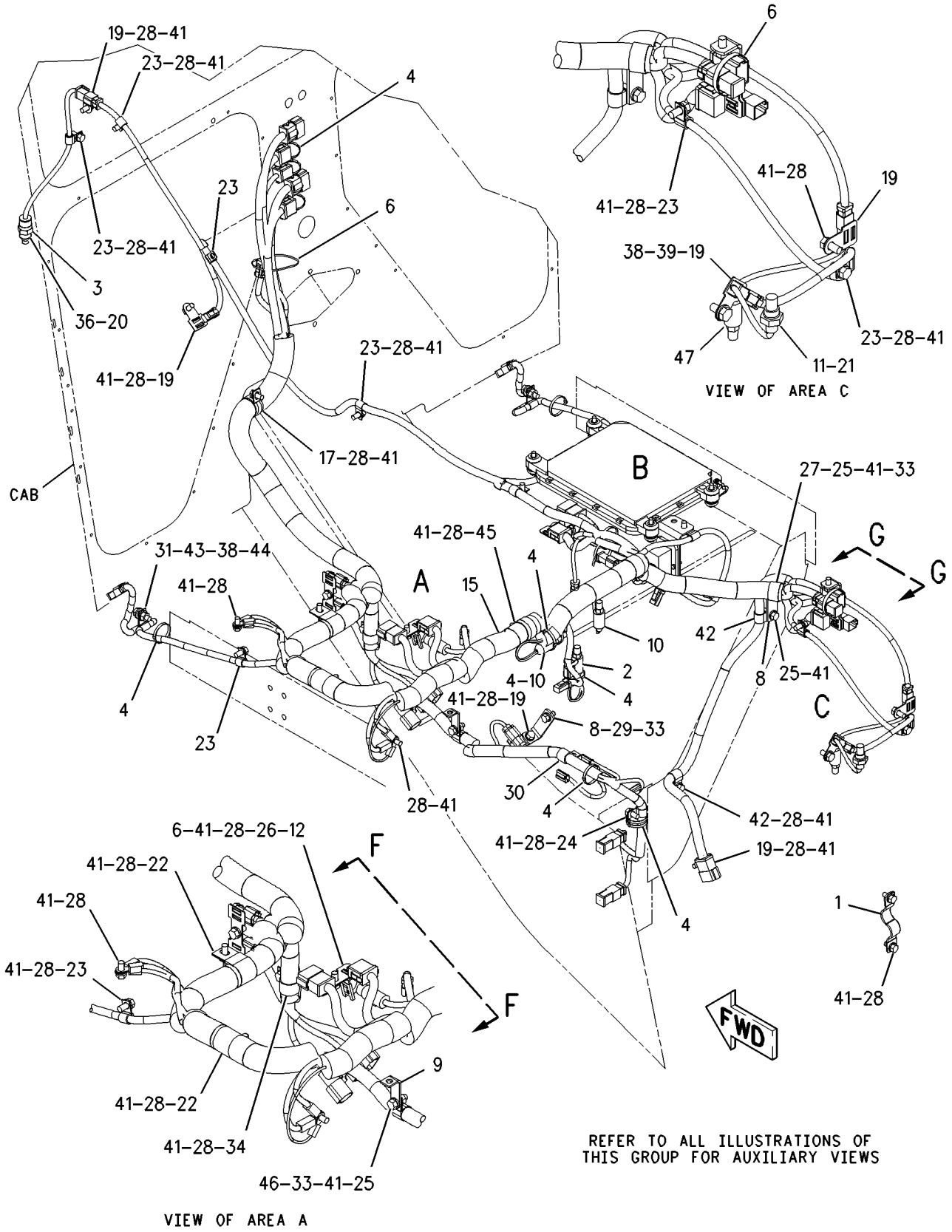

GRAPHIC #1 g00941012

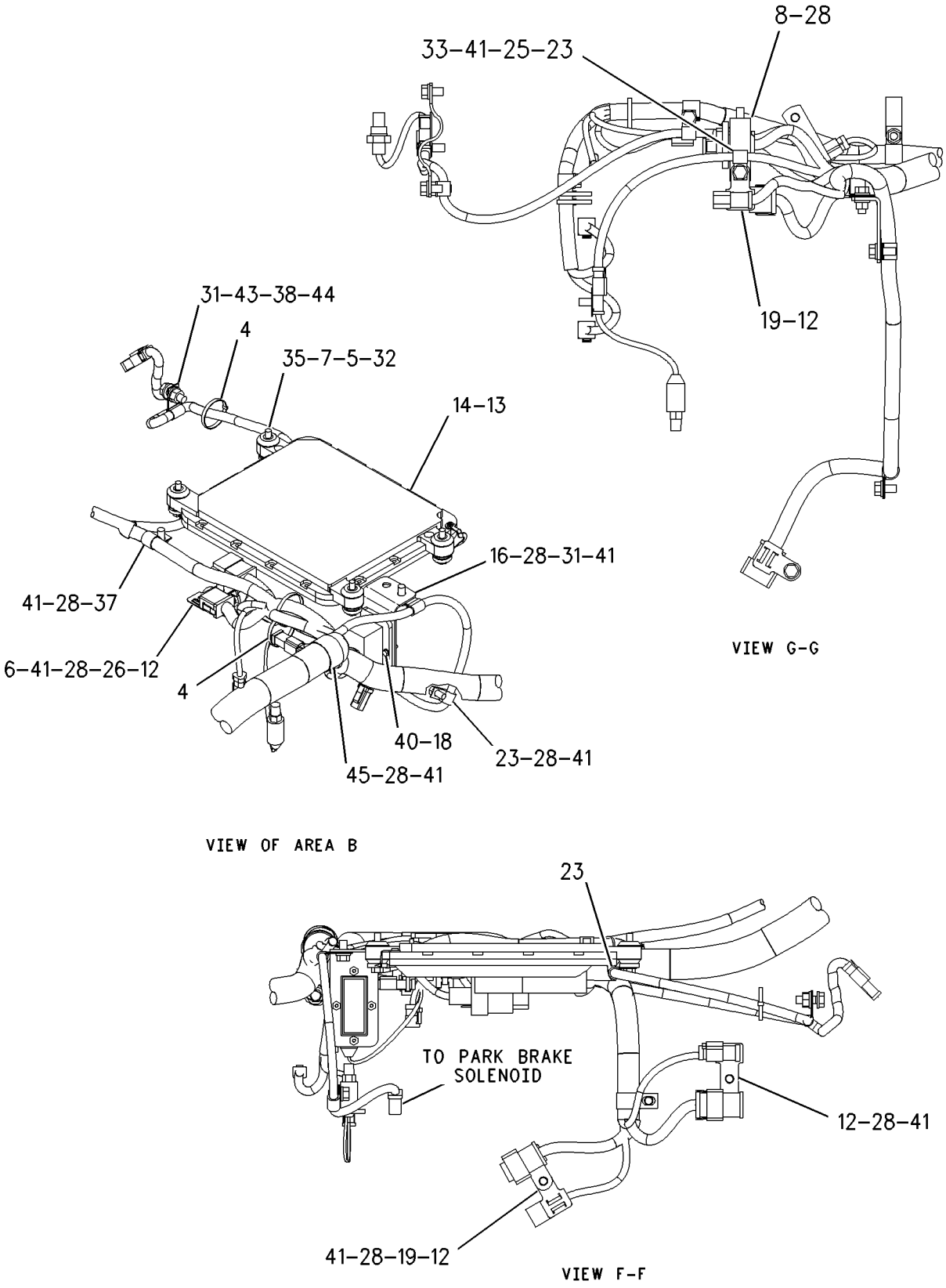

GRAPHIC #2

g00941203

159-5865 WIRING GP-FRONT–EU

S/N: CAF1-UP

PART OF 207-3665, 210-2042 CONVERSION AR-CERTIFICATION

AN ATTACHMENT

SMCS-1408 **i01684447**

NOTE	REF NO	GRAPHIC REF	PART NUMBER	QTY	PART NAME 1 2 3 4 5 6 (PRODUCT LEVEL)	SEE PAGE
	1	1	**1S-2342**	1	STRAP AS-GROUND	
	2	2	**2G-0617**	2	CLAMP	
	3	2	**2G-0988**	2	CAP	
	4	1	**2L-0273**	1	FITTING (RUBBER)	
	5	1	**3E-2026**	1	SWITCH AS-PRESSURE (STOP LAMP)	
		1	**102-8802**	1	KIT-RECEPTACLE (2 PIN)	
					(INCLUDES RECEPTACLE AS & WEDGE)	
		1	**186-3735**	2	PIN-CONNECTOR	
	6	1	**3E-3636**	1	SWITCH AS-BALL (CENTERSHIFT INDICATOR)	
		1	**186-3735**	4	PIN-CONNECTOR	
		1	**102-8804**	1	KIT-RECEPTACLE (4 PIN)	
					(INCLUDES RECEPTACLE AS & WEDGE)	
	7	1	**3E-6450**	1	SWITCH AS-PRESSURE (PRIMARY STEERING)	
		1	**102-8803**	1	KIT-RECEPTACLE (3 PIN)	
					(INCLUDES RECEPTACLE AS & WEDGE)	
		1	**186-3735**	3	PIN-CONNECTOR	
	8	2	**3K-9520**	3	GROMMET	
	9	1,2	**3S-2093**	17	STRAP-CABLE	
	10	1	**6I-1418**	4	SPACER (8.2X12.7X28.7MM THK)	
	11	1,2	**7K-1181**	7	STRAP-CABLE	
	12	1	**8T-9655**	8	MOUNT (ISOLATION)	
	13	1	**9L-1566**	3	SUPPORT-TUBE	
	14	1	**9L-6331**	1	BRACKET	
Y	15	2	**105-4849**	1	LAMP GP-HEAD & SIGNAL (LH) (HI/LO LH TURN BOLSTER)	160
Y	16	2	**105-4850**	1	LAMP GP-HEAD & SIGNAL (RH) (HI/LO RH TURN BOLSTER)	162
	17	1	**114-9281**	2	SWITCH AS-PRESSURE (AIR BRAKE)	
					(EACH SWITCH AS INCLUDES)	
		1	**102-8802**	1	KIT-RECEPTACLE (2 PIN)	
					(INCLUDES RECEPTACLE AS & WEDGE)	
		1	**186-3735**	2	PIN-CONNECTOR	
	18	1	**131-4135**	1	SWITCH AS-TEMPERATURE (HYDRAULIC OIL)	
		1	**102-8802**	1	KIT-RECEPTACLE (2 PIN)	
					(INCLUDES RECEPTACLE AS & WEDGE)	
		1	**186-3735**	2	PIN-CONNECTOR	
	19	2	**137-9410**	2	CLAMP	
	20	1	**140-8864**	1	CABLE AS	
	21	2	**159-3959**	1	TUBE	
	22	1,2	**169-5414**	5	CLIP	
Y	23	1	*171-5941*	1	ELECTRONICS GP-POWER TRAIN (MOTOR GRADER)	150
Y	24	1	**172-9389**	1	CONTROL GP-UNPROGRAMMED	144
	25	1	**179-8700**	1	HARNESS AS-FRONT CHASSIS	
		1	**155-2255**	1	KIT-CONNECTING PLUG (12 PIN) (MAIN CHASIS HI/LO TURN LAMPS)	
					(INCLUDES PLUG AS & WEDGE)	
		1	**102-8801**	1	KIT-RECEPTACLE (12 PIN) (MAIN CHASIS HI/LO TURN LAMPS)	
					(INCLUDES RECEPTACLE AS & WEDGE)	
	27	1	**196-4226**	1	HARNESS AS-PLATFORM	
		1	**127-5483**	3	PLUG AS-CONNECTOR (1 PIN)	
		1	**9X-1343**	1	RECEPTACLE AS (40 PIN)	
		1	**155-2255**	6	KIT-CONNECTING PLUG (12 PIN)	
		1	**155-2265**	1	KIT-CONNECTING PLUG (8 PIN)	
		1	**155-2260**	4	KIT-CONNECTING PLUG (3 PIN)	
		1	**155-2270**	13	KIT-CONNECTING PLUG (2 PIN)	
		1	**155-2271**	1	KIT-CONNECTING PLUG (4 PIN) (LAMP INDICATOR)	

159-5865 **WIRING GP-FRONT** ***(contd.)*** **i01684447**

NOTE	REF NO	GRAPHIC REF	PART NUMBER	QTY	PART NAME 1 2 3 4 5 6 (PRODUCT LEVEL)	SEE PAGE
		1	**155-2274**	4	KIT-CONNECTING PLUG (6 PIN)	
					(EACH INCLUDES PLUG AS & WEDGE)	
		1	**102-8802**	4	KIT-RECEPTACLE (2 PIN)	
		1	**102-8803**	1	KIT-RECEPTACLE (3 PIN)	
		1	**102-8805**	5	KIT-RECEPTACLE (6 PIN)	
		1	**102-8801**	7	KIT-RECEPTACLE (12 PIN)	
					(EACH INCLUDES RECEPTACLE AS & WEDGE)	
	28	2	**197-1988**	1	HARNESS AS-FRONT LIGHTING	
		2	**155-2274**	2	KIT-CONNECTING PLUG (6 PIN) (MAIN CHASIS & HI/LO TURN LAMPS)	
					(EACH INCLUDES PLUG AS & WEDGE)	
		2	**102-8801**	1	KIT-RECEPTACLE (12 PIN) (MAIN CHASIS & HI/LO TURN LAMPS)	
					(INCLUDES RECEPTACLE AS & WEDGE)	
	29	1	**201-5244**	1	PLATE AS	
	31	1	**096-6166**	4	WASHER-HARD (4.5X9X1MM THK)	
	32	2	**108-3519**	4	CLAMP	
	33	1,2	**130-5300**	9	CLIP	
	34	1	**174-5907**	4	CLIP	
	36	1	**3J-1907**	1	SEAL-O-RING	
	37	1	**3K-0360**	2	SEAL-O-RING	
	38	1	**4D-7794**	11	CLIP	
	39	1	**4K-8864**	1	CLIP	
	40	1,2	**4L-6454**	6	BOLT (3/8-16X1 IN)	
	41	1	**4P-8134**	2	CLIP	
	42	1	**4S-4455**	1	CLIP	
	43	2	**5M-2894**	4	WASHER-HARD (10.2X18.5X2.5MM THK)	
	44	1,2	**5M-3062**	32	BOLT (3/8-16X0.75 IN)	
	45	1,2	**5S-7379**	5	BOLT (3/8-16X0.875 IN)	
	46	1	**6D-4246**	1	CLIP	
	47	1	**6V-3265**	3	CLIP	
	48	1	**6V-3964**	4	WASHER-HARD (8.8X25.5X5MM THK)	
	49	1,2	**6V-8801**	6	NUT (3/8-16 THD)	
	50	1	**7C-4354**	1	CLIP	
	51	1	**7D-7233**	4	CLIP	
	52	1	**7X-0440**	4	BOLT (5/16-18X1.75 IN)	
B	53	1	**8F-1974**	10	SHIM (.13MM THK)	
	54	1,2	**8M-2770**	3	CLIP	
	55	1	**8M-2773**	1	CLIP	
	56	1	**8T-4121**	5	WASHER-HARD (11X21X2.5MM THK)	
M	57	1	**8T-4137**	1	BOLT (M10X1.5X20MM)	
M	58	1	**8T-4647**	4	SCREW-MACHINE (M4X0.7X20MM)	
	59	1,2	**8T-4896**	43	WASHER-HARD (10.2X18.5X2.5MM THK)	
	60	2	**9D-6164**	4	BOSS (3/8-16 THD)	
M	61	1	**8T-4195**	2	BOLT (M10X1.5X30MM)	
M	62	1	**8T-4133**	2	NUT (M10X1.5 THD)	
	63	2	**6V-1889**	1	CLIP	
	64	1	**114-9281**	1	SWITCH AS-PRESSURE (PARKING BRAKE)	
		1	**102-8802**	1	KIT-RECEPTACLE (2 PIN)	
					(INCLUDES RECEPTACLE AS & WEDGE)	
		1	**186-3735**	2	PIN-CONNECTOR	
FY			*198-7332*	1	ELECTRONICS GP-MONITOR (CATERPILLAR MONITORING SYSTEM)	149

B-USE AS REQUIRED
F-NOT SHOWN
M-METRIC PART
Y-SEPARATE ILLUSTRATION

159-5865 **WIRING GP-FRONT** *(contd.)* **i01684447**

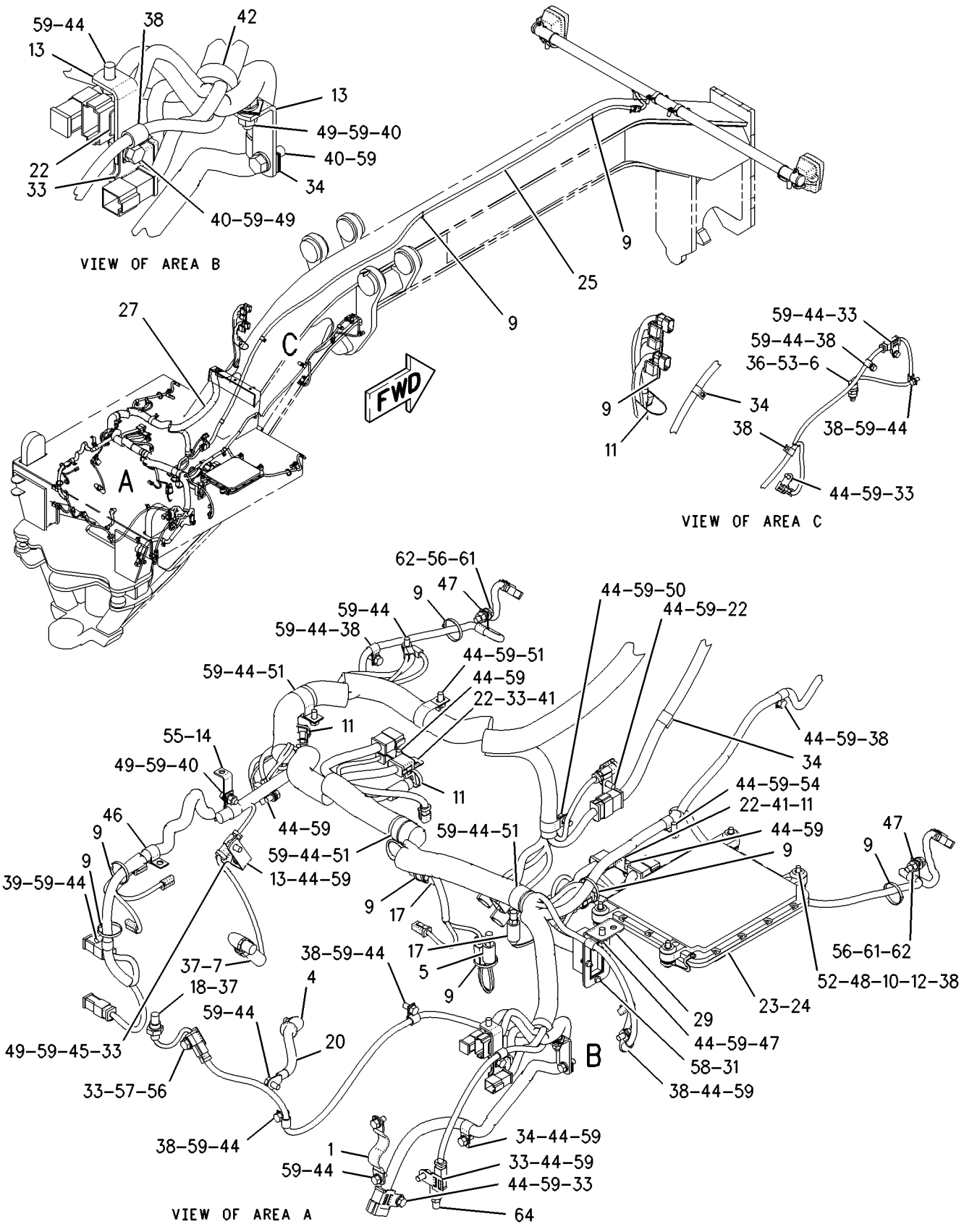

GRAPHIC #1 g00944397

159-5865 **WIRING GP-FRONT** ***(contd.)*** **i01684447**

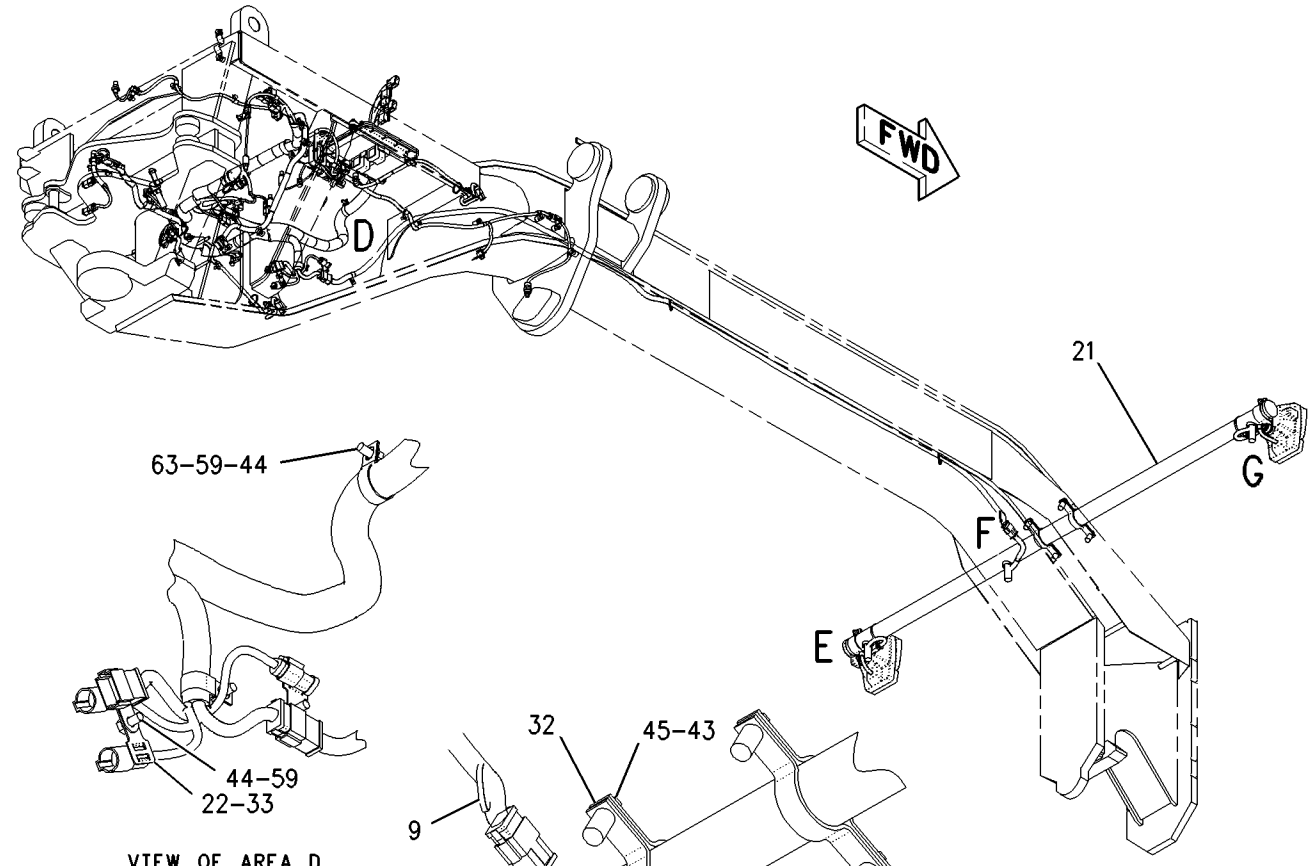

VIEW OF AREA D

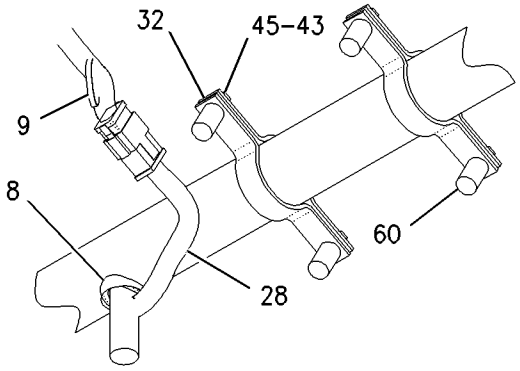

VIEW OF AREA F

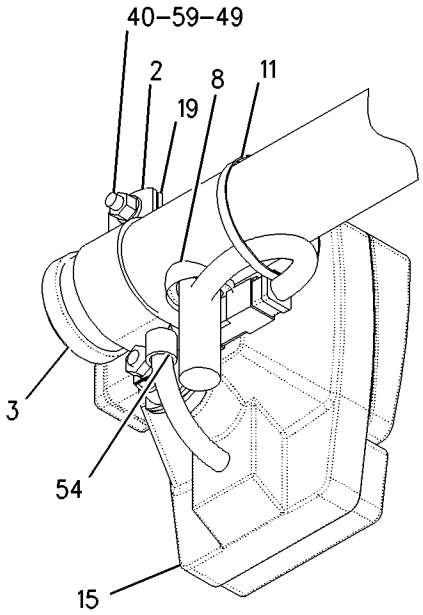

VIEW OF AREA E

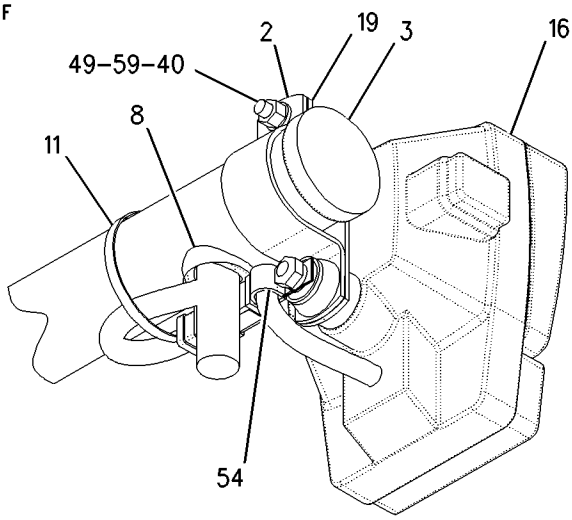

VIEW OF AREA G

GRAPHIC #2 g00944398

204-2162 WIRING GP-HEATER

S/N: BMA1-UP

PART OF 199-5055 ENGINE AR-COMPLETE

SMCS-1090, 1408 **i01696067**

NOTE	REF NO	GRAPHIC REF	PART NUMBER	QTY	PART NAME 1 2 3 4 5 6 (PRODUCT LEVEL)	SEE PAGE
	1	1	**003-9835**	2	PROTECTOR	
M	2	1	**112-6646**	2	LOCKNUT	
	3	1	**147-0286**	1	WIRE AS	
	4	1	**148-0757**	1	SWITCH AS-MAGNETIC (24 VOLT) (AIR INLET HEATER)	
	5	1	**215-2316**	1	WIRE AS	
	6	1	**4D-7794**	1	CLIP	
	7	1	**6V-5839**	1	WASHER (11X21X2.5MM THK)	
M	8	1	**8T-4133**	1	NUT (M10X1.5 THD)	
M	9	1	**8T-4970**	2	BOLT (M6X1X14MM)	
	10	1	**9X-8256**	2	WASHER (6.6X12X2MM THK)	

M-METRIC PART

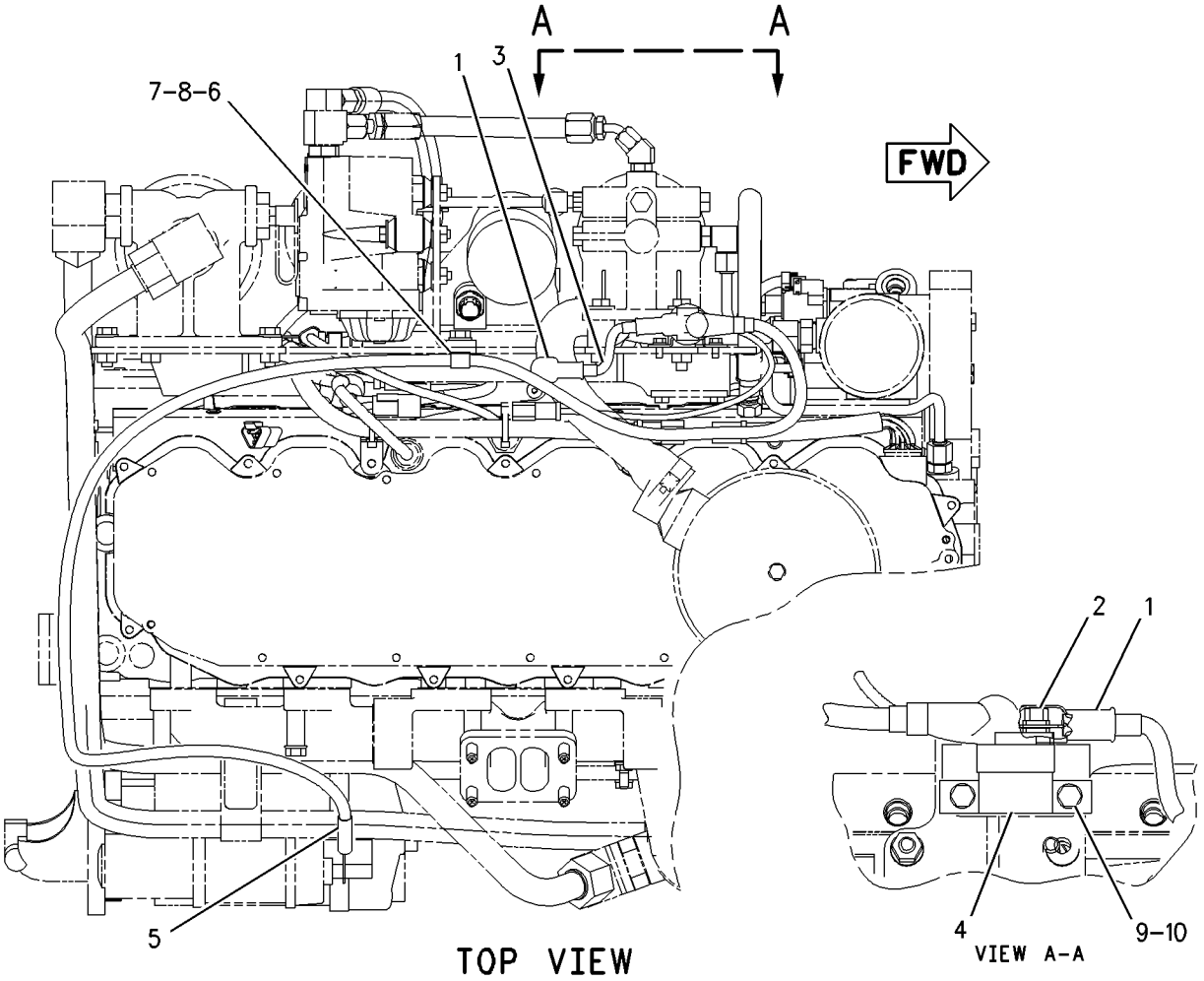

GRAPHIC #1 g00873756

MEMORANDA

ELECTRICAL AND STARTING SYSTEM

159-5869 WIRING GP-REAR

S/N: CAF1-UP

PART OF 162-5603 GENERAL AR

SMCS-1408 **i01674672**

NOTE	REF NO	GRAPHIC REF	PART NUMBER	QTY	PART NAME 1 2 3 4 5 6 (PRODUCT LEVEL)	SEE PAGE
	1	2	**3E-5239**	1	RELAY AS (24 VOLT) (CONDENSER)	
	2	1,2	**3S-2093**	6	STRAP-CABLE	
	3	2	**7C-3254**	1	PLATE	
	4	1	**7G-1060**	1	STRAP AS-GROUND	
	5	1	**7Y-5548**	1	CABLE AS (BLACK)(00 GA)	
		1	**1S-7251**	2	TERMINAL-RING (FOR 1/2 IN BOLT)	
BE		1	**5P-0747**		CABLE (00GA)(BLACK) (52CM)	
	6	2	**8W-1614**	1	CLIP	
	7	2	**8W-3642**	1	CABLE AS	
		2	**1S-7251**	2	TERMINAL-RING (FOR 1/2 IN BOLT)	
BE		2	**5P-0747**		CABLE (00GA)(BLACK) (90CM)	
		2	**9G-8909**	1	COVER-TERMINAL (BLACK)	
	8	1	**8W-8527**	1	SLEEVE	
	9	1	**8W-8528**	4	SLEEVE	
	10	2	**9L-1566**	1	SUPPORT-TUBE	
	11	2	**9U-2277**	1	CLIP AS	
	12	1	**106-8704**	1	SUPPRESSOR AS-ARC	
		1	**3E-3365**	1	WEDGE-RECEPTACLE LOCK (2 PIN)	
		1	**186-3735**	2	PIN-CONNECTOR	
		1	**102-8802**	1	KIT-RECEPTACLE (2 PIN)	
					(INCLUDES RECEPTACLE AS & WEDGE)	
	13	2	**123-3688**	1	PLATE AS	
		2	**7L-0811**	1	DOWEL	
	14	2	**123-3689**	1	PLATE AS	
		2	**5M-6687**	1	STUD-TAPERLOCK (3/8-16X1.28 IN OAL)	
	15	2	**123-3692**	1	ARM	
	16	2	**123-3695**	1	PLATE	
	17	2	**139-2116**	1	SWITCH AS-TOGGLE (ENGINE SHUTDOWN)	
		2	**186-3735**	3	PIN-CONNECTOR	
		2	**3E-3371**	1	WEDGE-RECEPTACLE LOCK (3 PIN)	
		2	**6T-3631**	2	NUT-HEX (15/32-32 THD)	
		2	**6T-3632**	1	LOCKWASHER (11.96X15.08X053MM THK)	
		2	**6T-3633**	1	RING-LOCKING	
		2	**102-8803**	1	KIT-RECEPTACLE (3 PIN) (ENGINE SHUTDOWN)	
					(INCLUDES RECEPTACLE AS & WEDGE)	
	18	2	**139-6122**	1	BOSS	
	19	1	**142-5991**	1	SPACER (16.5X40X30MM THK)	
	20	1	**169-3502**	1	HARNESS AS-REAR CHASSIS	
		1	**102-8802**	2	KIT-RECEPTACLE (2 PIN)	
					(INCLUDES RECEPTACLE AS & WEDGE)	
		1	**155-2255**	2	KIT-CONNECTING PLUG (12 PIN)	
		1	**155-2270**	5	KIT-CONNECTING PLUG (2 PIN)	
					(EACH INCLUDES PLUG AS & WEDGE)	
	21	2	**187-1008**	1	SENDER AS-POSITION (ARTICULATION ANGLE)	
		2	**3E-3365**	1	WEDGE-RECEPTACLE LOCK (2 PIN)	
		2	**186-3735**	2	PIN-CONNECTOR	
E		2	**9X-1813**		SLEEVE (15CM)	
		2	**102-8802**	1	KIT-RECEPTACLE (2 PIN)	
					(INCLUDES RECEPTACLE AS & WEDGE)	
	22	1	**194-7195**	1	HARNESS AS-TRANSMISSION	
		1	**102-8802**	1	KIT-RECEPTACLE (2 PIN)	
		1	**102-8803**	2	KIT-RECEPTACLE (3 PIN)	
		1	**102-8801**	2	KIT-RECEPTACLE (12 PIN)	
					(EACH INCLUDES RECEPTACLE AS & WEDGE)	
		1	**155-2255**	3	KIT-CONNECTING PLUG (12 PIN)	
					(EACH INCLUDES PLUG AS & WEDGE)	

159-5869 **WIRING GP-REAR** ***(contd.)*** **i01674672**

NOTE	REF NO	GRAPHIC REF	PART NUMBER	QTY	PART NAME 1 2 3 4 5 6 (PRODUCT LEVEL)	SEE PAGE
		1	**3E-6287**	1	PLUG AS-CONNECTOR (40 PIN)	
		1	**9X-0141**	1	PLUG AS-CONNECTOR (40 PIN)	
		1	**9X-1054**	1	PLUG AS-CONNECTOR (4 PIN)	
		1	**160-7689**	1	PLUG AS-CONNECTOR (70 PIN)	
	23	1	**199-5032**	1	HARNESS AS-REAR CHASSIS	
		1	**102-8802**	1	KIT-RECEPTACLE (2 PIN)	
		1	**102-8805**	1	KIT-RECEPTACLE (6 PIN)	
					(EACH INCLUDES RECEPTACLE AS & WEDGE)	
		1	**127-5483**	5	PLUG AS-CONNECTOR (1 PIN)	
		1	**127-5485**	1	PLUG AS-CONNECTOR (1 PIN)	
		1	**155-2255**	1	KIT-CONNECTING PLUG (12 PIN)	
		1	**155-2270**	1	KIT-CONNECTING PLUG (2 PIN)	
					(EACH INCLUDES PLUG AS & WEDGE)	
	24	2	**033-8248**	1	CLIP	
	25	2	**109-0361**	1	FILM-INSTRUCTION (ENGINE SHUTDOWN)	
	26	2	**115-3073**	1	CLIP AS-CONNECTING	
	27	2	**130-5300**	7	CLIP	
	28	2	**130-5301**	1	CLIP	
M	29	1	**130-9864**	1	BOLT-HEX HEAD (M14X2.0X25MM)	
	30	2	**174-5907**	4	CLIP	
	31	1	**1S-0994**	1	CLIP	
	32	1	**1S-0996**	1	CLIP	
	33	2	**3E-5169**	1	GUARD-SWITCH	
	34	1	**4D-7388**	1	CLIP	
	35	1,2	**4D-7794**	6	CLIP	
	36	1,2	**4S-4455**	5	CLIP	
M	37	2	**5C-2890**	1	NUT (M6X1 THD)	
M	38	2	**5C-7261**	1	NUT (M8X1.25 THD)	
M	39	2	**5C-9553**	1	BOLT (M6X1X16MM)	
	40	1	**5D-2651**	2	CLIP	
	41	1	**5M-3062**	1	BOLT (3/8-16X0.75 IN)	
	42	2	**5P-8167**	2	BOLT (3/8-16X0.625 IN)	
	43	1,2	**6D-4244**	6	CLIP	
	44	1	**6D-4246**	4	CLIP	
	45	2	**6V-6893**	3	BOLT (6-32X.375 IN)	
	46	2	**6V-8801**	1	NUT (3/8-16 THD)	
	47	1,2	**7C-4354**	2	CLIP	
	48	1	**7X-0510**	1	WASHER-HARD (15.5X29X3MM THK)	
	49	2	**8C-7528**	1	CLIP	
	50	2	**8M-2770**	1	CLIP	
	51	2	**8M-2772**	1	CLIP	
	52	2	**8M-2773**	1	CLIP	
	53	1,2	**8T-4121**	25	WASHER-HARD (11X21X2.5MM THK)	
M	54	1,2	**8T-4133**	2	NUT (M10X1.5 THD)	
M	55	1,2	**8T-4136**	2	BOLT (M10X1.5X25MM)	
M	56	1,2	**8T-4137**	16	BOLT (M10X1.5X20MM)	
M	57	1,2	**8T-4179**	4	BOLT (M12X1.75X20MM)	
M	58	2	**8T-4185**	1	BOLT (M10X1.5X50MM)	
M	59	2	**8T-4190**	1	BOLT (M16X2X25MM)	
M	60	1	**8T-4191**	2	BOLT (M10X1.5X16MM)	
M	61	1	**8T-4193**	1	BOLT (M16X2X50MM)	
M	62	2	**8T-4195**	1	BOLT (M10X1.5X30MM)	
M	63	2	**8T-4200**	2	BOLT (M8X1.25X16MM)	
	64	2	**8T-4205**	2	WASHER-HARD (7.2X14.5X2MM THK)	
	65	1,2	**8T-4223**	4	WASHER-HARD (13.5X25.5X3MM THK)	
	66	2	**8T-4224**	3	WASHER-HARD (8.8X16X2MM THK)	
	67	2	**8T-4226**	1	WASHER-PLATED (10.5X45X3MM THK)	
	68	1,2	**8T-4896**	3	WASHER-HARD (10.2X18.5X2.5MM THK)	
M	69	1	**8T-5005**	1	BOLT (M10X1.50X70MM)	

159-5869 **WIRING GP-REAR** ***(contd.)*** **i01674672**

NOTE	REF NO	GRAPHIC REF	PART NUMBER	QTY	PART NAME 1 2 3 4 5 6 (PRODUCT LEVEL)	SEE PAGE
	70	2	**8T-9364**	2	BOLT (1/4-20X0.625 IN)	
	71	2	**8W-8909**	2	SLEEVE	
	72	2	**8X-5489**	1	SLEEVE	
	73	1	**9R-3884**	1	SPACER (13X20X45MM THK)	
	74	2	**9X-8256**	2	WASHER (6.6X12X2MM THK)	
	75	1,2	**9X-8257**	2	WASHER (17.5X30X3.5MM THK)	

B-USE AS REQUIRED
E-ORDER BY THE CENTIMETER
M-METRIC PART

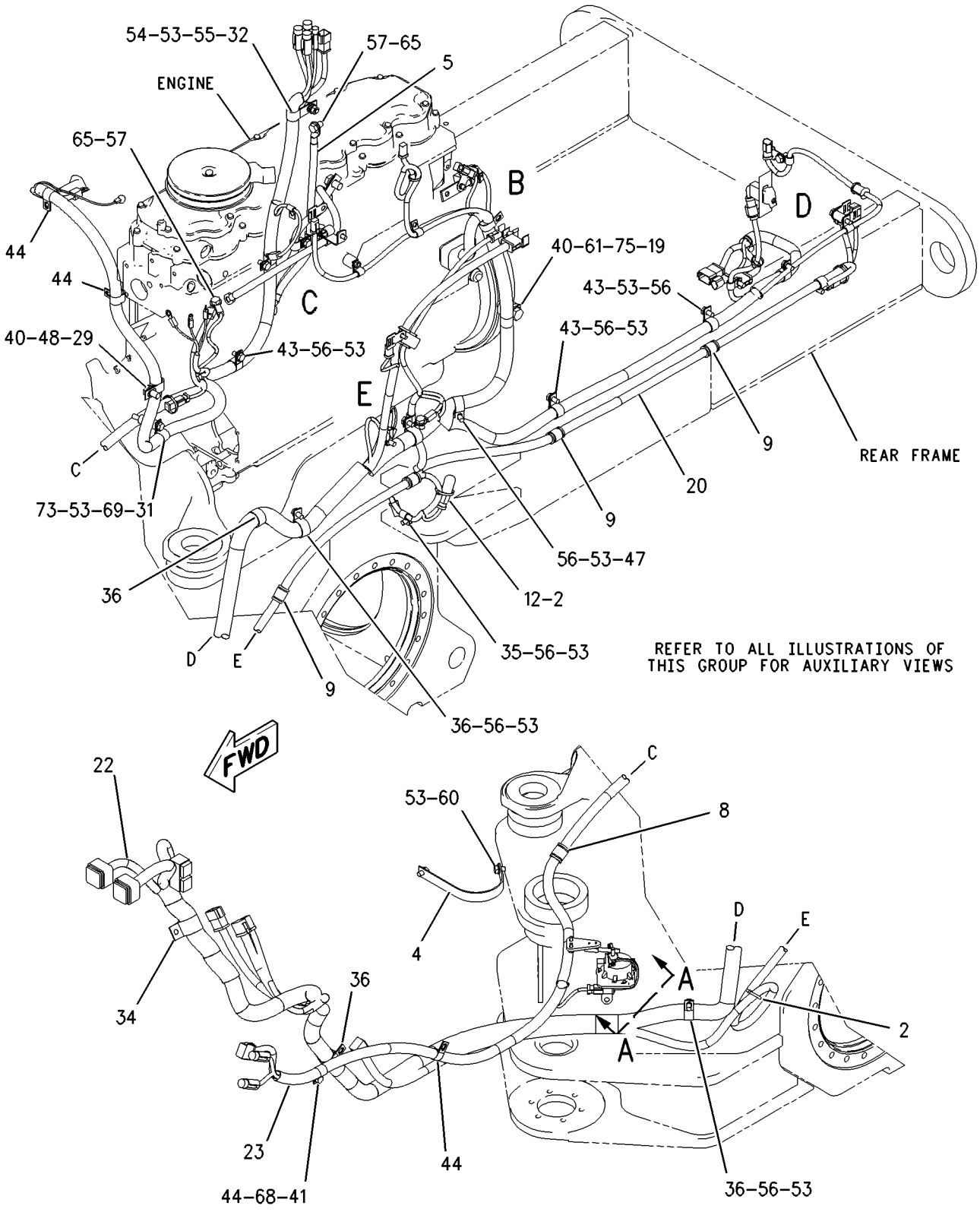

GRAPHIC #1 g00935834

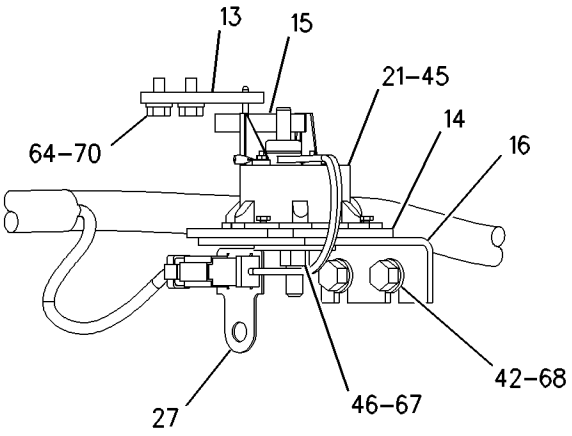

VIEW A-A

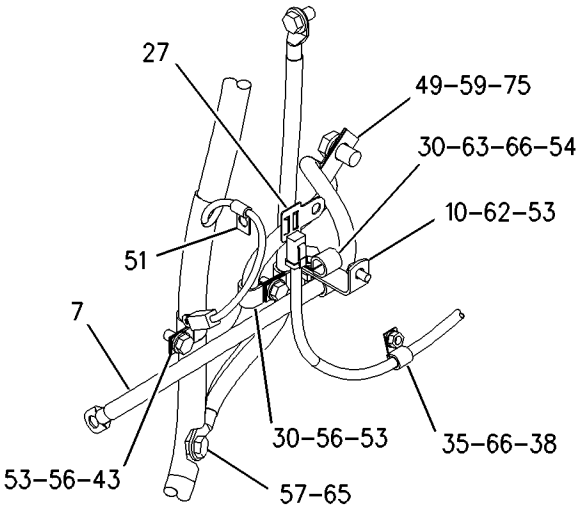

VIEW OF AREA C

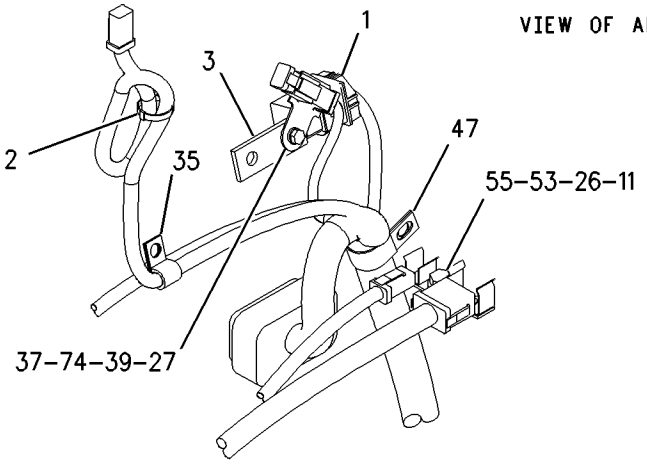

VIEW OF AREA B

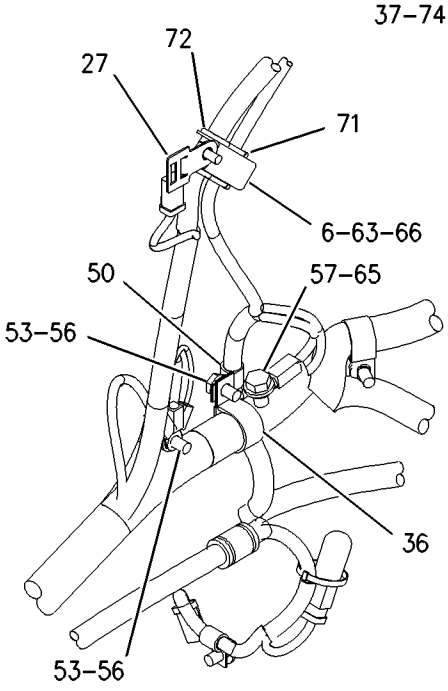

VIEW OF AREA E

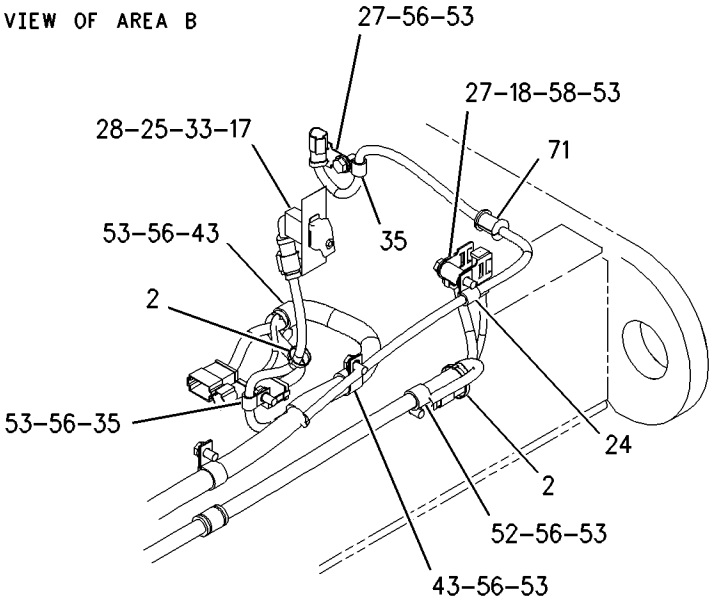

VIEW OF AREA D

GRAPHIC #2 g00935835

MEMORANDA

ELECTRICAL AND STARTING SYSTEM

178-0163 WIRING GP-REAR—SERVICE CENTER

S/N: CAF1-UP

PART OF 194-2869 SUPPORT AR-REAR CHASSIS

SMCS-1408 **i01755613**

NOTE	REF NO	GRAPHIC REF	PART NUMBER	QTY	PART NAME 1 2 3 4 5 6 (PRODUCT LEVEL)	SEE PAGE
	1	1	**2L-0273**	1	FITTING (RUBBER)	
	2	1	**3E-8320**	1	PLATE-INSTRUCTION (BATTERY)	
	3	1	**3S-2093**	2	STRAP-CABLE	
	4	1	**6V-4283**	1	PLATE-ALTERNATOR	
	5	1	**7K-4743**	2	SPACER-FLANGED	
	6	1	**7V-9275**	1	STRAP	
	7	1	**9L-1566**	1	SUPPORT-TUBE	
	8	1	**112-4428**	1	CABLE AS	
		1	**1S-7251**	1	TERMINAL-RING (FOR 1/2 IN BOLT)	
		1	**1S-7252**	1	TERMINAL-RING (FOR 3/8 IN BOLT)	
		1	**5P-0747**		CABLE (OOGA)(BLACK) (27CM)	
	9	1	**115-5593**	1	CABLE AS	
		1	**1S-7252**	1	TERMINAL-RING (FOR 3/8 IN BOLT)	
E		1	**5P-0747**		CABLE (OOGA)(BLACK) (119CM)	
		1	**7N-5274**	1	COVER-TERMINAL (BLACK)	
		1	**3S-6050**	1	TERMINAL AS-BATTERY (NEGATIVE)	
		1	**1M-6119**	1	BOLT-BATTERY TERMINAL (5/16-18X1.375 IN)	
		1	**1M-6120**	1	NUT-BATTERY TERMINAL (5/16-18 THD)	
	10	1	**118-3534**	1	SWITCH GP-MAGNETIC (24V) (CRANKING RELAY)	
	11	1	**125-6390**	1	PLATE-ENGINE	
Y	12	1	**167-0138**	1	SWITCH GP-MAGNETIC (MAIN RELAY)	227
	13	1	**169-5414**	1	CLIP	
	14	1	**169-7262**	1	HARNESS AS-REAR	
		1	**102-8802**	1	KIT-RECEPTACLE (2 PIN)	
		1	**127-5484**	1	RECEPTACLE AS (1 PIN)	
		1	**127-5486**	1	RECEPTACLE AS (1 PIN)	
		1	**155-2270**	1	KIT-CONNECTING PLUG (2 PIN)	
		1	**155-2274**	2	KIT-CONNECTING PLUG (6 PIN)	
	15	1	**169-7263**	1	HARNESS AS-REAR	
		1	**102-8802**	1	KIT-RECEPTACLE (2 PIN)	
		1	**102-8804**	1	KIT-RECEPTACLE (4 PIN)	
		1	**102-8805**	1	KIT-RECEPTACLE (6 PIN)	
		1	**102-8801**	1	KIT-RECEPTACLE (12 PIN)	
		1	**155-2270**	1	KIT-CONNECTING PLUG (2 PIN)	
		1	**155-2271**	1	KIT-CONNECTING PLUG (4 PIN)	
	16	1	**171-2210**	1	CIRCUIT BREAKER AS (80 AMP) (MAIN)	
	16A	1	**171-2210**	1	CIRCUIT BREAKER AS (80 AMP) (ALTERNATOR)	
					(EACH CIRCUIT BREAKER AS INCLUDES)	
		1	**8T-4205**	2	WASHER-HARD (7.2X14.5X2MM THK)	
		1	**6V-8187**	2	NUT (1/4-28 THD)	
		1	**1H-3244**	2	LOCKWASHER	
	17	1	**177-8802**	1	CABLE AS	
		1	**1S-7251**	1	TERMINAL-RING (FOR 1/2 IN BOLT)	
E		1	**5P-0761**		CABLE (OOGA)(RED) (32CM)	
		1	**8N-0869**	1	COVER-TERMINAL (RED)	
		1	**8N-1725**	1	COVER-TERMINAL (RED)	
		1	**3S-6049**	1	TERMINAL AS-BATTERY (POSITIVE)	
		1	**1M-6119**	1	BOLT-BATTERY TERMINAL (5/16-18X1.375 IN)	
		1	**1M-6120**	1	NUT-BATTERY TERMINAL (5/16-18 THD)	
	18	1	**177-9813**	1	CABLE AS	
		1	**2L-8050**	1	TERMINAL (6 GA, 6.35MM/.25IN SCREW)	
		1	**2L-8058**	1	TERMINAL (8 GA, 6.35MM/.25IN SCREW)	
		1	**8N-1546**	1	PIN-CONNECTOR	
		1	**127-5484**	1	RECEPTACLE AS (1 PIN)	
	19	1	**177-9814**	1	CABLE AS	
		1	**9G-4343**	1	TERMINAL-CRIMP	

178-0163 **WIRING GP-REAR** ***(contd.)*** **i01755613**

NOTE	REF NO	GRAPHIC REF	PART NUMBER	QTY	PART NAME 1 2 3 4 5 6 (PRODUCT LEVEL)	SEE PAGE
		1	**8N-1548**	1	PIN-CONNECTOR	
		1	**127-5484**	1	RECEPTACLE AS (1 PIN)	
	20	1	**178-0160**	1	WIRE AS	
	21	1	**178-0162**	1	CABLE AS	
BD		1	**5P-5689**		WIRE (8 GA)	
		1	**2L-8050**	1	TERMINAL (6 GA, 6.35MM/.25IN SCREW)	
		1	**2L-8058**	1	TERMINAL (8 GA, 6.35MM/.25IN SCREW)	
	22	1	**178-0555**	1	CABLE AS	
		1	**9G-4343**	1	TERMINAL-CRIMP	
		1	**5P-3454**	1	TERMINAL-CRIMP (FOR 5/16IN BOLT)	
	23	1	**180-6153**	1	PLATE	
	24	1	**189-0108**	1	PLATE	
	25	1	**194-1854**	1	COVER	
	26	1	**194-1855**	1	PLATE AS	
	27	1	**195-4990**	1	WIRE AS	
	28	1	**200-8817**	1	CABLE AS	
		1	**1S-7251**	2	TERMINAL-RING (FOR 1/2 IN BOLT)	
E		1	**5P-0761**		CABLE (00GA)(RED) (119CM)	
		1	**8N-0869**	2	COVER-TERMINAL (RED)	
	29	1	**033-8248**	1	CLIP	
	30	1	**130-5300**	3	CLIP	
	31	1	**132-6938**	1	PLATE	
	32	1	**157-2528**	1	SPACER (7X16X20MM THK)	
	33	1	**1S-0994**	2	CLIP	
	34	1	**1S-1015**	1	CLIP	
	35	1	**1V-6688**	1	GROMMET	
	36	1	**2Y-5429**	1	GROMMET	
	37	1	**3K-8106**	2	SCREW-MACHINE (8-32 X 1 IN)	
	38	1	**4B-4274**	4	WASHER (5.5X13X1.2MM THK)	
	39	1	**4B-4863**	2	WASHER (4.7X11X1.2MM THK)	
	40	1	**4D-7794**	3	CLIP	
	41	1	**4D-8948**	1	CLIP (SLOT)	
	42	1	**4H-2558**	1	GROMMET	
M	43	1	**5C-9553**	4	BOLT (M6X1X16MM)	
	44	1	**5L-4507**	4	SCREW-MACHINE (10-32X0.875 IN)	
	45	1	**5P-4116**	1	WASHER-HARD (8.8X20.5X2MM THK)	
	46	1	**6D-3479**	1	CLIP	
	47	1	**6K-8178**	2	CLIP	
	48	1	**6T-3643**	1	CIRCUIT BREAKER AS (15 AMP) (ENGINE CONTROL)	
		1	**6V-8376**	2	SCREW-MACHINE (8-32X0.25 IN)	
		1	**9B-7233**	2	LOCKWASHER	
Y	49	1	**7N-0718**	1	SWITCH GP-DISCONNECT (BATTERY)	223
	50	1	**7N-3718**	1	CLIP	
M	51	1	**7X-2533**	1	BOLT (M6X1X35MM)	
	52	1	**7Y-8169**	1	GROMMET	
	53	1	**8M-2772**	1	CLIP	
M	54	1	**8T-0293**	1	BOLT (M12X1.75X20MM)	
	55	1	**8T-4121**	22	WASHER-HARD (11X21X2.5MM THK)	
M	56	1	**8T-4133**	1	NUT (M10X1.5 THD)	
M	57	1	**8T-4136**	13	BOLT (M10X1.5X25MM)	
M	58	1	**8T-4137**	8	BOLT (M10X1.5X20MM)	
M	59	1	**8T-4189**	3	BOLT (M8X1.25X20MM)	
M	60	1	**8T-4191**	2	BOLT (M10X1.5X16MM)	
	61	1	**8T-4205**	4	WASHER-HARD (7.2X14.5X2MM THK)	
	62	1	**8T-4223**	1	WASHER-HARD (13.5X25.5X3MM THK)	
	63	1	**8T-4224**	3	WASHER-HARD (8.8X16X2MM THK)	
	64	1	**174-5907**	6	CLIP	
Y	65	1	*9W-0742*	1	BLOCK GP-JUNCTION	137

B-USE AS REQUIRED
D-ORDER BY THE METER
E-ORDER BY THE CENTIMETER
M-METRIC PART
Y-SEPARATE ILLUSTRATION

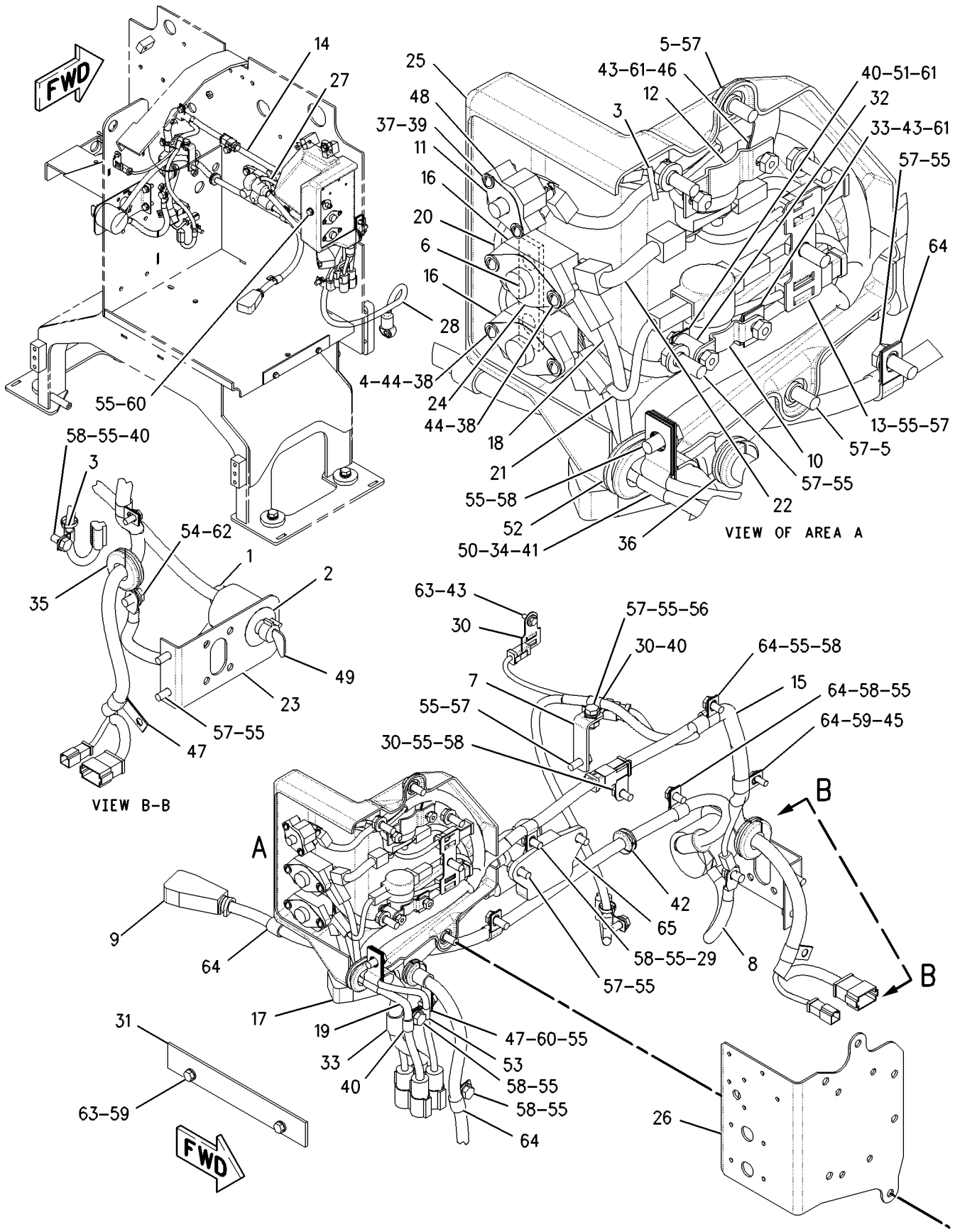

GRAPHIC #1

g00898262

184-1299 WIRING GP-REAR–RADIATOR

S/N: CAF1-UP

PART OF 194-2911 COOLING AR

SMCS-1408 **i01679181**

NOTE	REF NO	GRAPHIC REF	PART NUMBER	QTY	PART NAME 1 2 3 4 5 6 (PRODUCT LEVEL)	SEE PAGE
	1	1	**3S-2093**	7	STRAP-CABLE	
	2	1	**169-3190**	1	HARNESS AS-REAR LIGHTING	
		1	**102-8803**	2	KIT-RECEPTACLE (3 PIN)	
		1	**102-8805**	1	KIT-RECEPTACLE (6 PIN)	
					(EACH INCLUDES RECEPTACLE AS & WEDGE)	
		1	**155-2260**	4	KIT-CONNECTING PLUG (3 PIN)	
					(EACH INCLUDES PLUG AS & WEDGE)	
		1	**155-2270**	1	KIT-CONNECTING PLUG (2 PIN)	
					(EACH INCLUDES PLUG AS & WEDGE)	
Y	3	1	**123-6449**	1	WARNING GP-BACKUP	229
	4	1	**130-5300**	5	CLIP	
Y	5	1	**135-0426**	2	LAMP GP-SIGNAL (24 VOLT) (STOP/TAIL)	166
M	6	1	**5C-2890**	6	NUT (M6X1 THD)	
	7	1	**7N-3718**	1	CLIP	
	8	1	**8T-4121**	2	WASHER-HARD (11X21X2.5MM THK)	
M	9	1	**8T-4198**	2	BOLT (M10X1.5X100MM)	
	10	1	**8T-4224**	6	WASHER-HARD (8.8X16X2MM THK)	

M-METRIC PART
Y-SEPARATE ILLUSTRATION

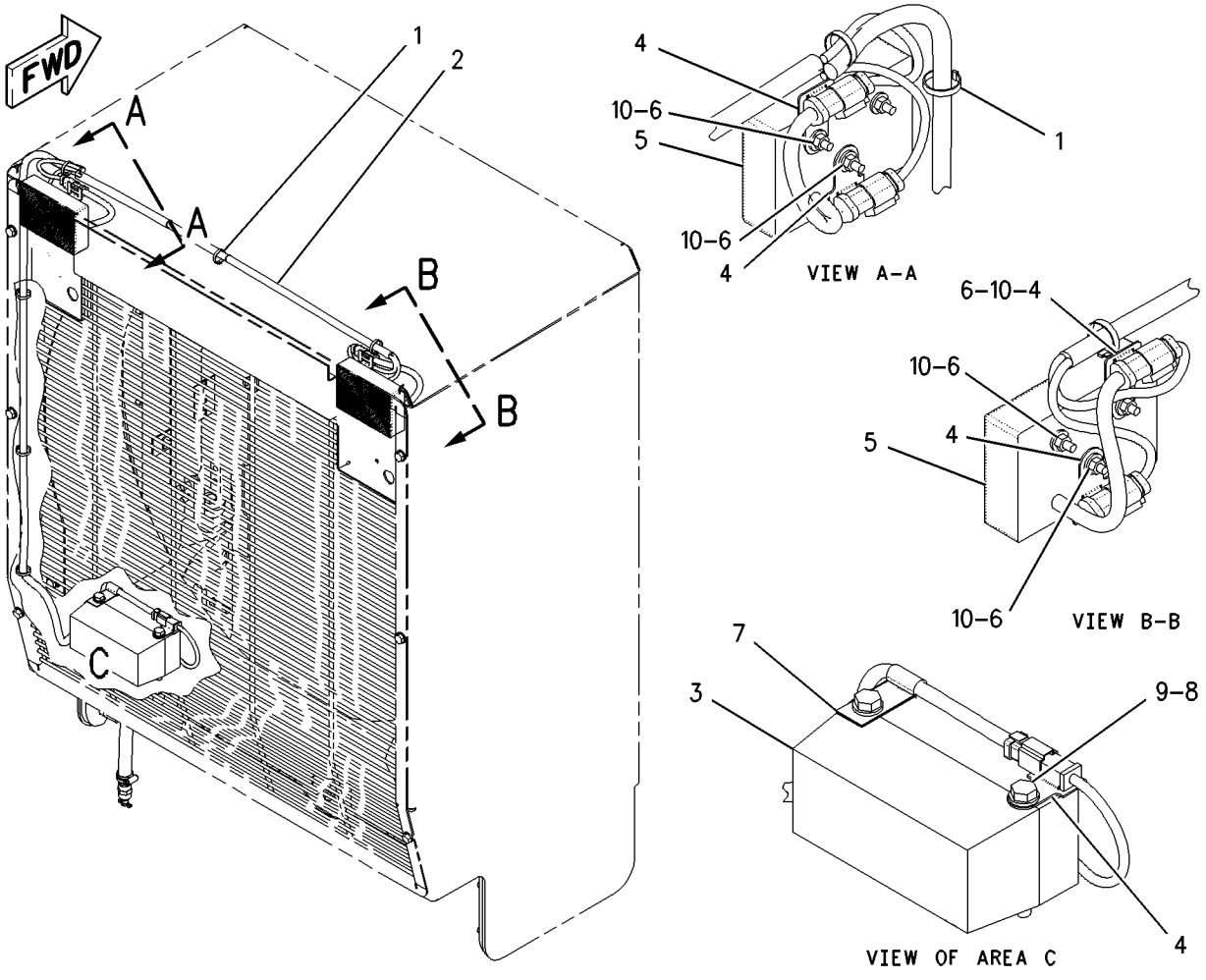

GRAPHIC #1 g00911697

MEMORANDA

ELECTRICAL AND STARTING SYSTEM

193-8253 WIRING GP-REAR–EU

S/N: CAF1-UP
PART OF 194-2912 COOLING AR
AN ATTACHMENT

SMCS-1408 **i01862173**

NOTE	REF NO	GRAPHIC REF	PART NUMBER	QTY	PART NAME 1 2 3 4 5 6 (PRODUCT LEVEL)	SEE PAGE
	1	1	**3S-2093**	12	STRAP-CABLE	
	2	1	*5C-9930*	1	LAMP GP (RH)	
		1	**4V-8116**	1	LAMP (24 VOLT)(5 WATT) (TAIL)	
		1	**5C-9584**	2	LAMP (24 VOLT)(21 WATT) (BRAKE)	
		1	**6C-0109**	1	LAMP AS-RH (TURN)	
		1	**5M-6725**	1	SCREW-TAPPING (8-18X.625 IN)	
		1	**8L-5828**	1	SCREW-TAPPING (8-18X.875 IN)	
		1	**188-9694**	1	LENS	
		1	**188-9695**	1	SEAL	
	3	1	*5C-9931*	1	LAMP GP (LH)	
		1	**4V-8116**	1	LAMP (24 VOLT)(5 WATT) (TAIL)	
		1	**5C-9584**	2	LAMP (24 VOLT)(21 WATT) (BRAKE)	
		1	**6C-0110**	1	LAMP AS-LH (TURN)	
		1	**5M-6725**	1	SCREW-TAPPING (8-18X.625 IN)	
		1	**8L-5828**	1	SCREW-TAPPING (8-18X.875 IN)	
		1	**188-9694**	1	LENS	
		1	**188-9695**	1	SEAL	
	4	1	**6C-5233**	1	BRACKET AS-RH	
	5	1	**6C-5234**	1	BRACKET AS-LH	
	6	1	**7V-7835**	1	ARM AS	
		1	**5C-9563**	1	SPACER (11.2X26.67X55MM THK)	
	7	1	**7V-7838**	1	ARM AS	
		1	**5C-9563**	1	SPACER (11.2X26.67X55MM THK)	
	8	1	**7X-2393**	4	BUMPER-CONICAL	
	9	1	**9S-1316**	2	SPRING	
	10	1	**112-5555**	2	ROD	
	11	1	**156-0283**	2	WASHER-HARD (8.4X35X2.5MM THK)	
	12	1	**196-4609**	1	HARNESS AS-REAR LIGHTING	
		1	**102-8802**	2	KIT-RECEPTACLE (2 PIN)	
		1	**102-8801**	1	KIT-RECEPTACLE (12 PIN)	
					(EACH INCLUDES RECEPTACLE AS & WEDGE)	
		1	**155-2270**	2	KIT-CONNECTING PLUG (2 PIN)	
					(EACH INCLUDES PLUG AS & WEDGE)	
	13	1	**208-7933**	2	PLATE	
	15	1	**2V-3216**	2	CLIP	
	16	1	**3B-5301**	2	PIN-COTTER	
M	17	1	**5C-2890**	6	NUT (M6X1 THD)	
M	18	1	**5C-7261**	4	NUT (M8X1.25 THD)	
	19	1	**8D-5641**	4	BEARING	
	20	1	**8T-4121**	12	WASHER-HARD (11X21X2.5MM THK)	
	21	1	**8T-4122**	4	WASHER-HARD (17X32X3.5MM THK)	
M	22	1	**8T-4136**	8	BOLT (M10X1.5X25MM)	
M	23	1	**8T-4171**	2	BOLT (M6X1X12MM)	
M	24	1	**8T-4173**	2	BOLT (M16X2.0X110MM)	
	25	1	**8T-4205**	6	WASHER-HARD (7.2X14.5X2MM THK)	
	26	1	**8T-4223**	2	WASHER-HARD (13.5X25.5X3MM THK)	
	27	1	**8T-4224**	4	WASHER-HARD (8.8X16X2MM THK)	
M	28	1	**8T-4778**	2	LOCKNUT (M16X2 THD)	
	29	1	**9M-5870**	2	GROMMET (11.11MM ID)	
M	30	1	**8T-4133**	2	NUT (M10X1.5 THD)	
M	31	1	**8T-4198**	2	BOLT (M10X1.5X100MM)	
Y	32	1	**123-6449**	1	WARNING GP-BACKUP	229
	33	1	**130-5300**	3	CLIP	
	34	1	**160-1744**	2	BRACKET	
	35	1	**213-1413**	1	HARNESS AS-REAR LIGHTING (RH)	

193-8253 **WIRING GP-REAR** ***(contd.)*** **i01862173**

NOTE	REF NO	GRAPHIC REF	PART NUMBER	QTY	PART NAME 1 2 3 4 5 6 (PRODUCT LEVEL)	SEE PAGE
		1	**102-8804**	1	KIT-RECEPTACLE (4 PIN)	
					(INCLUDES RECEPTACLE AS & WEDGE)	
	36	1	**213-1414**	1	HARNESS AS-REAR LIGHTING (LH)	
		1	**102-8804**	1	KIT-RECEPTACLE (4 PIN)	
					(INCLUDES RECEPTACLE AS & WEDGE)	

M-METRIC PART
Y-SEPARATE ILLUSTRATION

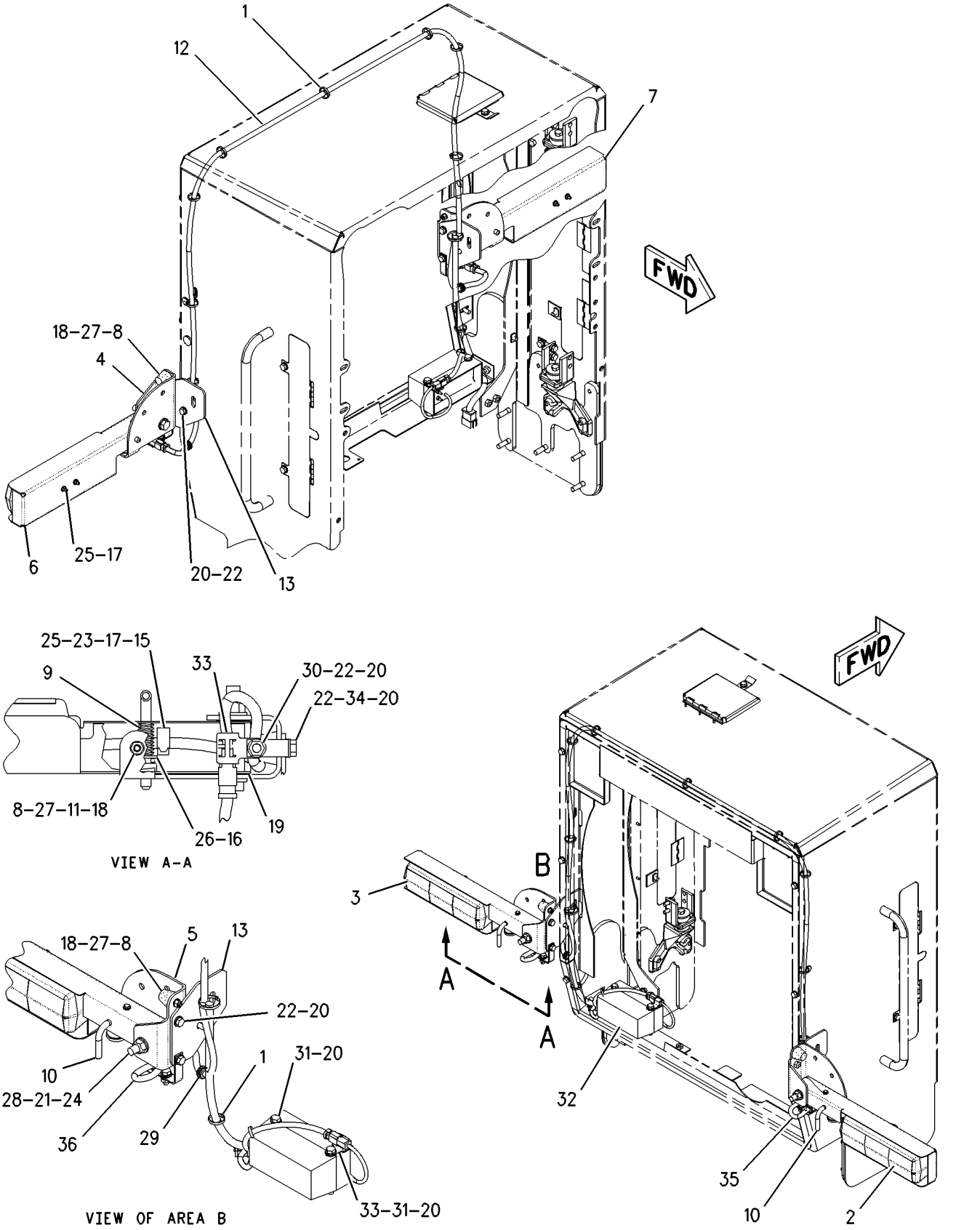

GRAPHIC #1

g00845742

MEMORANDA

199-1398 WIRING GP-REAR–EU

S/N: CAF1-UP

PART OF 194-2870 SUPPORT AR-REAR CHASSIS AN ATTACHMENT

SMCS-1408 **i01705581**

NOTE	REF NO	GRAPHIC REF	PART NUMBER	QTY	PART NAME 1 2 3 4 5 6 (PRODUCT LEVEL)	SEE PAGE
	1	1	**2L-0273**	1	FITTING (RUBBER)	
	2	1	**3E-8320**	1	PLATE-INSTRUCTION (BATTERY)	
	3	1	**3S-2093**	1	STRAP-CABLE	
	4	1	**6V-4283**	1	PLATE-ALTERNATOR	
	5	1	**7K-4743**	2	SPACER-FLANGED	
	6	1	**7V-9275**	1	STRAP	
	7	1	**9L-1566**	1	SUPPORT-TUBE	
	8	1	**112-4428**	1	CABLE AS	
		1	**1S-7251**	1	TERMINAL-RING (FOR 1/2 IN BOLT)	
		1	**1S-7252**	1	TERMINAL-RING (FOR 3/8 IN BOLT)	
E		1	**5P-0747**		CABLE (OOGA)(BLACK) (27 CM)	
	9	1	**115-5593**	1	CABLE AS	
		1	**1S-7252**	1	TERMINAL-RING (FOR 3/8 IN BOLT)	
		1	**7N-5274**	1	COVER-TERMINAL (BLACK)	
		1	**3S-6050**	1	TERMINAL AS-BATTERY (NEGATIVE)	
	10	1	**118-3534**	1	SWITCH GP-MAGNETIC (24V) (STARTING)	
	11	1	**125-6390**	1	PLATE-ENGINE	
Y	12	1	**167-0138**	1	SWITCH GP-MAGNETIC (MAIN RELAY)	227
	13	1	**169-5414**	1	CLIP	
	14	1	**169-7262**	1	HARNESS AS-REAR	
		1	**155-2270**	1	KIT-CONNECTING PLUG (2 PIN)	
		1	**155-2274**	2	KIT-CONNECTING PLUG (6 PIN)	
					(KIT INCLUDES PLUG AS & WEDGE)	
		1	**102-8802**	1	KIT-RECEPTACLE (2 PIN)	
					(KIT INCLUDES RECEPTACLE AS & WEDGE)	
	15	1	**169-7263**	1	HARNESS AS-REAR	
		1	**155-2270**	1	KIT-CONNECTING PLUG (2 PIN) (TMSN BYPASS FILTER SWITCH)	
					(KIT INCLUDES PLUG AS & WEDGE)	
		1	**155-2271**	1	KIT-CONNECTING PLUG (4 PIN)	
		1	**102-8802**	1	KIT-RECEPTACLE (2 PIN) (BACK-UP ALARM/AIR DRYER)	
		1	**102-8804**	1	KIT-RECEPTACLE (4 PIN)	
		1	**102-8805**	1	KIT-RECEPTACLE (6 PIN)	
		1	**102-8801**	1	KIT-RECEPTACLE (12 PIN)	
					(KIT INCLUDES RECEPTACLE AS & WEDGE)	
	16	1	**171-2210**	2	CIRCUIT BREAKER AS (80 AMP) (MAIN)	
	16A	1	**171-2210**	2	CIRCUIT BREAKER AS (80 AMP) (ALTERNATOR)	
					(EACH CIRCUIT BREAKER INCLUDES)	
		1	**1H-3244**	2	LOCKWASHER	
		1	**6V-8187**	2	NUT (1/4-28 THD)	
		1	**8T-4205**	2	WASHER-HARD (7.2X14.5X2MM THK)	
	17	1	**177-8802**	1	CABLE AS	
		1	**1S-7251**	1	TERMINAL-RING (FOR 1/2 IN BOLT)	
E		1	**5P-0761**		CABLE (OOGA)(RED) (32 CM)	
		1	**8N-0869**	1	COVER-TERMINAL (RED)	
		1	**8N-1725**	1	COVER-TERMINAL (RED)	
		1	**3S-6049**	1	TERMINAL AS-BATTERY (POSITIVE)	
		1	**1M-6119**	1	BOLT-BATTERY TERMINAL (5/16-18X1.375 IN)	
		1	**1M-6120**	1	NUT-BATTERY TERMINAL (5/16-18 THD)	
	18	1	**177-9813**	1	CABLE AS	
		1	**2L-8050**	1	TERMINAL (6 GA, 6.35MM/.25IN SCREW)	
					–OR–	
		1	**2L-8058**	1	TERMINAL (8 GA, 6.35MM/.25IN SCREW)	
		1	**8N-1546**	1	PIN-CONNECTOR	

199-1398 **WIRING GP-REAR** ***(contd.)*** **i01705581**

NOTE	REF NO	GRAPHIC REF	PART NUMBER	QTY	PART NAME 1 2 3 4 5 6 (PRODUCT LEVEL)	SEE PAGE
		1	**127-5484**	1	RECEPTACLE AS (1 PIN)	
	19	1	**177-9814**	1	CABLE AS	
		1	**127-5484**	1	RECEPTACLE AS (1 PIN)	
		1	**9G-4343**	1	TERMINAL-CRIMP	
		1	**8N-1548**	1	PIN-CONNECTOR	
	20	1	**178-0160**	1	WIRE AS	
	21	1	**178-0162**	1	CABLE AS	
		1	**2L-8050**	1	TERMINAL (6 GA, 6.35MM/.25IN SCREW)	
					—OR—	
		1	**2L-8058**	1	TERMINAL (8 GA, 6.35MM/.25IN SCREW)	
	22	1	**178-0555**	1	CABLE AS	
		1	**9G-4343**	1	TERMINAL-CRIMP	
		1	**5P-3454**	1	TERMINAL-CRIMP (FOR 5/16IN BOLT)	
	23	1	**180-6153**	1	PLATE	
	25	1	**194-1854**	1	COVER	
	26	1	**194-1855**	1	PLATE AS	
M		1	**6V-9632**	4	NUT-WELD (M6X1 THD)	
M		1	**8T-3490**	1	NUT-WELD (M10X1.5 THD)	
	27	1	**195-2097**	1	WIRE AS	
	28	1	**195-4990**	1	WIRE AS	
	29	1	**200-8817**	1	CABLE AS	
E		1	**5P-0761**		CABLE (00GA)(RED) (119 CM)	
		1	**1S-7251**	2	TERMINAL-RING (FOR 1/2 IN BOLT)	
		1	**8N-0869**	2	COVER-TERMINAL (RED)	
	30	1	**201-8424**	1	STRAP	
	31	1	**033-8248**	1	CLIP	
	32	1	**127-0724**	1	SPACER (10.5X16X20.0MM THK)	
	33	1	**130-5300**	3	CLIP	
	34	1	*132-6938*	1	PLATE	
	35	1	**157-2528**	1	SPACER (7X16X20MM THK)	
	36	1	**1S-0994**	2	CLIP	
	37	1	**1S-1015**	1	CLIP	
	38	1	**1V-6688**	1	GROMMET	
	39	1	**2Y-5429**	1	GROMMET	
	40	1	**3K-8106**	6	SCREW-MACHINE (8-32 X 1 IN)	
	41	1	**3T-2662**	1	CIRCUIT BREAKER AS (15 AMP) (HEAD/RH POSITION LAMPS)	
	41A	1	**3T-2662**	1	CIRCUIT BREAKER AS (15 AMP) (TURN/HAZARD/LH POSITION/PANEL)	
					(EACH CIRCUIT BREAKER INCLUDES)	
		1	**6V-8376**	2	SCREW-MACHINE (8-32X0.25 IN)	
		1	**9B-7233**	2	LOCKWASHER	
	42	1	**4B-4274**	4	WASHER (5.5X13X1.2MM THK)	
	43	1	**4B-4863**	2	WASHER (4.7X11X1.2MM THK)	
	44	1	**4D-7794**	3	CLIP	
	45	1	**4D-8948**	1	CLIP (SLOT)	
	46	1	**4H-2558**	1	GROMMET	
M	47	1	**5C-9553**	4	BOLT (M6X1X16MM)	
	48	1	**5L-4507**	4	SCREW-MACHINE (10-32X0.875 IN)	
	49	1	**5P-4116**	1	WASHER-HARD (8.8X20.5X2MM THK)	
	50	1	**6D-3479**	1	CLIP	
	51	1	**6K-8178**	2	CLIP	
	52	1	**6T-3643**	1	CIRCUIT BREAKER AS (15 AMP) (ENGINE CONTROL)	
		1	**6V-8376**	2	SCREW-MACHINE (8-32X0.25 IN)	
		1	**9B-7233**	2	LOCKWASHER	
Y	53	1	**7N-0718**	1	SWITCH GP-DISCONNECT (BATTERY)	223
	54	1	**7N-3718**	1	CLIP	
M	55	1	**7X-2533**	1	BOLT (M6X1X35MM)	
	56	1	**7Y-8169**	1	GROMMET	
	57	1	**8M-2772**	1	CLIP	

199-1398 **WIRING GP-REAR** ***(contd.)*** **i01705581**

NOTE	REF NO	GRAPHIC REF	PART NUMBER	QTY	PART NAME 1 2 3 4 5 6 (PRODUCT LEVEL)	SEE PAGE
M	58	1	**8T-0293**	1	BOLT (M12X1.75X20MM)	
	59	1	**8T-4121**	22	WASHER-HARD (11X21X2.5MM THK)	
M	60	1	**8T-4133**	2	NUT (M10X1.5 THD)	
M	61	1	**8T-4136**	11	BOLT (M10X1.5X25MM)	
M	62	1	**8T-4137**	6	BOLT (M10X1.5X20MM)	
M	63	1	**8T-4189**	3	BOLT (M8X1.25X20MM)	
M	64	1	**8T-4191**	2	BOLT (M10X1.5X16MM)	
	65	1	**8T-4205**	4	WASHER-HARD (7.2X14.5X2MM THK)	
	66	1	**8T-4223**	1	WASHER-HARD (13.5X25.5X3MM THK)	
	67	1	**8T-4224**	3	WASHER-HARD (8.8X16X2MM THK)	
M	68	1	**8T-5005**	1	BOLT (M10X1.50X70MM)	
M	69	1	**8T-6466**	1	BOLT (M10X1.50X60MM)	
	70	1	**9B-7233**	4	LOCKWASHER	
	71	1	**9M-8406**	7	CLIP	
	72	1	**9R-3884**	1	SPACER (13X20X45MM THK)	
Y	73	1	*9W-0742*	1	BLOCK GP-JUNCTION	137

E-ORDER BY THE CENTIMETER
M-METRIC PART
Y-SEPARATE ILLUSTRATION

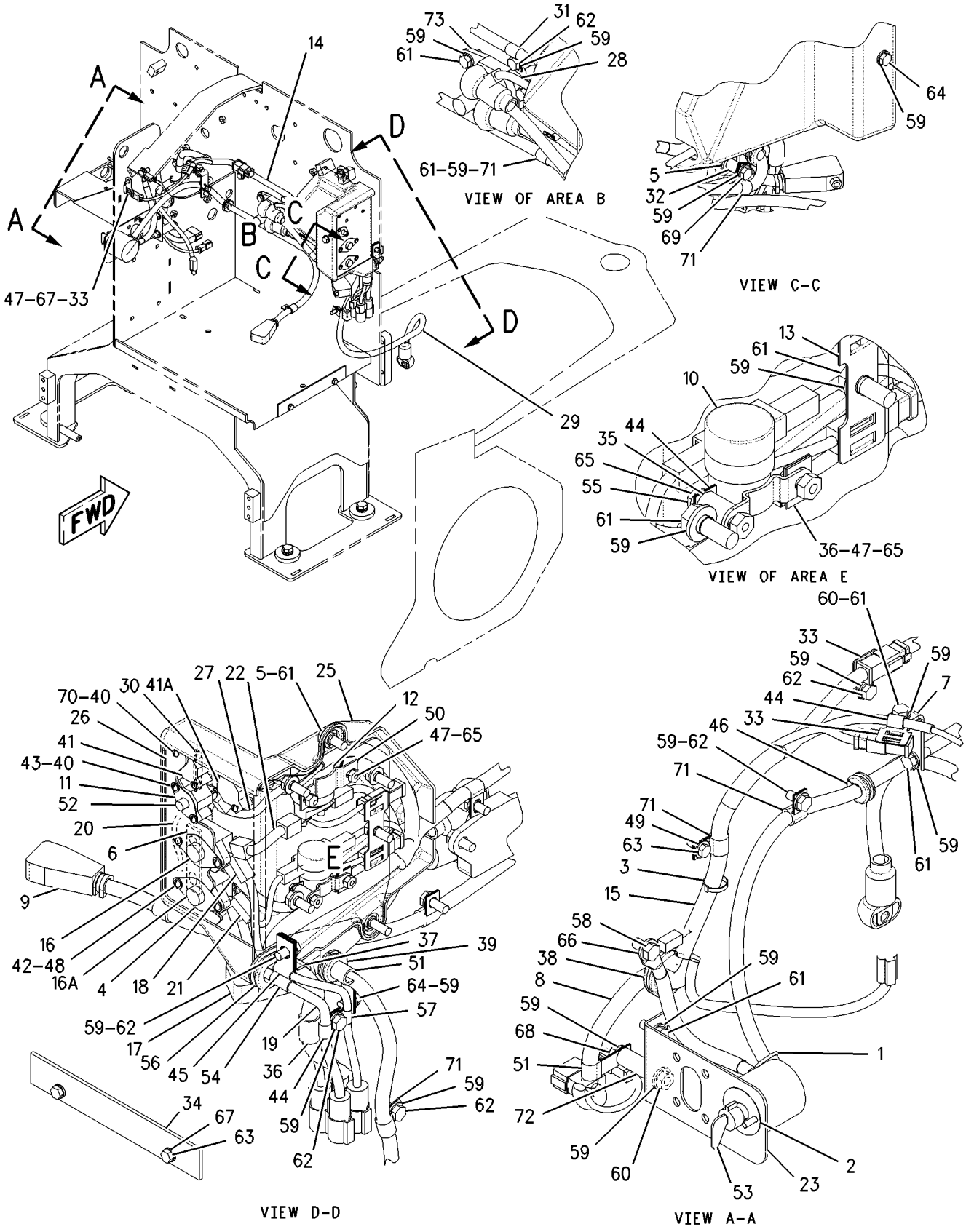

GRAPHIC #1

g00878903

200-6207 WIRING GP-REAR

S/N: CAF1-UP
PART OF 207-3665, 210-2042 CONVERSION AR-CERTIFICATION
AN ATTACHMENT

SMCS-1408 **i01862218**

NOTE	REF NO	GRAPHIC REF	PART NUMBER	QTY	PART NAME 1 2 3 4 5 6 (PRODUCT LEVEL)	SEE PAGE
	1	1	**3E-0154**	1	SWITCH GP-MAGNETIC (ENGINE SHUTDOWN)	
		1	**4D-1326**	2	LOCKWASHER	
		1	**6V-8378**	2	NUT (10-32 THD)	
		1	**6V-8801**	2	NUT (3/8-16 THD)	
		1	**7X-0608**	2	WASHER-HARD (10.2X16X2.0MM THK)	
		1	**7X-0620**	2	WASHER-HARD (5.5X13X1.6MM THK)	
		1	**8F-1434**	2	LOCKWASHER	
	2	2	**3E-5239**	1	RELAY AS (24 VOLT)	
	3	1	**3E-7842**	1	RESISTOR AS	
	4	1,2	**3S-2093**	6	STRAP-CABLE	
	5	2	**7C-3254**	1	PLATE	
	6	2	**7Y-5548**	1	CABLE AS (BLACK)(00 GA)	
		2	**1S-7251**	2	TERMINAL-RING	
E		2	**5P-0747**		CABLE (00GA)(BLACK) (52CM)	
	7	2	**8W-1614**	1	CLIP	
	8	2	**8W-3642**	1	CABLE AS	
		2	**1S-7251**	2	TERMINAL-RING	
E		2	**5P-0747**		CABLE (00GA)(BLACK) (90CM)	
		2	**9G-8909**	1	COVER-TERMINAL (BLACK)	
	9	1	**8W-8527**	1	SLEEVE	
	10	1,2	**8W-8528**	4	SLEEVE	
	11	2	**9L-1566**	1	SUPPORT-TUBE	
	12	2	**9U-2277**	1	CLIP AS	
		2	**8C-3334**	1	RIVET-TUBULAR	
	13	2	**106-8704**	1	SUPPRESSOR AS-ARC	
		2	**102-8802**	1	KIT-RECEPTACLE (2 PIN)	
					(INCLUDES RECEPTACLE AS & WEDGE)	
		2	**3E-3365**	1	WEDGE-RECEPTACLE LOCK (2 PIN)	
		2	**186-3735**	2	PIN-CONNECTOR	
	14	1	**123-3688**	1	PLATE AS	
		1	**7L-0811**	1	DOWEL	
	15	1	**123-3689**	1	PLATE AS	
		1	**5M-6687**	1	STUD-TAPERLOCK (3/8-16X1.28 IN OAL)	
	16	1	**123-3692**	1	ARM	
	17	1	**123-3695**	1	PLATE	
	18	1	**134-3355**	1	STRAP AS	
	19	2	**139-2116**	1	SWITCH AS-TOGGLE (ENGINE SHUTDOWN)	
		2	**3E-3371**	1	WEDGE-RECEPTACLE LOCK (3 PIN)	
		2	**6T-3631**	2	NUT-HEX (15/32-32 THD)	
		2	**6T-3632**	1	LOCKWASHER (11.96X15.08X053MM THK)	
		2	**6T-3633**	1	RING-LOCKING	
		2	**186-3735**	3	PIN-CONNECTOR	
		2	**102-8803**	1	KIT-RECEPTACLE (3 PIN)	
					(INCLUDES RECEPTACLE AS & WEDGE)	
	20	2	**139-6122**	1	BOSS	
	21	2	**142-5991**	1	SPACER (16.5X40X30MM THK)	
	22	1	**187-1008**	1	SENDER AS-POSITION (ENGINE SHUTDOWN)	
		1	**3E-3365**	1	WEDGE-RECEPTACLE LOCK (2 PIN)	
E		1	**9X-1813**		SLEEVE (15CM)	
		1	**102-8802**	1	KIT-RECEPTACLE (2 PIN)	
					(INCLUDES RECEPTACLE AS & WEDGE)	
		1	**186-3735**	2	PIN-CONNECTOR	
	23	1	**194-7195**	1	HARNESS AS-TRANSMISSION	
		1	**9X-1054**	1	PLUG AS-CONNECTOR (4 PIN)	
		1	**160-7689**	1	PLUG AS-CONNECTOR (70 PIN)	

200-6207 **WIRING GP-REAR** ***(contd.)*** **i01862218**

NOTE	REF NO	GRAPHIC REF	PART NUMBER	QTY	PART NAME 1 2 3 4 5 6 (PRODUCT LEVEL)	SEE PAGE
		1	**101-0205**	1	PLUG AS-CONNECTOR	
		1	**110-6848**	1	PLUG AS-CONNECTOR (40 PIN)	
		1	**9X-0141**	1	PLUG AS-CONNECTOR (40 PIN)	
		1	**155-2255**	3	KIT-CONNECTING PLUG (12 PIN)	
		1	**155-2260**	1	KIT-CONNECTING PLUG (3 PIN)	
		1	**155-2270**	4	KIT-CONNECTING PLUG (2 PIN)	
		1	**155-2271**	1	KIT-CONNECTING PLUG (4 PIN)	
					(EACH INCLUDES PLUG AS & WEDGE)	
		1	**102-8802**	1	KIT-RECEPTACLE (2 PIN)	
		1	**102-8803**	2	KIT-RECEPTACLE (3 PIN)	
		1	**102-8801**	2	KIT-RECEPTACLE (12 PIN)	
					(EACH INCLUDES RECEPTACLE AS & WEDGE)	
	24	1	**196-2970**	1	HARNESS AS-REAR LIGHTING	
		1	**155-2255**	2	KIT-CONNECTING PLUG (12 PIN)	
		1	**155-2270**	5	KIT-CONNECTING PLUG (2 PIN)	
					(EACH INCLUDES PLUG AS & WEDGE)	
		1	**102-8802**	2	KIT-RECEPTACLE (2 PIN)	
					(EACH INCLUDES RECEPTACLE AS & WEDGE)	
	25	1	**197-1459**	1	PLATE	
	26	1	**199-5032**	1	HARNESS AS-REAR CHASSIS	
		1	**127-5483**	5	PLUG AS-CONNECTOR (1 PIN)	
		1	**127-5485**	1	PLUG AS-CONNECTOR (1 PIN)	
		1	**155-2255**	1	KIT-CONNECTING PLUG (12 PIN)	
		1	**155-2270**	2	KIT-CONNECTING PLUG (2 PIN)	
					(EACH INCLUDES PLUG AS & WEDGE)	
		1	**102-8802**	1	KIT-RECEPTACLE (2 PIN)	
		1	**102-8805**	1	KIT-RECEPTACLE (6 PIN)	
					(EACH INCLUDES RECEPTACLE AS & WEDGE)	
	27	1	**200-8279**	1	CABLE AS	
		1	**1S-7252**	1	TERMINAL-RING	
E		1	**5P-0761**		CABLE (00GA)(RED) (770CM)	
D		1	**6V-2722**		TUBE-HEAT SHRINK	
		1	**8N-0869**	1	COVER-TERMINAL (RED)	
		1	**9X-9825**	1	TERMINAL-CABLE	
	28	1	**200-8280**	1	CABLE AS	
		1	**1S-7252**	2	TERMINAL-RING	
E		1	**5P-0761**		CABLE (00GA)(RED) (1750CM)	
		1	**8N-0869**	2	COVER-TERMINAL (RED)	
	29	2	**033-8248**	1	CLIP	
	30	2	**109-0361**	1	FILM-INSTRUCTION (ENGINE SHUTDOWN)	
	31	2	**115-3073**	1	CLIP AS-CONNECTING	
		2	**8C-3334**	1	RIVET-TUBULAR	
	32	1,2	**130-5300**	7	CLIP	
	33	2	**130-5301**	1	CLIP	
M	34	1	**130-9864**	1	BOLT-HEX HEAD (M14X2.0X25MM)	
	35	1,2	**174-5907**	7	CLIP	
	36	1	**1S-0994**	1	CLIP	
	37	2	**1S-0996**	1	CLIP	
	38	2	**3E-5169**	1	GUARD-SWITCH	
	39	1	**4D-7388**	1	CLIP	
	40	2	**4D-7794**	6	CLIP	
	41	1,2	**4S-4455**	5	CLIP	
M	42	2	**5C-2890**	1	NUT (M6X1 THD)	
M	43	2	**5C-7261**	1	NUT (M8X1.25 THD)	
M	44	2	**5C-9553**	1	BOLT (M6X1X16MM)	
	45	1,2	**5D-2651**	2	CLIP	
	46	1	**5M-3062**	1	BOLT (3/8-16X0.75 IN)	
	47	1	**5P-8167**	2	BOLT (3/8-16X0.625 IN)	
	48	1,2	**6D-4244**	6	CLIP	

200-6207 **WIRING GP-REAR** ***(contd.)*** **i01862218**

NOTE	REF NO	GRAPHIC REF	PART NUMBER	QTY	PART NAME 1 2 3 4 5 6 (PRODUCT LEVEL)	SEE PAGE
	49	1	**6D-4246**	4	CLIP	
	50	1	**6V-1322**	4	BOLT (1/4-20X0.375 IN)	
	51	1	**6V-6893**	3	BOLT (6-32X.375 IN)	
	52	1	**6V-8801**	1	NUT (3/8-16 THD)	
	53	2	**7C-4354**	2	CLIP	
	54	1	**7X-0507**	1	WASHER-HARD (12X22.5X5MM THK)	
	55	1	**7X-0510**	1	WASHER-HARD (15.5X29X3MM THK)	
	56	2	**8C-7528**	1	CLIP	
	57	2	**8M-2770**	1	CLIP	
	58	2	**8M-2772**	1	CLIP	
	59	2	**8M-2773**	1	CLIP	
	60	1,2	**8T-4121**	27	WASHER-HARD (11X21X2.5MM THK)	
M	61	2	**8T-4133**	2	NUT (M10X1.5 THD)	
M	62	1,2	**8T-4136**	3	BOLT (M10X1.5X25MM)	
M	63	1,2	**8T-4137**	17	BOLT (M10X1.5X20MM)	
M	64	1,2	**8T-4179**	4	BOLT (M12X1.75X20MM)	
M	65	2	**8T-4185**	1	BOLT (M10X1.5X50MM)	
M	66	2	**8T-4190**	1	BOLT (M16X2X25MM)	
M	67	1	**8T-4191**	3	BOLT (M10X1.5X16MM)	
M	68	2	**8T-4193**	1	BOLT (M16X2X50MM)	
M	69	2	**8T-4195**	1	BOLT (M10X1.5X30MM)	
M	70	2	**8T-4200**	2	BOLT (M8X1.25X16MM)	
	71	1	**8T-4205**	6	WASHER-HARD (7.2X14.5X2MM THK)	
	72	1,2	**8T-4223**	4	WASHER-HARD (13.5X25.5X3MM THK)	
	73	2	**8T-4224**	3	WASHER-HARD (8.8X16X2MM THK)	
	74	1	**8T-4226**	1	WASHER-PLATED (10.5X45X3MM THK)	
	75	1	**8T-4896**	3	WASHER-HARD (10.2X18.5X2.5MM THK)	
M	76	1	**8T-5005**	1	BOLT (M10X1.50X70MM)	
	77	1	**8T-9364**	2	BOLT (1/4-20X0.625 IN)	
	78	2	**8W-8909**	2	SLEEVE	
	79	2	**8X-5489**	1	SLEEVE	
	80	1	**9R-3884**	1	SPACER (13X20X45MM THK)	
	81	2	**9X-8256**	2	WASHER (6.6X12X2MM THK)	
	82	2	**9X-8257**	2	WASHER (17.5X30X3.5MM THK)	

D-ORDER BY THE METER
E-ORDER BY THE CENTIMETER
M-METRIC PART

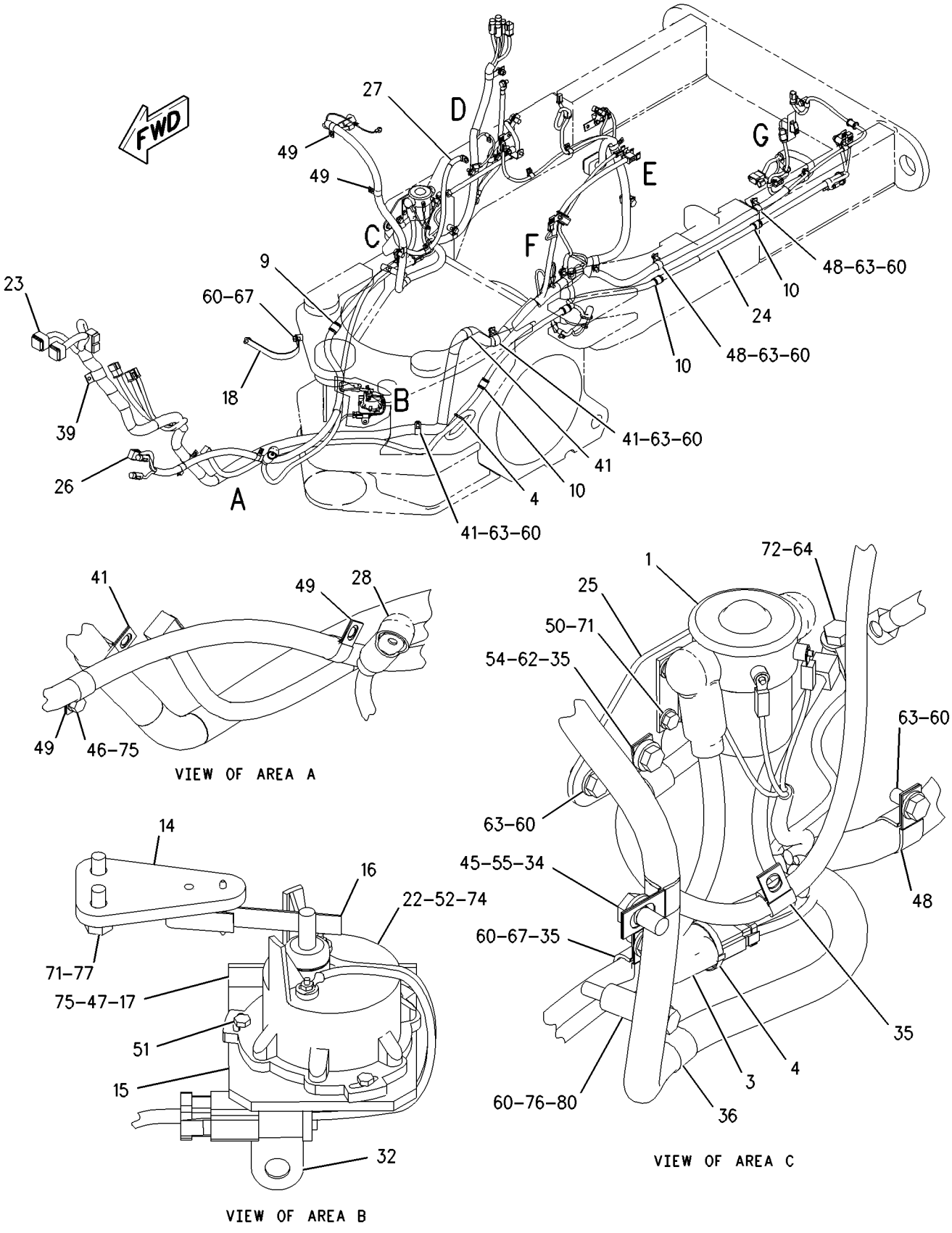

GRAPHIC #1 g00942098

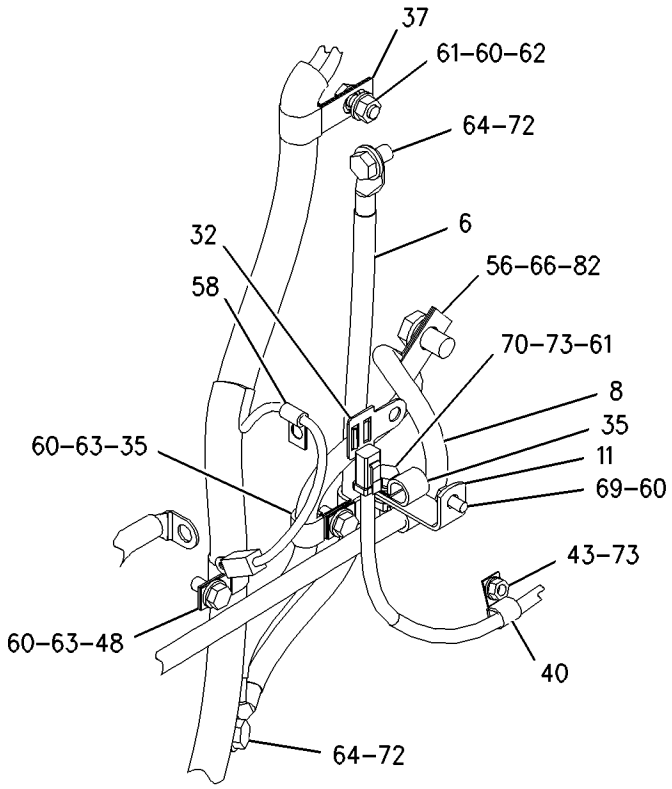

VIEW OF AREA D

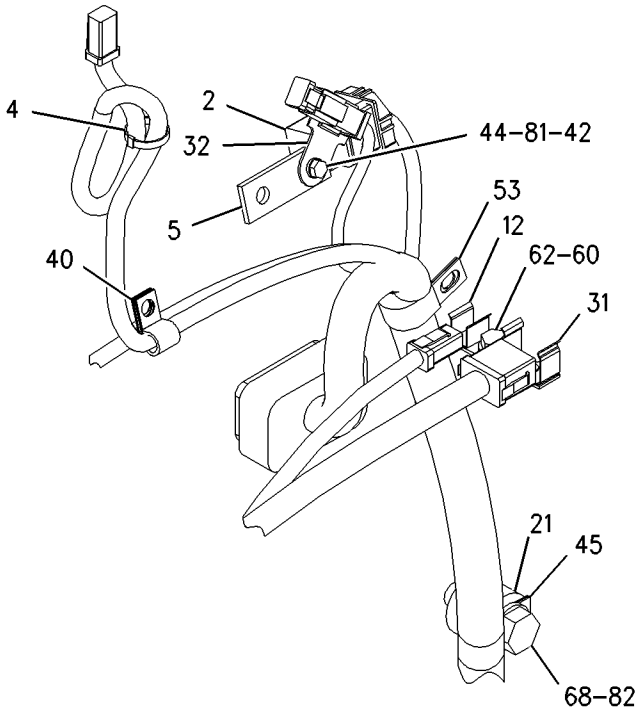

VIEW OF AREA E

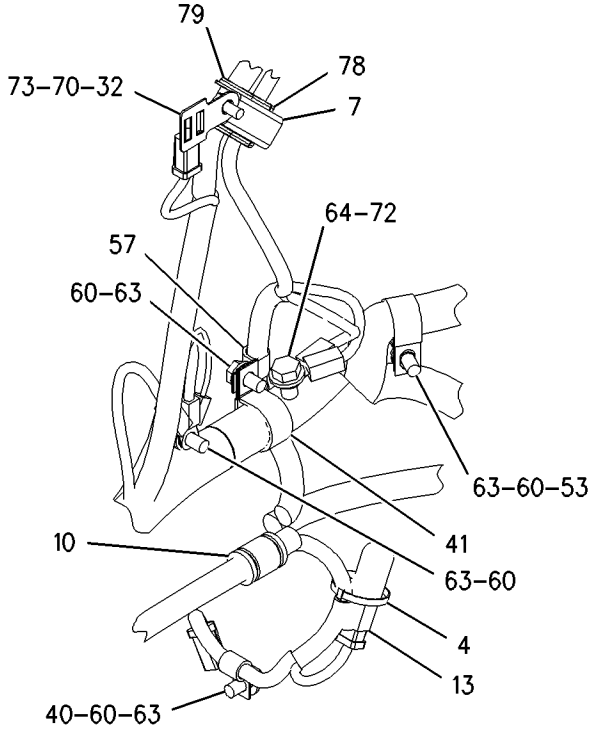

VIEW OF AREA F

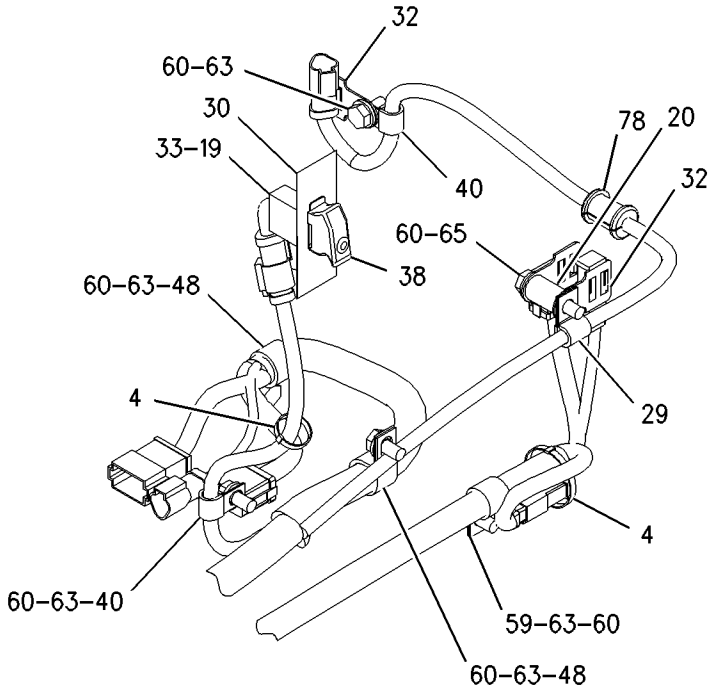

VIEW OF AREA G

GRAPHIC #2

g00942099

MEMORANDA

188-1041 WIRING GP-SECONDARY STEERING—EU

S/N: CAF1-UP

PART OF 188-1055 STEERING AR-SECONDARY

AN ATTACHMENT

SMCS-1408, 4334 **i01682057**

NOTE	REF NO	GRAPHIC REF	PART NUMBER	QTY	PART NAME 1 2 3 4 5 6 (PRODUCT LEVEL)	SEE PAGE
	1	1	**2L-0273**	1	FITTING (RUBBER)	
	2	1	**3E-6450**	1	SWITCH AS-PRESSURE (SECONDARY STEERING)	
		1	**102-8803**	1	KIT-RECEPTACLE (3 PIN)	
		1	**3E-3371**	1	WEDGE-RECEPTACLE LOCK (3 PIN)	
		1	**186-3735**	3	PIN-CONNECTOR	
	3	1	**3E-7842**	1	RESISTOR AS	
		1	**102-8802**	1	KIT-RECEPTACLE (2 PIN)	
		1	**3E-3365**	1	WEDGE-RECEPTACLE LOCK (2 PIN)	
		1	**186-3735**	2	PIN-CONNECTOR	
	4	1	**3S-2093**	1	STRAP-CABLE	
	5	1	**9L-1566**	1	SUPPORT-TUBE	
	6	1	**9W-1442**	2	FUSE (10 AMP) (SECONDARY STEERING)	
Y	7	1	**132-6640**	1	CONTROL GP-SECONDARY STEERING	143
	8	1	**134-3355**	1	STRAP AS	
	9	1	**140-8864**	1	CABLE AS	
		1	**1S-7252**	2	TERMINAL-RING	
	10	1	*194-2903*	1	ELBOW AS	
		1	**8T-0119**	1	ELBOW	
		1	**3K-0360**	1	SEAL-O-RING	
	11	1	**197-1459**	1	PLATE	
	12	1	**200-8279**	1	CABLE AS	
		1	**1S-7252**	1	TERMINAL-RING	
		1	**8N-0869**	1	COVER-TERMINAL (RED)	
		1	**9X-9825**	1	TERMINAL-CABLE	
	13	1	**200-8280**	1	CABLE AS	
		1	**1S-7252**	2	TERMINAL-RING	
		1	**8N-0869**	2	COVER-TERMINAL (RED)	
	14	1	**130-5300**	1	CLIP	
	15	1	**174-5907**	3	CLIP	
Y	16	1	**3E-0154**	1	SWITCH GP-MAGNETIC (SECONDARY STEERING)	226
	17	1	**3E-6754**	1	GROMMET	
	18	1	**3K-0360**	1	SEAL-O-RING	
M	19	1	**5C-2890**	2	NUT (M6X1 THD)	
	20	1	**5M-3062**	2	BOLT (3/8-16X0.75 IN)	
	21	1	**6V-1322**	4	BOLT (1/4-20X0.375 IN)	
	22	1	**6V-8801**	2	NUT (3/8-16 THD)	
	23	1	**7X-0507**	1	WASHER-HARD (12X22.5X5MM THK)	
	24	1	**8T-4121**	2	WASHER-HARD (11X21X2.5MM THK)	
M	25	1	**8T-4136**	1	BOLT (M10X1.5X25MM)	
M	26	1	**8T-4137**	1	BOLT (M10X1.5X20MM)	
M	27	1	**8T-4191**	1	BOLT (M10X1.5X16MM)	
	28	1	**8T-4205**	4	WASHER-HARD (7.2X14.5X2MM THK)	
	29	1	**8T-4896**	4	WASHER-HARD (10.2X18.5X2.5MM THK)	
M	30	1	**9X-2045**	2	SCREW-TRUSS HEAD (M6X1X20MM)	
	31	1	**9X-8256**	2	WASHER (6.6X12X2MM THK)	
	32	1	**9X-9633**	1	SWITCH AS-ROCKER (SECONDARY STEERING)	
		1	**3E-8816**	1	ACTUATOR-ROCKER	
		1	**3E-8825**	2	LAMP (24 VOLT) (SECONDARY STEERING INDICATOR)	

M-METRIC PART
Y-SEPARATE ILLUSTRATION

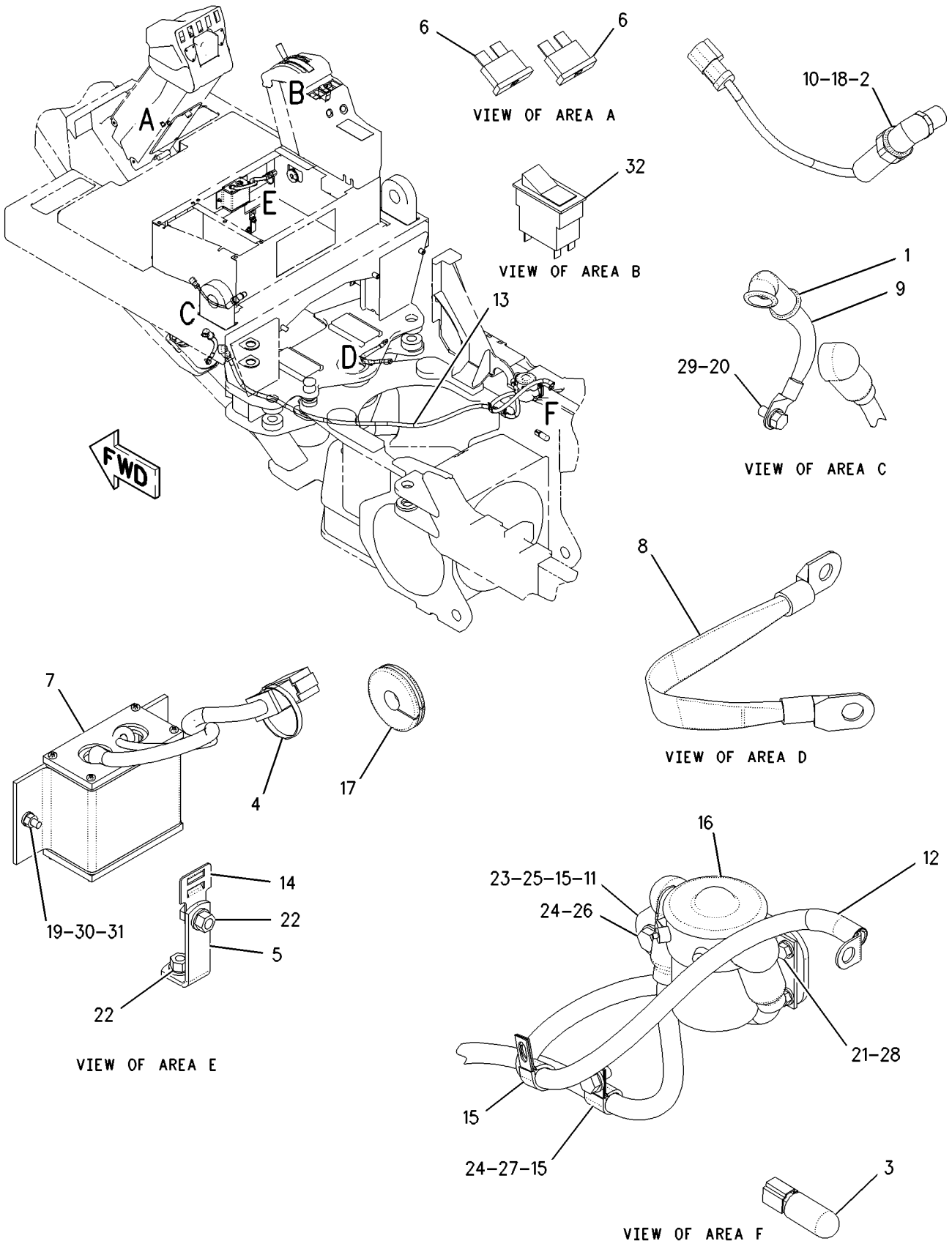

GRAPHIC #1

g00939588

ELECTRICAL AND STARTING SYSTEM

159-5839 WIRING GP-SHIFT CONSOLE

S/N: CAF1-UP

PART OF 162-5603 GENERAL AR

SMCS-1408, 1435 **i01755295**

NOTE	REF NO	GRAPHIC REF	PART NUMBER	QTY	PART NAME 1 2 3 4 5 6 (PRODUCT LEVEL)	SEE PAGE
	1	1	**3E-0109**	4	PLUG-ROCKER SWITCH	
Y	2	1	**3E-6328**	1	ALARM GP (ACTION)	124
	3	1	**3S-2093**	5	STRAP-CABLE	
	4	1	**7N-5876**	1	LAMP (24 VOLT) (CENTERSHIFT PIN INDICATOR)	
	5	1	**8C-6354**	1	CAP-RECEPTACLE	
	6	1	**110-7887**	1	SWITCH GP-START (KEY)	
		1	**3E-3377**	1	WEDGE-RECEPTACLE LOCK	
		1	**7T-6799**	1	NUT-MOUNTING (1-32 THD)	
		1	**186-3735**	4	PIN-CONNECTOR	
		1	**102-8804**	1	KIT-RECEPTACLE (4 PIN) (KEY SWITCH)	
	8	1	**167-7506**	1	HARNESS AS-CONSOLE	
		1	**102-8804**	1	KIT-RECEPTACLE (4 PIN)	
		1	**102-8805**	1	KIT-RECEPTACLE (6 PIN)	
		1	**102-8801**	1	KIT-RECEPTACLE (12 PIN)	
		1	**155-2255**	2	KIT-CONNECTING PLUG (12 PIN)	
		1	**155-2270**	1	KIT-CONNECTING PLUG (2 PIN) (ACTION ALARM)	
		1	**155-2271**	2	KIT-CONNECTING PLUG (4 PIN) (OPEN ROPS BEACON/KEY SWITCH)	
		1	**155-2274**	2	KIT-CONNECTING PLUG (6 PIN)	
		1	**102-8801**	1	KIT-RECEPTACLE (12 PIN)	
	9	1	**167-7536**	1	HARNESS AS-CONSOLE	
		1	**7X-6222**	1	PLUG AS-CONNECTOR (24 PIN)	
		1	**102-8804**	1	KIT-RECEPTACLE (4 PIN)	
		1	**102-8801**	1	KIT-RECEPTACLE (12 PIN)	
		1	**155-2255**	1	KIT-CONNECTING PLUG (12 PIN)	
	10	1	**169-5414**	2	CLIP	
	11	1	**196-7268**	1	SWITCH AS (THROTTLE SPEED SET)	
		1	**3E-8825**	2	LAMP (24 VOLT) (THROTTLE SPEED SET)	
		1	**183-2136**	1	ACTUATOR-ROCKER	
	12	1	**190-0370**	1	SWITCH AS (THROTTLE HOLD MODE)	
		1	**3E-8825**	2	LAMP (24 VOLT) (THROTTLE HOLD MODE)	
		1	**187-9380**	1	ACTUATOR-ROCKER	
	13	1	**130-5300**	2	CLIP	
	14	1	**2V-8259**	2	GROMMET	
	15	1	**3H-2900**	1	GROMMET	
	16	1	**4D-7794**	1	CLIP	
	17	1	**4L-6454**	1	BOLT (3/8-16X1 IN)	
	18	1	**4P-7581**	1	CLIP	
	19	1	**5M-3062**	3	BOLT (3/8-16X0.75 IN)	
	20	1	**5S-4246**	4	LOCKWASHER	
	21	1	**6B-4540**	4	NUT (4-40 THD)	
	22	1	**6V-2480**	4	SCREW (4-40X0.5 IN)	
	23	1	**6V-8801**	1	NUT (3/8-16 THD)	
	24	1	**7C-4354**	1	CLIP	
	25	1	**7G-7053**	1	GROMMET	
	26	1	**8M-2770**	1	CLIP	
	27	1	**8T-4121**	1	WASHER-HARD (11X21X2.5MM THK)	
M	28	1	**8T-4137**	1	BOLT (M10X1.5X20MM)	
	29	1	**8T-4896**	5	WASHER-HARD (10.2X18.5X2.5MM THK)	
	30	1	**9W-0335**	1	LIGHTER AS (CIGAR)(24 VOLT)	
	31	1	**3E-9327**	1	SWITCH AS (CENTERSHIFT PIN PULLER)	
		1	**3E-8817**	1	ACTUATOR-ROCKER	
		1	**3E-8825**	1	LAMP (24 VOLT) (CENTERSHIFT PIN PULLER)	

M-METRIC PART
Y-SEPARATE ILLUSTRATION

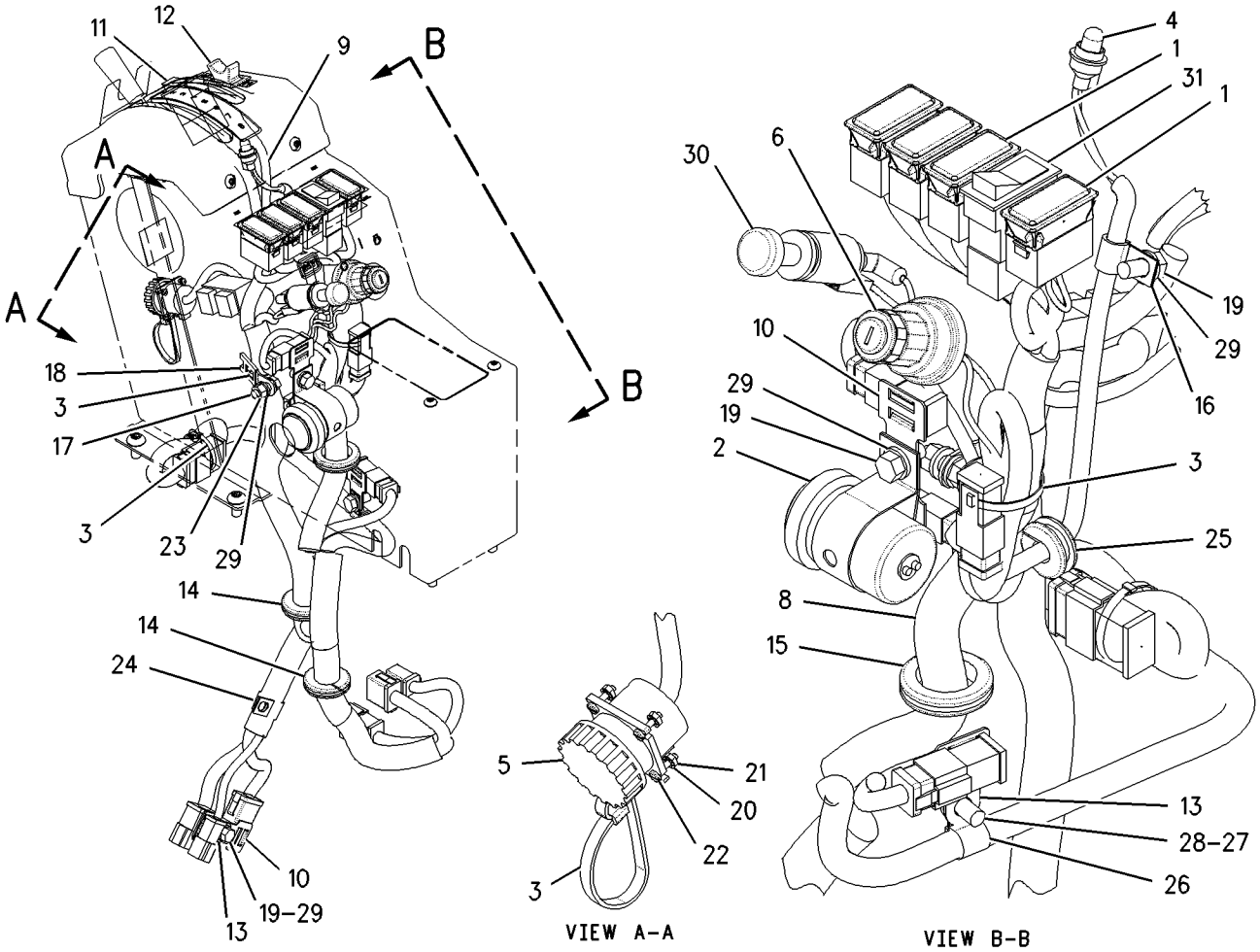

GRAPHIC #1 g00865816

ELECTRICAL AND STARTING SYSTEM

159-5841 WIRING GP-SHIFT CONSOLE

S/N: CAF1-UP

PART OF 207-3665, 210-2042 CONVERSION AR-CERTIFICATION

AN ATTACHMENT

SMCS-1408, 1435 **i01684316**

NOTE	REF NO	GRAPHIC REF	PART NUMBER	QTY	PART NAME 1 2 3 4 5 6 (PRODUCT LEVEL)	SEE PAGE
	1	2	**3E-0109**	3	PLUG-ROCKER SWITCH	
Y	2	1	**3E-6328**	1	ALARM GP (24V) (ACTION)	124
	3	1,2	**3S-2093**	6	STRAP-CABLE	
	4	1	**7N-5876**	1	LAMP (24 VOLT) (SHIFT CONSOLE)	
	5	1	**8C-6354**	1	CAP-RECEPTACLE	
	6	1	**110-7887**	1	SWITCH GP-START (KEY)	
		1	**3E-3377**	1	WEDGE-RECEPTACLE LOCK	
		1	**7T-6799**	1	NUT-MOUNTING (1-32 THD)	
		1	**186-3735**	4	PIN-CONNECTOR	
		1	**102-8804**	1	KIT-RECEPTACLE (4 PIN)	
					(INCLUDES RECEPTACLE AS & WEDGE)	
Y	8	2	**132-6640**	1	CONTROL GP-SECONDARY STEERING	143
	9	1	**167-7506**	1	HARNESS AS-CONSOLE	
		1	**155-2255**	2	KIT-CONNECTING PLUG (12 PIN)	
		1	**155-2270**	1	KIT-CONNECTING PLUG (2 PIN)	
		1	**155-2271**	2	KIT-CONNECTING PLUG (4 PIN)	
		1	**155-2274**	2	KIT-CONNECTING PLUG (6 PIN)	
					(EACH INCLUDES PLUG AS & WEDGE)	
		1	**102-8804**	1	KIT-RECEPTACLE (4 PIN)	
		1	**102-8805**	1	KIT-RECEPTACLE (6 PIN)	
		1	**102-8801**	1	KIT-RECEPTACLE (12 PIN)	
					(EACH INCLUDES RECEPTACLE AS & WEDGE)	
	10	1	**167-7536**	1	HARNESS AS-CONSOLE	
		1	**155-2255**	1	KIT-CONNECTING PLUG (12 PIN)	
					(INCLUDES PLUG AS & WEDGE)	
		1	**102-8804**	1	KIT-RECEPTACLE (4 PIN)	
		1	**102-8801**	1	KIT-RECEPTACLE (12 PIN)	
					(EACH INCLUDES RECEPTACLE AS & WEDGE)	
		1	**7X-6222**	1	PLUG AS-CONNECTOR (24 PIN)	
	11	2	**169-5414**	2	CLIP	
	12	1	**196-7268**	1	SWITCH AS (THROTTLE HOLD AUTO/MAN)	
		1	**183-2136**	1	ACTUATOR-ROCKER	
		1	**3E-8825**	2	LAMP (24 VOLT) (THROTTLE HOLD AUTO/MAN)	
	13	1	**185-2197**	1	SWITCH AS-ROCKER (THROTTLE HOLD SET/RESUME)	
	14	1,2	**130-5300**	2	CLIP	
	15	1	**2V-8259**	2	GROMMET	
	16	2	**3E-6754**	1	GROMMET	
	17	1	**3H-2900**	1	GROMMET	
	18	1	**4D-7794**	1	CLIP	
	19	1	**4L-6454**	1	BOLT (3/8-16X1 IN)	
	20	1	**4P-7581**	1	CLIP	
M	21	2	**5C-2890**	2	NUT (M6X1 THD)	
	22	2	**5M-3062**	3	BOLT (3/8-16X0.75 IN)	
	23	1	**5S-4246**	4	LOCKWASHER	
	24	1	**6B-4540**	4	NUT (4-40 THD)	
	25	1	**6V-2480**	4	SCREW (4-40X0.5 IN)	
	26	1	**6V-8801**	1	NUT (3/8-16 THD)	
	27	1	**7C-4354**	1	CLIP	
	28	1	**7G-7053**	1	GROMMET	
	29	1	**8M-2770**	1	CLIP	
	30	1	**8T-4121**	1	WASHER-HARD (11X21X2.5MM THK)	
M	31	1	**8T-4137**	1	BOLT (M10X1.5X20MM)	
	32	1,2	**8T-4896**	5	WASHER-HARD (10.2X18.5X2.5MM THK)	
	33	1	**9W-0335**	1	LIGHTER AS (CIGAR)(24 VOLT)	
M	34	2	**9X-2045**	2	SCREW-TRUSS HEAD (M6X1X20MM)	

159-5841 **WIRING GP-SHIFT CONSOLE** ***(contd.)*** **i01684316**

NOTE	REF NO	GRAPHIC REF	PART NUMBER	QTY	PART NAME 1 2 3 4 5 6 (PRODUCT LEVEL)	SEE PAGE
	35	2	**9X-8256**	2	WASHER (6.6X12X2MM THK)	
	36	2	**9X-9633**	1	SWITCH AS-ROCKER (SECONDARY STEERING)	
		2	**3E-8816**	1	ACTUATOR-ROCKER	
		2	**3E-8825**	2	LAMP (24 VOLT) (SECONDARY STEERING)	
	37	2	**3E-9327**	1	SWITCH AS (CENTERSHIFT PIN PULLER)	
		2	**3E-8825**	1	LAMP (24 VOLT) (CENTERSHIFT PIN PULLER)	
		2	**3E-8817**	1	ACTUATOR-ROCKER	

M-METRIC PART
Y-SEPARATE ILLUSTRATION

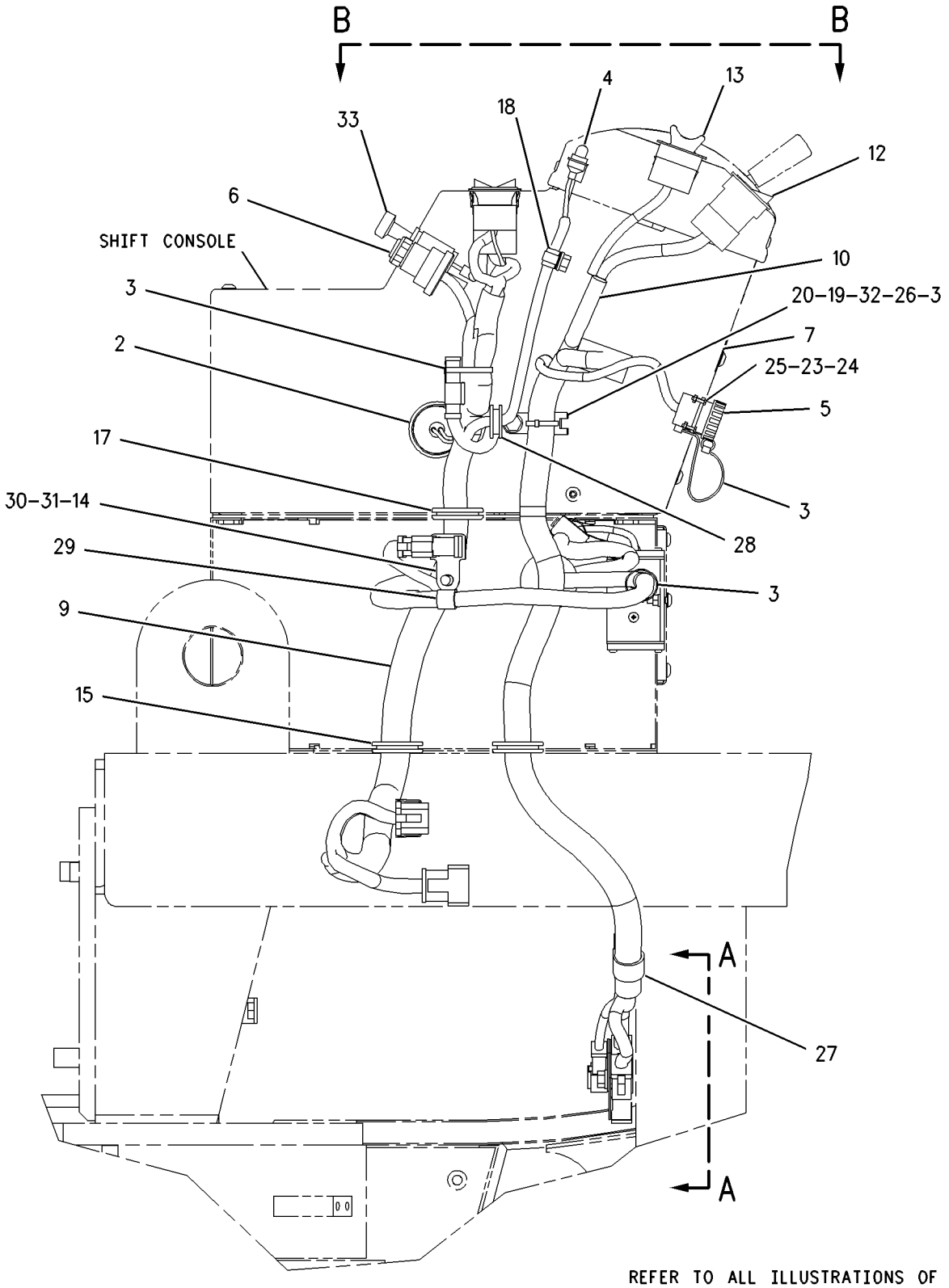

RIGHT SIDE VIEW

GRAPHIC #1 g00934782

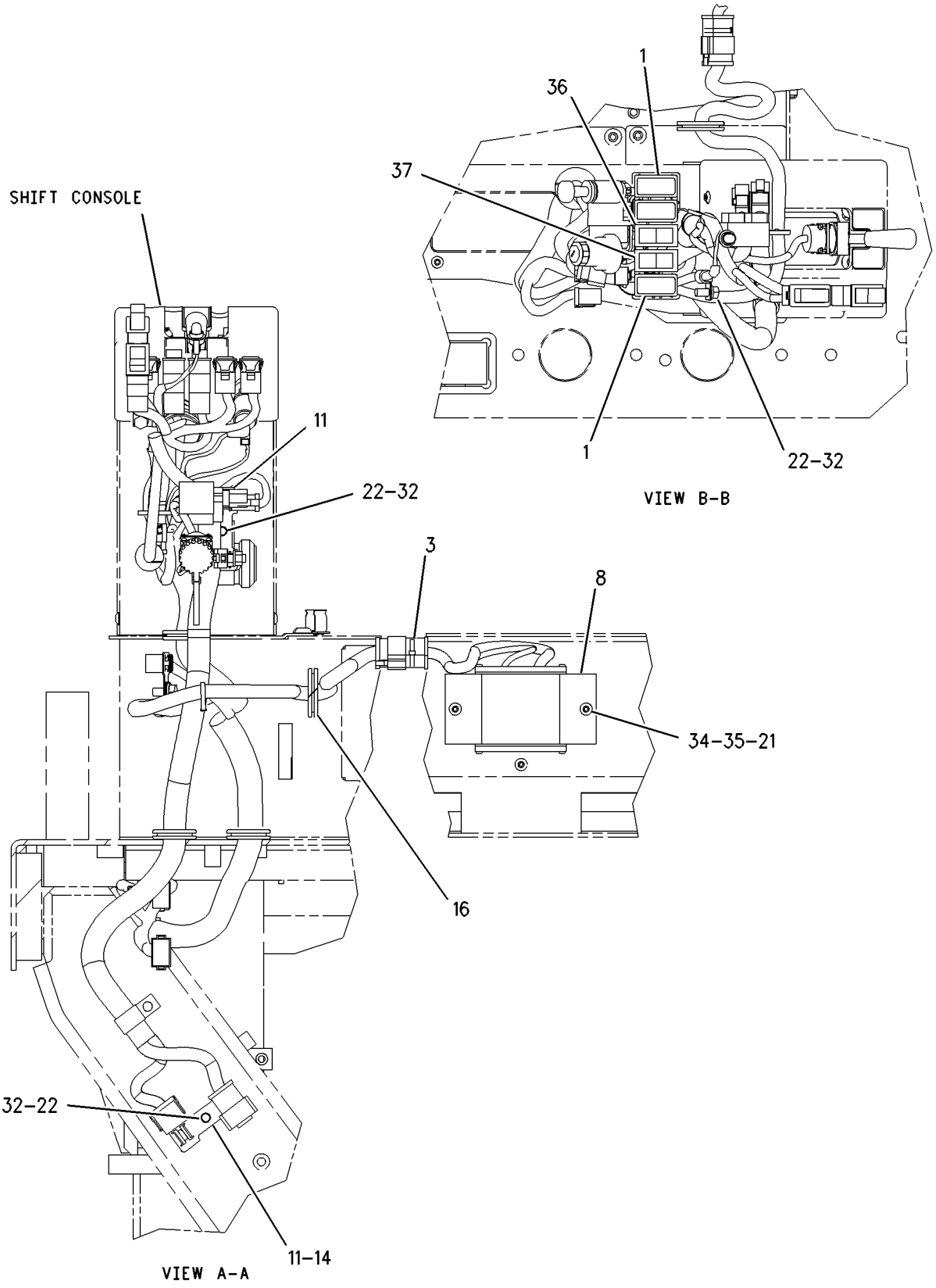

GRAPHIC #2

g00934783

ELECTRICAL AND STARTING SYSTEM

159-5845 WIRING GP-STEERING CONSOLE

S/N: CAF1-UP

PART OF 162-5603 GENERAL AR

SMCS-4334 **i01862230**

NOTE	REF NO	GRAPHIC REF	PART NUMBER	QTY	PART NAME 1 2 3 4 5 6 (PRODUCT LEVEL)	SEE PAGE
	1	1	**3E-0109**	3	PLUG-ROCKER SWITCH	
	2	1	**3E-6477**	1	RELAY AS (24 VOLT) (TAIL/PANEL LAMPS)	
	3	1	**3S-2093**	8	STRAP-CABLE	
	4	1	**9W-1441**	1	FUSE (15 AMP) (TRANSMISSION)	
	5	1	**9W-1442**	11	FUSE (10 AMP) (INSTRUMENT PANEL)	
	6	1	**102-9383**	1	PLATE	
	7	1	**112-6175**	2	SWITCH AS-LIMIT (BRAKE/INCHING PEDALS)	
					(EACH INCLUDES)	
		1	**6V-8376**	3	SCREW-MACHINE (8-32X0.25 IN)	
		1	**9B-7233**	3	LOCKWASHER	
	8	1	**169-3283**	1	HARNESS AS-CONSOLE	
		1	**174-7566**	2	BLOCK AS-FUSE (16 POLE)	
		1	**127-5483**	1	PLUG AS-CONNECTOR (1 PIN)	
		1	**127-5484**	2	RECEPTACLE AS (1 PIN)	
		1	**155-2255**	2	KIT-CONNECTING PLUG (12 PIN)	
		1	**155-2260**	1	KIT-CONNECTING PLUG (3 PIN)	
		1	**155-2270**	2	KIT-CONNECTING PLUG (2 PIN) (PANEL LAMP/HORN)	
		1	**155-2271**	1	KIT-CONNECTING PLUG (4 PIN)	
					(EACH INCLUDES PLUG AS & WEDGE)	
		1	**102-8803**	1	KIT-RECEPTACLE (3 PIN)	
		1	**102-8804**	1	KIT-RECEPTACLE (4 PIN)	
		1	**102-8801**	2	KIT-RECEPTACLE (12 PIN)	
					(EACH INCLUDES RECEPTACLE AS & WEDGE)	
	9	1	**180-4028**	2	BRACKET	
	10	1	**180-7033**	1	COVER	
	11	1	**186-1714**	1	FILM-FUSE (LH)	
	12	1	**186-1715**	1	FILM-FUSE (RH)	
	13	1	**194-4181**	1	RESISTOR AS	
		1	**102-8802**	1	KIT-RECEPTACLE (2 PIN)	
					(INCLUDES RECEPTACLE AS & WEDGE)	
		1	**3E-3365**	1	WEDGE-RECEPTACLE LOCK (2 PIN)	
G		1	**5P-6008**		TUBE (4IN)	
		1	**8C-3334**	1	RIVET-TUBULAR	
		1	**186-3735**	1	PIN-CONNECTOR	
		1	**1S-9593**	1	STRAP-CABLE	
	14	1	**3L-8187**	4	LOCKWASHER (3.70X7.24X.48MM THK)	
	15	1	**130-5300**	2	CLIP	
	16	1	**139-2120**	1	SWITCH AS (DIFFERENTIAL LOCK)	
		1	**3E-8825**	2	LAMP (24 VOLT) (DIFFERENTIAL LOCK INDICATOR)	
		1	**123-5861**	1	ACTUATOR-ROCKER	
	17	1	**3E-9324**	1	SWITCH AS (PANEL LAMP DIMMER)	
		1	**3E-8783**	1	ACTUATOR-ROCKER	
		1	**3E-8825**	1	LAMP (24 VOLT) (PANEL LAMP DIMMER INDICATOR)	
	18	1	**3E-8763**	1	SWITCH AS (TAIL LAMP)	
		1	**3E-8825**	1	LAMP (24 VOLT) (TAIL LAMP INDICATOR)	
		1	**3E-9323**	1	ACTUATOR-ROCKER	
	19	1	**4B-1280**	4	SCREW-MACHINE (1/4-20X.5 IN)	
	20	1	**4B-2047**	1	NUT (10-24 THD)	
	21	1	**4B-4274**	8	WASHER (5.5X13X1.2MM THK)	
	22	1	**4D-1212**	1	GROMMET	
	23	1	**5P-4115**	2	WASHER-HARD (7.2X19X2MM THK)	
M	24	1	**3C-6969**	4	NUT (M3X0.5 THD)	
	25	1	**6J-0488**	1	SCREW-BUTTON HEAD (3/8-16X0.875 IN)	
	26	1	**6V-8185**	4	NUT (1/4-20 THD)	
	27	1	**6V-8801**	1	NUT (3/8-16 THD)	
	28	1	**6D-4244**	2	CLIP	

159-5845 **WIRING GP-STEERING CONSOLE** ***(contd.)*** **i01862230**

NOTE	REF NO	GRAPHIC REF	PART NUMBER	QTY	PART NAME 1 2 3 4 5 6 (PRODUCT LEVEL)	SEE PAGE
	29	1	**8C-7507**	1	LOCKWASHER	
	30	1	**8J-1256**	1	CLIP	
	31	1	**8L-6521**	8	BOLT (10-32X0.5IN)	
	32	1	**8T-1688**	1	SCREW-MACHINE (10-24 X 12.70MM)	
	33	1	**8T-4205**	2	WASHER-HARD (7.2X14.5X2MM THK)	
	34	1	**8T-4896**	1	WASHER-HARD (10.2X18.5X2.5MM THK)	
M	35	1	**9X-1046**	6	SCREW (M4X0.7X18MM)	
M	36	1	**9X-2042**	1	SCREW-TRUSS HEAD (M6X1X12MM)	
M	37	1	**151-4957**	4	BOLT-SOCKET HEAD (M3X0.5X25MM)	

G-ORDER BY THE INCH
M-METRIC PART

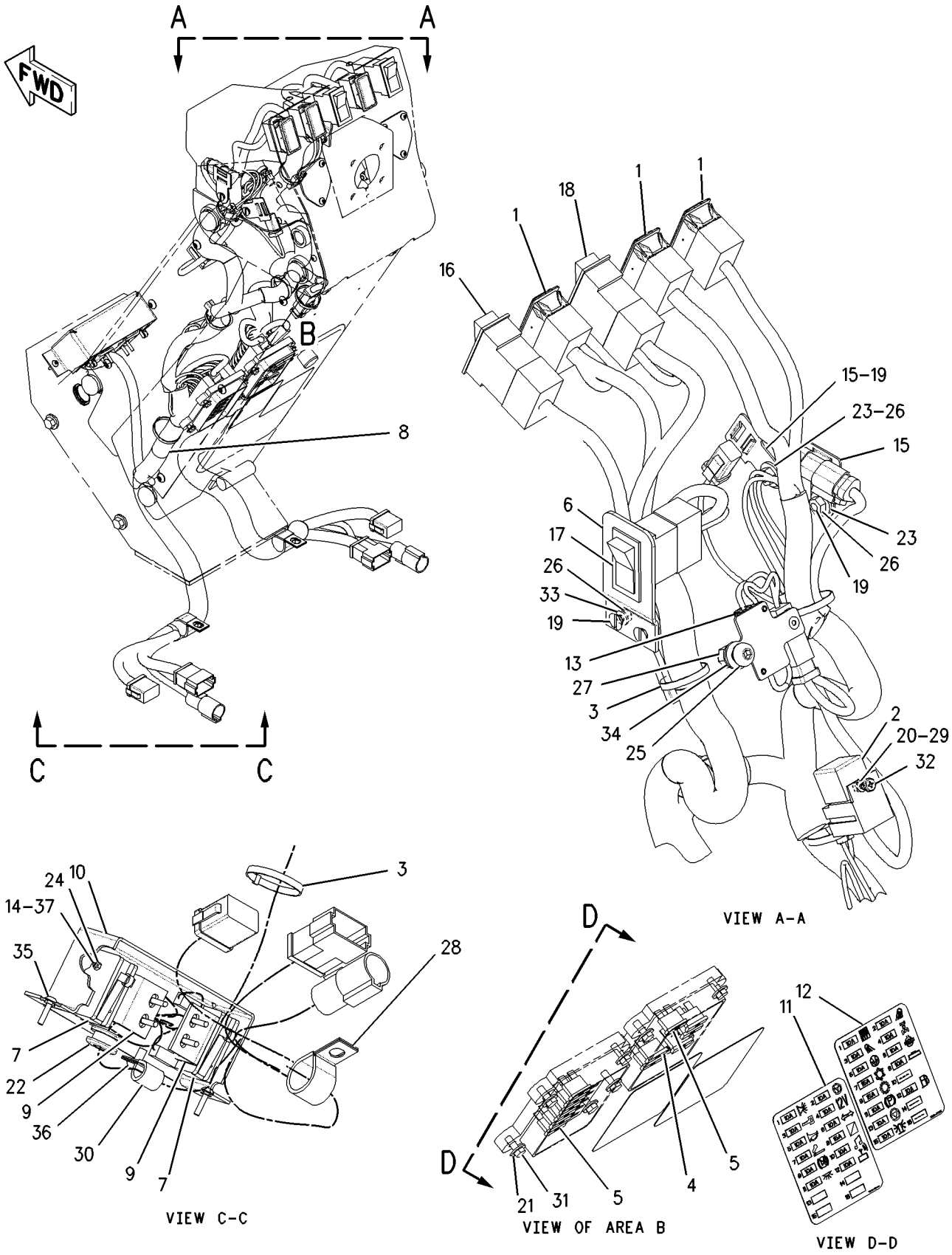

GRAPHIC #1

g00898280

MEMORANDA

159-5853 WIRING GP-STEERING CONSOLE–EU

S/N: CAF1-UP

PART OF 207-3665, 210-2042 CONVERSION AR-CERTIFICATION AN ATTACHMENT

SMCS-4334 **i01862234**

NOTE	REF NO	GRAPHIC REF	PART NUMBER	QTY	PART NAME 1 2 3 4 5 6 (PRODUCT LEVEL)	SEE PAGE
	1	1	**3E-0109**	3	PLUG-ROCKER SWITCH	
	2	2	**3E-6477**	3	RELAY AS (24 VOLT) (TAIL/PANEL LAMPS)	
	3	1	**3S-2093**	8	STRAP-CABLE	
	4	1	**8X-5153**	1	FILM-FACE (TURN SIGNAL/HAZARD)	
	5	1	**8X-5154**	1	FILM-FACE (HEADLIGHTS HIGH/LOW BEAM)	
	6	1	**9W-1441**	1	FUSE (15 AMP) (TRANSMISSION)	
	7	1	**9W-1442**	12	FUSE (10 AMP) (INSTRUMENT PANEL)	
	8	2	**102-9383**	1	PLATE	
	9	2	**112-6175**	1	SWITCH AS-LIMIT (INCHING PEDAL)	
		2	**6V-8376**	3	SCREW-MACHINE (8-32X0.25 IN)	
		2	**9B-7233**	3	LOCKWASHER	
	10	1	**173-3064**	1	SWITCH AS-TURN SIG & WARNING	
		1	**5L-7200**	1	SCREW (8-32X0.375 IN)	
		1	**9B-7233**	1	LOCKWASHER	
	11	1	**173-4490**	1	FLASHER AS (24 VOLT)	
	12	2	**180-4028**	2	BRACKET	
	13	2	**180-7033**	1	COVER	
	14	1	**186-1715**	1	FILM-FUSE (LH)	
	15	2	**194-4181**	1	RESISTOR AS	
	16	1	**196-4143**	1	HARNESS AS-CONSOLE	
		1	**127-5483**	1	PLUG AS-CONNECTOR (1 PIN)	
		1	**127-5484**	2	RECEPTACLE AS (1 PIN)	
		1	**155-2255**	2	KIT-CONNECTING PLUG (12 PIN)	
		1	**155-2260**	1	KIT-CONNECTING PLUG (3 PIN)	
		1	**155-2270**	3	KIT-CONNECTING PLUG (2 PIN)	
		1	**155-2271**	1	KIT-CONNECTING PLUG (4 PIN)	
		1	**155-2274**	2	KIT-CONNECTING PLUG (6 PIN)	
					(EACH INCLUDES PLUG AS & WEDGE)	
		1	**102-8802**	1	KIT-RECEPTACLE (2 PIN)	
		1	**102-8803**	1	KIT-RECEPTACLE (3 PIN)	
		1	**102-8804**	1	KIT-RECEPTACLE (4 PIN)	
		1	**102-8801**	2	KIT-RECEPTACLE (12 PIN)	
					(EACH INCLUDES RECEPTACLE AS & WEDGE)	
	17	1	**197-5453**	1	FILM-FUSE (RH)	
	18	1	**089-7960**	2	WASHER (5.3X25X1.6MM THK)	
	19	1	**103-5678**	1	SWITCH AS-ROTARY (HEADLIGHTS HIGH/LOW BEAM)	
		1	**5L-7200**	1	SCREW (8-32X0.375 IN)	
		1	**9B-7233**	1	LOCKWASHER	
	20	1	**130-5300**	2	CLIP	
	21	1	**139-2120**	1	SWITCH AS (DIFFERENTIAL LOCK)	
		1	**3E-8825**	2	LAMP (24 VOLT) (DIFF LOCK SWITCH INDICATOR)	
		1	**123-5861**	1	ACTUATOR-ROCKER	
M	22	2	**151-4957**	4	BOLT-SOCKET HEAD (M3X0.5X25MM)	
M	23	2	**3C-6969**	4	NUT (M3X0.5 THD)	
	24	1	**3E-8772**	1	SWITCH AS-ROCKER (TAIL LAMP)	
		1	**3E-8825**	2	LAMP (24 VOLT) (TAIL LAMP SWITCH INDICATOR)	
		1	**3E-9326**	1	ACTUATOR-ROCKER	
	25	2	**3E-9324**	1	SWITCH AS (PANEL LAMP DIMMER)	
		2	**3E-8783**	1	ACTUATOR-ROCKER	
		2	**3E-8825**	1	LAMP (24 VOLT) (PANEL DIMMER SWITCH INDICATOR)	
	26	2	**3L-8187**	4	LOCKWASHER (3.70X7.24X.48MM THK)	
	27	1,2	**4B-1280**	4	SCREW-MACHINE (1/4-20X.5 IN)	
	28	1,2	**4B-2047**	4	NUT (10-24 THD)	
	29	1	**4B-4274**	10	WASHER (5.5X13X1.2MM THK)	
	30	2	**4D-1212**	1	GROMMET	

159-5853 WIRING GP-STEERING CONSOLE *(contd.)* i01862234

NOTE	REF NO	GRAPHIC REF	PART NUMBER	QTY	PART NAME 1 2 3 4 5 6 (PRODUCT LEVEL)	SEE PAGE
	31	1	**5M-6755**	2	SCREW-MACHINE (NO10X.562 IN)	
	32	1	**5P-4115**	2	WASHER-HARD (7.2X19X2MM THK)	
	33	1	**6D-4244**	2	CLIP	
	34	2	**6J-0488**	1	SCREW-BUTTON HEAD (3/8-16X0.875 IN)	
	35	1,2	**6V-8185**	4	NUT (1/4-20 THD)	
	36	2	**6V-8801**	1	NUT (3/8-16 THD)	
	37	2	**8C-7507**	2	LOCKWASHER	
	38	2	**8J-1256**	1	CLIP	
	39	1	**8L-6521**	8	BOLT (10-32X0.5IN)	
	40	2	**8T-1688**	2	SCREW-MACHINE (10-24 X 12.70MM)	
	41	2	**8T-4205**	2	WASHER-HARD (7.2X14.5X2MM THK)	
	42	2	**8T-4896**	1	WASHER-HARD (10.2X18.5X2.5MM THK)	
	43	1	**8X-6296**	1	LEVER (TURN SIGNAL/HAZARD)	
M	44	2	**9X-1046**	6	SCREW (M4X0.7X18MM)	
M	45	2	**9X-2042**	1	SCREW-TRUSS HEAD (M6X1X12MM)	
	46	2	**112-6175**	1	SWITCH AS-LIMIT (BRAKE PEDAL)	
		2	**6V-8376**	3	SCREW-MACHINE (8-32X0.25 IN)	
		2	**9B-7233**	3	LOCKWASHER	
	47	1	**8X-6296**	1	LEVER (HEADLIGHTS HIGH/LOW BEAM)	

M-METRIC PART

159-5853 **WIRING GP-STEERING CONSOLE** ***(contd.)*** **i01862234**

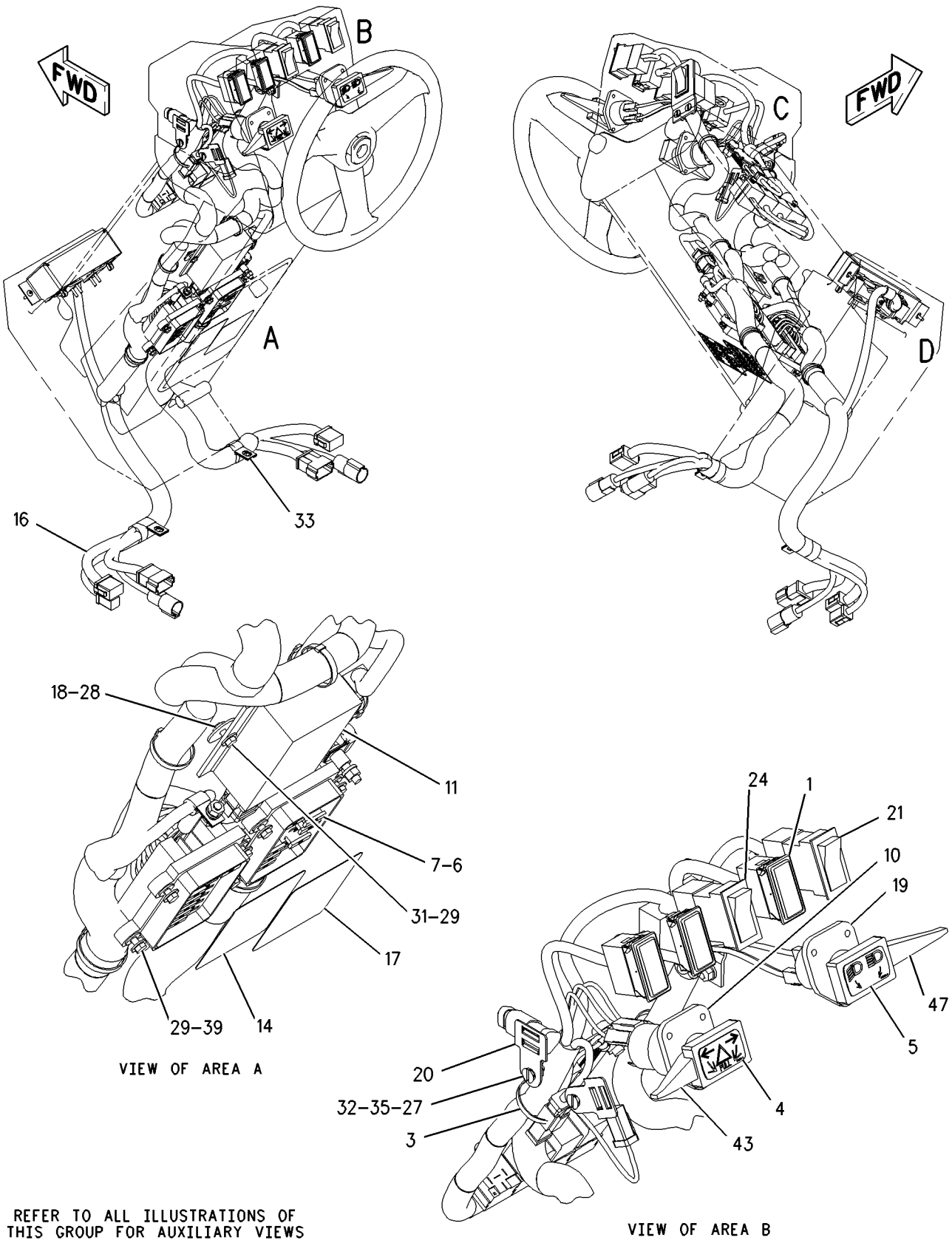

REFER TO ALL ILLUSTRATIONS OF THIS GROUP FOR AUXILIARY VIEWS

GRAPHIC #1 g00940091

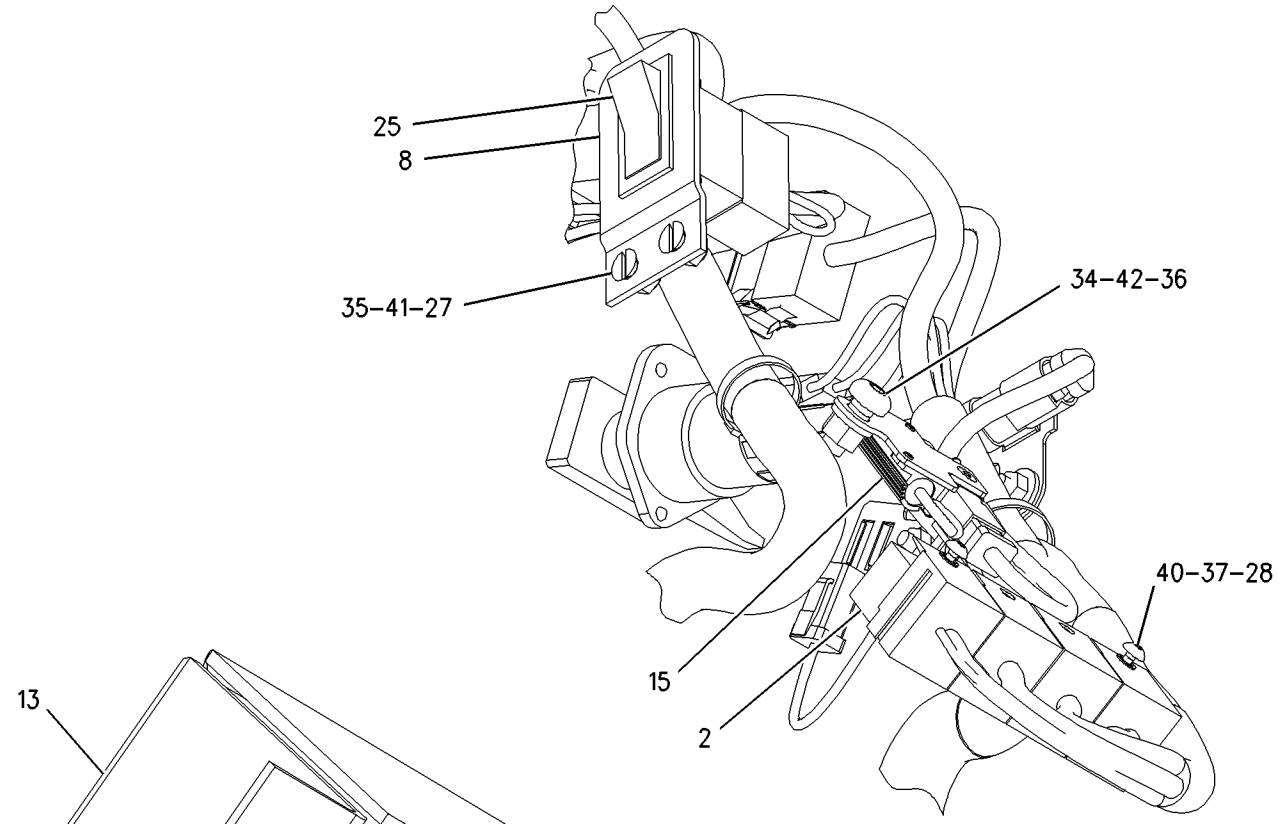

VIEW OF AREA C

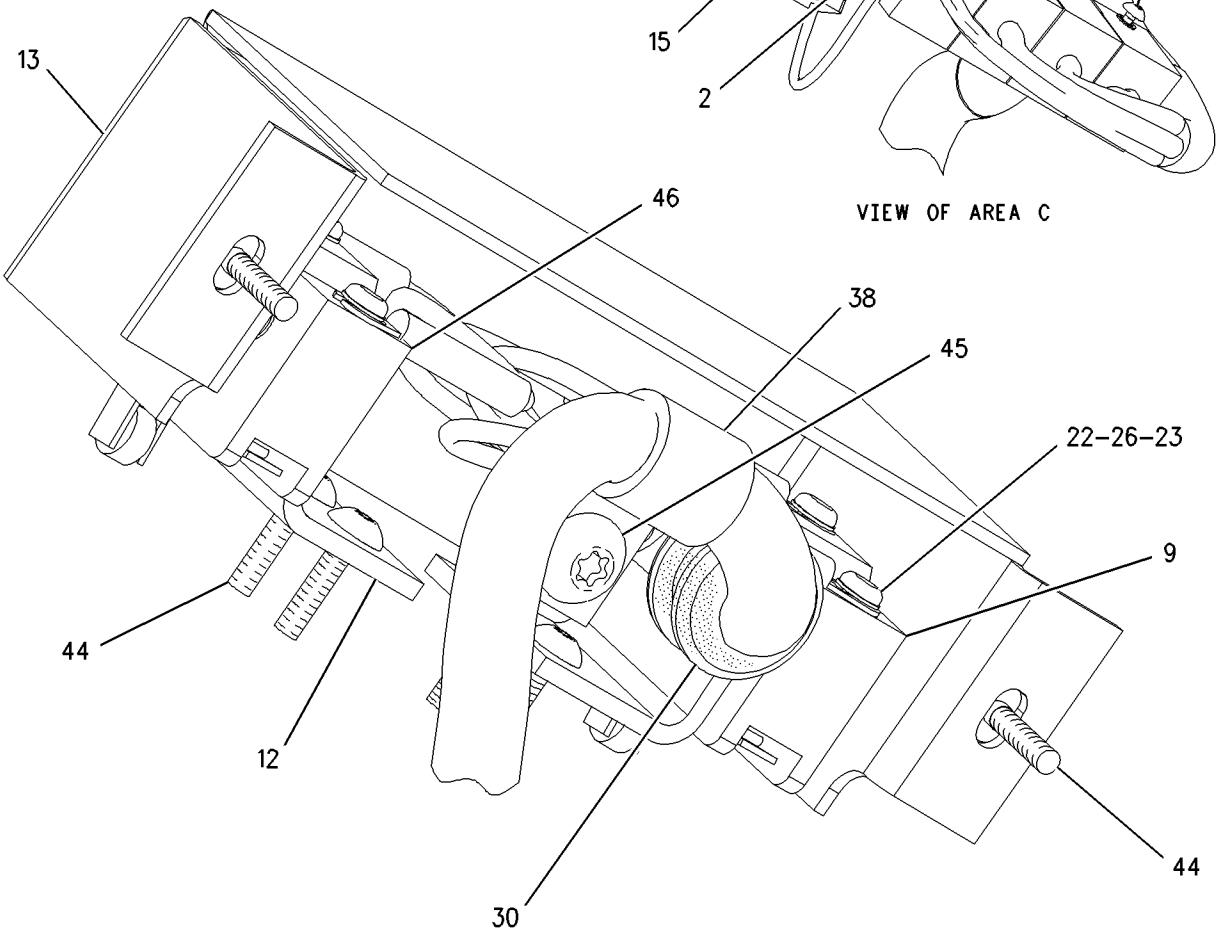

VIEW OF AREA D

GRAPHIC #2

g00940092

180-9146 CASE & PARTS GP-TRANSMISSION

S/N: BJN1-UP

PART OF 160-2196 TRANSMISSION AR

SMCS-3064 **i01755154**

NOTE	REF NO	GRAPHIC REF	PART NUMBER	QTY	PART NAME 1 2 3 4 5 6 (PRODUCT LEVEL)	SEE PAGE
	1	1	**178-9158**	1	CASE AS	
		1	**7T-6496**	7	PLUG (11.9 MM DIA)	
		1	**8M-6521**	2	DOWEL	
	2	1	**6Y-5728**	1	COVER AS-TRANSMISSION	
		1	**7T-6496**	1	PLUG (11.9 MM DIA)	
M	3	1	**6V-1820**	35	BOLT (M10X1.50X30MM)	
M	4	1	**8T-5436**	2	BOLT (M10X1.50X130MM)	
	5	1,2	**9S-4185**	2	PLUG	
	6	1,2	**3K-0360**	9	SEAL-O-RING	
	7	1	**2J-0157**	1	SEAL-O-RING	
	8	1,2	**1U-8846**		SEALANT-GASKET (15ML)	
	9	1	**8T-6765**	1	PLUG-PIPE	
	10	1	**5M-6200**	1	SEAL-O-RING	
	11	1	**8E-1133**	1	TUBE AS	
	12	1	**6L-1650**	1	SEAL-O-RING	
M	13	1,2	**6V-5217**	13	BOLT (M8X1.25X20MM)	
	14	1,2	**5P-3863**	5	SEAL-O-RING	
	15	1,2	**9W-1454**	5	COVER	
	16	1	**8S-9129**	1	FILTER-MAGNETIC (TMSN OIL)	
	17	1	**8S-9130**	1	SCREEN-SUCTION (TMSN OIL)	
	18	1	**4M-6108**	2	RACE-BEARING OUTER	
	19	1	**148-1925**	2	VALVE-RELIEF	
	20	1	**9X-4609**	2	SEAL-O-RING	
	21	1	**9W-7038**	1	RING-SNAP	
M	22	1	**6V-3940**	4	BOLT (M8X1.25X25MM)	
	23	1	**6Y-9763**	1	GEAR AS (38 TEETH)	
		1	**4K-8603**	1	PLUG-CUP (25.73MM OD)	
	24	1	**2S-3029**	1	BALL BEARING	
	25	1	**9W-6465**	1	RETAINER-BEARING	
	26	2	**9S-4190**	5	PLUG	
	27	2	**2M-9780**	6	SEAL-O-RING	
	28	2	**9S-4191**	1	PLUG	
	29	1,2	**3J-1907**	2	SEAL-O-RING	
	30	1,2	**8T-4121**	13	WASHER-HARD (11X21X2.5MM THK)	
	31	1	**190-1684**	1	PLATE AS	
M	32	1	**6V-8212**	1	BOLT (M10X1.50X16MM)	
	33	1	**5P-4483**	1	PLUG	
	34	1	**7M-8485**	4	SEAL-O-RING	
M	35	1,2	**6V-7981**	5	BOLT (M10X1.50X70MM)	
M	36	1,2	**6V-4248**	8	BOLT (M10X1.50X25MM)	
	37	2	**9S-8006**	1	PLUG	
	38	2	**9S-8005**	2	PLUG	
	39	2	**4M-6109**	4	RACE-ROLLER BEARING	
	40	2	**5P-3924**	2	RACE-BEARING OUTER	
	41	2	**9M-2042**	1	RACE-BEARING OUTER	
	42	2	**191-3680**	1	COVER AS	
		2	**4F-2609**	2	DOWEL	
	43	2	**2H-6489**	1	RACE-BEARING OUTER	
	44	2	**198-6421**	1	HARNESS AS-TRANSMISSION	
		2	**155-2255**	1	KIT-CONNECTING PLUG (12 PIN) (TMSN CONTROL)	
		2	**155-2270**	5	KIT-CONNECTING PLUG (2 PIN) (TMSN SPEED SENSOR) (EACH PLUG KIT INCLUDES PLUG ASSEMBLY AND WEDGE)	
	45	2	**191-9256**	2	CLIP	
M	46	1,2	**8T-4137**	4	BOLT (M10X1.5X20MM)	
Y	48	2	**183-8597**	2	SENSOR GP-SPEED (TMSN INTERMEDIATE SPEED)	215

180-9146 **CASE & PARTS GP-TRANSMISSION** ***(contd.)*** **i01755154**

NOTE	REF NO	GRAPHIC REF	PART NUMBER	QTY	PART NAME 1 2 3 4 5 6 (PRODUCT LEVEL)	SEE PAGE
Y	48A	2	**183-8597**	1	SENSOR GP-SPEED (TMSN INPUT SPEED)	215
Y	48B	2	**183-8597**	2	SENSOR GP-SPEED (TMSN OUTPUT SPEED)	215
	49	2	**201-0387**	1	CLIP AS	
M	50	2	**8T-4133**	1	NUT (M10X1.5 THD)	
	51	2	**143-5373**	1	GUARD AS	
	52	1,2	**5P-9299**	3	CLIP	
Y	53	1	**3E-8700**	1	SENSOR GP-TEMPERATURE (TMSN OIL)	216
M	54	2	**6V-3822**	2	BOLT (M10X1.5X35MM)	
	55	1	**9S-4181**	3	PLUG	
	56	1	**1B-5174**	1	PLUG-PIPE	
	57	2	**113-7745**	1	PLATE AS	
M		2	**8T-3490**	2	NUT-WELD (M10X1.5 THD)	
	58	1	**6D-3479**	1	CLIP	
	59	2	**206-3713**	1	PLATE AS	
M		2	**8T-3490**	3	NUT-WELD (M10X1.5 THD)	
	60	1	**145-8039**	3	LOCK	
	61	2	**133-5631**	1	PLUG	
	62	2	**5F-1678**	1	SEAL-O-RING	
M	63	2	**6V-5219**	4	BOLT (M8X1.25X40MM)	
	64	2	**190-5212**	1	ROTOR	
M	65	2	**6V-8202**	4	BOLT-HEX SOCKET (M8X1.25X16MM)	
	66	1,2	**130-5300**	3	CLIP	
	67	2	**206-3714**	1	PLATE	
M	68	2	**6V-2317**	2	BOLT (M8X1.25X30MM)	

M-METRIC PART
Y-SEPARATE ILLUSTRATION

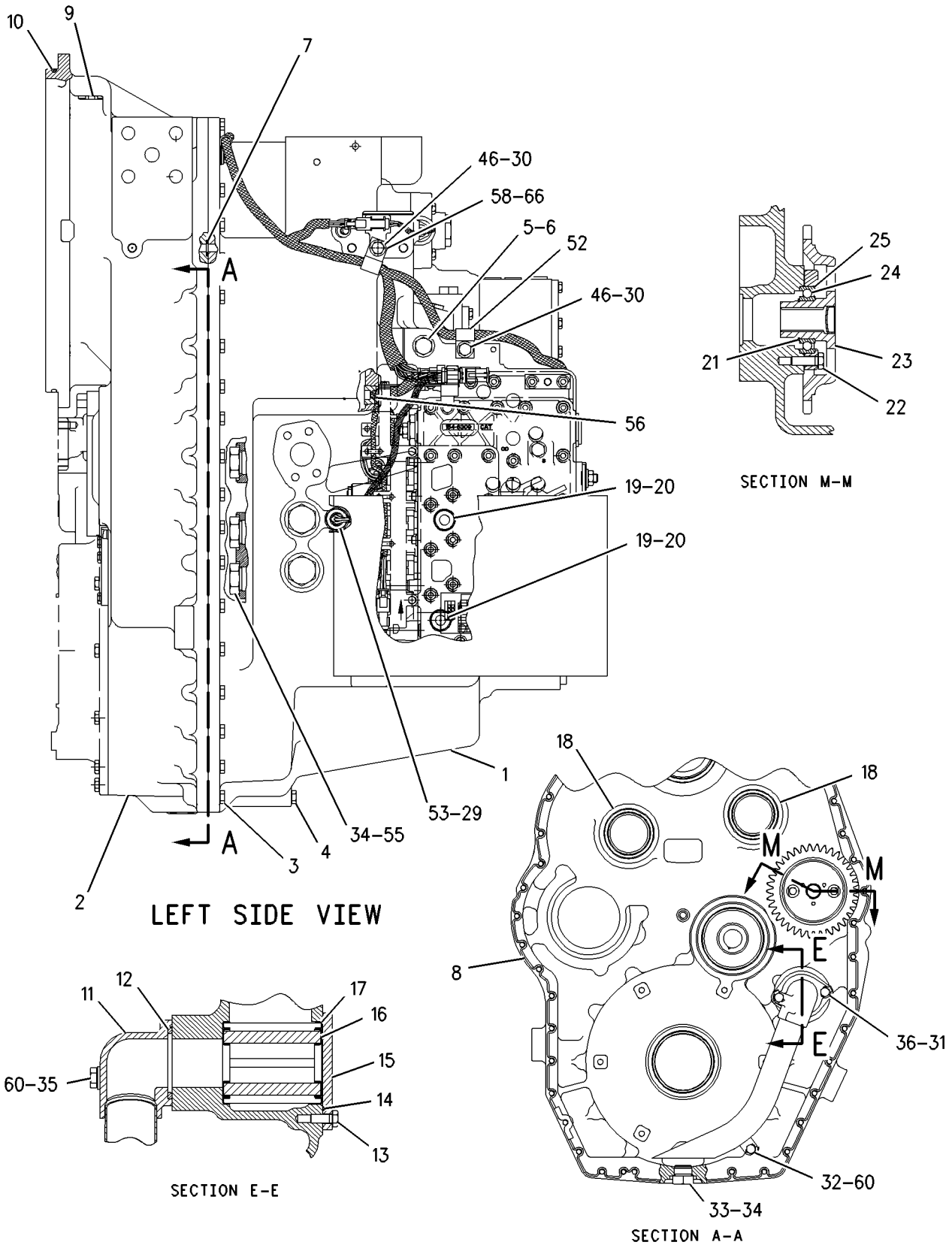

GRAPHIC #1

g00849253

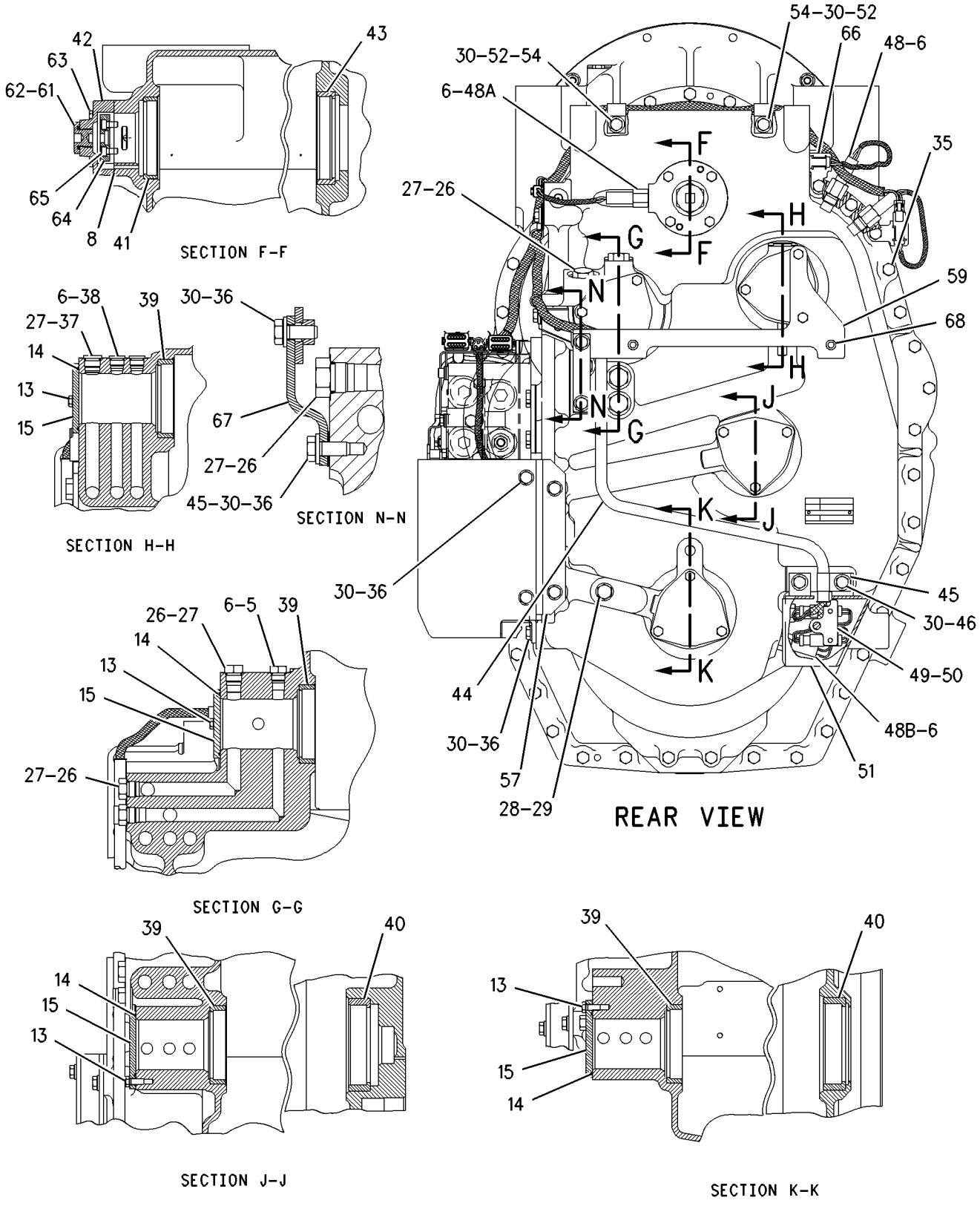

GRAPHIC #2

g00849255

POWER TRAIN

2G-0585 CHAIN GP-DRIVE

S/N: CAF1-UP

PART OF 162-5603 GENERAL AR

SMCS-3261, 4063 **i00819104**

NOTE	REF NO	GRAPHIC REF	PART NUMBER	QTY	PART NAME 1 2 3 4 5 6 (PRODUCT LEVEL)	SEE PAGE
	1	1	**5T-0735**	4	CHAIN GP	
					(EACH INCLUDES)	
	2	1	**5T-0731**	1	LINK-CONNECTING	

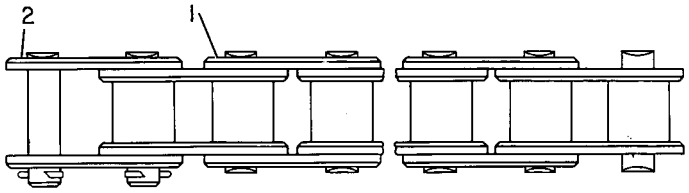

GRAPHIC #1 g00108306

MEMORANDA

6Y-2303 CLUTCH GP-TRANSMISSION

S/N: BJN1-UP

1ST & 3RD

PART OF 160-2196 TRANSMISSION AR

SMCS-3063, 3155, 3170 **i01052624**

NOTE	REF NO	GRAPHIC REF	PART NUMBER	QTY	PART NAME 1 2 3 4 5 6 (PRODUCT LEVEL)	SEE PAGE
	1	1,2	**6Y-1878**	1	SHAFT AS (64 TEETH)	
	2	1,2	**6Y-1000**	1	GEAR (69 TEETH)	
	3	1,2	**8E-1909**	1	GEAR AS (54 TEETH)	
	4	1,2	**6Y-1895**	1	BEARING-SLEEVE	
	5	1,2	**3B-8921**	1	BEARING-INNER	
	6	1,2	**6Y-8285**	1	RING-SEAL	
	7	1,2	**7T-4897**	2	DISC-THRUST	
	8	1,2	**6Y-1891**	1	HUB AS	
	9	1,2	**8E-5734**	2	RING-SEAL EXTENSION	
	10	1,2	**6Y-1887**	2	PISTON	
	11	1,2	**5H-8985**	1	PIN-SPRING	
	12	1,2	**6I-8912**	10	DISC-FRICTION	
	13	1,2	**110-7723**	8	PLATE-CLUTCH	
	14	1,2	**6Y-2312**	1	HUB AS	
	15	1,2	**8E-1910**	1	GEAR AS (79 TEETH)	
	16	1,2	**6Y-2419**	1	BEARING-SLEEVE	
	17	1,2	**6I-8641**	1	RACE & BEARING	
	18	1,2	**7G-4822**	3	RING-SEAL	
M	19	1,2	**6V-1819**	2	BOLT (M10X1.50X100MM)	
	20	1,2	**6Y-2425**	1	CARRIER-SEAL	
	21	1,2	**8F-3469**	3	SEAL (15.54MM ID)	
	22	1,2	**8E-8319**	4	DISC-THRUST	
	23	1,2	**6Y-1115**	4	RING-HALF	
	24	1,2	**6Y-1114**	2	WASHER	
	25	1,2	**9W-9905**	4	LOCKRING	
	26	1,2	**102-5881**	2	SPRING-WAVE	
	27	1,2	**8E-5742**	2	RING-SEAL	
	28	1,2	**6Y-0982**	1	GEAR (30 TEETH)	

M-METRIC PART

6Y-2303 **CLUTCH GP-TRANSMISSION** *(contd.)* **i01052624**

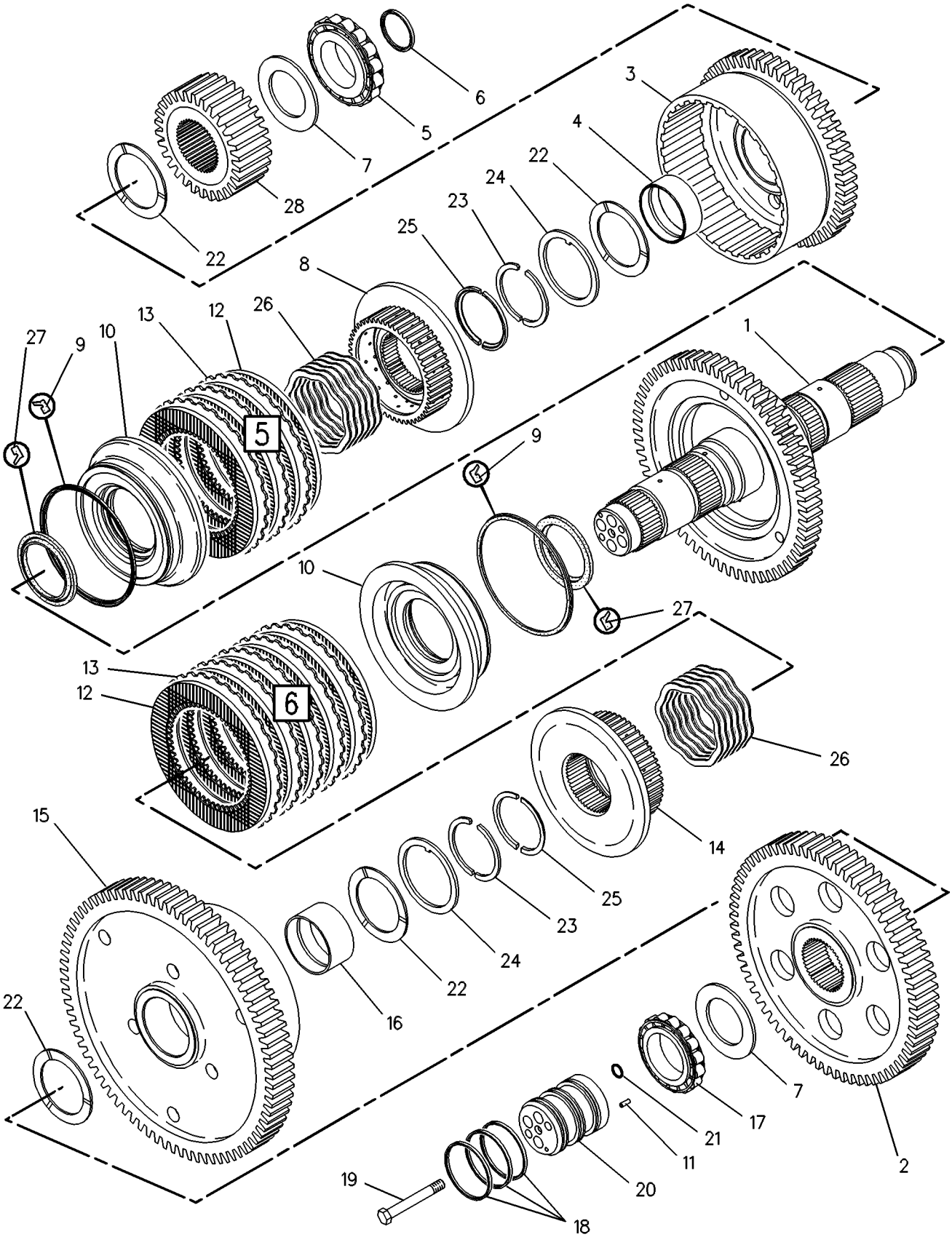

GRAPHIC #1 g00108910

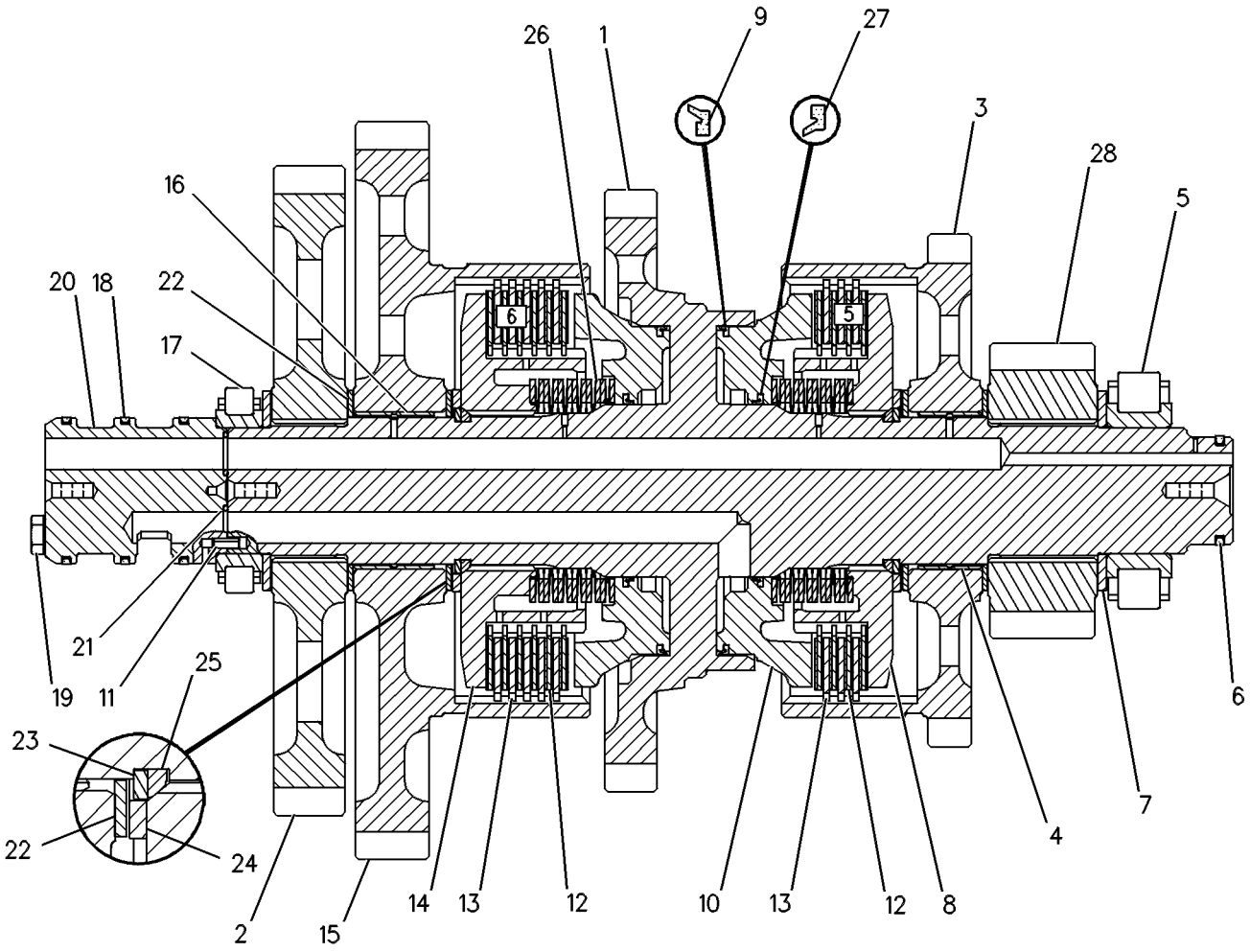

GRAPHIC #2 g00108656

MEMORANDA

8E-9316 CLUTCH GP-TRANSMISSION

S/N: BJN1-UP
HI & LO
PART OF 160-2196 TRANSMISSION AR

SMCS-3063, 3155, 3170 **i00131365**

NOTE	REF NO	GRAPHIC REF	PART NUMBER	QTY	PART NAME 1 2 3 4 5 6 (PRODUCT LEVEL)	SEE PAGE
	1	1,2	**6Y-1864**	1	SHAFT AS	
	2	1,2	**8M-4295**	15	SPRING	
	3	1,2	**6Y-2428**	1	PISTON	
	4	1,2	**6Y-1890**	1	RING-RETAINING	
	5	1,2	**9W-9905**	4	LOCKRING	
	6	1,2	**6Y-1114**	2	WASHER	
	7	1,2	**6Y-1115**	4	RING-HALF	
	8	1,2	**8E-8319**	4	DISC-THRUST	
	9	1,2	**7T-4897**	1	DISC-THRUST	
	10	1,2	**3B-8921**	1	BEARING-INNER	
	11	1,2	**8E-1913**	1	GEAR AS (84 TEETH)	
	12	1,2	**9W-6467**	2	BEARING-SLEEVE	
	13	1,2	**6Y-7981**	7	DISC-FRICTION	
	14	1,2	**3P-0337**	8	PLATE-CLUTCH	
	15	1,2	**8E-5736**	2	RING-SEAL EXTENSION	
	16	1,2	**6Y-2429**	1	PISTON-BALANCE	
	17	1,2	**102-5881**	1	SPRING-WAVE	
	18	1,2	**8E-5742**	2	RING-SEAL	
	19	1,2	**8E-5734**	1	RING-SEAL EXTENSION	
	20	1,2	**110-7723**	5	PLATE-CLUTCH	
	21	1,2	**6I-8912**	6	DISC-FRICTION	
	22	1,2	**8E-1914**	1	GEAR AS (45 TEETH)	
	23	1,2	**9W-6467**	2	BEARING-SLEEVE	
	24	1,2	**6I-8641**	1	RACE & BEARING	
	25	1,2	**6Y-2425**	1	CARRIER-SEAL	
M	26	1,2	**6V-1819**	2	BOLT (M10X1.50X100MM)	
	27	1,2	**7G-4822**	3	RING-SEAL	
	28	1,2	**8F-3469**	3	SEAL (15.54MM ID)	
	29	1,2	**6Y-2312**	1	HUB AS	
	30	1,2	**5H-8985**	1	PIN-SPRING	
	31	1,2	**6Y-1887**	1	PISTON	
	32	1,2	**6Y-2430**	1	HUB AS	
	33	1,2	**8E-1161**	1	ROTOR	

M-METRIC PART

8E-9316 **CLUTCH GP-TRANSMISSION** *(contd.)* **i00131365**

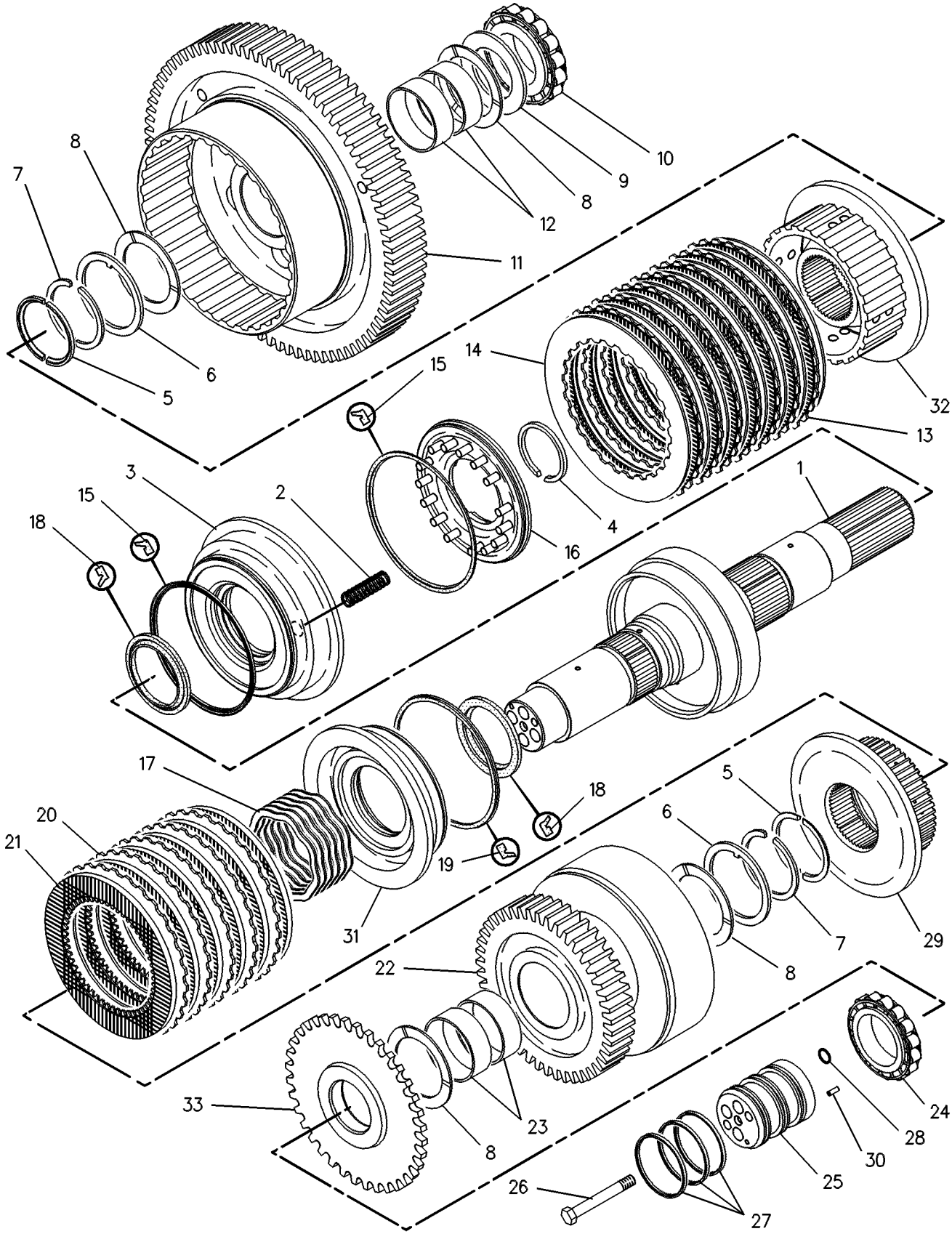

GRAPHIC #1 g00108549

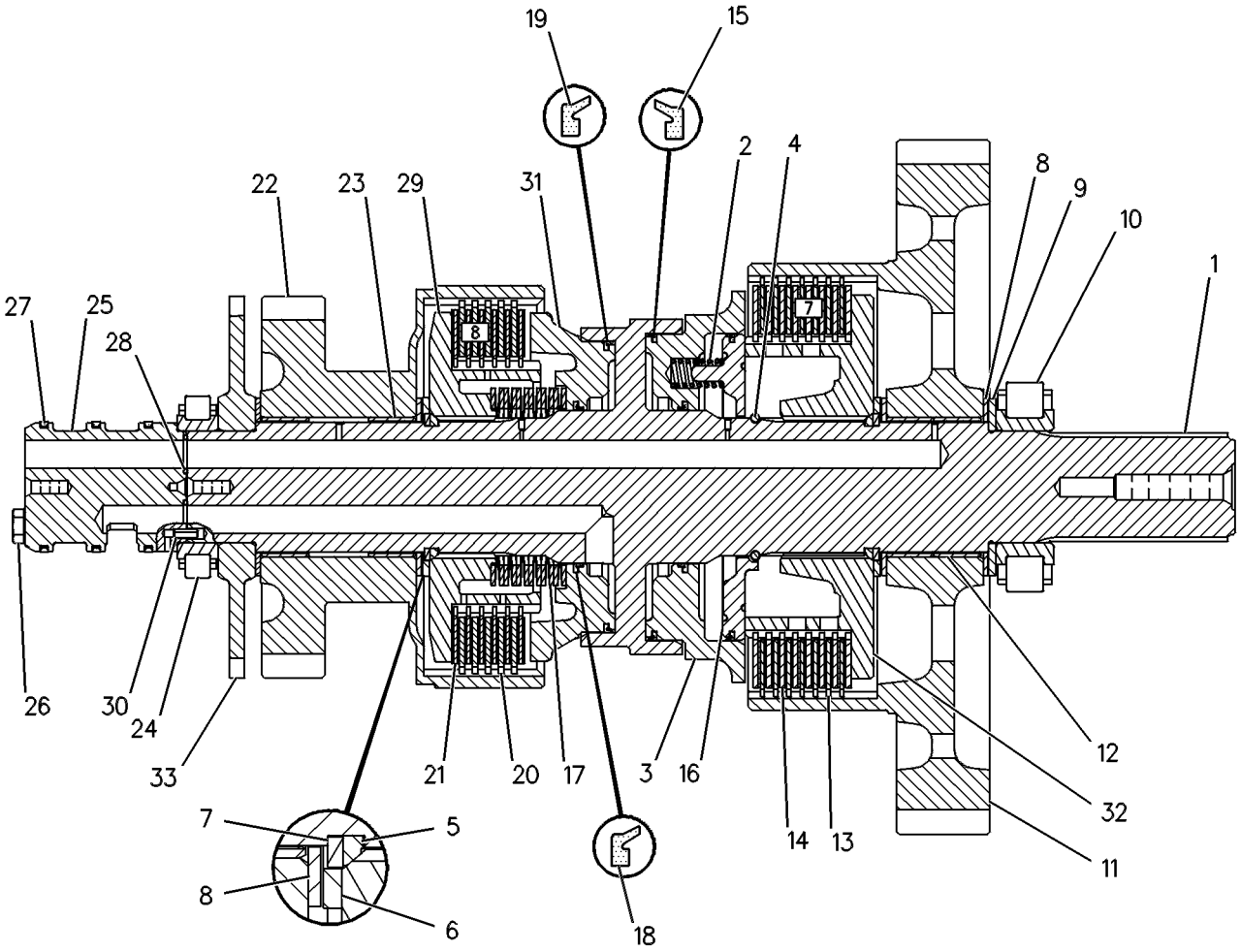

GRAPHIC #2 g00108658

MEMORANDA

159-9228 CLUTCH GP-TRANSMISSION

S/N: BJN1-UP

FORWARD

PART OF 160-2196 TRANSMISSION AR

SMCS-3063, 3155, 3170 **i01832815**

NOTE	REF NO	GRAPHIC REF	PART NUMBER	QTY	PART NAME 1 2 3 4 5 6 (PRODUCT LEVEL)	SEE PAGE
	1	1	**171-7091**	1	SHAFT AS	
		1	**1P-0604**	1	PLUG-CUP	
	2	1	**159-0308**	2	PISTON	
	3	1	**159-9258**	2	VALVE AS	
	4	1	**9U-8815**	2	SPRING	
	5	1	**161-6713**	2	PLATE-LOCK	
	6	1	**6Y-1115**	4	RING-HALF	
	7	1	**8E-8319**	4	DISC-THRUST	
	8	1	**5H-8985**	1	PIN-SPRING	
	9	1	**4M-6107**	1	BEARING-INNER	
	10	1	**9W-2029**	1	RACE-THRUST BEARING	
	11	1	**8E-1263**	2	BEARING-ROLLER	
	12	1	**132-9625**	1	GEAR AS (50 TEETH)	
	13	1	**171-7093**	2	HUB AS	
	14	1	**6I-8911**	5	DISC-FRICTION	
	15	1	**9U-9995**	6	PLATE-CLUTCH	
	16	1	**8E-5742**	2	RING-SEAL	
	17	1	**9W-9371**	2	RING-SEAL	
	18	1	**131-3919**	1	BEARING-ROLLER	
	19	1	**7G-4822**	3	RING-SEAL	
M	20	1	**6V-1819**	2	BOLT (M10X1.50X100MM)	
	21	1	**6Y-1119**	1	CARRIER-SEAL	
	22	1	**8F-3469**	4	SEAL-O-RING	
	23	1	**7T-4897**	2	DISC-THRUST	
	24	1	**6Y-1116**	1	GEAR AS (43 TEETH)	
	25	1	**110-7723**	6	PLATE-CLUTCH	
	26	1	**6I-8912**	6	DISC-FRICTION	
	27	1	**108-5751**	2	DISC-FRICTION	
	28	1	**159-0927**	1	DISC-FRICTION	
	29	1	**9W-9905**	4	RING-LOCK	
M	30	1	**5C-7423**	4	SCREW (M6X1X16MM)	

M-METRIC PART

159-9228 **CLUTCH GP-TRANSMISSION** ***(contd.)*** **i01832815**

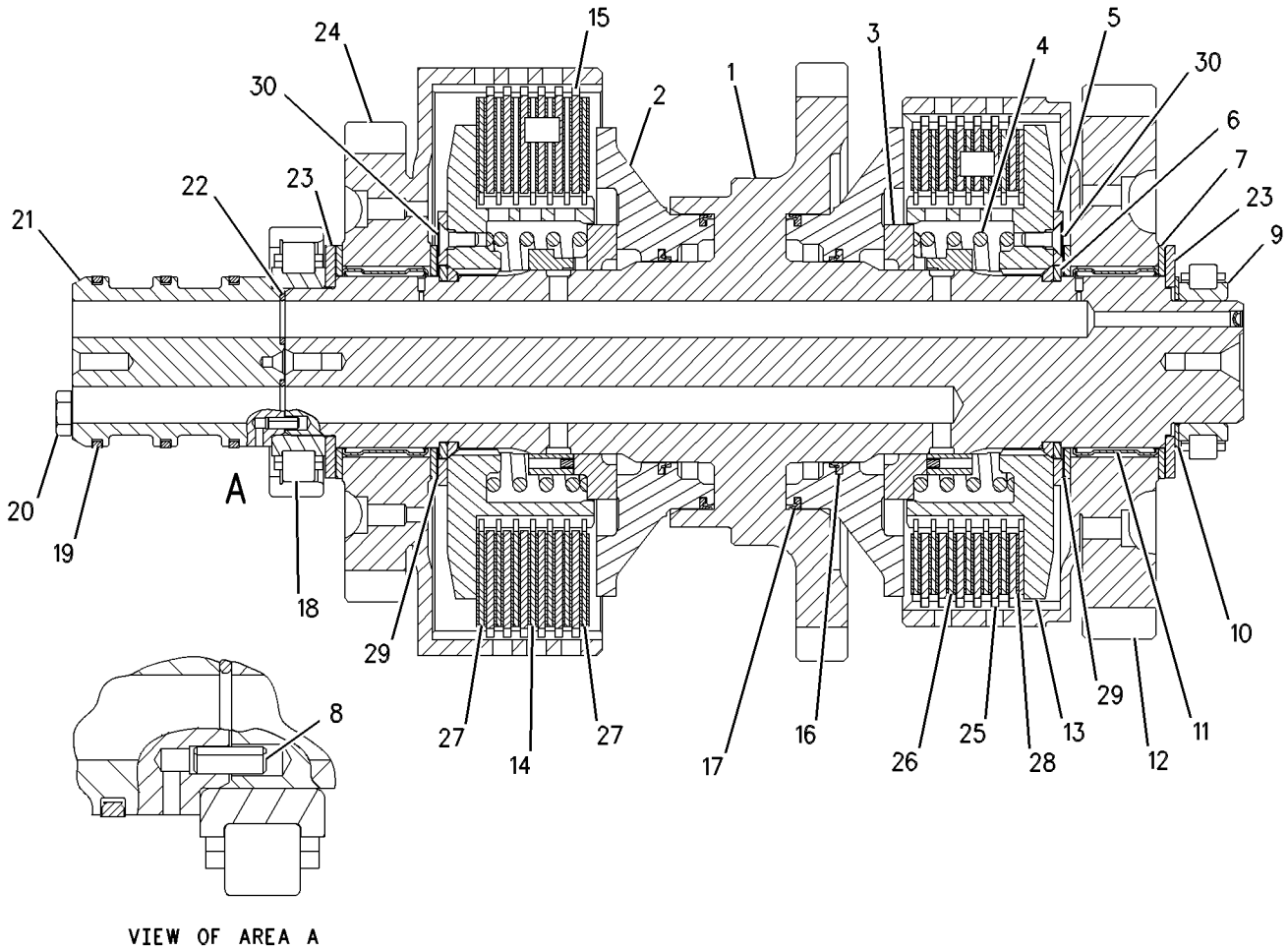

GRAPHIC #1 g00574942

159-9229 CLUTCH GP-TRANSMISSION

S/N: BJN1-UP
REVERSE & 2ND
PART OF 160-2196 TRANSMISSION AR

SMCS-3063, 3155, 3170 **i01638091**

NOTE	REF NO	GRAPHIC REF	PART NUMBER	QTY	PART NAME 1 2 3 4 5 6 (PRODUCT LEVEL)	SEE PAGE
	1	1	**171-7095**	1	SHAFT AS	
		1	**1P-0604**	1	PLUG-CUP	
	2	1	**159-0308**	1	PISTON	
	3	1	**159-9258**	1	VALVE AS	
	4	1	**9U-8815**	1	SPRING	
	5	1	**6Y-1114**	1	LOCKWASHER	
	6	1	**6Y-1115**	4	RING-HALF	
	7	1	**8E-8319**	4	DISC-THRUST	
	8	1	**7T-4897**	1	DISC-THRUST	
	9	1	**4M-6107**	1	BEARING-INNER	
	10	1	**6Y-3855**	1	GEAR AS (46 TEETH)	
	11	1	**9W-2029**	1	RACE-THRUST BEARING	
	12	1	**8E-1263**	1	BEARING-ROLLER	
	13	1	**171-7093**	1	HUB AS	
	14	1	**110-7723**	9	PLATE-CLUTCH	
	15	1	**6I-8912**	10	DISC-FRICTION	
	16	1	**5H-8985**	1	PIN-SPRING	
	17	1	**8E-5742**	2	RING-SEAL	
	18	1	**9W-9371**	1	RING-SEAL	
	19	1	**8E-5734**	1	RING-SEAL EXTENSION	
	20	1	**6Y-1888**	1	PLATE-CLUTCH	
	21	1	**6Y-0976**	1	GEAR (29 TEETH)	
	22	1	**6Y-2307**	1	SPACER (61X82.55X43.88MM THK)	
	23	1	**131-3919**	1	BEARING-ROLLER	
	24	1	**6Y-1119**	1	CARRIER-SEAL	
M	25	1	**6V-1819**	2	BOLT (M10X1.50X100MM)	
	26	1	**7G-4822**	3	RING-SEAL	
	27	1	**8F-3469**	4	SEAL-O-RING	
	28	1	**8E-1908**	1	GEAR AS (44 TEETH)	
		1	**6Y-1895**	1	BEARING-SLEEVE	
	29	1	**6Y-1891**	1	HUB AS	
	30	1	**6Y-1887**	1	PISTON	
	31	1	**102-5881**	1	SPRING-WAVE	
	32	1	**9W-9905**	4	LOCK RING	
	33	1	**159-0927**	1	DISC-FRICTION	
	34	1	**161-6713**	1	PLATE-LOCK	
M	35	1	**5C-7423**	2	SCREW (M6X1X16MM)	

M-METRIC PART

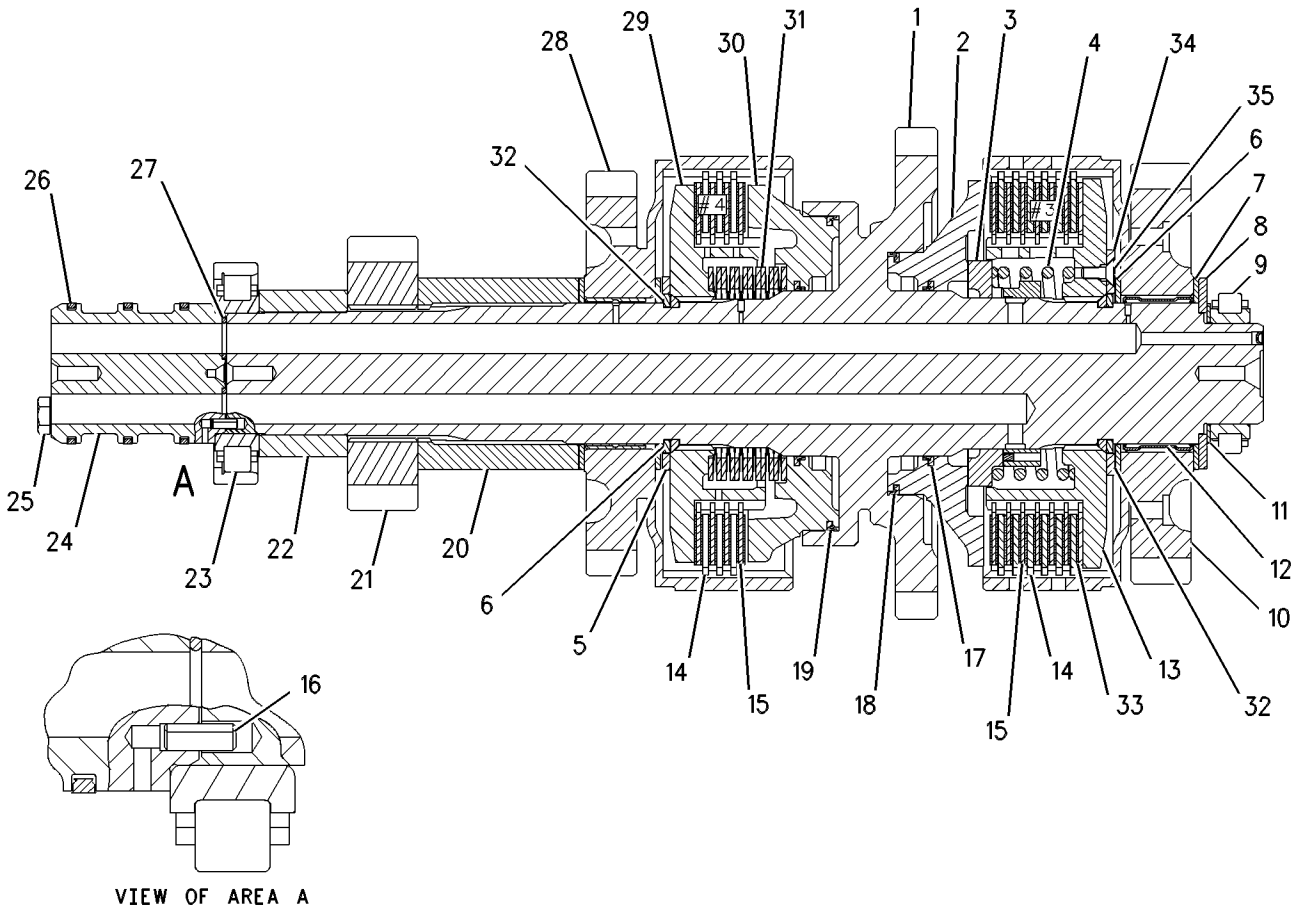

GRAPHIC #1

g00574994

POWER TRAIN

159-5933 CONTROL GP-CLUTCH

S/N: CAF1-UP

PART OF 162-5603 GENERAL AR

SMCS-5157 **i01673206**

NOTE	REF NO	GRAPHIC REF	PART NUMBER	QTY	PART NAME 1 2 3 4 5 6 (PRODUCT LEVEL)	SEE PAGE
	1	1	**1B-2578**	1	NUT (3/8-16 THD)	
	2	1	**1F-4622**	2	BEARING AS-NEEDLE	
	3	1	**5P-9209**	2	BEARING-ROLLER	
	4	1	**206-3599**	1	LEVER	
	5	1	**7V-0446**	2	CLIP	
	6	1	**207-4922**	1	PEDAL-CLUTCH	
	7	1	**9J-8783**	1	SHIM (.508MM THK)	
	8	1	**116-5710**	1	GROMMET	
	9	1	**130-5300**	1	CLIP	
Y	10	1	**147-1680**	1	SENSOR GP-POSITION (CLUTCH)	206
	11	1	**149-2065**	1	SPRING	
	12	1	**161-7062**	1	HOUSING	
	13	1	**161-7063**	1	SHAFT	
	14	1	**162-8218**	1	GASKET	
	15	1	**162-8219**	1	COVER	
	16	1	**169-0921**	1	ROD END (INTERNAL THREAD)	
	17	1	**169-0922**	1	ROD	
	18	1	**172-4211**	1	SPACER (10.5X22X50.8MM THK)	
	19	1	**180-4027**	1	CAM	
	20	1	**180-7147**	1	LEVER	
	21	1	**190-3043**	1	BRACKET AS	
	22	1	**129-3173**	1	BOLT-12 POINT HEAD (3/8-16X31.75MM)	
	23	1	**1B-0676**	1	PIN	
	24	1	**1B-8704**	1	KEY-WOODRUFF	
	25	1	**3H-8538**	1	PIN	
	26	1	**3S-2713**	1	NUT-FULL (3/8-24 THD)	
	27	1	**4B-6060**	1	SETSCREW-SOCKET (1/4-20X.375 IN)	
	28	1	**4J-8922**	1	ROD END	
	29	1	**5P-1075**	2	WASHER-HARD (10.2X22.5X3MM THK)	
	30	1	**5S-7382**	2	BOLT (3/8-16X1.375 IN)	
M	31	1	**6V-2313**	2	BOLT (M5X0.8X30MM)	
	32	1	**8T-0328**	2	WASHER-HARD (5.5X10X1MM THK)	
	33	1	**8T-4121**	5	WASHER-HARD (11X21X2.5MM THK)	
M	34	1	**8T-4133**	1	NUT (M10X1.5 THD)	
M	35	1	**8T-4136**	3	BOLT (M10X1.5X25MM)	
M	36	1	**8T-4182**	1	BOLT (M10X1.5X45MM)	
M	37	1	**8T-4195**	2	BOLT (M10X1.5X30MM)	
	38	1	**8T-4226**	1	WASHER-PLATED (10.5X45X3MM THK)	
	39	1	**8T-4896**	1	WASHER-HARD (10.2X18.5X2.5MM THK)	
	40	1	**8T-5390**	1	BOLT (3/8-16X88.9MM)	

M-METRIC PART
Y-SEPARATE ILLUSTRATION

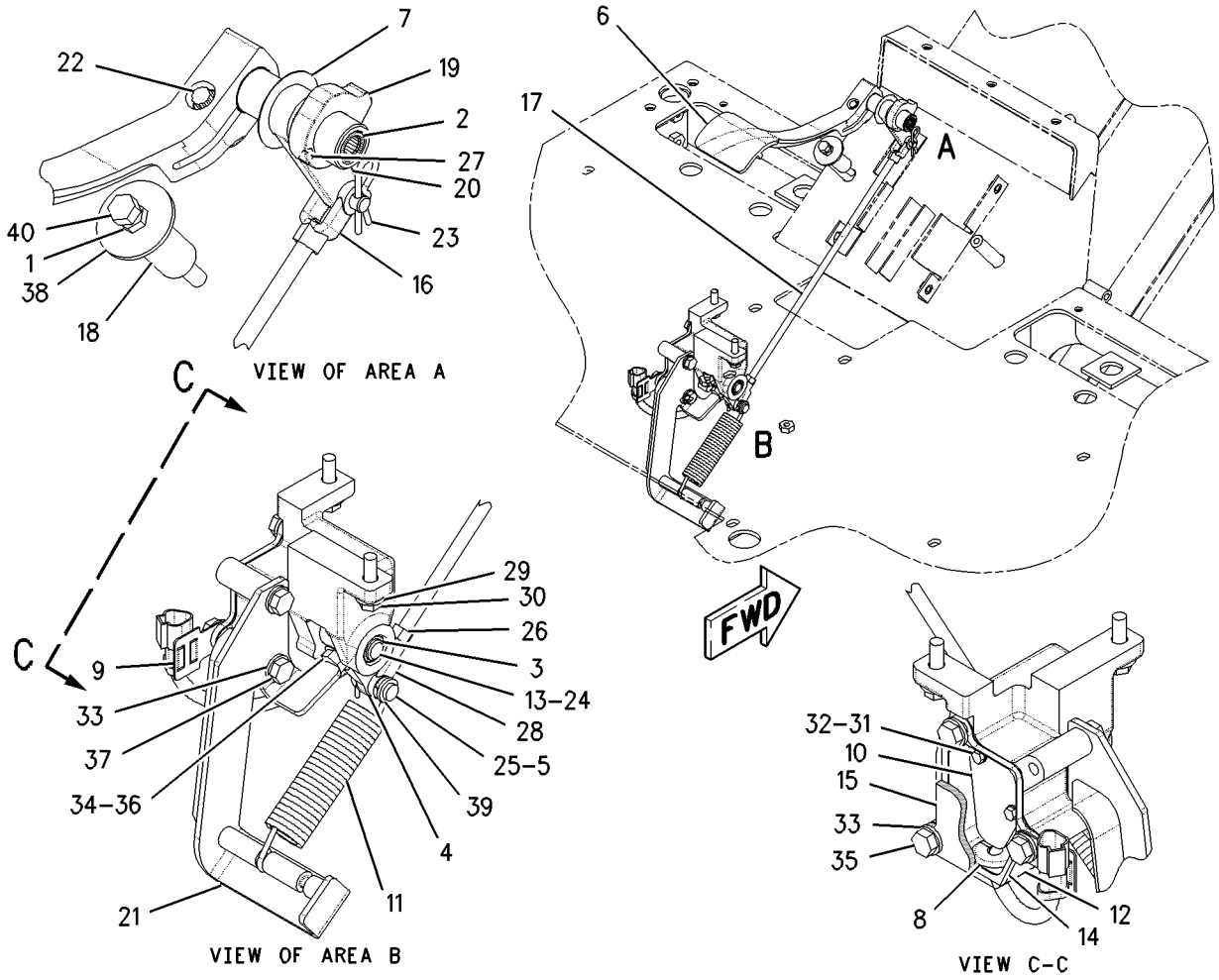

GRAPHIC #1

g00788554

173-5305 CONTROL GP-DIFFERENTIAL LOCK

S/N: CAF1-UP

PART OF 162-5603 GENERAL AR

SMCS-3264 **i01830082**

NOTE	REF NO	GRAPHIC REF	PART NUMBER	QTY	PART NAME 1 2 3 4 5 6 (PRODUCT LEVEL)	SEE PAGE
	1	1	**6V-0852**	1	CAP-DUST	
I	2	1	**7T-1159**	1	HOSE AS	
	3	1	**8X-5492**	1	TUBE	
	4	1	*156-4281*	1	TEE AS	
		1	**7X-0838**	1	TEE-O-RING	
		1	**3J-7354**	1	SEAL-O-RING	
		1	**6V-8397**	2	SEAL-O-RING	
	5	1	**165-9928**	1	PLATE	
Y	6	1	**174-3705**	1	VALVE & MTG GP-DIFF LOCK	346
I	7	1	**178-9952**	1	HOSE AS	
	8	1	*180-9933*	1	ADAPTER GP	
		1	**135-9941**	1	ADAPTER-90 DEGREE	
		1	**3J-7354**	1	SEAL-O-RING	
	9	1	*148-8316*	1	CONNECTOR AS	
		1	**6V-8647**	1	CONNECTOR	
		1	**3J-7354**	1	SEAL-O-RING	
		1	**4J-5477**	1	SEAL-O-RING	
	10	1	*148-8368*	1	ELBOW GP	
		1	**6V-8627**	1	ELBOW	
		1	**3J-1907**	1	SEAL-O-RING	
		1	**4J-5477**	1	SEAL-O-RING	
	11	1	*148-8369*	1	ELBOW GP	
		1	**6V-8628**	1	ELBOW	
		1	**3J-7354**	1	SEAL-O-RING	
		1	**4J-5477**	1	SEAL-O-RING	
	12	1	*164-5567*	1	FITTING GP	
		1	**6V-3965**	1	FITTING AS (QUICK DISCONNECT)	
		1	**3J-1907**	1	SEAL-O-RING	
	13	1	**4J-2506**	2	SEAL-O-RING	
	14	1	**4P-8134**	1	CLIP	
	15	1	**8M-4438**	2	SEAL-O-RING	
	16	1	**8T-2501**	2	BOLT (3/8-16X2 IN)	
	17	1	**8T-4896**	2	WASHER-HARD (10.2X18.5X2.5MM THK)	
	18	1	**9X-6772**	1	STRAP-CABLE	
	19	1	**130-5300**	1	CLIP	

I-SEE HOSE FABRICATION GUIDE
Y-SEPARATE ILLUSTRATION

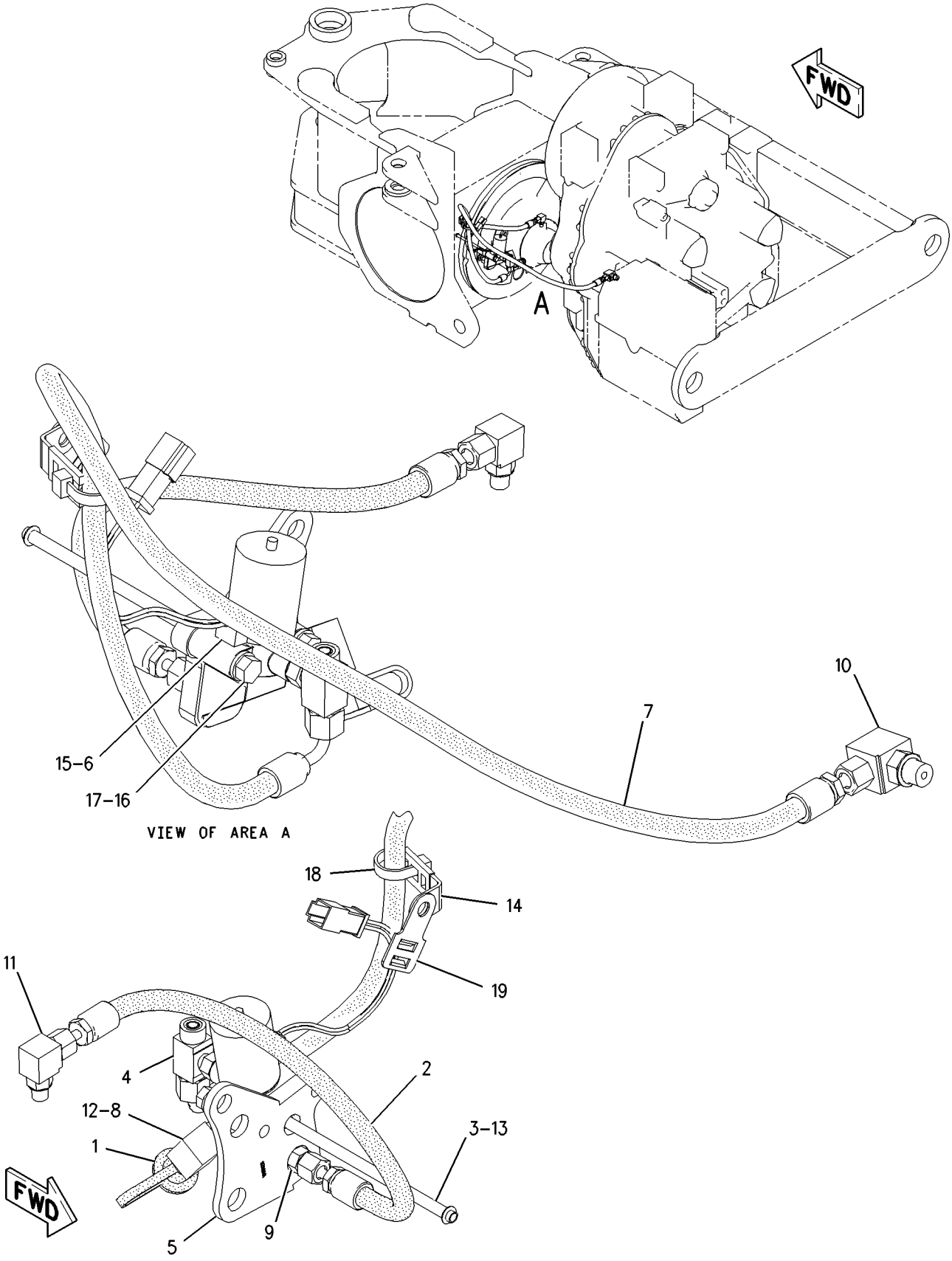

GRAPHIC #1

g00943287

167-9002 CONTROL GP-TRANSMISSION

S/N: CAF1-UP

PART OF 162-5603 GENERAL AR

SMCS-3065 **i01753049**

NOTE	REF NO	GRAPHIC REF	PART NUMBER	QTY	PART NAME 1 2 3 4 5 6 (PRODUCT LEVEL)	SEE PAGE
	1	1	**7M-0706**	1	KNOB (GEARSHIFT) (TMSN DIRECTION & SPEED CONTROL)	
	2	1	**8X-4879**	2	BRACKET AS	
M		1	**6V-9632**	1	NUT-WELD (M6X1 THD)	
	3	1	**8X-8096**	1	FILM (COVER BLACK)	
	4	1	**143-9290**	1	PLATE AS	
M		1	**6V-9632**	2	NUT-WELD (M6X1 THD)	
	5	1	**169-2621**	1	GATE AS	
	6	1	**169-3380**	1	PLATE AS	
	7	1	**180-3531**	1	CONTROL GP-TRANSMISSION	
	8	1	**171-2122**	1	COVER	
	9	1	**172-7105**	1	FILM-PANEL (TMSN DIRECTION & PARKING)	
	10	1	**172-7106**	1	FILM-PANEL (SPEED CONTROL)	
	11	1	**185-2274**	1	FILM-PANEL (ENGINE-HIGH IDLE-HOLD)	
	12	1	**185-2287**	1	FILM-PANEL (ENGINE-LOW IDLE-HOLD)	
	13	1	**187-0491**	1	COVER	
M	14	1	**9X-2041**	10	SCREW-TRUSS HEAD (M10X1.5X20MM)	
M	15	1	**9X-2042**	2	SCREW-TRUSS HEAD (M6X1X12MM)	
M	16	1	**9X-2043**	10	SCREW-TRUSS HEAD (M6X1X14MM)	
M	17	1	**9X-2045**	4	SCREW-TRUSS HEAD (M6X1X20MM)	

M-METRIC PART

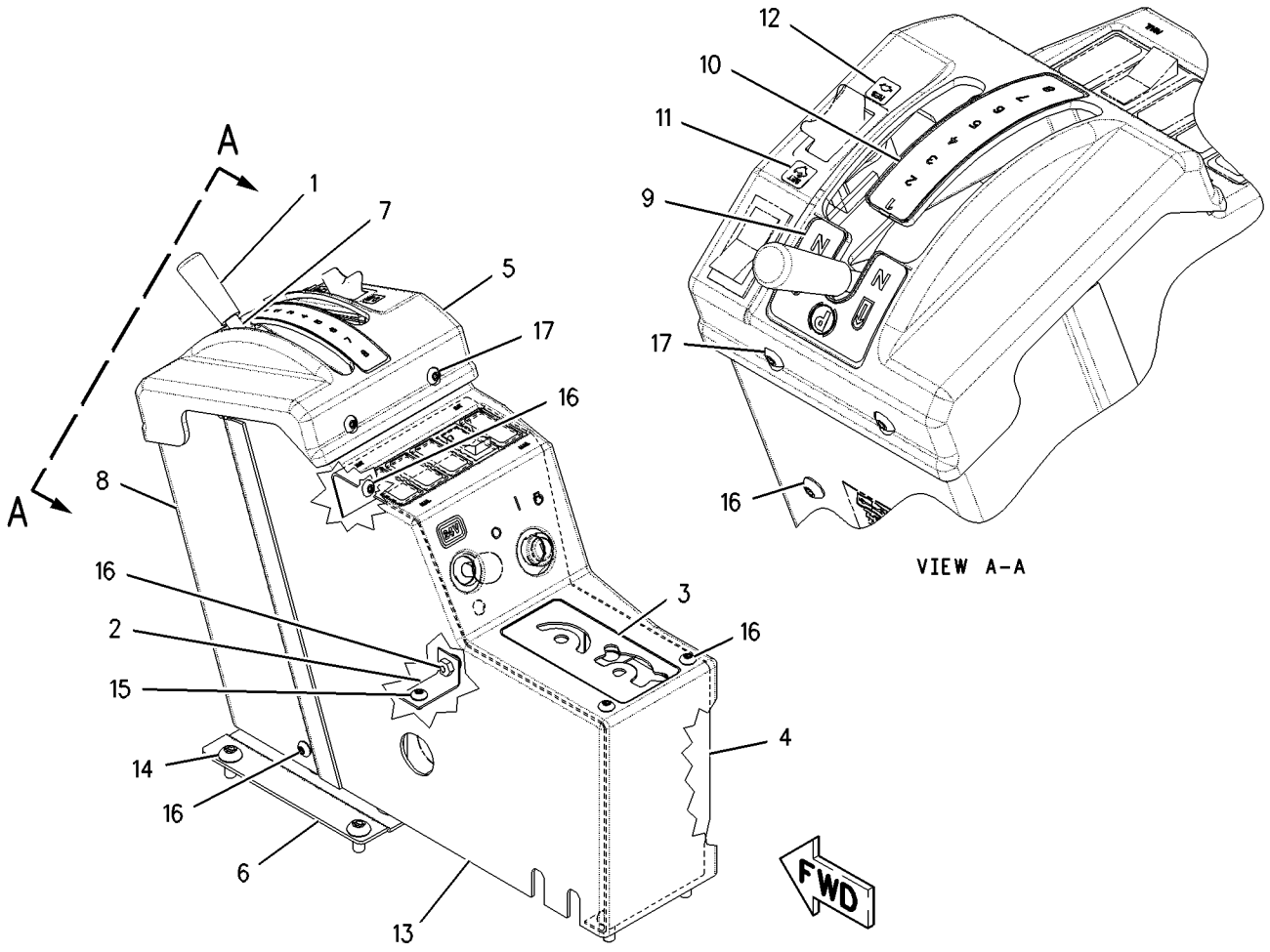

GRAPHIC #1 g00937652

179-6064 CONTROL GP-TRANSMISSION HYD

S/N: BJN1-UP

PART OF 160-2196 TRANSMISSION AR

SMCS-3073, 3167 **i01675191**

NOTE	REF NO	GRAPHIC REF	PART NUMBER	QTY	PART NAME 1 2 3 4 5 6 (PRODUCT LEVEL)	SEE PAGE
Y	1	1	**179-6063**	1	VALVE GP-TRANSMISSION CONTROL	358
M	2	1	**6V-3918**	5	BOLT (M8X1.25X50MM)	
	3	1	**9P-9150**	66	WASHER (8.25X18X.84MM THK)	
	4	1	**1T-0738**	31	WASHER (8.4X19X1.83MM THK)	
M	5	1	**8C-4984**	14	BOLT (M8X1.25X150MM)	
M	6	1	**3E-8005**	14	BOLT (M8X1.25X160MM)	
	7	1	**4S-5879**	1	SEAL-O-RING	
	8	1	**180-9322**	1	HARNESS AS-TRANSMISSION	
		1	**102-8801**	1	KIT-RECEPTACLE (12 PIN) (TMSN CONTROL)	
					(INCLUDES RECEPTACLE AS & WEDGE)	
		1	**155-2270**	8	KIT-CONNECTING PLUG (2 PIN) (CLUTCHES 1-8)	
					(EACH INCLUDES PLUG AS & WEDGE)	
M	9	1	**8T-0639**	2	BOLT (M6X1.00X12MM)	
M	10	1	**6V-5217**	3	BOLT (M8X1.25X20MM)	
	11	1	**198-7657**	1	BLOCK	

M-METRIC PART
Y-SEPARATE ILLUSTRATION

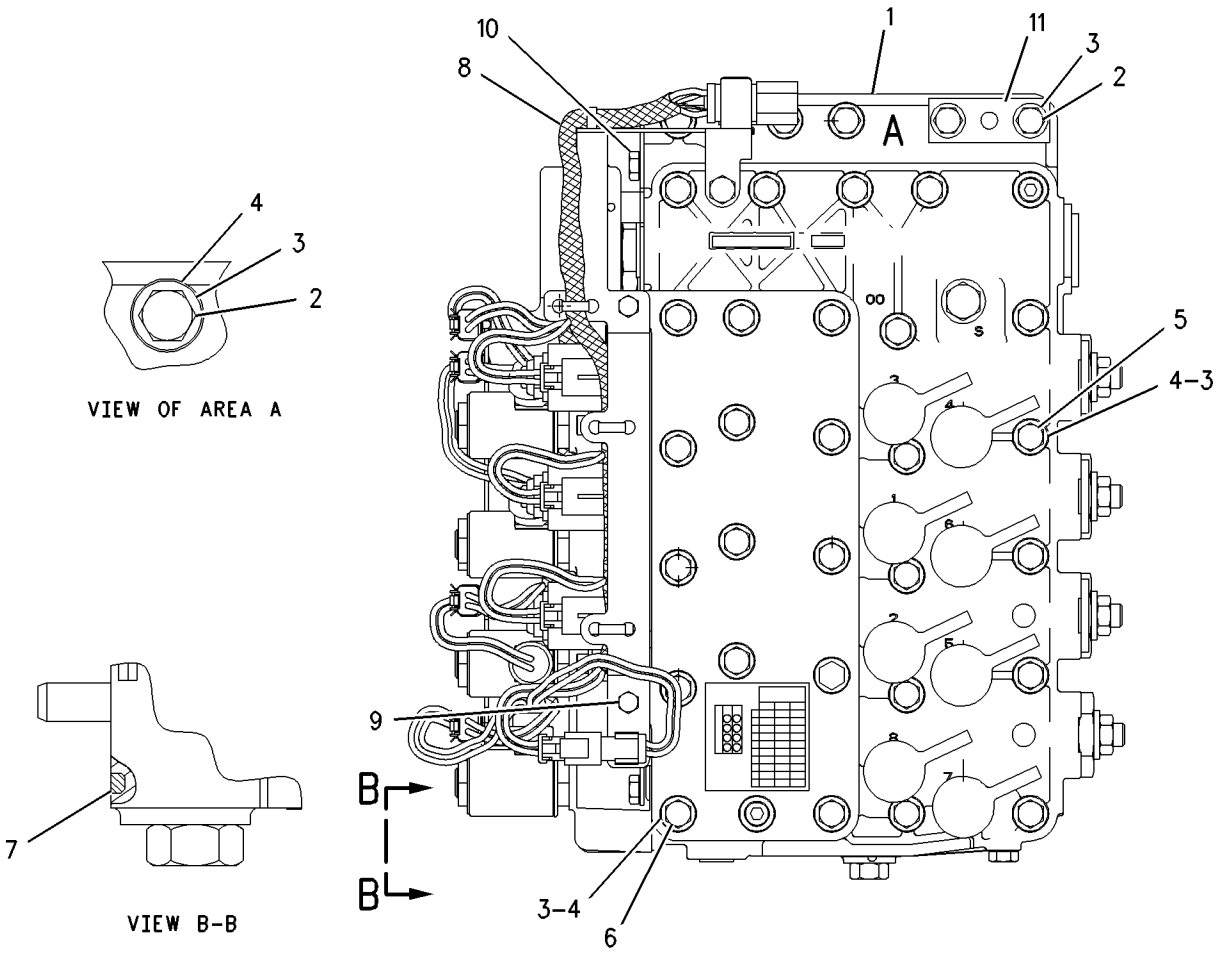

GRAPHIC #1 g00864228

6Y-3978 COUPLING GP-TORSIONAL

S/N: CAF1-UP

PART OF 162-5603 GENERAL AR

SMCS-3252, 3279 **i00135735**

NOTE	REF NO	GRAPHIC REF	PART NUMBER	QTY	PART NAME 1 2 3 4 5 6 (PRODUCT LEVEL)	SEE PAGE
	1	1	**8E-1368**	1	COUPLING AS	
M	2	1	**6V-1820**	12	BOLT (M10X1.50X30MM)	

M-METRIC PART

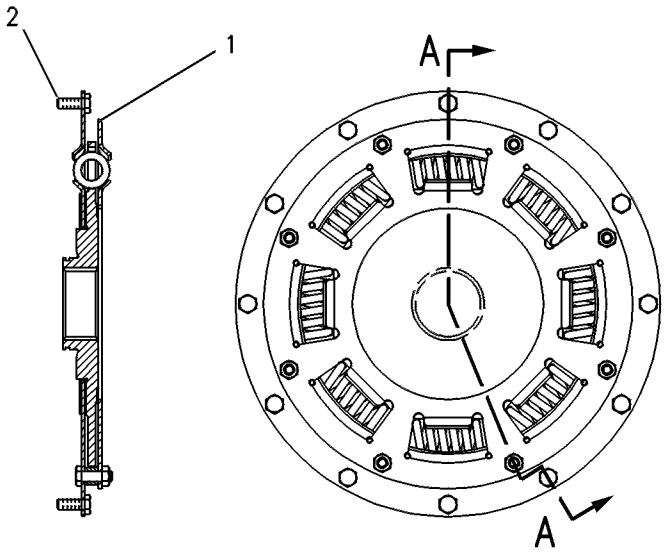

SECTION A-A

GRAPHIC #1 g00108540

8W-5575 DIFFERENTIAL & BEVEL GEAR GP

S/N: CAF1-UP

PART OF 162-5603 GENERAL AR

SMCS-3256, 3258 **i01254104**

NOTE	REF NO	GRAPHIC REF	PART NUMBER	QTY	PART NAME 1 2 3 4 5 6 (PRODUCT LEVEL)	SEE PAGE
	1	1	**5D-9844**	1	BOLT-LOCKING (3/8-16X50.80MM)	
	2	1	**5P-8247**	20	WASHER-HARD (3.5MM THK)	
	3	1	**034-3557**	5	BOLT-LOCKING (3/8-16X1.125IN)	
	4	1	**5M-2894**	8	WASHER (2.5MM THK)	
	5	1	**2K-5109**	1	GASKET	
	6	1	**8W-5279**	1	RETAINER	
	7	1	**123-4003**	1	SEAL-LIP TYPE	
	8	1	**7S-4571**	1	SEAL-O-RING	
	9	1	**5P-5813**	1	LOCKNUT-BEARING	
	10	1	**9B-0143**	1	LOCK-NUT	
	11	1	**7D-8347**	1	WASHER (.187IN THK)	
	12	1	**8X-2316**	1	HOUSING	
	13	1	**5L-2031**	1	CUP-ROLLER BEARING	
	14	1	**5L-2030**	1	CONE-ROLLER BEARING	
	15	1	**0S-1587**	8	BOLT (1/2-13X1.75IN)	
B	16	1	**8V-3273**	1	SHIM PACK (INCLUDES 10 SHIMS)	
	17	1	**1F-7958**	12	NUT-FULL (1/2-13 THD)	
	18	1	**9F-1399**	1	SEAL-O-RING (171.04MM ID)	
	19	1	**1S-3184**	1	CONE-ROLLER BEARING	
	20	1	**2D-9454**	1	CUP-ROLLER BEARING	
	21	1	**9D-3306**	1	CAGE	
	22	1	**6G-4702**	1	NUT	
	23	1	**126-2728**	1	CONE-TAPERED	
	24	1	**2N-2138**	1	CUP-ROLLER BEARING	
	25	1	**6F-0698**	1	DOWEL	
	26	1	**8D-9784**	2	LOCK	
	27	1	**030-8535**	2	BOLT-LOCKING (3/8-16X.875 IN)	
	28	1	**8X-2305**	1	CARRIER AS	
	29	1	**0S-1756**	4	BOLT (3/4-10X4.25IN)	
	30	1	**5P-8248**	4	WASHER-HARD (3.5MM THK)	
	31	1	**4D-5292**	1	RING-RETAINING	
	32	1	**1P-2662**	1	CONE-ROLLER BEARING (65 MM ID)	
	33	1	**1P-2636**	1	CUP-ROLLER BEARING (105 MM OD)	
	34	1	**6G-4701**	1	NUT	
	35	1	**8X-2308**	1	CAGE AS	
		1	**2D-6642**	1	BALL	
	36	1	**2H-5001**	1	SEAL (5.94MM ID)	
	37	1	**8W-5111**	1	SLEEVE	
	38	1	**8X-1206**	1	SHAFT-PINION (14 TEETH)	
Y	39	1	**8W-5587**	1	DIFFERENTIAL GP	324
	40	1	**9G-2991**	2	RING-SEAL	

B-USE AS REQUIRED
Y-SEPARATE ILLUSTRATION

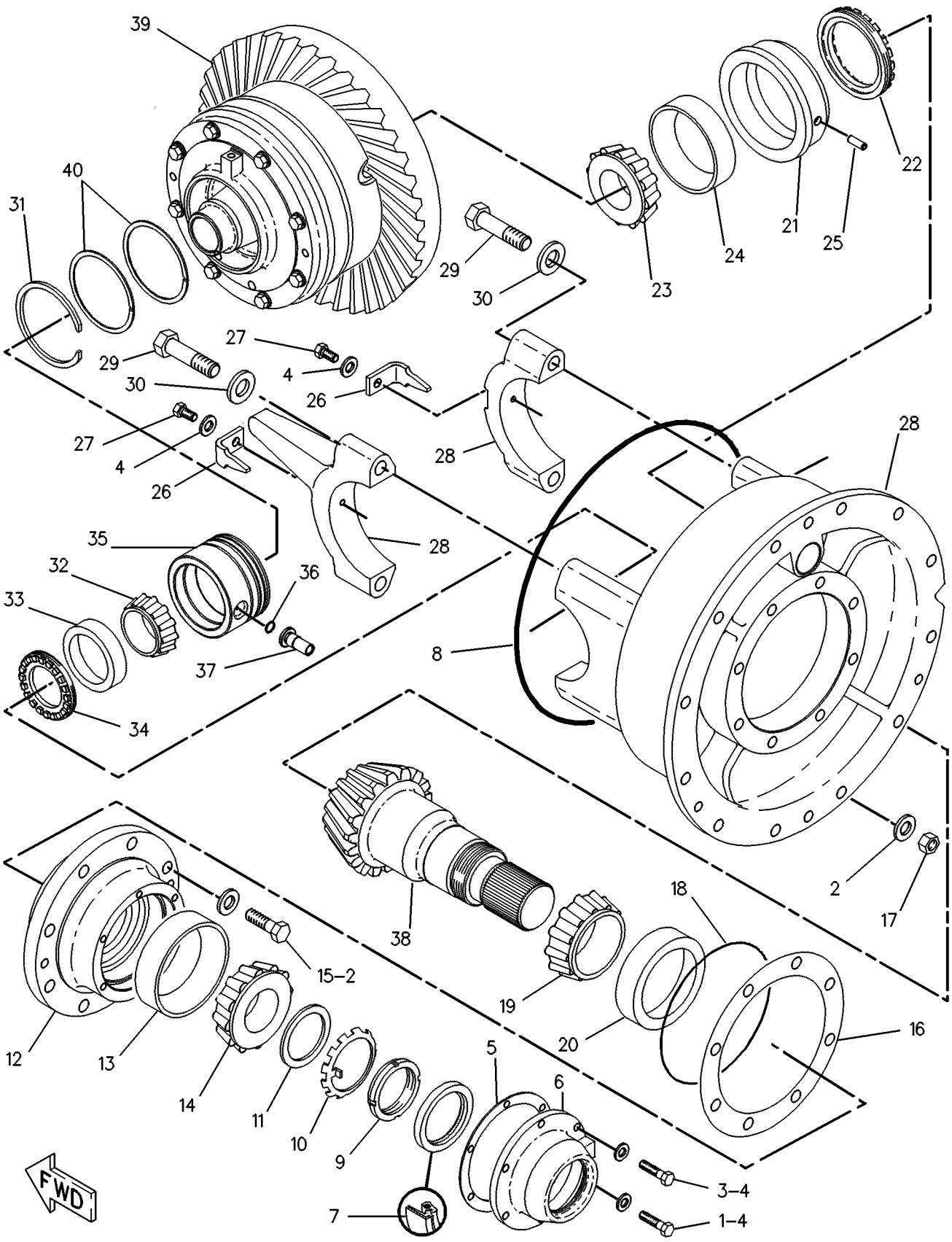

GRAPHIC #1 g00108677

8W-5587 DIFFERENTIAL GP

S/N: CAF1-UP

PART OF 8W-5575 DIFFERENTIAL & BEVEL GEAR GP

SMCS-3258 **i00135232**

NOTE	REF NO	GRAPHIC REF	PART NUMBER	QTY	PART NAME 1 2 3 4 5 6 (PRODUCT LEVEL)	SEE PAGE
	1	1	**8W-5578**	1	PISTON	
	2	1	**8D-9738**	1	SEAL-RING	
	3	1	**6T-0840**	1	RING-SEAL	
	4	1	**6Y-7955**	7	DISC-FRICTION	
	5	1	**8X-1205**	1	GEAR-BEVEL (50 TEETH)	
	6	1	**8X-2310**	1	HOUSING AS	
	7	1	**2D-6642**	1	BALL	
	8	1	**3D-6509**	2	DOWEL	
	9	1	**5P-8247**	18	WASHER-HARD (3.5MM THK)	
	10	1	**8D-9756**	2	WASHER-THRUST	
	11	1	**5B-0841**	18	BOLT (5/8-18X1.75IN)	
	12	1	**8X-4865**	1	HOUSING AS	
	13	1	**3D-6509**	2	DOWEL	
	15	1	**1B-2886**	9	BOLT (1/2-13X3.75IN)	
	16	1	**5P-8245**	9	WASHER (3MM THK)	
	17	1	**2B-0947**	8	BOLT (1/2-13X2.25IN)	
	18	1	**5P-8245**	8	WASHER (3MM THK)	
	19	1	**8W-5586**	1	SPIDER	
	20	1	**8X-4869**	3	SPACER	
	21	1	**8W-5589**	3	PINION AS-DIFFERENTIAL (11 TEETH)	
	22	1	**8D-9749**	1	BEARING-SLEEVE	
	23	1	**109-4580**	1	GEAR-DIFFERENTIAL BEVEL (18 TEETH)	
	24	1	**109-4581**	1	GEAR-DIFFERENTIAL BEVEL (18 TEETH)	
	25	1	**2G-1084**	1	DISC	
	26	1	**8D-9718**	8	DISC	

8W-5587 DIFFERENTIAL GP ***(contd.)*** **i00135232**

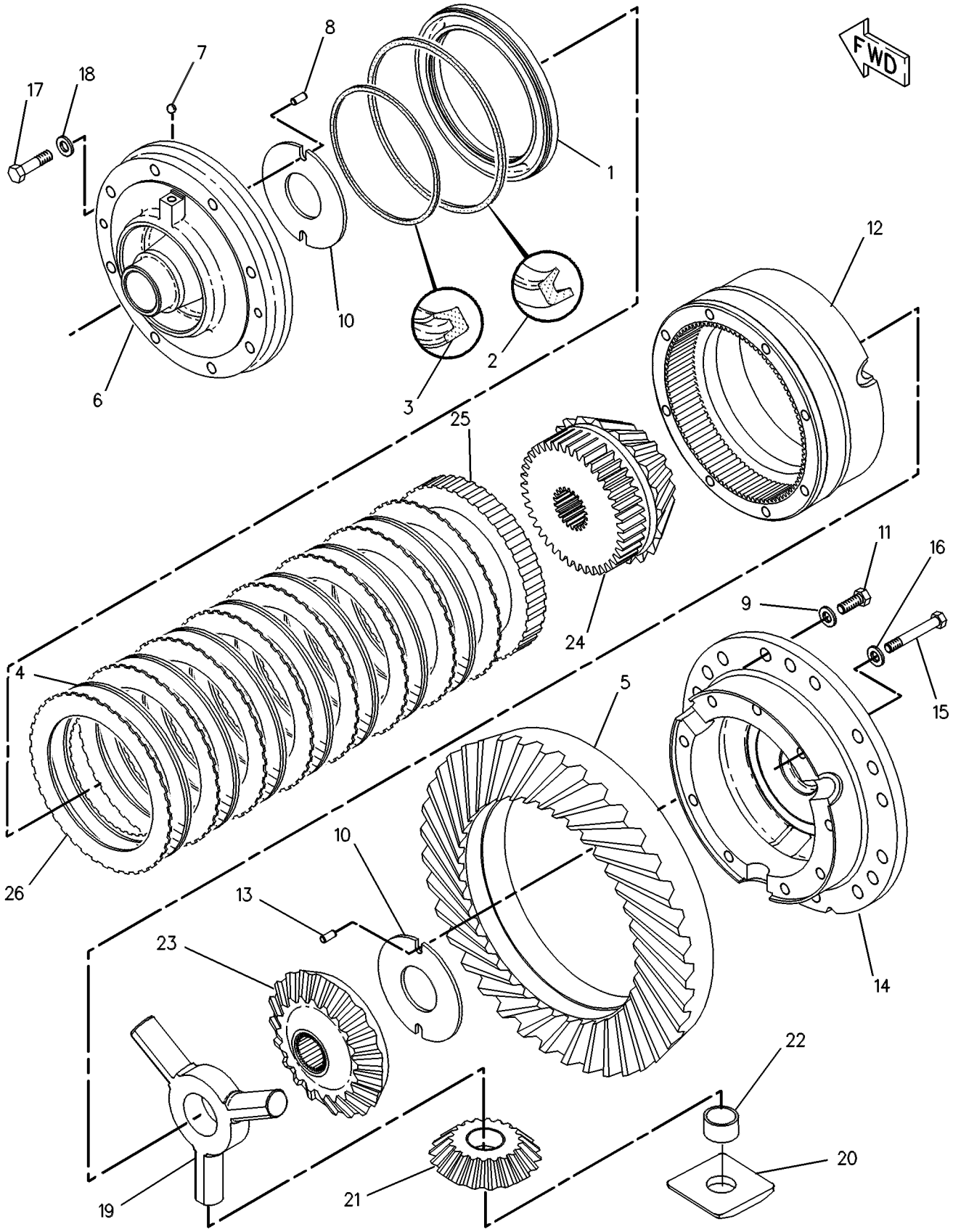

GRAPHIC #1 g00108721

198-4822 FILLER GP-POWER TRAIN OIL

S/N: CAF1-UP

PART OF 162-5603 GENERAL AR

SMCS-3005, 3081 **i01673491**

NOTE	REF NO	GRAPHIC REF	PART NUMBER	QTY	PART NAME 1 2 3 4 5 6 (PRODUCT LEVEL)	SEE PAGE
	1	1	**8X-4271**	1	GAUGE AS	
	2	1	**9G-5127**	1	BREATHER (POWER TRAIN)	
	3	1	**198-4840**	1	TUBE AS	
	4	1	**7J-8611**	1	ELBOW	
	5	1	**8B-1615**	1	GASKET	
	6	1	**8T-4121**	2	WASHER-HARD (11X21X2.5MM THK)	
M	7	1	**9X-2125**	2	BOLT-LOCKING (M10X1.5X25MM)	

M-METRIC PART

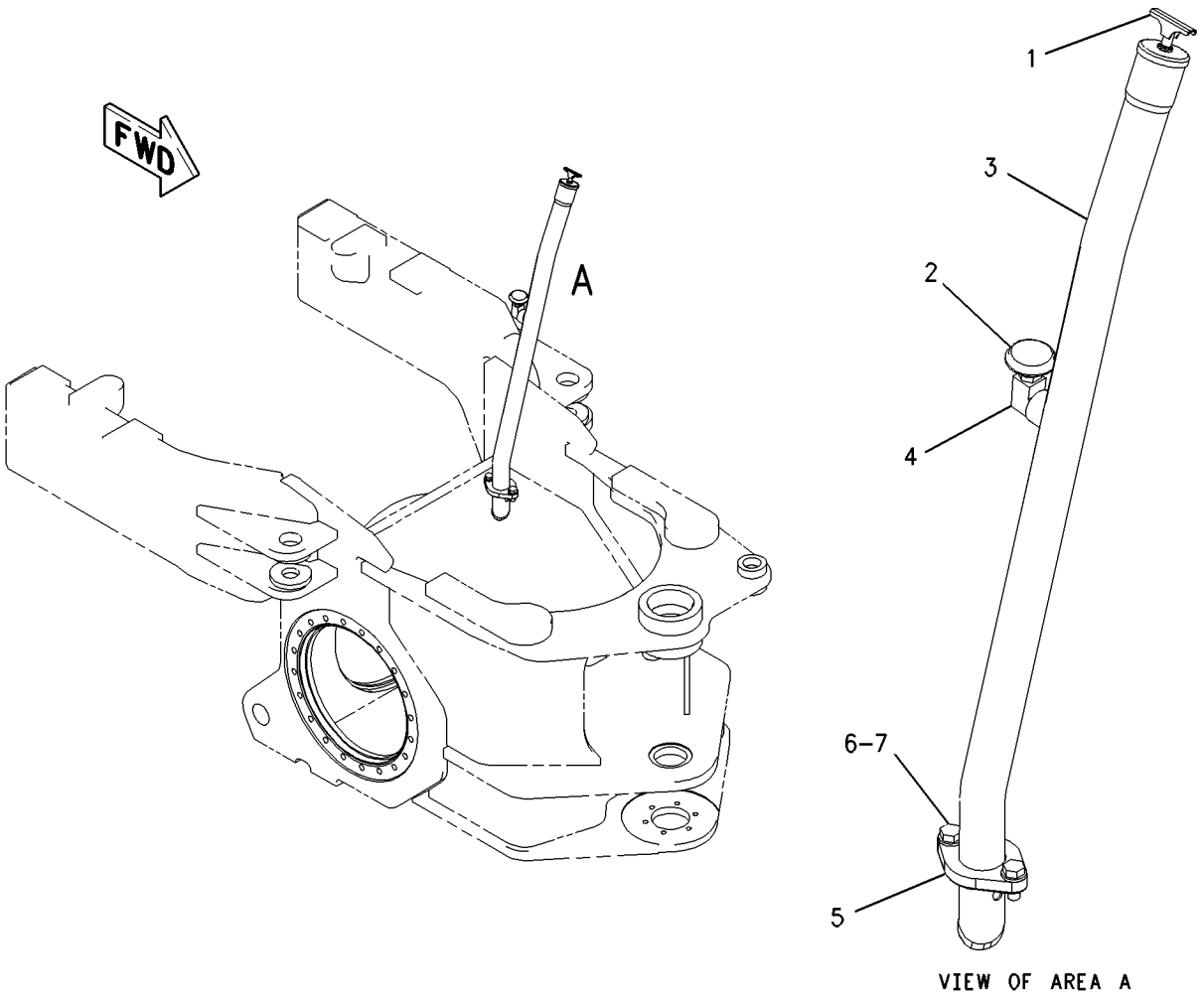

GRAPHIC #1 g00891248

MEMORANDA

169-3651 FILTER & MTG GP-OIL

S/N: CAF1-UP

PART OF 194-2869, 194-2870 SUPPORT AR-REAR CHASSIS

ALSO AN ATTACHMENT

SMCS-3067, 5068 **i01678795**

NOTE	REF NO	GRAPHIC REF	PART NUMBER	QTY	PART NAME 1 2 3 4 5 6 (PRODUCT LEVEL)	SEE PAGE
	1	1	**5P-4961**	1	CLAMP-HOSE	
	2	1	*164-5590*	1	VALVE GP-FLUID SAMPLING (TRANSMISSION OIL)	
		1	**3J-7354**	1	SEAL-O-RING	
Y	3	1	**207-3819**	1	FILTER GP-OIL (TRANSMISSION)	330
	4	1	**215-1868**	1	VALVE-DRAIN (TRANSMISSION OIL)	
	5	1	*148-8339*	1	CONNECTOR GP	
		1	**6V-8716**	1	CONNECTOR	
		1	**6V-9746**	1	SEAL-O-RING	
		1	**7M-8485**	1	SEAL-O-RING	
	6	1	*148-8357*	1	ELBOW GP	
		1	**6V-9008**	1	ELBOW	
		1	**5K-9090**	1	SEAL-O-RING	
		1	**7M-8485**	1	SEAL-O-RING	
	7	1	*148-8392*	1	ELBOW GP	
		1	**6V-9853**	1	ELBOW-SWIVEL	
		1	**6V-9746**	1	SEAL-O-RING	
	8	1	**3K-0360**	1	SEAL-O-RING	
	9	1	**5M-3062**	3	BOLT (3/8-16X0.75 IN)	
	10	1	**8C-3447**	1	CAP-DUST	
	11	1	**8T-4896**	3	WASHER-HARD (10.2X18.5X2.5MM THK)	
	12	1	**8X-5489**	1	SLEEVE	
	13	1	**9S-8005**	1	PLUG	
E	14	1	**9X-2023**		HOSE (75CM)	

E-ORDER BY THE CENTIMETER
Y-SEPARATE ILLUSTRATION

169-3651 **FILTER & MTG GP-OIL** ***(contd.)*** **i01678795**

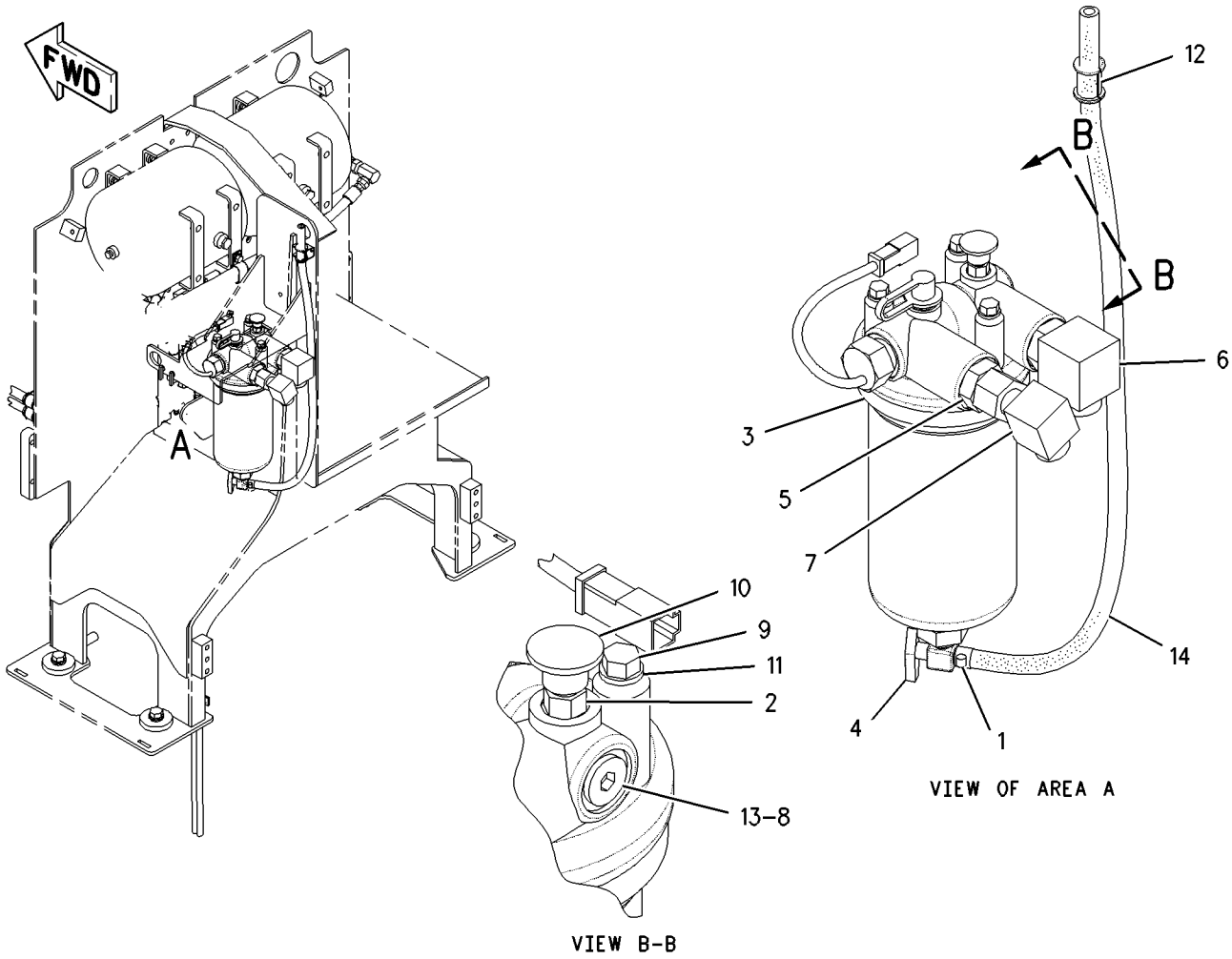

GRAPHIC #1 g00860464

207-3819 FILTER GP-OIL

S/N: CAF1-UP
PART OF 169-3651 FILTER & MTG GP-OIL
ALSO AN ATTACHMENT

SMCS-3067 **i01755258**

NOTE	REF NO	GRAPHIC REF	PART NUMBER	QTY	PART NAME 1 2 3 4 5 6 (PRODUCT LEVEL)	SEE PAGE
	1	1	**9T-8326**	1	BASE	
Y	2	1	**164-7577**	1	SWITCH GP-BYPASS (OIL FILTER)	222
	3	1	**6V-0852**	1	CAP-DUST (TRANS OIL)	
	4	1	**6V-3965**	1	FITTING AS (QUICK DISCONNECT) (DIAGNOSTIC)	
	5	1	**3J-1907**	2	SEAL-O-RING	
	6	1	**2S-8439**	1	SEAL-O-RING	
	7	1	**133-1278**	1	HOUSING AS-OIL FILTER	
	8	1	**132-8875**	1	FILTER ELEMENT AS-OIL	
	9	1	**8M-6393**	1	RING-RETAINING	
	10	1	**133-1288**	1	RETAINER	
	11	1	**9S-4191**	1	PLUG	
	12	1	**3S-8652**	1	SPRING	
	13	1	**6T-9222**	1	SPOOL	
	14	1	**133-2199**	1	SPRING	

Y-SEPARATE ILLUSTRATION

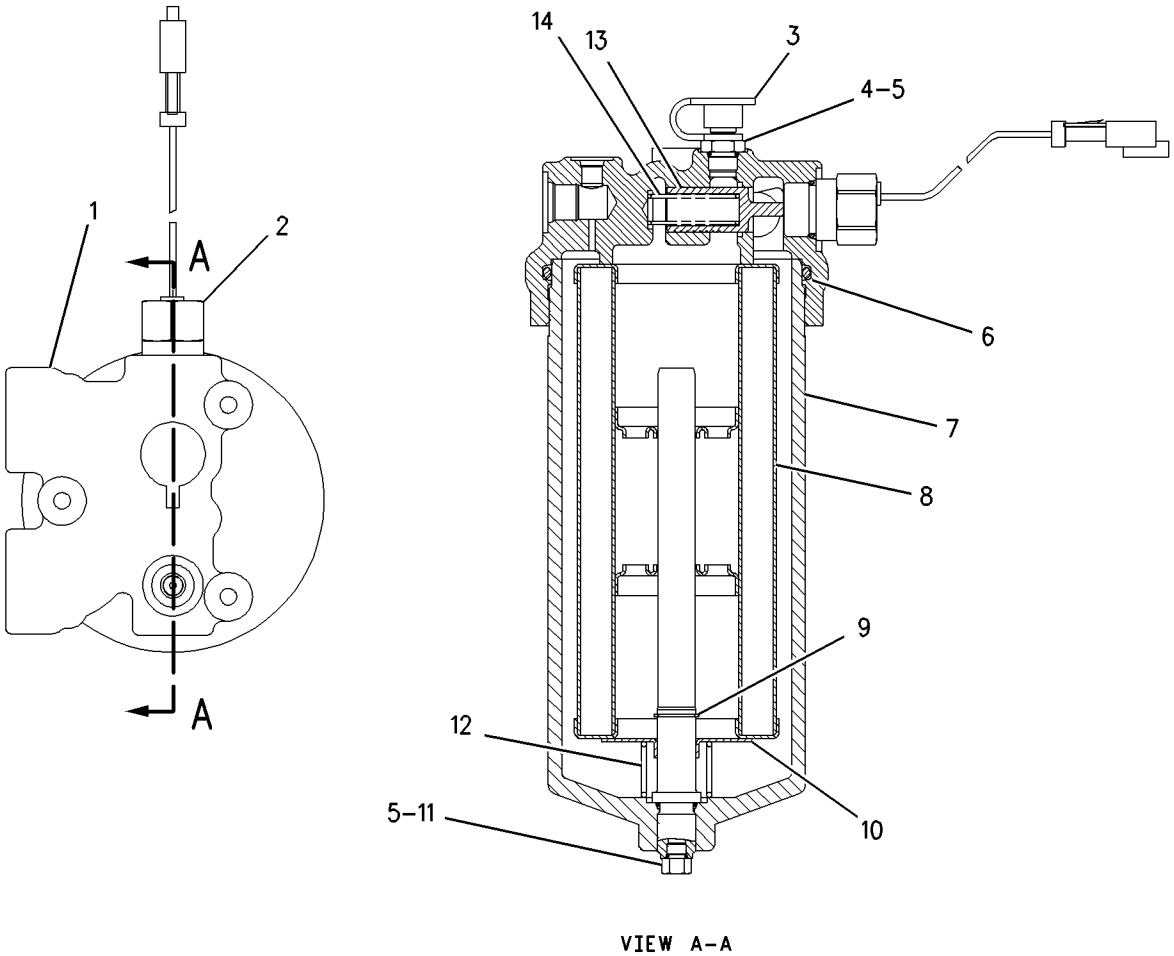

VIEW A–A

GRAPHIC #1 g00844181

MEMORANDA

POWER TRAIN

194-6773 FINAL DRIVE GP

S/N: CAF1-UP

PART OF 162-5603 GENERAL AR

SMCS-4050 **i01673453**

NOTE	REF NO	GRAPHIC REF	PART NUMBER	QTY	PART NAME 1 2 3 4 5 6 (PRODUCT LEVEL)	SEE PAGE
	1	1	**6K-8329**	2	CONE-BEARING	
	2	1	**030-0060**	2	CUP-BEARING	
	3	1	**030-0061**	2	CONE-BEARING	
	4	1	**2G-6396**	2	NUT (2 7/8-12 THD)	
	5	1	**5P-6851**	48	BOLT-LOCKING	
	6	1	**6F-2956**	2	CUP-BEARING	
	7	1	**8D-8628**	2	WASHER (49.3X91.29X6.35MM THK)	
	8	1	**8S-9092**	32	BOLT (5/8-11X2.25 IN)	
	9	1	**8W-4979**	2	SHAFT-DRIVE	
	10	1	**8W-4981**	2	LOCK	
	11	1	**2G-6377**	4	SPROCKET (20 TEETH)	
	13	1	**8X-2968**	2	HOUSING-AXLE	
	14	1	**219-2437**	2	RETAINER	
	15	1	**219-2434**	4	RING-WEAR	
	16	1	**8X-3276**	4	WASHER-THRUST (247X281.28X6.97MM THK)	
B	17	1	**8X-3364**	2	SHIM PACK (EACH INCLUDES 10 SHIMS)	
	18	1	**8X-3395**	2	HOUSING	
	19	1	**200-3011**	272	BEARING AS-ROLLER	
	20	1	**200-3012**	8	GEAR (24 TEETH)	
	21	1	**200-3013**	2	CARRIER	
	22	1	**200-3014**	8	SHAFT-PLANETARY	
	23	1	**200-3015**	2	SHAFT	
	24	1	**200-6919**	2	GEAR (67 TEETH)	
	25	1	**200-6920**	8	SPACER (48.5X64.16X3.95MM THK)	
	26	1	**030-8535**	2	BOLT-LOCKING (3/8-16X0.875 IN)	
	27	1	**4D-3704**	40	WASHER-HARD (17X30X5MM THK)	
	28	1	**4K-0367**	40	NUT-FULL (5/8-11 THD)	
	29	1	**4L-9822**	2	SEAL-LIP	
	30	1	**5D-0353**	16	BOLT-LOCKING (3/8-16X1 IN)	
	31	1	**5J-1086**	2	SEAL-O-RING	
	32	1	**5M-2894**	18	WASHER-HARD (10.2X18.5X2.5MM THK)	
	33	1	**5P-2545**	2	SEAL-O-RING	
	34	1	**5P-8245**	48	WASHER-HARD (13.5X25.5X3MM THK)	
	35	1	**5P-8247**	32	WASHER-HARD (17X32X3.5MM THK)	
	36	1	**6V-8082**	2	SEAL-LIP	
	37	1	**7D-0028**	8	RETAINER	
	38	1	**8D-8621**	2	RING-RETAINING	
	39	1	**8X-8376**	16	WASHER (44.78X79.25X2.92MM THK)	
	40	1	**9F-2247**	2	PLUG-PIPE	

B-USE AS REQUIRED

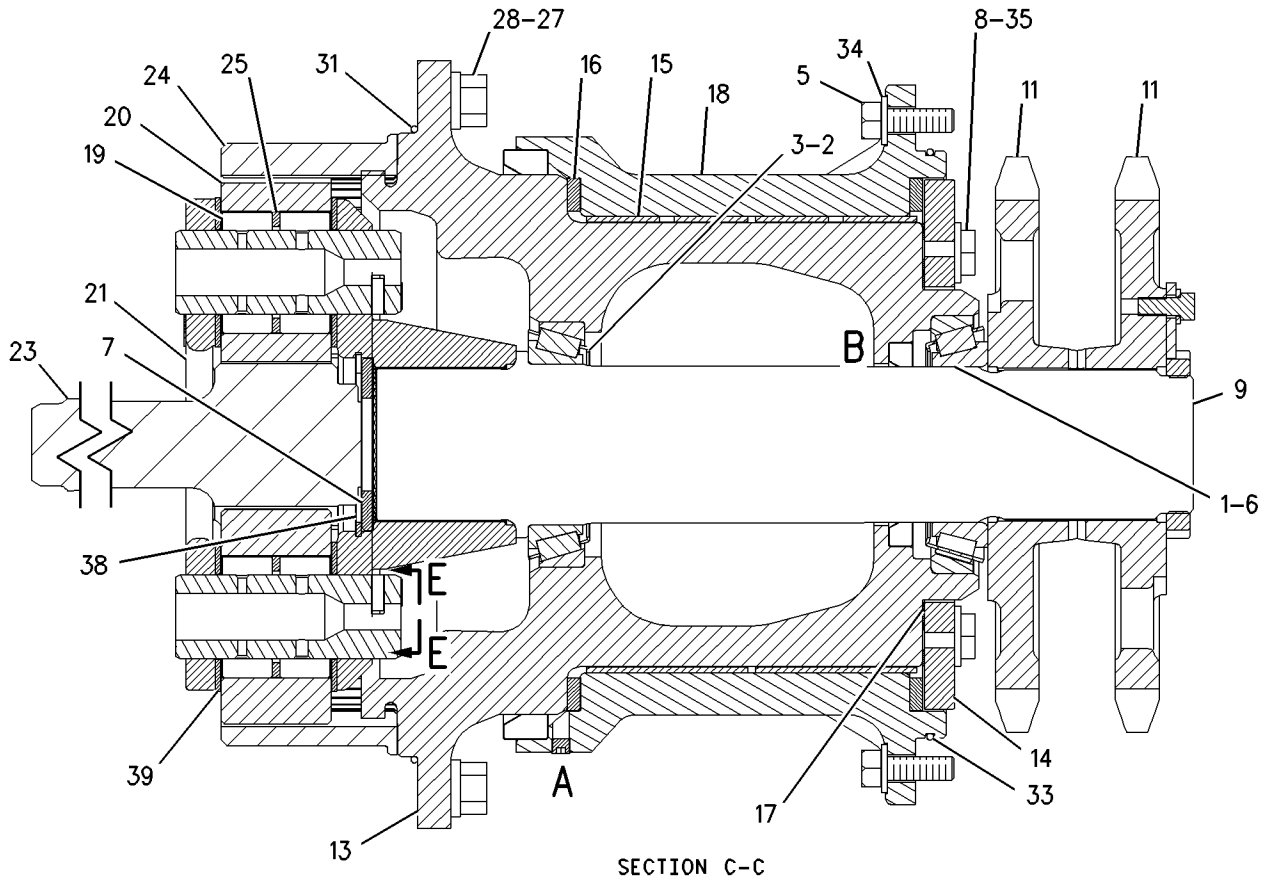

SECTION C-C

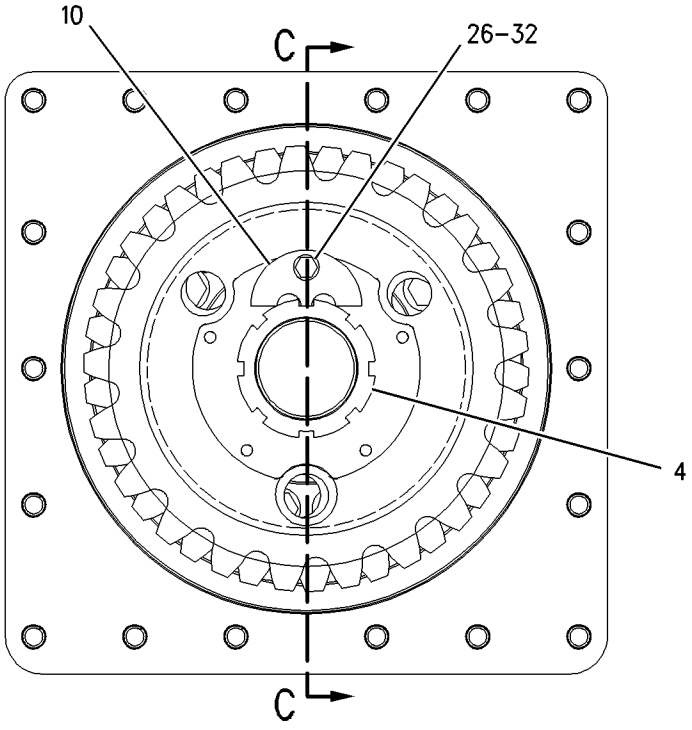

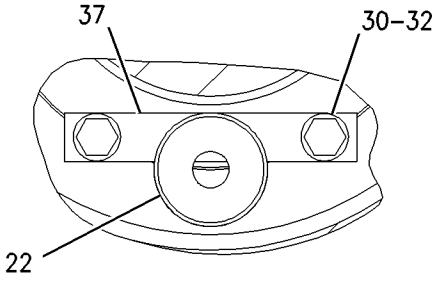

VIEW E-E

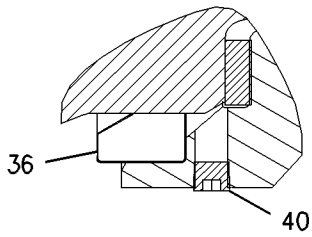

VIEW OF AREA A

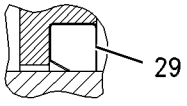

VIEW OF AREA B

GRAPHIC #1 g00940372

POWER TRAIN

194-4078 LINES GP-TRANSMISSION OIL

S/N: CAF1-UP

PART OF 162-5603 GENERAL AR

SMCS-3154 **i01674508**

NOTE	REF NO	GRAPHIC REF	PART NUMBER	QTY	PART NAME 1 2 3 4 5 6 (PRODUCT LEVEL)	SEE PAGE
	1	1	**5D-1026**	2	CLAMP-HOSE	
	2	1	**8T-4983**	2	CLAMP-HOSE	
B	3	1	**8X-5121**	1	TUBE	
	4	1	**8X-7317**	1	HOSE	
	5	1	**8X-8916**	1	PLATE	
	6	1	**9C-5344**	1	SPACER (10.5X20X18MM THK)	
	7	1	**9C-9467**	1	CLIP	
	8	1	**005-7898**	2	CONNECTOR-HOSE	
	9	1	**113-9048**	1	BAFFLE	
	10	1	**173-2087**	2	SPACER (11X20X28MM THK)	
I	11	1	**176-9747**	1	HOSE AS	
I	12	1	**177-1677**	1	HOSE AS	
	13	1	**178-3695**	1	ADAPTER	
I	14	1	**185-7387**	1	HOSE AS	
I	15	1	**203-6016**	1	HOSE AS	
	16	1	**203-6019**	1	TUBE AS	
I	17	1	**204-2610**	1	HOSE AS	
	18	1	*148-8335*	1	CONNECTOR AS	
		1	**6V-8635**	1	CONNECTOR	
		1	**5K-9090**	1	SEAL-O-RING	
		1	**7M-8485**	1	SEAL-O-RING	
	19	1	*148-8339*	2	CONNECTOR GP	
					(EACH INCLUDES)	
		1	**6V-8716**	1	CONNECTOR	
		1	**6V-9746**	1	SEAL-O-RING	
		1	**7M-8485**	1	SEAL-O-RING	
	20	1	*148-8360*	1	ELBOW GP	
		1	**6V-9182**	1	ELBOW	
		1	**6V-9746**	1	SEAL-O-RING	
		1	**7M-8485**	1	SEAL-O-RING	
	21	1	*148-8392*	1	ELBOW GP	
		1	**6V-9853**	1	ELBOW-SWIVEL	
		1	**6V-9746**	1	SEAL-O-RING	
	22	1	*148-8407*	1	PLUG GP	
		1	**9S-4191**	1	PLUG	
		1	**3J-1907**	1	SEAL-O-RING	
	23	1	**1L-0509**	2	BOLT (3/8-16X.74 IN)	
	24	1	**1P-4577**	6	FLANGE-HALF	
	25	1	**1P-4578**	2	FLANGE-HALF	
	26	1	**4F-7389**	2	SEAL-O-RING	
	27	1	**4J-0520**	4	SEAL-O-RING	
	28	1	**4J-0522**	1	SEAL-O-RING	
	29	1	**5K-9090**	1	SEAL-O-RING	
	30	1	**5P-4116**	1	WASHER-HARD (8.8X20.5X2MM THK)	
	31	1	**6V-1889**	4	CLIP	
M	32	1	**6V-3940**	1	BOLT (M8X1.25X25MM)	
	33	1	**7X-0342**	1	BOLT (5/8-11X0.74 IN)	
	34	1	**8T-4121**	18	WASHER-HARD (11X21X2.5MM THK)	
M	35	1	**8T-4182**	2	BOLT (M10X1.5X45MM)	
M	36	1	**8T-4196**	12	BOLT (M10X1.5X35MM)	
	37	1	**8T-4896**	2	WASHER-HARD (10.2X18.5X2.5MM THK)	
M	38	1	**8T-6466**	4	BOLT (M10X1.50X60MM)	
E	39	1	**5P-0765**		HOSE (55CM)	

B-USE AS REQUIRED
E-ORDER BY THE CENTIMETER
I-SEE HOSE FABRICATION GUIDE
M-METRIC PART

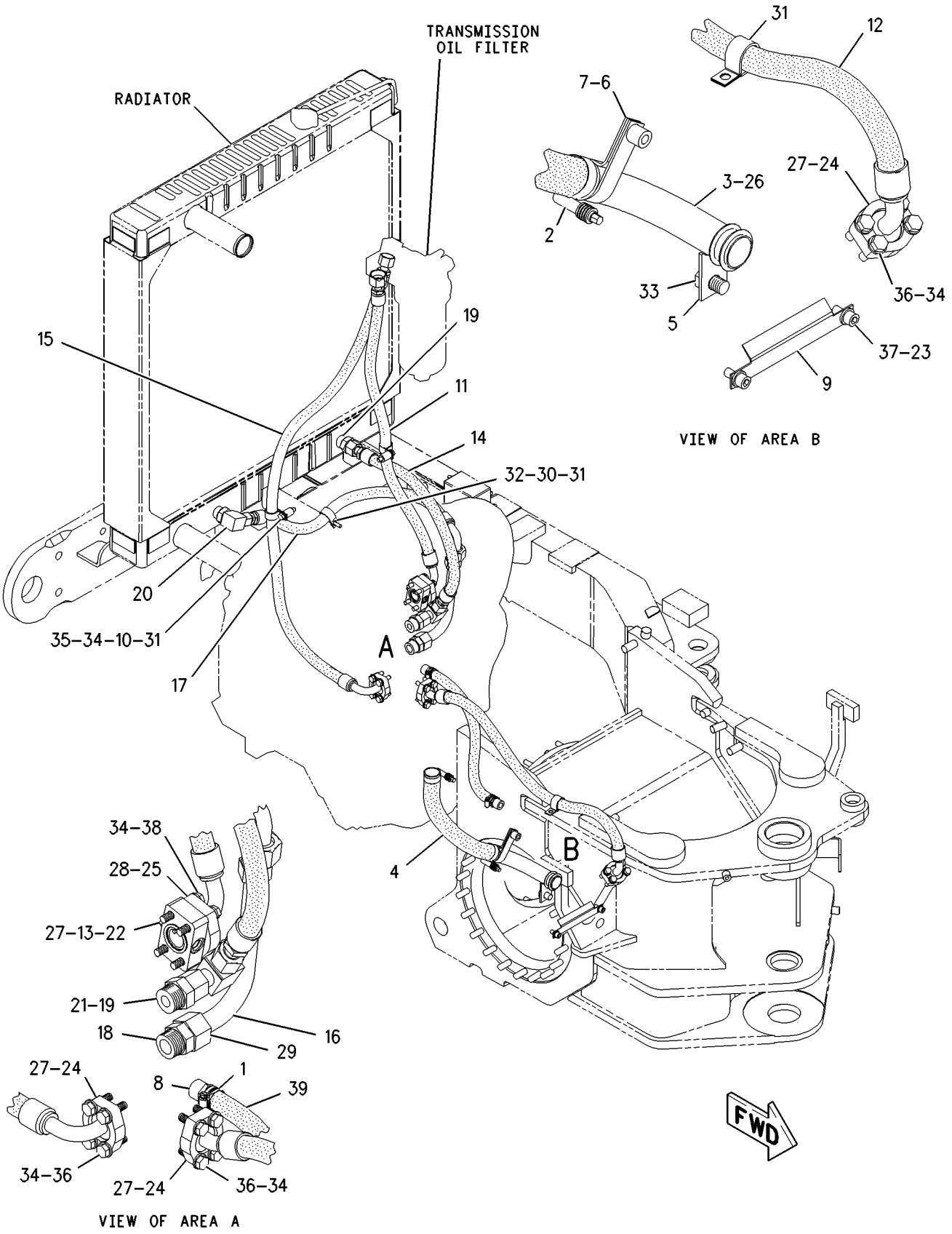

GRAPHIC #1

g00937313

142-6203 MOUNTING GP-WHEEL

S/N: CAF1-UP

PART OF 162-5603 GENERAL AR

SMCS-4201 **i01055119**

NOTE	PART NUMBER	QTY	PART NAME 1 2 3 4 5 6 (PRODUCT LEVEL)	SEE PAGE
	0S-1973	60	BOLT (7/8-9X2IN)	
	4M-6953	60	WASHER-HARD (3.5MM THK)	

<END>

6Y-8764 PUMP GP-GEAR–TRANSMISSION

S/N: BJN1-UP
2 SECTION
PART OF 6Y-8765 PUMP GP-GEAR

SMCS-3066 **i00683477**

NOTE	REF NO	GRAPHIC REF	PART NUMBER	QTY	PART NAME 1 2 3 4 5 6 (PRODUCT LEVEL)	SEE PAGE
	1	1	**9N-4163**	1	COVER AS-PUMP	
	2	1	**1M-3780**	2	BEARING (25.413 MM OD)	
	3	1	**9N-4162**	1	GEAR AS-OIL PUMP (12 TEETH)	
		1	**2B-9373**	1	KEY-WOODRUFF (.75X.25IN)	
	4	1	**9N-4159**	1	BODY AS-OIL PUMP	
	5	1	**1M-3780**	2	BEARING (25.413 MM OD)	
	6	1	**5S-4385**	1	BODY AS-OIL PUMP	
		1	**8M-8489**	4	DOWEL (12.54MM DIA)	
	7	1	**9N-4158**	2	GEAR-OIL PUMP (8 TEETH)	
	8	1	**2B-9373**	1	KEY-WOODRUFF (.75X.25IN)	
	9	1	**2D-8009**	3	SEAL-O-RING (142.47MM ID)	
	10	1	**3S-0004**	6	WASHER (2.29MM THK)	
M	11	1	**8T-5030**	2	BOLT (M10X1.5X120MM)	
	12	1	**6Y-5010**	8	WASHER (0.84MM THK)	
M	13	1	**8C-2926**	4	BOLT (M10X1.50X140MM)	
	14	1	**9N-4161**	1	GEAR AS-OIL PUMP (12 TEETH)	
		1	**2B-9373**	1	KEY-WOODRUFF (.75X.25IN)	
	15	1	**9N-4156**	1	MANIFOLD AS-PUMP	
		1	**8M-8489**	2	DOWEL (12.54MM DIA)	

M-METRIC PART

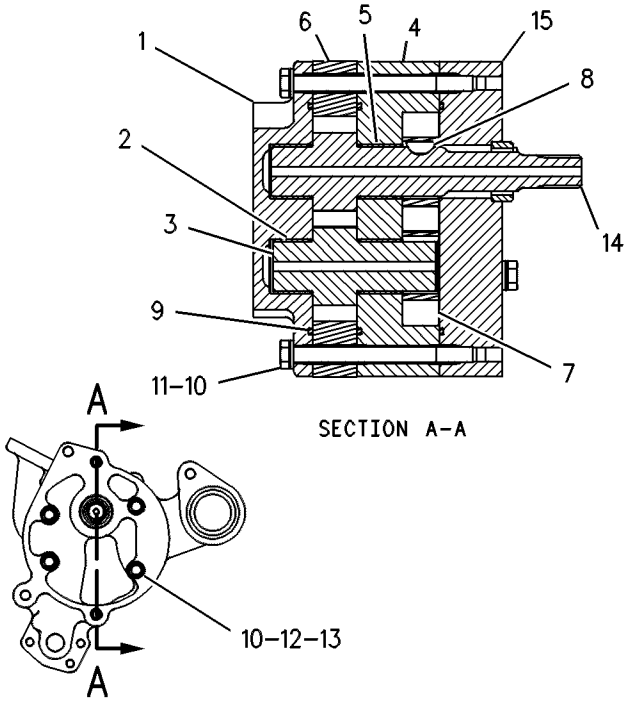

GRAPHIC #1 g00108548

6Y-8765 PUMP GP-GEAR–TRANSMISSION

S/N: BJN1-UP
2 SECTION
PART OF 160-2196 TRANSMISSION AR

SMCS-3066 **i01459307**

NOTE	REF NO	GRAPHIC REF	PART NUMBER	QTY	PART NAME 1 2 3 4 5 6 (PRODUCT LEVEL)	SEE PAGE
Y	1	1	**6Y-8764**	1	PUMP GP-GEAR (TRANSMISSION)	338
	2	1	**4F-7952**	1	SEAL-O-RING	
	3	1	**7F-8268**	1	SEAL-O-RING	
M	4	1	**6V-1820**	3	BOLT (M10X1.50X30MM)	

M-METRIC PART
Y-SEPARATE ILLUSTRATION

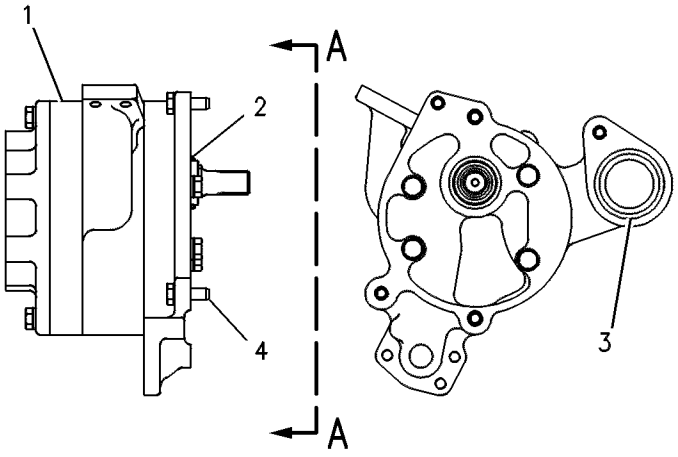

VIEW A-A

GRAPHIC #1 g00108547

9W-5134 SCREEN GP-MAGNETIC—TRANSMISSION

S/N: BJN1-UP

PART OF 160-2196 TRANSMISSION AR

SMCS-3067 **i01623693**

NOTE	REF NO	GRAPHIC REF	PART NUMBER	QTY	PART NAME 1 2 3 4 5 6 (PRODUCT LEVEL)	SEE PAGE
	1	1	**6Y-3861**	1	COVER AS	
	2	1	**6Y-3860**	1	HOUSING-FILTER	
	3	1	**8S-9130**	1	SCREEN-SUCTION (TRANSMISSION)	
	4	1	**8S-9129**	1	FILTER-MAGNETIC (TRANSMISSION)	
	5	1	**5P-3863**	1	SEAL-O-RING	
M	6	1	**6V-5219**	3	BOLT (M8X1.25X40MM)	
	7	1	**5F-8000**	1	SEAL-O-RING (50.39MM ID)	
M	8	1	**8T-0355**	3	BOLT (M10X1.50X110MM)	

M-METRIC PART

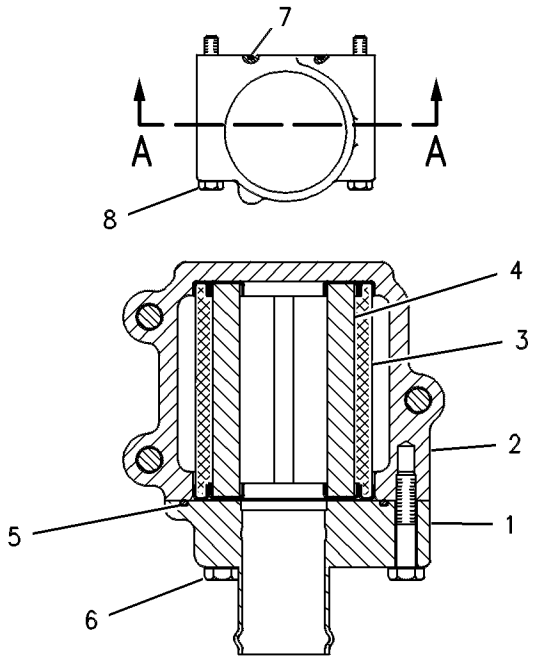

VIEW A–A

GRAPHIC #1 g00108551

POWER TRAIN

8W-5621 SHAFT GP-DRIVE

S/N: CAF1-UP

PART OF 162-5603 GENERAL AR

SMCS-3253 **i01774030**

NOTE	REF NO	GRAPHIC REF	PART NUMBER	QTY	PART NAME 1 2 3 4 5 6 (PRODUCT LEVEL)	SEE PAGE
	1	1	**8X-5620**	2	SHIELD AS	
	2	1	**8W-1592**	1	YOKE AS	
		1	**3K-0986**	1	PLUG	
	3	1	**3K-0196**	1	GUARD-DIRT	
	4	1	**0S-1604**	4	BOLT (1/2-20X2.5 IN)	
	5	1	**5P-7213**	4	WASHER-HARD (13.5X20.5X2MM THK)	
	6	1	**6B-6684**	4	NUT-FULL (1/2-20 THD)	
	7	1	**6V-1911**	4	BOLT-LOCKING (1/2-20X2 IN)	
Y	8	1	**8X-5006**	1	UNIVERSAL JOINT GP	345
M	9	1	**8T-4179**	2	BOLT (M12X1.75X20MM)	
	10	1	**8T-4223**	6	WASHER-HARD (13.5X25.5X3MM THK)	
M	11	1	**8T-4192**	4	BOLT (M12X1.75X25MM)	

M-METRIC PART
Y-SEPARATE ILLUSTRATION

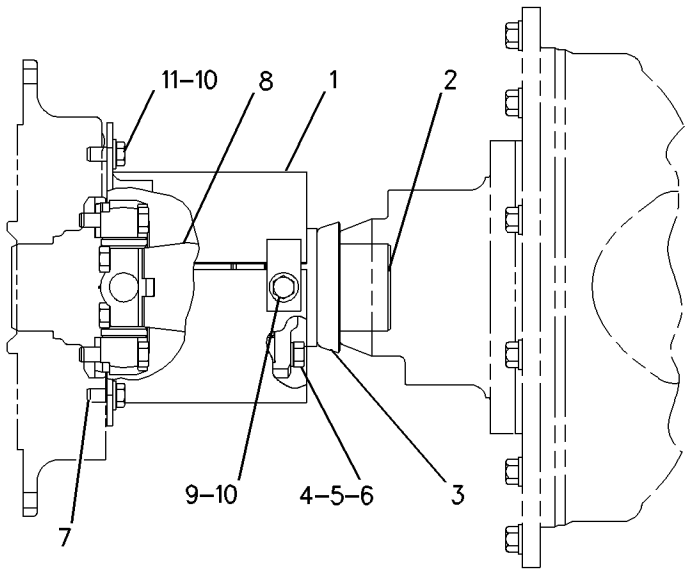

GRAPHIC #1 g00932664

176-6465 SHAFT GP-INPUT

S/N: BJN1-UP

PART OF 160-2196 TRANSMISSION AR

SMCS-3063 **i01675188**

NOTE	REF NO	GRAPHIC REF	PART NUMBER	QTY	PART NAME 1 2 3 4 5 6 (PRODUCT LEVEL)	SEE PAGE
	1	1	**176-6464**	1	SHAFT AS	
		1	**4B-4845**	1	PLUG	
	2	1	**3T-4377**	2	SEAL-RING	
	3	1	**6Y-0591**	1	GEAR (45 TEETH)	
	4	1	**6Y-0590**	1	GEAR (38 TEETH)	
	5	1	**2H-6490**	1	BEARING-INNER	
	6	1	**1M-4095**	1	BEARING-INNER	

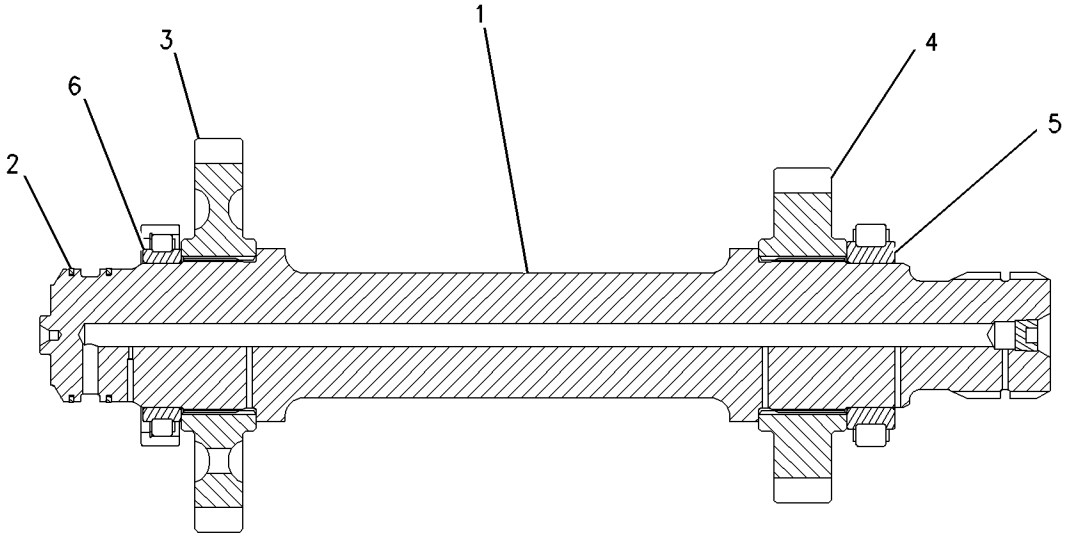

GRAPHIC #1 g00788549

POWER TRAIN

193-1721 TANDEM & COVER GP

S/N: CAF1-UP

PART OF 162-5603 GENERAL AR

SMCS-4062, 4064 **i01674654**

NOTE	REF NO	GRAPHIC REF	PART NUMBER	QTY	PART NAME 1 2 3 4 5 6 (PRODUCT LEVEL)	SEE PAGE
	1	1	**1F-8488**	2	BREATHER AS (TANDEM)	
	2	1	**2A-6938**	2	COVER	
	3	1	**2B-3147**	8	GASKET	
	4	1	**2B-3148**	8	COVER	
	5	1	**2G-9789**	4	GASKET	
	6	1	**8T-6468**	48	BOLT (1/2-13X1 IN)	
	7	1	**002-6453**	2	ELBOW-PIPE	
	8	1	**194-2877**	1	HOUSING AS-TANDEM DRIVE (RH)	
	9	1	**194-2878**	1	HOUSING AS-TANDEM DRIVE (LH)	
	10	1	**2G-9791**	2	GASKET	
	11	1	**2M-9780**	2	SEAL-O-RING	
	12	1	**3K-0360**	2	SEAL-O-RING	
	13	1	**5P-8245**	32	WASHER-HARD (13.5X25.5X3MM THK)	
	14	1	**6B-5072**	2	BUSHING-TERMINAL	
	15	1	**6E-5047**	2	PLUG	
	16	1	**8D-8807**	4	COVER	
	17	1	**9S-4190**	2	PLUG	

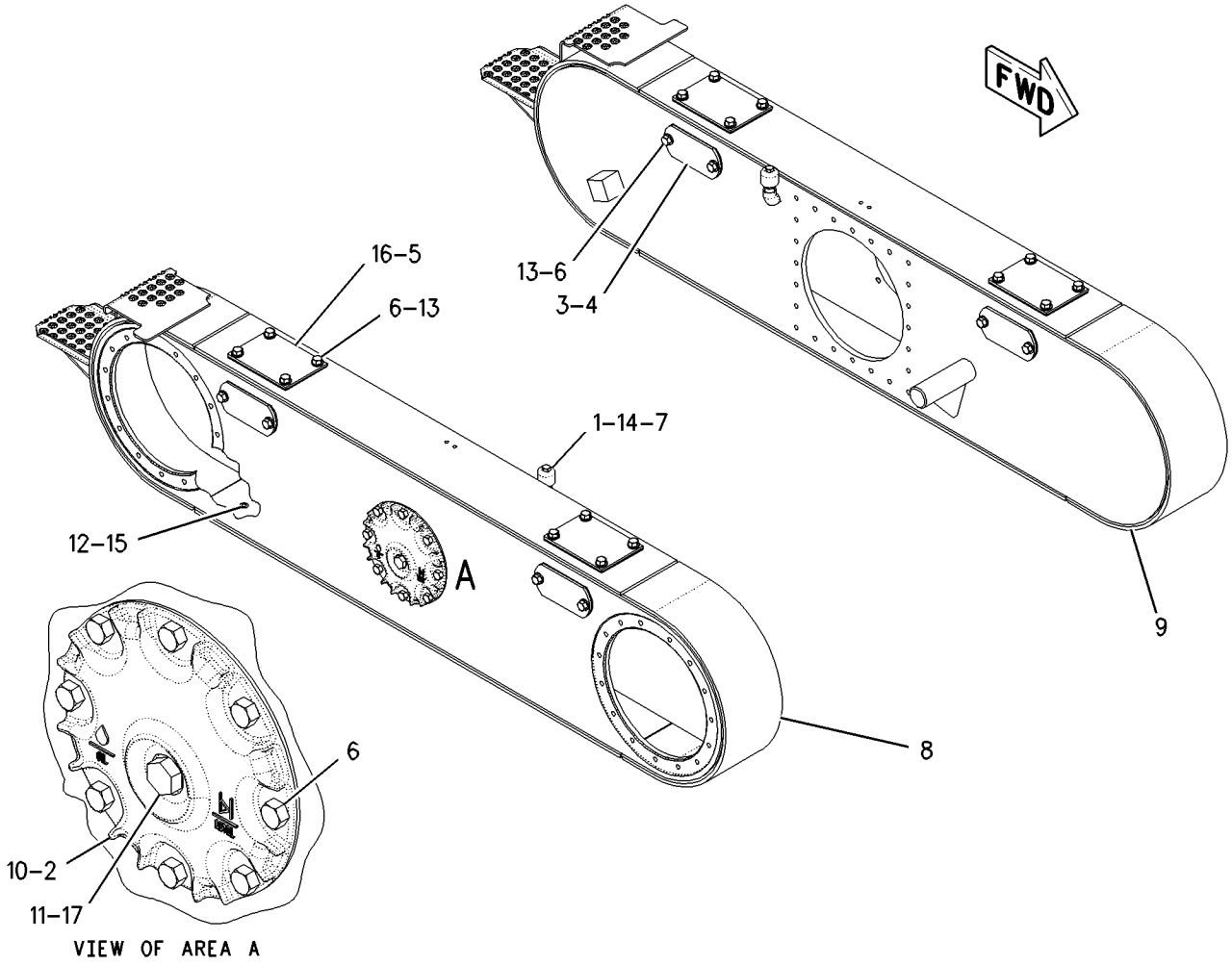

GRAPHIC #1 g00890349

160-2196 TRANSMISSION AR

S/N: BJN1-UP

PART OF 162-5603 GENERAL AR

SMCS-3030 **i01674820**

NOTE	PART NUMBER	QTY	PART NAME 1 2 3 4 5 6 (PRODUCT LEVEL)	SEE PAGE
Y	*9W-5132*	1	BRAKE GP-PARKING	460
Y	**180-9146**	1	CASE & PARTS GP-TRANSMISSION	296
Y	*6Y-2303*	1	CLUTCH GP-TRANSMISSION (1ST & 3RD)	302
Y	*8E-9316*	1	CLUTCH GP-TRANSMISSION (HI & LO)	306
Y	*159-9228*	1	CLUTCH GP-TRANSMISSION (FWD)	310
Y	*159-9229*	1	CLUTCH GP-TRANSMISSION (REV & 2ND)	312
Y	**179-6064**	1	CONTROL GP-TRANSMISSION HYD	320
Y	*6Y-8765*	1	PUMP GP-GEAR	339
Y	*9W-5134*	1	SCREEN GP-MAGNETIC (TRANSMISSION)	340
Y	**176-6465**	1	SHAFT GP-INPUT	342

Y-SEPARATE ILLUSTRATION

<END>

8X-5006 UNIVERSAL JOINT GP

S/N: CAF1-UP

PART OF 8W-5621 SHAFT GP-DRIVE

SMCS-3251, 3253 **i00135695**

NOTE	REF NO	GRAPHIC REF	PART NUMBER	QTY	PART NAME 1 2 3 4 5 6 (PRODUCT LEVEL)	SEE PAGE
	1	1	**8X-5044**	1	PLATE-COUPLING	
	2	1	**9P-0356**	2	SPIDER & BEARING AS	
	3	1	**0S-1579**	8	BOLT (1/2-20X2IN)	

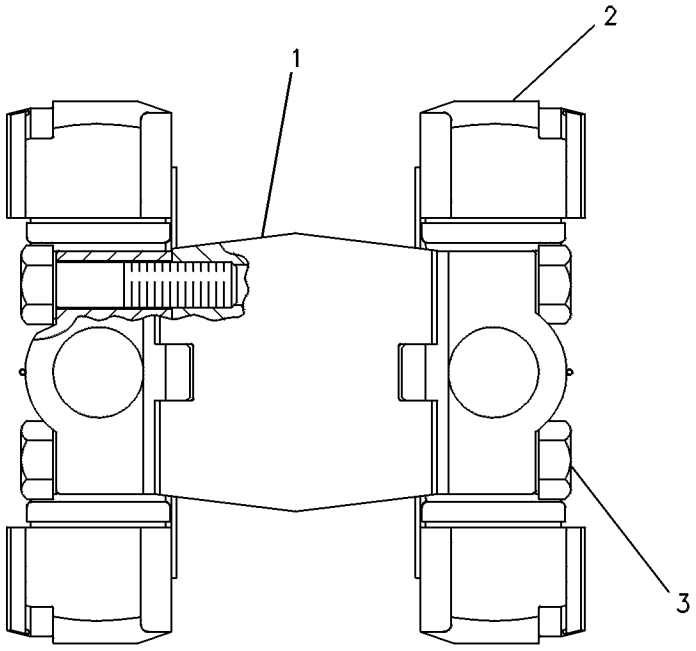

GRAPHIC #1 g00108712

174-3705 VALVE & MTG GP-DIFF LOCK

S/N: CAF1-UP

PART OF 173-5305 CONTROL GP-DIFFERENTIAL LOCK

SMCS-3272 **i01678771**

NOTE	REF NO	GRAPHIC REF	PART NUMBER	QTY	PART NAME 1 2 3 4 5 6 (PRODUCT LEVEL)	SEE PAGE
	1	1	**6G-5979**	1	KIT-CARTRIDGE SEAL (DIFFERENTIAL LOCK)	
					(INCLUDES O-RINGS)	
Y	2	1	**154-3064**	1	VALVE GP-SOLENOID (DIFFERENTIAL LOCK)	355
	3	1	**148-2516**	1	MANIFOLD	

Y-SEPARATE ILLUSTRATION

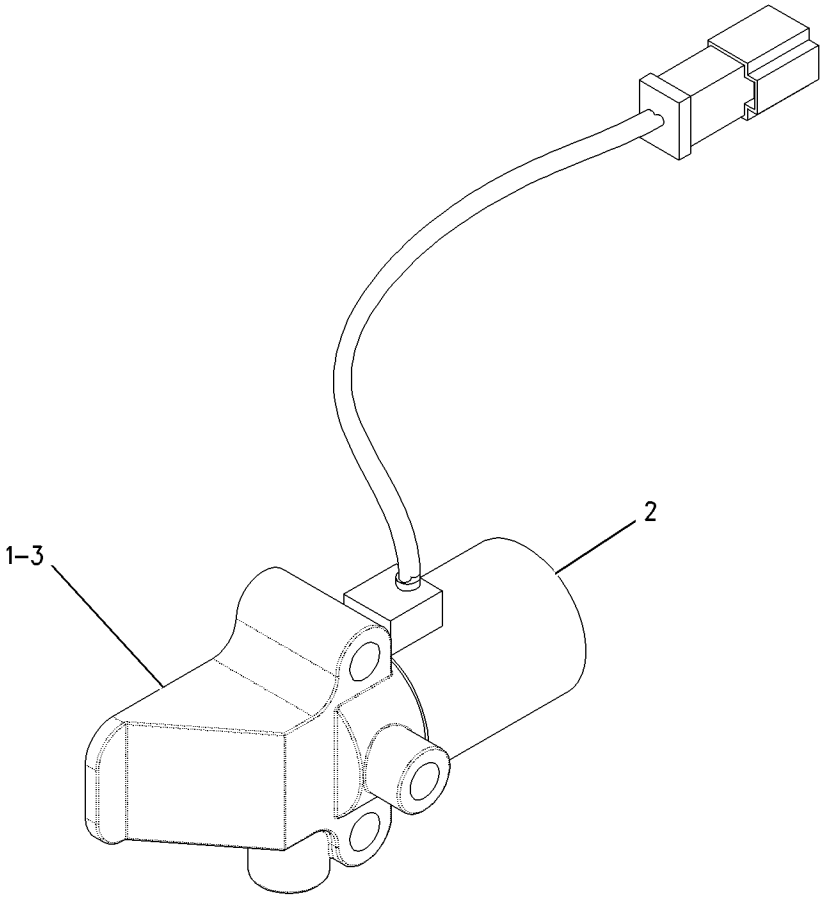

GRAPHIC #1 g00806911

MEMORANDA

184-1130 VALVE GP-SELECTOR & PRESS CONT–
DIRECTION & RANGE
S/N: BJN1-UP

PART OF 179-6063 VALVE GP-TRANSMISSION CONTROL

SMCS-3083 **i01696424**

NOTE	REF NO	GRAPHIC REF	PART NUMBER	QTY	PART NAME 1 2 3 4 5 6 (PRODUCT LEVEL)	SEE PAGE
	1	1	**154-6309**	1	BODY	
M	2	1	**149-4311**	5	BOLT-SOCKET HEAD (M6X1X16MM)	
	3	1	**7M-8485**	5	SEAL-O-RING	
	4	1	**3D-4245**	1	SEAL-O-RING	
	5	1	**5F-9144**	1	SEAL-O-RING	
	6	1	**8E-9894**	1	SPOOL	
	7	1	**9U-8068**	1	SLUG	
	8	1	**9U-9282**	1	SPRING (OUTER)	
	9	1	**9U-9316**	1	SPRING (INNER)	
	10	1	**108-6523**	1	ADJUSTER AS	
		1	**4K-2039**	1	SEAL-O-RING	
		1	**7M-8485**	1	SEAL-O-RING	
		1	**8T-4223**	1	WASHER-HARD (13.5X25.5X3MM THK)	
		1	**9U-8069**	1	PLUG	
M		1	**095-1207**	1	NUT (M12X1.75 THD)	
		1	**101-9754**	1	SCREW-ADJUSTMENT	
	11	1	**9U-8620**	1	ORIFICE	
	12	1	**9U-8067**	1	RETAINER	
	13	1	**8E-9895**	1	PISTON-LOAD	
	14	1	**9W-7412**	1	SPRING (OUTER)	
	15	1	**4J-2506**	1	SEAL-O-RING	
	16	1	**6F-4855**	1	SEAL-O-RING	
B	17	1	**5J-1036**	4	SHIM (0.80MM THK)	
	18	1	**8E-9896**	1	PISTON-SELECTOR	
	19	1	**179-1298**	3	SPACER	
	20	1	**7T-0570**	1	SPRING (INNER)	
B	21	1	**4M-1751**	2	SPACER (15.09X0.4MM THK)	
	22	1	**4J-7533**	1	SEAL-O-RING	
Y	23	1	**186-1526**	1	VALVE GP-SOLENOID (24 VOLT DC) (SELECTOR & PRESSURE RANGE)	356
	25	1	**9G-7132**	1	PLUG-ORIFICE	
	26	1	**9S-8004**	1	PLUG	
	27	1	**3J-1907**	1	SEAL-O-RING	
	28	1	**180-9327**	1	MANIFOLD	
	30	1	**3K-6116**	1	WASHER	
M	31	1	**8T-8442**	1	BOLT-SOCKET HEAD (M6X1X30MM)	
	32	1	**5P-0537**	6	WASHER-HARD (7.2X14.5X2MM THK)	
	33	1	**9X-7384**	3	SEAL-O-RING	
	34	1	**175-3893**	1	VALVE GP-SOLENOID (PROPN SOL FOR CL PACK 1)	
	34A	1	**175-3893**	1	VALVE GP-SOLENOID (PROPN SOL FOR CL PACK 2)	
	34B	1	**175-3893**	1	VALVE GP-SOLENOID (PROPN SOL FOR CL PACK 3)	
					(EACH CLUTCH PACK INCLUDES)	
		1	**145-1144**	1	COIL AS	
		1	**164-2108**	1	WASHER (13.03X25.4X2.38MM THK)	
		1	**167-9524**	1	NUT-SELF LOCKING (1/2-28 THD)	
	35	1	**183-6774**	1	PLATE-SIDE	
M	36	1	**8C-6965**	1	BOLT-SOCKET HEAD (M6X1X45MM)	
	37	1	**154-7172**	1	SPOOL	
	38	1	**6Y-4638**	5	PLUG-HEX SOCKET	
	39	1	**183-6775**	3	SPOOL AS	
					(EACH INCLUDES)	
		1	**167-0566**	1	CARTRIDGE	
	40	1	**154-7175**	3	SLUG	
	41	1	**154-7176**	3	SPRING (INNER)	
	42	1	**154-7177**	3	SPRING (OUTER)	

184-1130 **VALVE GP-SELECTOR & PRESS CONT** ***(contd.)*** **i01696424**

B-USE AS REQUIRED
M-METRIC PART
Y-SEPARATE ILLUSTRATION

184-1130 **VALVE GP-SELECTOR & PRESS CONT** *(contd.)* **i01696424**

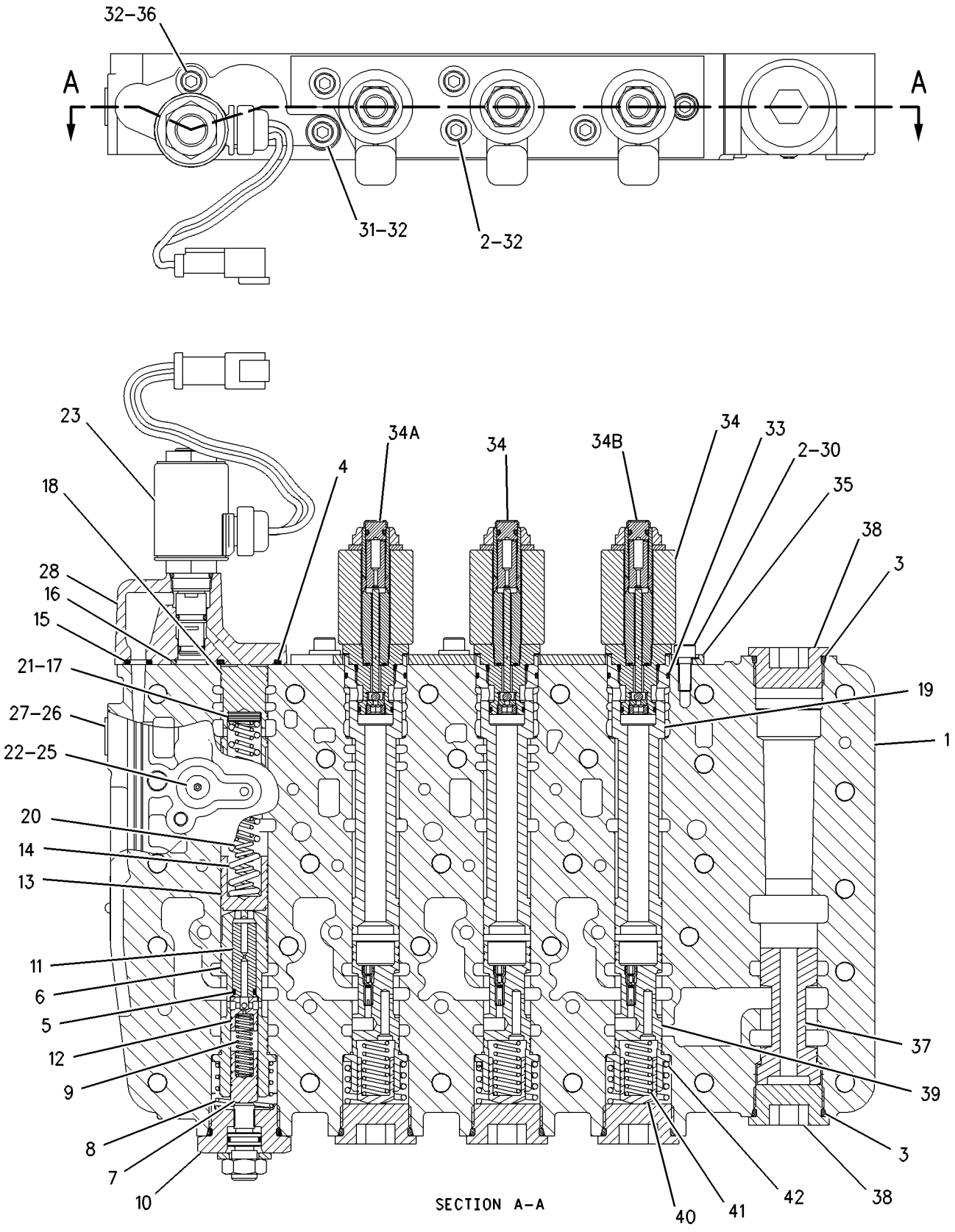

GRAPHIC #1

g00876452

MEMORANDA

184-1132 VALVE GP-SELECTOR & PRESS CONT–SPEED & RANGE

S/N: BJN1-UP

PART OF 179-6063 VALVE GP-TRANSMISSION CONTROL

SMCS-3083 **i01755276**

NOTE	REF NO	GRAPHIC REF	PART NUMBER	QTY	PART NAME 1 2 3 4 5 6 (PRODUCT LEVEL)	SEE PAGE
	1	1	**110-5158**	1	BODY	
	2	1	**8E-7714**	2	ORIFICE	
	3	1	**5F-9144**	4	SEAL-O-RING (7.65MM ID)	
	4	1	**8E-9894**	4	SPOOL	
	5	1	**9U-8068**	4	SLUG	
	6	1	**9U-9316**	4	SPRING (INNER)	
	7	1	**9U-9282**	4	SPRING (OUTER)	
	8	1	**7M-8485**	1	SEAL-O-RING	
	9	1	**9U-8067**	4	RETAINER	
	10	1	**8E-9895**	4	PISTON-LOAD	
	11	1	**4J-2506**	1	SEAL-O-RING	
	12	1	**6F-4855**	4	SEAL-O-RING	
	13	1	**8E-9896**	4	PISTON-SELECTOR	
B	14	1	**4M-1751**	3	SPACER (15.09X0.4MM THK)	
B	15	1	**5J-1036**	14	SHIM (0.80MM THK)	
	16	1	**3D-4245**	4	SEAL-O-RING	
	17	1	**9W-7410**	2	SPRING (OUTER)	
	18	1	**7T-0570**	2	SPRING (INNER)	
	19	1	**8E-1143**	1	SLUG	
	20	1	**9U-8668**	1	SPOOL AS	
		1	**3D-8317**	1	RING-RETAINING	
		1	**4B-9880**	1	BALL	
		1	**4M-2381**	1	SPRING	
		1	**8E-9893**	1	SPOOL-RELIEF	
		1	**9U-8669**	1	RETAINER	
	21	1	**9U-9595**	1	SPRING	
	22	1	**9N-4500**	1	SPRING (OUTER)	
	23	1	**9N-4498**	1	SPRING (INNER)	
	24	1	**8E-9897**	1	SPOOL	
	25	1	**9W-0898**	1	SLUG	
	26	1	**4J-7533**	4	SEAL-O-RING	
	27	1	**8E-6570**	1	MANIFOLD	
Y	28	1	**186-1526**	4	VALVE GP-SOLENOID (24 VOLT DC) (SELECTOR & PRESSURE RANGE)	356
M	31	1	**8C-6965**	4	BOLT-SOCKET HEAD (M6X1X45MM)	
	32	1	**5P-0537**	5	WASHER-HARD (7.2X14.5X2MM THK)	
M	33	1	**8T-8442**	1	BOLT-SOCKET HEAD (M6X1X30MM)	
	34	1	**9U-8620**	1	ORIFICE	
	35	1	**9G-7132**	4	PLUG-ORIFICE	
	36	1	**3J-7354**	1	SEAL-O-RING	
	37	1	**9S-8002**	1	PLUG	
	38	1	**9S-8004**	1	PLUG	
	39	1	**3J-1907**	1	SEAL-O-RING	
	40	1	**108-6523**	5	ADJUSTER AS	
					(EACH INCLUDES)	
		1	**4K-2039**	1	SEAL-O-RING	
		1	**7M-8485**	1	SEAL-O-RING	
		1	**8T-4223**	1	WASHER-HARD (13.5X25.5X3MM THK)	
		1	**9U-8069**	1	PLUG	
M		1	**095-1207**	1	NUT (M12X1.75 THD)	
		1	**101-9754**	1	SCREW-ADJUSTMENT	
	41	1	**6Y-4638**	1	PLUG-HEX SOCKET	
	42	1	**8E-7713**	1	ORIFICE	
	43	1	**9W-7412**	2	SPRING (OUTER)	
	44	1	**7G-5453**	1	SPRING (INNER)	
	45	1	**108-3129**	1	STOP	

B-USE AS REQUIRED
M-METRIC PART
Y-SEPARATE ILLUSTRATION

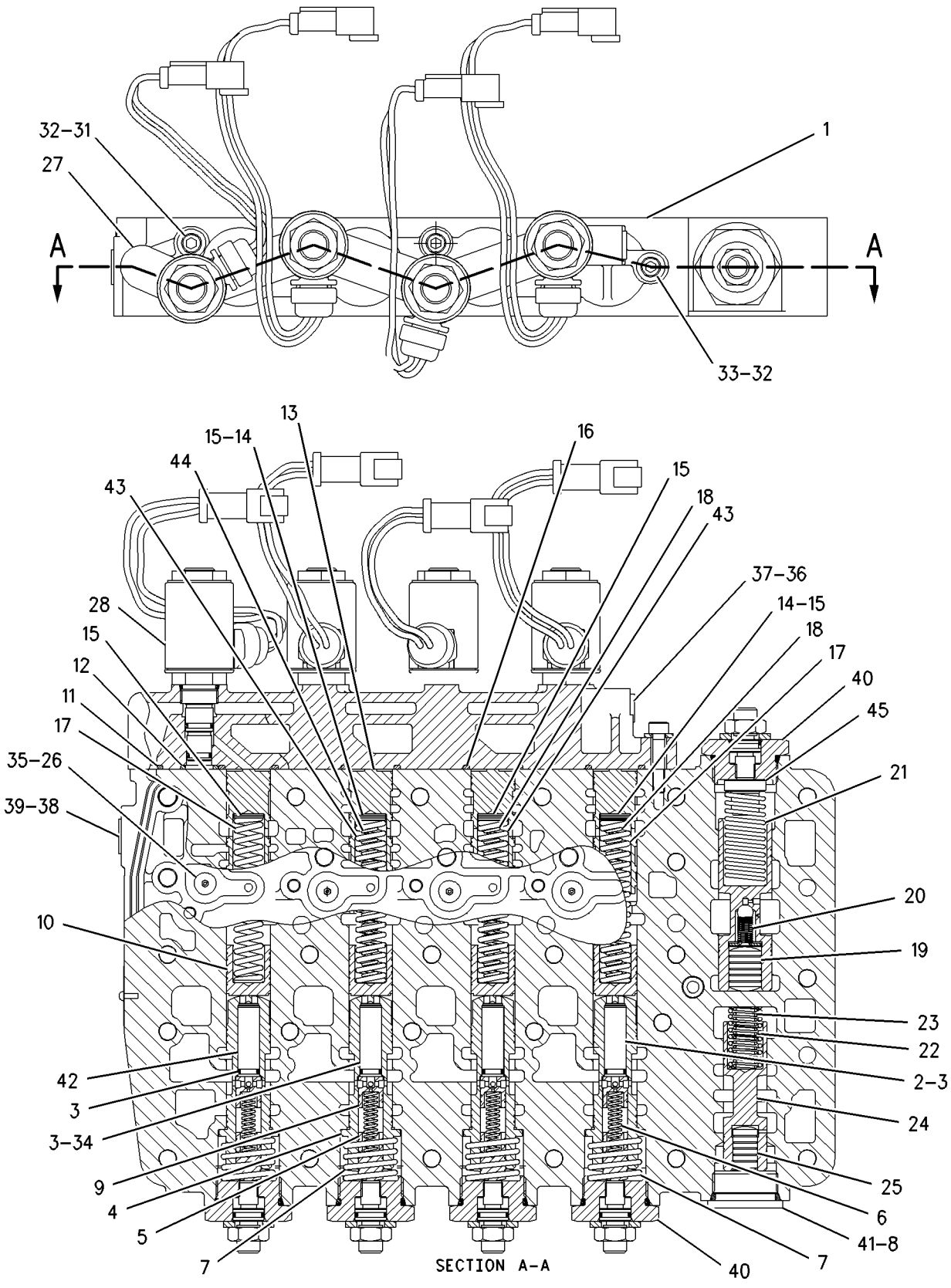

GRAPHIC #1 g00898353

154-3064 VALVE GP-SOLENOID

S/N: CAF1-UP
24V DC
PART OF 174-3705 VALVE & MTG GP-DIFF LOCK

SMCS-5479 **i01819956**

NOTE	REF NO	GRAPHIC REF	PART NUMBER	QTY	PART NAME 1 2 3 4 5 6 (PRODUCT LEVEL)	SEE PAGE
	1	1	**8C-9987**	1	WASHER (8.3X28X2.5MM THK)	
	2	1	**111-0343**	1	LOCKNUT (5/16-18 THD)	
	3	1	**142-0350**	1	CARTRIDGE AS	
		1	**8C-9987**	1	WASHER (8.3X28X2.5MM THK)	
		1	**111-0343**	1	LOCKNUT (5/16-18 THD)	
	4	1	**189-0189**	1	COIL AS	
		1	**1S-9593**	2	STRAP-CABLE	
		1	**102-8802**	1	KIT-RECEPTACLE (2 PIN)	
					(INCLUDES RECEPTACLE AS & WEDGE)	
		1	**3E-3365**	1	WEDGE-RECEPTACLE LOCK (2 PIN)	
		1	**186-3735**	2	PIN-CONNECTOR	
					AVAILABLE REPAIR KIT(S):	
			6G-5979	1	KIT-SEAL	

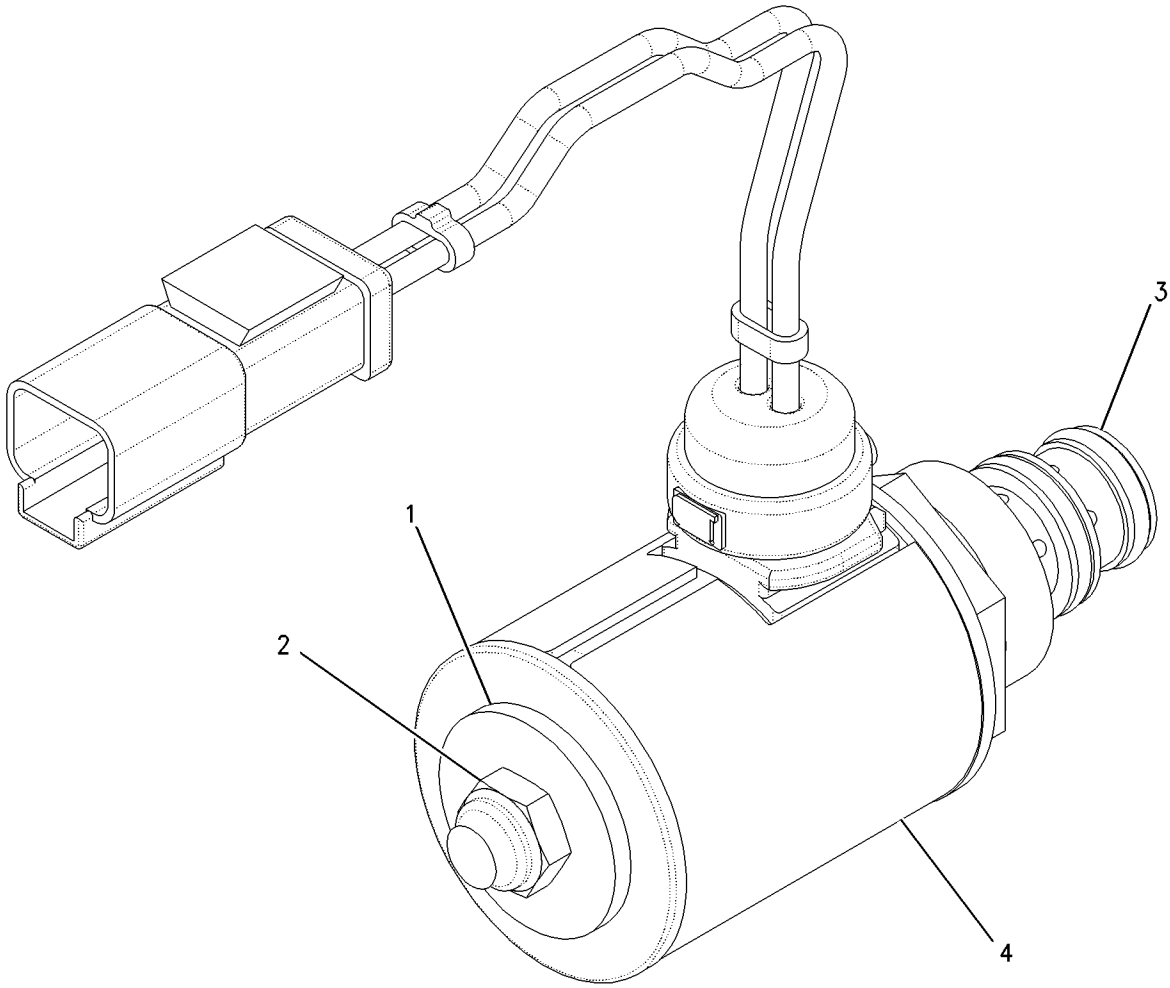

GRAPHIC #1 g00877963

186-1526 VALVE GP-SOLENOID—DIRECTION—SPEED

S/N: BJN1-UP

PART OF 184-1130, 184-1132 VALVE GP-SELECTOR & PRESS CONT

SMCS-5479 **i01696436**

NOTE	REF NO	GRAPHIC REF	PART NUMBER	QTY	PART NAME 1 2 3 4 5 6 (PRODUCT LEVEL)	SEE PAGE
	1	1	**100-4915**	1	CARTRIDGE AS	
	2	1	**104-3947**	1	LOCKNUT (5/8-11 THD)	
	3	1	**213-8760**	1	COIL AS	
	4	1	**1S-9593**	2	STRAP-CABLE	
	5	1	**102-8802**	1	KIT-RECEPTACLE (2 PIN)	
					(INCLUDES RECEPTACLE AS & WEDGE)	
	6	1	**3E-3365**	1	WEDGE-RECEPTACLE LOCK (2 PIN)	
	7	1	**186-3735**	2	PIN-CONNECTOR	
					AVAILABLE REPAIR KIT(S):	
			7T-4515		KIT-SEAL	
					(INCLUDES SEAL-O-RINGS)	

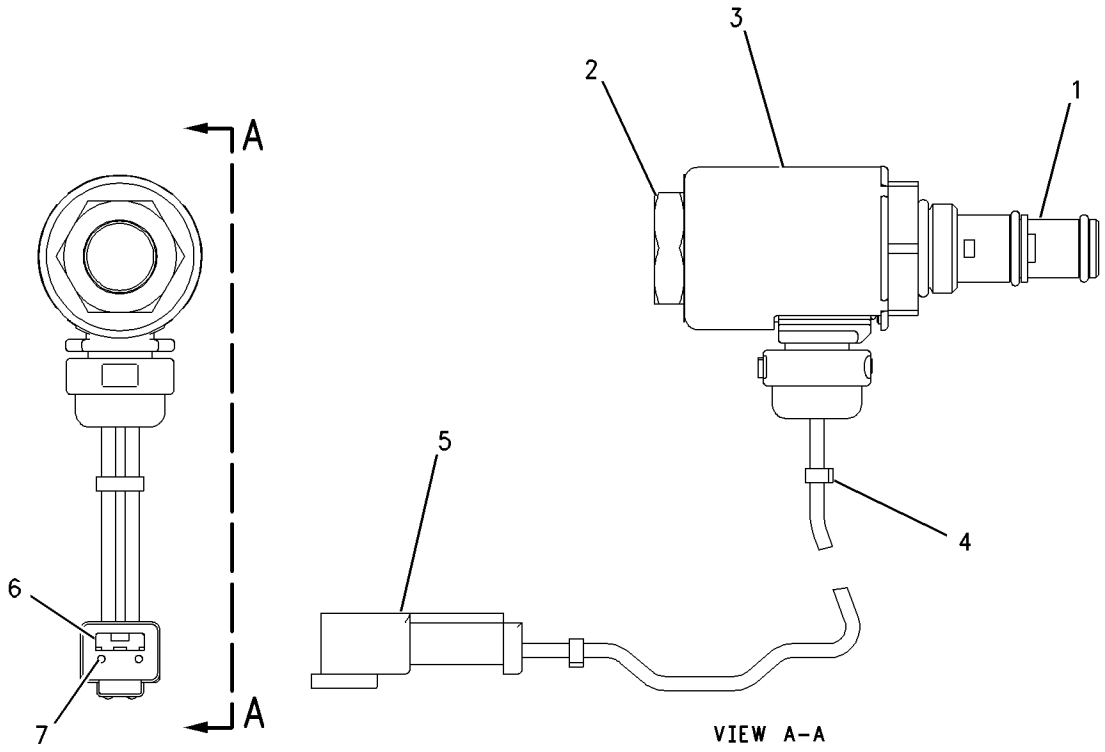

GRAPHIC #1 g00875304

MEMORANDA

179-6063 VALVE GP-TRANSMISSION CONTROL

S/N: BJN1-UP

PART OF 179-6064 CONTROL GP-TRANSMISSION HYD

SMCS-3073 **i01819310**

NOTE	REF NO	GRAPHIC REF	PART NUMBER	QTY	PART NAME 1 2 3 4 5 6 (PRODUCT LEVEL)	SEE PAGE
Y	1	1	**184-1130**	1	VALVE GP-SELECTOR & PRESS CONT (TRANSMISSION DIRECTION/RANGE)	348
	2	1	**154-6306**	1	PLATE	
Y	3	1	**184-1132**	1	VALVE GP-SELECTOR & PRESS CONT (TRANSMISSION SPEED/RANGE)	352
	4	1	**110-5161**	1	MANIFOLD	
	5	1	**154-6307**	1	PLATE	
	6	1	**8E-9474**	1	COVER	
	7	1	**6V-3965**	8	FITTING AS (QUICK DISCONNECT) (DIAGNOSTIC)	
	8	1	**3J-1907**	10	SEAL-O-RING	
	9	1	**6V-0852**	8	CAP-DUST (TRANSMISSION OIL)	
	11	1	**1T-0738**	2	WASHER (8.4X19X1.83MM THK)	
	12	1	**9P-9150**	4	WASHER (8.25X18X.84MM THK)	
M	13	1	**3E-8006**	2	BOLT-HEX HEAD (M8X1.25X130MM)	
	15	1	**9L-9068**	6	DOWEL	
	16	1	**8F-6230**	1	SEAL-O-RING	
	17	1	**4D-6695**	4	SEAL-O-RING	
	18	1	**142-1767**	1	POPPET	
	19	1	**4D-1322**	1	RING-RETAINING	
	20	1	**6Y-2584**	1	RETAINER	
	21	1	**3J-6956**	1	SPRING	
	22	1	**6I-9395**	1	SCREEN (TRANSMISSION OIL FILTER)	
M	23	1	**6V-5217**	1	BOLT (M8X1.25X20MM)	
	24	1	**9S-4191**	2	PLUG	

M-METRIC PART
Y-SEPARATE ILLUSTRATION

179-6063 VALVE GP-TRANSMISSION CONTROL *(contd.)* i01819310

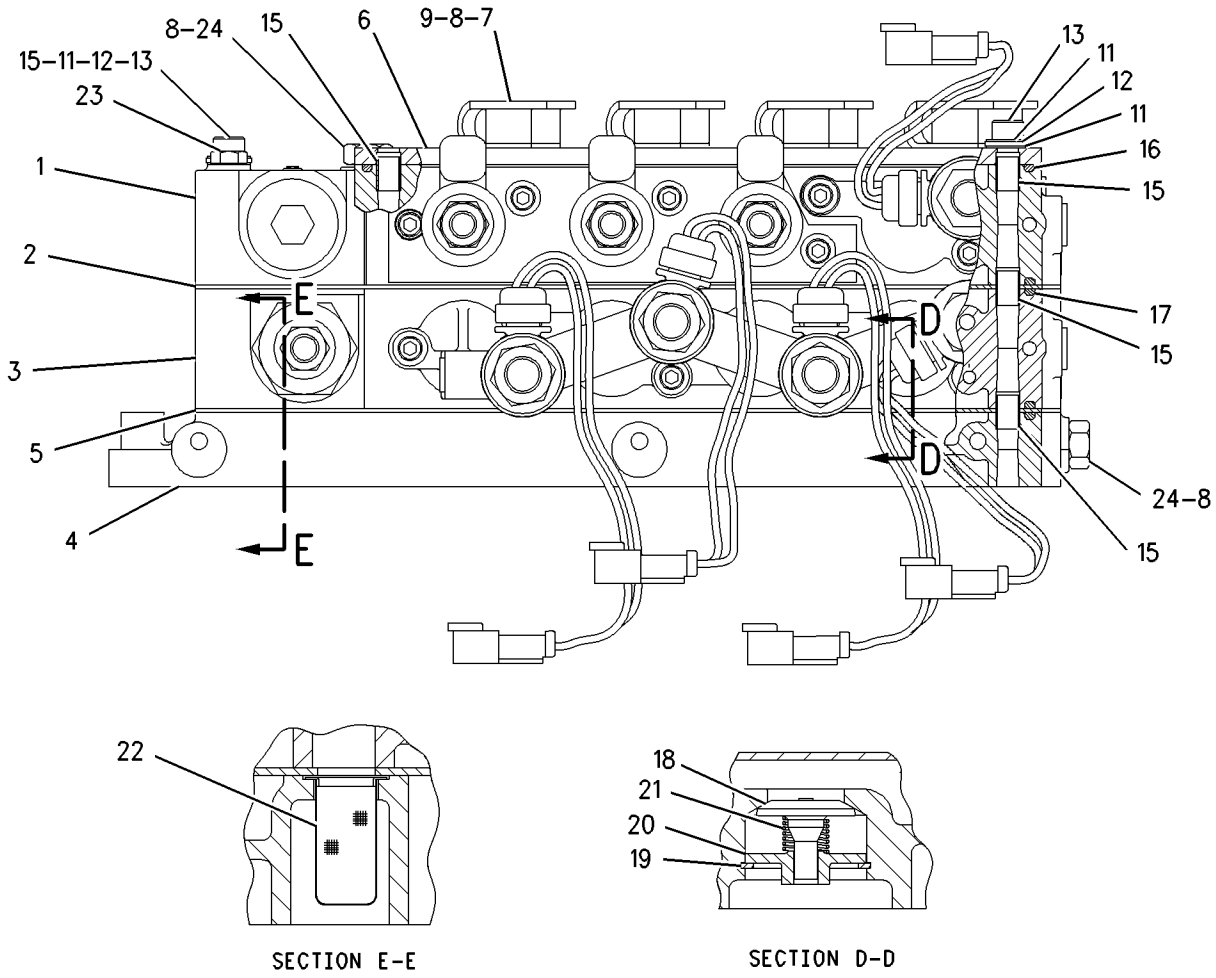

GRAPHIC #1 g00928707

142-6390 WHEEL & TIRE AR

S/N: CAF1-UP
AN ATTACHMENT

SMCS-4200 **i00753232**

NOTE	PART NUMBER	QTY	PART NAME 1 2 3 4 5 6 (PRODUCT LEVEL)	SEE PAGE
Y	*142-6285*	6	WHEEL & TIRE GP	377

Y-SEPARATE ILLUSTRATION

<END>

142-6391 WHEEL & TIRE AR

S/N: CAF1-UP
AN ATTACHMENT

SMCS-4200 **i00753236**

NOTE	PART NUMBER	QTY	PART NAME 1 2 3 4 5 6 (PRODUCT LEVEL)	SEE PAGE
Y	*142-6286*	6	WHEEL & TIRE GP	378

Y-SEPARATE ILLUSTRATION

<END>

142-6392 WHEEL & TIRE AR

S/N: CAF1-UP
AN ATTACHMENT

SMCS-4200 **i00753233**

NOTE	PART NUMBER	QTY	PART NAME 1 2 3 4 5 6 (PRODUCT LEVEL)	SEE PAGE
Y	*142-6287*	6	WHEEL & TIRE GP	378

Y-SEPARATE ILLUSTRATION

<END>

142-6393 WHEEL & TIRE AR

S/N: CAF1-UP
AN ATTACHMENT

SMCS-4200 **i00753234**

NOTE	PART NUMBER	QTY	PART NAME 1 2 3 4 5 6 (PRODUCT LEVEL)	SEE PAGE
Y	*142-6288*	6	WHEEL & TIRE GP	379

Y-SEPARATE ILLUSTRATION

<END>

142-6395 WHEEL & TIRE AR

S/N: CAF1-UP
AN ATTACHMENT

SMCS-4200 **i00753239**

NOTE	PART NUMBER	QTY	PART NAME 1 2 3 4 5 6 (PRODUCT LEVEL)	SEE PAGE
Y	*142-6290*	6	WHEEL & TIRE GP	379

Y-SEPARATE ILLUSTRATION

<END>

142-6439 WHEEL & TIRE AR

S/N: CAF1-UP
AN ATTACHMENT

SMCS-4200 **i00753241**

NOTE	PART NUMBER	QTY	PART NAME 1 2 3 4 5 6 (PRODUCT LEVEL)	SEE PAGE
Y	*142-6291*	6	WHEEL & TIRE GP	380

Y-SEPARATE ILLUSTRATION

<END>

142-6440 WHEEL & TIRE AR

S/N: CAF1-UP
AN ATTACHMENT

SMCS-4200 **i00751768**

NOTE	PART NUMBER	QTY	PART NAME 1 2 3 4 5 6 (PRODUCT LEVEL)	SEE PAGE
Y	*142-6292*	6	WHEEL & TIRE GP	380

Y-SEPARATE ILLUSTRATION

<END>

142-6441 WHEEL & TIRE AR

S/N: CAF1-UP
AN ATTACHMENT

SMCS-4200 **i00751982**

NOTE	PART NUMBER	QTY	PART NAME 1 2 3 4 5 6 (PRODUCT LEVEL)	SEE PAGE
Y	*142-6293*	6	WHEEL & TIRE GP	381

Y-SEPARATE ILLUSTRATION

<END>

142-6442 WHEEL & TIRE AR

S/N: CAF1-UP
AN ATTACHMENT

SMCS-4200 **i00751980**

NOTE	PART NUMBER	QTY	PART NAME 1 2 3 4 5 6 (PRODUCT LEVEL)	SEE PAGE
Y	*142-6294*	6	WHEEL & TIRE GP	381

Y-SEPARATE ILLUSTRATION

<END>

142-6443 WHEEL & TIRE AR

S/N: CAF1-UP
AN ATTACHMENT

SMCS-4200 **i00751979**

NOTE	PART NUMBER	QTY	PART NAME 1 2 3 4 5 6 (PRODUCT LEVEL)	SEE PAGE
Y	*142-6295*	6	WHEEL & TIRE GP	382

Y-SEPARATE ILLUSTRATION

<END>

142-6444 WHEEL & TIRE AR

S/N: CAF1-UP
AN ATTACHMENT

SMCS-4200 **i00751978**

NOTE	PART NUMBER	QTY	PART NAME 1 2 3 4 5 6 (PRODUCT LEVEL)	SEE PAGE
Y	*142-6296*	6	WHEEL & TIRE GP	382

Y-SEPARATE ILLUSTRATION

<END>

142-6445 WHEEL & TIRE AR

S/N: CAF1-UP
AN ATTACHMENT

SMCS-4200 **i00751976**

NOTE	PART NUMBER	QTY	PART NAME 1 2 3 4 5 6 (PRODUCT LEVEL)	SEE PAGE
Y	*142-6297*	6	WHEEL & TIRE GP	383

Y-SEPARATE ILLUSTRATION

<END>

142-6446 WHEEL & TIRE AR

S/N: CAF1-UP
AN ATTACHMENT

SMCS-4200 **i00751969**

NOTE	PART NUMBER	QTY	PART NAME 1 2 3 4 5 6 (PRODUCT LEVEL)	SEE PAGE
Y	*142-6298*	6	WHEEL & TIRE GP	383

Y-SEPARATE ILLUSTRATION

<END>

142-6448 WHEEL & TIRE AR

S/N: CAF1-UP
AN ATTACHMENT

SMCS-4200 **i00758986**

NOTE	PART NUMBER	QTY	PART NAME 1 2 3 4 5 6 (PRODUCT LEVEL)	SEE PAGE
Y	*142-6300*	6	WHEEL & TIRE GP	384

Y-SEPARATE ILLUSTRATION

<END>

142-6449 WHEEL & TIRE AR

S/N: CAF1-UP
AN ATTACHMENT

SMCS-4200 **i00759108**

NOTE	PART NUMBER	QTY	PART NAME 1 2 3 4 5 6 (PRODUCT LEVEL)	SEE PAGE
Y	*142-6301*	6	WHEEL & TIRE GP	384

Y-SEPARATE ILLUSTRATION

<END>

142-6454 WHEEL & TIRE AR

S/N: CAF1-UP
AN ATTACHMENT

SMCS-4200 **i00758826**

NOTE	PART NUMBER	QTY	PART NAME 1 2 3 4 5 6 (PRODUCT LEVEL)	SEE PAGE
Y	*142-6306*	6	WHEEL & TIRE GP	385

Y-SEPARATE ILLUSTRATION

<END>

142-6455 WHEEL & TIRE AR

S/N: CAF1-UP
AN ATTACHMENT

SMCS-4200 **i00758972**

NOTE	PART NUMBER	QTY	PART NAME 1 2 3 4 5 6 (PRODUCT LEVEL)	SEE PAGE
Y	*142-6307*	6	WHEEL & TIRE GP	385

Y-SEPARATE ILLUSTRATION

<END>

142-6457 WHEEL & TIRE AR

S/N: CAF1-UP
AN ATTACHMENT

SMCS-4200 **i00758987**

NOTE	PART NUMBER	QTY	PART NAME 1 2 3 4 5 6 (PRODUCT LEVEL)	SEE PAGE
Y	*142-6309*	6	WHEEL & TIRE GP	386

Y-SEPARATE ILLUSTRATION

<END>

142-6458 WHEEL & TIRE AR

S/N: CAF1-UP
AN ATTACHMENT

SMCS-4200 **i00759110**

NOTE	PART NUMBER	QTY	PART NAME 1 2 3 4 5 6 (PRODUCT LEVEL)	SEE PAGE
Y	*142-6310*	6	WHEEL & TIRE GP	386

Y-SEPARATE ILLUSTRATION

<END>

142-6460 WHEEL & TIRE AR

S/N: CAF1-UP
AN ATTACHMENT

SMCS-4200 **i00758825**

NOTE	PART NUMBER	QTY	PART NAME 1 2 3 4 5 6 (PRODUCT LEVEL)	SEE PAGE
Y	*142-6312*	6	WHEEL & TIRE GP	387

Y-SEPARATE ILLUSTRATION

<END>

142-6461 WHEEL & TIRE AR

S/N: CAF1-UP
AN ATTACHMENT

SMCS-4200 **i00758822**

NOTE	PART NUMBER	QTY	PART NAME 1 2 3 4 5 6 (PRODUCT LEVEL)	SEE PAGE
Y	*142-6313*	6	WHEEL & TIRE GP	387

Y-SEPARATE ILLUSTRATION

<END>

142-6463 WHEEL & TIRE AR

S/N: CAF1-UP
AN ATTACHMENT

SMCS-4200 **i00758971**

NOTE	PART NUMBER	QTY	PART NAME 1 2 3 4 5 6 (PRODUCT LEVEL)	SEE PAGE
Y	*142-6315*	6	WHEEL & TIRE GP	388

Y-SEPARATE ILLUSTRATION

<END>

142-6464 WHEEL & TIRE AR

S/N: CAF1-UP
AN ATTACHMENT

SMCS-4200 **i00758982**

NOTE	PART NUMBER	QTY	PART NAME 1 2 3 4 5 6 (PRODUCT LEVEL)	SEE PAGE
Y	*142-6316*	6	WHEEL & TIRE GP	388

Y-SEPARATE ILLUSTRATION

<END>

142-6466 WHEEL & TIRE AR

S/N: CAF1-UP
AN ATTACHMENT

SMCS-4200 **i00766611**

NOTE	PART NUMBER	QTY	PART NAME 1 2 3 4 5 6 (PRODUCT LEVEL)	SEE PAGE
Y	*142-6318*	6	WHEEL & TIRE GP	389

Y-SEPARATE ILLUSTRATION

<END>

142-6467 WHEEL & TIRE AR

S/N: CAF1-UP
AN ATTACHMENT

SMCS-4200 **i00766609**

NOTE	PART NUMBER	QTY	PART NAME 1 2 3 4 5 6 (PRODUCT LEVEL)	SEE PAGE
Y	*142-6319*	6	WHEEL & TIRE GP	389

Y-SEPARATE ILLUSTRATION

<END>

142-6469 WHEEL & TIRE AR

S/N: CAF1-UP
AN ATTACHMENT

SMCS-4200 **i00766607**

NOTE	PART NUMBER	QTY	PART NAME 1 2 3 4 5 6 (PRODUCT LEVEL)	SEE PAGE
Y	*142-6321*	6	WHEEL & TIRE GP	390

Y-SEPARATE ILLUSTRATION

<END>

142-6470 WHEEL & TIRE AR

S/N: CAF1-UP
AN ATTACHMENT

SMCS-4200 **i00766617**

NOTE	PART NUMBER	QTY	PART NAME 1 2 3 4 5 6 (PRODUCT LEVEL)	SEE PAGE
Y	*142-6322*	6	WHEEL & TIRE GP	390

Y-SEPARATE ILLUSTRATION

<END>

142-6472 WHEEL & TIRE AR

S/N: CAF1-UP
AN ATTACHMENT

SMCS-4200 **i00766614**

NOTE	PART NUMBER	QTY	PART NAME 1 2 3 4 5 6 (PRODUCT LEVEL)	SEE PAGE
Y	*142-6324*	6	WHEEL & TIRE GP	391

Y-SEPARATE ILLUSTRATION

<END>

142-6474 WHEEL & TIRE AR

S/N: CAF1-UP
AN ATTACHMENT

SMCS-4200 **i00766612**

NOTE	PART NUMBER	QTY	PART NAME 1 2 3 4 5 6 (PRODUCT LEVEL)	SEE PAGE
Y	*142-6325*	6	WHEEL & TIRE GP	391

Y-SEPARATE ILLUSTRATION

<END>

142-6477 WHEEL & TIRE AR

S/N: CAF1-UP
AN ATTACHMENT

SMCS-4200 **i00766608**

NOTE	PART NUMBER	QTY	PART NAME 1 2 3 4 5 6 (PRODUCT LEVEL)	SEE PAGE
Y	*142-6328*	6	WHEEL & TIRE GP	392

Y-SEPARATE ILLUSTRATION

<END>

142-6479 WHEEL & TIRE AR

S/N: CAF1-UP
AN ATTACHMENT

SMCS-4200 **i00766605**

NOTE	PART NUMBER	QTY	PART NAME 1 2 3 4 5 6 (PRODUCT LEVEL)	SEE PAGE
Y	*142-6330*	6	WHEEL & TIRE GP	392

Y-SEPARATE ILLUSTRATION

<END>

151-0286 WHEEL & TIRE AR

S/N: CAF1-UP
AN ATTACHMENT

SMCS-4200 **i00759198**

NOTE	PART NUMBER	QTY	PART NAME 1 2 3 4 5 6 (PRODUCT LEVEL)	SEE PAGE
Y	*142-6283*	6	WHEEL & TIRE GP	376

Y-SEPARATE ILLUSTRATION

<END>

151-0287 WHEEL & TIRE AR

S/N: CAF1-UP
AN ATTACHMENT

SMCS-4200 **i00759199**

NOTE	PART NUMBER	QTY	PART NAME 1 2 3 4 5 6 (PRODUCT LEVEL)	SEE PAGE
Y	*142-6284*	6	WHEEL & TIRE GP	377

Y-SEPARATE ILLUSTRATION

<END>

151-0329 WHEEL & TIRE AR

S/N: CAF1-UP
AN ATTACHMENT

SMCS-4200 **i00759189**

NOTE	PART NUMBER	QTY	PART NAME 1 2 3 4 5 6 (PRODUCT LEVEL)	SEE PAGE
Y	*142-6335*	6	WHEEL & TIRE GP	393

Y-SEPARATE ILLUSTRATION

<END>

151-0330 WHEEL & TIRE AR

S/N: CAF1-UP
AN ATTACHMENT

SMCS-4200 **i00759120**

NOTE	PART NUMBER	QTY	PART NAME 1 2 3 4 5 6 (PRODUCT LEVEL)	SEE PAGE
Y	*142-6338*	6	WHEEL & TIRE GP	395

Y-SEPARATE ILLUSTRATION

<END>

151-0331 WHEEL & TIRE AR

S/N: CAF1-UP
AN ATTACHMENT

SMCS-4200 **i00759122**

NOTE	PART NUMBER	QTY	PART NAME 1 2 3 4 5 6 (PRODUCT LEVEL)	SEE PAGE
Y	*142-6341*	6	WHEEL & TIRE GP	396

Y-SEPARATE ILLUSTRATION

<END>

151-0347 WHEEL & TIRE AR

S/N: CAF1-UP
AN ATTACHMENT

SMCS-4200 **i00759191**

NOTE	PART NUMBER	QTY	PART NAME 1 2 3 4 5 6 (PRODUCT LEVEL)	SEE PAGE
Y	*142-6336*	6	WHEEL & TIRE GP	394
Y-SEPARATE ILLUSTRATION				

<END>

151-0348 WHEEL & TIRE AR

S/N: CAF1-UP
AN ATTACHMENT

SMCS-4200 **i00759196**

NOTE	PART NUMBER	QTY	PART NAME 1 2 3 4 5 6 (PRODUCT LEVEL)	SEE PAGE
Y	*142-6339*	6	WHEEL & TIRE GP	395
Y-SEPARATE ILLUSTRATION				

<END>

151-0355 WHEEL & TIRE AR

S/N: CAF1-UP
AN ATTACHMENT

SMCS-4200 **i00759125**

NOTE	PART NUMBER	QTY	PART NAME 1 2 3 4 5 6 (PRODUCT LEVEL)	SEE PAGE
Y	*142-6337*	6	WHEEL & TIRE GP	394
Y-SEPARATE ILLUSTRATION				

<END>

151-0362 WHEEL & TIRE AR

S/N: CAF1-UP
AN ATTACHMENT

SMCS-4200 **i00775616**

NOTE	PART NUMBER	QTY	PART NAME 1 2 3 4 5 6 (PRODUCT LEVEL)	SEE PAGE
Y	*142-6332*	6	WHEEL & TIRE GP	393
Y-SEPARATE ILLUSTRATION				

<END>

151-0364 WHEEL & TIRE AR

S/N: CAF1-UP
AN ATTACHMENT

SMCS-4200 **i00759127**

NOTE	PART NUMBER	QTY	PART NAME 1 2 3 4 5 6 (PRODUCT LEVEL)	SEE PAGE
Y	*142-6353*	6	WHEEL & TIRE GP	396

Y-SEPARATE ILLUSTRATION

<END>

151-0365 WHEEL & TIRE AR

S/N: CAF1-UP
AN ATTACHMENT

SMCS-4200 **i00759194**

NOTE	PART NUMBER	QTY	PART NAME 1 2 3 4 5 6 (PRODUCT LEVEL)	SEE PAGE
Y	*142-6360*	6	WHEEL & TIRE GP	399

Y-SEPARATE ILLUSTRATION

<END>

151-0366 WHEEL & TIRE AR

S/N: CAF1-UP
AN ATTACHMENT

SMCS-4200 **i00759349**

NOTE	PART NUMBER	QTY	PART NAME 1 2 3 4 5 6 (PRODUCT LEVEL)	SEE PAGE
Y	*142-6363*	6	WHEEL & TIRE GP	400

Y-SEPARATE ILLUSTRATION

<END>

151-0367 WHEEL & TIRE AR

S/N: CAF1-UP
AN ATTACHMENT

SMCS-4200 **i00759353**

NOTE	PART NUMBER	QTY	PART NAME 1 2 3 4 5 6 (PRODUCT LEVEL)	SEE PAGE
Y	*142-6366*	6	WHEEL & TIRE GP	401

Y-SEPARATE ILLUSTRATION

<END>

151-0368 WHEEL & TIRE AR

S/N: CAF1-UP
AN ATTACHMENT

SMCS-4200 **i00759354**

NOTE	PART NUMBER	QTY	PART NAME 1 2 3 4 5 6 (PRODUCT LEVEL)	SEE PAGE
Y	*142-6371*	6	WHEEL & TIRE GP	402

Y-SEPARATE ILLUSTRATION

<END>

151-0371 WHEEL & TIRE AR

S/N: CAF1-UP
AN ATTACHMENT

SMCS-4200 **i00759269**

NOTE	PART NUMBER	QTY	PART NAME 1 2 3 4 5 6 (PRODUCT LEVEL)	SEE PAGE
Y	*142-6354*	6	WHEEL & TIRE GP	397

Y-SEPARATE ILLUSTRATION

<END>

151-0372 WHEEL & TIRE AR

S/N: CAF1-UP
AN ATTACHMENT

SMCS-4200 **i00759272**

NOTE	PART NUMBER	QTY	PART NAME 1 2 3 4 5 6 (PRODUCT LEVEL)	SEE PAGE
Y	*142-6372*	6	WHEEL & TIRE GP	402

Y-SEPARATE ILLUSTRATION

<END>

151-0374 WHEEL & TIRE AR

S/N: CAF1-UP
AN ATTACHMENT

SMCS-4200 **i00759278**

NOTE	PART NUMBER	QTY	PART NAME 1 2 3 4 5 6 (PRODUCT LEVEL)	SEE PAGE
Y	*142-6355*	6	WHEEL & TIRE GP	397

Y-SEPARATE ILLUSTRATION

<END>

151-0375 WHEEL & TIRE AR

S/N: CAF1-UP
AN ATTACHMENT

SMCS-4200 **i00759351**

NOTE	PART NUMBER	QTY	PART NAME 1 2 3 4 5 6 (PRODUCT LEVEL)	SEE PAGE
Y	*142-6373*	6	WHEEL & TIRE GP	403

Y-SEPARATE ILLUSTRATION

<END>

151-0378 WHEEL & TIRE AR

S/N: CAF1-UP
AN ATTACHMENT

SMCS-4200 **i00759357**

NOTE	PART NUMBER	QTY	PART NAME 1 2 3 4 5 6 (PRODUCT LEVEL)	SEE PAGE
Y	*142-6356*	6	WHEEL & TIRE GP	398

Y-SEPARATE ILLUSTRATION

<END>

151-0380 WHEEL & TIRE AR

S/N: CAF1-UP
AN ATTACHMENT

SMCS-4200 **i00759275**

NOTE	PART NUMBER	QTY	PART NAME 1 2 3 4 5 6 (PRODUCT LEVEL)	SEE PAGE
Y	*142-6364*	6	WHEEL & TIRE GP	400

Y-SEPARATE ILLUSTRATION

<END>

151-0381 WHEEL & TIRE AR

S/N: CAF1-UP
AN ATTACHMENT

SMCS-4200 **i00760333**

NOTE	PART NUMBER	QTY	PART NAME 1 2 3 4 5 6 (PRODUCT LEVEL)	SEE PAGE
Y	*142-6367*	6	WHEEL & TIRE GP	401

Y-SEPARATE ILLUSTRATION

<END>

151-0382 WHEEL & TIRE AR

S/N: CAF1-UP
AN ATTACHMENT

SMCS-4200 **i00760334**

NOTE	PART NUMBER	QTY	PART NAME 1 2 3 4 5 6 (PRODUCT LEVEL)	SEE PAGE
Y	*142-6374*	6	WHEEL & TIRE GP	403

Y-SEPARATE ILLUSTRATION

<END>

151-0385 WHEEL & TIRE AR

S/N: CAF1-UP
AN ATTACHMENT

SMCS-4200 **i00775615**

NOTE	PART NUMBER	QTY	PART NAME 1 2 3 4 5 6 (PRODUCT LEVEL)	SEE PAGE
Y	*142-6385*	6	WHEEL & TIRE GP	405

Y-SEPARATE ILLUSTRATION

<END>

151-0388 WHEEL & TIRE AR

S/N: CAF1-UP
AN ATTACHMENT

SMCS-4200 **i00760579**

NOTE	PART NUMBER	QTY	PART NAME 1 2 3 4 5 6 (PRODUCT LEVEL)	SEE PAGE
Y	*142-6357*	6	WHEEL & TIRE GP	398

Y-SEPARATE ILLUSTRATION

<END>

151-0389 WHEEL & TIRE AR

S/N: CAF1-UP
AN ATTACHMENT

SMCS-4200 **i00760599**

NOTE	PART NUMBER	QTY	PART NAME 1 2 3 4 5 6 (PRODUCT LEVEL)	SEE PAGE
Y	*142-6375*	6	WHEEL & TIRE GP	404

Y-SEPARATE ILLUSTRATION

<END>

151-0392 WHEEL & TIRE AR

S/N: CAF1-UP
AN ATTACHMENT

SMCS-4200 **i00760499**

NOTE	PART NUMBER	QTY	PART NAME 1 2 3 4 5 6 (PRODUCT LEVEL)	SEE PAGE
Y	*142-6358*	6	WHEEL & TIRE GP	399

Y-SEPARATE ILLUSTRATION

<END>

151-0393 WHEEL & TIRE AR

S/N: CAF1-UP
AN ATTACHMENT

SMCS-4200 **i00760539**

NOTE	PART NUMBER	QTY	PART NAME 1 2 3 4 5 6 (PRODUCT LEVEL)	SEE PAGE
Y	*142-6376*	6	WHEEL & TIRE GP	404

Y-SEPARATE ILLUSTRATION

<END>

153-5460 WHEEL & TIRE AR

S/N: CAF1-UP
AN ATTACHMENT

SMCS-4200 **i00767526**

NOTE	PART NUMBER	QTY	PART NAME 1 2 3 4 5 6 (PRODUCT LEVEL)	SEE PAGE
Y	*153-5459*	6	WHEEL & TIRE GP	406

Y-SEPARATE ILLUSTRATION

<END>

153-5464 WHEEL & TIRE AR

S/N: CAF1-UP
AN ATTACHMENT

SMCS-4200 **i00767583**

NOTE	PART NUMBER	QTY	PART NAME 1 2 3 4 5 6 (PRODUCT LEVEL)	SEE PAGE
Y	*153-5463*	6	WHEEL & TIRE GP	406

Y-SEPARATE ILLUSTRATION

<END>

153-5468 WHEEL & TIRE AR

S/N: CAF1-UP
AN ATTACHMENT

SMCS-4200 **i00767538**

NOTE	PART NUMBER	QTY	PART NAME 1 2 3 4 5 6 (PRODUCT LEVEL)	SEE PAGE
Y	*153-5467*	6	WHEEL & TIRE GP	407

Y-SEPARATE ILLUSTRATION

<END>

159-1782 WHEEL & TIRE AR

S/N: CAF1-UP
AN ATTACHMENT

SMCS-4200 **i01035793**

NOTE	PART NUMBER	QTY	PART NAME 1 2 3 4 5 6 (PRODUCT LEVEL)	SEE PAGE
Y	*159-1785*	6	WHEEL & TIRE GP	407

Y-SEPARATE ILLUSTRATION

<END>

174-2304 WHEEL & TIRE AR

S/N: CAF1-UP
AN ATTACHMENT

SMCS-4200 **i01680354**

NOTE	PART NUMBER	QTY	PART NAME 1 2 3 4 5 6 (PRODUCT LEVEL)	SEE PAGE
Y	*173-7813*	6	WHEEL & TIRE GP	408

Y-SEPARATE ILLUSTRATION

<END>

184-2362 WHEEL & TIRE AR

S/N: CAF1-UP
AN ATTACHMENT

SMCS-4200 **i01459486**

NOTE	PART NUMBER	QTY	PART NAME 1 2 3 4 5 6 (PRODUCT LEVEL)	SEE PAGE
Y	*184-2346*	6	WHEEL & TIRE GP	408

Y-SEPARATE ILLUSTRATION

<END>

184-2363 WHEEL & TIRE AR

S/N: CAF1-UP
AN ATTACHMENT

SMCS-4200 **i01459493**

NOTE	PART NUMBER	QTY	PART NAME 1 2 3 4 5 6 (PRODUCT LEVEL)	SEE PAGE
Y	*184-2347*	6	WHEEL & TIRE GP	409

Y-SEPARATE ILLUSTRATION

<END>

204-8786 WHEEL & TIRE AR

S/N: CAF1-UP
(14 X 25)
AN ATTACHMENT

SMCS-4200 **i01562289**

NOTE	PART NUMBER	QTY	PART NAME 1 2 3 4 5 6 (PRODUCT LEVEL)	SEE PAGE
Y	*204-8785*	6	WHEEL & TIRE GP	409

Y-SEPARATE ILLUSTRATION

<END>

142-6283 WHEEL & TIRE GP

S/N: CAF1-UP
(9 X 24)
PART OF 151-0286 WHEEL & TIRE AR
AN ATTACHMENT

SMCS-4200 **i01757686**

NOTE	PART NUMBER	QTY	PART NAME 1 2 3 4 5 6 (PRODUCT LEVEL)	SEE PAGE
	123-3420	1	RIM AS	
	142-6165	1	TIRE (13.00-24 10PR G-2)	
	2D-2511	1	VALVE GP-TIRE	
	9K-7951	1	CAP-VALVE (STEM)	
	6F-3930	1	CORE-VALVE	
	7D-5252	1	SPUD AS	
	2D-2508	1	GROMMET	
	2D-2509	1	LOCKNUT	
	2D-2507	1	SPUD	

<END>

142-6284 WHEEL & TIRE GP

S/N: CAF1-UP
PART OF 151-0287 WHEEL & TIRE AR
AN ATTACHMENT

SMCS-4200 **i01456689**

NOTE	PART NUMBER	QTY	PART NAME 1 2 3 4 5 6 (PRODUCT LEVEL)	SEE PAGE
	2D-2565	1	SEAL-O-RING	
	142-6165	1	TIRE (13.00-24 10PR G-2)	
	110-4213	1	VALVE GP-TIRE	
	7D-5252	1	SPUD AS	
	2D-2508	1	GROMMET	
	2D-2509	1	LOCKNUT	
	110-4214	1	STEM AS	
	9K-7951	1	CAP-VALVE (STEM)	
	6F-3930	1	CORE-VALVE	
Y	*142-6226*	1	WHEEL GP	411

Y-SEPARATE ILLUSTRATION

<END>

142-6285 WHEEL & TIRE GP

S/N: CAF1-UP
(9 X 24)
PART OF 142-6390 WHEEL & TIRE AR
AN ATTACHMENT

SMCS-4200 **i01757694**

NOTE	PART NUMBER	QTY	PART NAME 1 2 3 4 5 6 (PRODUCT LEVEL)	SEE PAGE
	123-3420	1	RIM AS	
	142-6166	1	TIRE (13.00-24 10PR G2/L2)	
	2D-2511	1	VALVE GP-TIRE	
	9K-7951	1	CAP-VALVE (STEM)	
	6F-3930	1	CORE-VALVE	
	7D-5252	1	SPUD AS	
	2D-2508	1	GROMMET	
	2D-2509	1	LOCKNUT	
	2D-2507	1	SPUD	

<END>

142-6286 WHEEL & TIRE GP

S/N: CAF1-UP
PART OF 142-6391 WHEEL & TIRE AR
AN ATTACHMENT

SMCS-4200 **i01456692**

NOTE	PART NUMBER	QTY	PART NAME 1 2 3 4 5 6 (PRODUCT LEVEL)	SEE PAGE
	2D-2565	1	SEAL-O-RING	
	142-6166	1	TIRE (13.00-24 10PR G2/L2)	
	110-4213	1	VALVE GP-TIRE	
	7D-5252	1	SPUD AS	
	2D-2508	1	GROMMET	
	2D-2509	1	LOCKNUT	
	110-4214	1	STEM AS	
	9K-7951	1	CAP-VALVE (STEM)	
	6F-3930	1	CORE-VALVE	
Y	*142-6226*	1	WHEEL GP	411
Y-SEPARATE ILLUSTRATION				

<END>

142-6287 WHEEL & TIRE GP

S/N: CAF1-UP
(9 X 24)
PART OF 142-6392 WHEEL & TIRE AR
AN ATTACHMENT

SMCS-4200 **i01457452**

NOTE	PART NUMBER	QTY	PART NAME 1 2 3 4 5 6 (PRODUCT LEVEL)	SEE PAGE
	123-3420	1	RIM AS	
	142-6167	1	TIRE (13.00-24 12PR G-2)	
	2D-2511	1	VALVE GP-TIRE	
	9K-7951	1	CAP-VALVE (STEM)	
	6F-3930	1	CORE-VALVE	
	7D-5252		SPUD AS	
	2D-2508	1	GROMMET	
	2D-2509	1	LOCKNUT	

<END>

142-6288 WHEEL & TIRE GP

S/N: CAF1-UP
(9 X 24)
PART OF 142-6393 WHEEL & TIRE AR
AN ATTACHMENT

SMCS-4200 **i01457453**

NOTE	PART NUMBER	QTY	PART NAME 1 2 3 4 5 6 (PRODUCT LEVEL)	SEE PAGE
	123-3420	1	RIM AS	
	142-6168	1	TIRE (13.00-24 12PR G-2/L2)	
	2D-2511	1	VALVE GP-TIRE	
	9K-7951	1	CAP-VALVE (STEM)	
	6F-3930	1	CORE-VALVE	
	7D-5252	1	SPUD AS	
	2D-2508	1	GROMMET	
	2D-2509	1	LOCKNUT	

<END>

142-6290 WHEEL & TIRE GP

S/N: CAF1-UP
PART OF 142-6395 WHEEL & TIRE AR
AN ATTACHMENT

SMCS-4200 **i01456697**

NOTE	PART NUMBER	QTY	PART NAME 1 2 3 4 5 6 (PRODUCT LEVEL)	SEE PAGE
	2D-2565	1	SEAL-O-RING	
	142-6167	1	TIRE (13.00-24 12PR G-2)	
	110-4213	1	VALVE GP-TIRE	
	7D-5252	1	SPUD AS	
	2D-2508	1	GROMMET	
	2D-2509	1	LOCKNUT	
	110-4214		STEM AS	
	9K-7951	1	CAP-VALVE (STEM)	
	6F-3930	1	CORE-VALVE	
Y	*142-6226*	1	WHEEL GP	411

Y-SEPARATE ILLUSTRATION

<END>

142-6291 WHEEL & TIRE GP

S/N: CAF1-UP
PART OF 142-6439 WHEEL & TIRE AR
AN ATTACHMENT

SMCS-4200 **i01457454**

NOTE	PART NUMBER	QTY	PART NAME 1 2 3 4 5 6 (PRODUCT LEVEL)	SEE PAGE
	2D-2565	1	SEAL-O-RING	
	142-6168	1	TIRE (13.00-24 12PR G-2/L2)	
	110-4213	1	VALVE GP-TIRE	
	7D-5252	1	SPUD AS	
	2D-2508	1	GROMMET	
	2D-2509	1	LOCKNUT	
	110-4214	1	STEM AS	
	9K-7951	1	CAP-VALVE (STEM)	
	6F-3930	1	CORE-VALVE	
Y	*142-6226*	1	WHEEL GP	411

Y-SEPARATE ILLUSTRATION

<END>

142-6292 WHEEL & TIRE GP

S/N: CAF1-UP
PART OF 142-6440 WHEEL & TIRE AR
AN ATTACHMENT

SMCS-4200 **i01457455**

NOTE	PART NUMBER	QTY	PART NAME 1 2 3 4 5 6 (PRODUCT LEVEL)	SEE PAGE
	2D-2565	1	SEAL-O-RING	
	142-6169	1	TIRE (13.00-24 12PR G-2)	
	110-4213	1	VALVE GP-TIRE	
	7D-5252	1	SPUD AS	
	2D-2508	1	GROMMET	
	2D-2509	1	LOCKNUT	
	110-4214	1	STEM AS	
	9K-7951	1	CAP-VALVE (STEM)	
	6F-3930	1	CORE-VALVE	
Y	*142-6226*	1	WHEEL GP	411

Y-SEPARATE ILLUSTRATION

<END>

142-6293 WHEEL & TIRE GP

S/N: CAF1-UP
(9 X 24)
PART OF 142-6441 WHEEL & TIRE AR
AN ATTACHMENT

SMCS-4200 **i01457456**

NOTE	PART NUMBER	QTY	PART NAME 1 2 3 4 5 6 (PRODUCT LEVEL)	SEE PAGE
	123-3420	1	RIM AS	
	112-9924	1	TIRE (13.0 R24 XGLA2)	
	2D-2511	1	VALVE GP-TIRE	
	9K-7951	1	CAP-VALVE (STEM)	
	6F-3930	1	CORE-VALVE	
	7D-5252	1	SPUD AS	
	2D-2508	1	GROMMET	
	2D-2509	1	LOCKNUT	

<END>

142-6294 WHEEL & TIRE GP

S/N: CAF1-UP
PART OF 142-6442 WHEEL & TIRE AR
AN ATTACHMENT

SMCS-4200 **i01456706**

NOTE	PART NUMBER	QTY	PART NAME 1 2 3 4 5 6 (PRODUCT LEVEL)	SEE PAGE
	2D-2565	1	SEAL-O-RING	
	112-9924	1	TIRE (13.0 R24 XGLA2)	
	110-4213	1	VALVE GP-TIRE	
	7D-5252	1	SPUD AS	
	2D-2508	1	GROMMET	
	2D-2509	1	LOCKNUT	
	110-4214	1	STEM AS	
	9K-7951	1	CAP-VALVE (STEM)	
	6F-3930	1	CORE-VALVE	
Y	*142-6226*	1	WHEEL GP	411

Y-SEPARATE ILLUSTRATION

<END>

142-6295 WHEEL & TIRE GP

S/N: CAF1-UP
(9 X 24)
PART OF 142-6443 WHEEL & TIRE AR
AN ATTACHMENT

SMCS-4200 **i01457457**

NOTE	PART NUMBER	QTY	PART NAME 1 2 3 4 5 6 (PRODUCT LEVEL)	SEE PAGE
	123-3420	1	RIM AS	
	2A-7327	1	TIRE (13.0 R24 X RL2F)	
	2D-2511	1	VALVE GP-TIRE	
	9K-7951	1	CAP-VALVE (STEM)	
	6F-3930	1	CORE-VALVE	
	7D-5252	1	SPUD AS	
	2D-2508	1	GROMMET	
	2D-2509	1	LOCKNUT	

<END>

142-6296 WHEEL & TIRE GP

S/N: CAF1-UP
PART OF 142-6444 WHEEL & TIRE AR
AN ATTACHMENT

SMCS-4200 **i01456356**

NOTE	PART NUMBER	QTY	PART NAME 1 2 3 4 5 6 (PRODUCT LEVEL)	SEE PAGE
	2D-2565	1	SEAL-O-RING	
	2A-7327	1	TIRE (13.0 R24 X RL2F)	
	110-4213	1	VALVE GP-TIRE	
	7D-5252	1	SPUD AS	
	2D-2508	1	GROMMET	
	2D-2509	1	LOCKNUT	
	110-4214	1	STEM AS	
	9K-7951	1	CAP-VALVE (STEM)	
	6F-3930	1	CORE-VALVE	
Y	*142-6226*	1	WHEEL GP	411

Y-SEPARATE ILLUSTRATION

<END>

142-6297 WHEEL & TIRE GP

S/N: CAF1-UP
(9 X 24)
PART OF 142-6445 WHEEL & TIRE AR
AN ATTACHMENT

SMCS-4200 **i01455716**

NOTE	PART NUMBER	QTY	PART NAME 1 2 3 4 5 6 (PRODUCT LEVEL)	SEE PAGE
	123-3420	1	RIM AS	
	142-6170	1	TIRE (14.00-24 10PR G-2)	
	2D-2511	1	VALVE GP-TIRE	
	9K-7951	1	CAP-VALVE (STEM)	
	6F-3930	1	CORE-VALVE	
	7D-5252	1	SPUD AS	
	2D-2508	1	GROMMET	
	2D-2509	1	LOCKNUT	
	2D-2507	1	SPUD	

<END>

142-6298 WHEEL & TIRE GP

S/N: CAF1-UP
PART OF 142-6446 WHEEL & TIRE AR
AN ATTACHMENT

SMCS-4200 **i01455718**

NOTE	PART NUMBER	QTY	PART NAME 1 2 3 4 5 6 (PRODUCT LEVEL)	SEE PAGE
	2D-2565	1	SEAL-O-RING	
	142-6170	1	TIRE (14.00-24 10PR G-2)	
	110-4213	1	VALVE GP-TIRE	
	7D-5252	1	SPUD AS	
	2D-2508	1	GROMMET	
	2D-2509	1	LOCKNUT	
	110-4214	1	STEM AS	
	9K-7951	1	CAP-VALVE (STEM)	
	6F-3930	1	CORE-VALVE	
Y	*142-6226*	1	WHEEL GP	411

Y-SEPARATE ILLUSTRATION

<END>

142-6300 WHEEL & TIRE GP

S/N: CAF1-UP
(9 X 24)
PART OF 142-6448 WHEEL & TIRE AR
AN ATTACHMENT

SMCS-4200 **i01455722**

NOTE	PART NUMBER	QTY	PART NAME 1 2 3 4 5 6 (PRODUCT LEVEL)	SEE PAGE
	123-3420	1	RIM AS	
	142-6171	1	TIRE (14.00-24 10PR G2/L2)	
	2D-2511	1	VALVE GP-TIRE	
	9K-7951	1	CAP-VALVE (STEM)	
	6F-3930	1	CORE-VALVE	
	7D-5252	1	SPUD AS	
	2D-2508	1	GROMMET	
	2D-2509	1	LOCKNUT	
	2D-2507	1	SPUD	

<END>

142-6301 WHEEL & TIRE GP

S/N: CAF1-UP
PART OF 142-6449 WHEEL & TIRE AR
AN ATTACHMENT

SMCS-4200 **i01455727**

NOTE	PART NUMBER	QTY	PART NAME 1 2 3 4 5 6 (PRODUCT LEVEL)	SEE PAGE
	2D-2565	1	SEAL-O-RING	
	142-6171	1	TIRE (14.00-24 10PR G2/L2)	
	110-4213	1	VALVE GP-TIRE	
	7D-5252	1	SPUD AS	
	2D-2508	1	GROMMET	
	2D-2509	1	LOCKNUT	
	110-4214	1	STEM AS	
	9K-7951	1	CAP-VALVE (STEM)	
	6F-3930	1	CORE-VALVE	
Y	*142-6226*	1	WHEEL GP	411

Y-SEPARATE ILLUSTRATION

<END>

142-6306 WHEEL & TIRE GP

S/N: CAF1-UP
(9 X 24)
PART OF 142-6454 WHEEL & TIRE AR
AN ATTACHMENT

SMCS-4200 **i01455725**

NOTE	PART NUMBER	QTY	PART NAME 1 2 3 4 5 6 (PRODUCT LEVEL)	SEE PAGE
	123-3420	1	RIM AS	
	142-6173	1	TIRE (14.00-24 12PR G-2 GY)	
	2D-2511	1	VALVE GP-TIRE	
	9K-7951	1	CAP-VALVE (STEM)	
	6F-3930	1	CORE-VALVE	
	7D-5252	1	SPUD AS	
	2D-2508	1	GROMMET	
	2D-2509	1	LOCKNUT	
	2D-2507	1	SPUD	

<END>

142-6307 WHEEL & TIRE GP

S/N: CAF1-UP
PART OF 142-6455 WHEEL & TIRE AR
AN ATTACHMENT

SMCS-4200 **i01455814**

NOTE	PART NUMBER	QTY	PART NAME 1 2 3 4 5 6 (PRODUCT LEVEL)	SEE PAGE
	2D-2565	1	SEAL-O-RING	
	142-6173	1	TIRE (14.00-24 12PR G-2 GY)	
	110-4213	1	VALVE GP-TIRE	
	7D-5252	1	SPUD AS	
	2D-2508	1	GROMMET	
	2D-2509	1	LOCKNUT	
	110-4214	1	STEM AS	
	6F-3930	1	CORE-VALVE	
	9K-7951	1	CAP-VALVE (STEM)	
Y	*142-6226*	1	WHEEL GP	411

Y-SEPARATE ILLUSTRATION

<END>

142-6309 WHEEL & TIRE GP

S/N: CAF1-UP
(9 X 24)
PART OF 142-6457 WHEEL & TIRE AR
AN ATTACHMENT

SMCS-4200 **i01455811**

NOTE	PART NUMBER	QTY	PART NAME 1 2 3 4 5 6 (PRODUCT LEVEL)	SEE PAGE
	123-3420	1	RIM AS	
	142-6174	1	TIRE (14.00-24 12PR G2/L2)	
	2D-2511	1	VALVE GP-TIRE	
	9K-7951	1	CAP-VALVE (STEM)	
	6F-3930	1	CORE-VALVE	
	7D-5252	1	SPUD AS	
	2D-2508	1	GROMMET	
	2D-2509	1	LOCKNUT	
	2D-2507	1	SPUD	

<END>

142-6310 WHEEL & TIRE GP

S/N: CAF1-UP
PART OF 142-6458 WHEEL & TIRE AR
AN ATTACHMENT

SMCS-4200 **i01455819**

NOTE	PART NUMBER	QTY	PART NAME 1 2 3 4 5 6 (PRODUCT LEVEL)	SEE PAGE
	2D-2565	1	SEAL-O-RING	
	142-6174	1	TIRE (14.00-24 12PR G2/L2)	
	110-4213	1	VALVE GP-TIRE	
	7D-5252	1	SPUD AS	
	2D-2508	1	GROMMET	
	2D-2509	1	LOCKNUT	
	110-4214	1	STEM AS	
	9K-7951	1	CAP-VALVE (STEM)	
	6F-3930	1	CORE-VALVE	
Y	*142-6226*	1	WHEEL GP	411

Y-SEPARATE ILLUSTRATION

<END>

142-6312 WHEEL & TIRE GP

S/N: CAF1-UP
(9 X 24)
PART OF 142-6460 WHEEL & TIRE AR
AN ATTACHMENT

SMCS-4200 **i01455816**

NOTE	PART NUMBER	QTY	PART NAME 1 2 3 4 5 6 (PRODUCT LEVEL)	SEE PAGE
	123-3420	1	RIM AS	
	142-6175	1	TIRE (14.00-24 12PR G-2)	
	2D-2511	1	VALVE GP-TIRE	
	9K-7951	1	CAP-VALVE (STEM)	
	6F-3930	1	CORE-VALVE	
	7D-5252	1	SPUD AS	
	2D-2508	1	GROMMET	
	2D-2509	1	LOCKNUT	
	2D-2507	1	SPUD	

<END>

142-6313 WHEEL & TIRE GP

S/N: CAF1-UP
PART OF 142-6461 WHEEL & TIRE AR
AN ATTACHMENT

SMCS-4200 **i01455829**

NOTE	PART NUMBER	QTY	PART NAME 1 2 3 4 5 6 (PRODUCT LEVEL)	SEE PAGE
	2D-2565	1	SEAL-O-RING	
	142-6175	1	TIRE (14.00-24 12PR G-2)	
	110-4213	1	VALVE GP-TIRE	
	7D-5252	1	SPUD AS	
	2D-2508	1	GROMMET	
	2D-2509	1	LOCKNUT	
	110-4214		STEM AS	
	9K-7951	1	CAP-VALVE (STEM)	
	6F-3930	1	CORE-VALVE	
Y	*142-6226*	1	WHEEL GP	411

Y-SEPARATE ILLUSTRATION

<END>

142-6315 WHEEL & TIRE GP

S/N: CAF1-UP
(9 X 24)
PART OF 142-6463 WHEEL & TIRE AR
AN ATTACHMENT

SMCS-4200 **i01455825**

NOTE	PART NUMBER	QTY	PART NAME 1 2 3 4 5 6 (PRODUCT LEVEL)	SEE PAGE
	123-3420	1	RIM AS	
	112-9813	1	TIRE (14.0 R24 * XGLA2 G-2)	
	2D-2511	1	VALVE GP-TIRE	
	9K-7951	1	CAP-VALVE (STEM)	
	6F-3930	1	CORE-VALVE	
	7D-5252	1	SPUD AS	
	2D-2508	1	GROMMET	
	2D-2509	1	LOCKNUT	
	2D-2507	1	SPUD	

<END>

142-6316 WHEEL & TIRE GP

S/N: CAF1-UP
PART OF 142-6464 WHEEL & TIRE AR
AN ATTACHMENT

SMCS-4200 **i01455847**

NOTE	PART NUMBER	QTY	PART NAME 1 2 3 4 5 6 (PRODUCT LEVEL)	SEE PAGE
	2D-2565	1	SEAL-O-RING	
	112-9813	1	TIRE (14.0 R24 * XGLA2 G-2)	
	110-4213	1	VALVE GP-TIRE	
	7D-5252	1	SPUD AS	
	2D-2508	1	GROMMET	
	2D-2509	1	LOCKNUT	
	110-4214	1	STEM AS	
	6F-3930	1	CORE-VALVE	
	9K-7951	1	CAP-VALVE (STEM)	
Y	*142-6226*	1	WHEEL GP	411

Y-SEPARATE ILLUSTRATION

<END>

142-6318 WHEEL & TIRE GP

S/N: CAF1-UP
(9 X 24)
PART OF 142-6466 WHEEL & TIRE AR
AN ATTACHMENT

SMCS-4200 **i01455844**

NOTE	PART NUMBER	QTY	PART NAME 1 2 3 4 5 6 (PRODUCT LEVEL)	SEE PAGE
	123-3420	1	RIM AS	
	123-3178	1	TIRE (14.00 R24 TG RL2F * G-2)	
	2D-2511	1	VALVE GP-TIRE	
	9K-7951	1	CAP-VALVE (STEM)	
	6F-3930	1	CORE-VALVE	
	7D-5252	1	SPUD AS	
	2D-2508	1	GROMMET	
	2D-2509	1	LOCKNUT	
	2D-2507	1	SPUD	

<END>

142-6319 WHEEL & TIRE GP

S/N: CAF1-UP
PART OF 142-6467 WHEEL & TIRE AR
AN ATTACHMENT

SMCS-4200 **i01455851**

NOTE	PART NUMBER	QTY	PART NAME 1 2 3 4 5 6 (PRODUCT LEVEL)	SEE PAGE
	2D-2565	1	SEAL-O-RING	
	123-3178	1	TIRE (14.00 R24 TG RL2F * G-2)	
	110-4213	1	VALVE GP-TIRE	
	7D-5252	1	SPUD AS	
	2D-2508	1	GROMMET	
	2D-2509	1	LOCKNUT	
	110-4214	1	STEM AS	
	9K-7951	1	CAP-VALVE (STEM)	
	6F-3930	1	CORE-VALVE	
Y	*142-6226*	1	WHEEL GP	411

Y-SEPARATE ILLUSTRATION

<END>

142-6321 WHEEL & TIRE GP

S/N: CAF1-UP
(9 X 24)
PART OF 142-6469 WHEEL & TIRE AR
AN ATTACHMENT

SMCS-4200 **i01455849**

NOTE	PART NUMBER	QTY	PART NAME 1 2 3 4 5 6 (PRODUCT LEVEL)	SEE PAGE
	123-3420	1	RIM AS	
	106-1567	1	TIRE (14.0 R24 * XMPS G-3)	
	2D-2511	1	VALVE GP-TIRE	
	9K-7951	1	CAP-VALVE (STEM)	
	6F-3930	1	CORE-VALVE	
	7D-5252	1	SPUD AS	
	2D-2508	1	GROMMET	
	2D-2509	1	LOCKNUT	
	2D-2507	1	SPUD	

<END>

142-6322 WHEEL & TIRE GP

S/N: CAF1-UP
PART OF 142-6470 WHEEL & TIRE AR
AN ATTACHMENT

SMCS-4200 **i01455857**

NOTE	PART NUMBER	QTY	PART NAME 1 2 3 4 5 6 (PRODUCT LEVEL)	SEE PAGE
	2D-2565	1	SEAL-O-RING	
	106-1567	1	TIRE (14.0 R24 * XMPS G-3)	
	110-4213	1	VALVE GP-TIRE	
	7D-5252	1	SPUD AS	
	2D-2508	1	GROMMET	
	2D-2509	1	LOCKNUT	
	110-4214	1	STEM AS	
	6F-3930	1	CORE-VALVE	
	9K-7951	1	CAP-VALVE (STEM)	
Y	*142-6226*	1	WHEEL GP	411

Y-SEPARATE ILLUSTRATION

<END>

142-6324 WHEEL & TIRE GP

S/N: CAF1-UP
(9 X 24)
PART OF 142-6472 WHEEL & TIRE AR
AN ATTACHMENT

SMCS-4200 **i01757683**

NOTE	PART NUMBER	QTY	PART NAME 1 2 3 4 5 6 (PRODUCT LEVEL)	SEE PAGE
	123-3420	1	RIM AS	
	129-5454	1	TIRE (14.0 R24 * SG-2B)	
	2D-2511	1	VALVE GP-TIRE	
	9K-7951	1	CAP-VALVE (STEM)	
	6F-3930	1	CORE-VALVE	
	7D-5252	1	SPUD AS	
	2D-2508	1	GROMMET	
	2D-2509	1	LOCKNUT	
	2D-2507	1	SPUD	

<END>

142-6325 WHEEL & TIRE GP

S/N: CAF1-UP
PART OF 142-6474 WHEEL & TIRE AR
AN ATTACHMENT

SMCS-4200 **i01455865**

NOTE	PART NUMBER	QTY	PART NAME 1 2 3 4 5 6 (PRODUCT LEVEL)	SEE PAGE
	2D-2565	1	SEAL-O-RING	
	129-5454	1	TIRE (14.0 R24 * SG-2B)	
	110-4213	1	VALVE GP-TIRE	
	7D-5252	1	SPUD AS	
	2D-2508	1	GROMMET	
	2D-2509	1	LOCKNUT	
	110-4214	1	STEM AS	
	9K-7951	1	CAP-VALVE (STEM)	
	6F-3930	1	CORE-VALVE	
Y	*142-6226*	1	WHEEL GP	411

Y-SEPARATE ILLUSTRATION

<END>

142-6328 WHEEL & TIRE GP

S/N: CAF1-UP
PART OF 142-6477 WHEEL & TIRE AR
AN ATTACHMENT

SMCS-4200 **i01456358**

NOTE	PART NUMBER	QTY	PART NAME 1 2 3 4 5 6 (PRODUCT LEVEL)	SEE PAGE
	2D-2565	1	SEAL-O-RING	
	141-0360	1	TIRE (14.00 R24 * G-2)	
	110-4213	1	VALVE GP-TIRE	
	7D-5252	1	SPUD AS	
	2D-2507	1	SPUD	
	2D-2508	1	GROMMET	
	2D-2509	1	LOCKNUT	
	110-4214	1	STEM AS	
	6F-3930	1	CORE-VALVE	
	9K-7951	1	CAP-VALVE (STEM)	
Y	*142-6226*	1	WHEEL GP	411

Y-SEPARATE ILLUSTRATION

<END>

142-6330 WHEEL & TIRE GP

S/N: CAF1-UP
PART OF 142-6479 WHEEL & TIRE AR
AN ATTACHMENT

SMCS-4200 **i01456353**

NOTE	PART NUMBER	QTY	PART NAME 1 2 3 4 5 6 (PRODUCT LEVEL)	SEE PAGE
	2D-2565	1	SEAL-O-RING	
	140-3607	1	TIRE (14.0 R24 * G-2 VSW)	
	110-4213	1	VALVE GP-TIRE	
	7D-5252	1	SPUD AS	
	2D-2508	1	GROMMET	
	2D-2509	1	LOCKNUT	
	110-4214	1	STEM AS	
	9K-7951	1	CAP-VALVE (STEM)	
	6F-3930	1	CORE-VALVE	
Y	*142-6226*	1	WHEEL GP	411

Y-SEPARATE ILLUSTRATION

<END>

142-6332 WHEEL & TIRE GP

S/N: CAF1-UP
PART OF 151-0362 WHEEL & TIRE AR
AN ATTACHMENT

SMCS-4200 **i01456352**

NOTE	PART NUMBER	QTY	PART NAME 1 2 3 4 5 6 (PRODUCT LEVEL)	SEE PAGE
	2D-2565	1	SEAL-O-RING	
	8W-7957	1	TIRE (14.0 R24 * G-2 VKT)	
	110-4213	1	VALVE GP-TIRE	
	7D-5252	1	SPUD AS	
	2D-2508	1	GROMMET	
	2D-2509	1	LOCKNUT	
	110-4214	1	STEM AS	
	9K-7951	1	CAP-VALVE (STEM)	
	6F-3930	1	CORE-VALVE	
Y	*142-6226*	1	WHEEL GP	411

Y-SEPARATE ILLUSTRATION

<END>

142-6335 WHEEL & TIRE GP

S/N: CAF1-UP
(13 X 25)
PART OF 151-0329 WHEEL & TIRE AR
AN ATTACHMENT

SMCS-4200 **i01757684**

NOTE	PART NUMBER	QTY	PART NAME 1 2 3 4 5 6 (PRODUCT LEVEL)	SEE PAGE
	8X-1160	1	RIM AS	
	142-6176	1	TIRE (15.5-25 25PR L-2)	
	2G-6595	1	VALVE GP-TIRE	
	9K-7951	1	CAP-VALVE (STEM)	
	6F-3930	1	CORE-VALVE	
	7D-5252	1	SPUD AS	
	2D-2508	1	GROMMET	
	2D-2509	1	LOCKNUT	
	2D-2507	1	SPUD	

<END>

142-6336 WHEEL & TIRE GP

S/N: CAF1-UP
(13 X 25)
PART OF 151-0347 WHEEL & TIRE AR
AN ATTACHMENT

SMCS-4200 **i01757685**

NOTE	PART NUMBER	QTY	PART NAME 1 2 3 4 5 6 (PRODUCT LEVEL)	SEE PAGE
	8X-1160	1	RIM AS	
	142-6177	1	TIRE (15.5-25 12PR L-2)	
	2G-6595	1	VALVE GP-TIRE	
	9K-7951	1	CAP-VALVE (STEM)	
	6F-3930	1	CORE-VALVE	
	7D-5252	1	SPUD AS	
	2D-2508	1	GROMMET	
	2D-2509	1	LOCKNUT	
	2D-2507	1	SPUD	

<END>

142-6337 WHEEL & TIRE GP

S/N: CAF1-UP
(13 X 25)
PART OF 151-0355 WHEEL & TIRE AR
AN ATTACHMENT

SMCS-4200 **i01757687**

NOTE	PART NUMBER	QTY	PART NAME 1 2 3 4 5 6 (PRODUCT LEVEL)	SEE PAGE
	8X-1160	1	RIM AS	
	142-6178	1	TIRE (15.50-25 12PR L-2)	
	2G-6595	1	VALVE GP-TIRE	
	9K-7951	1	CAP-VALVE (STEM)	
	6F-3930	1	CORE-VALVE	
	7D-5252	1	SPUD AS	
	2D-2508	1	GROMMET	
	2D-2509	1	LOCKNUT	
	2D-2507	1	SPUD	

<END>

142-6338 WHEEL & TIRE GP

S/N: CAF1-UP
(13 X 25)
PART OF 151-0330 WHEEL & TIRE AR
AN ATTACHMENT

SMCS-4200 **i01757689**

NOTE	PART NUMBER	QTY	PART NAME 1 2 3 4 5 6 (PRODUCT LEVEL)	SEE PAGE
	8X-1160	1	RIM AS	
	142-6179	1	TIRE (15.5-25 12PR L-3)	
	2G-6595	1	VALVE GP-TIRE	
	9K-7951	1	CAP-VALVE (STEM)	
	6F-3930	1	CORE-VALVE	
	7D-5252	1	SPUD AS	
	2D-2508	1	GROMMET	
	2D-2509	1	LOCKNUT	
	2D-2507	1	SPUD	

<END>

142-6339 WHEEL & TIRE GP

S/N: CAF1-UP
(13 X 25)
PART OF 151-0348 WHEEL & TIRE AR
AN ATTACHMENT

SMCS-4200 **i01757696**

NOTE	PART NUMBER	QTY	PART NAME 1 2 3 4 5 6 (PRODUCT LEVEL)	SEE PAGE
	8X-1160	1	RIM AS	
	142-6180	1	TIRE (15.50-25 12PR L-3)	
	2G-6595	1	VALVE GP-TIRE	
	9K-7951	1	CAP-VALVE (STEM)	
	6F-3930	1	CORE-VALVE	
	7D-5252	1	SPUD AS	
	2D-2508	1	GROMMET	
	2D-2509	1	LOCKNUT	
	2D-2507	1	SPUD	

<END>

142-6341 WHEEL & TIRE GP

S/N: CAF1-UP
(13 X 25)
PART OF 151-0331 WHEEL & TIRE AR
AN ATTACHMENT

SMCS-4200 **i01755156**

NOTE	PART NUMBER	QTY	PART NAME 1 2 3 4 5 6 (PRODUCT LEVEL)	SEE PAGE
	8X-1160	1	RIM AS	
	6C-3248	1	TIRE (15.5R25 * L-3 XHA)	
	2G-6595	1	VALVE GP-TIRE	
	9K-7951	1	CAP-VALVE (STEM)	
	6F-3930	1	CORE-VALVE	
	7D-5252	1	SPUD AS	
	2D-2508	1	GROMMET	
	2D-2509	1	LOCKNUT	
	2D-2507	1	SPUD	

<END>

142-6353 WHEEL & TIRE GP

S/N: CAF1-UP
(13 X 25)
PART OF 151-0364 WHEEL & TIRE AR
AN ATTACHMENT

SMCS-4200 **i01755166**

NOTE	PART NUMBER	QTY	PART NAME 1 2 3 4 5 6 (PRODUCT LEVEL)	SEE PAGE
	8X-1160	1	RIM AS	
	142-6182	1	TIRE (17.50-25 12PR L-2)	
	2G-6595	1	VALVE GP-TIRE	
	9K-7951	1	CAP-VALVE (STEM)	
	6F-3930	1	CORE-VALVE	
	7D-5252	1	SPUD AS	
	2D-2508	1	GROMMET	
	2D-2509	1	LOCKNUT	
	2D-2507	1	SPUD	

<END>

142-6354 WHEEL & TIRE GP

S/N: CAF1-UP
(13 X 25)
PART OF 151-0371 WHEEL & TIRE AR
AN ATTACHMENT

SMCS-4200 **i01755171**

NOTE	PART NUMBER	QTY	PART NAME 1 2 3 4 5 6 (PRODUCT LEVEL)	SEE PAGE
	8X-1160	1	RIM AS	
	142-6183	1	TIRE (17.5X25 12PR L-2)	
	2G-6595	1	VALVE GP-TIRE	
	9K-7951	1	CAP-VALVE (STEM)	
	6F-3930	1	CORE-VALVE	
	7D-5252	1	SPUD AS	
	2D-2508	1	GROMMET	
	2D-2509	1	LOCKNUT	
	2D-2507	1	SPUD	

<END>

142-6355 WHEEL & TIRE GP

S/N: CAF1-UP
(13 X 25)
PART OF 151-0374 WHEEL & TIRE AR
AN ATTACHMENT

SMCS-4200 **i01755178**

NOTE	PART NUMBER	QTY	PART NAME 1 2 3 4 5 6 (PRODUCT LEVEL)	SEE PAGE
	8X-1160	1	RIM AS	
	142-6184	1	TIRE (17.50X25 12PR L-2)	
	2G-6595	1	VALVE GP-TIRE	
	9K-7951	1	CAP-VALVE (STEM)	
	6F-3930	1	CORE-VALVE	
	7D-5252	1	SPUD AS	
	2D-2508	1	GROMMET	
	2D-2509	1	LOCKNUT	
	2D-2507	1	SPUD	

<END>

142-6356 WHEEL & TIRE GP

S/N: CAF1-UP
PART OF 151-0378 WHEEL & TIRE AR
AN ATTACHMENT

SMCS-4200 **i01755185**

NOTE	PART NUMBER	QTY	PART NAME 1 2 3 4 5 6 (PRODUCT LEVEL)	SEE PAGE
	8W-3686	1	SEAL-O-RING	
	142-6182	1	TIRE (17.50-25 12PR L-2)	
	2G-6595	1	VALVE GP-TIRE	
	9K-7951	1	CAP-VALVE (STEM)	
	6F-3930	1	CORE-VALVE	
	7D-5252	1	SPUD AS	
	2D-2508	1	GROMMET	
	2D-2509	1	LOCKNUT	
	2D-2507	1	SPUD	
Y	*142-6229*	1	WHEEL GP	411

Y-SEPARATE ILLUSTRATION

<END>

142-6357 WHEEL & TIRE GP

S/N: CAF1-UP
PART OF 151-0388 WHEEL & TIRE AR
AN ATTACHMENT

SMCS-4200 **i01755193**

NOTE	PART NUMBER	QTY	PART NAME 1 2 3 4 5 6 (PRODUCT LEVEL)	SEE PAGE
	8W-3686	1	SEAL-O-RING	
	142-6183	1	TIRE (17.5X25 12PR L-2)	
	2G-6595	1	VALVE GP-TIRE	
	9K-7951	1	CAP-VALVE (STEM)	
	6F-3930	1	CORE-VALVE	
	7D-5252	1	SPUD AS	
	2D-2508	1	GROMMET	
	2D-2509	1	LOCKNUT	
	2D-2507	1	SPUD	
Y	*142-6229*	1	WHEEL GP	411

Y-SEPARATE ILLUSTRATION

<END>

142-6358 WHEEL & TIRE GP

S/N: CAF1-UP
PART OF 151-0392 WHEEL & TIRE AR
AN ATTACHMENT

SMCS-4200 **i01755205**

NOTE	PART NUMBER	QTY	PART NAME 1 2 3 4 5 6 (PRODUCT LEVEL)	SEE PAGE
	8W-3686	1	SEAL-O-RING	
	142-6184	1	TIRE (17.50X25 12PR L-2)	
	2G-6595	1	VALVE GP-TIRE	
	9K-7951	1	CAP-VALVE (STEM)	
	6F-3930	1	CORE-VALVE	
	7D-5252	1	SPUD AS	
	2D-2508	1	GROMMET	
	2D-2509	1	LOCKNUT	
	2D-2507	1	SPUD	
Y	*142-6229*	1	WHEEL GP	411
Y-SEPARATE ILLUSTRATION				

<END>

142-6360 WHEEL & TIRE GP

S/N: CAF1-UP
(13 X 25)
PART OF 151-0365 WHEEL & TIRE AR
AN ATTACHMENT

SMCS-4200 **i01755157**

NOTE	PART NUMBER	QTY	PART NAME 1 2 3 4 5 6 (PRODUCT LEVEL)	SEE PAGE
	8X-1160	1	RIM AS	
	6C-7366	1	TIRE (17.5 R25 * GP2BL2)	
	2G-6595	1	VALVE GP-TIRE	
	6F-3930	1	CORE-VALVE	
	9K-7951	1	CAP-VALVE (STEM)	
	7D-5252	1	SPUD AS	
	2D-2507	1	SPUD	
	2D-2508	1	GROMMET	
	2D-2509	1	LOCKNUT	

<END>

142-6363 WHEEL & TIRE GP

S/N: CAF1-UP
(13 X 25)
PART OF 151-0366 WHEEL & TIRE AR
AN ATTACHMENT

SMCS-4200 **i01755167**

NOTE	PART NUMBER	QTY	PART NAME 1 2 3 4 5 6 (PRODUCT LEVEL)	SEE PAGE
	8X-1160	1	RIM AS	
	6C-3246	1	TIRE (17.5 R25*L-3)	
	2G-6595	1	VALVE GP-TIRE	
	6F-3930	1	CORE-VALVE	
	9K-7951	1	CAP-VALVE (STEM)	
	7D-5252	1	SPUD AS	
	2D-2507	1	SPUD	
	2D-2508	1	GROMMET	
	2D-2509	1	LOCKNUT	

<END>

142-6364 WHEEL & TIRE GP

S/N: CAF1-UP
PART OF 151-0380 WHEEL & TIRE AR
AN ATTACHMENT

SMCS-4200 **i01755175**

NOTE	PART NUMBER	QTY	PART NAME 1 2 3 4 5 6 (PRODUCT LEVEL)	SEE PAGE
	8W-3686	1	SEAL-O-RING	
	6C-3246	1	TIRE (17.5 R25*L-3)	
	2G-6595	1	VALVE GP-TIRE	
	6F-3930	1	CORE-VALVE	
	9K-7951	1	CAP-VALVE (STEM)	
	7D-5252	1	SPUD AS	
	2D-2507	1	SPUD	
	2D-2508	1	GROMMET	
	2D-2509	1	LOCKNUT	
Y	*142-6229*	1	WHEEL GP	411

Y-SEPARATE ILLUSTRATION

<END>

142-6366 WHEEL & TIRE GP

S/N: CAF1-UP
(13 X 25)
PART OF 151-0367 WHEEL & TIRE AR
AN ATTACHMENT

SMCS-4200 **i01755200**

NOTE	PART NUMBER	QTY	PART NAME 1 2 3 4 5 6 (PRODUCT LEVEL)	SEE PAGE
	8X-1160	1	RIM AS	
	106-4835	1	TIRE (17.5 R25*L-2)	
	2G-6595	1	VALVE GP-TIRE	
	6F-3930	1	CORE-VALVE	
	9K-7951	1	CAP-VALVE (STEM)	
	7D-5252	1	SPUD AS	
	2D-2507	1	SPUD	
	2D-2508	1	GROMMET	
	2D-2509	1	LOCKNUT	

<END>

142-6367 WHEEL & TIRE GP

S/N: CAF1-UP
PART OF 151-0381 WHEEL & TIRE AR
AN ATTACHMENT

SMCS-4200 **i01755828**

NOTE	PART NUMBER	QTY	PART NAME 1 2 3 4 5 6 (PRODUCT LEVEL)	SEE PAGE
	8W-3686	1	SEAL-O-RING	
	106-4835	1	TIRE (17.5 R25*L-2)	
	2G-6595	1	VALVE GP-TIRE	
	6F-3930	1	CORE-VALVE	
	9K-7951	1	CAP-VALVE (STEM)	
	7D-5252	1	SPUD AS	
	2D-2507	1	SPUD	
	2D-2508	1	GROMMET	
	2D-2509	1	LOCKNUT	
Y	*142-6229*	1	WHEEL GP	411

Y-SEPARATE ILLUSTRATION

<END>

142-6371 WHEEL & TIRE GP

S/N: CAF1-UP
(13 X 25)
PART OF 151-0368 WHEEL & TIRE AR
AN ATTACHMENT

SMCS-4200 **i01755163**

NOTE	PART NUMBER	QTY	PART NAME 1 2 3 4 5 6 (PRODUCT LEVEL)	SEE PAGE
	8X-1160	1	RIM AS	
	142-6185	1	TIRE (17.50-25 12PR L-3)	
	2G-6595	1	VALVE GP-TIRE	
	9K-7951	1	CAP-VALVE (STEM)	
	6F-3930	1	CORE-VALVE	
	7D-5252	1	SPUD AS	
	2D-2508	1	GROMMET	
	2D-2509	1	LOCKNUT	
	2D-2507	1	SPUD	

<END>

142-6372 WHEEL & TIRE GP

S/N: CAF1-UP
(13 X 25)
PART OF 151-0372 WHEEL & TIRE AR
AN ATTACHMENT

SMCS-4200 **i01755168**

NOTE	PART NUMBER	QTY	PART NAME 1 2 3 4 5 6 (PRODUCT LEVEL)	SEE PAGE
	8X-1160	1	RIM AS	
	142-6186	1	TIRE (17.5X25 12PR L-3)	
	2G-6595	1	VALVE GP-TIRE	
	9K-7951	1	CAP-VALVE (STEM)	
	6F-3930	1	CORE-VALVE	
	7D-5252	1	SPUD AS	
	2D-2508	1	GROMMET	
	2D-2509	1	LOCKNUT	
	2D-2507	1	SPUD	

<END>

142-6373 WHEEL & TIRE GP

S/N: CAF1-UP
(13 X 25)
PART OF 151-0375 WHEEL & TIRE AR
AN ATTACHMENT

SMCS-4200 **i01755176**

NOTE	PART NUMBER	QTY	PART NAME 1 2 3 4 5 6 (PRODUCT LEVEL)	SEE PAGE
	8X-1160	1	RIM AS	
	142-6187	1	TIRE (17.50X25 12PR L-3)	
	2G-6595	1	VALVE GP-TIRE	
	9K-7951	1	CAP-VALVE (STEM)	
	6F-3930	1	CORE-VALVE	
	7D-5252	1	SPUD AS	
	2D-2508	1	GROMMET	
	2D-2509	1	LOCKNUT	
	2D-2507	1	SPUD	

<END>

142-6374 WHEEL & TIRE GP

S/N: CAF1-UP
PART OF 151-0382 WHEEL & TIRE AR
AN ATTACHMENT

SMCS-4200 **i01755181**

NOTE	PART NUMBER	QTY	PART NAME 1 2 3 4 5 6 (PRODUCT LEVEL)	SEE PAGE
	8W-3686	1	SEAL-O-RING	
	142-6185	1	TIRE (17.50-25 12PR L-3)	
	2G-6595	1	VALVE GP-TIRE	
	9K-7951	1	CAP-VALVE (STEM)	
	6F-3930	1	CORE-VALVE	
	7D-5252	1	SPUD AS	
	2D-2508	1	GROMMET	
	2D-2509	1	LOCKNUT	
	2D-2507	1	SPUD	
Y	*142-6229*	1	WHEEL GP	411

Y-SEPARATE ILLUSTRATION

<END>

142-6375 WHEEL & TIRE GP

S/N: CAF1-UP
PART OF 151-0389 WHEEL & TIRE AR
AN ATTACHMENT

SMCS-4200 **i01755201**

NOTE	PART NUMBER	QTY	PART NAME 1 2 3 4 5 6 (PRODUCT LEVEL)	SEE PAGE
	8W-3686	1	SEAL-O-RING	
	142-6186	1	TIRE (17.5X25 12PR L-3)	
	2G-6595	1	VALVE GP-TIRE	
	9K-7951	1	CAP-VALVE (STEM)	
	6F-3930	1	CORE-VALVE	
	7D-5252	1	SPUD AS	
	2D-2508	1	GROMMET	
	2D-2509	1	LOCKNUT	
	2D-2507	1	SPUD	
Y	*142-6229*	1	WHEEL GP	411

Y-SEPARATE ILLUSTRATION

<END>

142-6376 WHEEL & TIRE GP

S/N: CAF1-UP
PART OF 151-0393 WHEEL & TIRE AR
AN ATTACHMENT

SMCS-4200 **i01755206**

NOTE	PART NUMBER	QTY	PART NAME 1 2 3 4 5 6 (PRODUCT LEVEL)	SEE PAGE
	8W-3686	1	SEAL-O-RING	
	142-6187	1	TIRE (17.50X25 12PR L-3)	
	2G-6595	1	VALVE GP-TIRE	
	9K-7951	1	CAP-VALVE (STEM)	
	6F-3930	1	CORE-VALVE	
	7D-5252	1	SPUD AS	
	2D-2508	1	GROMMET	
	2D-2509	1	LOCKNUT	
	2D-2507	1	SPUD	
Y	*142-6229*	1	WHEEL GP	411

Y-SEPARATE ILLUSTRATION

<END>

142-6385 WHEEL & TIRE GP

S/N: CAF1-UP
PART OF 151-0385 WHEEL & TIRE AR
AN ATTACHMENT

SMCS-4200 **i01755230**

NOTE	PART NUMBER	QTY	PART NAME 1 2 3 4 5 6 (PRODUCT LEVEL)	SEE PAGE
	8W-3686	1	SEAL-O-RING	
	105-3249	1	TIRE (17.5 R25 * D2A)	
	2G-6595	1	VALVE GP-TIRE	
	9K-7951	1	CAP-VALVE (STEM)	
	6F-3930	1	CORE-VALVE	
	7D-5252	1	SPUD AS	
	2D-2508	1	GROMMET	
	2D-2509	1	LOCKNUT	
	2D-2507	1	SPUD	
Y	*142-6229*	1	WHEEL GP	411
Y-SEPARATE ILLUSTRATION				

<END>

142-6405 WHEEL & TIRE GP

S/N: CAF1-UP
(17X25)
AN ATTACHMENT

SMCS-4200 **i01677017**

NOTE	PART NUMBER	QTY	PART NAME 1 2 3 4 5 6 (PRODUCT LEVEL)	SEE PAGE
	8W-3686	1	SEAL-O-RING	
	128-5164	1	TIRE (20.5X25 12PR L-2)	
	2G-6595	1	VALVE GP-TIRE	
	9K-7951	1	CAP-VALVE (STEM)	
	6F-3930	1	CORE-VALVE	
	7D-5252	1	SPUD AS	
	2D-2508	1	GROMMET	
	2D-2509	1	LOCKNUT	
	142-6232	1	WHEEL GP	
	179-5774	1	FLANGE AS	
	195-1122	1	RIM AS	
	4K-4881	1	RING-LOCK	

<END>

153-5459 WHEEL & TIRE GP

S/N: CAF1-UP
(13 X 25)
PART OF 153-5460 WHEEL & TIRE AR
AN ATTACHMENT

SMCS-4200 **i01755234**

NOTE	PART NUMBER	QTY	PART NAME 1 2 3 4 5 6 (PRODUCT LEVEL)	SEE PAGE
	8X-1160	1	RIM AS	
	153-5425	1	TIRE (15.50-25 12PR L-3)	
	2G-6595	1	VALVE GP-TIRE	
	9K-7951	1	CAP-VALVE (STEM)	
	6F-3930	1	CORE-VALVE	
	7D-5252	1	SPUD AS	
	2D-2508	1	GROMMET	
	2D-2509	1	LOCKNUT	
	2D-2507	1	SPUD	

<END>

153-5463 WHEEL & TIRE GP

S/N: CAF1-UP
(13 X 25)
PART OF 153-5464 WHEEL & TIRE AR
AN ATTACHMENT

SMCS-4200 **i01755182**

NOTE	PART NUMBER	QTY	PART NAME 1 2 3 4 5 6 (PRODUCT LEVEL)	SEE PAGE
	8X-1160	1	RIM AS	
	153-5427	1	TIRE	
	2G-6595	1	VALVE GP-TIRE	
	9K-7951	1	CAP-VALVE (STEM)	
	6F-3930	1	CORE-VALVE	
	7D-5252	1	SPUD AS	
	2D-2508	1	GROMMET	
	2D-2509	1	LOCKNUT	
	2D-2507	1	SPUD	

<END>

153-5467 WHEEL & TIRE GP

S/N: CAF1-UP
(13 X 25)
PART OF 153-5468 WHEEL & TIRE AR
AN ATTACHMENT

SMCS-4200 **i01755232**

NOTE	PART NUMBER	QTY	PART NAME 1 2 3 4 5 6 (PRODUCT LEVEL)	SEE PAGE
	8X-1160	1	RIM AS	
	105-3249	1	TIRE (17.5 R25 * D2A)	
	2G-6595	1	VALVE GP-TIRE	
	9K-7951	1	CAP-VALVE (STEM)	
	6F-3930	1	CORE-VALVE	
	7D-5252	1	SPUD AS	
	2D-2508	1	GROMMET	
	2D-2509	1	LOCKNUT	
	2D-2507	1	SPUD	

<END>

159-1785 WHEEL & TIRE GP

S/N: CAF1-UP
PART OF 159-1782 WHEEL & TIRE AR
AN ATTACHMENT

SMCS-4200 **i01755235**

NOTE	PART NUMBER	QTY	PART NAME 1 2 3 4 5 6 (PRODUCT LEVEL)	SEE PAGE
	8W-3686	1	SEAL-O-RING	
	154-0051	1	TIRE (17.5 R25 * XSNOPLUS G-2)	
	2G-6595	1	VALVE GP-TIRE	
	9K-7951	1	CAP-VALVE (STEM)	
	6F-3930	1	CORE-VALVE	
	7D-5252	1	SPUD AS	
	2D-2507	1	SPUD	
	2D-2508	1	GROMMET	
	2D-2509	1	LOCKNUT	
Y	*142-6229*	1	WHEEL GP	411

Y-SEPARATE ILLUSTRATION

<END>

173-7813 WHEEL & TIRE GP

S/N: CAF1-UP
PART OF 174-2304 WHEEL & TIRE AR
AN ATTACHMENT

SMCS-4200 **i01680355**

NOTE	PART NUMBER	QTY	PART NAME 1 2 3 4 5 6 (PRODUCT LEVEL)	SEE PAGE
	2D-2565	1	SEAL-O-RING	
	173-7830	1	TIRE (14.00R24 * VUT)	
	110-4213	1	VALVE GP-TIRE	
	110-4214	1	STEM AS	
	6F-3930	1	CORE-VALVE	
	9K-7951	1	CAP-VALVE (STEM)	
	7D-5252	1	SPUD AS	
	2D-2508	1	GROMMET	
	2D-2509	1	LOCKNUT	
Y	*142-6226*	1	WHEEL GP	411
Y-SEPARATE ILLUSTRATION				

<END>

184-2346 WHEEL & TIRE GP

S/N: CAF1-UP
(9 X 24)
PART OF 184-2362 WHEEL & TIRE AR
AN ATTACHMENT

SMCS-4200 **i01459491**

NOTE	PART NUMBER	QTY	PART NAME 1 2 3 4 5 6 (PRODUCT LEVEL)	SEE PAGE
	123-3420	1	RIM AS	
	184-1681	1	TIRE (14.00 R24 * G-3 AS-3A)	
	2D-2511	1	VALVE GP-TIRE	
	3D-2239	1	VALVE GP-TIRE	
	6F-3930	1	CORE-VALVE	
	9K-7951	1	CAP-VALVE (STEM)	
	7D-5252	1	SPUD AS	
	2D-2508	1	GROMMET	
	2D-2509	1	LOCKNUT	

<END>

184-2347 WHEEL & TIRE GP

S/N: CAF1-UP
PART OF 184-2363 WHEEL & TIRE AR
AN ATTACHMENT

SMCS-4200 **i01459520**

NOTE	PART NUMBER	QTY	PART NAME 1 2 3 4 5 6 (PRODUCT LEVEL)	SEE PAGE
	2D-2565	1	SEAL-O-RING	
	184-1681	1	TIRE (14.00 R24 * G-3 AS-3A)	
	110-4213	1	VALVE GP-TIRE	
	7D-5252	1	SPUD AS	
	2D-2508	1	GROMMET	
	2D-2509	1	LOCKNUT	
	110-4214	1	STEM AS	
	6F-3930	1	CORE-VALVE	
	9K-7951	1	CAP-VALVE (STEM)	
Y	*142-6226*	1	WHEEL GP	411

Y-SEPARATE ILLUSTRATION

<END>

204-8785 WHEEL & TIRE GP

S/N: CAF1-UP
17.5 R25 * VUT
PART OF 204-8786 WHEEL & TIRE AR
AN ATTACHMENT

SMCS-4200 **i01562298**

NOTE	PART NUMBER	QTY	PART NAME 1 2 3 4 5 6 (PRODUCT LEVEL)	SEE PAGE
	8W-3686	1	SEAL-O-RING	
	2G-6595	1	VALVE GP-TIRE	
	9K-7951	1	CAP-VALVE (STEM)	
	6F-3930	1	CORE-VALVE	
	7D-5252	1	SPUD AS	
	2D-2508	1	GROMMET	
	2D-2509	1	LOCKNUT	
Y	*142-6229*	1	WHEEL GP	411

Y-SEPARATE ILLUSTRATION

<END>

142-6303 WHEEL AR

S/N: CAF1-UP
AN ATTACHMENT

SMCS-4208 **i00761194**

NOTE	PART NUMBER	QTY	PART NAME 1 2 3 4 5 6 (PRODUCT LEVEL)	SEE PAGE
Y	*142-6172*	6	WHEEL GP	410

Y-SEPARATE ILLUSTRATION

<END>

142-6305 WHEEL AR

S/N: CAF1-UP
AN ATTACHMENT

SMCS-4208 **i00761196**

NOTE	PART NUMBER	QTY	PART NAME 1 2 3 4 5 6 (PRODUCT LEVEL)	SEE PAGE
Y	*142-6304*	6	WHEEL GP	411

Y-SEPARATE ILLUSTRATION

<END>

148-2405 WHEEL AR

S/N: CAF1-UP
AN ATTACHMENT

SMCS-4208 **i00762410**

NOTE	PART NUMBER	QTY	PART NAME 1 2 3 4 5 6 (PRODUCT LEVEL)	SEE PAGE
Y	*148-2404*	6	WHEEL GP	412

Y-SEPARATE ILLUSTRATION

<END>

148-2409 WHEEL AR

S/N: CAF1-UP
AN ATTACHMENT

SMCS-4208 **i00762414**

NOTE	PART NUMBER	QTY	PART NAME 1 2 3 4 5 6 (PRODUCT LEVEL)	SEE PAGE
Y	*148-2408*	6	WHEEL GP	412

Y-SEPARATE ILLUSTRATION

<END>

142-6172 WHEEL GP

S/N: CAF1-UP
(9 X 24)
PART OF 142-6303 WHEEL AR
AN ATTACHMENT

SMCS-4201, 4208 **i00761541**

NOTE	PART NUMBER	QTY	PART NAME 1 2 3 4 5 6 (PRODUCT LEVEL)	SEE PAGE
	123-3420	1	RIM AS	
	2D-2511	1	VALVE GP-TIRE	
	9K-7951	1	CAP-VALVE	
	6F-3930	1	CORE-VALVE	
	7D-5252	1	SPUD AS	
	2D-2508	1	GROMMET	
	2D-2509	1	LOCKNUT	
	2D-2507	1	SPUD	

<END>

142-6226 WHEEL GP

S/N: CAF1-UP
(10 X 24)
PART OF 142-6284, 142-6286, 142-6290, 142-6291, 142-6292, 142-6294, 142-6296, 142-6298, 142-6301, 142-6307, 142-6310, 142-6313, 142-6316, 142-6319, 142-6322, 142-6325, 142-6328, 142-6330, 142-6332, 173-7813, 184-2347 WHEEL & TIRE GP, 142-6304 WHEEL GP
AN ATTACHMENT

SMCS-4201, 4208 **i01457104**

NOTE	PART NUMBER	QTY	PART NAME 1 2 3 4 5 6 (PRODUCT LEVEL)	SEE PAGE
	8W-9566	1	FLANGE AS	
	2D-2654	1	LOCK RING	
	184-2309	1	RIM AS	

<END>

142-6229 WHEEL GP

S/N: CAF1-UP
(14 X 25)
PART OF 142-6356, 142-6357, 142-6358, 142-6364, 142-6367, 142-6374, 142-6375, 142-6376, 142-6385, 159-1785, 204-8785 WHEEL & TIRE GP, 148-2408 WHEEL GP
AN ATTACHMENT

SMCS-4201, 4208 **i00756189**

NOTE	PART NUMBER	QTY	PART NAME 1 2 3 4 5 6 (PRODUCT LEVEL)	SEE PAGE
	8W-9594	1	FLANGE AS	
	4K-4881	1	LOCKRING	
	6G-1528	1	WHEEL	

<END>

142-6304 WHEEL GP

S/N: CAF1-UP
PART OF 142-6305 WHEEL AR
AN ATTACHMENT

SMCS-4201, 4208 **i01456348**

NOTE	PART NUMBER	QTY	PART NAME 1 2 3 4 5 6 (PRODUCT LEVEL)	SEE PAGE
	2D-2565	1	SEAL-O-RING	
	110-4213	1	VALVE GP-TIRE	
	7D-5252	1	SPUD AS	
	2D-2508	1	GROMMET	
	2D-2509	1	LOCKNUT	
	110-4214	1	STEM AS	
	6F-3930	1	CORE-VALVE	
	9K-7951	1	CAP-VALVE (STEM)	
Y	*142-6226*	1	WHEEL GP	411

Y-SEPARATE ILLUSTRATION

<END>

148-2404 WHEEL GP

S/N: CAF1-UP
(13 X 25)
PART OF 148-2405 WHEEL AR
AN ATTACHMENT

SMCS-4201, 4208 **i01755146**

NOTE	PART NUMBER	QTY	PART NAME 1 2 3 4 5 6 (PRODUCT LEVEL)	SEE PAGE
	8X-1160	1	RIM AS	
	2G-6595	1	VALVE GP-TIRE	
	9K-7951	1	CAP-VALVE (STEM)	
	6F-3930	1	CORE-VALVE	
	7D-5252	1	SPUD AS	
	2D-2508	1	GROMMET	
	2D-2509	1	LOCKNUT	
	2D-2507	1	SPUD	

<END>

148-2408 WHEEL GP

S/N: CAF1-UP
PART OF 148-2409 WHEEL AR
AN ATTACHMENT

SMCS-4201, 4208 **i01755147**

NOTE	PART NUMBER	QTY	PART NAME 1 2 3 4 5 6 (PRODUCT LEVEL)	SEE PAGE
	8W-3686	1	SEAL-O-RING	
	2G-6595	1	VALVE GP-TIRE	
	9K-7951	1	CAP-VALVE (STEM)	
	6F-3930	1	CORE-VALVE	
	7D-5252	1	SPUD AS	
	2D-2508	1	GROMMET	
	2D-2509	1	LOCKNUT	
	2D-2507	1	SPUD	
Y	*142-6229*	1	WHEEL GP	411

Y-SEPARATE ILLUSTRATION

<END>

MEMORANDA

FRAME AND BODY

134-1080 AXLE GP-FRONT

S/N: CAF1-UP

PART OF 162-5603 GENERAL AR

SMCS-4305, 4313, 5225 **i01721141**

NOTE	REF NO	GRAPHIC REF	PART NUMBER	QTY	PART NAME 1 2 3 4 5 6 (PRODUCT LEVEL)	SEE PAGE
R	1	1	**5K-5288**	2	SEAL GP-DUO-CONE	
	2	1	**2G-8626**	2	WASHER-THRUST	
	3	1	**3B-8489**	7	FITTING-GREASE (1/8-27 THD) (WHEEL LEAN CYLINDER)	
	4	1	**4D-3704**	2	WASHER-HARD (17X30X5MM THK)	
	5	1	**2G-8615**	4	WASHER-THRUST	
	6	1	**2G-8742**	2	WASHER-HARD (20X65X5MM THK)	
	7	1	**2H-3740**	4	BOLT (3/4-16X1.25 IN)	
	8	1	**2G-8741**	4	RING-METAL SEAL	
	9	1	**2G-8777**	4	SEAL	
	10	1	**9M-2092**	4	SEAL-O-RING	
	11	1	**8W-5293**	4	PIN	
	12	1	**8W-4652**	1	HOUSING-SPINDLE	
	13	1	**8W-4653**	1	HOUSING-SPINDLE	
	14	1	**8D-2811**	2	WASHER (1.25X1.94X.032 IN THK)	
	15	1	**2G-8633**	2	PIN	
	16	1	**1D-4627**	2	BOLT (7/8-9X3 IN)	
	17	1	**2J-3505**	2	NUT-FULL (7/8-9 THD)	
	18	1	**7X-7731**	2	PLUG-PIPE (3/4-14 NPTF THD)	
	19	1	**5P-8842**	8	SEAL-LIP	
	20	1	**3B-8489**	4	FITTING-GREASE (1/8-27 THD) (STEERING CYLINDER)	
	21	1	**5P-1075**	4	WASHER-HARD (10.2X22.5X3MM THK)	
	22	1	**5S-7379**	4	BOLT (3/8-16X0.875 IN)	
	23	1	**2G-8768**	4	WASHER (10.5X53.8X3MM THK)	
	24	1	**103-9125**	1	BAR AS-LEAN	
		1	**2G-8624**	2	BEARING-SLEEVE	
	25	1	**5P-8890**	2	SEAL-LIP	
	26	1	**030-0060**	2	CUP-BEARING	
	27	1	**030-0061**	2	CONE-BEARING	
	28	1	**7D-8637**	2	CUP-BEARING	
	29	1	**7D-8636**	2	CONE-BEARING	
	30	1	**3B-4618**	2	PIN-COTTER	
	31	1	**7D-8643**	2	RETAINER	
B	32	1	**2G-3865**	6	SHIM (.127MM THK)	
	33	1	**0V-0375**	6	BOLT (1/2-13X3.25 IN)	
	34	1	**9D-9797**	2	LOCK	
	35	1	**5T-0906**	2	COVER	
	36	1	**2J-8163**	2	SEAL-O-RING	
	37	1	**5D-0353**	4	BOLT-LOCKING (3/8-16X1 IN)	
	38	1	**0S-1585**	1	BOLT (1/2-13X1.50 IN)	
	39	1	**7D-1649**	1	WASHER-HARD (13.5X32X5MM THK)	
	40	1	**5P-8843**	2	SEAL-LIP	
B	41	1	**2G-5673**	2	WASHER (2X4X.1 IN THK)	
	42	1	**9G-5211**	1	SPACER (12.95X19.05X9.0MM THK)	
	43	1	**130-3595**	1	PIN AS	
	44	1	**147-3400**	2	SPINDLE	
	45	1	**0S-1592**	2	BOLT (5/8-11X1.25 IN)	
	46	1	**2G-5667**	2	RETAINER	
Y	47	1	*7D-8912*	1	LINK GP-STEERING	442
	48	1	**134-1081**	1	AXLE AS-FRONT	
	49	1	**2G-8631**	4	BEARING-SLEEVE	
	50	1	**131-4428**	2	BEARING-SLEEVE	
	51	1	**8X-3434**	1	ARM AS-LEANING (LH)	
	52	1	**146-1842**	1	BEARING-SLEEVE	
	53	1	**146-1843**	1	BEARING-SLEEVE	
	54	1	**8W-6476**	1	PIN	

134-1080 **AXLE GP-FRONT** ***(contd.)*** **i01721141**

NOTE	REF NO	GRAPHIC REF	PART NUMBER	QTY	PART NAME 1 2 3 4 5 6 (PRODUCT LEVEL)	SEE PAGE
	56	1	**8X-3435**	1	ARM AS-LEANING (RH)	
	57	1	**146-1842**	1	BEARING-SLEEVE	
	58	1	**146-1843**	1	BEARING-SLEEVE	
	59	1	**8W-6497**	1	PIN	
	61	1	**9D-3523**	1	WASHER (2.062X4X.188MM THK)	

B-USE AS REQUIRED
R-REMFG PART MAY BE AVAILABLE
Y-SEPARATE ILLUSTRATION

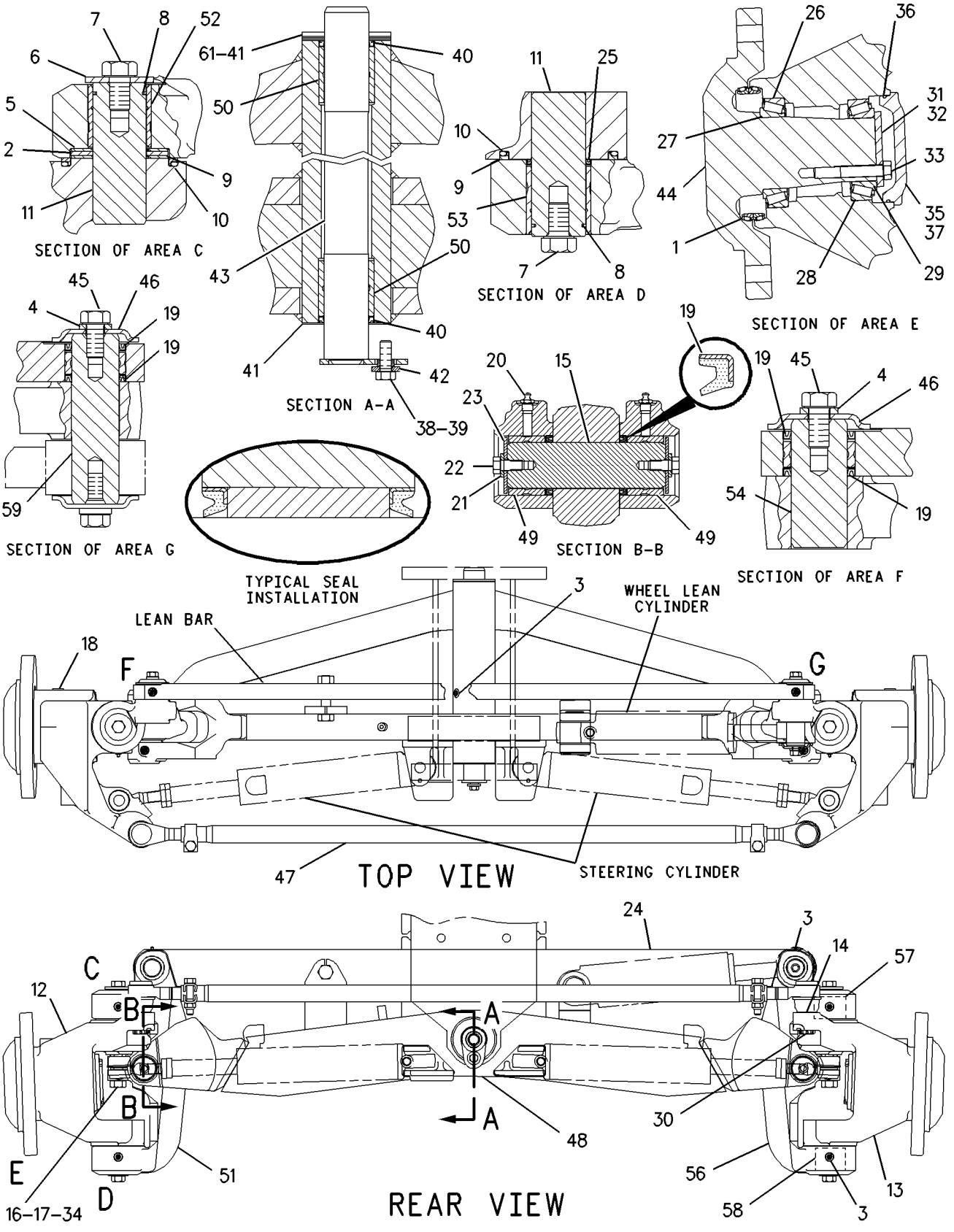

GRAPHIC #1 g00885270

201-4836 BAFFLE GP-RADIATOR

S/N: CAF1-UP
PART OF 194-2911, 194-2912 COOLING AR
ALSO AN ATTACHMENT

SMCS-1806 **i01679204**

NOTE	REF NO	GRAPHIC REF	PART NUMBER	QTY	PART NAME 1 2 3 4 5 6 (PRODUCT LEVEL)	SEE PAGE
	1	1	**199-2711**	2	SPACER (7.82X26.67X75MM THK)	
	2	1	**201-4837**	1	PLATE	
M	3	1	**2Y-5829**	4	NUT (M10X1.5 THD)	
M	4	1	**6V-4248**	4	BOLT (M10X1.50X25MM)	
	5	1	**6V-5839**	8	WASHER (11X21X2.5MM THK)	
M	6	1	**8T-4178**	2	BOLT (M10X1.5X90MM)	
	7	1	**8T-4222**	2	WASHER-PLATED (11X32X2.5MM THK)	

M-METRIC PART

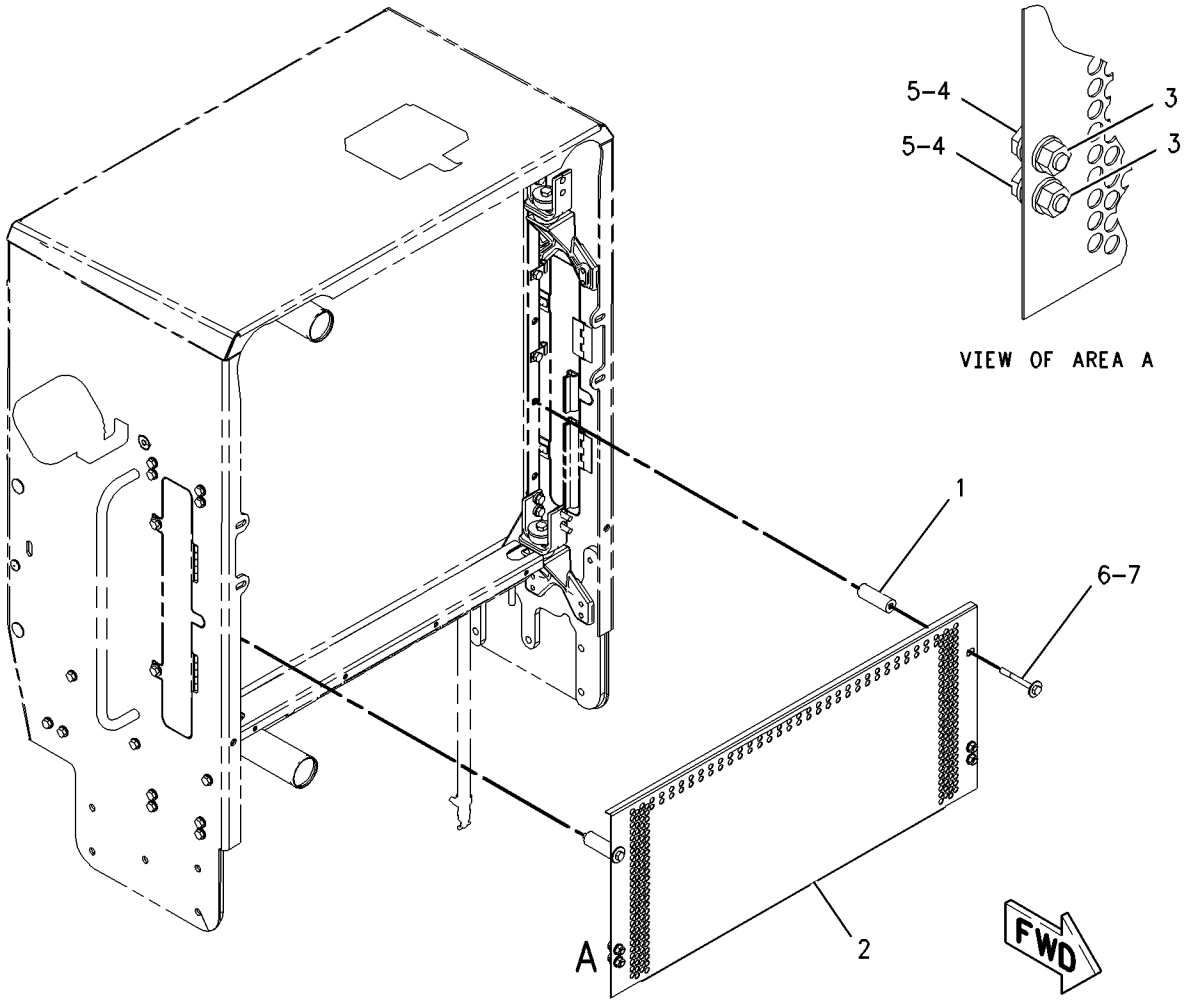

GRAPHIC #1 g00935883

FRAME AND BODY

162-1513 CASE & FRAME GP

S/N: CAF1-UP

PART OF 162-5603 GENERAL AR

SMCS-7051 **i01673295**

NOTE	REF NO	GRAPHIC REF	PART NUMBER	QTY	PART NAME 1 2 3 4 5 6 (PRODUCT LEVEL)	SEE PAGE
	1	1	**2A-3398**	1	GASKET	
	2	1	**4K-0367**	1	NUT-FULL (5/8-11 THD)	
	3	1	**8M-3837**	1	PLUG-MAGNETIC (TRANSMISSION OIL)	
	4	1	**105-6491**	1	BOLT-ADJUSTMENT (5/8-11X3.15 IN)	
	5	1	**173-3274**	1	CASE & FRAME AS	
	6	1	**2D-8822**	40	STUD-TAPERLOCK (5/8-11X2.36 IN OAL)	
	7	1	**4D-8148**	3	DOWEL	
	8	1	**5M-1932**	12	STUD-TAPERLOCK (1/2-13X2.2 IN OAL)	

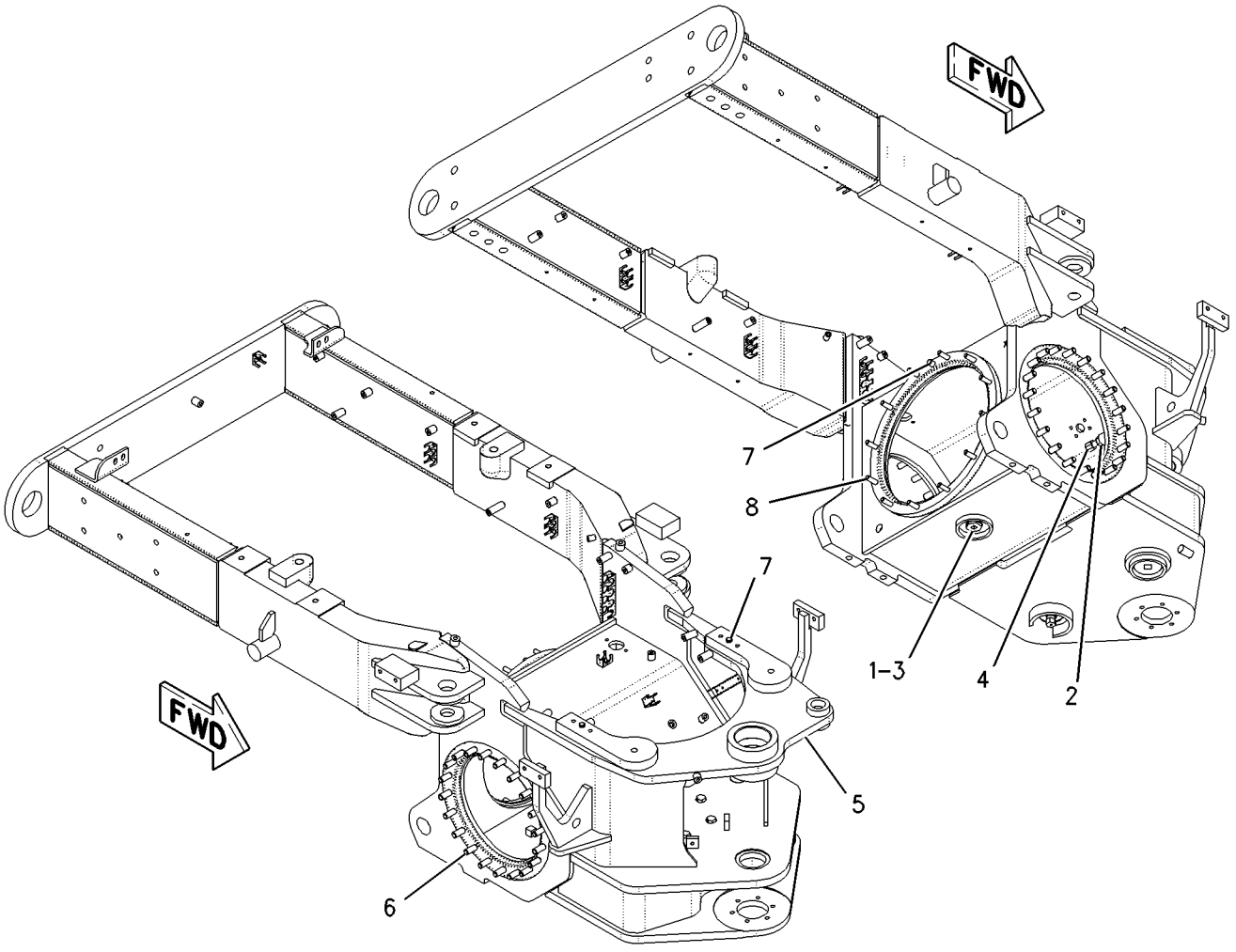

GRAPHIC #1 g00890701

126-6933 COVER GP-PROTECTION

S/N: CAF1-UP
PART OF 207-3665, 210-2042 CONVERSION AR-CERTIFICATION
AN ATTACHMENT

SMCS-7315 **i01772241**

NOTE	REF NO	GRAPHIC REF	PART NUMBER	QTY	PART NAME 1 2 3 4 5 6 (PRODUCT LEVEL)	SEE PAGE
B	1	1	**1W-3011**	1	SPACER (10.5X22X73.5MM THK)	
	2	1	**126-6929**	1	COVER-LH	
	3	1	**126-6930**	1	COVER-RH	
	4	1	**129-5049**	4	BRACKET AS	
	5	1	**201-7603**	2	PLATE-WARNING (NO CLEARANCE)	
	6	1	**220-1922**	2	BRACKET	
	7	1	**1F-5339**	4	LUG (3/8-16 THD)	
	8	1	**4L-6454**	4	BOLT (3/8-16X1 IN)	
	9	1	**5M-3062**	4	BOLT (3/8-16X0.75 IN)	
	10	1	**5P-1075**	14	WASHER-HARD (10.2X22.5X3MM THK)	
	11	1	**6D-4244**	2	CLIP	
	12	1	**6V-8801**	2	NUT (3/8-16 THD)	
B	13	1	**7X-0291**	1	BOLT (3/8-16X3.75 IN)	
	14	1	**8T-8915**	4	BOLT (3/8-16X3.25 IN)	
	15	1	**9D-5659**	2	BOSS (3/8-16 THD)	

B-USE AS REQUIRED

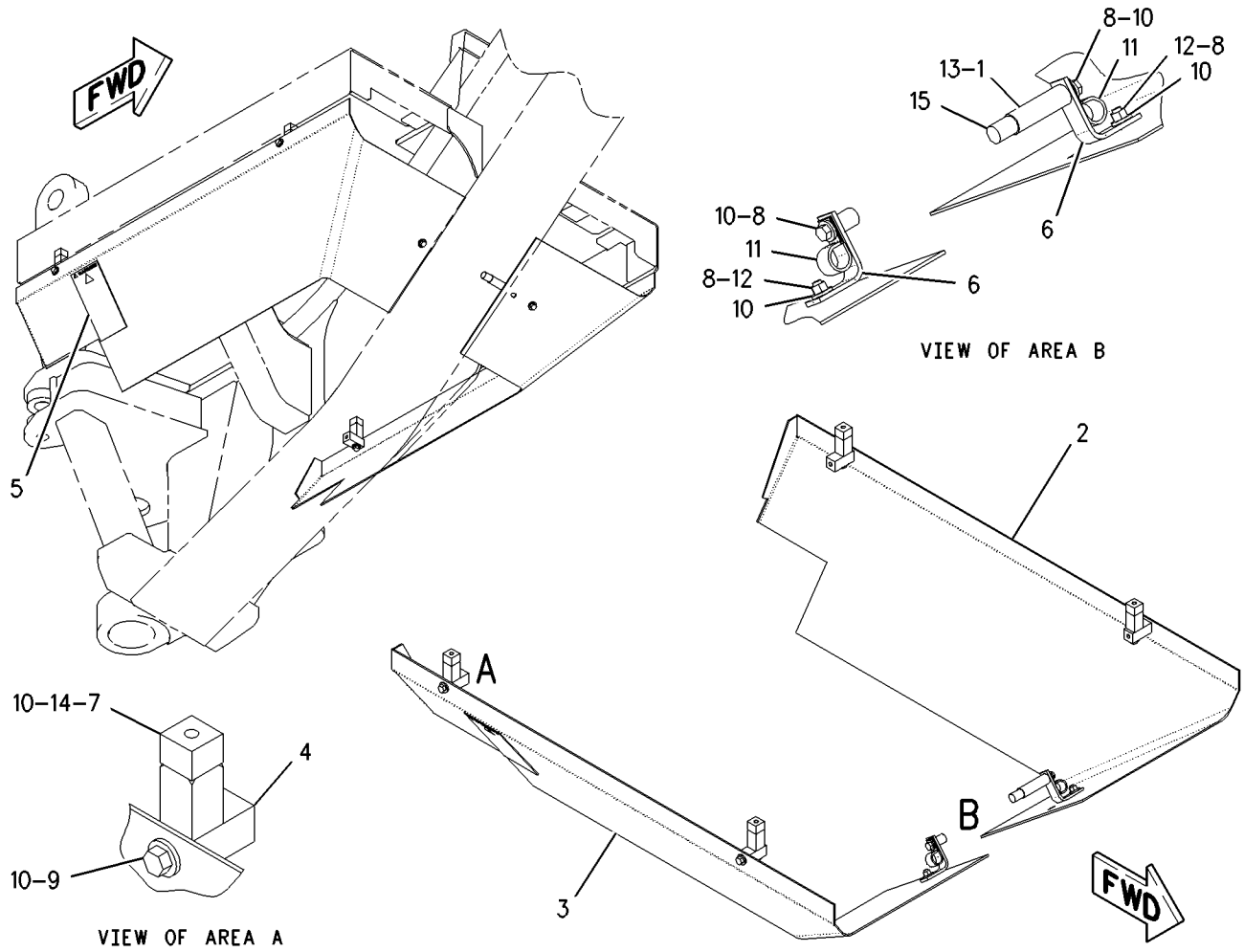

GRAPHIC #1 g00943601

FRAME AND BODY

162-1511 ENCLOSURE GP-ENGINE

S/N: CAF1-UP

PART OF 162-5603 GENERAL AR

SMCS-7263 **i01673474**

NOTE	REF NO	GRAPHIC REF	PART NUMBER	QTY	PART NAME 1 2 3 4 5 6 (PRODUCT LEVEL)	SEE PAGE
	1	1	**3P-9900**	2	WASHER (10.5X30X3MM THK)	
	2	1	**4B-4909**	2	SPRING	
	3	1	**132-4354**	2	SPACER (10.5X19X26.5MM THK)	
	4	1	**139-2944**	2	ROD	
	5	3	**175-5484**	1	DASH AS	
	6	3	**175-6287**	1	PLATE AS	
	7	2	**176-2918**	1	PILLAR AS (RH)	
	8	2	**176-2922**	1	PILLAR AS (LH)	
	9	3	**176-5767**	2	CATCH AS	
	10	3	**177-2932**	2	CATCH AS	
	11	1	**177-4120**	2	HANDHOLD	
	12	1	**187-0976**	2	PLATE	
	13	1	**192-5629**	4	LATCH AS	
		1	**126-7168**	1	LOCK AS	
		1	**7F-9223**	1	LOCKWASHER	
		1	**8T-5004**	1	SCREW-MACHINE (1/4-28X0.375 IN)	
	14	3	**192-5638**	4	PAWL	
	15	3	**194-4939**	2	SHIM (5MM THK)	
	16	1	**194-7987**	1	COVER AS	
	17	1	**197-6853**	1	HOOD AS	
	18	1	**197-6855**	1	DOOR AS-ACCESS	
		1	**178-0131**	1	HINGE	
	19	1	**197-6857**	1	DOOR AS-ACCESS	
		1	**178-0131**	1	HINGE	
	20	1	**197-8510**	2	HANDHOLD	
	21	1	**197-8606**	1	PANEL AS	
	22	1	**197-8608**	1	PANEL AS	
	23	1	**199-9906**	2	HANDHOLD	
	24	1	**199-9983**	2	GRAB IRON AS	
	25	2	**212-3590**	1	PLATE	
	26	2	**212-3591**	1	PLATE	
	27	1	**216-4267**	1	PANEL AS (LH)	
		1	**7T-1099**	1	LINK	
	28	1	**216-4269**	1	PANEL AS (RH)	
M	29	1	**127-4038**	16	SCREW-MACHINE (M6X1X16MM)	
M	30	1	**129-3178**	16	LOCKNUT (M6X1 THD)	
	31	1	**2K-5986**	2	PIN-SPRING	
	32	3	**5P-1076**	12	WASHER-HARD (13.5X30X4MM THK)	
	33	3	**7X-0632**	4	WASHER-HARD (11X36X6MM THK)	
	34	1,2,3	**7X-7729**	64	WASHER (11X25X3MM THK)	
M	35	2	**8T-0389**	4	LOCKNUT (M10X1.5 THD)	
M	36	2	**8T-4133**	4	NUT (M10X1.5 THD)	
M	37	1,2,3	**8T-4136**	53	BOLT (M10X1.5X25MM)	
M	38	3	**8T-4139**	10	BOLT (M12X1.75X30MM)	
M	39	3	**8T-4179**	2	BOLT (M12X1.75X20MM)	
M	40	1	**8T-4182**	2	BOLT (M10X1.5X45MM)	
M	41	3	**8T-4195**	15	BOLT (M10X1.5X30MM)	
	42	1	**8T-4994**	2	WASHER-HARD (20X36.5X3.5MM THK)	
	43	1	**9X-8256**	16	WASHER (6.6X12X2MM THK)	
	44	2	**5P-5923**		SEAL (EACH .7M)	
	45	2	**5P-5923**		SEAL (EACH .05M)	

M-METRIC PART

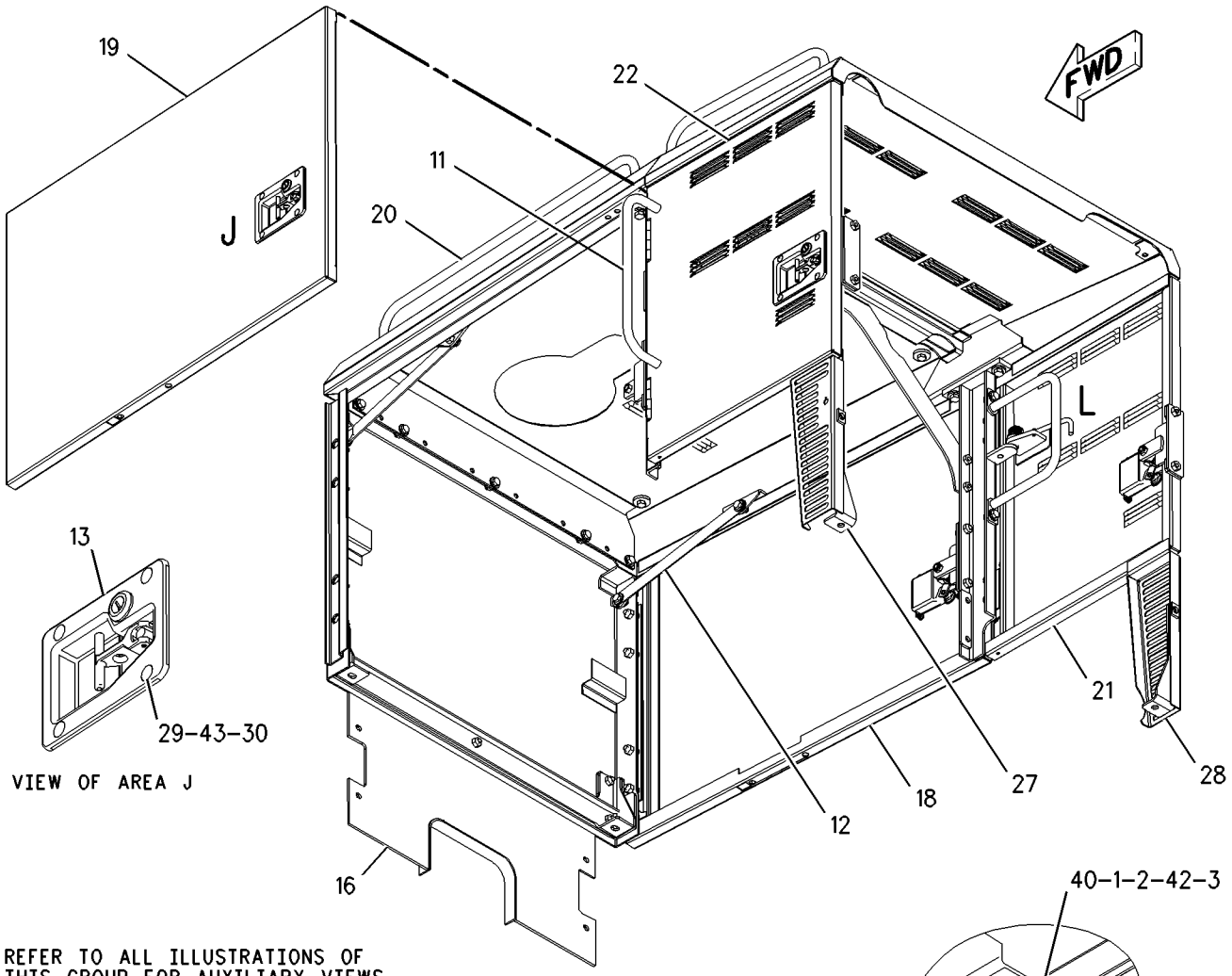

REFER TO ALL ILLUSTRATIONS OF
THIS GROUP FOR AUXILIARY VIEWS

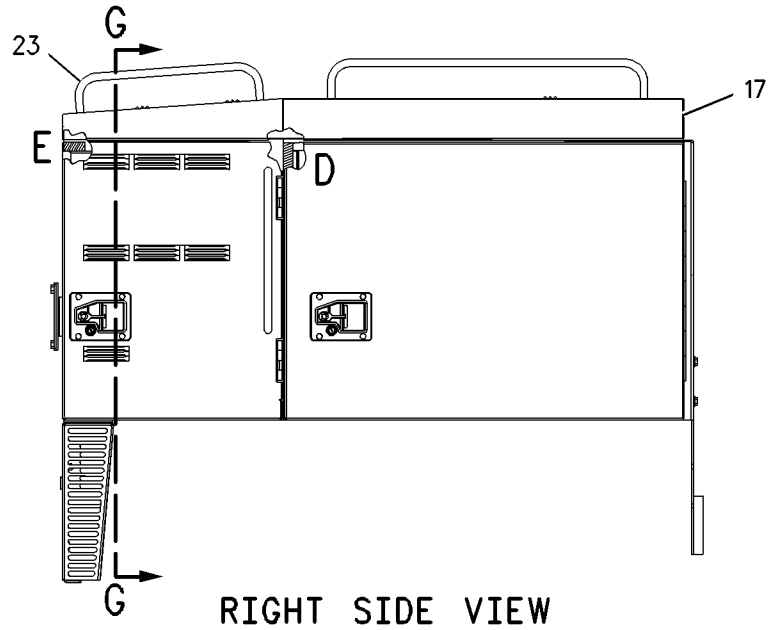

RIGHT SIDE VIEW

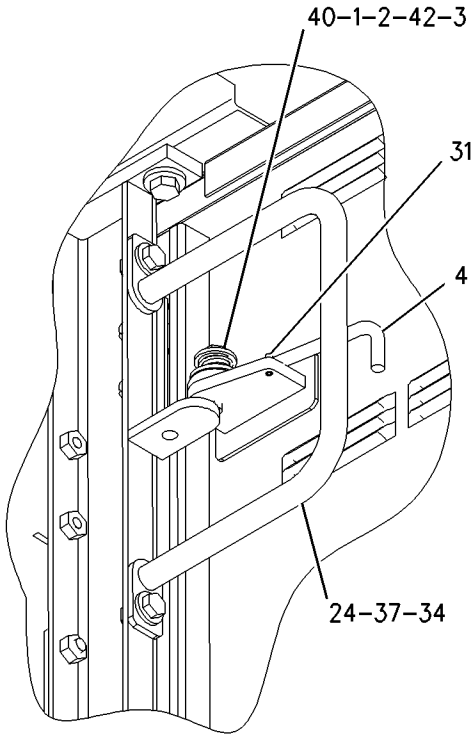

VIEW OF AREA L

GRAPHIC #1

g00937612

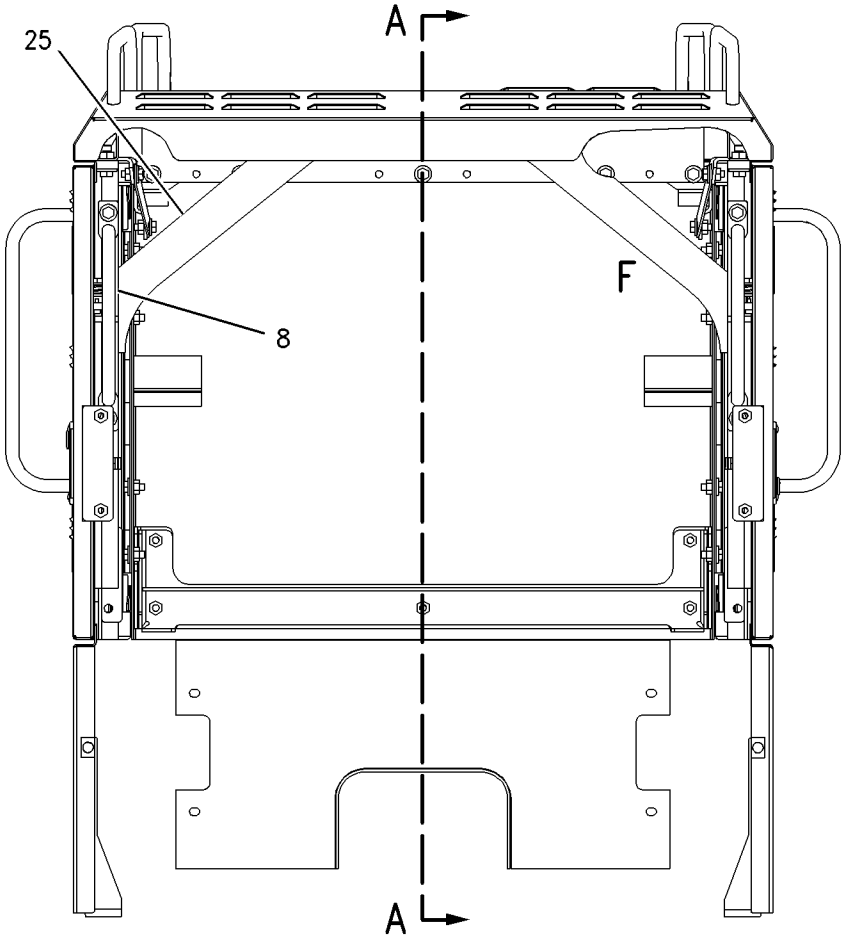

REAR VIEW

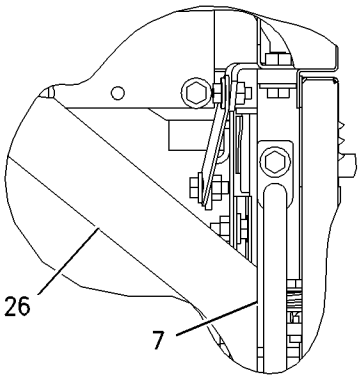

VIEW OF AREA F

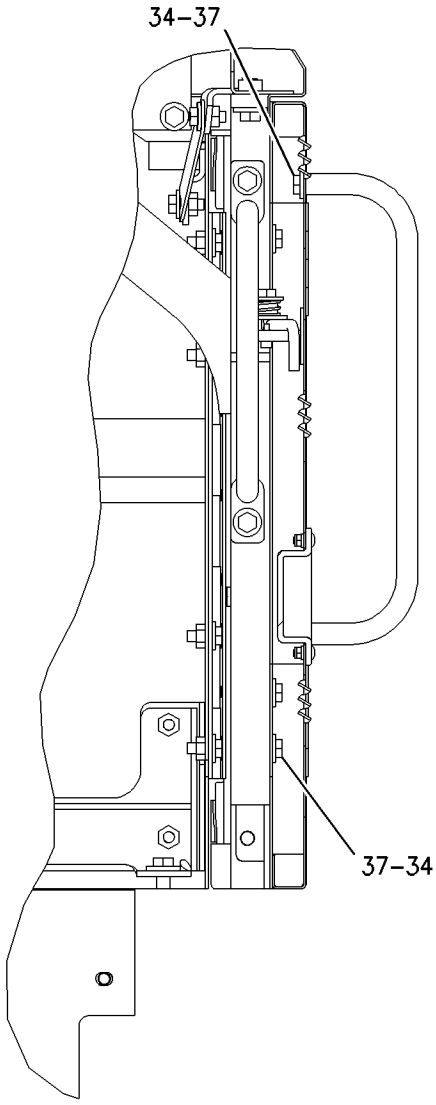

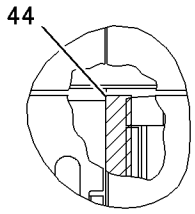

VIEW OF AREA D

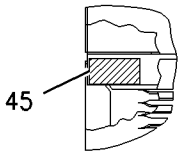

VIEW OF AREA E

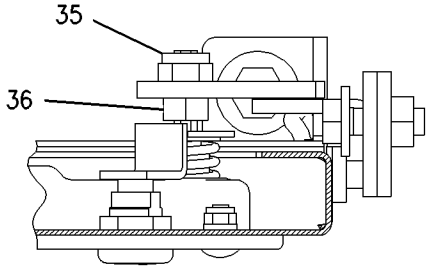

SECTION K-K

REFER TO ALL ILLUSTRATIONS OF
THIS GROUP FOR AUXILIARY VIEWS

SECTION G-G

GRAPHIC #2

g00937614

162-1511 **ENCLOSURE GP-ENGINE** ***(contd.)*** **i01673474**

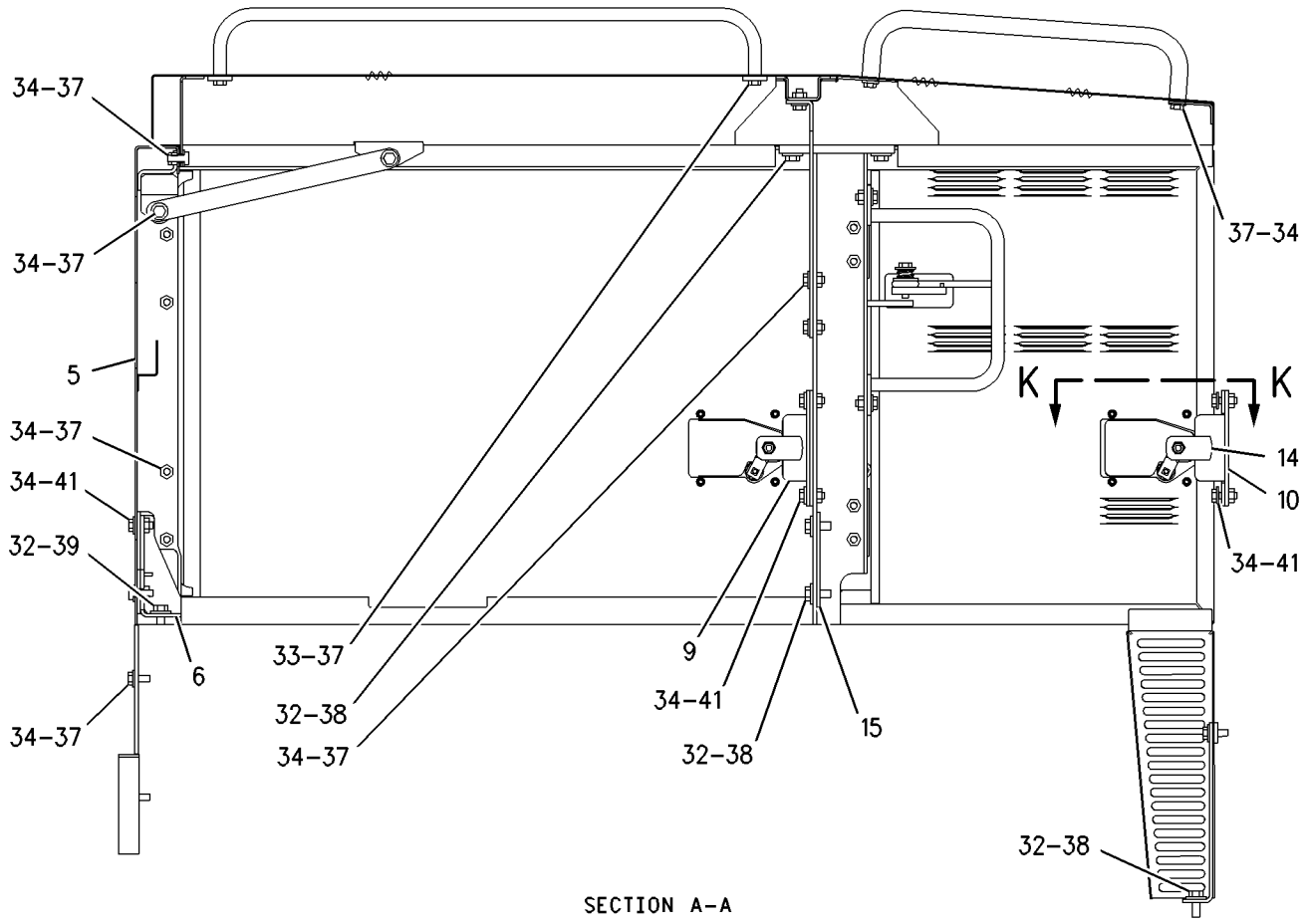

SECTION A-A

REFER TO ALL ILLUSTRATIONS OF
THIS GROUP FOR AUXILIARY VIEWS

GRAPHIC #3 g00937615

162-1508 FRAME GP-FRONT

S/N: CAF1-UP

PART OF 162-5603 GENERAL AR

SMCS-7050, 7051 **i01830368**

NOTE	REF NO	GRAPHIC REF	PART NUMBER	QTY	PART NAME 1 2 3 4 5 6 (PRODUCT LEVEL)	SEE PAGE
	1	2	**8D-3791**	1	PIN	
	2	2	**8X-3200**	1	PLATE AS	
	3	1	**9D-6584**	9	SEAL-LIP	
	4	2	**9D-9256**	1	PIN	
	5	1	**142-1814**	2	COVER	
	6	2	**144-2161**	1	PLATE	
	7	1	**145-5966**	1	COVER-RH	
	8	1	**145-5967**	1	COVER-LH	
	9	1	**169-0446**	1	FRAME AS	
	10	2	**191-5293**	1	INSULATION	
	11	2	**4L-6454**	7	BOLT (3/8-16X1 IN)	
	12	1	**5M-3062**	20	BOLT (3/8-16X0.75 IN)	
	13	1,2	**5P-1075**	27	WASHER-HARD (10.2X22.5X3MM THK)	
	14	2	**5P-8167**	3	BOLT (3/8-16X0.625 IN)	
	15	2	**8T-4896**	16	WASHER-HARD (10.2X18.5X2.5MM THK)	
	16	1	**9D-0178**	4	BEARING	
	17	1	**9D-3311**	1	BEARING-SLEEVE	
BD	18	2	**5P-5969**	1	SEAL	
BE	19	2	**146-9739**		TAPE	

B-USE AS REQUIRED
D-ORDER BY THE METER
E-ORDER BY THE CENTIMETER

162-1508 **FRAME GP-FRONT** *(contd.)* **i01830368**

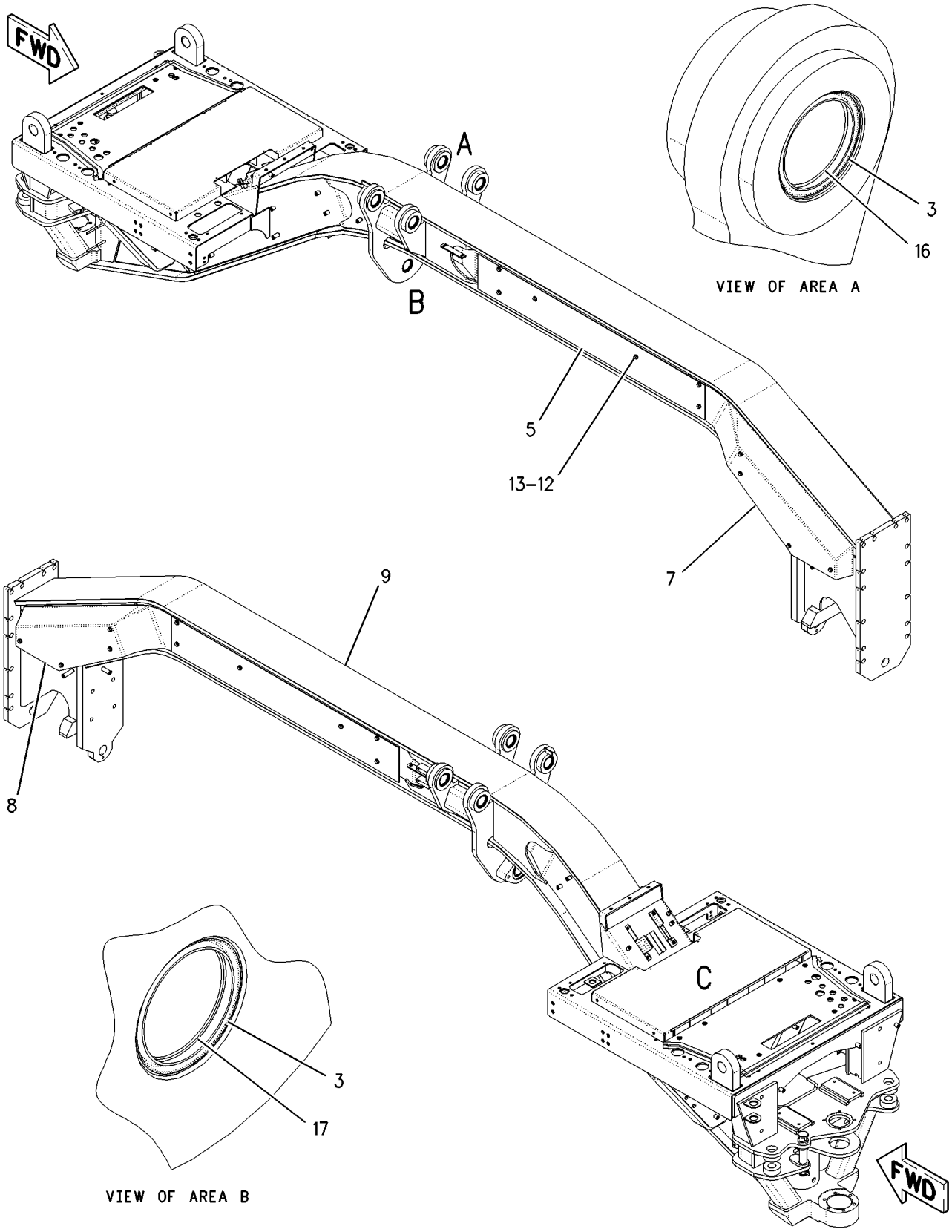

GRAPHIC #1 g00890249

162-1508 **FRAME GP-FRONT** *(contd.)* **i01830368**

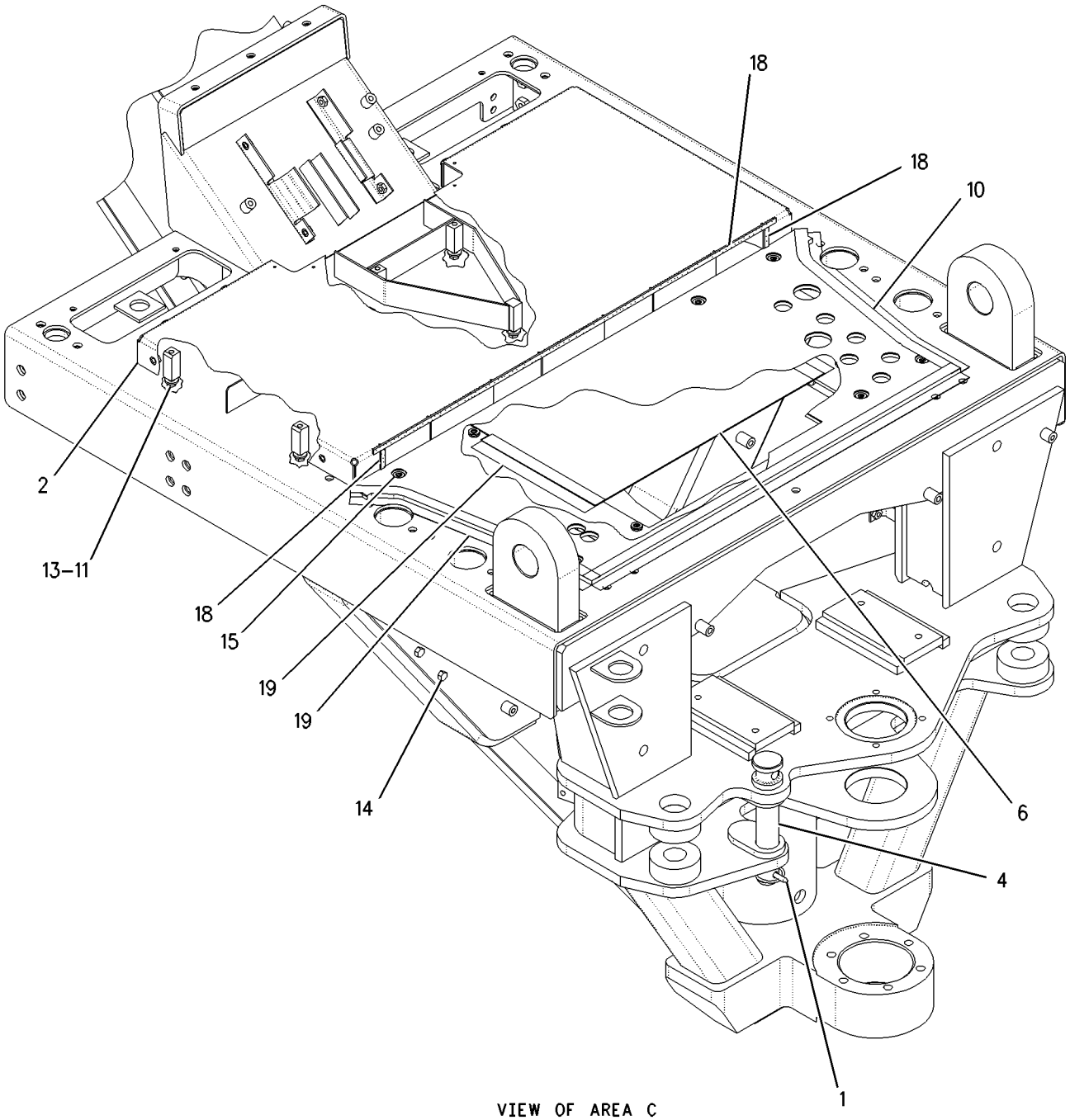

VIEW OF AREA C

GRAPHIC #2 g00890251

MEMORANDA

201-2547 GUARD & SUPPORT GP-RADIATOR

S/N: CAF1-UP
PART OF 194-2911, 194-2912 COOLING AR
ALSO AN ATTACHMENT

SMCS-7155 **i01782170**

NOTE	REF NO	GRAPHIC REF	PART NUMBER	QTY	PART NAME 1 2 3 4 5 6 (PRODUCT LEVEL)	SEE PAGE
	1	1	**1P-7297**	1	VALVE-DRAIN (RADIATOR)	
	2	1	**5D-1026**	2	CLAMP-HOSE	
	3	1	**7D-7026**	2	CONNECTOR-HOSE	
	4	1	**173-3882**	2	PLATE	
	5	1	**173-3924**	2	BAFFLE	
	6	2	**173-3942**	1	GUARD	
	7	1	**174-2863**	2	MOUNT AS	
					(EACH INCLUDES)	
	7A	1	**8F-6437**	1	WASHER (13.5X50.8X4.76MM THK)	
	7B	1	**8T-4223**	1	WASHER-HARD (13.5X25.5X3MM THK)	
M	7C	1	**8T-4244**	1	NUT (M12X1.75 THD)	
M	7D	1	**8T-6868**	1	BOLT (M12X1.75X80MM)	
	7E	1	**194-4863**	1	BRACKET	
	7F	1	**183-6933**	1	BRACKET	
	8	1	**177-4119**	2	HANDHOLD	
	9	1	**131-5171**	4	CLIP	
	10	1	**183-7913**	1	PLATE AS	
	11	1	**198-9943**	1	SHROUD AS	
	12	1	**199-2756**	2	MOUNT AS	
					(EACH INCLUDES)	
	12A	1	**8F-6437**	1	WASHER (13.5X50.8X4.76MM THK)	
	12B	1	**8T-4223**	1	WASHER-HARD (13.5X25.5X3MM THK)	
M	12C	1	**8T-4244**	1	NUT (M12X1.75 THD)	
M	12D	1	**8T-6868**	1	BOLT (M12X1.75X80MM)	
	12E	1	**198-9942**	1	BRACKET	
	12F	1	**226-9996**	1	BRACKET	
	13	1	**201-2550**	1	SUPPORT AS	
	14	1	**214-6867**	2	PLATE	
	15	1	**003-9514**	1	COUPLING-PIPE	
	16	1	**4S-9191**	8	WASHER (12X22.5X5MM THK)	
M	17	1	**6V-1820**	8	BOLT (M10X1.50X30MM)	
M	18	1	**6V-8214**	12	BOLT (M6X1X20MM)	
	19	1	**7X-7729**	6	WASHER (11X25X3MM THK)	
	20	1,2	**8T-4121**	47	WASHER-HARD (11X21X2.5MM THK)	
M	21	1,2	**8T-4136**	37	BOLT (M10X1.5X25MM)	
M	22	1	**8T-4186**	8	BOLT (M10X1.5X40MM)	
M	23	1	**8T-4195**	4	BOLT (M10X1.5X30MM)	
M	24	1	**8T-4196**	4	BOLT (M10X1.5X35MM)	
	25	1	**8T-4223**	10	WASHER-HARD (13.5X25.5X3MM THK)	
M	26	1	**8T-4910**	10	BOLT (M12X1.75X60MM)	
	27	1	**9D-3767**	6	PLUG-BUTTON	
	28	1	**9X-8267**	12	WASHER (6.6X12X2MM THK)	
BE	29	1	**5P-0767**		HOSE	
E	30	2	**123-3827**		SEAL (100CM)	
BE	31	1,2	**190-6616**		SEAL	
BE	32	1	**7X-7877**		STRIP-EDGING	

B-USE AS REQUIRED
E-ORDER BY THE CENTIMETER
M-METRIC PART

201-2547 **GUARD & SUPPORT GP-RADIATOR** *(contd.)* **i01782170**

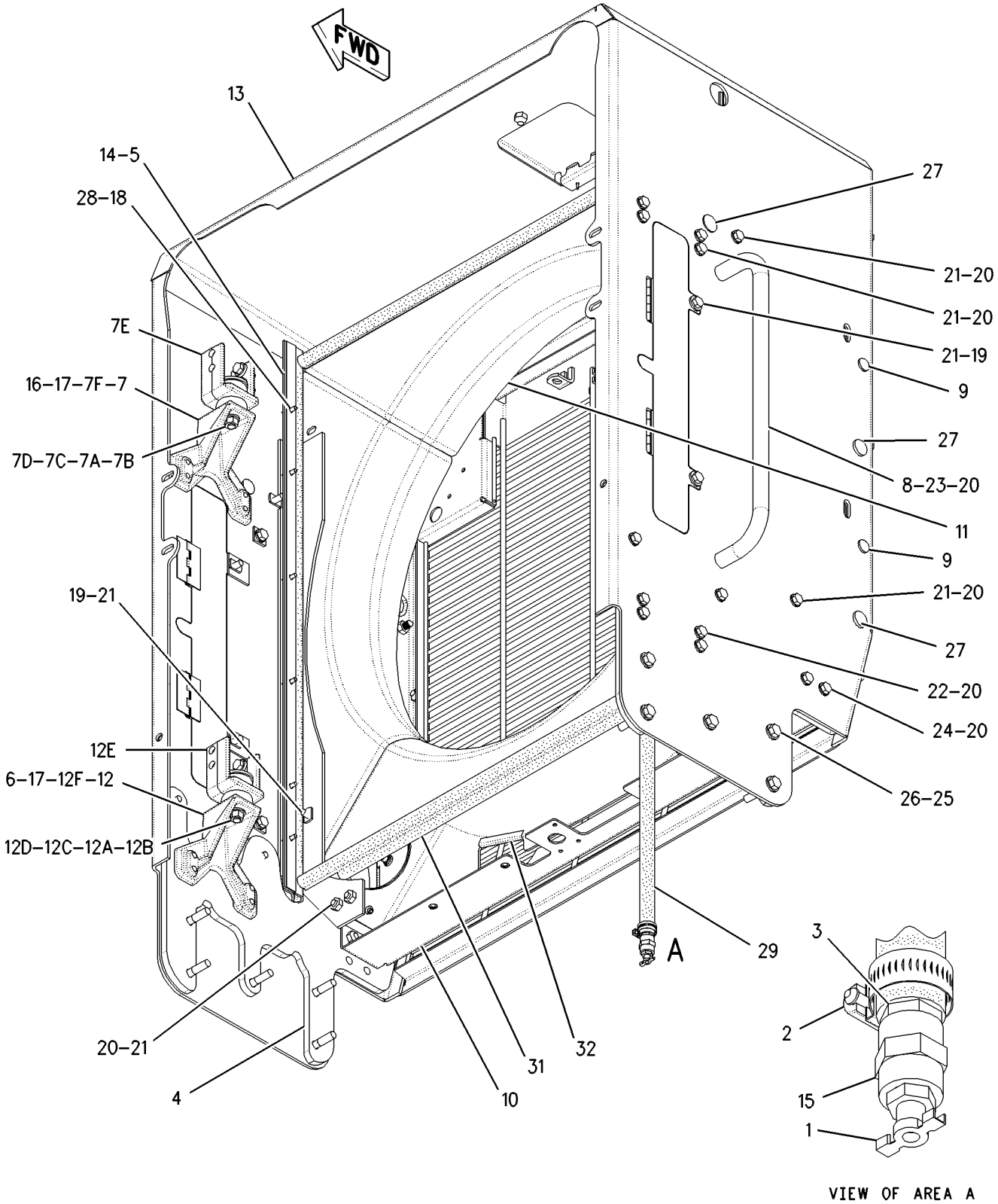

GRAPHIC #1 g00911469

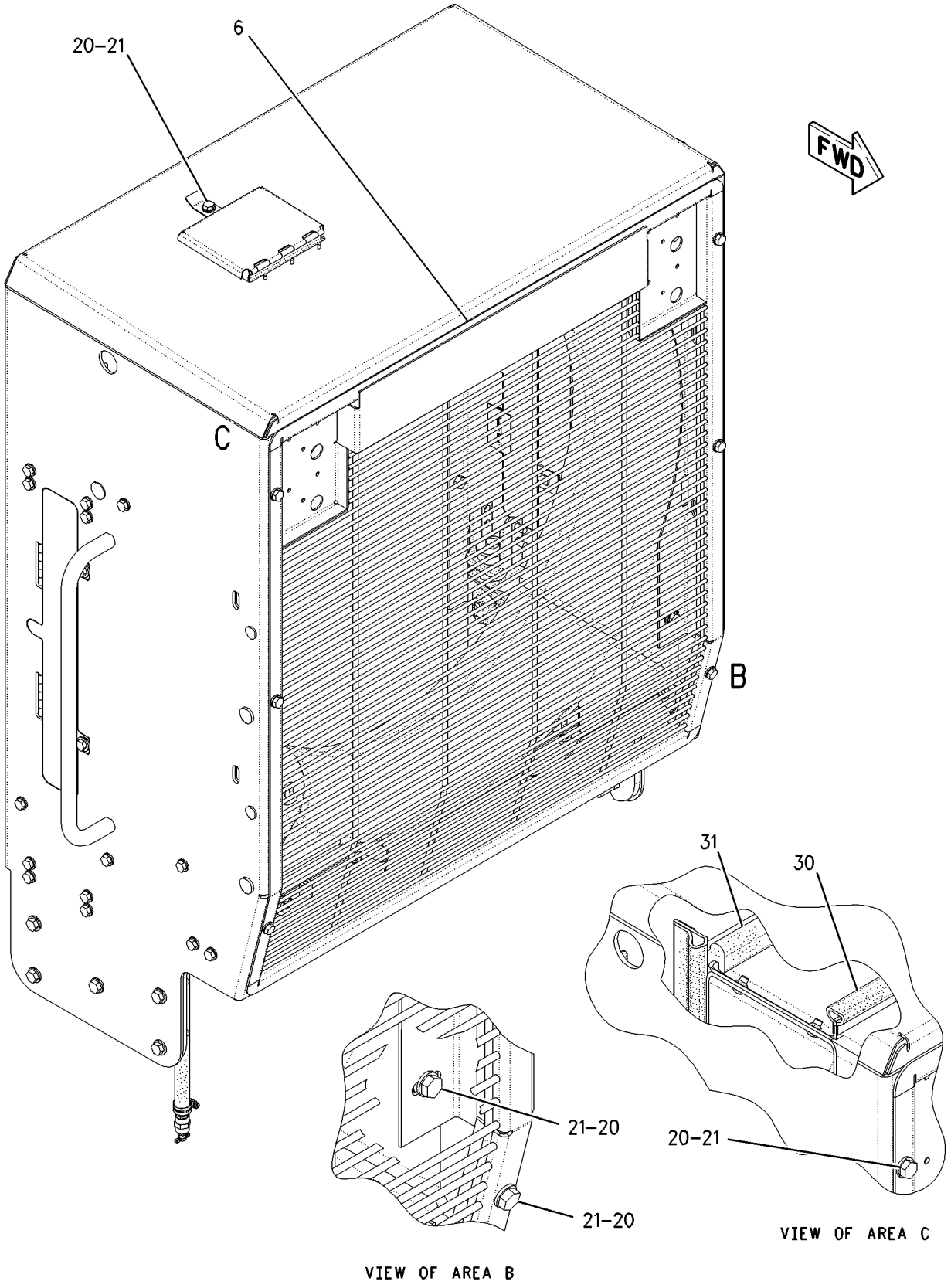

GRAPHIC #2 g00933024

203-2260 GUARD GP-BOTTOM

S/N: CAF1-UP
PART OF 207-3665, 210-2042 CONVERSION AR-CERTIFICATION
AN ATTACHMENT

SMCS-7153 **i01823191**

NOTE	REF NO	GRAPHIC REF	PART NUMBER	QTY	PART NAME 1 2 3 4 5 6 (PRODUCT LEVEL)	SEE PAGE
	1	1	**7D-7496**	2	PIN AS	
	2	1	**8W-6626**	2	CAP	
	3	1	**8W-6627**	1	SUPPORT AS	
	4	1	**8W-8412**	1	GUARD AS	
	5	1	**0L-1178**	4	BOLT (3/4-10X2 IN)	
	6	1	**1A-1460**	8	BOLT (1/2-13X2 IN)	
	7	1	**5P-6652**	4	WASHER (20X44.5X6MM THK)	
	8	1	**8K-0530**	2	PIN-CABLE SOCKET	
	9	1	**8T-4223**	8	WASHER-HARD (13.5X25.5X3MM THK)	

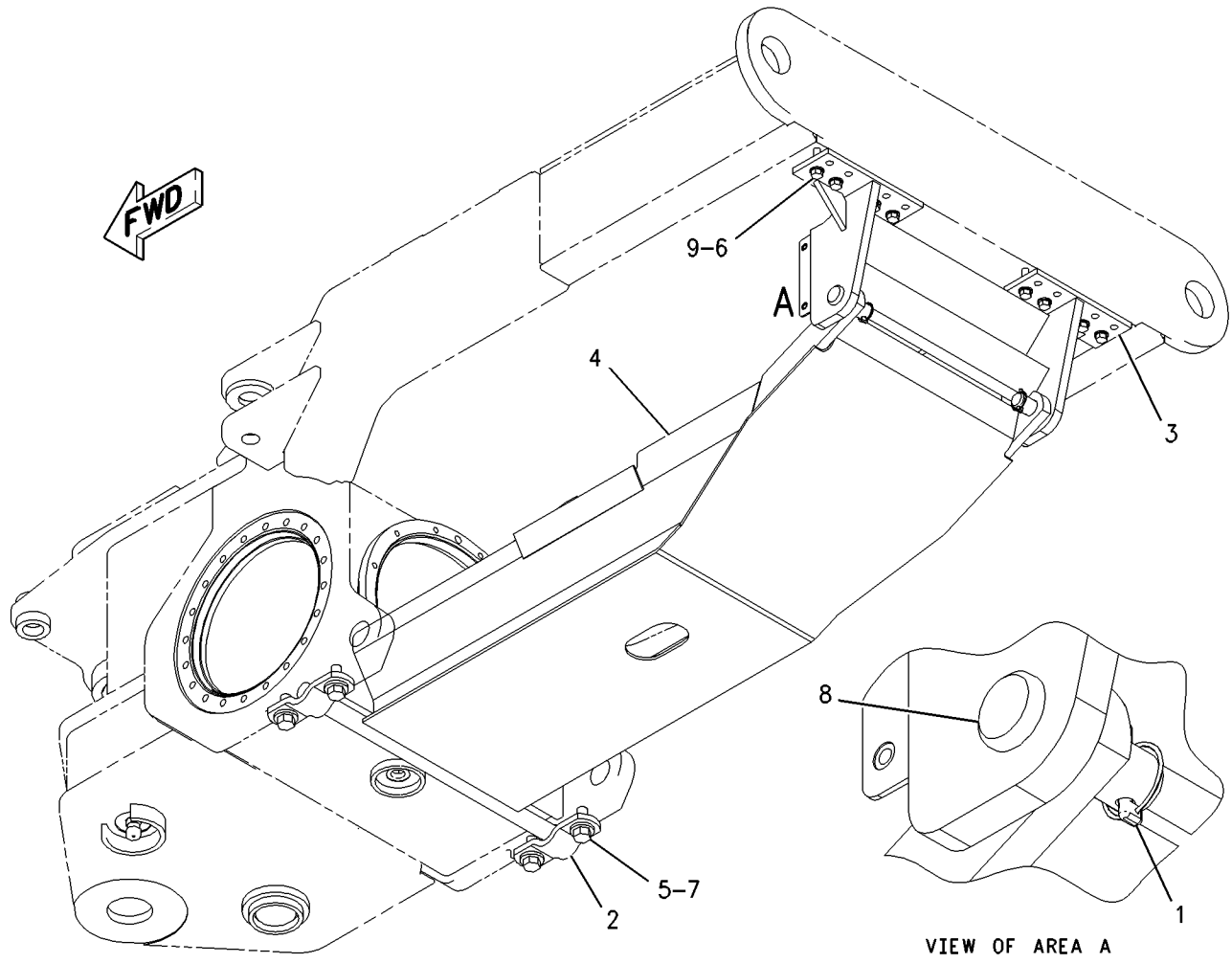

GRAPHIC #1 g00891324

FRAME AND BODY

171-8076 GUARD GP-FUEL TANK

S/N: CAF1-UP
AN ATTACHMENT

SMCS-1273, 7150 **i01680032**

NOTE	REF NO	GRAPHIC REF	PART NUMBER	QTY	PART NAME 1 2 3 4 5 6 (PRODUCT LEVEL)	SEE PAGE
	1	1	**124-2456**	2	FILM-INSTRUCTION (NO STEP)	
	2	1	**197-1801**	2	PLATE AS	
M		1	**8T-3490**	2	NUT-WELD (M10X1.5 THD)	
	3	1	**199-9931**	1	PLATE AS (LH)	
	4	1	**199-9933**	1	PLATE AS (RH)	
	5	1	**199-9935**	1	PLATE AS	
M		1	**8T-3490**	6	NUT-WELD (M10X1.5 THD)	
	6	1	**199-9937**	1	PLATE AS	
M		1	**8T-3490**	6	NUT-WELD (M10X1.5 THD)	
	7	1	**199-9939**	2	BRACKET	
	8	1	**7X-7729**	18	WASHER (11X25X3MM THK)	
M	9	1	**8T-0389**	2	LOCKNUT (M10X1.5 THD)	
M	10	1	**8T-4137**	12	BOLT (M10X1.5X20MM)	
M	11	1	**8T-4185**	4	BOLT (M10X1.5X50MM)	

M-METRIC PART

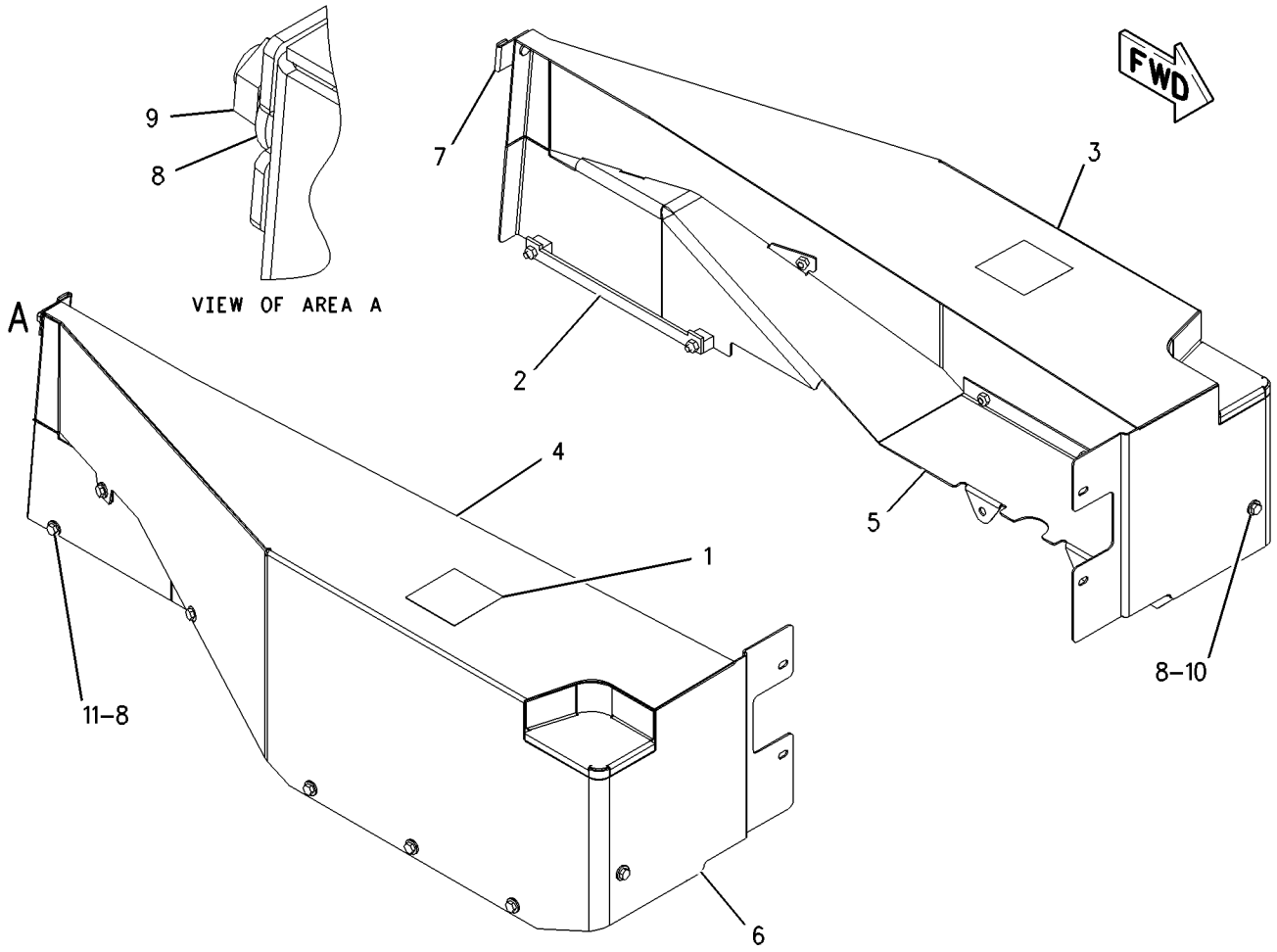

GRAPHIC #1 g00889815

MEMORANDA

166-7064 GUARD GP-PLATFORM—OPEN—HIGH PROFILE

S/N: CAF1-UP
PART OF 197-6663 ROPS AR-OPEN
AN ATTACHMENT

SMCS-7253, 7256 **i01755281**

NOTE	REF NO	GRAPHIC REF	PART NUMBER	QTY	PART NAME 1 2 3 4 5 6 (PRODUCT LEVEL)	SEE PAGE
	1	1	**7G-7920**	1	PLUG-SEAL	
	2	1	**7K-1181**	1	STRAP-CABLE	
	3	1	**8T-8737**	30	PLUG-SEAL	
	4	1	**8X-2226**	2	PLATE	
	5	1	**8X-2913**	2	COVER AS	
M		1	**6V-9632**	2	NUT-WELD (M6X1 THD)	
	6	1	**8X-6475**	2	PLATE	
	7	1	**8X-8505**	2	PLATE	
	9	1	**160-6382**	1	GROMMET	
	10	1	**169-5414**	1	CLIP	
	11	1	**198-8588**	1	PANEL	
	12	1	**200-3967**	1	PANEL AS	
M		1	**6V-9632**	8	NUT-WELD (M6X1 THD)	
M		1	**8T-3490**	1	NUT-WELD (M10X1.5 THD)	
	13	1	**115-3072**	1	CLIP AS-CONNECTOR	
	14	1	**127-5484**	1	RECEPTACLE AS (1 PIN)	
	15	1	**155-2255**	1	KIT-CONNECTING PLUG (12 PIN)	
					(INCLUDES PLUG ASSEMBLY AND WEDGE)	
	16	1	**102-8805**	1	KIT-RECEPTACLE (6 PIN)	
					(INCLUDES RECEPTACLE ASSEMBLY AND WEDGE)	
	17	1	**102-8801**	1	KIT-RECEPTACLE (12 PIN)	
					(INCLUDES RECEPTACLE ASSEMBLY AND WEDGE)	
	18	1	**3P-3839**	1	GROMMET	
	19	1	**4L-6454**	3	BOLT (3/8-16X1 IN)	
	20	1	**4M-5281**	4	BOLT (1/4-20X.750 IN)	
	21	1	**5P-1075**	3	WASHER-HARD (10.2X22.5X3MM THK)	
	22	1	**5P-4115**	4	WASHER-HARD (7.2X19X2MM THK)	
	23	1	**5P-9085**	2	CLIP	
	24	1	**6V-2687**	4	SCREW-PAN HEAD	
	25	1	**8T-4121**	2	WASHER-HARD (11X21X2.5MM THK)	
M	26	1	**8T-4137**	2	BOLT (M10X1.5X20MM)	
M	27	1	**9X-2043**	22	SCREW-TRUSS HEAD (M6X1X14MM)	

M-METRIC PART

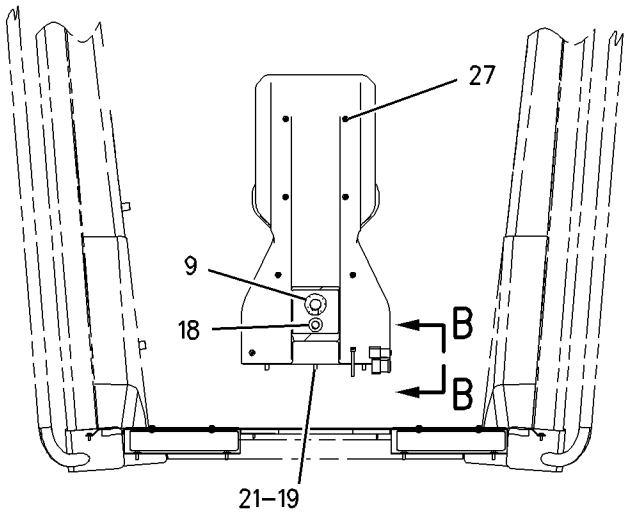

FRONT VIEW

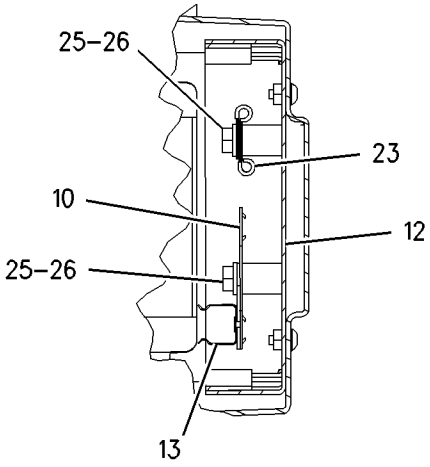

SECTION A-A

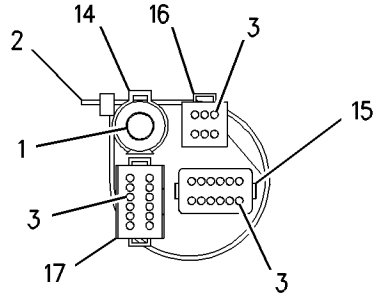

VIEW B-B

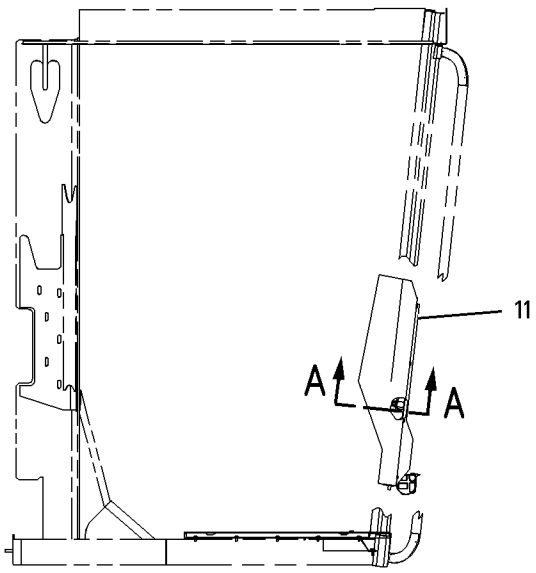

RIGHT SIDE VIEW

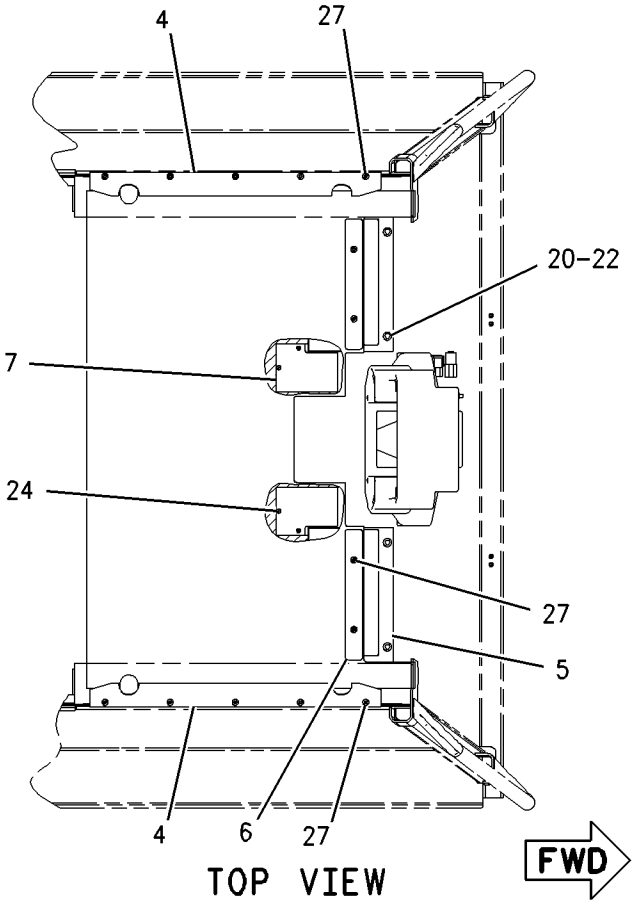

TOP VIEW

GRAPHIC #1

g00846264

166-7065 GUARD GP-PLATFORM—NON-ROPS

S/N: CAF1-UP
PART OF 183-3017 CONVERSION AR-NON-ROPS
AN ATTACHMENT

SMCS-7253, 7256 **i01755282**

NOTE	REF NO	GRAPHIC REF	PART NUMBER	QTY	PART NAME 1 2 3 4 5 6 (PRODUCT LEVEL)	SEE PAGE
	1	1	**7G-7920**	1	PLUG-SEAL	
	2	1	**7K-1181**	1	STRAP-CABLE	
	3	1	**8T-8737**	30	PLUG-SEAL	
	4	1	**8W-3902**	1	SUPPORT AS	
	5	1	**8X-2913**	2	COVER AS	
					(EACH INCLUDES)	
M		1	**6V-9632**	2	NUT-WELD (M6X1 THD)	
	6	1	**8X-6419**	1	FLOOR MAT	
	7	1	**8X-6475**	2	PLATE	
	8	1	**8X-8505**	2	PLATE	
	9	1	**8X-9464**	2	STEP AS	
	10	1	**135-3894**	1	PIPE AS	
	11	1	**160-6382**	1	GROMMET	
	12	1	**169-5414**	1	CLIP	
	13	1	**198-8588**	1	PANEL	
	14	1	**200-3967**	1	PANEL AS	
M		1	**6V-9632**	8	NUT-WELD (M6X1 THD)	
M		1	**8T-3490**	1	NUT-WELD (M10X1.5 THD)	
	15	1	**115-3072**	1	CLIP AS-CONNECTOR	
	16	1	**127-5484**	1	RECEPTACLE AS (1 PIN)	
	17	1	**155-2255**	1	KIT-CONNECTING PLUG (12 PIN)	
					(INCLUDES PLUG AS & WEDGE)	
	18	1	**102-8805**	1	KIT-RECEPTACLE (6 PIN)	
	19	1	**102-8801**	1	KIT-RECEPTACLE (12 PIN)	
					(EACH RECEPTACLE KIT INCLUDES A RECEPTACLE AS & WEDGE)	
	20	1	**3P-3839**	1	GROMMET	
	21	1	**4L-6454**	7	BOLT (3/8-16X1 IN)	
	22	1	**4M-5281**	4	BOLT (1/4-20X.750 IN)	
	23	1	**5P-1075**	7	WASHER-HARD (10.2X22.5X3MM THK)	
	24	1	**5P-2566**	8	BOLT (1/2-13X1.5 IN)	
	25	1	**5P-4115**	4	WASHER-HARD (7.2X19X2MM THK)	
	26	1	**5P-9085**	2	CLIP	
	27	1	**6V-2687**	4	SCREW-PAN HEAD	
	28	1	**6V-8188**	4	NUT (1/2-13 THD)	
	29	1	**7X-0328**	4	BOLT (1/2-13X3.50 IN)	
	30	1	**8T-4121**	2	WASHER-HARD (11X21X2.5MM THK)	
M	31	1	**8T-4137**	2	BOLT (M10X1.5X20MM)	
	32	1	**8T-4223**	16	WASHER-HARD (13.5X25.5X3MM THK)	
M	33	1	**9X-2043**	12	SCREW-TRUSS HEAD (M6X1X14MM)	

M-METRIC PART

166-7065 **GUARD GP-PLATFORM** *(contd.)* **i01755282**

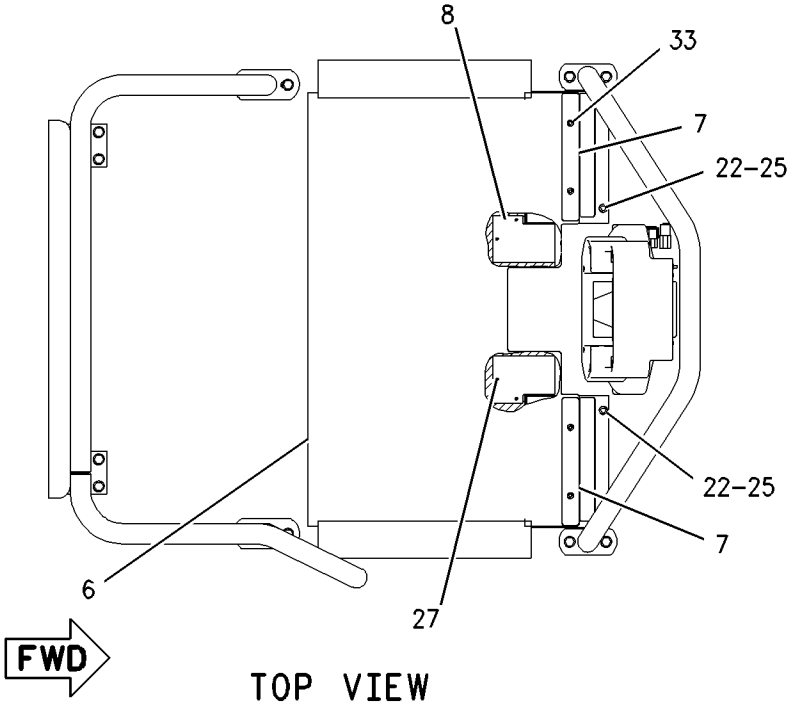

TOP VIEW

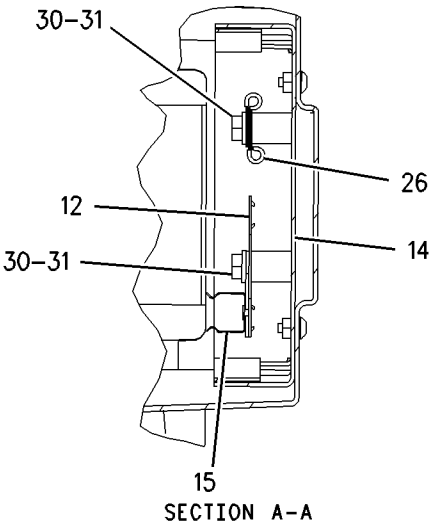

SECTION A-A

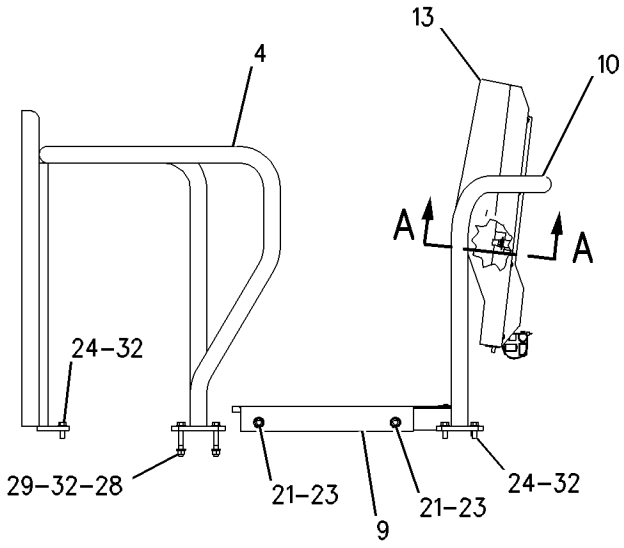

RIGHT SIDE VIEW

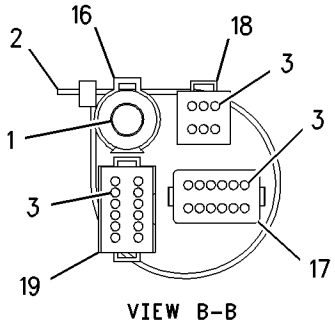

VIEW B-B

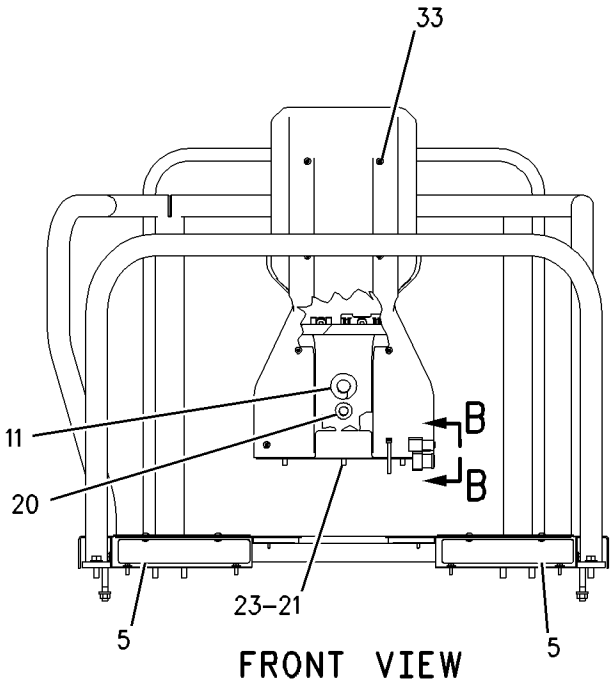

FRONT VIEW

GRAPHIC #1 g00847815

106-4883 HITCH GP-ARTICULATING

S/N: CAF1-UP

PART OF 162-5603 GENERAL AR

SMCS-7057, 7100 **i00134863**

NOTE	REF NO	GRAPHIC REF	PART NUMBER	QTY	PART NAME 1 2 3 4 5 6 (PRODUCT LEVEL)	SEE PAGE
	1	1	**4K-8659**	1	BEARING-SLEEVE	
	2	1	**4K-7463**	2	SEAL-LIP	
	3	1	**0S-1587**	2	BOLT (1/2-13X1.75IN)	
	4	1	**5P-8245**	22	WASHER (3MM THK)	
	5	1	**6G-0417**	1	COVER	
	6	1	**1A-1460**	4	BOLT (1/2-13X2IN)	
	7	1	**2G-4011**	1	COLLAR	
	8	1	**5K-0984**	1	BEARING-SLEEVE	
	9	1	**124-3240**	1	PIN	
	10	1	**2G-6157**	1	PIN	
	11	1	**6K-4185**	1	SPACER	
	12	1	**8D-9689**	1	SHIM PACK (INCLUDES 24 SHIMS)	
	13	1	**8D-9909**	1	BEARING AS-ROLLER	
	14	1	**6K-4187**	1	SHIM PACK (INCLUDES 19 SHIMS)	
	15	1	**7B-3235**	10	BOLT (1/2-13X1.375IN)	
	16	1	**6K-4193**	1	PLATE-LOCKING	
	17	1	**8D-9688**	1	SPACER	
	18	1	**6K-4190**	1	CAP-LOWER	
	19	1	**6K-4186**	2	SEAL-LIP	
	20	1	**6K-4191**	1	CAP-UPPER	
	21	1	**2B-2006**	6	BOLT (1/2-13X4.75IN)	

106-4883 **HITCH GP-ARTICULATING** *(contd.)* **i00134863**

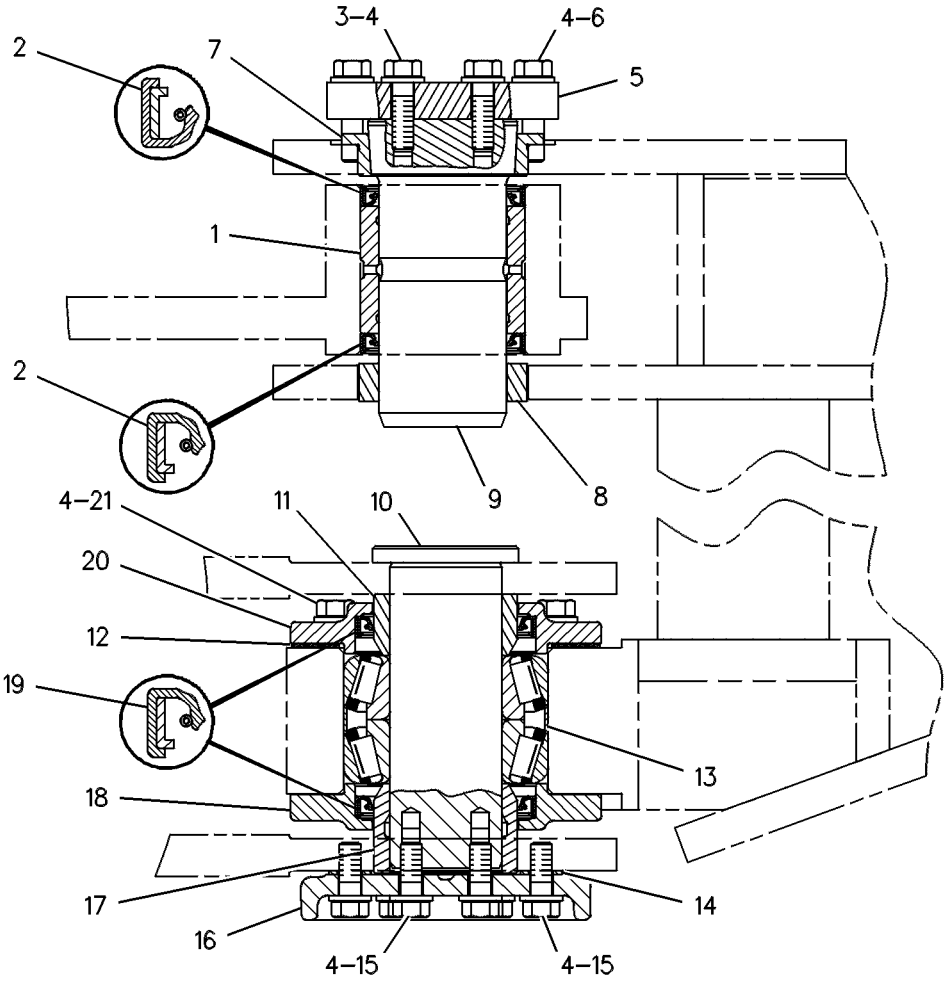

GRAPHIC #1 g00108679

FRAME AND BODY

168-7960 HITCH GP-TOWING

S/N: CAF1-UP

PART OF 162-5603 GENERAL AR

SMCS-7100, 7103 **i01673564**

NOTE	REF NO	GRAPHIC REF	PART NUMBER	QTY	PART NAME 1 2 3 4 5 6 (PRODUCT LEVEL)	SEE PAGE
	1	1	**175-7698**	1	HITCH AS	
	2	1	**7X-0403**	4	BOLT (1-8X2.25 IN)	
	3	1	**8T-5361**	4	WASHER-HARD (28X49X5MM THK)	

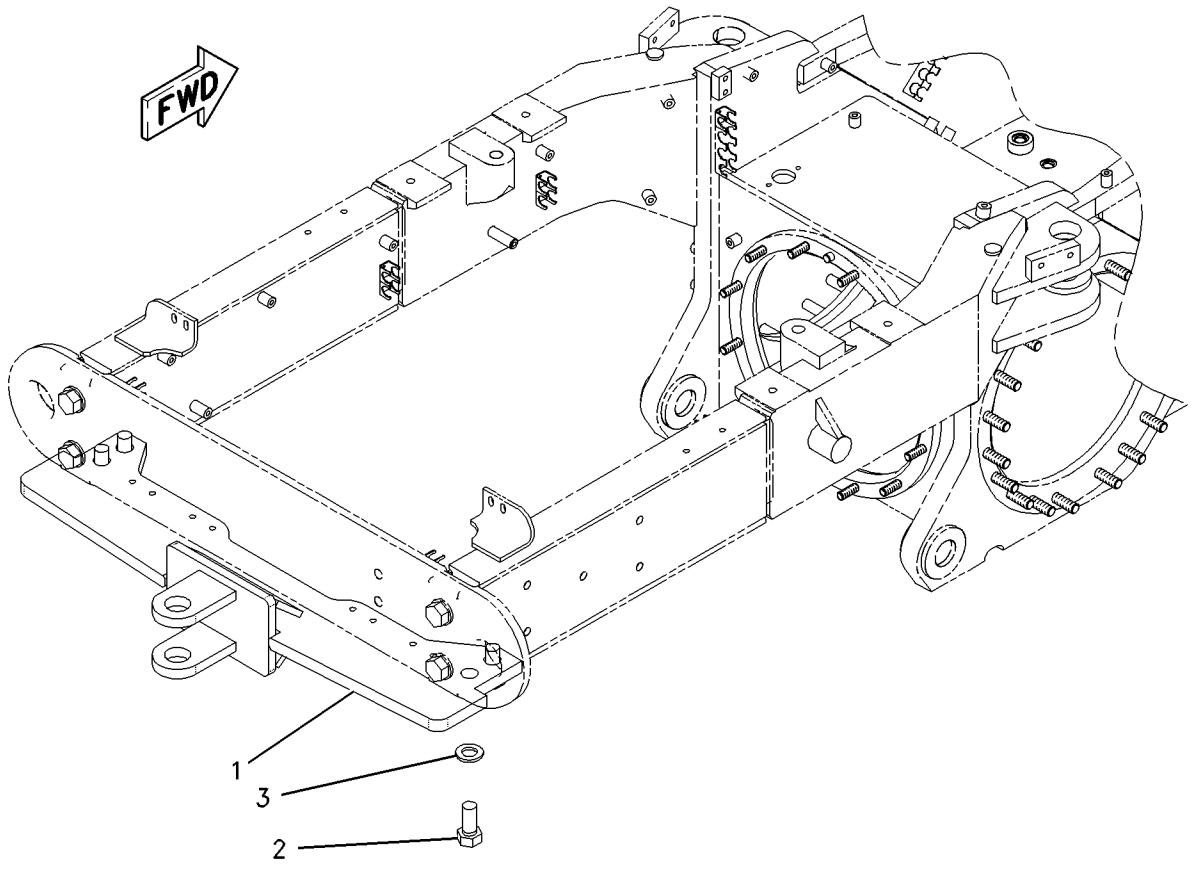

GRAPHIC #1 g00788973

FRAME AND BODY

7I-4610 LINES GP-GREASE

S/N: CAF1-UP

PART OF 162-5603 GENERAL AR

SMCS-7510 **i01456162**

NOTE	REF NO	GRAPHIC REF	PART NUMBER	QTY	PART NAME 1 2 3 4 5 6 (PRODUCT LEVEL)	SEE PAGE
	1	1	**3B-7733**	1	FITTING	
	2	1	**3B-6769**	2	ELBOW	
	3	1	**3B-8489**	2	FITTING-GREASE (ARTICULATION HITCH)	
	4	1	**4D-7794**	1	CLIP	
	5	1	**5H-7826**	1	NIPPLE-PIPE	
I	6	1	**3G-6659**	2	HOSE AS	

I-SEE HOSE FABRICATION GUIDE

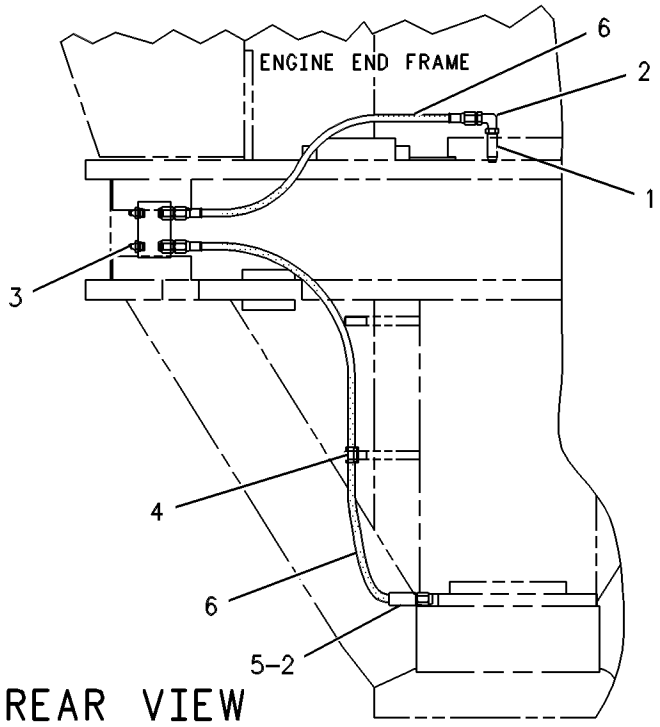

GRAPHIC #1 g00109092

7D-8912 LINK GP-STEERING

S/N: CAF1-UP

PART OF 134-1080 AXLE GP-FRONT

SMCS-4305 **i01767554**

NOTE	REF NO	GRAPHIC REF	PART NUMBER	QTY	PART NAME 1 2 3 4 5 6 (PRODUCT LEVEL)	SEE PAGE
	1	1	**131-3738**	1	SOCKET AS (LH THREAD)	
		1	**132-1143**	1	SEAL-BOOT	
	2	1	**2F-8057**	1	NUT-SLOTTED	
C	3	1	**132-1144**	2	CLAMP	
C	4	1	**1B-4367**	2	BOLT (5/8-11X3 IN)	
C		1	**3K-2889**	2	LOCKNUT (5/8-11 THD)	
	5	1	**131-3739**	1	TIE ROD	
	6	1	**131-3737**	1	SOCKET AS (RH THREAD)	
		1	**132-1143**	1	SEAL-BOOT	
	7	1	**2F-8057**	1	NUT-SLOTTED	

C-CHANGE FROM PREVIOUS TYPE

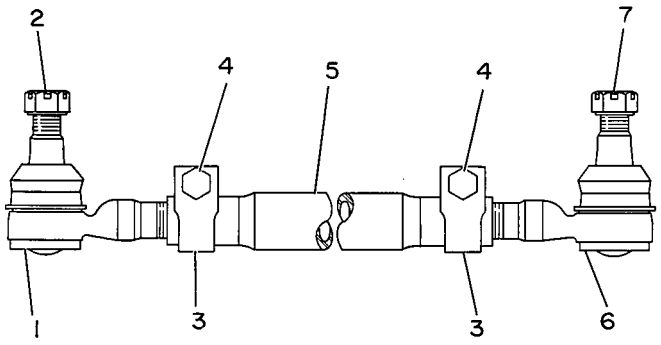

GRAPHIC #1 g00108232

211-1519 MOUNTING GP-REGISTRATION–EU

S/N: CAF1-UP
PART OF 197-5572 ROADING AR
AN ATTACHMENT

SMCS-1429 **i01683487**

NOTE	REF NO	GRAPHIC REF	PART NUMBER	QTY	PART NAME 1 2 3 4 5 6 (PRODUCT LEVEL)	SEE PAGE
	1	1	**3S-2093**	5	STRAP-CABLE	
Y	2	1	**117-8319**	1	LAMP GP-REGISTRATION PLATE	165
	3	1	**213-3733**	1	PLATE	
	4	1	**213-4099**	1	HARNESS AS-REAR LIGHTING	
		1	**155-2270**	1	KIT-CONNECTING PLUG (2 PIN)	
					(INCLUDES PLUG AS & WEDGE)	
	5	1	**113-8593**	4	TAB	
	6	1	**130-5300**	1	CLIP	
M	7	1	**5C-2890**	4	NUT (M6X1 THD)	
M	8	1	**8T-4971**	4	BOLT (M6X1X30MM)	
	9	1	**9X-8256**	8	WASHER (6.6X12X2MM THK)	

M-METRIC PART
Y-SEPARATE ILLUSTRATION

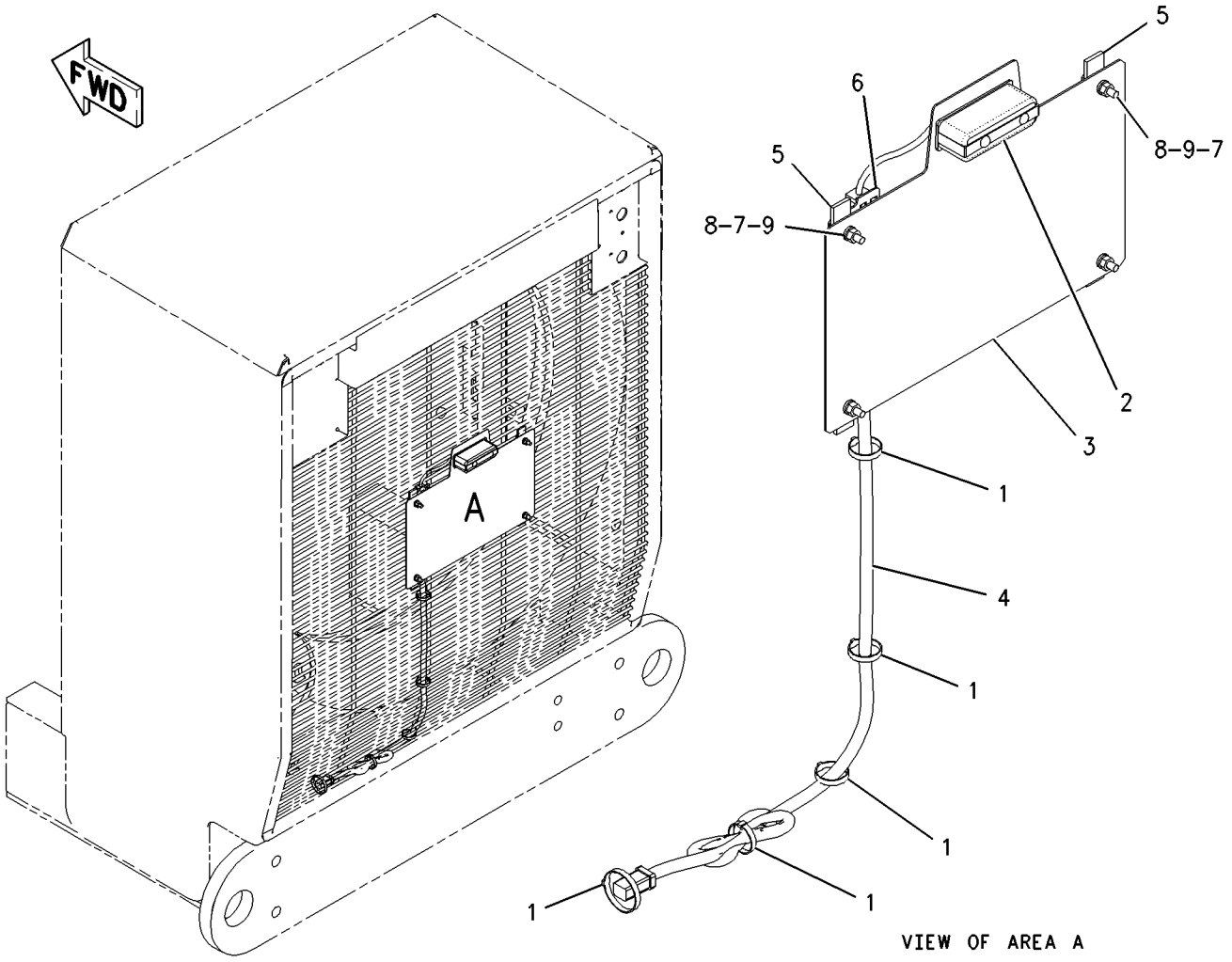

GRAPHIC #1 g00892314

FRAME AND BODY

8W-5870 SHIELD GP-DRIVE SHAFT

S/N: CAF1-UP

PART OF 162-5603 GENERAL AR

SMCS-3253, 7153 **i00134722**

NOTE	REF NO	GRAPHIC REF	PART NUMBER	QTY	PART NAME 1 2 3 4 5 6 (PRODUCT LEVEL)	SEE PAGE
	1	1	**5P-1075**	2	WASHER-HARD (3MM THK)	
	2	1	**8T-7971**	4	WASHER-HARD (5MM THK)	
	3	1	**5S-7379**	2	BOLT (3/8-16X.875IN)	
	4	1	**5C-6565**	4	BOLT (1/2-13X1.25IN)	
	5	1	**103-5419**	1	SHIELD AS	
		1	**9F-2978**	2	NUT-WELD (3/8-16 THD)	
	6	1	**103-5417**	1	SHIELD	

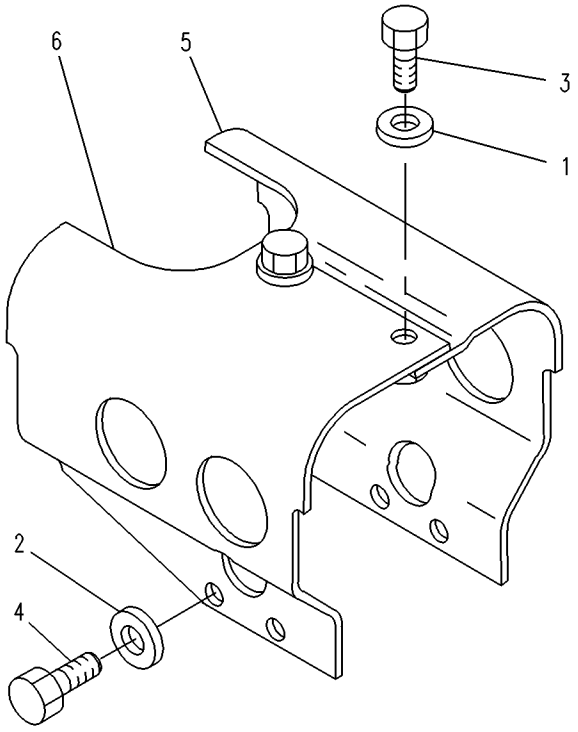

GRAPHIC #1 g00108482

200-5997 SHIELD GP-HEAT

S/N: CAF1-UP

PART OF 194-2869, 194-2870 SUPPORT AR-REAR CHASSIS

ALSO AN ATTACHMENT

SMCS-1408 **i01781449**

NOTE	REF NO	GRAPHIC REF	PART NUMBER	QTY	PART NAME 1 2 3 4 5 6 (PRODUCT LEVEL)	SEE PAGE
	1	1	**139-6122**	2	BOSS	
	2	1	**200-5985**	1	PLATE	
	3	1	**217-8412**	2	SPACER (24X33X50MM THK)	
	4	1	**5P-1076**	4	WASHER-HARD (13.5X30X4MM THK)	
M	5	1	**8T-4182**	2	BOLT (M10X1.5X45MM)	
M	6	1	**8T-5005**	2	BOLT (M10X1.50X70MM)	

M-METRIC PART

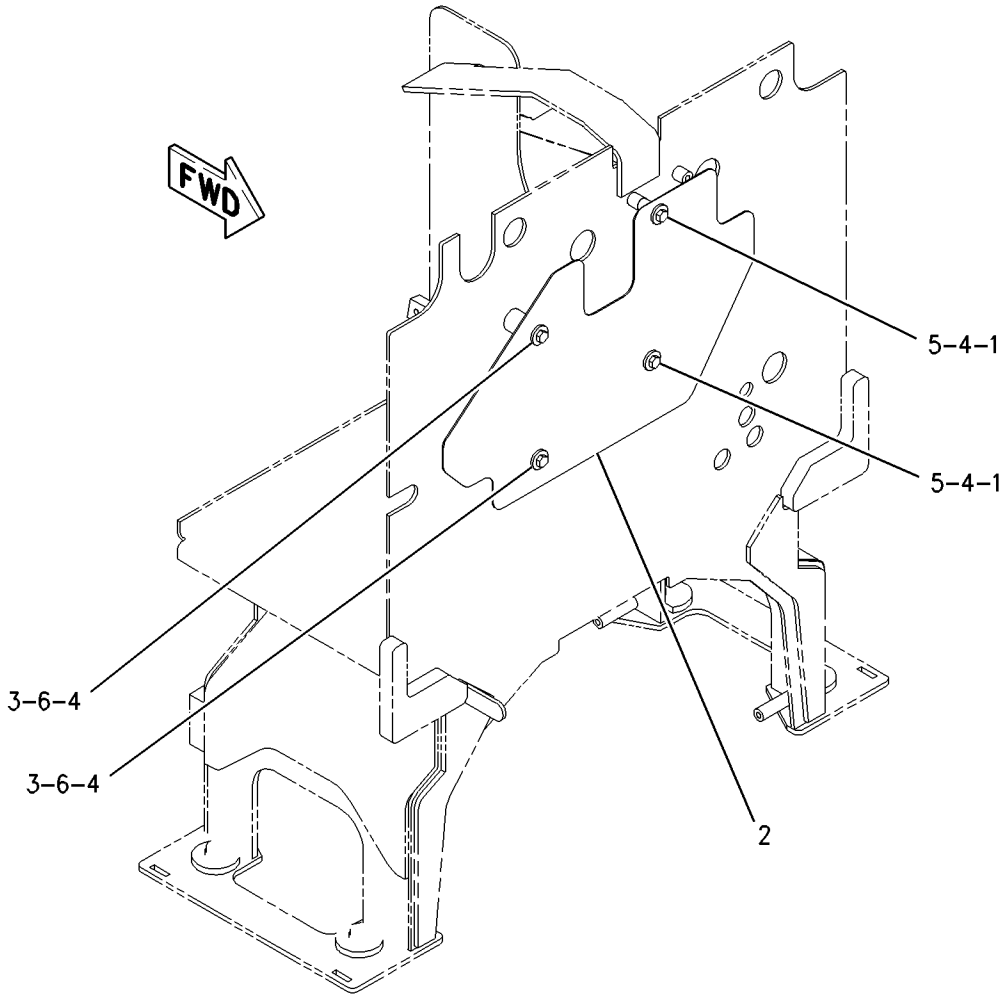

GRAPHIC #1 g00923059

FRAME AND BODY

8X-1030 STEP GP

S/N: CAF1-UP

PART OF 162-5603 GENERAL AR

SMCS-7254 **i01561201**

NOTE	REF NO	GRAPHIC REF	PART NUMBER	QTY	PART NAME 1 2 3 4 5 6 (PRODUCT LEVEL)	SEE PAGE
	1	1	**4V-9804**	8	PLATE	
	2	1	**4V-9809**	2	STEP AS	
		1	**4V-9803**	2	PLATE	
	3	1	**8X-1032**	4	BELT	
	4	1	**123-3698**	2	PLATE	
	5	1	**123-3699**	2	PLATE	
	6	1	**198-7379**	2	STEP AS	
		1	**4V-9803**	2	PLATE	
	7	1	**198-7380**	2	STEP AS	
		1	**4V-9803**	2	PLATE	
	8	1	**1D-4689**	24	BOLT (1/2-13X1.75IN)	
	9	1	**1K-6872**	24	LOCKNUT (1/2-13 THD)	
	10	1	**5P-1076**	8	WASHER-HARD (13.5X30X4MM THK)	
	11	1	**8T-4223**	24	WASHER-HARD (13.5X25.5X3MM THK)	
	12	1	**8T-8919**	8	BOLT (1/2-13X1.75 IN)	

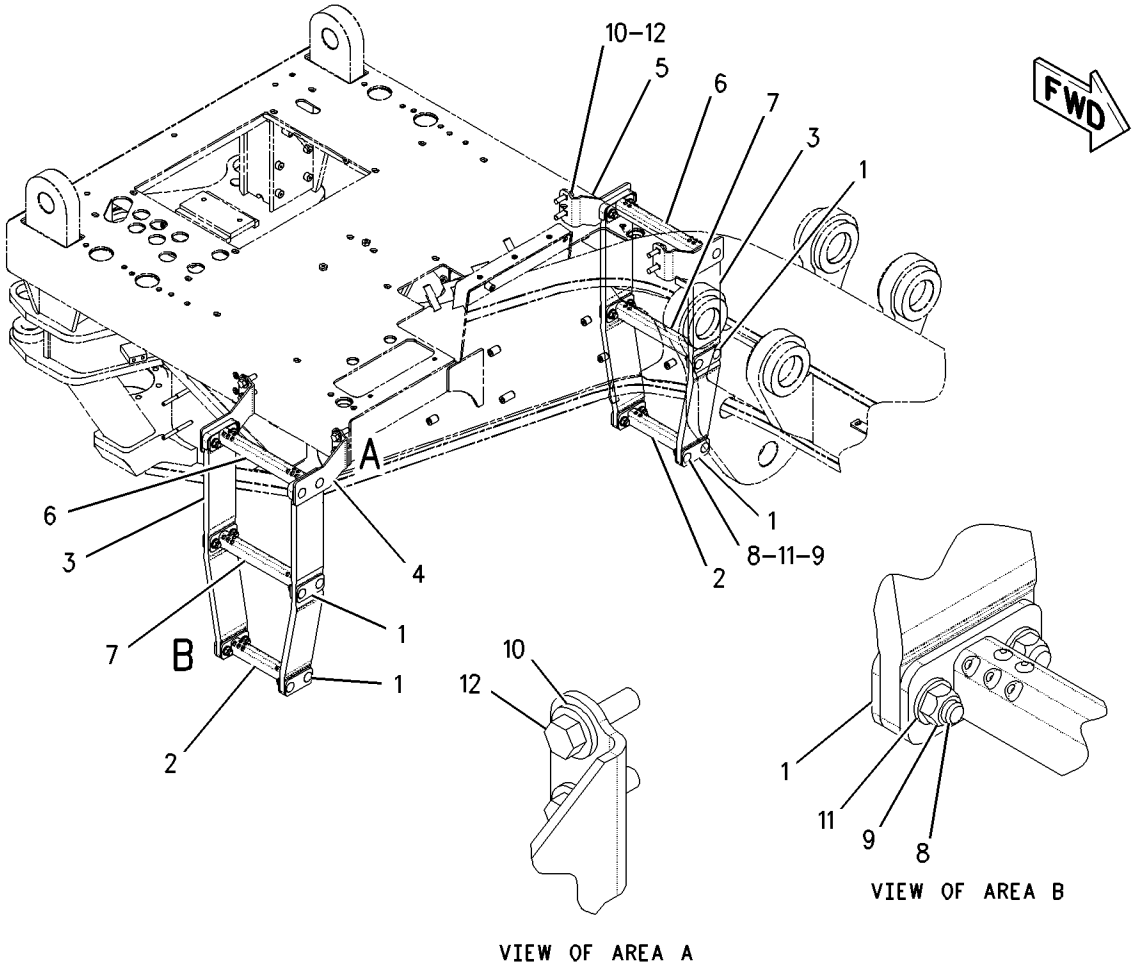

GRAPHIC #1 g00773667

194-2869 SUPPORT AR-REAR CHASSIS

S/N: CAF1-UP

PART OF 162-5603 GENERAL AR

SMCS-7509 **i01674805**

NOTE	PART NUMBER	QTY	PART NAME 1 2 3 4 5 6 (PRODUCT LEVEL)	SEE PAGE
Y	*188-3951*	1	BATTERY GP	136
Y	*169-3651*	1	FILTER & MTG GP-OIL (TRANSMISSION)	328
Y	*200-5997*	1	SHIELD GP-HEAT	445
Y	*159-3924*	1	SUPPORT GP-PLATFORM (REAR)	449
Y	*209-9986*	1	TANK GP-AIR	472
Y	*178-0163*	1	WIRING GP-REAR	260

Y-SEPARATE ILLUSTRATION

<END>

194-2870 SUPPORT AR-REAR CHASSIS–EU

S/N: CAF1-UP

PART OF 207-3665, 210-2042 CONVERSION AR-CERTIFICATION

AN ATTACHMENT

SMCS-7509 **i01836349**

NOTE	PART NUMBER	QTY	PART NAME 1 2 3 4 5 6 (PRODUCT LEVEL)	SEE PAGE
Y	*187-8028*	1	BATTERY GP	135
Y	*169-3651*	1	FILTER & MTG GP-OIL (TRANSMISSION)	328
Y	*200-5997*	1	SHIELD GP-HEAT	445
Y	*159-3924*	1	SUPPORT GP-PLATFORM (REAR)	449
Y	*209-9986*	1	TANK GP-AIR	472
Y	*199-1398*	1	WIRING GP-REAR (SERVICE CENTER)	270

Y-SEPARATE ILLUSTRATION

<END>

FRAME AND BODY

162-1515 SUPPORT GP-FUEL TANK

S/N: CAF1-UP

PART OF 162-5603 GENERAL AR

SMCS-1273 **i01821031**

NOTE	REF NO	GRAPHIC REF	PART NUMBER	QTY	PART NAME 1 2 3 4 5 6 (PRODUCT LEVEL)	SEE PAGE
	1	1	**193-9147**	2	BRACKET	
	2	1	**194-4679**	1	BRACKET	
	3	1	**196-9295**	1	BRACKET AS	
	4	1	**197-8982**	1	SUPPORT AS (RH)	
	5	1	**197-8983**	1	SUPPORT AS (LH)	
	6	1	**225-5182**	2	PLATE	
	7	1	**5P-1076**	8	WASHER-HARD (13.5X30X4MM THK)	
M	8	1	**8T-4139**	14	BOLT (M12X1.75X30MM)	
	9	1	**8T-4223**	18	WASHER-HARD (13.5X25.5X3MM THK)	
M	10	1	**8T-4956**	12	BOLT (M12X1.75X35MM)	

M-METRIC PART

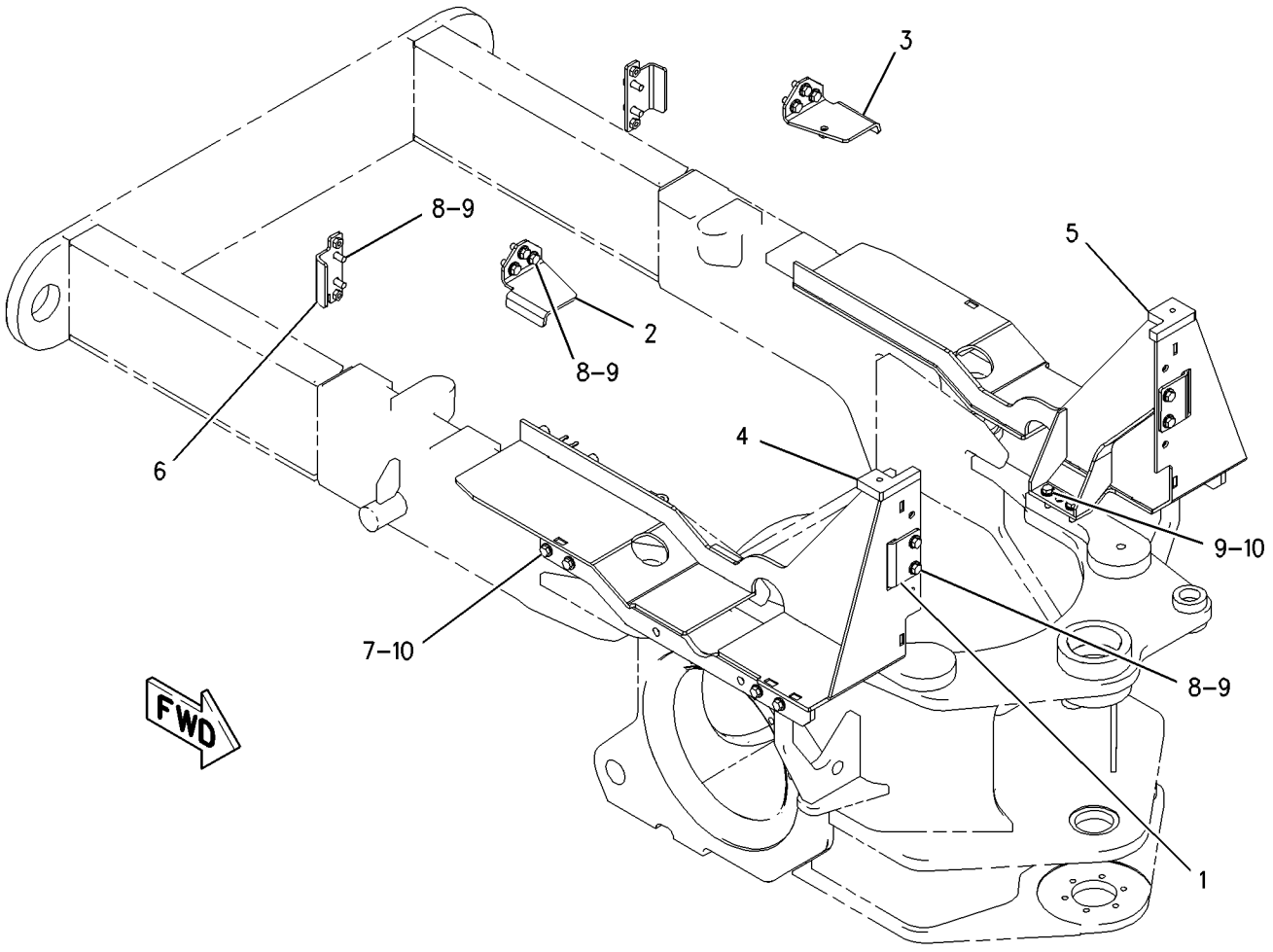

GRAPHIC #1 g00929691

159-3924 SUPPORT GP-PLATFORM–REAR

S/N: CAF1-UP

PART OF 194-2869, 194-2870 SUPPORT AR-REAR CHASSIS

ALSO AN ATTACHMENT

SMCS-7253 **i01837495**

NOTE	REF NO	GRAPHIC REF	PART NUMBER	QTY	PART NAME 1 2 3 4 5 6 (PRODUCT LEVEL)	SEE PAGE
	1	1	**167-1776**	1	PLATFORM AS	
M	2	1	**8T-4140**	4	BOLT (M16X2X60MM)	
	3	1	**9X-8257**	8	WASHER (17.5X30X3.5MM THK)	

M-METRIC PART

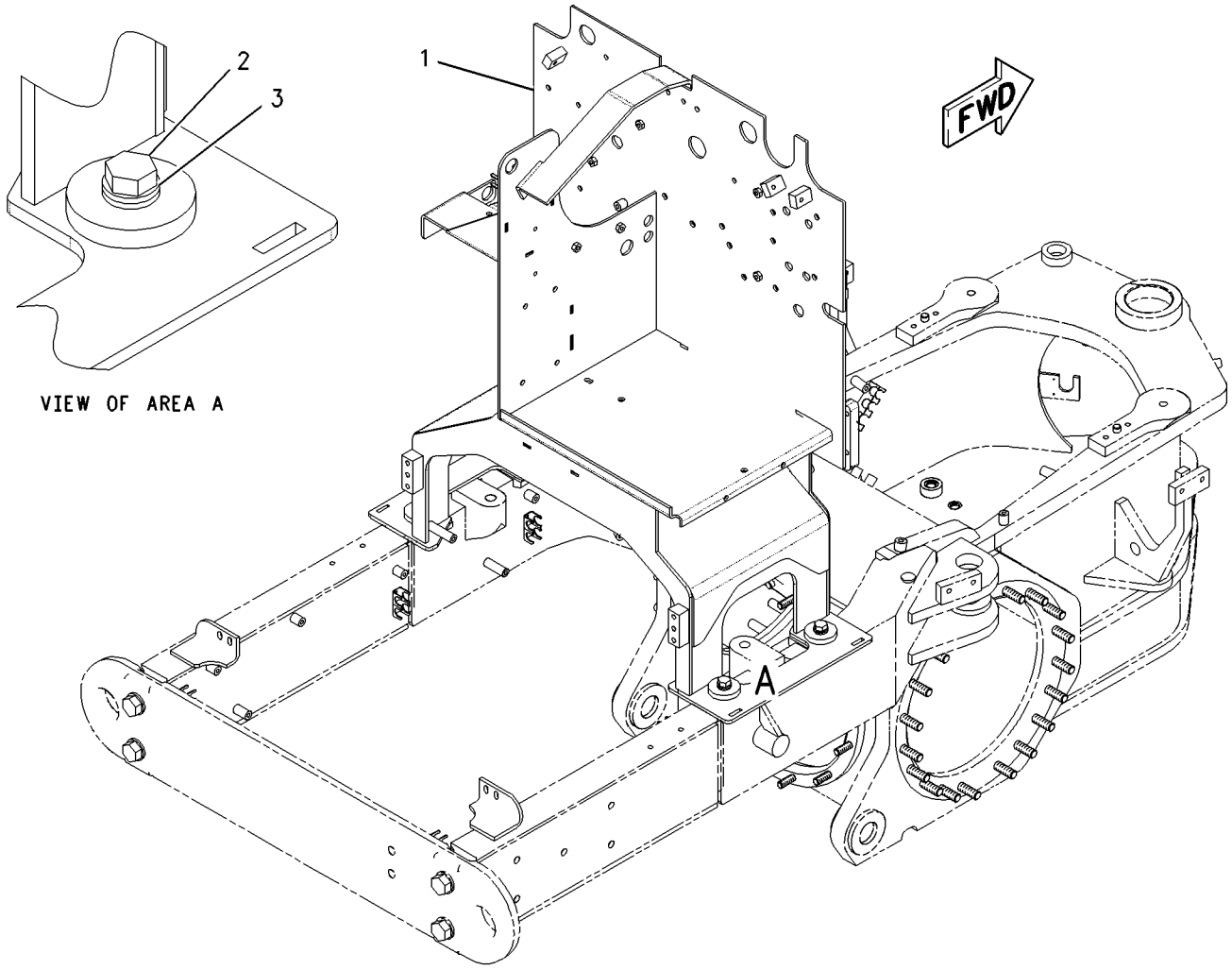

GRAPHIC #1 g00921765

BRAKING SYSTEM

173-5314 AIR DRYER GP

S/N: CAF1-UP
AN ATTACHMENT

SMCS-4285 **i01823164**

NOTE	REF NO	GRAPHIC REF	PART NUMBER	QTY	PART NAME 1 2 3 4 5 6 (PRODUCT LEVEL)	SEE PAGE
	1	1	**9W-1442**	1	FUSE (10 AMP) (AIR DRYER)	
	2	1	**198-4905**	1	HOSE AS	
Y	3	1	*208-0014*	1	AIR DRYER GP	452

Y-SEPARATE ILLUSTRATION

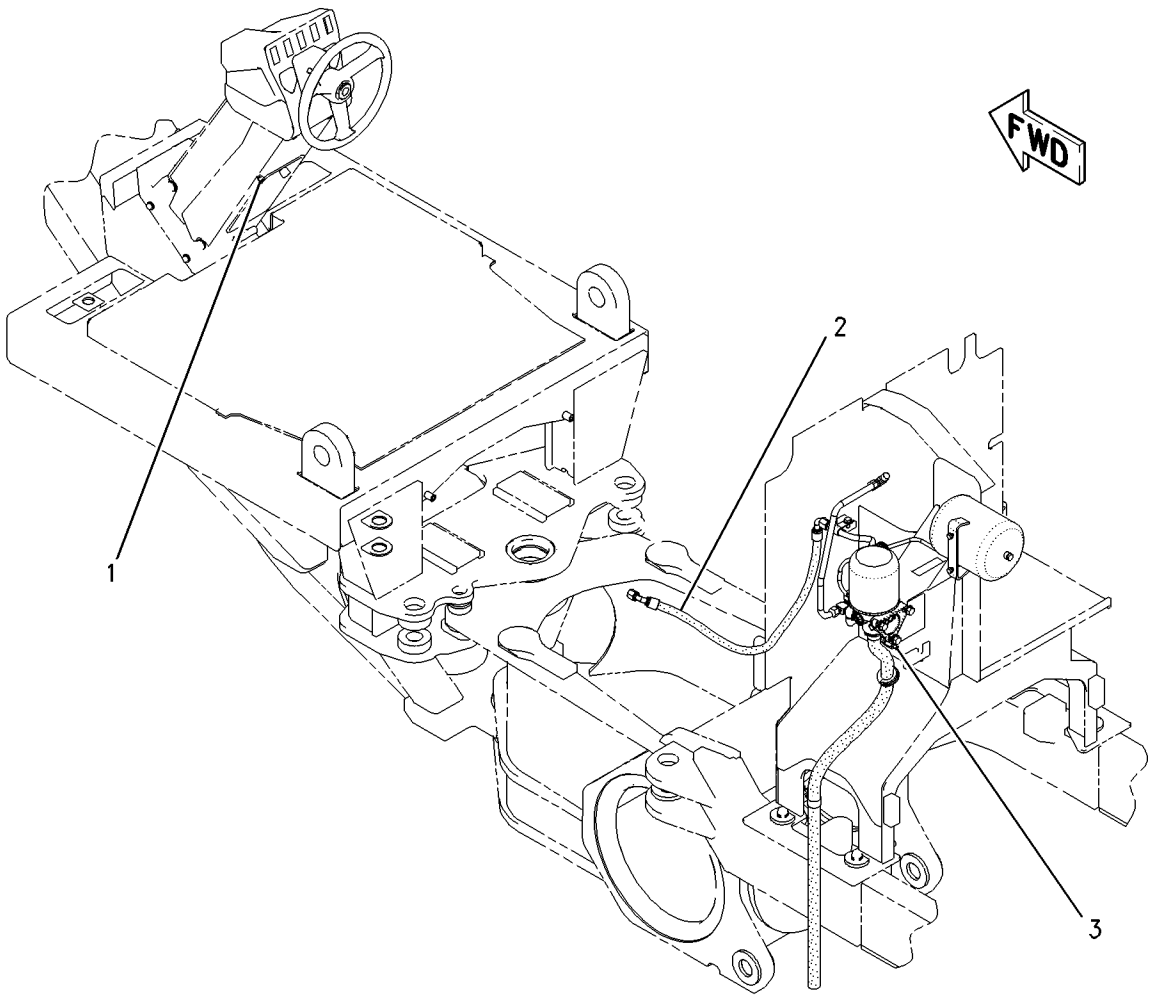

GRAPHIC #1 g00931030

MEMORANDA

BRAKING SYSTEM

208-0014 AIR DRYER GP

S/N: CAF1-UP
PART OF 173-5314 AIR DRYER GP
AN ATTACHMENT

SMCS-4285 **i01742404**

NOTE	REF NO	GRAPHIC REF	PART NUMBER	QTY	PART NAME 1 2 3 4 5 6 (PRODUCT LEVEL)	SEE PAGE
	1	1	**0A-3721**	1	CLIP	
	2	1	**5P-4401**	1	CONNECTOR-AIR BRAKE	
	3	1	**5P-4424**	1	ELBOW-AIR BRAKE	
	4	1	**5P-4426**	3	ELBOW-AIR BRAKE	
	5	1	**6V-2610**	1	FITTING	
	6	1	**9M-7958**	1	CLAMP-HOSE	
	7	1	**175-0403**	1	TUBE	
	8	1	**177-0279**	1	HOSE AS	
	9	1	**191-3645**	1	RESERVOIR	
	10	1	**208-1512**	1	TUBE AS	
	11	1	**208-1535**	1	TUBE	
Y	12	1	**215-3005**	1	AIR DRYER GP	454
	13	1	**3J-5390**	1	PLUG	
C	14	1	**5P-2566**	3	BOLT (1/2-13X1.5 IN)	
	15	1	**6K-8178**	1	CLIP	
	16	1	**6P-6641**	1	GROMMET	
	17	1	**7D-0215**	1	CONNECTOR-PIPE	
	18	1	**7D-4903**	1	ADAPTER	
	19	1	**7J-8611**	1	ELBOW	
C	20	1	**8D-1470**	1	GROMMET	
	21	1	**8T-4121**	2	WASHER-HARD (11X21X2.5MM THK)	
M	22	1	**8T-4137**	2	BOLT (M10X1.5X20MM)	
M	23	1	**8T-4189**	2	BOLT (M8X1.25X20MM)	
	24	1	**8T-4223**	3	WASHER-HARD (13.5X25.5X3MM THK)	
	25	1	**8T-4224**	2	WASHER-HARD (8.8X16X2MM THK)	
E	26	1	**8I-1362**		HOSE (100CM)	

C-CHANGE FROM PREVIOUS TYPE
E-ORDER BY THE CENTIMETER
M-METRIC PART
Y-SEPARATE ILLUSTRATION

208-0014 **AIR DRYER GP** ***(contd.)*** **i01742404**

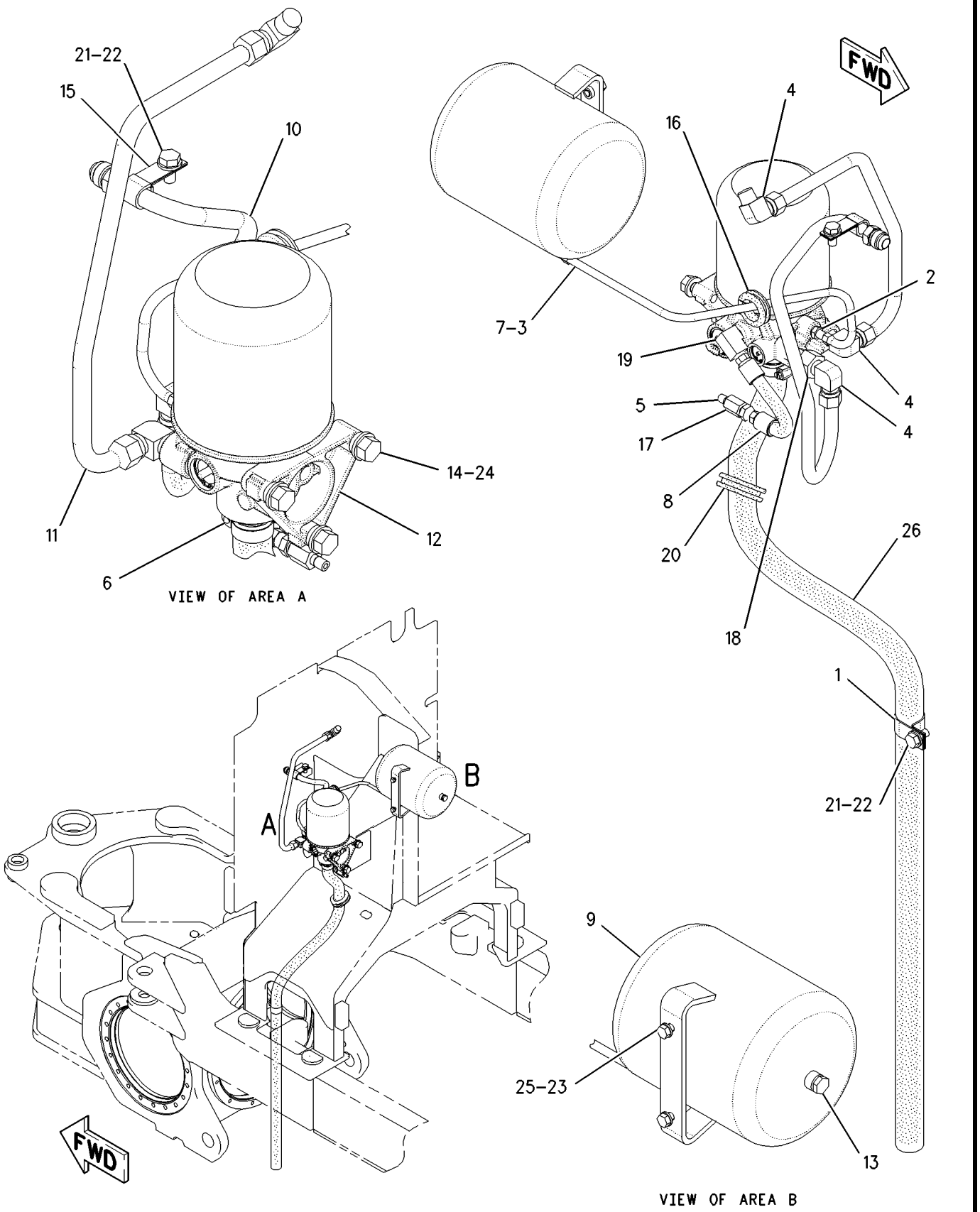

GRAPHIC #1

g00891969

BRAKING SYSTEM

215-3005 AIR DRYER GP

S/N: CAF1-UP

PART OF 208-0014, 215-3646 AIR DRYER GP

AN ATTACHMENT

SMCS-4285 **i01853174**

NOTE	REF NO	GRAPHIC REF	PART NUMBER	QTY	PART NAME 1 2 3 4 5 6 (PRODUCT LEVEL)	SEE PAGE
	1	1	**203-2390**	1	VALVE (AIR DRYER)	
	2	1	**203-2391**	1	VALVE AS (AIR DRYER)	
	3	1	**203-2423**	1	ELEMENT-HEATING (AIR DRYER)(24 VOLT)	
	4	1	**203-2389**	1	CARTRIDGE-DESICCANT (AIR DRYER)	
	5	1	**218-2971**	1	VALVE GP-PURGE (AIR DRYER)	

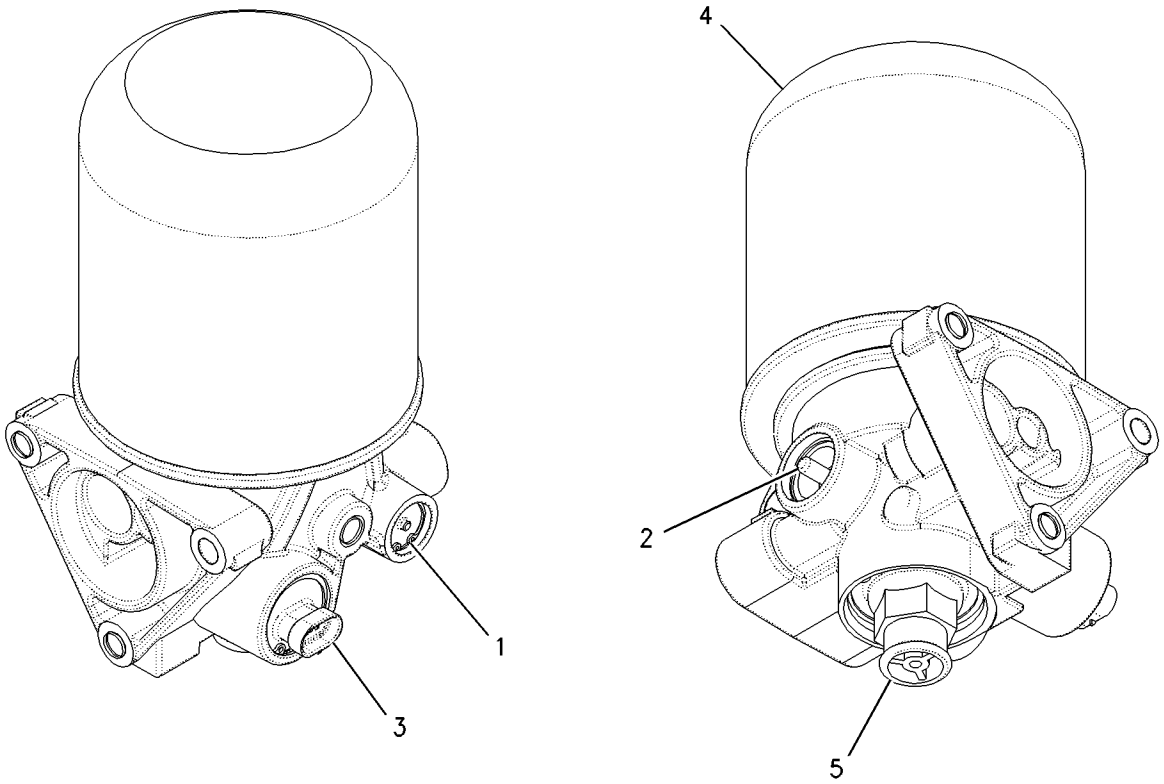

GRAPHIC #1 g00945969

MEMORANDA

BRAKING SYSTEM

215-3646 AIR DRYER GP

S/N: CAF1-UP
PART OF 217-9055 AIR DRYER GP
AN ATTACHMENT

SMCS-4285 **i01694115**

NOTE	REF NO	GRAPHIC REF	PART NUMBER	QTY	PART NAME 1 2 3 4 5 6 (PRODUCT LEVEL)	SEE PAGE
	1	1	**0A-3721**	1	CLIP	
	2	1	**2H-3940**	2	ELBOW	
I	3	1	**5D-7688**	1	HOSE AS	
	4	1	**5P-4401**	1	CONNECTOR-AIR BRAKE	
	5	1	**5P-4424**	1	ELBOW-AIR BRAKE	
	6	1	**5P-4426**	1	ELBOW-AIR BRAKE	
	7	1	**6V-2610**	1	FITTING	
	8	1	**175-0403**	1	TUBE	
	9	1	**177-0279**	1	HOSE AS	
	10	1	**191-3645**	1	RESERVOIR	
	11	1	**208-1512**	1	TUBE AS	
Y	12	1	**215-3005**	1	AIR DRYER GP	454
	13	1	**5M-6213**	1	PLUG-PIPE	
	14	1	**6K-8178**	1	CLIP	
	15	1	**6P-6641**	1	GROMMET	
	16	1	**7D-0215**	1	CONNECTOR-PIPE	
	17	1	**7D-4903**	1	ADAPTER	
	18	1	**7J-8611**	1	ELBOW	
	19	1	**8T-4121**	2	WASHER-HARD (11X21X2.5MM THK)	
M	20	1	**8T-4137**	2	BOLT (M10X1.5X20MM)	
M	21	1	**8T-4189**	2	BOLT (M8X1.25X20MM)	
	22	1	**8T-4224**	2	WASHER-HARD (8.8X16X2MM THK)	
E	23	1	**8I-1362**		HOSE (BULK) (130 CM)	

E-ORDER BY THE CENTIMETER
I-SEE HOSE FABRICATION GUIDE
M-METRIC PART
Y-SEPARATE ILLUSTRATION

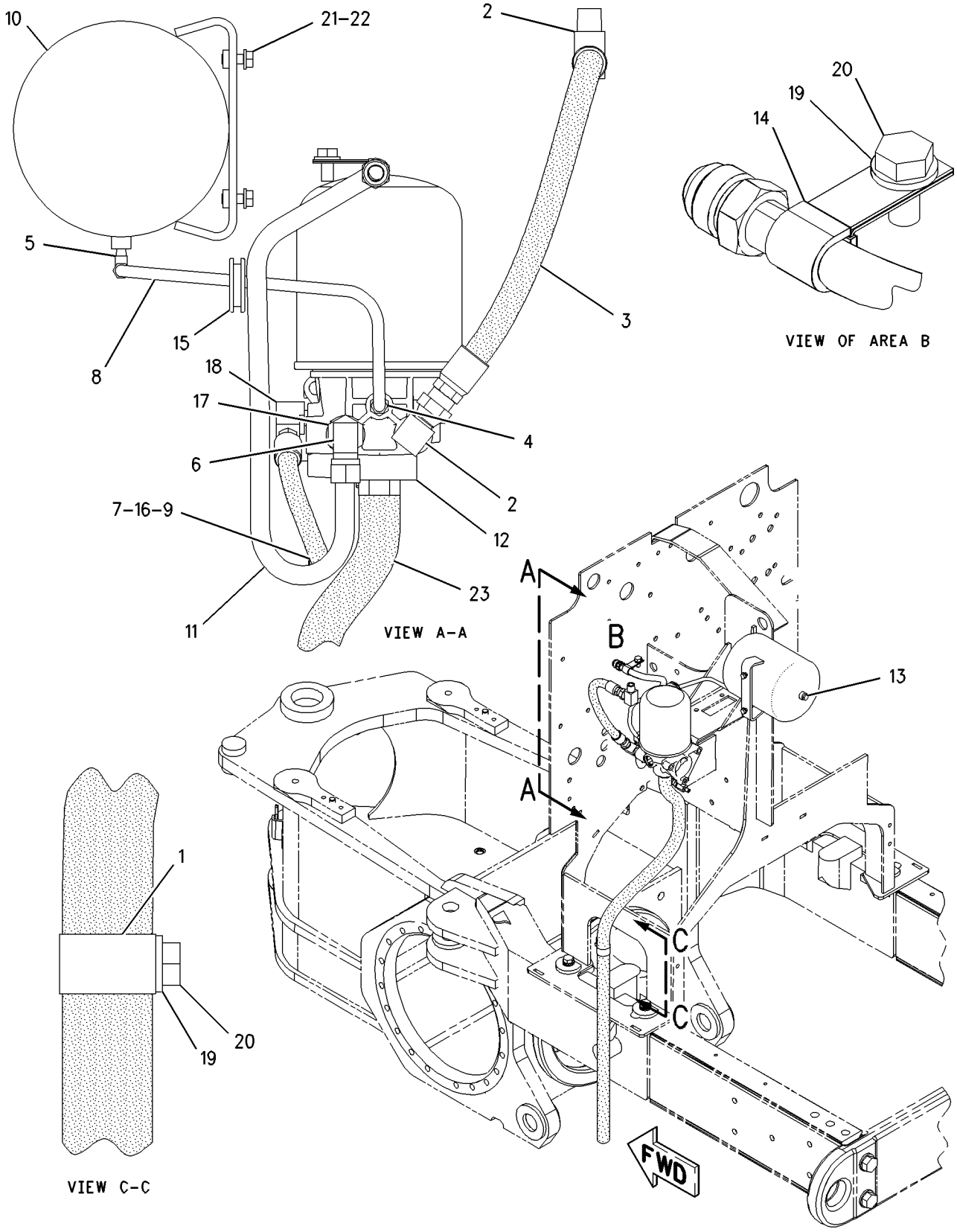

GRAPHIC #1

g00848330

BRAKING SYSTEM

217-9055 AIR DRYER GP

S/N: CAF1-UP

AN ATTACHMENT

SMCS-4285 **i01684322**

NOTE	REF NO	GRAPHIC REF	PART NUMBER	QTY	PART NAME 1 2 3 4 5 6 (PRODUCT LEVEL)	SEE PAGE
	1	1	**198-4905**	1	HOSE AS	
Y	2	1	*215-3646*	1	AIR DRYER GP	456

Y-SEPARATE ILLUSTRATION

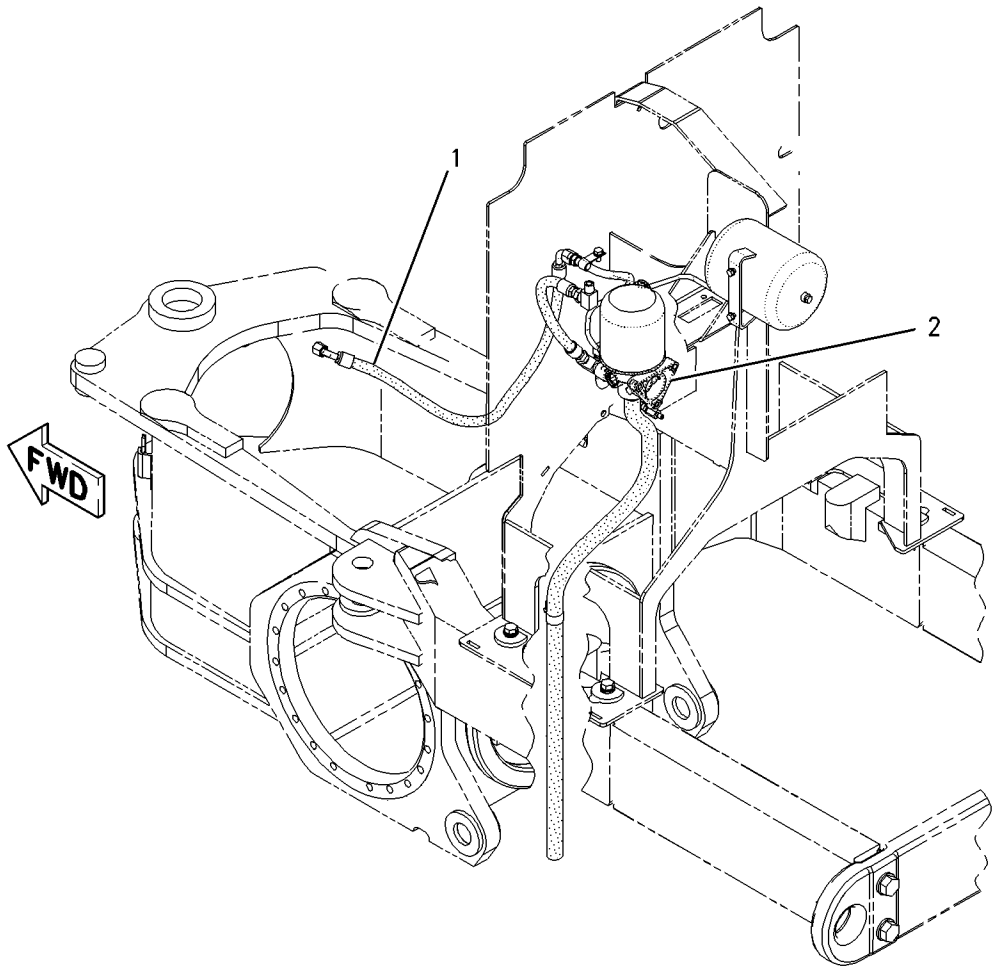

GRAPHIC #1 g00880488

MEMORANDA

BRAKING SYSTEM

9W-5132 BRAKE GP-PARKING

S/N: BJN1-UP

PART OF 160-2196 TRANSMISSION AR

SMCS-3077, 4267 **i00134413**

NOTE	REF NO	GRAPHIC REF	PART NUMBER	QTY	PART NAME 1 2 3 4 5 6 (PRODUCT LEVEL)	SEE PAGE
M	1	1	**6V-5842**	6	BOLT (M10X1.50X40MM)	
	2	1	**6V-5839**	6	WASHER (2.5MM THK)	
	3	1	**6Y-3849**	1	HUB-CLUTCH	
	4	1	**9M-4335**	6	DOWEL-REACTION	
	5	1	**5J-1086**	1	SEAL-O-RING (323.44MM ID)	
	6	1	**6Y-3850**	1	HOUSING-BRAKE	
	7	1	**4S-5838**	1	RETAINER	
M	8	1	**8T-0372**	1	BOLT (M12X1.75X90MM)	
	9	1	**4F-7390**	1	SEAL (53.34MM ID)	
	10	1	**1P-7521**	1	YOKE	
	11	1	**7D-8436**	1	SEAL-D-RING	
	12	1	**9W-4431**	20	SPRING	
	13	1	**9W-4430**	20	SPRING	
M	14	1	**6V-3668**	12	BOLT (M12X1.75X30MM)	
	15	1	**7G-0437**	6	PLATE-CLUTCH	
	16	1	**6Y-5352**	5	DISC-FRICTION	
	17	1	**2J-6274**	1	SEAL-O-RING	
	18	1	**9S-4182**	1	PLUG (7/16-20 THD)	
	19	1	**3J-7354**	1	SEAL-O-RING (8.92MM ID)	
	20	1	**8D-8795**	1	SEAL-D-RING	
	21	1	**9W-4452**	1	PISTON	
	22	1	**9W-4453**	1	PISTON	
	23	1	**4H-9105**	1	SEAL-O-RING (110.72MM ID)	
	24	1	**6Y-3852**	1	PLUG	
	25	1	**9N-6152**	1	PLUG-O-RING	
	26	1	**2M-9780**	1	SEAL-O-RING (19.18MM ID)	
	27	1	**1M-3003**	1	SEAL-LIP	

M-METRIC PART

9W-5132 **BRAKE GP-PARKING** *(contd.)* **i00134413**

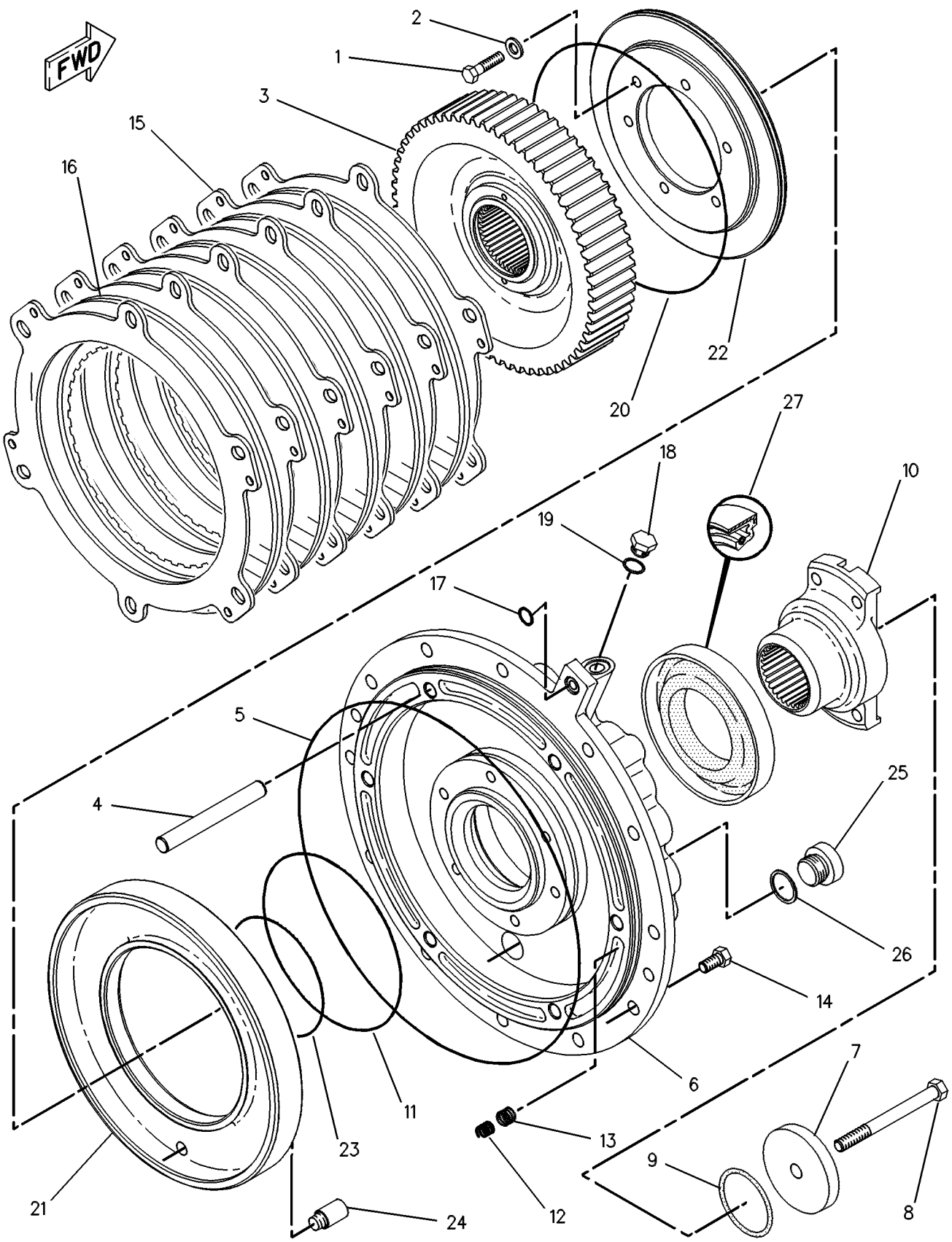

GRAPHIC #1 g00108550

BRAKING SYSTEM

218-2307 BRAKE GP-SERVICE

S/N: CAF1-UP

PART OF 162-5603 GENERAL AR

SMCS-4251 **i01837378**

NOTE	REF NO	GRAPHIC REF	PART NUMBER	QTY	PART NAME 1 2 3 4 5 6 (PRODUCT LEVEL)	SEE PAGE
	1	1	**2G-6336**	4	HUB-BRAKE	
	2	1	**2N-2138**	4	CUP-BEARING	
	3	1	**2N-2139**	4	CONE-BEARING	
	4	1	**3S-0303**	4	SEAL GP-DUO-CONE	
	5	1	**5P-4143**	52	BOLT-LOCKING (1/2-13X2 IN)	
	6	1	**6G-0905**	24	BOLT (7/16-14X4.37 IN)	
	7	1	**6Y-7915**	40	DISC-FRICTION	
BG	8	1	**8D-8791**	24	SHIM (.007 IN THK)	
BG	9	1	**8D-8792**	24	SHIM (.005 IN THK)	
	10	1	**8D-8794**	44	DISC	
	11	1	**8D-8805**	4	COVER	
	12	1	**8T-2861**	8	BOLT (1/2-13X2.5 IN)	
	13	1	**8W-0789**	4	RETAINER	
	14	1	**8W-8125**	4	HOUSING	
	15	1	**8W-8289**	4	SPROCKET	
	16	1	**9D-3241**	4	CUP-BEARING	
	17	1	**9D-3242**	4	CONE-BEARING	
	18	1	**9D-4029**	4	SPACER	
BG	19	1	**9D-7085**	8	SHIM (.02 IN THK)	
	20	1	**9J-5498**	24	SPRING	
	21	1	**147-3309**	4	SPINDLE-WHEEL	
	22	1	**218-2309**	4	PISTON	
	23	1	**0S-1595**	12	BOLT (1/2-13X1.25 IN)	
	24	1	**3J-5390**	4	PLUG	
	25	1	**5P-2545**	8	SEAL-O-RING	
	26	1	**5P-8244**	24	WASHER (12X22.5X2.5MM THK)	
	27	1	**5P-8245**	72	WASHER-HARD (13.5X25.5X3MM THK)	
	28	1	**6V-0314**	12	BOLT-LOCKING	
	29	1	**8D-8795**	4	SEAL-D-RING	
	30	1	**9D-7972**	4	SEAL-D-RING	

B-USE AS REQUIRED
G-ORDER BY THE INCH

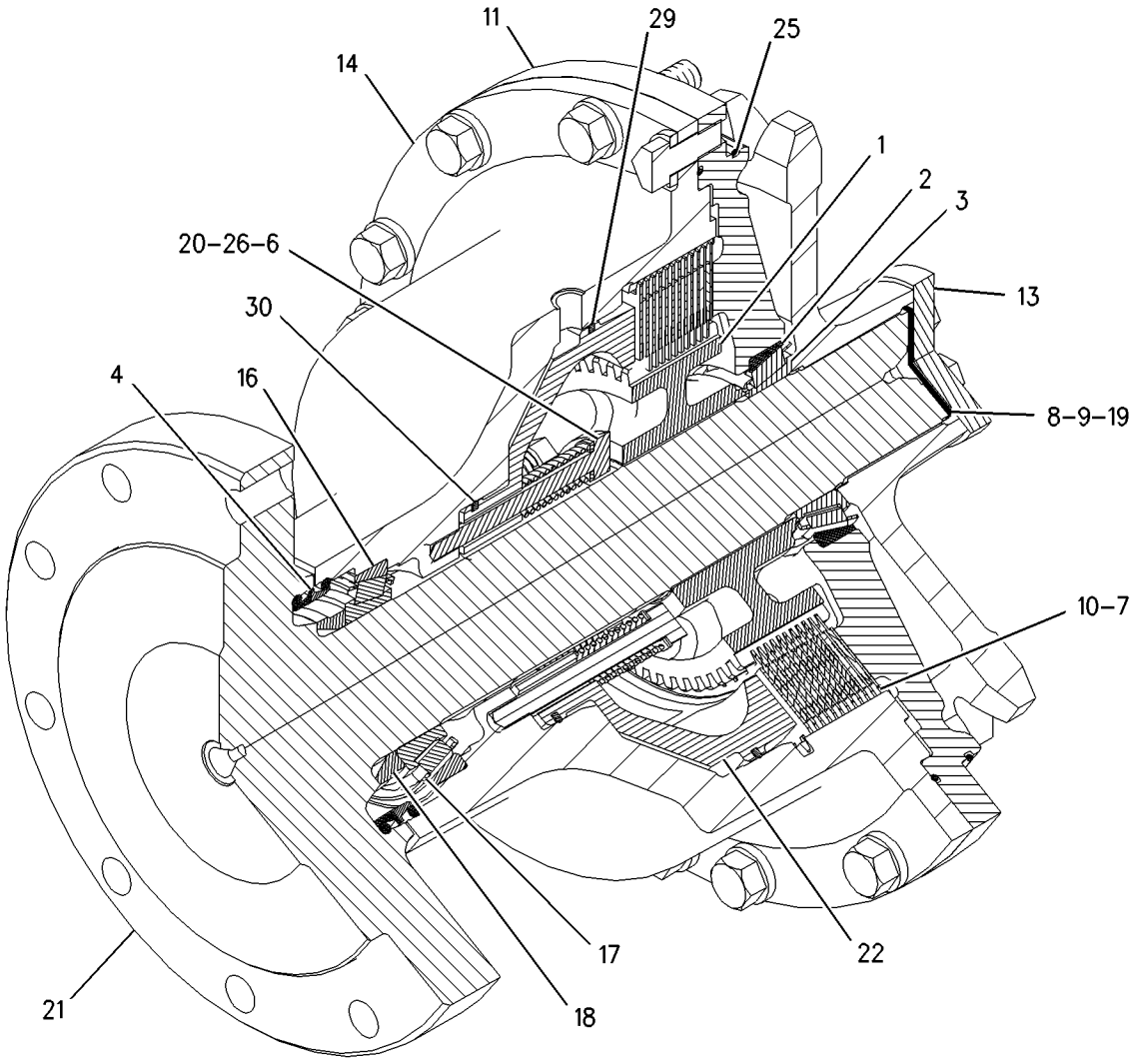

SECTION A-A

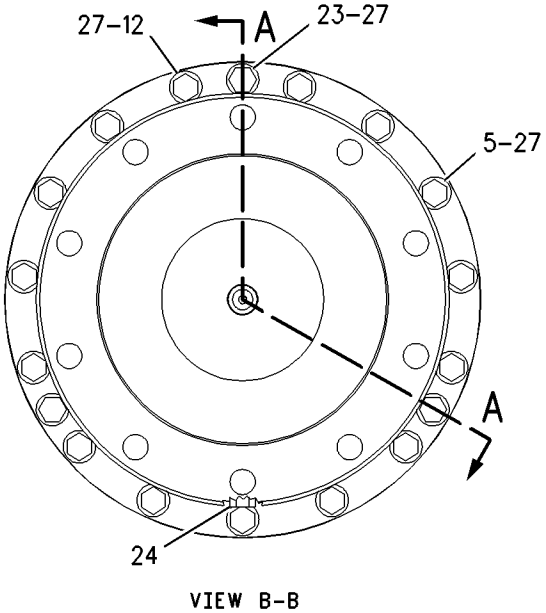

VIEW B-B

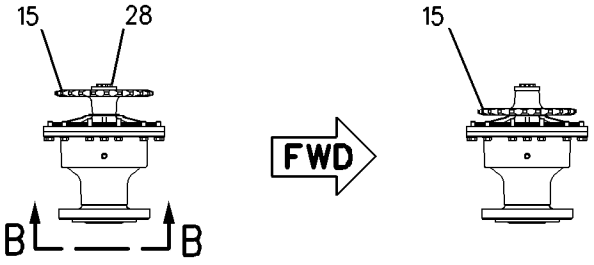

TOP VIEW
(RIGHT SIDE)

GRAPHIC #1

g00940924

160-7753 CONTROL GP-PARKING BRAKE

S/N: CAF1-UP

PART OF 162-5603 GENERAL AR

SMCS-4282, 4284 **i01673350**

NOTE	REF NO	GRAPHIC REF	PART NUMBER	QTY	PART NAME 1 2 3 4 5 6 (PRODUCT LEVEL)	SEE PAGE
	1	1	**3B-8822**	1	ELBOW	
I	2	1	**4S-7529**	1	HOSE AS	
	3	1	**4S-7606**	2	ELBOW	
Y	4	1	**5D-4382**	1	VALVE GP-AIR CONTROL (PARKING BRAKE)	474
	5	1	**5K-2408**	2	FITTING	
	6	1	**5T-8285**	1	JUNCTION BLOCK	
	7	1	**6D-1432**	1	VALVE-CHECK (PARKING BRAKE RELEASE)	
I	8	1	**7D-3963**	1	HOSE AS	
	9	1	**7X-4736**	1	GROMMET	
	10	1	**8W-8528**	2	SLEEVE	
	11	1	**8X-5160**	1	GROMMET	
I	12	1	**112-4834**	1	HOSE AS	
Y	13	1	**188-9250**	1	VALVE GP-SOLENOID (PARKING BRAKE)	478
	14	1	**130-5300**	1	CLIP	
	15	1	**3D-8884**	1	ELBOW	
	16	1	**4D-6585**	1	ELBOW-PIPE	
	17	1	**4H-6147**	1	CONNECTOR	
	18	1	**5H-4778**	2	ELBOW	
	19	1	**5M-3062**	1	BOLT (3/8-16X0.75 IN)	
	20	1	**5M-6213**	2	PLUG-PIPE	
	21	1	**6V-8801**	1	NUT (3/8-16 THD)	
	22	1	**8T-2502**	2	BOLT (3/8-16X1.125 IN)	
	23	1	**8T-4896**	3	WASHER-HARD (10.2X18.5X2.5MM THK)	

I-SEE HOSE FABRICATION GUIDE
Y-SEPARATE ILLUSTRATION

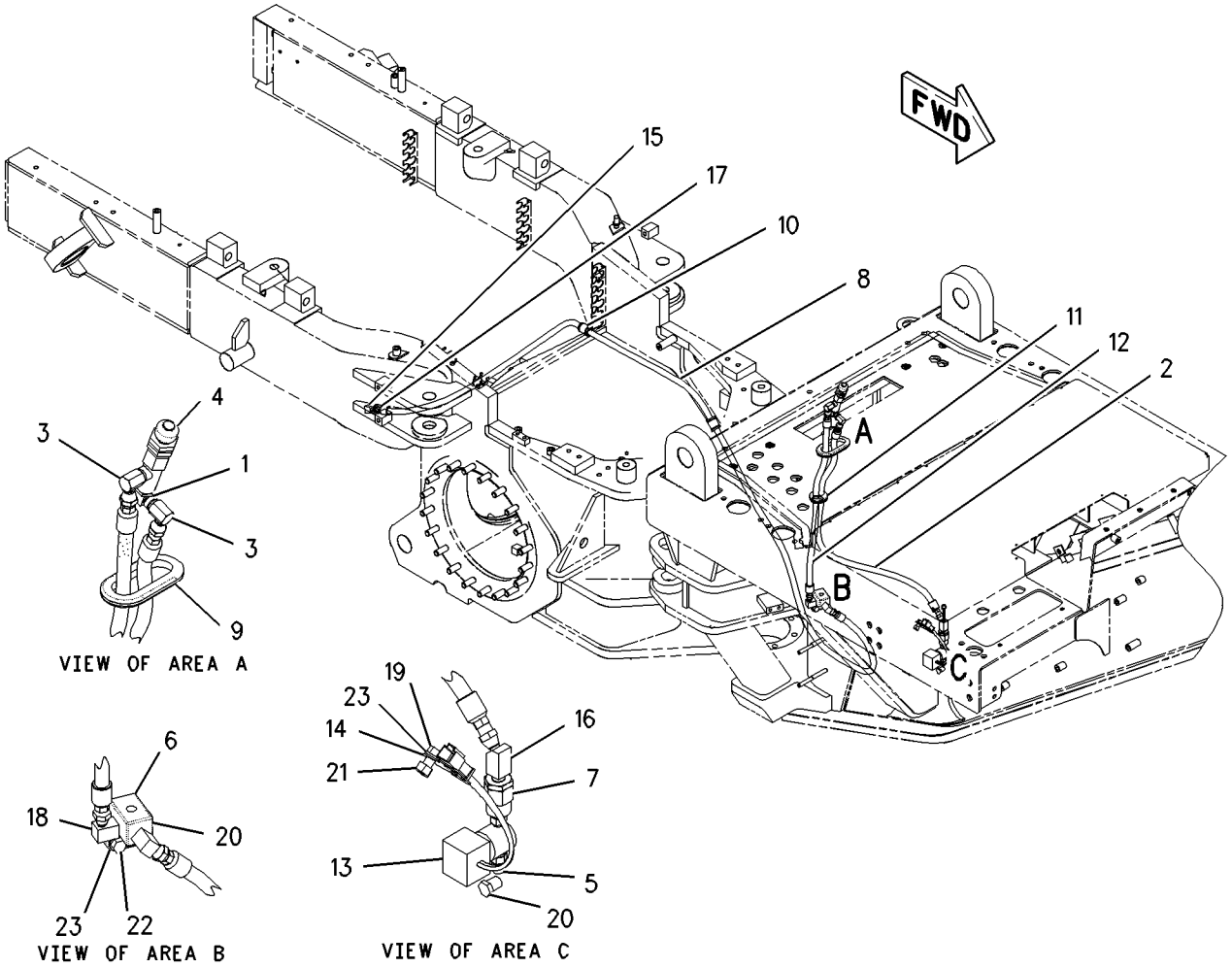

GRAPHIC #1 g00803380

BRAKING SYSTEM

171-2863 CONTROL GP-SERVICE BRAKE

S/N: CAF1-UP

PART OF 162-5603 GENERAL AR

SMCS-4265, 4269 **i01673373**

NOTE	REF NO	GRAPHIC REF	PART NUMBER	QTY	PART NAME 1 2 3 4 5 6 (PRODUCT LEVEL)	SEE PAGE
	1	3	**1B-2578**	1	NUT (3/8-16 THD)	
	2	3	**1F-4622**	2	BEARING AS-NEEDLE	
	3	3	**2D-7325**	1	TEE-PIPE	
	4	1,3	**2L-3331**	4	CONNECTOR-PIPE	
	5	3	**3S-2713**	1	NUT-FULL (3/8-24 THD)	
	6	2,3	**3T-0050**	4	CLIP	
	7	2	**5K-9238**	4	CONNECTOR	
	8	1	**5T-8285**	1	JUNCTION BLOCK	
	9	3	**6K-6826**	4	ELBOW	
	10	3	**6W-5817**	1	SPRING	
	11	3	**7V-0446**	2	CLIP	
	12	2	**8D-8826**	4	GUARD	
	13	3	**8L-6005**	3	TEE-PIPE	
	14	1,2,3	**8W-8527**	16	SLEEVE	
	15	1	**8W-8532**	1	CLIP	
	16	1	**8W-8903**	1	CLIP	
Y	17	1	*8X-2650*	1	VALVE GP-AIR CONTROL (SERVICE BRAKE)	476
	18	1	**8X-2680**	1	BRACKET AS	
	19	3	**9J-8783**	1	SHIM (.508MM THK)	
	20	2	**9S-1302**	2	WASHER (27.0X44.45X2.5MM THK)	
	21	2	**9S-7706**	2	ELBOW-FLARED	
	22	2	**9X-8606**	8	CLIP	
	23	3	**110-3326**	1	PLATE AS	
	24	3	**169-0921**	1	ROD END (INTERNAL THREAD)	
	25	3	**172-4211**	1	SPACER (10.5X22X50.8MM THK)	
	26	2	**176-2945**	2	FITTING-BULKHEAD	
	27	3	**177-1713**	1	ROD	
	28	3	**180-4027**	1	CAM	
	29	3	**180-7147**	1	LEVER	
	30	1,3	**180-9867**	2	CLAMP	
	31	1,3	**183-4691**	2	CLAMP	
	32	1,3	**184-6665**	2	CLAMP	
	33	3	**185-1122**	1	BRACKET	
	34	1,3	**187-0745**	4	CLAMP	
	35	2	**198-5438**	2	BLOCK	
	36	2	**204-8736**	1	TUBE AS	
	37	2	**204-8737**	1	TUBE AS	
	38	2	**204-8738**	1	TUBE AS	
	39	2	**204-8739**	1	TUBE AS	
	40	2	**204-8740**	1	TUBE AS	
	41	2	**204-8741**	1	TUBE AS	
	42	2	**207-4772**	2	HOSE AS	
	43	2	**207-4773**	2	HOSE AS	
	44	3	**207-4924**	1	PEDAL-BRAKE	
	45	3	**214-2415**	1	BRACKET AS	
	46	3	**214-2466**	1	PLATE AS	
	47	3	**129-3173**	1	BOLT-12 POINT HEAD (3/8-16X31.75MM)	
	48	3	**1B-0676**	1	PIN	
	49	3	**1H-7724**	3	BUSHING-REDUCER	
	50	3	**3B-7721**	1	BUSHING-REDUCER	
	51	1,3	**3K-6060**	8	LOCKNUT (3/8-16 THD)	
	52	3	**3K-8280**	1	PIN-CLEVIS	
	53	3	**4B-6060**	1	SETSCREW-SOCKET (1/4-20X.375 IN)	
	54	3	**4D-0577**	1	ELBOW	
	55	2,3	**4D-0582**	5	ELBOW	
	56	3	**4J-3914**	1	ELBOW	

171-2863 CONTROL GP-SERVICE BRAKE *(contd.)* i01673373

NOTE	REF NO	GRAPHIC REF	PART NUMBER	QTY	PART NAME 1 2 3 4 5 6 (PRODUCT LEVEL)	SEE PAGE
	57	3	**4J-8922**	1	ROD END	
	58	1	**4L-6454**	4	BOLT (3/8-16X1 IN)	
	59	3	**4M-6425**	1	BOLT (5/16-18X1 IN)	
M	60	3	**5C-2890**	3	NUT (M6X1 THD)	
	61	1	**5H-4778**	1	ELBOW	
	62	3	**5M-3062**	2	BOLT (3/8-16X0.75 IN)	
	63	1	**5M-6213**	1	PLUG-PIPE	
	64	1	**5P-1075**	2	WASHER-HARD (10.2X22.5X3MM THK)	
I	65	1	**6D-9855**	1	HOSE AS	
	66	3	**6V-4245**	1	ELBOW	
M	67	3	**6V-7357**	1	BOLT (M6X1.0X25MM)	
	68	3	**6V-8189**	3	NUT (5/16-18 THD)	
	69	1,3	**6V-8801**	4	NUT (3/8-16 THD)	
	70	3	**6V-8918**	2	BOLT (5/16-18X1.25 IN)	
I	71	2	**7D-7419**	2	HOSE AS	
	72	2,3	**7M-7410**	6	PLUG	
	73	1	**8T-2502**	1	BOLT (3/8-16X1.125 IN)	
	74	2,3	**8T-4121**	5	WASHER-HARD (11X21X2.5MM THK)	
M	75	3	**8T-4137**	4	BOLT (M10X1.5X20MM)	
M	76	2	**8T-4195**	1	BOLT (M10X1.5X30MM)	
	77	3	**8T-4224**	5	WASHER-HARD (8.8X16X2MM THK)	
	78	3	**8T-4226**	1	WASHER-PLATED (10.5X45X3MM THK)	
	79	1,2,3	**8T-4896**	22	WASHER-HARD (10.2X18.5X2.5MM THK)	
	80	3	**8T-5390**	1	BOLT (3/8-16X88.9MM)	
	81	2	**8T-9056**	4	BOLT (3/8-16X1.25 IN)	
	82	1	**8X-7603**	2	HOSE AS	
	83	2	**8X-8450**	1	PLATE	
	84	2	**8X-8451**	1	PLATE	
	85	3	**9X-8256**	1	WASHER (6.6X12X2MM THK)	
E	86	3	**5P-0767**		HOSE (60CM)	

E-ORDER BY THE CENTIMETER
I-SEE HOSE FABRICATION GUIDE
M-METRIC PART
Y-SEPARATE ILLUSTRATION

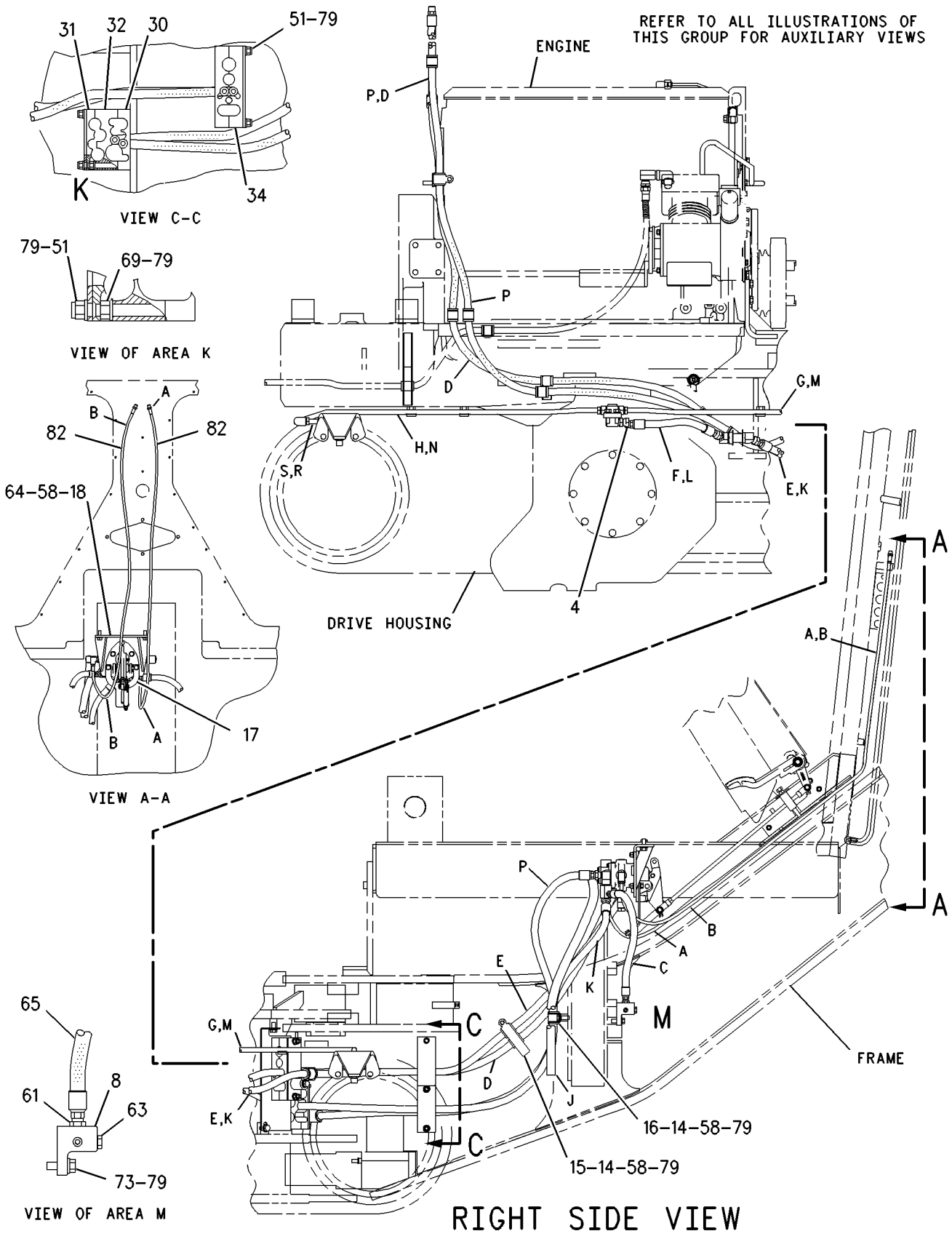

GRAPHIC #1 g00943838

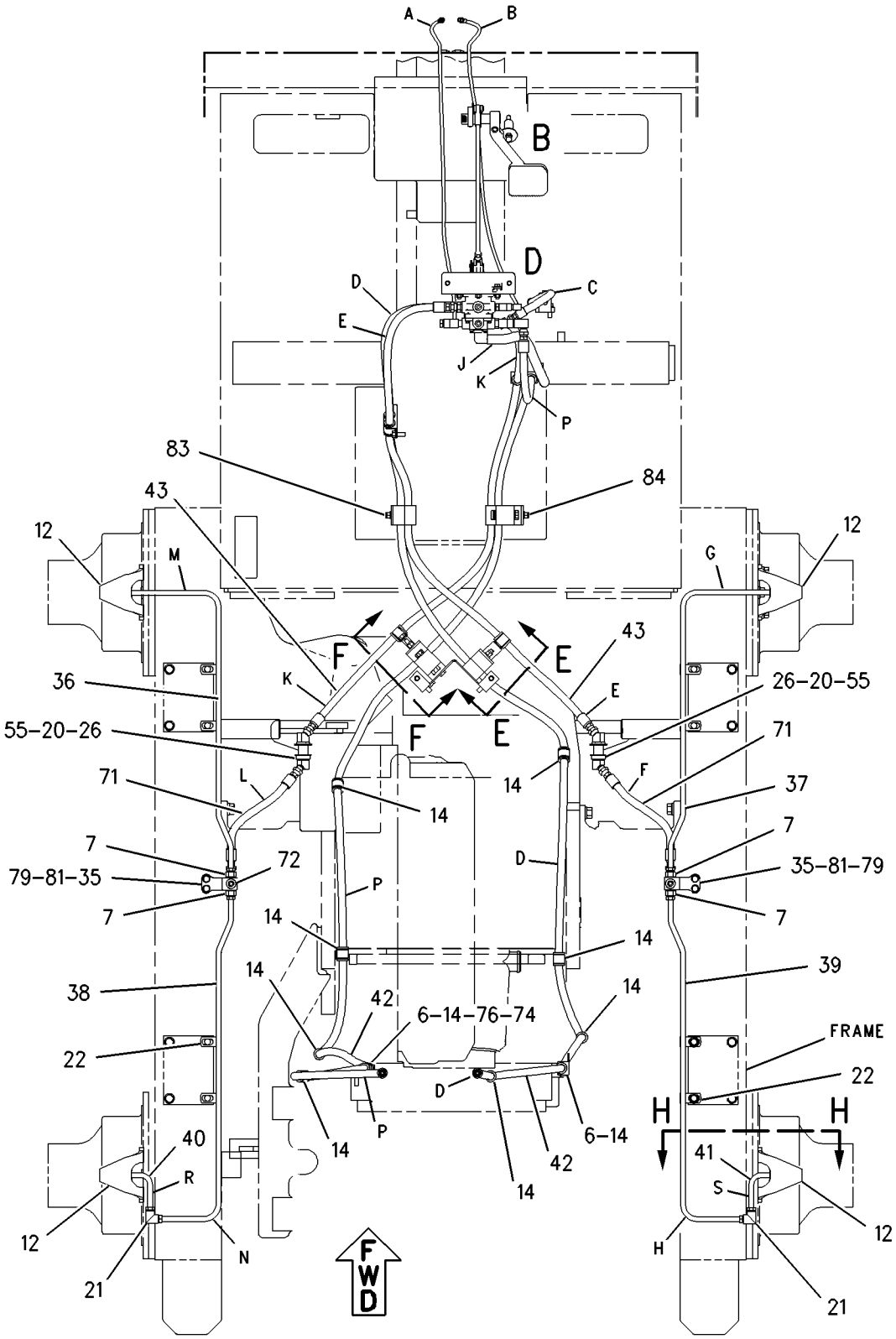

TOP VIEW

REFER TO ALL ILLUSTRATIONS OF THIS GROUP FOR AUXILIARY VIEWS

GRAPHIC #2 g00943839

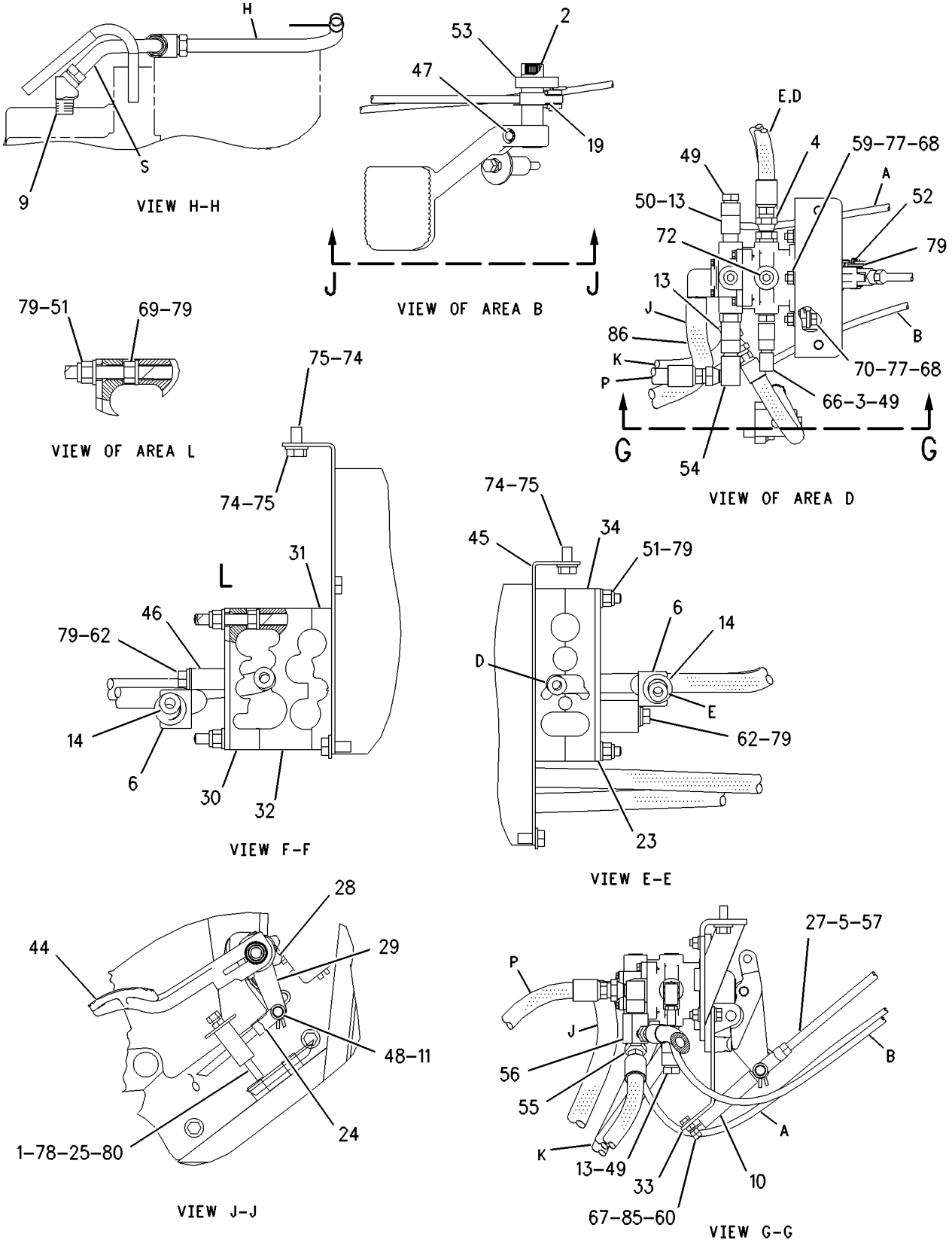

GRAPHIC #3

g00943840

BRAKING SYSTEM

212-7523 LINES GP-AIR TANK

S/N: CAF1-UP

PART OF 162-5603 GENERAL AR

SMCS-4272 **i01673917**

NOTE	REF NO	GRAPHIC REF	PART NUMBER	QTY	PART NAME 1 2 3 4 5 6 (PRODUCT LEVEL)	SEE PAGE
I	1	1	**3D-6388**	1	HOSE AS	
	2	1	**8W-1614**	1	CLIP	
	3	1	**8W-8528**	3	SLEEVE	
	4	1	**101-9759**	2	SPACER	
	5	1	**198-4876**	1	HOSE AS	
	6	1	*148-8328*	1	CONNECTOR GP	
		1	**6V-8633**	1	CONNECTOR	
		1	**3D-2824**	1	SEAL-O-RING	
		1	**6V-8398**	1	SEAL-O-RING	
	7	1	**4D-2560**	1	CONNECTOR-PIPE	
	8	1	**5P-4116**	2	WASHER-HARD (8.8X20.5X2MM THK)	
M	9	1	**7X-2539**	1	BOLT (M8X1.25X110MM)	
M	10	1	**7X-2541**	1	BOLT (M8X1.25X140MM)	
	11	1	**9G-9154**	1	CLIP	

I-SEE HOSE FABRICATION GUIDE
M-METRIC PART

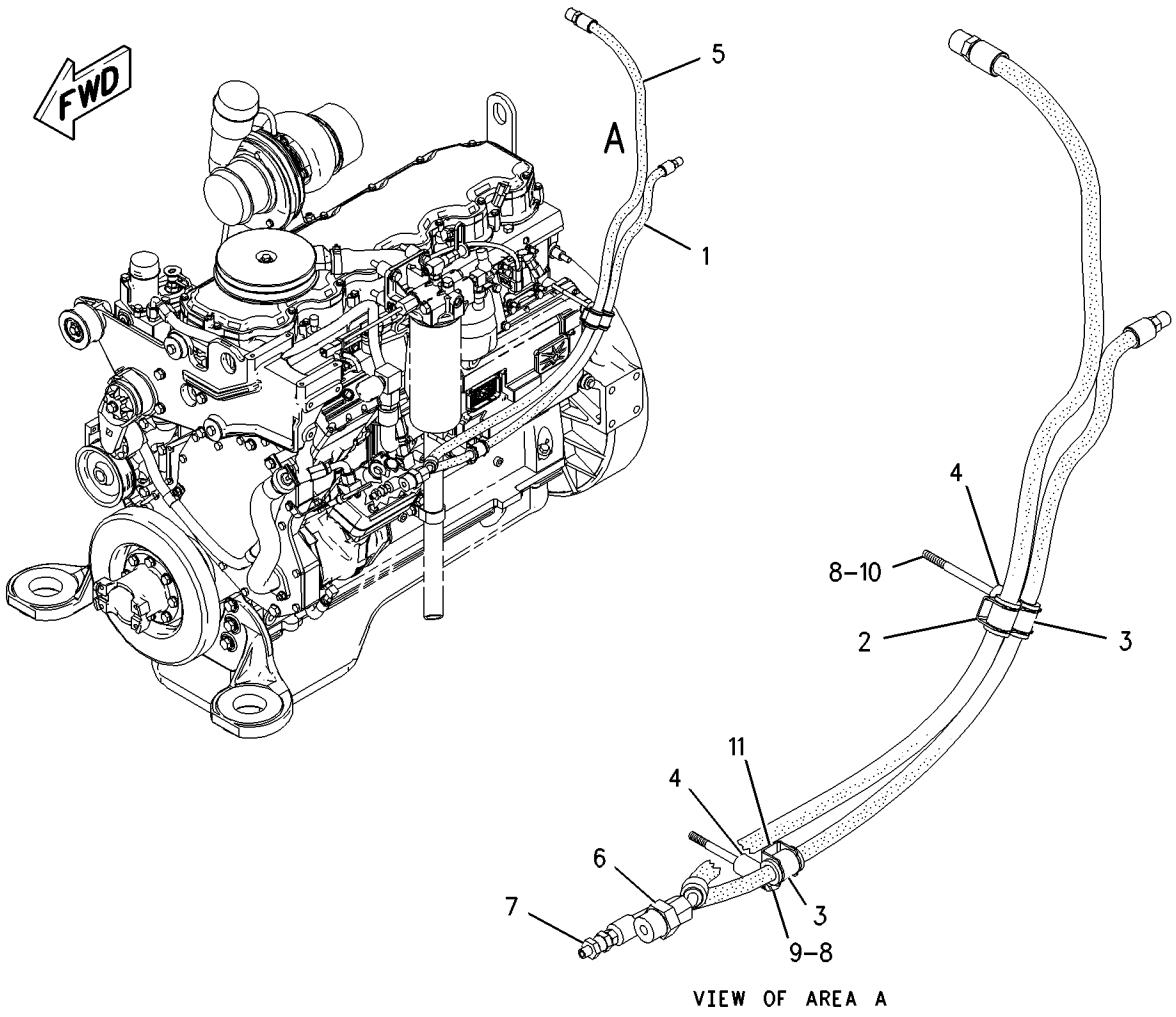

VIEW OF AREA A

GRAPHIC #1 g00939887

BRAKING SYSTEM

209-9986 TANK GP-AIR

S/N: CAF1-UP
PART OF 194-2869, 194-2870 SUPPORT AR-REAR CHASSIS
ALSO AN ATTACHMENT

SMCS-4272 **i01679066**

NOTE	REF NO	GRAPHIC REF	PART NUMBER	QTY	PART NAME 1 2 3 4 5 6 (PRODUCT LEVEL)	SEE PAGE
	1	1	**1P-4278**	1	CLAMP-HOSE	
	2	1	**1P-9328**	1	FITTING	
	3	1	**2G-1034**	1	VALVE-AIR RELIEF (AIR TANK)	
	4	1	**2H-3940**	1	ELBOW	
	5	1	**3D-8913**	2	ELBOW	
I	6	1	**4S-7560**	1	HOSE AS	
	7	1	**5F-5434**	1	VALVE AS-RELIEF (GOVERNOR)	
	8	1	**090-9019**	2	PLUG-PIPE	
	10	1	**160-6543**	1	HOSE AS	
	11	1	**177-0279**	1	HOSE AS	
	12	1	**191-2314**	1	HOSE AS	
	13	1	**205-7187**	1	GOVERNOR AS	
		1	**2S-2923**	1	COVER-GOVERNOR	
		1	**9M-0402**	1	KIT-GOVERNOR OVERHAUL (AIR TANK)	
	14	1	**208-0520**	1	VALVE-DRAIN (AIR TANK)	
	15	1	**209-9985**	1	TANK AS-AIR	
		1	**208-6678**	1	VALVE-CHECK	
	16	1	**1M-4543**	3	GROMMET	
	17	1	**3D-7587**	1	ELBOW	
	18	1	**4D-7735**	1	CLIP	
	19	1	**4S-7606**	2	ELBOW	
	20	1	**5H-4778**	3	ELBOW	
	21	1	**5P-9299**	2	CLIP	
	22	1	**7J-8611**	3	ELBOW	
	23	1	**8T-4121**	9	WASHER-HARD (11X21X2.5MM THK)	
M	24	1	**8T-4137**	7	BOLT (M10X1.5X20MM)	
M	25	1	**8T-4185**	1	BOLT (M10X1.5X50MM)	
M	26	1	**8T-6466**	1	BOLT (M10X1.50X60MM)	
	27	1	**8T-6757**	4	PLUG-PIPE	
M	28	1	**8T-6974**	2	BOLT (M6X1X80MM)	
	29	1	**9M-8406**	2	CLIP	
	30	1	**9X-8256**	2	WASHER (6.6X12X2MM THK)	
E	31	1	**5P-1465**		HOSE (150CM)	

E-ORDER BY THE CENTIMETER
I-SEE HOSE FABRICATION GUIDE
M-METRIC PART

209-9986 **TANK GP-AIR** *(contd.)* **i01679066**

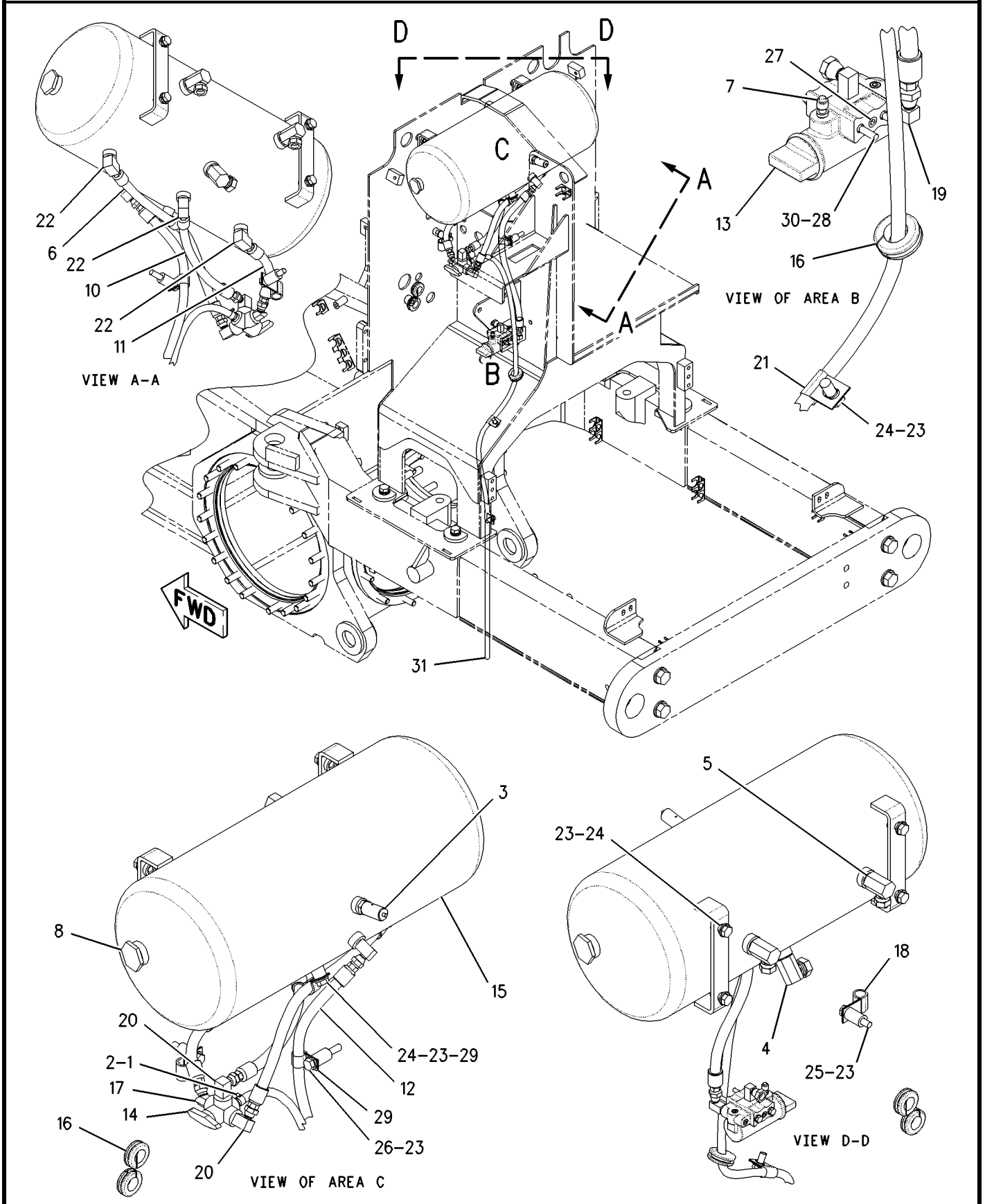

GRAPHIC #1 g00844649

5D-4382 VALVE GP-AIR CONTROL–PARKING BRAKE

S/N: CAF1-UP

PART OF 160-7753 CONTROL GP-PARKING BRAKE

SMCS-4280, 4282 **i01048737**

NOTE	REF NO	GRAPHIC REF	PART NUMBER	QTY	PART NAME 1 2 3 4 5 6 (PRODUCT LEVEL)	SEE PAGE
	1	1	**5D-7778**	1	BOOT	
	2	1	**6H-9691**	1	SEAL-O-RING (2.9MM ID)	
	3	1	**4J-8524**	1	BODY	
	4	1	**5D-7780**	1	SPRING	
	5	1	**4D-1138**	1	VALVE-INLET	
	6	1	**4J-8527**	1	STEM	
	7	1	**1H-1023**	1	SEAL-O-RING (9.25MM ID)	
	8	1	**4D-1135**	1	SEAT-SPRING	

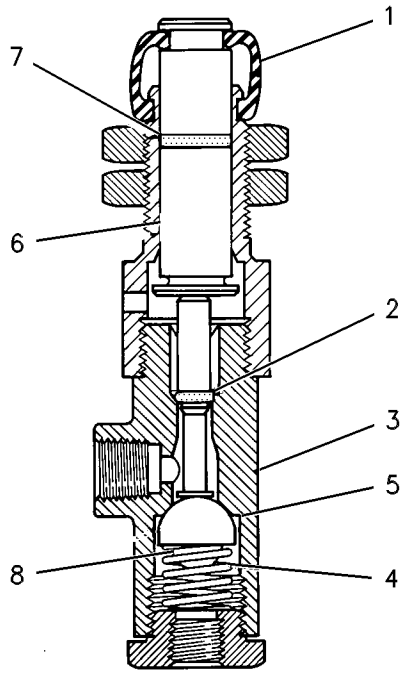

GRAPHIC #1 g00108912

MEMORANDA

BRAKING SYSTEM

8X-2650 VALVE GP-AIR CONTROL

S/N: CAF1-UP

PART OF 171-2863 CONTROL GP-SERVICE BRAKE

SMCS-4280, 4282 **i01367549**

NOTE	REF NO	GRAPHIC REF	PART NUMBER	QTY	PART NAME 1 2 3 4 5 6 (PRODUCT LEVEL)	SEE PAGE
	1	1	**8X-2646**	1	LEVER AS	
	2	1	**9D-8121**	1	ROLLER	
	3	1	**3B-4607**	1	COTTER	
		1	**7B-9323**	1	PIN	
	4	1	**5D-3636**	1	BOOT	
	5	1	**2R-0719**	1	PLUNGER	
	6	1	**125-5321**	3	BOLT	
	7	1	**2R-0694**	1	PLATE-BRAKE VALVE	
	8	1	**2R-0724**	1	BUTTON-STOP	
	9	1	**2D-6006**	1	PIN	
	10	1	**3B-4610**	1	COTTER	
J	11	1	**8W-5651**	1	VALVE GP-CONTROL	
		1	**5D-0768**	1	SPRING	
					AVAILABLE REPAIR KIT(S):	
J			**2G-6285**	1	KIT-AIR CONTROL VALVE	
					(INCLUDES SPRINGS, INLET & EXHAUST VALVES,O-RINGS, BOOT,SCREW,	
					LOCKNUT & FILTER)	

J-KIT MARKED J IS AVAILABLE FOR PART MARKED J

8X-2650 **VALVE GP-AIR CONTROL** ***(contd.)*** **i01367549**

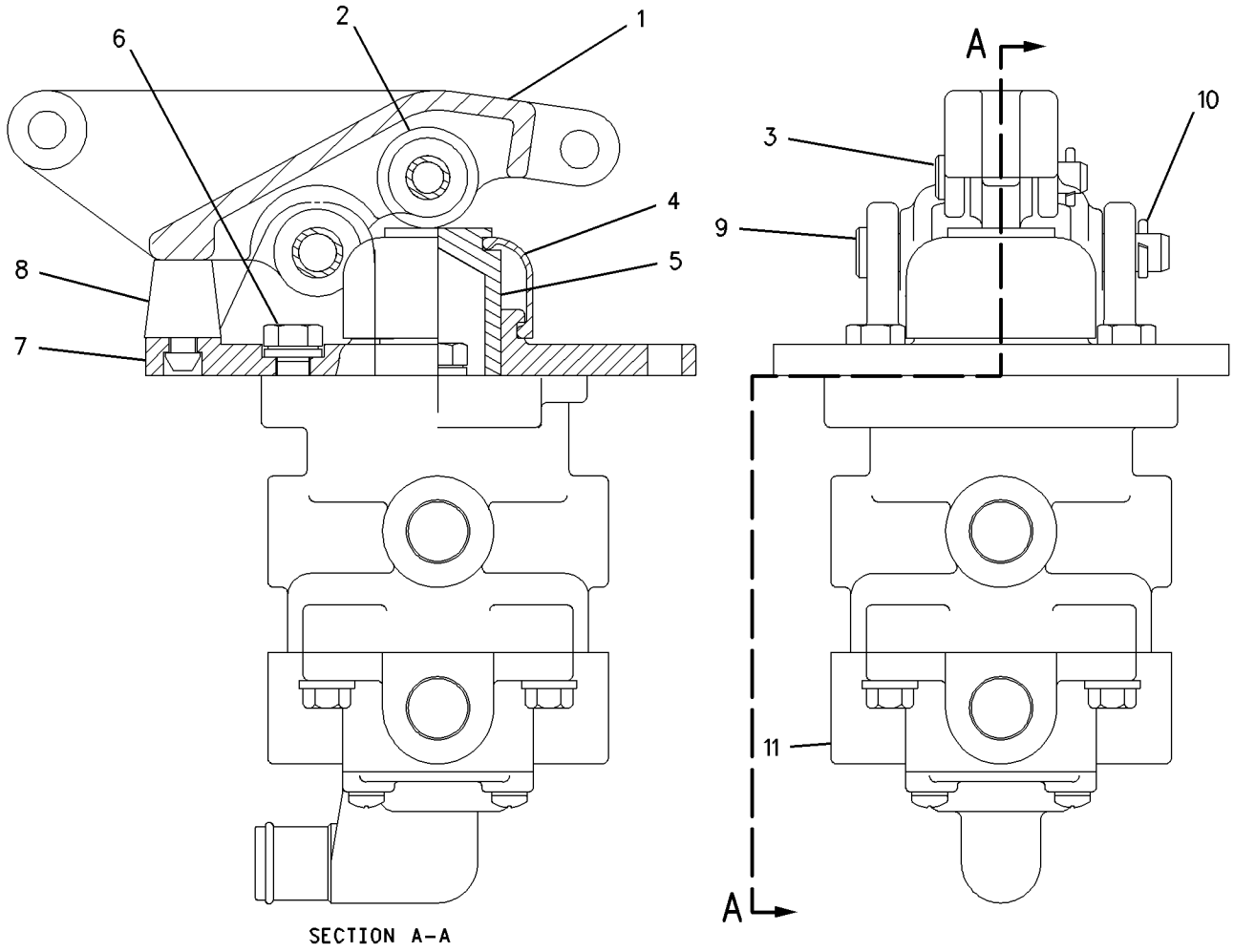

GRAPHIC #1 g00688575

BRAKING SYSTEM

188-9250 VALVE GP-SOLENOID

S/N: CAF1-UP

PART OF 160-7753 CONTROL GP-PARKING BRAKE, 160-7758 HORN GP-AIR

SMCS-5479 **i01674409**

NOTE	REF NO	GRAPHIC REF	PART NUMBER	QTY	PART NAME 1 2 3 4 5 6 (PRODUCT LEVEL)	SEE PAGE
	1	1	**102-8802**	1	KIT-RECEPTACLE (2 PIN) (SOLENOID VALVE)	
		1	**3E-3365**	1	WEDGE-RECEPTACLE LOCK (2 PIN)	
		1	**8T-8729**	2	PIN-CONNECTOR	

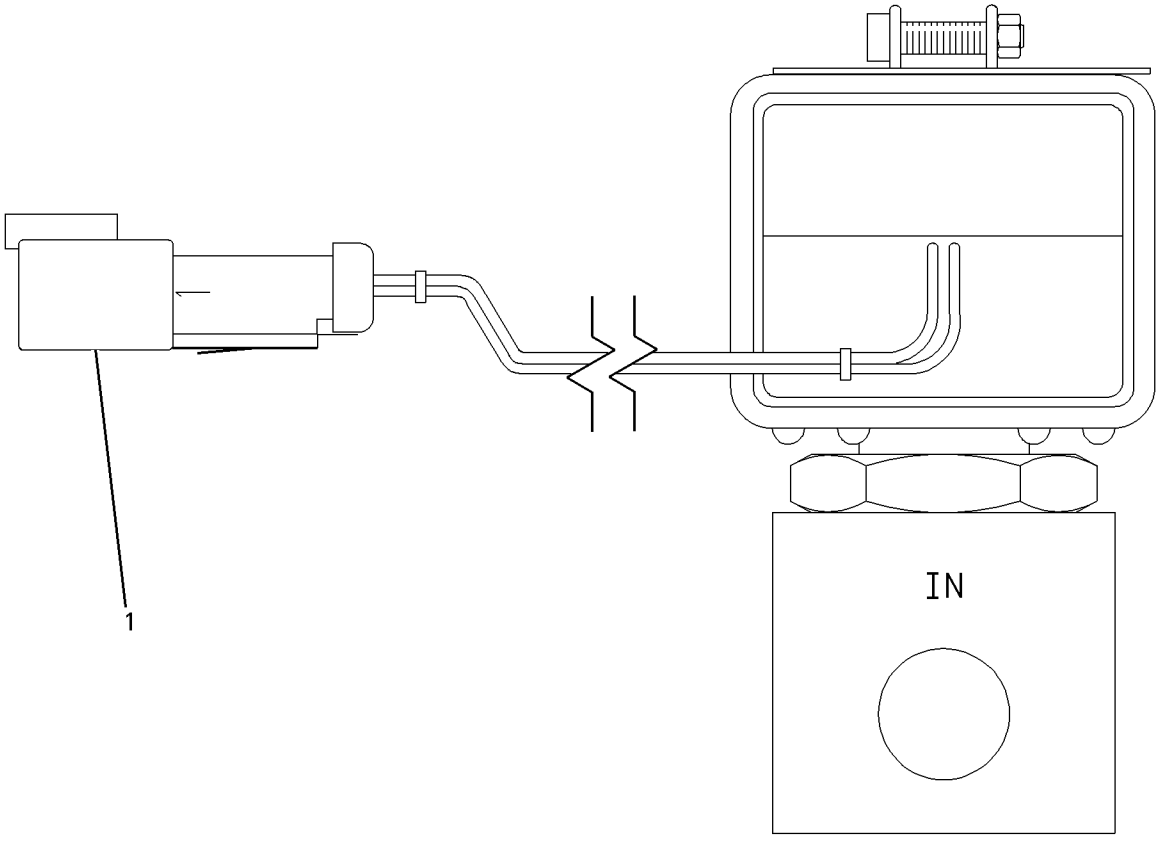

GRAPHIC #1 g00825932

162-7451 ACCUMULATOR & MTG GP-HYDRAULIC

S/N: CAF1-UP
PART OF 166-3337 ACCUMULATOR AR-BLADE CUSHION
AN ATTACHMENT

SMCS-5077 **i01680376**

NOTE	REF NO	GRAPHIC REF	PART NUMBER	QTY	PART NAME 1 2 3 4 5 6 (PRODUCT LEVEL)	SEE PAGE
	1	1	**4N-5091**	2	SPACER (.53X1X3.375 IN THK)	
	2	1	**162-7449**	2	CLAMP	
Y	3	1	*162-7450*	2	ACCUMULATOR GP-BLADE CUSHION	482
	4	1	**168-8758**	1	PLATE AS	
	5	1	**2M-4779**	3	STUD-TAPERLOCK (3/8X16X1.77 IN OAL)	
	6	1	**6V-8801**	3	NUT (3/8-16 THD)	
	7	1	**7X-0333**	2	BOLT (1/2-13X4.75 IN)	
	8	1	**8T-4223**	2	WASHER-HARD (13.5X25.5X3MM THK)	
	9	1	**8T-4896**	3	WASHER-HARD (10.2X18.5X2.5MM THK)	

Y-SEPARATE ILLUSTRATION

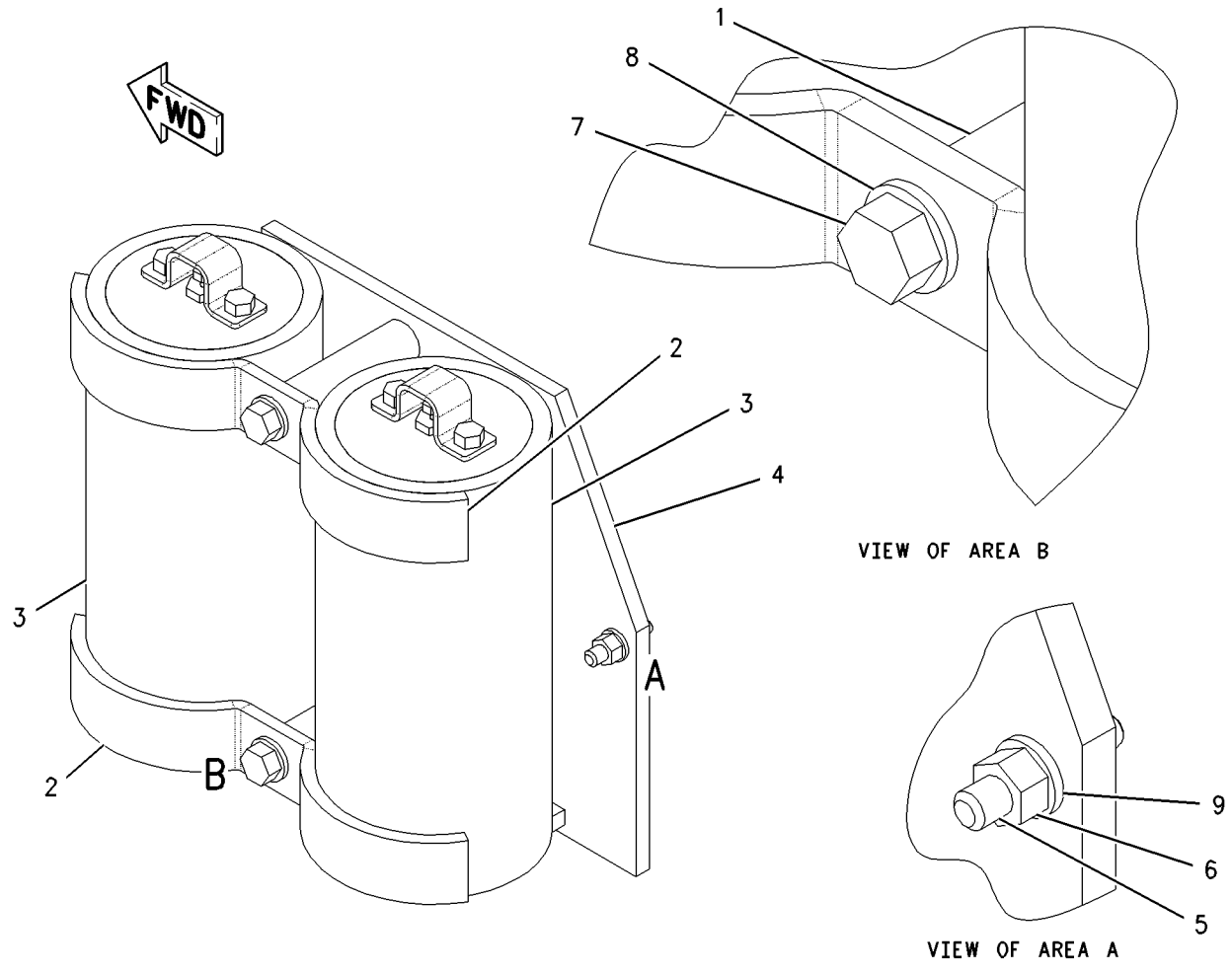

GRAPHIC #1 g00788552

HYDRAULIC SYSTEM

166-3337 ACCUMULATOR AR-BLADE CUSHION

S/N: CAF1-UP
AN ATTACHMENT

SMCS-5077, 5081 **i01678738**

NOTE	PART NUMBER	QTY	PART NAME 1 2 3 4 5 6 (PRODUCT LEVEL)	SEE PAGE
Y	*162-7451*	1	ACCUMULATOR & MTG GP-HYDRAULIC (BLADE CUSHION)	479
Y	*166-3336*	1	LINES GP-ACCUMULATOR	520
Y	*161-1022*	1	WIRING GP-BLADE CUSHION	230

Y-SEPARATE ILLUSTRATION

<END>

221-2961 ACCUMULATOR AR-BLADE CUSHION

S/N: CAF1-UP
EU
AN ATTACHMENT

SMCS-5077, 5081 **i01768310**

NOTE	PART NUMBER	QTY	PART NAME 1 2 3 4 5 6 (PRODUCT LEVEL)	SEE PAGE
Y	*221-2801*	1	ACCUMULATOR GP-BLADE CUSHION	483
Y	*166-3336*	1	LINES GP-ACCUMULATOR	520
Y	*161-1022*	1	WIRING GP-BLADE CUSHION	230

Y-SEPARATE ILLUSTRATION

<END>

219-7258 ACCUMULATOR GP

S/N: CAF1-UP
PART OF 221-2801 ACCUMULATOR GP-BLADE CUSHION
FIELD REPLACEMENT FOR 219-7265—PAGE 481

SMCS-5077 **i01861308**

NOTE	PART NUMBER	QTY	PART NAME 1 2 3 4 5 6 (PRODUCT LEVEL)	SEE PAGE
	222-2367	1	VALVE GP-ACCUMULATOR CHARGING	
	190-3850	1	CORE	
			AVAILABLE REPAIR KIT(S):	
	170-0493	1	KIT-SEAL	
			(INCLUDES RINGS, SEALS, & WASHERS)	

<END>

HYDRAULIC SYSTEM

219-7265 ACCUMULATOR GP

S/N: CAF1-UP
PART OF 221-2801 ACCUMULATOR GP-BLADE CUSHION
FIELD REPLACEMENT ORDER 219-7258—PAGE 480
AN ATTACHMENT

SMCS-5077 **i01861306**

NOTE	PART NUMBER	QTY	PART NAME 1 2 3 4 5 6 (PRODUCT LEVEL)	SEE PAGE
	222-2367	1	VALVE GP-ACCUMULATOR CHARGING	
	190-3850	1	CORE	
			AVAILABLE REPAIR KIT(S):	
	170-0493	1	KIT-SEAL	
			(INCLUDES RINGS, SEALS, & WASHERS)	

<END>

162-7450 ACCUMULATOR GP-BLADE CUSHION

S/N: CAF1-UP
PART OF 162-7451 ACCUMULATOR & MTG GP-HYDRAULIC
AN ATTACHMENT

SMCS-5077 **i01680379**

NOTE	REF NO	GRAPHIC REF	PART NUMBER	QTY	PART NAME 1 2 3 4 5 6 (PRODUCT LEVEL)	SEE PAGE
	1	1	**135-7123**	1	PISTON	
	2	1	**170-0493**	1	KIT-SEAL (BLADE CUSHION ACCUMULATOR)	
	3	1	**188-9390**	1	VALVE AS	
		1	**6M-5062**	1	SEAL-O-RING	
		1	**190-3850**	1	CORE	
	4	1	**111-9110**	1	PROTECTOR-GAS VALVE	
	5	1	**1J-9671**	1	SEAL-O-RING	
	6	1	**5M-3062**	2	BOLT (3/8-16X0.75 IN)	
	7	1	**170-0503**	1	NAMEPLATE	

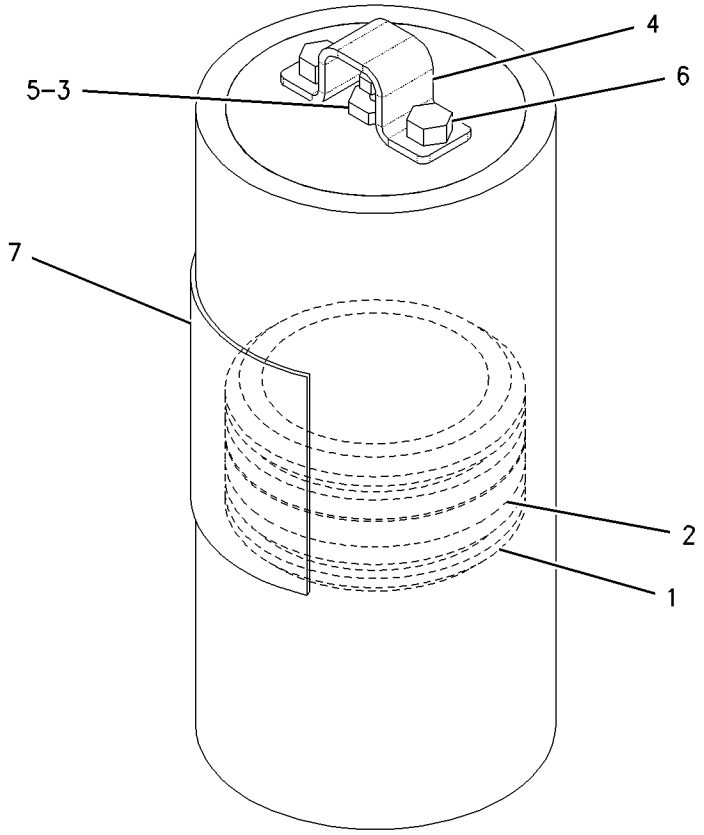

GRAPHIC #1 g00789082

221-2801 ACCUMULATOR GP-BLADE CUSHION

S/N: CAF1-UP

PART OF 221-2961 ACCUMULATOR AR-BLADE CUSHION

AN ATTACHMENT

SMCS-5077 **i01861348**

NOTE	REF NO	GRAPHIC REF	PART NUMBER	QTY	PART NAME 1 2 3 4 5 6 (PRODUCT LEVEL)	SEE PAGE
	1	1	**4N-5091**	2	SPACER (.53X1X3.375 IN THK)	
	2	1	**162-7449**	2	CLAMP	
	3	1	**168-8758**	1	PLATE AS	
Y	4	1	*219-7265*	2	ACCUMULATOR GP	481
	5	1	**2M-4779**	3	STUD-TAPERLOCK (3/8-16X1.8 IN)	
	6	1	**6V-8801**	3	NUT (3/8-16 THD)	
	7	1	**7X-0333**	2	BOLT (1/2-13X4.75 IN)	
	8	1	**8T-4223**	2	WASHER-HARD (13.5X25.5X3MM THK)	
	9	1	**8T-4896**	3	WASHER-HARD (10.2X18.5X2.5MM THK)	

Y-SEPARATE ILLUSTRATION

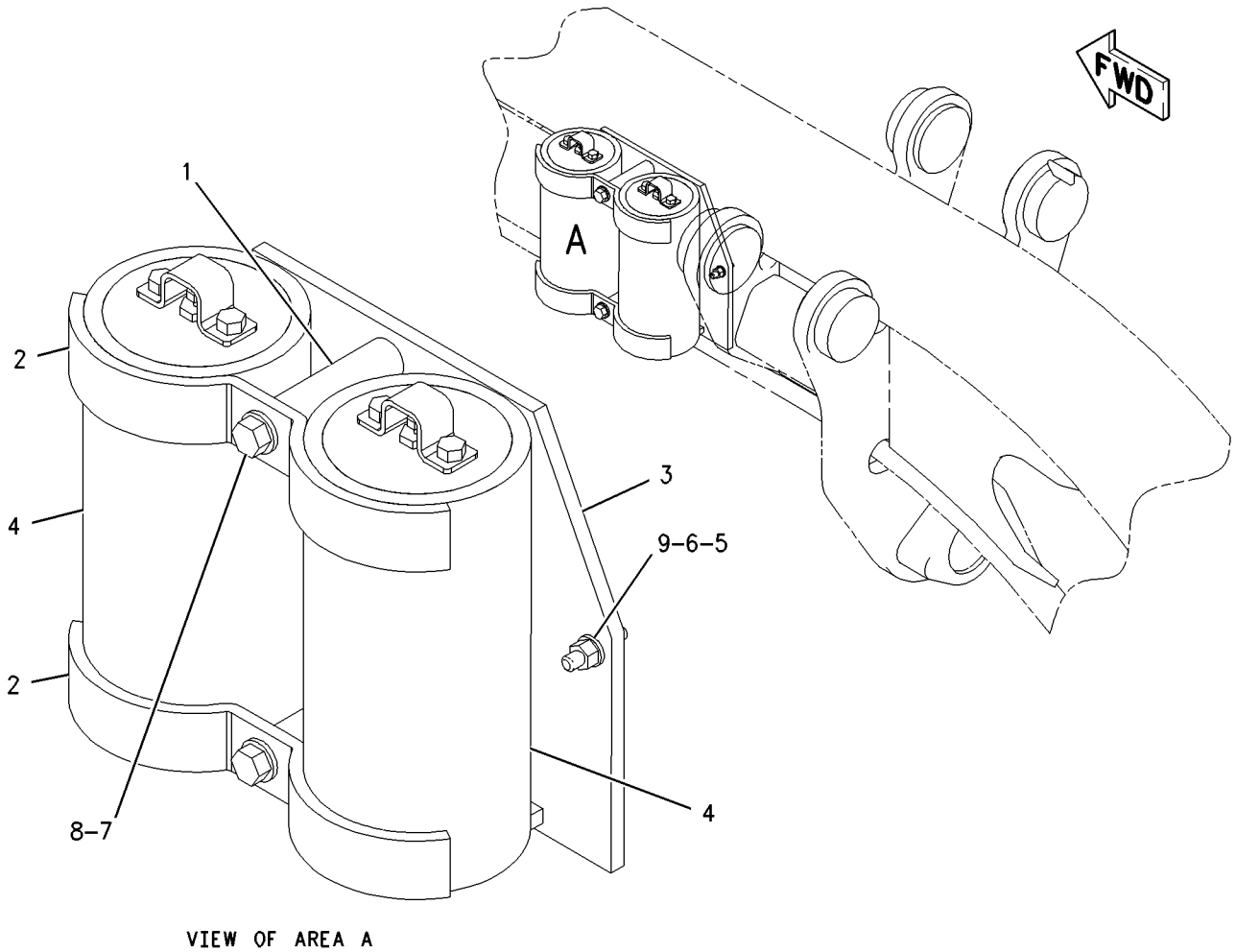

VIEW OF AREA A

GRAPHIC #1 g00943450

HYDRAULIC SYSTEM

166-3305 CONTROL AR-HYDRAULIC

S/N: CAF1-UP
AN ATTACHMENT

SMCS-5050 **i01861326**

NOTE	PART NUMBER	QTY	PART NAME 1 2 3 4 5 6 (PRODUCT LEVEL)	SEE PAGE
Y	*166-3308*	1	LINES GP-RIPPER	548
Y	*7I-4622*	1	VALVE & LINKAGE GP (BANK 4-LH, BANK 5-RH)	586

Y-SEPARATE ILLUSTRATION

<END>

184-7303 CONTROL AR-HYDRAULIC

S/N: CAF1-UP
AN ATTACHMENT

SMCS-5050 **i01681234**

NOTE	PART NUMBER	QTY	PART NAME 1 2 3 4 5 6 (PRODUCT LEVEL)	SEE PAGE
Y	*166-3308*	1	LINES GP-RIPPER	548
Y	*112-5499*	1	VALVE & LINKAGE GP (BANK 5-LH, RH)	592

Y-SEPARATE ILLUSTRATION

<END>

184-7307 CONTROL AR-HYDRAULIC

S/N: CAF1-UP
AN ATTACHMENT

SMCS-5050 **i01681242**

NOTE	PART NUMBER	QTY	PART NAME 1 2 3 4 5 6 (PRODUCT LEVEL)	SEE PAGE
Y	*166-3308*	1	LINES GP-RIPPER	548
Y	*121-4097*	1	VALVE & LINKAGE GP (BANK 5-LH,RH)	602

Y-SEPARATE ILLUSTRATION

<END>

HYDRAULIC SYSTEM

7I-4718 CONTROL GP-STEERING

S/N: CAF1-UP

PART OF 162-5603 GENERAL AR

SMCS-4309, 4310, 4343 **i01192566**

NOTE	REF NO	GRAPHIC REF	PART NUMBER	QTY	PART NAME 1 2 3 4 5 6 (PRODUCT LEVEL)	SEE PAGE
Y	1	1	**102-1501**	1	PUMP GP-METERING	566
	2	1	**092-3200**	1	STEERING WHEEL	
	3	1	**144-6695**	1	NUT	
	4	1	**6V-7692**	4	BOLT-12 POINT HEAD	

Y-SEPARATE ILLUSTRATION

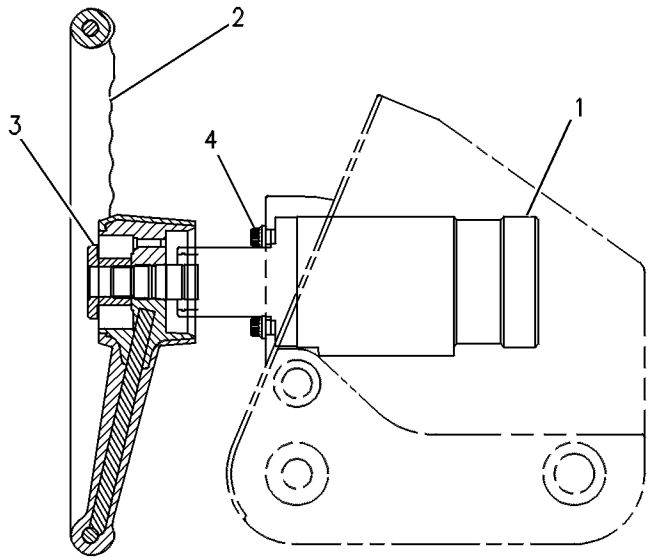

GRAPHIC #1 g00108618

208-9698 CYLINDER & LINES GP-RIPPER

S/N: CAF1-UP
PART OF 201-7352 RIPPER AR
AN ATTACHMENT

SMCS-5352 **i01683701**

NOTE	REF NO	GRAPHIC REF	PART NUMBER	QTY	PART NAME 1 2 3 4 5 6 (PRODUCT LEVEL)	SEE PAGE
Y	1	1	**6E-4724**	1	CYLINDER GP-HYDRAULIC	502
I	2	1	**6T-2421**	2	HOSE AS	
	3	1	**3K-0360**	2	SEAL-O-RING	
	4	1	**6V-8397**	2	SEAL-O-RING	
	5	1	**6V-9876**	1	ELBOW	
	6	1	**7K-9203**	4	SEAL-LIP	
	7	1	**8D-7685**	2	BEARING	
	8	1	**8T-1683**	1	ELBOW	

I-SEE HOSE FABRICATION GUIDE
Y-SEPARATE ILLUSTRATION

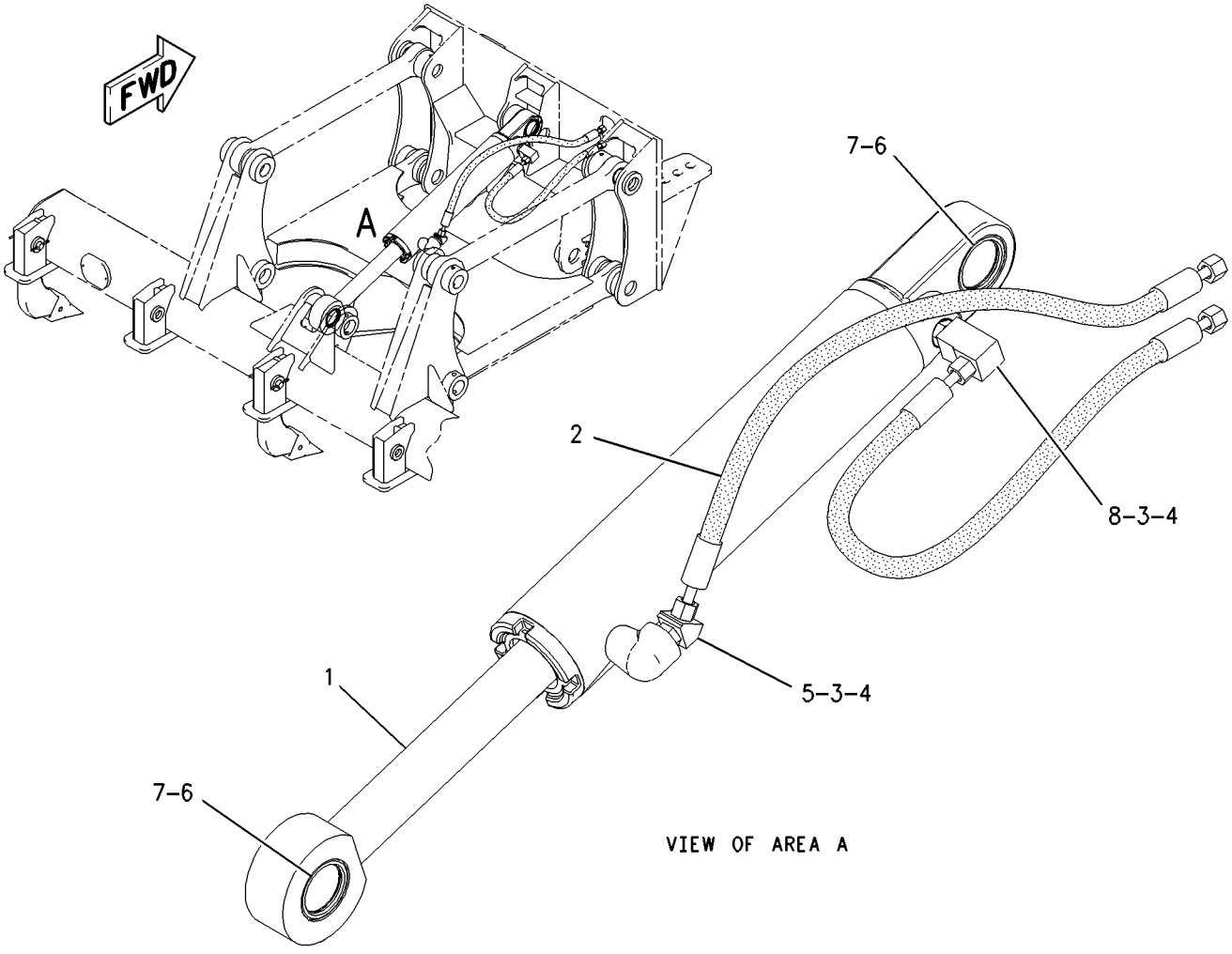

GRAPHIC #1 g00939357

193-1475 CYLINDER & MTG GP-ARTICULATION

S/N: CAF1-UP

PART OF 162-5603 GENERAL AR

SMCS-5265 **i01673420**

NOTE	REF NO	GRAPHIC REF	PART NUMBER	QTY	PART NAME 1 2 3 4 5 6 (PRODUCT LEVEL)	SEE PAGE
B	1	1	**3B-4897**	10	WASHER (1.531X2.875X.049 IN THK)	
	2	1	**7K-6128**	4	WASHER (.531X1.75X.312 IN THK)	
	3	1	**8D-9815**	4	PIN-CYLINDER	
Y	4	1	**198-8305**	2	CYLINDER GP-ARTICULATION	495
	5	1	**5P-2424**	2	BOLT (1/2-13X2.25 IN)	
	6	1	**5P-2566**	2	BOLT (1/2-13X1.5 IN)	
	7	1	**7K-9201**	8	SEAL-LIP	
	8	1	**8D-9814**	4	BEARING	
	9	1	**8T-4223**	4	WASHER-HARD (13.5X25.5X3MM THK)	

B-USE AS REQUIRED
Y-SEPARATE ILLUSTRATION

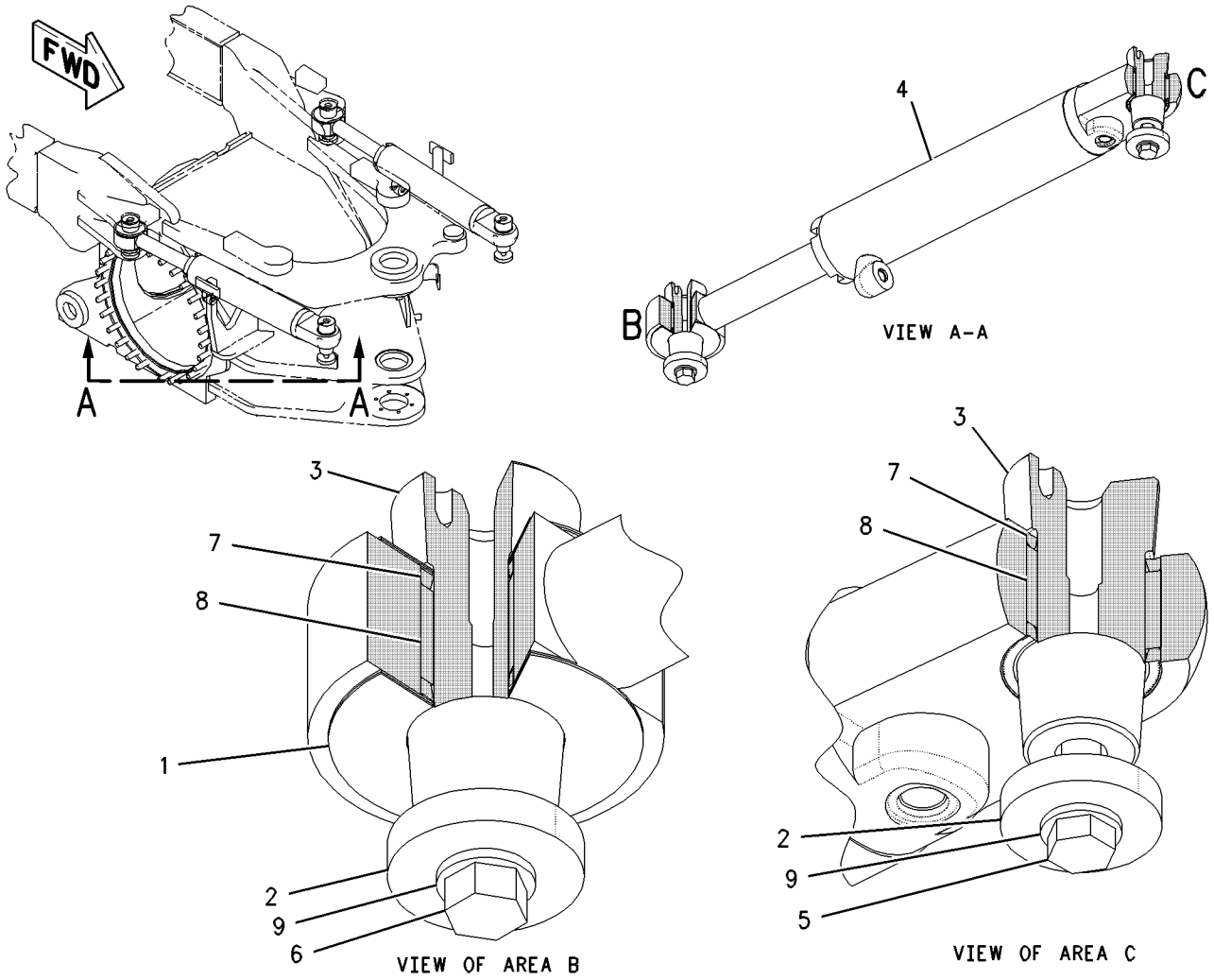

GRAPHIC #1 g00891009

HYDRAULIC SYSTEM

8X-1948 CYLINDER & MTG GP-BLADE LIFT

S/N: CAF1-UP

PART OF 162-5603 GENERAL AR

SMCS-5102 **i01066133**

NOTE	REF NO	GRAPHIC REF	PART NUMBER	QTY	PART NAME 1 2 3 4 5 6 (PRODUCT LEVEL)	SEE PAGE
CY	1	1	**132-4926**	2	CYLINDER GP-BLADE LIFT	496
	2	1	**0S-1573**	8	BOLT (1/2-13X4IN)	
	3	1	**2M-0849**	8	WASHER-HARD (5MM THK)	
	4	1	**1D-4628**	4	BOLT (7/8-9X3.25IN)	
	5	1	**5P-8249**	4	WASHER-HARD (4.0MM THK)	
	7	1	**8W-2842**	4	CAP AS	
					(EACH INCLUDES)	
		1	**8D-7996**	1	BEARING-SLEEVE	
		1	**3P-1461**	1	SEAL-LIP	
	8	1	**8X-4741**	4	INSERT	
B	9	1	**2G-9103**	8	SHIM (.5MM THK)	
	10	1	**3B-8485**	2	FITTING-HYDRAULIC	
	11	1	**2G-9098**	2	CAP	

QUANTITIES SHOWN ARE THOSE REQUIRED FOR BOTH LH AND RH SIDES
B-USE AS REQUIRED
C-CHANGE FROM PREVIOUS TYPE
Y-SEPARATE ILLUSTRATION

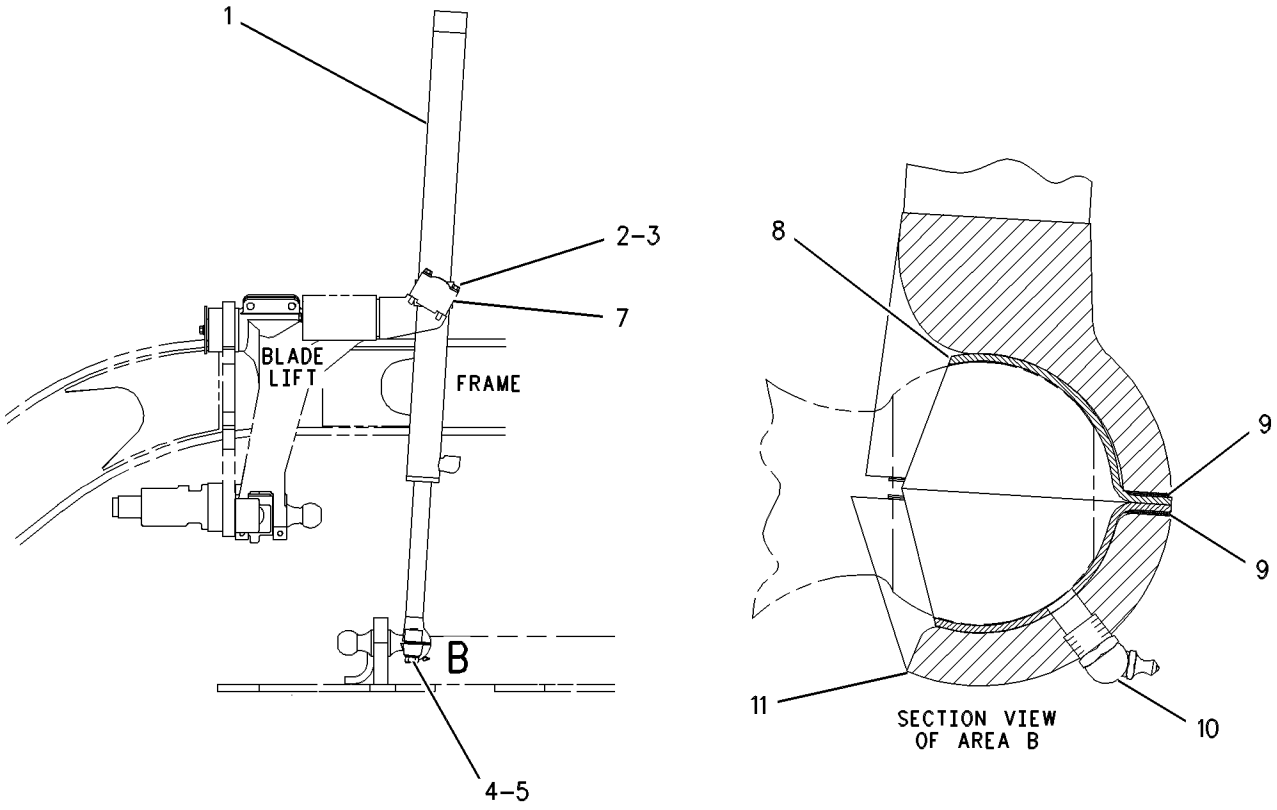

GRAPHIC #1 g00556065

HYDRAULIC SYSTEM

8X-1943 CYLINDER & MTG GP-BLADE TIP

S/N: CAF1-UP

PART OF 162-5603 GENERAL AR

SMCS-5106 **i01117955**

NOTE	REF NO	GRAPHIC REF	PART NUMBER	QTY	PART NAME 1 2 3 4 5 6 (PRODUCT LEVEL)	SEE PAGE
	1	1	**3B-5329**	1	COTTER	
	2	1	**8D-7678**	1	PIN	
CY	3	1	**131-7191**	1	CYLINDER GP-BLADE TIP	498
	4	1	**2G-3967**	2	SPACER (19.84 MM THK)	
	5	1	**5K-5552**	1	BOLT-LOCKING	
	6	1	**8D-6687**	1	PIN	
	7	1	**8F-4102**	2	PLATE-SEAL	

C-CHANGE FROM PREVIOUS TYPE
Y-SEPARATE ILLUSTRATION

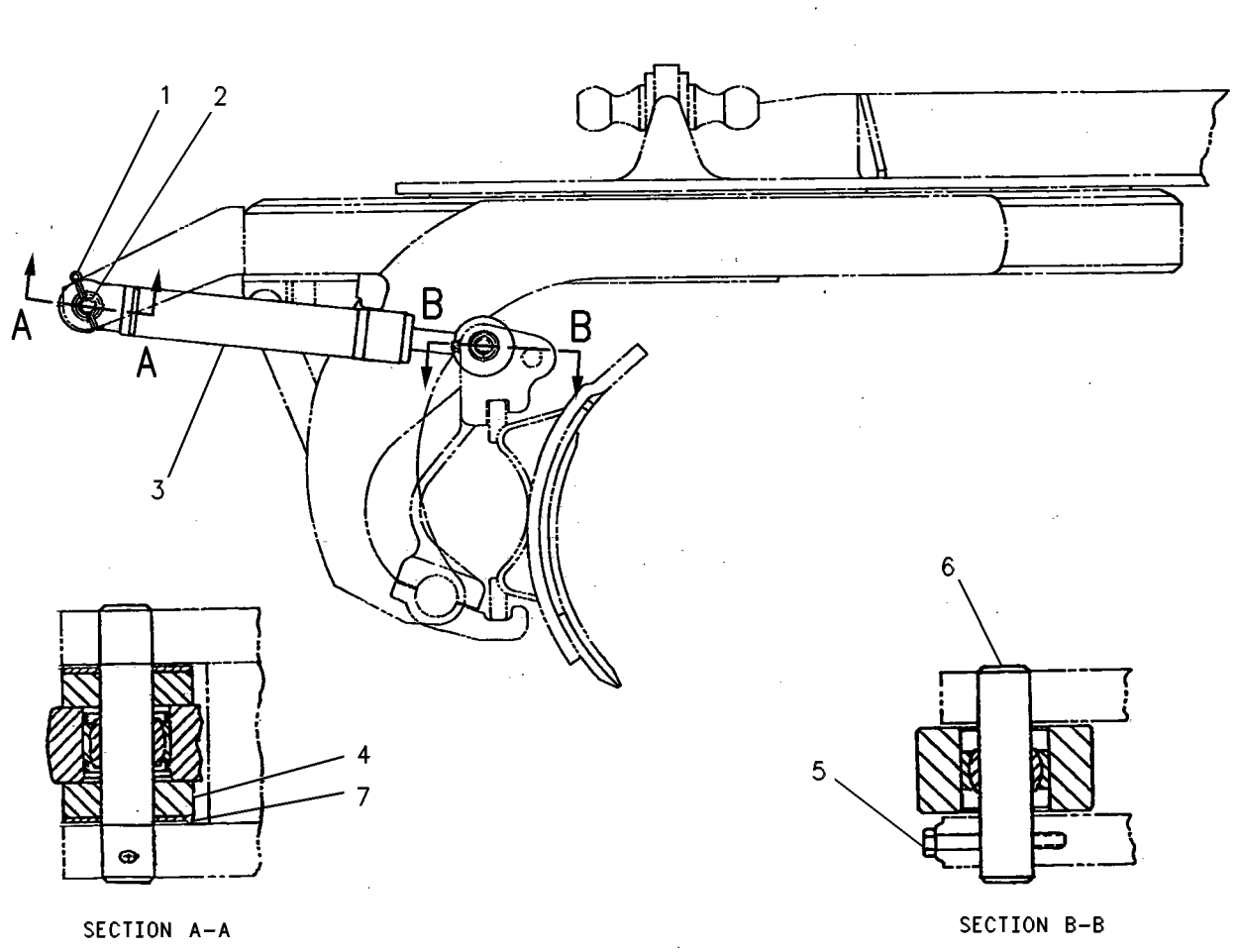

GRAPHIC #1 g00108521

HYDRAULIC SYSTEM

8X-1946 CYLINDER & MTG GP-CENTERSHIFT

S/N: CAF1-UP

PART OF 162-5603 GENERAL AR

SMCS-5223 **i00135244**

NOTE	REF NO	GRAPHIC REF	PART NUMBER	QTY	PART NAME 1 2 3 4 5 6 (PRODUCT LEVEL)	SEE PAGE
Y	1	1	**6E-1754**	1	CYLINDER GP-CENTERSHIFT	500
	2	1	**2G-9098**	2	CAP	
	3	1	**3B-8485**	2	FITTING-HYDRAULIC	
B	4	1	**2G-9103**	8	SHIM (.5MM THK)	
	5	1	**8X-4741**	4	INSERT	
	6	1	**1D-4628**	4	BOLT (7/8-9X3.25IN)	
	7	1	**5P-8249**	4	WASHER (4.0MM THK)	

B-USE AS REQUIRED
Y-SEPARATE ILLUSTRATION

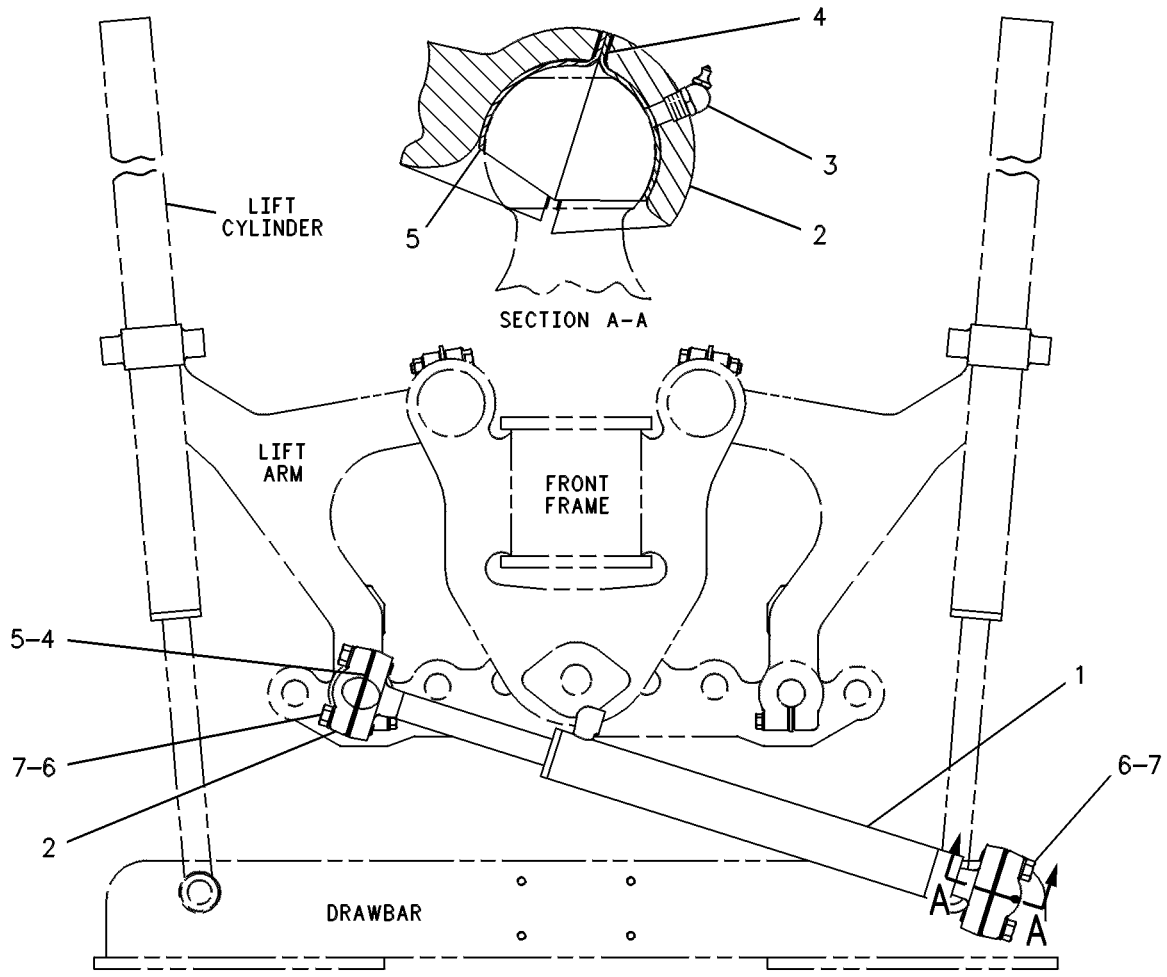

GRAPHIC #1 g00108522

8W-2913 CYLINDER & MTG GP-SCARIFIER

S/N: CAF1-UP
PART OF 108-1104, 113-0704 SCARIFIER AR
AN ATTACHMENT

SMCS-5213, 6165 **i01755262**

NOTE	REF NO	GRAPHIC REF	PART NUMBER	QTY	PART NAME 1 2 3 4 5 6 (PRODUCT LEVEL)	SEE PAGE
	1	1	**7K-9202**	4	SEAL-LIP	
	2	1	**8D-7086**	2	BEARING	
Y	3	1	**165-2510**	1	CYLINDER GP-SCARIFIER	504
	4	1	**6G-7187**	2	LOCK	
	5	1	**8D-7225**	2	PIN	
	6	1	**0S-1621**	4	BOLT (1/2-13X1 IN)	
		1	**5P-8245**	4	WASHER-HARD (13.5X25.5X3MM THK)	

Y-SEPARATE ILLUSTRATION

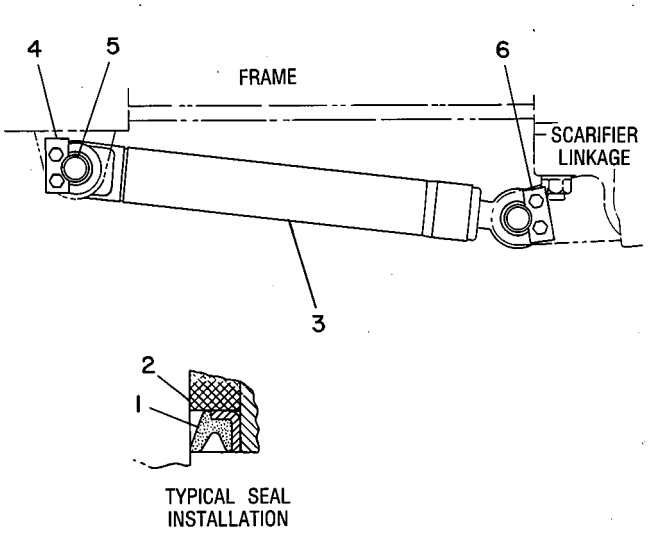

GRAPHIC #1 g00108274

112-7463 CYLINDER & MTG GP-SIDESHIFT

S/N: CAF1-UP

PART OF 162-5603 GENERAL AR

SMCS-5229 **i00131074**

NOTE	REF NO	GRAPHIC REF	PART NUMBER	QTY	PART NAME 1 2 3 4 5 6 (PRODUCT LEVEL)	SEE PAGE
	1	1	**6H-0211**	2	WASHER	
	2	1	**5T-5295**	1	PIN	
	3	1	**1B-2886**	1	BOLT (1/2-13X3.75IN)	
	4	1	**5P-8245**	1	WASHER (3MM THK)	
	5	1	**1F-7958**	1	NUT-FULL (1/2-13 THD)	
	6	1	**3B-4647**	1	PIN-COTTER	
	7	1	**5T-8417**	1	PIN	
	8	1	**112-7462**	1	BRACKET	
	9	1	**2A-1538**	4	BOLT (3/4-10X2.25IN)	
	10	1	**5P-8248**	4	WASHER-HARD (3.5MM THK)	
Y	11	1	**112-5575**	1	CYLINDER GP-SIDESHIFT	506

Y-SEPARATE ILLUSTRATION

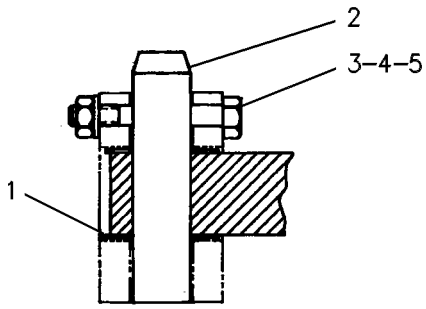

SECTION A–A

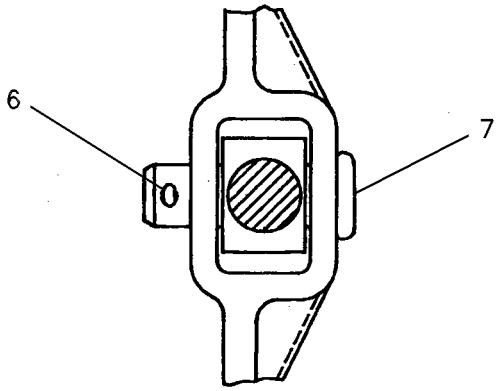

SECTION B–B

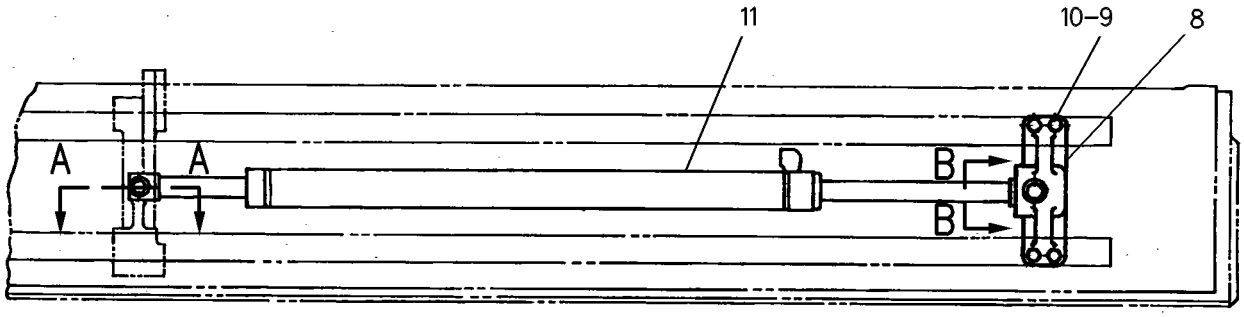

GRAPHIC #1 g00108539

8W-2290 CYLINDER & MTG GP-STEERING

S/N: CAF1-UP

PART OF 162-5603 GENERAL AR

SMCS-4303 **i01756387**

NOTE	REF NO	GRAPHIC REF	PART NUMBER	QTY	PART NAME 1 2 3 4 5 6 (PRODUCT LEVEL)	SEE PAGE
	1	1	**2H-3786**	2	NUT-JAM (1-14 THD)	
	2	1	**8D-2429**	2	PIN AS	
	3	1	**8D-2638**	4	SPACER (1.016X1.25X.39 IN THK)	
Y	4	1	**130-9041**	1	CYLINDER GP-STEERING (LH)	508
Y	5	1	**130-9042**	1	CYLINDER GP-STEERING (RH)	510
	6	1	**131-3736**	2	TIE ROD GP	
					(EACH INCLUDES)	
		1	**2F-8057**	1	NUT-SLOTTED	
		1	**132-1143**	1	SEAL-BOOT	
	7	1	**3B-4618**	2	PIN-COTTER	
	8	1	**5S-7379**	2	BOLT (3/8-16X0.875 IN)	
	9	1	**8D-2811**	2	WASHER (1.25X1.94X.032 IN THK)	
	10	1	**8T-4896**	2	WASHER-HARD (10.2X18.5X2.5MM THK)	

Y-SEPARATE ILLUSTRATION

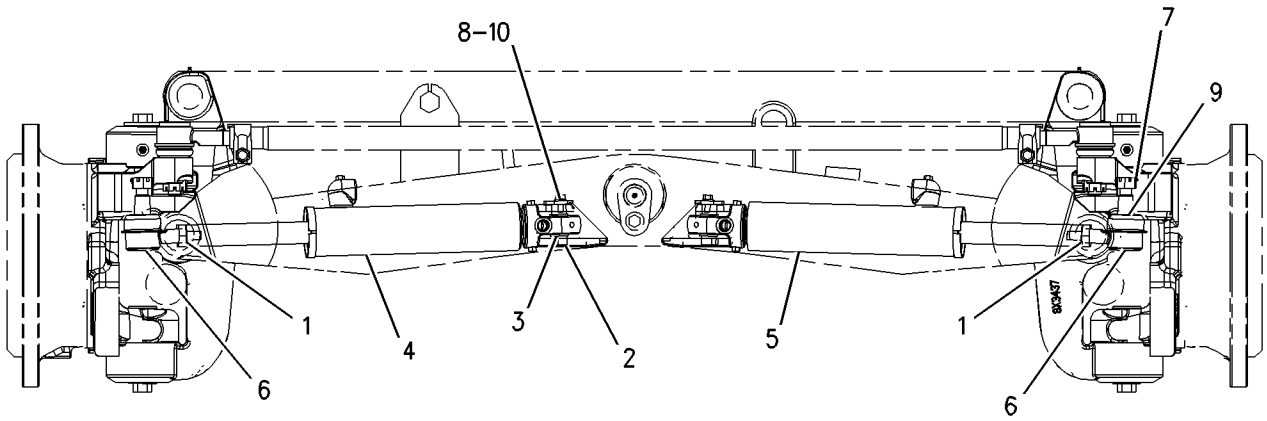

GRAPHIC #1 g00743415

HYDRAULIC SYSTEM

8W-2737 CYLINDER & MTG GP-WHEEL LEAN

S/N: CAF1-UP

PART OF 162-5603 GENERAL AR

SMCS-5211 **i01458451**

NOTE	REF NO	GRAPHIC REF	PART NUMBER	QTY	PART NAME 1 2 3 4 5 6 (PRODUCT LEVEL)	SEE PAGE
	1	1	**6H-1717**	2	BOLT (1/2-13X1.125 IN)	
		1	**5P-8245**	2	WASHER-HARD (13.5X25.5X3MM THK)	
	2	1	**3B-8489**	2	FITTING-GREASE (WHEEL LEAN)	
	3	1	**2G-8609**	1	PIN	
	4	1	**6G-7187**	1	LOCK	
Y	5	1	**121-9242**	1	CYLINDER GP-WHEEL LEAN	512
	6	1	**2G-5667**	1	RETAINER	
	7	1	**0S-1592**	1	BOLT (5/8-11X1.25IN)	
		1	**4D-3704**	1	WASHER-HARD (17X30X5MM THK)	
	8	1	**5P-8842**	4	SEAL-LIP	

Y-SEPARATE ILLUSTRATION

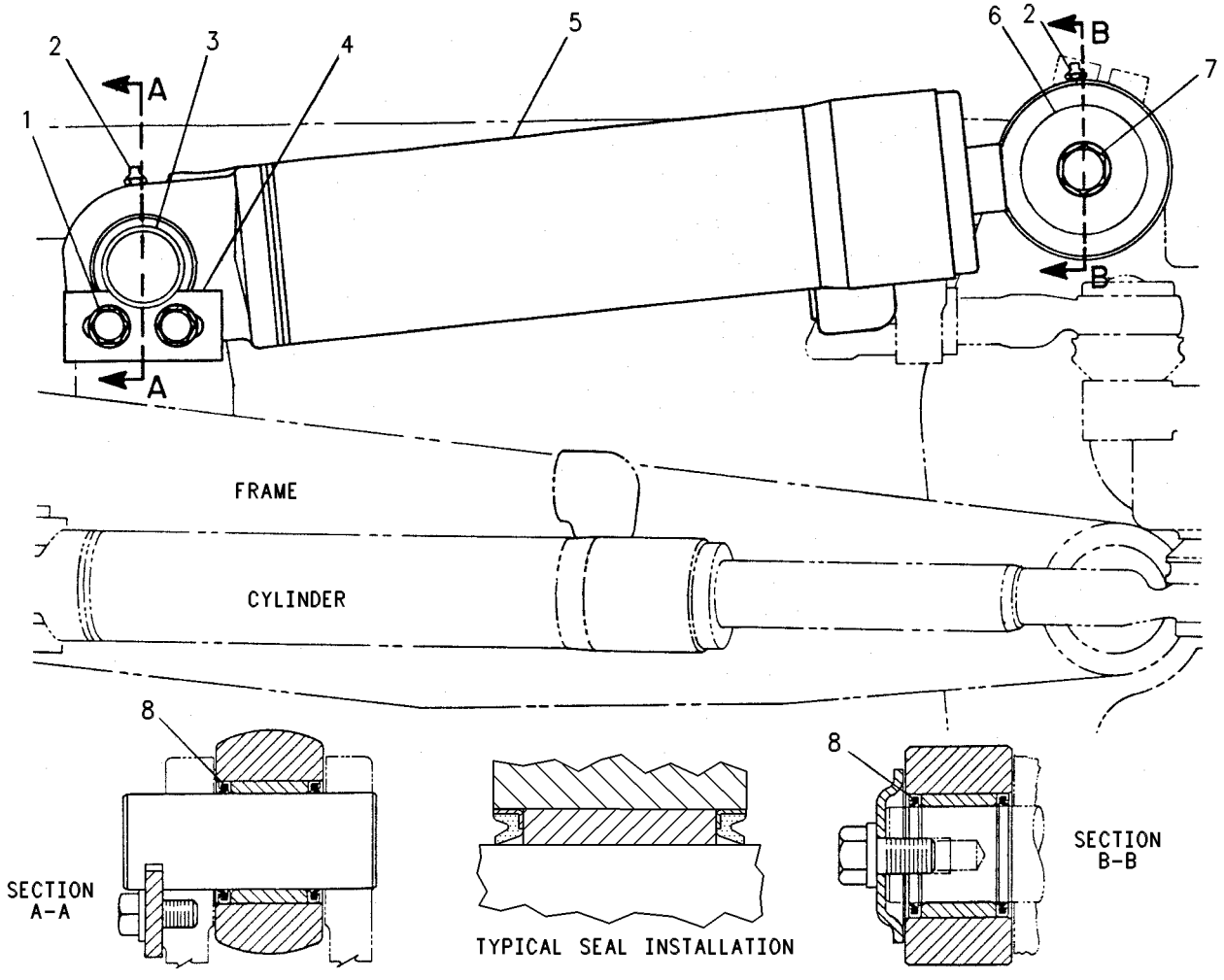

GRAPHIC #1 g00108800

198-8305 CYLINDER GP-ARTICULATION

S/N: CAF1-UP
(76.2 BORE X 284.3 STROKE)
PART OF 193-1475 CYLINDER & MTG GP-ARTICULATION

SMCS-5265 **i01740112**

NOTE	REF NO	GRAPHIC REF	PART NUMBER	QTY	PART NAME 1 2 3 4 5 6 (PRODUCT LEVEL)	SEE PAGE
	1	1	**6E-4090**	1	PISTON	
	2	1	**9T-2446**	1	CYLINDER AS	
	3	1	**184-9843**	1	HEAD	
	4	1	**198-8306**	1	ROD AS	
	5	1	**167-2190**	1	SEAL AS-BUFFER	
	6	1	**167-2300**	1	SEAL-U-CUP	
	7	1	**167-2452**	1	SEAL-WIPER	
M	8	1	**173-9779**	1	BOLT-HEX HEAD (M24X3.0X80MM)	
	9	1	**175-7896**	1	SEAL-O-RING	
	10	1	**4T-6907**	1	RING-WEAR	
	11	1	**6J-1972**	1	SEAL AS	
	12	1	**6J-5731**	1	RING-BACKUP	
	13	1	**6J-5733**	1	RING-WEAR	
	14	1	**6V-8237**	1	WASHER (26X44X4MM THK)	

M-METRIC PART

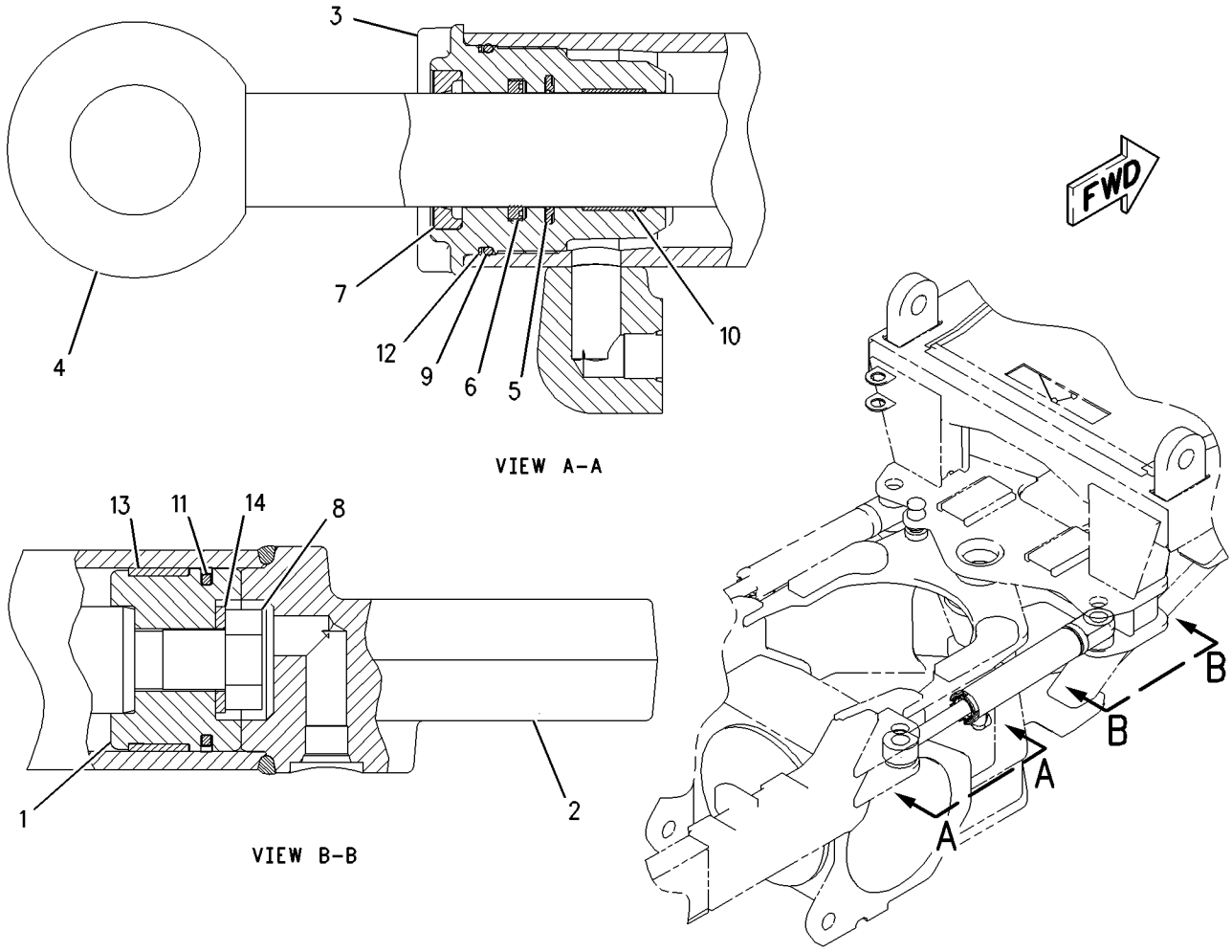

GRAPHIC #1 g00938418

HYDRAULIC SYSTEM

132-4926 CYLINDER GP-BLADE LIFT

S/N: CAF1-UP
76.2 MM BORE X 1170.0 MM STROKE
PART OF 8X-1948 CYLINDER & MTG GP-BLADE LIFT

SMCS-5102 **i01862320**

NOTE	REF NO	GRAPHIC REF	PART NUMBER	QTY	PART NAME 1 2 3 4 5 6 (PRODUCT LEVEL)	SEE PAGE
	1	1	**132-4927**	1	CYLINDER AS	
		1	**8J-6384**	2	BEARING-SLEEVE	
M	2	1	**173-9683**	1	BOLT-HEX HEAD (M30X3.5X90MM)	
	3	1	**3S-7023**	1	WASHER (34X57X6MM THK)	
J	4	1	**6J-1972**	1	SEAL AS	
J	5	1	**6J-5733**	1	RING-WEAR	
	6	1	**6E-1131**	1	PISTON	
J	7	1	**175-7896**	1	SEAL-O-RING	
J	8	1	**6J-5731**	1	RING-BACKUP	
	9	1	**148-2593**	1	HEAD	
	10	1	**119-8666**	1	ROD AS	
J	11	1	**167-2457**	1	SEAL-WIPER	
J	12	1	**167-2304**	1	SEAL-U-CUP	
J	13	1	**167-2195**	1	SEAL AS-BUFFER	
					(INCLUDES BUFFER SEAL AND BACKUP RING)	
J	14	1	**4T-5613**	1	RING-WEAR	
					AVAILABLE REPAIR KIT(S):	
AJ			**185-7667**	1	KIT-SEAL	

A-NOT PART OF THIS GROUP
J-KIT MARKED J INCLUDES PARTS MARKED J
M-METRIC PART

132-4926 **CYLINDER GP-BLADE LIFT** *(contd.)* **i01862320**

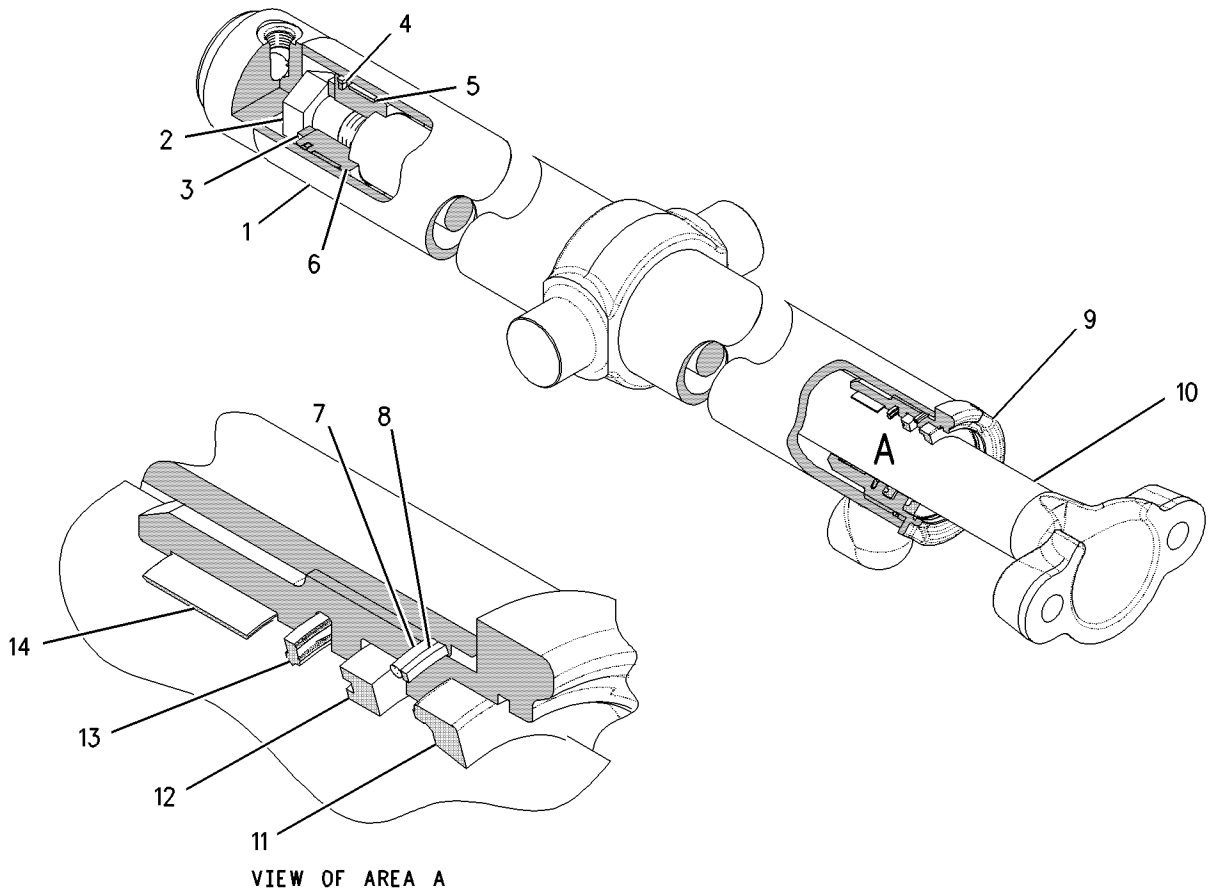

GRAPHIC #1 g00898576

HYDRAULIC SYSTEM

131-7191 CYLINDER GP-BLADE TIP

S/N: CAF1-UP
69.85 MM BORE X 307.00 MM STROKE
PART OF 8X-1943 CYLINDER & MTG GP-BLADE TIP

SMCS-5106 **i01862313**

NOTE	REF NO	GRAPHIC REF	PART NUMBER	QTY	PART NAME 1 2 3 4 5 6 (PRODUCT LEVEL)	SEE PAGE
	1	1	**131-7194**	1	CYLINDER AS	
		1	**2D-8652**	1	BEARING	
M	2	1	**173-9685**	1	BOLT-HEX HEAD (M20X2.5X70MM)	
	3	1	**8T-3282**	1	WASHER-HARD (22X35X3.5MM THK)	
J	4	1	**5J-7010**	1	SEAL AS	
J	5	1	**8J-0112**	1	RING-WEAR	
	6	1	**9T-2457**	1	PISTON	
J	7	1	**175-7895**	1	SEAL-O-RING	
J	8	1	**4J-9225**	1	RING-BACKUP	
	9	1	**6E-4940**	1	HEAD	
	10	1	**131-7195**	1	ROD AS	
		1	**2D-8652**	1	BEARING	
J	11	1	**4T-6780**	1	RING-WEAR	
J	12	1	**167-2186**	1	SEAL AS-BUFFER	
J	13	1	**167-2294**	1	SEAL-U-CUP	
J	14	1	**167-2450**	1	SEAL-WIPER	
					AVAILABLE REPAIR KIT(S):	
AJ			**185-6596**	1	KIT-SEAL	

A-NOT PART OF THIS GROUP
J-KIT MARKED J INCLUDES PARTS MARKED J
M-METRIC PART

131-7191 CYLINDER GP-BLADE TIP *(contd.)* i01862313

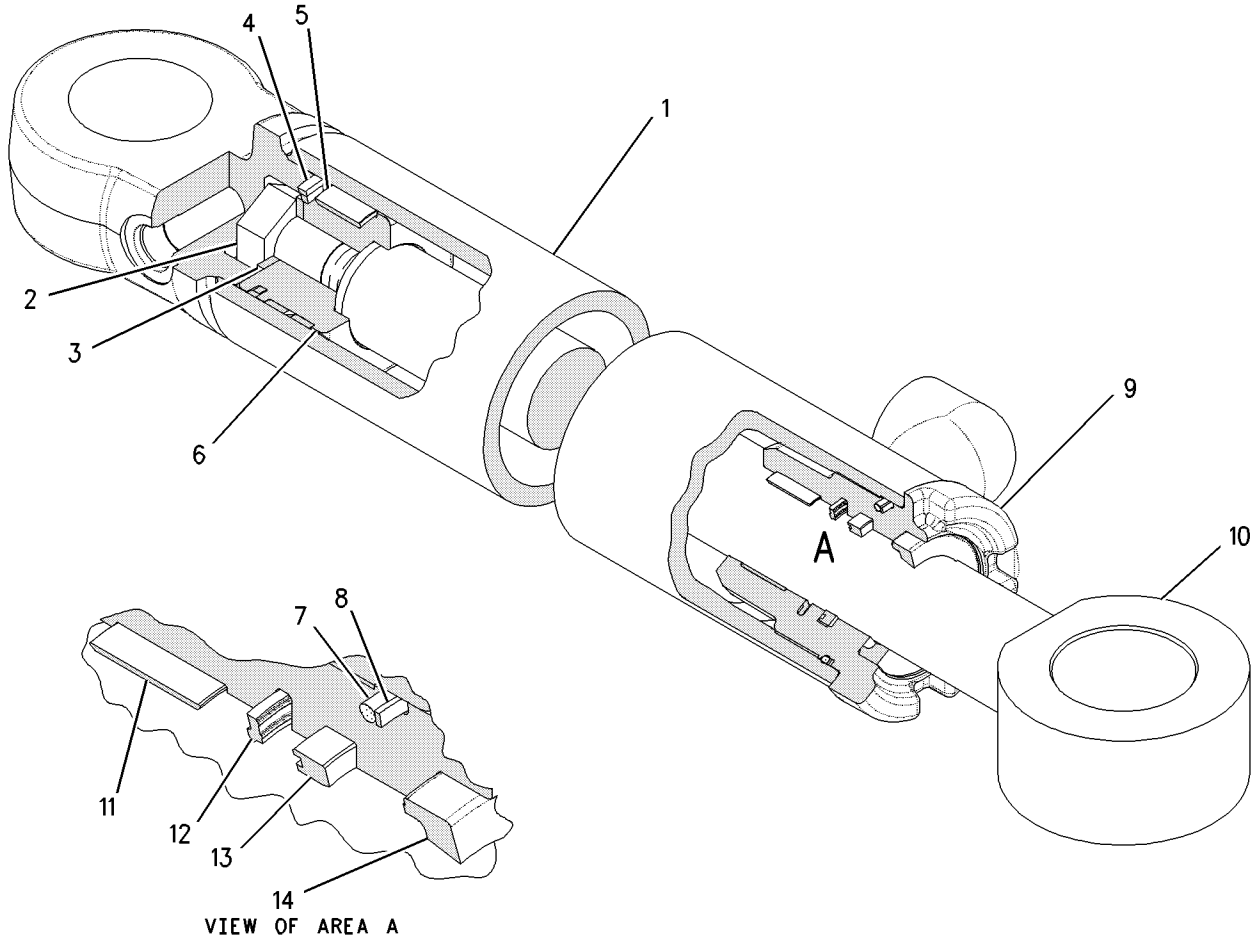

GRAPHIC #1 g00761162

HYDRAULIC SYSTEM

6E-1754 CYLINDER GP-CENTERSHIFT

S/N: CAF1-UP
76.2 MM BORE X 590 MM STROKE
PART OF 8X-1946 CYLINDER & MTG GP-CENTERSHIFT

SMCS-5223 **i01862340**

NOTE	REF NO	GRAPHIC REF	PART NUMBER	QTY	PART NAME 1 2 3 4 5 6 (PRODUCT LEVEL)	SEE PAGE
	1	1	**6E-1634**	1	CYLINDER AS	
M	2	1	**173-9683**	1	BOLT-HEX HEAD (M30X3.5X90MM)	
	3	1	**3S-7023**	1	WASHER (34X57X6MM THK)	
	4	1	**6E-1131**	1	PISTON	
	5	1	**6E-1857**	1	ROD AS	
J	6	1	**175-7896**	1	SEAL-O-RING	
J	7	1	**6J-5731**	1	RING-BACKUP	
	8	1	**120-6680**	1	HEAD	
J	9	1	**6J-5733**	1	RING-WEAR	
J	10	1	**6J-1972**	1	SEAL AS	
J	11	1	**167-2457**	1	SEAL-WIPER	
J	12	1	**167-2304**	1	SEAL-U-CUP	
J	13	1	**167-2195**	1	SEAL AS-BUFFER	
J	14	1	**4T-5613**	1	RING-WEAR	
					AVAILABLE REPAIR KIT(S):	
AJ			**185-7667**	1	KIT-SEAL	

A-NOT PART OF THIS GROUP
J-KIT MARKED J INCLUDES PARTS MARKED J
M-METRIC PART

6E-1754 CYLINDER GP-CENTERSHIFT *(contd.)* i01862340

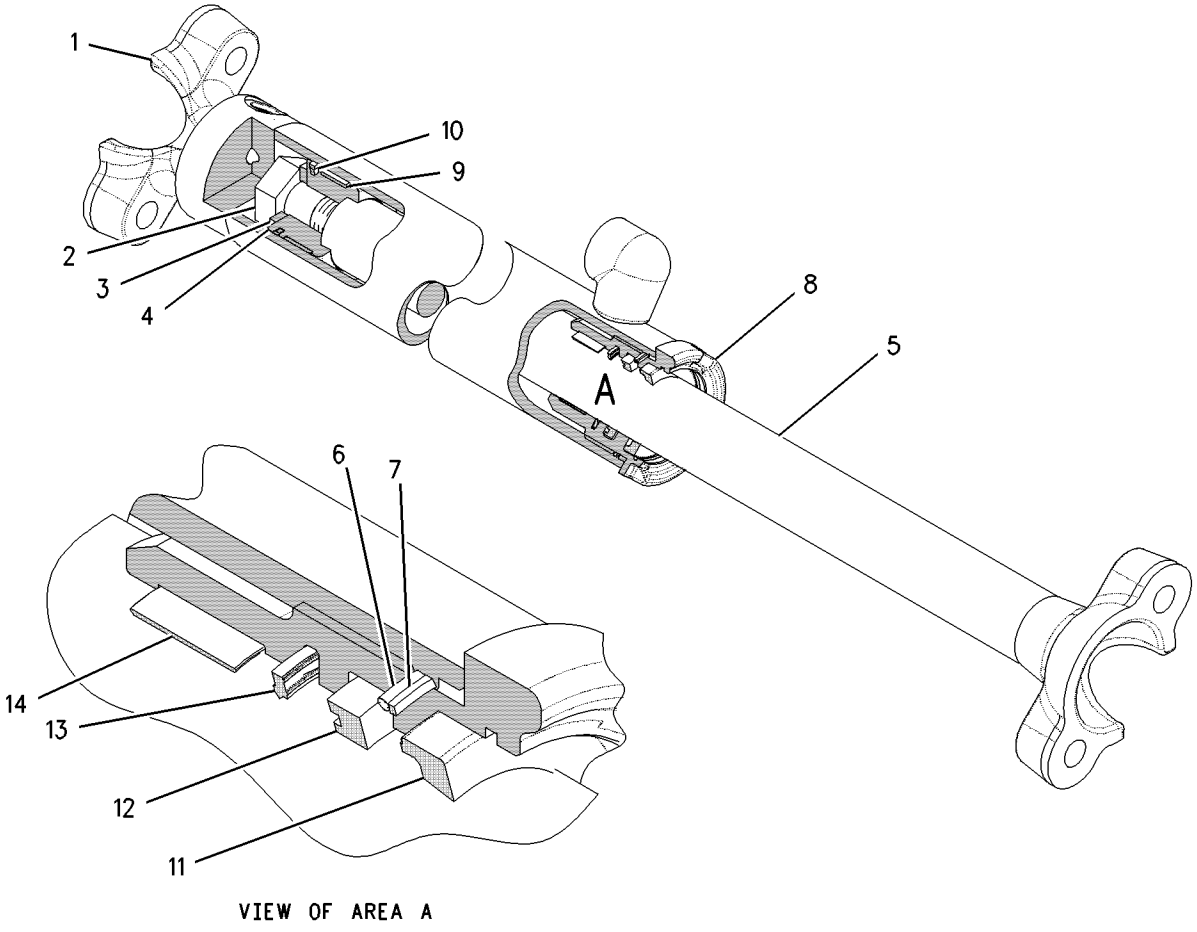

GRAPHIC #1 g00762040

HYDRAULIC SYSTEM

6E-4724 CYLINDER GP-HYDRAULIC

S/N: CAF1-UP
88.9 MM BORE X 329.3 MM STROKE
PART OF 208-9698 CYLINDER & LINES GP-RIPPER
AN ATTACHMENT

SMCS-7562 **i01862277**

NOTE	REF NO	GRAPHIC REF	PART NUMBER	QTY	PART NAME 1 2 3 4 5 6 (PRODUCT LEVEL)	SEE PAGE
R	1	1	**6E-4725**	1	CYLINDER AS	
M	2	1	**173-9683**	1	BOLT-HEX HEAD (M30X3.5X90MM)	
	3	1	**3S-7023**	1	WASHER (34X57X6MM THK)	
	4	1	**6E-4581**	1	PISTON	
J	5	1	**4T-8054**	1	SEAL AS	
					(INCLUDES EXPANDER RING & SEAL RING)	
J	6	1	**7J-9885**	1	RING-WEAR	
J	7	1	**4T-5613**	1	RING-WEAR	
J	8	1	**167-2195**	1	SEAL AS-BUFFER	
					(INCLUDES BUFFER SEAL & BACK-UP RING)	
J	9	1	**167-2304**	1	SEAL-U-CUP	
J	10	1	**167-2457**	1	SEAL-WIPER	
	11	1	**6E-2447**	1	ROD AS	
	12	1	**6E-4974**	1	HEAD	
J	13	1	**175-7898**	1	SEAL-O-RING	
J	14	1	**4J-9224**	1	RING-BACKUP	
					AVAILABLE REPAIR KIT(S):	
AJ			**185-7674**	1	KIT-SEAL	
					(INCLUDES BACK-UP RING)	

A-NOT PART OF THIS GROUP
J-KIT MARKED J INCLUDES PARTS MARKED J
M-METRIC PART
R-REMFG PART MAY BE AVAILABLE

6E-4724 CYLINDER GP-HYDRAULIC *(contd.)* i01862277

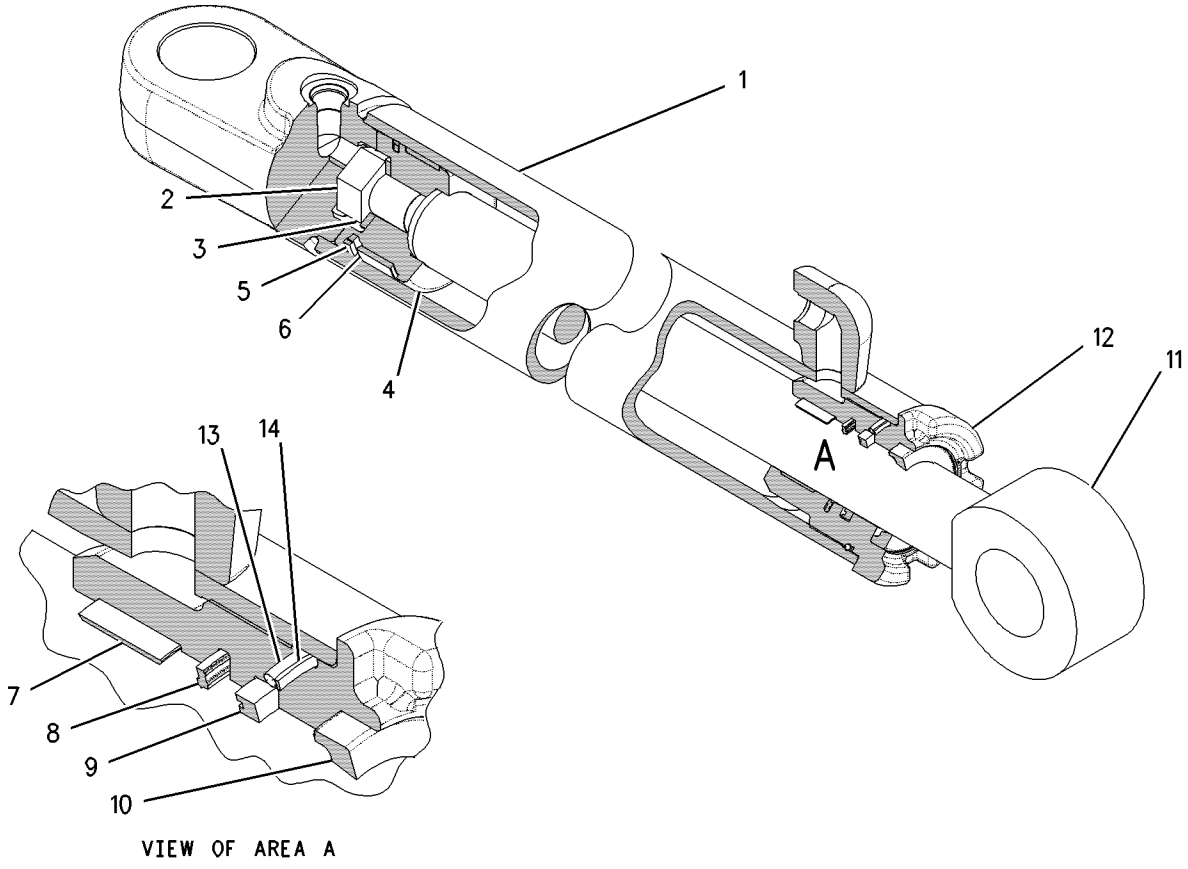

GRAPHIC #1 g00777840

HYDRAULIC SYSTEM

165-2510 CYLINDER GP-SCARIFIER

S/N: CAF1-UP
76.2 MM BORE X 406.5 MM STROKE
PART OF 8W-2913 CYLINDER & MTG GP-SCARIFIER
AN ATTACHMENT

SMCS-5213 **i01862272**

NOTE	REF NO	GRAPHIC REF	PART NUMBER	QTY	PART NAME 1 2 3 4 5 6 (PRODUCT LEVEL)	SEE PAGE
	1	1	**9T-4211**	1	PISTON	
	2	1	**168-9108**	1	CYLINDER AS	
	3	1	**168-9110**	1	ROD AS	
	4	1	**184-9843**	1	HEAD	
J	5	1	**167-2190**	1	SEAL AS-BUFFER	
J	6	1	**167-2300**	1	SEAL-U-CUP	
J	7	1	**167-2452**	1	SEAL-WIPER	
M	8	1	**173-9779**	1	BOLT-HEX HEAD (M24X3.0X80MM)	
J	9	1	**175-7896**	1	SEAL-O-RING	
J	10	1	**4T-6907**	1	RING-WEAR	
J	11	1	**6J-1972**	1	SEAL AS	
J	12	1	**6J-5731**	1	RING-BACKUP	
J	13	1	**6J-5733**	1	RING-WEAR	
	14	1	**6V-8237**	1	WASHER (26X44X4MM THK)	
					AVAILABLE REPAIR KIT(S):	
AJ			**185-7025**	1	KIT-SEAL	
					(INCLUDES SEAL O-RING)	

A-NOT PART OF THIS GROUP
J-KIT MARKED J INCLUDES PARTS MARKED J
M-METRIC PART

165-2510 **CYLINDER GP-SCARIFIER** *(contd.)* **i01862272**

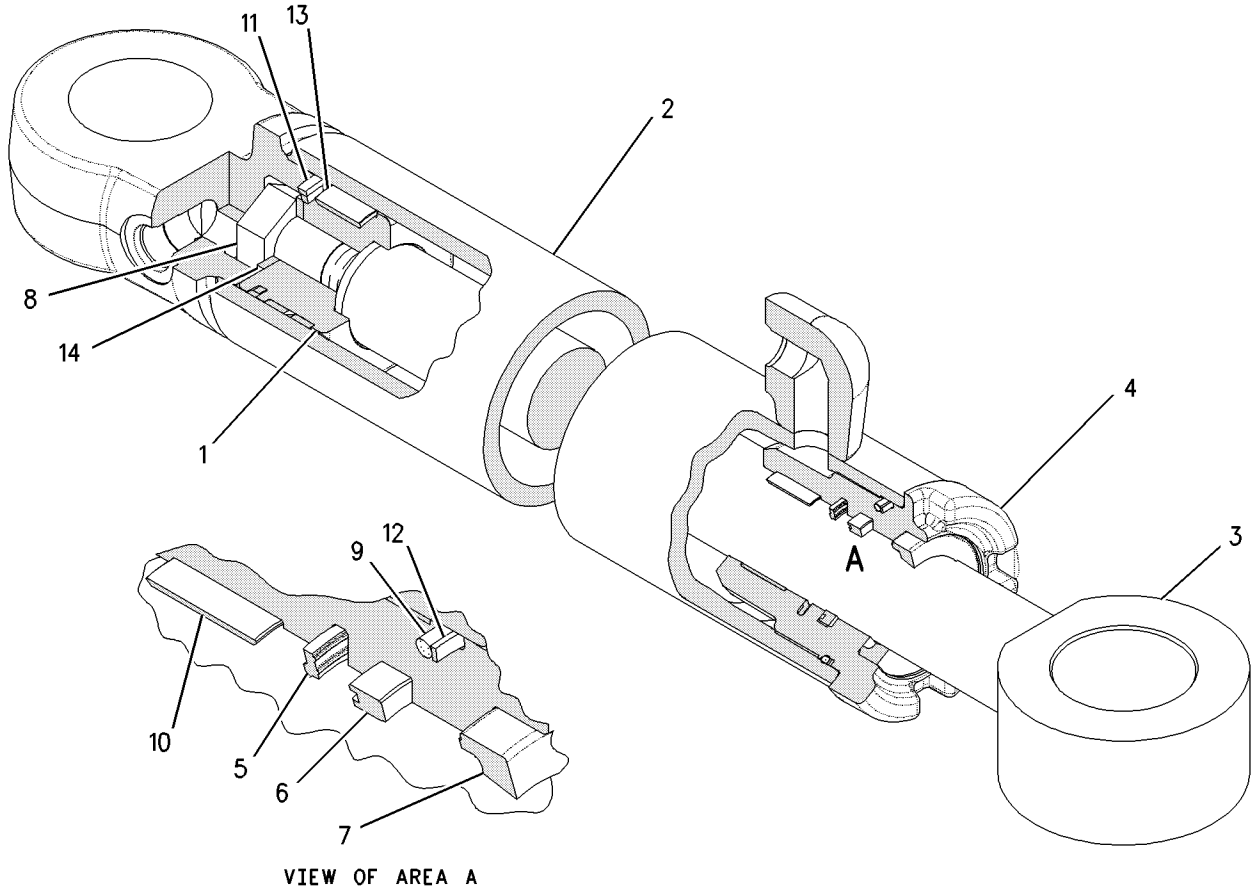

GRAPHIC #1 g00756604

HYDRAULIC SYSTEM

112-5575 CYLINDER GP-SIDESHIFT

S/N: CAF1-UP
76.2 MM BORE X 1185.0 MM STROKE
PART OF 112-7463 CYLINDER & MTG GP-SIDESHIFT

SMCS-5229 **i01862263**

NOTE	REF NO	GRAPHIC REF	PART NUMBER	QTY	PART NAME 1 2 3 4 5 6 (PRODUCT LEVEL)	SEE PAGE
R	1	1	**9T-2482**	1	CYLINDER AS	
M	2	1	**8T-0667**	1	BOLT (M24X3X100MM)	
	3	1	**150-1280**	1	WASHER-HARD (26X44X22MM THK)	
	4	1	**9T-4211**	1	PISTON	
J	5	1	**175-7896**	1	SEAL-O-RING	
J	6	1	**6J-5731**	1	RING-BACKUP	
R	7	1	**112-9035**	1	ROD AS	
	8	1	**184-9843**	1	HEAD	
J	9	1	**167-2452**	1	SEAL-WIPER	
J	10	1	**167-2300**	1	SEAL-U-CUP	
J	11	1	**167-2190**	1	SEAL AS-BUFFER	
					(INCLUDES BUFFER SEAL AND BACKUP RING)	
J	12	1	**4T-6907**	1	RING-WEAR	
J	13	1	**6J-5733**	1	RING-WEAR	
J	14	1	**6J-1972**	1	SEAL AS	
					AVAILABLE REPAIR KIT(S):	
AJ			**185-7025**	1	KIT-SEAL	
					(INCLUDES SEAL O-RING)	

A-NOT PART OF THIS GROUP
J-KIT MARKED J INCLUDES PARTS MARKED J
M-METRIC PART
R-REMFG PART MAY BE AVAILABLE

112-5575 CYLINDER GP-SIDESHIFT *(contd.)* **i01862263**

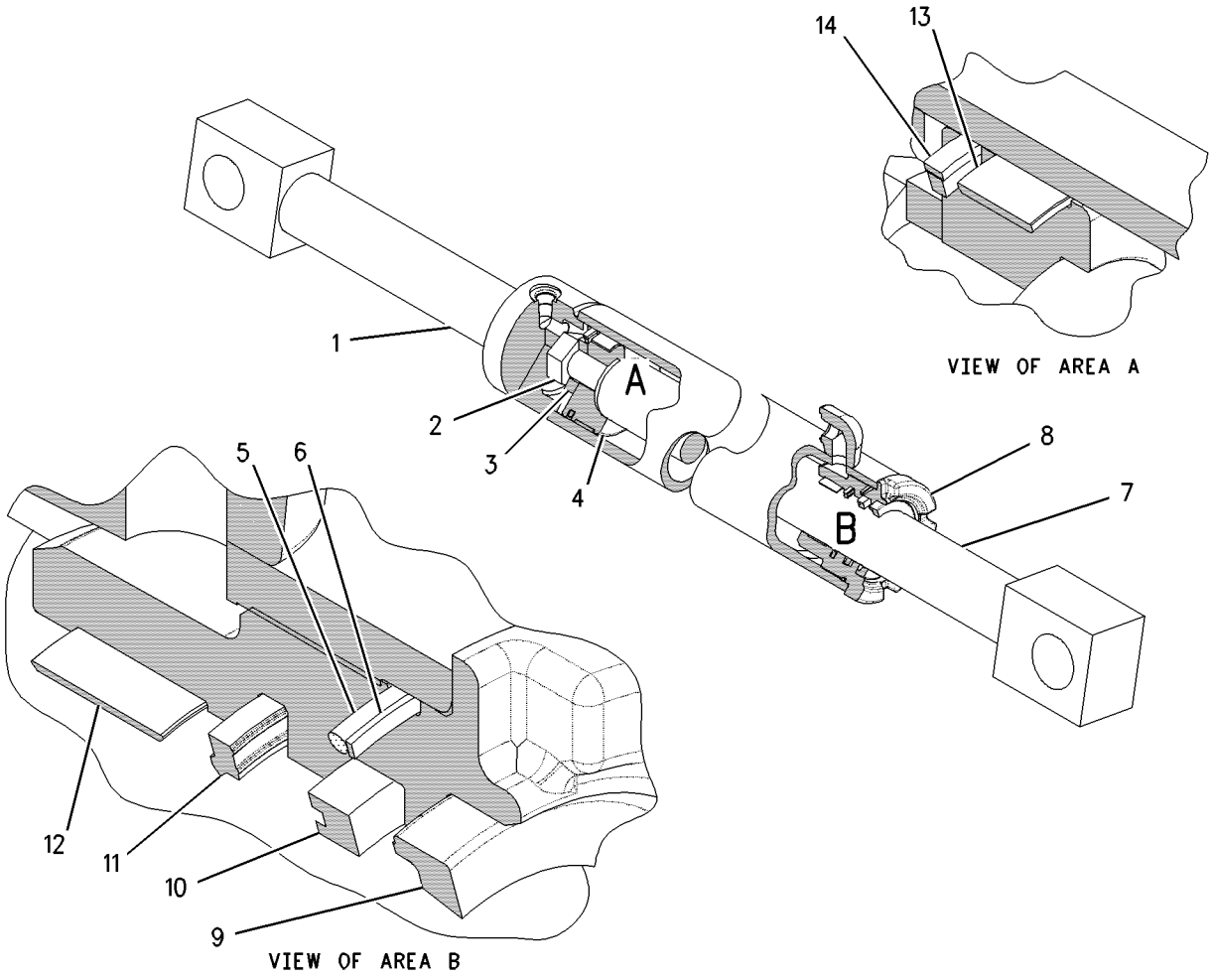

GRAPHIC #1 g00762035

HYDRAULIC SYSTEM

130-9041 CYLINDER GP-STEERING—LH

S/N: CAF1-UP
57.15 MM BORE X 267.00 MM STROKE
PART OF 8W-2290 CYLINDER & MTG GP-STEERING

SMCS-4303 **i01412219**

NOTE	REF NO	GRAPHIC REF	PART NUMBER	QTY	PART NAME 1 2 3 4 5 6 (PRODUCT LEVEL)	SEE PAGE
	1	1	**9T-2388**	1	PISTON	
	2	1	**130-9044**	1	CYLINDER AS-LH	
		1	**1N-5999**	1	PLUG (3/8-24 THD)	
		1	**7J-0204**	1	SEAL-O-RING (7.65MM ID)	
		1	**142-0308**	1	BOSS	
		1	**005-8639**	1	BEARING-ALIGNING	
Z	3	1		1	ROD	
	4	1	**167-2186**	1	SEAL AS-BUFFER	
	5	1	**167-2294**	1	SEAL-U-CUP	
	6	1	**167-2450**	1	SEAL-WIPER	
M	7	1	**173-9685**	1	BOLT-HEX HEAD (M20X2.5X70MM)	
	8	1	**175-7895**	1	SEAL-O-RING (69.44MM ID)	
	9	1	**1N-5999**	2	PLUG (3/8-24 THD)	
	10	1	**1U-3998**	1	SEAL AS	
	11	1	**4J-9225**	1	RING-BACKUP	
	12	1	**7H-2423**	1	RING-WEAR	
	13	1	**7J-0204**	2	SEAL-O-RING (7.65MM ID)	
	14	1	**8T-3282**	1	WASHER-HARD (22X35X3.5MM THK)	
	15	1	**9T-3727**	1	HEAD	

M-METRIC PART
Z-NOT SERVICED SEPARATELY

130-9041 **CYLINDER GP-STEERING** *(contd.)* **i01412219**

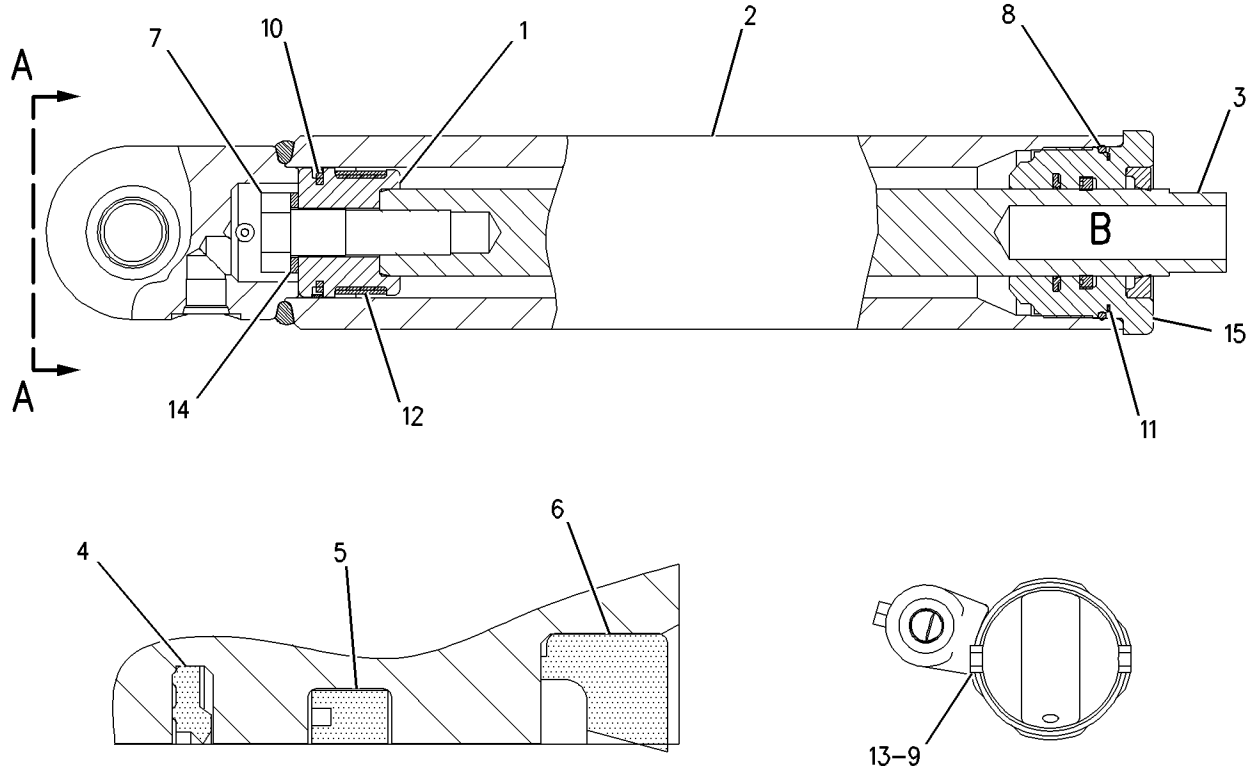

GRAPHIC #1 g00743510

HYDRAULIC SYSTEM

130-9042 CYLINDER GP-STEERING–RH

S/N: CAF1-UP

57.15 MM BORE X 267.00 MM STROKE

PART OF 8W-2290 CYLINDER & MTG GP-STEERING

SMCS-4303 **i01412276**

NOTE	REF NO	GRAPHIC REF	PART NUMBER	QTY	PART NAME 1 2 3 4 5 6 (PRODUCT LEVEL)	SEE PAGE
	1	1	**9T-2388**	1	PISTON	
	2	1	**130-9045**	1	CYLINDER AS-RH	
		1	**1N-5999**	1	PLUG (3/8-24 THD)	
		1	**7J-0204**	1	SEAL-O-RING (7.65MM ID)	
		1	**142-0308**	1	BOSS	
		1	**005-8639**	1	BEARING-ALIGNING	
	3	1	**154-6579**	1	ROD	
	4	1	**167-2186**	1	SEAL AS-BUFFER	
	5	1	**167-2294**	1	SEAL-U-CUP	
	6	1	**167-2450**	1	SEAL-WIPER	
M	7	1	**173-9685**	1	BOLT-HEX HEAD (M20X2.5X70MM)	
	8	1	**175-7895**	1	SEAL-O-RING (69.44MM ID)	
	9	1	**1N-5999**	2	PLUG (3/8-24 THD)	
	10	1	**1U-3998**	1	SEAL AS	
	11	1	**4J-9225**	1	RING-BACKUP	
	12	1	**7H-2423**	1	RING-WEAR	
	13	1	**7J-0204**	2	SEAL-O-RING (7.65MM ID)	
	14	1	**8T-3282**	1	WASHER-HARD (22X35X3.5MM THK)	
	15	1	**9T-3727**	1	HEAD	

M-METRIC PART

130-9042 **CYLINDER GP-STEERING** *(contd.)* **i01412276**

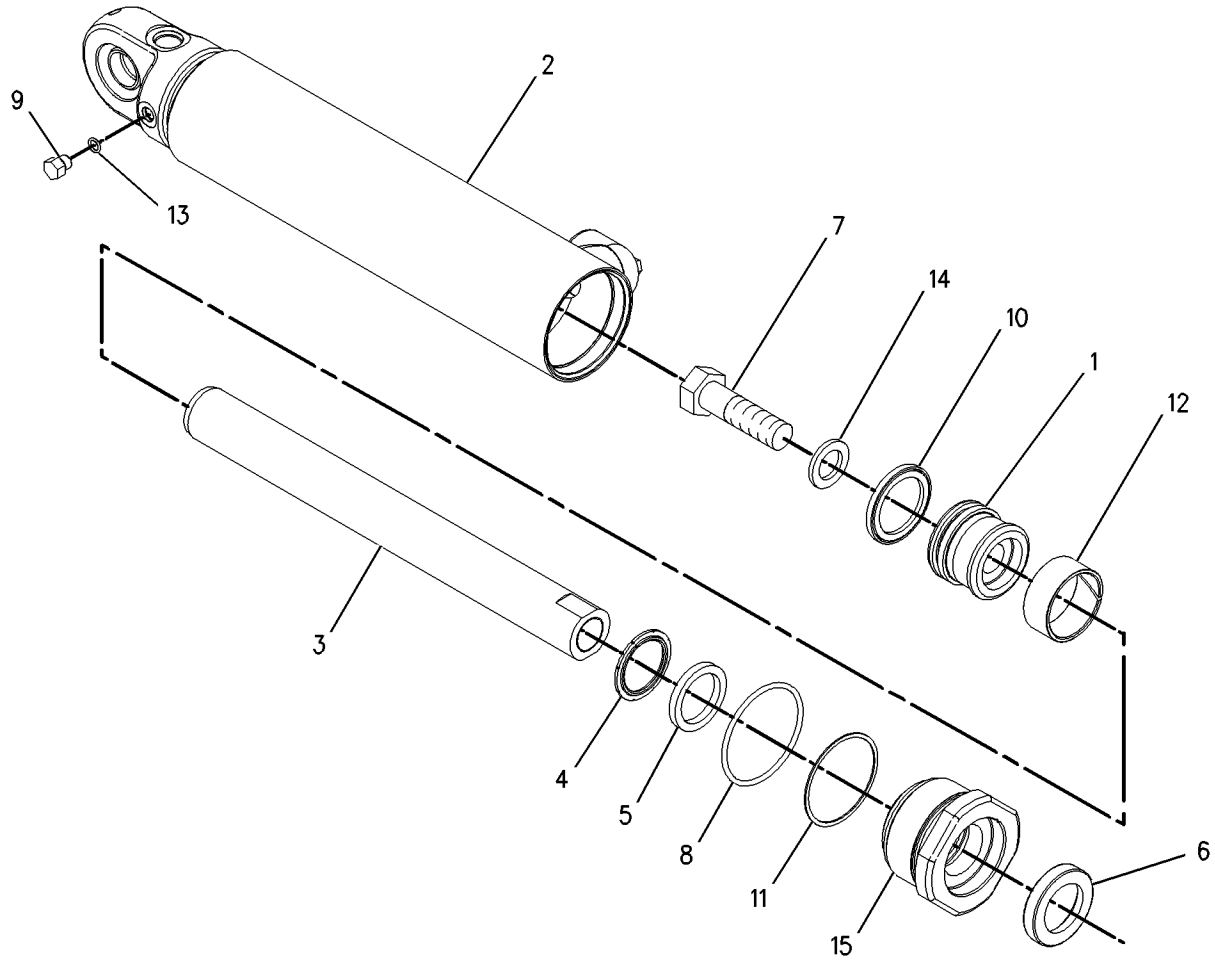

GRAPHIC #1 g00721190

HYDRAULIC SYSTEM

121-9242 CYLINDER GP-WHEEL LEAN

S/N: CAF1-UP
88.9 MM BORE X 149.0 MM STROKE
PART OF 8W-2737 CYLINDER & MTG GP-WHEEL LEAN

SMCS-5211 **i01454181**

NOTE	REF NO	GRAPHIC REF	PART NUMBER	QTY	PART NAME 1 2 3 4 5 6 (PRODUCT LEVEL)	SEE PAGE
	1	1	**123-1076**	1	CYLINDER AS	
		1	**2G-8631**	1	BEARING-SLEEVE	
M	2	1	**173-9683**	1	BOLT-HEX HEAD (M30X3.5X90MM)	
	3	1	**9X-8399**	1	WASHER (33X56X6MM THK)	
	4	1	**4T-8054**	1	SEAL AS	
	5	1	**7J-9885**	1	RING-WEAR	
	6	1	**9T-9040**	1	PISTON	
	7	1	**175-7898**	1	SEAL-O-RING	
	8	1	**4J-9224**	1	RING-BACKUP	
	9	1	**6E-4974**	1	HEAD	
	10	1	**121-9245**	1	ROD AS	
		1	**2G-8631**	1	BEARING-SLEEVE	
	11	1	**167-2457**	1	SEAL-WIPER	
	12	1	**167-2304**	1	SEAL-U-CUP	
	13	1	**167-2195**	1	SEAL AS-BUFFER	
	14	1	**4T-5613**	1	RING-WEAR	

M-METRIC PART

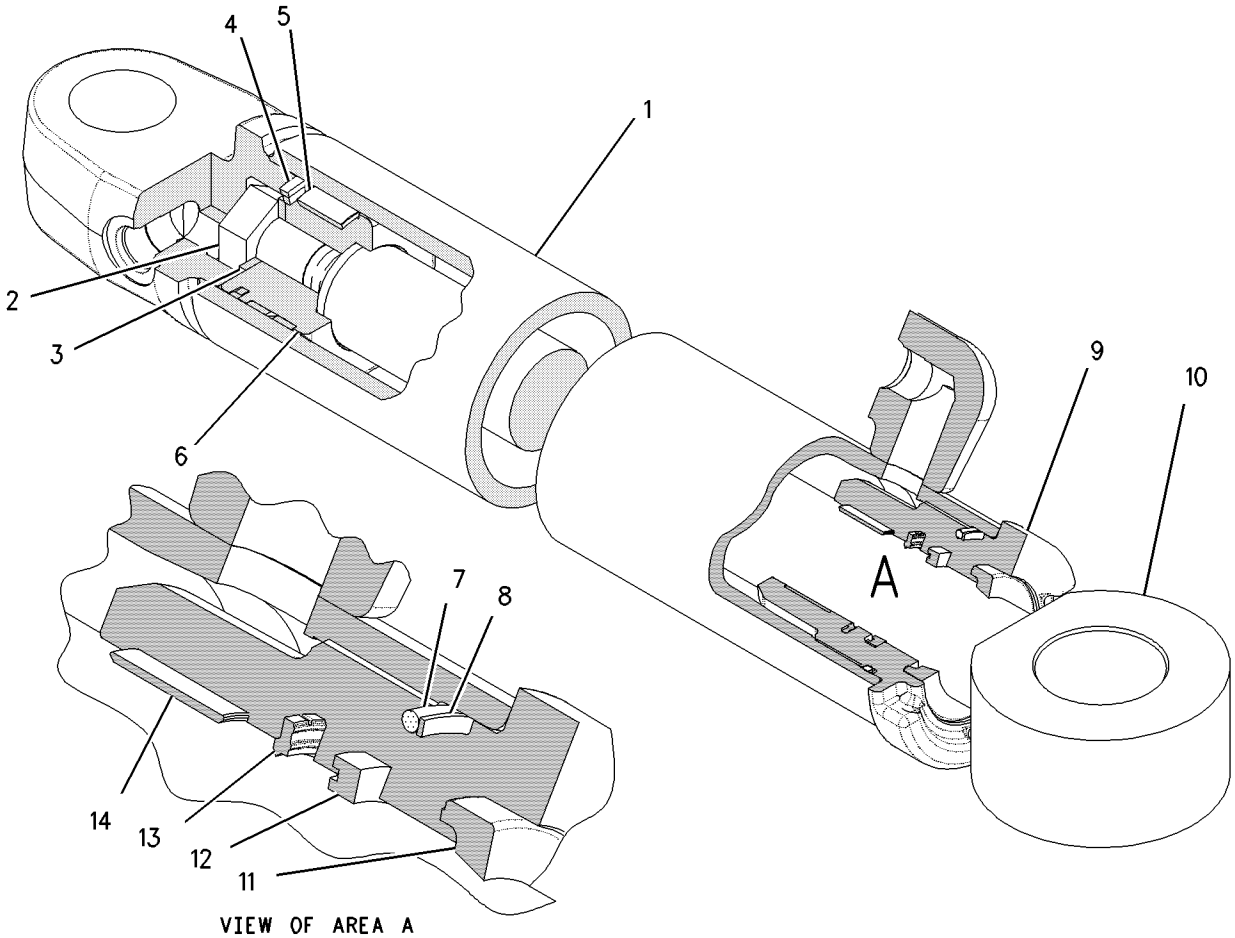

VIEW OF AREA A

GRAPHIC #1 g00761198

108-4916 DETENT GP-CONTROL VALVE

S/N: CAF1-UP

PART OF 107-0547, 6E-3031, 6E-3037 VALVE GP-CONTROL

ALSO AN ATTACHMENT

SMCS-5051 **i00131376**

NOTE	REF NO	GRAPHIC REF	PART NUMBER	QTY	PART NAME 1 2 3 4 5 6 (PRODUCT LEVEL)	SEE PAGE
	1	1	**101-1974**	1	RETAINER	
	2	1	**101-1975**	1	RETAINER	
	3	1	**102-7423**	1	SPRING	
	4	1	**5B-9318**	6	BALL	

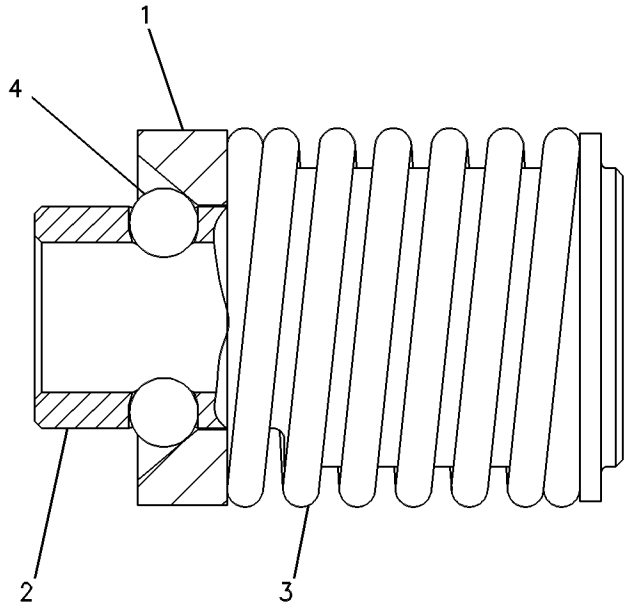

GRAPHIC #1 g00108519

HYDRAULIC SYSTEM

130-3535 DETENT GP-CONTROL VALVE

S/N: CAF1-UP

PART OF 128-8647, 130-3110, 130-3111 VALVE GP-CONTROL

AN ATTACHMENT

SMCS-5051 **i01623986**

NOTE	REF NO	GRAPHIC REF	PART NUMBER	QTY	PART NAME 1 2 3 4 5 6 (PRODUCT LEVEL)	SEE PAGE
M	1	1	**7X-2540**	2	BOLT (M8X1.25X120MM)	
	2	1	**8T-4224**	2	WASHER-HARD (8.8X16X2MM THK)	
	3	1	**6V-5722**	2	SEAL-O-RING	
	4	1	**4J-7533**	2	SEAL-O-RING	
	5	1	**9S-8001**	2	PLUG	
	6	1	**124-2890**	1	HOUSING	
	7	1	**9S-8006**	1	PLUG	
	8	1	**2M-9780**	1	SEAL-O-RING	
	9	1	**124-2887**	1	PISTON	
	10	1	**124-2889**	1	STOP	
	11	1	**5B-9318**	6	BALL	
	12	1	**101-1974**	1	RETAINER	
	13	1	**124-2888**	1	RETAINER	
	14	1	**124-2891**	1	SPACER	
	15	1	**2K-8199**	2	SEAL-O-RING	
	16	1	**128-8643**	1	SPRING (INNER)	
	17	1	**128-8644**	1	SPRING (OUTER)	

M-METRIC PART

130-3535 DETENT GP-CONTROL VALVE *(contd.)* i01623986

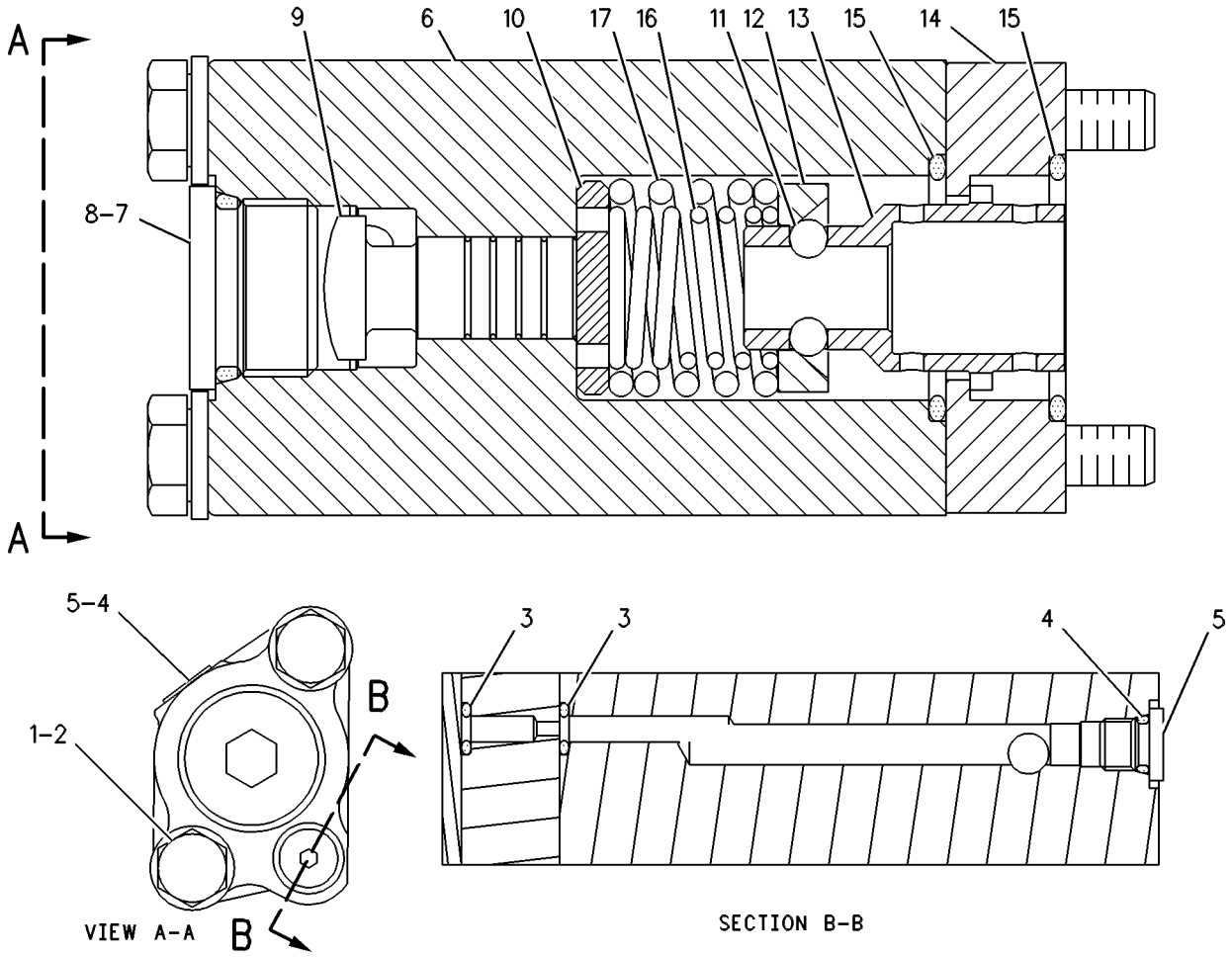

GRAPHIC #1 g00109431

HYDRAULIC SYSTEM

5T-0570 DRIVE GP-CIRCLE

S/N: CAF1-UP

PART OF 162-5603 GENERAL AR

SMCS-5207 **i01191602**

NOTE	REF NO	GRAPHIC REF	PART NUMBER	QTY	PART NAME 1 2 3 4 5 6 (PRODUCT LEVEL)	SEE PAGE
CY	1	1	**105-3196**	1	MOTOR GP-GEROTOR (CIRCLE DRIVE)	560
	2	1	**1B-4038**	2	CUP-ROLLER BEARING	
		1	**1B-4046**	2	CONE-BEARING	
	3	1	**1B-5174**	1	PLUG-PIPE (3/4-14 NPTF)	
	4	1	**9D-1142**	1	WORM-CIRCLE DRIVE	
	5	1	**5K-8454**	3	BOLT (1/2-13X1.12 IN)	
	6	1	**5P-8245**	12	WASHER-HARD (3MM THK)	
	7	1	**6H-1717**	5	BOLT (1/2-13X1.125IN)	
	8	1	**2B-7410**	1	PLUG-PIPE	
	9	1	**2H-9247**	1	SEAL-O-RING (132.94MM ID)	
B	10	1	**7D-8983**	10	SHIM (.127MM THK)	
B		1	**7D-8984**	6	SHIM (.178MM THK)	
	11	1	**4H-6996**	1	PIN-SPRING	
	12	1	**9D-1491**	1	COUPLING	
	13	1	**2G-6695**	1	BRACKET	
	14	1	**1H-7339**	1	SEAL-O-RING (75.79MM ID)	
	15	1	**0S-1585**	4	BOLT (1/2-13X1.50IN)	
	16	1	**8T-0336**	1	FITTING-RELIEF	
	17	1	**6G-5534**	1	COVER AS	
		1	**6G-5537**	1	BEARING	
	18	1	**5S-7379**	4	BOLT (3/8-16X.875IN)	
		1	**8T-4896**	4	WASHER-HARD (2.5MM THK)	
C	19	2	**1F-7958**	4	NUT-FULL (1/2-13 THD)	
	20	2	**6G-1908**	1	HOUSING AS-DRIVE	
	21	2	**2D-8154**	4	STUD (TAPERLOCK)	
	22	2	**8D-7426**	1	BEARING-SLEEVE	
	23	2	**4D-7246**	4	STUD-TAPERLOCK	
	24	2	**6G-6122**	1	SPRING-DISC	
	25	2	**6G-5547**	1	PLATE	
	26	2	**6G-5538**	1	COVER	
	27	2	**6G-5539**	1	GASKET	
	28	2	**5H-4909**	1	SEAL-O-RING (253.59MM ID)	
	29	2	**6G-5542**	2	SPACER (8.8 MM THK)	
	30	2	**6G-5533**	1	GEAR-WORM (36 TEETH)	
C	31	2	**9X-8887**	2	BOLT (3/4-10X3IN)	
		2	**7M-2360**	2	WASHER (9.5MM THK)	
	32	2	**9W-6645**	1	SEAL GP-DUO-CONE	
	33	2	**5K-5129**	2	RING-SEALING	
	34	2	**8D-7425**	2	WASHER-THRUST	
	35	2	**6G-5532**	1	SHAFT-DRIVE PINION	
	36	2	**1A-1415**	1	NUT	
		2	**8D-7423**	1	LOCK-NUT	
		2	**8D-7424**	1	SPACER (6.0 MM THK)	
	37	2	**2J-3506**	4	NUT-FULL (3/4-10 THD)	
	38	2	**5P-8248**	4	WASHER-HARD (3.5MM THK)	
	39	2	**4F-9653**	1	SEAL-O-RING (46.99MM ID)	
	40	2	**8W-5092**	1	PINION-CIRCLE DRIVE	
	41	2	**6G-5548**	1	SPACER (39.25 MM THK)	
	42	2	**5P-8245**	7	WASHER-HARD (3MM THK)	
	43	2	**0S-1585**	3	BOLT (1/2-13X1.50IN)	
	44	2	**6Y-7953**	6	DISC-FRICTION (2.87MM .112IN THK)	
		2	**2G-0478**	5	DISC (1.52MM THK)	
B	45	2	**6G-5543**	6	SHIM (0.13MM THK)	
B		2	**6G-5544**	9	SHIM (0.25MM THK)	

B-USE AS REQUIRED
C-CHANGE FROM PREVIOUS TYPE
Y-SEPARATE ILLUSTRATION

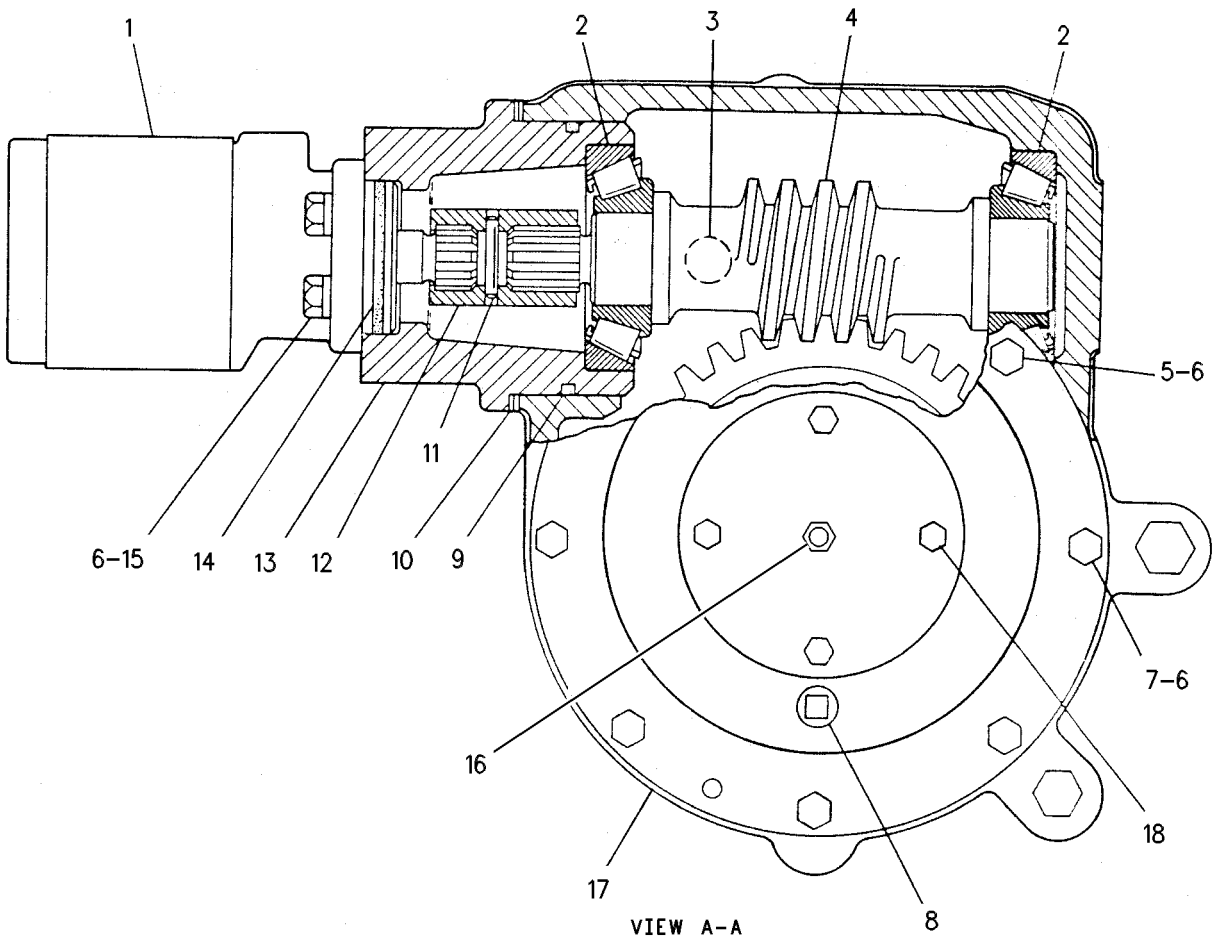

GRAPHIC #1

g00109248

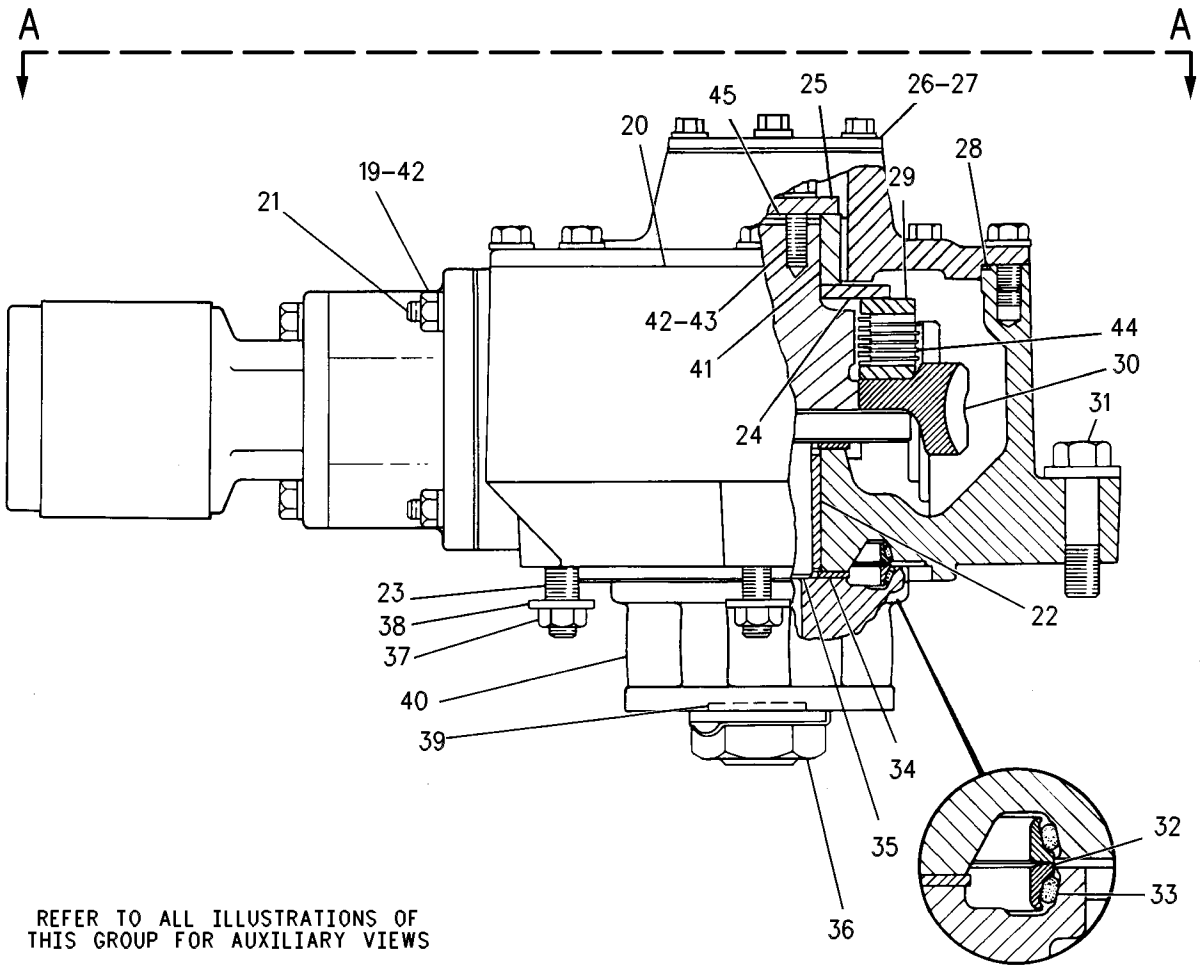

GRAPHIC #2

g00304034

HYDRAULIC SYSTEM

178-9582 DRIVE GP-PUMP

S/N: CAF1-UP

PART OF 162-5603 GENERAL AR

SMCS-3108 **i01674706**

NOTE	REF NO	GRAPHIC REF	PART NUMBER	QTY	PART NAME 1 2 3 4 5 6 (PRODUCT LEVEL)	SEE PAGE
	1	1	**1B-8737**	1	KEY-WOODRUFF	
	2	1	**1D-5120**	1	NUT-JAM (3/4-16 THD)	
	3	1	**7D-9267**	1	YOKE	
	4	1	**178-7983**	1	SLIP JOINT GP	
		1	**0L-0478**	8	BOLT (3/8-24X1.75 IN)	
		1	**5T-1362**	2	SPIDER & BEARING AS	
		1	**178-7985**	1	YOKE AS	
	5	1	**0L-0478**	4	BOLT (3/8-24X1.75 IN)	
	6	1	**0S-1571**	4	BOLT (3/8-16X1.75 IN)	
	7	1	**5P-8248**	1	WASHER-HARD (20X36.5X3.5MM THK)	

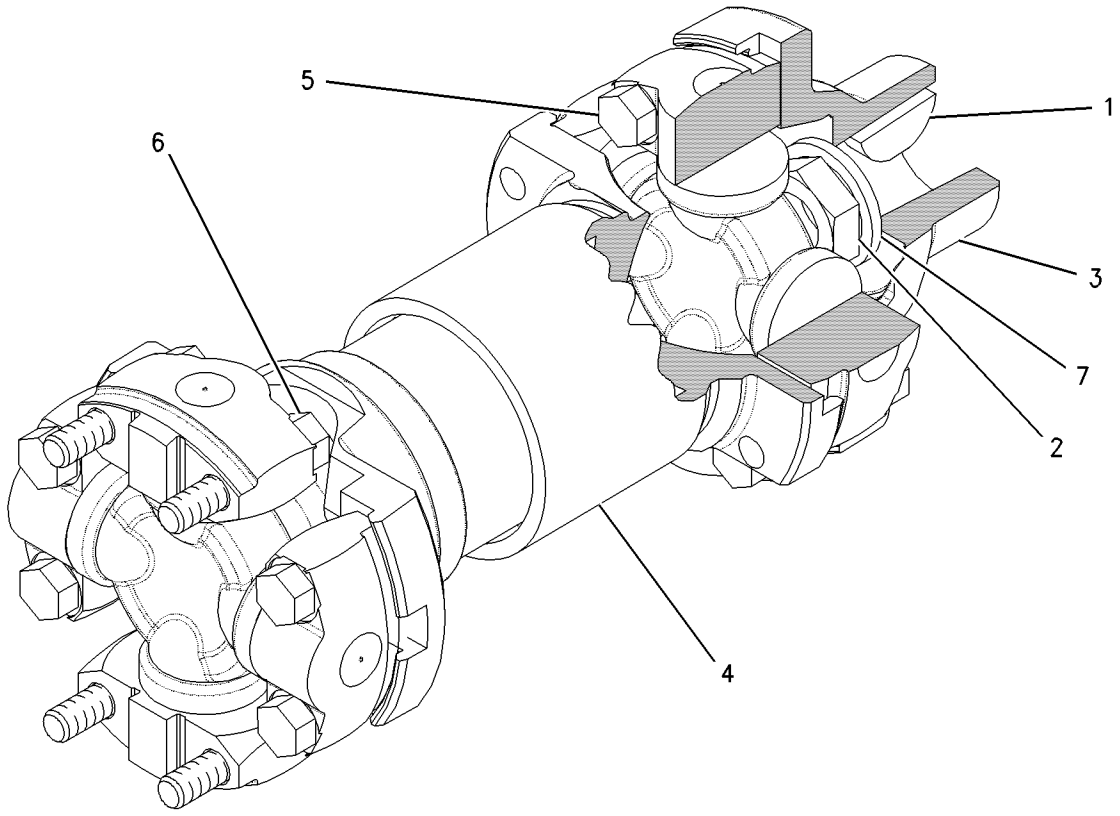

GRAPHIC #1 g00808419

HYDRAULIC SYSTEM

166-3336 LINES GP-ACCUMULATOR

S/N: CAF1-UP

PART OF 166-3337, 221-2961 ACCUMULATOR AR-BLADE CUSHION AN ATTACHMENT

SMCS-5057 **i01680380**

NOTE	REF NO	GRAPHIC REF	PART NUMBER	QTY	PART NAME 1 2 3 4 5 6 (PRODUCT LEVEL)	SEE PAGE
	1	1	**9D-0953**	1	SPACER (.406X.75X.88 IN THK)	
I	2	1	**108-0706**	1	HOSE AS	
Y	3	1	**112-2240**	2	VALVE GP-SOLENOID & MANIFOLD (BLADE CUSHION)	673
I	4	1	**134-0744**	1	HOSE AS	
I	5	1	**134-0746**	1	HOSE AS	
I	6	1	**151-9849**	1	HOSE AS	
	7	1	*171-6466*	2	UNION AS	
					(EACH INCLUDES)	
		1	**5P-9810**	1	UNION	
		1	**3D-2824**	2	SEAL-O-RING	
	8	1	*148-8328*	2	CONNECTOR GP	
					(EACH INCLUDES)	
		1	**6V-8633**	1	CONNECTOR	
		1	**3D-2824**	1	SEAL-O-RING	
		1	**6V-8398**	1	SEAL-O-RING	
	9	1	*148-8370*	1	ELBOW GP	
		1	**6V-9851**	1	ELBOW	
		1	**6V-8398**	1	SEAL-O-RING	
	10	1	*148-8444*	2	TEE GP	
					(EACH INCLUDES)	
		1	**6V-9837**	1	TEE-SWIVEL	
		1	**6V-8398**	2	SEAL-O-RING	
	11	1	**6D-4244**	2	CLIP	
	12	1	**7X-0289**	1	BOLT (3/8-16X1.875 IN)	
	13	1	**8T-4896**	1	WASHER-HARD (10.2X18.5X2.5MM THK)	

I-SEE HOSE FABRICATION GUIDE
Y-SEPARATE ILLUSTRATION

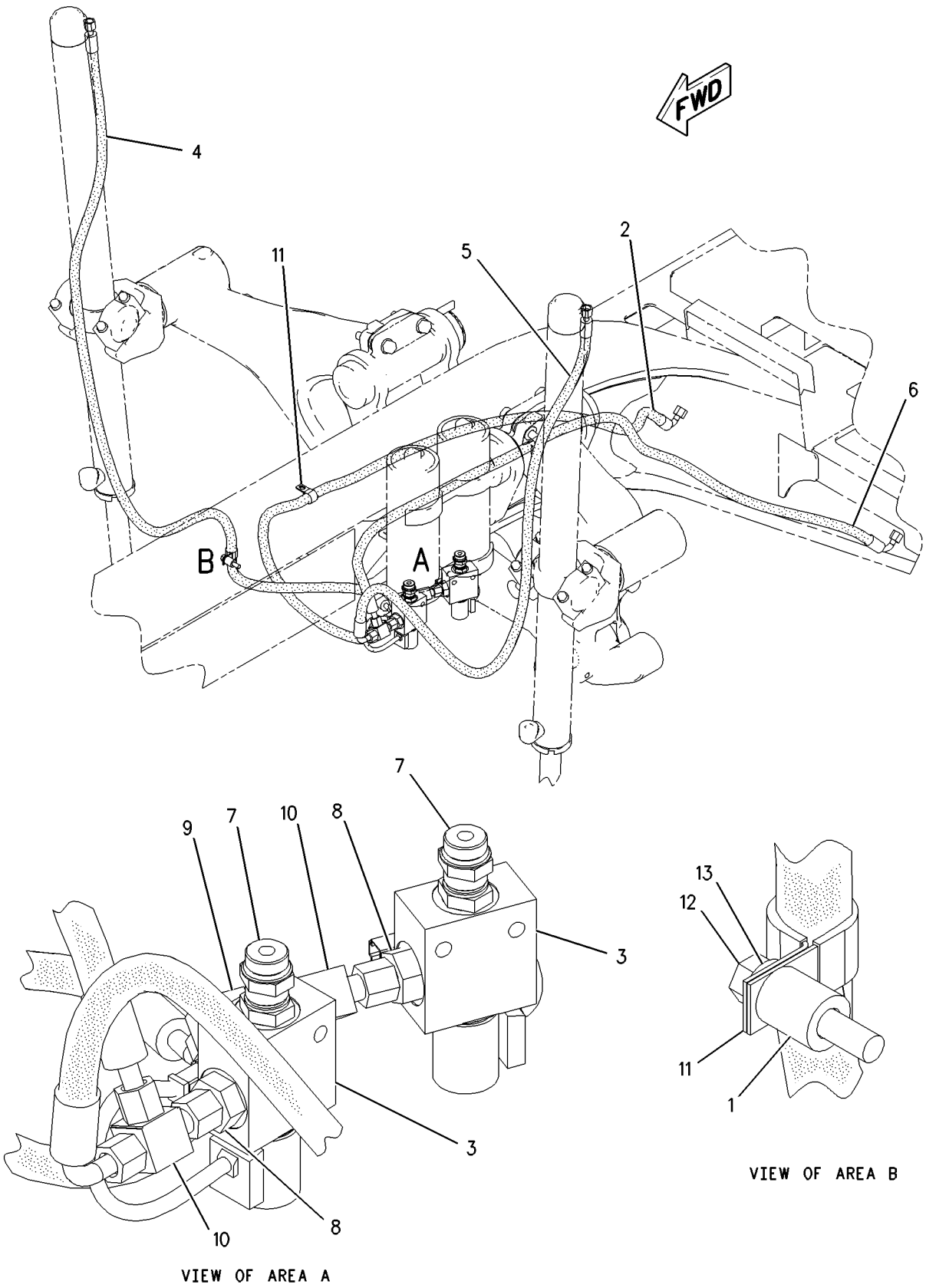

GRAPHIC #1 g00889359

HYDRAULIC SYSTEM

8X-6070 LINES GP-HYDRAULIC—SCARIFIER

S/N: CAF1-UP
PART OF 108-1104, 113-0704 SCARIFIER AR
AN ATTACHMENT

SMCS-5057 **i01459260**

NOTE	REF NO	GRAPHIC REF	PART NUMBER	QTY	PART NAME 1 2 3 4 5 6 (PRODUCT LEVEL)	SEE PAGE
	1	1	**2B-0941**	1	SPACER (10.5X19X19MM THK)	
	2	1	**4J-5468**	1	CLAMP	
I	3	1	**112-3199**	1	HOSE AS	
I	4	1	**112-3200**	1	HOSE AS	
	5	1	*164-5605*	1	CONNECTOR AS	
		1	**3K-0360**	1	SEAL-O-RING	
		1	**6V-8397**	1	SEAL-O-RING	
		1	**8T-0076**		CONNECTOR	
	6	1	*148-8318*	2	CONNECTOR GP	
					(EACH INCLUDES)	
		1	**3K-0360**	1	SEAL-O-RING	
		1	**6V-8397**	1	SEAL-O-RING	
		1	**6V-8634**	1	CONNECTOR	
	7	1	*148-8374*	1	ELBOW GP	
		1	**3K-0360**	1	SEAL-O-RING	
		1	**6V-8397**	1	SEAL-O-RING	
		1	**6V-8723**	1	ELBOW	
	8	1	**6D-4247**	1	CLIP	
	9	1	**7X-0289**	1	BOLT (3/8-16X1.875 IN)	
	10	1	**8T-4896**	1	WASHER-HARD (10.2X18.5X2.5MM THK)	

I-SEE HOSE FABRICATION GUIDE

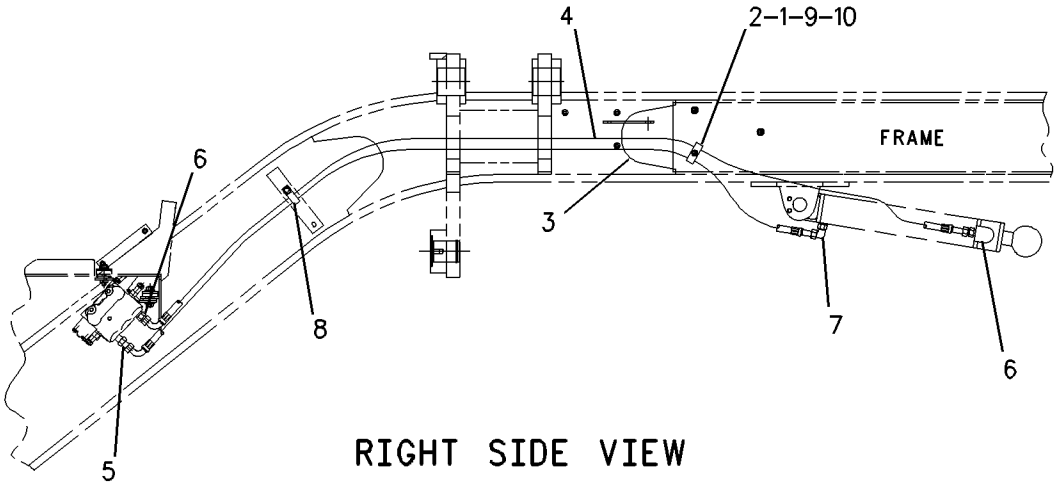

RIGHT SIDE VIEW

GRAPHIC #1 g00633579

HYDRAULIC SYSTEM

114-0025 LINES GP-HYDRAULIC–PLOW/DOZER LIFT

S/N: CAF1-UP
AN ATTACHMENT

SMCS-5057 **i01228319**

NOTE	REF NO	GRAPHIC REF	PART NUMBER	QTY	PART NAME 1 2 3 4 5 6 (PRODUCT LEVEL)	SEE PAGE
I	1	1	**114-0027**	2	HOSE AS	
	2	1	*164-5605*	1	CONNECTOR AS	
		1	**3K-0360**	1	SEAL-O-RING (16.36MM ID)	
		1	**6V-8397**	1	SEAL-O-RING (9.27MM ID)	
		1	**8T-0076**	1	CONNECTOR	
	3	1	*148-8318*	1	CONNECTOR GP	
		1	**3K-0360**	1	SEAL-O-RING (16.36MM ID)	
		1	**6V-8397**	1	SEAL-O-RING (9.27MM ID)	
		1	**6V-8634**	1	CONNECTOR-ORFS TO O-RING PORT (ORFS 11/16-16; PORT 9/16-18)	

I-SEE HOSE FABRICATION GUIDE

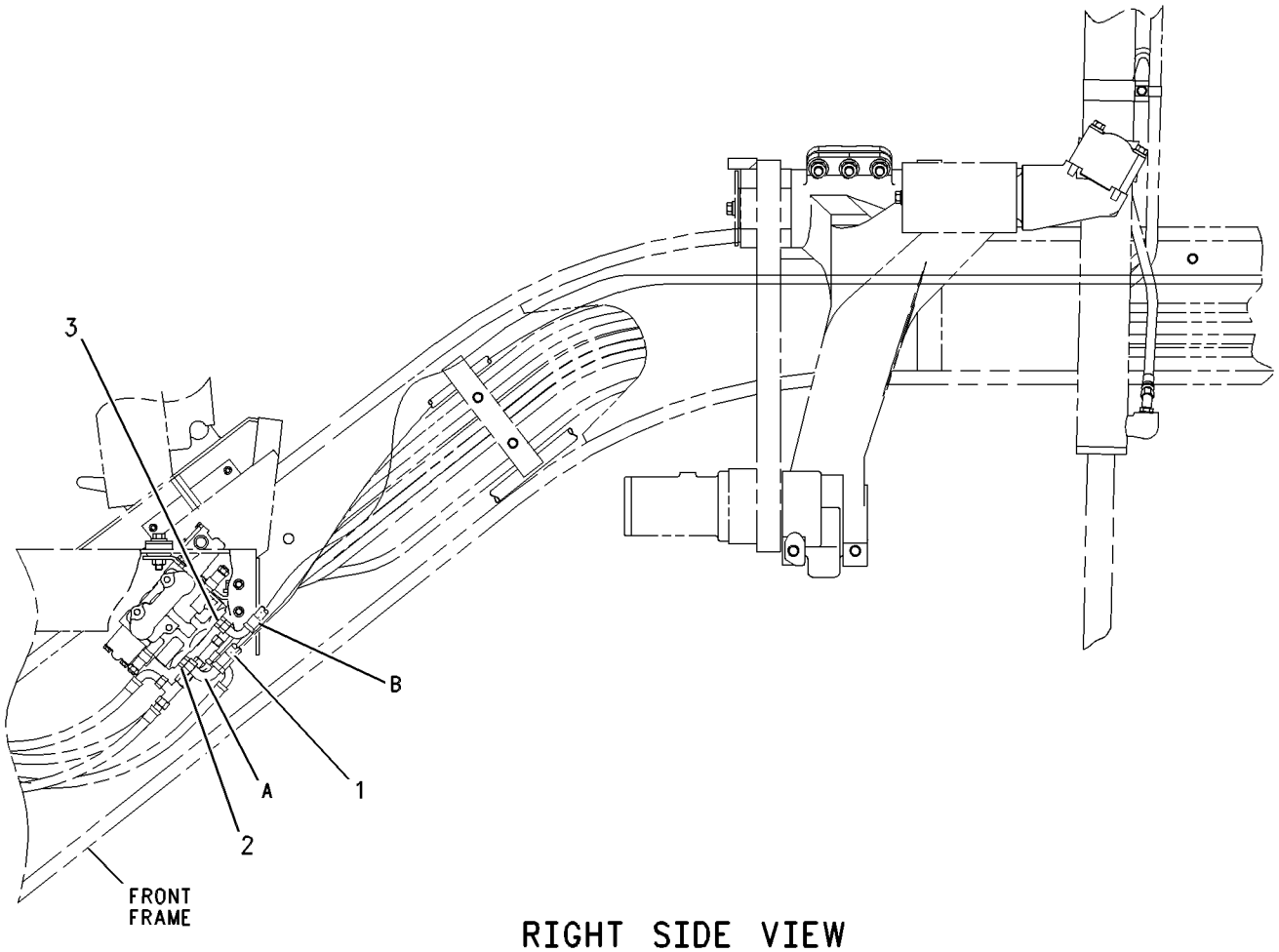

RIGHT SIDE VIEW

GRAPHIC #1 g00636139

155-4077 LINES GP-HYDRAULIC–PLOW/DOZER LIFT–LH

S/N: CAF1-UP
AN ATTACHMENT

SMCS-5057 **i01596405**

NOTE	REF NO	GRAPHIC REF	PART NUMBER	QTY	PART NAME 1 2 3 4 5 6 (PRODUCT LEVEL)	SEE PAGE
I	1	1	**114-0026**	2	HOSE AS	
	2	1	*148-8318*	1	CONNECTOR GP	
		1	**3K-0360**	1	SEAL-O-RING	
		1	**6V-8397**	1	SEAL-O-RING	
		1	**6V-8634**	1	CONNECTOR	
	3	1	*164-5605*	1	CONNECTOR AS	
		1	**3K-0360**	1	SEAL-O-RING	
		1	**6V-8397**	1	SEAL-O-RING	
		1	**8T-0076**	1	CONNECTOR	

I-SEE HOSE FABRICATION GUIDE

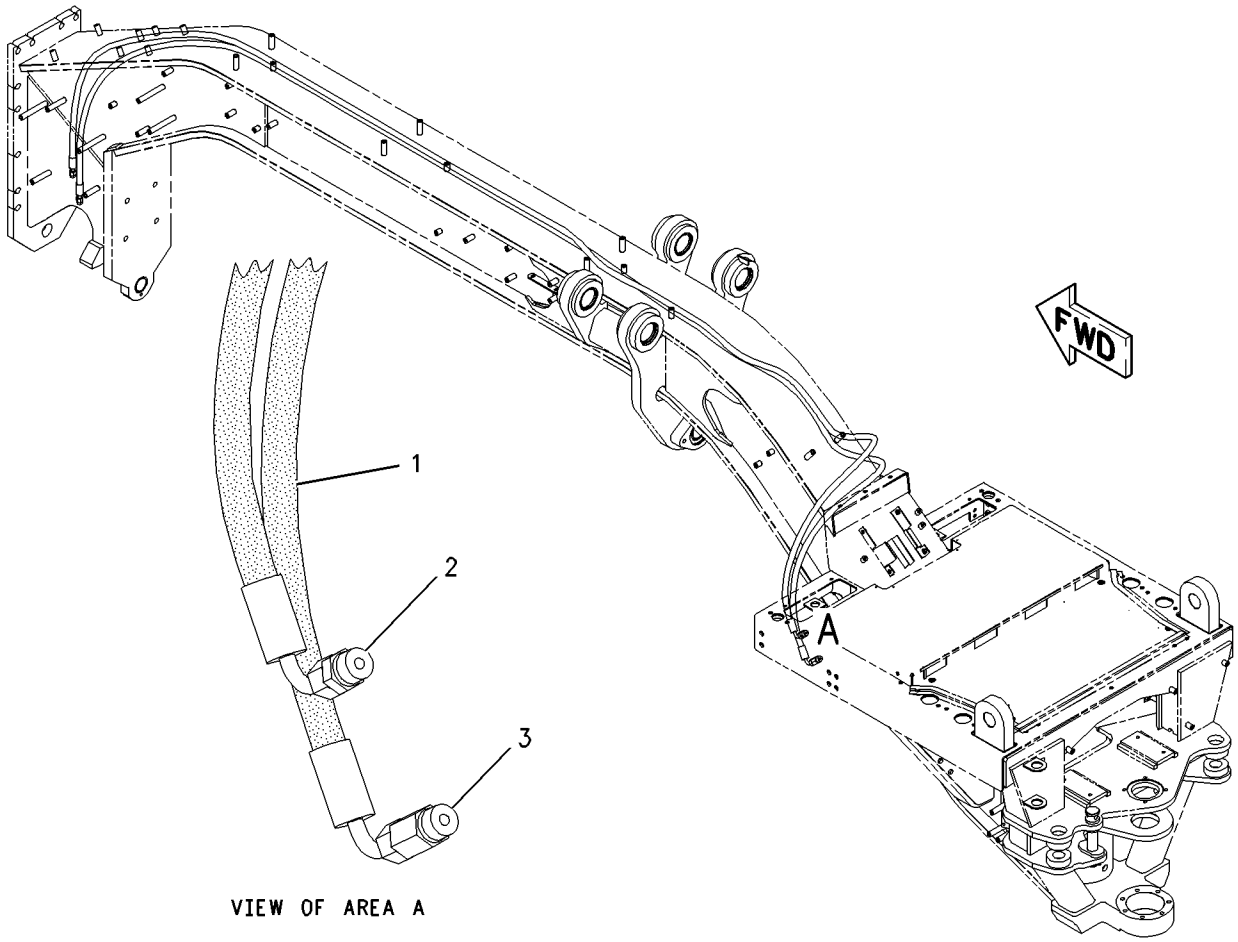

VIEW OF AREA A

GRAPHIC #1 g00830992

HYDRAULIC SYSTEM

159-4730 LINES GP-HYDRAULIC—LH BANK

S/N: CAF1-UP

PART OF 162-5603 GENERAL AR

SMCS-5057 **i01861403**

NOTE	REF NO	GRAPHIC REF	PART NUMBER	QTY	PART NAME 1 2 3 4 5 6 (PRODUCT LEVEL)	SEE PAGE
	1	1	**2A-7081**	1	GUIDE AS-HOSE	
	2	1	**2B-0941**	3	SPACER (10.5X19X19MM THK)	
	3	1	**2G-5493**	1	CLAMP	
	4	1	**4J-5468**	6	CLAMP	
	5	1	**5D-2645**	3	CLAMP	
I	6	1	**5T-9986**	1	HOSE AS	
	7	1	**7W-5672**	1	PIPE	
I	8	1	**8W-4193**	1	HOSE AS	
I	9	1	**8W-4194**	1	HOSE AS	
	10	1	**9D-0953**	4	SPACER (.406X.75X.88 IN THK)	
I	11	1	**9R-1183**	1	HOSE AS	
I	12	1	**107-8143**	2	HOSE AS	
I	13	1	**107-8144**	2	HOSE AS	
I	14	1	**107-8149**	2	HOSE AS	
I	15	1	**107-8150**	1	HOSE AS	
	16	1	**108-1610**	4	CLAMP	
I	17	1	**134-0747**	1	HOSE AS	
	18	1	**135-0451**	1	PLATE	
	19	1	**135-0452**	2	PLATE	
	20	1	*164-5605*	1	CONNECTOR AS	
		1	**8T-0076**	1	CONNECTOR	
		1	**3K-0360**	1	SEAL-O-RING	
		1	**6V-8397**	1	SEAL-O-RING	
	21	1	*164-5608*	2	CONNECTOR GP	
					(EACH INCLUDES)	
		1	**8T-1687**	1	CONNECTOR	
		1	**3K-0360**	1	SEAL-O-RING	
		1	**6V-8398**	1	SEAL-O-RING	
Y	22	1	**173-1011**	1	SWIVEL GP	579
	23	1	*148-8318*	8	CONNECTOR GP	
					(EACH INCLUDES)	
		1	**6V-8634**	1	CONNECTOR	
		1	**3K-0360**	1	SEAL-O-RING	
		1	**6V-8397**	1	SEAL-O-RING	
	24	1	*148-8340*	1	CONNECTOR GP	
		1	**6V-8639**	1	CONNECTOR	
		1	**3K-0360**	1	SEAL-O-RING	
		1	**6V-8398**	1	SEAL-O-RING	
	25	1	*148-8358*	2	ELBOW AS	
					(EACH INCLUDES)	
		1	**6V-8624**	1	ELBOW	
		1	**2M-9780**	1	SEAL-O-RING	
		1	**6V-8398**	1	SEAL-O-RING	
	26	1	*148-8363*	6	ELBOW GP	
					(EACH INCLUDES)	
		1	**6V-9876**	1	ELBOW	
		1	**3K-0360**	1	SEAL-O-RING	
		1	**6V-8397**	1	SEAL-O-RING	
	27	1	*148-8364*	1	ELBOW AS	
		1	**6V-8625**	1	ELBOW	
		1	**3K-0360**	1	SEAL-O-RING	
		1	**6V-8398**	1	SEAL-O-RING	
	28	1	*148-8374*	3	ELBOW GP	
					(EACH INCLUDES)	
		1	**6V-8723**	1	ELBOW	
		1	**3K-0360**	1	SEAL-O-RING	

159-4730 **LINES GP-HYDRAULIC** *(contd.)* **i01861403**

NOTE	REF NO	GRAPHIC REF	PART NUMBER	QTY	PART NAME 1 2 3 4 5 6 (PRODUCT LEVEL)	SEE PAGE
		1	**6V-8397**	1	SEAL-O-RING	
	29	1	**1S-0994**	8	CLIP	
	30	1	**2H-9889**	1	BOLT (3/8-16X2.375 IN)	
	31	1	**3B-4628**	2	PIN-COTTER	
	32	1	**5S-7379**	7	BOLT (3/8-16X0.875 IN)	
	33	1	**5S-7383**	3	BOLT (3/8-16X1.75 IN)	
	34	1	**6D-4244**	2	CLIP	
	35	1	**6V-8801**	6	NUT (3/8-16 THD)	
	36	1	**8D-9092**	1	PIN	
	37	1	**8T-2501**	2	BOLT (3/8-16X2 IN)	
	38	1	**8T-2502**	2	BOLT (3/8-16X1.125 IN)	
	39	1	**8T-4223**	4	WASHER-HARD (13.5X25.5X3MM THK)	
	40	1	**8T-4896**	20	WASHER-HARD (10.2X18.5X2.5MM THK)	
	41	1	**8T-4994**	2	WASHER-HARD (20X36.5X3.5MM THK)	
	42	1	**8T-7008**	1	BOLT (3/8-16X3 IN)	
	43	1	**8T-9389**	4	BOLT (1/2-13X2.75 IN)	
D	44	1	**5P-5931**		SEAL (.1M)	
B	45	1	**8T-1296**	4	WASHER (10.5X19X3.5MM THK)	

B-USE AS REQUIRED
D-ORDER BY THE METER
I-SEE HOSE FABRICATION GUIDE
Y-SEPARATE ILLUSTRATION

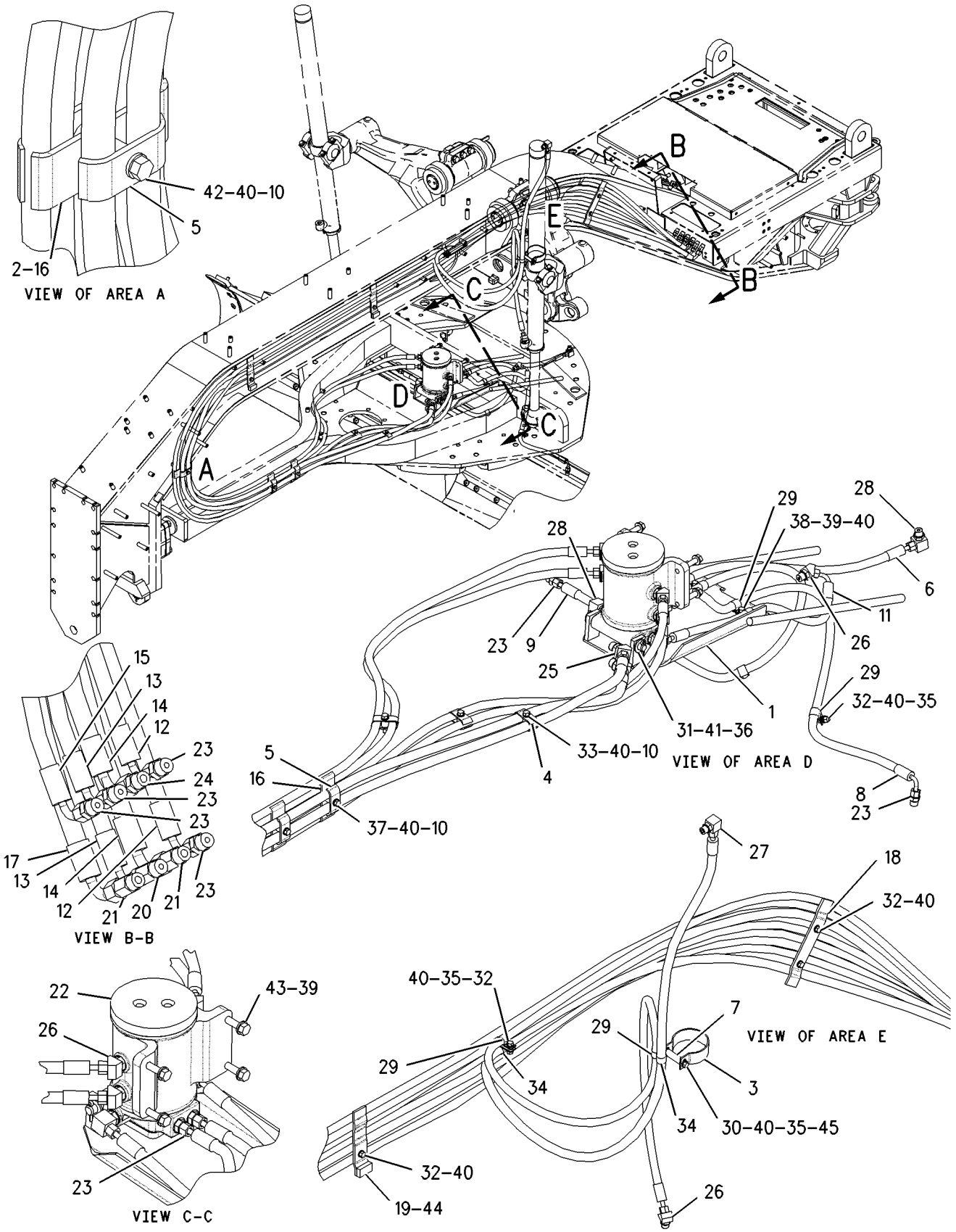

GRAPHIC #1

g00844468

MEMORANDA

HYDRAULIC SYSTEM

159-4731 LINES GP-HYDRAULIC–RH

S/N: CAF1-UP

PART OF 162-5603 GENERAL AR

SMCS-5057 **i01755290**

NOTE	REF NO	GRAPHIC REF	PART NUMBER	QTY	PART NAME 1 2 3 4 5 6 (PRODUCT LEVEL)	SEE PAGE
	1	1	**2B-0941**	4	SPACER (10.5X19X19MM THK)	
	2	1	**2G-5493**	1	CLAMP	
	3	1	**3S-2093**	1	STRAP-CABLE	
	4	1	**4J-5468**	3	CLAMP	
	5	1	**5D-2645**	2	CLAMP	
	6	1	**5D-4988**	4	CLAMP	
	7	1	**5P-0599**	1	CLAMP	
	8	1	**7W-5672**	1	PIPE	
B	9	1	**8T-1296**	4	WASHER (10.5X19X3.5MM THK)	
I	10	1	**8W-0220**	1	HOSE AS	
I	11	1	**8W-0302**	1	HOSE AS	
	12	1	**9R-8870**	1	BLOCK	
I	13	1	**107-8140**	1	HOSE AS	
I	14	1	**107-8141**	1	HOSE AS	
I	15	1	**107-8142**	1	HOSE AS	
I	16	1	**107-8147**	1	HOSE AS	
I	17	1	**107-8148**	1	HOSE AS	
I	18	1	**107-8150**	1	HOSE AS	
	19	1	**108-1610**	2	CLAMP	
I	20	1	**110-3003**	1	HOSE AS	
I	21	1	**134-0747**	1	HOSE AS	
	22	1	**135-0450**	2	PLATE	
	23	1	**135-0453**	1	PLATE	
	24	1	*164-5605*	2	CONNECTOR AS	
					(EACH INCLUDES)	
		1	**8T-0076**	1	CONNECTOR	
		1	**3K-0360**	1	SEAL-O-RING	
		1	**6V-8397**	1	SEAL-O-RING	
	25	1	*164-5608*	1	CONNECTOR GP	
		1	**8T-1687**	1	CONNECTOR	
		1	**3K-0360**	1	SEAL-O-RING	
		1	**6V-8398**	1	SEAL-O-RING	
	26	1	**100-4336**	1	CLIP	
	27	1	*148-8318*	6	CONNECTOR GP	
					(EACH INCLUDES)	
		1	**6V-8634**	1	CONNECTOR	
		1	**3K-0360**	1	SEAL-O-RING	
		1	**6V-8397**	1	SEAL-O-RING	
	28	1	**148-8363**	2	ELBOW GP	
					(EACH INCLUDES)	
		1	**6V-9876**	1	ELBOW	
		1	**3K-0360**	1	SEAL-O-RING	
		1	**6V-8397**	1	SEAL-O-RING	
	29	1	*148-8364*	1	ELBOW GP	
		1	**6V-8625**	1	ELBOW	
		1	**3K-0360**	1	SEAL-O-RING	
		1	**6V-8398**	1	SEAL-O-RING	
	30	1	*148-8374*	4	ELBOW GP	
					(EACH INCLUDES)	
		1	**6V-8723**	1	ELBOW	
		1	**3K-0360**	1	SEAL-O-RING	
		1	**6V-8397**	1	SEAL-O-RING	
	31	1	*148-8383*	2	ELBOW AS	
					(EACH INCLUDES)	
		1	**8T-1683**	1	ELBOW	
		1	**3K-0360**	1	SEAL-O-RING	

159-4731 **LINES GP-HYDRAULIC** *(contd.)* **i01755290**

NOTE	REF NO	GRAPHIC REF	PART NUMBER	QTY	PART NAME 1 2 3 4 5 6 (PRODUCT LEVEL)	SEE PAGE
		1	**6V-8397**	1	SEAL-O-RING	
	32	1	*148-8433*	2	TEE GP	
					(EACH INCLUDES)	
		1	**6V-9836**	1	TEE-SWIVEL	
		1	**6V-8397**	2	SEAL-O-RING	
	33	1	**1S-0994**	6	CLIP	
	34	1	**2H-9889**	1	BOLT (3/8-16X2.375 IN)	
	35	1	**4L-6454**	1	BOLT (3/8-16X1 IN)	
	36	1	**5S-7379**	10	BOLT (3/8-16X0.875 IN)	
	37	1	**5S-7383**	1	BOLT (3/8-16X1.75 IN)	
	38	1	**6D-4244**	2	CLIP	
	39	1	**6V-8801**	3	NUT (3/8-16 THD)	
	40	1	**7X-0288**	1	BOLT (3/8-16X1.625 IN)	
	41	1	**7X-0289**	1	BOLT (3/8-16X1.875 IN)	
	42	1	**8T-2501**	1	BOLT (3/8-16X2 IN)	
	43	1	**8T-4896**	20	WASHER-HARD (10.2X18.5X2.5MM THK)	
	44	1	**9B-7237**	1	BOLT (3/8-16X1.25 IN)	
D	45	1	**5P-5931**		SEAL (.1M)	

B-USE AS REQUIRED
D-ORDER BY THE METER
I-SEE HOSE FABRICATION GUIDE

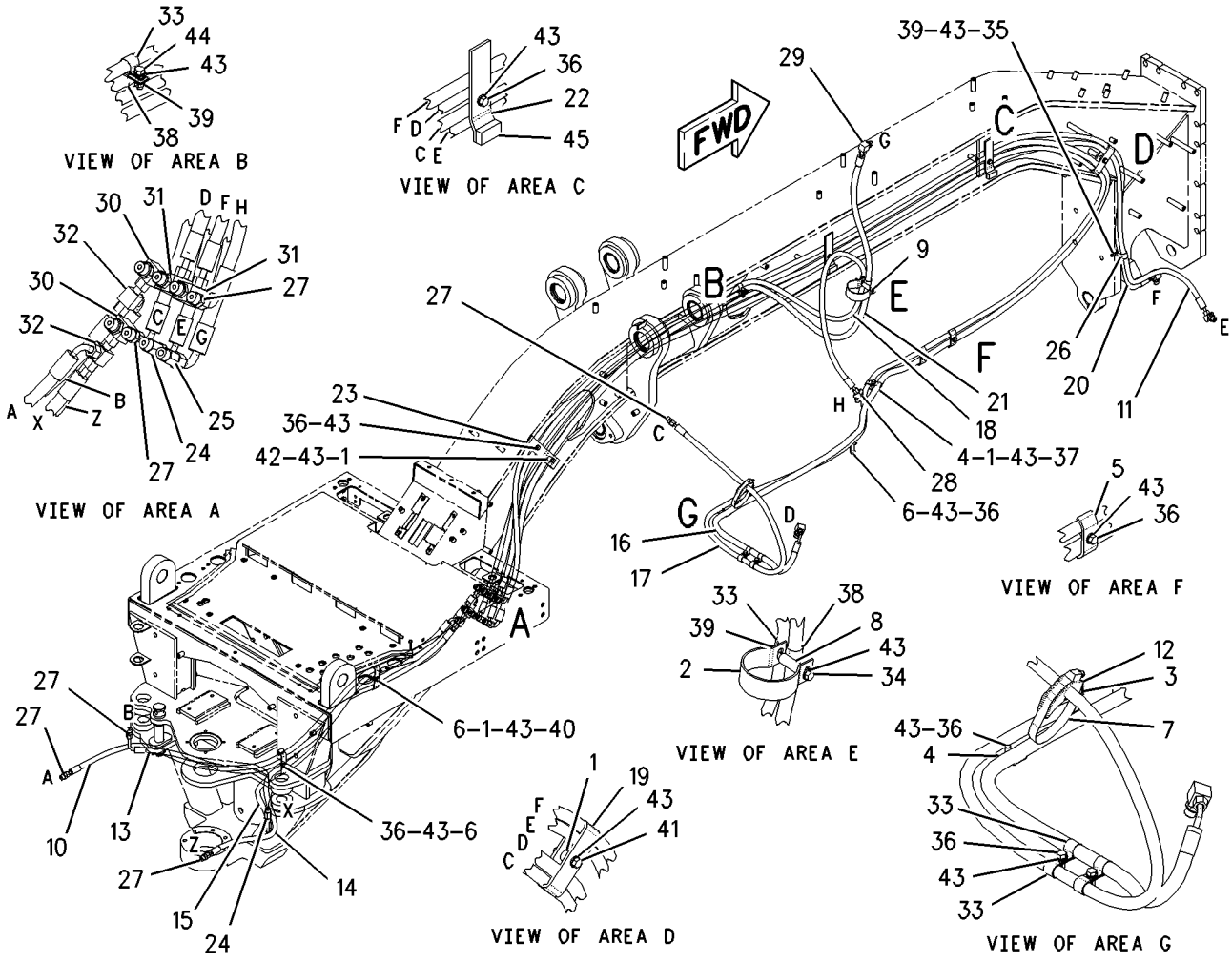

GRAPHIC #1 g00898582

171-6421 LINES GP-HYDRAULIC—CENTERSHIFT LOCK

S/N: CAF1-UP

PART OF 162-5603 GENERAL AR

SMCS-5057 **i01829211**

NOTE	REF NO	GRAPHIC REF	PART NUMBER	QTY	PART NAME 1 2 3 4 5 6 (PRODUCT LEVEL)	SEE PAGE
I	1	1	**123-4994**	1	HOSE AS	
I	2	1	**158-2072**	1	HOSE AS	
I	3	1	**112-9442**	1	HOSE AS	
	4	1	*148-8336*	3	CONNECTOR AS	
					(EACH INCLUDES)	
		1	**6V-8636**	1	CONNECTOR	
		1	**3J-1907**	1	SEAL-O-RING	
		1	**6V-8397**	1	SEAL-O-RING	
	5	1	*148-8367*	2	ELBOW GP	
					(EACH INCLUDES)	
		1	**6V-9850**	1	ELBOW-SWIVEL	
		1	**6V-8397**	1	SEAL-O-RING	
	6	1	*148-8378*	2	ELBOW AS	
					(EACH INCLUDES)	
		1	**6V-8724**	1	ELBOW	
		1	**3J-1907**	1	SEAL-O-RING	
		1	**6V-8397**	1	SEAL-O-RING	
	7	1	**4D-7733**	3	CLIP	
	8	1	**8M-2773**	1	CLIP	
	9	1	**8T-4121**	1	WASHER-HARD (11X21X2.5MM THK)	
M	10	1	**8T-4137**	1	BOLT (M10X1.5X20MM)	

I-SEE HOSE FABRICATION GUIDE
M-METRIC PART

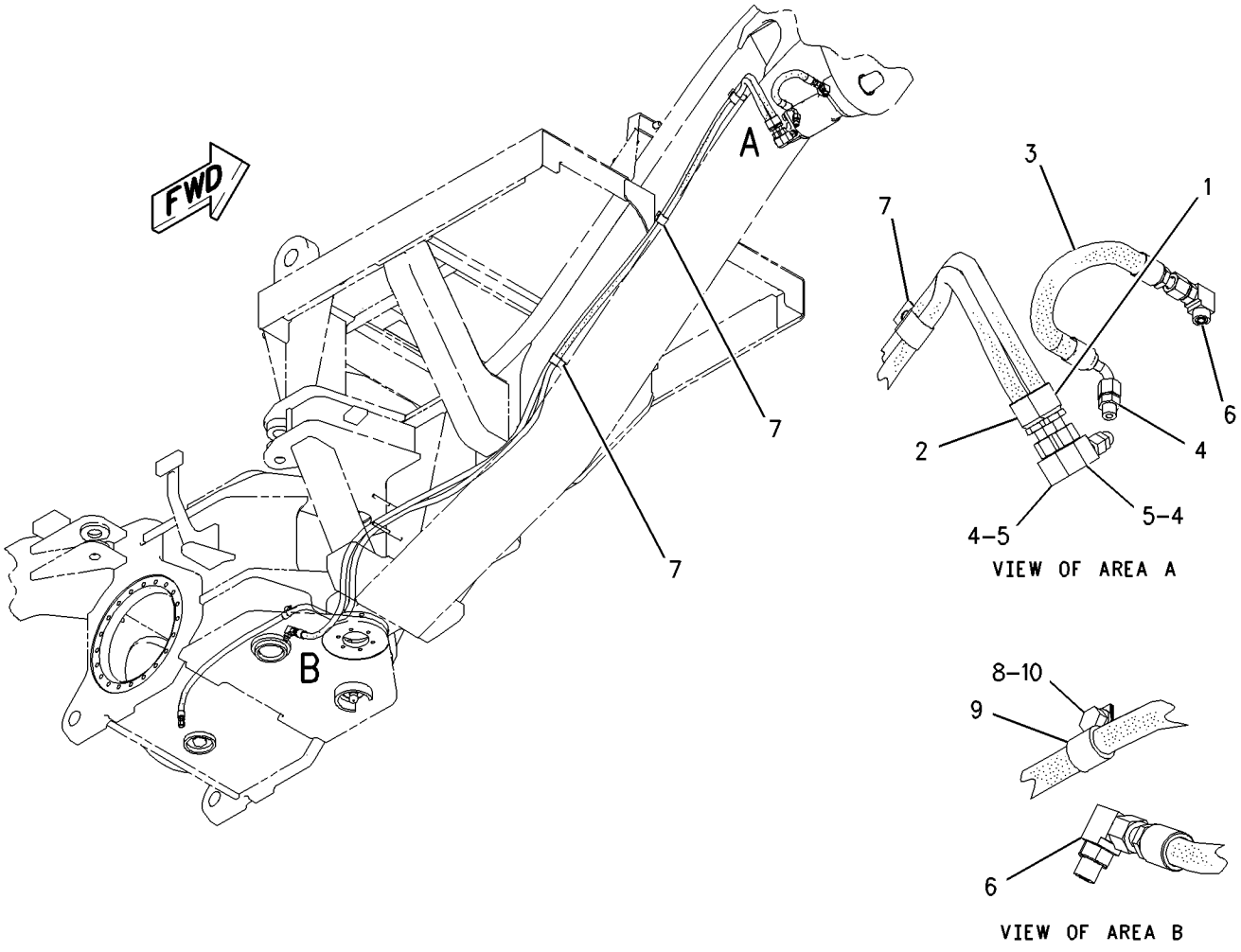

GRAPHIC #1 g00933376

HYDRAULIC SYSTEM

192-4699 LINES GP-HYDRAULIC—PLOW/DOZER ANGLE—RH

S/N: CAF1-UP
AN ATTACHMENT

SMCS-5057 **i01682187**

NOTE	REF NO	GRAPHIC REF	PART NUMBER	QTY	PART NAME 1 2 3 4 5 6 (PRODUCT LEVEL)	SEE PAGE
I	1	1	**114-2886**	1	HOSE AS	
I	2	1	**119-7997**	1	HOSE AS	
	3	1	*148-8340*	1	CONNECTOR GP	
		1	**6V-8639**	1	CONNECTOR	
		1	**3K-0360**	1	SEAL-O-RING	
		1	**6V-8398**	1	SEAL-O-RING	
	4	1	*164-8908*	1	CONNECTOR GP	
		1	**8T-0077**	1	CONNECTOR	
		1	**3K-0360**	1	SEAL-O-RING	
		1	**6V-8398**	1	SEAL-O-RING	
	5	1	**5S-7379**	1	BOLT (3/8-16X0.875 IN)	
	6	1	**6D-1641**	1	CLIP	
	7	1	**6D-4244**	1	CLIP	
	8	1	**8T-4896**	1	WASHER-HARD (10.2X18.5X2.5MM THK)	

I-SEE HOSE FABRICATION GUIDE

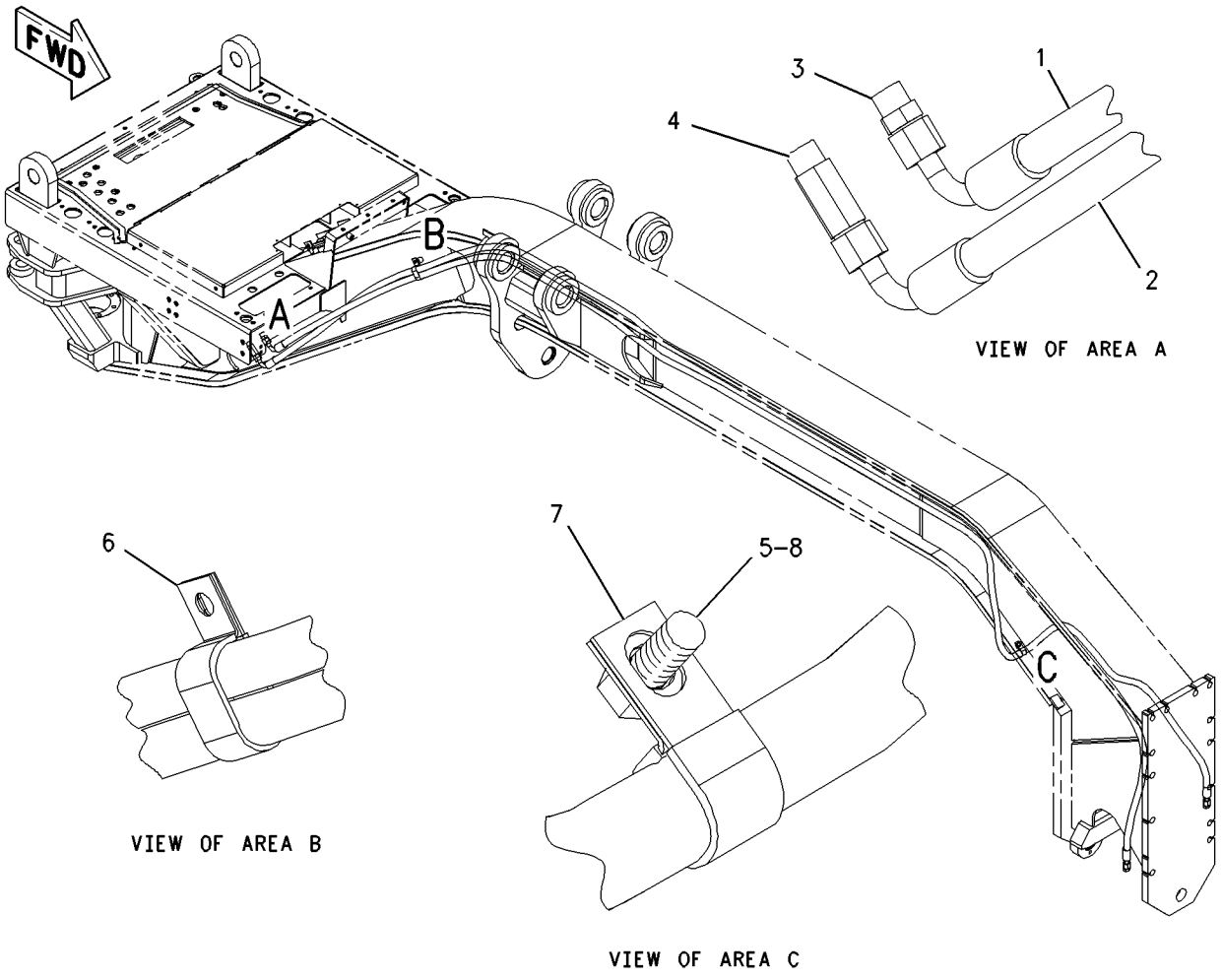

GRAPHIC #1 g00847325

MEMORANDA

HYDRAULIC SYSTEM

175-6979 LINES GP-HYDRAULIC FAN

S/N: CAF1-UP

PART OF 162-5603 GENERAL AR

SMCS-1359, 1386, 1387, 5057 **i01674423**

NOTE	REF NO	GRAPHIC REF	PART NUMBER	QTY	PART NAME 1 2 3 4 5 6 (PRODUCT LEVEL)	SEE PAGE
	1	1	**6V-0852**	1	CAP-DUST (HYDRAULIC OIL)	
I	2	1	**165-4632**	1	HOSE AS	
	3	1	**174-8961**	1	TUBE AS	
Y	4	1	**191-5292**	1	VALVE GP-SOLENOID & MANIFOLD (FAN SPEED)	674
I	5	1	**199-7082**	1	HOSE AS	
I	6	1	**199-7083**	1	HOSE AS	
	7	1	*148-8326*	1	CONNECTOR GP	
		1	**6V-9872**	1	CONNECTOR	
		1	**3J-7354**	1	SEAL-O-RING	
		1	**6V-8397**	1	SEAL-O-RING	
	8	1	**148-8353**	1	ELBOW GP	
		1	**3J-1907**	1	SEAL-O-RING	
		1	**6V-8397**	1	SEAL-O-RING	
	9	1	*148-8368*	1	ELBOW GP	
		1	**6V-8627**	1	ELBOW	
		1	**3J-1907**	1	SEAL-O-RING	
		1	**4J-5477**	1	SEAL-O-RING	
	10	1	*148-8369*	1	ELBOW GP	
		1	**6V-8628**	1	ELBOW	
		1	**3J-7354**	1	SEAL-O-RING	
		1	**4J-5477**	1	SEAL-O-RING	
	11	1	*148-8392*	1	ELBOW GP	
		1	**6V-9853**	1	ELBOW-SWIVEL	
		1	**6V-9746**	1	SEAL-O-RING	
	12	1	*164-5567*	1	FITTING GP	
		1	**6V-3965**	1	FITTING AS	
		1	**3J-1907**	1	SEAL-O-RING	
	13	1	**3P-1932**	1	ADAPTER	
		1	**3K-0360**	1	SEAL-O-RING	
	14	1	**4J-5267**	2	SEAL-O-RING	
	15	1	**5P-7854**	3	CLIP	
	16	1	**5S-7379**	3	BOLT (3/8-16X0.875 IN)	
	17	1	**6V-1889**	4	CLIP	
	18	1	**6V-5839**	4	WASHER (11X21X2.5MM THK)	
M	19	1	**6V-7981**	4	BOLT (M10X1.50X70MM)	
	20	1	**8C-3205**	2	FLANGE-HALF	
	21	1	**8M-2773**	2	CLIP	
	22	1	**8T-4121**	5	WASHER-HARD (11X21X2.5MM THK)	
M	23	1	**8T-4137**	5	BOLT (M10X1.5X20MM)	
	24	1	**8T-4896**	3	WASHER-HARD (10.2X18.5X2.5MM THK)	

I-SEE HOSE FABRICATION GUIDE
M-METRIC PART
Y-SEPARATE ILLUSTRATION

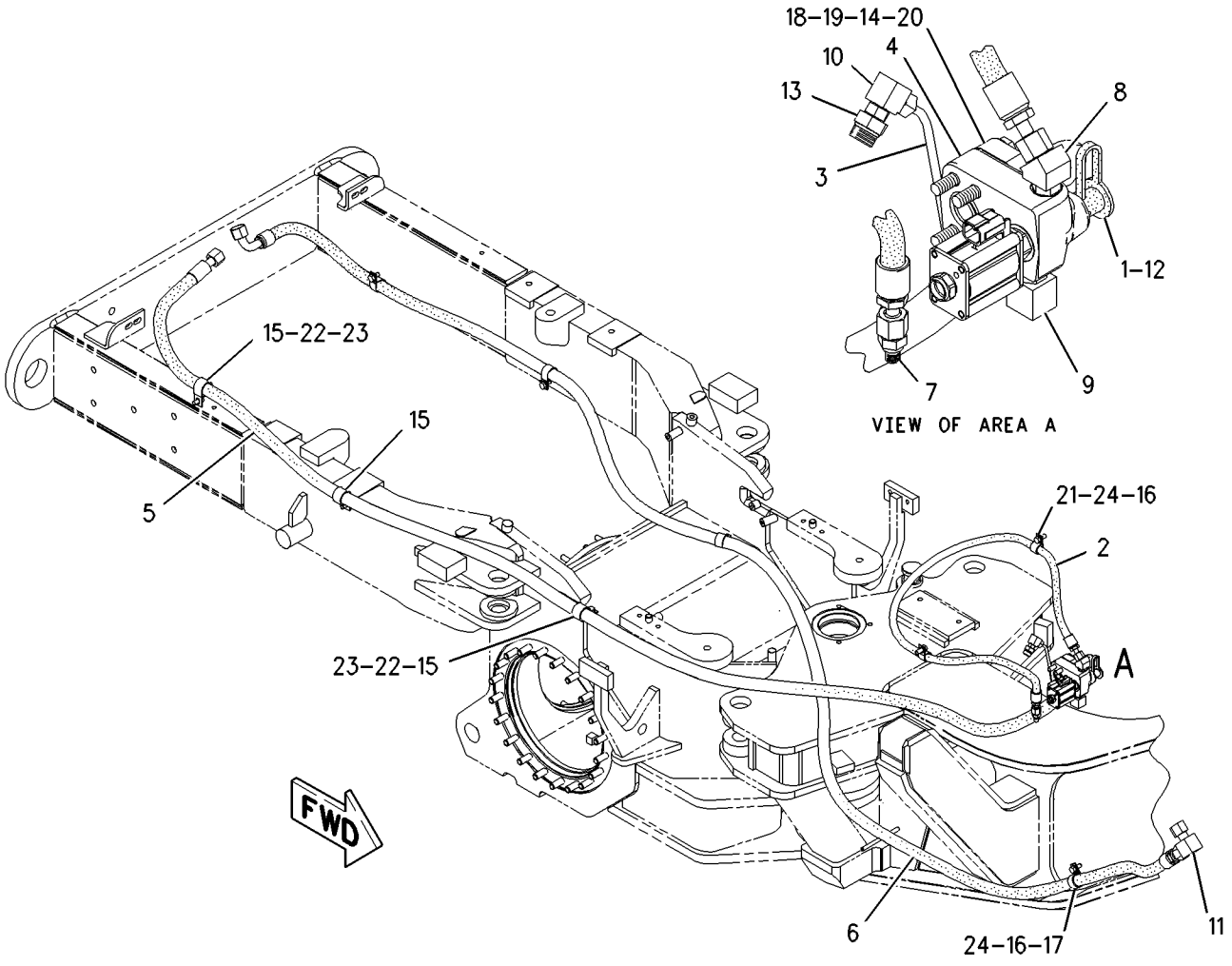

GRAPHIC #1

g00940179

HYDRAULIC SYSTEM

175-6981 LINES GP-HYDRAULIC FAN–RADIATOR

S/N: CAF1-UP

PART OF 194-2911, 194-2912 COOLING AR

ALSO AN ATTACHMENT

SMCS-1359, 1386, 1387, 5057 **i01829006**

NOTE	REF NO	GRAPHIC REF	PART NUMBER	QTY	PART NAME 1 2 3 4 5 6 (PRODUCT LEVEL)	SEE PAGE
I	1	1	**4E-9628**	2	HOSE AS	
Y	2	1	**167-1709**	1	SENSOR GP-PRESSURE (RADIATOR FAN)	208
	3	1	**175-0447**	1	VALVE AS-CHECK (RADIATOR FAN)	
	4	1	**175-7049**	1	BODY	
	5	1	*148-8327*	1	CONNECTOR AS	
		1	**6V-8637**	1	CONNECTOR-SEAL	
		1	**3D-2824**	1	SEAL-O-RING	
		1	**6V-9746**	1	SEAL-O-RING	
	6	1	**148-8347**	1	ELBOW GP	
		1	**3D-2824**	1	SEAL-O-RING	
		1	**6V-9746**	1	SEAL-O-RING	
	7	1	*148-8449*	1	TEE GP-SWIVEL	
		1	**6V-9839**	1	TEE-SWIVEL	
		1	**6V-9746**	2	SEAL-O-RING	
M	8	1	**5C-9553**	3	BOLT (M6X1X16MM)	
	9	1	**7J-0204**	1	SEAL-O-RING	
	10	1	**9X-8256**	3	WASHER (6.6X12X2MM THK)	

I-SEE HOSE FABRICATION GUIDE
M-METRIC PART
Y-SEPARATE ILLUSTRATION

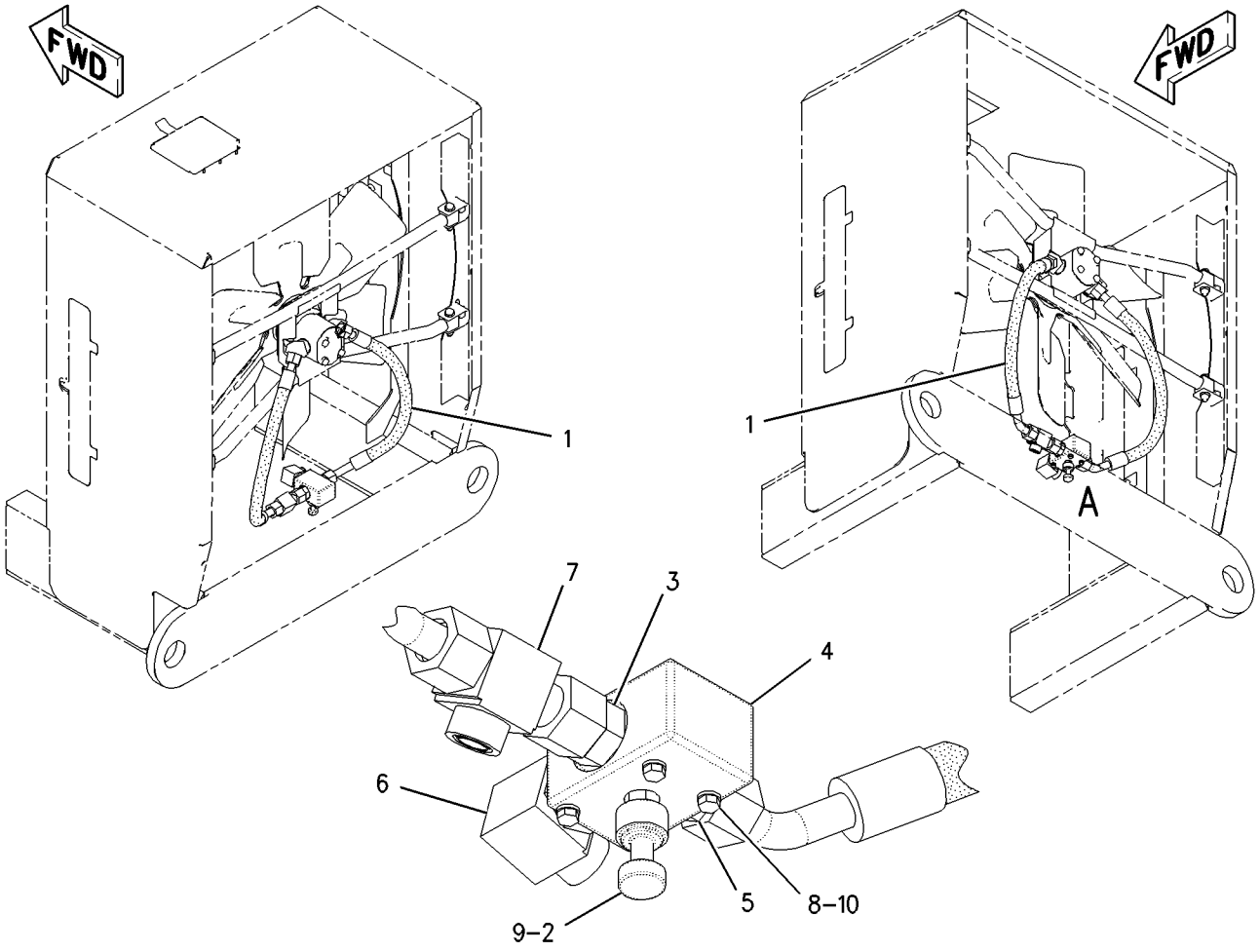

GRAPHIC #1 g00889990

HYDRAULIC SYSTEM

160-9178 LINES GP-PUMP

S/N: CAF1-UP
PART OF 171-6457 LINES GP-PUMP
AN ATTACHMENT

SMCS-5057 **i01812056**

NOTE	REF NO	GRAPHIC REF	PART NUMBER	QTY	PART NAME 1 2 3 4 5 6 (PRODUCT LEVEL)	SEE PAGE
	1	1	**5P-4868**	4	CLAMP (HOSE)	
	2	1	**6E-1926**	1	ADAPTER	
E	3	1	**5P-1295**		HOSE (13CM)	
	4	1	**6V-0852**	1	CAP-DUST (HYDRAULIC OIL)	
E	5	1	**5P-1291**		HOSE (13CM)	
E	6	1	**5P-1295**		HOSE (10CM)	
I	7	1	**8W-2624**	1	HOSE AS	
I	8	1	**8W-3166**	1	HOSE AS	
I	9	1	**8X-7820**	1	HOSE AS	
I	10	1	**8X-7973**	1	HOSE AS	
I	11	1	**8X-7974**	1	HOSE AS	
	12	1	**8X-8813**	1	ELBOW	
	13	1	**9M-0164**	4	CLAMP-HOSE	
Y	14	1	**9T-5957**	1	VALVE GP-COMBINATION	618
	15	1	**104-4286**	1	TUBE	
	16	1	**113-9533**	1	HOSE	
I	17	1	**116-3211**	1	HOSE AS	
I	18	1	**125-9487**	1	HOSE AS	
	19	1	**132-2906**	1	TUBE AS	
	20	1	*148-8368*	2	ELBOW GP	
					(EACH INCLUDES)	
		1	**6V-8627**	1	ELBOW	
		1	**3J-1907**	1	SEAL-O-RING	
		1	**4J-5477**	1	SEAL-O-RING	
	21	1	*164-5567*	1	FITTING GP	
		1	**6V-3965**	1	FITTING AS	
		1	**3J-1907**	1	SEAL-O-RING	
	22	1	*164-5641*	1	TEE AS	
		1	**128-7625**	1	TEE	
		1	**3D-2824**	1	SEAL-O-RING	
		1	**5K-9090**	1	SEAL-O-RING	
		1	**6V-9746**	1	SEAL-O-RING	
	23	1	*165-7014*	1	FITTING GP	
		1	**8C-3309**	1	TEE	
		1	**3J-1907**	1	SEAL-O-RING	
		1	**4J-5477**	1	SEAL-O-RING	
	24	1	**170-9051**	1	TUBE	
	25	1	**173-8290**	1	ELBOW	
I	26	1	**174-2253**	1	HOSE AS	
I	27	1	**201-8430**	1	HOSE AS	
	28	1	*148-8316*	2	CONNECTOR GP	
					(EACH INCLUDES)	
		1	**6V-8647**	1	CONNECTOR	
		1	**3J-7354**	1	SEAL-O-RING	
		1	**4J-5477**	1	SEAL-O-RING	
	29	1	*148-8323*	1	CONNECTOR GP	
		1	**6V-9875**	1	CONNECTOR	
		1	**2S-4078**	1	SEAL-O-RING	
		1	**5K-9090**	1	SEAL-O-RING	
	30	1	*148-8347*	5	ELBOW GP	
					(EACH INCLUDES)	
		1	**6V-9007**	1	ELBOW	
		1	**3D-2824**	1	SEAL-O-RING	
		1	**6V-9746**	1	SEAL-O-RING	
	31	1	*148-8364*	1	ELBOW GP	

160-9178 **LINES GP-PUMP** ***(contd.)*** **i01812056**

NOTE	REF NO	GRAPHIC REF	PART NUMBER	QTY	PART NAME 1 2 3 4 5 6 (PRODUCT LEVEL)	SEE PAGE
		1	**6V-8625**	1	ELBOW	
		1	**3K-0360**	1	SEAL-O-RING	
		1	**6V-8398**	1	SEAL-O-RING	
	32	1	*148-8407*	2	PLUG GP	
					(EACH INCLUDES)	
		1	**9S-4191**	1	PLUG	
		1	**3J-1907**	1	SEAL-O-RING	
	33	1	*148-8408*	1	PLUG AS	
		1	**9S-4183**	1	PLUG	
		1	**3D-2824**	1	SEAL-O-RING	
	34	1	*148-8429*	1	TEE AS	
		1	**6V-9840**	1	TEE-SWIVEL	
		1	**5K-9090**	2	SEAL-O-RING	
	35	1	*150-5968*	1	TEE GP	
		1	**6V-9835**	1	TEE	
		1	**4J-5477**	2	SEAL-O-RING	
	36	1	*153-6237*	2	ELBOW GP	
					(EACH INCLUDES)	
		1	**6V-9004**	1	ELBOW	
		1	**3D-2824**	1	SEAL-O-RING	
		1	**6V-9746**	1	SEAL-O-RING	
	37	1	*153-6259*	1	TEE GP	
		1	**6V-8777**	1	TEE-FACE SEAL	
		1	**3D-2824**	1	SEAL-O-RING	
		1	**6V-9746**	2	SEAL-O-RING	
	38	1	**4J-0521**	2	SEAL-O-RING	
	39	1	**4J-0523**	1	SEAL-O-RING	
	40	1	**5H-8848**	1	SEAL-O-RING	
	41	1	**5K-9090**	1	SEAL-O-RING	
M	42	1	**6V-5696**	1	BOLT (M12X1.75X80MM)	
M	43	1	**8T-0646**	3	BOLT (M12X1.75X110MM)	
M	44	1	**8T-3957**	1	BOLT-HEX SOCKET (M12X1.75X30MM)	
	45	1	**8T-4121**	4	WASHER-HARD (11X21X2.5MM THK)	
M	46	1	**8T-4172**	2	BOLT (M10X1.50X80MM)	
	47	1	**8T-4223**	8	WASHER-HARD (13.5X25.5X3MM THK)	
M	48	1	**8T-4956**	4	BOLT (M12X1.75X35MM)	
M	49	1	**8T-6685**	2	BOLT (M10X1.50X110MM)	
	50	1	*148-8312*	1	ADAPTER AS	
		1	**3T-4965**	1	ADAPTER-O-RING	
		1	**3D-2824**	1	SEAL-O-RING	

E-ORDER BY THE CENTIMETER
I-SEE HOSE FABRICATION GUIDE
M-METRIC PART
Y-SEPARATE ILLUSTRATION

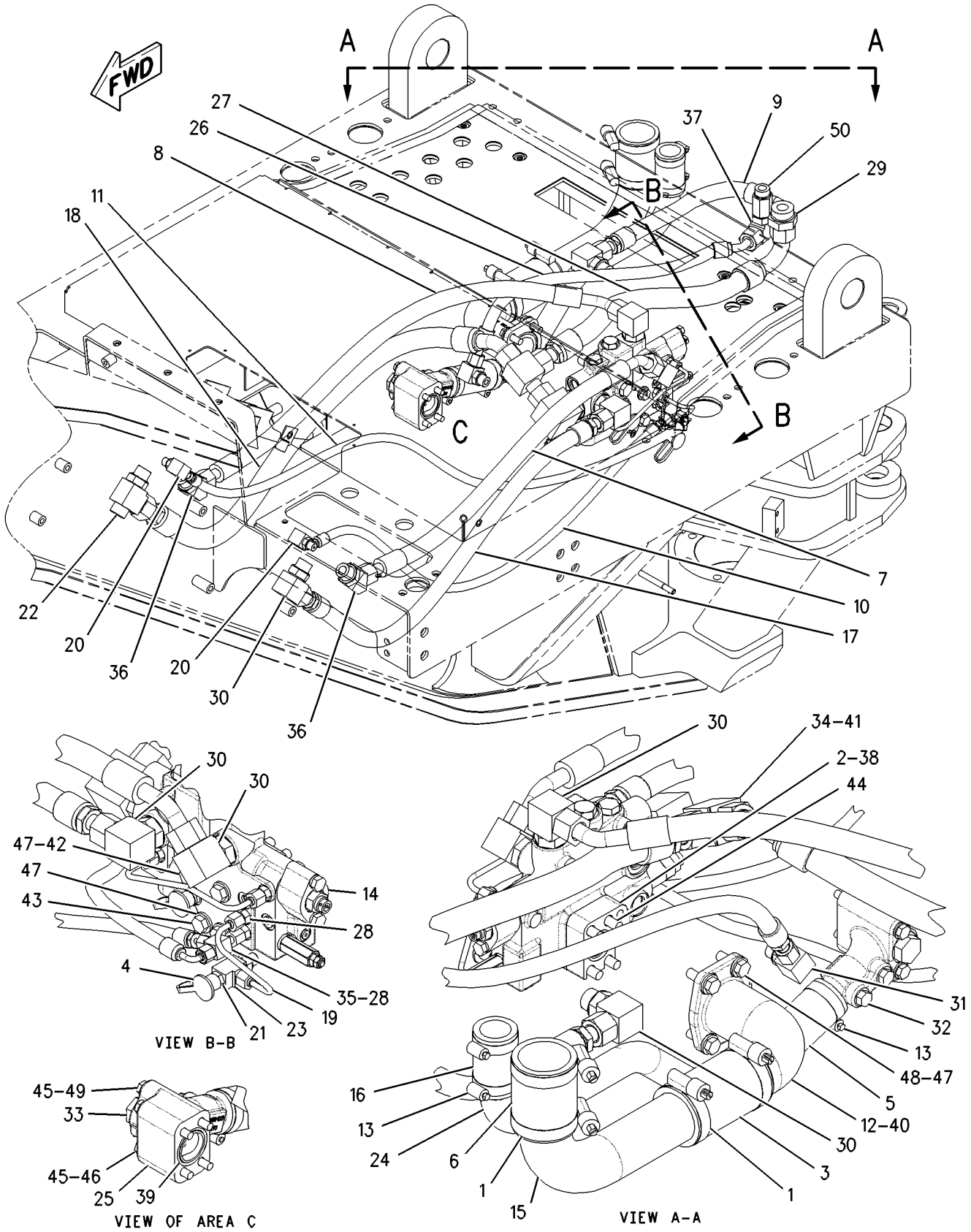

GRAPHIC #1 g00894423

MEMORANDA

HYDRAULIC SYSTEM

171-6431 LINES GP-PUMP

S/N: CAF1-UP

PART OF 162-5603 GENERAL AR

SMCS-5057 **i01829237**

NOTE	REF NO	GRAPHIC REF	PART NUMBER	QTY	PART NAME 1 2 3 4 5 6 (PRODUCT LEVEL)	SEE PAGE
	1	1	**5P-4868**	4	CLAMP (HOSE)	
	2	1	**6E-1926**	1	ADAPTER	
E	3	1	**5P-1295**		HOSE (13CM)	
	4	1	**6V-0852**	1	CAP-DUST	
	5	1	**5P-1291**	1	HOSE	
E	6	1	**5P-1295**		HOSE (10CM)	
I	7	1	**8W-3166**	1	HOSE AS	
I	8	1	**8X-7820**	1	HOSE AS	
I	9	1	**8X-7973**	1	HOSE AS	
I	10	1	**8X-7974**	1	HOSE AS	
I	11	1	**9C-1067**	1	HOSE AS	
	12	1	**9M-0164**	4	CLAMP-HOSE	
Y	13	1	**9T-5957**	1	VALVE GP-COMBINATION	618
	14	1	**102-3659**	1	ELBOW	
	15	1	**104-4286**	1	TUBE	
	16	1	**113-9533**	1	HOSE	
I	17	1	**116-3211**	1	HOSE AS	
I	18	1	**125-9487**	1	HOSE AS	
	19	1	**132-3067**	1	TUBE AS	
I	20	1	**142-8751**	1	HOSE AS	
	21	1	*165-7014*	1	FITTING GP	
		1	**8C-3309**	1	TEE	
		1	**3J-1907**	1	SEAL-O-RING	
		1	**4J-5477**	1	SEAL-O-RING	
	22	1	**173-8290**	1	ELBOW	
I	23	1	**174-2253**	1	HOSE AS	
	24	1	**199-5064**	1	TUBE	
	25	1	*148-8316*	2	CONNECTOR GP	
					(EACH INCLUDES)	
		1	**6V-8647**	1	CONNECTOR	
		1	**3J-7354**	1	SEAL-O-RING	
		1	**4J-5477**	1	SEAL-O-RING	
	26	1	*148-8323*	1	CONNECTOR GP	
		1	**6V-9875**	1	CONNECTOR	
		1	**2S-4078**	1	SEAL-O-RING	
		1	**5K-9090**	1	SEAL-O-RING	
	27	1	*148-8347*	4	ELBOW GP	
					(EACH INCLUDES)	
		1	**3D-2824**	1	SEAL-O-RING	
		1	**6V-9007**	1	ELBOW	
		1	**6V-9746**	1	SEAL-O-RING	
	28	1	*148-8359*	1	ELBOW GP	
		1	**6V-9877**	1	ELBOW	
		1	**3K-0360**	1	SEAL-O-RING	
		1	**6V-9746**	1	SEAL-O-RING	
	29	1	*148-8364*	1	ELBOW GP	
		1	**6V-8625**	1	ELBOW	
		1	**3K-0360**	1	SEAL-O-RING	
		1	**6V-8398**	1	SEAL-O-RING	
	30	1	*148-8368*	2	ELBOW GP	
					(EACH INCLUDES)	
		1	**6V-8627**	1	ELBOW	
		1	**3J-1907**	1	SEAL-O-RING	
		1	**4J-5477**	1	SEAL-O-RING	
	31	1	*148-8407*	2	PLUG GP	
					(EACH INCLUDES)	

171-6431 **LINES GP-PUMP** ***(contd.)*** **i01829237**

NOTE	REF NO	GRAPHIC REF	PART NUMBER	QTY	PART NAME 1 2 3 4 5 6 (PRODUCT LEVEL)	SEE PAGE
		1	**9S-4191**	1	PLUG	
		1	**3J-1907**	1	SEAL-O-RING	
	32	1	*148-8408*	1	PLUG AS	
		1	**9S-4183**	1	PLUG	
		1	**3D-2824**	1	SEAL-O-RING	
	33	1	*148-8429*	1	TEE AS	
		1	**6V-9840**	1	TEE-SWIVEL	
		1	**5K-9090**	2	SEAL-O-RING	
	34	1	*150-5968*	1	TEE GP	
		1	**6V-9835**	1	TEE	
		1	**4J-5477**	2	SEAL-O-RING	
	35	1	*153-6237*	2	ELBOW GP	
					(EACH INCLUDES)	
		1	**6V-9004**	1	ELBOW	
		1	**3D-2824**	1	SEAL-O-RING	
		1	**6V-9746**	1	SEAL-O-RING	
	36	1	*153-6259*	1	TEE GP	
		1	**6V-8777**	1	TEE-FACE SEAL	
		1	**3D-2824**	1	SEAL-O-RING	
		1	**6V-9746**	2	SEAL-O-RING	
	37	1	*164-5567*	1	FITTING GP	
		1	**6V-3965**	1	FITTING AS (QUICK DISCONNECT)(DIAGNOSTIC)	
		1	**3J-1907**	1	SEAL-O-RING	
	38	1	*164-5641*	1	TEE AS	
		1	**128-7625**	1	TEE	
		1	**3D-2824**	1	SEAL-O-RING	
		1	**5K-9090**	1	SEAL-O-RING	
		1	**6V-9746**	1	SEAL-O-RING	
	39	1	**1H-8720**	1	SEAL-O-RING	
	40	1	**4J-0521**	2	SEAL-O-RING	
	41	1	**4J-0523**	1	SEAL-O-RING	
	42	1	**5K-9090**	1	SEAL-O-RING	
M	43	1	**6V-5696**	1	BOLT (M12X1.75X80MM)	
M	44	1	**8T-0646**	3	BOLT (M12X1.75X110MM)	
M	45	1	**8T-3957**	1	BOLT-HEX SOCKET (M12X1.75X30MM)	
	46	1	**8T-4121**	4	WASHER-HARD (11X21X2.5MM THK)	
M	47	1	**8T-4172**	2	BOLT (M10X1.50X80MM)	
	48	1	**8T-4223**	4	WASHER-HARD (13.5X25.5X3MM THK)	
M	49	1	**8T-4956**	4	BOLT (M12X1.75X35MM)	
M	50	1	**8T-6685**	2	BOLT (M10X1.50X110MM)	
	51	1	*148-8312*	1	ADAPTER AS	
		1	**3T-4965**	1	ADAPTER-O-RING	
		1	**3D-2824**	1	SEAL-O-RING	

E-ORDER BY THE CENTIMETER
I-SEE HOSE FABRICATION GUIDE
M-METRIC PART
Y-SEPARATE ILLUSTRATION

171-6431 **LINES GP-PUMP** ***(contd.)*** **i01829237**

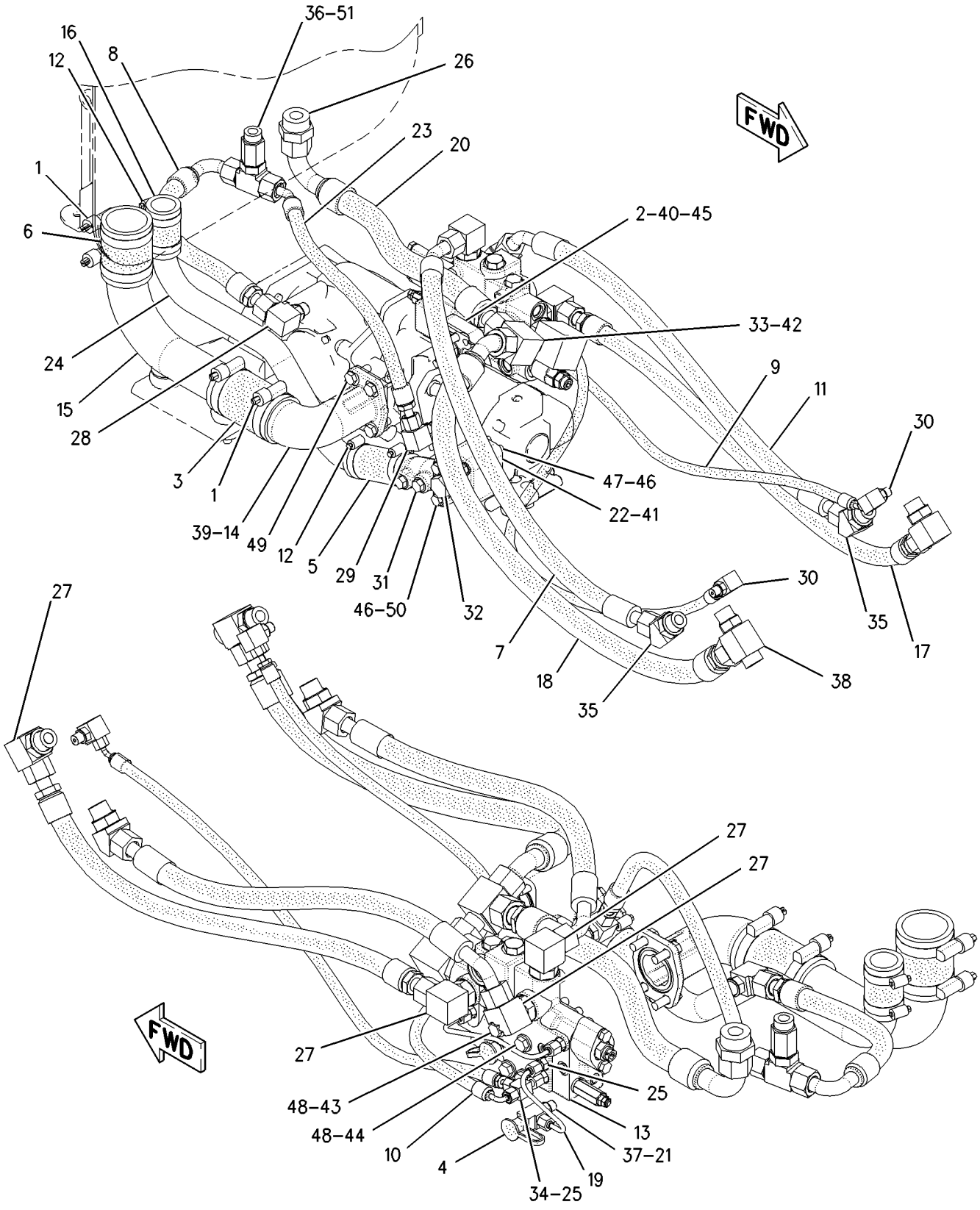

GRAPHIC #1 g00933402

HYDRAULIC SYSTEM

171-6457 LINES GP-PUMP

S/N: CAF1-UP
AN ATTACHMENT

SMCS-5057 **i01861134**

NOTE	PART NUMBER	QTY	PART NAME 1 2 3 4 5 6 (PRODUCT LEVEL)	SEE PAGE
Y	*160-9178*	1	LINES GP-PUMP (HYDRAULIC TANK)	540
Y	*160-9180*	1	PUMP & MTG GP-PISTON (HYDRAULIC TANK)	564

Y-SEPARATE ILLUSTRATION

<END>

HYDRAULIC SYSTEM

166-3308 LINES GP-RIPPER

S/N: CAF1-UP

PART OF 166-3305, 184-7303, 184-7307 CONTROL AR-HYDRAULIC

AN ATTACHMENT

SMCS-5057 **i01819294**

NOTE	REF NO	GRAPHIC REF	PART NUMBER	QTY	PART NAME 1 2 3 4 5 6 (PRODUCT LEVEL)	SEE PAGE
J	1	1	**7F-4617**	1	SPACER (.41X.75X1.31 IN THK)	
I	3	1	**8W-0206**	2	HOSE AS	
	4	1	**8W-8527**	6	SLEEVE	
	5	1	*105-7167*	2	ADAPTER GP	
					(EACH INCLUDES)	
		1	**6V-8397**	2	SEAL-O-RING	
		1	**8T-5890**	1	UNION-BULKHEAD	
JM	6	1	**116-3715**	1	STUD-TAPERLOCK (M10X1.5X85MM)	
	7	1	*148-8374*	1	ELBOW GP	
		1	**6V-8723**	1	ELBOW	
		1	**3K-0360**	1	SEAL-O-RING	
		1	**6V-8397**	1	SEAL-O-RING	
	8	1	*148-8383*	1	ELBOW AS	
		1	**8T-1683**	1	ELBOW	
		1	**3K-0360**	1	SEAL-O-RING	
		1	**6V-8397**	1	SEAL-O-RING	
J	9	1	**1S-0994**	2	CLIP	
	10	1	**5M-3062**	1	BOLT (3/8-16X0.75 IN)	
	11	1	**6D-4247**	1	CLIP	
	12	1	**6V-9168**	2	NUT (11/16-16 THD)	
	13	1	**6V-9829**	2	CAP AS	
J	14	1	**8T-4121**	1	WASHER-HARD (11X21X2.5MM THK)	
JM	15	1	**8T-4133**	1	NUT (M10X1.5 THD)	
	16	1	**8T-4896**	1	WASHER-HARD (10.2X18.5X2.5MM THK)	

I-SEE HOSE FABRICATION GUIDE
J-PARTS NOT USED ON AWD OR 120H
M-METRIC PART

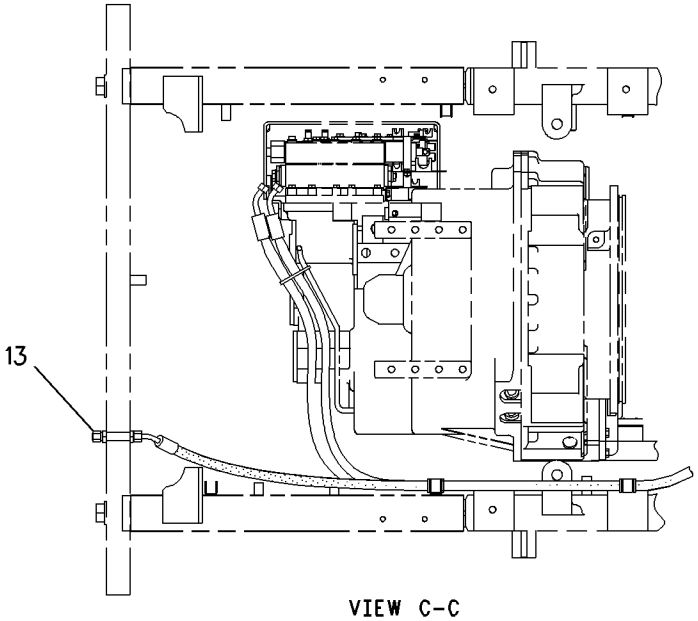

VIEW C-C

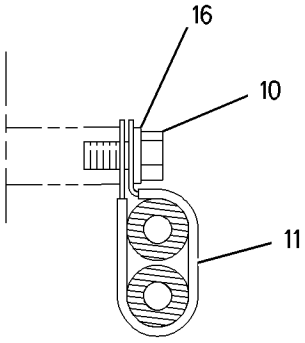

SECTION B-B

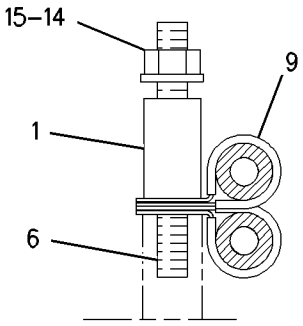

SECTION A-A

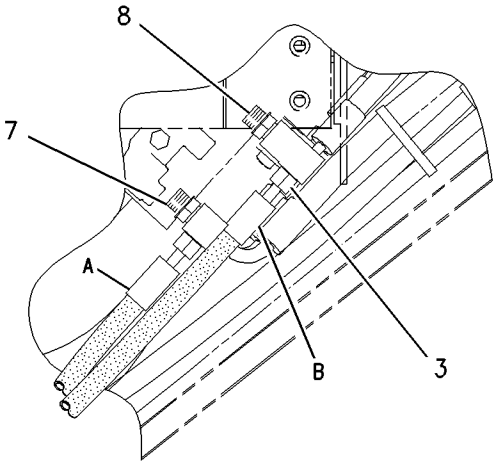

VIEW OF AREA E

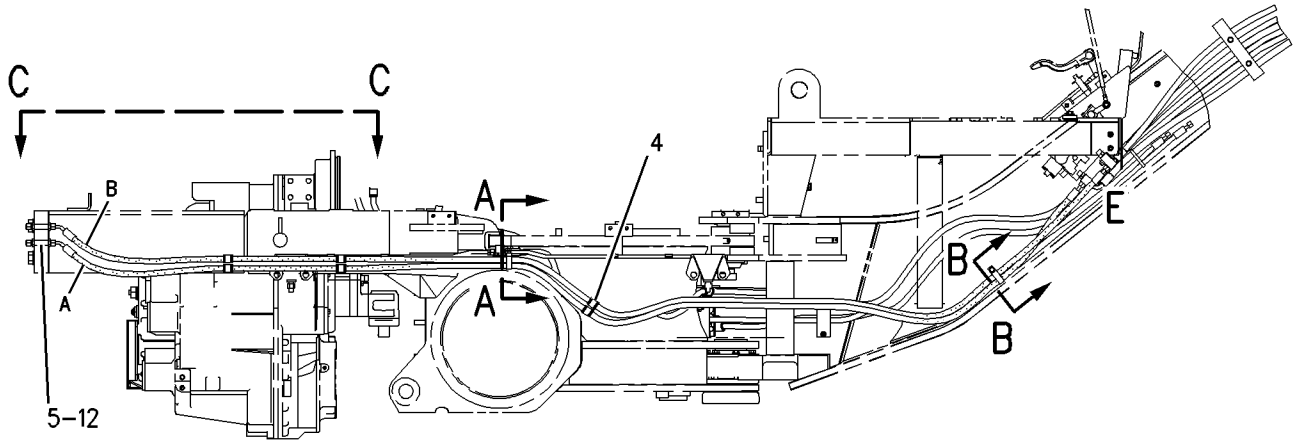

RIGHT SIDE VIEW

GRAPHIC #1

g00928693

HYDRAULIC SYSTEM

171-6458 LINES GP-SECONDARY STEERING

S/N: CAF1-UP
PART OF 207-3665, 210-2042 CONVERSION AR-CERTIFICATION, 188-1055 STEERING AR-SECONDARY AN ATTACHMENT

SMCS-4304 **i01795117**

NOTE	REF NO	GRAPHIC REF	PART NUMBER	QTY	PART NAME 1 2 3 4 5 6 (PRODUCT LEVEL)	SEE PAGE
I	1	1	**4E-6867**	1	HOSE AS	
	2	1	**5B-8978**	1	TEE	
	3	1	**9T-1013**	1	VALVE AS-CHECK (SECONDARY STEERING)	
		1	**3K-0360**	1	SEAL-O-RING	
		1	**6V-8398**	1	SEAL-O-RING	
	4	1	**9T-8071**	1	VALVE GP-RELIEF (SECONDARY STEERING)	
I	5	1	**108-0712**	1	HOSE AS	
I	6	1	**108-0713**	1	HOSE AS	
	7	1	*171-6470*	1	VALVE GP-CHECK (SECONDARY STEERING)	
		1	**9T-6146**	1	VALVE GP-CHECK	
		1	**3J-7354**	1	SEAL-O-RING	
		1	**4J-5477**	1	SEAL-O-RING	
	8	1	*171-6728*	1	ELBOW GP	
		1	**8T-0249**	1	ELBOW-SWIVEL	
		1	**3K-0360**	1	SEAL-O-RING	
	9	1	*148-8351*	1	ELBOW GP	
		1	**6V-9849**	1	ELBOW-SWIVEL	
		1	**4J-5477**	1	SEAL-O-RING	
	10	1	*148-8364*	2	ELBOW GP	
					(EACH INCLUDES)	
		1	**6V-8625**	1	ELBOW	
		1	**3K-0360**	1	SEAL-O-RING	
		1	**6V-8398**	1	SEAL-O-RING	
	11	1	*148-8381*	1	ELBOW GP	
		1	**8T-5429**	1	ELBOW	
		1	**6V-8398**	1	SEAL-O-RING	
		1	**3D-2824**	1	SEAL-O-RING	
	12	1	*150-4037*	1	TEE GP	
		1	**6V-9844**	1	TEE-SWIVEL	
		1	**6V-8398**	2	SEAL-O-RING	
	13	1	*150-4043*	1	CONNECTOR GP	
		1	**6V-9873**	1	CONNECTOR-SEAL	
		1	**3J-1907**	1	SEAL-O-RING	
		1	**6V-8398**	1	SEAL-O-RING	
	14	1	*165-4931*	1	ELBOW GP	
		1	**6V-8077**	1	ELBOW	
		1	**3J-1907**	1	SEAL-O-RING	

I-SEE HOSE FABRICATION GUIDE

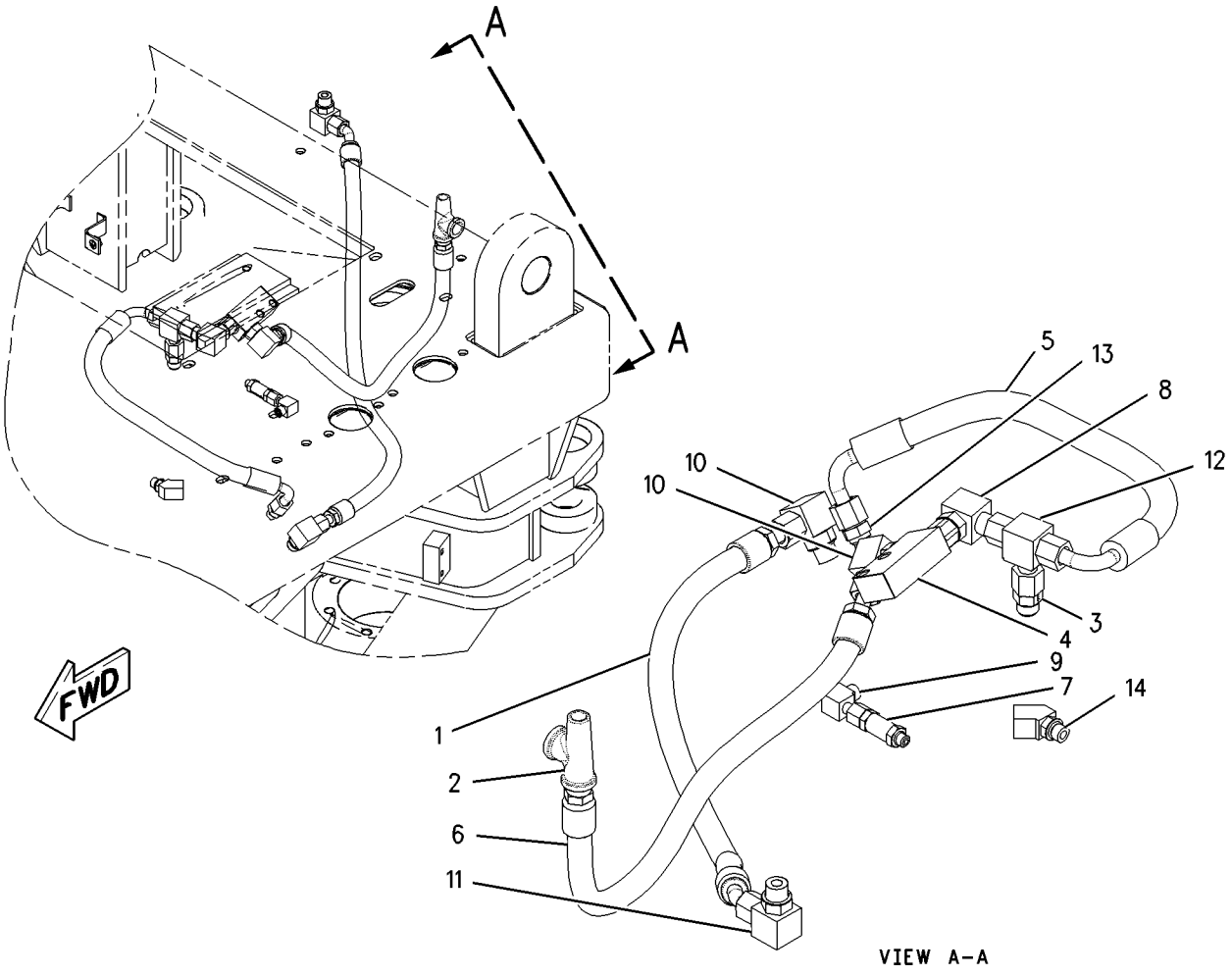

GRAPHIC #1 g00919032

HYDRAULIC SYSTEM

171-6442 LINES GP-STEERING

S/N: CAF1-UP

PART OF 162-5603 GENERAL AR

SMCS-4304 **i01674501**

NOTE	REF NO	GRAPHIC REF	PART NUMBER	QTY	PART NAME 1 2 3 4 5 6 (PRODUCT LEVEL)	SEE PAGE
	1	1	**3S-2093**	2	STRAP-CABLE	
I	2	2	**4E-2392**	1	HOSE AS	
	3	2	**4J-5468**	2	CLAMP	
I	4	2	**5T-9903**	1	HOSE AS	
	5	1	**8C-3451**	1	CAP-DUST	
I	6	2	**8W-0225**	1	HOSE AS	
I	7	1	**8X-7975**	1	HOSE AS	
	8	2	**9D-0953**	1	SPACER (.406X.75X.88 IN THK)	
I	9	1	**108-0703**	1	HOSE AS	
I	10	1	**108-0714**	2	HOSE AS	
	11	2	**108-1610**	2	CLAMP	
	12	1	**136-6330**	1	SEAL	
	13	1	**136-6331**	2	SEAL	
I	14	2	**150-4868**	1	HOSE AS	
	15	1	*164-5586*	1	TEE GP	
		1	**7X-0871**	1	TEE	
		1	**6V-8398**	1	SEAL-O-RING	
I	16	1	**108-0702**	3	HOSE AS	
	17	1	*148-8305*	1	ADAPTER GP	
		1	**5P-9617**	1	ADAPTER	
		1	**3J-1907**	1	SEAL-O-RING	
	18	1	*148-8316*	2	CONNECTOR AS	
					(EACH INCLUDES)	
		1	**6V-8647**	1	CONNECTOR	
		1	**3J-7354**	1	SEAL-O-RING	
		1	**4J-5477**	1	SEAL-O-RING	
	19	1,2	*148-8340*	6	CONNECTOR GP	
					(EACH INCLUDES)	
		1,2	**6V-8639**	1	CONNECTOR	
		1,2	**3K-0360**	1	SEAL-O-RING	
		1,2	**6V-8398**	1	SEAL-O-RING	
	20	1	*148-8351*	1	ELBOW GP	
		1	**6V-9849**	1	ELBOW-SWIVEL	
		1	**4J-5477**	1	SEAL-O-RING	
	21	2	**148-8354**	2	ELBOW GP	
					(EACH INCLUDES)	
		2	**3K-0360**	1	SEAL-O-RING	
		2	**6V-8398**	1	SEAL-O-RING	
	22	1,2	*148-8364*	2	ELBOW AS	
					(EACH INCLUDES)	
		1,2	**6V-8625**	1	ELBOW	
		1,2	**3K-0360**	1	SEAL-O-RING	
		1,2	**6V-8398**	1	SEAL-O-RING	
	23	2	*148-8444*	2	TEE GP	
					(EACH INCLUDES)	
		2	**6V-9837**	1	TEE-SWIVEL	
		2	**6V-8398**	2	SEAL-O-RING	
	24	1	*164-5590*	1	VALVE GP-FLUID SAMPLING (STEERING)	
		1	**8C-3446**	1	VALVE GP-FLUID SAMPLING (STEERING)	
		1	**3J-7354**	1	SEAL-O-RING	
	25	1,2	*171-6467*	4	UNION AS	
					(EACH INCLUDES)	
		1,2	**8T-5082**	1	UNION	
		1,2	**6V-8398**	1	SEAL-O-RING	
		1,2	**6V-9746**	1	SEAL-O-RING	
	26	1,2	**4L-6454**	8	BOLT (3/8-16X1 IN)	

171-6442 **LINES GP-STEERING** *(contd.)* **i01674501**

NOTE	REF NO	GRAPHIC REF	PART NUMBER	QTY	PART NAME 1 2 3 4 5 6 (PRODUCT LEVEL)	SEE PAGE
	27	1	**4S-4455**	3	CLIP	
	28	2	**5P-1075**	4	WASHER-HARD (10.2X22.5X3MM THK)	
	29	2	**5S-7379**	2	BOLT (3/8-16X0.875 IN)	
	30	1,2	**6D-4244**	13	CLIP	
	31	2	**6V-8801**	3	NUT (3/8-16 THD)	
	32	2	**7X-0289**	1	BOLT (3/8-16X1.875 IN)	
	33	1,2	**8T-4896**	10	WASHER-HARD (10.2X18.5X2.5MM THK)	
I-SEE HOSE FABRICATION GUIDE						

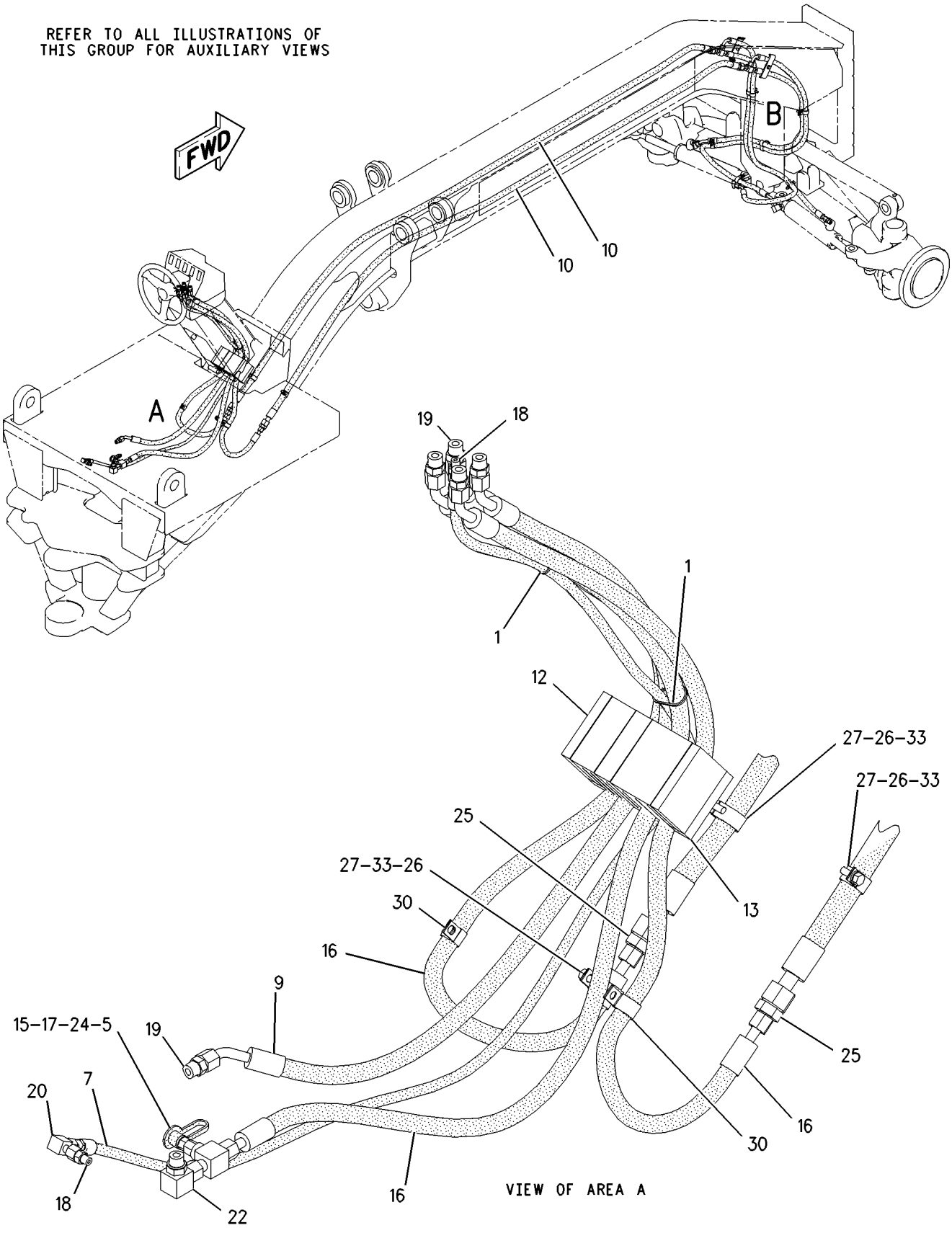

GRAPHIC #1 g00944535

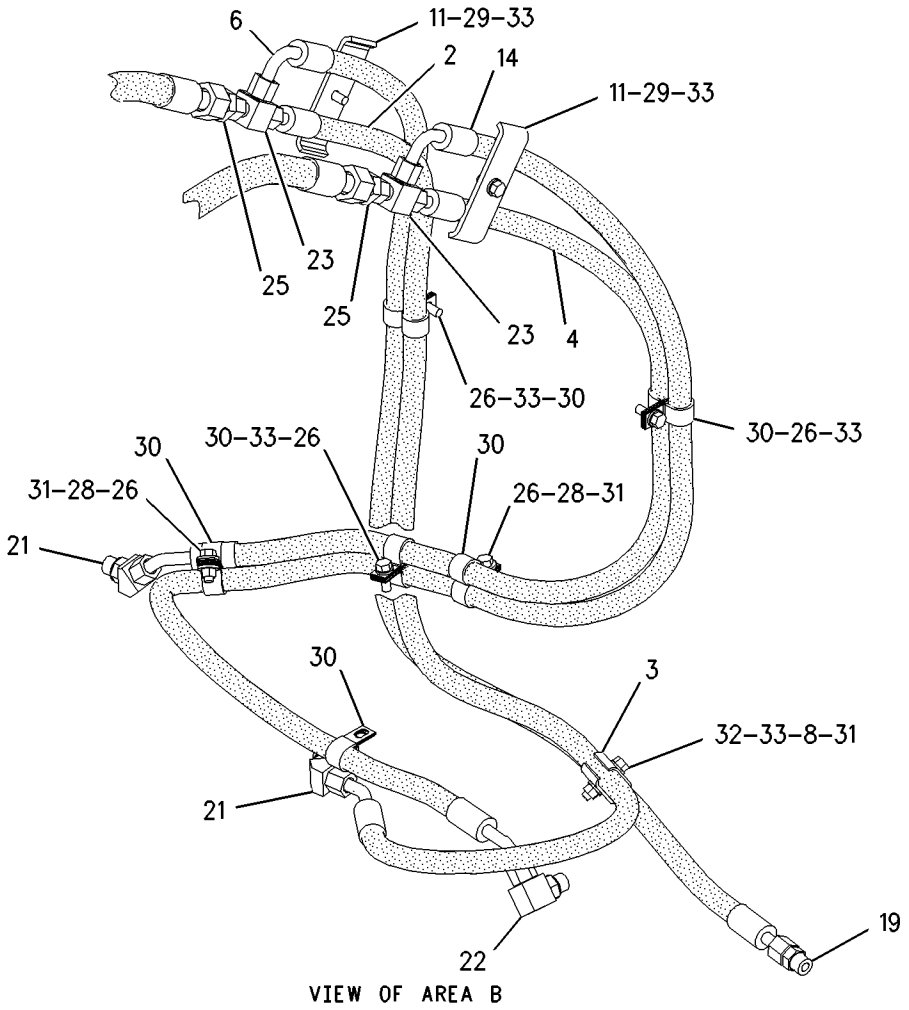

VIEW OF AREA B

GRAPHIC #2

g00944536

HYDRAULIC SYSTEM

164-8462 LOCK GP-CENTERSHIFT

S/N: CAF1-UP

PART OF 162-5603 GENERAL AR

SMCS-5221 **i01674357**

NOTE	REF NO	GRAPHIC REF	PART NUMBER	QTY	PART NAME 1 2 3 4 5 6 (PRODUCT LEVEL)	SEE PAGE
	1	1	**2H-3931**	1	SEAL-O-RING	
	2	1	**4T-8054**	1	SEAL AS	
	3	1	**8X-3749**	1	PISTON	
	4	1	**9D-6584**	1	SEAL-LIP	
	5	1	**115-0540**	1	CYLINDER	
	6	1	**115-0541**	1	PIN	
	7	1	**142-5787**	1	CAP	
Y	8	1	**152-8346**	1	VALVE GP-SOLENOID (CENTERSHIFT LOCK)	672
	9	1	**167-2307**	1	SEAL-U-CUP	
	10	1	**7X-0346**	3	BOLT (5/8-11X2 IN)	
	11	1	**8T-4122**	3	WASHER-HARD (17X32X3.5MM THK)	
	12	1	**8T-4223**	2	WASHER-HARD (13.5X25.5X3MM THK)	
	13	1	**8T-8917**	2	BOLT (1/2-13X1.25 IN)	

Y-SEPARATE ILLUSTRATION

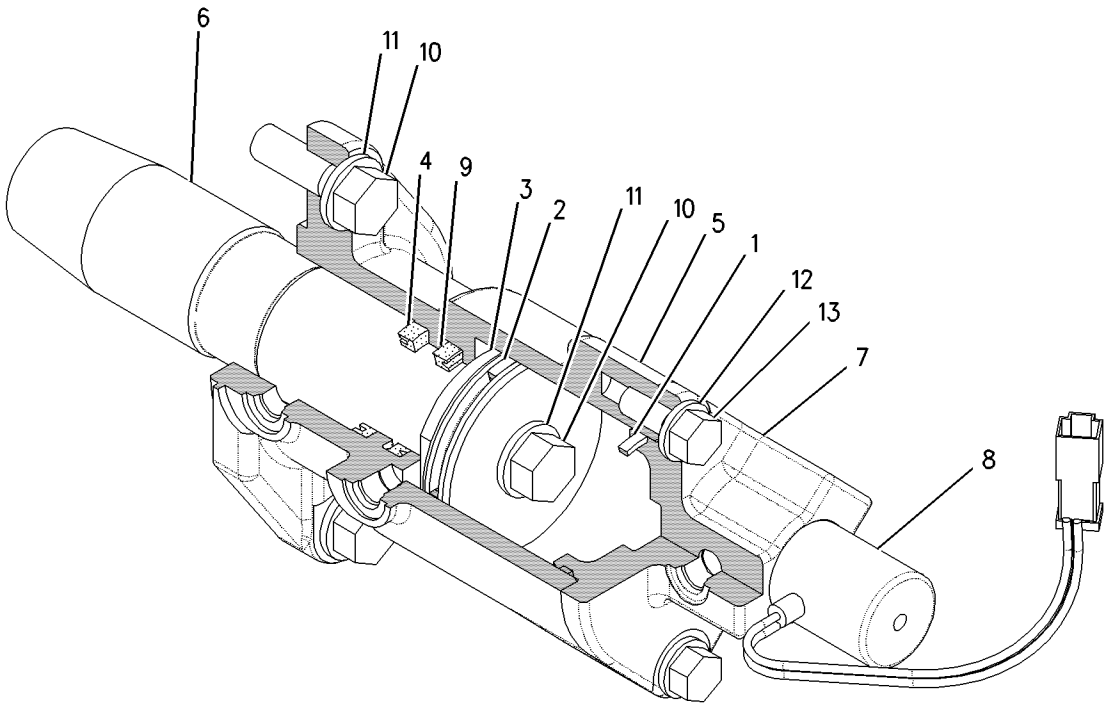

GRAPHIC #1 g00788558

152-7903 LOCK GP-HYDRAULIC HAND CONTROL

S/N: CAF1-UP
PART OF 207-3665, 210-2042 CONVERSION AR-CERTIFICATION
AN ATTACHMENT

SMCS-5001 **i01069961**

NOTE	REF NO	GRAPHIC REF	PART NUMBER	QTY	PART NAME 1 2 3 4 5 6 (PRODUCT LEVEL)	SEE PAGE
	1	1	**107-5014**	4	KNOB	
	2	1	**152-5430**	4	BLOCK	
B	3	1	**152-5431**	12	COLLAR	
	4	1	**152-5436**	2	PLATE AS	
					(EACH INCLUDES)	
		1	**3W-6485**	2	SPRING	
BM	5	1	**095-1260**	12	SETSCREW-SOCKET (M6X1.0X6MM)	
M	6	1	**9X-2043**	4	SCREW-TRUSS HEAD (M6X1X14MM)	
BD	7	1	**5P-5969**		SEAL	

B-USE AS REQUIRED
D-ORDER BY THE METER
M-METRIC PART

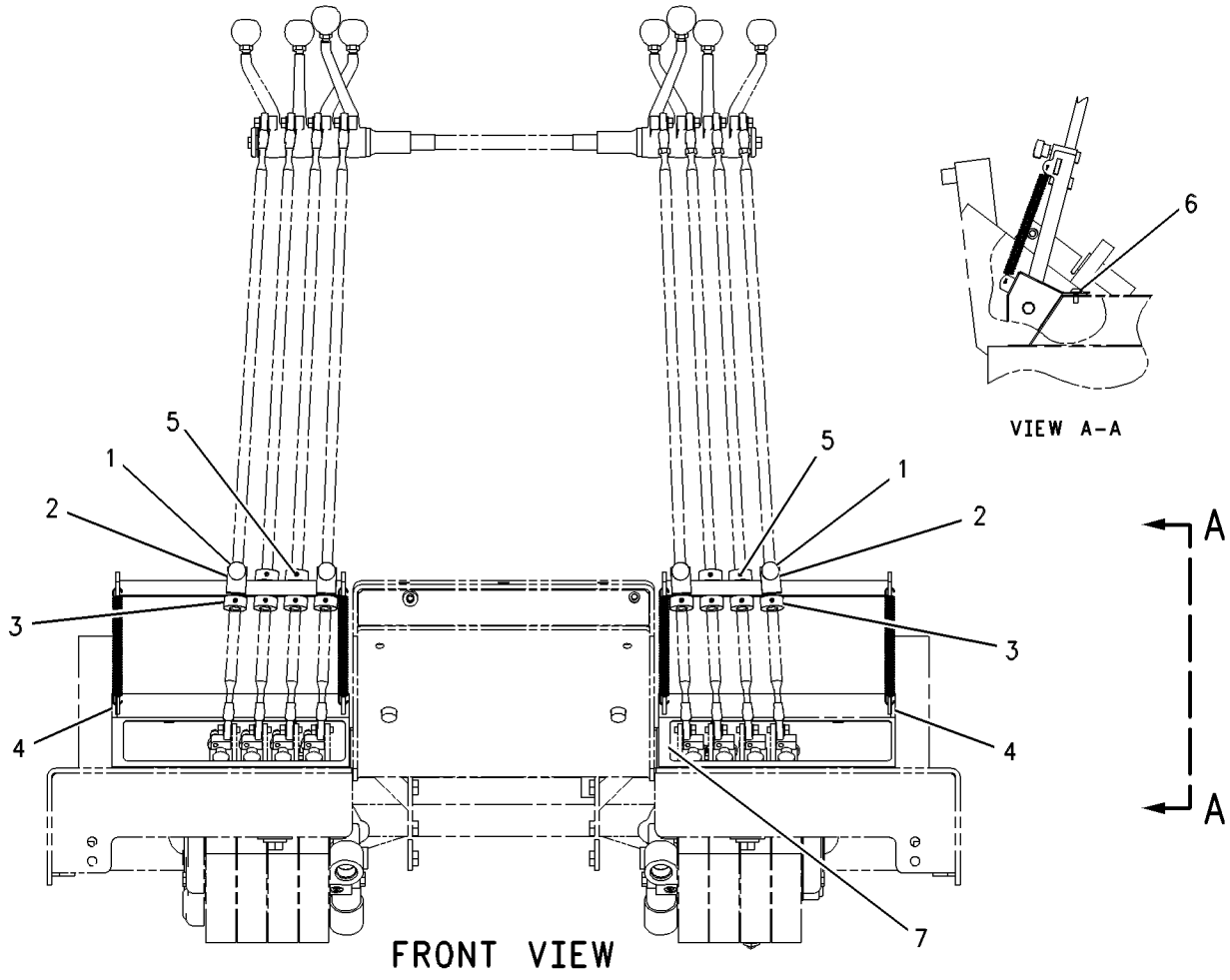

GRAPHIC #1 g00377492

HYDRAULIC SYSTEM

224-7040 MOTOR GP-GEAR

S/N: CAF1-UP
PART OF 196-6985 FAN & MOTOR GP
ALSO AN ATTACHMENT

SMCS-1386, 5061 **i01815956**

NOTE	REF NO	GRAPHIC REF	PART NUMBER	QTY	PART NAME 1 2 3 4 5 6 (PRODUCT LEVEL)	SEE PAGE
	1	1	**6B-6684**	1	NUT-FULL (1/2-20 THD)	
	2	1	**5P-8245**	1	WASHER-HARD (13.5X25.5X3MM THK)	
J	3	1	**176-0209**	1	SEAL-LIP TYPE	
J	4	1	**8J-6273**	1	RING-RETAINING	
J	5	1	**177-4255**	1	SEAL-SHAFT	
	6	1	**199-4321**	1	FLANGE	
	7	1	**099-3095**	4	DOWEL	
J	8	1	**4W-7356**	2	SEAL	
	9	1	**199-4322**	1	COVER	
	10	1	**199-4317**	4	BOLT (M10X1.5X115MM)	
					AVAILABLE REPAIR KIT(S):	
J			**199-4320**	1	KIT-SEAL	

J-KIT MARKED J INCLUDES PARTS MARKED J

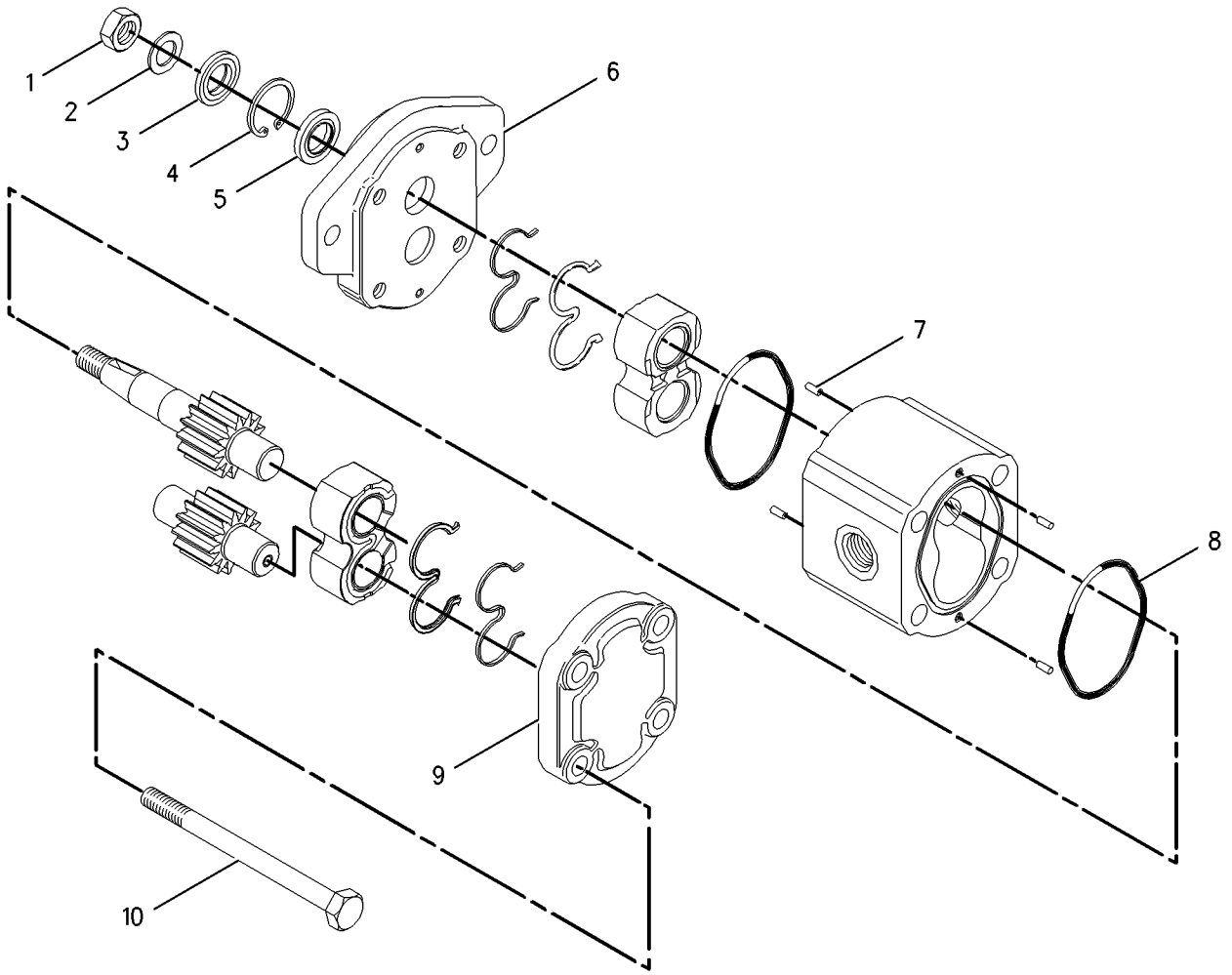

GRAPHIC #1 g00914004

MEMORANDA

HYDRAULIC SYSTEM

105-3196 MOTOR GP-GEROTOR

S/N: CAF1-UP

PART OF 5T-0570 DRIVE GP-CIRCLE

SMCS-5082 **i00131116**

NOTE	REF NO	GRAPHIC REF	PART NUMBER	QTY	PART NAME 1 2 3 4 5 6 (PRODUCT LEVEL)	SEE PAGE
	1	1	**9T-8051**	7	BOLT	
	2	1	**9T-8070**	1	HOUSING AS	
	3	1	**6Y-2934**	1	BEARING-ROLLER	
	4	1	**6Y-2933**	2	RACE	
	5	1	**6Y-2932**	1	BEARING-THRUST	
	6	1	**8T-1698**	1	BEARING-NEEDLE	
	7	1	**9T-9071**	1	SHIM	
	8	1	**9T-8058**	1	BACKUP	
	9	1	**9T-8059**	1	SEAL	
	10	1	**9T-8056**	1	SHAFT-GOVERNOR CONTROL	
	11	1	**6Y-2935**	1	BEARING	
	12	1	**9T-8053**	5	SEAL	
	13	1	**9T-8054**	1	LINK	
	14	1	**9T-8061**	1	PLATE	
	15	1	**9T-8063**	1	ROTOR SET	
	16	1	**9T-8065**	1	MANIFOLD	
	17	1	**9J-4963**	1	RING	
	18	1	**9T-8069**	1	PLATE AS	
	19	1	**9T-8067**	1	COVER	
					AVAILABLE REPAIR KIT(S):	
			9T-9072	1	KIT-SEAL	
					(INCLUDES RING, SHIM, SEALS & GREASE PACK)	

105-3196 MOTOR GP-GEROTOR *(contd.)* i00131116

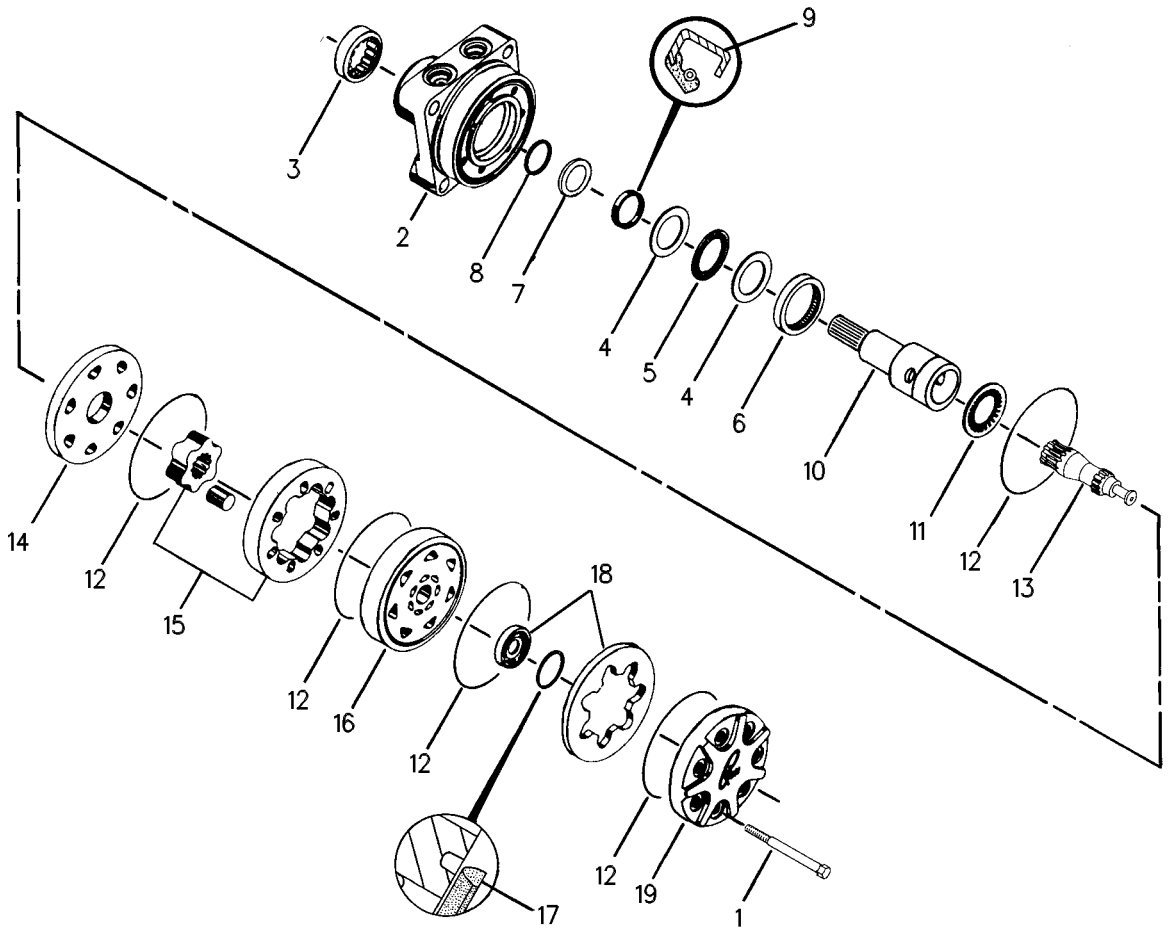

GRAPHIC #1 g00108578

HYDRAULIC SYSTEM

123-8867 PUMP & MOTOR GP-SEC STEERING

S/N: CAF1-UP

PART OF 8X-9751 PUMP & MTG GP-SECONDARY STEER

AN ATTACHMENT

SMCS-4324 **i00138981**

NOTE	REF NO	GRAPHIC REF	PART NUMBER	QTY	PART NAME 1 2 3 4 5 6 (PRODUCT LEVEL)	SEE PAGE
Y	1	1	**117-3915**	1	MOTOR GP-ELECTRIC	202
	2	1	**1A-2209**	2	BOLT (3/8-24X1.25IN)	
	3	1	**2Y-5828**	2	LOCKWASHER	
	4	1	**123-8866**	1	PUMP	

Y-SEPARATE ILLUSTRATION

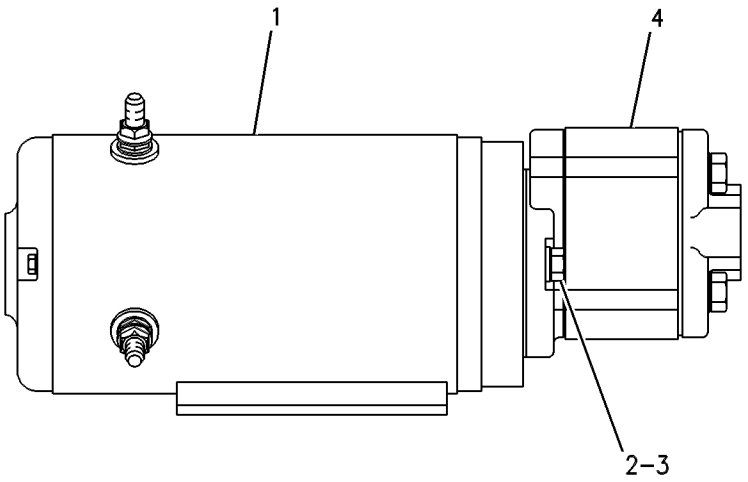

GRAPHIC #1 g00085788

HYDRAULIC SYSTEM

159-4739 PUMP & MTG GP-PISTON

S/N: CAF1-UP

PART OF 162-5603 GENERAL AR

SMCS-5070 **i01674634**

NOTE	REF NO	GRAPHIC REF	PART NUMBER	QTY	PART NAME 1 2 3 4 5 6 (PRODUCT LEVEL)	SEE PAGE
	1	1	**5R-4787**	4	PLATE	
	2	1	**8X-4467**	1	PLATE AS	
Y	3	1	**169-4883**	1	PUMP GP-PISTON (HYDRAULIC FAN)	570
	4	1	**196-1867**	4	MOUNT AS	
Y	5	1	**200-1934**	1	PUMP GP-PISTON (HYDRAULIC & STEERING)	572
	6	1	**201-8328**	1	COUPLING	
	7	1	**1A-5822**	4	BOLT (1/2-13X2.75 IN)	
	8	1	**5P-8245**	2	WASHER-HARD (13.5X25.5X3MM THK)	
	9	1	**6D-7146**	1	SEAL-O-RING	
M	10	1	**6V-8675**	2	BOLT (M12X1.75X35MM)	
	11	1	**6V-8765**	4	WASHER-HARD (15X26X3MM THK)	
M	12	1	**8C-3425**	4	BOLT (M14X2X35MM)	

M-METRIC PART
Y-SEPARATE ILLUSTRATION

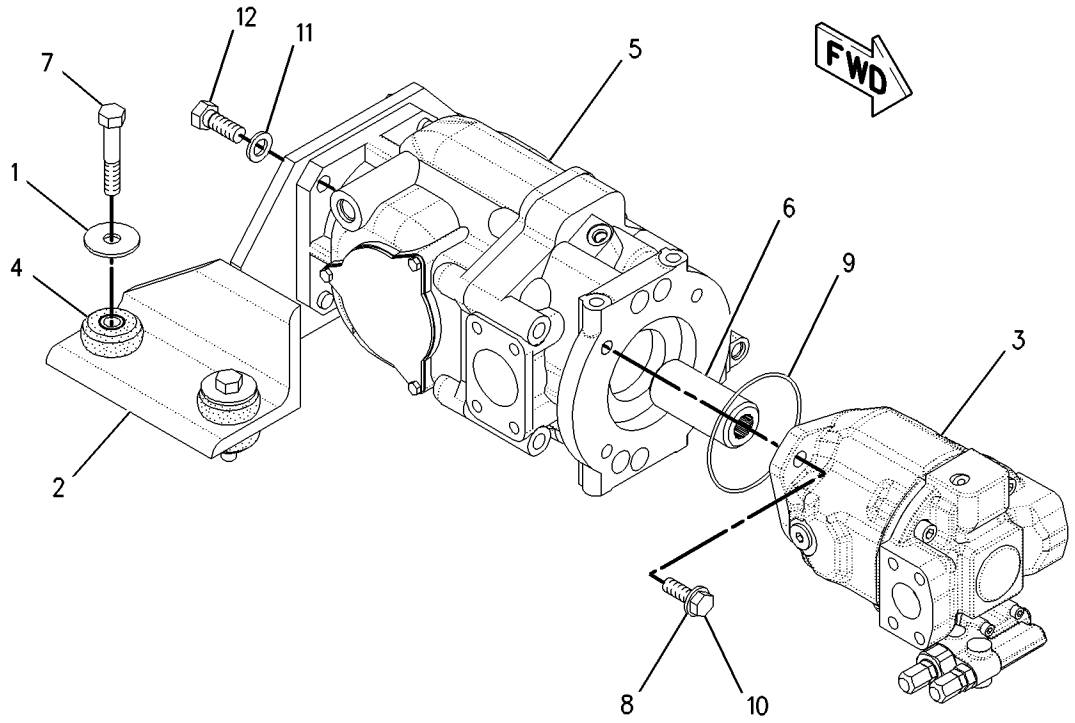

GRAPHIC #1 g00881153

HYDRAULIC SYSTEM

160-9180 PUMP & MTG GP-PISTON

S/N: CAF1-UP
PART OF 171-6457 LINES GP-PUMP
AN ATTACHMENT

SMCS-5070 **i01813684**

NOTE	REF NO	GRAPHIC REF	PART NUMBER	QTY	PART NAME 1 2 3 4 5 6 (PRODUCT LEVEL)	SEE PAGE
	1	1	**5R-4787**	4	PLATE	
	2	1	**8X-4467**	1	PLATE AS	
Y	3	1	**169-4882**	1	PUMP GP-PISTON (HYDRAULIC & STEERING)	568
Y	4	1	**169-4883**	1	PUMP GP-PISTON (HYDRAULIC FAN)	570
	5	1	**201-8328**	1	COUPLING	
	6	1	**196-1867**	4	MOUNT AS	
	7	1	**1A-5822**	4	BOLT (1/2-13X2.75 IN)	
	8	1	**5P-8245**	2	WASHER-HARD (13.5X25.5X3MM THK)	
	9	1	**6D-7146**	1	SEAL-O-RING	
M	10	1	**6V-8675**	2	BOLT (M12X1.75X35MM)	
	11	1	**6V-8765**	4	WASHER-HARD (15X26X3MM THK)	
M	12	1	**8C-3425**	4	BOLT (M14X2X35MM)	

M-METRIC PART
Y-SEPARATE ILLUSTRATION

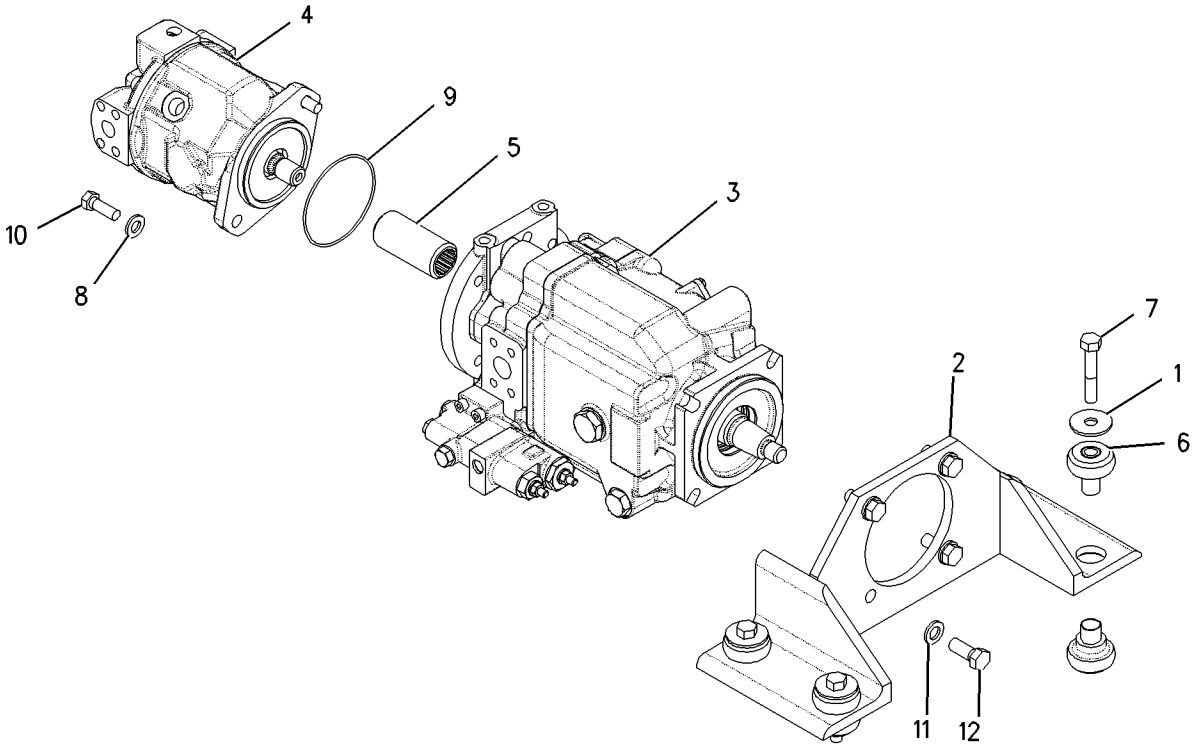

GRAPHIC #1 g00802939

HYDRAULIC SYSTEM

8X-9751 PUMP & MTG GP-SECONDARY STEER

S/N: CAF1-UP
PART OF 207-3665, 210-2042 CONVERSION AR-CERTIFICATION, 188-1055 STEERING
AR-SECONDARY
AN ATTACHMENT

SMCS-4324 **i00136018**

NOTE	REF NO	GRAPHIC REF	PART NUMBER	QTY	PART NAME 1 2 3 4 5 6 (PRODUCT LEVEL)	SEE PAGE
CY	1	1	*123-8867*	1	PUMP & MOTOR GP-SEC STEERING	562

C-CHANGE FROM PREVIOUS TYPE
Y-SEPARATE ILLUSTRATION

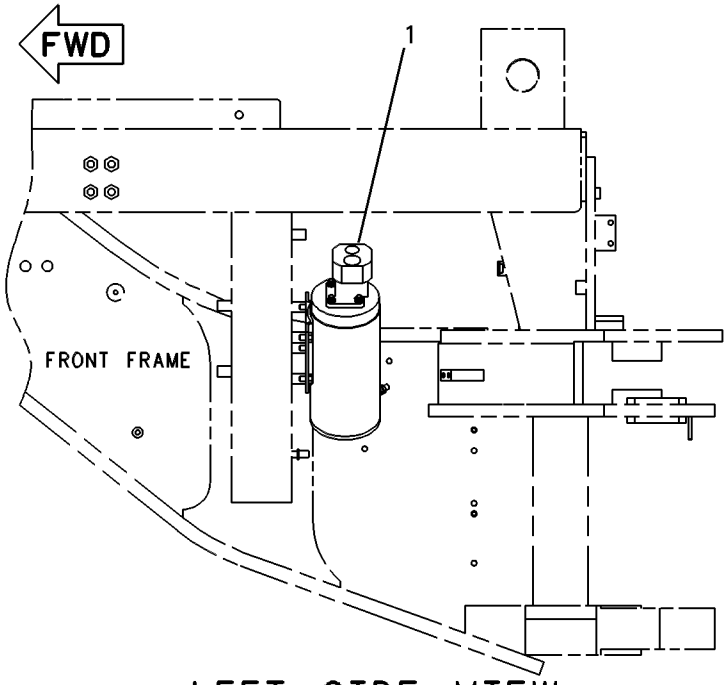

LEFT SIDE VIEW

GRAPHIC #1 g00108835

102-1501 PUMP GP-METERING–STEERING

S/N: CAF1-UP

PART OF 7I-4718 CONTROL GP-STEERING

SMCS-4312 **i01857300**

NOTE	REF NO	GRAPHIC REF	PART NUMBER	QTY	PART NAME 1 2 3 4 5 6 (PRODUCT LEVEL)	SEE PAGE
	1	1	**3G-6891**	2	RACE	
	2	1	**5L-1100**	1	BEARING-THRUST	
	3	1	**9J-5442**	1	RING-RETAINING (INTERNAL)(2.279IN OD)	
					AVAILABLE REPAIR KIT(S):	
			118-4660	1	KIT-SEAL (STEERING METERING)	

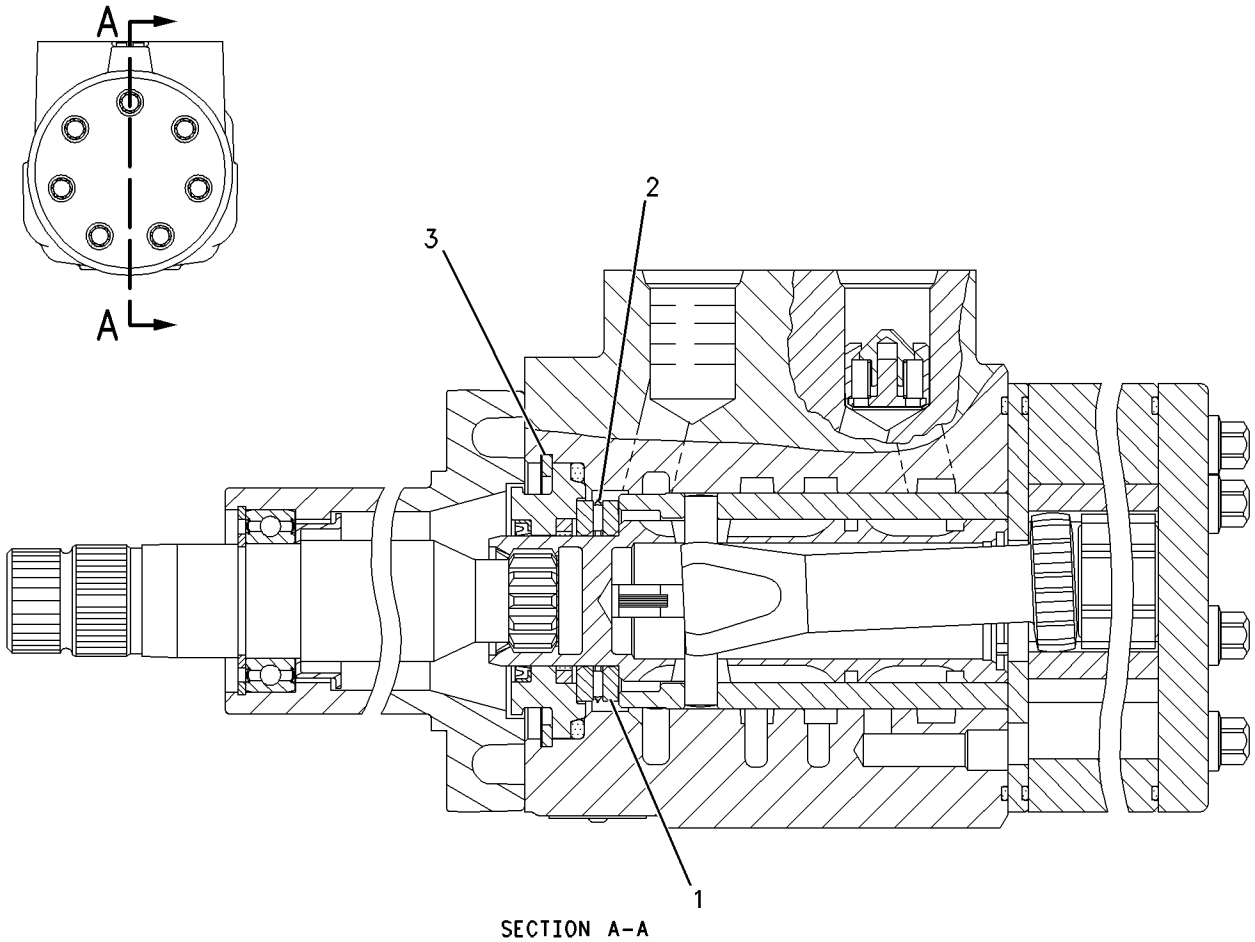

GRAPHIC #1 g00946692

MEMORANDA

HYDRAULIC SYSTEM

169-4882 PUMP GP-PISTON

S/N: CAF1-UP
PART OF 160-9180 PUMP & MTG GP-PISTON
AN ATTACHMENT

SMCS-5070 **i01771923**

NOTE	REF NO	GRAPHIC REF	PART NUMBER	QTY	PART NAME 1 2 3 4 5 6 (PRODUCT LEVEL)	SEE PAGE
	1	1	**6E-4224**	1	PLUG-SWASHPLATE	
	2	1	**033-6036**	1	SEAL-O-RING	
	3	1	**100-3402**	1	BEARING-SWASH	
	4	1	**100-3405**	1	BEARING-SWASH	
M	5	1	**6V-8837**	3	BOLT (M6X1X16 MM)	
	6	1	**4F-4097**	1	SEAL-O-RING	
M	7	1	**3E-4302**	2	SCREW-FLAT HEAD (M4X0.7X10MM)	
	8	1	**100-3404**	1	COVER-TRUNNION	
	9	1	**9T-1636**	1	SEAT	
	10	1	**9T-1710**	1	POPPET	
	11	1	**9T-1699**	1	SPRING	
	12	1	**102-4108**	1	HEAD-PUMP	
B	13	1	**6E-1436**	1	KIT-SHIM (INCLUDES 17 SHIMS)	
	14	1	**6Y-4280**	1	CONE-BEARING	
	15	1	**7T-9755**	1	CUP-BEARING	
	16	1	**9T-7775**	1	PLATE-VALVE	
	17	1	**3E-7417**	2	PLUG (M10X1 THD)	
	18	1	**8T-7876**	2	SEAL-O-RING	
	19	1	**7L-9061**	2	SEAL-O-RING	
	20	1	**100-3413**	1	GASKET	
Y	21	1	**100-3412**	1	ROTATING GP-PUMP (STEERING)	575
	22	1	**100-3409**	1	SPRING-BIAS	
	23	1	**100-3408**	1	KIT-BIAS PISTON	
					(KIT INCLUDES SPRING, ROD, PISTON, AND SEAL)	
	24	1	**002-1212**	1	CUP-BEARING	
	25	1	**2F-8509**	1	CONE-BEARING	
	26	1	**203-3175**	1	SHAFT	
	27	1	**100-3407**	1	HOUSING-PUMP	
	28	1	**006-8663**	1	RING	
	29	1	**8T-4750**	1	SEAL-LIP (RUBBER)	
Y	30	1	**169-3290**	1	SWASHPLATE GP	578
	31	1	**100-3415**	1	KIT-CONTROL PISTON	
					(KIT INCLUDES ROD, PISTON, AND SEAL)	
	32	1	**9T-1652**	1	PIN	
M	33	1	**6V-8336**	1	BOLT (M12X1.75X70MM)	
M	34	1	**6V-7673**	4	BOLT (M12X1.75X50MM)	
M	35	1	**8T-0372**	1	BOLT (M12X1.75X90MM)	
M	36	1	**6V-8337**	4	BOLT-SOCKET HEAD (M8X1.25X35MM)	
Y	37	1	**104-3122**	1	VALVE GP-PRESS & FLOW CMPNSTR (HYDRAULIC STEERING)	652
	38	1	**3D-2824**	1	SEAL-O-RING	
	39	1	**9S-4183**	1	PLUG	
	40	1	**095-0888**	2	PIN-SPRING	
	41	1	**109-3204**	3	SEAL-O-RING	
	42	1	**104-3124**	1	SHIELD	
	43	1	**8C-3089**	1	SEAL-O-RING	
	44	1	**201-8327**	1	ADAPTER	
M	45	1	**7X-2607**	2	BOLT-HEX HEAD (M12X1.75X130MM)	

B-USE AS REQUIRED
M-METRIC PART
Y-SEPARATE ILLUSTRATION

169-4882 PUMP GP-PISTON *(contd.)* **i01771923**

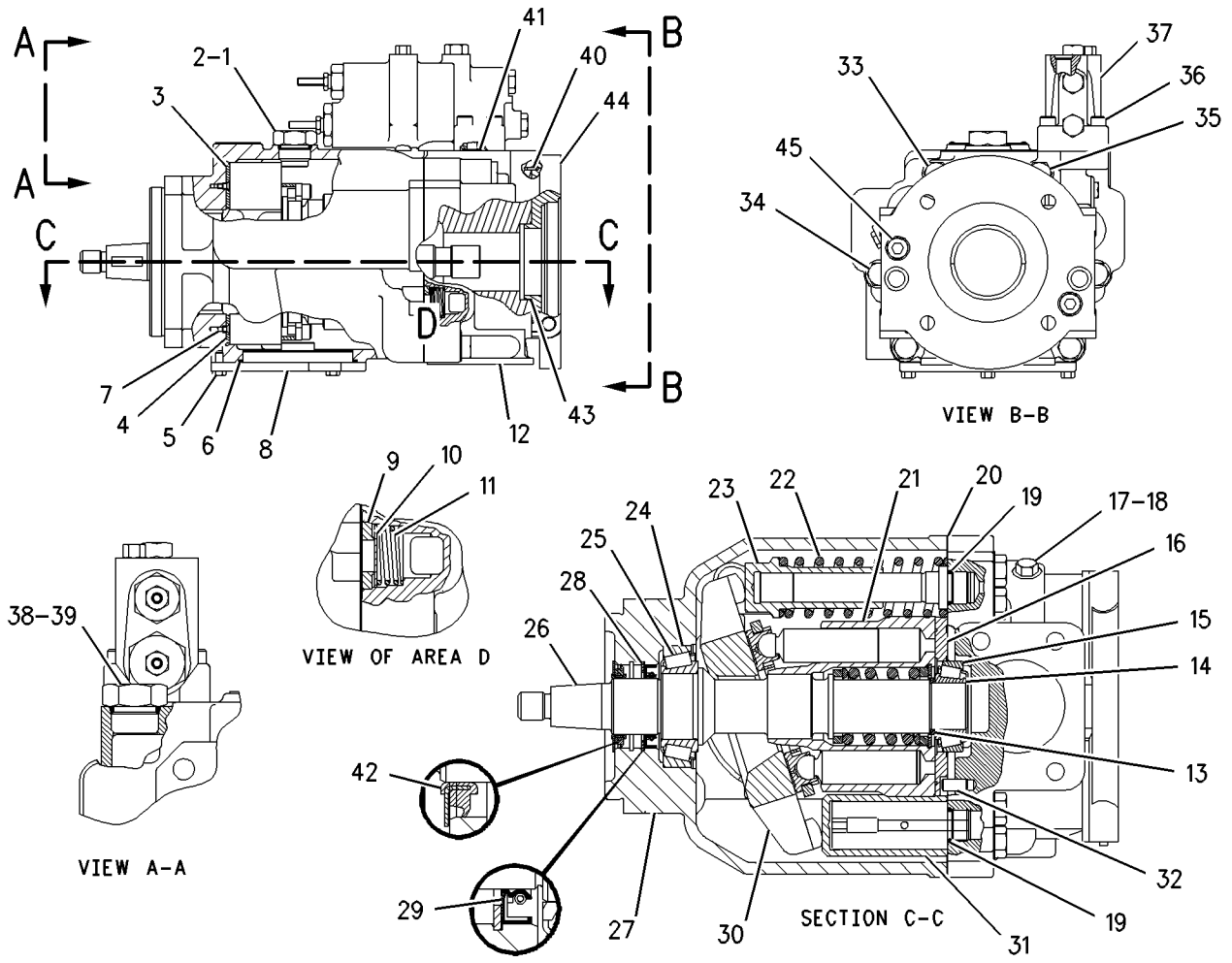

GRAPHIC #1 g00790750

169-4883 PUMP GP-PISTON–HYDRAULIC FAN

S/N: CAF1-UP
PART OF 159-4739, 160-9180 PUMP & MTG GP-PISTON
ALSO AN ATTACHMENT

SMCS-5070 **i01756828**

NOTE	REF NO	GRAPHIC REF	PART NUMBER	QTY	PART NAME 1 2 3 4 5 6 (PRODUCT LEVEL)	SEE PAGE
	1	1	**8T-9597**	1	RING-RETAINING	
	2	1	**155-9134**	2	PLATE	
Y	3	1	**194-9453**	1	ROTATING GP-PUMP (HYDRAULIC FAN)	576
	4	1	**8U-6457**	4	SEAL-O-RING	
M	5	1	**9X-6032**	4	BOLT-SOCKET HEAD (M10X1.5X30MM)	
	6	1	**191-7583**	1	BEARING	
	7	1	**191-7582**	1	SHIM (2.5MM THK)	
	8	1	**176-1378**	1	SEAL-O-RING	
	9	1	**155-9142**	1	GUIDE	
	10	1	**155-9143**	1	SPRING	
	11	1	**155-9141**	1	PISTON	
	14	1	**191-7581**	1	SHAFT	
	15	1	**155-9125**	1	BEARING	
	16	1	**155-9127**	1	SEAL	
	17	1	**195-9634**	1	SWASHPLATE AS	
	18	1	**155-9139**	1	PISTON	
	19	1	**191-7584**	1	GUIDE	
	20	1	**136-8423**	1	PLUG-BREAK OFF	
	21	1	**9X-8979**	1	DOWEL	
	22	1	**155-9129**	1	HOUSING	
Y	23	1	**195-9639**	1	VALVE GP-PRESS & FLOW CMPNSTR (HYDRAULIC FAN)	654
	24	1	**9X-7680**	3	SEAL-O-RING	
	25	1	**9S-8002**	1	PLUG	
	26	1	**3J-7354**	1	SEAL-O-RING	
M	27	1	**8T-8442**	4	BOLT-SOCKET HEAD (M6X1X30MM)	

M-METRIC PART
Y-SEPARATE ILLUSTRATION

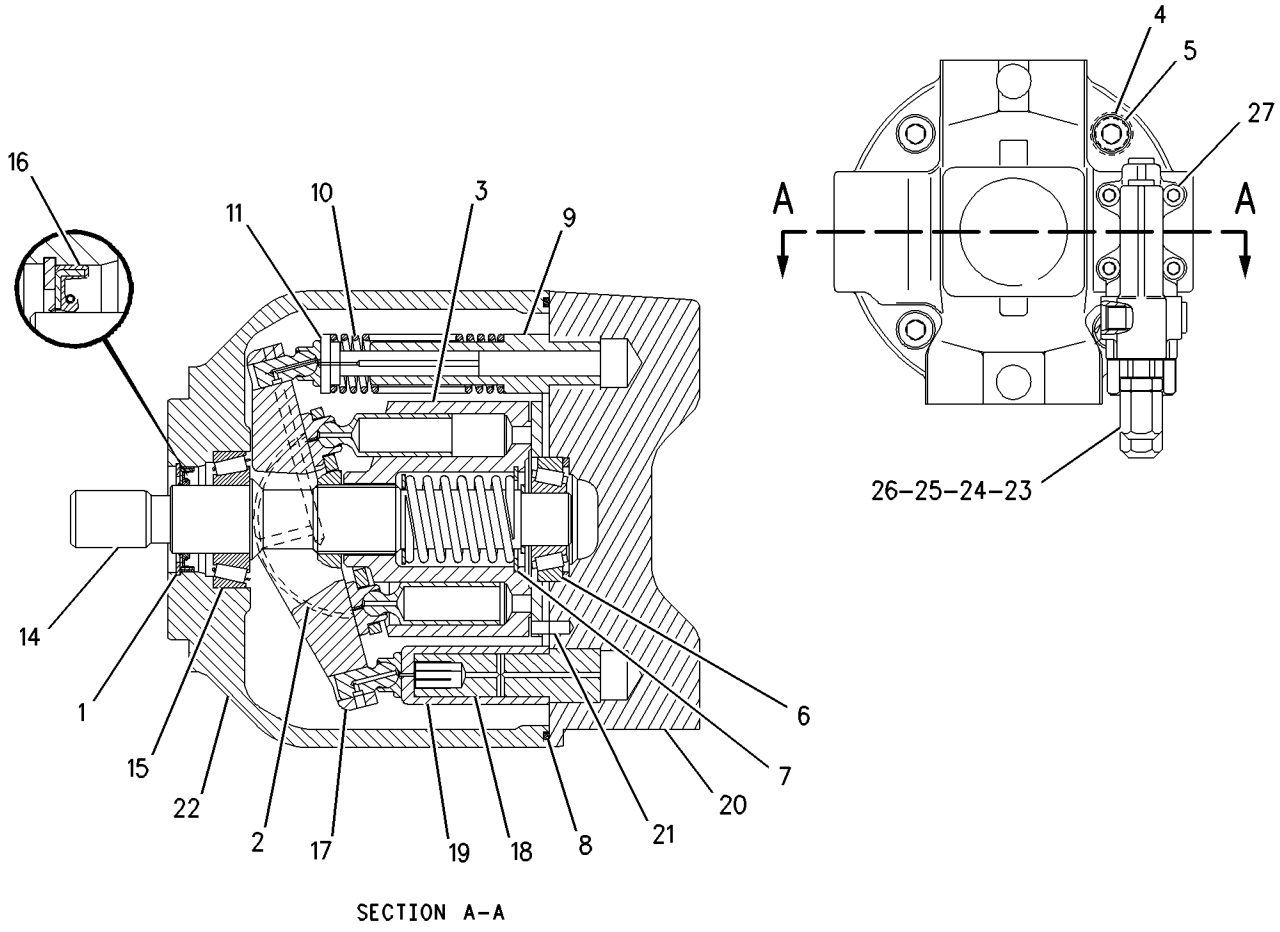

SECTION A-A

GRAPHIC #1

g00898603

200-1934 PUMP GP-PISTON—HYDRAULIC & STEERING

S/N: CAF1-UP

PART OF 159-4739 PUMP & MTG GP-PISTON

SMCS-5070 **i01694118**

NOTE	REF NO	GRAPHIC REF	PART NUMBER	QTY	PART NAME 1 2 3 4 5 6 (PRODUCT LEVEL)	SEE PAGE
	1	1	**6E-6594**	1	BEARING-SWASH	
	2	1	**6E-4224**	1	PLUG-SWASHPLATE	
	3	1	**033-6036**	1	SEAL-O-RING	
	4	1	**141-1052**	1	HEAD-PUMP	
	5	1	**9T-1699**	1	SPRING	
	6	1	**9T-1710**	1	POPPET	
	7	1	**9T-1636**	1	SEAT	
	8	1	**6E-6596**	1	COVER-TRUNNION	
	9	1	**6V-3834**	1	SEAL-O-RING	
M	10	1	**3E-4302**	2	SCREW-FLAT HEAD (M4X0.7X10MM)	
M	11	1	**6V-8214**	3	BOLT (M6X1X20MM)	
	12	1	**6E-6597**	1	BEARING-SWASH	
M	13	1	**7X-2607**	2	BOLT-HEX HEAD (M12X1.75X130MM)	
M	14	1	**8T-0372**	4	BOLT (M12X1.75X90MM)	
Y	15	1	**104-3122**	1	VALVE GP-PRESS & FLOW CMPNSTR (HYDRAULIC & STEERING)	652
	16	1	**8T-5039**	3	SEAL-O-RING	
M	17	1	**6V-8337**	4	BOLT-SOCKET HEAD (M8X1.25X35MM)	
	18	1	**095-0888**	2	PIN-SPRING	
	19	1	**201-8604**	1	SHAFT	
	20	1	**102-2384**	1	HOUSING-PUMP	
	21	1	**006-8663**	1	RING	
	22	1	**8T-4750**	1	SEAL-LIP (RUBBER)	
	23	1	**6E-6599**	1	KIT-BIAS PISTON	
					(INCLUDES SPRING, ROD, PISTON, SEAL)	
	24	1	**6E-6600**	1	SPRING-BIAS	
Y	25	1	**6E-6571**	1	ROTATING GP-PUMP	574
	26	1	**6E-6601**	1	GASKET	
	27	1	**7L-9061**	2	SEAL-O-RING	
	28	1	**3E-7417**	2	PLUG (M10X1 THD)	
	29	1	**8T-7876**	2	SEAL-O-RING	
	30	1	**9T-1633**	1	PLATE	
	31	1	**9T-2197**	1	KIT-SHAFT SHIM (INCLUDES 17 SHIMS)	
	32	1	**1P-6872**	1	CUP-BEARING	
	33	1	**004-9040**	1	CONE-BEARING	
	34	1	**9T-1652**	1	PIN	
	35	1	**6E-6602**	1	KIT-PISTON CONTROL	
					(INCLUDES ROD, PISTON, SEAL)	
	36	1	**167-1802**	1	SWASHPLATE GP	
		1	**1H-3937**	2	PIN	
		1	**167-1801**	1	STOP-SWASHPLATE	
	37	1	**7T-8273**	1	CUP-BEARING	
	38	1	**7T-8272**	1	CONE-BEARING	
	39	1	**3K-0360**	1	SEAL-O-RING	
	40	1	**9S-4185**	1	PLUG	
	41	1	**104-3124**	1	SHIELD	
	42	1	**201-8327**	1	ADAPTER	
	43	1	**8C-3089**	1	SEAL-O-RING	

M-METRIC PART
Y-SEPARATE ILLUSTRATION

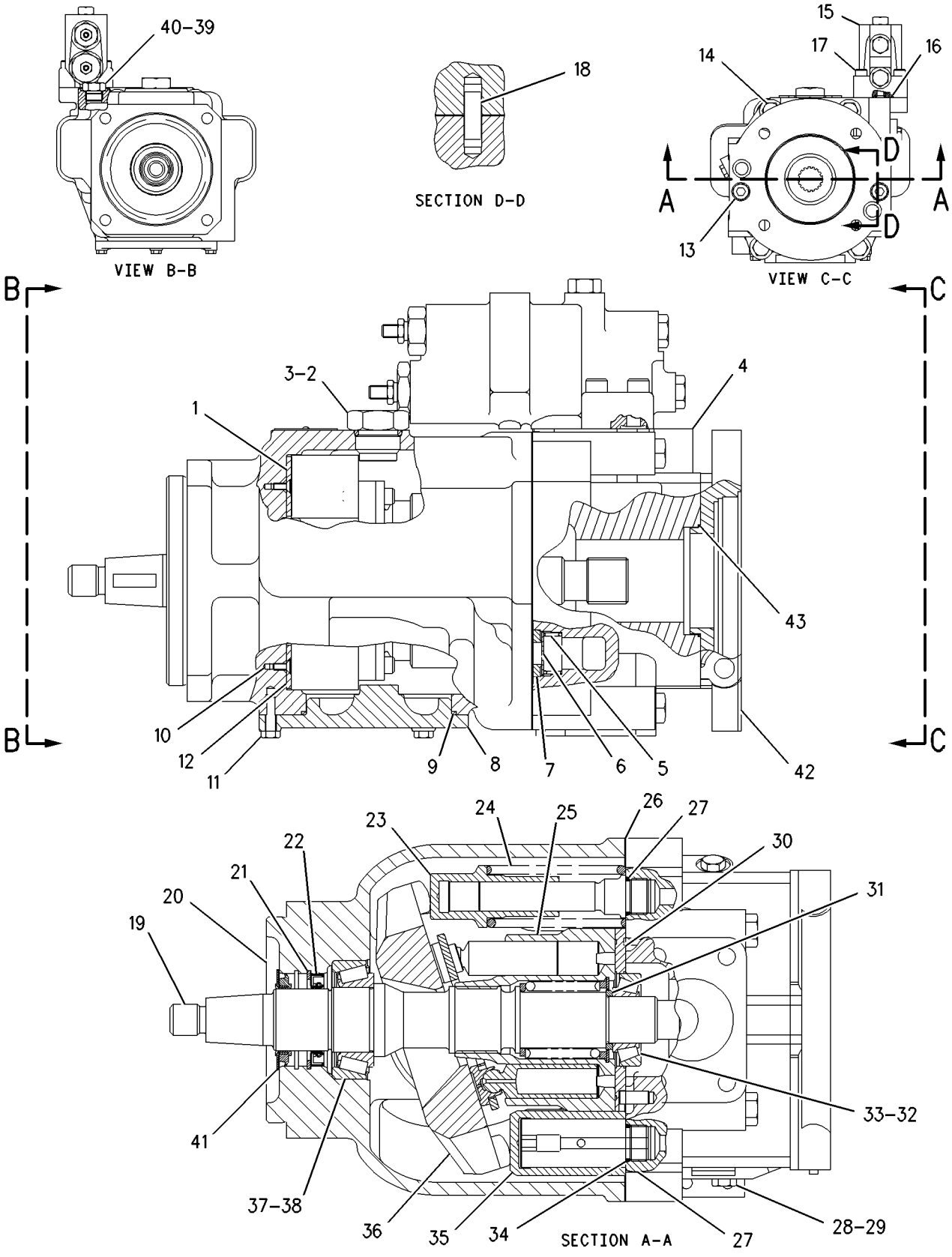

GRAPHIC #1

g00891097

HYDRAULIC SYSTEM

6E-6571 ROTATING GP-PUMP

S/N: CAF1-UP

PART OF 200-1934 PUMP GP-PISTON

SMCS-5070 **i00131155**

NOTE	REF NO	GRAPHIC REF	PART NUMBER	QTY	PART NAME 1 2 3 4 5 6 (PRODUCT LEVEL)	SEE PAGE
	1	1	**6E-6604**	2	PLATE-SPACER	
	2	1	**6E-6605**	2	PLATE-LIMITER	
M	3	1	**3T-0849**	4	BOLT-SOCKET HEAD (7.59MM'ID)	
	4	1	**9T-7755**	1	SPRING	
	5	1	**009-2069**	1	RING	
	6	1	**9T-7754**	1	GUIDE-OUTER	
	7	1	**9T-7757**	1	BARREL	
	8	1	**9T-7756**	1	GUIDE-INNER	
	9	1	**9T-7759**	1	PLATE-RETAINING	
	10	1	**9T-7761**	9	PISTON	

M-METRIC PART

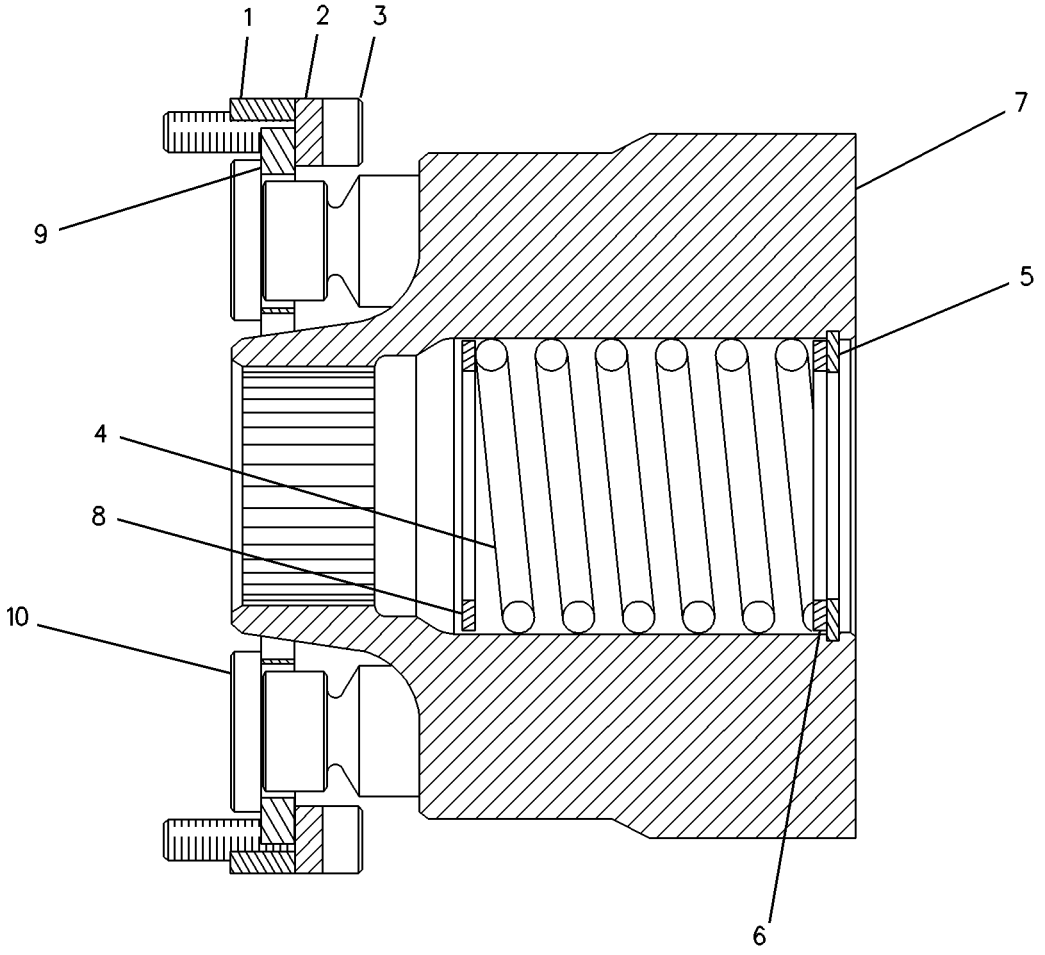

GRAPHIC #1 g00083480

100-3412 ROTATING GP-PUMP–STEERING

S/N: CAF1-UP
PART OF 169-4882 PUMP GP-PISTON
AN ATTACHMENT

SMCS-5070 **i00130809**

NOTE	REF NO	GRAPHIC REF	PART NUMBER	QTY	PART NAME 1 2 3 4 5 6 (PRODUCT LEVEL)	SEE PAGE
	1	1	**9T-7774**	1	BARREL	
	2	1	**3J-8500**	1	RING-RETAINING	
	3	1	**9T-7769**	1	GUIDE-OUTER	
M	4	1	**6V-5192**	4	BOLT-SOCKET HEAD (M8X1.25X30MM)	
	5	1	**100-3410**	2	PLATE	
	6	1	**100-3411**	2	PLATE-SPACER	
	7	1	**9T-7765**	9	PISTON	
	8	1	**9T-7767**	1	PLATE-RETRACTION	
	9	1	**9T-7773**	1	GUIDE-INNER	
	10	1	**9T-7771**	1	SPRING	

M-METRIC PART

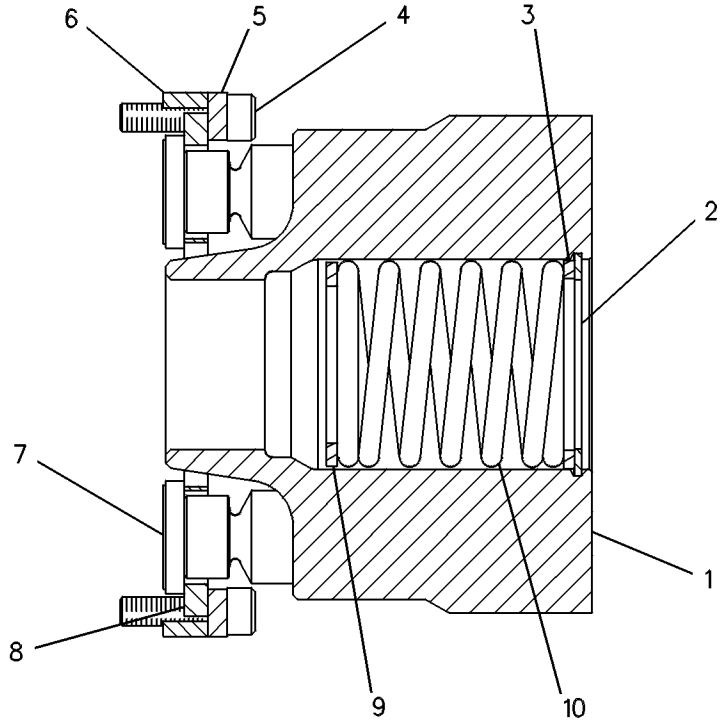

GRAPHIC #1 g00084780

194-9453 ROTATING GP-PUMP—HYDRAULIC FAN

S/N: CAF1-UP
PART OF 169-4883 PUMP GP-PISTON
ALSO AN ATTACHMENT

SMCS-5070 **i01529266**

NOTE	REF NO	GRAPHIC REF	PART NUMBER	QTY	PART NAME 1 2 3 4 5 6 (PRODUCT LEVEL)	SEE PAGE
	1	1	**155-9112**	9	PISTON AS	
	2	1	**155-9136**	1	BARREL	
	3	1	**155-9115**	1	PLATE	
	4	1	**155-9116**	1	GUIDE-BALL	
	5	1	**155-9117**	1	SPRING	
	6	1	**194-9479**	3	PIN	
	7	1	**194-9480**	1	RING-RETAINING	
	8	1	**194-9481**	1	DISC-THRUST	
	9	1	**194-9478**	1	PLATE-PORT	

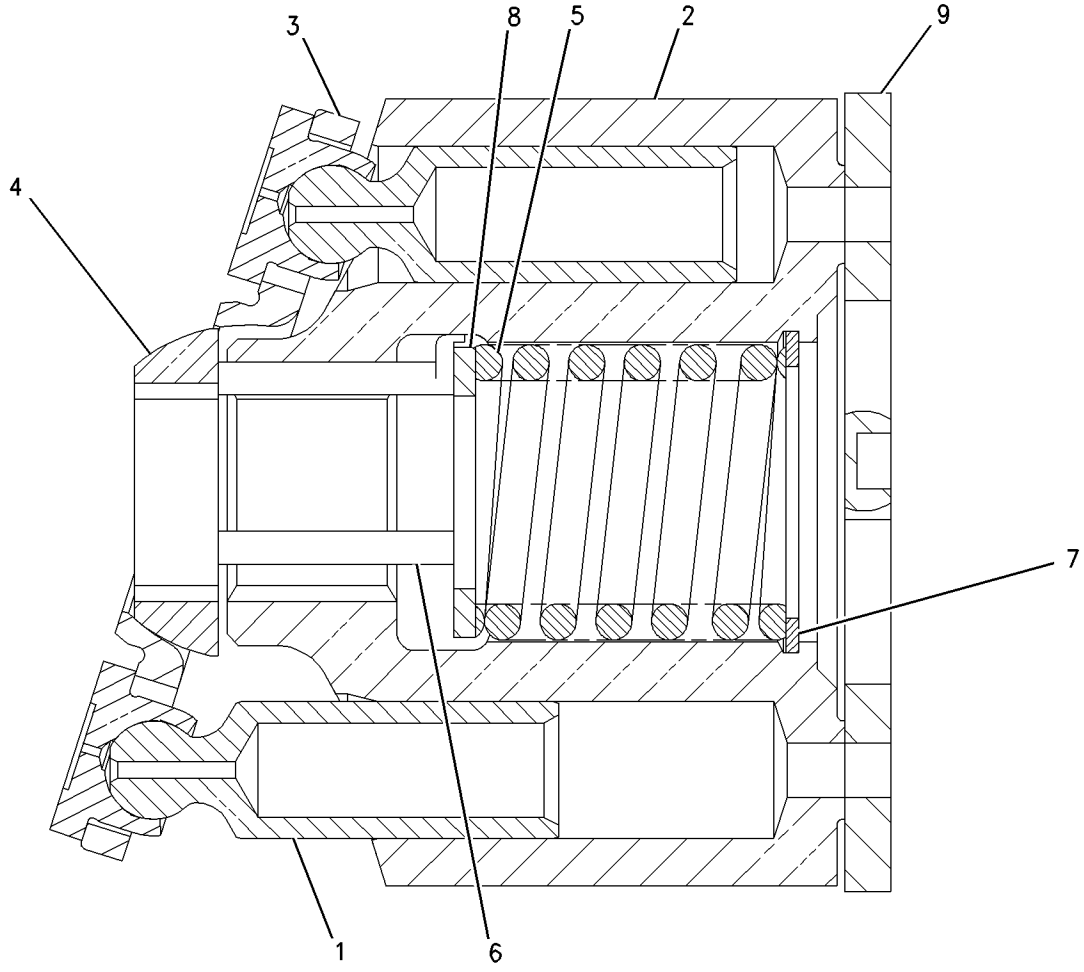

GRAPHIC #1 g00796070

HYDRAULIC SYSTEM

188-1055 STEERING AR-SECONDARY

S/N: CAF1-UP
AN ATTACHMENT

SMCS-4300 **i01681917**

NOTE	PART NUMBER	QTY	PART NAME 1 2 3 4 5 6 (PRODUCT LEVEL)	SEE PAGE
Y	*171-6458*	1	LINES GP-SECONDARY STEERING	550
Y	*8X-9751*	1	PUMP & MTG GP-SECONDARY STEER	565
Y	*188-1041*	1	WIRING GP-SECONDARY STEERING	280

Y-SEPARATE ILLUSTRATION

<END>

HYDRAULIC SYSTEM

169-3290 SWASHPLATE GP

S/N: CAF1-UP
PART OF 169-4882 PUMP GP-PISTON
AN ATTACHMENT

SMCS-5070 **i01771931**

NOTE	REF NO	GRAPHIC REF	PART NUMBER	QTY	PART NAME 1 2 3 4 5 6 (PRODUCT LEVEL)	SEE PAGE
	1	1	**1H-3937**	2	PIN	
	2	1	**167-1801**	2	STOP-SWASHPLATE	

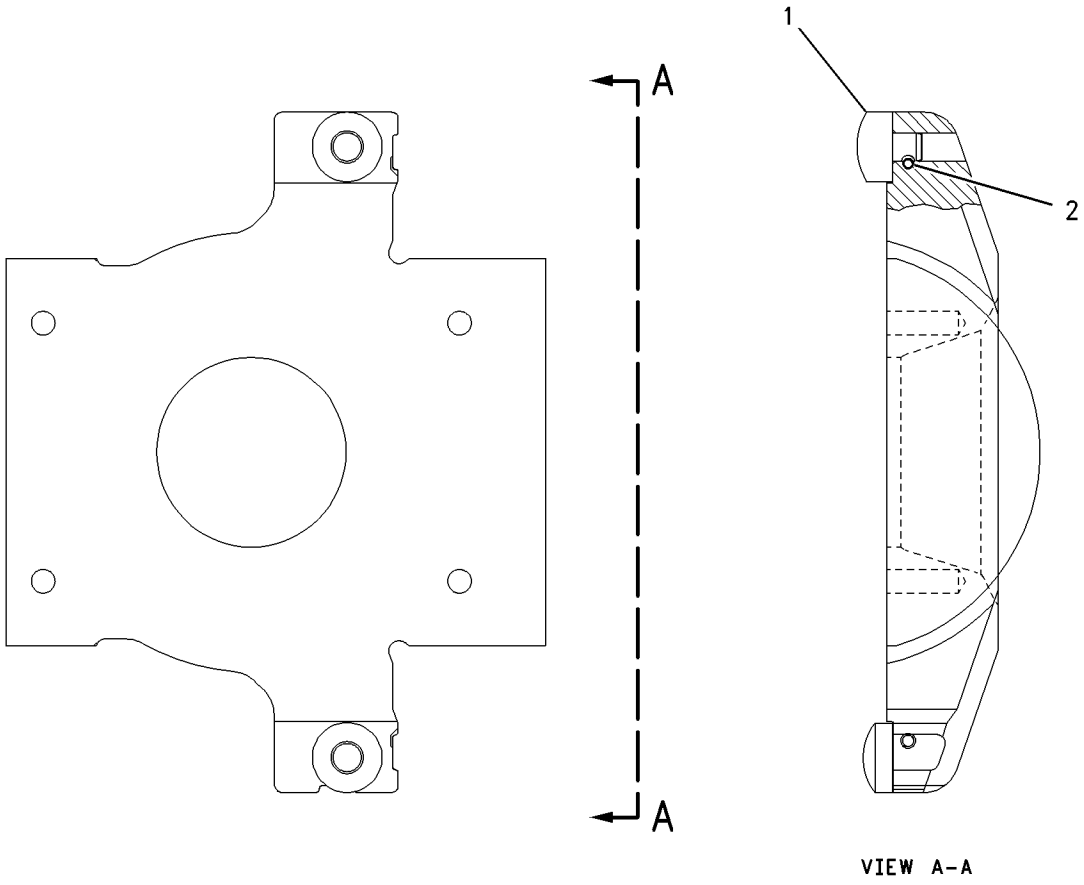

VIEW A-A

GRAPHIC #1 g00938671

HYDRAULIC SYSTEM

173-1011 SWIVEL GP

S/N: CAF1-UP

PART OF 159-4730 LINES GP-HYDRAULIC

SMCS-5060 **i01450843**

NOTE	REF NO	GRAPHIC REF	PART NUMBER	QTY	PART NAME 1 2 3 4 5 6 (PRODUCT LEVEL)	SEE PAGE
	1	1	**173-1009**	1	RETAINER	
	2	1	**8J-2331**	7	SEAL	
	3	1	**2H-3928**	7	SEAL-O-RING	
	4	1	**173-1007**	2	SEAL	
	5	1	**9T-5603**	1	BODY	
	6	1	**4J-9964**	2	SEAL	
	7	1	**8T-4223**	4	WASHER-HARD (13.5X25.5X3MM THK)	
	8	1	**5P-2566**	6	BOLT (1/2-13X1.5 IN)	
	9	1	**3H-0107**	4	SEAL-O-RING (21.82MM ID)	
	10	1	**8J-0377**	1	COVER	
	11	1	**173-1008**	1	ROTOR	
B	12	1	**5J-1246**	6	SHIM (.13MM THK)	

B-USE AS REQUIRED

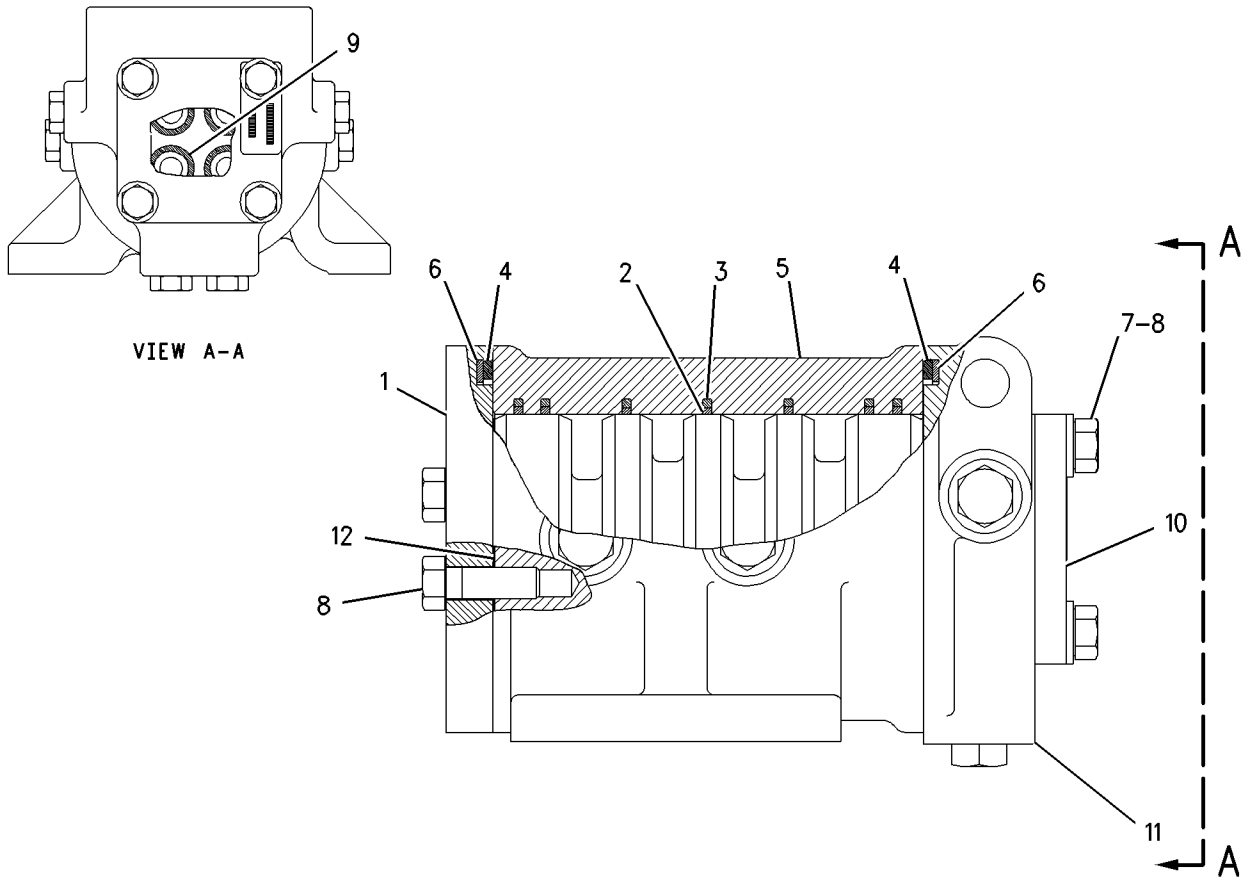

GRAPHIC #1 g00710910

HYDRAULIC SYSTEM

207-2410 TANK & FILTER GP-HYDRAULIC

S/N: CAF1-UP

PART OF 207-2409 TANK & MTG GP-HYDRAULIC

SMCS-4332, 5056, 5068 **i01827809**

NOTE	REF NO	GRAPHIC REF	PART NUMBER	QTY	PART NAME 1 2 3 4 5 6 (PRODUCT LEVEL)	SEE PAGE
	1	1	**1L-4349**	1	SPRING	
	2	1	**1R-0774**	1	FILTER ELEMENT AS-OIL (HYDRAULIC) (REVERSE FLOW)	
	3	1	**2D-4202**	1	PLATE	
	4	1	**3F-1547**	1	SEAL-O-RING	
	5	1	**3G-3498**	1	FLANGE	
	6	1	**4M-6921**	1	WASHER-SPRING	
	7	1	**5D-1911**	1	COVER-HYDRAULIC CAP	
	8	1	**7H-1447**	1	CAP-FILLER (HYDRAULIC OIL TANK)	
	9	1	**9J-1979**	1	RETAINER AS	
	10	1	**9J-1985**	1	TUBE AS	
	11	1	**9J-1988**	1	VALVE (FILTER BYPASS)	
	12	1	**9J-3047**	1	STRAINER (HYDRAULIC OIL FILLER)	
	13	1	**9M-7394**	1	LEVER (HYDRAULIC OIL FILLER CAP LOCK)	
	14	1	**207-2411**	1	TANK AS-HYDRAULIC	
	15	1	**217-2661**	1	GAUGE-SIGHT (HYDRAULIC OIL)	
		1	**5J-2974**	2	SEAL-O-RING	
		1	**215-6425**	2	BOLT (1/2-20X1.46 IN)	
	16	1	**226-2870**	1	CAP AS-FILLER (HYDRAULIC TANK)	
	17	1	**226-2871**	1	ROD	
	18	1	**086-0507**	1	PIN	
	19	1	**141-9661**	1	SPACER (20X128X6MM THK)	
	20	1	**1L-5072**	1	DOWEL	
	21	1	**2J-7761**	1	RING-RETAINING	
	22	1	**2K-4973**	1	LOCKNUT (3/8-16 THD)	
	23	1	**2S-5100**	1	VALVE AS-NEEDLE (TANK DRAIN)	
	24	1	**3B-4610**	1	PIN-COTTER	
	25	1	**3G-0361**	1	GASKET (HYDRAULIC OIL TANK FILLER CAP)	
	26	1	**4B-2913**	1	PIN-CLEVIS	
	27	1	**5K-9107**	2	BOLT-LOCKING (3/8-16X0.75 IN)	
	28	1	**7D-1195**	1	SEAL-O-RING	
	29	1	**8T-2275**	1	BALL	
	30	1	**8T-4121**	4	WASHER-HARD (11X21X2.5MM THK)	
M	31	1	**8T-4195**	4	BOLT (M10X1.5X30MM)	
	32	1	**9H-6454**	1	GASKET (HYDRAULIC OIL TANK FILLER CAP)	

M-METRIC PART

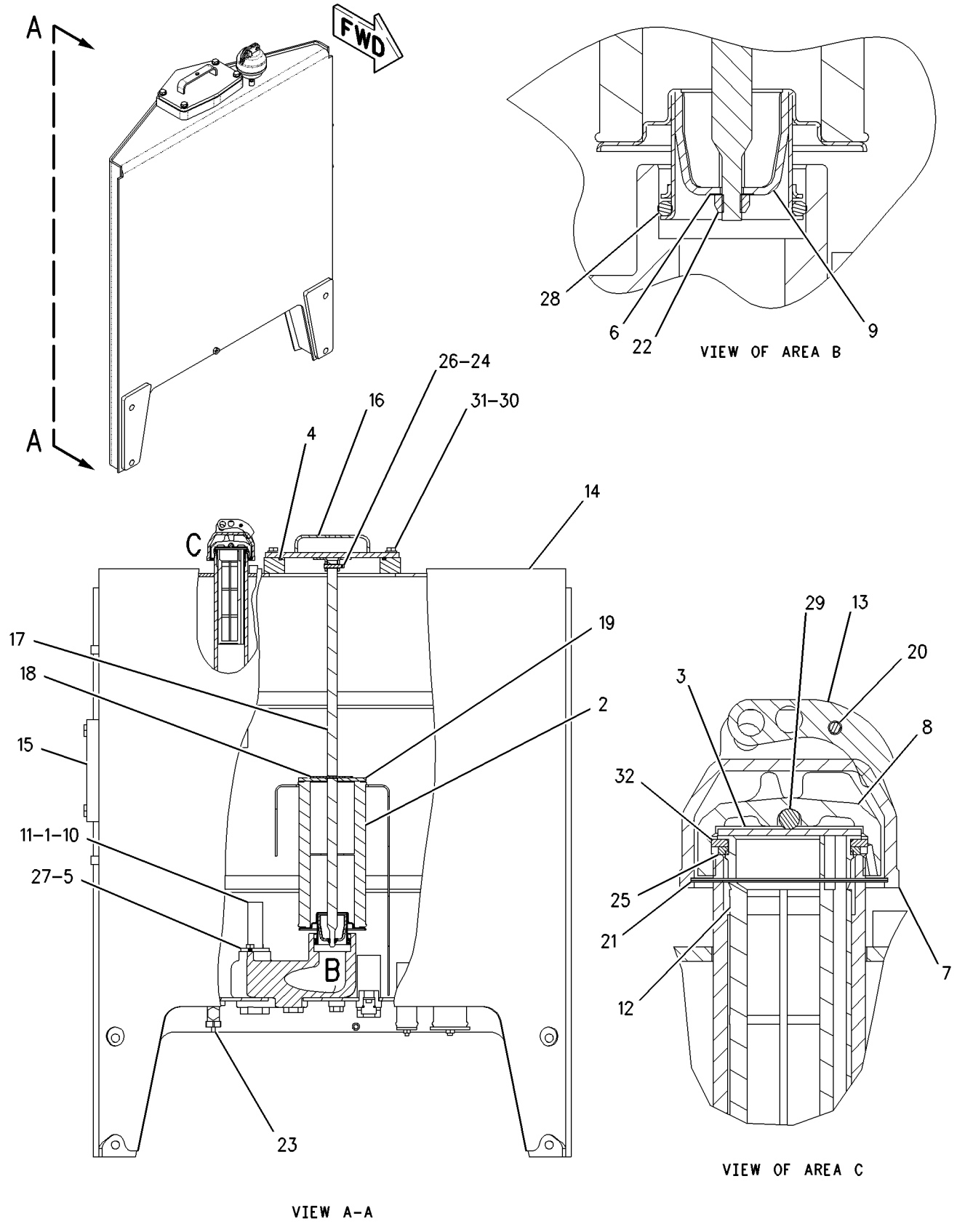

GRAPHIC #1

g00932289

HYDRAULIC SYSTEM

207-2409 TANK & MTG GP-HYDRAULIC

S/N: CAF1-UP

PART OF 162-5603 GENERAL AR

SMCS-4332, 5056, 5068 **i01755152**

NOTE	REF NO	GRAPHIC REF	PART NUMBER	QTY	PART NAME 1 2 3 4 5 6 (PRODUCT LEVEL)	SEE PAGE
	1	1	**5P-8502**	1	PADLOCK GP	
		1	**5P-8500**	1	KEY	
		1	**8Y-6364**	1	SLEEVE	
Y	2	1	*207-2410*	1	TANK & FILTER GP-HYDRAULIC	580
	3	1	**4D-7794**	3	CLIP	
	4	1	**8T-4121**	3	WASHER-HARD (11X21X2.5MM THK)	
M	5	1	**8T-4191**	3	BOLT (M10X1.5X16MM)	
	6	1	**8T-4223**	4	WASHER-HARD (13.5X25.5X3MM THK)	
	7	1	**8T-4835**	4	BOLT (1/2-13X2 IN)	

M-METRIC PART
Y-SEPARATE ILLUSTRATION

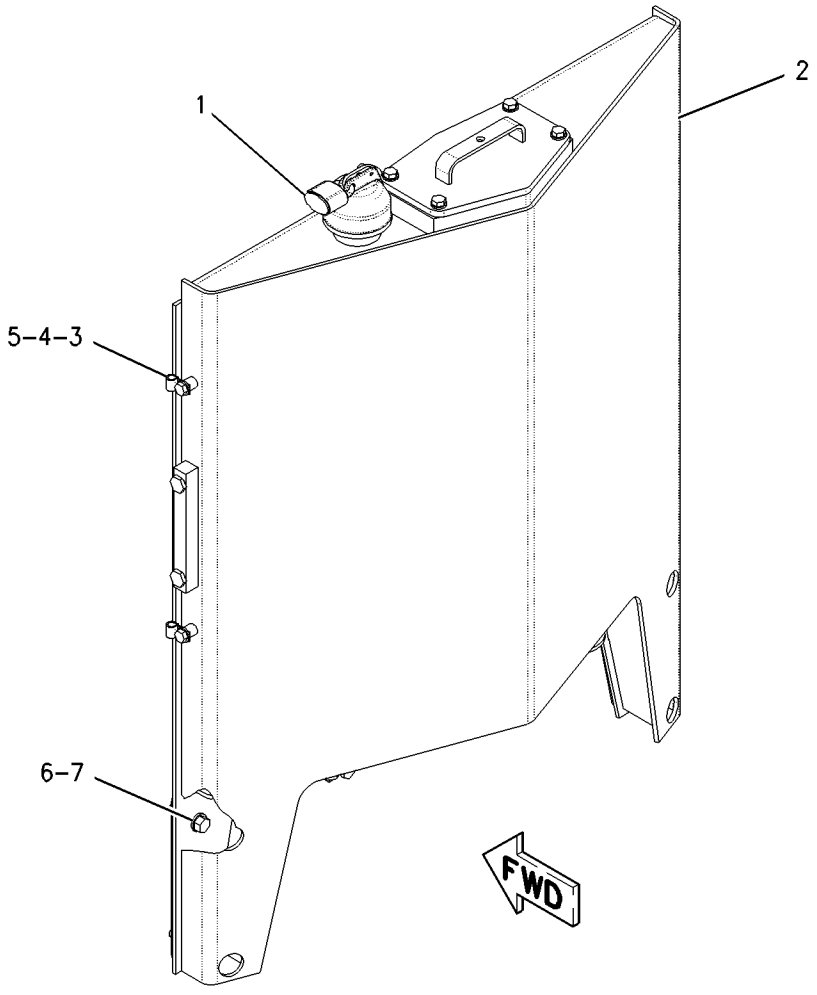

GRAPHIC #1 g00857379

MEMORANDA

HYDRAULIC SYSTEM

7I-4621 VALVE & LINKAGE GP–BANK 5 LH-RH

S/N: CAF1-UP
AN ATTACHMENT

SMCS-5051, 5063 **i01755238**

NOTE	REF NO	GRAPHIC REF	PART NUMBER	QTY	PART NAME 1 2 3 4 5 6 (PRODUCT LEVEL)	SEE PAGE
Y	1	1	**104-8671**	1	VALVE GP-BANK 5 (RH)	614
Y	2	1	**104-8646**	1	VALVE GP-BANK 5 (LH)	613
	3	1	**8X-5499**	2	RETAINER	
	4	1	**101-2457**	2	LEVER	
	5	1	**8D-5634**	2	LEVER	
	6	1	**4L-6459**	1	BOLT (3/8-16X2.5 IN)	
	7	1	**8W-0456**	1	SHAFT-GOVERNOR CONTROL	
	8	1	**8X-4276**	10	ROD	
		1	**6V-8186**	20	NUT-FULL (5/16-24 THD)	
		1	**7H-3641**	20	END-ROD (5/16-24 THD)	
	9	1	**8D-5633**	2	LEVER	
	10	1	**101-2458**	2	LEVER	
	11	1	**137-4515**	2	BUSHING	
	12	1	**8D-5640**	12	BEARING	
B	13	1	**8D-5636**	4	SHIM (.254MM THK)	
B	14	1	**8D-5637**	4	SHIM (.762MM THK)	
	15	1	**6L-1962**	10	NUT-JAM (3/8-24THD)	
	16	1	**8T-9043**	20	BOLT (5/16-18X.875 IN)	
	17	1	**3F-9556**	20	LOCKWASHER	
	18	1	**9B-7237**	1	BOLT (3/8-16X1.25 IN)	
	19	1	**8D-5641**	10	BEARING	
	20	1	**2G-6757**	1	KNOB-BLADE LIFT	
M	21	1	**8T-4136**	4	BOLT (M10X1.5X25MM)	
	22	1	**2G-6749**	1	KNOB-SIDESHIFT	
	23	1	**2G-6747**	1	KNOB-BLADE TIP	
	24	1	**8D-5632**	2	LEVER	
	25	1	**2G-6751**	1	KNOB-CIRCLE DRIVE	
	26	1	**2G-6748**	1	KNOB-BLADE LIFT	
	27	1	**2G-6756**	1	KNOB-WHEEL LEAN	
	28	1	**2G-6752**	1	KNOB-ARTICULATION	
	29	1	**2G-6755**	1	KNOB-CENTERSHIFT	
	30	1	**5P-1075**	2	WASHER-HARD (10.2X22.5X3MM THK)	
	31	1	**9M-1853**	6	MOUNTING	
	32	1	**8T-4121**	8	WASHER-HARD (11X21X2.5MM THK)	
M	33	1	**8T-4195**	4	BOLT (M10X1.5X30MM)	
	34	1	**6V-8188**	2	NUT (1/2-13 THD)	
	35	1	**5P-2424**	6	BOLT (1/2-13X2.25 IN)	
	36	1	**5P-1076**	6	WASHER-HARD (13.5X30X4MM THK)	
	37	1	**6B-0933**	4	SPACER (10.31X19.05X6.35MM THK)	
	38	1	**104-7740**	1	PLATE AS-LH	
	39	1	**104-7419**	1	PLATE AS-RH	
					(EACH PLATE AS INCLUDES)	
	40	1	**1F-0748**	2	NUT-WELD (1/2-13 THD)	
	41	1	**2G-6753**	1	KNOB-SCARIFIER	
	42	1	**137-4516**	1	SHAFT	
	43	1	**104-7429**	2	PLATE	
	44	1	**8F-6437**	6	WASHER (13.5X50.8X4.76MM THK)	
	45	1	**2G-6754**	1	KNOB (PLOW/DOZER LIFT)	

B-USE AS REQUIRED
M-METRIC PART
Y-SEPARATE ILLUSTRATION

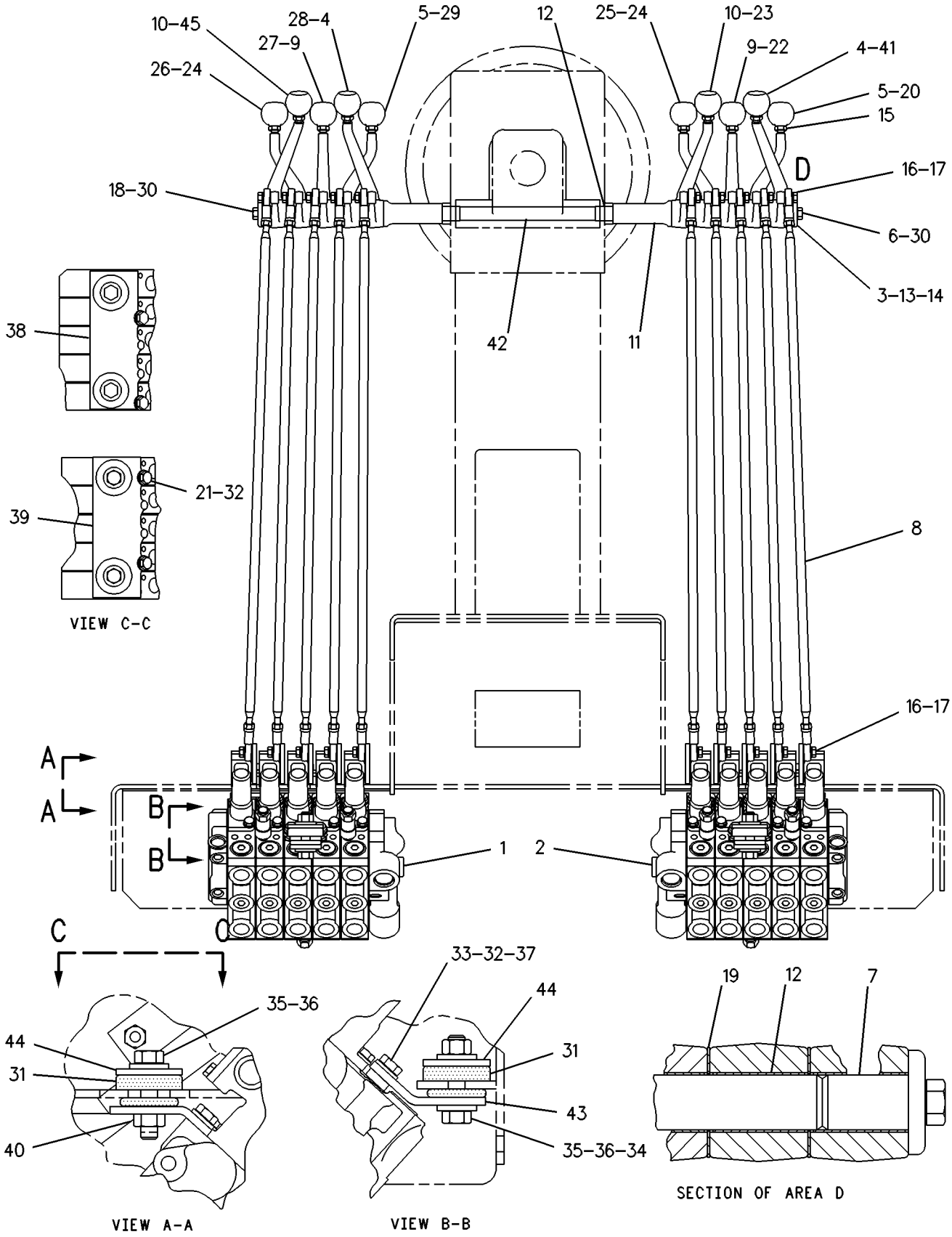

GRAPHIC #1 g00109580

HYDRAULIC SYSTEM

7I-4622 VALVE & LINKAGE GP—BANK 4 (RH)—BANK 5 (LH)

S/N: CAF1-UP
PART OF 166-3305 CONTROL AR-HYDRAULIC
AN ATTACHMENT

SMCS-5051, 5063 **i01755243**

NOTE	REF NO	GRAPHIC REF	PART NUMBER	QTY	PART NAME 1 2 3 4 5 6 (PRODUCT LEVEL)	SEE PAGE
Y	1	1	**6E-3032**	1	VALVE GP-BANK 4 (RH)	608
Y	2	1	**104-8645**	1	VALVE GP-BANK 5 (LH)	612
	3	1	**8X-5499**	2	RETAINER	
	4	1	**101-2457**	2	LEVER	
	5	1	**8D-5634**	2	LEVER	
	6	1	**8X-4276**	9	ROD	
	7	1	**6V-8186**	18	NUT-FULL (5/16-24 THD)	
	8	1	**7H-3641**	18	END-ROD (5/16-24 THD)	
	9	1	**8D-5633**	2	LEVER	
	10	1	**101-2458**	1	LEVER	
	11	1	**137-4515**	2	BUSHING	
	12	1	**8D-5640**	11	BEARING	
B	13	1	**8D-5636**	4	SHIM (.254MM THK)	
B	14	1	**8D-5637**	4	SHIM (.762MM THK)	
	15	1	**6L-1962**	9	NUT-JAM (3/8-24THD)	
	16	1	**8T-9043**	18	BOLT (5/16-18X.875 IN)	
	17	1	**3F-9556**	18	LOCKWASHER	
	18	1	**9B-7237**	2	BOLT (3/8-16X1.25 IN)	
	19	1	**8D-5641**	9	BEARING	
	20	1	**2G-6757**	1	KNOB-BLADE LIFT	
M	21	1	**8T-4136**	4	BOLT (M10X1.5X25MM)	
	22	1	**2G-6749**	1	KNOB-SIDESHIFT	
	23	1	**2G-6747**	1	KNOB-BLADE TIP	
	24	1	**8D-5632**	2	LEVER	
	25	1	**2G-6751**	1	KNOB-CIRCLE DRIVE	
	26	1	**2G-6748**	1	KNOB-BLADE LIFT	
	27	1	**2G-6756**	1	KNOB-WHEEL LEAN	
	28	1	**2G-6752**	1	KNOB-ARTICULATION	
	29	1	**2G-6755**	1	KNOB-CENTERSHIFT	
	30	1	**5P-1075**	2	WASHER-HARD (10.2X22.5X3MM THK)	
	31	1	**9M-1853**	6	MOUNTING	
	32	1	**8T-4121**	8	WASHER-HARD (11X21X2.5MM THK)	
M	33	1	**8T-4195**	4	BOLT (M10X1.5X30MM)	
	34	1	**6V-8188**	2	NUT (1/2-13 THD)	
	35	1	**5P-2424**	6	BOLT (1/2-13X2.25 IN)	
	36	1	**5P-1076**	6	WASHER-HARD (13.5X30X4MM THK)	
	37	1	**6B-0933**	4	SPACER (10.31X19.05X6.35MM THK)	
	38	1	**104-7740**	1	PLATE AS-LH	
	39	1	**104-7419**	1	PLATE AS-RH	
					(EACH INCLUDES)	
	40	1	**1F-0748**	2	NUT-WELD (1/2-13 THD)	
	41	1	**2G-6740**	1	KNOB-RIPPER	
	42	1	**137-4516**	1	SHAFT	
	43	1	**104-7429**	2	PLATE	
	44	1	**8F-6437**	6	WASHER (13.5X50.8X4.76MM THK)	

B-USE AS REQUIRED
M-METRIC PART
Y-SEPARATE ILLUSTRATION

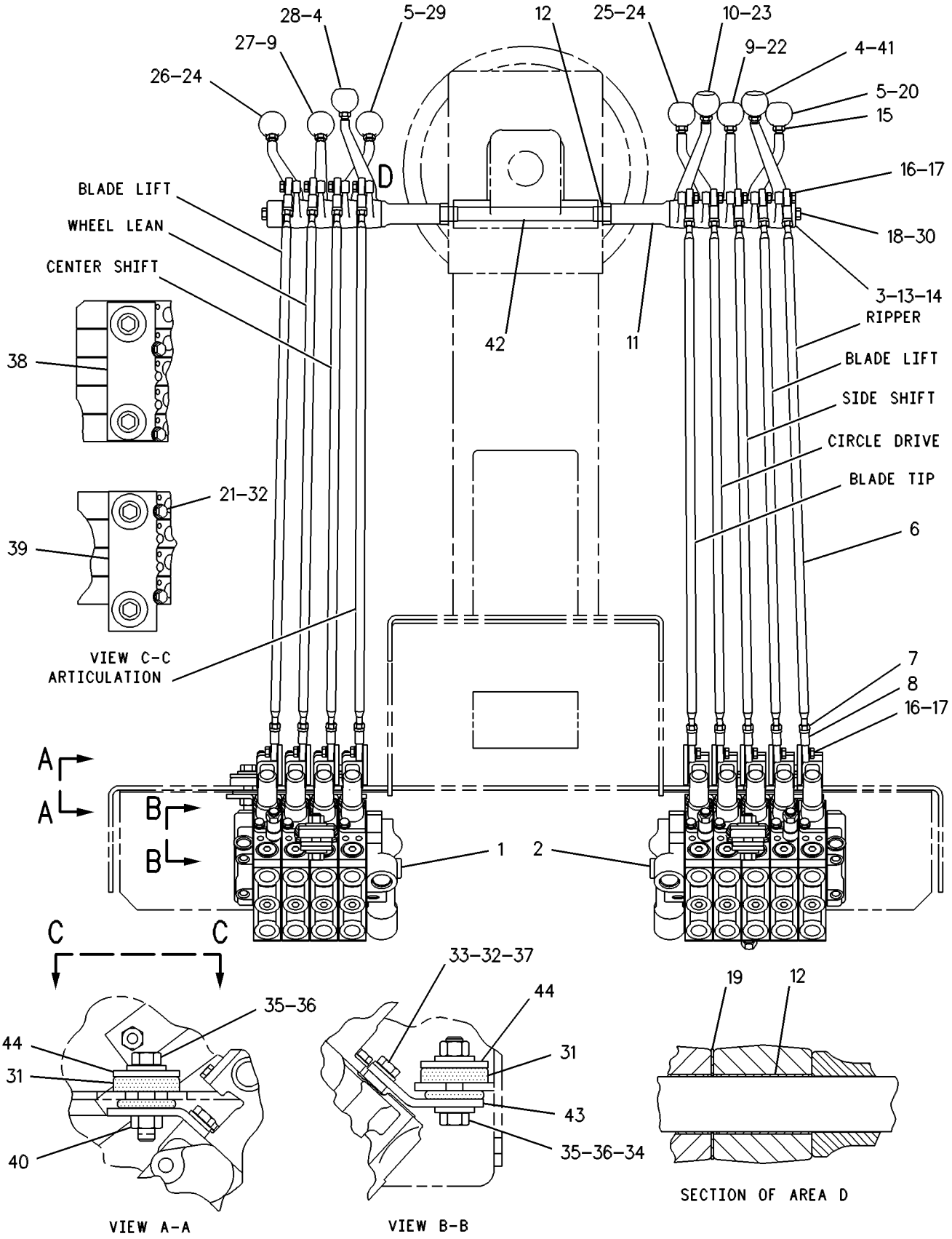

GRAPHIC #1 g00286446

HYDRAULIC SYSTEM

7I-4624 VALVE & LINKAGE GP—BANK 4 (RH)—BANK 5 (LH)

S/N: CAF1-UP
AN ATTACHMENT

SMCS-5051, 5063 **i01755244**

NOTE	REF NO	GRAPHIC REF	PART NUMBER	QTY	PART NAME 1 2 3 4 5 6 (PRODUCT LEVEL)	SEE PAGE
Y	1	1	**6E-3032**	1	VALVE GP-BANK 4 (RH)	608
Y	2	1	**104-8646**	1	VALVE GP-BANK 5 (LH)	613
	3	1	**8X-5499**	2	RETAINER	
	4	1	**101-2457**	2	LEVER	
	5	1	**8D-5634**	2	LEVER	
	6	1	**8X-4276**	9	ROD	
	7	1	**6V-8186**	18	NUT-FULL (5/16-24 THD)	
	8	1	**7H-3641**	18	END-ROD (5/16-24 THD)	
	9	1	**8D-5633**	2	LEVER	
	10	1	**101-2458**	1	LEVER	
	11	1	**137-4515**	2	BUSHING	
	12	1	**8D-5640**	11	BEARING	
B	13	1	**8D-5636**	4	SHIM (.254MM THK)	
B	14	1	**8D-5637**	4	SHIM (.762MM THK)	
	15	1	**6L-1962**	9	NUT-JAM (3/8-24THD)	
	16	1	**8T-9043**	18	BOLT (5/16-18X.875 IN)	
	17	1	**3F-9556**	18	LOCKWASHER	
	18	1	**9B-7237**	2	BOLT (3/8-16X1.25 IN)	
	19	1	**8D-5641**	9	BEARING	
	20	1	**2G-6757**	1	KNOB-BLADE LIFT	
M	21	1	**8T-4136**	4	BOLT (M10X1.5X25MM)	
	22	1	**2G-6749**	1	KNOB-SIDESHIFT	
	23	1	**2G-6747**	1	KNOB-BLADE TIP	
	24	1	**8D-5632**	2	LEVER	
	25	1	**2G-6751**	1	KNOB-CIRCLE DRIVE	
	26	1	**2G-6748**	1	KNOB-BLADE LIFT	
	27	1	**2G-6756**	1	KNOB-WHEEL LEAN	
	28	1	**2G-6752**	1	KNOB-ARTICULATION	
	29	1	**2G-6755**	1	KNOB-CENTERSHIFT	
	30	1	**5P-1075**	2	WASHER-HARD (10.2X22.5X3MM THK)	
	31	1	**9M-1853**	6	MOUNTING	
	32	1	**8T-4121**	8	WASHER-HARD (11X21X2.5MM THK)	
M	33	1	**8T-4195**	4	BOLT (M10X1.5X30MM)	
	34	1	**6V-8188**	2	NUT (1/2-13 THD)	
	35	1	**5P-2424**	6	BOLT (1/2-13X2.25 IN)	
	36	1	**5P-1076**	6	WASHER-HARD (13.5X30X4MM THK)	
	37	1	**6B-0933**	4	SPACER (10.31X19.05X6.35MM THK)	
	38	1	**104-7740**	1	PLATE AS-LH	
	39	1	**104-7419**	1	PLATE AS-RH	
					(EACH INCLUDES)	
	40	1	**1F-0748**	2	NUT-WELD (1/2-13 THD)	
	41	1	**2G-6753**	1	KNOB-SCARIFIER	
	42	1	**137-4516**	1	SHAFT	
	43	1	**104-7429**	2	PLATE	
	44	1	**8F-6437**	6	WASHER (13.5X50.8X4.76MM THK)	

B-USE AS REQUIRED
M-METRIC PART
Y-SEPARATE ILLUSTRATION

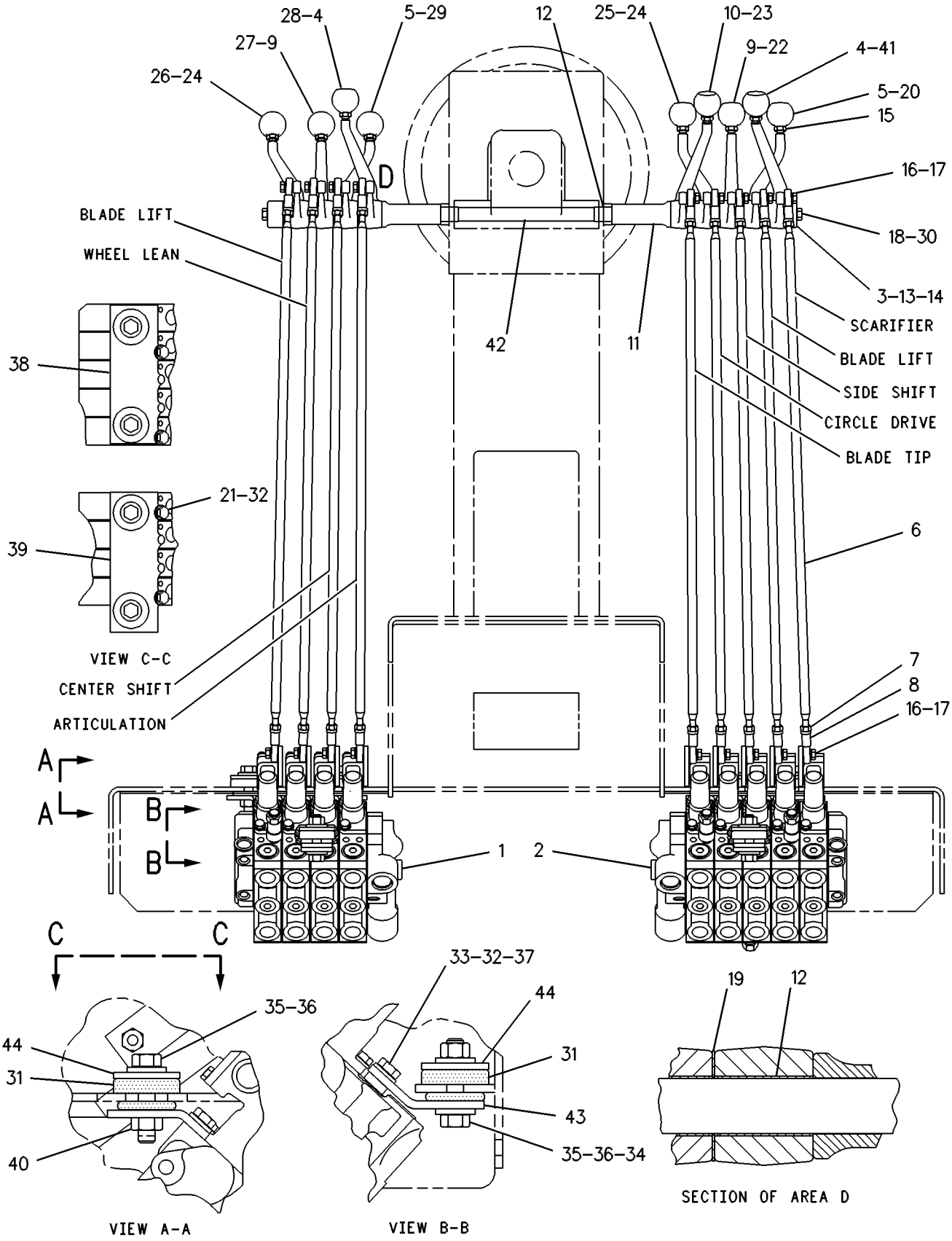

GRAPHIC #1 g00286447

HYDRAULIC SYSTEM

8X-1949 VALVE & LINKAGE GP—BANK 4 LH-RH

S/N: CAF1-UP

PART OF 162-5603 GENERAL AR

SMCS-5051, 5063 **i01755259**

NOTE	REF NO	GRAPHIC REF	PART NUMBER	QTY	PART NAME 1 2 3 4 5 6 (PRODUCT LEVEL)	SEE PAGE
Y	1	1	**6E-3032**	1	VALVE GP-BANK 4 (RH)	608
Y	2	1	**6E-3038**	1	VALVE GP-BANK 4 (LH)	609
	3	1	**8X-5498**	2	RETAINER	
	4	1	**101-2457**	1	LEVER	
	5	1	**8D-5634**	2	LEVER	
	6	1	**8F-6437**	6	WASHER (13.5X50.8X4.76MM THK)	
M	7	1	**8T-4195**	4	BOLT (M10X1.5X30MM)	
	8	1	**8X-4276**	8	ROD	
		1	**6V-8186**	16	NUT-FULL (5/16-24 THD)	
		1	**7H-3641**	16	END-ROD (5/16-24 THD)	
	9	1	**8D-5633**	2	LEVER	
	10	1	**101-2458**	1	LEVER	
	11	1	**137-4515**	2	BUSHING	
	12	1	**8D-5640**	10	BEARING	
B	13	1	**8D-5636**	4	SHIM (.254MM THK)	
B	14	1	**8D-5637**	4	SHIM (.762MM THK)	
	15	1	**6L-1962**	8	NUT-JAM (3/8-24THD)	
	16	1	**8T-9043**	16	BOLT (5/16-18X.875 IN)	
	17	1	**3F-9556**	16	LOCKWASHER	
	18	1	**9B-7237**	2	BOLT (3/8-16X1.25 IN)	
	19	1	**8D-5641**	8	BEARING	
	20	1	**2G-6757**	1	KNOB-BLADE LIFT	
M	21	1	**8T-4136**	4	BOLT (M10X1.5X25MM)	
	22	1	**2G-6749**	1	KNOB-SIDESHIFT	
	23	1	**2G-6747**	1	KNOB-BLADE TIP	
	24	1	**8D-5632**	2	LEVER	
	25	1	**2G-6751**	1	KNOB-CIRCLE DRIVE	
	26	1	**2G-6748**	1	KNOB-BLADE LIFT	
	27	1	**2G-6756**	1	KNOB-WHEEL LEAN	
	28	1	**2G-6752**	1	KNOB-ARTICULATION	
	29	1	**2G-6755**	1	KNOB-CENTERSHIFT	
	30	1	**5P-1075**	2	WASHER-HARD (10.2X22.5X3MM THK)	
	31	1	**9M-1853**	6	MOUNTING	
	32	1	**6V-8188**	2	NUT (1/2-13 THD)	
	33	1	**5P-2424**	6	BOLT (1/2-13X2.25 IN)	
	34	1	**6B-0933**	4	SPACER (10.31X19.05X6.35MM THK)	
	35	1	**8T-4121**	8	WASHER-HARD (11X21X2.5MM THK)	
	36	1	**5P-1076**	6	WASHER-HARD (13.5X30X4MM THK)	
	37	1	**137-4516**	1	SHAFT	
	38	1	**104-7740**	1	PLATE AS-LH	
		1	**1F-0748**	2	NUT-WELD (1/2-13 THD)	
	39	1	**104-7419**	1	PLATE AS-RH	
		1	**1F-0748**	2	NUT-WELD (1/2-13 THD)	
	40	1	**104-7429**	2	PLATE	

B-USE AS REQUIRED
M-METRIC PART
Y-SEPARATE ILLUSTRATION

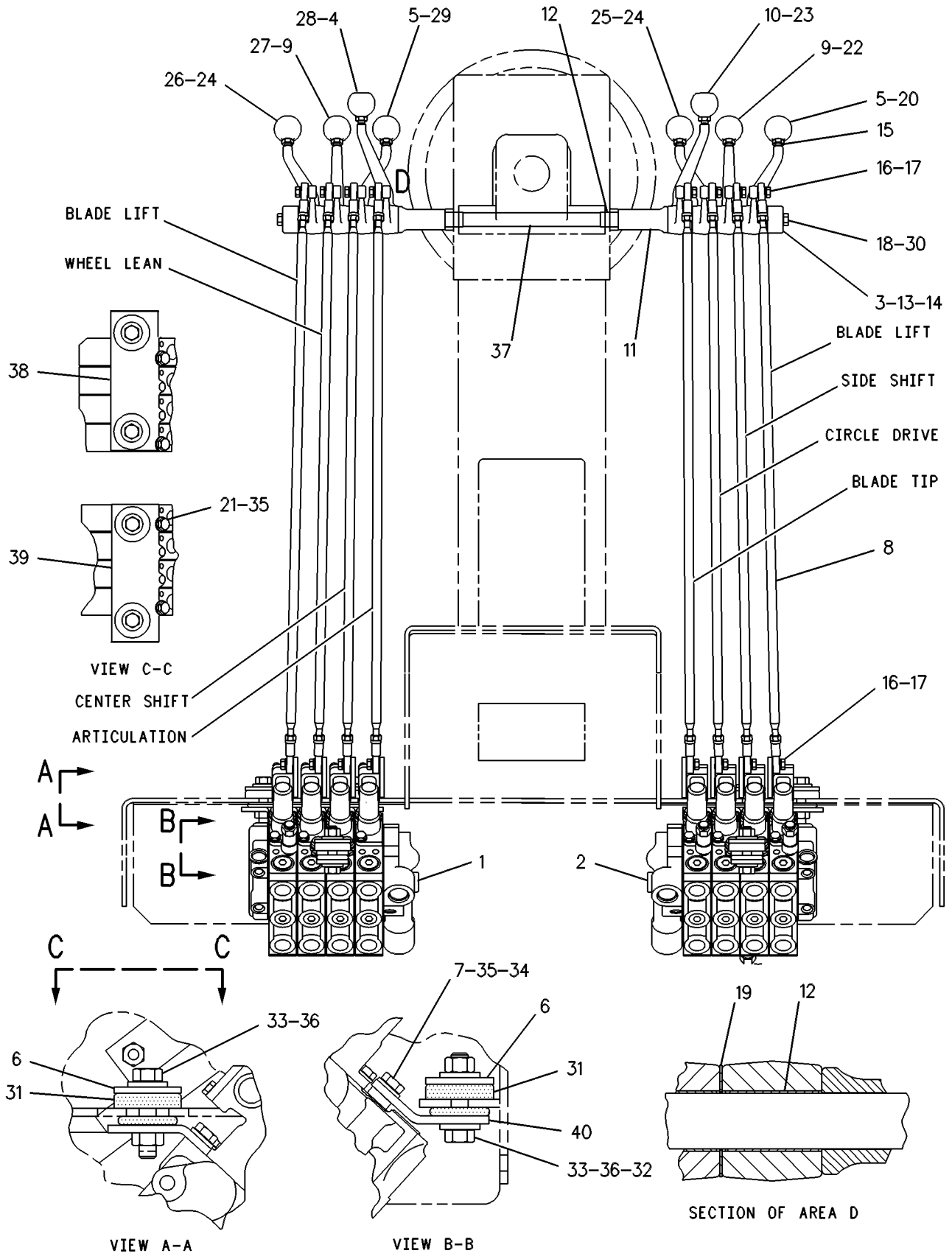

GRAPHIC #1 g00286448

HYDRAULIC SYSTEM

112-5499 VALVE & LINKAGE GP—BANK 5 LH-RH

S/N: CAF1-UP
PART OF 184-7303 CONTROL AR-HYDRAULIC
AN ATTACHMENT

SMCS-5051, 5063 **i01697376**

NOTE	REF NO	GRAPHIC REF	PART NUMBER	QTY	PART NAME 1 2 3 4 5 6 (PRODUCT LEVEL)	SEE PAGE
	1	1	**8X-5499**	2	RETAINER	
	2	1	**101-2457**	2	LEVER	
	3	1	**8D-5634**	2	LEVER	
	4	1	**4L-6459**	1	BOLT (3/8-16X2.5 IN)	
	5	1	**8W-0456**	1	SHAFT-GOVERNOR CONTROL	
	6	1	**8X-4276**	10	ROD	
		1	**6V-8186**	20	NUT-FULL (5/16-24 THD)	
		1	**7H-3641**	20	END-ROD (5/16-24 THD)	
	7	1	**8D-5633**	2	LEVER	
	8	1	**101-2458**	2	LEVER	
	9	1	**137-4515**	2	BUSHING	
	10	1	**8D-5640**	12	BEARING	
B	11	1	**8D-5636**	4	SHIM (.254MM THK)	
B	12	1	**8D-5637**	4	SHIM (.762MM THK)	
	13	1	**6L-1962**	10	NUT-JAM (3/8-24THD)	
	14	1	**8T-9043**	20	BOLT (5/16-18X.875 IN)	
	15	1	**3F-9556**	20	LOCKWASHER	
	16	1	**9B-7237**	1	BOLT (3/8-16X1.25 IN)	
	17	1	**8D-5641**	10	BEARING	
	18	1	**2G-6757**	1	KNOB-BLADE LIFT	
M	19	1	**8T-4136**	4	BOLT (M10X1.5X25MM)	
	20	1	**2G-6749**	1	KNOB-SIDESHIFT	
	21	1	**2G-6747**	1	KNOB-BLADE TIP	
	22	1	**8D-5632**	2	LEVER	
	23	1	**2G-6751**	1	KNOB-CIRCLE DRIVE	
	24	1	**2G-6748**	1	KNOB-BLADE LIFT	
	25	1	**2G-6756**	1	KNOB-WHEEL LEAN	
	26	1	**2G-6752**	1	KNOB-ARTICULATION	
	27	1	**2G-6755**	1	KNOB-CENTERSHIFT	
	28	1	**5P-1075**	2	WASHER-HARD (10.2X22.5X3MM THK)	
	29	1	**9M-1853**	6	MOUNTING	
	30	1	**5P-1076**	6	WASHER-HARD (13.5X30X4MM THK)	
	31	1	**104-7740**	1	PLATE AS-LH	
		1	**1F-0748**	2	NUT-WELD (1/2-13 THD)	
	32	1	**104-7419**	1	PLATE AS-RH	
		1	**1F-0748**	2	NUT-WELD (1/2-13 THD)	
	33	1	**104-7429**	2	PLATE	
	34	1	**137-4516**	1	SHAFT	
	35	1	**2G-6740**	1	KNOB-RIPPER	
	36	1	**2G-6754**	1	KNOB (PLOW/DOZER LIFT)	
	37	1	**6V-8188**	2	NUT (1/2-13 THD)	
M	38	1	**8T-4195**	4	BOLT (M10X1.5X30MM)	
	39	1	**8F-6437**	6	WASHER (13.5X50.8X4.76MM THK)	
	40	1	**5P-2424**	6	BOLT (1/2-13X2.25 IN)	
	41	1	**6B-0933**	4	SPACER (10.31X19.05X6.35MM THK)	
	42	1	**8T-4121**	8	WASHER-HARD (11X21X2.5MM THK)	
Y	43	1	**104-8671**	1	VALVE GP-BANK 5 (RH)	614
Y	44	1	**104-8645**	1	VALVE GP-BANK 5 (LH)	612

B-USE AS REQUIRED
M-METRIC PART
Y-SEPARATE ILLUSTRATION

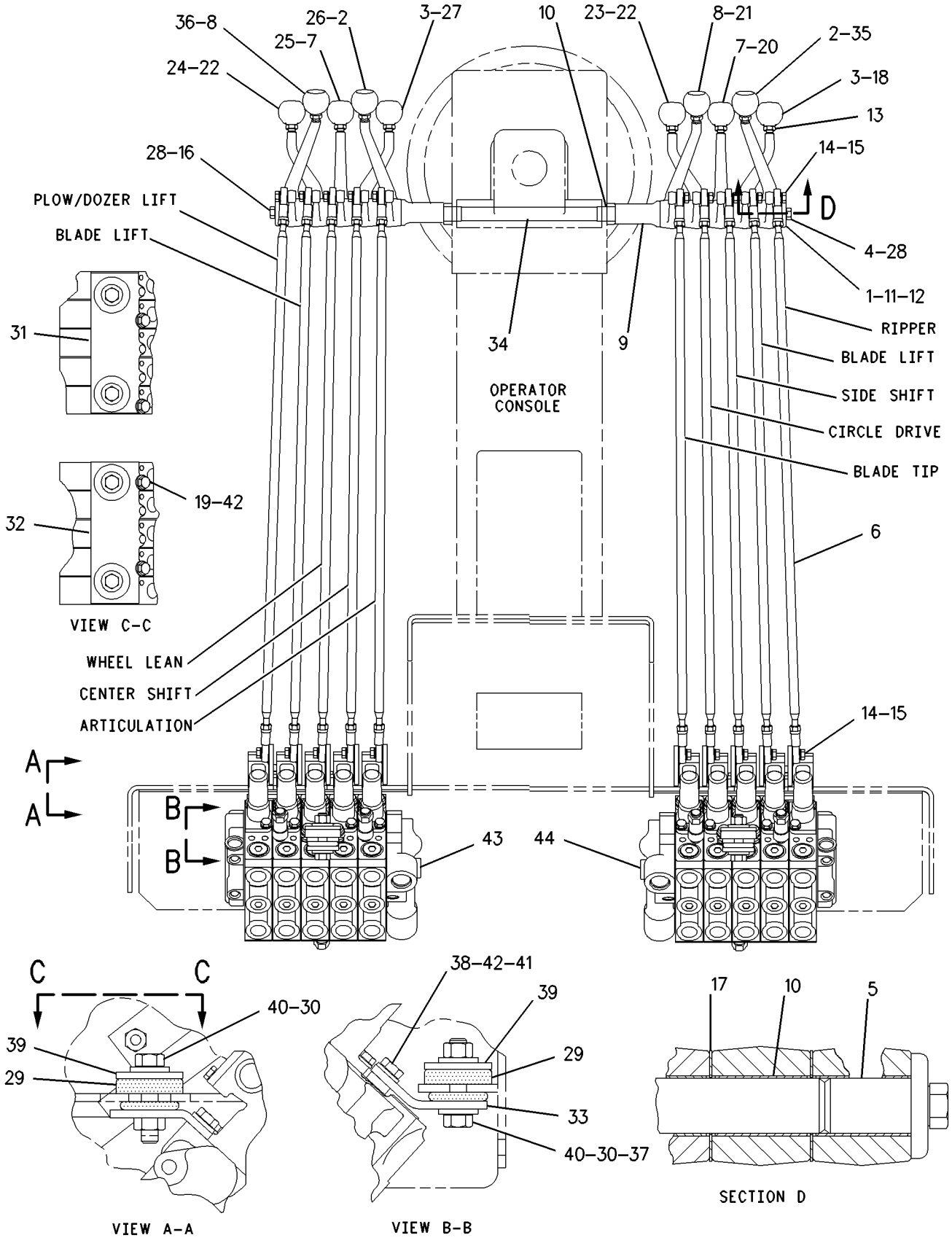

GRAPHIC #1 g00873832

HYDRAULIC SYSTEM

121-4083 VALVE & LINKAGE GP–BANK 4 LH-RH

S/N: CAF1-UP
AN ATTACHMENT

SMCS-5051, 5063 **i00888420**

NOTE	REF NO	GRAPHIC REF	PART NUMBER	QTY	PART NAME 1 2 3 4 5 6 (PRODUCT LEVEL)	SEE PAGE
CY	1	1	**130-3116**	1	VALVE GP-BANK 4 (RH)	610
CY	2	1	**130-3117**	1	VALVE GP-BANK 4 (LH)	611
	3	1	**8X-5498**	2	RETAINER	
	4	1	**101-2457**	1	LEVER (ARTICULATION)	
	5	1	**8D-5634**	1	LEVER (CENTERSHIFT)	
	6	1	**8X-4276**	8	ROD	
		1	**6V-8186**	16	NUT-FULL (5/16-24 THD)	
		1	**7H-3641**	16	ROD END	
	7	1	**8D-5633**	1	LEVER (WHEEL LEAN)	
	8	1	**101-2458**	1	LEVER (BLADE TIP)	
	9	1	**137-4515**	2	SPACER	
	10	1	**8D-5640**	10	BEARING	
B	11	1	**8D-5636**	4	SHIM (.254MM THK)	
B	12	1	**8D-5637**	4	SHIM (.762MM THK)	
	13	1	**6L-1962**	8	NUT-JAM	
	14	1	**8T-9043**	16	BOLT (5/16-18X.875IN)	
	15	1	**3F-9556**	16	LOCKWASHER (8.4MM ID)	
	16	1	**9B-7237**	2	BOLT (3/8-16X1.25IN)	
	17	1	**8D-5641**	8	BEARING	
	18	1	**2G-6757**	1	KNOB-BLADE LIFT (LH)	
M	19	1	**8T-4136**	4	BOLT (M10X1.50X25MM)	
	20	1	**2G-6749**	1	KNOB-SIDESHIFT	
	21	1	**2G-6747**	1	KNOB-BLADE TIP	
	22	1	**8D-5632**	1	LEVER (BLADE LIFT-RH)	
	23	1	**2G-6751**	1	KNOB-CIRCLE DRIVE	
	24	1	**2G-6748**	1	KNOB-BLADE LIFT (RH)	
	25	1	**2G-6756**	1	KNOB-WHEEL LEAN	
	26	1	**2G-6752**	1	KNOB-ARTICULATION	
	27	1	**2G-6755**	1	KNOB-CENTERSHIFT	
	28	1	**5P-1075**	2	WASHER-HARD (3MM THK)	
	29	1	**9M-1853**	6	MOUNTING	
	30	1	**5P-1076**	6	WASHER-HARD (4MM THK)	
	31	1	**104-7740**	1	PLATE AS-LH	
		1	**1F-0748**	2	NUT-WELD (1/2-13 THD)	
	32	1	**104-7419**	1	PLATE AS-RH	
		1	**1F-0748**	2	NUT-WELD (1/2-13 THD)	
	33	1	**104-7429**	2	PLATE	
	34	1	**137-4516**	1	SHAFT	
	35	1	**8T-4121**	8	WASHER (2.5MM THK)	
	36	1	**6B-0933**	4	SPACER	
	37	1	**5P-2424**	6	BOLT (1/2-13X2.25IN)	
	38	1	**6V-8188**	2	NUT (1/2-13 THD)	
M	39	1	**8T-4195**	4	BOLT (M10X1.50X30MM)	
	40	1	**8F-6437**	6	WASHER (4.76MM THK)	
	41	1	**8D-5634**	1	LEVER (BLADE LIFT-LH)	
	42	1	**8D-5633**	1	LEVER (SIDESHIFT)	
	43	1	**8D-5632**	1	LEVER (CIRCLE DRIVE)	

B-USE AS REQUIRED
C-CHANGE FROM PREVIOUS TYPE
M-METRIC PART
Y-SEPARATE ILLUSTRATION

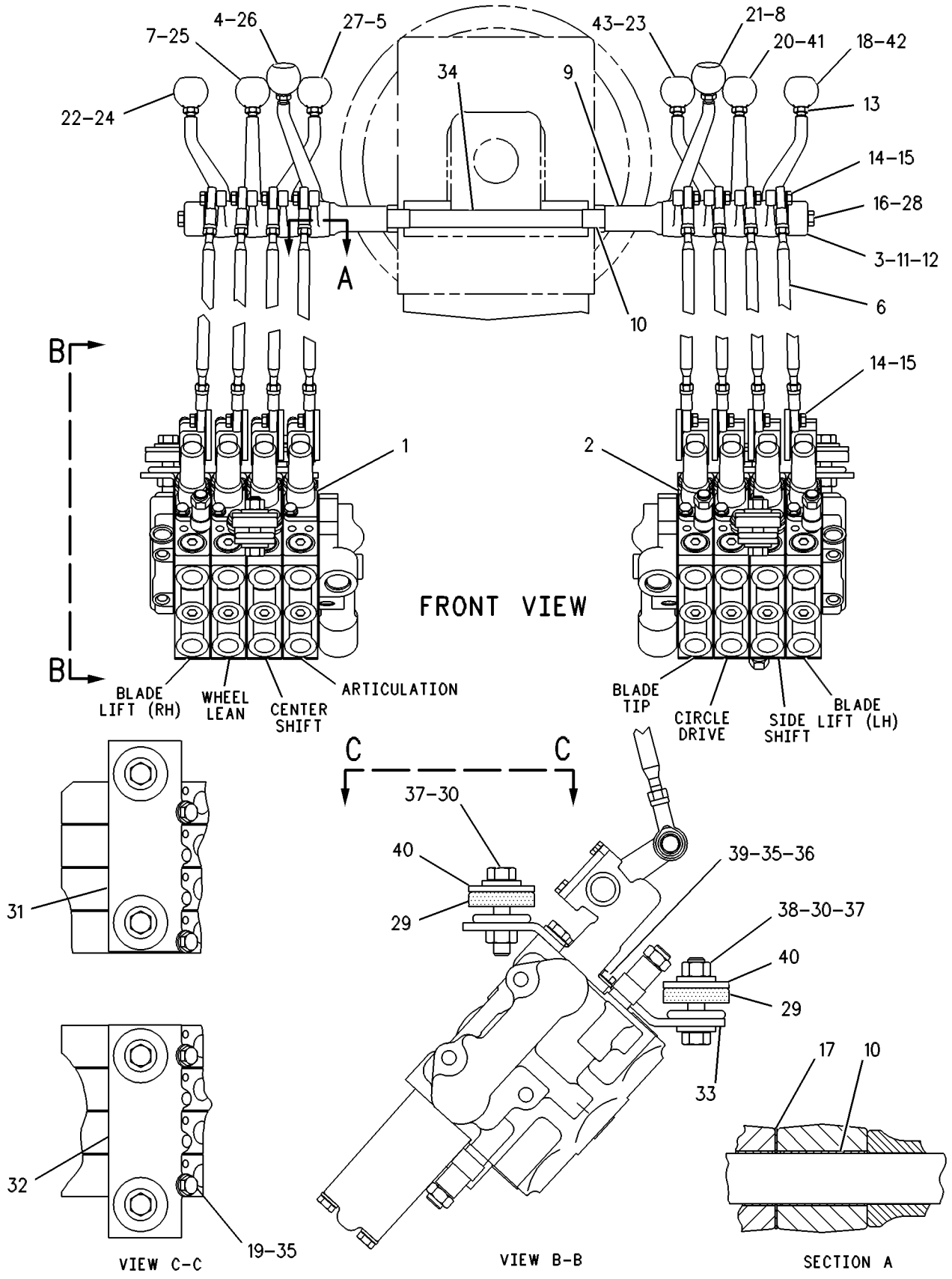

GRAPHIC #1 g00293447

HYDRAULIC SYSTEM

121-4086 VALVE & LINKAGE GP–BANK 5 LH-RH

S/N: CAF1-UP
AN ATTACHMENT

SMCS-5051, 5063 **i00138910**

NOTE	REF NO	GRAPHIC REF	PART NUMBER	QTY	PART NAME 1 2 3 4 5 6 (PRODUCT LEVEL)	SEE PAGE
YC	1	1	**130-3123**	1	VALVE GP-BANK 5 (RH)	617
YC	2	1	**130-3119**	1	VALVE GP-BANK 5 (LH)	616
	3	1	**8X-5499**	2	RETAINER	
	4	1	**101-2457**	1	LEVER (SCARIFIER)	
	5	1	**8D-5634**	1	LEVER (BLADE LIFT)	
	6	1	**4L-6459**	1	BOLT (3/8-16X2.5IN)	
	7	1	**8W-0456**	1	SHAFT-GOVERNOR CONTROL	
	8	1	**8X-4276**	10	ROD	
	9	1	**6V-8186**	20	NUT-FULL (5/16-24 THD)	
	10	1	**7H-3641**	20	ROD END	
	11	1	**137-4515**	2	SPACER	
	12	1	**8D-5640**	12	BEARING	
B	13	1	**8D-5636**	4	SHIM (.254MM THK)	
B	14	1	**8D-5637**	4	SHIM (.762MM THK)	
	15	1	**6L-1962**	10	NUT-JAM	
	16	1	**8T-9043**	20	BOLT (5/16-18X.875IN)	
	17	1	**3F-9556**	20	LOCKWASHER (8.4MM ID)	
	18	1	**9B-7237**	1	BOLT (3/8-16X1.25IN)	
	19	1	**8D-5641**	10	BEARING	
	20	1	**2G-6757**	1	KNOB-BLADE LIFT	
M	21	1	**8T-4136**	4	BOLT (M10X1.50X25MM)	
	22	1	**2G-6749**	1	KNOB-SIDESHIFT	
	23	1	**2G-6747**	1	KNOB-BLADE TIP	
	24	1	**8D-5632**	1	LEVER (CIRCLE DRIVE)	
	25	1	**2G-6751**	1	KNOB-CIRCLE DRIVE	
	26	1	**2G-6748**	1	KNOB-BLADE LIFT	
	27	1	**2G-6756**	1	KNOB-WHEEL LEAN	
	28	1	**2G-6752**	1	KNOB-ARTICULATION	
	29	1	**2G-6755**	1	KNOB-CENTERSHIFT	
	30	1	**5P-1075**	2	WASHER-HARD (3MM THK)	
	31	1	**9M-1853**	6	MOUNTING	
	32	1	**5P-1076**	6	WASHER-HARD (4MM THK)	
	33	1	**104-7740**	1	PLATE AS-LH	
	34	1	**104-7419**	1	PLATE AS-RH	
					(EACH PLATE AS INCLS)	
		1	**1F-0748**	2	NUT-WELD (1/2-13 THD)	
	35	1	**104-7429**	2	PLATE	
	36	1	**137-4516**	1	SHAFT	
	37	1	**2G-6753**	1	KNOB-SCARIFIER	
	38	1	**2G-6754**	1	KNOB-PLOW & BULLDOZER LIFT	
	39	1	**6V-8188**	2	NUT (1/2-13 THD)	
M	40	1	**8T-4195**	4	BOLT (M10X1.50X30MM)	
	41	1	**8T-4121**	8	WASHER (2.5MM THK)	
	42	1	**6B-0933**	4	SPACER	
	43	1	**8F-6437**	6	WASHER (4.76MM THK)	
	44	1	**5P-2424**	6	BOLT (1/2-13X2.25IN)	
	45	1	**8D-5633**	1	LEVER (SIDE SHIFT)	
	46	1	**101-2458**	1	LEVER (BLADE LIFT)	
	47	1	**101-2457**	1	LEVER (ARTICULATION)	
	48	1	**8D-5634**	1	LEVER (CENTER SHIFT)	
	49	1	**8D-5633**	1	LEVER (WHEEL LEAN)	
	50	1	**101-2458**	1	LEVER (PLOW & BULLDOZER LIFT)	
	51	1	**8D-5632**	1	LEVER (BLADE LIFT)	

B-USE AS REQUIRED
C-CHANGE FROM PREVIOUS TYPE
M-METRIC PART
Y-SEPARATE ILLUSTRATION

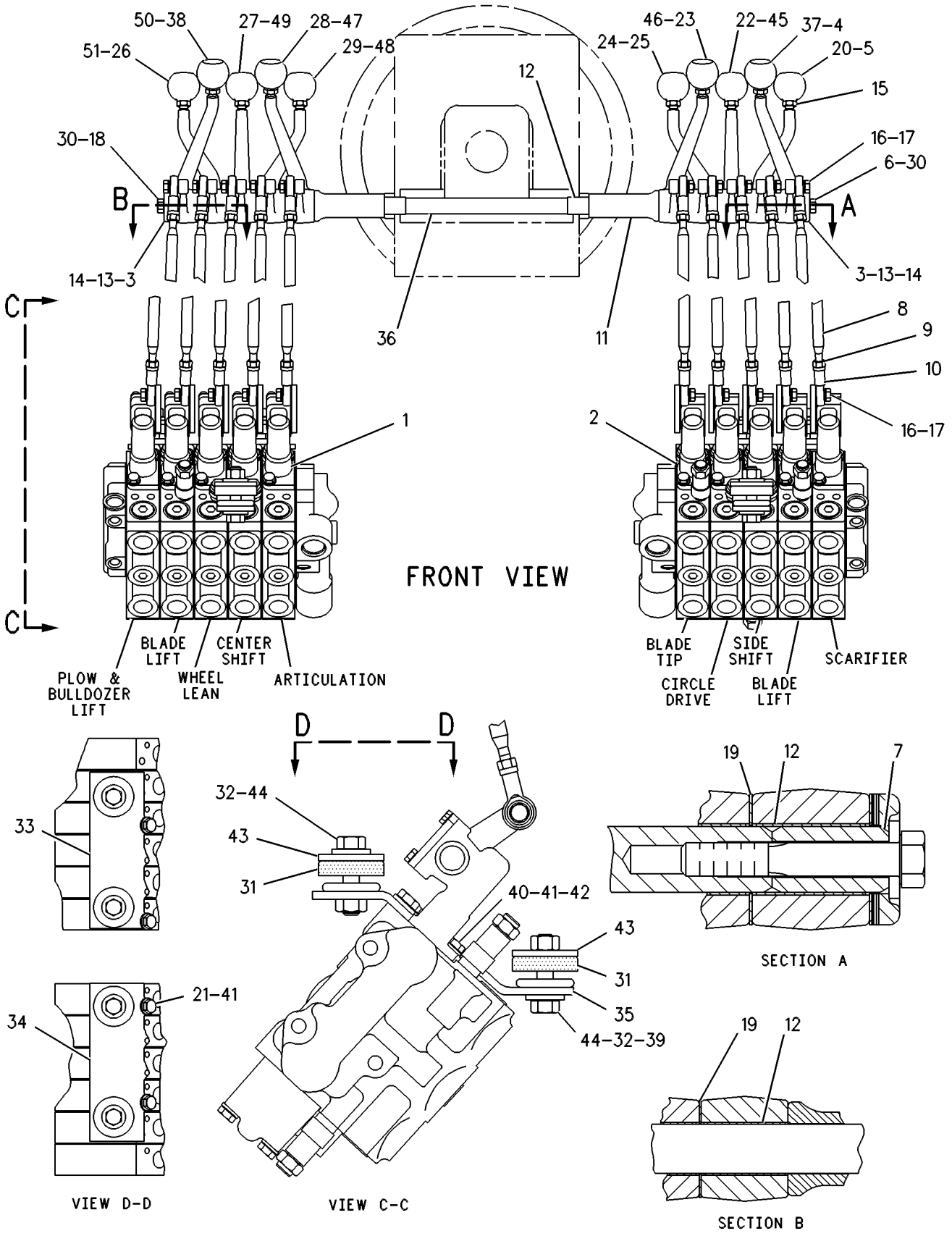

GRAPHIC #1 g00109713

MEMORANDA

HYDRAULIC SYSTEM

121-4095 VALVE & LINKAGE GP

S/N: CAF1-UP
AN ATTACHMENT

SMCS-5051, 5063 **i00138956**

NOTE	REF NO	GRAPHIC REF	PART NUMBER	QTY	PART NAME 1 2 3 4 5 6 (PRODUCT LEVEL)	SEE PAGE
CY	1	1	**130-3116**	1	VALVE GP-BANK 4 (RH)	610
CY	2	1	**130-3119**	1	VALVE GP-BANK 5 (LH)	616
	3	1	**8X-5499**	2	RETAINER	
	4	1	**101-2457**	1	LEVER (SCARIFIER)	
	5	1	**8D-5634**	1	LEVER (BLADE LIFT)	
	6	1	**6V-8186**	18	NUT-FULL (5/16-24 THD)	
	7	1	**7H-3641**	18	ROD END	
		1	**8X-4276**	9	ROD	
	8	1	**101-2458**	1	LEVER (BLADE TIP)	
	9	1	**137-4515**	2	SPACER	
	10	1	**8D-5640**	11	BEARING	
B	11	1	**8D-5636**	4	SHIM (.254MM THK)	
B	12	1	**8D-5637**	4	SHIM (.762MM THK)	
	13	1	**6L-1962**	9	NUT-JAM	
	14	1	**8T-9043**	18	BOLT (5/16-18X.875IN)	
	15	1	**3F-9556**	18	LOCKWASHER (8.4MM ID)	
	16	1	**9B-7237**	2	BOLT (3/8-16X1.25IN)	
	17	1	**8D-5641**	9	BEARING	
	18	1	**2G-6757**	1	KNOB-BLADE LIFT	
M	19	1	**8T-4136**	4	BOLT (M10X1.50X25MM)	
	20	1	**2G-6749**	1	KNOB-SIDESHIFT	
	21	1	**2G-6747**	1	KNOB-BLADE TIP	
	22	1	**8D-5632**	1	LEVER (CIRCLE DRIVE)	
	23	1	**2G-6751**	1	KNOB-CIRCLE DRIVE	
	24	1	**2G-6748**	1	KNOB-BLADE LIFT	
	25	1	**2G-6756**	1	KNOB-WHEEL LEAN	
	26	1	**2G-6752**	1	KNOB-ARTICULATION	
	27	1	**2G-6755**	1	KNOB-CENTERSHIFT	
	28	1	**5P-1075**	2	WASHER-HARD (3MM THK)	
	29	1	**9M-1853**	6	MOUNTING	
	30	1	**5P-1076**	6	WASHER-HARD (4MM THK)	
	31	1	**104-7740**	1	PLATE AS-LH	
	32	1	**104-7419**	1	PLATE AS-RH	
					(EACH PLATE AS INCLS)	
		1	**1F-0748**	2	NUT-WELD (1/2-13 THD)	
	33	1	**104-7429**	2	PLATE	
	34	1	**137-4516**	1	SHAFT	
	35	1	**8T-4121**	8	WASHER (2.5MM THK)	
	36	1	**6B-0933**	4	SPACER	
	37	1	**5P-2424**	6	BOLT (1/2-13X2.25IN)	
	38	1	**6V-8188**	2	NUT (1/2-13 THD)	
M	39	1	**8T-4195**	4	BOLT (M10X1.50X30MM)	
	40	1	**2G-6753**	1	KNOB-SCARIFIER	
	41	1	**8F-6437**	6	WASHER (4.76MM THK)	
	42	1	**8D-5633**	1	LEVER (SIDE SHIFT)	
	43	1	**101-2457**	1	LEVER (ARTICULATION)	
	44	1	**8D-5634**	1	LEVER (CENTER SHIFT)	
	45	1	**8D-5633**	1	LEVER (WHEEL LEAN)	
	46	1	**8D-5632**	1	LEVER (BLADE LIFT)	

B-USE AS REQUIRED
C-CHANGE FROM PREVIOUS TYPE
M-METRIC PART
Y-SEPARATE ILLUSTRATION

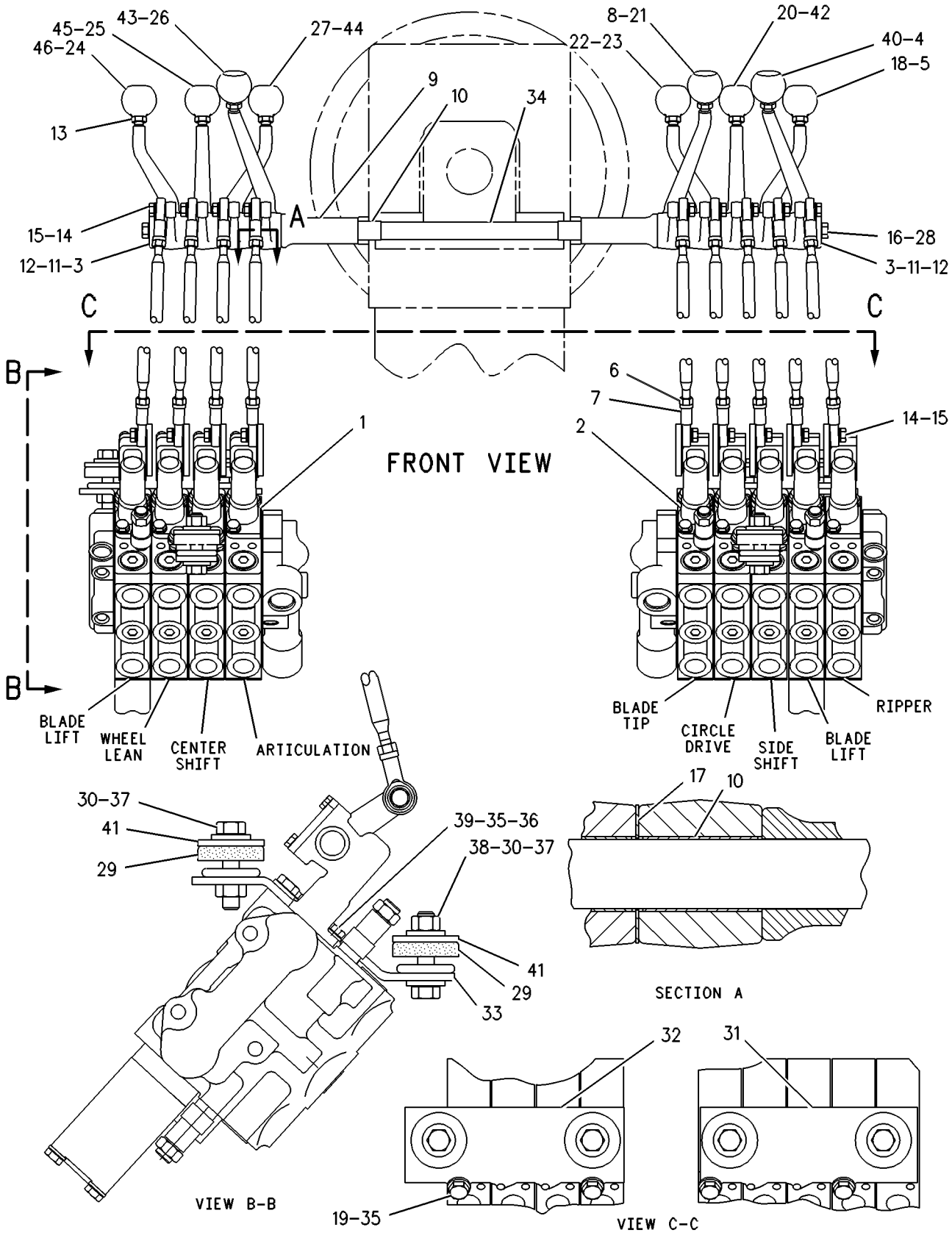

GRAPHIC #1 g00109724

HYDRAULIC SYSTEM

121-4097 VALVE & LINKAGE GP—BANK 5—LH—RH

S/N: CAF1-UP
PART OF 184-7307 CONTROL AR-HYDRAULIC
AN ATTACHMENT

SMCS-5051, 5063 **i01696746**

NOTE	REF NO	GRAPHIC REF	PART NUMBER	QTY	PART NAME 1 2 3 4 5 6 (PRODUCT LEVEL)	SEE PAGE
	1	1	**8X-5499**	2	RETAINER	
	2	1	**101-2457**	2	LEVER	
	3	1	**8D-5634**	2	LEVER	
	4	1	**4L-6459**	1	BOLT (3/8-16X2.5 IN)	
	5	1	**8W-0456**	1	SHAFT-GOVERNOR CONTROL	
	6	1	**8X-4276**	10	ROD	
		1	**6V-8186**	20	NUT-FULL (5/16-24 THD)	
		1	**7H-3641**	20	END-ROD (5/16-24 THD)	
	7	1	**8D-5633**	2	LEVER	
	8	1	**101-2458**	2	LEVER	
	9	1	**137-4515**	2	BUSHING	
	10	1	**8D-5640**	12	BEARING	
B	11	1	**8D-5636**	4	SHIM (.254MM THK)	
B	12	1	**8D-5637**	4	SHIM (.762MM THK)	
	13	1	**6L-1962**	10	NUT-JAM (3/8-24THD)	
	14	1	**8T-9043**	20	BOLT (5/16-18X.875 IN)	
	15	1	**3F-9556**	20	LOCKWASHER	
	16	1	**9B-7237**	1	BOLT (3/8-16X1.25 IN)	
	17	1	**8D-5641**	10	BEARING	
	18	1	**2G-6757**	1	KNOB-BLADE LIFT (LH)	
M	19	1	**8T-4136**	4	BOLT (M10X1.5X25MM)	
	20	1	**2G-6749**	1	KNOB-SIDESHIFT	
	21	1	**2G-6747**	1	KNOB-BLADE TIP	
	22	1	**8D-5632**	2	LEVER	
	23	1	**2G-6751**	1	KNOB-CIRCLE DRIVE	
	24	1	**2G-6748**	1	KNOB-BLADE LIFT (RH)	
	25	1	**2G-6756**	1	KNOB-WHEEL LEAN	
	26	1	**2G-6752**	1	KNOB-ARTICULATION	
	27	1	**2G-6755**	1	KNOB-CENTERSHIFT	
	28	1	**5P-1075**	2	WASHER-HARD (10.2X22.5X3MM THK)	
	29	1	**9M-1853**	6	MOUNTING	
	30	1	**5P-1076**	6	WASHER-HARD (13.5X30X4MM THK)	
	31	1	**104-7740**	1	PLATE AS-LH	
		1	**1F-0748**	2	NUT-WELD (1/2-13 THD)	
	32	1	**104-7419**	1	PLATE AS-RH	
		1	**1F-0748**	2	NUT-WELD (1/2-13 THD)	
	33	1	**104-7429**	2	PLATE	
	34	1	**137-4516**	1	SHAFT	
	35	1	**2G-6740**	1	KNOB-RIPPER	
	36	1	**2G-6754**	1	KNOB (PLOW/DOZER LIFT)	
	37	1	**6V-8188**	2	NUT (1/2-13 THD)	
M	38	1	**8T-4195**	4	BOLT (M10X1.5X30MM)	
	39	1	**8F-6437**	6	WASHER (13.5X50.8X4.76MM THK)	
	40	1	**5P-2424**	6	BOLT (1/2-13X2.25 IN)	
	41	1	**6B-0933**	4	SPACER (10.31X19.05X6.35MM THK)	
	42	1	**8T-4121**	8	WASHER-HARD (11X21X2.5MM THK)	
CY	43	1	**130-3123**	1	VALVE GP-BANK 5 (RH)	617
CY	44	1	**130-3118**	1	VALVE GP-BANK 5 (LH)	615

B-USE AS REQUIRED
C-CHANGE FROM PREVIOUS TYPE
M-METRIC PART
Y-SEPARATE ILLUSTRATION

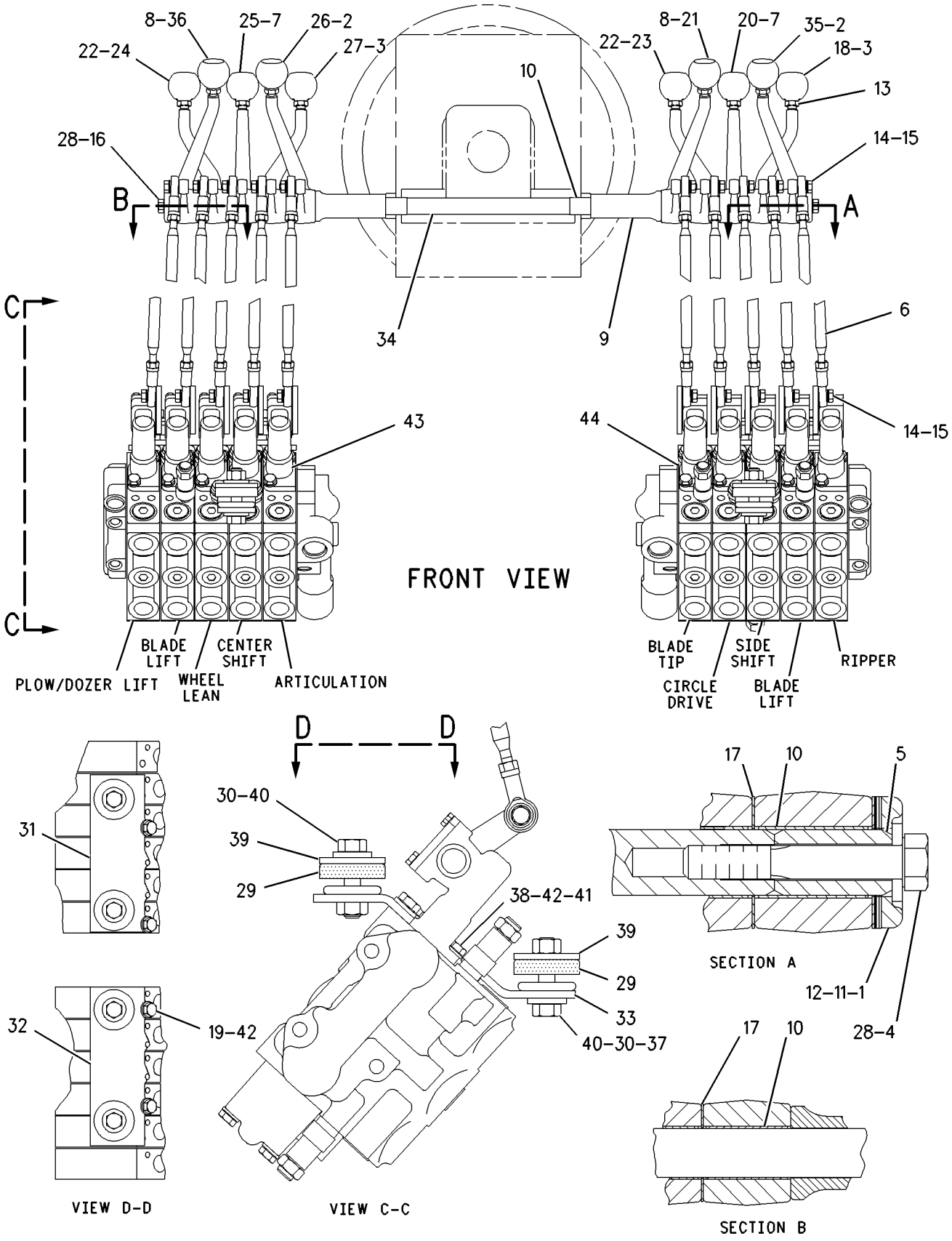

GRAPHIC #1 g00873635

HYDRAULIC SYSTEM

124-0311 VALVE & LINKAGE GP–BANK 4-LH, BANK 5-RH

S/N: CAF1-UP
AN ATTACHMENT

SMCS-5051, 5063 **i01755237**

NOTE	REF NO	GRAPHIC REF	PART NUMBER	QTY	PART NAME 1 2 3 4 5 6 (PRODUCT LEVEL)	SEE PAGE
Y	1	1	**104-8671**	1	VALVE GP-BANK 5 (RH)	614
Y	2	1	**6E-3038**	1	VALVE GP-BANK 4 (LH)	609
	3	1	**8X-5499**	2	RETAINER	
	4	1	**101-2457**	1	LEVER	
	5	1	**8D-5634**	2	LEVER	
	6	1	**8X-4276**	9	ROD	
		1	**6V-8186**	18	NUT-FULL (5/16-24 THD)	
		1	**7H-3641**	18	END-ROD (5/16-24 THD)	
	7	1	**8D-5633**	2	LEVER	
	8	1	**101-2458**	2	LEVER	
	9	1	**137-4515**	2	BUSHING	
	10	1	**8D-5640**	11	BEARING	
B	11	1	**8D-5636**	4	SHIM (.254MM THK)	
B	12	1	**8D-5637**	4	SHIM (.762MM THK)	
	13	1	**6L-1962**	9	NUT-JAM (3/8-24THD)	
	14	1	**8T-9043**	18	BOLT (5/16-18X.875 IN)	
	15	1	**3F-9556**	18	LOCKWASHER	
	16	1	**9B-7237**	2	BOLT (3/8-16X1.25 IN)	
	17	1	**8D-5641**	9	BEARING	
	18	1	**2G-6757**	1	KNOB-BLADE LIFT	
M	19	1	**8T-4136**	4	BOLT (M10X1.5X25MM)	
	20	1	**2G-6749**	1	KNOB-SIDESHIFT	
	21	1	**2G-6747**	1	KNOB-BLADE TIP	
	22	1	**8D-5632**	2	LEVER	
	23	1	**2G-6751**	1	KNOB-CIRCLE DRIVE	
	24	1	**2G-6748**	1	KNOB-BLADE LIFT	
	25	1	**2G-6756**	1	KNOB-WHEEL LEAN	
	26	1	**2G-6752**	1	KNOB-ARTICULATION	
	27	1	**2G-6755**	1	KNOB-CENTERSHIFT	
	28	1	**5P-1075**	2	WASHER-HARD (10.2X22.5X3MM THK)	
	29	1	**9M-1853**	6	MOUNTING	
	30	1	**5P-1076**	6	WASHER-HARD (13.5X30X4MM THK)	
	31	1	**104-7740**	1	PLATE AS-LH	
		1	**1F-0748**	2	NUT-WELD (1/2-13 THD)	
	32	1	**104-7419**	1	PLATE AS-RH	
		1	**1F-0748**	2	NUT-WELD (1/2-13 THD)	
	33	1	**104-7429**	2	PLATE	
	34	1	**137-4516**	1	SHAFT	
	35	1	**2G-6754**	1	KNOB (PLOW/DOZER LIFT)	
	36	1	**6V-8188**	2	NUT (1/2-13 THD)	
M	37	1	**8T-4195**	4	BOLT (M10X1.5X30MM)	
	38	1	**8T-4121**	8	WASHER-HARD (11X21X2.5MM THK)	
	39	1	**6B-0933**	4	SPACER (10.31X19.05X6.35MM THK)	
	40	1	**8F-6437**	6	WASHER (13.5X50.8X4.76MM THK)	
	41	1	**5P-2424**	6	BOLT (1/2-13X2.25 IN)	

B-USE AS REQUIRED
M-METRIC PART
Y-SEPARATE ILLUSTRATION

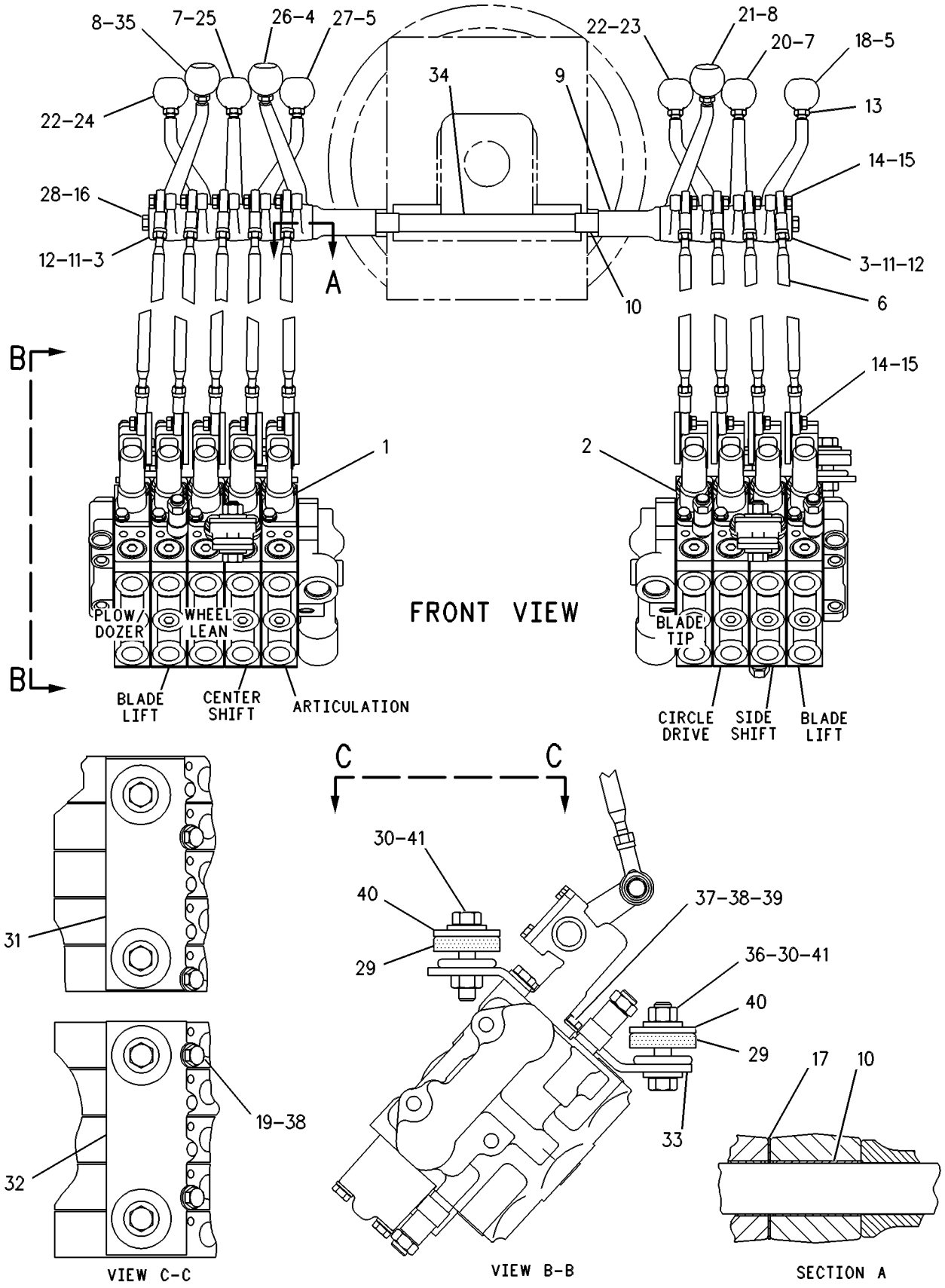

GRAPHIC #1 g00109685

HYDRAULIC SYSTEM

124-3771 VALVE & LINKAGE GP—BANK 4-LH, BANK 5-RH

S/N: CAF1-UP
AN ATTACHMENT

SMCS-5051, 5063 **i00137442**

NOTE	REF NO	GRAPHIC REF	PART NUMBER	QTY	PART NAME 1 2 3 4 5 6 (PRODUCT LEVEL)	SEE PAGE
CY	1	1	**130-3123**	1	VALVE GP-BANK 5 (RH)	617
CY	2	1	**130-3117**	1	VALVE GP-BANK 4 (LH)	611
	3	1	**8X-5499**	2	RETAINER	
	4	1	**101-2457**	1	LEVER (ARTICULATION)	
	5	1	**8D-5634**	1	LEVER (BLADE LIFT)	
	6	1	**8X-4276**	9	ROD	
	7	1	**6V-8186**	2	NUT-FULL (5/16-24 THD)	
	8	1	**7H-3641**	2	ROD END	
	9	1	**8D-5633**	1	LEVER (SIDE SHIFT)	
	10	1	**101-2458**	1	LEVER (BLADE TIP)	
	11	1	**8X-4279**	2	SPACER	
	12	1	**8D-5640**	11	BEARING	
B	13	1	**8D-5636**	4	SHIM (.254MM THK)	
B	14	1	**8D-5637**	4	SHIM (.762MM THK)	
	15	1	**6L-1962**	9	NUT-JAM	
	16	1	**8T-9043**	18	BOLT (5/16-18X.875IN)	
	17	1	**3F-9556**	18	LOCKWASHER (8.4MM ID)	
	18	1	**9B-7237**	2	BOLT (3/8-16X1.25IN)	
	19	1	**8D-5641**	9	BEARING	
	20	1	**2G-6757**	1	KNOB-BLADE LIFT	
M	21	1	**8T-4136**	8	BOLT (M10X1.50X25MM)	
	22	1	**2G-6749**	1	KNOB-SIDESHIFT	
	23	1	**2G-6747**	1	KNOB-BLADE TIP	
	24	1	**8D-5632**	1	LEVER (CIRCLE DRIVE)	
	25	1	**2G-6751**	1	KNOB-CIRCLE DRIVE	
	26	1	**2G-6748**	1	KNOB-BLADE LIFT	
	27	1	**2G-6756**	1	KNOB-WHEEL LEAN	
	28	1	**2G-6752**	1	KNOB-ARTICULATION	
	29	1	**2G-6755**	1	KNOB-CENTERSHIFT	
	30	1	**5P-1075**	2	WASHER-HARD (3MM THK)	
	31	1	**9M-1853**	6	MOUNTING	
	32	1	**5P-1076**	6	WASHER-HARD (4MM THK)	
	33	1	**104-7740**	1	PLATE AS-LH	
	34	1	**104-7419**	1	PLATE AS-RH	
					(EA PLATE AS INCLS)	
	35	1	**1F-0748**	2	NUT-WELD (1/2-13 THD)	
	36	1	**104-7429**	2	PLATE	
	37	1	**9D-2804**	1	SHAFT-GOVERNOR CONTROL	
	38	1	**2G-6754**	1	KNOB-PLOW & BULLDOZER LIFT	
	39	1	**6V-8188**	2	NUT (1/2-13 THD)	
M	40	1	**8T-4195**	4	BOLT (M10X1.50X30MM)	
	41	1	**8T-4121**	12	WASHER (2.5MM THK)	
	42	1	**6B-0933**	4	SPACER	
	43	1	**8F-6437**	6	WASHER (4.76MM THK)	
	44	1	**5P-2424**	6	BOLT (1/2-13X2.25IN)	
	45	1	**8D-5634**	1	LEVER (CENTER SHIFT)	
	46	1	**8D-5633**	1	LEVER (WHEEL LEAN)	
	47	1	**101-2458**	1	LEVER (PLOW & BULLDOZER LIFT)	
	48	1	**8D-5632**	1	LEVER (BLADE LIFT)	

B-USE AS REQUIRED
C-CHANGE FROM PREVIOUS TYPE
M-METRIC PART
Y-SEPARATE ILLUSTRATION

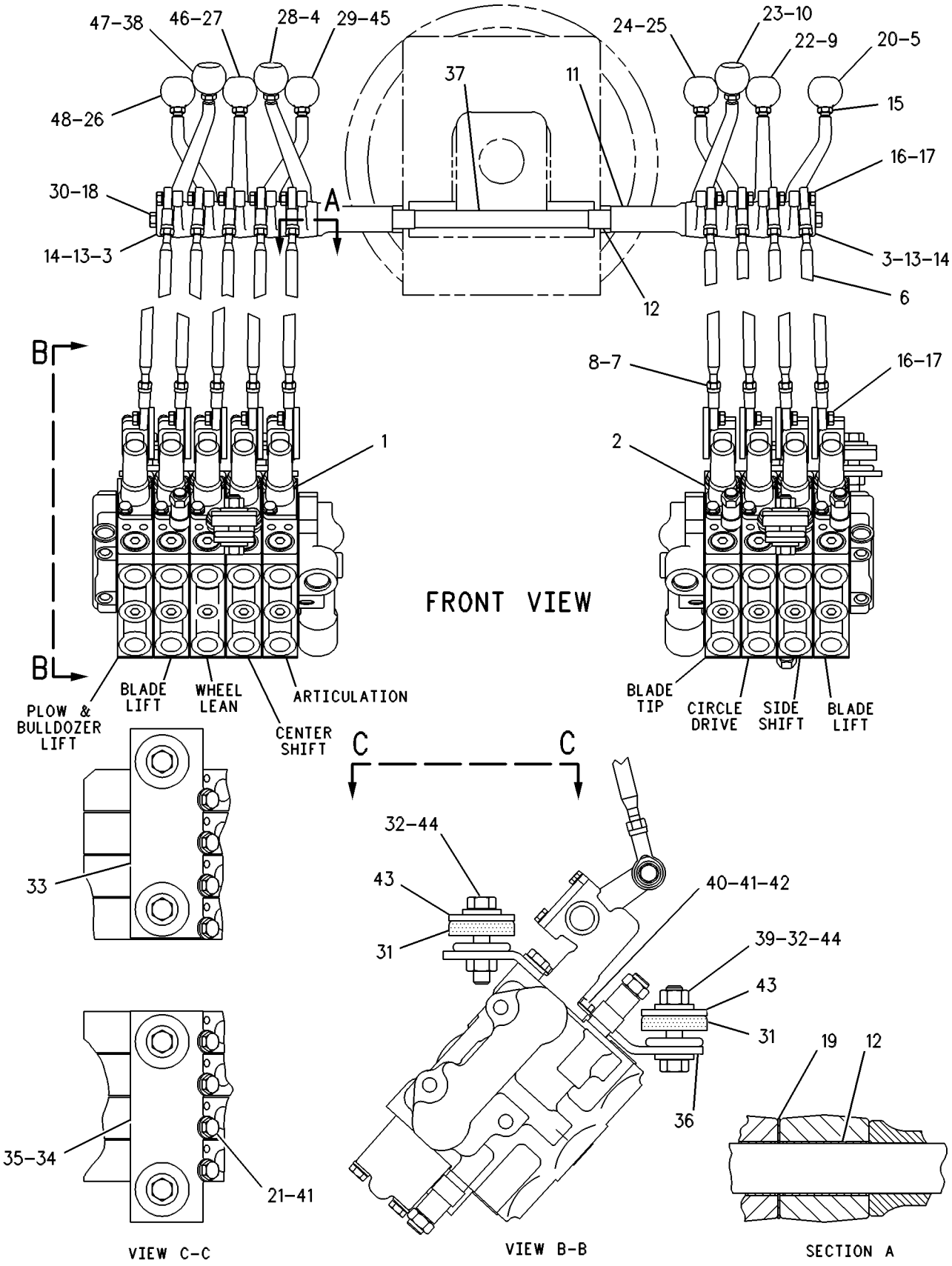

GRAPHIC #1 g00108948

HYDRAULIC SYSTEM

6E-3032 VALVE GP-BANK 4

S/N: CAF1-UP
RH
PART OF 7I-4622, 7I-4624, 8X-1949 VALVE & LINKAGE GP
ALSO AN ATTACHMENT

SMCS-5051 **i00611327**

NOTE	REF NO	GRAPHIC REF	PART NUMBER	QTY	PART NAME 1 2 3 4 5 6 (PRODUCT LEVEL)	SEE PAGE
M	1	1	**7X-2546**	2	BOLT (M10X1.50X180MM)	
M	2	1	**137-6720**	1	BOLT-HEX HEAD	
	3	1	**102-6238**	1	MANIFOLD	
	4	1	**101-0509**	5	PLATE-SEAL	
Y	5	1	**6E-3028**	1	VALVE GP-CONTROL (ARTICULATION)	620
Y	6	1	**6E-3029**	1	VALVE GP-CONTROL (CENTERSHIFT)	622
Y	7	1	**6E-3030**	1	VALVE GP-CONTROL (WHEEL LEAN)	624
Y	8	1	**6E-3031**	1	VALVE GP-CONTROL (BLADE LIFT)	626
	9	1	**101-9346**	1	COVER	
M	10	1	**8T-4186**	3	BOLT (M10X1.50X40MM)	
	11	1	**6E-3027**	1	PLATE-IDENTIFICATION	
	12	1	**9S-4180**	1	PLUG-O-RING (5/16-24 THD)	
	13	1	**4J-7533**	1	SEAL-O-RING (6.07MM ID)	

M-METRIC PART
Y-SEPARATE ILLUSTRATION

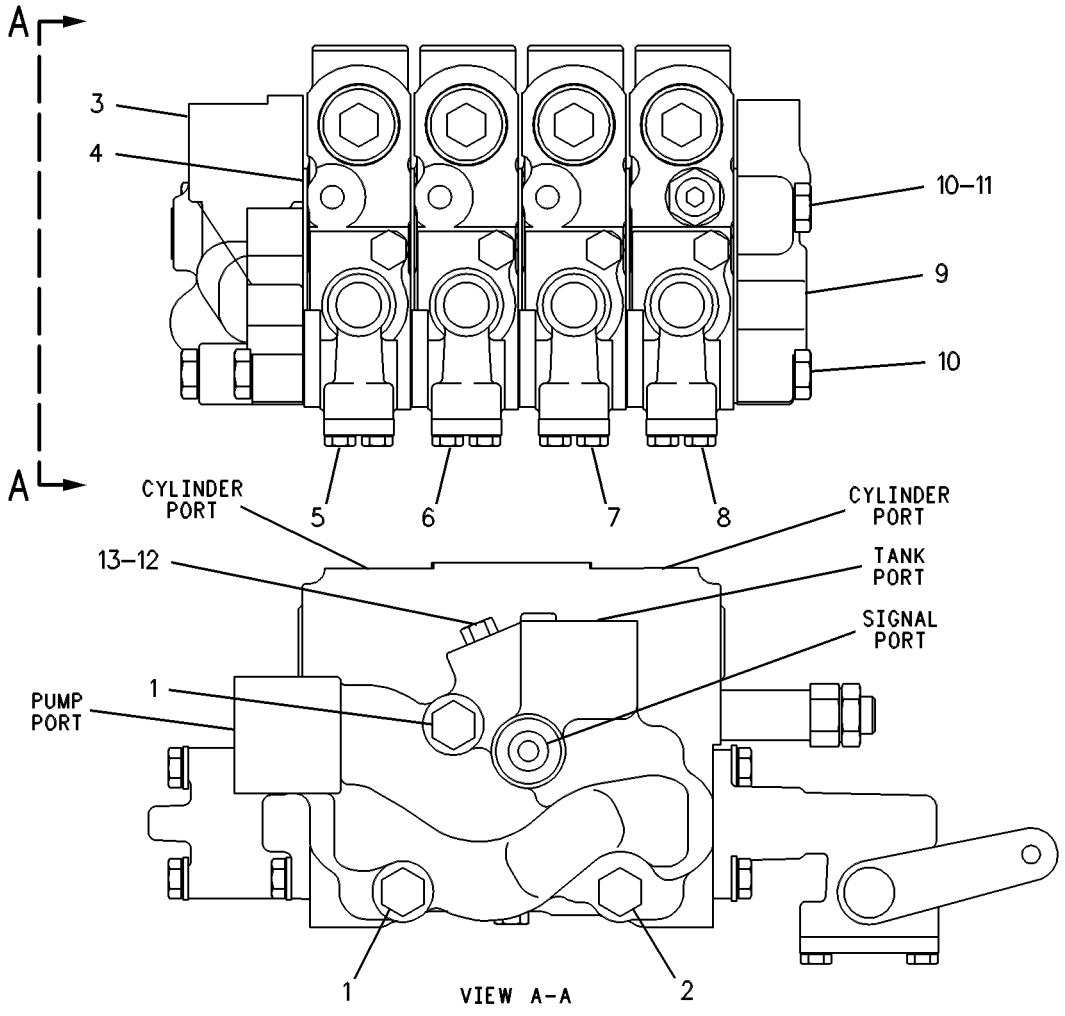

GRAPHIC #1 g00108530

6E-3038 VALVE GP-BANK 4—LH

S/N: CAF1-UP
PART OF 124-0311, 8X-1949 VALVE & LINKAGE GP
ALSO AN ATTACHMENT

SMCS-5051 **i01862273**

NOTE	REF NO	GRAPHIC REF	PART NUMBER	QTY	PART NAME 1 2 3 4 5 6 (PRODUCT LEVEL)	SEE PAGE
M	1	1	**7X-2546**	2	BOLT (M10X1.50X180MM)	
M	2	1	**137-6720**	1	BOLT-HEX HEAD (M10X1.50X160MM)	
	3	1	**102-8385**	1	MANIFOLD	
	4	1	**101-0509**	5	PLATE-SEAL	
Y	5	1	**6E-3037**	1	VALVE GP-CONTROL (BLADE LIFT)	634
Y	6	1	**6E-3036**	1	VALVE GP-CONTROL (SIDESHIFT)	632
Y	7	1	**6E-3035**	1	VALVE GP-CONTROL (CIRCLE DRIVE)	630
Y	8	1	**6E-3034**	1	VALVE GP-CONTROL (BLADE TIP)	628
	9	1	**101-9346**	1	COVER	
M	10	1	**8T-4186**	3	BOLT (M10X1.5X40MM)	
	11	1	**4J-7533**	1	SEAL-O-RING	
	12	1	**9S-4180**	1	PLUG	

M-METRIC PART
Y-SEPARATE ILLUSTRATION

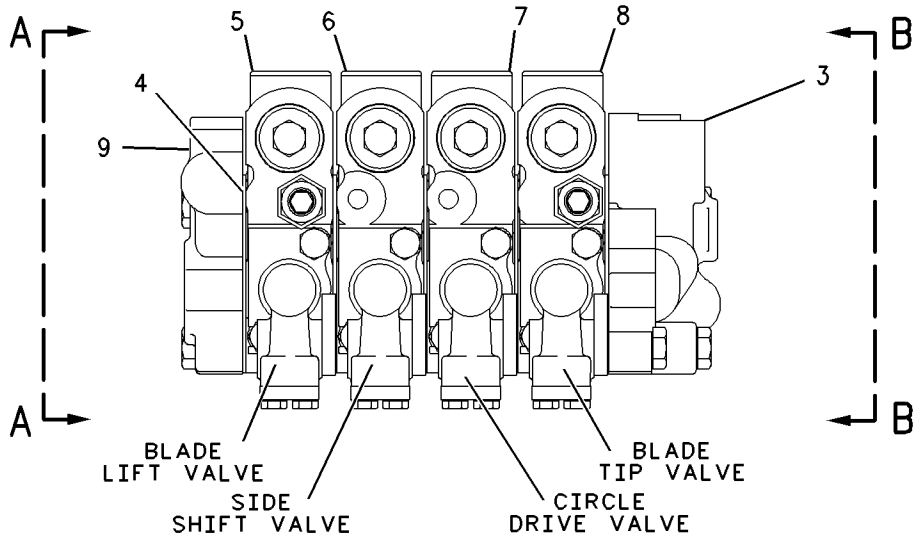

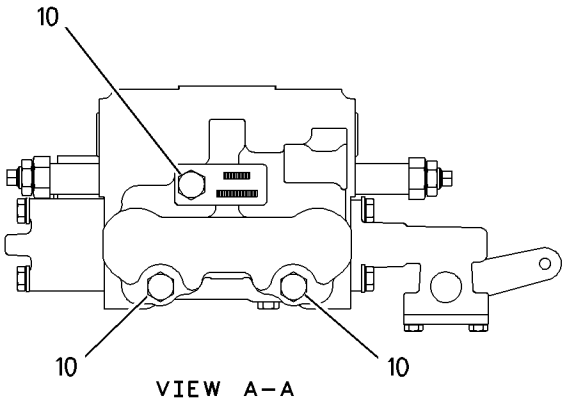

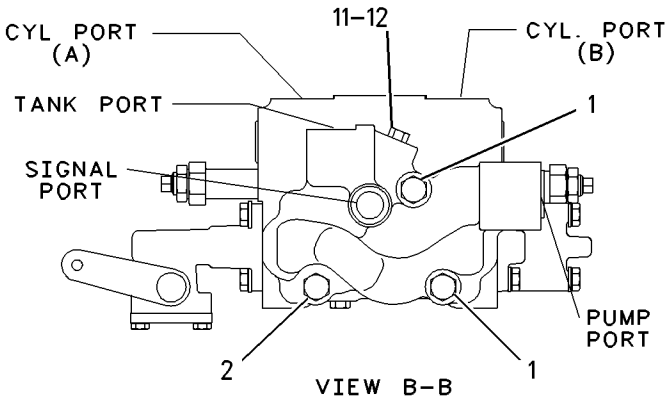

GRAPHIC #1 g00898688

HYDRAULIC SYSTEM

130-3116 VALVE GP-BANK 4–RH

S/N: CAF1-UP
PART OF 121-4083, 121-4095 VALVE & LINKAGE GP
AN ATTACHMENT

SMCS-5051 **i01041783**

NOTE	REF NO	GRAPHIC REF	PART NUMBER	QTY	PART NAME 1 2 3 4 5 6 (PRODUCT LEVEL)	SEE PAGE
M	1	1	**7X-2546**	2	BOLT (M10X1.50X180MM)	
M	2	1	**137-6720**	1	BOLT-HEX HEAD (M10X1.50X160MM)	
	3	1	**102-6238**	1	MANIFOLD	
	4	1	**101-0509**	5	PLATE-SEAL	
Y	5	1	**6E-3028**	1	VALVE GP-CONTROL (ARTICULATION)	620
Y	6	1	**6E-3029**	1	VALVE GP-CONTROL (CENTERSHIFT)	622
Y	7	1	**6E-3030**	1	VALVE GP-CONTROL (WHEEL LEAN)	624
Y	8	1	**128-8647**	1	VALVE GP-CONTROL (BLADE LIFT)	646
	9	1	**101-9346**	1	COVER	
M	10	1	**8T-4186**	3	BOLT (M10X1.50X40MM)	
	11	1	**4J-7533**	1	SEAL-O-RING (6.07MM ID)	
	12	1	**9S-4180**	1	PLUG-O-RING (5/16-24 THD)	

M-METRIC PART
Y-SEPARATE ILLUSTRATION

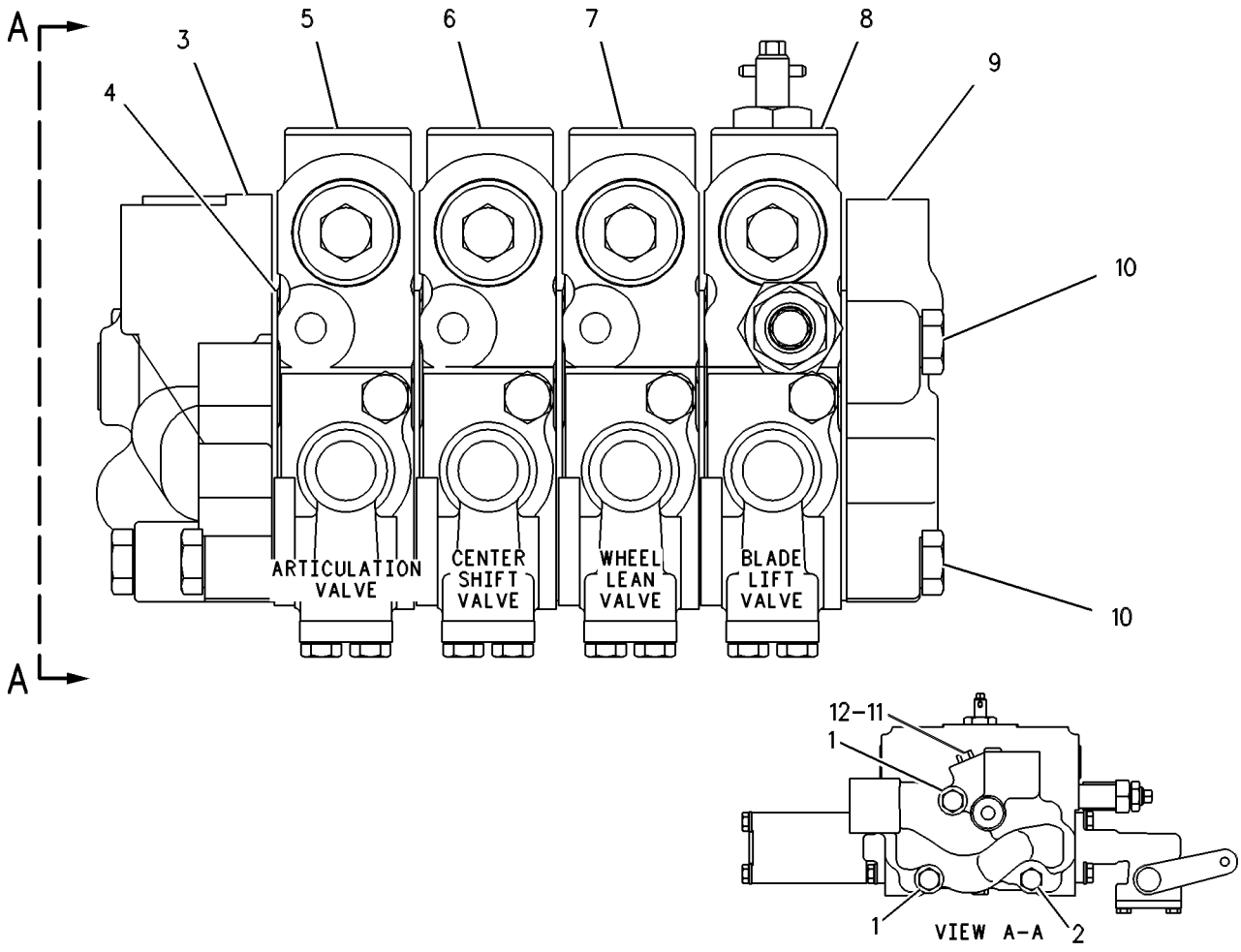

GRAPHIC #1 g00109425

130-3117 VALVE GP-BANK 4–LH

S/N: CAF1-UP
PART OF 121-4083, 124-3771 VALVE & LINKAGE GP
AN ATTACHMENT

SMCS-5051 **i00139068**

NOTE	REF NO	GRAPHIC REF	PART NUMBER	QTY	PART NAME 1 2 3 4 5 6 (PRODUCT LEVEL)	SEE PAGE
M	1	1	**7X-2546**	2	BOLT (M10X1.50X180MM)	
M	2	1	**137-6720**	1	BOLT-HEX HEAD (M10X1.50X160MM)	
	3	1	**102-8385**	1	MANIFOLD	
	4	1	**101-0509**	5	PLATE-SEAL	
	5	1	**4J-7533**	1	SEAL-O-RING (6.07MM ID)	
Y	6	1	**6E-3036**	1	VALVE GP-CONTROL (SIDESHIFT)	632
Y	7	1	**6E-3035**	1	VALVE GP-CONTROL (CIRCLE DRIVE)	630
Y	8	1	**6E-3034**	1	VALVE GP-CONTROL (BLADE TIP)	628
	9	1	**101-9346**	1	COVER	
Y	10	1	**130-3110**	1	VALVE GP-CONTROL (BLADE LIFT)	648
M	11	1	**8T-4186**	3	BOLT (M10X1.50X40MM)	
	12	1	**9S-4180**	1	PLUG-O-RING (5/16-24 THD)	

M-METRIC PART
Y-SEPARATE ILLUSTRATION

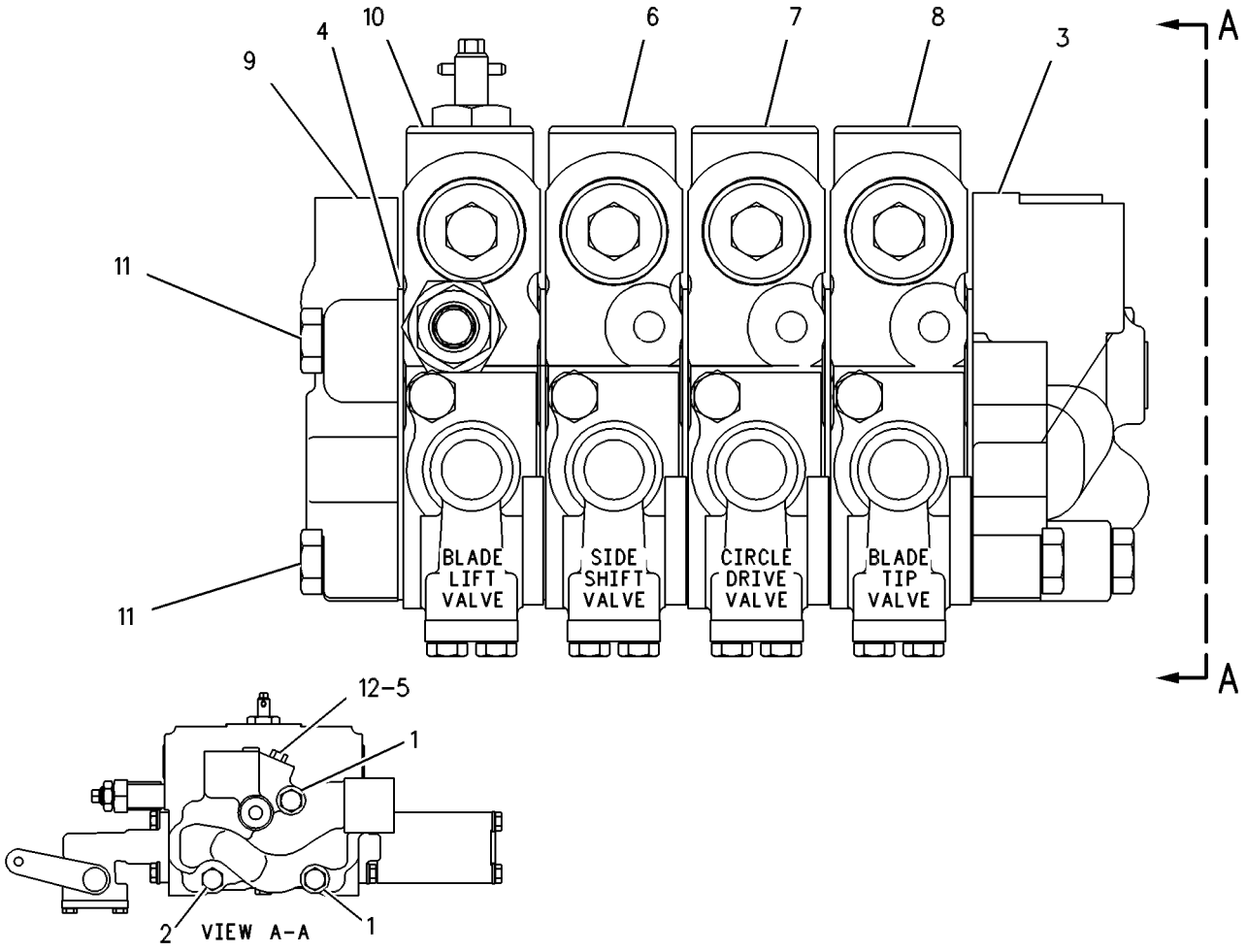

GRAPHIC #1 g00109434

HYDRAULIC SYSTEM

104-8645 VALVE GP-BANK 5–LH

S/N: CAF1-UP
PART OF 112-5499, 7I-4622 VALVE & LINKAGE GP
AN ATTACHMENT

SMCS-5051 **i01191688**

NOTE	REF NO	GRAPHIC REF	PART NUMBER	QTY	PART NAME 1 2 3 4 5 6 (PRODUCT LEVEL)	SEE PAGE
M	1	1	**7X-2546**	2	BOLT (M10X1.50X180MM)	
M	2	1	**137-6720**	1	BOLT-HEX HEAD (M10X1.50X160MM)	
	3	1	**102-8385**	1	MANIFOLD	
	4	1	**101-0509**	6	PLATE-SEAL	
Y	5	1	**6E-3034**	1	VALVE GP-CONTROL (BLADE TIP)	628
Y	6	1	**6E-3035**	1	VALVE GP-CONTROL (CIRCLE DRIVE)	630
Y	7	1	**6E-3036**	1	VALVE GP-CONTROL (SIDESHIFT)	632
Y	8	1	**6E-3037**	1	VALVE GP-CONTROL (BLADE LIFT)	634
Y	9	1	**107-0545**	1	VALVE GP-CONTROL (RIPPER)	638
	10	1	**101-9346**	1	COVER	
	11	1	**9S-4180**	1	PLUG-O-RING (5/16-24 THD)	
	12	1	**4J-7533**	1	SEAL-O-RING (6.07MM ID)	

M-METRIC PART
Y-SEPARATE ILLUSTRATION

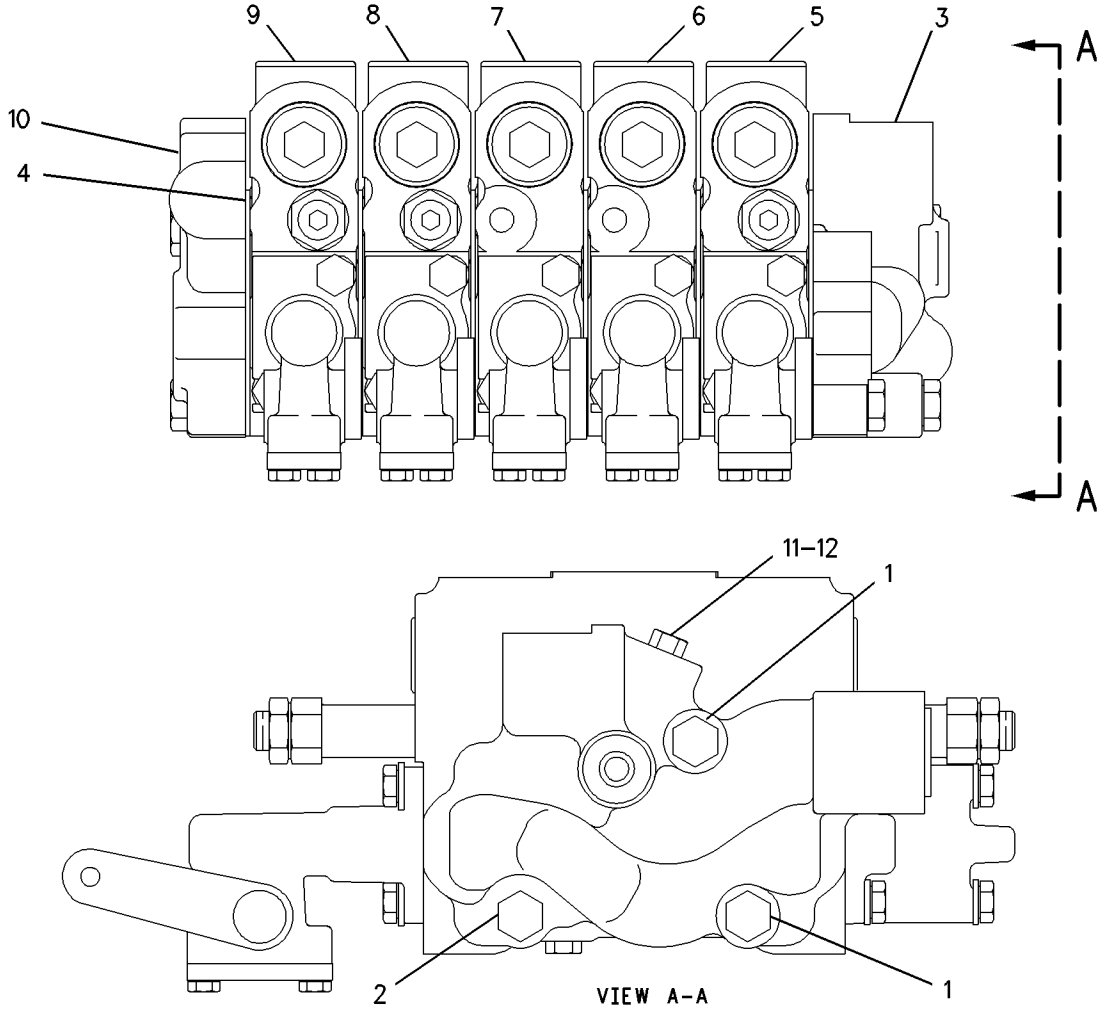

GRAPHIC #1 g00637795

104-8646 VALVE GP-BANK 5–RH

S/N: CAF1-UP
PART OF 7I-4621, 7I-4624 VALVE & LINKAGE GP
AN ATTACHMENT

SMCS-5051 **i01191692**

NOTE	REF NO	GRAPHIC REF	PART NUMBER	QTY	PART NAME 1 2 3 4 5 6 (PRODUCT LEVEL)	SEE PAGE
M	1	1	**7X-2546**	2	BOLT (M10X1.50X180MM)	
M	2	1	**137-6720**	1	BOLT-HEX HEAD (M10X1.50X160MM)	
	3	1	**102-8385**	1	MANIFOLD	
	4	1	**101-0509**	6	PLATE-SEAL	
Y	5	1	**6E-3034**	1	VALVE GP-CONTROL (BLADE TIP)	628
Y	6	1	**6E-3035**	1	VALVE GP-CONTROL (CIRCLE DRIVE)	630
Y	7	1	**6E-3036**	1	VALVE GP-CONTROL (SIDESHIFT)	632
Y	8	1	**6E-3037**	1	VALVE GP-CONTROL (BLADE LIFT)	634
Y	9	1	**107-0543**	1	VALVE GP-CONTROL (SCARIFIER)	636
	10	1	**101-9346**	1	COVER	
	12	1	**9S-4180**	1	PLUG-O-RING (5/16-24 THD)	
	13	1	**4J-7533**	1	SEAL-O-RING (6.07MM ID)	

M-METRIC PART
Y-SEPARATE ILLUSTRATION

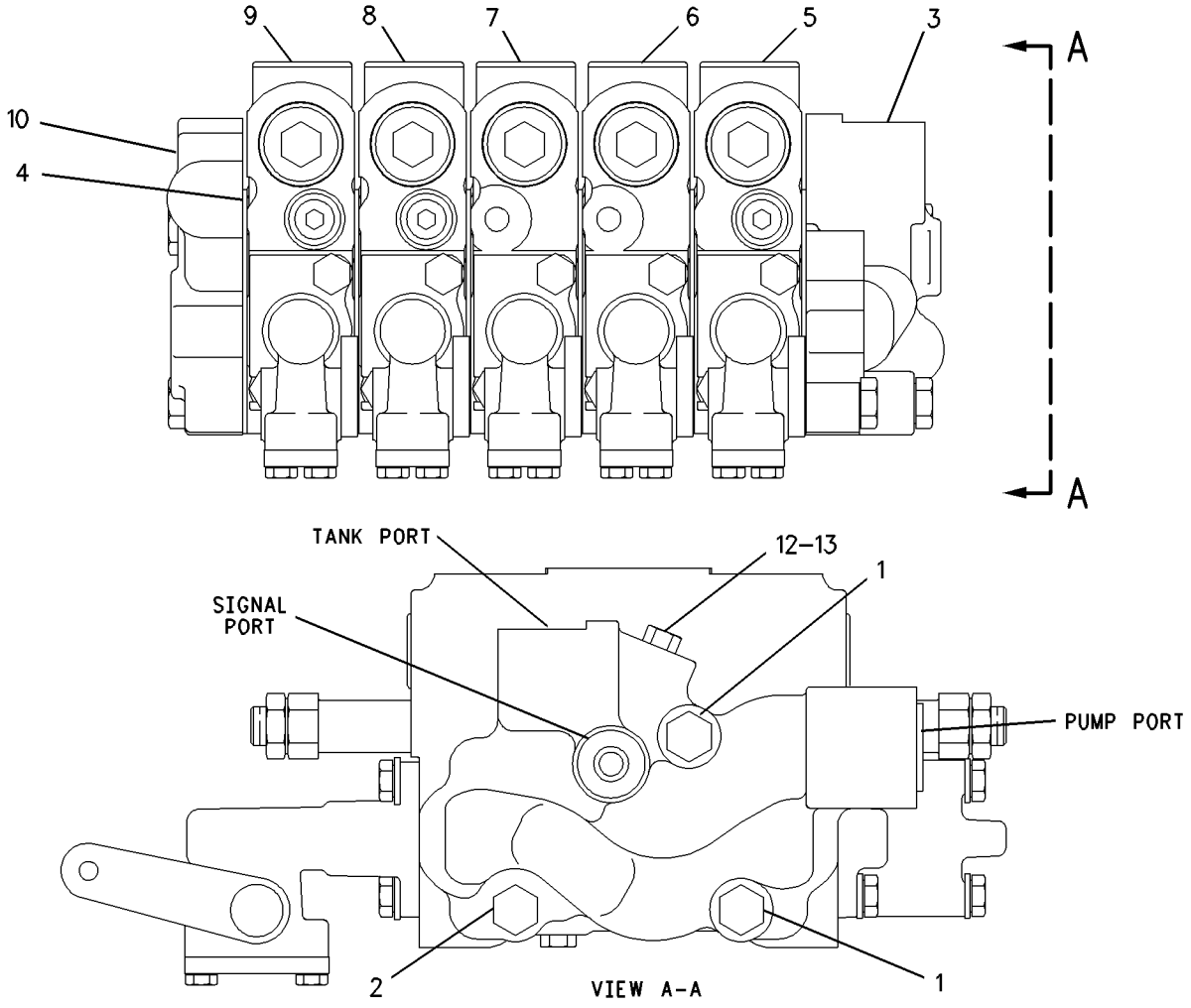

GRAPHIC #1 g00637801

HYDRAULIC SYSTEM

104-8671 VALVE GP-BANK 5–RH

S/N: CAF1-UP

PART OF 112-5499, 124-0311, 7I-4621 VALVE & LINKAGE GP

AN ATTACHMENT

SMCS-5051 **i01861344**

NOTE	REF NO	GRAPHIC REF	PART NUMBER	QTY	PART NAME 1 2 3 4 5 6 (PRODUCT LEVEL)	SEE PAGE
M	1	1	**7X-2546**	2	BOLT (M10X1.50X180MM)	
M	2	1	**137-6720**	1	BOLT-HEX HEAD (M10X1.50X160MM)	
	3	1	**102-6238**	1	MANIFOLD	
	4	1	**101-0509**	6	PLATE-SEAL	
Y	5	1	**6E-3028**	1	VALVE GP-CONTROL (ARTICULATION)	620
Y	6	1	**6E-3029**	1	VALVE GP-CONTROL (CENTERSHIFT)	622
Y	7	1	**6E-3030**	1	VALVE GP-CONTROL (WHEEL LEAN)	624
Y	8	1	**6E-3031**	1	VALVE GP-CONTROL (BLADE LIFT)	626
Y	9	1	**107-0547**	1	VALVE GP-CONTROL (PLOW/DOZER LIFT)	640
	10	1	**101-9346**	1	COVER	
	13	1	**9S-4180**	1	PLUG	
	14	1	**4J-7533**	1	SEAL-O-RING	

M-METRIC PART
Y-SEPARATE ILLUSTRATION

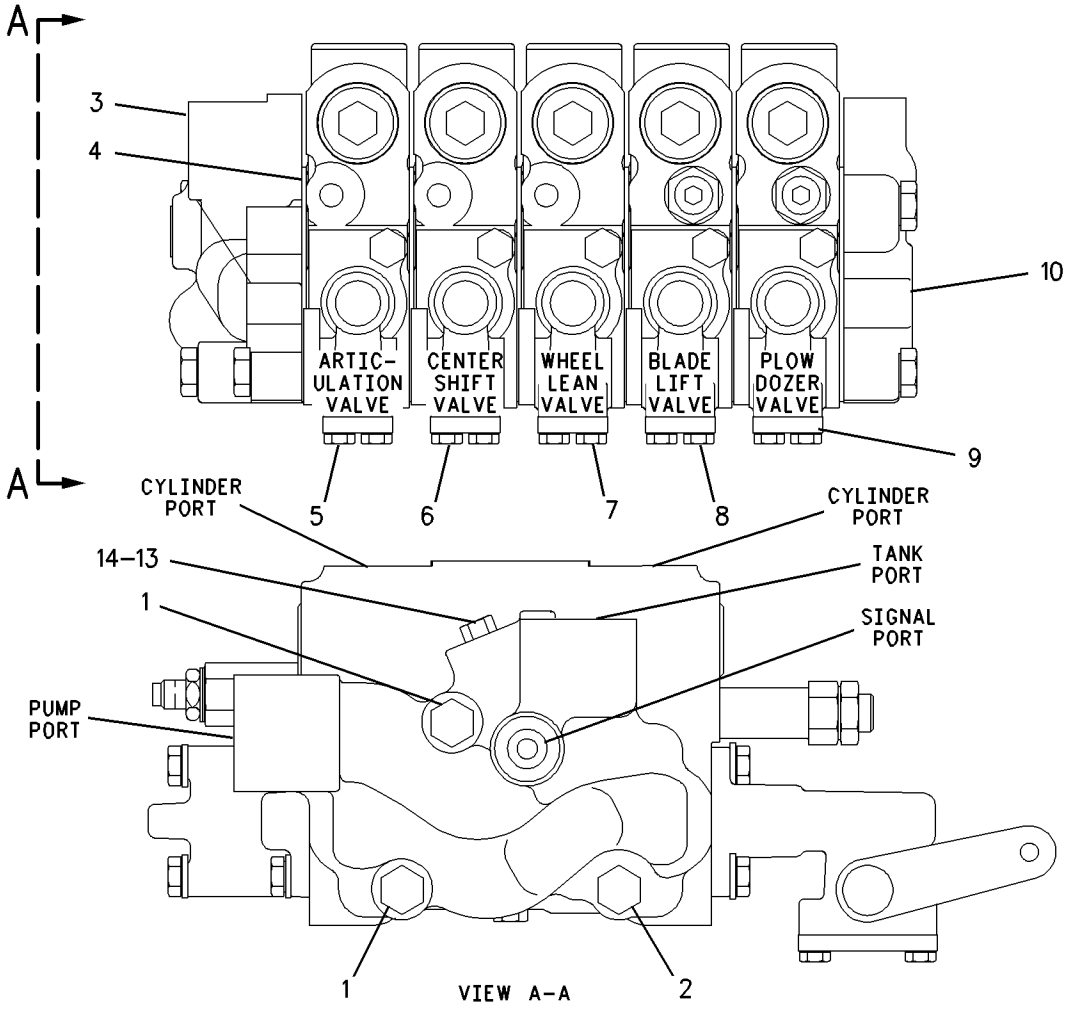

GRAPHIC #1 g00949086

130-3118 VALVE GP-BANK 5–LH

S/N: CAF1-UP
PART OF 121-4097 VALVE & LINKAGE GP
AN ATTACHMENT

SMCS-5051 **i00139065**

NOTE	REF NO	GRAPHIC REF	PART NUMBER	QTY	PART NAME 1 2 3 4 5 6 (PRODUCT LEVEL)	SEE PAGE
M	1	1	**7X-2546**	2	BOLT (M10X1.50X180MM)	
M	2	1	**137-6720**	1	BOLT-HEX HEAD (M10X1.50X160MM)	
	3	1	**102-8385**	1	MANIFOLD	
	4	1	**101-0509**	6	PLATE-SEAL	
Y	5	1	**6E-3034**	1	VALVE GP-CONTROL (BLADE TIP)	628
Y	6	1	**6E-3035**	1	VALVE GP-CONTROL (CIRCLE DRIVE)	630
Y	7	1	**6E-3036**	1	VALVE GP-CONTROL (SIDESHIFT)	632
Y	8	1	**130-3110**	1	VALVE GP-CONTROL (BLADE LIFT)	648
Y	9	1	**119-9550**	1	VALVE GP-CONTROL (RIPPER)	644
M	10	1	**137-6719**	3	BOLT-HEX HEAD (M10X1.50X80MM)	
	11	1	**101-9346**	1	COVER	
	12	1	**9S-4180**	1	PLUG-O-RING (5/16-24 THD)	
	13	1	**4J-7533**	1	SEAL-O-RING (6.07MM ID)	

M-METRIC PART
Y-SEPARATE ILLUSTRATION

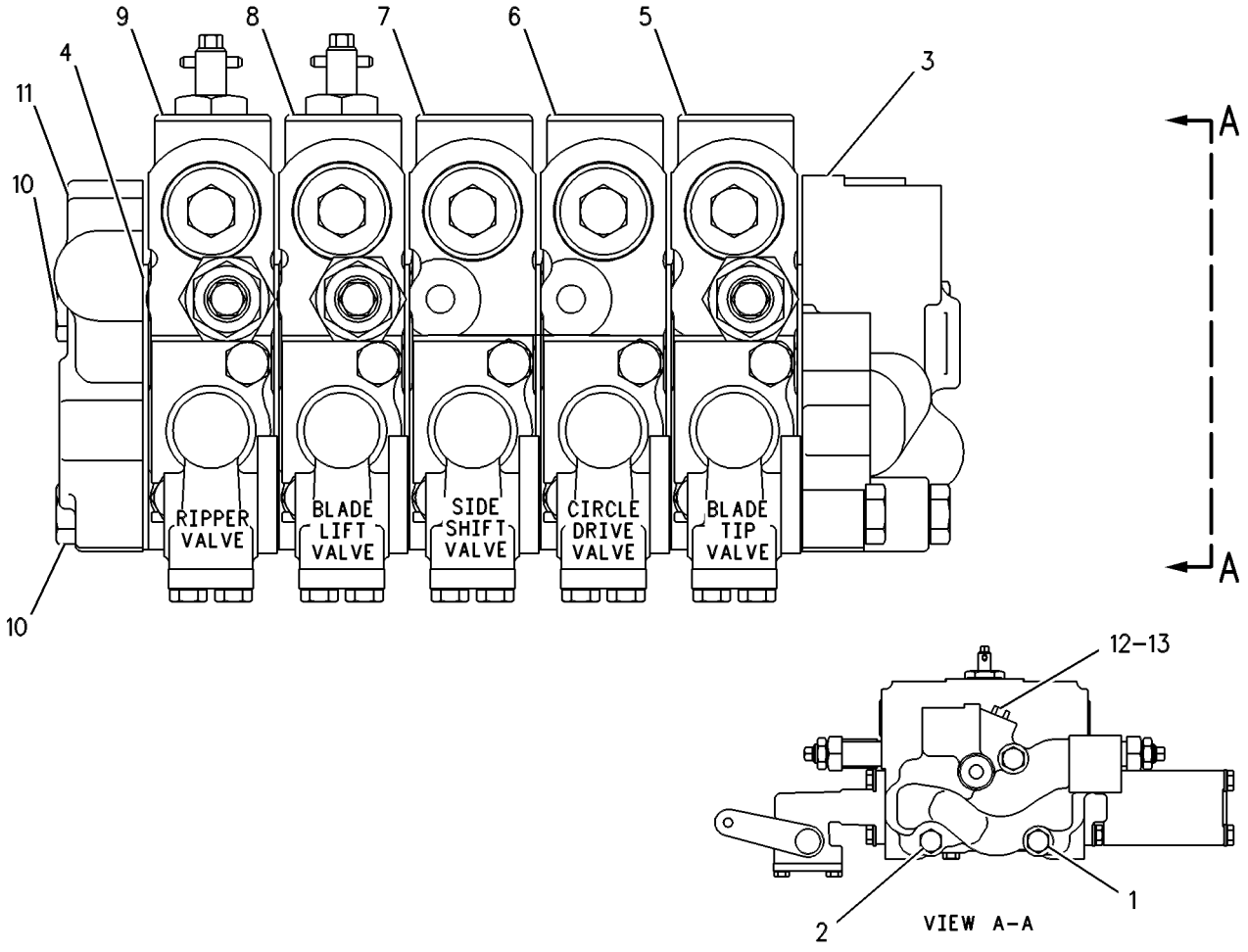

GRAPHIC #1 g00109426

HYDRAULIC SYSTEM

130-3119 VALVE GP-BANK 5–LH

S/N: CAF1-UP
PART OF 121-4086, 121-4095 VALVE & LINKAGE GP
AN ATTACHMENT

SMCS-5051 **i00857068**

NOTE	REF NO	GRAPHIC REF	PART NUMBER	QTY	PART NAME 1 2 3 4 5 6 (PRODUCT LEVEL)	SEE PAGE
M	1	1	**7X-2546**	2	BOLT (M10X1.50X180MM)	
M	2	1	**137-6720**	1	BOLT-HEX HEAD	
	3	1	**102-8385**	1	MANIFOLD	
	4	1	**101-0509**	6	PLATE-SEAL	
Y	5	1	**6E-3034**	1	VALVE GP-CONTROL (BLADE TIP)	628
Y	6	1	**6E-3035**	1	VALVE GP-CONTROL (CIRCLE DRIVE)	630
Y	7	1	**6E-3036**	1	VALVE GP-CONTROL (SIDESHIFT)	632
Y	8	1	**130-3110**	1	VALVE GP-CONTROL (BLADE LIFT)	648
Y	9	1	**119-9549**	1	VALVE GP-CONTROL (SCARIFIER)	642
M	10	1	**137-6719**	3	BOLT-HEX HEAD (M10X1.50X80MM)	
	11	1	**101-9346**	1	COVER	
	12	1	**9S-4180**	1	PLUG-O-RING (5/16-24 THD)	
	13	1	**4J-7533**	1	SEAL-O-RING (6.07MM ID)	

M-METRIC PART
Y-SEPARATE ILLUSTRATION

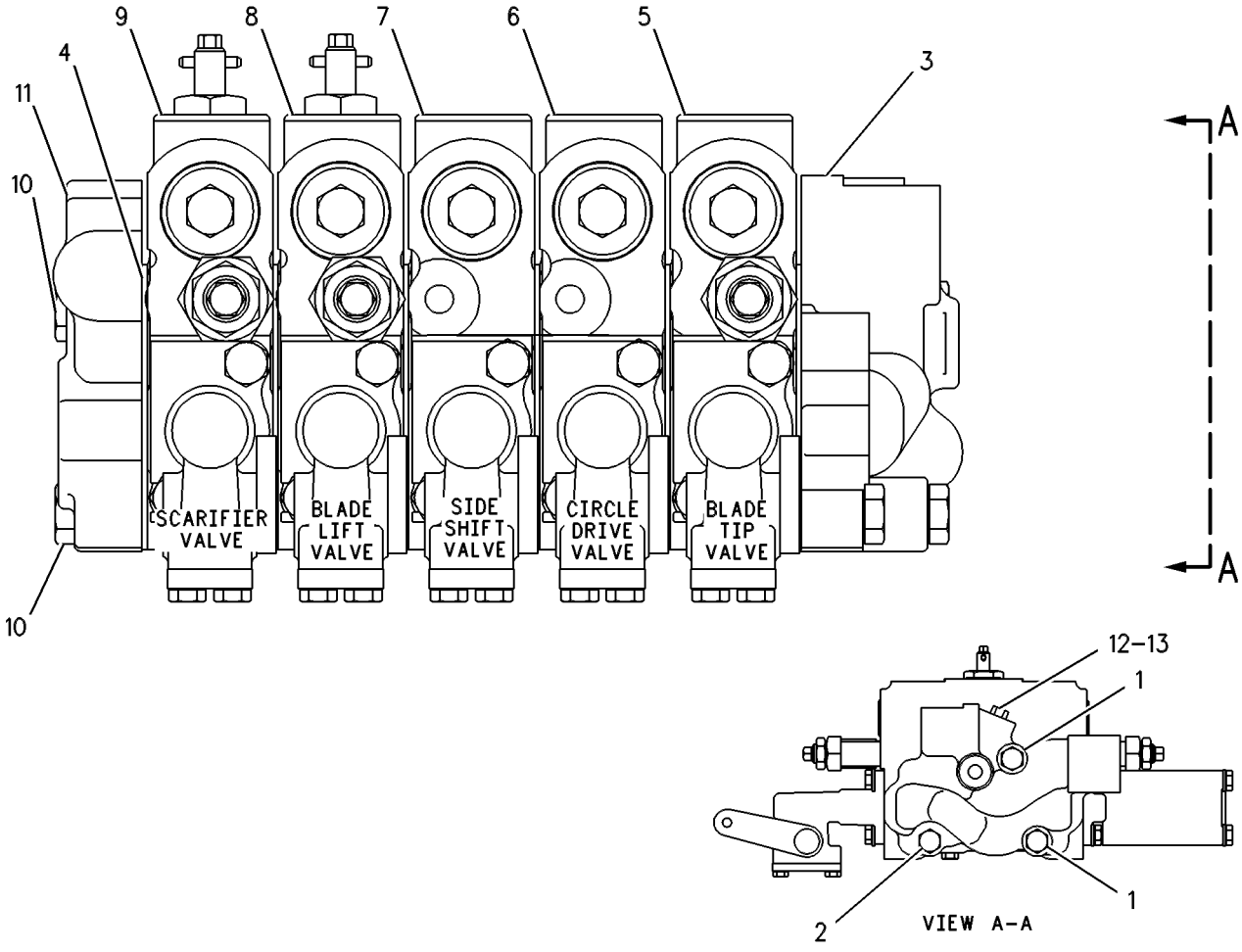

GRAPHIC #1 g00109430

HYDRAULIC SYSTEM

130-3123 VALVE GP-BANK 5–RH

S/N: CAF1-UP
PART OF 121-4086, 121-4097, 124-3771 VALVE & LINKAGE GP
AN ATTACHMENT

SMCS-5051 **i01668524**

NOTE	REF NO	GRAPHIC REF	PART NUMBER	QTY	PART NAME 1 2 3 4 5 6 (PRODUCT LEVEL)	SEE PAGE
M	1	1	**7X-2546**	2	BOLT (M10X1.50X180MM)	
M	2	1	**137-6720**	1	BOLT-HEX HEAD (M10X1.50X160MM)	
	3	1	**102-6238**	1	MANIFOLD	
	4	1	**101-0509**	6	PLATE-SEAL	
Y	5	1	**6E-3028**	1	VALVE GP-CONTROL (ARTICULATION)	620
Y	6	1	**6E-3029**	1	VALVE GP-CONTROL (CENTERSHIFT)	622
Y	7	1	**6E-3030**	1	VALVE GP-CONTROL (WHEEL LEAN)	624
	8	1	**4J-7533**	1	SEAL-O-RING	
Y	9	1	**128-8647**	1	VALVE GP-CONTROL (BLADE LIFT)	646
Y	10	1	**130-3111**	1	VALVE GP-CONTROL (PLOW/DOZER LIFT)	650
	11	1	**101-9346**	1	COVER	
M	12	1	**137-6719**	3	BOLT-HEX HEAD (M10X1.50X80MM)	
	13	1	**9S-4180**	1	PLUG	

M-METRIC PART
Y-SEPARATE ILLUSTRATION

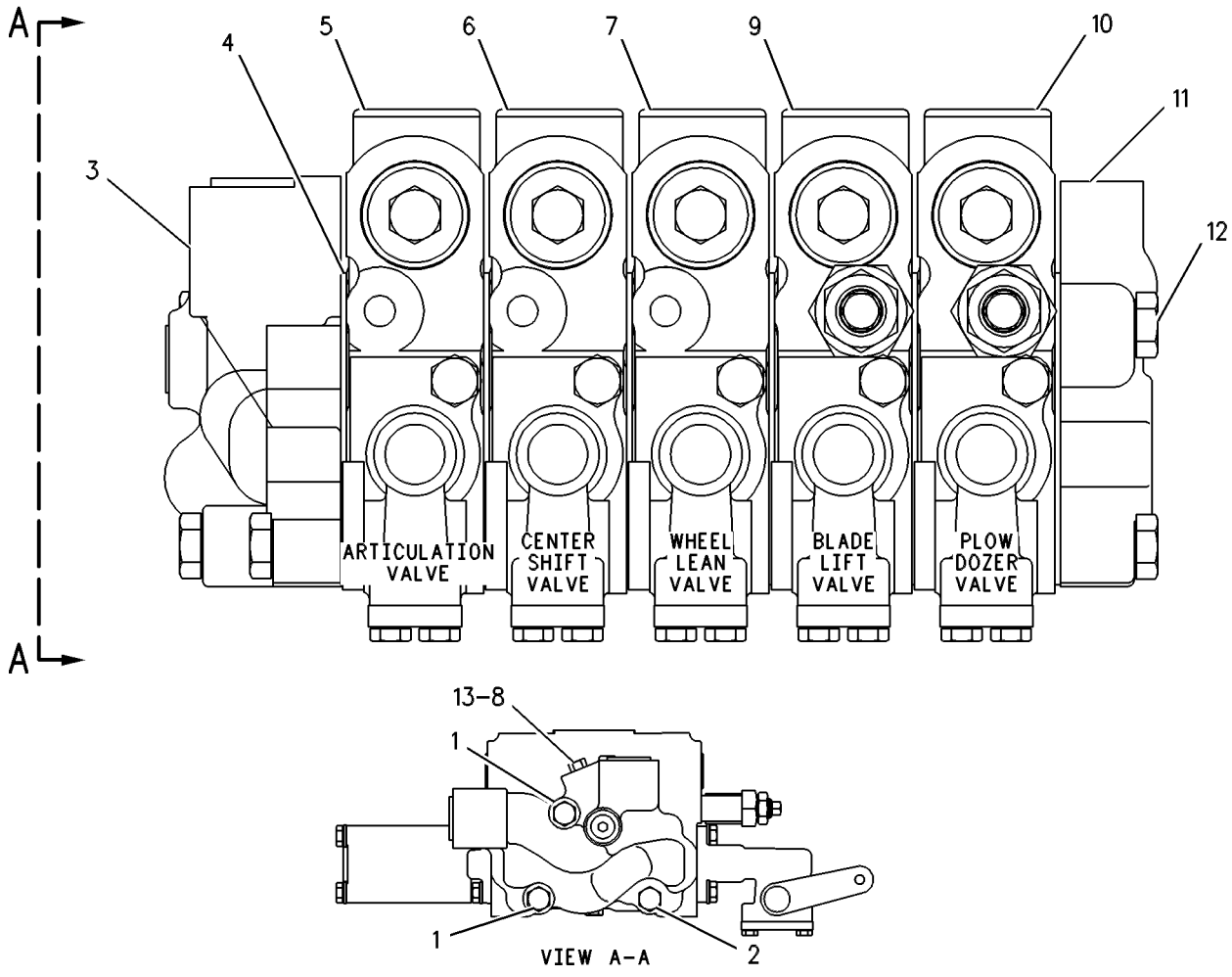

GRAPHIC #1 g00272878

HYDRAULIC SYSTEM

9T-5957 VALVE GP-COMBINATION

S/N: CAF1-UP

PART OF 160-9178, 171-6431 LINES GP-PUMP

ALSO AN ATTACHMENT

SMCS-5064 **i01831440**

NOTE	REF NO	GRAPHIC REF	PART NUMBER	QTY	PART NAME 1 2 3 4 5 6 (PRODUCT LEVEL)	SEE PAGE
Z	1	1		1	BODY	
Y	2	1	**100-6021**	1	VALVE GP-RELIEF (STEERING)	661
C	3	1	**9S-8003**	1	PLUG	
	4	1	**3T-8236**	1	SPRING	
M	5	1	**6V-5230**	2	BOLT (M10X1.5X60MM)	
	6	1	**6V-3965**	1	FITTING AS (QUICK DISCONNECT)(DIAGNOSTIC)	
	7	1	**3J-1907**	1	SEAL-O-RING	
	8	1	**6V-8647**	2	CONNECTOR	
C	9	1	**3J-7354**	3	SEAL-O-RING	
	10	1	**6E-1923**	1	TUBE AS	
	11	1	**4J-5477**	2	SEAL-O-RING	
Y	12	1	**4T-4935**	1	VALVE GP-RELIEF (MAIN)	658
	13	1	**8T-8987**	1	ELBOW	
	14	1	**2M-9780**	1	SEAL-O-RING	
	15	1	**1H-0337**	1	VALVE	
	16	1	**9F-6705**	1	SPRING	
	17	1	**9S-4189**	1	PLUG	
	18	1	**6E-1924**	1	SPRING (OUTER)	
	19	1	**6E-1925**	1	SPRING (INNER)	
	20	1	**5M-2057**	1	SEAL-O-RING	
	21	1	**8M-3175**	2	WASHER-HARD (10.2X16X3MM THK)	
	22	1	**6V-0852**	1	CAP-DUST	
Y	23	1	**6E-4703**	1	VALVE GP-RELIEF (IMPLEMENT SIGNAL)	660
C	24	1	**3K-0360**	1	SEAL-O-RING	
C	25	1	**9S-8001**	2	PLUG	
C	26	1	**4J-7533**	2	SEAL-O-RING	
Y	27	1	**4T-1860**	1	VALVE GP-SHUTTLE (BALL RESOLVER) (SIGNAL)	670
	30	1	**2S-4078**	1	SEAL-O-RING	
	31	1	**9S-8009**	1	PLUG	
	32	1	**4K-1388**	1	SEAL-O-RING	
C	33	1	**6V-8398**	1	SEAL-O-RING	
C	34	1	**7X-4776**	2	RING-BACKUP	
C	35	1	**9S-8002**	1	PLUG	
CY	36	1	**131-8350**	1	VALVE GP-PURGE (IMPLEMENT SIGNAL)	657
C	37	1	**3P-9498**	1	PLUG-ORIFICE	
C	39	1	**8J-6815**	2	PLUG-ORIFICE	
C	40	1	**1J-9671**	1	SEAL-O-RING	
	41	1	**9S-4183**	3	PLUG	
	42	1	**3D-2824**	3	SEAL-O-RING (23.47MM ID)	

C-CHANGE FROM PREVIOUS TYPE
M-METRIC PART
Y-SEPARATE ILLUSTRATION
Z-NOT SERVICED SEPARATELY

9T-5957 VALVE GP-COMBINATION *(contd.)* i01831440

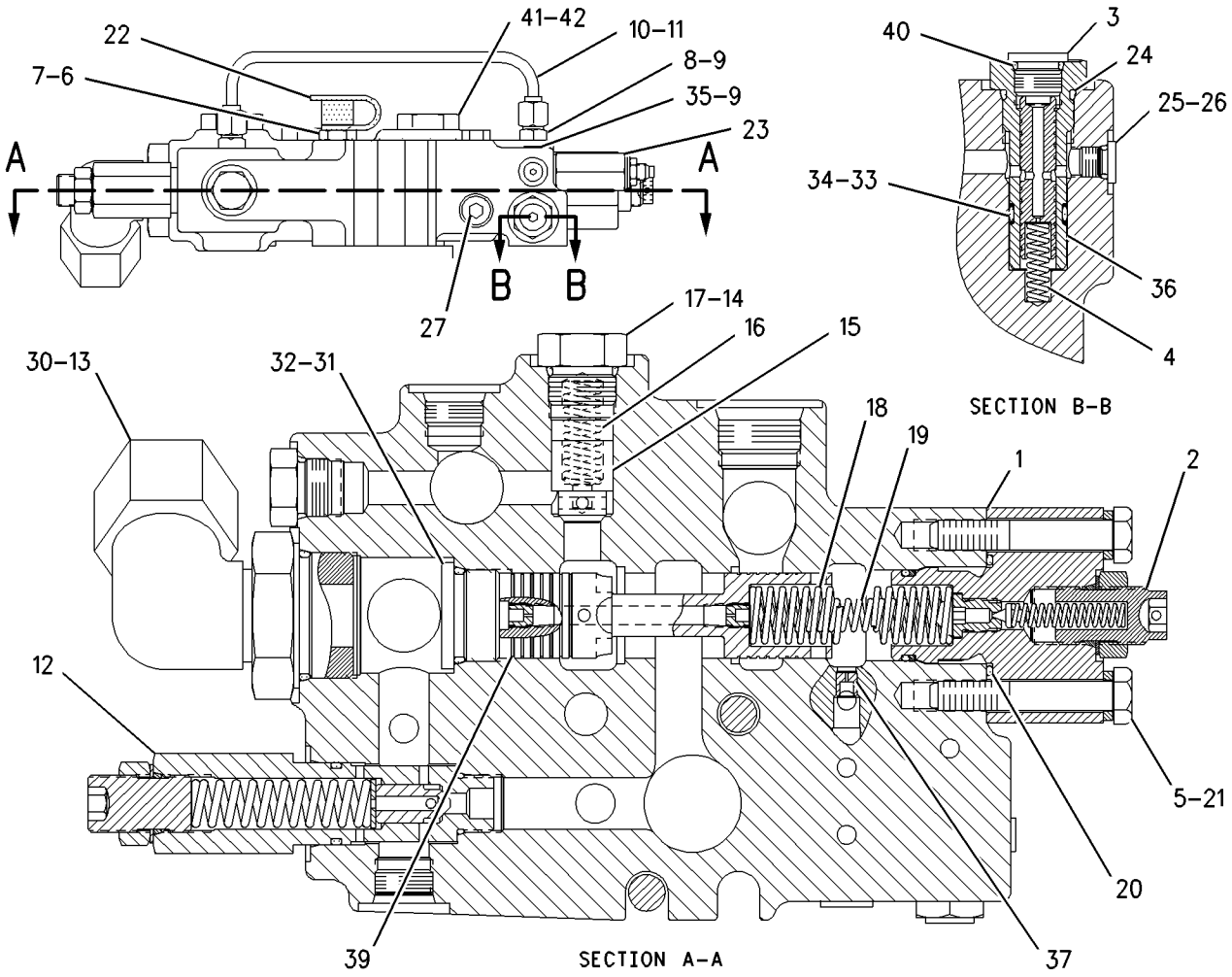

GRAPHIC #1 g00934827

HYDRAULIC SYSTEM

6E-3028 VALVE GP-CONTROL—ARTICULATION

S/N: CAF1-UP

PART OF 130-3116, 6E-3032 VALVE GP-BANK 4, 104-8671, 130-3123 VALVE GP-BANK 5

ALSO AN ATTACHMENT

SMCS-5051 **i01052769**

NOTE	REF NO	GRAPHIC REF	PART NUMBER	QTY	PART NAME 1 2 3 4 5 6 (PRODUCT LEVEL)	SEE PAGE
	1	1	**6E-3044**	1	BODY	
	2	1	**101-1148**	1	STEM	
	3	1	**101-1978**	1	COVER	
	4	1	**2K-8199**	2	SEAL-O-RING (28.24MM ID)	
M	5	1	**8T-4189**	4	BOLT (M8X1.25X20MM)	
	6	1	**8T-4224**	4	WASHER-HARD (2MM THK)	
	7	1	**101-1984**	1	BODY	
	8	1	**102-7412**	1	SPRING	
	9	1	**101-1973**	4	RETAINER	
	10	1	**101-1971**	1	LEVER	
	11	1	**101-1970**	1	LEVER AS	
	12	1	**8M-4437**	2	SEAL-O-RING	
	13	1	**101-1983**	2	RING-BACKUP	
	14	1	**4D-9986**	1	SEAL-O-RING (23.47MM ID)	
	15	1	**101-2480**	1	COVER	
M	16	1	**8T-4138**	2	BOLT (M6X1.0X20MM)	
	17	1	**5B-9318**	1	BALL (4.76MM)	
	18	1	**6E-3007**	1	SPRING	
	19	1	**6E-4502**	1	PLUG	
	20	1	**4J-7533**	1	SEAL-O-RING (6.07MM ID)	
	21	1	**6E-3019**	1	VALVE	
	22	1	**6E-5153**	1	SPRING	
	23	1	**108-2187**	1	PLUG-PIPE	
	24	1	**9S-8005**	1	PLUG-O-RING (3/4-16 THD)	
	25	1	**3K-0360**	3	SEAL-O-RING (16.36MM ID)	
	26	1	**106-3659**	1	PISTON	
	27	1	**6E-3013**	2	SEAT	
	28	1	**106-3658**	2	VALVE	
	29	1	**9J-0403**	2	SPRING	
	30	1	**9J-0404**	2	PLUG	
	31	1	**7J-9933**	2	SEAL-O-RING (21.89MM ID)	
	33	1	**111-8233**	1	SPRING	

M-METRIC PART

6E-3028 VALVE GP-CONTROL *(contd.)*

i01052769

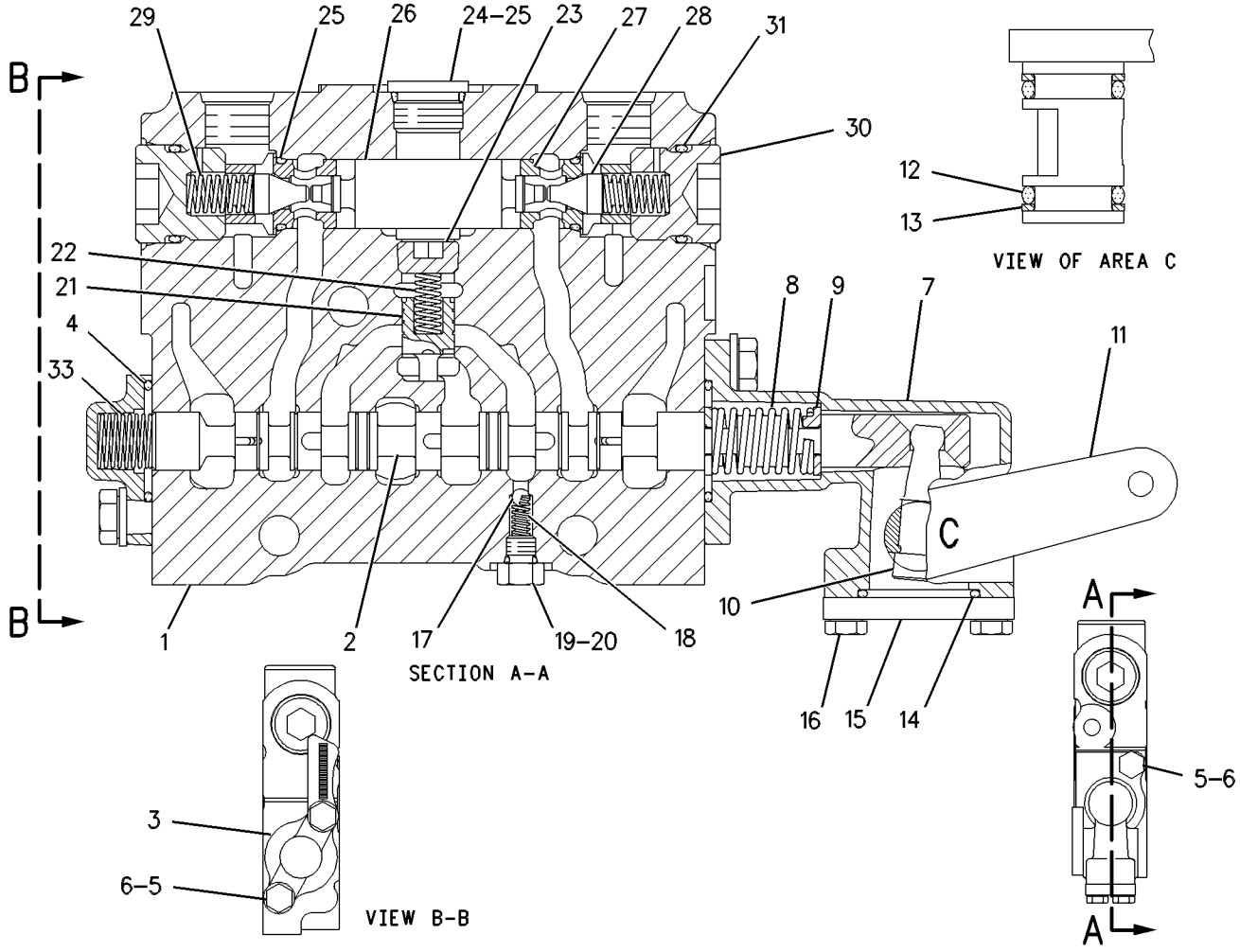

GRAPHIC #1

g00546074

HYDRAULIC SYSTEM

6E-3029 VALVE GP-CONTROL—CENTERSHIFT

S/N: CAF1-UP

PART OF 130-3116, 6E-3032 VALVE GP-BANK 4, 104-8671, 130-3123 VALVE GP-BANK 5

ALSO AN ATTACHMENT

SMCS-5051 **i01052813**

NOTE	REF NO	GRAPHIC REF	PART NUMBER	QTY	PART NAME 1 2 3 4 5 6 (PRODUCT LEVEL)	SEE PAGE
	1	1	**6E-3044**	1	BODY	
	2	1	**101-1149**	1	STEM	
	3	1	**101-1978**	1	COVER	
	4	1	**2K-8199**	2	SEAL-O-RING (28.24MM ID)	
M	5	1	**8T-4189**	4	BOLT (M8X1.25X20MM)	
	6	1	**8T-4224**	4	WASHER-HARD (2MM THK)	
	7	1	**101-1984**	1	BODY	
	8	1	**102-7412**	1	SPRING	
	9	1	**101-1973**	4	RETAINER	
	10	1	**101-1971**	1	LEVER	
	11	1	**101-1970**	1	LEVER AS	
	12	1	**8M-4437**	2	SEAL-O-RING	
	13	1	**101-1983**	2	RING-BACKUP	
	14	1	**4D-9986**	1	SEAL-O-RING (23.47MM ID)	
	15	1	**101-2480**	1	COVER	
M	16	1	**8T-4138**	2	BOLT (M6X1.0X20MM)	
	17	1	**5B-9318**	1	BALL (4.76MM)	
	18	1	**6E-3007**	1	SPRING	
	19	1	**6E-4502**	1	PLUG	
	20	1	**4J-7533**	1	SEAL-O-RING (6.07MM ID)	
	21	1	**6E-3019**	1	VALVE	
	22	1	**6E-5153**	1	SPRING	
	23	1	**108-2187**	1	PLUG-PIPE	
	24	1	**9S-8005**	1	PLUG-O-RING (3/4-16 THD)	
	25	1	**3K-0360**	3	SEAL-O-RING (16.36MM ID)	
	26	1	**106-3659**	1	PISTON	
	27	1	**6E-3013**	2	SEAT	
	28	1	**106-3658**	2	VALVE	
	29	1	**9J-0403**	2	SPRING	
	30	1	**9J-0404**	2	PLUG	
	31	1	**7J-9933**	2	SEAL-O-RING (21.89MM ID)	
	33	1	**111-8233**	1	SPRING	

M-METRIC PART

6E-3029 VALVE GP-CONTROL *(contd.)* i01052813

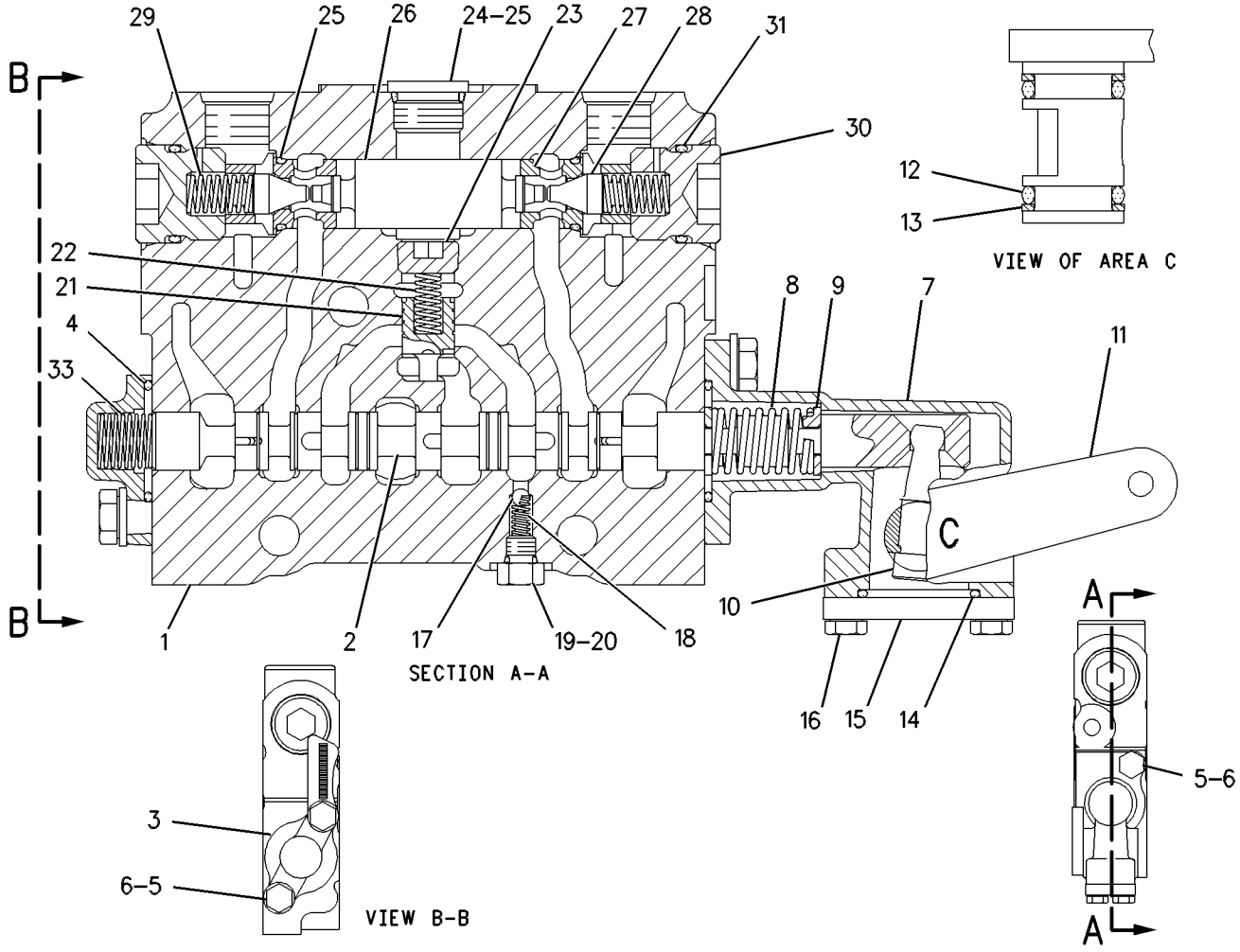

GRAPHIC #1 g00546075

6E-3030 VALVE GP-CONTROL—WHEEL LEAN

S/N: CAF1-UP

PART OF 130-3116, 6E-3032 VALVE GP-BANK 4, 104-8671, 130-3123 VALVE GP-BANK 5

ALSO AN ATTACHMENT

SMCS-5051 **i01052815**

NOTE	REF NO	GRAPHIC REF	PART NUMBER	QTY	PART NAME 1 2 3 4 5 6 (PRODUCT LEVEL)	SEE PAGE
	1	1	**6E-3044**	1	BODY	
	2	1	**101-1154**	1	STEM	
	3	1	**101-1978**	1	COVER	
	4	1	**2K-8199**	2	SEAL-O-RING (28.24MM ID)	
M	5	1	**8T-4189**	4	BOLT (M8X1.25X20MM)	
	6	1	**8T-4224**	4	WASHER-HARD (2MM THK)	
	7	1	**101-1984**	1	BODY	
	8	1	**102-7412**	1	SPRING	
	9	1	**101-1973**	4	RETAINER	
	10	1	**101-1971**	1	LEVER	
	11	1	**101-1970**	1	LEVER AS	
	12	1	**8M-4437**	2	SEAL-O-RING	
	13	1	**101-1983**	2	RING-BACKUP	
	14	1	**4D-9986**	1	SEAL-O-RING (23.47MM ID)	
	15	1	**101-2480**	1	COVER	
M	16	1	**8T-4138**	2	BOLT (M6X1.0X20MM)	
	17	1	**5B-9318**	1	BALL (4.76MM)	
	18	1	**6E-3007**	1	SPRING	
	19	1	**6E-4502**	1	PLUG	
	20	1	**4J-7533**	1	SEAL-O-RING (6.07MM ID)	
	21	1	**6E-3019**	1	VALVE	
	22	1	**6E-5153**	1	SPRING	
	23	1	**108-2187**	1	PLUG-PIPE	
	24	1	**9S-8005**	1	PLUG-O-RING (3/4-16 THD)	
	25	1	**3K-0360**	3	SEAL-O-RING (16.36MM ID)	
	26	1	**106-3659**	1	PISTON	
	27	1	**6E-3013**	2	SEAT	
	28	1	**106-3658**	2	VALVE	
	29	1	**9J-0403**	2	SPRING	
	30	1	**9J-0404**	2	PLUG	
	31	1	**7J-9933**	2	SEAL-O-RING (21.89MM ID)	
	33	1	**111-8233**	1	SPRING	

M-METRIC PART

6E-3030 VALVE GP-CONTROL *(contd.)* i01052815

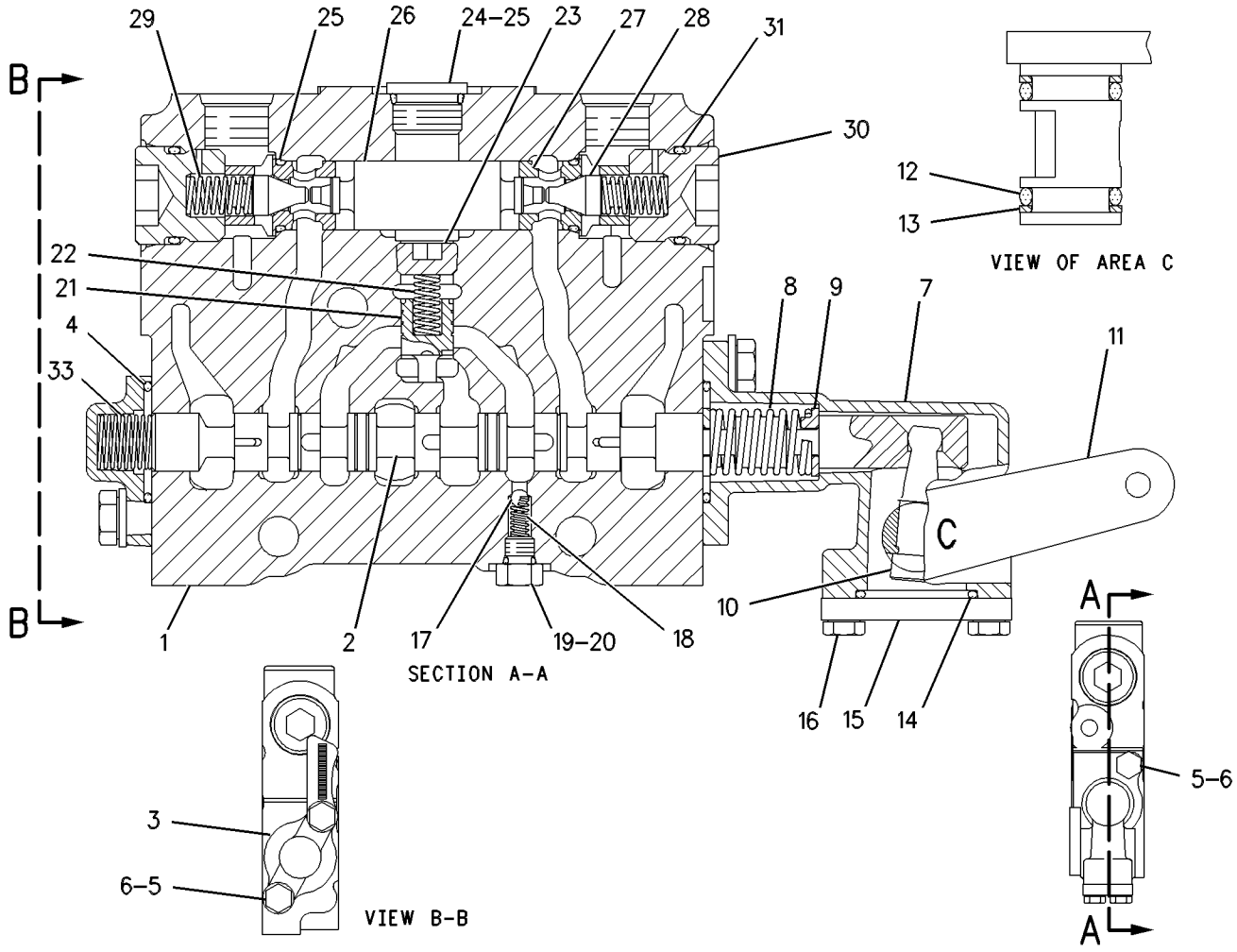

GRAPHIC #1 g00546077

6E-3031 VALVE GP-CONTROL–BLADE LIFT

S/N: CAF1-UP

PART OF 6E-3032 VALVE GP-BANK 4, 104-8671 VALVE GP-BANK 5

ALSO AN ATTACHMENT

SMCS-5051 **i01459258**

NOTE	REF NO	GRAPHIC REF	PART NUMBER	QTY	PART NAME 1 2 3 4 5 6 (PRODUCT LEVEL)	SEE PAGE
	1	1	**6E-3043**	1	BODY	
	2	1	**101-1150**	1	STEM	
	3	1	**101-1980**	1	HOUSING	
	4	1	**101-1972**	1	DETENT	
	5	1	**5B-9318**	1	BALL	
M	6	1	**8T-6869**	2	BOLT (M8X1.25X60MM)	
	7	1	**2K-8199**	2	SEAL-O-RING	
M	8	1	**8T-4189**	2	BOLT (M8X1.25X20MM)	
	9	1	**8T-4224**	4	WASHER-HARD (8.8X16X2MM THK)	
	10	1	**101-1984**	1	BODY	
	11	1	**102-7412**	1	SPRING	
	12	1	**101-1973**	4	RETAINER	
	13	1	**101-1971**	1	LEVER	
	14	1	**101-1970**	1	LEVER AS	
	15	1	**8M-4437**	2	SEAL-O-RING	
	16	1	**101-1983**	2	RING-BACKUP (14.65MM ID)	
	17	1	**4D-9986**	1	SEAL-O-RING	
	18	1	**101-2480**	1	COVER	
M	19	1	**8T-4138**	2	BOLT (M6X1X20MM)	
	20	1	**6E-3007**	1	SPRING	
	21	1	**6E-4502**	1	PLUG	
	22	1	**4J-7533**	1	SEAL-O-RING	
	23	1	**6E-3019**	1	VALVE	
	24	1	**6E-5153**	1	SPRING	
	25	1	**108-2187**	1	PLUG-PIPE	
	26	1	**9S-8005**	1	PLUG	
	27	1	**3K-0360**	3	SEAL-O-RING	
	28	1	**106-3660**	2	PISTON	
	29	1	**6E-3013**	2	SEAT	
	30	1	**106-3658**	2	VALVE	
	31	1	**9J-0403**	2	SPRING	
	32	1	**9J-0404**	2	PLUG	
	33	1	**7J-9933**	2	SEAL-O-RING	
Y	34	1	*6E-3033*	1	VALVE GP-RELIEF (BLADE LIFT)	659
	35	1	**107-0516**	1	PLATE-IDENTIFICATION	
Y	36	1	**108-4916**	1	DETENT GP-CONTROL VALVE	513
	37	1	**111-8234**	1	SPRING	

M-METRIC PART
Y-SEPARATE ILLUSTRATION

6E-3031 VALVE GP-CONTROL *(contd.)* i01459258

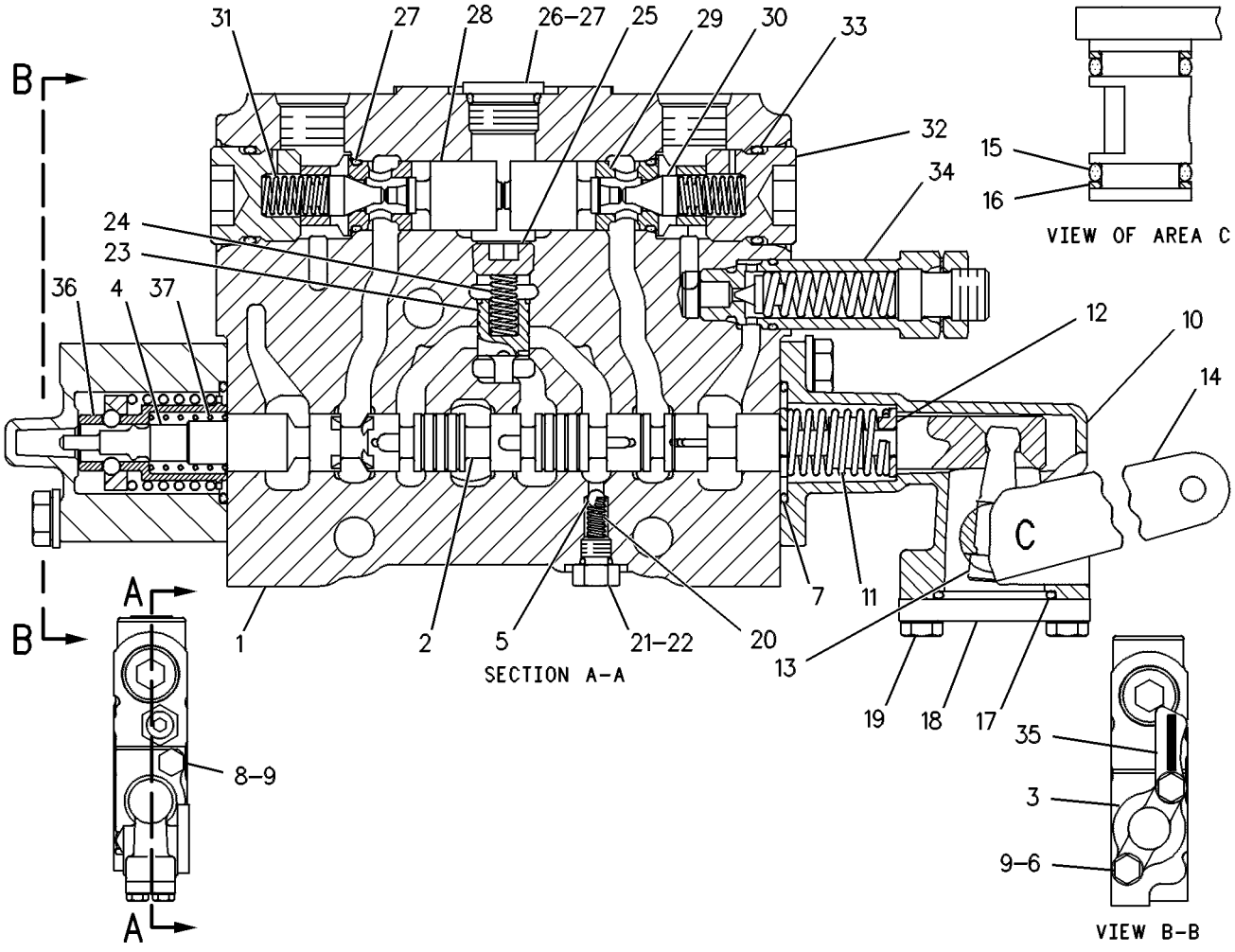

GRAPHIC #1 g00108533

6E-3034 VALVE GP-CONTROL—BLADE TIP

S/N: CAF1-UP

PART OF 130-3117, 6E-3038 VALVE GP-BANK 4, 104-8645, 104-8646, 130-3118, 130-3119 VALVE GP-BANK 5

ALSO AN ATTACHMENT

SMCS-5051 **i01455748**

NOTE	REF NO	GRAPHIC REF	PART NUMBER	QTY	PART NAME 1 2 3 4 5 6 (PRODUCT LEVEL)	SEE PAGE
	1	1	**6E-4599**	1	BODY	
	2	1	**101-1155**	1	STEM	
	3	1	**101-1978**	1	COVER	
	4	1	**2K-8199**	2	SEAL-O-RING	
M	5	1	**8T-4189**	4	BOLT (M8X1.25X20MM)	
	6	1	**8T-4224**	4	WASHER-HARD (8.8X16X2MM THK)	
	7	1	**101-1984**	1	BODY	
	8	1	**7J-9933**	2	SEAL-O-RING	
Y	9	1	**101-4147**	1	VALVE GP-RELIEF (BLADE TIP)	662
	11	1	**102-7412**	1	SPRING	
	12	1	**101-1973**	4	RETAINER	
	13	1	**101-1971**	1	LEVER	
	14	1	**101-1982**	1	LEVER AS	
	15	1	**8M-4437**	2	SEAL-O-RING	
	16	1	**101-1983**	2	RING-BACKUP (14.65MM ID)	
	17	1	**4D-9986**	1	SEAL-O-RING	
	18	1	**101-2480**	1	COVER	
M	19	1	**8T-4138**	2	BOLT (M6X1X20MM)	
	20	1	**5B-9318**	1	BALL	
	21	1	**6E-3007**	1	SPRING	
	22	1	**6E-4502**	1	PLUG	
	23	1	**4J-7533**	1	SEAL-O-RING	
	24	1	**6E-3019**	1	VALVE	
	25	1	**6E-5153**	1	SPRING	
	26	1	**108-2187**	1	PLUG-PIPE	
	27	1	**9J-0403**	2	SPRING	
	28	1	**9J-0404**	2	PLUG	
	29	1	**9S-8005**	1	PLUG	
	30	1	**3K-0360**	3	SEAL-O-RING	
	31	1	**106-3659**	1	PISTON	
	32	1	**6E-3013**	2	SEAT	
	33	1	**106-3658**	2	VALVE	
	34	1	**111-8233**	1	SPRING	

M-METRIC PART
Y-SEPARATE ILLUSTRATION

6E-3034 VALVE GP-CONTROL *(contd.)*

i01455748

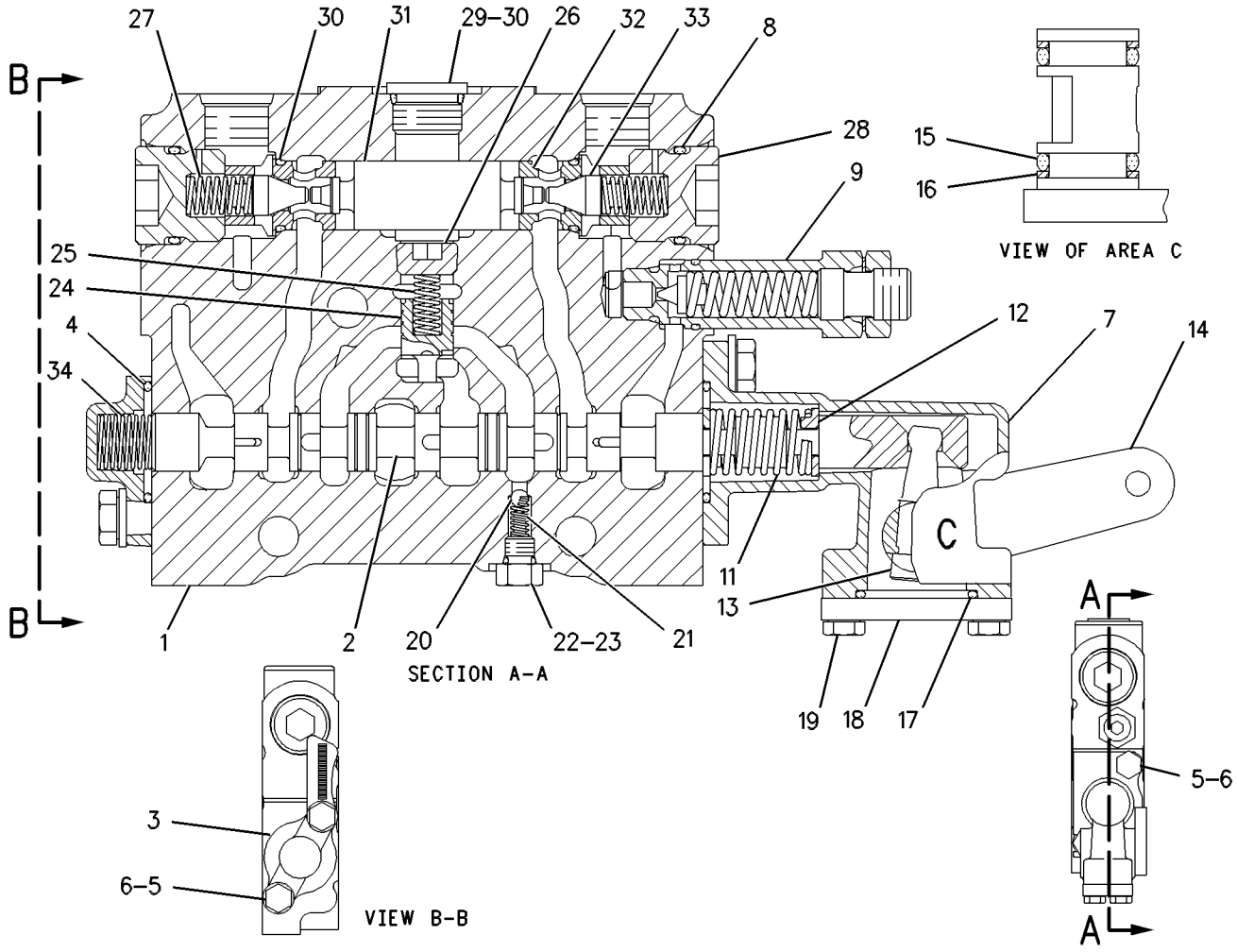

GRAPHIC #1

g00546078

HYDRAULIC SYSTEM

6E-3035 VALVE GP-CONTROL—CIRCLE DRIVE

S/N: CAF1-UP

PART OF 130-3117, 6E-3038 VALVE GP-BANK 4, 104-8645, 104-8646, 130-3118, 130-3119 VALVE GP-BANK 5

ALSO AN ATTACHMENT

SMCS-5051 **i01052829**

NOTE	REF NO	GRAPHIC REF	PART NUMBER	QTY	PART NAME 1 2 3 4 5 6 (PRODUCT LEVEL)	SEE PAGE
	1	1	**6E-3044**	1	BODY	
	2	1	**101-1151**	1	STEM	
	3	1	**101-1978**	1	COVER	
	4	1	**2K-8199**	2	SEAL-O-RING (28.24MM ID)	
M	5	1	**8T-4189**	4	BOLT (M8X1.25X20MM)	
	6	1	**8T-4224**	4	WASHER-HARD (2MM THK)	
	7	1	**101-1984**	1	BODY	
	8	1	**102-7412**	1	SPRING	
	9	1	**101-1973**	4	RETAINER	
	10	1	**101-1971**	1	LEVER	
	11	1	**101-1982**	1	LEVER AS	
	12	1	**8M-4437**	2	SEAL-O-RING	
	13	1	**101-1983**	2	RING-BACKUP	
	14	1	**4D-9986**	1	SEAL-O-RING (23.47MM ID)	
	15	1	**101-2480**	1	COVER	
M	16	1	**8T-4138**	2	BOLT (M6X1.0X20MM)	
	17	1	**5B-9318**	1	BALL (4.76MM)	
	18	1	**6E-3007**	1	SPRING	
	19	1	**6E-4502**	1	PLUG	
	20	1	**4J-7533**	1	SEAL-O-RING (6.07MM ID)	
	21	1	**6E-3019**	1	VALVE	
	22	1	**6E-5153**	1	SPRING	
	23	1	**108-2187**	1	PLUG-PIPE	
	24	1	**9S-8005**	1	PLUG-O-RING (3/4-16 THD)	
	25	1	**3K-0360**	3	SEAL-O-RING (16.36MM ID)	
	26	1	**106-3659**	1	PISTON	
	27	1	**6E-3013**	2	SEAT	
	28	1	**106-3658**	2	VALVE	
	29	1	**9J-0403**	2	SPRING	
	30	1	**9J-0404**	2	PLUG	
	31	1	**7J-9933**	2	SEAL-O-RING (21.89MM ID)	
	33	1	**111-8233**	1	SPRING	

M-METRIC PART

6E-3035 VALVE GP-CONTROL *(contd.)* i01052829

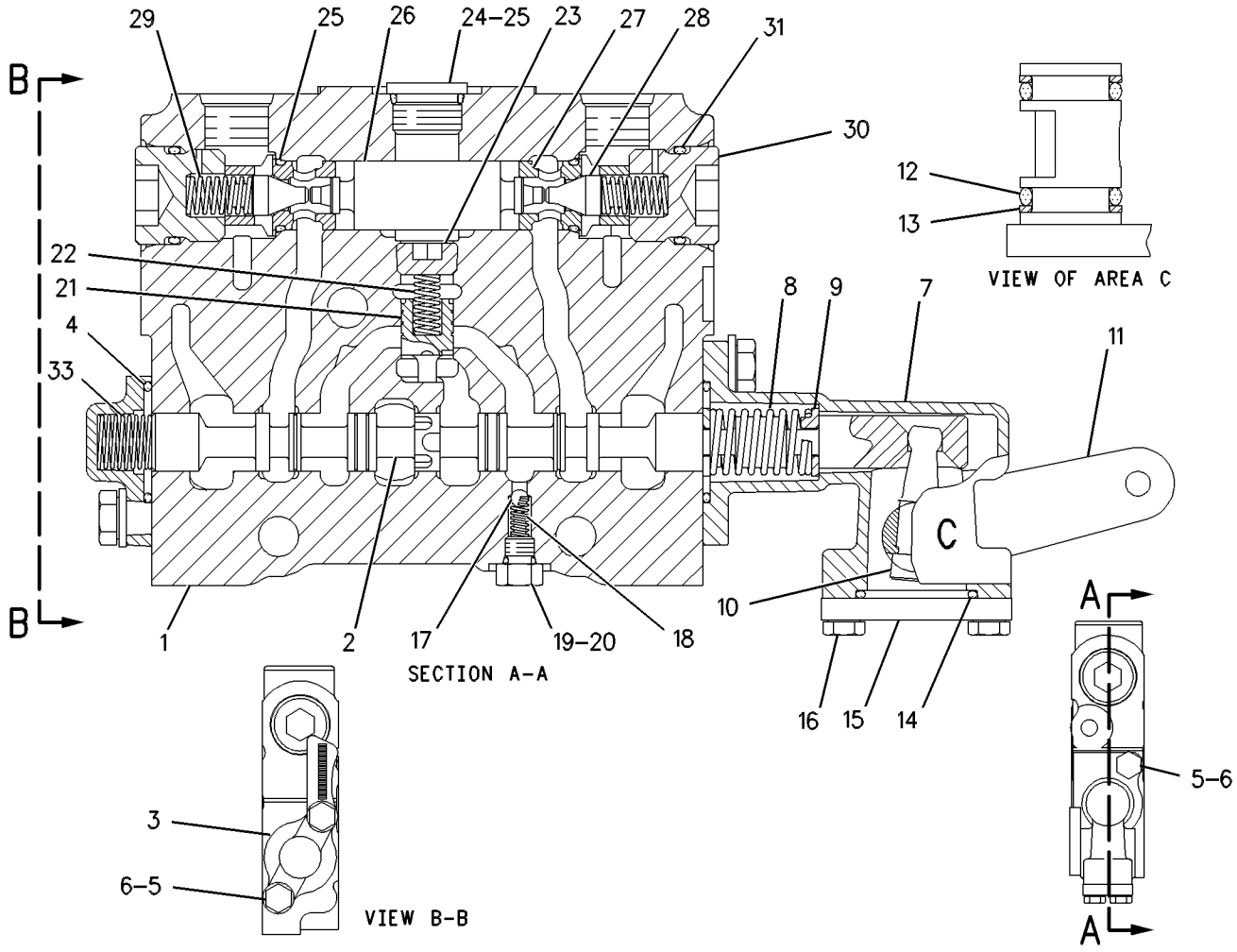

GRAPHIC #1 g00546080

6E-3036 VALVE GP-CONTROL—SIDESHIFT

S/N: CAF1-UP

PART OF 130-3117, 6E-3038 VALVE GP-BANK 4, 104-8645, 104-8646, 130-3118, 130-3119 VALVE GP-BANK 5

ALSO AN ATTACHMENT

SMCS-5051 **i01457313**

NOTE	REF NO	GRAPHIC REF	PART NUMBER	QTY	PART NAME 1 2 3 4 5 6 (PRODUCT LEVEL)	SEE PAGE
	1	1	**6E-3058**	1	BODY	
	2	1	**101-1153**	1	STEM	
	3	1	**101-1978**	1	COVER	
	4	1	**2K-8199**	2	SEAL-O-RING	
M	5	1	**8T-4189**	4	BOLT (M8X1.25X20MM)	
	6	1	**8T-4224**	4	WASHER-HARD (8.8X16X2MM THK)	
	7	1	**101-1984**	1	BODY	
	8	1	**7J-9933**	2	SEAL-O-RING	
Y	9	1	**101-4147**	1	VALVE GP-RELIEF (SIDESHIFT)	662
	11	1	**102-7412**	1	SPRING	
	12	1	**101-1973**	4	RETAINER	
	13	1	**101-1971**	1	LEVER	
	14	1	**101-1982**	1	LEVER AS	
	15	1	**8M-4437**	2	SEAL-O-RING	
	16	1	**101-1983**	2	RING-BACKUP (14.65MM ID)	
	17	1	**4D-9986**	1	SEAL-O-RING	
	18	1	**101-2480**	1	COVER	
M	19	1	**8T-4138**	2	BOLT (M6X1X20MM)	
	20	1	**5B-9318**	1	BALL	
	21	1	**6E-3007**	1	SPRING	
	22	1	**6E-4502**	1	PLUG	
	23	1	**4J-7533**	1	SEAL-O-RING	
	24	1	**6E-3019**	1	VALVE	
	25	1	**6E-5153**	1	SPRING	
	26	1	**108-2187**	1	PLUG-PIPE	
	27	1	**9J-0403**	2	SPRING	
	28	1	**9J-0404**	2	PLUG	
	29	1	**9S-8005**	1	PLUG	
	30	1	**3K-0360**	3	SEAL-O-RING	
	31	1	**106-3659**	1	PISTON	
	32	1	**6E-3013**	2	SEAT	
	33	1	**106-3658**	2	VALVE	
	34	1	**111-8233**	1	SPRING	

M-METRIC PART
Y-SEPARATE ILLUSTRATION

6E-3036 VALVE GP-CONTROL *(contd.)* i01457313

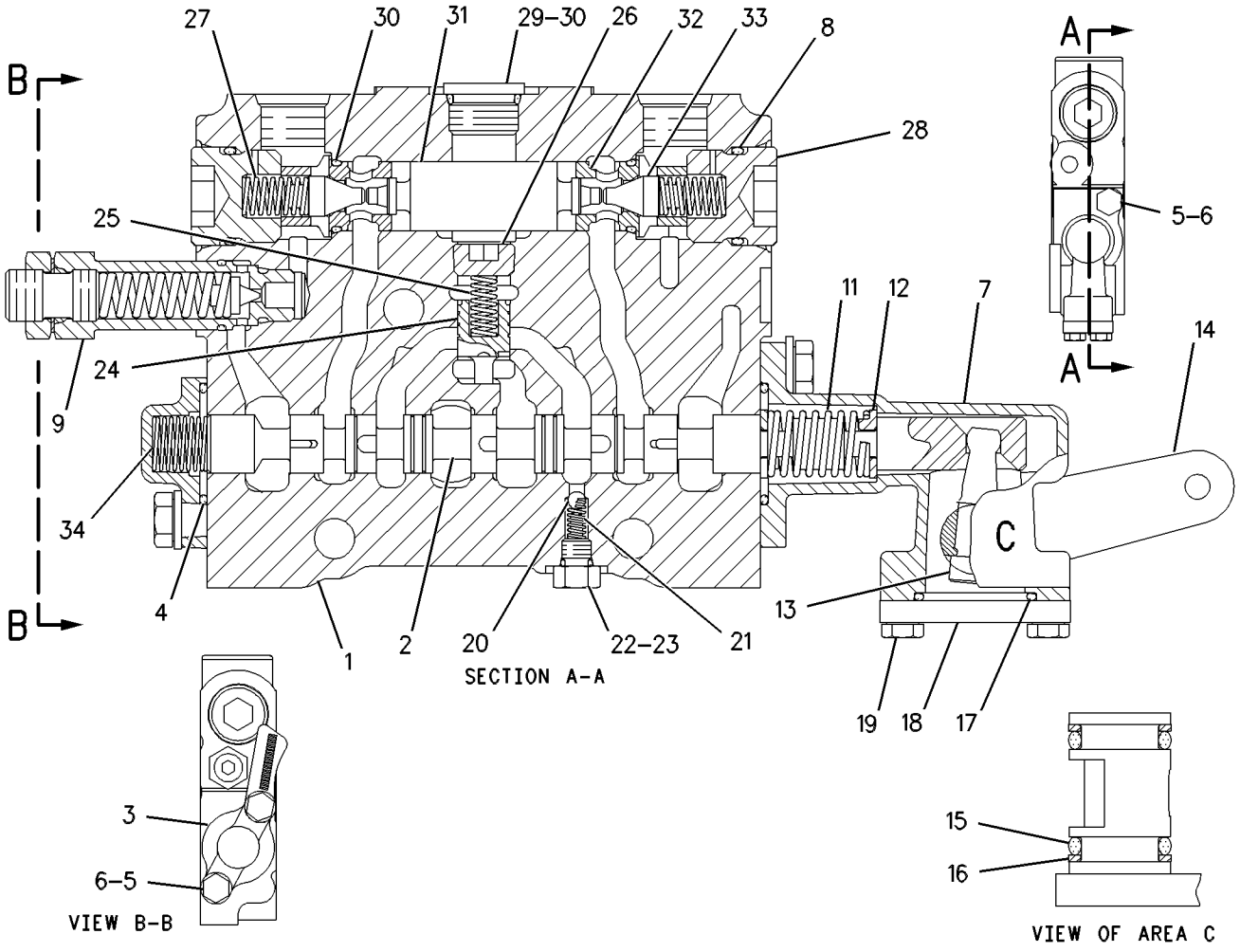

GRAPHIC #1 g00546111

HYDRAULIC SYSTEM

6E-3037 VALVE GP-CONTROL–BLADE LIFT

S/N: CAF1-UP

PART OF 6E-3038 VALVE GP-BANK 4, 104-8645, 104-8646 VALVE GP-BANK 5

ALSO AN ATTACHMENT

SMCS-5051 **i01455637**

NOTE	REF NO	GRAPHIC REF	PART NUMBER	QTY	PART NAME 1 2 3 4 5 6 (PRODUCT LEVEL)	SEE PAGE
	1	1	**6E-3043**	1	BODY	
	2	1	**101-1150**	1	STEM	
	3	1	**101-1980**	1	HOUSING	
	4	1	**101-1972**	1	DETENT	
	5	1	**5B-9318**	1	BALL	
M	6	1	**8T-6869**	2	BOLT (M8X1.25X60MM)	
	7	1	**2K-8199**	2	SEAL-O-RING	
M	8	1	**8T-4189**	2	BOLT (M8X1.25X20MM)	
	9	1	**8T-4224**	4	WASHER-HARD (8.8X16X2MM THK)	
	10	1	**101-1984**	1	BODY	
	11	1	**102-7412**	1	SPRING	
	12	1	**101-1973**	4	RETAINER	
	13	1	**101-1971**	1	LEVER	
	14	1	**101-1982**	1	LEVER AS	
	15	1	**8M-4437**	2	SEAL-O-RING	
	16	1	**101-1983**	2	RING-BACKUP (14.65MM ID)	
	17	1	**4D-9986**	1	SEAL-O-RING	
	18	1	**101-2480**	1	COVER	
M	19	1	**8T-4138**	2	BOLT (M6X1X20MM)	
	20	1	**6E-3007**	1	SPRING	
	21	1	**6E-4502**	1	PLUG	
	22	1	**4J-7533**	1	SEAL-O-RING	
	23	1	**6E-3019**	1	VALVE	
	24	1	**6E-5153**	1	SPRING	
	25	1	**108-2187**	1	PLUG-PIPE	
	26	1	**9S-8005**	1	PLUG	
	27	1	**3K-0360**	3	SEAL-O-RING	
	28	1	**106-3660**	2	PISTON	
	29	1	**6E-3013**	2	SEAT	
	30	1	**106-3658**	2	VALVE	
	31	1	**9J-0403**	2	SPRING	
	32	1	**9J-0404**	2	PLUG	
	33	1	**7J-9933**	2	SEAL-O-RING	
Y	34	1	*6E-3033*	1	VALVE GP-RELIEF (BLADE LIFT)	659
	35	1	**107-0520**	1	PLATE-IDENTIFICATION	
Y	36	1	**108-4916**	1	DETENT GP-CONTROL VALVE	513
	37	1	**111-8234**	1	SPRING	

M-METRIC PART
Y-SEPARATE ILLUSTRATION

6E-3037 VALVE GP-CONTROL *(contd.)* i01455637

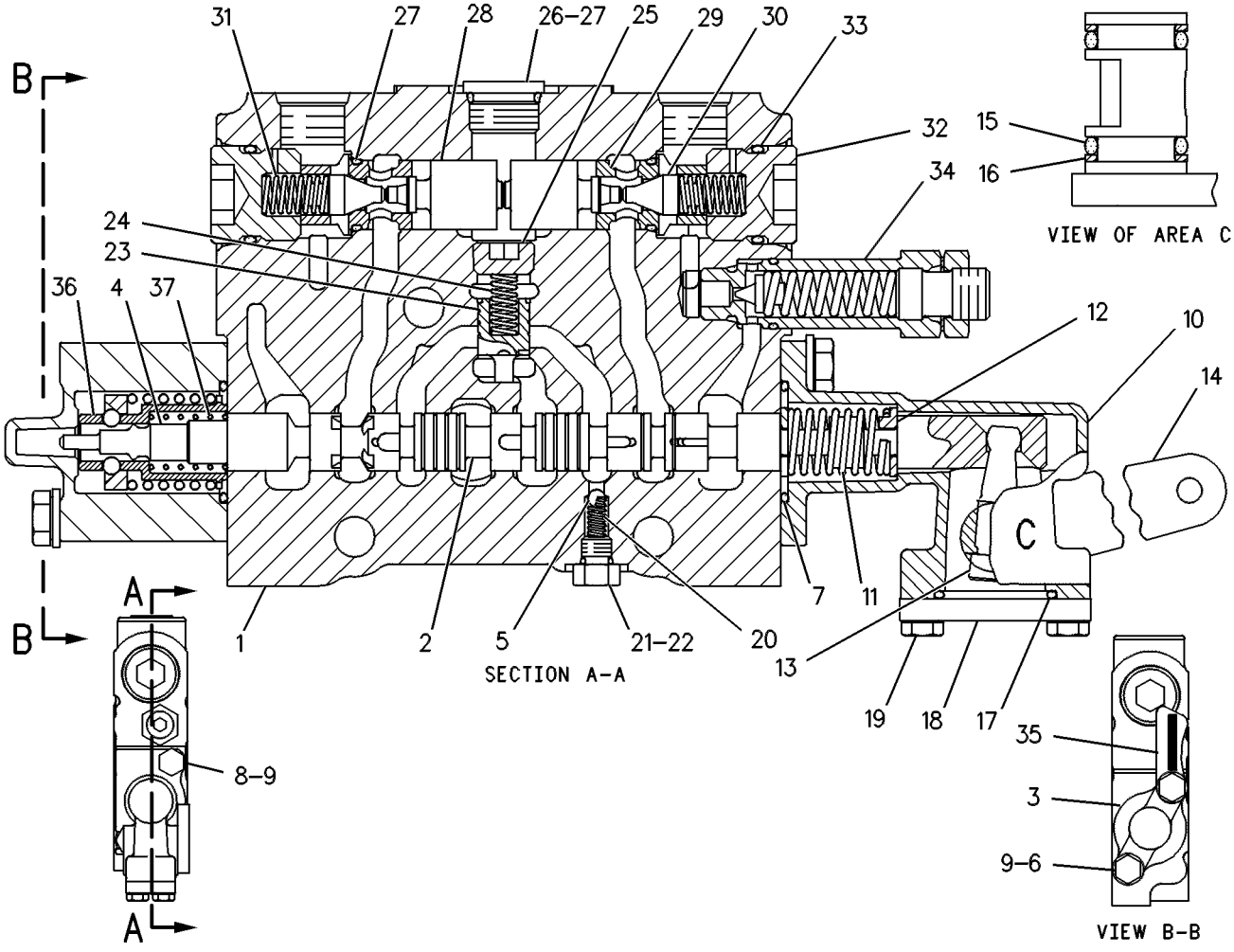

GRAPHIC #1 g00108518

HYDRAULIC SYSTEM

107-0543 VALVE GP-CONTROL—SCARIFIER

S/N: CAF1-UP

PART OF 104-8646 VALVE GP-BANK 5

AN ATTACHMENT

SMCS-5051 **i01605648**

NOTE	REF NO	GRAPHIC REF	PART NUMBER	QTY	PART NAME 1 2 3 4 5 6 (PRODUCT LEVEL)	SEE PAGE
	1	1	**6E-4599**	1	BODY	
	2	1	**128-2972**	1	STEM	
	3	1	**101-1978**	1	COVER	
	4	1	**2K-8199**	2	SEAL-O-RING	
M	5	1	**8T-4189**	4	BOLT (M8X1.25X20MM)	
	6	1	**8T-4224**	4	WASHER-HARD (8.8X16X2MM THK)	
	7	1	**101-1984**	1	BODY	
	8	1	**7J-9933**	2	SEAL-O-RING	
	9	1	**111-8233**	1	SPRING	
CY	10	1	**139-8473**	1	VALVE GP-RELIEF (SCARIFIER)	668
	11	1	**102-7412**	1	SPRING	
	12	1	**101-1973**	4	RETAINER	
	13	1	**101-1971**	1	LEVER	
	14	1	**101-1982**	1	LEVER AS (SCARIFIER)	
	15	1	**8M-4437**	2	SEAL-O-RING	
	16	1	**101-1983**	2	RING-BACKUP (14.65MM ID)	
	17	1	**4D-9986**	1	SEAL-O-RING	
	18	1	**101-2480**	1	COVER	
M	19	1	**8T-4138**	2	BOLT (M6X1X20MM)	
	20	1	**5B-9318**	1	BALL	
	21	1	**6E-3007**	1	SPRING	
	22	1	**6E-4502**	1	PLUG	
	23	1	**4J-7533**	1	SEAL-O-RING	
	24	1	**6E-3019**	1	VALVE	
	25	1	**6E-5153**	1	SPRING	
	26	1	**108-2187**	1	PLUG-PIPE	
	27	1	**9J-0403**	2	SPRING	
	28	1	**9J-0404**	2	PLUG	
	29	1	**9S-8005**	1	PLUG-O-RING	
	30	1	**3K-0360**	3	SEAL-O-RING	
C	31	1	**106-3659**	1	PISTON	
	32	1	**6E-3013**	2	SEAT	
	33	1	**106-3658**	2	VALVE	

C-CHANGE FROM PREVIOUS TYPE
M-METRIC PART
Y-SEPARATE ILLUSTRATION

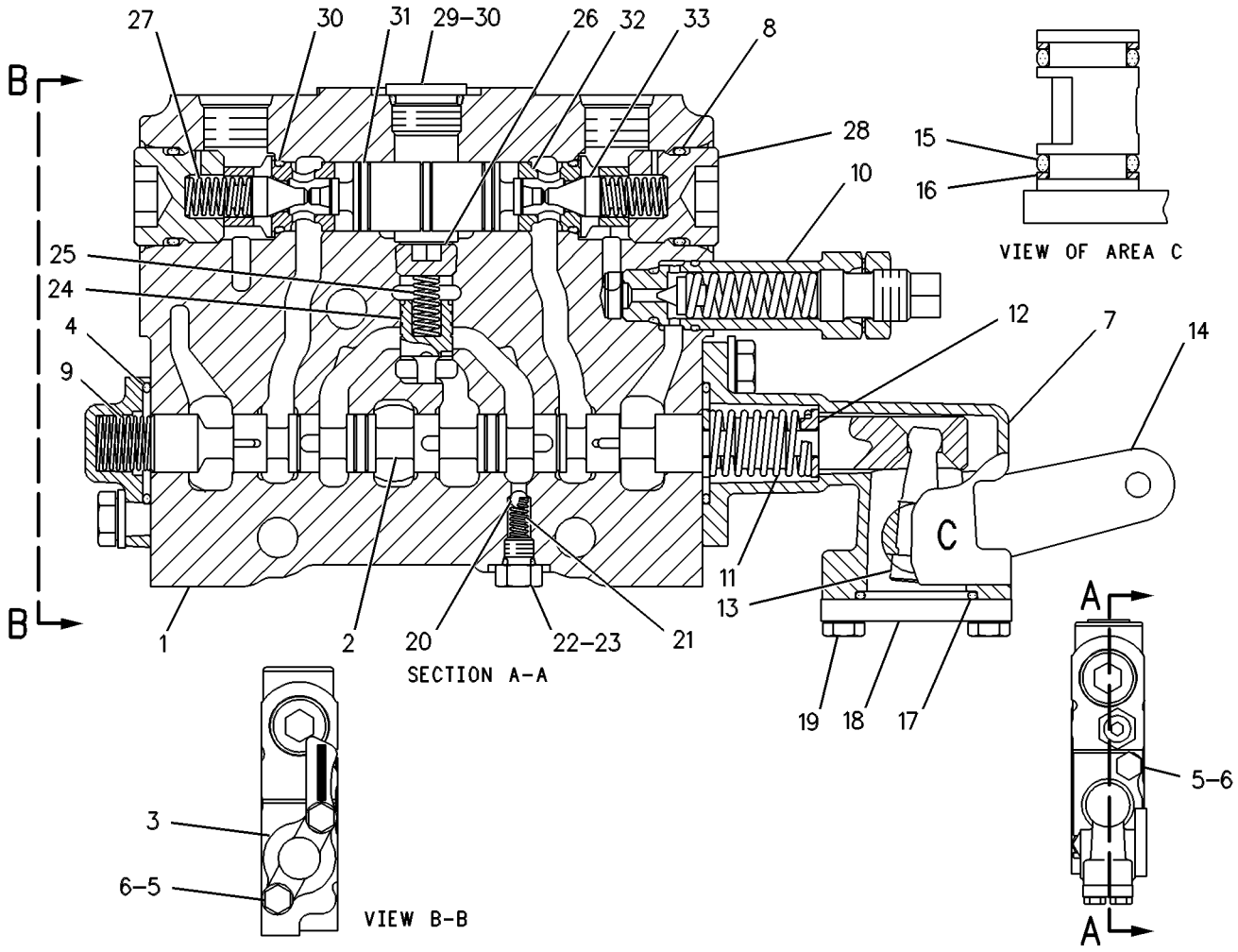

GRAPHIC #1

g00109669

HYDRAULIC SYSTEM

107-0545 VALVE GP-CONTROL—RIPPER

S/N: CAF1-UP
PART OF 104-8645 VALVE GP-BANK 5
AN ATTACHMENT

SMCS-5051 **i01862281**

NOTE	REF NO	GRAPHIC REF	PART NUMBER	QTY	PART NAME 1 2 3 4 5 6 (PRODUCT LEVEL)	SEE PAGE
	1	1	**6E-4599**	1	BODY	
	2	1	**101-1152**	1	STEM	
	3	1	**101-1978**	1	COVER	
	4	1	**2K-8199**	2	SEAL-O-RING	
M	5	1	**8T-4189**	4	BOLT (M8X1.25X20MM)	
	6	1	**8T-4224**	4	WASHER-HARD (8.8X16X2MM THK)	
	7	1	**101-1984**	1	BODY	
	8	1	**7J-9933**	2	SEAL-O-RING	
Y	9	1	**101-4147**	1	VALVE GP-RELIEF (RIPPER)	662
	11	1	**102-7412**	1	SPRING	
	12	1	**101-1973**	4	RETAINER	
	13	1	**101-1971**	1	LEVER	
	14	1	**101-1982**	1	LEVER AS	
	15	1	**8M-4437**	2	SEAL-O-RING	
	16	1	**101-1983**	2	RING-BACKUP (14.65MM ID)	
	17	1	**4D-9986**	1	SEAL-O-RING	
	18	1	**101-2480**	1	COVER	
M	19	1	**8T-4138**	2	BOLT (M6X1X20MM)	
	20	1	**5B-9318**	1	BALL	
	21	1	**6E-3007**	1	SPRING	
	22	1	**6E-4502**	1	PLUG	
	23	1	**4J-7533**	1	SEAL-O-RING	
	24	1	**6E-3019**	1	VALVE	
	25	1	**6E-5153**	1	SPRING	
	26	1	**108-2187**	1	PLUG-PIPE	
	27	1	**9J-0403**	2	SPRING	
	28	1	**9J-0404**	2	PLUG	
	29	1	**9S-8005**	1	PLUG	
	30	1	**3K-0360**	3	SEAL-O-RING	
	31	1	**106-3659**	1	PISTON	
	32	1	**6E-3013**	2	SEAT	
	33	1	**106-3658**	2	VALVE	
	34	1	**111-8233**	1	SPRING	

M-METRIC PART
Y-SEPARATE ILLUSTRATION

107-0545 VALVE GP-CONTROL *(contd.)* **i01862281**

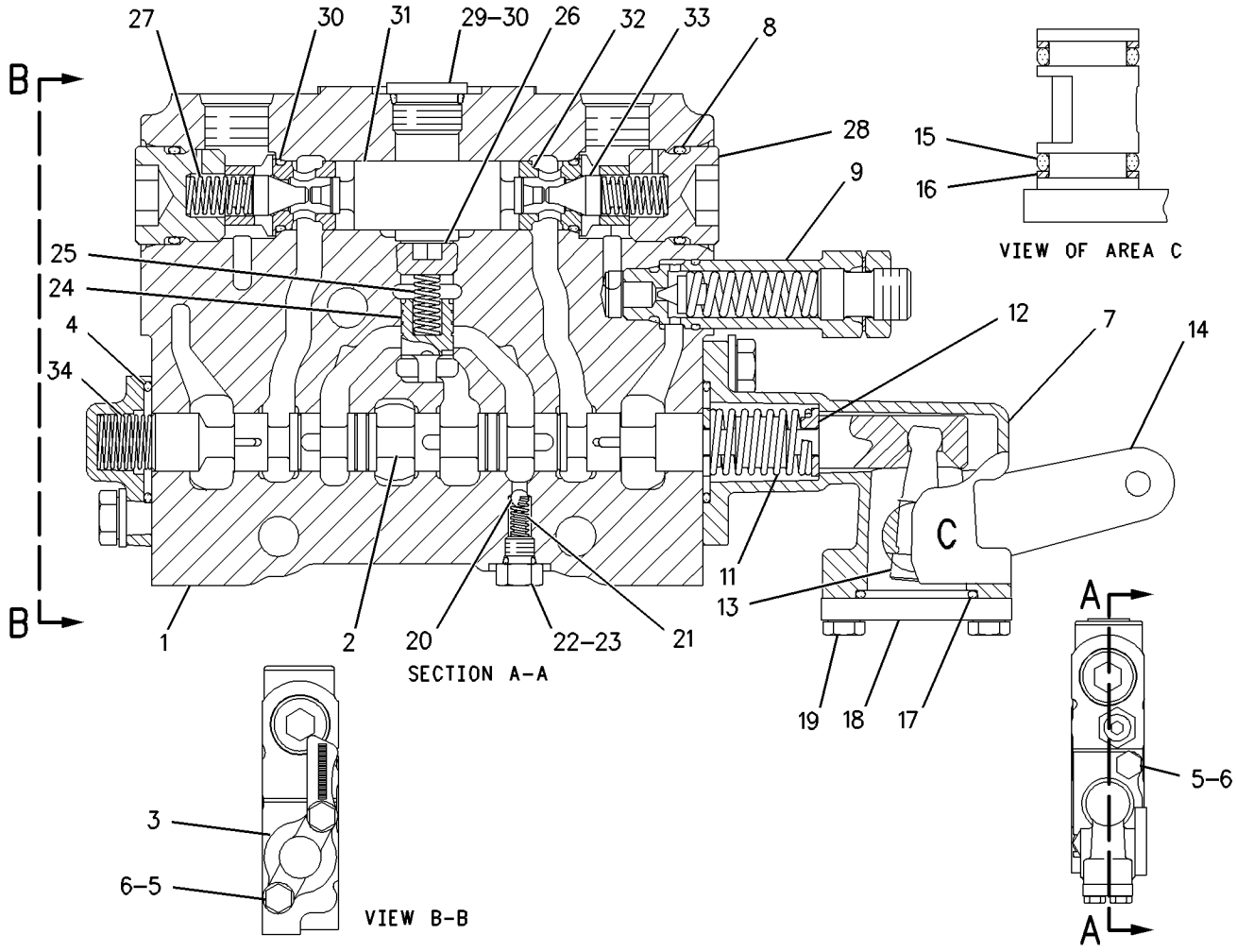

GRAPHIC #1 g00637815

HYDRAULIC SYSTEM

107-0547 VALVE GP-CONTROL—PLOW/DOZER LIFT

S/N: CAF1-UP
PART OF 104-8671 VALVE GP-BANK 5
AN ATTACHMENT

SMCS-5051 **i01862343**

NOTE	REF NO	GRAPHIC REF	PART NUMBER	QTY	PART NAME 1 2 3 4 5 6 (PRODUCT LEVEL)	SEE PAGE
	1	1	**6E-3059**	1	BODY	
	2	1	**101-1147**	1	STEM	
	3	1	**101-1980**	1	HOUSING	
	4	1	**101-1972**	1	DETENT	
Y	5	1	**108-4916**	1	DETENT GP-CONTROL VALVE (PLOW/DOZER LIFT)	513
	6	1	**5B-9318**	1	BALL	
M	7	1	**8T-6869**	2	BOLT (M8X1.25X60MM)	
	8	1	**2K-8199**	2	SEAL-O-RING	
M	9	1	**8T-4189**	2	BOLT (M8X1.25X20MM)	
	10	1	**8T-4224**	4	WASHER-HARD (8.8X16X2MM THK)	
	11	1	**101-1984**	1	BODY	
	12	1	**102-7412**	1	SPRING	
	13	1	**101-1973**	4	RETAINER	
	14	1	**101-1971**	1	LEVER	
	15	1	**101-1970**	1	LEVER AS	
	16	1	**8M-4437**	2	SEAL-O-RING	
	17	1	**101-1983**	2	RING-BACKUP (14.65MM ID)	
	18	1	**4D-9986**	1	SEAL-O-RING	
	19	1	**101-2480**	1	COVER	
M	20	1	**8T-4138**	2	BOLT (M6X1X20MM)	
	21	1	**6E-3007**	1	SPRING	
	22	1	**6E-4502**	1	PLUG	
	23	1	**4J-7533**	1	SEAL-O-RING	
	24	1	**6E-3019**	1	VALVE	
	25	1	**6E-5153**	1	SPRING	
	26	1	**108-2187**	1	PLUG-PIPE	
	27	1	**9S-8005**	1	PLUG	
	28	1	**3K-0360**	3	SEAL-O-RING	
	29	1	**106-3660**	2	PISTON	
	30	1	**6E-3013**	2	SEAT	
	31	1	**106-3658**	2	VALVE	
	32	1	**9J-0403**	2	SPRING	
	33	1	**9J-0404**	2	PLUG	
	34	1	**7J-9933**	2	SEAL-O-RING	
Y	35	1	*6E-3033*	1	VALVE GP-RELIEF (PLOW/DOZER LIFT)	659
	37	1	**111-8234**	1	SPRING	

M-METRIC PART
Y-SEPARATE ILLUSTRATION

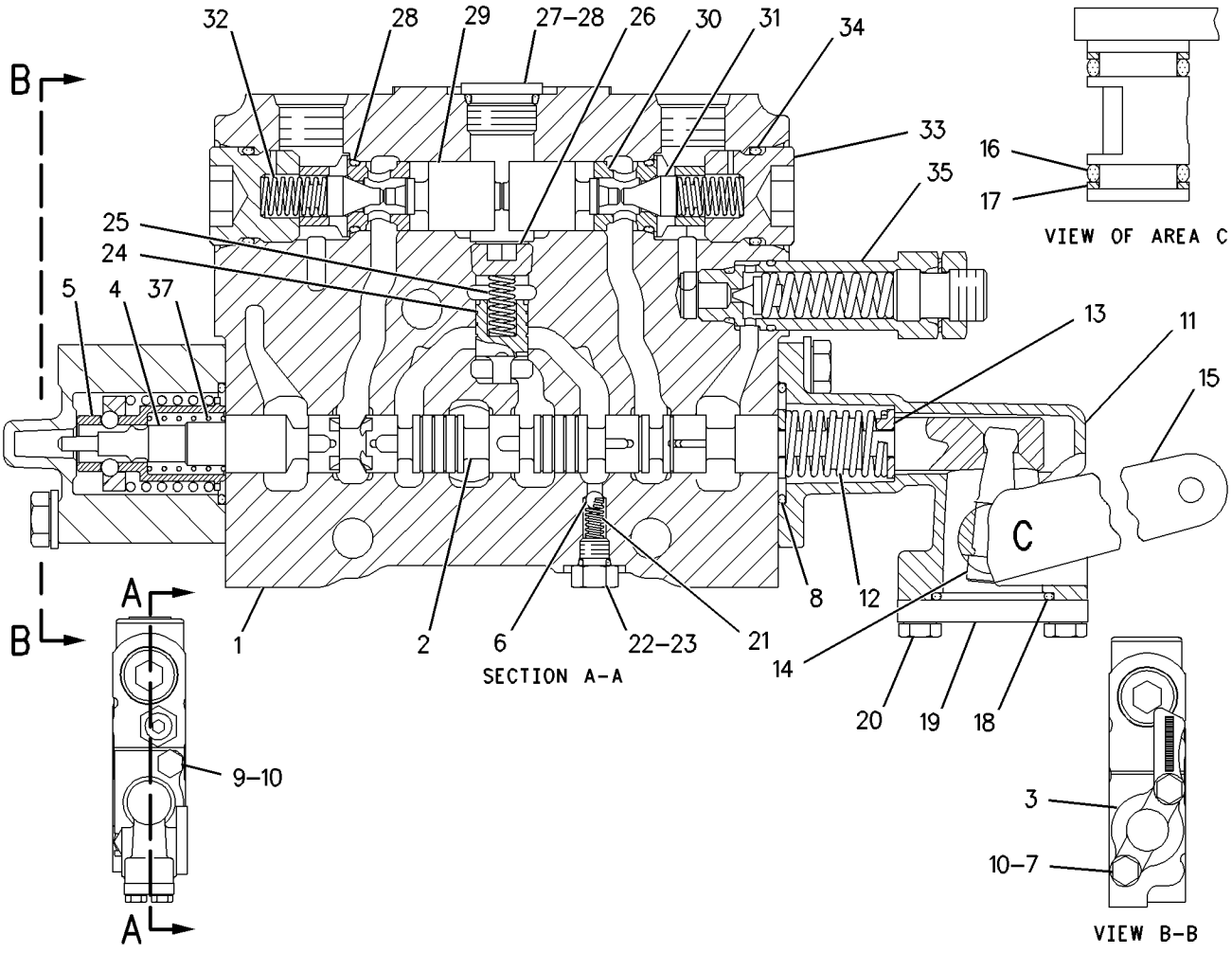

GRAPHIC #1 g00637816

HYDRAULIC SYSTEM

119-9549 VALVE GP-CONTROL—SCARIFIER

S/N: CAF1-UP
PART OF 130-3119 VALVE GP-BANK 5
AN ATTACHMENT

SMCS-5051 **i01624073**

NOTE	REF NO	GRAPHIC REF	PART NUMBER	QTY	PART NAME 1 2 3 4 5 6 (PRODUCT LEVEL)	SEE PAGE
	1	1	**6E-4599**	1	BODY	
	2	1	**128-2972**	1	STEM	
	3	1	**101-1978**	1	COVER	
	4	1	**2K-8199**	2	SEAL-O-RING	
M	5	1	**8T-4189**	4	BOLT (M8X1.25X20MM)	
	6	1	**8T-4224**	4	WASHER-HARD (8.8X16X2MM THK)	
	7	1	**101-1984**	1	BODY	
	8	1	**7J-9933**	2	SEAL-O-RING	
	9	1	**111-8233**	1	SPRING	
CY	10	1	**139-8476**	1	VALVE GP-RELIEF (SCARIFIER)	669
	11	1	**102-7412**	1	SPRING	
	12	1	**101-1973**	4	RETAINER	
	13	1	**101-1971**	1	LEVER	
	14	1	**101-1982**	1	LEVER AS	
	15	1	**8M-4437**	2	SEAL-O-RING	
	16	1	**101-1983**	2	RING-BACKUP (14.65MM ID)	
	17	1	**4D-9986**	1	SEAL-O-RING	
	18	1	**101-2480**	1	COVER	
M	19	1	**8T-4138**	2	BOLT (M6X1X20MM)	
	20	1	**5B-9318**	1	BALL	
	21	1	**6E-3007**	1	SPRING	
	22	1	**6E-4502**	1	PLUG	
	23	1	**4J-7533**	1	SEAL-O-RING	
	24	1	**6E-3019**	1	VALVE	
	25	1	**6E-5153**	1	SPRING	
	26	1	**108-2187**	1	PLUG-PIPE	
	27	1	**9J-0403**	2	SPRING	
	28	1	**9J-0404**	2	PLUG	
	29	1	**9S-8005**	1	PLUG-O-RING	
	30	1	**3K-0360**	3	SEAL-O-RING	
	31	1	**106-3659**	1	PISTON	
	32	1	**6E-3013**	2	SEAT	
	33	1	**106-3658**	2	VALVE	

C-CHANGE FROM PREVIOUS TYPE
M-METRIC PART
Y-SEPARATE ILLUSTRATION

119-9549 VALVE GP-CONTROL *(contd.)* i01624073

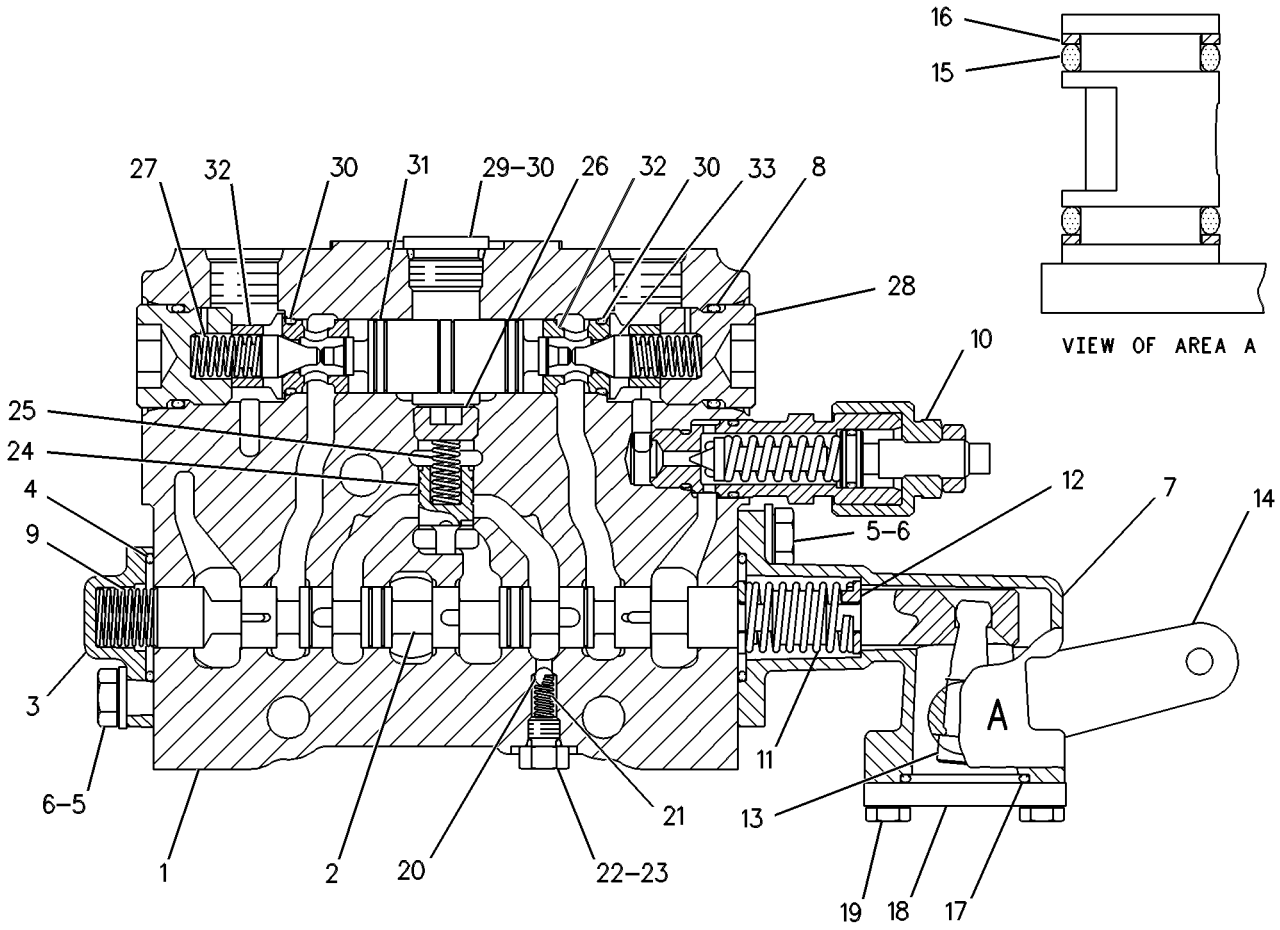

GRAPHIC #1 g00277255

HYDRAULIC SYSTEM

119-9550 VALVE GP-CONTROL—RIPPER

S/N: CAF1-UP
PART OF 130-3118 VALVE GP-BANK 5
AN ATTACHMENT

SMCS-5051 **i01668214**

NOTE	REF NO	GRAPHIC REF	PART NUMBER	QTY	PART NAME 1 2 3 4 5 6 (PRODUCT LEVEL)	SEE PAGE
	1	1	**6E-4599**	1	BODY	
	2	1	**101-1152**	1	STEM	
	3	1	**101-1978**	1	COVER	
	4	1	**2K-8199**	2	SEAL-O-RING	
M	5	1	**8T-4189**	4	BOLT (M8X1.25X20MM)	
	6	1	**8T-4224**	4	WASHER-HARD (8.8X16X2MM THK)	
	7	1	**101-1984**	1	BODY	
	8	1	**7J-9933**	2	SEAL-O-RING	
	9	1	**111-8233**	1	SPRING	
Y	10	1	*116-0374*	1	VALVE GP-RELIEF (RIPPER)	667
	11	1	**102-7412**	1	SPRING	
	12	1	**101-1973**	4	RETAINER	
	13	1	**101-1971**	1	LEVER	
	14	1	**101-1982**	1	LEVER AS	
	15	1	**8M-4437**	2	SEAL-O-RING	
	16	1	**101-1983**	2	RING-BACKUP (14.65MM ID)	
	17	1	**4D-9986**	1	SEAL-O-RING	
	18	1	**101-2480**	1	COVER	
M	19	1	**8T-4138**	2	BOLT (M6X1X20MM)	
	20	1	**5B-9318**	1	BALL	
	21	1	**6E-3007**	1	SPRING	
	22	1	**6E-4502**	1	PLUG	
	23	1	**4J-7533**	1	SEAL-O-RING	
	24	1	**6E-3019**	1	VALVE (SEQUENCE)	
	25	1	**6E-5153**	1	SPRING	
	26	1	**108-2187**	1	PLUG-PIPE	
	27	1	**9J-0403**	2	SPRING	
	28	1	**9J-0404**	2	PLUG	
	29	1	**9S-8005**	1	PLUG	
	30	1	**3K-0360**	3	SEAL-O-RING	
	31	1	**106-3659**	1	PISTON	
	32	1	**6E-3013**	2	SEAT	
	33	1	**106-3658**	2	VALVE (LOCK VALVE POPPET)	

M-METRIC PART
Y-SEPARATE ILLUSTRATION

119-9550 VALVE GP-CONTROL *(contd.)* i01668214

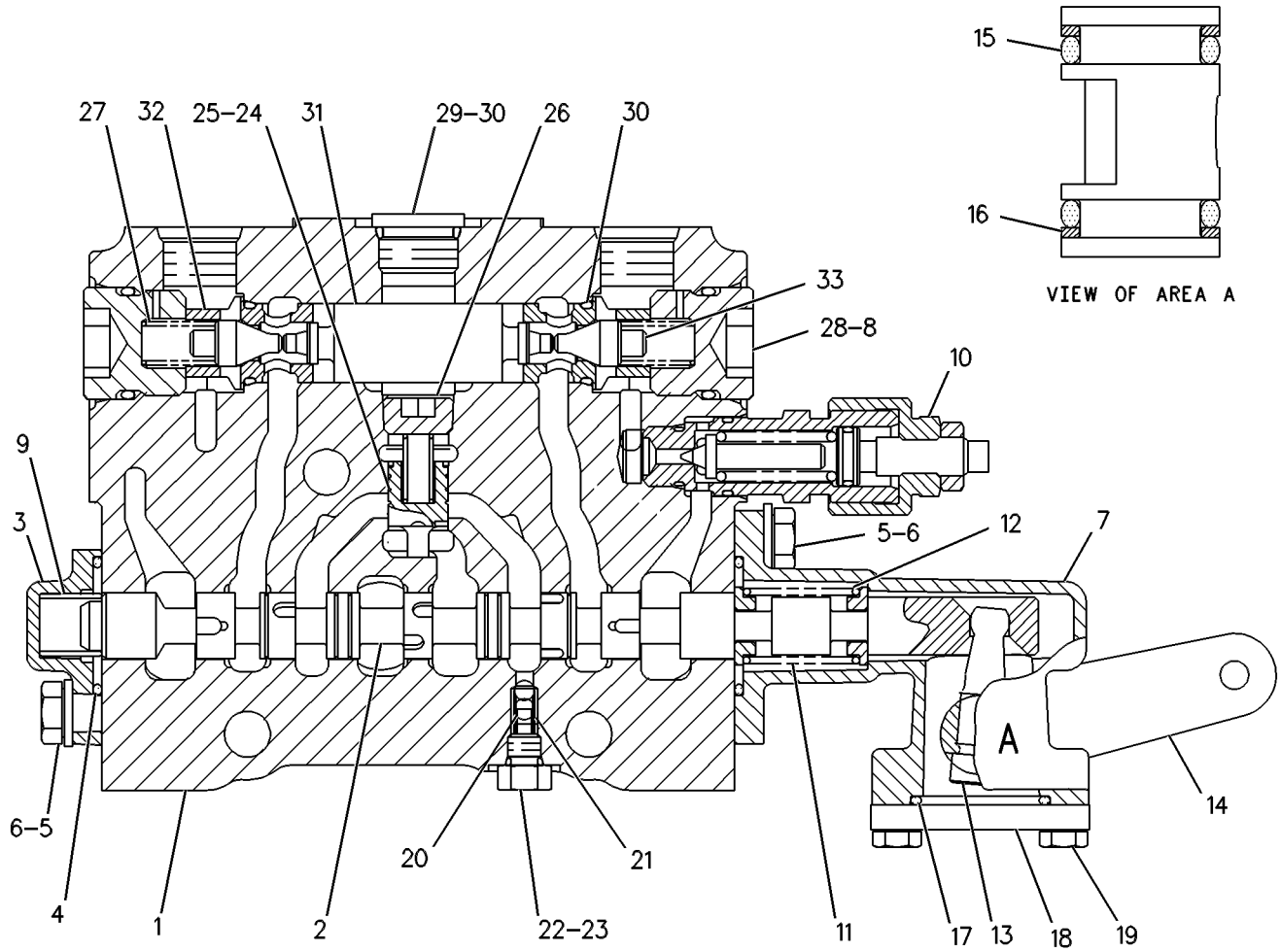

GRAPHIC #1 g00108897

HYDRAULIC SYSTEM

128-8647 VALVE GP-CONTROL–BLADE LIFT (RH)

S/N: CAF1-UP

PART OF 130-3116 VALVE GP-BANK 4, 130-3123 VALVE GP-BANK 5

AN ATTACHMENT

SMCS-5051 **i01624197**

NOTE	REF NO	GRAPHIC REF	PART NUMBER	QTY	PART NAME 1 2 3 4 5 6 (PRODUCT LEVEL)	SEE PAGE
	1	1	**128-8645**	1	BODY	
	2	1	**101-1150**	1	STEM	
	3	1	**9S-8001**	1	PLUG	
	4	1	**101-1972**	1	DETENT	
Y	5	1	**130-3535**	1	DETENT GP-CONTROL VALVE (BLADE LIFT RH)	514
	6	1	**5B-9318**	1	BALL	
	7	1	**2K-8199**	1	SEAL-O-RING	
M	8	1	**8T-4189**	2	BOLT (M8X1.25X20MM)	
	9	1	**8T-4224**	2	WASHER-HARD (8.8X16X2MM THK)	
	10	1	**101-1984**	1	BODY	
	11	1	**102-7412**	1	SPRING	
	12	1	**101-1973**	4	RETAINER	
	13	1	**101-1971**	1	LEVER	
	14	1	**101-1970**	1	LEVER AS	
	15	1	**8M-4437**	2	SEAL-O-RING	
	16	1	**101-1983**	2	RING-BACKUP (14.65MM ID)	
	17	1	**4D-9986**	1	SEAL-O-RING	
	18	1	**101-2480**	1	COVER	
M	19	1	**8T-4138**	2	BOLT (M6X1X20MM)	
	20	1	**6E-3007**	1	SPRING	
	21	1	**6E-4502**	1	PLUG	
	22	1	**4J-7533**	2	SEAL-O-RING	
	23	1	**6E-3019**	1	VALVE	
	24	1	**6E-5153**	1	SPRING	
	25	1	**108-2187**	1	PLUG-PIPE	
Y	26	1	*129-1054*	1	VALVE GP-PURGE	656
	27	1	**3K-0360**	2	SEAL-O-RING	
	28	1	**106-3660**	2	PISTON	
	29	1	**6E-3013**	2	SEAT	
	30	1	**106-3658**	2	VALVE	
	31	1	**9J-0403**	2	SPRING	
	32	1	**9J-0404**	2	PLUG	
	33	1	**7J-9933**	2	SEAL-O-RING	
Y	34	1	*6E-3033*	1	VALVE GP-RELIEF (BLADE LIFT)	659
	35	1	**111-8234**	1	SPRING	

M-METRIC PART
Y-SEPARATE ILLUSTRATION

128-8647 VALVE GP-CONTROL *(contd.)* i01624197

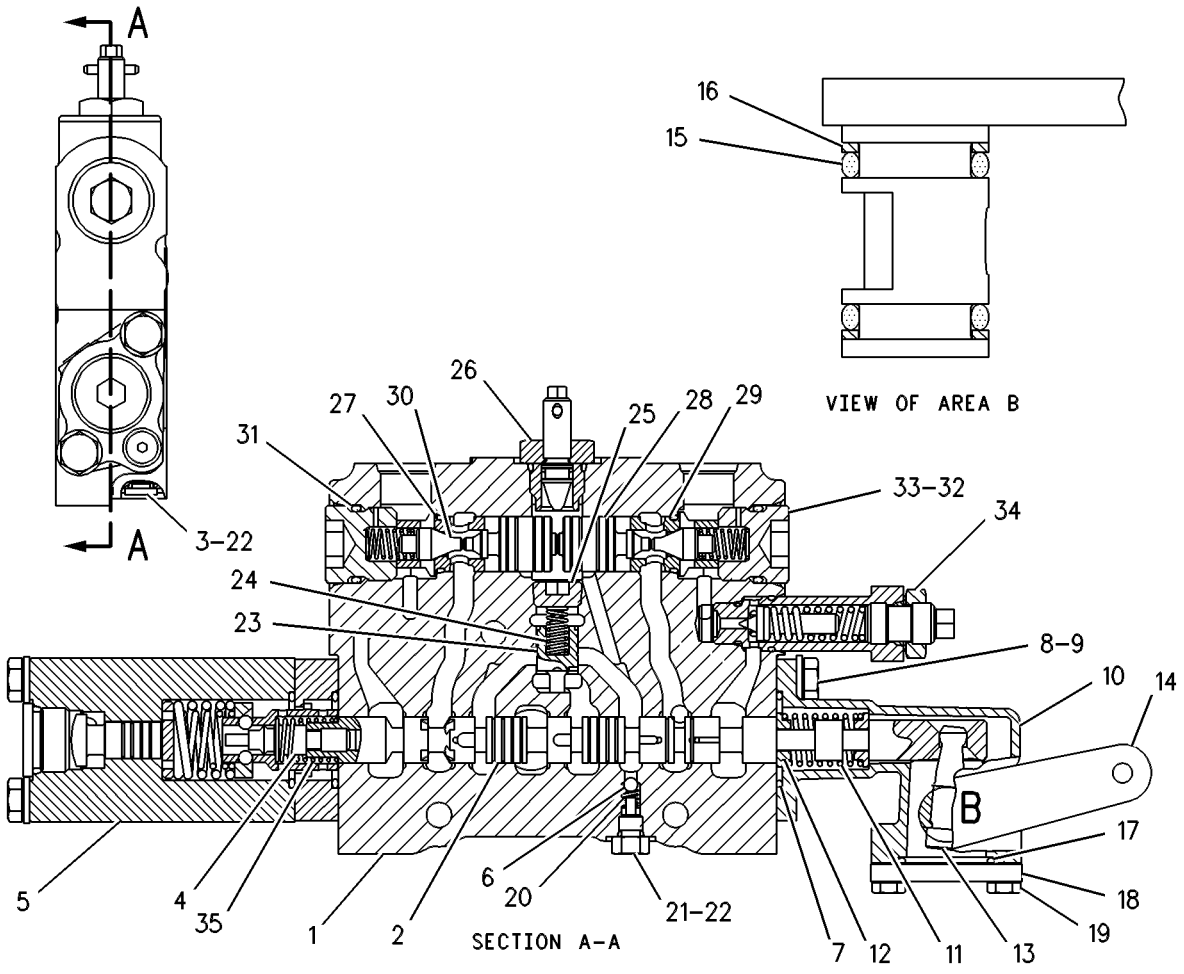

GRAPHIC #1 g00109439

HYDRAULIC SYSTEM

130-3110 VALVE GP-CONTROL–BLADE LIFT (LH)

S/N: CAF1-UP

PART OF 130-3117 VALVE GP-BANK 4, 130-3118, 130-3119 VALVE GP-BANK 5

AN ATTACHMENT

SMCS-5051 **i01624199**

NOTE	REF NO	GRAPHIC REF	PART NUMBER	QTY	PART NAME 1 2 3 4 5 6 (PRODUCT LEVEL)	SEE PAGE
	1	1	**128-8645**	1	BODY	
	2	1	**101-1150**	1	STEM	
	3	1	**9S-8001**	1	PLUG	
	4	1	**101-1972**	1	DETENT	
Y	5	1	**130-3535**	1	DETENT GP-CONTROL VALVE (BLADE LIFT)	514
	6	1	**5B-9318**	1	BALL	
	7	1	**2K-8199**	1	SEAL-O-RING	
M	8	1	**8T-4189**	2	BOLT (M8X1.25X20MM)	
	9	1	**8T-4224**	2	WASHER-HARD (8.8X16X2MM THK)	
	10	1	**101-1984**	1	BODY	
	11	1	**102-7412**	1	SPRING	
	12	1	**101-1973**	4	RETAINER	
	13	1	**101-1971**	1	LEVER	
	14	1	**101-1982**	1	LEVER AS	
	15	1	**8M-4437**	2	SEAL-O-RING	
	16	1	**101-1983**	2	RING-BACKUP (14.65MM ID)	
	17	1	**4D-9986**	1	SEAL-O-RING	
	18	1	**101-2480**	1	COVER	
M	19	1	**8T-4138**	2	BOLT (M6X1X20MM)	
	20	1	**6E-3007**	1	SPRING	
	21	1	**6E-4502**	1	PLUG	
	22	1	**4J-7533**	2	SEAL-O-RING	
	23	1	**6E-3019**	1	VALVE	
	24	1	**6E-5153**	1	SPRING	
	25	1	**108-2187**	1	PLUG-PIPE	
Y	26	1	*129-1054*	1	VALVE GP-PURGE (3/4-16 THD)	656
	27	1	**3K-0360**	2	SEAL-O-RING	
	28	1	**106-3660**	2	PISTON	
	29	1	**6E-3013**	2	SEAT	
	30	1	**106-3658**	2	VALVE	
	31	1	**9J-0403**	2	SPRING	
	32	1	**9J-0404**	2	PLUG	
	33	1	**7J-9933**	2	SEAL-O-RING	
Y	34	1	*6E-3033*	1	VALVE GP-RELIEF (BLADE LIFT)	659
	35	1	**111-8234**	1	SPRING	

M-METRIC PART
Y-SEPARATE ILLUSTRATION

130-3110 VALVE GP-CONTROL *(contd.)* i01624199

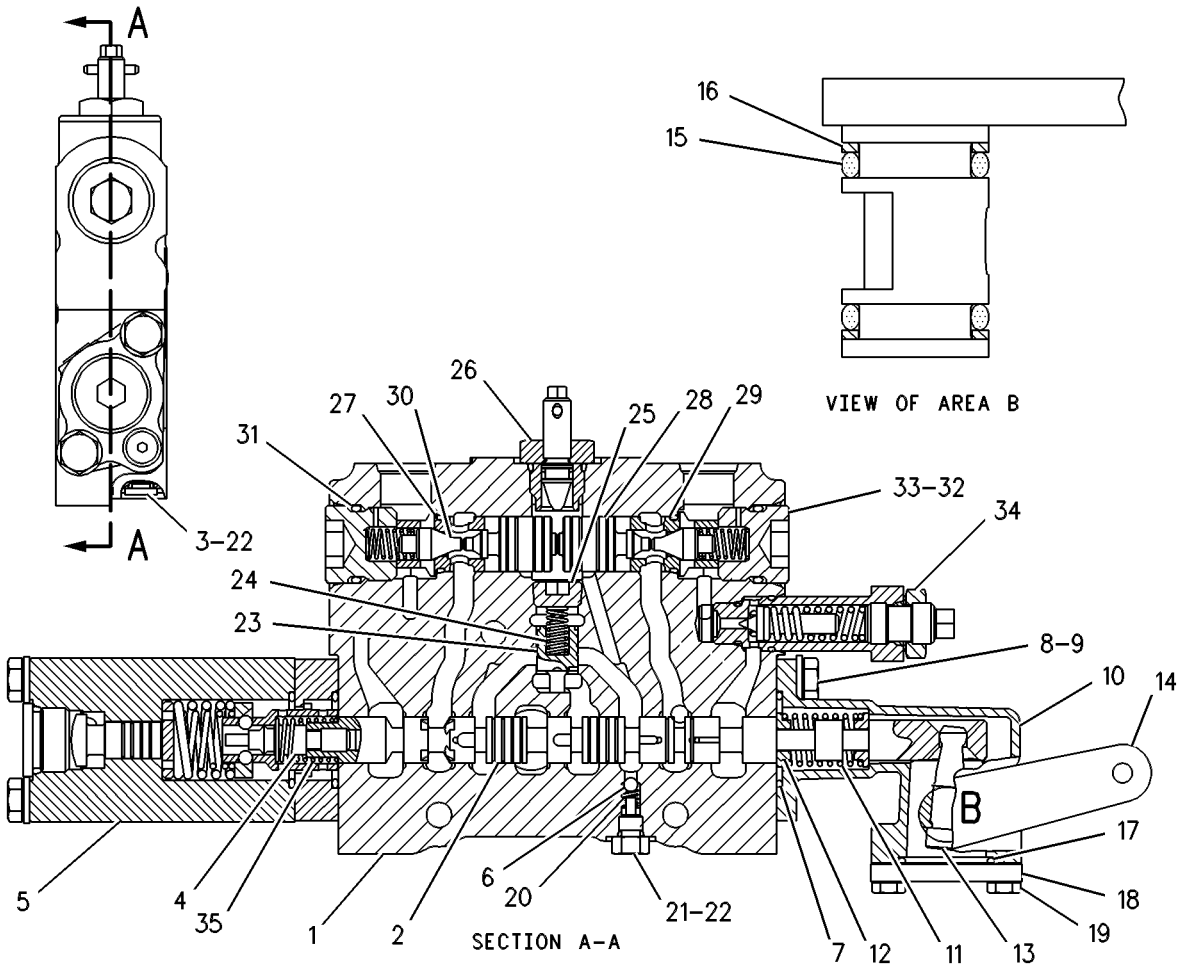

GRAPHIC #1 g00109438

HYDRAULIC SYSTEM

130-3111 VALVE GP-CONTROL—PLOW/DOZER LIFT

S/N: CAF1-UP
PART OF 130-3123 VALVE GP-BANK 5
AN ATTACHMENT

SMCS-5051 **i01624205**

NOTE	REF NO	GRAPHIC REF	PART NUMBER	QTY	PART NAME 1 2 3 4 5 6 (PRODUCT LEVEL)	SEE PAGE
	1	1	**128-8646**	1	BODY	
	2	1	**101-1147**	1	STEM	
	3	1	**9S-8001**	1	PLUG	
	4	1	**101-1972**	1	DETENT	
Y	5	1	**130-3535**	1	DETENT GP-CONTROL VALVE (PLOW & BULLDOZER LIFT)	514
	6	1	**5B-9318**	1	BALL	
	7	1	**2K-8199**	1	SEAL-O-RING	
M	8	1	**8T-4189**	2	BOLT (M8X1.25X20MM)	
	9	1	**8T-4224**	2	WASHER-HARD (8.8X16X2MM THK)	
	10	1	**101-1984**	1	BODY	
	11	1	**102-7412**	1	SPRING	
	12	1	**101-1973**	4	RETAINER	
	13	1	**101-1971**	1	LEVER	
	14	1	**101-1970**	1	LEVER AS	
	15	1	**8M-4437**	2	SEAL-O-RING	
	16	1	**101-1983**	2	RING-BACKUP (14.65MM ID)	
	17	1	**4D-9986**	1	SEAL-O-RING	
	18	1	**101-2480**	1	COVER	
M	19	1	**8T-4138**	2	BOLT (M6X1X20MM)	
	20	1	**6E-3007**	1	SPRING	
	21	1	**6E-4502**	1	PLUG	
	22	1	**4J-7533**	2	SEAL-O-RING	
	23	1	**6E-3019**	1	VALVE	
	24	1	**6E-5153**	1	SPRING	
	25	1	**108-2187**	1	PLUG-PIPE	
Y	26	1	*129-1054*	1	VALVE GP-PURGE	656
	27	1	**3K-0360**	2	SEAL-O-RING	
	28	1	**106-3660**	2	PISTON	
	29	1	**6E-3013**	2	SEAT	
	30	1	**106-3658**	2	VALVE	
	31	1	**9J-0403**	2	SPRING	
	32	1	**9J-0404**	2	PLUG	
	33	1	**7J-9933**	2	SEAL-O-RING	
Y	34	1	*6E-3033*	1	VALVE GP-RELIEF (PLOW & BULLDOZER LIFT)	659
	35	1	**111-8234**	1	SPRING	

M-METRIC PART
Y-SEPARATE ILLUSTRATION

130-3111 VALVE GP-CONTROL *(contd.)* i01624205

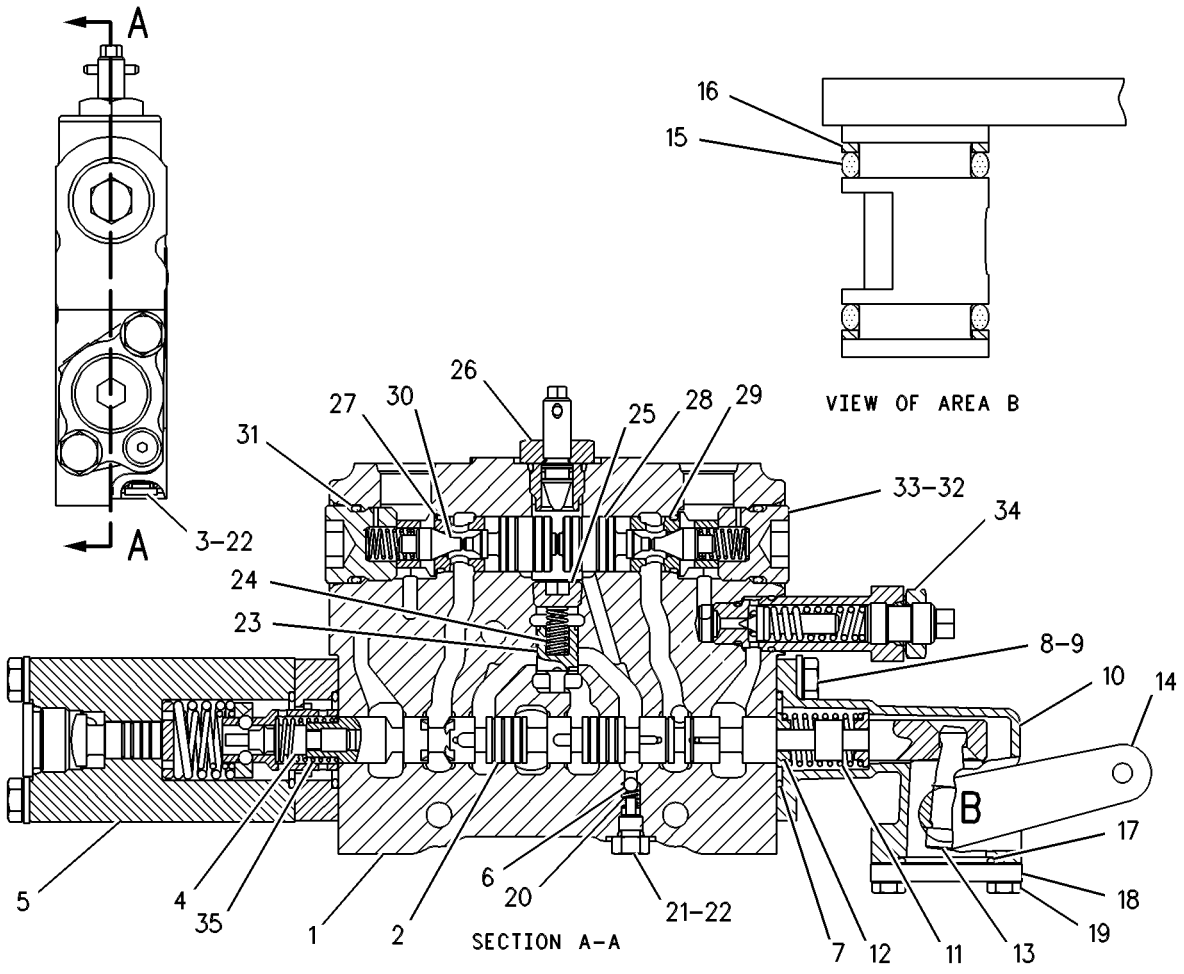

GRAPHIC #1 g00109441

HYDRAULIC SYSTEM

104-3122 VALVE GP-PRESS & FLOW CMPNSTR

S/N: CAF1-UP

PART OF 169-4882, 200-1934 PUMP GP-PISTON

ALSO AN ATTACHMENT

SMCS-5086 **i00130963**

NOTE	REF NO	GRAPHIC REF	PART NUMBER	QTY	PART NAME 1 2 3 4 5 6 (PRODUCT LEVEL)	SEE PAGE
	1	1	**108-4814**	1	BODY-COMPENSATOR	
	2	1	**9S-4191**	1	PLUG-O-RING (9/16-18 THD)	
	3	1	**3J-1907**	3	SEAL-O-RING (11.89MM ID)	
	4	1	**108-4815**	1	SPOOL-MARGIN	
	5	1	**9T-2186**	2	PLUG	
	6	1	**6E-4239**	1	SPOOL-CUTOFF	
	7	1	**6E-4230**	2	SPRING-GUIDE	
	8	1	**6E-4228**	1	SPRING-CUTOFF	
	9	1	**6E-6140**	1	PLUG-COMPENSATOR	
	10	1	**033-6036**	1	SEAL-O-RING (23.47MM ID)	
	11	1	**6E-6141**	2	LOCKNUT-SEALING	
M	12	1	**129-7632**	2	SCREW-ADJUSTMENT	
	13	1	**6E-6142**	1	PLUG-MARGIN	
	14	1	**033-6027**	1	SEAL-O-RING (19.18MM ID)	
	15	1	**9T-7750**	1	SPRING	
	16	1	**108-4816**	1	PIN-SPRING STOP	
	17	1	**9T-1857**	2	GUIDE	
	18	1	**6E-6420**	1	VALVE-NEEDLE	
	19	1	**6E-6419**	1	RING	
	20	1	**9X-7680**	1	SEAL-O-RING	

M-METRIC PART

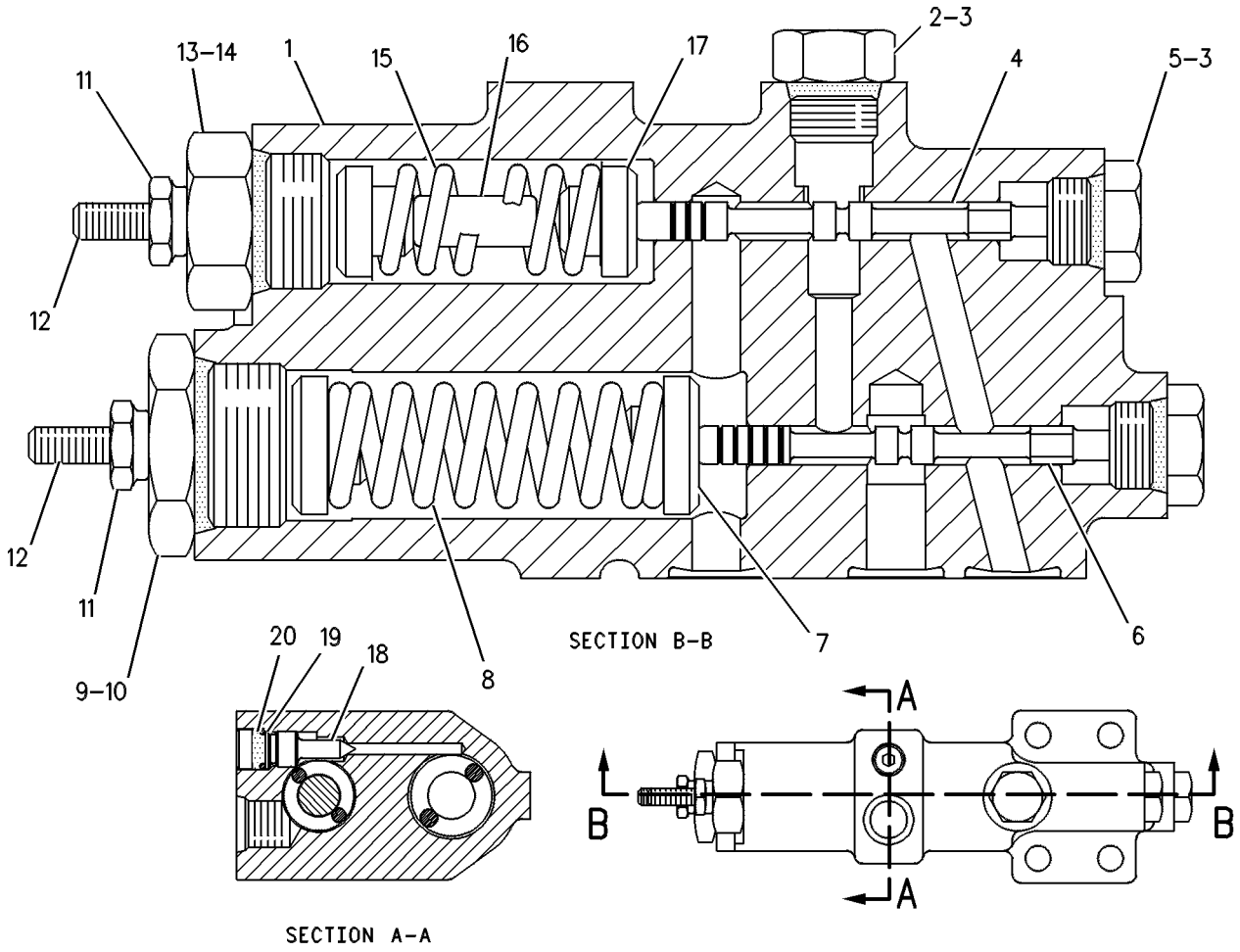

GRAPHIC #1 g00084774

HYDRAULIC SYSTEM

195-9639 VALVE GP-PRESS & FLOW CMPNSTR–HYDRAULIC FAN

S/N: CAF1-UP

PART OF 169-4883 PUMP GP-PISTON

ALSO AN ATTACHMENT

SMCS-5086 **i01694072**

NOTE	REF NO	GRAPHIC REF	PART NUMBER	QTY	PART NAME 1 2 3 4 5 6 (PRODUCT LEVEL)	SEE PAGE
	1	1	**6E-6528**	6	SEAL	
	2	1	**6E-6527**	2	PLUG	
	3	1	**6E-3268**	1	RETAINER-SPRING	
	4	1	**6E-3275**	1	SPRING (INSIDE)	
	5	1	**6E-3274**	1	SPRING (OUTSIDE)	
	6	1	**033-6043**	1	SEAL-O-RING	
	7	1	**6E-3272**	1	SEAT	
	8	1	**6E-6540**	1	PLUG	
M	9	1	**6E-6538**	2	NUT-ADJUSTMENT (M8X1 THD)	
M	10	1	**6E-6537**	2	SCREW-ADJUSTMENT (M8X1X28MM)	
M	11	1	**6E-6539**	2	NUT-CAP (M8X1 THD)	
	12	1	**6E-3273**	1	SEAT	
	13	1	**6E-6536**	1	PLUG	
	14	1	**6V-8352**	1	SEAL-O-RING	
	15	1	**9S-8002**	1	PLUG	
	16	1	**3J-7354**	1	SEAL-O-RING	
	17	1	**193-1036**	1	SPRING (INSIDE)	
	18	1	**6E-3276**	1	SPRING (OUTSIDE)	
	19	1	**6E-3269**	1	RETAINER-SPRING	
	20	1	**105-2145**	1	VALVE-ORIFICE	
	21	1	**5P-9262**	1	SEAL-O-RING	

M-METRIC PART

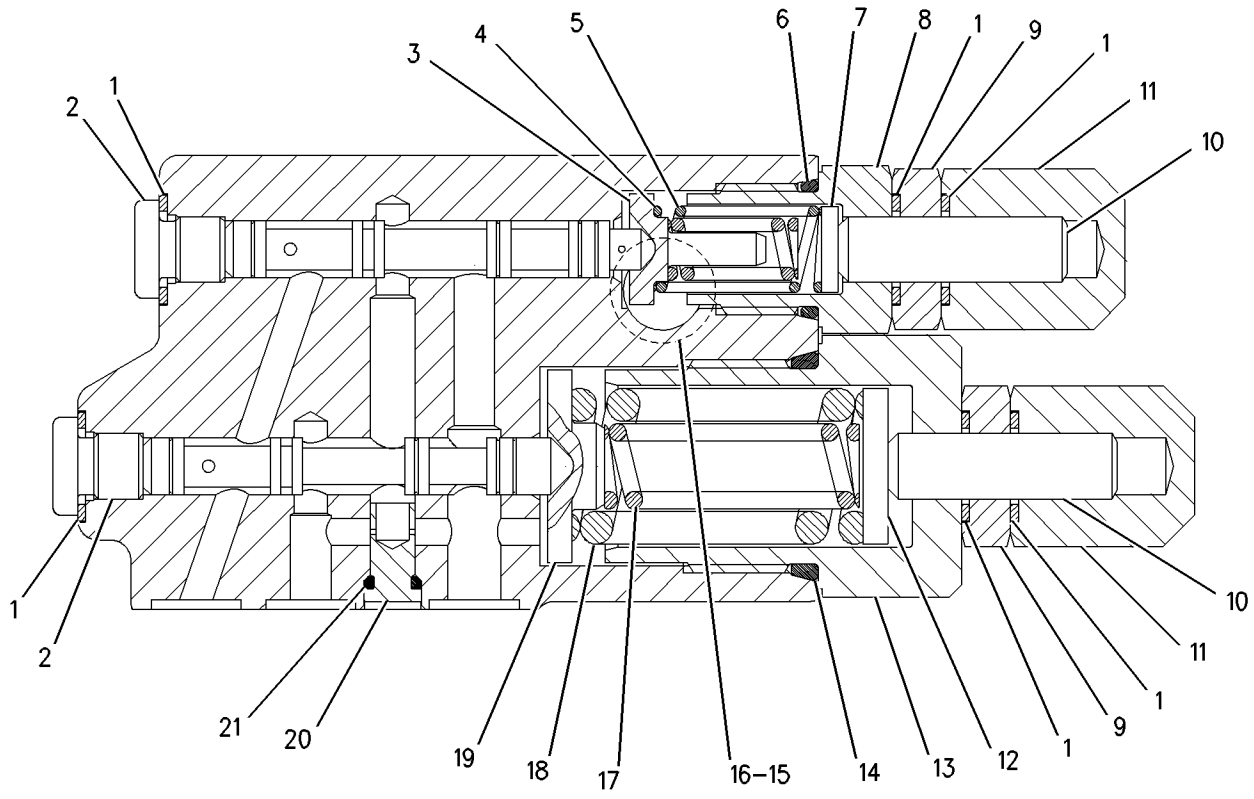

GRAPHIC #1 g00795717

HYDRAULIC SYSTEM

129-1054 VALVE GP-PURGE

S/N: CAF1-UP

PART OF 128-8647, 130-3110, 130-3111 VALVE GP-CONTROL

AN ATTACHMENT

SMCS-4293 **i00881598**

NOTE	REF NO	GRAPHIC REF	PART NUMBER	QTY	PART NAME 1 2 3 4 5 6 (PRODUCT LEVEL)	SEE PAGE
	1	1	**129-1047**	1	PLUG	
	2	1	**3K-4897**	1	PIN-SPRING	
	3	1	**129-1052**	1	VALVE	
	4	1	**3K-0360**	1	SEAL-O-RING (16.36MM ID)	
	5	1	**8C-3085**	1	SEAL-O-RING (7.65MM ID)	
	6	1	**3E-6017**	1	RING-BACKUP	

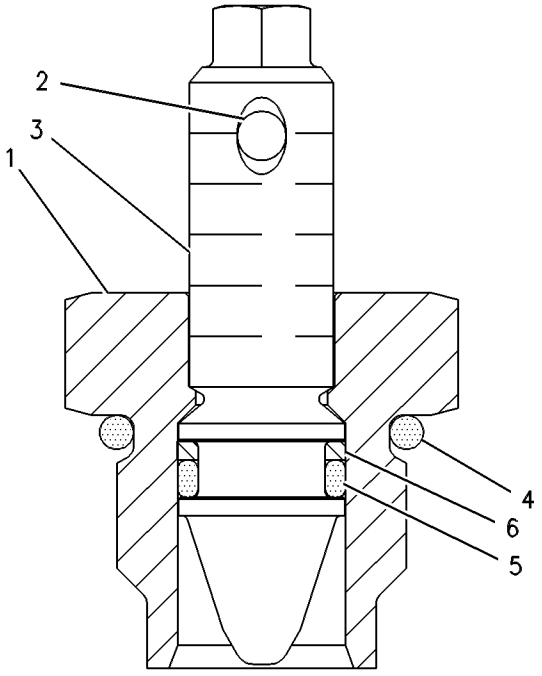

GRAPHIC #1 g00109443

131-8350 VALVE GP-PURGE–IMPLEMENT SIGNAL

S/N: CAF1-UP
PART OF 9T-5957 VALVE GP-COMBINATION
ALSO AN ATTACHMENT

SMCS-4293 **i00139150**

NOTE	REF NO	GRAPHIC REF	PART NUMBER	QTY	PART NAME 1 2 3 4 5 6 (PRODUCT LEVEL)	SEE PAGE
	1	1	**109-1144**	1	VALVE	
	2	1	**130-5770**	1	SLEEVE	

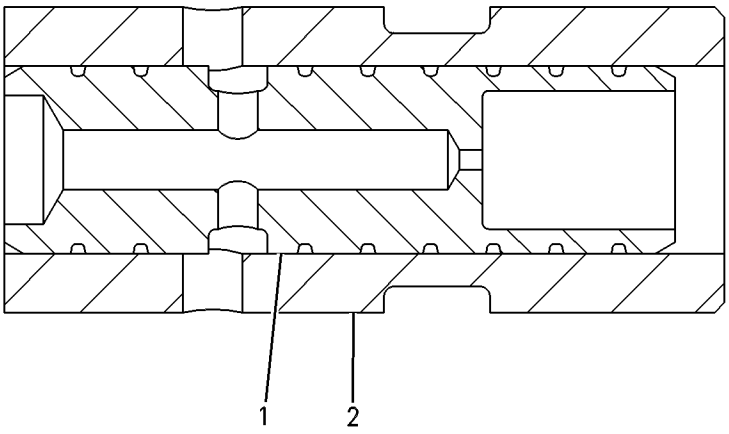

GRAPHIC #1 g00087876

4T-4935 VALVE GP-RELIEF–MAIN

S/N: CAF1-UP
PART OF 9T-5957 VALVE GP-COMBINATION
ALSO AN ATTACHMENT

SMCS-4322, 5069, 5072, 5117 **i00131002**

NOTE	REF NO	GRAPHIC REF	PART NUMBER	QTY	PART NAME 1 2 3 4 5 6 (PRODUCT LEVEL)	SEE PAGE
	1	1	**6E-1835**	1	RETAINER AS	
	2	1	**9X-6395**	1	NUT-ORFS (3/4-16 THD)	
	3	1	**7J-9933**	1	SEAL-O-RING (21.89MM ID)	
	4	1	**4T-7571**	1	PLATE	
	5	1	**6J-6439**	1	VALVE	
	6	1	**3K-0360**	2	SEAL-O-RING (16.36MM ID)	
	7	1	**4T-4942**	1	SPRING	

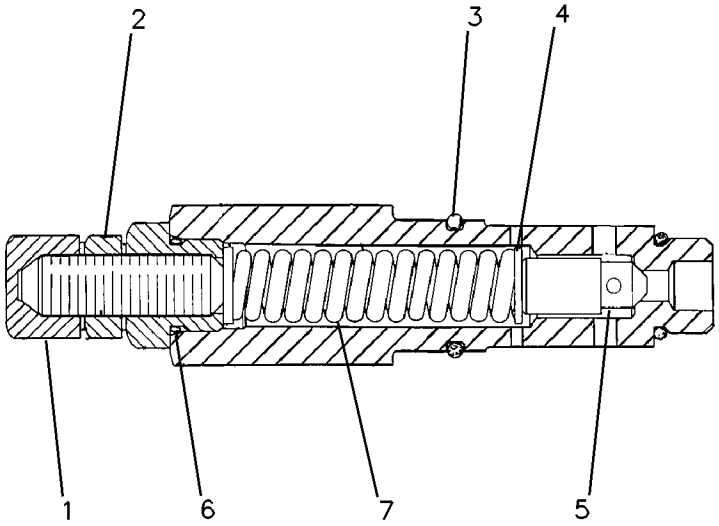

GRAPHIC #1 g00082648

HYDRAULIC SYSTEM

6E-3033 VALVE GP-RELIEF

S/N: CAF1-UP

PART OF 107-0547, 128-8647, 130-3110, 130-3111, 6E-3031, 6E-3037 VALVE GP-CONTROL

ALSO AN ATTACHMENT

SMCS-4322, 5069, 5072, 5117 **i01862903**

NOTE	PART NUMBER	QTY	PART NAME 1 2 3 4 5 6 (PRODUCT LEVEL)	SEE PAGE
Y	*106-7390*	1	VALVE GP-RELIEF (HYDRAULIC)	665
			—OR—	
	6E-4704	1	VALVE GP-RELIEF (HYDRAULIC)	
	3G-3726	1	NUT (3/8-40 THD)	
	3J-1907	1	SEAL-O-RING	
	4D-2297	1	SEAL-O-RING	

Y-SEPARATE ILLUSTRATION

<END>

HYDRAULIC SYSTEM

6E-4703 VALVE GP-RELIEF–IMPLEMENT

S/N: CAF1-UP
PART OF 9T-5957 VALVE GP-COMBINATION
ALSO AN ATTACHMENT

SMCS-4322, 5069, 5072, 5117 **i00131105**

NOTE	REF NO	GRAPHIC REF	PART NUMBER	QTY	PART NAME 1 2 3 4 5 6 (PRODUCT LEVEL)	SEE PAGE
	1	1	**4D-2297**	1	SEAL-O-RING (15.60MM ID)	
	2	1	**3J-1907**	1	SEAL-O-RING (11.89MM ID)	
	3	1	**3G-3726**	1	NUT	

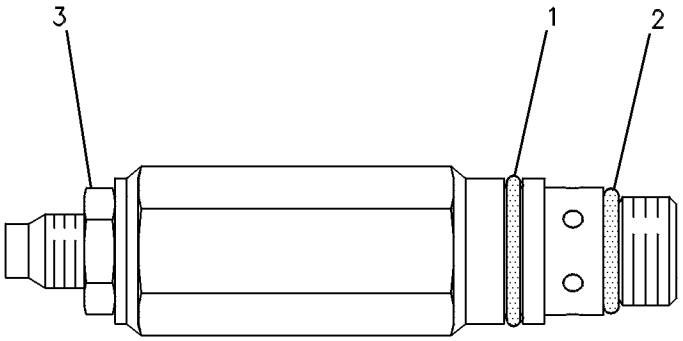

GRAPHIC #1 g00084814

100-6021 VALVE GP-RELIEF–STEERING

S/N: CAF1-UP
PART OF 9T-5957 VALVE GP-COMBINATION
ALSO AN ATTACHMENT

SMCS-4322, 5069, 5072, 5117 **i01853030**

NOTE	REF NO	GRAPHIC REF	PART NUMBER	QTY	PART NAME 1 2 3 4 5 6 (PRODUCT LEVEL)	SEE PAGE
	1	1	**4T-1700**	1	SPRING	
	2	1	**4T-4509**	1	SEAT	
	3	1	**4T-5074**	1	RING-BACKUP	
	4	1	**6E-5200**	1	RETAINER AS	
	5	1	**123-6661**	1	HOUSING	
	6	1	**108-5157**	1	VALVE	
	7	1	**3J-7354**	1	SEAL-O-RING	
	8	1	**3K-0360**	1	SEAL-O-RING	
	9	1	**6V-5556**	1	SEAL-O-RING	
	10	1	**9X-6395**	1	NUT (3/4-16 THD)	

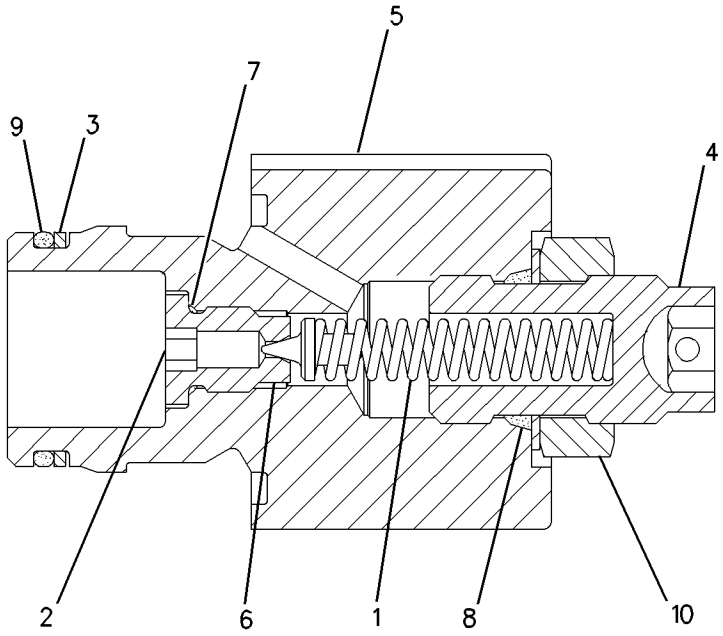

GRAPHIC #1 g00949717

HYDRAULIC SYSTEM

101-4147 VALVE GP-RELIEF

S/N: CAF1-UP
PART OF 107-0545, 6E-3034, 6E-3036 VALVE GP-CONTROL
FIELD REPLACEMENT FOR 101-4148—PAGE 663, 106-7389—PAGE 664
ALSO AN ATTACHMENT

SMCS-4322, 5069, 5072, 5117 **i01457309**

NOTE	PART NUMBER	QTY	PART NAME 1 2 3 4 5 6 (PRODUCT LEVEL)	SEE PAGE
Y	*101-4148*	1	VALVE GP-RELIEF (HYDRAULIC)	663
			—OR—	
Y	*106-7389*	1	VALVE GP-RELIEF (HYDRAULIC)	664
Y-SEPARATE ILLUSTRATION				

<END>

101-4148 VALVE GP-RELIEF

S/N: CAF1-UP
PART OF 101-4147 VALVE GP-RELIEF
FIELD REPLACEMENT ORDER 101-4147—PAGE 662
ALSO AN ATTACHMENT

SMCS-4322, 5069, 5072, 5117 **i00130985**

NOTE	REF NO	GRAPHIC REF	PART NUMBER	QTY	PART NAME 1 2 3 4 5 6 (PRODUCT LEVEL)	SEE PAGE
	1	1	**4D-2297**	1	SEAL-O-RING (15.60MM ID)	
	2	1	**3J-1907**	1	SEAL-O-RING (11.89MM ID)	
	3	1	**3G-3726**	1	NUT	

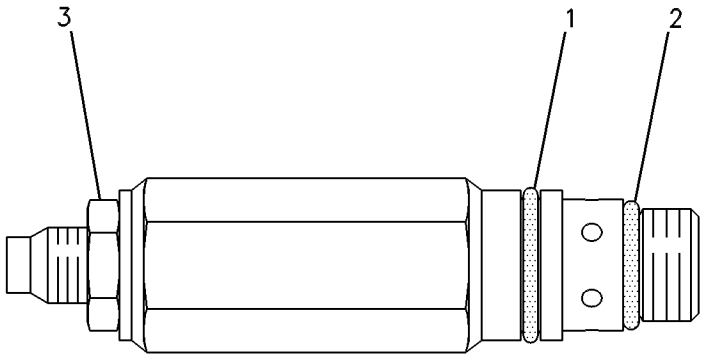

GRAPHIC #1 g00084716

106-7389 VALVE GP-RELIEF—HYDRAULIC

S/N: CAF1-UP

PART OF 101-4147 VALVE GP-RELIEF

FIELD REPLACEMENT ORDER 101-4147—PAGE 662

ALSO AN ATTACHMENT

SMCS-4322, 5069, 5072, 5117 **i00131229**

NOTE	REF NO	GRAPHIC REF	PART NUMBER	QTY	PART NAME 1 2 3 4 5 6 (PRODUCT LEVEL)	SEE PAGE
	1	1	**114-6635**	1	RETAINER AS	
	2	1	**2P-1279**	1	LOCKNUT (9/16-18 THD)	
	3	1	**3J-1907**	2	SEAL-O-RING (11.89MM ID)	
	4	1	**2J-6089**	1	SPRING	
	5	1	**6E-3006**	1	BODY	
	6	1	**111-5754**	1	VALVE	
	7	1	**4D-2297**	1	SEAL-O-RING (15.60MM ID)	
B	8	1	**2A-3211**	1	WASHER	

B-USE AS REQUIRED

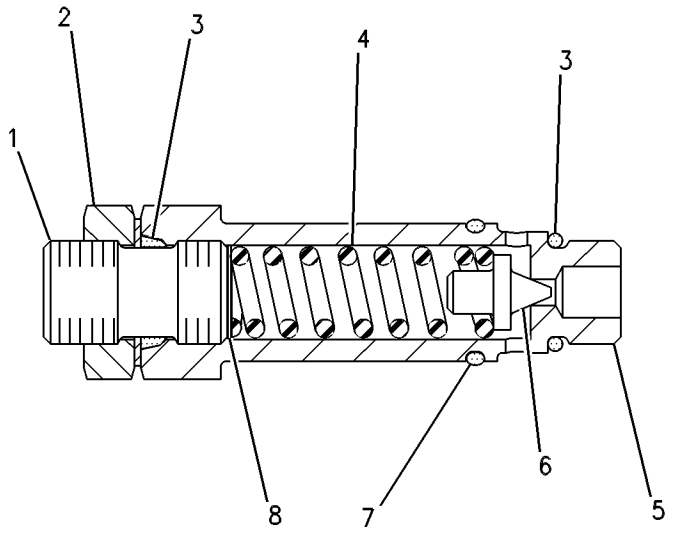

GRAPHIC #1 g00108790

106-7390 VALVE GP-RELIEF

S/N: CAF1-UP
PART OF 6E-3033 VALVE GP-RELIEF
FIELD REPLACEMENT ORDER 6E-3033–PAGE 659
ALSO AN ATTACHMENT
TYPE 1

SMCS-4322, 5069, 5072, 5117 **i01197997**

NOTE	REF NO	GRAPHIC REF	PART NUMBER	QTY	PART NAME 1 2 3 4 5 6 (PRODUCT LEVEL)	SEE PAGE
	1	1	**114-6635**	1	RETAINER AS	
	2	1	**2P-1279**	1	LOCKNUT (9/16-18 THD)	
	3	1	**3J-1907**	2	SEAL-O-RING (11.89MM ID)	
	4	1	**2J-6089**	1	SPRING	
	6	1	**111-5754**	1	VALVE	
	7	1	**4D-2297**	1	SEAL-O-RING (15.60MM ID)	

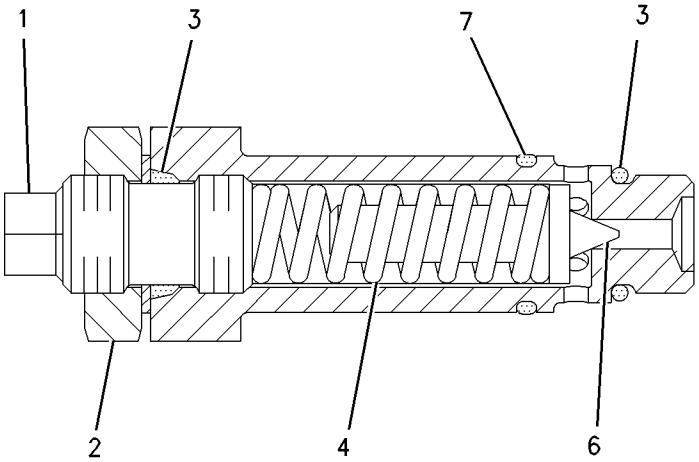

GRAPHIC #1 g00638990

106-7390 VALVE GP-RELIEF

S/N: CAF1-UP
PART OF 6E-3033 VALVE GP-RELIEF
FIELD REPLACEMENT ORDER 6E-3033—PAGE 659
ALSO AN ATTACHMENT
TYPE 2

SMCS-4322, 5069, 5072, 5117 **i00131256**

NOTE	REF NO	GRAPHIC REF	PART NUMBER	QTY	PART NAME 1 2 3 4 5 6 (PRODUCT LEVEL)	SEE PAGE
	1	1	**114-6635**	1	RETAINER AS	
	2	1	**2P-1279**	1	LOCKNUT (9/16-18 THD)	
	3	1	**3J-1907**	2	SEAL-O-RING (11.89MM ID)	
	4	1	**2J-6089**	1	SPRING	
	5	1	**6E-3006**	1	BODY	
	6	1	**111-5754**	1	VALVE	
	7	1	**4D-2297**	1	SEAL-O-RING (15.60MM ID)	
B	8	1	**2A-3211**	1	WASHER	

B-USE AS REQUIRED

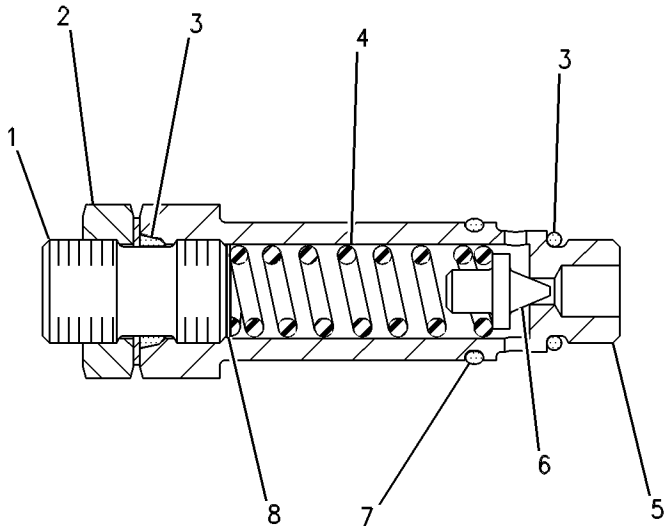

GRAPHIC #1 g00108790

116-0374 VALVE GP-RELIEF–RIPPER

S/N: CAF1-UP
PART OF 119-9550 VALVE GP-CONTROL
AN ATTACHMENT

SMCS-4322, 5069, 5072, 5117 **i00138690**

NOTE	REF NO	GRAPHIC REF	PART NUMBER	QTY	PART NAME 1 2 3 4 5 6 (PRODUCT LEVEL)	SEE PAGE
	1	1	**4D-2297**	1	SEAL-O-RING (15.60MM ID)	
	2	1	**9T-2659**	1	SPRING	
	3	1	**3J-1907**	1	SEAL-O-RING (11.89MM ID)	
	4	1	**6M-5062**	1	SEAL-O-RING (10.82MM ID)	
	5	1	**5B-9079**	1	NUT-JAM (3/8-24 THD)	
	6	1	**131-8777**	1	VALVE	

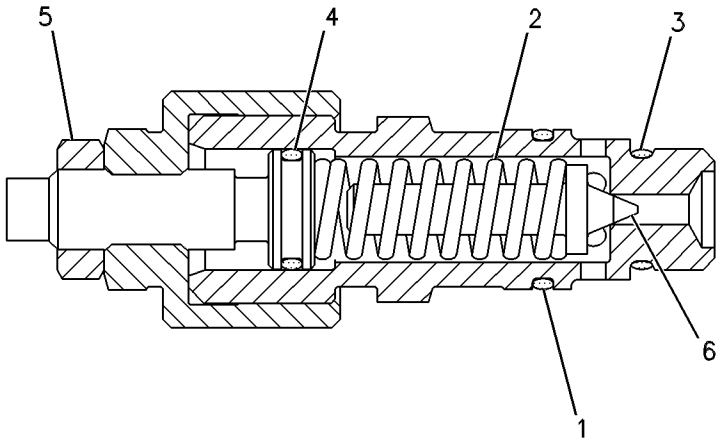

GRAPHIC #1 g00108898

HYDRAULIC SYSTEM

139-8473 VALVE GP-RELIEF–SCARIFIER

S/N: CAF1-UP
PART OF 107-0543 VALVE GP-CONTROL
AN ATTACHMENT

SMCS-4322, 5069, 5072, 5117 **i00916444**

NOTE	REF NO	GRAPHIC REF	PART NUMBER	QTY	PART NAME 1 2 3 4 5 6 (PRODUCT LEVEL)	SEE PAGE
	1	1	**114-6635**	1	RETAINER AS	
	2	1	**2P-1279**	1	LOCKNUT (9/16-18 THD)	
	3	1	**3J-1907**	2	SEAL-O-RING (11.89MM ID)	
	4	1	**2J-6089**	1	SPRING	
	5	1	**2A-3211**	1	WASHER (0.8MM THICK)	
	6	1	**131-8777**	1	VALVE	
	7	1	**4D-2297**	1	SEAL-O-RING (15.60MM ID)	

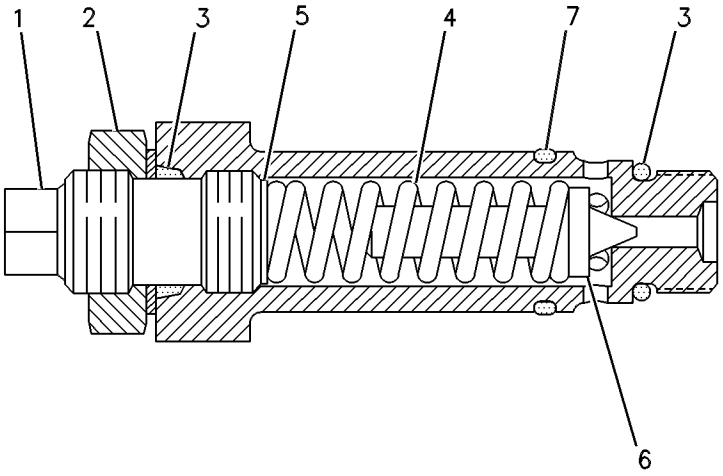

GRAPHIC #1 g00109670

139-8476 VALVE GP-RELIEF–SCARIFIER

S/N: CAF1-UP
PART OF 119-9549 VALVE GP-CONTROL
AN ATTACHMENT

SMCS-4322, 5069, 5072, 5117 **i00611518**

NOTE	REF NO	GRAPHIC REF	PART NUMBER	QTY	PART NAME 1 2 3 4 5 6 (PRODUCT LEVEL)	SEE PAGE
	1	1	**5B-9079**	1	NUT-JAM (3/8-24 THD)	
	2	1	**9T-2659**	1	SPRING	
	3	1	**3J-1907**	1	SEAL-O-RING (11.89MM ID)	
	4	1	**6M-5062**	1	SEAL-O-RING (10.82MM ID)	
	5	1	**4D-2297**	1	SEAL-O-RING (15.60MM ID)	
	6	1	**131-8777**	1	VALVE	

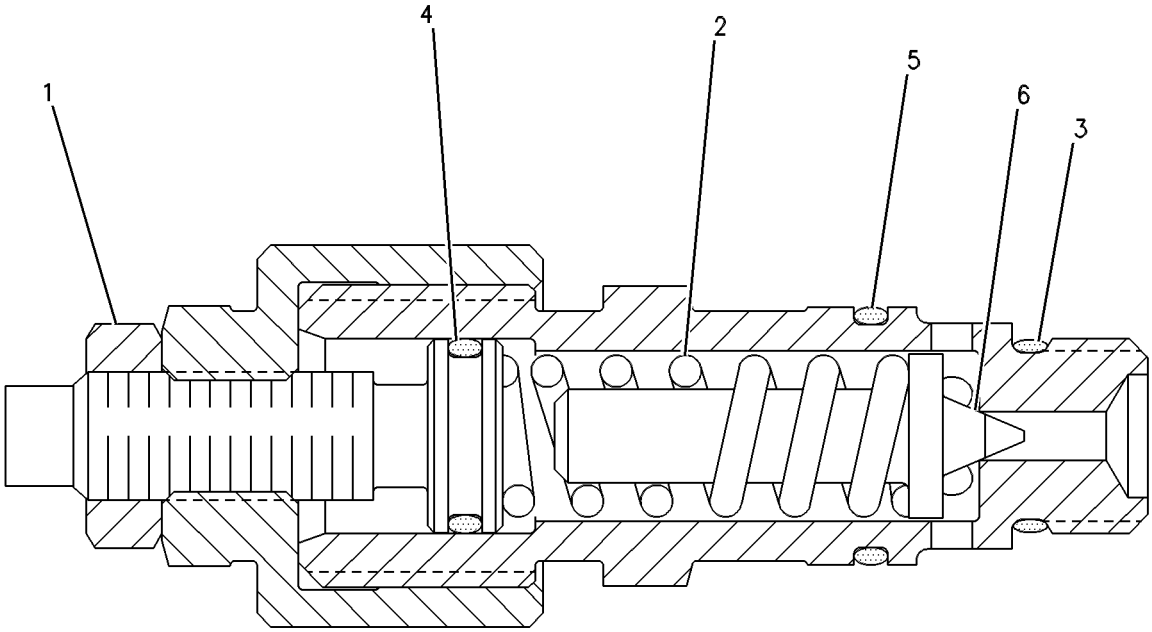

GRAPHIC #1 g00109725

HYDRAULIC SYSTEM

4T-1860 VALVE GP-SHUTTLE

S/N: CAF1-UP
PART OF 9T-5957 VALVE GP-COMBINATION
ALSO AN ATTACHMENT

SMCS-5079 **i01502182**

NOTE	REF NO	GRAPHIC REF	PART NUMBER	QTY	PART NAME 1 2 3 4 5 6 (PRODUCT LEVEL)	SEE PAGE
Z	1	1		1	SEAT	
	2	1	**1M-6718**	1	BALL	
Z	3	1		1	VALVE	
	4	1	**8C-3085**	1	SEAL-O-RING	
	5	1	**6V-5586**	1	SEAL-O-RING	
	6	1	**3J-1907**	1	SEAL-O-RING	
	7	1	**4T-5070**	2	RING-BACKUP	
	8	1	**4T-5071**	2	RING-BACKUP	

Z-NOT SERVICED SEPARATELY

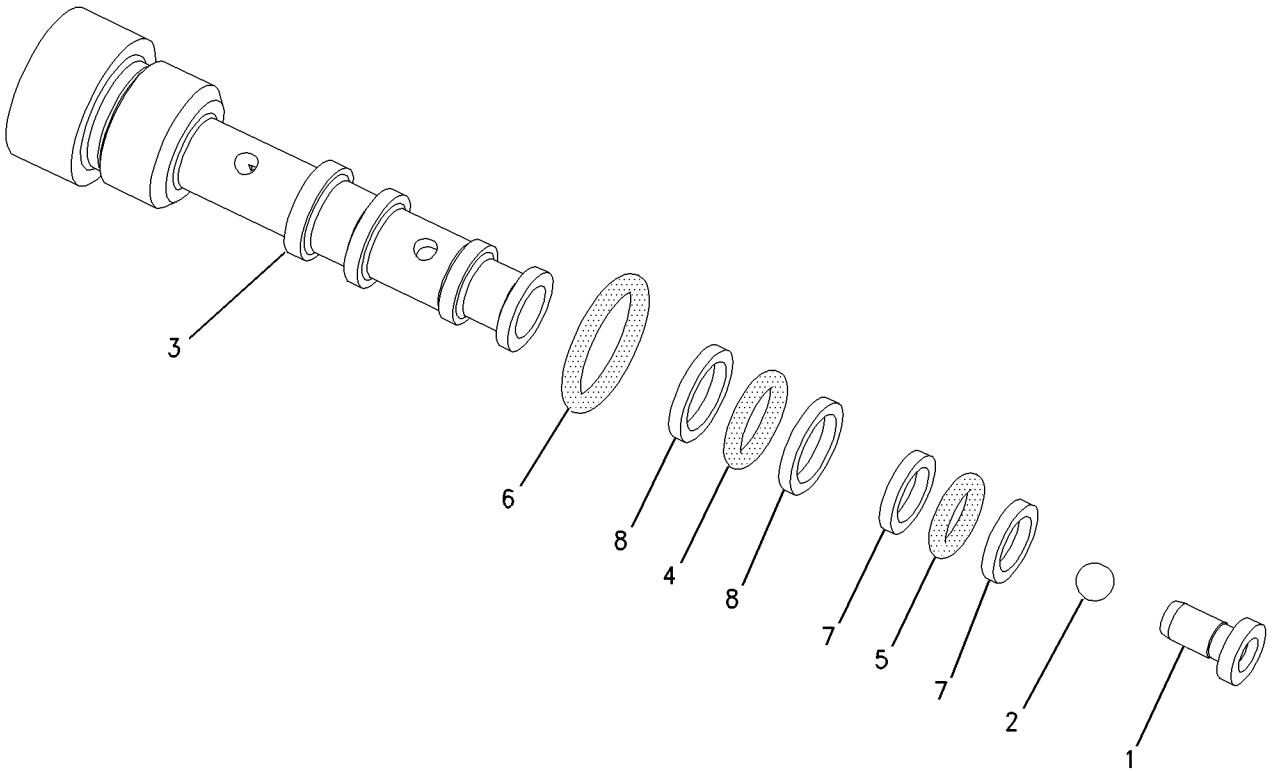

GRAPHIC #1 g00775006

149-2610 VALVE GP-SOLENOID—BLADE CUSHION

S/N: CAF1-UP
24 VOLT
PART OF 112-2240 VALVE GP-SOLENOID & MANIFOLD
AN ATTACHMENT

SMCS-5479 **i01755293**

NOTE	REF NO	GRAPHIC REF	PART NUMBER	QTY	PART NAME 1 2 3 4 5 6 (PRODUCT LEVEL)	SEE PAGE
	1	1	**149-2611**	1	CARTRIDGE AS	
		1	**8C-9987**	1	WASHER (8.3X28X2.5MM THK)	
	2	1	**111-0343**	1	LOCKNUT (5/16-18 THD)	
	3	1	**141-6787**	1	COIL AS	
		1	**1S-9593**	2	STRAP-CABLE	
		1	**3E-3365**	1	WEDGE-RECEPTACLE LOCK (2 PIN)	
		1	**186-3735**	2	PIN-CONNECTOR	
		1	**102-8802**	2	KIT-RECEPTACLE (2 PIN)	
					(INCLUDES RECEPTACLE AS AND WEDGE)	
	4	1	**8C-9987**	1	WASHER (8.3X28X2.5MM THK)	
		1	**111-0343**	1	LOCKNUT (5/16-18 THD)	
					AVAILABLE REPAIR KIT(S):	
			3G-8175	1	KIT-SEAL	
					(INCLUDES O-RINGS & BACK-UP RINGS)	

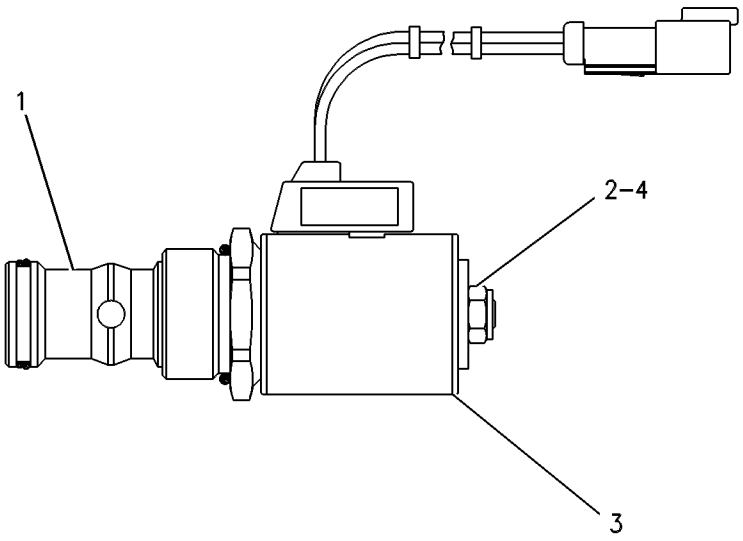

GRAPHIC #1 g00308949

HYDRAULIC SYSTEM

152-8346 VALVE GP-SOLENOID–CENTERSHIFT

S/N: CAF1-UP

PART OF 164-8462 LOCK GP-CENTERSHIFT

SMCS-5479 **i01861563**

NOTE	REF NO	GRAPHIC REF	PART NUMBER	QTY	PART NAME 1 2 3 4 5 6 (PRODUCT LEVEL)	SEE PAGE
	1	1	**141-6787**	1	COIL AS	
	2	1	**102-8802**	1	KIT-RECEPTACLE (2 PIN)	
					(INCLUDES RECEPTACLE AS AND WEDGE)	
	3	1	**3E-3365**	1	WEDGE-RECEPTACLE LOCK (2 PIN)	
	4	1	**8T-8729**	2	PIN-CONNECTOR	
	5	1	**1S-9593**	2	STRAP-CABLE	
	6	1	**152-8352**	1	SPOOL AS-VALVE	
	7	1	**111-0343**	1	LOCKNUT (5/16-18 THD)	
	8	1	**8C-9987**	1	WASHER (8.3X28X2.5MM THK)	
					AVAILABLE REPAIR KIT(S):	
			109-3036	1	KIT-SEAL	
					(INCLUDES SEALS & RINGS)	

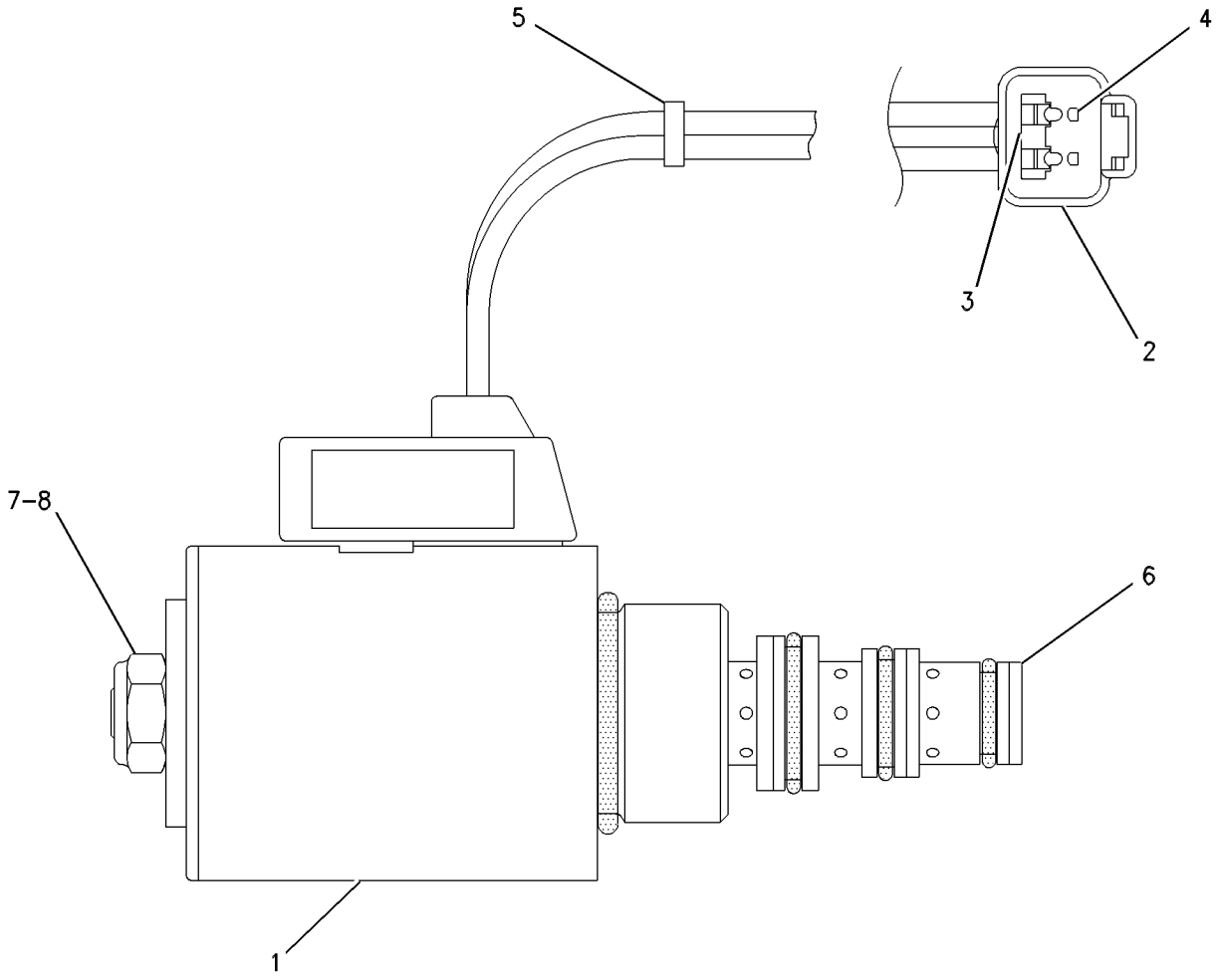

GRAPHIC #1 g00482067

112-2240 VALVE GP-SOLENOID & MANIFOLD–BLADE CUSHION

S/N: CAF1-UP
PART OF 166-3336 LINES GP-ACCUMULATOR
AN ATTACHMENT

SMCS-5264, 5479 **i01680383**

NOTE	REF NO	GRAPHIC REF	PART NUMBER	QTY	PART NAME 1 2 3 4 5 6 (PRODUCT LEVEL)	SEE PAGE
Y	1	1	**149-2610**	1	VALVE GP-SOLENOID (BLADE CUSHION)	671
	2	1	**8C-6162**	1	MANIFOLD	

Y-SEPARATE ILLUSTRATION

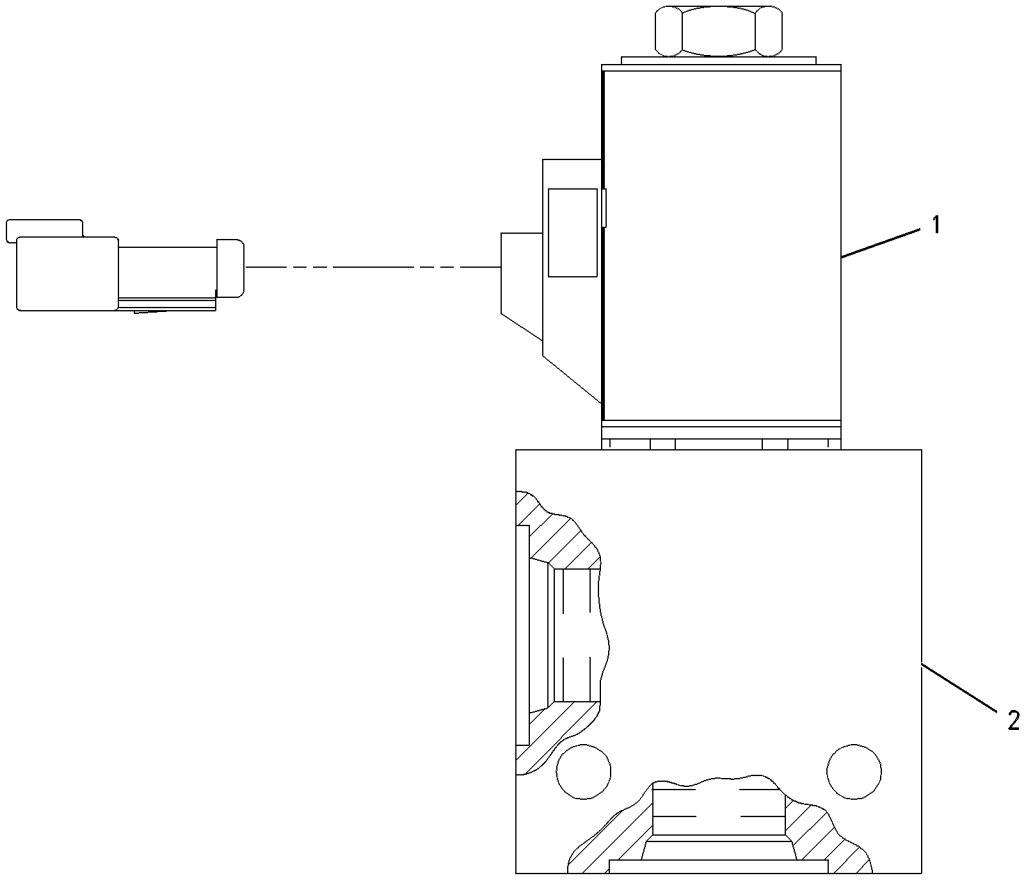

GRAPHIC #1 g00469610

HYDRAULIC SYSTEM

191-5292 VALVE GP-SOLENOID & MANIFOLD—FAN SPEED

S/N: CAF1-UP

PART OF 175-6979 LINES GP-HYDRAULIC FAN

SMCS-5264, 5479 **i01701706**

NOTE	REF NO	GRAPHIC REF	PART NUMBER	QTY	PART NAME 1 2 3 4 5 6 (PRODUCT LEVEL)	SEE PAGE
	1	1	**183-7595**	1	VALVE GP-SOLENOID (HYDRAULIC FAN)	
	2	1	**192-5490**	1	MANIFOLD AS	
					AVAILABLE REPAIR KIT(S):	
			100-4318	1	KIT-SEAL	
					(INCLUDES SEALS & RINGS)	

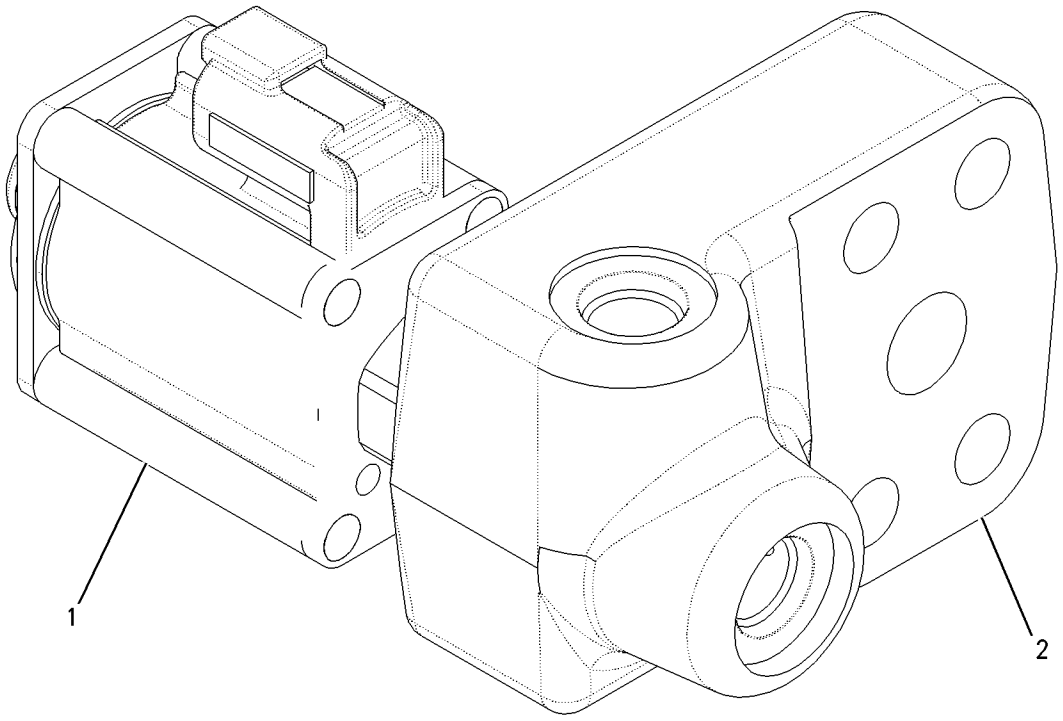

GRAPHIC #1 g00889834

MEMORANDA

IMPLEMENTS

8X-1965 CIRCLE GP

S/N: CAF1-UP

PART OF 162-5603 GENERAL AR

SMCS-6152, 6154, 6155 **i01450802**

NOTE	REF NO	GRAPHIC REF	PART NUMBER	QTY	PART NAME 1 2 3 4 5 6 (PRODUCT LEVEL)	SEE PAGE
	1	1	**1D-0503**	2	WASHER (1 3/4X3X1/4IN THK)	
B	2	1	**2G-3219**	4	SHIM (.80MM THK)	
B	3	1	**2G-3221**	4	SHIM (1.6MM THK)	
	4	1	**2K-0419**	4	WASHER (3/4X3.5X.065 IN THK)	
B	5	1	**5D-6644**	10	SHIM (.762MM THK)	
	6	1	**5T-8366**	4	STRIP-WEAR	
	7	1	**178-1685**	1	STRIP-WEAR	
	8	1	**8D-5949**	1	BAR-SPREADER	
	9	1	**8W-1749**	10	PLATE	
	10	1	**163-4721**	1	GUARD-RH	
	11	1	**163-4720**	1	GUARD-LH	
	12	1	**102-4139**	8	SPACER (18.85X26.67X78MM THK)	
C	13	1	**153-3580**	1	SHAFT	
CY	14	1	**153-9359**	1	CIRCLE GP	678
	15	1	**105-2080**	4	BRACKET AS	
		1	**1F-0748**	2	NUT-WELD (1/2-13 THD)	
	16	1	**2B-2673**	2	NUT (1 3/4-5 THD)	
	17	1	**3B-5320**	2	COTTER	
	18	1	**5P-8245**	30	WASHER-HARD (13.5X25.5X3MM THK)	
	19	1	**6H-1717**	30	BOLT (1/2-13X1.125 IN)	
	20	1	**7X-0334**	8	BOLT (1/2-13X5 IN)	
	21	1	**7X-0452**	4	NUT-FULL (1-1/2-6 THD)	
	22	1	**7X-0550**	8	WASHER-HARD (13.5X32X5MM THK)	
	23	1	**159-8127**	1	BRACKET AS	
	23A	1	**9X-8881**	2	BOLT (5/8-11X2.25 IN)	
	23B	1	**5P-8247**	4	WASHER-HARD (17X32X3.5MM THK)	
	23C	1	**9X-8883**	2	BOLT (5/8-11X2.75 IN)	
	24	1	**8W-4066**	1	BRACKET-RAIL	
	25	1	**8W-4067**	1	BRACKET-RAIL	
B	26	1	**163-6074**	2	SHIM (.381MM THK)	
B	27	1	**178-8455**	1	SHIM (.4MM THK)	
B	28	1	**178-1686**	1	SHIM (.8MM THK)	
B	29	1	**178-1688**	1	SHIM (1.8MM THK)	

B-USE AS REQUIRED
C-CHANGE FROM PREVIOUS TYPE
Y-SEPARATE ILLUSTRATION

8X-1965 **CIRCLE GP** *(contd.)* **i01450802**

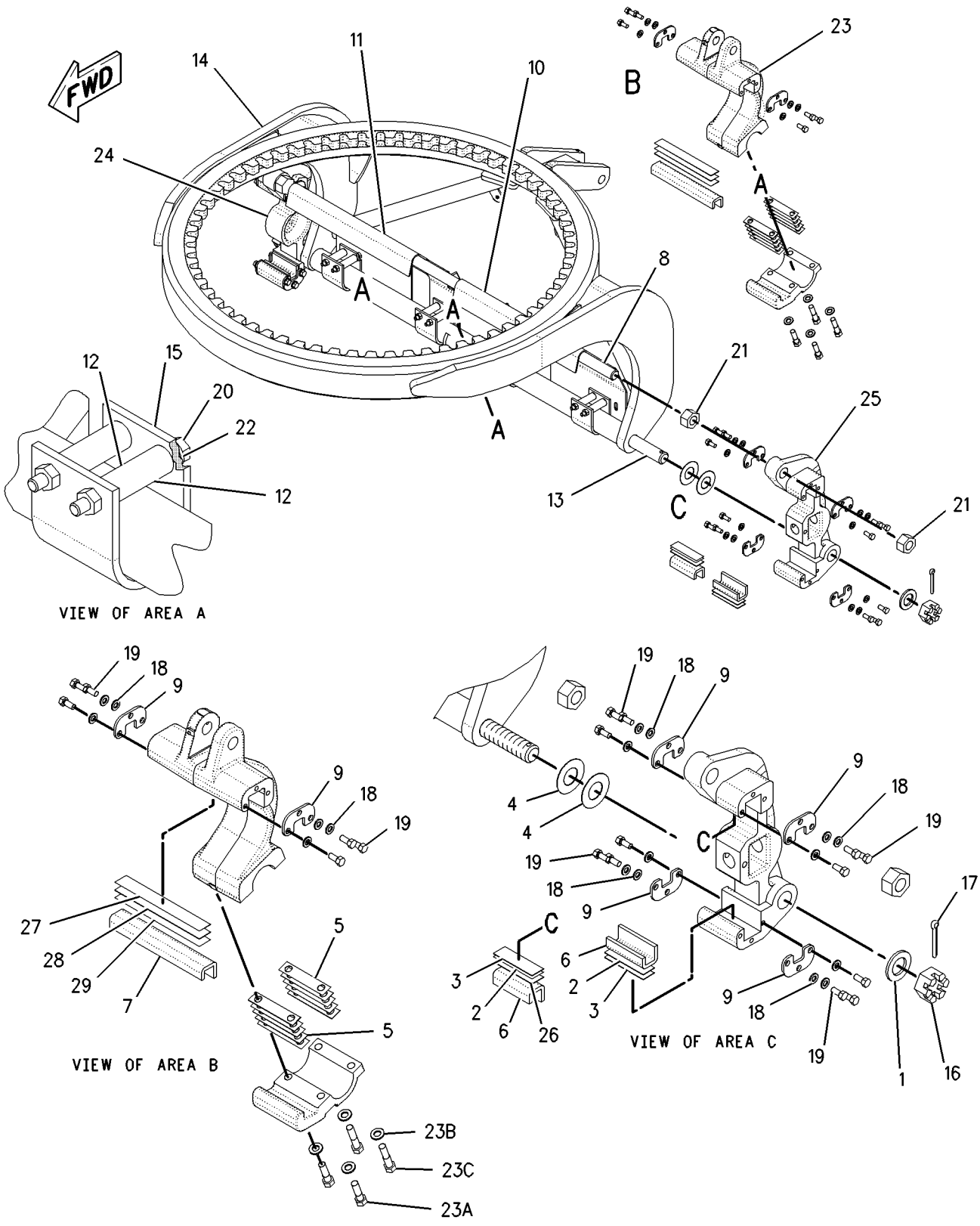

GRAPHIC #1 g00751760

IMPLEMENTS

153-9359 CIRCLE GP

S/N: CAF1-UP

PART OF 8X-1965 CIRCLE GP

SMCS-6152, 6154, 6155 **i01029173**

NOTE	REF NO	GRAPHIC REF	PART NUMBER	QTY	PART NAME 1 2 3 4 5 6 (PRODUCT LEVEL)	SEE PAGE
	2	1	**2G-3971**	1	BRACKET AS	
	3	1	**4D-4375**	2	LUG	
	5	1	**5T-3889**	1	BRACE	
	6	1	**5T-3890**	1	BRACE	
	7	1	**6G-2946**	2	STOP	
	8	1	**8D-9882**	2	BLOCK-FILLER	
	9	1	**8D-9886**	1	BRACE	
	10	1	**8D-9887**	1	BRACE	
	12	1	**147-6143**	1	PLATE-LH	
	13	1	**147-6144**	1	PLATE-RH	
	14	1	**153-0188**	1	BEAM-BLADE	
	15	1	**153-0189**	1	BEAM-BLADE	
	16	1	**6G-2949**	1	BRACE	
AF		1	**5T-4267**	1	SEGMENT-CIRCLE (4 TEETH)	
					(SERVICE REPAIR FOR WORN OR DAMAGED TEETH)	

A-NOT PART OF THIS GROUP
F-NOT SHOWN

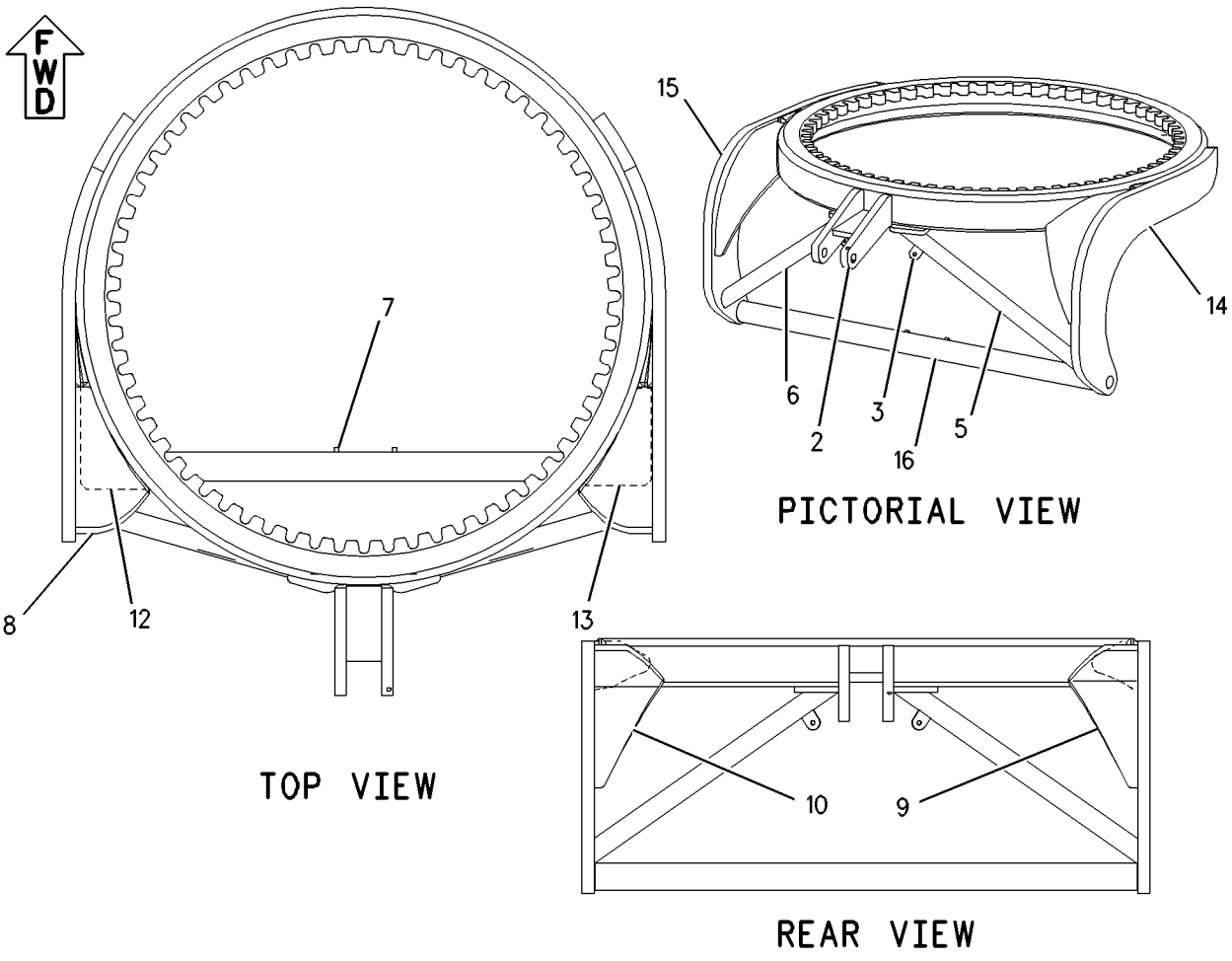

GRAPHIC #1 g00395882

MEMORANDA

8X-2373 DRAWBAR GP

S/N: CAF1-UP

PART OF 162-5603 GENERAL AR

SMCS-6153 **i01456105**

NOTE	REF NO	GRAPHIC REF	PART NUMBER	QTY	PART NAME 1 2 3 4 5 6 (PRODUCT LEVEL)	SEE PAGE
	1	1	**9S-1322**	4	BOLT (7/8-9X6IN)	
B	2	1	**6G-1915**	24	SHIM (.25MM THK)	
	3	1	**5P-6652**	12	WASHER (20X44.5X6MM THK)	
		1	**3B-6753**	12	BOLT (3/4-10X4.75 IN)	
	4	1	**6G-5442**	1	BALL	
	5	1	**8X-8406**	1	CAP-DRAWBAR PIVOT	
B	6	1	**8X-8409**	4	SHIM (.8MM THK)	
B	7	1	**8X-8408**	6	SHIM (.25MM THK)	
	8	1	**8X-8407**	1	ADAPTER	
	9	1	**5P-8291**	5	BOLT (3/4-16X2.0 IN)	
	10	1	**2H-3764**	2	BOLT-HEX SOCKET HEAD (1/4-20X1.5IN)	
	11	1	**9H-1031**	4	WASHER-HARD (24X41.5X6MM THK)	
	12	1	**3B-8489**	1	FITTING-GREASE (DRAW BAR)	
	13	1	**6G-4526**	4	SHOE-CIRCLE GUIDE	
	14	1	**4B-3604**	8	SETSCREW-SQUARE HEAD (3/4-10X2.5 IN)	
	15	1	**1D-5119**	8	NUT (3/4-10 THD)	
B	16	1	**6G-1914**	28	SHIM (.76MM THK)	
	17	1	**128-9654**	9	STRIP-WEAR	
	18	1	**128-9656**	4	STRIP-WEAR	
	19	1	**8X-4266**	1	DRAWBAR & YOKE AS	
	20	1	**8X-7956**	1	SHAFT AS	
	21	1	**8F-9836**	12	LUG (3/8-16 THD)	
	23	1	**8X-2694**	3	BALLSTUD	
B	24	1	**153-7383**	1	SHIM (.12MM THK)	

B-USE AS REQUIRED

8X-2373 **DRAWBAR GP** *(contd.)* **i01456105**

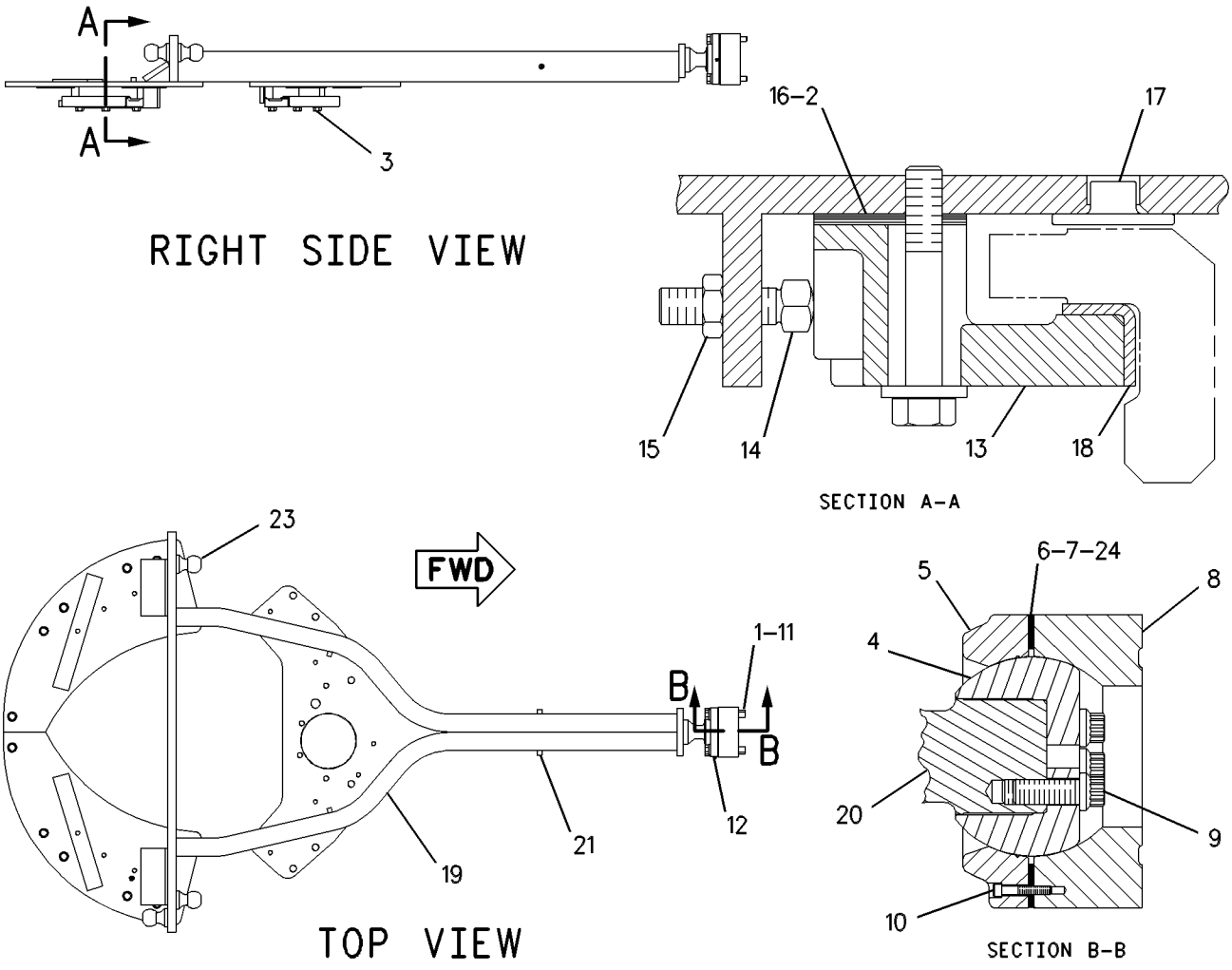

GRAPHIC #1 g00545484

IMPLEMENTS

113-0997 LINK GP-LOWER

S/N: CAF1-UP
PART OF 124-9782 RIPPER GP
AN ATTACHMENT

SMCS-6313 **i00834888**

NOTE	REF NO	GRAPHIC REF	PART NUMBER	QTY	PART NAME 1 2 3 4 5 6 (PRODUCT LEVEL)	SEE PAGE
	1	1	**113-0998**	1	LINK AS	
	2	1	**3G-0472**	4	BEARING	
	3	1	**7K-9203**	8	SEAL-LIP	

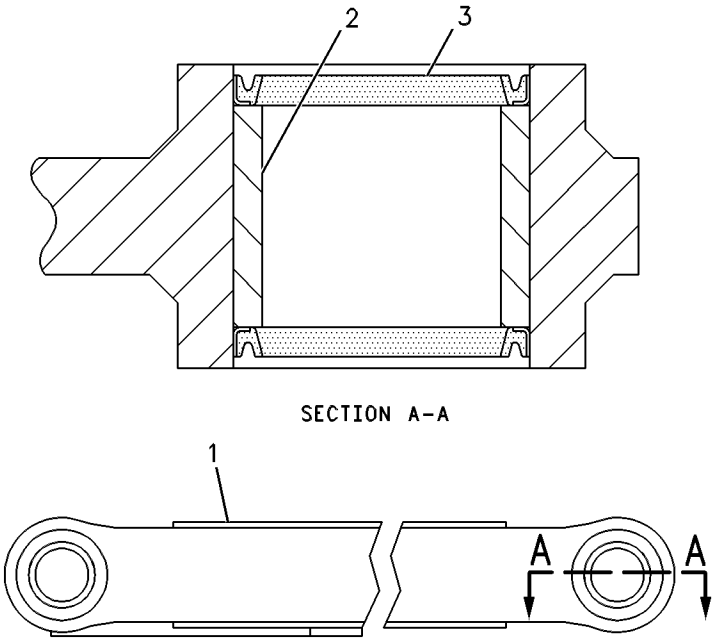

GRAPHIC #1 g00109099

113-0994 LINK GP-UPPER

S/N: CAF1-UP
PART OF 124-9782 RIPPER GP
AN ATTACHMENT

SMCS-6313 **i00834887**

NOTE	REF NO	GRAPHIC REF	PART NUMBER	QTY	PART NAME 1 2 3 4 5 6 (PRODUCT LEVEL)	SEE PAGE
	1	1	**127-8157**	1	LINK	
	2	1	**8D-9296**	2	BEARING	
	3	1	**7K-9202**	4	SEAL-LIP	

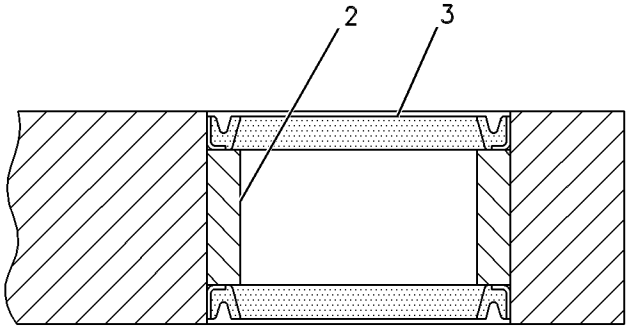

SECTION A-A

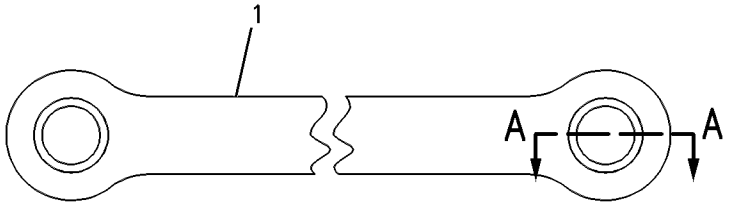

GRAPHIC #1 g00109098

IMPLEMENTS

8X-2349 PLATE GP-PUSH

S/N: CAF1-UP
AN ATTACHMENT

SMCS-6077 **i00134436**

NOTE	REF NO	GRAPHIC REF	PART NUMBER	QTY	PART NAME 1 2 3 4 5 6 (PRODUCT LEVEL)	SEE PAGE
	1	1	**8X-2366**	1	PLATE AS-PUSH	
	2	1	**5J-7333**	2	HOOK	
	3	1	**112-5853**	1	PLATE	
D	4	1	**5P-5923**		SEAL (.4M)	
	5	1	**112-5855**	1	BRACKET AS	
	6	1	**9F-2978**	2	NUT-WELD (3/8-16 THD)	
	7	1	**5P-6652**	8	WASHER (6.0MM THK)	
	8	1	**5M-3062**	6	BOLT (3/8-16X.750IN)	
	9	1	**5P-1075**	8	WASHER-HARD (3MM THK)	
	10	1	**8T-8917**	2	BOLT (1/2-13X1.25IN)	
	11	1	**8T-4223**	2	WASHER-HARD (3MM THK)	
	12	1	**5S-7379**	2	BOLT (3/8-16X.875IN)	
	13	1	**112-5852**	1	PLATE AS	
	14	1	**9F-2978**	4	NUT-WELD (3/8-16 THD)	
	15	1	**8C-6857**	8	BOLT (3/4-10X2.75IN)	
	16	1	**9D-6164**	2	BOSS (3/8-16 THD)	

D-ORDER BY THE METER

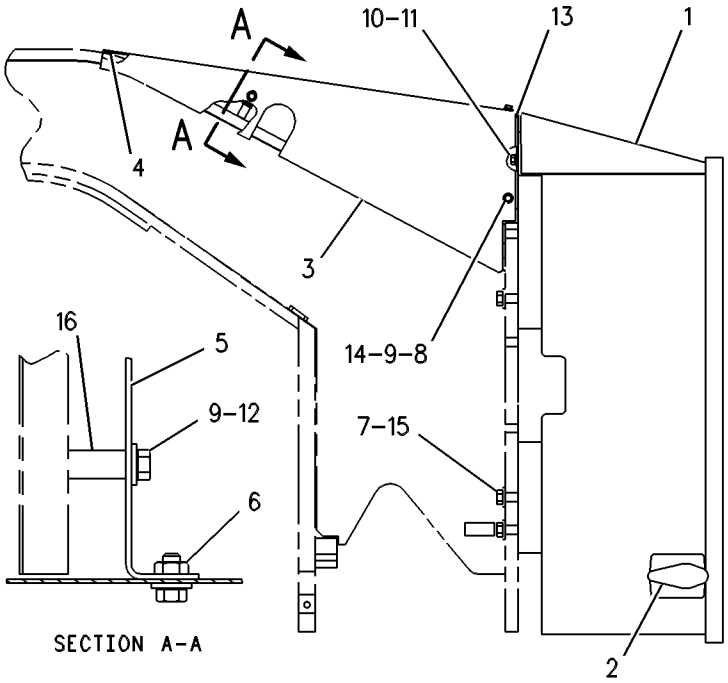

RIGHT SIDE VIEW

GRAPHIC #1 g00108774

WORK TOOLS

105-5183 BIT AS

S/N: CAF1-UP
PART OF 107-3421, 107-3422 BIT GP
AN ATTACHMENT

SMCS-6804 **i00657700**

NOTE	PART NUMBER	QTY	PART NAME 1 2 3 4 5 6 (PRODUCT LEVEL)	SEE PAGE
	105-5185	1	BIT	
	105-5184	1	BIT AS	
	068-4860	1	RING-RETAINING	
	105-6600	1	TIP-CARBIDE	

<END>

WORK TOOLS

107-3421 BIT GP

S/N: CAF1-UP
60 BIT 12 FT
AN ATTACHMENT

SMCS-6804 **i00139072**

NOTE	REF NO	GRAPHIC REF	PART NUMBER	QTY	PART NAME 1 2 3 4 5 6 (PRODUCT LEVEL)	SEE PAGE
Y	1	1	**105-5183**	60	BIT AS	685
	2	1	**6Y-4335**	4	ADAPTER	

Y-SEPARATE ILLUSTRATION

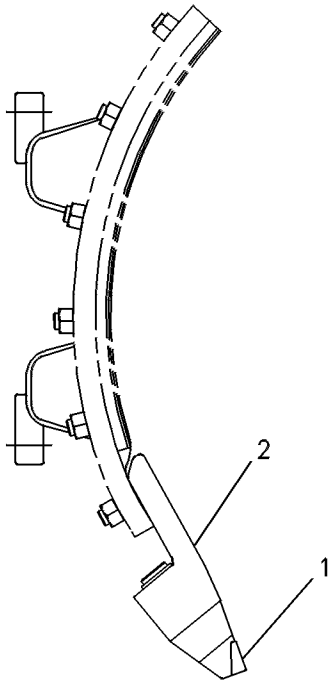

GRAPHIC #1 g00108706

WORK TOOLS

107-3422 BIT GP

S/N: CAF1-UP
70 BIT 14 FT
AN ATTACHMENT

SMCS-6804 **i00139078**

NOTE	REF NO	GRAPHIC REF	PART NUMBER	QTY	PART NAME 1 2 3 4 5 6 (PRODUCT LEVEL)	SEE PAGE
Y	1	1	**105-5183**	70	BIT AS	685
	2	1	**6Y-4336**	2	ADAPTER	
	3	1	**6Y-4335**	2	ADAPTER	

Y-SEPARATE ILLUSTRATION

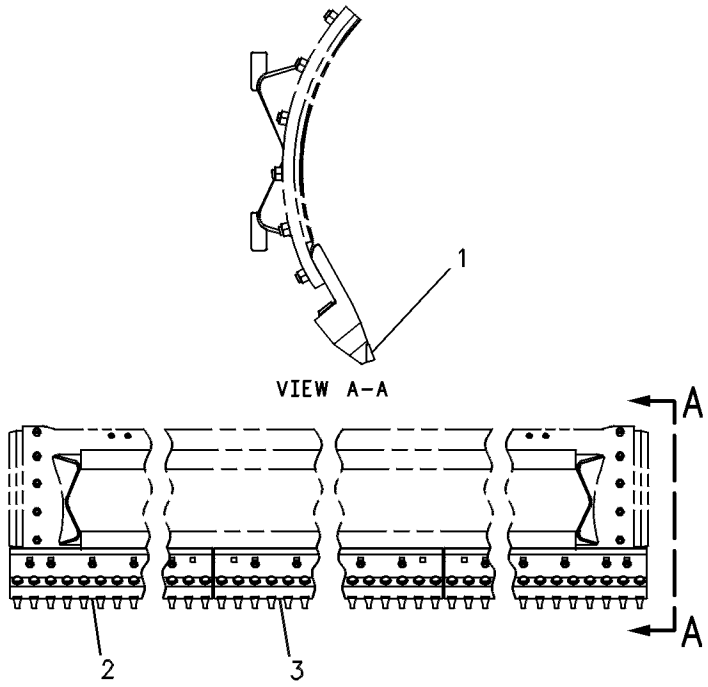

GRAPHIC #1 g00108704

WORK TOOLS

7D-6671 BIT GP-END

S/N: CAF1-UP

AN ATTACHMENT

SMCS-6804 **i00611332**

NOTE	PART NUMBER	QTY	PART NAME 1 2 3 4 5 6 (PRODUCT LEVEL)	SEE PAGE
	9W-1767	2	BIT-END	
	4F-3657	10	BOLT-PLOW	

<END>

107-3395 BIT GP-END

S/N: CAF1-UP

AN ATTACHMENT

SMCS-6804 **i00609607**

NOTE	PART NUMBER	QTY	PART NAME 1 2 3 4 5 6 (PRODUCT LEVEL)	SEE PAGE
	9W-1768	2	BIT-END	
	4F-3658	4	BOLT-PLOW (5/8-11X3.0IN)	
	4F-3657	6	BOLT-PLOW	

<END>

WORK TOOLS

8X-8011 BLADE GP–12 FT

S/N: CAF1-UP

PART OF 162-5603 GENERAL AR

SMCS-6151 **i00134831**

NOTE	REF NO	GRAPHIC REF	PART NUMBER	QTY	PART NAME 1 2 3 4 5 6 (PRODUCT LEVEL)	SEE PAGE
	1	1	**8W-2768**	1	MOLDBOARD AS	
		1	**112-1813**	1	RAIL-MOLDBOARD	
	2	1	**5D-9553**	2	EDGE-CUTTING	
	3	1	**3F-5108**	36	BOLT-PLOW	
	4	1	**4K-0367**	36	NUT (5/8-11 THD)	
	5	1	**8E-5531**	2	BIT-END	

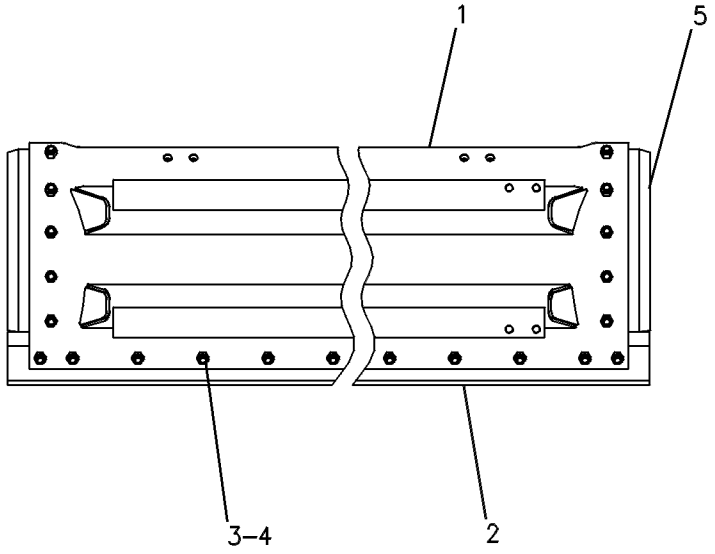

GRAPHIC #1 g00108660

WORK TOOLS

8X-8016 BLADE GP–14 FT

S/N: CAF1-UP

AN ATTACHMENT

SMCS-6151 **i00135705**

NOTE	REF NO	GRAPHIC REF	PART NUMBER	QTY	PART NAME 1 2 3 4 5 6 (PRODUCT LEVEL)	SEE PAGE
	1	1	**8W-2761**	1	MOLDBOARD AS	
		1	**112-1814**	2	RAIL-MOLDBOARD	
	2	1	**5D-9554**	2	EDGE-CUTTING	
	3	1	**3F-5108**	40	BOLT-PLOW	
	4	1	**4K-0367**	40	NUT (5/8-11 THD)	
	5	1	**8E-5531**	2	BIT-END	

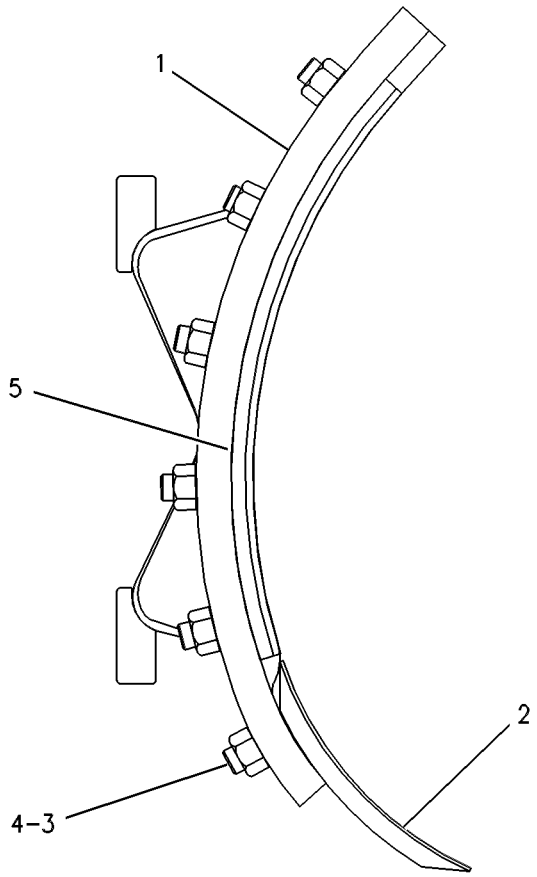

GRAPHIC #1 g00108846

WORK TOOLS

116-0379 BRACKET GP-SCARIFIER

S/N: CAF1-UP
PART OF 108-1104, 113-0704 SCARIFIER AR
AN ATTACHMENT

SMCS-6162 **i01066613**

NOTE	REF NO	GRAPHIC REF	PART NUMBER	QTY	PART NAME 1 2 3 4 5 6 (PRODUCT LEVEL)	SEE PAGE
	1	1	**8W-0684**	1	BRACKET AS	
	2	1	**8W-0681**	1	PLATE	

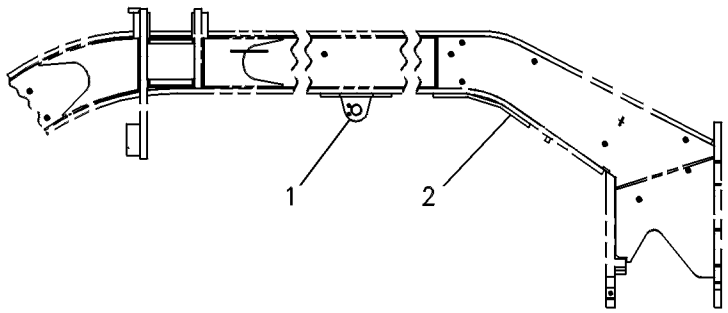

GRAPHIC #1 g00108689

107-3392 EDGE GP-CUTTING–7 FT

S/N: CAF1-UP
AN ATTACHMENT

SMCS-6801 **i00136035**

NOTE	PART NUMBER	QTY	PART NAME 1 2 3 4 5 6 (PRODUCT LEVEL)	SEE PAGE
	5D-9558	2	EDGE-CUTTING	

<END>

107-3393 EDGE GP-CUTTING–8 FT

S/N: CAF1-UP
AN ATTACHMENT

SMCS-6801 **i00136054**

NOTE	PART NUMBER	QTY	PART NAME 1 2 3 4 5 6 (PRODUCT LEVEL)	SEE PAGE
	5D-9559	2	EDGE-CUTTING	

<END>

107-3425 EDGE GP-CUTTING–7 FT

S/N: CAF1-UP
AN ATTACHMENT

SMCS-6801 **i00136068**

NOTE	PART NUMBER	QTY	PART NAME 1 2 3 4 5 6 (PRODUCT LEVEL)	SEE PAGE
	5D-9562	2	EDGE-CUTTING	

<END>

107-3426 EDGE GP-CUTTING–8 FT

S/N: CAF1-UP
AN ATTACHMENT

SMCS-6801 **i00609615**

NOTE	PART NUMBER	QTY	PART NAME 1 2 3 4 5 6 (PRODUCT LEVEL)	SEE PAGE
	5D-9561	2	EDGE-CUTTING	

<END>

8W-3330 EXTENSION GP-BLADE–RH–2 FT

S/N: CAF1-UP
AN ATTACHMENT

SMCS-6173 **i01358528**

NOTE	REF NO	GRAPHIC REF	PART NUMBER	QTY	PART NAME 1 2 3 4 5 6 (PRODUCT LEVEL)	SEE PAGE
	1	1	**3F-5108**	6	BOLT-PLOW (5/8-11 X 2 1/4 IN)	
	2	1	**4K-0367**	16	NUT (5/8-11 THD)	
	3	1	**176-5641**	1	PLATE AS	
	4	1	**4F-3658**	10	BOLT-PLOW (5/8-11X3.0IN)	
	5	1	**8W-2214**	1	EXTENSION	
	6	1	**9W-1835**	1	EDGE-CUTTING	
	7	1	**9B-1565**	2	SPACER (3MM THK)	
	8	1	**6D-7563**	1	ANGLE AS	
	9	1	**9X-8880**	2	BOLT (5/8-11X2IN)	
	10	1	**5P-8247**	2	WASHER-HARD (3.5MM THK)	
B	11	1	**176-5642**	1	SPACER (2MM THK)	
B	12	1	**176-5643**	2	SPACER (1MM THK)	

B-USE AS REQUIRED

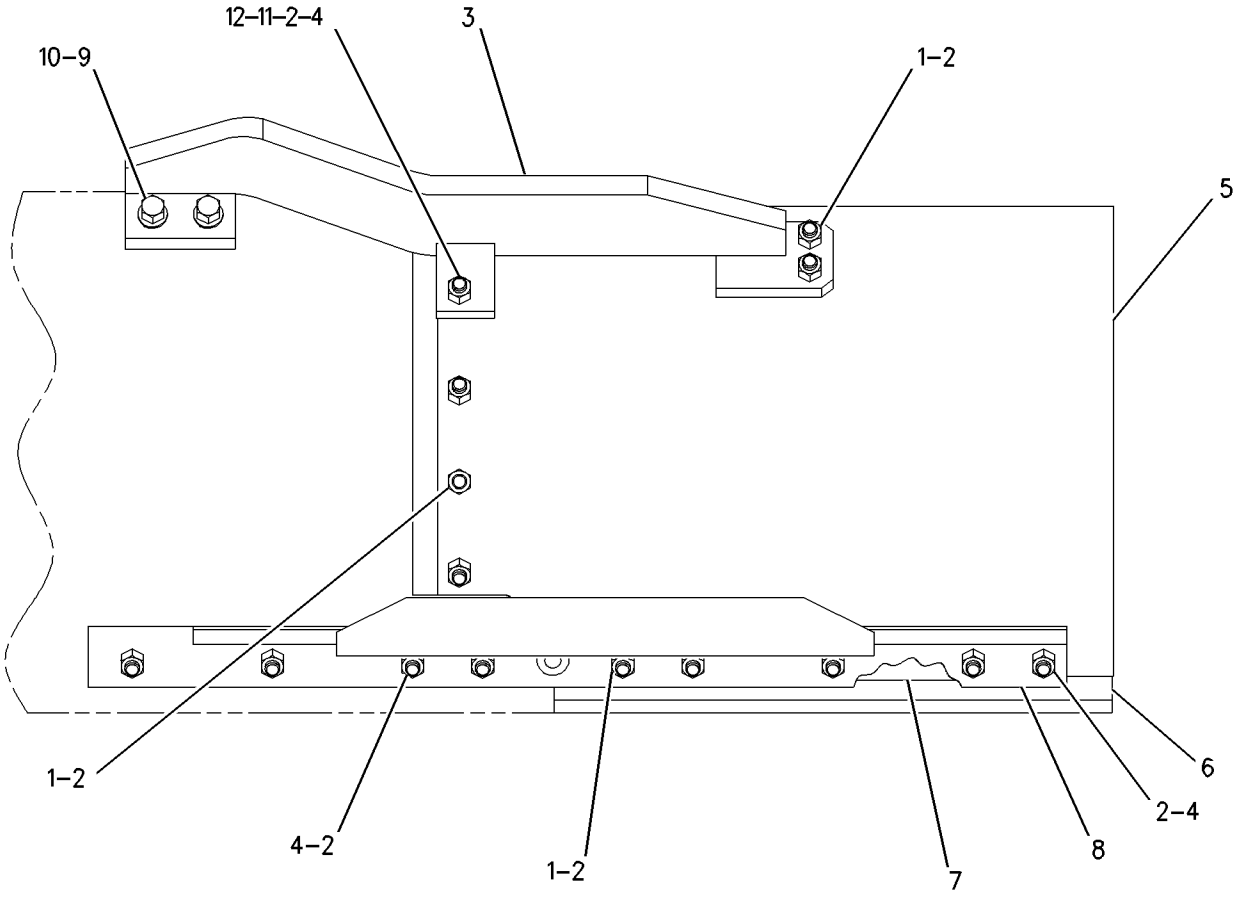

GRAPHIC #1 g00716937

8W-3332 EXTENSION GP-BLADE–LH–2 FT

S/N: CAF1-UP

AN ATTACHMENT

SMCS-6173 **i01358334**

NOTE	REF NO	GRAPHIC REF	PART NUMBER	QTY	PART NAME 1 2 3 4 5 6 (PRODUCT LEVEL)	SEE PAGE
	1	1	**3F-5108**	6	BOLT-PLOW (5/8-11 X 2 1/4 IN)	
	2	1	**4K-0367**	16	NUT (5/8-11 THD)	
	3	1	**176-5640**	1	PLATE AS	
C	4	1	**4F-3658**	10	BOLT-PLOW (5/8-11X3.0IN)	
	5	1	**8W-2213**	1	EXTENSION	
C	6	1	**9W-1835**	1	EDGE-CUTTING	
	7	1	**9B-1565**	2	SPACER (3MM THK)	
	8	1	**6D-7564**	1	ANGLE AS	
	9	1	**9X-8880**	2	BOLT (5/8-11X2IN)	
	10	1	**5P-8247**	2	WASHER-HARD (3.5MM THK)	
	11	1	**176-5643**	2	SPACER (1MM THK)	
	12	1	**176-5642**	1	SPACER (2MM THK)	

C-CHANGE FROM PREVIOUS TYPE

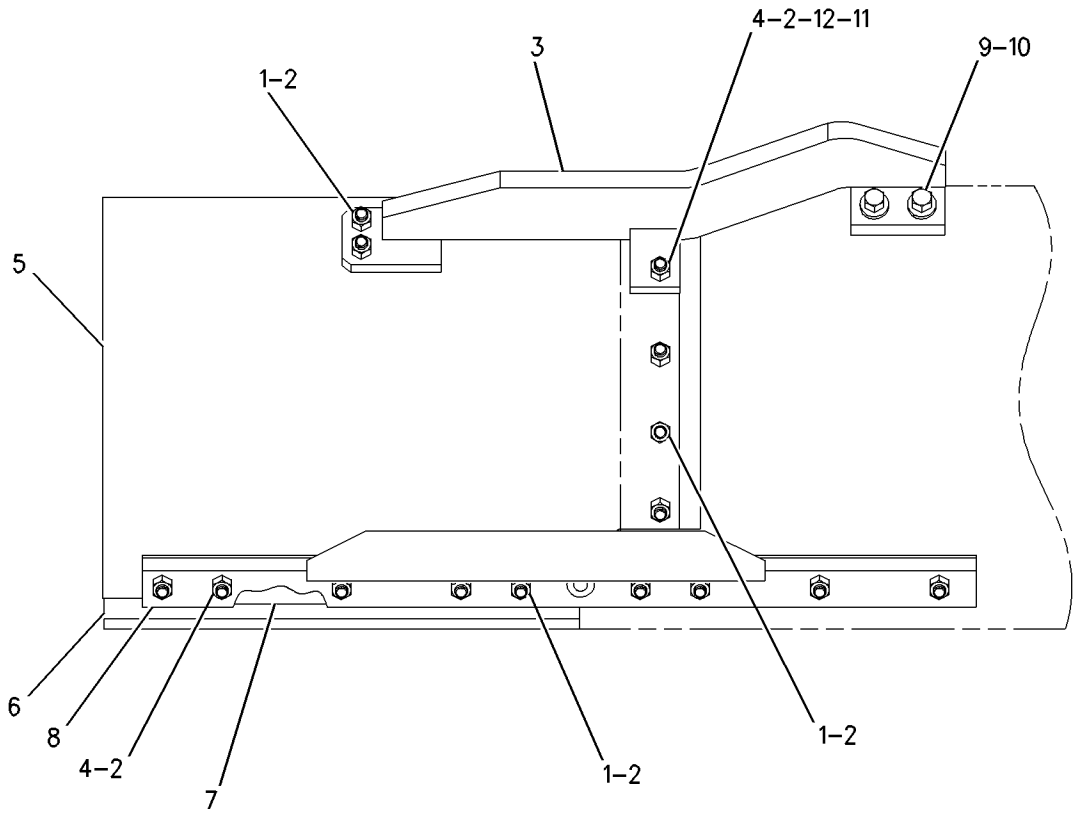

GRAPHIC #1 g00716883

MEMORANDA

WORK TOOLS

8X-1940 LIFT GP-BLADE

S/N: CAF1-UP

PART OF 162-5603 GENERAL AR

SMCS-6151 **i00139155**

NOTE	REF NO	GRAPHIC REF	PART NUMBER	QTY	PART NAME 1 2 3 4 5 6 (PRODUCT LEVEL)	SEE PAGE
	1	1	**8T-4223**	4	WASHER-HARD (3MM THK)	
	2	1	**8T-8919**	4	BOLT (1/2-13X1.75IN)	
	3	1	**7D-8891**	2	RETAINER	
	4	1	**8X-4650**	1	ARM AS-RH	
	5	1	**7D-8889**	1	BEARING (76.35MM ID)	
	6	1	**8D-8168**	1	BEARING (63.65MM ID)	
	7	1	**6V-8182**	4	NUT (3/4-10 THD)	
		1	**8C-8842**	4	BOLT (3/4-10X4.0IN)	
	8	1	**8T-4994**	8	WASHER (3.5MM THK)	
	9	1	**8X-4644**	1	BALLSTUD	
	10	1	**9D-1531**	2	PIN	
	11	1	**8X-5110**	2	YOKE AS	
					(EACH INCLUDES)	
		1	**2G-8233**	1	RING	
	12	1	**2M-0849**	1	WASHER (5MM THK)	
		1	**9S-1366**	1	BOLT (1/2-13X2.5IN)	
	13	1	**8X-5028**	1	BAR AS	
	14	1	**8X-5021**	2	BEARING	
	15	1	**8T-4122**	4	WASHER (3.5MM THK)	
	16	1	**7X-0351**	4	BOLT (5/8-11X3.75IN)	
	17	1	**9D-2753**	2	LOCK	
	18	1	**7H-2444**	2	SEAL (75.6MM ID)	
	19	1	**7D-8878**	4	WASHER-THRUST	
	20	1	**7D-8877**	2	WASHER-THRUST	
B	21	1	**7D-8879**	8	SHIM (.127MM THK)	
B	22	1	**7D-8881**	6	SHIM (.254MM THK)	
B	23	1	**7D-8882**	2	SHIM (.508MM THK)	
	24	1	**7D-8875**	4	WASHER-THRUST	
	25	1	**5F-0149**	2	SEAL (91.44MM ID)	
	26	1	**7D-8883**	2	SEAL	
	27	1	**8X-4884**	1	PIN	
	28	1	**7K-9203**	4	SEAL-LIP	
	29	1	**7D-8876**	2	WASHER-THRUST	
	30	1	**8X-2881**	2	LOCK	
	31	1	**7D-8884**	2	SEAL	
	32	1	**8X-4649**	1	ARM AS-LH	
		1	**8D-8168**	1	BEARING (63.65MM ID)	
		1	**7D-8889**	1	BEARING (76.35MM ID)	
	33	1	**129-7261**	1	PLATE	
B	34	1	**9D-1530**	2	WASHER-THRUST (1.90MM THK)	
B		1	**124-0360**	2	WASHER-THRUST (1MM THK)	

B-USE AS REQUIRED

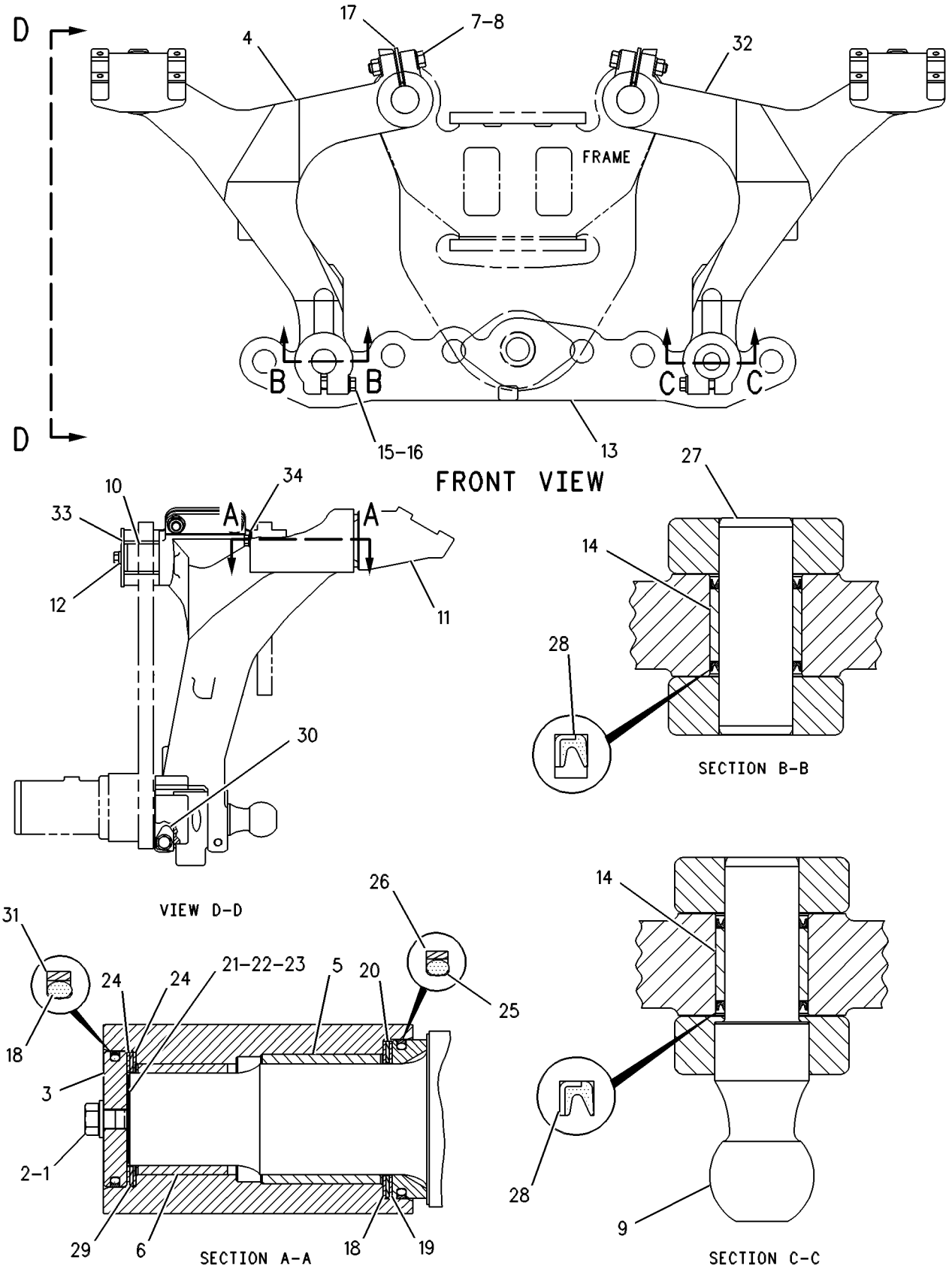

GRAPHIC #1 g00108879

WORK TOOLS

201-7371 MOUNTING GP-RIPPER

S/N: CAF1-UP
PART OF 201-7352 RIPPER AR
AN ATTACHMENT

SMCS-6165, 6324 **i01683698**

NOTE	REF NO	GRAPHIC REF	PART NUMBER	QTY	PART NAME 1 2 3 4 5 6 (PRODUCT LEVEL)	SEE PAGE
	1	1	**6P-5647**	2	BOSS	
	2	1	**104-4523**	2	CAM AS	
	3	1	**113-0995**	2	LINK AS	
		1	**2K-4233**	1	BOSS	
	4	1	**201-6614**	1	PLATE AS	
		1	**5G-8760**	2	BOSS	
	5	1	**113-0993**	1	PIN	
	6	1	**124-6679**	2	PIN	
	7	1	**1K-6872**	3	LOCKNUT (1/2-13 THD)	
	8	1	**2K-4973**	4	LOCKNUT (3/8-16 THD)	
	9	1	**7X-0293**	2	BOLT (3/8-16X4.75 IN)	
	10	1	**7X-0331**	3	BOLT (1/2-13X4.25 IN)	
	11	1	**7X-0403**	10	BOLT (1-8X2.25 IN)	
	12	1	**8J-3326**	2	PIN	
	13	1	**8T-5361**	10	WASHER-HARD (28X49X5MM THK)	
	14	1	**8T-9378**	2	BOLT (3/8-16X4 IN)	
	15	1	**9J-0090**	2	PIN	

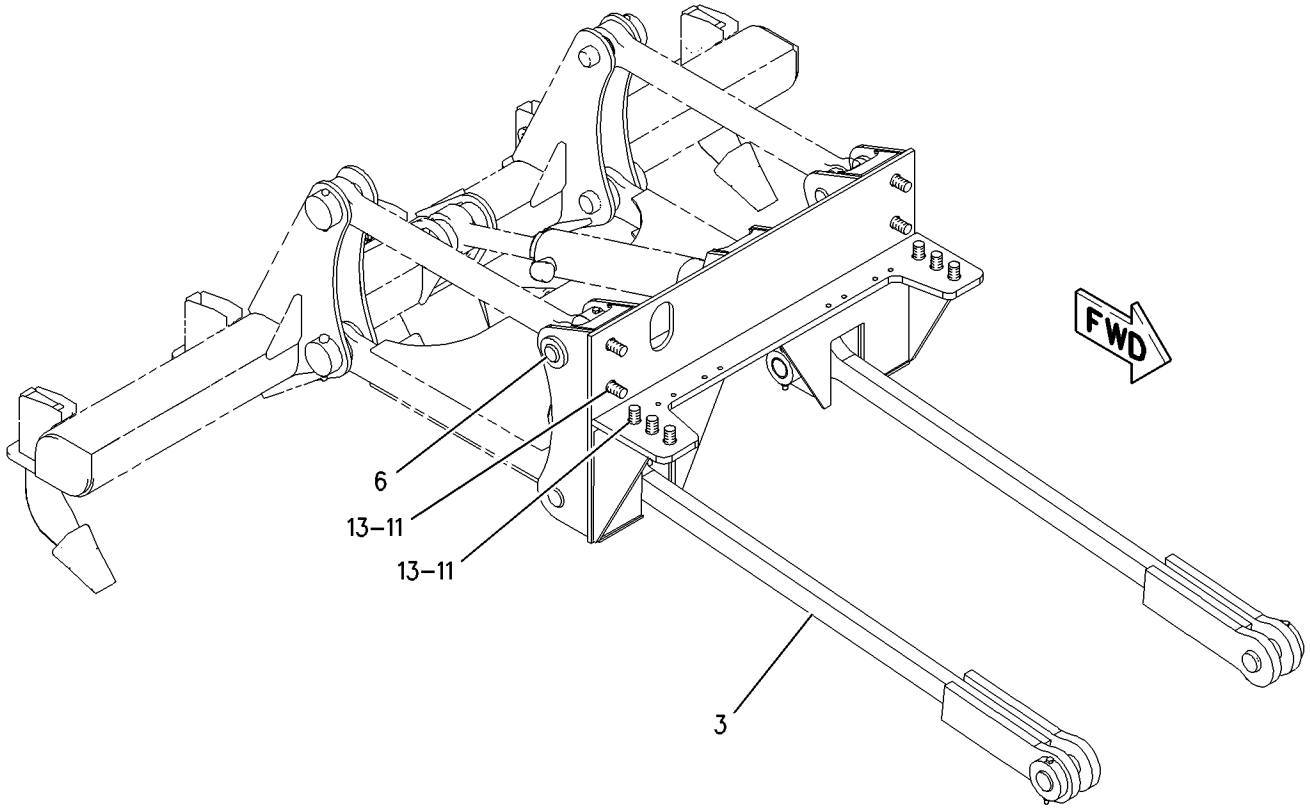

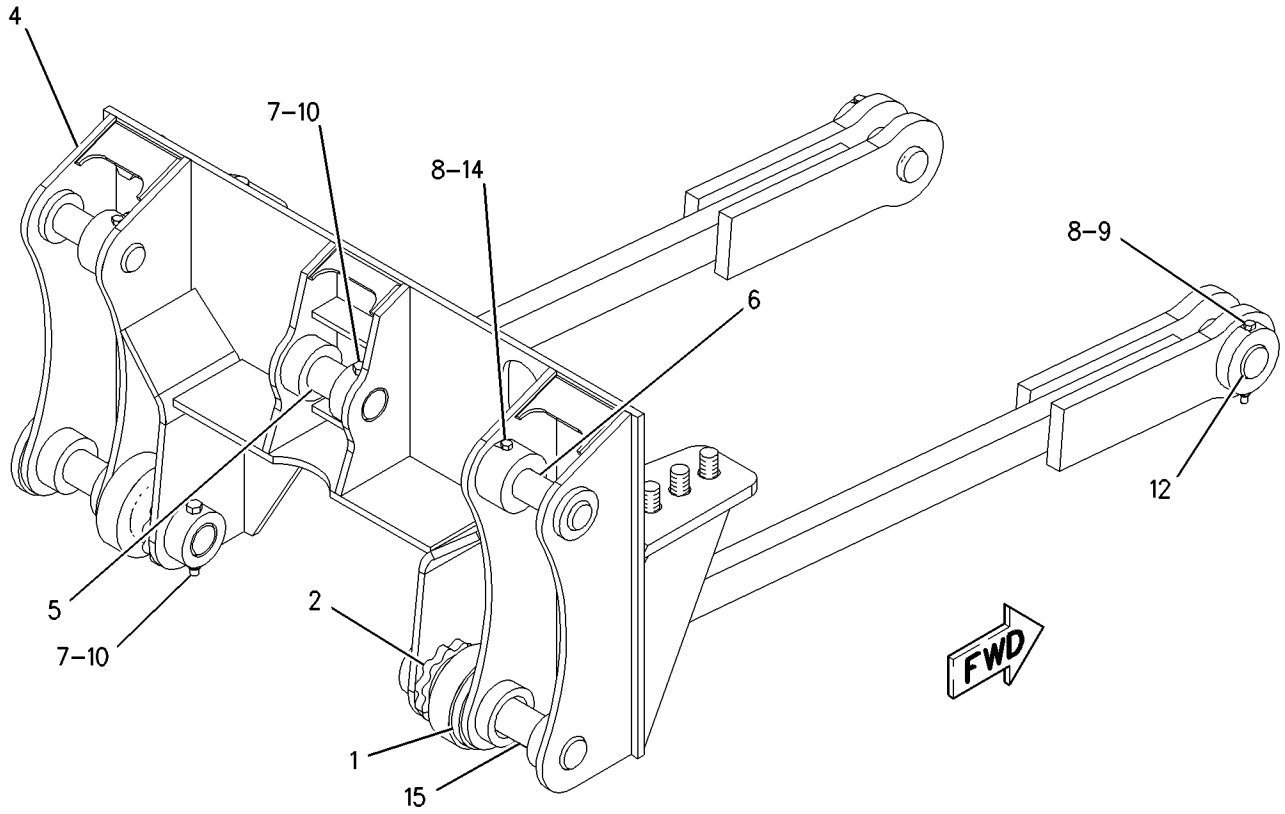

GRAPHIC #1 g00891661

WORK TOOLS

201-7352 RIPPER AR

S/N: CAF1-UP

AN ATTACHMENT

SMCS-6325 **i01823035**

NOTE	PART NUMBER	QTY	PART NAME 1 2 3 4 5 6 (PRODUCT LEVEL)	SEE PAGE
Y	*208-9698*	1	CYLINDER & LINES GP-RIPPER	486
	2P-8540	1	LITERATURE GP	
Y	*201-7371*	1	MOUNTING GP-RIPPER	698
Y	*8T-4009*	1	PLATE & FILM GP	900
Y	*124-9782*	1	RIPPER GP	701

Y-SEPARATE ILLUSTRATION

<END>

WORK TOOLS

124-9782 RIPPER GP

S/N: CAF1-UP
PART OF 201-7352 RIPPER AR
AN ATTACHMENT

SMCS-6325 **i00135052**

NOTE	REF NO	GRAPHIC REF	PART NUMBER	QTY	PART NAME 1 2 3 4 5 6 (PRODUCT LEVEL)	SEE PAGE
	1	1	**124-9768**	1	CARRIAGE AS	
		1	**5G-8760**	6	BOSS	
Y	2	1	**113-0994**	2	LINK GP-UPPER	683
Y	3	1	**113-0997**	1	LINK GP-LOWER	682
Y	4	1	*8J-5313*	3	TOOTH GP-RIPPER	711
	5	1	**7X-0331**	2	BOLT (1/2-13X4.25IN)	
	6	1	**1K-6872**	2	LOCKNUT (1/2-13 THD)	
	7	1	**8T-9378**	2	BOLT (3/8-16X4IN)	
	8	1	**2K-4973**	3	LOCKNUT (3/8-16 THD)	
	9	1	**113-0996**	2	PIN	
	10	1	**3G-0471**	1	PIN	
	11	1	**109-6776**	2	PIN	
	12	1	**7X-0291**	1	BOLT (3/8-16X3.75IN)	
	13	1	**1L-6931**	4	SCREW AS-MACHINE	
	14	1	**7L-6363**	2	MARKER-REFLEX	

Y-SEPARATE ILLUSTRATION

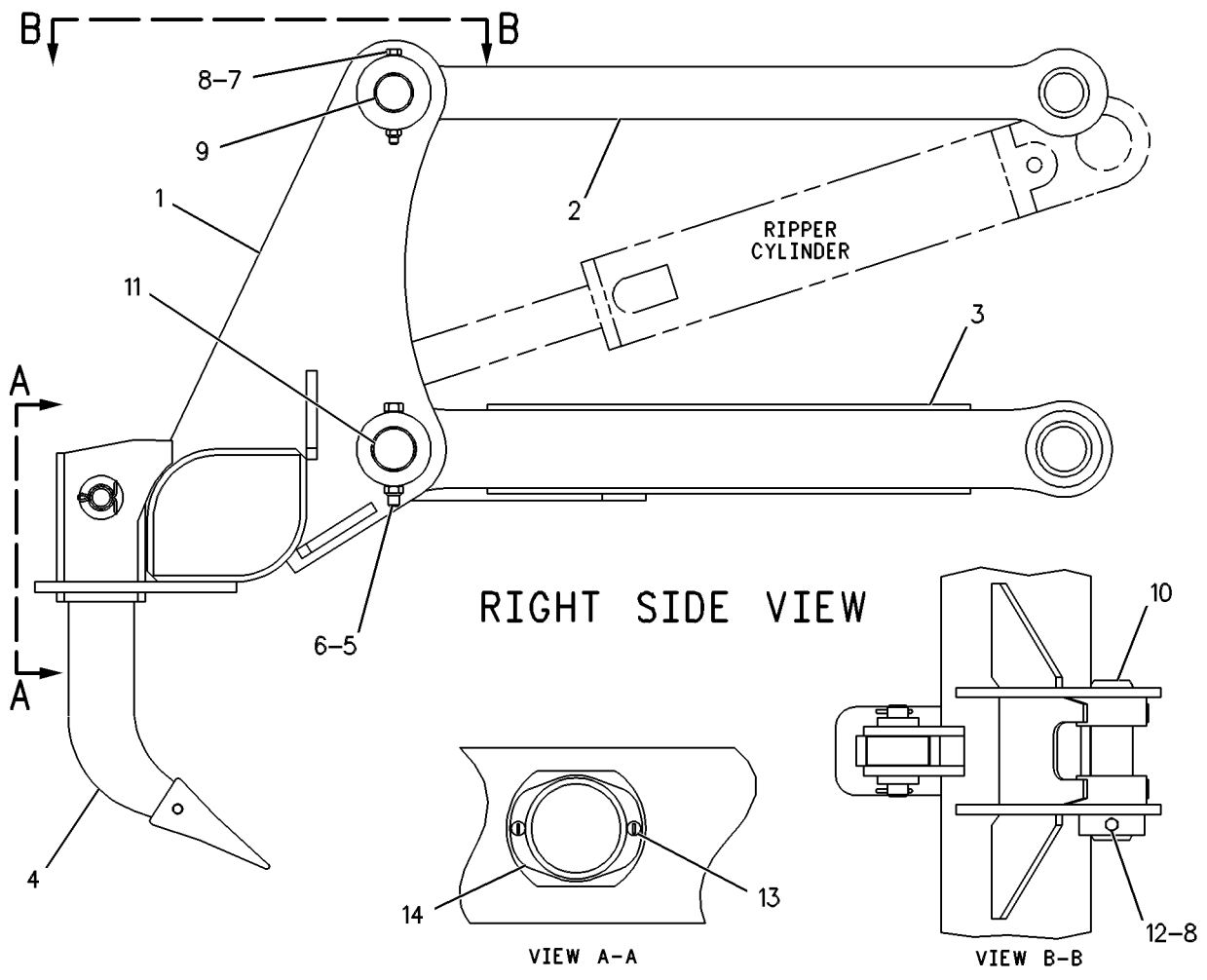

GRAPHIC #1 g00109105

WORK TOOLS

108-1104 SCARIFIER AR

S/N: CAF1-UP
AN ATTACHMENT

SMCS-6162, 6325, 6811 **i01511636**

NOTE	PART NUMBER	QTY	PART NAME 1 2 3 4 5 6 (PRODUCT LEVEL)	SEE PAGE
Y	*116-0379*	1	BRACKET GP-SCARIFIER	691
Y	*8W-2913*	1	CYLINDER & MTG GP-SCARIFIER	491
Y	*8X-6070*	1	LINES GP-HYDRAULIC	522
Y	*8X-6080*	1	SCARIFIER GP	704

Y-SEPARATE ILLUSTRATION

<END>

113-0704 SCARIFIER AR

S/N: CAF1-UP
STRAIGHT
AN ATTACHMENT

SMCS-6162, 6325, 6811 **i01537910**

NOTE	PART NUMBER	QTY	PART NAME 1 2 3 4 5 6 (PRODUCT LEVEL)	SEE PAGE
Y	*116-0379*	1	BRACKET GP-SCARIFIER	691
Y	*8W-2913*	1	CYLINDER & MTG GP-SCARIFIER	491
Y	*8X-6070*	1	LINES GP-HYDRAULIC	522
Y	*111-3883*	1	SCARIFIER GP	708

Y-SEPARATE ILLUSTRATION

<END>

MEMORANDA

WORK TOOLS

8X-6080 SCARIFIER GP—VEE

S/N: CAF1-UP
PART OF 108-1104 SCARIFIER AR
AN ATTACHMENT

SMCS-6162, 6325, 6811 **i01829843**

NOTE	REF NO	GRAPHIC REF	PART NUMBER	QTY	PART NAME 1 2 3 4 5 6 (PRODUCT LEVEL)	SEE PAGE
	1	1	**9D-5516**	2	LINK AS-LIFT	
					(EACH INCLUDES)	
		1	**7D-2135**	1	SOCKET-BALL	
	2	1	**7D-2196**	2	SLEEVE AS-LINK	
					(EACH INCLUDES)	
		1	**7D-2136**	1	SOCKET-BALL	
	3	1	**5D-8161**	2	PIN	
		1	**5D-8159**	2	PIN AS	
	4	1	**107-8375**	1	SHAFT AS	
	5	1	**118-7880**	1	DRAWBAR AS	
	6	1	**8W-5597**	1	STUD-BALL	
	7	1	**2G-7728**	2	COLLAR	
	8	1	**2G-7309**	1	SHAFT-GOVERNOR CONTROL	
	9	1	**8X-6075**	1	BOLSTER AS	
	10	1	**1D-4612**	4	BOLT (3/4-10X4 IN)	
		1	**2J-3506**	4	NUT-FULL (3/4-10 THD)	
		1	**8X-3663**	8	WASHER (20X45X12MM THK)	
	11	1	**5B-0577**	2	COLLAR	
	12	1	**9X-8875**	2	BOLT (1/2-13X3.5 IN)	
		1	**1F-7958**	2	NUT-FULL (1/2-13 THD)	
		1	**5P-8245**	2	WASHER-HARD (13.5X25.5X3MM THK)	
	13	1	**5K-1458**	11	GROMMET	
	14	1	**8W-0663**	2	BRACKET AS	
					(EACH INCLUDES)	
		1	**3B-8489**	1	FITTING-GREASE (SCARIFIER)	
		1	**107-8374**	2	BEARING	
	15	1	**118-7881**	1	DRAWBAR AS	
	16	1	**8W-5597**	1	STUD-BALL	
	17	1	**2G-7728**	2	COLLAR	
	18	1	**1A-0224**	2	BOLT (7/8-14X3.5 IN)	
		1	**1B-4208**	2	NUT-FULL (7/8-14 THD)	
	19	1	**8H-4040**	4	BOLT (1 1/8-12X4.5 IN)	
		1	**3D-4904**	4	LOCKNUT	
		1	**3S-1349**	4	WASHER-HARD (31X52.5X6MM THK)	
	20	1	**5K-1459**	11	LOCK PIN	
	21	1	**2G-4332**	1	BLOCK AS-SCARIFIER	
		1	**7D-8825**	11	SPACER	
		1	**7D-8826**	11	SPACER	
	22	1	**6B-3260**	1	TOOL	
	23	1	**2H-3746**	4	BOLT (1-14X5 IN)	
		1	**2K-7471**	4	LOCKNUT	
		1	**5P-8250**	8	WASHER (28X49X5MM THK)	
	24	2	**3B-8489**	4	FITTING-GREASE (SCARIFIER LIFT LINK SOCKET)	
	25	2	**4D-6086**	2	KEY	
	26	2	**6F-6992**	4	CAP-BALL SOCKET	
B		2	**7F-1327**	32	SHIM (.030 IN THK)	
	27	2	**6Y-5230**	11	TOOTH-SCARIFIER	
	28	2	**6K-0545**	4	LOCKNUT	
	29	2	**7X-0390**	4	BOLT (7/8-9X5 IN)	
		2	**8C-6913**	4	WASHER-HARD (24X41.5X4MM THK)	
	30	2	**195-7218**	11	SHANK	
	31	2	**1A-8063**	8	BOLT (3/4-10X2.5 IN)	
	32	2	**5P-8248**	8	WASHER-HARD (20X36.5X3.5MM THK)	
	33	2	**8D-1268**	2	ARM AS-LIFT	
					(EACH INCLUDES)	

8X-6080 **SCARIFIER GP** *(contd.)* **i01829843**

NOTE	REF NO	GRAPHIC REF	PART NUMBER	QTY	PART NAME 1 2 3 4 5 6 (PRODUCT LEVEL)	SEE PAGE
		2	**7D-8245**	1	STUD-BALL	
B	34	1	**198-9812**	2	SPACER (83X145X2MM THK)	
B		1	**198-9811**	2	SPACER (83X145X3MM THK)	

B-USE AS REQUIRED

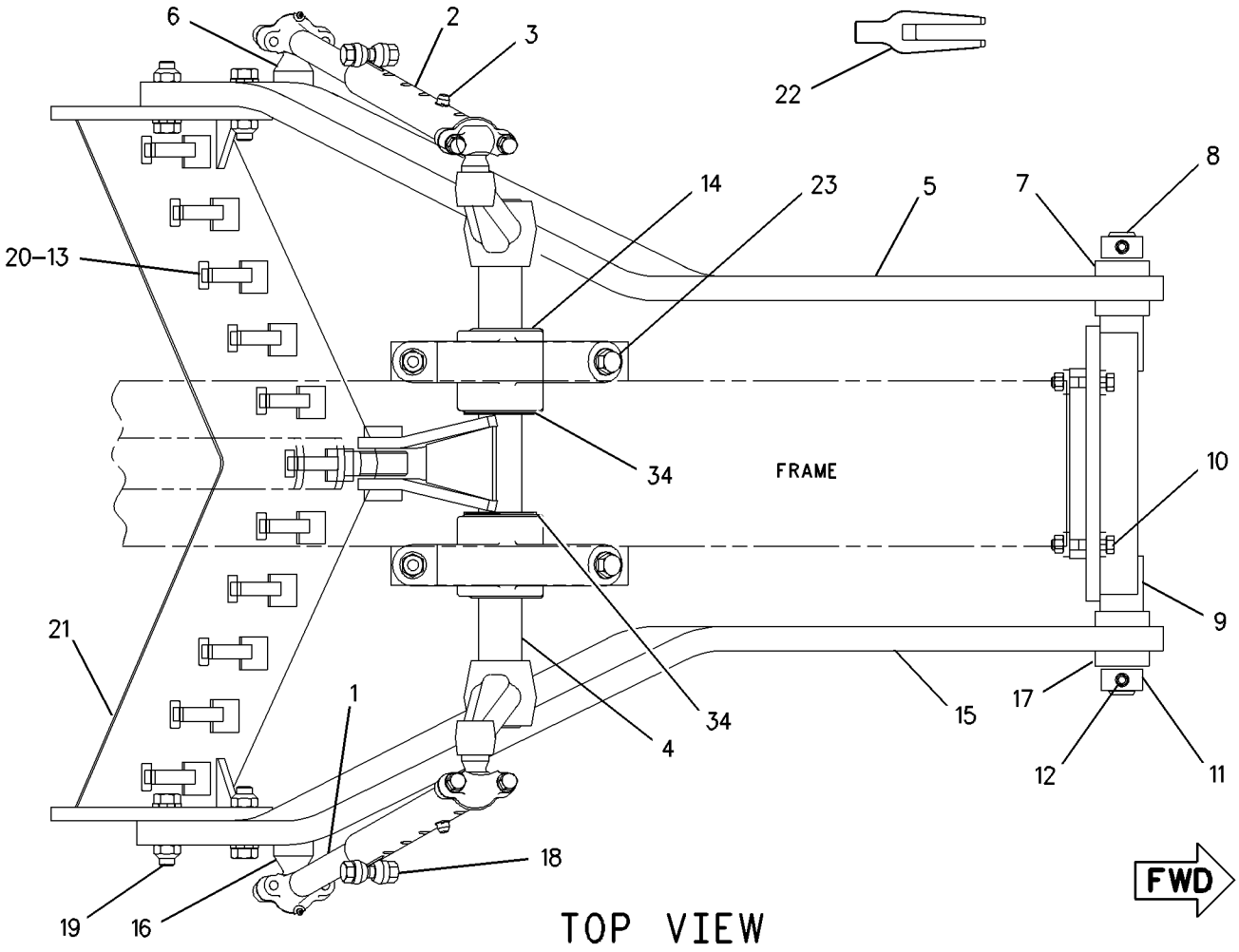

GRAPHIC #1 g00762234

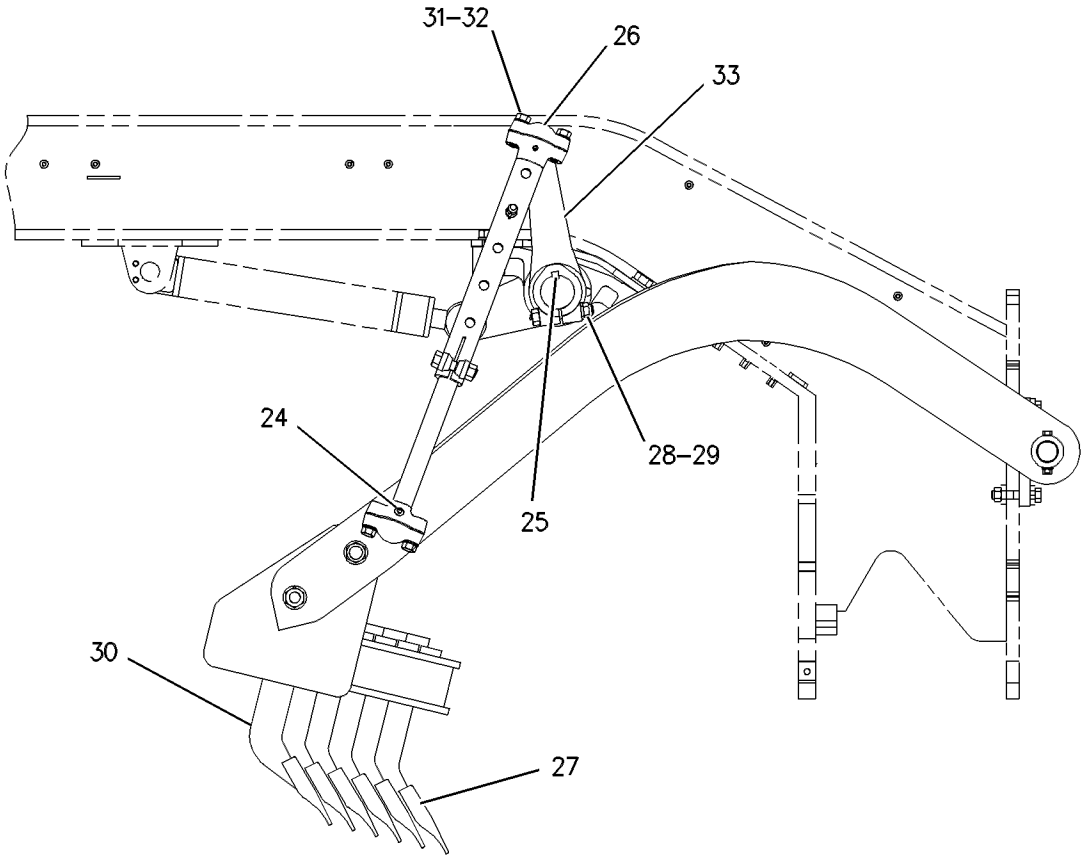

RIGHT SIDE VIEW

GRAPHIC #2 g00304037

MEMORANDA

WORK TOOLS

111-3883 SCARIFIER GP—STRAIGHT

S/N: CAF1-UP
PART OF 113-0704 SCARIFIER AR
AN ATTACHMENT

SMCS-6162, 6325, 6811 **i01537773**

NOTE	REF NO	GRAPHIC REF	PART NUMBER	QTY	PART NAME 1 2 3 4 5 6 (PRODUCT LEVEL)	SEE PAGE
	1	1	**9D-5516**	2	LINK AS-LIFT	
					(EACH INCLUDES)	
		1	**7D-2135**	1	SOCKET-BALL	
	2	1	**7D-2196**	2	SLEEVE AS-LINK	
					(EACH INCLUDES)	
		1	**7D-2136**	1	SOCKET-BALL	
	3	1	**5D-8161**	2	PIN	
		1	**5D-8159**	2	PIN AS	
	4	1	**107-8375**	1	SHAFT AS	
	5	1	**118-7880**	1	DRAWBAR AS	
	6	1	**8W-5597**	1	STUD-BALL	
	7	1	**2G-7728**	2	COLLAR	
	8	1	**2G-7309**	1	SHAFT-GOVERNOR CONTROL	
	9	1	**8X-6075**	1	BOLSTER AS	
	10	1	**1D-4612**	4	BOLT (3/4-10X4 IN)	
		1	**2J-3506**	4	NUT-FULL (3/4-10 THD)	
		1	**8X-3663**	8	WASHER (20X45X12MM THK)	
	11	1	**5B-0577**	2	COLLAR	
	12	1	**9X-8875**	2	BOLT (1/2-13X3.5 IN)	
		1	**1F-7958**	2	NUT-FULL (1/2-13 THD)	
		1	**5P-8245**	2	WASHER-HARD (13.5X25.5X3MM THK)	
	13	1	**5K-1458**	11	GROMMET	
	14	1	**8W-0663**	2	BRACKET AS	
					(EACH INCLUDES)	
		1	**3B-8489**	1	FITTING-GREASE (TRUNNION)	
		1	**107-8374**	2	BEARING	
	15	1	**118-7881**	1	DRAWBAR AS	
	16	1	**8W-5597**	1	STUD-BALL	
	17	1	**2G-7728**	2	COLLAR	
	18	1	**1A-0224**	2	BOLT (7/8-14X3.5 IN)	
		1	**1B-4208**	2	NUT-FULL (7/8-14 THD)	
	19	1	**8H-4040**	4	BOLT (1 1/8-12X4.5 IN)	
		1	**3D-4904**	4	LOCKNUT (1-1/8-12 THD)	
		1	**3S-1349**	4	WASHER-HARD (31X52.5X6MM THK)	
	20	1	**5K-1459**	11	LOCKPIN	
	21	1	**2G-7149**	1	BLOCK AS	
	22	1	**6B-3260**	1	TOOL	
	23	1	**2H-3746**	4	BOLT (1-14X5 IN)	
		1	**2K-7471**	4	LOCKNUT	
		1	**5P-8250**	8	WASHER (28X49X5MM THK)	
	24	2	**3B-8489**	4	FITTING-GREASE (SCARIFIER LIFT LINK SOCKET)	
	25	2	**4D-6086**	2	KEY	
	26	2	**6F-6992**	4	CAP-BALL SOCKET	
B		2	**7F-1327**	32	SHIM (.030 IN THK)	
	27	2	**6Y-5230**	11	TOOTH-SCARIFIER	
	28	2	**6K-0545**	4	LOCKNUT	
	29	2	**7X-0390**	4	BOLT (7/8-9X5 IN)	
		2	**8C-6913**	4	WASHER-HARD (24X41.5X4MM THK)	
	30	2	**5B-6251**	17	SHANK-TOOTH	
	31	2	**1A-8063**	8	BOLT (3/4-10X2.5 IN)	
	32	2	**5P-8248**	8	WASHER-HARD (20X36.5X3.5MM THK)	
	33	2	**8D-1268**	2	ARM AS-LIFT	
					(EACH INCLUDES)	
		2	**7D-8245**	1	STUD-BALL	
B	34	1	**198-9811**	2	SPACER (83X145X3MM THK)	

111-3883 **SCARIFIER GP** *(contd.)* **i01537773**

NOTE	REF NO	GRAPHIC REF	PART NUMBER	QTY	PART NAME 1 2 3 4 5 6 (PRODUCT LEVEL)	SEE PAGE
B	35	1	**198-9812**	2	SPACER (83X145X2MM THK)	

B-USE AS REQUIRED

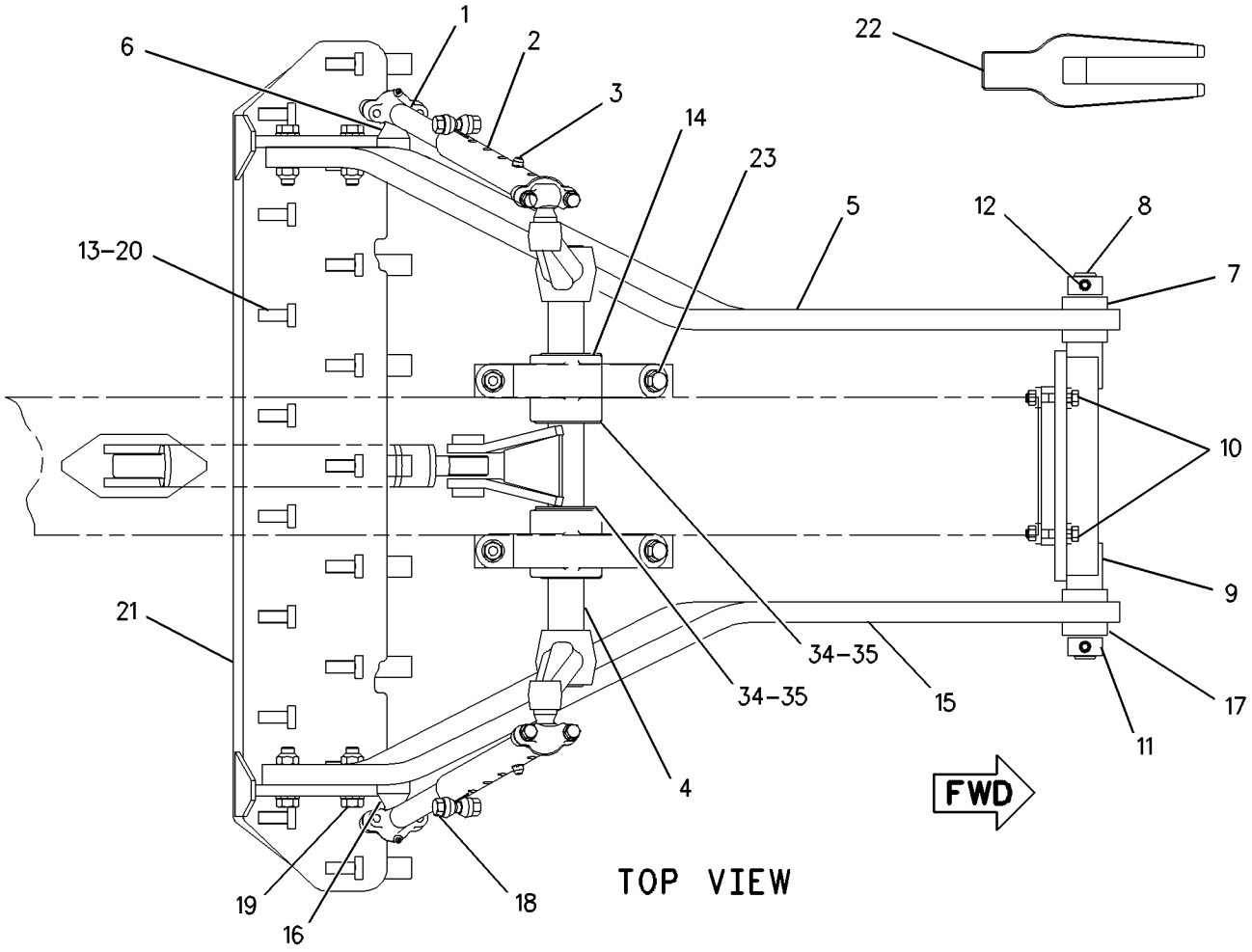

GRAPHIC #1

g00772503

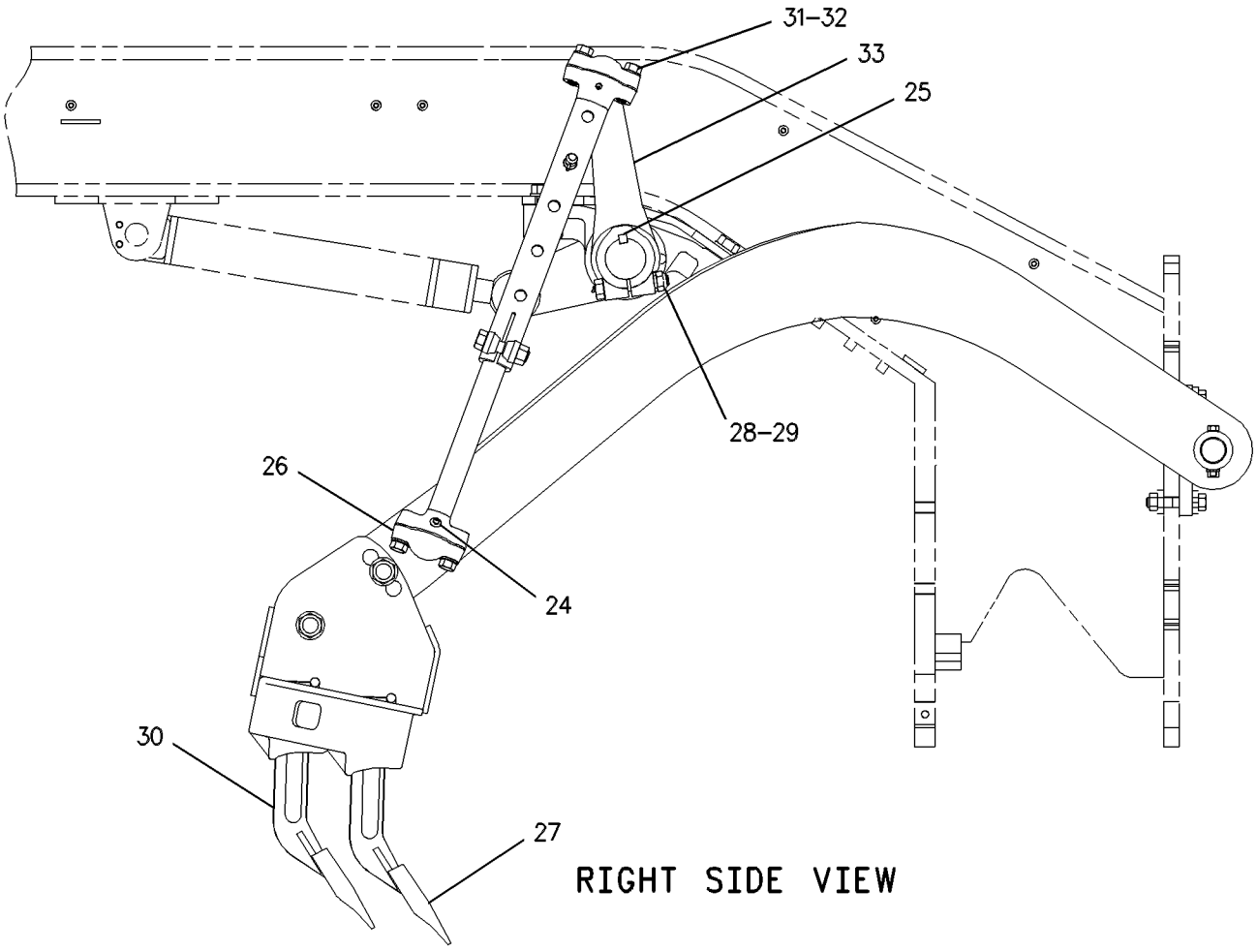

GRAPHIC #2 g00304036

WORK TOOLS

8J-5313 TOOTH GP-RIPPER

S/N: CAF1-UP
PART OF 124-9782 RIPPER GP
AN ATTACHMENT

SMCS-6808 **i00834867**

NOTE	REF NO	GRAPHIC REF	PART NUMBER	QTY	PART NAME 1 2 3 4 5 6 (PRODUCT LEVEL)	SEE PAGE
	1	1	**6B-5464**	1	PIN	
	2	1	**8J-5299**	1	SHANK-RIPPER	
C	3	1	**8E-6208**	1	PIN-G.E.T.	
C		1	**8E-6209**	1	RETAINER AS-G.E.T.	
C	4	1	**1U-3202**	1	TIP-LONG	
	5	1	**3B-4632**	2	COTTER	

C-CHANGE FROM PREVIOUS TYPE

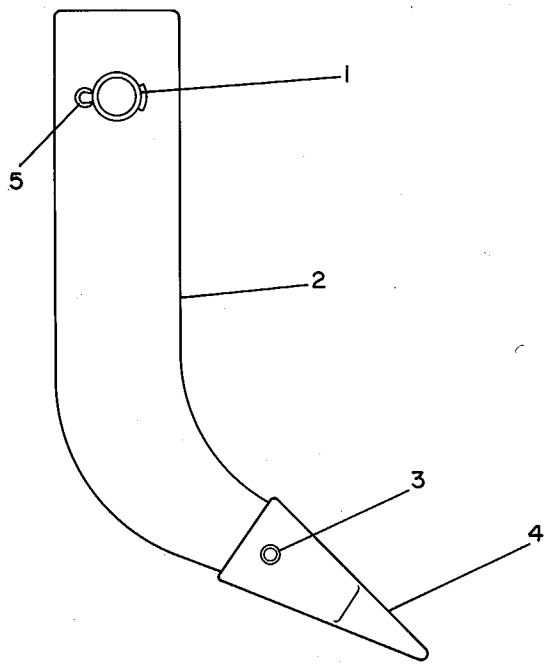

GRAPHIC #1 g00108181

OPERATOR STATION

171-7185 ACCESSORY GP-CAB–12V POWER PORT–LOW PROFILE

S/N: CAF1-UP

PART OF 161-0776 CONVERTER AR-ELECTRICAL

AN ATTACHMENT

SMCS-1408, 1421 **i01683341**

NOTE	REF NO	GRAPHIC REF	PART NUMBER	QTY	PART NAME 1 2 3 4 5 6 (PRODUCT LEVEL)	SEE PAGE
	1	1	**117-2311**	1	RECEPTACLE AS-POWER (12 VOLT)	
	2	1	**138-7065**	1	PLATE	
	3	1	**169-3264**	1	HARNESS AS-CAB	
		1	**102-8802**	1	KIT-RECEPTACLE (2 PIN) (12V POWER PORT)	
M	4	1	**129-3178**	2	LOCKNUT (M6X1 THD)	
	5	1	**6P-0205**	2	SPACER (.269X.405X.656 IN THK)	
	6	1	**9X-8256**	2	WASHER (6.6X12X2MM THK)	

M-METRIC PART

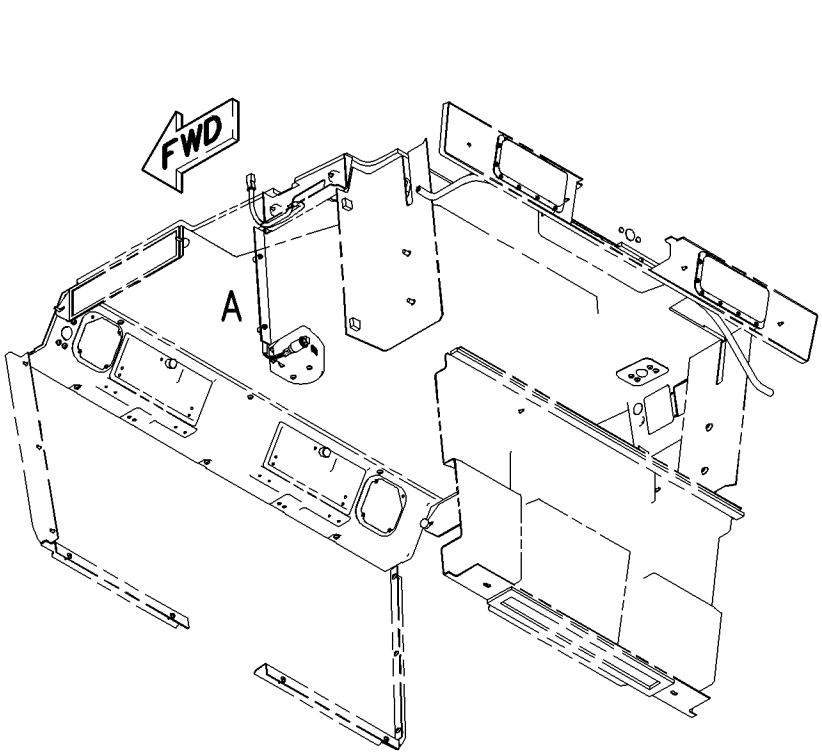

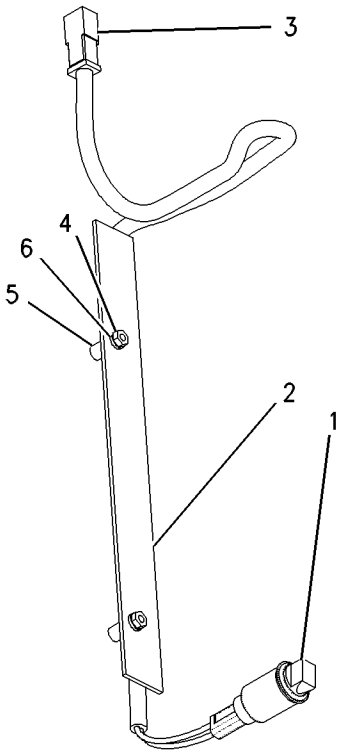

VIEW OF AREA A

GRAPHIC #1 g00808417

OPERATOR STATION

171-7186 ACCESSORY GP-CAB—HIGH PROFILE—12V POWER PORT

S/N: CAF1-UP

PART OF 161-0777 CONVERTER AR-ELECTRICAL

AN ATTACHMENT

SMCS-1408, 1421 **i01689402**

NOTE	REF NO	GRAPHIC REF	PART NUMBER	QTY	PART NAME 1 2 3 4 5 6 (PRODUCT LEVEL)	SEE PAGE
	1	1	**117-2311**	1	RECEPTACLE AS-POWER (12 VOLT)	
	2	1	**169-3264**	1	HARNESS AS-CAB	
		1	**102-8802**	1	KIT-RECEPTACLE (2 PIN) (12V POWER PORT)	
					(INCLUDES RECEPTACLE AS & WEDGE)	
M	3	1	**129-3178**	2	LOCKNUT (M6X1 THD)	
	4	1	**139-1153**	1	PLATE	
	5	1	**6P-0205**	2	SPACER (.269X.405X.656 IN THK)	
	6	1	**9X-8256**	2	WASHER (6.6X12X2MM THK)	

M-METRIC PART

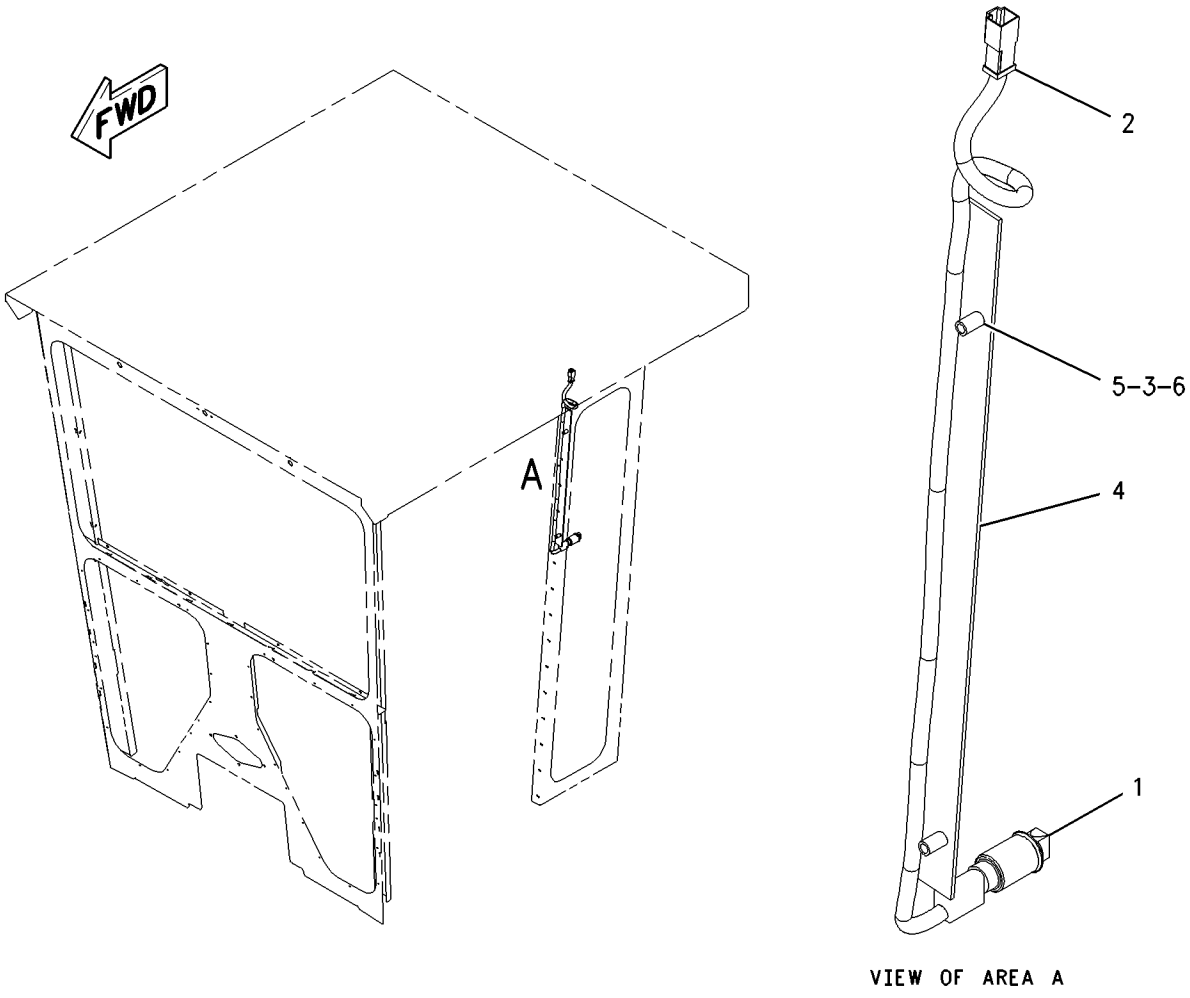

GRAPHIC #1 g00890902

OPERATOR STATION

116-2779 ADJUSTER GP-SEAT

S/N: CAF1-UP

PART OF 8Y-6851, 8Y-6852 SEAT GP-STATIC

ALSO AN ATTACHMENT

SMCS-7321 **i01378421**

NOTE	REF NO	GRAPHIC REF	PART NUMBER	QTY	PART NAME 1 2 3 4 5 6 (PRODUCT LEVEL)	SEE PAGE
	1	1	**9C-5347**	4	BOLT	
	2	1	**9V-7943**	2	SPRING	
	3	1	**116-2327**	1	SUPPORT AS	
	4	1	**9C-2177**	1	CAP	
	5	1	**6W-0590**	1	LEVER (SEAT ADJUST)	
	6	1	**3J-5696**	1	PIPE	
	7	1	**4V-7890**	1	SPRING	
	8	1	**6W-0111**	2	LINK	
	9	1	**2L-5893**	1	PIN-SPRING	
	10	1	**4V-7891**	1	LATCH AS	
	11	1	**5B-6172**	8	WASHER (9.7X19X.8MM THK)	
	12	1	**2K-4973**	8	LOCKNUT (3/8-16 THD)	
	13	1	**9V-3043**	1	LINK AS	
	14	1	**6W-0108**	1	LINK AS	
	15	1	**116-2016**	1	ANGLE AS	
		1	**116-2014**	1	BRACKET	
		1	**119-6172**	2	CLIP	
	16	1	**116-2015**	1	ANGLE AS	
		1	**116-2013**	1	BRACKET	
		1	**119-6172**	2	CLIP	
	17	1	**6W-1885**	1	CHANNEL AS	
		1	**9V-7440**	4	NUT-WELD (3/8-16 THD)	
	18	1	**5M-3062**	4	BOLT (3/8-16X.75 IN)	

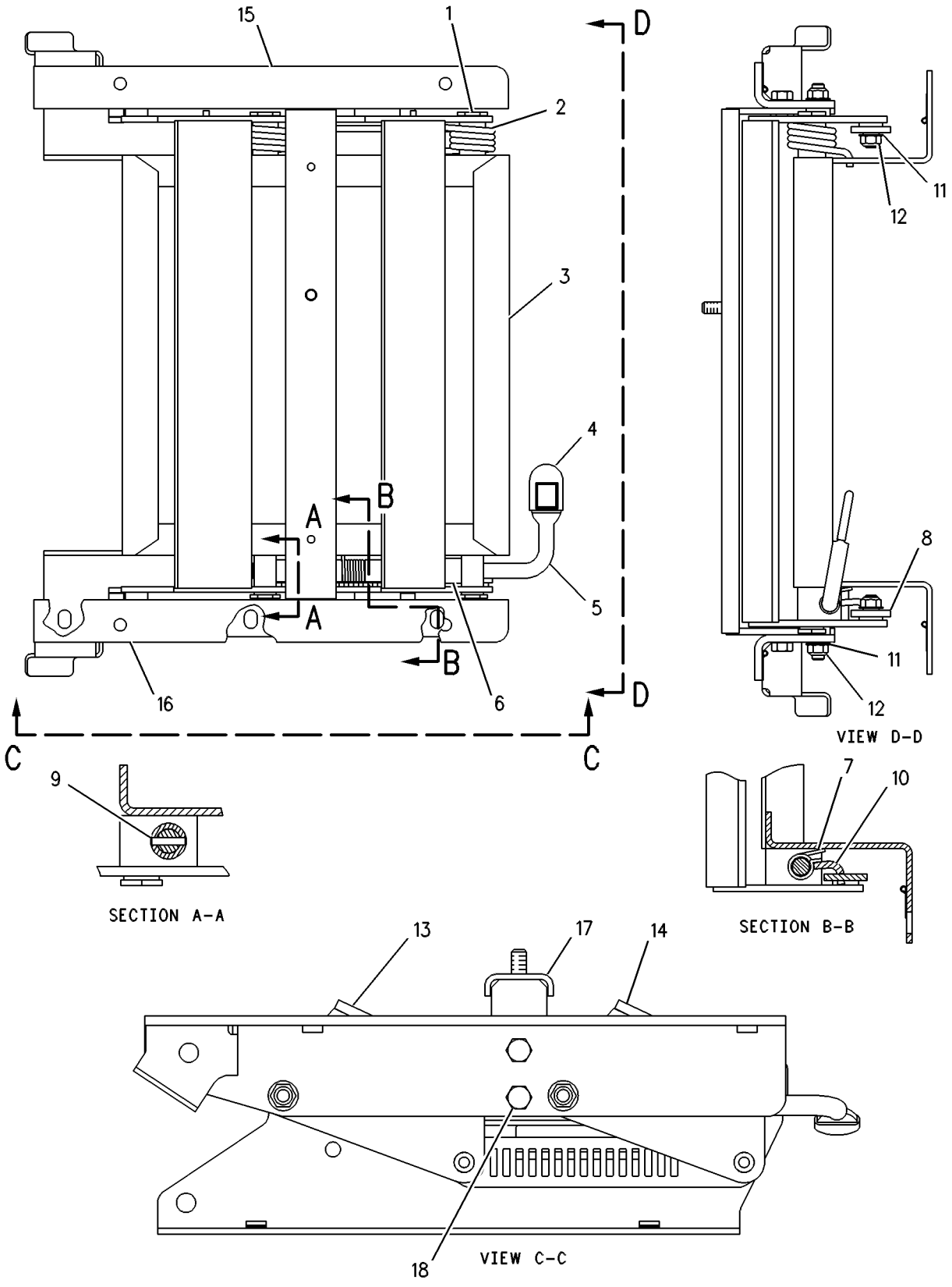

GRAPHIC #1 g00108773

OPERATOR STATION

173-5313 AIR CONDITIONER & MOUNTING GP

S/N: CAF1-UP
PART OF 167-8066 AIR CONDITIONER AR
AN ATTACHMENT

SMCS-7320 **i01755303**

NOTE	PART NUMBER	QTY	PART NAME 1 2 3 4 5 6 (PRODUCT LEVEL)	SEE PAGE
Y	**174-4548**	1	AIR CONDITIONER GP	718
	5M-3062	1	BOLT (3/8-16X0.75 IN)	
	8M-2773	2	CLIP	
	9W-1441	1	FUSE (15 AMP) (AIR CONDITIONER)	
	123-0872	1	PAD	
	191-5236	1	PAD	
	8T-4896	1	WASHER-HARD (10.2X18.5X2.5MM THK)	

Y-SEPARATE ILLUSTRATION

<END>

167-8066 AIR CONDITIONER AR

S/N: CAF1-UP
PART OF 210-2042 CONVERSION AR-CERTIFICATION
AN ATTACHMENT

SMCS-7320 **i01678741**

NOTE	PART NUMBER	QTY	PART NAME 1 2 3 4 5 6 (PRODUCT LEVEL)	SEE PAGE
Y	*173-5313*	1	AIR CONDITIONER & MOUNTING GP	716
Y	*197-4562*	1	COMPRESSOR GP-REFRIGERANT	728
Y	*197-2855*	1	CONDENSER & MTG GP-REFRIGERANT	729
Y	*177-7891*	1	DUCT & CONTROL GP	746
Y	*7I-5015*	1	DUCT GP	747
Y	**8X-2925**	1	FILTER GP-CAB AIR	756
Y	*167-8100*	1	LINES GP-AIR	90
Y	*167-8396*	1	LINES GP-HEATER	798

Y-SEPARATE ILLUSTRATION

<END>

MEMORANDA

OPERATOR STATION

174-4548 AIR CONDITIONER GP

S/N: CAF1-UP

PART OF 173-5313 AIR CONDITIONER & MOUNTING GP

AN ATTACHMENT

SMCS-7320 **i01680324**

NOTE	REF NO	GRAPHIC REF	PART NUMBER	QTY	PART NAME 1 2 3 4 5 6 (PRODUCT LEVEL)	SEE PAGE
	1	1	**2P-4339**	1	NUT-JAM (7/16-20 THD)	
	2	1	**2V-0099**	2	KNOB (FAN SPEED/ TEMP CONTROL)	
	3	1	**3E-0400**	2	WHEEL-BLOWER	
	4	1	**3E-3890**	1	FILM-CONTROL (FAN SPEED/ TEMP CONTROL)	
	5	1	**3E-5464**	1	SWITCH AS-THERMOSTAT	
	6	1	**3S-2093**	2	STRAP-CABLE	
	7	1	**3T-3197**	1	GROMMET	
	8	1	**3T-3198**	1	GROMMET	
	9	2	**5P-7803**	2	PLUG-BUTTON	
	10	1	**6P-3236**	1	SWITCH AS-ROTARY (FAN SPEED)	
		1	**6V-8362**	5	SCREW-MACHINE (8-32X0.31 IN)	
		1	**9B-7233**	5	LOCKWASHER	
	11	1	**6T-5345**	1	BUSHING-TERMINAL	
	12	1	**6T-6708**	2	WASHER (7X28.6X4.1MM THK)	
	13	1	**7G-4824**	1	STRAP	
	14	1	**7T-9793**	2	VALVE (CHECK) (PURGE)	
	15	2	**8C-3756**	1	FILM-IDENTIFICATION (GROUP & SEQUENCE NO.)	
	16	1	**8C-4586**	2	CLAMP	
	17	1	**8D-1429**	1	LAMP (24 VOLT) (FAN SPEED/TEMP CONTROL)	
	18	1	**8E-7791**	1	STRAP	
	19	1	**8P-5141**	2	PLATE-ORIFICE	
	20	1	**8X-5536**	1	COVER	
	21	2	**8X-5538**	1	COVER AS	
M		2	**8T-3490**	4	NUT-WELD (M10X1.5 THD)	
	22	1	**8X-5540**	1	COVER	
I	23	1	**8X-7152**	1	HOSE AS	
I	24	1	**8X-7153**	1	HOSE AS	
	25	2	**8Y-6388**	4	LOUVER AS	
	26	1	**9G-1950**	1	RESISTOR	
	27	1	**9X-2185**	4	SCREW (8-15X0.44 IN)	
	28	1	**9X-2488**	6	CLAMP-HOSE	
	29	1	**9X-9653**	1	COIL AS-EVAPORATOR	
	30	1	**9X-9654**	1	COIL AS-HEATER	
	31	2	**110-6393**	1	PLATE-INSTRUCTION (AIR CONDITIONER)	
	32	1	**123-4618**	1	COVER	
	33	2	**123-4701**	1	SEAL	
	34	1	**124-1431**	1	BRACKET	
	35	1	**124-1432**	1	HOUSING AS	
		1	**7T-1099**	1	LINK	
		1	**8P-5141**	2	PLATE-ORIFICE	
	36	1	**124-3137**	1	BRACKET	
	37	1	**124-3138**	1	SEAL	
	38	1	**124-9006**	1	SHAFT	
	39	1	**124-9007**	1	SHAFT AS	
		1	**4L-5966**	2	SETSCREW (NO 10X.19 IN)	
	40	1	**125-0438**	1	GASKET	
	41	2	**129-4935**	1	SEAL	
	42	1	**142-4940**	1	PLATE AS	
	43	1	**174-1494**	1	MOTOR GP-ELECTRIC (27 VOLT)	
		1	**3E-3365**	1	WEDGE-RECEPTACLE LOCK (2 PIN)	
		1	**9W-0852**	2	PIN-CONNECTOR	
		1	**102-8802**	1	KIT-RECEPTACLE (2 PIN)	
	44	2	**174-4492**	1	COVER	
	45	1	**174-4971**	1	SUPPORT AS	
	46	1	**174-6353**	1	PLATE	

174-4548 AIR CONDITIONER GP *(contd.)* i01680324

NOTE	REF NO	GRAPHIC REF	PART NUMBER	QTY	PART NAME 1 2 3 4 5 6 (PRODUCT LEVEL)	SEE PAGE
	47	1	**176-5507**	1	PAD	
	48	1	**177-7858**	1	HARNESS AS-HEATER & AIR COND	
		1	**102-8805**	1	KIT-RECEPTACLE (6 PIN) (DRYER/THERMO/LT TERM/A/C BREAK)	
		1	**155-2270**	1	KIT-CONNECTING PLUG (2 PIN) (MOTOR)	
	49	2	**191-0027**	1	PAD	
	50	1	**204-4376**	1	CAP-PROTECTIVE	
	51	1	**206-5154**	1	VALVE AS (AIR CONDITIONER)	
	52	2	**104-2091**	8	SCREW-FLAT HEAD (6-20X0.5 IN)	
M	53	1	**129-3178**	4	LOCKNUT (M6X1 THD)	
	54	1	**130-5300**	1	CLIP	
M	55	1	**141-9784**	1	BOLT-HEX HEAD (M6X190MM)	
	56	1	**3B-4501**	2	LOCKWASHER	
	57	1	**3H-2900**	1	GROMMET	
M	58	1	**5C-2890**	7	NUT (M6X1 THD)	
	59	1,2	**5P-1075**	13	WASHER-HARD (10.2X22.5X3MM THK)	
	60	1	**5P-9135**	1	GROMMET	
	61	1	**6V-1668**	2	WASHER (6.5X29.1X3MM THK)	
M	62	1	**6V-7728**	1	BOLT (M6X1.0X45MM)	
	63	1,2	**6V-8801**	13	NUT (3/8-16 THD)	
	64	1	**7X-0591**	2	WASHER-HARD (17X29X3MM THK)	
M	65	1	**8T-4171**	2	BOLT (M6X1X12MM)	
	66	1,2	**8T-4205**	15	WASHER-HARD (7.2X14.5X2MM THK)	
	67	1	**8T-6631**	2	SCREW-MACHINE (8-32X0.5 IN)	
	68	1	**9M-8406**	1	CLIP	
M	69	1	**9X-2040**	4	SCREW-TRUSS HEAD (M10X1.5X25MM)	
M	70	1	**9X-2041**	5	SCREW-TRUSS HEAD (M10X1.5X20MM)	
M	71	2	**9X-2045**	6	SCREW-TRUSS HEAD (M6X1X20MM)	
	72	1	**9X-7381**	1	SEAL-O-RING	
	73	1	**9X-7382**	1	SEAL-O-RING	
E	74	1	**136-1953**		HOSE (42CM)	
B	75	1	**5P-5908**		SEAL	
B	76	1	**5P-5637**		SEAL	
B	77	1	**9X-2126**		SEAL	
B	78	1	**5P-6129**		TUBE	

B-USE AS REQUIRED
E-ORDER BY THE CENTIMETER
I-SEE HOSE FABRICATION GUIDE
M-METRIC PART

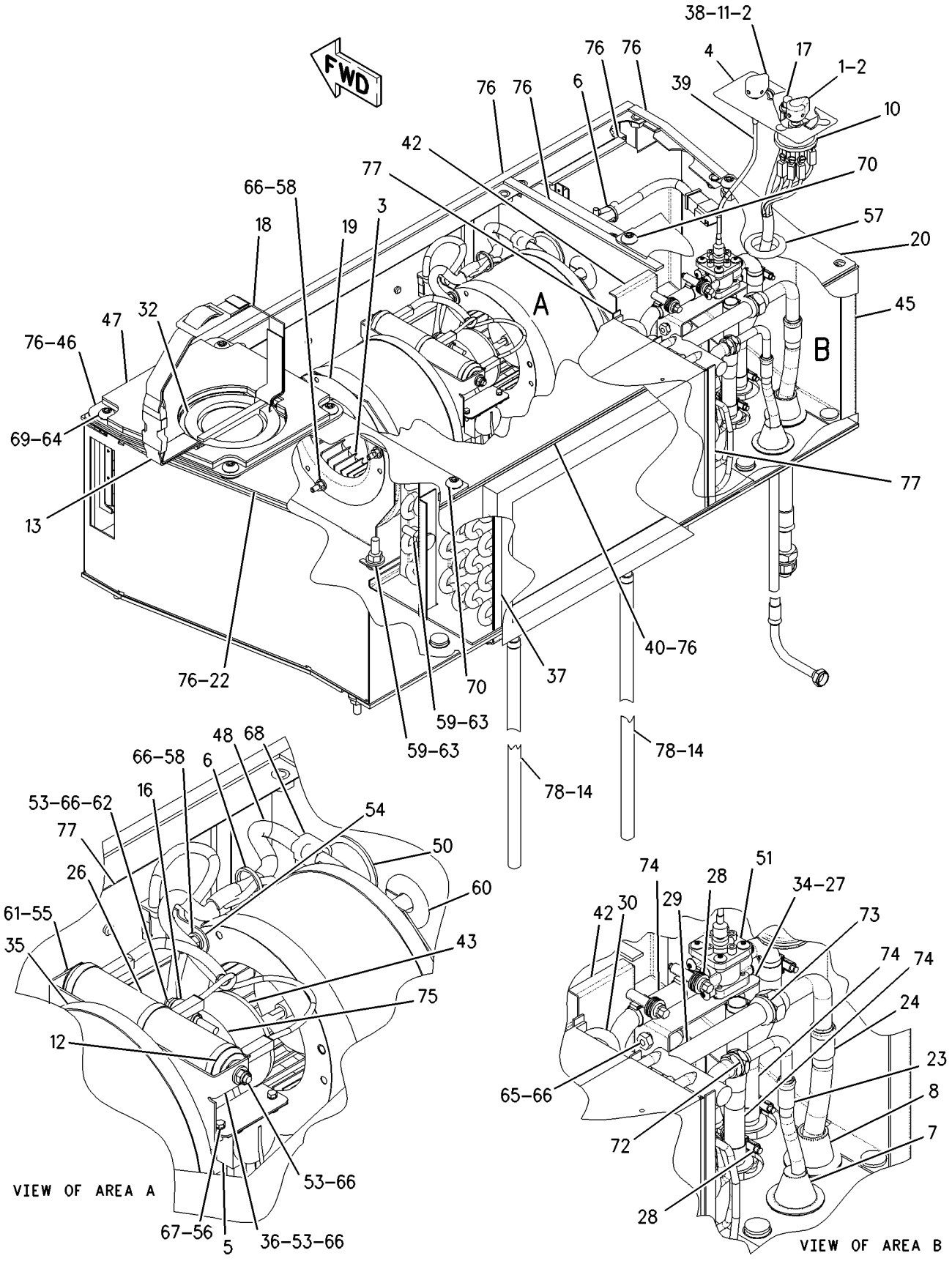

GRAPHIC #1

g00943208

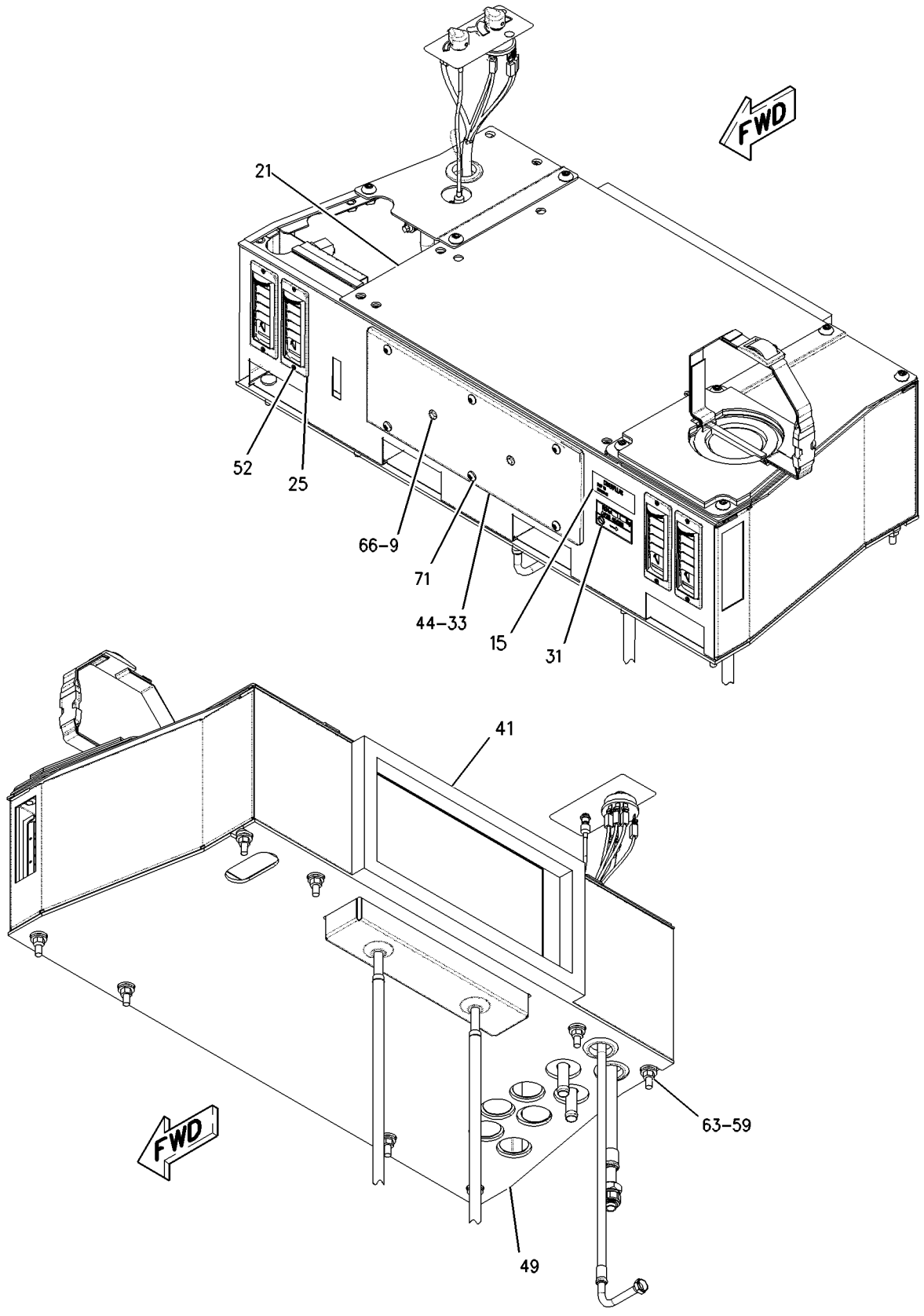

GRAPHIC #2 g00943206

OPERATOR STATION

198-7333 APPLICATION GP-MONITOR

S/N: CAF1-UP

PART OF 159-5812, 178-3030, 196-4909 PANEL GP-INSTRUMENT

ALSO AN ATTACHMENT

SMCS-7490 **i01676199**

NOTE	PART NUMBER	QTY	PART NAME 1 2 3 4 5 6 (PRODUCT LEVEL)	SEE PAGE
	160-6567	1	CONTROL GP-MONITOR (CATERPILLAR MONITORING SYSTEM)	

<END>

OPERATOR STATION

113-4242 ARMREST GP–LH

S/N: CAF1-UP

PART OF 112-9104, 112-9105, 155-5958 SEAT GP-SUSPENSION

AN ATTACHMENT

SMCS-7307 **i00136232**

NOTE	REF NO	GRAPHIC REF	PART NUMBER	QTY	PART NAME 1 2 3 4 5 6 (PRODUCT LEVEL)	SEE PAGE
	1	1	**9V-7447**	1	PAD AS	
		1	**9F-2978**	1	NUT-WELD (3/8-16 THD)	
	2	1	**113-4240**	1	BRACKET AS-LH	
	3	1	**7X-0456**	1	BOLT (7/16-14X4.5IN)	
	4	1	**0S-1594**	1	BOLT (3/8-16X1IN)	
	5	1	**5V-1498**	1	LOCKNUT (3/8-16 THD)	
	6	1	**2K-4973**	1	LOCKNUT (3/8-16 THD)	
	7	1	**5S-7383**	1	BOLT (3/8-16X1.75IN)	
	8	1	**8Y-6277**	2	SPACER	
	9	1	**2K-6061**	1	SCREW-MACHINE	

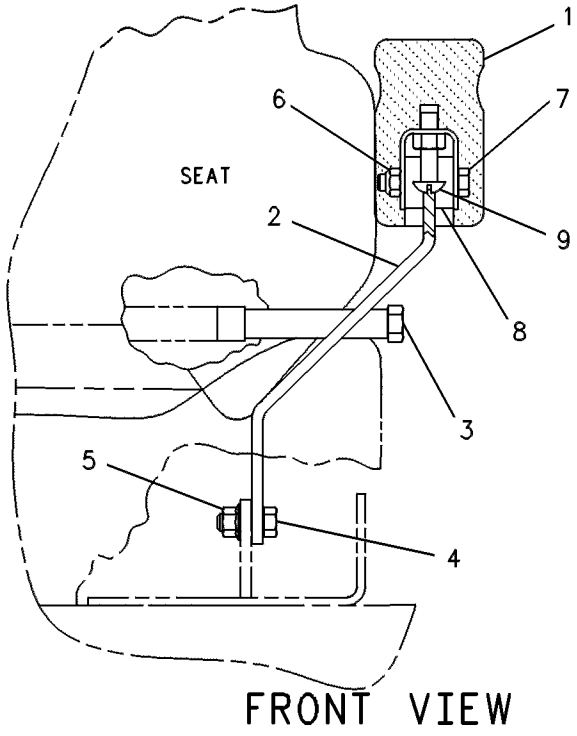

FRONT VIEW

GRAPHIC #1 g00108710

OPERATOR STATION

113-4245 ARMREST GP–RH

S/N: CAF1-UP

PART OF 112-9104, 112-9105, 155-5958 SEAT GP-SUSPENSION

AN ATTACHMENT

SMCS-7307 **i00136247**

NOTE	REF NO	GRAPHIC REF	PART NUMBER	QTY	PART NAME 1 2 3 4 5 6 (PRODUCT LEVEL)	SEE PAGE
	1	1	**9V-7447**	1	PAD AS	
		1	**9F-2978**	1	NUT-WELD (3/8-16 THD)	
	2	1	**113-4243**	1	BRACKET AS-RH	
	3	1	**7X-0456**	1	BOLT (7/16-14X4.5IN)	
	4	1	**0S-1594**	1	BOLT (3/8-16X1IN)	
	5	1	**5V-1498**	1	LOCKNUT (3/8-16 THD)	
	6	1	**5S-7383**	1	BOLT (3/8-16X1.75IN)	
	7	1	**2K-4973**	1	LOCKNUT (3/8-16 THD)	
	8	1	**8Y-6277**	2	SPACER	
	9	1	**2K-6061**	1	SCREW-MACHINE	

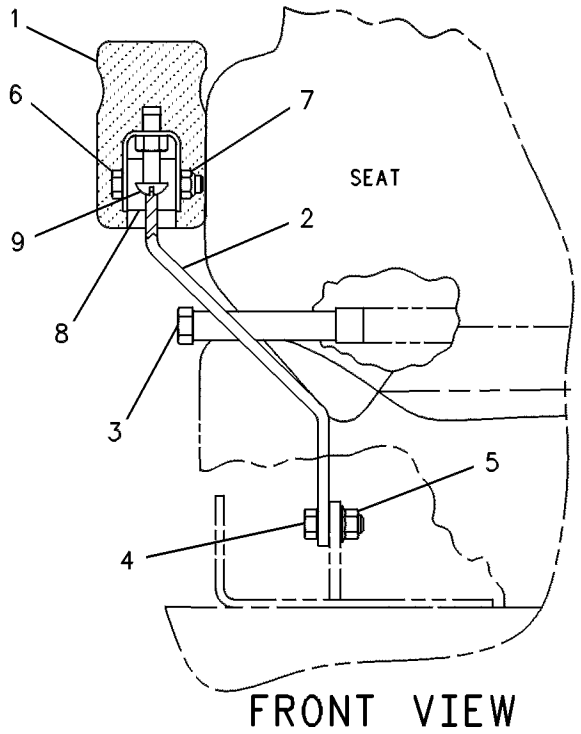

GRAPHIC #1 g00108709

OPERATOR STATION

223-3938 CAB AR-HIGH PROFILE

S/N: CAF1-UP
AN ATTACHMENT

SMCS-7301 **i01862264**

NOTE	PART NUMBER	QTY	PART NAME 1 2 3 4 5 6 (PRODUCT LEVEL)	SEE PAGE
Y	*223-3937*	1	CAB GP	726
Y	**8X-2795**	1	MIRROR GP-REAR VIEW (INSIDE)	802
Y	*125-4344*	1	MOUNTING GP-CAB (NON-ROPS)(ENCLOSED)	811
Y	*8X-8945*	1	SEAT GP-STATIC (VINYL)	852
Y	*125-4342*	1	WASHER GP-WINDOW (FRONT)	878
	171-7626	1	FILM	
	5P-8502	1	PADLOCK GP	
	5P-8500		KEY	
	8Y-6364	1	SLEEVE	
	170-6570	1	PLATE AS	
	143-9288	1	COVER	
Y-SEPARATE ILLUSTRATION				

<END>

211-4906 CAB AR-NON-ROPS

S/N: CAF1-UP
AN ATTACHMENT

SMCS-7301 **i01861343**

NOTE	PART NUMBER	QTY	PART NAME 1 2 3 4 5 6 (PRODUCT LEVEL)	SEE PAGE
Y	*211-4907*	1	CAB GP (HIGH PROFILE)	725
Y	*172-5378*	1	INSULATION GP-WEATHER	780
Y	**8X-2795**	1	MIRROR GP-REAR VIEW (INSIDE DUAL)	802
Y	*125-4344*	1	MOUNTING GP-CAB (NON-ROPS)(ENCLOSED)	811
Y	*125-4342*	1	WASHER GP-WINDOW (FRONT)	878
Y-SEPARATE ILLUSTRATION				

<END>

211-4907 CAB GP

S/N: CAF1-UP
PART OF 211-4906 CAB AR-NON-ROPS
AN ATTACHMENT

SMCS-7301, 7325 **i01861347**

NOTE	PART NUMBER	QTY	PART NAME 1 2 3 4 5 6 (PRODUCT LEVEL)	SEE PAGE
	211-4908	1	CAB AS (NON ROPS)(HIGH PROFILE)	
Y	*8X-4413*	1	DOOR GP-CAB (HIGH PROFILE)	738
Y	*211-4912*	1	LINER GP-CAB (ENCLOSED)(HIGH PROFILE)	796
Y	*8X-2385*	1	PANEL GP-CAB (HIGH PROFILE)	819
Y	*211-4913*	1	WIPER GP-WINDOW (FRONT)(HIGH PROFILE)	897
Y-SEPARATE ILLUSTRATION				

<END>

OPERATOR STATION

223-3937 CAB GP

S/N: CAF1-UP
PART OF 223-3938 CAB AR-HIGH PROFILE
AN ATTACHMENT

SMCS-7301, 7325 **i01821841**

NOTE	PART NUMBER	QTY	PART NAME 1 2 3 4 5 6 (PRODUCT LEVEL)	SEE PAGE
Y	*129-4618*	1	LINER GP-CAB	782
Y	*129-8614*	1	PANEL GP-CAB	820
Y	*223-3936*	1	WIPER GP-WINDOW	898
Y	*223-3941*	1	WIRING GP-CAB	240
	223-3935	1	CAB AS	

Y-SEPARATE ILLUSTRATION

<END>

OPERATOR STATION

163-0872 COMPRESSOR GP-REFRIGERANT

S/N: CAF1-UP

PART OF 197-4562 COMPRESSOR GP-REFRIGERANT

AN ATTACHMENT

SMCS-1802 **i01730643**

NOTE	REF NO	GRAPHIC REF	PART NUMBER	QTY	PART NAME 1 2 3 4 5 6 (PRODUCT LEVEL)	SEE PAGE
	1	1	**102-8802**	1	KIT-RECEPTACLE (2 PIN)	
	2	1	**114-3469**	1	VALVE GP-RELIEF	
		1	**9X-7378**	1	SEAL-O-RING	
	3	1	**7T-4532**	1	PLUG AS	
	4	1	**9X-7385**	2	SEAL-O-RING	

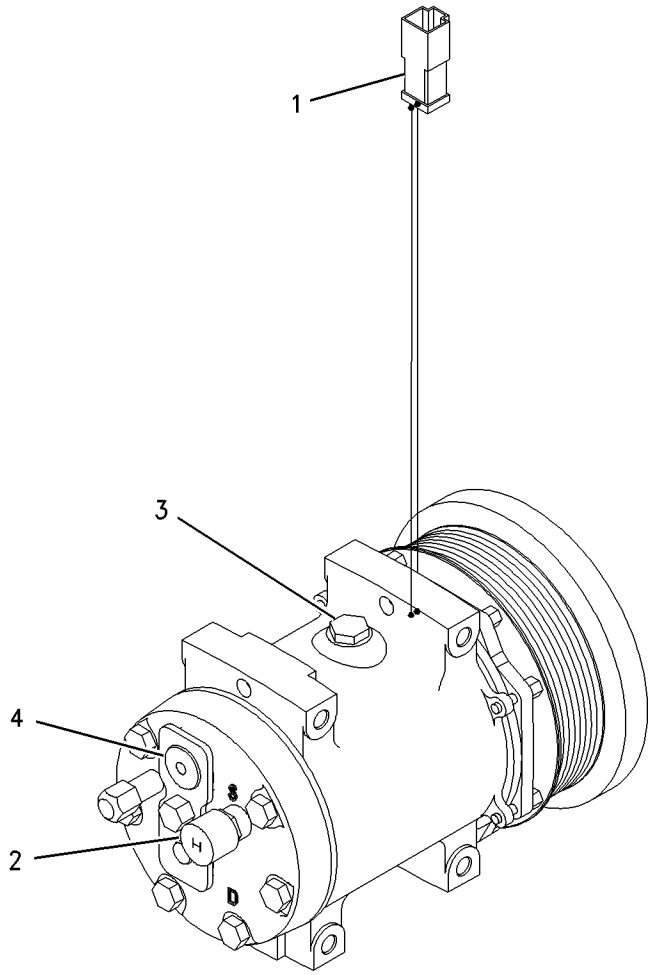

GRAPHIC #1 g00673316

OPERATOR STATION

197-4562 COMPRESSOR GP-REFRIGERANT

S/N: CAF1-UP
PART OF 167-8066 AIR CONDITIONER AR
AN ATTACHMENT

SMCS-1802 **i01755319**

NOTE	REF NO	GRAPHIC REF	PART NUMBER	QTY	PART NAME 1 2 3 4 5 6 (PRODUCT LEVEL)	SEE PAGE
Y	1	1	**163-0872**	1	COMPRESSOR GP-REFRIGERANT	727
	2	1	**192-1563**	2	IDLER AS	
		1	**6V-9027**	1	SEAL-O-RING	
		1	**145-2901**	1	COVER-DUST	
		1	**151-2900**	1	BOLT (M10X1.5X54.25MM)	
		1	**191-6628**	1	PULLEY AS-IDLER	
		1	**191-6629**	1	SPACER (10.4X35X16.1MM THK)	
	3	1	**194-5141**	1	GUARD (A/C)	
	4	1	**197-4567**	1	BELT (AIR CONDITIONER)	
M	5	1	**7X-2538**	4	BOLT (M8X1.25X100MM)	
	6	1	**8T-4224**	4	WASHER-HARD (8.8X16X2MM THK)	

M-METRIC PART
Y-SEPARATE ILLUSTRATION

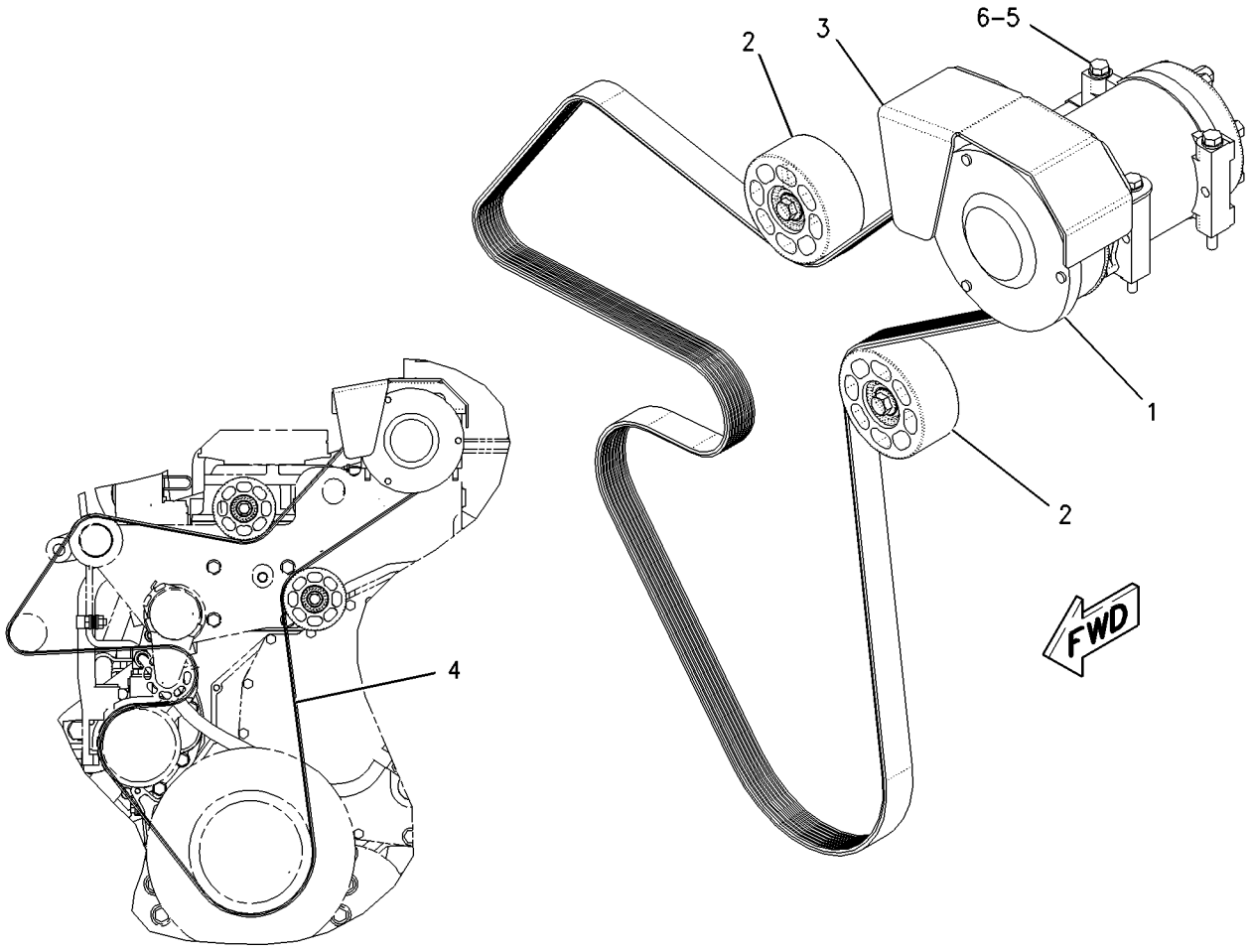

FRONT VIEW OF ENGINE

GRAPHIC #1 g00880803

OPERATOR STATION

197-2855 CONDENSER & MTG GP-REFRIGERANT

S/N: CAF1-UP
PART OF 167-8066 AIR CONDITIONER AR
AN ATTACHMENT

SMCS-1805 **i01680327**

NOTE	REF NO	GRAPHIC REF	PART NUMBER	QTY	PART NAME 1 2 3 4 5 6 (PRODUCT LEVEL)	SEE PAGE
	1	1	**197-7660**	1	CORE AS	
	2	1	**199-2711**	2	SPACER (7.82X26.67X75MM THK)	
	3	1	**204-7480**	1	PLATE AS	
M		1	**6V-9632**	4	NUT-WELD (M6X1 THD)	
	4	1	**4S-9191**	4	WASHER (12X22.5X5MM THK)	
M	5	1	**6V-1820**	4	BOLT (M10X1.50X30MM)	
	6	1	**7X-7729**	2	WASHER (11X25X3MM THK)	
M	7	1	**8T-4171**	4	BOLT (M6X1X12MM)	
M	8	1	**8T-4198**	2	BOLT (M10X1.5X100MM)	
	9	1	**9X-8256**	4	WASHER (6.6X12X2MM THK)	
E	10	1	**123-3827**		SEAL (8CM)	
E	10A	1	**123-3827**		SEAL (8CM)	
E	10B	1	**123-3827**		SEAL (19.3CM)	
E	10C	1	**123-3827**		SEAL (19.3CM)	

E-ORDER BY THE CENTIMETER
M-METRIC PART

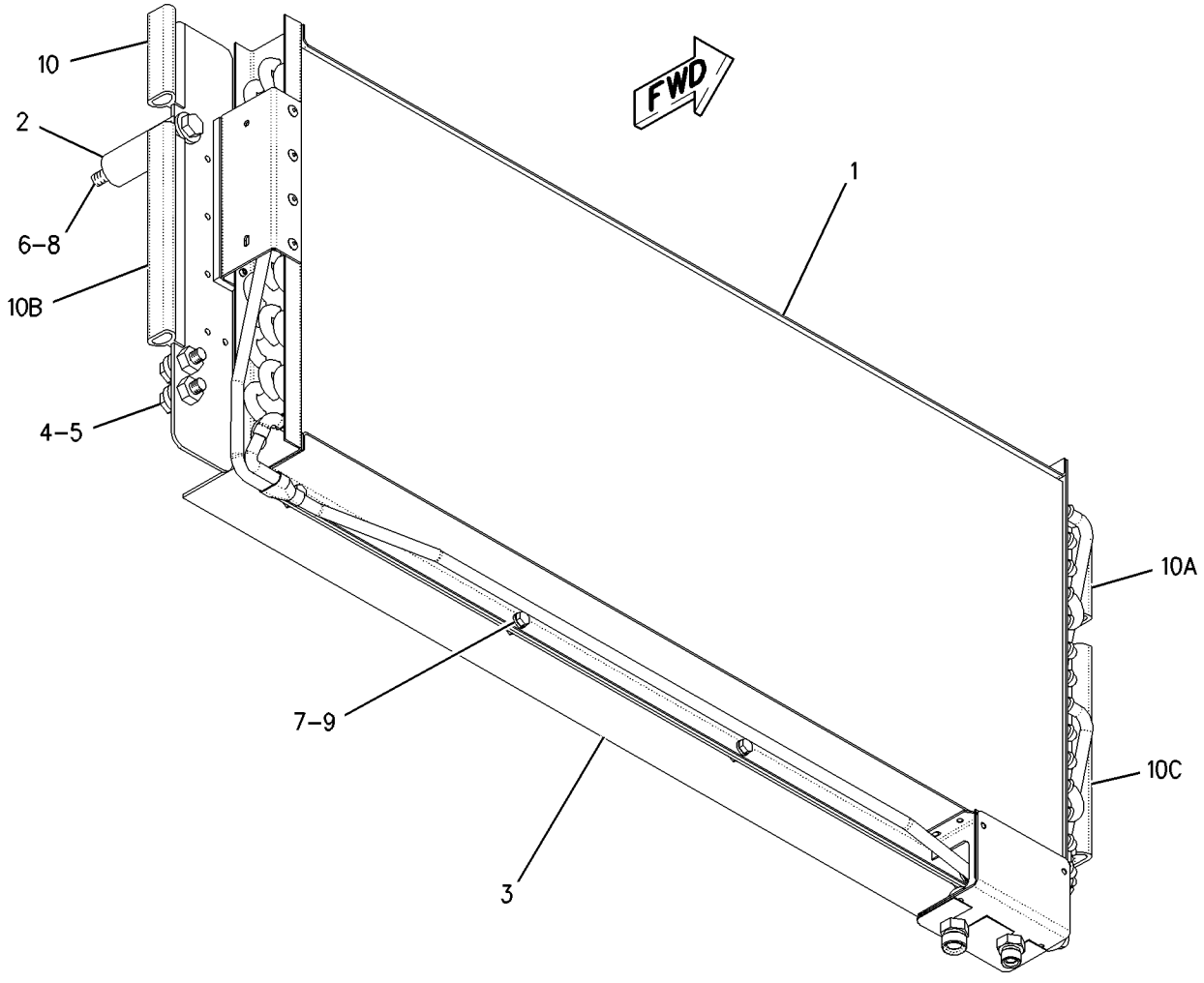

GRAPHIC #1 g00880660

OPERATOR STATION

167-8053 CONSOLE GP-OPERATOR

S/N: CAF1-UP

PART OF 162-5603 GENERAL AR

SMCS-5258 **i01755301**

NOTE	REF NO	GRAPHIC REF	PART NUMBER	QTY	PART NAME 1 2 3 4 5 6 (PRODUCT LEVEL)	SEE PAGE
	1	1	**2A-6908**	1	CYLINDER	
	2	1	**2G-8572**	8	WASHER-SPECIAL (10X27.81X2.54MM THK)	
	3	1	**2G-8573**	8	CAP	
	4	1	**2K-5830**	2	BEARING AS-NEEDLE	
	5	1	**3B-4607**	2	PIN-COTTER	
	6	1	**3E-9865**	1	LOCKNUT (1/4-20 THD)	
	7	1	**3Y-2806**	1	SPRING	
	8	1	**4B-4314**	1	RIVET	
	9	1	**206-4097**	8	FASTENER	
	10	1	**6G-2914**	1	LATCH	
	11	1	**6G-8814**	2	BRACKET	
	12	1	**7I-4890**	1	PLATE AS	
	13	1	**8C-3442**	1	SPRING-COIL	
	14	1	**8D-5641**	14	BEARING	
	15	1	**8D-7960**	2	PLATE	
	16	1	**8L-7905**	2	RIVET-POP	
M	17	1	**8T-9006**	2	BOLT-SOCKET HEAD (M3X.5X20MM)	
	18	1	**8X-1904**	1	SPACER (20X35X26MM THK)	
	19	1	**8X-1908**	1	PANEL	
	20	1	**8X-1911**	1	PANEL	
	21	1	**8X-1913**	6	SPACER-FLANGED	
	22	1	**8X-1914**	1	SHAFT	
	23	1	**8X-1915**	1	SPACER (10.31X25.4X35MM THK)	
	24	1	**8X-1921**	1	HOOD	
	25	1	**8X-2160**	1	LEVER	
	26	1	**8X-2161**	1	LEVER (STEERING COLUMN TILT CONTROL)	
	27	1	**8X-2893**	10	NUT (M4X0.7 THD)	
	28	1	**8X-3789**	1	PANEL	
	29	1	**8X-3951**	1	PANEL	
	30	1	**8X-3965**	1	RATCHET	
	31	1	**8X-5123**	1	RETAINER	
	32	1	**206-9651**	2	PLATE	
	33	1	**031-2666**	1	ROD	
	34	1	**034-1994**	1	PIN	
	35	1	**110-6241**	1	BRACKET	
	36	1	**177-7448**	1	CHANNEL AS	
M		1	**6V-9632**	6	NUT-WELD (M6X1 THD)	
		1	**7T-1099**	6	LINK	
		1	**177-7449**	1	PLATE	
	37	1	**183-1425**	1	BASE	
	38	1	**204-6488**	1	CHANNEL AS	
M		1	**6V-9632**	6	NUT-WELD (M6X1 THD)	
		1	**7T-1099**	3	LINK	
	39	1	**2A-7184**	2	PLATE	
	40	1	**030-8535**	1	BOLT-LOCKING (3/8-16X0.875 IN)	
	41	1	**096-6166**	6	WASHER-HARD (4.5X9X1MM THK)	
	42	1	**2K-7979**	13	BEARING-SLEEVE	
	43	1	**3E-8043**	4	SCREW (3/8-16X.75 IN)	
	44	1	**3F-7514**	4	PIN	
	45	1	**3K-6060**	6	LOCKNUT (3/8-16 THD)	
M	46	1	**5C-8312**	6	NUT (M4X0.7 THD)	
	47	1	**5M-8500**	1	KNOB (STEERING WHEEL TILT CONTROL)	
	48	1	**5P-1075**	8	WASHER-HARD (10.2X22.5X3MM THK)	
	49	1	**5P-8167**	2	BOLT (3/8-16X0.625 IN)	
	50	1	**5S-7379**	4	BOLT (3/8-16X0.875 IN)	
	51	1	**5S-7383**	6	BOLT (3/8-16X1.75 IN)	

167-8053 **CONSOLE GP-OPERATOR** *(contd.)* **i01755301**

NOTE	REF NO	GRAPHIC REF	PART NUMBER	QTY	PART NAME 1 2 3 4 5 6 (PRODUCT LEVEL)	SEE PAGE
	52	1	**6V-8183**	1	NUT-FULL (3/8-24 THD)	
	53	1	**8T-1174**	4	SEAL-LIP	
	54	1	**8T-2561**	11	WASHER-HARD (10.5X28.5X5MM THK)	
M	55	1	**8T-4133**	1	NUT (M10X1.5 THD)	
	56	1	**8X-1907**	1	SHAFT	
	57	1	**9M-5590**	1	BALL	
M	58	1	**9X-1046**	16	SCREW (M4X0.7X18MM)	
M	59	1	**9X-2042**	12	SCREW-TRUSS HEAD (M6X1X12MM)	
BD	60	1	**5P-5637**		SEAL	
BD	61	1	**5P-5639**		SEAL	

B-USE AS REQUIRED
D-ORDER BY THE METER
M-METRIC PART

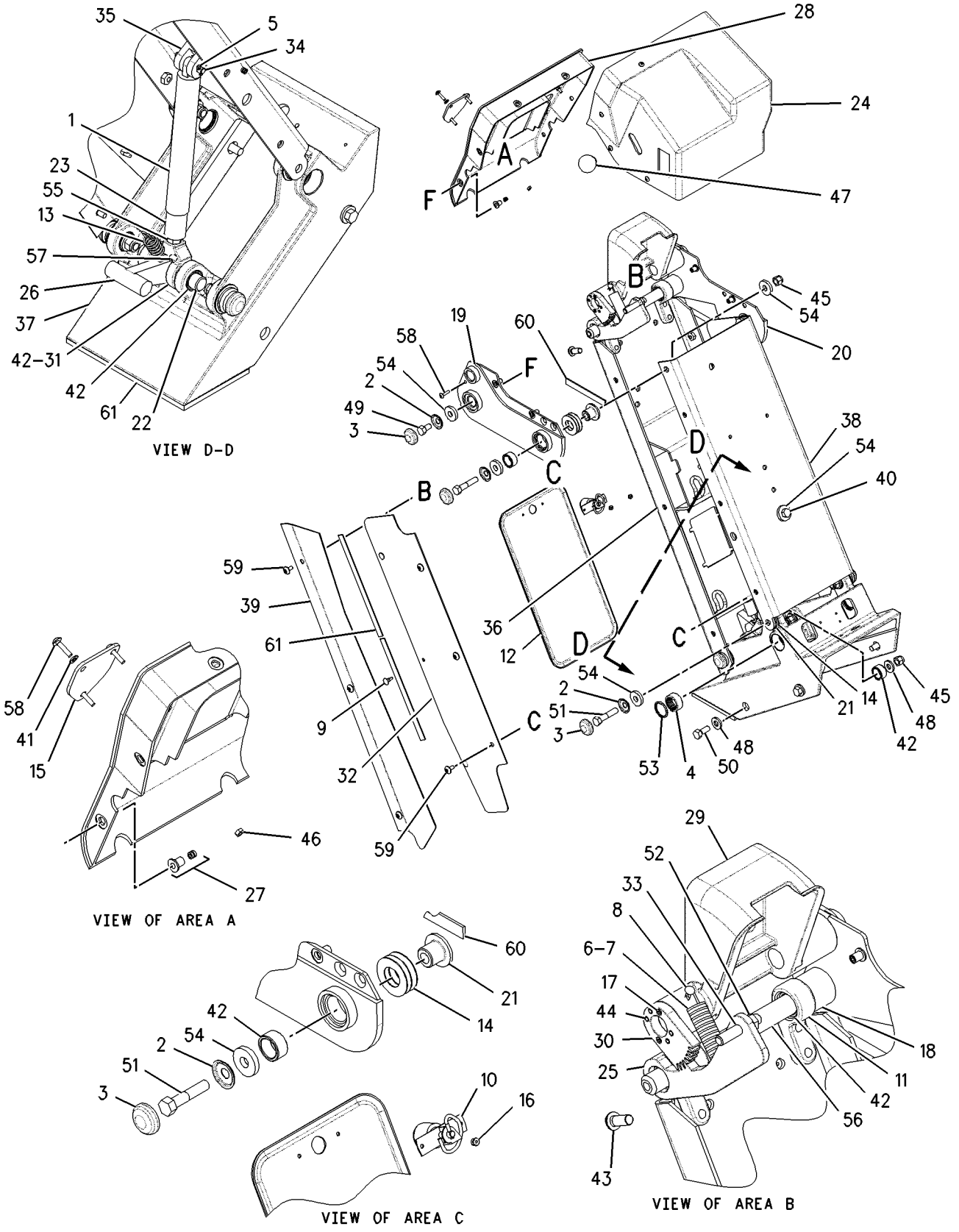

GRAPHIC #1

g00898720

OPERATOR STATION

183-3017 CONVERSION AR-NON-ROPS

S/N: CAF1-UP
AN ATTACHMENT

SMCS-7323 **i01830504**

NOTE	REF NO	GRAPHIC REF	PART NUMBER	QTY	PART NAME 1 2 3 4 5 6 (PRODUCT LEVEL)	SEE PAGE
	1	1	**4B-4158**	4	SCREW-DRIVE (3/16X0.25 IN)	
	2	1	**5P-8197**	1	PLATE-WARNING (DO NOT OPERATE)	
	3	1	**5P-8502**	1	PADLOCK GP	
		1	**5P-8500**	1	KEY	
		1	**8Y-6364**	1	SLEEVE	
Y	4	1	*8X-8945*	1	SEAT GP-STATIC (VINYL)	852
Y	5	1	*166-7065*	1	GUARD GP-PLATFORM	436
Y	6	1	*178-3030*	1	PANEL GP-INSTRUMENT	824
	7	1	**9D-3767**	1	PLUG-BUTTON	

Y-SEPARATE ILLUSTRATION

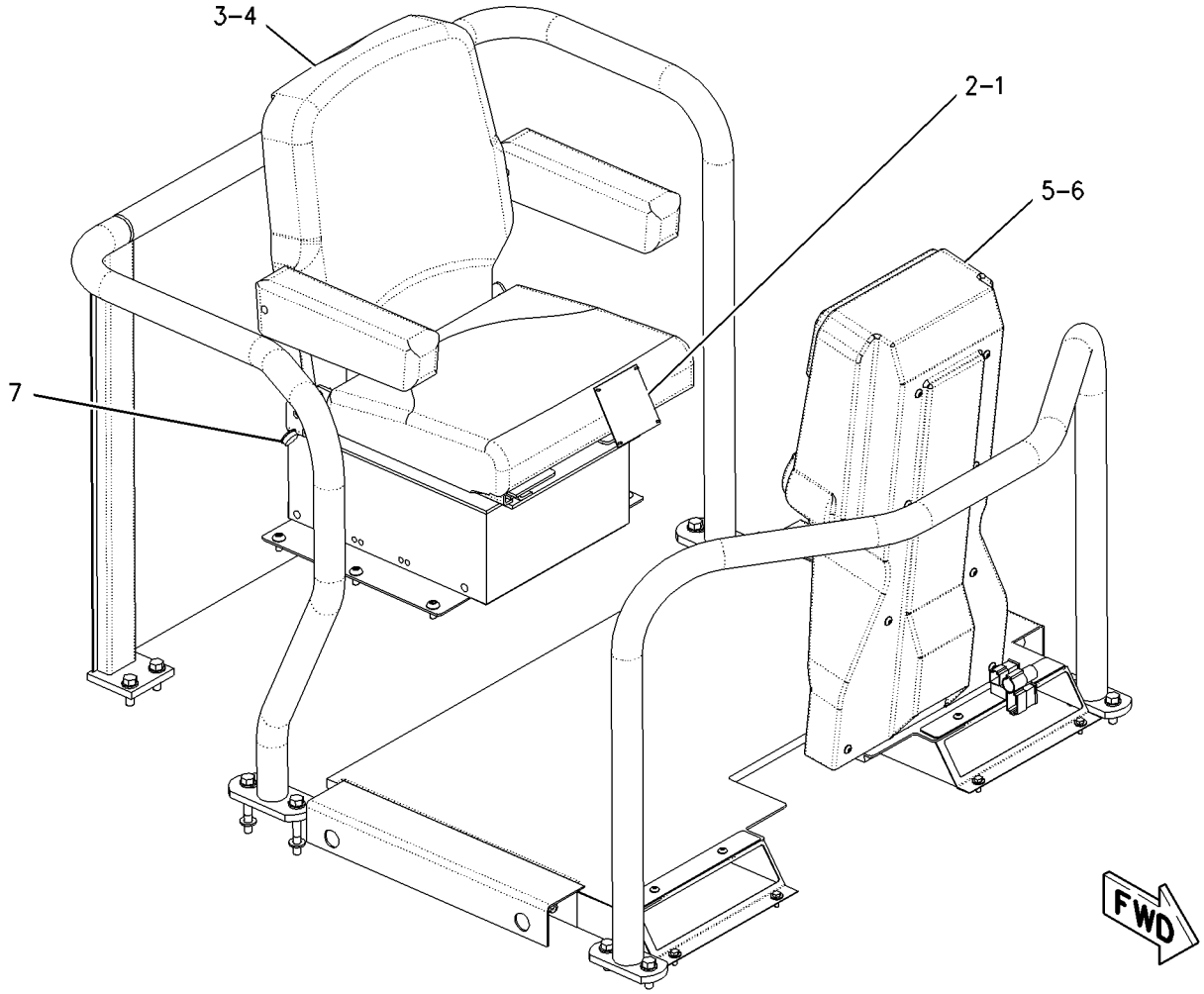

GRAPHIC #1 g00937381

OPERATOR STATION

8X-4317 DOOR GP—HIGH PROFILE—RH

S/N: CAF1-UP
PART OF 8X-4413 DOOR GP-CAB
AN ATTACHMENT

SMCS-7308 **i01755145**

NOTE	REF NO	GRAPHIC REF	PART NUMBER	QTY	PART NAME 1 2 3 4 5 6 (PRODUCT LEVEL)	SEE PAGE
	1	1	**199-2677**	1	LINK	
	2	1	**1H-3338**	1	LOCKWASHER	
	3	1	**5T-7486**	1	RETAINER-SPRING	
	4	1	**6D-6581**	16	RIVET-POP	
	5	1	**6V-2773**	2	PLUG	
	6	1	**6V-7636**	4	PIN AS-SPRING	
	7	1	**8X-3806**	1	HINGE (HIGH PROFILE)	
	8	1	**8X-4243**	1	COVER-RH	
	9	1	**8X-4262**	1	COVER-RH	
	10	1	**8X-3938**	1	GLASS (HIGH PROFILE)	
	11	1	**8X-4448**	1	GLASS	
	12	1	**8Y-4398**	1	LINK-CONNECTING	
	13	1	**8Y-4400**	1	LATCH AS-DOOR	
	14	1	**8Y-4401**	1	HANDLE AS (INSIDE)	
	15	1	**8Y-4619**	1	HANDLE AS (OUTSIDE)	
	16	1	**8Y-4620**	1	LINK-CONNECTING	
J	17	1	**8Y-4801**	1	LOCK AS-CYLINDER	
M	18	1	**9X-2546**	4	BOLT (M6X1X20MM)	
	19	1	**107-9641**	1	PLATE AS	
	20	1	**108-5950**	1	LATCH AS-RH	
	21	1	**108-5952**	1	LINK-TAG-RH	
	22	1	**114-9190**	1	SEAL	
	23	1	**128-0037**	1	KNOB-BALL (RH DOOR)	
	24	1	**199-2712**	1	HANDLE (RH)	
	25	1	**199-2739**	1	DOOR AS (RH) (HIGH PROFILE)	
M		1	**6V-9632**	8	NUT-WELD (M6X1 THD)	
M		1	**8T-3490**	2	NUT-WELD (M10X1.5 THD)	
	26	1	**8T-4121**	2	WASHER-HARD (11X21X2.5MM THK)	
M	27	1	**8T-4137**	2	BOLT (M10X1.5X20MM)	
M	28	1	**8T-4181**	10	BOLT (M6X1X20MM)	
	29	1	**8X-4245**	1	BOSS (M6X18MM) (M6X18MM)	
M	30	1	**9X-2042**	7	SCREW-TRUSS HEAD (M6X1X12MM)	
	31	1	**9X-8256**	6	WASHER (6.6X12X2MM THK)	
D	32	1	**5P-5768**		SEAL (2.875M)	
D	32A	1	**5P-5768**		SEAL (2.725M)	

D-ORDER BY THE METER
J-REQUIRES 5P8500 KEY
M-METRIC PART

8X-4317 DOOR GP *(contd.)*

i01755145

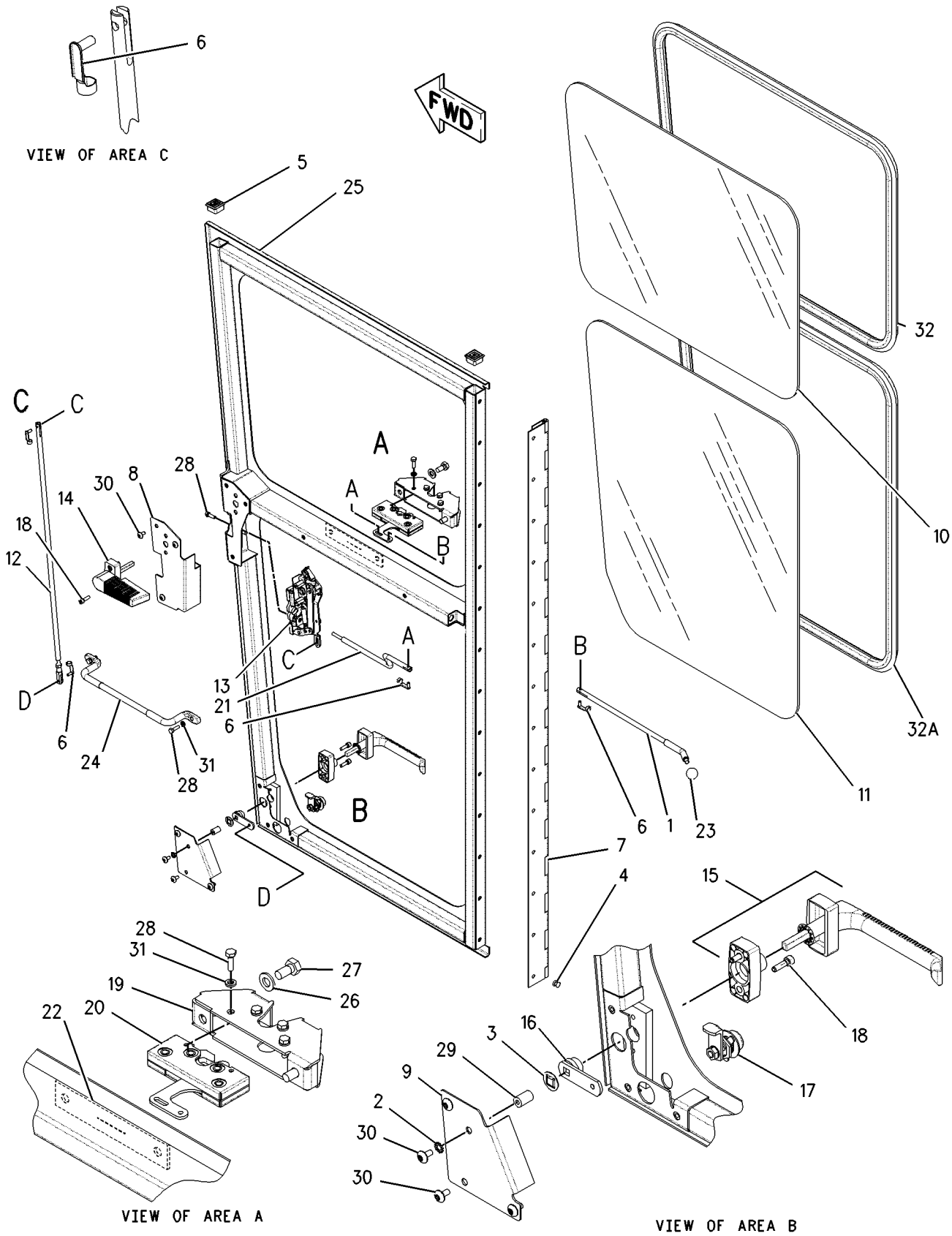

GRAPHIC #1

g00898721

OPERATOR STATION

8X-4318 DOOR GP—HIGH PROFILE—LH

S/N: CAF1-UP
PART OF 8X-4413 DOOR GP-CAB
AN ATTACHMENT

SMCS-7308 **i01703457**

NOTE	REF NO	GRAPHIC REF	PART NUMBER	QTY	PART NAME 1 2 3 4 5 6 (PRODUCT LEVEL)	SEE PAGE
	1	1	**199-2677**	1	LINK	
	2	1	**1H-3338**	1	LOCKWASHER	
	3	1	**5T-7486**	1	RETAINER-SPRING	
	4	1	**6D-6581**	16	RIVET-POP	
	5	1	**6V-2773**	2	PLUG	
	6	1	**6V-7636**	4	PIN AS-SPRING	
	7	1	**8X-3806**	1	HINGE (HIGH PROFILE)	
	8	1	**8X-4244**	1	COVER-LH	
	9	1	**8X-4263**	1	COVER-LH	
	10	1	**8X-3938**	1	GLASS (HIGH PROFILE)	
	11	1	**8X-4448**	1	GLASS	
	12	1	**8Y-4398**	1	LINK-CONNECTING	
	13	1	**8Y-4399**	1	LATCH AS-DOOR	
	14	1	**8Y-4401**	1	HANDLE AS (INSIDE)	
	15	1	**8Y-4619**	1	HANDLE AS (OUTSIDE)	
	16	1	**8Y-4620**	1	LINK-CONNECTING	
J	17	1	**8Y-4801**	1	LOCK AS-CYLINDER	
M	18	1	**9X-2546**	4	BOLT (M6X1X20MM)	
	19	1	**107-9641**	1	PLATE AS	
	20	1	**108-5949**	1	LATCH AS-LH	
	21	1	**108-5951**	1	LINK-TAG-LH	
	22	1	**114-9190**	1	SEAL	
	23	1	**128-0037**	1	KNOB-BALL (LH DOOR)	
	24	1	**199-2712**	1	HANDLE (LH)	
	25	1	**199-2740**	1	DOOR AS (LH) (HIGH PROFILE)	
M		1	**6V-9632**	8	NUT-WELD (M6X1 THD)	
M		1	**8T-3490**	2	NUT-WELD (M10X1.5 THD)	
	26	1	**8T-4121**	2	WASHER-HARD (11X21X2.5MM THK)	
M	27	1	**8T-4137**	2	BOLT (M10X1.5X20MM)	
M	28	1	**8T-4181**	10	BOLT (M6X1X20MM)	
	29	1	**8X-4245**	1	BOSS (M6X18MM) (M6X18MM)	
M	30	1	**9X-2042**	7	SCREW-TRUSS HEAD (M6X1X12MM)	
	31	1	**9X-8256**	6	WASHER (6.6X12X2MM THK)	
D	32	1	**5P-5768**		SEAL (2.875M)	
D	32A	1	**5P-5768**		SEAL (2.725M)	

D-ORDER BY THE METER
J-REQUIRES 5P8500 KEY
M-METRIC PART

8X-4318 DOOR GP *(contd.)*

i01703457

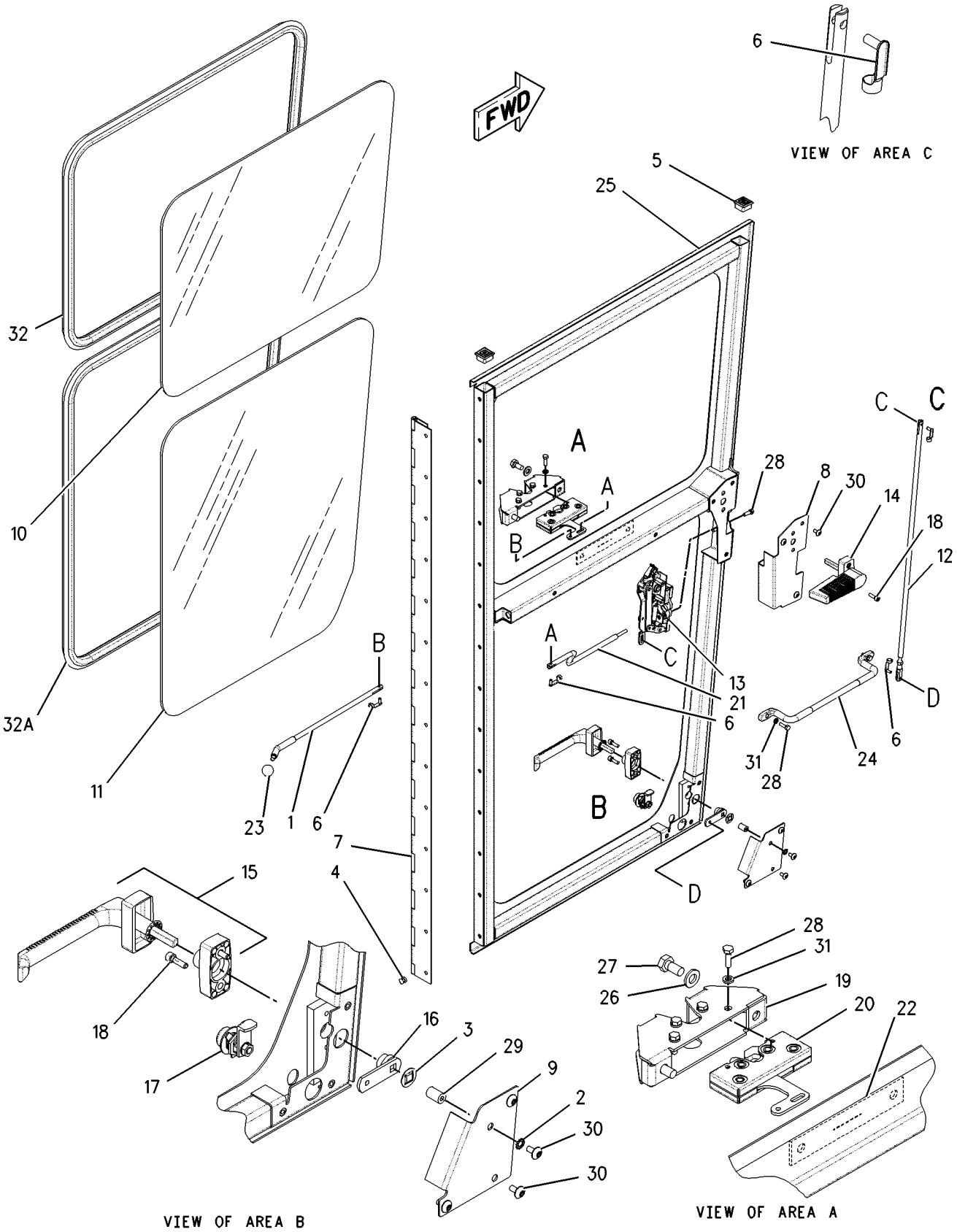

GRAPHIC #1

g00772891

OPERATOR STATION

8X-4413 DOOR GP-CAB—HIGH PROFILE

S/N: CAF1-UP

PART OF 211-4907 CAB GP, 177-8779, 218-4759 ROPS GP-ENCLOSED

AN ATTACHMENT

SMCS-7308 **i01220161**

NOTE	REF NO	GRAPHIC REF	PART NUMBER	QTY	PART NAME 1 2 3 4 5 6 (PRODUCT LEVEL)	SEE PAGE
Y	1	1	**8X-4317**	1	DOOR GP (RH)	734
Y	2	1	**8X-4318**	1	DOOR GP (LH)	736
M	3	1	**138-4054**	5	SCREW-FLAT HEAD	
M	4	1	**129-3178**	32	LOCKNUT (M6X1.0 THD)	
	5	1	**9X-8256**	32	WASHER (2MM THK)	
BD	6	1	**6V-5163**		SEAL	
BD	7	1	**5P-5969**		SEAL	
B	8	1	**4J-3915**	8	SHIM (1.52MM THK)	
	9	1	**6V-5158**	2	STRIKER AS-BODY	
	10	1	**154-8292**	1	SEAL (LH)	
M	11	1	**8C-8454**	27	SCREW-MACHINE FLAT HEAD	
	12	1	**107-6813**	2	PLATE AS	
	13	1	**8T-4121**	4	WASHER-HARD (2.5MM THK)	
M	14	1	**8T-4195**	4	BOLT (M10X1.50X30MM)	
M	15	1	**8T-4133**	4	NUT (M10X1.50 THD)	
	16	1	**106-6553**	4	BUMPER-CONICAL	
	17	1	**124-8843**	2	PLATE AS	
	18	1	**5M-3062**	4	BOLT (3/8-16X.75IN)	
	19	1	**5P-1075**	4	WASHER-HARD (3MM THK)	
M	20	1	**9X-2045**	4	SCREW-TRUSS HEAD (M6X1X20MM)	
	21	1	**126-4966**	2	PLATE	
	22	1	**154-8293**	1	SEAL (RH)	

B-USE AS REQUIRED
D-ORDER BY THE METER
M-METRIC PART
Y-SEPARATE ILLUSTRATION

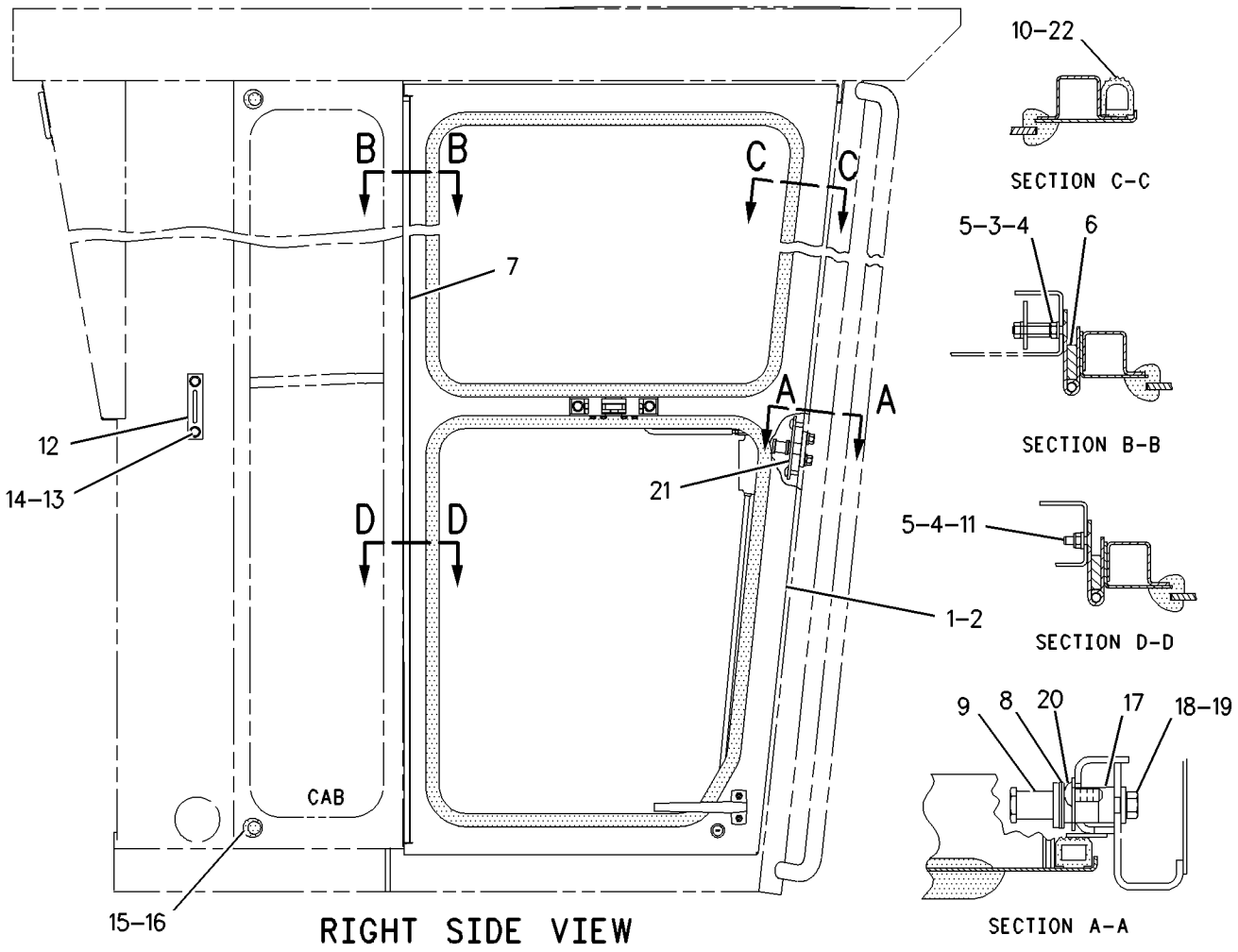

GRAPHIC #1

g00652299

OPERATOR STATION

8X-4525 DOOR GP-CAB—RH

S/N: CAF1-UP
PART OF 8X-4527 DOOR GP-CAB
ALSO AN ATTACHMENT

SMCS-7308 **i01755149**

NOTE	REF NO	GRAPHIC REF	PART NUMBER	QTY	PART NAME 1 2 3 4 5 6 (PRODUCT LEVEL)	SEE PAGE
	1	1	**199-2677**	1	LINK	
	2	1	**1H-3338**	1	LOCKWASHER	
	3	1	**5T-7486**	1	RETAINER-SPRING	
	4	1	**6D-6581**	14	RIVET-POP	
	5	1	**6V-2773**	2	PLUG	
	6	1	**6V-7636**	4	PIN AS-SPRING	
	7	1	**8X-4066**	1	HINGE	
	8	1	**8X-4243**	1	COVER-RH	
	9	1	**8X-4262**	1	COVER-RH	
	10	1	**8X-4446**	1	GLASS (HIGH PROFILE)	
	11	1	**8X-4448**	1	GLASS	
	12	1	**8Y-4398**	1	LINK-CONNECTING	
	13	1	**8Y-4400**	1	LATCH AS-DOOR	
	14	1	**8Y-4401**	1	HANDLE AS (INSIDE)	
	15	1	**8Y-4619**	1	HANDLE AS (OUTSIDE)	
	16	1	**8Y-4620**	1	LINK-CONNECTING	
J	17	1	**8Y-4801**	1	LOCK AS-CYLINDER	
M	18	1	**9X-2546**	4	BOLT (M6X1X20MM)	
	19	1	**107-9641**	1	PLATE AS	
	20	1	**108-5950**	1	LATCH AS-RH	
	21	1	**108-5952**	1	LINK-TAG-RH	
	22	1	**114-9190**	1	SEAL	
	23	1	**128-0037**	1	KNOB-BALL (RH DOOR)	
	24	1	**199-2712**	1	HANDLE (RH)	
	25	1	**199-2737**	1	DOOR AS (RH)	
M		1	**6V-9632**	8	NUT-WELD (M6X1 THD)	
M		1	**8T-3490**	2	NUT-WELD (M10X1.5 THD)	
	26	1	**8T-4121**	2	WASHER-HARD (11X21X2.5MM THK)	
M	27	1	**8T-4137**	2	BOLT (M10X1.5X20MM)	
M	28	1	**8T-4181**	10	BOLT (M6X1X20MM)	
	29	1	**8X-4245**	1	BOSS (M6X18MM) (M6X18MM)	
M	30	1	**9X-2042**	7	SCREW-TRUSS HEAD (M6X1X12MM)	
	31	1	**9X-8256**	6	WASHER (6.6X12X2MM THK)	
D	32	1	**5P-5768**		SEAL (2.7M)	
D	32A	1	**5P-5768**		SEAL (2.4M)	

D-ORDER BY THE METER
J-REQUIRES 5P8500 KEY
M-METRIC PART

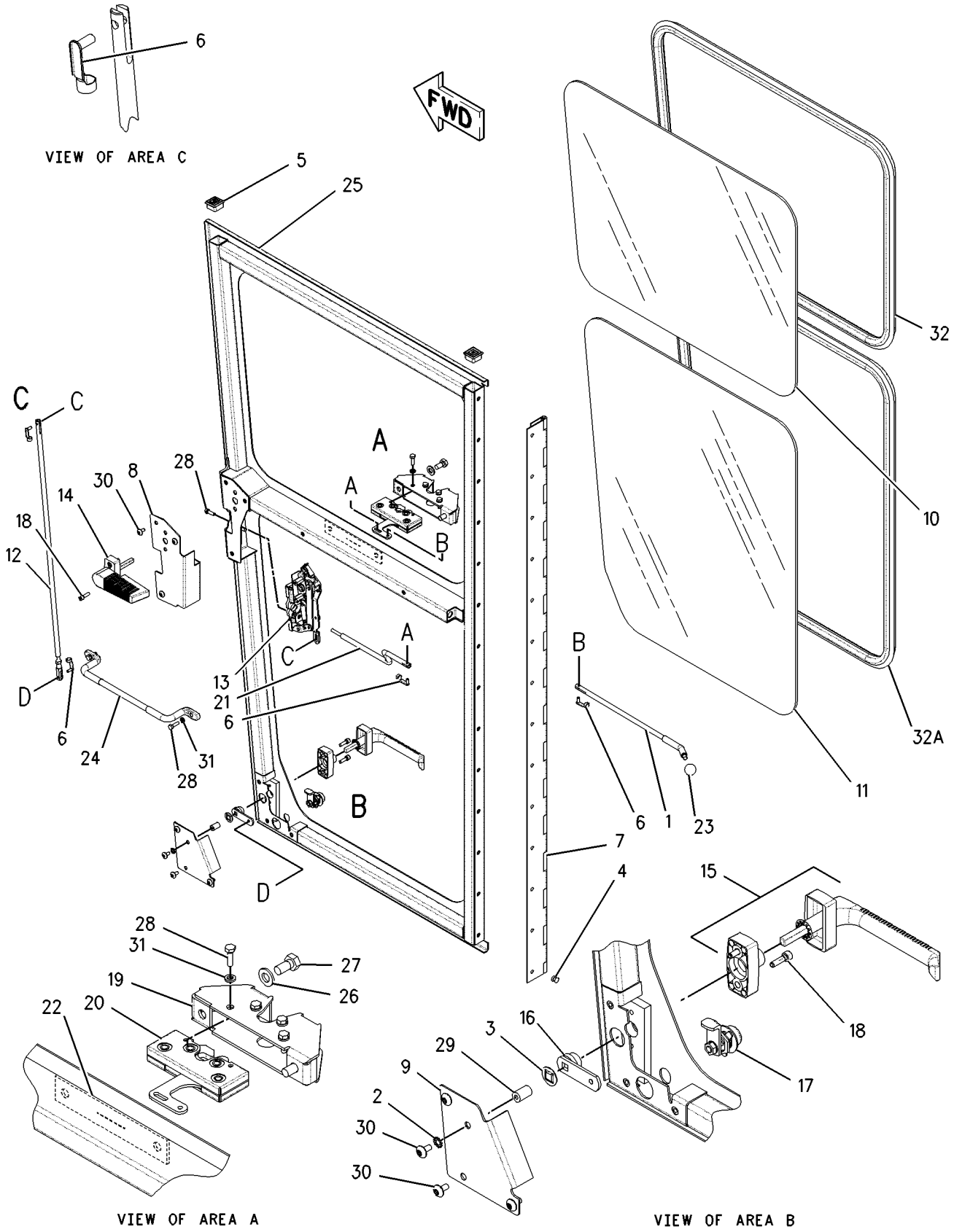

GRAPHIC #1 g00798657

OPERATOR STATION

8X-4526 DOOR GP-CAB—LH

S/N: CAF1-UP
PART OF 8X-4527 DOOR GP-CAB
ALSO AN ATTACHMENT

SMCS-7308 **i01774758**

NOTE	REF NO	GRAPHIC REF	PART NUMBER	QTY	PART NAME 1 2 3 4 5 6 (PRODUCT LEVEL)	SEE PAGE
	1	1	**199-2677**	1	LINK	
	2	1	**1H-3338**	1	LOCKWASHER	
	3	1	**5T-7486**	1	RETAINER-SPRING	
	4	1	**6D-6581**	14	RIVET-POP	
	5	1	**6V-2773**	2	PLUG	
	6	1	**6V-7636**	4	PIN AS-SPRING	
	7	1	**8X-4066**	1	HINGE (LOW PROFILE)	
	8	1	**8X-4244**	1	COVER-LH	
	9	1	**8X-4263**	1	COVER-LH	
	10	1	**8X-4446**	1	GLASS (LOW PROFILE)	
	11	1	**8X-4448**	1	GLASS	
	12	1	**8Y-4398**	1	LINK-CONNECTING	
	13	1	**8Y-4399**	1	LATCH AS-DOOR	
	14	1	**8Y-4401**	1	HANDLE AS (INSIDE)	
	15	1	**8Y-4619**	1	HANDLE AS (OUTSIDE)	
	16	1	**8Y-4620**	1	LINK-CONNECTING	
J	17	1	**8Y-4801**	1	LOCK AS-CYLINDER	
M	18	1	**9X-2546**	4	BOLT (M6X1X20MM)	
	19	1	**107-9641**	1	PLATE AS	
	20	1	**108-5949**	1	LATCH AS-LH	
	21	1	**108-5951**	1	LINK-TAG-LH	
	22	1	**114-9190**	1	SEAL	
	23	1	**128-0037**	1	KNOB-BALL (LH DOOR)	
	24	1	**199-2712**	1	HANDLE (LH)(GRAB)	
	25	1	**199-2738**	1	DOOR AS (LH)	
	26	1	**8T-4121**	2	WASHER-HARD (11X21X2.5MM THK)	
M	27	1	**8T-4137**	2	BOLT (M10X1.5X20MM)	
M	28	1	**8T-4181**	10	BOLT (M6X1X20MM)	
	29	1	**8X-4245**	1	BOSS (M6X18MM) (M6X18MM)	
M	30	1	**9X-2042**	7	SCREW-TRUSS HEAD (M6X1X12MM)	
	31	1	**9X-8256**	6	WASHER (6.6X12X2MM THK)	
D	32	1	**5P-5768**		SEAL (2.4M)	
D	32A	1	**5P-5768**		SEAL (2.7M)	

D-ORDER BY THE METER
J-REQUIRES 5P8500 KEY
M-METRIC PART

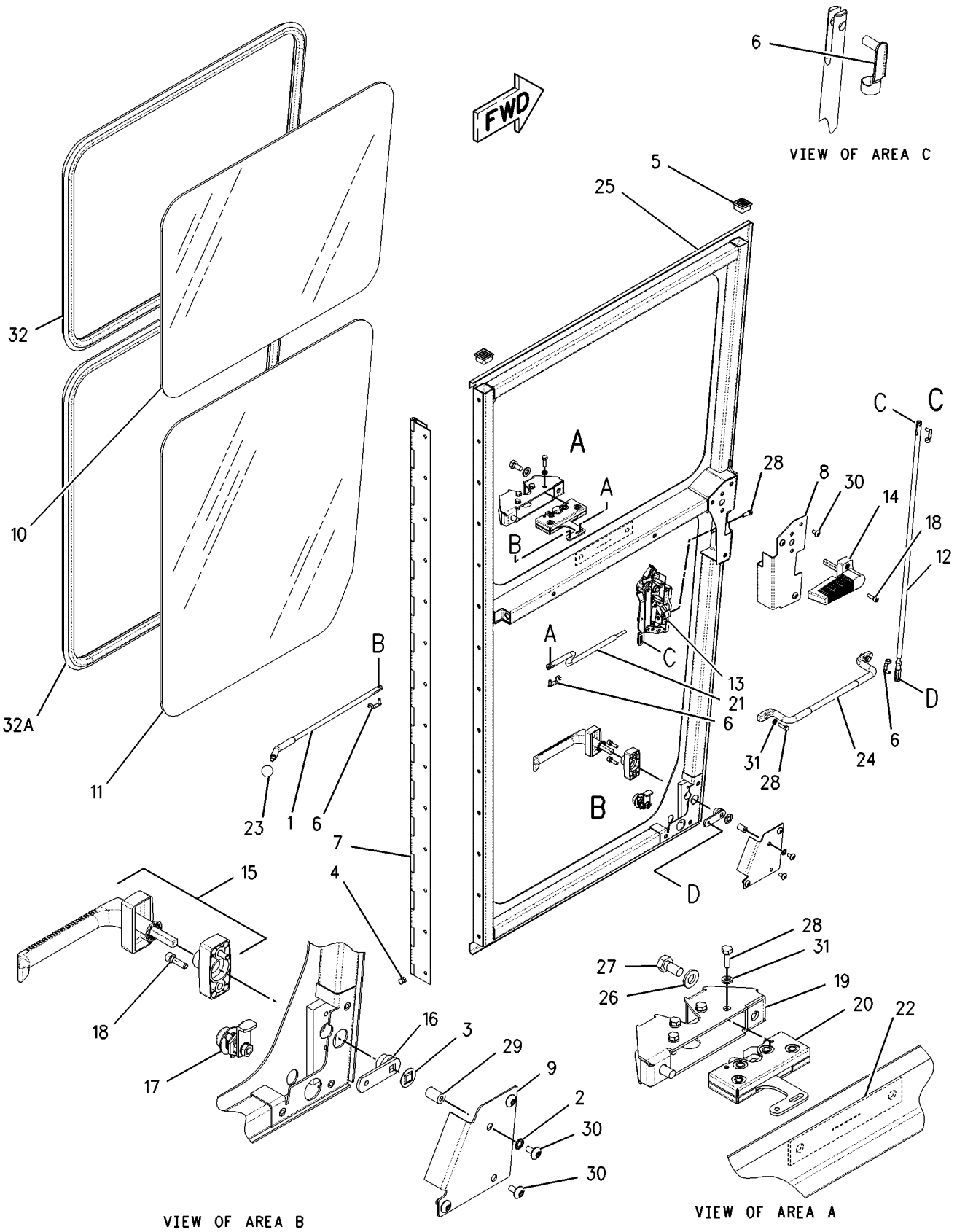

GRAPHIC #1 g00772891

OPERATOR STATION

8X-4527 DOOR GP-CAB—LOW PROFILE

S/N: CAF1-UP
PART OF 172-5377, 218-4761 ROPS GP-ENCLOSED
ALSO AN ATTACHMENT

SMCS-7308 **i01158543**

NOTE	REF NO	GRAPHIC REF	PART NUMBER	QTY	PART NAME 1 2 3 4 5 6 (PRODUCT LEVEL)	SEE PAGE
Y	1	1	*8X-4526*	1	DOOR GP-CAB (LH)	742
Y	2	1	*8X-4525*	1	DOOR GP-CAB (RH)	740
M	3	1	**138-4054**	5	SCREW-FLAT HEAD	
M	4	1	**129-3178**	28	LOCKNUT (M6X1.0 THD)	
	5	1	**9X-8256**	28	WASHER (2MM THK)	
DB	6	1	**6V-5163**		SEAL	
	7	1	**124-8843**	2	PLATE AS	
B	8	1	**4J-3915**	8	SHIM (1.52MM THK)	
	9	1	**6V-5158**	2	STRIKER AS-BODY	
B	10	1	**154-8290**	1	SEAL (LH)	
M	11	1	**8C-8454**	23	SCREW-MACHINE FLAT HEAD	
	12	1	**107-6813**	2	PLATE AS	
	13	1	**8T-4121**	4	WASHER (2.5MM THK)	
M	14	1	**8T-4195**	4	BOLT (M10X1.50X30MM)	
M	15	1	**8T-4133**	4	NUT (M10X1.50 THD)	
	16	1	**106-6553**	4	BUMPER-CONICAL	
BD	17	1	**5P-5969**		SEAL	
	18	1	**5M-3062**	4	BOLT (3/8-16X.75IN)	
	19	1	**5P-1075**	4	WASHER-HARD (3MM THK)	
M	20	1	**9X-2045**	4	SCREW-TRUSS HEAD (M6X1X20MM)	
	21	1	**126-4966**	2	PLATE	
B	22	1	**154-8291**	1	SEAL	

B-USE AS REQUIRED
D-ORDER BY THE METER
M-METRIC PART
Y-SEPARATE ILLUSTRATION

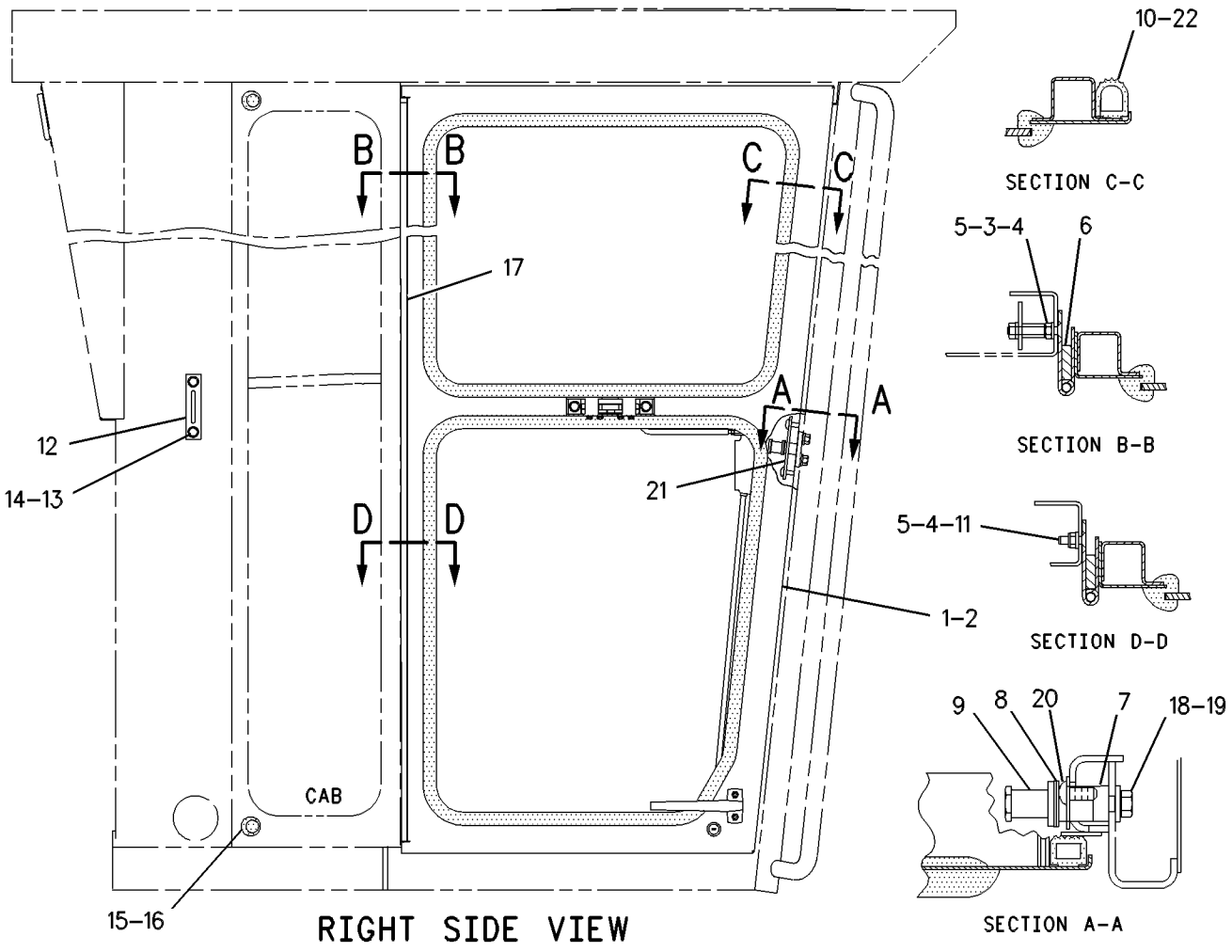

GRAPHIC #1

g00589586

OPERATOR STATION

177-7891 DUCT & CONTROL GP—HEATER—AIR CONDITIONER

S/N: CAF1-UP

PART OF 167-8066 AIR CONDITIONER AR, 167-8389 HEATER AR-CAB

AN ATTACHMENT

SMCS-7337 **i01679811**

NOTE	REF NO	GRAPHIC REF	PART NUMBER	QTY	PART NAME 1 2 3 4 5 6 (PRODUCT LEVEL)	SEE PAGE
	1	1	**8Y-6388**	6	LOUVER AS	
	2	1	**139-3595**	1	PANEL AS	
		1	**7K-4201**	2	NUT-SPEED	
		1	**8S-7566**	4	RIVET-POP	
	3	1	**164-8474**	2	LOUVER AS	
M	4	1	**9X-2043**	2	SCREW-TRUSS HEAD (M6X1X14MM)	

M-METRIC PART

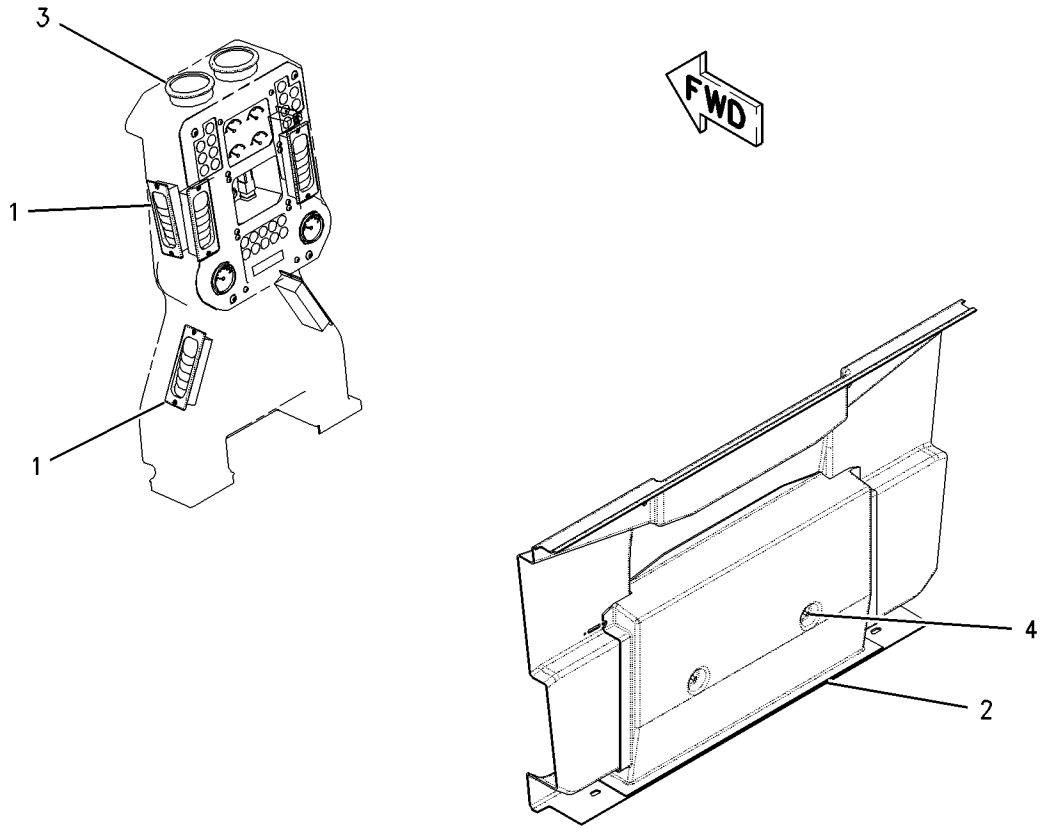

GRAPHIC #1 g00796998

OPERATOR STATION

7I-5015 DUCT GP

S/N: CAF1-UP

PART OF 167-8066 AIR CONDITIONER AR, 167-8389 HEATER AR-CAB AN ATTACHMENT

i00135943

NOTE	REF NO	GRAPHIC REF	PART NUMBER	QTY	PART NAME 1 2 3 4 5 6 (PRODUCT LEVEL)	SEE PAGE
	1	1	**104-2091**	8	SCREW-FLAT HEAD (NO.6-20X0.5IN)	
	2	1	**106-4496**	6	BRACKET AS	
					(EACH INCLUDES)	
M	3	1	**6V-9632**	1	NUT-WELD (M6X1 THD)	
	4	1	**8X-5102**	2	SEAL	
	5	1	**8Y-6388**	4	LOUVER AS	
	6	1	**122-8155**	1	DUCT	
	7	1	**122-8154**	1	DUCT	
M	8	1	**9X-2043**	8	SCREW-TRUSS HEAD (M6X1X14MM)	
	9	1	**8T-4205**	2	WASHER-HARD (2MM THK)	
M	10	1	**5C-2890**	2	NUT (M6X1.00 THD)	

M-METRIC PART

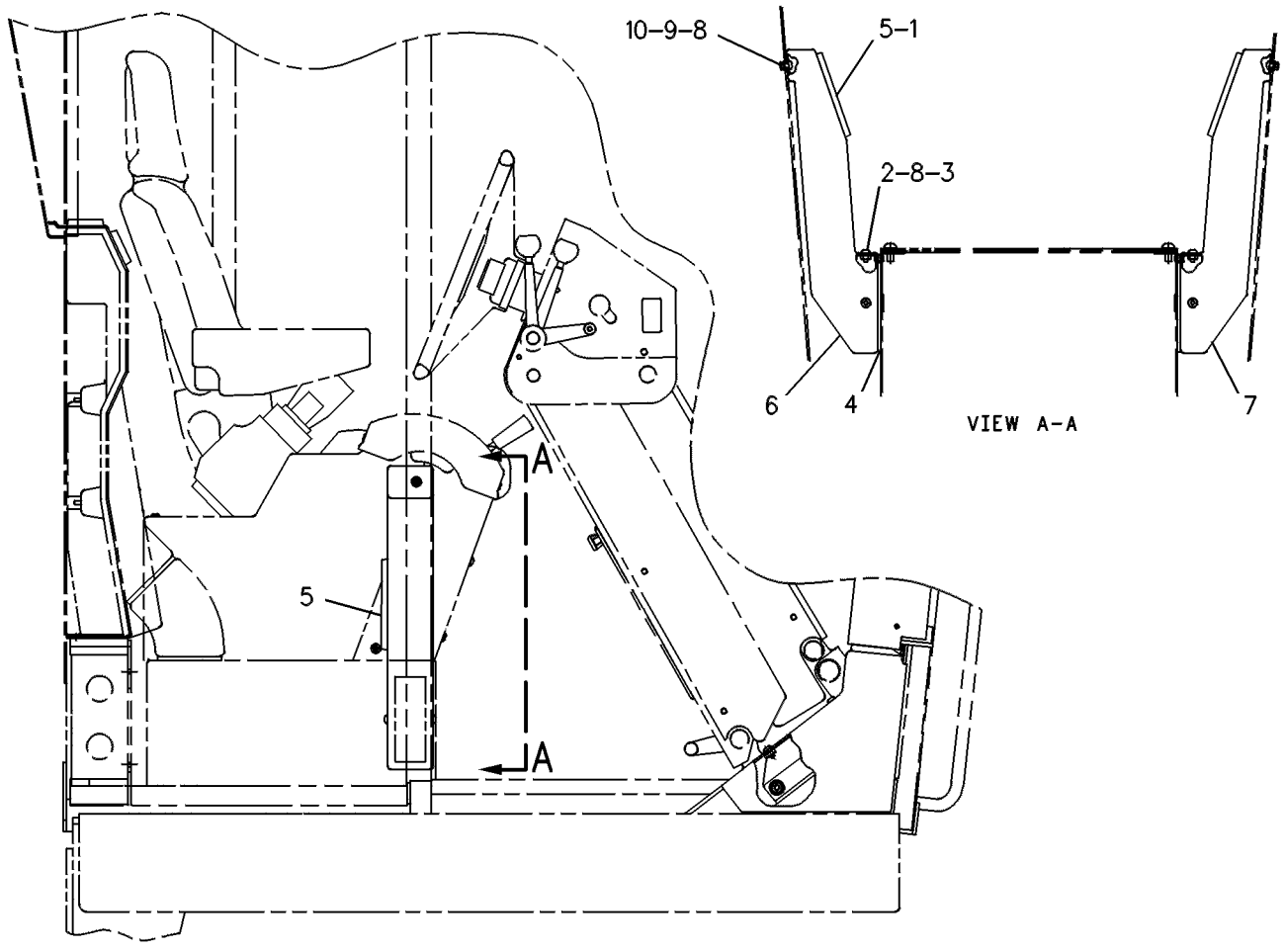

RIGHT SIDE VIEW

GRAPHIC #1

g00108768

OPERATOR STATION

8Y-5874 EXTENSION GP-BACKREST—CLOTH

S/N: CAF1-UP
PART OF 112-9104, 155-5958 SEAT GP-SUSPENSION
AN ATTACHMENT

SMCS-7312 **i01861569**

NOTE	REF NO	GRAPHIC REF	PART NUMBER	QTY	PART NAME 1 2 3 4 5 6 (PRODUCT LEVEL)	SEE PAGE
	1	1	**8Y-5877**	1	PAN AS-EXTENSION	
J	2	1	**8Y-5947**	2	FASTENER	
J	3	1		1	CUSHION AS-BACKREST	
					AVAILABLE REPAIR KIT(S):	
J			**8Y-5943**	1	KIT-CUSHION	
					(INCLUDES CUSHION AS AND FASTENERS)	

J-PARTS MARKED J SERVICED BY KIT MARKED J

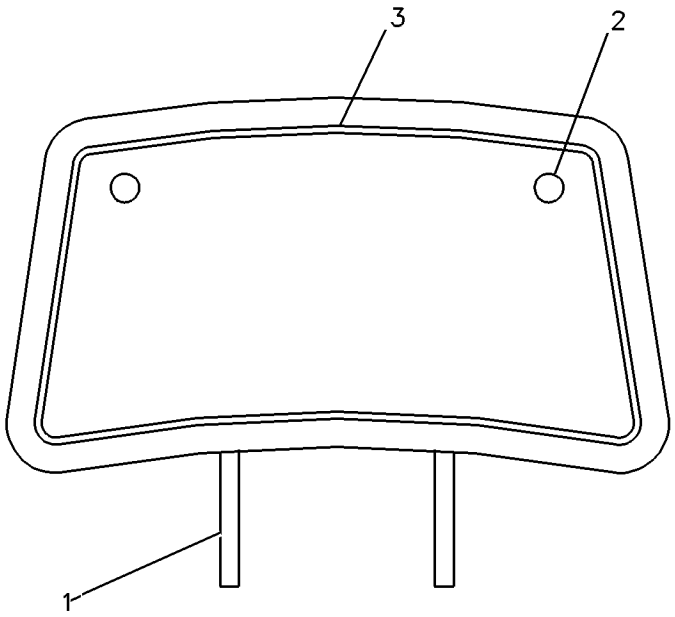

GRAPHIC #1 g00949157

OPERATOR STATION

8Y-5959 EXTENSION GP-BACKREST

S/N: CAF1-UP
PART OF 112-9105 SEAT GP-SUSPENSION
AN ATTACHMENT

SMCS-7312 **i00733739**

NOTE	REF NO	GRAPHIC REF	PART NUMBER	QTY	PART NAME 1 2 3 4 5 6 (PRODUCT LEVEL)	SEE PAGE
	1	1	**8Y-5877**	1	PAN AS-EXTENSION	
J	2	1	**8Y-5947**	2	FASTENER	
JZ	3	1		1	CUSHION AS	
					AVAILABLE REPAIR KIT(S):	
J			**8Y-5960**	1	KIT-CUSHION	

J-KIT MARKED J INCLUDES PART(S) MARKED J
Z-NOT SERVICED SEPARATELY

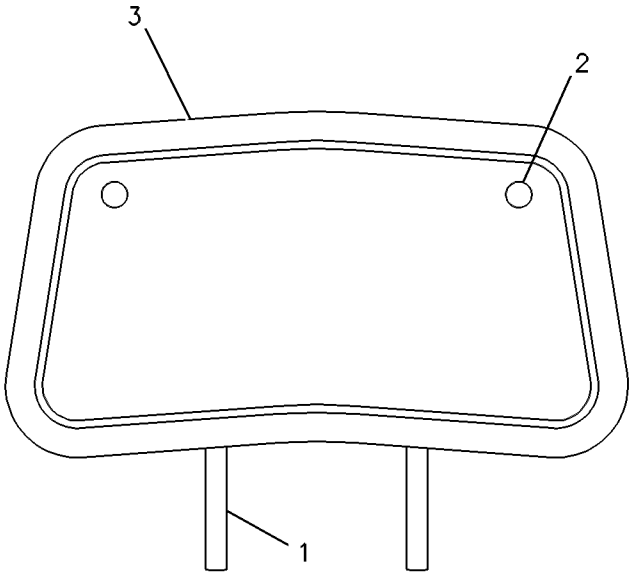

GRAPHIC #1 g00326278

OPERATOR STATION

170-4820 FAN GP-CIRCULATING–REAR

S/N: CAF1-UP
24 VOLT
PART OF 172-6835 FAN GP-CIRCULATING
AN ATTACHMENT

SMCS-7316 **i01680059**

NOTE	REF NO	GRAPHIC REF	PART NUMBER	QTY	PART NAME 1 2 3 4 5 6 (PRODUCT LEVEL)	SEE PAGE
	1	1	**3D-8747**	1	BRACKET	
	2	1	**3D-8748**	1	FAN AS	
	3	1	**3D-8749**	1	GUARD	
	4	1	**3T-6774**	1	GROMMET	
	5	1	**9X-9689**	1	BASE-FAN	
	6	1	**170-5335**	1	MOTOR GP-ELECTRIC	
		1	**3E-3365**	1	WEDGE-RECEPTACLE LOCK (2 PIN)	
		1	**9W-0852**	2	PIN-CONNECTOR	
		1	**102-8802**	1	KIT-RECEPTACLE (2 PIN)	
	7	1	**1B-2713**	1	BOLT (1/4-20X1.75 IN)	
	8	1	**1M-1230**	2	NUT & LOCK AS (10/32 THD)	
	9	1	**2D-6235**	1	LOCKNUT (1/4-20 THD)	
	10	1	**3D-8752**	1	LOCKNUT (5/16-24 THD)	
	11	1	**5P-0537**	4	WASHER-HARD (7.2X14.5X2MM THK)	
	12	1	**6G-5987**	1	BRACKET	
	13	1	**7L-8316**	1	SETSCREW-SOCKET (10-32X.25IN)	
	14	1	**7T-0582**	1	BOLT	
	15	1	**9M-1974**	2	WASHER-HARD (8.8X16X2MM THK)	

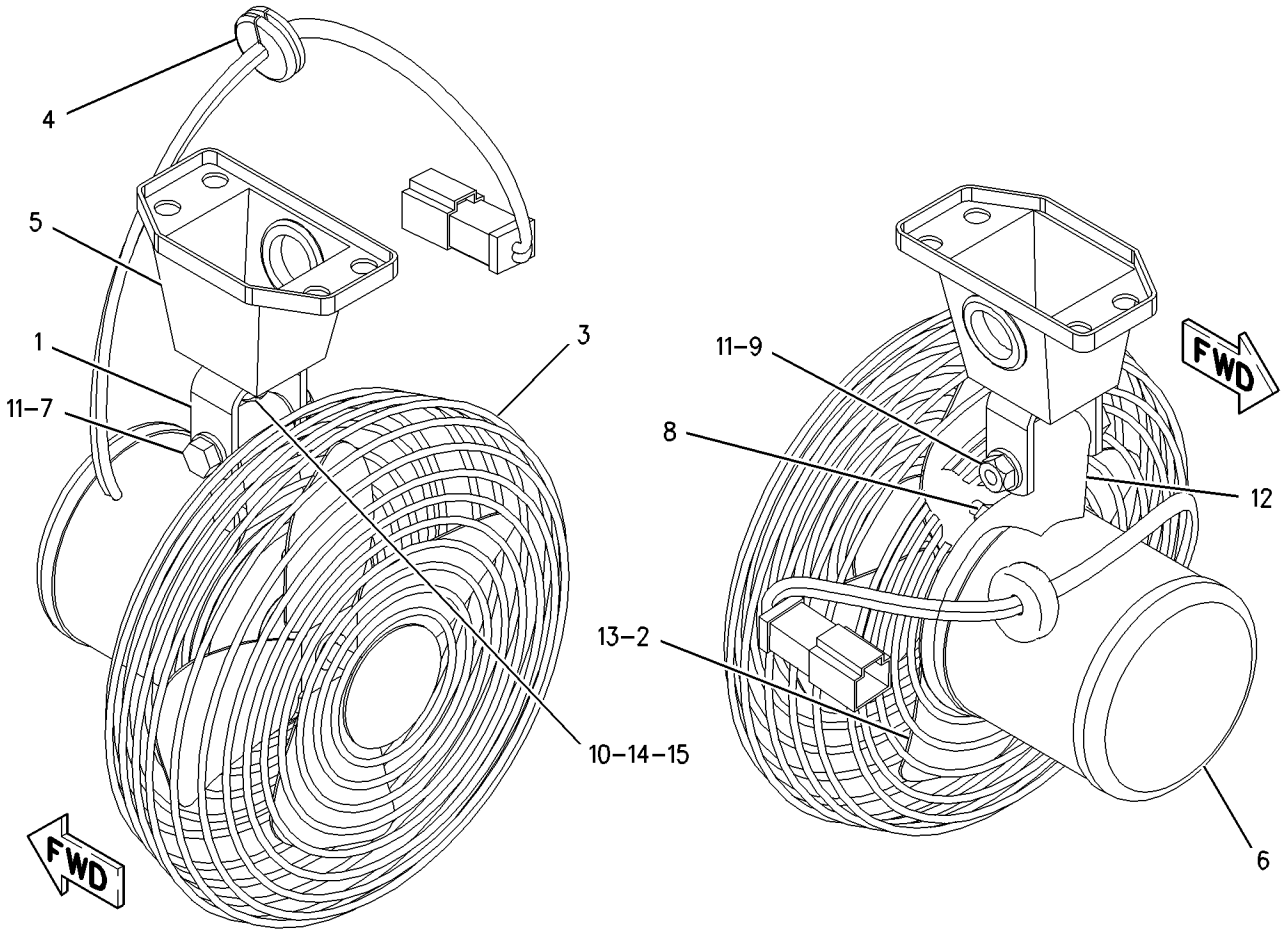

GRAPHIC #1 g00843653

OPERATOR STATION

170-5334 FAN GP-CIRCULATING—FRONT

S/N: CAF1-UP
24 VOLT
PART OF 172-6834 FAN GP-CIRCULATING
AN ATTACHMENT

SMCS-7316 **i01691044**

NOTE	REF NO	GRAPHIC REF	PART NUMBER	QTY	PART NAME 1 2 3 4 5 6 (PRODUCT LEVEL)	SEE PAGE
	1	1	**3D-8747**	1	BRACKET	
	2	1	**3D-8748**	1	FAN AS	
	3	1	**3D-8749**	1	GUARD	
	4	1	**3T-6774**	1	GROMMET	
	5	1	**9X-9689**	1	BASE-FAN	
	6	1	**135-1979**	1	BRACKET	
	7	1	**170-5335**	1	MOTOR GP-ELECTRIC (DEFROSTER FAN)	
		1	**3E-3365**	1	WEDGE-RECEPTACLE LOCK (2 PIN)	
		1	**9W-0852**	2	PIN-CONNECTOR	
		1	**102-8802**	1	KIT-RECEPTACLE (2 PIN)	
	8	1	**031-4155**	1	LOCKNUT (5/16-18 THD)	
	9	1	**1B-2713**	1	BOLT (1/4-20X1.75 IN)	
	10	1	**1M-1230**	2	NUT & LOCK AS	
	11	1	**2D-6235**	1	LOCKNUT (1/4-20 THD)	
	12	1	**3D-8752**	1	LOCKNUT (5/16-24 THD)	
	13	1	**4M-0061**	1	BOLT (5/16-18X.750 IN)	
	14	1	**5P-0537**	4	WASHER-HARD (7.2X14.5X2MM THK)	
	15	1	**6G-5987**	1	BRACKET	
	16	1	**7L-8316**	1	SETSCREW-SOCKET (10-32X.25IN)	
	17	1	**7T-0582**	1	BOLT	
	18	1	**9M-1974**	3	WASHER-HARD (8.8X16X2MM THK)	
	19	1	**9T-5241**	2	WASHER (9.53X18X1MM THK)	

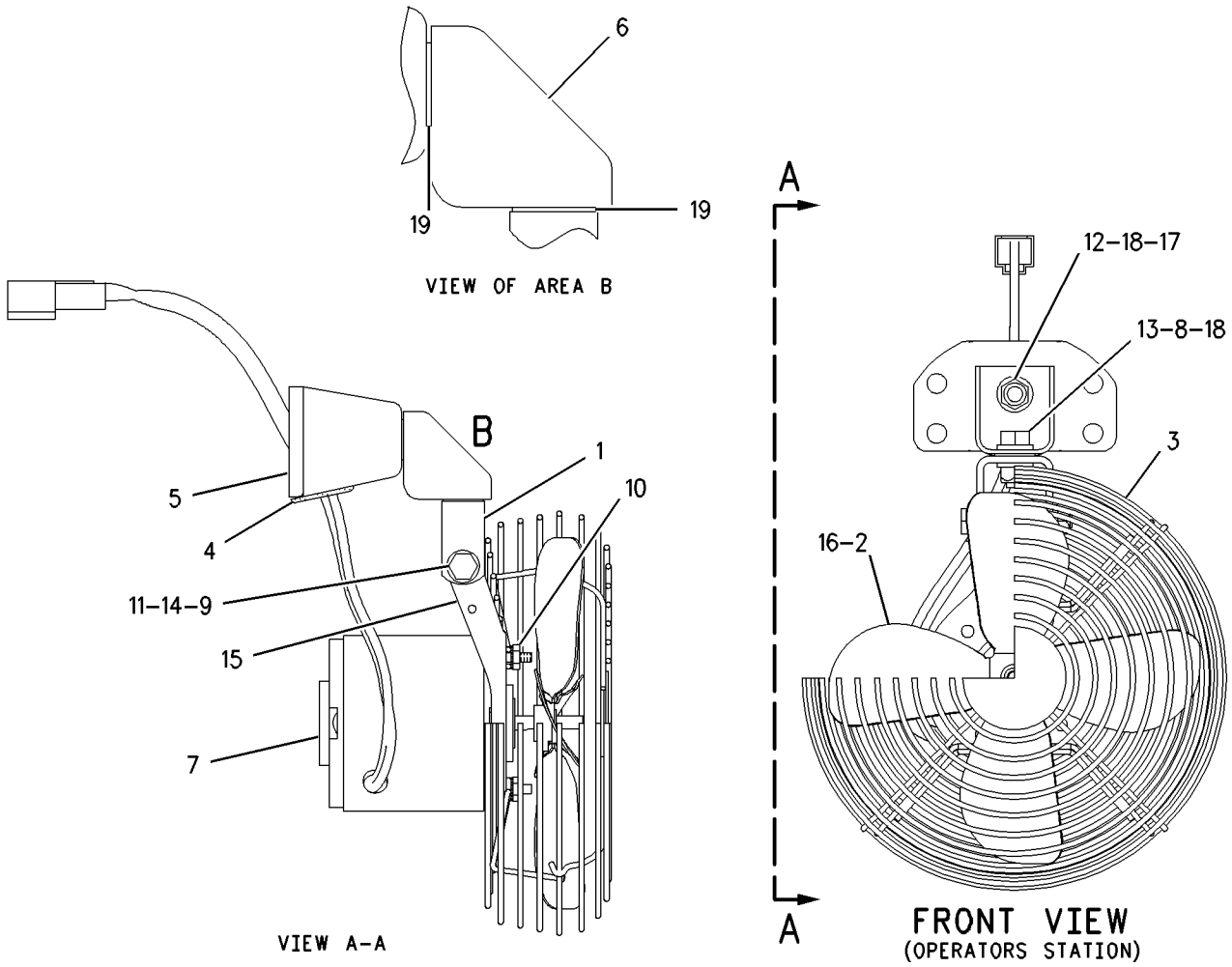

GRAPHIC #1

g00761361

OPERATOR STATION

172-6834 FAN GP-CIRCULATING–FRONT DEFROSTER

S/N: CAF1-UP
AN ATTACHMENT

SMCS-7316 **i01680042**

NOTE	REF NO	GRAPHIC REF	PART NUMBER	QTY	PART NAME 1 2 3 4 5 6 (PRODUCT LEVEL)	SEE PAGE
	1	1	**7T-4003**	1	RESISTOR	
	2	1	**9W-1442**	1	FUSE (10 AMP) (FRONT DEFROSTER)	
Y	3	1	*170-5334*	1	FAN GP-CIRCULATING (FRONT)	752
M	4	1	**9X-1046**	2	SCREW (M4X0.7X18MM)	
	5	1	**3E-9330**	1	SWITCH AS (ON/OFF) (FRONT DEFROSTER)	
		1	**3E-8821**	1	ACTUATOR-ROCKER	
		1	**3E-8825**	1	LAMP (24 VOLT) (FRONT DEFROSTER)	

M-METRIC PART
Y-SEPARATE ILLUSTRATION

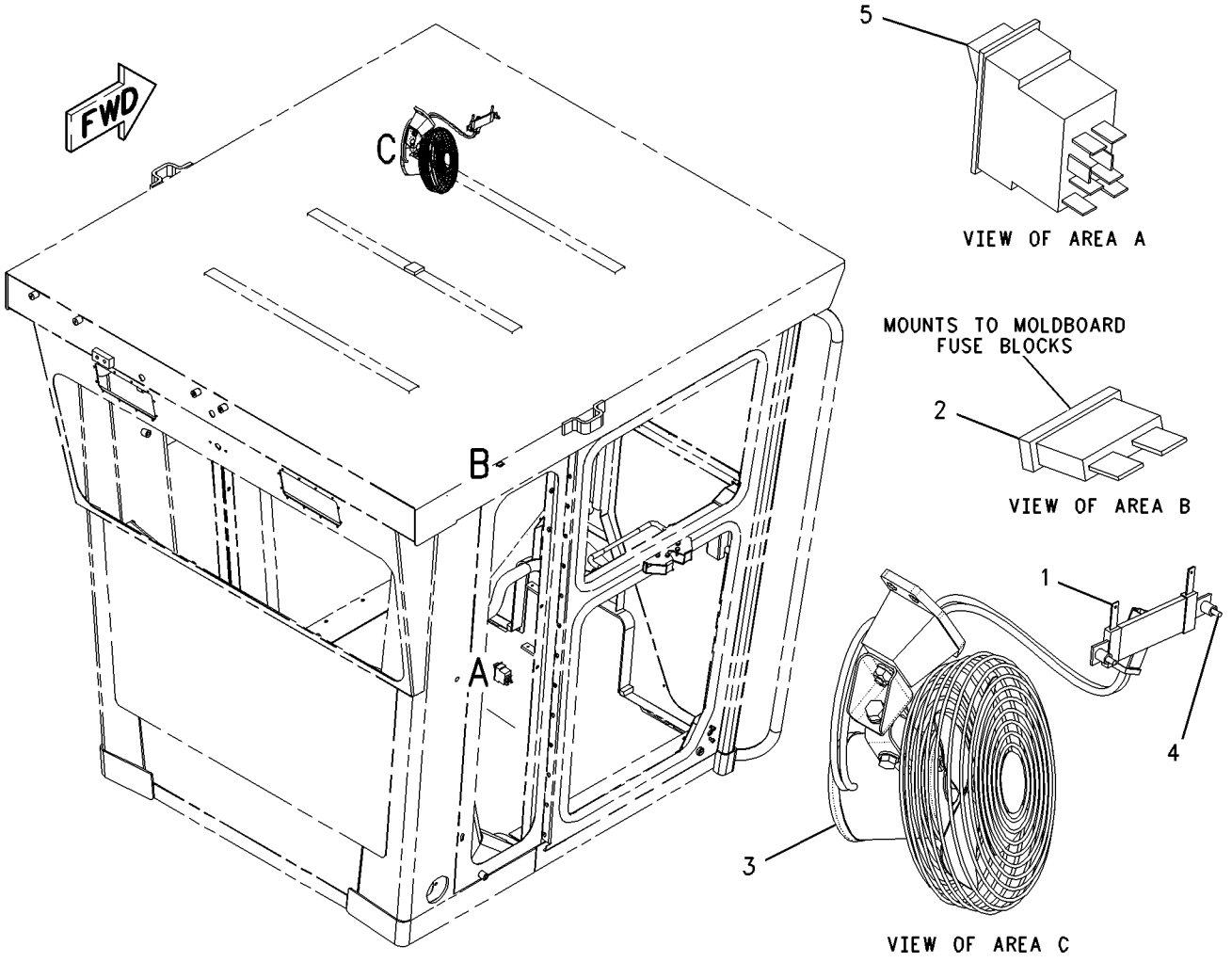

GRAPHIC #1 g00846757

OPERATOR STATION

172-6835 FAN GP-CIRCULATING–REAR DEFROSTER

S/N: CAF1-UP
AN ATTACHMENT

SMCS-7316 **i01680056**

NOTE	REF NO	GRAPHIC REF	PART NUMBER	QTY	PART NAME 1 2 3 4 5 6 (PRODUCT LEVEL)	SEE PAGE
	1	1	**7T-4003**	1	RESISTOR	
	2	1	**9W-1442**	1	FUSE (10 AMP) (REAR DEFROSTER)	
Y	3	1	*170-4820*	1	FAN GP-CIRCULATING (REAR)	750
	4	1	**5P-8525**	1	GROMMET	
M	5	1	**9X-1046**	2	SCREW (M4X0.7X18MM)	
M	6	1	**9X-2045**	4	SCREW-TRUSS HEAD (M6X1X20MM)	
	7	1	**3E-9330**	1	SWITCH AS (ON/OFF) (REAR DEFROSTER)	
		1	**3E-8821**	1	ACTUATOR-ROCKER	
		1	**3E-8825**	1	LAMP (24 VOLT) (REAR DEFROSTER)	

M-METRIC PART
Y-SEPARATE ILLUSTRATION

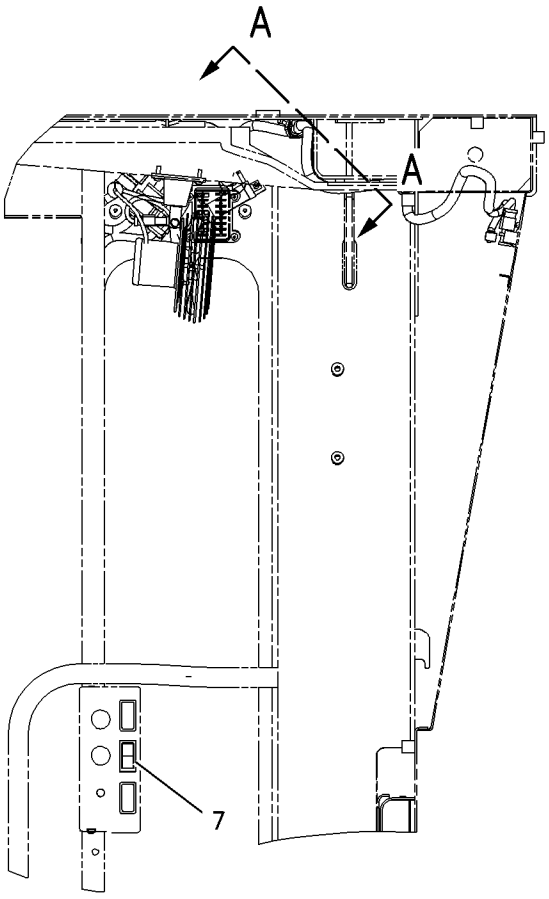

LEFT SIDE VIEW

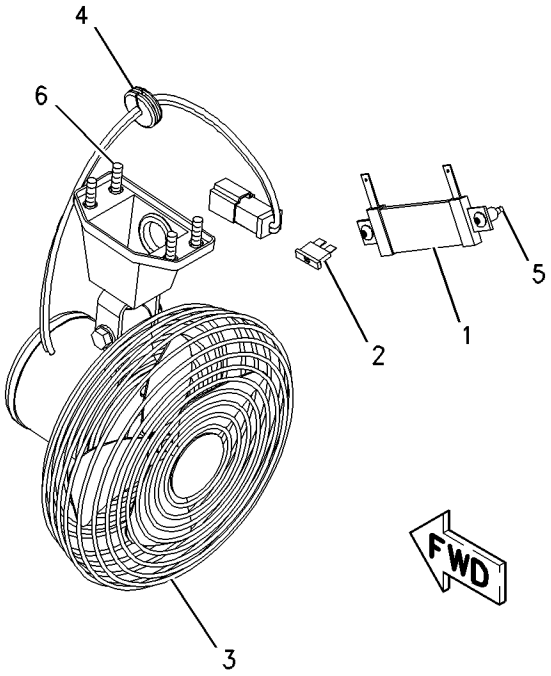

VIEW A-A

GRAPHIC #1 g00846366

OPERATOR STATION

8X-2925 FILTER GP-CAB AIR

S/N: CAF1-UP

PART OF 167-8066 AIR CONDITIONER AR, 167-8389 HEATER AR-CAB

AN ATTACHMENT

SMCS-7342 **i01755249**

NOTE	PART NUMBER	QTY	PART NAME 1 2 3 4 5 6 (PRODUCT LEVEL)	SEE PAGE
	9X-4986	2	FILTER (CAB AIR)	
	7T-7358	1	FILTER-AIR (CAB AIR)	
	9X-8122	1	PLATE AS	
	8R-1778	1	COVER-FILTER	
	112-9555	4	SPRING-FILTER	

<END>

OPERATOR STATION

199-2585 HAMMER & MOUNTING GP—LOW PROFILE

S/N: CAF1-UP
AN ATTACHMENT

SMCS-0606, 7310 **i01862259**

NOTE	REF NO	GRAPHIC REF	PART NUMBER	QTY	PART NAME 1 2 3 4 5 6 (PRODUCT LEVEL)	SEE PAGE
	1	1	**8Y-6379**	1	KIT-HAMMER	
	2	1	**100-5612**	1	FILM-INSTRUCTION (ALT EXIT/REMOVE WINDOW)	
	3	1	**199-2586**	1	COVER AS	
M	4	1	**155-4098**	4	SCREW-BUTTON HEAD	
B	5	1	**6V-0505**		SEAL	

B-USE AS REQUIRED
M-METRIC PART

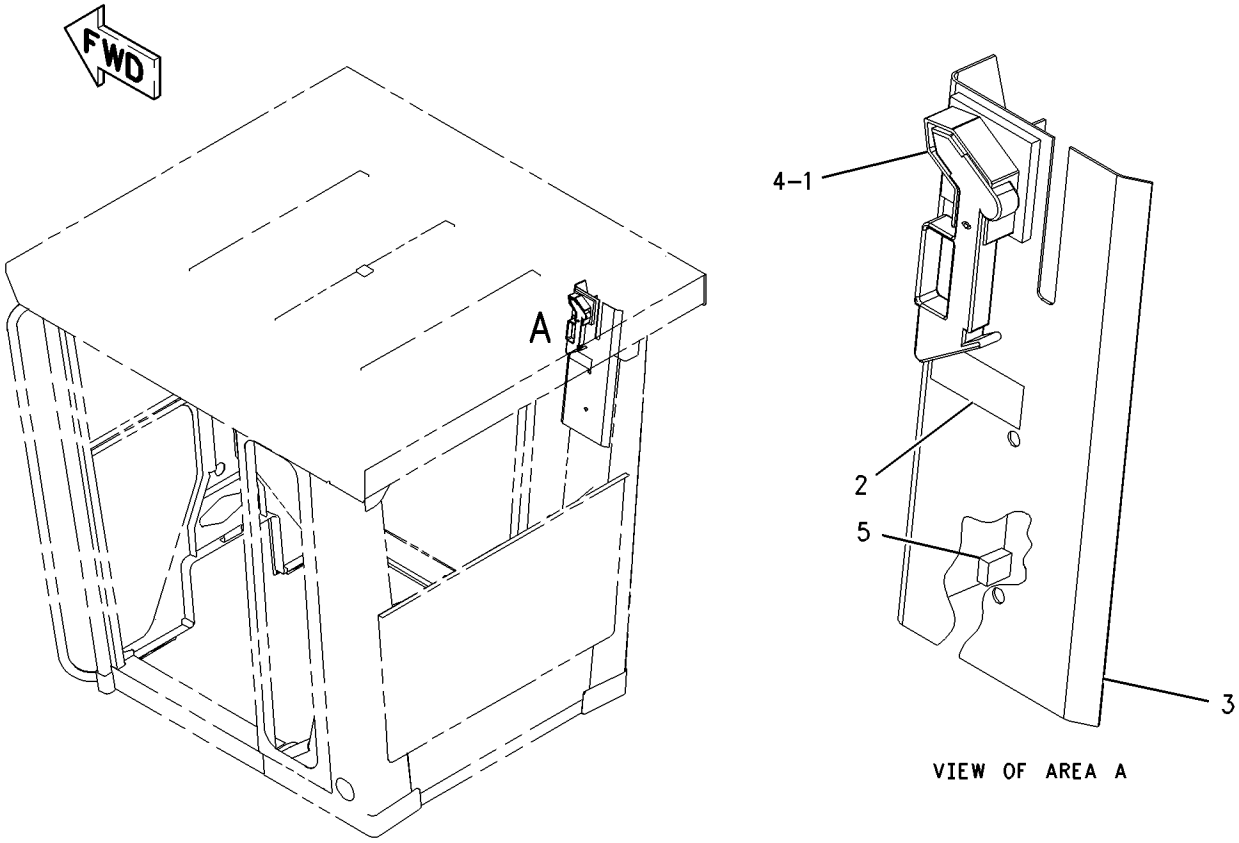

GRAPHIC #1 g00891876

OPERATOR STATION

200-7934 HAMMER & MOUNTING GP—HIGH PROFILE

S/N: CAF1-UP
AN ATTACHMENT

SMCS-0606, 7310 **i01862256**

NOTE	REF NO	GRAPHIC REF	PART NUMBER	QTY	PART NAME 1 2 3 4 5 6 (PRODUCT LEVEL)	SEE PAGE
	1	1	**8Y-6379**	1	KIT-HAMMER	
	2	1	**100-5612**	1	FILM-INSTRUCTION (ALT EXIT/REMOVE WINDOW)	
	3	1	**200-7933**	1	COVER AS	
M	4	1	**155-4098**	4	SCREW-BUTTON HEAD	
B	5	1	**6V-0505**		SEAL	

B-USE AS REQUIRED
M-METRIC PART

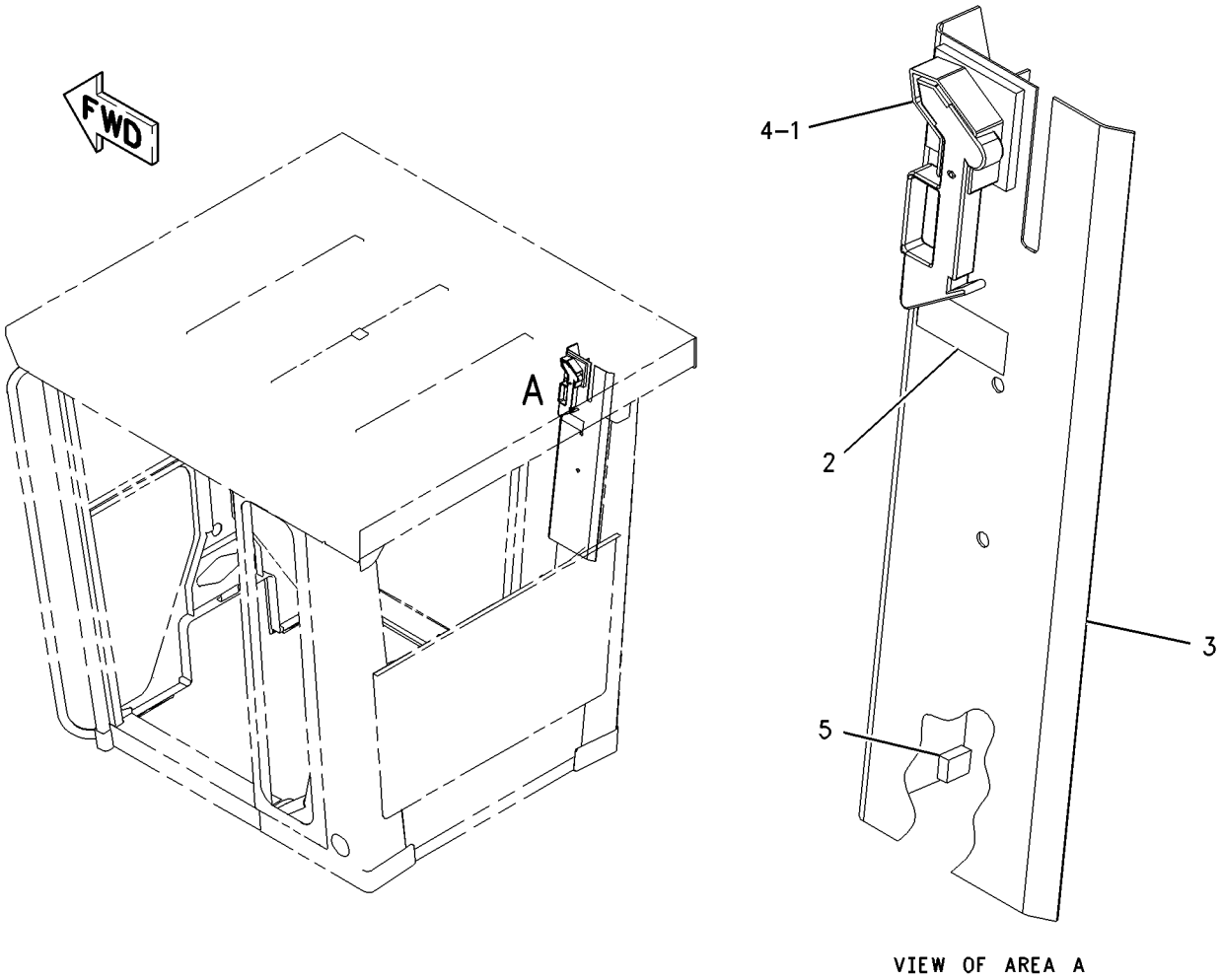

VIEW OF AREA A

GRAPHIC #1 g00891310

OPERATOR STATION

173-5360 HEATER & MTG GP-CAB

S/N: CAF1-UP
PART OF 167-8422 HEATER AR-CAB
AN ATTACHMENT

SMCS-7304 **i01755155**

NOTE	PART NUMBER	QTY	PART NAME 1 2 3 4 5 6 (PRODUCT LEVEL)	SEE PAGE
	9W-1441	1	FUSE (15 AMP) (HEATER)	
Y	*174-4547*	1	HEATER GP-CAB	766

Y-SEPARATE ILLUSTRATION

<END>

174-4552 HEATER & MTG GP-CAB

S/N: CAF1-UP
PART OF 167-8389 HEATER AR-CAB
AN ATTACHMENT

SMCS-7304 **i01755161**

NOTE	PART NUMBER	QTY	PART NAME 1 2 3 4 5 6 (PRODUCT LEVEL)	SEE PAGE
	9W-1441	1	FUSE (15 AMP) (HEATER)	
Y	**173-5322**	1	HEATER GP-CAB	762
	123-0872	1	PAD	
	191-5236	1	PAD	

Y-SEPARATE ILLUSTRATION

<END>

167-8389 HEATER AR-CAB–EU

S/N: CAF1-UP
PART OF 207-3665 CONVERSION AR-CERTIFICATION
AN ATTACHMENT

SMCS-7304 **i01679615**

NOTE	PART NUMBER	QTY	PART NAME 1 2 3 4 5 6 (PRODUCT LEVEL)	SEE PAGE
Y	*177-7891*	1	DUCT & CONTROL GP	746
Y	*7I-5015*	1	DUCT GP	747
Y	**8X-2925**	1	FILTER GP-CAB AIR	756
Y	*174-4552*	1	HEATER & MTG GP-CAB	759
Y	*167-8396*	1	LINES GP-HEATER	798

Y-SEPARATE ILLUSTRATION

<END>

OPERATOR STATION

167-8422 HEATER AR-CAB

S/N: CAF1-UP

AN ATTACHMENT

SMCS-7304 **i01679911**

NOTE	PART NUMBER	QTY	PART NAME 1 2 3 4 5 6 (PRODUCT LEVEL)	SEE PAGE
Y	*173-5360*	1	HEATER & MTG GP-CAB	759
Y	*167-8396*	1	LINES GP-HEATER	798
Y	*178-8603*	1	LOUVER GP-CAB	801

Y-SEPARATE ILLUSTRATION

<END>

MEMORANDA

OPERATOR STATION

173-5322 HEATER GP-CAB

S/N: CAF1-UP
PART OF 174-4552 HEATER & MTG GP-CAB
AN ATTACHMENT

SMCS-7304 **i01862249**

NOTE	REF NO	GRAPHIC REF	PART NUMBER	QTY	PART NAME 1 2 3 4 5 6 (PRODUCT LEVEL)	SEE PAGE
	1	2	**2P-4339**	1	NUT-JAM (7/16-20 THD)	
	2	2	**2V-0099**	2	KNOB (TEMP CONTROL/FAN SPEED)	
	3	2	**3E-0400**	2	WHEEL-BLOWER	
	4	2	**3E-3890**	1	FILM-CONTROL (FAN SPEED/TEMP)	
	5	1	**3S-2093**	2	STRAP-CABLE	
	6	1	**5P-7803**	2	PLUG-BUTTON	
	7	2	**5P-9135**	1	GROMMET	
	8	2	**6P-3236**	1	SWITCH AS-ROTARY (AIR CONDITIONER/HEATER)	
		2	**6V-8362**	5	SCREW-MACHINE (8-32X0.31 IN)	
		2	**9B-7233**	5	LOCKWASHER	
	9	2	**6T-5345**	1	BUSHING-TERMINAL	
	10	2	**6T-6708**	2	WASHER (7X28.6X4.1MM THK)	
	11	1	**7G-4824**	1	STRAP	
	12	1	**8C-3756**	1	FILM-IDENTIFICATION (GROUP & SEQUENCE NO.)	
	13	2	**8C-4586**	2	CLAMP	
	14	2	**8D-1429**	1	LAMP (24 VOLT) (A/C & HEATER CONTROL PANEL)	
	15	1	**8E-7791**	1	STRAP	
	16	1	**8P-5141**	2	PLATE-ORIFICE	
	17	2	**8X-5536**	1	COVER	
	18	1	**8X-5538**	1	COVER AS	
M		1	**8T-3490**	4	NUT-WELD (M10X1.5 THD)	
	19	1	**8X-5540**	1	COVER	
	20	1	**8Y-6388**	4	LOUVER AS	
	21	2	**9G-1950**	1	RESISTOR	
	22	2	**9X-2185**	4	SCREW (8-15X0.44 IN)	
	23	1,2	**9X-2488**	6	CLAMP-HOSE	
	24	1	**9X-9654**	1	COIL AS-HEATER	
	25	1	**123-4618**	1	COVER	
	26	1	**123-4701**	1	SEAL	
	27	2	**124-1431**	1	BRACKET	
	28	1	**124-1432**	1	HOUSING AS	
		1	**7T-1099**	1	LINK	
		1	**8P-5141**	2	PLATE-ORIFICE	
	29	2	**124-3137**	1	BRACKET	
	30	1	**124-3138**	1	SEAL	
	31	2	**124-9006**	1	SHAFT	
	32	2	**124-9007**	1	SHAFT AS	
		2	**4L-5966**	2	SETSCREW (NO 10X.19 IN)	
	33	1	**125-0439**	1	GASKET	
	34	1	**125-0442**	1	PLATE	
	35	2	**129-4935**	1	SEAL	
	36	1	**142-4940**	1	PLATE AS	
	37	2	**174-1494**	1	MOTOR GP-ELECTRIC (27 VOLT)	
		2	**3E-3365**	1	WEDGE-RECEPTACLE LOCK (2 PIN)	
		2	**9W-0852**	2	PIN-CONNECTOR	
		2	**102-8802**	1	KIT-RECEPTACLE (2 PIN) (INCLUDES RECEPTACLE AS & WEDGE)	
	38	1	**174-4492**	1	COVER	
	39	1	**174-4971**	1	SUPPORT AS	
	40	1	**174-6353**	1	PLATE	
	41	1	**176-5507**	1	PAD	
	42	1	**177-7858**	1	HARNESS AS-HEATER & AIR COND	
		1	**155-2270**	1	KIT-CONNECTING PLUG (2 PIN) (MOTOR) (INCLUDES PLUG AS & WEDGE)	

173-5322 HEATER GP-CAB *(contd.)* i01862249

NOTE	REF NO	GRAPHIC REF	PART NUMBER	QTY	PART NAME 1 2 3 4 5 6 (PRODUCT LEVEL)	SEE PAGE
		1	**102-8805**	1	KIT-RECEPTACLE (6 PIN)	
					(INCLUDES RECEPTACLE AS & WEDGE)	
	43	1	**191-0027**	1	PAD	
	44	2	**204-4376**	1	CAP-PROTECTIVE	
	45	2	**206-5154**	1	VALVE AS (HEATER WATER)	
	46	1	**104-2091**	8	SCREW-FLAT HEAD (6-20X0.5 IN)	
M	47	2	**129-3178**	4	LOCKNUT (M6X1 THD)	
	48	2	**130-5300**	1	CLIP	
M	49	2	**141-9784**	1	BOLT-HEX HEAD (M6X190MM)	
	50	2	**3H-2900**	1	GROMMET	
M	51	1,2	**5C-2890**	7	NUT (M6X1 THD)	
	52	1	**5P-1075**	13	WASHER-HARD (10.2X22.5X3MM THK)	
	53	2	**6V-1668**	2	WASHER (6.5X29.1X3MM THK)	
M	54	2	**6V-7728**	1	BOLT (M6X1.0X45MM)	
	55	1	**6V-8801**	13	NUT (3/8-16 THD)	
	56	1	**7X-0591**	2	WASHER-HARD (17X29X3MM THK)	
M	57	2	**8T-4171**	2	BOLT (M6X1X12MM)	
	58	1,2	**8T-4205**	15	WASHER-HARD (7.2X14.5X2MM THK)	
	59	1	**9M-8406**	1	CLIP	
M	60	1	**9X-2040**	4	SCREW-TRUSS HEAD (M10X1.5X25MM)	
M	61	1,2	**9X-2041**	5	SCREW-TRUSS HEAD (M10X1.5X20MM)	
M	62	1	**9X-2045**	6	SCREW-TRUSS HEAD (M6X1X20MM)	
E	63	1	**136-1953**		HOSE (8CM)	
BD	64	2	**5P-5908**	1	SEAL	
BD	65	1	**5P-5637**	1	SEAL	
E	66	1	**9X-2126**	2	SEAL (2.05CM EACH)	
E	67	2	**136-1953**	2	HOSE (17CM EACH)	
E	68	1	**9X-2126**		SEAL (3.30CM)	
E	69	1	**9X-2126**		SEAL (2.05CM)	
E	70	2	**9X-2126**		SEAL (2.84CM)	
E	71	2	**9X-2126**		SEAL (2.84CM)	

B-USE AS REQUIRED
D-ORDER BY THE METER
E-ORDER BY THE CENTIMETER
M-METRIC PART

173-5322 HEATER GP-CAB *(contd.)* i01862249

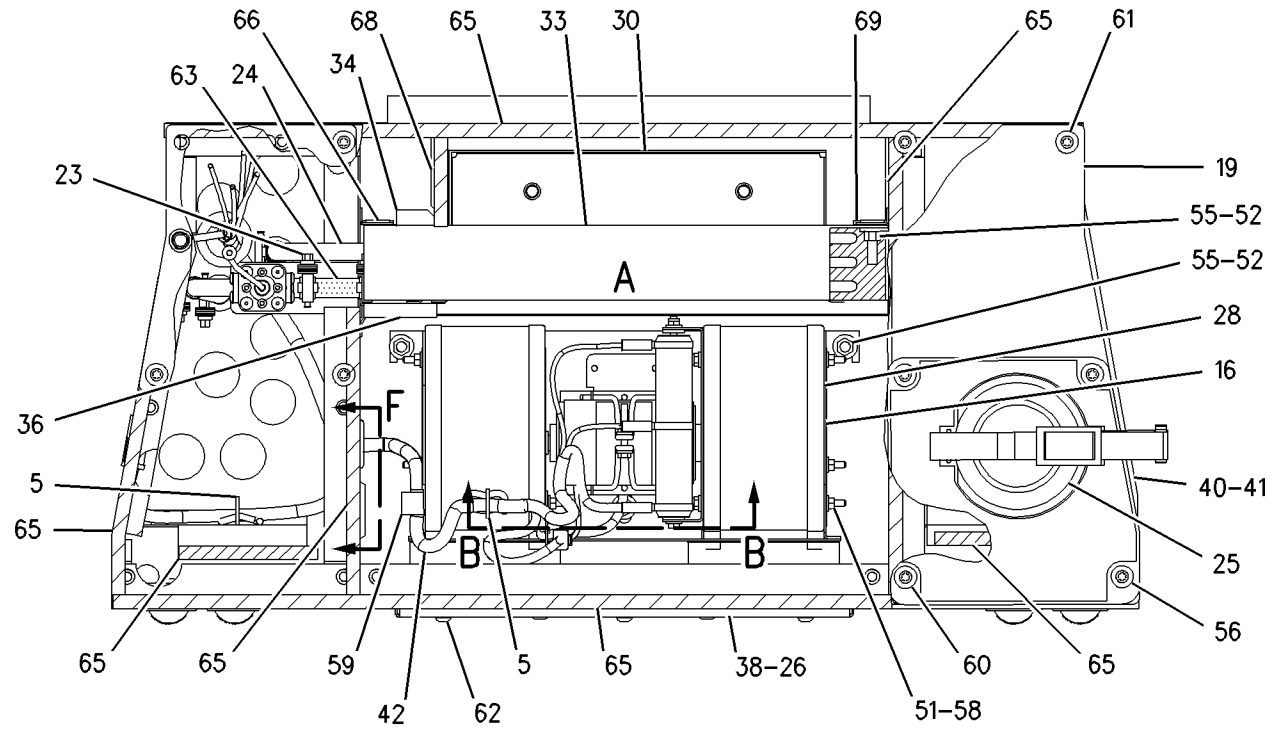

TOP VIEW

FWD

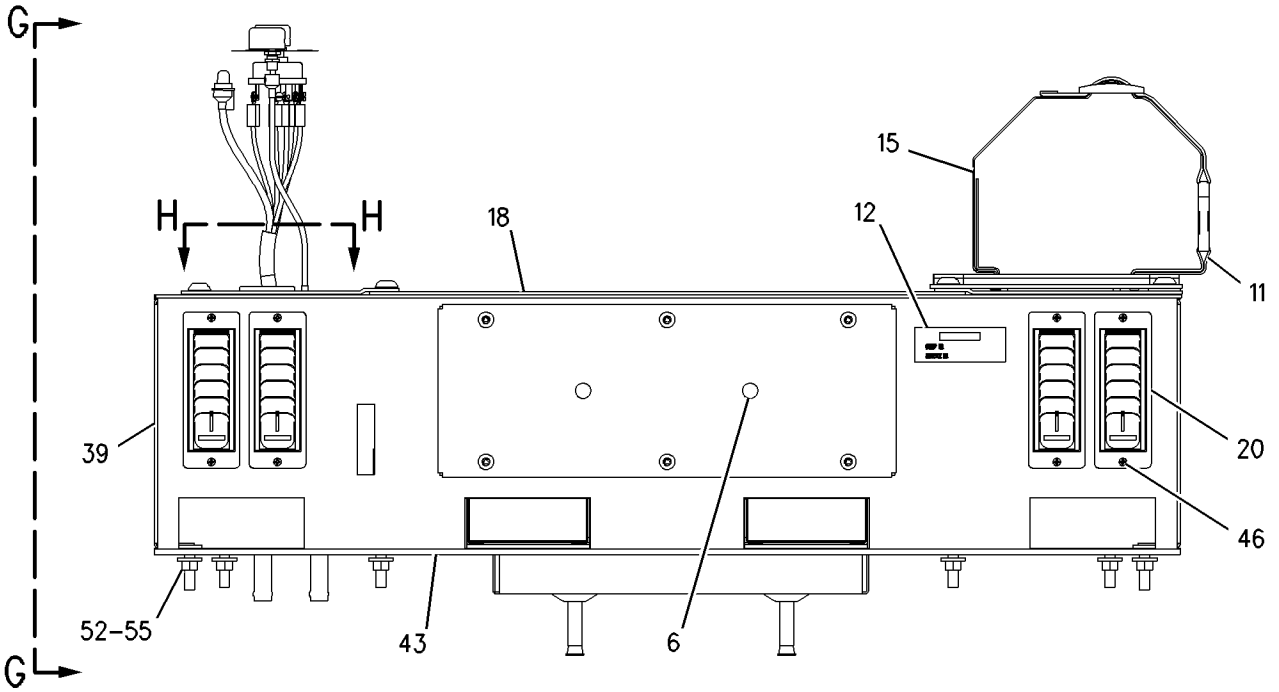

FRONT VIEW

REFER TO ALL ILLUSTRATIONS OF THIS GROUP FOR AUXILIARY VIEWS

GRAPHIC #1 g00936477

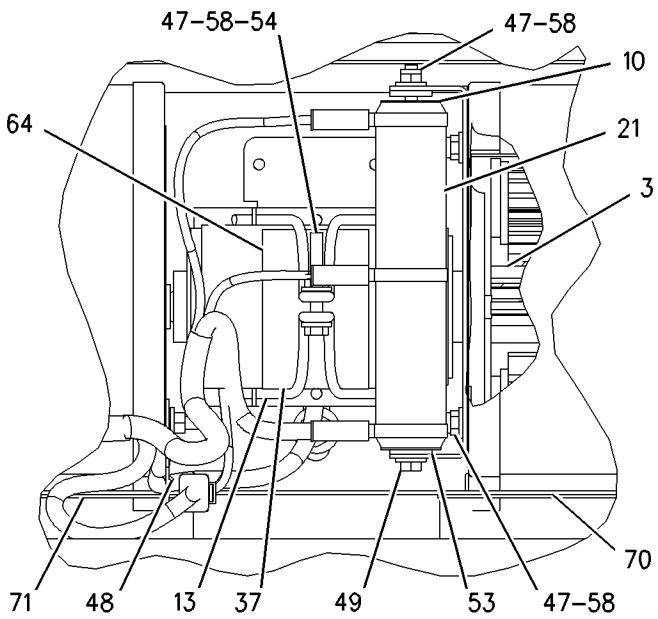

VIEW OF AREA A

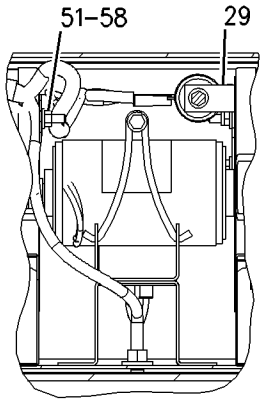

SECTION B-B

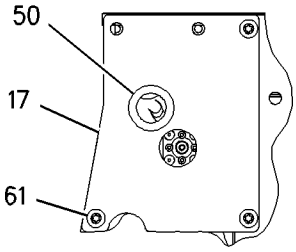

SECTION H-H

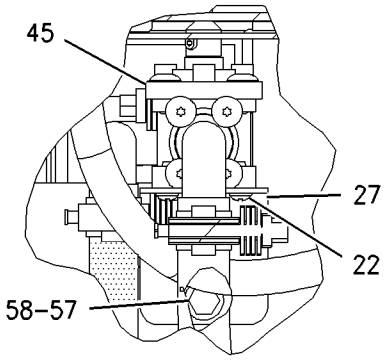

VIEW OF AREA C

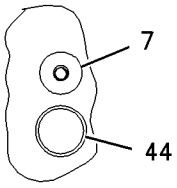

SECTION F

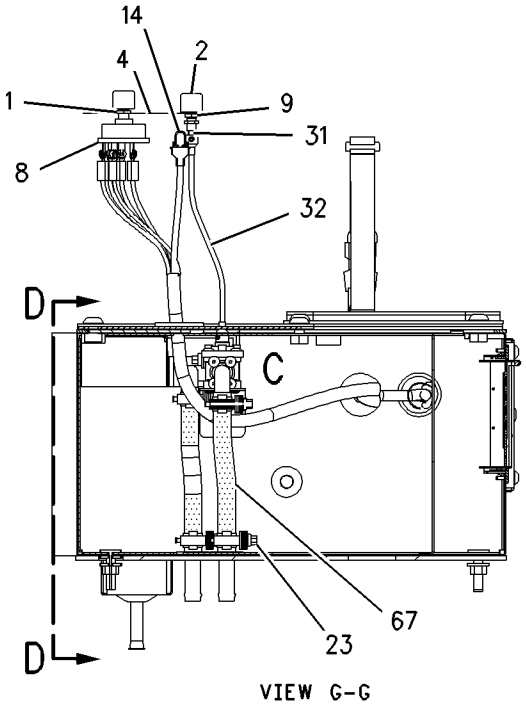

VIEW G-G

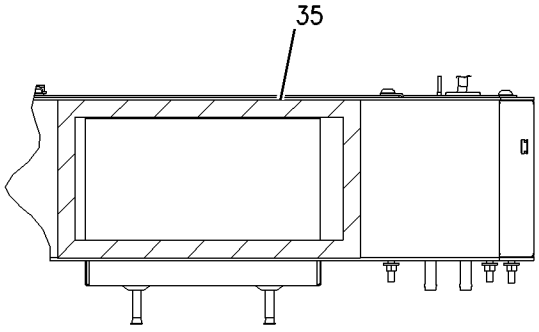

SECTION D-D

GRAPHIC #2

g00936478

OPERATOR STATION

174-4547 HEATER GP-CAB—LIGHT DUTY

S/N: CAF1-UP

PART OF 173-5360 HEATER & MTG GP-CAB

AN ATTACHMENT

SMCS-7304 **i01679967**

NOTE	REF NO	GRAPHIC REF	PART NUMBER	QTY	PART NAME 1 2 3 4 5 6 (PRODUCT LEVEL)	SEE PAGE
	1	1	**2P-4339**	1	NUT-JAM (7/16-20 THD)	
	2	1	**2V-0099**	2	KNOB (TEMP/FAN SPEED)	
	3	2	**3E-0400**	2	WHEEL-BLOWER	
	4	1	**3E-3890**	1	FILM-CONTROL (AIR CONDITIONER/HEATER)	
	5	1	**3H-2900**	1	GROMMET	
	6	1	**3S-2093**	1	STRAP-CABLE	
	7	1	**5P-7803**	2	PLUG-BUTTON	
	8	1	**5P-9135**	1	GROMMET	
	9	1	**6P-3236**	1	SWITCH AS-ROTARY (AIR CONDITIONER/HEATER)	
		1	**6V-8362**	5	SCREW-MACHINE (8-32X0.31 IN)	
		1	**9B-7233**	5	LOCKWASHER	
	10	1	**6T-5345**	1	BUSHING-TERMINAL	
	11	2	**6T-6708**	2	WASHER (7X28.6X4.1MM THK)	
	12	1	**7G-4824**	1	STRAP	
	13	1	**8C-3756**	1	FILM-IDENTIFICATION (GROUP & SEQUENCE NO.)	
	14	2	**8C-4586**	2	CLAMP	
	15	1	**8D-1429**	1	LAMP (24 VOLT) (TEMP/FAN SPEED)	
	16	1	**8E-7791**	1	STRAP	
	17	2	**8P-5141**	2	PLATE-ORIFICE	
	18	1	**8X-5536**	1	COVER	
	19	1	**8X-5538**	1	COVER AS	
	20	1	**8X-5540**	1	COVER	
	21	2	**9G-1950**	1	RESISTOR	
M	22	1	**9X-2041**	5	SCREW-TRUSS HEAD (M10X1.5X20MM)	
	23	2	**9X-2185**	4	SCREW (8-15X0.44 IN)	
	24	1,2	**9X-2488**	6	CLAMP-HOSE	
	25	2	**9X-9654**	1	COIL AS-HEATER	
	26	1	**123-4618**	1	COVER	
	27	1	**123-4701**	1	SEAL	
	28	2	**124-1431**	1	BRACKET	
	29	1	**124-1432**	1	HOUSING AS	
		1	**7T-1099**	1	LINK	
		1	**8P-5141**	2	PLATE-ORIFICE	
	30	2	**124-3137**	1	BRACKET	
	31	2	**124-3138**	1	SEAL	
	32	1	**124-9006**	1	SHAFT	
	33	1	**124-9007**	1	SHAFT AS	
		1	**4L-5966**	2	SETSCREW (NO 10X.19 IN)	
	34	1	**125-0439**	1	GASKET	
	35	2	**125-0442**	1	PLATE	
	36	1	**129-4935**	1	SEAL	
	37	1	**130-5300**	1	CLIP	
	38	2	**142-4940**	1	PLATE AS	
	39	2	**174-1494**	1	MOTOR GP-ELECTRIC (27 VOLT)	
		2	**3E-3365**	1	WEDGE-RECEPTACLE LOCK (2 PIN)	
		2	**9W-0852**	2	PIN-CONNECTOR	
		2	**102-8802**	1	KIT-RECEPTACLE (2 PIN)	
					(INCLUDES RECEPTACLE AS & WEDGE)	
	40	1	**174-4492**	1	COVER	
	41	1	**174-6051**	1	SUPPORT AS	
	42	1	**174-6353**	1	PLATE	
	43	1	**176-5507**	1	PAD	
	44	1	**177-7858**	1	HARNESS AS-HEATER & AIR COND	
		1	**155-2270**	1	KIT-CONNECTING PLUG (2 PIN) (MOTOR)	
					(INCLUDES PLUG AS & WEDGE)	

174-4547 **HEATER GP-CAB** ***(contd.)*** **i01679967**

NOTE	REF NO	GRAPHIC REF	PART NUMBER	QTY	PART NAME 1 2 3 4 5 6 (PRODUCT LEVEL)	SEE PAGE
		1	**102-8805**	1	KIT-RECEPTACLE (6 PIN) (A/C BREAK/DRYER/THERMO/LIT TRM)	
					(INCLUDES RECEPTACLE AS & WEDGE)	
	45	1	**191-0027**	1	PAD	
	46	1	**204-4376**	1	CAP-PROTECTIVE	
	47	2	**206-5154**	1	VALVE AS	
M	48	2	**129-3178**	4	LOCKNUT (M6X1 THD)	
M	49	2	**141-9784**	1	BOLT-HEX HEAD (M6X190MM)	
M	50	1	**5C-2890**	7	NUT (M6X1 THD)	
	51	1,2	**5P-1075**	13	WASHER-HARD (10.2X22.5X3MM THK)	
	52	2	**6V-1668**	2	WASHER (6.5X29.1X3MM THK)	
M	53	2	**6V-7728**	1	BOLT (M6X1.0X45MM)	
	54	1,2	**6V-8801**	13	NUT (3/8-16 THD)	
	55	1	**7X-0591**	2	WASHER-HARD (17X29X3MM THK)	
M	56	2	**8T-4171**	2	BOLT (M6X1X12MM)	
	57	1,2	**8T-4205**	15	WASHER-HARD (7.2X14.5X2MM THK)	
	58	1	**9M-8406**	1	CLIP	
M	59	1	**9X-2040**	4	SCREW-TRUSS HEAD (M10X1.5X25MM)	
M	60	1	**9X-2045**	6	SCREW-TRUSS HEAD (M6X1X20MM)	
E	61	1	**136-1953**		HOSE (EACH 17CM)	
D	62	2	**5P-5908**		SEAL (.2M)	
E	63	2	**9X-2126**		SEAL (33CM)	
D	64	2	**5P-5637**		SEAL (.84M)	
E	65	2	**136-1953**		HOSE (8CM)	
D	66	2	**5P-5637**		SEAL (.39M)	
D	67	2	**5P-5637**		SEAL (.23M)	
D	68	2	**5P-5637**		SEAL (.42M)	
D	69	2	**5P-5637**		SEAL (.94M)	
D	70	2	**5P-5637**		SEAL (EACH .28M)	

D-ORDER BY THE METER
E-ORDER BY THE CENTIMETER
M-METRIC PART

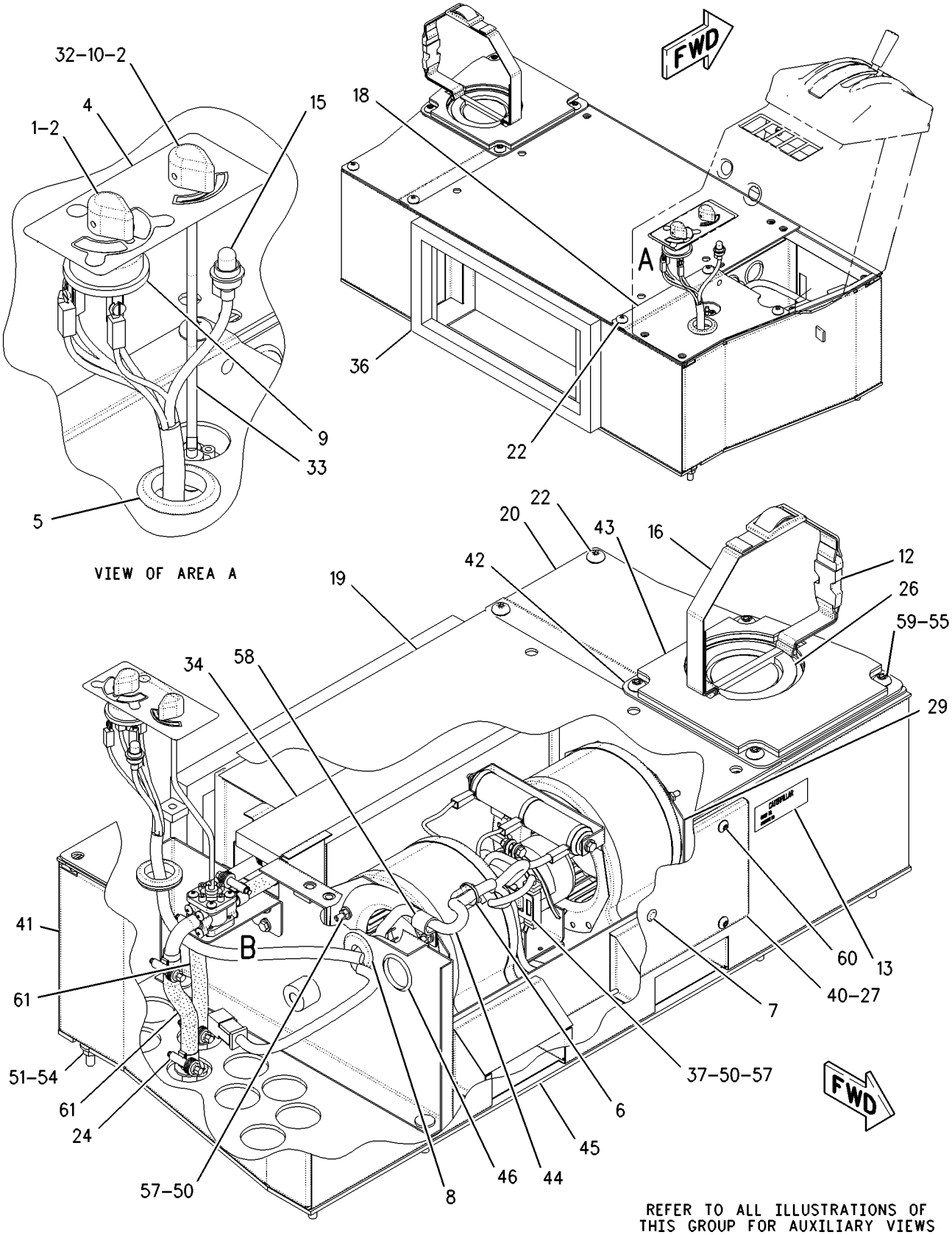

GRAPHIC #1 g00939211

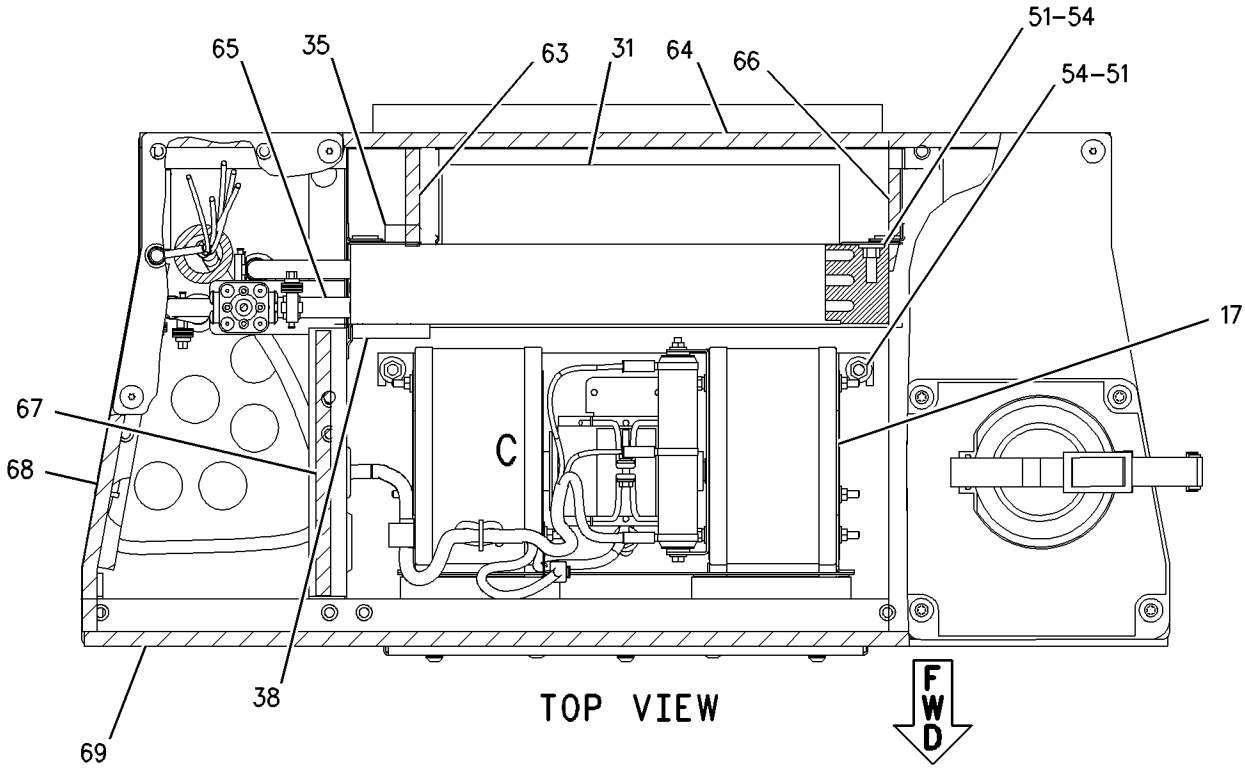

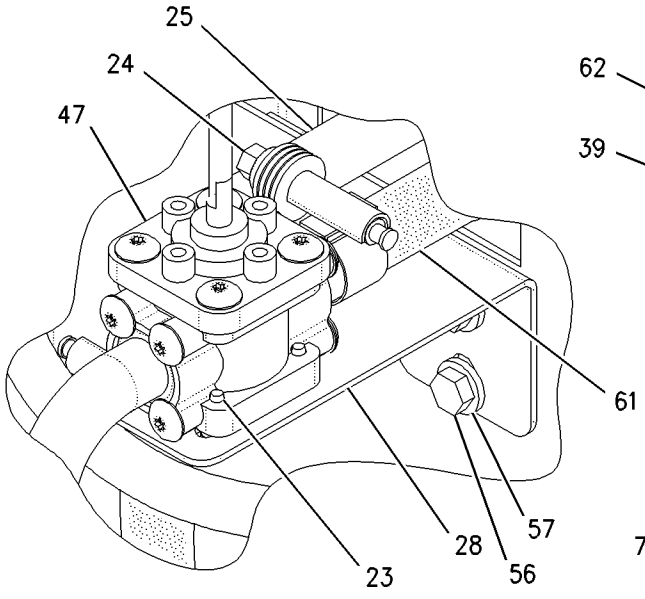

VIEW OF AREA B

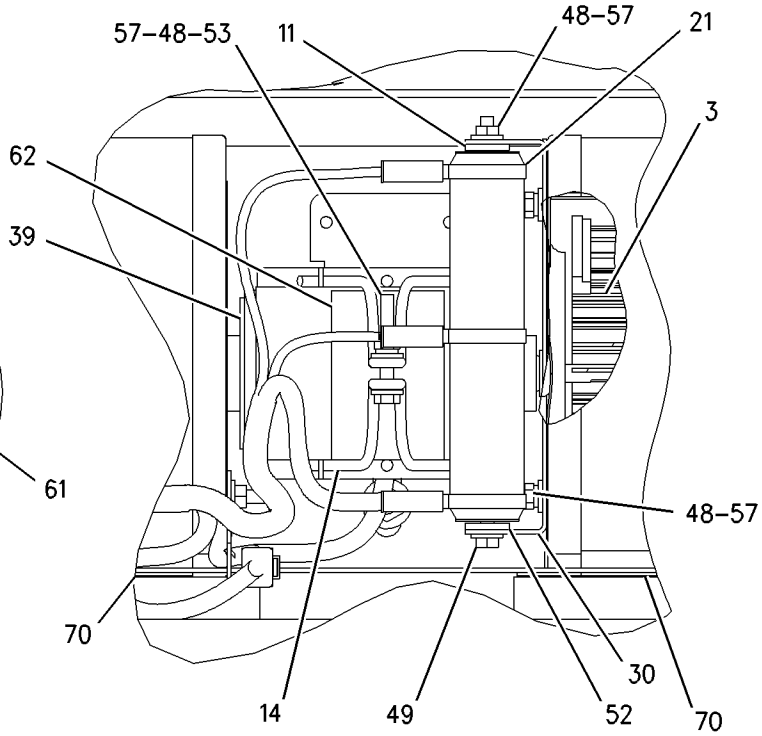

VIEW OF AREA C

GRAPHIC #2

g00939212

OPERATOR STATION

5D-6998 HORN GP-AIR

S/N: CAF1-UP

PART OF 160-7758 HORN GP-AIR

SMCS-7402 **i01757140**

NOTE	REF NO	GRAPHIC REF	PART NUMBER	QTY	PART NAME 1 2 3 4 5 6 (PRODUCT LEVEL)	SEE PAGE
	1	1	**5D-6994**	1	PROJECTOR (LH)	
	2	1	**5D-6993**	1	HORN (RH)	
	3	1	**5D-6997**	1	PAD	
	4	1	**4B-5275**	1	WASHER (17.5X 4.4X3.5MM THK)	
	5	1	**5D-6996**	1	ADAPTER	
	6	1	**9S-1354**	1	NUT (5/8-18 THD)	
	7	1	**6F-0253**	1	LOCKWASHER	
					AVAILABLE REPAIR KIT(S):	
			2G-6664	2	KIT-DIAPHRAGM	
					(EACH INCLUDES DIAPHRAGM,SEAL, DECAL, SCREWS,NUTS, GASKET & INST SHEET)	

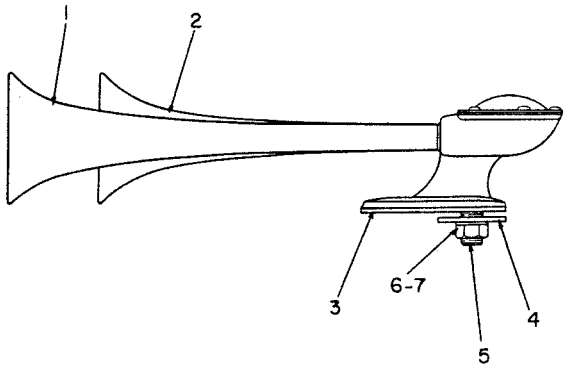

GRAPHIC #1 g00081628

MEMORANDA

OPERATOR STATION

160-7758 HORN GP-AIR

S/N: CAF1-UP

PART OF 162-5603 GENERAL AR

SMCS-7402 **i01757144**

NOTE	REF NO	GRAPHIC REF	PART NUMBER	QTY	PART NAME 1 2 3 4 5 6 (PRODUCT LEVEL)	SEE PAGE
	1	1	**3G-1701**	1	SPRING	
Y	2	1	**5D-6998**	1	HORN GP-AIR	770
	3	1	**5T-4030**	1	BRACKET	
I	4	1	**6D-9718**	1	HOSE AS	
	5	1	**7I-4696**	1	RETAINER	
	6	1	**7I-4698**	1	RING	
	7	1	**7I-4699**	1	INSULATOR	
	8	1	**8X-9387**	1	PLATE	
	9	1	**009-4184**	4	SPRING-HORN	
	10	1	**009-4185**	4	BRUSH-HORN	
	11	1	**091-9071**	1	SEAL-HORN BUTTON	
	12	1	**098-7467**	1	BUTTON (AIR HORN)	
	13	1	**169-3145**	1	WIRE AS	
		1	**102-8802**	1	KIT-RECEPTACLE (2 PIN)	
					(INCLUDES RECEPTACLE ASSEMBLY AND WEDGE)	
		1	**3E-3365**	1	WEDGE-RECEPTACLE LOCK (2 PIN)	
		1	**6D-4161**	1	CONTACT	
		1	**186-3735**	1	PIN-CONNECTOR	
		1	**9G-3695**	1	PLUG (GROMMET SEALING)	
	14	1	**179-4814**	3	PIN	
Y	15	1	**188-9250**	1	VALVE GP-SOLENOID (AIR HORN)	478
	16	1	**4B-3388**	1	BOLT (5/16-18X1.125 IN)	
	17	1	**4L-6454**	3	BOLT (3/8-16X1 IN)	
	18	1	**5H-4778**	2	ELBOW	
	19	1	**5K-2408**	1	FITTING	
	20	1	**5S-0003**	1	NUT (5/16-18 THD)	
	21	1	**6V-3342**	1	ELBOW-PIPE	
	22	1	**8T-4896**	3	WASHER-HARD (10.2X18.5X2.5MM THK)	
	23	1	**9M-1974**	1	WASHER-HARD (8.8X16X2MM THK)	

I-SEE HOSE FABRICATION GUIDE
Y-SEPARATE ILLUSTRATION

160-7758 **HORN GP-AIR** *(contd.)* **i01757144**

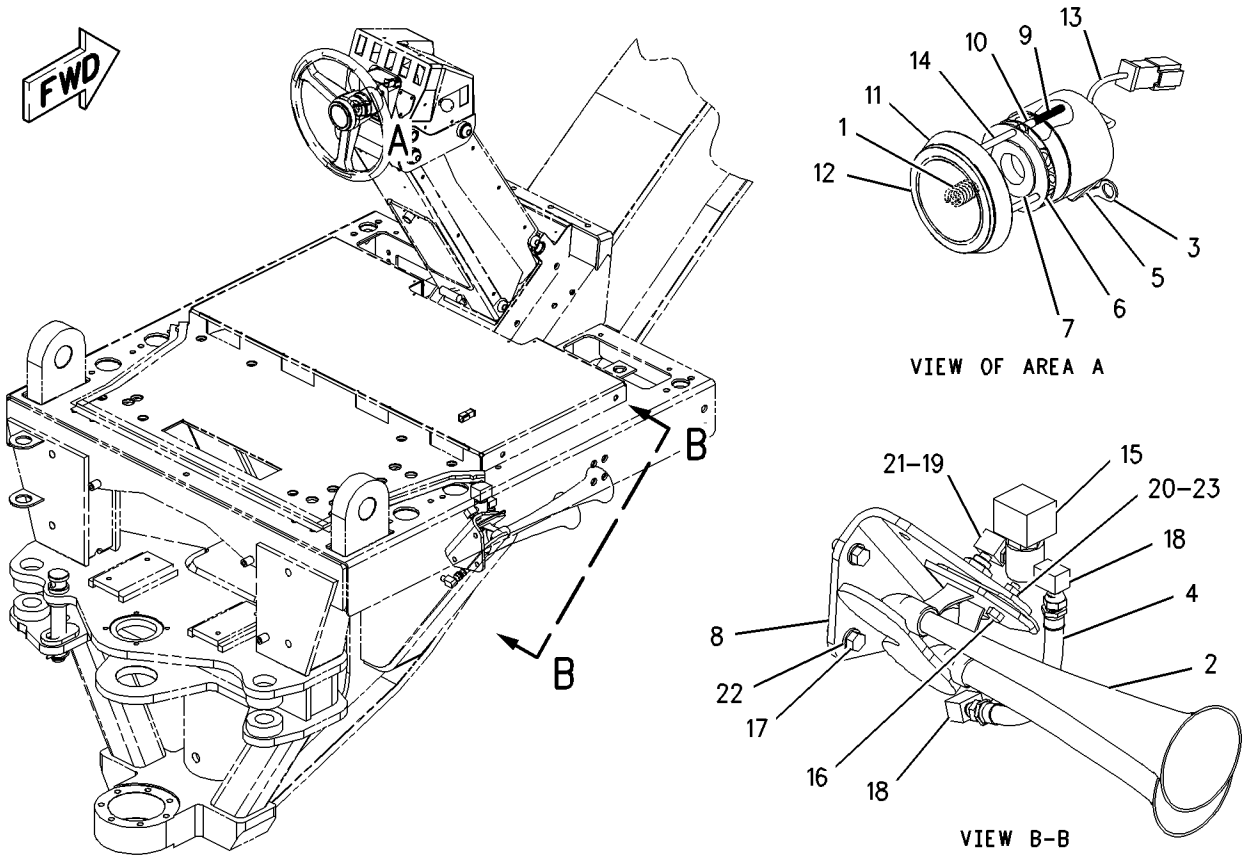

GRAPHIC #1 g00865365

OPERATOR STATION

113-5808 HOUSING GP-SEAT SUSPENSION

S/N: CAF1-UP
PART OF 113-5800 SUSPENSION GP-SEAT
AN ATTACHMENT

SMCS-7321, 7324 **i01755289**

NOTE	REF NO	GRAPHIC REF	PART NUMBER	QTY	PART NAME 1 2 3 4 5 6 (PRODUCT LEVEL)	SEE PAGE
	1	1	**8Y-6044**	1	SHAFT	
	2	1	**8Y-6066**	1	SPRING	
	3	1	**8Y-6069**	1	ADJUSTER AS	
	4	1	**8Y-6068**	1	NUT (3/8 X 16 THD)	
	5	1	**113-5801**	1	HOUSING AS-UPPER	
	6	1	**8Y-6047**	2	PIN	
	7	1	**2M-7819**	4	RING-RETAINING	
	8	1	**8Y-6041**	1	ARM AS	
	9	1	**8Y-6045**	1	CAM	
	10	1	**8Y-6046**	1	PIN	
	11	1	**8S-7803**	4	RING-RETAINING	
	12	1	**095-0878**	1	PIN-SPRING	
	13	1	**7M-7219**	1	BEARING-THRUST	
	14	1	**4N-2927**	2	RACE-THRUST BEARING	
	15	1	**1Y-7927**	1	PIN	
	16	1	**8Y-6060**	2	ROLLER	
	17	1	**5V-0770**	2	BOLT-CARRIAGE	
		1	**2D-6235**	2	LOCKNUT (1/4-20 THD)	
	18	1	**113-5806**	1	ROD	
	19	1	**8Y-6063**	1	LINK-ACTUATOR-LH	
	20	1	**131-5167**	1	KNOB AS-WEIGHT	
		1	**4V-7875**	1	HANDLE	
		1	**4V-7877**	1	SPRING	
		1	**6V-3259**	1	PIN-SPRING	
		1	**149-7226**	1	SCREW-PAN HEAD	
	21	1	**8Y-6062**	1	LINK-ACTUATOR-RH	
	22	1	**113-5805**	1	KEY	
	23	1	**4B-5059**	6	WASHER (29.5X15X2.5MM THK)	
	24	1	**8Y-6064**	2	ROLLER-SLIDER	
	25	1	**7V-5191**	2	SPACER (28X10X7.1MM THK)	
	26	1	**5D-4822**	2	RING-RETAINING	
	27	1	**5P-8445**	6	RING-RETAINING	
	28	1	**5V-1497**	2	RETAINER	
	29	1	**5V-1474**	1	SCREW-FORMING (10-16X0.625 IN)	
	30	1	**113-5807**	1	KNOB	
	31	1	**8Y-6067**	1	SPACER (10.54MM THK)	
	32	1	**131-4242**	1	BOLT (3/8-16X5.18 IN)	
JZ	33	1		1	PIN	
JZ	34	1		1	FOLLOWER	
Z	35	1		2	SPRING	
Z	36	1		2	BUSHING	
NZ	37	1		2	ROD AS	
NZ	38	1		2	SPRING	
NZ	39	1		2	SPACER	
NZ	40	1		2	BUSHING	
QZ	41	1		1	GUIDE	
QZ	42	1		1	RIVET	
QZ	43	1		1	TAPE	
Z	44	1		1	FOLLOWER	
Z	45	1		1	PIN	
SZ	46	1		3	BUMPER	
					AVAILABLE REPAIR KIT(S):	
J			**108-4087**	1	KIT-FOLLOWER	

113-5808 HOUSING GP-SEAT SUSPENSION *(contd.)* i01755289

NOTE	REF NO	GRAPHIC REF	PART NUMBER	QTY	PART NAME 1 2 3 4 5 6 (PRODUCT LEVEL)	SEE PAGE
			108-4103	1	KIT-BEARING	
					(INCLUDES 3-ROLLERS AS)	
			8Y-6859	1	KIT-SPRING	
N			**8Y-6860**	1	KIT-SPRING (HEIGHT ADJUSTMENT)	
Q			**100-3224**	1	KIT-INDICATOR (WEIGHT ADJUSTMENT)	
					(INCLUDES STRAP)	
			108-4086	1	KIT-FOLLOWER	
S			**100-5179**	1	KIT-BUMPER (WEIGHT ADJUSTMENT)	

J-KIT MARKED J INCLUDES PART(S) MARKED J
N-KIT MARKED N INCLUDES PART(S) MARKED N
Q-KIT MARKED Q INCLUDES PART(S) MARKED Q
S-KIT MARKED S INCLUDES PART(S) MARKED S
Z-NOT SERVICED SEPARATELY

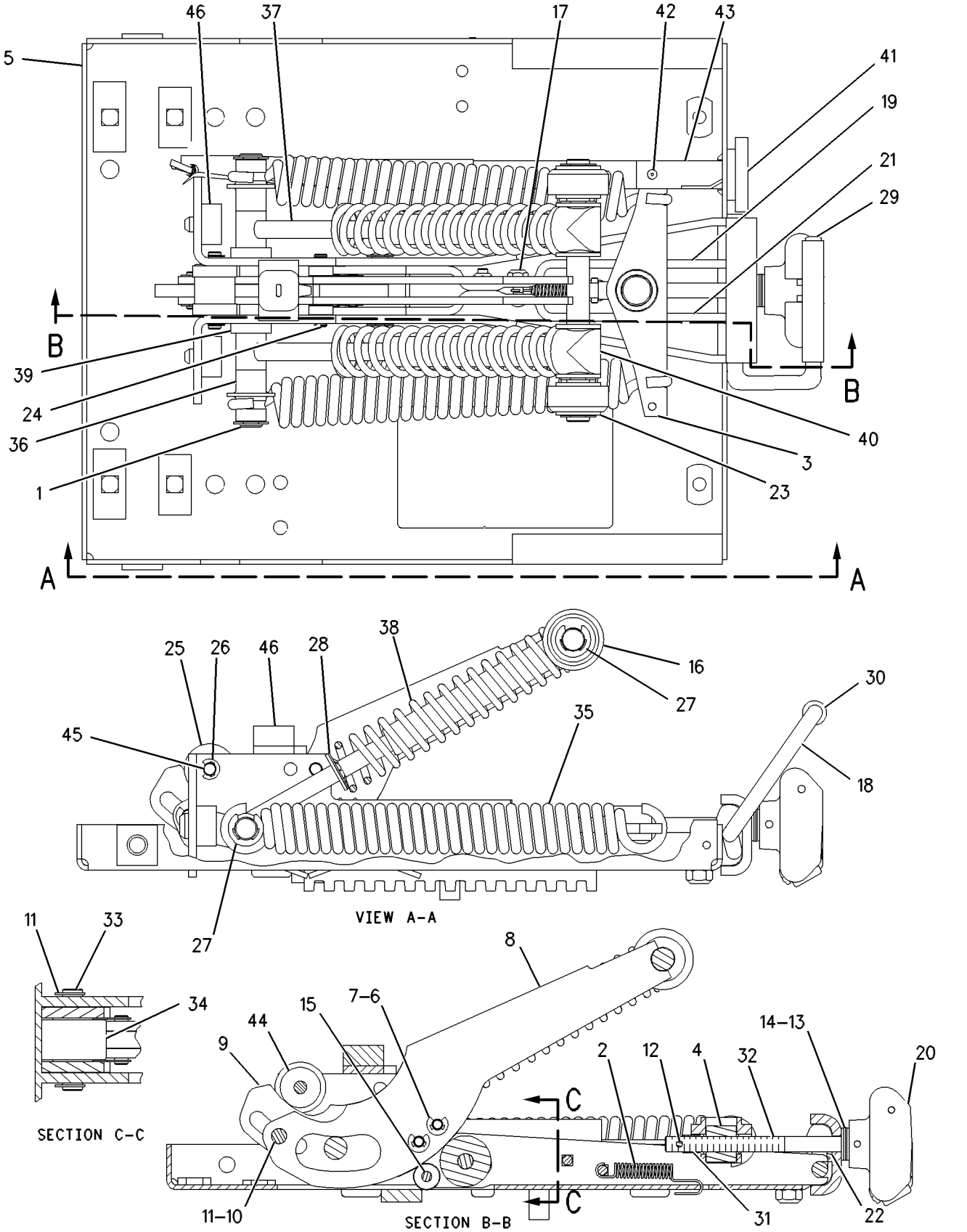

GRAPHIC #1 g00548284

OPERATOR STATION

145-1300 INSTALLATION AR-RADIO

S/N: CAF1-UP

AN ATTACHMENT

SMCS-7338 **i00609526**

NOTE	PART NUMBER	QTY	PART NAME 1 2 3 4 5 6 (PRODUCT LEVEL)	SEE PAGE
Y	*145-1297*	1	CONVERTER GP-ELECTRICAL	146
Y	*130-9432*	1	INSTALLATION GP-RADIO	778

Y-SEPARATE ILLUSTRATION

<END>

OPERATOR STATION

130-9432 INSTALLATION GP-RADIO

S/N: CAF1-UP

PART OF 145-1300 INSTALLATION AR-RADIO

AN ATTACHMENT

SMCS-7338 **i01755314**

NOTE	REF NO	GRAPHIC REF	PART NUMBER	QTY	PART NAME 1 2 3 4 5 6 (PRODUCT LEVEL)	SEE PAGE
	1	1	**2G-8767**	1	WASHER (10.5X60X3MM THK)	
	2	1	**9U-8263**	1	COVER	
	3	1	**2A-6684**	1	BRACKET	
	4	1	**3S-2093**	2	STRAP-CABLE	
	5	1	**6T-7695**	2	SPEAKER AS-RADIO	
	6	1	**8E-1118**	1	ANTENNA AS	
	7	1	**8X-9884**	1	BRACKET AS	
	8	1	**9W-3073**	1	CABLE AS-COAXIAL	
	9	1	**5P-8525**	1	GROMMET	
	10	1	**6V-5834**	3	SCREW-HEAD (10-14X0.75IN)	
	11	1	**8T-4121**	2	WASHER-HARD (11X21X2.5MM THK)	
M	12	1	**8T-4137**	2	BOLT (M10X1.5X20MM)	

M-METRIC PART

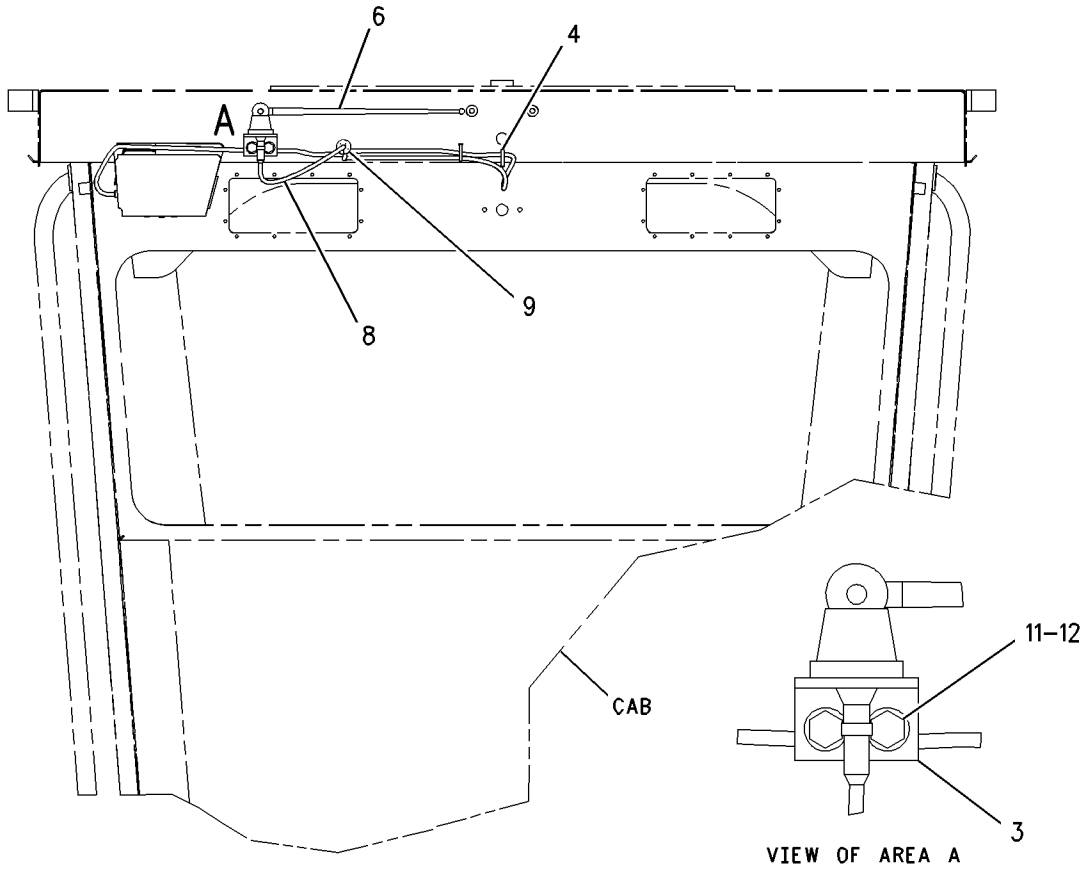

REAR VIEW

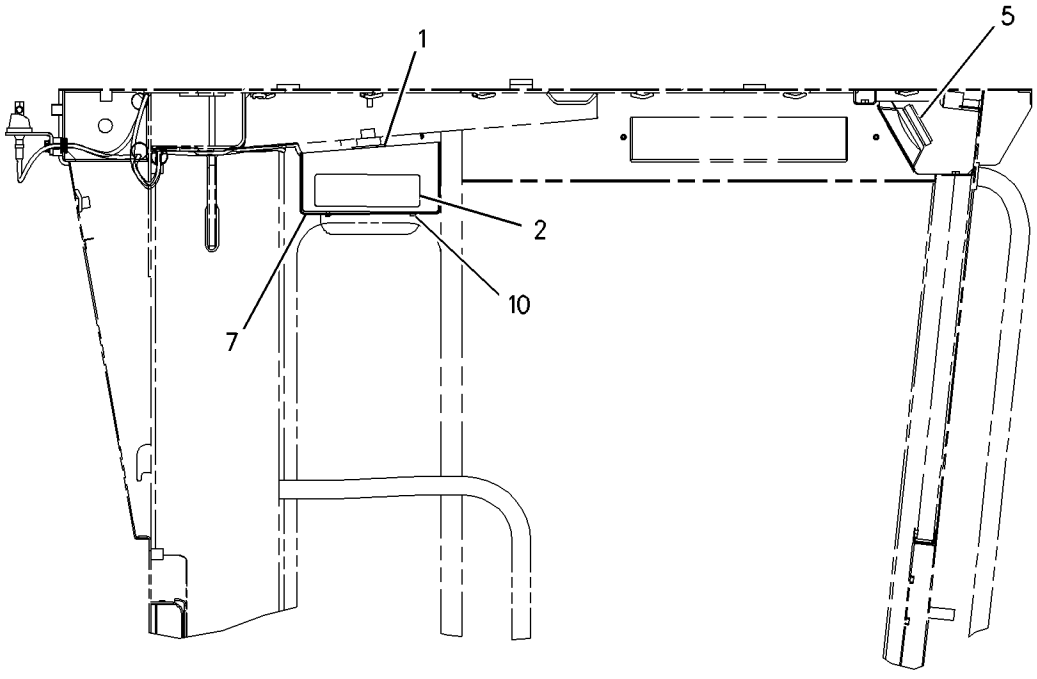

RIGHT SIDE VIEW

GRAPHIC #1 g00898752

OPERATOR STATION

172-5378 INSULATION GP-WEATHER

S/N: CAF1-UP

PART OF 211-4906 CAB AR-NON-ROPS, 161-1141, 179-3581, 218-4758, 218-4760 ROPS AR-ENCLOSED

ALSO AN ATTACHMENT

SMCS-7329 **i01755317**

NOTE	REF NO	GRAPHIC REF	PART NUMBER	QTY	PART NAME 1 2 3 4 5 6 (PRODUCT LEVEL)	SEE PAGE
	1	1	**8X-2226**	2	PLATE	
	2	1	**8X-2913**	2	COVER AS	
					(EACH INCLUDES)	
M		1	**6V-9632**	2	NUT-WELD (M6X1 THD)	
B	3	1	**8X-8055**	6	PLUG	
	4	1	**8X-8351**	2	PLATE AS	
	5	1	**8W-6061**	1	FLOOR MAT (CAB)	
	6	1	**171-6165**	2	DUCT	
	7	1	**178-4190**	2	SEAL	
	8	1	**179-2138**	2	SEAL	
	9	1	**179-2139**	1	FOAM (RH)	
	10	1	**179-2140**	1	FOAM (LH)	
	11	1	**4M-5281**	4	BOLT (1/4-20X.750 IN)	
	12	1	**5P-4115**	4	WASHER-HARD (7.2X19X2MM THK)	
M	13	1	**9X-2043**	14	SCREW-TRUSS HEAD (M6X1X14MM)	
BD	14	1	**5P-6882**		SEAL	
BD	15	1	**5P-5969**		SEAL	

B-USE AS REQUIRED
D-ORDER BY THE METER
M-METRIC PART

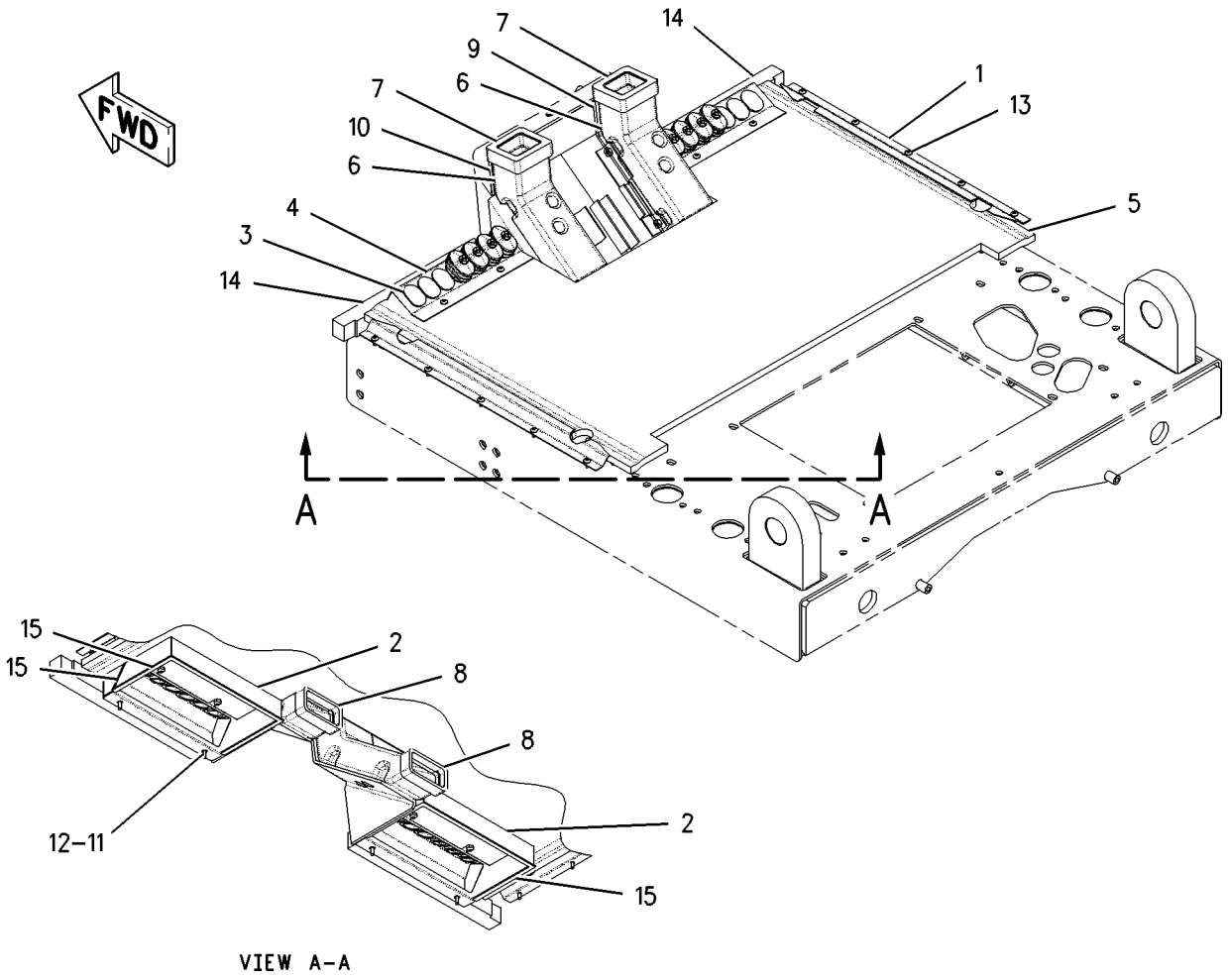

VIEW A–A

GRAPHIC #1 g00870521

OPERATOR STATION

129-4618 LINER GP-CAB—HIGH PROFILE

S/N: CAF1-UP
PART OF 223-3937 CAB GP
AN ATTACHMENT

SMCS-7329 **i00606553**

NOTE	REF NO	GRAPHIC REF	PART NUMBER	QTY	PART NAME 1 2 3 4 5 6 (PRODUCT LEVEL)	SEE PAGE
M	1	1	**9X-2043**	12	SCREW-TRUSS HEAD (M6X1X14MM)	
M	2	1	**9X-2045**	3	SCREW-TRUSS HEAD (M6X1X20MM)	
	3	1	**129-4622**	1	PANEL-CAB	
	4	1	**129-4645**	1	INSULATION	
	5	1	**6V-3928**	2	PLUG-BUTTON	
	6	1	**129-4646**	1	INSULATION	
	7	1	**134-6474**	1	PLATE	
	8	1	**115-6804**	1	DUCT-RH	
	9	1	**115-6805**	1	DUCT-LH	

M-METRIC PART

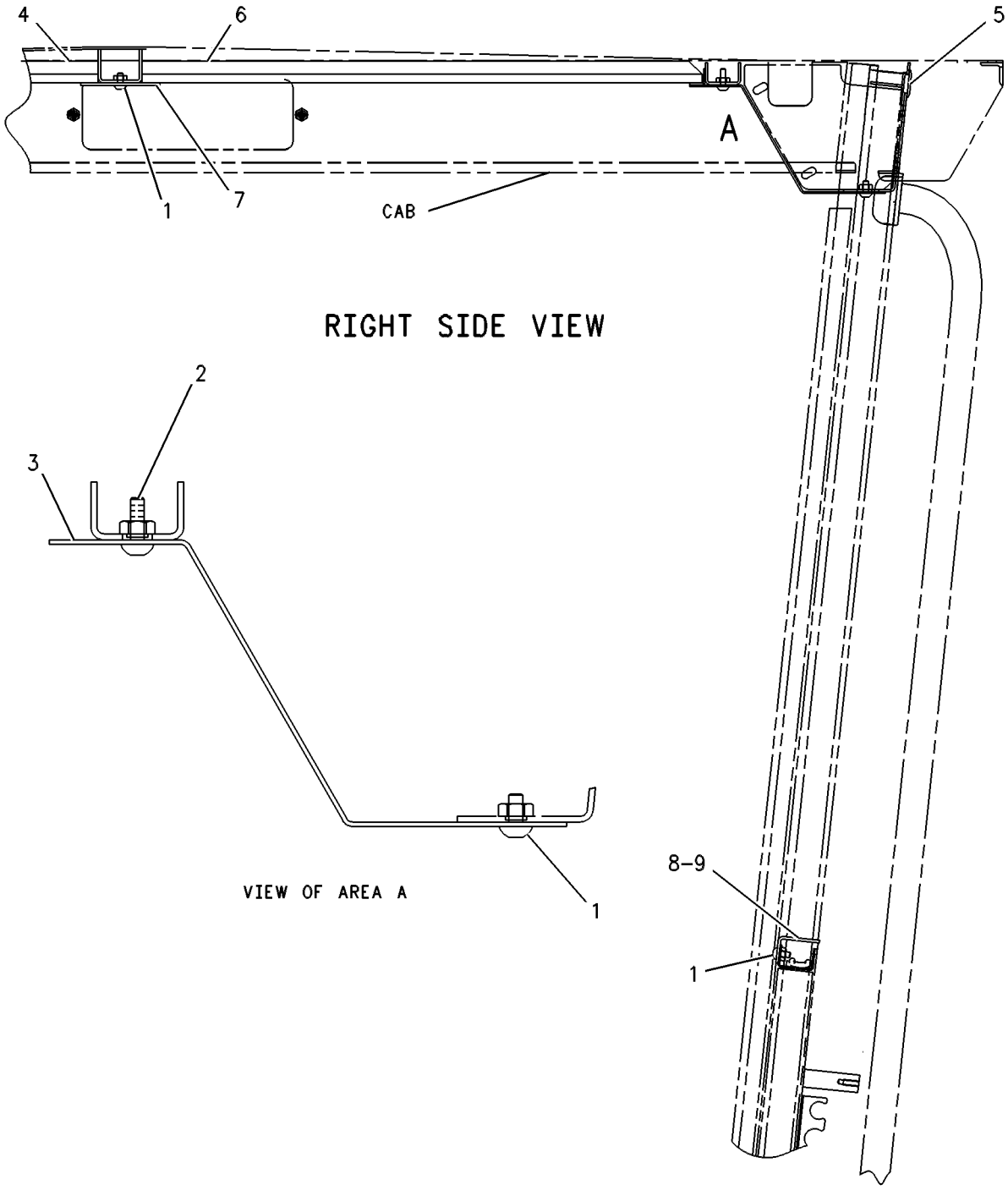

GRAPHIC #1 g00109332

OPERATOR STATION

172-5376 LINER GP-CAB—LOW PROFILE

S/N: CAF1-UP

PART OF 172-5377, 218-4761 ROPS GP-ENCLOSED

ALSO AN ATTACHMENT

SMCS-7329 **i01693877**

NOTE	REF NO	GRAPHIC REF	PART NUMBER	QTY	PART NAME 1 2 3 4 5 6 (PRODUCT LEVEL)	SEE PAGE
	1	1	**2G-8572**	2	WASHER-SPECIAL (10X27.81X2.54MM THK)	
	2	1	**2G-8573**	2	CAP	
	3	1	**2G-8767**	1	WASHER (10.5X60X3MM THK)	
	4	1	**3G-3265**	24	RIVET	
	5	1	**5P-5454**	1	ASHTRAY	
	6	1	**5P-5824**	1	HOLDER-ASH TRAY	
	7	1	**5P-7803**	8	PLUG-BUTTON	
	8	1	**6G-2395**	2	DOOR GP	
					(EACH INCLUDES)	
		1	**6G-7222**	2	ROLLER	
	9	1	**6G-2396**	2	GASKET	
	10	1	**6G-2751**	4	HINGE	
	11	1	**6G-2914**	2	LATCH	
	12	1	**6K-3273**	4	RIVET-POP	
	13	1	**6P-0205**	3	SPACER (.269X.405X.656 IN THK)	
	14	1	**6V-3928**	7	PLUG-BUTTON	
	15	1	**6V-8928**	1	HOOK-COAT	
	16	1	**7G-4824**	1	STRAP	
	17	1	**8E-7791**	1	STRAP	
	18	1	**8F-0492**	1	SPACER (.531X1.125X.625 IN THK)	
	19	1	**8T-5401**	2	PLUG-BUTTON	
	20	1	**8X-5414**	1	PLATE	
	21	1	**8X-6998**	1	INSULATION	
	22	1	**8X-7845**	2	COVER	
	23	1	**9N-1995**	20	RIVET-POP	
	24	1	**101-3055**	2	COVER-SPEAKER	
	25	1	**107-5014**	4	KNOB	
	26	1	**109-2804**	2	DOOR	
	27	1	**115-6807**	1	PLATE	
	28	1	**115-9923**	1	COVER-LH	
	29	1	**122-8677**	1	PANEL	
	30	1	**122-8795**	2	PLATE	
	31	1	**137-6783**	1	HOLDER	
	32	1	**137-8065**	1	COVER	
	33	1	**138-7026**	1	PLATE	
	34	1	**138-9910**	1	PLATE AS	
	35	1	**139-1117**	1	PLATE	
	36	1	**139-3593**	1	PANEL	
	37	1	**172-1239**	1	COVER (RH)	
	38	1	**174-4141**	1	PANEL	
	39	1	**179-2173**	1	COVER (RH)	
	40	1	**179-2177**	1	COVER AS (LH)	
	41	1	**197-8611**	1	COVER (RH)	
	42	1	**197-8624**	1	COVER (LH)	
	43	1	**197-8627**	1	COVER (RH)	
	44	1	**197-8628**	1	COVER (LH)	
	45	1	**200-8623**	8	NUT-RETAINER	
	46	1	**103-9425**	8	SCREW-MACHINE (8-32X1 IN)	
M	47	1	**129-3178**	3	LOCKNUT (M6X1 THD)	
	48	1	**131-6009**	2	PIN	
	49	1	**5P-4115**	2	WASHER-HARD (7.2X19X2MM THK)	
	50	1	**6V-0292**	1	PLUG	
	51	1	**8T-4121**	1	WASHER-HARD (11X21X2.5MM THK)	
	52	1	**144-4107**	2	FASTENER	
M	53	1	**8T-4182**	2	BOLT (M10X1.5X45MM)	

172-5376 **LINER GP-CAB** ***(contd.)*** **i01693877**

NOTE	REF NO	GRAPHIC REF	PART NUMBER	QTY	PART NAME 1 2 3 4 5 6 (PRODUCT LEVEL)	SEE PAGE
M	54	1	**8T-4195**	1	BOLT (M10X1.5X30MM)	
	55	1	**9R-2620**	1	PLUG	
M	56	1	**9X-2041**	4	SCREW-TRUSS HEAD (M10X1.5X20MM)	
M	57	1	**9X-2043**	33	SCREW-TRUSS HEAD (M6X1X14MM)	
M	58	1	**9X-2045**	6	SCREW-TRUSS HEAD (M6X1X20MM)	
M	59	1	**9X-2046**	4	SCREW-TRUSS HEAD (M6X1X35MM)	
	60	1	**9X-8256**	3	WASHER (6.6X12X2MM THK)	
BD	61	1	**8T-3426**		CHANNEL-TRIM	
BD	62	1	**6V-0505**		SEAL	
BD	63	1	**5P-5969**		SEAL	
BD	64	1	**6V-5163**		SEAL	

B-USE AS REQUIRED
D-ORDER BY THE METER
M-METRIC PART

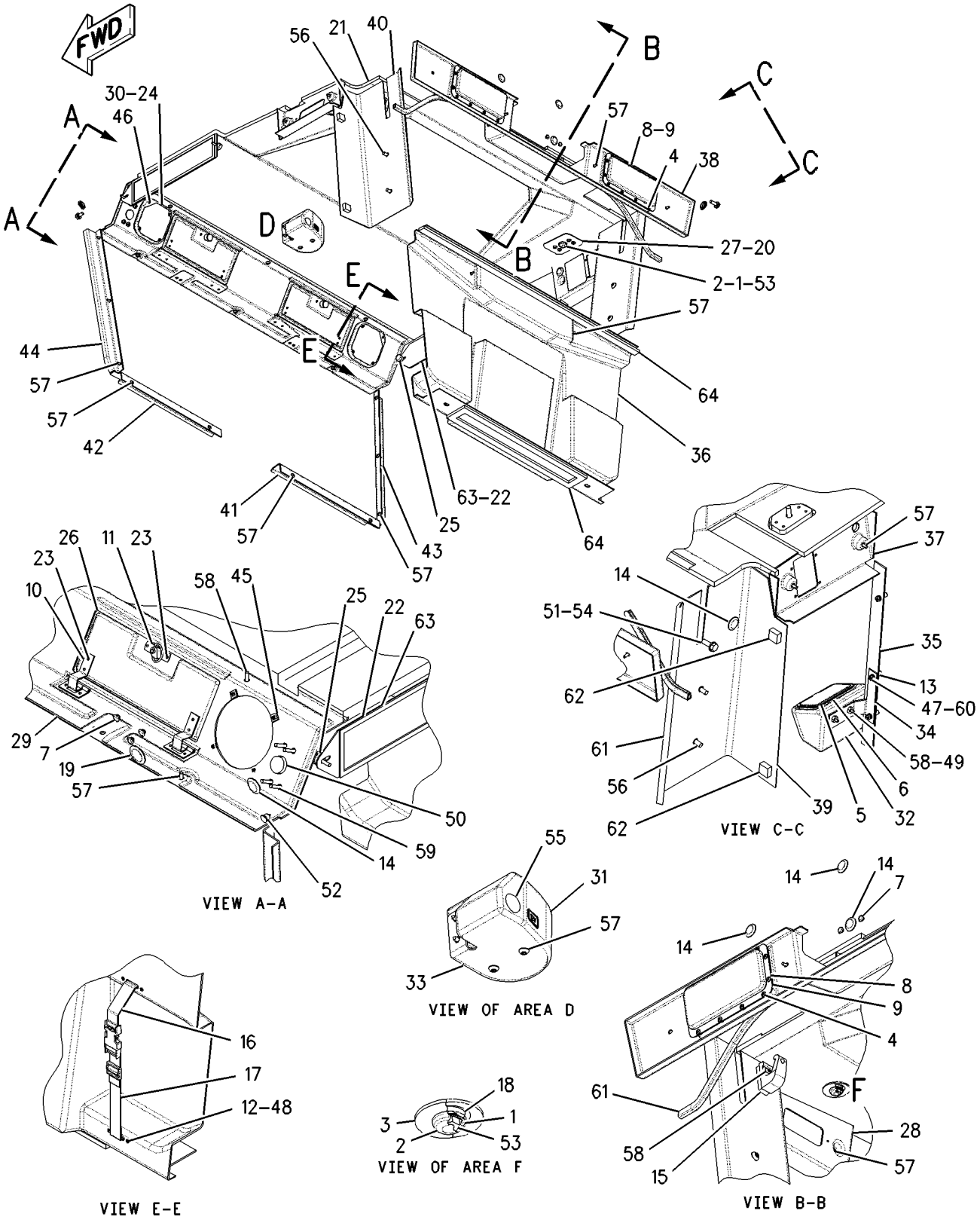

GRAPHIC #1 g00831632

MEMORANDA

OPERATOR STATION

177-8781 LINER GP-CAB—ENCLOSED —HIGH PROFILE

S/N: CAF1-UP

PART OF 177-8779, 218-4759 ROPS GP-ENCLOSED

AN ATTACHMENT

SMCS-7329 **i01684244**

NOTE	REF NO	GRAPHIC REF	PART NUMBER	QTY	PART NAME 1 2 3 4 5 6 (PRODUCT LEVEL)	SEE PAGE
	1	2	**2G-8572**	2	WASHER-SPECIAL (10X27.81X2.54MM THK)	
	2	2	**2G-8573**	2	CAP	
	3	2	**2G-8767**	1	WASHER (10.5X60X3MM THK)	
	4	2	**3G-3265**	24	RIVET	
	5	3	**5P-5454**	1	ASHTRAY	
	6	3	**5P-5824**	1	HOLDER-ASH TRAY	
	7	2	**5P-7803**	2	PLUG-BUTTON	
	8	1	**6G-2395**	2	DOOR GP	
	9	1	**6G-2396**	2	GASKET	
	10	1	**6G-2751**	4	HINGE	
	11	1	**6G-2914**	2	LATCH	
	12	3	**6K-3273**	4	RIVET-POP	
	13	1	**6P-0205**	3	SPACER (.269X.405X.656 IN THK)	
	14	1,2	**6V-3928**	7	PLUG-BUTTON	
	15	2	**6V-8928**	1	HOOK-COAT	
	16	3	**7G-4824**	1	STRAP	
	17	3	**8E-7791**	1	STRAP	
	18	2	**8F-0492**	1	SPACER (.531X1.125X.625 IN THK)	
	19	2	**8T-5401**	2	PLUG-BUTTON	
	20	2	**8X-5414**	1	PLATE	
	21	1	**8X-6999**	1	INSULATION	
	22	1	**8X-7845**	2	COVER	
	23	3	**9N-1995**	20	RIVET-POP	
	24	3	**101-3055**	2	COVER-SPEAKER	
	25	1	**107-5014**	4	KNOB (AIR FILTER)	
	26	3	**109-2804**	2	DOOR	
	27	2	**115-6807**	1	PLATE	
	28	1	**115-9923**	1	COVER-LH	
	29	1	**118-2558**	1	PANEL	
	30	3	**122-8795**	2	PLATE	
	31	3	**137-6783**	1	HOLDER	
	32	3	**137-8065**	1	COVER	
	33	3	**138-7026**	1	PLATE	
	34	3	**138-9910**	1	PLATE AS	
	35	1	**139-1118**	1	PLATE	
	36	1	**139-3593**	1	PANEL	
	37	2	**144-4107**	2	FASTENER	
	38	1	**172-1239**	1	COVER (RH)	
	39	1	**174-4140**	1	PANEL	
	41	1	**179-2179**	1	PLATE AS	
	42	1	**197-8611**	1	COVER (RH)	
	43	1	**197-8624**	1	COVER (LH)	
	44	2	**197-8629**	1	COVER (RH)	
	45	2	**197-8630**	1	COVER (LH)	
	46	2	**200-8623**	8	NUT-RETAINER	
	47	3	**103-9425**	8	SCREW-MACHINE (8-32X1 IN)	
M	48	1	**129-3178**	3	LOCKNUT (M6X1 THD)	
	49	3	**131-6009**	2	PIN	
	50	3	**5P-4115**	2	WASHER-HARD (7.2X19X2MM THK)	
	51	3	**6V-0292**	1	PLUG	
	52	1	**8T-4121**	1	WASHER-HARD (11X21X2.5MM THK)	
M	53	2	**8T-4182**	2	BOLT (M10X1.5X45MM)	
M	54	1	**8T-4195**	1	BOLT (M10X1.5X30MM)	
	55	3	**9R-2620**	1	PLUG	
M	56	2	**9X-2041**	4	SCREW-TRUSS HEAD (M10X1.5X20MM)	

177-8781 **LINER GP-CAB** ***(contd.)*** **i01684244**

NOTE	REF NO	GRAPHIC REF	PART NUMBER	QTY	PART NAME 1 2 3 4 5 6 (PRODUCT LEVEL)	SEE PAGE
M	57	1,3	**9X-2043**	33	SCREW-TRUSS HEAD (M6X1X14MM)	
M	58	1,2,3	**9X-2045**	6	SCREW-TRUSS HEAD (M6X1X20MM)	
M	59	3	**9X-2046**	4	SCREW-TRUSS HEAD (M6X1X35MM)	
	60	1	**9X-8256**	3	WASHER (6.6X12X2MM THK)	
BD	61	1,2	**8T-3426**		CHANNEL-TRIM	
BD	62	2	**6V-0505**		SEAL	
BD	63	1	**5P-5969**		SEAL	
B	64	1,2	**6V-5163**		SEAL	

B-USE AS REQUIRED
D-ORDER BY THE METER
M-METRIC PART

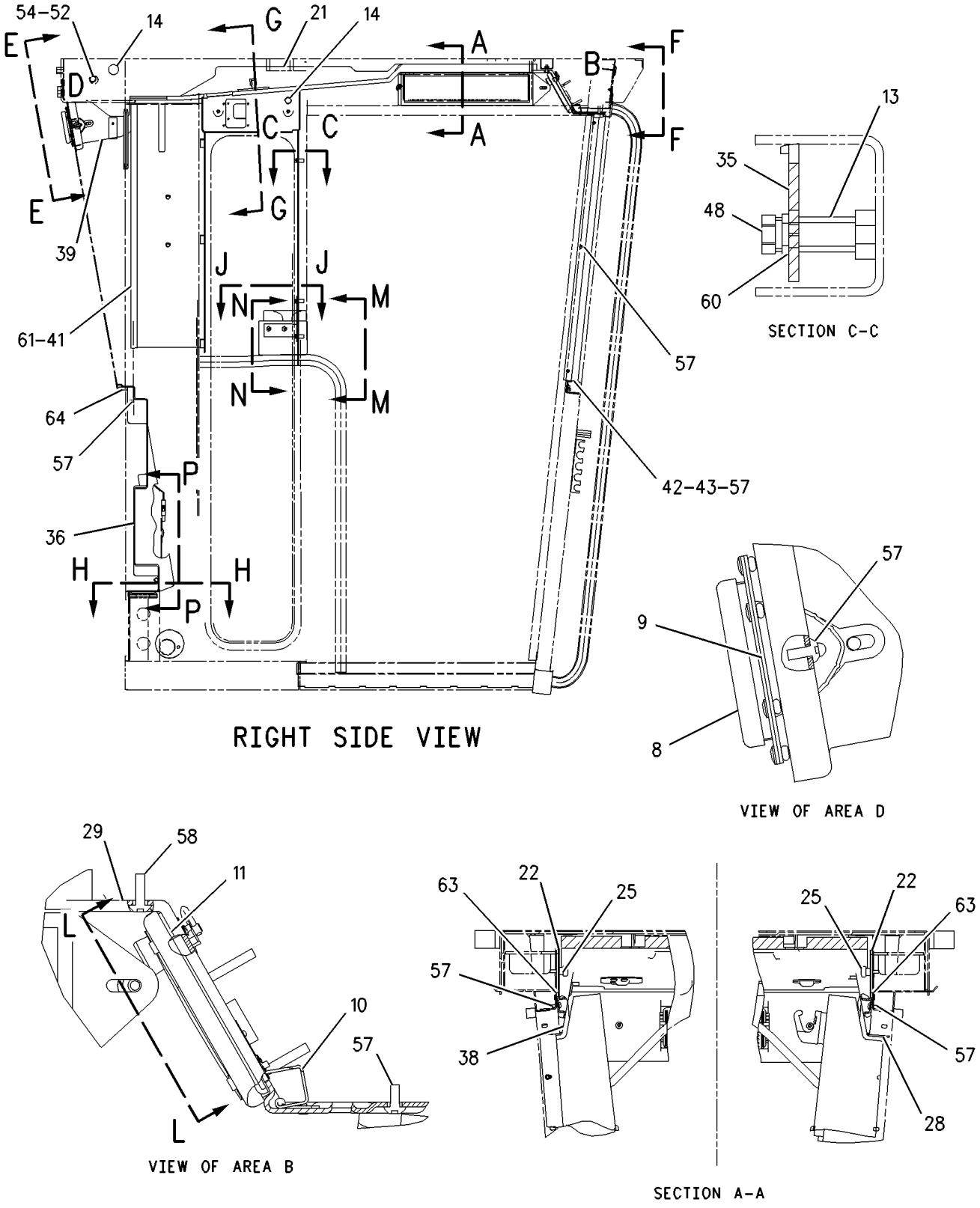

GRAPHIC #1 g00846120

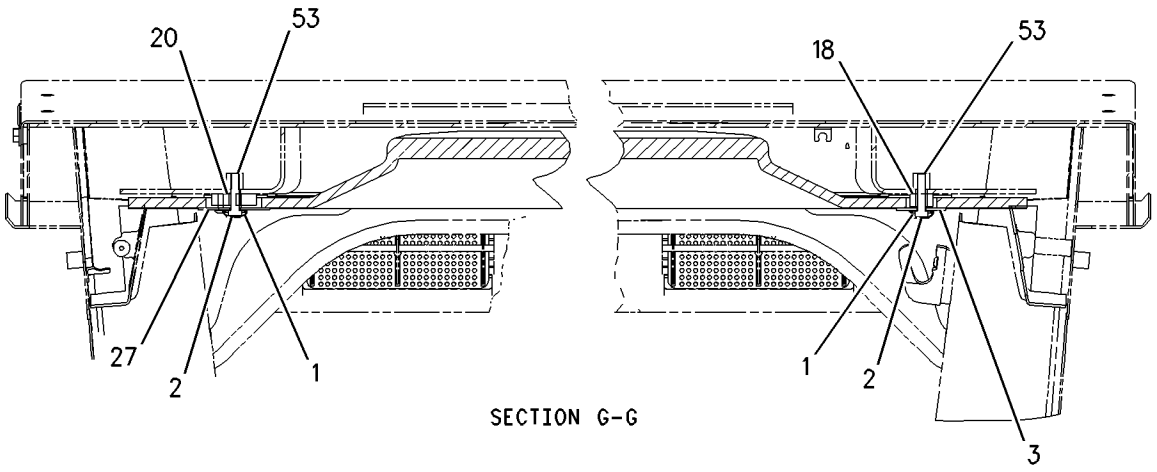

SECTION G-G

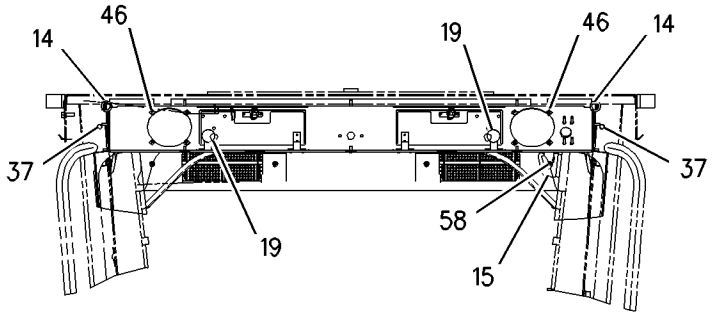

VIEW F-F

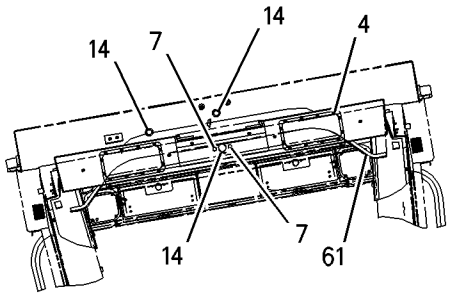

VIEW E-E

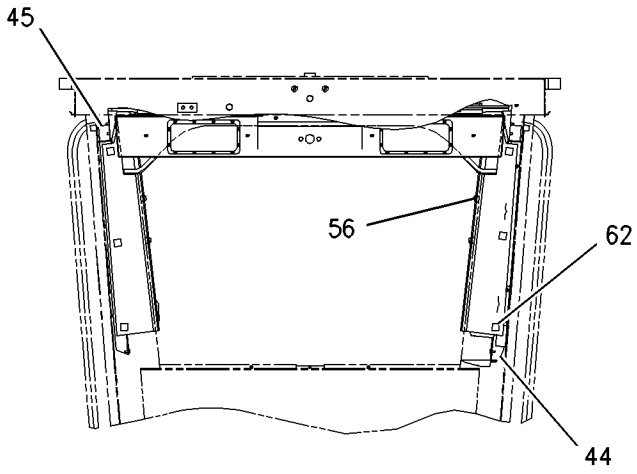

REAR VIEW

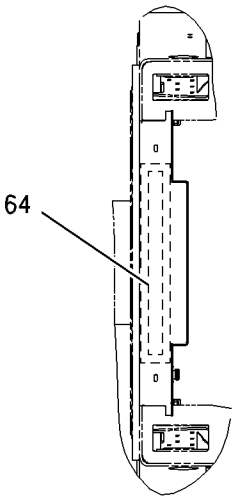

SECTION H-H

REFER TO ALL ILLUSTRATIONS OF
THIS GROUP FOR AUXILIARY VIEWS

GRAPHIC #2 g00846121

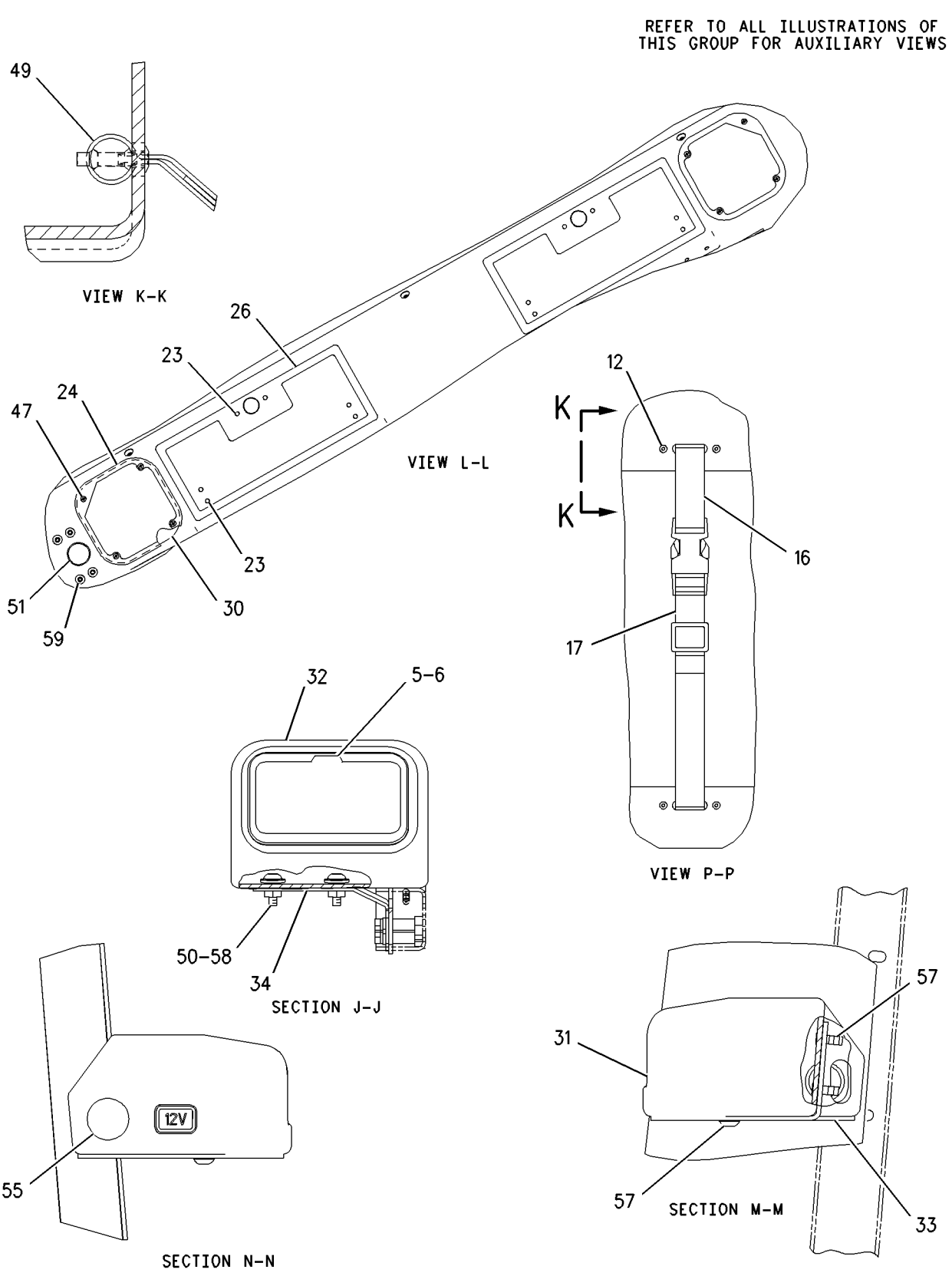

GRAPHIC #3 g00846122

MEMORANDA

OPERATOR STATION

191-8695 LINER GP-CAB—OPEN—HIGH PROFILE

S/N: CAF1-UP
PART OF 173-2751 ROPS GP-OPEN
AN ATTACHMENT

SMCS-7329 **i01755162**

NOTE	REF NO	GRAPHIC REF	PART NUMBER	QTY	PART NAME 1 2 3 4 5 6 (PRODUCT LEVEL)	SEE PAGE
	1	1	**2G-8572**	2	WASHER-SPECIAL (10X27.81X2.54MM THK)	
	2	1	**2G-8573**	2	CAP	
	3	1	**2G-8767**	1	WASHER (10.5X60X3MM THK)	
	4	1	**3E-0109**	1	PLUG-ROCKER SWITCH	
	5	1	**3G-3265**	24	RIVET	
	6	1	**3V-4694**	1	PLUG-BUTTON	
	7	1	**5P-7803**	2	PLUG-BUTTON	
	8	1	**6G-2395**	2	DOOR GP	
		1	**6G-7222**	2	ROLLER	
	9	1	**6G-2396**	2	GASKET	
	10	1	**6K-3273**	4	RIVET-POP	
	11	1	**6V-3928**	4	PLUG-BUTTON	
	12	1	**6V-8928**	1	HOOK-COAT	
	13	1	**7G-4824**	1	STRAP	
	15	1	**8E-7791**	1	STRAP	
	16	1	**8F-0492**	1	SPACER (.531X1.125X.625 IN THK)	
	17	1	**8X-5414**	1	PLATE	
	18	1	**8X-6999**	1	INSULATION	
	19	1	**115-6807**	1	PLATE	
	20	1	**117-8810**	1	INSULATION	
	21	1	**139-3593**	1	PANEL	
	22	1	**145-7214**	1	BLOCK	
	23	1	**145-7217**	1	PLATE AS	
	24	1	**156-8352**	1	HOLDER	
	25	1	**179-2176**	1	COVER	
	26	1	**179-2179**	1	PLATE AS	
	27	1	**201-5894**	1	PANEL	
	28	1	**131-6009**	2	PIN	
	29	1	**8T-4121**	3	WASHER-HARD (11X21X2.5MM THK)	
M	30	1	**8T-4182**	4	BOLT (M10X1.5X45MM)	
M	31	1	**8T-4195**	1	BOLT (M10X1.5X30MM)	
M	32	1	**9X-2041**	4	SCREW-TRUSS HEAD (M10X1.5X20MM)	
M	33	1	**9X-2043**	13	SCREW-TRUSS HEAD (M6X1X14MM)	
M	34	1	**9X-2045**	1	SCREW-TRUSS HEAD (M6X1X20MM)	
BD	35	1	**8T-3426**		CHANNEL-TRIM	
BD	36	1	**6V-0505**		SEAL	
	37	1	**6V-5164**		SEAL (2.7M)	

B-USE AS REQUIRED
D-ORDER BY THE METER
M-METRIC PART

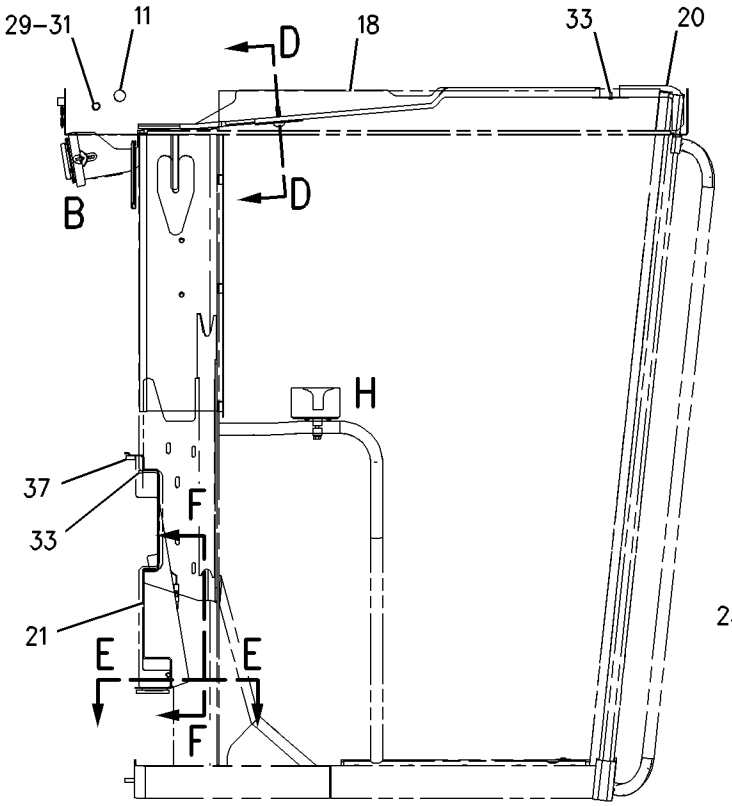

RIGHT SIDE VIEW

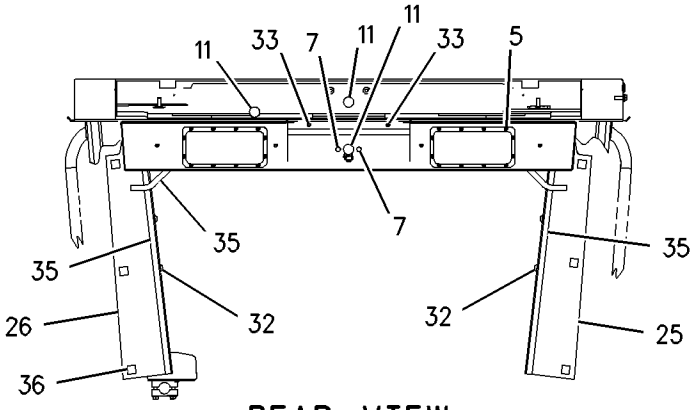

REAR VIEW

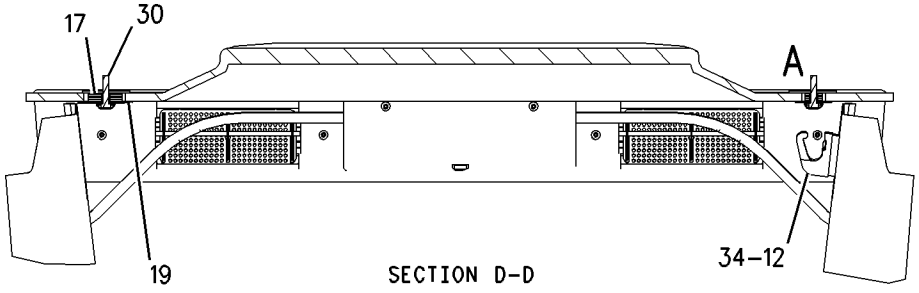

SECTION D-D

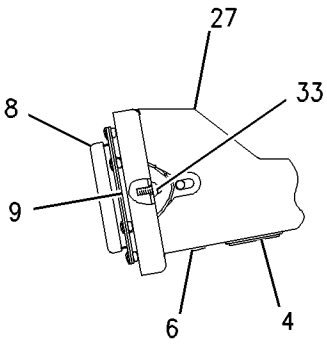

VIEW OF AREA B

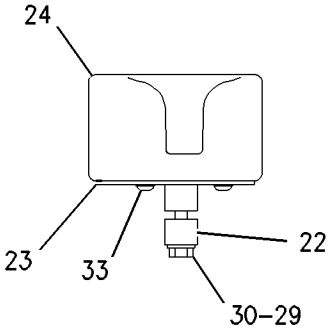

VIEW OF AREA H

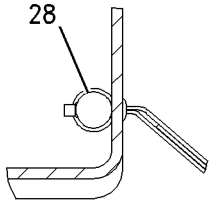

VIEW G-G

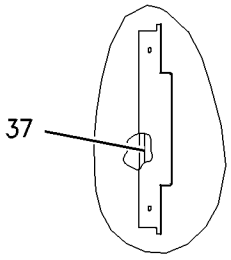

VIEW E-E

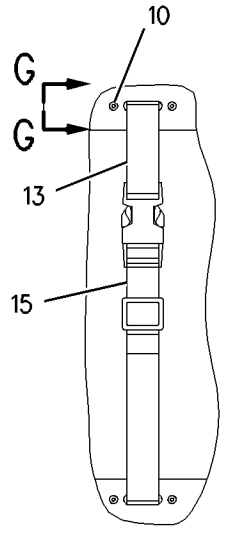

VIEW F-F

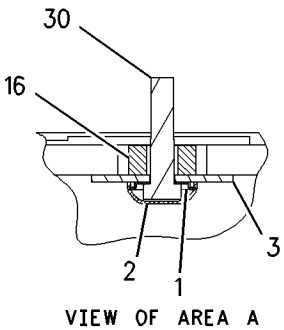

VIEW OF AREA A

GRAPHIC #1 g00847812

OPERATOR STATION

211-4912 LINER GP-CAB—ENCLOSED—HIGH PROFILE

S/N: CAF1-UP
PART OF 211-4907 CAB GP
AN ATTACHMENT

SMCS-7329 **i01861352**

NOTE	REF NO	GRAPHIC REF	PART NUMBER	QTY	PART NAME 1 2 3 4 5 6 (PRODUCT LEVEL)	SEE PAGE
M	1	1	**9X-2043**	20	SCREW-TRUSS HEAD (M6X1X14MM)	
	2	1	**6G-5214**	5	WASHER	
M	3	1	**9X-2045**	7	SCREW-TRUSS HEAD (M6X1X20MM)	
	4	1	**125-5520**	1	PANEL AS-CAB	
M		1	**6V-9632**	4	NUT-WELD (M6X1 THD)	
	5	1	**125-9596**	1	COVER-LH	
	6	1	**5P-5969**	1	SEAL	
	7	1	**125-6482**	1	COVER AS (RH)	
M		1	**6V-9632**	4	NUT-WELD (M6X1 THD)	
	8	1	**125-4389**	1	INSULATION	
	9	1	**125-4388**	1	INSULATION	
	10	1	**6V-3928**	3	PLUG-BUTTON	
	11	1	**8X-7845**	2	COVER	
	12	1	**125-9584**	1	INSULATION	
	13	1	**125-6483**	1	PLATE	
	14	1	**197-8624**	1	COVER (LH)	
	15	1	**197-8611**	1	COVER (RH)	
	16	1	**107-5014**	4	KNOB	
	17	1	**6V-0292**	2	PLUG	
	18	1	**8X-8790**	1	PLATE	
	19	1	**6P-0205**	2	SPACER (.269X.405X.656 IN THK)	
M	20	1	**099-0492**	2	LOCKNUT (M6X1 THD)	
	21	1	**9X-8256**	2	WASHER (6.6X12X2MM THK)	
	22	1	**5P-7803**	2	PLUG-BUTTON	
	23	1	**6G-2396**	2	GASKET	
	24	1	**3G-3265**	24	RIVET	
	25	1	**6G-2395**	2	DOOR GP	
					(EACH INCLUDES)	
		1	**6G-7222**		ROLLER	

M-METRIC PART

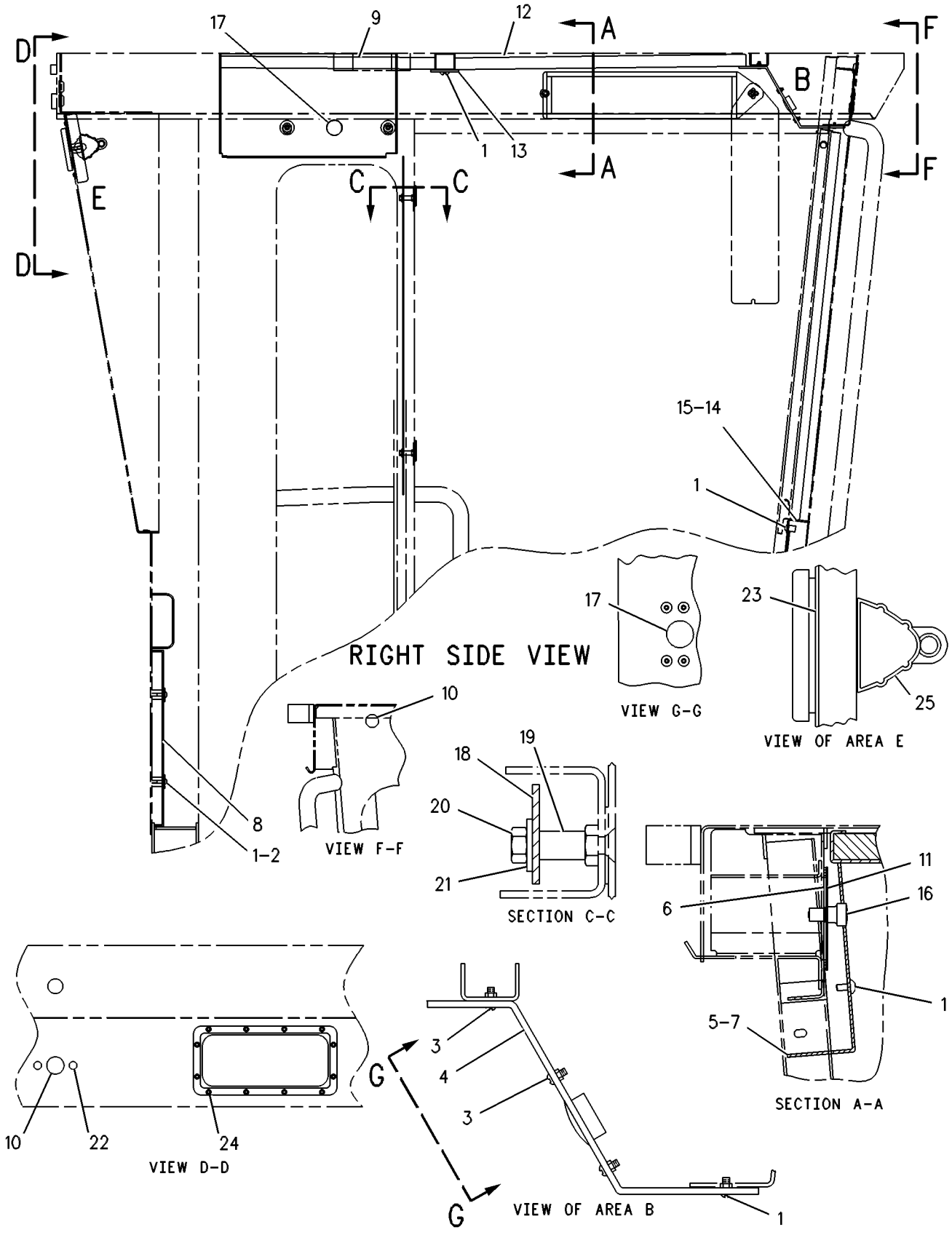

GRAPHIC #1 g00109333

OPERATOR STATION

167-8396 LINES GP-HEATER

S/N: CAF1-UP

PART OF 167-8066 AIR CONDITIONER AR, 167-8389, 167-8422 HEATER AR-CAB

AN ATTACHMENT

SMCS-7304 **i01679776**

NOTE	REF NO	GRAPHIC REF	PART NUMBER	QTY	PART NAME 1 2 3 4 5 6 (PRODUCT LEVEL)	SEE PAGE
	1	1	**5D-1026**	4	CLAMP-HOSE	
	2	1	**8F-8151**	1	VALVE-SHUTOFF (HEATER LINE)	
	3	1	*170-0967*	1	ELBOW AS	
		1	**5P-4906**	1	ELBOW	
		1	**3K-0360**	1	SEAL-O-RING	
	4	1	**2M-9780**	1	SEAL-O-RING	
	5	1	**3B-7255**	1	BUSHING-REDUCING	
	6	1	**4S-1962**	2	CLIP	
	7	1	**6D-1641**	2	CLIP	
	8	1	**6V-7420**	1	ADAPTER-STRAIGHT THREAD	
	9	1	**8T-4121**	2	WASHER-HARD (11X21X2.5MM THK)	
M	10	1	**8T-4136**	2	BOLT (M10X1.5X25MM)	
	11	1	**8T-6756**	1	ELBOW	
E	12	1	**5P-0767**		HOSE (289 CM)	
E	12A	1	**5P-0767**		HOSE (248 CM)	

E-ORDER BY THE CENTIMETER
M-METRIC PART

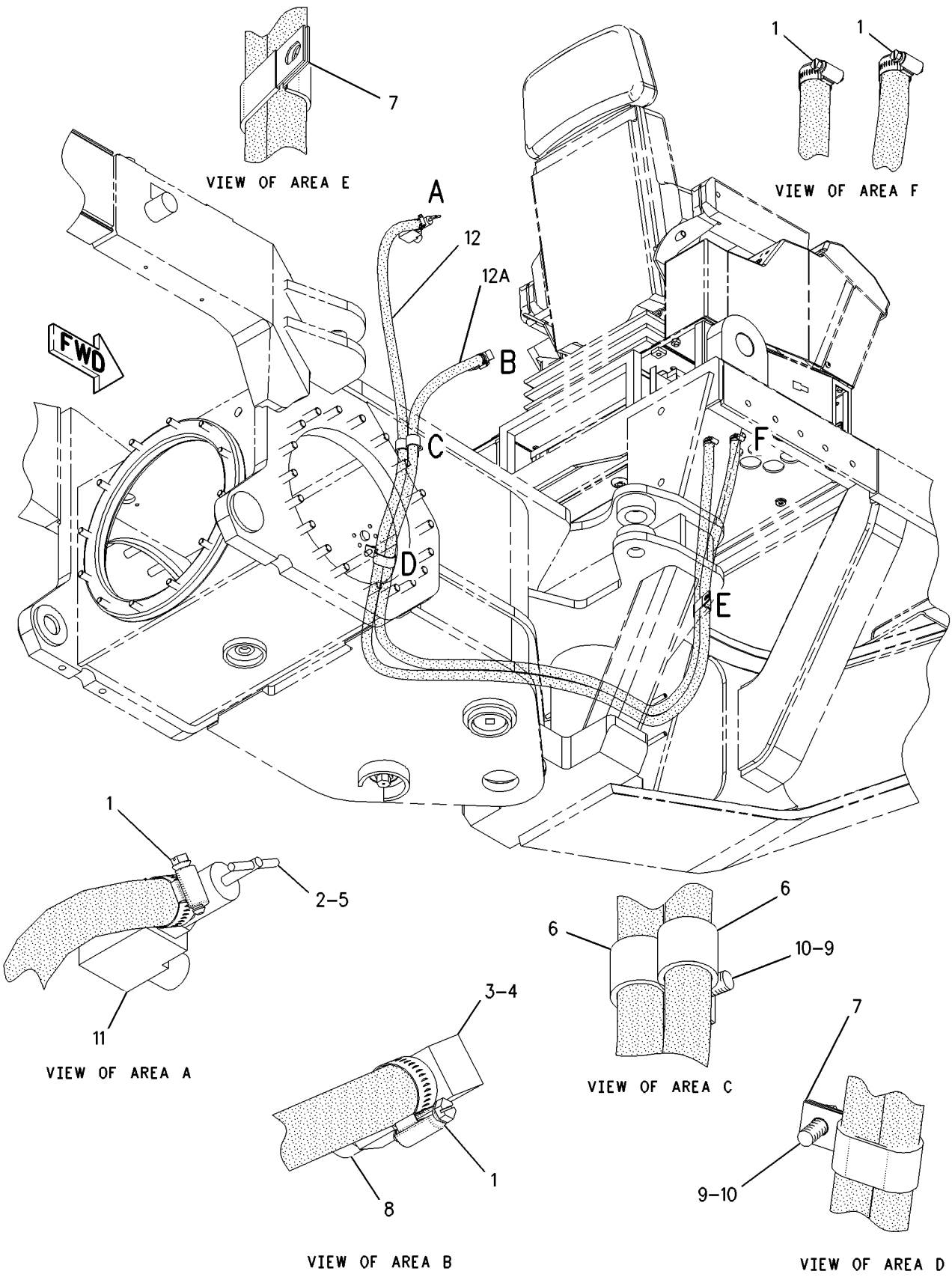

GRAPHIC #1

g00889501

OPERATOR STATION

6V-1970 LITERATURE GP

S/N: CAF1-UP

PART OF 162-5603 GENERAL AR

SMCS-0375 **i00607038**

NOTE	PART NUMBER	QTY	PART NAME 1 2 3 4 5 6 (PRODUCT LEVEL)	SEE PAGE
	5P-8500	2	KEY	
	2Y-3209	2	SEAL-WIRE	

<END>

OPERATOR STATION

178-8603 LOUVER GP-CAB

S/N: CAF1-UP
PART OF 167-8422 HEATER AR-CAB
AN ATTACHMENT

SMCS-7301 **i01778669**

NOTE	REF NO	GRAPHIC REF	PART NUMBER	QTY	PART NAME 1 2 3 4 5 6 (PRODUCT LEVEL)	SEE PAGE
	1	1	**8Y-6388**	6	LOUVER AS	
	2	1	**164-8474**	2	LOUVER AS	
	3	1	**126-1135**	2	PLATE	
	4	1	**126-1136**	2	PLATE	
	5	1	**6V-2687**	4	SCREW-PAN HEAD	
BD	6	1	**5P-5969**		SEAL	

B-USE AS REQUIRED
D-ORDER BY THE METER

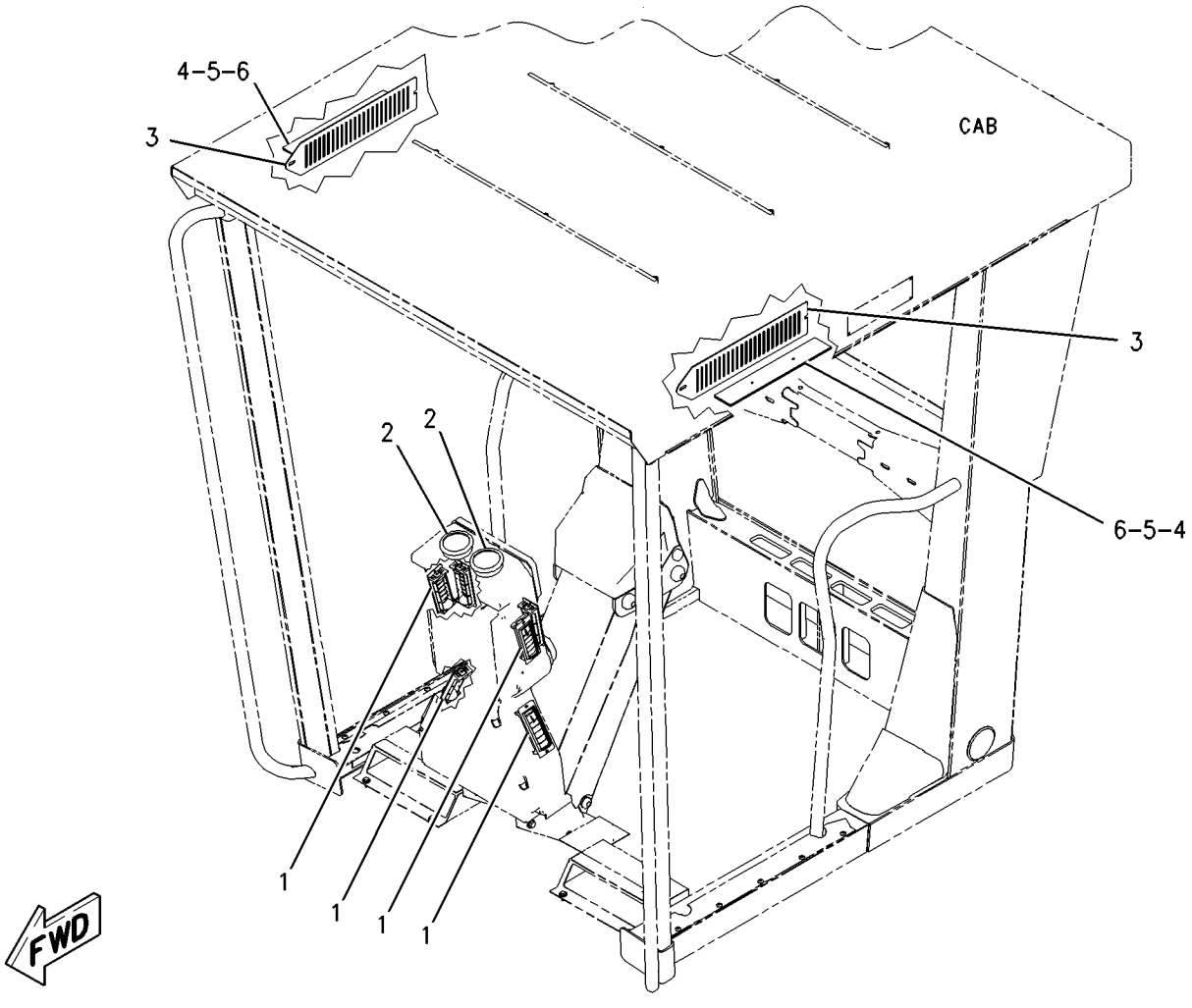

GRAPHIC #1 g00940703

OPERATOR STATION

8X-2795 MIRROR GP-REAR VIEW

S/N: CAF1-UP

PART OF 223-3938 CAB AR-HIGH PROFILE, 211-4906 CAB AR-NON-ROPS, 162-5603 GENERAL AR

ALSO AN ATTACHMENT

SMCS-7319 **i00134556**

NOTE	REF NO	GRAPHIC REF	PART NUMBER	QTY	PART NAME 1 2 3 4 5 6 (PRODUCT LEVEL)	SEE PAGE
	1	1	**8Y-4512**	1	MIRROR	
	2	1	**2G-8241**	2	CLAMP	
M	3	1	**9X-2046**	4	SCREW-TRUSS HEAD (M6X1X35MM)	
	4	1	**2G-8572**	2	WASHER (2.54MM THK)	
	5	1	**2G-8573**	2	CAP	
	6	1	**2G-8242**	2	ARM	
	7	1	**5P-1075**	2	WASHER-HARD (3MM THK)	
	8	1	**8H-1728**	2	NUT-ACORN	
	9	1	**5S-7379**	2	BOLT (3/8-16X.875IN)	
	10	1	**1P-2378**	2	CAP	

M-METRIC PART

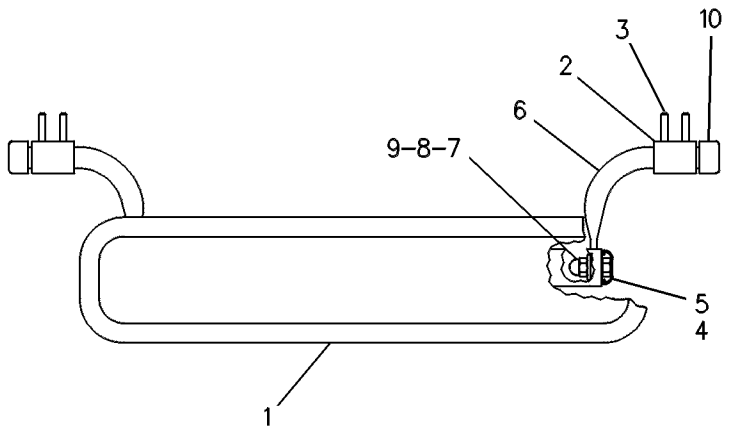

GRAPHIC #1 g00084778

OPERATOR STATION

123-4358 MIRROR GP-REAR VIEW

S/N: CAF1-UP
AN ATTACHMENT

SMCS-7319 **i00130904**

NOTE	REF NO	GRAPHIC REF	PART NUMBER	QTY	PART NAME 1 2 3 4 5 6 (PRODUCT LEVEL)	SEE PAGE
M	1	1	**8T-4133**	8	NUT (M10X1.50 THD)	
M	2	1	**8T-4137**	8	BOLT (M10X1.50X20MM)	
	3	1	**8T-4121**	24	WASHER (2.5MM THK)	
	4	1	**6G-8831**	4	CLAMP	
	5	1	**5P-6871**	2	MIRROR	
	6	1	**113-8218**	2	ARM	
	7	1	**123-4586**	4	BLOCK	
	8	1	**123-4587**	4	BRACKET	
M	9	1	**8T-4182**	8	BOLT (M10X1.5X45MM)	
M	10	1	**8T-4195**	4	BOLT (M10X1.50X30MM)	
M	11	1	**6V-7744**	4	LOCKNUT (M10X1.50 THD)	
	12	1	**9C-5928**	4	SPACER	

M-METRIC PART

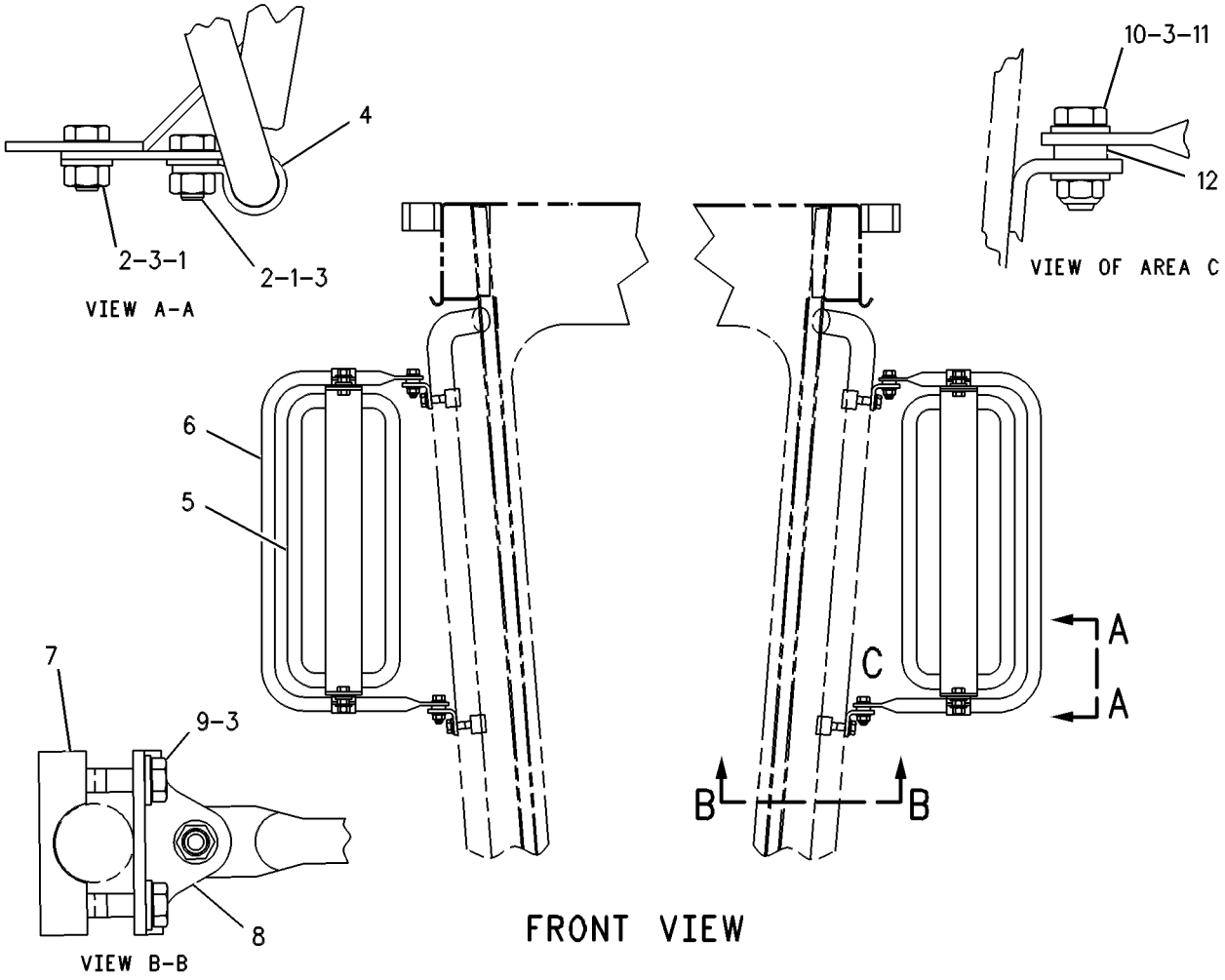

GRAPHIC #1 g00109253

OPERATOR STATION

193-8212 MIRROR GP-REAR VIEW—OUTSIDE—HEATED—EU

S/N: CAF1-UP
AN ATTACHMENT

SMCS-7319 **i01683409**

NOTE	REF NO	GRAPHIC REF	PART NUMBER	QTY	PART NAME 1 2 3 4 5 6 (PRODUCT LEVEL)	SEE PAGE
	1	1	**3E-0109**	5	PLUG-ROCKER SWITCH	
	2	1	**3S-2093**	8	STRAP-CABLE	
	3	1	**9W-1442**	1	FUSE (10 AMP) (OUTSIDE HEATED MIRROR)	
	4	1	**113-8218**	2	ARM	
	5	1	**123-4586**	4	BLOCK	
	6	1	**123-4587**	4	BRACKET	
	7	1	**145-3350**	1	PLATE	
	8	1	**153-2147**	1	PLATE	
	9	1	**172-6556**	1	PANEL	
	10	1	**188-3862**	1	BRACKET AS	
M		1	**6V-9632**	4	NUT-WELD (M6X1 THD)	
	11	1	**196-8557**	1	HARNESS AS-CAB	
		1	**155-2255**	1	KIT-CONNECTING PLUG (12 PIN)	
					(INCLUDES PLUG AS & WEDGE)	
		1	**155-2265**	4	KIT-CONNECTING PLUG (8 PIN)	
					(EACH INCLUDES PLUG AS & WEDGE)	
		1	**155-2270**	1	KIT-CONNECTING PLUG (2 PIN) (FLOOD LAMP SIDE & AUX CKT)	
					(INCLUDES PLUG AS & WEDGE)	
		1	**155-2271**	1	PLUG AS-CONNECTOR (4 PIN)	
					(INCLUDES PLUG AS & WEDGE)	
		1	**102-8802**	1	KIT-RECEPTACLE (2 PIN)	
					(INCLUDES RECEPTACLE AS & WEDGE)	
		1	**102-8804**	2	KIT-RECEPTACLE (4 PIN)	
					(EACH INCLUDES RECEPTACLE AS & WEDGE)	
		1	**102-8806**	1	KIT-RECEPTACLE (8 PIN)	
					(INCLUDES RECEPTACLE AS & WEDGE)	
		1	**102-8801**	1	KIT-RECEPTACLE (12 PIN)	
					(INCLUDES RECEPTACLE AS & WEDGE)	
	12	1	**202-8649**	2	MIRROR AS	
					(EACH INCLUDES)	
		1	**102-8802**	1	KIT-RECEPTACLE (2 PIN)	
		1	**3E-3365**	1	WEDGE-RECEPTACLE LOCK (2 PIN)	
		1	**9G-3695**	2	PLUG (GROMMET SEALING)	
	13	1	**3E-8766**	1	SWITCH AS (HEATED MIRROR)	
		1	**3E-8825**	1	LAMP (24 VOLT) (HEATED MIRROR INDICATOR)	
		1	**123-5857**	1	ACTUATOR-ROCKER (HEATED MIRROR)	
	14	1	**130-5300**	2	CLIP	
	15	1	**3P-9554**	2	GROMMET	
	16	1	**6G-8831**	4	CLAMP	
M	17	1	**6V-7744**	4	LOCKNUT (M10X1.5 THD)	
	18	1	**8T-4121**	25	WASHER-HARD (11X21X2.5MM THK)	
M	19	1	**8T-4133**	8	NUT (M10X1.5 THD)	
M	20	1	**8T-4136**	8	BOLT (M10X1.5X25MM)	
M	21	1	**8T-4182**	8	BOLT (M10X1.5X45MM)	
M	22	1	**8T-4186**	4	BOLT (M10X1.5X40MM)	
	23	1	**9C-5928**	4	SPACER (5.15MM LG X 19.0 DIA)	
M	24	1	**9X-2043**	6	SCREW-TRUSS HEAD (M6X1X14MM)	

M-METRIC PART

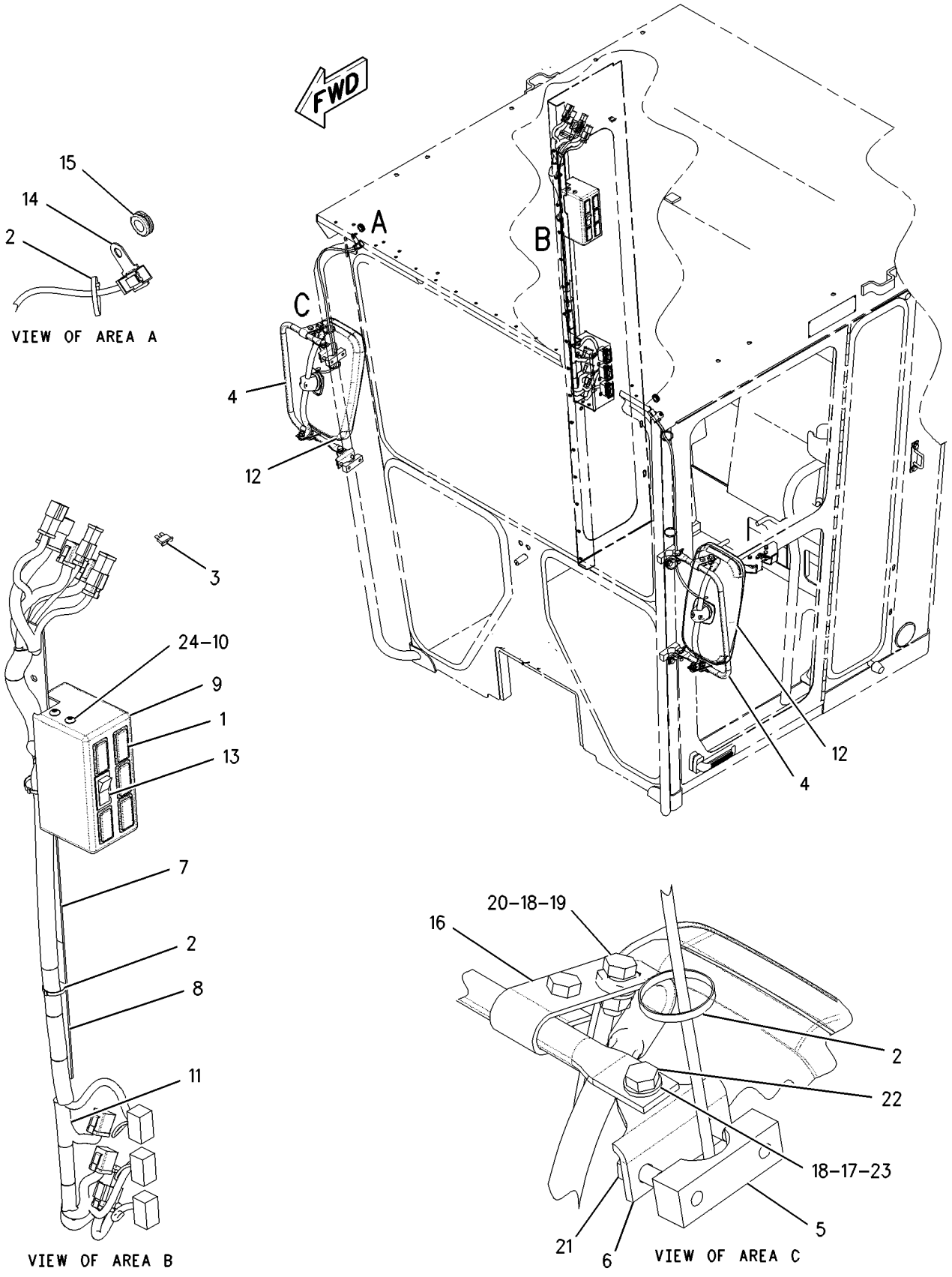

GRAPHIC #1

g00804836

OPERATOR STATION

197-2064 MIRROR GP-REAR VIEW—OUTSIDE—EU

S/N: CAF1-UP
PART OF 197-5572 ROADING AR
AN ATTACHMENT

SMCS-7319 **i01682193**

NOTE	PART NUMBER	QTY	PART NAME 1 2 3 4 5 6 (PRODUCT LEVEL)	SEE PAGE
	113-8218	2	ARM	
	123-4586	4	BLOCK	
M	**8T-4137**	8	BOLT (M10X1.5X20MM)	
M	**8T-4182**	8	BOLT (M10X1.5X45MM)	
M	**8T-4186**	4	BOLT (M10X1.5X40MM)	
	123-4587	4	BRACKET	
	6G-8831	4	CLAMP	
M	**6V-7744**	4	LOCKNUT (M10X1.5 THD)	
	197-2055	2	MIRROR AS	
M	**8T-4133**	8	NUT (M10X1.5 THD)	
	9C-5928	8	SPACER (5.15MM LG X 19.0 DIA)	
	8T-4121	24	WASHER-HARD (11X21X2.5MM THK)	

M-METRIC PART

<END>

OPERATOR STATION

197-2066 MIRROR GP-REAR VIEW—INSIDE—DUAL—EU

S/N: CAF1-UP
PART OF 207-3665, 210-2042 CONVERSION AR-CERTIFICATION
AN ATTACHMENT

SMCS-7319 **i01782623**

NOTE	REF NO	GRAPHIC REF	PART NUMBER	QTY	PART NAME 1 2 3 4 5 6 (PRODUCT LEVEL)	SEE PAGE
	1	1	**1P-2378**	4	CAP	
	2	1	**2G-8241**	2	CLAMP	
	3	1	**197-2054**	1	MIRROR AS (RH)	
	4	1	**213-5132**	1	MIRROR AS (LH)	
M	5	1	**9X-2046**	4	SCREW-TRUSS HEAD (M6X1X35MM)	

M-METRIC PART

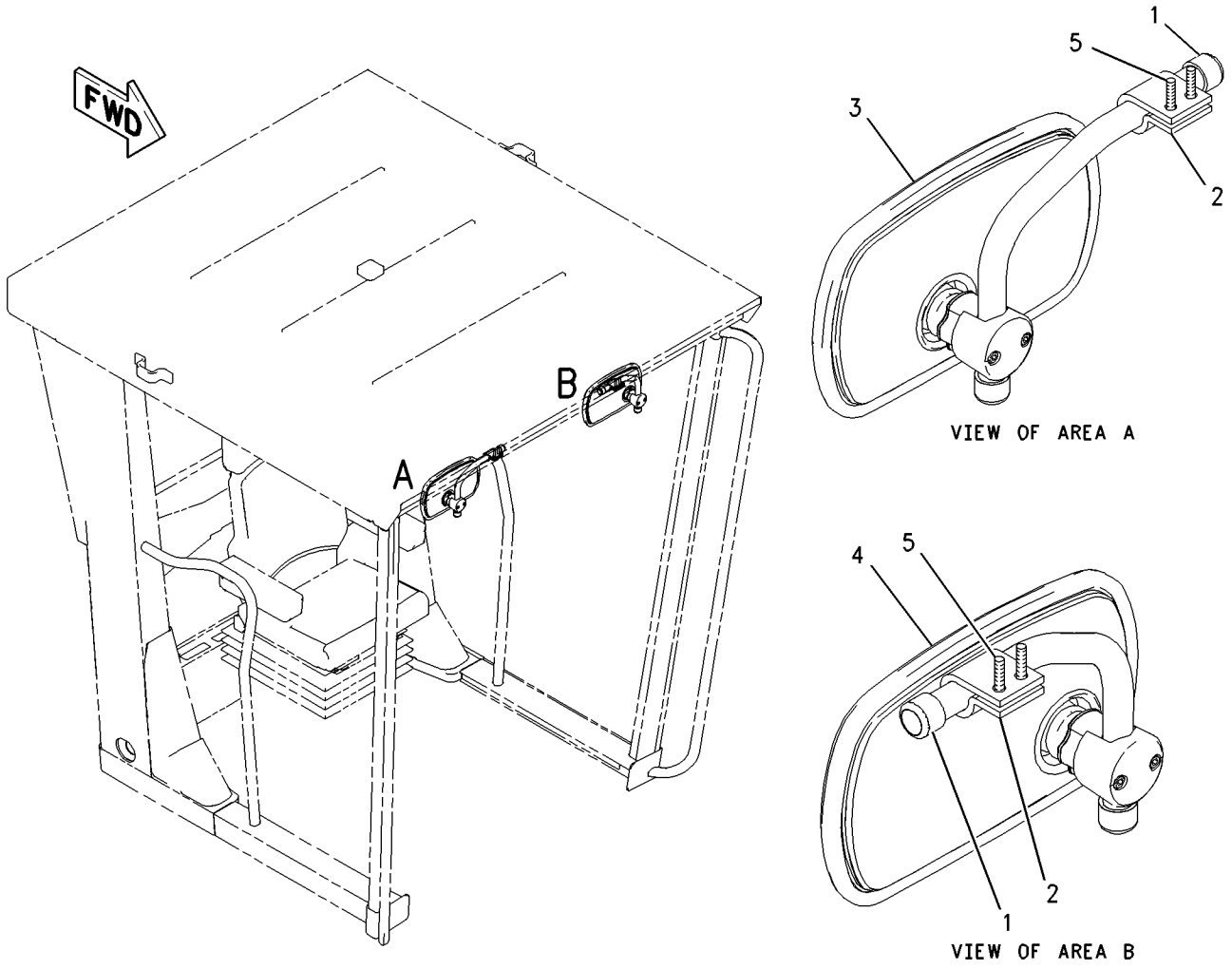

GRAPHIC #1 g00893892

OPERATOR STATION

180-9285 MODULE GP-QUAD GAUGE

S/N: CAF1-UP

PART OF 159-5812, 178-3030, 196-4909 PANEL GP-INSTRUMENT

ALSO AN ATTACHMENT

SMCS-7451, 7490 **i01676197**

NOTE	REF NO	GRAPHIC REF	PART NUMBER	QTY	PART NAME 1 2 3 4 5 6 (PRODUCT LEVEL)	SEE PAGE
	1	1	**102-8805**	1	KIT-RECEPTACLE (6 PIN) (QUAD GAGE MODULE)	
					(INCLUDES RECEPTACLE ASSEMBLY AND WEDGE)	
	2	1	**186-3735**	6	PIN-CONNECTOR	
	3	1	**3E-3383**	1	WEDGE-RECEPTACLE LOCK	

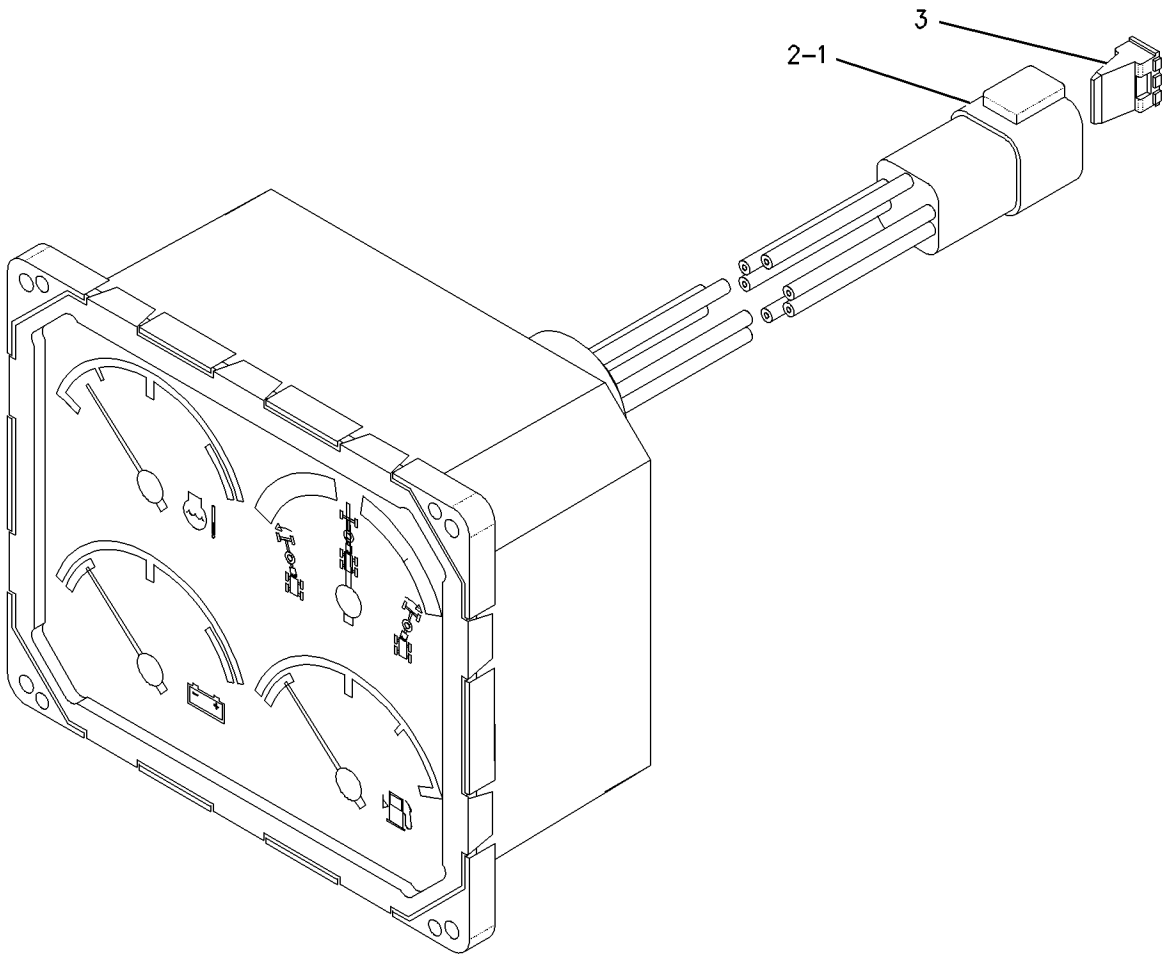

GRAPHIC #1 g00877962

OPERATOR STATION

153-8061 MODULE GP-SPEEDOMETER & TACH

S/N: CAF1-UP
PART OF 196-4909 PANEL GP-INSTRUMENT
AN ATTACHMENT

SMCS-7451, 7462, 7463, 7490 **i01178042**

NOTE	REF NO	GRAPHIC REF	PART NUMBER	QTY	PART NAME 1 2 3 4 5 6 (PRODUCT LEVEL)	SEE PAGE
	1	1	**8T-8729**	6	PIN-CONNECTOR	
	2	1	**3E-3383**	1	WEDGE-RECEPTACLE LOCK	
	3	1	**102-8805**	1	KIT-RECEPTACLE (6 PIN)	
					(INCLUDES WEDGE)	
		1	**102-8810**	1	KIT-CONNECTING PLUG (6 PINS)	
					(INCLUDES WEDGE)	

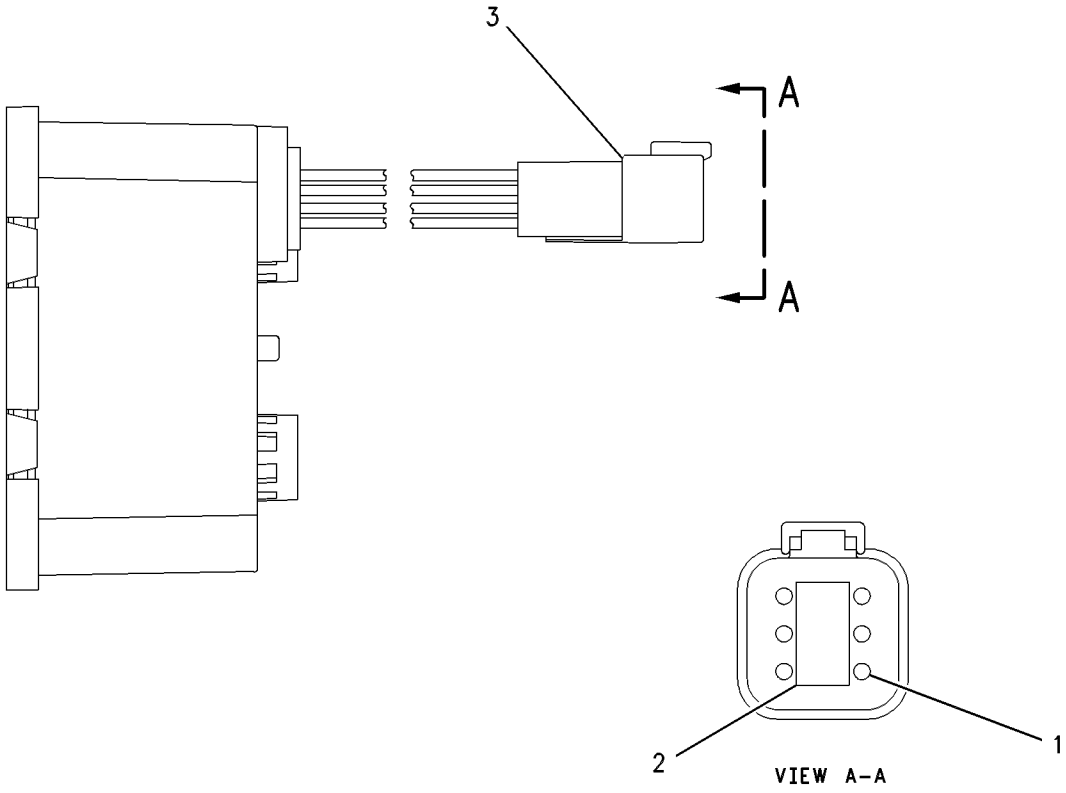

GRAPHIC #1 g00395696

OPERATOR STATION

177-9741 MODULE GP-SPEEDOMETER & TACH–SNOW

S/N: CAF1-UP
AN ATTACHMENT

SMCS-7451, 7462, 7463, 7490 **i01680684**

NOTE	REF NO	GRAPHIC REF	PART NUMBER	QTY	PART NAME 1 2 3 4 5 6 (PRODUCT LEVEL)	SEE PAGE
	1	1	**7N-5876**	2	LAMP (24 VOLT) (SPEEDOMETER & TACH)	
	2	1	**190-3482**	1	MODULE GP-SPEEDOMETER & TACH	
		1	**3E-3383**	1	WEDGE-RECEPTACLE LOCK	
		1	**186-3735**	6	PIN-CONNECTOR	
		1	**102-8805**	1	KIT-RECEPTACLE (6 PIN) (SPEEDOMETER & TACH)	

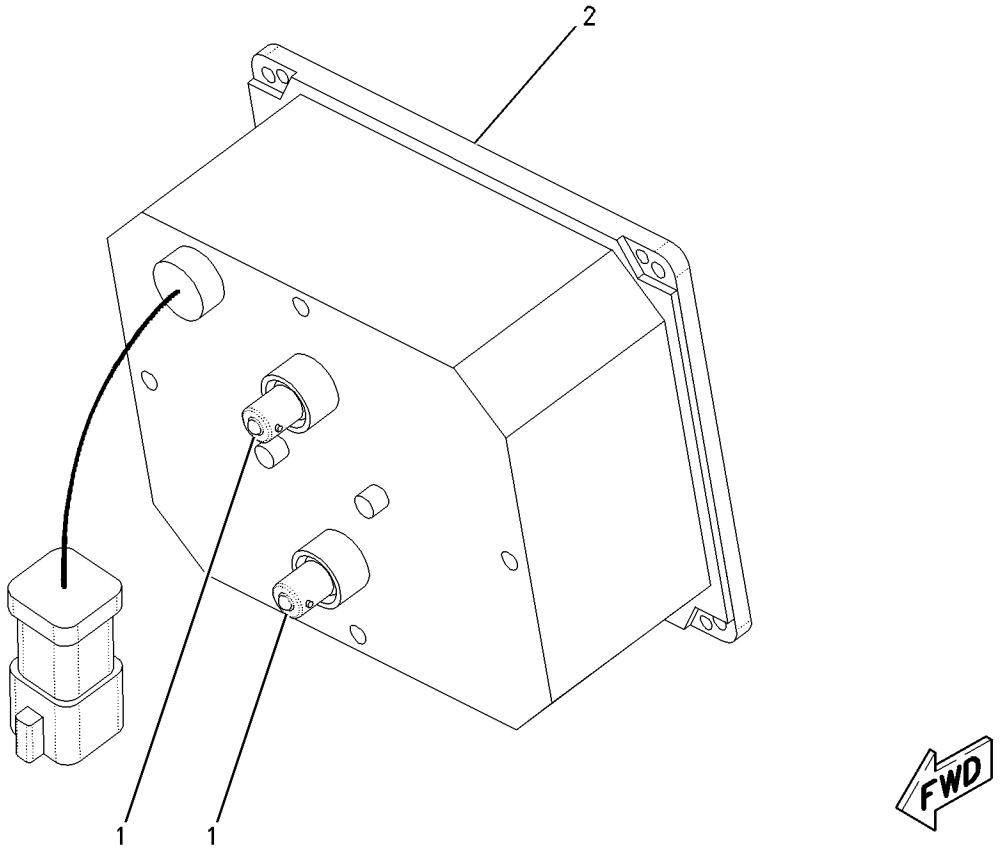

GRAPHIC #1 g00845776

OPERATOR STATION

125-4344 MOUNTING GP-CAB—NON-ROPS, ENCLOSED

S/N: CAF1-UP

PART OF 223-3938 CAB AR-HIGH PROFILE, 211-4906 CAB AR-NON-ROPS

AN ATTACHMENT

SMCS-7301 **i01132163**

NOTE	REF NO	GRAPHIC REF	PART NUMBER	QTY	PART NAME 1 2 3 4 5 6 (PRODUCT LEVEL)	SEE PAGE
	1	1	**103-5515**	1	PAD-RH	
	2	1	**103-5516**	1	PAD-LH	
	3	1	**103-4953**	4	MOUNTING	
	4	1	**7X-0375**	4	BOLT (3/4X10X5 IN)	
	5	1	**8X-0674**	4	WASHER (10MM THK)	
	6	1	**038-3987**	2	WASHER	
	7	1	**4K-0367**	2	NUT (5/8-11 THD)	
	8	1	**7X-0354**	2	BOLT (5/8-11X4.50IN)	
	9	1	**8T-4122**	2	WASHER (3.5MM THK)	
	10	1	**8X-6131**	2	SEAL	
	11	1	**164-2465**	2	PAD	
	12	1	**9D-1589**	2	MOUNTING	
	13	1	**2G-7098**	2	PAD	
	14	1	**2G-7097**	1	PAD	
B	15	1	**123-6806**		SEAL	

B-USE AS REQUIRED

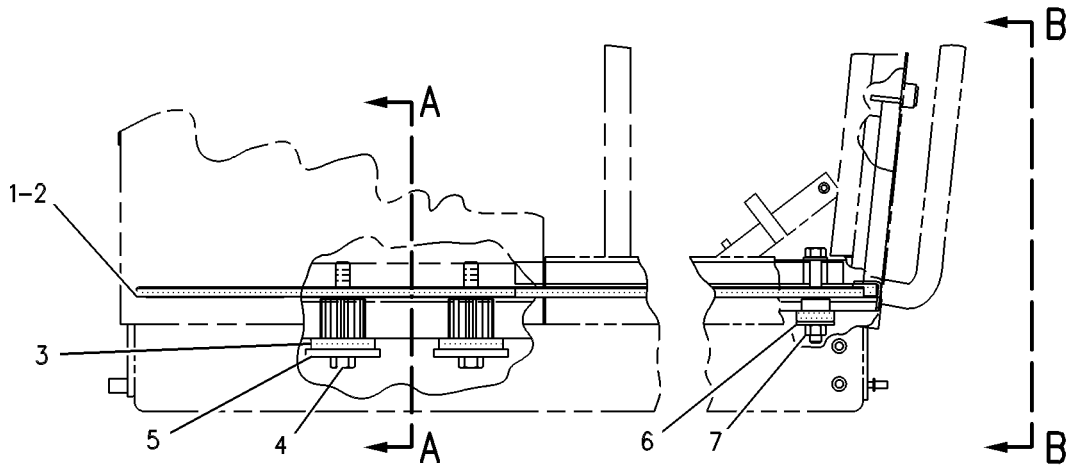

RIGHT SIDE VIEW

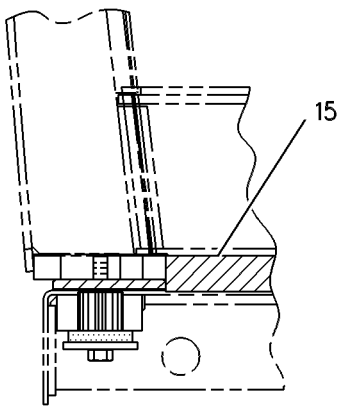

SECTION A-A

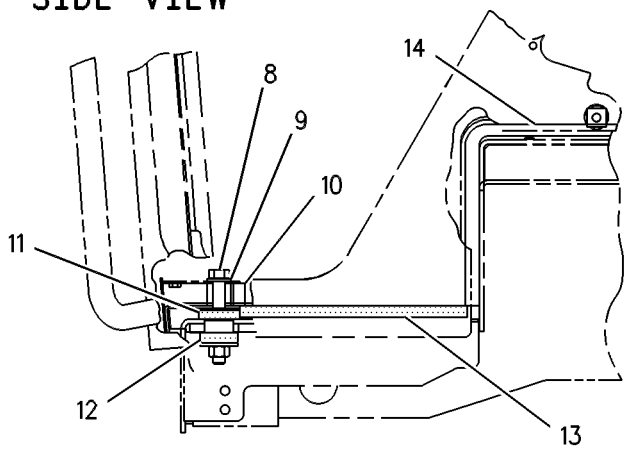

VIEW B-B

GRAPHIC #1 g00109328

OPERATOR STATION

2A-6985 MOUNTING GP-ROPS

S/N: CAF1-UP

PART OF 218-4758, 218-4760 ROPS AR-ENCLOSED, 172-5377, 177-8779 ROPS GP-ENCLOSED

ALSO AN ATTACHMENT

SMCS-7266 **i01435139**

NOTE	REF NO	GRAPHIC REF	PART NUMBER	QTY	PART NAME 1 2 3 4 5 6 (PRODUCT LEVEL)	SEE PAGE
	1	1	**3E-4048**	2	CAP-PLUG	
	2	1	**103-5515**	1	PAD-RH	
	3	1	**103-5516**	1	PAD-LH	
	4	1	**103-4953**	4	MOUNTING	
	5	1	**7X-0375**	4	BOLT (3/4-10X5 IN)	
	6	1	**8X-0674**	4	WASHER (22X100X10MM THK)	
	7	1	**038-3987**	2	WASHER (16.75X50.8X4.76MM THK)	
	8	1	**4K-0367**	2	NUT-FULL (5/8-11 THD)	
	9	1	**7X-0354**	2	BOLT (5/8-11X4.50IN)	
	10	1	**8T-4122**	4	WASHER-HARD (17X32X3.5MM THK)	
	11	1	**8X-6131**	2	SEAL	
	12	1	**164-2465**	2	PAD	
	13	1	**9D-1589**	2	MOUNTING	
	14	1	**2G-7098**	2	PAD	
	15	1	**2G-7097**	1	PAD	
	16	1	**103-4771**	2	PIN AS	
	17	1	**030-8535**	2	BOLT-LOCKING (3/8-16X0.875 IN)	
	18	1	**8T-4896**	2	WASHER-HARD (10.2X18.5X2.5MM THK)	
	19	1	**166-1999**	2	SHIM (2.28MM THK)	
BE	20	1	**123-6806**		SEAL	
	21	1	**166-1997**	2	SHIM (1.2MM THK)	

B-USE AS REQUIRED
E-ORDER BY THE CENTIMETER

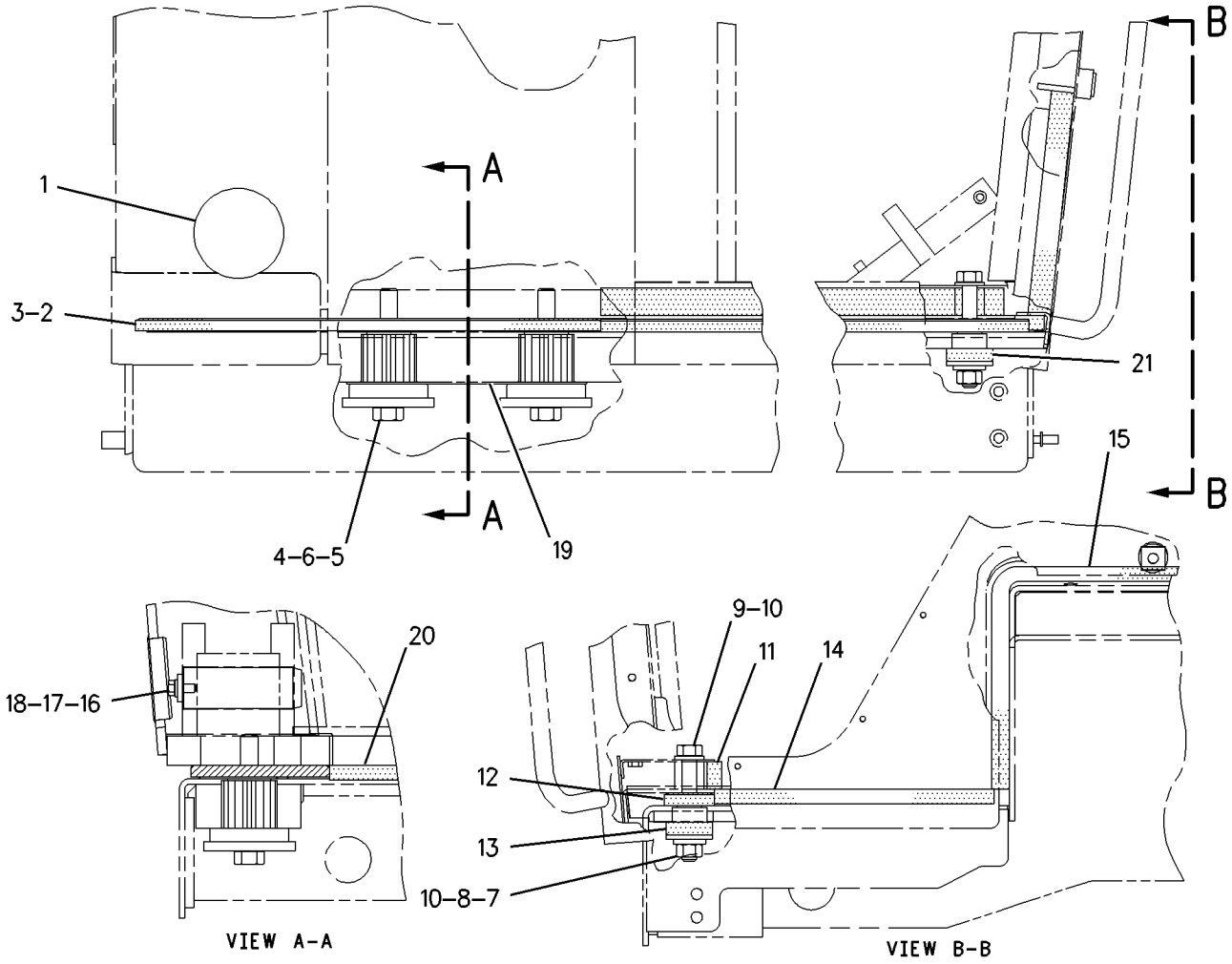

GRAPHIC #1 g00752004

OPERATOR STATION

191-8692 MOUNTING GP-ROPS—OPEN—HIGH PROFILE

S/N: CAF1-UP
PART OF 173-2751 ROPS GP-OPEN
AN ATTACHMENT

SMCS-7266 **i01683445**

NOTE	REF NO	GRAPHIC REF	PART NUMBER	QTY	PART NAME 1 2 3 4 5 6 (PRODUCT LEVEL)	SEE PAGE
	1	1	**3E-4048**	2	CAP-PLUG	
	2	1	**8T-4122**	4	WASHER-HARD (17X32X3.5MM THK)	
	3	1	**9D-1589**	2	MOUNTING	
	4	1	**103-4771**	2	PIN AS	
	5	1	**103-4953**	4	MOUNTING	
	6	1	**103-5515**	1	PAD-RH	
	7	1	**103-5516**	1	PAD-LH	
	8	1	**164-2465**	2	PAD	
	9	1	**166-1997**	2	SHIM (1.2MM THK)	
	10	1	**166-1999**	2	SHIM (2.28MM THK)	
	11	1	**030-8535**	2	BOLT-LOCKING (3/8-16X0.875 IN)	
	12	1	**3V-9244**	2	WASHER (16.5X50X5MM THK)	
	13	1	**4K-0367**	2	NUT-FULL (5/8-11 THD)	
	14	1	**7X-0354**	2	BOLT (5/8-11X4.5 IN)	
	15	1	**7X-0375**	4	BOLT (3/4-10X5 IN)	
	16	1	**8T-4896**	2	WASHER-HARD (10.2X18.5X2.5MM THK)	
	17	1	**8X-0674**	4	WASHER (22X100X10MM THK)	

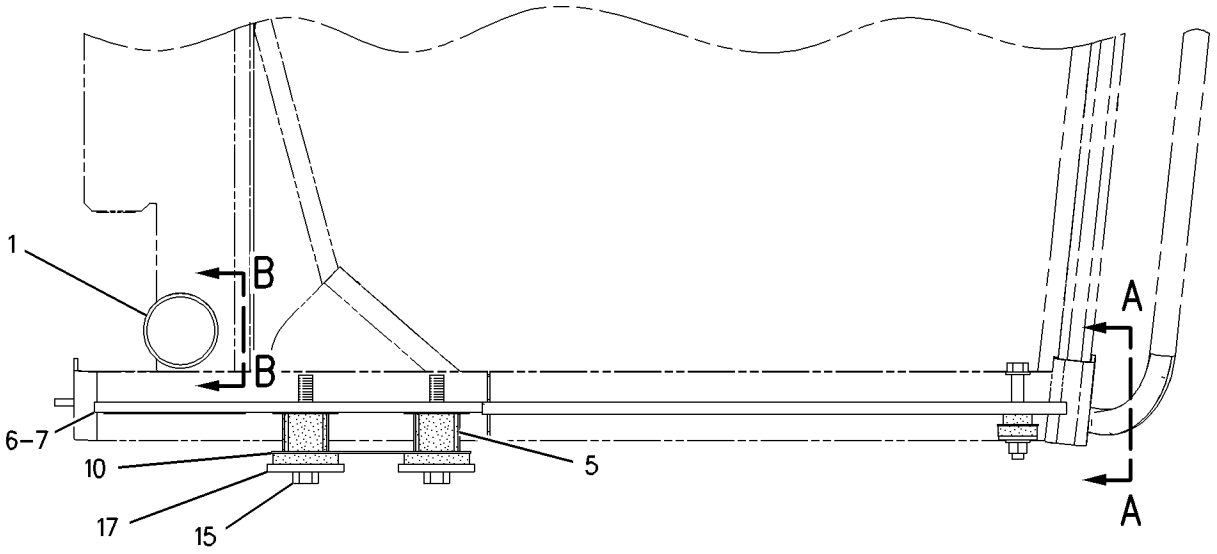

RIGHT SIDE VIEW

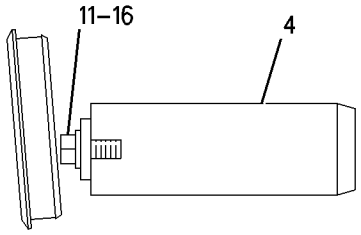

VIEW B-B

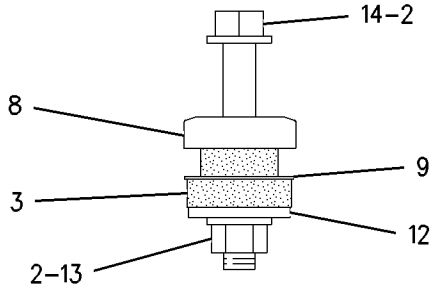

VIEW A-A

GRAPHIC #1 g00846778

OPERATOR STATION

108-8421 PAN GP-BACKREST

S/N: CAF1-UP
PART OF 114-1183, 114-1185 SEAT GP
AN ATTACHMENT

SMCS-7312 **i01298788**

NOTE	REF NO	GRAPHIC REF	PART NUMBER	QTY	PART NAME 1 2 3 4 5 6 (PRODUCT LEVEL)	SEE PAGE
	1	1	**9M-5733**	2	RIVET-POP (4.78MM DIA)	
	2	1	**8Y-6006**	1	LID AS	
	3	1	**8Y-6010**	1	LANYARD	
	4	1	**4S-8287**	8	RIVET-POP (6MM DIA)	
	5	1	**8Y-5972**	1	LATCH	
	6	1	**108-8423**	1	SHAFT AS-LUMBAR	
	7	1	**3E-4336**	1	STUD-BALL	
	8	1	**3E-4335**	1	CLIP	
	9	1	**2F-7306**	1	SCREW-MACHINE (6-32X.25 IN)	
	10	1	**8F-1462**	1	WASHER-PLATED	
E	11	1	**3E-6575**		SEAL (76CM)	
	12	1	**108-8424**	1	PAN-LUMBAR	
	13	1	**8Y-5903**	2	CAM	
	14	1	**3E-4362**	2	PIN-SPRING	

E-ORDER BY THE CENTIMETER

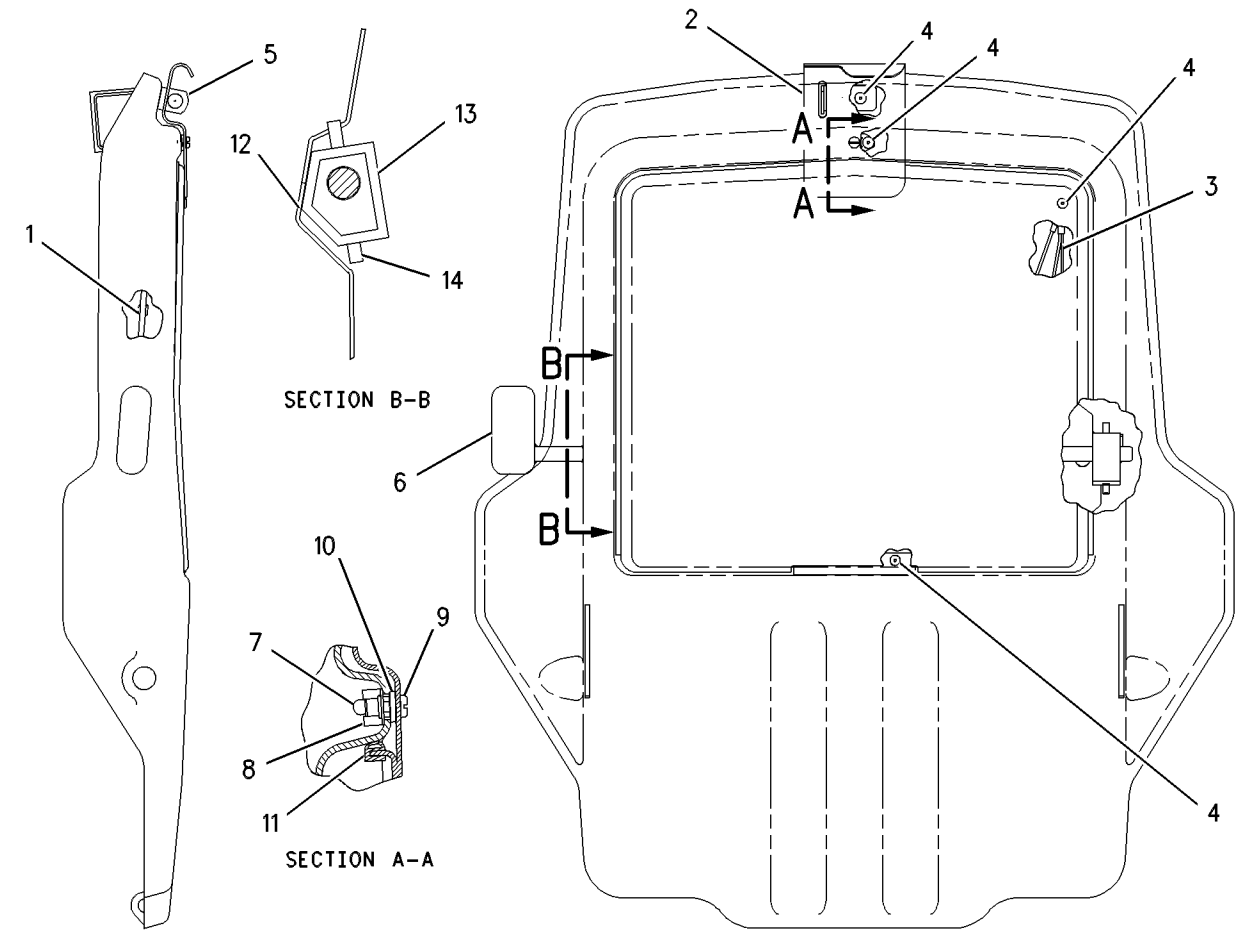

GRAPHIC #1 g00383446

OPERATOR STATION

113-5810 PAN GP-SEAT

S/N: CAF1-UP
PART OF 114-1183, 114-1185 SEAT GP
AN ATTACHMENT

SMCS-7312 **i00137428**

NOTE	REF NO	GRAPHIC REF	PART NUMBER	QTY	PART NAME 1 2 3 4 5 6 (PRODUCT LEVEL)	SEE PAGE
	1	1	**113-5809**	1	PAN AS-SEAT	
JZ	2	1		1	ROD AS	
HJNZ	3	1		3	SPRING	
	4	1	**3K-4897**	10	PIN-SPRING	
HZ	5	1		1	ROD	
HZ	6	1		1	ROD AS	
	7	1	**9M-5733**	1	RIVET-POP (4.78MM DIA)	
	8	1	**114-1083**	1	KNOB-BACK TILT	
PZ	9	1		1	CABLE AS	
	10	1	**009-3681**	2	RING-RETAINING	
PZ	11	1		1	PIN	
PZ	12	1		1	ADJUSTER AS	
	13	1	**114-1082**	1	KNOB-SLIDE	
	14	1	**114-1081**	1	KNOB-SEAT TILT	
	15	1	**114-1070**	1	BRACKET	
					AVAILABLE REPAIR KIT(S):	
J			**114-1068**	1	KIT-SEAT TILT	
N			**114-1067**	1	KIT-BACK TILT	
P			**8Y-5999**	1	KIT-ADJUSTER	
H			**114-1069**	1	KIT-ROD	

H-KIT MARKED H INCLUDES PART(S) MARKED H
J-KIT MARKED J INCLUDES PART(S) MARKED J
N-KIT MARKED N INCLUDES PART(S) MARKED N
P-KIT MARKED P INCLUDES PART(S) MARKED P
Z-NOT SERVICED SEPARATELY

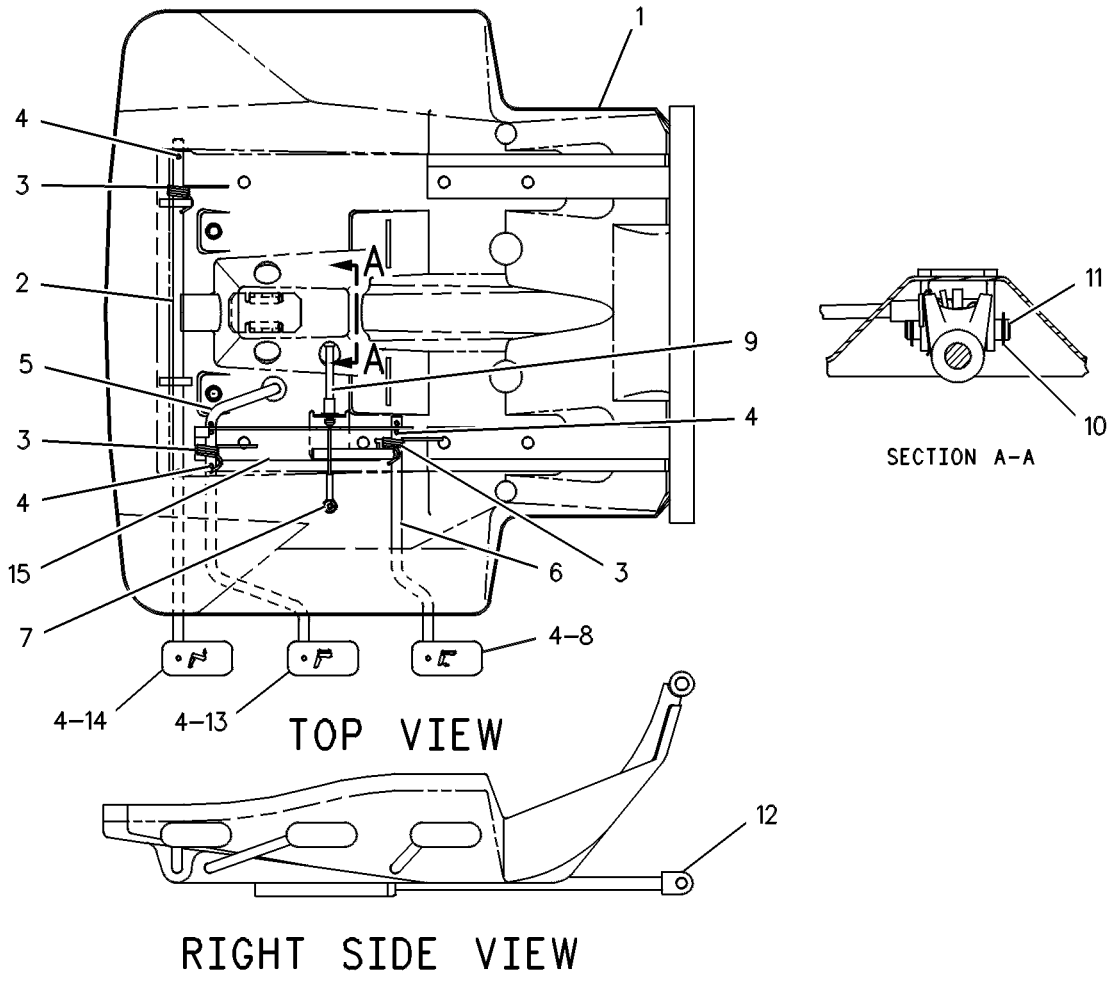

GRAPHIC #1 g00108701

OPERATOR STATION

8X-2375 PANEL GP-CAB—LOW PROFILE

S/N: CAF1-UP

PART OF 172-5377, 218-4761 ROPS GP-ENCLOSED

ALSO AN ATTACHMENT

SMCS-7301 **i01755188**

NOTE	REF NO	GRAPHIC REF	PART NUMBER	QTY	PART NAME 1 2 3 4 5 6 (PRODUCT LEVEL)	SEE PAGE
	1	1	**8X-5456**	1	GLASS-FRONT	
	2	1	**118-2557**	2	GLASS (SIDE)	
	3	1	**102-9381**	1	GLASS (REAR)	
	4	1	**149-3409**	2	GLASS	
	5	1	**166-2829**	1	FILM (SUNSHADE-CATERPILLAR)	
D	6	1	**5P-5768**		SEAL (10.5M)	
E	7	1	**3E-9413**		SEAL (913CM)	

D-ORDER BY THE METER
E-ORDER BY THE CENTIMETER

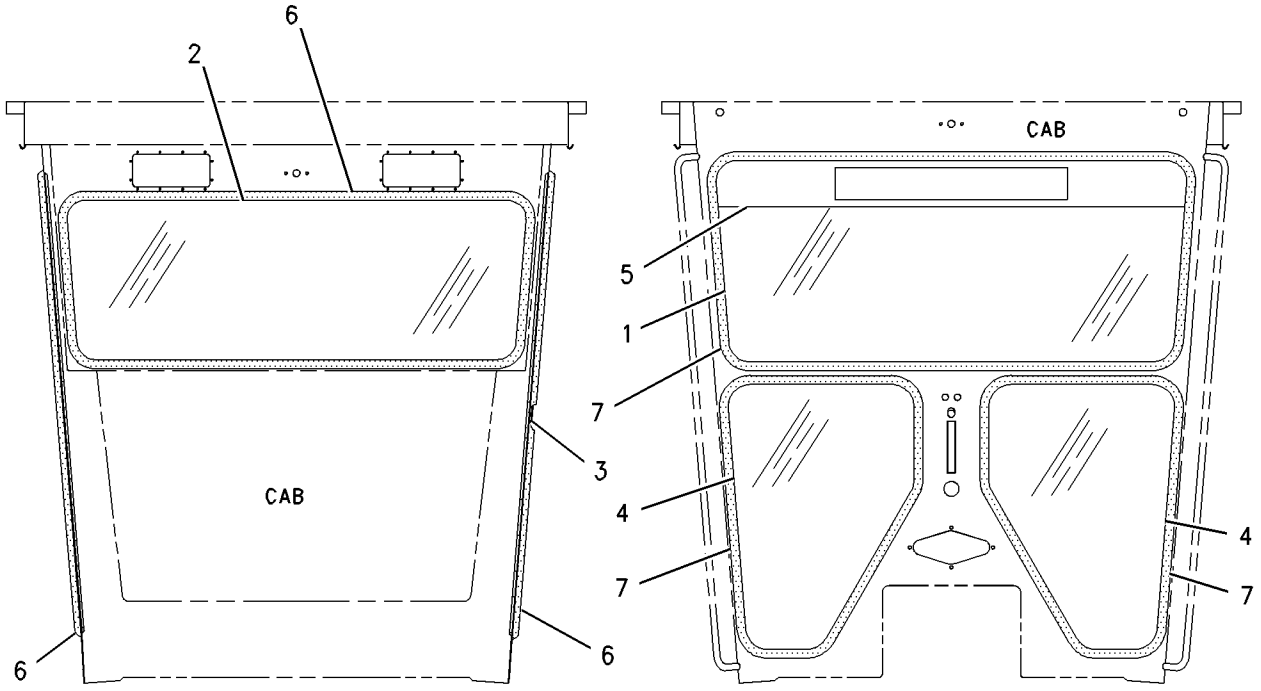

GRAPHIC #1 g00693198

OPERATOR STATION

8X-2385 PANEL GP-CAB

S/N: CAF1-UP
PART OF 211-4907 CAB GP, 177-8779, 218-4759 ROPS GP-ENCLOSED
AN ATTACHMENT

SMCS-7301 **i01755179**

NOTE	REF NO	GRAPHIC REF	PART NUMBER	QTY	PART NAME 1 2 3 4 5 6 (PRODUCT LEVEL)	SEE PAGE
	1	1	**115-6806**	2	GLASS (SIDE)	
	2	1	**8X-2228**	1	GLASS-FRONT	
BD	3	1	**5P-5768**		SEAL	
	4	1	**102-9372**	1	GLASS	
	5	1	**149-3409**	2	GLASS	
E	6	1	**3E-9413**		SEAL (963CM)	
	7	1	**166-2830**	1	FILM (SUNSHADE-CATERPILLAR)	

B-USE AS REQUIRED
D-ORDER BY THE METER
E-ORDER BY THE CENTIMETER

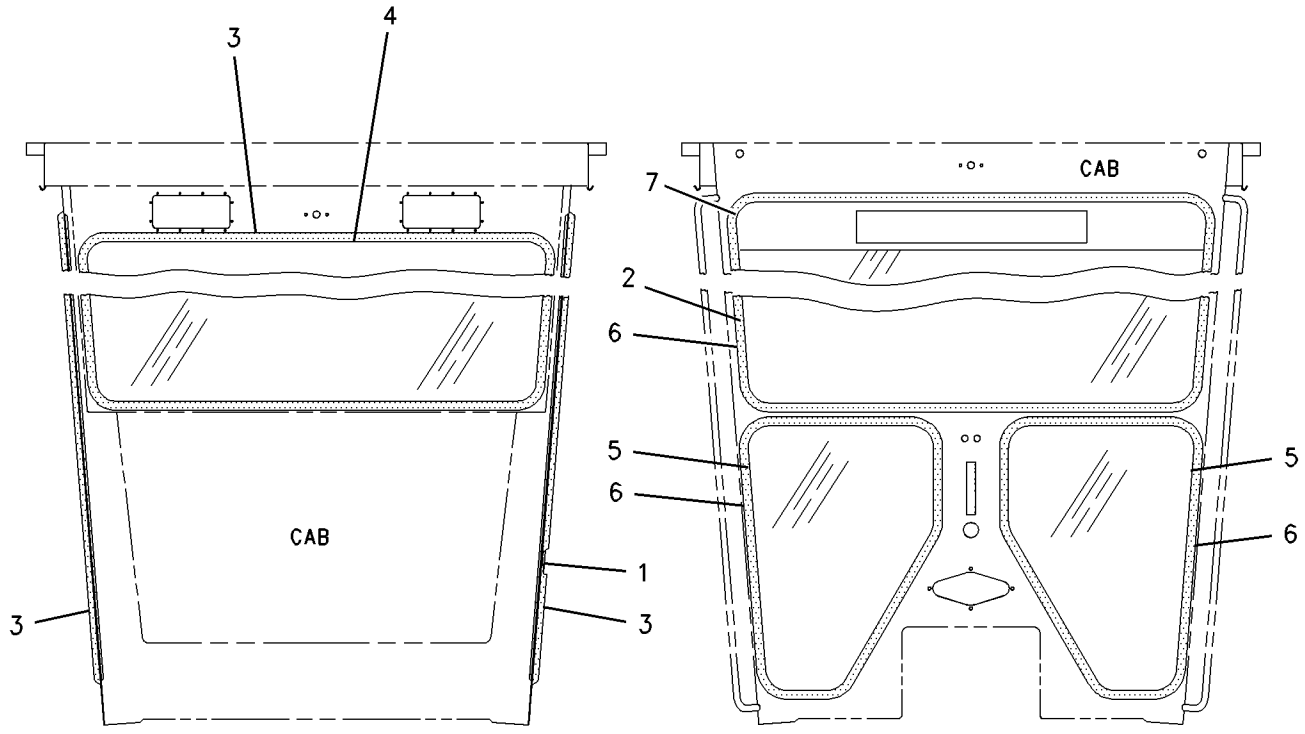

REAR VIEW FRONT VIEW

GRAPHIC #1 g00693201

OPERATOR STATION

129-8614 PANEL GP-CAB—HIGH PROFILE

S/N: CAF1-UP
PART OF 223-3937 CAB GP
AN ATTACHMENT

SMCS-7301 **i00677677**

NOTE	REF NO	GRAPHIC REF	PART NUMBER	QTY	PART NAME 1 2 3 4 5 6 (PRODUCT LEVEL)	SEE PAGE
	1	1	**8X-2228**	1	GLASS-FRONT	
D	2	1	**5P-5768**		SEAL (4.3M)	
	3	1	**102-9372**	1	GLASS-REAR	
	4	1	**149-3409**	2	GLASS	
D	5	1	**3E-9413**		SEAL (9.7M)	

D-ORDER BY THE METER

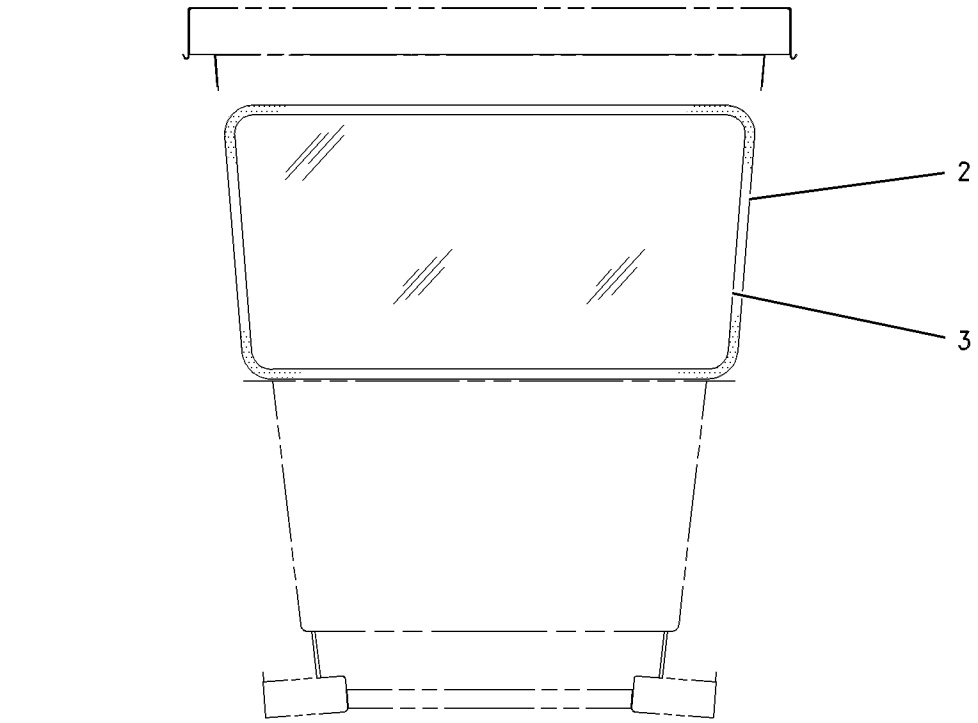

REAR VIEW

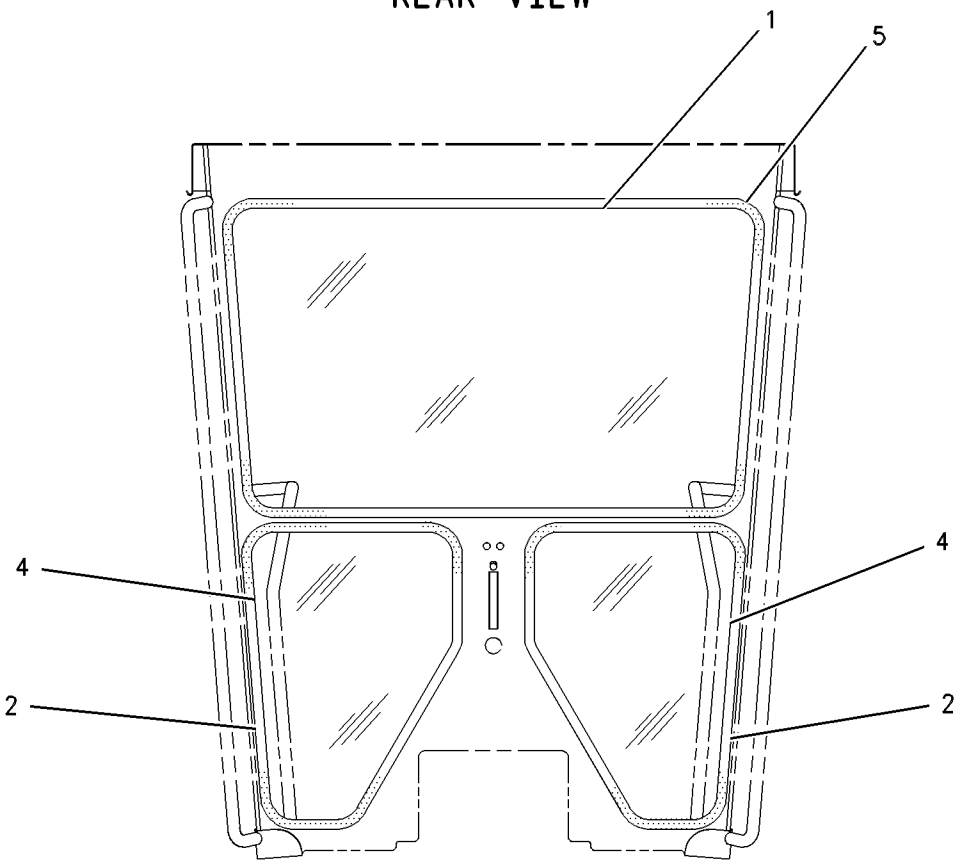

FRONT VIEW

GRAPHIC #1

g00294475

OPERATOR STATION

159-5812 PANEL GP-INSTRUMENT

S/N: CAF1-UP

PART OF 162-5603 GENERAL AR

SMCS-7450, 7451 **i01862276**

NOTE	REF NO	GRAPHIC REF	PART NUMBER	QTY	PART NAME 1 2 3 4 5 6 (PRODUCT LEVEL)	SEE PAGE
	1	1	**1W-3306**	2	GAUGE GP-AIR PRESSURE (RH & LH TANKS)	
					(EACH INCLUDES)	
		1	**4B-2049**	2	NUT (10-32 THD)	
		1	**8F-1434**	2	LOCKWASHER	
	2	1	**5D-0269**	2	ELBOW	
	3	1	**5K-7577**	2	HOSE AS	
	4	1	**7N-5876**	4	LAMP (24 VOLT) (INDICATOR)	
	5	1	**9M-8662**	2	COUPLING	
	6	1	**9X-9688**	1	SWITCH AS-PUSH BUTTON (OPERATOR MODE)	
		1	**3E-3365**	1	WEDGE-RECEPTACLE LOCK (2 PIN)	
		1	**3K-0835**	1	NUT (5/8-24 THD)	
		1	**6F-0253**	1	LOCKWASHER	
		1	**186-3735**	2	PIN-CONNECTOR	
		1	**8T-8748**	1	ADAPTER-MOUNT	
		1	**102-8802**	1	KIT-RECEPTACLE (2 PIN) (OPERATOR MODE SWITCH)	
					(INCLUDES RECEPTACLE ASSEMBLY AND WEDGE)	
	7	1	**107-1983**	1	LAMP (24 VOLT) (EMS MASTER ACTION INDICATOR)	
	8	1	**115-1748**	10	LAMP (24 VOLT) (INSTRUMENT PANEL)	
	9	1	**117-9966**	2	PLUG	
	10	1	**122-7045**	6	COVER	
	11	1	**122-8146**	2	PLATE AS	
	12	1	**175-1343**	1	PANEL	
Y	13	1	**180-9285**	1	MODULE GP-QUAD GAUGE	808
	14	1	**184-4322**	1	FILM-MONITOR (EMS-III)	
	15	1	**185-6362**	1	PAD	
	16	1	**196-0180**	1	PANEL	
	17	1	**196-4150**	1	PANEL	
	18	1	**169-3263**	1	HARNESS AS-INSTRUMENT PANEL	
		1	**8T-9834**	1	PLUG AS-CONNECTOR (40 PIN)	
		1	**155-2255**	1	KIT-CONNECTING PLUG (12 PIN)	
		1	**155-2270**	1	KIT-CONNECTING PLUG (2 PIN) (OPERATOR MODE SWITCH & RETURN)	
		1	**155-2274**	2	KIT-CONNECTING PLUG (6 PIN)	
					(EACH INCLUDES PLUG ASSEMBLY AND WEDGE)	
		1	**102-8805**	1	KIT-RECEPTACLE (6 PIN)	
		1	**102-8806**	1	KIT-RECEPTACLE (8 PIN)	
		1	**102-8801**	1	KIT-RECEPTACLE (12 PIN)	
					(EACH INCLUDES RECEPTACLE ASSEMBLY AND WEDGE)	
	19	1	**197-5964**	1	FILM-PANEL (LH ACTION INDICATORS)	
	20	1	**197-5966**	1	FILM-PANEL (RH ACTION INDICATORS)	
Y	21	1	*198-7333*	1	APPLICATION GP-MONITOR	722
	22	1	**202-1138**	4	ELBOW	
	23	1	**104-2091**	12	SCREW-FLAT HEAD (6-20X0.5 IN)	
	24	1	**2H-3922**	2	LOCKWASHER	
M	25	1	**3E-8020**	10	SCREW-TRUSS HEAD (M6X1X25MM)	
M	26	1	**7Y-7388**	12	SCREW-BUTTON HEAD (M5X0.8X12MM)	
M	27	1	**9X-2043**	4	SCREW-TRUSS HEAD (M6X1X14MM)	

M-METRIC PART
Y-SEPARATE ILLUSTRATION

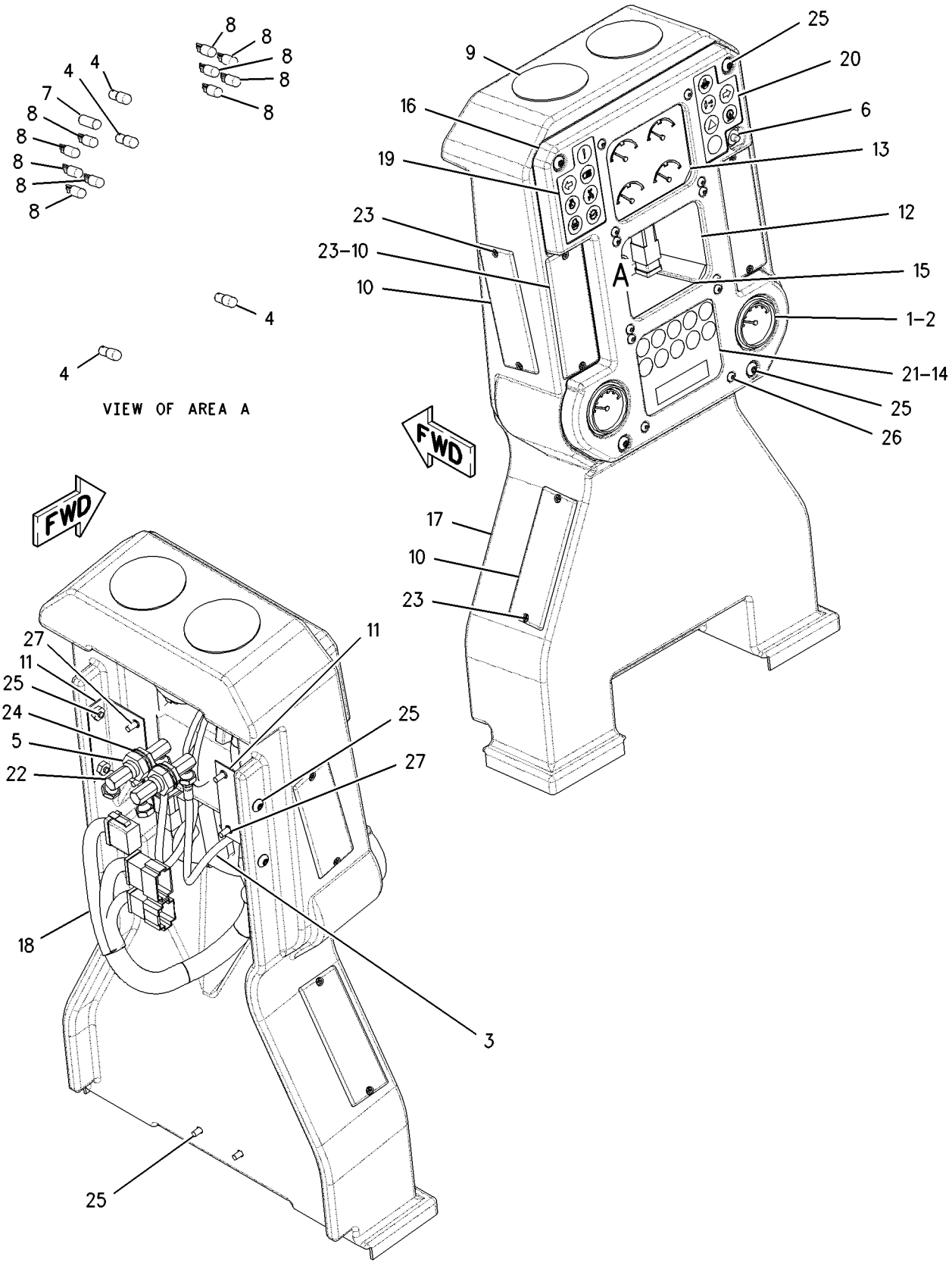

GRAPHIC #1 g00788570

OPERATOR STATION

178-3030 PANEL GP-INSTRUMENT—HIGH PROFILE

S/N: CAF1-UP

PART OF 183-3017 CONVERSION AR-NON-ROPS, 197-6663 ROPS AR-OPEN AN ATTACHMENT

SMCS-7450, 7451 **i01862247**

NOTE	REF NO	GRAPHIC REF	PART NUMBER	QTY	PART NAME 1 2 3 4 5 6 (PRODUCT LEVEL)	SEE PAGE
	1	1	**1W-3306**	1	GAUGE GP-AIR PRESSURE (RH TANK)	
	1A	1	**1W-3306**	1	GAUGE GP-AIR PRESSURE (LH TANK)	
					(EACH INDICATOR AS INCLUDES)	
		1	**4B-2049**	2	NUT (10-32 THD)	
		1	**8F-1434**	2	LOCKWASHER	
	2	1	**5D-0269**	2	ELBOW	
	3	1	**7N-5876**	2	LAMP (24 VOLT) (QUAD GAUGE)	
	3A	1	**7N-5876**	1	LAMP (24 VOLT) (RH AIR TANK GAUGE)	
	3B	1	**7N-5876**	1	LAMP (24 VOLT) (LH AIR TANK GAUGE)	
	4	1	**9X-9688**	1	SWITCH AS-PUSH BUTTON (MACHINE INFORMATION SELECTOR)	
		1	**3E-3365**	1	WEDGE-RECEPTACLE LOCK (2 PIN)	
		1	**3K-0835**	1	NUT (5/8-24 THD)	
		1	**6F-0253**	1	LOCKWASHER	
		1	**186-3735**	2	PIN-CONNECTOR	
		1	**8T-8748**	1	ADAPTER-MOUNT	
		1	**102-8802**	1	KIT-RECEPTACLE (2 PIN)	
					(INCLUDES RECEPTACLE ASSEMBLY AND WEDGE)	
	5	1	**107-1983**	1	LAMP (24 VOLT) (EMS MASTER ACTION INDICATOR)	
	6	1	**115-1748**	10	LAMP (24 VOLT) (INSTRUMENT PANEL)	
	7	1	**169-3263**	1	HARNESS AS-INSTRUMENT PANEL	
		1	**155-2255**	1	KIT-CONNECTING PLUG (12 PIN)	
		1	**155-2270**	1	KIT-CONNECTING PLUG (2 PIN)	
		1	**155-2271**	2	KIT-CONNECTING PLUG (4 PIN)	
					(EACH PLUG KIT INCLUDES PLUG ASSEMBLY AND WEDGE)	
		1	**8T-9834**	1	PLUG AS-CONNECTOR (40 PIN)	
		1	**102-8805**	1	KIT-RECEPTACLE (6 PIN)	
		1	**102-8806**	1	KIT-RECEPTACLE (8 PIN)	
		1	**102-8801**	1	KIT-RECEPTACLE (12 PIN)	
					(EACH RECEPTACLE KIT INCLUDES RECEPTACLE ASSEMBLY AND WEDGE)	
	8	1	**175-1343**	1	PANEL	
Y	9	1	**180-9285**	1	MODULE GP-QUAD GAUGE	808
	10	1	**184-4322**	1	FILM-MONITOR (SMART EMS)	
	11	1	**196-0180**	1	PANEL	
	12	1	**197-5964**	1	FILM-PANEL (LH INSTRUMENT)	
	13	1	**197-5966**	1	FILM-PANEL (RH INSTRUMENT)	
Y	14	1	*198-7333*	1	APPLICATION GP-MONITOR	722
M	15	1	**3E-8020**	4	SCREW-TRUSS HEAD (M6X1X25MM)	
M	16	1	**7Y-7388**	12	SCREW-BUTTON HEAD (M5X0.8X12MM)	

M-METRIC PART
Y-SEPARATE ILLUSTRATION

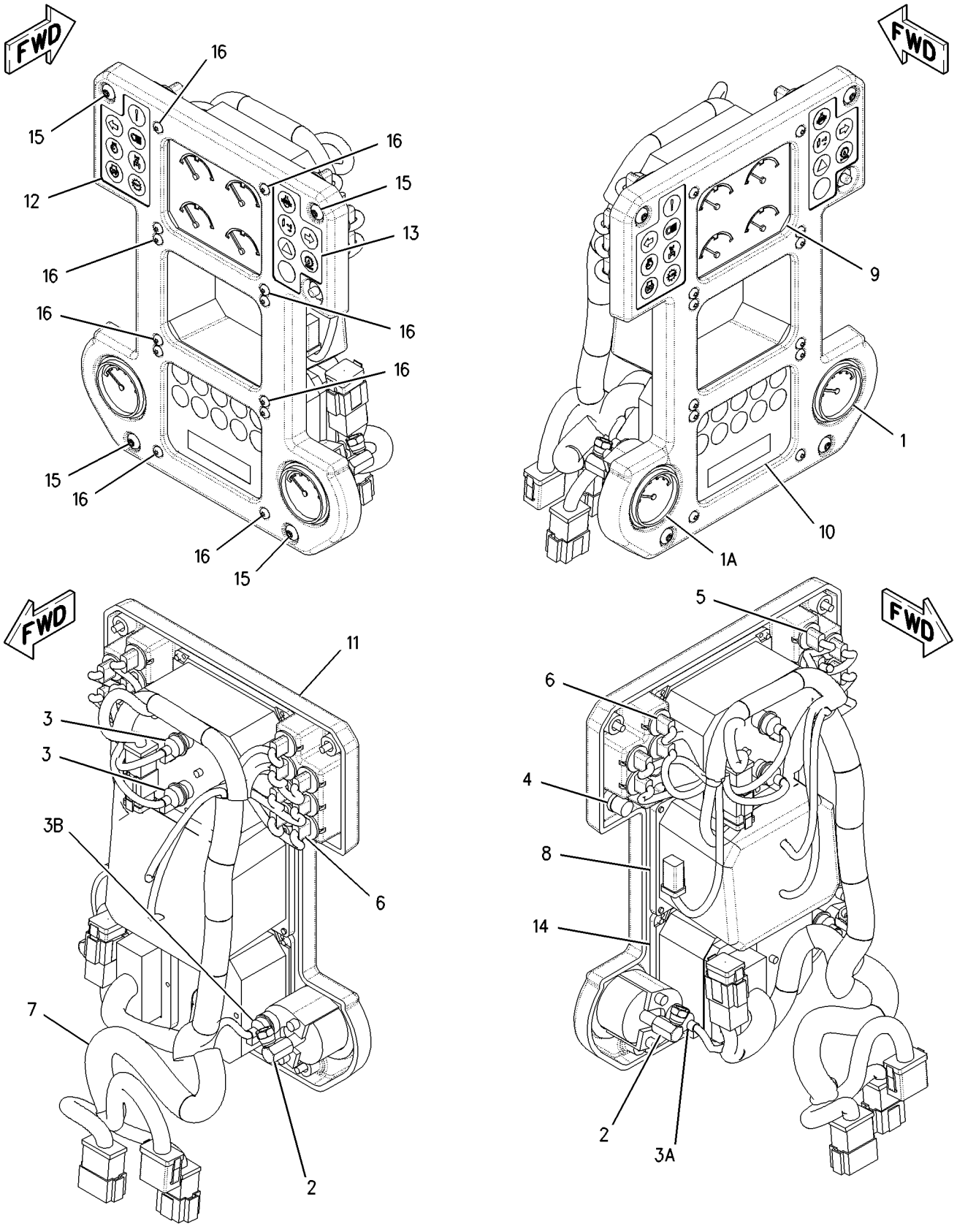

GRAPHIC #1 g00846070

OPERATOR STATION

196-4909 PANEL GP-INSTRUMENT—EU

S/N: CAF1-UP

PART OF 207-3665, 210-2042 CONVERSION AR-CERTIFICATION

AN ATTACHMENT

SMCS-7450, 7451 **i01862235**

NOTE	REF NO	GRAPHIC REF	PART NUMBER	QTY	PART NAME 1 2 3 4 5 6 (PRODUCT LEVEL)	SEE PAGE
	1	1	**1W-3306**	2	GAUGE GP-AIR PRESSURE (LH & RH TANK)	
					(EACH INCLUDES)	
		1	**4B-2049**	2	NUT (10-32 THD)	
		1	**8F-1434**	2	LOCKWASHER	
	2	1	**3S-2093**	2	STRAP-CABLE	
	3	1	**5D-0269**	2	ELBOW	
	4	1	**5K-7577**	2	HOSE AS	
	5	1	**7N-5876**	6	LAMP (24 VOLT) (INDICATOR)	
	6	1	**9M-8662**	2	COUPLING	
	7	1	**9X-9688**	1	SWITCH AS-PUSH BUTTON (OPERATOR MODE)	
		1	**3E-3365**	1	WEDGE-RECEPTACLE LOCK (2 PIN)	
		1	**3K-0835**	1	NUT (5/8-24 THD)	
		1	**6F-0253**	1	LOCKWASHER	
		1	**8T-8729**	2	PIN-CONNECTOR	
		1	**8T-8748**	1	ADAPTER-MOUNT	
		1	**102-8802**	1	KIT-RECEPTACLE (2 PIN) (OPERATOR MODE SWITCH)	
	8	1	**106-8704**	2	SUPPRESSOR AS-ARC	
					(EACH INCLUDES)	
		1	**3E-3365**	1	WEDGE-RECEPTACLE LOCK (2 PIN)	
		1	**186-3735**	1	PIN-CONNECTOR	
		1	**102-8802**	1	KIT-RECEPTACLE (2 PIN)	
					(INCLUDES A RECEPTACLE AS & WEDGE)	
	9	1	**107-1983**	1	LAMP (24 VOLT) (EMS MASTER ACTION INDICATOR)	
	10	1	**115-1748**	11	LAMP (24 VOLT) (ACTION INDICATOR)	
	11	1	**117-9966**	2	PLUG	
	12	1	**122-7045**	6	COVER	
	13	1	**122-8146**	2	PLATE AS	
					(EACH INCLUDES)	
M		1	**6V-9632**	2	NUT-WELD (M6X1 THD)	
Y	14	1	**153-8061**	1	MODULE GP-SPEEDOMETER & TACH (EU)	809
Y	15	1	**180-9285**	1	MODULE GP-QUAD GAUGE	808
	16	1	**184-4322**	1	FILM-MONITOR (CATERPILLAR MONITORING SYSTEM)	
	17	1	**196-0180**	1	PANEL	
	18	1	**196-4150**	1	PANEL	
	19	1	**196-4622**	1	HARNESS AS-DASH	
		1	**155-2255**	1	KIT-CONNECTING PLUG (12 PIN)	
		1	**155-2265**	1	KIT-CONNECTING PLUG (8 PIN)	
		1	**155-2270**	3	KIT-CONNECTING PLUG (2 PIN) (OPERATOR MODE SWITCH)	
		1	**155-2274**	2	KIT-CONNECTING PLUG (6 PIN) (QUAD GAUGE/SPEEDOMETER)	
		1	**102-8805**	1	KIT-RECEPTACLE (6 PIN)	
		1	**102-8806**	1	KIT-RECEPTACLE (8 PIN)	
		1	**102-8806**	1	KIT-RECEPTACLE (8 PIN)	
		1	**102-8801**	1	KIT-RECEPTACLE (12 PIN)	
		1	**8T-9834**	1	PLUG AS-CONNECTOR (40 PIN)	
	20	1	**197-5964**	1	FILM-PANEL (ACTION INDICATOR LH)	
	21	1	**197-5966**	1	FILM-PANEL (ACTION INDICATOR RH)	
Y	22	1	**198-7333**	1	APPLICATION GP-MONITOR	722
	23	1	**202-1138**	4	ELBOW	
	24	1	**104-2091**	12	SCREW-FLAT HEAD (6-20X0.5 IN)	
	25	1	**2H-3922**	4	LOCKWASHER	
M	26	1	**3E-8020**	10	SCREW-TRUSS HEAD (M6X1X25MM)	
M	27	1	**7Y-7388**	12	SCREW-BUTTON HEAD (M5X0.8X12MM)	
M	28	1	**9X-2043**	4	SCREW-TRUSS HEAD (M6X1X14MM)	

M-METRIC PART
Y-SEPARATE ILLUSTRATION

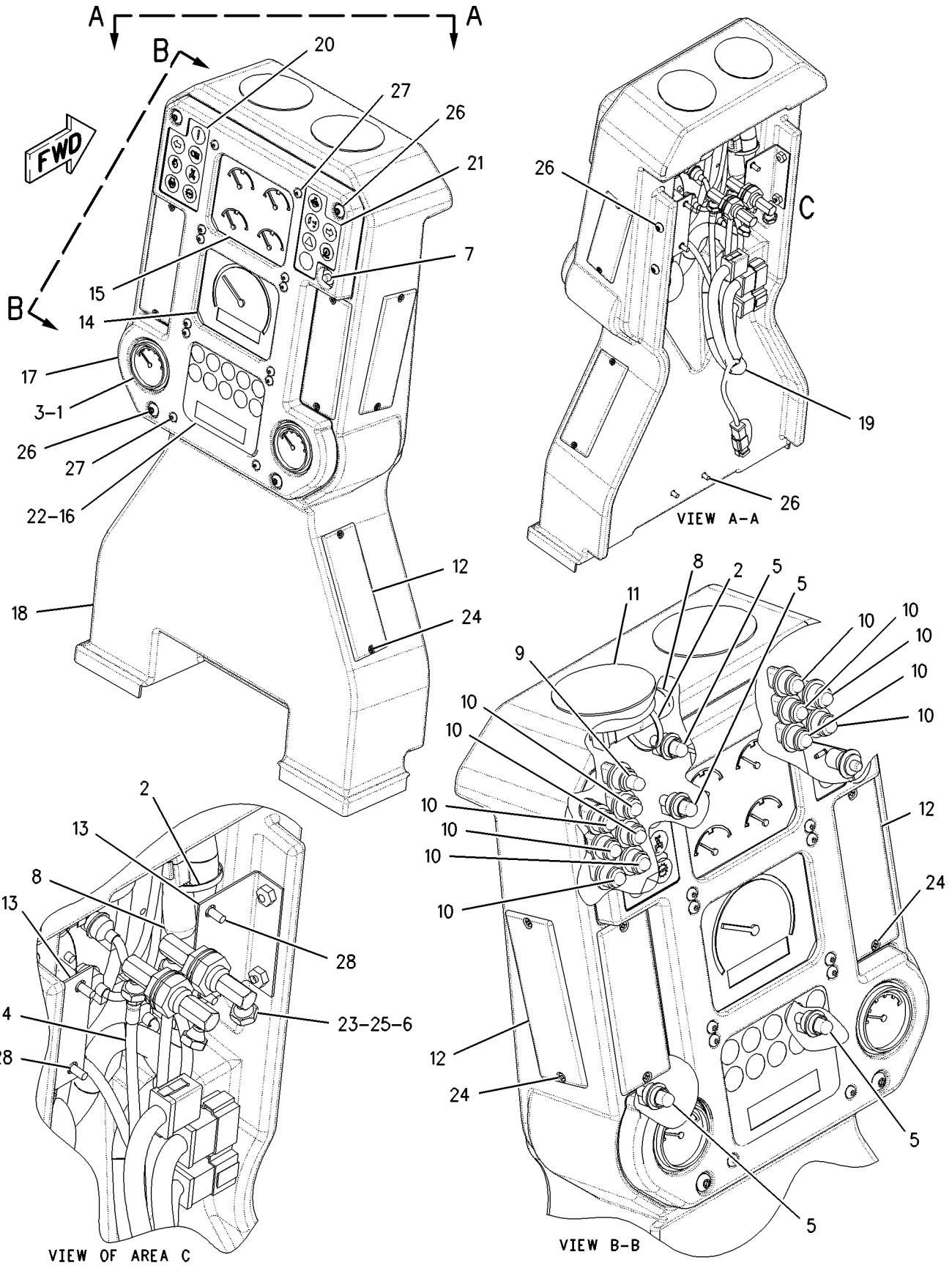

GRAPHIC #1

g00840248

MEMORANDA

OPERATOR STATION

150-5106 PANEL GP-WINDOW–RH

S/N: CAF1-UP
PART OF 126-0961 WINDOW GP
AN ATTACHMENT

SMCS-7310 **i01453670**

NOTE	REF NO	GRAPHIC REF	PART NUMBER	QTY	PART NAME 1 2 3 4 5 6 (PRODUCT LEVEL)	SEE PAGE
	1	1	**5T-1958**	1	IDLER AS-RH	
		1	**5T-3144**	1	PIVOT AS-IDLER	
		1	**5T-3146**	1	KIT-IDLER HOUSING-RH	
					(INCLUDES HOUSING,BEARING, & WASHER)	
	2	1	**1H-3340**	12	BOLT (M10X24X25.4MM)	
	3	1	**8W-1028**	1	HINGE AS-RH	
	4	1	**126-1167**	1	BOLT (3/8-24X5.375 IN)	
	5	1	**126-0228**	1	CATCH-STOP	
	6	1	**5T-1969**	1	HANDLE	
	7	1	**1H-8456**	2	SCREW-MACHINE (10/24X1.0 IN)	
BD	8	1	**5P-5680**		SEAL	
	9	1	**150-5105**	1	GLASS	
	10	1	**126-1539**	1	HANDLE-PULL	
B	11	1	**5T-1964**	1	SEAL	
E	12	1	**7X-7661**		TAPE (229 CM)	
	13	1	**126-0208**	1	SPACER (10.31X17.45X50.8MM THK))	
	14	1	**126-0209**	1	PLATE	
	15	1	**126-0210**	1	PLATE	
	16	1	**5T-1972**	14	INSERT-SCREW	
M	17	1	**8T-0352**	3	BOLT (M5X0.8X45MM)	
	18	1	**8T-0328**	6	WASHER-HARD (5.5X10X1MM THK)	
M	19	1	**7Y-5226**	3	NUT (M5X0.8 THD)	

B-USE AS REQUIRED
D-ORDER BY THE METER
E-ORDER BY THE CENTIMETER
M-METRIC PART

150-5106 PANEL GP-WINDOW ***(contd.)*** **i01453670**

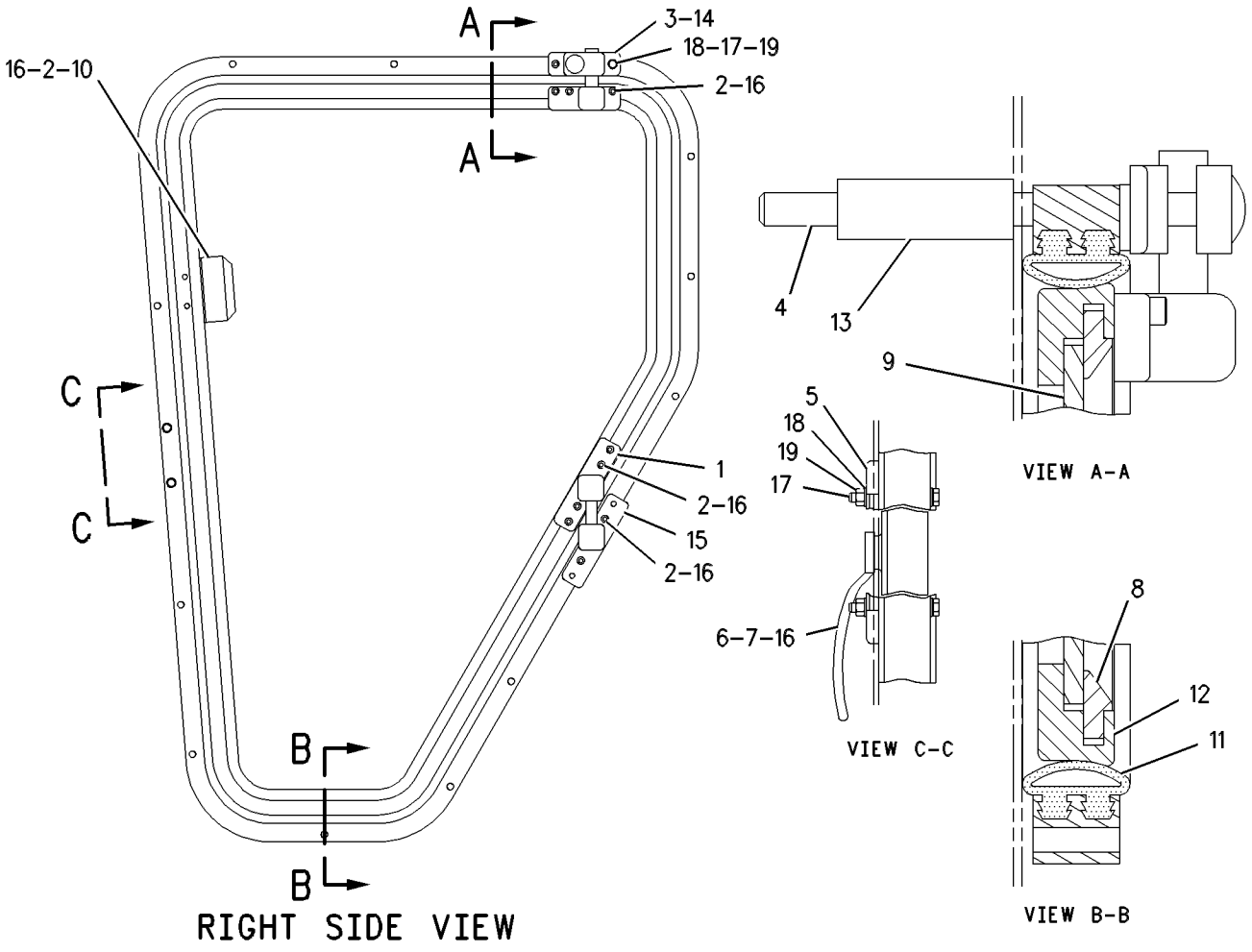

GRAPHIC #1

g00291495

OPERATOR STATION

150-5107 PANEL GP-WINDOW–LH

S/N: CAF1-UP
PART OF 126-0961 WINDOW GP
AN ATTACHMENT

SMCS-7310 **i01454822**

NOTE	REF NO	GRAPHIC REF	PART NUMBER	QTY	PART NAME 1 2 3 4 5 6 (PRODUCT LEVEL)	SEE PAGE
	1	1	**5T-1959**	1	IDLER AS-LH	
		1	**5T-3145**	1	PIVOT AS-IDLER	
		1	**5T-3147**	1	KIT-IDLER HOUSING-LH	
					(INCLUDES HOUSING, BEARING, & WASHER)	
	2	1	**1H-3340**	12	BOLT (M10X24X25.4MM)	
	3	1	**8W-1029**	1	HINGE AS-LH	
	4	1	**126-1167**	1	BOLT (3/8-24X5.375 IN)	
	5	1	**126-0228**	1	CATCH-STOP	
	6	1	**6G-2959**	1	HANDLE	
	7	1	**1H-8456**	2	SCREW-MACHINE (10/24X1.0 IN)	
D	8	1	**5P-5680**		SEAL (1 M)	
	9	1	**150-5105**	1	GLASS	
	10	1	**126-1539**	1	HANDLE-PULL	
	11	1	**5T-1964**	1	SEAL	
E	12	1	**7X-7661**		TAPE (229 CM)	
	13	1	**126-0208**	1	SPACER (10.31X17.45X50.8MM THK))	
	14	1	**126-0209**	1	PLATE	
	15	1	**126-0210**	1	PLATE	
	16	1	**5T-1972**	14	INSERT-SCREW	
M	17	1	**8T-0352**	3	BOLT (M5X0.8X45MM)	
	18	1	**8T-0328**	6	WASHER-HARD (5.5X10X1MM THK)	
M	19	1	**7Y-5226**	3	NUT (M5X0.8 THD)	

D-ORDER BY THE METER
E-ORDER BY THE CENTIMETER
M-METRIC PART

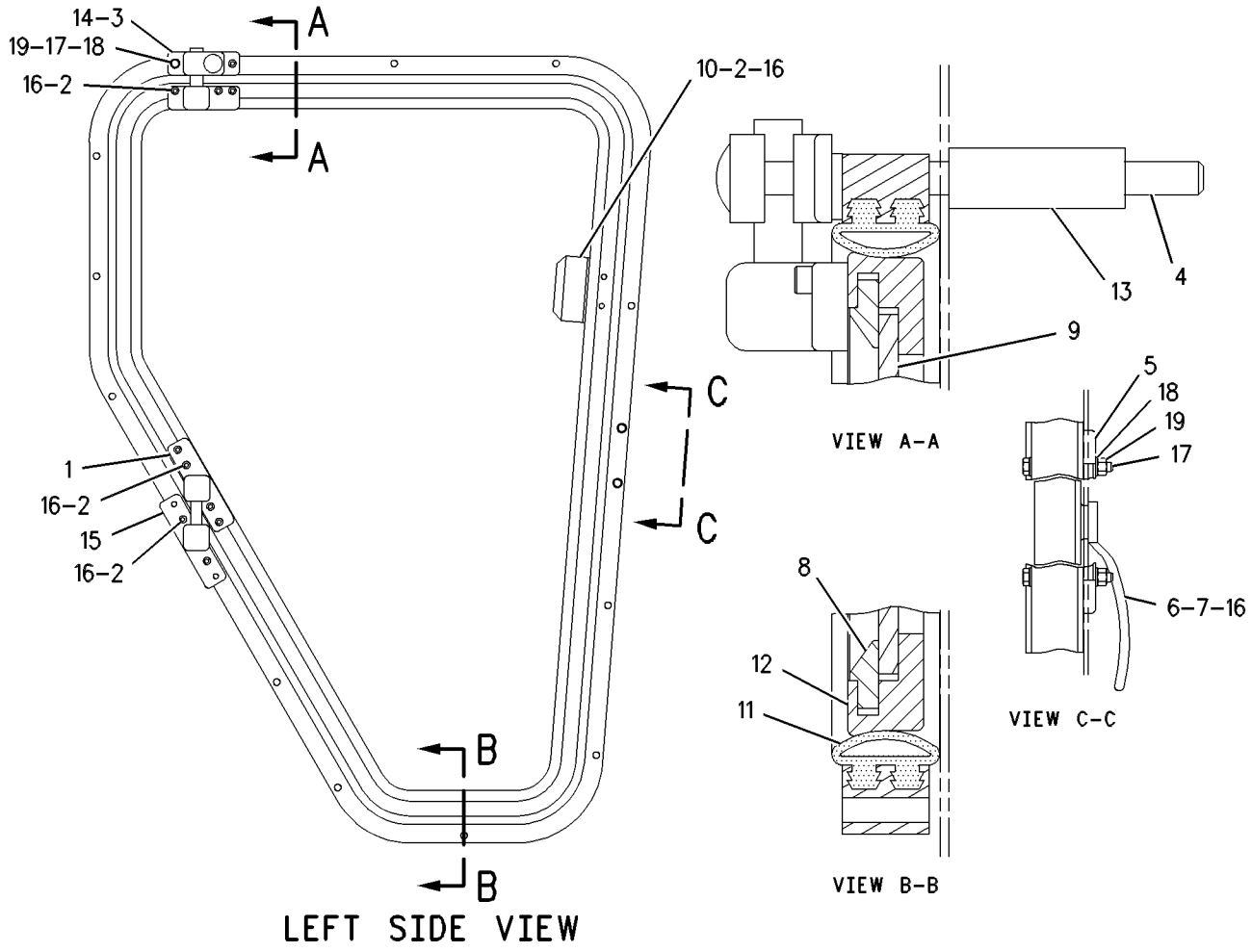

GRAPHIC #1

g00291496

OPERATOR STATION

161-1141 ROPS AR-ENCLOSED—HIGH PROFILE

S/N: CAF1-UP
AN ATTACHMENT

SMCS-7323 **i01678683**

NOTE	PART NUMBER	QTY	PART NAME 1 2 3 4 5 6 (PRODUCT LEVEL)	SEE PAGE
Y	*172-5378*	1	INSULATION GP-WEATHER	780
Y	*177-8779*	1	ROPS GP-ENCLOSED	836
Y	*8X-9675*	1	WASHER GP-WINDOW	874

Y-SEPARATE ILLUSTRATION

<END>

179-3581 ROPS AR-ENCLOSED—LOW PROFILE

S/N: CAF1-UP
PART OF 162-5603 GENERAL AR

SMCS-7323 **i01674686**

NOTE	PART NUMBER	QTY	PART NAME 1 2 3 4 5 6 (PRODUCT LEVEL)	SEE PAGE
Y	*172-5378*	1	INSULATION GP-WEATHER	780
Y	*172-5377*	1	ROPS GP-ENCLOSED	835
Y	*8X-9675*	1	WASHER GP-WINDOW	874

Y-SEPARATE ILLUSTRATION

<END>

218-4758 ROPS AR-ENCLOSED—ENCLOSED—HIGH PROFILE—EU

S/N: CAF1-UP
AN ATTACHMENT

SMCS-7323 **i01818800**

NOTE	PART NUMBER	QTY	PART NAME 1 2 3 4 5 6 (PRODUCT LEVEL)	SEE PAGE
Y	*172-5378*	1	INSULATION GP-WEATHER	780
Y	*2A-6985*	1	MOUNTING GP-ROPS	812
Y	*218-4759*	1	ROPS GP-ENCLOSED	836
Y	*8X-9675*	1	WASHER GP-WINDOW (FRONT)	874
	159-3759	1	FILM-INSTRUCTION (DO NOT DRILL/WELD ROPS)	

Y-SEPARATE ILLUSTRATION

<END>

OPERATOR STATION

218-4760 ROPS AR-ENCLOSED—LOW PROFILE—EU

S/N: CAF1-UP

PART OF 207-3665, 210-2042 CONVERSION AR-CERTIFICATION

AN ATTACHMENT

SMCS-7323 **i01684481**

NOTE	PART NUMBER	QTY	PART NAME 1 2 3 4 5 6 (PRODUCT LEVEL)	SEE PAGE
	159-3759	1	FILM-INSTRUCTION (DO NOT DRILL/WELD ROPS)	
Y	*172-5378*	1	INSULATION GP-WEATHER	780
Y	*2A-6985*	1	MOUNTING GP-ROPS	812
Y	*218-4761*	1	ROPS GP-ENCLOSED	837
Y	*8X-9675*	1	WASHER GP-WINDOW	874

Y-SEPARATE ILLUSTRATION

<END>

197-6663 ROPS AR-OPEN—HIGH PROFILE

S/N: CAF1-UP

AN ATTACHMENT

SMCS-7323 **i01755247**

NOTE	PART NUMBER	QTY	PART NAME 1 2 3 4 5 6 (PRODUCT LEVEL)	SEE PAGE
Y	*166-7064*	1	GUARD GP-PLATFORM (OPEN)(HIGH PROFILE)	434
	5P-8502	1	PADLOCK GP	
	5P-8500	1	KEY	
	8Y-6364	1	SLEEVE	
Y	*178-3030*	1	PANEL GP-INSTRUMENT (OPEN)(HIGH PROFILE)	824
	5P-8197	1	PLATE-WARNING (DO NOT OPERATE)	
	9D-3767	1	PLUG-BUTTON	
Y	*173-2751*	1	ROPS GP-OPEN (OPEN)(HIGH PROFILE)	838
	4B-4158	4	SCREW-DRIVE (3/16X0.25 IN)	
Y	*8X-8945*	1	SEAT GP-STATIC (VINYL)	852

Y-SEPARATE ILLUSTRATION

<END>

172-5377 ROPS GP-ENCLOSED—LOW PROFILE

S/N: CAF1-UP

PART OF 179-3581 ROPS AR-ENCLOSED

SMCS-7325 **i01755313**

NOTE	PART NUMBER	QTY	PART NAME 1 2 3 4 5 6 (PRODUCT LEVEL)	SEE PAGE
Y	*8X-4527*	1	DOOR GP-CAB (LOW PROFILE)	744
	159-3759	2	FILM-INSTRUCTION (DO NOT DRILL/WELD ROPS)	
Y	*172-5376*	1	LINER GP-CAB (LOW PROFILE)	784
Y	*2A-6985*	1	MOUNTING GP-ROPS (ENCLOSED)	812
Y	*8X-2375*	1	PANEL GP-CAB (LOW PROFILE)	818
Y	*172-6830*	1	WIPER GP-WINDOW (LOW PROFILE)	888

Y-SEPARATE ILLUSTRATION

<END>

OPERATOR STATION

173-6756 ROPS GP-ENCLOSED—HIGH PROFILE

S/N: CAF1-UP

PART OF 177-8779 ROPS GP-ENCLOSED

AN ATTACHMENT

SMCS-7325 **i01684242**

NOTE	PART NUMBER	QTY	PART NAME 1 2 3 4 5 6 (PRODUCT LEVEL)	SEE PAGE
			(NO SERVICED PARTS)	

<END>

177-8779 ROPS GP-ENCLOSED—HIGH PROFILE

S/N: CAF1-UP

PART OF 161-1141 ROPS AR-ENCLOSED

AN ATTACHMENT

SMCS-7325 **i01755321**

NOTE	PART NUMBER	QTY	PART NAME 1 2 3 4 5 6 (PRODUCT LEVEL)	SEE PAGE
Y	*8X-4413*	1	DOOR GP-CAB (HIGH PROFILE)	738
	159-3759	2	FILM-INSTRUCTION (DO NOT DRILL/WELD ROPS)	
Y	*177-8781*	1	LINER GP-CAB (ENCLOSED HIGH PROFILE)	788
Y	*2A-6985*	1	MOUNTING GP-ROPS (ENCLOSED)	812
Y	*8X-2385*	1	PANEL GP-CAB (HIGH PROFILE)	819
Y	**173-6756**	1	ROPS GP-ENCLOSED (HIGH PROFILE)	836
Y	*172-6831*	1	WIPER GP-WINDOW (HIGH PROFILE)	890
Y-SEPARATE ILLUSTRATION				

<END>

218-4759 ROPS GP-ENCLOSED—HIGH PROFILE—EU

S/N: CAF1-UP

PART OF 218-4758 ROPS AR-ENCLOSED

AN ATTACHMENT

SMCS-7325 **i01818805**

NOTE	PART NUMBER	QTY	PART NAME 1 2 3 4 5 6 (PRODUCT LEVEL)	SEE PAGE
Y	*8X-4413*	1	DOOR GP-CAB	738
Y	*177-8781*	1	LINER GP-CAB	788
Y	*8X-2385*	1	PANEL GP-CAB	819
Y	*172-6831*	1	WIPER GP-WINDOW (FRONT)	890
Y	*193-7359*	1	WIRING GP-CAB	234
	169-5937	1	ROPS AS-ENCLOSED	
Y-SEPARATE ILLUSTRATION				

<END>

OPERATOR STATION

218-4761 ROPS GP-ENCLOSED—LOW PROFILE—EU

S/N: CAF1-UP

PART OF 218-4760 ROPS AR-ENCLOSED

AN ATTACHMENT

SMCS-7325 **i01706641**

NOTE	PART NUMBER	QTY	PART NAME 1 2 3 4 5 6 (PRODUCT LEVEL)	SEE PAGE
Y	*8X-4527*	1	DOOR GP-CAB	744
Y	*172-5376*	1	LINER GP-CAB	784
Y	*8X-2375*	1	PANEL GP-CAB	818
	173-6754	1	ROPS GP-ENCLOSED	
Y	*172-6830*	1	WIPER GP-WINDOW	888
Y	*193-7359*	1	WIRING GP-CAB	234

Y-SEPARATE ILLUSTRATION

<END>

OPERATOR STATION

173-2751 ROPS GP-OPEN—HIGH PROFILE

S/N: CAF1-UP
PART OF 197-6663 ROPS AR-OPEN
AN ATTACHMENT

SMCS-7323, 7325 **i01862229**

NOTE	REF NO	GRAPHIC REF	PART NUMBER	QTY	PART NAME 1 2 3 4 5 6 (PRODUCT LEVEL)	SEE PAGE
	1	1	**159-3759**	2	FILM-INSTRUCTION (DO NOT DRILL/WELD ROPS)	
	2	1	**117-4698**	1	ROPS GP-OPEN	
Y	4	1	*191-8692*	1	MOUNTING GP-ROPS (OPEN HIGH PROFILE)	814
Y	5	1	*191-8695*	1	LINER GP-CAB (OPEN HIGH PROFILE)	794
	6	1	*194-3845*	1	WINDOW GP	
BD		1	**5P-5768**		SEAL	
		1	**102-9372**	1	GLASS (HIGH PROFILE)	

B-USE AS REQUIRED
D-ORDER BY THE METER
Y-SEPARATE ILLUSTRATION

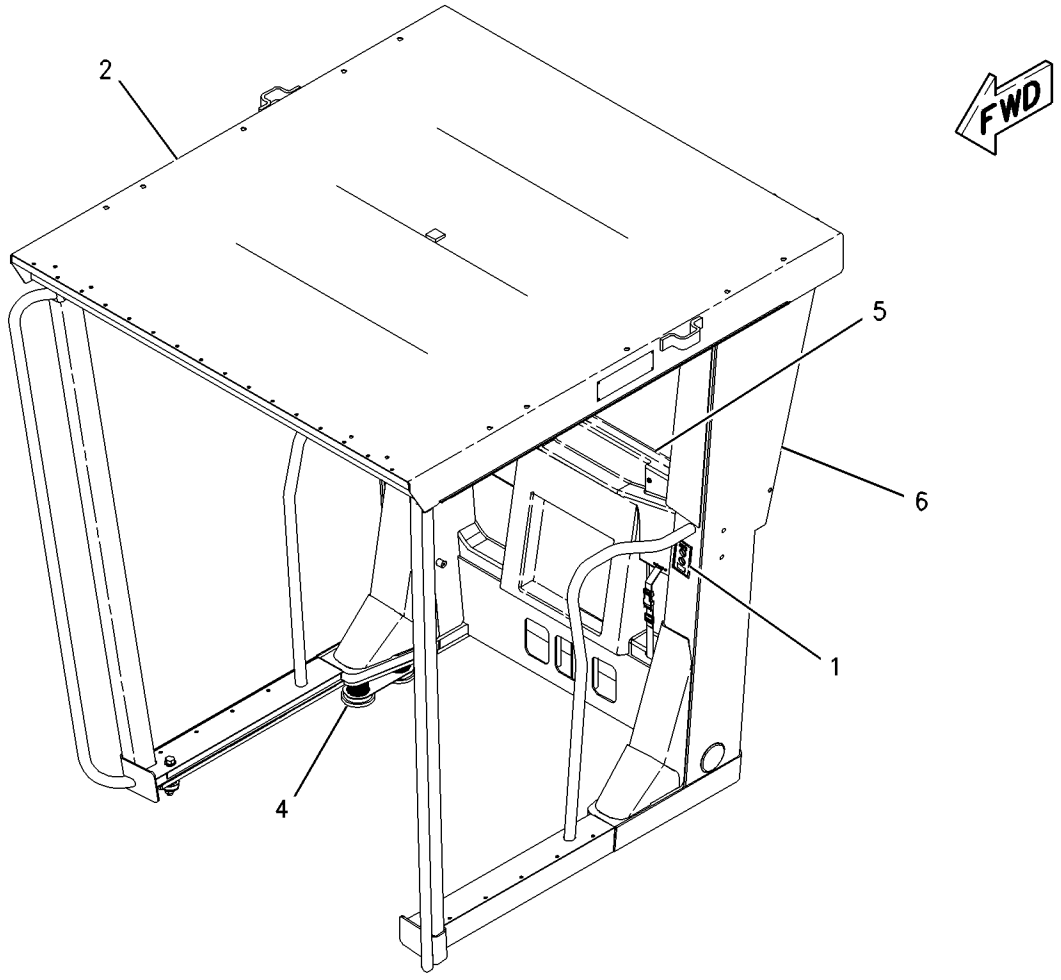

GRAPHIC #1 g00846632

OPERATOR STATION

139-4612 SCREEN GP-SUN

S/N: CAF1-UP
AN ATTACHMENT

SMCS-7165 **i00698315**

NOTE	REF NO	GRAPHIC REF	PART NUMBER	QTY	PART NAME 1 2 3 4 5 6 (PRODUCT LEVEL)	SEE PAGE
	1	1	**137-5503**	1	SCREEN GP-SUN	
	2	1	**139-4605**	1	PLATE AS	
M		1	**6V-9632**	4	NUT-WELD (M6X1 THD)	
M	3	1	**5C-9553**	4	BOLT (M6X1.0X16MM)	
	4	1	**9X-8256**	4	WASHER (2MM THK)	

M-METRIC PART

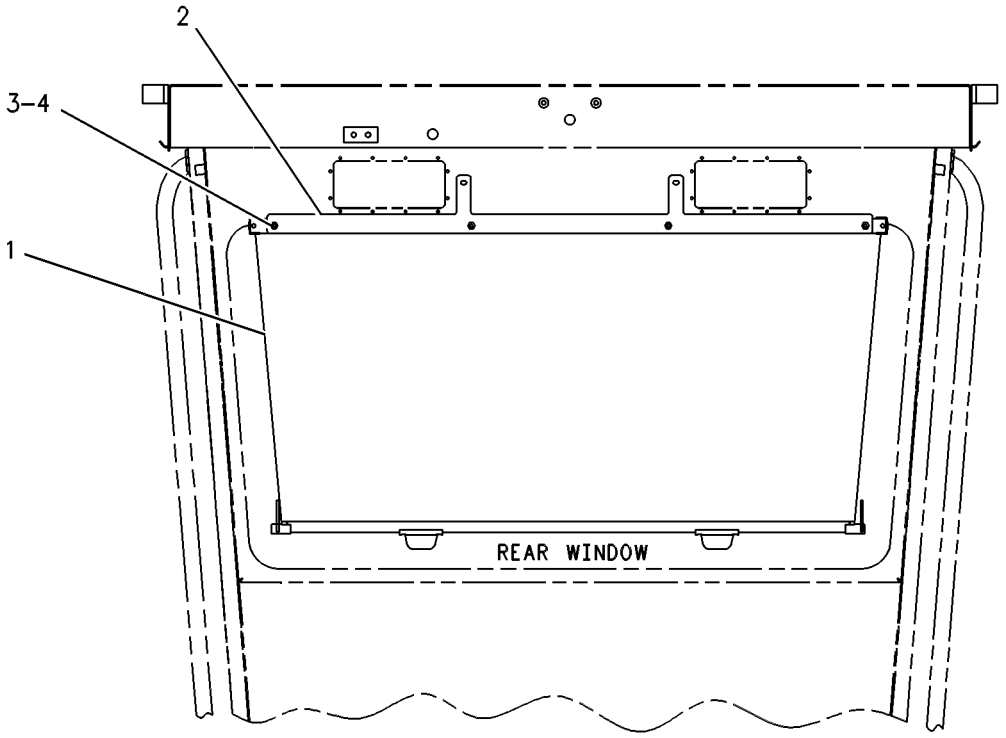

REAR VIEW

GRAPHIC #1 g00301584

116-1965 SEAT BELT GP

S/N: CAF1-UP
PART OF 8X-8940, 8X-8945 SEAT GP-STATIC
ALSO AN ATTACHMENT

SMCS-7327 **i00131156**

NOTE	REF NO	GRAPHIC REF	PART NUMBER	QTY	PART NAME 1 2 3 4 5 6 (PRODUCT LEVEL)	SEE PAGE
	1	1	**1A-4350**	1	BOLT (7/16-20X1.75IN)	
	2	1	**4D-6432**	1	LOCKNUT (7/16-20 THD)	
	3	1	**8S-0934**	2	LOCKNUT-FLANGE (7/16-20 THD)	
	4	1	**8T-9381**	1	BOLT (7/16-20X1IN)	

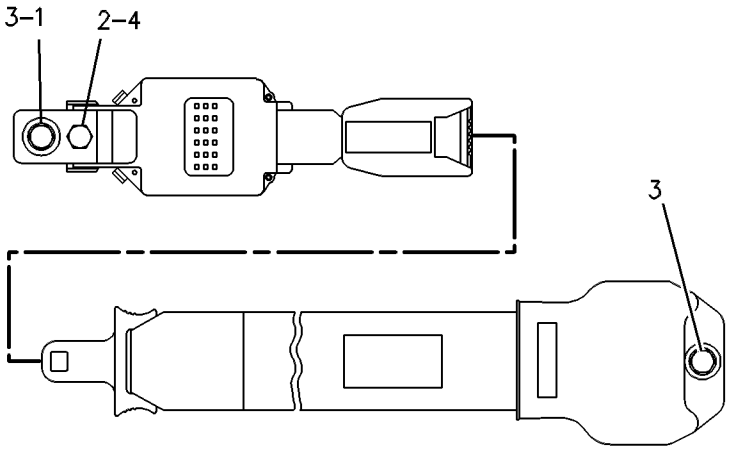

GRAPHIC #1 g00109323

OPERATOR STATION

122-4617 SEAT BELT GP

S/N: CAF1-UP
PART OF 112-9105 SEAT GP-SUSPENSION
AN ATTACHMENT

SMCS-7327 **i01094807**

NOTE	REF NO	GRAPHIC REF	PART NUMBER	QTY	PART NAME 1 2 3 4 5 6 (PRODUCT LEVEL)	SEE PAGE
	1	1	**4D-6432**	1	LOCKNUT (7/16-20 THD)	
	2	1	**8T-5360**	1	WASHER (2.5MM THK)	
	3	1	**8Y-5953**	1	BOLT-HEX (7/16-20X1.5IN)	
	4	1	**1A-4350**	1	BOLT (7/16-20X1.75IN)	

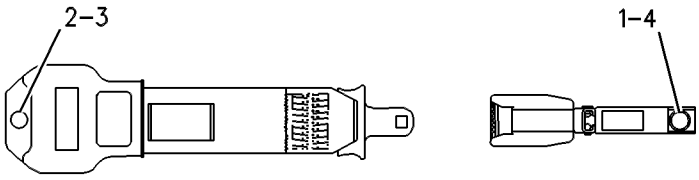

GRAPHIC #1 g00086974

OPERATOR STATION

156-1148 SEAT BELT GP–RETRACTABLE

S/N: CAF1-UP
PART OF 112-9104, 155-5958 SEAT GP-SUSPENSION
AN ATTACHMENT

SMCS-7327 **i01204029**

NOTE	REF NO	GRAPHIC REF	PART NUMBER	QTY	PART NAME 1 2 3 4 5 6 (PRODUCT LEVEL)	SEE PAGE
	1	1	**8Y-5953**	1	BOLT-HEX (7/16-20X1.5IN)	
	2	1	**8T-5360**	1	WASHER (2.5MM THK)	
	3	1	**1A-4350**	1	BOLT (7/16-20X1.75IN)	
	4	1	**4D-6432**	1	LOCKNUT (7/16-20 THD)	

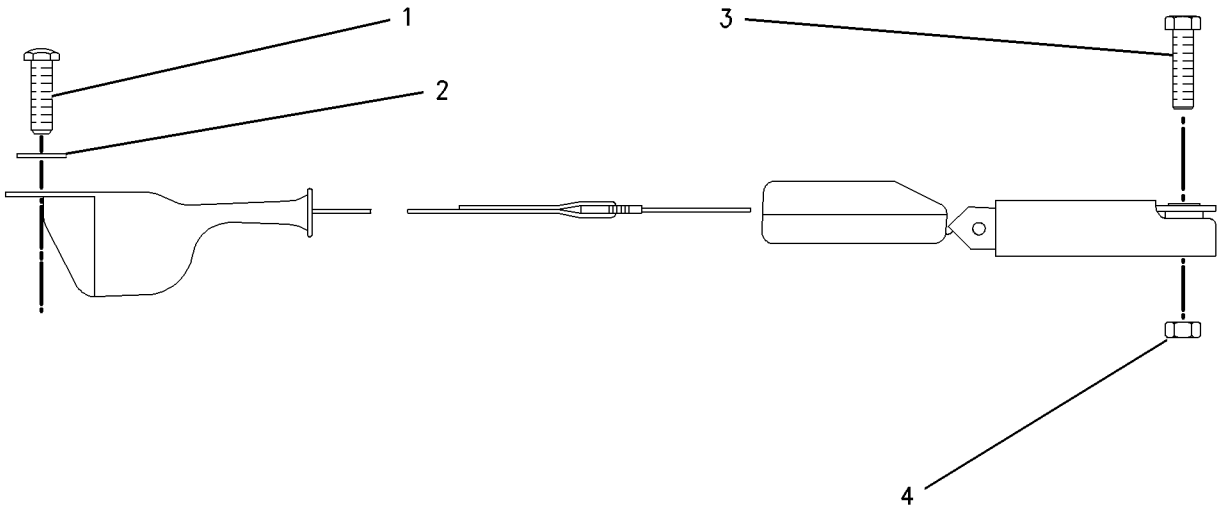

GRAPHIC #1 g00643863

MEMORANDA

OPERATOR STATION

8Y-3912 SEAT GP—CLOTH

S/N: CAF1-UP

PART OF 8Y-6851 SEAT GP-STATIC

SMCS-7312 **i01755142**

NOTE	REF NO	GRAPHIC REF	PART NUMBER	QTY	PART NAME 1 2 3 4 5 6 (PRODUCT LEVEL)	SEE PAGE
BE	1	1	**7X-7877**		STRIP-EDGING	
	2	1	**8Y-3913**	1	CUSHION AS-SEAT	
	3	1	**9C-5324**	1	CUSHION AS-BACK	
	4	1	**6W-1895**	1	BAR	
	5	1	**6W-1890**	1	BAR AS	
	6	1	**9C-1587**	1	LEVER	
	7	1	**9X-6624**	4	BOLT	
	8	1	**033-4843**	4	NUT (5/16-18 THD)	
	9	1	**6W-9693**	2	ADJUSTER AS	
	10	1	**6W-2373**	1	SPRING	
	11	1	**9X-8277**	4	SCREW-HEX SOCKET	
	12	1	**9V-7437**	1	SHELL AS	
	13	1	**9S-2544**	4	SCREW-HEX HEAD (8-32X11.13MM)	
	14	1	**6W-5757**	1	CLIP	
	15	1	**6W-3309**	1	HOLDER	
	16	1	**8T-7565**	7	RIVET-POP	
	17	1	**5P-7957**	1	LANYARD	
	18	1	**6W-5740**	1	CAP	
	19	1	**5B-6172**	4	WASHER (9.7X19X.8MM THK)	
	20	1	**7X-7739**	4	WASHER (9.7X25.4 X4MM THK)	

B-USE AS REQUIRED
E-ORDER BY THE CENTIMETER

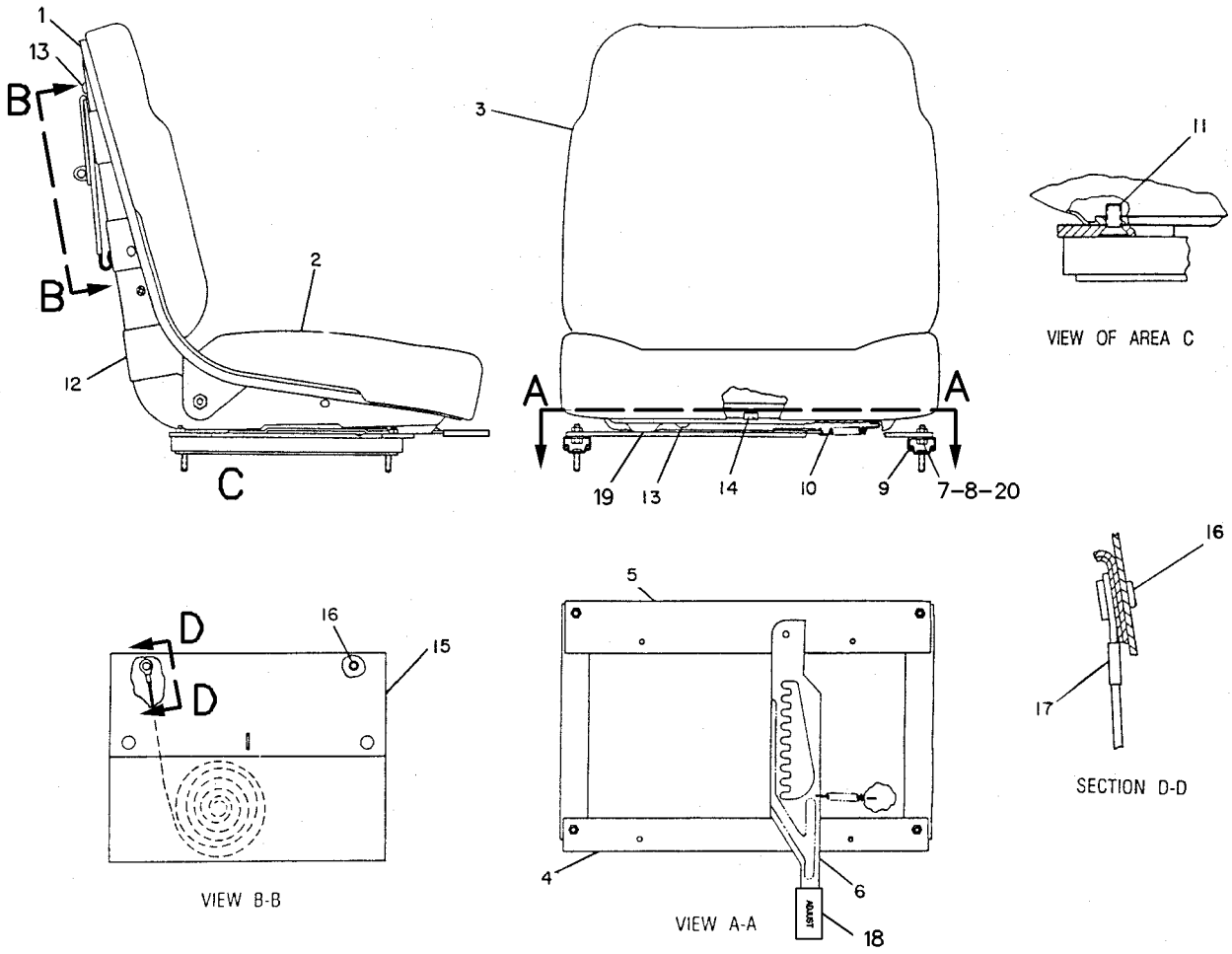

GRAPHIC #1 g00108400

OPERATOR STATION

8Y-4005 SEAT GP–VINYL

S/N: CAF1-UP
PART OF 8Y-6852 SEAT GP-STATIC
AN ATTACHMENT

SMCS-7312 **i01755141**

NOTE	REF NO	GRAPHIC REF	PART NUMBER	QTY	PART NAME 1 2 3 4 5 6 (PRODUCT LEVEL)	SEE PAGE
BE	1	1	**7X-7877**		STRIP-EDGING	
	2	1	**8R-2057**	1	CUSHION AS-SEAT	
	3	1	**8R-2054**	1	CUSHION AS-BACK	
	4	1	**6W-1895**	1	BAR	
	5	1	**6W-1890**	1	BAR AS	
	6	1	**9C-1587**	1	LEVER	
	7	1	**9X-6624**	4	BOLT	
	8	1	**033-4843**	4	NUT (5/16-18 THD)	
	9	1	**6W-9693**	2	ADJUSTER AS	
	10	1	**6W-2373**	1	SPRING	
	11	1	**9X-8277**	4	SCREW-HEX SOCKET	
	12	1	**9V-7437**	1	SHELL AS	
		1	**9V-7440**	4	NUT-WELD (3/8-16 THD)	
	13	1	**9S-2544**	4	SCREW-HEX HEAD (8-32X11.13MM)	
	14	1	**6W-5757**	1	CLIP	
	15	1	**6W-3309**	1	HOLDER	
	16	1	**8T-7565**	7	RIVET-POP	
	17	1	**5P-7957**	1	LANYARD	
	18	1	**6W-5740**	1	CAP	
	19	1	**5B-6172**	4	WASHER (9.7X19X.8MM THK)	
	20	1	**7X-7739**	4	WASHER (9.7X25.4 X4MM THK)	

B-USE AS REQUIRED
E-ORDER BY THE CENTIMETER

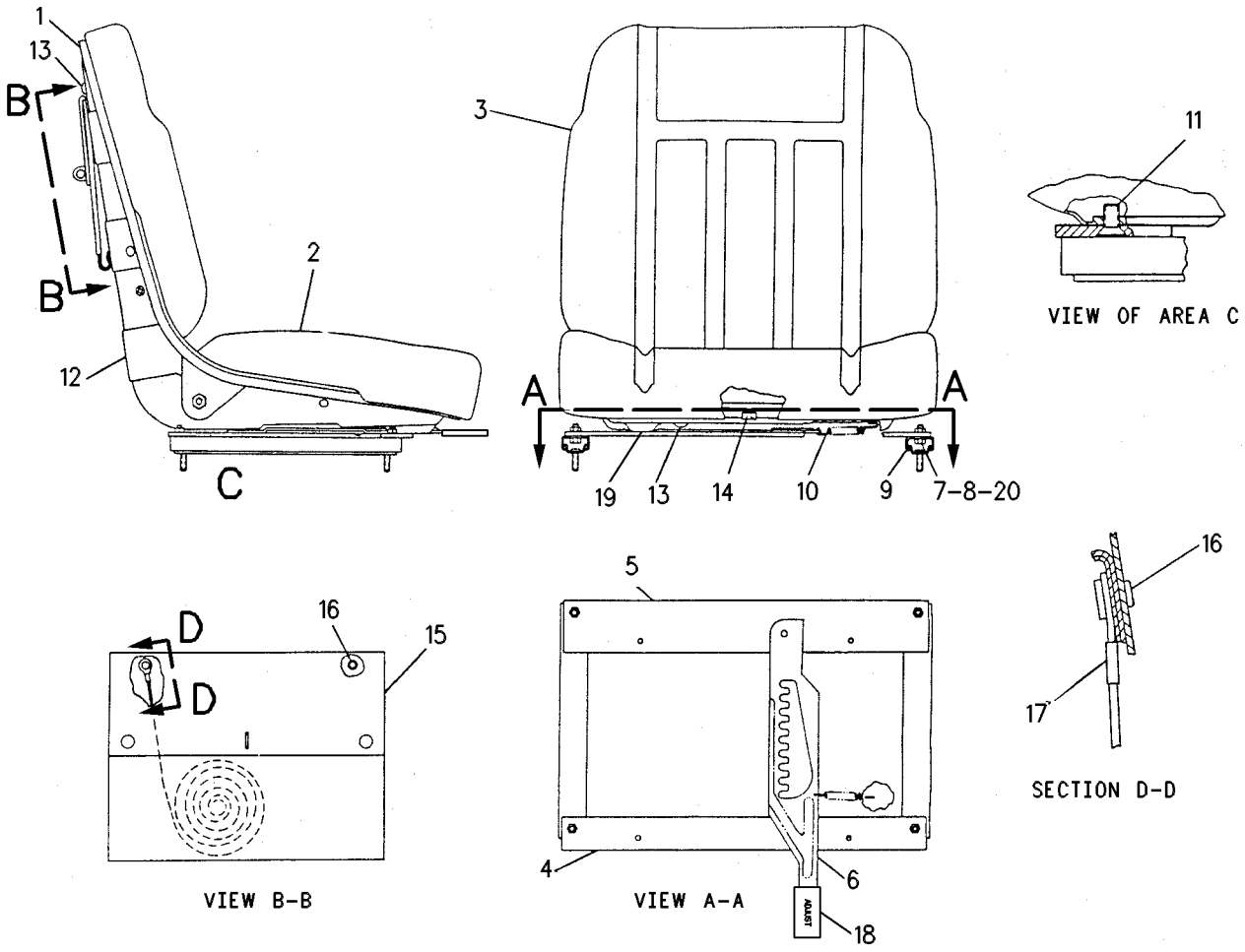

GRAPHIC #1 g00109668

OPERATOR STATION

114-1183 SEAT GP–CLOTH

S/N: CAF1-UP
PART OF 112-9104, 155-5958 SEAT GP-SUSPENSION
AN ATTACHMENT

SMCS-7312 **i01755139**

NOTE	REF NO	GRAPHIC REF	PART NUMBER	QTY	PART NAME 1 2 3 4 5 6 (PRODUCT LEVEL)	SEE PAGE
	1	1	**9L-7469**	2	LOCK PIN	
Y	2	1	*113-5810*	1	PAN GP-SEAT	816
	3	1	**8Y-5890**	1	CUSHION AS-SEAT	
	4	1	**108-8426**	1	CUSHION AS-BACK	
	5	1	**8Y-5878**	1	PAN AS	
	6	1	**8Y-5929**	1	PLATE AS-SLIDE	
		1	**4K-9097**	7	NUT-WELD (5/16-18 THD)	
	7	1	**8Y-5932**	1	LATCH AS	
	8	1	**8Y-5936**	1	SPRING	
	9	1	**095-0878**	1	PIN-SPRING	
	10	1	**8Y-5937**	1	BRACKET AS-RH	
	11	1	**8Y-5938**	1	BRACKET AS-LH	
		1	**4D-6432**	1	LOCKNUT (7/16-20 THD)	
	12	1	**7U-4998**	6	SHIM	
	13	1	**2K-4973**	6	LOCKNUT (3/8-16 THD)	
	14	1	**8Y-5979**	1	PIN	
	15	1	**009-3681**	2	RING-RETAINING	
	16	1	**8Y-5947**	4	FASTENER	
	17	1	**8Y-6833**	1	SPRING	
	18	1	**8Y-6834**	1	SPRING	
	19	1	**1C-0569**	3	BOLT (5/16-18X0.5 IN)	
	20	1	**2B-2695**	4	BOLT (5/16-18X0.875 IN)	
	21	1	**8Y-5928**	2	SPRING	
	22	1	**8Y-5981**	2	BUSHING-BACKREST	
	23	1	**7B-7525**	2	BOLT-SOCKET HEAD (7/16-14X1.25 IN)	
	24	1	**8Y-6051**	2	SPACER (11.19X14.21X14.24MM THK)	
Y	25	1	**108-8421**	1	PAN GP-BACKREST	815
					AVAILABLE REPAIR KIT(S):	
			8Y-6933		KIT-TILT PAN	
					(INCLUDES FASTENERS, PINS)	
			8Y-5891		KIT-SEAT CUSHION	
					(INCLUDES FASTENERS)	
A			**5P-7958**		SLEEVE-CABLE SPLICE	

A-NOT PART OF THIS GROUP
Y-SEPARATE ILLUSTRATION

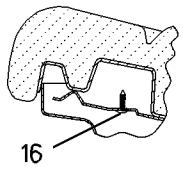

SECTION C-C

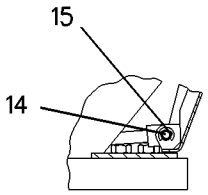

SECTION E-E

LEFT SIDE VIEW

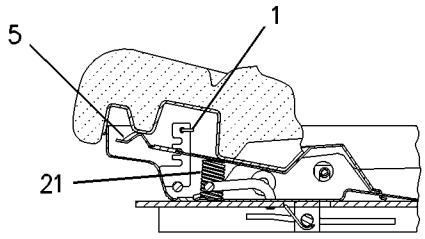

SECTION D-D

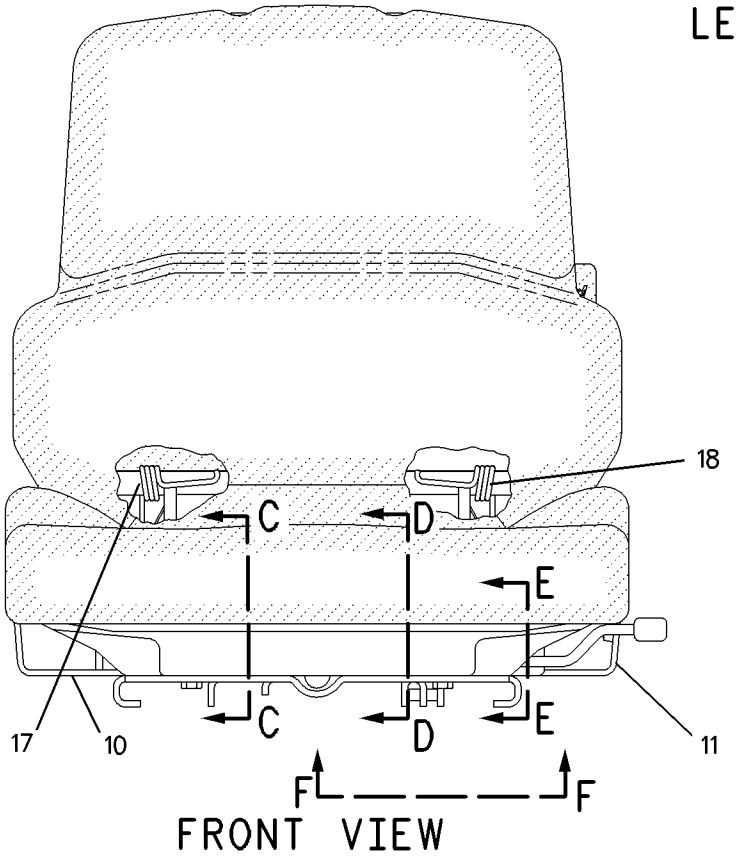

FRONT VIEW

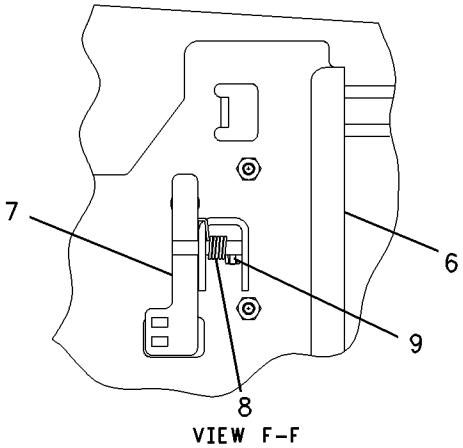

VIEW F-F

GRAPHIC #1

g00898771

OPERATOR STATION

114-1185 SEAT GP

S/N: CAF1-UP
PART OF 112-9105 SEAT GP-SUSPENSION
AN ATTACHMENT

SMCS-7312 **i01862223**

NOTE	REF NO	GRAPHIC REF	PART NUMBER	QTY	PART NAME 1 2 3 4 5 6 (PRODUCT LEVEL)	SEE PAGE
	1	1	**9L-7469**	2	LOCK PIN	
Y	2	1	*113-5810*	1	PAN GP-SEAT	816
	3	1	**9M-5733**	2	RIVET-POP (4.78MM DIA)	
	4	1	**108-8425**	1	CUSHION AS-BACK	
	5	1	**8Y-6051**	2	SPACER (11.19X14.21X14.24MM THK)	
	6	1	**8Y-5929**	1	PLATE AS-SLIDE	
		1	**4K-9097**	7	NUT-WELD (5/16-18 THD)	
	7	1	**8Y-5932**	1	LATCH AS	
	8	1	**8Y-5936**	1	SPRING	
	9	1	**095-0878**	1	PIN-SPRING	
	10	1	**8Y-5937**	1	BRACKET AS-RH	
	11	1	**8Y-5938**	1	BRACKET AS-LH	
		1	**4D-6432**	1	LOCKNUT (7/16-20 THD)	
	12	1	**7U-4898**	6	SCREW (3/8-16X0.75 IN)	
	13	1	**2K-4973**	6	LOCKNUT (3/8-16 THD)	
	14	1	**8Y-5979**	1	PIN	
	15	1	**009-3681**	2	RING-RETAINING	
	16	1	**8Y-5947**	4	FASTENER	
	17	1	**8Y-6833**	1	SPRING	
	18	1	**8Y-6834**	1	SPRING	
	19	1	**1C-0569**	3	BOLT (5/16-18X0.5 IN)	
	20	1	**2B-2695**	4	BOLT (5/16-18X0.875 IN)	
	21	1	**8Y-5928**	2	SPRING	
	22	1	**8Y-5981**	2	BUSHING-BACKREST	
	23	1	**7B-7525**	2	BOLT-SOCKET HEAD (7/16-14X1.25 IN)	
Y	24	1	**108-8421**	1	PAN GP-BACKREST	815
					AVAILABLE REPAIR KIT(S):	
			8Y-6933		KIT-TILT PAN	
					(INCLUDES FASTENERS, PINS)	
			8Y-5957		KIT-SEAT CUSHION (VINYL)	
					(INCLUDES CUSHION, & FASTENERS)	

Y-SEPARATE ILLUSTRATION

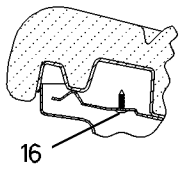

SECTION C-C

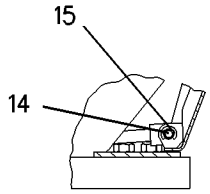

SECTION E-E

LEFT SIDE VIEW

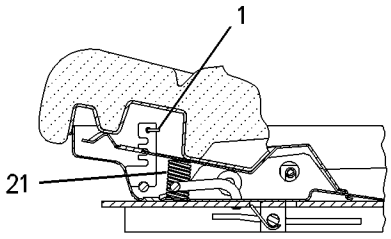

SECTION D-D

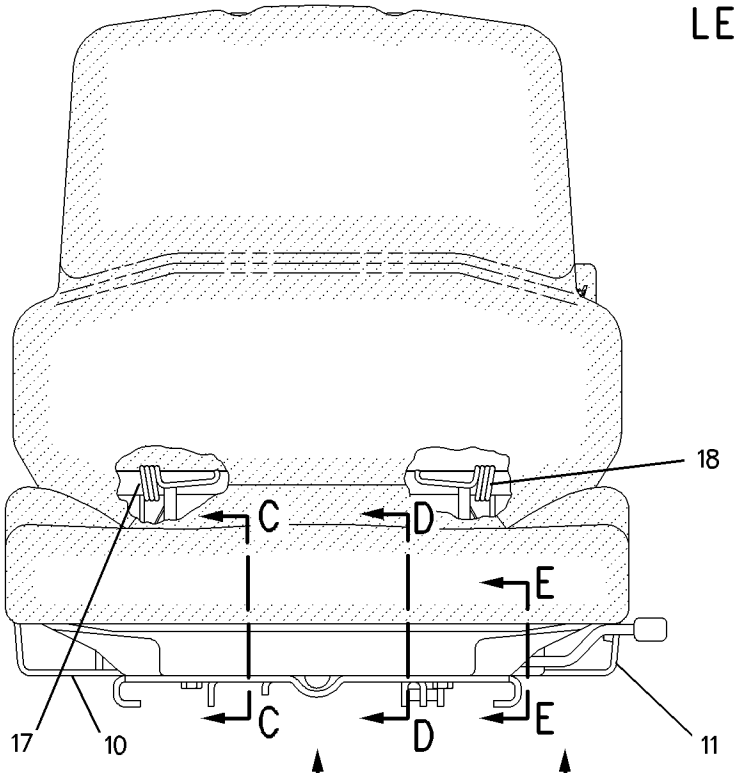

FRONT VIEW

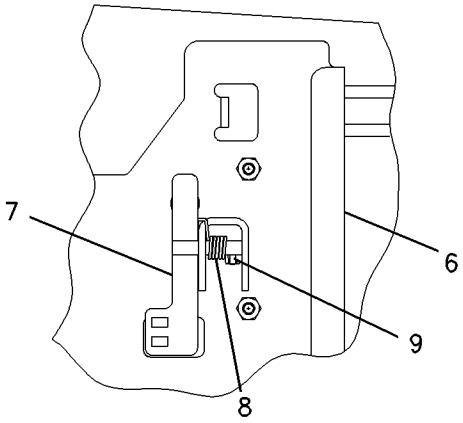

VIEW F-F

GRAPHIC #1

g00898774

OPERATOR STATION

8X-8940 SEAT GP-STATIC—CLOTH

S/N: CAF1-UP

PART OF 162-5603 GENERAL AR

SMCS-7312 **i00607171**

NOTE	PART NUMBER	QTY	PART NAME 1 2 3 4 5 6 (PRODUCT LEVEL)	SEE PAGE
Y	**116-1965**	1	SEAT BELT GP	840
Y	**8Y-6851**	1	SEAT GP-STATIC	854
M	**9X-2041**	1	SCREW-TRUSS HEAD (M10X1.5X20MM)	

M-METRIC PART
Y-SEPARATE ILLUSTRATION

<END>

8X-8945 SEAT GP-STATIC—VINYL

S/N: CAF1-UP

PART OF 223-3938 CAB AR-HIGH PROFILE, 183-3017 CONVERSION AR-NON-ROPS, 197-6663 ROPS AR-OPEN

AN ATTACHMENT

SMCS-7312 **i00609971**

NOTE	PART NUMBER	QTY	PART NAME 1 2 3 4 5 6 (PRODUCT LEVEL)	SEE PAGE
Y	**116-1965**	1	SEAT BELT GP	840
Y	**8Y-6852**	1	SEAT GP-STATIC	856
M	**9X-2041**	6	SCREW-TRUSS HEAD (M10X1.5X20MM)	

M-METRIC PART
Y-SEPARATE ILLUSTRATION

<END>

MEMORANDA

OPERATOR STATION

8Y-6851 SEAT GP-STATIC—CLOTH

S/N: CAF1-UP

PART OF 8X-8940 SEAT GP-STATIC

SMCS-7312 **i01755312**

NOTE	REF NO	GRAPHIC REF	PART NUMBER	QTY	PART NAME 1 2 3 4 5 6 (PRODUCT LEVEL)	SEE PAGE
Y	1	1	**116-2779**	1	ADJUSTER GP-SEAT	714
Y	2	1	**8Y-3912**	1	SEAT GP	844
	3	1	**9L-9814**	4	LOCKNUT	
	4	1	**8S-4790**	2	SPACER (6.35 MM THK)	
	5	1	**119-6194**	1	BOOT AS	
	6	1	**089-7968**	2	WASHER	
	7	1	**8R-4519**	2	LOCKNUT	
	8	1	**6W-3628**	2	CABLE	
	9	1	**5M-2894**	4	WASHER-HARD (10.2X18.5X2.5MM THK)	
	10	1	**9V-7446**	1	ARMREST AS-RH	
		1	**2K-4973**	1	LOCKNUT (3/8-16 THD)	
		1	**2K-6061**	1	SCREW-MACHINE (3/8-16X1.5 IN)	
		1	**5S-7383**	1	BOLT (3/8-16X1.75 IN)	
		1	**8Y-6277**	2	SPACER (10.5X28.6X10MM THK)	
		1	**9V-7447**	1	PAD AS	
		1	**1F-0750**	1	NUT-WELD (3/8-16 THD)	
		1	**9V-7453**	1	BRACKET-RH	
	11	1	**9V-7454**	1	ARMREST AS-LH	
		1	**2K-4973**	1	LOCKNUT (3/8-16 THD)	
		1	**2K-6061**	1	SCREW-MACHINE (3/8-16X1.5 IN)	
		1	**5S-7383**	1	BOLT (3/8-16X1.75 IN)	
		1	**8Y-6277**	2	SPACER (10.5X28.6X10MM THK)	
		1	**9V-7447**	1	PAD AS	
		1	**1F-0750**	1	NUT-WELD (3/8-16 THD)	
		1	**9V-7458**	1	BRACKET-LH	
	12	1	**8T-9381**	2	BOLT (7/16-20X1IN)	
	13	1	**9X-8276**	4	BOLT	

Y-SEPARATE ILLUSTRATION

8Y-6851 SEAT GP-STATIC ***(contd.)*** **i01755312**

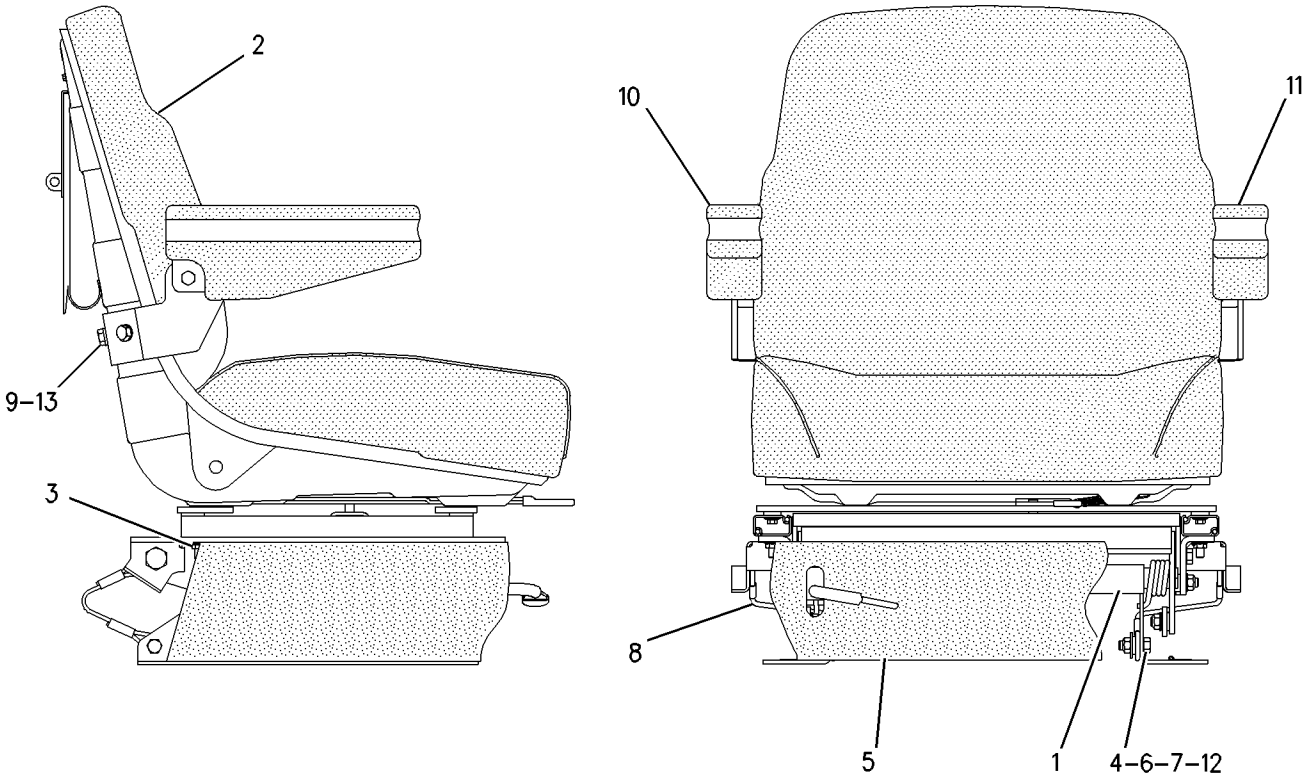

GRAPHIC #1 g00898784

OPERATOR STATION

8Y-6852 SEAT GP-STATIC—VINYL

S/N: CAF1-UP
PART OF 8X-8945 SEAT GP-STATIC
AN ATTACHMENT

SMCS-7312 **i00857882**

NOTE	REF NO	GRAPHIC REF	PART NUMBER	QTY	PART NAME 1 2 3 4 5 6 (PRODUCT LEVEL)	SEE PAGE
Y	1	1	**116-2779**	1	ADJUSTER GP-SEAT	714
Y	2	1	**8Y-4005**	1	SEAT GP	846
	3	1	**9L-9814**	4	LOCKNUT	
	4	1	**8S-4790**	2	SPACER	
	5	1	**119-6194**	1	BOOT AS	
	6	1	**089-7968**	2	WASHER	
	7	1	**8R-4519**	2	LOCKNUT	
	8	1	**6W-3628**	2	CABLE	
	9	1	**5M-2894**	4	WASHER (2.5MM THK)	
	10	1	**9V-7446**	1	ARMREST AS-RH	
		1	**2K-4973**	1	LOCKNUT (3/8-16 THD)	
		1	**2K-6061**	1	SCREW-MACHINE	
		1	**5S-7383**	1	BOLT (3/8-16X1.75IN)	
		1	**8Y-6277**	2	SPACER	
		1	**9V-7447**	1	PAD AS	
		1	**1F-0750**	1	NUT-WELD (3/8-16 THD)	
		1	**9V-7453**	1	BRACKET-RH	
	11	1	**9V-7454**	1	ARMREST AS-LH	
		1	**2K-4973**	1	LOCKNUT (3/8-16 THD)	
		1	**2K-6061**	1	SCREW-MACHINE	
		1	**5S-7383**	1	BOLT (3/8-16X1.75IN)	
		1	**8Y-6277**	2	SPACER	
		1	**9V-7447**	1	PAD AS	
		1	**1F-0750**	1	NUT-WELD (3/8-16 THD)	
		1	**9V-7458**	1	BRACKET-LH	
	12	1	**8T-9381**	2	BOLT (7/16-20X1IN)	
	13	1	**9X-8276**	4	BOLT	

Y-SEPARATE ILLUSTRATION

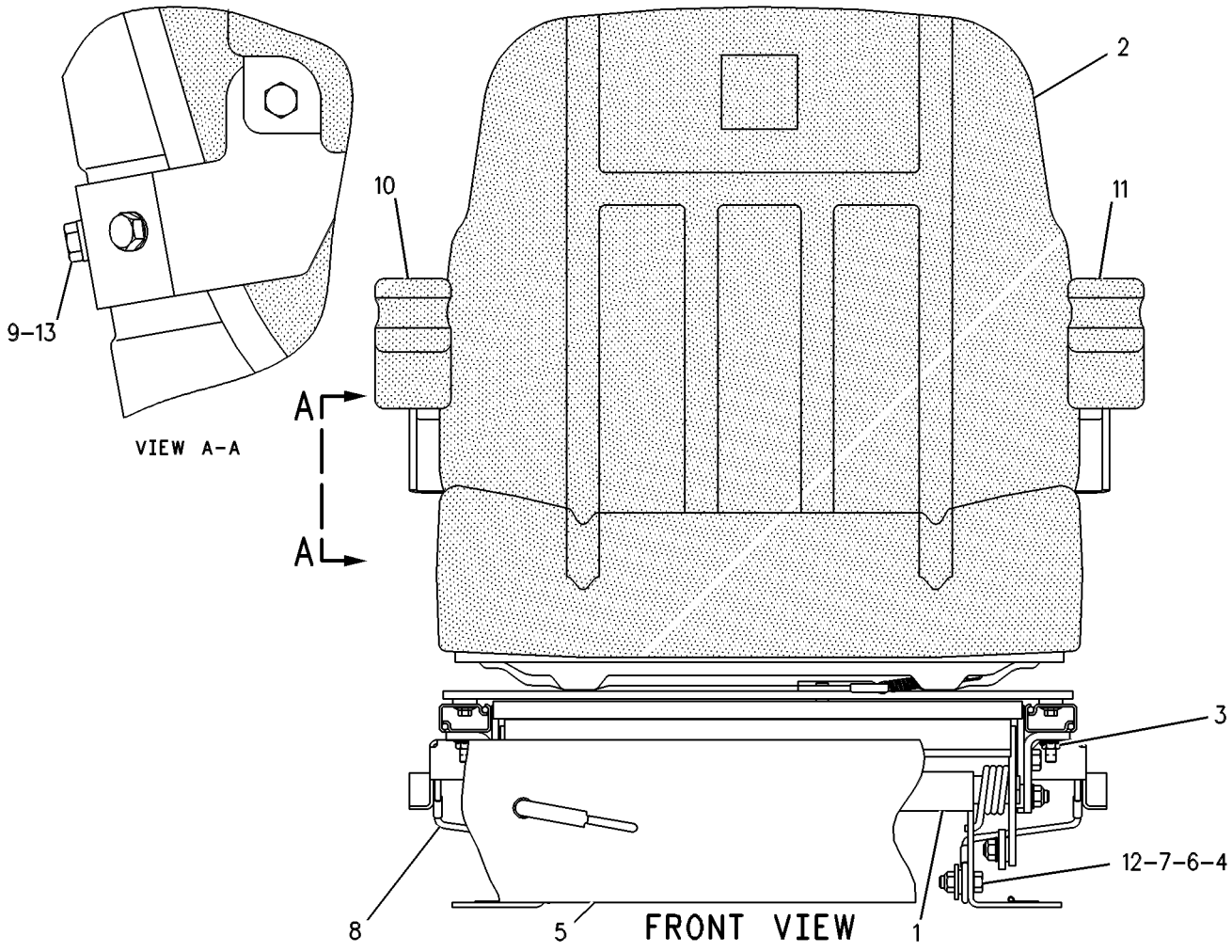

GRAPHIC #1

g00109321

OPERATOR STATION

8Y-4194 SEAT GP-SUSPENSION

S/N: CAF1-UP
PART OF 207-3665, 210-2042 CONVERSION AR-CERTIFICATION
AN ATTACHMENT

SMCS-7312 **i00607072**

NOTE	PART NUMBER	QTY	PART NAME 1 2 3 4 5 6 (PRODUCT LEVEL)	SEE PAGE
Y	**112-9104**	1	SEAT GP-SUSPENSION	859
M	**9X-2041**	6	SCREW-TRUSS HEAD (M10X1.5X20MM)	

M-METRIC PART
Y-SEPARATE ILLUSTRATION

<END>

OPERATOR STATION

112-9104 SEAT GP-SUSPENSION—CLOTH

S/N: CAF1-UP

PART OF 212-3683, 8Y-4194 SEAT GP-SUSPENSION

AN ATTACHMENT

SMCS-7312 **i01453735**

NOTE	REF NO	GRAPHIC REF	PART NUMBER	QTY	PART NAME 1 2 3 4 5 6 (PRODUCT LEVEL)	SEE PAGE
Y	1	1	**8Y-5874**	1	EXTENSION GP-BACKREST	748
Y	2	1	**114-1183**	1	SEAT GP	848
Y	3	1	**113-4245**	1	ARMREST GP (RH)	724
Y	4	1	**113-4242**	1	ARMREST GP (LH)	723
Y	5	1	**113-5800**	1	SUSPENSION GP-SEAT	870
CY	6	1	**156-1148**	1	SEAT BELT GP (RETRACTABLE)	842
	7	1	**4F-4879**	1	BOLT (3/8-16X.5 IN)	
					AVAILABLE REPAIR KIT(S):	
			149-4745	1	KIT-SLIDER BLOCK (INCLUDES BLOCKS AND BOLT)	

C-CHANGE FROM PREVIOUS TYPE
Y-SEPARATE ILLUSTRATION

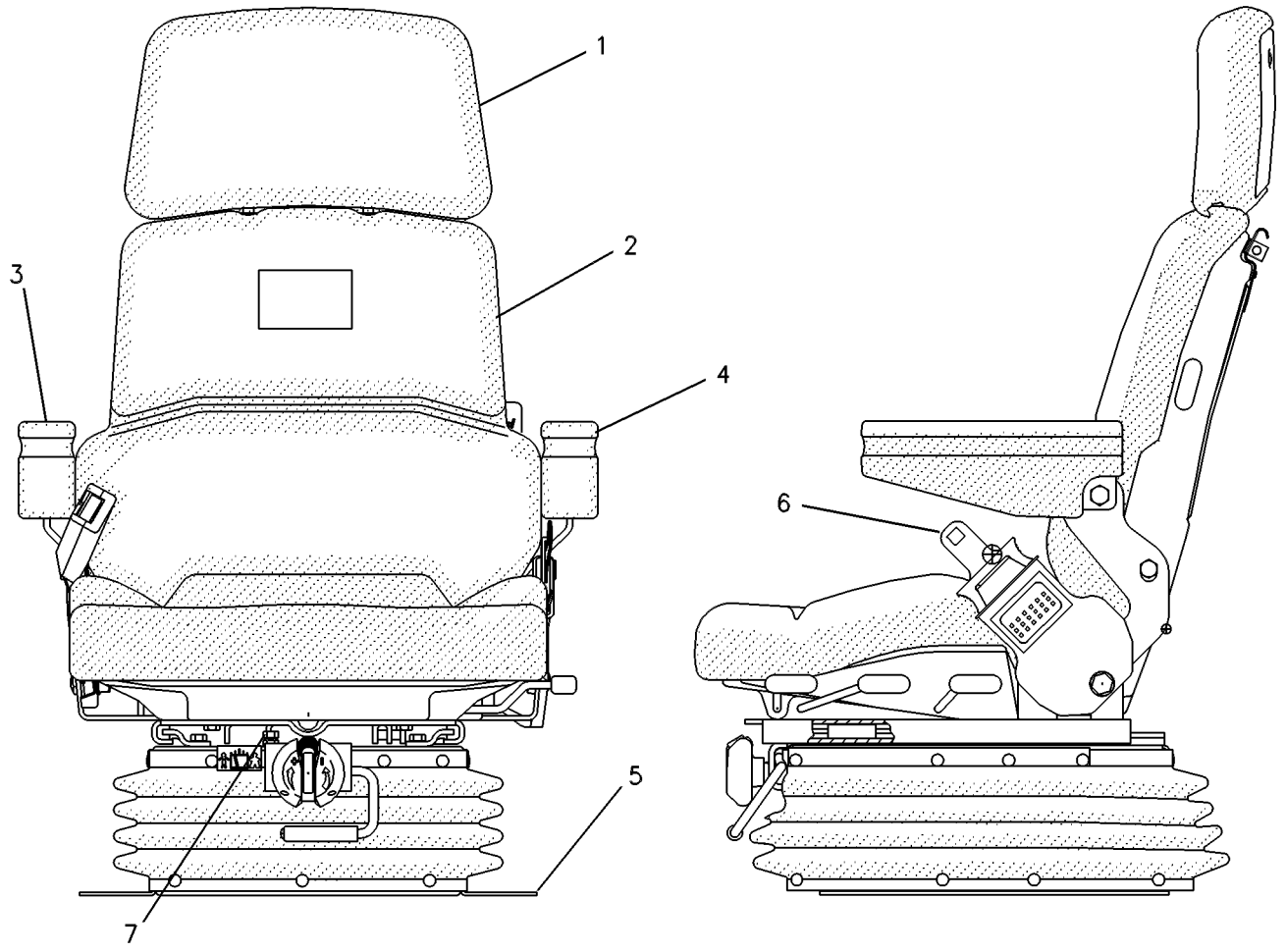

GRAPHIC #1 g00109695

OPERATOR STATION

112-9105 SEAT GP-SUSPENSION

S/N: CAF1-UP
PART OF 113-1689, 131-9311 SEAT GP-SUSPENSION
AN ATTACHMENT

SMCS-7312 **i00755229**

NOTE	REF NO	GRAPHIC REF	PART NUMBER	QTY	PART NAME 1 2 3 4 5 6 (PRODUCT LEVEL)	SEE PAGE
Y	1	1	**8Y-5959**	1	EXTENSION GP-BACKREST	749
Y	2	1	**114-1185**	1	SEAT GP	850
Y	3	1	**113-4245**	1	ARMREST GP (RH)	724
Y	4	1	**113-4242**	1	ARMREST GP (LH)	723
Y	5	1	**113-5800**	1	SUSPENSION GP-SEAT	870
CY	6	1	*122-4617*	1	SEAT BELT GP	841
J	7	1	**4F-4879**	1	BOLT (3/8-16X.5IN)	
					AVAILABLE REPAIR KIT(S):	
J			**149-4745**	1	KIT-SLIDER BLOCK (INCLUDES 4 BLOCKS)	

C-CHANGE FROM PREVIOUS TYPE
J-KIT MARKED J INCLUDES PART MARKED J
Y-SEPARATE ILLUSTRATION

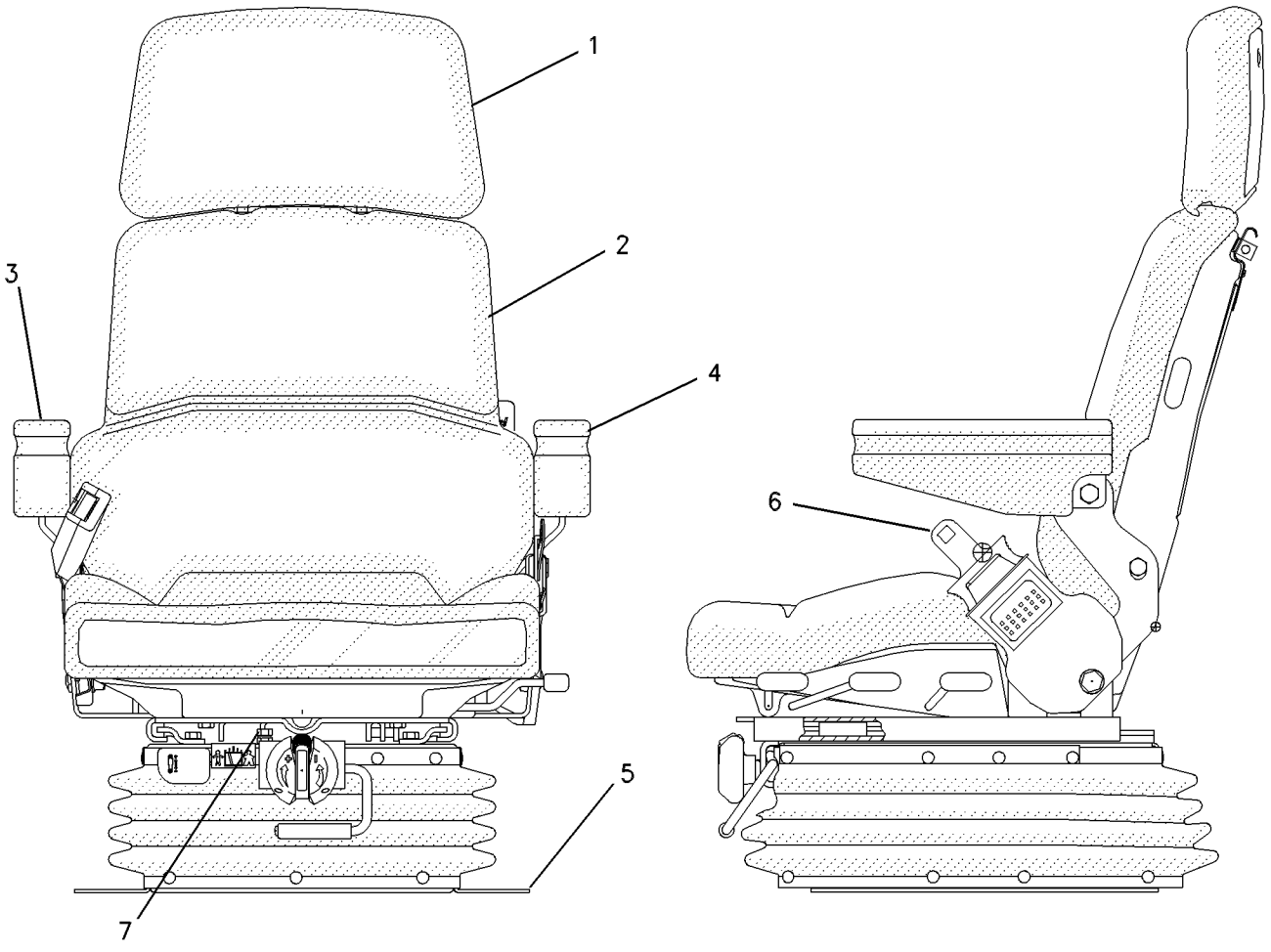

GRAPHIC #1 g00285098

OPERATOR STATION

113-1689 SEAT GP-SUSPENSION

S/N: CAF1-UP
AN ATTACHMENT

SMCS-7312 **i00606982**

NOTE	PART NUMBER	QTY	PART NAME 1 2 3 4 5 6 (PRODUCT LEVEL)	SEE PAGE
M	**9X-2041**	6	SCREW-TRUSS HEAD (M10X1.5X20MM)	
Y	**112-9105**	1	SEAT GP-SUSPENSION	860

M-METRIC PART
Y-SEPARATE ILLUSTRATION

<END>

OPERATOR STATION

131-9311 SEAT GP-SUSPENSION

S/N: CAF1-UP
AN ATTACHMENT

SMCS-7312 **i01823208**

NOTE	REF NO	GRAPHIC REF	PART NUMBER	QTY	PART NAME 1 2 3 4 5 6 (PRODUCT LEVEL)	SEE PAGE
Y	1	1	**112-9105**	1	SEAT GP-SUSPENSION	860
M	2	1	**9X-2041**	6	SCREW-TRUSS HEAD (M10X1.5X20MM)	

M-METRIC PART
Y-SEPARATE ILLUSTRATION

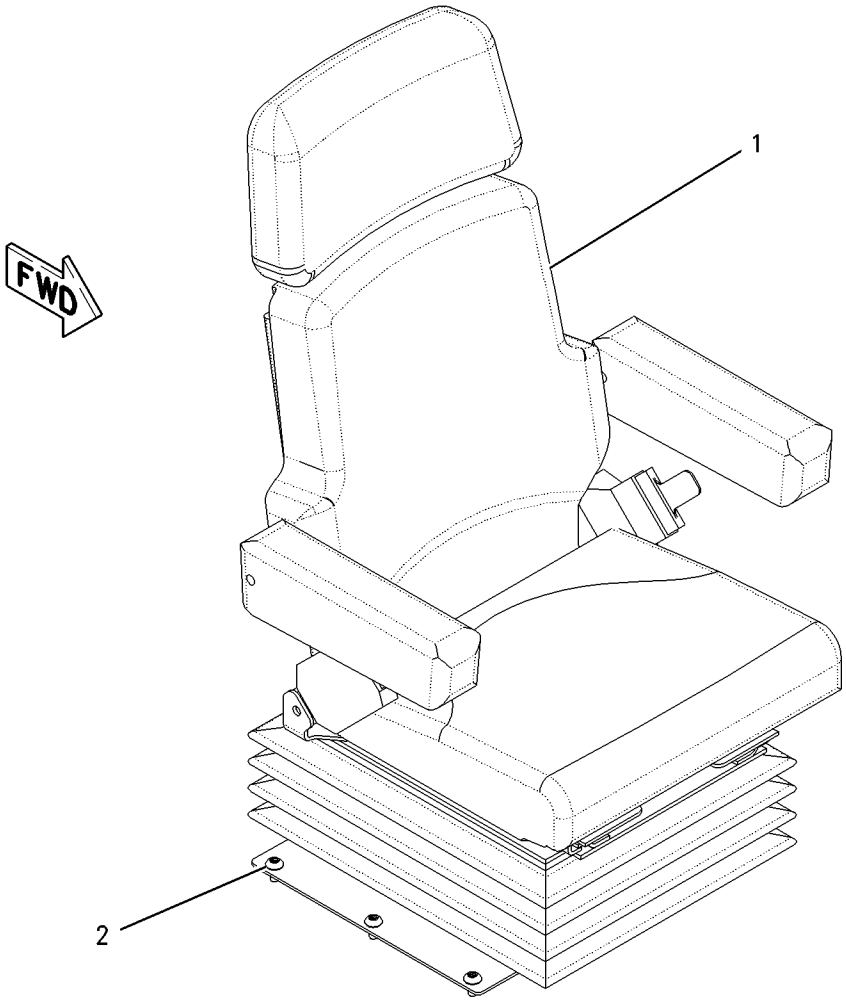

GRAPHIC #1 g00939377

154-5732 SEAT GP-SUSPENSION–CLOTH

S/N: CAF1-UP
PART OF 157-2175 SEAT GP-SUSPENSION
AN ATTACHMENT

SMCS-7312 **i01179034**

NOTE	REF NO	GRAPHIC REF	PART NUMBER	QTY	PART NAME 1 2 3 4 5 6 (PRODUCT LEVEL)	SEE PAGE
Y	1	1	**155-5959**	1	SUSPENSION GP-SEAT	872
Y	2	1	**155-5958**	1	SEAT GP-SUSPENSION	864
	3	1	**4F-4879**	1	BOLT (3/8-16X.5IN)	
					AVAILABLE REPAIR KIT(S):	
			166-7225	1	KIT-SLIDER BLOCK	
					(INCLUDES BOLT, SETSCREW, & SLIDER BLOCK)	

Y-SEPARATE ILLUSTRATION

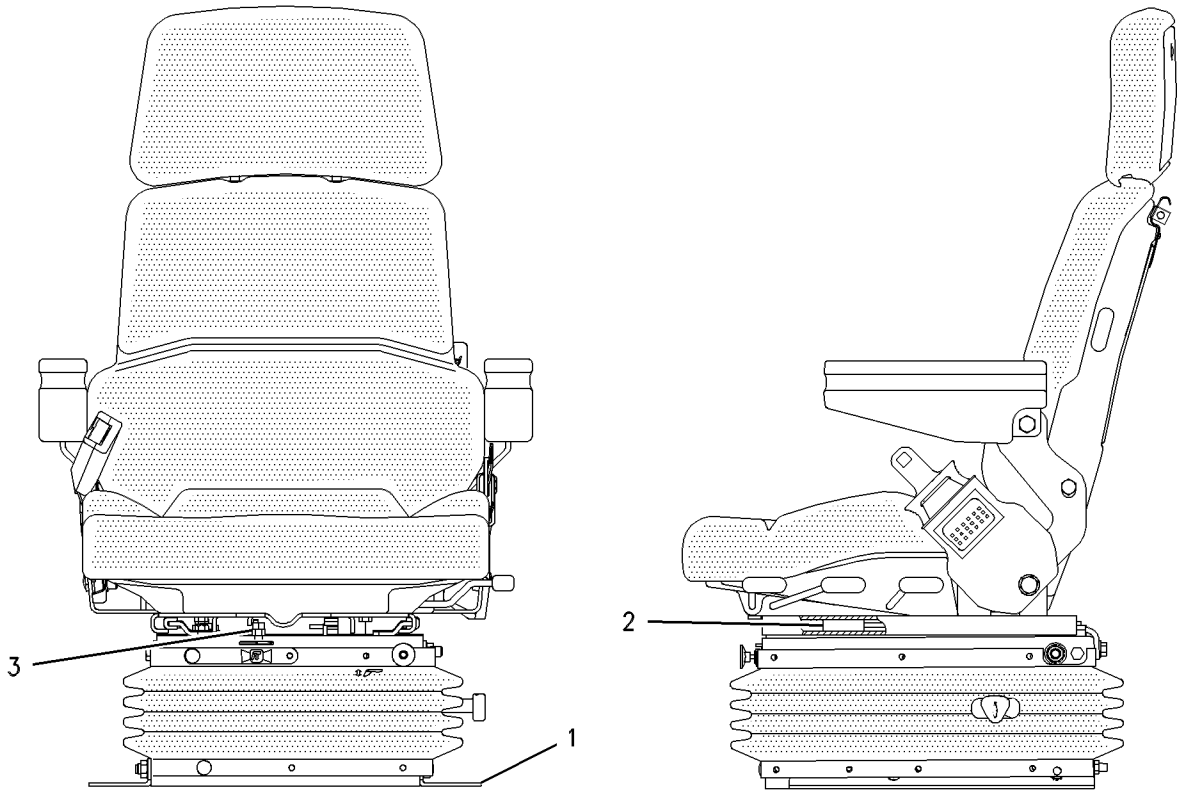

GRAPHIC #1 g00593643

OPERATOR STATION

155-5958 SEAT GP-SUSPENSION—CLOTH

S/N: CAF1-UP
PART OF 154-5732 SEAT GP-SUSPENSION
AN ATTACHMENT

SMCS-7312 **i01044407**

NOTE	REF NO	GRAPHIC REF	PART NUMBER	QTY	PART NAME 1 2 3 4 5 6 (PRODUCT LEVEL)	SEE PAGE
Y	1	1	**8Y-5874**	1	EXTENSION GP-BACKREST	748
Y	2	1	**114-1183**	1	SEAT GP	848
Y	3	1	**113-4242**	1	ARMREST GP (LH)	723
Y	4	1	**113-4245**	1	ARMREST GP (RH)	724
Y	5	1	**156-1148**	1	SEAT BELT GP	842

Y-SEPARATE ILLUSTRATION

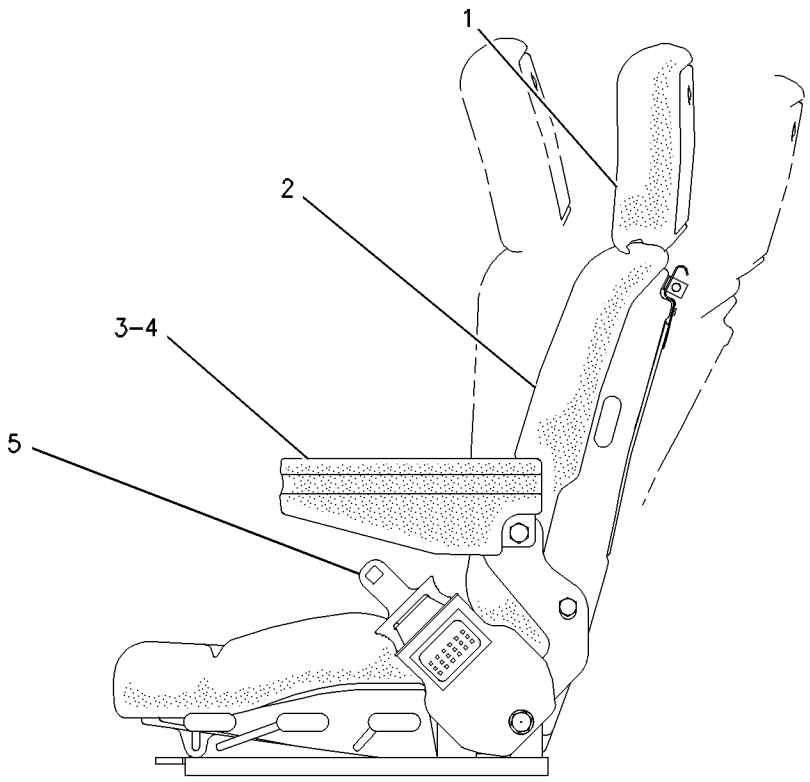

GRAPHIC #1 g00513814

OPERATOR STATION

157-2175 SEAT GP-SUSPENSION—CLOTH

S/N: CAF1-UP
AN ATTACHMENT

SMCS-7312 **i01196309**

NOTE	PART NUMBER	QTY	PART NAME 1 2 3 4 5 6 (PRODUCT LEVEL)	SEE PAGE
	5H-8936	1	ADAPTER	
	4D-7794	1	CLIP (10.0MM ID)	
	2R-1922	1	CONNECTOR	
	3D-9253	1	CONNECTOR-PIPE	
	5D-0269	1	ELBOW	
	7J-8611	1	ELBOW (1/4-18 NPTF)	
	157-6129	1	GROMMET	
	3G-7875	1	HOSE AS	
	160-2353	1	HOSE AS	
	5K-2408	1	NIPPLE-HEX	
M	**9X-2039**	1	SCREW-TRUSS HEAD (M10X1.5X35MM)	
M	**9X-2041**	6	SCREW-TRUSS HEAD (M10X1.5X20MM)	
Y	*154-5732*	1	SEAT GP-SUSPENSION	863
	091-0081	1	SPACER (10.0MM THK)	
	3S-2093	3	STRAP-CABLE	
	161-2444	1	VALVE AS	
	161-2445	1	VALVE AS-FILTER	

M-METRIC PART
Y-SEPARATE ILLUSTRATION

<END>

212-3683 SEAT GP-SUSPENSION—CLOTH

S/N: CAF1-UP
AN ATTACHMENT

SMCS-7312 **i01683738**

NOTE	PART NUMBER	QTY	PART NAME 1 2 3 4 5 6 (PRODUCT LEVEL)	SEE PAGE
M	**9X-2041**	6	SCREW-TRUSS HEAD (M10X1.5X20MM)	
Y	**112-9104**	1	SEAT GP-SUSPENSION (CLOTH)	859

M-METRIC PART
Y-SEPARATE ILLUSTRATION

<END>

OPERATOR STATION

174-4546 SUPPORT GP-SEAT

S/N: CAF1-UP

PART OF 162-5603 GENERAL AR

SMCS-7321 **i01674709**

NOTE	REF NO	GRAPHIC REF	PART NUMBER	QTY	PART NAME 1 2 3 4 5 6 (PRODUCT LEVEL)	SEE PAGE
	1	1	**5P-7803**	2	PLUG-BUTTON	
	2	1	**7G-4824**	1	STRAP	
	4	1	**8E-7791**	1	STRAP	
	5	1	**8X-5536**	1	COVER	
	6	1	**8X-5538**	1	COVER AS	
M		1	**8T-3490**	4	NUT-WELD (M10X1.5 THD)	
	7	1	**8X-5540**	1	COVER	
	8	1	**123-4618**	1	COVER	
	9	1	**123-4701**	1	SEAL	
	10	1	**174-4492**	1	COVER	
	11	1	**174-6051**	1	SUPPORT AS	
		1	**5P-1075**	8	WASHER-HARD (10.2X22.5X3MM THK)	
M		1	**6V-9632**	6	NUT-WELD (M6X1 THD)	
M		1	**8T-3490**	13	NUT-WELD (M10X1.5 THD)	
M		1	**9T-6001**	2	BOSS (M10X1.5X25MM)	
		1	**123-8408**	2	TUBE AS	
	12	1	**174-6353**	1	PLATE	
	13	1	**176-5507**	1	PAD	
	14	1	**191-0027**	1	PAD	
	15	1	**5P-1075**	8	WASHER-HARD (10.2X22.5X3MM THK)	
	16	1	**6V-8801**	8	NUT (3/8-16 THD)	
	17	1	**7X-0591**	2	WASHER-HARD (17X29X3MM THK)	
M	18	1	**9X-2040**	4	SCREW-TRUSS HEAD (M10X1.5X25MM)	
M	19	1	**9X-2041**	5	SCREW-TRUSS HEAD (M10X1.5X20MM)	
M	20	1	**9X-2045**	6	SCREW-TRUSS HEAD (M6X1X20MM)	

M-METRIC PART

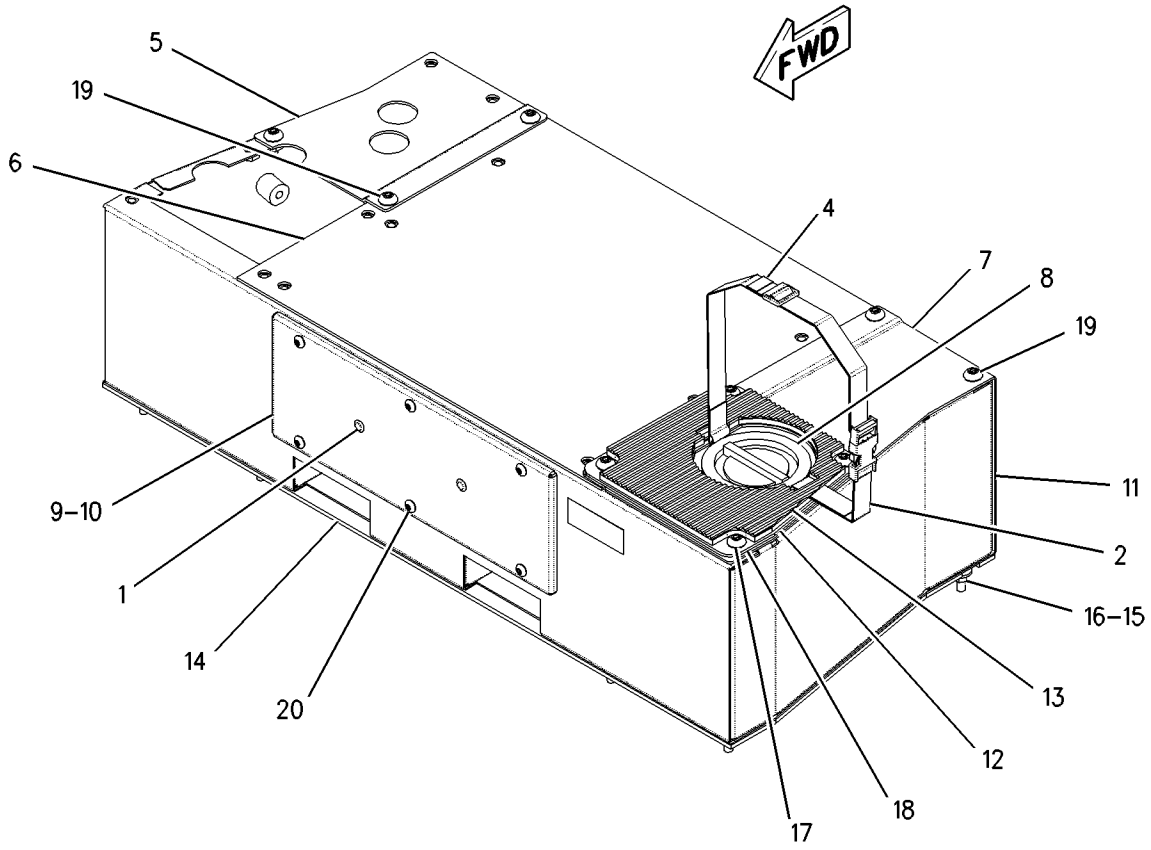

GRAPHIC #1 g00865561

OPERATOR STATION

200-2969 SUPPRESSION GP-SOUND

S/N: CAF1-UP
ENGINE ENCLOSURE
PART OF 207-3665, 210-2042 CONVERSION AR-CERTIFICATION
AN ATTACHMENT

SMCS-7329, 7330 **i01684476**

NOTE	REF NO	GRAPHIC REF	PART NUMBER	QTY	PART NAME 1 2 3 4 5 6 (PRODUCT LEVEL)	SEE PAGE
	1	1	**199-9955**	2	CLIP	
	2	1	**199-9956**	2	CLIP	
	3	1	**205-3100**	1	PANEL	
	4	1	**205-3102**	1	PANEL	
	5	1	**205-3103**	1	INSULATION	
	6	1	**205-5526**	1	PANEL	

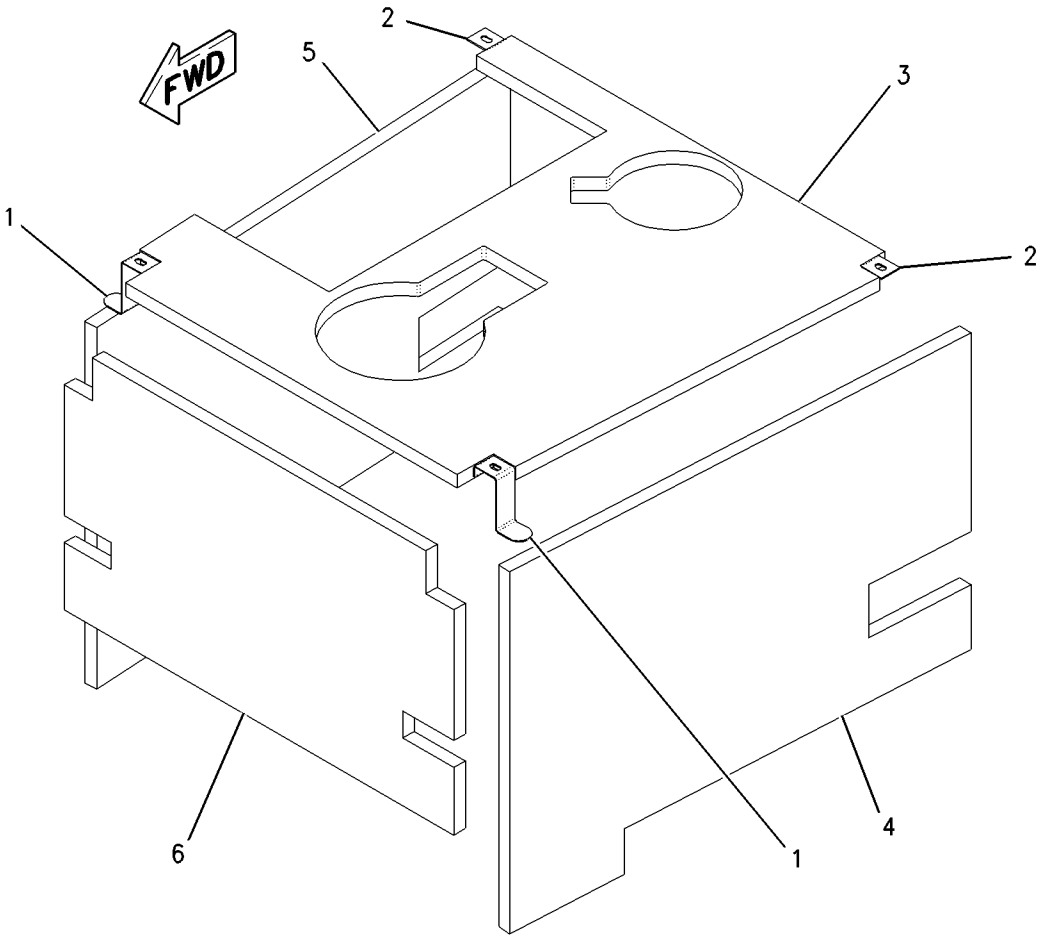

GRAPHIC #1 g00881116

MEMORANDA

OPERATOR STATION

113-5800 SUSPENSION GP-SEAT

S/N: CAF1-UP

PART OF 112-9104, 112-9105 SEAT GP-SUSPENSION

AN ATTACHMENT

SMCS-7324 **i00136249**

NOTE	REF NO	GRAPHIC REF	PART NUMBER	QTY	PART NAME 1 2 3 4 5 6 (PRODUCT LEVEL)	SEE PAGE
	1	1	**8Y-6022**	1	PLATE-SLIDE	
	2	1	**8Y-6023**	1	PLATE-SLIDE	
	3	1	**5M-3062**	2	BOLT (3/8-16X.750IN)	
	4	1	**5P-1075**	4	WASHER-HARD (3MM THK)	
	5	1	**2K-4973**	6	LOCKNUT (3/8-16 THD)	
	6	1	**113-5804**	1	HOUSING AS-LOWER	
Y	7	1	**113-5808**	1	HOUSING GP-SEAT SUSPENSION	774
	8	1	**8Y-6012**	1	ARM AS-SUSPENSION	
	9	1	**1D-4677**	4	BOLT-ROUND HEAD	
J	10	1	**101-0003**	23	FASTENER	
J	11	1	**111-5042**	3	FASTENER	
J	12	1	**108-4878**	3	NUT-PUSH	
	13	1	**5V-1497**	1	RETAINER	
	14	1	**4V-7884**	2	BEARING	
	15	1	**4V-8577**	4	BEARING	
	16	1	**8Y-6024**	2	SHAFT AS	
	17	1	**124-0507**	1	ABSORBER-SHOCK	
JZ	18	1		1	BOOT	
JZ	19	1		2	RETAINER	
Z	20	1		2	BELT	
NZ	21	1		4	ROLLER	
					AVAILABLE REPAIR KIT(S):	
			101-4194	1	KIT-BELT TETHER	
J			**8Y-5944**	1	KIT-SUSPENSION BOOT	
N			**101-4195**		KIT-SUSPENSION ROLLER	

J-KIT MARKED J INCLUDES PART(S) MARKED J
N-KIT MARKED N INCLUDES PART MARKED N
Y-SEPARATE ILLUSTRATION
Z-NOT SERVICED SEPARATELY

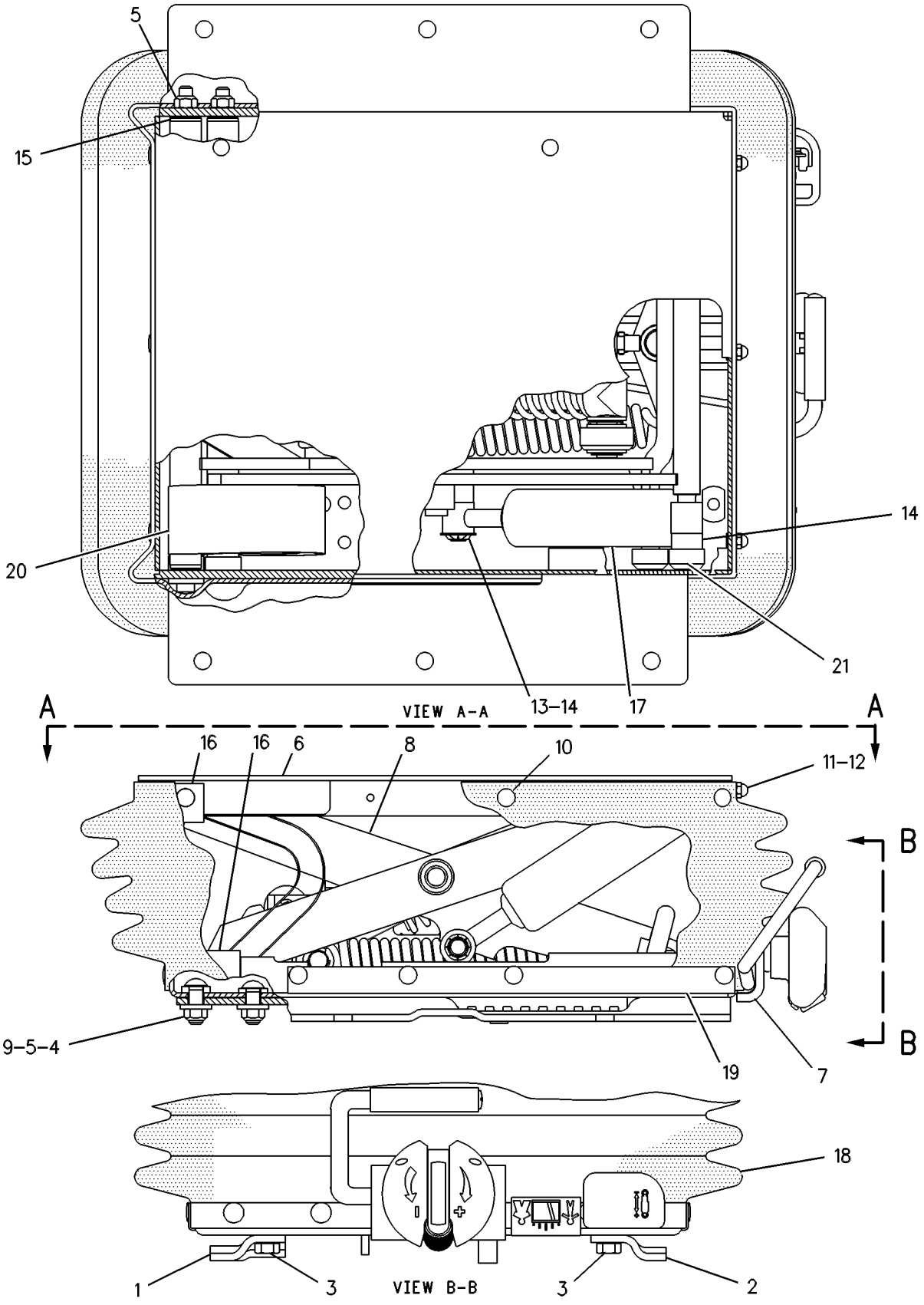

GRAPHIC #1 g00108834

OPERATOR STATION

155-5959 SUSPENSION GP-SEAT—AIR

S/N: CAF1-UP
PART OF 154-5732 SEAT GP-SUSPENSION
AN ATTACHMENT

SMCS-7324 **i01605093**

NOTE	REF NO	GRAPHIC REF	PART NUMBER	QTY	PART NAME 1 2 3 4 5 6 (PRODUCT LEVEL)	SEE PAGE
	1	1	**3J-4818**	4	LOCKWASHER	
	2	1	**102-6317**	4	BUMPER	
	3	1	**123-8157**	2	SHAFT	
	4	1	**128-0686**	2	SPACER (9.78X15.88X27.8MM THK)	
	5	1	**128-5082**	1	BOOT	
	6	1	**128-5084**	1	ABSORBER-SHOCK	
	7	1	**128-5085**	1	KNOB-DAMPER (SEAT)	
	8	1	**147-4549**	2	FITTING-ELBOW	
	9	1	**147-6522**	1	SPRING	
	10	1	**148-3749**	1	SCISSORS AS	
	11	1	**149-2400**	1	FITTING	
	12	1	**149-2402**	1	VALVE AS (SEAT)	
	13	1	**158-3198**	1	HOUSING AS	
	14	1	**160-3662**	2	FITTING-BULKHEAD	
B	15	1	**160-7765**	1	WASHER (16.26X22.23X1.97MM THK)	
B	16	1	**160-7766**	6	WASHER (16.26X22.23X0.51MM THK)	
B	17	1	**160-7767**	6	WASHER (3.68X12.57X0.51MM THK)	
	18	1	**166-7224**	1	HOUSING AS	
	19	1	**1B-4430**	4	NUT-JAM (1/2-20 THD)	
	20	1	**2K-4973**	3	LOCKNUT (3/8-16 THD)	
	21	1	**4V-7884**	2	BEARING	
	22	1	**4V-8556**	1	BOLT (3/8-16X2.34 IN)	
	23	1	**5P-8167**	1	BOLT (3/8-16X0.625 IN)	
	24	1	**8L-8413**	3	STRAP-CABLE	
	25	1	**7X-7739**	1	WASHER (9.7X25.4 X4MM THK)	
	26	1	**8M-3267**	1	SCREW-HEX SOCKET (3/8-16X0.75 IN)	
	27	1	**8T-2501**	2	BOLT (3/8-16X2 IN)	
BE	28	1	**147-6541**		TUBE	
	29	1	**145-0326**	1	FILM-INSTRUCTION (SEAT ADJUSTMENT)	
F		1	**4F-4879**	1	BOLT (3/8-16X.5 IN)	
					AVAILABLE REPAIR KIT(S):	
			8Y-6928	1	KIT-FASTENER (SEAT)	
					(INCLUDES CLIPS-RACHET)	
			123-9128	1	KIT-ROLLER (SEAT)	
					(INCLUDES BEARINGS, ROLLERS, TIE WRAP)	
			128-0613	1	KIT-TETHER (SEAT)	
					(INCLUDES TETHERS)	
			132-3439	1	KIT-INDICATOR (SEAT)	
					(INCLUDES MAGNET, CAM, INDICATOR, NUT, SPRING, LABEL)	

B-USE AS REQUIRED
E-ORDER BY THE CENTIMETER
F-NOT SHOWN

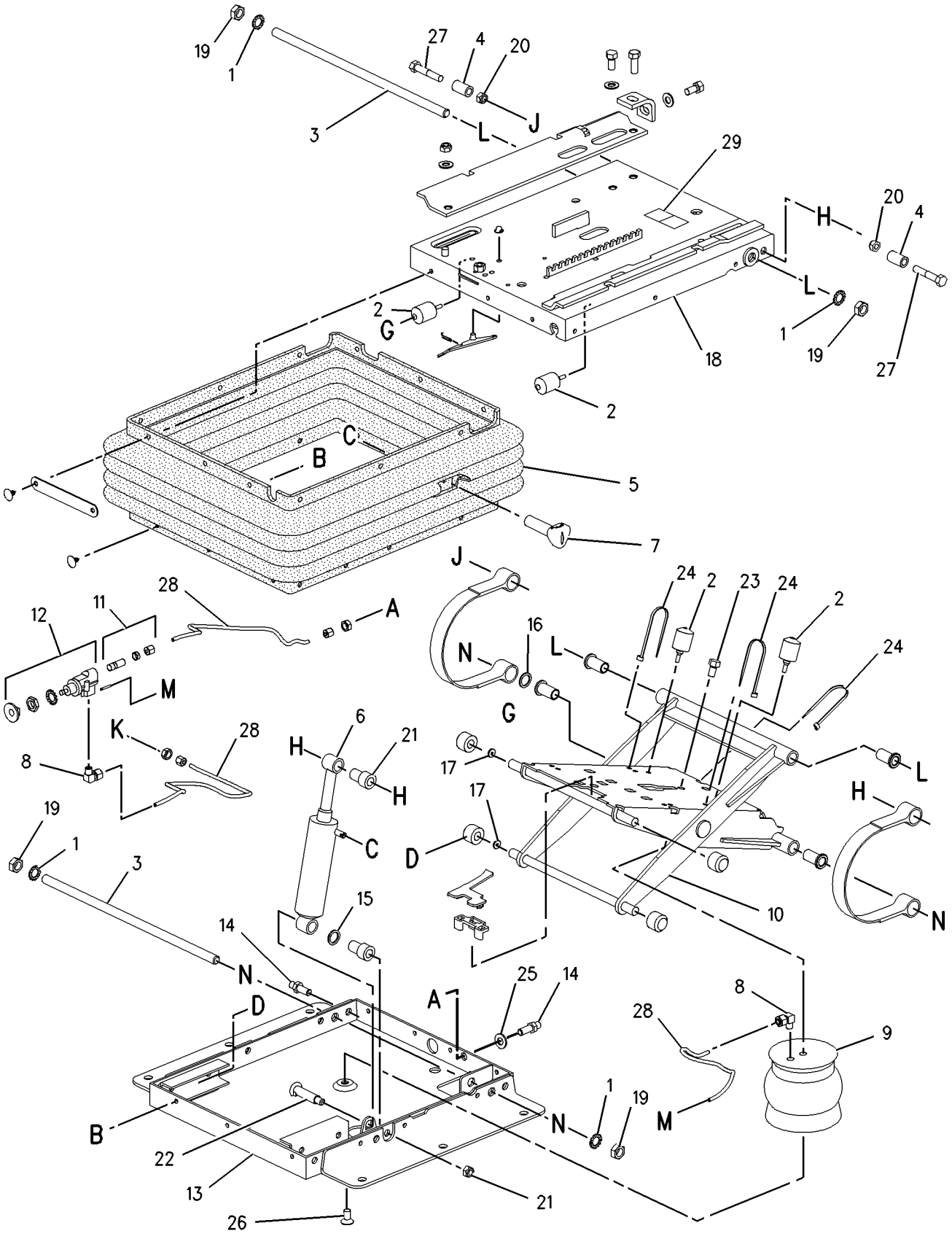

GRAPHIC #1 g00795577

OPERATOR STATION

8X-9675 WASHER GP-WINDOW—FRONT

S/N: CAF1-UP

PART OF 161-1141, 179-3581, 218-4758, 218-4760 ROPS AR-ENCLOSED ALSO AN ATTACHMENT

SMCS-7306 **i01193188**

NOTE	REF NO	GRAPHIC REF	PART NUMBER	QTY	PART NAME 1 2 3 4 5 6 (PRODUCT LEVEL)	SEE PAGE
BE	1	1	**144-0195**		HOSE	
	2	1	**8W-0935**	1	GASKET	
	3	1	**8W-0934**	1	BRACKET	
	4	1	**9P-2369**	1	JET AS-WASHER	
		1	**8Y-4408**	1	NOZZLE AS-JET	
	5	1	**8T-2901**	1	NOZZLE AS	
		1	**8Y-4409**	1	NOZZLE AS-JET	
M	7	1	**5C-2890**	2	NUT (M6X1.00 THD)	
	8	1	**5P-4115**	2	WASHER (2MM THK)	
	9	1	**3S-2093**	3	STRAP-CABLE	
	10	1	**102-3645**	1	COVER	
M	11	1	**9X-2045**	5	SCREW-TRUSS HEAD (M6X1X20MM)	
	12	1	**4D-7388**	2	CLIP (34.92MM ID)	
	13	1	**5M-3062**	1	BOLT (3/8-16X.75IN)	
	14	1	**8T-4896**	2	WASHER-HARD (2.5MM THK)	
	15	1	**7T-8891**	2	PUMP AS-WASHER	
	16	1	**8X-9405**	1	RESERVOIR AS	
	17	1	**8X-5280**	2	CONNECTOR	
	18	1	**6W-5698**	2	GROMMET	
	19	1	**7T-1961**	1	CAP	
	20	1	**8X-1135**	1	GASKET	
	21	1	**8X-9349**	1	PAD	
	22	1	**107-4865**	1	PAD	
	24	1	**4L-6454**	1	BOLT (3/8-16X1 IN)	
	25	1	**6V-8801**	1	NUT (3/8-16 THD)	
	26	1	**7G-4326**	1	PLATE	

B-USE AS REQUIRED
E-ORDER BY THE CENTIMETER
M-METRIC PART

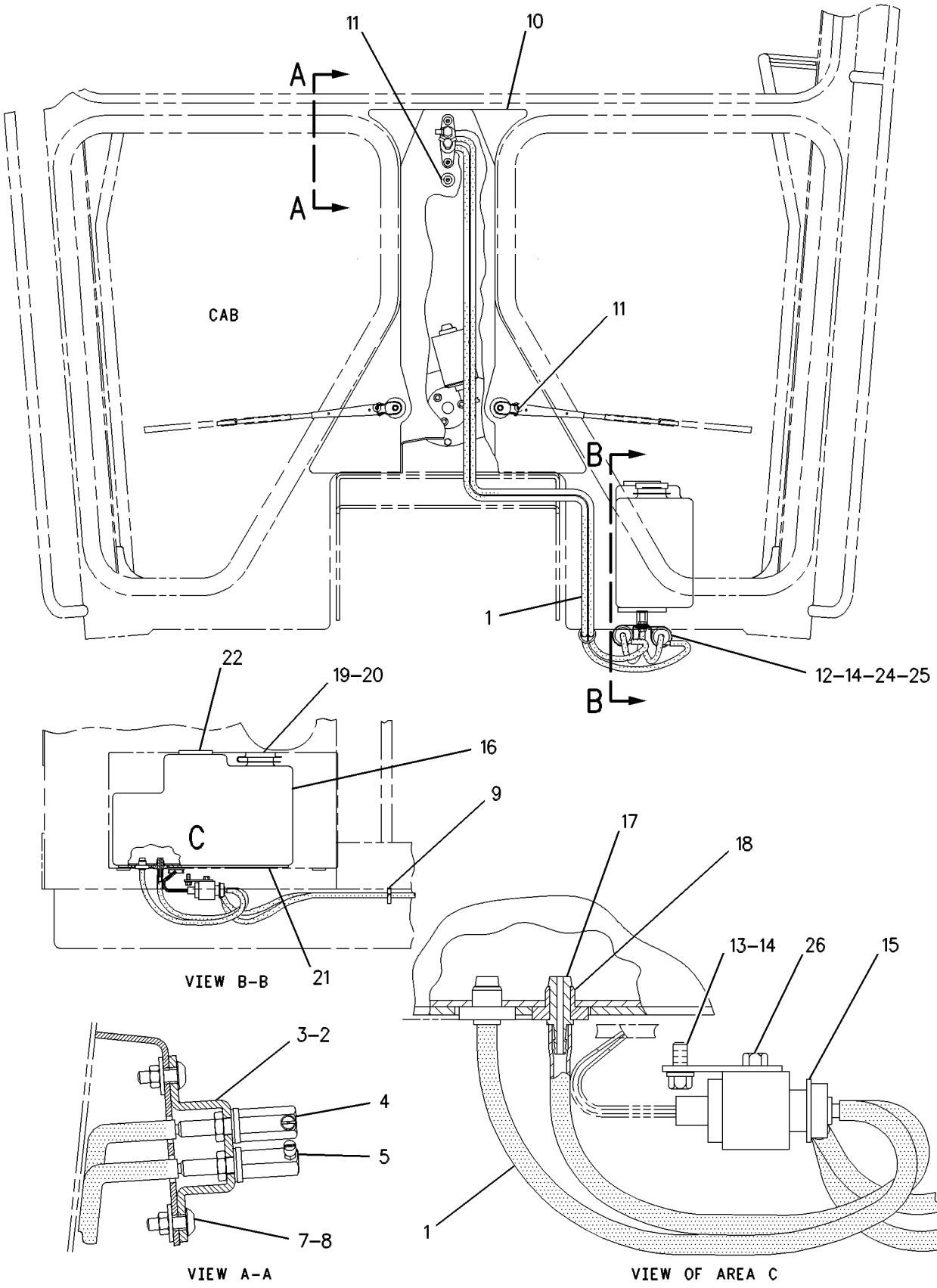

GRAPHIC #1

g00638869

OPERATOR STATION

8X-9680 WASHER GP-WINDOW

S/N: CAF1-UP
PART OF 177-8830, 177-8831 WIPER AR-WINDOW
AN ATTACHMENT

SMCS-7306 **i01774581**

NOTE	REF NO	GRAPHIC REF	PART NUMBER	QTY	PART NAME 1 2 3 4 5 6 (PRODUCT LEVEL)	SEE PAGE
	1	1	**3V-3816**	1	NOZZLE AS	
	2	1	**7T-8891**	1	PUMP AS-WASHER	
	3	1	**4D-7388**	1	CLIP	
	4	1	**4D-7794**	1	CLIP	
	5	1	**5P-8167**	2	BOLT (3/8-16X0.625 IN)	
	6	1	**6K-9632**	1	TEE	
	7	1	**8T-4896**	2	WASHER-HARD (10.2X18.5X2.5MM THK)	
E	8	1	**144-0195**		HOSE (188CM)	
E	9	1	**144-0195**		HOSE (20CM)	
E	10	1	**144-0195**		HOSE (10CM)	

E-ORDER BY THE CENTIMETER

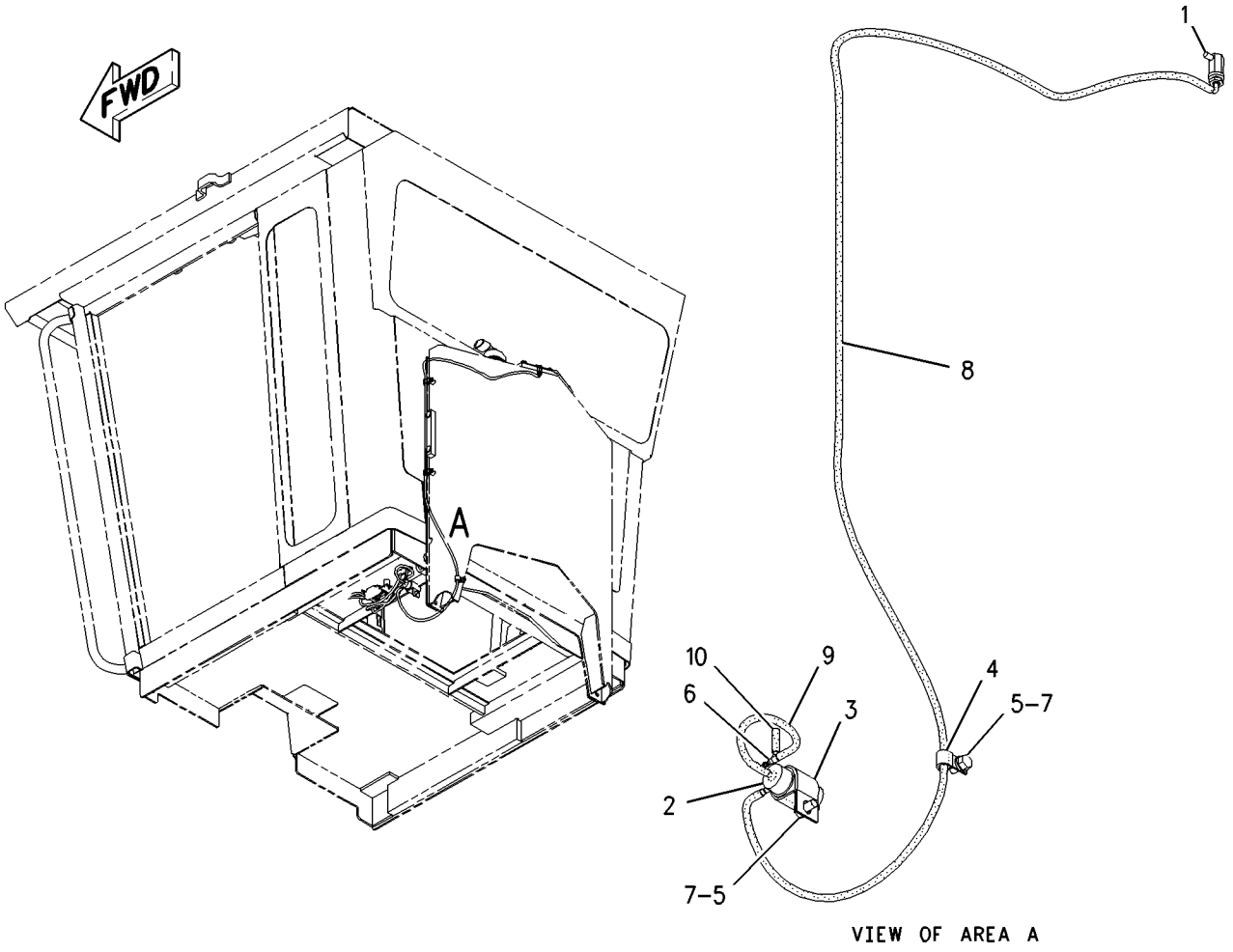

GRAPHIC #1 g00943510

MEMORANDA

OPERATOR STATION

125-4342 WASHER GP-WINDOW

S/N: CAF1-UP

PART OF 223-3938 CAB AR-HIGH PROFILE, 211-4906 CAB AR-NON-ROPS

AN ATTACHMENT

SMCS-7306 **i01193196**

NOTE	REF NO	GRAPHIC REF	PART NUMBER	QTY	PART NAME 1 2 3 4 5 6 (PRODUCT LEVEL)	SEE PAGE
	1	1	**8X-9405**	1	RESERVOIR AS	
		1	**6W-5698**	2	GROMMET	
		1	**7T-1961**	1	CAP	
		1	**8X-1135**	1	GASKET	
		1	**8X-5280**	2	CONNECTOR	
		1	**8X-9349**	1	PAD (RECTANGULAR)	
		1	**107-4865**	1	PAD (ROUND)	
	2	1	**8W-0935**	1	GASKET	
	3	1	**8W-0934**	1	BRACKET	
	4	1	**9P-2369**	1	JET AS-WASHER	
		1	**8Y-4408**	1	NOZZLE AS-JET	
M	5	1	**9X-2042**	2	SCREW-TRUSS HEAD (M6X1.0X12MM)	
M	6	1	**5C-2890**	2	NUT (M6X1.00 THD)	
	7	1	**5P-4115**	2	WASHER (2MM THK)	
	8	1	**3S-2093**	3	STRAP-CABLE	
	9	1	**102-3645**	1	COVER	
M	10	1	**9X-2045**	3	SCREW-TRUSS HEAD (M6X1X20MM)	
	11	1	**4D-7388**	1	CLIP (34.92MM ID)	
	12	1	**5M-3062**	1	BOLT (3/8-16X.75IN)	
	13	1	**6K-9632**	1	TEE	
	14	1	**7T-8891**	1	PUMP AS-WASHER	
BE	15	1	**144-0195**		HOSE	
	16	1	**6V-6467**	2	PLUG	
	17	1	**8T-4896**	2	WASHER-HARD (2.5MM THK)	

B-USE AS REQUIRED
E-ORDER BY THE CENTIMETER
M-METRIC PART

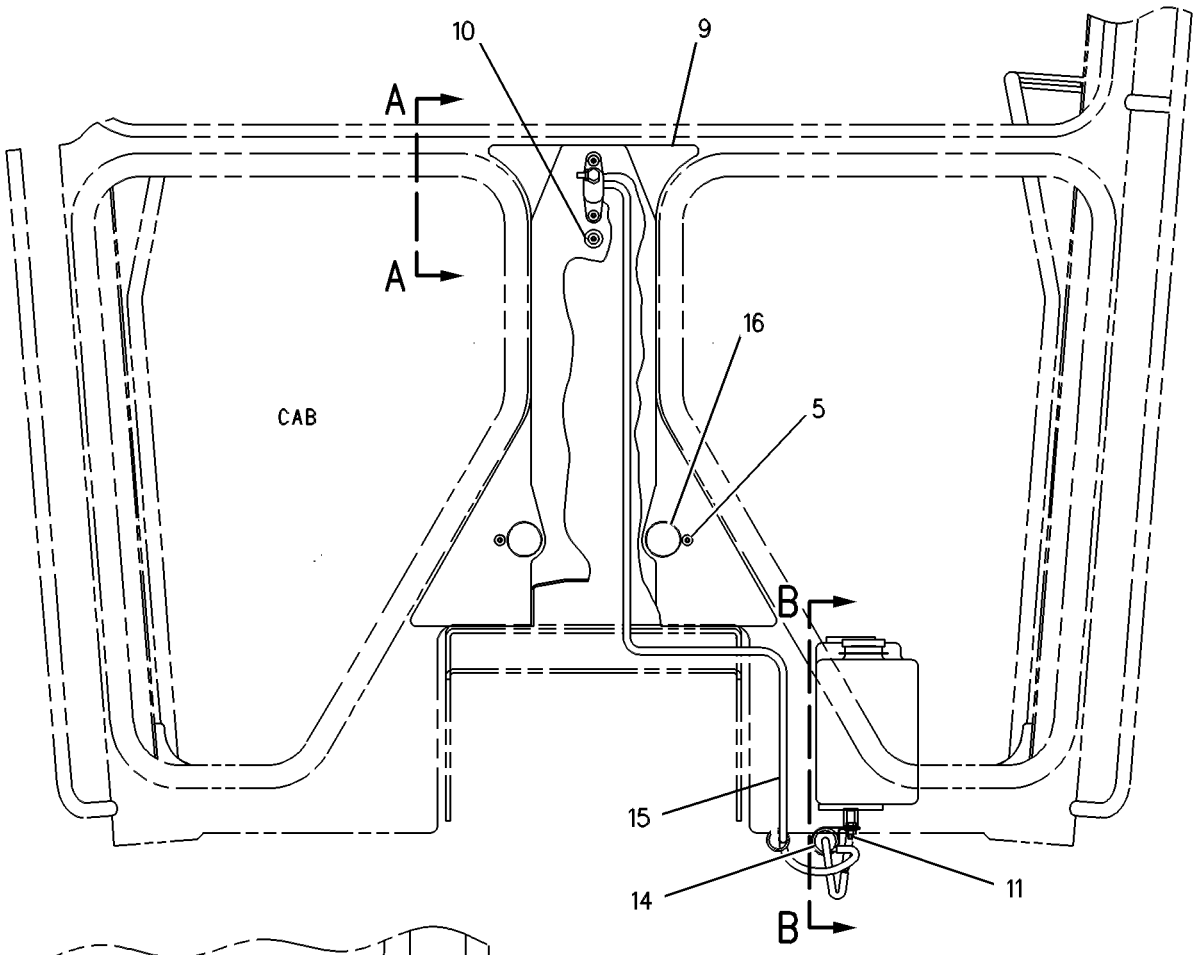

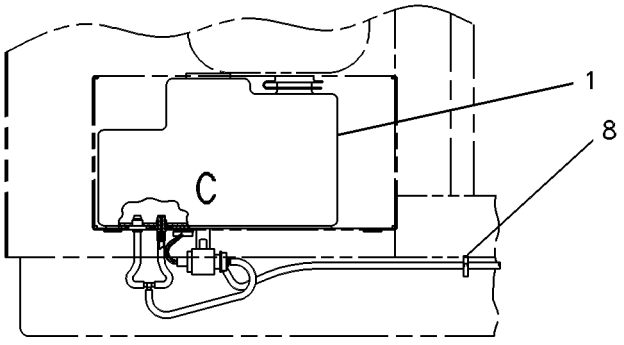

VIEW B-B

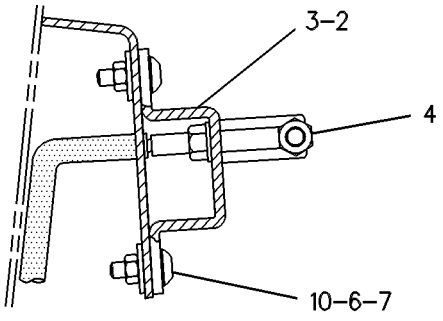

VIEW A-A

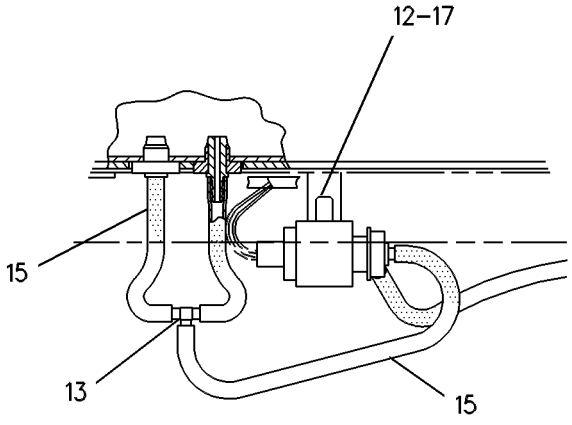

VIEW OF AREA C

GRAPHIC #1 g00286150

OPERATOR STATION

126-0961 WINDOW GP–VENT–CAB

S/N: CAF1-UP
AN ATTACHMENT

SMCS-7310, 7340 **i01453632**

NOTE	REF NO	GRAPHIC REF	PART NUMBER	QTY	PART NAME 1 2 3 4 5 6 (PRODUCT LEVEL)	SEE PAGE
CY	1	1	**150-5106**	1	PANEL GP-WINDOW (RH)	830
CY	2	1	**150-5107**	1	PANEL GP-WINDOW (LH)	832
	3	1	**5T-3093**	2	HANDLE	
	4	1	**5P-5969**		SEAL (25.35 DM)	
M	5	1	**8T-0352**	4	BOLT (M5X0.8X45MM)	
	6	1	**8T-0328**	56	WASHER-HARD (5.5X10X1MM THK)	
M	7	1	**7Y-5226**	28	NUT (M5X0.8 THD)	
M	8	1	**8T-0335**	24	BOLT (M5X0.8X40MM)	
	9	1	**6V-8255**	2	BLADE AS-WIPER	

C-CHANGE FROM PREVIOUS TYPE
M-METRIC PART
Y-SEPARATE ILLUSTRATION

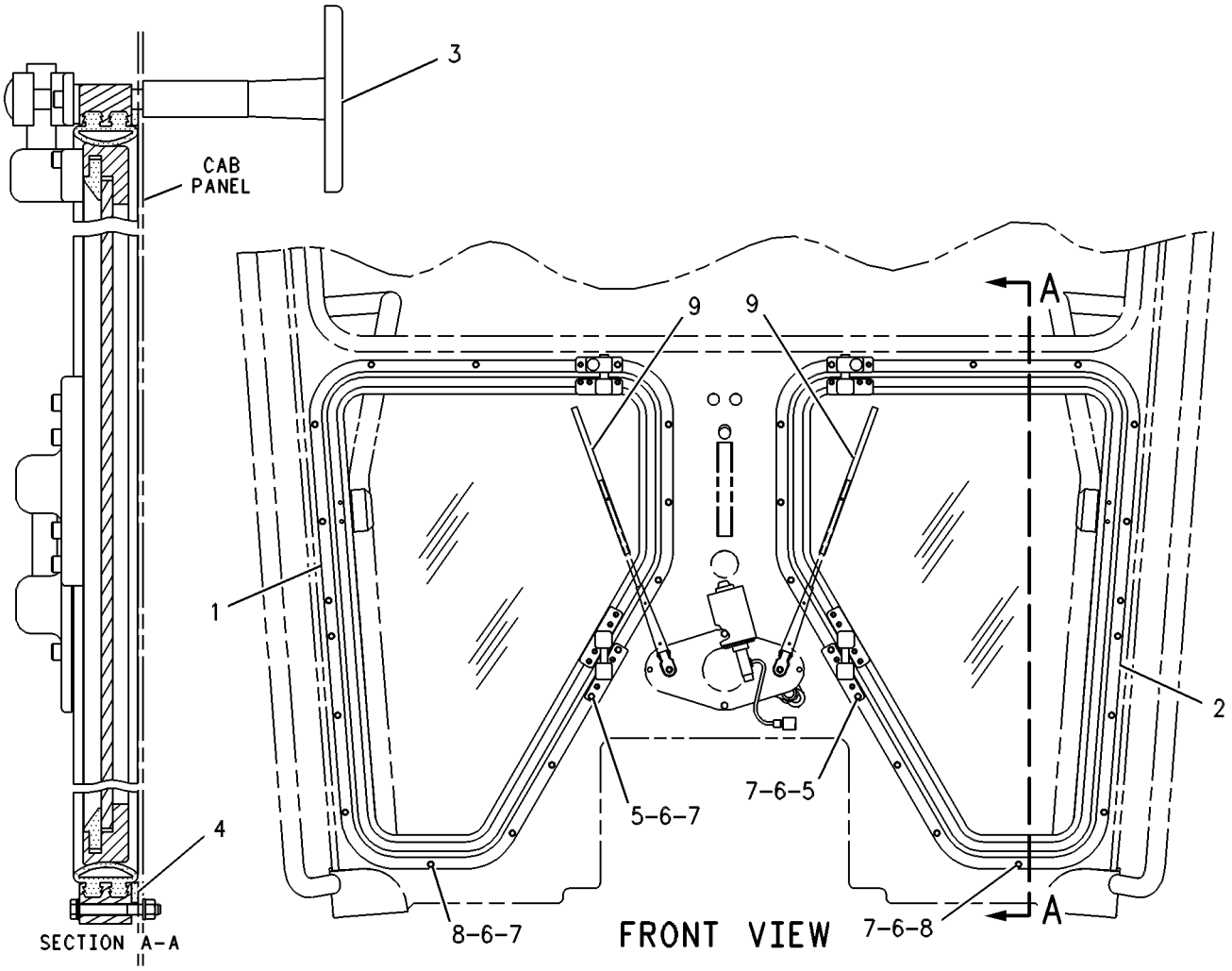

GRAPHIC #1 g00108855

OPERATOR STATION

134-8232 WINDOW GP—SIDE SLIDING—HIGH PROFILE

S/N: CAF1-UP
PART OF 139-6129 WINDOW GP
AN ATTACHMENT

SMCS-7310, 7340 **i01052405**

NOTE	REF NO	GRAPHIC REF	PART NUMBER	QTY	PART NAME 1 2 3 4 5 6 (PRODUCT LEVEL)	SEE PAGE
	1	1	**5M-9695**	4	SCREW	
	2	1	**5P-7162**	2	SCREW-MACHINE (10-32 THD)	
	3	1	**8C-6738**	2	SCREW-PAN HEAD	
	4	1	**9X-6019**	4	LOCKSCREW	
	5	1	**104-5958**	2	NUT	
	6	1	**109-0146**	2	STOP-SLIDE	
	7	1	**139-9132**	1	LATCH AS	
	8	1	**139-9138**	1	GLASS-SLIDING	
	9	1	**139-9134**	1	POST-CENTER	
	10	1	**139-9135**	1	GLASS-FIXED	
	11	1	**139-9137**	1	CATCH	
E	12	1	**8Y-6981**		SEAL (21 CM)	
E	13	1	**139-9136**		SEAL-WEATHER (285 CM)	
D	14	1	**5P-5627**		SEAL (1 M)	
E	15	1	**8Y-6982**		SEAL (188 CM)	

D-ORDER BY THE METER
E-ORDER BY THE CENTIMETER

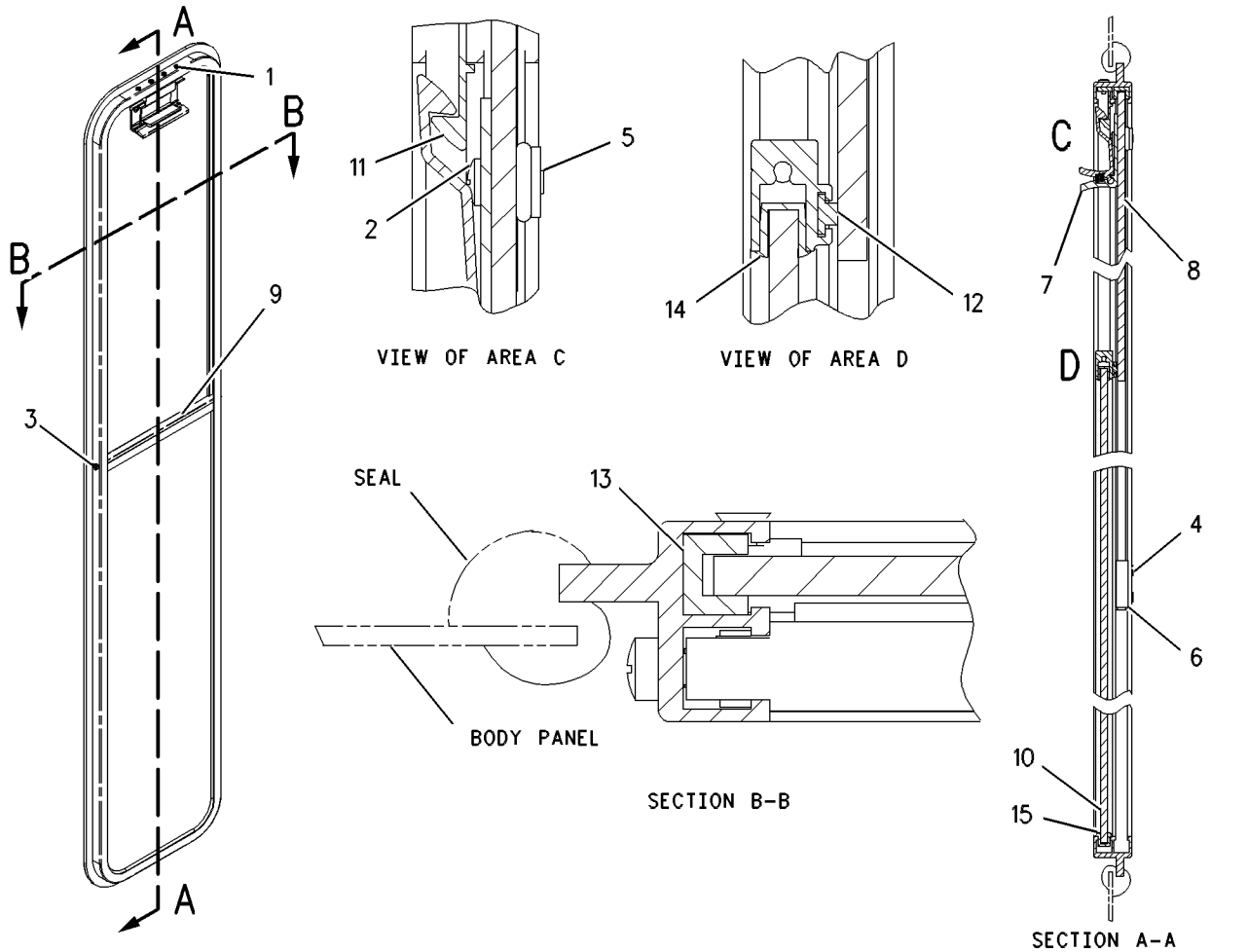

GRAPHIC #1 g00545825

OPERATOR STATION

134-8233 WINDOW GP—SIDE SLIDING—LOW PROFILE

S/N: CAF1-UP
PART OF 139-6128 WINDOW GP
AN ATTACHMENT

SMCS-7310, 7340 **i01056062**

NOTE	REF NO	GRAPHIC REF	PART NUMBER	QTY	PART NAME 1 2 3 4 5 6 (PRODUCT LEVEL)	SEE PAGE
	1	1	**5M-9695**	4	SCREW	
	2	1	**5P-7162**	2	SCREW-MACHINE (10-32 THD)	
	3	1	**8C-6738**	2	SCREW-PAN HEAD	
	4	1	**9X-6019**	4	LOCKSCREW	
	5	1	**104-5958**	2	NUT	
	6	1	**109-0146**	2	STOP-SLIDE	
	7	1	**139-9132**	1	LATCH AS	
	8	1	**139-9133**	1	GLASS-SLIDING	
	9	1	**139-9134**	1	POST-CENTER	
	10	1	**139-9135**	1	GLASS-FIXED	
	11	1	**139-9137**	1	CATCH	
E	12	1	**8Y-6981**		SEAL (21 CM)	
E	13	1	**139-9136**		SEAL-WEATHER (194 CM)	
D	14	1	**5P-5627**		SEAL (1 M)	
E	15	1	**8Y-6982**		SEAL (188 CM)	

D-ORDER BY THE METER
E-ORDER BY THE CENTIMETER

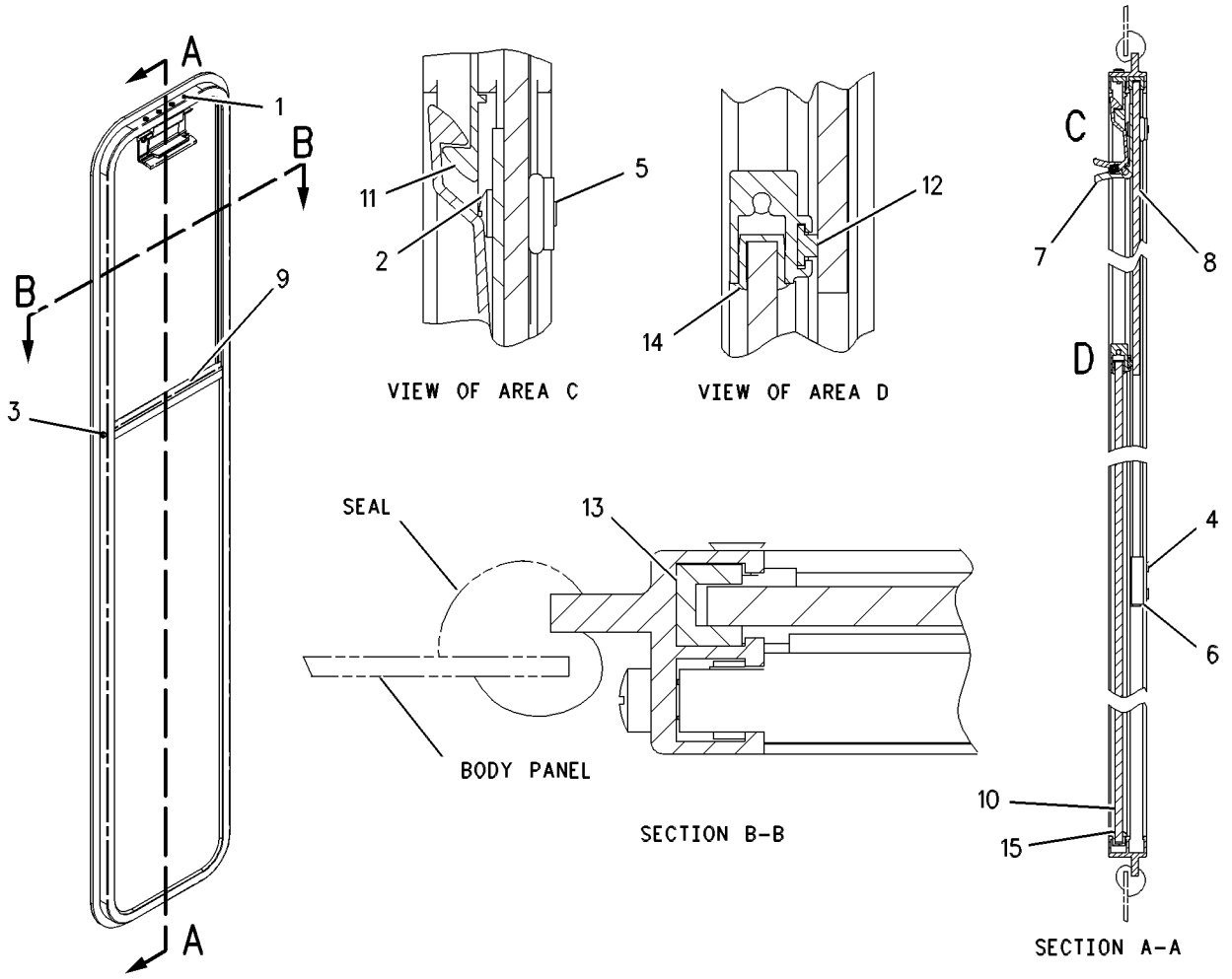

GRAPHIC #1 g00548221

OPERATOR STATION

139-6128 WINDOW GP—SIDE SLIDING LP

S/N: CAF1-UP

AN ATTACHMENT

SMCS-7310, 7340 **i01668204**

NOTE	REF NO	GRAPHIC REF	PART NUMBER	QTY	PART NAME 1 2 3 4 5 6 (PRODUCT LEVEL)	SEE PAGE
Y	1	1	**134-8233**	2	WINDOW GP (SIDE SLIDING)(LP)	882

Y-SEPARATE ILLUSTRATION

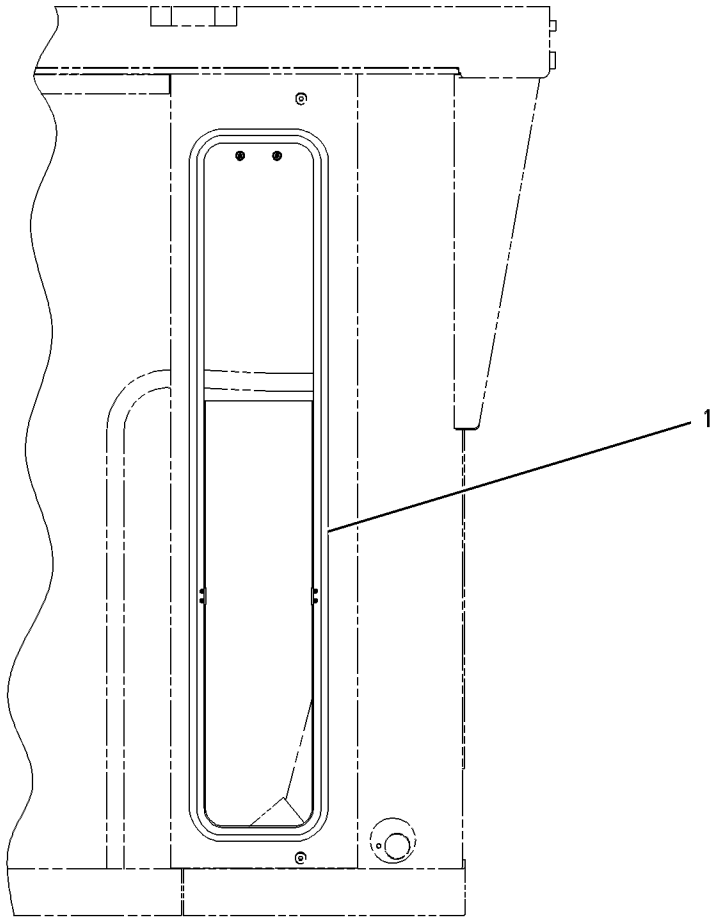

GRAPHIC #1 g00301642

OPERATOR STATION

139-6129 WINDOW GP—SIDE SLIDING HP

S/N: CAF1-UP

AN ATTACHMENT

SMCS-7310, 7340 **i01668211**

NOTE	REF NO	GRAPHIC REF	PART NUMBER	QTY	PART NAME 1 2 3 4 5 6 (PRODUCT LEVEL)	SEE PAGE
Y	1	1	**134-8232**	2	WINDOW GP (SIDE SLIDING)(HP)	881

Y-SEPARATE ILLUSTRATION

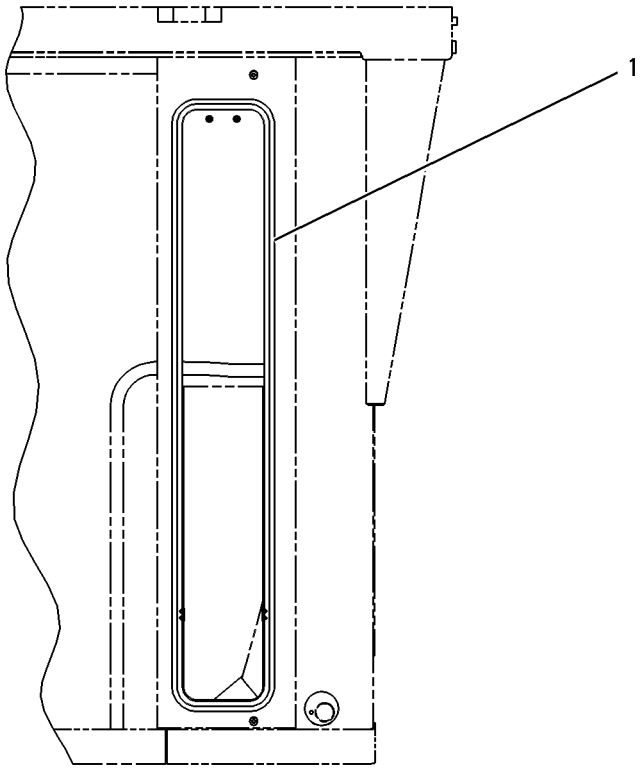

LEFT SIDE VIEW

GRAPHIC #1 g00301585

177-8830 WIPER AR-WINDOW—REAR—LOW PROFILE

S/N: CAF1-UP
AN ATTACHMENT

SMCS-7305, 7306 **i01680432**

NOTE	PART NUMBER	QTY	PART NAME 1 2 3 4 5 6 (PRODUCT LEVEL)	SEE PAGE
Y	*8X-9680*	1	WASHER GP-WINDOW (REAR)	876
Y	*173-5320*	1	WIPER GP-WINDOW (REAR)	892

Y-SEPARATE ILLUSTRATION

<END>

177-8831 WIPER AR-WINDOW—REAR—HIGH PROFILE

S/N: CAF1-UP
AN ATTACHMENT

SMCS-7305, 7306 **i01680454**

NOTE	PART NUMBER	QTY	PART NAME 1 2 3 4 5 6 (PRODUCT LEVEL)	SEE PAGE
Y	*8X-9680*	1	WASHER GP-WINDOW (REAR)	876
Y	*173-5321*	1	WIPER GP-WINDOW (REAR)	894

Y-SEPARATE ILLUSTRATION

<END>

OPERATOR STATION

114-6685 WIPER GP-WINDOW

S/N: CAF1-UP

PART OF 172-6830, 172-6831, 173-5320, 173-5321, 211-4913 WIPER GP-WINDOW

ALSO AN ATTACHMENT

SMCS-7305 **i01755311**

NOTE	REF NO	GRAPHIC REF	PART NUMBER	QTY	PART NAME 1 2 3 4 5 6 (PRODUCT LEVEL)	SEE PAGE
	1	1	**3T-7059**	1	BRACKET	
M	2	1	**5C-9553**	3	BOLT (M6X1X16MM)	
	3	1	**3T-7086**	1	CRANK AS	
M	4	1	**6V-6889**	2	NUT (M8X1.25 THD)	
	5	1	**6V-6888**	1	WASHER-SPRING (8.31X15.54X1.07MM THK)	
	6	1	**6V-6219**	1	LINK-CONNECTING	
M	7	1	**3C-1884**	4	SCREW-MACHINE (M5X0.8 BG THD)	
	8	1	**6T-2770**	1	SHAFT AS-DRIVE	
	9	1	**6V-6209**	1	CAP	
M	10	1	**6V-6213**	1	NUT (M20X1 THD)	
	11	1	**6V-6214**	1	WASHER (20.15X29.6X1MM THK)	
	12	1	**5P-0537**	3	WASHER-HARD (7.2X14.5X2MM THK)	
	13	1	**6A-9718**	1	WASHER (8.1X12.5X1MM THK)	
	14	1	**3E-6388**	1	MOTOR AS-WINDOW WIPER	
		1	**102-8805**	2	KIT-RECEPTACLE (6 PIN)	
					(EACH INCLUDES RECEPTACLE AS & WEDGE)	
		1	**3E-3383**	1	WEDGE-RECEPTACLE LOCK	
		1	**186-3735**	5	PIN-CONNECTOR	
		1	**8T-8737**	1	PLUG-SEAL	

M-METRIC PART

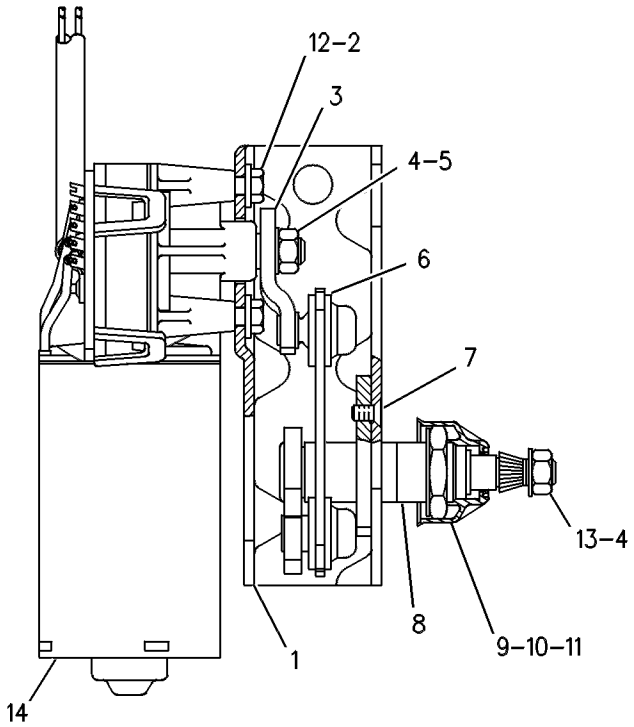

GRAPHIC #1 g00245521

MEMORANDA

OPERATOR STATION

172-6830 WIPER GP-WINDOW—FRONT—LOW PROFILE

S/N: CAF1-UP

PART OF 172-5377, 218-4761 ROPS GP-ENCLOSED

ALSO AN ATTACHMENT

SMCS-7305 **i01840727**

NOTE	REF NO	GRAPHIC REF	PART NUMBER	QTY	PART NAME 1 2 3 4 5 6 (PRODUCT LEVEL)	SEE PAGE
	1	1	**2A-6926**	1	LEVER AS	
	2	1	**2A-6928**	1	LINK	
	3	1	**2A-6929**	1	LINK	
	4	1	**3E-6388**	1	MOTOR AS-WINDOW WIPER	
		1	**3E-3383**	1	WEDGE-RECEPTACLE LOCK	
		1	**102-8805**	1	KIT-RECEPTACLE (6 PIN) (WINDOW WIPER MOTOR)	
					(INCLUDES RECEPTACLE AS & WEDGE)	
		1	**186-3735**	5	PIN-CONNECTOR	
		1	**8T-8737**	1	PLUG-SEAL	
	5	1	**4B-4283**	2	WASHER (20.6X37.5X3.5MM THK)	
	6	1	**6V-5853**	1	BLADE AS-WIPER (LOW PROFILE FRONT LOWER)	
	7	1	**6V-6888**	1	WASHER-SPRING (8.31X15.54X1.07MM THK)	
M	8	1	**6V-6889**	1	NUT (M8X1.25 THD)	
	9	1	**6V-8258**	1	ARM AS-WIPER	
	10	1	**8X-2556**	1	FLANGE	
	11	1	**8X-2663**	1	GASKET	
Y	12	1	**114-6685**	1	WIPER GP-WINDOW (FRONT)	886
	13	1	**123-4354**	2	ARM AS-WIPER	
	14	1	**123-4355**	2	BLADE AS-WIPER	
	15	1	**125-7003**	1	SHAFT AS	
	16	1	**125-7004**	1	SHAFT AS	
M	17	1	**5C-7423**	3	SCREW (M6X1X16MM)	
	18	1	**5P-4115**	2	WASHER-HARD (7.2X19X2MM THK)	
	19	1	**7X-3182**	2	BOLT (1/4-28X0.5 IN)	
M	20	1	**8T-4138**	2	BOLT (M6X1X20MM)	

M-METRIC PART
Y-SEPARATE ILLUSTRATION

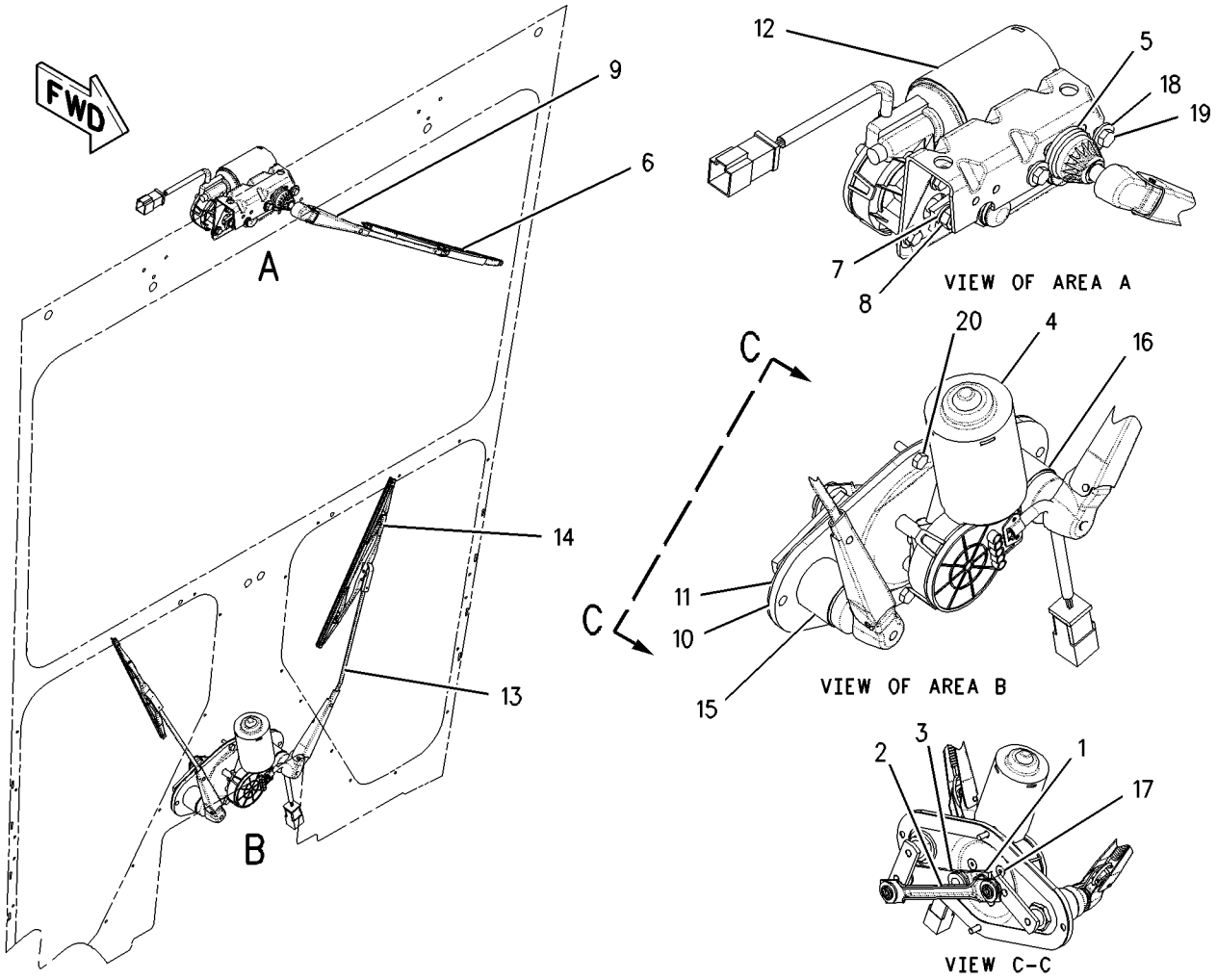

GRAPHIC #1 g00939294

OPERATOR STATION

172-6831 WIPER GP-WINDOW—FRONT—HIGH PROFILE

S/N: CAF1-UP

PART OF 177-8779, 218-4759 ROPS GP-ENCLOSED

AN ATTACHMENT

SMCS-7305 **i01684236**

NOTE	REF NO	GRAPHIC REF	PART NUMBER	QTY	PART NAME 1 2 3 4 5 6 (PRODUCT LEVEL)	SEE PAGE
	1	1	**2A-6926**	1	LEVER AS	
	2	1	**2A-6928**	1	LINK	
	3	1	**2A-6929**	1	LINK	
	4	1	**3E-6388**	1	MOTOR AS-WINDOW WIPER	
		1	**102-8805**	1	KIT-RECEPTACLE (6 PIN) (WINDOW WIPER MOTOR)	
		1	**3E-3383**	1	WEDGE-RECEPTACLE LOCK	
		1	**186-3735**	5	PIN-CONNECTOR	
		1	**8T-8737**	1	PLUG-SEAL	
	5	1	**4B-4283**	4	WASHER (20.6X37.5X3.5MM THK)	
	6	1	**6V-5853**	1	BLADE AS-WIPER (FRONT)	
	7	1	**6V-6888**	1	WASHER-SPRING (8.31X15.54X1.07MM THK)	
M	8	1	**6V-6889**	1	NUT (M8X1.25 THD)	
	9	1	**6V-8259**	1	ARM AS-WIPER	
	10	1	**8X-2556**	1	FLANGE	
	11	1	**8X-2663**	1	GASKET	
Y	12	1	**114-6685**	1	WIPER GP-WINDOW (FRONT)	886
	13	1	**123-4354**	2	ARM AS-WIPER	
	14	1	**123-4355**	2	BLADE AS-WIPER	
	15	1	**125-7003**	1	SHAFT AS	
	16	1	**125-7004**	1	SHAFT AS	
M	17	1	**5C-7423**	3	SCREW (M6X1X16MM)	
	18	1	**5P-4115**	2	WASHER-HARD (7.2X19X2MM THK)	
	19	1	**7X-3182**	2	BOLT (1/4-28X0.5 IN)	
M	20	1	**8T-4138**	2	BOLT (M6X1X20MM)	

M-METRIC PART
Y-SEPARATE ILLUSTRATION

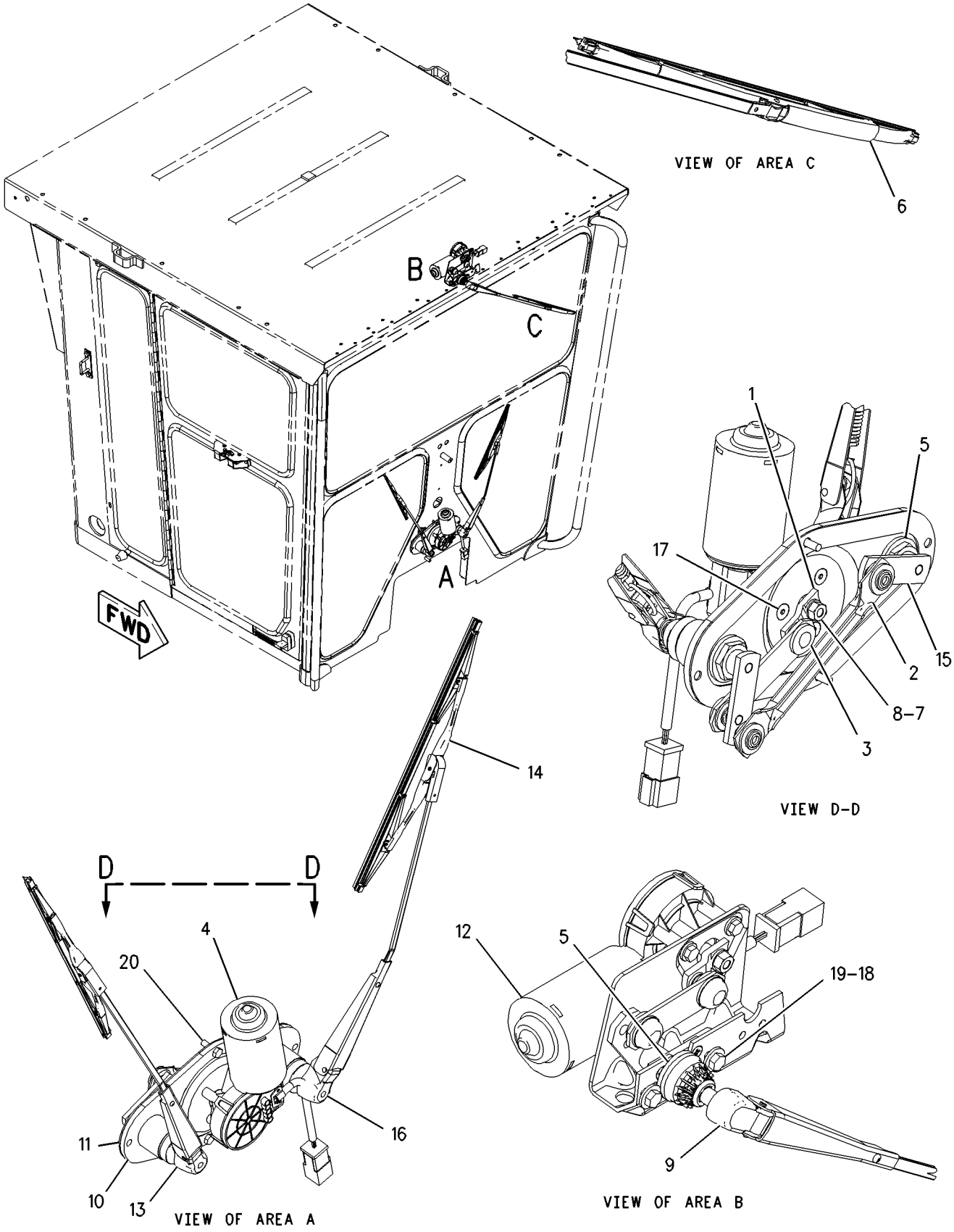

GRAPHIC #1

g00845739

OPERATOR STATION

173-5320 WIPER GP-WINDOW—REAR—LOW PROFILE

S/N: CAF1-UP

PART OF 177-8830 WIPER AR-WINDOW

AN ATTACHMENT

SMCS-7305 **i01826721**

NOTE	REF NO	GRAPHIC REF	PART NUMBER	QTY	PART NAME 1 2 3 4 5 6 (PRODUCT LEVEL)	SEE PAGE
B	1	1	**4B-4283**	2	WASHER (20.6X37.5X3.5MM THK)	
	2	1	**6V-5849**	1	BLADE AS-WIPER (LOW PROFILE REAR)	
		1	**8C-5060**	1	KIT-WIPER BLADE (REAR)	
	3	1	**6V-8258**	1	ARM AS-WIPER	
	4	1	**9W-1442**	1	FUSE (10 AMP) (WIPER)	
	5	1	**110-7885**	1	KNOB (WIPER) (REAR)	
	6	1	**110-7886**	1	SWITCH AS-WIPER (REAR)	
		1	**186-3735**	3	PIN-CONNECTOR	
		1	**2H-3920**	1	LOCKWASHER	
		1	**6V-8369**	1	NUT (7/16-28 THD)	
		1	**8T-8737**	1	PLUG-SEAL	
		1	**9W-0852**	4	PIN-CONNECTOR	
		1	**102-8806**	1	KIT-RECEPTACLE (8 PIN) (REAR WIPER SWITCH) (INCLUDES RECEPTACLE AS & WEDGE)	
Y	7	1	**114-6685**	1	WIPER GP-WINDOW (REAR)	886
	8	1	**5P-4115**	2	WASHER-HARD (7.2X19X2MM THK)	
	9	1	**7X-3182**	2	BOLT (1/4-28X0.5 IN)	

B-USE AS REQUIRED
Y-SEPARATE ILLUSTRATION

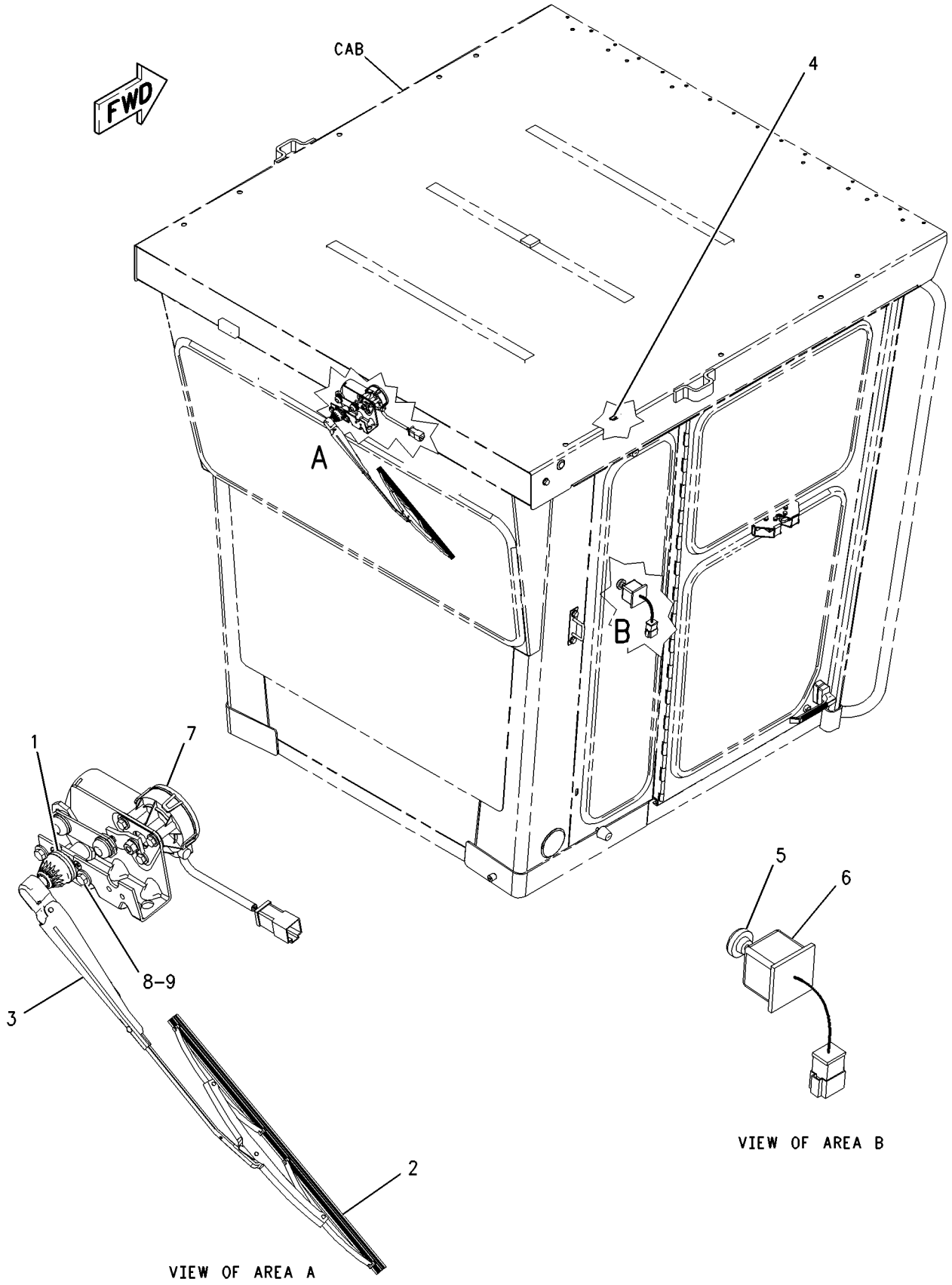

GRAPHIC #1 g00937321

OPERATOR STATION

173-5321 WIPER GP-WINDOW—REAR—HIGH PROFILE

S/N: CAF1-UP

PART OF 177-8831 WIPER AR-WINDOW

AN ATTACHMENT

SMCS-7305 **i01680456**

NOTE	REF NO	GRAPHIC REF	PART NUMBER	QTY	PART NAME 1 2 3 4 5 6 (PRODUCT LEVEL)	SEE PAGE
B	1	1	**4B-4283**	2	WASHER (20.6X37.5X3.5MM THK)	
	2	1	**6V-5853**	1	BLADE AS-WIPER (HIGH PROFILE REAR)	
	3	1	**6V-8258**	1	ARM AS-WIPER	
	4	1	**9W-1442**	1	FUSE (10 AMP) (WIPER)	
	5	1	**110-7885**	1	KNOB-WIPER SWITCH (REAR WINDOW)	
	6	1	**110-7886**	1	SWITCH AS-WIPER (REAR)	
		1	**2H-3920**	1	LOCKWASHER	
		1	**3E-3389**	1	WEDGE-RECEPTACLE LOCK	
		1	**6V-8369**	1	NUT (7/16-28 THD)	
		1	**186-3735**	3	PIN-CONNECTOR	
		1	**8T-8737**	1	PLUG-SEAL	
		1	**9W-0852**	4	PIN-CONNECTOR	
		1	**102-8806**	1	KIT-RECEPTACLE (8 PIN) (REAR WIPER SWITCH)	
					(INCLUDES RECEPTACLE AS & WEDGE)	
Y	7	1	**114-6685**	1	WIPER GP-WINDOW (REAR)	886
	8	1	**5P-4115**	2	WASHER-HARD (7.2X19X2MM THK)	
	9	1	**7X-3182**	2	BOLT (1/4-28X0.5 IN)	

B-USE AS REQUIRED
Y-SEPARATE ILLUSTRATION

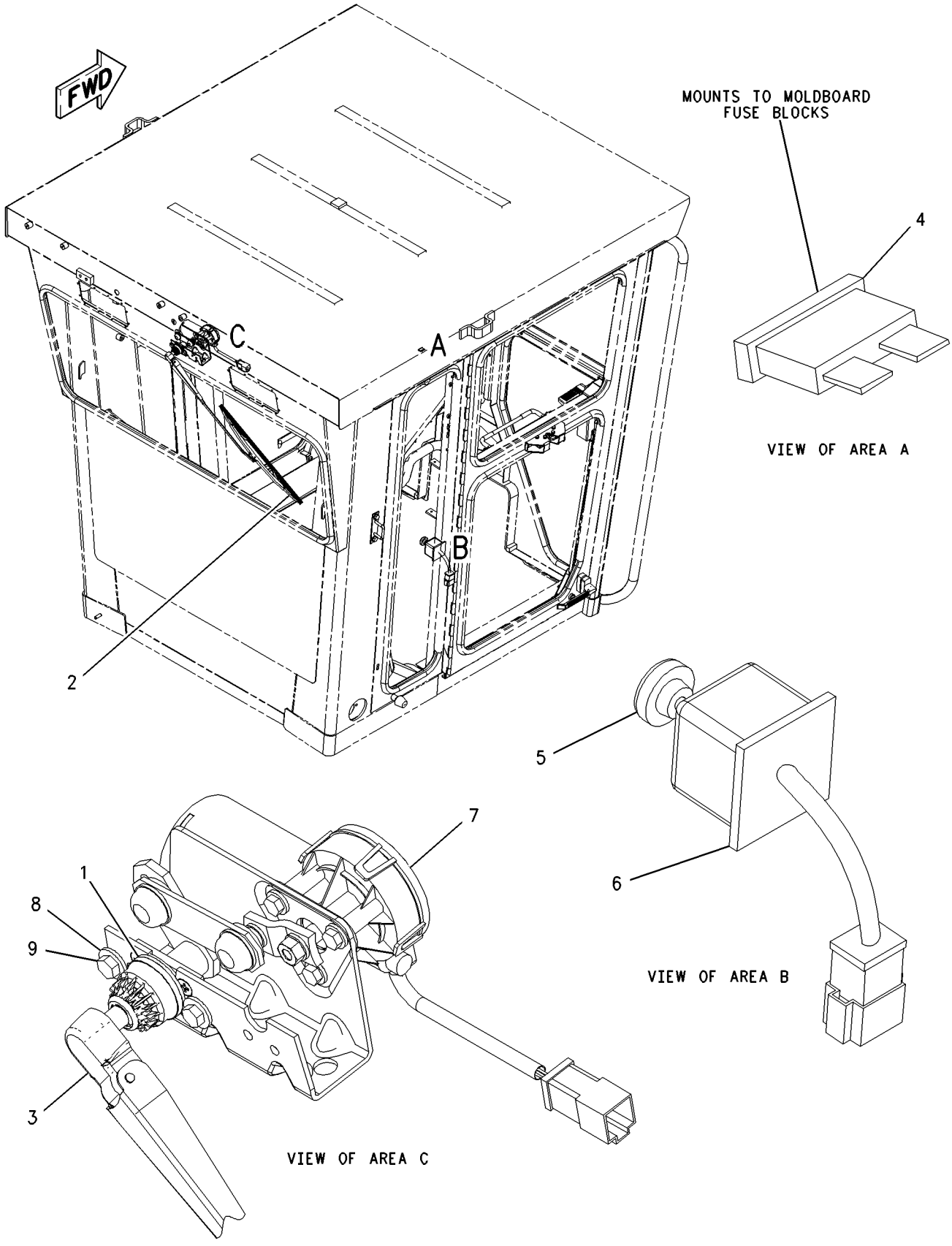

GRAPHIC #1 g00846638

OPERATOR STATION

177-8784 WIPER GP-WINDOW–FRONT

S/N: CAF1-UP
AN ATTACHMENT

SMCS-7305 **i01680415**

NOTE	REF NO	GRAPHIC REF	PART NUMBER	QTY	PART NAME 1 2 3 4 5 6 (PRODUCT LEVEL)	SEE PAGE
Y	1	1	**3E-0155**	2	SWITCH GP-WIPER	228

Y-SEPARATE ILLUSTRATION

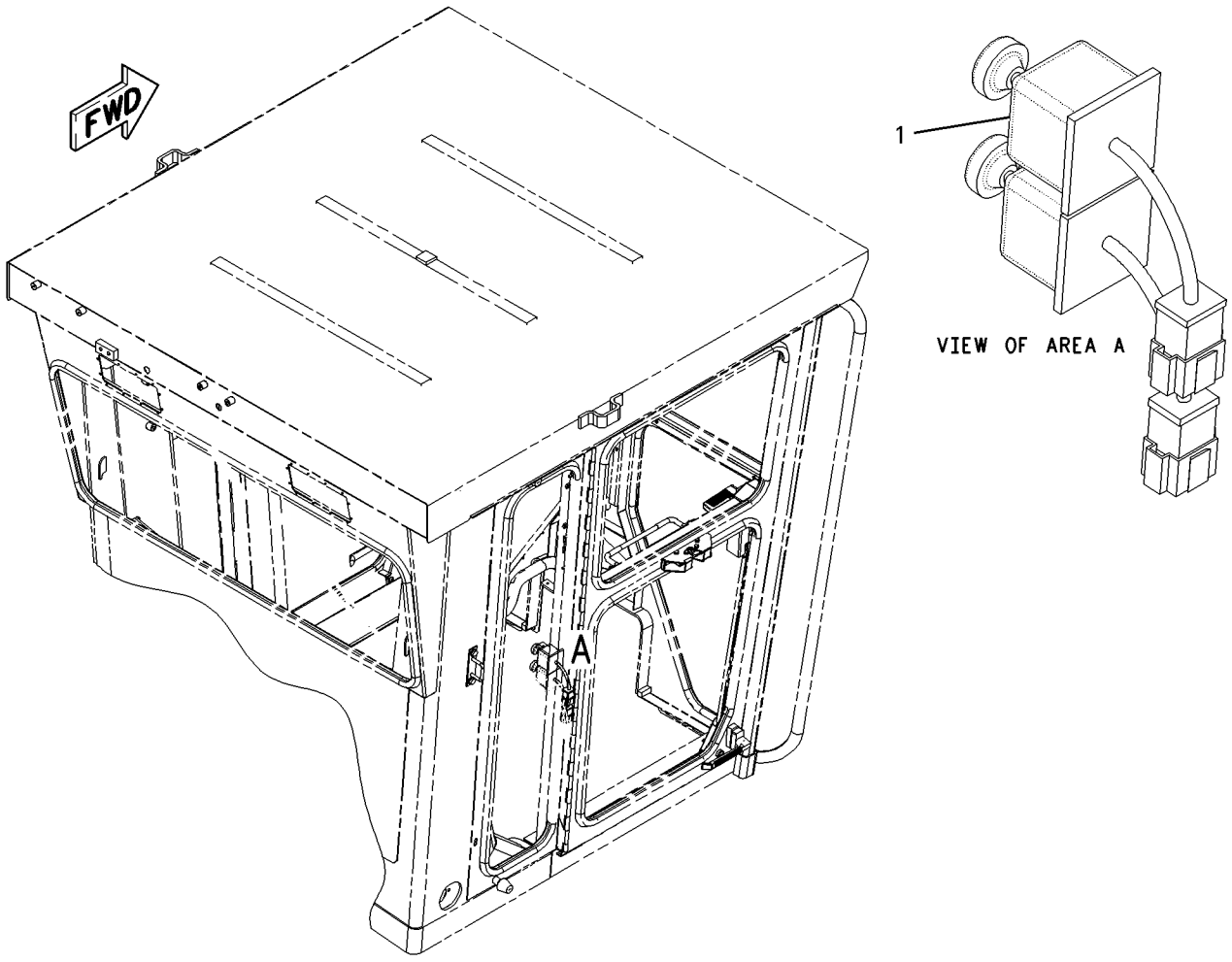

GRAPHIC #1 g00847324

211-4913 WIPER GP-WINDOW—FRONT—HIGH PROFILE

S/N: CAF1-UP
PART OF 211-4907 CAB GP
AN ATTACHMENT

SMCS-7305 **i01861359**

NOTE	REF NO	GRAPHIC REF	PART NUMBER	QTY	PART NAME 1 2 3 4 5 6 (PRODUCT LEVEL)	SEE PAGE
Y	1	1	**114-6685**	1	WIPER GP-WINDOW	886
M	2	1	**8T-4171**	2	BOLT (M6X1X12MM)	
	3	1	**5P-4115**	2	WASHER-HARD (7.2X19X2MM THK)	
	4	1	**6V-8259**	1	ARM AS-WIPER	
	5	1	**6V-5853**	1	BLADE AS-WIPER	
	6	1	**4B-4283**	2	WASHER (20.6X37.5X3.5MM THK)	

M-METRIC PART
Y-SEPARATE ILLUSTRATION

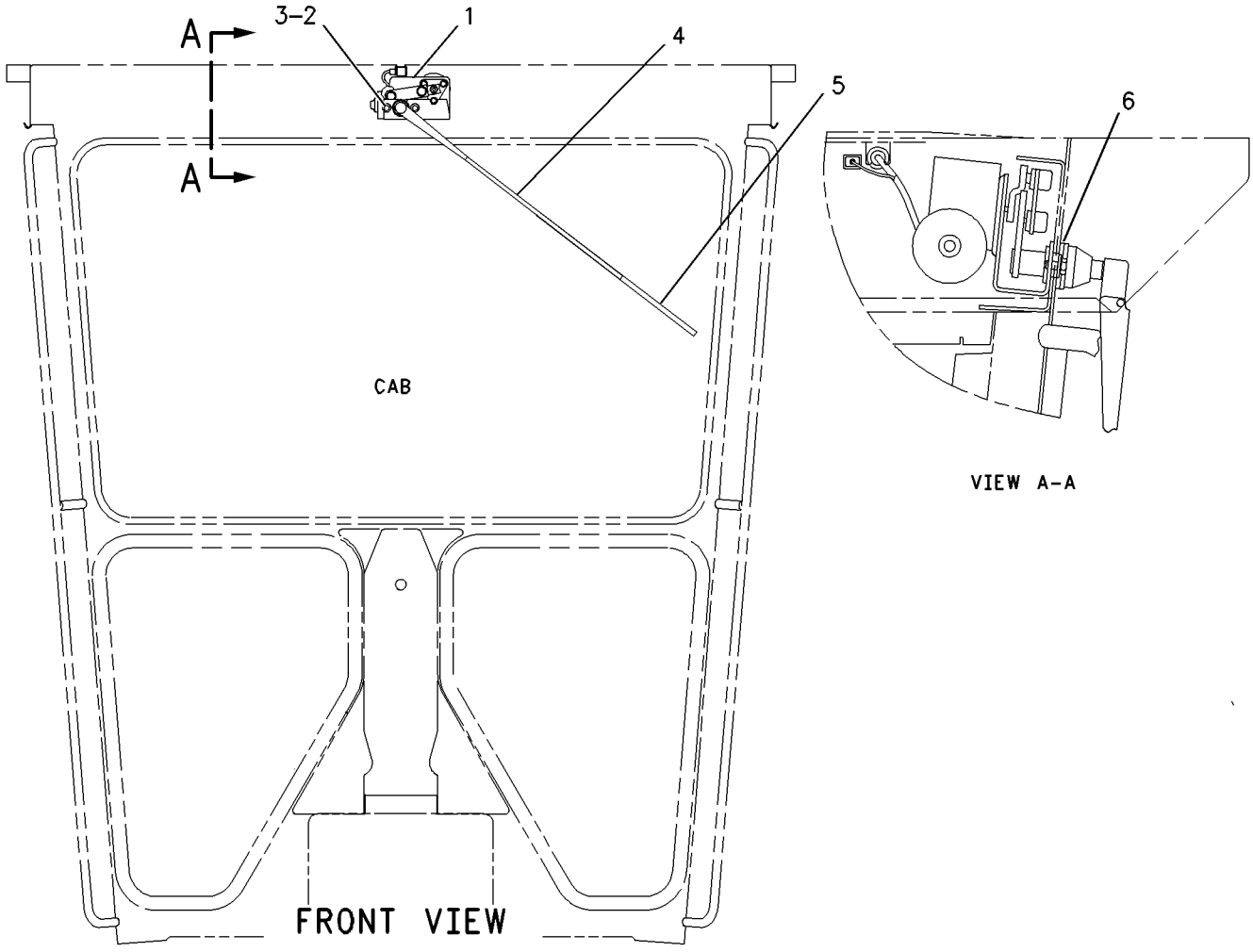

GRAPHIC #1 g00949975

OPERATOR STATION

223-3936 WIPER GP-WINDOW—HIGH PROFILE

S/N: CAF1-UP
PART OF 223-3937 CAB GP
AN ATTACHMENT

SMCS-7305 **i01821745**

NOTE	REF NO	GRAPHIC REF	PART NUMBER	QTY	PART NAME 1 2 3 4 5 6 (PRODUCT LEVEL)	SEE PAGE
B	1	1	**4B-4283**	2	WASHER (20.6X37.5X3.5MM THK)	
	2	1	**6V-5853**	1	BLADE AS-WIPER	
	3	1	**6V-8259**	1	ARM AS-WIPER	
	4	1	**203-1124**	1	MOTOR GP-WINDOW WIPER	
	5	1	**5P-4115**	2	WASHER-HARD (7.2X19X2MM THK)	
	6	1	**7X-3182**	2	BOLT (1/4-28X0.5 IN)	

B-USE AS REQUIRED

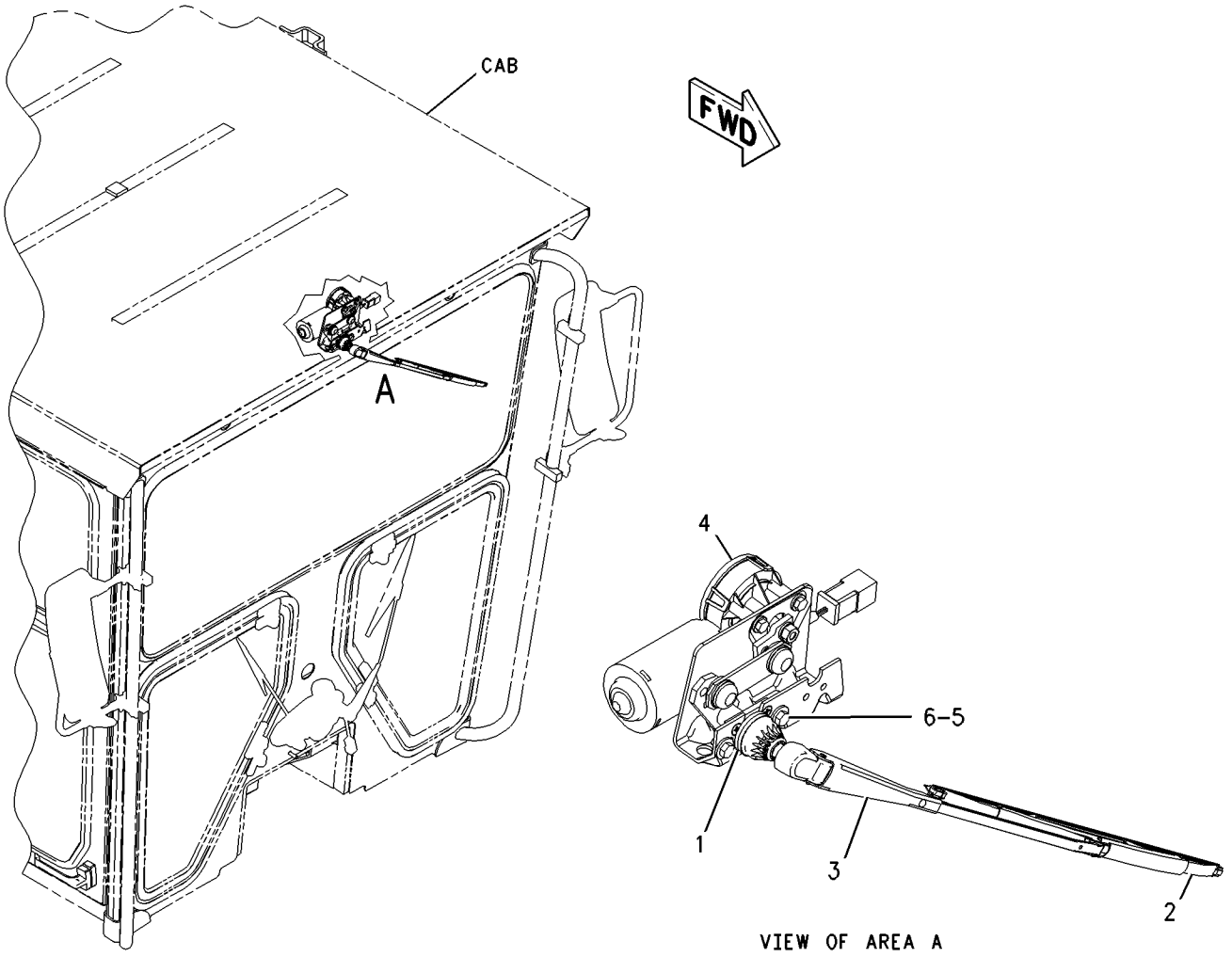

GRAPHIC #1 g00937371

SERVICE EQUIPMENT AND SUPPLIES

111-1719 TOOL BOX GP

S/N: CAF1-UP

PART OF 162-5603 GENERAL AR

SMCS-7259 **i01449464**

NOTE	REF NO	GRAPHIC REF	PART NUMBER	QTY	PART NAME 1 2 3 4 5 6 (PRODUCT LEVEL)	SEE PAGE
	1	1	**129-7249**	1	TOOL BOX	
	2	1	**5P-8502**	1	PADLOCK GP (TOOL BOX)	
A		1	**5P-8500**	1	KEY (TOOL BOX)	
A		1	**8Y-6364**	1	SLEEVE	
	3	1	**5K-9107**	4	BOLT-LOCKING (3/8-16X0.75 IN)	
	4	1	**5P-1075**	4	WASHER-HARD (10.2X22.5X3MM THK)	

A-NOT PART OF THIS GROUP

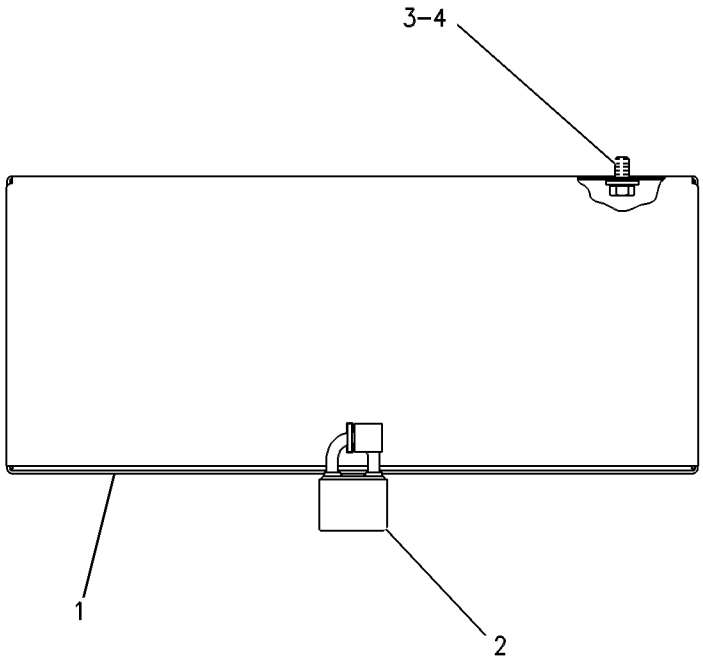

GRAPHIC #1 g00109173

SERVICE EQUIPMENT AND SUPPLIES

212-1522 FILM GP—NON VHP

S/N: CAF1-UP

PART OF 162-5603 GENERAL AR

i01814835

NOTE	PART NUMBER	QTY	PART NAME 1 2 3 4 5 6 (PRODUCT LEVEL)	SEE PAGE
	115-5852	1	PLATE & FILM GP (ENGINE)	
			(LOCATE ON LEFT SIDE OF CYL BLOCK TOWARDS REAR ON VERTICAL SURFACE BELOW FUEL RAIL TO RT OF FUEL FILTERS)	

<END>

212-1524 FILM GP—VHP

S/N: CAF1-UP

AN ATTACHMENT

i01684319

NOTE	PART NUMBER	QTY	PART NAME 1 2 3 4 5 6 (PRODUCT LEVEL)	SEE PAGE
	114-5224	2	FILM (VARIABLE HORSE POWER)	
			(LOCATE ON BOTH SIDES OF THE PLATFORM)	
	115-5852	1	PLATE & FILM GP	
			(LOCATE ON LEFT SIDE OF CYL BLOCK TOWARD REAR)	

<END>

8T-5255 JACK-HYDRAULIC

S/N: CAF1-UP

AN ATTACHMENT

i01757229

NOTE	PART NUMBER	QTY	PART NAME 1 2 3 4 5 6 (PRODUCT LEVEL)	SEE PAGE
			(NO SERVICED PARTS)	

<END>

8T-4009 PLATE & FILM GP

S/N: CAF1-UP

PART OF 201-7352 RIPPER AR

AN ATTACHMENT

SMCS-7405, 7557

i01367605

NOTE	PART NUMBER	QTY	PART NAME 1 2 3 4 5 6 (PRODUCT LEVEL)	SEE PAGE
			(NO SERVICED PARTS)	

<END>

SERVICE EQUIPMENT AND SUPPLIES

171-5826 PLATE & FILM GP

S/N: CAF1-UP

PART OF 162-5603 GENERAL AR

SMCS-7405, 7557 **i01862841**

NOTE	PART NUMBER	QTY	PART NAME 1 2 3 4 5 6 (PRODUCT LEVEL)	SEE PAGE
	183-5802	1	FILM GP	
	201-1055	1	FILM (CATERPILLAR)	
	116-6276	1	FILM-STRIPE (120H)	
	116-6277	1	FILM-STRIPE (120H)	
	184-5074	1	FILM-STRIPE (LH)	
	184-5076	1	FILM-STRIPE (RH)	
	195-1146	1	FILM-STRIPE (LH)	
	201-9622	2	FILM-STRIPE (RH)	
	229-0119		STRIPE (EACH 71CM)	
	1P-2807	2	FILM (LIFT EYE LOCATION)	
			(LOCATE ON OUTBOARD SIDE OF RH & LH BLADE LIFT ARMS)	
	5P-1175	1	FILM (ENGINE OIL FILL)	
			(LOCATE ON ENGINE OIL FILLER CAP)	
	7X-7644	2	FILM (TIE DOWN)	
			(LOCATE TOWARD FRONT OF LH & RH SIDE OF AXLE TUBE IN BOLSTER)	
	209-5776	1	FILM (ENGINE COOLANT)	
			(LOCATE NEAR RADIATOR SIGHT GAGE ON LH RADIATOR SUPPORT)	
	215-5648	1	FILM (TILT STEERING WHEEL CONTROL)	
			(LOCATE NEAR TILT KNOB ON STEERING CONSOLE)	
	224-6637	1	FILM (FAST FILL) (FAST FILL)	
			(LOCATE ON FILL NECK OF LH FUEL TANK)	
	4P-8681	1	FILM-IDENTIFICATION (ENGINE OIL FILTER)	
			(LOCATE ON ENGINE OIL FILTER)	
	8C-5897	1	FILM-IDENTIFICATION (SIGHT GAUGE)	
			(LOCATE ON THE HYDRAULIC TANK ABOVE THE SIGHT GAGE)	
	9X-8356	1	FILM-INDICATOR (BLADE CENTERSHIFT)	
			(LOCATE ON RH BLADE LIFT PIN)	
	188-8044	1	FILM-INFORMATION (FUEL FILTER/WATER SEP IDENT)	
			(LOCATE ON WATER SEPARATOR ELEMENT)	
	9X-8372	1	FILM-INSTRUCTION (WASHER FILL)	
			(LOCATE ON THE COVER FOR THE WINDOW WASHER FLUID BOTTLE)	
	129-7679	1	FILM-INSTRUCTION (ENGINE OIL DRAIN)	
			(LH SIDE OF CASE NEAR ARTICULATION PIN ON MOUNTING PLATE FOR DRAIN ASSEMBLY)	
	7X-3229	2	FILM-LIFT & TIE DOWN	
			(LOCATE BE CENTERING ON OUTSIDE OF RH & LH REAR FRAME RAILS FORWARD OF THE LIFTING EYES)	
	8C-8923	1	FILM-NOTICE (SHIPPING LIFT TIE DOWN)	
			(LOCATE BY CENTERING ON OUTSIDE OF LH REAR FRAME RAIL IN FRONT OF LIFTING EYES)	
	190-5386	2	FILM-REFLECTOR (RED)	
			(LOCATE NEAR LIFTING EYES ON REAR PLATE OF CASE AND FRAME)	
	5P-4077	1	FILM-WARNING (GROUND BLADE)	
			(LOCATE ON THE SHIFT CONSOLE BELOW THE CENTERSHIFT PIN PULLER)	
	9T-7308	1	FILM-WARNING (HIGH PRESSURE CYLINDER)	
			(LOCATE ON STEERING ACCUMULATOR UNDER PLATFORM (LH SIDE)	
	190-2938	1	FILM-WARNING (PRESSURIZED COOLANT)	
			(POSITION UNDER RADIATOR FILL LID TO BE READ FROM LH SIDE OF MACHINE)	
	212-2162	1	FILM-WARNING (CABLE CONNECTION)	

171-5826 **PLATE & FILM GP** ***(contd.)*** **i01862841**

NOTE	PART NUMBER	QTY	PART NAME 1 2 3 4 5 6 (PRODUCT LEVEL)	SEE PAGE
			(LOCATE ON SERVICE CENTER ACCESS DOOR BETWEEN LOUVERS)	
	4P-6422	2	FILM-WARNING (NO ETHER/AIR INTAKE)	
			(LOCATE ON PRESCREENER ASSEMBLY ABOVE THE HOOD, TO BE VISIBLE FROM SIDES OF MACHINE)	
	194-0856	1	PLATE (PRODUCT IDENTIFICATION)	
			(LOCATE ON LH SIDE OF MAIN FRAME BEHIND LIFT CYLINDER BRACKET BELOW MAIN FRAME PLATE)	
	5P-3999	1	PLATE-MAIN FRAME (DO NOT DRILL OR WELD)	
			(LOCATE ON LH SIDE OF FRONT FRAME BEHIND LIFT CYLINDER BRACKET)	
	8T-1191	1	PLATE-WARNING (MACHINE OPERATION)	
			(LOCATE ON RH GLOVE BOX DOOR)	
	201-7603	2	PLATE-WARNING (NO CLEARANCE)	
			(LOCATE ON RH & LH REAR PLATFORM SUPPORTS)	
	136-4150	1	TAG-WARNING (COLD DRIVE TRAIN OIL)	
			(LOCATE ON STEERING WHEEL SPOKE)	
	8T-9530	8	TACK-FASTENER	
A	*4W-1413*	1	PLATE-SERIAL NUMBER (ENGINE)	

A-NOT PART OF THIS GROUP

<END>

SERVICE EQUIPMENT AND SUPPLIES

192-1434 PLATE & FILM GP–EU

S/N: CAF1-UP
PART OF 207-3665, 210-2042 CONVERSION AR-CERTIFICATION
AN ATTACHMENT

SMCS-7405, 7557 **i01684449**

NOTE	REF NO	GRAPHIC REF	PART NUMBER	QTY	PART NAME 1 2 3 4 5 6 (PRODUCT LEVEL)	SEE PAGE
	1	1	**190-5386**	2	FILM-REFLECTOR (RED)	
	2	1	**195-2274**	6	FILM-REFLECTOR (YELLOW)	
	3	1	**197-5867**	2	PLATE	

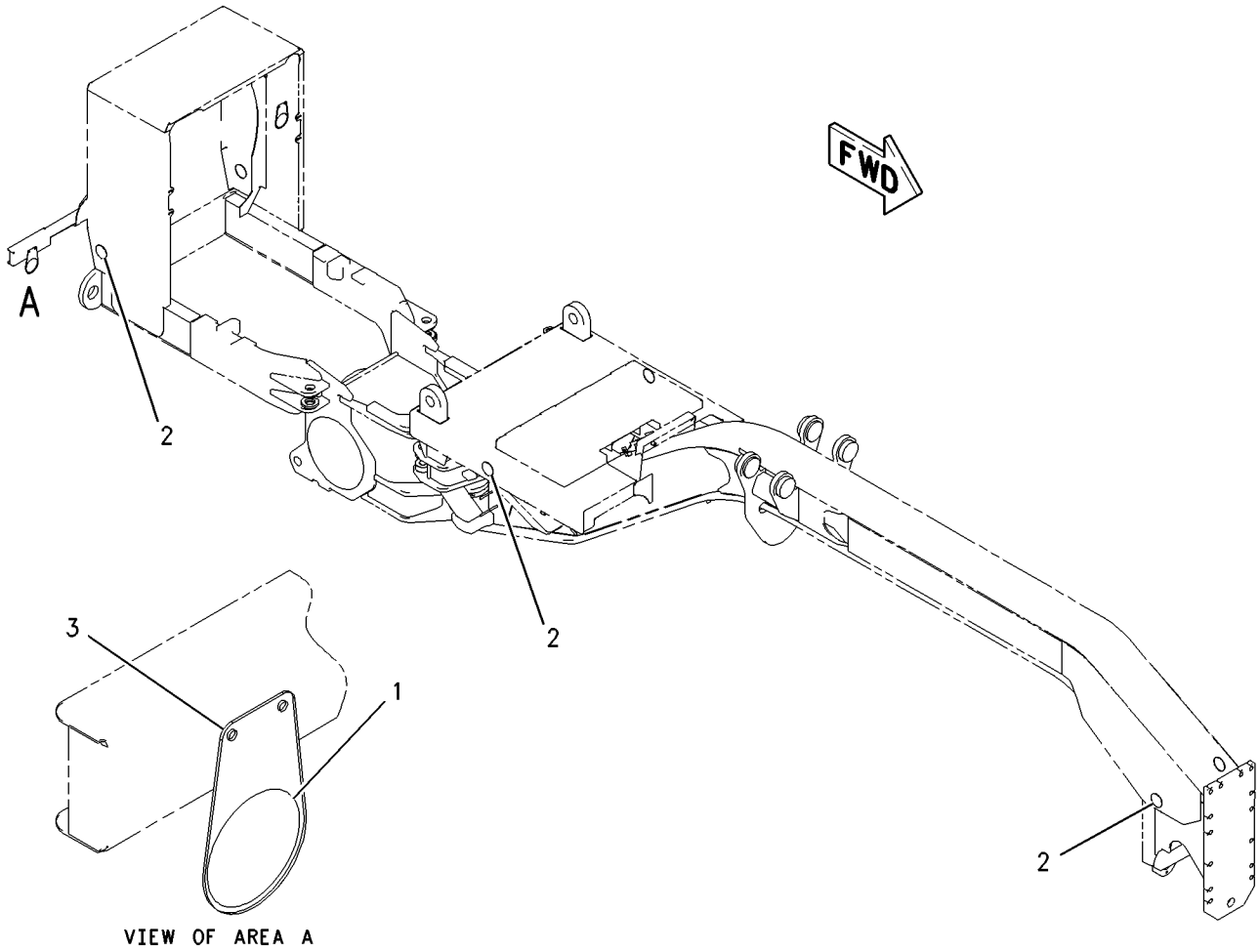

GRAPHIC #1 g00940853

202-4309 PLATE & FILM GP—FRENCH

S/N: CAF1-UP
AN ATTACHMENT

SMCS-7405, 7557 **i01853556**

NOTE	PART NUMBER	QTY	PART NAME 1 2 3 4 5 6 (PRODUCT LEVEL)	SEE PAGE
	224-6958	1	FILM (FAST FILL)	
			(LOCATE ON FILL NECK OF LH FUEL TANK)	
	213-0430	1	FILM-WARNING (CABLE CONNECTION)	
			(LOCATE ON SERVICE CENTER ACCESS DOOR BETWEEN LOUVERS)	
	7X-0943	1	FILM-WARNING (HIGH PRESS CYLINDER)	
			(LOCATE ON STEERING ACCUMULATOR UNDER PLATFORM AND ON ALL WHEEL DRIVE ACCUMULATORS ON FRONT AXLE)	
	5P-4000	1	PLATE-MAIN FRAME (DO NOT DRILL OR WELD)	
			(LOCATE ON LH SIDE OF FRONT FRAME BEHIND LIFT CYLINDER BRACKET)	
	8T-1192	1	PLATE-WARNING (MACHINE OPERATION)	
			(LOCATE ON RH GLOVE BOX DOOR)	
	201-7626	2	PLATE-WARNING (NO CLEARANCE)	
			(LOCATE ON RH AND LH REAR PLATFORM SUPPORTS)	

<END>

202-4310 PLATE & FILM GP—SPANISH

S/N: CAF1-UP
AN ATTACHMENT

SMCS-7405, 7557 **i01853147**

NOTE	PART NUMBER	QTY	PART NAME 1 2 3 4 5 6 (PRODUCT LEVEL)	SEE PAGE
	224-6965	1	FILM (FAST FILL)	
			(LOCATE ON FILL NECK ONLH FUEL TANK)	
	213-0437	1	FILM-WARNING (CABLE CONNECTION)	
			(LOCATE ON SERVICE CENTER ACCESS DOOR BETWEEN LOUVERS)	
	7X-0944	1	FILM-WARNING (HIGH PRESSURE CYLINDER)	
			(LOCATE ON STEERING ACCUMULATOR UNDER PLATFORM AND ON ALL WHELL DRIVE ACCUMULATORS ON FRONT AXLE)	
	5P-4001	1	PLATE-MAIN FRAME (DO NOT DRILL OR WELD)	
			(LOCATE ON LH SIDE OF FRONT FRAME BEHIND LIFT CYLINDER BRACKET)	
	8T-1193	1	PLATE-WARNING (MACHINE OPERATION)	
			(LOCATE ON RH GLOVE BOX DOOR)	
	201-7633	2	PLATE-WARNING (NO CLEARANCE)	
			(LOCATE ON RH AND LH REAR PLATFORM SUPPORTS)	

<END>

SERVICE EQUIPMENT AND SUPPLIES

202-4311 PLATE & FILM GP—PORTUGUESE

S/N: CAF1-UP

AN ATTACHMENT

SMCS-7405, 7557 **i01853580**

NOTE	PART NUMBER	QTY	PART NAME 1 2 3 4 5 6 (PRODUCT LEVEL)	SEE PAGE
	224-6963	1	FILM (FAST FILL FUEL)	
			(LOCATE ON FILL NECK OF LH FUEL TANK)	
	5P-4086	1	FILM-WARNING (GROUND BLADE)	
			(LOCATE ON THE SHIFT CONSOLE BELOW THE CS PIN PULLER SWITCH)	
	213-0435	1	FILM-WARNING (CABLE CONNECTION)	
			(LOCATE ON SERVICE CENTER DOOR BETWEEN LOUVERS)	
	7X-0945	1	FILM-WARNING (HIGH PRESSURE CYLINDER)	
			(LOCATE ON STEERING ACCUMULATOR UNDER PLATFORM)	
	8T-1194	1	PLATE-WARNING (MACHINE OPERATION)	
			(LOCATE ON RH GLOVE BOX DOOR)	
	201-7631	2	PLATE-WARNING (NO CLEARANCE)	
			(LOCATE ON RH AND LH PLATFORM SUPPORTS)	

<END>

202-4317 PLATE & FILM GP—GERMAN

S/N: CAF1-UP

AN ATTACHMENT

SMCS-7405, 7557 **i01853589**

NOTE	PART NUMBER	QTY	PART NAME 1 2 3 4 5 6 (PRODUCT LEVEL)	SEE PAGE
	224-6959	1	FILM (FAST FILL FUEL)	
			(LOCATE ON FILL NECK OF LH FUEL TANK)	
	6V-4615	1	FILM-WARNING (CABLE CONNECTION)	
			(LOCATE ON SERVICE CENTER ACCESS DOOR BETWEEN LOUVERS)	
	7X-0946	1	FILM-WARNING (HIGH PRESSURE CYLINDER)	
			(LOCATE ON STEERING ACCUMULATOR UNDER PLATFORM (LH SIDE)	
	5P-4003	1	PLATE-MAIN FRAME (DO NOT DRILL OR WELD)	
			(LOCATE ON LH SIDE OF FRONT FRAME BEHIND LIFT CYLINDER BRACKET)	
	8T-1195	1	PLATE-WARNING (MACHINE OPERATION)	
			(LOCATE ON RH GLOVE BOX DOOR)	
	201-7627	2	PLATE-WARNING ((NO CLEARANCE))	
			(LOCATE ON RH AND LH REAR PLATFORM SUPPORTS)	

<END>

SERVICE EQUIPMENT AND SUPPLIES

219-8541 PLATE & FILM GP

S/N: CAF1-UP
PORTUGUESE
AN ATTACHMENT

SMCS-7405, 7557 **i01769194**

NOTE	PART NUMBER	QTY	PART NAME 1 2 3 4 5 6 (PRODUCT LEVEL)	SEE PAGE
	224-6963	1	FILM (FAST FILL)	
			(LOCATE ON FILL NECK OF LH FUEL TANK)	
	5P-4086	1	FILM-WARNING (GROUND BLADE)	
			(LOCATE ON THE SHIFT CONSOLE BELOW THE CENTERSHIFT PIN PULLER SWITCH)	
	7X-0945	1	FILM-WARNING (HIGH PRESSURE CYLINDER)	
			(LOCATE ON STEERING ACCUMULATOR UNDER PLATFORM (LH SIDE)	
	213-0435	2	FILM-WARNING (CABLE CONNECTION) (JUMPER)	
			(LOCATE ON SERVICE CENTER ACCESS DOOR BETWEEN LOUVERS)	
	117-3302	1	GAUGE AS-DIPSTICK	
	8T-1194	1	PLATE-WARNING (MACHINE OPERATION)	
			(LOCATE ON RH GLOVE BOX DOOR)	
	201-7631	2	PLATE-WARNING (NO CLEARANCE)	
			(LOCATE ON RH & LH REAR PLATFORM SUPPORTS)	

<END>

PART NUMBER INDEX

Part	Page
0	
0A-3721	452
	456
0L-0478	519
0L-1178	431
0S-1571	519
0S-1573	488
0S-1579	345
0S-1585	414
	516
0S-1587	322
	438
0S-1591	83
0S-1592	414
	494
0S-1594	723
	724
0S-1595	462
0S-1604	341
0S-1621	491
0S-1756	322
0S-1973	337
0V-0375	414
1	
1A-0224	704
	708
1A-1415	516
1A-1460	431
	438
1A-2209	562
1A-4350	840
	841
	842
1A-5822	563
	564
1A-8063	704
	708
1B-0676	98
	314
	466
1B-2578	98
	314
	466
1B-2713	750
	752
1B-2886	324
	492
1B-4038	516
1B-4046	516
1B-4208	704
	708
1B-4367	442
1B-4430	872
1B-5174	297
	516
1B-8704	98
	314
1B-8705	10
	17
1B-8737	519
1C-0569	848
1D-0503	676
1D-4612	704
	708
1D-4627	414
1D-4628	488
	490
1D-4677	870
1D-4689	446
1D-4717	83
1D-5119	680
1D-5120	519
1F-0748	584
	586
	588
	590
	592
	594
	596
	600
	602
	604
	606
	676
1F-0750	854
	856
1F-4622	314
	466
1F-5339	419
1F-7567	61
	64
1F-7958	322
	492
	516
	704
	708
1F-8488	343
1H-0337	618
1H-1023	474
1H-3244	126
	132
	260
	270
1H-3338	734
	736
	740
	742
1H-3340	830
	832
1H-3937	572
	578
1H-7339	516
1H-7724	466
1H-8456	830
	832
1H-8720	545
1J-5929	44
1J-9671	24
	28
	34
	78
	482
	618
1K-6872	446
	698
1L-0509	334
1L-2279	74
1L-4349	580
1L-5072	580
1L-6931	701
1M-1230	750
	752
1M-3003	460
1M-3780	338
1M-4095	342
1M-4543	472
1M-4982	136
1M-6119	134
	135
	136
	260
	270
1M-6120	134
	135
	136
	260
	270
1M-6718	670
1N-5999	24
	28
	32
	34
	508
	510
1P-0604	310
	312
1P-2378	802
	807
1P-2636	322
1P-2662	322
1P-2807	901
1P-4278	472
1P-4577	334
1P-4578	334
1P-6356	90
1P-6872	572
1P-7297	428
1P-7521	460
1P-9328	472
1R-0716	58
1R-0762	100
1R-0770	102
1R-0774	580
1S-0994	255
	261
	271
	275
	527
	531
	548
1S-0996	255
	275
1S-1015	261
	271
1S-2342	244
	248
1S-2563	61
1S-3184	322
1S-7251	203
1S-7252	218
	254
	260
	261
	270
	271
	274
	218
	260
	270
	275
	280
1S-9593	143
	288
	355
	356
	671
	672
1T-0738	320
	358
1U-3202	711
1U-3998	508
	510
1U-8846	11
	12
	40
	51
	88
	296
1V-6256	128
1V-6688	261
	271
1W-2715	27
	30
1W-3011	419
1W-3306	822
	824
	826
1W-8407	20
1Y-7927	774
2	
2A-1162	48
2A-1538	492
2A-3211	664
	666
	668
2A-3398	418
2A-4429	27
	30
2A-6684	778
2A-6908	730
2A-6926	888
	890
2A-6928	888
	890
2A-6929	888
	890
2A-6938	343
2A-6985	►812
	834
	835
	836

► **PRIMARY REFERENCE**

PART NUMBER INDEX

Part	Page	Part	Page	Part	Page	Part	Page
2A-7081	526		397		389	2G-5493	526
2A-7184	730		398		390		530
2A-7327	382		399		391	2G-5667	414
2B-0941	522		400		408		494
	526		401		410	2G-5673	414
	530		402	2D-2565	377	2G-6157	438
2B-0947	324		403		378	2G-6285	476
2B-2006	438		404		379	2G-6336	462
2B-2673	676		405		380	2G-6377	332
2B-2695	848		406		381	2G-6396	332
	850		407		382	2G-6595	393
2B-3147	343		408		383		394
2B-3148	343		409		384		395
2B-7410	516		410		385		396
2B-9373	338		411		386		397
2D-2507	376		412		387		398
	377	2D-2509	376		388		399
	383		377		389		400
	384		378		390		401
	385		379		391		402
	386		380		392		403
	387		381		393		404
	388		382		408		405
	389		383		409		406
	390		384		411		407
	391		385	2D-2654	411		409
	392		386	2D-4202	580		412
	393		387	2D-6006	476	2G-6664	770
	394		388	2D-6235	750	2G-6695	516
	395		389		752	2G-6740	586
	396		390		774		592
	397		391	2D-6642	41		602
	398		392		322	2G-6747	584
	399		393		324		586
	400		394	2D-7325	466		588
	401		395	2D-8009	338		590
	402		396	2D-8154	516		592
	403		397	2D-8652	498		594
	404		398	2D-8822	418		596
	405		399	2D-9454	322		600
	406		400	2F-7306	815		602
	407		401	2F-8057	442		604
	410		402		493		606
	412		403	2F-8509	568	2G-6748	584
2D-2508	376		404	2G-0478	516		586
	377		405	2G-0585	2		588
	378		406		►300		590
	379		407	2G-0617	182		592
	380		408		186		594
	381		409		188		596
	382		410		248		600
	383		411	2G-0659	188		602
	384		412	2G-0988	182		604
	385	2D-2511	376		186		606
	386		377		188	2G-6749	584
	387		378		248		586
	388		379	2G-1034	472		588
	389		381	2G-1084	324		590
	390		382	2G-3219	676		592
	391		383	2G-3221	676		594
	392		384	2G-3865	414		596
	393		385	2G-3967	489		600
	394		386	2G-3971	678		602
	395		387	2G-4011	438		604
	396		388	2G-4332	704		606

► **PRIMARY REFERENCE**

PART NUMBER INDEX

Part	Page	Part	Page	Part	Page	Part	Page
2G-6751	584	2G-7097	811	2H-9889	527		270
	586		812		531		271
	588	2G-7098	811	2J-0157	296	2L-8058	260
	590		812	2J-3505	414		261
	592	2G-7149	708	2J-3506	516		270
	594	2G-7309	704		704		271
	596		708		708	2M-0849	488
	600	2G-7728	704	2J-6089	664		696
	602		708		665	2M-4453	76
	604	2G-8233	696		666	2M-4779	479
	606	2G-8241	802		668		483
2G-6752	584		807	2J-6274	460	2M-6471	19
	586	2G-8242	802	2J-7761	580	2M-7819	774
	588	2G-8572	730	2J-8163	414	2M-9780	19
	590		784	2K-0419	676		24
	592		788	2K-4233	698		28
	594		794	2K-4821	126		32
	596		802	2K-4973	83		34
	600	2G-8573	730		580		58
	602		784		698		63
	604		788		701		78
	606		794		714		100
2G-6753	584		802		723		104
	588	2G-8609	494		724		296
	596	2G-8615	414		848		343
	600	2G-8624	414		850		460
2G-6754	584	2G-8626	414		854		514
	592	2G-8631	414		856		526
	596		512		870		618
	602	2G-8633	414		872		798
	604	2G-8741	414	2K-5109	322	2N-2138	322
	606	2G-8742	414	2K-5830	730		462
2G-6755	584	2G-8767	778	2K-5986	420	2N-2139	462
	586		784	2K-6061	723	2N-9421	98
	588		788		724	2P-1279	664
	590		794		854		665
	592	2G-8768	414		856		666
	594	2G-8777	414	2K-7471	704		668
	596	2G-9098	488		708	2P-2975	203
	600		490	2K-7979	730	2P-4304	58
	602	2G-9103	488	2K-8199	514	2P-4339	718
	604		490		620		762
	606	2G-9789	343		622		766
2G-6756	584	2G-9791	343		624	2P-4358	7
	586	2H-3740	414		626	2P-8540	700
	588	2H-3746	704		628	2R-0694	476
	590		708		630	2R-0719	476
	592	2H-3764	680		632	2R-0724	476
	594	2H-3786	493		634	2R-1922	865
	596	2H-3920	228		636	2S-2053	103
	600		232		638	2S-2923	472
	602		240		640	2S-3029	296
	604		892		642	2S-4078	540
	606		894		644		544
2G-6757	584	2H-3922	223		646		618
	586		822		648	2S-5100	580
	588		826		650	2S-8439	330
	590	2H-3928	579	2L-0273	248	2T-2951	58
	592	2H-3931	556		260		►67
	594	2H-3940	456		270	2V-0099	718
	596		472		280		762
	600	2H-5001	322	2L-3331	466		766
	602	2H-6489	296	2L-5893	714	2V-3216	266
	604	2H-6490	342	2L-8050	260	2V-8259	282
	606	2H-9247	516		261		284

► **PRIMARY REFERENCE**

PART NUMBER INDEX

Part	Page
2W-0027	47
2W-6544	12
2W-6546	11
2W-7213	19
2W-7381	36
2W-8147	17
2Y-3209	800
2Y-5429	261
	271
2Y-5828	562
2Y-5829	54
	64
	417
3	
3B-4501	719
3B-4607	476
	730
3B-4610	476
	580
3B-4615	116
3B-4618	414
	493
3B-4628	527
3B-4632	711
3B-4647	492
3B-4897	487
3B-5301	266
3B-5320	676
3B-5329	489
3B-6753	680
3B-6769	441
3B-7255	798
3B-7721	466
3B-7733	441
3B-8485	488
	490
3B-8489	414
	441
	494
	680
	704
	708
3B-8822	464
3B-8921	302
	306
3C-1884	886
3C-6969	288
	292
3D-2239	408
3D-2824	8
	12
	46
	51
	58
	70
	78
	84
	222
	471
	520
	538
	540
	541
	544
	545
	550
	568
	618
3D-2834	103
3D-4245	348
	352
3D-4904	704
	708
3D-6388	471
3D-6509	324
3D-7587	472
3D-8317	352
3D-8747	750
	752
3D-8748	750
	752
3D-8749	750
	752
3D-8752	750
	752
3D-8884	464
3D-8913	472
3D-9253	865
3E-0109	172
	174
	232
	234
	236
	238
	282
	284
	288
	292
	794
	804
3E-0154	▶226
	274
	280
3E-0155	▶228
	234
	896
3E-0400	718
	762
	766
3E-2026	244
	248
3E-2332	204
3E-3213	37
3E-3365	100
	164
	168
	215
	222
	254
	274
	280
	288
	355
	356
	478
	671
	672
	718
	750
	752
	762
	766
	772
	804
	822
	824
	826
3E-3368	208
	209
	211
	212
	216
3E-3371	152
	166
	167
	178
	204
	207
	210
	254
	274
	280
3E-3377	282
	284
3E-3383	156
	158
	160
	162
	808
	809
	810
	886
	888
	890
3E-3389	228
	232
	240
	894
3E-3636	244
	248
3E-3890	718
	762
	766
3E-4048	812
	814
3E-4302	568
	572
3E-4335	815
3E-4336	815
3E-4352	204
3E-4353	100
3E-4362	815
3E-5169	255
	275
3E-5180	143
3E-5239	172
	174
	254
	274
3E-5458	132
3E-5464	718
3E-6017	656
3E-6287	255
3E-6328	▶124
	282
	284
3E-6388	886
	888
	890
3E-6389	▶152
	232
	234
	240
3E-6450	248
	280
3E-6477	181
	288
	292
3E-6575	815
3E-6754	280
	284
3E-7417	568
	572
3E-7842	274
	280
3E-7852	220
3E-7853	220
3E-7855	220
3E-7857	220
3E-7858	220
3E-7860	220
3E-7861	220
3E-8005	320
3E-8006	358
3E-8017	81
	97
3E-8020	822
	824
	826
3E-8043	730
3E-8320	260
	270
3E-8646	147
3E-8700	▶216
	297
3E-8763	230
	288
3E-8764	188
3E-8766	236
	238
	804
3E-8770	174
3E-8772	180
	182
	186
	188
	224
	292
3E-8782	236
	238
3E-8783	288
	292
3E-8812	230
3E-8814	186
	188
3E-8815	180
3E-8816	280

▶ **PRIMARY REFERENCE**

PART NUMBER INDEX

Part	Page	Part	Page	Part	Page	Part	Page
	285	3G-0361	580	3J-4818	872		638
3E-8817	282	3G-0471	701	3J-5390	452		640
	285	3G-0472	682		462		642
3E-8821	754	3G-1701	772	3J-5696	714		644
	755	3G-3265	784	3J-6956	358		646
3E-8822	198		788	3J-7354	51		648
	200		794		67		650
3E-8825	172		796		72		656
	174	3G-3498	580		100		658
	180	3G-3726	659		204		661
	182		660		316		798
	186		663		328	3K-0835	822
	188	3G-6659	441		352		824
	189	3G-6891	566		460		826
	198	3G-7875	865		536	3K-0986	341
	200	3G-8175	671		540	3K-2889	442
	224	3H-0107	579		544	3K-3257	218
	230	3H-2900	282		550	3K-4897	656
	236		284		552		816
	238		719		570	3K-6060	466
	280		763		618		730
	282		766		654	3K-6116	348
	284	3H-5552	19		661	3K-8106	138
	285	3H-8538	314	3J-8500	575		139
	288	3J-1907	8	3K-0196	341		261
	292		12	3K-0360	7		271
	754		24		8	3K-8280	466
	755		28		24	3K-8460	204
	804		32		28	3K-8782	240
3E-9323	288		34		34	3K-9520	182
3E-9324	288		64		63		186
	292		67		72		188
3E-9326	182		87		78		248
	186		100		88	3L-8187	288
	188		104		106		292
	224		204		244	3P-0337	306
	292		244		249	3P-1156	62
3E-9327	282		249		280	3P-1461	488
	285		296		296	3P-1932	72
3E-9330	754		316		328		536
	755		330		343	3P-3839	434
3E-9412	53		334		486		436
3E-9413	818		348		522	3P-9498	618
	819		352		524	3P-9554	176
	820		358		525		178
3E-9865	730		532		526		804
3F-0379	220		536		530	3P-9900	420
3F-1547	580		540		534	3S-0004	338
3F-5108	689		541		536	3S-0303	462
	690		544		541	3S-1349	704
	693		545		544		708
	694		550		548	3S-2093	90
3F-7514	730		552		550		147
3F-9556	126		618		552		172
	584		652		572		174
	586		659		618		182
	588		660		620		186
	590		663		622		188
	592		664		624		198
	594		665		626		200
	596		666		628		230
	600		667		630		232
	602		668		632		234
	604		669		634		236
	606		670		636		238

► **PRIMARY REFERENCE**

PART NUMBER INDEX

Part	Page
	240
	242
	244
	248
	254
	260
	264
	266
	270
	274
	280
	282
	284
	288
	292
	443
	530
	552
	718
	762
	766
	778
	804
	826
	865
	874
	878
3S-2713	314
	466
3S-6049	260
	270
3S-6050	260
	270
3S-7023	496
	500
	502
3S-8652	330
3S-8665	106
3T-0050	106
	466
3T-0849	574
3T-2662	138
	139
	271
3T-3197	718
3T-3198	718
3T-4377	342
3T-4965	541
	545
3T-5760	136
3T-6354	132
3T-6774	750
	752
3T-7059	886
3T-7086	886
3T-8236	618
3V-3816	876
3V-4694	794
3V-9244	814
3W-6485	557
3Y-2806	730

4

Part	Page
4B-1280	288
	292
4B-2047	132
	288
	292
4B-2049	822
	824
	826
4B-2913	580
4B-3388	772
4B-3604	680
4B-4158	733
	835
4B-4274	261
	271
	288
	292
4B-4283	888
	890
	892
	894
	897
	898
4B-4314	730
4B-4845	342
4B-4863	118
	120
	261
	271
4B-4909	420
4B-5059	774
4B-5275	770
4B-6060	314
	466
4B-9302	90
4B-9880	352
4D-0577	466
4D-0582	466
4D-1135	474
4D-1138	474
4D-1212	288
	292
4D-1322	358
4D-1326	226
	274
4D-2297	659
	660
	663
	664
	665
	666
	667
	668
	669
4D-2560	471
4D-3704	332
	414
	494
4D-4064	98
4D-4375	678
4D-5292	322
4D-6086	704
	708
4D-6432	840
	841
	842
	848
	850
4D-6585	464
4D-6695	358
4D-7246	516
4D-7388	244
	255
	275
	874
	876
	878
4D-7733	532
4D-7735	472
4D-7794	90
	182
	186
	188
	230
	240
	244
	249
	252
	255
	261
	271
	275
	282
	284
	441
	582
	865
	876
4D-8148	418
4D-8948	261
	271
4D-9517	194
	230
4D-9986	620
	622
	624
	626
	628
	630
	632
	634
	636
	638
	640
	642
	644
	646
	648
	650
4E-2392	552
4E-4454	232
	234
4E-6867	550
4E-9628	538
4F-2294	227
4F-2609	296
4F-3657	688
4F-3658	688
	693
	694
4F-4097	568
4F-4879	859
	860
	863
	872
4F-5695	21
	22
4F-7389	334
4F-7390	460
4F-7952	339
4F-9653	12
	516
4H-2558	203
	261
	271
4H-2633	80
	90
4H-6147	464
4H-6996	516
4H-9105	460
4J-0520	334
4J-0521	541
	545
4J-0522	334
4J-0523	541
	545
4J-2506	316
	348
	352
4J-3914	466
4J-3915	738
	744
4J-5267	536
4J-5468	522
	526
	530
	552
4J-5477	83
	316
	536
	540
	541
	544
	545
	550
	552
	618
4J-7533	348
	352
	514
	608
	609
	610
	611
	612
	613
	614
	615
	616
	617
	618
	620
	622

► **PRIMARY REFERENCE**

PART NUMBER INDEX

Part	Page	Part	Page	Part	Page	Part	Page
	624		552	4T-4942	658		640
	626		772	4T-5070	670		642
	628		874	4T-5071	670		644
	630	4L-6459	230	4T-5074	661		646
	632		584	4T-5613	496		648
	634		592		500		650
	636		596		502	5C-2874	165
	638		602		512		196
	640	4L-9564	57	4T-6780	498	5C-2890	178
	642	4L-9822	332	4T-6907	495		182
	644	4M-0061	752		504		186
	646	4M-1751	348		506		188
	648		352	4T-7571	658		197
	650	4M-1831	220	4T-8054	502		224
4J-8524	474	4M-2381	352		512		255
4J-8527	474	4M-5281	434		556		264
4J-8922	314		436	4V-7875	774		266
	467		780	4V-7877	774		275
4J-9224	502	4M-6107	310	4V-7884	870		280
	512		312		872		284
4J-9225	498	4M-6108	296	4V-7890	714		443
	508	4M-6109	296	4V-7891	714		467
	510	4M-6425	467	4V-8116	266		719
4J-9964	579	4M-6921	580	4V-8556	872		747
4K-0367	332	4M-6953	337	4V-8577	870		763
	418	4N-2927	774	4V-9803	446		767
	689	4N-5091	479	4V-9804	446		874
	690		483	4V-9809	446		878
	693	4P-5524	86	4W-0253	78	5C-6565	444
	694	4P-5918	12	4W-1413	902	5C-7261	12
	811		114	4W-2232	62		15
	812	4P-6422	902	4W-3087	15		110
	814	4P-7581	282	4W-3462	5		176
4K-1388	618		284		▶11		178
4K-2039	348	4P-8134	245	4W-7356	558		180
	352		249	4W-7592	78		181
4K-4881	405		316	4W-7627	90		182
	411	4P-8525	8	4Y-9652	12		186
4K-5122	240	4P-8681	901				188
4K-7463	438	4P-9103	58				192
4K-8603	296	4P-9107	58	**5**			194
4K-8659	438	4R-9999	50				255
4K-8864	106	4S-1962	90	5B-0577	704		266
	182		798		708		275
	245	4S-4455	245	5B-0841	324	5C-7423	310
	249		249	5B-1866	54		312
4K-9097	848		255	5B-6172	714		888
	850		275		844		890
4L-3641	64		553		846	5C-8312	232
4L-5966	718	4S-5838	460	5B-6251	708		234
	762	4S-5879	320	5B-8978	550		240
	766	4S-7529	464	5B-9079	667		730
4L-6454	182	4S-7560	472		669	5C-9553	255
	186	4S-7606	464	5B-9318	513		261
	203		472		514		271
	245	4S-8287	815		620		275
	249	4S-9191	82		622		538
	282		428		624		839
	284		729		626		886
	419	4T-1700	661		628	5C-9563	266
	424	4T-1860	618		630	5C-9583	165
	434		▶670		632	5C-9584	266
	436	4T-4509	661		634	5C-9930	266
	467	4T-4935	618		636	5C-9931	266
	531		▶658		638	5D-0269	822

▶ **PRIMARY REFERENCE**

PART NUMBER INDEX

Part	Page
	824
	826
	865
5D-0353	332
	414
5D-0768	476
5D-1026	74
	334
	428
	798
5D-1911	580
5D-2645	526
	530
5D-2651	255
	275
5D-3636	476
5D-4382	464
	▶474
5D-4822	774
5D-4988	530
5D-6644	676
5D-6993	770
5D-6994	770
5D-6996	770
5D-6997	770
5D-6998	▶770
	772
5D-7688	456
5D-7778	474
5D-7780	474
5D-8159	704
	708
5D-8161	704
	708
5D-9553	689
5D-9554	690
5D-9558	692
5D-9559	692
5D-9561	692
5D-9562	692
5D-9844	322
5F-0149	696
5F-0304	48
5F-1678	297
5F-5434	472
5F-8000	340
5F-9144	348
	352
5G-8760	698
	701
5H-4778	464
	467
	472
	772
5H-4909	516
5H-7826	441
5H-8848	541
5H-8936	865
5H-8985	302
	306
	310
	312
5J-1036	348
	352
5J-1086	332
	460
5J-1246	579
5J-2974	580
5J-7010	498
5J-7333	684
5K-0984	438
5K-1458	704
	708
5K-1459	704
	708
5K-2408	464
	772
	865
5K-3294	192
5K-5068	83
5K-5129	516
5K-5288	414
5K-5552	489
5K-7577	822
	826
5K-8454	516
5K-9090	84
	328
	334
	540
	541
	544
	545
5K-9107	580
	899
5K-9238	466
5K-9660	90
5L-1100	566
5L-2030	322
5L-2031	322
5L-4507	261
	271
5L-7200	182
	186
	188
	224
	292
5M-1932	418
5M-2057	618
5M-2894	249
	322
	332
	854
	856
5M-3062	90
	106
	148
	182
	186
	188
	240
	245
	249
	255
	275
	280
	282
	284
	328
	419
	424
	464
	467
	482
	548
	684
	714
	716
	738
	744
	870
	874
	878
5M-6200	296
5M-6213	456
	464
	467
5M-6687	254
	274
5M-6725	266
5M-6755	293
5M-7087	58
5M-8500	730
5M-9695	881
	882
5P-0537	16
	168
	348
	352
	750
	752
	886
5P-0599	530
5P-0747	203
	218
	254
	260
	270
	274
5P-0761	134
	135
	203
	260
	261
	270
	271
	275
5P-0763	72
5P-0765	334
5P-0767	428
	467
	798
5P-1075	83
	90
	98
	314
	414
	419
	424
	434
	436
	444
	467
	553
	584
	586
	588
	590
	592
	594
	596
	600
	602
	604
	606
	684
	719
	730
	738
	744
	763
	767
	802
	866
	870
	899
5P-1076	70
	98
	116
	420
	445
	446
	448
	584
	586
	588
	590
	592
	594
	596
	600
	602
	604
	606
5P-1175	901
5P-1291	116
	540
	544
5P-1293	74
5P-1295	540
	544
5P-1465	472
5P-2424	487
	584
	586
	588
	590
	592
	594
	596
	600
	602
	604
	606
5P-2545	332
	462
5P-2566	436
	452
	487
	579

▶ **PRIMARY REFERENCE**

PART NUMBER INDEX

Part	Page	Part	Page	Part	Page	Part	Page
5P-3418	132		819	5P-8245	8		762
5P-3419	132		820		37		766
5P-3454	261		838		52	5P-9209	98
	271	5P-5813	322		53		314
5P-3863	296	5P-5824	784		70	5P-9262	654
	340		788		324	5P-9299	297
5P-3924	296	5P-5908	719		332		472
5P-3999	902		763		343	5P-9617	67
5P-4000	904		767		438		100
5P-4001	904	5P-5923	420		462		552
5P-4003	905		684		491	5P-9810	520
5P-4077	901	5P-5931	527		492	5R-4787	563
5P-4086	905		531		494		564
	906	5P-5969	424		516	5S-0003	772
5P-4115	288		557		558	5S-4246	282
	293		738		563		284
	434		744		564	5S-4385	338
	436		780		676	5S-7349	126
	780		785		704		132
	784		789		708		220
	788		796	5P-8247	18	5S-7379	182
	874		801		126		186
	878		880		322		245
	888	5P-6008	288		324		249
	890	5P-6129	719		332		414
	892	5P-6652	431		676		444
	894		680		693		493
	897		684		694		516
	898	5P-6851	332	5P-8248	322		527
5P-4116	261	5P-6871	803		492		531
	271	5P-6882	780		516		534
	334	5P-7162	881		519		536
	471		882		704		553
5P-4143	462	5P-7213	341		708		684
5P-4401	452	5P-7701	58	5P-8249	488		730
	456	5P-7803	718		490		802
5P-4424	452		762	5P-8250	704	5S-7382	83
	456		766		708		98
5P-4426	452		784	5P-8291	680		314
	456		788	5P-8347	72	5S-7383	527
5P-4483	296		794		140		531
5P-4868	540		796	5P-8439	116		723
	544		866	5P-8445	774		724
5P-4906	798	5P-7814	204	5P-8500	582		730
5P-4961	106	5P-7854	536		725		854
	328	5P-7957	844		733		856
5P-5454	784		846		800	5T-0570	3
	788	5P-7958	848		835		►516
5P-5627	881	5P-7970	8		899	5T-0731	300
	882		61	5P-8502	582	5T-0735	300
5P-5637	719		151		725	5T-0906	414
	731	5P-8066	58		733	5T-1362	519
	763		64		835	5T-1958	830
	767	5P-8167	194		899	5T-1959	832
5P-5639	731		230	5P-8525	198	5T-1964	830
5P-5677	229		255		200		832
5P-5678	16		275		755	5T-1969	830
5P-5680	830		424		778	5T-1972	830
	832		730	5P-8842	414		832
5P-5689	261		872		494	5T-3093	880
5P-5768	734		876	5P-8843	414	5T-3144	830
	736	5P-8196	58	5P-8890	414	5T-3145	832
	740	5P-8197	733	5P-9085	434	5T-3146	830
	742		835		436	5T-3147	832
	818	5P-8244	462	5P-9135	719	5T-3889	678

► **PRIMARY REFERENCE**

PART NUMBER INDEX

Part	Page
5T-3890	678
5T-4030	772
5T-4267	678
5T-5295	492
5T-7486	734
	736
	740
	742
5T-8285	464
	466
5T-8366	676
5T-8417	492
5T-9313	182
	186
5T-9903	552
5T-9986	526
5V-0770	774
5V-1474	774
5V-1497	774
	870
5V-1498	723
	724
6	
6A-9718	886
6B-0933	584
	586
	588
	590
	592
	594
	596
	600
	602
	604
	606
6B-3260	704
	708
6B-4540	282
	284
6B-5072	343
6B-5464	711
6B-6684	70
	341
	558
6C-0109	266
6C-0110	266
6C-3246	400
6C-3248	396
6C-5233	266
6C-5234	266
6C-7366	399
6D-1004	7
6D-1432	464
6D-1641	534
	798
6D-3479	8
	261
	271
	297
6D-4161	772
6D-4244	255
	275
	288
	293
	419
	520
	527
	531
	534
	553
6D-4246	8
	245
	249
	255
	276
6D-4247	522
	548
6D-6581	734
	736
	740
	742
6D-7146	563
	564
6D-7563	693
6D-7564	694
6D-9718	772
6D-9855	467
6E-1131	496
	500
6E-1436	568
6E-1634	500
6E-1754	490
	▶500
6E-1835	658
6E-1857	500
6E-1923	618
6E-1924	618
6E-1925	618
6E-1926	540
	544
6E-2447	502
6E-3006	664
	666
6E-3007	620
	622
	624
	626
	628
	630
	632
	634
	636
	638
	640
	642
	644
	646
	648
	650
6E-3013	620
	622
	624
	626
	628
	630
	632
	634
	636
	638
	640
	642
	644
	646
	648
	650
6E-3019	620
	622
	624
	626
	628
	630
	632
	634
	636
	638
	640
	642
	644
	646
	648
	650
6E-3027	608
6E-3028	608
	610
	614
	617
	▶620
6E-3029	608
	610
	614
	617
	▶622
6E-3030	608
	610
	614
	617
	▶624
6E-3031	608
	614
	▶626
6E-3032	586
	588
	590
	▶608
6E-3033	626
	634
	640
	646
	648
	650
	▶659
6E-3034	609
	611
	612
	613
	615
	616
	▶628
6E-3035	609
	611
	612
	613
	615
	616
	▶632
6E-3036	609
	611
	612
	613
	615
	616
	▶632
6E-3037	609
	612
	613
	▶634
6E-3038	590
	604
	▶609
6E-3043	626
	634
6E-3044	620
	622
	624
	630
6E-3058	632
6E-3059	640
6E-3268	654
6E-3269	654
6E-3272	654
6E-3273	654
6E-3274	654
6E-3275	654
6E-3276	654
6E-4090	495
6E-4224	568
	572
6E-4228	652
6E-4230	652
6E-4239	652
6E-4502	620
	622
	624
	626
	628
	630
	632
	634
	636
	638
	640
	642
	644
	646
	648
	650
6E-4581	502
6E-4599	628
	636
	638
	642
	644
6E-4703	618
	▶660
6E-4704	659
6E-4724	486
	▶502

▶ **PRIMARY REFERENCE**

PART NUMBER INDEX

Part	Page
6E-4725	502
6E-4940	498
6E-4974	502
	512
6E-5047	343
6E-5153	620
	622
	624
	626
	628
	630
	632
	634
	636
	638
	640
	642
	644
	646
	648
	650
6E-5200	661
6E-6140	652
6E-6141	652
6E-6142	652
6E-6419	652
6E-6420	652
6E-6527	654
6E-6528	654
6E-6536	654
6E-6537	654
6E-6538	654
6E-6539	654
6E-6540	654
6E-6571	572
	▶574
6E-6594	572
6E-6596	572
6E-6597	572
6E-6599	572
6E-6600	572
6E-6601	572
6E-6602	572
6E-6604	574
6E-6605	574
6F-0253	770
	822
	824
	826
6F-0698	322
6F-2956	332
6F-3930	376
	377
	378
	379
	380
	381
	382
	383
	384
	385
	386
	387
	388
	389
	390
	391
	392
	393
	394
	395
	396
	397
	398
	399
	400
	401
	402
	403
	404
	405
	406
	407
	408
	409
	410
	411
	412
6F-4855	348
	352
6F-6992	704
	708
6F-7045	223
6G-0417	438
6G-0905	462
6G-1528	411
6G-1908	516
6G-1914	680
6G-1915	680
6G-2395	784
	788
	794
	796
6G-2396	784
	788
	794
	796
6G-2751	784
	788
6G-2914	730
	784
	788
6G-2946	678
6G-2949	678
6G-2959	832
6G-4526	680
6G-4701	322
6G-4702	322
6G-5214	796
6G-5442	680
6G-5532	516
6G-5533	516
6G-5534	516
6G-5537	516
6G-5538	516
6G-5539	516
6G-5542	516
6G-5543	516
6G-5544	516
6G-5547	516
6G-5548	516
6G-5979	346
	355
6G-5987	750
	752
6G-6122	516
6G-7187	491
	494
6G-7222	784
	794
	796
6G-8814	730
6G-8831	803
	804
	806
6H-0211	492
6H-1717	494
	516
	676
6H-9691	474
6I-0273	86
6I-0274	86
6I-0275	86
6I-1418	244
	248
6I-8641	302
	306
6I-8911	310
6I-8912	302
	306
	310
	312
6I-9395	358
6J-0488	288
	293
6J-1972	495
	496
	500
	504
	506
6J-5731	495
	496
	500
	504
	506
6J-5733	495
	496
	500
	504
	506
6J-6439	658
6K-0545	704
	708
6K-3273	784
	788
	794
6K-3607	104
6K-4185	438
6K-4186	438
6K-4187	438
6K-4190	438
6K-4191	438
6K-4193	438
6K-6826	466
6K-8178	261
6K-8329	332
6K-9632	876
	878
6L-1650	296
6L-1962	584
	586
	588
	590
	592
	594
	596
	600
	602
	604
	606
6L-8617	80
6M-5062	482
	667
	669
6P-0205	712
	713
	784
	788
	796
6P-3236	718
	762
	766
6P-5647	698
6P-6641	452
	456
6T-0840	324
6T-2421	486
6T-2770	886
6T-3631	254
	274
6T-3632	254
	274
6T-3633	254
	274
6T-3643	261
	271
6T-5345	718
	762
	766
6T-6708	718
	762
	766
6T-7695	778
6T-8115	240
6T-9222	330
6V-0292	784
	788
	796
6V-0314	462
6V-0505	757
	758
	785
	789
	794
6V-0852	100
	316
	330

▶ **PRIMARY REFERENCE**

PART NUMBER INDEX

Part	Page
	358
	536
	540
	544
	618
6V-0894	98
6V-1322	276
	280
6V-1520	74
6V-1572	108
6V-1573	108
6V-1668	719
	763
	767
6V-1722	8
6V-1819	302
	306
	310
	312
6V-1820	7
	82
	296
	321
	339
	428
	729
6V-1889	244
	249
	334
	536
6V-1911	341
6V-1970	3
	►800
6V-2313	98
	314
6V-2315	16
6V-2317	12
	15
	58
	61
	87
	297
6V-2480	282
	284
6V-2610	452
	456
6V-2687	434
	436
	801
6V-2722	137
	275
6V-2773	734
	736
	740
	742
6V-3259	774
6V-3265	90
	181
	192
	245
	249
6V-3342	772
6V-3538	11
	20
6V-3668	460
6V-3822	297
6V-3834	572
6V-3918	40
	78
	320
6V-3922	100
6V-3928	782
	784
	788
	794
	796
6V-3940	10
	11
	47
	58
	62
	72
	204
	296
	334
6V-3964	151
	245
	249
6V-3965	316
	330
	358
	536
	540
	545
	618
6V-4245	467
6V-4248	64
	296
	417
6V-4283	260
	270
6V-4589	110
6V-4615	905
6V-5048	8
	24
	28
	32
	34
	204
6V-5049	100
	104
	109
	204
6V-5158	738
	744
6V-5163	738
	744
	785
	789
6V-5164	794
6V-5192	575
6V-5217	40
	61
	64
	296
	320
	358
6V-5219	109
	297
	340
6V-5221	7
6V-5223	72
	140
6V-5230	100
	618
6V-5556	661
6V-5586	670
6V-5645	232
	234
6V-5696	52
	53
	541
	545
6V-5722	514
6V-5815	66
6V-5834	778
6V-5839	7
	12
	15
	26
	36
	64
	66
	110
	252
	417
	460
	536
6V-5842	39
	460
6V-5843	12
	38
	110
6V-5849	892
6V-5853	888
	890
	894
	897
	898
6V-6209	886
6V-6213	886
6V-6214	886
6V-6219	886
6V-6467	878
6V-6578	232
	234
	240
6V-6609	204
6V-6703	144
	150
6V-6888	886
	888
	890
6V-6889	886
	888
	890
6V-6893	255
	276
6V-6934	106
6V-6959	118
	120
6V-7357	467
6V-7420	798
6V-7636	734
	736
	740
	742
6V-7673	568
6V-7687	70
6V-7692	485
6V-7728	16
	719
	763
	767
6V-7744	803
	804
	806
6V-7981	36
	296
	536
6V-8077	550
6V-8082	332
6V-8182	696
6V-8183	98
	731
6V-8185	288
	293
6V-8186	227
	584
	586
	588
	590
	592
	594
	596
	600
	602
	604
	606
6V-8187	132
	260
	270
6V-8188	220
	436
	584
	586
	588
	590
	592
	594
	596
	600
	602
	604
	606
6V-8189	126
	467
6V-8202	297
6V-8212	296
6V-8214	428
	572
6V-8225	168
6V-8237	495
	504
6V-8255	880
6V-8258	888
	892
	894
6V-8259	890
	897

► **PRIMARY REFERENCE**

PART NUMBER INDEX

Part	Page	Part	Page	Part	Page	Part	Page
	898		536		531	6V-9844	550
6V-8336	8	6V-8632	63		553	6V-9849	550
	70	6V-8633	471		719		552
	568		520		763	6V-9850	532
6V-8337	568	6V-8634	522		767	6V-9851	520
	572		524		866	6V-9853	328
6V-8352	654		525		874		334
6V-8362	718		526	6V-8837	568		536
	762		530	6V-8918	467	6V-9872	536
	766	6V-8635	334	6V-8928	784	6V-9873	550
6V-8369	228	6V-8636	64		788	6V-9875	540
	232		104		794		544
	240		532	6V-9002	8	6V-9876	106
	892	6V-8637	538		106		486
	894	6V-8639	106	6V-9004	70		526
6V-8376	138		526		103		530
	139		534		541	6V-9877	544
	261		552		545	6W-0108	714
	271	6V-8642	63	6V-9005	58	6W-0111	714
	288	6V-8647	316	6V-9007	540	6W-0590	714
	292		540		544	6W-1885	714
	293		544	6V-9008	58	6W-1890	844
6V-8378	220		552		328		846
	226		618	6V-9027	728	6W-1895	844
	274	6V-8675	563	6V-9168	548		846
6V-8397	64		564	6V-9182	334	6W-2373	844
	104	6V-8714	84	6V-9632	110		846
	106	6V-8716	328		147	6W-3309	844
	316		334		271		846
	486	6V-8723	522		318	6W-3628	854
	522		526		434		856
	524		530		436	6W-5698	874
	525		548		729		878
	526	6V-8724	532		730	6W-5740	844
	527	6V-8765	563		734		846
	530		564		736	6W-5757	844
	531	6V-8777	541		740		846
	532		545		747	6W-5817	466
	536	6V-8801	98		780	6W-9693	844
	548		106		796		846
6V-8398	8		147		804	6Y-0590	342
	106		182		826	6Y-0591	342
	471		186		839	6Y-0976	312
	520		202		866	6Y-0982	302
	526		203	6V-9746	70	6Y-1000	302
	530		226		103	6Y-1114	302
	534		230		328		306
	541		232		334		312
	544		234		536	6Y-1115	302
	550		245		538		306
	552		249		540		310
	618		255		541		312
6V-8624	526		274		544	6Y-1116	310
6V-8625	8		276		545	6Y-1119	310
	526		280		552		312
	530		282	6V-9804	109	6Y-1864	306
	541		284	6V-9829	548	6Y-1878	302
	544		288	6V-9835	541	6Y-1887	302
	550		293		545		306
	552		419	6V-9836	531		312
6V-8627	316		464	6V-9837	520	6Y-1888	312
	536		467		552	6Y-1890	306
	540		479	6V-9839	538	6Y-1891	302
	544		483	6V-9840	541		312
6V-8628	316		527		545	6Y-1895	302

► **PRIMARY REFERENCE**

PART NUMBER INDEX

Part	Page
	312
6Y-2303	▶302
	344
6Y-2307	312
6Y-2312	302
	306
6Y-2419	302
6Y-2425	302
	306
6Y-2428	306
6Y-2429	306
6Y-2430	306
6Y-2584	358
6Y-2932	560
6Y-2933	560
6Y-2934	560
6Y-2935	560
6Y-3849	460
6Y-3850	460
6Y-3852	460
6Y-3855	312
6Y-3860	340
6Y-3861	340
6Y-3978	2
	▶321
6Y-4280	568
6Y-4335	686
	687
6Y-4336	687
6Y-4638	348
	352
6Y-5010	338
6Y-5230	704
	708
6Y-5352	460
6Y-5728	296
6Y-7915	462
6Y-7953	516
6Y-7955	324
6Y-7981	306
6Y-8285	302
6Y-8764	▶338
	339
6Y-8765	▶339
	344
6Y-9763	296

7

Part	Page
7B-3235	438
7B-7525	848
	850
7B-9323	476
7C-0111	47
7C-0752	95
7C-1160	68
7C-1493	58
7C-1770	5
	▶51
7C-2475	5
	▶62
7C-3254	254
	274
7C-4354	84
	245
	249
	255
	276
	282
	284
7C-5403	62
7C-6670	96
7C-6672	96
7C-6976	47
7C-6977	47
7C-7431	81
	97
7C-7980	17
7D-0028	332
7D-0215	452
	456
7D-1195	580
7D-1649	414
7D-2135	704
	708
7D-2136	704
	708
7D-2196	704
	708
7D-3963	464
7D-4903	452
	456
7D-5252	376
	377
	378
	379
	380
	381
	382
	383
	384
	385
	386
	387
	388
	389
	390
	391
	392
	393
	394
	395
	396
	397
	398
	399
	400
	401
	402
	403
	404
	405
	406
	407
	408
	409
	410
	411
	412
7D-6671	▶688
7D-7026	428
7D-7233	60
	245
	249
7D-7419	467
7D-7496	431
7D-8245	705
	708
7D-8347	322
7D-8436	460
7D-8636	414
7D-8637	414
7D-8643	414
7D-8825	704
7D-8826	704
7D-8875	696
7D-8876	696
7D-8877	696
7D-8878	696
7D-8879	696
7D-8881	696
7D-8882	696
7D-8883	696
7D-8884	696
7D-8889	696
7D-8891	696
7D-8912	414
	▶442
7D-8983	516
7D-8984	516
7D-9267	519
7E-2968	18
7E-5677	▶83
	84
7E-6794	41
7E-7589	50
7E-7779	27
	30
7F-0192	98
7F-0216	58
7F-0560	137
7F-1327	704
	708
7F-4617	548
7F-8267	76
7F-8268	339
7F-9223	420
7G-0437	460
7G-1060	254
7G-4326	874
7G-4822	302
	306
	310
	312
7G-4824	718
	762
	766
	784
	788
	794
	866
7G-5453	352
7G-7053	282
	284
7G-7920	434
	436
7H-1447	580
7H-2423	508
	510
7H-2444	696
7H-3641	584
	586
	588
	590
	592
	594
	596
	600
	602
	604
	606
7I-4610	3
	▶441
7I-4621	▶584
7I-4622	484
	▶586
7I-4624	▶588
7I-4696	772
7I-4698	772
7I-4699	772
7I-4718	2
	▶485
7I-4890	730
7I-5015	716
	▶747
	759
7J-0204	24
	28
	32
	34
	508
	510
	538
7J-4026	8
7J-8611	326
	452
	456
	472
	865
7J-9108	63
7J-9885	502
	512
7J-9933	620
	622
	624
	626
	628
	630
	632
	634
	636
	638
	640
	642
	644
	646
	648
	650
	658

▶ **PRIMARY REFERENCE**

PART NUMBER INDEX

Part	Page
7K-1181	244
	248
	434
	436
7K-4201	746
7K-4743	260
	270
7K-6128	487
7K-9201	487
7K-9202	491
	683
7K-9203	486
	682
	696
7L-0811	254
	274
7L-2894	220
7L-6363	701
7L-8316	750
	752
7L-9061	568
	572
7M-0706	318
7M-2360	516
7M-7219	774
7M-7410	467
7M-8485	58
	296
	328
	334
	348
	352
7M-9918	96
7N-0718	▶223
	261
	271
7N-3718	261
	264
	271
7N-5274	260
	270
7N-5683	20
7N-5876	282
	284
	810
	822
	824
	826
7N-7688	74
7N-9943	152
7S-4571	322
7S-7680	83
7S-9396	83
7T-0020	152
7T-0570	348
	352
7T-0582	750
	752
7T-1099	420
	718
	730
	762
	766
7T-1159	316
7T-1961	874
7T-3451	220
7T-3454	220
7T-4003	754
	755
7T-4515	356
7T-4532	727
7T-4897	302
	306
	310
	312
7T-6496	296
7T-6799	282
	284
7T-7358	756
7T-8272	572
7T-8273	572
7T-8891	874
	876
	878
7T-9302	228
	232
	234
	240
7T-9755	568
7T-9793	718
7U-4898	850
7U-4998	848
7V-0446	98
	314
	466
7V-5191	774
7V-7835	266
7V-7838	266
7V-9275	260
	270
7W-2398	64
7W-3871	12
7W-3872	12
	128
7W-5095	37
7W-5340	62
7W-5672	526
	530
7W-6492	72
7W-9415	47
7W-9737	65
7W-9738	65
7W-9740	65
7W-9930	65
7X-0288	531
7X-0289	520
	522
	531
	553
7X-0291	419
	701
7X-0293	698
7X-0328	436
7X-0331	698
	701
7X-0333	479
	483
7X-0334	676
7X-0342	334
7X-0346	556
7X-0351	696
7X-0354	811
	812
	814
7X-0375	811
	812
	814
7X-0390	704
	708
7X-0403	440
	698
7X-0440	245
	249
7X-0452	676
7X-0456	723
	724
7X-0492	83
7X-0507	276
	280
7X-0510	255
	276
	676
7X-0550	220
7X-0562	118
7X-0579	120
	719
7X-0591	763
	767
	866
7X-0608	202
	226
	274
7X-0620	226
	274
7X-0632	420
7X-0838	316
7X-0871	552
7X-0943	904
7X-0944	904
7X-0945	905
	906
7X-0946	905
7X-1387	116
7X-1950	220
7X-1952	220
7X-2049	90
7X-2393	266
7X-2459	100
7X-2533	261
	271
7X-2537	128
7X-2538	728
7X-2539	110
	471
7X-2540	514
7X-2541	90
	471
7X-2546	608
	609
	610
	611
	612
	613
	614
7X-2552	106
7X-2607	568
	572
7X-3182	888
	890
	892
	894
	898
7X-3229	901
7X-3373	220
7X-4736	464
7X-4776	618
7X-6222	282
	284
7X-6315	141
	144
	150
7X-7644	901
7X-7661	830
	832
7X-7729	82
	93
	420
	428
	432
	729
7X-7731	72
	414
7X-7739	844
	846
	872
7X-7877	147
	232
	234
	240
	428
	844
	846
7X-7958	84
	103
7X-7961	37
7Y-5226	830
	832
	880
7Y-5548	254
	274
7Y-7388	822
	824
	826
7Y-8169	261
	271
8B-1615	326
8C-0563	21
	22
8C-0573	134
	135
	136
8C-2926	338

8

▶ **PRIMARY REFERENCE**

PART NUMBER INDEX

Part	Page
8C-3085	656
	670
8C-3089	568
	572
8C-3091	11
8C-3205	536
8C-3309	540
	544
8C-3334	274
	275
	288
8C-3425	563
	564
8C-3442	730
8C-3445	67
8C-3446	67
	100
	552
8C-3447	328
8C-3451	552
8C-3756	718
	762
	766
8C-4586	718
	762
	766
8C-4984	320
8C-5060	892
8C-5897	901
8C-5917	134
	135
8C-6162	673
8C-6354	282
	284
8C-6358	137
8C-6738	881
	882
8C-6857	684
8C-6872	106
8C-6913	704
	708
8C-6921	137
8C-6959	106
8C-6965	348
	352
8C-7507	289
	293
8C-7528	255
	276
8C-8454	738
	744
8C-8842	696
8C-8923	901
8C-9987	355
	671
	672
8D-1268	704
	708
8D-1429	718
	762
	766
8D-1470	452
8D-2429	493
8D-2638	493
8D-2811	414
	493
8D-3791	424
8D-5632	584
	586
	588
	590
	592
	594
	596
	600
	602
	604
	606
8D-5633	584
	586
	588
	590
	592
	594
	596
	600
	602
	604
	606
8D-5634	584
	586
	588
	590
	592
	594
	596
	600
	602
	604
	606
8D-5636	584
	586
	588
	590
	592
	594
	596
	600
	602
	604
	606
8D-5637	584
	586
	588
	590
	592
	594
	596
	600
	602
	604
	606
8D-5640	584
	586
	588
	590
	592
	594
	596
	600
	602
	604
	606
8D-5641	266
	584
	586
	588
	590
	592
	594
	596
	600
	602
	604
	606
	730
8D-5949	676
8D-6687	489
8D-7086	491
8D-7225	491
8D-7423	516
8D-7424	516
8D-7425	516
8D-7426	516
8D-7678	489
8D-7685	486
8D-7960	730
8D-7996	488
8D-8168	696
8D-8621	332
8D-8628	332
8D-8791	462
8D-8792	462
8D-8794	462
8D-8795	460
	462
8D-8805	462
8D-8807	343
8D-8826	466
8D-9092	527
8D-9296	683
8D-9688	438
8D-9689	438
8D-9718	324
8D-9738	324
8D-9749	324
8D-9756	324
8D-9784	322
8D-9814	487
8D-9815	487
8D-9882	678
8D-9886	678
8D-9887	678
8D-9909	438
8E-1118	778
8E-1133	296
8E-1143	352
8E-1161	306
8E-1263	310
	312
8E-1368	321
8E-1908	312
8E-1909	302
8E-1910	302
8E-1913	306
8E-1914	306
8E-5531	689
	690
8E-5734	302
	306
	312
8E-5736	306
8E-5742	302
	306
	310
	312
8E-6208	711
8E-6209	711
8E-6570	352
8E-7713	352
8E-7714	352
8E-7791	718
	762
	766
	784
	788
	794
	866
8E-8319	302
	306
	310
	312
8E-9316	▶306
	344
8E-9474	358
8E-9893	352
8E-9894	348
	352
8E-9895	348
	352
8E-9896	348
	352
8E-9897	352
8F-0492	784
	788
	794
8F-1434	132
	165
	220
	226
	274
	822
	824
	826
8F-1462	815
8F-1974	245
	249
8F-3469	302
	306
	310
	312
8F-4102	489
8F-6230	358
8F-6437	428
	584
	586
	588
	590
	592
	594

▶ **PRIMARY REFERENCE**

PART NUMBER INDEX

Part	Page	Part	Page	Part	Page	Part	Page
	596		622		522	8T-1687	526
	600		624		524		530
	602		626		525	8T-1688	289
	604		628		526		293
	606		630		530	8T-1698	560
8F-8151	798		632	8T-0077	534	8T-2275	580
8F-9836	680		634	8T-0100	15	8T-2396	7
8H-1728	802		636		53		113
8H-3481	164		638		72	8T-2501	146
8H-4040	704		640	8T-0119	280		316
	708		642	8T-0226	39		527
8H-5244	54		644	8T-0249	550		531
8H-5303	223		646	8T-0276	8		872
8H-5306	223		648		58	8T-2502	464
8H-7521	58		650		64		467
8I-1362	452	8M-4438	316	8T-0285	146		527
	456	8M-4445	68		148	8T-2561	731
8J-0112	498	8M-5860	21	8T-0292	88	8T-2861	462
8J-0377	579		22	8T-0293	261	8T-2901	874
8J-0426	58	8M-6393	330		272	8T-3282	26
8J-1256	289	8M-6521	296	8T-0328	98		498
	293	8M-8489	338		132		508
8J-2331	579	8N-0869	203		220		510
8J-3326	698		260		314	8T-3426	785
8J-5299	711		261		830		789
8J-5313	701		270		832		794
	►711		271		880	8T-3490	60
8J-6273	558		275	8T-0335	880		84
8J-6384	496		280	8T-0336	516		110
8J-6815	618	8N-1546	260	8T-0352	830		176
8K-0530	431		270		832		178
8K-8854	136	8N-1548	261		880		181
8L-2779	100		271	8T-0355	340		182
8L-5828	266	8N-1725	260	8T-0372	52		186
8L-6005	466		270		460		188
8L-6521	289	8N-2694	83		568		271
	293	8N-4617	86		572		297
8L-7905	730	8N-8846	80	8T-0389	84		432
8L-8413	872	8N-9071	74		134		434
8M-0547	104	8N-9072	74		135		436
8M-2770	188	8P-5141	718		136		718
	194		762		156		734
	245		766		158		736
	249	8R-1778	756		160		740
	255	8R-2054	846		162		762
	276	8R-2057	846		420		866
	282	8R-3393	90		432	8T-3518	137
	284	8R-3652	90	8T-0639	320	8T-3519	137
8M-2772	255	8R-4519	854	8T-0643	15	8T-3612	110
	261		856	8T-0644	76	8T-3666	36
	271	8S-0934	840	8T-0646	541	8T-3957	541
	276	8S-2634	203		545		545
8M-2773	245	8S-4790	854	8T-0667	506	8T-4009	700
	249		856	8T-1174	731		►900
	255	8S-4950	140	8T-1191	902	8T-4121	42
	276	8S-6109	90	8T-1192	904		49
	532	8S-6110	90	8T-1193	904		58
	536	8S-7566	746	8T-1194	905		60
	716	8S-7803	774		906		70
8M-3175	88	8S-9092	332	8T-1195	905		74
	618	8S-9129	296	8T-1296	527		84
8M-3267	872		340		530		90
8M-3837	418	8S-9130	296	8T-1683	486		95
8M-4295	306		340		530		97
8M-4437	620	8T-0076	106		548		98

► **PRIMARY REFERENCE**

PART NUMBER INDEX

Part	Page	Part	Page	Part	Page	Part	Page
	103		784		596	8T-4140	449
	106		788		600	8T-4171	266
	108		794		602		719
	134		798		604		729
	135		803		606		763
	136		804		798		767
	147		806		804		897
	176	8T-4122	266	8T-4137	49	8T-4172	49
	178		556		60		541
	181		696		84		545
	182		811		90	8T-4173	266
	186		812		103	8T-4178	417
	188		814		106	8T-4179	255
	192	8T-4123	44		147		276
	196	8T-4128	83		176		341
	198	8T-4133	84		178		420
	200		90		192	8T-4181	734
	218		95		196		736
	245		98		245		740
	249		188		249		742
	255		245		255	8T-4182	84
	261		249		261		98
	264		252		272		134
	266		255		276		135
	272		261		280		136
	276		266		282		314
	280		272		284		334
	282		276		296		420
	284		297		432		445
	296		314		434		784
	314		420		436		788
	326		548		452		794
	334		731		456		803
	428		738		467		804
	434		744		472		806
	436		803		532	8T-4183	70
	452		804		536		128
	456		806		734	8T-4185	95
	467	8T-4136	42		736		255
	472		84		740		276
	532		90		742		432
	536		95		778		472
	541		98		803	8T-4186	428
	545		181		806		608
	548		182	8T-4138	620		609
	580		186		622		610
	582		188		624		611
	584		192		626		804
	586		198		628		806
	588		200		630	8T-4189	74
	590		255		632		118
	592		261		634		120
	594		266		636		261
	596		272		638		272
	600		276		640		452
	602		280		642		456
	604		314		644		620
	606		420		646		622
	734		428		648		624
	736		584		650		626
	738		586		888		628
	740		588		890		630
	742		590	8T-4139	114		632
	744		592		420		634
	778		594		448		636

PART NUMBER INDEX

Part	Page
	638
	640
	642
	644
	646
	648
	650
8T-4190	255
	276
8T-4191	218
	255
	261
	272
	276
	280
	582
8T-4192	341
8T-4193	255
	276
8T-4194	128
8T-4195	58
	70
	74
	93
	108
	136
	245
	249
	255
	276
	314
	420
	428
	467
	580
	584
	586
	588
	590
	592
	594
	596
	600
	602
	604
	606
	738
	744
	785
	788
	794
	803
8T-4196	49
	58
	84
	95
	334
	428
8T-4198	264
	266
	729
8T-4200	114
	255
	276
8T-4205	126
	132
	182
	186
	188
	196
	220
	255
	260
	261
	266
	270
	272
	276
	280
	289
	293
	719
	747
	763
	767
8T-4222	417
8T-4223	70
	128
	188
	255
	261
	266
	272
	276
	341
	348
	352
	428
	431
	436
	446
	448
	452
	479
	483
	487
	527
	541
	545
	556
	579
	582
	684
	696
8T-4224	12
	15
	57
	61
	74
	90
	110
	114
	126
	128
	176
	178
	180
	181
	182
	186
	188
	192
	194
	197
	255
	261
	264
	266
	272
	276
	452
	456
	467
	514
	620
	622
	624
	626
	628
	630
	632
	634
	636
	638
	640
	642
	644
	646
	648
	650
	728
8T-4226	49
	98
	255
	276
	314
	467
8T-4244	128
	188
	428
8T-4647	245
	249
8T-4750	568
	572
8T-4778	266
8T-4835	582
8T-4896	44
	83
	106
	146
	147
	148
	182
	186
	188
	194
	203
	230
	232
	234
	240
	245
	249
	255
	276
8T-4910	116
	128
	428
8T-4956	448
	541
	545
8T-4970	252
8T-4971	443
8T-4983	72
	334
8T-4984	108
8T-4986	84
8T-4987	84
8T-4994	44
	420
	527
	696
8T-5004	420
8T-5005	156
	158
	160
	162
	255
	272
	276
	445
8T-5030	338
8T-5039	572
8T-5082	552
8T-5255	►900
8T-5360	841
	842
8T-5361	44
	440

► **PRIMARY REFERENCE**

PART NUMBER INDEX

Part	Page	Part	Page	Part	Page	Part	Page
	698		809	8T-9884	220	8W-4981	332
8T-5390	98		826	8U-6457	570	8W-5092	516
	314	8T-8730	216	8V-0622	134	8W-5111	322
	467		227		135	8W-5279	322
8T-5401	784	8T-8737	143	8V-3273	322	8W-5293	414
	788		156	8W-0206	548	8W-5575	3
8T-5412	188		158	8W-0220	530		▶322
8T-5429	550		160	8W-0225	552	8W-5578	324
8T-5436	82		162	8W-0302	530	8W-5586	324
	296		204	8W-0456	584	8W-5587	322
8T-5890	548		228		592		▶324
8T-6430	44		232		596	8W-5589	324
8T-6466	90		240		602	8W-5597	704
	272		434	8W-0663	704		708
	334		436		708	8W-5621	3
	472		886	8W-0681	691		▶341
8T-6468	343		888	8W-0684	691	8W-5651	476
8T-6631	719		890	8W-0789	462	8W-5870	3
8T-6684	58		892	8W-0934	874		▶444
8T-6685	541		894		878	8W-6061	780
	545	8T-8748	822	8W-0935	874	8W-6476	414
8T-6703	116		824		878	8W-6497	415
8T-6756	798		826	8W-1028	830	8W-6626	431
8T-6757	472	8T-8915	419	8W-1029	832	8W-6627	431
8T-6765	296	8T-8917	128	8W-1592	341	8W-7957	393
8T-6767	72		556	8W-1614	254	8W-8125	462
	74		684		274	8W-8289	462
8T-6868	428	8T-8919	446		471	8W-8412	431
8T-6869	110		696	8W-1749	676	8W-8527	106
	176	8T-8987	618	8W-2213	694		254
	178	8T-9006	730	8W-2214	693		274
	180	8T-9043	584	8W-2290	2		466
	181		586		▶493		548
	182		588	8W-2624	540	8W-8528	90
	186		590	8W-2737	2		254
	188		592		▶494		274
	192		594	8W-2761	690		464
	194		596	8W-2768	689		471
	626		600	8W-2842	488	8W-8532	466
	634		602	8W-2913	▶491	8W-8903	466
	640		604		702	8W-8909	256
8T-6870	57		606	8W-3166	540		276
8T-6974	472	8T-9056	467		544	8W-9566	411
8T-7008	527	8T-9311	44	8W-3330	▶693	8W-9594	411
8T-7044	94	8T-9364	256	8W-3332	▶694	8X-0674	811
8T-7565	844		276	8W-3642	254		812
	846	8T-9377	83		274		814
8T-7876	568	8T-9378	698	8W-3686	398	8X-1030	3
	572		701		399		▶446
8T-7950	26	8T-9381	840		400	8X-1032	446
8T-7971	444		854		401	8X-1135	874
8T-8442	53		856		403		878
	348	8T-9389	527		404	8X-1160	393
	352	8T-9530	902		405		394
	570	8T-9597	570		407		395
8T-8569	220	8T-9636	147		409		396
8T-8729	152	8T-9655	110		412		397
	160		140	8W-3902	436		399
	165		244	8W-4066	676		400
	168		248	8W-4067	676		401
	206	8T-9757	134	8W-4193	526		402
	207		135	8W-4194	526		403
	228	8T-9834	822	8W-4652	414		406
	478		824	8W-4653	414		407
	672		826	8W-4979	332		412

▶ **PRIMARY REFERENCE**

PART NUMBER INDEX

Part	Page
8X-1205	324
8X-1206	322
8X-1853	146
8X-1904	730
8X-1907	731
8X-1908	730
8X-1911	730
8X-1913	730
8X-1914	730
8X-1915	730
8X-1921	730
8X-1940	3
	▶696
8X-1943	2
	▶489
8X-1946	2
	▶490
8X-1948	2
	▶488
8X-1949	3
	▶590
8X-1965	2
	▶676
8X-2160	730
8X-2161	730
8X-2226	434
	780
8X-2228	819
	820
8X-2305	322
8X-2308	322
8X-2310	324
8X-2316	322
8X-2349	▶684
8X-2366	684
8X-2373	3
	▶680
8X-2375	▶818
	835
	837
8X-2385	725
	▶819
	836
8X-2556	888
	890
8X-2646	476
8X-2650	466
	▶476
8X-2663	888
	890
8X-2680	466
8X-2694	680
8X-2795	3
	725
	▶802
8X-2881	696
8X-2893	730
8X-2913	434
	436
	780
8X-2925	716
	▶756
	759
8X-2968	332
8X-3200	424
8X-3261	98
8X-3276	332
8X-3364	332
8X-3395	332
8X-3434	414
8X-3435	415
8X-3663	704
	708
8X-3749	556
8X-3789	730
8X-3806	734
	736
8X-3938	734
	736
8X-3951	730
8X-3965	730
8X-4066	740
	742
8X-4243	734
	740
8X-4244	736
	742
8X-4245	734
	736
	740
	742
8X-4262	734
	740
8X-4263	736
	742
8X-4266	680
8X-4271	326
8X-4276	584
	586
	588
	590
	592
	594
	596
	600
	602
	604
	606
8X-4279	606
8X-4317	▶734
	738
8X-4318	▶736
	738
8X-4413	725
	▶738
	836
8X-4446	740
	742
8X-4448	734
	736
	740
	742
8X-4467	563
	564
8X-4525	▶740
	744
8X-4526	▶742
	744
8X-4527	▶744
	835
	837
8X-4644	696
8X-4649	696
8X-4650	696
8X-4741	488
	490
8X-4865	324
8X-4869	324
8X-4879	318
8X-4884	696
8X-5006	341
	▶345
8X-5021	696
8X-5028	696
8X-5044	345
8X-5102	747
8X-5110	696
8X-5121	334
8X-5123	730
8X-5153	182
	186
	188
	224
	292
8X-5154	182
	186
	188
	224
	292
8X-5160	464
8X-5280	874
	878
8X-5414	784
	788
	794
8X-5456	818
8X-5489	256
	276
	328
8X-5492	316
8X-5498	590
	594
8X-5499	584
	586
	588
	592
	596
	600
	602
	604
	606
8X-5536	718
	762
	766
	866
8X-5538	718
	762
	766
	866
8X-5540	718
	762
	766
	866
8X-5620	341
8X-6070	▶522
8X-6075	704
	708
8X-6080	702
	▶704
8X-6131	811
	812
8X-6296	182
	186
	188
	224
	293
8X-6419	436
8X-6475	434
	436
8X-6998	784
8X-6999	788
	794
8X-7152	718
8X-7153	718
8X-7317	334
8X-7603	467
8X-7820	540
	544
8X-7845	784
	788
	796
8X-7956	680
8X-7973	540
	544
8X-7974	540
	544
8X-7975	552
8X-8011	2
	▶689
8X-8016	▶690
8X-8055	780
8X-8096	318
8X-8351	780
8X-8376	332
8X-8406	680
8X-8407	680
8X-8408	680
8X-8409	680
8X-8450	467
8X-8451	467
8X-8505	434
	436
8X-8790	796
8X-8813	540
8X-8916	334
8X-8940	3
	▶852
8X-8945	725
	733
	835
	▶852
8X-9349	874
	878
8X-9387	772
8X-9405	874
	878
8X-9464	436
8X-9675	834
	835

▶ **PRIMARY REFERENCE**

PART NUMBER INDEX

Part	Page
	▶874
8X-9680	▶876
	885
8X-9751	1
	2
	▶565
	577
8X-9884	778
8Y-3912	▶844
	854
8Y-3913	844
8Y-4005	▶846
	856
8Y-4194	1
	2
	▶858
8Y-4398	734
	736
	740
	742
8Y-4399	736
	742
8Y-4400	734
	740
8Y-4401	734
	736
	740
	742
8Y-4408	874
	878
8Y-4409	874
8Y-4512	802
8Y-4619	734
	736
	740
	742
8Y-4620	734
	736
	740
	742
8Y-4801	734
	736
	740
	742
8Y-5874	▶748
	859
	864
8Y-5877	748
	749
8Y-5878	848
8Y-5890	848
8Y-5891	848
8Y-5903	815
8Y-5928	848
	850
8Y-5929	848
	850
8Y-5932	848
	850
8Y-5936	848
	850
8Y-5937	848
	850
8Y-5938	848
	850
8Y-5943	748
8Y-5944	870
8Y-5947	748
	749
	848
	850
8Y-5953	841
	842
8Y-5957	850
8Y-5959	▶749
	860
8Y-5960	749
8Y-5972	815
8Y-5979	848
	850
8Y-5981	848
	850
8Y-5999	816
8Y-6006	815
8Y-6010	815
8Y-6012	870
8Y-6022	870
8Y-6023	870
8Y-6024	870
8Y-6041	774
8Y-6044	774
8Y-6045	774
8Y-6046	774
8Y-6047	774
8Y-6051	848
	850
8Y-6060	774
8Y-6062	774
8Y-6063	774
8Y-6064	774
8Y-6066	774
8Y-6067	774
8Y-6068	774
8Y-6069	774
8Y-6277	723
	724
	854
	856
8Y-6364	582
	725
	733
	835
	899
8Y-6379	757
	758
8Y-6388	718
	746
	747
	762
	801
8Y-6833	848
	850
8Y-6834	848
	850
8Y-6851	852
	▶854
8Y-6852	852
	▶856
8Y-6859	775
8Y-6860	775
8Y-6928	872
8Y-6933	848
	850
8Y-6981	881
	882
8Y-6982	881
	882
8Y-9603	218
9	
9B-0143	322
9B-1565	693
	694
9B-7233	138
	139
	182
	186
	188
	224
	261
	271
	272
	288
	292
	293
	718
	762
	766
9B-7237	44
	90
	531
	584
	586
	588
	590
	592
	594
	596
	600
	602
	604
	606
9C-1067	544
9C-1587	844
	846
9C-2177	714
9C-5324	844
9C-5344	334
9C-5347	714
9C-5928	803
	804
	806
9C-9467	334
9D-0178	424
9D-0953	520
	526
	552
9D-1142	516
9D-1491	516
9D-1530	696
9D-1531	696
9D-1589	811
	812
	814
9D-2753	696
9D-2804	606
9D-3241	462
9D-3242	462
9D-3306	322
9D-3311	424
9D-3523	415
9D-3767	428
	733
	835
9D-4029	462
9D-5516	704
	708
9D-5659	419
9D-6164	182
	186
	249
	684
9D-6196	74
9D-6197	74
9D-6584	424
	556
9D-7085	462
9D-7972	462
9D-8121	476
9D-8508	200
9D-9256	424
9D-9797	414
9F-1399	322
9F-2247	332
9F-2978	444
	684
	723
	724
9F-5644	223
9F-6705	618
9G-0002	136
9G-0003	134
	135
9G-0004	134
	135
9G-0005	136
9G-1950	718
	762
	766
9G-2265	240
9G-2991	322
9G-3695	772
	804
9G-4343	260
	261
	271
9G-5127	326
9G-5211	414
9G-7132	348
	352
9G-8909	254
	274
9G-9154	471
9H-1031	680
9H-6454	580
9J-0090	698
9J-0403	620
	622

▶ **PRIMARY REFERENCE**

PART NUMBER INDEX

Part	Page	Part	Page	Part	Page	Part	Page
	624		402	9M-5590	74	9S-4182	39
	626		403		731		460
	628		404	9M-5733	815	9S-4183	39
	630		405		816		541
	632		406		850		545
	634		407	9M-5870	266		568
	636		408	9M-7394	580		618
	638		409	9M-7958	452	9S-4185	296
	640		410	9M-8406	203		572
	642		411		272	9S-4189	618
	644		412		472	9S-4190	296
	646	9L-1566	244		719		343
	648		248		763	9S-4191	34
	650		254		767		87
9J-0404	620		260	9M-8662	822		100
	622		270		826		296
	624		274	9N-0869	110		330
	626		280		140		334
	628	9L-6331	244	9N-0943	132		358
	630		248	9N-1995	784		541
	632	9L-6770	126		788		545
	634		132	9N-4156	338		652
	636	9L-7469	848	9N-4158	338	9S-6147	83
	638		850	9N-4159	338	9S-7706	466
	640	9L-9068	358	9N-4161	338	9S-8001	514
	642	9L-9188	58	9N-4162	338		618
	644	9L-9814	854	9N-4163	338		646
	646		856	9N-4498	352		648
	648	9M-0164	84	9N-4500	352		650
	650		540	9N-6152	460	9S-8002	24
9J-1979	580		544	9P-0356	345		28
9J-1985	580	9M-0402	472	9P-2369	874		32
9J-1988	580	9M-1853	584		878		34
9J-3047	580		586	9P-9150	320		352
9J-4963	560		588		358		570
9J-5442	566		590	9R-1183	526		618
9J-5498	462		592	9R-2620	785		654
9J-8783	314		594		788	9S-8003	24
	466		596	9R-3884	256		28
9K-7951	376		600		272		34
	377		602		276		78
	378		604	9R-7240	118		618
	379		606	9R-8870	530	9S-8004	12
	380	9M-1974	7	9S-1302	466		24
	381		8	9S-1316	266		28
	382		11	9S-1322	680		32
	383		12	9S-1354	770		34
	384		40	9S-1366	696		109
	385		53	9S-2302	132		348
	386		58	9S-2390	132		352
	387		62	9S-2396	128	9S-8005	7
	388		64	9S-2544	844		24
	389		72		846		28
	390		78	9S-4167	100		34
	391		87	9S-4180	608		72
	392		109		609		78
	393		140		610		88
	394		151		611		296
	395		750		612		328
	396		752		613		620
	397		772		614		622
	398	9M-2042	296		615		624
	399	9M-2092	414		616		626
	400	9M-2904	60		617		628
	401	9M-4335	460	9S-4181	297		630

► **PRIMARY REFERENCE**

PART NUMBER INDEX

Part	Page
	632
	634
	636
	638
	640
	642
	644
9S-8006	19
	24
	28
	32
	34
	78
	110
	296
	514
9S-8008	12
	46
	78
9S-8009	618
9S-9334	21
	22
	24
	28
	32
	34
9T-1013	550
9T-1633	572
9T-1636	568
	572
9T-1652	568
	572
9T-1699	568
	572
9T-1710	568
	572
9T-1857	652
9T-2186	652
9T-2197	572
9T-2388	508
	510
9T-2446	495
9T-2457	498
9T-2482	506
9T-2659	667
	669
9T-3727	508
	510
9T-4211	504
	506
9T-5241	752
9T-5603	579
9T-5957	540
	544
	▶618
9T-6001	866
9T-6146	550
9T-7308	901
9T-7750	652
9T-7754	574
9T-7755	574
9T-7756	574
9T-7757	574
9T-7759	574
9T-7761	574
9T-7765	575
9T-7767	575
9T-7769	575
9T-7771	575
9T-7773	575
9T-7774	575
9T-7775	568
9T-8051	560
9T-8053	560
9T-8054	560
9T-8056	560
9T-8058	560
9T-8059	560
9T-8061	560
9T-8063	560
9T-8065	560
9T-8067	560
9T-8069	560
9T-8070	560
9T-8071	550
9T-8326	330
9T-9040	512
9T-9071	560
9T-9072	560
9U-2277	254
	274
9U-8067	348
	352
9U-8068	348
	352
9U-8069	348
	352
9U-8263	778
9U-8620	348
	352
9U-8668	352
9U-8669	352
9U-8815	310
	312
9U-9282	348
	352
9U-9316	348
	352
9U-9595	352
9U-9995	310
9V-3043	714
9V-7437	844
	846
9V-7440	714
	846
9V-7446	854
	856
9V-7447	723
	724
	854
	856
9V-7453	854
	856
9V-7454	854
	856
9V-7458	854
	856
9V-7943	714
9W-0335	282
	284
9W-0742	▶137
	261
	272
9W-0852	228
	718
	750
	752
	762
	766
	892
	894
9W-0898	352
9W-1441	232
	234
	288
	292
	716
	759
9W-1442	146
	148
	172
	174
	180
	181
	182
	186
	188
	198
	200
	224
	236
	238
	280
	288
	292
	450
	754
	755
	804
	892
	894
9W-1454	296
9W-1767	688
9W-1768	688
9W-1835	693
	694
9W-2029	310
	312
9W-3073	778
9W-4430	460
9W-4431	460
9W-4452	460
9W-4453	460
9W-5132	344
	▶460
9W-5134	▶340
	344
9W-6465	296
9W-6467	306
9W-6582	44
9W-6584	44
9W-6645	516
9W-7038	296
9W-7385	44
9W-7388	44
9W-7410	352
9W-7412	348
	352
9W-9371	310
	312
9W-9905	302
	306
	310
	312
9X-0141	255
	275
9X-0262	204
9X-1046	232
	234
	240
	289
	293
	731
	754
	755
9X-1054	172
	174
	255
	274
9X-1343	244
	248
9X-1484	122
9X-1813	100
	208
	209
	210
	211
	212
	215
	216
	222
	229
	254
	274
9X-2023	328
9X-2039	865
9X-2040	719
	763
	767
	866
9X-2041	318
	719
	763
	766
	785
	788
	794
	852
	858
	861
	862
	865
	866
9X-2042	147
	232
	234
	289
	293
	318
	731

▶ **PRIMARY REFERENCE**

PART NUMBER INDEX

Part	Page
	734
	736
	740
	742
	878
9X-2043	172
	174
	182
	186
	188
	200
	224
	236
	238
	240
	318
	434
	436
	557
	746
	747
	780
	782
	785
	789
	794
	796
	804
	822
	826
9X-2045	280
	284
	318
	719
	738
	744
	755
	763
	767
	782
	785
	789
	794
	796
	866
	874
	878
9X-2046	785
	789
	802
	807
9X-2097	151
9X-2099	15
	58
	87
9X-2125	326
9X-2126	719
	763
	767
9X-2185	718
	762
	766
9X-2305	65
9X-2388	80
9X-2389	74
9X-2488	718
	762
	766
9X-2546	734
	736
	740
	742
9X-2646	93
9X-2647	93
9X-3463	153
	154
	155
	178
9X-3465	156
	158
	160
	162
9X-4244	156
	158
	160
	162
9X-4271	220
9X-4493	156
	158
	160
	162
9X-4494	164
9X-4609	296
9X-4821	220
9X-4824	220
9X-4825	220
9X-4986	756
9X-6019	881
	882
9X-6032	570
9X-6395	658
	661
9X-6624	844
	846
9X-6772	316
9X-7378	90
	727
9X-7380	91
9X-7381	91
	719
9X-7382	90
	719
9X-7383	91
9X-7384	348
9X-7385	91
	727
9X-7557	115
9X-7680	570
	652
9X-7712	21
	22
	24
	28
	32
	34
9X-7849	168
9X-8121	168
9X-8122	756
9X-8139	168
9X-8256	172
	174
	178
	182
	224
	252
	256
	276
	280
	285
	420
	443
	467
	472
	538
	712
	713
	729
	734
	736
	738
	740
	742
	744
	785
	789
	796
	839
9X-8257	106
	256
	276
	449
9X-8267	7
	428
9X-8276	854
	856
9X-8277	844
	846
9X-8356	901
9X-8372	901
9X-8399	512
9X-8600	120
9X-8606	466
9X-8875	704
	708
9X-8880	693
	694
9X-8881	676
9X-8883	676
9X-8887	516
9X-8916	18
9X-8979	570
9X-9365	192
9X-9631	186
9X-9632	181
9X-9633	280
	285
9X-9653	718
9X-9654	718
	762
	766
9X-9688	822
	824
	826
9X-9689	750
	752
9X-9825	275
	280
9X-9865	156
	158
	160
	162
9Y-0747	12
9Y-9236	80
0	
002-1212	568
002-3448	15
002-6453	343
002-6454	118
	120
003-9514	428
003-9835	252
004-9040	572
005-4173	104
005-7898	334
005-8639	508
	510
006-8663	568
	572
009-0008	98
009-2069	574
009-3681	816
	848
	850
009-4184	772
009-4185	772
014-0816	228
	240
030-0060	332
	414
030-0061	332
	414
030-7942	104
030-7943	8
030-7946	8
030-7962	104
030-8535	322
	332
	730
	812
	814
031-2666	730
031-4155	752
031-9746	74
033-4843	844
	846
033-6027	652
033-6036	568
	572
	652
033-6043	654
033-8248	194
	230
	255
	261
	271
	275
034-1994	730

► **PRIMARY REFERENCE**

PART NUMBER INDEX

Part	Page
034-3557	322
036-9823	220
038-3987	811
	812
061-9455	15
068-4860	685
086-0507	580
089-7960	292
089-7968	854
	856
090-7055	8
090-9019	472
091-0081	865
091-9071	772
092-3200	485
095-0878	774
	848
	850
095-0888	568
	572
095-1207	348
	352
095-1260	557
096-6166	146
	148
	232
	234
	240
	244
	249
	730
098-7467	772
099-0492	796
099-3095	558
1	
100-3224	775
100-3245	156
	158
	160
	162
100-3248	160
	162
100-3249	156
	158
100-3250	156
	158
	160
	162
100-3251	156
	158
	160
	162
100-3253	156
	158
	160
	162
100-3254	156
	158
	160
	162
100-3255	156
	158
	160
100-3320	242
100-3402	568
100-3404	568
100-3405	568
100-3407	568
100-3408	568
100-3409	568
100-3410	575
100-3411	575
100-3412	568
	▶575
100-3413	568
100-3415	568
100-4318	674
100-4336	530
100-4915	356
100-5179	775
100-5612	757
	758
100-6021	618
	▶661
100-6531	132
100-6550	39
101-0003	870
101-0205	275
101-0509	608
	609
	610
	611
	612
	613
	614
	615
	616
	617
101-0852	144
	150
101-1147	640
	650
101-1148	620
101-1149	622
101-1150	626
	634
	646
	648
101-1151	630
101-1152	638
	644
101-1153	632
101-1154	624
101-1155	628
101-1970	620
	622
	624
	626
	640
	646
	650
101-1971	620
	622
	624
	626
	628
101-1972	626
	634
	640
	646
	648
	650
101-1973	620
	622
	624
	626
	628
	630
	632
	634
	636
	638
	640
	642
	644
	646
	648
101-1974	513
	514
101-1975	513
101-1978	620
	622
	624
	628
	630
	632
	636
	638
	642
	644
101-1980	626
	634
	640
101-1982	628
	630
	632
	634
	636
	638
	642
	644
	648
101-1983	620
	622
	624
	626
	628
	630
	632
	634
101-1984	620
	622
	624
	626
	628
	630
	632
	634
	636
	638
	640
	642
	644
	646
	648
	650
101-2457	584
	586
	588
	590
	592
	594
	596
	600
	602
	604
	606
101-2458	584
	586
	588
	590
	592
	594
	596
	600
	602
	604
	606
101-2480	620
	622
	624
	626
	628
	630
	632
	634
	636
	638
	640
	642
	644
	646
	648
	650
101-3055	784
	788

▶ **PRIMARY REFERENCE**

PART NUMBER INDEX

Part	Page
101-3128	140
101-3625	90
101-4147	628
	632
	638
	▶662
101-4148	662
	▶663
101-4194	870
101-4195	870
101-9080	58
101-9346	608
	609
	610
	611
	612
	613
	614
	615
	616
	617
101-9754	348
	352
101-9759	471
102-1501	485
	▶566
102-2384	572
102-3645	874
	878
102-3659	544
102-4108	568
102-4139	676
102-5881	302
	306
	312
102-6229	24
	27
	30
102-6238	608
	610
	614
	617
102-6317	872
102-7412	620
	622
	624
	626
	628
	630
	632
	634
	636
	638
	640
	642
	644
	646
	648
	650
102-7423	513
102-8385	609
	611
	612
	613
	615
	616
102-8801	143
	172
	174
	182
	186
	188
	232
	234
	236
	238
	240
	242
	244
	248
	249
	254
	260
	266
	270
	275
	282
	284
	288
	292
	320
	434
	436
	804
	822
	824
	826
102-8802	90
	100
	110
	124
	147
	164
	165
	168
	172
	174
	192
	194
	215
	222
	229
	230
	232
	234
	236
	238
	242
	244
	245
	248
	249
	254
	255
	260
	266
	270
	274
	275
	280
	288
102-8803	152
	166
	167
	178
	194
	204
	206
	207
	210
	230
	232
	242
	244
	248
	249
	254
	264
	274
	275
	280
	288
	292
102-8804	172
	174
	200
	232
	234
	236
	238
	244
	248
	260
	267
	270
	282
	284
	288
	292
	804
102-8805	156
	158
	160
	162
	232
	234
	244
	249
	255
	260
	266
	270
	275
	282
	284
	288
	292
	355
	356
	478
	671
	672
	712
	713
	718
	727
	750
	752
	762
	766
	772
	804
	822
	824
	826
102-8806	172
	174
	228
	232
	234
	236
	238
	240
	804
	822
	824
	826
	886
	888
	890
	892
	894
102-8808	216
102-8810	809
102-8813	216
102-9372	819
	820
	838
102-9381	818
102-9383	288
	292
102-9862	198
	200
102-9863	220
103-1592	182
103-1743	106
103-2006	120
103-4771	812
	814
103-4953	811
	812
	814
103-5417	444
103-5419	444
103-5515	811
	812
	814
103-5516	811
	812
	814

▶ **PRIMARY REFERENCE**

PART NUMBER INDEX

Part	Page
103-5678	182
	186
	188
	224
	292
103-6100	90
103-9125	414
103-9425	784
	788
104-2091	719
	747
	763
	822
	826
104-3122	568
	572
	▶652
104-3124	568
	572
104-3601	164
104-3947	356
104-4286	540
	544
104-4523	698
104-5958	881
	882
104-7419	584
	586
	588
	590
	592
	594
	596
	600
	602
	604
	606
104-7429	584
	586
	588
	590
	592
	594
	596
	600
	602
	604
	606
104-7740	584
	586
	588
	590
	592
	594
	596
	600
	602
	604
	606
104-8645	586
	592
	▶612
104-8646	584
	588
	▶613
104-8671	584
	592
	604
	▶614
105-1725	17
105-1797	242
105-2080	676
105-2145	654
105-3196	516
	▶560
105-3249	405
	407
105-3484	70
105-4849	▶160
	248
105-4850	▶162
	248
105-5183	▶685
	686
	687
105-5184	685
105-5185	685
105-6491	418
105-6600	685
105-7167	548
106-1567	390
106-3658	620
	622
	624
	626
	628
	630
	632
	634
	636
	638
	640
	642
	644
	646
	648
	650
106-3659	620
	622
	624
	628
	630
	632
	636
	638
	642
	644
106-3660	626
	634
	640
	646
	648
	650
106-4496	747
106-4835	401
106-4883	3
	▶438
106-6553	738
	744
106-7149	220
106-7389	662
	▶664
106-7390	659
	▶665
	▶666
106-7657	83
106-8704	90
	254
	274
	826
106-9586	58
107-0516	626
107-0520	634
107-0543	613
	▶636
107-0545	612
	▶638
107-0547	614
	▶640
107-1983	822
	824
	826
107-3392	▶692
107-3393	▶692
107-3395	▶688
107-3421	▶686
107-3422	▶687
107-3425	▶692
107-3426	▶692
107-4865	874
	878
107-4932	198
	200
107-5014	557
	784
	788
	796
107-6813	738
	744
107-7566	47
107-7694	10
107-7708	17
107-8140	530
107-8141	530
107-8142	530
107-8143	526
107-8144	526
107-8147	530
107-8148	530
107-8149	526
107-8150	526
	530
107-8374	704
	708
107-8375	704
	708
107-9641	734
	736
	740
	742
108-0358	182
	186
	188
	224
108-0702	552
108-0703	552
108-0706	520
108-0712	550
108-0713	550
108-0714	552
108-1104	▶702
108-1610	526
	530
	552
108-2187	620
	622
	624
	626
	628
	630
	632
	634
	636
	638
	640
	642
	644
	646
	648
	650
108-3129	352
108-3519	182
	186
	249
108-3612	15
108-4086	775
108-4087	774
108-4103	775
108-4814	652
108-4815	652
108-4816	652
108-4878	870
108-4916	▶513
	626
	634
	640
108-5157	661
108-5751	310
108-5949	736
	742
108-5950	734
	740
108-5951	736
	742
108-5952	734
	740
108-6523	348
	352
108-8421	▶815
	848
	850
108-8423	815
108-8424	815
108-8425	850
108-8426	848
109-0146	881
	882
109-0361	255
	275
109-1144	657

▶ **PRIMARY REFERENCE**

PART NUMBER INDEX

Part	Page	Part	Page	Part	Page	Part	Page
109-2804	784		894	112-9035	506	114-1083	816
	788	110-7886	892	112-9104	858	114-1183	▶848
109-3036	672		894		▶859		859
109-3204	568	110-7887	282		865		864
109-3207	115		284	112-9105	▶860	114-1185	▶850
109-4580	324	111-0343	355		861		860
109-4581	324		671		862	114-2687	64
109-6776	701		672	112-9442	532	114-2886	534
109-7194	214	111-1719	2	112-9555	756	114-3469	727
109-7195	214		▶899	112-9813	388	114-5224	900
110-2445	118	111-2416	242	112-9924	381	114-6635	664
	120	111-3883	702	113-0704	▶702		665
110-3003	530		▶708	113-0993	698		666
110-3326	466	111-4275	5	113-0994	▶683		668
110-4213	377		▶218		701	114-6685	▶886
	378	111-5042	870	113-0995	698		888
	379	111-5754	664	113-0996	701		890
	380		665	113-0997	▶682		892
	381		666		701		894
	382	111-7092	74	113-0998	682		897
	383	111-7978	136	113-1689	▶861	114-9190	734
	384	111-8233	620	113-4240	723		736
	385		622	113-4242	▶723		740
	386		624		859		742
	387		628		860	114-9281	244
	388		630		864		245
	389		632	113-4243	724		248
	390		636	113-4245	▶724		249
	391		638		859	115-0540	556
	392		642		860	115-0541	556
	393		644		864	115-1748	822
	408	111-8234	626	113-5800	859		824
	409		634		860		826
	411		640		▶870	115-3070	200
110-4214	377		646	113-5801	774	115-3072	434
	378		648	113-5804	870		436
	379		650	113-5805	774	115-3073	255
	380	111-9110	482	113-5806	774		275
	381	112-1813	689	113-5807	774	115-4072	38
	382	112-1814	690	113-5808	▶774	115-4210	5
	383	112-2240	520		870		▶50
	384		▶673	113-5809	816	115-4219	38
	385	112-3199	522	113-5810	▶816	115-5593	260
	386	112-3200	522		848		270
	387	112-4387	106		850	115-5852	900
	388	112-4428	260	113-6069	38	115-6804	782
	389		270	113-6087	6	115-6805	782
	390	112-4834	464		▶17	115-6806	819
	391	112-5499	484	113-7745	297	115-6807	784
	392		▶592	113-8218	803		788
	393	112-5555	266		804		794
	408	112-5575	492		806	115-9923	784
	409		▶506	113-8593	443		788
	411	112-5852	684	113-9048	334	116-0374	644
110-5158	352	112-5853	684	113-9533	540		▶667
110-5161	358	112-5855	684		544	116-0379	▶691
110-6241	730	112-6174	232	114-0025	▶524		702
110-6393	718		240	114-0026	525	116-1965	▶840
110-6848	275	112-6175	288	114-0027	524		852
110-7618	12		292	114-1067	816	116-2013	714
110-7723	302		293	114-1068	816	116-2014	714
	306	112-6646	252	114-1069	816	116-2015	714
	310	112-7462	492	114-1070	816	116-2016	714
	312	112-7463	2	114-1081	816	116-2327	714
110-7885	892		▶492	114-1082	816	116-2779	▶714

▶ **PRIMARY REFERENCE**

PART NUMBER INDEX

Part	Page
	854
	856
116-3211	540
	544
116-3715	548
116-4663	88
116-5710	98
	178
	192
	314
116-6276	901
116-6277	901
117-1385	204
	213
117-2311	712
	713
117-3302	906
117-3437	78
117-3643	6
	▶68
117-3915	▶202
	562
117-4698	838
117-5118	5
	▶39
117-8319	▶165
	443
117-8810	794
117-9966	822
	826
118-0275	114
118-2557	818
118-2558	788
118-3534	260
	270
118-4660	566
118-7880	704
	708
118-7881	704
	708
118-9573	218
119-2921	50
119-2942	64
119-3025	78
119-4142	▶213
119-5708	180
119-6172	714
119-6194	854
	856
119-7864	70
119-7997	534
119-8666	496
119-9549	616
	▶642
119-9550	615
	▶644
120-6680	500
121-0798	5
	▶14
121-4083	▶594
121-4086	▶596
121-4095	▶600
121-4097	484
	▶602
121-9242	494
	▶512
121-9245	512
122-4026	100
122-4617	▶841
	860
122-5053	114
	▶122
122-7045	822
	826
122-8146	822
	826
122-8154	747
122-8155	747
122-8677	784
122-8795	784
	788
123-0872	716
	759
123-1076	512
123-3178	389
123-3420	376
	377
	378
	379
	381
	382
	383
	384
	385
	386
	387
	388
	389
	390
	391
	408
	410
123-3688	254
	274
123-3689	254
	274
123-3692	254
	274
123-3695	254
	274
123-3698	446
123-3699	446
123-3827	82
	428
	729
123-4003	322
123-4354	888
	890
123-4355	888
	890
123-4358	▶803
123-4511	88
123-4586	803
	804
	806
123-4587	803
	804
	806
123-4618	718
	762
	766
	866
123-4701	718
	762
	766
	866
123-4994	532
123-5857	804
123-5861	288
	292
123-6449	▶229
	264
	266
123-6661	661
123-6806	811
	812
123-8157	872
123-8408	866
123-8866	562
123-8867	▶562
	565
123-9128	872
124-0178	106
124-0311	▶604
124-0360	696
124-0507	870
124-1431	718
	762
	766
124-1432	718
	762
	766
124-2456	432
124-2887	514
124-2888	514
124-2889	514
124-2890	514
124-2891	514
124-3137	718
	762
	766
124-3138	718
	762
	766
124-3240	438
124-3771	▶606
124-6679	698
124-8843	738
	744
124-9006	718
	762
	766
124-9007	718
	762
	766
124-9768	701
124-9782	700
	▶701
125-0438	718
125-0439	762
	766
125-0442	762
	766
125-4342	725
	▶878
125-4344	725
	▶811
125-4388	796
125-4389	796
125-5321	476
125-5520	796
125-6390	260
	270
125-6482	796
125-6483	796
125-7003	888
	890
125-7004	888
	890
125-9487	540
	544
125-9584	796
125-9596	796
126-0208	830
	832
126-0209	830
	832
126-0210	830
	832
126-0228	830
	832
126-0961	▶880
126-1135	801
126-1136	801
126-1167	830
	832
126-1539	830
	832
126-1757	15
126-2728	322
126-4966	738
	744
126-5011	242
126-5466	72
126-5869	72
126-6929	419
126-6930	419
126-6933	1
	2
	▶419
126-7168	420
127-0724	271
127-4038	420
127-5483	244
	248
	255
	275
	288
	292
127-5484	234
	240
	244
	260
	261
	271
	288
	292
	434
	436
127-5485	244

▶ **PRIMARY REFERENCE**

PART NUMBER INDEX

Part	Page
	255
	275
127-5486	244
	260
127-8157	683
128-0037	734
	736
	740
	742
128-0314	136
128-0613	872
128-0686	872
128-2972	636
	642
128-3473	114
128-3883	40
128-5082	872
128-5084	872
128-5085	872
128-5164	405
128-5924	90
128-6983	▶168
	198
	200
128-7625	540
	545
128-8643	514
128-8644	514
128-8645	646
	648
128-8646	650
128-8647	610
	617
	▶646
128-9654	680
128-9656	680
129-1047	656
129-1052	656
129-1054	646
	648
	650
	▶656
129-1163	▶18
	19
129-1164	▶19
	20
129-1165	6
	▶20
129-1170	78
129-3173	98
	314
	466
129-3178	420
	712
	713
	719
	738
	744
	763
	767
	784
	788
129-4618	726
	▶782
129-4622	782
129-4645	782
129-4646	782
129-4647	240
129-4935	718
	762
	766
129-5049	419
129-5096	128
129-5454	391
129-7163	244
129-7164	244
129-7249	899
129-7261	696
129-7632	652
129-7679	901
129-8614	726
	▶820
130-1396	240
130-3110	611
	615
	616
	▶648
130-3111	617
	▶650
130-3116	594
	600
	▶610
130-3117	594
	606
	▶611
130-3118	602
	▶615
130-3119	596
	600
	▶616
130-3123	596
	602
	606
	▶617
130-3374	74
130-3535	▶514
	646
	648
	650
130-3595	414
130-5300	90
	98
	178
	182
	196
	198
	200
	230
	244
	249
	255
	261
	264
	266
	271
	275
	280
	282
	284
	288
	292
	297
	314
	316
	443
	464
	719
	763
	766
	804
130-5301	255
	275
130-5770	657
130-9041	493
	▶508
130-9042	493
	▶510
130-9044	508
130-9045	510
130-9432	777
	▶778
130-9811	204
130-9864	255
	275
131-1845	114
131-3736	493
131-3737	442
131-3738	442
131-3739	442
131-3919	310
	312
131-4135	244
	248
131-4242	774
131-4428	414
131-5167	774
131-5171	428
131-6009	784
	788
	794
131-7191	489
	▶498
131-7194	498
131-7195	498
131-8350	618
	▶657
131-8777	667
	668
	669
131-9311	▶862
132-1143	442
	493
132-1144	442
132-1225	132
132-2906	540
132-3067	544
132-3439	872
132-4354	420
132-4926	488
	▶496
132-4927	496
132-5246	47
132-6640	▶143
	280
	284
132-6938	261
	271
132-8875	330
132-9625	310
133-1278	330
133-1288	330
133-2199	330
133-3715	115
133-3730	72
133-3742	6
	▶26
133-4995	26
133-5055	6
	▶40
133-5631	297
133-6379	53
134-0744	520
134-0746	520
134-0747	526
	530
134-1080	2
	▶414
134-1081	414
134-3355	274
	280
134-4483	27
	30
134-6474	782
134-6749	165
134-6751	165
134-8232	▶881
	884
134-8233	▶882
	883
135-0426	▶166
	264
135-0427	▶167
	178
	182
	197
135-0450	530
135-0451	526
135-0452	526
135-0453	530
135-1979	752
135-2969	6
	▶53
135-3894	436
135-5970	47
135-7123	482
135-8015	5
	▶48
135-9819	8
135-9941	316
136-0812	72
136-0822	15
136-0823	15
136-1953	719
	763
	767
136-3845	156
	160
136-3846	158
	162
136-3848	156

▶ **PRIMARY REFERENCE**

PART NUMBER INDEX

Part	Page
	158
	160
	162
136-4150	902
136-4183	38
136-6330	552
136-6331	552
136-8423	570
137-4515	584
	586
	588
	590
	592
	594
	596
	600
	602
	604
137-4516	584
	586
	588
	590
	592
	594
	596
	600
	602
	604
137-5503	839
137-6715	24
	27
	30
137-6717	54
137-6718	27
	30
137-6719	615
	616
	617
137-6720	608
	609
	610
	611
	612
	613
	614
	615
	616
	617
137-6783	784
	788
137-8065	784
	788
137-8752	214
137-9410	182
	186
	188
	248
138-3252	26
138-4054	738
	744
138-7026	784
	788
138-7065	712
138-7198	54
138-8401	54
138-8402	54
138-8403	54
138-9868	54
138-9910	784
	788
139-0178	240
139-1117	784
139-1118	788
139-1153	713
139-2116	254
	274
139-2120	288
	292
139-2380	61
139-2944	420
139-3526	15
139-3593	784
	788
	794
139-3595	746
139-4081	▶41
	53
139-4084	41
139-4605	839
139-4612	▶839
139-6122	254
	274
	445
139-6128	▶883
139-6129	▶884
139-8473	636
	▶668
139-8476	642
	▶669
139-9132	881
	882
139-9133	882
139-9134	881
	882
139-9135	881
	882
139-9136	881
	882
139-9137	881
	882
139-9138	881
139-9476	41
140-3607	392
140-6188	27
	30
140-8864	248
	280
140-9670	24
	27
	30
141-0360	392
141-1052	572
141-1480	95
141-2325	174
141-6343	98
141-6787	671
	672
141-9661	580
141-9784	719
	763
	767
142-0308	508
	510
142-0350	355
142-0367	8
142-1767	358
142-1814	424
142-4940	718
	762
	766
142-5787	556
142-5991	254
	274
142-6165	376
	377
142-6166	377
	378
142-6167	378
	379
142-6168	379
	380
142-6169	380
142-6170	383
142-6171	384
142-6172	409
	▶410
142-6173	385
142-6174	386
142-6175	387
142-6176	393
142-6177	394
142-6178	394
142-6179	395
142-6180	395
142-6182	396
	398
142-6183	397
	398
142-6184	397
	399
142-6185	402
	403
142-6186	402
	404
142-6187	403
	404
142-6203	3
	▶337
142-6226	377
	378
	379
	380
	381
	382
	383
	384
	385
	386
	387
	388
	389
	390
	391
	392
	393
142-6229	398
	399
	400
	401
	403
	404
	405
	407
	409
	▶411
	412
142-6232	405
142-6283	367
	▶376
142-6284	368
	▶377
142-6285	360
	▶377
142-6286	360
	▶378
142-6287	360
	▶378
142-6288	360
	▶379
142-6290	361
	▶379
142-6291	361
	▶380
142-6292	361
	▶380
142-6293	361
	▶381
142-6294	362
	▶381
142-6295	362
	▶382
142-6296	362
	▶382
142-6297	362
	▶383
142-6298	363
	▶383
142-6300	363
	▶384
142-6301	363
	▶384
142-6303	▶409
142-6304	410
	▶411
142-6305	▶410
142-6306	363
	▶385
142-6307	364
	▶385
142-6309	364
	▶386
142-6310	364
	▶386
142-6312	364
	▶387
142-6313	365
	▶387

▶ **PRIMARY REFERENCE**

PART NUMBER INDEX

Part	Page
142-6315	365
	▶388
142-6316	365
	▶388
142-6318	365
	▶389
142-6319	366
	▶389
142-6321	366
	▶390
142-6322	366
	▶390
142-6324	366
	▶391
142-6325	367
	▶391
142-6328	367
	▶392
142-6330	367
	▶392
142-6332	369
	▶393
142-6335	368
	▶393
142-6336	369
	▶394
142-6337	369
	▶394
142-6338	368
	▶395
142-6339	369
	▶395
142-6341	368
	▶396
142-6353	370
	▶396
142-6354	371
	▶397
142-6355	371
	▶397
142-6356	372
	▶398
142-6357	373
	▶398
142-6358	374
	▶399
142-6360	370
	▶399
142-6363	370
	▶400
142-6364	372
	▶400
142-6366	370
	▶401
142-6367	372
	▶401
142-6371	371
	▶402
142-6372	371
	▶402
142-6373	372
	▶403
142-6374	373
	▶403
142-6375	373
142-6376	374
142-6385	373
142-6390	▶360
142-6391	▶360
142-6392	▶360
142-6393	▶360
142-6395	▶361
142-6405	▶405
142-6439	▶361
142-6440	▶361
142-6441	▶361
142-6442	▶362
142-6443	▶362
142-6444	▶362
142-6445	▶362
142-6446	▶363
142-6448	▶363
142-6449	▶363
142-6454	▶363
142-6455	▶364
142-6457	▶364
142-6458	▶364
142-6460	▶364
142-6461	▶365
142-6463	▶365
142-6464	▶365
142-6466	▶365
142-6467	▶366
142-6469	▶366
142-6470	▶366
142-6472	▶366
142-6474	▶367
142-6477	▶367
142-6479	▶367
142-8333	5
142-8751	544
143-5373	297
143-9288	725
143-9290	318
144-0195	874
	876
	878
144-1102	49
144-2161	424
144-3472	87
144-4107	784
	788
144-6695	485
144-7339	114
145-0162	17
145-0164	17
145-0168	17
145-0170	17
145-0326	872
145-1144	348
145-1297	▶146
	777
145-1300	▶777
145-2901	728
145-3350	172
	174
	236
	238
	804
145-5966	424
145-5967	424
145-7214	794
145-7217	794
145-7376	54
145-7385	54
145-7390	27
	30
145-8039	297
146-1842	414
	415
146-1843	414
	415
146-7453	103
146-9739	424
147-0286	252
147-1680	▶206
	314
147-3309	462
147-3400	414
147-4549	872
147-5088	78
147-6143	678
147-6144	678
147-6522	872
147-6541	872
147-8211	27
	30
147-8214	24
	27
	30
147-8218	21
	22
147-8220	24
	27
	30
148-0757	252
148-1925	296
148-2404	410
	▶412
148-2405	▶410
148-2408	410
	▶412
148-2409	▶410
148-2516	346
148-2593	496
148-2903	115
148-3749	872
148-8305	552
148-8312	541
	545
148-8316	316
	540
	544
	552
148-8317	84
148-8318	522
	524
	525
	526
	530
148-8323	540
	544
148-8326	536
148-8327	538
148-8328	471
	520
148-8335	334
148-8336	532
148-8339	328
	334
148-8340	106
	526
	534
	552
148-8347	538
	540
	544
148-8351	550
	552
148-8353	536
148-8354	106
	552
148-8357	328
148-8358	526
148-8359	544
148-8360	334
148-8363	106
	526
	530
148-8364	526
	530
	540
	544
	550
	552
148-8367	532
148-8368	316
	536
	540
	544
148-8369	316
	536
148-8370	520
148-8374	522
	526
	530
	548
148-8378	532
148-8381	550
148-8383	530
	548
148-8392	328
	334
	536
148-8407	100
	334
	541
	544
148-8408	541
	545
148-8429	541
	545
148-8433	531
148-8444	520
	552
148-8449	538

▶ **PRIMARY REFERENCE**

PART NUMBER INDEX

Part	Page
149-2065	314
149-2400	872
149-2402	872
149-2610	▶671
	673
149-2611	671
149-3409	818
	819
	820
149-4311	348
149-4745	859
	860
149-5240	115
149-7226	774
150-1280	506
150-4037	550
150-4043	550
150-4105	115
150-4621	47
150-4868	552
150-5105	830
	832
150-5106	▶830
	880
150-5107	▶832
	880
150-5968	541
	545
151-0286	▶367
151-0287	▶368
151-0329	▶368
151-0330	▶368
151-0331	▶368
151-0347	▶369
151-0348	▶369
151-0355	▶369
151-0362	▶369
151-0364	▶370
151-0365	▶370
151-0366	▶370
151-0367	▶370
151-0368	▶371
151-0371	▶371
151-0372	▶371
151-0374	▶371
151-0375	▶372
151-0378	▶372
151-0380	▶372
151-0381	▶372
151-0382	▶373
151-0385	▶373
151-0388	▶373
151-0389	▶373
151-0392	▶374
151-0393	▶374
151-2900	49
	128
	728
151-4957	289
	292
151-9849	520
152-3952	78
152-5430	557
152-5431	557
152-5436	557
152-7903	1
	2
	▶557
152-8346	556
	▶672
152-8352	672
153-0188	678
153-0189	678
153-2073	▶153
	176
	180
	181
	188
	192
	194
153-2147	172
	174
	236
	238
	804
153-3580	676
153-5043	217
153-5425	406
153-5427	406
153-5459	374
	▶406
153-5460	▶374
153-5463	374
	▶406
153-5464	▶374
153-5467	375
	▶407
153-5468	▶375
153-5700	134
	135
153-6237	70
	103
	541
	545
153-6259	541
	545
153-7383	680
153-8061	▶809
	826
153-8467	54
153-8470	54
153-8920	242
153-9359	676
	▶678
154-0051	407
154-3064	346
	▶355
154-5732	▶863
	865
154-6306	358
154-6307	358
154-6309	348
154-6579	510
154-7172	348
154-7175	348
154-7176	348
154-7177	348
154-8016	112
	▶115
154-8025	21
	22
154-8290	744
154-8291	744
154-8292	738
154-8293	738
154-9023	72
155-2255	172
	174
	186
	188
	232
	234
	236
	238
	242
	255
	260
	264
	266
	270
	275
	282
	284
	288
	292
	296
	434
	436
	804
	822
	824
	826
155-2260	182
	208
	209
	211
	212
	232
	234
	240
	242
	244
	248
	260
	264
	275
	288
	292
155-2261	217
	227
155-2265	172
	174
	232
	234
	236
	238
	240
	244
	249
	260
	270
	282
	284
155-2270	90
	110
	172
	174
	182
	186
155-2271	172
	174
	234
	236
	238
	244
	248
	254
	255
	260
	264
	266
	270
	275
	282
	284
	288
	292
	296
	320
	443
	719
	762
	766
	804
	822
	824
	826
155-2274	232
	234
	240
	244
	249
	260
	270
	282
	284
	292
	822
	826
155-4077	▶525
155-4098	757
	758

▶ **PRIMARY REFERENCE**

PART NUMBER INDEX

Part	Page
155-4773	53
	▶54
155-5958	863
	▶864
155-5959	863
	▶872
155-9112	576
155-9115	576
155-9116	576
155-9117	576
155-9125	570
155-9127	570
155-9129	570
155-9134	570
155-9136	576
155-9139	570
155-9141	570
155-9142	570
155-9143	570
155-9504	21
	22
156-0233	6
	▶57
156-0283	266
156-1148	▶842
	859
	864
156-4281	316
156-6175	242
156-8352	794
157-0305	178
157-0670	72
157-2175	▶865
157-2528	261
	271
157-6129	865
158-0248	153
158-0249	155
	178
158-0250	153
	154
	155
	178
158-0252	153
	154
	155
	178
158-2072	532
158-3198	872
158-6072	96
159-0286	15
159-0288	113
159-0300	21
	22
159-0308	310
	312
159-0927	310
	312
159-1782	▶375
159-1785	375
	▶407
159-3759	834
	835
	836
	838
159-3924	447
	▶449
159-3959	248
159-4730	3
	▶526
159-4731	3
	▶530
159-4739	3
	▶563
159-5812	3
	▶822
159-5839	3
	▶282
159-5841	1
	2
	▶284
159-5845	3
	▶288
159-5853	1
	2
	▶292
159-5856	3
	▶244
159-5865	1
	2
	▶248
159-5869	3
	▶254
159-5878	3
	▶232
159-5933	2
	▶314
159-5935	2
	▶98
159-7342	4
159-8127	676
159-9228	▶310
	344
159-9229	▶312
	344
159-9258	310
	312
159-9322	242
160-1744	266
160-2196	3
	▶344
160-2353	865
160-2443	98
	▶207
160-3662	872
160-5140	58
160-6382	232
	234
	434
	436
160-6543	472
160-6567	722
160-7689	255
	274
160-7690	242
160-7753	2
	▶464
160-7758	3
	▶772
160-7765	872
160-7766	872
160-7767	872
160-8225	37
160-9178	▶540
	547
160-9180	547
	▶564
161-0768	▶169
161-0769	169
	▶176
161-0770	▶170
161-0771	▶170
161-0772	170
	▶178
161-0773	▶198
161-0774	▶200
161-0776	▶145
161-0777	▶145
161-0778	169
	▶180
161-0779	169
	▶181
161-0908	178
161-1015	169
	▶182
161-1017	170
	▶186
161-1018	170
	▶224
161-1022	▶230
	480
161-1141	▶834
161-1417	172
161-1418	172
161-2326	2
	▶84
161-2335	3
	▶95
161-2444	865
161-2445	865
161-3509	▶154
	182
	186
161-6713	310
	312
161-7062	98
	314
161-7063	314
161-8420	6
	▶47
162-1508	3
	▶424
162-1511	3
	▶420
162-1513	2
	▶418
162-1514	3
	▶116
162-1515	3
	▶448
162-2077	154
	178
162-5603	▶2
162-7449	479
	483
162-7450	479
	▶482
162-7451	▶479
	480
162-8218	98
	314
162-8219	98
	314
162-9523	108
163-0872	▶727
	728
163-1850	83
	▶86
163-4720	676
163-4721	676
163-6074	676
164-2108	348
164-2465	811
	812
	814
164-4858	120
164-5567	316
	536
	540
	545
164-5586	552
164-5590	328
	552
164-5605	106
	522
	524
	525
	526
	530
164-5608	526
	530
164-5641	540
	545
164-7577	▶222
	330
164-8462	3
	▶556
164-8474	746
	801
164-8908	534
165-2510	491
	▶504
165-4632	536
165-4931	550
165-7014	540
	544
165-9928	316
166-1997	812
	814
166-1999	812
	814
166-2829	818
166-2830	819
166-2905	46
166-3305	▶484
166-3308	484
	▶548
166-3336	480
	▶520
166-3337	▶480

▶ **PRIMARY REFERENCE**

PART NUMBER INDEX

Part	Page
166-6358	49
	128
166-7064	▶434
	835
166-7065	▶436
	733
166-7224	872
166-7225	863
167-0138	▶227
	260
	270
167-0566	348
167-1709	▶208
	538
167-1776	449
167-1801	572
	578
167-1802	572
167-2186	498
	508
	510
167-2190	495
	504
	506
167-2195	496
	500
	502
	512
167-2294	498
	508
	510
167-2300	495
	504
	506
167-2304	496
	500
	502
	512
167-2307	556
167-2450	498
	508
	510
167-2452	495
	504
	506
167-2457	496
	500
	502
	512
167-7504	232
	234
167-7505	232
	234
167-7506	282
	284
167-7536	282
	284
167-8053	2
	▶730
167-8066	2
	▶716
167-8100	▶90
	716
167-8121	36
167-8354	16
167-8355	5
	▶16
167-8361	16
167-8382	▶147
167-8389	1
	▶759
167-8396	716
	759
	760
	▶798
167-8422	▶760
167-9002	2
	▶318
167-9524	348
168-7226	47
168-7960	3
	▶440
168-8233	147
168-8235	147
168-8243	172
	236
168-8248	232
168-8683	98
168-8758	479
	483
168-9108	504
168-9110	504
169-0446	424
169-0921	98
	314
	466
169-0922	98
	314
169-2621	318
169-3111	140
169-3145	772
169-3147	194
	230
169-3176	182
169-3181	186
169-3190	264
169-3230	200
169-3263	822
	824
169-3264	712
	713
169-3283	288
169-3290	568
	▶578
169-3300	204
	▶214
169-3345	▶126
	128
169-3380	318
169-3502	254
169-3520	192
169-3523	147
169-3651	▶328
	447
169-4279	106
169-4882	564
	▶568
169-4883	563
	564
	▶570
169-5414	244
	248
	260
	270
	282
	284
	434
	436
169-5861	204
169-5937	836
169-7262	260
	270
169-7263	260
	270
169-8938	232
	234
	240
170-0493	480
	481
	482
170-0503	482
170-0967	798
170-4820	▶750
	755
170-5334	▶752
	754
170-5335	750
	752
170-6570	725
170-9051	540
171-2122	318
171-2210	260
	270
171-2863	2
	▶466
171-5349	215
171-5826	3
	▶901
171-5941	▶150
	244
	248
171-6165	780
171-6421	3
	▶532
171-6431	3
	▶544
171-6442	3
	▶552
171-6457	▶547
171-6458	1
	2
	▶550
	577
171-6466	520
171-6467	552
171-6470	550
171-6561	240
171-6728	550
171-7091	310
171-7093	310
	312
171-7095	312
171-7096	▶172
171-7185	145
	▶712
171-7186	145
	▶713
171-7626	725
171-8076	▶432
172-0165	98
172-0961	5
	▶52
172-1001	52
172-1239	784
	788
172-4211	98
	314
	466
172-5376	▶784
	835
	837
172-5377	834
	▶835
172-5378	725
	▶780
	834
	835
172-6284	94
172-6298	94
172-6484	128
172-6555	232
	234
172-6556	172
	174
	236
	238
	804
172-6830	835
	837
	▶888
172-6831	836
	▶890
172-6834	▶754
172-6835	▶755
172-7105	318
172-7106	318
172-8641	232
	234
172-9316	232
	234
172-9367	36
172-9389	▶144
	150
	244
	248
173-1007	579
173-1008	579
173-1009	579
173-1011	526
	▶579
173-1498	49
	128
173-1500	49
	128
173-1885	200
173-2018	120
173-2087	334
173-2751	835
	▶838
173-3064	182

▶ **PRIMARY REFERENCE**

PART NUMBER INDEX

Part	Page	Part	Page	Part	Page	Part	Page
	186		762	176-5767	420		181
	188	174-5692	116	176-6464	342		182
	224	174-5907	245	176-6465	▶342		186
	292		249		344		188
173-3274	418		255	176-9747	334		192
173-3882	428		261	177-0279	452	178-8455	676
173-3924	428		275		456	178-8603	760
173-3942	428		280		472		▶801
173-4490	292	174-6051	766	177-0581	93	178-9158	296
173-5305	2		866	177-1677	334	178-9582	3
	▶316	174-6353	718	177-1713	466		▶519
173-5313	716		762	177-2932	420	178-9952	316
173-5314	▶450		766	177-4119	428	179-1298	348
173-5320	885		866	177-4120	420	179-1548	▶170
	▶892	174-7566	288	177-4255	558	179-1549	188
173-5321	885	174-8961	536	177-4752	112	179-1550	188
	▶894	174-9529	44	177-7448	730	179-2138	780
173-5322	759	174-9570	▶102	177-7449	730	179-2139	780
	▶762		123	177-7858	719	179-2140	780
173-5360	▶759	175-0403	452		762	179-2173	784
	760		456		766	179-2176	794
173-5549	54	175-0447	538	177-7891	716	179-2177	784
173-6754	837	175-1343	822		▶746	179-2179	788
173-6756	▶836		824		759		794
173-7126	102	175-1367	12	177-8779	834	179-2509	70
173-7813	375	175-3236	109		▶836	179-3581	3
	▶408	175-3676	46	177-8781	▶788		▶834
173-7830	408	175-3893	348		836	179-4814	772
173-8290	540	175-5484	420	177-8784	▶896	179-5774	405
	544	175-6287	420	177-8802	260	179-6063	320
173-9683	496	175-6979	3		270		▶358
	500		▶536	177-8830	▶885	179-6064	▶320
	502	175-6981	69	177-8831	▶885		344
	512		▶538	177-9548	▶134	179-7001	▶56
173-9685	498	175-7049	538	177-9741	▶810		109
	508	175-7162	90	177-9813	260	179-7002	56
	510	175-7698	440		270	179-7383	7
173-9779	495	175-7895	498	177-9814	260	179-8700	182
	504		508		271		186
174-1494	718		510	178-0131	420		188
	762	175-7896	495	178-0160	261		248
	766		496		271	179-8701	188
174-2104	70		500	178-0162	261	180-0385	8
174-2253	540		504		271	180-1300	▶155
	544		506	178-0163	▶260		182
174-2304	▶375	175-7898	502		447	180-2992	46
174-2863	428		512	178-0555	261	180-2993	5
174-3428	3	176-0209	558		271		▶46
	▶44	176-1378	570	178-1685	676	180-3531	318
174-3705	316	176-1387	6	178-1686	676	180-4027	314
	▶346		▶63	178-1688	676		466
174-4140	788	176-1388	63	178-3030	733	180-4028	288
174-4141	784	176-2918	420		▶824		292
174-4492	718	176-2922	420		835	180-4643	145
	762	176-2945	466	178-3695	334		▶148
	766	176-5507	719	178-4190	780	180-5462	90
	866		762	178-6267	172	180-6153	261
174-4546	3		766		174		271
	▶866		866	178-6342	▶112	180-7033	288
174-4547	759	176-5640	694		113		292
	▶766	176-5641	693	178-6343	6	180-7147	314
174-4548	716	176-5642	693		▶113		466
	▶718		694	178-7983	519	180-9146	▶296
174-4552	▶759	176-5643	693	178-7985	519		344
174-4971	718		694	178-8067	180	180-9285	▶808

▶ **PRIMARY REFERENCE**

PART NUMBER INDEX

Part	Page	Part	Page	Part	Page	Part	Page
	822	184-4322	822		222	188-9321	▶169
	824		824		229	188-9324	169
	826		826		232		▶192
180-9322	320	184-4467	203		240	188-9328	▶169
180-9327	348	184-5074	901		244	188-9331	169
180-9339	210	184-5076	901		245		170
180-9340	209	184-6665	466		248		▶197
	211	184-7303	▶484		249	188-9390	482
	212	184-7307	▶484		254	188-9694	266
180-9867	466	184-9843	495		274	188-9695	266
180-9933	316		504		280	189-0108	261
183-1195	5		506		282	189-0146	134
	▶140	185-1122	466		284		135
183-1425	730	185-2197	284		288	189-0189	355
183-2136	282	185-2274	318		355	189-8772	94
	284	185-2287	318		356	189-8779	87
183-2859	6	185-2638	126		671	189-9108	110
	▶109	185-2639	126		772	189-9989	81
183-3017	▶733	185-2640	126		808	190-0065	126
183-3405	100	185-2644	126		810	190-0370	282
183-4069	170	185-2645	126		822	190-1106	58
	▶188	185-2646	126		824	190-1684	296
183-4365	54	185-2647	126		826	190-2938	901
183-4691	466	185-2648	126		886	190-3043	314
183-5802	901	185-2650	126		888	190-3482	810
183-6189	▶203	185-2651	126		890	190-3850	480
183-6774	348	185-2652	126		892		481
183-6775	348	185-2653	126		894		482
183-6831	21	185-2654	126	186-3736	90	190-3974	7
183-6832	▶21	185-2655	126	187-0491	318	190-5038	5
	27	185-2656	126	187-0745	466		▶242
183-6833	▶27	185-2657	126	187-0976	420	190-5212	297
	28	185-2658	126	187-1008	254	190-5386	901
183-6835	▶28	185-3241	109		274		903
183-6845	5	185-4076	244	187-1513	47	190-6535	118
	▶94	185-6362	822	187-1603	▶96		120
183-6848	57	185-6596	498		97	190-6616	428
183-6854	94	185-7025	504	187-2034	132	190-8940	84
183-6856	94		506	187-8028	▶135	190-8970	123
183-6933	428	185-7387	334		447	190-8977	110
183-7595	674	185-7667	496	187-8592	58		▶123
183-7913	428		500	187-8595	68	190-9775	120
183-8597	▶215	185-7674	502	187-9380	282	191-0027	719
	296	185-9375	5	188-1041	▶280		763
	297		▶37		577		767
183-9606	178	186-1526	348	188-1055	▶577		866
	194		352	188-3862	172	191-1782	110
184-0903	176		▶356		174	191-1783	110
	178	186-1714	288		236	191-2314	472
184-1130	▶348	186-1715	288		238	191-3645	452
	358		292		804		456
184-1132	▶352	186-3410	109	188-3951	▶136	191-3680	296
	358		▶114		447	191-5236	716
184-1299	69	186-3735	90	188-3958	134		759
	▶264		100		135	191-5292	536
184-1681	408		124		136		▶674
	409		143	188-3959	136	191-5293	424
184-2309	411		156	188-8044	901	191-6587	204
184-2346	375		158	188-8849	153		▶217
	▶408		162		154	191-6628	728
184-2347	376		164		155	191-6629	728
	▶409		166		178	191-7581	570
184-2362	▶375		167	188-9250	464	191-7582	570
184-2363	▶376		178		▶478	191-7583	570
184-2472	141		215		772	191-7584	570

▶ **PRIMARY REFERENCE**

PART NUMBER INDEX

Part	Page
191-8692	▶814
	838
191-8695	▶794
	838
191-9256	296
192-1434	1
	2
	▶903
192-1563	728
192-4699	▶534
192-5429	128
192-5490	674
192-5629	420
192-5638	420
192-7352	95
192-7357	44
192-9971	72
192-9972	5
	▶72
193-1036	654
193-1475	2
	▶487
193-1502	90
193-1721	3
	▶343
193-2354	64
193-2355	64
193-3940	▶7
	8
193-7359	▶234
	836
	837
193-7416	178
193-8212	▶804
193-8253	69
	▶266
193-9147	448
193-9237	5
	▶76
193-9238	76
	▶78
193-9239	78
193-9240	78
194-0856	902
194-1854	261
	271
194-1855	261
	271
194-2612	118
	120
194-2615	106
194-2869	3
	▶447
194-2870	1
	2
	▶447
194-2877	343
194-2878	343
194-2903	280
194-2911	2
	▶69
194-2912	1
	2
	▶69
194-3845	838
194-4055	3
	▶74
194-4078	3
	▶334
194-4181	288
	292
194-4679	448
194-4863	428
194-4939	420
194-5120	5
	▶64
194-5122	5
	▶81
194-5123	5
	▶61
194-5124	110
194-5126	5
	▶58
194-5127	36
194-5128	5
	▶36
194-5129	5
	▶104
194-5130	61
194-5131	61
194-5132	5
	▶8
194-5134	5
	▶60
194-5135	128
194-5136	6
	▶97
194-5139	5
	▶100
194-5141	728
194-5142	128
194-5226	208
	217
194-5227	208
	217
194-6523	120
194-6722	204
	▶209
194-6723	204
	▶210
194-6725	204
	▶211
194-6726	204
	▶212
194-6748	3
	▶93
194-6773	3
	▶332
194-7195	254
	274
194-7987	420
194-8535	120
194-9453	570
	▶576
194-9478	576
194-9479	576
194-9480	576
194-9481	576
195-0321	47
195-0434	84
195-0852	106
195-1122	405
195-1146	901
195-2097	138
	271
195-2274	903
195-4990	261
	271
195-7218	704
195-7335	5
	▶204
195-7336	242
195-7616	149
195-7617	149
195-9634	570
195-9639	570
	▶654
196-0180	822
	824
	826
196-0246	58
196-0248	58
196-0251	2
	▶128
196-0253	58
196-0265	96
196-0267	96
196-0268	96
196-1867	563
	564
196-1907	5
	▶110
196-1908	104
196-1909	104
196-1910	104
196-1911	110
196-1912	5
	▶42
196-1913	60
196-1914	42
196-2970	275
196-4143	292
196-4150	822
	826
196-4226	248
196-4609	266
196-4622	826
196-4909	1
	2
	▶826
196-6840	104
196-6983	69
	▶80
196-6984	69
	▶82
196-6985	69
	▶70
196-7268	282
	284
196-8532	169
	170
	▶194
196-8557	174
	238
	804
196-9295	448
196-9373	234
196-9519	17
196-9810	74
197-0949	108
197-0951	108
197-1459	275
	280
197-1708	118
197-1744	▶174
197-1801	432
197-1988	249
197-2054	807
197-2055	806
197-2064	4
	▶806
197-2066	1
	2
	▶807
197-2855	716
	▶729
197-4561	5
	▶87
197-4562	716
	▶728
197-4564	5
	▶12
197-4566	60
197-4567	728
197-4637	108
197-4638	108
197-5453	292
197-5572	▶4
197-5867	903
197-5964	822
	824
	826
197-5966	822
	824
	826
197-6218	90
197-6663	▶835
197-6853	420
197-6855	420
197-6857	420
197-7660	729
197-8510	420
197-8606	420
197-8608	420
197-8611	784
	788
	796
197-8624	784
	788
	796
197-8627	784
197-8628	784
197-8629	788
197-8630	788
197-8982	448
197-8983	448
197-9277	47
198-1219	84
198-1220	84
198-1221	84

▶ **PRIMARY REFERENCE**

PART NUMBER INDEX

Part	Page
198-1533	82
198-1942	90
198-1943	90
198-1944	90
198-1945	90
198-3891	74
198-3892	74
198-3893	74
198-3894	74
198-4747	95
198-4748	95
198-4777	84
	95
198-4822	3
	▶326
198-4836	1
	2
	▶130
198-4840	326
198-4876	471
198-4905	450
	458
198-5438	466
198-5452	3
	▶106
198-5456	106
198-5457	106
198-6000	3
	▶103
198-6421	296
198-7332	▶149
	245
	249
198-7333	▶722
	822
	824
	826
198-7379	446
198-7380	446
198-7657	320
198-8305	487
	▶495
198-8306	495
198-8588	434
	436
198-9811	705
	708
198-9812	705
	709
198-9942	428
198-9943	428
199-1020	90
199-1021	90
199-1322	93
199-1325	93
199-1398	▶270
	447
199-2585	▶757
199-2586	757
199-2677	734
	736
	740
	742
199-2711	82
	417
	729
199-2712	734
	736
	740
	742
199-2737	740
199-2738	742
199-2739	734
199-2740	736
199-2756	428
199-4317	558
199-4320	558
199-4321	558
199-4322	558
199-4433	6
199-5032	255
	275
199-5055	3
	▶5
199-5056	5
	▶6
199-5064	544
199-5564	118
199-5565	120
199-6103	113
199-7082	536
199-7083	536
199-7123	84
199-9729	118
199-9730	120
199-9890	116
199-9906	420
199-9907	120
199-9931	432
199-9933	432
199-9935	432
199-9937	432
199-9939	432
199-9955	868
199-9956	868
199-9983	420
199-9998	116
	▶118
199-9999	116
	▶120

2

Part	Page
200-1934	563
	▶572
200-2969	1
	2
	▶868
200-3011	332
200-3012	332
200-3013	332
200-3014	332
200-3015	332
200-3967	434
	436
200-4495	38
200-5153	103
200-5985	445
200-5997	▶445
200-6207	1
	2
	▶274
200-6919	332
200-6920	332
200-7933	758
200-7934	▶758
200-8027	70
200-8279	275
	280
200-8280	275
	280
200-8281	130
	▶132
200-8623	784
	788
200-8817	261
	271
201-0346	95
201-0387	297
201-1036	▶138
	170
201-1038	▶139
	169
	170
201-1055	901
201-2547	69
	▶428
201-2550	428
201-4836	69
	▶417
201-4837	417
201-5244	244
	249
201-5894	794
201-6614	698
201-7352	▶700
201-7371	▶698
	700
201-7603	419
	902
201-7626	904
201-7627	905
201-7631	905
	906
201-7633	904
201-8327	568
	572
201-8328	563
	564
201-8424	138
	139
	271
201-8430	540
201-8604	572
201-9622	901
202-1138	822
	826
202-2699	132
202-2700	132
202-2703	132
202-2708	132
202-2783	132
202-2784	132
202-2785	132
202-2786	132
202-2787	132
202-4309	▶904
202-4310	▶904
202-4311	▶905
202-4317	▶905
202-8647	132
202-8649	804
202-9897	132
203-1124	898
203-2260	1
	2
	▶431
203-2389	454
203-2390	454
203-2391	454
203-2423	454
203-3175	568
203-3768	94
203-6016	334
203-6019	334
203-6536	▶169
203-6551	169
	▶236
203-7620	▶195
203-7625	▶156
	195
203-7626	▶158
	195
204-2162	5
	▶252
204-2610	334
204-4376	719
	763
	767
204-6109	▶170
204-6127	170
	▶238
204-6488	730
204-7480	729
204-8736	466
204-8737	466
204-8738	466
204-8739	466
204-8740	466
204-8741	466
204-8785	376
	▶409
204-8786	▶376
205-1271	▶22
	24
	30
205-1272	▶24
205-1273	▶30
	32
	34
205-1274	26
	▶32
205-1275	▶34
205-1320	38
205-1321	6
	▶38
205-1322	10
205-3081	5

▶ **PRIMARY REFERENCE**

PART NUMBER INDEX

Part	Page	Part	Page	Part	Page	Part	Page
	▶15	211-1520	4	216-7921	10		
205-3100	868		▶196	216-7922	6		
205-3102	868	211-4906	▶725		▶10		
205-3103	868	211-4907	725	216-9746	95		
205-3235	1	211-4908	725	217-2661	580		
205-4285	146	211-4912	725	217-5241	74		
	148		▶796	217-6885	74		
205-5526	868	211-4913	725	217-8412	445		
205-7187	472		▶897	217-9055	▶458		
206-3599	98	211-9274	44	218-2307	2		
	314	211-9275	44		▶462		
206-3600	98	212-1522	3	218-2309	462		
206-3713	297		▶900	218-2971	454		
206-3714	297	212-1524	▶900	218-4758	▶834		
206-4097	730	212-2162	901	218-4759	834		
206-4669	103	212-2269	▶65		▶836		
206-5154	719		66	218-4760	1		
	763	212-2270	6		2		
	767		▶66		▶835		
206-8784	220	212-2768	100	218-4761	835		
206-9651	730	212-3246	49		▶837		
207-1517	218	212-3590	420	219-2434	332		
	▶220	212-3591	420	219-2437	332		
207-2409	3	212-3683	▶865	219-7258	▶480		
	▶582	212-3924	▶164	219-7265	▶481		
207-2410	▶580		196		483		
	582	212-4174	103	219-8541	▶906		
207-2411	580	212-4893	17	220-0768	3		
207-3665	▶1	212-6933	74		▶108		
207-3819	328	212-7523	3	220-1922	419		
	▶330		▶471	220-6366	53		
207-4772	466	212-8135	5	220-8678	102		
207-4773	466		▶88	221-2801	480		
207-4922	314	213-0064	100		▶483		
207-4924	466	213-0430	904	221-2961	▶480		
207-4927	98	213-0435	905	222-1185	54		
208-0014	450		906	222-1186	54		
	▶452	213-0437	904	222-2367	480		
208-0520	472	213-1413	266		481		
208-0800	120	213-1414	267	223-3935	726		
208-1512	452	213-3193	47	223-3936	726		
	456	213-3733	443		▶898		
208-1535	452	213-4099	443	223-3937	725		
208-6054	74	213-5132	807		▶726		
208-6055	93	213-5158	5	223-3938	▶725		
208-6678	472		▶49	223-3939	240		
208-7782	146	213-8760	356	223-3940	240		
	148	214-2415	466	223-3941	▶240		
208-7933	266	214-2466	466		726		
208-9698	▶486	214-6598	118	224-6637	901		
	700		120	224-6958	904		
209-5776	901	214-6867	428	224-6959	905		
209-9985	472	214-7568	56	224-6963	905		
209-9986	447	215-1868	328		906		
	▶472	215-2316	252	224-6965	904		
210-0848	▶141	215-3005	452	224-7040	70		
	142		▶454		▶558		
210-0849	140		456	225-0947	97		
	▶142	215-3646	▶456	225-5182	448		
210-2042	▶2		458	225-5404	150		
210-3321	12	215-5648	901	225-5405	150		
210-5559	65	215-6425	580	226-2870	580		
210-7722	94	216-4267	420	226-2871	580		
211-1519	4	216-4269	420	226-9996	428		
	▶443	216-5586	19	229-0119	901		

▶ **PRIMARY REFERENCE**

MEMORANDA



© 2002 Caterpillar
All Rights Reserved

Printed in U.S.A.