CATERPILLAR®

SEBP2539-02
March 1998

VOLUME I
Pages 1-480

RUTHZIL TRATOR COMERCIAL DE PEÇAS LTDA 11 97083-6812 ROLANDO CITRANGULO

Parts Manual

SIS

See "General Information" for New Parts Manual Features.

120H Motor Grader

5FM1-Up Std Version (Machine)
98Z15500-Up (Engine)
4MY440-Up (Transmission)
5AY527-99999 (Transmission)
7LX750-99999 (Transmission)

Powered By 3116 Engine

Product and Dealer Information

Note: For product identification plate locations, see the section "Product Identification Information" in the Operation and Maintenance Manual.

Delivery Date: _____

Product Information

Model: _____

Product Identification Number: _____

Engine Serial Number: _____

Transmission Serial Number: _____

Generator Serial Number: _____

Attachment Serial Numbers: _____

Attachment Information: _____

Customer Equipment Number: _____

Dealer Equipment Number: _____

Dealer Information

Name: _____ Branch: _____

Address: _____

_____

_____

	Dealer Contact	Phone Number	Hours
Sales:	_____	_____	_____
Parts:	_____	_____	_____
Service:	_____	_____	_____

Informations produit et concessionnaire

Nota: Voir l'emplacement de la plaque signalétique du produit au chapitre "Informations produit" du guide d'utilisation et d'entretien.

Date de livraison: _____

Informations produit

Modèle: _____

Numéro d'identification produit: _____

Numéro de série du moteur: _____

Numéro de série de la boîte de vitesses: _____

Numéro de série de l'alternateur: _____

Numéros de série d'équipement: _____

Informations sur l'équipement: _____

Numéro matériel client: _____

Numéro matériel concessionnaire: _____

Informations concessionnaire

Nom: _____ Agence: _____

Adresse: _____

_____

_____

	Contact concessionnaire	Numéro de téléphone	Heures
Ventes:	_____	_____	_____
Pièces:	_____	_____	_____
Service:	_____	_____	_____

Información del Producto/Distribuidor

Nota: Para saber la ubicación de las placas de identificación del producto, ver la sección "Información sobre identificación del producto" en el Manual de Operación y Mantenimiento.

Fecha de entrega: _____

Información del producto

Modelo: _____

Número de identificación del producto: _____

Número de serie del motor: _____

Número de serie de la transmisión: _____

Número de serie del generador: _____

Números de serie de los accesorios: _____

Información sobre los accesorios: _____

Número del equipo del cliente: _____

Número del equipo del distribuidor: _____

Información del distribuidor

Nombre: _____ Sucursal: _____

Dirección: _____

_____

_____

	Comunicación con el distribuidor	Número de teléfono	Horas
Ventas:	_____	_____	_____
Piezas:	_____	_____	_____
Servicio:	_____	_____	_____

Informações Sobre Produto e Revendedor

Nota: Para localizações da placa de identificação do produto, colsulte a seção, "Informações Sobre Identificação do Produto" no Manual de Operação e Manutenção.

Data de Entrega: _____

Informações Sobre o Produto

Modelo: _____

Número de Identificação do Produto: _____

Número de Série do Motor: _____

Número de Série da Transmissão: _____

Número de Série do Gerador: _____

Números de Série de Acessórios: _____

Informações Sobre Acessórios: _____

Número do Equipamento do Cliente: _____

Número do Equipamento do Revendedor: _____

Informações Sobre o Revendedor

Nome: _____ Filial: _____

Endereço: _____

_____

_____

	Contato do Revendedor	Telefone	Horas
Vendas:	_____	_____	_____
Peças:	_____	_____	_____
Serviço:	_____	_____	_____

Produkt- und Händlerinformation

Anmerkung: Für die Lage der Produkt-Identnummer und Seriennummern siehe Abschnitt "Produkt-Identinformation" im Betriebs- und Wartungshandbuch.

Lieferdatum: _____

Produkt-Identinformation

Modell: _____

Produkt-Identnummer: _____

Seriennummer des Motors: _____

Seriennummer des Getriebes: _____

Seriennummer des Generators: _____

Seriennummern des Arbeitsgeräte: _____

Arbeitsgeräteinformation: _____

Kundennummer: _____

Händlernummer: _____

Händlerinformation

Name: _____ Niederlassung: _____

Adresse: _____

_____

_____

	Kontaktperson beim Händler	Telefon	Dienststunden
Verkauf:	_____	_____	_____
Ersatzteile:	_____	_____	_____
Service:	_____	_____	_____

MEMORANDA

TABLE OF CONTENTS

Name	Page
GENERAL INFORMATION	A20
REPAIR ALTERNATIVES	A35
SUPPLEMENTAL COOLANT ADDITIVES	A40
ENGLISH-PORTUGUESE PARTS NOMENCLATURE	A45
MAINTENANCE PARTS	A53
INDEX	A77
MACHINE ARRANGEMENT	1
CHASSIS AR	1
GENERAL AR	2
ENGINE ARRANGEMENT	2
ENGINE AR	3
INSTALLATION AR-ENGINE	5
BASIC ENGINE	5
AIR COMPRESSOR GP	6
CAMSHAFT GP	14
CARRIER GP-SEAL	15
COVER GP-CYLINDER BLOCK	16
COVER GP-FRONT HOUSING	17
COVER GP-SOUND SUPPRESSION	18
COVER GP-VALVE MECHANISM	19
CRANKSHAFT GP	20
CYLINDER BLOCK GP	21
CYLINDER HEAD AS	25
CYLINDER HEAD GP	26
DAMPER & PULLEY GP	28
DRAIN GP-OIL PAN	29
DRIVE GP-FAN	30
DRIVE GP-WATER PUMP	32
FLYWHEEL GP	33
GEAR GP-FRONT	34
HOUSING GP-FLYWHEEL	35
HOUSING GP-FRONT	36
LIFTING GP-ENGINE	37
LINES GP-AIR COMPRESSOR	38
MOUNTING GP-ENGINE & TMSN	44
PAN GP-OIL	46
PISTON & ROD GP	47
PULLEY GP-CRANKSHAFT	48
ROCKER ARM GP	49
SEAL GP-CRANKSHAFT	50
SEAL GP-FLYWHEEL HOUSING	53
SUPPORT GP-ENGINE	54
VALVE MECHANISM GP	55
LUBRICATION SYSTEM	55
BREATHER GP	56
FILLER GP-OIL	57
FILTER GP-ENGINE OIL	60
FUMES DISPOSAL GP	62
GAUGE GP-OIL LEVEL (DIPSTICK)	63
LINES GP-ENGINE OIL	64
LINES GP-TURBOCHARGER OIL	65
PROTECTION GP-LUBE SYSTEM	66
PUMP GP-ENGINE OIL	68
COOLING SYSTEM	71
COOLER GP-ENGINE OIL	72
COOLER GP-TRANSMISSION OIL	73
EXTENSION GP-DRAIN	74
FAN GP-BLOWER	75
LINES GP-WATER	76
PUMP GP-WATER	80
RADIATOR GP	82
AIR INLET AND EXHAUST SYSTEM	84
AFTERCOOLER GP-WATER	85
AIR CLEANER GP	86
CARTRIDGE GP-TURBOCHARGER	88
DUST EJECTOR GP	89
LINES GP-AIR	90
MANIFOLD GP-EXHAUST	93
MANIFOLD GP-INLET	94
MUFFLER GP	95
TURBOCHARGER GP	96
FUEL SYSTEM	99
BASE GP-FUEL FILTER	100
CONTROL GP-FUEL INJECTION	101
CONTROL GP-GOVERNOR	102
DRIVE GP-GOV & TRANSFER PUMP	106
FASTENER GP-GOVERNOR	108
GOVERNOR GP-UNIT INJECTOR	109
HOUSING GP-GOVERNOR	122
LINES GP-DRAIN	126
LINES GP-FUEL	128
LINES GP-FUEL FILTER	130
LINES GP-FUEL RATIO CONTROL	132
LINES GP-GOVERNOR OIL	133
PUMP GP-UNIT INJECTION	134
SEPARATOR GP-WATER	136
SOLENOID GP-SHUTOFF	137
TANK GP-FUEL	138
VALVE GP-CHECK	139
VALVE GP-SOLENOID	140
ELECTRICAL AND STARTING SYSTEM	141
ALARM GP	142
ALTERNATOR GP-CHARGING	144
CONTROL GP-SYSTEM ELECTRONIC	152
CONTROL GP-TORQUE CONV ELEK	153

TABLE OF CONTENTS

Name	Page
CONVERTER & MTG GP-ELECTRICAL	155
CONVERTER AR-ELECTRICAL	156
ELECTRONICS GP-TRANSMISSION	158
LAMP GP-FLOOD	159
LAMP GP-HEAD	160
LAMP GP-SIGNAL	162
LIGHTING GP	164
LIGHTING GP-FLOOD	168
SENSOR GP-TEMPERATURE	174
STARTING AID GP-ETHER	176
STARTING MOTOR GP-ELECTRIC	178
SWITCH AS-DISCONNECT	184
SWITCH GP-START	185
WARNING GP-BACKUP	186
WIRING GP-CAB	188
WIRING GP-ENGINE	192
WIRING GP-FRONT	196
WIRING GP-REAR	206
WIRING GP-SHIFT CONSOLE	226
WIRING GP-STEERING CONSOLE	232
POWER TRAIN	233
BRAKE GP-PARKING	234
CASE & PARTS GP-PLANETARY	236
CASE & PARTS GP-TRANSMISSION	248
CHAIN GP-DRIVE	253
CLUTCH GP-TRANSMISSION	254
CONTROL GP-CLUTCH	270
CONTROL GP-DIFFERENTIAL LOCK	272
CONTROL GP-TRANSMISSION	276
CONTROL GP-TRANSMISSION HYD	278
COUPLING GP-TORSIONAL	282
DIFFERENTIAL & BEVEL GEAR GP	284
DIFFERENTIAL AR-LOCK	286
DIFFERENTIAL GP	288
FILLER GP-POWER TRAIN OIL	290
FILTER GP-TRANSMISSION	291
FINAL DRIVE GP	292
GEAR GP-BEVEL	294
LINES GP-TRANSMISSION OIL	296
POWER TRAIN AR	298
PROTECTION GP-TMSN OIL FILLER	299
PUMP GP-GEAR	300
SCREEN GP-MAGNETIC	302
SHAFT GP-DRIVE	303
SHAFT GP-INPUT	304
TANDEM & COVER GP	306
TIRE GP	308
TRANSMISSION AR	314
UNIVERSAL JOINT GP	317
VALVE & MTG GP-DIFF LOCK	318
VALVE GP	320
VALVE GP-SELECTOR & PRESS CONT	322
VALVE GP-SOLENOID	334
VALVE GP-TRANSMISSION CONTROL	338
WHEEL & TIRE AR	342
WHEEL & TIRE GP	405
WHEEL AR	468
WHEEL GP	472
FRAME AND BODY	481
AXLE GP-FRONT	482
BATTERY BOX GP	489
BUMPER GP-REAR	491
CASE & FRAME GP	494
ENCLOSURE GP-ENGINE	496
FRAME GP-FRONT	504
GUARD & SUPPORT GP-RADIATOR	508
GUARD GP-BOTTOM	512
GUARD GP-PLATFORM	514
HITCH GP-ARTICULATED	518
HOOD & DASH GP	520
LINES GP-GREASE	522
LINK GP-STEERING	523
SHIELD GP-DRIVE SHAFT	524
STEP GP	525
BRAKING SYSTEM	525
BRAKE GP-SERVICE	526
CONTROL GP-PARKING BRAKE	528
CONTROL GP-SERVICE BRAKE	530
TANK GP-AIR	536
VALVE AS-AIR CONTROL	540
VALVE GP-AIR CONTROL	541
HYDRAULIC SYSTEM	541
CONTROL AR-HYDRAULIC	542
CONTROL GP-CENTERSHIFT LOCK	546
CONTROL GP-STEERING	548
CYLINDER & LINES GP-RIPPER	549
CYLINDER & MTG GP-ARTICULATION	550
CYLINDER & MTG GP-BLADE LIFT	551
CYLINDER & MTG GP-BLADE TIP	553
CYLINDER & MTG GP-CENTERSHIFT	554
CYLINDER & MTG GP-SCARIFIER	555
CYLINDER & MTG GP-SIDESHIFT	556
CYLINDER & MTG GP-STEERING	557
CYLINDER & MTG GP-WHEEL LEAN	558
CYLINDER GP-ARTICULATION	559
CYLINDER GP-BLADE LIFT	562
CYLINDER GP-BLADE TIP	564
CYLINDER GP-CENTERSHIFT	566
CYLINDER GP-ARTICULATION	567
CYLINDER GP-SCARIFIER	568
CYLINDER GP-SIDESHIFT	569
CYLINDER GP-STEERING	570
CYLINDER GP-WHEEL LEAN	574
DRIVE GP-CIRCLE	576
GUARD GP-CYLINDER	583
LINES GP-CENTERSHIFT LOCK	584

TABLE OF CONTENTS

Name	Page
LINES GP-HYDRAULIC	585
LINES GP-PUMP	602
LINES GP-RIPPER	604
LINES GP-STEERING	606
LOCK GP-CENTERSHIFT	608
MOTOR GP-GEROTOR	610
PUMP & MOUNTING GP	612
PUMP GP-METERING	614
PUMP GP-PISTON	616
ROTATING GP-PUMP	618
SHAFT GP-PUMP DRIVE	619
SWIVEL GP	621
TANK & FILTER GP-HYDRAULIC	622
TANK & MTG GP-HYDRAULIC	624
UNIVERSAL JOINT GP-PUMP DRIVE	626
VALVE & LINKAGE GP	628
VALVE GP-BANK 2	650
VALVE GP-BANK 3	651
VALVE GP-BANK 4	654
VALVE GP-BANK 5	658
VALVE GP	661
VALVE GP-COMBINATION	662
VALVE GP-CONTROL	666
VALVE GP-PRESS & FLOW CMPNSTR	690
VALVE GP-RELIEF	692
VALVE GP-SHUTTLE	705
VALVE GP-SOLENOID	706
IMPLEMENTS	706
BLADE & TIP AR-POWER	707
BLADE AR	709
BLADE GP	712
BRACKET GP-BLADE	717
BRACKET GP-SCARIFIER	718
CIRCLE GP	719
DRAWBAR GP	722
EXTENSION GP-BLADE	724
LIFT GP-BLADE	726
LINK GP-LOWER	728
LINK GP-UPPER	729
MOUNTING GP-RIPPER	730
PLATE GP-PUSH	732
RIPPER AR	733
RIPPER GP	734
SCARIFIER AR	735
SCARIFIER GP	736
TOOTH GP-RIPPER	739
OPERATOR STATION	739
ACCESSORY GP-CAB	740
ADJUSTER GP-SEAT	742
BLOWER & MTG GP-CAB	745
BLOWER AR-CAB	746
CAB AR-HIGH PROFILE	747
CAB AR-NON-ROPS	748
CAB GP-HIGH PROFILE	749
CAB GP-NON-ROPS	750
CANOPY AR	751
CANOPY GP	752
CONSOLE GP-OPERATOR	754
DOOR GP	758
DOOR GP-CAB	762
DOOR GP	764
DOOR GP-CAB	768
FAN GP-DEFROSTING	770
FAN GP-DEFROSTER	771
FAN GP-DEFROSTING	772
FAN GP-DEFROSTER	774
GUARD GP-VANDALISM	776
HEATER & MOUNTING GP	777
HEATER AR-CAB	778
HEATER GP-SEAT	780
HORN GP-AIR	783
HORN GP-ELECTRIC	790
INSULATION GP-WEATHER	792
LIGHTER GP-CIGAR	794
LINER GP-CAB	796
LINES GP-HEATER	808
LITERATURE GP	809
LOUVER GP-CAB	810
MIRROR GP-REAR VIEW	811
GAUGE GP	814
MOTOR GP-WINDOW WIPER	815
MOUNTING GP-CAB	816
MOUNTING GP-ROPS	818
PANEL GP-CAB	820
PANEL GP-INSTRUMENT	824
PANEL GP-RH	828
PANEL GP-LH	830
PROTECTION AR-VANDALISM	832
ROPS AR	833
ROPS GP	836
ROPS GP-ENCLOSED	837
ROPS GP-HIGH PROFILE	842
SCREEN GP-SUN	844
SEAT BELT GP	845
SEAT GP	846
SEAT GP-STATIC	853
SUPPORT GP-SEAT	860
VALVE GP-SOLENOID	862
WASHER GP-WINDOW	864
WASHER GP-WINDSHIELD	868
WINDOW GP	870
WINDOW GP-CAB	873
WINDOW GP	874
WIPER GP-WINDOW	876
WIPER GP-WINDSHIELD	882
SERVICE EQUIPMENT AND SUPPLIES	882
PLATE & FILM GP	883

TABLE OF CONTENTS

Name	Page	Name	Page
PLATE GP-CERTIFICATION	900		
TOOL BOX GP	901		
PART NUMBER INDEX	B1		

TABLE DES MATIÈRES

Désignation	Page
GÉNÉRALITÉS	A23
OPTIONS DE RÉPARATION	A36
ADDITIFS POUR LIQUIDE DE REFROIDISSEMENT	A41
PIÈCES DE RECHANGE	A57
INDEX	A87
VERSION DE MACHINE	1
VERSION DE CHASSIS	1
VUE DU MODELE	2
MOTEUR COMPLET	2
MOTEUR (VERSION)	3
MONTAGE DE MOTEUR (VERSION)	5
MOTEUR STANDARD	5
COMPRESSEUR D'AIR (ASS)	6
ARBRE A CAMES (ASS)	14
CHÂSSIS-PORTEUR DE JOINT (ASS)	15
BLOC-CYLINDRES - COUVERCLE (ASS)	16
COUVERCLE DE CARTER AV (ASS)	17
INSONORISATION - COUVERCLE (ASS)	18
CACHE-SOUPAPES (ASS)	19
VILEBREQUIN (ASS)	20
BLOC-CYLINDRES (ASS)	21
CULASSE (ENS)	25
CULASSE (ASS)	26
AMORTISSEUR DE VIBRATIONS ET POULIE (ASS)	28
CARTER D'HUILE MOTEUR - VIDANGE (ASS)	29
ENTRAINEMENT DE VENTILATEUR (ASS)	30
ENTRAÎNEMENT DE LA POMPE À EAU (ASS)	32
VOLANT MOTEUR (ASS)	33
PIGNONNERIE AV (ASS)	34
CARTER DE VOLANT (ASS)	35
CARTER AV (ASS)	36
OEILLETONS DE LEVAGE MOTEUR (ASS)	37
CANALISATIONS DU COMPRESSEUR D'AIR (ASS)	38
MONTAGE DE MOTEUR ET BOÎTE (ASS)	44
HUILE MOTEUR - CARTER (ASS)	46
PISTON ET BIELLE (ASS)	47
VILEBREQUIN - POULIE (ASS)	48
AXE DE CULBUTEUR (ASS)	49
JOINT DE VILEBREQUIN (ASS)	50
JOINT DE CARTER DE VOLANT (ASS)	53
SUPPORT DE MOTEUR (ASS)	54
CULBUTERIE (ASS)	55
CIRCUIT DE GRAISSAGE	55
RENIFLARD (ASS)	56
GOULOTTE D'HUILE MOTEUR (ASS)	57
FILTRE À HUILE MOTEUR (ASS)	60
DISPOSITIF D'EVACUATION DES VAPEURS DE CARTER	62
JAUGE D'HUILE MOTEUR (BAIONNETTE) (ASS)	63
CANALISATIONS D'HUILE MOTEUR (ASS)	64
CANALISATIONS D'HUILE DE TURBOCOMPRESSEUR (ASS)	65
CIRCUIT DE GRAISSAGE - PROTECTION (ASS)	66
POMPE A HUILE MOTEUR (ASS)	68
CIRCUIT DE REFROIDISSEMENT	71
REFROIDISSEUR D'HUILE MOTEUR (ASS)	72
REFROIDISSEUR D'HUILE DE BOÎTE (ASS)	73
RALLONGE DE VIDANGE (ASS)	74
VENTILATEUR SOUFFLANT (ASS)	75
CANALISATIONS D'EAU (ASS)	76
POMPE A EAU (ASS)	80
RADIATEUR (ASS)	82
CIRCUIT D'ADMISSION D'AIR ET D'ÉCHAPPEMENT	84
ADMISSION REFROIDIE PAR EAU (ASS)	85
FILTRE A AIR (ASS)	86
TURBOCOMPRESSEUR - CARTOUCHE (ASS)	88
EJECTEUR AUTOMATIQUE DE POUSSIERE (ASS)	89
CANALISATIONS D'AIR (ASS)	90
COLLECTEUR D'ECHAPPEMENT (ASS)	93
COLLECTEUR D'ADMISSION (ASS)	94
SILENCIEUX (ASS)	95
TURBOCOMPRESSEUR (ASS)	96
CIRCUIT DE CARBURANT	99
BASE DE FILTRE À CARBURANT (ASS)	100
COMMANDE D'INJECTION DE CARBURANT (ASS)	101
COMMANDE DE REGULATEUR (ASS)	102
ENTRAÎNEMENT DE RÉGULATEUR ET POMPE D'ALIMENTATION	106
BOULONNERIE DE REGULATEUR	108
RÉGULATEUR - INJECTEUR (ASS)	109
RÉGULATEUR - CARTER (ASS)	122
CANALISATIONS DE VIDANGE (ASS)	126
CANALISATIONS DE CARBURANT (ASS)	128
CANALISATIONS DU FILTRE A CARBURANT (ASS)	130
CANALISATIONS DU LIMITEUR D'INJECTION (ASS)	132

TABLE DES MATIÈRES

Désignation	Page
CANALISATIONS D'HUILE DE RÉGULATEUR (ASS)	133
POMPE D'INJECTION (ASS)	134
SÉPARATEUR D'EAU (ASS)	136
SOLÉNOÏDE D'ARRÊT (ASS)	137
RÉSERVOIR DE CARBURANT (ASS)	138
CLAPET DE RETENUE (ENS)	139
SOUPAPE - SOLENOIDE (ASS)	140
CIRCUIT ÉLECTRIQUE ET DE DÉMARRAGE	141
AVERTISSEUR (ASS)	142
ALTERNATEUR DE CHARGE (ASS)	144
COMMANDE ÉLECTRONIQUE DE SYSTÈME	152
COMMANDE ÉLECTRONIQUE DE CONVERTISSEUR DE COUPLE (ASS)	153
CONVERTISSEUR ET MONTAGE - ÉLECTRIQUE (ASS)	155
TRANSFORMATION ÉLECTRIQUE (VERSION)	156
COMPOSANTS ÉLECTRONIQUES DE BOÎTE DE VITESSES (ASS)	158
LAMPE - PHARE (ASS)	159
PHARE AV (ASS)	160
LAMPE - CLIGNOTANT DE DIRECTION (ASS)	162
ECLAIRAGE (ASS)	164
ÉCLAIRAGE - PROJECTEURS (ASS)	168
CAPTEUR DE TEMPERATURE (ASS)	174
AUXILIAIRE DE DEMARRAGE A L'ETHER (ASS)	176
DÉMARREUR ÉLECTRIQUE (ASS)	178
ROBINET DE BATTERIE (ENS)	184
INTERRUPTEUR DE DEMARRAGE (ASS)	185
AVERTISSEUR DE RECUL (ASS)	186
CABLAGE DE CABINE (ASS)	188
CABLAGE DE MOTEUR (ASS)	192
CABLAGE AV (ASS)	196
CABLAGE AR (ASS)	206
CABLAGE DE LA CONSOLE DE CHANGEMENTS DE VITESSE	226
CABLAGE DE LA CONSOLE DE DIRECTION	232
TRANSMISSION	233
FREIN DE STATIONNEMENT (ASS)	234
TRAINS PLANÉTAIRES - CARTER ET PIÈCES	236
CARTER ET PIECES DE BOITE (ASS)	248
ENTRAÎNEMENT DE CHAÎNE (ASS)	253
EMBRAYAGE DE BOÎTE DE VITESSES (ASS)	254
COMMANDE D'EMBRAYAGE (ASS)	270
COMMANDE DE DIFFÉRENTIEL - VERROUILLAGE (ASS)	272
COMMANDE DE BOITE DE VITESSES (ASS)	276
COMMANDE HYDRAULIQUE DE BOÎTE (ASS)	278
ACCOUPLEMENT DE TORSION (ASS)	282
COURONNE ET DIFFERENTIEL (ASS)	284
VERROUILLAGE DE DIFFÉRENTIEL (VERSION)	286
DIFFERENTIEL (ASS)	288
GOULOTTE DE REMPLISSAGE D'HUILE DE TRANSMISSION	290
FILTRE A HUILE DE BOITE (ASS)	291
REDUCTEURS LATERAUX (ASS)	292
COURONNE CONIQUE (ASS)	294
CANALISATIONS D'HUILE DE BOITE (TRANSMIS.) (ASS)	296
TRANSMISSION (VERSION)	298
GOULOTTE DE REMPLIS. D'HUILE DE BOÎTE - PROTECTION	299
POMPE A ENGRENAGES (ASS)	300
ÉCRAN MAGNÉTIQUE (ASS)	302
ARBRE D'ENTRAÎNEMENT (ASS)	303
ARBRE D'ENTRÉE (ASS)	304
TANDEM ET CARTER (ASS)	306
PNEUMATIQUE (ASS)	308
BOÎTE DE VITESSES (VERSION)	314
JOINT UNIVERSEL (ASS)	317
SOUPAPE ET MONTAGE DE VERROUILLAGE DE DIF. (ASS)	318
CLAPET (ASS)	320
SOUPAPE SELECTRICE ET REGULATRICE DE PRESSION	322
SOUPAPE - SOLENOIDE (ASS)	334
DISTRIBUTEUR DE BOITE (ASS)	338
ROUE ET PNEU (VERSION)	342
ROUE ET PNEU (ASS)	405
ROUE (VERSION)	468
JANTE (ASS)	472
CHÂSSIS ET BENNE	481
ESSIEU AV (ASS)	482
COFFRE DE BATTERIE (ASS)	489
PARE-CHOCS AR (ASS)	491
CHÂSSIS ET CARTER (ASS)	494
CARENAGE DE MOTEUR (ASS)	496
CHÂSSIS AV (ASS)	504
PROTÈGE-RADIATEUR ET SUPPORT (ASS)	508
BLINDAGE INFÉRIEUR (ASS)	512
PROTECTION DE PLATE-FORME (ASS)	514
ATTELAGE ARTICULÉ (ASS)	518
CAPOT ET CONSOLE (ASS)	520
CANALISATIONS DE GRAISSAGE (ASS)	522
ARTICULATION DE DIRECTION (ASS)	523
ÉCRAN D'ARBRE MOTEUR (ASS)	524
MARCHEPIED (ASS)	525

TABLE DES MATIÈRES

Désignation	Page
CIRCUIT DE FREINAGE	525
FREIN DE MANOEUVRE (ASS)	526
COMMANDE DE FREIN DE STATIONNEMENT (ASS)	528
FREIN DE MANOEUVRE - COMMANDE (ASS)	530
RÉSERVOIR PNEUMATIQUE (ASS)	536
DISTRIBUTEUR D'AIR (ENS)	540
DISTRIBUTEUR D'AIR (ASS)	541
CIRCUIT HYDRAULIQUE	541
COMMANDE HYDRAULIQUE (VERSION)	542
COMMANDE DE VERROUILLAGE DE DÉPORT DE FREIN	546
COMMANDE DE DIRECTION (ASS)	548
VÉRIN DE RIPPER ET CANALISATIONS (ASS)	549
VÉRIN D'ARTICULATION ET MONTAGE (ASS)	550
VÉRIN DE RELEVAGE DE LAME ET MONTAGE (ASS)	551
VÉRIN D'INCLINAISON DE LAME ET MONTAGE (ASS)	553
VÉRIN DE DÉPORT DE CERCLE ET MONTAGE (ASS)	554
VÉRIN DE SCARIFICATEUR ET MONTAGE (ASS)	555
VÉRIN DE DÉPORT DE LAME (ASS)	556
VERIN DE DIRECTION ET MONTAGE (ASS)	557
VÉRIN D'INCLINAISON DE ROUE ET MONTAGE (ASS)	558
VÉRIN D'ARTICULATION (ASS)	559
VÉRIN DE LEVAGE DE LAME (ASS)	562
VÉRIN D'INCIDENCE DE LAME (ASS)	564
VÉRIN DE DÉPORT DE CERCLE (ASS)	566
VÉRIN D'ARTICULATION (ASS)	567
VÉRIN DE SCARIFICATEUR (ASS)	568
VÉRIN DE DÉPORT DE LAME (ASS)	569
VERIN DE DIRECTION (ASS)	570
VÉRIN D'INCLINAISON DE ROUE (ASS)	574
ENTRAÎNEMENT DE CERCLE (ASS)	576
PROTECTION DE VÉRIN (ASS)	583
CANALISATIONS DE VERROUILLAGE DE DÉPORT DE CERCLE (ASS)	584
CANALISATIONS HYDRAULIQUES (ASS)	585
CANALISATIONS DE POMPE (ASS)	602
CANALISATIONS DU RIPPER (ASS)	604
CANALISATIONS DE DIRECTION (ASS)	606
VERROUILLAGE DE DÉPORT DE CERCLE (ASS)	608
MOTEUR HYDRAULIQUE (ASS)	610
POMPE ET MONTAGE (ASS)	612
POMPE DE REGULARISATION DE DEBIT (ASS)	614
POMPE A PISTONS (ASS)	616
GROUPE DE ROTATION DE POMPE	618
ARBRE D'ENTRAÎNEMENT DE POMPE (ASS)	619
GROUPE D'ORIENTATION	621
RÉSERVOIR HYDRAULIQUE ET FILTRE (ASS)	622
RÉSERVOIR HYDRAULIQUE ET MONTAGE (ASS)	624
JOINT UNIVERSEL D'ENTRAÎNEMENT DE POMPE (ASS)	626
SOUPAPE ET TIMONERIE (ASS)	628
DISTRIBUTEUR DOUBLE CORPS (ASS)	650
DISTRIBUTEUR TRIPLE CORPS (ASS)	651
DISTRIBUTEUR QUADRUPLE CORPS (ASS)	654
DISTRIBUTEUR QUINTUPLE CORPS	658
CLAPET (ASS)	661
SOUPAPE DE COMBINAISON (ASS)	662
DISTRIBUTEUR (ASS)	666
SOUPAPE RÉGULATRICE DE PRESSION ET DÉBIT	690
CLAPET DE DECHARGE (ASS)	692
VANNE PILOTE (ASS)	705
SOUPAPE - SOLENOIDE (ASS)	706
ÉQUIPEMENTS	706
LAME HYDRAULIQUE ET POINTE (VERSION)	707
LAME (VERSION)	709
LAME (ASS)	712
SUPPORT DE LAME (ASS)	717
SUPPORT DE SCARIFICATEUR (ASS)	718
CERCLE (ASS)	719
BARRE D'ATTELAGE (ASS)	722
RALLONGE DE LAME (ASS)	724
LEVAGE - LAME (ASS)	726
ARTICULATION INFÉRIEURE (ASS)	728
ARTICULATION SUPÉRIEURE (ASS)	729
MONTAGE DE RIPPER (ASS)	730
PLAQUE DE POUSSÉE (ASS)	732
RIPPER (VERSION)	733
RIPPER (ASS)	734
SCARIFICATEUR (VERSION)	735
SCARIFICATEUR (ASS)	736
DENT DE RIPPER (ASS)	739
POSTE DE CONDUITE	739
VISIÈRE - GROUPE AUXILIAIRE	740
REGLAGE DE SIEGE (ASS)	742
VENTILATEUR SOUFFLANT ET MONTAGE - CABINE (ASS)	745
VENTILATEUR SOUFFLANT - CABINE (VERSION)	746
CABINE - PROFIL ÉLEVÉ (VERSION)	747
CABINE SANS ROPS (VERSION)	748

TABLE DES MATIÈRES

Désignation	Page
CABINE - PROFIL ÉLEVÉ (ASS)	749
CABINE SANS ROPS (ASS)	750
TOIT (VERSION)	751
TOIT (ASS)	752
CONSOLE DE CONDUITE (ASS)	754
PORTE (ASS)	758
PORTIÈRE DE CABINE (ASS)	762
PORTE (ASS)	764
PORTIÈRE DE CABINE (ASS)	768
DEGIVREUR - VENTILATEUR	770
VENTILATEUR DÉGIVREUR (ASS)	771
DEGIVREUR - VENTILATEUR	772
VENTILATEUR DÉGIVREUR (ASS)	774
PROTECTION ANTI-VANDALISME (ASS)	776
CHAUFFAGE ET MONTAGE (ASS)	777
CHAUFFAGE DE CABINE (VERSION)	778
CHAUFFAGE DE SIÈGE (ASS)	780
KLAXON PNEUMATIQUE (ASS)	783
KLAXON ÉLECTRIQUE (ASS)	790
ISOLATION DE CABINE (ASS)	792
ALLUME-CIGARETTES (ASS)	794
CABINE - REVÊTEMENT (ASS)	796
CANALISATIONS DE CHAUFFAGE (ASS)	808
LITTERATURE (ASS)	809
VOLET - CABINE (ASS)	810
RÉTROVISEUR (ASS)	811
INDICATEURS (ASS)	814
MOTEUR D'ESSUIE-GLACE (ASS)	815
MONTAGE DE CABINE (ASS)	816
MONTAGE DU TOIT ROPS (ASS)	818
TABLEAU DE BORD (ASS)	820
PANNEAU - DROITE (ASS)	828
PANNEAU - GAUCHE (ASS)	830
PROTECTION ANTI-VANDALISME (VERSION)	832
ROPS (VERSION)	833
TOIT ROPS (ASS)	836
CABINE ROPS FERMÉE (ASS)	837
CABINE ROPS - PROFIL ÉLEVÉ (ASS)	842
ECRAN - SOLEIL (ASS)	844
CEINTURE DE SECURITE (ASS)	845
SIEGE (ASS)	846
SIÈGE À ÉQUILIBRAGE STATIQUE (ASS)	853
SUPPORT DE SIÈGE (ASS)	860
SOUPAPE - SOLENOIDE (ASS)	862
LAVE-GLACE - VITRE (ASS)	864
LAVE-GLACE DE PARE-BRISE (ASS)	868
GLACE (ASS)	870
GLACE DE CABINE (ASS)	873
GLACE (ASS)	874
ESSUIE-GLACE (ASS)	876
ESSUIE-GLACE - PARE-BRISE (ASS)	882

Désignation	Page
FOURNITURES ET ÉQUIPEMENTS POUR L'ENTRETIEN	882
PLAQUES SIGNALÉTIQUES ET AUTOCOLLANTS (ASS)	883
PLAQUE DE CERTIFICATION (ASS)	900
COFFRE A OUTILS (ASS)	901
INDEX DE NUMÉROS DE PIÈCES	B1

CONTENIDO

Nombre	Página
INFORMACIÓN GENERAL	A26
ALTERNATIVAS DE REPARACIÓN	A37
ADITIVOS DE REFRIGERANTE SUPLEMENTARIOS	A42
PIEZAS DE MANTENIMIENTO	A62
INDICE	A98
CONFIGURACIÓN DE MÁQUINA	1
CHASIS (CONFIG)	1
CONFIGURACIÓN GENERAL	2
CONFIGURACIÓN DE MOTOR	2
CONFIGURACIÓN DE MOTORES	3
CONFIGURACIÓN DE INSTALACIÓN DEL MOTOR	5
MOTOR BÁSICO	5
COMPRESOR DE AIRE (GR)	6
ÁRBOL DE LEVAS (GR)	14
SELLO DEL PORTADOR (GR)	15
BLOQUE MOTOR - CULATA DEL (GR)	16
TAPA DE LA CAJA DELANTERA (GR)	17
TAPA DEL INSONORIZADOR (GR)	18
TAPA DEL MECANISMO DE VÁLVULAS (GR)	19
CIGÜEÑAL (GR)	20
BLOQUE MOTOR (GR)	21
CULATA DE CILINDROS (CONJ)	25
CULATA DE CILINDROS (GR)	26
AMORTIGUADOR Y POLEA (GR)	28
DRENAJE DEL COLECTOR DEL CÁRTER (GR)	29
IMPULSOR DE VENTILADOR (GR)	30
MANDO DE LA BOMBA DE AGUA (GR)	32
VOLANTE (GR)	33
ENGRANAJE DELANTERO (GR)	34
VOLANTE - CAJA DE (GR)	35
CAJA DELANTERA (GR)	36
CÁNCAMOS DE LEVANTAMIENTO DEL MOTOR (GR)	37
TUBERÍAS DEL COMPRESOR DE AIRE (GR)	38
MONTAJE DEL MOTOR Y LA TRANSMISIÓN (GR)	44
CÁRTER - COLECTOR DEL (GR)	46
PISTÓN Y BIELA (GR)	47
CIGÜEÑAL - POLEA DE (GR)	48
BALANCÍN (GR)	49
SELLO DE CIGÜEÑAL (GR)	50
SELLO DE LA CAJA DE VOLANTE (GR)	53
MOTOR - SOPORTE DEL (GR)	54
MECANISMO DE VÁLVULAS (GR)	55
SISTEMA DE LUBRICACIÓN	55
RESPIRADERO (GR)	56
TUBO DE LLENADO DE ACEITE (GR)	57
FILTRO DE ACEITE DEL MOTOR (GR)	60
ESCAPE DE GASES (GR)	62
INDICADOR DEL NIVEL DE ACEITE (VARILLA) (GR)	63
TUBERÍAS DE ACEITE DEL MOTOR (GR)	64
TURBOCOMPRESOR - TUBERÍAS DE ACEITE DEL (GR)	65
PROTECCIÓN DEL SISTEMA DE LUBRICACIÓN (GR)	66
BOMBA DE ACEITE DEL MOTOR (GR)	68
SISTEMA DE ENFRIAMIENTO	71
ENFRIADOR DE ACEITE DEL MOTOR (GR)	72
ENFRIADOR DE ACEITE DE LA TRANSMISIÓN (GR)	73
EXTENSIÓN DE DRENAJE (GR)	74
SOPLADOR - VENTILADOR (GR)	75
TUBERÍAS DEL AGUA (GR)	76
BOMBA DE AGUA (GR)	80
RADIADOR (GR)	82
SISTEMA DE ADMISIÓN Y ESCAPE DE AIRE	84
POSENFRIADOR DE AGUA (GR)	85
FILTRO DE AIRE (GR)	86
NÚCLEO DE TURBOCOMPRESOR (GR)	88
EXPULSOR DE POLVO (GR)	89
AIRE - TUBERÍAS DE (GR)	90
MÚLTIPLE DE ESCAPE (GR)	93
MULTIPLE DE ADMISIÓN (GR)	94
SILENCIADOR (GR)	95
TURBOCOMPRESOR (GR)	96
SISTEMA DE COMBUSTIBLE	99
BASE DEL FILTRO DE COMBUSTIBLE (GR)	100
CONTROL DE INYECCION DE COMBUSTIBLE (GR)	101
CONTROL DE REGULADOR (GR)	102
MANDO DE REGULADOR Y BOMBA DE TRANSFERENCIA (GR)	106
TORNILLERIA DEL REGULADOR (GR)	108
BOMBA INYECTORA DEL REGULADOR (GR)	109
REGULADOR - CAJA DEL (GR)	122
TUBERÍAS DE DRENAJE (GR)	126
TUBERÍAS DE COMBUSTIBLE (GR)	128
TUBERÍAS DEL FILTRO DE COMBUSTIBLE	130
TUBERIAS DEL CONTROL DE LA RELACION DE COMBUSTIBLE (GR)	132

CONTENIDO

Nombre	Página
TUBERÍAS DE ACEITE DEL REGULADOR (GR)	133
BOMBA DE INYECCIÓN UNITARIA (GR)	134
SEPARADOR DE AGUA (GR)	136
SOLENOIDE DE CORTE	137
COMBUSTIBLE - TANQUE DE (GR)	138
VÁLVULA DE RETENCIÓN (GR)	139
VÁLVULA DE SOLENOIDE (GR)	140
SISTEMA ELÉCTRICO Y DE ARRANQUE	141
ALARMA (GR)	142
CARGA - ALTERNADOR DE (GR)	144
CONTROL DEL SISTEMA ELECTRÓNICO (GR)	152
CONTROL ELECTRÓNICO DEL CONVERTIDOR DE PAR (GR)	153
CONVERTIDOR ELÉCTRICO Y MONTAJE (GR)	155
CONVERTIDOR ELÉCTRICO (CONFIG)	156
TRANSMISIÓN DE LA ELECTRÓNICA (GR)	158
REFLECTOR (GR)	159
LÁMPARA DE FARO DELANTERO (GR)	160
LUZ DE SEÑAL DE GIRO (GR)	162
GRUPO DE LUCES	164
LUCES DE REFLECTOR (GR)	168
SENSOR DE TEMPERATURA (GR)	174
AUXILIAR DE ARRANQUE CON ÉTER (GR)	176
MOTOR DE ARRANQUE ELÉCTRICO (GR)	178
INTERRUPTOR GENERAL (CONJ)	184
ARRANQUE - INTERRUPTOR DE (GR)	185
RETROCESO - ALARMA DE (GR)	186
CABLES DE LA CABINA (GR)	188
CABLES DEL MOTOR (GR)	192
CABLES DELANTEROS (GR)	196
CABLES POSTERIORES (GR)	206
CABLES DE LA CONSOLA DE CAMBIOS (GR)	226
CABLES DE LA CONSOLA DE DIRECCIÓN (GR)	232
TREN DE FUERZA	233
FRENO DE ESTACIONAMIENTO (GR)	234
CAJA Y PIEZAS DE LOS PLANETARIOS	236
CAJA Y PIEZAS DE LA TRANSMISIÓN (GR)	248
CADENA DE IMPULSIÓN (GR)	253
EMBRAGUE DE LA TRANSMISIÓN (GR)	254
CONTROL DEL EMBRAGUE (GR)	270
CONTROL DE TRABA DEL DIFERENCIAL (GR)	272
CONTROL DE LA TRANSMISIÓN (GR)	276
CONTROL HIDRÁULICO DE LA TRANSMISIÓN (GR)	278
ACOPLAMIENTO TORSIONAL (GR)	282
DIFERENCIAL Y CORONA (GR)	284
TRABA DE DIFERENCIAL (CONFIG)	286
DIFERENCIAL (GR)	288
TUBO DE LLENADO DE ACEITE DE LA TRANSMISIÓN (GR)	290
FILTRO DE LA TRANSMISIÓN (GR)	291
MANDO FINAL (GR)	292
CORONA (GR)	294
TUBERÍAS DE ACEITE DE LA TRANSMISIÓN (GR)	296
TREN DE FUERZA (CONFIG)	298
PROT. TUBO DE LLENADO DE ACEITE DE TRANSM (GR)	299
BOMBA DE ENGRANAJES (GR)	300
REJILLA MAGNÉTICA (GR)	302
EJE DE MANDO (GR)	303
EJE DE ENTRADA (GR)	304
TÁNDEM Y CUBIERTA (GR)	306
NEUMÁTICO (GR)	308
TRANSMISIÓN (CONFIG)	314
JUNTA UNIVERSAL (GR)	317
VÁLVULA DE LA TRABA DEL DIFERENCIAL Y MONTAJE (GR)	318
GRUPO DE VÁLVULAS	320
VÁLVULA SELECTORA Y DE CONTROL DE PRESIÓN (GR)	322
VÁLVULA DE SOLENOIDE (GR)	334
VÁLVULA DE CONTROL DE LA TRANSMISIÓN (GR)	338
RUEDA Y LLANTA (CONFIG)	342
RUEDA Y NEUMÁTICO (GR)	405
RUEDA (CONFIG)	468
RUEDA (GR)	472
BASTIDOR Y CAJA	481
EJE DELANTERO (GR)	482
CAJA DE LA BATERÍA (GR)	489
PARAGOLPES TRASERO (GR)	491
CAJA Y BASTIDOR (GR)	494
COMPARTIMIENTO DEL MOTOR (GR)	496
BASTIDOR DELANTERO (GR)	504
PROTECTOR Y SOPORTE DEL RADIADOR (GR)	508
PROTECTOR INFERIOR (GR)	512
PROTECTOR DE LA PLATAFORMA (GR)	514
ENGANCHE ARTICULADO (GR)	518
CAPÓ Y CONSOLA (GR)	520
TUBERIAS DE ENGRASE (GR)	522
TIRANTE DE DIRECCIÓN (GR)	523
PROTECTOR TÉRMICO DEL EJE DE MANDO (GR)	524
ESTRIBO DEL OPERADOR (GR)	525
SISTEMA DE FRENOS	525
FRENO DE SERVICIO (GR)	526

CONTENIDO

Nombre	Página
CONTROL DEL FRENO DE ESTACIONAMIENTO	528
FRENO DE SERVICIO - CONTROL (GR)	530
TANQUE DE AIRE (GR)	536
VÁLVULA DE CONTROL DE AIRE (CONJ)	540
CONTROL DE AIRE-VÁLVULA	541
SISTEMA HIDRÁULICO	541
CONTROL HIDRÁULICO (CONFIG)	542
CONTROL DE TRABA DEL DESPLAZADOR DEL CÍRCULO (GR)	546
CONTROL DE DIRECCIÓN (GR)	548
CILINDRO DE DESGARRADOR Y TUBERÍAS (GR)	549
CILINDRO DE ARTICULACIÓN Y MONTAJE (GR)	550
CILINDRO DE LEVANTAMIENTO DE HOJA Y MONTAJE (GR)	551
CILINDRO DE LA PUNTA DE LA HOJA Y MONTAJE (GR)	553
CILINDRO DE DESPLAZAMIENTO DEL CÍRCULO Y MONTAJE (GR)	554
CILINDRO DE ESCARIFICADOR Y MONTAJE (GR)	555
CILINDRO DE DESPLAZAMIENTO LATERAL Y MONTAJE (GR)	556
CILINDRO DE DIRECCIÓN Y MONTAJE (GR)	557
CILINDRO DE INCLINACIÓN DE RUEDA Y MONTAJE (GR)	558
ARTICULACIÓN DE CILINDRO (GR)	559
CILINDRO DE LEVANTAMIENTO DE LA HOJA (GR)	562
CILINDRO DE INCLINACIÓN DE LA HOJA (GR)	564
CILINDRO DE DESPLAZAMIENTO DEL CÍRCULO (GR)	566
ARTICULACIÓN DE CILINDRO (GR)	567
CILINDRO DE ESCARIFICADOR (GR)	568
CILINDRO DE DESPLAZAMIENTO LATERAL (GR)	569
CILINDRO DE DIRECCIÓN (GR)	570
CILINDRO DE INCLINACIÓN DE LAS RUEDAS (GR)	574
MANDO DEL MANDO DEL CIRCULO (MANDO DEL CÍRCULO (GR)	576
PROTECTOR DE CILINDRO (GR)	583
CABLES DE LA TRABA DEL DESPLAZADOR DEL CÍRCULO (GR)	584
TUBERÍAS HIDRÁULICAS (GR)	585
BOMBA - TUBERÍAS DE (GR)	602
TUBERÍAS DEL DESGARRADOR (GR)	604
TUBERÍAS DE DIRECCIÓN (GR)	606
TRABA DE DESPLAZAMIENTO DEL CIRCULO (GR)	608
MOTOR HIDRÁULICO DE ENGRANAJES (GR)	610
BOMBA Y MONTAJE (GR)	612
DOSIFICACIÓN - BOMBA DE (GR)	614
BOMBA DE PISTONES (GR)	616
GRUPO GIRATORIO DE BOMBA	618
EJE DE MANDO DE LA BOMBA (GR)	619
UNION GIRATORIA (GR)	621
TANQUE Y FILTRO HIDRÁULICOS (GR)	622
TANQUE HIDRÁULICO Y MONTAJE (GR)	624
JUNTA UNIVERSAL DEL MANDO DE LA BOMBA (GR)	626
VÁLVULA Y VARILLAJE (GR)	628
VÁLVULAS HIDRÁULICAS - GRUPO DE 2	650
GRUPO DE 3 VÁLVULAS HIDRÁULICAS	651
GRUPO DE 4 VÁLVULAS HIDRÁULICAS	654
BANCADA 5 (GR)	658
GRUPO DE VÁLVULAS	661
VÁLVULA DE COMBINACIÓN (GR)	662
VÁLVULA DE CONTROL (GR)	666
VÁLVULA COMPENSADORA DE FLUJO Y PRESIÓN (GR)	690
VÁLVULA DE ALIVIO (GR)	692
VÁLVULA DE LANZADERA (GR)	705
VÁLVULA DE SOLENOIDE (GR)	706
IMPLEMENTOS	706
HOJA Y PUNTA HIDRÁULICAS (CONFIG)	707
CONFIGURACIÓN DE HOJA	709
HOJA (GR)	712
SOPORTE DE LA HOJA (GR)	717
SOPORTE DEL ESCARIFICADOR (GR)	718
CÍRCULO (GR)	719
BARRA DE TIRO (GR)	722
EXTENSIÓN DE LA HOJA (GR)	724
LEVANTAMIENTO - HOJA DE (GR)	726
TIRANTE INFERIOR (GR)	728
TIRANTE SUPERIOR (GR)	729
MONTAJE DEL DESGARRADOR (GR)	730
PLANCHA DE EMPUJE (GR)	732
DESGARRADOR (CONFIG)	733
DESGARRADOR (GR)	734
ESCARIFICADOR (CONFIG)	735
GRUPO ESCARIFICADOR	736
DIENTE DE DESGARRADOR (GR)	739
PUESTO DEL OPERADOR	739
ACCESORIOS DE LA CABINA (GR)	740
AJUSTADOR DEL ASIENTO (GR)	742
SOPLADOR DE LA CABINA Y MONTAJE (GR)	745
SOPLADOR DE LA CABINA	746
CABINA DE PERFIL ALTO (CONFIG)	747
CABINA SIN ROPS (CONFIG)	748
CABINA DE PERFIL ALTO (GR)	749

CONTENIDO

Nombre	Página
CABINA SIN ROPS (GR)	750
TECHO (CONFIG)	751
TECHO (GR)	752
CONSOLA DEL OPERADOR (GR)	754
PUERTA (GR)	758
PUERTA DE CABINA	762
PUERTA (GR)	764
PUERTA DE CABINA	768
DESEMPAÑADOR - VENTILADOR (GR)	770
VENTILADOR DESCONGELADOR (GR)	771
DESEMPAÑADOR - VENTILADOR (GR)	772
VENTILADOR DESCONGELADOR (GR)	774
PROTECTOR CONTRA EL VANDALISMO (GR)	776
CALEFACCIÓN Y MONTAJE (GR)	777
CALEFACCIÓN DE LA CABINA (CONFIG)	778
CALENTADOR DE ASIENTO (GR)	780
BOCINA DE AIRE (GR)	783
BOCINA ELÉCTRICA (GR)	790
GRUPO DE AISLAMIENTO DE LA CABINA	792
ENCENDEDOR DE CIGARRILLOS (GR)	794
REVESTIMIENTO DE LA CABINA (GR)	796
TUBERÍAS DE LA CALEFACCIÓN (GR)	808
GRUPO DE SUJECION DE MANUALES DE SERVICIO	809
PERSIANAS DE LA CABINA (GR)	810
RETROVISOR (GR)	811
GRUPO DE INDICADORES	814
MOTOR-LIMPIAPARABRISAS (GR)	815
GRUPO DE MONTAJE DE LA CABINA	816
MONTAJE DE LA ESTRUCTURA ROPS (GR)	818
PANEL DE LA CABINA (GR)	820
TABLERO DE INSTRUMENTOS (GR)	824
PANEL DERECHO (GR)	828
PANEL IZQUIERDO (GR)	830
PROTECCIÓN CONTRA EL VANDALISMO (CONFIG)	832
ESTRUCTURA ROPS (CONFIG)	833
ESTRUCTURA ROPS (GR)	836
CABINA ROPS CERRADA (GR)	837
CABINA ROPS DE ALTO PERFIL (GR)	842
PERSIANA PARA EL SOL (GR)	844
CINTURÓN DE SEGURIDAD (GR)	845
ASIENTO (GR)	846
ASIENTO FIJO (GR)	853
SOPORTE DEL ASIENTO (GR)	860
VÁLVULA DE SOLENOIDE (GR)	862
LAVAPARABRISAS DE LA VENTANA (GR)	864
LAVAPARABRISAS (GR)	868
VENTANA (GR)	870
VENTANA DE LA CABINA (GR)	873
VENTANA (GR)	874
LIMPIAPARABRISAS DE LA VENTANA (GR)	876
LIMPIAPARABRISAS (GR)	882

Nombre	Página
EQUIPO Y SUMINISTRO DE SERVICIOS	882
CALCOMANÍAS Y PLACAS DE IDENTIFICACIÓN (GR)	883
PLACA DE CERTIFICACIÓN	900
CAJA DE HERRAMIENTAS (GR)	901
INDICE DE NUMEROS DE PIEZA	B1

ÍNDICE

Designação	Página
INFORMAÇÃO GERAL	A29
ALTERNATIVAS DE REPARO	A38
ADITIVOS SUPLEMENTARES DO LÍQUIDO ARREFECEDOR	A43
NOMENCLATURA DE PEÇAS INGLÊS-PORTUGUÊS	A45
PEÇAS DE MANUTENÇÃO	A67
ÍNDICE	A109
MÁQUINA - ARRANJO	1
CHASSI	1
ARRANJO GERAL	2
MOTOR - ARRANJO	2
MOTOR	3
GRUPO DE INSTALAÇÃO - MOTOR	5
MOTOR BÁSICO	5
COMPRESSOR DE AR	6
EIXO-COMANDO DE VÁLVULA	14
SUPORTE DO RETENTOR	15
TAMPA - BLOCO DO MOTOR	16
TAMPA - CAIXA DIANTEIRA	17
TAMPA - REDUÇÃO DE RUÍDOS	18
TAMPA - MECANISMO DAS VÁLVULAS	19
VIRABREQUIM	20
BLOCO DO MOTOR	21
CABEÇOTE DO MOTOR	25
AMORTECEDOR DE VIBRAÇÕES E POLIA	28
DRENO - CÁRTER DO ÓLEO	29
COMANDO DO VENTILADOR	30
COMANDO DA BOMBA D'ÁGUA	32
VOLANTE DO MOTOR	33
ENGRENAGENS DE DISTRIBUIÇÃO	34
CAIXA DO VOLANTE DO MOTOR	35
CAIXA DIANTEIRA	36
LEVANTAMENTO DO MOTOR	37
TUBOS - COMPRESSOR DE AR	38
MONTAGEM - MOTOR E TRANSMISSÃO	44
CÁRTER DO ÓLEO DO MOTOR	46
PISTÃO E BIELA	47
POLIA DO VIRABREQUIM	48
BALANCIM	49
RETENTOR DO VIRABREQUIM	50
RETENTOR - CAIXA DO VOLANTE	53
SUPORTE DO MOTOR	54
MECANISMO DAS VÁLVULAS	55
SISTEMA DE LUBRIFICAÇÃO	55
RESPIRO	56
BOCAL DE ENCHIMENTO DE ÓLEO	57
FILTRO - ÓLEO DO MOTOR	60
ELIMINAÇÃO DE VAPORES DO CÁRTER	62
INDICADOR - NÍVEL DO ÓLEO (VARETA)	63
TUBOS - ÓLEO DO MOTOR	64
TUBOS - ÓLEO DO TURBOALIMENTADOR	65
PROTETOR - SISTEMA DE LUBRIFICAÇÃO	66
BOMBA DE ÓLEO - MOTOR	68
SISTEMA DE ARREFECIMENTO	71
ARREFECEDOR - ÓLEO DO MOTOR	72
ARREFECEDOR DE ÓLEO DA TRANSMISSÃO	73
EXTENSÃO DO TUBO DE DRENAGEM	74
VENTILADOR DE SOPRO	75
TUBOS - ÁGUA	76
BOMBA DE ÁGUA	80
RADIADOR	82
SISTEMA DE ADMISSÃO DE AR E DE ESCAPE	84
PÓS-ARREFECEDOR A ÁGUA	85
PURIFICADOR DE AR	86
CARTUCHO DO TURBOALIMENTADOR	88
EJETOR DE POEIRA	89
TUBOS - AR	90
COLETOR DE ESCAPE	93
COLETOR DE ADMISSÃO	94
SILENCIADOR	95
TURBOALIMENTADOR	96
SISTEMA DE COMBUSTÍVEL	99
BASE DO FILTRO DE COMBUSTÍVEL	100
CONTROLE DE INJEÇÃO DO COMBUSTÍVEL	101
CONTROLE DO GOVERNADOR	102
COMANDO DO GOVERNADOR E BOMBA DE TRANSFERÊNCIA	106
FIXADORES - GOVERNADOR	108
GOVERNADOR - INJETOR	109
CAIXA DO GOVERNADOR	122
TUBOS - DRENAGEM	126
TUBOS - COMBUSTÍVEL	128
TUBOS - FILTRO DO COMBUSTÍVEL	130
TUBOS - LIMITADOR DO COMBUSTÍVEL	132
TUBOS - ÓLEO DO GOVERNADOR	133
BOMBA DA UNIDADE INJETORA	134
SEPARADOR DE ÁGUA	136
SOLENÓIDE DE PARADA	137
TANQUE DE COMBUSTÍVEL	138
VÁLVULA DE RETENÇÃO	139
VÁLVULA SOLENÓIDE	140
SISTEMA ELÉTRICO E DE PARTIDA	141
ALARME	142
ALTERNADOR DE CORRENTE	144

ÍNDICE

Designação	Página
CONTROLE DO SISTEMA ELETRÔNICO	152
CONTROLE ELETRÔNICO - CONVERSOR DE TORQUE	153
CONVERSOR ELÉTRICO E MONTAGEM	155
CONVERSOR ELÉTRICO	156
SISTEMA ELETRÔNICO - TRANSMISSÃO	158
LÂMPADA - FAROL	159
FAROL DIANTEIRO	160
LÂMPADA - SINALIZAÇÃO	162
ILUMINAÇÃO	164
SISTEMA DE ILUMINAÇÃO - FARÓIS	168
SENSOR - TEMPERATURA	174
AUXILIAR DE PARTIDA A ÉTER	176
MOTOR ELÉTRICO DE PARTIDA	178
INTERRUPTOR - BATERIA	184
INTERRUPTOR - PARTIDA	185
ALARME DE MARCHA À RÉ	186
CABOS/FIOS ELÉTRICOS - CABINE	188
CABOS/FIOS ELÉTRICOS - MOTOR	192
CABOS/FIOS ELÉTRICOS - DIANTEIROS	196
CABOS/FIOS ELÉTRICOS - TRASEIROS	206
CABOS/FIOS ELÉTRICOS - CONSOLE DA TRANSMISSÃO	226
CABOS/FIOS ELÉTRICOS - CONSOLE DA DIREÇÃO	232
TREM DE FORÇA	233
FREIO DE ESTACIONAMENTO	234
CARCAÇA DAS ENGRENAGENS PLANETÁRIAS E COMPONENTES	236
CAIXA E COMPONENTES - TRANSMISSÃO	248
CORRENTE - COMANDO	253
EMBREAGEM DA TRANSMISSÃO	254
CONTROLE DA EMBREAGEM	270
CONTROLE DA TRAVA DO DIFERENCIAL	272
CONTROLE DA TRANSMISSÃO	276
CONTROLE HIDRÁULICO DA TRANSMISSÃO	278
ACOPLAMENTO TORSIONAL	282
DIFERENCIAL E COROA	284
TRAVA - DIFERENCIAL	286
DIFERENCIAL	288
BOCAL DE ENCHIMENTO DE ÓLEO DO TREM DE FORÇA	290
FILTRO - ÓLEO DA TRANSMISSÃO	291
COMANDO FINAL	292
ENGRENAGEM - COROA	294
TUBOS - ÓLEO DA TRANSMISSÃO	296
TREM DE FORÇA	298
PROTETOR - BOCAL DE ENCHIMENTO DO ÓLEO DO MOTOR	299
BOMBA DE ENGRENAGENS	300
FILTRO - MAGNÉTICO	302
EIXO DE TRANSMISSÃO	303
EIXO DE ENTRADA	304
TANDEM E TAMPA	306
PNEU	308
TRANSMISSÃO	314
JUNTA UNIVERSAL	317
VÁLVULA E MONTAGEM - TRAVA DO DIFERENCIAL	318
VÁLVULA	320
VÁLVULA SELETORA E CONTROLE DE PRESSÃO	322
VÁLVULA SOLENÓIDE	334
VÁLVULA DE CONTROLE - TRANSMISSÃO	338
RODA E PNEU	342
RODA	468
CHASSI E CARROCERIA	481
EIXO DIANTEIRO	482
CAIXA DA BATERIA	489
PÁRA-CHOQUE TRASEIRO	491
CAIXA E CHASSI	494
COBERTURA DO MOTOR	496
CHASSI DIANTEIRO	504
PROTETOR E SUPORTE DO RADIADOR	508
PROTETOR INFERIOR	512
PROTETOR - PLATAFORMA	514
ENGATE ARTICULADO	518
CAPO E PAINEL	520
TUBOS - GRAXA	522
ELO - DIREÇÃO	523
BLINDAGEM DO EIXO DA TRANSMISSÃO	524
DEGRAU	525
SISTEMA DE FREIO	525
FREIO DE SERVIÇO	526
CONTROLE DO FREIO DE ESTACIONAMENTO	528
CONTROLE DO FREIO DE SERVIÇO	530
TANQUE DE AR	536
VÁLVULA DE CONTROLE DO AR	540
SISTEMA HIDRÁULICO	541
CONTROLE HIDRÁULICO	542
CONTROLE DO PINO MESTRE DE DESLOCAMENTO LATERAL	546
CONTROLE DE DIREÇÃO	548
CILINDROS E TUBOS - RÍPER	549
CILINDRO E MONTAGEM - ARTICULAÇÃO	550
CILINDRO E MONTAGEM - LEVANTAMENTO DA LÂMINA	551
CILINDRO E MONTAGEM - TOMBAMENTO DA LÂMINA	553
CILINDRO E MONTAGEM - DESLOCAMENTO DO CÍRCULO	554
CILINDRO E MONTAGEM - ESCARIFICADOR	555
CILINDRO E MONTAGEM - DESLOCAMENTO DA LÂMINA	556

ÍNDICE

Designação	Página
CILINDRO DE DIREÇÃO E MONTAGEM	557
CILINDRO E MONTAGEM - INCLINAÇÃO DAS RODAS	558
CILINDRO DE ARTICULAÇÃO	559
CILINDRO DE LEVANTAMENTO DA LÂMINA	562
CILINDRO DE TOMBAMENTO DA LÂMINA	564
CILINDRO DE DESLOCAMENTO LATERAL	566
CILINDRO DE ARTICULAÇÃO	567
CILINDRO DO ESCARIFICADOR	568
CILINDRO DE DESLIZAMENTO LONGITUDINAL	569
CILINDRO DA DIREÇÃO	570
CILINDRO DE INCLINAÇÃO LATERAL DAS RODAS	574
MOTOR DE REVERSÃO DO CÍRCULO	576
PROTETOR - CILINDRO	583
TUBOS - PINO MESTRE DE DESLOCAMENTO LATERAL	584
TUBOS - ÓLEO HIDRÁULICO	585
TUBOS - BOMBA	602
TUBOS - RÍPER	604
TUBOS - DIREÇÃO	606
TRAVA - DESLOCAMENTO LATERAL	608
MOTOR HIDRÁULICO GEROTOR	610
BOMBA E MONTAGEM	612
BOMBA REGULADORA	614
BOMBA DE PISTÃO	616
GRUPO ROTATIVO DA BOMBA	618
EIXO DE COMANDO DA BOMBA	619
ARTICULAÇÃO GIRATÓRIA	621
TANQUE HIDRÁULICO E FILTRO	622
TANQUE DE ÓLEO HIDRÁULICO E MONTAGEM	624
JUNTA UNIVERSAL - COMANDO DA BOMBA	626
VÁLVULA E ARTICULAÇÕES	628
GRUPO DE VÁLVULAS DE CONTROLE - DUPLO	650
GRUPO DE VÁLVULAS DE CONTROLE - TRIPLO	651
GRUPO DE VÁLVULAS DE CONTROLE - QUÁDRUPLO	654
GRUPO DE VÁLVULAS DE CONTROLE 5	658
VÁLVULA	661
VÁLVULA COMBINADA	662
VÁLVULA DE CONTROLE	666
VÁLVULA DE CONTROLE - PRESSÃO E COMPENSAÇÃO DE FLUXO	690
VÁLVULA DE ALÍVIO	692
VÁLVULA DE SEPARAÇÃO	705
VÁLVULA SOLENÓIDE	706
ACESSÓRIOS	706
LÂMINA HIDRÁULICA E INCLINAÇÃO	707
LÂMINA	709
TIRANTE DA LÂMINA	717
SUPORTE DO ESCARIFICADOR	718
CÍRCULO	719
BARRA DE TRAÇÃO	722
EXTENSÃO DA LÂMINA	724
LEVANTAMENTO DA LÂMINA	726
ELO - INFERIOR	728
ELO - SUPERIOR	729
MONTAGEM - RÍPER	730
CHAPA DE EMPUXO	732
RÍPER	733
ESCARIFICADOR	735
DENTE DO RÍPER	739
ESTAÇÃO DO OPERADOR	739
ACESSÓRIO - CABINE	740
AJUSTADOR DO ASSENTO	742
VENTILADOR DA CABINE E MONTAGEM	745
VENTILADOR DA CABINE	746
CABINE - PERFIL ALTO	747
CABINE OPERADOR - SEM ROPS	748
CABINE - ALTO PERFIL	749
CABINE	750
TOLDO	751
CONSOLE DO OPERADOR	754
PORTA	758
PORTA DA CABINE	762
PORTA	764
PORTA DA CABINE	768
VENTILADOR DESEMBAÇADOR	770
DESCONGELADOR	771
VENTILADOR DESEMBAÇADOR	772
DESCONGELADOR	774
PROTETOR CONTRA VANDALISMO	776
AQUECEDOR E MONTAGEM	777
AQUECEDOR DA CABINE	778
AQUECEDOR DO ASSENTO	780
BUZINA DE AR	783
BUZINA ELÉTRICA	790
ISOLADOR - TEMPO	792
ACENDEDOR DE CIGARROS	794
REVESTIMENTO DA CABINE	796
TUBOS - AQUECEDOR	808
PUBLICAÇÃO	809
VENEZIANA	810
ESPELHO RETROVISOR	811
INDICADOR	814
MOTOR - LIMPADOR DA JANELA	815
MONTAGEM - CABINE	816
MONTAGEM - ESTRUTURA ROPS	818
PAINEL - CABINE	820
PAINEL DE INSTRUMENTOS	824
PAINEL - LADO DIREITO	828
PAINEL - LADO ESQUERDO	830
PROTEÇÃO CONTRA VANDALISMO	832
ESTRUTURA ROPS	833

ÍNDICE

Designação	Página	Designação	Página
ROPS FECHADA	837		
ROPS DE ALTO PERFIL	842		
TELA PÁRA-SOL	844		
CINTO DE SEGURANÇA	845		
ASSENTO	846		
ASSENTO ESTÁTICO	853		
SUPORTE - ASSENTO	860		
VÁLVULA SOLENÓIDE	862		
LAVADOR - JANELA	864		
LAVADOR DA JANELA	868		
JANELA	870		
JANELA DA CABINE	873		
JANELA	874		
LIMPADOR - JANELA	876		
LIMPADOR DO PÁRA-BRISA	882		
EQUIPAMENTOS DE SERVIÇO E SUPRIMENTOS	882		
PLACA E DECALQUE	883		
PLACA DE CERTIFICAÇÃO	900		
CAIXA DE FERRAMENTAS	901		
ÍNDICE DE NÚMERO DE PEÇA	B1		

INHALTSVERZEICHNIS

Bezeichnung	Seite
ALLGEMEINE HINWEISE	A32
REPARATURALTERNATIVEN	A39
KÜHLMITTELZUSATZ	A44
WARTUNGSTEILE	A72
STICHWORTVERZEICHNIS	A119
MASCHINENAUSFÜHRUNG	1
FAHRWERK	1
MASCHINENAUSFÜHRUNG	2
MOTORAUSFÜHRUNG	2
MOTORAUSFÜHRUNG	3
MOTOR-EINBAUSATZ	5
MOTOR - GRUNDAUSFÜHRUNG	5
LUFTKOMPRESSOR	6
NOCKENWELLE	14
DICHTUNGSTRÄGER	15
MOTORBLOCKDECKEL	16
STIRNRADGEHÄUSEDECKEL	17
SCHALLDÄMPFENDE VERKLEIDUNG	18
VENTILDECKEL	19
KURBELWELLE	20
MOTORBLOCK	21
ZYLINDERKOPF	25
DÄMPFER UND RIEMENSCHEIBE	28
ÖLWANNENABLASS	29
LÜFTERANTRIEB	30
KÜHLWASSERPUMPENANTRIEB	32
SCHWUNGRAD	33
STIRNRAD	34
SCHWUNGRADGEHÄUSE	35
STIRNRADGEHÄUSE	36
MOTORHUBÖSE	37
LUFTKOMPRESSORLEITUNGEN	38
MOTOR- UND GETRIEBEAUFLAGER	44
ÖLWANNE	46
PLEUELSTANGE UND KOLBEN	47
KURBELWELLEN-RIEMENSCHEIBE	48
VENTILKIPPHEBEL	49
KURBELWELLENDICHTUNG	50
SCHWUNGRADGEHÄUSEDICHTUNG	53
MOTORAUFHÄNGUNG	54
VENTILSTEUERUNG	55
SCHMIERSYSTEM	55
ENTLÜFTER	56
ÖLEINFÜLLSTUTZEN	57
ÖLFILTER	60
ENTDUNSTER	62
ÖLMESSSTAB	63
MOTORÖLLEITUNGEN	64
TURBOLADERÖLLEITUNGEN	65
SCHUTZABDECKUNG - SCHMIERSYSTEM	66
SCHMIERPUMPE	68
KÜHLSYSTEM	71
MOTORÖLKÜHLER	72
GETRIEBEÖLKÜHLER	73
ABLASSVERLÄNGERUNG	74
DRUCKLÜFTER	75
KÜHLWASSERLEITUNGEN	76
KÜHLWASSERPUMPE	80
KÜHLER	82
LUFTANSAUG- UND ABGASSYSTEM	84
LADELUFTKÜHLER, WASSERGEKÜHLT	85
LUFTREINIGER	86
TURBOLADEREINSATZ	88
STAUBAUSWERFER	89
DRUCKLUFTLEITUNGEN	90
AUSPUFFKRÜMMER	93
ANSAUGKRÜMMER	94
SCHALLDÄMPFER	95
TURBOLADER	96
KRAFTSTOFFSYSTEM	99
KRAFTSTOFFILTERSOCKEL	100
KRAFTSTOFFEINSPRITZSTEUERUNG	101
REGLERSTEUERUNG	102
REGLER UND KRAFTSTOFFÖRDERPUMPENANTRIEB	106
REGLER-HALTETEILE	108
REGLEREINSPRITZEINHEIT	109
REGLERGEHÄUSE	122
ABLASSLEITUNGEN	126
KRAFTSTOFFLEITUNGEN	128
KRAFTSTOFFILTERLEITUNGEN	130
KRAFTSTOFFREGLERLEITUNGEN	132
REGLERÖLLEITUNGEN	133
EINSPRITZDÜSENPUMPE	134
WASSERABSCHEIDER	136
ABSTELLMAGNETSPULE	137
KRAFTSTOFFTANK	138
SPERRVENTIL	139
MAGNETVENTIL	140
ELEKTRISCHE ANLAGE UND STARTSYSTEM	141
WARNVORRICHTUNG	142
DREHSTROMGENERATOR	144
ELEKTRON. ÜBERWACHUNGSSYSTEM	152
STEUERUNG, ELEKTRON. - DREHMOMENTWANDLER	153
UMFORMER, ELEKTR. UND BEFESTIGUNGSTEILE	155

INHALTSVERZEICHNIS

Bezeichnung	Seite
UMFORMER, ELEKTR.	156
GETRIEBEELEKTRONIK	158
ARBEITSLEUCHTEN	159
FRONTSCHEINWERFER	160
BLINKLEUCHTE	162
BELEUCHTUNGSANLAGE	164
ARBEITSLEUCHTEN	168
TEMPERATURSENSOR	174
ÄTHERSTARTHILFE	176
ANLASSMOTOR	178
HAUPTSCHALTER	184
STARTSCHALTER	185
RÜCKFAHRWARNHORN	186
FAHRERHAUSVERDRAHTUNG	188
MOTORVERDRAHTUNG	192
VERDRAHTUNG, VORNE	196
VERDRAHTUNG, HINTEN	206
SCHALTKONSOLENVERDRAHTUNG	226
LENKKONSOLENVERDRAHTUNG	232
KRAFTÜBERTRAGUNG	233
FESTSTELLBREMSE	234
PLANETGEHÄUSE UND TEILE	236
GETRIEBEGEHÄUSE UND TEILE	248
ANTRIEBSKETTE	253
GETRIEBEKUPPLUNG	254
KUPPLUNGSGESTÄNGE	270
DIFFERENTIALSPERRENGESTÄNGE	272
GETRIEBESTEUERUNG	276
GETRIEBEHYDRAULIK	278
TORSIONSKUPPLUNG	282
DIFFERENTIAL UND TELLERRAD	284
DIFFERENTIALSPERRE	286
DIFFERENTIAL	288
GETRIEBEÖLFÜLLSTUTZEN	290
GETRIEBESCHMIERFILTER	291
SEITENANTRIEB	292
TELLERRAD	294
GETRIEBEÖLLEITUNGEN	296
KRAFTÜBERTRAGUNG	298
GETRIEBEÖLEINFÜLLSTUTZENSCHUTZ	299
ZAHNRADPUMPE	300
MAGNETSIEB	302
ANTRIEBSWELLE	303
TANDEMGEHÄUSE UND DECKEL	306
REIFEN	308
GETRIEBE	314
KREUZGELENK	317
DIFFERENTIALSPERRE - VENTIL UND BEFESTIGUNGSTEILE	318
VENTIL	320
VENTIL - SCHALT- UND DRUCKSTEUERUNG	322
MAGNETVENTIL	334
GETRIEBESTEUERVENTIL	338
RAD UND REIFEN	342
RADSATZ	468
RAHMEN UND AUFBAU	481
VORDERACHSE	482
BATTERIEKASTEN	489
HECKSTOSSSTANGE	491
RAHMEN UND GEHÄUSE	494
MOTORVERKLEIDUNG	496
VORDERRAHMEN	504
VERKLEIDUNG UND BEFESTIGUNG - KÜHLER	508
PANZERWANNE	512
FAHRERPLATTFORMVERKLEIDUNG	514
KNICKRAHMENANSCHLUSS	518
MOTORHAUBE UND ARMATURENBRETT	520
SCHMIERLEITUNGEN	522
LENKGESTÄNGE	523
ANTRIEBSWELLENSCHUTZ	524
STEIGLEITER	525
BREMSSYSTEM	525
BETRIEBSBREMSE	526
FESTSTELLBREMSGESTÄNGE	528
BREMSGESTÄNGE	530
DRUCKLUFTBEHÄLTER	536
DRUCKLUFT-STEUERVENTIL	540
HYDRAULIKSYSTEM	541
HYDRAULIKSTEUERUNG	542
SCHARDREHWERKSPERRENSTEUERUNG	546
LENKBETÄTIGUNG	548
AUFREISSERZYLINDER UND -LEITUNGEN	549
GELENKZYLINDER UND BEFESTIGUNGSTEILE	550
SCHARHUBZYLINDER UND BEFESTIGUNGSTEILE	551
SCHARKIPPZYLINDER UND BEFESTIGUNGSTEILE	553
SEITENSCHUBZYLINDER UND BEFESTIGUNGSTEILE	554
AUFREISSERZYLINDER UND BEFESTIGUNGSTEILE	555
SEITENSCHIEBERZYLINDER UND BEFESTIGUNGSTEILE	556
LENKZYLINDER UND AUFHÄNGUNG	557
RADSTURZZYLINDER UND BEFESTIGUNGSTEILE	558
KNICKLENKZYLINDER	559
SCHARHUBZYLINDER	562
SCHARNEIGEZYLINDER	564
SEITENSCHUBZYLINDER	566
KNICKLENKZYLINDER	567
FRONTAUFREISSERZYLINDER	568
SEITENSCHUBZYLINDER	569

INHALTSVERZEICHNIS

Bezeichnung	Seite
LENKZYLINDER	570
RADSTURZZYLINDER	574
SCHARDREHWERK	576
ZYLINDERVERKLEIDUNG	583
SCHARDREHWERKSPERRENLEITUNGEN	584
HYDRAULIKLEITUNGEN	585
HYDRAULIKPUMPE UND LEITUNGEN	602
AUFREISSERLEITUNGEN	604
LENKÖLLEITUNGEN	606
SEITENSCHUBSPERRE	608
ZAHNRADANTRIEB	610
PUMPE UND BEFESTIGUNGSTEILE	612
ZUMESSPUMPE	614
KOLBENPUMPE	616
KOLBENPUMPENUMLAUFSATZ	618
PUMPENANTRIEBSWELLE	619
SCHWENKBLOCK	621
HYDRAULIKTANK UND SCHMIERFILTER	622
HYDRAULIKTANK UND BEFESTIGUNGSTEILE	624
PUMPENANTRIEB - KUGELGELENK-STECKSCHLÜSSEL	626
VENTIL UND GESTÄNGE	628
VENTILSATZ (2-VENTIL)	650
VENTILSATZ (3-VENTIL)	651
VENTILSATZ (4-VENTIL)	654
VENTILSATZ (5-VENTIL)	658
VENTIL	661
SAMMELVENTIL	662
STEUERVENTIL	666
DRUCK- UND ZUFLUSSAUSGLEICHSVENTIL	690
ÜBERDRUCKVENTIL	692
PENDELVENTIL	705
MAGNETVENTIL	706
ARBEITSGERÄTE	706
SCHARSEITENVERSTELLUNG UND -NEIGUNG	707
SCHAR	709
SCHARAUFHÄNGUNG	717
AUFREISSERTRÄGER	718
SCHARDREHWERK	719
ZUGHAKEN	722
SCHARVERLÄNGERUNG	724
SCHARHUB	726
GESTÄNGE - UNTEN	728
GESTÄNGE - OBEN	729
AUFREISSERAUFHÄNGUNG	730
SCHUBPLATTE	732
AUFREISSER - TEILLISTE	733
AUFREISSER	734
FRONTAUFREISSER	735
AUFREISSERZAHN	739
FAHRERHAUS	739
FAHRERHAUSZUBEHÖR	740
FAHRERSITZVERSTELLER	742
FAHRERHAUSGEBLÄSE U. BEFESTIGUNGSTEILE	745
FAHRERHAUSVENTILATOR	746
FAHRERHAUS, ERHÖHT	747
FAHRERHAUS (OHNE ÜBERROLLSCHUTZ)	748
FAHRERHAUS, ERHÖHT	749
FAHRERHAUS (OHNE ÜBERROLLSCHUTZ)	750
WETTERDACH	751
STEUERKONSOLE	754
FAHRERHAUSTÜR	758
ENTFROSTERGEBLÄSE	770
SCHUTZVERKLEIDUNG	776
FAHRERHAUSHEIZUNG UND AUFHÄNGUNG	777
FAHRERHAUSHEIZUNG	778
FAHRERSITZHEIZUNG	780
DRUCKLUFTHUPE	783
HUPE, ELEKTR.	790
WÄRMEISOLIERUNG	792
ZIGARETTENANZÜNDER	794
FAHRERHAUSAUSKLEIDUNG	796
HEIZUNGSLEITUNGEN	808
DOKUMENTATION	809
FAHRERHAUSLUFTSCHLITZE	810
RÜCKSPIEGEL	811
ANZEIGENSATZ	814
SCHEIBENWISCHERMOTOR	815
FAHRERHAUSANBAUSATZ	816
ÜBERROLLSCHUTZAUFLAGER	818
FAHRERHAUSVERKLEIDUNG	820
INSTRUMENTENTAFEL	824
VERKLEIDUNG, RECHTS	828
VERKLEIDUNG, LINKS	830
SCHUTZABDECKUNG	832
ÜBERROLLSCHUTZ	833
ÜBERROLL-SCHUTZKABINE	837
ÜBERROLLSCHUTZ, ERHÖHT	842
SONNENBLENDE	844
SICHERHEITSGURT	845
FAHRERSITZ	846
FAHRERSITZ, FESTSTEHEND	853
SITZUNTERBAU	860
MAGNETVENTIL	862
SCHEIBENWASCHANLAGE	864
FAHRERHAUSFENSTER	870
SCHEIBENWISCHER	876
WARTUNGSAUSRÜSTUNG	882
SCHILD UND AUFKLEBER	883
BESCHEINIGUNGSPLAKETTE	900
WERKZEUGKASTEN	901
ERSATZTEILNUMMERNINDEX	B1

GENERAL INFORMATION

1. MACHINE IDENTIFICATION

Caterpillar machines are identified by Product Information Numbers (PIN). Some components included in a machine may be identified by Serial Numbers (S/N). Typical components that will be serialized include engines, transmissions, bulldozers, and rippers. The machine and engine are further identified by arrangement numbers and in some cases modification numbers. These numbers are shown on the product identification plate(s) and on the master plate in the operator's compartment.

Caterpillar dealers need all of these numbers to determine accurate parts identification.

2. ORDERING PARTS

Quality Caterpillar replacement parts are available from Caterpillar dealers throughout the world. Their parts inventories are up to date and include all parts normally required to protect your investment in Caterpillar machines. Dealers may offer repair kits or remanufactured parts to allow selection of the most effective repair alternative for a particular situation. When ordering parts, your order should specify the quantity, part number, part name, and the serial number/product identification number of the machine for which the parts are needed.

3. PARTS MANUAL ORGANIZATION

Product information in this manual is presented as "information elements" that represent all of the components for the specific model. Engine Arrangement and Seat Group are examples of information elements. The information elements are organized alphabetically by part name and secondarily by part number within each major section of the manual.

4. TABLE OF CONTENTS

SIS ***New Feature***

A table of contents (TOC) is found at the beginning of the manual. The TOC lists each section of the manual with a complete list of all information elements organized as they appear in the manual. Page numbers are provided for quick reference to detailed parts identification illustrations and serviceable consist lists.

5. MAINTENANCE PARTS INDEX

The Maintenance Parts Index, located near the beginning of the manual, references most frequently used maintenance part numbers, providing description, quantity, usage and page number. This information is organized alphabetically by part description.

6. INDEX

The index located near the front of the manual is an alphabetical listing of all information elements included in the manual. Page numbers are provided for quick reference to detailed parts identification illustrations and serviceable consist lists.

7. PART NUMBER INDEX

A numerical index listing all part numbers and the corresponding page number(s) appears at the back of the manual.

8. CAPTIONS

Captions located at the top of each page of an information element identify the part number and part name along with additional descriptive information. PIN and S/N information found in each caption should be used to select correct information for a specific machine. Field replacement options, identification of optional attachment components, and where used ("part of") information is also provided.

SIS ***New Feature***

The first line of a caption is shown in larger type font to indicate the beginning of an information element. Captions for additional pages that may be required to illustrate an information element will be shown in standard type font and will include the term *(contd.)*

.

9. NON-SERVICED PARTS

SIS ***New Feature***

In some instances it is necessary to display non-serviced parts that are a link to a lower level serviceable consist lists. These non-serviced part numbers are shown in *italic* type indicating that they are not available.

10. PARTS LIST REFERENCE NUMBERS

SIS *New Feature*

Numbers shown in the Ref No column correspond to numbers used in the associated graphic(s). An alphabetic suffix may be added to a reference number to identify lower level consist items. Numbers shown in the Graphic Ref column refer to the graphic number identifier displayed in the lower left corner of each illustration. The Graphic Ref number may be used in combination with the item Ref No to determine the correct part number. There may be intentional omission of a Ref No in a consist list as information is updated to reflect the latest serviceable part numbers.

11. INDENTED PART NAMES

When a part name is indented in a parts list, it is part of (included in) the group or assembly under which it is indented.

12. ILLUSTRATION REFERENCE LETTERS

When necessary, illustrations contain reference letters (A, B, C etc.) that are intended to track lines and harnesses from one point to another. They are also used to show where to reconnect illustrations that have been separated.

13. ABBREVIATIONS AND SYMBOLS

O.D. – Outside Diameter
I.D. – Inside Diameter
A – Not Part Of This Group
B – Use As Required
C – Change From Previous Type
D – Order By The Meter
E – Order By The Centimeter
F – Not Shown
G – Order By The Inch
I – See Hose Fabrication Guide
M – Metric Part
R – Remfg Part May Be Available
Y – Separate Illustration
Z – Not Serviced Separately

NOTE:

Continuing improvement and advancement of product design may cause changes to your machine which may not be included in this publication. Whenever a question arises regarding your Caterpillar product or this publication, please consult your Caterpillar dealer for the latest available information.

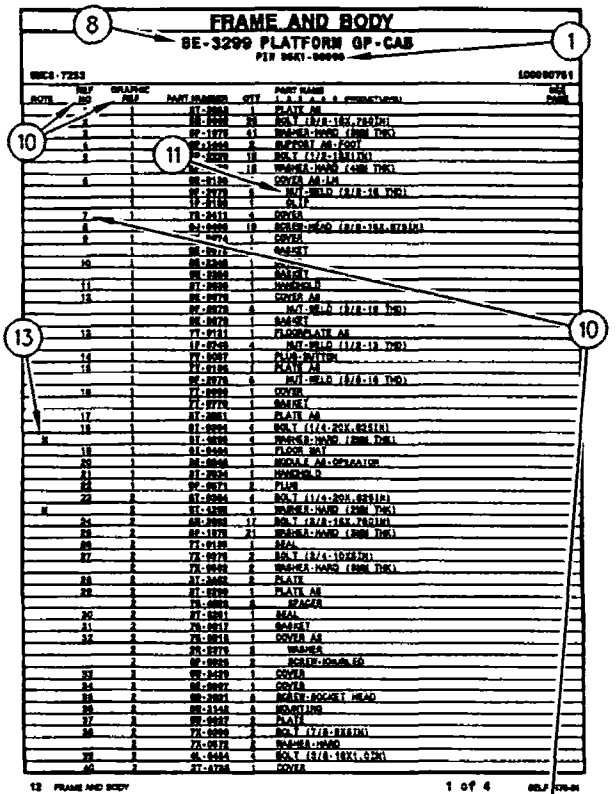
FRAME AND BODY
SE-3299 PLATFORM GP-CAB
1 of 4

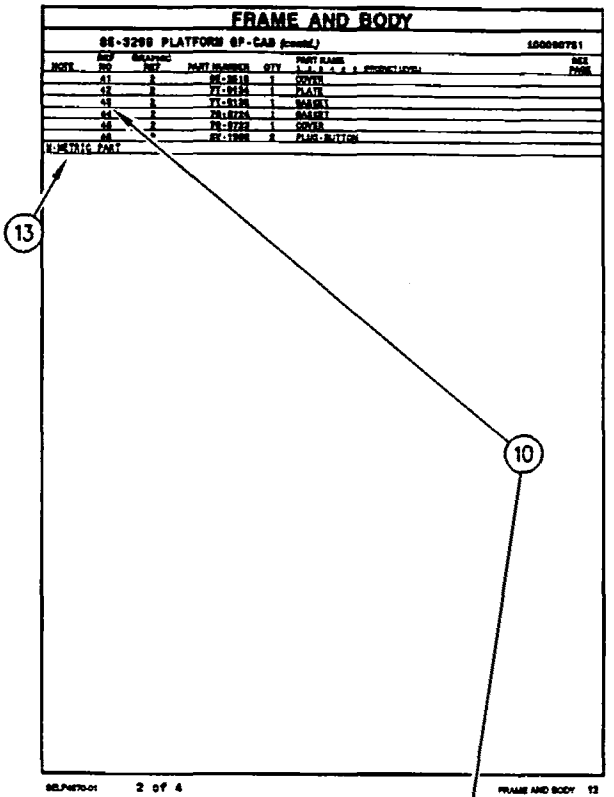
FRAME AND BODY
SE-3299 PLATFORM GP-CAB (cont'd.)
2 of 4

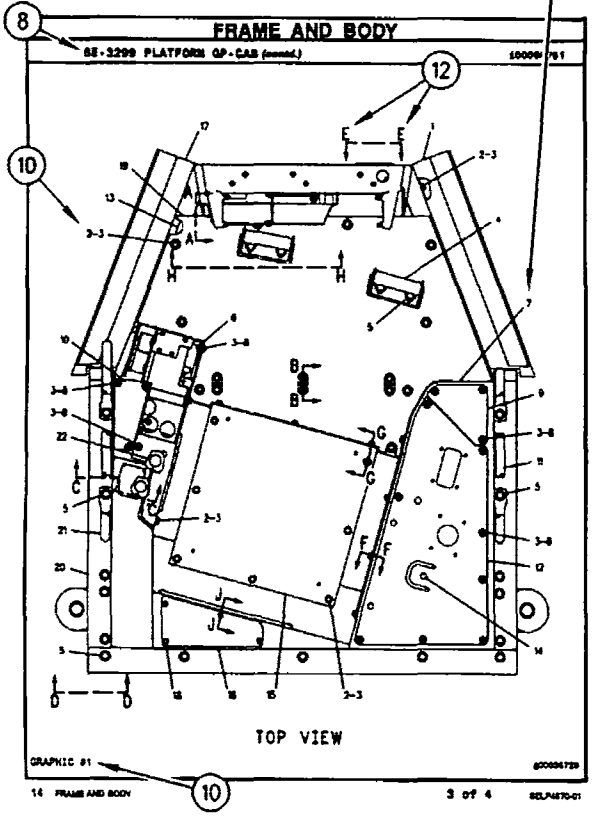
FRAME AND BODY
SE-3299 PLATFORM GP-CAB (cont'd.)
TOP VIEW
3 of 4

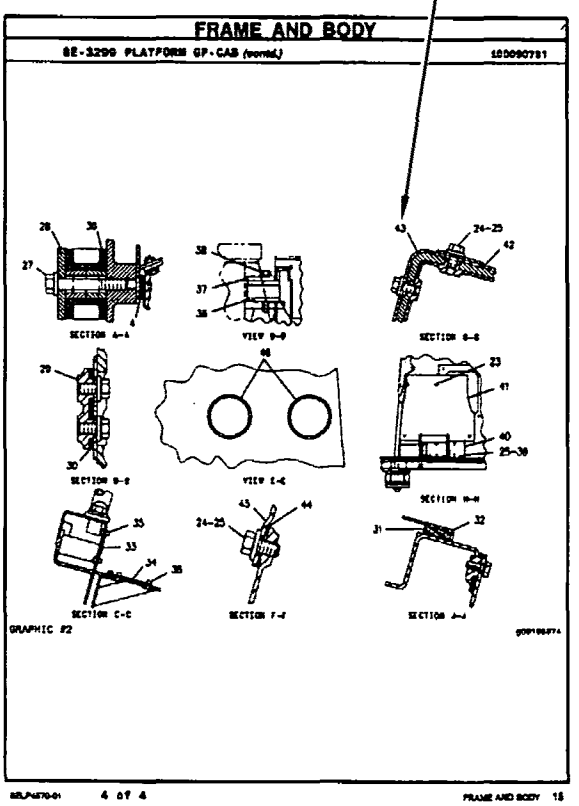
FRAME AND BODY
SE-3299 PLATFORM GP-CAB (cont'd.)
4 of 4

GÉNÉRALITÉS

1. IDENTIFICATION DE LA MACHINE

Toutes les machines Caterpillar portent un numéro d'identification (PIN). Certains composants des machines peuvent porter des numéros de série (S/N). En général, parmi les composants qui portent des numéros de série il y a les moteurs, les transmissions, les bulldozers et les rippers. En plus, la machine et le moteur peuvent recevoir des numéros de version, et dans certains cas, de modification. Ces numéros figurent sur les plaques de numéro de série et sur la plaque signalétique principale qui se trouve dans le poste de conduite.

Les concessionnaires Caterpillar doivent connaître tous ces numéros pour identifier correctement les pièces.

2. COMMANDE DE PIÈCES

Les concessionnaires Caterpillar fournissent dans le monde entier des pièces de rechange de qualité Caterpillar. Leurs stocks de pièces sont constamment réapprovisionnés et comptent toutes les pièces nécessaires pour assurer la bonne marche de vos machines Caterpillar. Certains concessionnaires proposent également des kits de réparation ou des pièces rénovées, ce qui permet de choisir la solution la plus économique dans une situation donnée. Lors des commandes de pièces, mentionner la quantité, le numéro et la désignation des pièces ainsi que le numéro de série ou le numéro d'identification (PIN) de la machine pour laquelle ces pièces sont requises.

3. ORGANISATION DU CATALOGUE DE PIÈCES

Les renseignements sur les produits sont présentés sous forme de "Information element" (élément d'information) représentant tous les composants d'un modèle donné. "Engine Arrangement" (version de moteur) et "Seat Group" (assemblage de siège)" sont des exemples d'éléments d'information. Les éléments d'information sont classés par ordre alphabétique par la désignation standard des pièces et par numéros de pièces dans chaque partie importante du manuel.

4. TABLE DES MATIÈRES

SIS ***Nouvelle Caractéristique***

La table des matières se trouve au début du manuel. La table des matières fournit la liste de tous les chapitres du manuel avec une liste complète de tous les éléments d'information classés par ordre d'apparition dans le manuel. Les numéros de page sont fournis afin que l'utilisateur puisse trouver rapidement les illustrations détaillées concernant l'identification des pièces et les listes des pièces d'entretien.

5. INDEX DES PIÈCES D'ENTRETIEN

La rubrique "Index des pièces d'entretien" qui se trouve au début du manuel renvoie aux pièces d'entretien les plus fréquemment utilisées en précisant la désignation, la quantité, là où la pièce est utilisée et le numéro de page. Ces pièces sont classés par ordre alphabétique.

6. INDEX

L'index qui se trouve vers le début du manuel est une liste alphabétique de tous les éléments d'information du manuel. Les numéros de page sont fournis afin que l'utilisateur puisse trouver rapidement les illustrations détaillées concernant l'identification des pièces et les listes des pièces d'entretien.

7. INDEX DES NUMÉROS DE PIÈCES

Une liste numérique de tous les numéros de pièces et des pages correspondantes se trouve à la fin du manuel.

8. LÉGENDES

SIS ***Nouvelle Caractéristique***

Les légendes qui se trouvent en haut de chaque page de chaque élément d'information fournissent le numéro de pièce, la désignation ainsi que des renseignements supplémentaires sur les pièces. Les renseignements concernant les numéros d'identification produit (PIN) et les numéros de série (S/N) qui se trouvent dans chaque légende doivent être utilisés pour sélectionner les informations correctes pour une machine donnée. Les informations concernant les options de remplacement sur le chantier, l'identification des composants des équipements offerts en option et les lieux d'application sont aussi fournies.

9. PIÈCES NON FOURNIES

SIS ***Nouvelle Caractéristique***

Dans certains cas, il est nécessaire d'indiquer les pièces non fournies qui sont en aval de la liste des pièces d'entretien. Les numéros des pièces non fournies dans la liste des pièces et les légendes seront en italique pour signaler qu'ils ne sont pas disponibles.

10. NUMÉROS DE RÉFÉRENCE DE LA LISTE DES PIÈCES

SIS ***Nouvelle Caractéristique***

Les numéros indiqués dans la colonne des numéros de références correspondent aux numéros utilisés dans les illustrations auxquelles ils sont associés. Un suffixe alphabétique peut être ajouté à un numéro de référence pour identifier la liste des articles en aval. Les numéros indiqués dans la colonne de référence de l'illustration renvoient à l'identification du numéro affiché dans le coin inférieur gauche de chaque illustration. Le numéro de référence de l'illustration pourrait être utilisé avec le numéro de référence de l'article pour déterminer le numéro de pièce correct. Il peut y avoir une omission intentionnelle d'un numéro de référence dans une liste de pièces suite à la mise à jour des informations en vue de refléter les numéros de pièces les plus récentes.

11. INDENTED PART NAMES (DÉSIGNATIONS DE PIÈCES EN RETRAIT)

Lorsqu'une désignation de pièce est en retrait, cela veut dire que l'article en regard fait partie de l'ensemble sous lequel il figure.

12. LETTRES DE RÉFÉRENCE DES ILLUSTRATIONS

Quand cela est nécessaire, les illustrations comportent des lettres de référence (A, B, C, etc.) pour montrer le trajet des canalisations et faisceaux de câbles d'un point à l'autre. Elles sont utilisées également pour indiquer où relier les illustrations séparées auparavant.

13. ABRÉVIATIONS ET SYMBOLES

O.D. – Diamètre extérieur
I.D. – Diamètre intérieur
A – Ne fait pas partie de ce groupe
B – Utiliser selon besoin
C – Modification
D – Commander par mètre
E – Commander par centimètre
F – Non représenté
G – Commander par pouce
I – Voir "Hose Fabrication Guide"
M – Pièce métrique
R – Pièce rénovée éventuellement disponible
Y – Illustration séparée
Z – Non fourni séparément

NOTA:

En raison du progrès technique et des améliorations continuelles apportées au matériel, votre machine comporte peut-être des modifications qui n'apparaissent pas dans la présente publication. En cas de doute sur un détail de votre machine Caterpillar ou sur le texte de la présente publication, adressez-vous à votre concessionnaire Caterpillar.

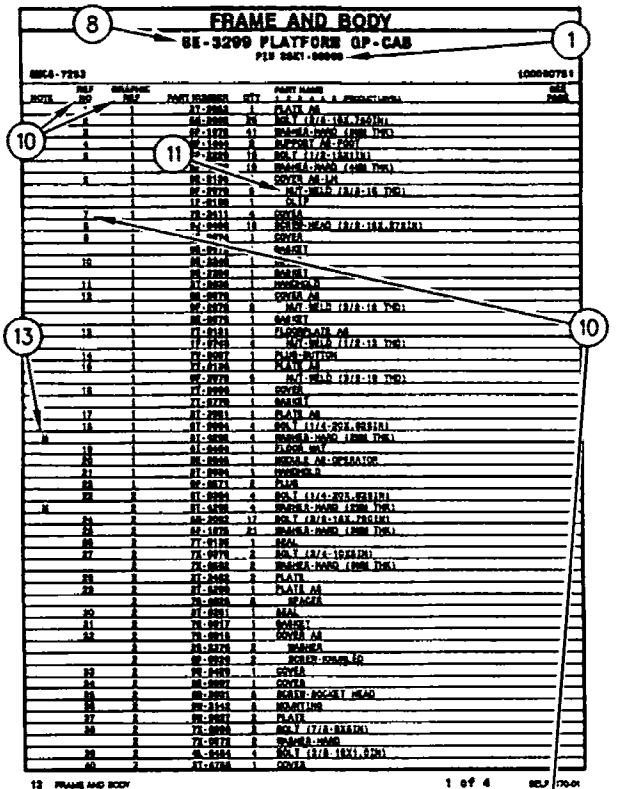
FRAME AND BODY
8E-3299 PLATFORM GP-CAB
1 of 4

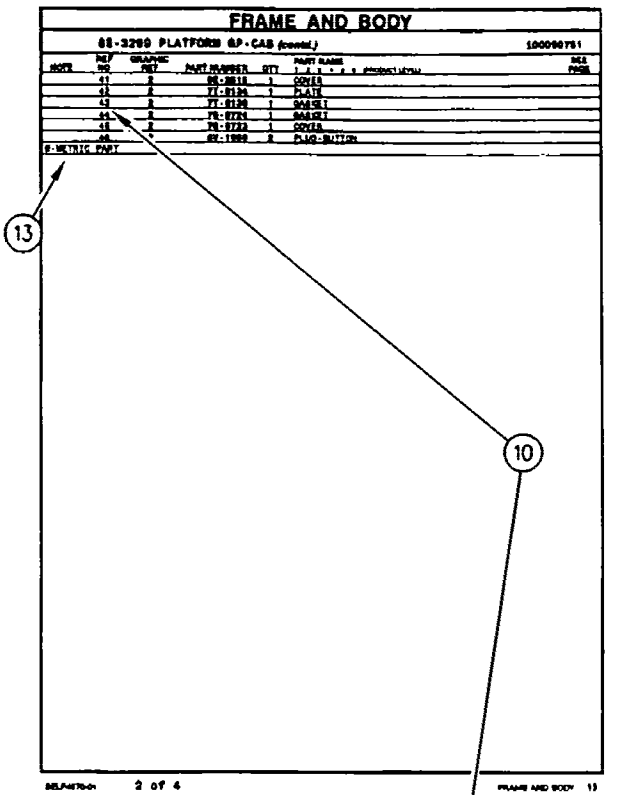
FRAME AND BODY
8E-3299 PLATFORM GP-CAB (contd.)
2 of 4

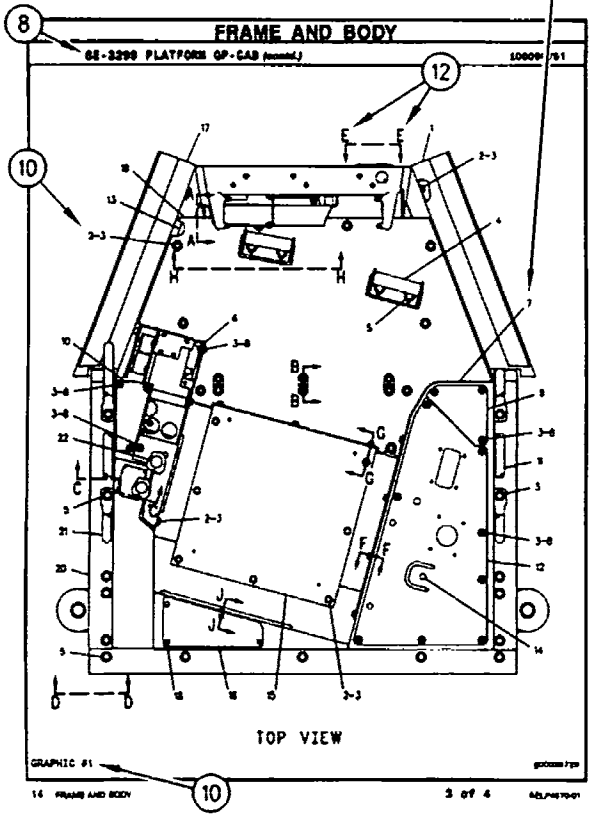
FRAME AND BODY
8E-3299 PLATFORM GP-CAB (contd.)
TOP VIEW
3 of 4

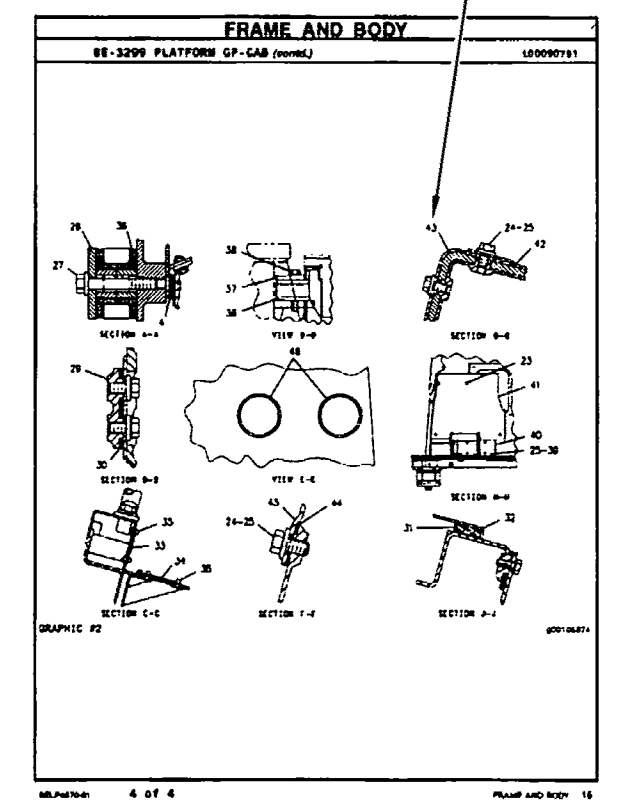
FRAME AND BODY
8E-3299 PLATFORM GP-CAB (contd.)
4 of 4

INFORMACIÓN GENERAL

1. MÁQUINAS

Las máquinas Caterpillar se identifican con Números de Identificación del Producto (PIN). Algunos componentes incluídos en la máquina pueden estar identificados con Números de Serie (N/S). Los componentes que tienen típicamente esta identificación incluyen motores, transmisiones, hojas topadoras y desgarradores. La máquina y el motor se identifican además con Números de Configuración y en algunos casos, Números de Modificación. Estos números están en las placas de identificación del producto o en la placa principal en la cabina del operador.

Los distribuidores Caterpillar necesitan estos números para identificar con exactitud los números de piezas de repuesto.

2. COMO PEDIR REPUESTOS

Las piezas de repuesto Caterpillar de calidad están a la disposición de los distribuidores Caterpillar en todo el mundo. Sus existencias actualizadas incluyen todas las piezas normalmente requeridas para proteger su inversión en máquinas Caterpillar. Los distribuidores pueden tener juegos de reparación o piezas remanufacturadas para permitir la selección de la mejor alternativa de reparación en un caso en particular. Al pedir piezas de repuesto, especifique en su pedido la cantidad, el número de pieza, el nombre de la pieza y el número de serie/número de identificación del producto, de la máquina para la cual se necesitan estas piezas.

3. ORGANIZACION DEL MANUAL DE PIEZAS

La información sobre el producto, se presenta en este manual, como "elementos de información" que representan todos los componentes de un modelo específico. Las configuraciones de motores y los grupos de asientos son ejemplos de elementos de información. Los elementos de información están organizados primeramente por nombres de piezas en orden alfabético y en segundo lugar, por el número de pieza dentro de cada sección principal del manual.

4. CONTENIDO

SIS ***Nueva Característica***

La página de Contenido se encuentra al principio del manual. El Contenido indica cada sección del manual con una lista completa de todos los elementos de información organizados en el orden que aparecen en el manual. Los números de página proporcionan una referencia rápida a las ilustraciones detalladas de identificación de piezas y a las listas de componentes de repuesto de dichas piezas.

5. ÍNDICE DE PIEZAS DE MANTENIMIENTO

Al principio de este catálogo se encuentra un índice de los números de piezas utilizadas más frecuentemente para el mantenimiento, que incluye descripción, cantidad necesaria, lugar de utilización y número de página. Esta información está organizada alfabéticamente, por descripción de la pieza.

6. ÍNDICE

El Índice, ubicado cerca del principio del manual, es una lista en orden alfabético de todos los elementos de información incluídos en el manual. Los números de página proporcionan una referencia rápida a las ilustraciones detalladas de identificación de piezas y a las listas de componentes de repuesto de dichas piezas.

7. INDICE NUMÉRICO DE PIEZAS

Un índice numérico de piezas con el correspondiente número de página aparece al final de este catálogo.

8. TÍTULOS

Los títulos ubicados en la parte superior de cada página de elementos de información identifican el número y el nombre de la pieza junto con información descriptiva adicional para ayudar al usuario a determinar las piezas necesarias para una máquina en particular. También se suministra información sobre las opciones de reparación en el campo, la identificación de componentes de accesorios optativos y el lugar de ubicación de la pieza ("es parte de").

SIS ***Nueva Característica***

La primera línea del título se muestra con un tipo de letra más grande para indicar el comienzo de un elemento de información. Si se requieren páginas adicionales para ilustrar un elemento de información, los títulos se muestran con un tipo de letra normal y la continuación se indica entre paréntesis.

9. PIEZAS QUE NO SE SUMINISTRAN COMO REPUESTO

SIS *Nueva Característica*

En algunos casos es necesario indicar piezas que no se suministran como repuesto pero que pueden estar conectadas a listas de componentes de otras piezas de repuesto. En tal caso, dichas piezas se muestran en cursiva para indicar que no son piezas disponibles.

10. NÚMEROS DE REFERENCIA

SIS *Nueva Característica*

Los números en la columna de No. de Referencia corresponden a los números indicados en la ilustración que pertenece a ese número de pieza. Los números que tienen un sufijo alfabético identifican artículos de las listas de componentes de piezas. Los números en la columna de Referencia de la ilustración se identifican en la esquina inferior izquierda de cada ilustración. Para determinar el número de pieza correcto se puede utilizar tanto el No. de Referencia de la ilustración como el No. de Referencia del artículo. A medida que se actualiza la información para indicar los más recientes números de piezas de repuesto, puede omitirse intencionalmente un No. de Referencia en una lista de componentes de piezas.

11. NOMBRES DE PIEZA SANGRADOS

Cuando el nombre de una pieza está sangrado en una lista, significa que esta pieza forma parte del grupo o conjunto del renglón inmediatamente superior.

12. LETRAS DE REFERENCIA DE ILUSTRACIONES

Las ilustraciones contienen algunas veces letras de referencia (A, B, C etc.) cuyo propósito es seguir el trayecto de líneas y mazos de cables de un punto a otro. También se utilizan para mostrar dónde volver a unir ilustraciones que se habían separado.

13. ABREVIATURAS Y SIMBOLOS

O.D. – Diámetro exterior
I.D. – Diámetro interior
A – No es pieza de este grupo
B – Utilizado según la demanda
C – Indica cambio
D – Se pide por metro
E – Se pide por centímetro
F – No se muestra
G – Se pide por pulgada
I – Ver "Hose Fabrication Guide"
M – Pieza métrica
R – Puede estar disponible como pieza remanufacturada
Y – Ilustración separada
Z – No se suministra por separado

NOTA:

Las contínuas mejoras y adelantos en diseño podrían originar cambios a su máquina que no se incluyen en esta publicación. Cuando tenga alguna pregunta acerca de su producto Caterpillar o de esta publicación, consulte al distribuidor Caterpillar para obtener la información más reciente.

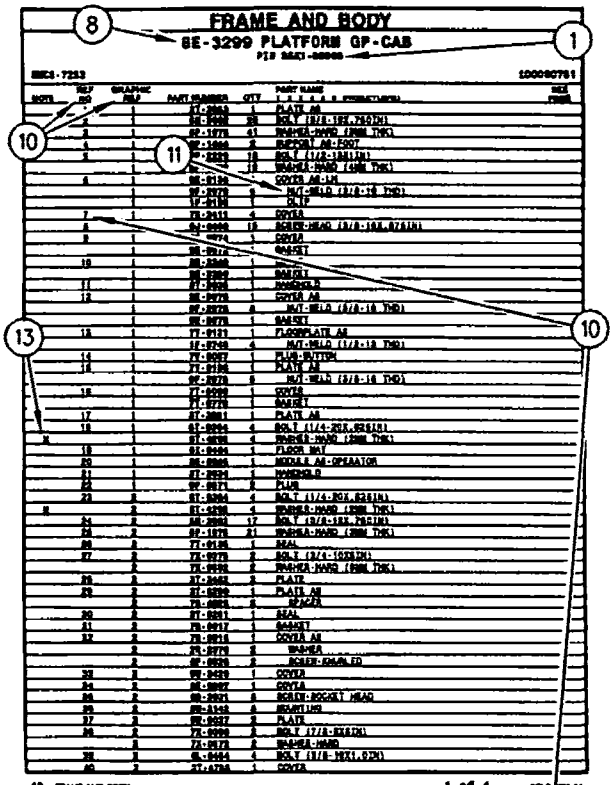
FRAME AND BODY
8E-3299 PLATFORM GP-CAB
1 of 4

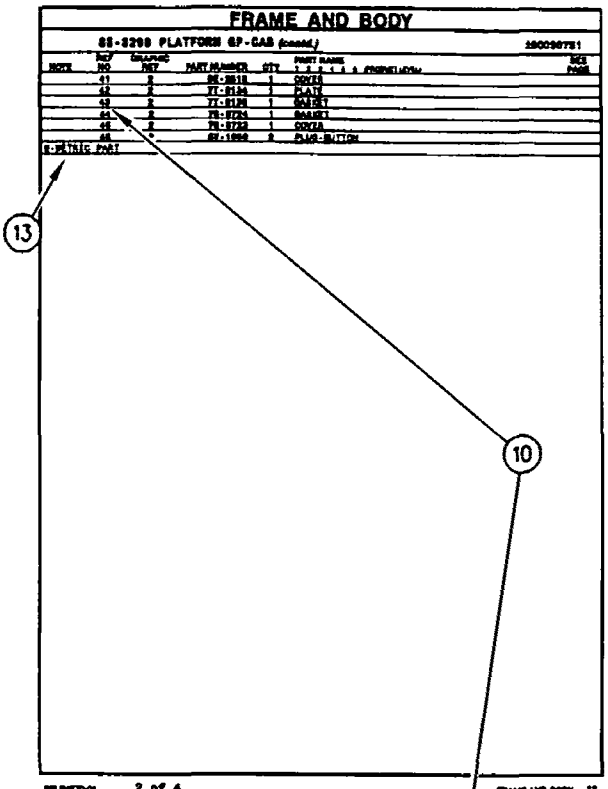
FRAME AND BODY
8E-3299 PLATFORM GP-CAB (cont'd)
2 of 4

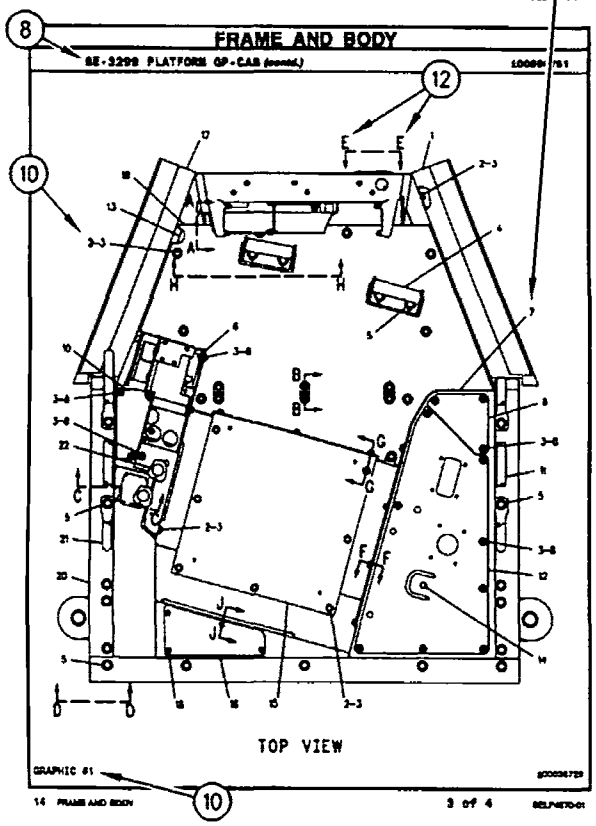
FRAME AND BODY
8E-3299 PLATFORM GP-CAB (cont'd)
TOP VIEW
3 of 4

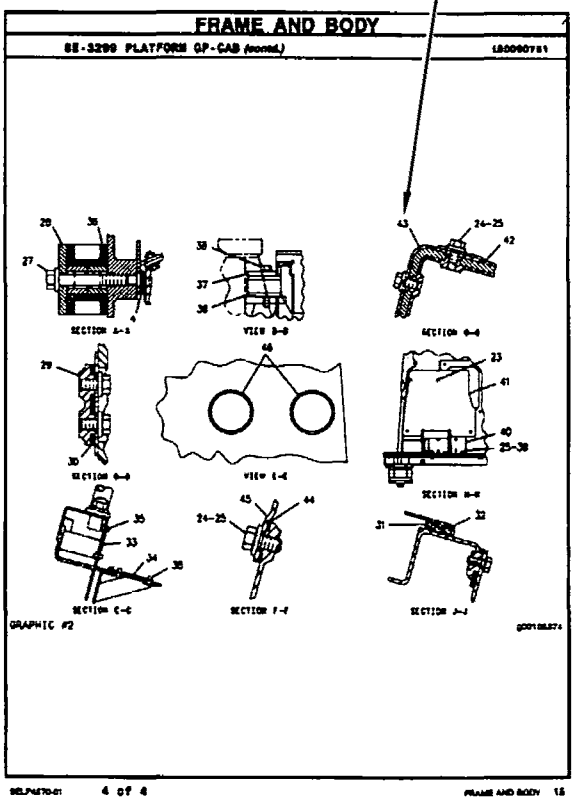
FRAME AND BODY
8E-3299 PLATFORM GP-CAB (cont'd)
4 of 4

INFORMAÇÃO GERAL

1. IDENTIFICAÇÃO DA MÁQUINA

As máquinas Caterpillar são identificadas pelos Números de Informação do Produto (PIN). Alguns componentes incluídos numa máquina podem ser identificados por Números de Série (S/N). Componentes típicos que serão enumerados com números de série incluem motores, transmissões, lâminas e ríperes. Além do número de série, a máquina e o motor são ainda identificados por números de arranjo e, em alguns casos, números de modificações. Tais números encontram-se na(s) placa(s) de identificação do produto e na placa mestre no compartimento do operador.

2. COMO OBTER PEÇAS

As Peças de Reposição de Qualidade Caterpillar encontram-se disponíveis nos revendedores Caterpillar no mundo inteiro. Seus estoques de peças são atualizados e incluem todas as peças normalmente necessárias para proteger seu investimento em máquinas Caterpillar. Alguns revendedores podem oferecer jogos de reparo ou peças de troca/ remanufaturadas disponíveis como uma opção da alternativa de reparo mais eficaz para uma situação específica. Ao encomendar peças, seu pedido deve especificar a quantidade, o número e o nome da peça e o número de série/número de identificação do produto referentes à máquina para a qual as peças se destinam.

3. ORGANIZAÇÃO DO MANUAL DE PEÇAS

A informação do produto neste manual é apresentada em forma de "elementos de informação" que representam todos os componentes para o modelo específico. Arranjo de Motor e Grupo de Assento são exemplos de elementos de informação. Os elementos de informação são organizados em ordem alfabética por nome de peça ou secundariamente, por número de peça incluído em cada seção principal do manual.

4. LISTA DE CONTEÚDOS

SIS ***Novidades***

A Lista de Conteúdos (TOC) se encontra no princípio do manual. A Lista de Conteúdos (TOC) relaciona em cada seção do manual uma lista completa com todos os elementos de informação organizados conforme aparecem no manual. Números de página são fornecidos para que se tenha referência rápida de ilustrações de peças detalhadas e listas de conteúdos que podem receber serviço de manutenção.

5. ÍNDICE DE PEÇAS DE MANUTENÇÃO

O Índice de Peças de Manutenção, localizado perto do princípio do manual, faz referência aos números de peça de manutenção usados com maior frequência, fornecendo uma descrição, a quantidade, o uso e o número de página. Esta informação é organizada com a descrição da peça em ordem alfabética.

6. ÍNDICE

O Índice localizado perto do princípio do manual, consiste de uma lista em ordem alfabética de todos os elementos de informação incluídos no manual. Números de página são fornecidos para que se tenha referência rápida de ilustrações de peças detalhadas e listas de conteúdos que podem receber serviço de manutenção.

7. ÍNDICE DE NÚMERO DE PEÇA

Um índice numérico relacionando todos os números de peça e a(s) página(s) correspondentes, aparece no final do manual.

8. LEGENDAS

As legendas localizadas na parte de cima de cada página de um elemento de informação identifica o número de peça e o nome da peça, juntamente com informação descritiva adicional. Informações sobre o Número de Informação do Produto (PIN) e o Número de Série (S/N) encontradas em cada legenda devem ser usadas para selecionar a informação correta sobre uma máquina específica. Opções de substituição no campo, identificação de componentes de acessórios opcionais e informações sobre onde são utilizados ("parte de") são também fornecidas.

SIS ***Novidades***

A primeira linha de uma legenda é indicada em tipo maior para indicar o princípio de um elemento de informação. Legendas para páginas adicionais que podem ser necessárias para ilustrar um elemento de informação serão apresentadas em tipo padrão e incluirão o termo *(continua)* .

9. NÃO DISPONÍVEL SEPARADAMENTE

SIS ***Novidades***

Em alguns casos, é necessário mostrar peças não disponíveis separadamente que têm uma ligação com listas de conteúdos de nível inferior que podem receber serviço de manutenção. Os números de peça destes componentes não disponíveis aparecerão em *itálico* , a fim de indicar que não estão disponíveis.

10. NÙMEROS DE REFERÊNCIA À LISTA DE PEÇAS

SIS ***Novidades***

Os números indicados na coluna Ref No (No. de Referência) correspondem-se aos números usados no(s) gráfico(s) correspondente(s). Um sufixo com letras pode ser acrescentado a um número de referência para identificar itens de conteúdo de nível inferior. Os números indicados na coluna Graphic Ref (Referência de Gráfico) referem-se ao identificador de número de gráfico presente no canto esquerdo inferior de cada ilustração. O número de Referência de Gráfico pode ser usado em combinação com o item Ref No para determinar-se o número de peça correto. Poderá haver omissão intencional de um número de referência (Ref No) de uma lista de conteúdos uma vez que as informações são atualizadas para refletir os números de peça mais recentes que podem receber serviço de manutenção.

11. NOMES DE PEÇAS DESALINHADOS

Quando um nome de peça encontra-se desalinhado numa lista de peças, significa que tal item faz parte do (está incluído no) grupo ou conjunto sob o qual está relacionado.

12. LETRAS DE REFERÊNCIA NAS ILUSTRAÇÕES

Quando necessário, as ilustrações contêm letras de referência (A, B, C, etc.) que são utilizadas para seguir tubulações e cabos elétricos de um ponto a outro. Também foram utilizadas para indicar onde se pode reconectar as ilustrações que foram separadas.

13. ABREVIAÇÕES E SÍMBOLOS

O.D. – "Outside Diameter" (Diâmetro Externo)
I.D. – "Inside Diameter" (Diâmetro Interno)
A – Não faz parte deste grupo
B – Use conforme necessário
C – Indica modificação
D – Vendido por metro
E – Vendido por centímetro
F – Não ilustrado
G – Vendido por polegada
I – Consulte o seu revendedor quanto a mangueira
M – Peça métrica
R – Peça remanufaturada pode estar disponível; consulte o seu revendedor Cat
Y – Ilustração separada
Z – Não disponível separadamente

NOTA:

Os contínuos aperfeiçoamentos e avanços no projeto do produto podem ocasionar modificações em sua máquina que talvez ainda não estejam incluídas nesta publicação. Sempre que surgirem dúvidas quanto a um produto Caterpillar ou quanto à presente publicação, consulte o seu revendedor Caterpillar para obter as informações mais recentes disponíveis.

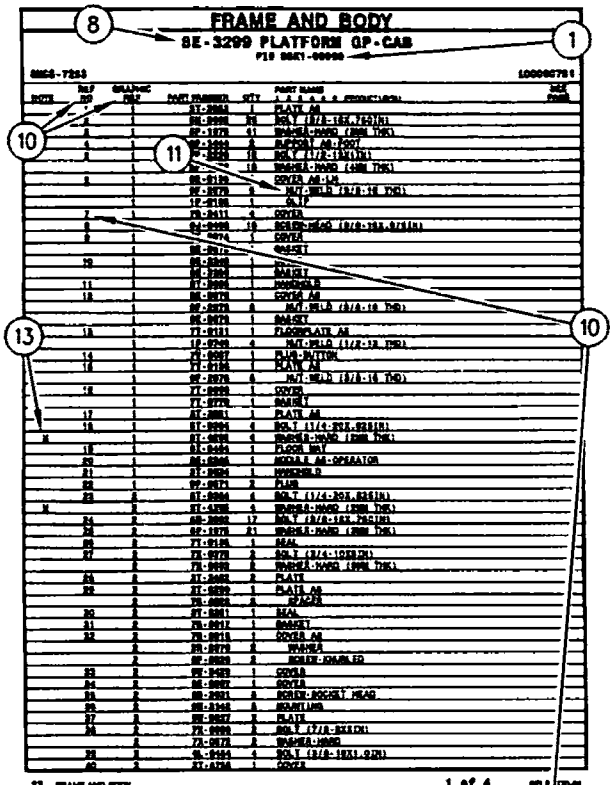
FRAME AND BODY
SE-3299 PLATFORM GP-CAB
8
1
10
11
13
10
12 FRAME AND BODY
1 of 4

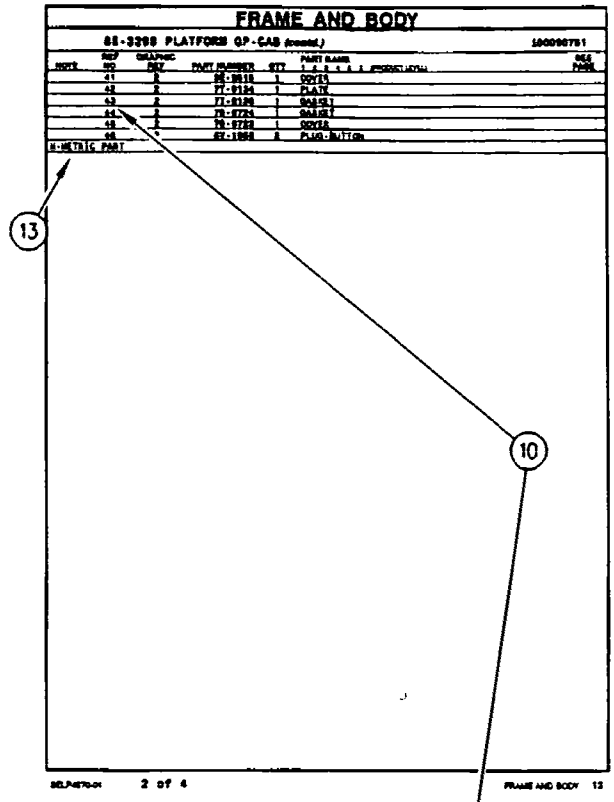
FRAME AND BODY
SE-3299 PLATFORM GP-CAB (contd.)
13
10
2 of 4
FRAME AND BODY 13

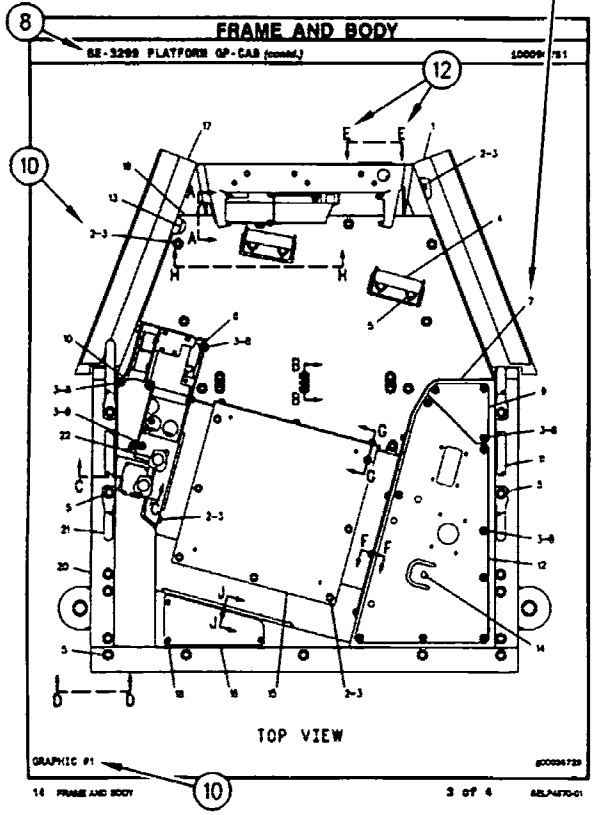
FRAME AND BODY
SE-3299 PLATFORM GP-CAB (contd.)
8
12
10
TOP VIEW
GRAPHIC #1
10
14 FRAME AND BODY
3 of 4

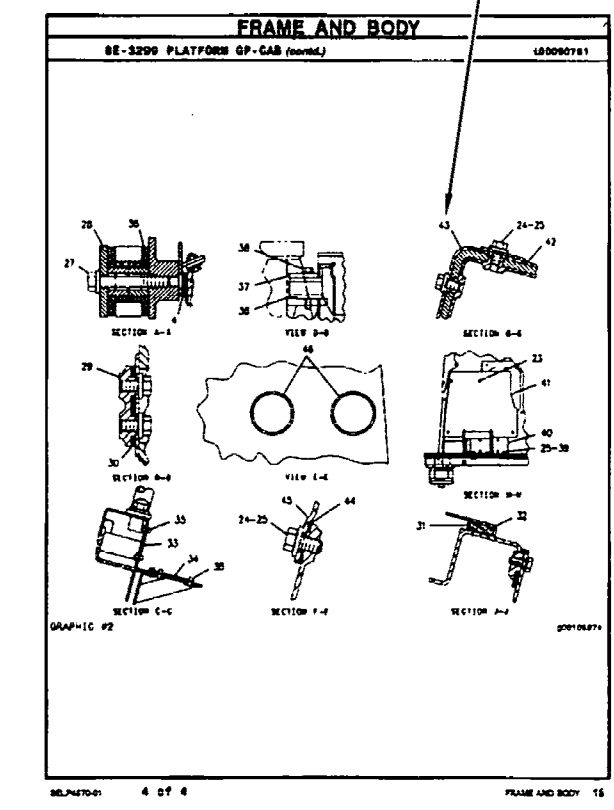
FRAME AND BODY
SE-3299 PLATFORM GP-CAB (contd.)
GRAPHIC #2
4 of 4
FRAME AND BODY 15

ALLGEMEINE HINWEISE

1. MASCHINENKENNZEICHNUNG

Caterpillar-Maschinen sind mit PRODUCT IDENTIFICATION NUMBERS (PIN) (Produkt-Identnummern) gekennzeichnet. Einige Baugruppen, z.B. Motoren, Getriebe, Planierschilde und Aufreißer, sind mit SERIAL NUMBERS (S/N) (Seriennummern) gekennzeichnet. An der Maschine und am Motor befinden sich außerdem ARRANGEMENT NUMBERS (Ausrüstungsnummern) sowie in einigen Fällen MODIFICATION NUMBERS (Änderungsnummern). Sie befinden sich auf den PIN-Schildern und auf dem Typenschild im Fahrerhaus.

Bei Ersatzteilbestellungen müssen dem Händler alle diese Nummern zur Verfügung gestellt werden.

2. BESTELLEN VON ERSATZTEILEN

Original Caterpillar-Ersatzteile können weltweit bei jedem Caterpillar-Händlern bestellt werden. Die umfangreichen Händlerlager enthalten normalerweise alle Teile, die Sie für Ihre Caterpillar-Maschine benötigen. Einige Händler bieten Reparatursätze, Austausch- oder werküberholte Teile an, so daß Sie eine Auswahl unter verschiedenen Reparaturmöglichkeiten treffen können. Ihre Bestellung muß folgende Angaben enthalten: Anzahl der benötigten Teile, Bestellnummer, Bezeichnung des Teils, Serien-Nr./Produkt-Ident-Nr., Ausrüstungs-Nr. und Änderungs-Nr. der Maschine, für die diese Teile benötigt werden.

3. AUFBAU DES PARTS MANUAL

Die Produktinformationen für alle Komponenten eines bestimmten Modells sind in INFORMATION ELEMENTS (Informationseinheiten) gegliedert. ENGINE ARRANGEMENT (Motorausführung) und SEAT GROUP (Fahrersitz) sind Beispiele für solche Informationseinheiten. Sie sind innerhalb jeder Gruppe alphabetisch, entsprechend der Ersatzteilbezeichnung, und zusätzlich numerisch, entsprechend der Ersatzteilnummer, geordnet.

4. INHALTSVERZEICHNIS

SIS ***Neu im Parts Manual***

Das Inhaltsverzeichnis befindet sich am Anfang des Buches. Im Inhaltsverzeichnis werden die einzelnen Abschnitte des Buches aufgeführt. Die Abschnitte enthalten eine vollständige Aufstellung aller Informationseinheiten. Diese sind entsprechend ihrem Erscheinen im Buch geordnet. Das Inhaltsverzeichnis enthält Seitenangaben für Schnellverweise auf detaillierte Abbildungen und Teillisten.

5. INDEX FÜR WARTUNGSTEILE

Der Index für Wartungsteile vorn im Buch enthält die Bestellnummern, Seitenangaben, Mengenangaben und Informationen über den Einsatzbereich für die am häufigsten benötigten Ersatzteile. Die Angaben sind alphabetisch entsprechend der Teilebezeichnung geordnet.

6. INDEX

Der Index vorn im Buch enthält eine alphabetische Liste aller Informationseinheiten. Er enthält Seitenangaben für Schnellverweise auf detaillierte Abbildungen und Teillisten.

7. INDEX FÜR BESTELLNUMMERN

Hinten im Buch befindet sich ein numerischer Index, mit allen Bestellnummern und dem Hinweis auf die Seite, auf der sich die betreffende Abbildung befindet.

8. ÜBERSCHRIFTEN

Die Überschriften, die sich oben auf den Seiten der Informationseinheiten befinden, enthalten Bestellnummern, Ersatzteilbezeichnungen und zusätzliche beschreibende Informationen. Produkt-Ident- und Seriennummern in den Überschriften sollten zur Auswahl der richtigen Informationen für die betreffende Maschine verwendet werden. Die Überschriften enthalten außerdem Informationen über möglichen Außendienstersatz, mögliche Baugerätekomponenten und die Baugruppe, zu der das Teil gehört.

SIS ***Neu im Parts Manual***

Die erste Zeile einer Überschrift erscheint in einer größeren Schriftart, um den Anfang einer Informationseinheit zu kennzeichnen. Überschriften für zusätzliche Seiten, die zur Erläuterung einer Informationseinheit notwendig sind, erscheinen in normaler Schriftart und enthalten den Begriff "(contd.)".

9. NICHT EINZELN LIEFERBARE TEILE

SIS ***Neu im Parts Manual***

In einigen Fällen ist es notwendig nicht lieferbare Teile, die selbst mit einer eigenen Teilliste im Buch vertreten sind, aufzuführen. Die Bestellnummern dieser nicht einzeln lieferbaren Teile erscheinen kursiv, wodurch angezeigt wird, daß sie nur in Verbindung mit anderen Teilen lieferbar sind.

10. REFERENZNUMMER FÜR ERSATZTEILE

SIS ***Neu im Parts Manual***

Die Zahlen, die in der Spalte "Ref No" aufgeführt sind, stimmen mit den Zahlen in den beigefügten Abbildungen überein. Ein Buchstaben-Suffix kann zu einer Referenznummer hinzugefügt werden, um zu kennzeichnen, daß das Teil mit einer eigenen Teilliste im Buch aufgeführt ist. Die in der Spalte "Graphic Ref" angeführten Zahlen verweisen auf die Identifikationsnummer der Abbildung, die sich in der linken unteren Ecke der Abbildung befindet. Diese Nummer kann zusammen mit der Referenznummer des Teils angegeben werden, um die richtige Ersatzteilnummer zu ermitteln. Referenznummern können absichtlich weggelassen werden, da die Nummern der lieferbaren Ersatzteile ständig aktualisiert werden.

11. EINGERÜCKTE BEZEICHNUNGEN

Wenn eine Bezeichnung eingerückt ist, wird dadurch angezeigt, daß das Teil zu einer Baugruppe gehört, unter deren Bezeichnung es eingerückt ist.

12. REFERENZBUCHSTABEN

Falls erforderlich sind in den Abbildungen Referenzbuchstaben enthalten (z.B. A, B, C, usw.), die Leitungen und Kabelbäume von einem Punkt zum anderen verfolgen. Außerdem geben sie die Stelle an, an der getrennte Abbildungen fortgesetzt werden.

13. ABKÜRZUNGEN UND SYMBOLE

O.D. – Außendurchmesser
I.D. – Innendurchmesser
A – kein Teil dieser Gruppe
B – nach Bedarf verwenden
C – Hinweis auf eine Änderung
D – in Meter-Länge bestellen
E – in Zentimeter-Länge bestellen
F – nicht gezeigt
G – in Zoll-Länge bestellen
I – siehe "Hose Fabrication Guide"
M – metrisches Teil
R – werküberholtes Teil unter Umständen lieferbar
Y – separate Abbildung
Z – nicht einzeln lieferbar

ANMERKUNG:

Ständig vorgenommene Verbesserungen und Weiterentwicklungen an Ihrer Maschine können Änderungen verursachen, die in der vorliegenden Ausgabe noch nicht berücksichtigt sind. Fragen zu Ihrer Caterpillar-Maschine oder diesem Ersatzteilbuch beantwortet Ihr Caterpillar-Händler.

ALLGEMEINE HINWEISE

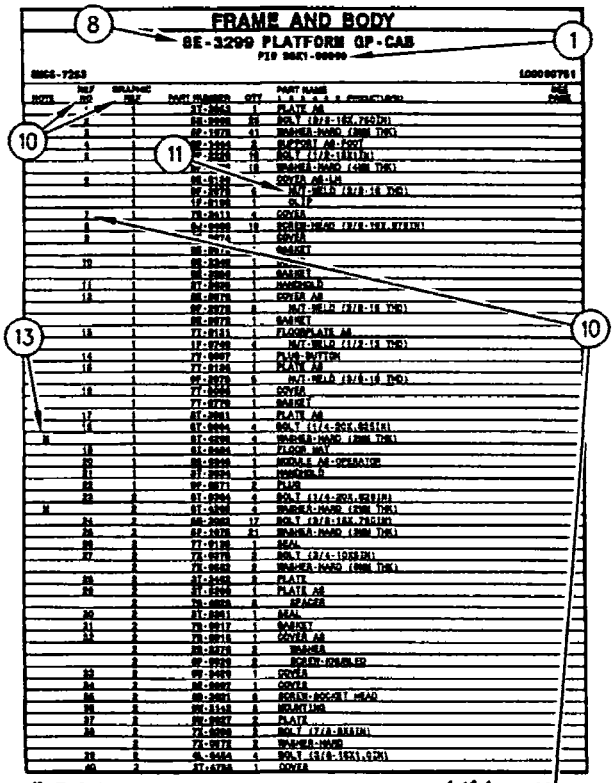

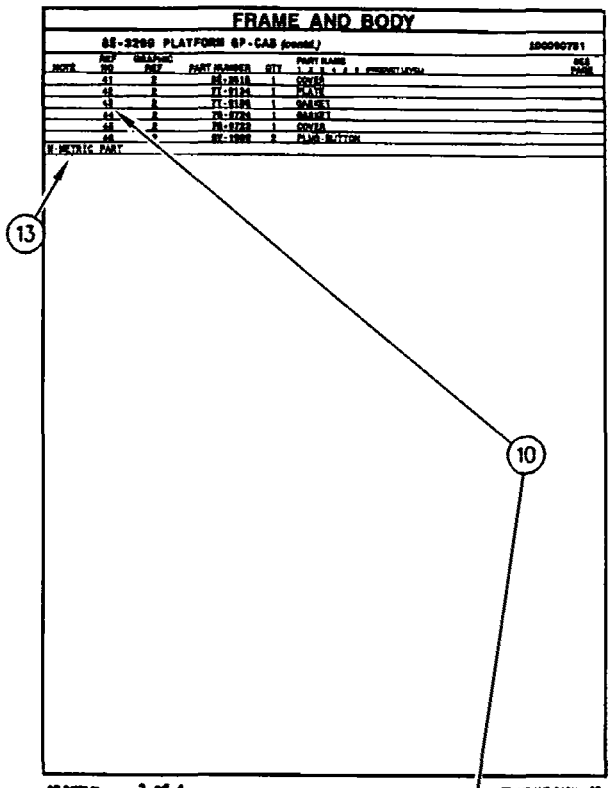

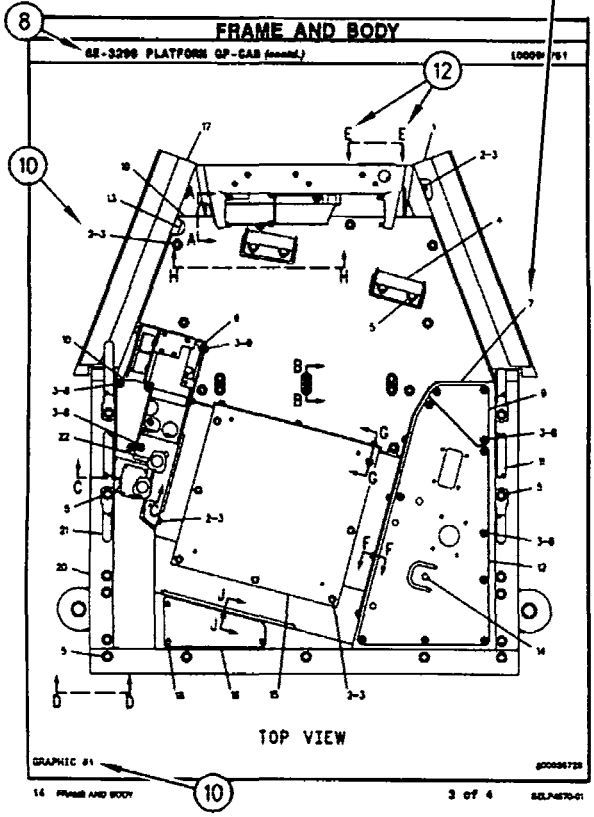

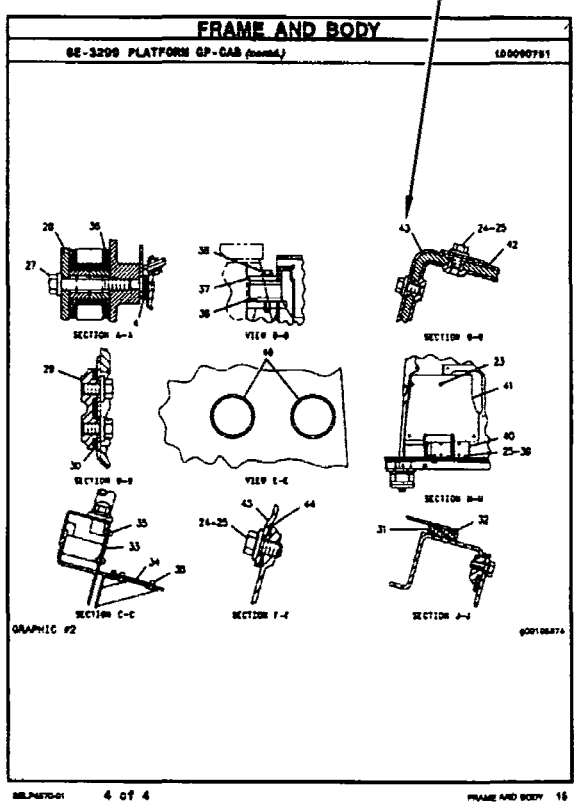

REMANUFACTURED COMPONENTS

As an option when making repairs consider Caterpillar Remanufactured Components. Components that are available through the Caterpillar Remanufactured Program are identified three ways in the parts book:

- with the letter R in the note field of the parts list
- with an R* at the beginning of the first line of the caption
- with an *R at the end of the first line of the caption

Typical components included in the Remanufacturing Program include:

ALTERNATORS
CONNECTING RODS
CRANKSHAFTS - UNDERSIZE
CRANKSHAFTS - UPGRADE TO NEW
CYLINDER HEADS
ELECTRONIC CONTROL MODULES (ECM)
ELECTRONIC SENSORS
FUEL INJECTORS
FUEL NOZZLES
FUEL PUMPS
GOVERNORS
OIL PUMPS
PISTONS
SHORT BLOCKS
STARTERS
TURBOCHARGERS - COMPLETE
TURBOCHARGER CARTRIDGES
WATER PUMPS

Caterpillar Remanufactured engines for many engine arrangements are also available.

OPTIONS DE RÉPARATION

COMPOSANTS RÉNOVÉS

Comme option de réparation, considérer les composants rénovés Caterpillar. Les composants disponibles dans le cadre du programme Caterpillar de composants rénovés sont identifiés de trois façons dans le catalogue de pièces:

- avec la lettre "R" dans l'espace note de la liste des pièces
- avec R* au début de la première ligne des légendes
- avec *R à la fin de la première ligne des légendes

Les composants suivants figurent parmi les composants typiques du programme de rénovation:

ALTERNATEURS
BIELLES
VILEBREQUINS - SOUS-DIMENSIONNÉS
VILEBREQUINS - REMIS À NEUF
CULASSES
MODULES DE COMMANDE ÉLECTRONIQUE (ECM)
CAPTEURS ÉLECTRONIQUES
INJECTEURS
TÊTES D'INJECTEURS
POMPES À CARBURANT
RÉGULATEURS
POMPES À HUILE
PISTONS
BLOCS EMBIELLÉS
DÉMARREURS
TURBOCOMPRESSEURS - COMPLETS
CARTOUCHES DE TURBOCOMPRESSEUR
POMPES À EAU

Des moteurs rénovés sont aussi disponibles pour plusieurs versions de moteur.

COMPONENTES REMANUFACTURADOS

Al hacer reparaciones, tenga en cuenta la opción de Componentes Remanufacturados Caterpillar. Los componentes que están disponibles por medio del programa de Productos Remanufacturados Caterpillar se identifican de tres maneras en el manual de piezas:

- con la letra R en el espacio de Nota de la lista de piezas
- con una R* al comienzo de la primera línea de la leyenda
- con una *R al final de la primera línea de la leyenda

Los componentes que se incluyen típicamente en el Programa de Productos Remanufacturados son:

ALTERNADORES
BIELAS
CIGÜEÑALES - BAJOMEDIDA
CIGÜEÑALES - REMANUFACTURADOS A NUEVO
CULATAS
MÓDULOS DE CONTROL ELECTRÓNICO (ECM)
SENSORES ELECTRONICOS
INYECTORES
BOQUILLAS
BOMBAS DE COMBUSTIBLE
REGULADORES
BOMBAS DE ACEITE
PISTONES
MONOBLOQUES
MOTORES DE ARRANQUE
TURBOCOMPRESORES - COMPLETOS
NÚCLEOS DE TURBOCOMPRESOR
BOMBAS DE AGUA

También hay disponibles motores Remanufacturados Caterpillar para muchas de las configuraciones de motores.

ALTERNATIVAS DE REPARO

COMPONENTES REMANUFATURADOS

Considere o uso de Componentes Remanufaturados Caterpillar ao efetuar reparos. Os componentes disponíveis através do Programa de Remanufatura Caterpillar são identificados de três formas no manual de peças:

- com um R na área da nota da lista de peças
- com um R* no princípio da primeira linha da legenda
- com um *R no final da primeira linha da legenda

Os componentes típicos que constam no Programa de Remanufatura incluem:

ALTERNADORES
BIELAS
VIRABREQUINS - SUBMEDIDAS
VIRABREQUINS - ATUALIZAÇÃO
CABEÇOTES
MÓDULOS DE CONTROLE ELETRÔNICO (ECM)
SENSORES ELETRÔNICOS
INJETORES DE COMBUSTÍVEL
BICOS DE ABASTECIMENTO DE COMBUSTÍVEL
BOMBAS DE COMBUSTÍVEL
GOVERNADORES
BOMBAS DE ÓLEO
PISTÕES
BLOCOS BÁSICOS DO MOTOR
MOTORES DE PARTIDA
TURBOALIMENTADORES - COMPLETOS
CARTUCHOS DE TURBOALIMENTADORES
BOMBAS D'ÁGUA

Motores Remanufaturados Caterpillar também encontram-se disponíveis para diversos arranjos de motor.

WERKÜBERHOLTE AT-PRODUKTE

Bei Reparaturen sollten werküberholte AT-Produkte von Caterpillar in Betracht gezogen werden. Die durch das AT-Programm von Caterpillar erhältlichen Teile sind im Parts Book auf drei verschiedene Arten gekennzeichnet:

- mit dem Buchstaben R in der Spalte NOTE der Ersatzteilliste
- mit einem R* am Anfang der ersten Zeile der Überschrift
- mit einem *R am Ende der ersten Zeile der Überschrift

Das AT-Programm umfaßt u.a. folgende Produkte:

DREHSTROMGENERATOREN
PLEUELSTANGEN
KURBELWELLEN - MIT UNTERMASS
KURBELWELLEN - MIT ORIGINALMASS
ZYLINDERKÖPFE
ELEKTRONISCHE STEUEREINHEITEN (EMC)
ELEKTRONISCHE SENSOREN
PUMPENDÜSEN
EINSPRITZDÜSEN
KRAFTSTOFFPUMPEN
DREHZAHLREGLER
ÖLPUMPEN
KOLBEN
TEILMOTOREN
ANLASSER
TURBOLADER - KOMPLETT
TURBOLADERLAUFZEUGE
KÜHLWASSERPUMPEN

Viele Motoren können durch werküberholte AT-Motoren von Caterpillar ersetzt werden.

SUPPLEMENTAL COOLANT ADDITIVES

CUSTOMER BENEFITS:

Protects against cavitation, foam, erosion, corrosion, and scale buildup in cooling systems.

- Provides measured coolant conditioner.

DESCRIPTION:

Additives deplete from the coolant with normal operation. For this reason, Supplemental Coolant Additives (SCA) must be added to all heavy duty coolants at regular intervals. In addition, when not using a fully formulated, pre-charged antifreeze, like Caterpillar's DEAC, an initial charge of SCA must be added to the cooling system. The amount of SCA added to the system is dependent on the capacity of the system.

The SCA for initial fill is provided as a liquid. SCA's for maintenance intervals are available in liquid form and as a spin-on element. (No Spin-on available for 3600 Family of Engines)

NOTE:

The amount of SCA added at initial fill is not the same as the amount added at maintenance intervals.

The coolant additive elements can be used with any ethylene or propylene glycol type antifreeze which meets ASTM D4985 or ASTM D5345 Specifications.

NOTE:

For use with standard heavy duty coolant only, not for use with Extended Life Coolant.

PARTS NEEDED:

Cooling System Capacity		Liquid SCA at Initial Fill	Liquid SCA at Maintenance*	Spin-on SCA Maintenance Element*
Liters	Gallons			
22-30	(6-8)	3P-2044 (1)	6V-3542 (1)	111-2370 (1)
30-38	(8-10)	3P-2044 (1) 6V-3542 (1)	111-2372 (1)	111-2369 (1)
38-49	(10-13)	3P-2044 (1) 8T-1589 (1)	111-2372 (1)	111-2369 (1)
49-64	(13-17)	3P-2044 (2)	8T-1589 (1)	9N-3368 (1)
64-83	(17-22)	3P-2044 (2) 8T-1589 (1)	111-2372 (1) 6V-3542 (1)	111-2371)1)
83-114	(22-30)	3P-2044 (3) 8T-1589 (1)	3P-2044 (1)	9N-3718 (1)
114-163	(30-43)	3P-2044 (5)	3P-2044 (1) 6V-3542 (1)	111-2371 (2)
163-242	(43-64)	3P-2044 (8)	3P-2044 (2)	9N-3718 (2)

** Normal maintenance period is 250 hrs. See your Operation and Maintenance Manual for complete coolant maintenance instructions.*

( ) Indicates quantity required.

ADDITIFS POUR LIQUIDE DE REFROIDISSEMENT

AVANTAGES POUR LE CLIENT

L'additif protège contre la cavitation, la mousse, l'érosion, la corrosion et l'accumulation de dépôts dans le circuit de refroidissement.

- L'additif complémentaire fournit une quantité mesurée d'additif.

DESCRIPTION:

Les additifs s'épuisent pendant l'utilisation du moteur. C'est pourquoi l'on doit ajouter de l'additif au liquide de refroidissement/antigel pour moteurs diesel à intervalles réguliers. En plus, si l'on n'utilise pas de l'antigel entièrement formulé et pré-chargé comme le liquide de refroidissement/antigel Caterpillar pour moteurs diesel, une quantité initiale d'additif doit être ajoutée au circuit de refroidissement. La quantité d'additif à ajouter au circuit dépend de la contenance du circuit.

L'additif pour le remplissage initial est fourni sous forme liquide. L'additif pour l'entretien ultérieur est disponible sous forme liquide et sous forme d'élément à visser. (Il n'y a pas d'élément à visser pour les moteurs de la famille 3600).

NOTA:

La quantité d'additif à ajouter au remplissage initial diffère de la quantité à ajouter aux intervalles d'entretien.

Les éléments d'additif peuvent être utilisés avec tout antigel de type éthylène ou propylène-glycol conforme à la norme ASTM D4985 ou ASTM D5345.

NOTA:

A utiliser uniquement avec du liquide de refroidissement pour moteurs diesel et non avec le liquide de refroidissement longue durée.

PIÈCES NÉCESSAIRES:

Contenance du circuit de refroidissement		Additif liquide au remplissage initial	Additif liquide aux intervalles d'entretien*	Elément d'additif à visser aux intervalles d'entretien*
Litres	Gallons U.S.			
22-30	(6-8)	3P-2044 (1)	6V-3542 (1)	111-2370 (1)
30-38	(8-10)	3P-2044 (1) 6V-3542 (1)	111-2372 (1)	111-2369 (1)
38-49	(10-13)	3P-2044 (1) 8T-1589 (1)	111-2372 (1)	111-2369 (1)
49-64	(13-17)	3P-2044 (2)	8T-1589 (1)	9N-3368 (1)
64-83	(17-22)	3P-2044 (2) 8T-1589 (1)	111-2372 (1) 6V-3542 (1)	111-2371)1)
83-114	(22-30)	3P-2044 (3) 8T-1589 (1)	3P-2044 (1)	9N-3718 (1)
114-163	(30-43)	3P-2044 (5)	3P-2044 (1) 6V-3542 (1)	111-2371 (2)
163-242	(43-64)	3P-2044 (8)	3P-2044 (2)	9N-3718 (2)

** L'intervalle d'entretien normal est de 250 heures-service. Voir le guide d'utilisation et d'entretien pour de plus amples renseignements concernant l'entretien du circuit de refroidissement.*

( ) Indique la quantité exigée.

ADITIVOS DE REFRIGERANTE SUPLEMENTARIOS

VENTAJAS PARA EL USUARIO:

Protegen contra la cavitación, la formación de espuma, la corrosión y la acumulación de escamas en los sistemas de enfriamiento.

- Suministra un acondicionador dosificado de refrigerante.

DESCRIPCIÓN:

Los aditivos en el refrigerante se agotan con la operación normal. Por esta razón, se debe agregar Aditivo de refrigerante suplementario (SCA) a todos los refrigerantes para servicio pesado, a intervalos regulares. Además, cuando no se usa un anticongelante de precarga completo, tal como el DEAC de Caterpillar, es necesario agregar una cantidad de aditivo de refrigerante suplementario inicial al sistema de enfriamiento. La cantidad de aditivo que se debe agregar depende de la capacidad del sistema.

El SCA de llenado inicial es líquido. El que se usa para el mantenimiento está disponible tanto en líquido como en un elemento enroscable. (No hay elemento enroscable disponible para la Familia de Motores 3600).

NOTA:

La cantidad de aditivo de llenado inicial no es la misma que se agrega en los intervalos de mantenimiento.

Los elementos de aditivo de refrigerante se pueden usar con cualquier anticongelante de tipo glicol etilénico o propílico que esté de acuerdo con las especificaciones de las normas ASTM D4985 o ASTM D5345.

NOTA:

Se debe utilizar únicamente con refrigerante estándar para servicio pesado; no se debe usar con Refrigerante de Larga Duración.

PIEZAS NECESARIAS:

Capacidad del Sistema de Enfriamiento		SCA líquido de llenado inicial	SCA líquido de mantenimiento*	Elemento de mantenimiento enroscable*
litros	gal EE.UU.			
22-30	6-8	3P-2044 (1)	6V-3542 (1)	111-2370 (1)
30-38	8-10	3P-2044 (1) 6V-3542 (1)	111-2372 (1)	111-2369 (1)
38-49	10-13	3P-2044 (1) 8T-1589 (1)	111-2372 (1)	111-2369 (1)
49-64	13-17	3P-2044 (2)	8T-1589 (1)	9N-3368 (1)
64-83	17-22	3P-2044 (2) 8T-1589 (1)	111-2372 (1) 6V-3542 (1)	111-2371 (1)
83-114	22-30	3P-2044 (3) 8T-1589 (1)	3P-2044 (1)	9N-3718 (1)
114-163	30-43	3P-2044 (5)	3P-2044 (1) 6V-3542 (1)	111-2371 (2)
163-242	43-64	3P-2044 (8)	3P-2044 (2)	9N-3718 (2)

** El período normal de mantenimiento es de 250 horas. Para ver las instrucciones completas sobre el mantenimiento del refrigerante, consulte el Manual de Operación y Mantenimiento.*

( ) Indica la cantidad necesaria.

ADITIVOS SUPLEMENTARES DO LÍQUIDO ARREFECEDOR

BENEFÍCIOS PARA O CLIENTE:

Protege contra cavitação, espuma, erosão, corrosão e acúmulo de crostas nos sistemas de arrefecimento.

- Fornece uma quantidade pré-determinada de condicionador de arrefecimento.

DESCRIÇÃO:

Com a operação normal, os aditivos se esgotam do líquido arrefecedor. Por isso, Aditivos Suplementares do Líquido Arrefecedor (SCA) devem ser acrescentados a todos os líquidos arrefecedores para serviço pesado em intervalos regulares. Além disso, quando um anticongelante pré-carregado, totalmente formulado não for usado, como o DEAC Caterpillar, uma carga inicial de SCA deve ser acrescentada ao sistema de arrefecimento. A quantidade de SCA acrescentada ao sistema depende da capacidade do sistema.

O SCA para abastecimento inicial é fornecido em forma de líquido. Os aditivos suplementares (SCA) para intervalos de manutenção estão à disposição em forma líquida e como um elemento com roscas. (Exceto os Motores da Família 3600)

NOTA:

A quantidade de SCA adicionada no abastecimento inicial não é a mesma que a acrescentada nos intervalos de manutenção.

Os elementos do aditivo do líquido arrefecedor podem ser usados com qualquer tipo de anticongelante etileno ou propileno que satisfaz as Especificações ASTM D4985 ou ASTM D5345.

NOTA:

Para uso apenas com líquido arrefecedor para serviço pesado padrão, não deve ser usado com Líquido Arrefecedor de Vida Longa.

PEÇAS NECESSÁRIAS:

Capacidade do Sistema de Arrefecimento		Líquido SCA Durante Abastecimento Inicial	Líquido SCA Durante Manutenção*	Elemento de Manutenção de SCA com Roscas*
Litros	Galões			
22-30	6-8	3P-2044 (1)	6V-3542 (1)	111-2370 (1)
30-38	8-10	3P-2044 (1) 6V-3542 (1)	111-2372 (1)	111-2369 (1)
38-49	10-13	3P-2044 (1) 8T-1589 (1)	111-2372 (1)	111-2369 (1)
49-64	13-17	3P-2044 (2)	8T-1589 (1)	9N-3368 (1)
64-83	17-22	3P-2044 (2) 8T-1589 (1)	111-2372 (1) 6V-3542 (1)	111-2371 (1)
83-114	22-30	3P-2044 (3) 8T-1589 (1)	3P-2044 (1)	9N-3718 (1)
114-163	30-43	3P-2044 (5)	3P-2044 (1) 6V-3542 (1)	111-2371 (2)
163-242	43-64	3P-2044 (8)	3P-2044 (2)	9N-3718 (2)

** O período normal de manutenção é de 250 horas. Consulte o Manual de Operação e Manutenção para obter instruções completas quanto à manutenção do líquido arrefecedor.*

( ) Indica a quantidade exigida.

KÜHLMITTELZUSATZ

VORTEILE FüR DEN KUNDEN:

Schutz gegen Kavitation, Schaumbildung, Erosion, Korrosion und Kesselsteinbildung in Kühlsystemen.

- Richtig dosierter Kühlmittelzusatz

BESCHREIBUNG:

Additive erschöpfen sich während des Motorbetriebs. Deshalb muß allen HD-Kühlmitteln regelmäßig Kühlmittelzusatz beigefügt werden. Wenn bei Erstfüllung kein vollwertiges Fertigkühlmittel, wie das Frostschutz- und Kühlmittel für Dieselmotoren von Caterpiller (DEAC), verwendet wird, muß bei Erstfüllung Kühlmittelzusatz beigefügt werden. Wieviel Kühlmittelzusatz beigefügt werden muß, hängt vom Inhalt des Kühlsystems ab.

Für Erstfüllung ist Kühlmittelzusatz nur in flüssiger Form erhältlich. Für Wartungsintervalle ist Kühlmittelzusatz in flüssiger Form und als Zusatzelement erhältlich. (Für die Motorbaureihe 3600 sind keine Zusatzelemente erhältlich.)

ANMERKUNG:

Die Kühlmittelmenge bei Erstfüllung ist nicht die gleiche Menge, die bei Wartungsintervallen beigefügt werden muß.

Die Kühlmittelzusatzelemente können mit allen Frostschutzmitteln auf Ethylen- oder Propylenglykolbasis verwendet werden, die den Standards nach ASTM D4985 oder ASTM D5345 entsprechen.

ANMERKUNG:

Den Kühlmittelzusatz nicht mit Langzeitkühlmittel (ELC) von Caterpillar verwenden. Der Kühlmittelzusatz ist nur für HD-Kühlmittel bestimmt.

TEILEBEZEICHNUNG:

Kühlsysteminhalt		Kühlmittelzusatz bei Erstfüllung	Flüssiger Kühlmittelzusatz bei Wartung*	Kühlmittelzusatzelement bei Wartung*
Liter	US-Gall.			
22-30	(6-8)	3P-2044 (1)	6V-3542 (1)	111-2370 (1)
30-38	(8-10)	3P-2044 (1) 6V-3542 (1)	111-2372 (1)	111-2369 (1)
38-49	(10-13)	3P-2044 (1) 8T-1589 (1)	111-2372 (1)	111-2369 (1)
49-64	(13-17)	3P-2044 (2)	8T-1589 (1)	9N-3368 (1)
64-83	(17-22)	3P-2044 (2) 8T-1589 (1)	111-2372 (1) 6V-3542 (1)	111-2371 (1)
83-114	(22-30)	3P-2044 (3) 8T-1589 (1)	3P-2044 (1)	9N-3718 (1)
114-163	(30-43)	3P-2044 (5)	3P-2044 (1) 6V-3542 (1)	111-2371 (2)
163-242	(43-64)	3P-2044 (8)	3P-2044 (2)	9N-3718 (2)

** Der normale Wartungsintervall beträgt 250 Betriebsstunden. Für vollständige Anweisungen zur Wartung des Kühlsystems, siehe Betriebs- und Wartungshandbuch.*

( ) Erforderliche Anzahl

NOMENCLATURA DE PEÇAS INGLÊS-PORTUGUÊS

INGLÊS	PORTUGUÊS
ABOVE	Acima
ABSORBER	Amortecedor
ACCESSORY	Acessório
ACTUATOR	Acionador
ADAPTER	Adaptador
ADHESIVE	Adesivo
ADJUSTER	Adjustador
AFTERCOOLER	Pós-resfriador
AIR	Ar
AIR CLEANER	Purificador de ar
AIR SYSTEM	Sistema de ar
ALARM	Alarme
ALTERNATOR	Alternador
AMMETER	Amperímetro
ANCHOR	Âncora, fixador
ANGLE	Ângulo, canto
ANVIL A.	Bigorna conj.
ARBOR	Mandril, eixo
ARM	Braço
ARMATURE	Armadura, Induzida
ARM REST	Apoio para braço
ARRESTER	Detentor
ASSEM. = ASSEMBLY	Conjunto
ATTACHMENT	Acessório
AVAILABLE	Disponível
AXLE	Eixo
AXLE SHAFT	Semi-eixo, ponta
BACK-UP ALARM	Alarme de marcha à ré
BACK-UP LIGHT	Luz da marcha à ré
BACK-UP SWITCH	Interruptor de marcha à ré
BACKBOARD	Prancha traseira
BACK CUSHION	Encosto
BACKHOE	Retroescavadeira
BAFFLE	Defletor
BAG	Saco, sacola
BAIL	Alça
BALANCER	Balanceador
BALL	Esfera
BALLCHECK ASSEMBLY	Conjunto de (válvula) de esfera de retenção
BALL JOINT	Junta esférica
BALLSTUD	Munhão esférica
BAND	Banda, cinta, tira
BAND & LINING	Banda e revestimento
BAR	Barra
BARREL	Cilindro
BARRIER	Barreira
BASE	Base
BASIN	Bacia, coletor
BATTERY	Bateria
BEAM	Barra, viga, trave
BEARING	Mancal, rolamento
BEARING BALL	Rolamento de esferas
BEARING-SLEEVE	Mancal tipo luva
BEARING-NEEDLE	Rolamento de agulha
BEARING-ROLLER	Rolamento tipo roletes
BELL	Campânula
BELLCRANK	Alavanca angular
BELLOWS	Fole
BELOW	Abaixo
BELT	Correia, cinto
BELT TIGHTENER	Ajustador de correia
BEVEL GEAR	Coroa
BIT-CUTTER	Broca, fresa
BLACK	Preto
BLADE	Lâmina
BLEEDER	Sangrador
BLOCK	Bloco, calço
BLOWER	Ventilador
BLUE	Azul
BOARD	Prancha, tábua
BODY	Corpo
BOLT	Parafuso
BONNET	Tampa
BOOM	Lança
BOOSTER	Reforçador
BOOT	Protetor contra poeira
BORE	Furo
BOSS	Ressalto
BOTH	Ambos (as)
BOTTOM	Fundo
BOWL	Caçamba
BOX	Caixa
BRACE	Tirante
BRACKET	Suporte
BRAKE	Freio
BREAKER	Interruptor
BREATHER	Respiro
BRIDGE	Braço
BROWN	Marrom
BRUSH	Escova
BUCKET	Caçamba
BULB	Bulbo
BULLDOZER	Bulldozer
BUMPER	Pára-choque
BUSHING	Bucha
BUTTON	Botão
BUZZER WARNING	Alarme sonoro
C = CHANGE	Alteração
CAB	Cabina
CABINET	Gabinete
CABLE	Cabo
CAGE	Alojamento
CALIPER	Calibrador
CAM	Excêntrico, ressalto
CAMSHAFT	Eixo-comando-de-válvulas
CANOPY	Coberta, toldo
CAP	Tampa
CAPACITOR	Capacitor, condensador

NOMENCLATURA DE PEÇAS INGLÊS-PORTUGUÊS

INGLÊS	PORTUGUÊS
CARBURETOR	Caburador
CARCASS	Carcaça
CARRIER	Suporte
CARTON	Caixa de papelão
CARTRIDGE	Cartucho
CASE	Caixa, alojamento
CASING	Invólucro, revestimento
CASTER	Rolete, roldana
CAST IRON	Ferro fundido
CATWALK	Passadiço
CENTER	Centro
CHAIN	Corrente
CHAMBER	Câmara
CHANGEOVER	Modificação
CHANNEL	Canal
CHASSIS	Chassi, armação
CHECK-VALVE	Válvula de retenção
CIRCUIT	Circuito
CIRCUIT BREAKER	Interruptor de circuito
CLAMP	Braçadeira
CLASP	Fecho, grampo
CLEANER	Purificador
CLEVIS	Forquilha, garfo
CLIP	Clipe, presilha, grampo
CLOSURE	Fecho
CLUTCH	Embreagem
COARSE	Grosso, áspero
COATING	Capa, revestimento
COCK	Torneira
COIL	Bobina, serpentina
COLLAR	Colar
COLLECTOR	Coletor
COLLET	Mandril
COLUMN	Coluna
COMPACTOR	Compactador
COMPARTMENT	Compartimento
COMPLETE	Completo
COMPOUND	Composto
COMPRESSOR	Compressor
CONCAVE	Côncavo
CONDITIONER	Condicionador
CONDUIT	Conduite, eletroduto
CONE	Cone
CONNECTING	Ligação
CONNECTED ROD	Biela
CONNECTION	Conexão
CONNECTOR	Conetor
CONSISTS OF	Consiste de
CONSOLE	Consolo
CONTACT	Contato, platinado
CONTACTOR	Contactador
CONTINUED FROM	Continuação de
CONTROL	Controle
CONVERSION	Conversão
CONVERTER	Conversor
COOLER	Arrefecedor
COOLING	Arrefecimento
CORK	Cortiça
CORE	Núcleo
CORNER	Canto
COTTER PIN	Contrapino
COUNTER	Contador, tacômetro
COUNTERWEIGHT	Contrapeso
COUPLER	Acoplador, engate
COUPLING	Acoplamento, conexão
COVER	Tampa
COWL	Capota
COWLING	Capota
CRADLE	Armação, suporte
CRANK	Manivela
CRANKCASE	Cárter
CRANKSHAFT	Virabrequim
CROSS UNION	Junta transversal
CROSSBAR	Barra transversal
CUP	Capa, anel externa
CURTAIN	Cortina
CUSHION	Almofada, amortecedor
CUTTER	Fresa, cortador
CUTTING EDGE	Borda cortante
CYLINDER	Cilindro
CYLINDER BLOCK	Bloco do motor
CYLINDER HEAD	Cabeçote
DAMPER	Amortecedor
DARK GREEN	Verde escuro
DASH	Painel
DASH PANEL	Painel de Instrumento
DECELERATOR	Desacelerador
DEFLECTOR	Defletor
DETENT	Retém, pino de trava
DIAGRAM-WIRING	Diagrama dos circuitos elétricos
DIAL	Medidor de dial
DIAPHRAGM	Diafragma
DIESEL ENGINE COMPLETE	Motor diesel completo
DIFFERENTIAL	Diferencial
DIFFUSER	Difusor
DIMMER	Redutor de luminosidade
DIODE	Diodo
DIRECTOR	Diretor
DISC	Disco
DISCONNECT	Desligar
DISPOSABLE	Disponível, substituível
DISSIPATOR	Dissipador de calor
DISTRIBUTOR	Distribuidor
DM = DECIMETER	dm = decímetro
DOME LIGHT	Lâmpada do teto
DOOR	Porta
DOWEL	Pino-guia, cavilha

NOMENCLATURA DE PEÇAS INGLÊS-PORTUGUÊS

INGLÊS	PORTUGUÊS
DOWNSHIFT	Mudança para marcha mais baixa
DOZER	Bulldozer (lâmina)
DRAIN	Dreno
DRAWBAR	Barra de tração
DRILL	Broca
DRILLED	Broqueado, perturado
DRIVE	Comando, acionamento, propulsão
DRIVER	Acionador, mecanismo propulsor
DRIVESHAFT	Eixo acionador, eixo de transmissão
DRUM	Tambor
DUCT	Conduto, canal
EACH	Cada
EDGE	Borda, canto
EFFECTIVE WITH	Efetivo a partir de
EJECTOR	Ejetor
ELBOW	Cotovelo
ELEMENT	Elemento
ENCLOSURE	Cobertura
END	Extremidade
END BIT	Canto de lâmina
END VIEW	Vista traseira
ENGINE	Motor
ENGINE ARRANGEMENT	Arranjo do motor
EXCEPT	Exceto
EXHAUST	Escape
EXHAUST PIPE	Cano de escape
EXPANDER	Expansor
EXPANSION PLUG	Bujão de expansão
EXTENSION	Extensão
EXTINGUISHER	Extintor
EXTRACTOR	Extrator
EYE	Olhal
EYEBOLT	Parafuso de olhal
FABRIC	Tecido, tela textura
FACING	Revestimento, forro
FAN	Ventilador
FASTENED	Fixo, preso
FASTENER	Fixador, prendedor
FENDER	Pára-lamas
FERRULE	Virola
FIELD COIL	Bobina indutora, ou de campo
FIELD REPLACEMENT	Reposicão ou substituicão no campo
FILLER	Bocal de enchimento
FILM	Película
FILTER	Filtro
FINAL DRIVE	Comando final
FINGER	Dedo
FIREWALL	Parede contra fogo

INGLÊS	PORTUGUÊS
FITTING	Graxeira, conexão
FIXTURE	Dispositivo, Aparelho
FLANGE	Flange
FLASHER	Luz intermitente
FLOAT	Flutuar, livre
FLOOD-LAMP	Farol
FLOOR	Piso
FLOORMAT	Tapete
FLOORPLATE	Chapa do piso
FLYWEIGHT	Peso volante
FLYWHEEL	Volante
FOLLOWER	Seguidor
FOOT	Pé
FORK	Garfo
FOR USE WITH	Para usar com
FOUNDATION	Assentamento, alicerce
FRAME	Armacão, chassi
FRONT	Frente, dianteiro
FT = FOOT	Pé
FUEL INJECTION	Injecão de combustível
FUEL PUMP	Bomba de combustível
FUEL RATIO	Limitador de combustível
FUEL SYSTEM	Sistema do combustível
FUEL TANK	Tanque do combustível
FUMES DISPOSAL	Eliminação de vapores do cárter
FUSE	Fusível
G = GROUP	Grupo
GAGE	Indicador, manômetro
GAP	Folga, lacuna, intervalo
GASKET	Junta
GASKET KIT	Jogo de junta
GATE	Entrada, trava
GAUGE	Indicador, manômetro
GEAR	Engrenagem, marcha
GEAR BOX	Caixa de engrenagem
GEAR PUMP	Bomba de engrenagem
GENERATOR	Gerador
GLAND	Junta, gaxeta, vedacão sobreposta
GLASS	Vidro
GLOW PLUG	Vela incandescente
GOVERNOR	Governador
GRAB IRON	Balaústre corrimão
GRATE	Grade, grelha
GRAY	Cinza
GRID	Grade, grelha
GRILL	Grade, grelha
GRIP	Pega, garra, cabo
GROMMET	Ilhós
GROUND BRUSH	Escova-terra
GROUND (ELECTRIC)	Terra (eletricidade)
GROUSER	Garra (de sapata)
GUARD	Protetor
GUIDE	Guia

NOMENCLATURA DE PEÇAS INGLÊS-PORTUGUÊS

INGLÊS	PORTUGUÊS
GUSSET	Cantoneira
HACKSAW	Serra para metais
HALF	Metade, meio (a)
HALF LINK	Semi-elo
HAMMER	Martelo
HAND CONTROL	Controle manual
HANDLE	Cabo, alça
HANDRAIL	Corrimão, balaústre
HANGER	Suporte, dispositivo de suspensão
HARDWARE	Ferragem
HARDWARE KIT	Jogo de ferragem
HARNESS	Chicote
HEAD = HD	Cabeça
HEADER	Coletor
HEADLAMP	Farol dianteiro
HEADLIGHT	Farol dianteiro
HEAT SINK	Difusor de calor
HEATER	Aquecedor
HIGH-IDLE	Marcha acelerada em vazio
HINGE	Dobradiça, articulacão
HITCH	Engate
HOIST	Guincho, talha
HOLD	Suporte, fixador
HOLD DOWN	Fixar, reter, manter abaixado
HOLDER	Fixador, suporte
HOLE	Furo, buraco
HOOD	Capô
HOOD & DASH	Capô e painel
HOOK	Gancho
HORN	Buzina
HOSE	Mangueira
HOUSING	Alojamento
HUB	Cubo
HYDRAULIC	Hidráulico
ID = INSIDE DIAMETER	Diâmetro interno
IDLER	Roda-guia
IDLER & SHAFT	Roda-guia e eixo
IDLER GEAR	Engrenagem intermediária
IDLER PULLEY	Polia intermediária
IMPELLER	Impulsor, rotor
IN = INCH	Polegada
INCLUDES	Inclui
INDICATE	Indicam
INDICATOR	Indicador
INLAY	Incrustação
INLET	Admissão, entrada
INPUT	Entrada
INSERT	Inserção
INSTALLATION	Instalação
INSTALLED ON MODEL	Instalação no modelo
INSTRUCTION	Instrução
INSTRUMENT	Instrumento
INSULATED BRUSH	Escova isolada
INSULATION	Isolação, isolamento
INSULATOR	Isolante, isolador
INTAKE	Admissão
INTERLOCK	Trava interna
INTERMEDIATE	Intermediário
INTERNAL	Interno
INVERTER	Inversor
IRON	Ferro
JACK	Macaco
JAW	Mandíbula, garra
JET	Jato, vaporizador
JOINT	Junta, articulação
JUNCTION	Junção
KEY	Chaveta
KINGBOLT	Pino de engate
KNIFE	Faca, lâmina
KNOB	Maçaneta, botão
LADDER	Escada
LAMP	Lâmpada
LARGE	Grande
LATCH	Trinco, lingüeta
LEAD	Condutor, cabo
LEG	Perna
LENS	Lente
LEVEL	Nível
LEVER	Alavanca
L.H. = LEFT HAND	Lado esquerdo
LID	Placa, tampa
LIFT	Levantar
LIFT CYLINDER	Cilindro de levantamento
LIFTER	Tucho
LIFTING EYE	Olhal de levantamento
LIGHT GREEN	Verde claro
LIGHTING	Sistema de iluminação
LINE	Tubulação
LINER	Camisa
LINES & PUMP	Tubulação e bomba
LINES & VALVE	Tubulação e válvula
LINING	Revestimento, lona
LINK	Elo
LINKAGE	Articulação
LIP	Lábio, borda
LISTED	Relacionamento
LITERATURE	Literatura
LOCATED	Localizado
LOCATOR	Localizador
LOCK	Trava
LOCKNUT	Contraporca
LOCKWASHER	Arruela de pressão
LOCKWIRE	Arame de trava
LONG	Longo
LOOM	Tubo isolador
LOW IDLE	Marcha lenta
LOUVER	Persiana
LOWER	Abaixar, inferior

NOMENCLATURA DE PEÇAS INGLÊS-PORTUGUÊS

INGLÊS	PORTUGUÊS
LUBRICANT	Lubrificante
LUG	Ressalto, orelha
MACHINE SCREW	Parafuso de fenda
MAGNET	Imã magneto
MAIN	Principal
MAINTENANCE	Manutenção
MANIFOLD	Coletor
MARKED	Marcado (a)
MARKER	Marcador
MASTER PIN	Pino mestre
MAT	Capacho, esteira
METER	Medidor, contador
MINOR	Menor
MIRROR	Espelho
MISCELLANEOUS	Miscelânea
MODIFICATION	Modificação
MOLDBOARD	Armação da lâmina
MOTOR	Motor
MOULDING	Moldura
MOUNT	Montar
MOUNTED	Montado (a)
MOUNTING	Montagem
MUFFLER	Silenciador
NAMEPLATE	Plaqueta de identificação
N.C. (THREAD)	Rosca grossa
NEEDLE	Agulha
N.F. (THREAD)	Rosca fina
NIB	Ponta, bico
NIPPLE	Conexão
NONE	Nenhum (a)
NORMALIZING	Normalização
NOT PART OF	Não faz parte de
NOZZLE	Bocal, bico injetor
N/S = NOT SERVICED	Não vendável
NUMBER (No)	Número (No)
NUT	Porca
NUT-WING	Porca borboleta
NUT-CASTLE	Porca acastelada
NUT-WELD	Porca-soldada
NUT-CAP	Porca cega
NUT-HEX	Porca sextavada
NUT-LOCK	Contraporca
NUT-IMPERIAL	Porca imperial
NUT-JAM	Porca de trava, contraporca
NUT-LOW CROWN	Porca de meia coroa
NUT-RETAINING	Porca de retenção
NUT-SELF LOCK	Porca de autotravamento
NUT-SLOTTED	Porca fendada
NUT-SPANNER	Porca para chaves
O.D. = OUTSIDE DIAMETER	Diâmetro externo
O-RING	Anel "O"
OIL	Óleo
OILPAN	Cárter
OIL PUMP	Bomba de óleo
OIL SYSTEM	Sistema de lubrificação
OILER	Almotolia, lubrificador
ORANGE	Laranja
TO ORDER	Para pedir
ORIFICE	Orifício
OUTER	Externo
OUTER RACE	Anel externo
OUTPUT	Saída
OVERALL	Geral, total
OVERHAUL	Revisão
OVER SIZE	Sobremedida
PACKING	Embalagem, gaxeta
PAD	Coxim, calço
PADLOCK	Cadeado
PAINT	Pintura
PAN	Cárter
PANEL	Painel
PARKING BRAKE	Freio de estacionamento
PARTITION	Separacão
PARTS G	Grupo de peças
PARTS OF	Peça de
PARTS OF ALL ENGINE ARRANGEMENTS	Peças de todos os arranjos do motor exceto
PAWL	Garra
PEDAL	Pedal
PEDESTAL	Pedestal
PERFORMANCE	Desempenho
PILOT	Piloto
PIN	Pino
PIN & BUSHING	Pino e bucha
PIN-COTTER	Contrapino
PINCH BAR	Pé de cabra
PINION	Pinhão
PIPE	Tubo
PISTON	Pistão
PIVOT	Articulação, pivô
PLANETARY	Planetário
PLATE	Placa
PLATFORM	Plataforma
PLUG	Bujão
PLUNGER	Pistão, êmbolo
POINT	Ponta, ponto
POINTER	Ponteiro
POLE & COIL	Polo e bobina
POLE	Polo, lança, vara
POPPET	Gatilho
POST	Poste, coluna
POTENTIOMETER	Potenciômetro
POWER TAKE OFF	Tomada de força
POWER TRAIN	Trem de força
PRE-SCREENER	Tela protetora
PRECHAMBER	Câmara de pré-combustão
PRECLEANER	Pré-purificador
PRECOMBUSTION	Pré-combustão

NOMENCLATURA DE PEÇAS INGLÊS-PORTUGUÊS

INGLÊS	PORTUGUÊS
PRESS	Prensa
PRESS = PRESSURE	Pressão
PREVIOUS	Prévio, anterior
PRIMARY	Primário, principal
PROBE	Prova
PROJECTOR	Projeter
PROTECTION	Proteção
PROTECTOR	Proteter
PULLER	Extrator, sacador
PULLEY	Polia
PUMP	Bomba
PURPLE	Roxo
PUSHROD	Haste de empuxo
QTY = QUANTITY	Quantidade
RACE	Pista
RACE & ROLLER	Pista e rolete
RACK	Cremalheira
RADIATOR	Radiador
RAIL	Trilho, guia
RANGE TRANSM	Transmissão manual
RATCHET	Catraca
REAR	Traseiro (a)
REBORED	Escareado, alargado
REBUILD KIT	Jogo de recondicionamento
RECEPTACLE	Recipiente
RECTIFIER	Retificador
RED	Vermelho
REDUCER	Redutor
REFER	Referir
REGULATOR	Regulador
RELATED REPAIR ITEMS	Itens de reparos relacionados
RELAY	Relé
RELIEF VALVE	Válvula de alívio
REPAIR G	Grupo de reparo
REPAIR KIT	Jogo de reparo
REPAIR ITEMS	Itens de reparo
REPLACEMENT	Reposição, substituição
REQUIRED	Necessário
RESERVOIR A	Reservatório
RESIN	Resina
RESISTOR	Resistência
RETAINER	Fixador
RETARDER	Retardador
REVERSIBLE	Reversível
R.H. = RIGHT HAND	Lado direito
RIM	Aro
RIM & TIRE	Aro e pneu
RING	Anel
RIVET	Rebite
ROCKET	Balancim
ROD	Haste
ROD END	Extremidade da haste
ROLLER	Rolete
ROPE-STARTING	Partida à corda
ROTATOR	Girador
ROTOCHAMBER	Càmara pneumática
ROTOCOIL	Girador de válvula
ROTOR	Rotor
RUST INHIBITOR	Antioxidante
SADDLE	Sela, assento
SAFETY	Segurança
SAFETY TREAD	Tiras antiderrapante
SCRAPER	Tampa
SCREEN	Tela
SCREW	Parafuso
SCREW-HEX HD	Parafuso de cabeça hexagonal
SCREW-KIT	Jogos de parafuso
SCREW-MACHINE	Parafuso de fenda
SCREW-ROUND HD	Parafuso de cabeça redonda
SCREW-FLANGED	Parafuso com flange
SCREW-LOCKING	Parafuso de trava
SCREW-THUMB	Parafuso de orelhas
SCREWDRIVER	Chave de fenda
SEAL	Retentor
SEALED UNIT	Unidade vedada
SEALER	Vedador isolante
SEAT	Assento
SECONDARY	Secundário
SECTION	Seção
SEGMENT	Segmento
SENDER	Emissor
SENSOR	Sensor
SEPARATE	Separar, separado
SEPARATOR	Separador
SERIAL NUMBER PLATE	Placa de número de série
SERVICE	Serviço, manutenção
SERVICE KIT	Jogo de manutenção
SERVICE METER	Horômetro
SETSCREW	Parafuso de fixação
SHACKLE	Grilheto, anel, manilha
SHAFT	Eixo
SHANK	Porta-ponta do escarificador
SHEAVE	Polia, roldana
SHEET	Folha, lâmina
SHELL	Invólucro, cápsula, casquilho
SHIELD	Blindagem, protetor
SHIFT	Mudança
SHIM	Calço
SHIPPING	Embarque
SHOCK ABSORBER	Amortecedor de choques
SHOCKMOUNT	Montagem a prova de choques
SHOE	Sapata
SHORT	Curto

NOMENCLATURA DE PEÇAS INGLÊS-PORTUGUÊS

INGLÊS	PORTUGUÊS
SHOWN	Ilustrado, mostrado
SHROUD	Tampa de proteção
SHUNT	Derivação
SHUT OFF	Desligar, parada
SHUTTLE	Pistão de vaivém
SIDE	Lateral
SIDE VIEW	Vista lateral
SILICONE	Silicone
SINK	Absorvente de calor
SKIVING	Desbaste
SLACK ADJUSTER	Adjustador de folga
SLEEVE	Luva, manga, camisa
SLIDER	Cursor, deslizador
SLIDE RAIL	Trilho deslizante
SLING	Cabos, amarras, linga
SLINGER	Defletor
SLUG	Pistão de reação, pistãozinho
SMALL	Pequeno
SNAP RING	Anel de retenção, anel de pressão
SNUBBER	Amortecedor
SOCKET	Soquete, tomada
SOLENOID	Solenóide
SPACER	Espaçador
SPARE	Sobressalente
SPARK PLUG	Vela de ignição
SPECIAL	Especial
SPEEDOMETER	Velocimetro
SPIDER	Cruzeta
SPINDLE	Ponta de eixo
SPLINE	Estria
SPOOL	Carretel
SPOUT	Calha, tubo
SPRING	Mola
SPROCKET	Roda motriz, roda dentada
STABILIZER	Estabilizador
STACK	Chaminé, cano de escapamento
STAND	Suporte, cavalete
STANDPIPE	Suporte vertical de sucção
STAPLE	Grampo
STARTER	Arranque motor de partida
STATOR	Estator
STEERING	Direção
STEM	Haste
STEP	Degrau
STICK	Vareta
STOP	Parar
STORAGE	Armazenagem
STRAINER	Tela filtrante
STRAP	Tira, cinta, suporte de fixação
STREET ELL	Conexão cotovelo
STRIP	Tira, fita, listra
STROKE	Curso do pistão
STUD	Prisioneiro
SUMP	Tanque, reservatório
SUPPLY VALVE	Válvula de suprimento
SUPPORT	Suporte
SUSPENSION	Suspensão
SWITCH	Interruptor
SWIVEL	Articulação giratória
TAB	Tira, aba, lingüeta
TABLE	Mesa
TACHOGRAPH	Tacógrafo
TACHOMETER	Tacômetro
TAG	Etiqueta
TAIL LAMP	Farol traseiro
TAN	Castanho
TANG	Lingüeta
TANK	Tanque
TAP	Macho
TAPE	Fita
TAPPET	Tucho
TEE	Conexão em "T"
TEMP. = TEMPERATURE	Temperatura
TERMINAL	Terminal
TEST UNIT	Unidade de teste
TESTER	Aparelho de teste
THERMISTOR	Termistor
THERMOCOUPLE	Termopar
THERMOMETER	Termômetro
THERMOSTAT	Termostato
THERMOSWITCH	Interruptor térmico
THICK	Grosso (a) espesso (a)
TIE	Ligação, tirante
THREAD (OF NUT)	Rosca (de porca)
THROTTLE	Acelerador de
THROWER	Defletor
THRU = THROUGH	Através de
TIGHTENER	Tensor
TILT CYLINDER	Cilindro de inclinação
TIMING	Sincronização, Distribuição
TIP	Ponta
TIRE	Pneu
TIRE & RIM	Pneu e aro
TONGUE	Língua, lingueta
TOOL	Ferramenta
TOOLCABINET	Armário para ferramenta
TOOTH/TEETH	Dente/dentes
TOP	Topo, parte superior
TORQUE	Torque
TORQ. CONV.	Conversor de torque
TORQ. DIVIDER	Divisor de torque
TOWER	Torre
TRACK	Esteira
TRACK PIN	Pino de esteira
TRACTOR	Trator

NOMENCLATURA DE PEÇAS INGLÊS-PORTUGUÊS

INGLÊS	PORTUGUÊS
TRAILING UNIT	Unidade rebocada
TRANSFER	Decalcomania
TRANSFORMER	Transformador
TRANSISTOR	Transistor
TRANSMISSION	Transmissão
TRANSMISSION OVERHAUL	Revisão da transmissão
TREAD	Piso, banda de rodagem
TREADLE	Pedal
TROLLY	Carrinho
TRUCK	Caminhão
TRUNNION	Munhão
TUBE	Tubo, cano
TUBING	Tubulagem canalização
TURBINE	Turbina
TURBOCHARGER	Turboalimentador
U-BOLT	Parafuso em "U"
U-JOINT	Junta universal
UNDERSIZE	Submedida
UNION	União
UPPER	Superior
USE AS REQUIRED	Usar conforme necessitar
VALUE	Valor
VALVE	Válvula
VALVE GRINDING	Retificação das válvulas
VEE BELT	Correia "V"
VEE BELT SET	Jogo de correia em "V"
VENT	Respiro
VIEW	Vista
VISE	Morsa, torno
VISOR	Pára-sol
WALKWAY	Passadiço, corredor
WARNING G.	Grupo de alarma
WASHER	Arruela
WATER PUMP	Bomba d'água
WEARPLATE	Placa de desgaste
WEDGE	Cunha
WEIGHT	Peso
WELD	Solda
WELDNUT	Porca soldada
WHEEL	Roda
WHITE	Branco
WICK	Mecha, pavio
WINCH	Guincho
WINDOW	Janela
WINDSHIELD	Pára-brisa
WIPER	Limpador
WIRE	Fio
WIRING	Sistema elétrico
WIRING DIAGRAM	Diagrama do sistema elétrico
WITH	Com
WRAPPER	Invólucro, envoltório
WRENCH	Chave
YELLOW	Amarelo
YOKE	Garfo

MAINTENANCE PARTS

DESCRIPTION	PART NUMBER	QTY	WHERE USED	PAGE
BATTERY-MAINTENANCE FREE (12V)(750 AMP)	3T-5760	2	WIRING GP-REAR	206
		2	WIRING GP-REAR	212
		2	WIRING GP-REAR	218
BLADE AS-WIPER	6V-5849	1	WIPER GP-WINDOW	880
	6V-5853	1	WIPER GP-WINDOW	876
		1	WIPER GP-WINDOW	878
		1	WIPER GP-WINDOW	881
		1	WIPER GP-WINDSHIELD	882
BREATHER AS-CRANKCASE	2W-9162	1	BREATHER GP	56
BREATHER (PRESSURE RELIEF)	9G-5127	1	FILLER GP-POWER TRAIN OIL	290
BREATHER (TANDEM)	1F-8488	2	TANDEM & COVER GP	306
CAP	7C-8370	1	DRIVE GP-FAN	30
CAP AS-FUEL TANK	7X-7700	1	TANK GP-FUEL	138
CAP AS-OIL FILLER	5L-2952	1	FILLER GP-OIL	57
		1	FILLER GP-OIL	58
CAP-DUST	8C-3445	1	FILTER GP-ENGINE OIL	60
CAP-FILLER (HYDRAULIC)	7H-1447	1	TANK & FILTER GP-HYDRAULIC	622
CAP-FUSE HOLDER	7N-2867	1	FAN GP-DEFROSTING	770
		1	FAN GP-DEFROSTER	771
		1	FAN GP-DEFROSTING	772
		1	WIPER GP-WINDOW	880
		1	WIPER GP-WINDOW	881
		1	WIRING GP-CAB	188
	139-0178	1	LIGHTER GP-CIGAR	794
CAP-RADIATOR	6L-8617	1	RADIATOR GP	84
CIRCUIT BREAKER AS (15 AMP)	3T-2662	1	LIGHTING GP	164
CIRCUIT BREAKER AS (60 AMP)	9S-0174	1	WIRING GP-REAR	213
		1	WIRING GP-REAR	219
CYLINDER AS (ETHER)	7N-0296	1	STARTING AID GP-ETHER	176
ELEMENT AS-HYD REVERSE FLOW	1R-0722	1	TANK & FILTER GP-HYDRAULIC	622
ELEMENT AS-HYDRAULIC	1R-0719	1	LINES GP-TRANSMISSION OIL	296
ELEMENT AS-PRIMARY (AIR)	6I-2499	1	AIR CLEANER GP	86
ELEMENT AS-SECONDARY (AIR)	6I-2500	1	AIR CLEANER GP	86
ELEMENT-FILTER	7M-1674	1	LINES GP-AIR	90

MAINTENANCE PARTS

DESCRIPTION	PART NUMBER	QTY	WHERE USED	PAGE
ELEMENT-WATER SEPARATOR	117-4089	1	SEPARATOR GP-WATER	136
FILTER AS-FUEL	1R-0751	1	LINES GP-FUEL FILTER	130
	1R-0753	1	LINES GP-FUEL FILTER	130
FILTER AS-OIL	1R-0739	1	FILTER GP-ENGINE OIL	60
FILTER-MAGNETIC (TRANSMISSION)	8S-9129	1	CASE & PARTS GP-PLANETARY	236
		1	SCREEN GP-MAGNETIC	302
FITTING-GREASE (1/8-27 THD)	3B-8489	7	AXLE GP-FRONT	482
		7	AXLE GP-FRONT	486
		4	AXLE GP-FRONT	486
		2	LINES GP-GREASE	522
		2	CYLINDER & MTG GP-WHEEL LEAN	558
		1	DRAWBAR GP	722
		1	SCARIFIER GP	736
		4	SCARIFIER GP	736
FITTING-HYDRAULIC	3B-8488	4	AXLE GP-FRONT	482
FUSE (10 AMP)	3K-8782	1	FAN GP-DEFROSTING	770
		1	FAN GP-DEFROSTER	771
		1	FAN GP-DEFROSTING	772
		1	LIGHTER GP-CIGAR	794
		1	WIPER GP-WINDOW	880
		1	WIPER GP-WINDOW	881
		1	CONVERTER & MTG GP-ELECTRICAL	155
		2	LIGHTING GP-FLOOD	168
		1	LIGHTING GP-FLOOD	170
		2	LIGHTING GP-FLOOD	172
		3	WIRING GP-CAB	188
		2	WIRING GP-CAB	190
		6	WIRING GP-STEERING CONSOLE	232
		1	CONTROL GP-DIFFERENTIAL LOCK	272
FUSE (15 AMP)	8M-8948	1	BLOWER & MTG GP-CAB	745
		1	HEATER & MOUNTING GP	777
INDICATOR-AIR FILTER SERVICE	8N-2694	1	LINES GP-AIR	90
INSERT	139-3531	1	BASE GP-FUEL FILTER	100
INSERT-FUEL FILTER	112-6523	1	BASE GP-FUEL FILTER	100

MAINTENANCE PARTS

DESCRIPTION	PART NUMBER	QTY	WHERE USED	PAGE
KEY	5P-8500	1	PROTECTION GP-LUBE SYSTEM	67
		2	LITERATURE GP	809
		1	SEAT GP	850
		1	SEAT GP	852
		1	TOOL BOX GP	901
		1	TANK GP-FUEL	138
		1	PROTECTION GP-TMSN OIL FILLER	299
		1	ENCLOSURE GP-ENGINE	496
		1	ENCLOSURE GP-ENGINE	500
		1	GUARD & SUPPORT GP-RADIATOR	510
		1	PROTECTION GP-LUBE SYSTEM	66
		1	TANK & MTG GP-HYDRAULIC	624
	8H-5306	1	SWITCH AS-DISCONNECT	184
KIT-CAP FILTER	9X-2205	1	TANK GP-FUEL	138
LAMP	9X-3463	1	LAMP GP-FLOOD	159
		1	LAMP GP-HEAD	160
		1	LAMP GP-HEAD	161
	9X-4492	1	LAMP GP-SIGNAL	162
	9X-4493	1	LAMP GP-SIGNAL	163
LAMP-MINIATURE	7N-9943	1	WIRING GP-CAB	188
	8M-6176	2	GAUGE GP	814
LAMP-MINIATURE (24 VOLT)	3E-8825	1	FAN GP-DEFROSTING	770
		1	FAN GP-DEFROSTER	771
		1	FAN GP-DEFROSTING	772
		2	LIGHTING GP	164
		2	LIGHTING GP-FLOOD	168
		1	LIGHTING GP-FLOOD	170
		2	LIGHTING GP-FLOOD	172
		1	STARTING AID GP-ETHER	176
		1	WIRING GP-SHIFT CONSOLE	230
		1	WIRING GP-STEERING CONSOLE	232
		1	CONTROL GP-DIFFERENTIAL LOCK	272
		1	CONTROL GP-DIFFERENTIAL LOCK	274
LAMP-MINIATURE (24 VOLT) (1.75 DIA)	3E-8825	1	WIRING GP-SHIFT CONSOLE	226
		1	WIRING GP-SHIFT CONSOLE	228
LAMP-MINIATURE (28 VOLT)	7N-5876	7	PANEL GP-INSTRUMENT	824
		8	PANEL GP-INSTRUMENT	826
		1	WIRING GP-SHIFT CONSOLE	226
		1	WIRING GP-SHIFT CONSOLE	228
		1	WIRING GP-SHIFT CONSOLE	230

MAINTENANCE PARTS

DESCRIPTION	PART NUMBER	QTY	WHERE USED	PAGE
PADLOCK GP	5P-8502	3	PROTECTION GP-LUBE SYSTEM	67
		1	SEAT GP	850
		1	SEAT GP	852
		1	TOOL BOX GP	901
		1	TANK GP-FUEL	138
		1	PROTECTION GP-TMSN OIL FILLER	299
		2	PROTECTION GP-LUBE SYSTEM	66
		2	ENCLOSURE GP-ENGINE	496
		2	ENCLOSURE GP-ENGINE	500
		1	GUARD & SUPPORT GP-RADIATOR	510
		1	TANK & MTG GP-HYDRAULIC	624
PLUG-O-RING	5P-4483	1	CASE & PARTS GP-PLANETARY	236
		1	CASE & PARTS GP-PLANETARY	242
		1	CASE & PARTS GP-TRANSMISSION	248
REGULATOR-WATER	126-5869	1	LINES GP-WATER	76
SCREEN	6I-9395	1	VALVE GP-TRANSMISSION CONTROL	338
		1	VALVE GP-TRANSMISSION CONTROL	340
SCREEN AS	7C-4483	1	GOVERNOR GP-UNIT INJECTOR	118
SEAL-O-RING (110.49MM ID)	9X-8600	1	TANK GP-FUEL	138
SEAL-O-RING (123.19MM ID)	2S-8439	1	FILTER GP-TRANSMISSION	291
SEAT BELT GP	8Y-4030	1	SEAT GP	850
STRAINER-FUEL TANK	9P-7121	1	TANK GP-FUEL	138
STRAINER (HYDRAULIC)	9J-3047	1	TANK & FILTER GP-HYDRAULIC	622
V-BELT	036-6775	1	DRIVE GP-WATER PUMP	32

PIÈCES DE RECHANGE

DESCRIPTION	NUMÉRO DE PIECÈS	QTÉ	DOMAINE D'APPLICATION	PAGE
AMPOULE	9X-3463	1	LAMPE - PHARE (ASS)	159
		1	PHARE AV (ASS)	160
		1	PHARE AV (ASS)	161
	9X-4492	1	LAMPE - CLIGNOTANT DE DIRECTION (ASS)	162
	9X-4493	1	LAMPE - CLIGNOTANT DE DIRECTION (ASS)	163
BALAI ESSUIE-GLACE (ENS)	6V-5849	1	ESSUIE-GLACE (ASS)	880
	6V-5853	1	ESSUIE-GLACE (ASS)	876
		1	ESSUIE-GLACE (ASS)	878
		1	ESSUIE-GLACE (ASS)	881
		1	ESSUIE-GLACE - PARE-BRISE (ASS)	882
BATTERIE SANS ENTRETIEN ((12 V) (750 A))	3T-5760	2	CABLAGE AR (ASS)	206
		2	CABLAGE AR (ASS)	212
		2	CABLAGE AR (ASS)	218
BOUCHON DE GOULOTTE DE REMPLISSAGE D'HUILE MOTEUR	5L-2952	1	GOULOTTE D'HUILE MOTEUR (ASS)	57
		1	GOULOTTE D'HUILE MOTEUR (ASS)	58
BOUCHON DE GOULOTTE DE REMPLISSAGE (HYDRAULIQUE)	7H-1447	1	RÉSERVOIR HYDRAULIQUE ET FILTRE (ASS)	622
BOUCHON DE RÉSERVOIR DE CARBURANT (ENS)	7X-7700	1	RÉSERVOIR DE CARBURANT (ASS)	138
BOUCHON-JOINT TORIQUE	5P-4483	1	TRAINS PLANÉTAIRES - CARTER ET PIÈCES	236
		1	TRAINS PLANÉTAIRES - CARTER ET PIÈCES	242
		1	CARTER ET PIECES DE BOITE (ASS)	248
CADENAS (ASS)	5P-8502	2	CIRCUIT DE GRAISSAGE - PROTECTION (ASS)	66
		3	CIRCUIT DE GRAISSAGE - PROTECTION (ASS)	67
		1	RÉSERVOIR DE CARBURANT (ASS)	138
		1	GOULOTTE DE REMPLIS. D'HUILE DE BOÎTE - PROTECTION	299
		2	CARENAGE DE MOTEUR (ASS)	496
		2	CARENAGE DE MOTEUR (ASS)	500
		1	PROTÈGE-RADIATEUR ET SUPPORT (ASS)	510
		1	RÉSERVOIR HYDRAULIQUE ET MONTAGE (ASS)	624
		1	SIEGE (ASS)	850
		1	SIEGE (ASS)	852
		1	COFFRE A OUTILS (ASS)	901

PIÈCES DE RECHANGE

DESCRIPTION	NUMÉRO DE PIECÈS	QTÉ	DOMAINE D'APPLICATION	PAGE
CEINTURE DE SECURITE (ASS)	8Y-4030	1	SIEGE (ASS)	850
CHAPEAU	7C-8370	1	ENTRAINEMENT DE VENTILATEUR (ASS)	30
CHAPEAU - RADIATEUR	6L-8617	1	RADIATEUR (ASS)	84
CHAPEAU (PORTE-FUSIBLES)	7N-2867	1	CABLAGE DE CABINE (ASS)	188
		1	DEGIVREUR - VENTILATEUR	770
		1	VENTILATEUR DÉGIVREUR (ASS)	771
		1	DEGIVREUR - VENTILATEUR	772
		1	ESSUIE-GLACE (ASS)	880
		1	ESSUIE-GLACE (ASS)	881
	139-0178	1	ALLUME-CIGARETTES (ASS)	794
CLÉ	5P-8500	1	CIRCUIT DE GRAISSAGE - PROTECTION (ASS)	66
		1	CIRCUIT DE GRAISSAGE - PROTECTION (ASS)	67
		1	RÉSERVOIR DE CARBURANT (ASS)	138
		1	GOULOTTE DE REMPLIS. D'HUILE DE BOÎTE - PROTECTION	299
		1	CARENAGE DE MOTEUR (ASS)	496
		1	CARENAGE DE MOTEUR (ASS)	500
		1	PROTÈGE-RADIATEUR ET SUPPORT (ASS)	510
		1	RÉSERVOIR HYDRAULIQUE ET MONTAGE (ASS)	624
		2	LITTERATURE (ASS)	809
		1	SIEGE (ASS)	850
		1	SIEGE (ASS)	852
		1	COFFRE A OUTILS (ASS)	901
	8H-5306	1	ROBINET DE BATTERIE (ENS)	184
COURROIE TRAPEZOIDALE	036-6775	1	ENTRAÎNEMENT DE LA POMPE À EAU (ASS)	32
ÉCRAN - CIRCUIT HYDRAULIQUE	6I-9395	1	DISTRIBUTEUR DE BOITE (ASS)	338
		1	DISTRIBUTEUR DE BOITE (ASS)	340
ÉCRAN (ENS)	7C-4483	1	RÉGULATEUR - INJECTEUR (ASS)	118
ÉCRAN MAGNÉTIQUE (BOîTE DE VITESSES)	8S-9129	1	TRAINS PLANÉTAIRES - CARTER ET PIÈCES	236
		1	ÉCRAN MAGNÉTIQUE (ASS)	302
CREPINE (HYDRAULIQUE)	9J-3047	1	RÉSERVOIR HYDRAULIQUE ET FILTRE (ASS)	622
DISJONCTEUR (ENS) (15 A)	3T-2662	1	ECLAIRAGE (ASS)	164
DISJONCTEUR (ENS) (60 A)	9S-0174	1	CABLAGE AR (ASS)	213
		1	CABLAGE AR (ASS)	219

PIÈCES DE RECHANGE

DESCRIPTION	NUMÉRO DE PIECÈS	QTÉ	DOMAINE D'APPLICATION	PAGE
ELEMENT - DEBIT INVERSE HYDRAULIQUE (ENS)	1R-0722	1	RÉSERVOIR HYDRAULIQUE ET FILTRE (ASS)	622
ELEMENT DE FILTRE	7M-1674	1	CANALISATIONS D'AIR (ASS)	90
ELEMENT HYDRAULIQUE (ENS)	1R-0719	1	CANALISATIONS D'HUILE DE BOITE (TRANSMIS.) (ASS)	296
ELEMENT PRIMAIRE (ENS) (AIR)	6I-2499	1	FILTRE A AIR (ASS)	86
ELEMENT SECONDAIRE (ENS) (AIR)	6I-2500	1	FILTRE A AIR (ASS)	86
FILTRE À HUILE (ENS)	1R-0739	1	FILTRE À HUILE MOTEUR (ASS)	60
FILTRE A CARBURANT (ENS)	1R-0751	1	CANALISATIONS DU FILTRE A CARBURANT (ASS)	130
	1R-0753	1	CANALISATIONS DU FILTRE A CARBURANT (ASS)	130
FUSIBLE (10 A)	3K-8782	1	CONVERTISSEUR ET MONTAGE - ÉLECTRIQUE (ASS)	155
		2	ÉCLAIRAGE - PROJECTEURS (ASS)	168
		1	ÉCLAIRAGE - PROJECTEURS (ASS)	170
		2	ÉCLAIRAGE - PROJECTEURS (ASS)	172
		3	CABLAGE DE CABINE (ASS)	188
		2	CABLAGE DE CABINE (ASS)	190
		6	CABLAGE DE LA CONSOLE DE DIRECTION	232
		1	COMMANDE DE DIFFÉRENTIEL - VERROUILLAGE (ASS)	272
		1	DEGIVREUR - VENTILATEUR	770
		1	VENTILATEUR DÉGIVREUR (ASS)	771
		1	DEGIVREUR - VENTILATEUR	772
		1	ALLUME-CIGARETTES (ASS)	794
		1	ESSUIE-GLACE (ASS)	880
		1	ESSUIE-GLACE (ASS)	881
FUSIBLE (15 A)	8M-8948	1	VENTILATEUR SOUFFLANT ET MONTAGE - CABINE (ASS)	745
		1	CHAUFFAGE ET MONTAGE (ASS)	777
GRAISSEUR	3B-8488	4	ESSIEU AV (ASS)	482
GRAISSEUR (FILETAGE DE 1/8-27)	3B-8489	7	ESSIEU AV (ASS)	482
		7	ESSIEU AV (ASS)	486
		4	ESSIEU AV (ASS)	486
		2	CANALISATIONS DE GRAISSAGE (ASS)	522
		2	VÉRIN D'INCLINAISON DE ROUE ET MONTAGE (ASS)	558
		1	BARRE D'ATTELAGE (ASS)	722
		1	SCARIFICATEUR (ASS)	736
		4	SCARIFICATEUR (ASS)	736

PIÈCES DE RECHANGE

DESCRIPTION	NUMÉRO DE PIECÈS	QTÉ	DOMAINE D'APPLICATION	PAGE
INDICATEUR DE COLMATAGE DE FILTRE A AIR	8N-2694	1	CANALISATIONS D'AIR (ASS)	90
INTERCALAIRE DE FILTRE À CARBURANT	112-6523	1	BASE DE FILTRE À CARBURANT (ASS)	100
JOINT TORIQUE (DIA INT 123,19 MM)	2S-8439	1	FILTRE A HUILE DE BOITE (ASS)	291
JOINT TORIQUE (DIAMTRE INTRIEUR DE 110,49 MM)	9X-8600	1	RÉSERVOIR DE CARBURANT (ASS)	138
KIT DE CHAPEAU DE FILTRE	9X-2205	1	RÉSERVOIR DE CARBURANT (ASS)	138
LAMPE (AMPOULE MINIATURE)	7N-9943	1	CABLAGE DE CABINE (ASS)	188
	8M-6176	2	INDICATEURS (ASS)	814
LAMPE (AMPOULE MINIATURE) (24 V)	3E-8825	2	ECLAIRAGE (ASS)	164
		2	ÉCLAIRAGE - PROJECTEURS (ASS)	168
		1	ÉCLAIRAGE - PROJECTEURS (ASS)	170
		2	ÉCLAIRAGE - PROJECTEURS (ASS)	172
		1	AUXILIAIRE DE DEMARRAGE A L'ETHER (ASS)	176
		1	CABLAGE DE LA CONSOLE DE CHANGEMENTS DE VITESSE	230
		1	CABLAGE DE LA CONSOLE DE DIRECTION	232
		1	COMMANDE DE DIFFÉRENTIEL - VERROUILLAGE (ASS)	272
		1	COMMANDE DE DIFFÉRENTIEL - VERROUILLAGE (ASS)	274
		1	DEGIVREUR - VENTILATEUR	770
		1	VENTILATEUR DÉGIVREUR (ASS)	771
		1	DEGIVREUR - VENTILATEUR	772
LAMPE (AMPOULE MINIATURE) (24 V) (DIA1.75)	3E-8825	1	CABLAGE DE LA CONSOLE DE CHANGEMENTS DE VITESSE	226
		1	CABLAGE DE LA CONSOLE DE CHANGEMENTS DE VITESSE	228
LAMPE (AMPOULE MINIATURE) (28 V)	7N-5876	1	CABLAGE DE LA CONSOLE DE CHANGEMENTS DE VITESSE	226
		1	CABLAGE DE LA CONSOLE DE CHANGEMENTS DE VITESSE	228
		1	CABLAGE DE LA CONSOLE DE CHANGEMENTS DE VITESSE	230
		7	TABLEAU DE BORD (ASS)	824
		8	TABLEAU DE BORD (ASS)	826
ÉLÉMENT DE SÉPARATEUR D'EAU	117-4089	1	SÉPARATEUR D'EAU (ASS)	136
PARE-POUSSIERE	8C-3445	1	FILTRE À HUILE MOTEUR (ASS)	60

PIÈCES DE RECHANGE

DESCRIPTION	NUMÉRO DE PIECÈS	QTÉ	DOMAINE D'APPLICATION	PAGE
RENIFLARD DE CARTER (ENS)	2W-9162	1	RENIFLARD (ASS)	56
RENIFLARD (DÉCHARGE DE PRESSION)	9G-5127	1	GOULOTTE DE REMPLISSAGE D'HUILE DE TRANSMISSION	290
RENIFLARD (TANDEM)	1F-8488	2	TANDEM ET CARTER (ASS)	306
RÉGULATEUR D'EAU	126-5869	1	CANALISATIONS D'EAU (ASS)	76
SIEGE RAPPORTE	139-3531	1	BASE DE FILTRE À CARBURANT (ASS)	100
TAMIS DE RÉSERVOIR DE CARBURANT	9P-7121	1	RÉSERVOIR DE CARBURANT (ASS)	138
VERIN (ENS) (ÉTHER)	7N-0296	1	AUXILIAIRE DE DEMARRAGE A L'ETHER (ASS)	176

PIEZAS DE MANTENIMIENTO

DESCRIPCION	NUMERO DE PIEZA	CANT	SE UTILIZA EN	PAGINA
ACOPLAMIENTO HIDRÁULICO	3B-8488	4	EJE DELANTERO (GR)	482
BATERIA SIN MANTENIMIENTO (12 V -750 A)	3T-5760	2	CABLES POSTERIORES (GR)	206
		2	CABLES POSTERIORES (GR)	212
		2	CABLES POSTERIORES (GR)	218
CANDADO (GR)	5P-8502	2	PROTECCIÓN DEL SISTEMA DE LUBRICACIÓN (GR)	66
		3	PROTECCIÓN DEL SISTEMA DE LUBRICACIÓN (GR)	67
		1	COMBUSTIBLE - TANQUE DE (GR)	138
		1	PROT. TUBO DE LLENADO DE ACEITE DE TRANSM (GR)	299
		2	COMPARTIMIENTO DEL MOTOR (GR)	496
		2	COMPARTIMIENTO DEL MOTOR (GR)	500
		1	PROTECTOR Y SOPORTE DEL RADIADOR (GR)	510
		1	TANQUE HIDRÁULICO Y MONTAJE (GR)	624
		1	ASIENTO (GR)	850
		1	ASIENTO (GR)	852
		1	CAJA DE HERRAMIENTAS (GR)	901
CILINDRO (CONJ) (ETER)	7N-0296	1	AUXILIAR DE ARRANQUE CON ÉTER (GR)	176
CINTURÓN DE SEGURIDAD (GR)	8Y-4030	1	ASIENTO (GR)	850
COLADOR DEL TANQUE DE COMBUSTIBLE	9P-7121	1	COMBUSTIBLE - TANQUE DE (GR)	138
COLADOR (HIDRÁULICO)	9J-3047	1	TANQUE Y FILTRO HIDRÁULICOS (GR)	622
CONEXIÓN DE ENGRASE (ROSCA DE1/8-27)	3B-8489	7	EJE DELANTERO (GR)	482
		7	EJE DELANTERO (GR)	486
		4	EJE DELANTERO (GR)	486
		2	TUBERIAS DE ENGRASE (GR)	522
		2	CILINDRO DE INCLINACIÓN DE RUEDA Y MONTAJE (GR)	558
		1	BARRA DE TIRO (GR)	722
		1	GRUPO ESCARIFICADOR	736
		4	GRUPO ESCARIFICADOR	736
CORREA TRAPEZOIDAL	036-6775	1	MANDO DE LA BOMBA DE AGUA (GR)	32
DISYUNTOR (CONJ) (15 A)	3T-2662	1	GRUPO DE LUCES	164
DISYUNTOR (CONJ) (60 AMP)	9S-0174	1	CABLES POSTERIORES (GR)	213
		1	CABLES POSTERIORES (GR)	219
ELEMENTO DE FILTRO	7M-1674	1	AIRE - TUBERÍAS DE (GR)	90

PIEZAS DE MANTENIMIENTO

DESCRIPCION	NUMERO DE PIEZA	CANT	SE UTILIZA EN	PAGINA
ELEMENTO DEL FILTRO DE ACEITE HIDRÁULICO (CONJ)	1R-0719	1	TUBERÍAS DE ACEITE DE LA TRANSMISIÓN (GR)	296
ELEMENTO DEL SEPARADOR DE AGUA	117-4089	1	SEPARADOR DE AGUA (GR)	136
ELEMENTO PARA FLUJO HIDRÁULICO INVERSO (CONJ)	1R-0722	1	TANQUE Y FILTRO HIDRÁULICOS (GR)	622
ELEMENTO PRIMARIO (CONJ) (AIRE)	6I-2499	1	FILTRO DE AIRE (GR)	86
ELEMENTO SECUNDARIO (CONJ) (AIRE)	6I-2500	1	FILTRO DE AIRE (GR)	86
ENCASTRE DE FILTRO DE COMBUSTIBLE	112-6523	1	BASE DEL FILTRO DE COMBUSTIBLE (GR)	100
FILTRO DE ACEITE (CONJ)	1R-0739	1	FILTRO DE ACEITE DEL MOTOR (GR)	60
FILTRO DE COMBUSTIBLE (CONJ)	1R-0751	1	TUBERÍAS DEL FILTRO DE COMBUSTIBLE	130
	1R-0753	1	TUBERÍAS DEL FILTRO DE COMBUSTIBLE	130
FILTRO MAGNÉTICO (TRANSMISION)	8S-9129	1	CAJA Y PIEZAS DE LOS PLANETARIOS	236
		1	REJILLA MAGNÉTICA (GR)	302
FUSIBLE (10 A)	3K-8782	1	CONVERTIDOR ELÉCTRICO Y MONTAJE (GR)	155
		2	LUCES DE REFLECTOR (GR)	168
		1	LUCES DE REFLECTOR (GR)	170
		2	LUCES DE REFLECTOR (GR)	172
		3	CABLES DE LA CABINA (GR)	188
		2	CABLES DE LA CABINA (GR)	190
		6	CABLES DE LA CONSOLA DE DIRECCIÓN (GR)	232
		1	CONTROL DE TRABA DEL DIFERENCIAL (GR)	272
		1	DESEMPAÑADOR - VENTILADOR (GR)	770
		1	VENTILADOR DESCONGELADOR (GR)	771
		1	DESEMPAÑADOR - VENTILADOR (GR)	772
		1	ENCENDEDOR DE CIGARRILLOS (GR)	794
		1	LIMPIAPARABRISAS DE LA VENTANA (GR)	880
		1	LIMPIAPARABRISAS DE LA VENTANA (GR)	881
FUSIBLE (15 A)	8M-8948	1	SOPLADOR DE LA CABINA Y MONTAJE (GR)	745
		1	CALEFACCIÓN Y MONTAJE (GR)	777

PIEZAS DE MANTENIMIENTO

DESCRIPCION	NUMERO DE PIEZA	CANT	SE UTILIZA EN	PAGINA
HOJA DE LIMPIAPARABRISAS (CONJ)	6V-5849	1	LIMPIAPARABRISAS DE LA VENTANA (GR)	880
	6V-5853	1	LIMPIAPARABRISAS DE LA VENTANA (GR)	876
		1	LIMPIAPARABRISAS DE LA VENTANA (GR)	878
		1	LIMPIAPARABRISAS DE LA VENTANA (GR)	881
		1	LIMPIAPARABRISAS (GR)	882
INDICADOR DE SERVICIO DEL FILTRO DE AIRE	8N-2694	1	AIRE - TUBERÍAS DE (GR)	90
JUEGO DE FILTRO DE TAPA	9X-2205	1	COMBUSTIBLE - TANQUE DE (GR)	138
LAMPARA	9X-3463	1	REFLECTOR (GR)	159
		1	LÁMPARA DE FARO DELANTERO (GR)	160
		1	LÁMPARA DE FARO DELANTERO (GR)	161
	9X-4492	1	LUZ DE SEÑAL DE GIRO (GR)	162
	9X-4493	1	LUZ DE SEÑAL DE GIRO (GR)	163
LLAVE	5P-8500	1	PROTECCIÓN DEL SISTEMA DE LUBRICACIÓN (GR)	66
		1	PROTECCIÓN DEL SISTEMA DE LUBRICACIÓN (GR)	67
		1	COMBUSTIBLE - TANQUE DE (GR)	138
		1	PROT. TUBO DE LLENADO DE ACEITE DE TRANSM (GR)	299
		1	COMPARTIMIENTO DEL MOTOR (GR)	496
		1	COMPARTIMIENTO DEL MOTOR (GR)	500
		1	PROTECTOR Y SOPORTE DEL RADIADOR (GR)	510
		1	TANQUE HIDRÁULICO Y MONTAJE (GR)	624
		2	GRUPO DE SUJECION DE MANUALES DE SERVICIO	809
		1	ASIENTO (GR)	850
		1	ASIENTO (GR)	852
		1	CAJA DE HERRAMIENTAS (GR)	901
	8H-5306	1	INTERRUPTOR GENERAL (CONJ)	184
LÁMPARA MINIATURA	7N-9943	1	CABLES DE LA CABINA (GR)	188
	8M-6176	2	GRUPO DE INDICADORES	814

PIEZAS DE MANTENIMIENTO

DESCRIPCION	NUMERO DE PIEZA	CANT	SE UTILIZA EN	PAGINA
LÁMPARA MINIATURA (24 VOLTIOS)	3E-8825	2	GRUPO DE LUCES	164
		2	LUCES DE REFLECTOR (GR)	168
		1	LUCES DE REFLECTOR (GR)	170
		2	LUCES DE REFLECTOR (GR)	172
		1	AUXILIAR DE ARRANQUE CON ÉTER (GR)	176
		1	CABLES DE LA CONSOLA DE CAMBIOS (GR)	230
		1	CABLES DE LA CONSOLA DE DIRECCIÓN (GR)	232
		1	CONTROL DE TRABA DEL DIFERENCIAL (GR)	272
		1	CONTROL DE TRABA DEL DIFERENCIAL (GR)	274
		1	DESEMPAÑADOR - VENTILADOR (GR)	770
		1	VENTILADOR DESCONGELADOR (GR)	771
		1	DESEMPAÑADOR - VENTILADOR (GR)	772
LÁMPARA MINIATURA (24 VOLTIOS) (1,75 DIA)	3E-8825	1	CABLES DE LA CONSOLA DE CAMBIOS (GR)	226
		1	CABLES DE LA CONSOLA DE CAMBIOS (GR)	228
LÁMPARA MINIATURA (28 VOLTIOS)	7N-5876	1	CABLES DE LA CONSOLA DE CAMBIOS (GR)	226
		1	CABLES DE LA CONSOLA DE CAMBIOS (GR)	228
		1	CABLES DE LA CONSOLA DE CAMBIOS (GR)	230
		7	TABLERO DE INSTRUMENTOS (GR)	824
		8	TABLERO DE INSTRUMENTOS (GR)	826
PANTALLA (CONJ)	7C-4483	1	BOMBA INYECTORA DEL REGULADOR (GR)	118
REGULADOR DEL AGUA	126-5869	1	TUBERÍAS DEL AGUA (GR)	76
REJILLA	6I-9395	1	VÁLVULA DE CONTROL DE LA TRANSMISIÓN (GR)	338
		1	VÁLVULA DE CONTROL DE LA TRANSMISIÓN (GR)	340
RESPIRADERO DEL CARTER (CONJ)	2W-9162	1	RESPIRADERO (GR)	56
RESPIRADERO (ALIVIO DE LA PRESIÓN)	9G-5127	1	TUBO DE LLENADO DE ACEITE DE LA TRANSMISIÓN (GR)	290
RESPIRADERO (TÁNDEM)	1F-8488	2	TÁNDEM Y CUBIERTA (GR)	306
SELLO ANULAR (DI DE110,49 MM)	9X-8600	1	COMBUSTIBLE - TANQUE DE (GR)	138
SELLO ANULAR (DI123.19MM)	2S-8439	1	FILTRO DE LA TRANSMISIÓN (GR)	291

PIEZAS DE MANTENIMIENTO

DESCRIPCION	NUMERO DE PIEZA	CANT	SE UTILIZA EN	PAGINA
SUPLEMENTO	139-3531	1	BASE DEL FILTRO DE COMBUSTIBLE (GR)	100
TAPA	7C-8370	1	IMPULSOR DE VENTILADOR (GR)	30
TAPA CONTRA EL POLVO	8C-3445	1	FILTRO DE ACEITE DEL MOTOR (GR)	60
TAPA DE PORTAFUSIBLES	7N-2867	1	CABLES DE LA CABINA (GR)	188
		1	DESEMPAÑADOR - VENTILADOR (GR)	770
		1	VENTILADOR DESCONGELADOR (GR)	771
		1	DESEMPAÑADOR - VENTILADOR (GR)	772
		1	LIMPIAPARABRISAS DE LA VENTANA (GR)	880
		1	LIMPIAPARABRISAS DE LA VENTANA (GR)	881
	139-0178	1	ENCENDEDOR DE CIGARRILLOS (GR)	794
TAPA DEL RADIADOR	6L-8617	1	RADIADOR (GR)	84
TAPA DEL TANQUE DE COMBUSTIBLE (CONJ)	7X-7700	1	COMBUSTIBLE - TANQUE DE (GR)	138
TAPA DEL TUBO DE LLENADO DE ACEITE (CONJ)	5L-2952	1	TUBO DE LLENADO DE ACEITE (GR)	57
		1	TUBO DE LLENADO DE ACEITE (GR)	58
TAPA DEL TUBO DE LLENADO (HIDRÁULICO)	7H-1447	1	TANQUE Y FILTRO HIDRÁULICOS (GR)	622
TAPÓN	5P-4483	1	CAJA Y PIEZAS DE LOS PLANETARIOS	236
		1	CAJA Y PIEZAS DE LOS PLANETARIOS	242
		1	CAJA Y PIEZAS DE LA TRANSMISIÓN (GR)	248

PEÇAS DE MANUTENÇÃO

DESCRIÇÃO	NÚMERO DE PEÇA	QUANT	UTILIZADA EM	PÁGINA
BATERIA - ISENTA DE MANUTENÇÃO (12 V)(750 A)	3T-5760	2	CABOS/FIOS ELÉTRICOS - TRASEIROS	206
		2	CABOS/FIOS ELÉTRICOS - TRASEIROS	212
		2	CABOS/FIOS ELÉTRICOS - TRASEIROS	218
BUJÃO - ANEL O	5P-4483	1	CARCAÇA DAS ENGRENAGENS PLANETÁRIAS E COMPONENTES	236
		1	CARCAÇA DAS ENGRENAGENS PLANETÁRIAS E COMPONENTES	242
		1	CAIXA E COMPONENTES - TRANSMISSÃO	248
CADEADO	5P-8502	2	PROTETOR - SISTEMA DE LUBRIFICAÇÃO	66
		3	PROTETOR - SISTEMA DE LUBRIFICAÇÃO	67
		1	TANQUE DE COMBUSTÍVEL	138
		1	PROTETOR - BOCAL DE ENCHIMENTO DO ÓLEO DO MOTOR	299
		2	COBERTURA DO MOTOR	496
		2	COBERTURA DO MOTOR	500
		1	PROTETOR E SUPORTE DO RADIADOR	510
		1	TANQUE DE ÓLEO HIDRÁULICO E MONTAGEM	624
		1	ASSENTO	850
		1	ASSENTO	852
		1	CAIXA DE FERRAMENTAS	901
CHAVE	5P-8500	1	PROTETOR - SISTEMA DE LUBRIFICAÇÃO	66
		1	PROTETOR - SISTEMA DE LUBRIFICAÇÃO	67
		1	TANQUE DE COMBUSTÍVEL	138
		1	PROTETOR - BOCAL DE ENCHIMENTO DO ÓLEO DO MOTOR	299
		1	COBERTURA DO MOTOR	496
		1	COBERTURA DO MOTOR	500
		1	PROTETOR E SUPORTE DO RADIADOR	510
		1	TANQUE DE ÓLEO HIDRÁULICO E MONTAGEM	624
		2	PUBLICAÇÃO	809
		1	ASSENTO	850
		1	ASSENTO	852
		1	CAIXA DE FERRAMENTAS	901
	8H-5306	1	INTERRUPTOR - BATERIA	184
CILINDRO (ÉTER)	7N-0296	1	AUXILIAR DE PARTIDA A ÉTER	176
CINTO DE SEGURANÇA	8Y-4030	1	ASSENTO	850
CONEXÃO HIDRÁULICA	3B-8488	4	EIXO DIANTEIRO	482

PEÇAS DE MANUTENÇÃO

DESCRIÇÃO	NÚMERO DE PEÇA	QUANT	UTILIZADA EM	PÁGINA
CORREIA EM V	036-6775	1	COMANDO DA BOMBA D'ÁGUA	32
DISJUNTOR AUTOMÁTICO DE CIRCUITO (15 A)	3T-2662	1	ILUMINAÇÃO	164
DISJUNTOR AUTOMÁTICO DE CIRCUITO (60 A)	9S-0174	1	CABOS/FIOS ELÉTRICOS - TRASEIROS	213
		1	CABOS/FIOS ELÉTRICOS - TRASEIROS	219
ELEMENTO - FILTRANTE	7M-1674	1	TUBOS - AR	90
ELEMENTO - FLUXO HIDRÁULICO INVERSO	1R-0722	1	TANQUE HIDRÁULICO E FILTRO	622
ELEMENTO - HIDRÁULICO	1R-0719	1	TUBOS - ÓLEO DA TRANSMISSÃO	296
ELEMENTO - PRIMÁRIO (AR)	6I-2499	1	PURIFICADOR DE AR	86
ELEMENTO - SECUNDÁRIO (AR)	6I-2500	1	PURIFICADOR DE AR	86
ELEMENTO - SEPARADOR DE ÁGUA	117-4089	1	SEPARADOR DE ÁGUA	136
FILTRO - COMBUSTÍVEL	1R-0751	1	TUBOS - FILTRO DO COMBUSTÍVEL	130
	1R-0753	1	TUBOS - FILTRO DO COMBUSTÍVEL	130
FILTRO - ÓLEO	1R-0739	1	FILTRO - ÓLEO DO MOTOR	60
FILTRO - MAGNÉTICO (TRANSMISSÃO)	8S-9129	1	CARCAÇA DAS ENGRENAGENS PLANETÁRIAS E COMPONENTES	236
		1	FILTRO - MAGNÉTICO	302
FUSÍVEL (10 A)	3K-8782	1	CONVERSOR ELÉTRICO E MONTAGEM	155
		2	SISTEMA DE ILUMINAÇÃO - FARÓIS	168
		1	SISTEMA DE ILUMINAÇÃO - FARÓIS	170
		2	SISTEMA DE ILUMINAÇÃO - FARÓIS	172
		3	CABOS/FIOS ELÉTRICOS - CABINE	188
		2	CABOS/FIOS ELÉTRICOS - CABINE	190
		6	CABOS/FIOS ELÉTRICOS - CONSOLE DA DIREÇÃO	232
		1	CONTROLE DA TRAVA DO DIFERENCIAL	272
		1	VENTILADOR DESEMBAÇADOR	770
		1	DESCONGELADOR	771
		1	VENTILADOR DESEMBAÇADOR	772
		1	ACENDEDOR DE CIGARROS	794
		1	LIMPADOR - JANELA	880
		1	LIMPADOR - JANELA	881
FUSÍVEL (15 A)	8M-8948	1	VENTILADOR DA CABINE E MONTAGEM	745
		1	AQUECEDOR E MONTAGEM	777

PEÇAS DE MANUTENÇÃO

DESCRIÇÃO	NÚMERO DE PEÇA	QUANT	UTILIZADA EM	PÁGINA
GRAXEIRA (ROSCA 1/8-27 POL)	3B-8489	7	EIXO DIANTEIRO	482
		7	EIXO DIANTEIRO	486
		4	EIXO DIANTEIRO	486
		2	TUBOS - GRAXA	522
		2	CILINDRO E MONTAGEM - INCLINAÇÃO DAS RODAS	558
		1	BARRA DE TRAÇÃO	722
		1	ESCARIFICADOR	736
		4	ESCARIFICADOR	736
INDICADOR - LIMPEZA DO FILTRO DE AR	8N-2694	1	TUBOS - AR	90
INSERTO	139-3531	1	BASE DO FILTRO DE COMBUSTÍVEL	100
INSERTO - FILTRO DE COMBUSTÍVEL	112-6523	1	BASE DO FILTRO DE COMBUSTÍVEL	100
JOGO DE FILTRO DA TAMPA	9X-2205	1	TANQUE DE COMBUSTÍVEL	138
LÂMINA DO LIMPADOR DE PÁRA-BRISA	6V-5849	1	LIMPADOR - JANELA	880
	6V-5853	1	LIMPADOR - JANELA	876
		1	LIMPADOR - JANELA	878
		1	LIMPADOR - JANELA	881
		1	LIMPADOR DO PÁRA-BRISA	882
LÂMPADA	9X-3463	1	LÂMPADA - FAROL	159
		1	FAROL DIANTEIRO	160
		1	FAROL DIANTEIRO	161
	9X-4492	1	LÂMPADA - SINALIZAÇÃO	162
	9X-4493	1	LÂMPADA - SINALIZAÇÃO	163
LÂMPADA - MINIATURA	7N-9943	1	CABOS/FIOS ELÉTRICOS - CABINE	188
	8M-6176	2	INDICADOR	814
LÂMPADA - MINIATURA (24 V)	3E-8825	2	ILUMINAÇÃO	164
		2	SISTEMA DE ILUMINAÇÃO - FARÓIS	168
		1	SISTEMA DE ILUMINAÇÃO - FARÓIS	170
		2	SISTEMA DE ILUMINAÇÃO - FARÓIS	172
		1	AUXILIAR DE PARTIDA A ÉTER	176
		1	CABOS/FIOS ELÉTRICOS - CONSOLE DA TRANSMISSÃO	230
		1	CABOS/FIOS ELÉTRICOS - CONSOLE DA DIREÇÃO	232
		1	CONTROLE DA TRAVA DO DIFERENCIAL	272
		1	CONTROLE DA TRAVA DO DIFERENCIAL	274
		1	VENTILADOR DESEMBAÇADOR	770
		1	DESCONGELADOR	771
		1	VENTILADOR DESEMBAÇADOR	772

PEÇAS DE MANUTENÇÃO

DESCRIÇÃO	NÚMERO DE PEÇA	QUANT	UTILIZADA EM	PÁGINA
LÂMPADA - MINIATURA (24 V) (1.75 POLEGADAS DIAM.)	3E-8825	1	CABOS/FIOS ELÉTRICOS - CONSOLE DA TRANSMISSÃO	226
		1	CABOS/FIOS ELÉTRICOS - CONSOLE DA TRANSMISSÃO	228
LÂMPADA - MINIATURA (28 V)	7N-5876	1	CABOS/FIOS ELÉTRICOS - CONSOLE DA TRANSMISSÃO	226
		1	CABOS/FIOS ELÉTRICOS - CONSOLE DA TRANSMISSÃO	228
		1	CABOS/FIOS ELÉTRICOS - CONSOLE DA TRANSMISSÃO	230
		7	PAINEL DE INSTRUMENTOS	824
		8	PAINEL DE INSTRUMENTOS	826
PENEIRA DO TANQUE DE COMBUSTÍVEL	9P-7121	1	TANQUE DE COMBUSTÍVEL	138
REGULADOR - ÁGUA	126-5869	1	TUBOS - ÁGUA	76
RESPIRO DO CÁRTER	2W-9162	1	RESPIRO	56
RESPIRO (ALÍVIO DE PRESSÃO)	9G-5127	1	BOCAL DE ENCHIMENTO DE ÓLEO DO TREM DE FORÇA	290
RESPIRO (TANDEM)	1F-8488	2	TANDEM E TAMPA	306
RETENTOR DE ANEL-O (DIÂMETRO INTERNO DE 110,49 MM)	9X-8600	1	TANQUE DE COMBUSTÍVEL	138
RETENTOR DE ANEL-O (DIÂMETRO INTERNO DE 123,19 MM)	2S-8439	1	FILTRO - ÓLEO DA TRANSMISSÃO	291
TAMPA	7C-8370	1	COMANDO DO VENTILADOR	30
TAMPA - BOCAL DE ENCHIMENTO DE ÓLEO	5L-2952	1	BOCAL DE ENCHIMENTO DE ÓLEO	57
		1	BOCAL DE ENCHIMENTO DE ÓLEO	58
TAMPA - BOCAL DE ENCHIMENTO (HIDRÁULICO)	7H-1447	1	TANQUE HIDRÁULICO E FILTRO	622
TAMPA - PORTA-FUSÍVEL	7N-2867	1	CABOS/FIOS ELÉTRICOS - CABINE	188
		1	VENTILADOR DESEMBAÇADOR	770
		1	DESCONGELADOR	771
		1	VENTILADOR DESEMBAÇADOR	772
		1	LIMPADOR - JANELA	880
		1	LIMPADOR - JANELA	881
	139-0178	1	ACENDEDOR DE CIGARROS	794
TAMPA - RADIADOR	6L-8617	1	RADIADOR	84
TAMPA CONTRA POEIRA	8C-3445	1	FILTRO - ÓLEO DO MOTOR	60
TAMPA DO TANQUE DE COMBUSTÍVEL	7X-7700	1	TANQUE DE COMBUSTÍVEL	138

PEÇAS DE MANUTENÇÃO

DESCRIÇÃO	NÚMERO DE PEÇA	QUANT	UTILIZADA EM	PÁGINA
TELA FILTRANTE	6I-9395	1	VÁLVULA DE CONTROLE - TRANSMISSÃO	338
		1	VÁLVULA DE CONTROLE - TRANSMISSÃO	340
	7C-4483	1	GOVERNADOR - INJETOR	118
TELA FILTRANTE (HIDRÁULICO)	9J-3047	1	TANQUE HIDRÁULICO E FILTRO	622

WARTUNGSTEILE

BESCHREIBUNG	ERSATZTEIL-NUMMER	MENGE	VERWENDET IN	SEITE
BATTERIE - WARTUNGSFREI (12 V,750 A)	3T-5760	2	VERDRAHTUNG, HINTEN	206
		2	VERDRAHTUNG, HINTEN	212
		2	VERDRAHTUNG, HINTEN	218
EINFÜLLVERSCHLUSS (HYDRAULIK)	7H-1447	1	HYDRAULIKTANK UND SCHMIERFILTER	622
EINSATZ	139-3531	1	KRAFTSTOFFILTERSOCKEL	100
ENTLÜFTER (DRUCKBEGRENZUNG)	9G-5127	1	GETRIEBEÖLFÜLLSTUTZEN	290
ENTLÜFTER (TANDEM)	1F-8488	2	TANDEMGEHÄUSE UND DECKEL	306
FILTER	7M-1674	1	DRUCKLUFTLEITUNGEN	90
HAUPTFILTER (LUFTFILTER)	6I-2499	1	LUFTREINIGER	86
HYDRAULIKANSCHLUSSSTÜCK	3B-8488	4	VORDERACHSE	482
HYDRAULIKELEMENT	1R-0719	1	GETRIEBEÖLLEITUNGEN	296
KAPPE	7C-8370	1	LÜFTERANTRIEB	30
KAPPENFILTERSATZ	9X-2205	1	KRAFTSTOFFTANK	138
KEILRIEMEN	036-6775	1	KÜHLWASSERPUMPENANTRIEB	32
KÜHLERKAPPE	6L-8617	1	KÜHLER	84
KRAFTSTOFFILTER	1R-0751	1	KRAFTSTOFFILTERLEITUNGEN	130
	1R-0753	1	KRAFTSTOFFILTERLEITUNGEN	130
KRAFTSTOFFILTEREINSATZ	112-6523	1	KRAFTSTOFFILTERSOCKEL	100
KRAFTSTOFFTANK-SIEBEINSATZ	9P-7121	1	KRAFTSTOFFTANK	138
KRAFTSTOFFTANKKAPPE	7X-7700	1	KRAFTSTOFFTANK	138
KURBELGEHÄUSEENTLÜFTER	2W-9162	1	ENTLÜFTER	56
ÖLEINFÜLLSTUTZEN	5L-2952	1	ÖLEINFÜLLSTUTZEN	57
		1	ÖLEINFÜLLSTUTZEN	58
LEUCHTE	9X-3463	1	ARBEITSLEUCHTEN	159
		1	FRONTSCHEINWERFER	160
		1	FRONTSCHEINWERFER	161
	9X-4492	1	BLINKLEUCHTE	162
	9X-4493	1	BLINKLEUCHTE	163
ÖLFILTER	1R-0739	1	ÖLFILTER	60
LUFTFILTER-WARTUNGSANZEIGE	8N-2694	1	DRUCKLUFTLEITUNGEN	90

WARTUNGSTEILE

BESCHREIBUNG	ERSATZTEIL-NUMMER	MENGE	VERWENDET IN	SEITE
MAGNETFILTER (GETRIEBE)	8S-9129	1	PLANETGEHÄUSE UND TEILE	236
		1	MAGNETSIEB	302
MINIATURLEUCHTE	7N-9943	1	FAHRERHAUSVERDRAHTUNG	188
	8M-6176	2	ANZEIGENSATZ	814
MINIATURLEUCHTE (24 V)	3E-8825	2	BELEUCHTUNGSANLAGE	164
		2	ARBEITSLEUCHTEN	168
		1	ARBEITSLEUCHTEN	170
		2	ARBEITSLEUCHTEN	172
		1	ÄTHERSTARTHILFE	176
		1	SCHALTKONSOLENVERDRAHTUNG	230
		1	LENKKONSOLENVERDRAHTUNG	232
		1	DIFFERENTIALSPERRENGESTÄNGE	272
		1	DIFFERENTIALSPERRENGESTÄNGE	274
		1	ENTFROSTERGEBLÄSE	770
		1	ENTFROSTERGEBLÄSE	771
		1	ENTFROSTERGEBLÄSE	772
MINIATURLEUCHTE (24 V) (1,75 DURCHMESSER)	3E-8825	1	SCHALTKONSOLENVERDRAHTUNG	226
		1	SCHALTKONSOLENVERDRAHTUNG	228
MINIATURLEUCHTE (28 V)	7N-5876	1	SCHALTKONSOLENVERDRAHTUNG	226
		1	SCHALTKONSOLENVERDRAHTUNG	228
		1	SCHALTKONSOLENVERDRAHTUNG	230
		7	INSTRUMENTENTAFEL	824
		8	INSTRUMENTENTAFEL	826
O-RING-DICHTUNG (110,49 MM INNENDURCHMESSER)	9X-8600	1	KRAFTSTOFFTANK	138
O-RING-DICHTUNG (123,19 MM INNENDURCHMESSER)	2S-8439	1	GETRIEBESCHMIERFILTER	291
O-RING-STOPFEN	5P-4483	1	PLANETGEHÄUSE UND TEILE	236
		1	PLANETGEHÄUSE UND TEILE	242
		1	GETRIEBEGEHÄUSE UND TEILE	248
RÜCKLAUFELEMENT (HYDRAULIK)	1R-0722	1	HYDRAULIKTANK UND SCHMIERFILTER	622
SCHEIBENWISCHERBLATT	6V-5849	1	SCHEIBENWISCHER	880
	6V-5853	1	SCHEIBENWISCHER	876
		1	SCHEIBENWISCHER	878
		1	SCHEIBENWISCHER	881
		1	SCHEIBENWISCHER	882

WARTUNGSTEILE

BESCHREIBUNG	ERSATZTEIL-NUMMER	MENGE	VERWENDET IN	SEITE
SCHLÜSSEL	5P-8500	1	SCHUTZABDECKUNG - SCHMIERSYSTEM	66
		1	SCHUTZABDECKUNG - SCHMIERSYSTEM	67
		1	KRAFTSTOFFTANK	138
		1	GETRIEBEÖLEINFÜLLSTUTZENSCHUTZ	299
		1	MOTORVERKLEIDUNG	496
		1	MOTORVERKLEIDUNG	500
		1	VERKLEIDUNG UND BEFESTIGUNG - KÜHLER	510
		1	HYDRAULIKTANK UND BEFESTIGUNGSTEILE	624
		2	DOKUMENTATION	809
		1	FAHRERSITZ	850
		1	FAHRERSITZ	852
		1	WERKZEUGKASTEN	901
	8H-5306	1	HAUPTSCHALTER	184
SCHMIERNIPPEL (GEWINDE1/8-27)	3B-8489	7	VORDERACHSE	482
		7	VORDERACHSE	486
		4	VORDERACHSE	486
		2	SCHMIERLEITUNGEN	522
		2	RADSTURZZYLINDER UND BEFESTIGUNGSTEILE	558
		1	ZUGHAKEN	722
		1	FRONTAUFREISSER	736
		4	FRONTAUFREISSER	736
SICHERHEITSFILTER (LUFTFILTER)	6I-2500	1	LUFTREINIGER	86
SICHERHEITSGURT	8Y-4030	1	FAHRERSITZ	850
SICHERUNGSHALTERKAPPE	7N-2867	1	FAHRERHAUSVERDRAHTUNG	188
		1	ENTFROSTERGEBLÄSE	770
		1	ENTFROSTERGEBLÄSE	771
		1	ENTFROSTERGEBLÄSE	772
		1	SCHEIBENWISCHER	880
		1	SCHEIBENWISCHER	881
	139-0178	1	ZIGARETTENANZÜNDER	794

WARTUNGSTEILE

BESCHREIBUNG	ERSATZTEIL-NUMMER	MENGE	VERWENDET IN	SEITE
SICHERUNG (10 A)	3K-8782	1	UMFORMER, ELEKTR. UND BEFESTIGUNGSTEILE	155
		2	ARBEITSLEUCHTEN	168
		1	ARBEITSLEUCHTEN	170
		2	ARBEITSLEUCHTEN	172
		3	FAHRERHAUSVERDRAHTUNG	188
		2	FAHRERHAUSVERDRAHTUNG	190
		6	LENKKONSOLENVERDRAHTUNG	232
		1	DIFFERENTIALSPERRENGESTÄNGE	272
		1	ENTFROSTERGEBLÄSE	770
		1	ENTFROSTERGEBLÄSE	771
		1	ENTFROSTERGEBLÄSE	772
		1	ZIGARETTENANZÜNDER	794
		1	SCHEIBENWISCHER	880
		1	SCHEIBENWISCHER	881
SICHERUNG (15 A)	8M-8948	1	FAHRERHAUSGEBLÄSE U. BEFESTIGUNGSTEILE	745
		1	FAHRERHAUSHEIZUNG UND AUFHÄNGUNG	777
SIEB	6I-9395	1	GETRIEBESTEUERVENTIL	338
		1	GETRIEBESTEUERVENTIL	340
	7C-4483	1	REGLEREINSPRITZEINHEIT	118
SIEBEINSATZ (HYDRAULIK)	9J-3047	1	HYDRAULIKTANK UND SCHMIERFILTER	622
STAUBKAPPE	8C-3445	1	ÖLFILTER	60
TEMPERATURREGLER	126-5869	1	KÜHLWASSERLEITUNGEN	76
UNTERBRECHER (15 A)	3T-2662	1	BELEUCHTUNGSANLAGE	164
UNTERBRECHER (60 A)	9S-0174	1	VERDRAHTUNG, HINTEN	213
		1	VERDRAHTUNG, HINTEN	219
VORHÄNGESCHLOSS	5P-8502	2	SCHUTZABDECKUNG - SCHMIERSYSTEM	66
		3	SCHUTZABDECKUNG - SCHMIERSYSTEM	67
		1	KRAFTSTOFFTANK	138
		1	GETRIEBEÖLEINFÜLLSTUTZENSCHUTZ	299
		2	MOTORVERKLEIDUNG	496
		2	MOTORVERKLEIDUNG	500
		1	VERKLEIDUNG UND BEFESTIGUNG - KÜHLER	510
		1	HYDRAULIKTANK UND BEFESTIGUNGSTEILE	624
		1	FAHRERSITZ	850
		1	FAHRERSITZ	852
		1	WERKZEUGKASTEN	901
WASSERABSCHEIDERELEMENT	117-4089	1	WASSERABSCHEIDER	136

WARTUNGSTEILE

BESCHREIBUNG	ERSATZTEIL-NUMMER	MENGE	VERWENDET IN	SEITE
ZYLINDER (ÄTHER)	7N-0296	1	ÄTHERSTARTHILFE	176

INDEX

Name	Page
A	
ACCESSORY GP-CAB	740
	741
ADJUSTER GP-SEAT	742
	744
AFTERCOOLER GP-WATER	85
AIR CLEANER GP	86
	87
AIR COMPRESSOR GP	6
	8
	10
	12
AIR COMPRESSOR LINES	40
	42
AIR HORN	783
	788
AIR LINES	90
ALARM GP	142
ALTERNATOR GP-CHARGING	144
	146
	147
	148
	150
ASHTRAY	796
	800
AXLE GP-FRONT	482
	486
B	
BASE GP-FUEL FILTER	100
BATTERY BOX GP	489
	490
BATTERY-MAINTENANCE FREE (12V)(750 AMP)	206
	212
	218
BEARING-SLEEVE	23
	24
BLADE & TIP AR-POWER	707
	708
BLADE AR	709
	710
	711
BLADE AS-WIPER	876
	878
	880
	881
	882
BLADE GP	712
	713
	714
	715
	716
BLOWER & MTG GP-CAB	745
BLOWER AR-CAB	746
BOLT (3/4-10X4.50IN)	138
BRACKET GP-BLADE	717
BRACKET GP-SCARIFIER	718
BRAKE GP-PARKING	234
BRAKE GP-SERVICE	526
BREATHER AS-CRANKCASE	56
BREATHER GP	56
BREATHER (PRESSURE RELIEF)	290
BREATHER (TANDEM)	306
BUMPER GP-REAR	491
	492
	493
C	
CAB AR-HIGH PROFILE	747
CAB AR-NON-ROPS	748
CAB GP-HIGH PROFILE	749
CAB GP-NON-ROPS	750
CAB LINER	796
	800
	806
CAB WIRING	190
CAMSHAFT GP	14
CANOPY AR	751
CANOPY GP	752
CAP	30
	742
	846
	848
CAP AS-FUEL TANK	138
CAP AS-OIL FILLER	57
	58
CAP-DUST	60
CAP-FILLER (HYDRAULIC)	622
CAP-FUSE HOLDER	188
	770
	771
	772
	794
	880
	881
CAP-RADIATOR	84
CARRIER GP-SEAL	15
CARTRIDGE GP-TURBOCHARGER	88
CASE & FRAME GP	494
CASE & PARTS GP-PLANETARY	236
	242
CASE & PARTS GP-TRANSMISSION	248
CHAIN GP-DRIVE	253
CHASSIS AR	1
CIRCLE GP	719
	720

INDEX

Name	Page
CIRCUIT BREAKER AS (15 AMP)	164
CIRCUIT BREAKER AS (60 AMP)	213
	219
CLUTCH GP-TRANSMISSION	254
	258
	262
	266
CONSOLE GP-OPERATOR	754
CONTROL AR-HYDRAULIC	542
	543
	544
	545
CONTROL GP-CENTERSHIFT LOCK	546
CONTROL GP-CLUTCH	270
CONTROL GP-DIFFERENTIAL LOCK	272
	274
CONTROL GP-ELECTRONIC	200
	226
	228
CONTROL GP-FUEL INJECTION	101
CONTROL GP-GOVERNOR	102
CONTROL GP-PARKING BRAKE	528
CONTROL GP-POWER TRAIN ELEK	200
CONTROL GP-RELAY ELECTRONIC	196
	200
CONTROL GP-SERVICE BRAKE	530
CONTROL GP-STEERING	548
CONTROL GP-SYSTEM ELECTRONIC	152
CONTROL GP-TORQUE_CONV ELEK	153
	154
CONTROL GP-TRANSMISSION	276
CONTROL GP-TRANSMISSION HYD	278
	280
CONTROL VALVE	684
	686
CONTROL VALVE-SELECTOR & PRESS	322
	326
	330
CONVERTER & MTG GP-ELECTRICAL	155
CONVERTER AR-ELECTRICAL	156
	157
CONVERTER-POWER	155
COOLER GP-ENGINE OIL	72
COOLER GP-TRANSMISSION OIL	73
COUPLING GP-TORSIONAL	282
COVER GP-CYLINDER BLOCK	16
COVER GP-FRONT HOUSING	17
COVER GP-SOUND SUPPRESSION	18
COVER GP-VALVE MECHANISM	19
CRANKSHAFT GP	20
CRANKSHAFT SEAL	51
	52
CYLINDER & LINES GP-RIPPER	549
CYLINDER & MTG GP-ARTICULATION	550
CYLINDER & MTG GP-BLADE LIFT	551
	552
CYLINDER & MTG GP-BLADE TIP	553
CYLINDER & MTG GP-CENTERSHIFT	554
CYLINDER & MTG GP-SCARIFIER	555
CYLINDER & MTG GP-SIDESHIFT	556
CYLINDER & MTG GP-STEERING	557
CYLINDER & MTG GP-WHEEL LEAN	558
CYLINDER AS (ETHER)	176
CYLINDER BLOCK GP	21
	22
	23
	24
CYLINDER GP-ARTICULATION	559
	560
	567
CYLINDER GP-BLADE LIFT	562
	563
CYLINDER GP-BLADE TIP	564
CYLINDER GP-CENTERSHIFT	566
CYLINDER GP-SCARIFIER	568
CYLINDER GP-SIDESHIFT	569
CYLINDER GP-STEERING	570
	572
CYLINDER GP-WHEEL LEAN	574
CYLINDER HEAD AS	25
CYLINDER HEAD GP	26
	27

D

Name	Page
DAMPER & PULLEY GP	28
DIFFERENTIAL & BEVEL GEAR GP	284
DIFFERENTIAL AR-LOCK	286
DIFFERENTIAL GP	288
DIFFERENTIAL LOCK CONTROL	274
DOOR GP	758
	760
	764
	766
DOOR GP-CAB	762
	768
DRAIN GP-OIL PAN	29
DRAWBAR GP	722
DRIVE GP-CIRCLE	576
	580
DRIVE GP-FAN	30
DRIVE GP-GOV & TRANSFER PUMP	106
DRIVE GP-WATER PUMP	32
DUST EJECTOR GP	89

E

Name	Page
ELECTRIC HORN	790
ELECTRIC STARTING MOTOR	179
ELECTRONICS GP-TRANSMISSION	158

INDEX

Name	Page
ELEMENT AS-HYD REVERSE FLOW	622
ELEMENT AS-HYDRAULIC	296
ELEMENT AS-PRIMARY (AIR)	86
ELEMENT AS-SECONDARY (AIR)	86
ELEMENT-FILTER	90
ELEMENT-WATER SEPARATOR	136
ENCLOSURE GP-ENGINE	496
	500
ENGINE AR	3
	4
ENGINE OIL PUMP	70
ETHER STARTING AID	176
EXHAUST MANIFOLD	93
EXTENSION GP-BLADE	724
	725
EXTENSION GP-DRAIN	74

F

FAN GP-BLOWER	75
FAN GP-DEFROSTER	771
	774
FAN GP-DEFROSTING	770
	772
	773
FASTENER GP-GOVERNOR	108
FILLER GP-OIL	57
	58
FILLER GP-POWER TRAIN OIL	290
FILM-AIR CLEANER	86
FILM-IDENTIFICATION	780
	860
FILM-WARNING (JUMPER CABLE)	886
FILTER AS-FUEL	130
FILTER AS-OIL	60
FILTER GP-ENGINE OIL	60
FILTER GP-TRANSMISSION	291
FILTER-MAGNETIC	242
	248
FILTER-MAGNETIC (TRANSMISSION)	236
	302
FINAL DRIVE GP	292
FITTING	627
FITTING-GREASE (1/8-27 THD)	482
	486
	522
	558
	722
	736
FITTING-HYDRAULIC	482
FLOODLIGHT	172
FLOOR MAT	516
	792
FLYWHEEL GP	33
FRAME GP-FRONT	504
	506
FRONT HOUSING	36
FUEL FILTER LINES	130
FUEL INJECTION PUMP	134
	135
FUMES DISPOSAL GP	62
FUSE (10 AMP)	155
	168
	170
	172
	188
	190
	232
	272
	770
	771
	772
	794
	880
	881
FUSE (15 AMP)	745
	777

G

GASKET-CYLINDER HEAD (1.85MM THK)	27
GASKET-POWER TAKE-OFF	6
GASKET-REGULATOR	76
GAUGE GP	814
GAUGE GP-OIL LEVEL (DIPSTICK)	63
GEAR GP-BEVEL	294
GEAR GP-FRONT	34
GENERAL AR	2
GOVERNOR CONTROL	102
GOVERNOR GP-UNIT INJECTOR	109
	110
	114
	115
	116
	118
GUARD & SUPPORT GP-RADIATOR	508
	510
GUARD GP-BOTTOM	512
GUARD GP-CYLINDER	583
GUARD GP-PLATFORM	514
	516
GUARD GP-VANDALISM	776
GUARD-RADIATOR	510

H

HEATER & MOUNTING GP	777
HEATER AR-CAB	778
HEATER GP-SEAT	780
HEATER LINES	808

INDEX

Name	Page
HITCH GP-ARTICULATED	518
HOOD & DASH GP	520
HORN AS (24 VOLT)	790
HORN GP-AIR	783
	784
	786
	788
HORN GP-ELECTRIC	790
HOUSING GP-FLYWHEEL	35
HOUSING GP-FRONT	36
HOUSING GP-GOVERNOR	122
	124
HYDRAULIC CONTROL	542
	543
	544
	545
HYDRAULIC LINES	594
HYDRAULIC TANK & FILTER	622
I	
INDICATOR AS-AIR PRESSURE	826
INDICATOR AS-AIR PRESSURE (RESEVOIRS)	824
INDICATOR AS (COOLANT TEMP)	814
INDICATOR-AIR FILTER SERVICE	90
INJECTOR GP-FUEL	134
	135
INSERT	100
INSERT-FUEL FILTER	100
INSERT-VALVE SEAT	25
INSTALLATION AR-ENGINE	5
INSTRUMENT PANEL	826
INSULATION GP-WEATHER	792
K	
KEY	66
	67
	138
	184
	299
	496
	500
	510
	624
	809
	850
	852
	901
KIT-BEARING	150
KIT-BIAS PISTON	616
KIT-BOWL SEAL	136
KIT-BRUSH	181
	780
KIT-CAP FILTER	138
KIT-CAPACITOR	148
KIT-CHECK VALVE	8
KIT-CONNECTING PLUG	174
KIT-CRANKSHAFT BEARING	10
KIT-CYLINDER HEAD	10
KIT-DIAPHRAGM	783
	784
KIT-FAN	148
KIT-GAUGE CLUSTER BEZEL	814
KIT-GOVERNOR OVERHAUL	6
	12
KIT-HARDWARE	150
KIT-INSULATOR	181
KIT-OUTPUT TERMINAL	148
KIT-PISTON CONTROL	616
KIT-RECEPTACLE	141
	274
KIT-REGULATOR TERMINAL	148
KIT-RELAY TERMINAL	148
KIT-RETAINING BOLT	152
KIT-SEAL	322
	335
KIT-SEAL (INCLUDES3 SEALS)	141
KIT-SEAL (STEERING METERING)	614
KIT-SEAL (TRANSMISSION CONTROL)	326
KIT-SERVICE METER	232
KIT-SHAFT SHIM	616
KIT-SPRING	614
KIT-STANDARD RING	10
KIT-TERMINAL GROUND	148
KIT-TERMINAL (ALTERNATOR)	144
KIT-TERMINAL (NEG)	150
KIT-TERMINAL (OUTPUT)	144
KIT-TERMINAL (POS)	150
KIT-TERMINAL (RELAY)	150
KIT-WATER BASE	136
KIT-WIPER BLADE (INCLUDES2 REFILL BLADES)	880
L	
LAMP	159
	160
	161
	162
	163
LAMP GP-DOME	188
	190
LAMP GP-FLOOD	159
LAMP GP-HEAD	160
	161
LAMP GP-SIGNAL	162
	163
	207

INDEX

Name	Page
LAMP-MINIATURE	188, 814
LAMP-MINIATURE (24 VOLT)	164, 168, 170, 172, 176, 230, 232, 272, 274, 770, 771, 772
LAMP-MINIATURE (24 VOLT) (1.75 DIA)	226, 228
LAMP-MINIATURE (28 VOLT)	226, 228, 230, 824, 826
LANYARD	846, 848, 851
LENS	188
LIFT GP-BLADE	726
LIFTER GP	55
LIFTING GP-ENGINE	37
LIGHTER AS-CIGAR	794
LIGHTER GP-CIGAR	794
LIGHTING GP	164
LIGHTING GP-FLOOD	168, 170, 172
LINER GP-CAB	796, 800, 804, 806
LINES GP-AIR	90, 92
LINES GP-AIR COMPRESSOR	38, 40, 42
LINES GP-CENTERSHIFT LOCK	584
LINES GP-DRAIN	126
LINES GP-ENGINE OIL	64
LINES GP-FUEL	128
LINES GP-FUEL FILTER	130
LINES GP-FUEL RATIO CONTROL	132
LINES GP-GOVERNOR OIL	133
LINES GP-GREASE	522
LINES GP-HEATER	808
LINES GP-HYDRAULIC	585, 586, 590, 594, 598
LINES GP-PUMP	602
LINES GP-RIPPER	604
LINES GP-STEERING	606
LINES GP-TRANSMISSION OIL	296
LINES GP-TURBOCHARGER OIL	65
LINES GP-WATER	76, 78
LINK GP-LOWER	728
LINK GP-STEERING	523
LINK GP-UPPER	729
LITERATURE GP	809
LOCK GP-CENTERSHIFT	608, 609
LOUVER GP-CAB	810

M

Name	Page
MAGNETIC SCREEN	302
MANIFOLD GP-EXHAUST	93
MANIFOLD GP-INLET	94
MIRROR GP-REAR VIEW	811, 812, 813
MOTOR GP-GEROTOR	610
MOTOR GP-WINDOW WIPER	815
MOUNTING GP-CAB	816
MOUNTING GP-ENGINE & TMSN	44
MOUNTING GP-RIPPER	730
MOUNTING GP-ROPS	818
MUFFLER GP	95

P

Name	Page
PADLOCK GP	66, 67, 138, 299, 496, 500, 510, 624, 850, 852, 901
PAN GP-OIL	46
PANEL GP-CAB	820, 821, 822
PANEL GP-INSTRUMENT	824, 826
PANEL GP-LH	830
PANEL GP-RH	828
PISTON & ROD GP	47

INDEX

Name	Page
PLATE & FILM GP	883
	884
	886
	890
	892
	894
	896
	898
PLATE GP-CERTIFICATION	900
PLATE GP-PUSH	732
PLATE-SERIAL NUMBER	236
PLUG-O-RING	236
	242
	248
POWER TRAIN AR	298
PROTECTION AR-VANDALISM	832
PROTECTION GP-LUBE SYSTEM	66
	67
PROTECTION GP-TMSN OIL FILLER	299
PULLEY GP-CRANKSHAFT	48
PUMP & MOUNTING GP	612
PUMP GP-ENGINE OIL	68
	69
	70
	71
PUMP GP-GEAR	300
	301
PUMP GP-METERING	614
PUMP GP-PISTON	616
PUMP GP-UNIT INJECTION	134
	135
PUMP GP-WATER	80
	81

R

RADIATOR GP	82
	84
REAR WHEEL	473
REGULATOR-WATER	76
RELAY AS (24 VOLT)	196
RELIEF VALVE	693
	699
	704
RIPPER AR	733
RIPPER GP	734
RIPPER TOOTH	739
ROCKER ARM GP	49
ROD & PISTON	47
ROPS AR	833
	834
	835
ROPS GP	836
ROPS GP-ENCLOSED	837
	838
	840
ROPS GP-HIGH PROFILE	842
ROTATING GP-PUMP	618

S

SCARIFIER AR	735
SCARIFIER GP	736
SCREEN	338
	340
SCREEN AS	118
SCREEN GP-MAGNETIC	302
SCREEN GP-SUN	844
SEAL GP-CRANKSHAFT	50
	51
	52
SEAL GP-FLYWHEEL HOUSING	53
SEAL-O-RING (110.49MM ID)	138
SEAL-O-RING (123.19MM ID)	291
SEAT BELT GP	845
	850
SEAT GP	846
	848
	850
	851
	852
SEAT GP-STATIC	853
	854
	856
	858
SEAT SUPPORT	860
SENDER AS-PRESSURE (ENGINE OIL)	192
SENDER-ARTICULATION POSITION	206
	212
SENDER-TEMPERATURE (COOLANT)	192
SENSOR & SPEED AS	236
	242
	248
SENSOR GP-TEMPERATURE	174
	218
SEPARATOR GP-WATER	136
SHAFT GP-DRIVE	303
SHAFT GP-INPUT	304
SHAFT GP-PUMP DRIVE	619
	620
SHIELD GP-DRIVE SHAFT	524
SIDESHIFT CYLINDER	569
SLEEVE-OIL SEAL	20
SOLENOID AS	180
SOLENOID AS-MAGNETIC	137
SOLENOID GP-SHUTOFF	137
SOLENOID VALVE	335
STARTING AID GP-ETHER	176
STARTING MOTOR GP-ELECTRIC	178
	179

INDEX

Name	Page
	180
	183
STATIC SEAT	853
	856
STEP GP	525
STRAINER-FUEL TANK	138
STRAINER (HYDRAULIC)	622
SUPPORT GP-ENGINE	54
SUPPORT GP-SEAT	860
SWASHPLATE GP	616
SWITCH AS	172
SWITCH AS-AIR PRESSURE (STOP LAMP)	196
SWITCH AS-BALL (CENTERSHIFT IND)	196
	200
SWITCH AS-DISCONNECT	184
	207
	213
SWITCH AS-DISCONNECT (IGNITION)	219
SWITCH AS-MAGNETIC	207
	213
	219
SWITCH AS-PRESSURE	278
SWITCH AS-PRESSURE (INCHING)	280
SWITCH AS-ROCKER (DEFROSTER)	770
	771
	772
SWITCH AS-ROCKER (FLOODS)	172
SWITCH AS-ROCKER (LIGHTS)	168
SWITCH AS-ROTARY	745
SWITCH AS-ROTARY (FAN SPEED)	780
SWITCH AS-ROTARY (HI/LO BEAM)	164
SWITCH AS-ROTARY (WIPER/WASHER)	188
	190
	880
	881
SWITCH AS-TEMPERATURE (COOLANT)	176
SWITCH AS (BLADE FLOOD LAMP)	170
SWITCH AS (CENTERSHIFT PIN PULL)	226
	228
	230
SWITCH AS (DIFFERENTIAL LOCK)	272
SWITCH AS (HEADLAMP/TAIL)	164
SWITCH AS (ON/OFF)	770
	771
	772
SWITCH AS (TAIL LAMP)	232
SWITCH GP-START	185
	226
	228
	230
SWIVEL GP	621

T

TANDEM & COVER GP	306
TANK & FILTER GP-HYDRAULIC	622
TANK & MTG GP-HYDRAULIC	624
TANK GP-AIR	536
	538
TANK GP-FUEL	138
TIRE GP	308
	309
	310
	311
	312
	313
TOOL BOX GP	901
TOOTH GP-RIPPER	739
TRANSMISSION AR	314
	315
	316
TRANSMISSION HYDRAULIC CONTROL	280
TRANSMISSION OIL COOLER	73
TURBOCHARGER GP	96
	97
	98
	99

U

UNIT INJECTOR GOVERNOR	109
	115
UNIVERSAL JOINT GP	317
UNIVERSAL JOINT GP-PUMP DRIVE	626
	627

V

V-BELT	32
VALVE & LINKAGE GP	628
	630
	632
	634
	636
	638
	640
	642
	644
	646
	648
VALVE & MTG GP-DIFF LOCK	318
	319
VALVE AS-AIR CONTROL	540
VALVE AS-ETHER START	176
VALVE GP	320
	661
VALVE GP-AIR CONTROL	541
VALVE GP-BANK2	650
VALVE GP-BANK3	651
	652

INDEX

Name	Page
	653
VALVE GP-BANK4	654
	655
	656
	657
VALVE GP-BANK5	658
	659
	660
VALVE GP-CHECK	139
VALVE GP-COMBINATION	662
	664
VALVE GP-CONTROL	666
	668
	670
	672
	674
	676
	678
	680
	682
	684
	686
	688
VALVE GP-CONTROL (BLADE TIP)	655
	659
	660
VALVE GP-CONTROL (CIRCLE DRIVE)	650
	651
	652
	653
	655
	656
	657
	659
	660
VALVE GP-CONTROL (SCARIFIER)	652
	656
	659
VALVE GP-CONTROL (SIDESHIFT)	651
	655
	656
	657
	659
	660
VALVE GP-PRESS & FLOW CMPNSTR	690
VALVE GP-RELIEF	662
	664
	692
	693
	694
	695
	696
	697
	698
	699
	700
	701
	702
	703
	704
VALVE GP-SELECTOR & PRESS CONT	322
	326
	330
VALVE GP-SHUTTLE	705
VALVE GP-SOLENOID	140
	141
	334
	335
	336
	706
	862
VALVE GP-TIRE	405
	407
	409
	410
	411
	415
	417
	419
	421
	423
	425
	427
	429
	431
	433
	435
	474
	475
VALVE GP-TRANSMISSION CONTROL	338
	340
VALVE MECHANISM GP	55
VALVE-FLUID SAMPLING	60
VALVE-REGULATOR	130
VANDALISM GUARD	776

W

WARNING GP-BACKUP	186
WASHER GP-WINDOW	864
	866
WASHER GP-WINDSHIELD	868
WATER LINES	78
WHEEL & TIRE AR	342
	343
	344
	345
	346
	347
	348

INDEX

Name	Page	Name	Page
	349		404
	350	WHEEL & TIRE GP	405
	351		406
	352		407
	353		408
	354		409
	355		410
	356		411
	357		412
	358		413
	359		414
	360		415
	361		416
	362		417
	363		418
	364		419
	365		420
	366		421
	367		422
	368		423
	369		424
	370		425
	371		426
	372		427
	373		428
	374		429
	375		430
	376		431
	377		432
	378		433
	379		434
	380		435
	381		436
	382		437
	383		438
	384		439
	385		440
	386		441
	387		442
	388		443
	389		444
	390		445
	391		446
	392		447
	393		448
	394		449
	395		450
	396		451
	397		452
	398		453
	399		454
	400		455
	401		456
	402		457
	403		458

INDEX

Name	Page	Name	Page
	459		
	460		
	461		
	462		
	463		
	464		
	465		
	466		
	467		
WHEEL AR	468		
	469		
	470		
	471		
WHEEL GP	472		
	473		
	474		
	475		
	476		
	477		
	478		
	479		
	480		
WINDOW GP	870		
	871		
	872		
	874		
WINDOW GP-CAB	873		
WIPER GP-WINDOW	876		
	878		
	880		
	881		
WIPER GP-WINDSHIELD	882		
WIRING GP-CAB	188		
	190		
WIRING GP-ENGINE	192		
WIRING GP-FRONT	196		
	200		
WIRING GP-REAR	206		
	212		
	218		
WIRING GP-SHIFT CONSOLE	226		
	228		
	230		
WIRING GP-STEERING CONSOLE	232		

INDEX

Désignation	Page
A	
ACCOUPLEMENT DE TORSION (ASS)	282
ADMISSION REFROIDIE PAR EAU (ASS)	85
ALLUME-CIGARETTES (ASS)	794
ALLUME-CIGARETTES (ENS)	794
ALTERNATEUR DE CHARGE (ASS)	144
	146
	147
	148
	150
AMORTISSEUR DE VIBRATIONS ET POULIE (ASS)	28
AMPOULE	159
	160
	161
	162
	163
ARBRE A CAMES (ASS)	14
ARBRE D'ENTRAÎNEMENT (ASS)	303
ARBRE D'ENTRAÎNEMENT DE POMPE (ASS)	619
	620
ARBRE D'ENTRÉE (ASS)	304
ARTICULATION DE DIRECTION (ASS)	523
ARTICULATION INFÉRIEURE (ASS)	728
ARTICULATION SUPÉRIEURE (ASS)	729
ATTELAGE ARTICULÉ (ASS)	518
AUTOCOLLANT - DE MISE EN GARDE (CABLE VOLANT)	886
AUTOCOLLANT DE FILTRE A AIR	86
AUTOCOLLANT D'IDENTIFICATION	780
	860
AUXILIAIRE DE DEMARRAGE A L'ETHER (ASS)	176
AVERTISSEUR (ASS)	142
AVERTISSEUR DE RECUL (ASS)	186
AXE DE CULBUTEUR (ASS)	49
B	
BAGUE	23
	24
BALAI ESSUIE-GLACE (ENS)	876
	878
	880
	881
	882
BARRE D'ATTELAGE (ASS)	722
BASE DE FILTRE À CARBURANT (ASS)	100
BATTERIE SANS ENTRETIEN ((12 V) (750 A))	206
	212
	218
BIELLE ET PISTON	47
BLINDAGE INFÉRIEUR (ASS)	512
BLOC-CYLINDRES - COUVERCLE (ASS)	16
BLOC-CYLINDRES (ASS)	21
	22
	23
	24
BOÎTE DE VITESSES (VERSION)	314
	315
	316
BOUCHON DE GOULOTTE DE REMPLISSAGE D'HUILE MOTEUR	57
	58
BOUCHON DE GOULOTTE DE REMPLISSAGE (HYDRAULIQUE)	622
BOUCHON DE RÉSERVOIR DE CARBURANT (ENS)	138
BOUCHON-JOINT TORIQUE	236
	242
	248
BOULONNERIE DE REGULATEUR	108
BOULON (3/4-10X4.50PO)	138
C	
CABINE - PROFIL ÉLEVÉ (ASS)	749
CABINE - PROFIL ÉLEVÉ (VERSION)	747
CABINE - REVÊTEMENT (ASS)	796
	800
	804
	806
CABINE ROPS - PROFIL ÉLEVÉ (ASS)	842
CABINE ROPS FERMÉE (ASS)	837
	838
	840
CABINE SANS ROPS (ASS)	750
CABINE SANS ROPS (VERSION)	748
CABLAGE AR (ASS)	206
	212
	218
CABLAGE AV (ASS)	196
	200
CABLAGE DE CABINE (ASS)	188
	190
CABLAGE DE LA CONSOLE DE CHANGEMENTS DE VITESSE	226
	228
	230
CABLAGE DE LA CONSOLE DE DIRECTION	232
CABLAGE DE MOTEUR (ASS)	192
CACHE-SOUPAPES (ASS)	19
CADENAS (ASS)	66
	67
	138
	299
	496
	500

INDEX

Désignation	Page
	510
	624
	850
	852
	901
CANALISATIONS D'AIR	90
CANALISATIONS D'AIR (ASS)	90
	92
CANALISATIONS DE CARBURANT (ASS)	128
CANALISATIONS DE CHAUFFAGE (ASS)	808
CANALISATIONS DE DIRECTION (ASS)	606
CANALISATIONS DE FILTRE À CARBURANT	130
CANALISATIONS DE GRAISSAGE (ASS)	522
CANALISATIONS DE POMPE (ASS)	602
CANALISATIONS DE RÉCHAUFFEURS	808
CANALISATIONS DE VERROUILLAGE DE DÉPORT DE CERCLE (ASS)	584
CANALISATIONS DE VIDANGE (ASS)	126
CANALISATIONS D'EAU	78
CANALISATIONS D'EAU (ASS)	76
	78
CANALISATIONS D'HUILE DE BOITE (TRANSMIS.) (ASS)	296
CANALISATIONS D'HUILE DE RÉGULATEUR (ASS)	133
CANALISATIONS D'HUILE DE TURBOCOMPRESSEUR (ASS)	65
CANALISATIONS D'HUILE MOTEUR (ASS)	64
CANALISATIONS DU COMPRESSEUR D'AIR (ASS)	38
	40
	42
CANALISATIONS DU FILTRE A CARBURANT (ASS)	130
CANALISATIONS DU LIMITEUR D'INJECTION (ASS)	132
CANALISATIONS DU RIPPER (ASS)	604
CANALISATIONS HYDRAULIQUES	594
CANALISATIONS HYDRAULIQUES (ASS)	585
	586
	590
	594
	598
CAPOT ET CONSOLE (ASS)	520
CAPTEUR - POSITION D'ARTICULATION	206
	212
CAPTEUR DE TEMPERATURE (ASS)	174
	218
CAPTEUR DE VITESSE (ENS)	236
	242
	248
CARENAGE DE MOTEUR (ASS)	496
	500
CARTER AV (ASS)	36
CARTER AVANT	36
CARTER DE VOLANT (ASS)	35
CARTER D'HUILE MOTEUR - VIDANGE (ASS)	29
CARTER ET PIECES DE BOITE (ASS)	248
CÂBLAGE DE CABINE	190
CEINTURE DE SECURITE (ASS)	845
	850
CENDRIER	796
	800
CERCLE (ASS)	719
	720
CHAPEAU	30
	742
	846
	848
CHAPEAU - RADIATEUR	84
CHAPEAU (PORTE-FUSIBLES)	188
	770
	771
	772
	794
	880
	881
CHAUFFAGE DE CABINE (VERSION)	778
CHAUFFAGE DE SIÈGE (ASS)	780
CHAUFFAGE ET MONTAGE (ASS)	777
CHÂSSIS AV (ASS)	504
	506
CHÂSSIS ET CARTER (ASS)	494
CHÂSSIS-PORTEUR DE JOINT (ASS)	15
CIRCUIT DE GRAISSAGE - PROTECTION (ASS)	66
	67
CLÉ	66
	67
	138
	184
	299
	496
	500
	510
	624
	809
	850
	852
	901
ÉCLAIRAGE - PROJECTEURS (ASS)	168
	170
	172
CLAPET (ASS)	320
	661
CLAPET DE DECHARGE	693
	699
	704
CLAPET DE DECHARGE (ASS)	662

INDEX

Désignation	Page
	664
	692
	693
	694
	695
	696
	697
	698
	699
	700
	701
	702
	703
	704
CLAPET DE RETENUE (ENS)	139
COFFRE A OUTILS (ASS)	901
COFFRE DE BATTERIE (ASS)	489
	490
COLLECTEUR D'ADMISSION (ASS)	94
COLLECTEUR D'ÉCHAPPEMENT	93
COLLECTEUR D'ECHAPPEMENT (ASS)	93
COMMANDE DE BOITE DE VITESSES (ASS)	276
COMMANDE DE DIFFÉRENTIEL - VERROUILLAGE (ASS)	272
	274
COMMANDE DE DIRECTION (ASS)	548
COMMANDE DE FREIN DE STATIONNEMENT (ASS)	528
COMMANDE DE REGULATEUR (ASS)	102
COMMANDE DE RÉGULATEUR	102
COMMANDE DE VERROUILLAGE DE DIFFÉRENTIEL	274
COMMANDE DE VERROUILLAGE DE DÉPORT DE FREIN	546
COMMANDE D'EMBRAYAGE (ASS)	270
COMMANDE D'INJECTION DE CARBURANT (ASS)	101
COMMANDE ELECTRONIQUE DE BOITE (ASS)	200
	226
	228
COMMANDE HYDRAULIQUE	542
	543
	544
	545
COMMANDE HYDRAULIQUE DE BOÎTE	280
COMMANDE HYDRAULIQUE DE BOÎTE (ASS)	278
	280
COMMANDE HYDRAULIQUE (VERSION)	542
	543
	544
	545
COMMANDE ÉLECTR. DE TRANSMISSION (ASS)	200
COMMANDE ÉLECTRONIQUE DE CONVERTISSEUR DE COUPLE (ASS)	153
	154
COMMANDE ÉLECTRONIQUE DE RELAIS (ASS)	196
	200
COMMANDE ÉLECTRONIQUE DE SYSTÈME	152
COMPOSANTS ÉLECTRONIQUES DE BOÎTE DE VITESSES (ASS)	158
COMPRESSEUR D'AIR (ASS)	6
	8
	10
	12
COMPRESSEUR D'AIR-CANALISATIONS	40
	42
CONSOLE DE CONDUITE (ASS)	754
CONTACTEUR DE PRESSION D'AIR (FEU D'ARRÊT)	196
CONTACTEUR (ENS)	172
CONTACTEUR (ENS) (EXTRACTEUR BROCHE DÉPORT DE CERCLE)	226
	228
	230
CONTACTEUR (ENS) (FEU ARRIÈRE)	232
CONTACTEUR (ENS) (FEUX AVANT FEUX ARRIÈRE)	164
CONTACTEUR (ENS) (MARCHE-ARRÊT)	770
	771
	772
CONTACTEUR (ENS) (PROJECTEUR DE LAME)	170
CONTACTEUR (ENS) (VERROUILLAGE DE DIFFÉRENTIEL)	272
CONTACTEUR MAGNETIQUE (ENS)	207
	213
	219
CONVERTISSEUR ET MONTAGE - ÉLECTRIQUE (ASS)	155
CORDON POUR LITTÉRATURE	846
	848
	851
COURONNE CONIQUE (ASS)	294
COURONNE ET DIFFERENTIEL (ASS)	284
COURROIE TRAPEZOIDALE	32
COUVERCLE DE CARTER AV (ASS)	17
ÉCRAN - CIRCUIT HYDRAULIQUE	338
	340
ÉCRAN D'ARBRE MOTEUR (ASS)	524
ÉCRAN (ENS)	118
ÉCRAN MAGNÉTIQUE	242
	248
ÉCRAN MAGNÉTIQUE (ASS)	302
ÉCRAN MAGNÉTIQUE (BOÎTE DE VITESSES)	236
	302
CREPINE (HYDRAULIQUE)	622
CRÉPINE MAGNÉTIQUE	302
CULASSE (ASS)	26

INDEX

Désignation	Page
	27
CULASSE (ENS)	25
CULBUTERIE (ASS)	55

D

Désignation	Page
DEGIVREUR - VENTILATEUR	770
	772
	773
DENT DE RIPPER	739
DENT DE RIPPER (ASS)	739
DIFFERENTIEL (ASS)	288
DISJONCTEUR (ENS) (15 A)	164
DISJONCTEUR (ENS) (60 A)	213
	219
DISPOSITIF D'EVACUATION DES VAPEURS DE CARTER	62
DISTRIBUTEUR	684
	686
DISTRIBUTEUR (ASS)	666
	668
	670
	672
	674
	676
	678
	680
	682
	684
	686
	688
DISTRIBUTEUR (ASS) (DEVERS DE LAME)	655
	659
	660
DISTRIBUTEUR (ASS) (DÉPORT LATÉRAL)	651
	655
	656
	657
	659
	660
DISTRIBUTEUR (ASS) (ENTRAÎNEMENT DE CERCLE)	650
	651
	652
	653
	655
	656
	657
	659
	660
DISTRIBUTEUR (ASS) (SCARIFICATEUR)	652
	656
	659
DISTRIBUTEUR D'AIR (ASS)	541
DISTRIBUTEUR D'AIR (ENS)	540
DISTRIBUTEUR DE BOITE (ASS)	338
	340
DISTRIBUTEUR DOUBLE CORPS (ASS)	650
DISTRIBUTEUR QUADRUPLE CORPS (ASS)	654
	655
	656
	657
DISTRIBUTEUR QUINTUPLE CORPS	658
	659
	660
DISTRIBUTEUR TRIPLE CORPS (ASS)	651
	652
	653
DÉMARRAGE À L'ÉTHER	176
DÉMARREUR ÉLECTRIQUE	179
DÉMARREUR ÉLECTRIQUE (ASS)	178
	179
	180
	183

E

Désignation	Page
ECLAIRAGE (ASS)	164
ECRAN - SOLEIL (ASS)	844
EJECTEUR AUTOMATIQUE DE POUSSIERE (ASS)	89
ELEMENT - DEBIT INVERSE HYDRAULIQUE (ENS)	622
ELEMENT DE FILTRE	90
ELEMENT HYDRAULIQUE (ENS)	296
ELEMENT PRIMAIRE (ENS) (AIR)	86
ELEMENT SECONDAIRE (ENS) (AIR)	86
EMBRAYAGE DE BOÎTE DE VITESSES (ASS)	254
	258
	262
	266
ENTRAINEMENT DE VENTILATEUR (ASS)	30
ENTRAÎNEMENT DE CERCLE (ASS)	576
	580
ENTRAÎNEMENT DE CHAÎNE (ASS)	253
ENTRAÎNEMENT DE LA POMPE À EAU (ASS)	32
ENTRAÎNEMENT DE RÉGULATEUR ET POMPE D'ALIMENTATION	106
ESSIEU AV (ASS)	482
	486
ESSUIE-GLACE - PARE-BRISE (ASS)	882
ESSUIE-GLACE (ASS)	876
	878
	880
	881

F

Désignation	Page
FILTRE À HUILE (ENS)	60
FILTRE À HUILE MOTEUR (ASS)	60

INDEX

Désignation	Page
FILTRE A AIR (ASS)	86
	87
FILTRE A CARBURANT (ENS)	130
FILTRE A HUILE DE BOITE (ASS)	291
FREIN DE MANOEUVRE - COMMANDE (ASS)	530
FREIN DE MANOEUVRE (ASS)	526
FREIN DE STATIONNEMENT (ASS)	234
FUSIBLE (10 A)	155
	168
	170
	172
	188
	190
	232
	272
	770
	771
	772
	794
	880
	881
FUSIBLE (15 A)	745
	777
G	
GLACE (ASS)	870
	871
	872
	874
GLACE DE CABINE (ASS)	873
GOULOTTE DE REMPLIS. D'HUILE DE BOÎTE - PROTECTION	299
GOULOTTE DE REMPLISSAGE D'HUILE DE TRANSMISSION	290
GOULOTTE D'HUILE MOTEUR (ASS)	57
	58
GRAISSEUR	482
	627
GRAISSEUR (FILETAGE DE 1/8-27)	482
	486
	522
	558
	722
	736
GROUPE DE LEVAGE	55
GROUPE DE ROTATION DE POMPE	618
GROUPE D'ORIENTATION	621
H	
HUILE MOTEUR - CARTER (ASS)	46
I	
INDICATEUR DE COLMATAGE DE FILTRE A AIR	90
INDICATEUR (ENS) (TEMPÉRATURE DU LIQUIDE DE REFROIDISSEMENT)	814
INDICATEURS (ASS)	814
INJECTEUR DE CARBURANT (ASS)	134
	135
INJECTEUR DE RÉGULATEUR	109
	115
INSONORISATION - COUVERCLE (ASS)	18
INTERCALAIRE DE FILTRE À CARBURANT	100
INTERRUPTEUR BALANCIER (ENS) (ÉCLAIRAGE)	168
INTERRUPTEUR BALANCIER (ENS) (DÉGIVREUR)	770
	771
	772
INTERRUPTEUR BALANCIER (ENS) (PROJECTEURS)	172
INTERRUPTEUR DE DEMARRAGE (ASS)	185
	226
	228
	230
INTERRUPTEUR ROTATIF (ENS)	745
INTERRUPTEUR ROTATIF (ENS) (ESSUIE-GLACE/LAVE-GLACE)	188
	190
	880
	881
INTERRUPTEUR ROTATIF (ENS) (TÉMOINS CODE-PHARES)	164
INTERRUPTEUR ROTATIF (ENS) (VITESSE DU VENTILATEUR)	780
INTERRUPTEUR SPHÉRIQUE (ENS) (INDICATEUR DE DÉPORT DE CERCLE)	196
	200
ISOLATION DE CABINE (ASS)	792
J	
JANTE (ASS)	472
	473
	474
	475
	476
	477
	478
	479
	480
JAUGE D'HUILE MOTEUR (BAIONNETTE) (ASS)	63
JOINT DE CARTER DE VOLANT (ASS)	53
JOINT DE CULASSE (ÉPAISSEUR 1.85MM)	27

INDEX

Désignation	Page
JOINT DE PRISE DE FORCE	6
JOINT DE RÉGULATEUR	76
JOINT DE VILEBREQUIN (ASS)	50
	51
	52
JOINT TORIQUE (DIA INT 123,19 MM)	291
JOINT TORIQUE (DIAMTRE INTRIEUR DE 110,49 MM)	138
JOINT UNIVERSEL (ASS)	317
JOINT UNIVERSEL D'ENTRAÎNEMENT DE POMPE (ASS)	626
	627
KIT DE BALAI D'ESSUIE-GLACE (COMPREND 2 LAMES DE RECHARGE)	880
KIT DE BALAIS	181
	780
KIT DE BORNE DE MASSE	148
KIT DE BORNE DE REGULATEUR	148
KIT DE BORNE DE RELAIS	148
KIT DE BORNE DE SORTIE	148
KIT DE BORNE (ALTERNATEUR)	144
KIT DE BORNE (NEG)	150
KIT DE BORNE (POS)	150
KIT DE BORNE (RELAIS)	150
KIT DE BORNE (SORTIE)	144
KIT DE BOUGIE	174
KIT DE BOULONNERIE	150
KIT DE CALE D'ÉPAISSEUR D'ARBRE	616
KIT DE CHAPEAU DE FILTRE	138
KIT DE CLAPET DE RETENUE	8
KIT DE COMMANDE DE PISTON	616
KIT DE COMPTEUR D'ENTRETIEN	232
KIT DE CONDENSATEUR	148
KIT DE COUSSINET	150
KIT DE COUSSINETS DE VILEBREQUIN	10
KIT DE CULASSE	10
KIT DE DIAPHRAGME	783
	784
KIT DE JOINT DE FILTRE	136
KIT DE JOINTS	322
	335
KIT DE JOINTS (COMMANDE DE BOÎTE DE VITESSES)	326
KIT DE JOINTS (COMPREND3 JOINTS)	141
KIT DE JOINTS (RÉGULATION DE DIRECTION)	614
KIT DE LUNETTE DE GROUPE D'INSTRUMENTS	814
KIT DE PISTON EXCENTRIQUE	616
KIT DE PRISE FEMELLE	141
	274
KIT DE RESSORTS	614
KIT DE SEGMENT STANDARD	10
KIT DE VENTILATEUR	148
KIT DE VERIFICATION DU REGULATEUR	6
	12
KIT DE VIS DE RETENUE	152
KIT D'ISOLANT	181
KLAXON (ENS) (24 V)	790
KLAXON ÉLECTRIQUE	790
KLAXON ÉLECTRIQUE (ASS)	790
KLAXON PNEUMATIQUE	783
	788
KLAXON PNEUMATIQUE (ASS)	783
	784
	786
	788
LAME (ASS)	712
	713
	714
	715
	716
LAME HYDRAULIQUE ET POINTE (VERSION)	707
	708
LAME (VERSION)	709
	710
	711
LAMPE - CLIGNOTANT DE DIRECTION (ASS)	162
	163
	207
LAMPE - PHARE (ASS)	159
LAMPE (AMPOULE MINIATURE)	188
	814
LAMPE (AMPOULE MINIATURE) (24 V)	164
	168
	170
	172
	176
	230
	232
	272
	274
	770
	771
	772
LAMPE (AMPOULE MINIATURE) (24 V) (DIA1.75)	226
	228
LAMPE (AMPOULE MINIATURE) (28 V)	226
	228
	230
	824
	826

K

L

INDEX

Désignation	Page
LAVE-GLACE - VITRE (ASS)	864
	866
LAVE-GLACE DE PARE-BRISE (ASS)	868
ÉLECTROVANNE	335
LENTILLE	188
LEVAGE - LAME (ASS)	726
LITTERATURE (ASS)	809
ÉLÉMENT DE SÉPARATEUR D'EAU	136
M	
MANCHON - JOINT	20
MANOCONTACT (ENS)	278
MANOCONTACT (ENS) (APPROCHE)	280
MANOMÈTRE D'AIR (ENS)	826
MANOMÈTRE D'AIR (ENS) (RÉSERVOIRS)	824
MARCHEPIED (ASS)	525
MONTAGE DE CABINE (ASS)	816
MONTAGE DE MOTEUR ET BOÎTE (ASS)	44
MONTAGE DE MOTEUR (VERSION)	5
MONTAGE DE RIPPER (ASS)	730
MONTAGE DU TOIT ROPS (ASS)	818
MOTEUR D'ESSUIE-GLACE (ASS)	815
MOTEUR HYDRAULIQUE (ASS)	610
MOTEUR (VERSION)	3
	4
O	
OEILLETONS DE LEVAGE MOTEUR (ASS)	37
P	
PANNEAU - DROITE (ASS)	828
PANNEAU - GAUCHE (ASS)	830
PARE-CHOCS AR (ASS)	491
	492
	493
PARE-POUSSIERE	60
PHARE AV (ASS)	160
	161
PIGNONNERIE AV (ASS)	34
PISTON ET BIELLE (ASS)	47
PLAFONNIER (ASS)	188
	190
PLAQUE DE CERTIFICATION (ASS)	900
PLAQUE DE NUMÉRO DE SÉRIE	236
PLAQUE DE POUSSÉE (ASS)	732
PLAQUES SIGNALETIQUES ET AUTOCOLLANTS (ASS)	883
	884
	886
	890
	892
	894
	896
	898
PLATEAU OSCILLANT (ASS)	616
PNEU - GROUPE DE VALVE	405
	407
	409
	410
	411
	415
	417
	419
	421
	423
	425
	427
	429
	431
	433
	435
	474
	475
PNEUMATIQUE (ASS)	308
	309
	310
	311
	312
	313
POMPE À HUILE MOTEUR	70
POMPE A EAU (ASS)	80
	81
POMPE A ENGRENAGES (ASS)	300
	301
POMPE A HUILE MOTEUR (ASS)	68
	69
	70
	71
POMPE A PISTONS (ASS)	616
POMPE DE REGULARISATION DE DEBIT (ASS)	614
POMPE D'INJECTION (ASS)	134
	135
POMPE D'INJECTION DE CARBURANT	134
	135
POMPE ET MONTAGE (ASS)	612
PORTE (ASS)	758
	760
	764
	766
PORTIÈRE DE CABINE (ASS)	762
	768
PROJECTEUR	172
PROTECTION ANTI-VANDALISME	776
PROTECTION ANTI-VANDALISME (ASS)	776
PROTECTION ANTI-VANDALISME (VERSION)	832
PROTECTION DE PLATE-FORME (ASS)	514

INDEX

Désignation	Page
	516
PROTECTION DE VÉRIN (ASS)	583
PROTÈGE-RADIATEUR	510
PROTÈGE-RADIATEUR ET SUPPORT (ASS) .	508
	510

R

RADIATEUR (ASS)	82
	84
RALLONGE DE LAME (ASS)	724
	725
RALLONGE DE VIDANGE (ASS)	74
REDUCTEURS LATERAUX (ASS)	292
REFROIDISSEUR D'HUILE DE BOÎTE	73
REFROIDISSEUR D'HUILE DE BOÎTE (ASS)	73
REFROIDISSEUR D'HUILE MOTEUR (ASS) .	72
REGLAGE DE SIEGE (ASS)	742
	744
RELAIS (ENS) (24 V)	196
RENIFLARD (ASS)	56
RENIFLARD DE CARTER (ENS)	56
RENIFLARD (DÉCHARGE DE PRESSION) . .	290
RENIFLARD (TANDEM)	306
RESERVOIR HYDRAULIQUE ET FILTRE . . .	622
REVÊTEMENT DE CABINE	796
	800
	806
RÉGULATEUR - CARTER (ASS)	122
	124
RÉGULATEUR - INJECTEUR (ASS)	109
	110
	114
	115
	116
	118
RÉGULATEUR D'EAU	76
RIPPER (ASS)	734
RIPPER (VERSION)	733
ROBINET DE BATTERIE (ENS)	184
	207
	213
ROBINET DE BATTERIE (ENS) (ALLUMAGE)	219
ROPS (VERSION)	833
	834
	835
ROUE AR	473
ROUE ET PNEU (ASS)	405
	406
	407
	408
	409
	410
	411
	412

Désignation	Page
	413
	414
	415
	416
	417
	418
	419
	420
	421
	422
	423
	424
	425
	426
	427
	428
	429
	430
	431
	432
	433
	434
	435
	436
	437
	438
	439
	440
	441
	442
	443
	444
	445
	446
	447
	448
	449
	450
	451
	452
	453
	454
	455
	456
	457
	458
	459
	460
	461
	462
	463
	464
	465
	466
	467

INDEX

Désignation	Page
ROUE ET PNEU (VERSION)	342
	343
	344
	345
	346
	347
	348
	349
	350
	351
	352
	353
	354
	355
	356
	357
	358
	359
	360
	361
	362
	363
	364
	365
	366
	367
	368
	369
	370
	371
	372
	373
	374
	375
	376
	377
	378
	379
	380
	381
	382
	383
	384
	385
	386
	387
	388
	389
	390
	391
	392
	393
	394
	395
	396

Désignation	Page
	397
	398
	399
	400
	401
	402
	403
	404
ROUE (VERSION)	468
	469
	470
	471
RÉSERVOIR DE CARBURANT (ASS)	138
RÉSERVOIR HYDRAULIQUE ET FILTRE (ASS)	622
RÉSERVOIR HYDRAULIQUE ET MONTAGE (ASS)	624
RÉSERVOIR PNEUMATIQUE (ASS)	536
	538
RÉTROVISEUR (ASS)	811
	812
	813
S	
SCARIFICATEUR (ASS)	736
SCARIFICATEUR (VERSION)	735
SIEGE (ASS)	846
	848
	850
	851
	852
SIEGE RAPPORTE	100
SIEGE RAPPORTE (SOUPAPE)	25
SIÈGE À ÉQUILIBRAGE STATIQUE	853
	856
SIÈGE À ÉQUILIBRAGE STATIQUE (ASS)	853
	854
	856
	858
SILENCIEUX (ASS)	95
SOLÉNOÏDE D'ARRÊT (ASS)	137
SOLÉNOÏDE (ENS)	180
SOLÉNOÏDE MAGNÉTIQUE (ENS)	137
SONDE - PRESSION (HUILE MOTEUR)	192
SONDE THERMIQUE (LIQUIDE DE REFROIDISSEMENT)	192
SOUPAPE - PRÉLÈVEMENT D'ÉCHANTILLON DE LIQUIDE	60
SOUPAPE - SOLENOIDE (ASS)	140
	141
	334
	335
	336
	706

INDEX

Désignation	Page
	862
SOUPAPE DE COMBINAISON (ASS)	662
	664
SOUPAPE DE MISE EN MARCHE DE L'ÉTHER (ENS)	176
SOUPAPE ET MONTAGE DE VERROUILLAGE DE DIF. (ASS)	318
	319
SOUPAPE ET TIMONERIE (ASS)	628
	630
	632
	634
	636
	638
	640
	642
	644
	646
	648
SOUPAPE RÉGULATRICE	130
SOUPAPE RÉGULATRICE DE PRESSION ET DÉBIT	690
SOUPAPE SELECTRICE ET REGULATRICE DE PRESSION	322
	326
	330
SOUPAPE SÉLECTRICE ET RÉGULATRICE DE PRESSION	322
	326
	330
SÉPARATEUR D'EAU (ASS)	136
SUPPORT DE LAME (ASS)	717
SUPPORT DE MOTEUR (ASS)	54
SUPPORT DE SCARIFICATEUR (ASS)	718
SUPPORT DE SIÈGE	860
SUPPORT DE SIÈGE (ASS)	860
SUPPORT DE SÉPARATEUR D'EAU	136

T

TABLEAU DE BORD	826
TABLEAU DE BORD (ASS)	820
	821
	822
	824
	826
TAMIS DE RÉSERVOIR DE CARBURANT	138
TANDEM ET CARTER (ASS)	306
TAPIS DE PLANCHER	516
	792
THERMOCONTACT (ENS) (LIQUIDE DE REFROIDISSEMENT)	176
TOIT (ASS)	752
TOIT ROPS (ASS)	836
TOIT (VERSION)	751
TRAINS PLANÉTAIRES - CARTER ET PIÈCES	236
	242
TRANSFORMATEUR DE PUISSANCE	155
TRANSFORMATION ÉLECTRIQUE (VERSION)	156
	157
TRANSMISSION (VERSION)	298
TURBOCOMPRESSEUR - CARTOUCHE (ASS)	88
TURBOCOMPRESSEUR (ASS)	96
	97
	98
	99

V

VANNE PILOTE (ASS)	705
VENTILATEUR DÉGIVREUR (ASS)	771
	774
VENTILATEUR SOUFFLANT - CABINE (VERSION)	746
VENTILATEUR SOUFFLANT (ASS)	75
VENTILATEUR SOUFFLANT ET MONTAGE - CABINE (ASS)	745
VERIN DE DIRECTION (ASS)	570
	572
VERIN DE DIRECTION ET MONTAGE (ASS)	557
VERIN (ENS) (ÉTHER)	176
VERROUILLAGE DE DIFFÉRENTIEL (VERSION)	286
VERROUILLAGE DE DÉPORT DE CERCLE (ASS)	608
	609
VERSION DE CHASSIS	1
VILEBREQUIN - JOINT	51
	52
VILEBREQUIN - POULIE (ASS)	48
VILEBREQUIN (ASS)	20
VISIÈRE - GROUPE AUXILIAIRE	740
	741
VOLANT MOTEUR (ASS)	33
VOLET - CABINE (ASS)	810
VÉRIN D'ARTICULATION (ASS)	559
	560
	567
VÉRIN D'ARTICULATION ET MONTAGE (ASS)	550
VÉRIN DE DÉPORT DE CERCLE (ASS)	566
VÉRIN DE DÉPORT DE CERCLE ET MONTAGE (ASS)	554
VÉRIN DE DÉPORT DE LAME	569
VÉRIN DE DÉPORT DE LAME (ASS)	556
	569
VÉRIN DE LEVAGE DE LAME (ASS)	562
	563

INDEX

Désignation	Page	Désignation	Page
VÉRIN DE RELEVAGE DE LAME ET MONTAGE (ASS)	551 552		
VÉRIN DE RIPPER ET CANALISATIONS (ASS)	549		
VÉRIN DE SCARIFICATEUR (ASS)	568		
VÉRIN DE SCARIFICATEUR ET MONTAGE (ASS)	555		
VÉRIN D'INCIDENCE DE LAME (ASS)	564		
VÉRIN D'INCLINAISON DE LAME ET MONTAGE (ASS)	553		
VÉRIN D'INCLINAISON DE ROUE (ASS)	574		
VÉRIN D'INCLINAISON DE ROUE ET MONTAGE (ASS)	558		
VUE DU MODELE	2		

INDICE

Nombre	Página
A	
ACCESORIOS DE LA CABINA (GR)	740
	741
ACOPLAMIENTO HIDRÁULICO	482
ACOPLAMIENTO TORSIONAL (GR)	282
AIRE - TUBERÍAS DE (GR)	90
	92
AJUSTADOR DEL ASIENTO (GR)	742
	744
ALARMA (GR)	142
ALFOMBRILLA DEL PISO	516
	792
AMORTIGUADOR Y POLEA (GR)	28
ARRANQUE - INTERRUPTOR DE (GR)	185
	226
	228
	230
ARTICULACIÓN DE CILINDRO (GR)	559
	560
	567
ASIENTO DE VÁLVULA-CASQUILLO	25
ASIENTO FIJO	853
	856
ASIENTO FIJO (GR)	853
	854
	856
	858
ASIENTO (GR)	846
	848
	850
	851
	852
AUXILIAR DE ARRANQUE CON ÉTER (GR)	176
AYUDA DE ARRANQUE CON ÉTER	176
B	
BALANCÍN (GR)	49
BANCADA5 (GR)	658
	659
	660
BARRA DE TIRO (GR)	722
BASE DEL FILTRO DE COMBUSTIBLE (GR)	100
BASTIDOR DELANTERO (GR)	504
	506
BATERIA SIN MANTENIMIENTO (12 V -750 A)	206
	212
	218
BIELA Y PISTON	47
BLOQUE MOTOR - CULATA DEL (GR)	16
BLOQUE MOTOR (GR)	21
	22
	23
	24
BOCINA (CONJ) (24 VOLTIOS)	790
BOCINA DE AIRE (GR)	783
	784
	786
	788
BOCINA ELÉCTRICA	790
BOCINA ELÉCTRICA (GR)	790
BOCINA NEUMATICA	783
	788
BOMBA - TUBERÍAS DE (GR)	602
BOMBA DE ACEITE DEL MOTOR	70
BOMBA DE ACEITE DEL MOTOR (GR)	68
	69
	70
	71
BOMBA DE AGUA (GR)	80
	81
BOMBA DE ENGRANAJES (GR)	300
	301
BOMBA DE INYECCIÓN UNITARIA (GR)	134
	135
BOMBA DE INYECCION DE COMBUSTIBLE	134
	135
BOMBA DE PISTONES (GR)	616
BOMBA INYECTORA DEL REGULADOR (GR)	109
	110
	114
	115
	116
	118
BOMBA Y MONTAJE (GR)	612
C	
CABINA DE PERFIL ALTO (CONFIG)	747
CABINA DE PERFIL ALTO (GR)	749
CABINA ROPS CERRADA (GR)	837
	838
	840
CABINA ROPS DE ALTO PERFIL (GR)	842
CABINA SIN ROPS (CONFIG)	748
CABINA SIN ROPS (GR)	750
CABLES DE LA CABINA	190
CABLES DE LA CABINA (GR)	188
	190
CABLES DE LA CONSOLA DE CAMBIOS (GR)	226
	228
	230
CABLES DE LA CONSOLA DE DIRECCIÓN (GR)	232
CABLES DE LA TRABA DEL DESPLAZADOR DEL CÍRCULO (GR)	584
CABLES DEL MOTOR (GR)	192
CABLES DELANTEROS (GR)	196

INDICE

Nombre	Página
	200
CABLES POSTERIORES (GR)	206
	212
	218
CADENA DE IMPULSIÓN (GR)	253
CAJA DE HERRAMIENTAS (GR)	901
CAJA DE LA BATERÍA (GR)	489
	490
CAJA DELANTERA	36
CAJA DELANTERA (GR)	36
CAJA Y BASTIDOR (GR)	494
CAJA Y PIEZAS DE LA TRANSMISIÓN (GR)	248
CAJA Y PIEZAS DE LOS PLANETARIOS	236
	242
CALCOMANÍA DE ADVERTENCIA (CABLES AUXILIARES DE ARRANQUE)	886
CALCOMANÍA DE IDENTIFICACIÓN	780
	860
CALCOMANÍAS Y PLACAS DE IDENTIFICACIÓN (GR)	883
	884
	886
	890
	892
	894
	896
	898
CALEFACCIÓN DE LA CABINA (CONFIG)	778
CALEFACCIÓN Y MONTAJE (GR)	777
CALENTADOR DE ASIENTO (GR)	780
CANDADO (GR)	66
	67
	138
	299
	496
	500
	510
	624
	850
	852
	901
CAPÓ Y CONSOLA (GR)	520
CARGA - ALTERNADOR DE (GR)	144
	146
	147
	148
	150
CENICERO	796
	800
CHASIS (CONFIG)	1
CIGÜEÑAL - POLEA DE (GR)	48
CIGÜEÑAL (GR)	20
CILINDRO (CONJ) (ETER)	176
CILINDRO DE ARTICULACIÓN Y MONTAJE (GR)	550
CILINDRO DE DESGARRADOR Y TUBERÍAS (GR)	549
CILINDRO DE DESPLAZAMIENTO DEL CÍRCULO (GR)	566
CILINDRO DE DESPLAZAMIENTO DEL CÍRCULO Y MONTAJE (GR)	554
CILINDRO DE DESPLAZAMIENTO LATERAL	569
CILINDRO DE DESPLAZAMIENTO LATERAL (GR)	569
CILINDRO DE DESPLAZAMIENTO LATERAL Y MONTAJE (GR)	556
CILINDRO DE DIRECCIÓN (GR)	570
	572
CILINDRO DE DIRECCIÓN Y MONTAJE (GR)	557
CILINDRO DE ESCARIFICADOR (GR)	568
CILINDRO DE ESCARIFICADOR Y MONTAJE (GR)	555
CILINDRO DE INCLINACIÓN DE LA HOJA (GR)	564
CILINDRO DE INCLINACIÓN DE LAS RUEDAS (GR)	574
CILINDRO DE INCLINACIÓN DE RUEDA Y MONTAJE (GR)	558
CILINDRO DE LA PUNTA DE LA HOJA Y MONTAJE (GR)	553
CILINDRO DE LEVANTAMIENTO DE HOJA Y MONTAJE (GR)	551
	552
CILINDRO DE LEVANTAMIENTO DE LA HOJA (GR)	562
	563
CINTURÓN DE SEGURIDAD (GR)	845
	850
CÁNCAMOS DE LEVANTAMIENTO DEL MOTOR (GR)	37
COJINETE	23
	24
COLADOR DEL TANQUE DE COMBUSTIBLE	138
COLADOR (HIDRÁULICO)	622
COMBUSTIBLE - TANQUE DE (GR)	138
COMPARTIMIENTO DEL MOTOR (GR)	496
	500
COMPRESOR DE AIRE (GR)	6
	8
	10
	12
CONEXIÓN	627
CONEXIÓN DE ENGRASE (ROSCA DE1/8-27)	482
	486
	522
	558
	722
	736
CONFIGURACIÓN DE HOJA	709
	710

INDICE

Nombre	Página
	711
CONFIGURACIÓN DE INSTALACIÓN DEL MOTOR	5
CONFIGURACIÓN DE MOTORES	3
	4
CONFIGURACIÓN GENERAL	2
CONSOLA DEL OPERADOR (GR)	754
CONTROL DE AIRE-VÁLVULA	541
CONTROL DE DIRECCIÓN (GR)	548
CONTROL DE INYECCION DE COMBUSTIBLE (GR)	101
CONTROL DE LA TRANSMISIÓN (GR)	276
CONTROL DE LA TRANSMISIÓN HIDRÁULICA	280
CONTROL DE REGULADOR (GR)	102
CONTROL DE TRABA DEL DESPLAZADOR DEL CÍRCULO (GR)	546
CONTROL DE TRABA DEL DIFERENCIAL	274
CONTROL DE TRABA DEL DIFERENCIAL (GR)	272
	274
CONTROL DEL EMBRAGUE (GR)	270
CONTROL DEL FRENO DE ESTACIONAMIENTO	528
CONTROL DEL REGULADOR	102
CONTROL DEL SISTEMA ELECTRÓNICO (GR)	152
CONTROL ELECTRÓNICO DE RELÉ (GR)	196
	200
CONTROL ELECTRÓNICO DEL CONVERTIDOR DE PAR (GR)	153
	154
CONTROL ELECTRÓNICO DEL TREN DE FUERZA (GR)	200
CONTROL ELECTRÓNICO (GR)	200
	226
	228
CONTROL HIDRÁULICO	542
	543
	544
	545
CONTROL HIDRÁULICO (CONFIG)	542
	543
	544
	545
CONTROL HIDRÁULICO DE LA TRANSMISIÓN (GR)	278
	280
CONVERTIDOR DE VOLTAJE	155
CONVERTIDOR ELÉCTRICO (CONFIG)	156
	157
CONVERTIDOR ELÉCTRICO Y MONTAJE (GR)	155
CORONA (GR)	294
CORREA TRAPEZOIDAL	32
CÍRCULO (GR)	719
	720
CRISTAL	188
CÁRTER - COLECTOR DEL (GR)	46
CULATA DE CILINDROS (CONJ)	25
CULATA DE CILINDROS (GR)	26
	27

D

Nombre	Página
DESEMPAÑADOR - VENTILADOR (GR)	770
	772
	773
DESGARRADOR (CONFIG)	733
DESGARRADOR (GR)	734
DETECTOR DE POSICIÓN DE ARTICULACIÓN	206
	212
DETECTOR DE PRESIÓN (CONJ) (ACEITE DEL MOTOR)	192
DETECTOR DE TEMPERATURA (REFRIGERANTE)	192
DETECTOR DE VELOCIDAD (CONJ)	236
	242
	248
DIENTE DE DESGARRADOR	739
DIENTE DE DESGARRADOR (GR)	739
DIFERENCIAL (GR)	288
DIFERENCIAL Y CORONA (GR)	284
DISYUNTOR (CONJ) (15 A)	164
DISYUNTOR (CONJ) (60 AMP)	213
	219
DOSIFICACIÓN - BOMBA DE (GR)	614
DRENAJE DEL COLECTOR DEL CÁRTER (GR)	29

E

Nombre	Página
EJE DE ENTRADA (GR)	304
EJE DE MANDO DE LA BOMBA (GR)	619
	620
EJE DE MANDO (GR)	303
EJE DELANTERO (GR)	482
	486
ELEMENTO DE FILTRO	90
ELEMENTO DEL FILTRO DE ACEITE HIDRÁULICO (CONJ)	296
ELEMENTO DEL SEPARADOR DE AGUA	136
ELEMENTO PARA FLUJO HIDRÁULICO INVERSO (CONJ)	622
ELEMENTO PRIMARIO (CONJ) (AIRE)	86
ELEMENTO SECUNDARIO (CONJ) (AIRE)	86
EMBRAGUE DE LA TRANSMISIÓN (GR)	254
	258
	262
	266
EMPAQUETADURA DE LA CULATA (1.85MM DE GROSOR)	27
EMPAQUETADURA DE LA TOMA DE FUERZA	6
EMPAQUETADURA DE REGULADOR	76
ENCASTRE DE FILTRO DE COMBUSTIBLE	100

INDICE

Nombre	Página
ENCENDEDOR DE CIGARRILLOS (CONJ)	794
ENCENDEDOR DE CIGARRILLOS (GR)	794
ENFRIADOR DE ACEITE DE LA TRANSMISIÓN	73
ENFRIADOR DE ACEITE DE LA TRANSMISIÓN (GR)	73
ENFRIADOR DE ACEITE DEL MOTOR (GR)	72
ENGANCHE ARTICULADO (GR)	518
ENGRANAJE DELANTERO (GR)	34
ESCAPE DE GASES (GR)	62
ESCARIFICADOR (CONFIG)	735
ESTRIBO DEL OPERADOR (GR)	525
ESTRUCTURA ROPS (CONFIG)	833
	834
	835
ESTRUCTURA ROPS (GR)	836
EXPULSOR DE POLVO (GR)	89
EXTENSIÓN DE DRENAJE (GR)	74
EXTENSIÓN DE LA HOJA (GR)	724
	725

F

FILTRO DE ACEITE (CONJ)	60
FILTRO DE ACEITE DEL MOTOR (GR)	60
FILTRO DE AIRE (GR)	86
	87
FILTRO DE COMBUSTIBLE (CONJ)	130
FILTRO DE LA TRANSMISIÓN (GR)	291
FILTRO MAGNÉTICO	242
	248
FILTRO MAGNÉTICO (TRANSMISION)	236
	302
FRENO DE ESTACIONAMIENTO (GR)	234
FRENO DE SERVICIO - CONTROL (GR)	530
FRENO DE SERVICIO (GR)	526
FUSIBLE (10 A)	155
	168
	170
	172
	188
	190
	232
	272
	770
	771
	772
	794
	880
	881
FUSIBLE (15 A)	745
	777

G

GRUPO DE AISLAMIENTO DE LA CABINA	792
GRUPO DE INDICADORES	814
GRUPO DE LUCES	164
GRUPO DE MONTAJE DE LA CABINA	816
GRUPO DE SUJECION DE MANUALES DE SERVICIO	809
GRUPO DE VÁLVULAS	320
	661
GRUPO DE3 VÁLVULAS HIDRÁULICAS	651
	652
	653
GRUPO DE4 VÁLVULAS HIDRÁULICAS	654
	655
	656
	657
GRUPO ESCARIFICADOR	736
GRUPO GIRATORIO DE BOMBA	618

H

HOJA DE LIMPIAPARABRISAS (CONJ)	876
	878
	880
	881
	882
HOJA (GR)	712
	713
	714
	715
	716
HOJA Y PUNTA HIDRÁULICAS (CONFIG)	707
	708

I

IMPULSOR DE VENTILADOR (GR)	30
INDICADOR (CONJ) (TEMPERATURA DEL REFRIGERANTE)	814
INDICADOR DE PRESIÓN DE AIRE (CONJ)	826
INDICADOR DE PRESIÓN DE AIRE (CONJ) (TANQUES)	824
INDICADOR DE SERVICIO DEL FILTRO DE AIRE	90
INDICADOR DEL NIVEL DE ACEITE (VARILLA) (GR)	63
INTERRUPTOR (CONJ)	172
INTERRUPTOR (CONJ) (APAGADO/ ENCENDIDO)	770
	771
	772
INTERRUPTOR (CONJ) (EXTRACTOR DE PASADOR DEL DESPLAZADOR DEL CÍRCULO)	226

INDICE

Nombre	Página
	228
	230
INTERRUPTOR (CONJ) (FARO DELANTERO/ COLA)	164
INTERRUPTOR (CONJ) (LUZ DE COLA)	232
INTERRUPTOR (CONJ) (REFLECTOR DE LA HOJA)	170
INTERRUPTOR (CONJ) (TRABA DE DIFERENCIAL)	272
INTERRUPTOR DE BOLA (CONJ) (IND DEL DESPLAZADOR DEL CÍRCULO)	196
	200
INTERRUPTOR DE PRESIÓN DE AIRE (CONJ) (LUZ DE PARADA)	196
INTERRUPTOR DE PRESION (CONJ)	278
INTERRUPTOR DE PRESION (CONJ) (MOVIMIENTO ULTRALENTO)	280
INTERRUPTOR DE TEMPERATURA (CONJ) (REFRIGERANTE)	176
INTERRUPTOR DE VOLQUETE (CONJ) (DESCONGELADOR)	770
	771
	772
INTERRUPTOR DE VOLQUETE (CONJ) (LUCES)	168
INTERRUPTOR DE VOLQUETE (CONJ) (REFLECTORES)	172
INTERRUPTOR GENERAL (CONJ)	184
	207
	213
INTERRUPTOR GENERAL (CONJ) (ENCENDIDO)	219
INTERRUPTOR MAGNÉTICO (CONJ)	207
	213
	219
INTERRUPTOR ROTATIVO (CONJ)	745
INTERRUPTOR ROTATIVO (CONJ) (LIMPIA/ LAVAPARABRISAS)	188
	190
	880
	881
INTERRUPTOR ROTATIVO (CONJ) (LUZ DE LOS FAROS ALTA/BAJA)	164
INTERRUPTOR ROTATIVO (CONJ) (VELOCIDAD DEL VENTILADOR)	780
INYECTOR DE COMBUSTIBLE (GR)	134
	135
JUEGO DE COJINETES	150
JUEGO DE COJINETES DE BANCADA	10
JUEGO DE CONTROL DE PISTÓN	616
JUEGO DE DIAFRAGMA	783
	784
JUEGO DE ENCHUFE	174
JUEGO DE ENGASTE DE GRUPO DE INSTRUMENTOS	814
JUEGO DE ESCOBILLAS	181
	780
JUEGO DE FILTRO DE TAPA	138
JUEGO DE HOJA DE LIMPIAPARABRISAS (INCLUYE2 HOJAS DE REPUESTO)	880
JUEGO DE LA CULATA DE CILINDROS	10
JUEGO DE MEDIDOR DE SERVICIO	232
JUEGO DE PERNO RETENEDOR	152
JUEGO DE PISTÓN	616
JUEGO DE REACONDICIONAMIENTO DEL REGULADOR	6
	12
JUEGO DE RECEPTACULO	141
	274
JUEGO DE RESORTES	614
JUEGO DE SELLO DE TAZA	136
JUEGO DE SELLOS	322
	335
JUEGO DE SELLOS (CONTROL DE LA TRANSMISIÓN)	326
JUEGO DE SELLOS (DOSIFICACIÓN DE DIRECCIÓN)	614
JUEGO DE SELLOS (INCLUYE3 SELLOS)	141
JUEGO DE TERMINAL A MASA	148
JUEGO DE TERMINAL DE REGULADOR	148
JUEGO DE TERMINAL DE RELE	148
JUEGO DE TERMINAL DE SALIDA	148
JUEGO DE TERMINAL (ALTERNADOR)	144
JUEGO DE TERMINAL (NEG)	150
JUEGO DE TERMINAL (POS)	150
JUEGO DE TERMINAL (RELE)	150
JUEGO DE TERMINAL (SALIDA)	144
JUEGO DE TORNILLERIA	150
JUEGO DE VENTILADOR	148
JUEGO DE VÁLVULA DE RETENCIÓN	8
JUNTA UNIVERSAL DEL MANDO DE LA BOMBA (GR)	626
	627
JUNTA UNIVERSAL (GR)	317

J

JUEGO (AISLADOR)	181
JUEGO DE ANILLO ESTANDAR	10
JUEGO DE BASE DEL SEPARADOR DE AGUA	136
JUEGO DE CALCE DE EJE	616
JUEGO DE CAPACITOR	148

L

LAMPARA	159
	160
	161
	162
	163

INDICE

Nombre	Página
LAMPARA DEL TECHO (GR)	188
	190
LAVAPARABRISAS DE LA VENTANA (GR)	864
	866
LAVAPARABRISAS (GR)	868
LEVANTAMIENTO - HOJA DE (GR)	726
LEVANTAVÁLVULAS (GR)	55
LIMPIAPARABRISAS DE LA VENTANA (GR)	876
	878
	880
	881
LIMPIAPARABRISAS (GR)	882
LLAVE	66
	67
	138
	184
	299
	496
	500
	510
	624
	809
	850
	852
	901
LÁMPARA DE FARO DELANTERO (GR)	160
	161
LÁMPARA MINIATURA	188
	814
LÁMPARA MINIATURA (24 VOLTIOS)	164
	168
	170
	172
	176
	230
	232
	272
	274
	770
	771
	772
LÁMPARA MINIATURA (24 VOLTIOS) (1,75 DIA)	226
	228
LÁMPARA MINIATURA (28 VOLTIOS)	226
	228
	230
	824
	826
LUCES DE REFLECTOR (GR)	168
	170
	172
LUZ DE SEÑAL DE GIRO (GR)	162
	163
	207

M

Nombre	Página
MANDO DE LA BOMBA DE AGUA (GR)	32
MANDO DE REGULADOR Y BOMBA DE TRANSFERENCIA (GR)	106
MANDO DEL MANDO DEL CIRCULO (MANDO DEL CÍRCULO (GR)	576
	580
MANDO FINAL (GR)	292
MANGUITO-SELLO DE ACEITE	20
MECANISMO DE VÁLVULAS (GR)	55
MÚLTIPLE DE ESCAPE (GR)	93
MONTAJE DE LA ESTRUCTURA ROPS (GR)	818
MONTAJE DEL DESGARRADOR (GR)	730
MONTAJE DEL MOTOR Y LA TRANSMISIÓN (GR)	44
MOTOR - SOPORTE DEL (GR)	54
MOTOR DE ARRANQUE ELÉCTRICO	179
MOTOR DE ARRANQUE ELÉCTRICO (GR)	178
	179
	180
	183
MOTOR HIDRÁULICO DE ENGRANAJES (GR)	610
MOTOR-LIMPIAPARABRISAS (GR)	815
MULTIPLE DE ADMISIÓN (GR)	94
MULTIPLE DE ESCAPE	93

N

Nombre	Página
NÚCLEO DE TURBOCOMPRESOR (GR)	88
NEUMÁTICO (GR)	308
	309
	310
	311
	312
	313

P

Nombre	Página
PANEL DE LA CABINA (GR)	820
	821
	822
PANEL DERECHO (GR)	828
PANEL IZQUIERDO (GR)	830
PANTALLA (CONJ)	118
PANTALLA MAGNÉTICA	302
PARAGOLPES TRASERO (GR)	491
	492
	493
PERNO (3/4-10X4,50 PULG.)	138
PERSIANA PARA EL SOL (GR)	844
PERSIANAS DE LA CABINA (GR)	810
PISTÓN Y BIELA (GR)	47
PLACA DE CERTIFICACIÓN	900

INDICE

Nombre	Página
PLACA DEL FILTRO DE AIRE	86
PLACA DEL NUMERO DE SERIE	236
PLANCHA DE EMPUJE (GR)	732
PLATO OSCILANTE (GR)	616
POSENFRIADOR DE AGUA (GR)	85
PROT. TUBO DE LLENADO DE ACEITE DE TRANSM (GR)	299
PROTECCIÓN CONTRA EL VANDALISMO (CONFIG)	832
PROTECCIÓN DEL SISTEMA DE LUBRICACIÓN (GR)	66
	67
PROTECTOR CONTRA EL VANDALISMO	776
PROTECTOR CONTRA EL VANDALISMO (GR)	776
PROTECTOR DE CILINDRO (GR)	583
PROTECTOR DE LA PLATAFORMA (GR)	514
	516
PROTECTOR DEL RADIADOR	510
PROTECTOR INFERIOR (GR)	512
PROTECTOR TÉRMICO DEL EJE DE MANDO (GR)	524
PROTECTOR Y SOPORTE DEL RADIADOR (GR)	508
	510
PUERTA DE CABINA	762
	768
PUERTA (GR)	758
	760
	764
	766

R

RADIADOR (GR)	82
	84
ÁRBOL DE LEVAS (GR)	14
REFLECTOR	172
REFLECTOR (GR)	159
REGULADOR - CAJA DEL (GR)	122
	124
REGULADOR DEL AGUA	76
REJILLA	338
	340
REJILLA MAGNÉTICA (GR)	302
RELE (CONJ) (24 VOLTIOS)	196
RESPIRADERO DEL CARTER (CONJ)	56
RESPIRADERO (GR)	56
RESPIRADERO (ALIVIO DE LA PRESIÓN)	290
RESPIRADERO (TÁNDEM)	306
RETROCESO - ALARMA DE (GR)	186
RETROVISOR (GR)	811
	812
	813
REVESTIMIENTO DE LA CABINA	796
	800
	806
REVESTIMIENTO DE LA CABINA (GR)	796
	800
	804
	806
RUEDA (CONFIG)	468
	469
	470
	471
RUEDA (GR)	472
	473
	474
	475
	476
	477
	478
	479
	480
RUEDA TRASERA	473
RUEDA Y LLANTA (CONFIG)	342
	343
	344
	345
	346
	347
	348
	349
	350
	351
	352
	353
	354
	355
	356
	357
	358
	359
	360
	361
	362
	363
	364
	365
	366
	367
	368
	369
	370
	371
	372
	373
	374
	375
	376
	377

INDICE

Nombre	Página
	378
	379
	380
	381
	382
	383
	384
	385
	386
	387
	388
	389
	390
	391
	392
	393
	394
	395
	396
	397
	398
	399
	400
	401
	402
	403
	404
RUEDA Y NEUMÁTICO (GR)	405
	406
	407
	408
	409
	410
	411
	412
	413
	414
	415
	416
	417
	418
	419
	420
	421
	422
	423
	424
	425
	426
	427
	428
	429
	430
	431
	432

Nombre	Página
	433
	434
	435
	436
	437
	438
	439
	440
	441
	442
	443
	444
	445
	446
	447
	448
	449
	450
	451
	452
	453
	454
	455
	456
	457
	458
	459
	460
	461
	462
	463
	464
	465
	466
	467
S	
SELLO ANULAR (DI DE110,49 MM)	138
SELLO ANULAR (DI123.19MM)	291
SELLO DE CIGÜEÑAL	51
	52
SELLO DE CIGÜEÑAL (GR)	50
	51
	52
SELLO DE LA CAJA DE VOLANTE (GR) . .	53
SELLO DEL PORTADOR (GR)	15
SENSOR DE TEMPERATURA (GR)	174
	218
SEPARADOR DE AGUA (GR)	136
SILENCIADOR (GR)	95
SOLENOIDE (CONJ)	180
SOLENOIDE DE CORTE	137
SOLENOIDE MAGNÉTICO (CONJ)	137
SOPLADOR - VENTILADOR (GR)	75

INDICE

Nombre	Página
SOPLADOR DE LA CABINA	746
SOPLADOR DE LA CABINA Y MONTAJE (GR)	745
SOPORTE DE LA HOJA (GR)	717
SOPORTE DEL ASIENTO	860
SOPORTE DEL ASIENTO (GR)	860
SOPORTE DEL ESCARIFICADOR (GR)	718
SUJETADOR DEL MANUAL DE LA MÁQUINA	846
	848
	851
SUPLEMENTO	100

T

TABLERO DE INSTRUMENTOS	826
TABLERO DE INSTRUMENTOS (GR)	824
	826
TANQUE DE AIRE (GR)	536
	538
TANQUE HIDRÁULICO Y MONTAJE (GR)	624
TANQUE Y FILTRO HIDRÁULICOS	622
TANQUE Y FILTRO HIDRÁULICOS (GR)	622
TAPA	30
	742
	846
	848
TAPA CONTRA EL POLVO	60
TAPA DE LA CAJA DELANTERA (GR)	17
TAPA DE PORTAFUSIBLES	188
	770
	771
	772
	794
	880
	881
TAPA DEL INSONORIZADOR (GR)	18
TAPA DEL MECANISMO DE VÁLVULAS (GR)	19
TAPA DEL RADIADOR	84
TAPA DEL TANQUE DE COMBUSTIBLE (CONJ)	138
TAPA DEL TUBO DE LLENADO DE ACEITE (CONJ)	57
	58
TAPA DEL TUBO DE LLENADO (HIDRÁULICO)	622
TAPÓN	236
	242
	248
TECHO (CONFIG)	751
TECHO (GR)	752
TIRANTE DE DIRECCIÓN (GR)	523
TIRANTE INFERIOR (GR)	728
TIRANTE SUPERIOR (GR)	729
TÁNDEM Y CUBIERTA (GR)	306
TORNILLERIA DEL REGULADOR (GR)	108
TRABA DE DESPLAZAMIENTO DEL CIRCULO (GR)	608
	609
TRABA DE DIFERENCIAL (CONFIG)	286
TRANSMISIÓN (CONFIG)	314
	315
	316
TRANSMISIÓN DE LA ELECTRÓNICA (GR)	158
TREN DE FUERZA (CONFIG)	298
TUBERÍAS DE ACEITE DE LA TRANSMISIÓN (GR)	296
TUBERÍAS DE ACEITE DEL MOTOR (GR)	64
TUBERÍAS DE ACEITE DEL REGULADOR (GR)	133
TUBERÍAS DE AIRE	90
TUBERÍAS DE COMBUSTIBLE (GR)	128
TUBERÍAS DE DIRECCIÓN (GR)	606
TUBERÍAS DE DRENAJE (GR)	126
TUBERÍAS DE LA CALEFACCIÓN (GR)	808
TUBERÍAS DEL AGUA (GR)	76
	78
TUBERÍAS DEL COMPRESOR DE AIRE (GR)	38
	40
	42
TUBERÍAS DEL DESGARRADOR (GR)	604
TUBERÍAS DEL FILTRO DE COMBUSTIBLE	130
TUBERÍAS HIDRÁULICAS	594
TUBERÍAS HIDRÁULICAS (GR)	585
	586
	590
	594
	598
TUBERIAS DE CALEFACCION	808
TUBERIAS DE ENGRASE (GR)	522
TUBERIAS DEL AGUA	78
TUBERIAS DEL COMPRESOR DE AIRE	40
	42
TUBERIAS DEL CONTROL DE LA RELACION DE COMBUSTIBLE (GR)	132
TUBO DE LLENADO DE ACEITE DE LA TRANSMISIÓN (GR)	290
TUBO DE LLENADO DE ACEITE (GR)	57
	58
TURBOCOMPRESOR - TUBERÍAS DE ACEITE DEL (GR)	65
TURBOCOMPRESOR (GR)	96
	97
	98
	99

U

UNIDAD DEL REGULADOR DEL INYECTOR	109
	115
UNION GIRATORIA (GR)	621

INDICE

Nombre	Página
V	
VALVULA DE ALIVIO	693 699 704
VALVULA DE SOLENOIDE	335
VENTANA DE LA CABINA (GR)	873
VENTANA (GR)	870 871 872 874
VENTILADOR DESCONGELADOR (GR)	771 774
VÁLVULA	130
VÁLVULA COMPENSADORA DE FLUJO Y PRESIÓN (GR)	690
VÁLVULA DE ACTIVACIÓN DEL ÉTER	176
VÁLVULA DE ALIVIO (GR)	662 664 692 693 694 695 696 697 698 699 700 701 702 703 704
VÁLVULA DE COMBINACIÓN (GR)	662 664
VÁLVULA DE CONTROL	684 686
VÁLVULA DE CONTROL DE AIRE (CONJ)	540
VÁLVULA DE CONTROL DE LA TRANSMISIÓN (GR)	338 340
VÁLVULA DE CONTROL DE PRESIÓN-SELECTOR	322 326 330
VÁLVULA DE CONTROL (GR)	666 668 670 672 674 676 678 680 682 684 686 688
VÁLVULA DE CONTROL (GR) (DESPLAZADOR LATERAL)	651 655 656 657 659 660
VÁLVULA DE CONTROL (GR) (ESCARIFICADOR)	652 656 659
VÁLVULA DE CONTROL (GR) (MANDO DEL CÍRCULO)	650 651 652 653 655 656 657 659 660
VÁLVULA DE CONTROL (GR) (PUNTA DE HOJA)	655 659 660
VÁLVULA DE LA TRABA DEL DIFERENCIAL Y MONTAJE (GR)	318 319
VÁLVULA DE LANZADERA (GR)	705
VÁLVULA DE MUESTREO	60
VÁLVULA DE RETENCIÓN (GR)	139
VÁLVULA DE SOLENOIDE (GR)	140 141 334 335 336 706 862
VÁLVULA DEL NEUMÁTICO (GR)	405 407 409 410 411 415 417 419 421 423 425 427 429 431 433 435

INDICE

Nombre	Página	Nombre	Página
	474		
	475		
VÁLVULA SELECTORA Y DE CONTROL DE PRESIÓN (GR)	322		
	326		
	330		
VÁLVULA Y VARILLAJE (GR)	628		
	630		
	632		
	634		
	636		
	638		
	640		
	642		
	644		
	646		
	648		
VÁLVULAS HIDRÁULICAS - GRUPO DE2 . .	650		
VOLANTE - CAJA DE (GR)	35		
VOLANTE (GR)	33		

ÍNDICE

Designação	Página
A	
ACENDEDOR DE CIGARROS	794
ACESSÓRIO - CABINE	740
	741
ACOPLAMENTO TORSIONAL	282
AJUSTADOR DO ASSENTO	742
	744
ALARME	142
ALARME DE MARCHA À RÉ	186
ALTERNADOR DE CORRENTE	144
	146
	147
	148
	150
AMORTECEDOR DE VIBRAÇÕES E POLIA	28
AQUECEDOR DA CABINE	778
AQUECEDOR DO ASSENTO	780
AQUECEDOR E MONTAGEM	777
ARRANJO GERAL	2
ARREFECEDOR - ÓLEO DO MOTOR	72
ARREFECEDOR DE ÓLEO DA TRANSMISSÃO	73
ARREFECEDOR DO ÓLEO DA TRANSMISSÃO	73
ARTICULAÇÃO GIRATÓRIA	621
ASSENTO	846
	848
	850
	851
	852
ASSENTO ESTÁTICO	853
	854
	856
	858
AUXILIAR DE PARTIDA A ÉTER	176
B	
BALANCIM	49
BARRA DE TRAÇÃO	722
BASE DO FILTRO DE COMBUSTÍVEL	100
BATERIA - ISENTA DE MANUTENÇÃO (12 V)(750 A)	206
	212
	218
BIELA E PISTÃO	47
BLINDAGEM DO EIXO DA TRANSMISSÃO	524
BLOCO DO MOTOR	21
	22
	23
	24
BOCAL DE ENCHIMENTO DE ÓLEO	57
	58
BOCAL DE ENCHIMENTO DE ÓLEO DO TREM DE FORÇA	290
BOMBA DA UNIDADE INJETORA	134
	135
BOMBA DE ENGRENAGENS	300
	301
BOMBA DE ÁGUA	80
	81
BOMBA DE INJEÇÃO DO COMBUSTÍVEL	134
	135
BOMBA DE ÓLEO - MOTOR	68
	69
	70
	71
BOMBA DE ÓLEO DO MOTOR	70
BOMBA DE PISTÃO	616
BOMBA E MONTAGEM	612
BOMBA REGULADORA	614
BRONZINA TIPO LUVA	23
	24
BUJÃO - ANEL O	236
	242
	248
BUZINA DE AR	783
	784
	786
	788
BUZINA ELÉTRICA	790
BUZINA PNEUMÁTICA	783
	788
BUZINA (24 V)	790
C	
CABEÇOTE DO MOTOR	25
	26
	27
CABINE	750
CABINE OPERADOR - SEM ROPS	748
CABINE - ALTO PERFIL	749
CABINE - CABOS E FIOS ELÉTRICOS	190
CABINE - PERFIL ALTO	747
CABOS/FIOS ELÉTRICOS - CABINE	188
	190
CABOS/FIOS ELÉTRICOS - CONSOLE DA DIREÇÃO	232
CABOS/FIOS ELÉTRICOS - CONSOLE DA TRANSMISSÃO	226
	228
	230
CABOS/FIOS ELÉTRICOS - DIANTEIROS	196
	200
CABOS/FIOS ELÉTRICOS - MOTOR	192
CABOS/FIOS ELÉTRICOS - TRASEIROS	206
	212
	218
CADEADO	66
	67

ÍNDICE

Designação	Página
	138
	299
	496
	500
	510
	624
	850
	852
	901
CAIXA DA BATERIA	489
	490
CAIXA DE FERRAMENTAS	901
CAIXA DIANTEIRA	36
CAIXA DO GOVERNADOR	122
	124
CAIXA DO VOLANTE DO MOTOR	35
CAIXA E CHASSI	494
CAIXA E COMPONENTES - TRANSMISSÃO	248
CAPO E PAINEL	520
CARCAÇA DAS ENGRENAGENS PLANETÁRIAS E COMPONENTES	236
	242
CARTUCHO DO TURBOALIMENTADOR	88
CHAPA DE EMPUXO	732
CHASSI	1
CHASSI DIANTEIRO	504
	506
CHAVE	66
	67
	138
	184
	299
	496
	500
	510
	624
	809
	850
	852
	901
CILINDRO DA DIREÇÃO	570
	572
CILINDRO DE ARTICULAÇÃO	559
	560
	567
CILINDRO DE DESLIZAMENTO LONGITUDINAL	569
CILINDRO DE DESLOCAMENTO LATERAL	566
	569
CILINDRO DE DIREÇÃO E MONTAGEM	557
CILINDRO DE INCLINAÇÃO LATERAL DAS RODAS	574
CILINDRO DE LEVANTAMENTO DA LÂMINA	562
	563
CILINDRO DE TOMBAMENTO DA LÂMINA	564
CILINDRO DO ESCARIFICADOR	568
CILINDRO E MONTAGEM - ARTICULAÇÃO	550
CILINDRO E MONTAGEM - DESLOCAMENTO DA LÂMINA	556
CILINDRO E MONTAGEM - DESLOCAMENTO DO CÍRCULO	554
CILINDRO E MONTAGEM - ESCARIFICADOR	555
CILINDRO E MONTAGEM - INCLINAÇÃO DAS RODAS	558
CILINDRO E MONTAGEM - LEVANTAMENTO DA LÂMINA	551
	552
CILINDRO E MONTAGEM - TOMBAMENTO DA LÂMINA	553
CILINDROS E TUBOS - RÍPER	549
CILINDRO (ÉTER)	176
CINTO DE SEGURANÇA	845
	850
CINZEIRO	796
	800
COBERTURA DO MOTOR	496
	500
COLETOR DE ADMISSÃO	94
COLETOR DE ESCAPE	93
COMANDO DA BOMBA D'ÁGUA	32
COMANDO DO GOVERNADOR E BOMBA DE TRANSFERÊNCIA	106
COMANDO DO VENTILADOR	30
COMANDO FINAL	292
COMPRESSOR DE AR	6
	8
	10
	12
CONEXÃO	627
CONEXÃO HIDRÁULICA	482
CONSOLE DO OPERADOR	754
CONTROLE DA EMBREAGEM	270
CONTROLE DA TRANSMISSÃO	276
CONTROLE DA TRAVA DO DIFERENCIAL	272
	274
CONTROLE DE DIREÇÃO	548
CONTROLE DE INJEÇÃO DO COMBUSTÍVEL	101
CONTROLE DE TRAVA DO DIFERENCIAL	274
CONTROLE DO FREIO DE ESTACIONAMENTO	528
CONTROLE DO FREIO DE SERVIÇO	530
CONTROLE DO GOVERNADOR	102
CONTROLE DO PINO MESTRE DE DESLOCAMENTO LATERAL	546
CONTROLE DO SISTEMA ELETRÔNICO	152
CONTROLE ELETRÔNICO	200
	226
	228
CONTROLE ELETRÔNICO - CONVERSOR DE TORQUE	153
	154

ÍNDICE

Designação	Página
CONTROLE ELETRÔNICO - RELÉ	196
	200
CONTROLE ELETRÔNICO DO TREM DE FORÇA	200
CONTROLE HIDRÁULICO	542
	543
	544
	545
CONTROLE HIDRÁULICO DA TRANSMISSÃO	278
	280
CONVERSOR DE POTÊNCIA	155
CONVERSOR ELÉTRICO	156
	157
CONVERSOR ELÉTRICO E MONTAGEM	155
CORDÃO PARA LITERATURA	846
	848
	851
CORREIA EM V	32
CORRENTE - COMANDO	253
CÍRCULO	719
	720
CÁRTER DO ÓLEO DO MOTOR	46

D

DECALQUE - ADVERTÊNCIA (CABO AUXILIAR DE PARTIDA)	886
DECALQUE - IDENTIFICAÇÃO	780
	860
DECALQUE - PURIFICADOR DE AR	86
DEGRAU	525
DENTE DO RÍPER	739
DESCONGELADOR	771
	774
DIFERENCIAL	288
DIFERENCIAL E COROA	284
DISJUNTOR AUTOMÁTICO DE CIRCUITO (15 A)	164
DISJUNTOR AUTOMÁTICO DE CIRCUITO (60 A)	213
	219
DRENO - CÁRTER DO ÓLEO	29

E

EIXO DE COMANDO DA BOMBA	619
	620
EIXO DE ENTRADA	304
EIXO DE TRANSMISSÃO	303
EIXO DIANTEIRO	482
	486
EIXO-COMANDO DE VÁLVULA	14
EJETOR DE POEIRA	89
ELEMENTO - FILTRANTE	90
ELEMENTO - FLUXO HIDRÁULICO INVERSO	622
ELEMENTO - HIDRÁULICO	296
ELEMENTO - PRIMÁRIO (AR)	86
ELEMENTO - SECUNDÁRIO (AR)	86
ELEMENTO - SEPARADOR DE ÁGUA	136
ELIMINAÇÃO DE VAPORES DO CÁRTER	62
ELO - DIREÇÃO	523
ELO - INFERIOR	728
ELO - SUPERIOR	729
EMBREAGEM DA TRANSMISSÃO	254
	258
	262
	266
EMISSOR - POSIÇÃO DE ARTICULAÇÃO	206
	212
EMISSOR - PRESSAO (ÓLEO DO MOTOR)	192
EMISSOR - TEMPERATURA (LÍQUIDO ARREFECEDOR)	192
ENGATE ARTICULADO	518
ENGRENAGEM - COROA	294
ENGRENAGENS DE DISTRIBUIÇÃO	34
ESCARIFICADOR	735
	736
ESPELHO RETROVISOR	811
	812
	813
ESTRUTURA ROPS	833
	834
	835
	836
EXTENSÃO DA LÂMINA	724
	725
EXTENSÃO DO TUBO DE DRENAGEM	74

F

FAROL	172
FAROL DIANTEIRO	160
	161
FILTRO - COMBUSTÍVEL	130
FILTRO - ÓLEO	60
FILTRO - ÓLEO DA TRANSMISSÃO	291
FILTRO - ÓLEO DO MOTOR	60
FILTRO - MAGNÉTICO	242
	248
	302
FILTRO - MAGNÉTICO (TRANSMISSÃO)	236
	302
FIXADORES - GOVERNADOR	108
FREIO DE ESTACIONAMENTO	234
FREIO DE SERVIÇO	526
FUSÍVEL (10 A)	155
	168
	170
	172
	188
	190

ÍNDICE

Designação	Página
	232
	272
	770
	771
	772
	794
	880
	881
FUSÍVEL (15 A)	745
	777

G

GOVERNADOR - CONTROLE	102
GOVERNADOR - INJETOR	109
	110
	114
	115
	116
	118
GOVERNADOR DA UNIDADE INJETORA	109
	115
GRAXEIRA (ROSCA 1/8-27 POL)	482
	486
	522
	558
	722
	736
GRUPO DE INSTALAÇÃO - MOTOR	5
GRUPO DE VÁLVULAS DE CONTROLE - DUPLO	650
GRUPO DE VÁLVULAS DE CONTROLE - QUÁDRUPLO	654
	655
	656
	657
GRUPO DE VÁLVULAS DE CONTROLE - TRIPLO	651
	652
	653
GRUPO DE VÁLVULAS DE CONTROLE5	658
	659
	660
GRUPO ROTATIVO DA BOMBA	618

I

ILUMINAÇÃO	164
INDICADOR	814
INDICADOR - LIMPEZA DO FILTRO DE AR	90
INDICADOR - NÍVEL DO ÓLEO (VARETA)	63
INDICADOR (TEMPERATURA DO LÍQUIDO ARREFECEDOR)	814
INJETOR DE COMBUSTÍVEL	134
	135
INSERTO	100
INSERTO - FILTRO DE COMBUSTÍVEL	100
INSERTO - SEDE DE VÁLVULA	25
INTERRUPTOR	172
INTERRUPTOR - BALANCIM (DESCONGELADOR)	770
	771
	772
INTERRUPTOR - BALANCIM (INTERRUPTOR - FARÓIS)	172
INTERRUPTOR - BALANCIM (LUZES)	168
INTERRUPTOR - BATERIA	184
	207
	213
INTERRUPTOR - BATERIA (IGNIÇÃO)	219
INTERRUPTOR - ESFERA (DESLOCAMENTO LATERAL)	196
	200
INTERRUPTOR - MAGNÉTICO	207
	213
	219
INTERRUPTOR - PARTIDA	185
	226
	228
	230
INTERRUPTOR - PRESSÃO	278
INTERRUPTOR - PRESSÃO DO AR (LUZ DO FREIO)	196
INTERRUPTOR - PRESSÃO (MOVIMENTO GRADUAL)	280
INTERRUPTOR - ROTATIVO	745
INTERRUPTOR - ROTATIVO (LIMPADOR / LAVADOR)	188
	190
	880
	881
INTERRUPTOR - ROTATIVO (LUZ ALTA/ BAIXA)	164
INTERRUPTOR - ROTATIVO (VELOCIDADE DO VENTILADOR)	780
INTERRUPTOR - TEMPERATURA (LÍQUIDO ARREFECEDOR)	176
INTERRUPTOR (FARÓIS DA LÂMINA)	170
INTERRUPTOR (LIGAR/DESLIGAR)	770
	771
	772
INTERRUPTOR (LUZ DIANTEIRA / TRASEIRA)	164
INTERRUPTOR (LUZ TRASEIRA)	232
INTERRUPTOR (SACA-PINO DESLOCAMENTO LATERAL)	226
	228
	230
INTERRUPTOR (TRAVA DO DIFERENCIAL)	272
ISOLADOR - TEMPO	792

ÍNDICE

Designação	Página
J	
JANELA	870
	871
	872
	874
JANELA DA CABINE	873
JOGO DE ANEL PADRÃO	10
JOGO DE BASE DO SEPARADOR DE ÁGUA	136
JOGO DE BUJÃO DE CONEXÃO	174
JOGO DE CABEÇOTE	10
JOGO DE CALÇO	616
JOGO DE CAPACITOR	148
JOGO DE CONTROLE DE PISTÃO	616
JOGO DE DIAFRAGMA	783
	784
JOGO DE ESCOVA	181
	780
JOGO DE FILTRO DA TAMPA	138
JOGO DE FIXADORES	150
JOGO DE ISOLADOR	181
JOGO DE LÂMINA DO LIMPADOR DE PÁRA-BRISA (INCLUI 2 LÂMINAS DE SUBSTITUIÇÃO)	880
JOGO DE MANCAL	150
JOGO DE MANCAL PRINCIPAL DO MOTOR	10
JOGO DE MARCADOR DE HORAS DE SERVIÇO	232
JOGO DE MOLA	614
JOGO DE MOLDURA DO GRUPO DE INDICADORES	814
JOGO DE PARAFUSO DE RETENÇÃO	152
JOGO DE PISTÃO	616
JOGO DE RECIPIENTE	141
	274
JOGO DE RETENTOR	322
	335
JOGO DE RETENTOR (BOMBA REGULADORA DE DIREÇÃO)	614
JOGO DE RETENTOR (INCLUI 3 RETENTORES)	141
JOGO DE RETENTOR (TRANSMISSÃO - CONTRÔLE DAS MARCHAS)	326
JOGO DE REVISÃO - GOVERNADOR	6
	12
JOGO DE TERMINAL DE SAÍDA	148
JOGO DE TERMINAL DO REGULADOR	148
JOGO DE TERMINAL RELÉ	148
JOGO DE TERMINAL TERRA	148
JOGO DE TERMINAL (ALTERNADOR)	144
JOGO DE TERMINAL (NEGATIVO)	150
JOGO DE TERMINAL (POSITIVO)	150
JOGO DE TERMINAL (RELÉ)	150
JOGO DE TERMINAL (SAÍDA)	144
JOGO DE VEDADOR DA CAÇAMBA	136
JOGO DE VENTILADOR	148
JOGO DE VÁLVULA DE RETENÇÃO	8
JUNTA - CABEÇA DO CILINDRO (1,85 MM DE ESPESSURA)	27
JUNTA - REGULADOR	76
JUNTA - TOMADA DE FORÇA	6
JUNTA UNIVERSAL	317
JUNTA UNIVERSAL - COMANDO DA BOMBA	626
	627
L	
LAVADOR - JANELA	864
	866
LAVADOR DA JANELA	868
LENTE	188
LEVANTAMENTO DA LÂMINA	726
LEVANTAMENTO DO MOTOR	37
LIMPADOR - JANELA	876
	878
	880
	881
LIMPADOR DO PÁRA-BRISA	882
LÂMINA	709
	710
	711
	712
	713
	714
	715
	716
LÂMINA HIDRÁULICA E INCLINAÇÃO	707
	708
LÂMINA DO LIMPADOR DE PÁRA-BRISA	876
	878
	880
	881
	882
LÂMPADA	159
	160
	161
	162
	163
LÂMPADA - FAROL	159
LÂMPADA - MINIATURA	188
	814
LÂMPADA - MINIATURA (24 V)	164
	168
	170
	172
	176
	230
	232
	272
	274
	770

ÍNDICE

Designação	Página
	771
	772
LÂMPADA - MINIATURA (24 V) (1.75 POLEGADAS DIAM.)	226
	228
LÂMPADA - MINIATURA (28 V)	226
	228
	230
	824
	826
LÂMPADA - SINALIZAÇÃO	162
	163
	207
LÂMPADA - TETO	188
	190

M

MANÔMETRO DE AR	826
MANÔMETRO DE AR (RESERVATÓRIOS)	824
MECANISMO DAS VÁLVULAS	55
MONTAGEM - CABINE	816
MONTAGEM - ESTRUTURA ROPS	818
MONTAGEM - MOTOR E TRANSMISSÃO	44
MONTAGEM - RÍPER	730
MOTOR	3
	4
MOTOR - LIMPADOR DA JANELA	815
MOTOR DE REVERSÃO DO CÍRCULO	576
	580
MOTOR ELÉTRICO DE PARTIDA	178
	179
	180
	183
MOTOR HIDRÁULICO GEROTOR	610

P

PAINEL - CABINE	820
	821
	822
PAINEL - LADO DIREITO	828
PAINEL - LADO ESQUERDO	830
PAINEL DE INSTRUMENTOS	824
	826
PARAFUSO (3/4-10X4.50POL)	138
PENEIRA DO TANQUE DE COMBUSTÍVEL	138
PISTÃO E BIELA	47
PLACA - NÚMERO DE SÉRIE	236
PLACA BASCULANTE	616
PLACA DE CERTIFICAÇÃO	900
PLACA E DECALQUE	883
	884
	886
	890
	892
	894
	896
	898
PNEU	308
	309
	310
	311
	312
	313
POLIA DO VIRABREQUIM	48
PORTA	758
	760
	764
	766
PORTA DA CABINE	762
	768
PÁRA-CHOQUE TRASEIRO	491
	492
	493
PROTEÇÃO CONTRA VANDALISMO	832
PROTETOR - BOCAL DE ENCHIMENTO DO ÓLEO DO MOTOR	299
PROTETOR - CILINDRO	583
PROTETOR - PLATAFORMA	514
	516
PROTETOR - SISTEMA DE LUBRIFICAÇÃO	66
	67
PROTETOR CONTRA VANDALISMO	776
PROTETOR DO RADIADOR	510
PROTETOR E SUPORTE DO RADIADOR	508
	510
PROTETOR INFERIOR	512
PÓS-ARREFECEDOR A ÁGUA	85
PUBLICAÇÃO	809
PURIFICADOR DE AR	86
	87

R

RADIADOR	82
	84
REGULADOR - ÁGUA	76
RELÉ (CONJ) (24 V)	196
RESPIRO	56
RESPIRO DO CÁRTER	56
RESPIRO (ALÍVIO DE PRESSÃO)	290
RESPIRO (TANDEM)	306
RETENTOR - CAIXA DO VOLANTE	53
RETENTOR - ÓLEO DA CAMISA	20
RETENTOR DE ANEL-O (DIÂMETRO INTERNO DE 110,49 MM)	138
RETENTOR DE ANEL-O (DIÂMETRO INTERNO DE 123,19 MM)	291
RETENTOR DO VIRABREQUIM	50

ÍNDICE

Designação	Página	Designação	Página
	51		378
	52		379
REVESTIMENTO DA CABINE	796		380
	800		381
	804		382
	806		383
RODA	468		384
	469		385
	470		386
	471		387
	472		388
	473		389
	474		390
	475		391
	476		392
	477		393
	478		394
	479		395
	480		396
RODA E PNEU	342		397
	343		398
	344		399
	345		400
	346		401
	347		402
	348		403
	349		404
	350		405
	351		406
	352		407
	353		408
	354		409
	355		410
	356		411
	357		412
	358		413
	359		414
	360		415
	361		416
	362		417
	363		418
	364		419
	365		420
	366		421
	367		422
	368		423
	369		424
	370		425
	371		426
	372		427
	373		428
	374		429
	375		430
	376		431
	377		432

ÍNDICE

Designação	Página
	433
	434
	435
	436
	437
	438
	439
	440
	441
	442
	443
	444
	445
	446
	447
	448
	449
	450
	451
	452
	453
	454
	455
	456
	457
	458
	459
	460
	461
	462
	463
	464
	465
	466
	467
RODA TRASEIRA	473
ROPS DE ALTO PERFIL	842
ROPS FECHADA	837
	838
	840
RÍPER	733
	734

S

SENSOR - TEMPERATURA	174
	218
SENSOR E VELOCIDADE	236
	242
	248
SEPARADOR DE ÁGUA	136
SILENCIADOR	95
SISTEMA DE ILUMINAÇÃO - FARÓIS	168
	170
	172
SISTEMA ELETRÔNICO - TRANSMISSÃO	158
SOLENÓIDE	180
SOLENÓIDE - VÁLVULA	335
SOLENÓIDE DE PARADA	137
SOLENOIDE MAGNÉTICO	137
SUPORTE - ASSENTO	860
SUPORTE DO ASSENTO	860
SUPORTE DO ESCARIFICADOR	718
SUPORTE DO MOTOR	54
SUPORTE DO RETENTOR	15

T

TAMPA	30
	742
	846
	848
TAMPA - BLOCO DO MOTOR	16
TAMPA - BOCAL DE ENCHIMENTO DE ÓLEO	57
	58
TAMPA - BOCAL DE ENCHIMENTO (HIDRÁULICO)	622
TAMPA - CAIXA DIANTEIRA	17
TAMPA - MECANISMO DAS VÁLVULAS	19
TAMPA - PORTA-FUSÍVEL	188
	770
	771
	772
	794
	880
	881
TAMPA - RADIADOR	84
TAMPA - REDUÇÃO DE RUÍDOS	18
TAMPA CONTRA POEIRA	60
TAMPA DO TANQUE DE COMBUSTÍVEL	138
TANDEM E TAMPA	306
TANQUE DE AR	536
	538
TANQUE DE COMBUSTÍVEL	138
TANQUE DE ÓLEO HIDRÁULICO E MONTAGEM	624
TANQUE HIDRÁULICO E FILTRO	622
TAPETE	516
	792
TELA FILTRANTE	118
	338
	340
TELA FILTRANTE (HIDRÁULICO)	622
TELA MAGNÉTICA	302
TELA PÁRA-SOL	844
TIRANTE DA LÂMINA	717
TOLDO	751
	752
TRANSMISSÃO	314
	315
	316

ÍNDICE

Designação	Página
TRAVA - DESLOCAMENTO LATERAL	608
	609
TRAVA - DIFERENCIAL	286
TREM DE FORÇA	298
TUBOS - AQUECEDOR	808
TUBOS - AR	90
	92
TUBOS - BOMBA	602
TUBOS - COMBUSTÍVEL	128
TUBOS - COMPRESSOR DE AR	38
	40
	42
TUBOS - DIREÇÃO	606
TUBOS - DRENAGEM	126
TUBOS - FILTRO DO COMBUSTÍVEL	130
TUBOS - GRAXA	522
TUBOS - ÁGUA	76
	78
TUBOS - ÓLEO DA TRANSMISSÃO	296
TUBOS - ÓLEO DO GOVERNADOR	133
TUBOS - ÓLEO DO MOTOR	64
TUBOS - ÓLEO DO TURBOALIMENTADOR	65
TUBOS - ÓLEO HIDRÁULICO	585
	586
	590
	594
	598
TUBOS - LIMITADOR DO COMBUSTÍVEL	132
TUBOS - PINO MESTRE DE DESLOCAMENTO LATERAL	584
TUBOS - RÍPER	604
TUBOS DE AR	90
TUBOS DE ÁGUA	78
TUBOS DO AQUECEDOR	808
TUBOS DO COMPRESSOR DE AR	40
	42
TUBOS DO FILTRO DE COMBUSTÍVEL	130
TUCHO	55
TURBOALIMENTADOR	96
	97
	98
	99

V

VENEZIANA	810
VENTILADOR DA CABINE	746
VENTILADOR DA CABINE E MONTAGEM	745
VENTILADOR DE SOPRO	75
VENTILADOR DESEMBAÇADOR	770
	772
	773
VIRABREQUIM	20
VÁLVULA	320
	661
VÁLVULA - OBTENÇÃO DE AMOSTRAS DE FLUIDOS	60
VÁLVULA - PARTIDA A ÉTER	176
VÁLVULA - REGULADOR	130
VÁLVULA COMBINADA	662
	664
VÁLVULA DE ALÍVIO	662
	664
	692
	693
	694
	695
	696
	697
	698
	699
	700
	701
	702
	703
	704
VÁLVULA DE CONTROLE	666
	668
	670
	672
	674
	676
	678
	680
	682
	684
	686
	688
VÁLVULA DE CONTROLE - PRESSÃO E COMPENSAÇÃO DE FLUXO	690
VÁLVULA DE CONTROLE - TRANSMISSÃO	338
	340
VÁLVULA DE CONTROLE DO AR	540
	541
VÁLVULA DE CONTROLE (COMANDO DO CÍRCULO)	650
	651
	652
	653
	655
	656
	657
	659
	660
VÁLVULA DE CONTROLE (DESLOCAMENTO LATERAL)	651
	655
	656
	657
	659

ÍNDICE

Designação	Página	Designação	Página
	660		
VÁLVULA DE CONTROLE (ESCARIFICADOR)	652		
	656		
	659		
VÁLVULA DE CONTROLE (TOMBAMENTO DA LÂMINA)	655		
	659		
	660		
VÁLVULA DE PNEU	405		
	407		
	409		
	410		
	411		
	415		
	417		
	419		
	421		
	423		
	425		
	427		
	429		
	431		
	433		
	435		
	474		
	475		
VÁLVULA DE RETENÇÃO	139		
VÁLVULA DE SEPARAÇÃO	705		
VÁLVULA E ARTICULAÇÕES	628		
	630		
	632		
	634		
	636		
	638		
	640		
	642		
	644		
	646		
	648		
VÁLVULA E MONTAGEM - TRAVA DO DIFERENCIAL	318		
	319		
VÁLVULA SELETORA E CONTROLE DE PRESSÃO	322		
	326		
	330		
VÁLVULA SOLENÓIDE	140		
	141		
	334		
	335		
	336		
	706		
	862		
VOLANTE DO MOTOR	33		

STICHWORTVERZEICHNIS

Bezeichnung	Seite
A	
ABDECKGLAS	188
ABLASSLEITUNGEN	126
ABLASSVERLÄNGERUNG	74
ABSTELLMAGNETSPULE	137
ANLASSMOTOR	178
	179
	180
	183
ANLASSMOTOR, ELEKTR.	179
ANSAUGKRÜMMER	94
ANSCHLUSSKLEMME (MASSE)	148
ANSCHLUSSKLEMMENSATZ (AUSGABE)	144
ANSCHLUSSKLEMMENSATZ (DREHSTROMGENERATOR)	144
ANSCHLUSSKLEMMENSATZ (NEGATIV)	150
ANSCHLUSSKLEMMENSATZ (POSITIV)	150
ANSCHLUSSKLEMMENSATZ (RELAIS)	150
ANTRIEBSKETTE	253
ANTRIEBSWELLE	303
	304
ANTRIEBSWELLENSCHUTZ	524
ANZEIGE (KÜHLMITTELTEMPERATUR)	814
ANZEIGENSATZ	814
ARBEITSLEUCHTE	172
ARBEITSLEUCHTEN	159
	168
	170
	172
ASCHENBECHER	796
	800
AUFKLEBER - LUFTREINIGER	86
AUFREISSER	734
AUFREISSER - TEILLISTE	733
AUFREISSERAUFHÄNGUNG	730
AUFREISSERLEITUNGEN	604
AUFREISSERTRÄGER	718
AUFREISSERZAHN	739
AUFREISSERZYLINDER UND -LEITUNGEN	549
AUFREISSERZYLINDER UND BEFESTIGUNGSTEILE	555
AUSGANGS-ANSCHLUSSKLEMMENSATZ	148
AUSPUFFKRÜMMER	93
B	
BATTERIE - WARTUNGSFREI (12 V,750 A)	206
	212
	218
BATTERIEKASTEN	489
	490
BEFESTIGUNGSSCHRAUBENSATZ	152
BEFESTIGUNGSTEILE	150
BELEUCHTUNGSANLAGE	164
ÜBERDRUCKVENTIL	662
	664
	692
	693
	694
	695
	696
	697
	698
	699
	700
	701
	702
	703
	704
ÜBERROLL-SCHUTZKABINE	837
	838
	840
ÜBERROLLSCHUTZ	833
	834
	835
	836
ÜBERROLLSCHUTZ, ERHÖHT	842
ÜBERROLLSCHUTZAUFLAGER	818
BESCHEINIGUNGSPLAKETTE	900
BETRIEBSBREMSE	526
BLINKLEUCHTE	162
	163
	207
BREMSGESTÄNGE	530
BÜRSTEN-EINBAUSATZ	181
	780
D	
DICHTUNG - REGLER	76
DICHTUNG - ZAPFWELLE	6
DICHTUNGSBUCHSE	20
DICHTUNGSSATZ	322
	335
DICHTUNGSSATZ (EINSCHL.3 DICHTUNGEN)	141
DICHTUNGSSATZ (GETRIEBESTEUERUNG)	326
DICHTUNGSSATZ (LENKZUMESSPUMPE)	614
DICHTUNGSTRÄGER	15
DIEBSTAHLSSICHERUNG	776
DIFFERENTIAL	288
DIFFERENTIAL UND TELLERRAD	284
DIFFERENTIALSPERRE	274
	286
DIFFERENTIALSPERRE - VENTIL UND BEFESTIGUNGSTEILE	318
	319
DIFFERENTIALSPERRENGESTÄNGE	272
	274
DÄMPFER UND RIEMENSCHEIBE	28

STICHWORTVERZEICHNIS

Bezeichnung	Seite
DOKUMENTATION	809
DREHKNOPFSCHALTER	745
DREHKNOPFSCHALTER (FERN-/ABBLENDLICHT)	164
DREHKNOPFSCHALTER (LÜFTERGESCHWINDIGKEIT)	780
DREHKNOPFSCHALTER (SCHEIBENWISCH- UND WASCHANLAGE)	188
	190
	880
	881
DREHSCHALTER (SCHARSCHWENKWERKSANZEIGE)	196
	200
DREHSTROMGENERATOR	144
	146
	147
	148
	150
DREHZAHLSENSOR	236
	242
	248
DRUCK- UND ZUFLUSSAUSGLEICHSVENTIL	690
DRUCKBEGRENZUNGSVENTIL	693
	699
	704
DRUCKLÜFTER	75
DRUCKLUFT-STEUERVENTIL	540
	541
DRUCKLUFTBEHÄLTER	536
	538
DRUCKLUFTHUPE	783
	784
	786
	788
DRUCKLUFTLEITUNGEN	90
	92
DRUCKSCHALTER	278
DRUCKSCHALTER (KRIECHGANG)	280

E

EINFÜLLVERSCHLUSS (HYDRAULIK)	622
EINSATZ	100
EINSPRITZDÜSENPUMPE	134
	135
ELEKTR. UMFORMER	155
ELEKTRON. ÜBERWACHUNGSSYSTEM	152
ENTDUNSTER	62
ENTFROSTERGEBLÄSE	770
	771
	772
	773
	774
ENTLÜFTER	56
ENTLÜFTER (DRUCKBEGRENZUNG)	290
ENTLÜFTER (TANDEM)	306

F

FAHRERHAUS, ERHÖHT	747
	749
FAHRERHAUS (OHNE ÜBERROLLSCHUTZ)	748
	750
FAHRERHAUSANBAUSATZ	816
FAHRERHAUSAUSKLEIDUNG	796
	800
	804
	806
FAHRERHAUSBELEUCHTUNG	188
	190
FAHRERHAUSFENSTER	870
	871
	872
	873
	874
FAHRERHAUSGEBLÄSE U. BEFESTIGUNGSTEILE	745
FAHRERHAUSHEIZUNG	778
FAHRERHAUSHEIZUNG UND AUFHÄNGUNG	777
FAHRERHAUSLUFTSCHLITZE	810
FAHRERHAUSTÜR	758
	760
	762
	764
	766
	768
FAHRERHAUSVENTILATOR	746
FAHRERHAUSVERDRAHTUNG	188
	190
FAHRERHAUSVERKLEIDUNG	820
	821
	822
FAHRERHAUSZUBEHÖR	740
	741
FAHRERPLATTFORMVERKLEIDUNG	514
	516
FAHRERSITZ	846
	848
	850
	851
	852
FAHRERSITZ, FESTSTEHEND	853
	854
	856
	858
FAHRERSITZHEIZUNG	780
FAHRERSITZVERSTELLER	742
	744
FAHRWERK	1

STICHWORTVERZEICHNIS

Bezeichnung	Seite
FEDER-EINBAUSATZ	614
FESTSTELLBREMSE	234
FESTSTELLBREMSGESTÄNGE	528
FILTER	90
FLÜSSIGKEITSPROBEENTNAHMEVENTIL	60
FRONTAUFREISSER	735
	736
FRONTAUFREISSERZYLINDER	568
FRONTSCHEINWERFER	160
	161
FUSSMATTE	516
	792

G

GELENKZYLINDER UND BEFESTIGUNGSTEILE	550
GESTÄNGE - OBEN	729
GESTÄNGE - UNTEN	728
GETRIEBE	314
	315
	316
GETRIEBEELEKTRONIK	158
GETRIEBEGEHÄUSE UND TEILE	248
GETRIEBEHYDRAULIK	278
	280
GETRIEBEKUPPLUNG	254
	258
	262
	266
GETRIEBEÖLEINFÜLLSTUTZENSCHUTZ	299
GETRIEBEÖLFÜLLSTUTZEN	290
GETRIEBEÖLKÜHLER	73
GETRIEBEÖLLEITUNGEN	296
GETRIEBESCHMIERFILTER	291
GETRIEBESTEUERUNG	276
GETRIEBESTEUERVENTIL	338
	340
GLEITLAGER	23
	24

H

HAUPTFILTER (LUFTFILTER)	86
HAUPTSCHALTER	184
	207
	213
HAUPTSCHALTER (ZÜNDUNG)	219
HECKSTOSSSTANGE	491
	492
	493
HEIZUNGSLEITUNGEN	808
HINTERRAD	473
HUPE, ELEKTR.	790
HYDRAULIKANSCHLUSSSTÜCK	482
HYDRAULIKELEMENT	296
HYDRAULIKLEITUNGEN	585
	586
	590
	594
	598
HYDRAULIKPUMPE UND LEITUNGEN	602
HYDRAULIKSTEUERUNG	542
	543
	544
	545
HYDRAULIKTANK UND BEFESTIGUNGSTEILE	624
HYDRAULIKTANK UND FILTER	622
HYDRAULIKTANK UND SCHMIERFILTER	622

I

IDENTIFIZIERUNGS-AUFKLEBER	780
	860
INSTRUMENTENTAFEL	824
	826
ISOLATOR-EINBAUSATZ	181

K

KAPPE	30
	742
	846
	848
KAPPENFILTERSATZ	138
KEILRIEMEN	32
KÜHLER	82
	84
KÜHLERKAPPE	84
KÜHLERVERKLEIDUNG	510
KÜHLWASSERLEITUNGEN	76
	78
KÜHLWASSERPUMPE	80
	81
KÜHLWASSERPUMPENANTRIEB	32
KIPPSCHALTER (ARBEITSLEUCHTEN)	172
KIPPSCHALTER (ENTFROSTER)	770
	771
	772
KIPPSCHALTER (LEUCHTEN)	168
KNICKLENKZYLINDER	559
	560
	567
KNICKRAHMENANSCHLUSS	518
KOLBENGESTÄNGE-EINBAUSATZ	616
KOLBENPUMPE	616
KOLBENPUMPENUMLAUFSATZ	618
KONDENSATORSATZ	148
KRAFTÜBERTRAGUNG	298
KRAFTSTOFFEINSPRITZDÜSE	134
	135

STICHWORTVERZEICHNIS

Bezeichnung	Seite
KRAFTSTOFFEINSPRITZPUMPE	134
	135
KRAFTSTOFFEINSPRITZSTEUERUNG	101
KRAFTSTOFFILTER	130
KRAFTSTOFFILTEREINSATZ	100
KRAFTSTOFFILTERLEITUNGEN	130
KRAFTSTOFFILTERSOCKEL	100
KRAFTSTOFFLEITUNGEN	128
KRAFTSTOFFREGLERLEITUNGEN	132
KRAFTSTOFFTANK	138
KRAFTSTOFFTANK-SIEBEINSATZ	138
KRAFTSTOFFTANKKAPPE	138
KREUZGELENK	317
KUPPLUNGSGESTÄNGE	270
KURBELGEHÄUSEENTLÜFTER	56
KURBELLAGER-EINBAUSATZ	10
KURBELWELLE	20
KURBELWELLEN-RIEMENSCHEIBE	48
KURBELWELLENDICHTUNG	50
	51
	52

L

LADELUFTKÜHLER, WASSERGEKÜHLT	85
LAGERSATZ	150
ÖLDRUCKGEBER (MOTORÖL)	192
ÖLEINFÜLLSTUTZEN	57
	58
LENKBETÄTIGUNG	548
LENKGESTÄNGE	523
LENKKONSOLENVERDRAHTUNG	232
LENKÖLLEITUNGEN	606
LENKPOSITIONSGEBER	206
	212
LENKZYLINDER	570
	572
LENKZYLINDER UND AUFHÄNGUNG	557
LEUCHTE	159
	160
	161
	162
	163
ÖLFILTER	60
LÜFTERANTRIEB	30
LÜFTERSATZ	148
LITERATURABLAGE	846
	848
	851
ÖLMESSSTAB	63
LUFTDRUCKHUPE	783
	788
LUFTDRUCKMESSER	826
LUFTDRUCKMESSER (BEHÄLTER)	824
LUFTDRUCKSCHALTER (BREMSLEUCHTE)	196

Bezeichnung	Seite
LUFTFILTER-WARTUNGSANZEIGE	90
LUFTKOMPRESSOR	6
	8
	10
	12
LUFTKOMPRESSORLEITUNGEN	38
	40
	42
LUFTREINIGER	86
	87
ÖLWANNE	46
ÖLWANNENABLASS	29

M

MAGNETFILTER	242
	248
MAGNETFILTER (GETRIEBE)	236
	302
MAGNETSCHALTER	207
	213
	219
MAGNETSIEB	302
MAGNETSPULE	180
MAGNETVENTIL	140
	141
	334
	335
	336
	706
	862
MASCHINENAUSFÜHRUNG	2
MEMBRANESATZ	783
	784
MINIATURLEUCHTE	188
	814
MINIATURLEUCHTE (24 V)	164
	168
	170
	172
	176
	230
	232
	272
	274
	770
	771
	772
MINIATURLEUCHTE (24 V) (1,75 DURCHMESSER)	226
	228
MINIATURLEUCHTE (28 V)	226
	228
	230
	824

STICHWORTVERZEICHNIS

Bezeichnung	Seite
	826
MOTOR- UND GETRIEBEAUFLAGER	44
MOTOR-EINBAUSATZ	5
MOTORAUFHÄNGUNG	54
MOTORAUSFÜHRUNG	3
	4
MOTORBLOCK	21
	22
	23
	24
MOTORBLOCKDECKEL	16
MOTORHAUBE UND ARMATURENBRETT	520
MOTORHUBÖSE	37
MOTORÖLKÜHLER	72
MOTORÖLLEITUNGEN	64
MOTORÖLPUMPE	70
MOTORVERDRAHTUNG	192
MOTORVERKLEIDUNG	496
	500

N

NIPPEL	627
NOCKENWELLE	14

O

O-RING-DICHTUNG (110,49 MM INNENDURCHMESSER)	138
O-RING-DICHTUNG (123,19 MM INNENDURCHMESSER)	291
O-RING-STOPFEN	236
	242
	248

P

PANZERWANNE	512
PENDELVENTIL	705
PLANETGEHÄUSE UND TEILE	236
	242
PLEUELSTANGE U. KOLBEN	47
PLEUELSTANGE UND KOLBEN	47
PUMPE UND BEFESTIGUNGSTEILE	612
PUMPENANTRIEB - KUGELGELENK-STECK-SCHLÜSSEL	626
	627
PUMPENANTRIEBSWELLE	619
	620

R

RAD UND REIFEN	342
	343
	344
	345
	346
	347
	348
	349
	350
	351
	352
	353
	354
	355
	356
	357
	358
	359
	360
	361
	362
	363
	364
	365
	366
	367
	368
	369
	370
	371
	372
	373
	374
	375
	376
	377
	378
	379
	380
	381
	382
	383
	384
	385
	386
	387
	388
	389
	390
	391
	392
	393
	394
	395
	396
	397
	398
	399

STICHWORTVERZEICHNIS

Bezeichnung	Seite	Bezeichnung	Seite
	400		455
	401		456
	402		457
	403		458
	404		459
	405		460
	406		461
	407		462
	408		463
	409		464
	410		465
	411		466
	412		467
	413	RADSATZ	468
	414		469
	415		470
	416		471
	417		472
	418		473
	419		474
	420		475
	421		476
	422		477
	423		478
	424		479
	425		480
	426	RADSTURZZYLINDER	574
	427	RADSTURZZYLINDER UND BEFESTIGUNGS-	
	428	TEILE	558
	429	RAHMEN UND GEHÄUSE	494
	430	RÜCKFAHRWARNHORN	186
	431	RÜCKLAUFELEMENT (HYDRAULIK)	622
	432	RÜCKSPIEGEL	811
	433		812
	434		813
	435	REGELVENTIL	130
	436	REGLER - ANSCHLUSSKLEMMENSATZ	148
	437	REGLER UND KRAFT-	
	438	STOFFÖRDERPUMPENANTRIEB	106
	439	REGLER-HALTETEILE	108
	440	REGLEREINBAUSATZ	6
	441		12
	442	REGLEREINSPRITZEINHEIT	109
	443		110
	444		114
	445		115
	446		116
	447		118
	448	REGLERGEHÄUSE	122
	449		124
	450	REGLERÖLLEITUNGEN	133
	451	REGLERSTEUERUNG	102
	452	REIFEN	308
	453		309
	454		310

STICHWORTVERZEICHNIS

Bezeichnung	Seite
	311
	312
	313
REIFENVENTIL	405
	407
	409
	410
	411
	415
	417
	419
	421
	423
	425
	427
	429
	431
	433
	435
	474
	475
RELAISANSCHLUSSKLEMMENSATZ	148
RELAISSTEUERUNG, ELEKTRON.	196
	200
RELAIS (24 V)	196

S

SAMMELVENTIL	662
	664
SCHALENDICHTUNGSSATZ	136
SCHALLDÄMPFENDE VERKLEIDUNG	18
SCHALLDÄMPFER	95
SCHALTER	172
SCHALTER (DIFFERENTIALSPERRE)	272
SCHALTER (EIN/AUS)	770
	771
	772
SCHALTER (HECKLEUCHTE)	232
SCHALTER (HECKSCHEINWERFER)	164
SCHALTER (SCHARARBEITSLEUCHTE)	170
SCHALTER (SCHARSCHWENKWERKSVERRIEGELUNG)	226
	228
	230
SCHALTKONSOLENVERDRAHTUNG	226
	228
	230
SCHAR	709
	710
	711
	712
	713
	714
	715
	716
SCHARAUFHÄNGUNG	717
SCHARDREHWERK	576
	580
	719
	720
SCHARDREHWERKSPERRENLEITUNGEN	584
SCHARDREHWERKSPERRENSTEUERUNG	546
SCHARHUB	726
SCHARHUBZYLINDER	562
	563
SCHARHUBZYLINDER UND BEFESTIGUNGSTEILE	551
	552
SCHARKIPPZYLINDER UND BEFESTIGUNGSTEILE	553
SCHARNEIGEZYLINDER	564
SCHARSEITENVERSTELLUNG UND -NEIGUNG	707
	708
SCHARVERLÄNGERUNG	724
	725
SCHEIBENWASCHANLAGE	864
	866
	868
SCHEIBENWISCHER	876
	878
	880
	881
	882
SCHEIBENWISCHERBLATT	876
	878
	880
	881
	882
SCHEIBENWISCHERBLATTSATZ (EINSCHL.2 ERSATZSCHEIBENWISCHBLÄTTER)	880
SCHEIBENWISCHERMOTOR	815
SCHILD UND AUFKLEBER	883
	884
	886
	890
	892
	894
	896
	898
SCHLÜSSEL	66
	67
	138
	184
	299
	496
	500
	510
	624
	809

STICHWORTVERZEICHNIS

Bezeichnung	Seite
	850
	852
	901
SCHMIERLEITUNGEN	522
SCHMIERNIPPEL (GEWINDE1/8-27)	482
	486
	522
	558
	722
	736
SCHMIERPUMPE	68
	69
	70
	71
SCHRAUBE (3/4-10X4.50 INCH)	138
SCHRÄGKOLBEN-EINBAUSATZ	616
SCHUBPLATTE	732
SCHUTZABDECKUNG	832
SCHUTZABDECKUNG - SCHMIERSYSTEM	66
	67
SCHUTZVERKLEIDUNG	776
SCHWENKBLOCK	621
SCHWENKSCHEIBE	616
SCHWUNGRAD	33
SCHWUNGRADGEHÄUSE	35
SCHWUNGRADGEHÄUSEDICHTUNG	53
SEITENANTRIEB	292
SEITENSCHIEBERZYLINDER UND BEFESTIGUNGSTEILE	556
SEITENSCHUBSPERRE	608
	609
SEITENSCHUBZYLINDER	566
	569
SEITENSCHUBZYLINDER UND BEFESTIGUNGSTEILE	554
SENSORANSCHLUSSSATZ	174
SERIENNUMMERNSCHILD	236
SICHERHEITSFILTER (LUFTFILTER)	86
SICHERHEITSGURT	845
	850
SICHERUNGSHALTERKAPPE	188
	770
	771
	772
	794
	880
	881
SICHERUNG (10 A)	155
	168
	170
	172
	188
	190
	232
	272
	770
	771
	772
	794
	880
	881
SICHERUNG (15 A)	745
	777
SIEB	118
	338
	340
SIEBEINSATZ (HYDRAULIK)	622
SITZUNTERBAU	860
SOLENOID	137
SONNENBLENDE	844
SPERRVENTIL	139
SPERRVENTILSATZ	8
STANDARDRINGSATZ	10
STARTSCHALTER	185
	226
	228
	230
STAUBAUSWERFER	89
STAUBKAPPE	60
STECKDOSEN - EINBAUSATZ	141
	274
STEIGLEITER	525
STEUERKONSOLE	754
STEUERUNG, ELEKTRON.	200
	226
	228
STEUERUNG, ELEKTRON. - DREHMOMENTWANDLER	153
	154
STEUERUNG, ELEKTRON - KRAFTÜBERTRAGUNG	200
STEUERVENTIL	666
	668
	670
	672
	674
	676
	678
	680
	682
	684
	686
	688
STEUERVENTIL (AUFREISSER)	652
	656
	659
STEUERVENTIL (DREHKRANZANTRIEB)	650
	651
	652
	653

STICHWORTVERZEICHNIS

Bezeichnung	Seite
	655
	656
	657
	659
	660
STEUERVENTIL (SCHARSTURZ)	655
	659
	660
STEUERVENTIL (SEITENSCHUB)	651
	655
	656
	657
	659
	660
STIRNRAD	34
STIRNRADGEHÄUSE	36
STIRNRADGEHÄUSEDECKEL	17

T

TANDEMGEHÄUSE UND DECKEL	306
TELLERRAD	294
TEMPERATURGEBER (KÜHLMITTEL)	192
TEMPERATURREGLER	76
TEMPERATURSCHALTER (KÜHLMITTEL)	176
TEMPERATURSENSOR	174
	218
ÄTHERSTARTHILFE	176
ÄTHERSTARTHILFEVENTIL	176
TORSIONSKUPPLUNG	282
TURBOLADER	96
	97
	98
	99
TURBOLADEREINSATZ	88
TURBOLADERÖLLEITUNGEN	65

U

UMFORMER, ELEKTR.	156
	157
UMFORMER, ELEKTR. UND BEFESTIGUNGS-TEILE	155
UNTERBRECHER (15 A)	164
UNTERBRECHER (60 A)	213
	219

V

VENTIL	320
	661
VENTIL - SCHALT- UND DRUCKSTEUERUNG	322
	326
	330
VENTIL UND GESTÄNGE	628
	630
	632
	634
	636
	638
	640
	642
	644
	646
	648
VENTILDECKEL	19
VENTILHEBER	55
VENTILKIPPHEBEL	49
VENTILSATZ (2-VENTIL)	650
VENTILSATZ (3-VENTIL)	651
	652
	653
VENTILSATZ (4-VENTIL)	654
	655
	656
	657
VENTILSATZ (5-VENTIL)	658
	659
	660
VENTILSITZEINSATZ	25
VENTILSTEUERUNG	55
VERDRAHTUNG, HINTEN	206
	212
	218
VERDRAHTUNG, VORNE	196
	200
VERKLEIDUNG, LINKS	830
VERKLEIDUNG, RECHTS	828
VERKLEIDUNG UND BEFESTIGUNG - KÜHLER	508
	510
VORDERACHSE	482
	486
VORDERRAHMEN	504
	506
VORHÄNGESCHLOSS	66
	67
	138
	299
	496
	500
	510
	624
	850
	852
	901

W

WARNAUFKLEBER (ÜBERBRÜCKUNGSKABEL)	886
WARNHORN (24 V)	790

STICHWORTVERZEICHNIS

Bezeichnung	Seite
WARNSUMMER, ELEKTR.	790
WARNVORRICHTUNG	142
WARTUNGSMESSER	232
WASSERABSCHEIDER	136
WASSERABSCHEIDER - EINBAUSATZ	136
WASSERABSCHEIDERELEMENT	136
WELLENSCHEIBEN-EINBAUSATZ	616
WERKZEUGKASTEN	901
WETTERDACH	751
	752
WÄRMEISOLIERUNG	792

Z

ZAHNRADANTRIEB	610
ZAHNRADPUMPE	300
	301
ZIGARETTENANZÜNDER	794
ZUGHAKEN	722
ZUMESSPUMPE	614
ZYLINDERKOPF	25
	26
	27
ZYLINDERKOPF-EINBAUSATZ	10
ZYLINDERKOPFDICHTUNG (1,85 MM DURCHMESSER)	27
ZYLINDER (ÄTHER)	176
ZYLINDERVERKLEIDUNG	583

MACHINE ARRANGEMENT

112-4103 CHASSIS AR

PIN 5FM1-UP

PART OF 112-3764 GENERAL AR

i00662040

NOTE	PART NUMBER	QTY	PART NAME 1 2 3 4 5 6 (PRODUCT LEVEL)	SEE PAGE
Y	*101-8075*	1	AXLE GP-FRONT	482
			PIN 5FM1-799	
Y	*134-1080*	1	AXLE GP-FRONT	486
			PIN 5FM800-UP	
Y	*113-5758*	1	BATTERY BOX GP	490
			PIN 5FM1-549	
Y	*8X-5330*	1	BATTERY BOX GP	489
			PIN 5FM550-UP	
Y	*115-7921*	1	BUMPER GP-REAR	492
Y	*8X-2330*	1	CONSOLE GP-OPERATOR	754
Y	*129-8215*	1	CONTROL GP-CLUTCH	270
Y	*8W-4743*	1	CONTROL GP-GOVERNOR	102
Y	*8W-5934*	1	CONTROL GP-PARKING BRAKE	528
Y	*8W-4740*	1	CONTROL GP-SERVICE BRAKE	530
Y	*7I-4718*	1	CONTROL GP-STEERING	548
Y	*8W-5595*	1	CONTROL GP-TRANSMISSION	276
Y	*115-5726*	1	CYLINDER & MTG GP-ARTICULATION	550
Y	*8W-2290*	1	CYLINDER & MTG GP-STEERING	557
Y	*8W-2737*	1	CYLINDER & MTG GP-WHEEL LEAN	558
Y	*8W-5794*	1	EXTENSION GP-DRAIN	74
Y	*8W-6247*	1	FRAME GP-FRONT	504
			PIN 5FM1-799	
Y	*141-2980*	1	FRAME GP-FRONT	506
			PIN 5FM800-UP	
Y	*108-8014*	1	GUARD & SUPPORT GP-RADIATOR	508
			PIN 5FM1-549	
Y	*138-7057*	1	GUARD & SUPPORT GP-RADIATOR	510
			PIN 5FM550-UP	
Y	*8X-4154*	1	GUARD GP-PLATFORM	516
Y	*106-4883*	1	HITCH GP-ARTICULATED	518
Y	*113-5756*	1	HOOD & DASH GP	520
Y	*116-2145*	1	HORN GP-ELECTRIC	790
Y	*132-0296*	1	LINES GP-FUEL	128
Y	*7I-4610*	1	LINES GP-GREASE	522
Y	*8W-6252*	1	LINES GP-PUMP	602
Y	*115-8080*	1	LINES GP-STEERING	606
Y	*6V-1970*	1	LITERATURE GP	809
Y	*116-2143*	1	PANEL GP-INSTRUMENT	824
Y	*115-9841*	1	PLATE & FILM GP	886
Y	*8X-2379*	1	PUMP & MTG GP-STEERING	612
Y	*113-4254*	1	SEAT GP	850
Y	*7D-9600*	1	SHAFT GP-PUMP DRIVE	619
Y	*8W-5870*	1	SHIELD GP-DRIVE SHAFT	524
Y	*8X-1030*	1	STEP GP	525
Y	*8W-6318*	1	SUPPORT GP-SEAT	860
Y	*8X-2369*	1	TANK & MTG GP-HYDRAULIC	624
Y	*8W-6259*	1	TANK GP-AIR	536
Y	*126-6084*	1	TANK GP-FUEL	138
Y	*111-1719*	1	TOOL BOX GP	901
Y	*112-5952*	1	WIRING GP-ENGINE	192
Y	*112-5978*	1	WIRING GP-FRONT	196
Y	*112-5983*	1	WIRING GP-REAR	206
Y	*112-5960*	1	WIRING GP-SHIFT CONSOLE	226
Y	*112-5974*	1	WIRING GP-STEERING CONSOLE	232

Y-SEPARATE ILLUSTRATION

MACHINE ARRANGEMENT

112-3764 GENERAL AR

PIN 5FM1-UP

SMCS-7000 **i00836264**

NOTE	PART NUMBER	QTY	PART NAME 1 2 3 4 5 6 (PRODUCT LEVEL)	SEE PAGE
Y	*112-4105*	1	BLADE AR	709
Y	*112-4103*	1	CHASSIS AR	1
Y	*7E-3352*	1	ENGINE AR	3
			S/N 98Z15500-22642	
Y	*146-8338*	1	ENGINE AR	4
			S/N 98Z22643-UP	
Y	*112-5819*	1	INSTALLATION AR-ENGINE	5
Y	*112-4119*	1	POWER TRAIN AR	298

Y-SEPARATE ILLUSTRATION

ENGINE ARRANGEMENT

7E-3352 ENGINE AR

S/N 98Z15500-22642

PART OF 112-3764 GENERAL AR

SMCS-1000 **i00820637**

NOTE	PART NUMBER	QTY	PART NAME 1 2 3 4 5 6 (PRODUCT LEVEL)	SEE PAGE
Y	6I-1222	1	AFTERCOOLER GP-WATER	85
Y	7E-7374	1	AIR COMPRESSOR GP	6
Y	131-4810	1	BREATHER GP	56
Y	108-5759	1	CAMSHAFT GP	14
Y	4W-3462	1	CARRIER GP-SEAL	15
Y	105-1695	1	CONTROL GP-FUEL INJECTION	101
Y	115-6951	1	COOLER GP-ENGINE OIL	72
Y	115-4179	1	COVER GP-CYLINDER BLOCK	16
Y	7W-9847	1	COVER GP-FRONT HOUSING	17
Y	9Y-1224	1	COVER GP-SOUND SUPPRESSION (VALVE COVER)	18
Y	4W-2172	1	COVER GP-VALVE MECHANISM	19
Y	4W-2197	1	CRANKSHAFT GP	20
YR	2W-9746	1	CYLINDER BLOCK GP	21
Y	4P-8264	1	CYLINDER HEAD GP	27
Y	7C-2469	1	DAMPER & PULLEY GP	28
Y	4P-2102	1	DRAIN GP-OIL PAN	29
Y	4W-5428	1	DRIVE GP-WATER PUMP	32
Y	130-8103	1	FILLER GP-ENGINE OIL	57
			S/N 98Z15500-17273	
Y	136-3074	1	FILLER GP-ENGINE OIL	58
			S/N 98Z17274-22642	
Y	7E-4891	1	FILTER GP-ENGINE OIL	60
Y	7E-5385	1	FLYWHEEL GP	33
Y	116-6501	1	FUMES DISPOSAL GP	62
Y	131-1934	1	GAUGE GP-OIL LEVEL (DIPSTICK)	63
Y	101-4540	1	GEAR GP-FRONT	34
Y	126-0468	1	GOVERNOR GP-UNIT INJECTOR	109
Y	9Y-0054	1	HOUSING GP-FLYWHEEL	35
Y	101-4539	1	HOUSING GP-FRONT	36
Y	4W-2515	1	LIFTING GP-ENGINE	37
Y	7C-6213	1	LINES GP-AIR	92
Y	7E-3872	1	LINES GP-AIR COMPRESSOR	38
Y	7E-6302	1	LINES GP-ENGINE OIL	64
Y	130-8101	1	LINES GP-FUEL FILTER	130
Y	4P-7591	1	LINES GP-FUEL RATIO CONTROL	132
Y	7C-2476	1	LINES GP-TURBOCHARGER OIL	65
Y	4W-6620	1	LINES GP-WATER	76
Y	6I-2298	1	MANIFOLD GP-EXHAUST	93
Y	4W-3480	1	MANIFOLD GP-INLET	94
Y	115-4119	1	PAN GP-OIL	46
Y	115-4084	6	PISTON & ROD GP	47
Y	4W-5429	1	PULLEY GP-CRANKSHAFT	48
Y	4W-2195	1	PUMP GP-ENGINE OIL	68
Y	107-7732	6	PUMP GP-UNIT INJECTION	134
Y	7E-7399	1	PUMP GP-WATER	81
Y	7E-7590	1	SEAL GP-CRANKSHAFT	50
Y	7C-1770	1	SEAL GP-FLYWHEEL HOUSING	53
Y	7C-4028	1	SOLENOID GP-SHUTOFF	137
Y	7C-2273	1	SUPPORT GP-ENGINE	54
Y	115-4068	1	TURBOCHARGER GP	96
Y	4P-4372	1	VALVE MECHANISM GP	55
			(GASKET KITS WILL BE PROVIDED WHEN AVAILABLE)	

R-REMFG PART MAY BE AVAILABLE
Y-SEPARATE ILLUSTRATION

ENGINE ARRANGEMENT

146-8338 ENGINE AR

S/N 98Z22643-UP

PART OF 112-3764 GENERAL AR

SMCS-1000 **i00819140**

NOTE	PART NUMBER	QTY	PART NAME 1 2 3 4 5 6 (PRODUCT LEVEL)	SEE PAGE
Y	6I-1222	1	AFTERCOOLER GP-WATER	85
Y	145-4539	1	AIR COMPRESSOR GP	12
Y	131-4810	1	BREATHER GP	56
Y	108-5759	1	CAMSHAFT GP	14
Y	4W-3462	1	CARRIER GP-SEAL	15
Y	105-1695	1	CONTROL GP-FUEL INJECTION	101
Y	115-6951	1	COOLER GP-ENGINE OIL	72
Y	115-4179	1	COVER GP-CYLINDER BLOCK	16
Y	7W-9847	1	COVER GP-FRONT HOUSING	17
Y	9Y-1224	1	COVER GP-SOUND SUPPRESSION (VALVE COVER)	18
Y	4W-2172	1	COVER GP-VALVE MECHANISM	19
Y	4W-2197	1	CRANKSHAFT GP	20
YR	2W-9746	1	CYLINDER BLOCK GP	21
Y	4P-8264	1	CYLINDER HEAD GP	27
Y	7C-2469	1	DAMPER & PULLEY GP	28
Y	4P-2102	1	DRAIN GP-OIL PAN	29
Y	4W-5428	1	DRIVE GP-WATER PUMP	32
Y	136-3074	1	FILLER GP-ENGINE OIL	58
Y	7E-4891	1	FILTER GP-ENGINE OIL	60
Y	7E-5385	1	FLYWHEEL GP	33
Y	116-6501	1	FUMES DISPOSAL GP	62
Y	131-1934	1	GAUGE GP-OIL LEVEL (DIPSTICK)	63
Y	101-4540	1	GEAR GP-FRONT	34
Y	140-7377	1	GOVERNOR GP-UNIT INJECTOR	115
Y	9Y-0054	1	HOUSING GP-FLYWHEEL	35
Y	101-4539	1	HOUSING GP-FRONT	36
Y	4W-2515	1	LIFTING GP-ENGINE	37
Y	7C-6213	1	LINES GP-AIR	92
Y	145-3993	1	LINES GP-AIR COMPRESSOR	42
Y	7E-6302	1	LINES GP-ENGINE OIL	64
Y	130-8101	1	LINES GP-FUEL FILTER	130
Y	4P-7591	1	LINES GP-FUEL RATIO CONTROL	132
Y	7C-2476	1	LINES GP-TURBOCHARGER OIL	65
Y	4W-6620	1	LINES GP-WATER	76
Y	6I-2298	1	MANIFOLD GP-EXHAUST	93
Y	4W-3480	1	MANIFOLD GP-INLET	94
Y	115-4119	1	PAN GP-OIL	46
Y	115-4084	6	PISTON & ROD GP	47
Y	7C-7301	1	PLATE & FILM GP (ENGINE)	883
Y	4W-5429	1	PULLEY GP-CRANKSHAFT	48
Y	115-4138	1	PUMP GP-ENGINE OIL	70
Y	107-7732	6	PUMP GP-UNIT INJECTION	134
Y	7E-7399	1	PUMP GP-WATER	81
Y	115-4210	1	SEAL GP-CRANKSHAFT	51
Y	7C-1770	1	SEAL GP-FLYWHEEL HOUSING	53
Y	7C-4028	1	SOLENOID GP-SHUTOFF	137
Y	7C-2273	1	SUPPORT GP-ENGINE	54
Y	140-7386	1	TURBOCHARGER GP	99
Y	4P-4372	1	VALVE MECHANISM GP	55
			(GASKET KITS WILL BE PROVIDED WHEN AVAILABLE)	

R-REMFG PART MAY BE AVAILABLE
Y-SEPARATE ILLUSTRATION

ENGINE ARRANGEMENT

112-5819 INSTALLATION AR-ENGINE

PIN 5FM1-UP

PART OF 112-3764 GENERAL AR

SMCS-1000 **i00836266**

NOTE	PART NUMBER	QTY	PART NAME 1 2 3 4 5 6 (PRODUCT LEVEL)	SEE PAGE
Y	*7C-3705*	1	AIR CLEANER GP	87
Y	*7C-1905*	1	ALTERNATOR GP-CHARGING	147
Y	*117-9571*	1	COOLER GP-TRANSMISSION OIL	73
Y	*107-3773*	1	DRIVE GP-FAN	30
Y	*7E-9505*	1	DUST EJECTOR GP	89
Y	*7C-2095*	1	FAN GP-BLOWER	75
Y	*7C-3706*	1	LINES GP-AIR	90
Y	*7E-7252*	1	LINES GP-AIR COMPRESSOR	40
Y	*125-4530*	1	LINES GP-DRAIN	126
Y	*8W-6210*	1	LINES GP-WATER	78
Y	*7C-2096*	1	MOUNTING GP-ENGINE & TMSN	44
Y	*7C-3707*	1	MUFFLER GP	95
Y	*151-5829*	1	PROTECTION GP-LUBE SYSTEM	67
Y	*7C-2098*	1	RADIATOR GP	82
Y	*111-4275*	1	STARTING MOTOR GP-ELECTRIC	183

Y-SEPARATE ILLUSTRATION

BASIC ENGINE

7E-7374 AIR COMPRESSOR GP

S/N 98Z15500-22642

PART OF 7E-3352 ENGINE AR

SMCS-1803, 1804 i00135158

NOTE	REF NO	GRAPHIC REF	PART NUMBER	QTY	PART NAME 1 2 3 4 5 6 (PRODUCT LEVEL)	SEE PAGE
Y	1	1	104-6046	1	AIR COMPRESSOR GP	8
	2	1	7C-5478	1	SUPPORT-COMPRESSOR	
	3	1	7C-3179	1	GEAR-AIR COMPRESSOR (50 TEETH)	
	4	1	6B-6682	1	NUT-FULL (3/4-16 THD)	
	5	1	7X-0521	1	WASHER-HARD (5MM THK)	
M	6	1	8T-4195	3	BOLT (M10X1.50X30MM)	
	7	1	8T-4121	3	WASHER (2.5MM THK)	
	8	1	9Y-4634	1	GASKET-POWER TAKE-OFF	
M	9	1	8T-4648	2	BOLT (M12X1.75X70MM)	
	10	1	8T-4223	2	WASHER-HARD (3MM THK)	
	11	1	6I-1240	1	GOVERNOR AS	
		1	2S-2923	1	COVER-GOVERNOR	
		1	9M-0402	1	KIT-GOVERNOR OVERHAUL	
	12	1	6L-1883	1	GASKET-GOVERNOR	
	13	1	1D-4540	2	BOLT (5/16-18X2.75IN)	
	14	1	9M-1974	2	WASHER-HARD (2MM THK)	
	15	1	9F-2247	5	PLUG-PIPE	
	16	1	5F-5434	1	VENT AS	

M-METRIC PART
Y-SEPARATE ILLUSTRATION

7E-7374 AIR COMPRESSOR GP *(contd.)*

i00135158

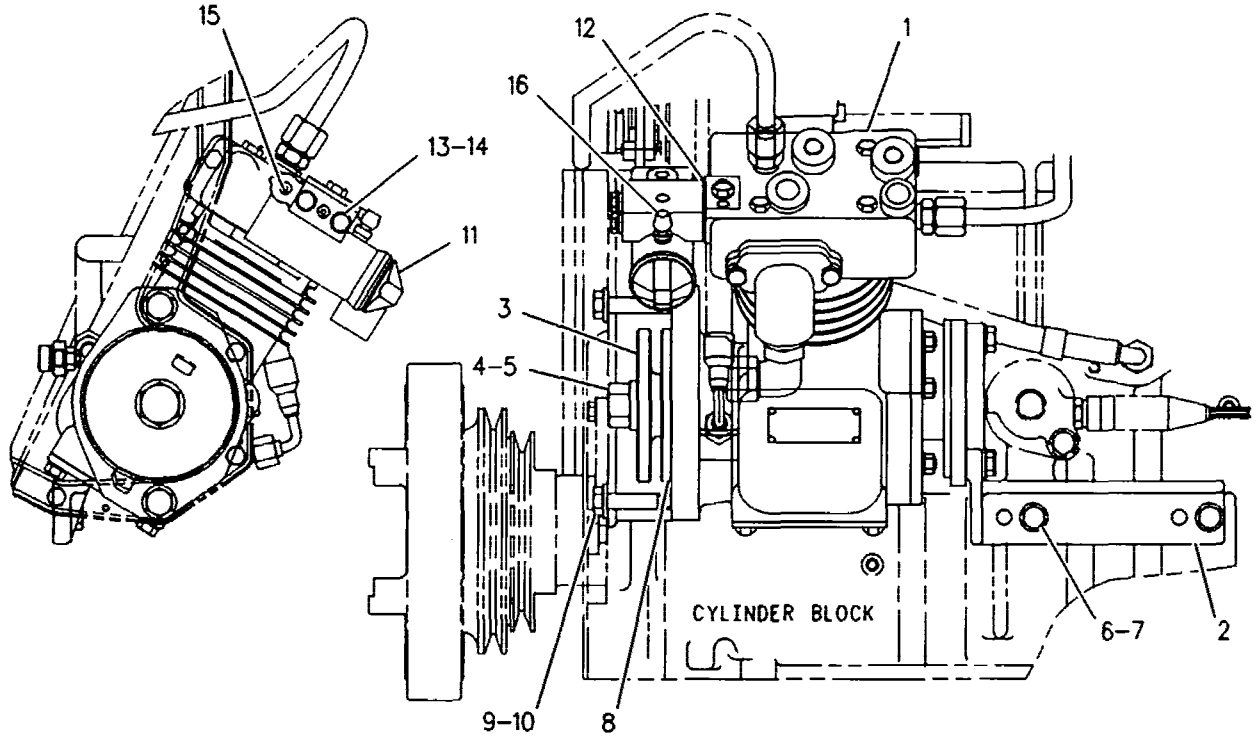

GRAPHIC #1

g00108729

BASIC ENGINE

104-6046 AIR COMPRESSOR GP

S/N 98Z15500-22642

PART OF 7E-7374 AIR COMPRESSOR GP

SMCS-1803, 1804 i00134850

NOTE	REF NO	GRAPHIC REF	PART NUMBER	QTY	PART NAME 1 2 3 4 5 6 (PRODUCT LEVEL)	SEE PAGE
	1	1	104-6347	1	COMPRESSOR AS	
	2	1	6V-8918	2	BOLT (5/16-18X1.25IN)	
	3	1	7W-5499	1	ELBOW	
	4	1	9M-0385	1	PLATE-STRAINER	
	5	1	3B-4505	2	LOCKWASHER (5/16IN)	
	6	1	8M-7065	2	GASKET-AIR INLET	
	7	1	4P-9306	1	KIT-CHECK VALVE	

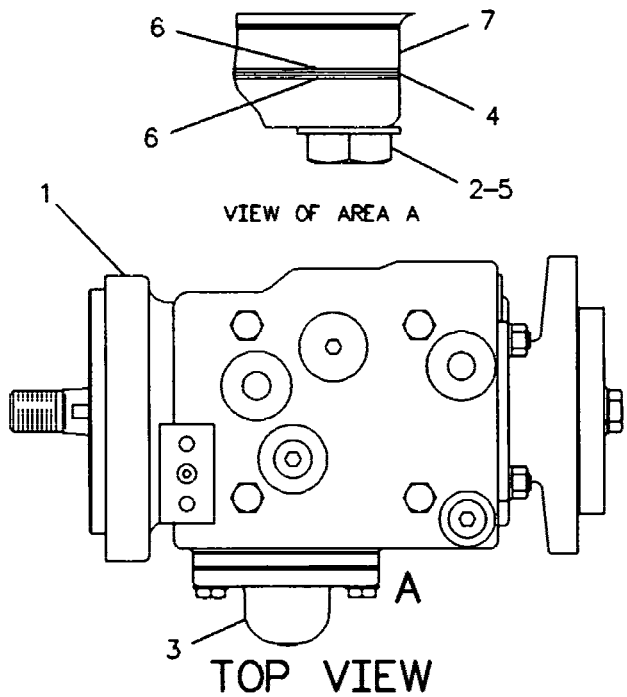

GRAPHIC #1 g00108423

MEMORANDA

BASIC ENGINE

145-0840 AIR COMPRESSOR GP

S/N 98Z22643-UP

PART OF 145-4539 AIR COMPRESSOR GP

SMCS-1803, 1804 i00692950

NOTE	REF NO	GRAPHIC REF	PART NUMBER	QTY	PART NAME 1 2 3 4 5 6 (PRODUCT LEVEL)	SEE PAGE
	1	1	8M-7065	1	GASKET-AIR INLET	
	2	1	3B-4505	2	LOCKWASHER (5/16IN)	
	3	1	7W-5499	1	ELBOW	
	4	1	6V-0387	2	PLUG-PIPE (1/2 NPF)	
	5	1	4P-3977	1	GASKET-CYLINDER HEAD	
	6	1	8T-6764	3	PLUG-PIPE (1/8-27 NPTF THD)	
	7	1	0S-1617	4	BOLT (5/16-18X.75IN)	
	8	1	144-5903	1	BRACKET AS	
M		1	8T-3490	1	NUT-WELD (M10X1.5 THD)	
	9	1	0S-1618	2	BOLT (5/16X18X1IN)	
	10	1	9M-1974	2	WASHER-HARD (2MM THK)	
	11	1	7E-8928	1	GASKET-BASE	
					AVAILABLE REPAIR KIT(S):	
			7E-8923	1	KIT-CRANKSHAFT BEARING	
					(INCL SEALS, BEARINGS, WASHERS, INSERTS, AND GASKETS)	
			7E-8925	1	KIT-STANDARD RING	
					(INCL RINGS AND INST SHEET)	
			7E-8926	1	KIT-CYLINDER HEAD	
					(INCL GASKETS, SPRINGS, VALVES, SEATS, PISTONS STOPS, AND O-RING)	
			4P-3966	1	PISTON & ROD AS	
			150-5146	1	UNLOADER KIT	

M-METRIC PART

145-0840 AIR COMPRESSOR GP *(contd.)* i00692950

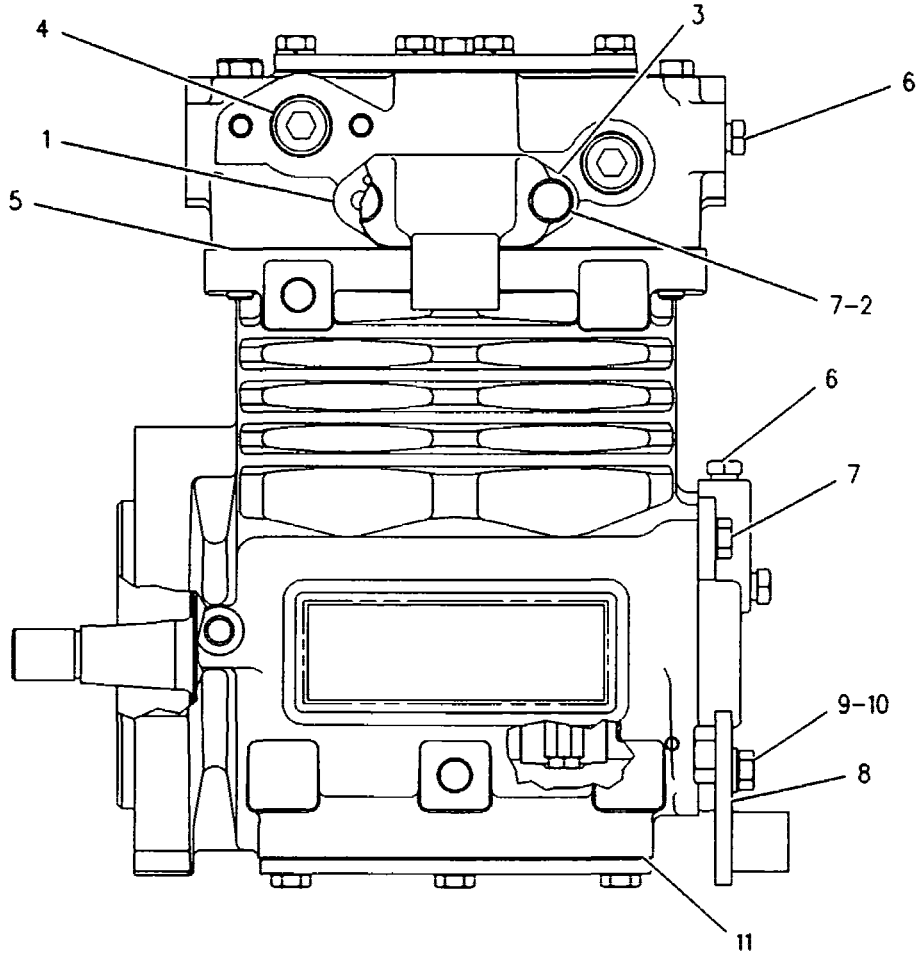

GRAPHIC #1 g00284038

BASIC ENGINE

145-4539 AIR COMPRESSOR GP

S/N 98Z22643-UP

PART OF 146-8338 ENGINE AR

SMCS-1803, 1804 i00676746

NOTE	REF NO	GRAPHIC REF	PART NUMBER	QTY	PART NAME 1 2 3 4 5 6 (PRODUCT LEVEL)	SEE PAGE
M	1	1	**6V-5696**	2	BOLT (M12X1.75X80MM)	
	2	1	**5F-5434**	1	VENT AS	
	3	1	**8T-6757**	5	PLUG-PIPE (1/8-27 NPTF THD)	
	4	1	**6L-1883**	1	GASKET-GOVERNOR	
	5	1	**6B-6682**	1	NUT-FULL (3/4-16 THD)	
	6	1	**7X-0521**	1	WASHER-HARD (5MM THK)	
	7	1	**7C-3179**	1	GEAR-AIR COMPRESSOR (50 TEETH)	
	8	1	**135-9819**	1	SEAL-INTEGRAL	
	9	1	**5P-8245**	2	WASHER (3MM THK)	
	10	1	**6I-1240**	1	GOVERNOR AS	
	11	1	**1D-4540**	2	BOLT (5/16-18X2.75IN)	
	12	1	**9M-1974**	2	WASHER-HARD (2MM THK)	
Y	13	1	*145-0840*	1	AIR COMPRESSOR GP	10
	14	1	**7C-5478**	1	SUPPORT-COMPRESSOR	
M	15	1	**8T-4195**	3	BOLT (M10X1.50X30MM)	
	16	1	**8T-4121**	3	WASHER (2.5MM THK)	
					AVAILABLE REPAIR KIT(S):	
			9M-0402	1	KIT-GOVERNOR OVERHAUL	
					(INCL COVER, GROMMETS, RING, GASKET, FILTERS, SPRING, AND VALVE)	

M-METRIC PART
Y-SEPARATE ILLUSTRATION

145-4539 AIR COMPRESSOR GP *(contd.)* i00676746

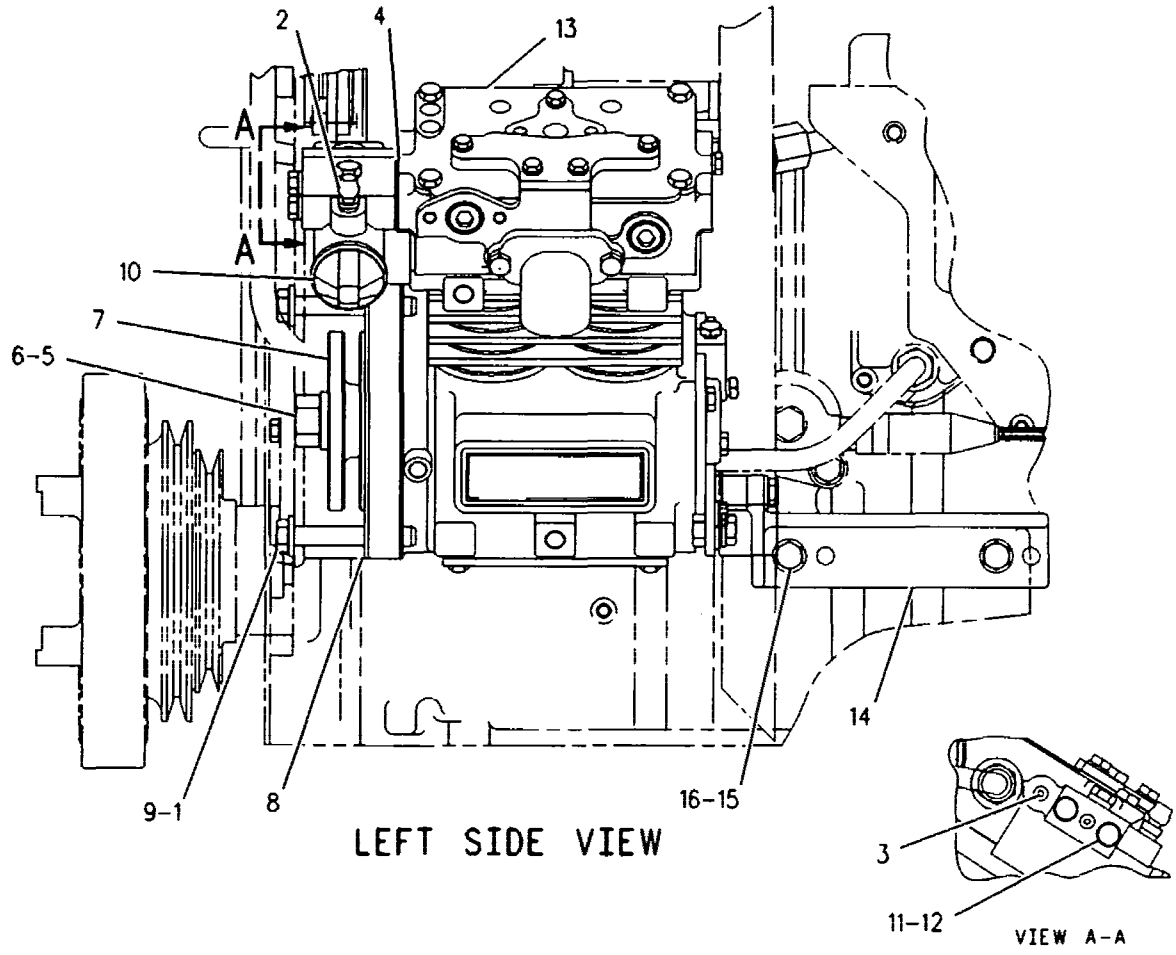

GRAPHIC #1 g00284041

BASIC ENGINE

108-5759 CAMSHAFT GP

S/N 98Z15500-UP

PART OF 146-8338, 7E-3352 ENGINE AR

SMCS-1210, 1211, 1212 **i00135049**

NOTE	REF NO	GRAPHIC REF	PART NUMBER	QTY	PART NAME 1 2 3 4 5 6 (PRODUCT LEVEL)	SEE PAGE
	1	1	134-5276	1	CAMSHAFT AS	
	2	1	1B-8705	1	KEY-WOODRUFF	
	3	1	7W-4070	1	GEAR (100 TEETH)	
	4	1	107-7694	1	PLATE-THRUST	
M	5	1	6V-3940	2	BOLT (M8X1.25X25MM)	

M-METRIC PART

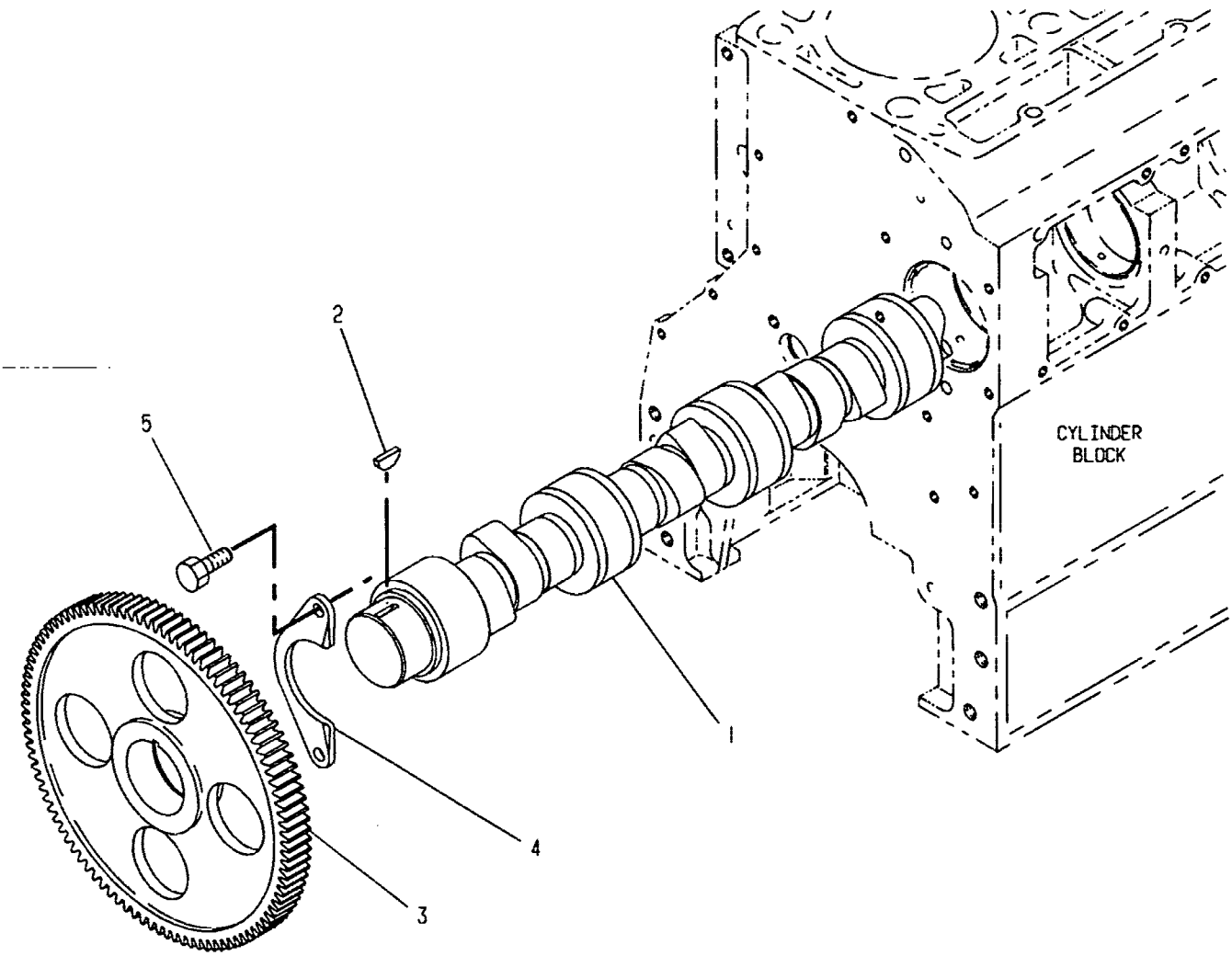

GRAPHIC #1 g00108297

BASIC ENGINE

4W-3462 CARRIER GP-SEAL

S/N 98Z15500-UP

PART OF 146-8338, 7E-3352 ENGINE AR

SMCS-1161 i00135088

NOTE	REF NO	GRAPHIC REF	PART NUMBER	QTY	PART NAME 1 2 3 4 5 6 (PRODUCT LEVEL)	SEE PAGE
M	1	1	6V-3940	8	BOLT (M8X1.25X25MM)	
	2	1	9M-1974	8	WASHER-HARD (2MM THK)	
	3	1	2W-6546	1	COVER	
B	4	1	1U-8846		GASKET-LIQUID (6ML)	
	5	1	6V-3538	2	DOWEL (20MM OAL)	
	6	1	8C-3091	1	SEAL-O-RING	

B-USE AS REQUIRED
M-METRIC PART

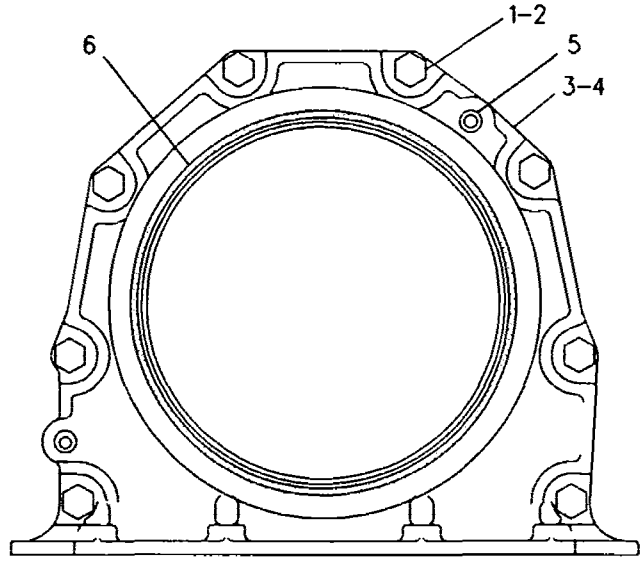

MOUNTED ON REAR OF CYLINDER BLOCK

GRAPHIC #1 g00108845

BASIC ENGINE

115-4179 COVER GP-CYLINDER BLOCK

S/N 98Z15500-UP

PART OF 146-8338, 7E-3352 ENGINE AR

SMCS-1201 **i00135891**

NOTE	REF NO	GRAPHIC REF	PART NUMBER	QTY	PART NAME 1 2 3 4 5 6 (PRODUCT LEVEL)	SEE PAGE
	1	1	7W-3871	1	COVER-SIDE	
	2	1	7W-9699	3	GASKET	
M	3	1	6V-2317	12	BOLT (M8X1.25X30MM)	
	4	1	9M-1974	23	WASHER-HARD (2MM THK)	
	5	1	7W-9395	2	COVER-SIDE	
M	6	1	6V-5217	11	BOLT (M8X1.25X20MM)	
	7	1	2W-6544	1	COVER	
	8	1	110-7618	4	BOLT AS	
					(EACH INCLUDES)	
M		1	6V-5215	1	BOLT (M8X1.25X16MM)	
		1	9M-1974	1	WASHER-HARD (2MM THK)	
	9	1	7W-3872	6	SLEEVE (MARKED X)	
B	10	1	1U-8846		GASKET-LIQUID (6ML)	
M	11	1	6V-3940	2	BOLT (M8X1.25X25MM)	
	12	1	7C-0358	1	GASKET	
	13	1	7C-2177	1	COVER	

B-USE AS REQUIRED
M-METRIC PART

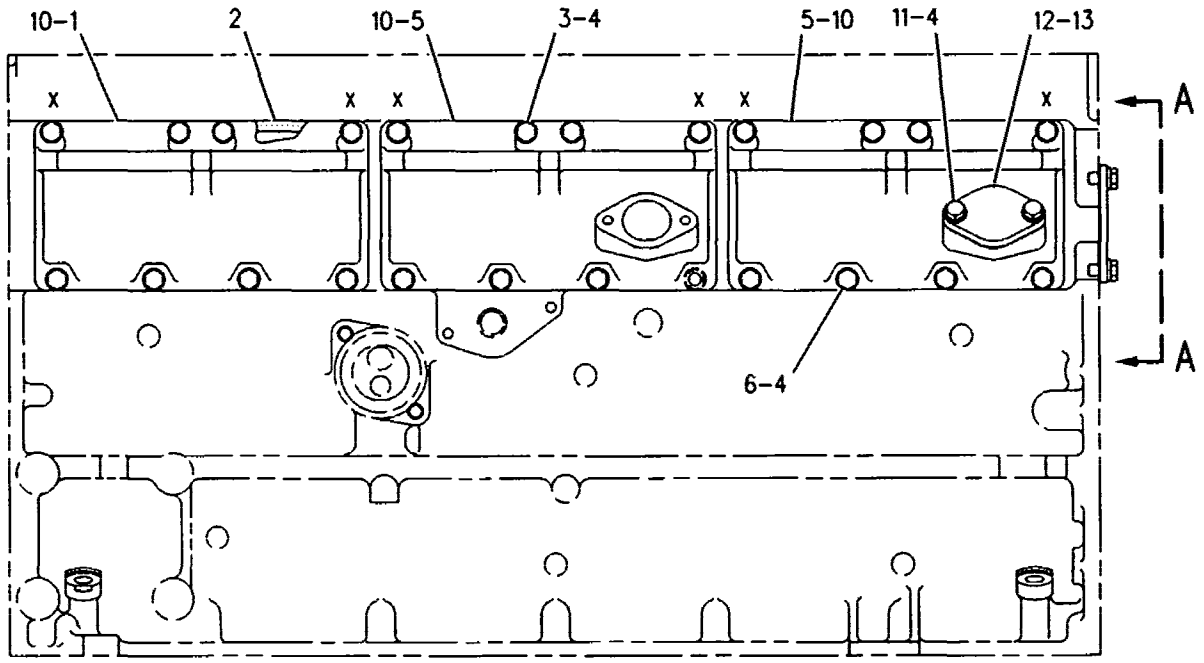

RIGHT SIDE VIEW

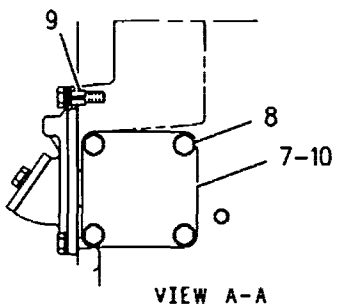

VIEW A-A

GRAPHIC #1 g00109289

BASIC ENGINE

7W-9847 COVER GP-FRONT HOUSING

S/N 98Z15500-UP

PART OF 146-8338, 7E-3352 ENGINE AR

SMCS-1151, 1166 i00135166

NOTE	REF NO	GRAPHIC REF	PART NUMBER	QTY	PART NAME 1 2 3 4 5 6 (PRODUCT LEVEL)	SEE PAGE
CM	1	1	8T-0100	2	BOLT (M8X1.25X60MM)	
C	2	1	106-7920	1	COVER AS-FRONT	
CBM	3	1	6V-2317	12	BOLT (M8X1.25X30MM)	
	4	1	7W-6552	1	GASKET	
B		1	1U-8846		GASKET-LIQUID (6ML)	

B-USE AS REQUIRED
C-CHANGE FROM PREVIOUS TYPE
M-METRIC PART

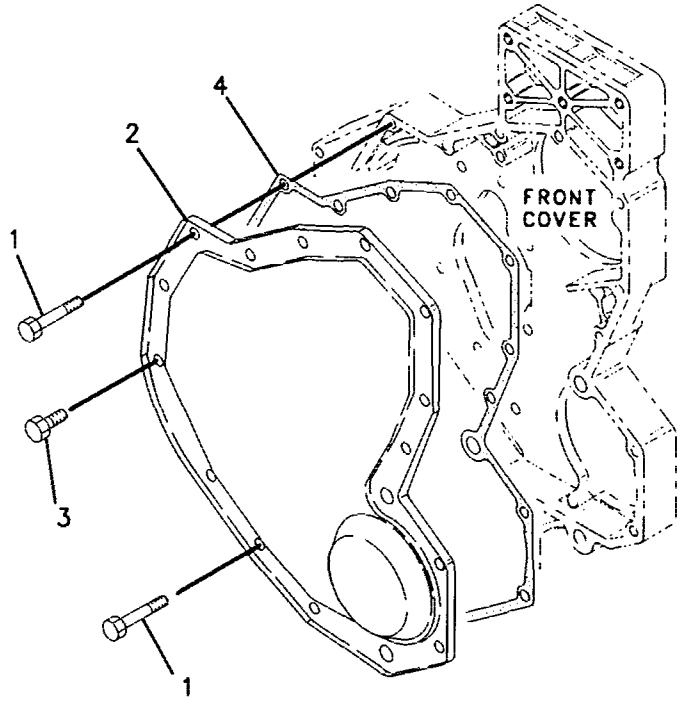

GRAPHIC #1 g00108344

BASIC ENGINE

9Y-1224 COVER GP-SOUND SUPPRESSION

S/N 98Z15500-UP

PART OF 146-8338, 7E-3352 ENGINE AR

SMCS-1801 i00135708

NOTE	REF NO	GRAPHIC REF	PART NUMBER	QTY	PART NAME 1 2 3 4 5 6 (PRODUCT LEVEL)	SEE PAGE
					(INDIVIDUAL PARTS ARE NOT SERVICED SEPARATELY)	

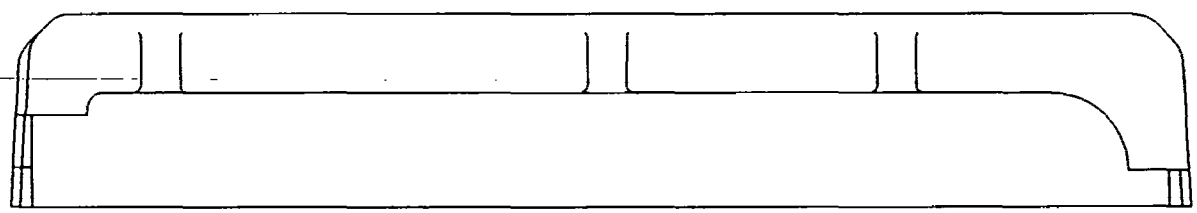

GRAPHIC #1 g00108398

BASIC ENGINE

4W-2172 COVER GP-VALVE MECHANISM

S/N 98Z15500-UP

PART OF 146-8338, 7E-3352 ENGINE AR

SMCS-1107, 1120 **i00448991**

NOTE	REF NO	GRAPHIC REF	PART NUMBER	QTY	PART NAME 1 2 3 4 5 6 (PRODUCT LEVEL)	SEE PAGE
	1	1	**119-2940**	1	GASKET	
M	2	1	**6V-2315**	14	BOLT (M6X1X35MM)	
	3	1	**119-2960**	1	COVER	
	4	1	**5P-0537**	14	WASHER (2MM THK)	

M-METRIC PART

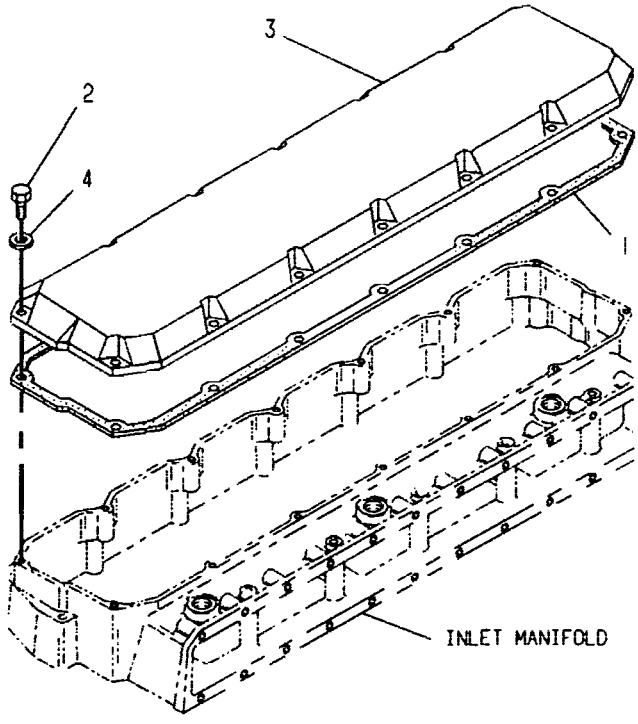

GRAPHIC #1 g00108317

BASIC ENGINE

4W-2197 CRANKSHAFT GP

S/N 98Z15500-UP

PART OF 146-8338, 7E-3352 ENGINE AR

SMCS-1202, 1203, 1204, 1232 **i00684088**

NOTE	REF NO	GRAPHIC REF	PART NUMBER	QTY	PART NAME 1 2 3 4 5 6 (PRODUCT LEVEL)	SEE PAGE
	1	1	**105-1725**	1	CRANKSHAFT AS	
	2	1	**1B-8705**	1	KEY-WOODRUFF	
	3	1	**2W-8147**	1	GEAR (50 TEETH)	
	4	1	**107-7602**	1	BEARING-THRUST	
AB		1	**7C-6966**		BEARING-THRUST 0.25MM US	
AB		1	**7C-6967**		BEARING-THRUST 0.5MM US	
AB		1	**7C-6969**		BEARING-THRUST 0.5MM OS	
AB		1	**7C-6970**		BEARING-THRUST (0.5MM US - 0.5MM OS)	
	5	1	**107-7708**	6	BEARING-MAIN	
AB		1	**145-0162**		BEARING-MAIN (0.25MM US)	
AB		1	**145-0164**		BEARING-MAIN (0.5MM US)	
AB		1	**145-0168**		BEARING-MAIN (0.5MM OS)	
AB		1	**145-0170**		BEARING-MAIN (0.5MM US - 0.5MM OS)	
AF		1	**7C-7980**	1	SLEEVE-OIL SEAL	
					(THIS WEAR SLEEVE IS USED ONLY TO SALVAGE (REPAIR) THE REAR SEAL SURFACE OF THE CRANKSHAFT)	

A-NOT PART OF THIS GROUP
B-USE AS REQUIRED
F-NOT SHOWN

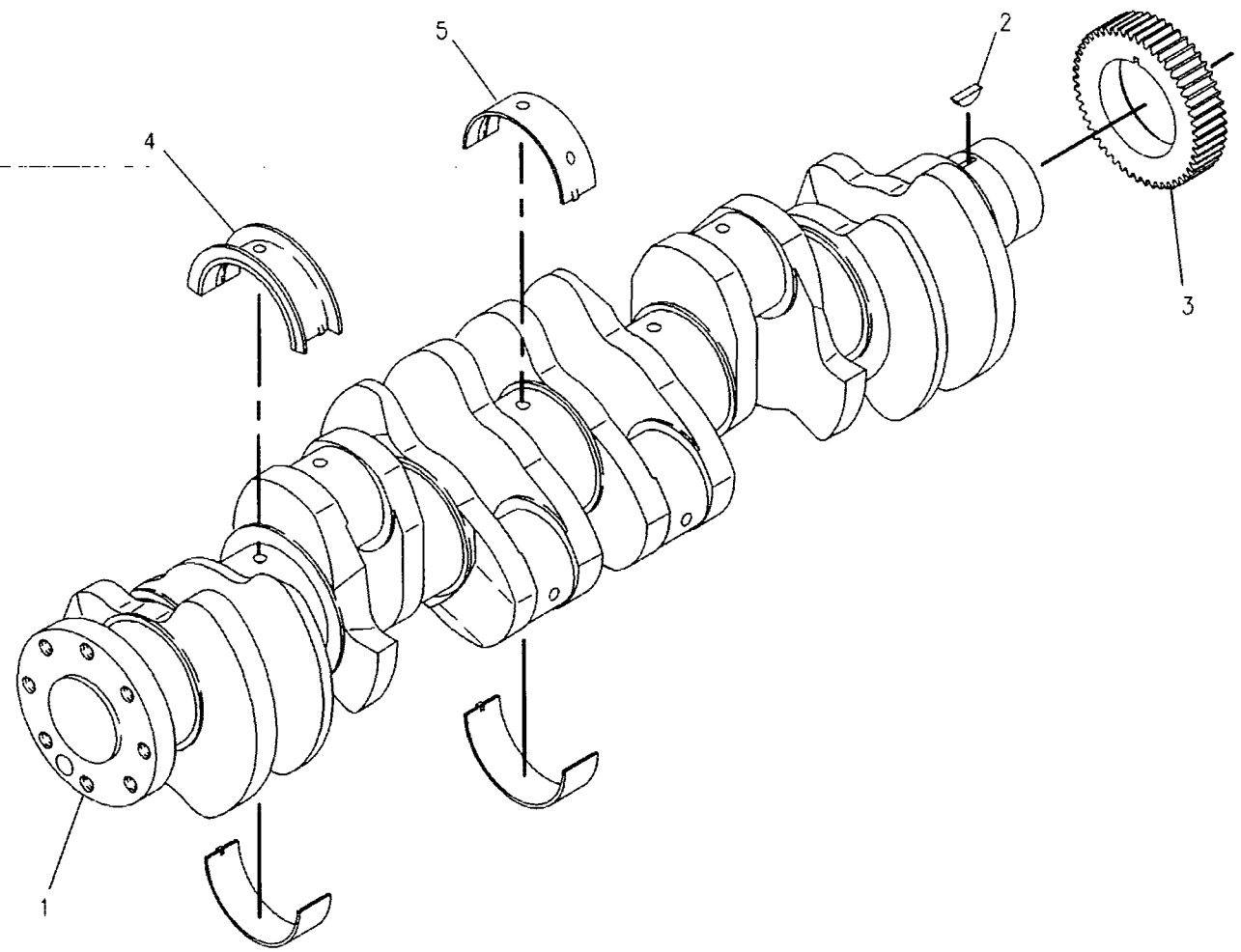

GRAPHIC #1 g00296192

BASIC ENGINE

2W-9746 CYLINDER BLOCK GP*R

S/N 98Z15500-17019
PART OF 7E-3352 ENGINE AR
FOR USE WITH ONE-PIECE PISTONS

SMCS-1200, 1201, 1211, 1216, 1217, 1221, 1331 **i00660192**

NOTE	REF NO	GRAPHIC REF	PART NUMBER	QTY	PART NAME 1 2 3 4 5 6 (PRODUCT LEVEL)	SEE PAGE
YC	1	1	*100-4948*	1	CYLINDER BLOCK GP	23
	2	1	**6V-3538**	2	DOWEL (20MM OAL)	
	3	1	**4P-2457**	6	TUBE AS-JET	
	4	1	**7N-5683**	2	DOWEL	
M	5	1	**6V-3940**	6	BOLT (M8X1.25X25MM)	
	6	1	**1W-8407**	2	SLEEVE	

C-CHANGE FROM PREVIOUS TYPE
M-METRIC PART
Y-SEPARATE ILLUSTRATION

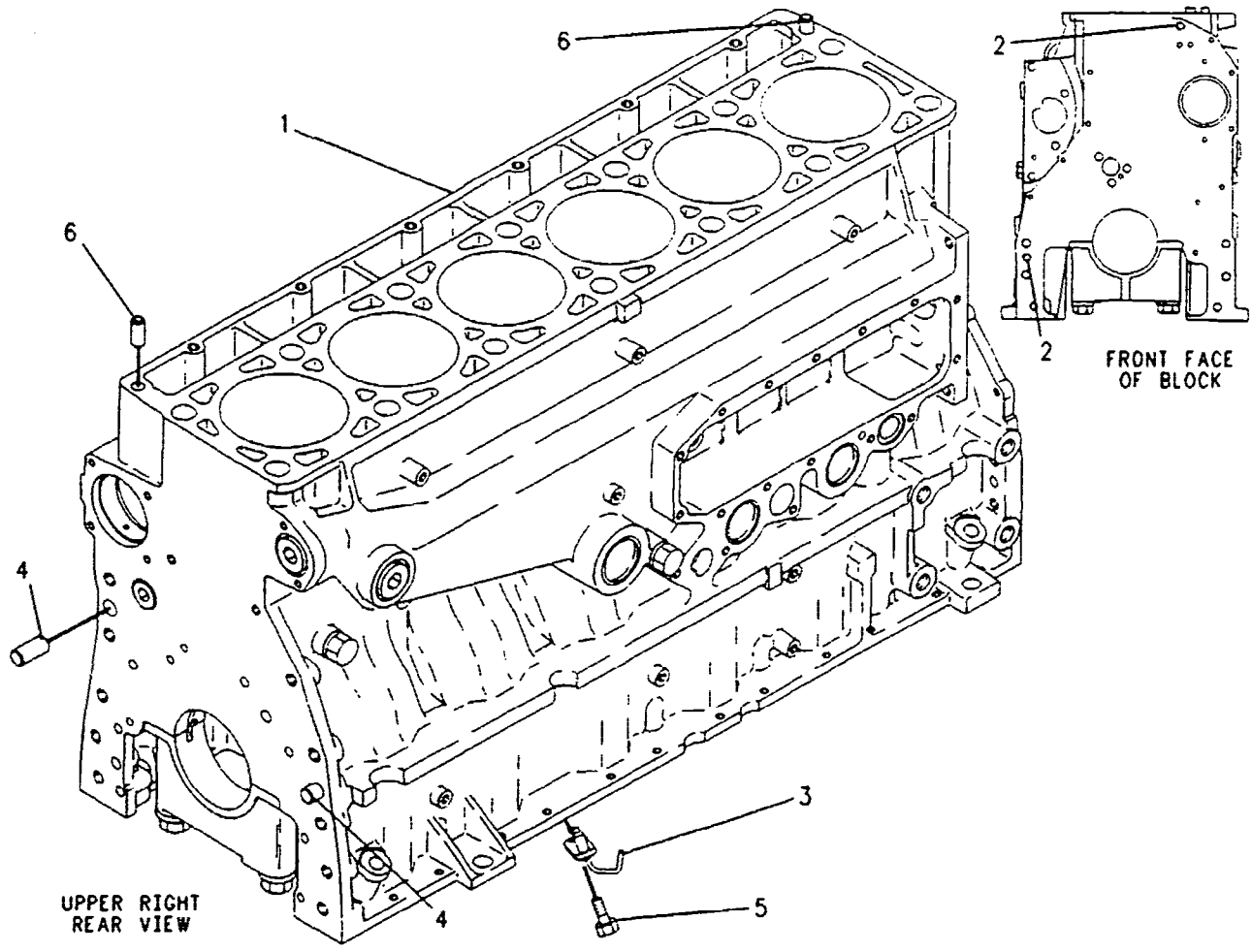

GRAPHIC #1 g00109080

BASIC ENGINE

2W-9746 CYLINDER BLOCK GP

S/N 98Z17020-UP

PART OF 146-8338, 7E-3352 ENGINE AR

FOR USE WITH ONE-PIECE PISTONS

SMCS-1200, 1201, 1211, 1216, 1217, 1221, 1331 **i00135779**

NOTE	REF NO	GRAPHIC REF	PART NUMBER	QTY	PART NAME 1 2 3 4 5 6 (PRODUCT LEVEL)	SEE PAGE
YC	1	1	129-1095	1	CYLINDER BLOCK GP	24
	2	1	6V-3538	2	DOWEL (20MM OAL)	
	3	1	4P-2457	6	TUBE AS-JET	
	4	1	7N-5683	2	DOWEL	
M	5	1	6V-3940	6	BOLT (M8X1.25X25MM)	
	6	1	1W-8407	2	SLEEVE	

C-CHANGE FROM PREVIOUS TYPE
M-METRIC PART
Y-SEPARATE ILLUSTRATION

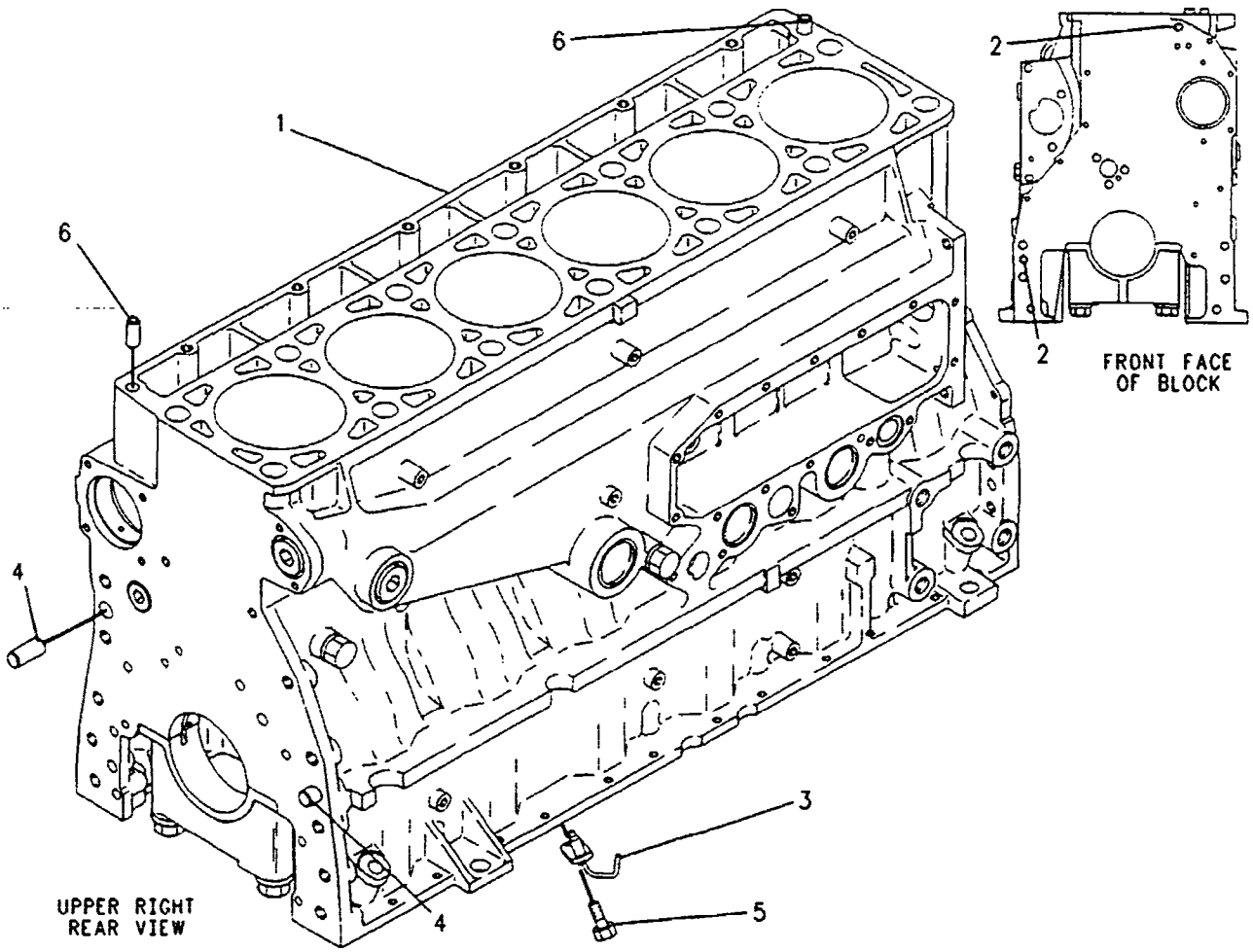

GRAPHIC #1 g00109080

BASIC ENGINE

100-4948 CYLINDER BLOCK GP

S/N 98Z15500-17019

PART OF 2W-9746 CYLINDER BLOCK GP

SMCS-1200, 1201, 1211, 1216, 1217, 1221, 1331 i00134835

NOTE	REF NO	GRAPHIC REF	PART NUMBER	QTY	PART NAME 1 2 3 4 5 6 (PRODUCT LEVEL)	SEE PAGE
	1	1	2M-6471	2	PLUG-CUP	
	2	1	7E-2968	7	CAP-CRANKSHAFT BEARING	
M	3	1	9X-8916	14	BOLT	
	4	1	5P-8247	14	WASHER-HARD (3.5MM THK)	
	5	1	9S-8005	1	PLUG-O-RING (3/4-16 THD)	
	6	1	3K-0360	1	SEAL-O-RING (16.36MM ID)	
	7	1	2W-7213	6	BEARING-SLEEVE	
B	8	1	3D-2824	2	SEAL-O-RING (23.47MM ID)	
B	9	1	9S-8008	2	PLUG-O-RING (1 1/16-12 THD)	
M	10	1	8T-0293	2	BOLT (M12X1.75X20MM)	
	11	1	6F-7062	2	WASHER	
	12	1	3H-5552	1	PLUG-CUP	
	13	1	9S-8006	1	PLUG-O-RING (7/8-14 THD)	
	14	1	2M-9780	1	SEAL-O-RING (19.18MM ID)	
	15	1	2W-7211	1	BEARING-SLEEVE	

B-USE AS REQUIRED
M-METRIC PART

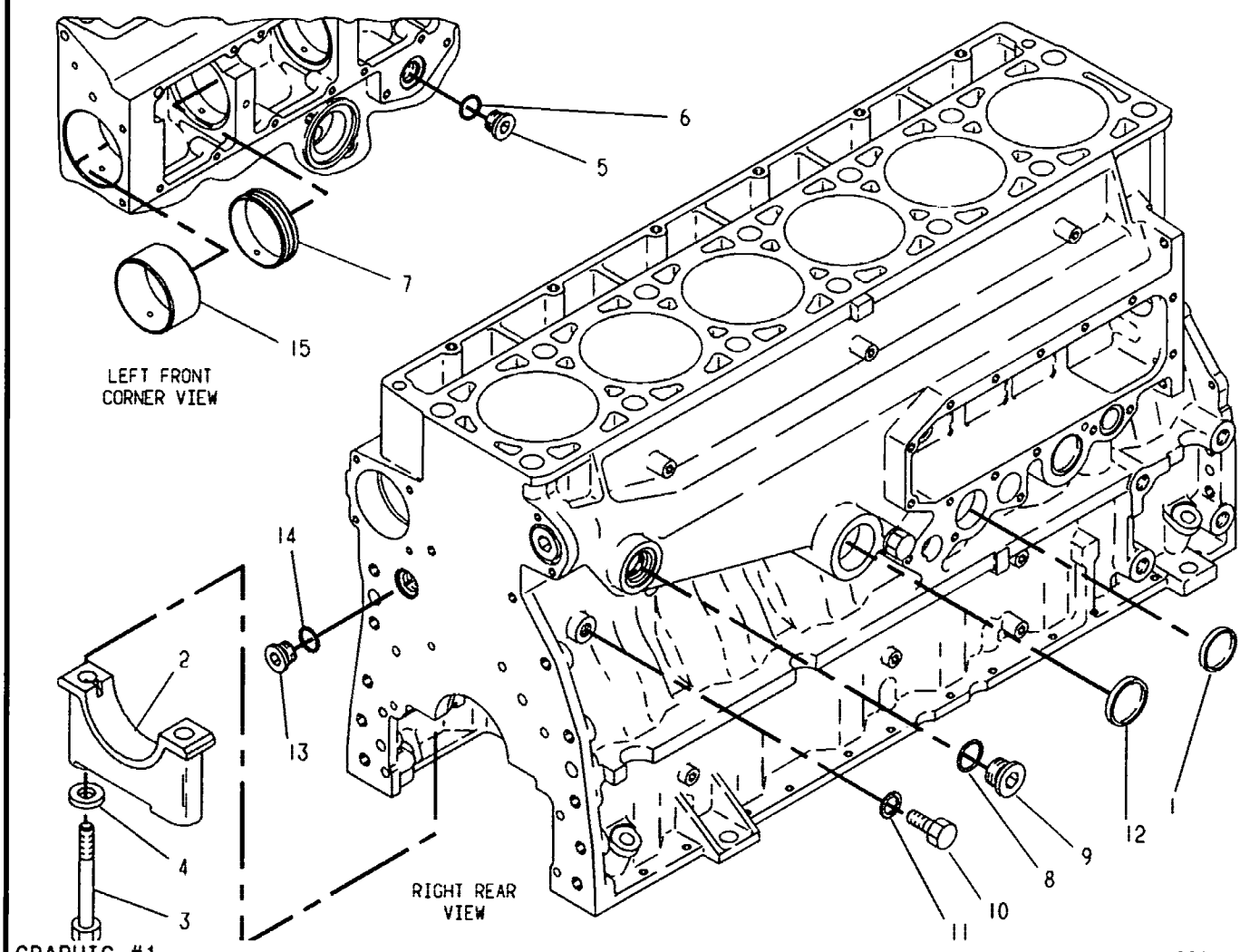

GRAPHIC #1

g00082090

BASIC ENGINE

129-1095 CYLINDER BLOCK GP

S/N 98Z17020-UP

PART OF 2W-9746 CYLINDER BLOCK GP

SMCS-1200, 1201, 1211, 1216, 1217, 1221, 1331 **i00135102**

NOTE	REF NO	GRAPHIC REF	PART NUMBER	QTY	PART NAME 1 2 3 4 5 6 (PRODUCT LEVEL)	SEE PAGE
	1	1	2M-6471	2	PLUG-CUP	
	2	1	7E-2968	7	CAP-CRANKSHAFT BEARING	
M	3	1	9X-8916	14	BOLT	
	4	1	5P-8247	14	WASHER-HARD (3.5MM THK)	
	5	1	9S-8005	1	PLUG-O-RING (3/4-16 THD)	
	6	1	3K-0360	1	SEAL-O-RING (16.36MM ID)	
	7	1	2W-7213	6	BEARING-SLEEVE	
B	8	1	3D-2824	2	SEAL-O-RING (23.47MM ID)	
B	9	1	9S-8008	2	PLUG-O-RING (1 1/16-12 THD)	
M	10	1	8T-0293	2	BOLT (M12X1.75X20MM)	
	11	1	6F-7062	2	WASHER	
	12	1	3H-5552	1	PLUG-CUP	
	13	1	9S-8006	1	PLUG-O-RING (7/8-14 THD)	
	14	1	2M-9780	1	SEAL-O-RING (19.18MM ID)	
	15	1	2W-7211	1	BEARING-SLEEVE	

B-USE AS REQUIRED
M-METRIC PART

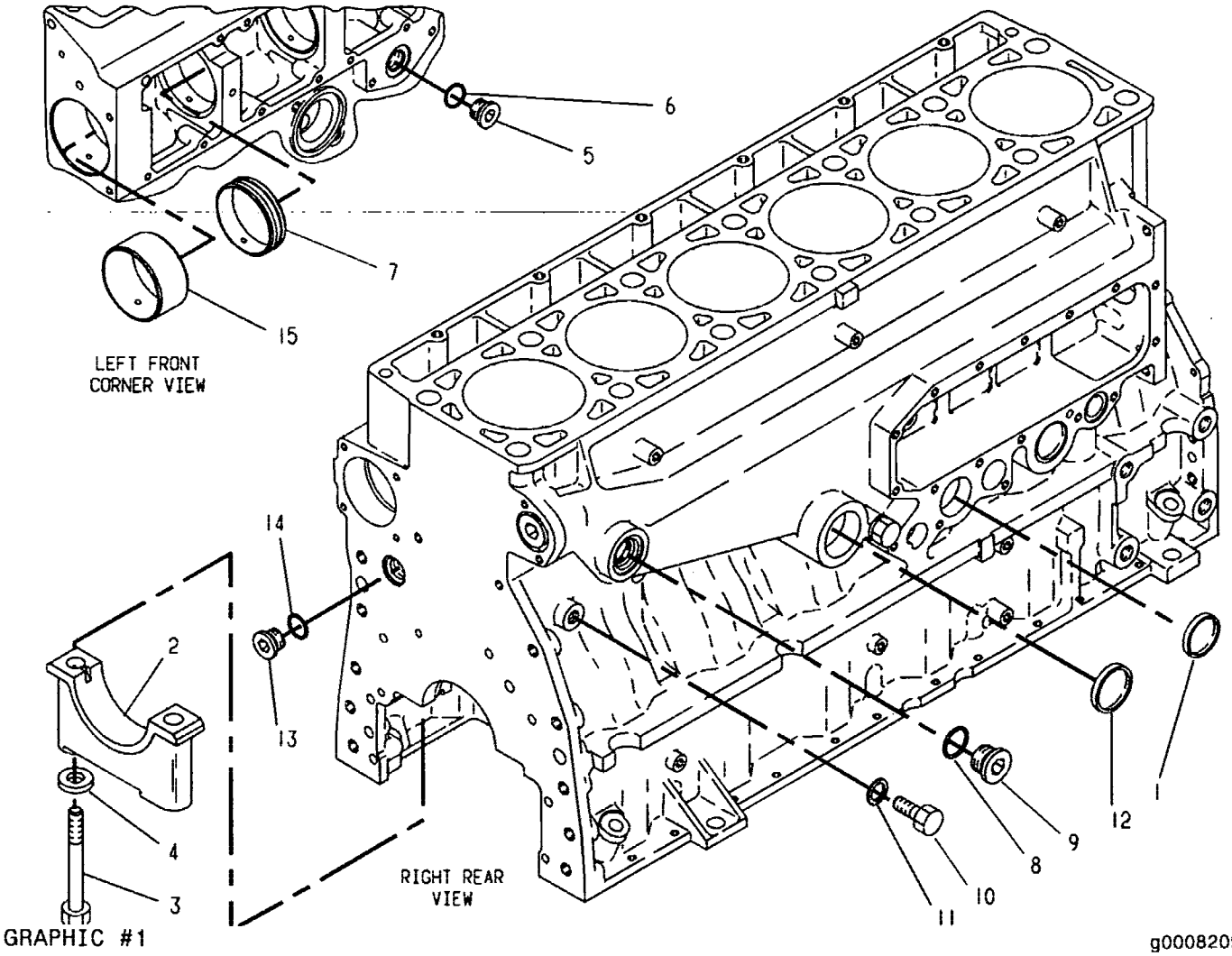

GRAPHIC #1

g00082090

BASIC ENGINE

119-3065 CYLINDER HEAD AS

S/N 98Z15500-UP

PART OF 4P-8263 CYLINDER HEAD GP

SMCS-1100, 1101, 1103, 1104, 1105, 1106, 1108, 1109, 1115, 1121, 1124, 1125

i00134995

NOTE	REF NO	GRAPHIC REF	PART NUMBER	QTY	PART NAME 1 2 3 4 5 6 (PRODUCT LEVEL)	SEE PAGE
Z	1	1		1	CYLINDER HEAD	
	2	1	1W-2713	6	INSERT-VALVE SEAT	
	3	1	126-0453	6	INSERT-V SEAT	
	4	1	119-3061	6	SLEEVE	
	5	1	8M-5860	6	PLUG-CUP	

Z-NOT SERVICED SEPARATELY

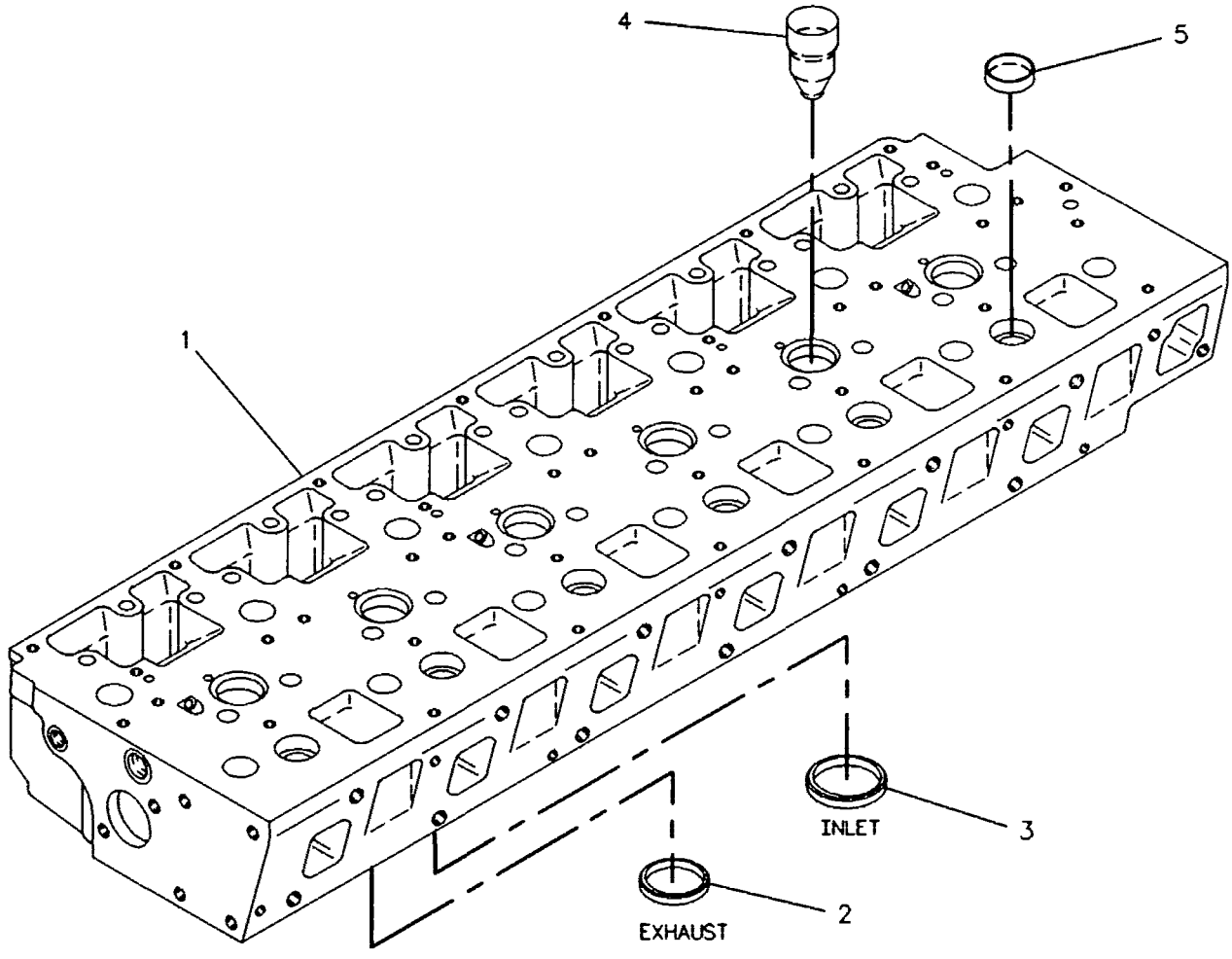

GRAPHIC #1

g00108621

BASIC ENGINE

4P-8263 CYLINDER HEAD GP

S/N 98Z15500-UP

PART OF 4P-8264 CYLINDER HEAD GP

SMCS-1100, 1103, 1104, 1105, 1106, 1108, 1109, 1115, 1121, 1124, 1125

i00135007

NOTE	REF NO	GRAPHIC REF	PART NUMBER	QTY	PART NAME 1 2 3 4 5 6 (PRODUCT LEVEL)	SEE PAGE
CY	1	1	**119-3065**	1	CYLINDER HEAD AS	25
	2	1	**113-6180**	6	VALVE-INLET	
	3	1	**105-1779**	6	VALVE-EXHAUST	
	4	1	**1W-2715**	24	LOCK-RETAINER	
	5	1	**7E-7779**	12	RETAINER-SPRING	
	6	1	**7C-4273**	12	SPRING-VALVE	
	7	1	**9Y-8848**	12	GUIDE-VALVE	
	8	1	**119-3036**	12	SEAL-VALVE STEM	

C-CHANGE FROM PREVIOUS TYPE
Y-SEPARATE ILLUSTRATION

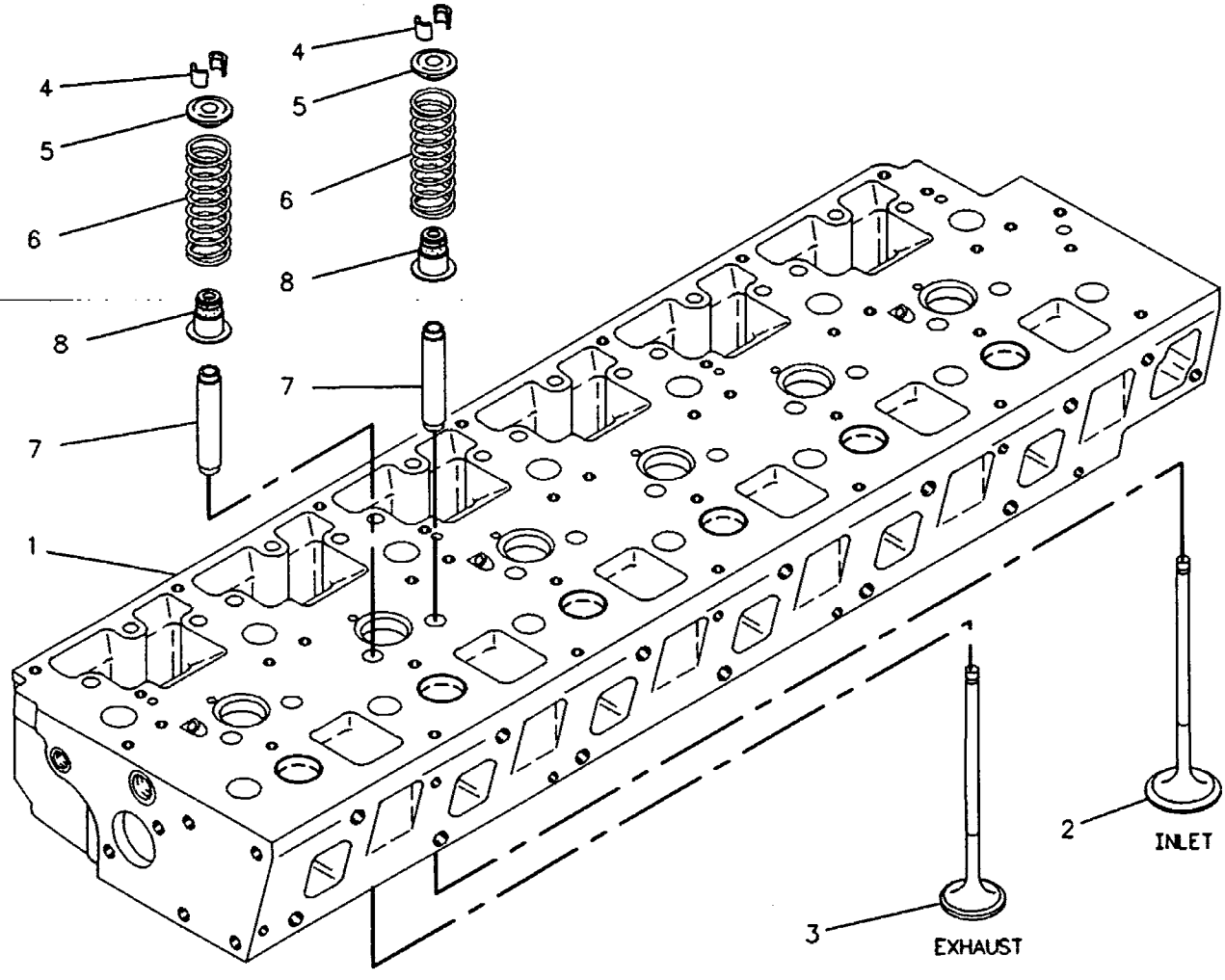

GRAPHIC #1

g00108608

BASIC ENGINE

4P-8264 CYLINDER HEAD GP

S/N 98Z15500-UP

PART OF 146-8338, 7E-3352 ENGINE AR

SMCS-1100, 1103, 1104, 1105, 1106, 1108, 1109, 1115, 1121, 1124, 1125

i00834865

NOTE	REF NO	GRAPHIC REF	PART NUMBER	QTY	PART NAME 1 2 3 4 5 6 (PRODUCT LEVEL)	SEE PAGE
	1	1	**1J-9671**	3	SEAL-O-RING (10.52MM ID)	
YR	2	1	*4P-8263*	1	CYLINDER HEAD GP	26
	3	1	**8T-3282**	14	WASHER-HARD (3.5MM THK)	
M		1	**127-4836**	14	BOLT-HEX HEAD	
	4	1	**9S-8003**	3	PLUG-O-RING (1/2-20 THD)	
	5	1	**2M-6471**	2	PLUG-CUP (38.35MM AVG OD)	
	6	1	**107-7832**	1	GASKET (1.60MM THK)	
AB		1	**4P-2590**	1	GASKET-CYLINDER HEAD (1.85MM THK)	
M	7	1	**8T-5030**	6	BOLT (M10X1.5X120MM)	

A-NOT PART OF THIS GROUP
B-USE AS REQUIRED
M-METRIC PART
R-REMFG PART MAY BE AVAILABLE
Y-SEPARATE ILLUSTRATION

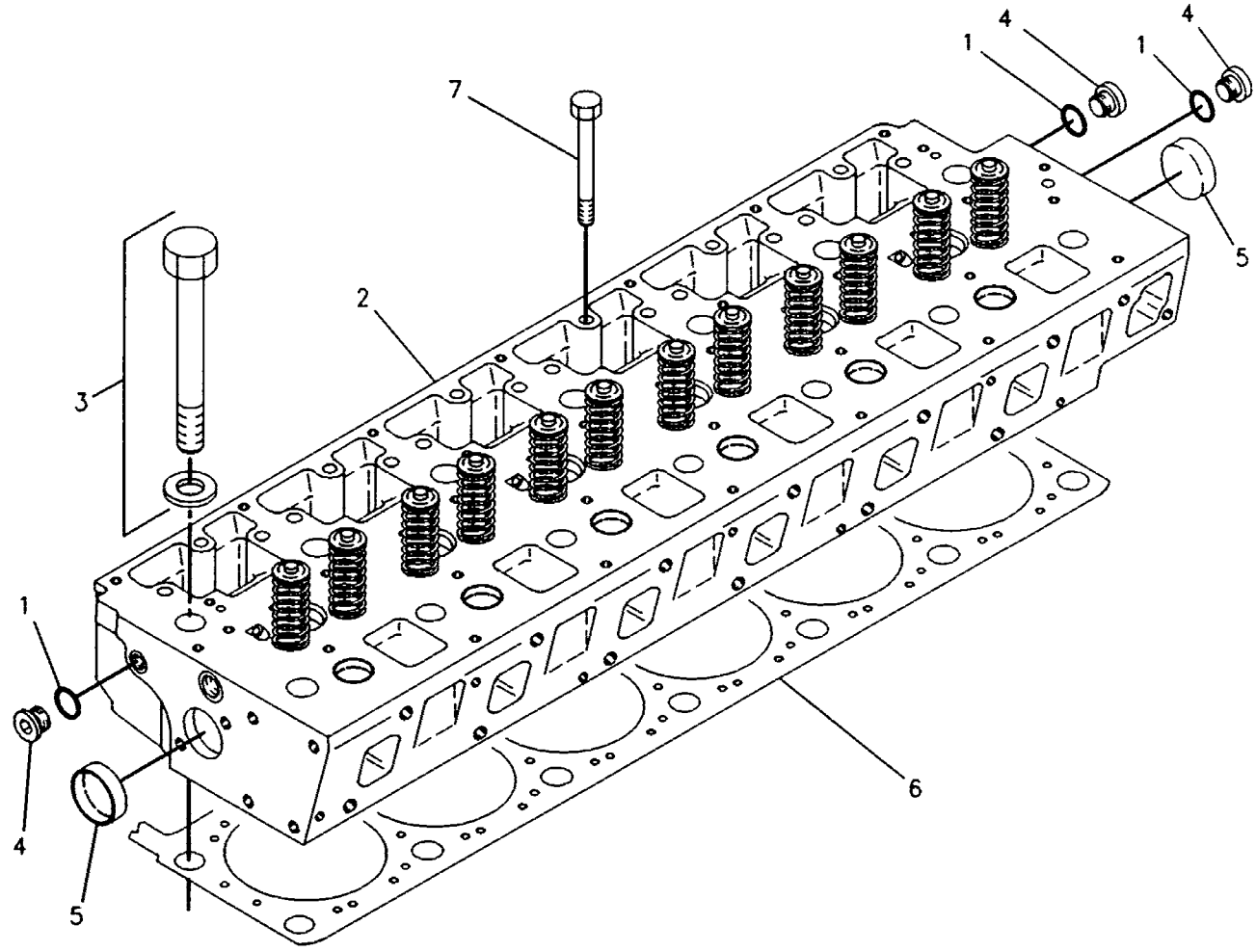

GRAPHIC #1

g00108764

BASIC ENGINE

7C-2469 DAMPER & PULLEY GP

S/N 98Z15500-UP

PART OF 146-8338, 7E-3352 ENGINE AR

SMCS-1205 i00135753

NOTE	REF NO	GRAPHIC REF	PART NUMBER	QTY	PART NAME 1 2 3 4 5 6 (PRODUCT LEVEL)	SEE PAGE
	1	1	**7C-2272**	1	YOKE-HYDRAULIC PUMP DRIVE	
	2	1	**7C-2430**	1	PULLEY	
	3	1	**7C-1631**	1	DAMPER AS	
M	4	1	**8T-2223**	8	BOLT-SOCKET HEAD	

M-METRIC PART

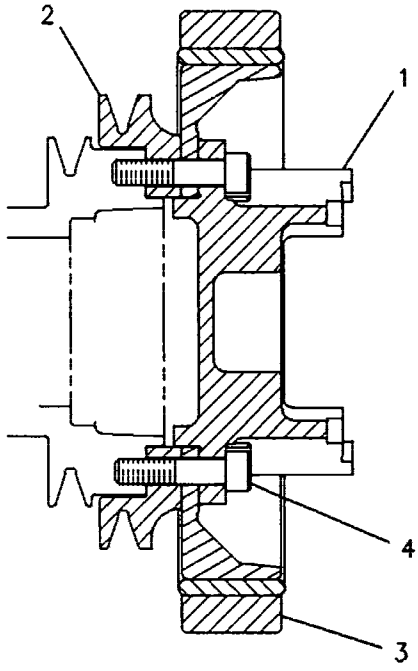

GRAPHIC #1 g00108726

BASIC ENGINE

4P-2102 DRAIN GP-OIL PAN

S/N 98Z15500-UP

PART OF 146-8338, 7E-3352 ENGINE AR

SMCS-1302 i00676755

NOTE	PART NUMBER	QTY	PART NAME 1 2 3 4 5 6 (PRODUCT LEVEL)	SEE PAGE
	113-5336	1	ADAPTER AS-DRAIN	
	8N-6849	1	ADAPTER-PLUG	
	5N-8780	1	PLUG-DRAIN	
M	7X-2537	2	BOLT (M8X1.25X35MM)	
	8N-6854	1	GASKET-ADAPTER	
	113-5335	1	PLUG-DRAIN	
	5P-4116	2	WASHER (2MM THK)	

M-METRIC PART

BASIC ENGINE

107-3773 DRIVE GP-FAN

PIN 5FM1-UP

PART OF 112-5819 INSTALLATION AR-ENGINE

SMCS-1359 **i00134940**

NOTE	REF NO	GRAPHIC REF	PART NUMBER	QTY	PART NAME 1 2 3 4 5 6 (PRODUCT LEVEL)	SEE PAGE
	1	1	**8W-5537**	1	SUPPORT AS	
		1	**1F-5339**	1	LUG (3/8-16 THD)	
		1	**5H-9394**	1	BOSS (1/2-13 THD)	
M	2	1	**8T-4908**	6	BOLT (M8X1.25X25MM)	
	3	1	**9X-8257**	4	WASHER (3.50MM THK)	
M	4	1	**7X-2553**	4	BOLT (M16X2.0X40MM)	
	5	1	**8X-1805**	1	PULLEY	
M	6	1	**8T-4196**	4	BOLT (M10X1.50X35MM)	
	7	1	**8T-4121**	8	WASHER (2.5MM THK)	
	8	1	**8W-5533**	1	PULLEY	
	9	1	**9L-2526**	1	V-BELT SET (INCLUDES 3 BELTS)	
	10	1	**107-9572**	1	PULLEY	
M	11	1	**8T-4185**	4	BOLT (M10X1.50X50MM)	
M	12	1	**5A-3604**	6	BOLT-SOCKET HEAD (M8X1.25X25MM)	
	13	1	**8T-4224**	12	WASHER-HARD (2MM THK)	
	14	1	**7C-8371**	1	ADAPTER-FAN	
	15	1	**7C-8365**	1	DRIVE GP-FAN	
	16	1	**5S-9062**	1	SPACER	
	17	1	**7C-8370**	1	CAP	
	18	1	**7C-8366**	1	BRACKET AS	
	19	1	**7C-8369**	1	HUB	
	20	1	**6V-9748**	1	SEAL-LIP	
	21	1	**4W-1203**	2	CUP-ROLLER BEARING	
	22	1	**4W-1204**	2	CONE-ROLLER BEARING	
	23	1	**4W-2042**	1	SPACER	
M	24	1	**6V-8004**	1	BOLT (M12X1.75X120MM)	
	25	1	**7C-8634**	1	PLATE	

M-METRIC PART

107-3773 DRIVE GP-FAN *(contd.)* i00134940

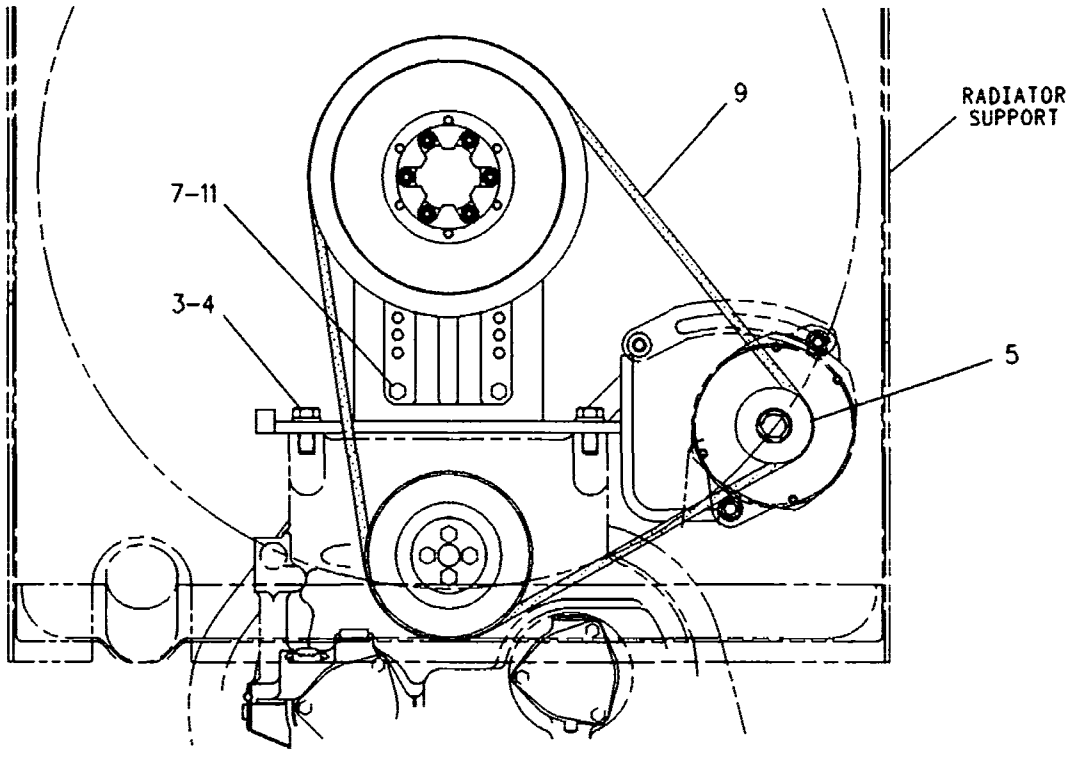

REAR VIEW

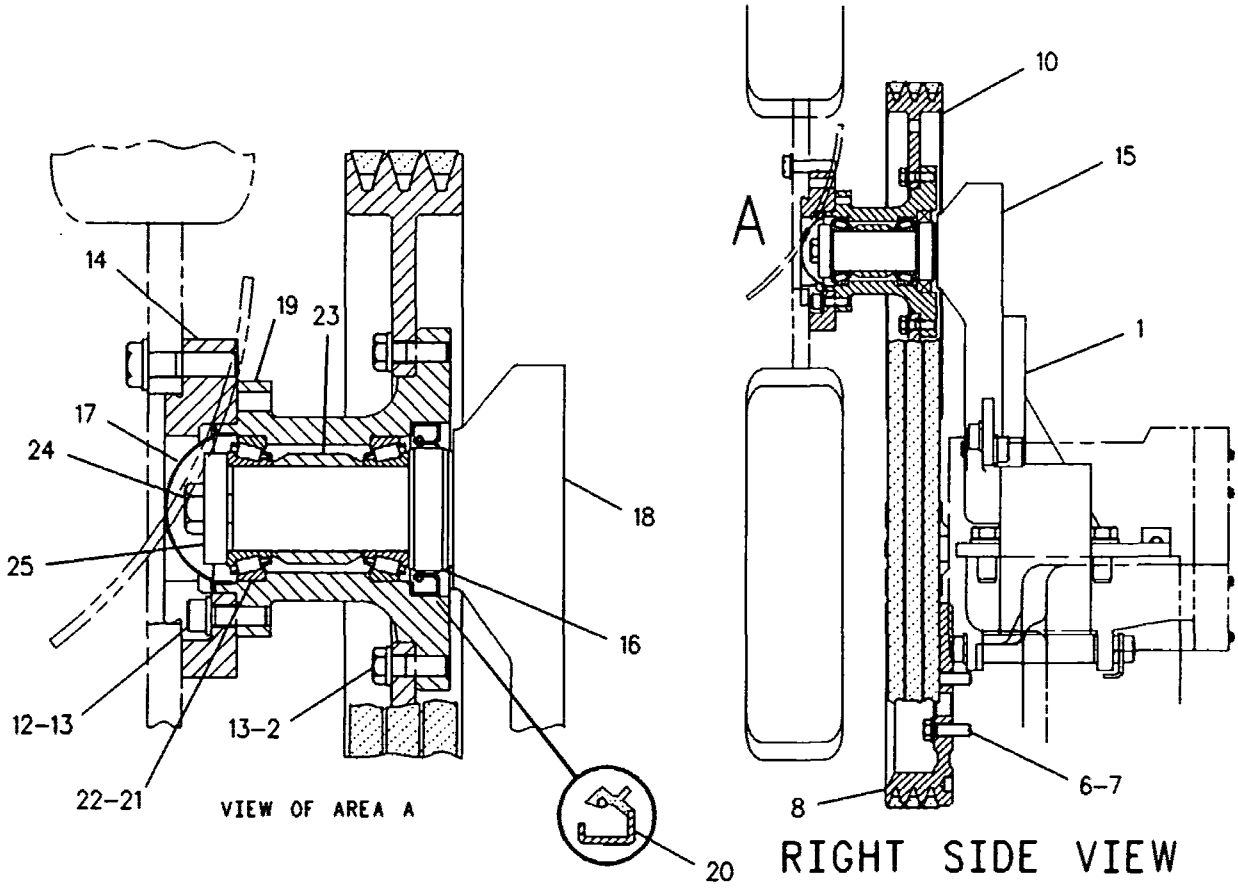

RIGHT SIDE VIEW

GRAPHIC #1 g00108742

BASIC ENGINE

4W-5428 DRIVE GP-WATER PUMP

S/N 98Z15500-UP

PART OF 146-8338, 7E-3352 ENGINE AR

SMCS-1358, 1361 i00135151

NOTE	REF NO	GRAPHIC REF	PART NUMBER	QTY	PART NAME 1 2 3 4 5 6 (PRODUCT LEVEL)	SEE PAGE
	1	1	036-6775	1	V-BELT	
M	2	1	6V-2317	2	BOLT (M8X1.25X30MM)	
	3	1	3E-4352	1	WASHER-HARD (2.5MM THK)	
	4	1	115-4204	1	PULLEY AS-IDLER	
	5	1	2L-8509	1	LOCKRING	
	6	1	117-7114	1	BALL BEARING AS	
	7	1	100-6267	1	PLATE AS-IDLER	
	8	1	9M-1974	1	WASHER-HARD (2MM THK)	
M	9	1	6V-5215	1	BOLT (M8X1.25X16MM)	
	10	1	4F-3714	1	WASHER	

M-METRIC PART

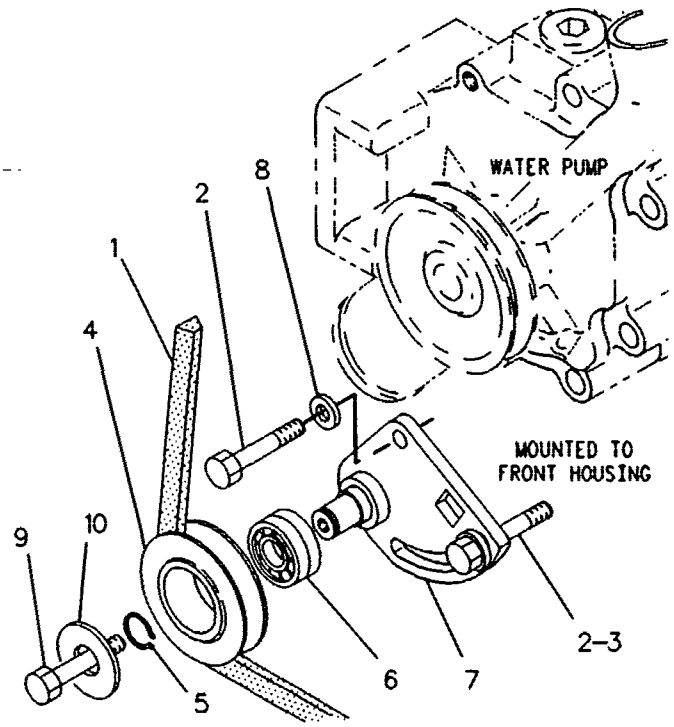

GRAPHIC #1 g00108755

BASIC ENGINE

7E-5385 FLYWHEEL GP

S/N 98Z15500-UP

PART OF 146-8338, 7E-3352 ENGINE AR

SMCS-1156, 1158 i00135106

NOTE	REF NO	GRAPHIC REF	PART NUMBER	QTY	PART NAME 1 2 3 4 5 6 (PRODUCT LEVEL)	SEE PAGE
	1	1	7E-5386	1	FLYWHEEL AS	
		1	7W-5095	1	GEAR-FLYWHEEL (134 TEETH)	
M	2	1	7X-7961	8	BOLT	
	3	1	5P-8245	8	WASHER (3MM THK)	

M-METRIC PART

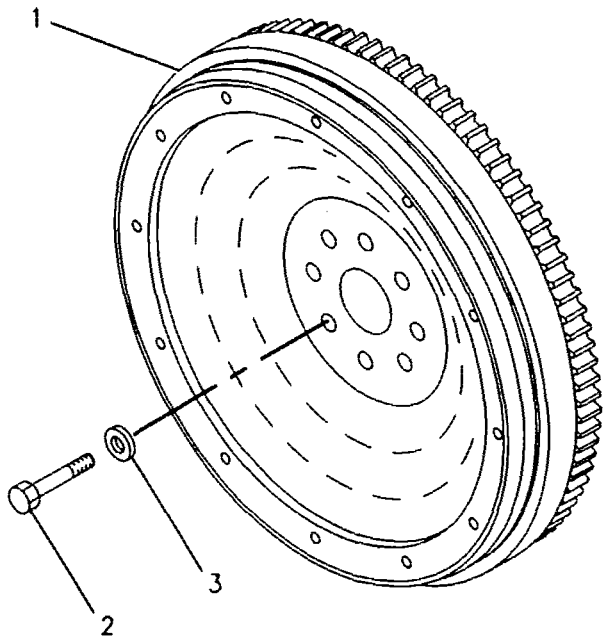

GRAPHIC #1 g00109210

BASIC ENGINE

101-4540 GEAR GP-FRONT

S/N 98Z15500-UP

PART OF 146-8338, 7E-3352 ENGINE AR

SMCS-1204, 1206, 1212, 1288, 1313 **i00134844**

NOTE	REF NO	GRAPHIC REF	PART NUMBER	QTY	PART NAME 1 2 3 4 5 6 (PRODUCT LEVEL)	SEE PAGE
	1	1	**2W-8476**	1	GEAR AS-IDLER (50 TEETH)	
	2	1	**2W-7566**	1	BEARING-SLEEVE	
	3	1	**7W-9740**	1	GEAR AS-IDLER (43 TEETH)	
	4	1	**7W-9930**	1	BEARING-SLEEVE	
	5	1	**7W-9738**	1	WASHER	
	6	1	**7W-9737**	1	SHAFT-OIL PUMP	
	7	1	**101-3207**	1	SHAFT-CAM IDLER	
M	8	1	**6V-5843**	2	BOLT (M10X1.50X45MM)	
M	9	1	**9X-2305**	1	BOLT-LOCKING	
M	10	1	**6V-3822**	1	BOLT (M10X1.50X35MM)	
	11	1	**101-3208**	1	PLATE-RETAINING	

M-METRIC PART

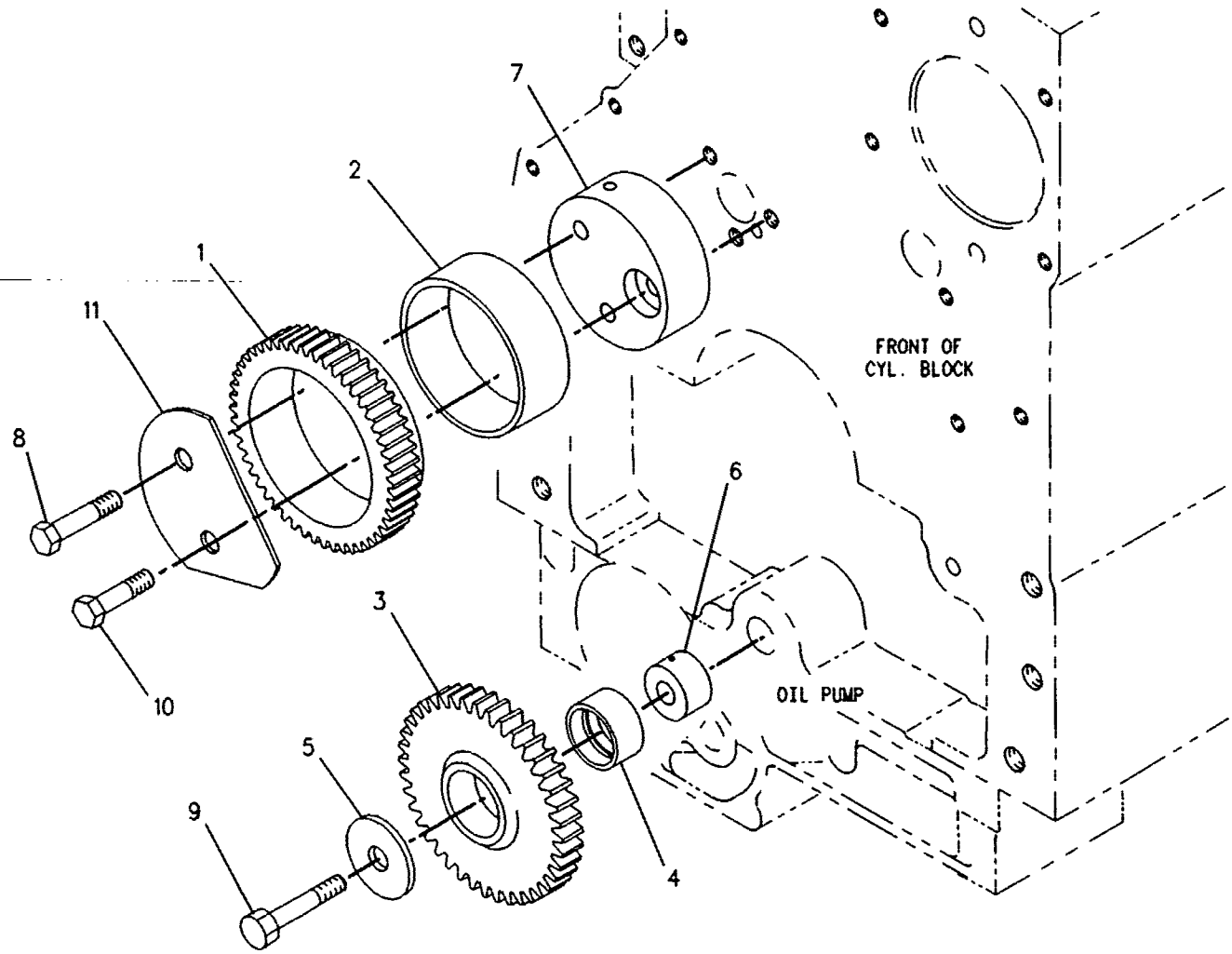

GRAPHIC #1 g00108507

BASIC ENGINE

9Y-0054 HOUSING GP-FLYWHEEL

S/N 98Z15500-UP

PART OF 146-8338, 7E-3352 ENGINE AR

SMCS-1157 i00135701

NOTE	REF NO	GRAPHIC REF	PART NUMBER	QTY	PART NAME 1 2 3 4 5 6 (PRODUCT LEVEL)	SEE PAGE
	1	1	**100-6550**	1	HOUSING-FLYWHEEL	
M	2	1	**8T-0226**	10	BOLT (M14X2X45 MM)	
	3	1	**2P-1294**	1	PLUG-SEAL	
M	4	1	**6V-5842**	2	BOLT (M10X1.50X40MM)	
	5	1	**9S-4183**	1	PLUG (1 1/16-12 THD)	
	6	1	**9S-4182**	1	PLUG (7/16-20 THD)	

M-METRIC PART

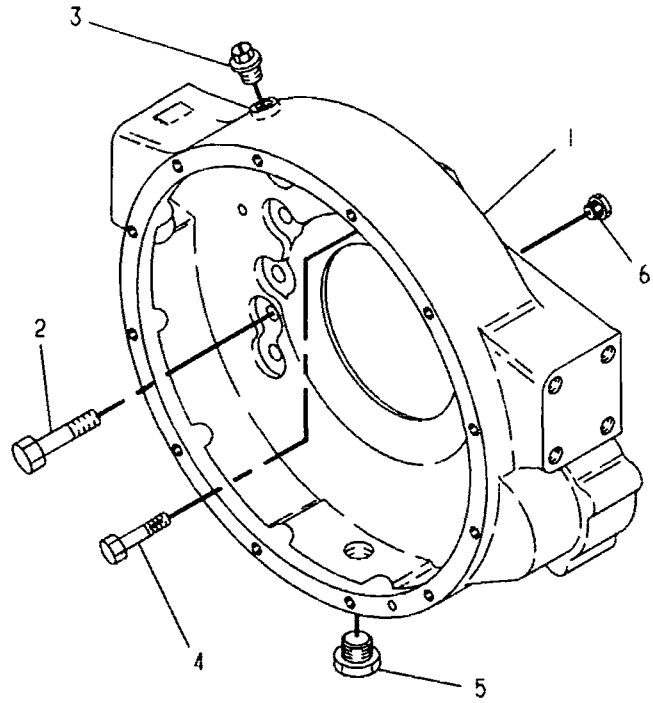

GRAPHIC #1 g00108332

BASIC ENGINE

101-4539 HOUSING GP-FRONT

S/N 98Z15500-UP

PART OF 146-8338, 7E-3352 ENGINE AR

SMCS-1151, 1162, 1166 **i00607135**

NOTE	REF NO	GRAPHIC REF	PART NUMBER	QTY	PART NAME 1 2 3 4 5 6 (PRODUCT LEVEL)	SEE PAGE
	1	1	**132-5242**	1	HOUSING-FRONT	
B		1	**1U-8846**		GASKET-LIQUID	
M	2	1	**6V-5217**	8	BOLT (M8X1.25X20MM)	
	3	1	**9M-1974**	12	WASHER-HARD (2MM THK)	
M	4	1	**6V-3918**	4	BOLT (M8X1.25X50MM)	
M	5	1	**6V-8336**	6	BOLT (M12X1.75X70MM)	
	6	1	**5P-8245**	6	WASHER (3MM THK)	
	7	1	**107-7611**	2	PLUG	

B-USE AS REQUIRED
M-METRIC PART

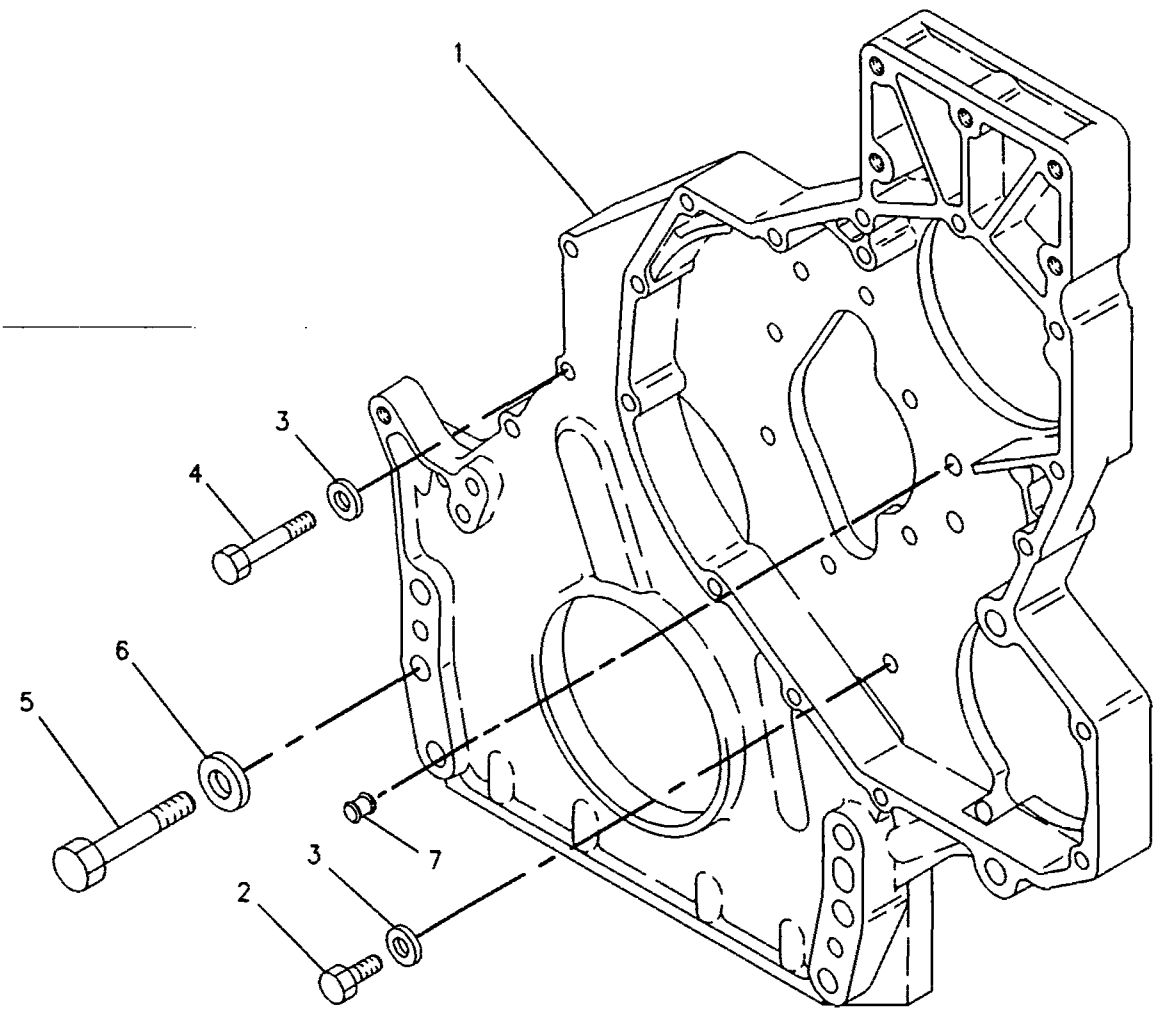

GRAPHIC #1 g00108885

BASIC ENGINE

4W-2515 LIFTING GP-ENGINE

S/N 98Z15500-UP

PART OF 146-8338, 7E-3352 ENGINE AR

SMCS-1122 i00135082

NOTE	REF NO	GRAPHIC REF	PART NUMBER	QTY	PART NAME 1 2 3 4 5 6 (PRODUCT LEVEL)	SEE PAGE
	1	1	**4W-1682**	1	PLATE-LIFTING	
	2	1	**4W-1683**	1	PLATE-LIFTING	
M	3	1	**6V-4248**	1	BOLT (M10X1.50X25MM)	
	4	1	**6V-5839**	1	WASHER (2.5MM THK)	
BM	5	1	**6V-4248**	4	BOLT (M10X1.50X25MM)	
B	6	1	**6V-5839**	4	WASHER (2.5MM THK)	
BM	7	1	**6V-4248**	3	BOLT (M10X1.50X25MM)	
B	8	1	**6V-5839**	3	WASHER (2.5MM THK)	

B-USE AS REQUIRED
M-METRIC PART

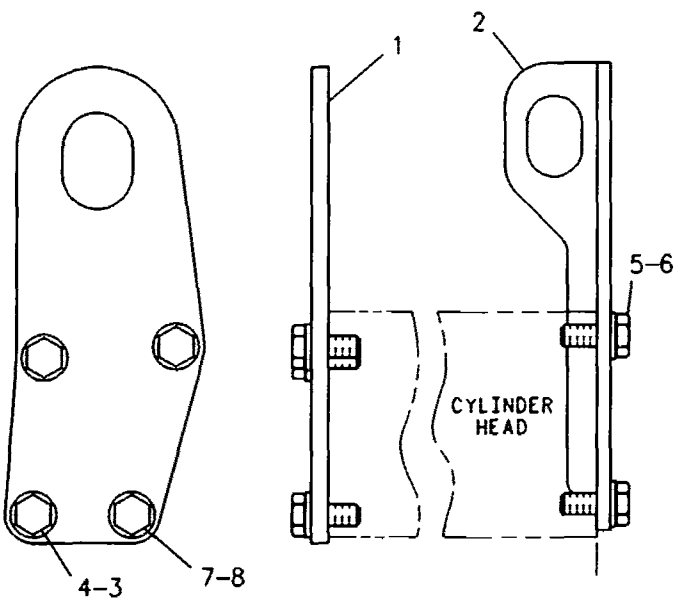

REAR VIEW RIGHT SIDE VIEW

GRAPHIC #1 g00108754

BASIC ENGINE

7E-3872 LINES GP-AIR COMPRESSOR

S/N 98Z15500-22642

PART OF 7E-3352 ENGINE AR

SMCS-1803 i00135812

NOTE	REF NO	GRAPHIC REF	PART NUMBER	QTY	PART NAME 1 2 3 4 5 6 (PRODUCT LEVEL)	SEE PAGE
	1	1	3B-6552	1	ELBOW	
I	2	1	4V-4770	1	HOSE AS	
	3	1	8C-6872	2	CONNECTOR	
	4	1	6V-8398	5	SEAL-O-RING (12.47MM ID)	
	5	1	128-0474	1	TUBE AS	
	6	1	7B-7501	1	CLIP (12.7MM ID)	
M	7	1	8T-4197	1	BOLT (M8X1.25X40MM)	
	8	1	5P-4116	2	WASHER (2MM THK)	
	9	1	8T-5429	2	ELBOW-90 DEGREE	
	10	1	3D-2824	2	SEAL-O-RING (23.47MM ID)	
	11	1	7E-7251	1	TUBE AS	
	12	1	7B-1598	1	CLIP (12.7MM ID)	
M	13	1	8T-6870	1	BOLT (M8X1.50X50MM)	
	14	1	8B-8679	1	SPACER (11.18MM THK)	
	15	1	122-2009	1	TUBE AS	
	16	1	3K-0360	1	SEAL-O-RING (16.36MM ID)	
M	17	1	8T-4137	2	BOLT (M10X1.50X20MM)	
	18	1	8T-4121	4	WASHER (2.5MM THK)	
	19	1	9M-7173	1	CLIP (12.7MM ID)	
	20	1	2Y-9255	1	SPACER	
M	21	1	8T-4133	1	NUT (M10X1.50 THD)	
	22	1	5P-9299	1	CLIP (12.7MM ID)	
	23	1	8R-9137	1	ANGLE	
M	24	1	8T-4136	1	BOLT (M10X1.50X25MM)	
	25	1	8J-7844	1	FITTING-ADAPTER	
	26	1	039-2281	1	SPACER	
	27	1	6V-7535	1	ELBOW-PIPE	

I-SEE HOSE FABRICATION GUIDE
M-METRIC PART

7E-3872 LINES GP-AIR COMPRESSOR *(contd.)* i00135812

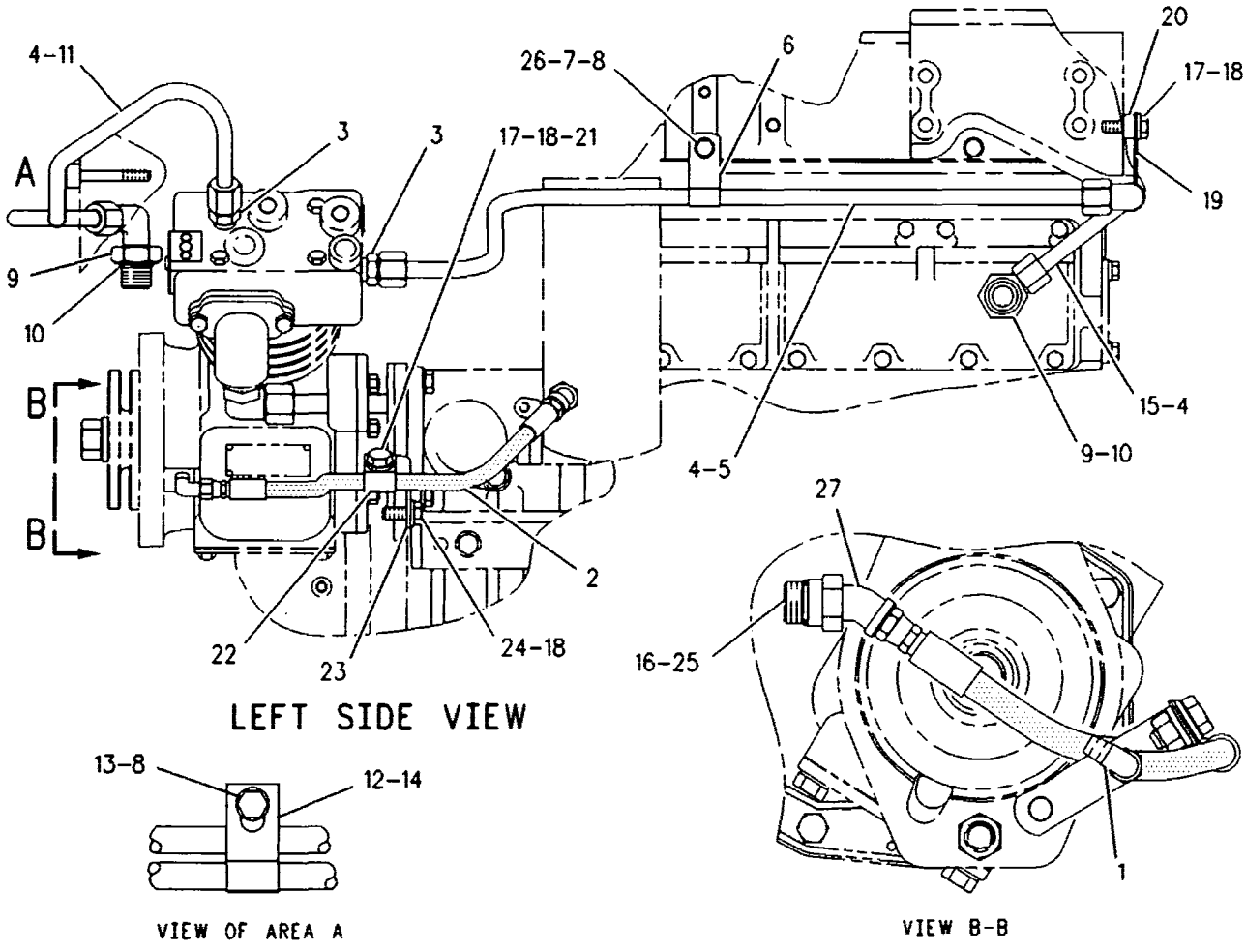

GRAPHIC #1 g00109083

BASIC ENGINE

7E-7252 LINES GP-AIR COMPRESSOR

PIN 5FM1-UP

PART OF 112-5819 INSTALLATION AR-ENGINE

SMCS-1803 i00612978

NOTE	REF NO	GRAPHIC REF	PART NUMBER	QTY	PART NAME 1 2 3 4 5 6 (PRODUCT LEVEL)	SEE PAGE
	1	1	5M-8537	1	BOSS	
	2	1	6V-8626	2	ELBOW-90 DEGREE	
	3	1	145-3740	1	TUBE AS	
	4	1	8F-8513	1	CLIP	
	5	1	4B-9302	1	CLIP (15.88MM ID)	
	6	1	8B-8679	1	SPACER (11.18MM THK)	
M	7	1	8T-4196	1	BOLT (M10X1.50X35MM)	
	8	1	8T-4121	1	WASHER (2.5MM THK)	
M	9	1	7X-0818	1	BOLT (M8X1.25X45MM)	
	10	1	5P-4116	1	WASHER (2MM THK)	
	11	1	2M-9780	2	SEAL-O-RING (19.18MM ID)	
	12	1	7J-9108	2	SEAL-O-RING (15.72MM ID)	

M-METRIC PART

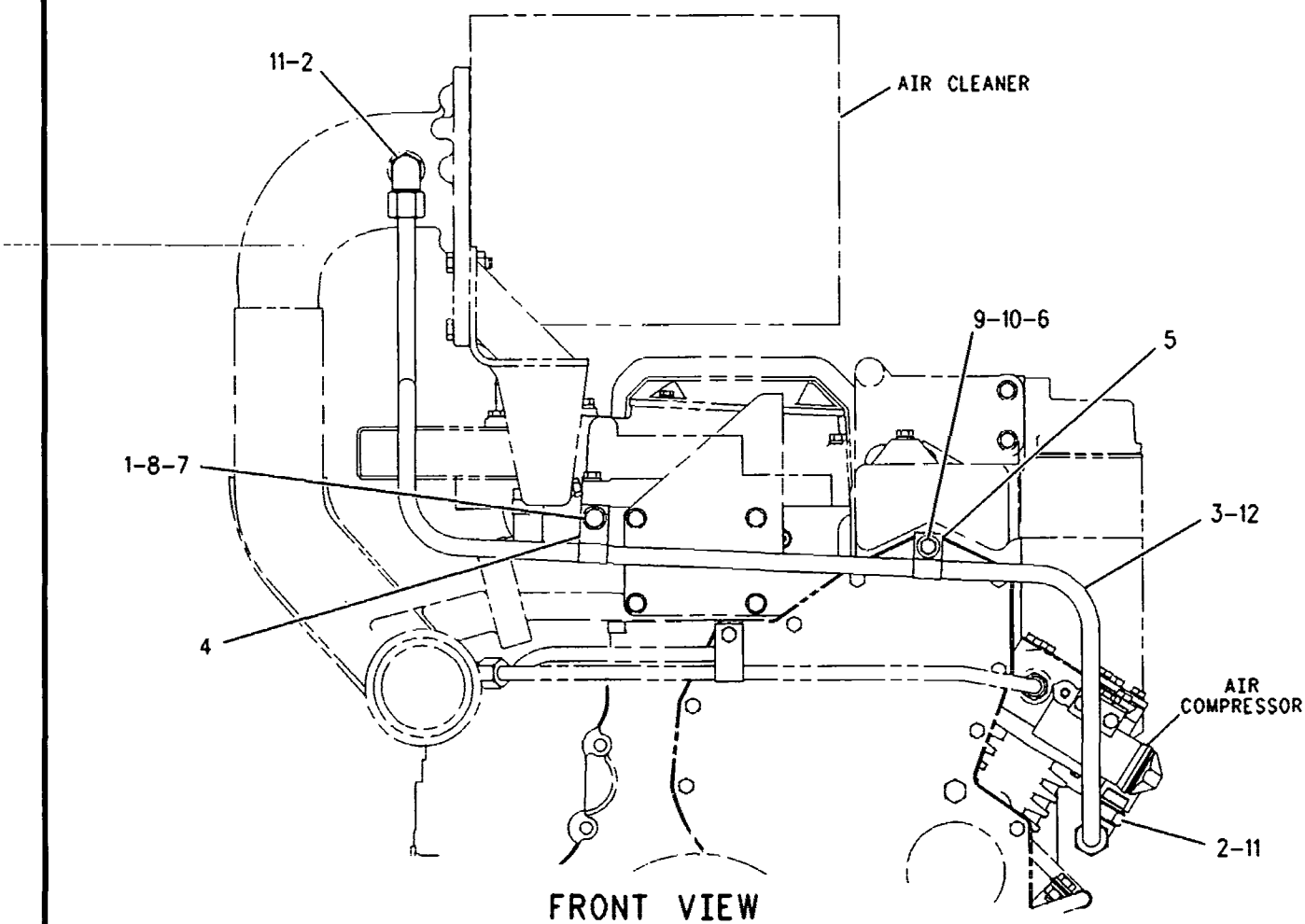

GRAPHIC #1 g00282422

MEMORANDA

BASIC ENGINE

145-3993 LINES GP-AIR COMPRESSOR

S/N 98Z22643-UP

PART OF 146-8338 ENGINE AR

SMCS-1803 i00676741

NOTE	REF NO	GRAPHIC REF	PART NUMBER	QTY	PART NAME 1 2 3 4 5 6 (PRODUCT LEVEL)	SEE PAGE
	1	1	3B-6552	1	ELBOW	
I	2	1	4V-4770	1	HOSE AS	
	3	1	3E-7449	1	ELBOW	
	4	1	6V-8398	5	SEAL-O-RING (12.47MM ID)	
M	5	1	8T-4189	1	BOLT (M8X1.25X20MM)	
	6	1	7B-7501	1	CLIP (12.7MM ID)	
	7	1	122-2009	1	TUBE AS	
	8	1	5P-4116	2	WASHER (2MM THK)	
	9	1	8T-5429	2	ELBOW-90 DEGREE	
	10	1	3D-2824	2	SEAL-O-RING (23.47MM ID)	
	11	1	145-0320	1	TUBE AS	
	12	1	7B-1598	1	CLIP (12.7MM ID)	
M	13	1	8T-6870	1	BOLT (M8X1.25X70MM)	
	14	1	8B-8679	1	SPACER (11.18MM THK)	
	15	1	145-0321	1	TUBE AS	
	16	1	3K-0360	1	SEAL-O-RING (16.36MM ID)	
M	17	1	8T-4137	2	BOLT (M10X1.50X20MM)	
	18	1	8T-4121	4	WASHER (2.5MM THK)	
	19	1	9M-7173	1	CLIP (12.7MM ID)	
	20	1	2Y-9255	1	SPACER	
M	21	1	8T-4133	1	NUT (M10X1.50 THD)	
	22	1	5P-9299	1	CLIP (12.7MM ID)	
	23	1	8R-9137	1	ANGLE	
M	24	1	8T-4136	1	BOLT (M10X1.50X25MM)	
	25	1	8J-7844	1	FITTING-ADAPTER	
	26	1	8C-6872	1	CONNECTOR	

I-SEE HOSE FABRICATION GUIDE
M-METRIC PART

145-3993 LINES GP-AIR COMPRESSOR *(contd.)* i00676741

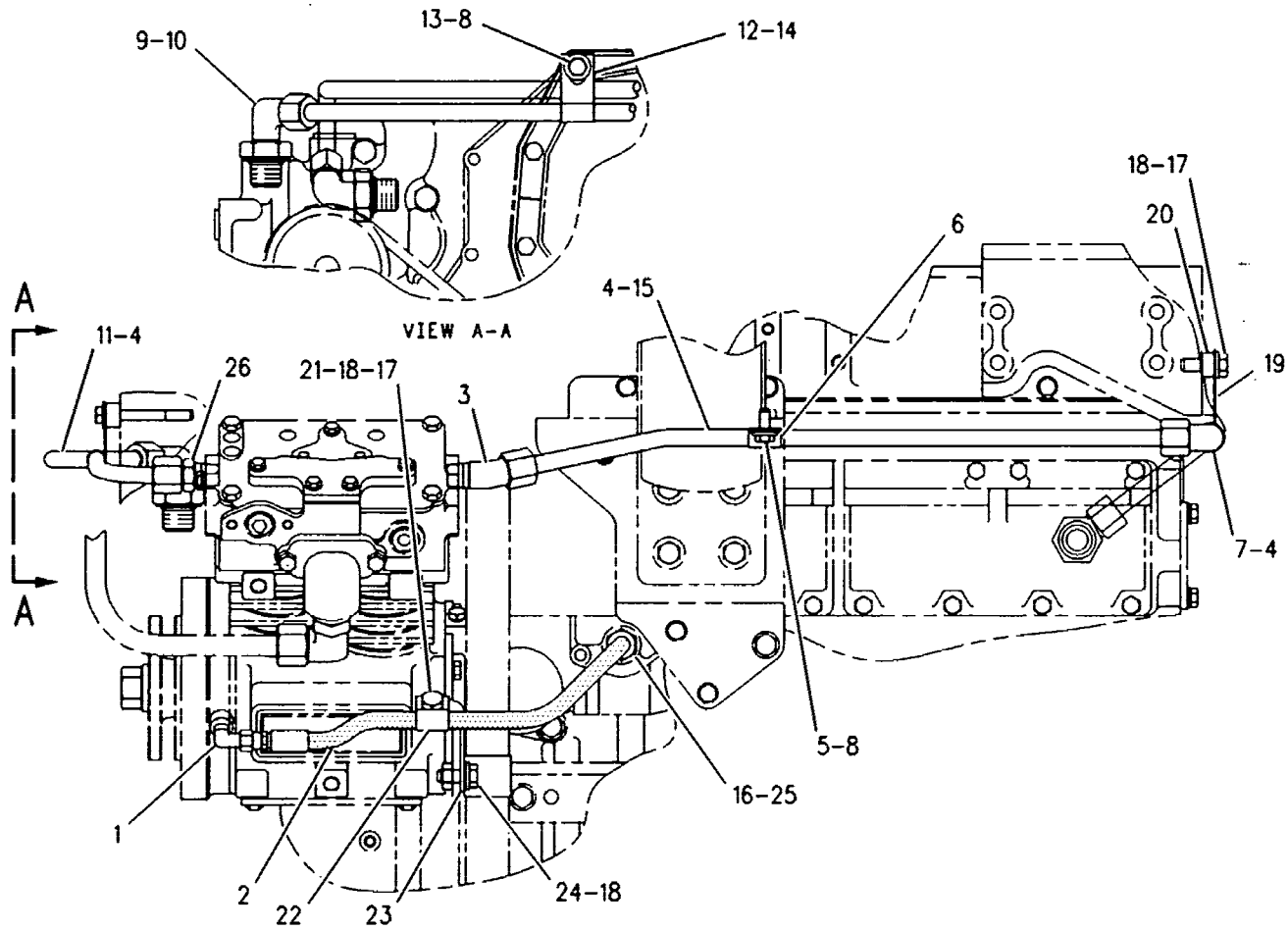

LEFT SIDE VIEW

GRAPHIC #1 g00284033

BASIC ENGINE

7C-2096 MOUNTING GP-ENGINE & TMSN

PIN 5FM1-UP

PART OF 112-5819 INSTALLATION AR-ENGINE

SMCS-1152, 1153, 1154 i00131110

NOTE	REF NO	GRAPHIC REF	PART NUMBER	QTY	PART NAME 1 2 3 4 5 6 (PRODUCT LEVEL)	SEE PAGE
	1	1	**9W-9920**	2	MOUNT AS	
	2	1	**9W-6582**	2	SLEEVE	
	3	1	**9W-6584**	4	WASHER (10MM THK)	
	4	1	*8T-4994*	2	WASHER (3.5MM THK)	
	5	1	**7X-0375**	2	BOLT (3/4 X 10 X 5IN)	
	6	1	**9W-7385**	2	SLEEVE	
	7	1	**6Y-9960**	2	MOUNT AS	
	8	1	**9W-7388**	4	WASHER (12.0MM THK)	
	9	1	**8T-5361**	2	WASHER (5MM THK)	
M	10	1	**8T-6430**	8	BOLT (M20X2.5X50MM)	
	11	1	**8T-4123**	8	WASHER-PLATED (3.5MM THK)	
	12	1	**1J-5929**	2	BOLT (1-8X6IN)	
	13	1	**8W-5897**	1	SUPPORT AS-RH	
		1	**8W-5820**	1	PLATE	
		1	*8W-5894*	1	PLATE	
		1	**8X-8794**	1	PLATE	
	14	1	**8W-5896**	1	SUPPORT AS-LH	
		1	**8G-2613**	1	PLATE	
		1	**8W-5895**	1	PLATE	
		1	**8X-8506**	1	PLATE	
		1	**8X-8507**	1	PLATE	
	15	1	**5S-7382**	12	BOLT (3/8-16X1.375IN)	
	16	1	**8T-4896**	12	WASHER-HARD (2.5MM THK)	

M-METRIC PART

7C-2096 MOUNTING GP-ENGINE & TMSN *(contd.)* i00131110

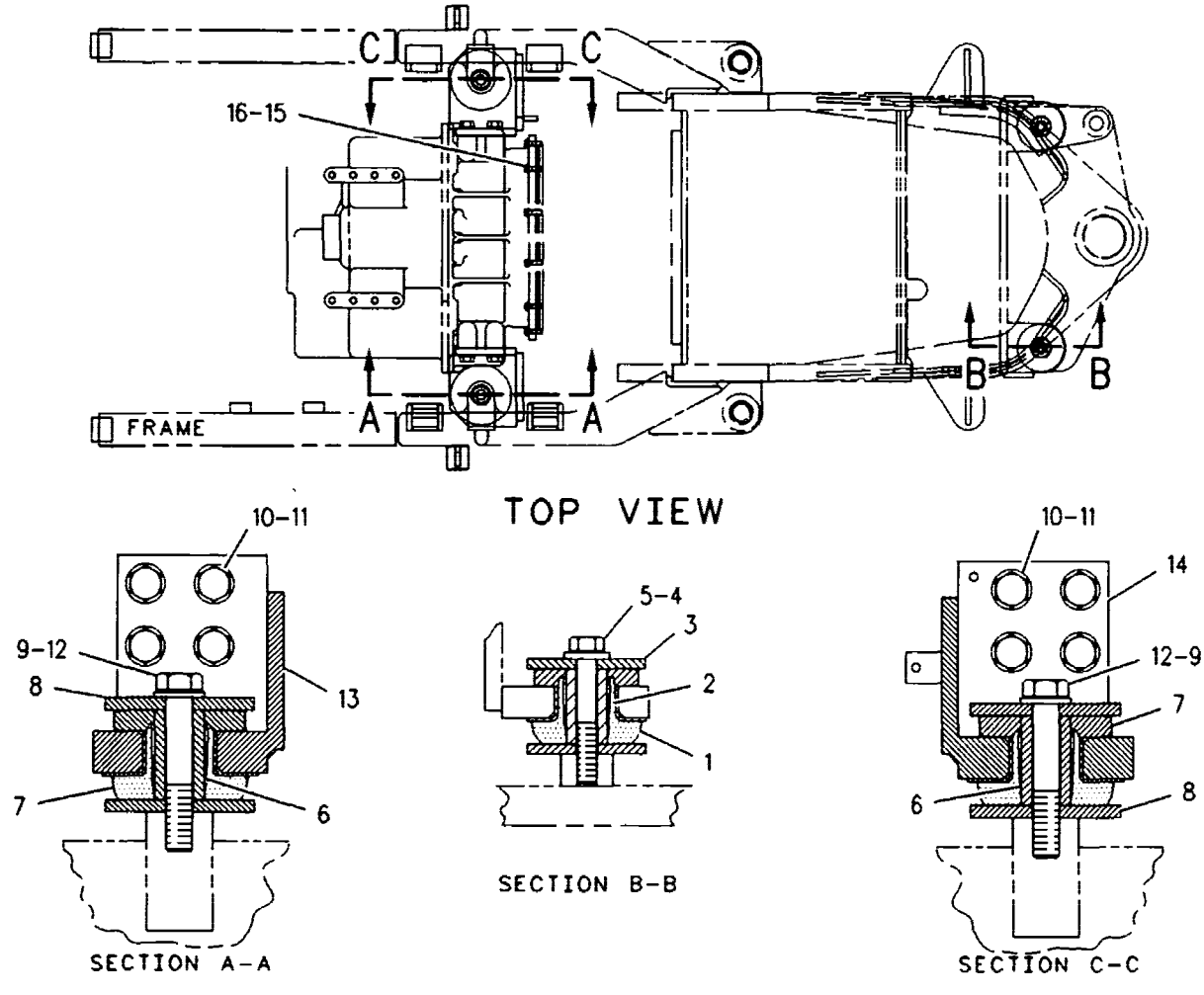

GRAPHIC #1 g00108573

BASIC ENGINE

115-4119 PAN GP-OIL

S/N 98Z15500-UP

PART OF 146-8338, 7E-3352 ENGINE AR

SMCS-1302 i00675073

NOTE	REF NO	GRAPHIC REF	PART NUMBER	QTY	PART NAME 1 2 3 4 5 6 (PRODUCT LEVEL)	SEE PAGE
					NO SERVICEABLE PARTS	

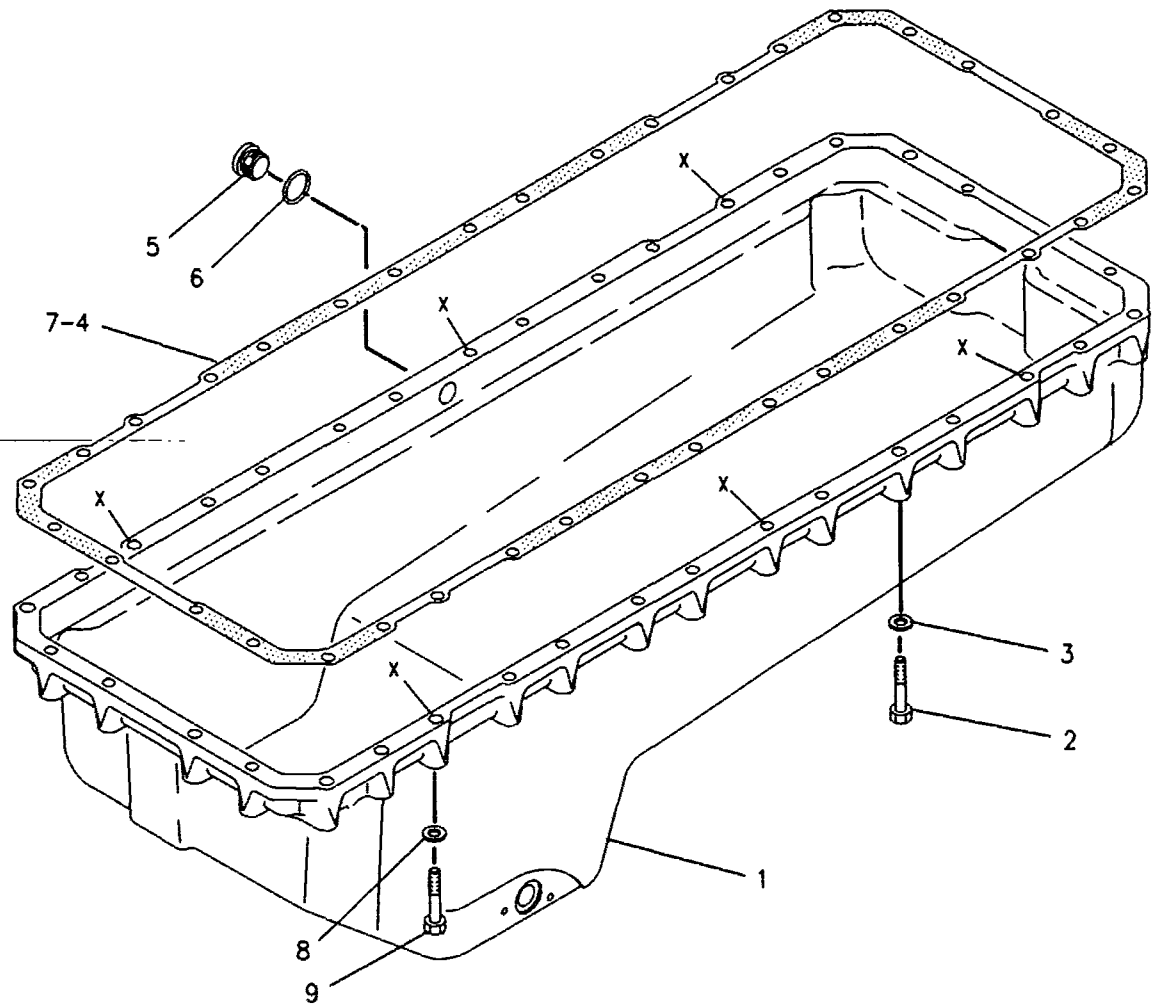

GRAPHIC #1 g00109082

BASIC ENGINE

115-4084 PISTON & ROD GP

S/N 98Z15500-UP

PART OF 146-8338, 7E-3352 ENGINE AR

SMCS-1214, 1215, 1218, 1219, 1225 i00664216

NOTE	REF NO	GRAPHIC REF	PART NUMBER	QTY	PART NAME 1 2 3 4 5 6 (PRODUCT LEVEL)	SEE PAGE
	1	1	107-7563	1	BODY AS-PISTON	
	2	1	7C-0115	1	PIN-PISTON	
	3	1	7W-9415	1	BEARING-CONNECTING ROD (STANDARD)	
A		1	7C-6976	1	BEARING (.25MM US)	
A		1	7C-6977	1	BEARING (.5MM US)	
	4	1	7C-0111	2	RETAINER-PIN	
R	5	1	2W-9128	1	ROD AS-CONNECTING	
	6	1	9N-3832	2	BOLT-CONNECTING ROD	
	7	1	9L-7669	2	NUT-CONNECTING ROD (7/16-20 THD)	
	8	1	2W-0027	1	BEARING	
	9	1	107-7787	1	RING-PISTON (TOP)	
	10	1	7E-5786	1	RING-PISTON (INTERMEDIATE)	
	11	1	7C-5232	1	RING-PISTON (OIL)	

A-NOT PART OF THIS GROUP
R-REMFG PART MAY BE AVAILABLE

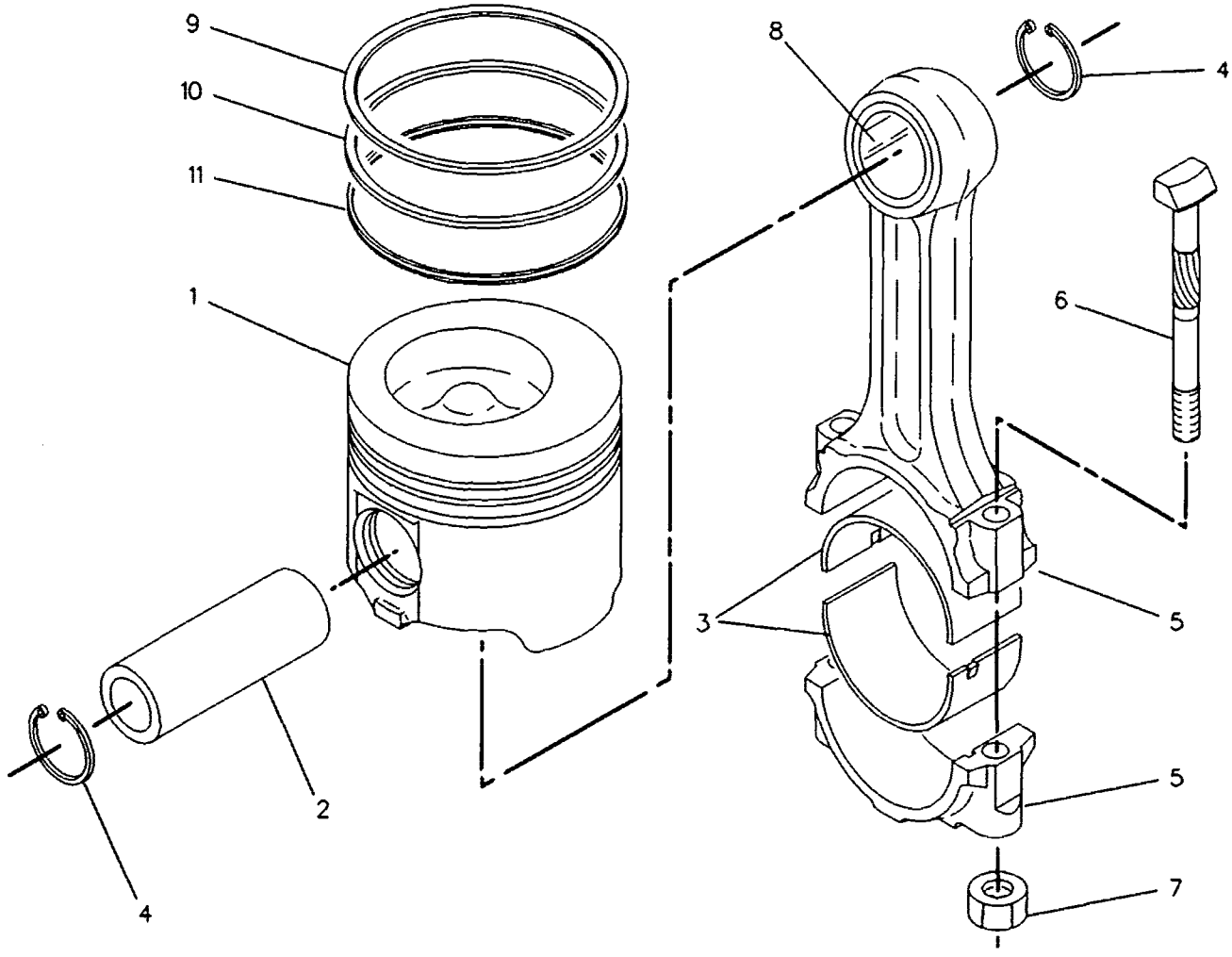

GRAPHIC #1 g00108380

BASIC ENGINE

4W-5429 PULLEY GP-CRANKSHAFT

S/N 98Z15500-UP

PART OF 146-8338, 7E-3352 ENGINE AR

SMCS-1205 i00135656

NOTE	REF NO	GRAPHIC REF	PART NUMBER	QTY	PART NAME 1 2 3 4 5 6 (PRODUCT LEVEL)	SEE PAGE
	1	1	7W-3773	1	PULLEY-CRANKSHAFT	
M	2	1	8T-3666	4	BOLT	
	3	1	2W-7381	1	WASHER-CLAMP	

M-METRIC PART

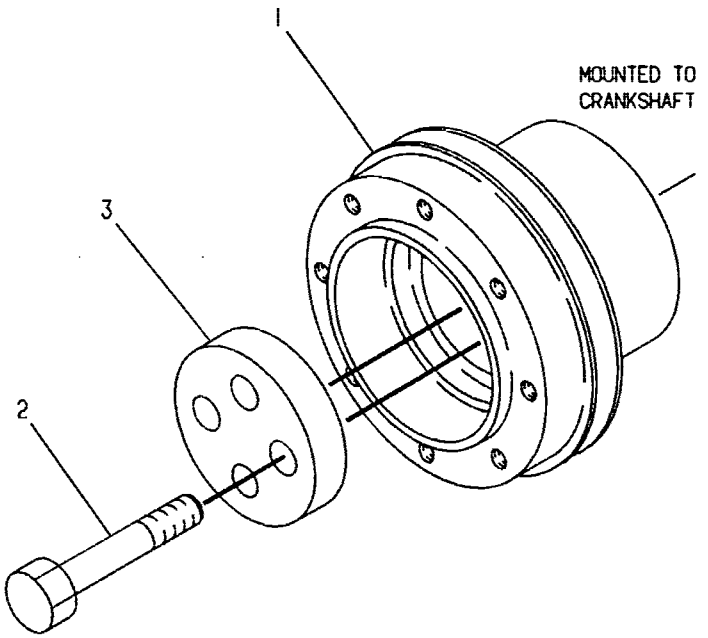

GRAPHIC #1 g00108307

BASIC ENGINE

107-7722 ROCKER ARM GP

S/N 98Z15500-UP

PART OF 4P-4372 VALVE MECHANISM GP

SMCS-1102, 1123 **i00134956**

NOTE	REF NO	GRAPHIC REF	PART NUMBER	QTY	PART NAME 1 2 3 4 5 6 (PRODUCT LEVEL)	SEE PAGE
M	1	1	9Y-4832	2	SCREW-VALVE ADJUSTMENT	
M	2	1	2Y-5829	2	NUT (M10X1.5 THD)	
	3	1	4P-7790	1	SHAFT AS-ARM	
	4	1	2D-6642	1	BALL	
	5	1	7M-5130	1	PIN	
	6	1	7W-4137	1	SHAFT AS	
	7	1	0L-1026	1	PLUG-CUP	
	8	1	7W-3983	1	RING-RETAINER	
	9	1	9Y-1582	1	BUTTON-ARM	
	10	1	6I-0924	2	ROCKER ARM AS	
	11	1	9Y-4973	1	SCREW-INJECTION ADJUSTMENT	
M	12	1	7W-4117	1	NUT	
	13	1	105-1776	1	ARM AS-UNIT INJECTOR	
Z	14	1		1	BEARING-SLEEVE	
Z	15	1		1	SOCKET-ARM	
	16	1	9Y-8534	1	SUPPORT-SHAFT	

M-METRIC PART
Z-NOT SERVICED SEPARATELY

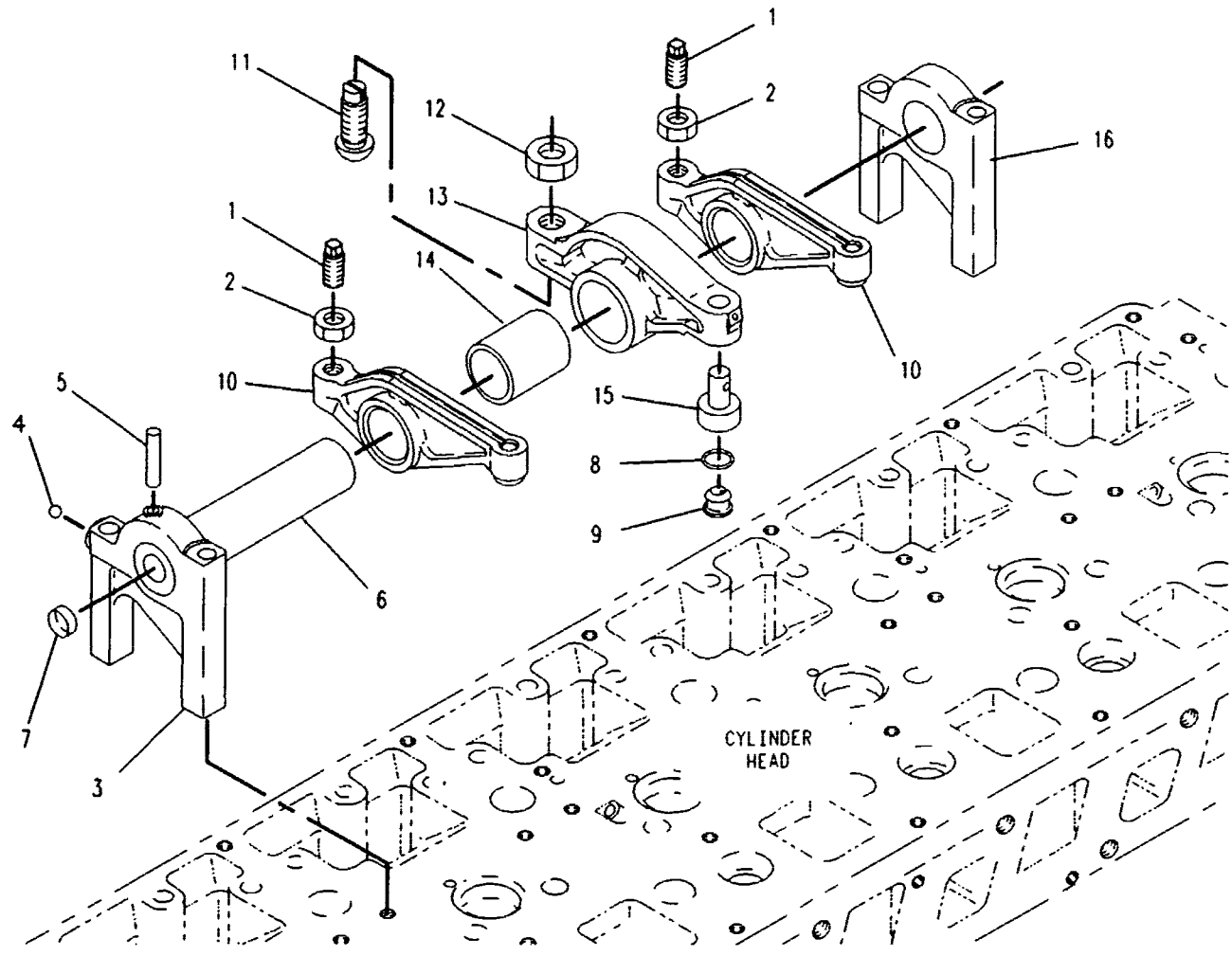

GRAPHIC #1 g00108442

BASIC ENGINE

7E-7590 SEAL GP-CRANKSHAFT

S/N 98Z15500-22642

PART OF 7E-3352 ENGINE AR

SMCS-1160, 1161 i00135162

NOTE	REF NO	GRAPHIC REF	PART NUMBER	QTY	PART NAME 1 2 3 4 5 6 (PRODUCT LEVEL)	SEE PAGE
	1	1	7E-7589	1	SEAL GP-CRANKSHAFT (REAR)	
	2	1	119-2921	1	SEAL GP-CRANKSHAFT (FRONT)	

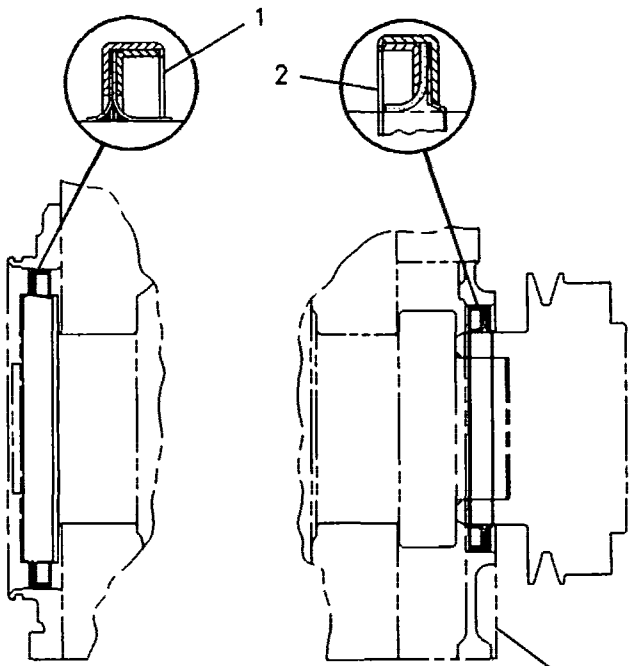

RIGHT SIDE VIEW

GRAPHIC #1 g00109225

BASIC ENGINE

115-4210 SEAL GP-CRANKSHAFT

S/N 98Z22643-UP

PART OF 146-8338 ENGINE AR

SMCS-1160, 1161 **i00718330**

NOTE	REF NO	GRAPHIC REF	PART NUMBER	QTY	PART NAME 1 2 3 4 5 6 (PRODUCT LEVEL)	SEE PAGE
	1	1	**115-4120**	1	SEAL GP-CRANKSHAFT	
Y	2	1	*119-2921*	1	SEAL GP-CRANKSHAFT	52
	3	1	**4R-9999**	1	EXCLUDER-CRANKSHAFT SEAL	

Y-SEPARATE ILLUSTRATION

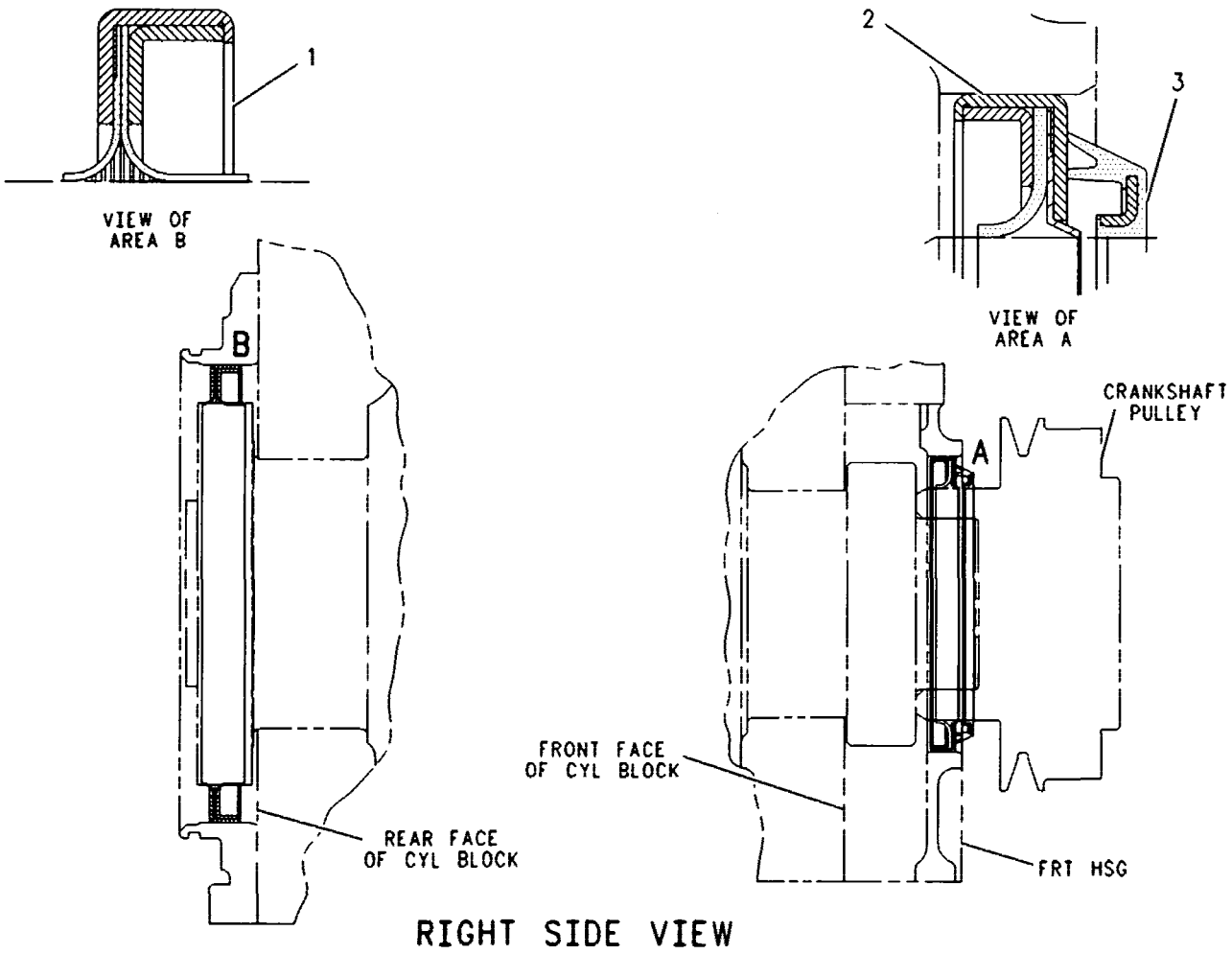

RIGHT SIDE VIEW

GRAPHIC #1 g00109240

BASIC ENGINE

119-2921 SEAL GP-CRANKSHAFT

S/N 98Z22643-UP

PART OF 115-4210 SEAL GP-CRANKSHAFT

SMCS-1160, 1161 i00676331

NOTE	PART NUMBER	QTY	PART NAME 1 2 3 4 5 6 (PRODUCT LEVEL)	SEE PAGE
			(INDIVIDUAL PARTS ARE NOT SERVICED SEPARATELY)	

BASIC ENGINE

7C-1770 SEAL GP-FLYWHEEL HOUSING

S/N 98Z15500-UP

PART OF 146-8338, 7E-3352 ENGINE AR

SMCS-1157, 1161 i00135740

NOTE	REF NO	GRAPHIC REF	PART NUMBER	QTY	PART NAME 1 2 3 4 5 6 (PRODUCT LEVEL)	SEE PAGE
B	1	1	1U-8846		GASKET-LIQUID (6ML)	
	2	1	3J-7354	1	SEAL-O-RING (8.92MM ID)	
B	3	1	3D-2824	1	SEAL-O-RING (23.47MM ID)	

B-USE AS REQUIRED

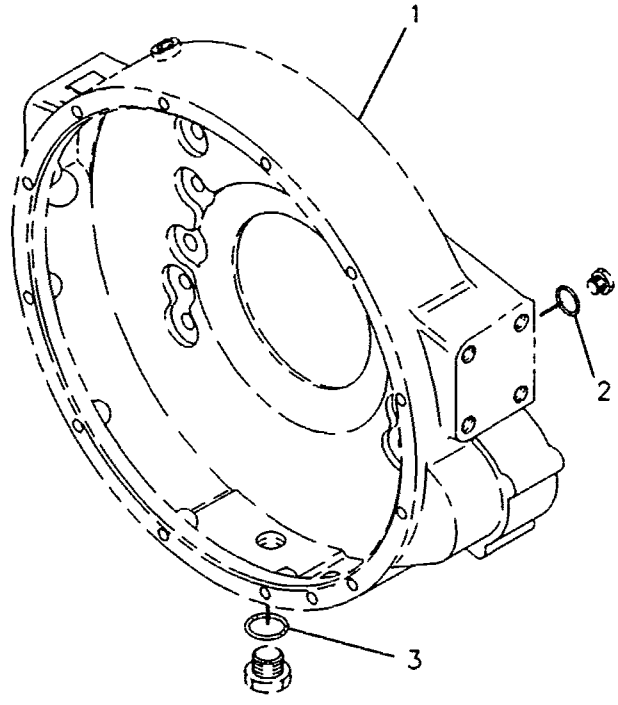

GRAPHIC #1 g00108872

BASIC ENGINE

7C-2273 SUPPORT GP-ENGINE

S/N 98Z15500-UP

PART OF 146-8338, 7E-3352 ENGINE AR

SMCS-1152, 1153, 1154 i00135746

NOTE	REF NO	GRAPHIC REF	PART NUMBER	QTY	PART NAME 1 2 3 4 5 6 (PRODUCT LEVEL)	SEE PAGE
	1	1	7C-2271	1	SUPPORT	
M	2	1	6V-5696	5	BOLT (M12X1.75X80MM)	
	3	1	6V-8178	6	WASHER	
M	4	1	6V-8336	1	BOLT (M12X1.75X70MM)	

M-METRIC PART

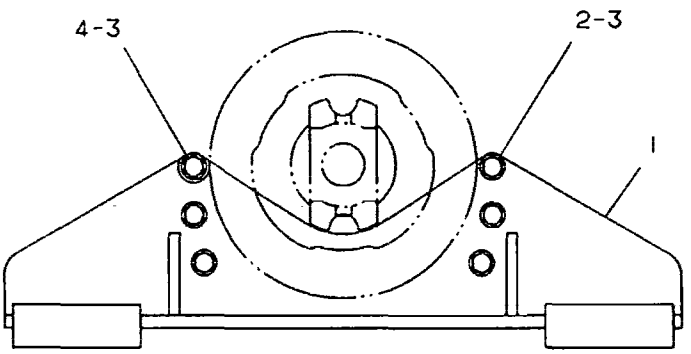

GRAPHIC #1 g00108392

BASIC ENGINE

4P-4372 VALVE MECHANISM GP

S/N 98Z15500-UP

PART OF 146-8338, 7E-3352 ENGINE AR

SMCS-1102, 1121, 1123, 1208, 1209 i00135807

NOTE	REF NO	GRAPHIC REF	PART NUMBER	QTY	PART NAME 1 2 3 4 5 6 (PRODUCT LEVEL)	SEE PAGE
Y	1	1	107-7722	6	ROCKER ARM GP	49
	2	1	3E-9412	6	DOWEL-BUSHING	
M	3	1	8T-8442	12	BOLT-SOCKET HEAD (M6X1X30)	
	4	1	7C-6078	3	LIFTER GP	
					(EACH INCLUDES)	
		1	4P-7738	1	SHAFT AS-LIFTER	
		1	2D-6642	2	BALL	
	5	1	7E-6794	2	ARM AS-INJECTOR	
	6	1	7W-3989	4	ARM AS-LIFTER	
	7	1	6I-1241	12	PUSHROD	
	8	1	4P-8577	6	ROD AS-INJECTOR	
M	9	1	6V-5223	23	BOLT (M8X1.25X100MM)	
M	10	1	9X-6005	1	BOLT-LOCKING	
	11	1	7E-5984	1	COVER	

M-METRIC PART
Y-SEPARATE ILLUSTRATION

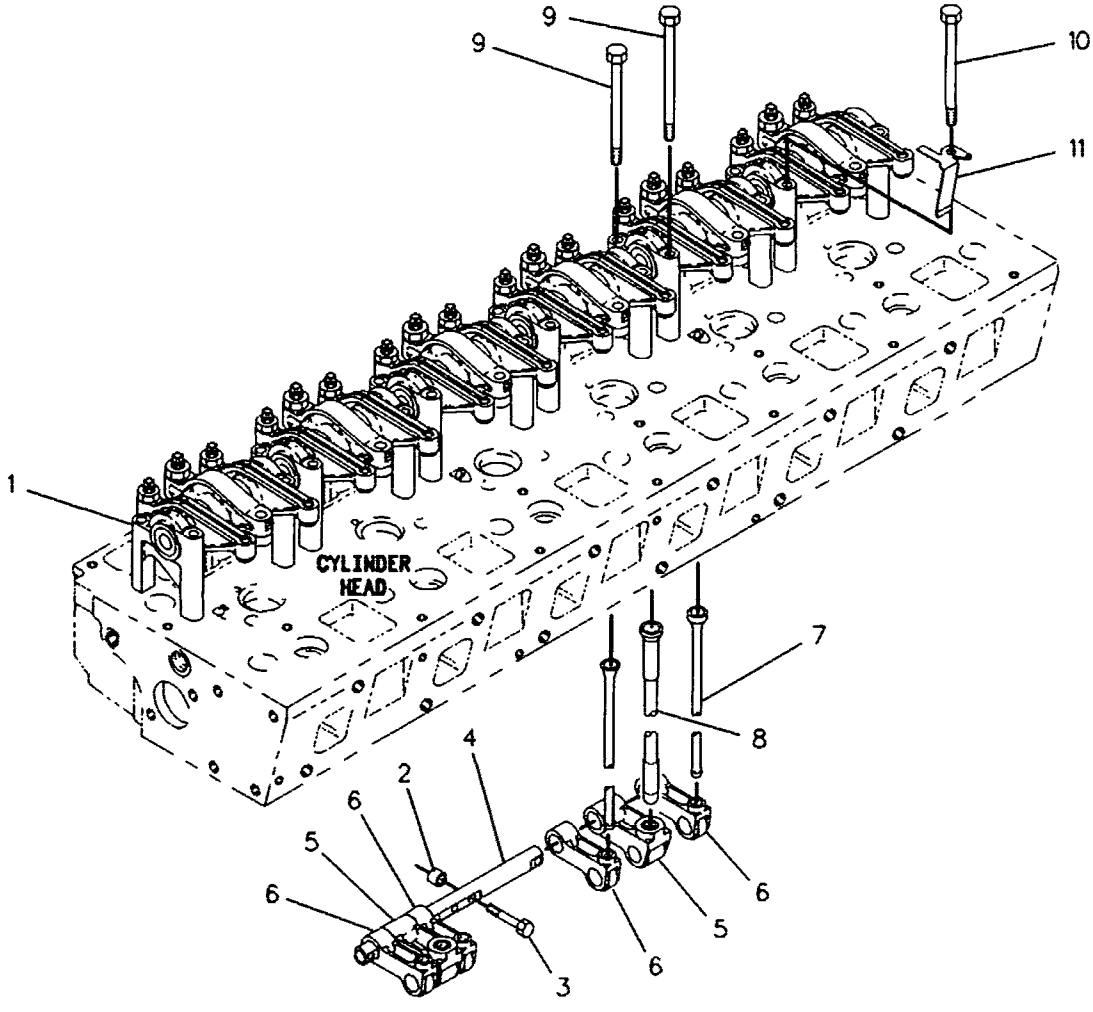

GRAPHIC #1 g00108470

LUBRICATION SYSTEM

131-4810 BREATHER GP

S/N 98Z15500-UP

PART OF 146-8338, 7E-3352 ENGINE AR

SMCS-1317 i00134991

NOTE	REF NO	GRAPHIC REF	PART NUMBER	QTY	PART NAME 1 2 3 4 5 6 (PRODUCT LEVEL)	SEE PAGE
	1	1	2W-9162	1	BREATHER AS-CRANKCASE	
	2	1	4L-9564	1	SEAL-O-RING (81.92MM ID)	
M	3	1	6V-3821	1	BOLT (M8X1.25MMX110MM)	
	4	1	9N-0869	1	WASHER (2MM THK)	
M	5	1	6V-5218	1	BOLT (M8X1.25X35MM)	
	6	1	9M-1974	1	WASHER-HARD (2MM THK)	
	7	1	4P-9936	1	BASE	
	8	1	7C-1159	1	GASKET	
BM	9	1	6V-5218	3	BOLT (M8X1.25X35MM)	
B	10	1	9M-1974	3	WASHER-HARD (2MM THK)	

B-USE AS REQUIRED
M-METRIC PART

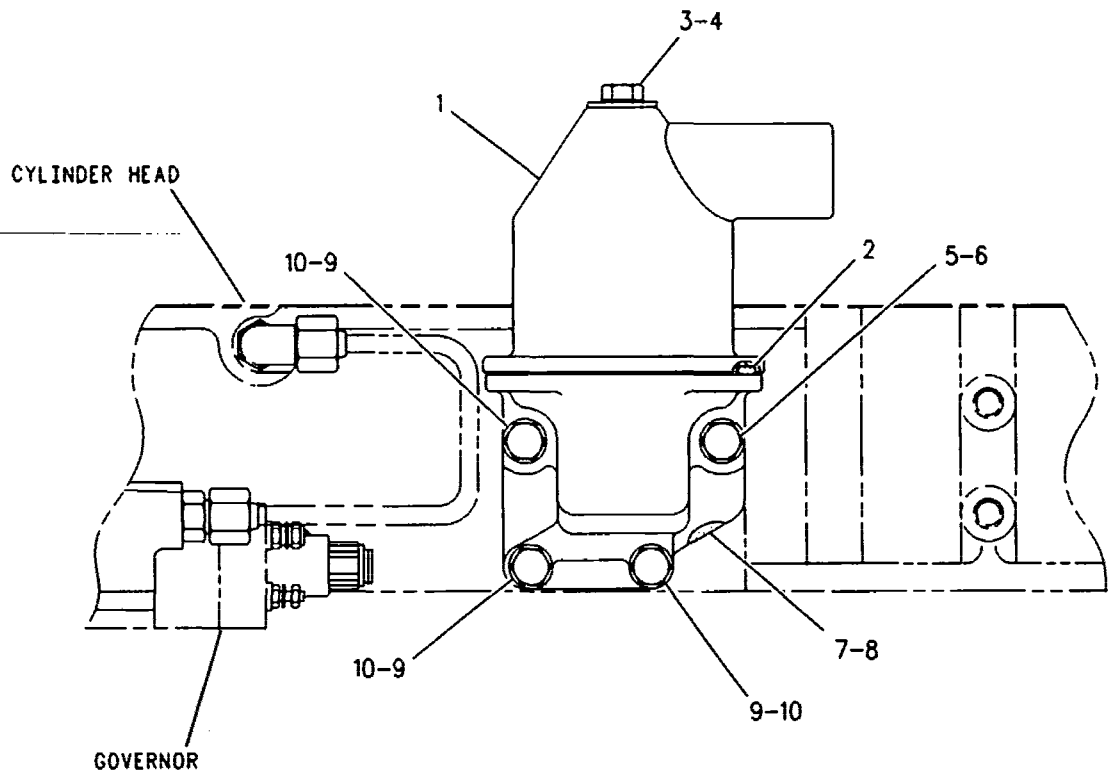

LEFT SIDE VIEW

GRAPHIC #1 g00109442

LUBRICATION SYSTEM

130-8103 FILLER GP-OIL

S/N 98Z15500-17273

PART OF 7E-3352 ENGINE AR

SMCS-1316 i00134954

NOTE	REF NO	GRAPHIC REF	PART NUMBER	QTY	PART NAME 1 2 3 4 5 6 (PRODUCT LEVEL)	SEE PAGE
	1	1	5L-2952	1	CAP AS-OIL FILLER	
		1	6L-2609	1	SEAL-RUBBER	
	2	1	133-2894	1	TUBE AS	
M	3	1	8T-4908	2	BOLT (M8X1.25X25MM)	
	4	1	8T-4224	2	WASHER-HARD (2MM THK)	
	5	1	7C-0358	1	GASKET	

M-METRIC PART

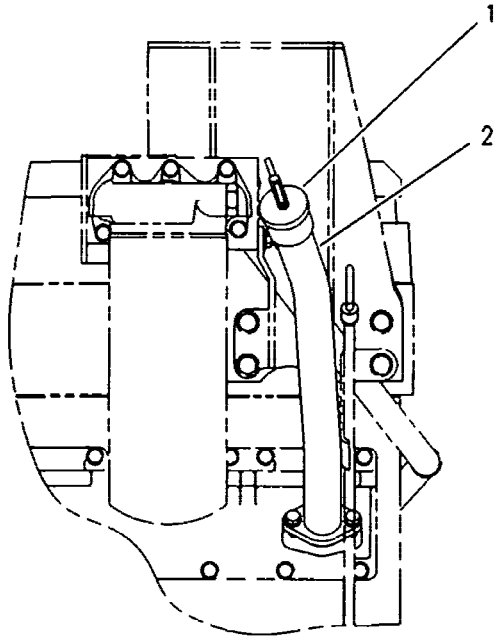

LEFT SIDE VIEW

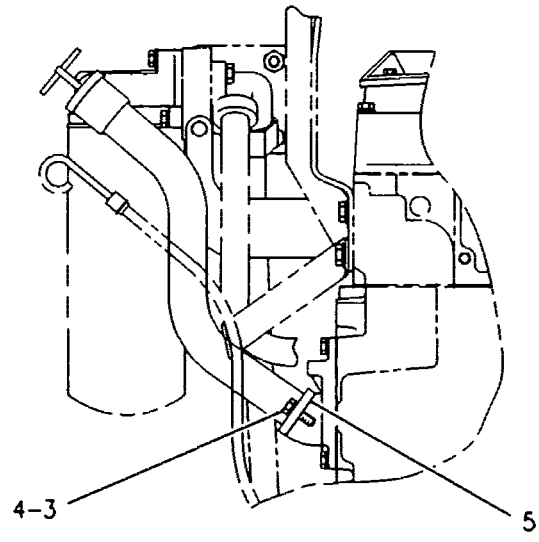

REAR VIEW

GRAPHIC #1 g00109278

LUBRICATION SYSTEM

136-3074 FILLER GP-OIL

S/N 98Z17274-UP

PART OF 146-8338, 7E-3352 ENGINE AR

SMCS-1316 i00135750

NOTE	REF NO	GRAPHIC REF	PART NUMBER	QTY	PART NAME 1 2 3 4 5 6 (PRODUCT LEVEL)	SEE PAGE
	1	1	5L-2952	1	CAP AS-OIL FILLER	
		1	6L-2609	1	SEAL-RUBBER	
	2	1	134-3535	1	TUBE AS	
M	3	1	8T-4908	2	BOLT (M8X1.25X25MM)	
	4	1	8T-4224	2	WASHER-HARD (2MM THK)	
	5	1	7C-0358	1	GASKET	

M-METRIC PART

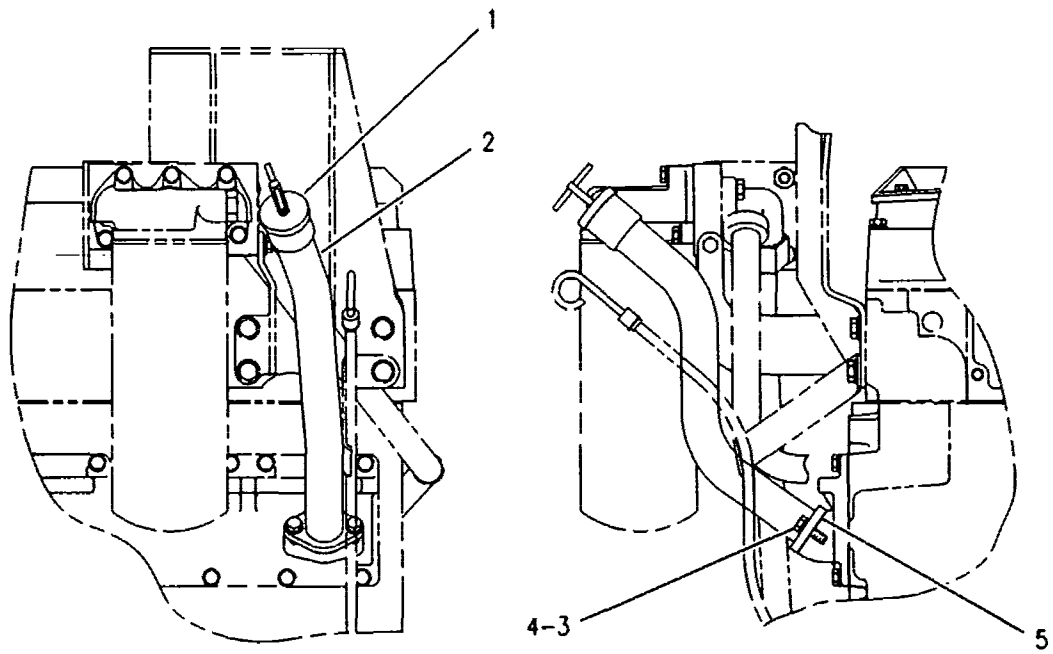

LEFT SIDE VIEW REAR VIEW

GRAPHIC #1 g00109278

MEMORANDA

LUBRICATION SYSTEM

7E-4891 FILTER GP-ENGINE OIL

S/N 98Z15500-UP

PART OF 146-8338, 7E-3352 ENGINE AR

SMCS-1308 i00135100

NOTE	REF NO	GRAPHIC REF	PART NUMBER	QTY	PART NAME 1 2 3 4 5 6 (PRODUCT LEVEL)	SEE PAGE
	1	1	7C-7489	1	PLATE	
	2	1	5F-9657	6	SEAL-O-RING (36.09MM ID)	
	3	1	7C-7488	1	ADAPTER	
	4	1	7C-7490	1	GASKET	
M	5	1	6V-5218	6	BOLT (M8X1.25X35MM)	
	6	1	9M-1974	17	WASHER-HARD (2MM THK)	
	7	1	8M-9024	1	WASHER-HARD (5MM THK)	
	8	1	3B-6552	1	ELBOW	
M	9	1	6V-5217	1	BOLT (M8X1.25X20MM)	
M	10	1	6V-5215	3	BOLT (M8X1.25X16MM)	
	11	1	7S-0530	1	CLIP	
	12	1	7E-6477	1	TUBE AS	
	13	1	4P-8861	1	BASE	
	14	1	6N-1172	2	SLEEVE	
	15	1	7C-4983	1	BRACKET AS	
	16	1	8M-4987	1	SEAL-O-RING (32.92MM ID)	
	17	1	7E-6476	1	BRACKET	
M	18	1	6V-6317	1	BOLT (M10X1.50X20MM)	
	19	1	6V-5839	5	WASHER (2.5MM THK)	
M	20	1	6V-4248	2	BOLT (M10X1.50X25MM)	
	21	1	8T-8986	2	ELBOW-O-RING	
	22	1	4K-1388	2	SEAL-O-RING (26.59MM ID)	
	23	1	5K-9090	3	SEAL-O-RING (23.52MM ID)	
	24	1	8C-3445	1	CAP-DUST	
	25	1	128-4142	1	TUBE AS	
	26	1	4F-9653	1	SEAL-O-RING (46.99MM ID)	
	27	1	9S-4191	2	PLUG-O-RING (9/16-18 THD)	
	28	1	3J-1907	2	SEAL-O-RING (11.89MM ID)	
	29	1	3E-7440	1	ELBOW-90 DEGREE	
	30	1	3D-2824	1	SEAL-O-RING (23.47MM ID)	
M	31	1	6V-4249	2	BOLT (M10X1.50X50MM)	
	32	1	7W-9028	1	BASE AS-OIL FILTER	
		1	2P-2537	1	STUD-HOLLOW	
	33	1	1R-0739	1	FILTER AS-OIL	
	34	1	7C-1493	1	VALVE-BYPASS	
	35	1	9L-9188	1	SPRING-VALVE	
	36	1	5P-8196	1	PLUG-O-RING	
	37	1	2M-9780	1	SEAL-O-RING (19.18MM ID)	
M	38	1	6V-2317	4	BOLT (M8X1.25X30MM)	
M	39	1	6V-5219	3	BOLT (M8X1.25X40MM)	
	40	1	4P-9128	1	ADAPTER	
	41	1	3J-7354	1	SEAL-O-RING (8.92MM ID)	
	42	1	6V-7529	1	ADAPTER	
	43	1	8C-3446	1	VALVE-FLUID SAMPLING	

M-METRIC PART

7E-4891 FILTER GP-ENGINE OIL *(contd.)* i00135100

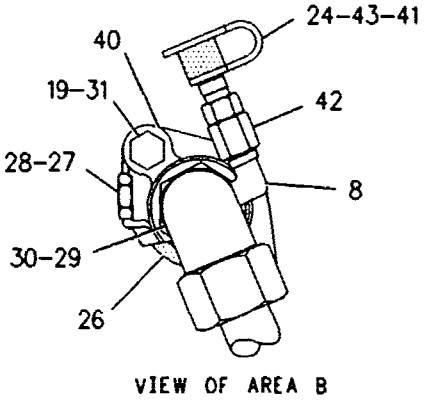

VIEW OF AREA B

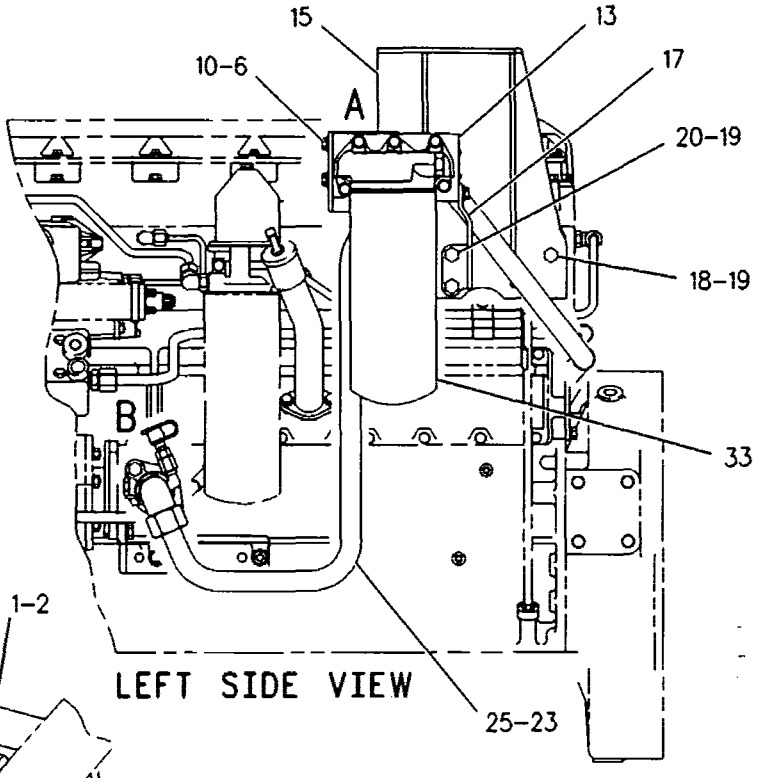

LEFT SIDE VIEW

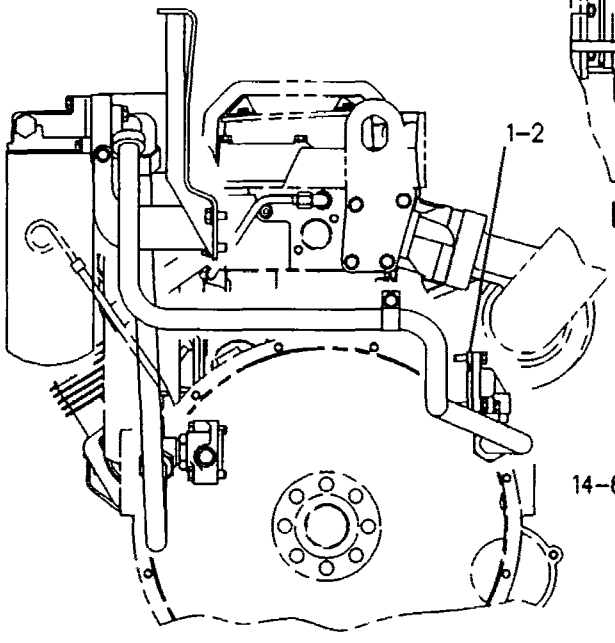

REAR VIEW

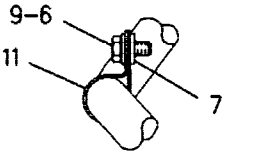

VIEW OF AREA C

RIGHT SIDE VIEW

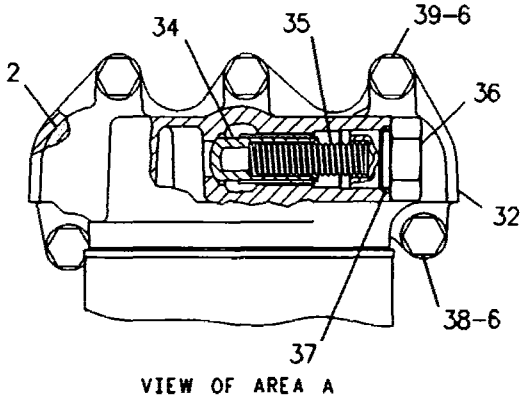

VIEW OF AREA A

GRAPHIC #1 g00109138

LUBRICATION SYSTEM

116-6501 FUMES DISPOSAL GP

S/N 98Z15500-UP

PART OF 146-8338, 7E-3352 ENGINE AR

SMCS-1317 i00136048

NOTE	REF NO	GRAPHIC REF	PART NUMBER	QTY	PART NAME 1 2 3 4 5 6 (PRODUCT LEVEL)	SEE PAGE
	1	1	**9M-2904**	1	CLAMP-HOSE	
	2	1	**7C-0952**	1	HOSE-DISPOSAL	
	3	1	**4D-7388**	1	CLIP (34.92MM ID)	
M	4	1	**6V-5217**	1	BOLT (M8X1.25X20MM)	
	5	1	**9M-1974**	1	WASHER-HARD (2MM THK)	

M-METRIC PART

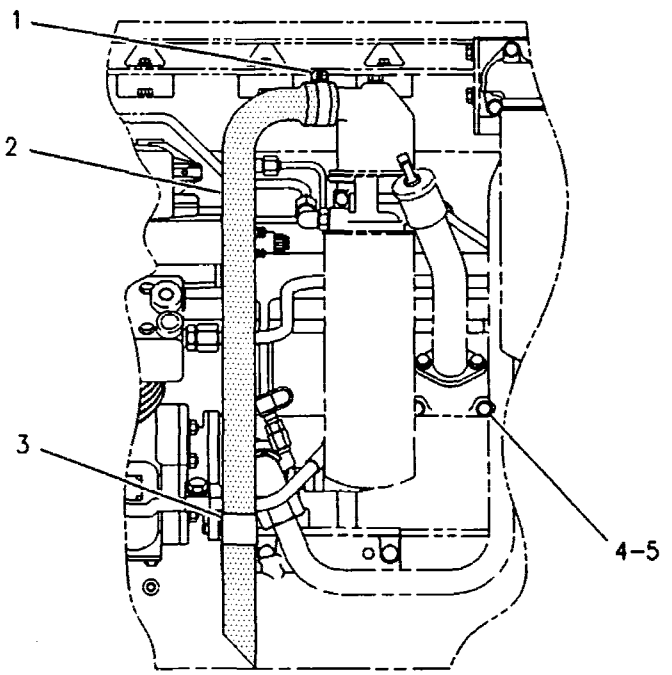

LEFT SIDE VIEW

GRAPHIC #1 g00109276

LUBRICATION SYSTEM

131-1934 GAUGE GP-OIL LEVEL (DIPSTICK)

S/N 98Z15500-UP

PART OF 146-8338, 7E-3352 ENGINE AR

SMCS-1326 i00134961

NOTE	REF NO	GRAPHIC REF	PART NUMBER	QTY	PART NAME 1 2 3 4 5 6 (PRODUCT LEVEL)	SEE PAGE
	1	1	9Y-0081	1	GAUGE-OIL LEVEL (DIPSTICK)	
	2	1	130-8104	1	TUBE AS-GUIDE	
M	3	1	8T-4136	1	BOLT (M10X1.50X25MM)	
	4	1	8T-4121	1	WASHER (2.5MM THK)	
	5	1	1S-2563	3	PLUG	

M-METRIC PART

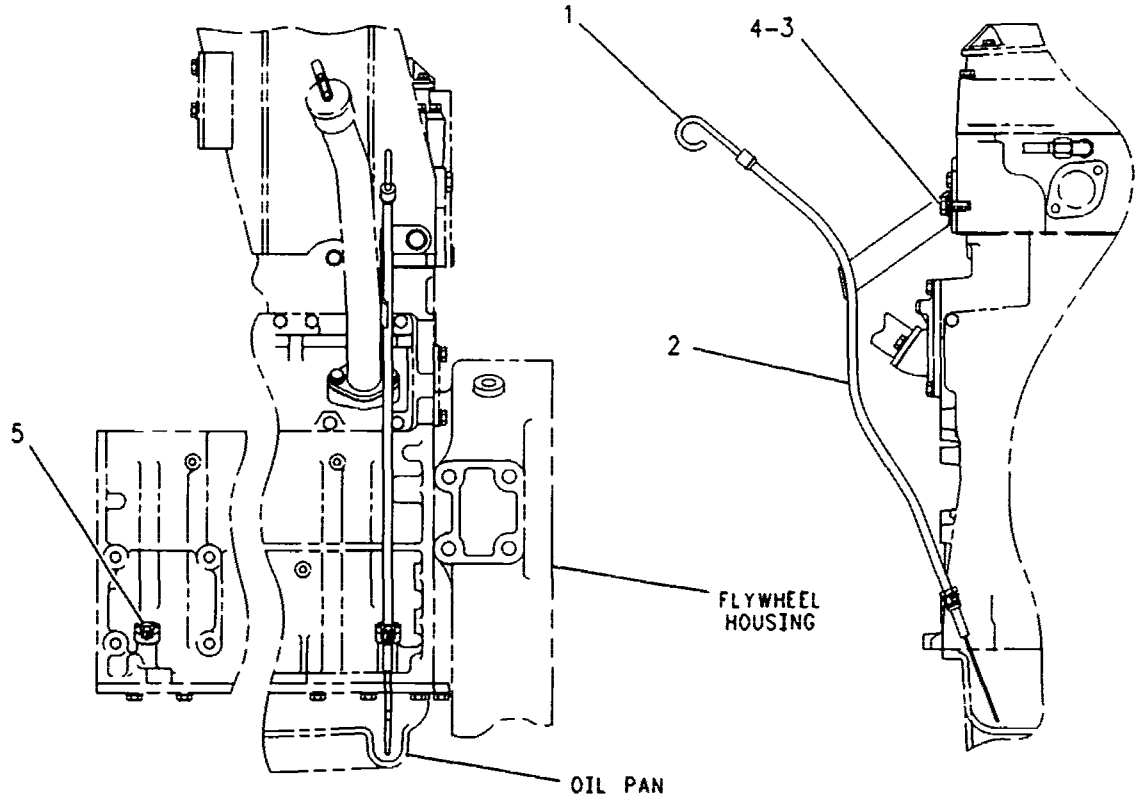

GRAPHIC #1 g00109279

LUBRICATION SYSTEM

7E-6302 LINES GP-ENGINE OIL

S/N 98Z15500-UP

PART OF 146-8338, 7E-3352 ENGINE AR

SMCS-1307 i00135152

NOTE	REF NO	GRAPHIC REF	PART NUMBER	QTY	PART NAME 1 2 3 4 5 6 (PRODUCT LEVEL)	SEE PAGE
	1	1	7E-6427	1	TUBE AS	
	2	1	7W-5340	1	GASKET	
M	3	1	6V-3940	4	BOLT (M8X1.25X25MM)	
	4	1	9M-1974	2	WASHER-HARD (2MM THK)	
	5	1	4W-2232	1	ELBOW-OUTLET	
	6	1	3P-1156	2	SEAL-O-RING	

M-METRIC PART

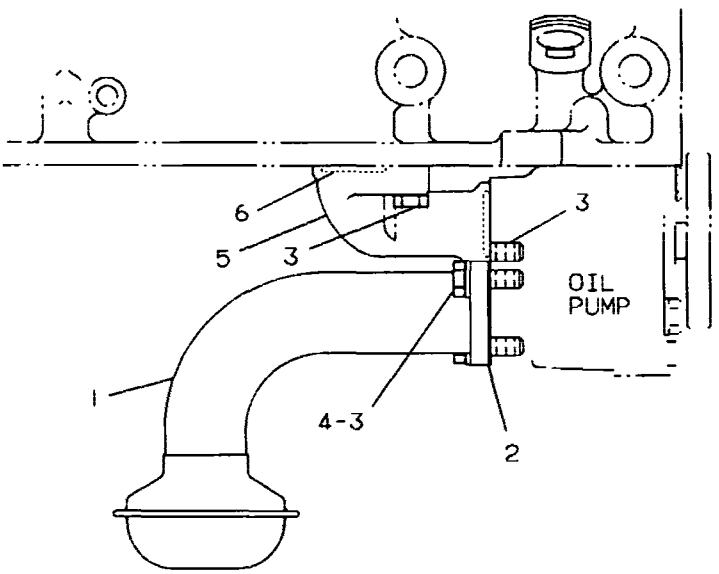

RIGHT SIDE VIEW

GRAPHIC #1 g00108378

LUBRICATION SYSTEM

7C-2476 LINES GP-TURBOCHARGER OIL

S/N 98Z15500-UP

PART OF 146-8338, 7E-3352 ENGINE AR

SMCS-1052, 1307 **i00135757**

NOTE	REF NO	GRAPHIC REF	PART NUMBER	QTY	PART NAME 1 2 3 4 5 6 (PRODUCT LEVEL)	SEE PAGE
	1	1	7W-2398	1	GASKET	
	2	1	1S-7057	1	GASKET	
M	3	1	6V-3940	4	BOLT (M8X1.25X25MM)	
	4	1	9M-1974	4	WASHER-HARD (2MM THK)	
	5	1	7E-5196	1	TUBE AS	
	6	1	6V-8397	1	SEAL-O-RING (9.27MM ID)	
	7	1	6V-8724	1	ELBOW-90 DEGREE (9/16-18 THD)	
	8	1	3J-1907	1	SEAL-O-RING (11.89MM ID)	
	9	1	7C-3760	1	TUBE AS-OIL DRAIN	
	10	1	9M-4849	1	SEAL-O-RING (23.16 ID)	
M	11	1	6V-5218	2	BOLT (M8X1.25X35MM)	
	12	1	4F-7391	1	SEAL-O-RING (32.92MM ID)	
	13	1	119-2942	1	ADAPTER	

M-METRIC PART

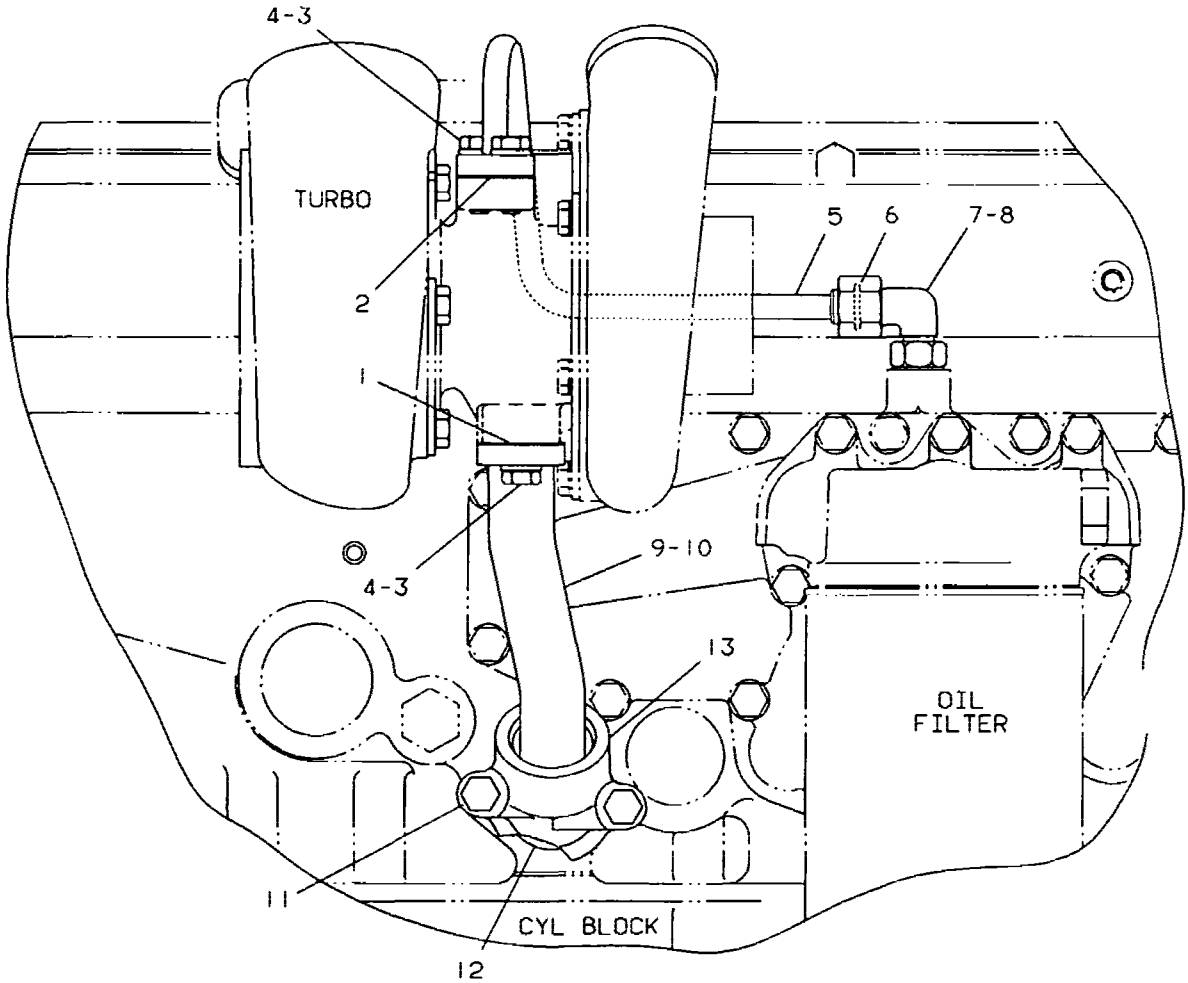

RIGHT SIDE VIEW OF ENGINE

GRAPHIC #1 g00108331

LUBRICATION SYSTEM

134-3534 PROTECTION GP-LUBE SYSTEM

PIN 5FM1-UP

PART OF 133-3289 PROTECTION AR-VANDALISM

AN ATTACHMENT

SMCS-1316, 1326, 7315 i00834929

NOTE	REF NO	GRAPHIC REF	PART NUMBER	QTY	PART NAME 1 2 3 4 5 6 (PRODUCT LEVEL)	SEE PAGE
	1	1	2P-2717	1	HASP-OIL FILLER	
	2	1	134-3537	1	HASP	
	3	1	5P-8502	2	PADLOCK GP	
					(EACH INCLUDES)	
A		1	5P-8500	1	KEY	
A		1	8Y-6364	1	SLEEVE	
	4	1	9B-7237	1	BOLT (3/8-16X1.25IN)	
	5	1	8T-2502	1	BOLT (3/8-16X1.13IN)	
	6	1	134-3536	1	PLATE	
	7	1	4D-6716	1	RIVET-POP	
	8	1	6N-2011	1	RIVET	

A-NOT PART OF THIS GROUP

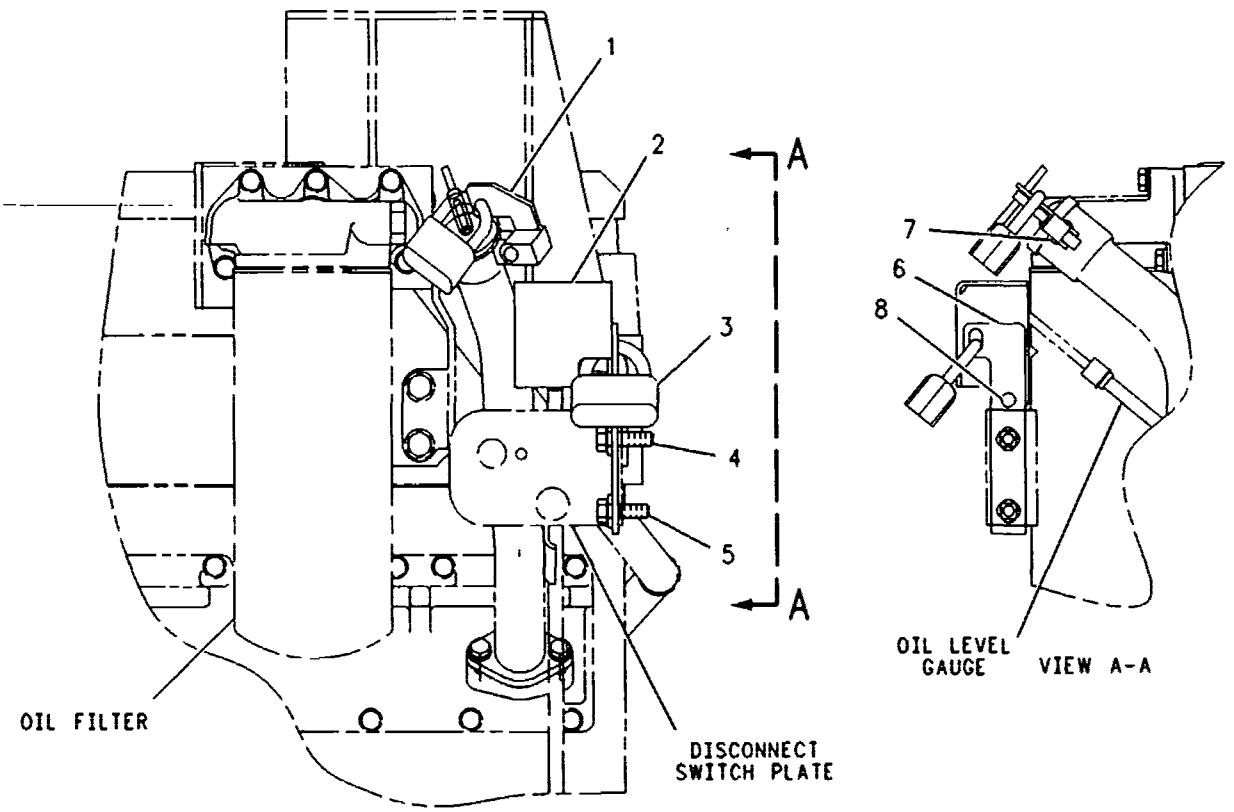

LEFT SIDE VIEW OF ENGINE

GRAPHIC #1 g00273846

LUBRICATION SYSTEM

151-5829 PROTECTION GP-LUBE SYSTEM

PIN 5FM1-UP

PART OF 112-5819 INSTALLATION AR-ENGINE

SMCS-1316, 1326, 7315 i00821400

NOTE	REF NO	GRAPHIC REF	PART NUMBER	QTY	PART NAME 1 2 3 4 5 6 (PRODUCT LEVEL)	SEE PAGE
	1	1	2P-2717	2	HASP-OIL FILLER	
	2	1	134-3537	1	HASP	
	3	1	5P-8502	3	PADLOCK GP	
					(EACH INCLUDES:)	
		1	5P-8500	1	KEY	
		1	8Y-6364	1	SLEEVE	
	4	1	6N-2011	1	RIVET	
	5	1	134-3536	1	PLATE	
	6	1	4D-6716	2	RIVET-POP	

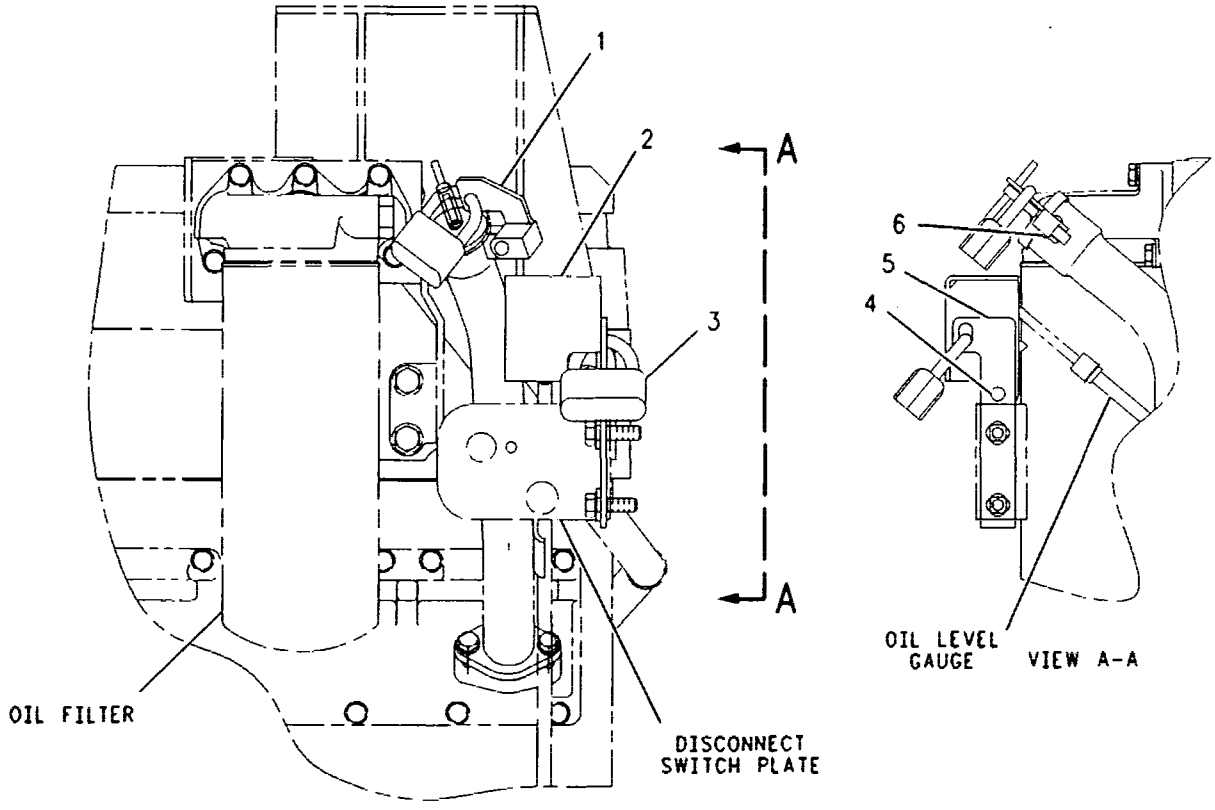

LEFT SIDE VIEW OF ENGINE

GRAPHIC #1 g00393932

LUBRICATION SYSTEM

4W-2195 PUMP GP-ENGINE OIL

S/N 98Z15500-22642
ONE SECTION GEAR
PART OF 7E-3352 ENGINE AR

SMCS-1304, 1315 **i00135055**

NOTE	REF NO	GRAPHIC REF	PART NUMBER	QTY	PART NAME 1 2 3 4 5 6 (PRODUCT LEVEL)	SEE PAGE
Y	1	1	**119-2924**	1	PUMP GP-ENGINE OIL	71
M	2	1	**6V-5815**	2	BOLT (M10X1.5X75MM)	
		1	**6V-5839**	2	WASHER (2.5MM THK)	

M-METRIC PART
Y-SEPARATE ILLUSTRATION

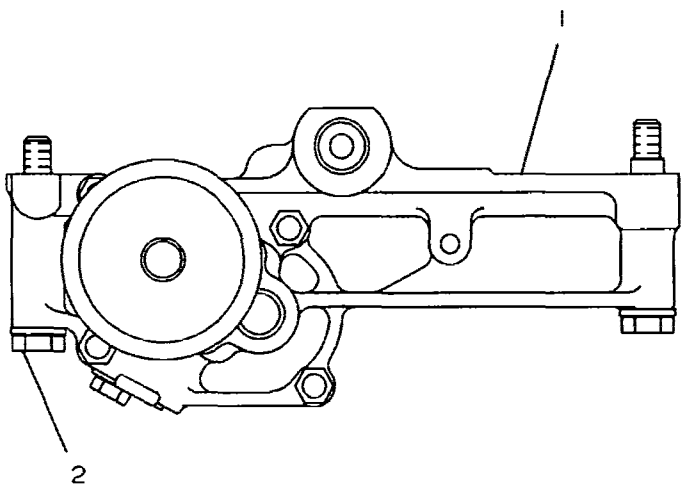

GRAPHIC #1 g00108298

LUBRICATION SYSTEM

115-4123 PUMP GP-ENGINE OIL*R

S/N 98Z22643-UP

PART OF 115-4138 PUMP GP-ENGINE OIL

SMCS-1304, 1315 i00675078

NOTE	REF NO	GRAPHIC REF	PART NUMBER	QTY	PART NAME 1 2 3 4 5 6 (PRODUCT LEVEL)	SEE PAGE
	1	1	2W-8077	1	BODY AS-OIL PUMP	
	2	1	7E-5536	1	BODY-OIL PUMP	
M	3	1	6V-5219	4	BOLT (M8X1.25X40MM)	
	4	1	9M-1974	4	WASHER-HARD (2MM THK)	
	5	1	115-4074	1	SHAFT AS	
		1	113-6118	1	GEAR-OIL PUMP (8 TEETH)	
	6	1	115-4116	1	SHAFT AS-IDLER	
		1	113-6118	1	GEAR-OIL PUMP (8 TEETH)	
	7	1	2W-8078	1	PLUNGER-RELIEF	
	8	1	105-1805	1	SPRING	
M	9	1	6V-5215	1	BOLT (M8X1.25X16MM)	
	10	1	2W-8079	1	WASHER	
	11	1	2W-8085	1	GEAR-PUMP DRIVE (33 TEETH)	

M-METRIC PART

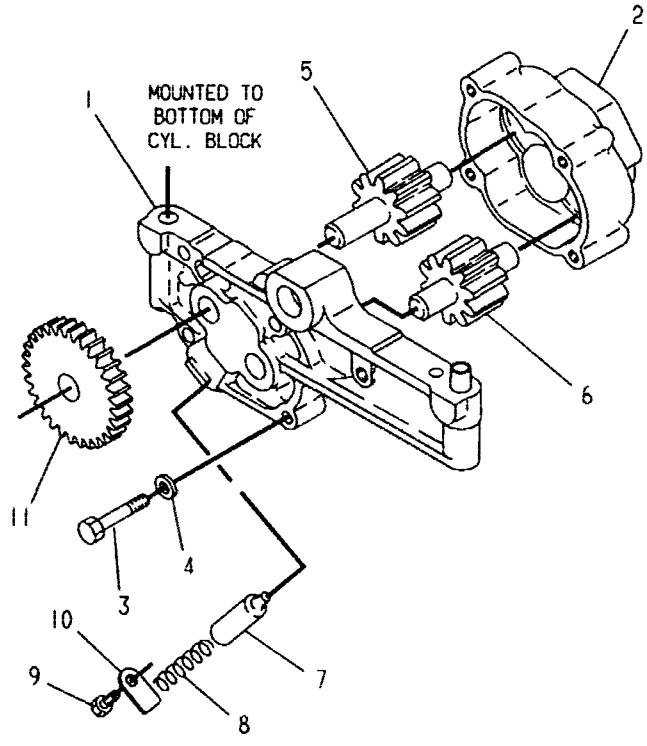

GRAPHIC #1 g00108299

LUBRICATION SYSTEM

115-4138 PUMP GP-ENGINE OIL

S/N 98Z22643-UP

PART OF 146-8338 ENGINE AR

SMCS-1304, 1315 i00659955

NOTE	REF NO	GRAPHIC REF	PART NUMBER	QTY	PART NAME 1 2 3 4 5 6 (PRODUCT LEVEL)	SEE PAGE
Y	1	1	*115-4123*	1	PUMP GP-ENGINE OIL	69
M	2	1	**6V-5815**	2	BOLT (M10X1.5X75MM)	
		1	**6V-5839**	2	WASHER (2.5MM THK)	

M-METRIC PART
Y-SEPARATE ILLUSTRATION

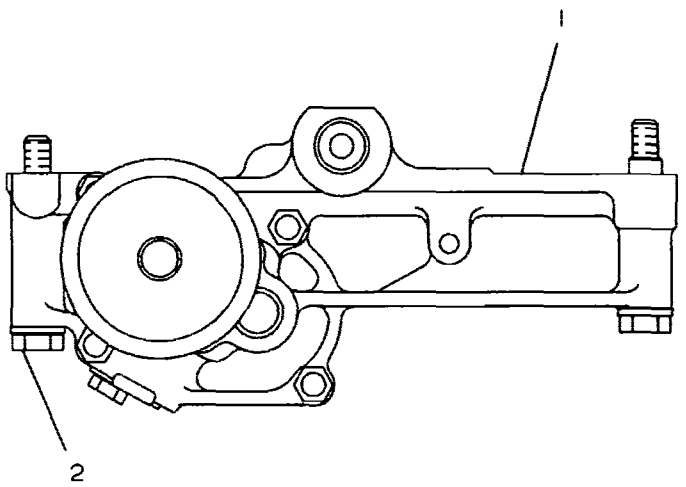

GRAPHIC #1 g00108298

LUBRICATION SYSTEM

119-2924 PUMP GP-ENGINE OIL

S/N 98Z15500-22642

PART OF 4W-2195 PUMP GP-ENGINE OIL

SMCS-1304, 1315 i00134953

NOTE	REF NO	GRAPHIC REF	PART NUMBER	QTY	PART NAME 1 2 3 4 5 6 (PRODUCT LEVEL)	SEE PAGE
	1	1	2W-8077	1	BODY AS-OIL PUMP	
	2	1	2W-8091	1	BODY-OIL PUMP	
M	3	1	6V-5219	4	BOLT (M8X1.25X40MM)	
	4	1	9M-1974	4	WASHER-HARD (2MM THK)	
	5	1	2W-8087	1	SHAFT AS	
	6	1	2W-8090	1	SHAFT AS-IDLER	
	7	1	2W-8078	1	PLUNGER-RELIEF	
	8	1	105-1805	1	SPRING	
M	9	1	6V-5215	1	BOLT (M8X1.25X16MM)	
	10	1	2W-8079	1	WASHER	
	11	1	2W-8085	1	GEAR-PUMP DRIVE (33 TEETH)	

M-METRIC PART

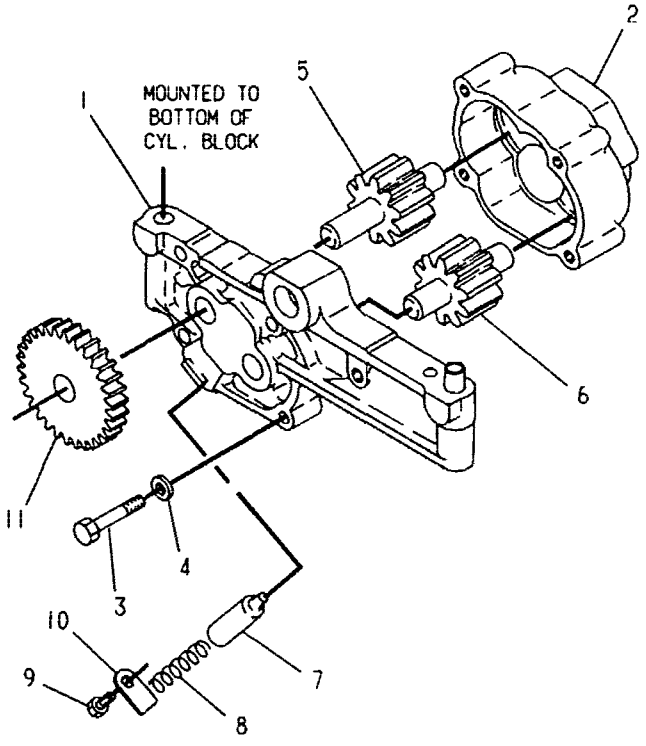

GRAPHIC #1 g00108299

COOLING SYSTEM

115-6951 COOLER GP-ENGINE OIL

S/N 98Z15500-UP

PART OF 146-8338, 7E-3352 ENGINE AR

SMCS-1378 i00136019

NOTE	REF NO	GRAPHIC REF	PART NUMBER	QTY	PART NAME 1 2 3 4 5 6 (PRODUCT LEVEL)	SEE PAGE
	1	1	7C-1493	1	VALVE-BYPASS	
	2	1	9L-9188	1	SPRING-VALVE	
	3	1	5P-8196	1	PLUG-O-RING	
	4	1	2M-9780	1	SEAL-O-RING (19.18MM ID)	
	5	1	7E-9817	1	GASKET	
	6	1	7W-9027	1	BASE-OIL COOLER	
M	7	1	6V-5218	8	BOLT (M8X1.25X35MM)	
M	8	1	8T-0276	7	BOLT (M8X1.25X45MM)	
	9	1	9M-1974	15	WASHER-HARD (2MM THK)	
	10	1	100-6270	1	CORE AS-OIL COOLER	
	11	1	8M-4445	2	SEAL-O-RING	
	12	1	7C-1160	1	GASKET	

M-METRIC PART

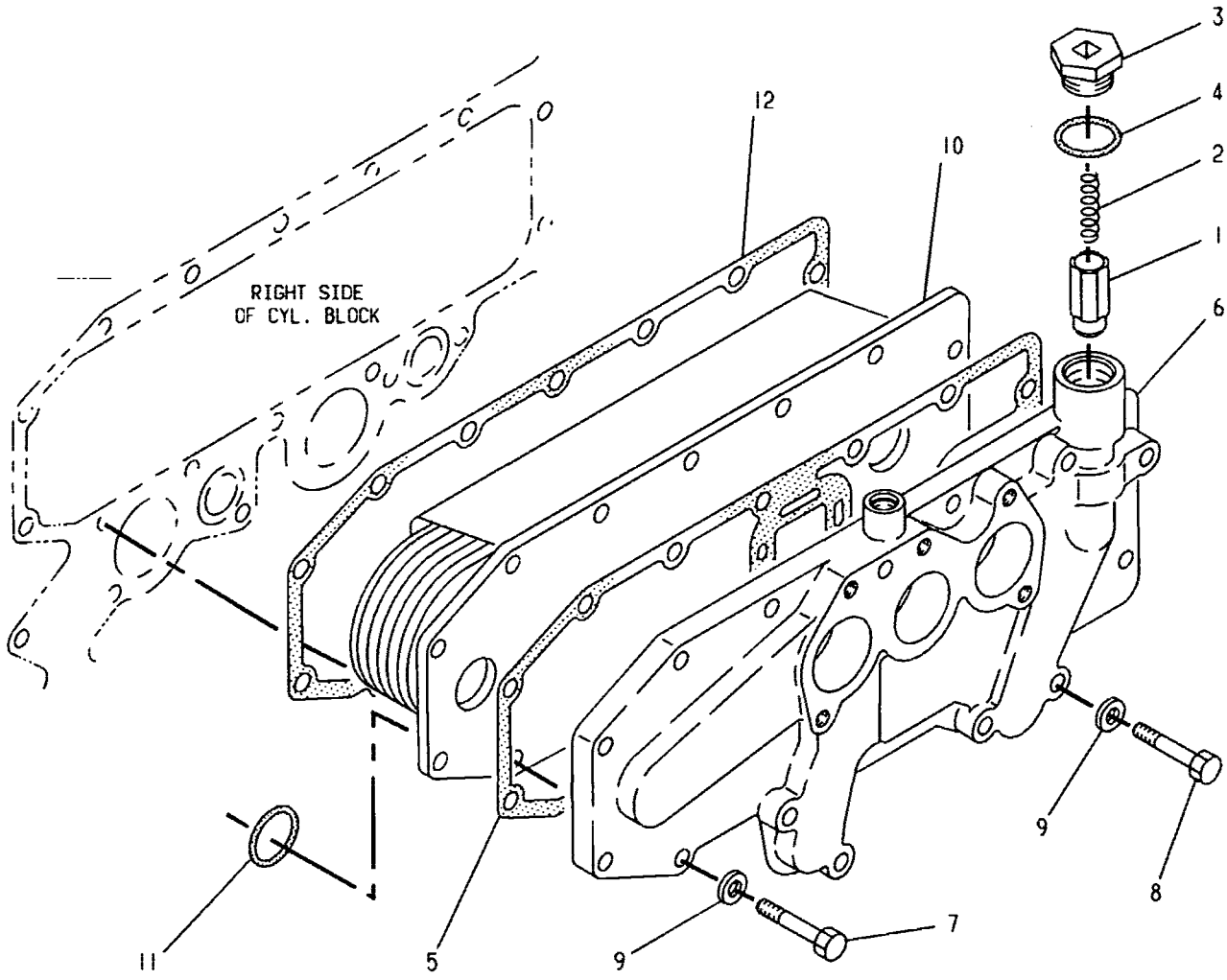

GRAPHIC #1 g00108301

117-9571 COOLER GP-TRANSMISSION OIL

PIN 5FM1-UP

PART OF 112-5819 INSTALLATION AR-ENGINE

SMCS-1375 i00609799

NOTE	PART NUMBER	QTY	PART NAME 1 2 3 4 5 6 (PRODUCT LEVEL)	SEE PAGE
	5S-7383	4	BOLT (3/8-16X1.75IN)	
	1W-0289	1	CORE AS-OIL COOLER	
	111-9959	2	PLUG-PIPE (3/8-18 THD)	
	101-3120	4	SPACER	
	5P-1075	4	WASHER-HARD (3MM THK)	

COOLING SYSTEM

8W-5794 EXTENSION GP-DRAIN

PIN 5FM1-UP

PART OF 112-4103 CHASSIS AR

SMCS-1353, 1372 **i00134687**

NOTE	REF NO	GRAPHIC REF	PART NUMBER	QTY	PART NAME 1 2 3 4 5 6 (PRODUCT LEVEL)	SEE PAGE
	1	1	**4L-6454**	1	BOLT (3/8-16X1.0IN)	
	2	1	**003-9514**	1	COUPLING-PIPE	
	3	1	**7D-7026**	1	CONNECTOR-HOSE	
EB	4	1	**5P-0767**		HOSE (328CM)	
	5	1	**008-6904**	1	FITTING	
	6	1	**5D-1026**	2	CLAMP-HOSE	
	7	1	**6D-4244**	1	CLIP (22.22MM ID)	
	8	1	**8T-4896**	1	WASHER-HARD (2.5MM THK)	
	9	1	**8F-8151**	1	COCK-SHUTOFF	

B-USE AS REQUIRED
E-ORDER BY THE CENTIMETER

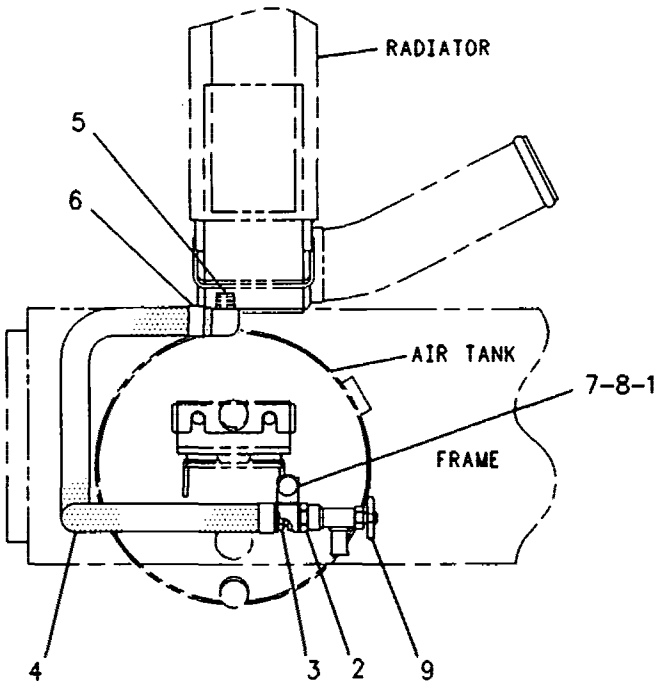

GRAPHIC #1 g00108781

COOLING SYSTEM

7C-2095 FAN GP-BLOWER

PIN 5FM1-UP

PART OF 112-5819 INSTALLATION AR-ENGINE

SMCS-1356 **i00134762**

NOTE	REF NO	GRAPHIC REF	PART NUMBER	QTY	PART NAME 1 2 3 4 5 6 (PRODUCT LEVEL)	SEE PAGE
M	1	1	**8T-4186**	6	BOLT (M10X1.50X40MM)	
	2	1	**8T-4121**	6	WASHER (2.5MM THK)	
	3	1	**100-3607**	1	SPIDER AS-FAN	

M-METRIC PART

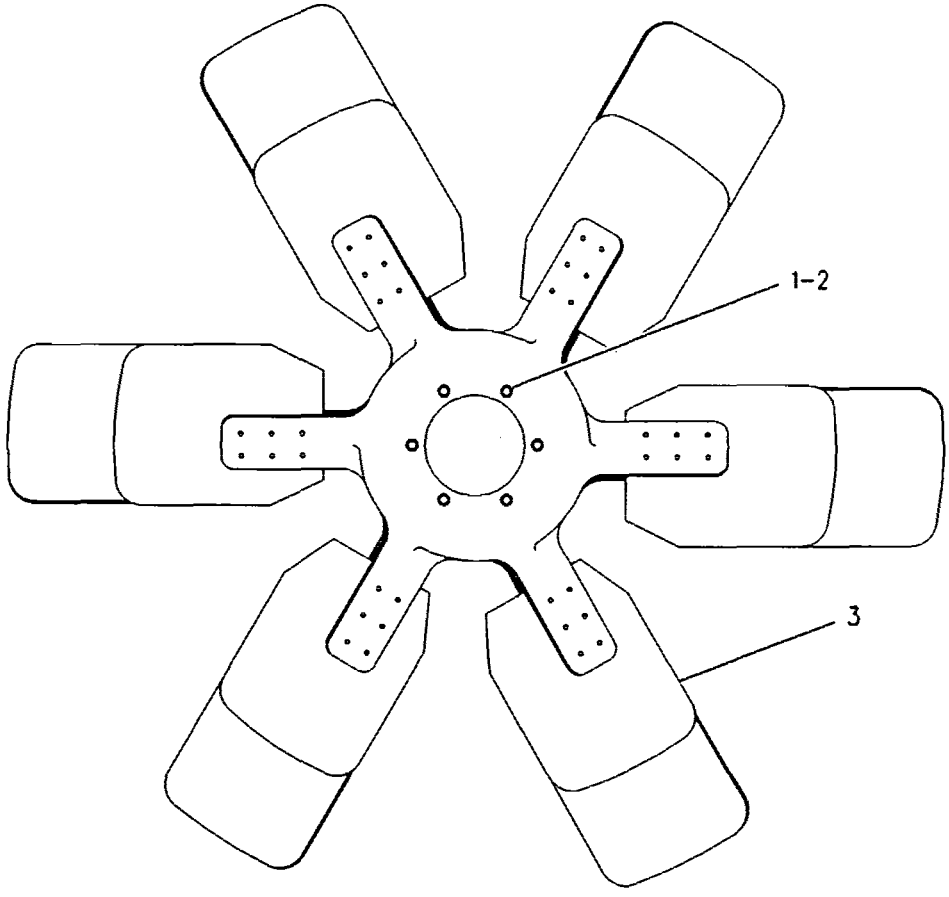

GRAPHIC #1 g00108806

COOLING SYSTEM

4W-6620 LINES GP-WATER

S/N 98Z15500-UP

PART OF 146-8338, 7E-3352 ENGINE AR

FOR USE WITH ENGINES REQUIRING VERTICAL WATER OUTLET PIPE

SMCS-1355, 1380, 1393 **i00135660**

NOTE	REF NO	GRAPHIC REF	PART NUMBER	QTY	PART NAME 1 2 3 4 5 6 (PRODUCT LEVEL)	SEE PAGE
C	1	1	**126-0447**	1	HOUSING-WATER REGULATING	
	2	1	**2W-7212**	1	GASKET-REGULATOR	
	3	1	**126-5869**	1	REGULATOR-WATER	
	4	1	**4W-0549**	1	GASKET-WATER REGULATOR	
	5	1	**4P-2685**	1	PIPE	
M	6	1	**6V-5230**	2	BOLT (M10X1.5X60MM)	
	7	1	**9S-8005**	2	PLUG-O-RING (3/4-16 THD)	
	8	1	**3K-0360**	2	SEAL-O-RING (16.36MM ID)	
C	9	1	**9S-8004**	2	PLUG-O-RING (9/16-18 THD)	
C	10	1	**3J-1907**	2	SEAL-O-RING (11.89MM ID)	
M	11	1	**6V-3940**	2	BOLT (M8X1.25X25MM)	
	12	1	**9M-1974**	2	WASHER-HARD (2MM THK)	
B	13	1	**6L-3929**	1	HOSE	
	14	1	**127-4471**	2	CLAMP-HOSE	
B	15	1	**3D-2824**	1	SEAL-O-RING (23.47MM ID)	
B	16	1	**9S-8008**	1	PLUG-O-RING (1 1/16-12 THD)	

B-USE AS REQUIRED
C-CHANGE FROM PREVIOUS TYPE
M-METRIC PART

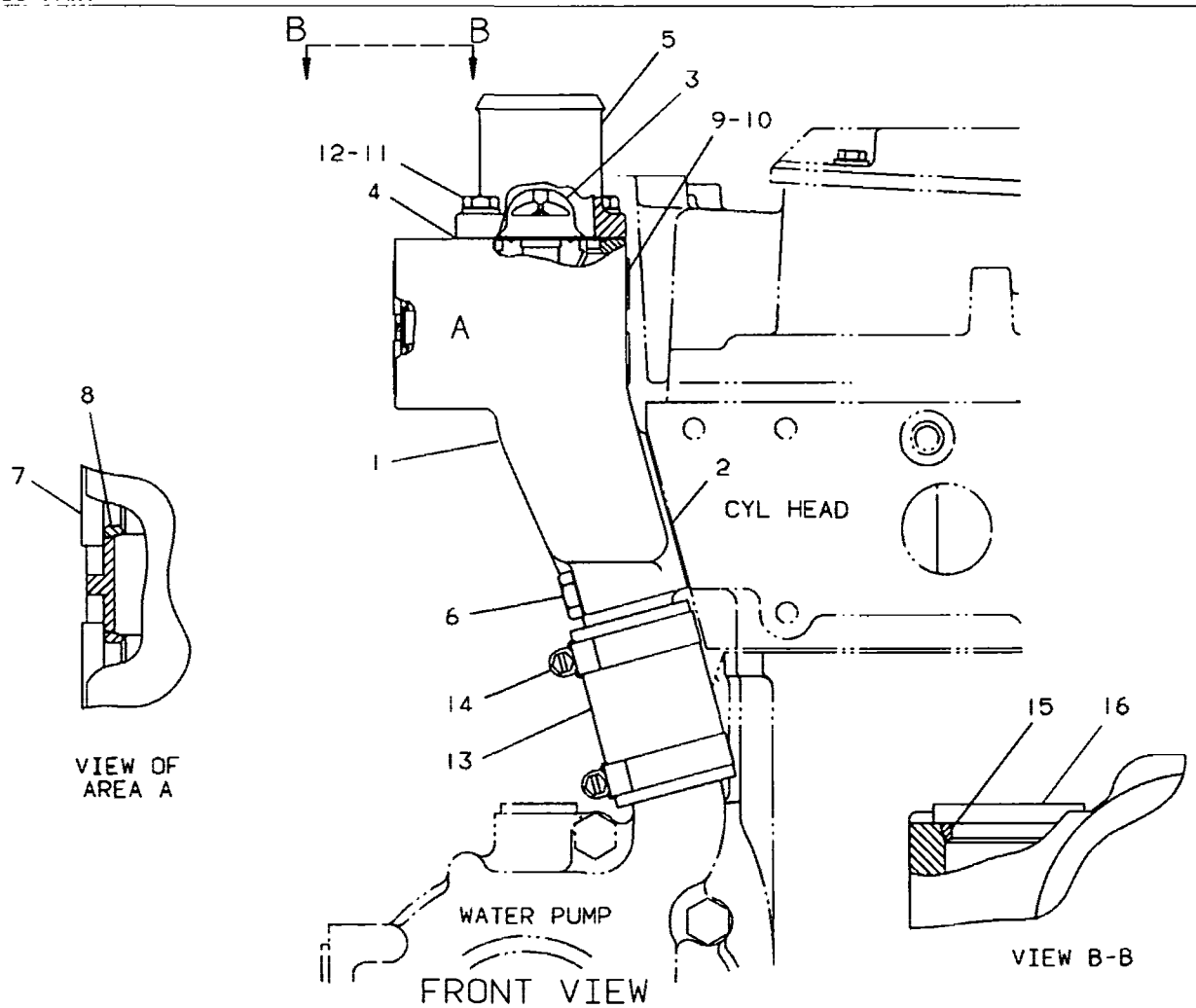

GRAPHIC #1 g00108342

MEMORANDA

COOLING SYSTEM

8W-6210 LINES GP-WATER

PIN 5FM1-UP

PART OF 112-5819 INSTALLATION AR-ENGINE

SMCS-1355, 1380, 1393 **i00659947**

NOTE	REF NO	GRAPHIC REF	PART NUMBER	QTY	PART NAME 1 2 3 4 5 6 (PRODUCT LEVEL)	SEE PAGE
BE	1	1	**5P-1293**		HOSE	
	2	1	**5P-0597**	6	CLAMP (RANGE 44.45-66.68MM)	
	3	1	**4L-6454**	2	BOLT (3/8-16X1.0IN)	
	4	1	**5P-1075**	3	WASHER-HARD (3MM THK)	
	5	1	**111-7093**	2	CLIP	
	6	1	**9B-7237**	1	BOLT (3/8-16X1.25IN)	
BE	7	1	**5P-0767**		HOSE	
	8	1	**5S-4578**	1	HOSE	
	9	1	**8W-6693**	1	TUBE AS	
	10	1	**8F-8151**	1	COCK-SHUTOFF	
	11	1	**003-2143**	1	ELBOW	
	12	1	**111-0351**	1	TUBE	
	13	1	**2A-6941**	1	HOSE	
	14	1	**111-7092**	2	HOSE-HUMP	
	15	1	**5P-4868**	4	CLAMP (RANGE 60.33-82.55MM)	
	16	1	**5D-1026**	1	CLAMP-HOSE	
	17	1	**8X-8296**	1	PLATE AS	
	18	1	**5V-5790**	1	BLOCK	
	19	1	**131-1879**	1	BRACKET AS	
		1	**1F-0750**	1	NUT-WELD (3/8-16 THD)	
	20	1	**130-3374**	1	CLIP-LOOP	

B-USE AS REQUIRED
E-ORDER BY THE CENTIMETER

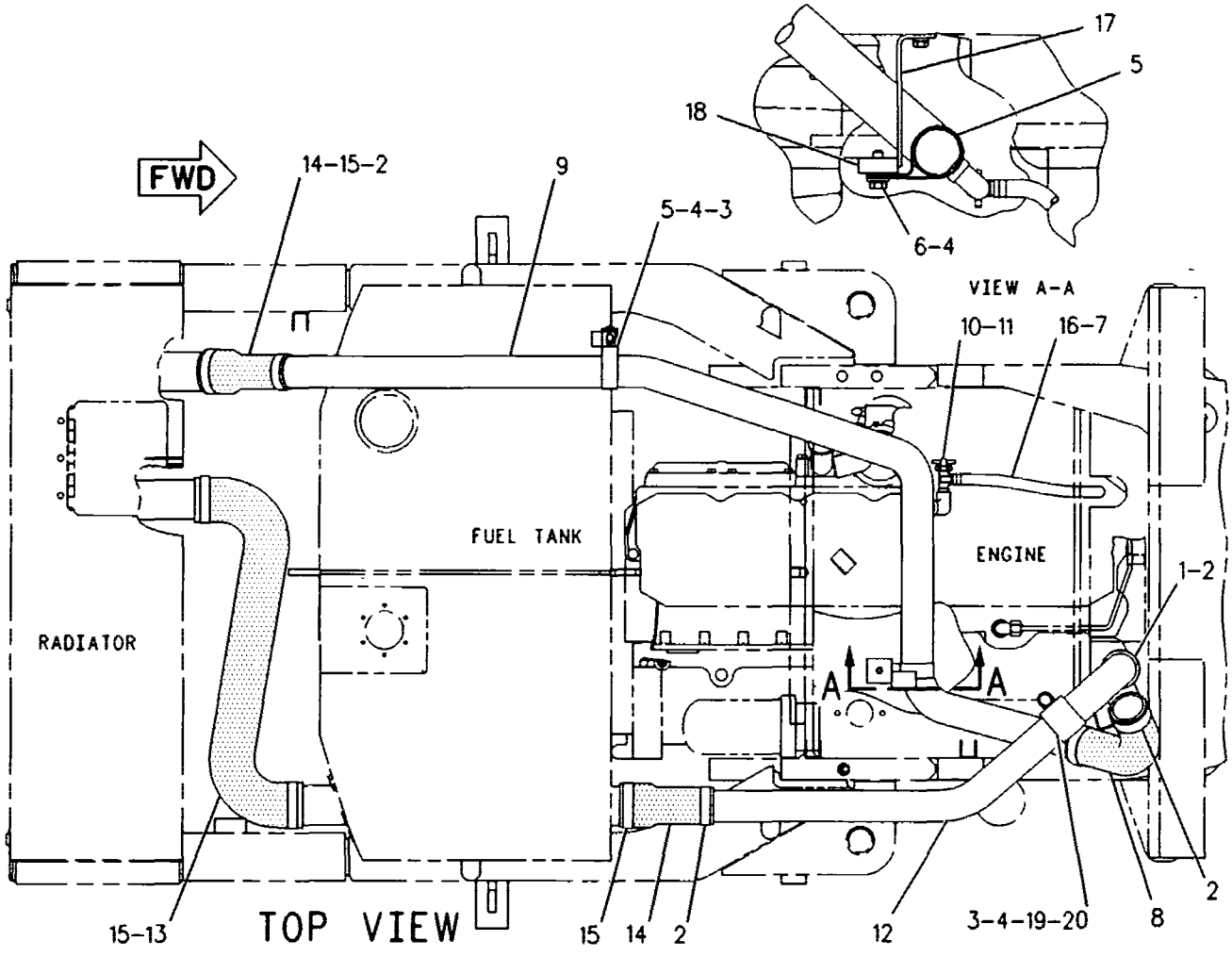

GRAPHIC #1 g00109261

COOLING SYSTEM

7E-7398 PUMP GP-WATER

S/N 98Z15500-UP

PART OF 7E-7399 PUMP GP-WATER

SMCS-1361, 1364, 1373, 1384, 1389 i00135159

NOTE	REF NO	GRAPHIC REF	PART NUMBER	QTY	PART NAME 1 2 3 4 5 6 (PRODUCT LEVEL)	SEE PAGE
B	1	1	3D-2824	1	SEAL-O-RING (23.47MM ID)	
	2	1	4W-7592	1	GASKET	
	3	1	4W-0253	1	COVER	
M	4	1	6V-3918	4	BOLT (M8X1.25X50MM)	
	5	1	9M-1974	4	WASHER-HARD (2MM THK)	
	6	1	9S-8003	1	PLUG-O-RING (1/2-20 THD)	
	7	1	1J-9671	1	SEAL-O-RING (10.52MM ID)	
	8	1	9S-8005	3	PLUG-O-RING (3/4-16 THD)	
	9	1	3K-0360	3	SEAL-O-RING (16.36MM ID)	
B	10	1	9S-8008	1	PLUG-O-RING (1 1/16-12 THD)	
	11	1	7E-3456	1	PUMP AS-WATER	
		1	4W-0250	1	SHAFT AS	
		1	2W-0712	1	SEAL AS-PUMP	
		1	4W-0251	1	IMPELLER	
	12	1	7W-3780	1	PULLEY	

B-USE AS REQUIRED
M-METRIC PART

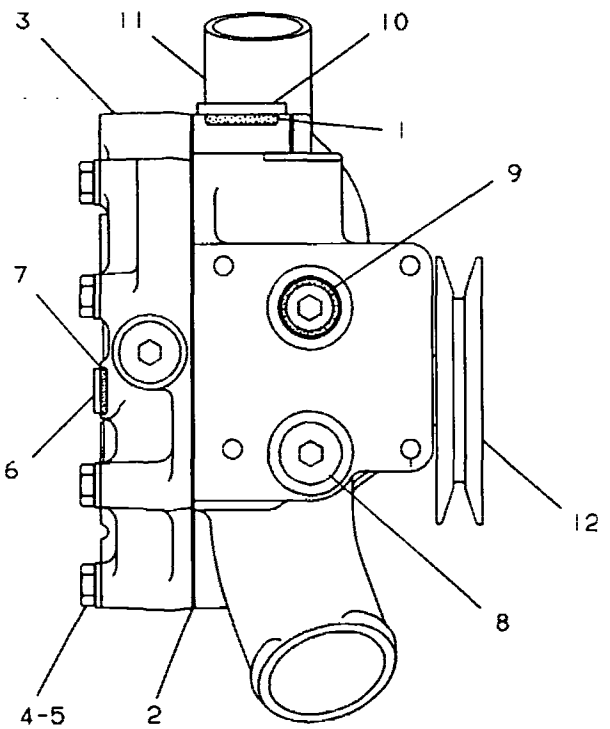

GRAPHIC #1 g00108394

COOLING SYSTEM

7E-7399 PUMP GP-WATER

S/N 98Z15500-UP

PART OF 146-8338, 7E-3352 ENGINE AR

SMCS-1361, 1364, 1373, 1384, 1389 **i00135161**

NOTE	REF NO	GRAPHIC REF	PART NUMBER	QTY	PART NAME 1 2 3 4 5 6 (PRODUCT LEVEL)	SEE PAGE
Y	1	1	**7E-7398**	1	PUMP GP-WATER	80
M	2	1	**8T-0644**	4	BOLT (M10X1.50X90MM)	
	3	1	**2M-4453**	1	SEAL-O-RING	
	4	1	**7F-8267**	1	SEAL-O-RING (47.2MM ID)	
B		1	**9S-8008**	1	PLUG-O-RING (1 1/16-12 THD)	
B		1	**3D-2824**	1	SEAL-O-RING (23.47MM ID)	

B-USE AS REQUIRED
M-METRIC PART
Y-SEPARATE ILLUSTRATION

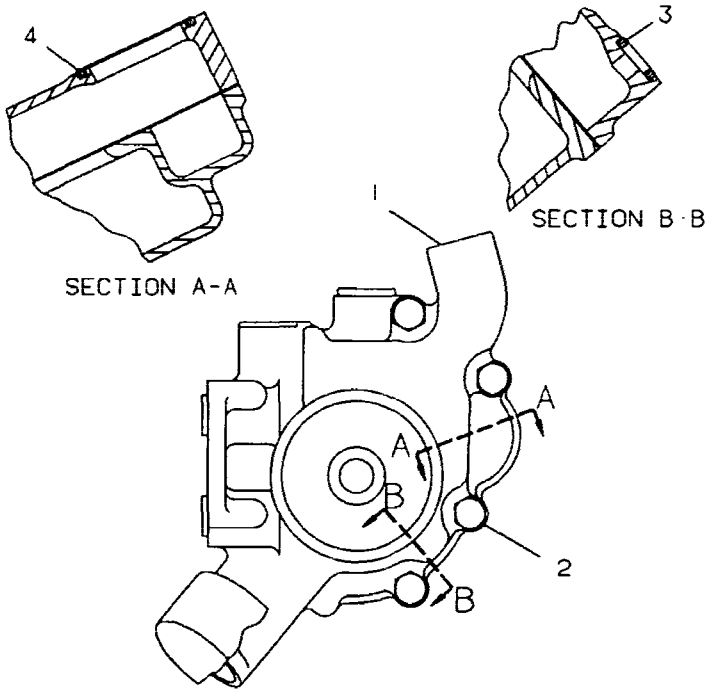

GRAPHIC #1 g00108393

COOLING SYSTEM

7C-2098 RADIATOR GP

PIN 5FM1-UP

PART OF 112-5819 INSTALLATION AR-ENGINE

SMCS-1353, 1377, 1382 **i00606994**

NOTE	REF NO	GRAPHIC REF	PART NUMBER	QTY	PART NAME 1 2 3 4 5 6 (PRODUCT LEVEL)	SEE PAGE
Y	1	1	*7C-2099*	1	RADIATOR GP	84
	2	1	**138-3777**	2	BRACKET	
	3	1	**9M-1853**	4	MOUNTING	
	4	1	**7X-0325**	2	BOLT (1/2-13X2.50IN)	
	5	1	**7X-0590**	4	WASHER-HARD (6.0MM THK)	
	6	1	**6V-8188**	2	NUT (1/2-13 THD)	
	7	1	**8T-4835**	2	BOLT (1/2-13X2IN)	
	8	1	**7I-4881**	2	BRACKET AS	
	9	1	**7X-0296**	6	BOLT (3/8-16X5.50IN)	
	10	1	**8T-4896**	8	WASHER-HARD (2.5MM THK)	
	11	1	**6V-8801**	2	NUT (3/8-16 THD)	
	12	1	**8T-4223**	4	WASHER-HARD (3MM THK)	
	13	1	**8N-7837**	2	PLATE AS	
					(EACH INCLUDES)	
		1	**9F-2978**	2	NUT-WELD (3/8-16 THD)	
	14	1	**4L-6454**	4	BOLT (3/8-16X1.0IN)	
	15	1	**5P-1075**	9	WASHER-HARD (3MM THK)	
	16	1	**7I-4713**	1	BAFFLE AS	
		1	**4B-4274**	7	WASHER (1.2MM THK)	
		1	**9M-5732**	7	RIVET-POP (4.78MM DIA)	
	17	1	**5M-3062**	5	BOLT (3/8-16X.750IN)	
	18	1	**2A-7304**	2	PLATE AS	

Y-SEPARATE ILLUSTRATION

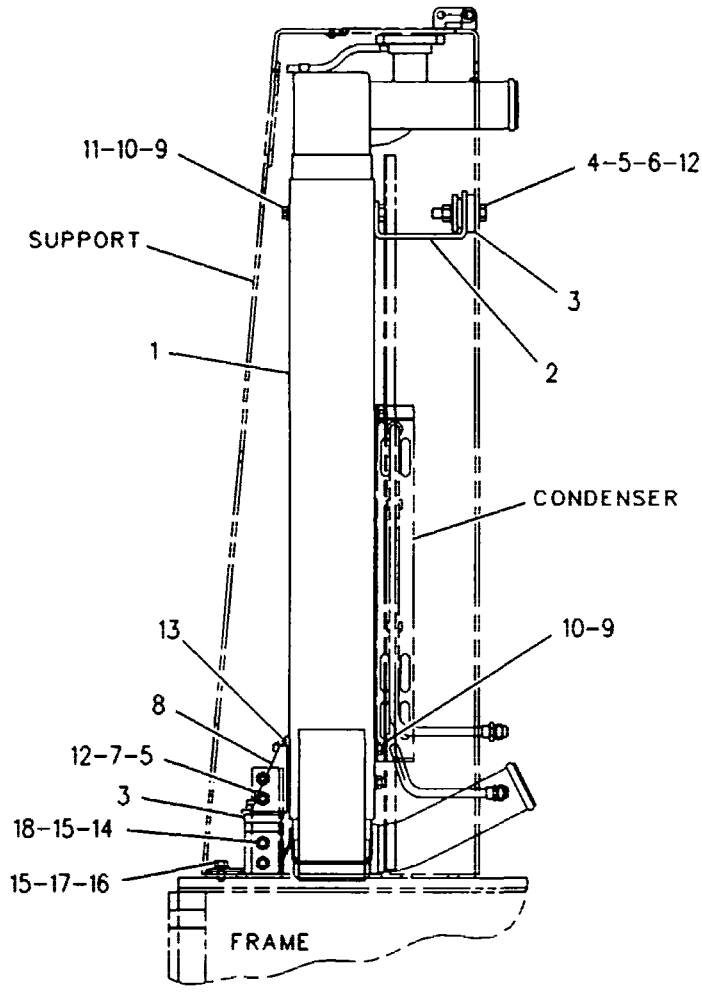

GRAPHIC #1 g00277253

COOLING SYSTEM

7C-2099 RADIATOR GP

PIN 5FM1-UP

PART OF 7C-2098 RADIATOR GP

SMCS-1353, 1377, 1382 i00131119

NOTE	REF NO	GRAPHIC REF	PART NUMBER	QTY	PART NAME 1 2 3 4 5 6 (PRODUCT LEVEL)	SEE PAGE
	1	1	8N-8846	1	NECK-FILLER	
	2	1	6L-8617	1	CAP-RADIATOR	

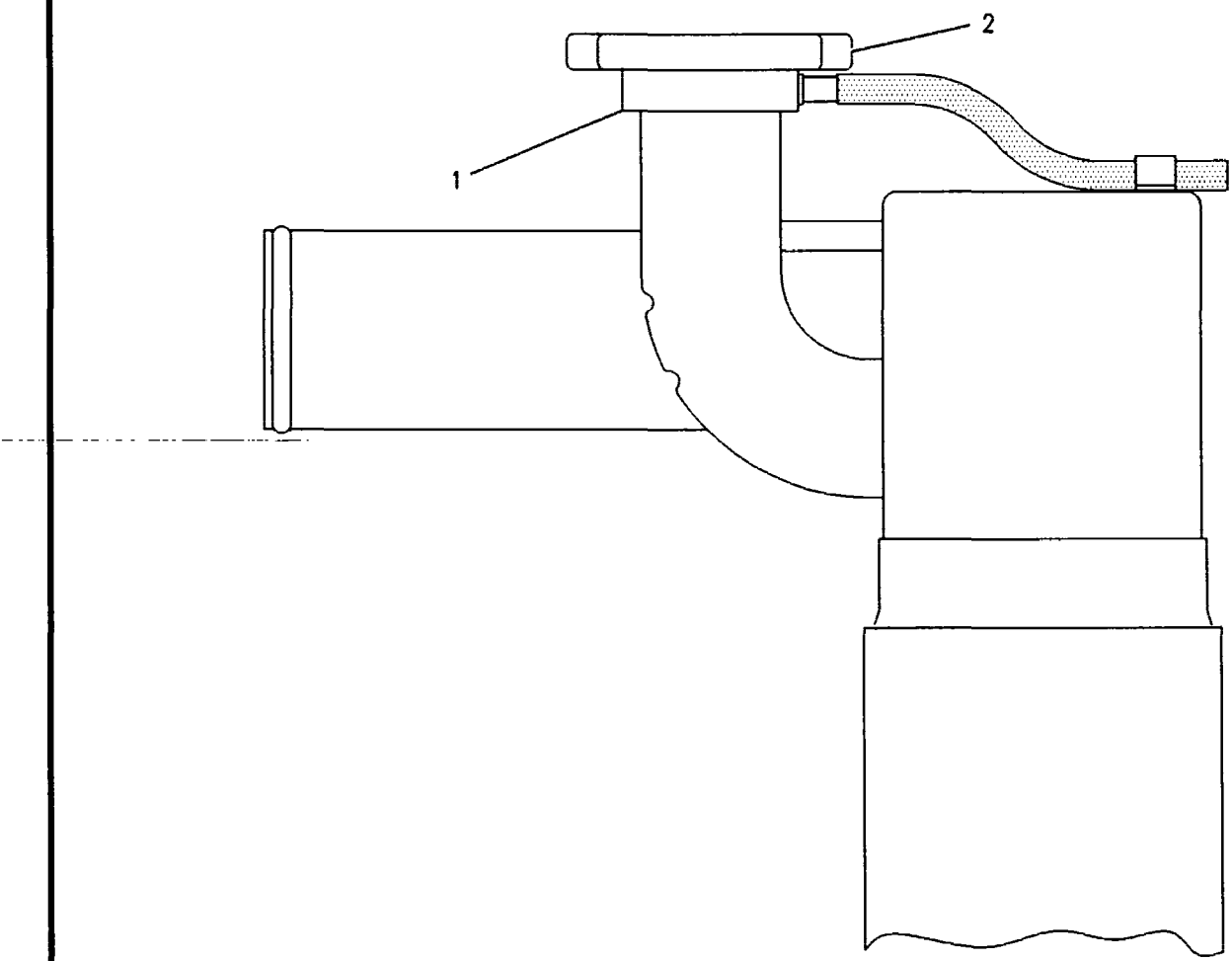

GRAPHIC #1 g00108571

AIR INLET AND EXHAUST SYSTEM

6I-1222 AFTERCOOLER GP-WATER

S/N 98Z15500-UP

PART OF 146-8338, 7E-3352 ENGINE AR

SMCS-1063, 1064, 1079 i00135709

NOTE	REF NO	GRAPHIC REF	PART NUMBER	QTY	PART NAME 1 2 3 4 5 6 (PRODUCT LEVEL)	SEE PAGE
	1	1	6I-1221	1	CORE AS	
M	2	1	6V-5219	22	BOLT (M8X1.25X40MM)	
	3	1	9M-1974	22	WASHER-HARD (2MM THK)	
	4	1	7C-1152	1	GASKET	
	5	1	8T-9402	4	CLAMP-HOSE	
	6	1	033-6783	2	NIPPLE-HOSE	
	7	1	3D-2824	2	SEAL-O-RING (23.47MM ID)	
E	8	1	8T-9543		HOSE (6 CM)	
	9	1	7C-3615	1	HOSE	
	10	1	9S-4182	1	PLUG (7/16-20 THD)	
	11	1	3J-7354	1	SEAL-O-RING (8.92MM ID)	

E-ORDER BY THE CENTIMETER
M-METRIC PART

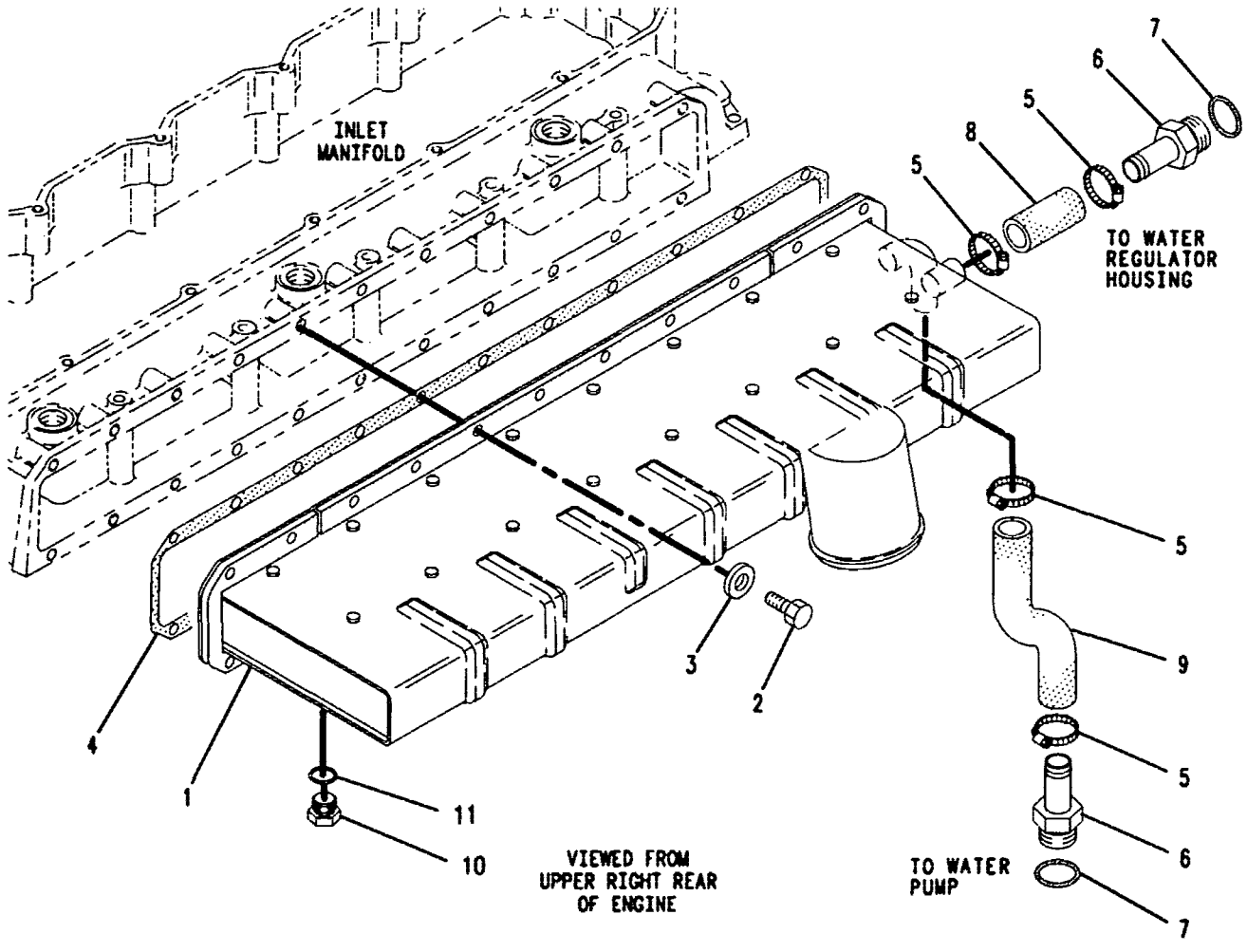

GRAPHIC #1 g00108343

AIR INLET AND EXHAUST SYSTEM

6I-2556 AIR CLEANER GP

PIN 5FM1-UP

PART OF 7C-3705 AIR CLEANER GP

SMCS-1051, 1054, 1055, 7452 i00135718

NOTE	REF NO	GRAPHIC REF	PART NUMBER	QTY	PART NAME 1 2 3 4 5 6 (PRODUCT LEVEL)	SEE PAGE
	1	1	6I-2499	1	ELEMENT AS-PRIMARY (AIR)	
	2	1	6I-2500	1	ELEMENT AS-SECONDARY (AIR)	
	3	1	6I-4466	1	COVER AS-AIR CLEANER	
		1	101-2850	1	FILM-AIR CLEANER	

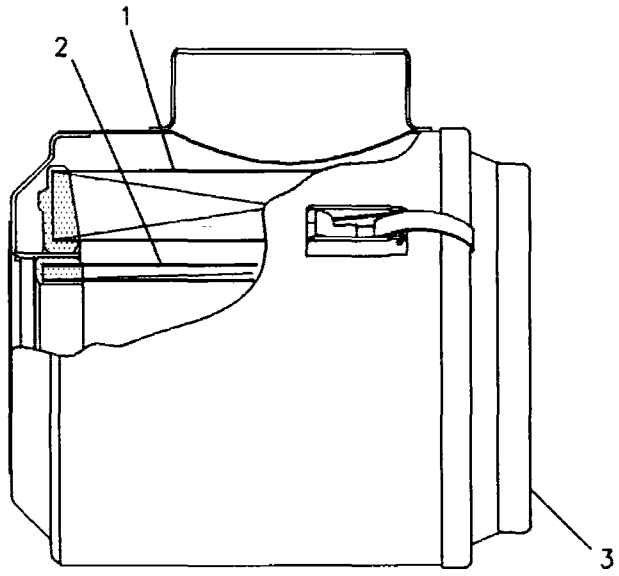

GRAPHIC #1 g00108745

AIR INLET AND EXHAUST SYSTEM

7C-3705 AIR CLEANER GP

PIN 5FM1-UP

PART OF 112-5819 INSTALLATION AR-ENGINE

SMCS-1051, 1054, 1055, 7452 i00135760

NOTE	REF NO	GRAPHIC REF	PART NUMBER	QTY	PART NAME 1 2 3 4 5 6 (PRODUCT LEVEL)	SEE PAGE
M	1	1	6V-7744	6	LOCKNUT (M10X1.50 THD)	
	2	1	8N-4902	1	GASKET	
Y	3	1	6I-2556	1	AIR CLEANER GP	86
	4	1	7S-6340	1	PRESCREEN AS	
		1	1D-4717	1	NUT (3/8-16 THD)	
		1	2D-2285	1	BOLT	
	5	1	7C-6443	1	BODY AS-PRECLEANER	
		1	1D-4717	1	NUT (3/8-16 THD)	
		1	7F-0192	1	BOLT (3/8-16X2.0IN)	
	6	1	7X-0608	6	WASHER-HARD (2.0MM THK)	

M-METRIC PART
Y-SEPARATE ILLUSTRATION

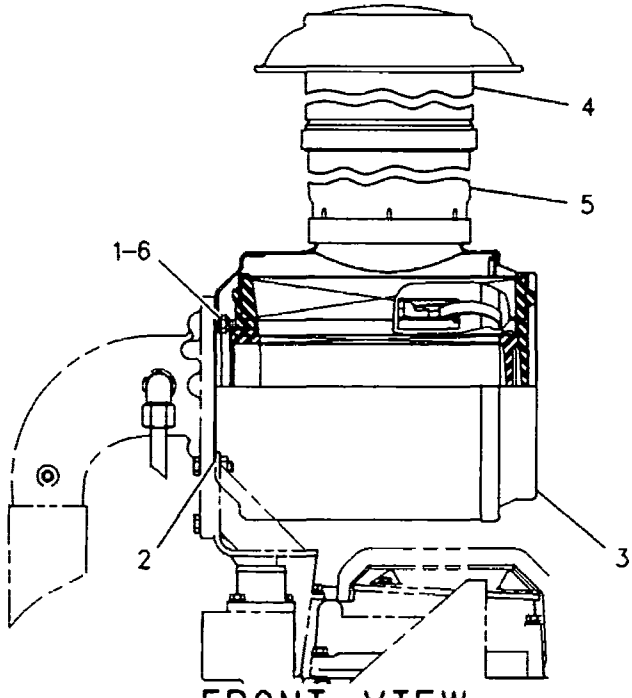

FRONT VIEW

GRAPHIC #1 g00108730

AIR INLET AND EXHAUST SYSTEM

100-6915 CARTRIDGE GP-TURBOCHARGER

S/N 98Z15500-22462

PART OF 115-5853 TURBOCHARGER GP

SMCS-1053, 1056, 1077 i00371387

NOTE	REF NO	GRAPHIC REF	PART NUMBER	QTY	PART NAME 1 2 3 4 5 6 (PRODUCT LEVEL)	SEE PAGE
					(INDIVIDUAL PARTS ARE NOT SERVICED SEPARATELY)	

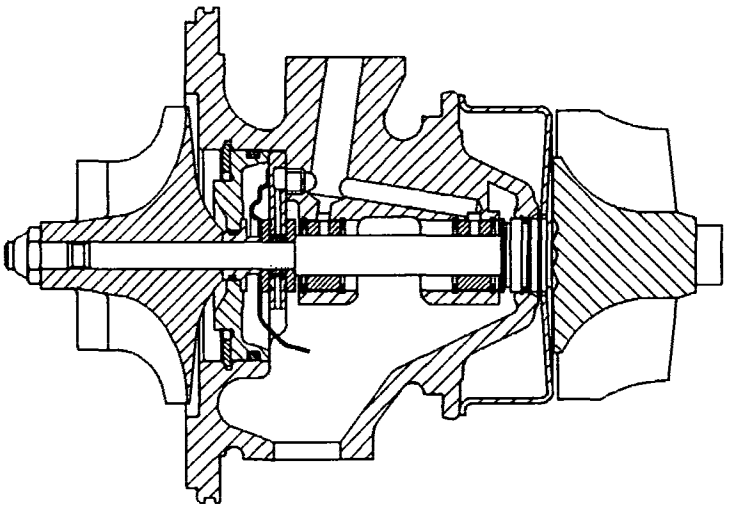

GRAPHIC #1 g00108738

AIR INLET AND EXHAUST SYSTEM

7E-9505 DUST EJECTOR GP

PIN 5FM1-UP

PART OF 112-5819 INSTALLATION AR-ENGINE

SMCS-1068 i00135165

NOTE	PART NUMBER	QTY	PART NAME 1 2 3 4 5 6 (PRODUCT LEVEL)	SEE PAGE
	7E-3870	1	CLAMP	
	5P-2230	4	CLAMP-HOSE	
	1W-4476	1	HOSE	
	5P-0763	10	HOSE	
	7E-9506	1	PIPE AS-EXHAUST	
	124-0544	1	VALVE AS-CHECK	

AIR INLET AND EXHAUST SYSTEM

7C-3706 LINES GP-AIR

PIN 5FM1-UP

PART OF 112-5819 INSTALLATION AR-ENGINE

SMCS-1071 **i00659608**

NOTE	REF NO	GRAPHIC REF	PART NUMBER	QTY	PART NAME 1 2 3 4 5 6 (PRODUCT LEVEL)	SEE PAGE
	1	1	7C-0752	1	CLAMP	
	2	1	7C-3699	1	HOSE	
	3	1	8T-6675	3	CLAMP-HOSE	
	4	1	7C-3703	1	ELBOW AS	
		1	5M-6214	1	PLUG-PIPE (1/8-27 THD)	
		1	7C-3704	1	ELBOW-AIR CLEANER	
		1	7M-1674	1	ELEMENT-FILTER	
M		1	8T-7004	6	STUD-TAPERLOCK	
	5	1	4P-4455	1	PIPE AS-EXHAUST	
		1	9Y-8315	1	CLAMP-BENT BOLT	
	6	1	7C-3700	1	BRACKET AS	
M	7	1	8T-6912	4	BOLT (M8X1.50X50MM)	
	8	1	8T-4224	4	WASHER-HARD (2MM THK)	
M	9	1	8T-4196	2	BOLT (M10X1.50X35MM)	
	10	1	8N-2694	1	INDICATOR-AIR FILTER SERVICE	
	11	1	3B-6552	1	ELBOW	
	12	1	5K-5068	1	NIPPLE	
	13	1	4P-4456	1	ELBOW-EXHAUST	
M	14	1	8T-4182	2	BOLT (M10X1.5X45MM)	
	15	1	8T-4121	2	WASHER (2.5MM THK)	

M-METRIC PART

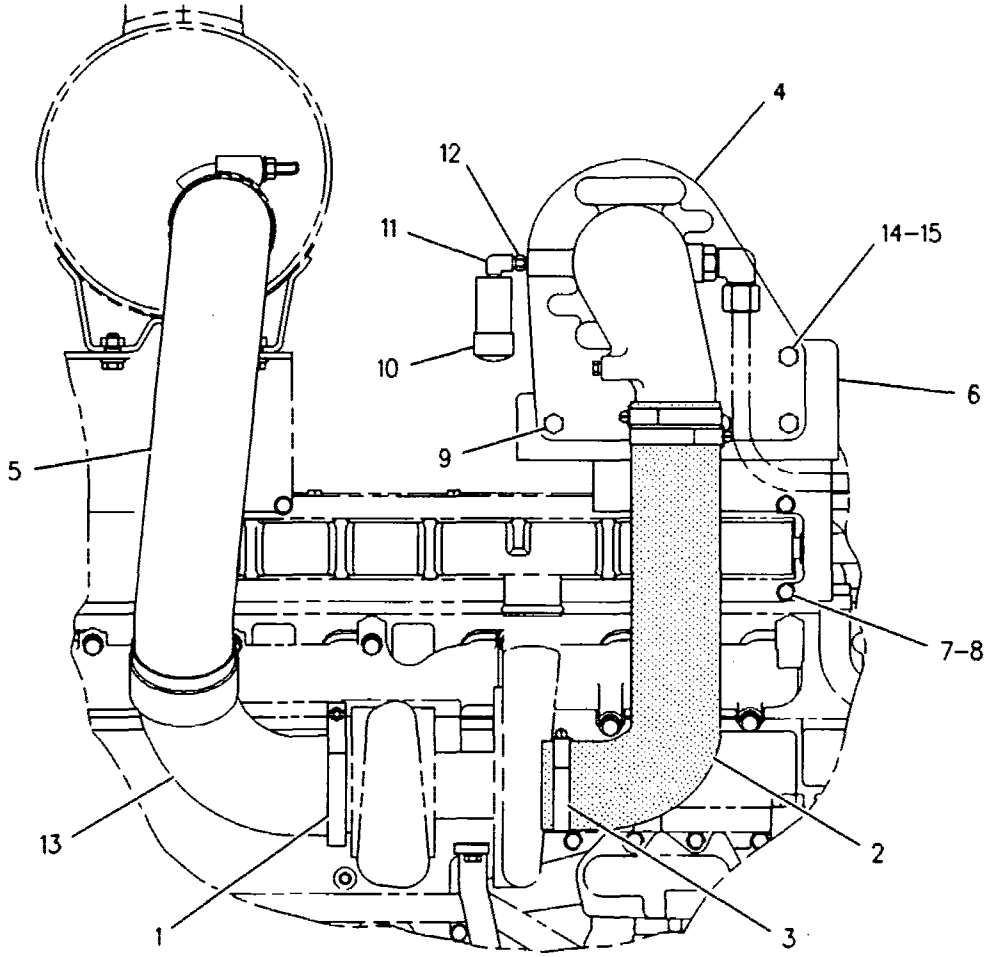

RIGHT SIDE VIEW

GRAPHIC #1 g00109346

AIR INLET AND EXHAUST SYSTEM

7C-6213 LINES GP-AIR

S/N 98Z15500-UP

PART OF 146-8338, 7E-3352 ENGINE AR

SMCS-1071 **i00135809**

NOTE	REF NO	GRAPHIC REF	PART NUMBER	QTY	PART NAME 1 2 3 4 5 6 (PRODUCT LEVEL)	SEE PAGE
	1	1	**8T-6703**	2	CLAMP-HOSE	
	2	1	**7C-6214**	1	HOSE	

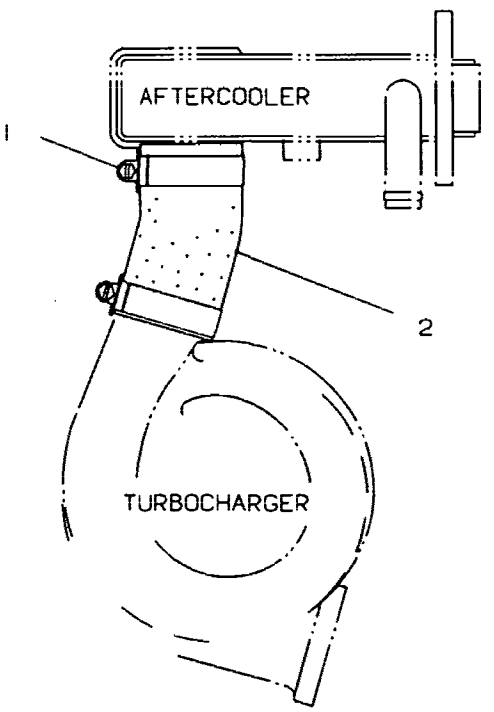

GRAPHIC #1 g00108370

AIR INLET AND EXHAUST SYSTEM

6I-2298 MANIFOLD GP-EXHAUST

S/N 98Z15500-UP

PART OF 146-8338, 7E-3352 ENGINE AR

SMCS-1059 **i00836284**

NOTE	REF NO	GRAPHIC REF	PART NUMBER	QTY	PART NAME 1 2 3 4 5 6 (PRODUCT LEVEL)	SEE PAGE
	1	1	**6I-3034**	3	GASKET	
	2	1	**115-4144**	1	MANIFOLD-EXHAUST (RIGHT)	
M	3	1	**8T-7044**	4	STUD	
M	4	1	**141-6348**	12	BOLT-HEX HEAD	
	5	1	**156-0235**	5	LOCK	
	6	1	**6I-3033**	1	LOCK	
	7	1	**6I-1099**	1	MANIFOLD-EXHAUST (CENTER)	
	8	1	**6I-0915**	1	MANIFOLD-EXHAUST (LEFT)	

M-METRIC PART

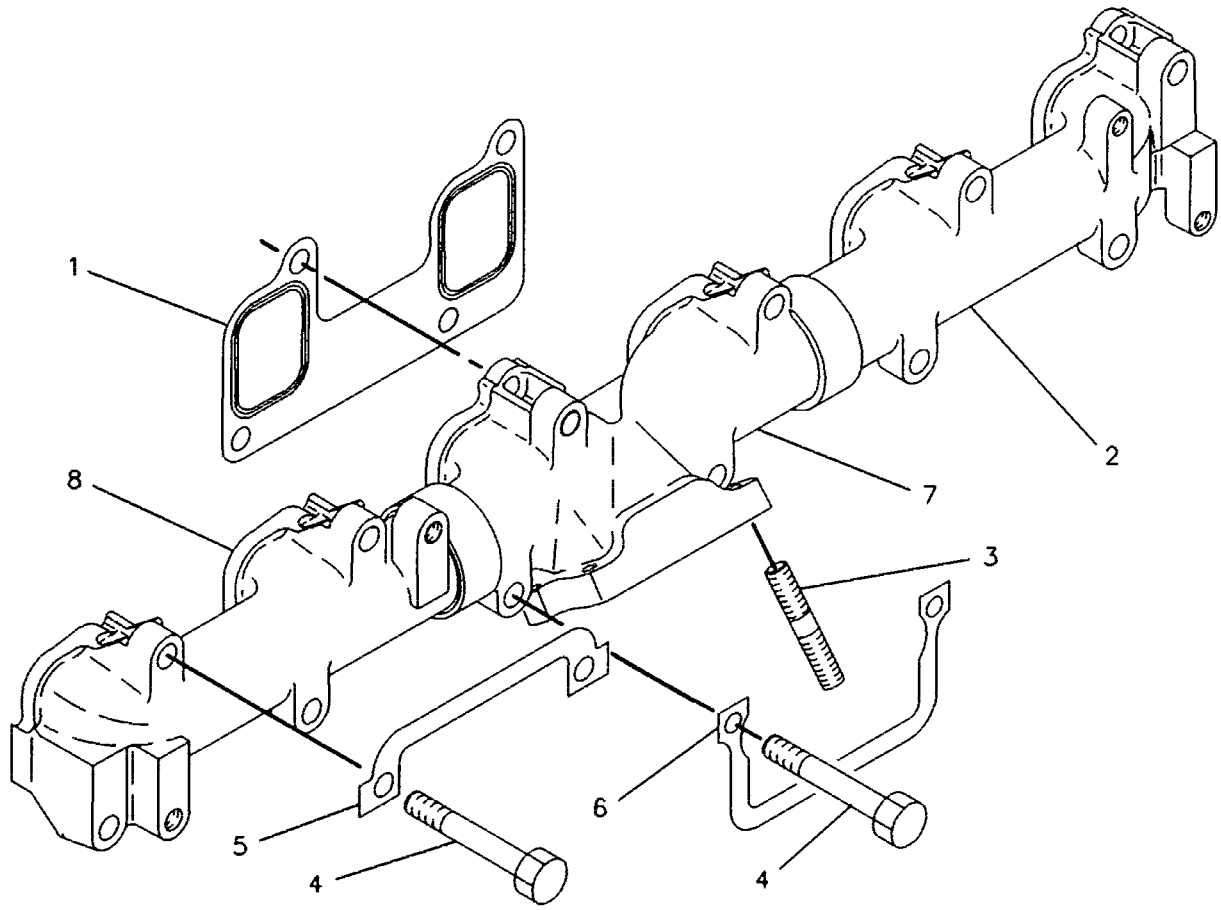

GRAPHIC #1 g00108444

AIR INLET AND EXHAUST SYSTEM

4W-3480 MANIFOLD GP-INLET

S/N 98Z15500-UP

PART OF 146-8338, 7E-3352 ENGINE AR

SMCS-1058 i00135096

NOTE	REF NO	GRAPHIC REF	PART NUMBER	QTY	PART NAME 1 2 3 4 5 6 (PRODUCT LEVEL)	SEE PAGE
M	1	1	5P-8347	13	BOLT (M8X1.25X70MM)	
	2	1	9M-1974	18	WASHER-HARD (2MM THK)	
M	3	1	6V-5218	1	BOLT (M8X1.25X35MM)	
	4	1	4W-8661	1	MANIFOLD-INLET	
	5	1	113-6250	1	GASKET	
M	6	1	6V-5223	4	BOLT (M8X1.25X100MM)	
	7	1	9S-8005	2	PLUG-O-RING (3/4-16 THD)	
	8	1	3K-0360	2	SEAL-O-RING (16.36MM ID)	
BM	9	1	5P-8347	2	BOLT (M8X1.25X70MM)	
B	10	1	9M-1974	2	WASHER-HARD (2MM THK)	
BM	11	1	6V-5223	1	BOLT (M8X1.25X100MM)	
B	12	1	9M-1974	1	WASHER-HARD (2MM THK)	
B	13	1	3K-0360	1	SEAL-O-RING (16.36MM ID)	
B	14	1	9S-8005	1	PLUG-O-RING (3/4-16 THD)	

B-USE AS REQUIRED
M-METRIC PART

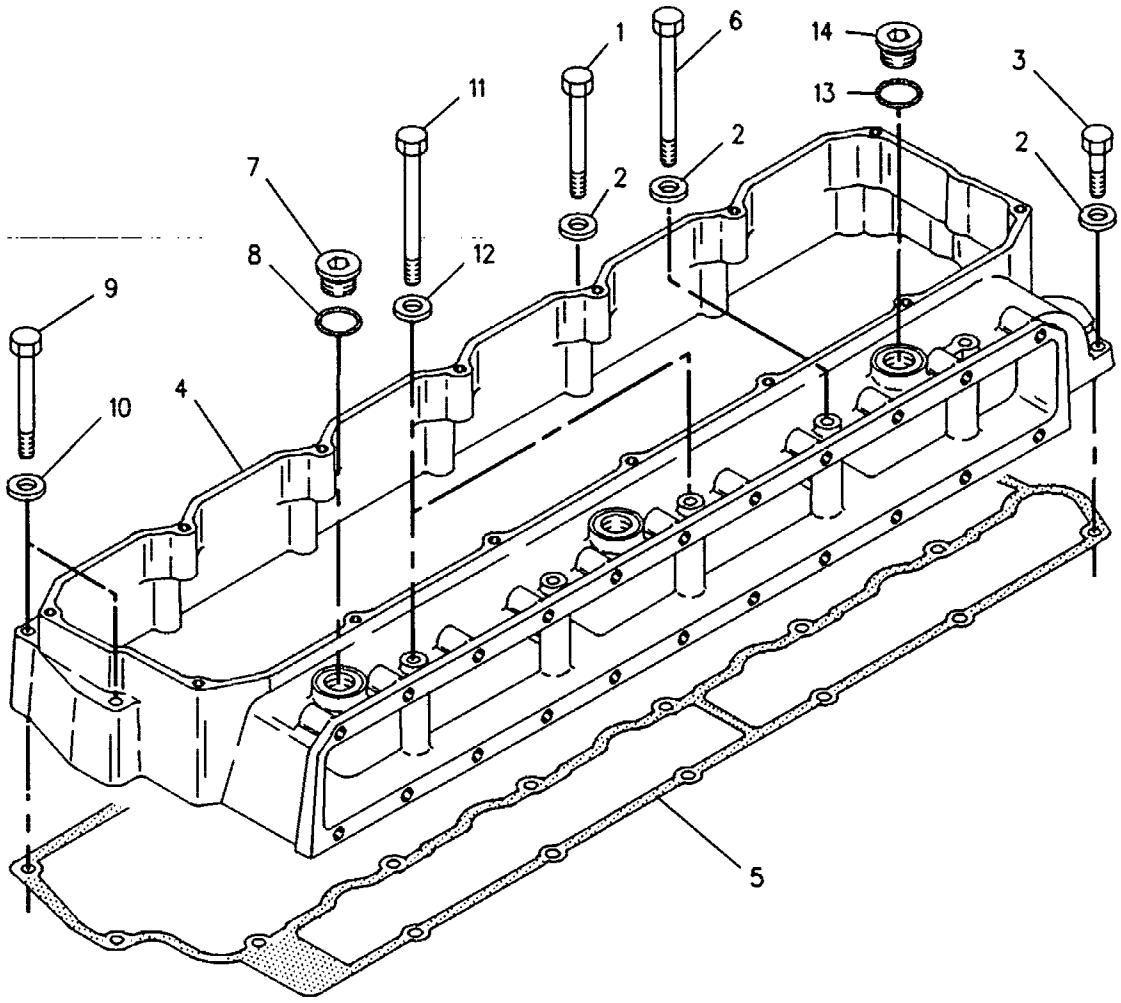

GRAPHIC #1 g00108501

AIR INLET AND EXHAUST SYSTEM

7C-3707 MUFFLER GP

PIN 5FM1-UP

PART OF 112-5819 INSTALLATION AR-ENGINE

SMCS-1062 **i00135778**

NOTE	REF NO	GRAPHIC REF	PART NUMBER	QTY	PART NAME 1 2 3 4 5 6 (PRODUCT LEVEL)	SEE PAGE
	1	1	**7C-3696**	1	BRACKET-MUFFLER (RH)	
	2	1	**8T-4224**	5	WASHER-HARD (2MM THK)	
	3	1	**7C-3693**	1	MUFFLER AS	
		1	**9Y-8315**	1	CLAMP-BENT BOLT	
M	4	1	**8T-6912**	5	BOLT (M8X1.50X50MM)	
M	5	1	**8T-4136**	4	BOLT (M10X1.50X25MM)	
	6	1	**8T-4121**	4	WASHER (2.5MM THK)	

M-METRIC PART

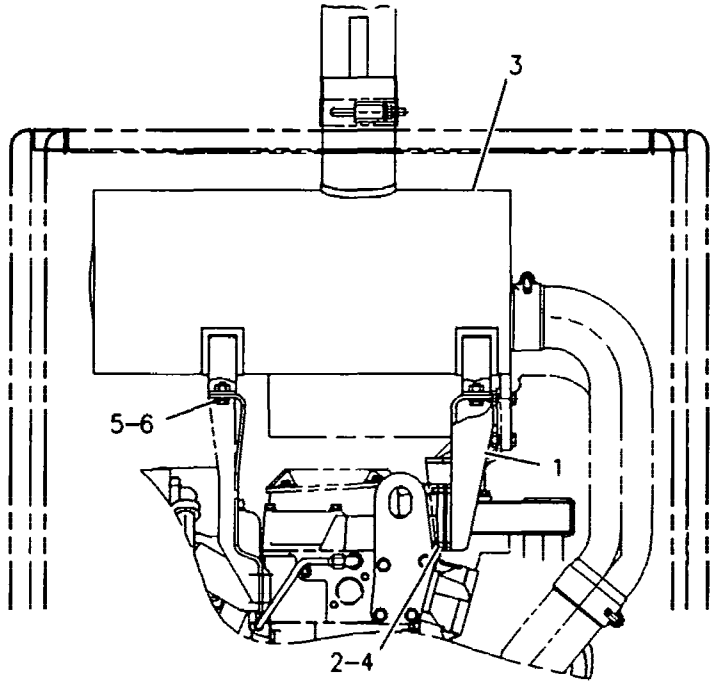

REAR VIEW

GRAPHIC #1 g00108724

AIR INLET AND EXHAUST SYSTEM

115-4068 TURBOCHARGER GP

S/N 98Z15500-22642

PART OF 7E-3352 ENGINE AR

SMCS-1052, 1053, 1056, 1060, 1065, 1066, 1077 i00135867

NOTE	REF NO	GRAPHIC REF	PART NUMBER	QTY	PART NAME 1 2 3 4 5 6 (PRODUCT LEVEL)	SEE PAGE
YR	1	1	115-5853	1	TURBOCHARGER GP	97
M	2	1	3E-8017	4	LOCKNUT	
	3	1	7C-7431	1	GASKET-TURBOCHARGER	

M-METRIC PART
R-REMFG PART MAY BE AVAILABLE
Y-SEPARATE ILLUSTRATION

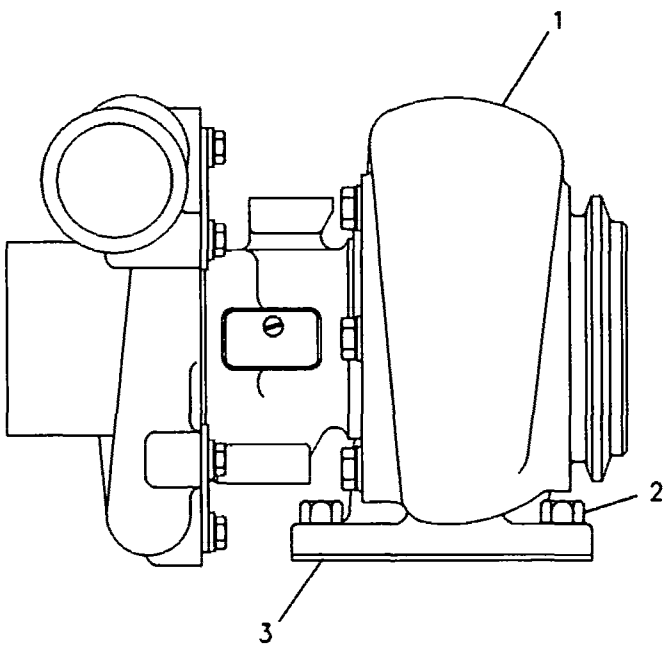

GRAPHIC #1 g00108732

AIR INLET AND EXHAUST SYSTEM

115-5853 TURBOCHARGER GP

S/N 98Z15500-22462

PART OF 115-4068 TURBOCHARGER GP

SMCS-1052, 1053, 1056, 1060, 1065, 1066, 1077 i00136004

NOTE	REF NO	GRAPHIC REF	PART NUMBER	QTY	PART NAME 1 2 3 4 5 6 (PRODUCT LEVEL)	SEE PAGE
M	1	1	7C-6671	6	BOLT AS	
M	2	1	7C-6670	4	BOLT	
	3	1	116-0459	1	HOUSING-TURBINE	
	4	1	7C-5802	3	PLATE-CLAMP	
	5	1	7C-6672	2	PLATE-CLAMP	
	6	1	1W-4795	1	PLATE-IDENTIFICATION	
		1	8H-3710	1	SCREW-TAPPING	
Y	7	1	100-6915	1	CARTRIDGE GP-TURBOCHARGER	88
	8	1	100-6762	1	HOUSING-COMPRESSOR	

M-METRIC PART
Y-SEPARATE ILLUSTRATION

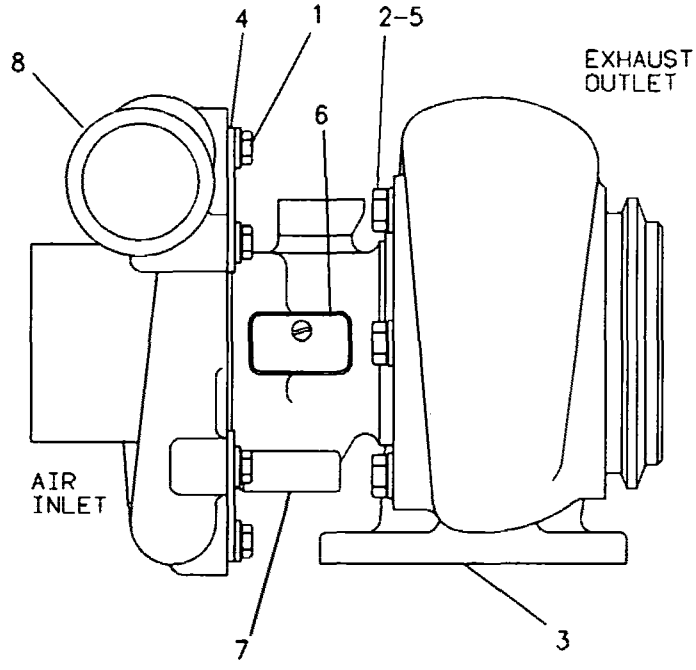

GRAPHIC #1 g00108639

AIR INLET AND EXHAUST SYSTEM

135-2650 TURBOCHARGER GP*R

S/N 98Z22643-UP

PART OF 140-7386 TURBOCHARGER GP

SMCS-1052, 1053, 1056, 1060, 1065, 1066, 1077 **i00675154**

NOTE	REF NO	GRAPHIC REF	PART NUMBER	QTY	PART NAME 1 2 3 4 5 6 (PRODUCT LEVEL)	SEE PAGE
R	1	1	**135-6806**	1	CARTRIDGE GP-TURBOCHARGER	
	2	1	**135-6636**	1	COVER-COMPRESSOR	
	3	1	**113-8465**	1	HOUSING-TURBINE	
	4	1	**121-9799**	3	PLATE-CLAMP	
	5	1	**7C-6672**	2	PLATE-CLAMP	
	6	1	**1W-4795**	1	PLATE-IDENTIFICATION	
	7	1	**125-5466**	6	BOLT AS	
M	8	1	**7C-6670**	4	BOLT	
	9	1	**121-7554**	1	SEAL-O-RING	

M-METRIC PART
R-REMFG PART MAY BE AVAILABLE

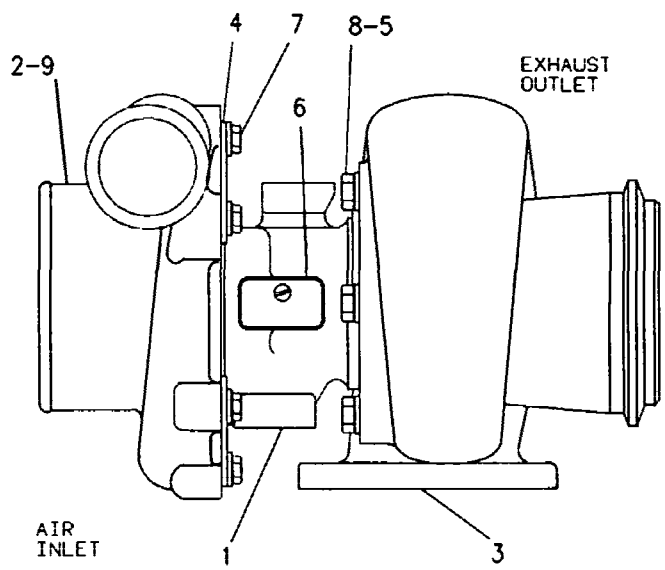

GRAPHIC #1 g00108753

AIR INLET AND EXHAUST SYSTEM

140-7386 TURBOCHARGER GP

S/N 98Z22643-UP

PART OF 146-8338 ENGINE AR

SMCS-1052, 1053, 1056, 1060, 1065, 1066, 1077 **i00681430**

NOTE	REF NO	GRAPHIC REF	PART NUMBER	QTY	PART NAME 1 2 3 4 5 6 (PRODUCT LEVEL)	SEE PAGE
YR	1	1	*135-2650*	1	TURBOCHARGER GP	98
M	2	1	**3E-8017**	4	LOCKNUT	
	3	1	**7C-7431**	1	GASKET-TURBOCHARGER	

M-METRIC PART
R-REMFG PART MAY BE AVAILABLE
Y-SEPARATE ILLUSTRATION

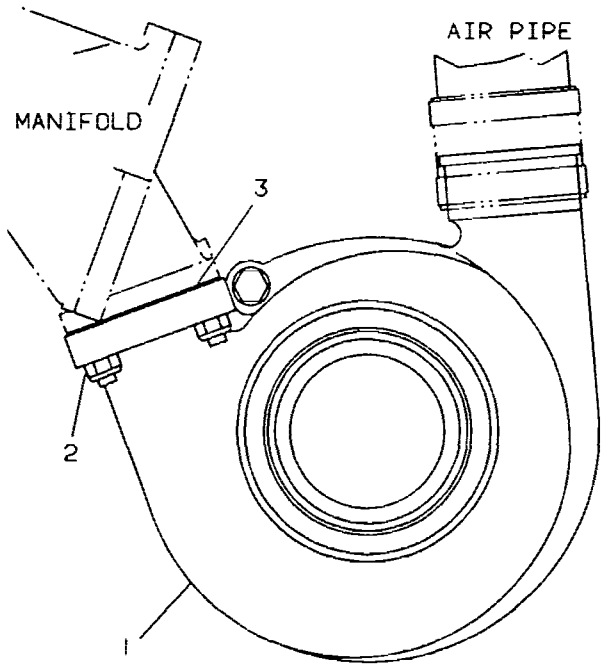

GRAPHIC #1 g00108333

FUEL SYSTEM

129-1102 BASE GP-FUEL FILTER

S/N 98Z15500-UP

PART OF 130-8101 LINES GP-FUEL FILTER

SMCS-1262 i00834898

NOTE	REF NO	GRAPHIC REF	PART NUMBER	QTY	PART NAME 1 2 3 4 5 6 (PRODUCT LEVEL)	SEE PAGE
	1	1	**129-1142**	1	BASE AS	
	2	1	**112-6523**	1	INSERT-FUEL FILTER	
	3	1	**139-3531**	1	INSERT	
Y	4	1	*129-1101*	1	VALVE GP-CHECK	139
	5	1	**6V-4589**	1	SEAL-O-RING (19.18MM ID)	

Y-SEPARATE ILLUSTRATION

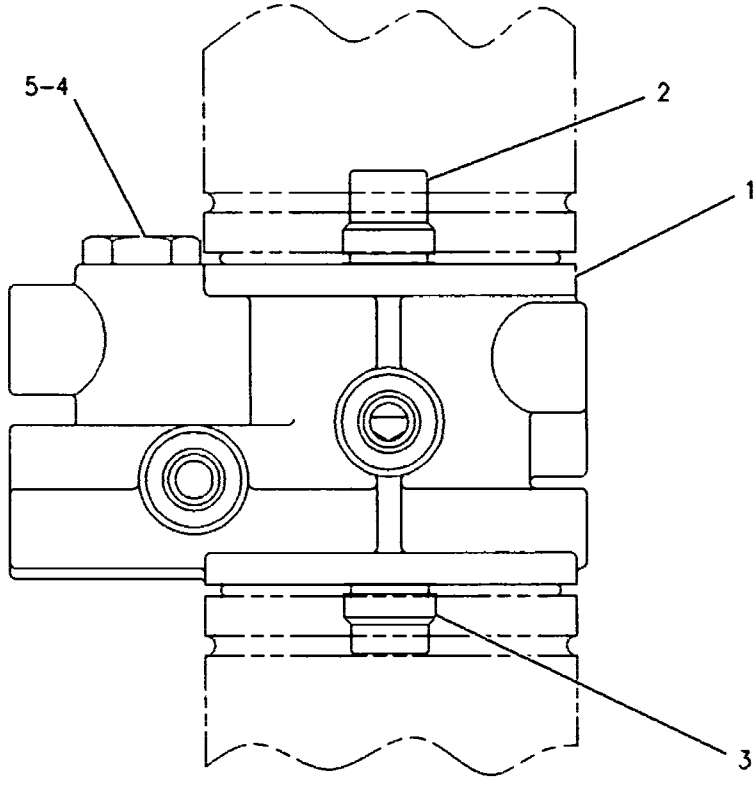

FRONT VIEW

GRAPHIC #1 g00109516

FUEL SYSTEM

105-1695 CONTROL GP-FUEL INJECTION

S/N 98Z15500-UP

PART OF 146-8338, 7E-3352 ENGINE AR

SMCS-1265, 1298 i00134853

NOTE	REF NO	GRAPHIC REF	PART NUMBER	QTY	PART NAME 1 2 3 4 5 6 (PRODUCT LEVEL)	SEE PAGE
	1	1	102-7459	1	CONTROL AS	
Z		1		6	NUT (M4X0.7 THD)	
Z		1		4	SCREW-BUTTON HEAD (M4X0.7X10MM)	
Z		1		5	SETSCREW-SOCKET	
Z		1		7	BOLT-SOCKET HEAD (M4X0.7X20MM)	
Z		1		2	RING-RETAINING	
Z		1		1	SETSCREW	
M	2	1	6V-5683	4	BOLT (M6X1X16MM)	

M-METRIC PART
Z-NOT SERVICED SEPARATELY

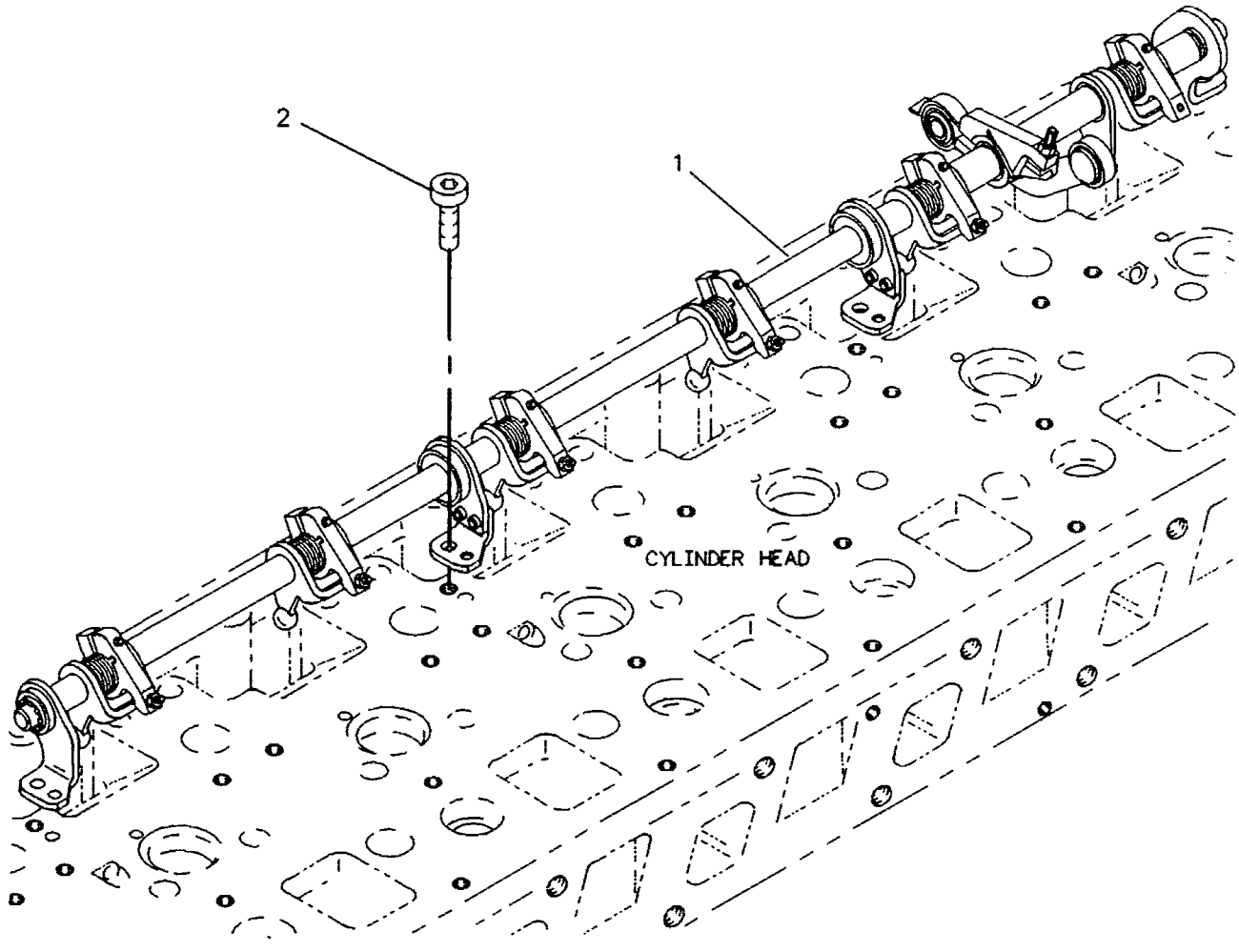

GRAPHIC #1 g00108505

FUEL SYSTEM

8W-4743 CONTROL GP-GOVERNOR

PIN 5FM1-UP

PART OF 112-4103 CHASSIS AR

SMCS-1265, 1276 **i00659944**

NOTE	REF NO	GRAPHIC REF	PART NUMBER	QTY	PART NAME 1 2 3 4 5 6 (PRODUCT LEVEL)	SEE PAGE
	1	1	6B-4196	1	WASHER-THRUST	
	2	1	7K-2135	2	BEARING-ROLLER	
	3	1	9G-9154	2	CLIP (10.5MM ID)	
M	4	1	8T-4154	1	BOLT (M8X1.25X35MM)	
	5	1	1B-8704	2	KEY-WOODRUFF	
	6	1	5M-3062	1	BOLT (3/8-16X.750IN)	
	7	1	8W-8909	3	SLEEVE	
	8	1	9L-1566	1	SUPPORT-TUBE	
	9	1	6V-8801	5	NUT (3/8-16 THD)	
	10	1	5B-1866	1	PLUG-CUP	
	11	1	4L-6454	1	BOLT (3/8-16X1.0IN)	
	12	1	8C-9587	1	CABLE AS	
	13	1	6D-4972	1	SPACER	
	14	1	8X-2496	1	HOUSING	
	15	1	1A-2457	1	PIN-CLEVIS	
		1	3B-4607	1	COTTER	
	16	1	3D-9609	1	ROD END	
	17	1	9K-4068	1	CONTROL	
M		1	9X-2043	2	SCREW-TRUSS HEAD (M6X1X14MM)	
	18	1	112-9164	3	BOOT	
	19	1	4J-8922	1	ROD END	
	20	1	3S-2713	2	NUT-FULL (3/8-24 THD)	
	21	1	1B-0676	1	PIN	
	22	1	7V-0446	1	CLIP	
	23	1	8X-3595	1	BRACKET	
	24	1	5S-7379	2	BOLT (3/8-16X.875IN)	
	25	1	8T-4896	4	WASHER-HARD (2.5MM THK)	
	26	1	0V-0196	2	BOLT (3/8-16X1.25IN)	
	27	1	8X-2955	1	SHAFT	
	28	1	8D-5996	1	LEVER	
	29	1	8X-2948	1	LEVER	
	30	1	2L-7693	2	BUSHING	
	31	1	4D-2498	1	LEVER	
	32	1	6H-7127	1	LUG (5/8-13/32X9/16IN)	
	33	1	7H-3641	4	ROD END	
	34	1	6V-8186	5	NUT-FULL (5/16-24 THD)	
	35	1	6V-8918	2	BOLT (5/16-18X1.25IN)	
	36	1	6V-8189	2	NUT (5/16-18 THD)	
	37	1	8X-3125	1	ROD	
	38	1	8T-4224	2	WASHER-HARD (2MM THK)	
	39	1	5S-7383	3	BOLT (3/8-16X1.75IN)	
	40	1	8X-2947	1	PEDAL AS-DECELERATOR	
	41	1	2K-2882	1	BOLT-SHOULDER	
	42	1	2K-2773	1	STUD	
	43	1	4D-4064	1	ROD END	
	44	1	8X-3122	1	LINK AS	
		1	6D-0458	2	RETAINER	
	45	1	4F-9503	1	SPRING (LONG)	
	46	1	2S-1382	1	SPRING (SHORT)	
	47	1	2B-8343	1	SPRING	
	1	2	8D-9973	1	HOUSING	
	2	2	7K-2135	2	BEARING-ROLLER	
	3	2	9D-0145	1	LEVER	
	4	2	8X-3123	1	SHAFT	
	5	2	1B-8704	4	KEY-WOODRUFF	
	6	2	9B-7237	2	BOLT (3/8-16X1.25IN)	

8W-4743 CONTROL GP-GOVERNOR *(contd.)*

i00659944

NOTE	REF NO	GRAPHIC REF	PART NUMBER	QTY	PART NAME 1 2 3 4 5 6 (PRODUCT LEVEL)	SEE PAGE
	7	2	4D-4895	2	LEVER	
	8	2	5S-7383	2	BOLT (3/8-16X1.75IN)	
	9	2	6V-8801	4	NUT (3/8-16 THD)	
	10	2	8X-3593	1	BRACKET AS	
	11	2	5P-1075	9	WASHER-HARD (3MM THK)	
	12	2	7X-0291	3	BOLT (3/8-16X3.75IN)	
	13	2	8X-3124	1	SHAFT	
	14	2	8X-3261	1	LEVER	
	15	2	8X-2500	1	PEDAL-GOVERNOR CONTROL	
	16	2	129-3173	1	BOLT-12 POINT HEAD	
	17	2	145-9077	1	ROD	
	18	2	009-0008	1	SETSCREW-SOCKET	
	19	2	4J-8922	2	ROD END	
	20	2	3S-2713	2	NUT-FULL (3/8-24 THD)	
	21	2	1B-0676	2	PIN	
	22	2	7V-0446	2	CLIP	
	23	2	6V-8185	2	NUT (1/4-20 THD)	
	24	2	6V-8187	2	NUT (1/4-28 THD)	
	25	2	1V-6341	2	SEAL (30.15MM OD)	
	26	2	4L-6454	6	BOLT (3/8-16X1.0IN)	
	27	2	8D-9969	1	COVER	
		2	8D-9974	1	GASKET	
	28	2	4M-5281	6	BOLT (1/4-20X.750IN)	
	29	2	8X-2954	1	COVER	
		2	8X-2952	1	GASKET	
	30	2	5P-7704	1	ROD END	
	31	2	8T-4205	10	WASHER-HARD (2MM THK)	
	32	2	8T-9043	1	BOLT (5/16-18X.875IN)	
	33	2	7H-3641	1	ROD END	
	34	2	2N-9421	2	SPRING-DISC	
	35	2	6L-7751	1	ROD END (INT THD)	
	36	2	6V-8189	2	NUT (5/16-18 THD)	
	37	2	8X-8299	1	LEVER	
	38	2	8T-4224	5	WASHER-HARD (2MM THK)	
	39	2	8C-6876	1	BOLT (5/16-18X1.625)	
	40	2	2V-7859	1	BEARING	
	41	2	7M-2697	1	SCREW-SOCKET	
	42	2	8X-3121	1	ROD	
	43	2	5M-8500	1	KNOB	
	44	2	6V-1322	1	BOLT (1/4-20X.375 IN)	
	45	2	8X-2956	1	LEVER AS	
	46	2	9M-2750	2	SCREW-HEX SOCKET	
	47	2	8X-2953	1	PLATE	
	48	2	8T-2604	1	SEAL-LIP	
	49	2	8T-4896	2	WASHER-HARD (2.5MM THK)	
	50	2	8T-8908	1	BOLT (1/4-20X1IN)	
M	51	2	8T-4136	2	BOLT (M10X1.50X25MM)	
	52	2	8W-6433	1	SHAFT AS	
M	53	2	5C-7423	1	SCREW	
	54	2	8W-6431	1	PLATE AS	
		2	4K-9097	2	NUT-WELD (5/16-18 THD)	
	55	2	4M-6425	2	BOLT (5/16-18X1IN)	
	56	2	7J-0637	1	BOLT-SOCKET HEAD	
	57	2	9X-8256	1	WASHER (2MM THK)	
	58	2	5P-1076	1	WASHER-HARD (4MM THK)	

M-METRIC PART

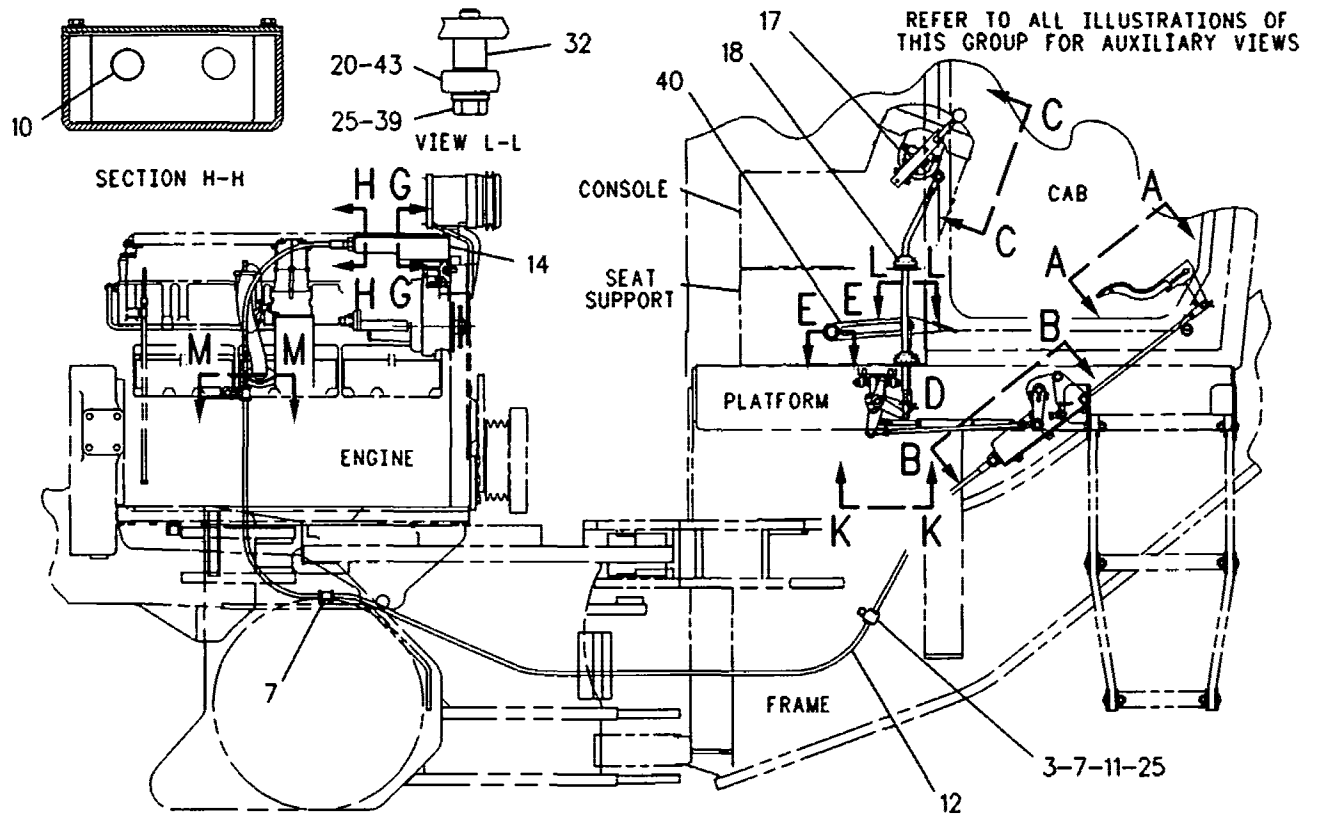

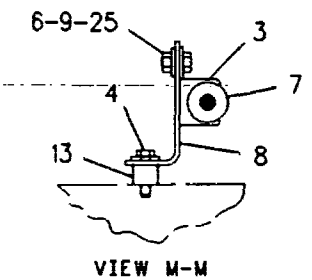

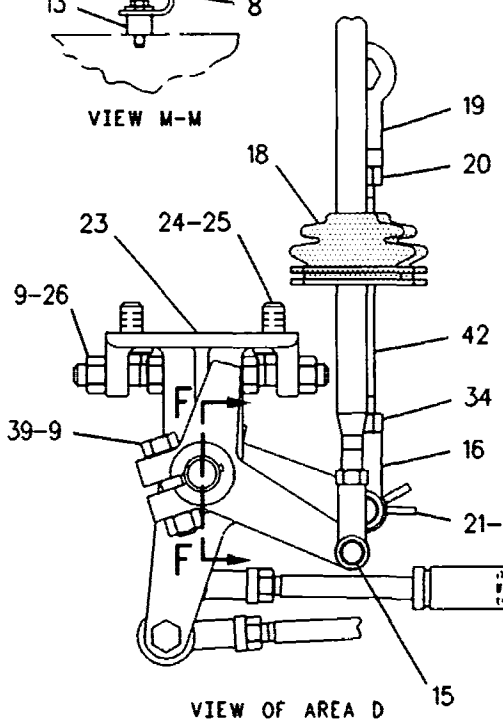

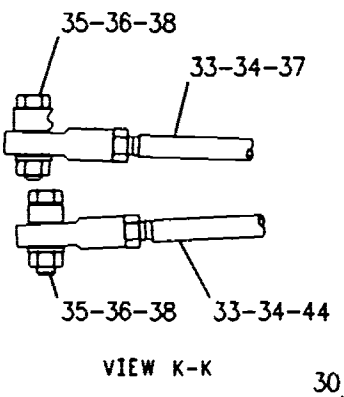

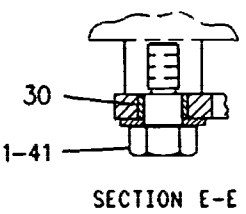

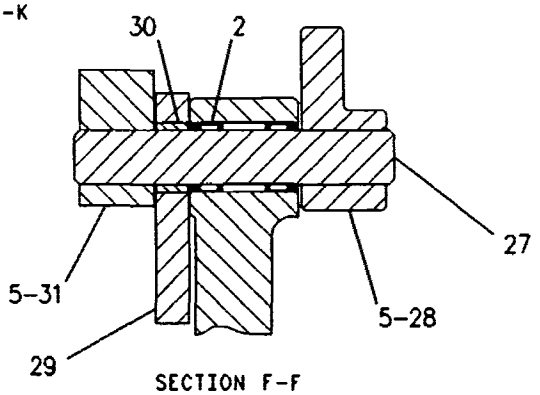

GRAPHIC #1 g00109176

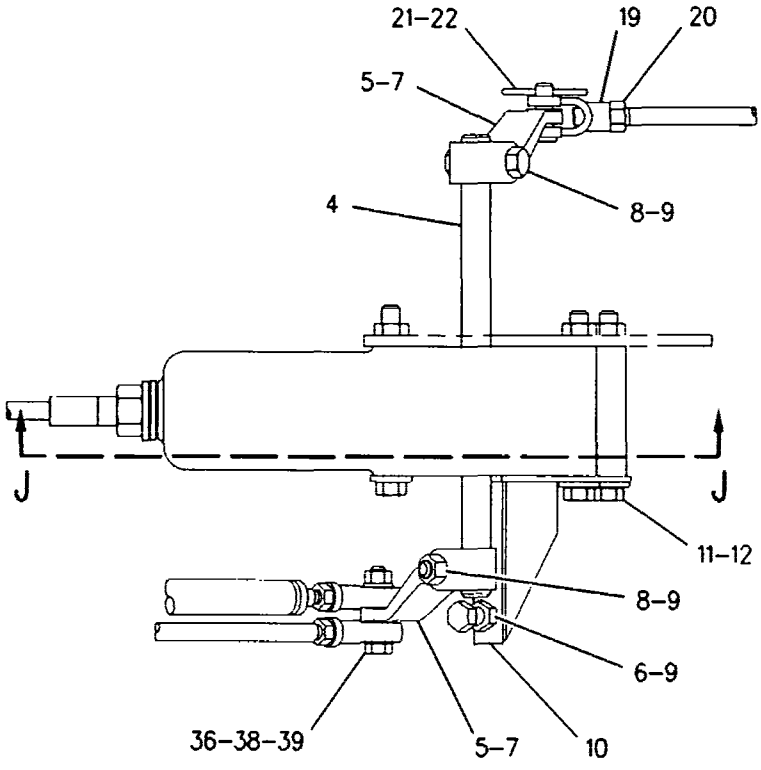

VIEW B-B

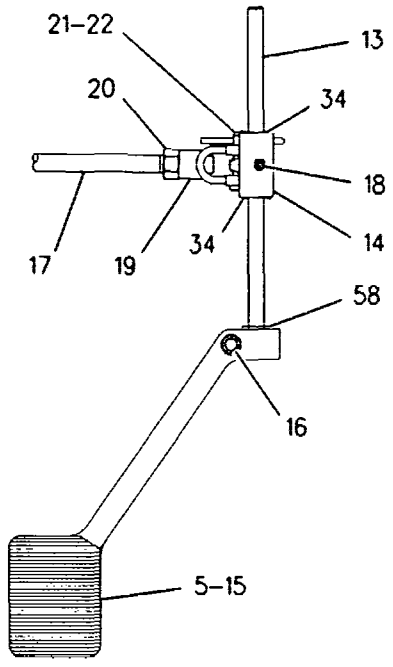

VIEW A-A

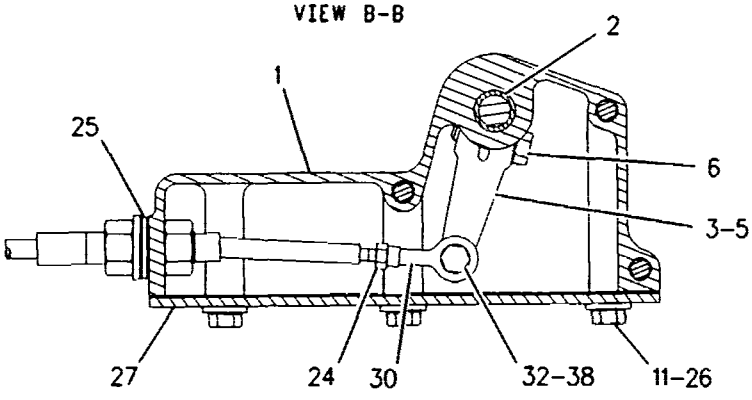

SECTION J-J

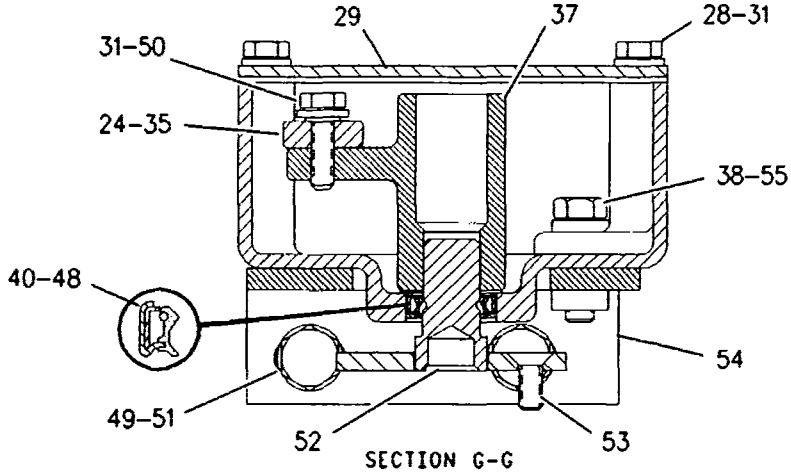

SECTION G-G

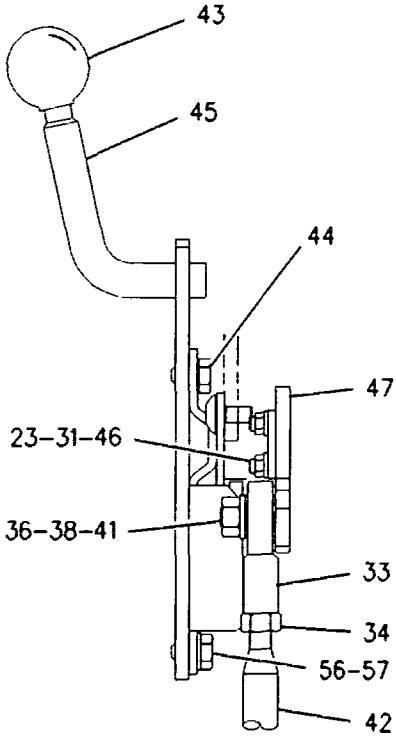

VIEW C-C

GRAPHIC #2 g00287117

FUEL SYSTEM

7E-8794 DRIVE GP-GOV & TRANSFER PUMP

S/N 98Z15500-UP

PART OF 131-6690, 142-5052 GOVERNOR GP-UNIT INJECTOR

SMCS-1288 i00135163

NOTE	REF NO	GRAPHIC REF	PART NUMBER	QTY	PART NAME 1 2 3 4 5 6 (PRODUCT LEVEL)	SEE PAGE
	1	1	4P-5612	1	HOUSING AS-FRONT	
		1	7S-5005	2	DOWEL	
		1	7S-6798	1	SEAL-LIP	
M		1	9Y-3107	1	BOLT	
	2	1	4P-8253	1	SPRING-TORSION	
	3	1	4P-9490	1	SHAFT AS-SHUTOFF	
		1	4P-9489	1	SHAFT-SHUTOFF	
		1	4P-9491	1	SHIM-SHUTOFF (1.75 MM THK)	
		1	4P-9492	1	BRACKET-SHAFT	
		1	4P-9493	1	LEVER-SHUTOFF	
		1	4P-9494	1	SPRING-SHUTOFF	
		1	105-0585	1	LEVER-SHUTOFF	
M		1	9X-8902	4	BOLT-SOCKET HEAD	
M	4	1	6V-5213	2	BOLT-SOCKET HEAD	
	5	1	7W-5615	1	SLEEVE AS-PUMP	
		1	1W-0565	1	RING-RETAINING	
	6	1	4D-9986	2	SEAL-O-RING (23.47MM ID)	
	7	1	4P-3953	1	PISTON AS	
	8	1	7E-0156	1	FITTING-INLET	
	9	1	4P-4224	1	COVER-TRANSFER PUMP	
	10	1	7C-5294	1	SPRING	
M	11	1	8C-6364	3	BOLT-SOCKET HEAD (M5X.8X14MM)	
	12	1	7E-9898	1	CONNECTOR-ORIFICE	
	13	1	3J-1907	2	SEAL-O-RING (11.89MM ID)	
	14	1	7W-7383	2	VALVE AS-CHECK	
	15	1	7E-3943	1	LEVER-CONTROL	
M	16	1	9Y-9846	1	SCREW-LOCATOR	
	17	1	6L-8598	2	RING-RETAINING	
	18	1	4P-3538	1	SHAFT-THROTTLE	
	19	1	7E-3944	1	SLEEVE	

M-METRIC PART

7E-8794 DRIVE GP-GOV & TRANSFER PUMP *(contd.)* i00135163

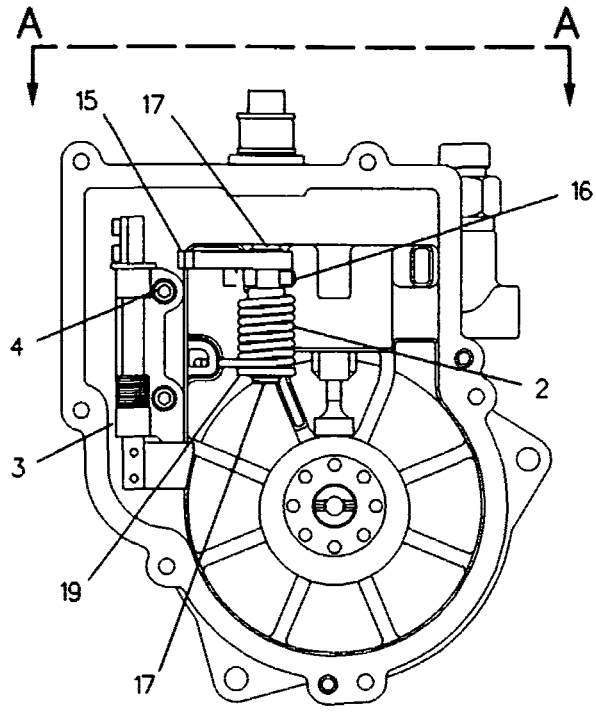

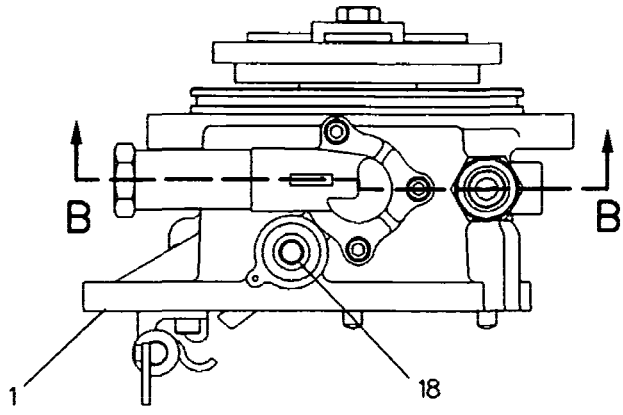

VIEW A–A

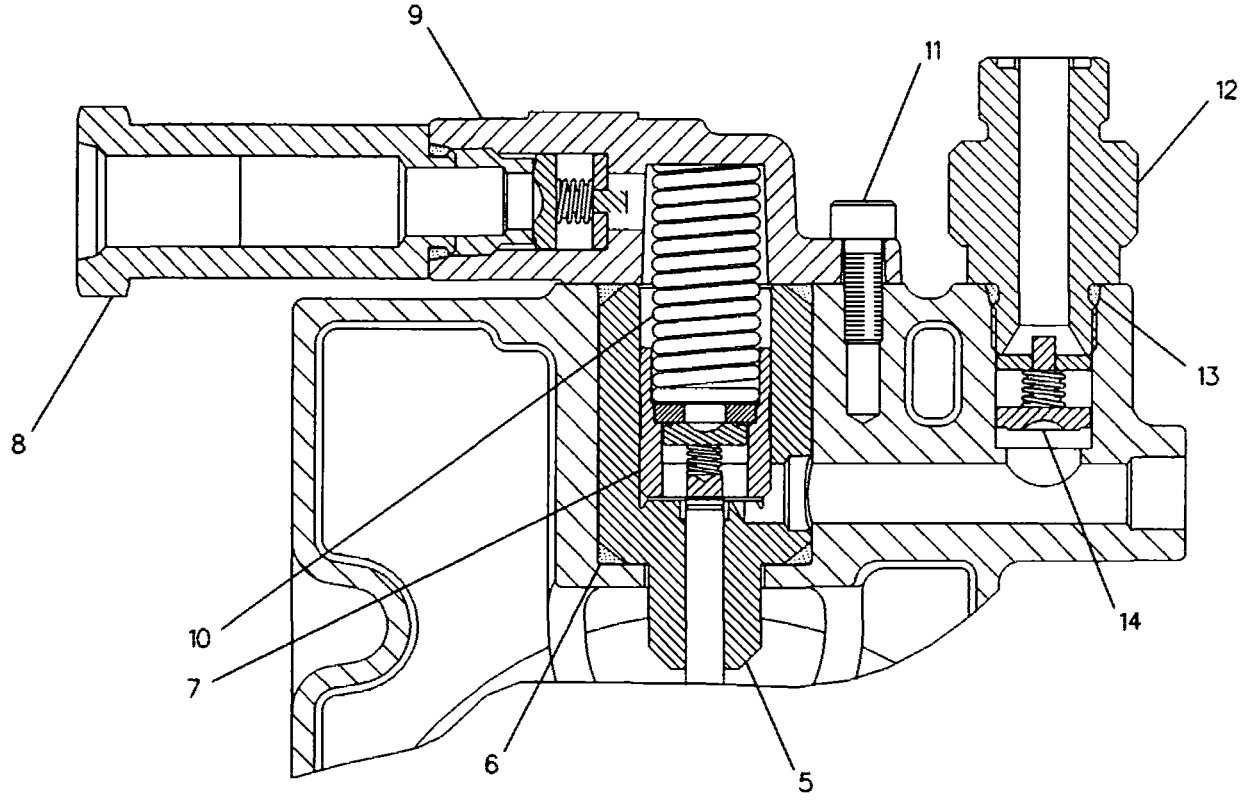

SECTION B–B

GRAPHIC #1 g00108434

FUEL SYSTEM

126-5929 FASTENER GP-GOVERNOR

S/N 98Z15500-UP

PART OF 126-0468, 140-7377 GOVERNOR GP-UNIT INJECTOR

SMCS-1264 i00135072

NOTE	REF NO	GRAPHIC REF	PART NUMBER	QTY	PART NAME 1 2 3 4 5 6 (PRODUCT LEVEL)	SEE PAGE
	1	1	7W-3872	1	SLEEVE	
	2	1	9M-1974	3	WASHER-HARD (2MM THK)	
M	3	1	6V-5218	3	BOLT (M8X1.25X35MM)	
	4	1	9Y-5295	1	TUBE-GOVERNOR CONNECTION	
	5	1	6F-6673	1	SEAL-O-RING (31.34MM ID)	
	6	1	7C-3839	1	CLIP-SPRING	
	7	1	7E-0844	1	SEAL	
	8	1	1T-1068	1	SEAL-O-RING	
	9	1	9G-9150	1	CLIP (10.2MM ID)	
M	10	1	5C-9553	1	BOLT (M6X1.0X16MM)	
	11	1	5P-4115	1	WASHER (2MM THK)	

M-METRIC PART

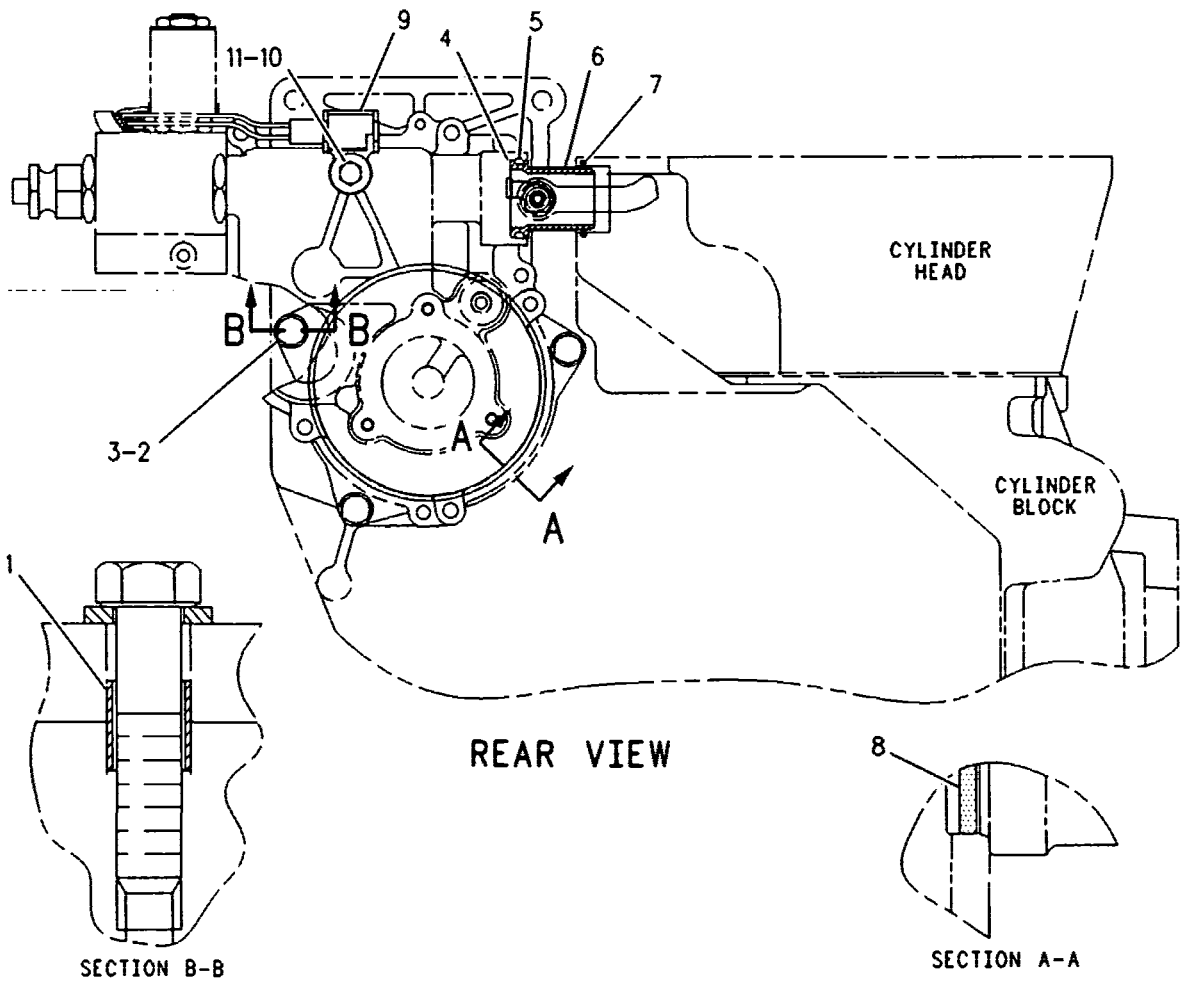

GRAPHIC #1 g00109273

FUEL SYSTEM

126-0468 GOVERNOR GP-UNIT INJECTOR

S/N 98Z15500-22642

PART OF 7E-3352 ENGINE AR

SMCS-1264, 1287, 1908 i00659889

NOTE	PART NUMBER	QTY	PART NAME 1 2 3 4 5 6 (PRODUCT LEVEL)	SEE PAGE
Y	*126-5929*	1	FASTENER GP-GOVERNOR	108
Y	*133-3064*	1	GOVERNOR GP-UNIT INJECTOR	114
Y	*111-2125*	1	LINES GP-GOVERNOR OIL	133

Y-SEPARATE ILLUSTRATION

FUEL SYSTEM

131-6690 GOVERNOR GP-UNIT INJECTOR

S/N 98Z15500-UP

PART OF 133-3064 GOVERNOR GP-UNIT INJECTOR

SMCS-1264, 1287, 1908 **i00135031**

NOTE	REF NO	GRAPHIC REF	PART NUMBER	QTY	PART NAME 1 2 3 4 5 6 (PRODUCT LEVEL)	SEE PAGE
Y	1	2	131-6689	1	HOUSING GP-GOVERNOR	122
Y	2	2	7E-8794	1	DRIVE GP-GOV & TRANSFER PUMP	106
M	3	1,2	8C-8546	9	BOLT-SOCKET HEAD	
	4	2	107-7498	1	BLOCK AS-BEARING	
		2	107-7496	2	BEARING-SLEEVE	
	5	2	1N-3887	1	SETSCREW-SOCKET	
	6	1	7C-8854	1	PIN-CLEVIS	
	7	1	8T-1460	2	RING-RETAINING	
	8	2	7C-4483	1	SCREEN AS	
	9	1	7C-5541	2	TOE-FLYWEIGHT	
M	10	2	8T-5435	1	BOLT	
	11	1	7C-5885	1	WASHER	
M	12	2	3T-0849	6	BOLT-SOCKET HEAD (7.59MM'ID)	
	13	1	108-1612	1	CLEVIS	
	14	2	7W-4313	2	WASHER	
	15	2	8T-7060	2	RING-RETAINING	
	16	1	125-8158	1	SLEEVE-RACK CONTROL	
M	17	2	5C-2874	1	NUT (M5X.8 THD)	
	18	1	115-2553	1	VALVE-GOVERNOR SERVO	
	19	1	7W-7364	1	SLEEVE-GOVERNOR SERVO	
	20	1	5P-9757	1	SEAL-O-RING (18.77MM ID)	
	21	1	6D-9953	1	PIN-SPRING	
	22	1	108-1613	1	PISTON-SERVO	
	23	1	8C-3312	1	RING-RETAINING	
	24	1	7C-5148	1	CARRIER-FLYWEIGHT	
	25	1	2S-7316	2	DOWEL	
	26	1	6V-7699	4	WASHER-HARD (1.6MM THK)	
M	27	1	8C-8545	4	BOLT-SOCKET HEAD	
	28	1	7W-8993	2	WEIGHT	
	29	1	4P-8947	1	RISER	
	30	1	4P-0737	1	SHAFT-RISER	
	31	1	7W-5591	1	SEAT-GOVERNOR SPRING	
M	32	1	6V-5213	3	BOLT-SOCKET HEAD	
	33	1	7L-3386	1	SEAL-O-RING	
	34	1	7C-5884	1	COVER-OIL SUMP	
	35	1	4P-4231	1	COVER-REAR	
	36	1	6V-5100	1	SEAL-O-RING (53.64MM ID)	
	37	1	7C-5883	7	SHIM (.25MM THK)	
	38	1	7C-3776	1	PISTON AS	
		1	4N-6404	1	RING-RETAINING	
		1	4N-6406	1	RING-SPACER	
		1	4N-6407	1	SPOOL-DASHPOT	
	39	1	4P-8948	1	SEAT AS-SPRING	
	40	1	7W-1440	8	SHIM (.12MM THK)	
	41	1	7C-2743	2	RACE	
	42	1	7W-5561	1	BEARING-THRUST	
	43	1	115-1192	1	SEAL-GOVERNOR HOUSING	
	44	1	8C-5061	1	RING-RETAINING	
	45	1	7C-5150	1	PIN	
	46	2	7C-5480	1	SPRING-TORSION	
	47	2	7E-3217	1	LEVER AS	
	48	2	3P-3547	1	RING-RETAINING	
	49	1	128-4786	1	PLUG	
M	50	2	9X-2547	2	SCREW-FLAT HEAD	
	51	2	4P-3539	1	LEVER-THROTTLE	
	52	2	4P-3537	1	RING-TOLERANCE	

131-6690 GOVERNOR GP-UNIT INJECTOR (contd.) i00135031

NOTE	REF NO	GRAPHIC REF	PART NUMBER	QTY	PART NAME 1 2 3 4 5 6 (PRODUCT LEVEL)	SEE PAGE
	53	1	9Y-1837	1	SPRING	
	54	2	6V-8189	1	NUT (5/16-18 THD)	
	55	1	117-9099	1	FLANGE	
	56	1	114-2897	1	COVER-FUEL RATIO CONTROL	
	57	1	7W-5324	1	BEARING	
	58	1	6I-1564	1	DIAPHRAGM	
	59	1	100-4392	1	SPRING-SERVO	
	60	1	100-4394	1	SEAT-SPRING	
	61	1	8N-5763	1	SEAL	
	62	1	8N-5764	1	PISTON	
	63	1	100-4393	1	SPRING-RETURN	
	64	1	100-4397	1	BODY-VALVE	
	65	1	129-4284	1	SEAT-SPRING	
	66	1	100-4390	1	SPRING-AIR SIDE	
	67	1	114-2899	1	RETAINER-DIAPHRAGM	
	68	1	7W-1691	1	WASHER (35MM OD)	
	69	2	100-6247	1	PLUG-EXPANSION	
	70	2	113-9439	1	LEVER AS	
		2	100-5733	1	PIN-LEVER	
	71	2	4P-7351	1	LEVER AS-SHAFT	
	72	1	2M-9780	1	SEAL-O-RING (19.18MM ID)	
	73	1	7N-2171	1	RING-RETAINING	
	74	2	131-7905	1	LEVER AS	
		2	8N-0984	1	PIN-SPRING	
	75	2	114-5065	1	COVER	
	76	2	100-5732	1	LEVER-TORQUE CAM	
M	77	2	101-0892	1	SCREW-TORQUE LEVER	
M	78	1,2	100-5738	2	NUT	
	79	2	100-5740	1	SPRING-TORSION	
	80	2	100-5739	1	SPRING-TORSION	
M	81	1	100-5737	1	SETSCREW-ADJUSTMENT	
	82	2	107-7497	1	WASHER-THRUST	
	83	1	109-4587	1	RING	
M	84	1	8T-0269	6	BOLT-SOCKET HEAD (M16X1X20MM)	
	85	2	5L-4758	1	SEAL-O-RING (14.0MM ID)	
	86	1	129-3897	1	VALVE	

M-METRIC PART
Y-SEPARATE ILLUSTRATION

131-6690 GOVERNOR GP-UNIT INJECTOR *(contd.)* i00135031

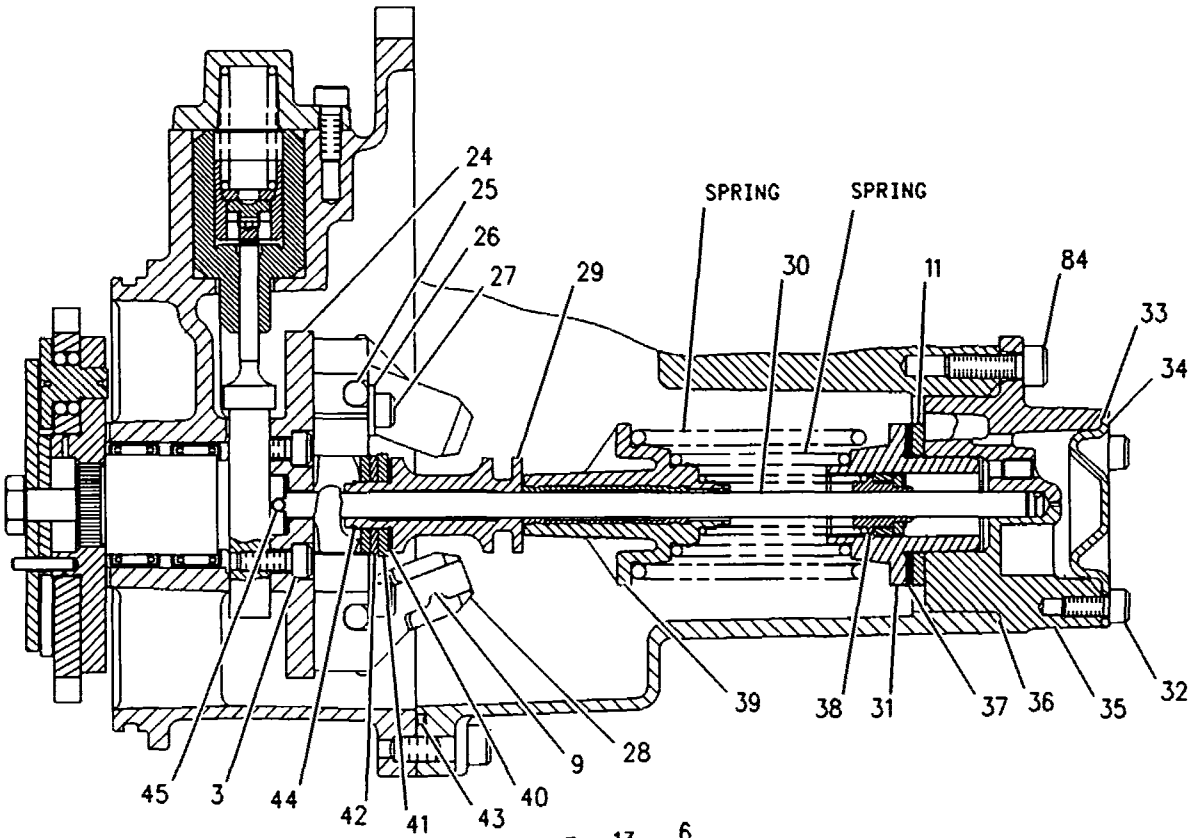

SECTION A-A

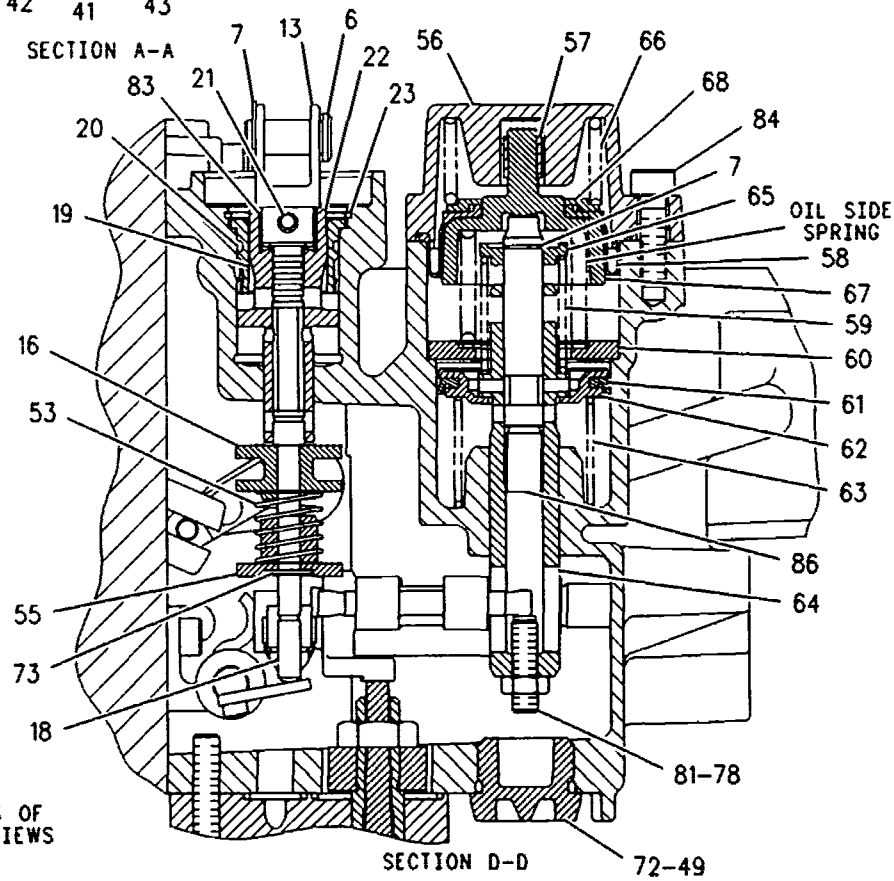

SECTION D-D

REFER TO ALL ILLUSTRATIONS OF THIS GROUP FOR AUXILIARY VIEWS

GRAPHIC #1 g00109348

131-6690 GOVERNOR GP-UNIT INJECTOR *(contd.)* i00135031

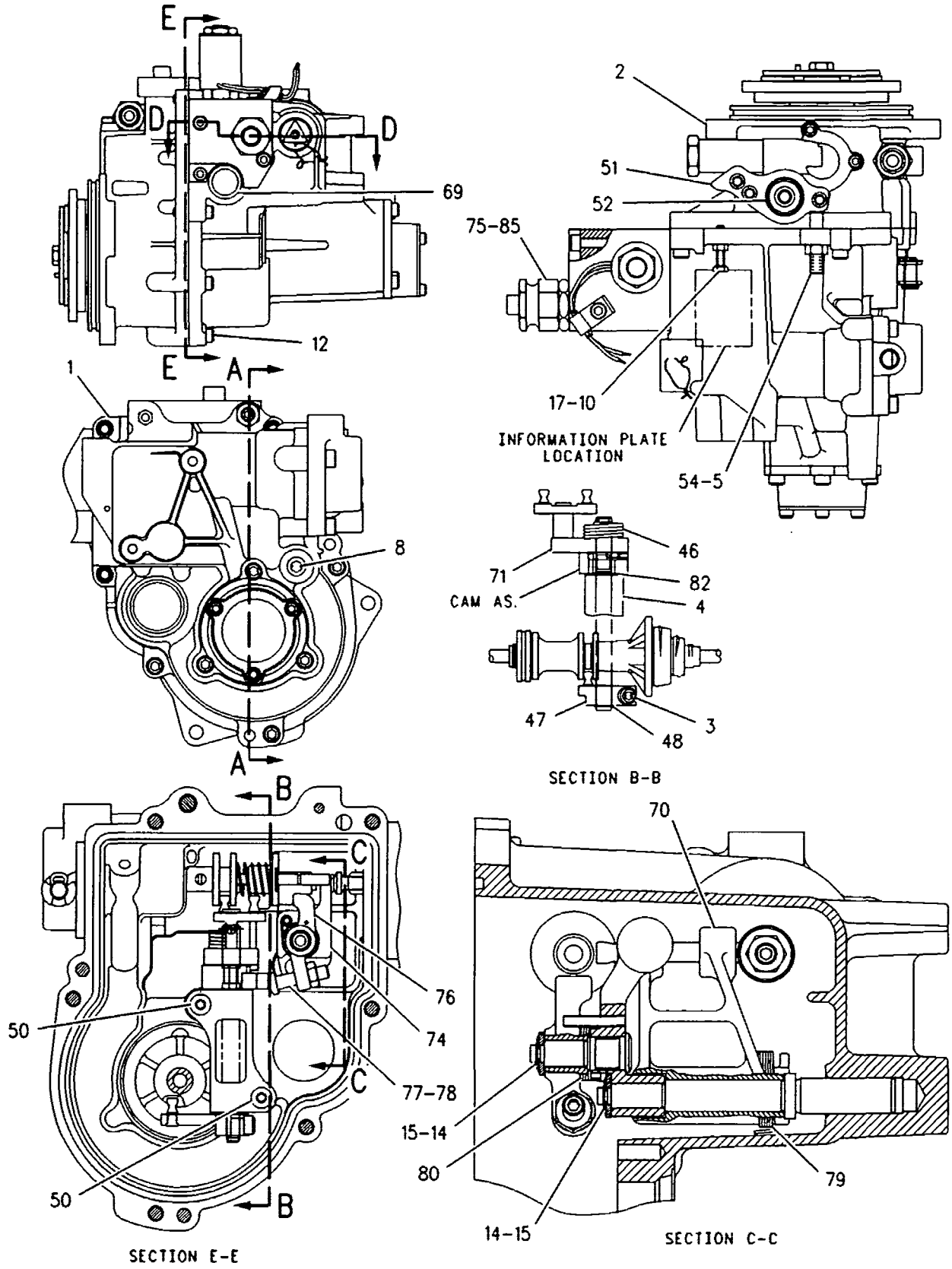

GRAPHIC #2 g00109349

FUEL SYSTEM

133-3064 GOVERNOR GP-UNIT INJECTOR

S/N 98Z15500-UP

PART OF 126-0468 GOVERNOR GP-UNIT INJECTOR

SMCS-1264, 1287, 1908 i00135745

NOTE	REF NO	GRAPHIC REF	PART NUMBER	QTY	PART NAME 1 2 3 4 5 6 (PRODUCT LEVEL)	SEE PAGE
Y	1	1	131-6690	1	GOVERNOR GP-UNIT INJECTOR	110
	2	1	116-6673	1	CAM AS	
	3	1	7E-9749	1	SPRING GP	
B	4	1	4P-5605	4	SHIM (.5MM THK)	
	5	1	7C-4466	1	SPRING-DASHPOT	
	6	1	7C-0989	1	PLUG-ORIFICE	
	7	1	100-4391	1	SPRING-OIL SIDE	

B-USE AS REQUIRED
Y-SEPARATE ILLUSTRATION

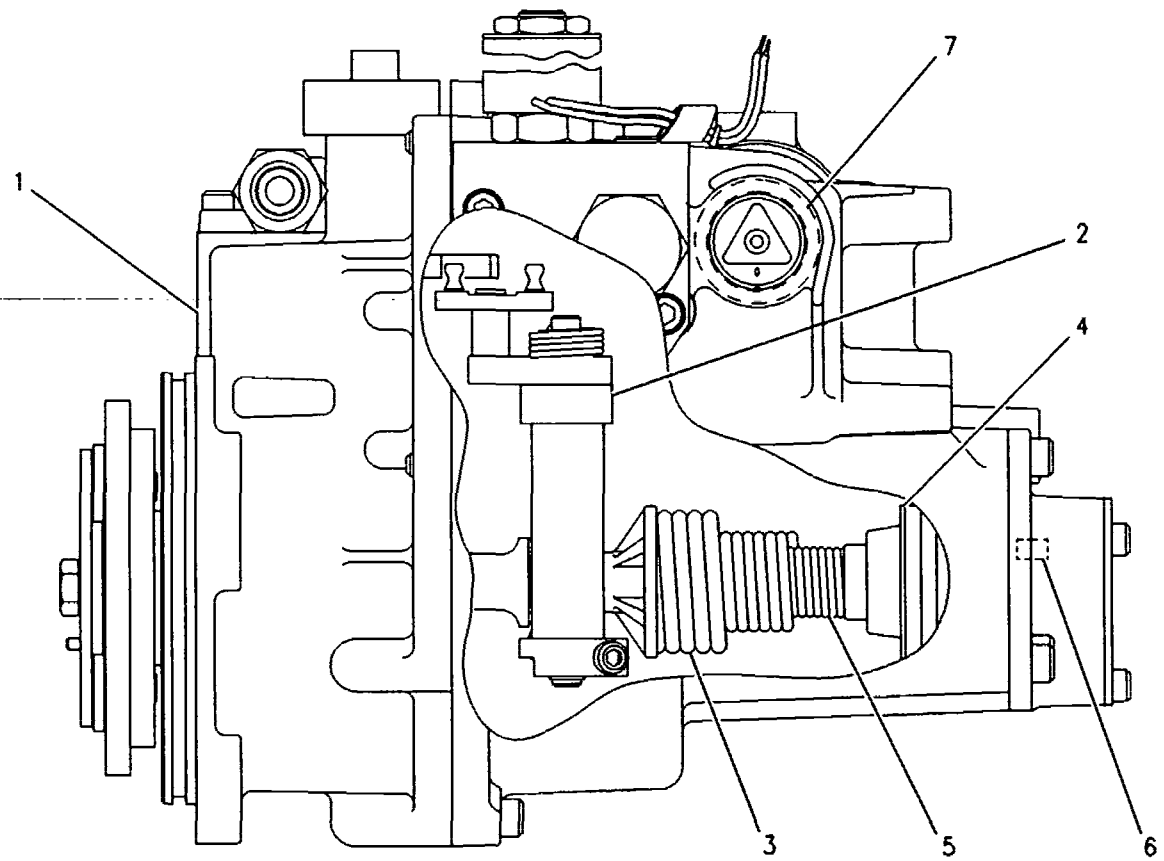

GRAPHIC #1 g00109347

FUEL SYSTEM

140-7377 GOVERNOR GP-UNIT INJECTOR

S/N 98Z22643-UP

PART OF 146-8338 ENGINE AR

SMCS-1264, 1287, 1908 i00606653

NOTE	PART NUMBER	QTY	PART NAME 1 2 3 4 5 6 (PRODUCT LEVEL)	SEE PAGE
Y	**126-5929**	1	FASTENER GP-GOVERNOR	108
Y	**142-1420**	1	GOVERNOR GP-UNIT INJECTOR	116
Y	**111-2125**	1	LINES GP-GOVERNOR OIL	133

Y-SEPARATE ILLUSTRATION

FUEL SYSTEM

142-1420 GOVERNOR GP-UNIT INJECTOR

S/N 98Z22643-UP

PART OF 140-7377 GOVERNOR GP-UNIT INJECTOR

SMCS-1264, 1287, 1908 i00675158

NOTE	REF NO	GRAPHIC REF	PART NUMBER	QTY	PART NAME 1 2 3 4 5 6 (PRODUCT LEVEL)	SEE PAGE
Y	1	1	*142-5052*	1	GOVERNOR GP-UNIT INJECTOR	118
	2	1	**107-7872**	1	CAM AS	
	3	1	**7E-9749**	1	SPRING GP	
B	4	1	**4P-5605**	4	SHIM (.5MM THK)	
	5	1	**7C-4466**	1	SPRING-DASHPOT	
	6	1	**7C-0989**	1	PLUG-ORIFICE	
	7	1	**4P-6493**	1	PLATE-INFORMATION	
	8	1	**100-4391**	1	SPRING-OIL SIDE	

B-USE AS REQUIRED
Y-SEPARATE ILLUSTRATION

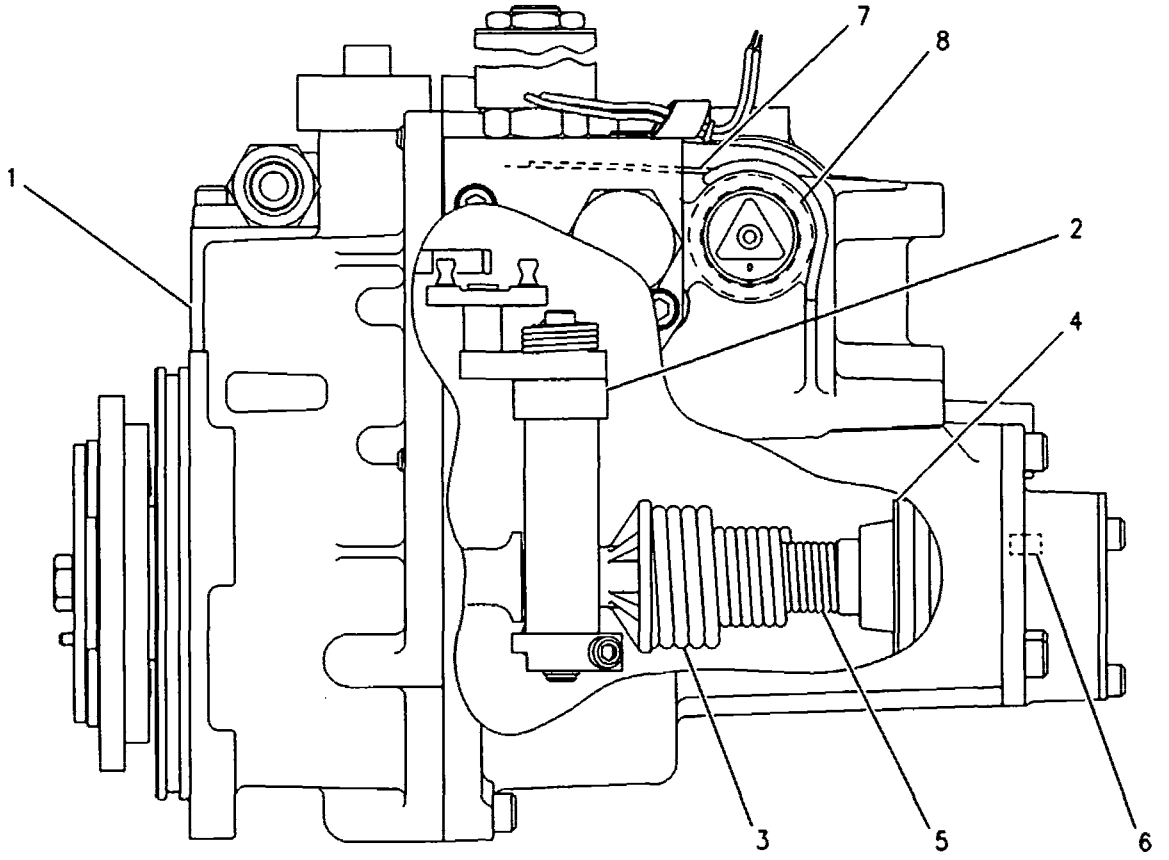

GRAPHIC #1 g00121719

MEMORANDA

FUEL SYSTEM

142-5052 GOVERNOR GP-UNIT INJECTOR

S/N 98Z22643-UP

PART OF 142-1420 GOVERNOR GP-UNIT INJECTOR

SMCS-1264, 1287, 1908 **i00836304**

NOTE	REF NO	GRAPHIC REF	PART NUMBER	QTY	PART NAME 1 2 3 4 5 6 (PRODUCT LEVEL)	SEE PAGE
Y	1	2	*142-5050*	1	HOUSING GP-GOVERNOR	124
Y	2	2	7E-8794	1	DRIVE GP-GOV & TRANSFER PUMP	106
M	3	1,2	8C-8546	9	BOLT-SOCKET HEAD	
	4	2	107-7498	1	BLOCK AS-BEARING	
	5	1	1N-3887	1	SETSCREW-SOCKET	
	6	1	7C-8854	1	PIN-CLEVIS	
	7	1	8T-1460	2	RING-RETAINING	
	8	2	7C-4483	1	SCREEN AS	
	9	1	7C-5541	2	TOE-FLYWEIGHT	
M	10	2	8T-5435	1	BOLT	
	11	1	7C-5885	1	WASHER	
M	12	2	3T-0849	6	BOLT-SOCKET HEAD (7.59MM ID)	
	13	1	108-1612	1	CLEVIS	
	14	2	7W-4313	2	WASHER	
	15	2	8T-7060	2	RING-RETAINING	
	16	1	125-8158	1	SLEEVE-RACK CONTROL	
M	17	2	5C-2874	1	NUT (M5X.8 THD)	
	18	1	115-2553	1	VALVE-GOVERNOR SERVO	
	19	1	7W-7364	1	SLEEVE-GOVERNOR SERVO	
	20	1	5P-9757	1	SEAL-O-RING (18.77MM ID)	
	21	1	6D-9953	1	PIN-SPRING	
	22	1	108-1613	1	PISTON-SERVO	
	23	1	8C-3312	1	RING-RETAINING	
	24	1	7C-5148	1	CARRIER-FLYWEIGHT	
	25	1	2S-7316	2	DOWEL	
	26	1	6V-7699	4	WASHER-HARD (1.6MM THK)	
M	27	1	8C-8545	4	BOLT-SOCKET HEAD	
	28	1	7W-8993	2	WEIGHT	
	29	1	4P-8947	1	RISER	
	30	1	4P-0737	1	SHAFT-RISER	
	31	1	7W-5591	1	SEAT-GOVERNOR SPRING	
M	32	1	099-2374	3	BOLT-HEX SOCKET (M5X0.8MM)	
	33	1	7L-3386	1	SEAL-O-RING	
	34	1	7C-5884	1	COVER-OIL SUMP	
	35	1	4P-4231	1	COVER-REAR	
	36	1	6V-5100	1	SEAL-O-RING (53.64MM ID)	
B	37	1	7C-5883	7	SHIM (.25MM THK)	
	38	1	7C-3776	1	PISTON AS	
		1	4N-6404	1	RING-RETAINING	
		1	4N-6406	1	RING-SPACER	
		1	4N-6407	1	SPOOL-DASHPOT	
	39	1	4P-8948	1	SEAT AS-SPRING	
		1	4P-8946	1	INSERT	
B	40	1	7W-1440	8	SHIM (.12MM THK)	
	41	1	7C-2743	2	RACE	
	42	1	7W-5561	1	BEARING-THRUST	
	43	1	115-1192	1	SEAL-GOVERNOR HOUSING	
	44	1	8C-5061	1	RING-RETAINING	
	45	1	7C-5150	1	PIN	
	46	2	7C-5480	1	SPRING-TORSION	
	47	2	7E-3217	1	LEVER AS	
	48	2	3P-3547	1	RING-RETAINING	
	49	1	128-4786	1	PLUG	
M	50	2	9X-2547	2	SCREW-FLAT HEAD	
	51	2	4P-3539	1	LEVER-THROTTLE	
	52	2	4P-3537	1	RING-TOLERANCE	

142-5052 GOVERNOR GP-UNIT INJECTOR (contd.) i00836304

NOTE	REF NO	GRAPHIC REF	PART NUMBER	QTY	PART NAME 1 2 3 4 5 6 (PRODUCT LEVEL)	SEE PAGE
	53	1	9Y-1837	1	SPRING	
	54	2	6V-8189	1	NUT (5/16-18 THD)	
	55	1	117-9099	1	FLANGE	
	56	1	114-2897	1	COVER-FUEL RATIO CONTROL	
	57	1	7W-5324	1	BEARING	
	58	1	6I-1564	1	DIAPHRAGM	
	59	1	100-4392	1	SPRING-SERVO	
	60	1	100-4394	1	SEAT-SPRING	
	61	1	8N-5763	1	SEAL	
	62	1	8N-5764	1	PISTON	
	63	1	100-4393	1	SPRING-RETURN	
	64	1	100-4397	1	BODY-VALVE	
	65	1	129-4284	1	SEAT-SPRING	
	66	1	100-4390	1	SPRING-AIR SIDE	
	67	1	114-2899	1	RETAINER-DIAPHRAGM	
	68	1	7W-1691	1	WASHER (35MM OD)	
	69	2	100-6247	1	PLUG-EXPANSION	
	70	2	113-9439	1	LEVER AS	
		2	100-5733	1	PIN-LEVER	
	71	2	4P-7351	1	LEVER AS-SHAFT	
	72	1	2M-9780	1	SEAL-O-RING (19.18MM ID)	
	73	1	7N-2171	1	RING-RETAINING	
	74	2	131-7905	1	LEVER AS	
		2	8N-0984	1	PIN-SPRING	
	75	2	114-5065	1	COVER	
	76	2	100-5732	1	LEVER-TORQUE CAM	
M	77	2	101-0892	1	SCREW-TORQUE LEVER	
M	78	1,2	100-5738	2	NUT	
	79	2	100-5740	1	SPRING-TORSION	
	80	2	100-5739	1	SPRING-TORSION	
M	81	1	100-5737	1	SETSCREW-ADJUSTMENT	
	82	2	107-7497	1	WASHER-THRUST	
	83	1	109-4587	1	RING-TOLERANCE	
M	84	1	8T-0269	6	BOLT-SOCKET HEAD (M16X1X20MM)	
	85	2	5L-4758	1	SEAL-O-RING (14.0MM ID)	
	86	1	129-3897	1	VALVE	

B-USE AS REQUIRED
M-METRIC PART
Y-SEPARATE ILLUSTRATION

142-5052 GOVERNOR GP-UNIT INJECTOR *(contd.)* i00836304

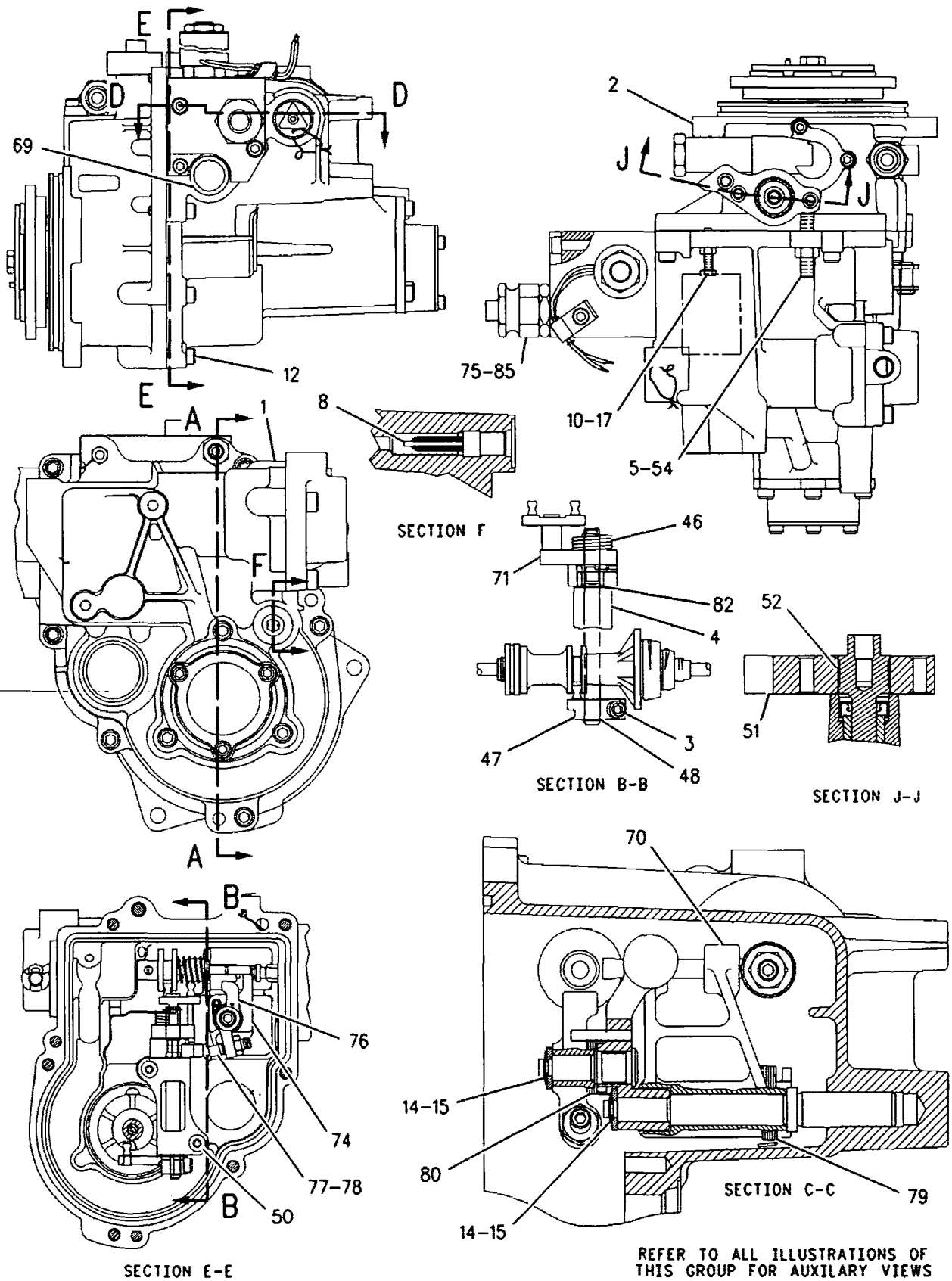

GRAPHIC #1

g00392857

142-5052 GOVERNOR GP-UNIT INJECTOR *(contd.)* i00836304

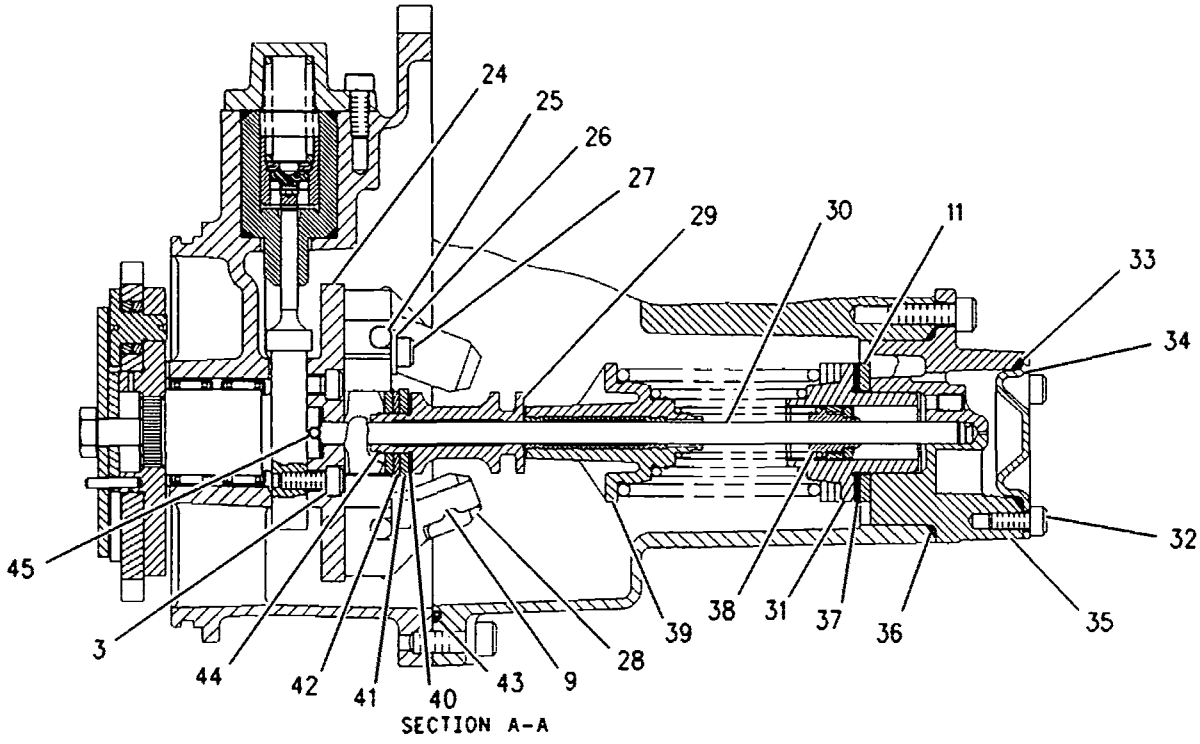

SECTION A-A

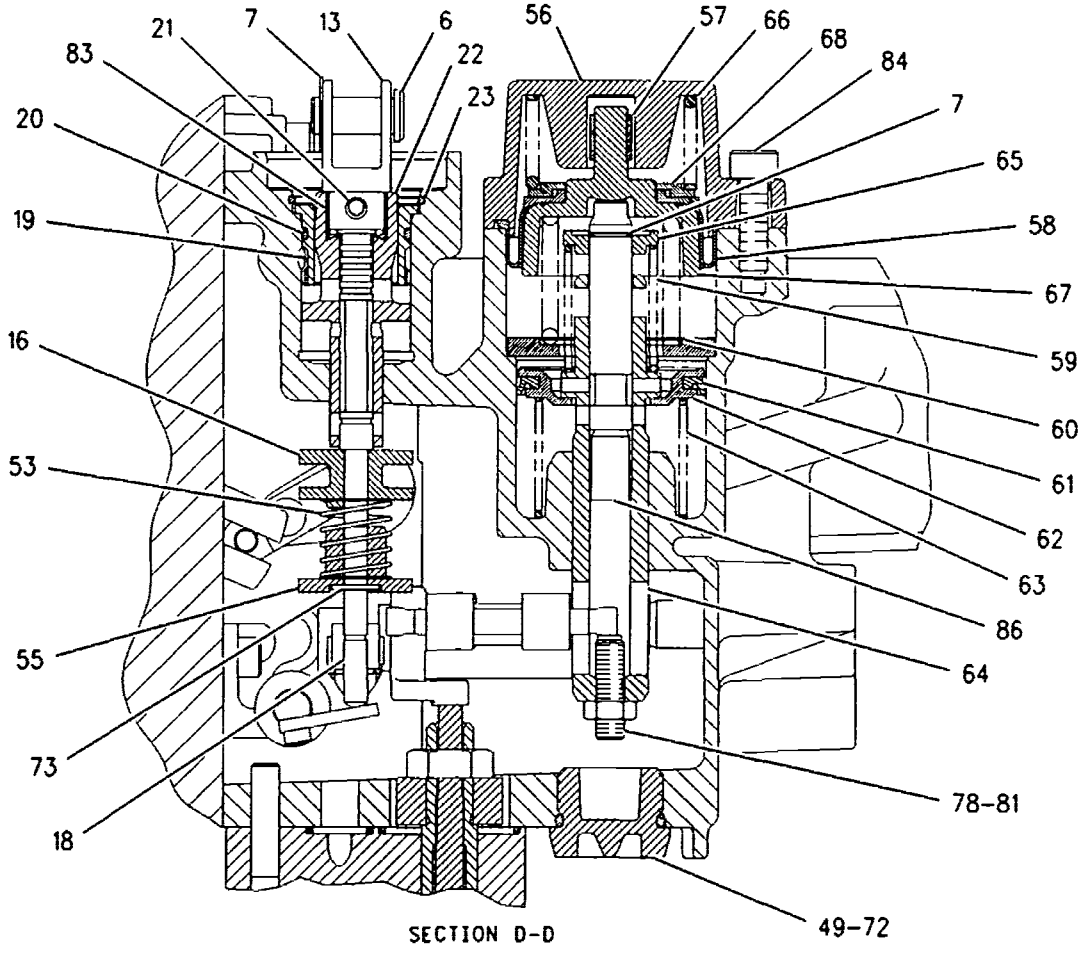

SECTION D-D

GRAPHIC #2 g00392999

FUEL SYSTEM

131-6689 HOUSING GP-GOVERNOR

S/N 98Z15500-UP

PART OF 131-6690 GOVERNOR GP-UNIT INJECTOR

SMCS-1287 i00835183

NOTE	REF NO	GRAPHIC REF	PART NUMBER	QTY	PART NAME 1 2 3 4 5 6 (PRODUCT LEVEL)	SEE PAGE
	1	1	131-6688	1	HOUSING AS-GOVERNOR	
		1	113-9432	1	SHAFT-LIMIT	
	2	1	111-6813	1	MANIFOLD AS	
		1	8C-5899	2	PIN-SPRING	
	3	1	109-1301	1	PISTON	
	4	1	111-3815	1	COLLAR AS	
	5	1	8C-5899	1	PIN-SPRING	
	6	1	033-6032	1	SEAL-O-RING	
	7	1	110-6096	1	SPRING	
	8	1	111-1576	1	SEAL-U-CUP	
	9	1	2M-9780	1	SEAL-O-RING (19.18MM ID)	
	10	1	113-9859	1	PLUG-STRAIGHT THREAD	
M	11	1	9X-2537	3	BOLT-SOCKET HEAD (M6X1X70MM)	
M	12	1	4T-8691	1	NUT	
Y	13	1	111-0570	1	VALVE GP-SOLENOID	140
	14	1	033-5879	1	SEAL-O-RING (11.12MM ID)	
	15	1	6T-5098	1	CLIP-CABLE	
M	16	1	099-0822	1	BOLT-SOCKET HEAD (M5X.8X10MM)	
M	17	1	100-5738	1	NUT	
M	18	1	100-5736	1	SCREW-TORQUE LEVER	
	19	1	115-9840	1	SCREW-ADJUSTMENT	

M-METRIC PART
Y-SEPARATE ILLUSTRATION

131-6689 HOUSING GP-GOVERNOR *(contd.)* i00835183

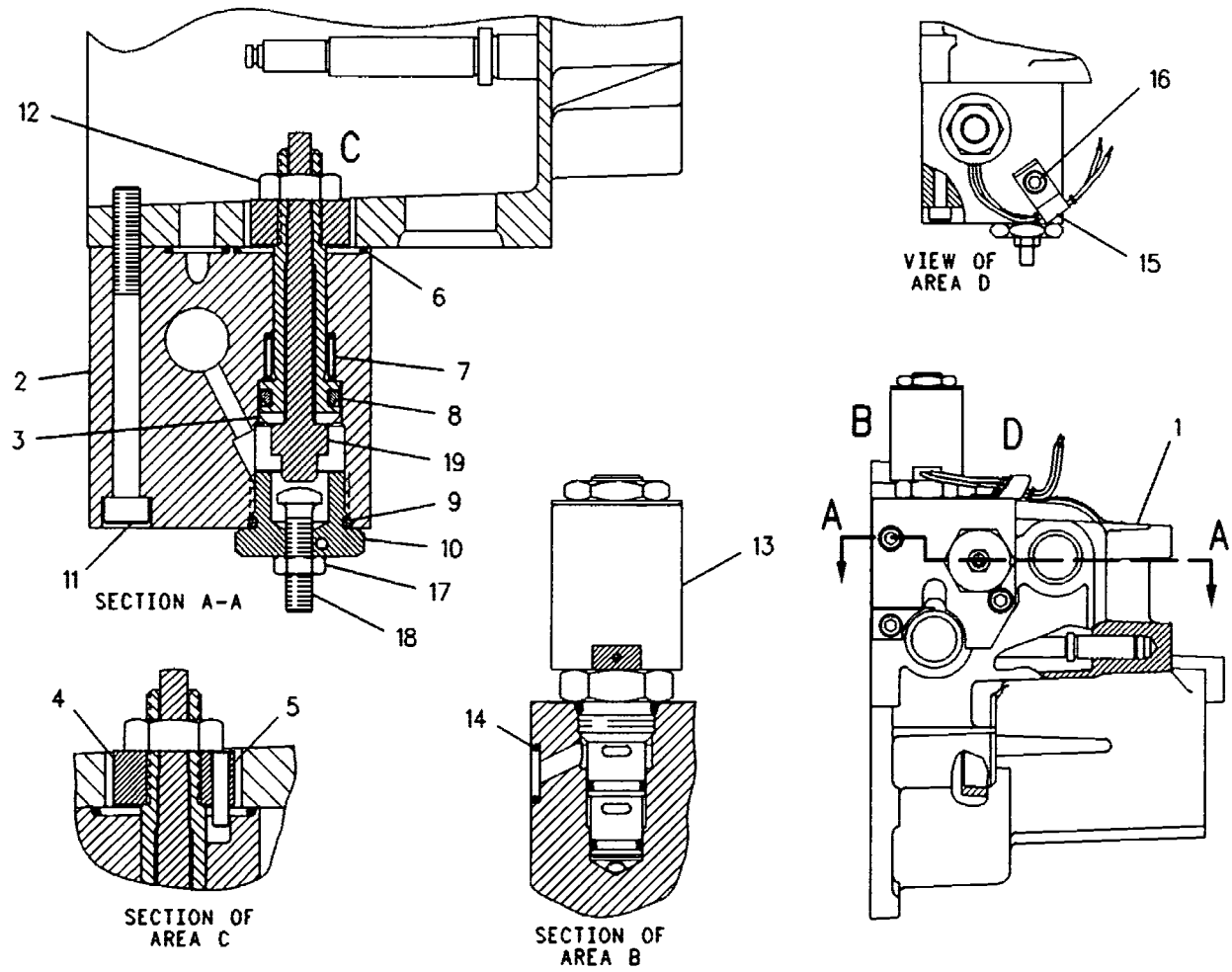

GRAPHIC #1 g00108740

FUEL SYSTEM

142-5050 HOUSING GP-GOVERNOR

S/N 98Z22643-UP

PART OF 142-5052 GOVERNOR GP-UNIT INJECTOR

SMCS-1287 i00835184

NOTE	REF NO	GRAPHIC REF	PART NUMBER	QTY	PART NAME 1 2 3 4 5 6 (PRODUCT LEVEL)	SEE PAGE
	1	1	131-6688	1	HOUSING AS-GOVERNOR	
		1	113-9432	1	SHAFT-LIMIT	
	2	1	111-6813	1	MANIFOLD AS	
		1	8C-5899	2	PIN-SPRING	
	3	1	109-1301	1	PISTON	
	4	1	111-3815	1	COLLAR AS	
	5	1	8C-5899	1	PIN-SPRING	
	6	1	033-6032	1	SEAL-O-RING	
	7	1	110-6096	1	SPRING	
	8	1	111-1576	1	SEAL-U-CUP	
	9	1	2M-9780	1	SEAL-O-RING (19.18MM ID)	
	10	1	113-9859	1	PLUG-STRAIGHT THREAD	
M	11	1	9X-2537	3	BOLT-SOCKET HEAD (M6X1X70MM)	
M	12	1	4T-8691	1	NUT	
Y	13	1	*129-7707*	1	VALVE GP-SOLENOID	141
	14	1	033-5879	1	SEAL-O-RING (11.12MM ID)	
	15	1	6T-5098	1	CLIP-CABLE	
M	16	1	099-0822	1	BOLT-SOCKET HEAD (M5X.8X10MM)	
M	17	1	100-5738	1	NUT	
M	18	1	100-5736	1	SCREW-TORQUE LEVER	
	19	1	115-9840	1	SCREW-ADJUSTMENT	

M-METRIC PART
Y-SEPARATE ILLUSTRATION

142-5050 HOUSING GP-GOVERNOR *(contd.)* i00835184

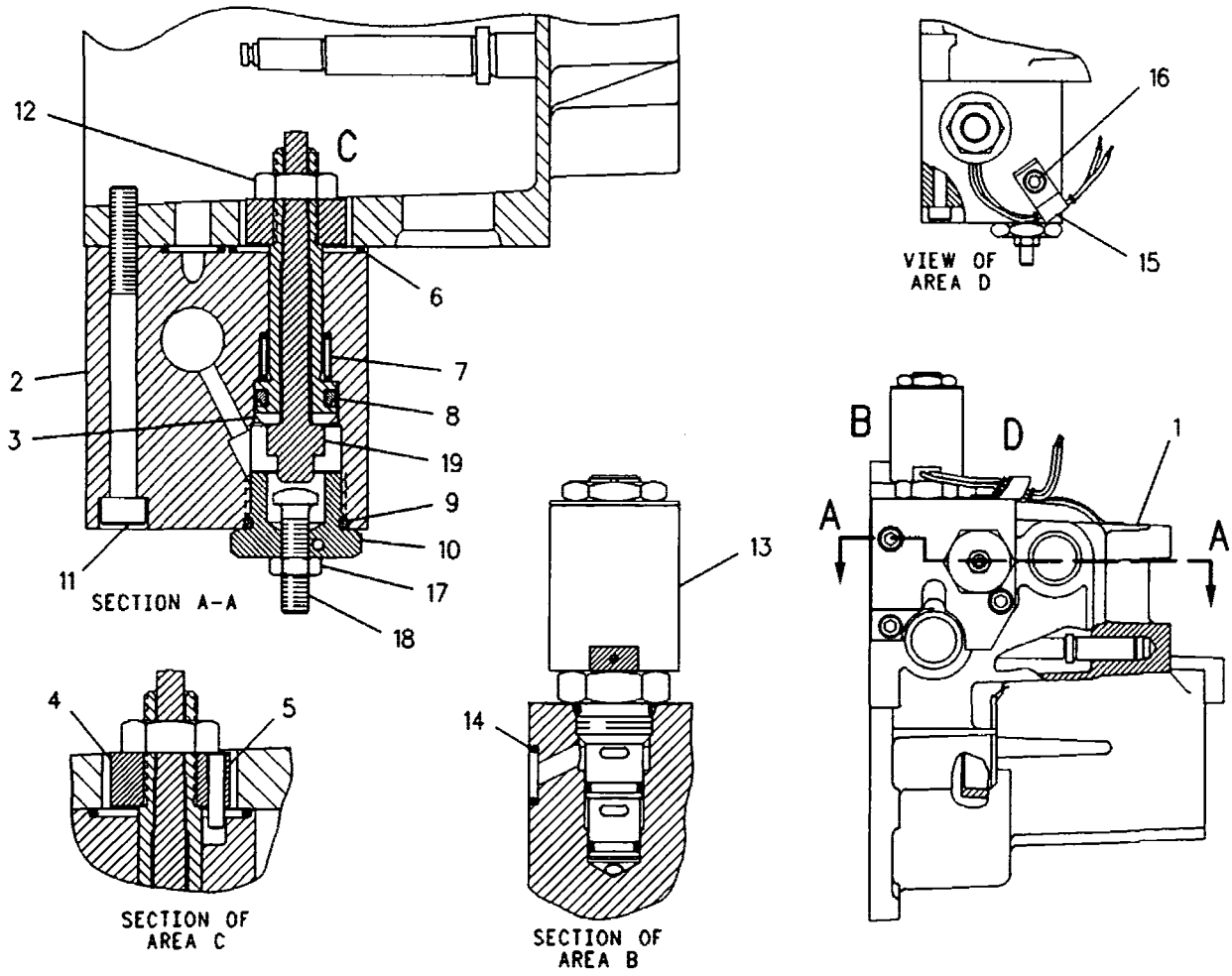

GRAPHIC #1 g00108740

FUEL SYSTEM

125-4530 LINES GP-DRAIN

PIN 5FM1-UP

PART OF 112-5819 INSTALLATION AR-ENGINE

SMCS-1274 i00835185

NOTE	PART NUMBER	QTY	PART NAME 1 2 3 4 5 6 (PRODUCT LEVEL)	SEE PAGE
	000-7246	1	ELBOW	
I	2P-0698	1	HOSE AS-OIL DRAIN EXTENSION	

I-SEE HOSE FABRICATION GUIDE

MEMORANDA

FUEL SYSTEM

132-0296 LINES GP-FUEL

PIN 5FM1-UP

PART OF 112-4103 CHASSIS AR

SMCS-1274 **i00836285**

NOTE	REF NO	GRAPHIC REF	PART NUMBER	QTY	PART NAME 1 2 3 4 5 6 (PRODUCT LEVEL)	SEE PAGE
Y	1	1	**127-2308**	1	SEPARATOR GP-WATER	136
	2	1	**8T-4896**	5	WASHER-HARD (2.5MM THK)	
	3	1	**9B-7237**	2	BOLT (3/8-16X1.25IN)	
	4	1	**8T-5043**	2	CONNECTOR	
	5	1	**1J-9671**	2	SEAL-O-RING (10.52MM ID)	
	6	1	**8C-3121**	1	BOLT (5/16-18X1.50IN)	
I	7	1	*114-6567*	1	HOSE AS	
	8	1	**6V-8397**	6	SEAL-O-RING (9.27MM ID)	
	9	1	**8T-8916**	1	BOLT (7/16-14X1.50IN)	
	10	1	**6V-8636**	2	CONNECTOR	
	11	1	**3J-1907**	7	SEAL-O-RING (11.89MM ID)	
	12	1	**2W-2605**	1	PUMP AS-FUEL PRIMING	
		1	**1H-8171**	1	SEAL-O-RING (20.22MM ID)	
		1	**7E-5346**	2	VALVE AS	
	13	1	**1P-0436**	1	GASKET (PRIMING PUMP)	
	14	1	**9Y-1760**	1	BRACKET-PRIMING PUMP	
E	15	1	**103-2529**	2	HOSE (30CM EACH)	
	16	1	*3R-4632*	1	TUBE	
M	17	1	**8T-7547**	1	BOLT (M8X1.25X30MM)	
	18	1	**8T-4224**	3	WASHER-HARD (2MM THK)	
M	19	1	**8T-4971**	1	BOLT (M6X1.0X30MM)	
	20	1	**8T-4205**	2	WASHER-HARD (2MM THK)	
	21	1	**6V-8189**	1	NUT (5/16-18 THD)	
	22	1	**7X-0447**	1	NUT (7/16-14 THD)	
	23	1	**8T-5360**	1	WASHER (2.5MM THK)	
	24	1	**6V-8627**	2	ELBOW-90 DEGREE (9/16-18 THD)	
	25	1	**6V-8724**	1	ELBOW (9/16-18 THD)	
I	26	1	**7I-5418**	1	HOSE AS	
I	27	1	**8W-9339**	1	HOSE AS	
	28	1	**4J-5477**	2	SEAL-O-RING (8.61MM ID)	
I	29	1	**2T-2173**	1	HOSE AS	
	30	1	**8M-2773**	3	CLIP (17.46MM ID)	
	31	1	**5P-2675**	1	BOLT (1/4-20X1.75IN)	
	32	1	**6V-4369**	2	CLIP	
	33	1	**4K-8864**	3	CLIP (14.2MM ID)	
	34	1	**5M-3062**	1	BOLT (3/8-16X.750IN)	
	35	1	**5P-8167**	2	BOLT (3/8-16X.625IN)	
	36	1	**5P-6944**	1	ADAPTER-STRAIGHT THREAD	
	37	1	**6V-0484**	1	ADAPTER-O-RING	
	38	1	**5P-8874**	1	ADAPTER	
	39	1	**3K-0360**	3	SEAL-O-RING (16.36MM ID)	
	40	1	**6V-8723**	1	ELBOW-90 DEGREE (3/4-16 THD)	
	41	1	**8T-0081**	1	VALVE-BALL	
	42	1	**6D-4972**	1	SPACER	
M	43	1	**7X-2537**	1	BOLT (M8X1.25X35MM)	

E-ORDER BY THE CENTIMETER
I-SEE HOSE FABRICATION GUIDE
M-METRIC PART
Y-SEPARATE ILLUSTRATION

132-0296 **LINES GP-FUEL** *(contd.)* **i00836285**

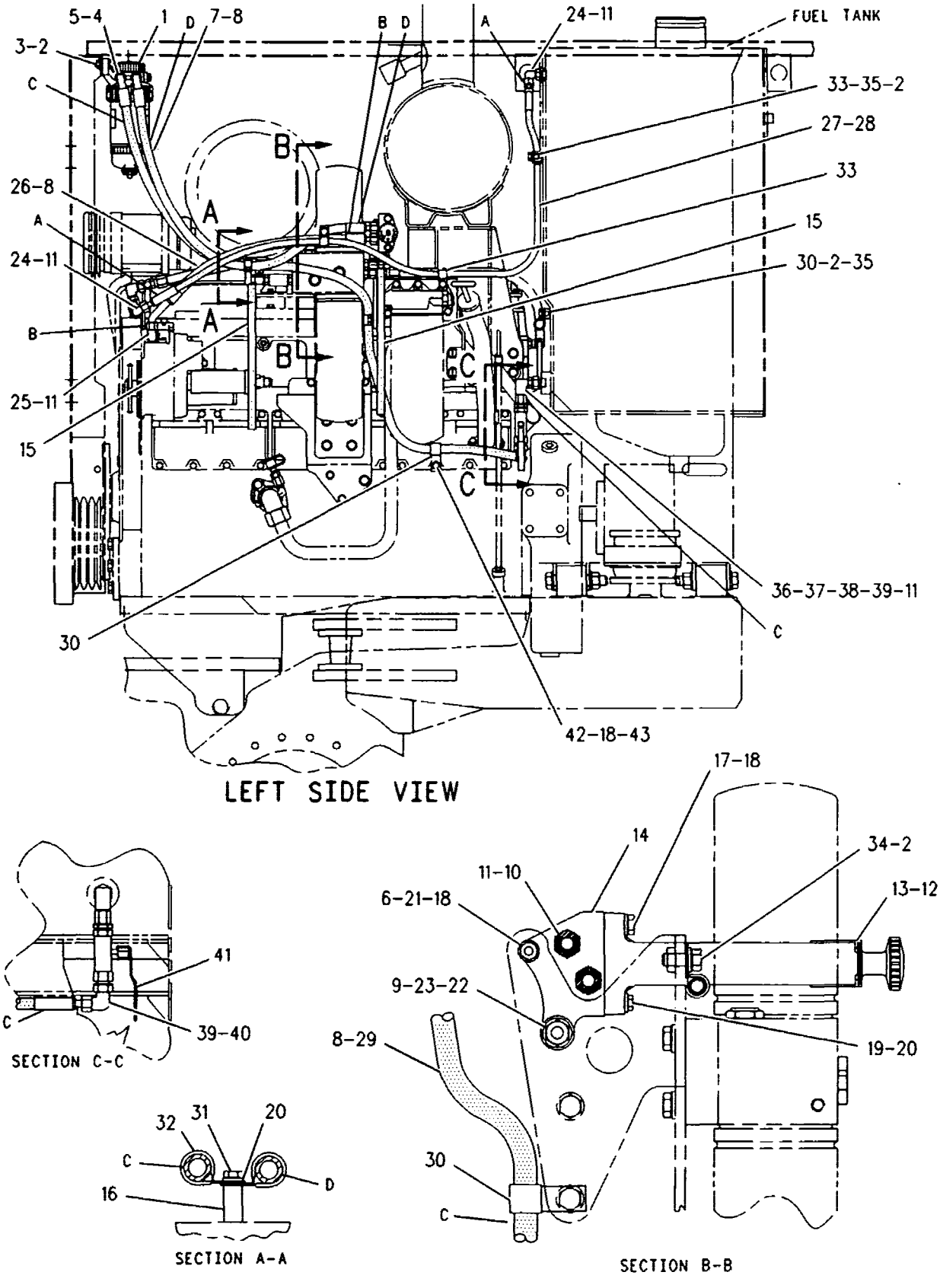

GRAPHIC #1 g00109354

FUEL SYSTEM

130-8101 LINES GP-FUEL FILTER

S/N 98Z15500-UP

PART OF 146-8338, 7E-3352 ENGINE AR

SMCS-1261, 1274 **i00612922**

NOTE	REF NO	GRAPHIC REF	PART NUMBER	QTY	PART NAME 1 2 3 4 5 6 (PRODUCT LEVEL)	SEE PAGE
	1	1	**8M-9024**	2	WASHER-HARD (5MM THK)	
I	2	1	**8X-6603**	1	HOSE AS	
	3	1	**1R-0751**	1	FILTER AS-FUEL	
	4	1	**6V-8724**	3	ELBOW (9/16-18 THD)	
	5	1	**3J-1907**	12	SEAL-O-RING (11.89MM ID)	
	6	1	**6V-5839**	5	WASHER (2.5MM THK)	
M	7	1	**6V-3822**	4	BOLT (M10X1.50X35MM)	
	8	1	**6V-8397**	8	SEAL-O-RING (9.27MM ID)	
M	9	1	**6V-4249**	1	BOLT (M10X1.50X50MM)	
M	10	1	**6V-6317**	2	BOLT (M10X1.50X20MM)	
	11	1	**9S-8004**	2	PLUG-O-RING (9/16-18 THD)	
	12	1	**5F-7054**	1	SEAL-O-RING (18.6MM ID)	
M	13	1	**6V-2317**	2	BOLT (M8X1.25X30MM)	
	14	1	**7E-5190**	1	TUBE AS	
	15	1	**7E-5189**	1	VALVE-REGULATOR	
	16	1	**8T-0151**	1	ADAPTER	
M	17	1	**6V-3918**	2	BOLT (M8X1.25X50MM)	
	18	1	**3N-3252**	1	SPRING (.406IN OD)	
	19	1	**3E-4353**	6	WASHER-HARD	
	20	1	**1R-0753**	1	FILTER AS-FUEL	
	21	1	**5P-7813**	1	SEAL-O-RING (7.65MM ID)	
	22	1	**9M-1974**	5	WASHER-HARD (2MM THK)	
M	23	1	**8T-0276**	3	BOLT (M8X1.25X45MM)	
M	24	1	**6V-1820**	6	BOLT (M10X1.50X30MM)	
	25	1	**3E-7410**	2	TEE-O-RING	
I	26	1	**122-9033**	1	HOSE AS	
	27	1	**132-5549**	1	TUBE AS	
	28	1	**129-1090**	2	VALVE	
	29	1	**6V-8636**	2	CONNECTOR	
Y	30	1	*129-1102*	1	BASE GP-FUEL FILTER	100
	31	1	**132-2101**	1	BRACKET AS	
M	32	1	**8T-3490**	2	NUT-WELD (M10X1.5 THD)	
	33	1	**130-8097**	1	BRACKET AS	
M	34	1	**8T-3612**	1	NUT-WELD (M8X1.25 THD)	
M	35	1	**8T-3490**	5	NUT-WELD (M10X1.5 THD)	
	36	1	**003-7764**	2	END-HOSE	
	37	1	**8C-6869**	2	ADAPTER	
	38	1	**8T-0788**	2	ELBOW-90 DEGREE	

I-SEE HOSE FABRICATION GUIDE
M-METRIC PART
Y-SEPARATE ILLUSTRATION

130-8101 LINES GP-FUEL FILTER *(contd.)* i00612922

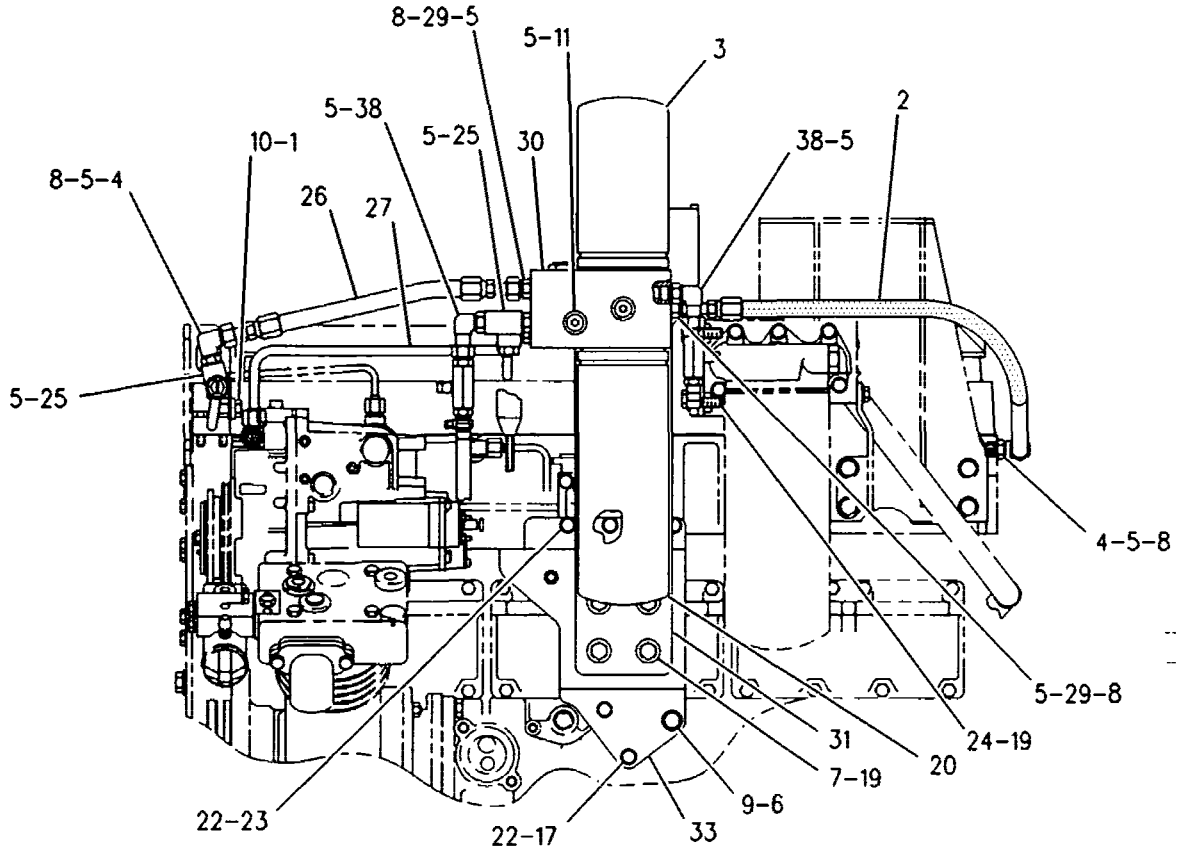

LEFT SIDE VIEW

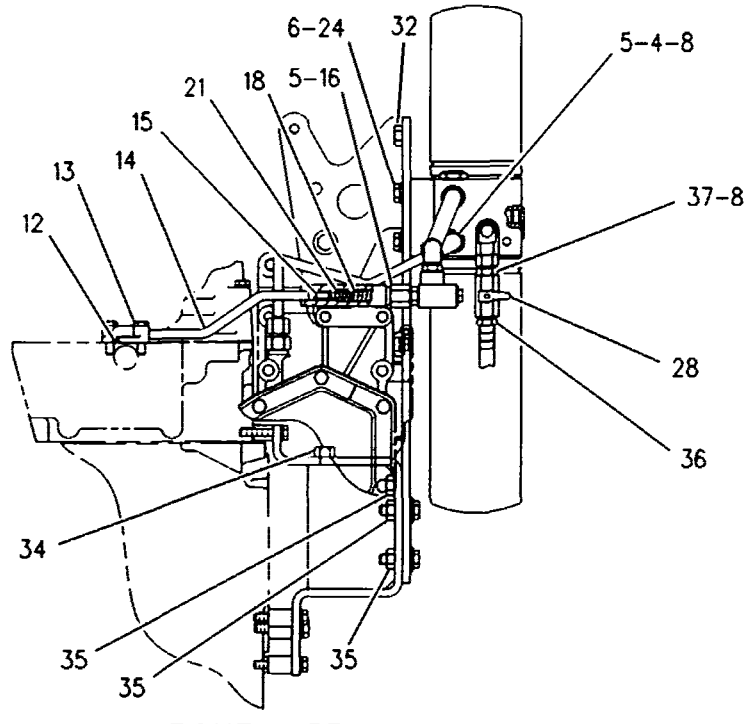

FRONT VIEW

GRAPHIC #1 g00271238

FUEL SYSTEM

4P-7591 LINES GP-FUEL RATIO CONTROL

S/N 98Z15500-UP

PART OF 146-8338, 7E-3352 ENGINE AR

SMCS-1278 i00135002

NOTE	REF NO	GRAPHIC REF	PART NUMBER	QTY	PART NAME 1 2 3 4 5 6 (PRODUCT LEVEL)	SEE PAGE
	1	1	6V-8647	1	CONNECTOR-SEAL	
	2	1	6V-8723	1	ELBOW-90 DEGREE (3/4-16 THD)	
	3	1	4P-7301	1	TUBE AS	
	4	1	3K-0360	1	SEAL-O-RING (16.36MM ID)	
	5	1	4J-5477	1	SEAL-O-RING (8.61MM ID)	
	6	1	3J-7354	1	SEAL-O-RING (8.92MM ID)	
	7	1	9M-1974	1	WASHER-HARD (2MM THK)	
	8	1	6V-8397	1	SEAL-O-RING (9.27MM ID)	
	9	1	8M-2772	1	CLIP (6.35MM ID)	

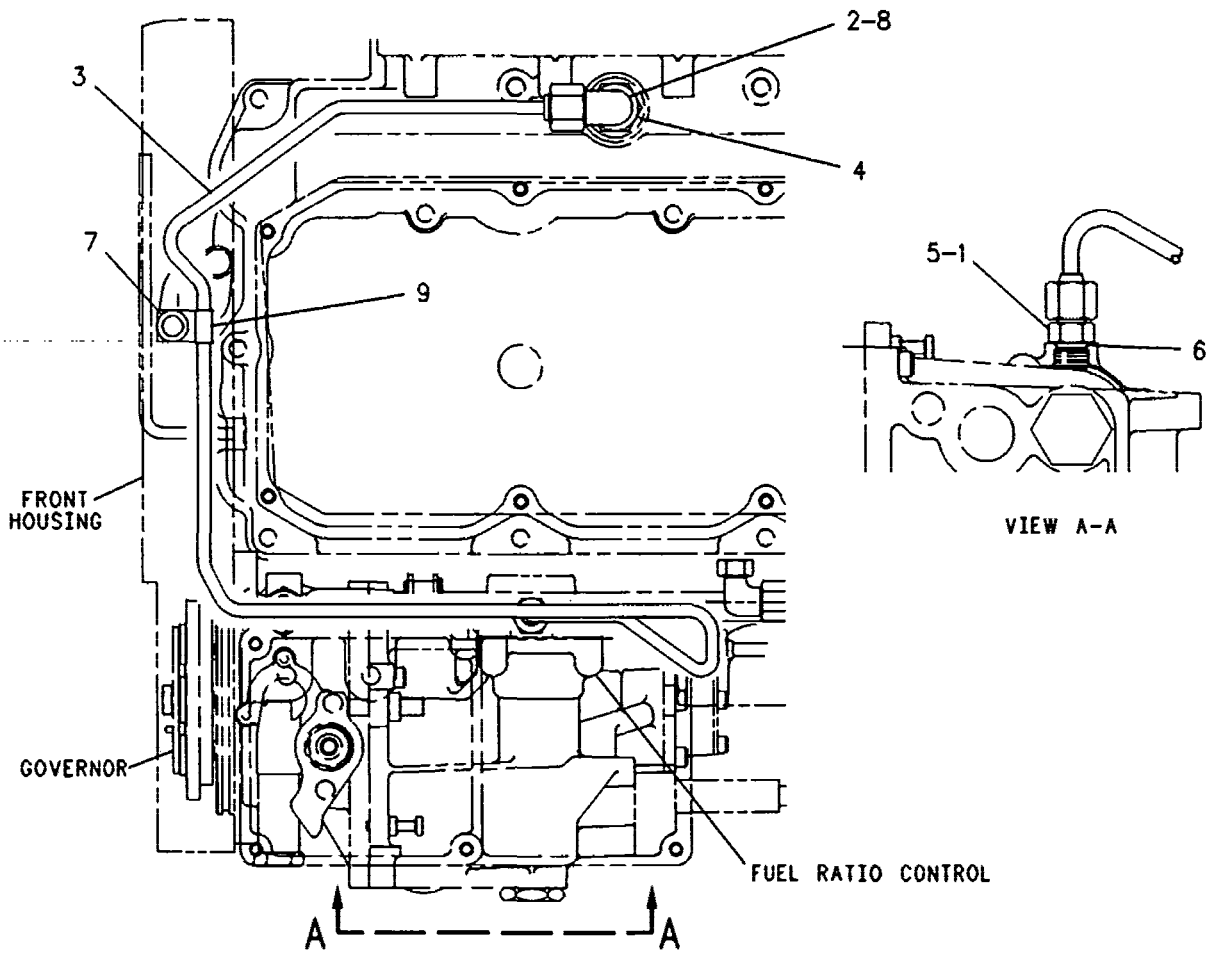

GRAPHIC #1 g00108725

FUEL SYSTEM

111-2125 LINES GP-GOVERNOR OIL

S/N 98Z15500-UP

PART OF 126-0468, 140-7377 GOVERNOR GP-UNIT INJECTOR

SMCS-1307 i00675048

NOTE	REF NO	GRAPHIC REF	PART NUMBER	QTY	PART NAME 1 2 3 4 5 6 (PRODUCT LEVEL)	SEE PAGE
					NO SERVICEABLE PARTS	

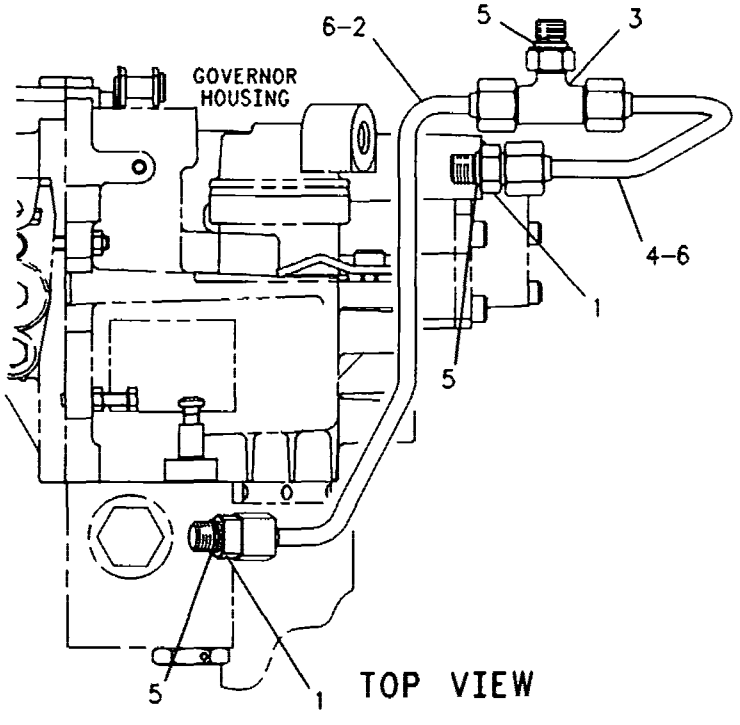

GRAPHIC #1 g00108509

FUEL SYSTEM

107-7732 PUMP GP-UNIT INJECTION

S/N 98Z15500-18130

PART OF 7E-3352 ENGINE AR

SMCS-1251, 1290 **i00834877**

NOTE	REF NO	GRAPHIC REF	PART NUMBER	QTY	PART NAME 1 2 3 4 5 6 (PRODUCT LEVEL)	SEE PAGE
M	1	1	**3T-0849**	1	BOLT-SOCKET HEAD (7.59MM ID)	
	2	1	**107-7733**	1	INJECTOR GP-FUEL	
	3	1	**114-8718**	1	SEAL-O-RING (26.64MM ID)	
	4	1	**125-8274**	1	SEAL-O-RING (7.59MM ID)	

M-METRIC PART

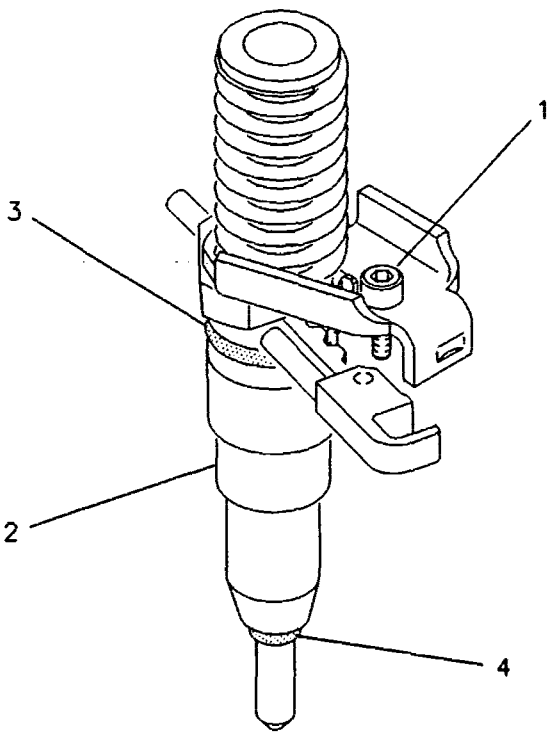

GRAPHIC #1 g00108390

FUEL SYSTEM

107-7732 PUMP GP-UNIT INJECTION

S/N 98Z18131-UP

PART OF 146-8338, 7E-3352 ENGINE AR

SMCS-1251, 1290 **i00834878**

NOTE	REF NO	GRAPHIC REF	PART NUMBER	QTY	PART NAME 1 2 3 4 5 6 (PRODUCT LEVEL)	SEE PAGE
CM	1	1	**139-5925**	1	BOLT-SOCKET HEAD (M6X1X30MM)	
CR	2	1	**127-8216**	1	INJECTOR GP-FUEL	
	3	1	**114-8718**	1	SEAL-O-RING (26.64MM ID)	
	4	1	**125-8274**	1	SEAL-O-RING (7.59MM ID)	
C	5	1	**9X-8267**	1	WASHER (2.0MM THK)	

C-CHANGE FROM PREVIOUS TYPE
M-METRIC PART
R-REMFG PART MAY BE AVAILABLE

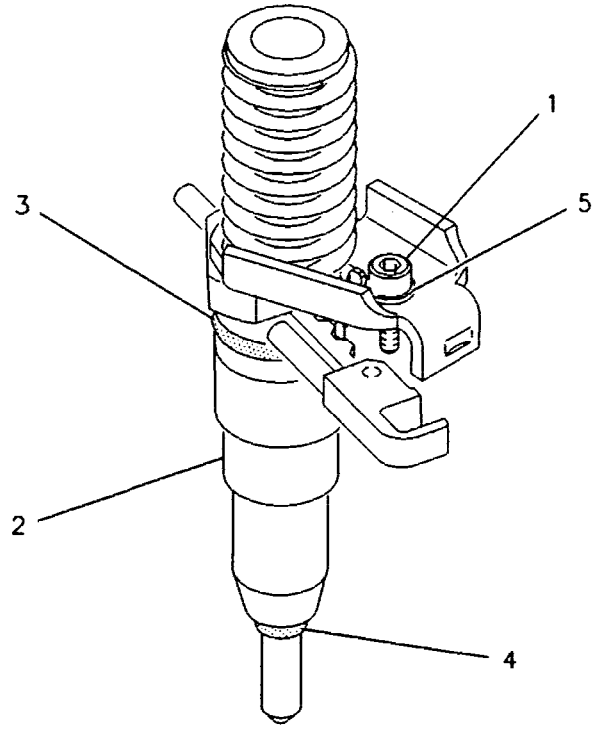

GRAPHIC #1 g00333524

FUEL SYSTEM

127-2308 SEPARATOR GP-WATER

PIN 5FM1-UP

PART OF 132-0296 LINES GP-FUEL

SMCS-1263 **i00823814**

NOTE	REF NO	GRAPHIC REF	PART NUMBER	QTY	PART NAME 1 2 3 4 5 6 (PRODUCT LEVEL)	SEE PAGE
	1	1	**3K-8460**	2	PLUG (1/2-20 THD)	
	2	1	**117-4089**	1	ELEMENT-WATER SEPARATOR	
	3	1	**118-1461**	1	BASE AS	
	4	1	**118-8118**	1	RING-RETAINING	
	5	1	**118-8119**	1	NUT	
	6	1	**5P-7814**	2	SEAL-O-RING	
	7	1	**112-9401**	1	BOWL AS-WATER COLLECTION	
		1	**128-8614**	1	KIT-BOWL SEAL	
					AVAILABLE REPAIR KIT(S):	
			121-4480	1	KIT-WATER BASE	
					(INCLUDES PLUGS, SEALS, RETAINING RING, & CAPS)	

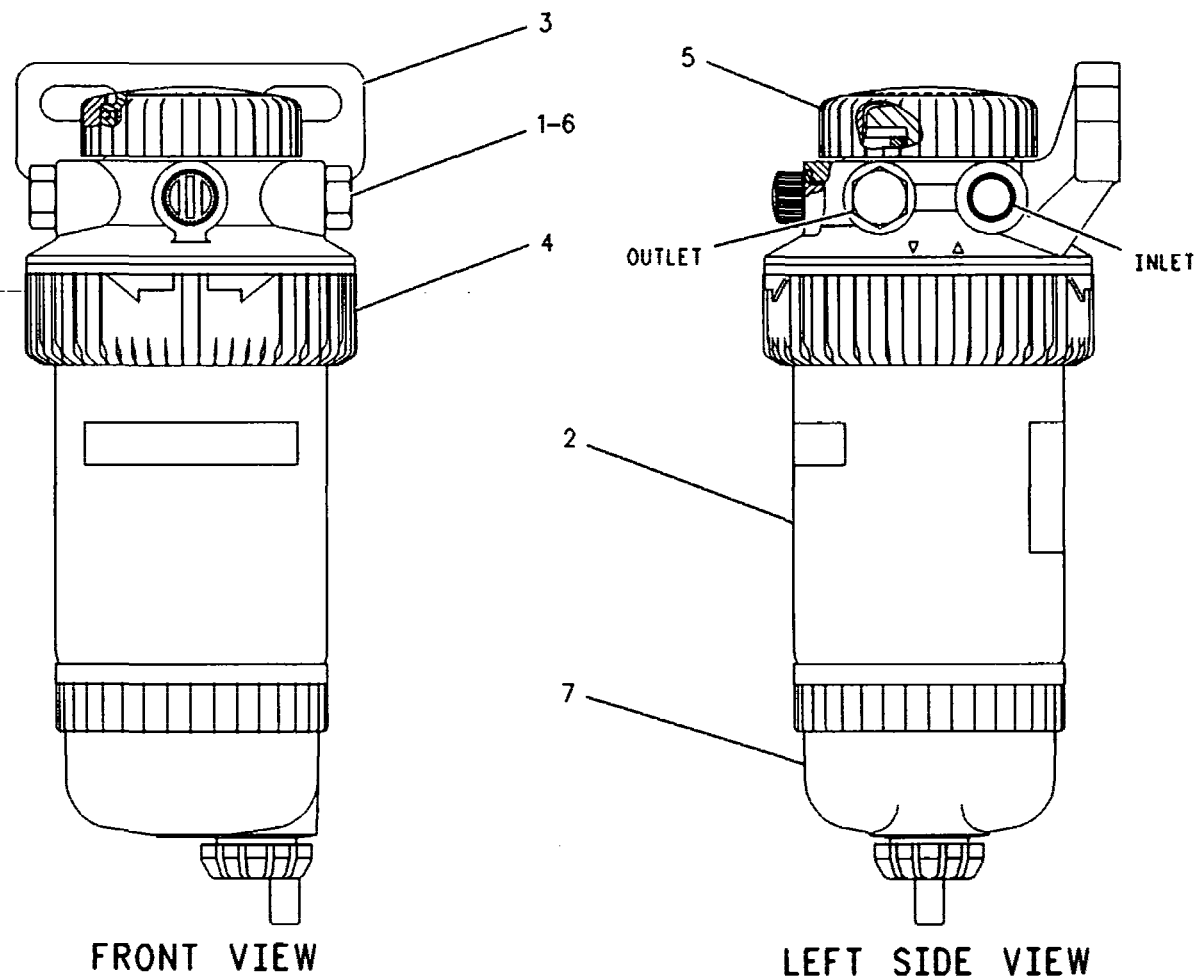

GRAPHIC #1 g00109191

7C-4028 SOLENOID GP-SHUTOFF

S/N 98Z15500-UP
24 VOLT
PART OF 146-8338, 7E-3352 ENGINE AR
FOR USE WITH ENERGIZED TO SHUTOFF CONTROL SYSTEM, EMCP OR ELECTRO-MECHANICAL & ON 24 VOLT LATCHING TYPE, SHUTOFF SOLENOID--BOSS MOUNTED

SMCS-1259, 7499 i00135790

NOTE	REF NO	GRAPHIC REF	PART NUMBER	QTY	PART NAME 1 2 3 4 5 6 (PRODUCT LEVEL)	SEE PAGE
	1	1	8C-3663	1	SOLENOID AS-MAGNETIC	
		1	6V-8377	2	NUT (8-32 THD)	
		1	9B-7233	2	LOCKWASHER (NO.8)	
		1	6V-8378	1	NUT (10-32 THD)	
		1	4B-4274	1	WASHER (1.2MM THK)	
	2	1	4K-1388	1	SEAL-O-RING (26.59MM ID)	

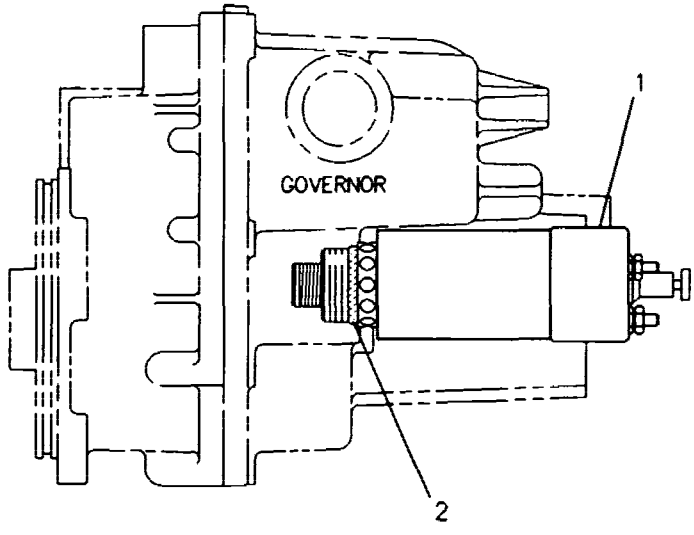

GRAPHIC #1 g00108439

FUEL SYSTEM

126-6084 TANK GP-FUEL

PIN 5FM1-UP

PART OF 112-4103 CHASSIS AR

SMCS-1273 i00135077

NOTE	REF NO	GRAPHIC REF	PART NUMBER	QTY	PART NAME 1 2 3 4 5 6 (PRODUCT LEVEL)	SEE PAGE
	1	1	126-6085	1	TANK AS-FUEL	
	2	1	9P-7121	1	STRAINER-FUEL TANK	
	3	1	7X-7700	1	CAP AS-FUEL TANK	
		1	9X-2205	1	KIT-CAP FILTER	
		1	9X-8600	1	SEAL-O-RING (110.49MM ID)	
	4	1	1H-8306	1	SCREW (1/2-20X1.625IN)	
	5	1	8T-9311	4	BOLT (3/4-10X4.50IN)	
	6	1	8T-4994	8	WASHER (3.5MM THK)	
	7	1	1K-6870	4	LOCKNUT (3/4-10 THD)	
	8	1	5P-8502	1	PADLOCK GP	
A		1	5P-8500	1	KEY	
A		1	8Y-6364	1	SLEEVE	
	9	1	126-6091	1	PLUNGER	

A-NOT PART OF THIS GROUP

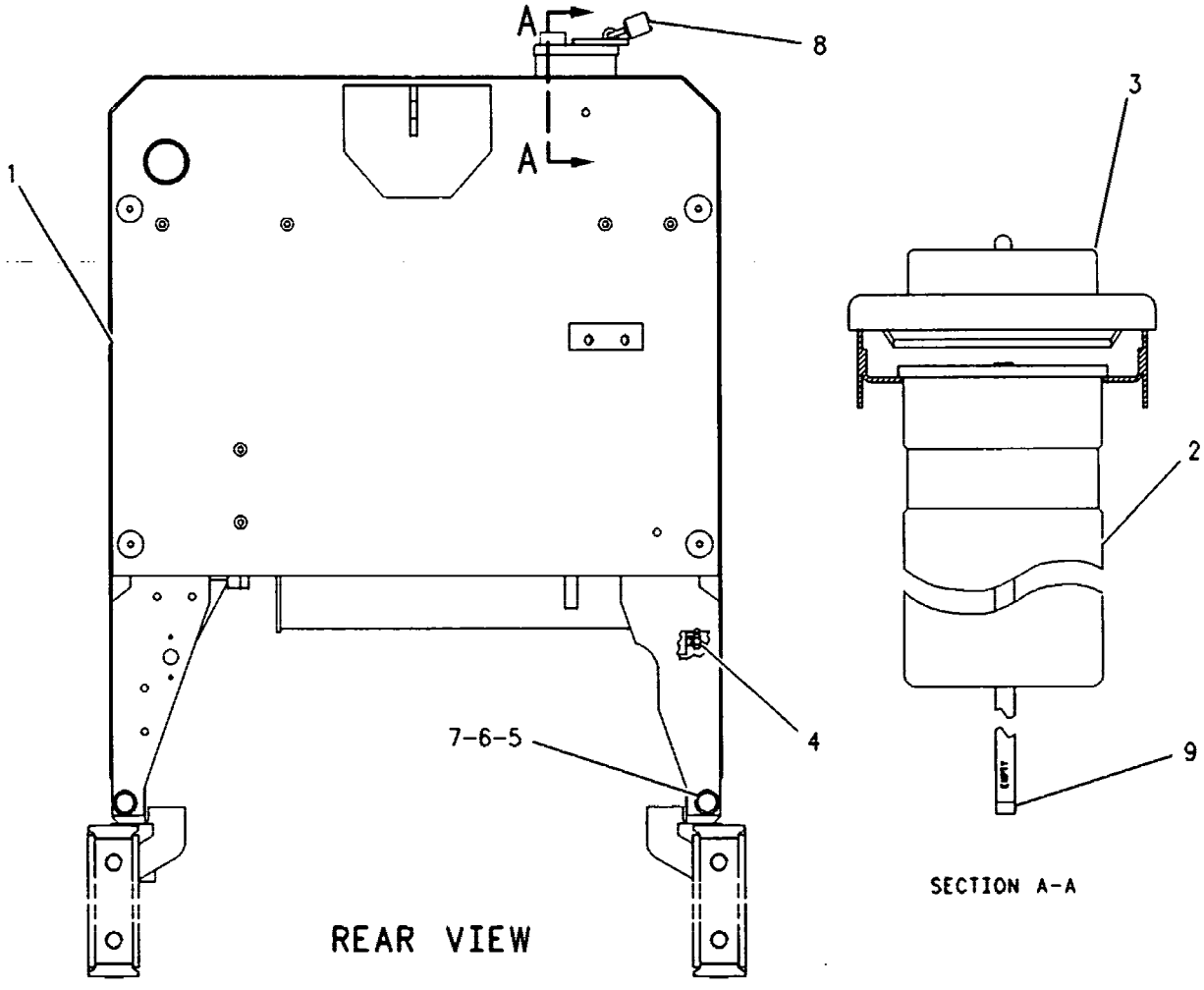

GRAPHIC #1 g00109180

FUEL SYSTEM

129-1101 VALVE GP-CHECK

S/N 98Z15500-UP

PART OF 129-1102 BASE GP-FUEL FILTER

i00135150

NOTE	REF NO	GRAPHIC REF	PART NUMBER	QTY	PART NAME 1 2 3 4 5 6 (PRODUCT LEVEL)	SEE PAGE
	1	1	033-6033	1	SEAL-O-RING (12.42MM ID)	
	2	1	6V-6923	1	RING-BACKUP	

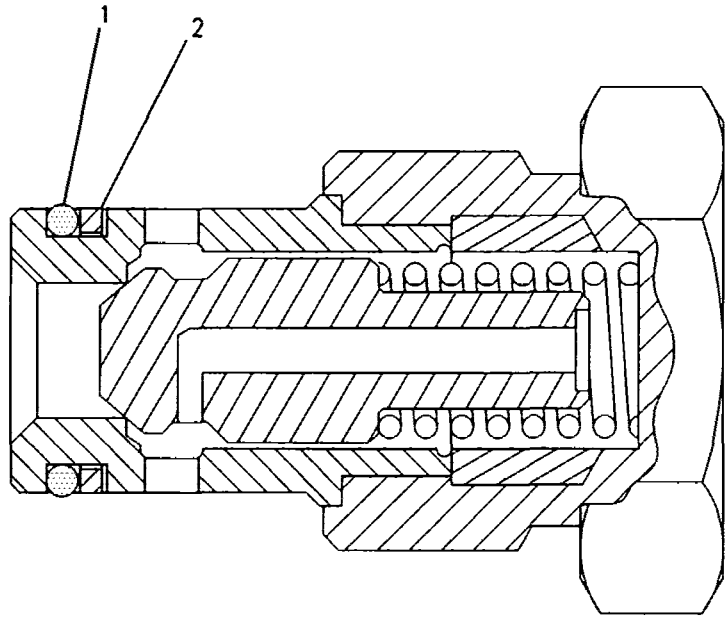

GRAPHIC #1

g00109281

FUEL SYSTEM

111-0570 VALVE GP-SOLENOID

S/N 98Z15500-UP

PART OF 131-6689 HOUSING GP-GOVERNOR

SMCS-1259, 1909 i00674169

NOTE	REF NO	GRAPHIC REF	PART NUMBER	QTY	PART NAME 1 2 3 4 5 6 (PRODUCT LEVEL)	SEE PAGE
					NO SERVICEABLE PARTS	

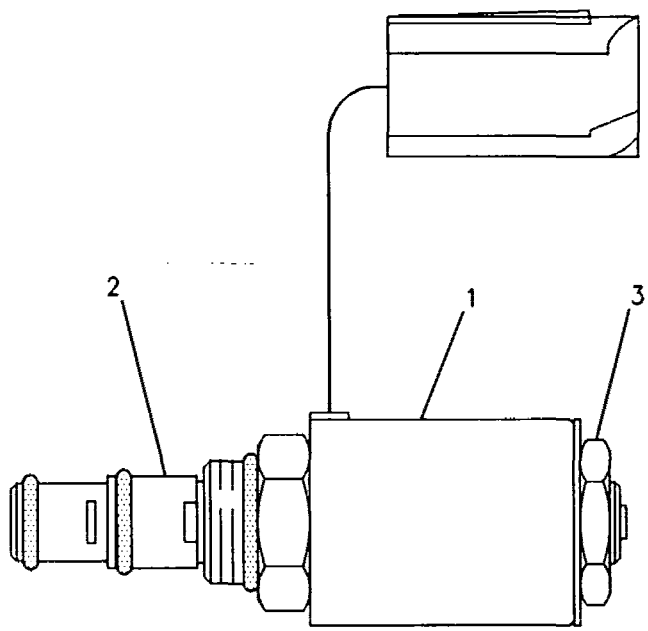

GRAPHIC #1 g00108510

FUEL SYSTEM

129-7707 VALVE GP-SOLENOID

S/N 98Z22643-UP

PART OF 142-5050 HOUSING GP-GOVERNOR

SMCS-1259, 1909 **i00834922**

NOTE	REF NO	GRAPHIC REF	PART NUMBER	QTY	PART NAME 1 2 3 4 5 6 (PRODUCT LEVEL)	SEE PAGE
	1	1	110-5103	1	CARTRIDGE AS	
	2	1	104-3947	1	LOCKNUT (5/8-11 THD)	
	3	1	129-7705	1	COIL AS	
		1	1S-9593	3	STRAP-CABLE (0.62IN DIA)	
		1	102-8802	1	KIT-RECEPTACLE	
		1	3E-3365	1	WEDGE	
		1	8T-8729	2	PIN-CONNECTOR	
					AVAILABLE REPAIR KIT(S):	
			7T-4515	1	KIT-SEAL (INCLUDES 3 SEALS)	

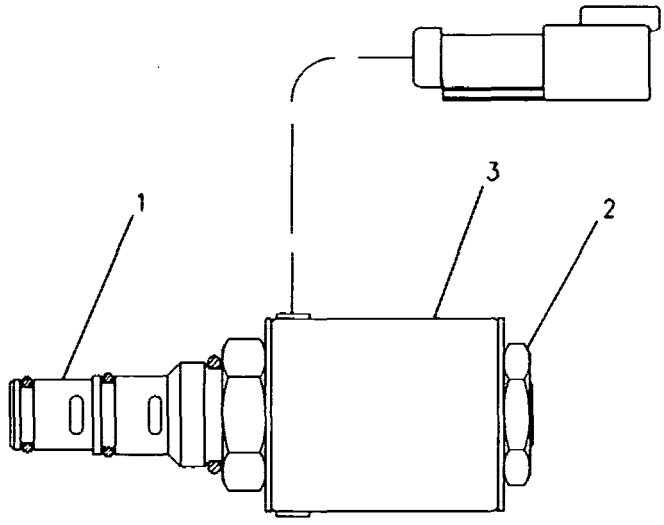

GRAPHIC #1 g00274221

ELECTRICAL AND STARTING SYSTEM

9G-9813 ALARM GP

PIN 5FM1-UP

24 VOLT

PART OF 112-5960 WIRING GP-SHIFT CONSOLE

SMCS-7400 i00158703

NOTE	REF NO	GRAPHIC REF	PART NUMBER	QTY	PART NAME 1 2 3 4 5 6 (PRODUCT LEVEL)	SEE PAGE
	1	1	7N-9737	1	HOUSING-PLUG	
	2	1	7N-7779	1	SOCKET	
	3	1	7N-7780	1	PIN-CONNECTOR (BLADE)	

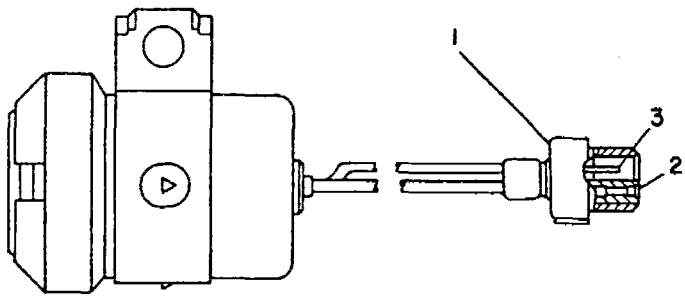

GRAPHIC #1 g00081694

MEMORANDA

ELECTRICAL AND STARTING SYSTEM

3T-6352 ALTERNATOR GP-CHARGING

PIN 5FM1-UP
24 VOLT, 35 AMP
PART OF 6N-9294 ALTERNATOR GP-CHARGING

SMCS-1405, 1410, 1425 i00743563

NOTE	REF NO	GRAPHIC REF	PART NUMBER	QTY	PART NAME 1 2 3 4 5 6 (PRODUCT LEVEL)	SEE PAGE
	1	1	7N-9024	4	BOLT	
	2	1	2K-4821	1	LOCKNUT (5/8-18 THD)	
	3	1	7F-7621	1	WASHER	
	4	1	3E-5454	1	FAN-ALTERNATOR	
	5	1	7N-7810	1	FRAME AS-DRIVE END	
	6	1	7N-7805	1	HOUSING	
	7	1	6V-2202	1	BALL BEARING	
	8	1	9S-2437	3	SCREW-TAPPING	
	9	1	7N-7809	1	PLATE	
	10	1	5P-6920	1	BEARING-ROLLER	
	11	1	030-9612	5	SCREW-FORMING	
	12	1	7N-7806	1	COIL AS-FIELD	
	13	1	7N-7800	1	ROTOR AS	
	14	1	7N-7804	1	STATOR AS	
	15	1	9L-2137	1	RETAINER AS	
	16	1	9N-3388	4	LOCKSCREW	
	17	1	7N-7795	1	COLLAR	
	18	1	9S-2544	2	SCREW-HEX HEAD	
	19	1	9L-2140	1	PLATE	
	20	1	9L-2139	1	WASHER-FELT	
	21	1	4B-2043	4	NUT (8-32 THD)	
	22	1	8T-0328	2	WASHER-HARD (1MM THK)	
	23	1	6N-1872	2	SCREW AS	
	24	1	9B-7233	6	LOCKWASHER (NO.8)	
	25	1	8F-1434	4	LOCKWASHER (#10-INT.)	
	26	1	7N-9023	2	SCREW AS	
	27	1	3T-6354	1	REGULATOR AS	
	28	1	1H-3244	1	LOCKWASHER (NO.14)	
	29	1	7N-7811	1	CONNECTOR	
	30	1	6V-8187	1	NUT (1/4-28 THD)	
	31	1	112-9119	1	DIODE AS-ALTERNATOR	
	32	1	8T-4205	1	WASHER-HARD (2MM THK)	
	33	1	7N-7122	1	RECTIFIER AS	
	34	1	7N-9021	1	SCREW AS	
	35	1	7N-7796	1	BUSHING-TERMINAL	
	36	1	7N-7802	1	CAPACITOR AS	
	37	1	7N-7801	1	CONNECTOR	
	38	1	7N-7798	1	CONNECTOR	
	39	1	9L-6770	1	CAP	
					AVAILABLE REPAIR KIT(S):	
			7N-7807	1	KIT-TERMINAL (OUTPUT)	
					(INCLUDES INSULATOR, SCREW, WASHERS, LOCKWASHER, NUT & ADAPTER)	
			7N-7808	1	KIT-TERMINAL (ALTERNATOR)	
					(INCLUDES STUD, BUSHINGS, WASHERS & NUT AS)	

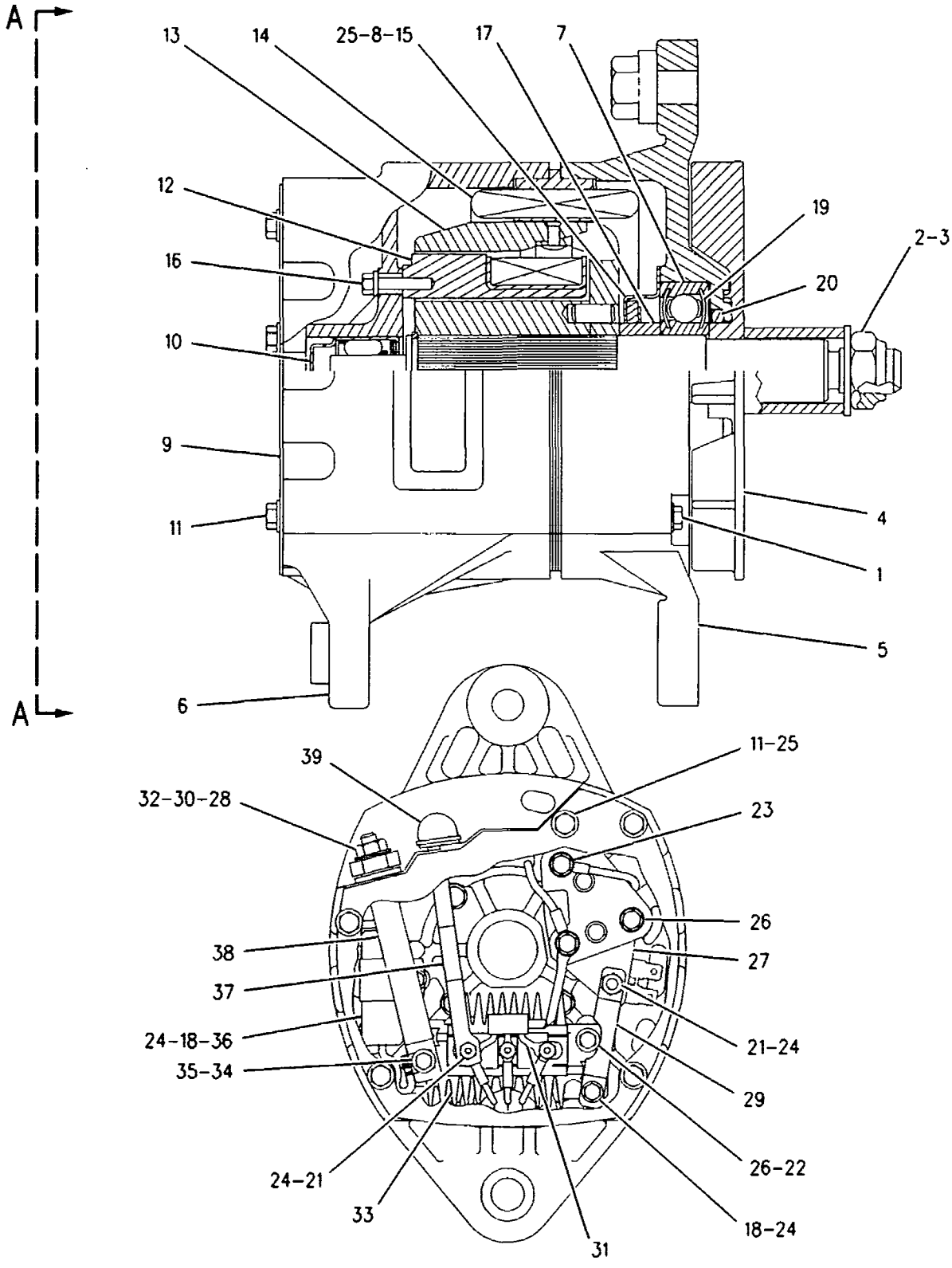

VIEW A-A

GRAPHIC #1 g00329017

ELECTRICAL AND STARTING SYSTEM

6N-9294 ALTERNATOR GP-CHARGING*R

PIN 5FM1-UP

24 VOLT, 35 AMP

PART OF 7C-1905 ALTERNATOR GP-CHARGING

SMCS-1405, 1410, 1425 **i00823365**

NOTE	PART NUMBER	QTY	PART NAME 1 2 3 4 5 6 (PRODUCT LEVEL)	SEE PAGE
Y	*7N-9720*	1	ALTERNATOR GP-CHARGING	148
			–OR–	
Y	*3T-6352*	1	ALTERNATOR GP-CHARGING	144
			–OR–	
Y	*9G-4574*	1	ALTERNATOR GP-CHARGING	150

Y-SEPARATE ILLUSTRATION

ELECTRICAL AND STARTING SYSTEM

7C-1905 ALTERNATOR GP-CHARGING

PIN 5FM1-UP
24 VOLT, 35 AMP
PART OF 112-5819 INSTALLATION AR-ENGINE

SMCS-1405, 1410, 1425 **i00134721**

NOTE	REF NO	GRAPHIC REF	PART NUMBER	QTY	PART NAME 1 2 3 4 5 6 (PRODUCT LEVEL)	SEE PAGE
YR	1	1	6N-9294	1	ALTERNATOR GP-CHARGING	146
	2	1	9S-5517	1	STRAP-ADJUSTMENT	
	3	1	7X-0339	1	BOLT (1/2NCX6 1/4)	
	4	1	8T-4223	2	WASHER-HARD (3MM THK)	
	5	1	9S-1240	1	NUT AS	
		1	1F-0748	1	NUT-WELD (1/2-13 THD)	
	6	1	8T-8917	2	BOLT (1/2-13X1.25IN)	
	7	1	5P-1076	1	WASHER-HARD (4MM THK)	

R-REMFG PART MAY BE AVAILABLE
Y-SEPARATE ILLUSTRATION

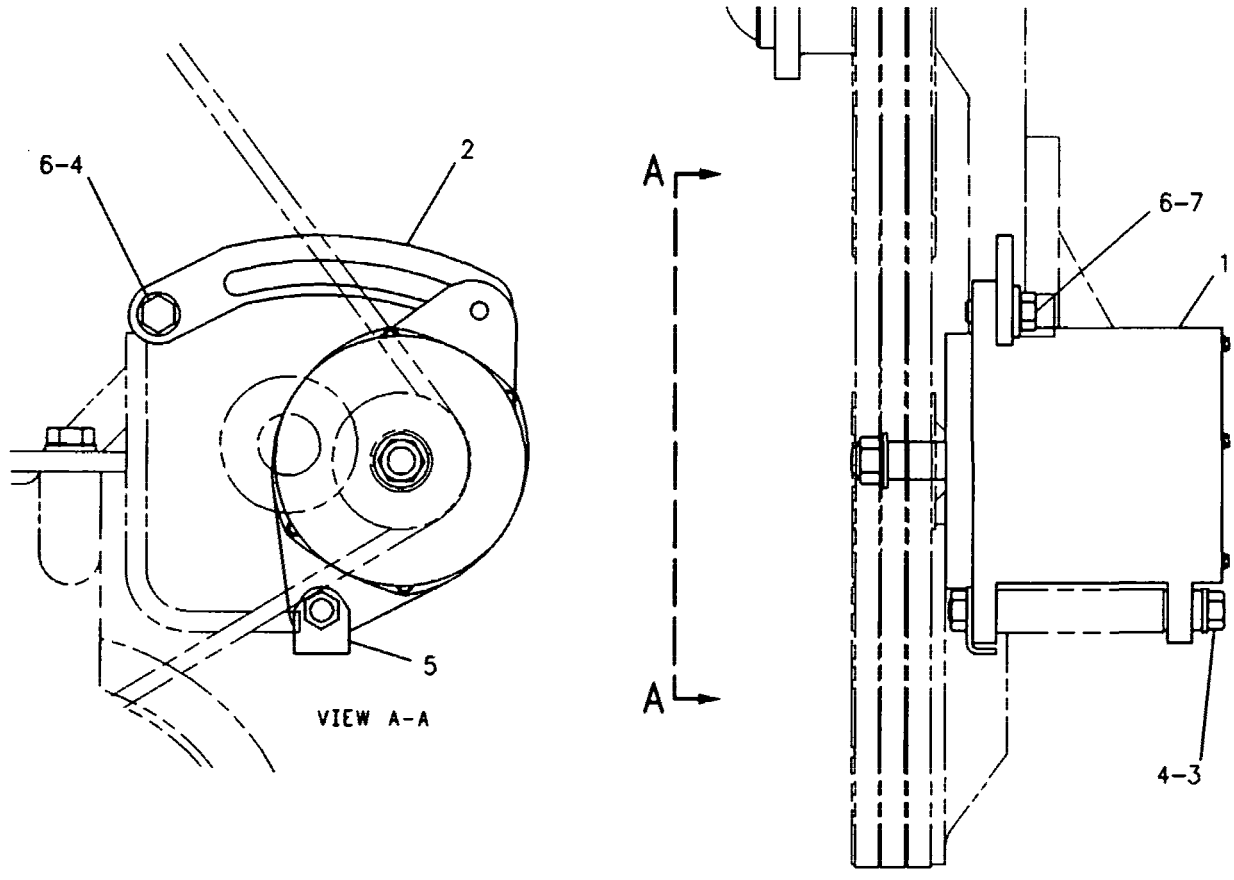

GRAPHIC #1 g00108583

ELECTRICAL AND STARTING SYSTEM

7N-9720 ALTERNATOR GP-CHARGING

PIN 5FM1-UP
24 VOLT, 35 AMP
PART OF 6N-9294 ALTERNATOR GP-CHARGING

SMCS-1405, 1410, 1425 i00131356

NOTE	REF NO	GRAPHIC REF	PART NUMBER	QTY	PART NAME 1 2 3 4 5 6 (PRODUCT LEVEL)	SEE PAGE
	1	1	9G-7551	1	BEARING	
	2	1	9G-7548	1	RING	
	3	1	9G-7558	1	COIL AS-FIELD	
	4	1	9G-7560	1	ROTOR AS	
	5	1	9G-7553	1	RING-COVER	
	6	1	9G-7562	1	COVER AS	
	7	1	9G-7567	1	REGULATOR AS	
	8	1	9G-7552	1	BEARING	
M	9	1	9X-6001	4	BOLT-HEX HEAD	
		1	8T-0328	4	WASHER-HARD (1MM THK)	
	10	1	9G-7568	1	FRAME AS-REAR	
	11	1	3T-1887	1	DIODE AS	
	12	1	9G-7561	1	STATOR AS	
	13	1	9G-7566	1	FRAME-DRIVE END	
C	14	1	9L-6770	1	CAP	
	15	1	9G-7549	1	SPACER	
	16	1	2K-4821	1	LOCKNUT (5/8-18 THD)	
M	17	1	5C-2874	1	NUT (M5X.8 THD)	
		1	7X-0620	1	WASHER-HARD (1.6MM THK)	
	18	1	1L-9048	1	NUT-PLATED JAM (7/16-14 THD)	
		1	8T-5360	1	WASHER (2.5MM THK)	
	19	1	5P-8247	1	WASHER-HARD (3.5MM THK)	
	20	1	1B-8705	1	KEY-WOODRUFF	
					AVAILABLE REPAIR KIT(S):	
			9G-7554	1	KIT-TERMINAL GROUND	
					INCLS NUTS AND LOCKWASHERS)	
			9G-7555	1	KIT-OUTPUT TERMINAL	
					INCLS NUTS, WASHERS, AND BUSHINGS)	
			9G-7556	1	KIT-CAPACITOR	
					INCLS CAPACITOR, SCREWS, AND LOCKWASHERS)	
			9G-7559	1	KIT-RELAY TERMINAL	
					INCLS SPLICE, NUTS, TUBES, TERMINALS,	
					WASHERS, LOCKWASHERS AND BUSHINGS)	
			9G-7565	1	KIT-REGULATOR TERMINAL	
					INCLS NUTS, LOCKWASHERS, WASHERS AND BUSHINGS)	
C			7T-0816	1	KIT-FAN	
					INCLS FAN, SUPPORTS, PLATES AND SPACERS)	

C-CHANGE FROM PREVIOUS TYPE
M-METRIC PART

7N-9720 ALTERNATOR GP-CHARGING *(contd.)*

i00131356

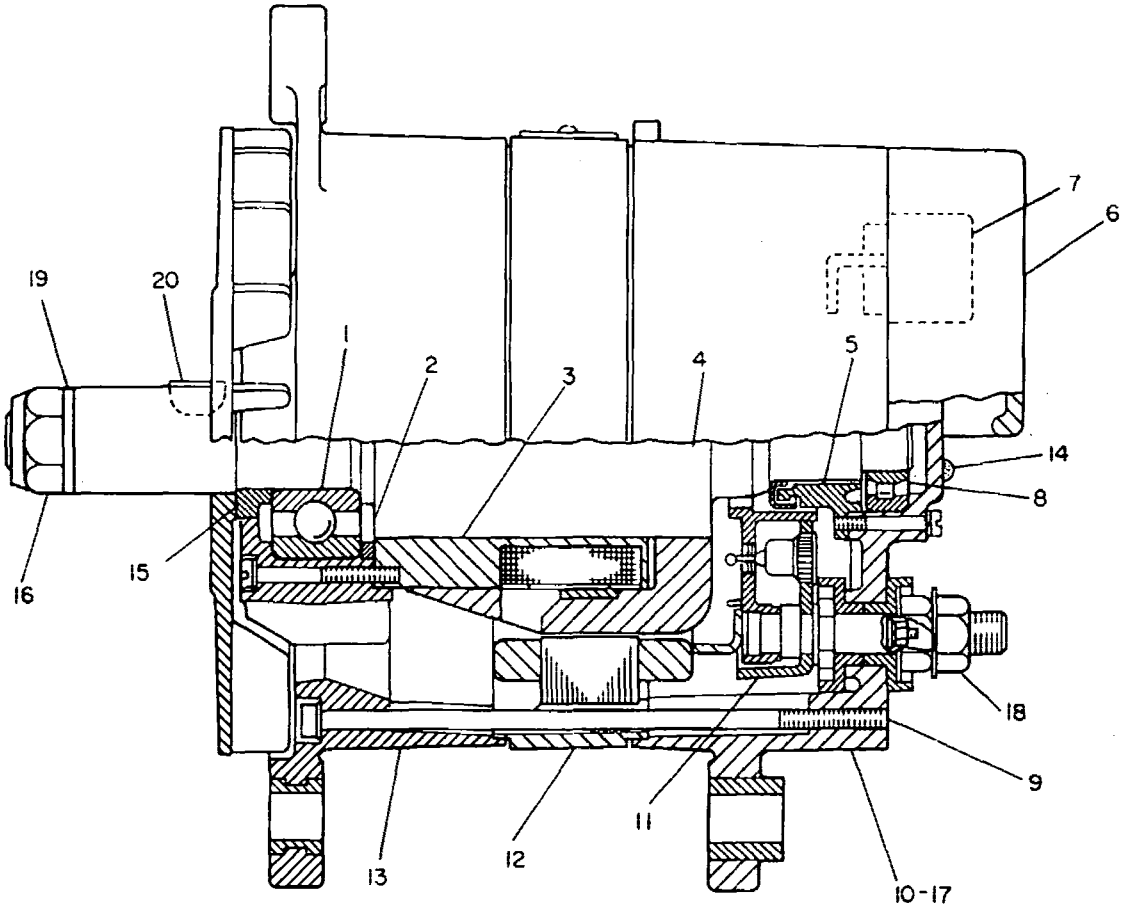

GRAPHIC #1

g00108353

ELECTRICAL AND STARTING SYSTEM

9G-4574 ALTERNATOR GP-CHARGING

PIN 5FM1-UP

24 VOLT, 35 AMP

PART OF 6N-9294 ALTERNATOR GP-CHARGING

SMCS-1405, 1410, 1425 **i00834874**

NOTE	REF NO	GRAPHIC REF	PART NUMBER	QTY	PART NAME 1 2 3 4 5 6 (PRODUCT LEVEL)	SEE PAGE
	1	1	**2K-4821**	1	LOCKNUT (5/8-18 THD)	
		1	**5P-8247**	1	WASHER-HARD (3.5MM THK)	
	2	1	**1B-8705**	1	KEY-WOODRUFF	
	3	1	**7T-2793**	1	FAN AS	
	4	1	**7T-2792**	1	FRAME AS	
	5	1	**7T-2794**	1	STATOR AS	
	6	1	**7T-2790**	1	ROTOR AS	
	7	1	**7T-2791**	1	COIL AS	
	8	1	**7T-2798**	1	REGULATOR AS	
	9	1	**7T-2797**	1	COVER	
	10	1	**7T-2796**	1	HOLDER AS	
	11	1	**7T-2795**	1	FRAME AS	
	12	1	**7T-2801**	1	CONDENSER	
	13	1	**9L-6770**	1	CAP	
	14	1	**7T-2802**	1	WIRE AS	
	15	1	**7X-0447**	1	NUT (7/16-14 THD)	
		1	**2H-3920**	1	LOCKWASHER (11.38MM ID)	
	16	1	**6V-8185**	1	NUT (1/4-20 THD)	
		1	**1H-3244**	1	LOCKWASHER (NO.14)	
					AVAILABLE REPAIR KIT(S):	
			7T-2800	1	KIT-TERMINAL (POS)	
					(INCLUDES INSULATORS, NUTS, LOCKWASHERS & WASHERS)	
			7T-2804	1	KIT-TERMINAL (RELAY)	
					(INCLUDES WIRE AS, CAP, BOLT & INSULATOR)	
			7T-2805	1	KIT-TERMINAL (NEG)	
					(INCLUDES INSULATORS, NUTS, WASHERS & LOCKWASHERS)	
			7T-2799	1	KIT-BEARING	
					(INCLUDES BEARINGS)	
			7T-2803	1	KIT-HARDWARE	
					(INCLUDES SCREW AS & BOLT AS)	
			7T-2816	1	KIT-HARDWARE	
					(INCLUDES PLATE AS PLATE, BOLT AS, WASHERS, SPACERS & RING)	

9G-4574 ALTERNATOR GP-CHARGING *(contd.)* i00834874

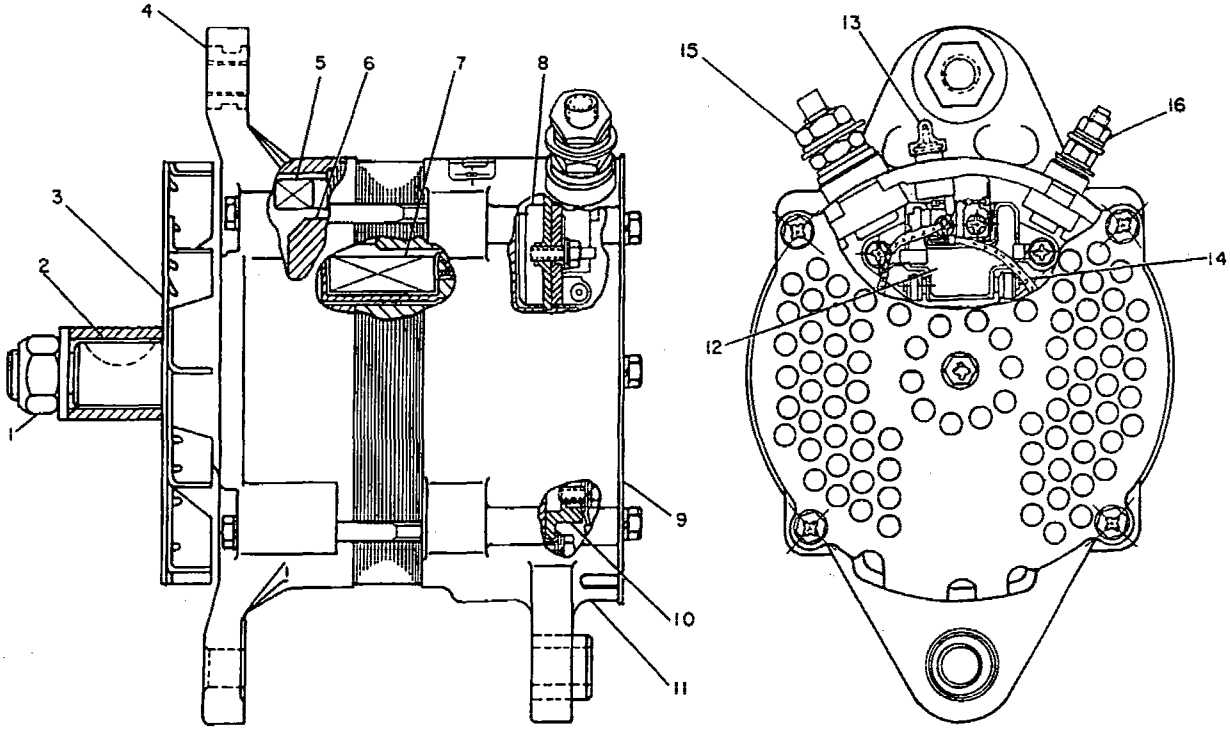

GRAPHIC #1 g00099436

ELECTRICAL AND STARTING SYSTEM

132-2148 CONTROL GP-SYSTEM ELECTRONIC

PIN 5FM800-UP

PART OF 112-5978 WIRING GP-FRONT

SMCS-4800 i00673193

NOTE	REF NO	GRAPHIC REF	PART NUMBER	QTY	PART NAME 1 2 3 4 5 6 (PRODUCT LEVEL)	SEE PAGE
	1	1	7X-6315	1	STRAP-GROUNDING	
	2	1	101-0852	1	SCREW-PAN HEAD	
M	3	1	6V-6703	2	KIT-RETAINING BOLT	

M-METRIC PART

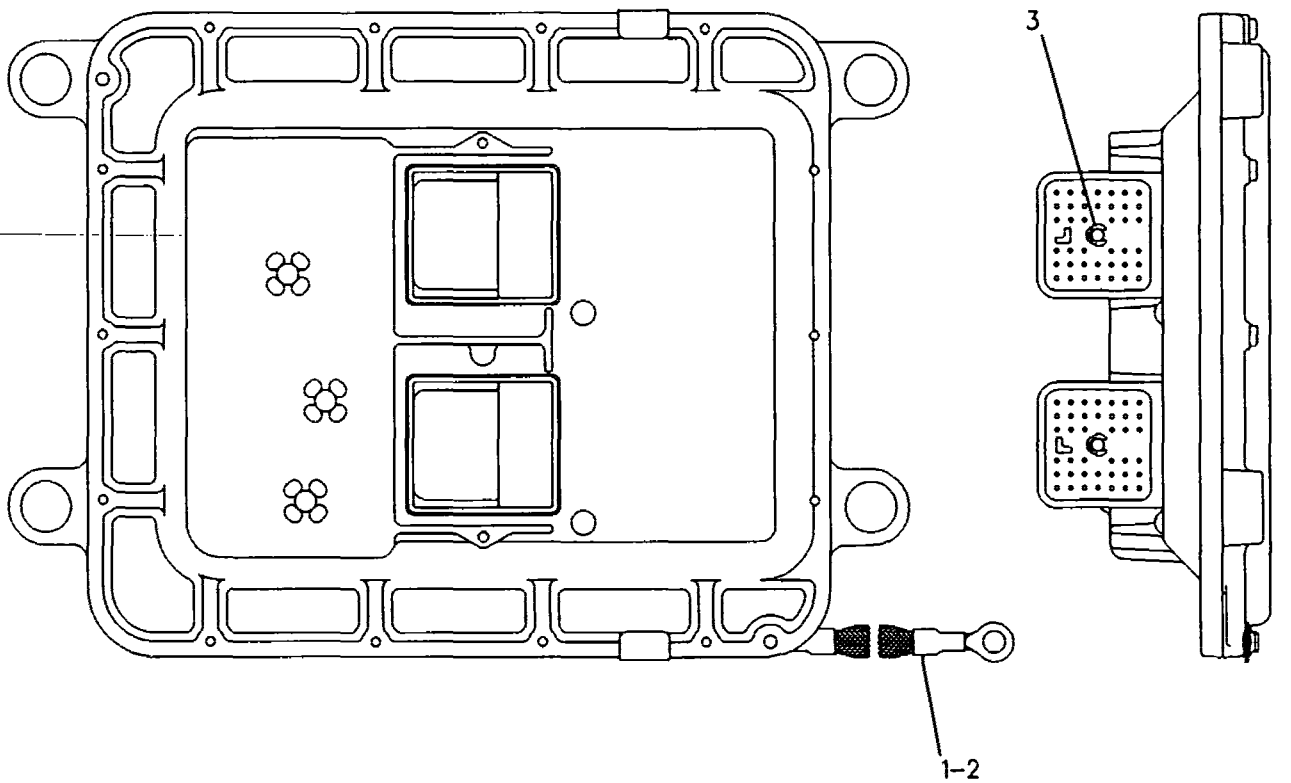

GRAPHIC #1 g00087166

ELECTRICAL AND STARTING SYSTEM

134-6553 CONTROL GP-TORQUE CONV ELEK

PIN 5FM1-549
TRANSMISSION ECM
PART OF 112-5960 WIRING GP-SHIFT CONSOLE

SMCS-3168, 4800 i00138768

NOTE	REF NO	GRAPHIC REF	PART NUMBER	QTY	PART NAME 1 2 3 4 5 6 (PRODUCT LEVEL)	SEE PAGE
					(INDIVIDUAL PARTS ARE NOT SERVICED SEPARATELY)	

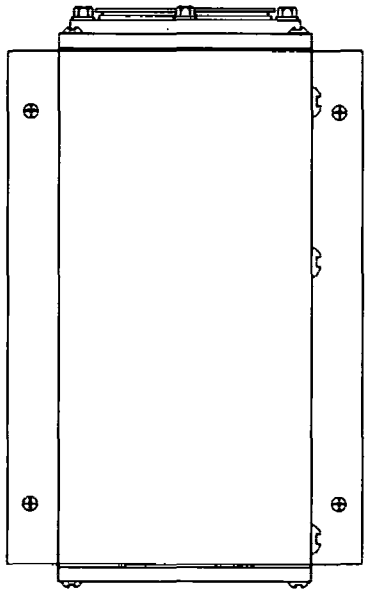

GRAPHIC #1 g00109251

ELECTRICAL AND STARTING SYSTEM

143-9634 CONTROL GP-TORQUE CONV ELEK*R

PIN 5FM550-799

PART OF 112-5960 WIRING GP-SHIFT CONSOLE

SMCS-3168, 4800 **i00606841**

NOTE	REF NO	GRAPHIC REF	PART NUMBER	QTY	PART NAME 1 2 3 4 5 6 (PRODUCT LEVEL)	SEE PAGE
					(INDIVIDUAL PARTS ARE NOT SERVICED SEPARATELY)	

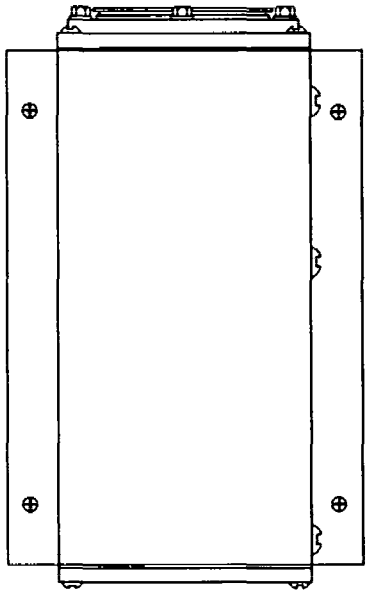

GRAPHIC #1 g00109251

ELECTRICAL AND STARTING SYSTEM

145-1261 CONVERTER & MTG GP-ELECTRICAL

PIN 5FM1-UP

PART OF 145-1278, 145-1279 CONVERTER AR-ELECTRICAL AN ATTACHMENT

SMCS-1421 i00665446

NOTE	REF NO	GRAPHIC REF	PART NUMBER	QTY	PART NAME 1 2 3 4 5 6 (PRODUCT LEVEL)	SEE PAGE
	1	1	119-1733	1	CONVERTER-POWER	
	2	1	9X-2498	2	SCREW-HEX FLANGE	
	3	1	3K-8782	1	FUSE (10 AMP)	

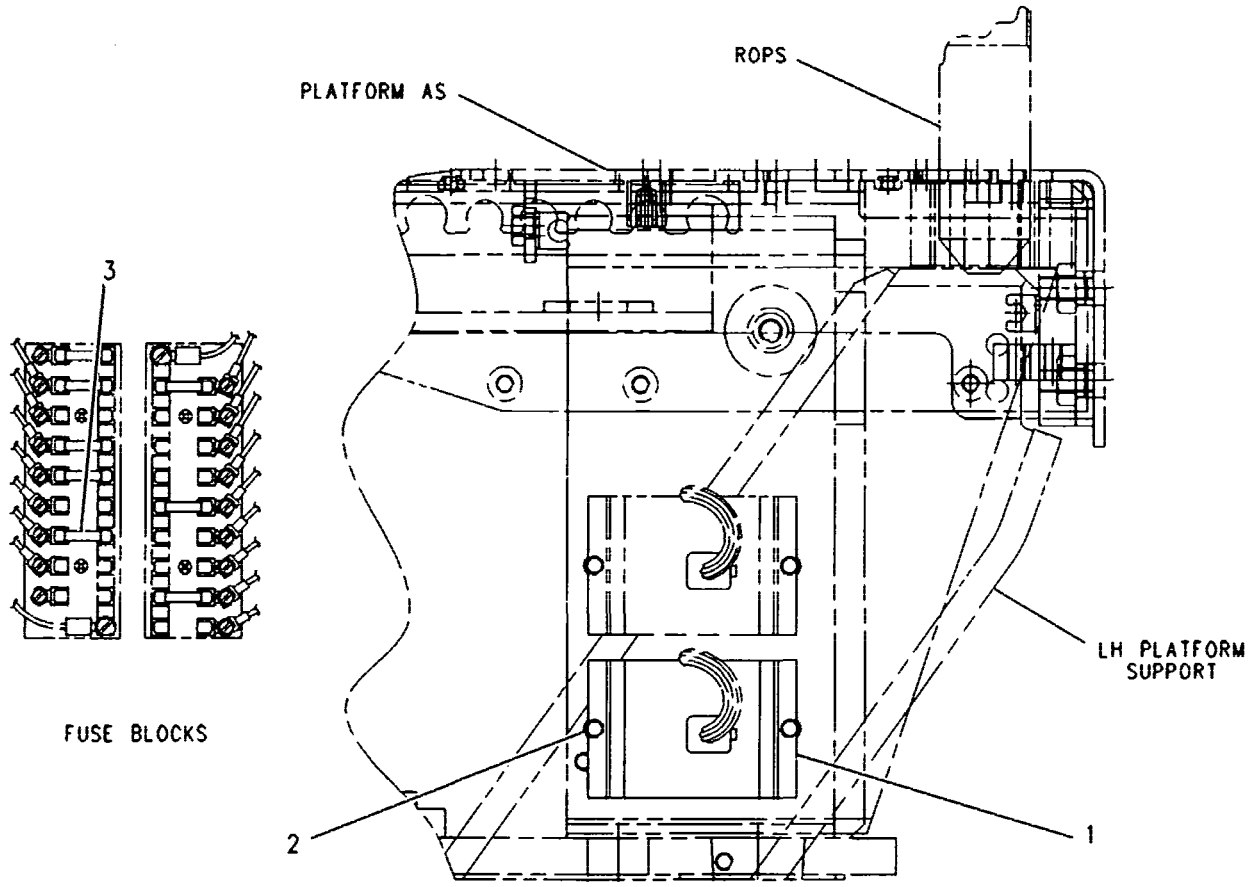

FRONT VIEW

GRAPHIC #1 g00277088

ELECTRICAL AND STARTING SYSTEM

145-1278 CONVERTER AR-ELECTRICAL

PIN 5FM1-UP

AN ATTACHMENT

SMCS-1421 **i00674674**

NOTE	PART NUMBER	QTY	PART NAME 1 2 3 4 5 6 (PRODUCT LEVEL)	SEE PAGE
Y	*142-0742*	1	ACCESSORY GP-CAB	740
Y	*145-1261*	1	CONVERTER & MTG GP-ELECTRICAL	155

Y-SEPARATE ILLUSTRATION

ELECTRICAL AND STARTING SYSTEM

145-1279 CONVERTER AR-ELECTRICAL

PIN 5FM1-UP

AN ATTACHMENT

SMCS-1421 **i00674684**

NOTE	PART NUMBER	QTY	PART NAME 1 2 3 4 5 6 (PRODUCT LEVEL)	SEE PAGE
Y	*142-0747*	1	ACCESSORY GP-CAB	741
Y	*145-1261*	1	CONVERTER & MTG GP-ELECTRICAL	155

Y-SEPARATE ILLUSTRATION

ELECTRICAL AND STARTING SYSTEM

144-8622 ELECTRONICS GP-TRANSMISSION

PIN 5FM800-UP

PART OF 112-5978 WIRING GP-FRONT

SMCS-4800 **i00797282**

NOTE	PART NUMBER	QTY	PART NAME 1 2 3 4 5 6 (PRODUCT LEVEL)	SEE PAGE
	144-8651	1	SOFTWARE GP-TMSN ELECTRONIC	

ELECTRICAL AND STARTING SYSTEM

9X-6775 LAMP GP-FLOOD

PIN 5FM1-UP
24 VOLT, VERTICAL
PART OF 127-1562, 137-7316, 8W-7662 LIGHTING GP-FLOOD
AN ATTACHMENT

SMCS-1434 i00683502

NOTE	REF NO	GRAPHIC REF	PART NUMBER	QTY	PART NAME 1 2 3 4 5 6 (PRODUCT LEVEL)	SEE PAGE
	1	1	9X-4244	4	SCREW	
	2	1	9X-4174	1	LENS AS	
		1	9X-4243	1	SEAL	
M	3	1	8T-0337	2	SCREW-MACHINE (M4X0.7X12MM)	
	4	1	9X-3455	1	BODY AS	
	5	1	9X-3463	1	LAMP	

M-METRIC PART

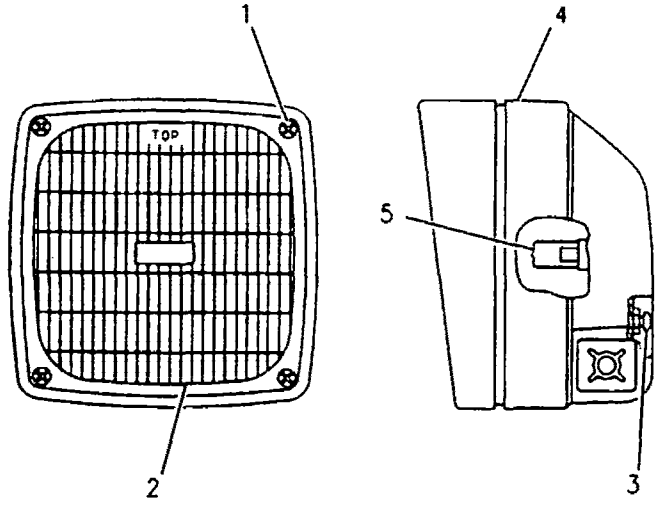

GRAPHIC #1 g00088698

ELECTRICAL AND STARTING SYSTEM

9X-7169 LAMP GP-HEAD

PIN 5FM1-UP
24 VOLT. VERTICAL. LOW
PART OF 127-1803 LIGHTING GP
AN ATTACHMENT

SMCS-1429 **i00134486**

NOTE	REF NO	GRAPHIC REF	PART NUMBER	QTY	PART NAME 1 2 3 4 5 6 (PRODUCT LEVEL)	SEE PAGE
	1	1	9X-4244	4	SCREW	
	2	1	9X-7798	1	LENS AS	
		1	9X-4243	1	SEAL	
M	3	1	8T-0337	2	SCREW-MACHINE	
	4	1	9X-3455	1	BODY AS	
	5	1	9X-3463	1	LAMP	

M-METRIC PART

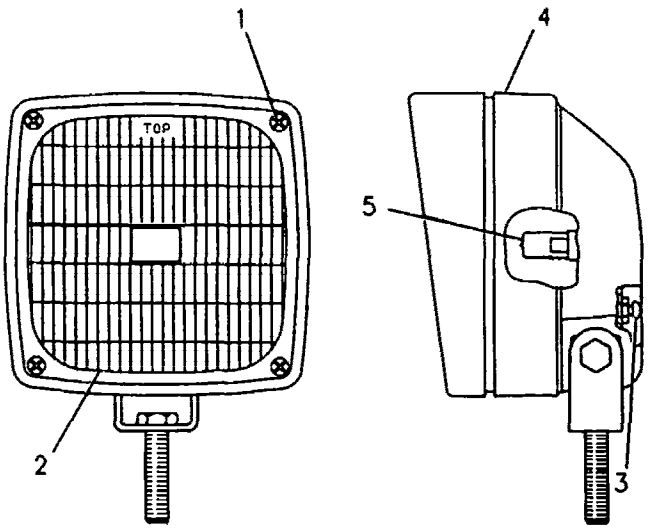

GRAPHIC #1 g00084678

ELECTRICAL AND STARTING SYSTEM

9X-7170 LAMP GP-HEAD

PIN 5FM1-UP
24 VOLT. VERTICAL
PART OF 127-1803 LIGHTING GP
AN ATTACHMENT

SMCS-1429 i00134495

NOTE	REF NO	GRAPHIC REF	PART NUMBER	QTY	PART NAME 1 2 3 4 5 6 (PRODUCT LEVEL)	SEE PAGE
	1	1	9X-4244	4	SCREW	
	2	1	9X-7797	1	LENS AS	
		1	9X-4243	1	SEAL	
M	3	1	8T-0337	2	SCREW-MACHINE	
	4	1	9X-3455	1	BODY AS	
	5	1	9X-3463	1	LAMP	

M-METRIC PART

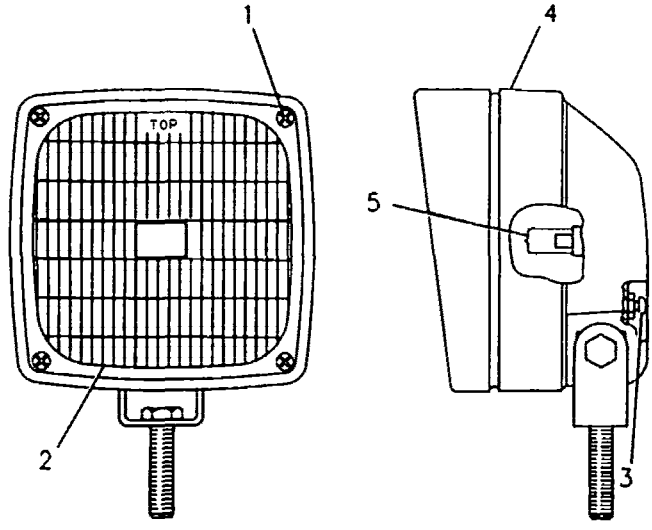

GRAPHIC #1 g00084678

ELECTRICAL AND STARTING SYSTEM

8C-6207 LAMP GP-SIGNAL

PIN 5FM1-799
24 VOLT. STOP/TAIL-RED
PART OF 112-5983 WIRING GP-REAR

SMCS-1430 **i00131312**

NOTE	REF NO	GRAPHIC REF	PART NUMBER	QTY	PART NAME 1 2 3 4 5 6 (PRODUCT LEVEL)	SEE PAGE
	1	1	**9X-3064**	1	LENS-RED	
	2	1	**9X-4492**	1	LAMP	
	3	1	**7N-7782**	1	HOUSING-PLUG	
	4	1	**7N-7779**	2	SOCKET	
	5	1	**7N-7780**	1	PIN-CONNECTOR (BLADE)	

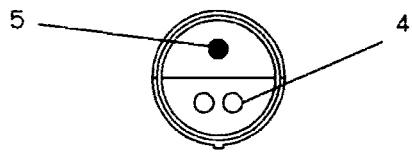

VIEW B-B

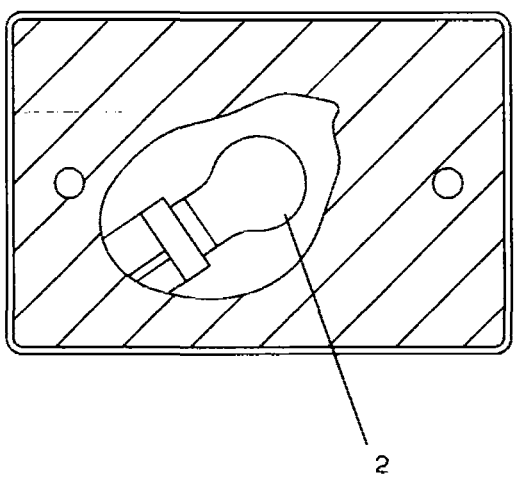

VIEW A-A

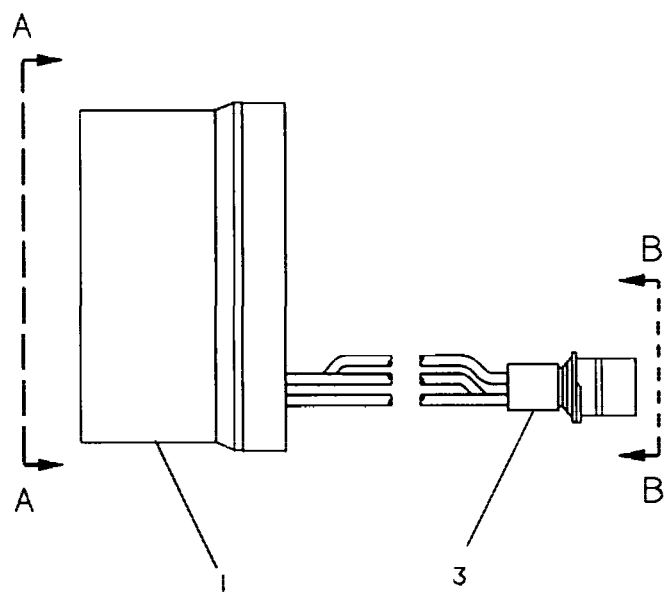

GRAPHIC #1 g00082500

130-3452 LAMP GP-SIGNAL

PIN 5FM375-UP
24 VOLT. STOP/TAIL-RED
PART OF 112-5983 WIRING GP-REAR

SMCS-1430 i00136155

NOTE	REF NO	GRAPHIC REF	PART NUMBER	QTY	PART NAME 1 2 3 4 5 6 (PRODUCT LEVEL)	SEE PAGE
	1	1	9X-3064	1	LENS-RED	
	2	1	9X-4493	1	LAMP	
	3	1	7N-7782	1	HOUSING-PLUG	
	4	1	7N-7779	2	SOCKET	
	5	1	7N-7780	1	PIN-CONNECTOR (BLADE)	

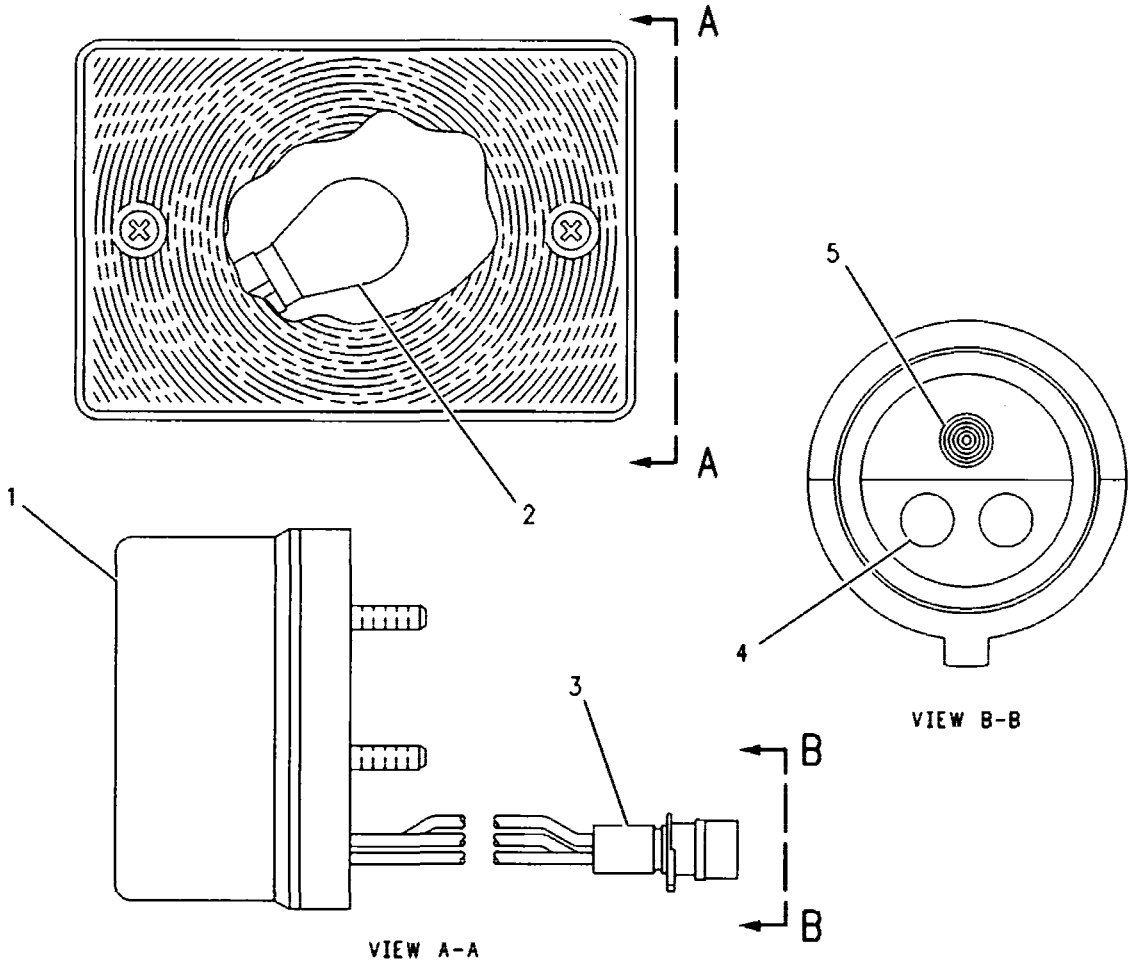

GRAPHIC #1 g00109498

ELECTRICAL AND STARTING SYSTEM

127-1803 LIGHTING GP

PIN 5FM1-UP

AN ATTACHMENT

SMCS-1429 **i00131001**

NOTE	REF NO	GRAPHIC REF	PART NUMBER	QTY	PART NAME 1 2 3 4 5 6 (PRODUCT LEVEL)	SEE PAGE
	1	1	**5T-9313**	1	TUBE	
	2	1	**2G-0988**	2	CAP	
	3	1	**108-3519**	2	CLAMP	
	4	1	**137-9410**	4	CLAMP	
	5	1	**2G-0617**	4	CLAMP	
	6	1	**4L-6454**	4	BOLT (3/8-16X1.0IN)	
	7	1,2	**8T-4896**	9	WASHER-HARD (2.5MM THK)	
	8	1	**6V-8801**	4	NUT (3/8-16 THD)	
	9	1	**2H-3920**	4	LOCKWASHER (11.38MM ID)	
M	10	1	**8T-4133**	4	NUT (M10X1.50 THD)	
	11	1	**3K-9520**	3	GROMMET	
	12	1	**127-1036**	1	HARNESS AS	
	13	1	**3S-2093**	4	STRAP-CABLE (1.75IN DIA)	
Y	14	1	**9X-7169**	2	LAMP GP-HEAD (LOW BEAM)	160
	15	1,2	**4D-7794**	6	CLIP (10.0MM ID)	
	16	2	**8X-6296**	1	LEVER	
	17	2	**8X-5154**	1	FILM-FACE	
	18	2	**3E-8772**	1	SWITCH AS (HEADLAMP/TAIL)	
		2	**3E-8825**	2	LAMP-MINIATURE (24 VOLT)	
		2	**3E-9326**	1	ACTUATOR-ROCKER	
	19	2	**103-5678**	1	SWITCH AS-ROTARY (HI/LO BEAM)	
		2	**9B-7233**	1	LOCKWASHER (NO.8)	
		2	**5L-7200**	1	SCREW (8-32X.375IN)	
	20	1,2	**5M-3062**	5	BOLT (3/8-16X.750IN)	
Y	21	1	**9X-7170**	2	LAMP GP-HEAD (HIGH BEAM)	161
	22	1	**9D-6164**	4	BOSS (3/8-16 THD)	
	23	2	**101-8197**	1	HARNESS AS	
	24	2	**3T-2662**	1	CIRCUIT BREAKER AS (15 AMP)	
		2	**9B-7233**	2	LOCKWASHER (NO.8)	
		2	**6V-8376**	2	SCREW-MACHINE (8-32X.25IN)	
	25	2	**5P-8394**	2	SCREW-MACHINE (8-32X.75IN)	
	26	2	**9B-7233**	2	LOCKWASHER (NO.8)	

M-METRIC PART
Y-SEPARATE ILLUSTRATION

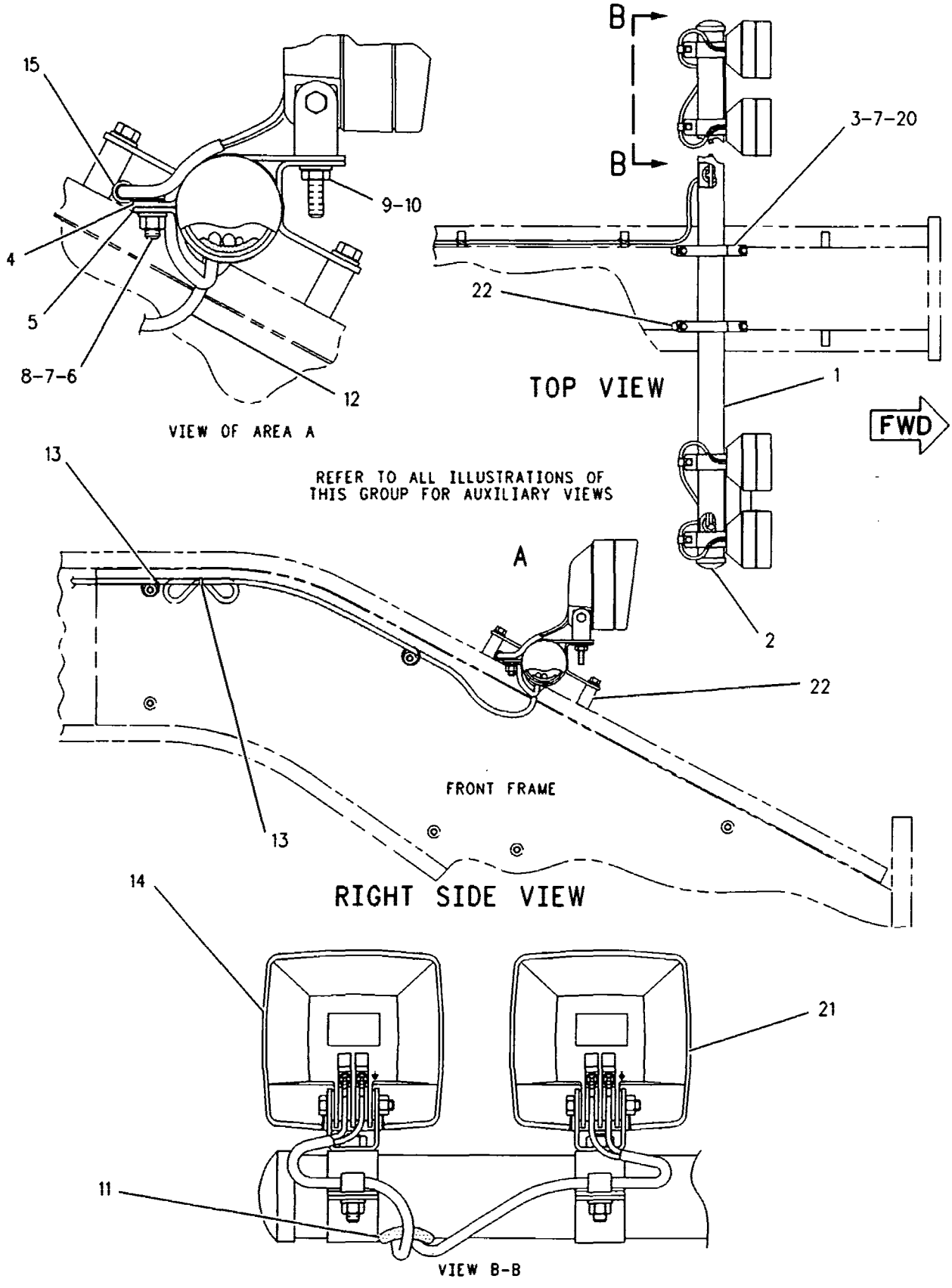

GRAPHIC #1 g00109167

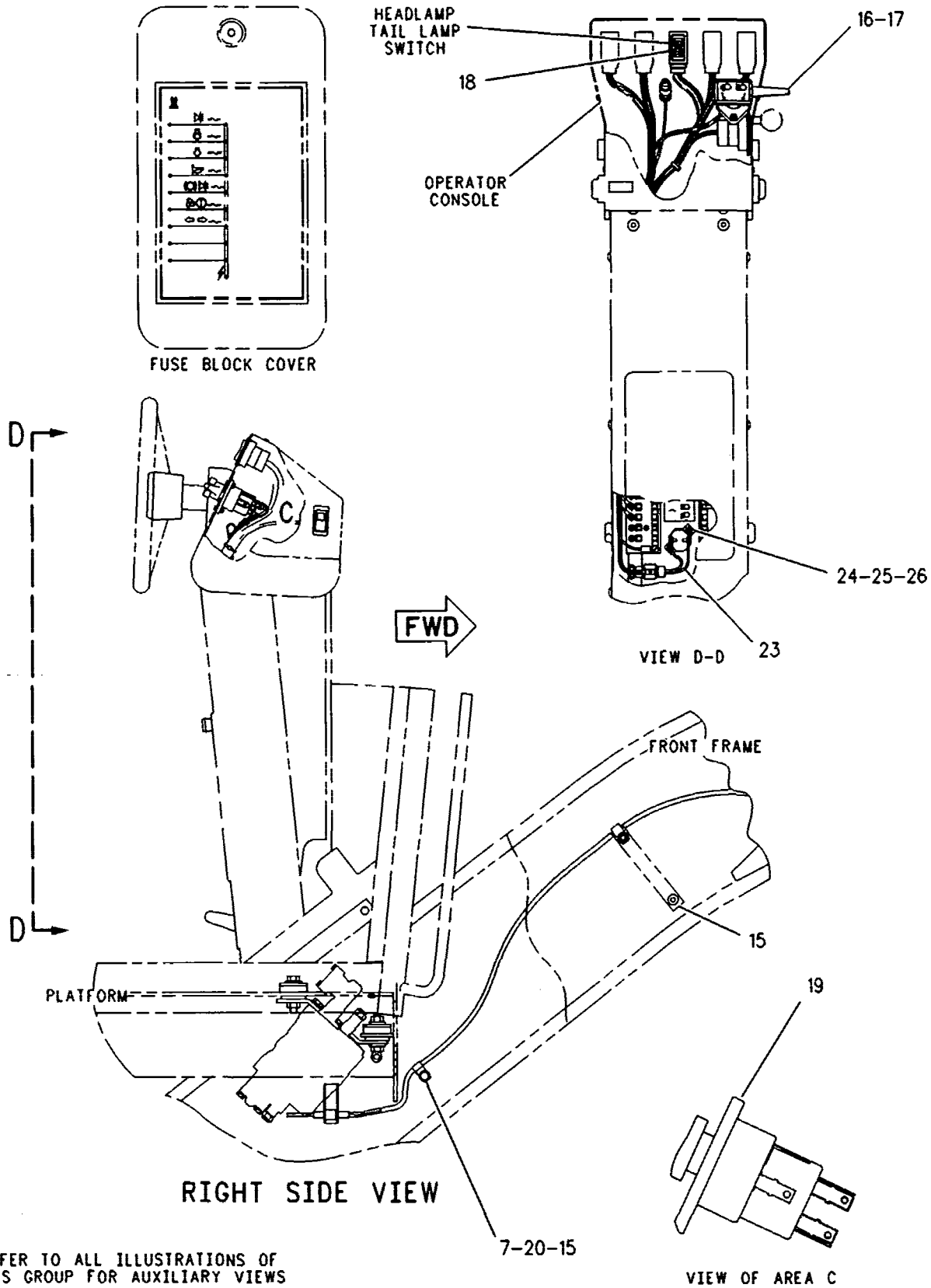

REFER TO ALL ILLUSTRATIONS OF THIS GROUP FOR AUXILIARY VIEWS

GRAPHIC #2 g00109569

MEMORANDA

ELECTRICAL AND STARTING SYSTEM

8W-7662 LIGHTING GP-FLOOD

PIN 5FM1-UP

AN ATTACHMENT

SMCS-1434 **i00712565**

NOTE	REF NO	GRAPHIC REF	PART NUMBER	QTY	PART NAME 1 2 3 4 5 6 (PRODUCT LEVEL)	SEE PAGE
Y	1	1	**9X-6775**	4	LAMP GP-FLOOD	159
	2	1	**9R-3852**	2	BRACKET	
	3	1	**103-0802**	1	PLATE AS	
		1	**9F-2978**	1	NUT-WELD (3/8-16 THD)	
	4	1	**9D-8508**	2	GROMMET	
	5	1	**9X-9365**	2	BRACKET-LAMP	
	6	1	**5S-7379**	4	BOLT (3/8-16X.875IN)	
	7	1	**8T-4896**	11	WASHER-HARD (2.5MM THK)	
	8	1	**6V-8801**	2	NUT (3/8-16 THD)	
M	9	1	**8T-6912**	4	BOLT (M8X1.50X50MM)	
	10	1	**8T-4224**	4	WASHER-HARD (2MM THK)	
M	11	1	**5C-7261**	4	NUT (M8X1.25 THD)	
	12	1	**101-8192**	2	HARNESS AS	
	13	1	**9G-9150**	2	CLIP (10.2MM ID)	
	14	1	**5M-3062**	5	BOLT (3/8-16X.750IN)	
	15	1	**3K-8782**	2	FUSE (10 AMP)	
	16	1	**103-1057**	2	BRACKET AS	
					(EACH INCLUDES)	
M		1	**8T-3490**	1	NUT-WELD (M10X1.5 THD)	
	17	1	**8T-4121**	2	WASHER (2.5MM THK)	
M	18	1	**8T-4137**	2	BOLT (M10X1.50X20MM)	
	19	1	**4D-7794**	3	CLIP (10.0MM ID)	
	20	1	**101-8190**	2	HARNESS AS	
	21	1	**8X-8059**	1	PLATE AS	
		1	**9F-2978**	1	NUT-WELD (3/8-16 THD)	
	22	1	**101-8193**	1	HARNESS AS	
	23	1	**9X-9632**	1	SWITCH AS-ROCKER (LIGHTS)	
		1	**3E-8815**	1	ACTUATOR-ROCKER	
		1	**3E-8825**	2	LAMP-MINIATURE (24 VOLT)	
	24	1	**6V-3265**	2	CLIP (9.52MM ID)	

M-METRIC PART
Y-SEPARATE ILLUSTRATION

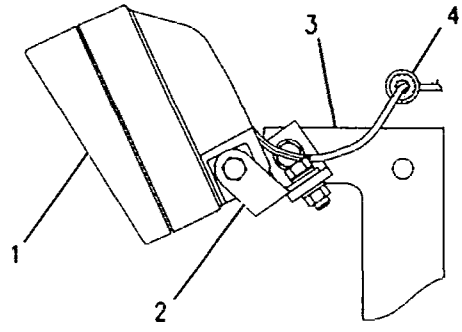

VIEW OF AREA A

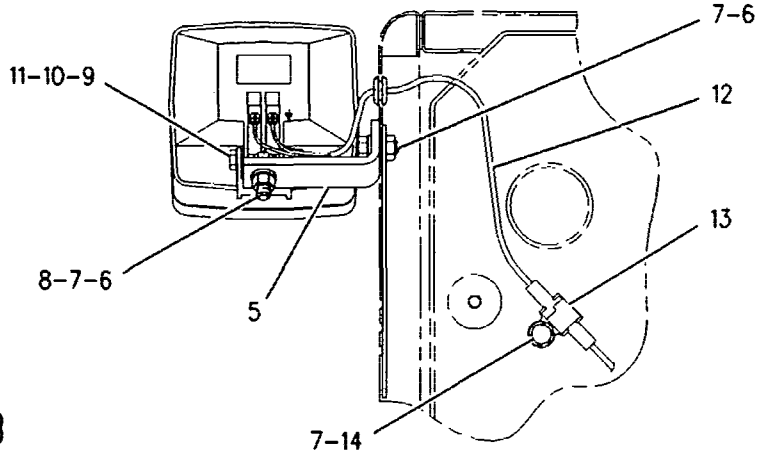

VIEW OF AREA C

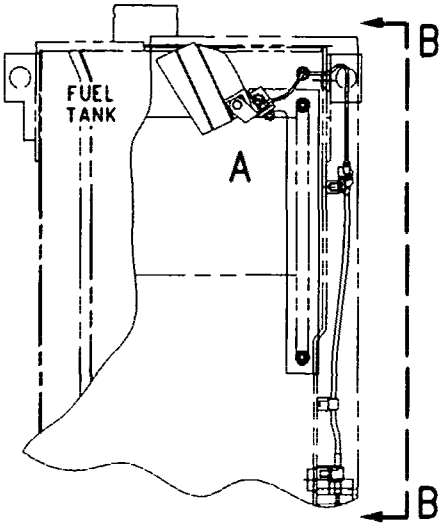

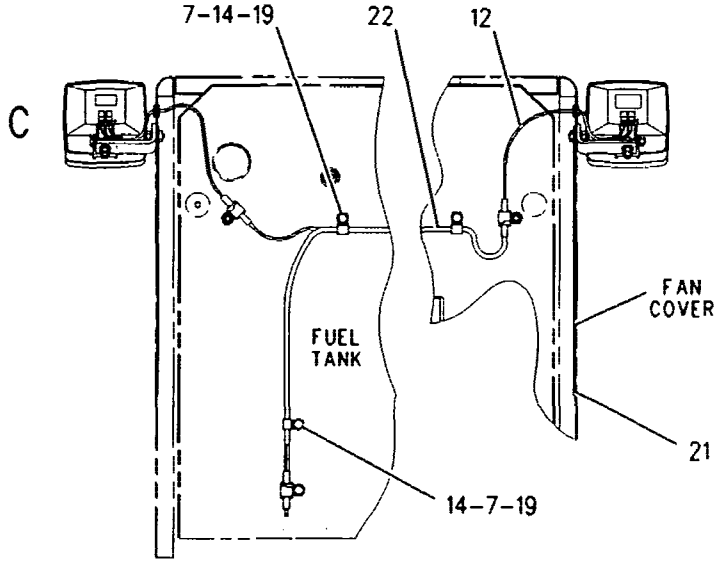

VIEW B-B

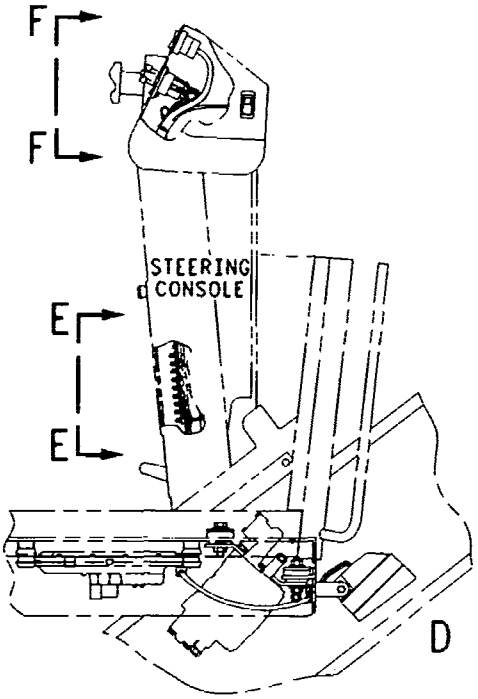

RIGHT SIDE VIEW

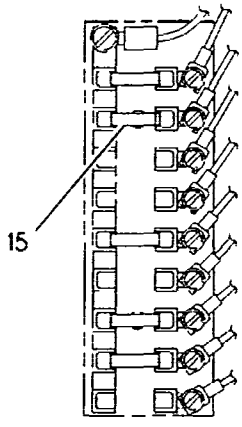

VIEW E-E

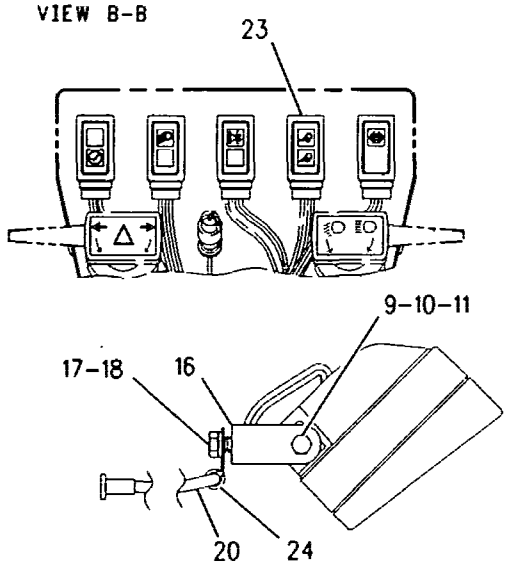

VIEW OF AREA D

GRAPHIC #1

g00316623

ELECTRICAL AND STARTING SYSTEM

127-1562 LIGHTING GP-FLOOD

PIN 5FM1-UP

AN ATTACHMENT

SMCS-1434 **i00682220**

NOTE	REF NO	GRAPHIC REF	PART NUMBER	QTY	PART NAME 1 2 3 4 5 6 (PRODUCT LEVEL)	SEE PAGE
Y	1	1	*9X-6775*	2	LAMP GP-FLOOD	159
	2	1	**3E-8763**	1	SWITCH AS (BLADE FLOOD LAMP)	
		1	**3E-8782**	1	ACTUATOR-ROCKER	
		1	**3E-8825**	1	LAMP-MINIATURE (24 VOLT)	
	3	1	**101-8190**	2	HARNESS AS	
	4	1	**6V-3265**	2	CLIP (9.52MM ID)	
M	5	1	**8T-6912**	2	BOLT (M8X1.50X50MM)	
	6	1	**8T-4224**	2	WASHER-HARD (2MM THK)	
M	7	1	**5C-7261**	2	NUT (M8X1.25 THD)	
	8	1	**3K-8782**	1	FUSE (10 AMP)	
	9	1	**103-1057**	2	BRACKET AS	
					(EACH INCLUDES)	
M		1	**8T-3490**	1	NUT-WELD (M10X1.5 THD)	
	10	1	**8T-4121**	2	WASHER (2.5MM THK)	
M	11	1	**8T-4137**	2	BOLT (M10X1.50X20MM)	

M-METRIC PART
Y-SEPARATE ILLUSTRATION

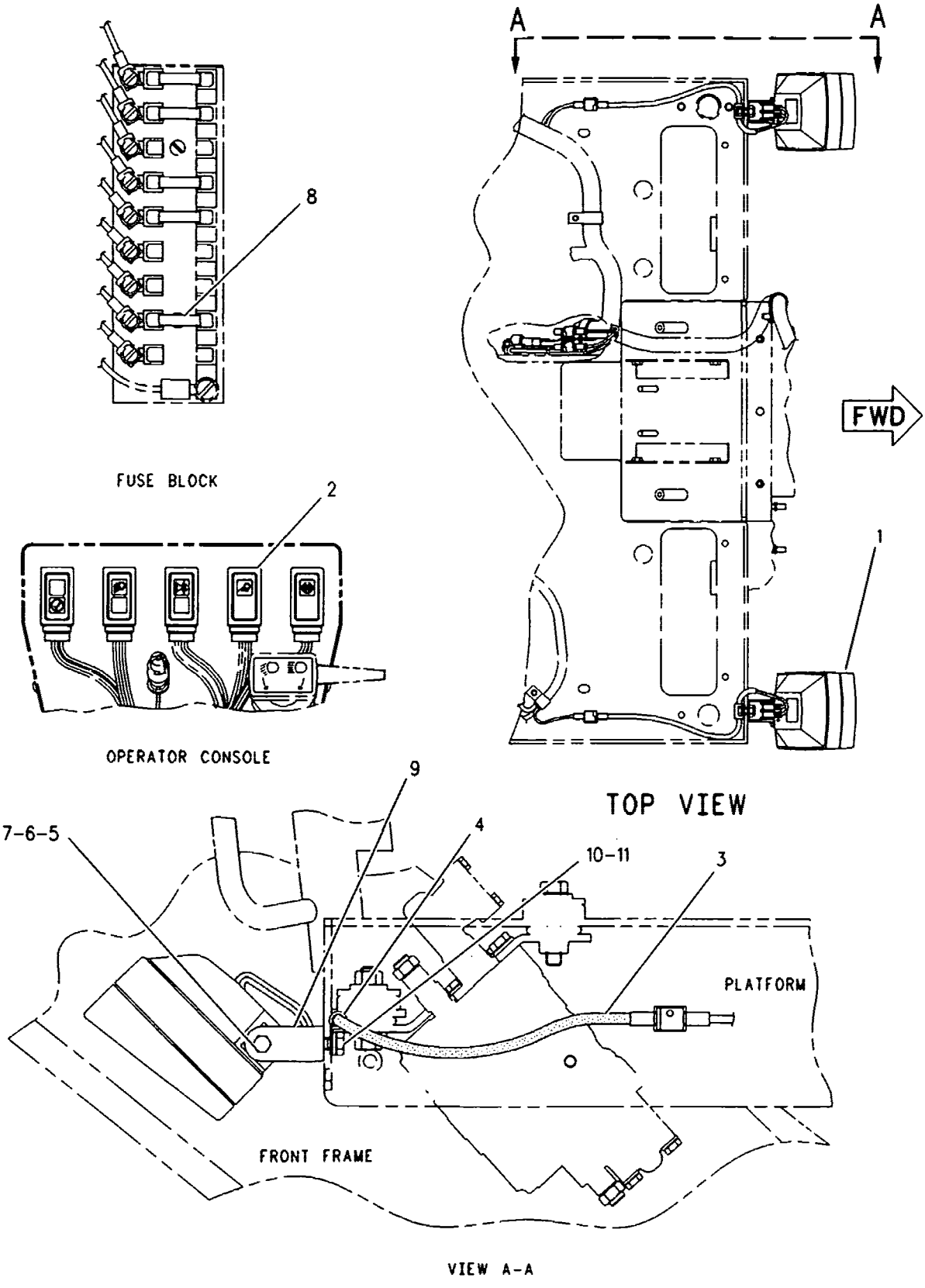

GRAPHIC #1 g00295645

ELECTRICAL AND STARTING SYSTEM

137-7316 LIGHTING GP-FLOOD

PIN 5FM1-UP

AN ATTACHMENT

SMCS-1434 **i00606786**

NOTE	REF NO	GRAPHIC REF	PART NUMBER	QTY	PART NAME 1 2 3 4 5 6 (PRODUCT LEVEL)	SEE PAGE
Y	1	1	*9X-6775*	4	LAMP GP-FLOOD	159
	2	1	**9R-3852**	2	BRACKET	
	3	1	**4L-6454**	6	BOLT (3/8-16X1.0IN)	
	4	1	**5S-7383**	2	BOLT (3/8-16X1.75IN)	
	5	1	**9X-9365**	2	BRACKET-LAMP	
	6	1	**5S-7379**	2	BOLT (3/8-16X.875IN)	
	7	1	**8T-4896**	13	WASHER-HARD (2.5MM THK)	
	8	1	**6V-8801**	2	NUT (3/8-16 THD)	
M	9	1	**8T-6912**	4	BOLT (M8X1.50X50MM)	
	10	1	**8T-4224**	4	WASHER-HARD (2MM THK)	
M	11	1	**5C-7261**	4	NUT (M8X1.25 THD)	
	12	1	**101-8192**	2	HARNESS AS	
	13	1	**9G-9150**	2	CLIP (10.2MM ID)	
	14	1	**5M-3062**	3	BOLT (3/8-16X.750IN)	
	15	1	**3K-8782**	2	FUSE (10 AMP)	
	16	1	**103-1057**	2	BRACKET AS	
					(EACH INCLUDES)	
M		1	**8T-3490**	1	NUT-WELD (M10X1.5 THD)	
	17	1	**8T-4121**	2	WASHER (2.5MM THK)	
M	18	1	**8T-4137**	2	BOLT (M10X1.50X20MM)	
	19	1	**4D-7794**	5	CLIP (10.0MM ID)	
	20	1	**101-8190**	2	HARNESS AS	
	21	1	**2V-4387**	2	SPACER	
	22	1	**101-8193**	1	HARNESS AS	
	23	1	**9X-9632**	1	SWITCH AS-ROCKER (FLOODS)	
		1	**3E-8772**	1	SWITCH AS	
		1	**3E-8815**	1	ACTUATOR-ROCKER	
		1	**3E-8825**	2	LAMP-MINIATURE (24 VOLT)	
	24	1	**6V-3265**	2	CLIP (9.52MM ID)	
	25	1	**137-7317**	1	PLATE AS-RH	
		1	**1F-0750**	1	NUT-WELD (3/8-16 THD)	
	26	1	**137-7318**	1	PLATE AS-LH	
		1	**1F-0750**	1	NUT-WELD (3/8-16 THD)	
	27	1	**3S-2093**	2	STRAP-CABLE (1.75IN DIA)	

M-METRIC PART
Y-SEPARATE ILLUSTRATION

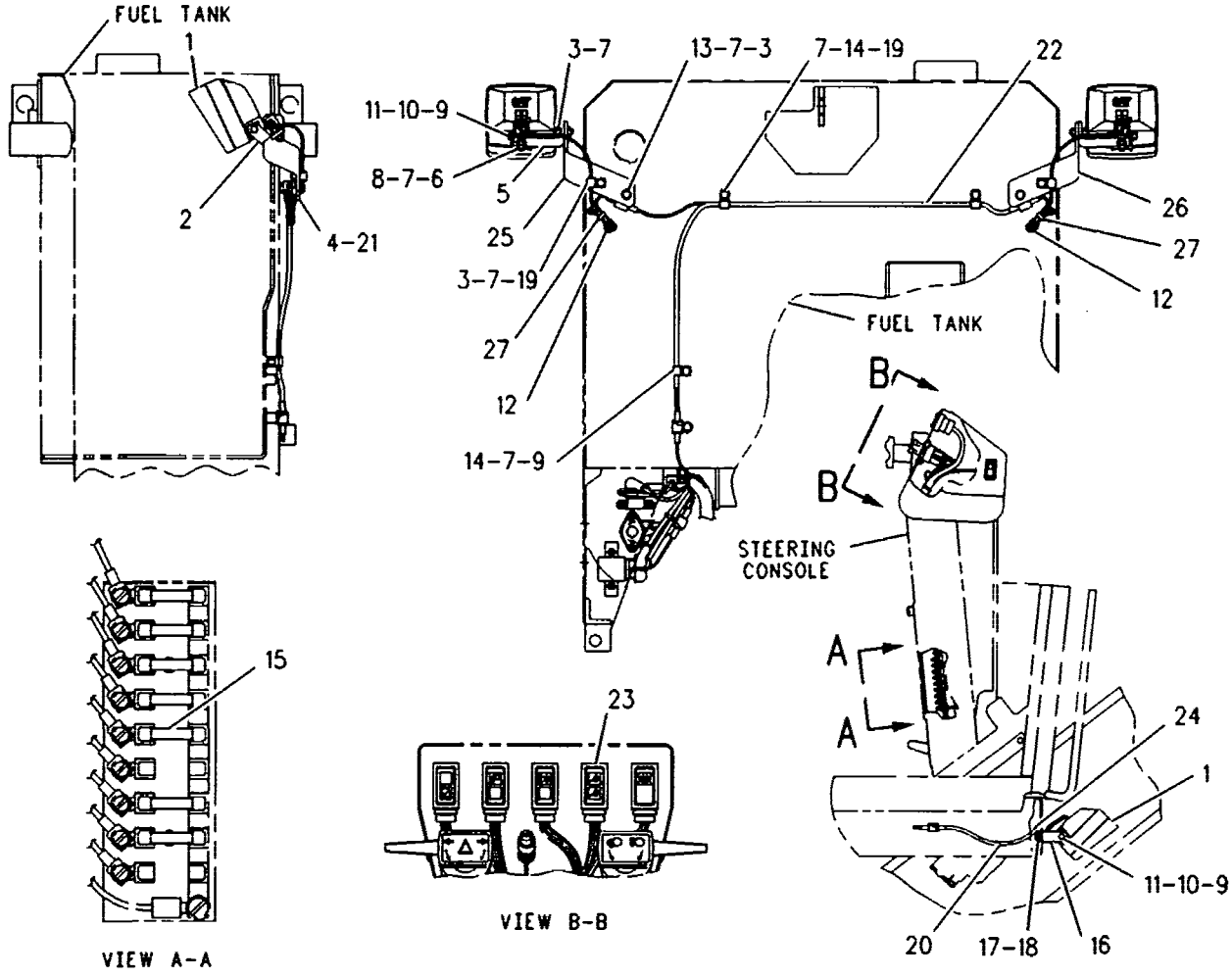

GRAPHIC #1 g00269531

ELECTRICAL AND STARTING SYSTEM

3E-8700 SENSOR GP-TEMPERATURE

PIN 5FM800-UP
4 CIRCUITS. LH
PART OF 112-5983 WIRING GP-REAR

SMCS-1330 **i00676749**

NOTE	REF NO	GRAPHIC REF	PART NUMBER	QTY	PART NAME 1 2 3 4 5 6 (PRODUCT LEVEL)	SEE PAGE
	1	1	**8T-8730**	3	SOCKET-CONNECTOR	
	2	1	**102-8813**	1	SEAL-INTERFACE	
	3	1	**102-8808**	1	KIT-CONNECTING PLUG	
E	4	1	**9X-1813**		SLEEVE (31 CM)	
	5	1	**3E-3368**	1	WEDGE-PLUG LOCK	

E-ORDER BY THE CENTIMETER

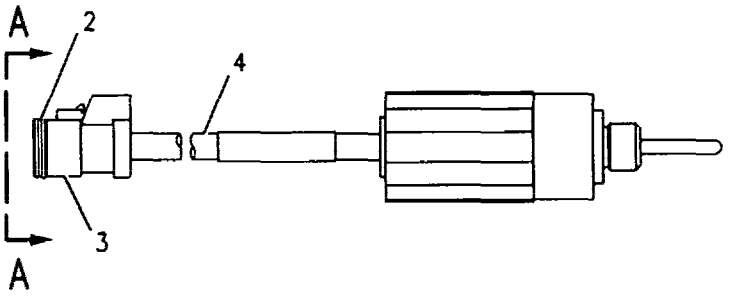

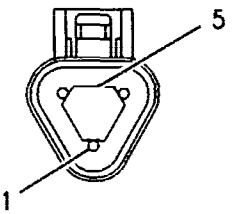

VIEW A-A

GRAPHIC #1 g00248316

MEMORANDA

ELECTRICAL AND STARTING SYSTEM

127-7087 STARTING AID GP-ETHER

PIN 5FM1-UP

AN ATTACHMENT

SMCS-1456 **i00606787**

NOTE	REF NO	GRAPHIC REF	PART NUMBER	QTY	PART NAME 1 2 3 4 5 6 (PRODUCT LEVEL)	SEE PAGE
	1	1	**9G-4365**	1	VALVE AS-ETHER START	
		1	**7N-7779**	1	SOCKET	
		1	**7N-7780**	1	PIN-CONNECTOR	
		1	**7N-9737**	1	HOUSING-PLUG	
		1	**7N-9801**	1	GASKET	
	2	1	**7N-2059**	1	CLAMP AS-CYLINDER	
	3	1	**5K-0906**	4	BOLT (5/16-18X0.63IN)	
	4	1	**8T-4224**	4	WASHER-HARD (2MM THK)	
	5	1	**9G-3695**	2	PLUG-SEAL	
	6	1	**6V-2686**	1	CLIP (3.18MM ID) (SLOT)	
	7	1	**4M-0061**	1	BOLT (5/16-18X.750IN)	
	8	1	**8X-2336**	1	TUBE AS	
	9	1	**6V-8189**	1	NUT (5/16-18 THD)	
	10	1	**4D-9517**	1	CLIP (12.7MM ID)	
	11	1	**4D-0623**	1	GROMMET	
	12	1	**6N-9995**	1	ATOMIZER AS-ETHER	
	13	1	**5M-3062**	1	BOLT (3/8-16X.750IN)	
	14	1	**8T-4896**	1	WASHER-HARD (2.5MM THK)	
	15	1	**123-6374**	1	SWITCH AS (STARTING AID)	
		1	**3E-8776**	1	ACTUATOR-ROCKER	
		1	**3E-8825**	1	LAMP-MINIATURE (24 VOLT)	
	16	1	**3K-0360**	2	SEAL-O-RING (16.36MM ID)	
	17	1	**8C-3569**	1	SWITCH AS-TEMPERATURE (COOLANT)	
		1	**7N-7779**	1	SOCKET	
		1	**7N-7780**	1	PIN-CONNECTOR	
		1	**7N-9737**	1	HOUSING-PLUG	
	18	1	**8J-7844**	1	FITTING-ADAPTER	
	19	1	**9G-9150**	1	CLIP (10.2MM ID) (TAB)	
	20	1	**7N-9738**	1	HOUSING-RECEPTACLE	
	21	1	**6K-8179**	3	CLIP (4.76MM ID)	
	22	1	**3S-2093**	1	STRAP-CABLE (1.75IN DIA)	
A		1	**7N-0296**	1	CYLINDER AS (ETHER)	

A-NOT PART OF THIS GROUP

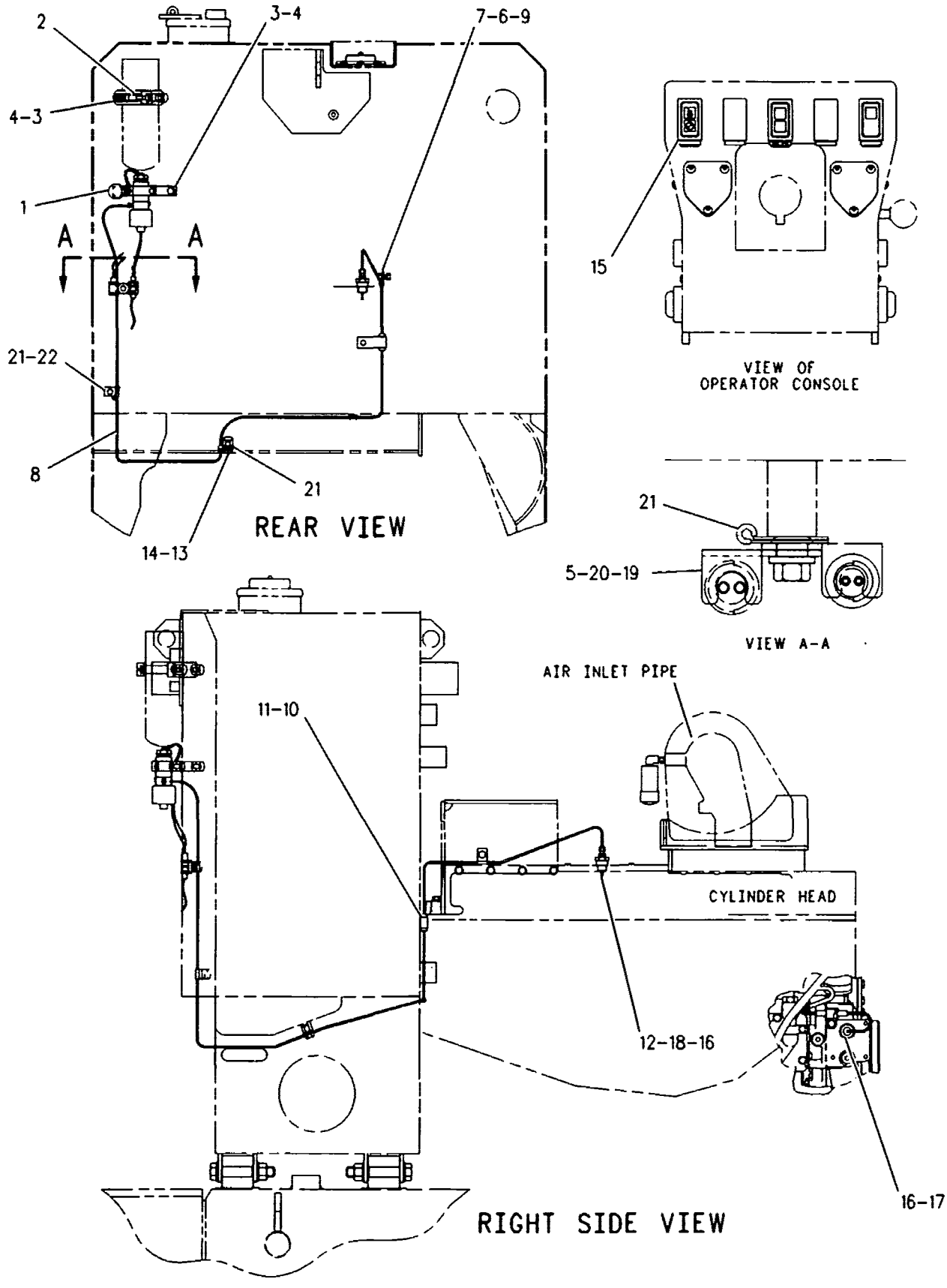

GRAPHIC #1

g00278917

ELECTRICAL AND STARTING SYSTEM

106-8557 STARTING MOTOR GP-ELECTRIC

PIN 5FM1-UP

24 VOLT

PART OF 106-8558 STARTING MOTOR GP-ELECTRIC

SMCS-1453, 1454, 1465, 1467 i00134869

NOTE	REF NO	GRAPHIC REF	PART NUMBER	QTY	PART NAME 1 2 3 4 5 6 (PRODUCT LEVEL)	SEE PAGE
M	1	1	8T-4244	3	NUT (M12X1.75 THD)	
	2	1	7X-0562	3	WASHER-HARD (0.8MM THK)	
M	3	1	8T-4133	1	NUT (M10X1.50 THD)	
M	4	1	9X-2036	2	SCREW-PAN HEAD	
	5	1	8F-1434	1	LOCKWASHER (5MM ID)	
	6	1	8T-0328	1	WASHER-HARD (1MM THK)	
	7	1	8T-4121	1	WASHER (2.5MM THK)	

M-METRIC PART

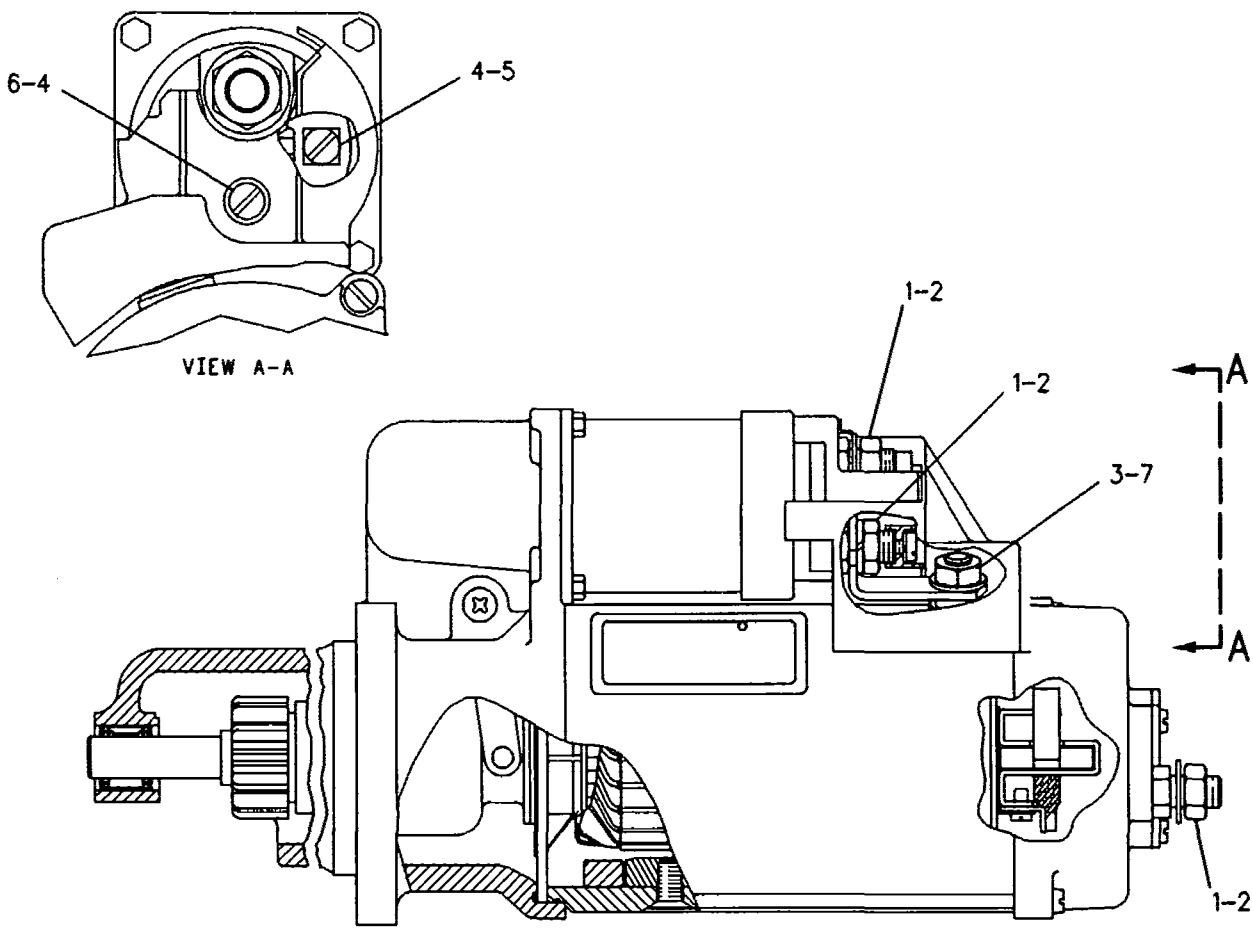

GRAPHIC #1 g00108504

ELECTRICAL AND STARTING SYSTEM

106-8558 STARTING MOTOR GP-ELECTRIC*R

PIN 5FM1-UP

24 VOLT

PART OF 111-4275 STARTING MOTOR GP-ELECTRIC

SMCS-1453, 1454, 1465, 1467 i00633806

NOTE	PART NUMBER	QTY	PART NAME 1 2 3 4 5 6 (PRODUCT LEVEL)	SEE PAGE
Y	*106-8557*	1	STARTING MOTOR GP-ELECTRIC	178
Y	*106-8559*	1	STARTING MOTOR GP-ELECTRIC	180

Y-SEPARATE ILLUSTRATION

ELECTRICAL AND STARTING SYSTEM

106-8559 STARTING MOTOR GP-ELECTRIC

PIN 5FM1-UP

24 VOLT

PART OF 106-8558 STARTING MOTOR GP-ELECTRIC

SMCS-1453, 1454, 1465, 1467 **i00134905**

NOTE	REF NO	GRAPHIC REF	PART NUMBER	QTY	PART NAME 1 2 3 4 5 6 (PRODUCT LEVEL)	SEE PAGE
	1	1	3E-7859	1	SOLENOID AS	
	2	1	5S-7349	4	BOLT (1/4-20X0.5IN)	
	3	1	6V-8188	4	NUT (1/2-13 THD)	
	4	1	4M-1828	1	RETAINER-SPRING	
J	5	1	036-9821	1	WASHER	
	6	1	7T-3269	1	BOOT	
	7	1	7T-3270	1	PLUNGER AS	
	8	1	9M-7609	1	SPRING	
	9	1	4M-1827	1	RETAINER-SPRING	
	10	1	102-9863	1	TERMINAL AS	
	11	1	4M-1831	1	PLUG-LEVER HOUSING	
JLP	12	1	7L-2894	1	GASKET	
	13	1	7X-1952	1	HOUSING AS	
	14	1	3E-7858	1	HOUSING AS	
	15	1	3E-7857	1	DRIVE AS-STARTING MOTOR	
	16	1	036-9823	5	BOLT	
	17	1	7X-3373	6	BOLT (5/16-18X.88IN)	
	18	1	3F-0379	8	SCREW-POLE SHOE	
	19	1	3E-7855	1	ARMATURE AS	
	20	1	7X-1950	4	SHOE-POLE	
	21	1	3E-7852	1	COIL-STARTING MOTOR	
	22	1	106-7149	1	HOUSING AS	
	23	1	9X-4821	1	PLATE AS	
JZ	24	1		1	SPACER	
PZ	25	1		1	RING	
	26	1	8T-4205	4	WASHER-HARD (2MM THK)	
	27	1	8T-0328	2	WASHER-HARD (1MM THK)	
	28	1	4B-2049	2	NUT (10-32 THD)	
	29	1	8F-1434	1	LOCKWASHER (5MM ID)	
	30	1	2H-3429	1	RING-RETAINING	
LZ	31	1		4	SCREW	
JZ	32	1		1	RETAINER	
PZ	33	1		1	LEVER AS	
	34	1	3E-7853	1	TERMINAL-STARTING MOTOR	
PZ	35	1		1	SHAFT AS	
JZ	36	1		1	RING	
JZ	37	1		1	WASHER	
	38	1	7X-0562	4	WASHER-HARD (0.8MM THK)	
	39	1	7T-3454	1	INSULATOR	
	40	1	7T-3451	1	INSULATOR-TERMINAL	
	41	1	8T-8569	1	INSULATOR-TERMINAL	
	42	1	9X-4271	1	CONNECTOR	
JLZ	43	1		1	O-RING	
LZ	44	1		4	SCREW	
LZ	45	1		4	SCREW AS	
LZ	46	1		4	BRUSH	
LZ	47	1		4	SPRING	
JZ	48	1		2	BUSHING	
JZ	49	1		1	BUSHING	
JZ	50	1		3	PLUG	
JZ	51	1		3	CUP	
JZ	52	1		1	WASHER	
PJZ	53	1		1	NUT	
PZ	54	1		1	SEAL	
PJZ	55	1		1	O-RING	

106-8559 STARTING MOTOR GP-ELECTRIC *(contd.)* i00134905

NOTE	REF NO	GRAPHIC REF	PART NUMBER	QTY	PART NAME 1 2 3 4 5 6 (PRODUCT LEVEL)	SEE PAGE
JPZ	56	1		1	O-RING	
JZ	57	1		1	O-RING	
Z	58	1		1	HOUSING	
PZ	59	1		1	RETAINER	
	60	1	9X-4824	1	COVER-STARTING MOTOR	
NZ	61	1		3	INSULATOR	
NZ		1		1	BUSHING	
					AVAILABLE REPAIR KIT(S):	
			3E-7860	1	KIT-BUSHING	
					(INCL PARTS MARKED J)	
			9X-4825	1	KIT-BRUSH	
					(INCL PARTS MARKED L)	
			3E-7861	1	KIT-LEVER	
					(INCL PARTS MARKED P)	
			8T-9884	1	KIT-INSULATOR	
					(INCL PARTS MARKED N)	

Z-NOT SERVICED SEPARATELY

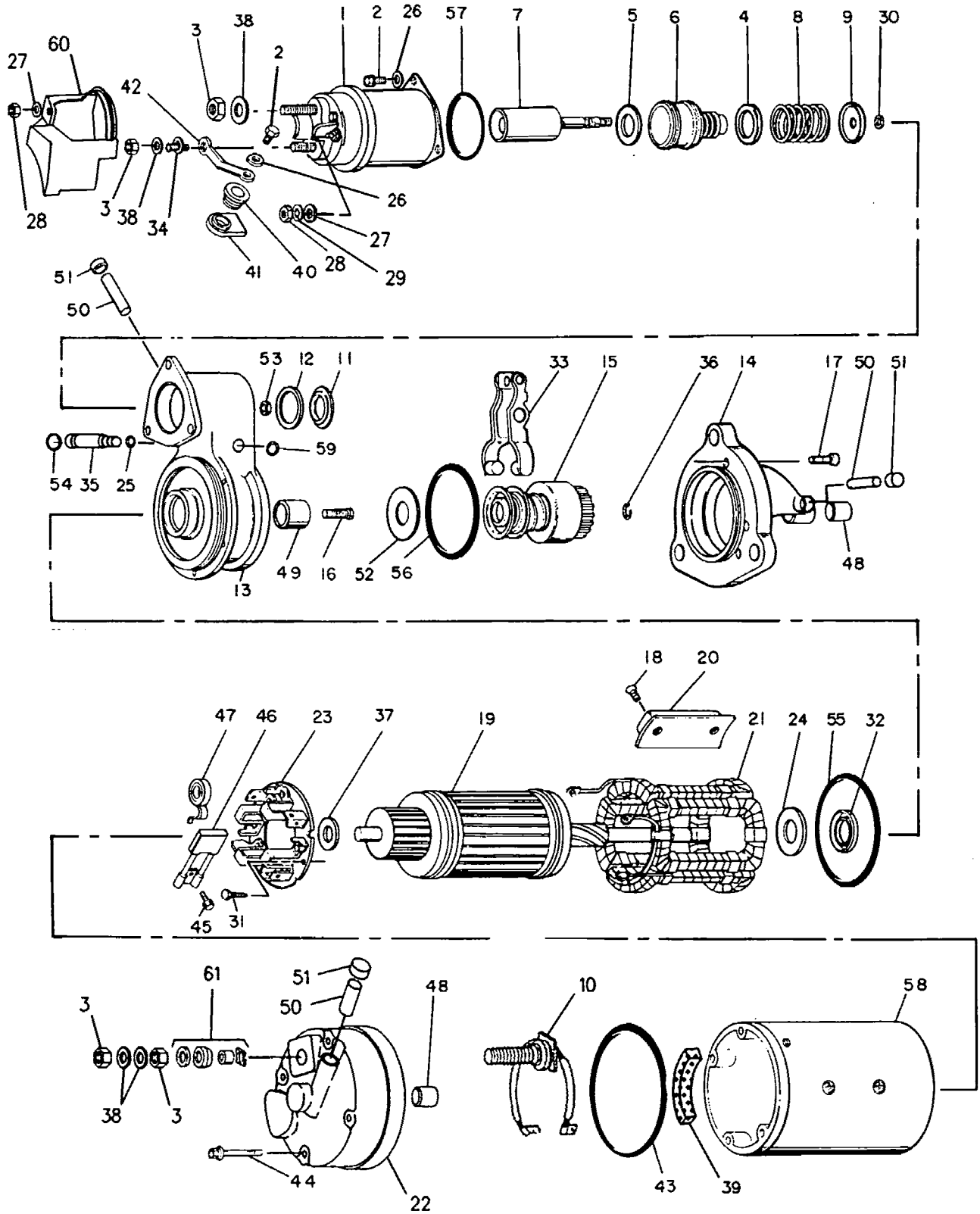

GRAPHIC #1 g00108489

ELECTRICAL AND STARTING SYSTEM

111-4275 STARTING MOTOR GP-ELECTRIC

PIN 5FM1-UP
24 VOLT
PART OF 112-5819 INSTALLATION AR-ENGINE

SMCS-1453, 1454, 1465, 1467 **i00135068**

NOTE	REF NO	GRAPHIC REF	PART NUMBER	QTY	PART NAME 1 2 3 4 5 6 (PRODUCT LEVEL)	SEE PAGE
M	1	1	**108-7808**	1	BOLT (M10X1.5X35MM)	
	2	1	**6V-5839**	3	WASHER (2.5MM THK)	
	3	1	**3K-3257**	1	GASKET	
M	4	1	**8T-4191**	1	BOLT (M10X1.50X16MM)	
	5	1	**8Y-9603**	1	CABLE AS-STARTING	
		1	**1S-7251**	1	TERMINAL (FOR 1/2IN BOLT)	
		1	**1S-7252**	1	TERMINAL (FOR 3/8IN BOLT)	
E		1	**5P-0747**		CABLE (00 GA)	
	6	1	**8T-4121**	1	WASHER (2.5MM THK)	
YR	7	1	**106-8558**	1	STARTING MOTOR GP-ELECTRIC	179

E-ORDER BY THE CENTIMETER
M-METRIC PART
R-REMFG PART MAY BE AVAILABLE
Y-SEPARATE ILLUSTRATION

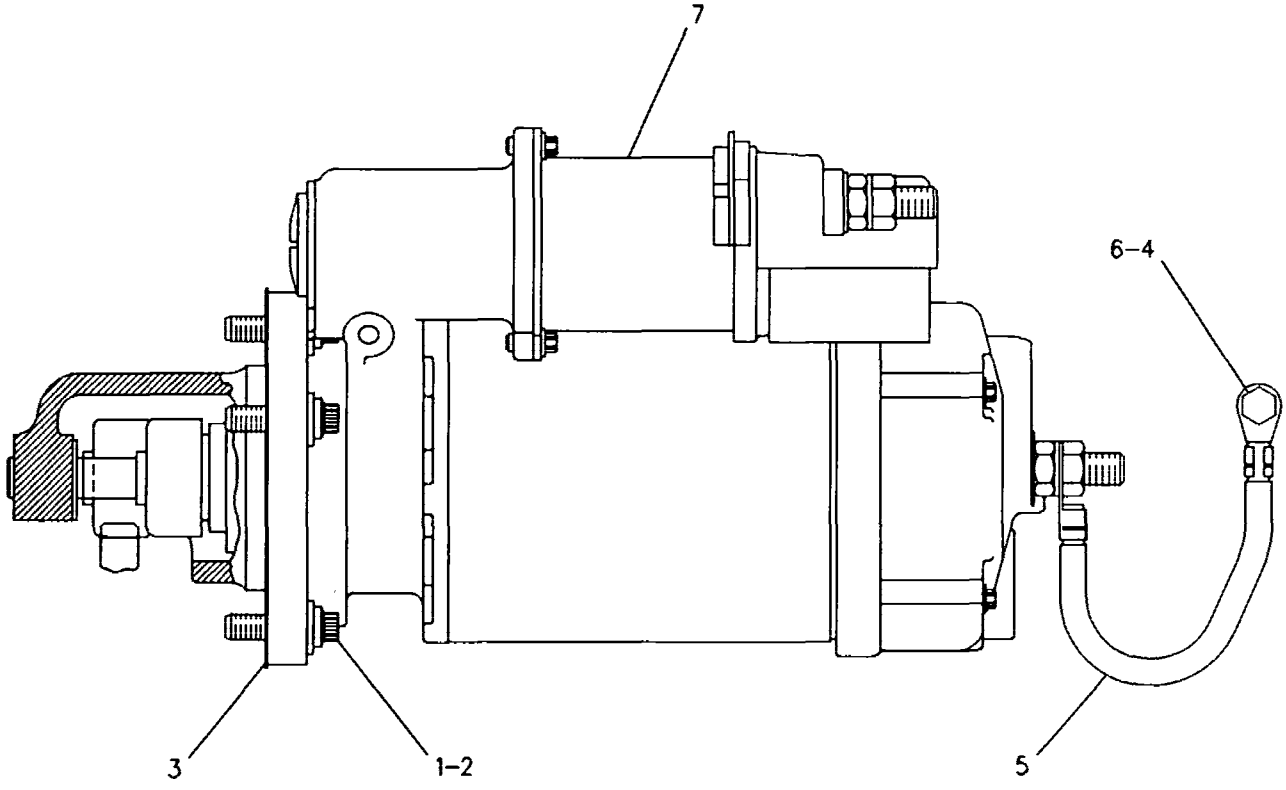

GRAPHIC #1 g00108666

ELECTRICAL AND STARTING SYSTEM

7N-0718 SWITCH AS-DISCONNECT

PIN 5FM1-UP

PART OF 112-5983 WIRING GP-REAR

SMCS-1411 i00131252

NOTE	REF NO	GRAPHIC REF	PART NUMBER	QTY	PART NAME 1 2 3 4 5 6 (PRODUCT LEVEL)	SEE PAGE
	1	1	8H-5306	1	KEY	
	2	1	8H-5303	1	NUT-HEX (3/4-16-2A THD)	
	3	1	2H-3922	2	LOCKWASHER (3/4 INTERNAL TOOTH)	
	4	1	9F-5644	2	LOCKWASHER (9.93MM ID)	
	5	1	6F-7045	2	NUT-FULL (3/8X24 THD)	

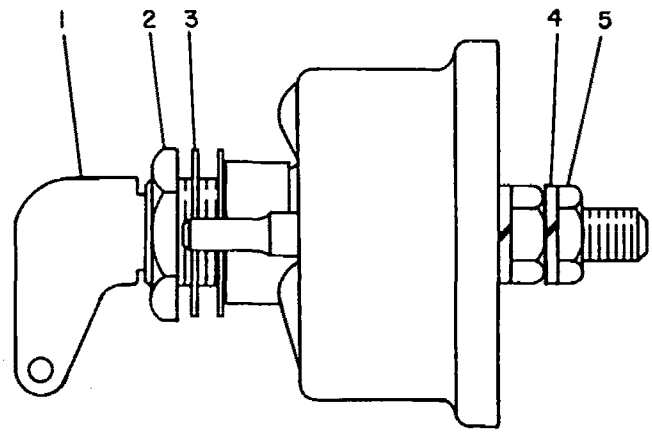

GRAPHIC #1 g00084912

ELECTRICAL AND STARTING SYSTEM

9G-7641 SWITCH GP-START

PIN 5FM1-UP

PART OF 112-5960 WIRING GP-SHIFT CONSOLE

SMCS-1416 **i00155910**

NOTE	REF NO	GRAPHIC REF	PART NUMBER	QTY	PART NAME 1 2 3 4 5 6 (PRODUCT LEVEL)	SEE PAGE
	1	1	**6V-8362**	4	SCREW-MACHINE (8-32X7.94MM)	
	2	1	**9B-7233**	4	LOCKWASHER (NO.8)	
	3	1	**7T-6799**	1	NUT-MOUNTING	
5P8500 KEY IS REQUIRED						

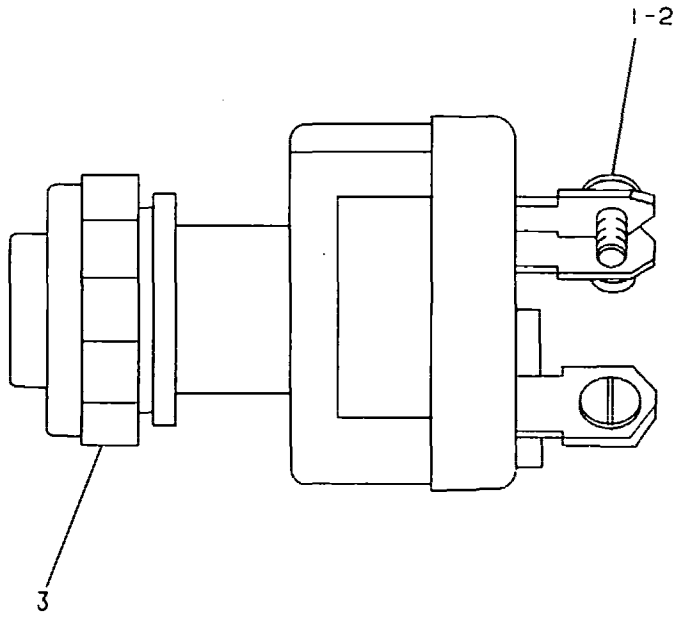

GRAPHIC #1 g00081868

ELECTRICAL AND STARTING SYSTEM

127-2978 WARNING GP-BACKUP

PIN 5FM1-UP

AN ATTACHMENT

SMCS-7406 **i00684616**

NOTE	REF NO	GRAPHIC REF	PART NUMBER	QTY	PART NAME 1 2 3 4 5 6 (PRODUCT LEVEL)	SEE PAGE
	1	1	**123-6449**	1	ALARM AS-BACKUP	
	2	1	**7I-4717**	1	PLATE AS	
		1	*1F-0750*	2	NUT-WELD (3/8-16 THD)	
	3	1	**5P-1075**	2	WASHER-HARD (3MM THK)	
	4	1	**5S-7382**	2	BOLT (3/8-16X1.375IN)	
	5	1	**7X-0291**	2	BOLT (3/8-16X3.75IN)	
	6	1	**7X-0575**	2	WASHER-HARD (5MM THK)	
	7	1	**9M-4594**	2	SPACER (19MM THK)	
	8	1	**116-0118**	1	CLIP	

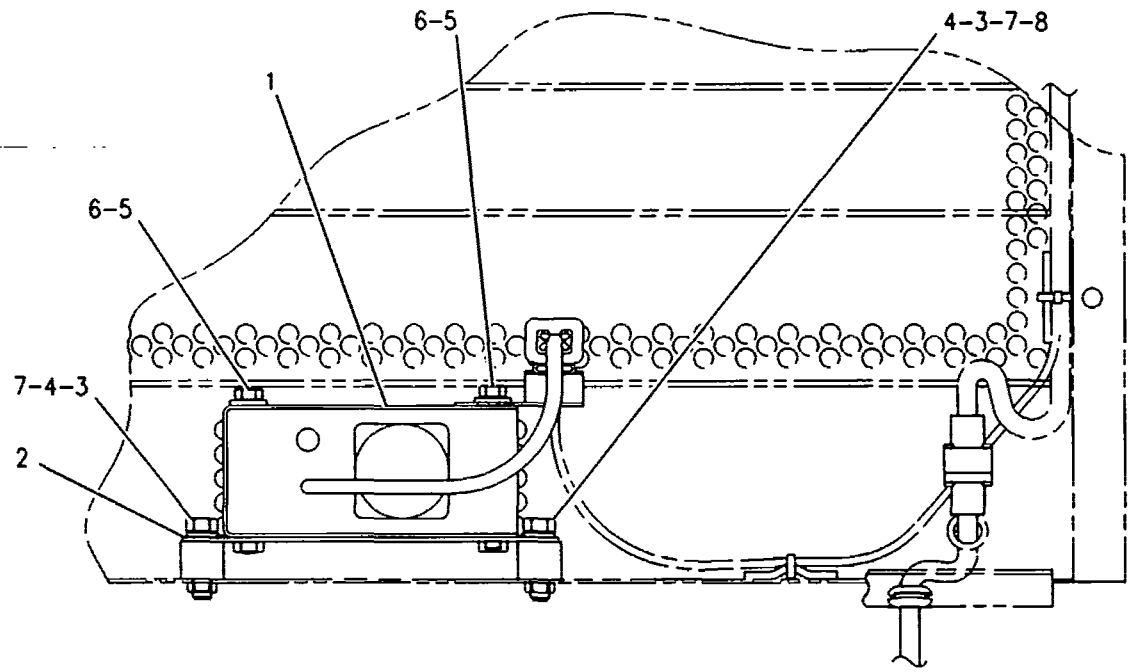

REAR VIEW

GRAPHIC #1 g00296383

MEMORANDA

ELECTRICAL AND STARTING SYSTEM

112-6080 WIRING GP-CAB

PIN 5FM1-UP

PART OF 130-4564 CAB GP-NON-ROPS, 116-5842, 131-0823 ROPS GP-ENCLOSED AN ATTACHMENT

SMCS-1408 **i00842702**

NOTE	REF NO	GRAPHIC REF	PART NUMBER	QTY	PART NAME 1 2 3 4 5 6 (PRODUCT LEVEL)	SEE PAGE
	1	1	**3T-6655**	1	SWITCH AS-ROTARY (WIPER/WASHER)	
		1	**7T-9302**	1	KNOB-WIPER SWITCH	
		1	**2H-3920**	1	LOCKWASHER (11.38MM ID)	
		1	**6V-8369**	1	NUT (7/16-28 THD)	
	2	1	**4E-4454**	1	PLUG	
	3	1	**3E-0109**	3	PLUG-ROCKER SWITCH	
	4	1	**3V-4694**	4	PLUG-BUTTON	
	5	1	**102-3981**	1	PANEL	
M	6	1	**9X-2042**	6	SCREW-TRUSS HEAD (M6X1.0X12MM)	
	7	1	**8Y-8606**	1	GROMMET	
	8	1	**4K-5122**	3	HOLDER AS-FUSE	
					(EACH INCLUDES)	
		1	**7N-2867**	1	CAP-FUSE HOLDER	
	9	1	**3K-8782**	3	FUSE (10 AMP)	
	10	1	**104-7837**	1	PLATE	
	11	1	**101-8161**	1	HARNESS AS	
	12	1	**127-1030**	1	HARNESS AS	
	13	1	**9G-2264**	2	CLIP-CONNECTOR	
	14	1	**127-0908**	1	HARNESS AS	
	15	1	**8C-9678**	1	LAMP GP-DOME	
		1	**7N-7779**	2	SOCKET	
		1	**7N-7780**	1	PIN-CONNECTOR (BLADE)	
		1	**7N-7782**	1	HOUSING-PLUG (1 PIN, 2 SOCKET)	
		1	**7N-9943**	1	LAMP-MINIATURE	
		1	**7T-0020**	1	LENS	
M	16	1	**9X-1046**	3	SCREW (M4X0.7X18MM)	
	17	1	**9G-2265**	1	CLIP	
	18	1	**127-1029**	1	HARNESS AS	
	19	1	**3S-2093**	8	STRAP-CABLE (1.75IN DIA)	
E	20	1	**7X-7877**		STRIP-EDGING (10 CM)	
	21	1	**096-6166**	3	WASHER-HARD (1MM THK)	
M	22	1	**5C-8312**	3	NUT (M4X0.7 THD)	
M	23	1	**6V-9632**	2	NUT-WELD (M6X1 THD)	
	24	1	**3T-6655**	1	SWITCH AS-ROTARY (WIPER/WASHER)	
		1	**7T-9302**	1	KNOB-WIPER SWITCH	
		1	**2H-3920**	1	LOCKWASHER (11.38MM ID)	
		1	**6V-8369**	1	NUT (7/16-28 THD)	

E-ORDER BY THE CENTIMETER
M-METRIC PART

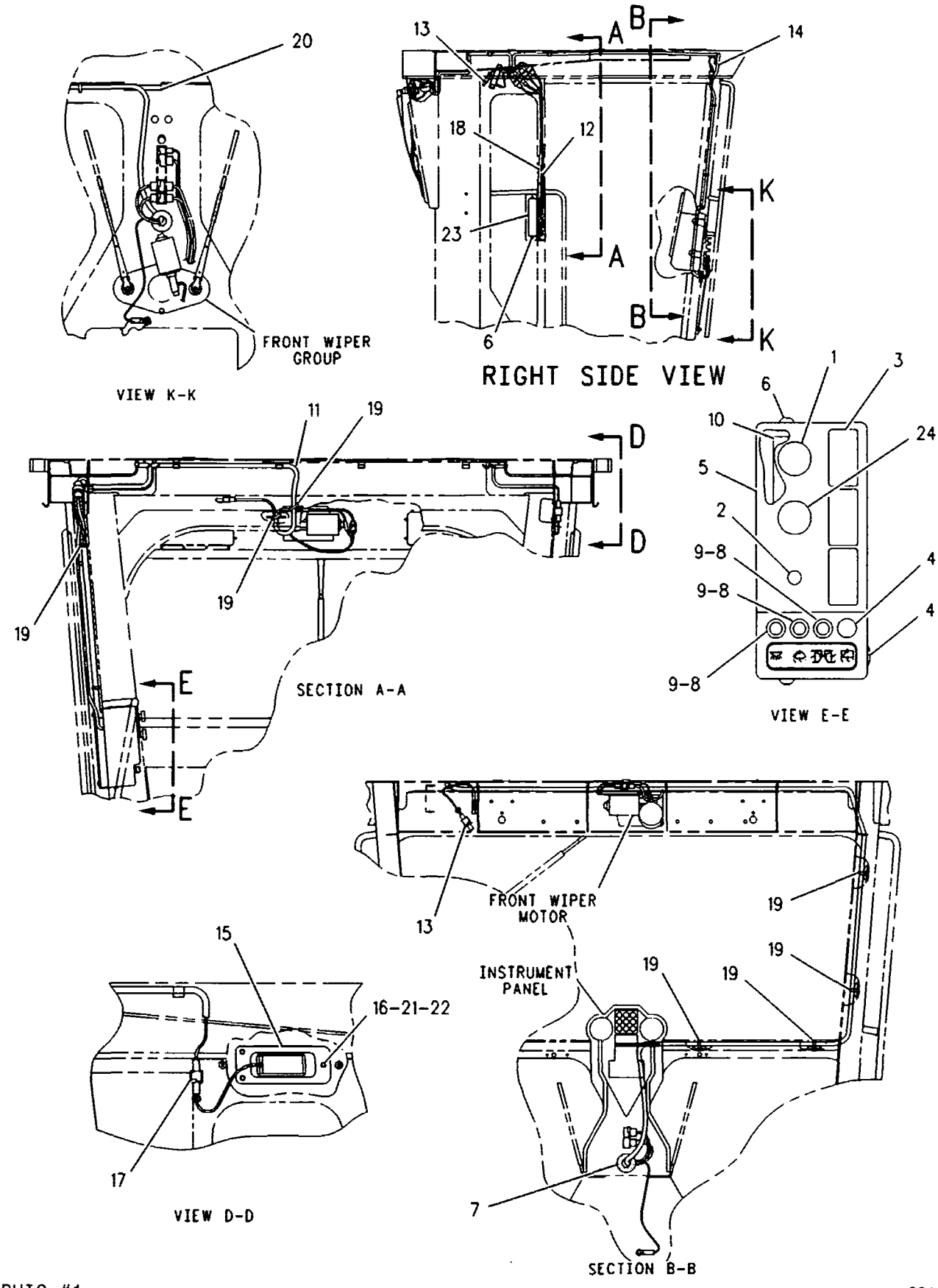

GRAPHIC #1

g00109181

ELECTRICAL AND STARTING SYSTEM

130-4565 WIRING GP-CAB

PIN 5FM1-UP

PART OF 130-4563 CAB GP-HIGH PROFILE

AN ATTACHMENT

SMCS-1408 **i00606623**

NOTE	PART NUMBER	QTY	PART NAME 1 2 3 4 5 6 (PRODUCT LEVEL)	SEE PAGE
	9G-2265	1	CLIP	
	130-1396	1	FILM	
	3K-8782	2	FUSE (10 AMP)	
	130-4568	1	HARNESS AS	
	8C-9678	1	LAMP GP-DOME	
M	5C-8312	3	NUT (M4X0.7 THD)	
	129-4647	1	PLATE	
M	9X-1046	3	SCREW (M4X0.7X18MM)	
M	9X-2043	2	SCREW-TRUSS HEAD (M6X1X14MM)	
	3S-2093	4	STRAP-CABLE (1.75IN DIA)	
	7X-7877	10	STRIP-EDGING	
	3T-6655	1	SWITCH AS-ROTARY (WIPER/WASHER)	
	096-6166	3	WASHER-HARD (1MM THK)	

M-METRIC PART

MEMORANDA

ELECTRICAL AND STARTING SYSTEM

112-5952 WIRING GP-ENGINE

PIN 5FM1-UP

PART OF 112-4103 CHASSIS AR

SMCS-1403, 1408 **i00834879**

NOTE	REF NO	GRAPHIC REF	PART NUMBER	QTY	PART NAME 1 2 3 4 5 6 (PRODUCT LEVEL)	SEE PAGE
	1	1	**8T-4224**	3	WASHER-HARD (2MM THK)	
M	2	1	**8T-4199**	2	BOLT (M8X1.25X12MM)	
M	3	2	**8T-4136**	1	BOLT (M10X1.50X25MM)	
	4	1	**8W-8909**	1	SLEEVE	
	5	2	**127-2246**	1	HARNESS AS	
	6	2	**8M-2773**	3	CLIP (17.46MM ID)	
	7	1	**4W-9972**	1	SENDER-TEMPERATURE (COOLANT)	
	8	1	**9G-9150**	1	CLIP (10.2MM ID)	
	9	1,2	**4K-8864**	2	CLIP (14.2MM ID)	
	10	1	**6D-4972**	1	SPACER	
	11	1,2	**3J-1907**	2	SEAL-O-RING (11.89MM ID)	
	12	2	**115-7103**	1	SWITCH AS-PRESSURE (FUEL)	
		2	**7N-7779**	1	SOCKET	
		2	**7N-7780**	2	PIN-CONNECTOR (BLADE)	
		2	**7N-7781**	1	HOUSING-RECEPTACLE	
	13	1,2	**4D-7794**	4	CLIP (10.0MM ID)	
	14	2	**9G-9152**	1	CLIP (12.0MM ID)	
	15	2	**5P-3422**	1	TEE-PIPE	
	16	2	**8T-4121**	1	WASHER (2.5MM THK)	
	17	2	**116-9937**	1	SENDER AS-PRESSURE (ENGINE OIL)	
		2	**4B-2049**	1	NUT (10-32 THD)	
		2	**8F-1434**	1	LOCKWASHER (0.51MM THK)	
M	18	1	**8T-4908**	1	BOLT (M8X1.25X25MM)	

M-METRIC PART

112-5952 **WIRING GP-ENGINE** *(contd.)* i00834879

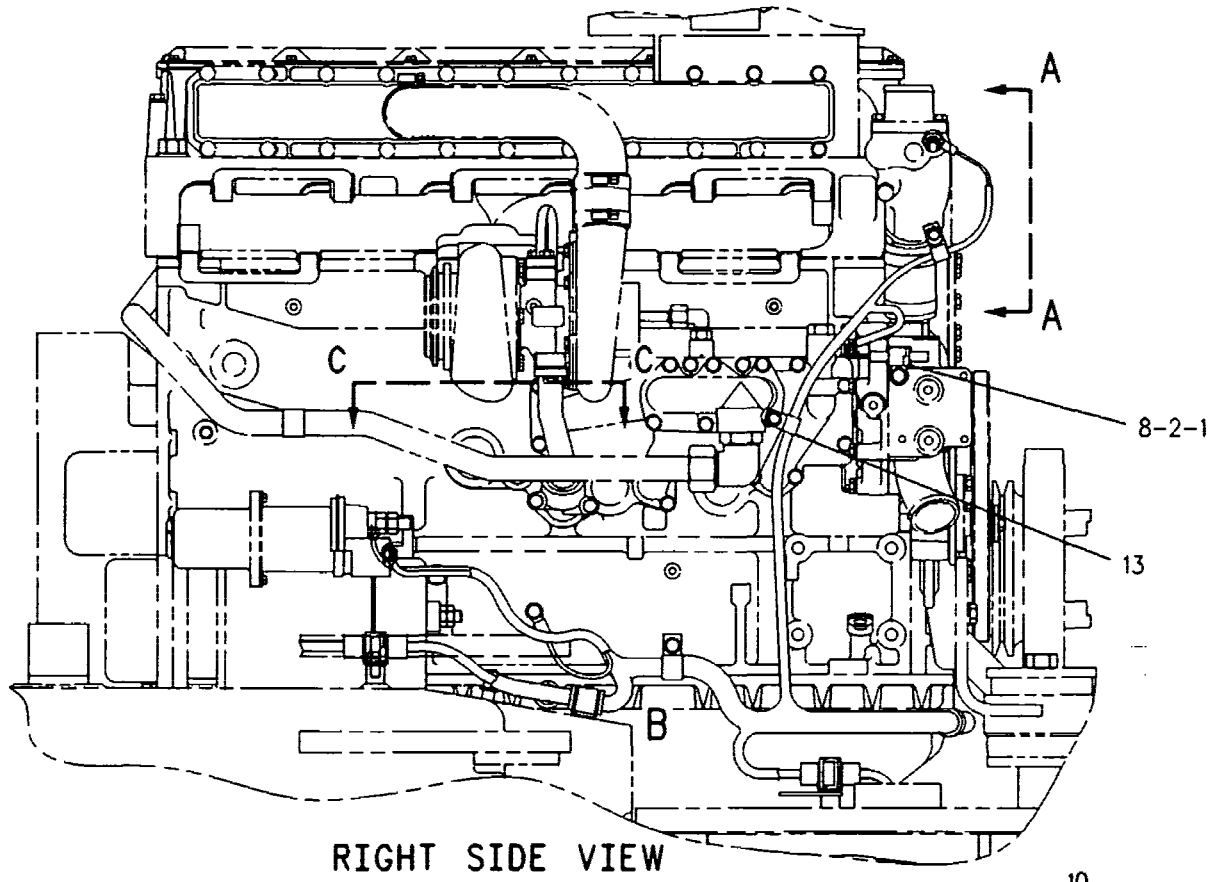

RIGHT SIDE VIEW

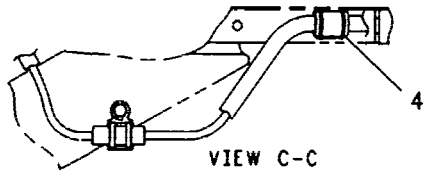

VIEW C-C

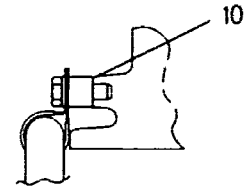

VIEW D-D

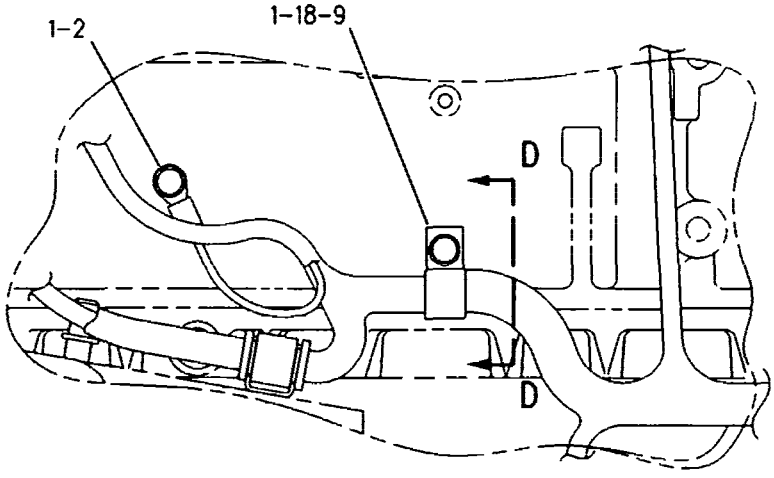

VIEW OF AREA B

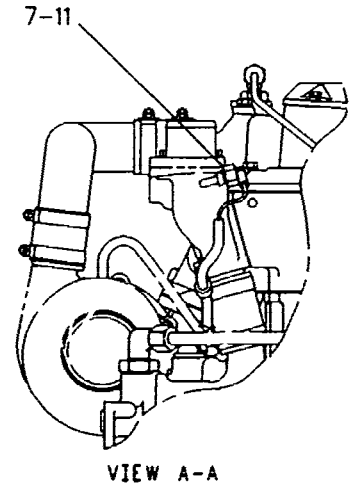

VIEW A-A

GRAPHIC #1 g00270839

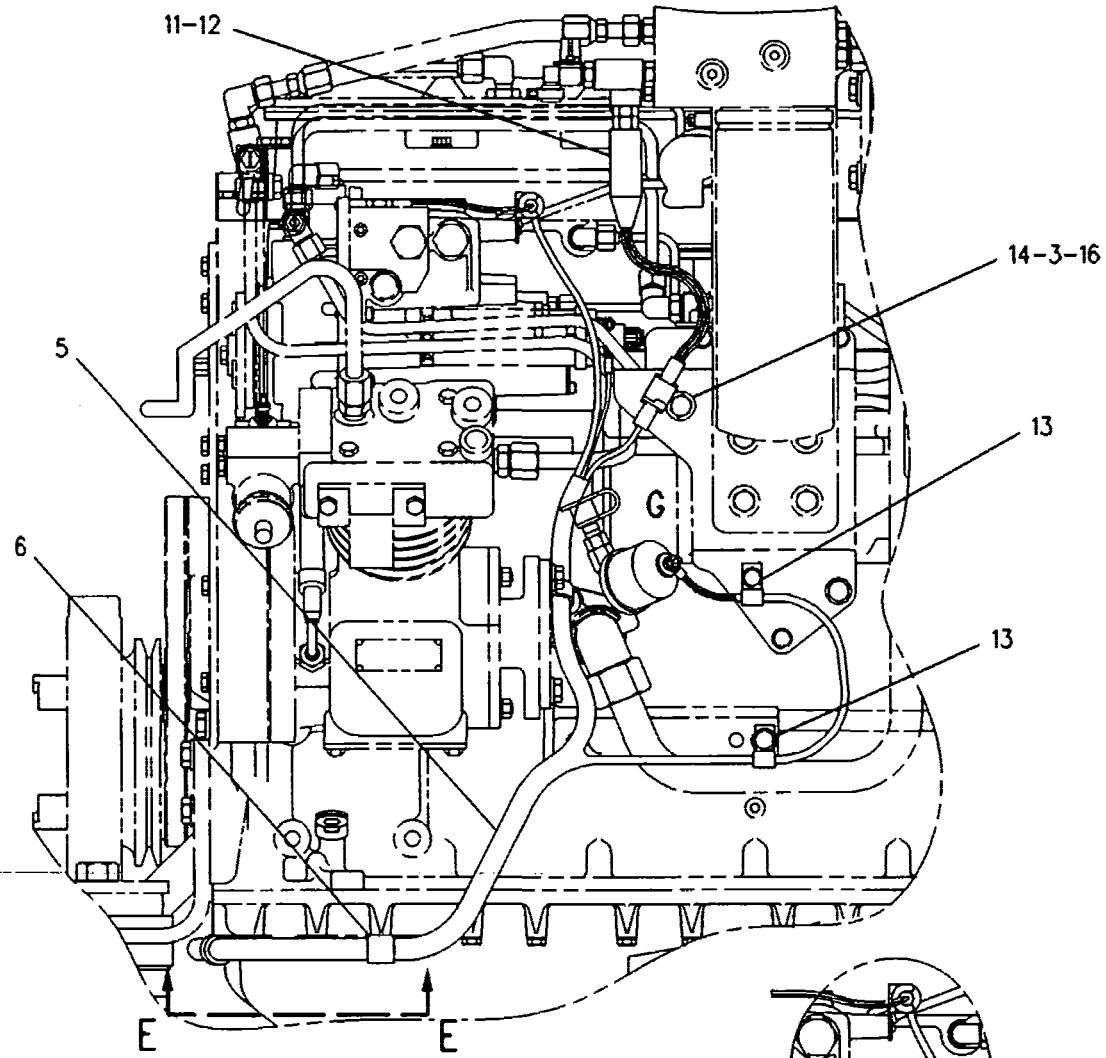

LEFT SIDE VIEW

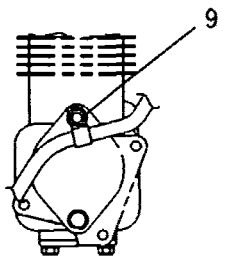

VIEW F-F

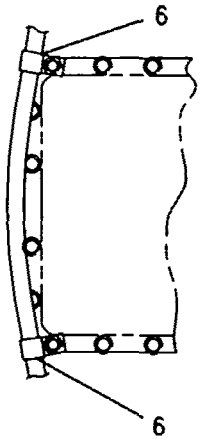

VIEW E-E

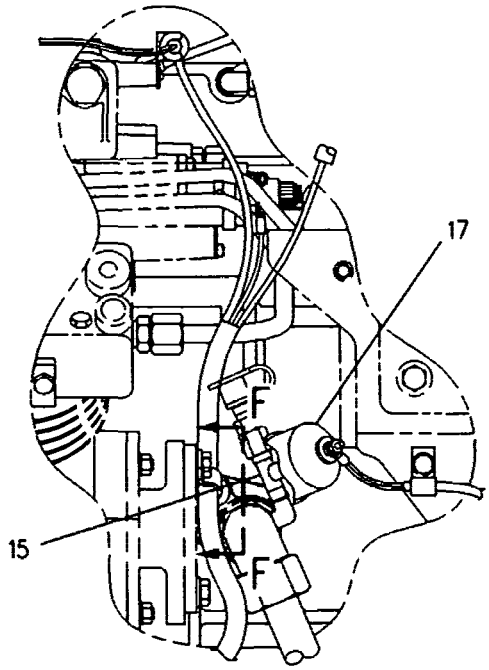

VIEW OF AREA G

GRAPHIC #2 g00270840

MEMORANDA

ELECTRICAL AND STARTING SYSTEM

112-5978 WIRING GP-FRONT

PIN 5FM1-799

PART OF 112-4103 CHASSIS AR

SMCS-1408 **i00834884**

NOTE	REF NO	GRAPHIC REF	PART NUMBER	QTY	PART NAME 1 2 3 4 5 6 (PRODUCT LEVEL)	SEE PAGE
	1	2	127-0879	1	HARNESS AS	
	2	2	6D-4244	1	CLIP (22.22MM ID)	
	3	1,2	5M-3062	20	BOLT (3/8-16X.750IN)	
	4	1,2	8T-4896	25	WASHER-HARD (2.5MM THK)	
	5	2	9G-2265	1	CLIP	
	6	2	7K-1181	1	STRAP-CABLE (4.00IN DIA)	
	7	1,2	6V-8801	3	NUT (3/8-16 THD)	
	8	2	1S-2342	1	STRAP AS-GROUND	
	9	1	9G-9150	3	CLIP (10.2MM ID)	
	10	2	9G-9154	1	CLIP (10.5MM ID)	
	11	2	9G-9152	1	CLIP (12.0MM ID)	
	12	1,2	6D-4246	5	CLIP (SLOT)	
	13	1,2	8M-2770	3	CLIP (12.7MM ID)	
	14	2	3E-9367	1	SWITCH AS-BALL (CENTERSHIFT IND)	
		2	7N-7779	2	SOCKET	
		2	7N-7780	2	PIN-CONNECTOR (BLADE)	
		2	7N-8205	1	HOUSING-PLUG	
	15	1	8M-2773	1	CLIP (17.46MM ID)	
	16	1,2	4D-7794	6	CLIP (10.0MM ID)	
	17	1	4K-8864	1	CLIP (14.2MM ID)	
	18	1,2	9L-1566	2	SUPPORT-TUBE	
	19	1	3T-0050	2	CLIP (23MM ID)	
	20	1	2M-9346	1	SWITCH AS-AIR PRESSURE (STOP LAMP)	
		1	3E-5239	1	RELAY AS (24 VOLT)	
		1	6V-8378	2	NUT (10-32 THD)	
		1	7N-7779	1	SOCKET	
		1	7N-7780	1	PIN-CONNECTOR (BLADE)	
		1	7N-9737	1	HOUSING-PLUG (1 PIN,1 SOCKET)	
		1	8F-1434	2	LOCKWASHER (0.51MM THK)	
	21	1	3S-2093	4	STRAP-CABLE (1.75IN DIA)	
	22	2	3J-1907	1	SEAL-O-RING (11.89MM ID)	
	23	1	3T-3048	3	CLIP AS (10.2MM ID)	
	24	1,2	4L-6454	2	BOLT (3/8-16X1.0IN)	
B	25	2	8F-1974	10	SHIM (.13MM THK)	
	26	1	112-2404	2	SWITCH AS-PRESSURE (AIR BRAKE) (EACH INCLUDES)	
		1	7N-7779	1	SOCKET	
		1	7N-7780	1	PIN-CONNECTOR (BLADE)	
		1	7N-9738	1	HOUSING-RECEPTACLE	
	27	1	106-9188	1	CONTROL GP-RELAY ELECTRONIC	
	28	1	8T-9367	2	BOLT (1/4-20X2IN)	
	29	1	8T-4205	2	WASHER-HARD (2MM THK)	
	30	1	132-0113	1	PLATE AS	
		1	9F-6445	2	NUT (1/4-20 THD)	
	31	1	9M-8406	2	CLIP (15.8MM ID)	
	32	2	112-2404	1	SWITCH AS-PRESSURE (PARKING BRAKE)	
		2	7N-7779	1	SOCKET	
		2	7N-7780	1	PIN-CONNECTOR (BLADE)	
		2	7N-9738	1	HOUSING-RECEPTACLE	

B-USE AS REQUIRED

112-5978 **WIRING GP-FRONT** *(contd.)* **i00834884**

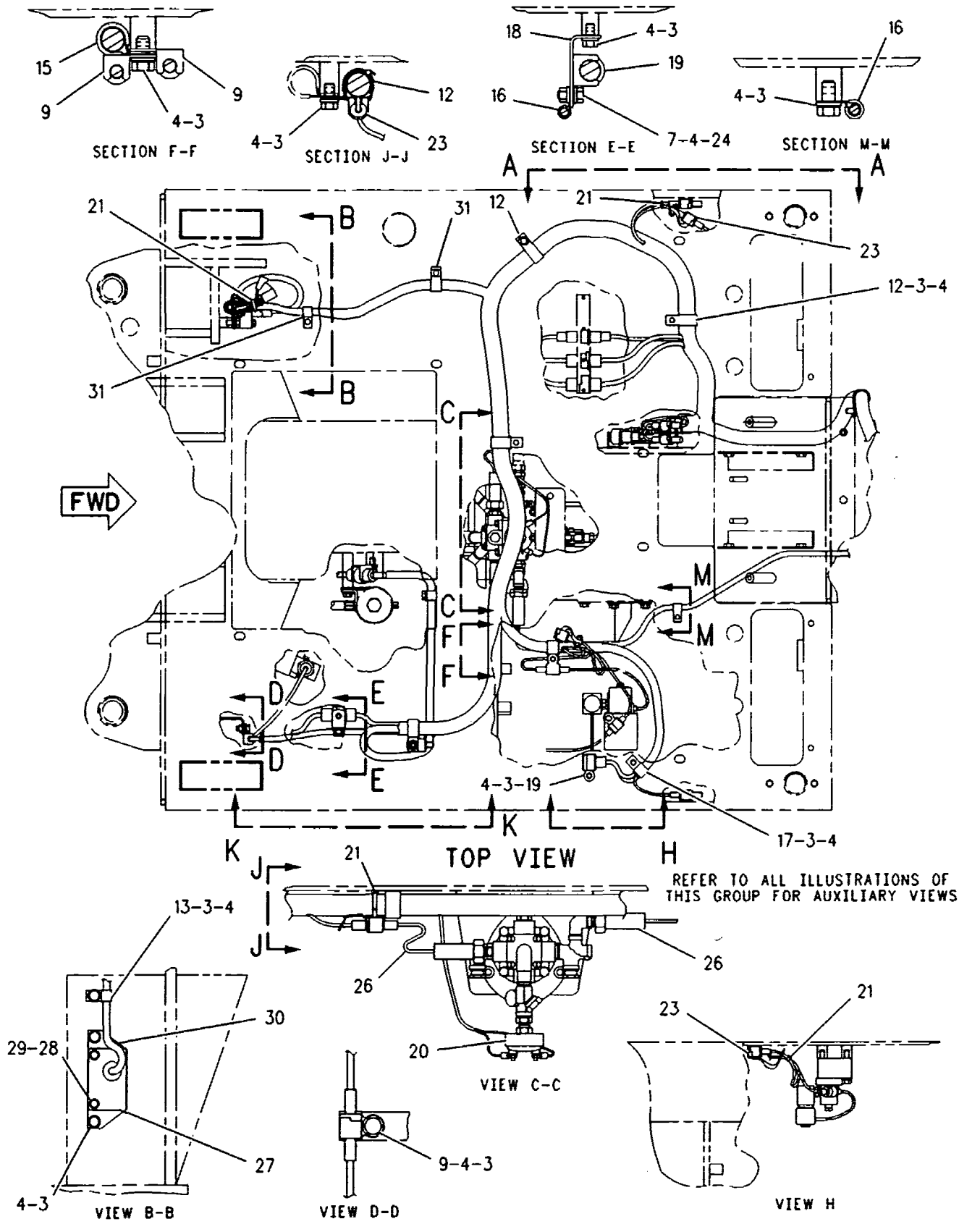

GRAPHIC #1 g00109334

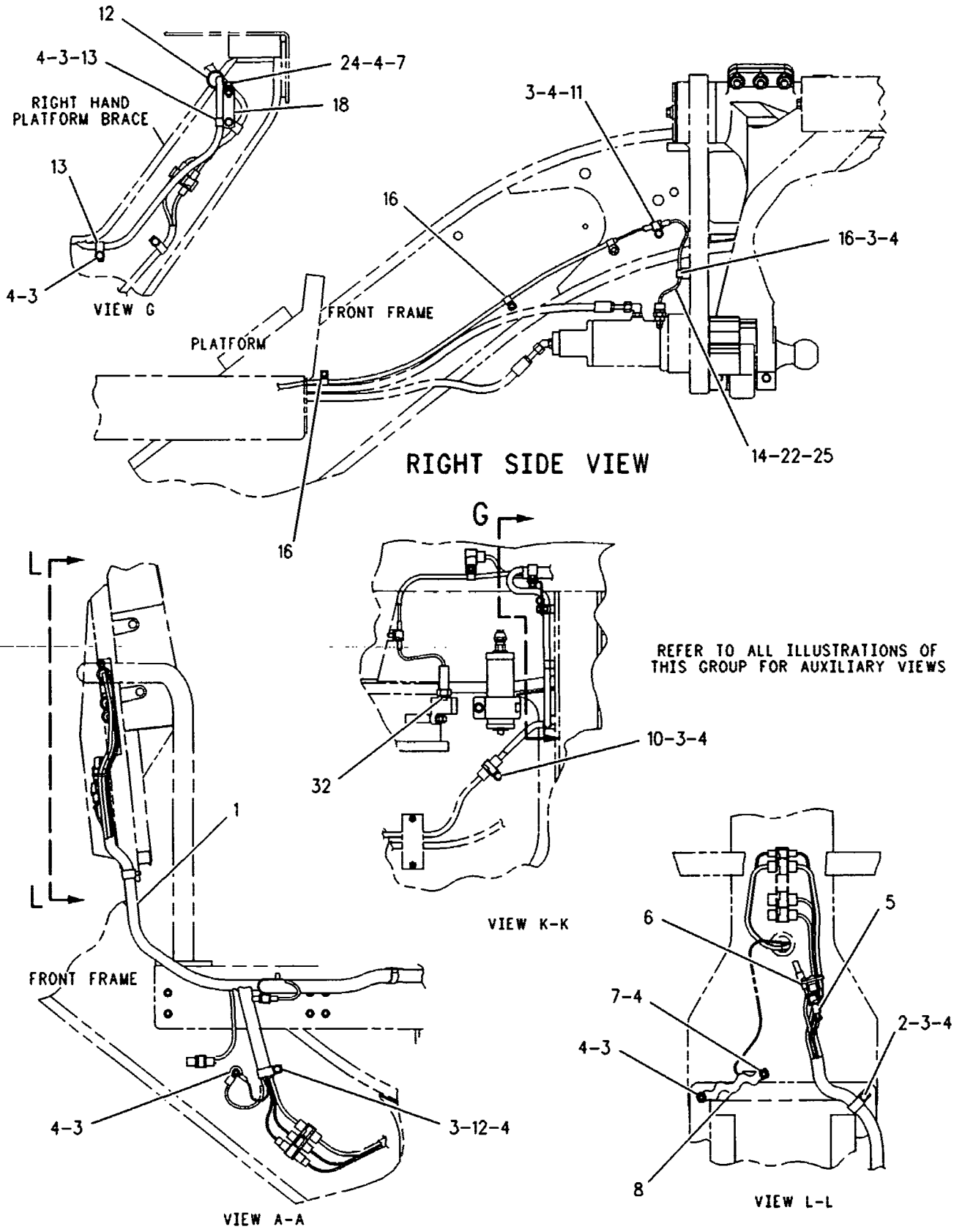

GRAPHIC #2

g00109335

MEMORANDA

ELECTRICAL AND STARTING SYSTEM

112-5978 WIRING GP-FRONT

PIN 5FM800-UP

PART OF 112-4103 CHASSIS AR

SMCS-1408 **i00834883**

NOTE	REF NO	GRAPHIC REF	PART NUMBER	QTY	PART NAME 1 2 3 4 5 6 (PRODUCT LEVEL)	SEE PAGE
C	1	2	141-5445	1	HARNESS AS	
	2	2	6D-4244	1	CLIP (22.22MM ID)	
	3	1,2,3	5M-3062	21	BOLT (3/8-16X.750IN)	
	4	1,2,3	8T-4896	26	WASHER-HARD (2.5MM THK)	
	5	2	9G-2265	1	CLIP	
	6	2	7K-1181	1	STRAP-CABLE (4.00IN DIA)	
C	7	1,2,3	6V-8801	4	NUT (3/8-16 THD)	
	8	2	1S-2342	1	STRAP AS-GROUND	
C	9	1,2,3	9G-9150	5	CLIP (10.2MM ID)	
C	10	1,2	9G-9154	2	CLIP (10.5MM ID)	
C	11	1,2	9G-9152	2	CLIP (12.0MM ID)	
	12	1,3	6D-4246	4	CLIP (SLOT)	
C	13	3	8M-2770	4	CLIP (12.7MM ID)	
	14	2	3E-9367	1	SWITCH AS-BALL (CENTERSHIFT IND)	
		2	7N-7779	2	SOCKET	
		2	7N-7780	2	PIN-CONNECTOR (BLADE)	
		2	7N-8205	1	HOUSING-PLUG	
C	15	2	8M-2773	2	CLIP (17.46MM ID)	
C	16	1,2,3	4D-7794	8	CLIP (10.0MM ID)	
C	17	3	9X-2498	2	SCREW-HEX FLANGE	
	18	1,3	9L-1566	2	SUPPORT-TUBE	
C	19	1	6I-1418	4	SPACER	
	20	1	125-9352	1	SWITCH AS-PRESSURE (STOP LAMP)	
		1	7N-7779	1	SOCKET	
		1	7N-7780	1	PIN-CONNECTOR (BLADE)	
		1	7N-9738	1	HOUSING-RECEPTACLE	
	21	1,2	3S-2093	4	STRAP-CABLE (1.75IN DIA)	
	22	2	3J-1907	1	SEAL-O-RING (11.89MM ID)	
	23	1	3T-3048	3	CLIP AS (10.2MM ID)	
	24	1,3	4L-6454	2	BOLT (3/8-16X1.0IN)	
B	25	2	8F-1974	10	SHIM (.13MM THK)	
	26	1	112-2404	2	SWITCH AS-PRESSURE (AIR BRAKE)	
					(EACH INCLUDES)	
		1	7N-7779	1	SOCKET	
		1	7N-7780	1	PIN-CONNECTOR (BLADE)	
		1	7N-9738	1	HOUSING-RECEPTACLE	
	27	3	106-9188	1	CONTROL GP-RELAY ELECTRONIC	
	28	3	8T-9367	2	BOLT (1/4-20X2IN)	
C	29	3	8T-4205	4	WASHER-HARD (2MM THK)	
C	30	3	144-8525	1	PLATE AS	
		3	9F-6445	2	NUT (1/4-20 THD)	
	31	1	7C-4354	3	CLIP (25.40MM ID)	
	32	2	112-2404	1	SWITCH AS-PRESSURE (PARKING BRAKE)	
		2	7N-7779	1	SOCKET	
		2	7N-7780	1	PIN-CONNECTOR (BLADE)	
		2	7N-9738	1	HOUSING-RECEPTACLE	
C	33	3	4M-5281	2	BOLT (1/4-20X.750IN)	
C	34	3	8X-5489	1	SLEEVE	
C	35	1	7X-0440	4	BOLT (5/16-18X1.75IN)	
C	36	3	117-9364	1	CONTROL GP-ELECTRONIC	
CY	37	1	*144-8622*	1	ELECTRONICS GP-TRANSMISSION	158
CY	38	1	*132-2148*	1	CONTROL GP-POWER TRAIN ELEK	152
C	39	1	8T-9655	8	MOUNT	
C	40	1	6V-3964	4	WASHER-HARD	
	41	1	1P-7009	1	CLIP (15.88MM ID)	

112-5978 WIRING GP-FRONT *(contd.)* i00834883

B-USE AS REQUIRED
C-CHANGE FROM PREVIOUS TYPE
Y-SEPARATE ILLUSTRATION

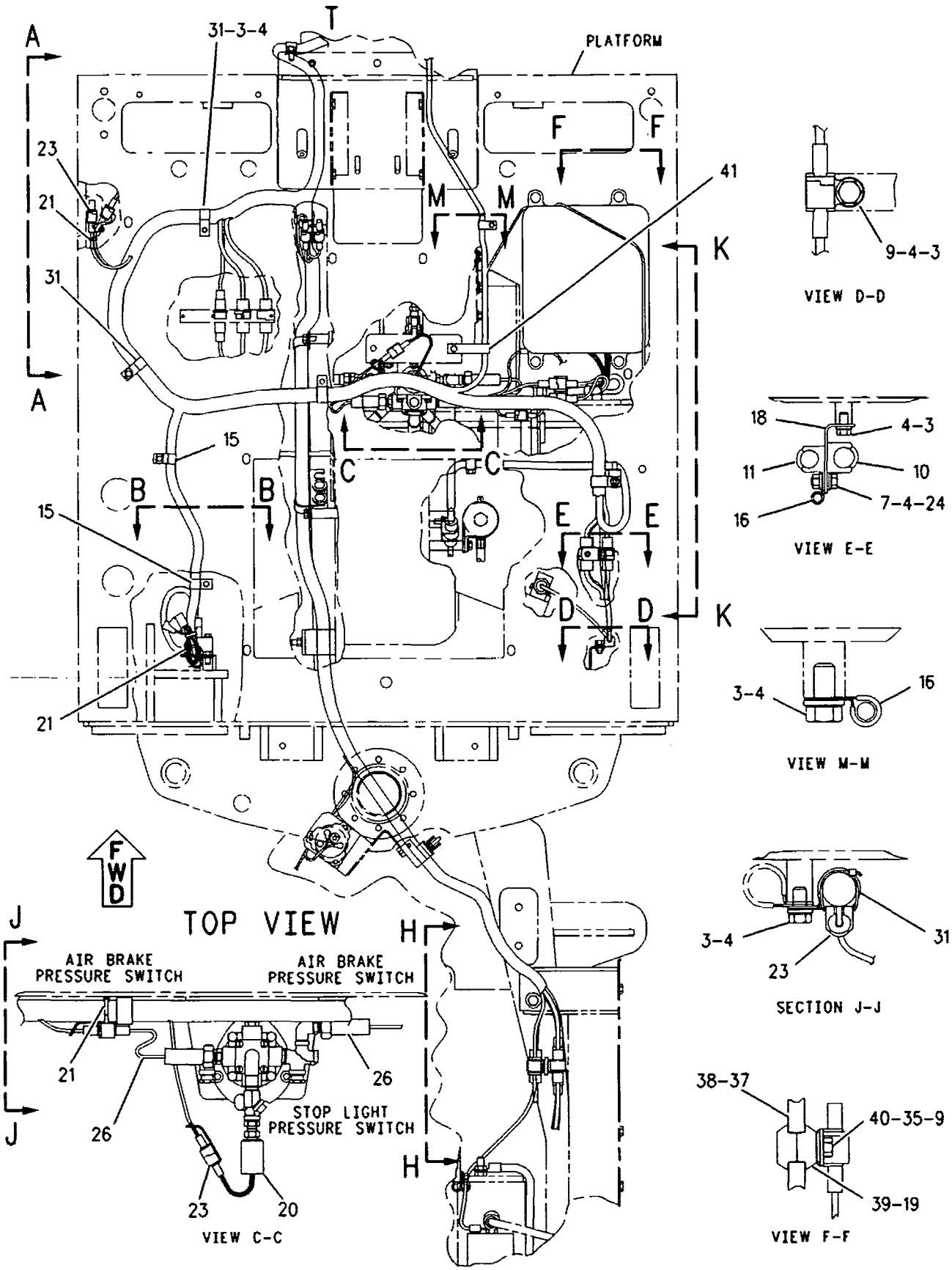

GRAPHIC #1 g00340552

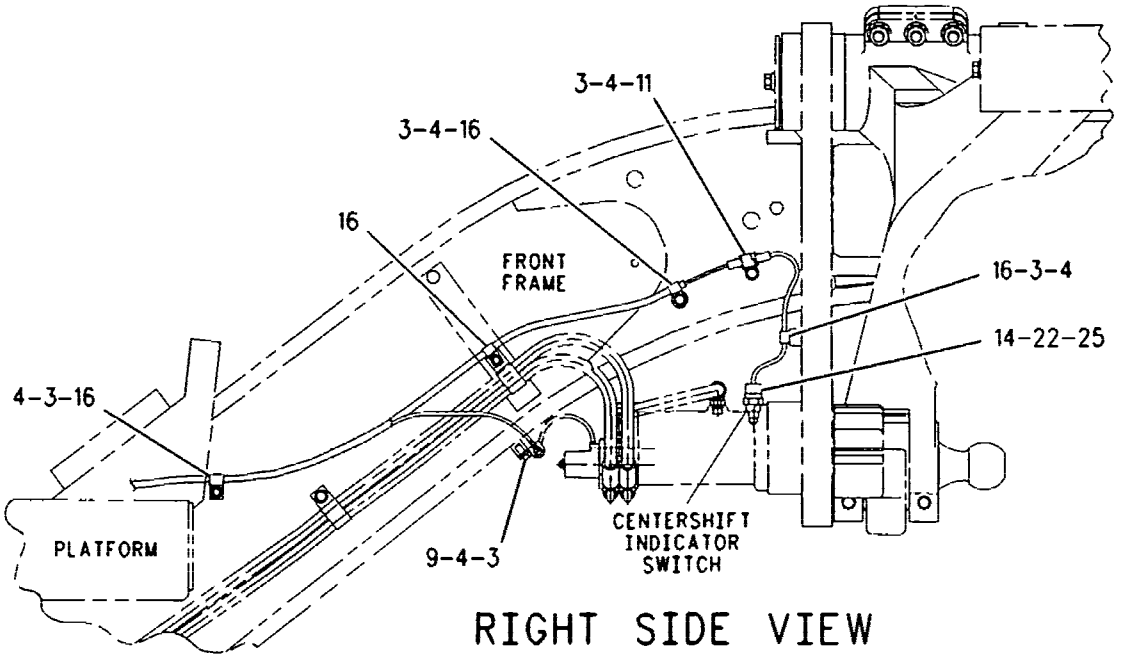

RIGHT SIDE VIEW

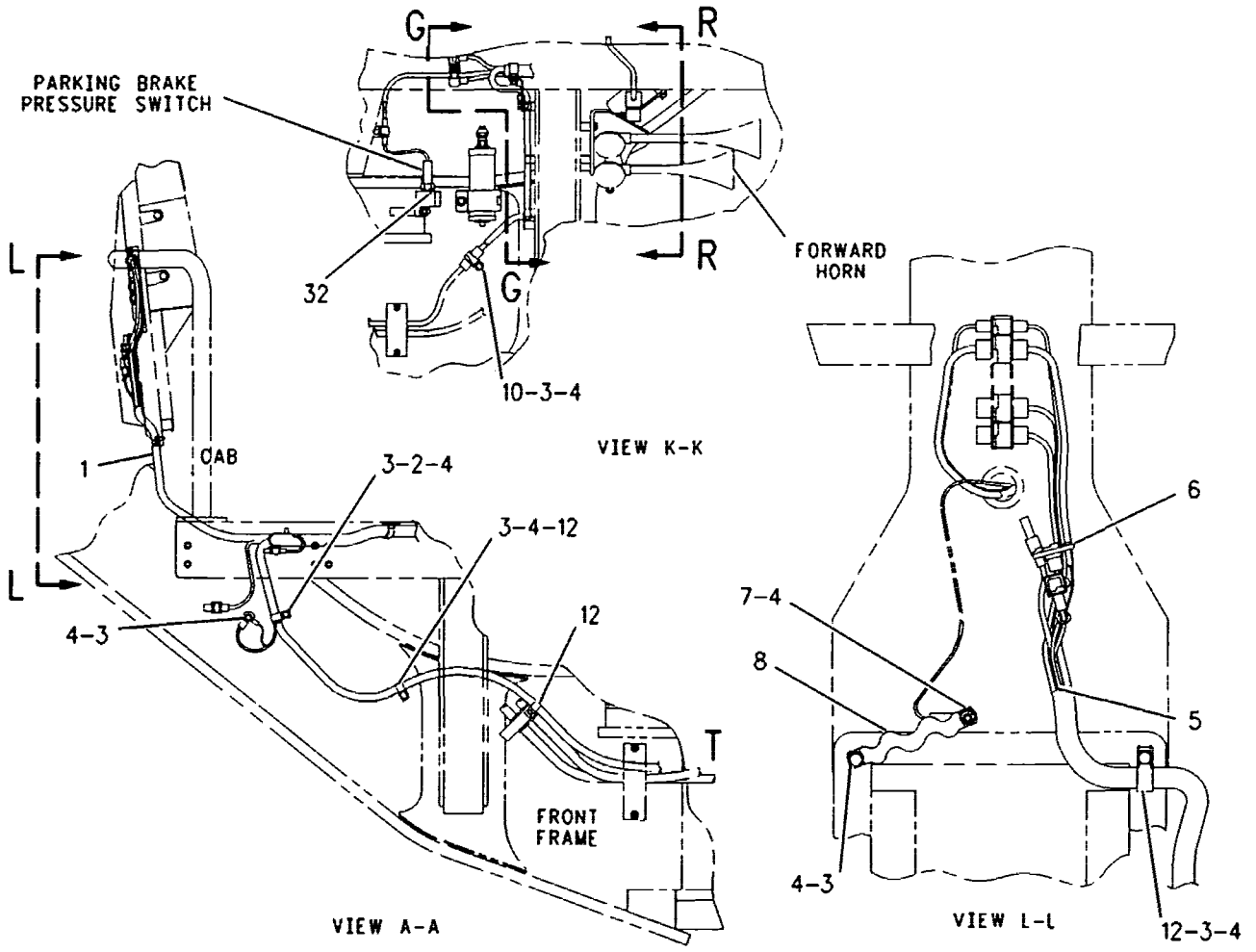

GRAPHIC #2 g00340692

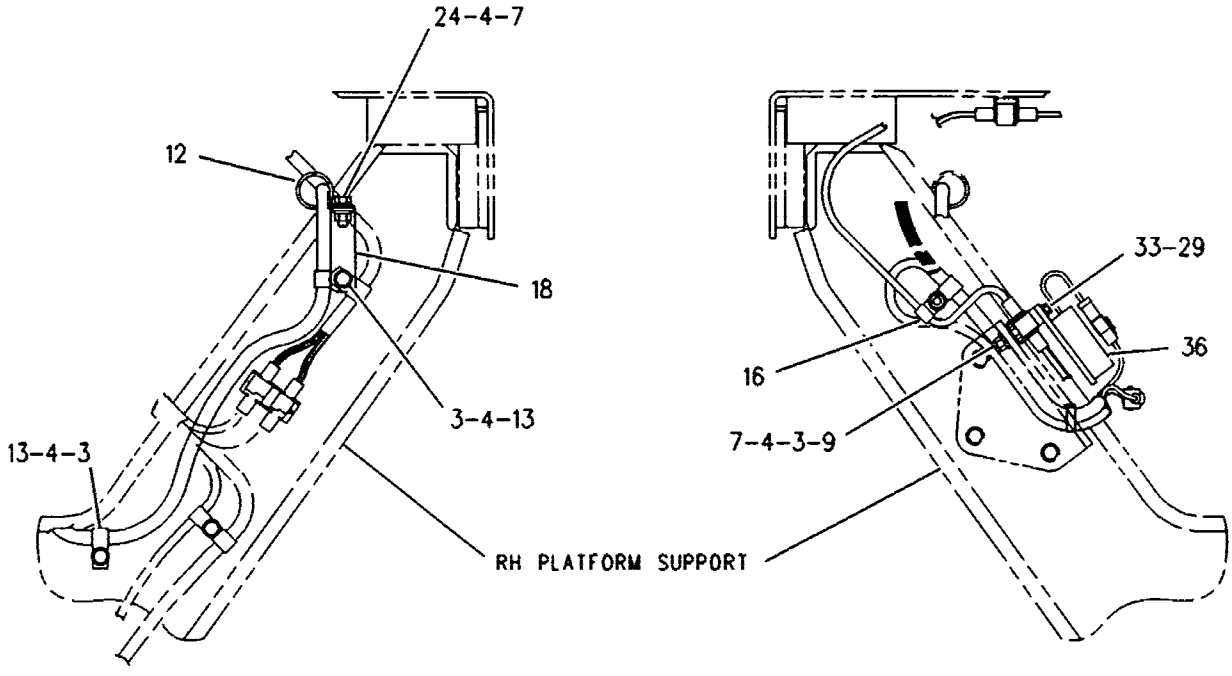

VIEW G-G

VIEW R-R

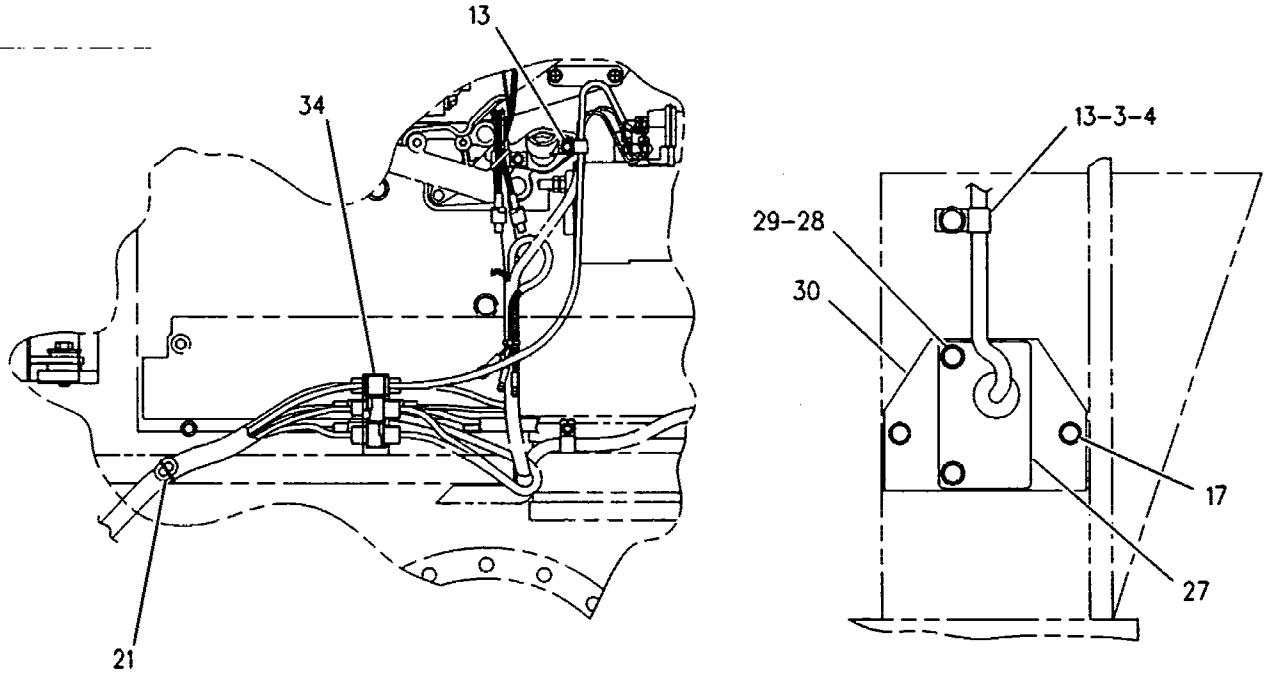

VIEW H-H

VIEW B-B

GRAPHIC #3

g00278932

MEMORANDA

ELECTRICAL AND STARTING SYSTEM

112-5983 WIRING GP-REAR

PIN 5FM1-374

PART OF 112-4103 CHASSIS AR

SMCS-1408 **i00785320**

NOTE	REF NO	GRAPHIC REF	PART NUMBER	QTY	PART NAME 1 2 3 4 5 6 (PRODUCT LEVEL)	SEE PAGE
	1	1	3T-5760	2	BATTERY-MAINTENANCE FREE (12V)(750 AMP)	
	2	1	8W-7136	2	HOLD-DOWN AS	
	3	2	123-3689	1	PLATE AS	
		2	5M-6687	1	STUD-TAPERLOCK	
	4	1	9M-8406	4	CLIP (15.8MM ID)	
	5	1,2	8T-4896	16	WASHER-HARD (2.5MM THK)	
	6	1,2	5M-3062	2	BOLT (3/8-16X.750IN)	
	7	1	5T-1553	1	CABLE AS	
		1	1M-6119	1	BOLT-BATTERY TERMINAL (5/16-18X1.375IN)	
		1	1M-6120	1	NUT-BATTERY TERMINAL (5/16-18 THD)	
		1	1S-7252	1	TERMINAL (FOR 3/8IN BOLT)	
E		1	5P-0747		CABLE (00'GA)	
		1	7N-5274	1	COVER (BLACK)(BATTERY)	
		1	9G-8909	1	COVER (BLACK)(RING)	
	8	1	111-0871	1	CABLE AS	
		1	1S-7251	1	TERMINAL (FOR 1/2IN BOLT)	
E		1	*5P-0761*		CABLE (RED)	
		1	8N-0869	1	COVER (RED)(RING)	
		1	8N-1725	1	COVER (RED)(BATTERY)	
		1	1M-6119	1	BOLT-BATTERY TERMINAL (5/16-18X1.375IN)	
		1	1M-6120	1	NUT-BATTERY TERMINAL (5/16-18 THD)	
	9	1	7C-4354	1	CLIP (25.40MM ID)	
	10	1	123-3692	1	ARM	
	11	2	3E-5383	1	SENDER-ARTICULATION POSITION	
	12	2	123-3688	1	PLATE AS	
		2	7L-0811	1	DOWEL (28.5MM LG)	
—	13	1,2	5P-8167	6	BOLT (3/8-16X.625IN)	
	14	2	9G-9150	1	CLIP (10.2MM ID) (TAB)	
	15	2	124-6691	1	PLATE	
	16	2	8M-2770	1	CLIP (12.7MM ID)	
	17	2	061-7661	1	CABLE AS	
E		2	5P-0747		CABLE (00'GA)	
		2	1S-7251	1	TERMINAL (FOR 1/2IN BOLT)	
	18	2	8T-9364	2	BOLT (1/4-20X.625IN)	
	19	1	6L-2479	4	BRACE	
	20	2	9G-9154	1	CLIP (10.5MM ID)	
	21	1,2	6V-8801	5	NUT (3/8-16 THD)	
	22	2	8T-4205	2	WASHER-HARD (2MM THK)	
	23	2	8T-4226	1	WASHER-PLATED (3MM THK)	
	24	1	4L-6454	4	BOLT (3/8-16X1.0IN)	
	25	2	6V-6893	3	SCREW-MACHINE	
	26	1	4E-0645	1	PLUG AS	
		1	7N-7779	1	SOCKET	
		1	7N-7780	2	PIN-CONNECTOR (BLADE)	
		1	7N-8205	1	HOUSING-PLUG	
		1	9G-3695	1	PLUG-SEAL	
	27	1	3S-2093	5	STRAP-CABLE (1.75IN DIA)	
	28	3	118-3421	1	CLIP AS	
	29	3	8T-9371	1	BOLT (3/8-16X0.5IN)	
	30	4	115-6908	1	CABLE AS	
E		4	5P-0761		CABLE (RED)	
		4	7N-5274	1	COVER (BLACK)(BATTERY)	
		4	8N-1725	1	COVER (RED)(BATTERY)	
		4	3S-6049	1	TERMINAL AS-POSITIVE	
		4	3S-6050	1	TERMINAL AS-NEGATIVE	
					(EACH INCLUDES)	

ELECTRICAL AND STARTING SYSTEM

112-5983 WIRING GP-REAR *(contd.)* i00785320

NOTE	REF NO	GRAPHIC REF	PART NUMBER	QTY	PART NAME 1 2 3 4 5 6 (PRODUCT LEVEL)	SEE PAGE
		4	1M-6120	1	NUT-BATTERY TERMINAL (5/16-18 THD)	
		4	1M-6119	1	BOLT-BATTERY TERMINAL (5/16-18X1.375IN)	
	31	4	9M-8406	3	CLIP (15.8MM ID)	
	32	3,4	8T-4896	21	WASHER-HARD (2.5MM THK)	
	33	3,4	5M-3062	14	BOLT (3/8-16X.750IN)	
	34	4	8W-8527	1	SLEEVE	
	35	3	113-7753	1	PLATE	
Y	36	3	*7N-0718*	1	SWITCH AS-DISCONNECT	184
	37	3	8H-8648	1	PLATE-INSTRUCTION	
	38	4	110-6399	1	CABLE AS	
		4	1S-7251	1	TERMINAL (FOR 1/2IN BOLT)	
		4	1S-7252	1	TERMINAL (FOR 3/8IN BOLT)	
E		4	5P-0747		CABLE (00'GA)	
	39	4	3K-6060	4	LOCKNUT (3/8-16 THD)	
	40	4	4K-3094	4	STUD	
	41	3,4	9G-9150	4	CLIP (10.2MM ID)	
	42	3	8M-2772	1	CLIP (6.35MM ID)	
	43	3	4B-4274	2	WASHER (1.2MM THK)	
	44	3	5L-4507	2	SCREW-MACHINE (10-32X.875IN)	
	45	3	8W-8528	4	SLEEVE	
	46	4	6V-8188	2	NUT (1/2-13 THD)	
	47	4	8T-4223	2	WASHER-HARD (3MM THK)	
	48	3,4	6V-8801	10	NUT (3/8-16 THD)	
	49	4	8X-5489	1	SLEEVE	
	50	4	137-1718	1	HARNESS AS	
	51	4	126-7570	1	HARNESS AS	
	52	3,4	8W-8909	4	SLEEVE	
	53	3,4	4D-7794	7	CLIP (10.0MM ID)	
	54	4	127-1641	1	HARNESS AS	
	55	4	8K-1433	1	GROMMET	
Y	56	3	*8C-6207*	2	LAMP GP-SIGNAL	162
	57	3	7G-1060	1	STRAP AS-GROUND	
M	58	3	5C-2890	6	NUT (M6X1.00 THD)	
	59	3	9X-8256	6	WASHER (2MM THK)	
	60	3	9G-9152	2	CLIP (12.0MM ID)	
	61	3	5S-7349	2	BOLT (1/4-20X0.5IN)	
	62	3	8T-4205	6	WASHER-HARD (2MM THK)	
	63	3	6V-8185	2	NUT (1/4-20 THD)	
	64	3	3S-2093	5	STRAP-CABLE (1.75IN DIA)	
	65	3,4	5P-1075	5	WASHER-HARD (3MM THK)	
	66	4	6D-4246	1	CLIP (19.05MM ID)	
	67	3	127-7072	1	PLATE	
	68	4	3T-3045	1	CLIP AS (12MM ID)	
	69	3	126-7238	1	HARNESS AS	
	70	4	033-8248	1	CLIP (11.11MM ID)	
	71	4	8M-2773	2	CLIP (17.46MM ID)	
	72	3	6V-4283	1	PLATE-ALTERNATOR	
	73	3	126-8197	1	HARNESS AS	
	74	3,4	5S-7379	2	BOLT (3/8-16X.875IN)	
	75	4	2H-1507	1	CIRCUIT BREAKER AS (40 AMP)	
		4	1H-3244	2	LOCKWASHER (NO.14)	
		4	6V-8365	2	SCREW-MACHINE (1/4-28X.5IN)	
	76	4	3E-7279	1	SWITCH AS-MAGNETIC	
	77	4	6V-0395	2	BOLT-12 POINT HEAD	
	78	4	136-3153	1	HARNESS AS-TMSN SPEED SENSOR	

E-ORDER BY THE CENTIMETER
M-METRIC PART
Y-SEPARATE ILLUSTRATION

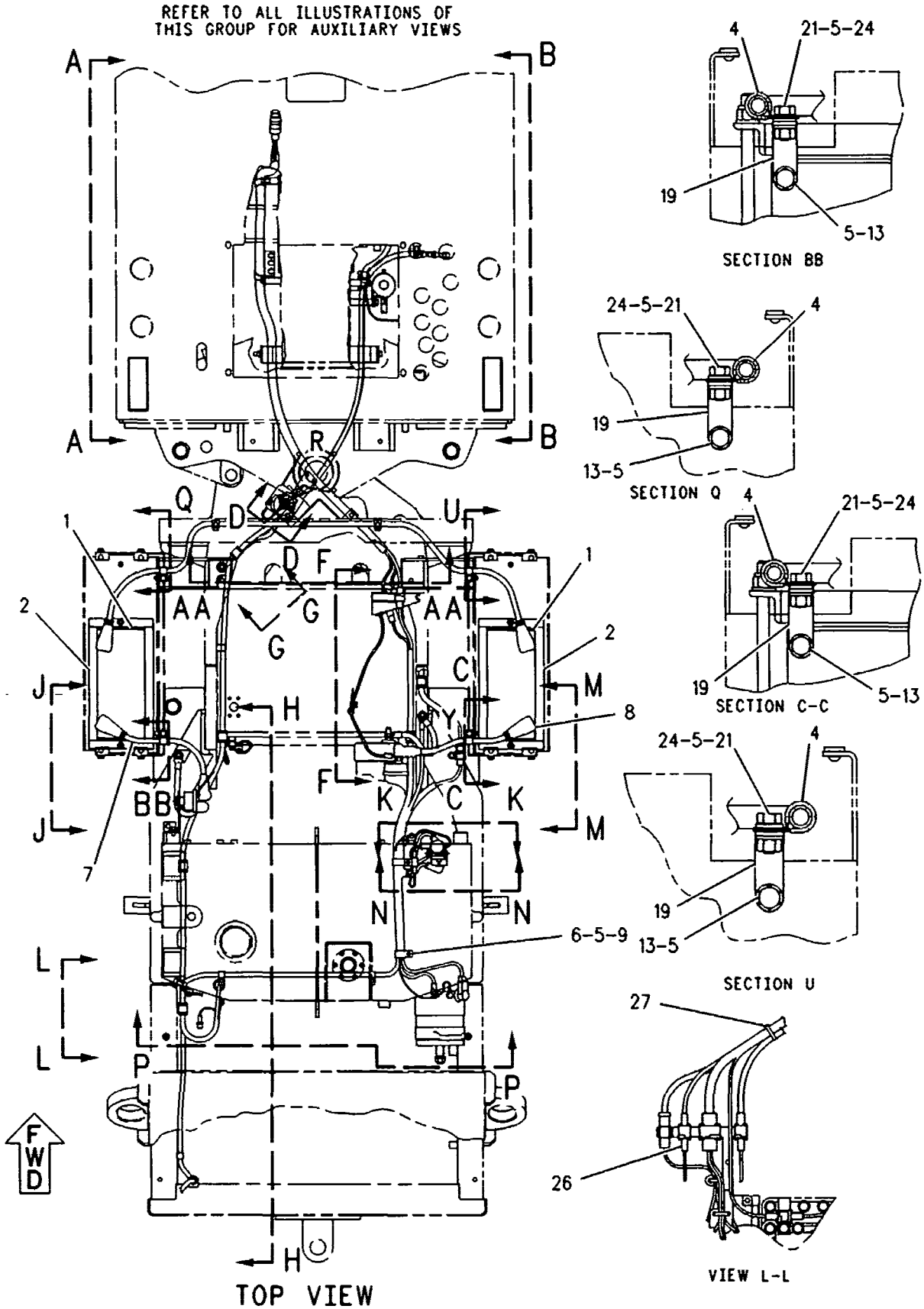

GRAPHIC #1 g00109554

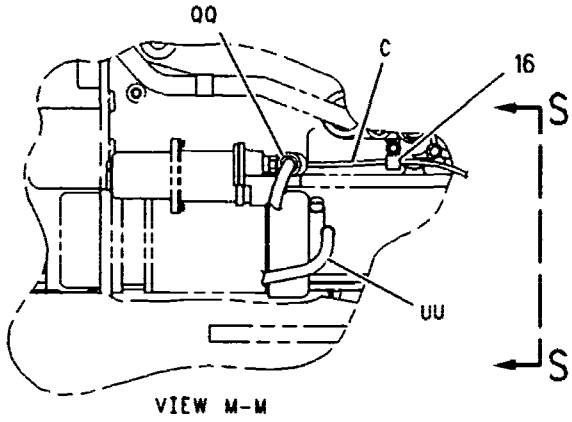

VIEW M-M

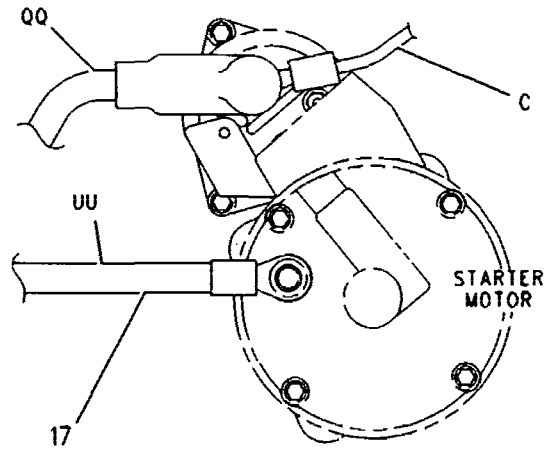

VIEW S-S

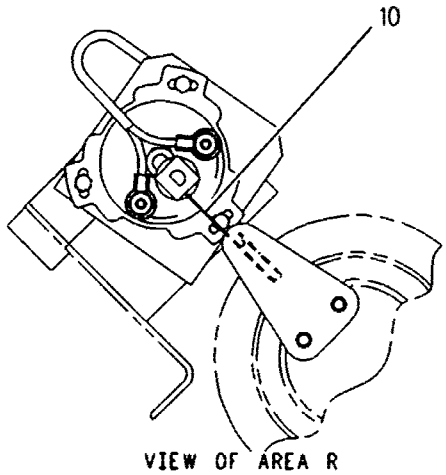

VIEW OF AREA R

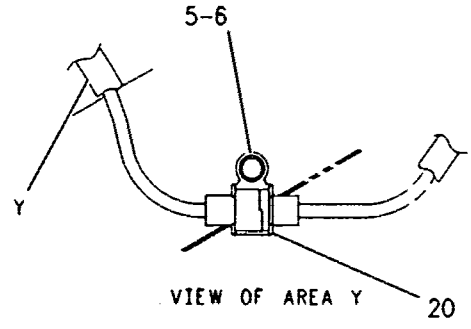

VIEW OF AREA Y

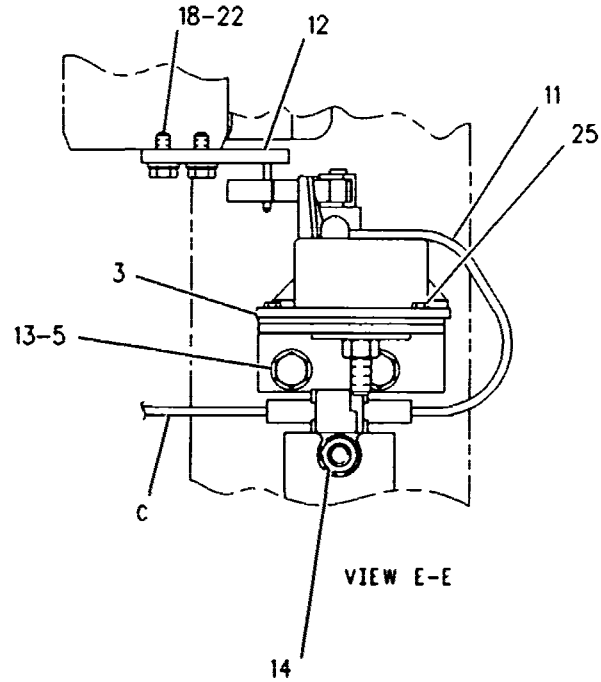

VIEW E-E

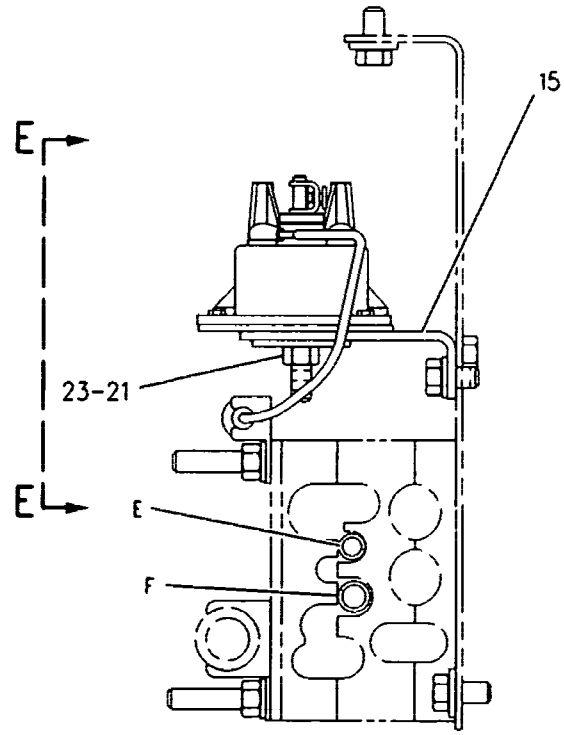

SECTION D-D

REFER TO ALL ILLUSTRATIONS OF THIS GROUP FOR AUXILIARY VIEWS

GRAPHIC #2

g00109555

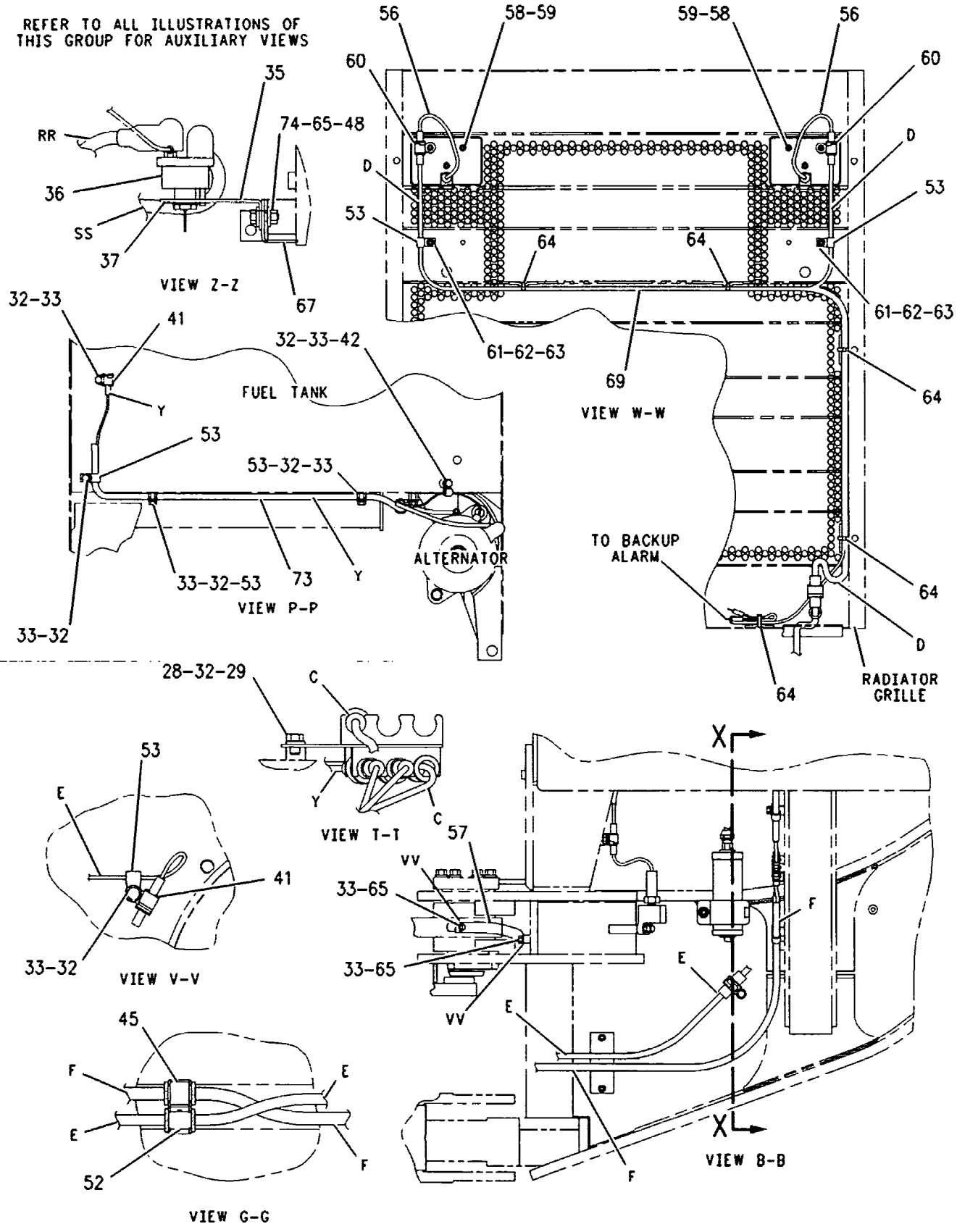

GRAPHIC #3 g00353612

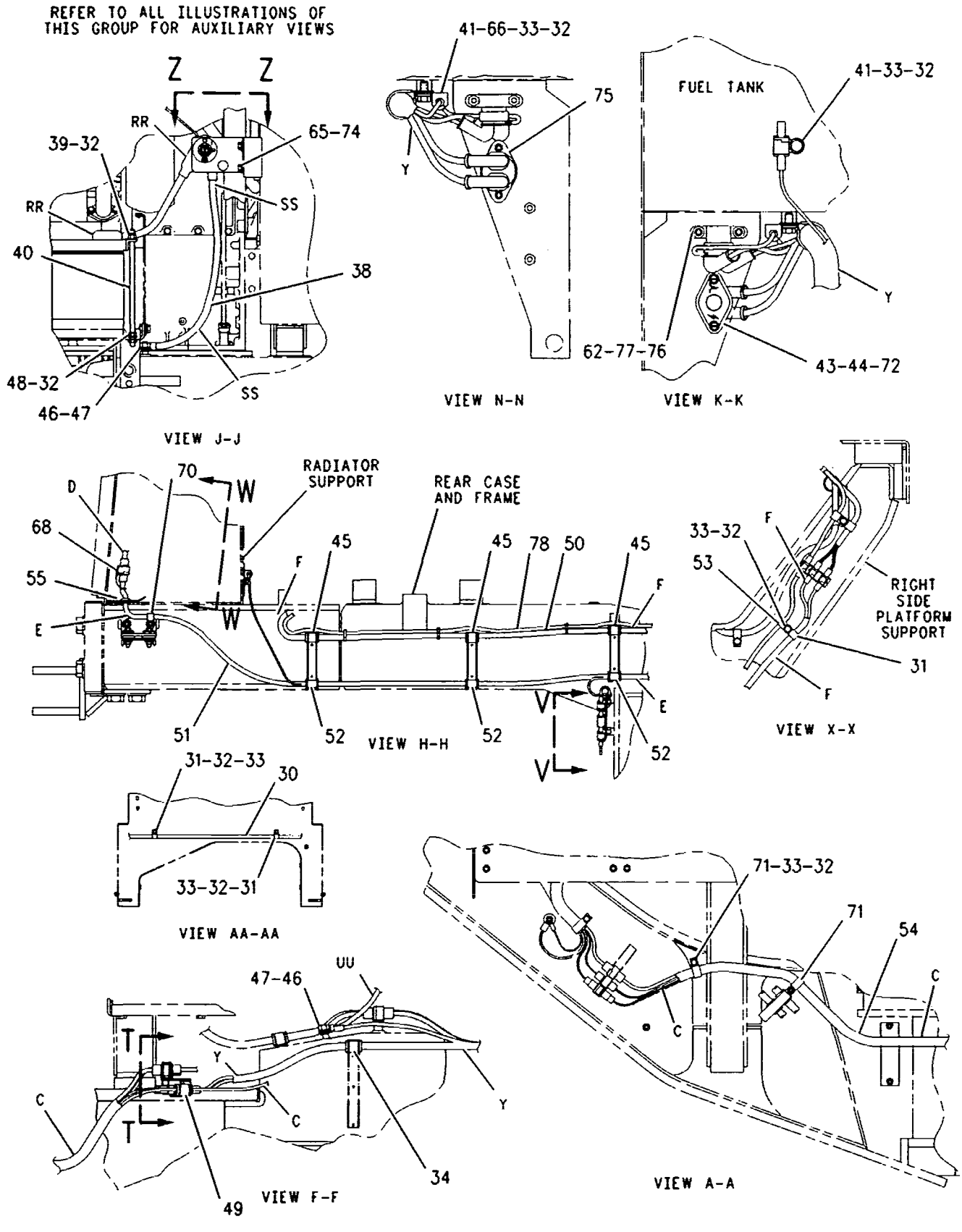

GRAPHIC #4 g00353613

ELECTRICAL AND STARTING SYSTEM

112-5983 WIRING GP-REAR

PIN 5FM375-799

PART OF 112-4103 CHASSIS AR

SMCS-1408 **i00785606**

NOTE	REF NO	GRAPHIC REF	PART NUMBER	QTY	PART NAME 1 2 3 4 5 6 (PRODUCT LEVEL)	SEE PAGE
	1	1	3T-5760	2	BATTERY-MAINTENANCE FREE (12V)(750 AMP)	
	2	1	8W-7136	2	HOLD-DOWN AS	
	3	1	123-3689	1	PLATE AS	
		1	5M-6687	1	STUD-TAPERLOCK	
	4	1	9M-8406	4	CLIP (15.8MM ID)	
	5	1,2	8T-4896	16	WASHER-HARD (2.5MM THK)	
	6	1,2	5M-3062	2	BOLT (3/8-16X.750IN)	
	7	1	5T-1553	1	CABLE AS	
		1	1M-6119	1	BOLT-BATTERY TERMINAL (5/16-18X1.375IN)	
		1	1M-6120	1	NUT-BATTERY TERMINAL (5/16-18 THD)	
		1	1S-7252	1	TERMINAL (FOR 3/8IN BOLT)	
E		1	5P-0747		CABLE (00'GA)	
		1	7N-5274	1	COVER (BLACK)(BATTERY)	
		1	9G-8909	1	COVER (BLACK)(RING)	
	8	1	111-0871	1	CABLE AS	
		1	1S-7251	1	TERMINAL (FOR 1/2IN BOLT)	
E		1	*5P-0761*		CABLE (RED)	
		1	8N-0869	1	COVER (RED)(RING)	
		1	8N-1725	1	COVER (RED)(BATTERY)	
		1	1M-6119	1	BOLT-BATTERY TERMINAL (5/16-18X1.375IN)	
		1	1M-6120	1	NUT-BATTERY TERMINAL (5/16-18 THD)	
	9	1	7C-4354	1	CLIP (25.40MM ID)	
	10	1	123-3692	1	ARM	
	11	1	3E-5383	1	SENDER-ARTICULATION POSITION	
	12	1	123-3688	1	PLATE AS	
		1,2	7L-0811	1	DOWEL (28.5MM LG)	
	13	1,2	5P-8167	6	BOLT (3/8-16X.625IN)	
	14	2	9G-9150	1	CLIP (10.2MM ID)	
	15	2	124-6691	1	PLATE	
	16	2	8M-2770	1	CLIP (12.7MM ID)	
	17	2	061-7661	1	CABLE AS	
E		2	5P-0747		CABLE (00'GA)	
		2	1S-7251	1	TERMINAL (FOR 1/2IN BOLT)	
	18	2	8T-9364	2	BOLT (1/4-20X.625IN)	
	19	1	6L-2479	4	BRACE	
	20	2	9G-9154	1	CLIP (10.5MM ID)	
	21	1,2	6V-8801	5	NUT (3/8-16 THD)	
	22	2	8T-4205	2	WASHER-HARD (2MM THK)	
	23	2	8T-4226	1	WASHER-PLATED (3MM THK)	
	24	1	4L-6454	4	BOLT (3/8-16X1.0IN)	
	25	2	6V-6893	3	SCREW-MACHINE	
	26	1	3S-2093	5	STRAP-CABLE (1.75IN DIA)	
	27	3	118-3421	1	CLIP AS	
	28	3	8T-9371	1	BOLT (3/8-16X0.5IN)	
	29	4	143-5963	1	CABLE AS	
E		4	*5P-0761*		CABLE (RED)	
		4	7N-5274	1	COVER (BLACK)(BATTERY)	
		4	8N-1725	1	COVER (RED)(BATTERY)	
		4	*9W-3460*	1	TERMINAL AS-POSITIVE	
		4	*9W-3459*	1	TERMINAL AS-BATTERY	
					(EACH TERMINAL AS INCLUDES)	
		4	1M-6120	1	NUT-BATTERY TERMINAL (5/16-18 THD)	
		4	1M-6119	1	BOLT-BATTERY TERMINAL (5/16-18X1.375IN)	
	30	4	9M-8406	3	CLIP (15.8MM ID)	
	31	3,4	8T-4896	21	WASHER-HARD (2.5MM THK)	
	32	3,4	5M-3062	14	BOLT (3/8-16X.750IN)	

112-5983 WIRING GP-REAR *(contd.)* i00785606

NOTE	REF NO	GRAPHIC REF	PART NUMBER	QTY	PART NAME 1 2 3 4 5 6 (PRODUCT LEVEL)	SEE PAGE
	33	4	**8W-8527**	1	SLEEVE	
	34	3	**113-7753**	1	PLATE	
Y	35	3	*7N-0718*	1	SWITCH AS-DISCONNECT	184
	36	3	**8H-8648**	1	PLATE-INSTRUCTION	
	37	4	**110-6399**	1	CABLE AS	
		4	**1S-7251**	1	TERMINAL (FOR 1/2IN BOLT)	
		4	**1S-7252**	1	TERMINAL (FOR 3/8IN BOLT)	
E		4	**5P-0747**		CABLE (00'GA)	
	38	4	**3K-6060**	4	LOCKNUT (3/8-16 THD)	
	39	4	**4K-3094**	4	STUD	
	40	3	**9G-9150**	4	CLIP (10.2MM ID)	
	41	3	**8M-2772**	1	CLIP (6.35MM ID)	
	42	4	**4B-4274**	2	WASHER (1.2MM THK)	
	43	4	**5L-4507**	2	SCREW-MACHINE (10-32X.875IN)	
	44	3,4	**8W-8528**	4	SLEEVE	
	45	4	**6V-8188**	2	NUT (1/2-13 THD)	
	46	4	**8T-4223**	2	WASHER-HARD (3MM THK)	
	47	3,4	**6V-8801**	10	NUT (3/8-16 THD)	
	48	4	**8X-5489**	1	SLEEVE	
	49	4	**137-1718**	1	HARNESS AS	
	50	4	**126-7570**	1	HARNESS AS	
	51	3,4	**8W-8909**	4	SLEEVE	
	52	3,4	**4D-7794**	7	CLIP (10.0MM ID)	
	53	4	**127-1641**	1	HARNESS AS	
	54	4	**8K-1433**	1	GROMMET	
CY	55	3	*130-3452*	2	LAMP GP-SIGNAL	163
	56	3	**7G-1060**	1	STRAP AS-GROUND	
M	57	3	**5C-2890**	6	NUT (M6X1.00 THD)	
	58	3	**9X-8256**	6	WASHER (2MM THK)	
	59	3,4	**9G-9152**	2	CLIP (12.0MM ID)	
	60	3	**5S-7349**	2	BOLT (1/4-20X0.5IN)	
	61	3,4	**8T-4205**	6	WASHER-HARD (2MM THK)	
	62	3	**6V-8185**	2	NUT (1/4-20 THD)	
	63	3	**3S-2093**	5	STRAP-CABLE (1.75IN DIA)	
	64	3,4	**5P-1075**	5	WASHER-HARD (3MM THK)	
	65	4	**6D-4246**	1	CLIP (19.05MM ID)	
	66	3	**127-7072**	1	PLATE	
	67	4	**3T-3045**	1	CLIP AS (12MM ID)	
	68	3	**126-7238**	1	HARNESS AS	
	69	4	**033-8248**	1	CLIP (11.11MM ID)	
	70	4	**8M-2773**	2	CLIP (17.46MM ID)	
	71	4	**6V-4283**	1	PLATE-ALTERNATOR	
	72	4	**126-8197**	1	HARNESS AS	
	73	3,4	**5S-7379**	2	BOLT (3/8-16X.875IN)	
	74	4	*9S-0174*	1	CIRCUIT BREAKER AS (60 AMP)	
		4	**1H-3244**	2	LOCKWASHER (NO.14)	
		4	**6V-8365**	2	SCREW-MACHINE (1/4-28X.5IN)	
	75	4	**3E-7279**	1	SWITCH AS-MAGNETIC	
	76	4	**6V-0395**	2	BOLT-12 POINT HEAD	
	77	4	**136-3153**	1	HARNESS AS-TMSN SPEED SENSOR	

C-CHANGE FROM PREVIOUS TYPE
E-ORDER BY THE CENTIMETER
M-METRIC PART
Y-SEPARATE ILLUSTRATION

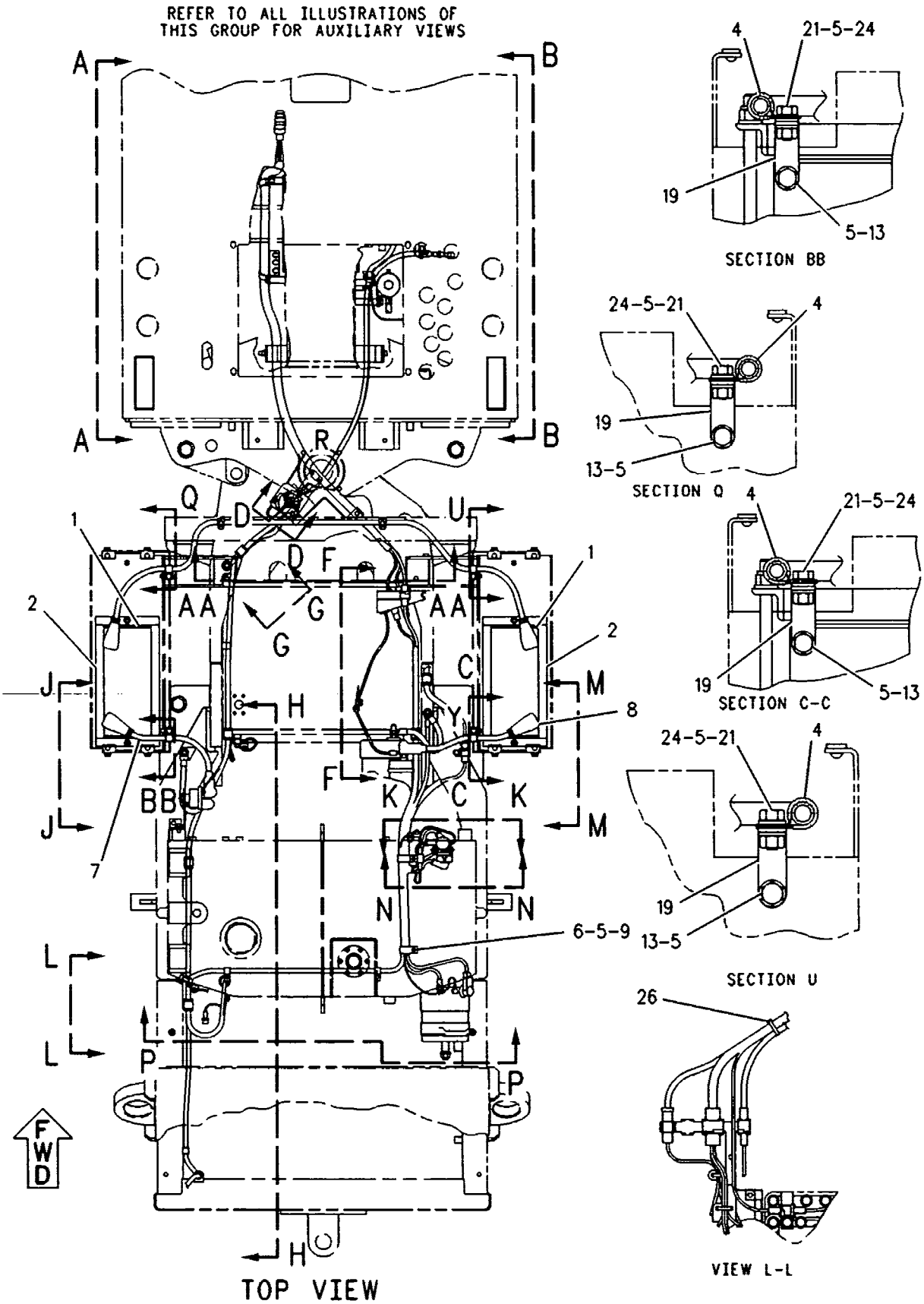

GRAPHIC #1 g00276434

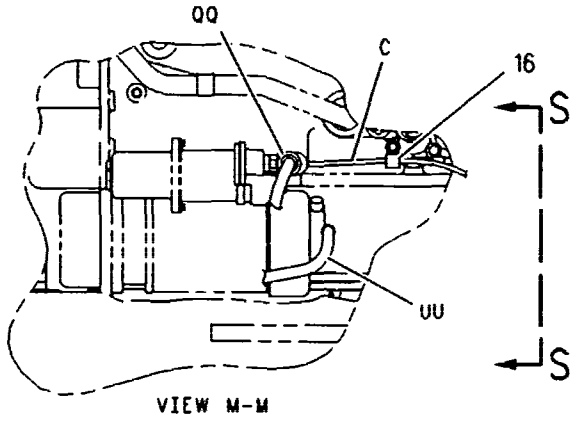

VIEW M-M

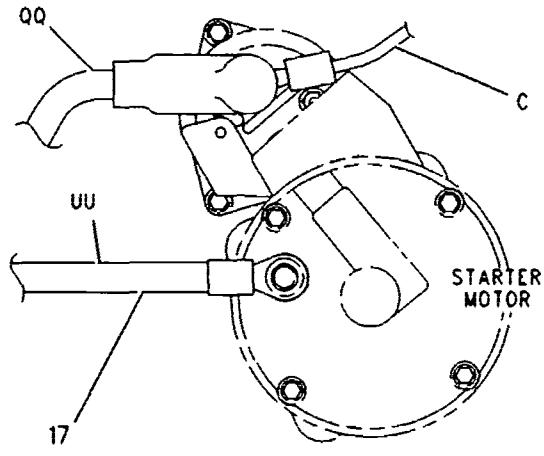

VIEW S-S

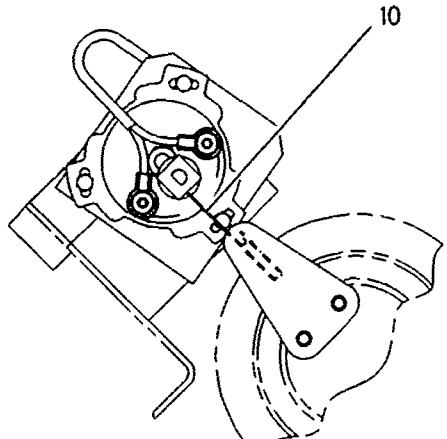

VIEW OF AREA R

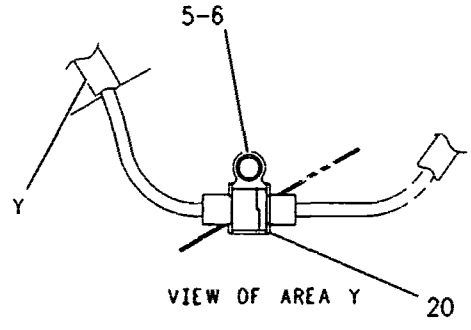

VIEW OF AREA Y

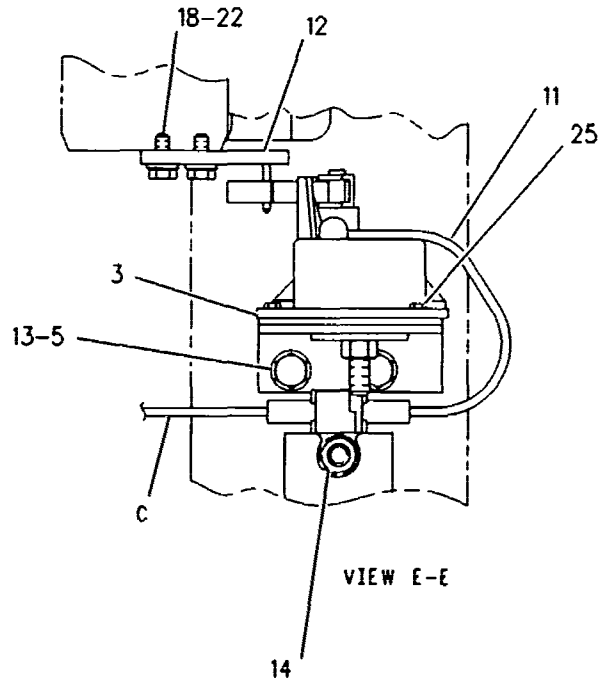

VIEW E-E

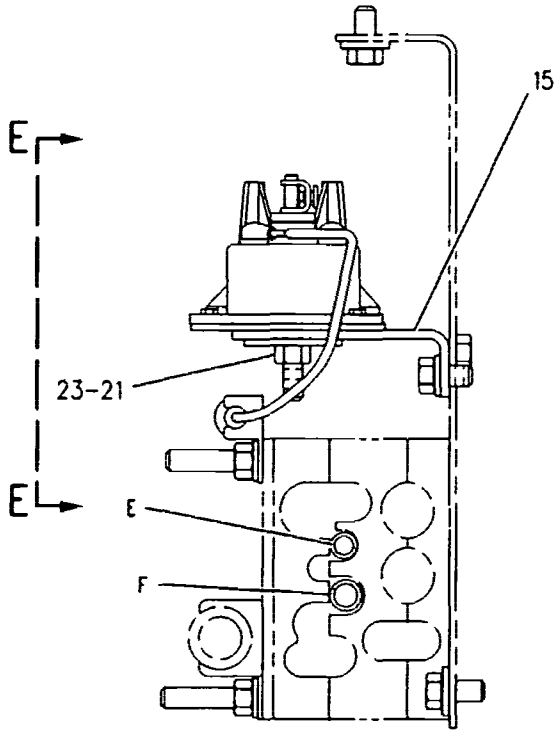

SECTION D-D

REFER TO ALL ILLUSTRATIONS OF THIS GROUP FOR AUXILIARY VIEWS

GRAPHIC #2

g00109555

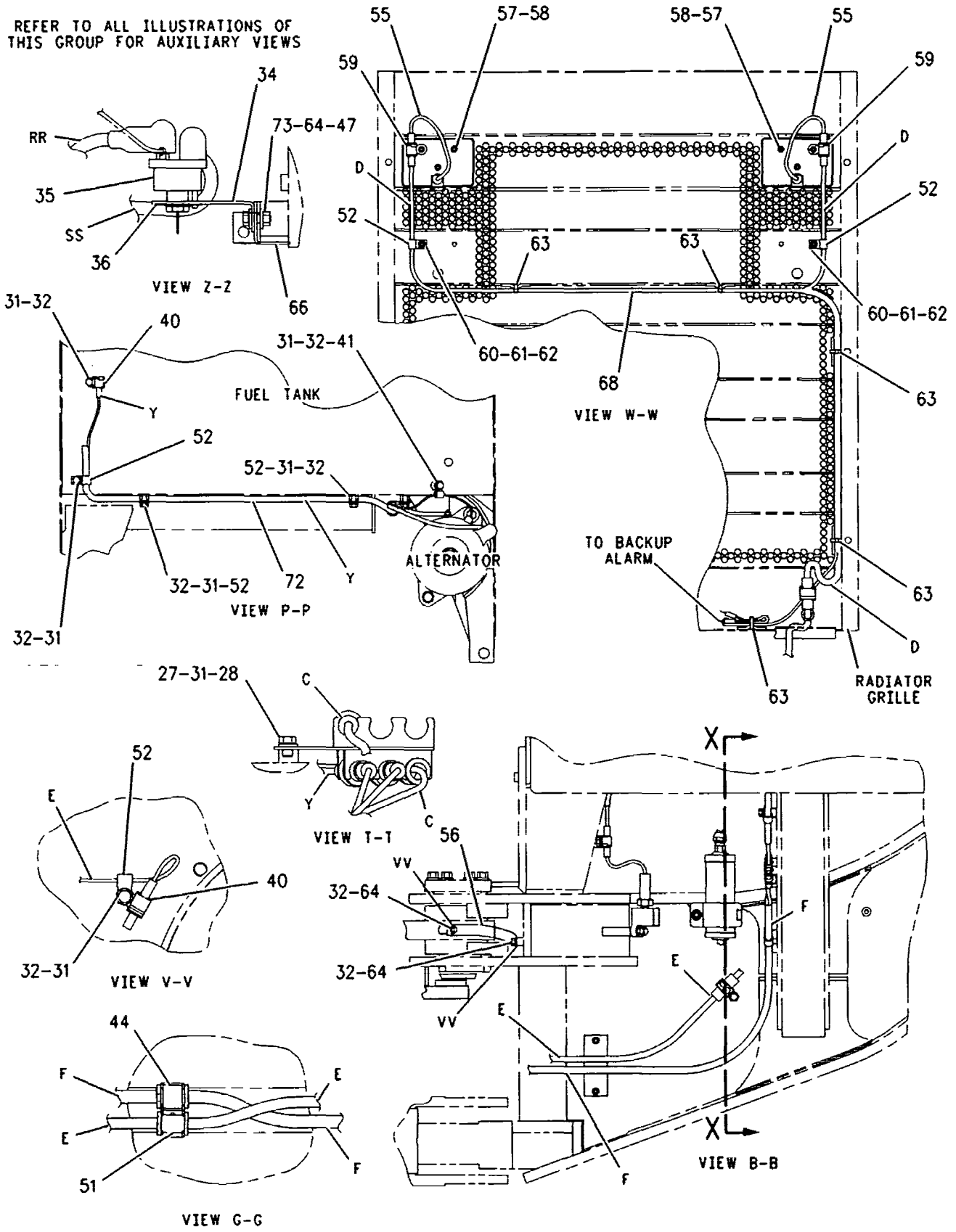

GRAPHIC #3

g00353614

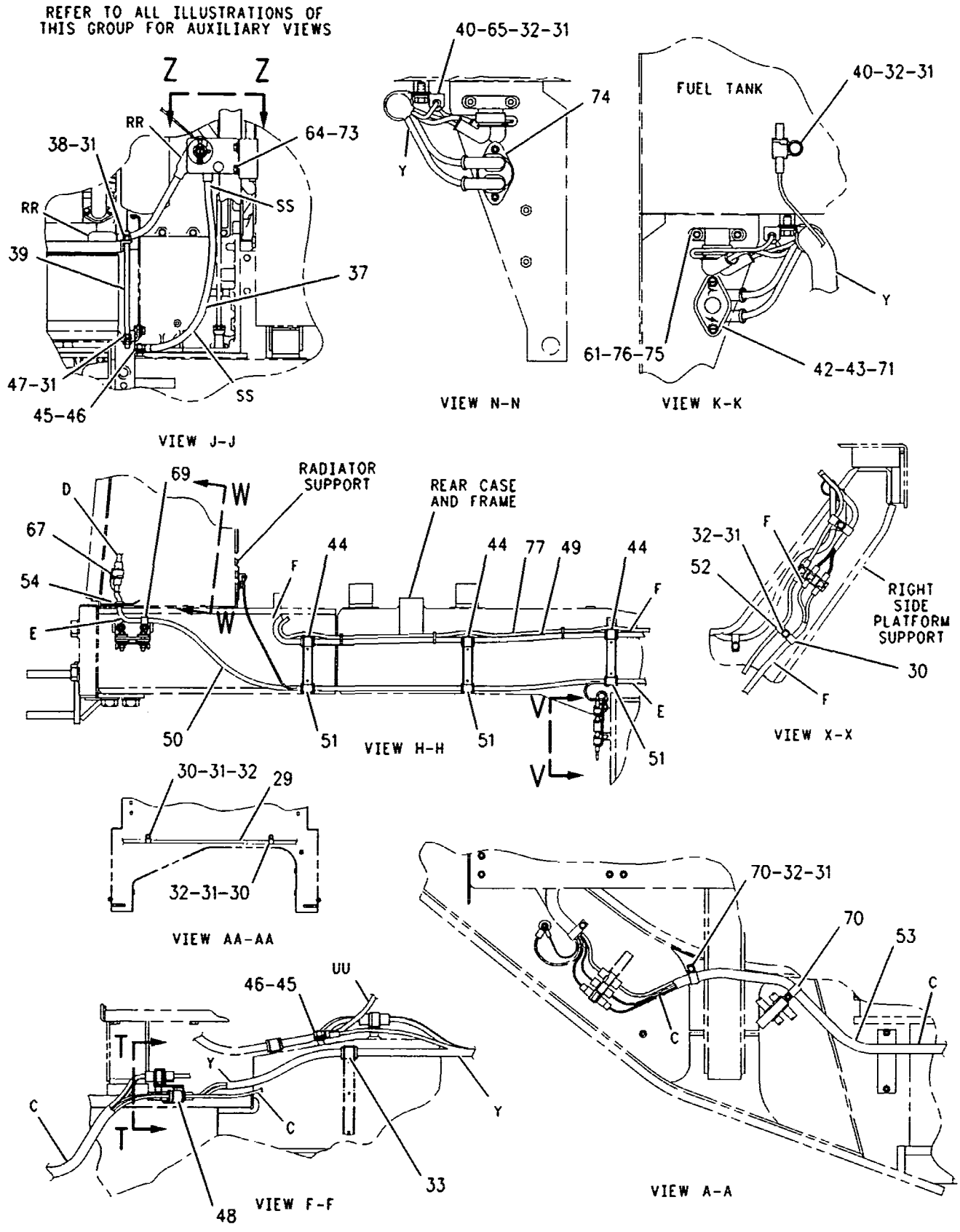

GRAPHIC #4

g00353615

ELECTRICAL AND STARTING SYSTEM

112-5983 WIRING GP-REAR

PIN 5FM800-UP

PART OF 112-4103 CHASSIS AR

SMCS-1408 **i00834885**

NOTE	REF NO	GRAPHIC REF	PART NUMBER	QTY	PART NAME 1 2 3 4 5 6 (PRODUCT LEVEL)	SEE PAGE
	1	1	**3T-5760**	2	BATTERY-MAINTENANCE FREE (12V)(750 AMP)	
	2	1	**8W-7136**	2	HOLD-DOWN AS	
	3	2	**123-3689**	1	PLATE AS	
		2	**5M-6687**	1	STUD-TAPERLOCK	
	4	1	**9M-8406**	4	CLIP (15.8MM ID)	
	5	1,2	**8T-4896**	12	WASHER-HARD (2.5MM THK)	
	6	1,2	**5M-3062**	2	BOLT (3/8-16X.750IN)	
	7	1	**5T-1553**	1	CABLE AS	
		1	**1M-6119**	1	BOLT-BATTERY TERMINAL (5/16-18X1.375IN)	
		1	**1M-6120**	1	NUT-BATTERY TERMINAL (5/16-18 THD)	
		1	**1S-7252**	1	TERMINAL (FOR 3/8IN BOLT)	
E		1	**5P-0747**		CABLE (00 GA)	
		1	**7N-5274**	1	COVER (BLACK)(BATTERY)	
		1	**9G-8909**	1	COVER (BLACK)(RING)	
	8	1	**111-0871**	1	CABLE AS	
		1	**1S-7251**	1	TERMINAL (FOR 1/2IN BOLT)	
E		1	*5P-0761*		CABLE (RED)	
		1	**8N-0869**	1	COVER (RED)(RING)	
		1	**8N-1725**	1	COVER (RED)(BATTERY)	
		1	**1M-6119**	1	BOLT-BATTERY TERMINAL (5/16-18X1.375IN)	
		1	**1M-6120**	1	NUT-BATTERY TERMINAL (5/16-18 THD)	
	9	1	**7C-4354**	1	CLIP (25.40MM ID)	
	10	2	**123-3692**	1	ARM	
	11	2	**149-1116**	1	SENDER AS-POS	
		2	**7N-7779**	1	SOCKET	
		2	**7N-7780**	1	PIN-CONNECTOR (BLADE)	
		2	**7N-9737**	1	HOUSING-PLUG (1 PIN,1 SOCKET)	
B		2	**9X-1813**		SLEEVE	
	12	2	**123-3688**	1	PLATE AS	
		2	**7L-0811**	1	DOWEL (28.5MM LG)	
	13	1,2	**5P-8167**	6	BOLT (3/8-16X.625IN)	
	14	2	**9G-9150**	1	CLIP (10.2MM ID) (TAB)	
	15	2	**124-6691**	1	PLATE	
	16	2	**8M-2770**	1	CLIP (12.7MM ID)	
	17	2	**061-7661**	1	CABLE AS	
E		2	**5P-0747**		CABLE (00 GA)	
		2	**1S-7251**	1	TERMINAL (FOR 1/2IN BOLT)	
	18	2	**8T-9364**	2	BOLT (1/4-20X.625IN)	
	19	1	**153-9480**	4	ANGLE AS	
		2	**1F-0750**	1	NUT-WELD (3/8-16 THD)	
		2	**8W-9466**	1	ANGLE	
	20	2	**9G-9154**	1	CLIP (10.5MM ID)	
	21	1,2	**6V-8801**	1	NUT (3/8-16 THD)	
	22	2	**8T-4205**	2	WASHER-HARD (2MM THK)	
	23	2	**8T-4226**	1	WASHER-PLATED (3MM THK)	
	24	1	**4L-6454**	4	BOLT (3/8-16X1.0IN)	
	25	2	**6V-6893**	3	SCREW-MACHINE	
	26	1	**3S-2093**	5	STRAP-CABLE (1.75IN DIA)	
YC	27	1	*3E-8700*	1	SENSOR GP-TEMPERATURE	174
C	28	1	**3J-1907**	1	SEAL-O-RING (11.89MM ID)	
	29	4	**7C-4354**	1	CLIP (25.40MM ID)	
C	30	3,4	**2L-0273**	1	NIPPLE	
	31	3,4	**143-5963**	1	CABLE AS	
E		3,4	*5P-0761*		CABLE (RED)	
		3,4	**7N-5274**	1	COVER (BLACK)(BATTERY)	
		3,4	**8N-1725**	1	COVER (RED)(BATTERY)	

112-5983 WIRING GP-REAR (contd.)

i00834885

NOTE	REF NO	GRAPHIC REF	PART NUMBER	QTY	PART NAME 1 2 3 4 5 6 (PRODUCT LEVEL)	SEE PAGE
		3,4	9W-3460	1	TERMINAL AS-POSITIVE	
		3,4	9W-3459	1	TERMINAL AS-BATTERY	
					(EACH TERMINAL AS	
					INCLUDES)	
		3,4	1M-6120	1	NUT-BATTERY TERMINAL (5/16-18 THD)	
		3,4	1M-6119	1	BOLT-BATTERY TERMINAL (5/16-18X1.375IN)	
	32	3	9M-8406	3	CLIP (15.8MM ID)	
	33	3,4	8T-4896	21	WASHER-HARD (2.5MM THK)	
C	34	3,4	5M-3062	15	BOLT (3/8-16X.750IN)	
	35	4	8W-8527	1	SLEEVE	
	36	3	113-7753	1	PLATE	
Y	37	3	7N-0718	1	SWITCH AS-DISCONNECT (IGNITION)	184
	38	3	3E-8320	1	PLATE-INSTRUCTION	
	39	3	110-6399	1	CABLE AS	
		4	1S-7251	1	TERMINAL (FOR 1/2IN BOLT)	
		4	1S-7252	1	TERMINAL (FOR 3/8IN BOLT)	
E		4	5P-0747		CABLE (00 GA)	
	40	4	3K-6060	4	LOCKNUT (3/8-16 THD)	
	41	4	4K-3094	4	STUD	
	42	3,4	9G-9150	4	CLIP (10.2MM ID) (TAB)	
	43	3	8M-2772	1	CLIP (6.35MM ID)	
	44	4	4B-4274	2	WASHER (1.2MM THK)	
	45	4	5L-4507	2	SCREW-MACHINE (10-32X.875IN)	
	46	3,4	8W-8528	4	SLEEVE	
	47	4	6V-8188	2	NUT (1/2-13 THD)	
	48	4	8T-4223	2	WASHER-HARD (3MM THK)	
	49	3,4	6V-8801	5	NUT (3/8-16 THD)	
	50	4	8X-5489	1	SLEEVE	
C	51	4	145-5999	1	HARNESS AS	
C	52	4	144-0383	1	HARNESS AS	
	53	3,4	8W-8909	4	SLEEVE	
	54	3,4	4D-7794	7	CLIP (10.0MM ID)	
C	55	3	144-0389	1	PLATE AS	
	56	4	8K-1433	1	GROMMET	
Y	57	3	130-3452	2	LAMP GP-SIGNAL	163
	58	3	7G-1060	1	STRAP AS-GROUND	
M	59	3	5C-2890	6	NUT (M6X1.00 THD)	
	60	3	9X-8256	6	WASHER (2MM THK)	
	61	3	9G-9152	2	CLIP (12.0MM ID)	
	62	3	5S-7349	2	BOLT (1/4-20X0.5IN)	
	63	3,4	8T-4205	6	WASHER-HARD (2MM THK)	
	64	3	6V-8185	2	NUT (1/4-20 THD)	
C	65	3,4	3S-2093	7	STRAP-CABLE (1.75IN DIA)	
	66	3,4	5P-1075	5	WASHER-HARD (3MM THK)	
C	67	4	6D-4246	2	CLIP (SLOT)	
	68	3	127-7072	1	PLATE	
C	69	4	3T-3045	2	CLIP AS (12MM ID)	
	70	3	144-0373	1	HARNESS AS	
	71	4	033-8248	1	CLIP (11.11MM ID)	
C	72	4	6V-0395	2	BOLT-12 POINT HEAD	
	73	4	6V-4283	1	PLATE-ALTERNATOR	
C	74	3	144-0382	1	HARNESS AS	
	75	3,4	4L-6454	2	BOLT (3/8-16X1.0IN)	
	76	4	9S-0174	1	CIRCUIT BREAKER AS (60 AMP)	
		4	1H-3244	2	LOCKWASHER (NO.14)	
		4	6V-8365	2	SCREW-MACHINE (1/4-28X.5IN)	
	77	4	3E-7279	1	SWITCH AS-MAGNETIC	
	78	4	7K-1181	1	STRAP-CABLE (4.00IN DIA)	

112-5983 WIRING GP-REAR *(contd.)* i00834885

B-USE AS REQUIRED
C-CHANGE FROM PREVIOUS TYPE
E-ORDER BY THE CENTIMETER
M-METRIC PART
Y-SEPARATE ILLUSTRATION

112-5983 WIRING GP-REAR (contd.) i00834885

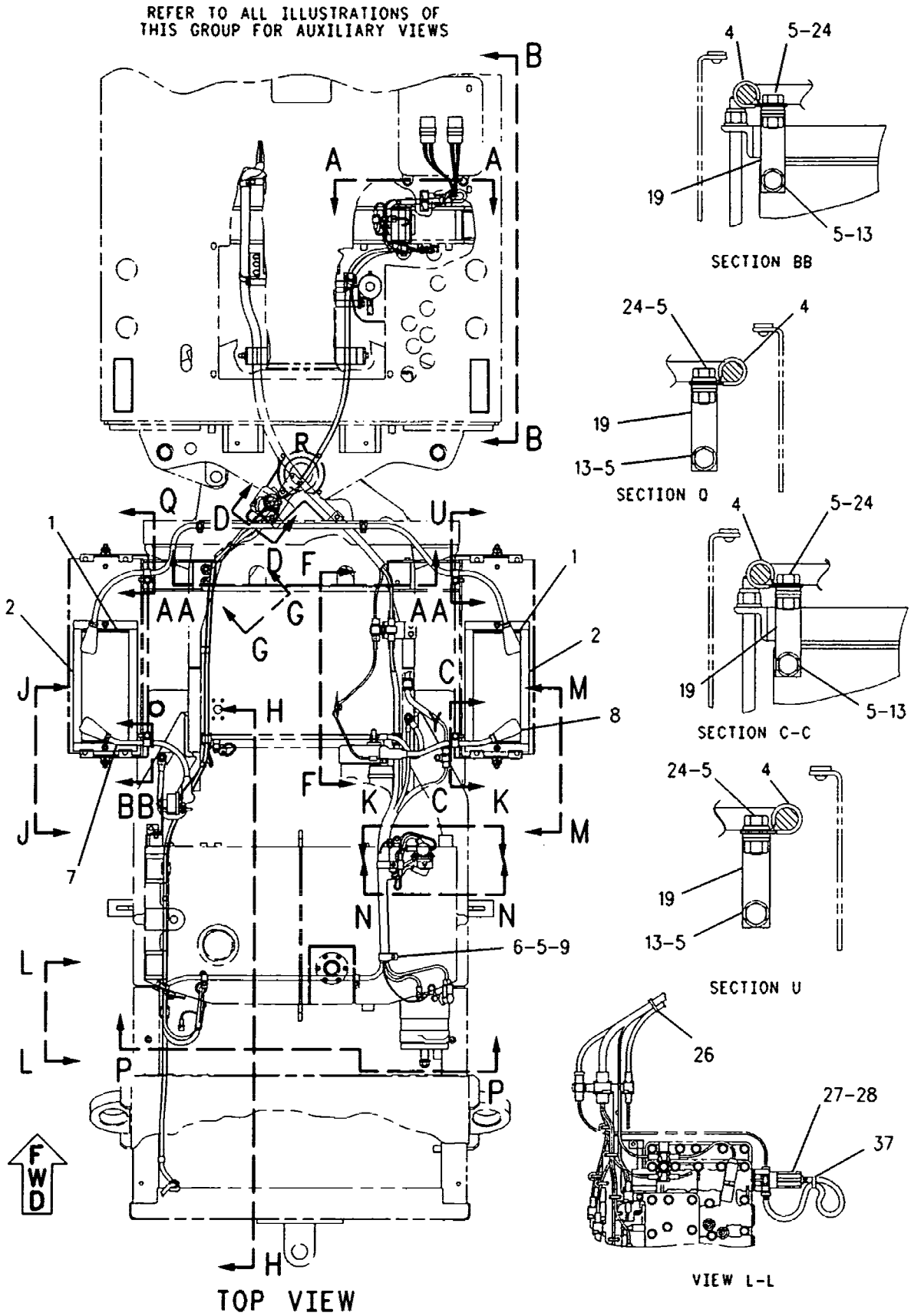

GRAPHIC #1 g00297073

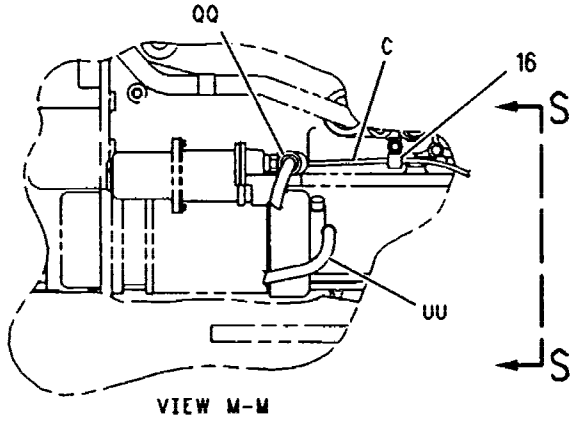

VIEW M-M

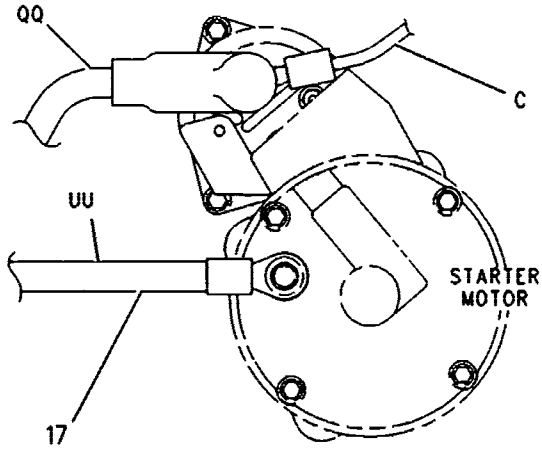

VIEW S-S

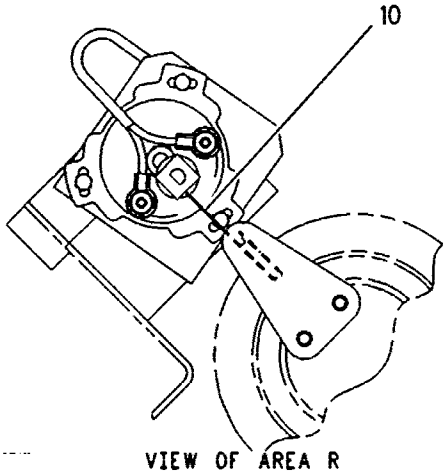

VIEW OF AREA R

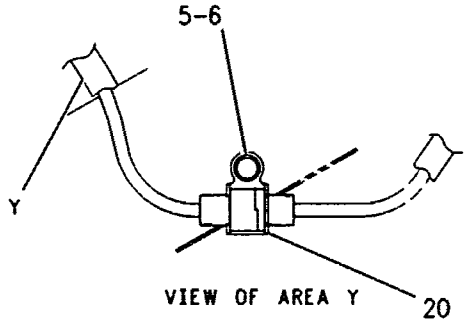

VIEW OF AREA Y

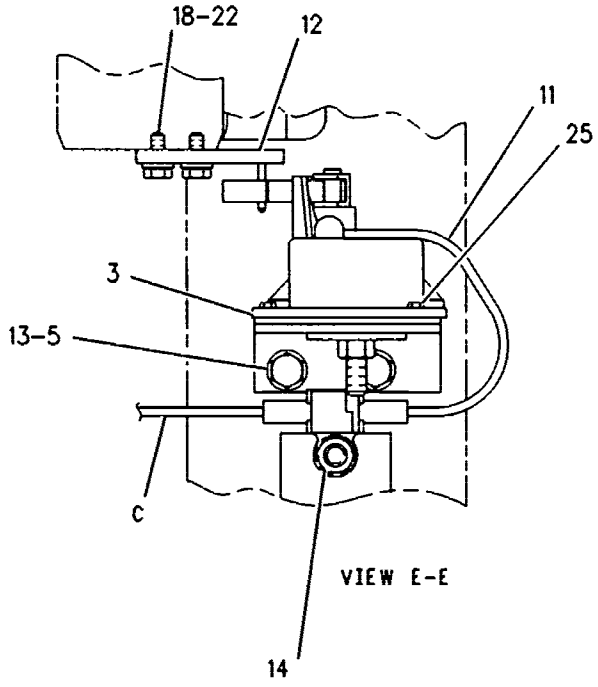

VIEW E-E

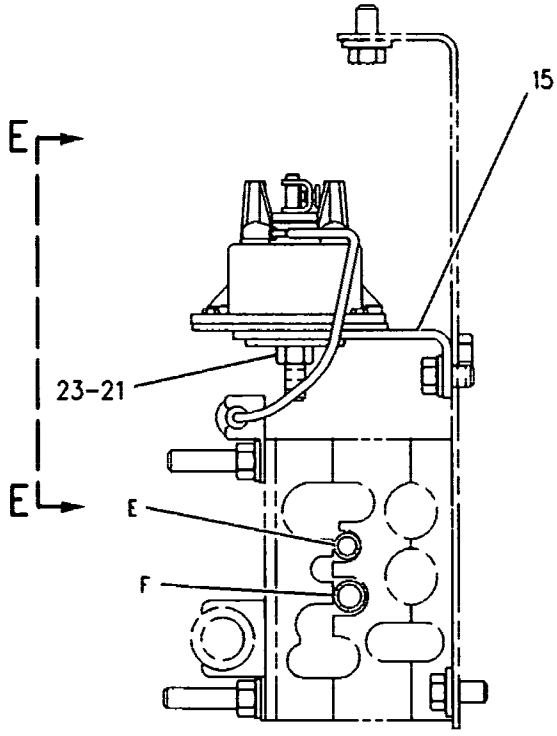

SECTION D-D

REFER TO ALL ILLUSTRATIONS OF THIS GROUP FOR AUXILIARY VIEWS

GRAPHIC #2

g00109555

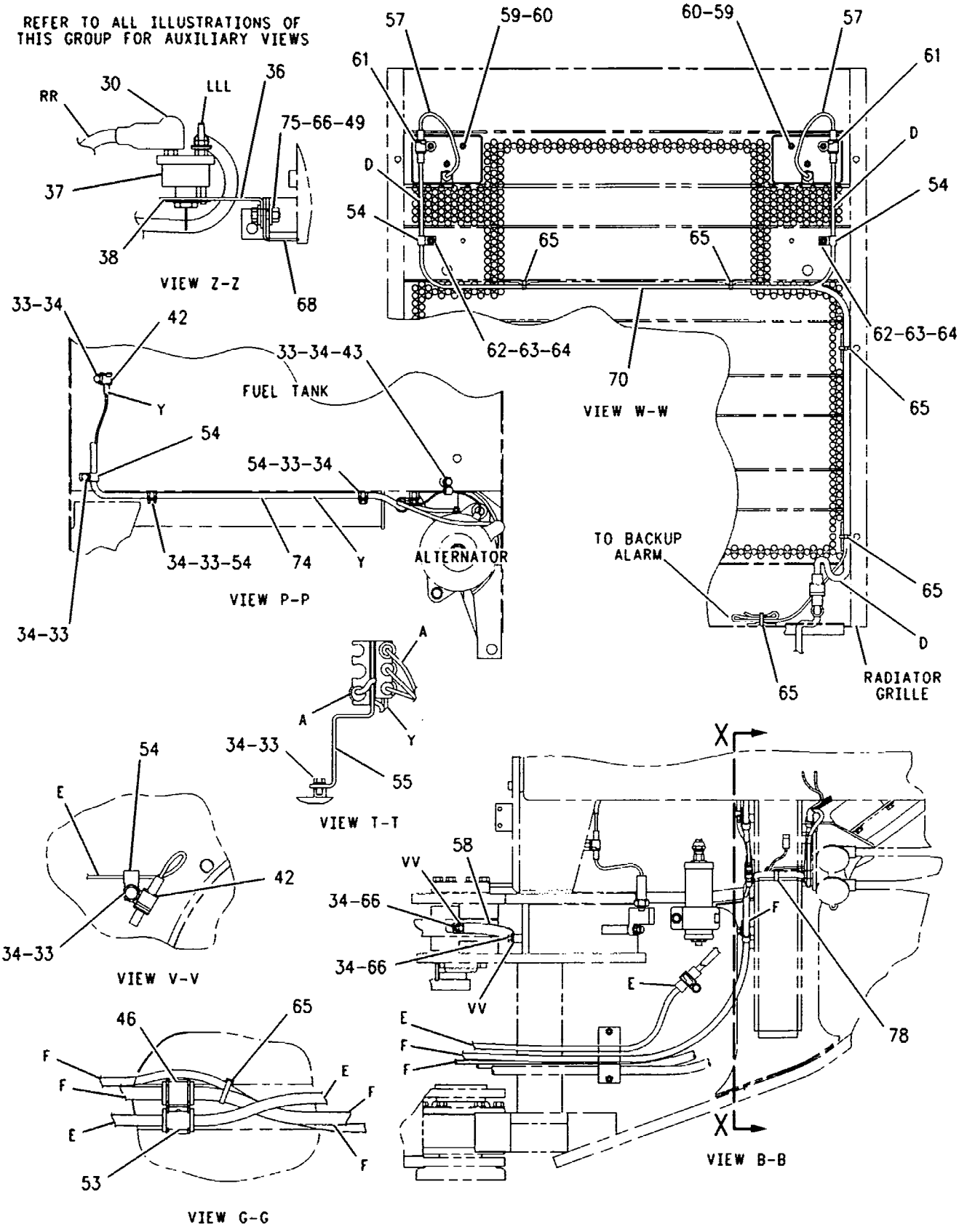

GRAPHIC #3 g00353616

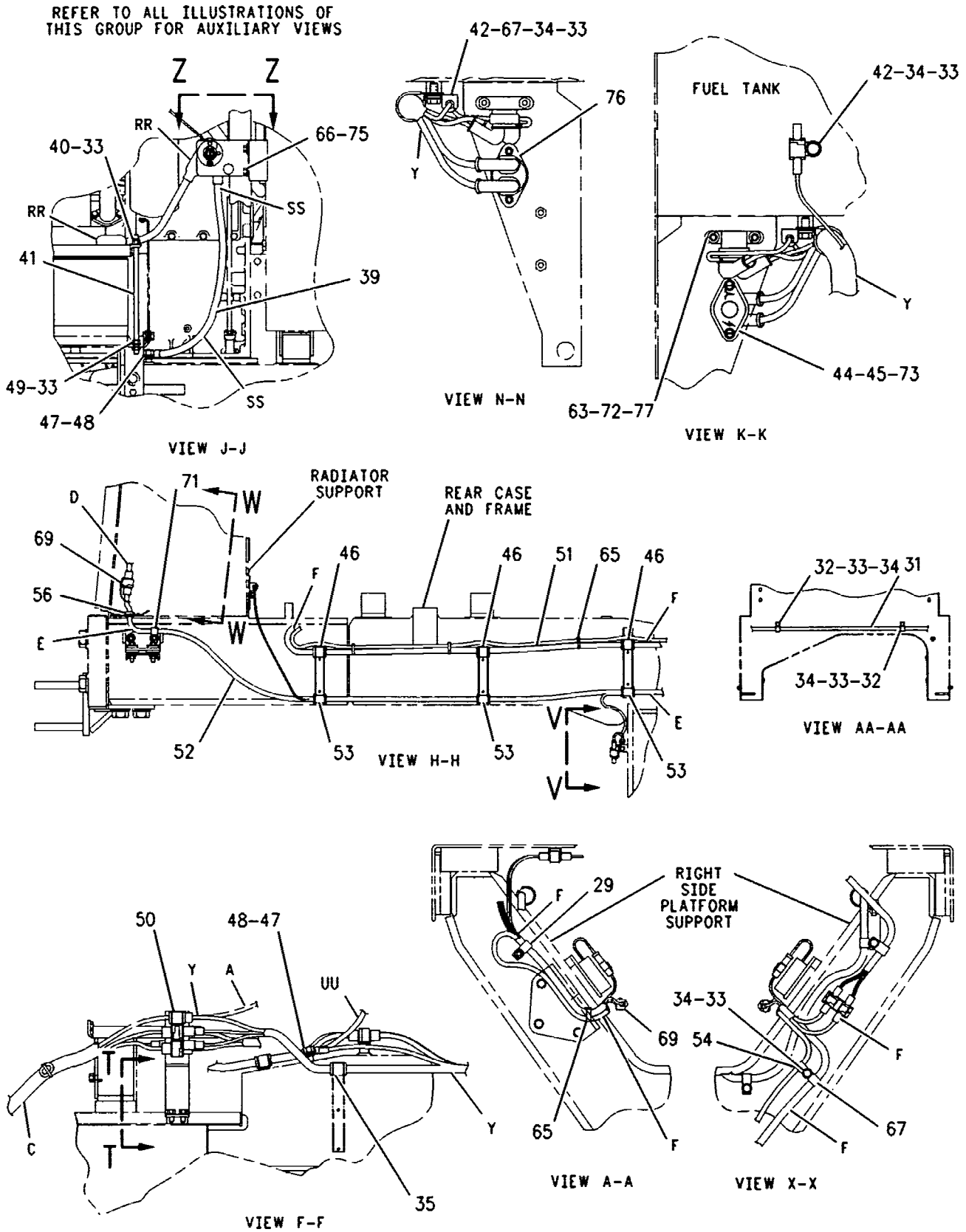

GRAPHIC #4 g00353617

MEMORANDA

ELECTRICAL AND STARTING SYSTEM

112-5960 WIRING GP-SHIFT CONSOLE

PIN 5FM1-549

PART OF 112-4103 CHASSIS AR

SMCS-1408, 1435 **i00834882**

NOTE	REF NO	GRAPHIC REF	PART NUMBER	QTY	PART NAME 1 2 3 4 5 6 (PRODUCT LEVEL)	SEE PAGE
	1	1	**126-9166**	1	HARNESS AS	
	2	1	**137-1722**	1	HARNESS AS	
Y	3	1	*9G-7641*	1	SWITCH GP-START	185
	4	1	**3E-8817**	1	ACTUATOR-ROCKER	
		1	**3E-8825**	1	LAMP-MINIATURE (24 VOLT) (1.75 DIA)	
		1	**3E-9327**	1	SWITCH AS (CENTERSHIFT PIN PULL)	
	5	1	**7G-7053**	1	GROMMET	
Y	6	1	*9G-9813*	1	ALARM GP	142
	7	1	**5M-3062**	2	BOLT (3/8-16X.750IN)	
	8	1	**8T-4896**	2	WASHER-HARD (2.5MM THK)	
	9	1	**8C-6354**	1	CAP-RECEPTACLE	
	10	1	**2S-9255**	4	BOLT-SOCKET HEAD	
	11	1	**5S-4246**	4	LOCKWASHER-TOOTH	
	12	1	**6B-4540**	4	NUT (4-40 THD)	
	13	1	**7N-5876**	1	LAMP-MINIATURE (28 VOLT)	
	14	1	**9M-8406**	1	CLIP (15.8MM ID)	
	15	1	**9G-9150**	1	CLIP (10.2MM ID)	
	16	1	**3S-2093**	2	STRAP-CABLE (1.75IN DIA)	
	17	1	**107-7090**	1	PLATE	
	18	1	**7M-3361**	1	GROMMET	
M	19	1	**5C-9553**	2	BOLT (M6X1.0X16MM)	
	20	1	**9X-8256**	2	WASHER (2MM THK)	
	21	1	**2V-8259**	2	GROMMET	
Y	22	1	*134-6553*	1	CONTROL GP-TMSN ELECTRONIC	153
	23	1	**4D-7794**	2	CLIP (10.0MM ID)	
	24	1	**3E-0109**	4	PLUG-ROCKER SWITCH	
	25	1	**9G-2265**	1	CLIP	
	26	1	**3H-2900**	1	GROMMET	
	27	1	**8M-2770**	1	CLIP (12.7MM ID)	
	28	1	**8T-9471**	1	GROMMET	
M	29	1	**8T-4138**	2	BOLT (M6X1.0X20MM)	
	30	1	**5P-4115**	2	WASHER (2MM THK)	
	31	1	**117-9364**	1	CONTROL GP-ELECTRONIC	

M-METRIC PART
Y-SEPARATE ILLUSTRATION

112-5960 WIRING GP-SHIFT CONSOLE *(contd.)* i00834882

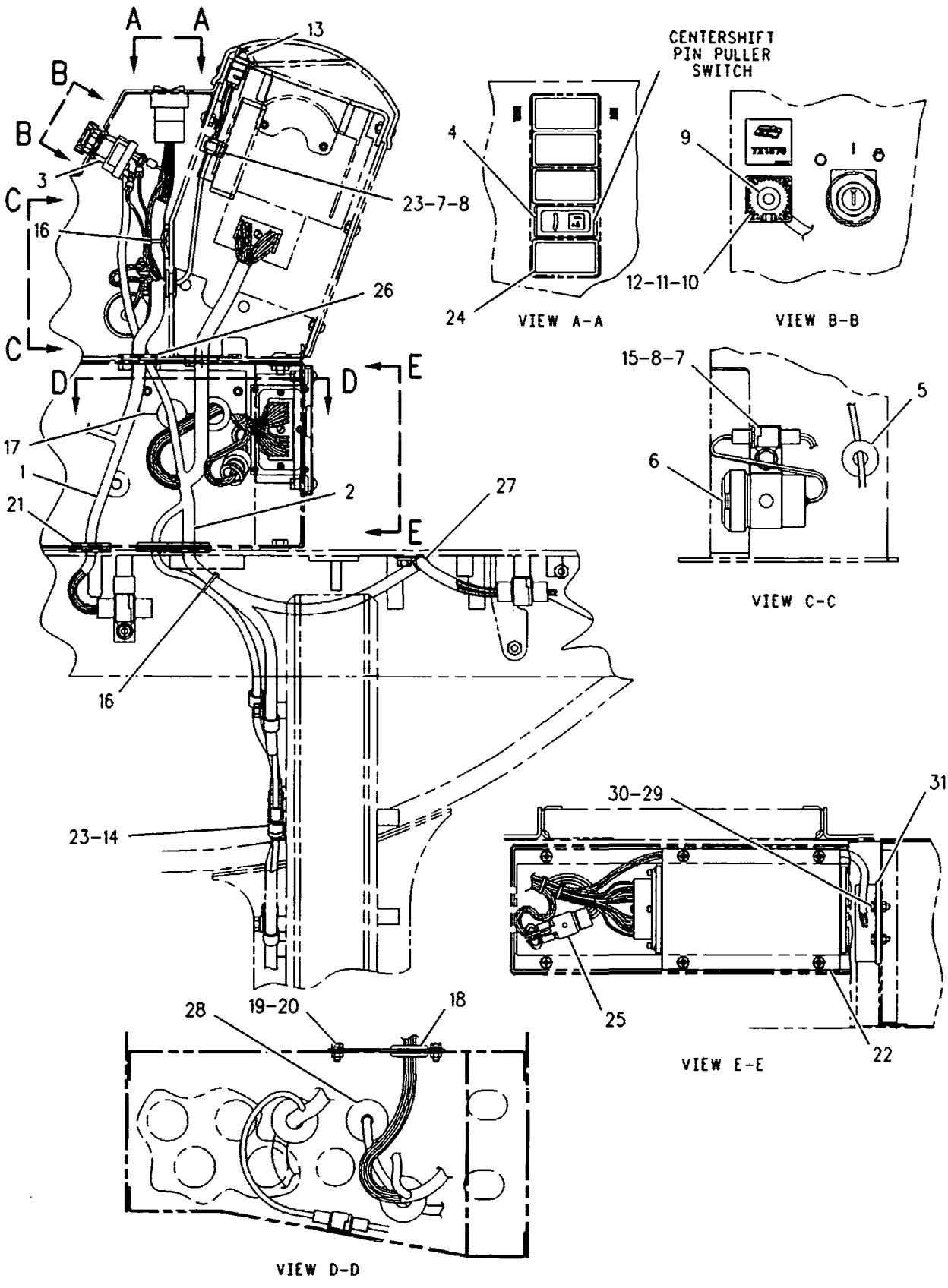

GRAPHIC #1 g00276735

ELECTRICAL AND STARTING SYSTEM

112-5960 WIRING GP-SHIFT CONSOLE

PIN 5FM550-799

PART OF 112-4103 CHASSIS AR

SMCS-1408, 1435 **i00834881**

NOTE	REF NO	GRAPHIC REF	PART NUMBER	QTY	PART NAME 1 2 3 4 5 6 (PRODUCT LEVEL)	SEE PAGE
	1	1	**126-9166**	1	HARNESS AS	
	2	1	**137-1722**	1	HARNESS AS	
Y	3	1	*9G-7641*	1	SWITCH GP-START	185
	4	1	**3E-9327**	1	SWITCH AS (CENTERSHIFT PIN PULL)	
		1	**3E-8825**	1	LAMP-MINIATURE (24 VOLT) (1.75 DIA)	
		1	**3E-8817**	1	ACTUATOR-ROCKER	
	5	1	**7G-7053**	1	GROMMET	
Y	6	1	*9G-9813*	1	ALARM GP	142
	7	1	**5M-3062**	2	BOLT (3/8-16X.750IN)	
	8	1	**8T-4896**	2	WASHER-HARD (2.5MM THK)	
	9	1	**8C-6354**	1	CAP-RECEPTACLE	
	10	1	**2S-9255**	4	BOLT-SOCKET HEAD	
	11	1	**5S-4246**	4	LOCKWASHER-TOOTH	
	12	1	**6B-4540**	4	NUT (4-40 THD)	
	13	1	**7N-5876**	1	LAMP-MINIATURE (28 VOLT)	
	14	1	**9M-8406**	1	CLIP (15.8MM ID)	
	15	1	**9G-9150**	1	CLIP (10.2MM ID)	
	16	1	**3S-2093**	2	STRAP-CABLE (1.75IN DIA)	
	17	1	**107-7090**	1	PLATE	
	18	1	**7M-3361**	1	GROMMET	
M	19	1	**5C-9553**	2	BOLT (M6X1.0X16MM)	
	20	1	**9X-8256**	2	WASHER (2MM THK)	
	21	1	**2V-8259**	2	GROMMET	
CYR	22	1	*143-9634*	1	CONTROL GP-TMSN ELECTRONIC	154
	23	1	**4D-7794**	2	CLIP (10.0MM ID)	
	24	1	**3E-0109**	4	PLUG-ROCKER SWITCH	
	25	1	**9G-2265**	1	CLIP	
	26	1	**3H-2900**	1	GROMMET	
	27	1	**8M-2770**	1	CLIP (12.7MM ID)	
	28	1	**8T-9471**	1	GROMMET	
M	29	1	**8T-4138**	2	BOLT (M6X1.0X20MM)	
	30	1	**5P-4115**	2	WASHER (2MM THK)	
	31	1	**117-9364**	1	CONTROL GP-ELECTRONIC	

C-CHANGE FROM PREVIOUS TYPE
M-METRIC PART
R-REMFG PART MAY BE AVAILABLE
Y-SEPARATE ILLUSTRATION

112-5960 WIRING GP-SHIFT CONSOLE *(contd.)* i00834881

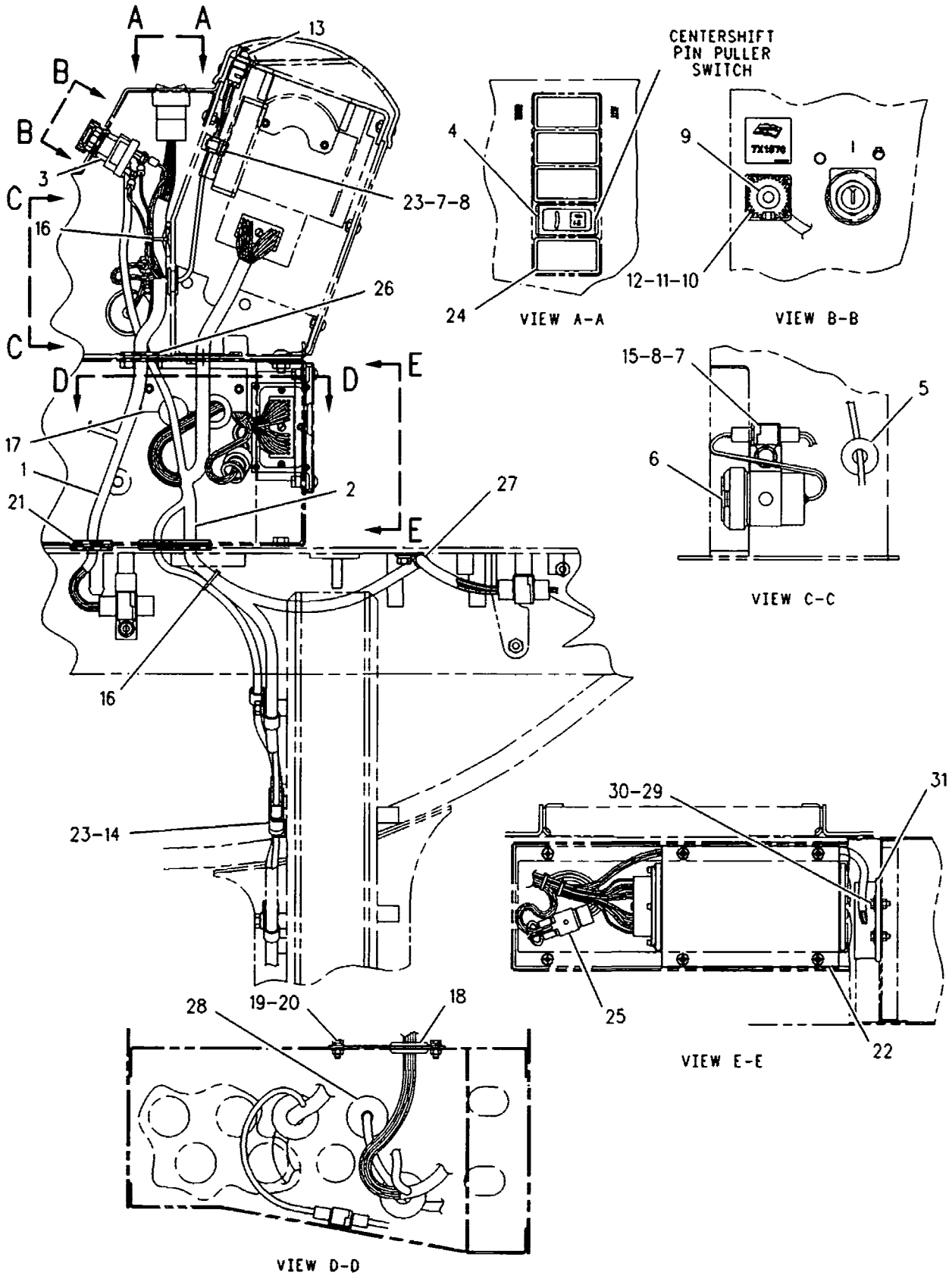

GRAPHIC #1 g00276735

ELECTRICAL AND STARTING SYSTEM

112-5960 WIRING GP-SHIFT CONSOLE

PIN 5FM800-UP

PART OF 112-4103 CHASSIS AR

SMCS-1408, 1435 **i00834880**

NOTE	REF NO	GRAPHIC REF	PART NUMBER	QTY	PART NAME 1 2 3 4 5 6 (PRODUCT LEVEL)	SEE PAGE
C	1	1	**143-3580**	1	HARNESS AS	
C	2	1	**142-5835**	1	HARNESS AS	
Y	3	1	*9G-7641*	1	SWITCH GP-START	185
	4	1	**3E-9327**	1	SWITCH AS (CENTERSHIFT PIN PULL)	
		1	**3E-8825**	1	LAMP-MINIATURE (24 VOLT)	
		1	**3E-8817**	1	ACTUATOR-ROCKER	
	5	1	**7G-7053**	1	GROMMET	
Y	6	1	*9G-9813*	1	ALARM GP	142
	7	1	**5M-3062**	2	BOLT (3/8-16X.750IN)	
	8	1	**8T-4896**	2	WASHER-HARD (2.5MM THK)	
	9	1	**8C-6354**	1	CAP-RECEPTACLE	
C	10	1	**6V-2480**	4	SCREW	
	11	1	**5S-4246**	4	LOCKWASHER-TOOTH	
	12	1	**6B-4540**	4	NUT (4-40 THD)	
	13	1	**7N-5876**	1	LAMP-MINIATURE (28 VOLT)	
	14	1	**9M-8406**	1	CLIP (15.8MM ID)	
	15	1	**9G-9150**	1	CLIP (10.2MM ID) (TAB)	
C	16	1	**3S-2093**	4	STRAP-CABLE (1.75IN DIA)	
C	17	1	**3V-4694**	1	PLUG-BUTTON	
C	18	1	**9R-2620**	1	PLUG	
	19	1	**3H-2900**	1	GROMMET	
	20	1	**3E-0109**	4	PLUG-ROCKER SWITCH	
	21	1	**2V-8259**	2	GROMMET	
C	22	1	**4D-7794**	2	CLIP (10.0MM ID)	

C-CHANGE FROM PREVIOUS TYPE
Y-SEPARATE ILLUSTRATION

112-5960 WIRING GP-SHIFT CONSOLE *(contd.)* i00834880

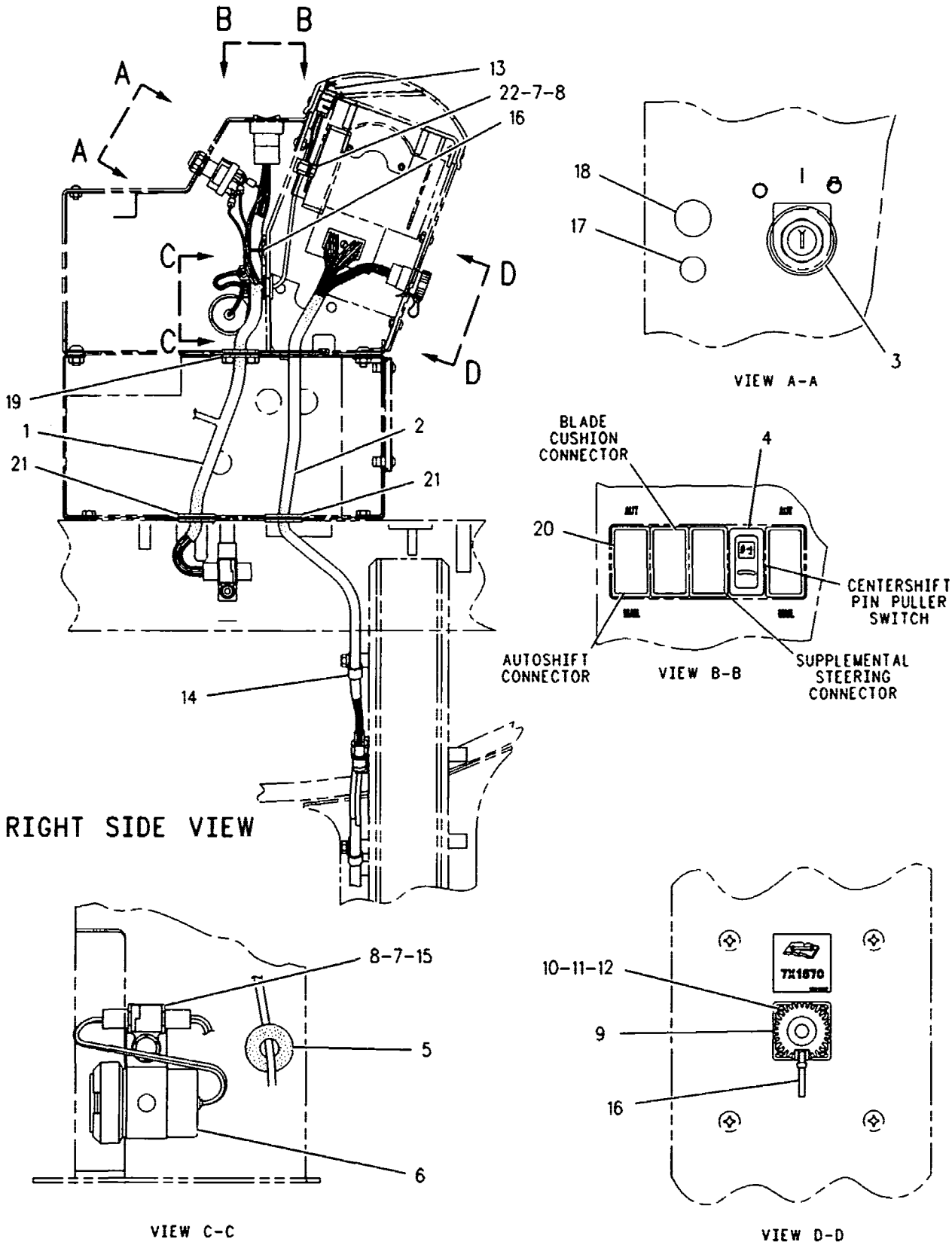

GRAPHIC #1 g00276738

ELECTRICAL AND STARTING SYSTEM

112-5974 WIRING GP-STEERING CONSOLE

PIN 5FM1-UP

PART OF 112-4103 CHASSIS AR

SMCS-1408, 4334 **i00679389**

NOTE	REF NO	GRAPHIC REF	PART NUMBER	QTY	PART NAME 1 2 3 4 5 6 (PRODUCT LEVEL)	SEE PAGE
	1	1	**6V-3507**	1	SEAL-RECTANGULAR	
	2	1	**151-4142**	1	HARNESS AS	
	3	1	**3S-2093**	5	STRAP-CABLE (1.75IN DIA)	
	4	1	**102-9383**	1	PLATE	
	5	1	**4B-1280**	2	SCREW-MACHINE	
	6	1	**8T-4205**	2	WASHER-HARD (2MM THK)	
	7	1	**6V-8185**	2	NUT (1/4-20 THD)	
	8	1	**3E-8763**	1	SWITCH AS (TAIL LAMP)	
		1	**3E-8825**	1	LAMP-MINIATURE (24 VOLT)	
	9	1	**2G-8096**	1	MOUNTING	
	10	1	**6D-4244**	1	CLIP (22.22MM ID)	
	11	1	**3K-8782**	6	FUSE (10 AMP)	
	12	1	**9X-6258**	2	SCREW-MACHINE (6-32X.50IN)	
	13	1	**9G-0747**	1	BLOCK AS-FUSE	
		1	**4B-5324**	9	WASHER (1.19MM THK)	
		1	**6V-8373**	9	SCREW-MACHINE (6-32X.187IN)	
		1	**6V-8376**	1	SCREW-MACHINE (8-32X.25IN)	
		1	**8C-9660**	1	WASHER (0.8MM THK)	
	14	1	**9G-2264**	3	CLIP-CONNECTOR	
	15	1	**3E-0109**	5	PLUG-ROCKER SWITCH	
	16	1	**121-1241**	1	KIT-SERVICE METER	
		1	**114-2505**	1	FILM-SERVICE METER	

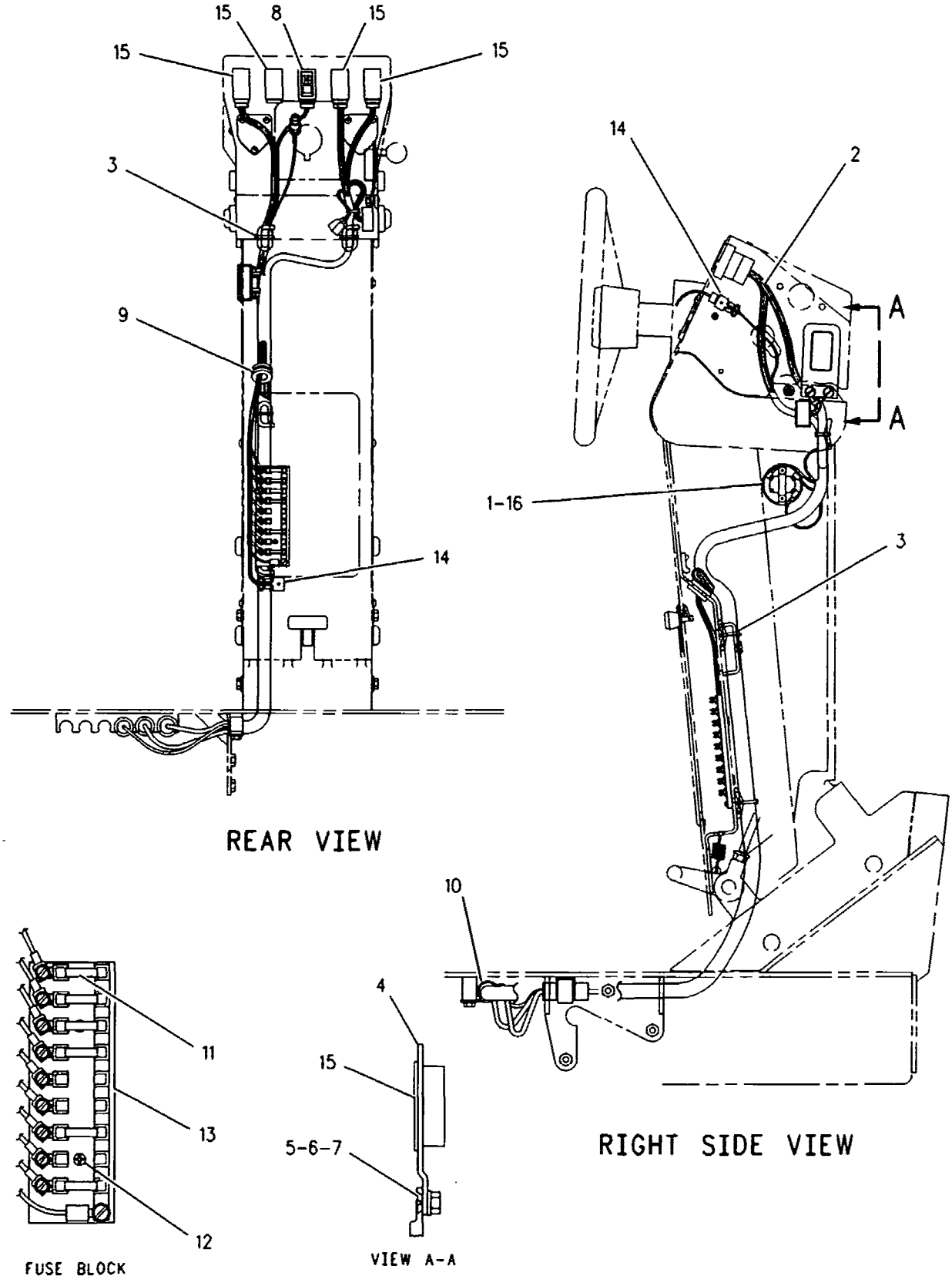

GRAPHIC #1 g00272747

POWER TRAIN

9W-5132 BRAKE GP-PARKING

S/N 7LX750-99999; 4MY440-UP; 5AY527-99999

PART OF 144-2234, 149-6083, 9W-7115 TRANSMISSION AR

SMCS-3077, 4267 i00134413

NOTE	REF NO	GRAPHIC REF	PART NUMBER	QTY	PART NAME 1 2 3 4 5 6 (PRODUCT LEVEL)	SEE PAGE
M	1	1	6V-5842	6	BOLT (M10X1.50X40MM)	
	2	1	6V-5839	6	WASHER (2.5MM THK)	
	3	1	6Y-3849	1	HUB-CLUTCH	
	4	1	9M-4335	6	DOWEL-REACTION	
	5	1	5J-1086	1	SEAL-O-RING (323.44MM ID)	
	6	1	6Y-3850	1	HOUSING-BRAKE	
	7	1	4S-5838	1	RETAINER	
M	8	1	8T-0372	1	BOLT (M12X1.75X90MM)	
	9	1	4F-7390	1	SEAL (53.34MM ID)	
	10	1	1P-7521	1	YOKE	
	11	1	7D-8436	1	SEAL-D-RING	
	12	1	9W-4431	20	SPRING	
	13	1	9W-4430	20	SPRING	
M	14	1	6V-3668	12	BOLT (M12X1.75X30MM)	
	15	1	7G-0437	6	PLATE-CLUTCH	
	16	1	6Y-5352	5	DISC-FRICTION	
	17	1	2J-6274	1	SEAL-O-RING	
	18	1	9S-4182	1	PLUG (7/16-20 THD)	
	19	1	3J-7354	1	SEAL-O-RING (8.92MM ID)	
	20	1	8D-8795	1	SEAL-D-RING	
	21	1	9W-4452	1	PISTON	
	22	1	9W-4453	1	PISTON	
	23	1	4H-9105	1	SEAL-O-RING (110.72MM ID)	
	24	1	6Y-3852	1	PLUG	
	25	1	9N-6152	1	PLUG-O-RING	
	26	1	2M-9780	1	SEAL-O-RING (19.18MM ID)	
	27	1	1M-3003	1	SEAL-LIP	

M-METRIC PART

9W-5132 BRAKE GP-PARKING *(contd.)* i00134413

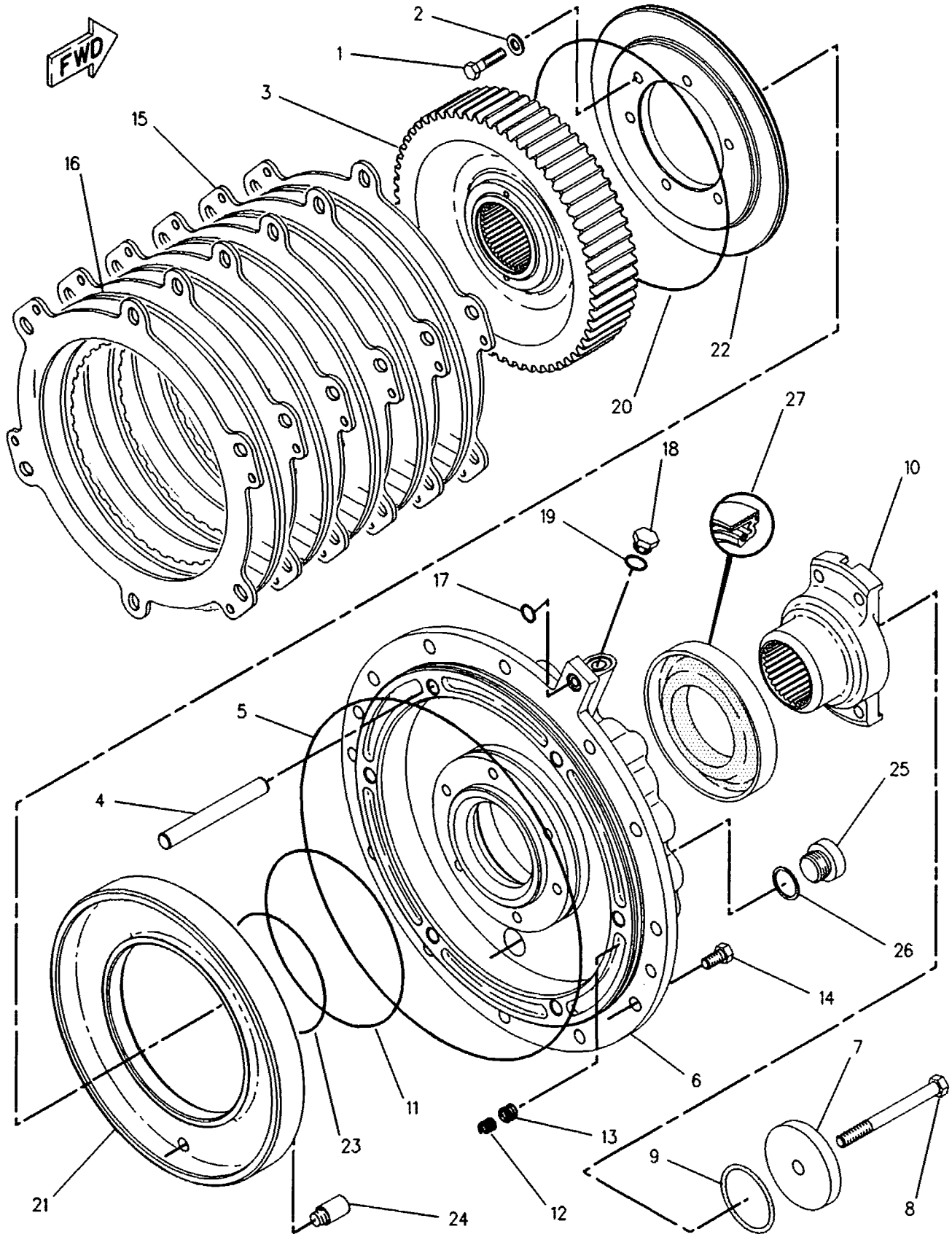

GRAPHIC #1 g00108550

POWER TRAIN

9W-5128 CASE & PARTS GP-PLANETARY

S/N 7LX750-99999

PART OF 9W-7115 TRANSMISSION AR

SMCS-3064 i00815864

NOTE	REF NO	GRAPHIC REF	PART NUMBER	QTY	PART NAME 1 2 3 4 5 6 (PRODUCT LEVEL)	SEE PAGE
	1	1	143-7403	1	CASE AS-TRANS	
		1	7T-6496	7	PLUG (11.9 MM DIA)	
		1	8M-6521	2	DOWEL	
	2	1	6Y-5728	1	COVER AS-TRANSMISSION	
		1	3S-2173	1	PLUG-CUP	
M	3	1	6V-1820	37	BOLT (M10X1.50X30MM)	
M	4	1	8T-5436	2	BOLT (M10X1.50X130MM)	
	5	1	9S-4185	1	PLUG-O-RING (3/4-16 THD)	
	6	1	3K-0360	1	SEAL-O-RING (16.36MM ID)	
	7	1	2J-0157	1	SEAL-O-RING (15.47MM ID)	
CB	8	1	1U-8846		GASKET-LIQUID	
	9	1	5M-6213	1	PLUG	
	10	1	5M-6200	1	SEAL-O-RING	
	11	1	8E-1133	1	TUBE AS	
	12	1	6L-1650	1	SEAL-O-RING	
M	13	1	6V-5217	3	BOLT (M8X1.25X20MM)	
	14	1	5P-3863	1	SEAL-O-RING (82.22MM ID)	
	15	1	9W-1454	1	COVER	
	16	1	8S-9129	1	FILTER-MAGNETIC (TRANSMISSION)	
	17	1	8S-9130	1	SCREEN-SUCTION	
	18	1	8E-2390	2	VALVE GP-RELIEF	
	19	1	9X-4609	2	SEAL-O-RING (23.47MM ID)	
	20	1	7M-8485	3	SEAL-O-RING (29.74MM ID)	
C	21	1	4N-9170	2	CLIP	
	22	1	9M-1974	1	WASHER-HARD (2MM THK)	
M	23	1	8T-4200	1	BOLT (M8X1.25X16MM)	
	24	1	9S-4181	3	PLUG-STRAIGHT THREAD (1-5/16-12 THD)	
	25	1	1B-5174	1	PLUG-PIPE (3/4-14 NPTF)	
	26	2	9S-4185	1	PLUG-O-RING (3/4-16 THD)	
	27	2	3K-0360	3	SEAL-O-RING (16.36MM ID)	
M	28	2	6V-5217	6	BOLT (M8X1.25X20MM)	
	29	2	5P-3863	2	SEAL-O-RING (82.22MM ID)	
	30	2	9W-1454	2	COVER	
	31	2	9S-4190	5	PLUG-O-RING (7/16-20 THD)	
	32	2	2M-9780	6	SEAL-O-RING (19.18MM ID)	
	33	2	9S-4191	1	PLUG-O-RING (9/16-18 THD)	
	34	2	3J-1907	1	SEAL-O-RING (11.89MM ID)	
	35	2	6V-5839	5	WASHER (2.5MM THK)	
	36	2	8E-7107	1	PLATE AS	
M	37	2	6V-8212	1	BOLT (M10X1.50X16MM)	
	38	2	5P-4483	1	PLUG-O-RING	
	39	2	7M-8485	1	SEAL-O-RING (29.74MM ID)	
M	40	2	6V-7981	5	BOLT (M10X1.50X70MM)	
M	41	2	6V-4248	6	BOLT (M10X1.50X25MM)	
	42	2	9S-8006	1	PLUG-O-RING (7/8-14 THD)	
	43	2	9S-8005	2	PLUG-O-RING (3/4-16 THD)	
	44	2	6I-8642	2	RACE-BEARING OUTER	
	45	2	104-8588	1	WIRE AS	
		2	7N-7779	2	SOCKET	
		2	7N-7780	2	PIN-CONNECTOR (BLADE)	
		2	7N-9737	2	HOUSING-PLUG (1 PIN,1 SOCKET)	
	46	2	1B-3057	2	CLIP (12.7MM ID)	
	47	2	5P-1075	3	WASHER-HARD (3MM THK)	
M	48	2	8T-4137	3	BOLT (M10X1.50X20MM)	
	49	2	7X-7816	1	PLATE-SERIAL NUMBER	
	50	2	104-6387	1	SENSOR & SPEED AS	

9W-5128 CASE & PARTS GP-PLANETARY *(contd.)* i00815864

NOTE	REF NO	GRAPHIC REF	PART NUMBER	QTY	PART NAME 1 2 3 4 5 6 (PRODUCT LEVEL)	SEE PAGE
		2	**7N-7779**	1	SOCKET	
		2	**7N-7780**	1	PIN-CONNECTOR (BLADE)	
		2	**7N-9738**	1	HOUSING-RECEPTACLE	
E		2	**9X-1386**		SLEEVE	
	51	2	**9G-9150**	1	CLIP (10.2MM ID) (TAB)	
M	52	2	**8T-4133**	1	NUT (M10X1.50 THD)	
	53	2	**104-8589**	1	GUARD AS	
	54	2	**113-7745**	1	PLATE AS	
M		2	**8T-3490**	2	NUT-WELD (M10X1.5 THD)	
M	55	3	**6V-5217**	6	BOLT (M8X1.25X20MM)	
	56	3	**5P-3863**	2	SEAL-O-RING (82.22MM ID)	
	57	3	**9W-1454**	2	COVER	
	58	3	**4M-6108**	2	RACE-BEARING OUTER	
	59	3	**9W-7038**	1	RING-SNAP	
M	60	3	**6V-3940**	4	BOLT (M8X1.25X25MM)	
	61	3	**6Y-9763**	1	GEAR AS (38 TEETH)	
		3	**4K-8603**	1	PLUG-CUP (25.73MM ID)	
	62	3	**2S-3029**	1	BALL BEARING	
	63	3	**9W-6465**	1	RETAINER-BEARING	
	64	3	**6I-8642**	4	RACE-BEARING OUTER	
	65	3	**2H-6489**	1	RACE-BEARING OUTER	
	66	3	**9M-2042**	1	RACE-BEARING OUTER	
	67	3	**1B-0936**	1	SEAL-LIP	

B-USE AS REQUIRED
C-CHANGE FROM PREVIOUS TYPE
E-ORDER BY THE CENTIMETER
M-METRIC PART

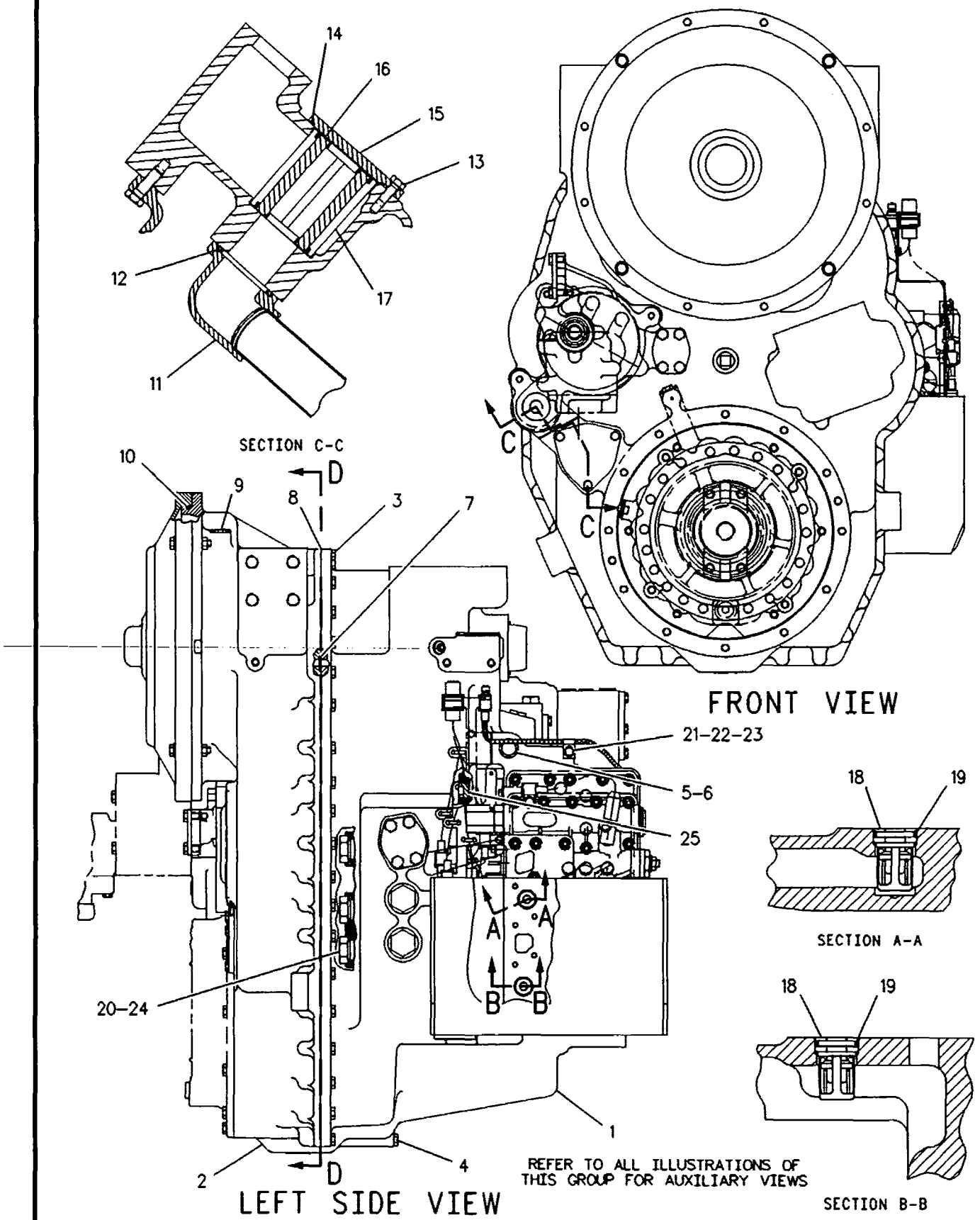

GRAPHIC #1

g00108588

9W-5128 CASE & PARTS GP-PLANETARY *(contd.)* i00815864

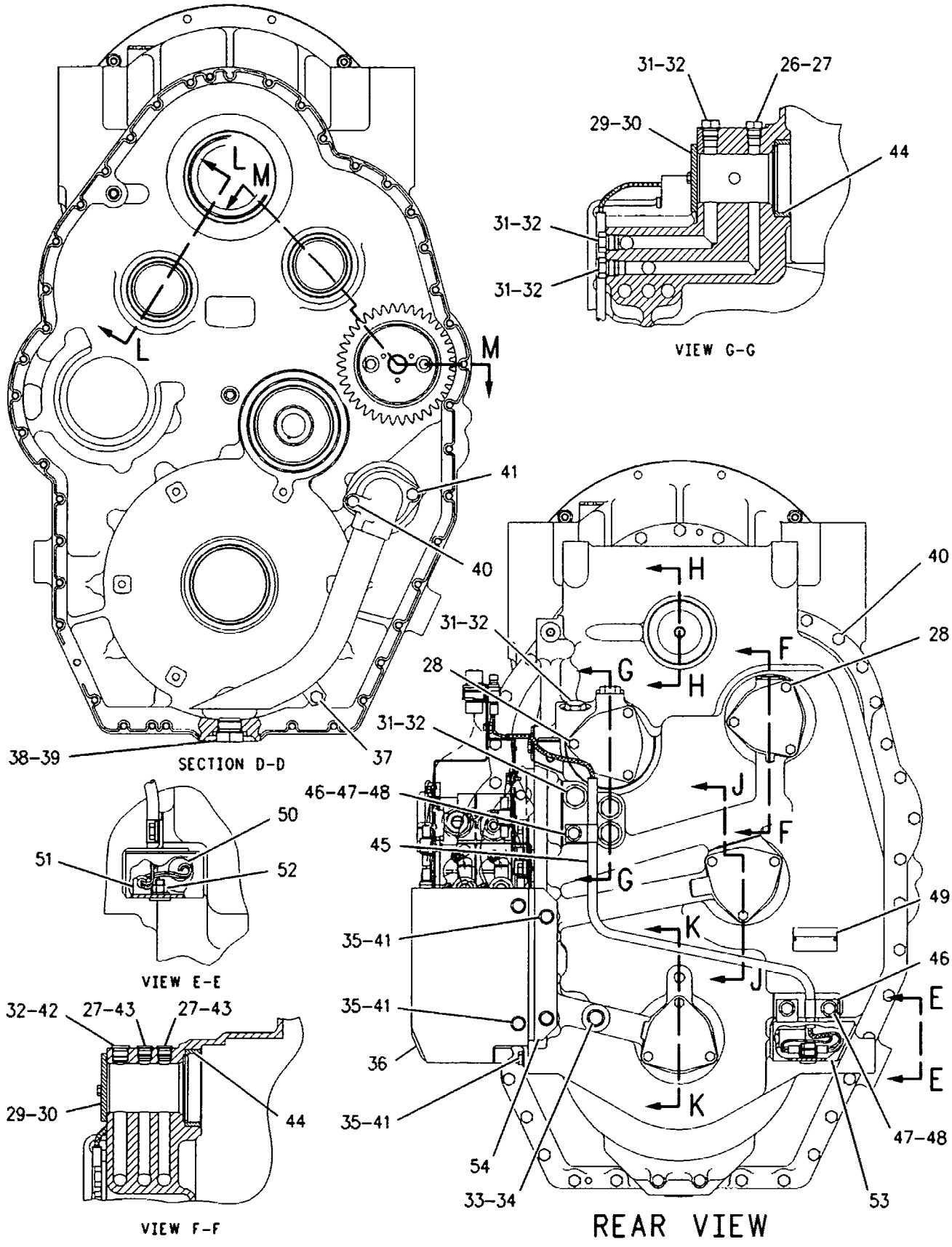

GRAPHIC #2 g00344348

9W-5128 CASE & PARTS GP-PLANETARY *(contd.)* i00815864

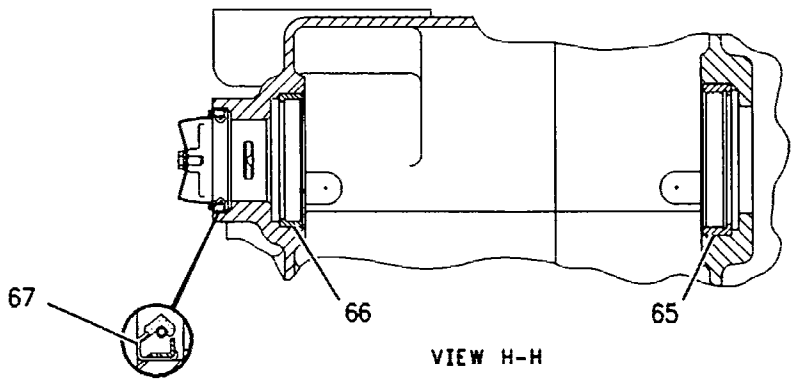

VIEW H-H

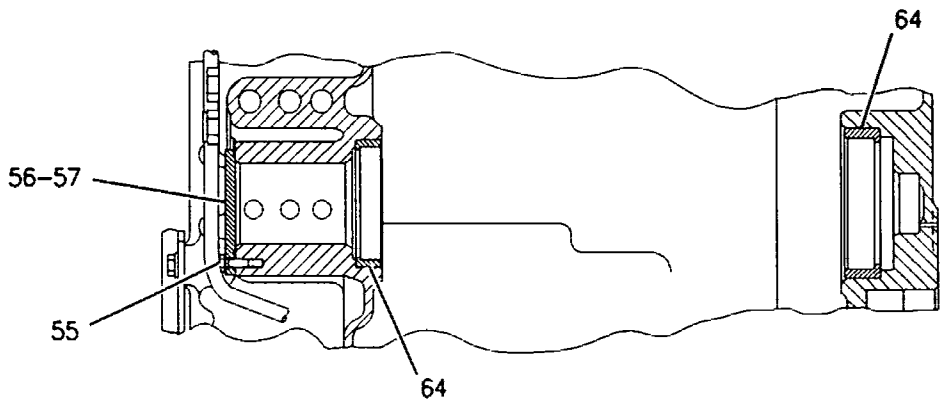

VIEW J-J

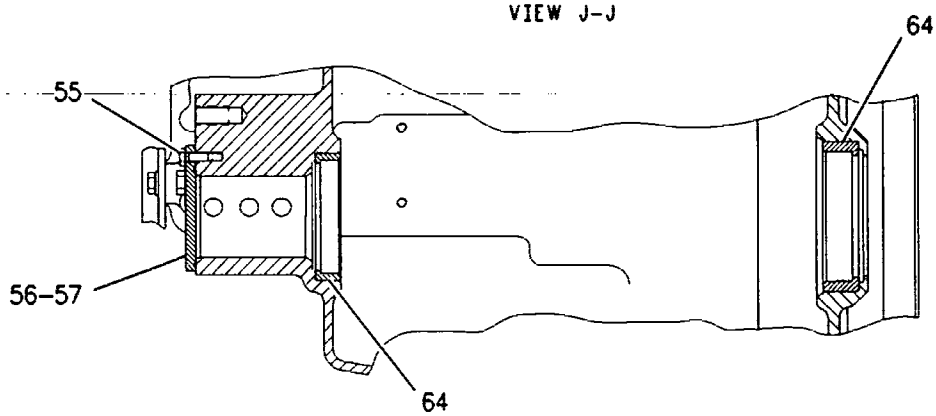

VIEW K-K

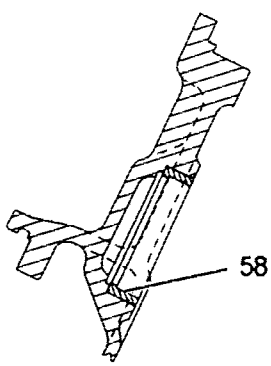

VIEW L-L

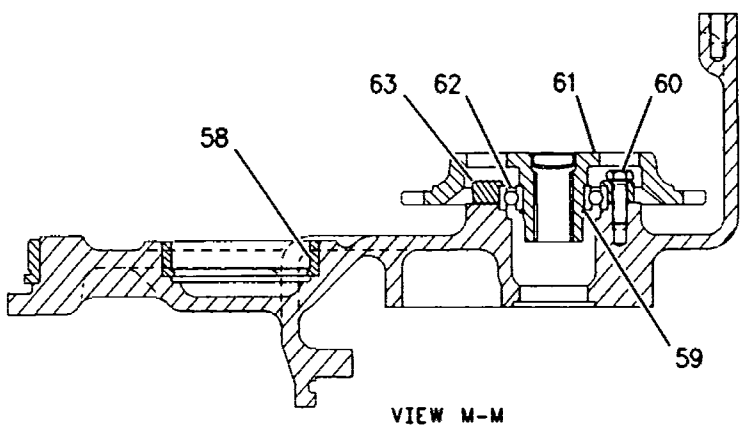

VIEW M-M

GRAPHIC #3 g00344349

MEMORANDA

POWER TRAIN

144-2205 CASE & PARTS GP-PLANETARY

S/N 4MY440-UP

PART OF 144-2234 TRANSMISSION AR

SMCS-3064 i00656044

NOTE	REF NO	GRAPHIC REF	PART NUMBER	QTY	PART NAME 1 2 3 4 5 6 (PRODUCT LEVEL)	SEE PAGE
	1	1	143-7403	1	CASE AS-TRANS	
		1	7T-6496	7	PLUG (11.9 MM DIA)	
		1	8M-6521	2	DOWEL	
	2	1	6Y-5728	1	COVER AS-TRANSMISSION	
		1	7T-6496	1	PLUG (11.9 MM DIA)	
M	3	1	6V-1820	37	BOLT (M10X1.50X30MM)	
M	4	1	8T-5436	2	BOLT (M10X1.50X130MM)	
	5	1,2	9S-4185	2	PLUG-O-RING (3/4-16 THD)	
	6	1,2	3K-0360	6	SEAL-O-RING (16.36MM ID)	
	7	1	2J-0157	1	SEAL-O-RING (15.47MM ID)	
B	8	1	8C-8422		SEALANT (2ML)	
	9	1	5M-6213	1	PLUG	
	10	1	5M-6200	1	SEAL-O-RING	
	11	1	8E-1133	1	TUBE AS	
	12	1	6L-1650	1	SEAL-O-RING	
M	13	1,2,3	6V-5217	15	BOLT (M8X1.25X20MM)	
	14	1,2,3	5P-3863	5	SEAL-O-RING (82.22MM ID)	
	15	1,2,3	9W-1454	5	COVER	
	16	1	8S-9129	1	FILTER-MAGNETIC	
	17	1	8S-9130	1	SCREEN-SUCTION	
	18	3	4M-6108	2	RACE-BEARING OUTER	
	19	1	8E-2390	2	VALVE GP-RELIEF	
	20	1	9X-4609	2	SEAL-O-RING (23.47MM ID)	
	21	3	9W-7038	1	RING-SNAP	
M	22	3	6V-3940	4	BOLT (M8X1.25X25MM)	
	23	3	6Y-9763	1	GEAR AS (38 TEETH)	
		3	4K-8603	1	PLUG-CUP (25.73MM ID)	
	24	3	2S-3029	1	BALL BEARING	
	25	3	9W-6465	1	RETAINER-BEARING	
	26	2	9S-4190	5	PLUG-O-RING (7/16-20 THD)	
	27	2	2M-9780	6	SEAL-O-RING (19.18MM ID)	
	28	2	9S-4191	1	PLUG-O-RING (9/16-18 THD)	
	29	2	3J-1907	1	SEAL-O-RING (11.89MM ID)	
	30	2	8T-4121	5	WASHER (2.5MM THK)	
	31	2	8E-7107	1	PLATE AS	
M	32	2	6V-8212	1	BOLT (M10X1.50X16MM)	
	33	2	5P-4483	1	PLUG-O-RING	
	34	1,2	7M-8485	4	SEAL-O-RING (29.74MM ID)	
M	35	2	6V-7981	5	BOLT (M10X1.50X70MM)	
M	36	2	6V-4248	6	BOLT (M10X1.50X25MM)	
	37	2	9S-8006	1	PLUG-O-RING (7/8-14 THD)	
	38	2	9S-8005	3	PLUG-O-RING (3/4-16 THD)	
	39	2,3	4M-6109	4	RACE-ROLLER BEARING	
	40	3	5P-3924	2	RACE-BEARING OUTER	
	41	3	9M-2042	1	RACE-BEARING OUTER	
	42	3	1B-0936	1	SEAL-LIP	
	43	3	2H-6489	1	RACE-BEARING OUTER	
	44	2	143-5374	1	HARNESS AS-WIRE	
	45	2	1B-3057	2	CLIP (12.7MM ID)	
	46	2	5P-1075	3	WASHER-HARD (3MM THK)	
M	47	2	8T-4137	3	BOLT (M10X1.50X20MM)	
	48	2	6V-1720	1	PLATE-SERIAL NUMBER	
	49	2	104-6387	1	SENSOR & SPEED AS	
		2	7N-7779	1	SOCKET	
		2	7N-7780	1	PIN-CONNECTOR (BLADE)	
		2	7N-9738	1	HOUSING-RECEPTACLE (1 PIN, 1 SOCKET)	

144-2205 CASE & PARTS GP-PLANETARY *(contd.)*

i00656044

NOTE	REF NO	GRAPHIC REF	PART NUMBER	QTY	PART NAME 1 2 3 4 5 6 (PRODUCT LEVEL)	SEE PAGE
		2	9X-1386	14	SLEEVE	
	50	2	144-2231	1	CLIP	
M	51	2	8T-4133	1	NUT (M10X1.50 THD)	
	52	2	143-5373	1	GUARD AS	
	53	1	134-3987	1	CLIP-LOOP	
	54	1	9M-1974	1	WASHER-HARD (2MM THK)	
M	55	1	8T-4189	1	BOLT (M8X1.25X20MM)	
	56	1	9S-4181	3	PLUG-STRAIGHT THREAD (1-5/16-12 THD)	
	57	1	1B-5174	1	PLUG-PIPE (3/4-14 NPTF)	
	58	2	113-7745	1	PLATE AS	
M		2	8T-3490	2	NUT-WELD (M10X1.5 THD)	
	59	2	138-2759	1	CLIP AS	
		2	8C-3334	1	RIVET-TUBULAR	
	60	2	145-9535	1	HARNESS AS-H	
	61	2	145-8039	3	LOCK	
	62	1	149-9129	1	CLIP-LOOP	

B-USE AS REQUIRED
M-METRIC PART

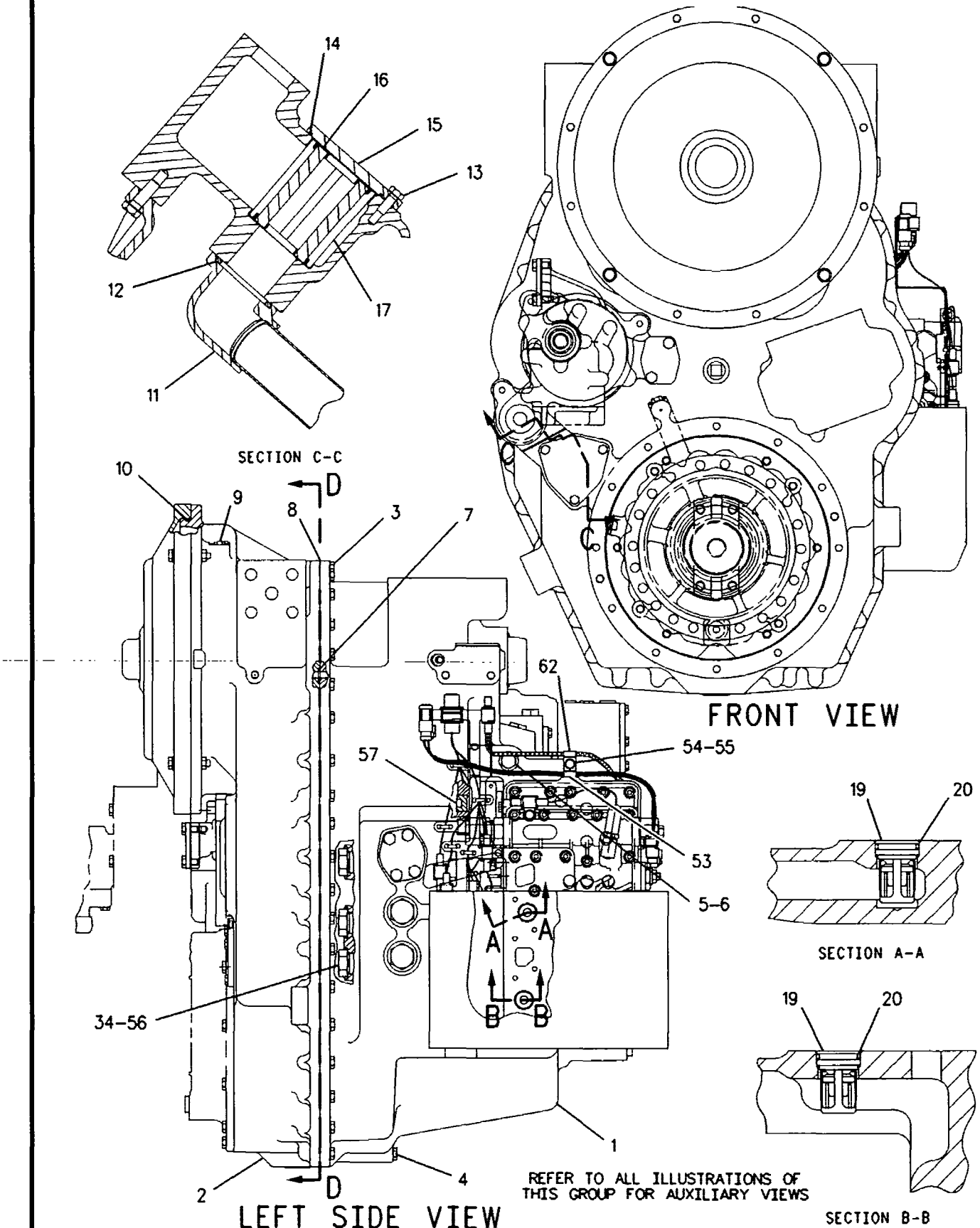

GRAPHIC #1

g00287500

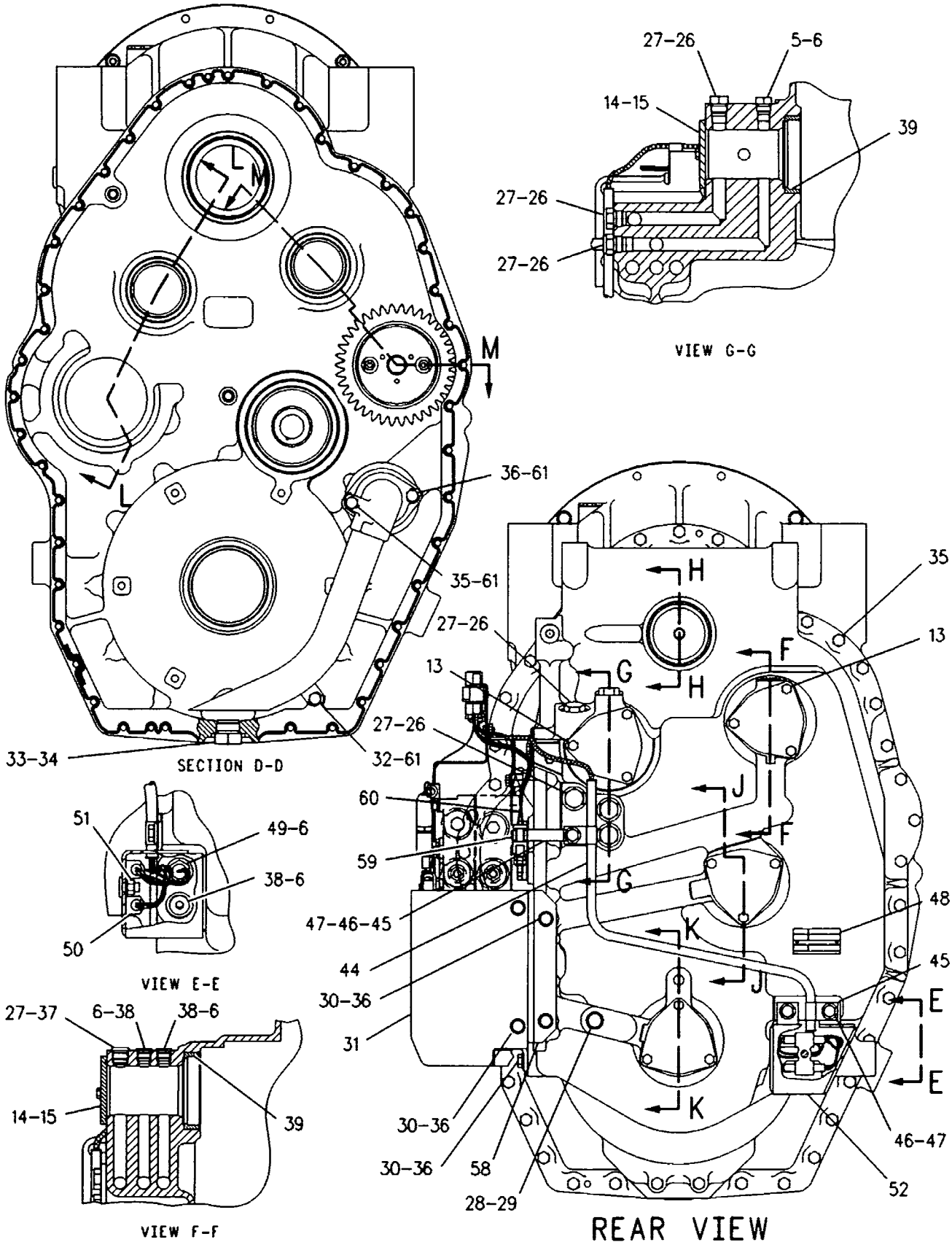

GRAPHIC #2

g00277275

144-2205 CASE & PARTS GP-PLANETARY *(contd.)* i00656044

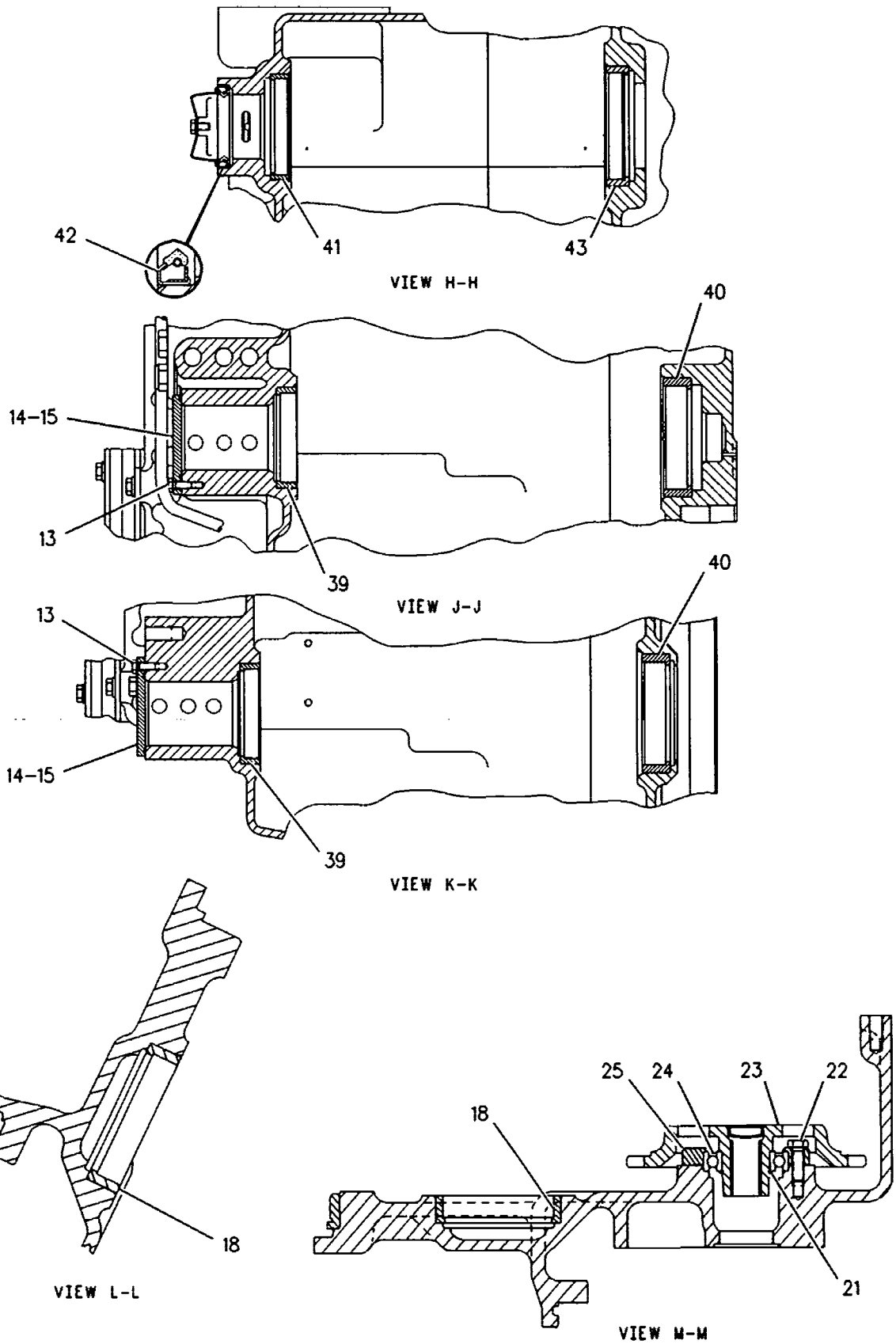

GRAPHIC #3 g00277276

MEMORANDA

POWER TRAIN

149-6082 CASE & PARTS GP-TRANSMISSION

S/N 5AY527-99999

PART OF 149-6083 TRANSMISSION AR

SMCS-3064 i00606910

NOTE	REF NO	GRAPHIC REF	PART NUMBER	QTY	PART NAME 1 2 3 4 5 6 (PRODUCT LEVEL)	SEE PAGE
	1	1	9W-5133	1	CASE AS-TRANSMISSION	
		1	7T-6496	7	PLUG (11.9 MM DIA)	
	2	1	6Y-5728	1	COVER AS-TRANSMISSION	
		1	6Y-5726	1	COVER-TRANSMISSION	
		1	7T-6496	1	PLUG (11.9 MM DIA)	
M	3	1	6V-1820	37	BOLT (M10X1.50X30MM)	
M	4	1	8T-5436	2	BOLT (M10X1.50X130MM)	
	5	1,3	9S-4185	2	PLUG-O-RING (3/4-16 THD)	
	6	1,3	3K-0360	5	SEAL-O-RING (16.36MM ID)	
	7	1	2J-0157	1	SEAL-O-RING (15.47MM ID)	
B	8	2	1U-8846		GASKET-LIQUID	
	9	1	5M-6213	1	PLUG	
	10	1	5M-6200	1	SEAL-O-RING	
	11	3	8E-1133	1	TUBE AS	
		3	6Y-9765	1	ELBOW	
		3	145-8038	1	CLIP	
	12	3	6L-1650	1	SEAL-O-RING	
M	13	2,3	6V-5217	15	BOLT (M8X1.25X20MM)	
	14	3	5P-3863	5	SEAL-O-RING (82.22MM ID)	
	15	3	9W-1454	5	COVER	
	16	3	8S-9129	1	FILTER-MAGNETIC	
	17	3	8S-9130	1	SCREEN-SUCTION	
	18	2,3	4M-6108	2	RACE-BEARING OUTER	
	19	1	8E-2390	2	VALVE GP-RELIEF	
	20	1	9X-4609	2	SEAL-O-RING (23.47MM ID)	
	21	3	9W-7038	1	RING-SNAP	
M	22	3	6V-3940	4	BOLT (M8X1.25X25MM)	
	23	3	6Y-9763	1	GEAR AS (38 TEETH)	
		3	4K-8603	1	PLUG-CUP (25.73MM ID)	
		3	6Y-1007	1	GEAR (38 TEETH)	
	24	3	2S-3029	1	BALL BEARING	
	25	3	9W-6465	1	RETAINER-BEARING	
	26	2,3	9S-4190	5	PLUG-O-RING (7/16-20 THD)	
	27	2,3	2M-9780	6	SEAL-O-RING (19.18MM ID)	
	28	2	9S-4191	1	PLUG-O-RING (9/16-18 THD)	
	29	2	3J-1907	1	SEAL-O-RING (11.89MM ID)	
	30	2	8T-4121	4	WASHER (2.5MM THK)	
	31	2	8E-7107	1	PLATE AS	
M	32	2	6V-8212	1	BOLT (M10X1.50X16MM)	
	33	2	5P-4483	1	PLUG-O-RING	
	34	1,2	7M-8485	4	SEAL-O-RING (29.74MM ID)	
M	35	2	6V-7981	5	BOLT (M10X1.50X70MM)	
M	36	2	6V-4248	6	BOLT (M10X1.50X25MM)	
	37	3	9S-8006	1	PLUG-O-RING (7/8-14 THD)	
	38	3	9S-8005	2	PLUG-O-RING (3/4-16 THD)	
	39	3	4M-6109	4	RACE-ROLLER BEARING	
	40	3	5P-3924	2	RACE-BEARING OUTER	
	41	3	9M-2042	1	RACE-BEARING OUTER	
	42	3	1B-3057	2	CLIP (12.7MM ID)	
	43	3	2H-6489	1	RACE-BEARING OUTER	
	44	2	143-5374	1	HARNESS AS-WIRE	
	45	2	1B-3057	2	CLIP (12.7MM ID)	
	46	2	5P-1075	3	WASHER-HARD (3MM THK)	
M	47	2	8T-4137	3	BOLT (M10X1.50X20MM)	
	48	1	134-3987	1	CLIP-LOOP	
	49	3	104-6387	1	SENSOR & SPEED AS	

149-6082 CASE & PARTS GP-TRANSMISSION *(contd.)* i00606910

NOTE	REF NO	GRAPHIC REF	PART NUMBER	QTY	PART NAME 1 2 3 4 5 6 (PRODUCT LEVEL)	SEE PAGE
	50	3	144-2231	1	CLIP	
	51	3	8Y-4133	1	PLATE	
	52	2	143-5373	1	GUARD AS	
		2	143-5372	1	GUARD	
	53	2	145-8039	3	LOCK	
	54	1	9M-1974	1	WASHER-HARD (2MM THK)	
M	55	1	8T-4189	1	BOLT (M8X1.25X20MM)	
	56	1	9S-4181	3	PLUG-STRAIGHT THREAD (1-5/16-12 THD)	
	57	1	1B-5174	1	PLUG-PIPE (3/4-14 NPTF)	
	58	2	113-7745	1	PLATE AS	
M		2	8T-3490	2	NUT-WELD (M10X1.5 THD)	
	59	2	138-2759	1	CLIP AS	
		2	8C-3334	1	RIVET-TUBULAR	
	60	2	145-9535	1	HARNESS AS-H	

B-USE AS REQUIRED
M-METRIC PART

REFER TO ALL ILLUSTRATIONS OF THIS GROUP FOR AUXILLARY VIEWS

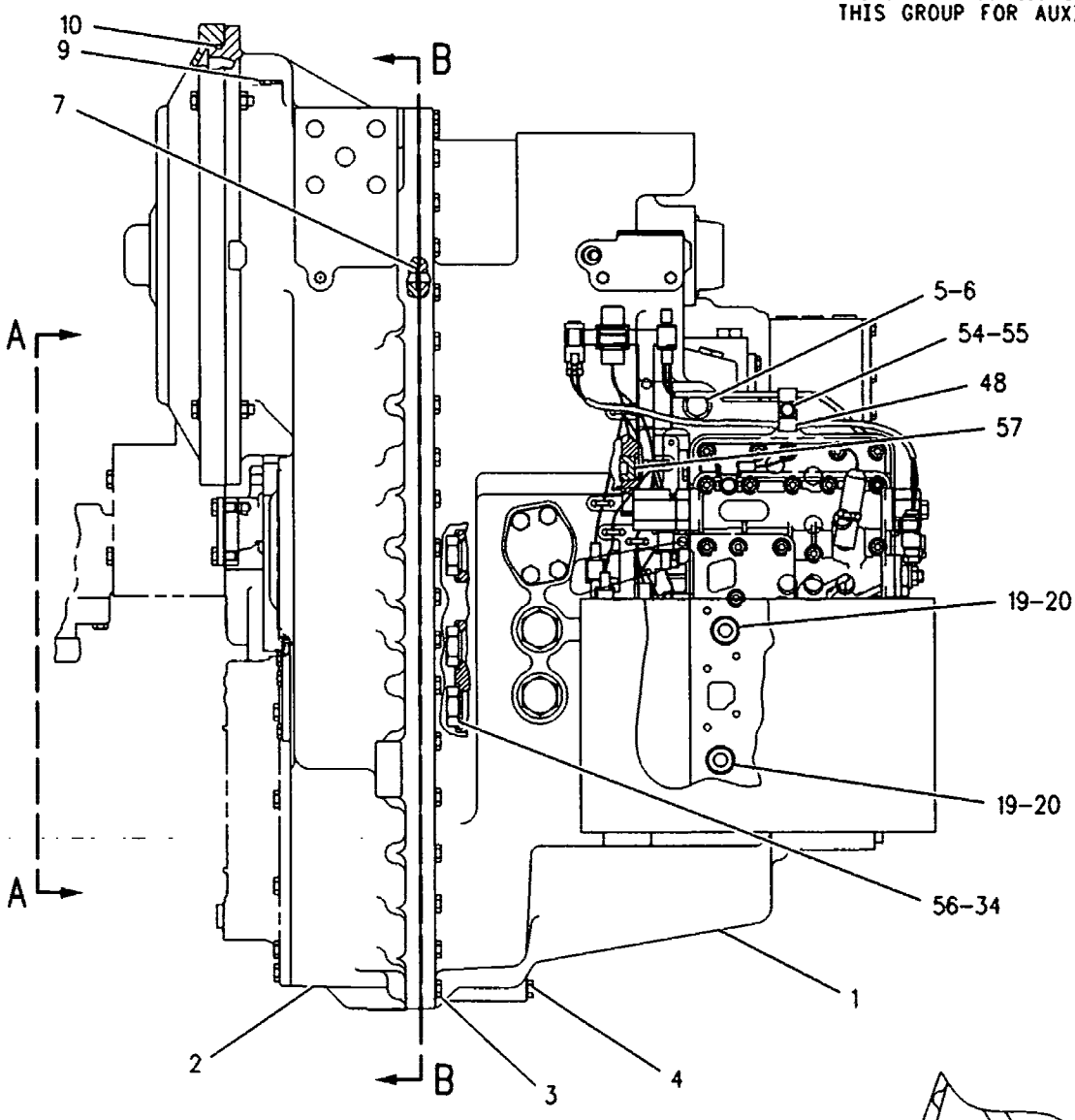

LEFT SIDE VIEW

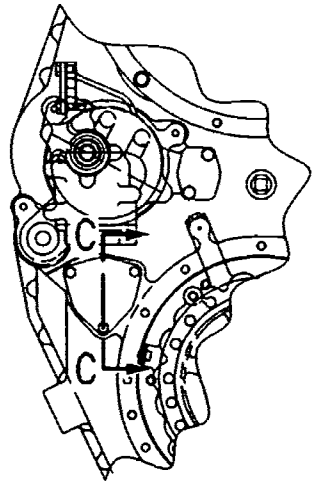

VIEW A-A

GRAPHIC #1

g00282664

REFER TO ALL ILLUSTRATIONS OF THIS GROUP FOR AUXILLARY VIEWS

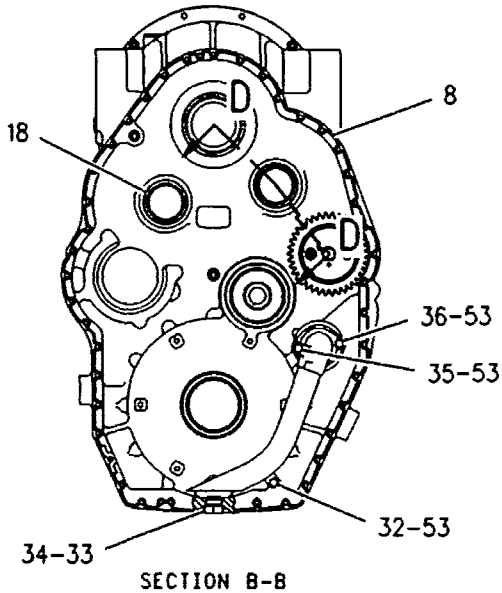

SECTION B-B

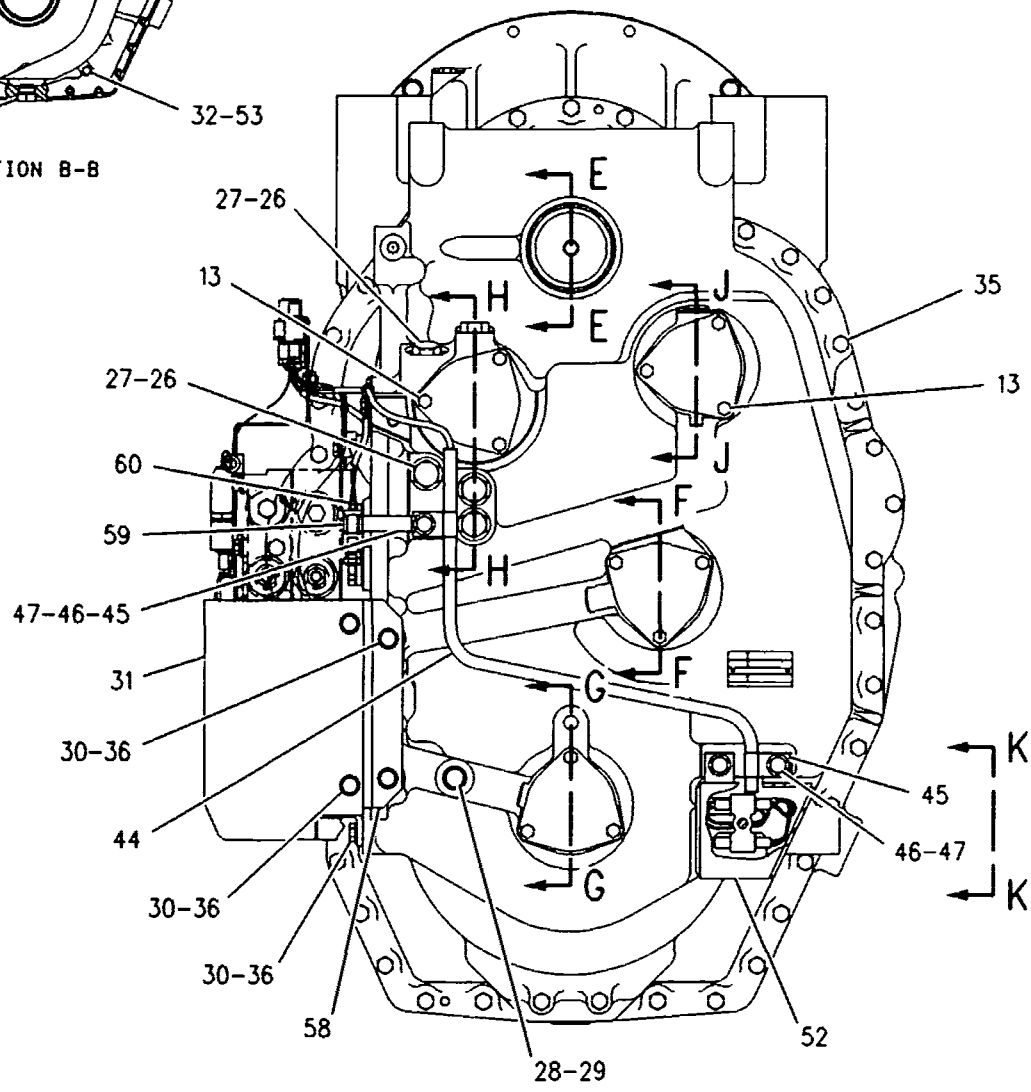

REAR VIEW

GRAPHIC #2 g00282665

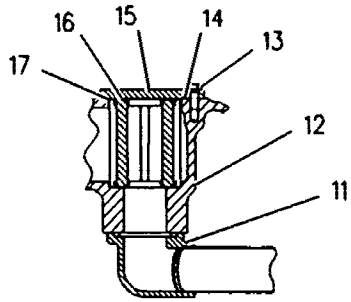

SECTION C-C

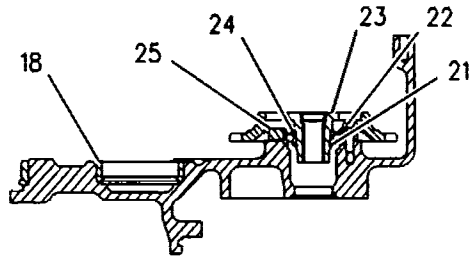

SECTION D-D

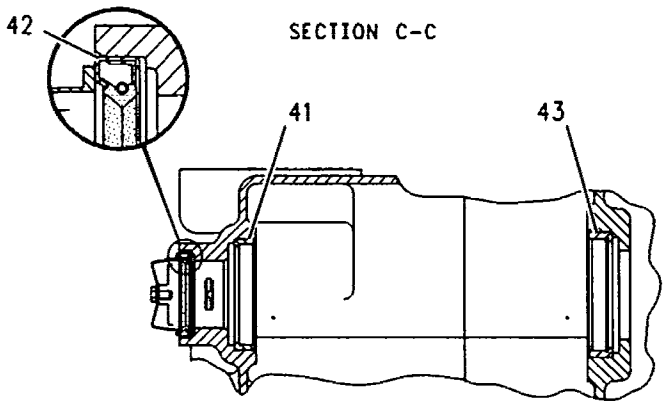

SECTION E-E

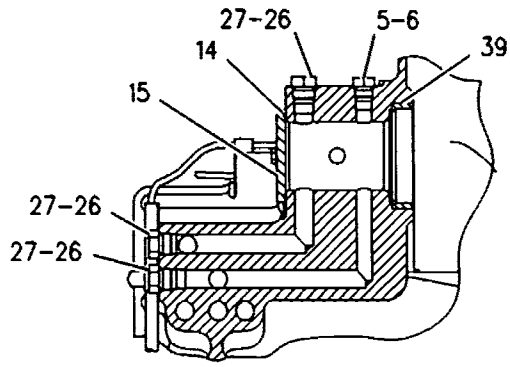

SECTION H-H

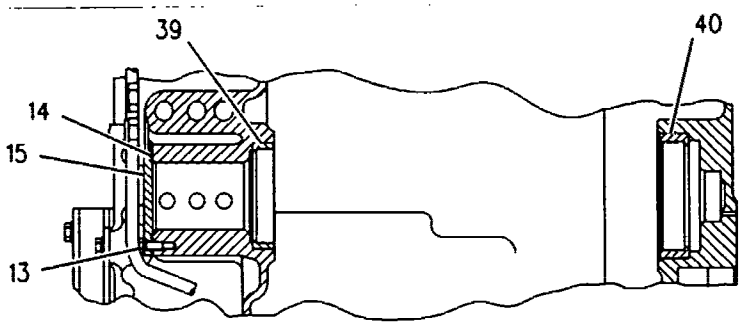

SECTION F-F

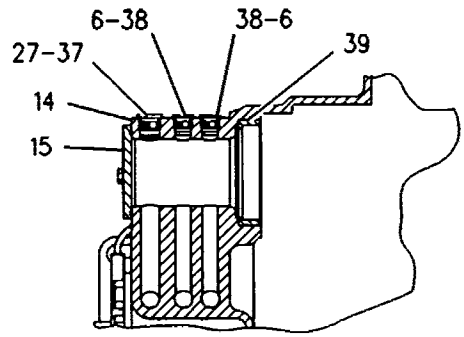

SECTION J-J

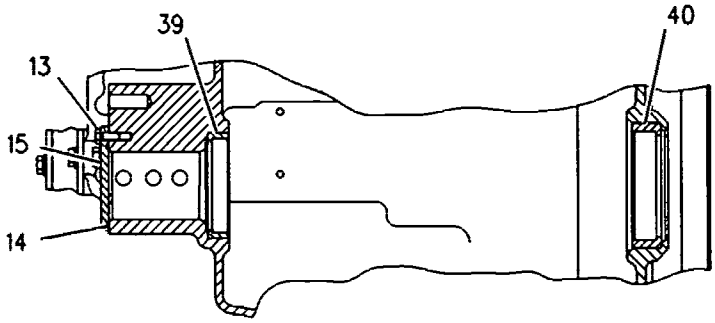

SECTION G-G

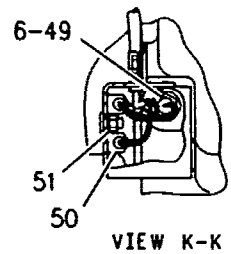

VIEW K-K

GRAPHIC #3 g00282666

POWER TRAIN

2G-0585 CHAIN GP-DRIVE

PIN 5FM1-UP

PART OF 112-4119 POWER TRAIN AR

SMCS-3261, 4063 i00819104

NOTE	REF NO	GRAPHIC REF	PART NUMBER	QTY	PART NAME 1 2 3 4 5 6 (PRODUCT LEVEL)	SEE PAGE
	1	1	5T-0735	4	CHAIN GP	
					(EACH INCLUDES)	
	2	1	5T-0731	1	LINK-CONNECTING	

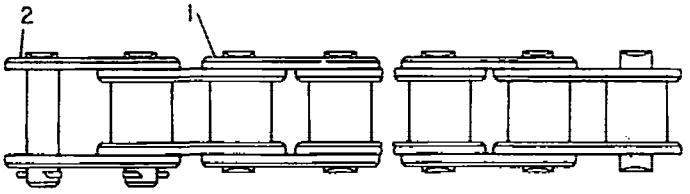

GRAPHIC #1 g00108306

POWER TRAIN

6Y-2301 CLUTCH GP-TRANSMISSION

S/N 7LX750-99999; 4MY440-UP; 5AY527-99999

FORWARD

PART OF 144-2234, 149-6083, 9W-7115 TRANSMISSION AR

SMCS-3063, 3155, 3170 i00134474

NOTE	REF NO	GRAPHIC REF	PART NUMBER	QTY	PART NAME 1 2 3 4 5 6 (PRODUCT LEVEL)	SEE PAGE
	1	1,2	6Y-1885	1	SHAFT AS (54 TEETH)	
	2	1,2	1P-0604	1	PLUG-CUP	
	3	1,2	8E-6140	2	VALVE AS	
	4	1,2	9U-8815	2	SPRING	
	5	1,2	6Y-1114	2	WASHER	
	6	1,2	6Y-1115	4	RING-HALF	
	7	1,2	8E-8319	4	DISC-THRUST	
	8	1,2	5H-8985	1	PIN-SPRING	
	9	1,2	4M-6107	1	BEARING-INNER	
	10	1,2	8E-9750	2	PISTON	
	11	1,2	8E-1263	2	BEARING-ROLLER	
	12	1,2	6Y-3853	1	GEAR AS (50 TEETH)	
	13	1,2	9W-9901	2	HUB AS	
	14	1,2	6I-8911	5	DISC-FRICTION	
	15	1,2	9U-9995	6	PLATE-CLUTCH	
	16	1,2	8E-5742	2	RING-SEAL	
	17	1,2	9W-9371	2	RING-SEAL	
	18	1,2	6I-8641	1	RACE & BEARING	
	19	1,2	7G-4822	3	RING-SEAL	
M	20	1,2	6V-1819	2	BOLT (M10X1.50X100MM)	
	21	1,2	6Y-1119	1	CARRIER-SEAL	
	22	1,2	8F-3469	4	SEAL (15.54MM ID)	
	23	1,2	7T-4897	2	DISC-THRUST	
	24	1,2	6Y-1116	1	GEAR AS (43 TEETH)	
	25	1,2	110-7723	6	PLATE-CLUTCH	
	26	1,2	6I-8912	7	DISC-FRICTION	
	27	1,2	108-5751	2	DISC-FRICTION	
	28	1,2	9W-2029	1	RACE-THRUST	

M-METRIC PART

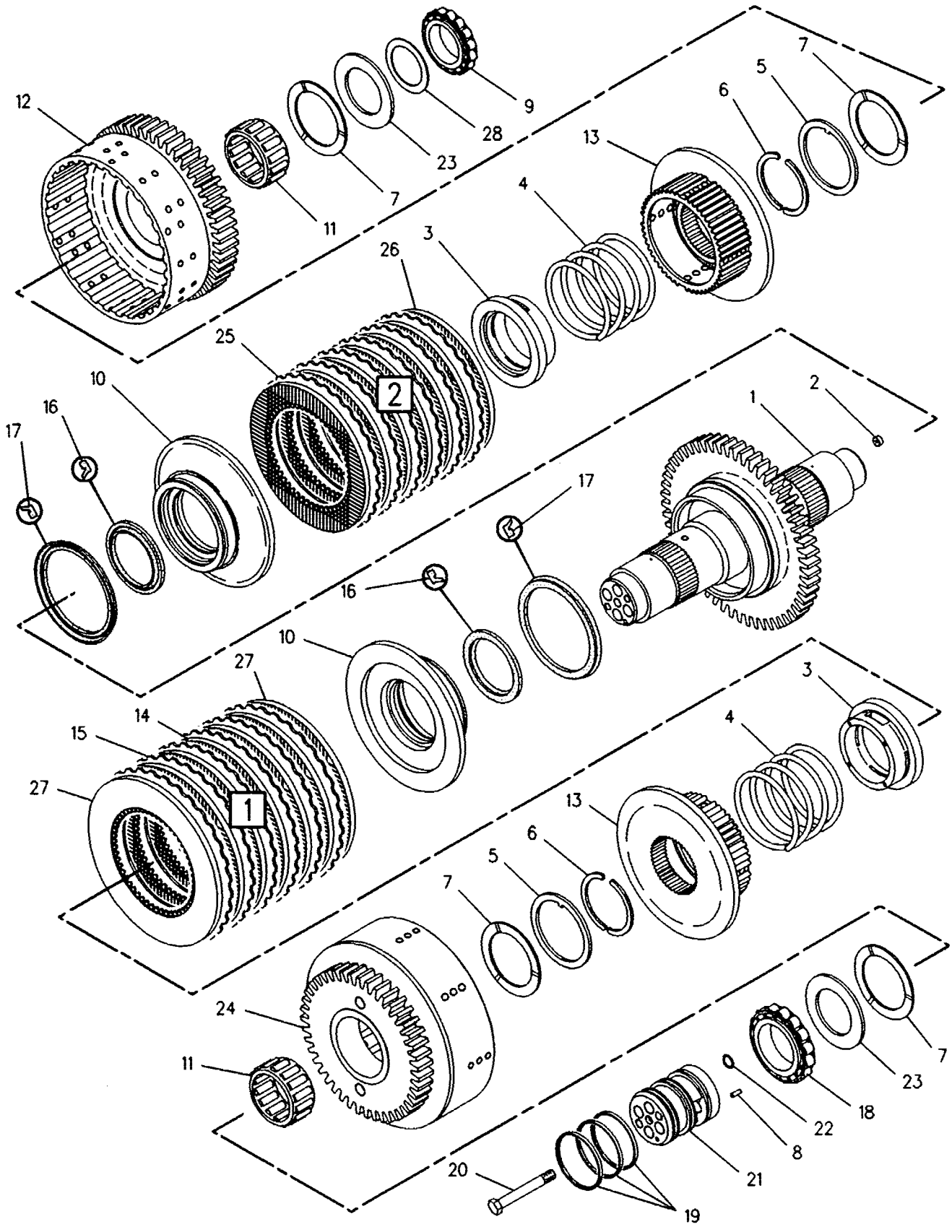

GRAPHIC #1 g00108545

6Y-2301 CLUTCH GP-TRANSMISSION *(contd.)* i00134474

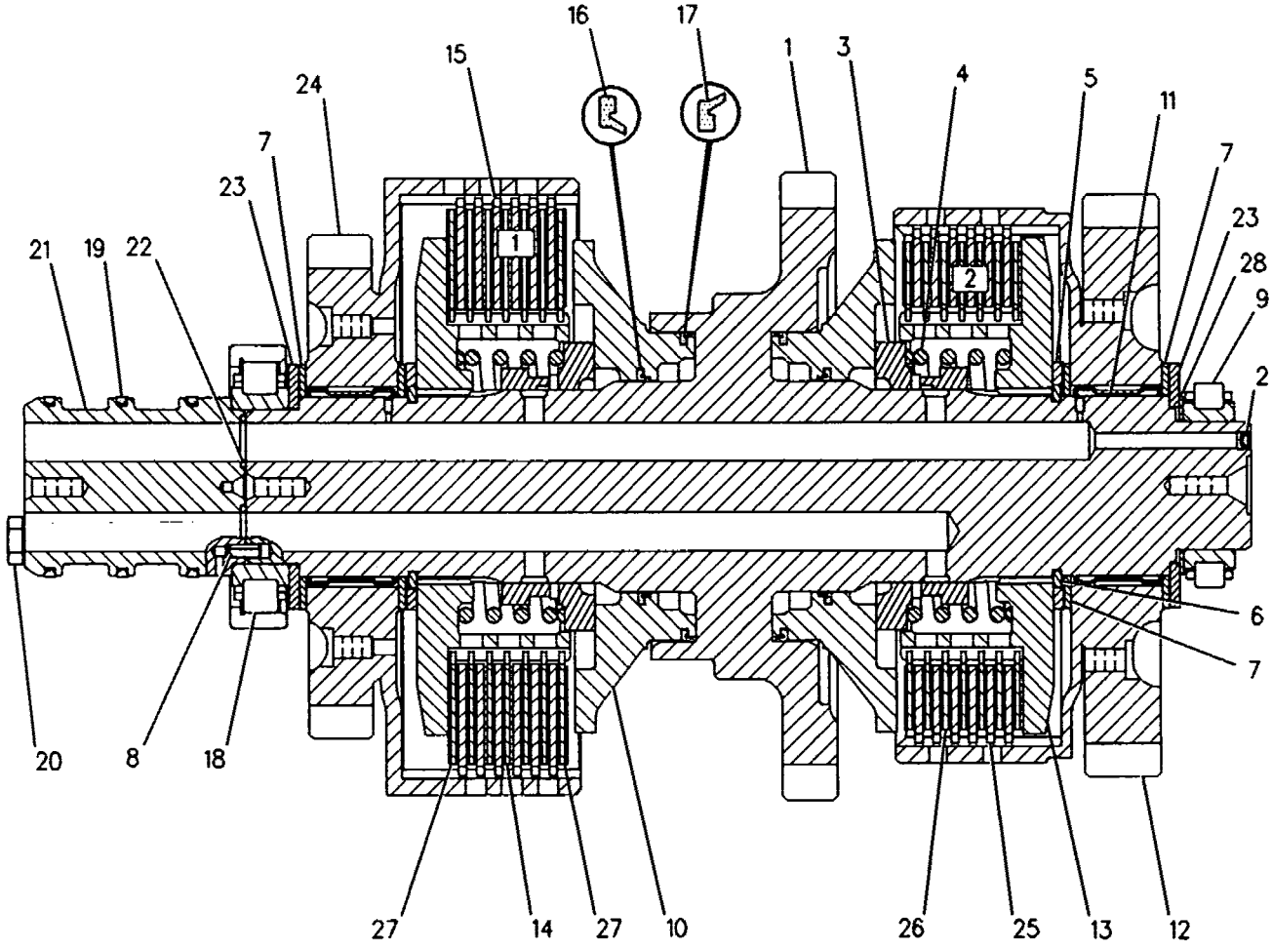

GRAPHIC #2 g00108653

MEMORANDA

POWER TRAIN

6Y-2302 CLUTCH GP-TRANSMISSION

S/N 7LX750-99999; 4MY440-UP; 5AY527-99999

REVERSE & 2ND

PART OF 144-2234, 149-6083, 9W-7115 TRANSMISSION AR

SMCS-3063, 3155, 3170 i00134493

NOTE	REF NO	GRAPHIC REF	PART NUMBER	QTY	PART NAME 1 2 3 4 5 6 (PRODUCT LEVEL)	SEE PAGE
	1	1,2	6Y-2424	1	SHAFT AS (54 TEETH)	
	2	1,2	1P-0604	1	PLUG-CUP	
	3	1,2	8E-6140	1	VALVE AS	
	4	1,2	9U-8815	1	SPRING	
	5	1,2	6Y-1114	2	WASHER	
	6	1,2	6Y-1115	4	RING-HALF	
	7	1,2	8E-8319	4	DISC-THRUST	
	8	1,2	7T-4897	1	DISC-THRUST	
	9	1,2	4M-6107	1	BEARING-INNER	
	10	1,2	6Y-3855	1	GEAR AS (46 TEETH)	
	11	1,2	8E-9750	1	PISTON	
	12	1,2	8E-1263	1	BEARING-ROLLER	
	13	1,2	9W-9901	1	HUB AS	
	14	1,2	110-7723	9	PLATE-CLUTCH	
	15	1,2	6I-8912	11	DISC-FRICTION	
	16	1,2	5H-8985	1	PIN-SPRING	
	17	1,2	8E-5742	2	RING-SEAL	
	18	1,2	9W-9371	1	RING-SEAL	
	19	1,2	8E-5734	1	RING-SEAL EXTENSION	
	20	1,2	6Y-2299	1	SPACER	
	21	1,2	6Y-0976	1	GEAR (29 TEETH)	
	22	1,2	6Y-2307	1	SPACER	
	23	1,2	6I-8641	1	RACE & BEARING	
	24	1,2	6Y-1119	1	CARRIER-SEAL	
M	25	1,2	6V-1819	2	BOLT (M10X1.50X100MM)	
	26	1,2	7G-4822	3	RING-SEAL	
	27	1,2	8F-3469	4	SEAL (15.54MM ID)	
	28	1,2	8E-1908	1	GEAR AS (44 TEETH)	
	29	1,2	6Y-1895	1	BEARING-SLEEVE	
	30	1,2	6Y-1887	1	PISTON	
	31	1,2	102-5881	1	SPRING-WAVE	
	32	1,2	9W-9905	2	LOCKRING	
	33	1,2	6Y-1891	1	HUB AS	
	34	1,2	9W-2029	1	RACE-THRUST	

M-METRIC PART

6Y-2302 CLUTCH GP-TRANSMISSION *(contd.)* i00134493

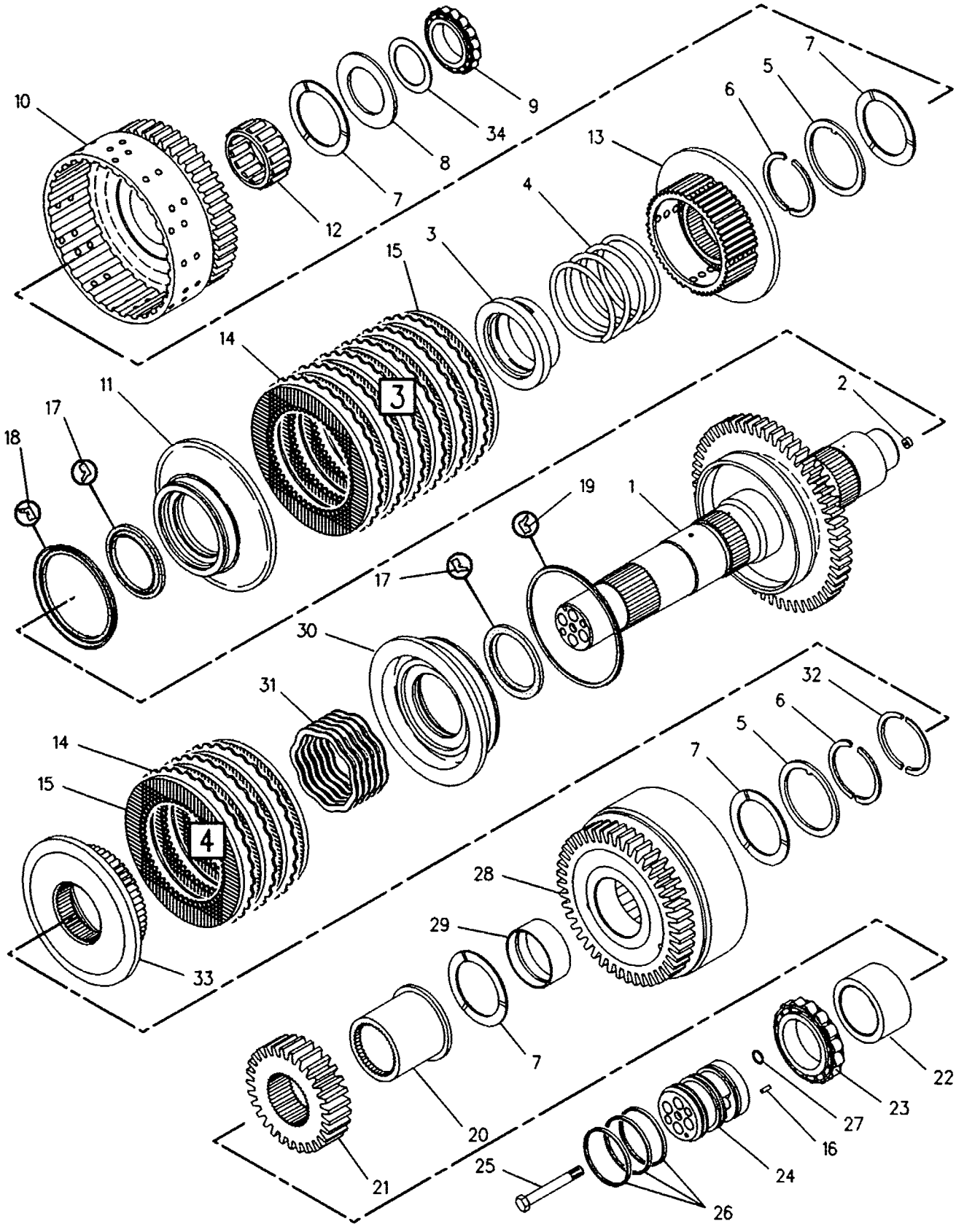

GRAPHIC #1 g00108546

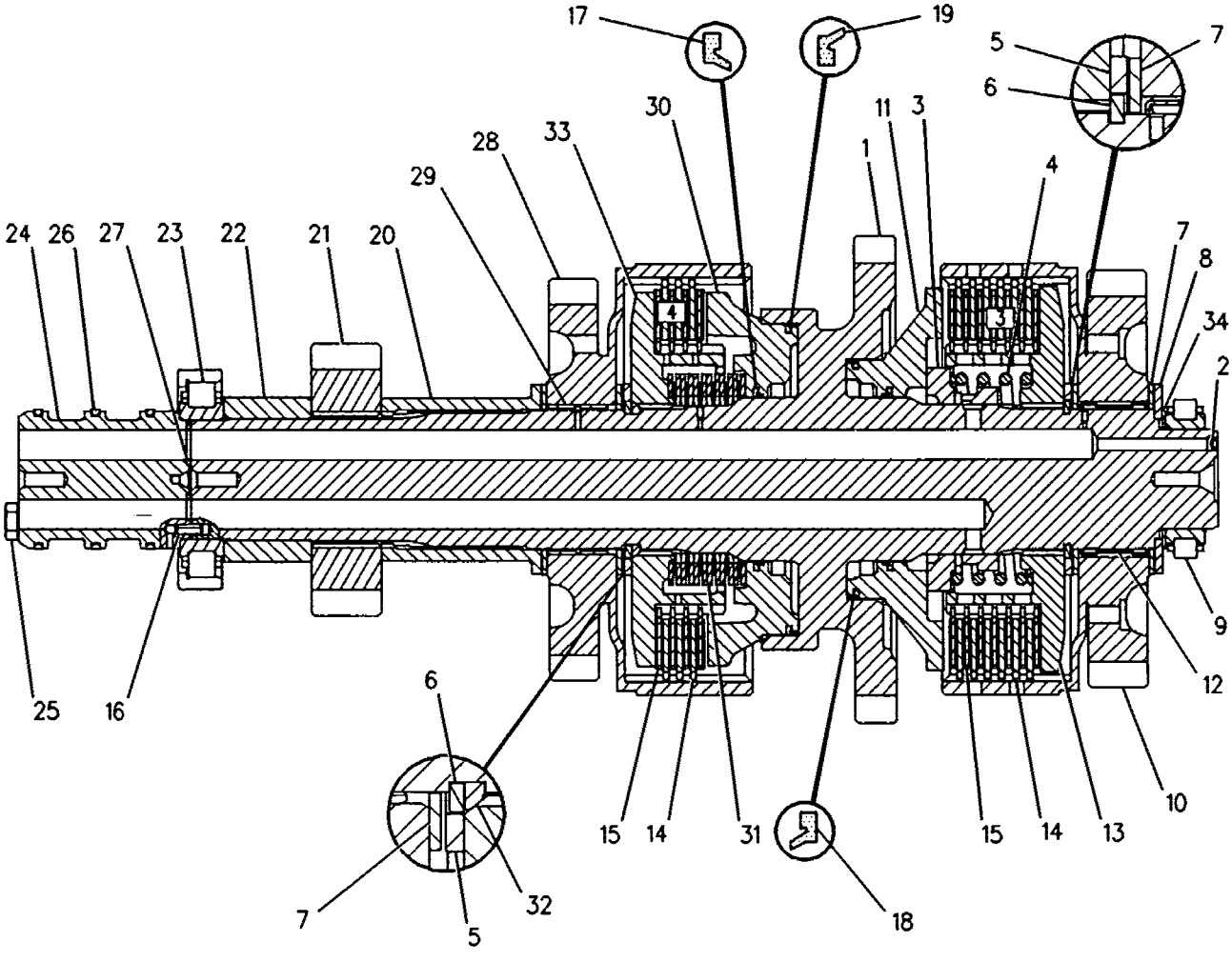

GRAPHIC #2 g00108654

MEMORANDA

POWER TRAIN

6Y-2303 CLUTCH GP-TRANSMISSION

S/N 7LX750-99999; 4MY440-UP; 5AY527-99999

1ST & 3RD

PART OF 144-2234, 149-6083, 9W-7115 TRANSMISSION AR

SMCS-3063, 3155, 3170 **i00134509**

NOTE	REF NO	GRAPHIC REF	PART NUMBER	QTY	PART NAME 1 2 3 4 5 6 (PRODUCT LEVEL)	SEE PAGE
	1	1,2	6Y-1878	1	SHAFT AS (64 TEETH)	
	2	1,2	6Y-1000	1	GEAR (69TEETH)	
	3	1,2	8E-1909	1	GEAR AS (54 TEETH)	
	4	1,2	6Y-1895	1	BEARING-SLEEVE	
	5	1,2	3B-8921	1	BEARING-INNER	
	6	1,2	6Y-8285	1	RING-SEAL	
	7	1,2	7T-4897	2	DISC-THRUST	
	8	1,2	6Y-1891	1	HUB AS	
	9	1,2	8E-5734	2	RING-SEAL EXTENSION	
	10	1,2	6Y-1887	2	PISTON	
	11	1,2	5H-8985	1	PIN-SPRING	
	12	1,2	6I-8912	10	DISC-FRICTION	
	13	1,2	110-7723	8	PLATE-CLUTCH	
	14	1,2	6Y-2312	1	HUB AS	
	15	1,2	8E-1910	1	GEAR AS (79 TEETH)	
	16	1,2	6Y-2419	1	BEARING-SLEEVE	
	17	1,2	6I-8641	1	RACE & BEARING	
	18	1,2	7G-4822	3	RING-SEAL	
M	19	1,2	6V-1819	2	BOLT (M10X1.50X100MM)	
	20	1,2	6Y-2425	1	CARRIER-SEAL	
	21	1,2	8F-3469	3	SEAL (15.54MM ID)	
	22	1,2	8E-8319	4	DISC-THRUST	
	23	1,2	6Y-1115	4	RING-HALF	
	24	1,2	6Y-1114	2	WASHER	
	25	1,2	9W-9905	4	LOCKRING	
	26	1,2	102-5881	2	SPRING-WAVE	
	27	1,2	8E-5742	2	RING-SEAL	
	28	1,2	6Y-0982	1	GEAR (30 TEETH)	

M-METRIC PART

6Y-2303 CLUTCH GP-TRANSMISSION *(contd.)* i00134509

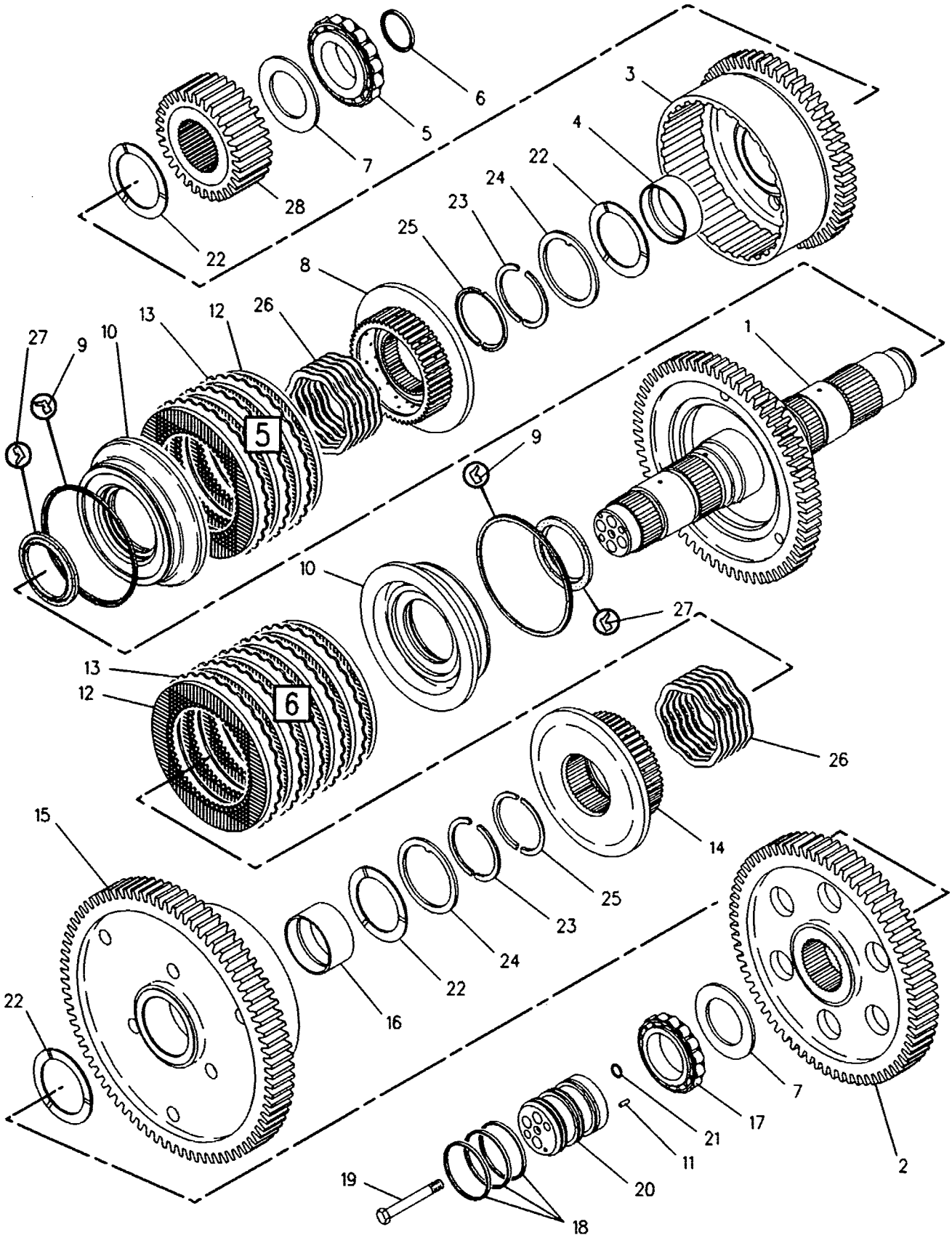

GRAPHIC #1 g00108910

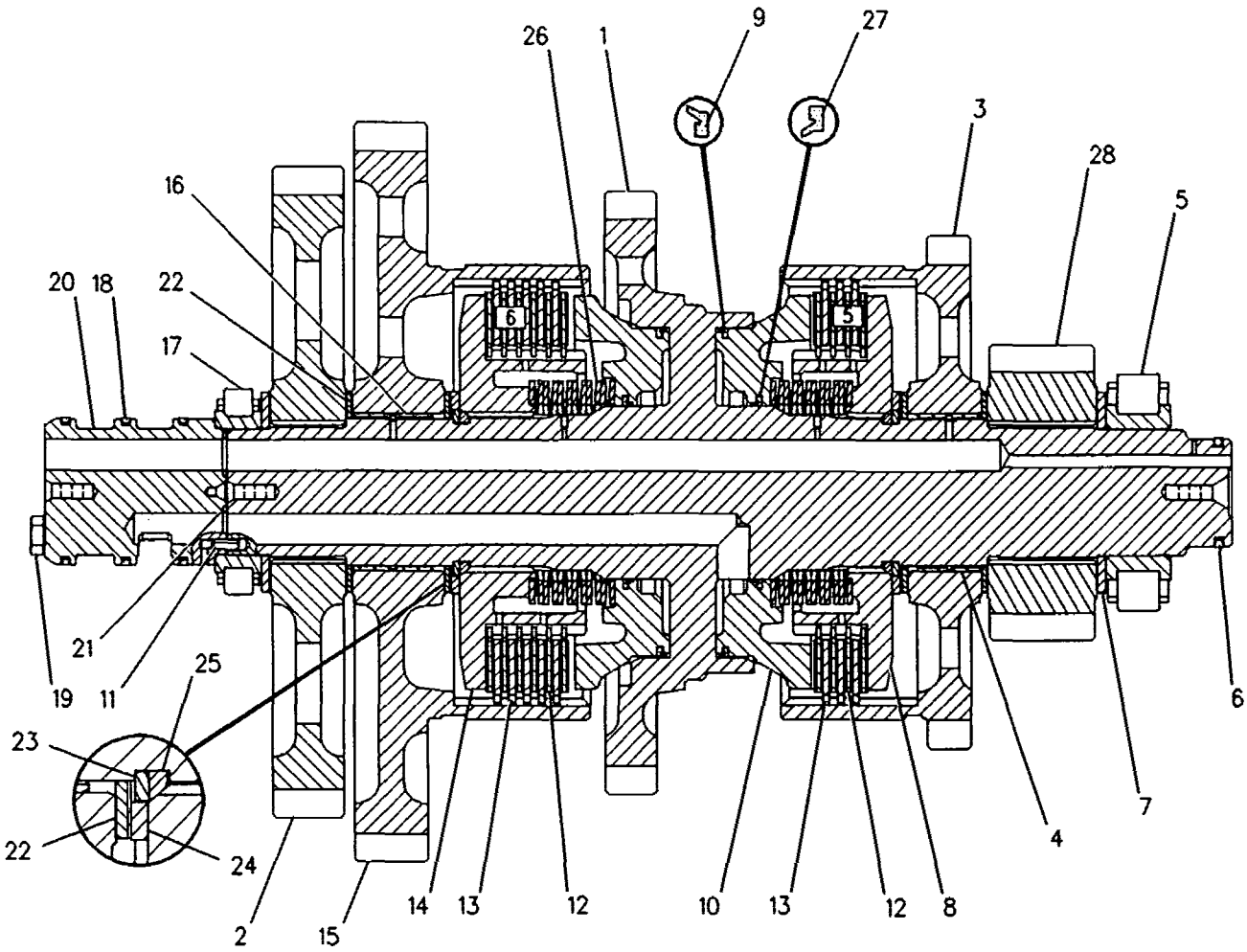

GRAPHIC #2

g00108656

MEMORANDA

POWER TRAIN

8E-9316 CLUTCH GP-TRANSMISSION

S/N 7LX750-99999; 4MY440-UP; 5AY527-99999
HI & LO
PART OF 144-2234, 149-6083, 9W-7115 TRANSMISSION AR

SMCS-3063, 3155, 3170 i00131365

NOTE	REF NO	GRAPHIC REF	PART NUMBER	QTY	PART NAME 1 2 3 4 5 6 (PRODUCT LEVEL)	SEE PAGE
	1	1,2	6Y-1864	1	SHAFT AS	
	2	1,2	8M-4295	15	SPRING	
	3	1,2	6Y-2428	1	PISTON	
	4	1,2	6Y-1890	1	RING-RETAINING	
	5	1,2	9W-9905	4	LOCKRING	
	6	1,2	6Y-1114	2	WASHER	
	7	1,2	6Y-1115	4	RING-HALF	
	8	1,2	8E-8319	4	DISC-THRUST	
	9	1,2	7T-4897	1	DISC-THRUST	
	10	1,2	3B-8921	1	BEARING-INNER	
	11	1,2	8E-1913	1	GEAR AS (84 TEETH)	
	12	1,2	9W-6467	2	BEARING-SLEEVE	
	13	1,2	6Y-7981	7	DISC-FRICTION	
	14	1,2	3P-0337	8	PLATE-CLUTCH	
	15	1,2	8E-5736	2	RING-SEAL EXTENSION	
	16	1,2	6Y-2429	1	PISTON-BALANCE	
	17	1,2	102-5881	1	SPRING-WAVE	
	18	1,2	8E-5742	2	RING-SEAL	
	19	1,2	8E-5734	1	RING-SEAL EXTENSION	
	20	1,2	110-7723	5	PLATE-CLUTCH	
	21	1,2	6I-8912	6	DISC-FRICTION	
	22	1,2	8E-1914	1	GEAR AS (45 TEETH)	
	23	1,2	9W-6467	2	BEARING-SLEEVE	
	24	1,2	6I-8641	1	RACE & BEARING	
	25	1,2	6Y-2425	1	CARRIER-SEAL	
M	26	1,2	6V-1819	2	BOLT (M10X1.50X100MM)	
	27	1,2	7G-4822	3	RING-SEAL	
	28	1,2	8F-3469	3	SEAL (15.54MM ID)	
	29	1,2	6Y-2312	1	HUB AS	
	30	1,2	5H-8985	1	PIN-SPRING	
	31	1,2	6Y-1887	1	PISTON	
	32	1,2	6Y-2430	1	HUB AS	
	33	1,2	8E-1161	1	ROTOR	

M-METRIC PART

8E-9316 CLUTCH GP-TRANSMISSION *(contd.)* i00131365

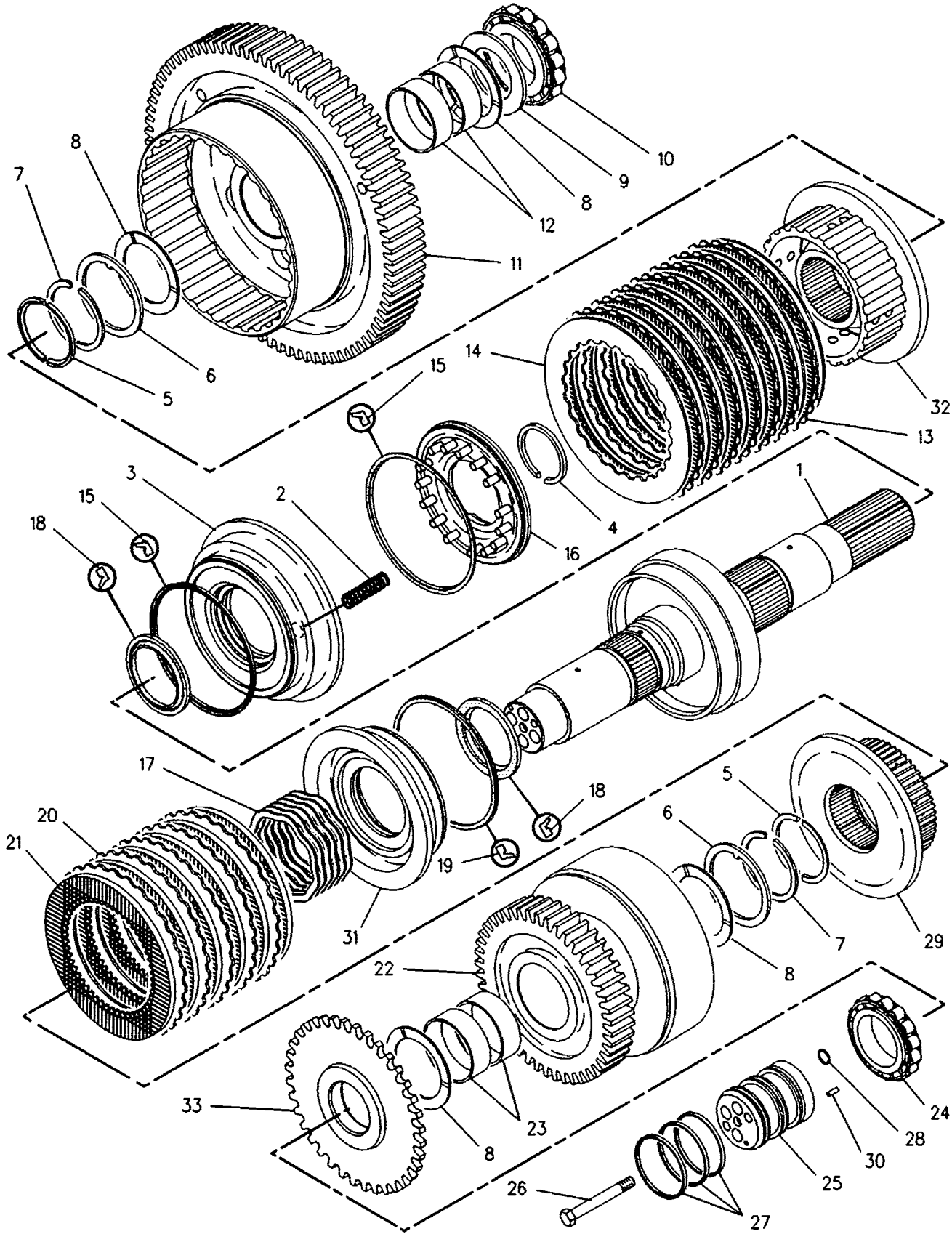

GRAPHIC #1 g00108549

8E-9316 CLUTCH GP-TRANSMISSION *(contd.)* i00131365

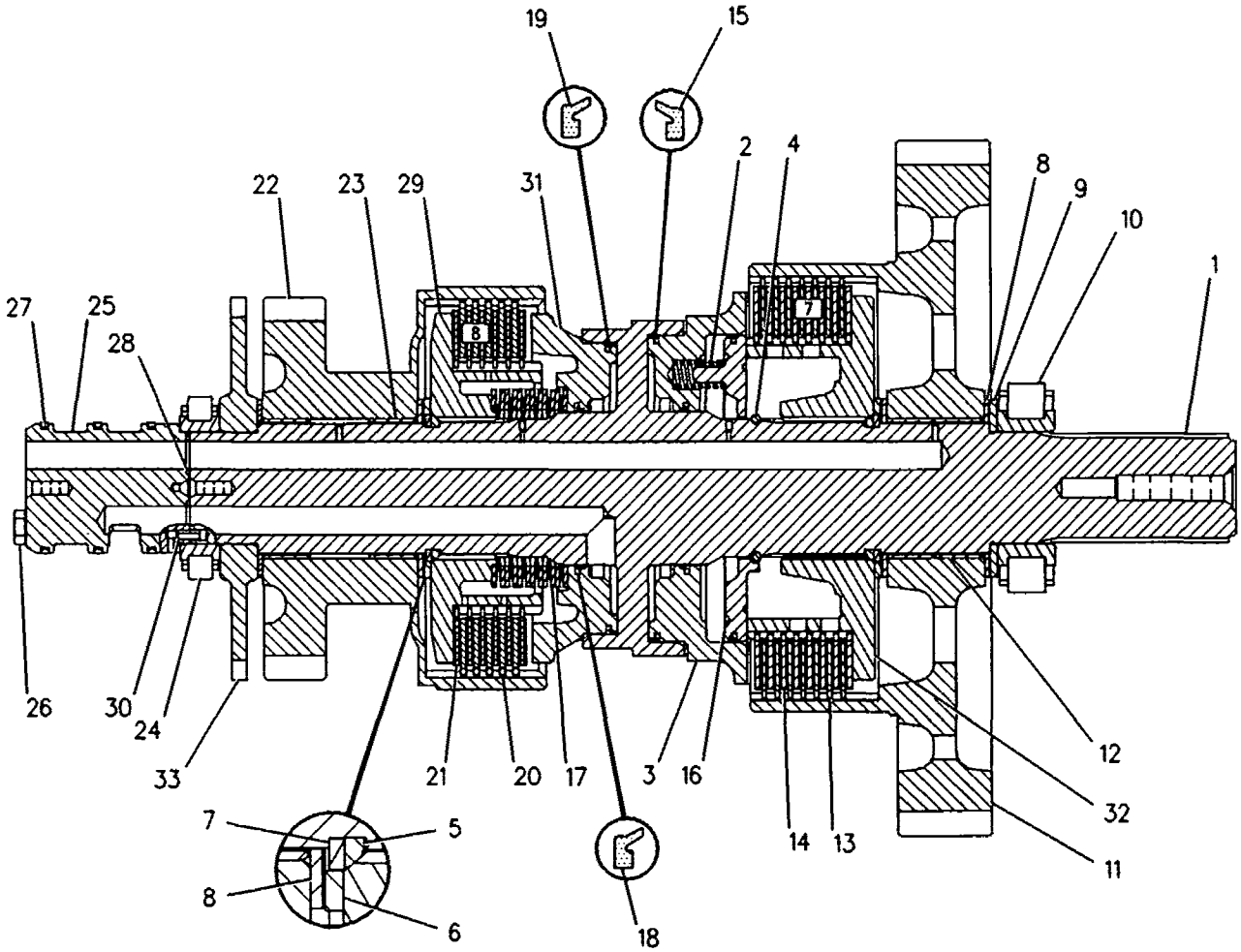

GRAPHIC #2 g00108658

MEMORANDA

POWER TRAIN

129-8215 CONTROL GP-CLUTCH

PIN 5FM1-UP
INCHING PEDAL
PART OF 112-4103 CHASSIS AR

SMCS-3059, 3071 **i00611717**

NOTE	REF NO	GRAPHIC REF	PART NUMBER	QTY	PART NAME 1 2 3 4 5 6 (PRODUCT LEVEL)	SEE PAGE
	1	1	8D-9973	1	HOUSING	
	2	1	7K-2135	1	BEARING-ROLLER	
	3	1	4J-2667	1	BEARING-NEEDLE	
	4	1	9D-0145	1	LEVER	
	5	1	8X-3805	1	SHAFT	
	6	1	1B-8704	2	KEY-WOODRUFF	
	7	1	9B-7237	3	BOLT (3/8-16X1.25IN)	
	8	1	4D-4895	1	LEVER	
	9	1	5S-7383	1	BOLT (3/8-16X1.75IN)	
	10	1	6V-8801	3	NUT (3/8-16 THD)	
	11	1	7X-0291	3	BOLT (3/8-16X3.75IN)	
	12	1	5P-1075	9	WASHER-HARD (3MM THK)	
	13	1	8X-2497	1	LEVER	
	14	1	1F-4622	2	BEARING-NEEDLE	
	15	1	8X-2498	1	PEDAL-CLUTCH	
	16	1	129-3173	1	BOLT-12 POINT HEAD	
	17	1	145-9077	1	ROD	
	18	1	4J-8922	2	ROD END	
	19	1	6V-8183	2	NUT-FULL (3/8-24 THD)	
	20	1	1B-0676	1	PIN	
	21	1	3K-8280	1	PIN-CLEVIS	
	22	1	7V-0446	2	CLIP	
	23	1	9X-5694	1	CABLE AS	
		1	8C-0620	2	PROTECTOR-THREAD	
	24	1	5P-7704	1	ROD END	
	25	1	6V-8187	2	NUT (1/4-28 THD)	
	26	1	8T-9043	1	BOLT (5/16-18X.875IN)	
	27	1	8T-4224	1	WASHER-HARD (2MM THK)	
	28	1	9S-1354	3	NUT (5/8-18 THD)	
	29	1	8T-4122	2	WASHER (3.5MM THK)	
	30	1	3D-4004	1	SEAL-QUAD RING	
	31	1	133-9185	1	ADAPTER	
	32	1	7M-8485	1	SEAL-O-RING (29.74MM ID)	
	33	1	7D-9212	1	SPRING	
	34	1	6P-5442	2	PLUG	
	35	1	136-5160	1	COUPLER	
	36	1	8D-9974	1	GASKET	
	37	1	8D-9969	1	COVER	
	38	1	4L-6454	6	BOLT (3/8-16X1.0IN)	
	39	1	8X-7665	1	BRACKET	
	40	1	1D-1313	1	SPRING	
	41	1	8W-8909	3	SLEEVE	
	42	1	1B-2578	1	NUT (3/8-16 THD)	
	43	1	6J-1889	1	SEAL-U-CUP	
B	44	1	9J-8783	1	SHIM (.508MM THK)	
	45	1	8T-4896	1	WASHER-HARD (2.5MM THK)	

B-USE AS REQUIRED

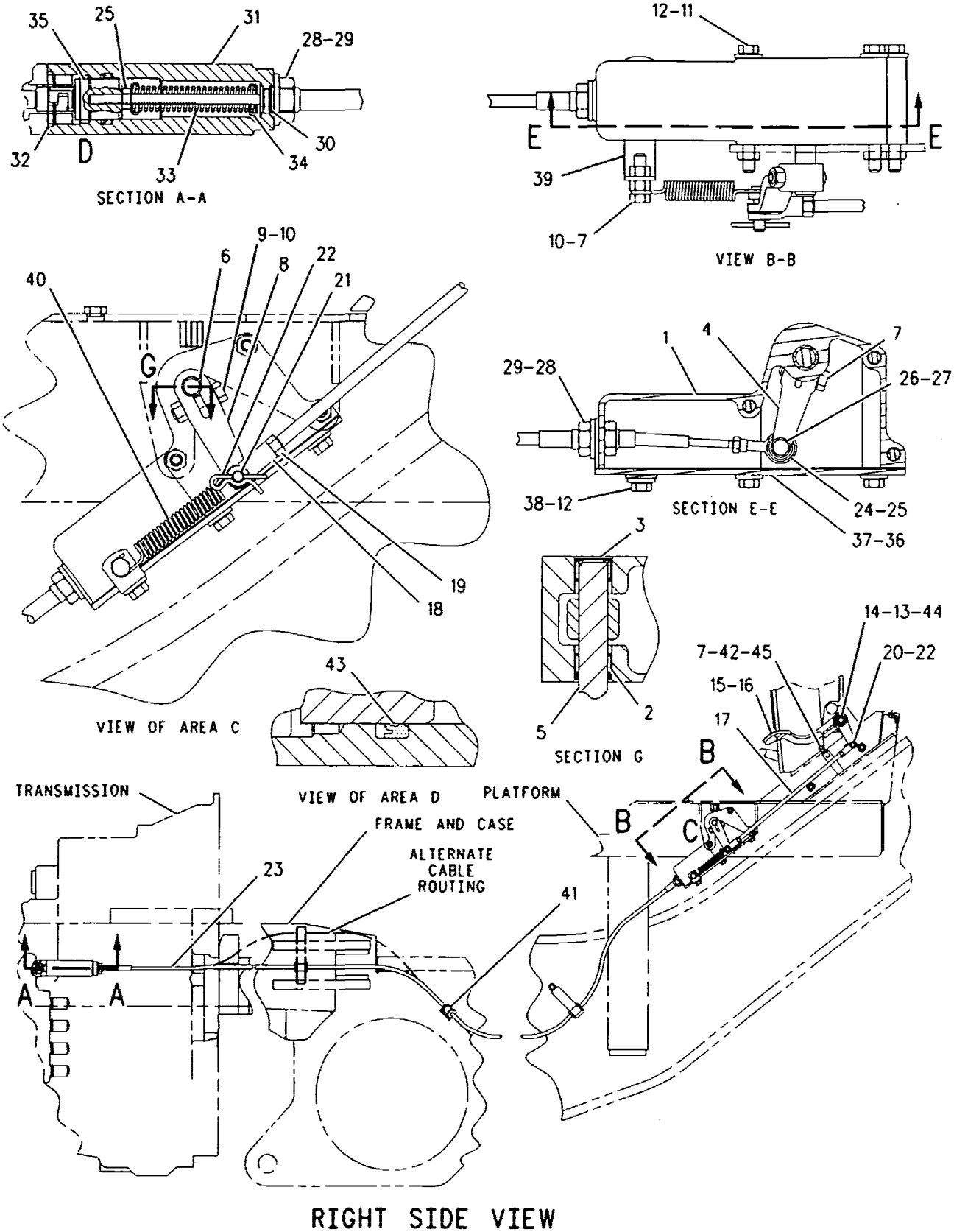

RIGHT SIDE VIEW

GRAPHIC #1 g00281137

POWER TRAIN

127-8375 CONTROL GP-DIFFERENTIAL LOCK

PIN 5FM1-UP
PART OF 115-0629 DIFFERENTIAL AR-LOCK
AN ATTACHMENT
TYPE 1

SMCS-3264 i00135095

NOTE	REF NO	GRAPHIC REF	PART NUMBER	QTY	PART NAME 1 2 3 4 5 6 (PRODUCT LEVEL)	SEE PAGE
Y	1	1	7T-9073	1	VALVE & MTG GP-DIFF LOCK	318
	2	1	8M-4438	2	SEAL-O-RING	
	3	1	136-1892	1	PLATE	
	4	1	8X-5492	1	TUBE	
	5	1	4J-2506	2	SEAL-O-RING (7.59MM ID)	
	6	1	5P-7981	2	ELBOW-O-RING	
	7	1	3J-7354	3	SEAL-O-RING (8.92MM ID)	
I	8	1	7J-6729	1	HOSE AS	
	9	1	8T-2501	2	BOLT (3/8-16X2IN)	
	10	1	8T-4896	3	WASHER-HARD (2.5MM THK)	
	11	1	135-9941	1	ADAPTER-90 DEGREE	
	12	1	6V-3965	1	NIPPLE AS	
	13	1	3J-1907	2	SEAL-O-RING (11.89MM ID)	
	14	1	6V-0852	1	CAP-DUST	
	15	1	9G-9154	1	CLIP (10.5MM ID)	
	16	1	8W-8528	1	SLEEVE	
I	17	1	5D-1260	1	HOSE AS	
	18	1	5P-7982	1	ELBOW-O-RING	
	19	1	3K-8782	1	FUSE (10 AMP)	
	20	1	118-0274	1	PLATE	
	21	1	9G-9150	1	CLIP (10.2MM ID)	
	22	1	5M-3062	1	BOLT (3/8-16X.750IN)	
	23	1	6V-8801	1	NUT (3/8-16 THD)	
	24	1	103-1031	1	SWITCH AS (DIFFERENTIAL LOCK)	
		1	3E-8825	1	LAMP-MINIATURE (24 VOLT)	
		1	123-5861	1	ACTUATOR-ROCKER	

I-SEE HOSE FABRICATION GUIDE
Y-SEPARATE ILLUSTRATION

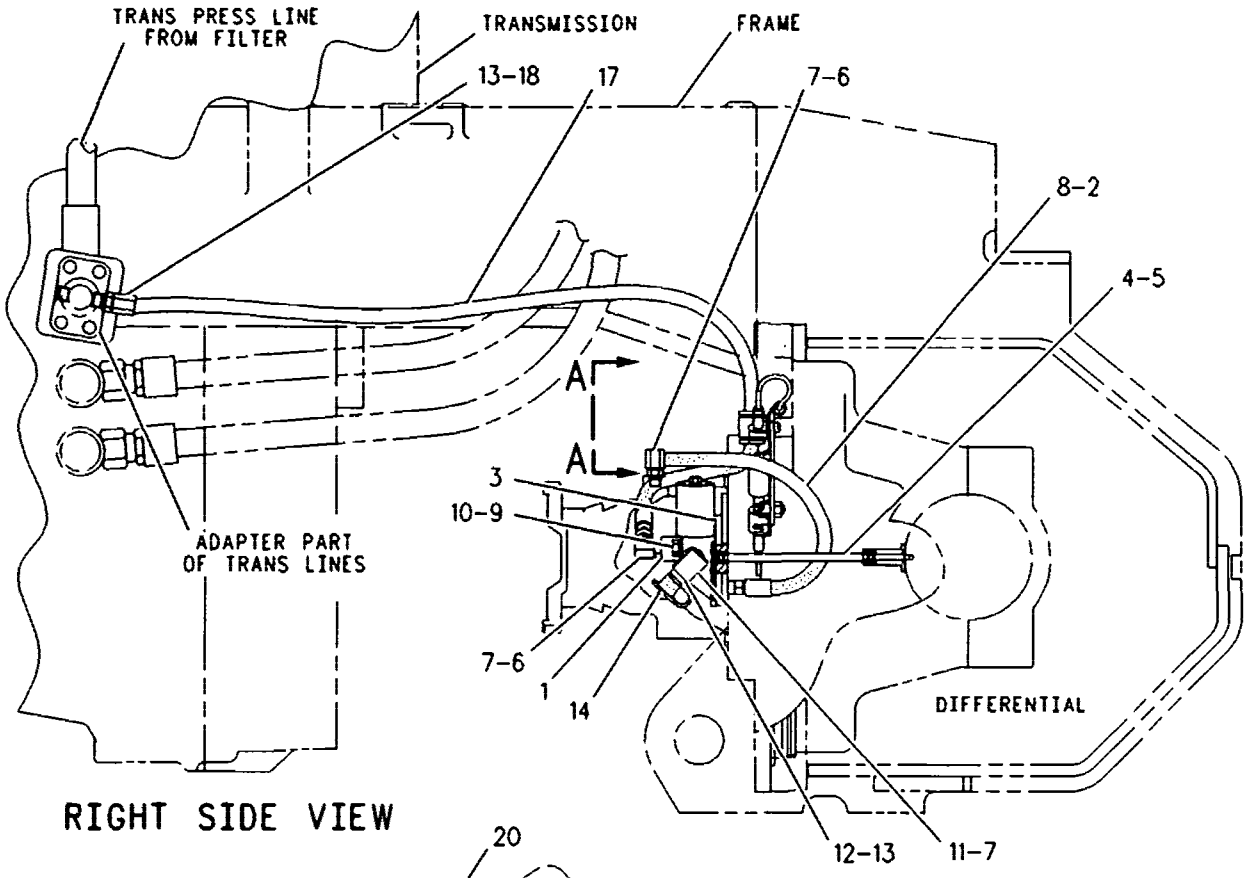

RIGHT SIDE VIEW

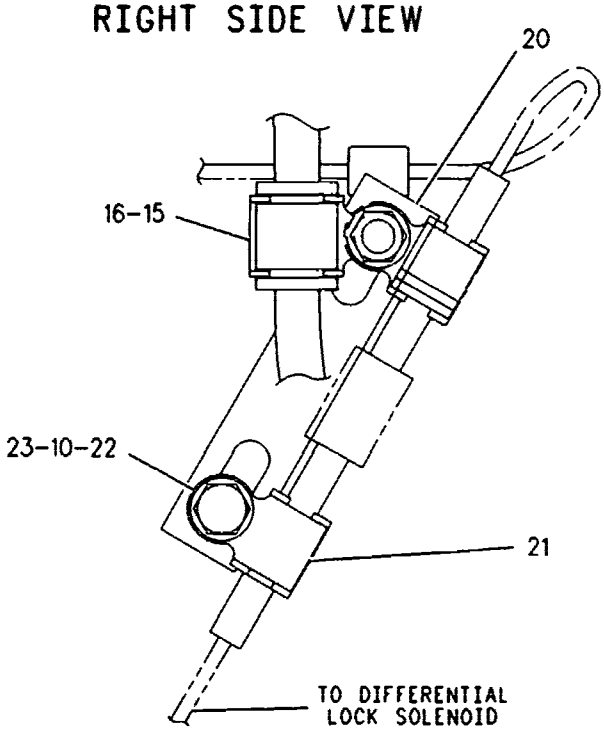

SECTION A-A

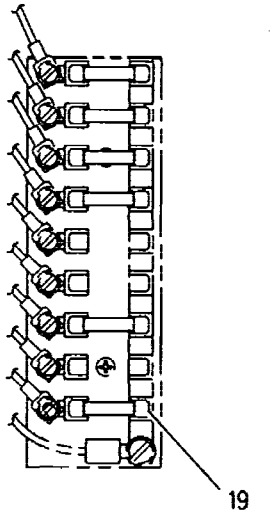

FUSE BLOCK COVER

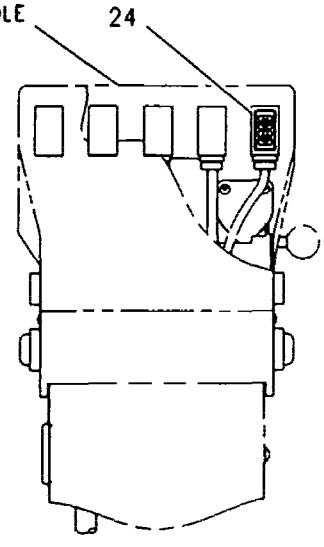

GRAPHIC #1 g00109409

127-8375 CONTROL GP-DIFFERENTIAL LOCK

PIN 5FM1-UP
PART OF 115-0629 DIFFERENTIAL AR-LOCK
AN ATTACHMENT
TYPE 2

SMCS-3264 i00681433

NOTE	REF NO	GRAPHIC REF	PART NUMBER	QTY	PART NAME 1 2 3 4 5 6 (PRODUCT LEVEL)	SEE PAGE
YC	1	1	*144-6295*	1	VALVE & MTG GP-DIFF LOCK	319
	2	1	**8M-4438**	2	SEAL-O-RING (17.12M ID)	
	3	1	**136-1892**	1	PLATE	
	4	1	**8X-5492**	1	TUBE	
	5	1	**4J-2506**	2	SEAL-O-RING (7.59MM ID)	
	6	1	**5P-7981**	2	ELBOW-O-RING	
	7	1	**3J-7354**	3	SEAL-O-RING (8.92MM ID)	
I	8	1	**7J-6729**	1	HOSE AS	
	9	1	**8T-2501**	2	BOLT (3/8-16X2IN)	
C	10	1	**8T-4896**	2	WASHER-HARD (2.5MM THK)	
	11	1	**135-9941**	1	ADAPTER-90 DEGREE	
	12	1	**6V-3965**	1	NIPPLE AS	
	13	1	**3J-1907**	2	SEAL-O-RING (11.89MM ID)	
	14	1	**6V-0852**	1	CAP-DUST	
	15	1	**9G-9154**	1	CLIP (10.5MM ID)	
	16	1	**8W-8528**	1	SLEEVE	
I	17	1	**5D-1260**	1	HOSE AS	
	18	1	**5P-7982**	1	ELBOW-O-RING	
C	19	1	**106-8704**	1	SUPPRESSOR AS-ARC	
		1	**102-8802**	1	KIT-RECEPTACLE	
					(INCL RECEPT. AS & WEDGE)	
		1	**3E-3365**	1	WEDGE	
		1	**8T-8729**	2	PIN-CONNECTOR	
C	20	1	**139-2120**	1	SWITCH AS (DIFFERENTIAL LOCK)	
		1	**3E-8825**	1	LAMP-MINIATURE (24 VOLT)	
		1	**123-5861**	1	ACTUATOR-ROCKER	

C-CHANGE FROM PREVIOUS TYPE
I-SEE HOSE FABRICATION GUIDE
Y-SEPARATE ILLUSTRATION

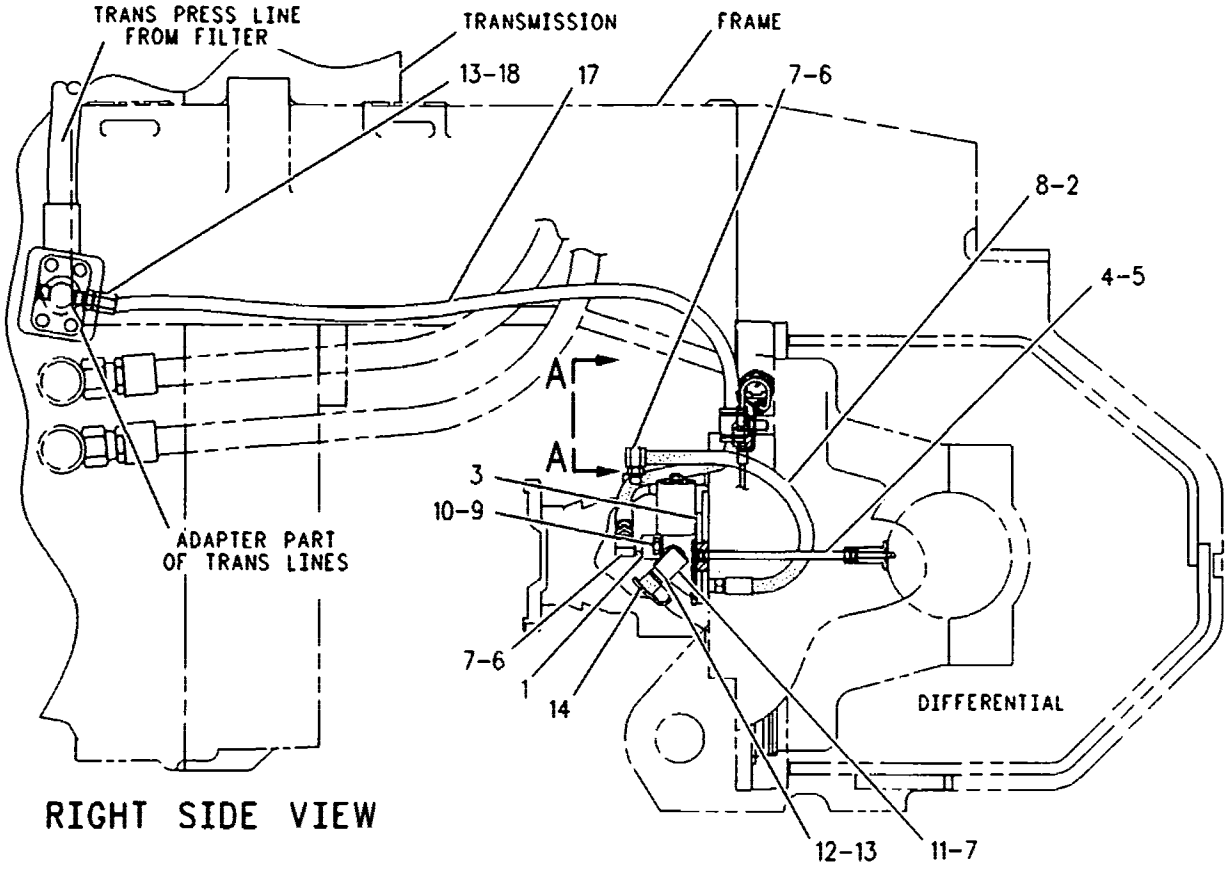

RIGHT SIDE VIEW

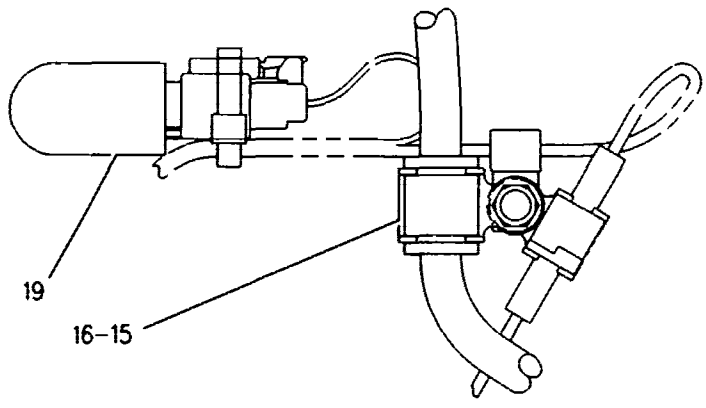

SECTION A-A

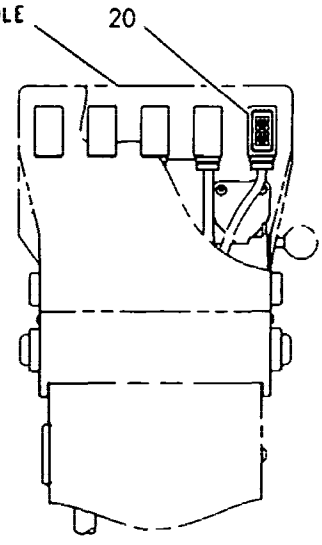

GRAPHIC #1 g00278884

POWER TRAIN

8W-5595 CONTROL GP-TRANSMISSION

PIN 5FM1-UP

SHIFTER

PART OF 112-4103 CHASSIS AR

SMCS-3065 **i00134676**

NOTE	REF NO	GRAPHIC REF	PART NUMBER	QTY	PART NAME 1 2 3 4 5 6 (PRODUCT LEVEL)	SEE PAGE
M	1	1	**9X-2043**	10	SCREW-TRUSS HEAD (M6X1X14MM)	
	2	1	**8X-2899**	1	COVER	
	3	1	**8X-2905**	1	PLATE AS	
M		1	**6V-9632**	14	NUT-WELD (M6X1 THD)	
		1	**7T-1099**	1	LINK	
		1	**8F-9836**	2	LUG (3/8-16 THD)	
	4	1	**8X-5705**	1	PLATE AS	
M		1	**6V-9632**	2	NUT-WELD (M6X1 THD)	
	5	1	**8X-5680**	1	FILM	
	6	1	**105-8681**	1	GATE AS	
		1	**8X-3798**	1	GATE	
	7	1	**106-9932**	1	LENS	
	8	1	**7M-0706**	1	KNOB	
	9	1	**8C-5337**	1	CONTROL GP-TRANSMISSION	
M	10	1	**9X-2045**	4	SCREW-TRUSS HEAD (M6X1X20MM)	
	11	1	**8X-2900**	1	COVER	
	12	1	**8X-4879**	2	BRACKET AS	
					(EACH INCLUDES)	
M		1	**6V-9632**	1	NUT-WELD (M6X1 THD)	
M	13	1	**9X-2042**	2	SCREW-TRUSS HEAD (M6X1.0X12MM)	
	14	1	**8X-8096**	1	FILM	
M	15	1	**9X-2041**	10	SCREW-TRUSS HEAD (M10X1.5X20MM)	

M-METRIC PART

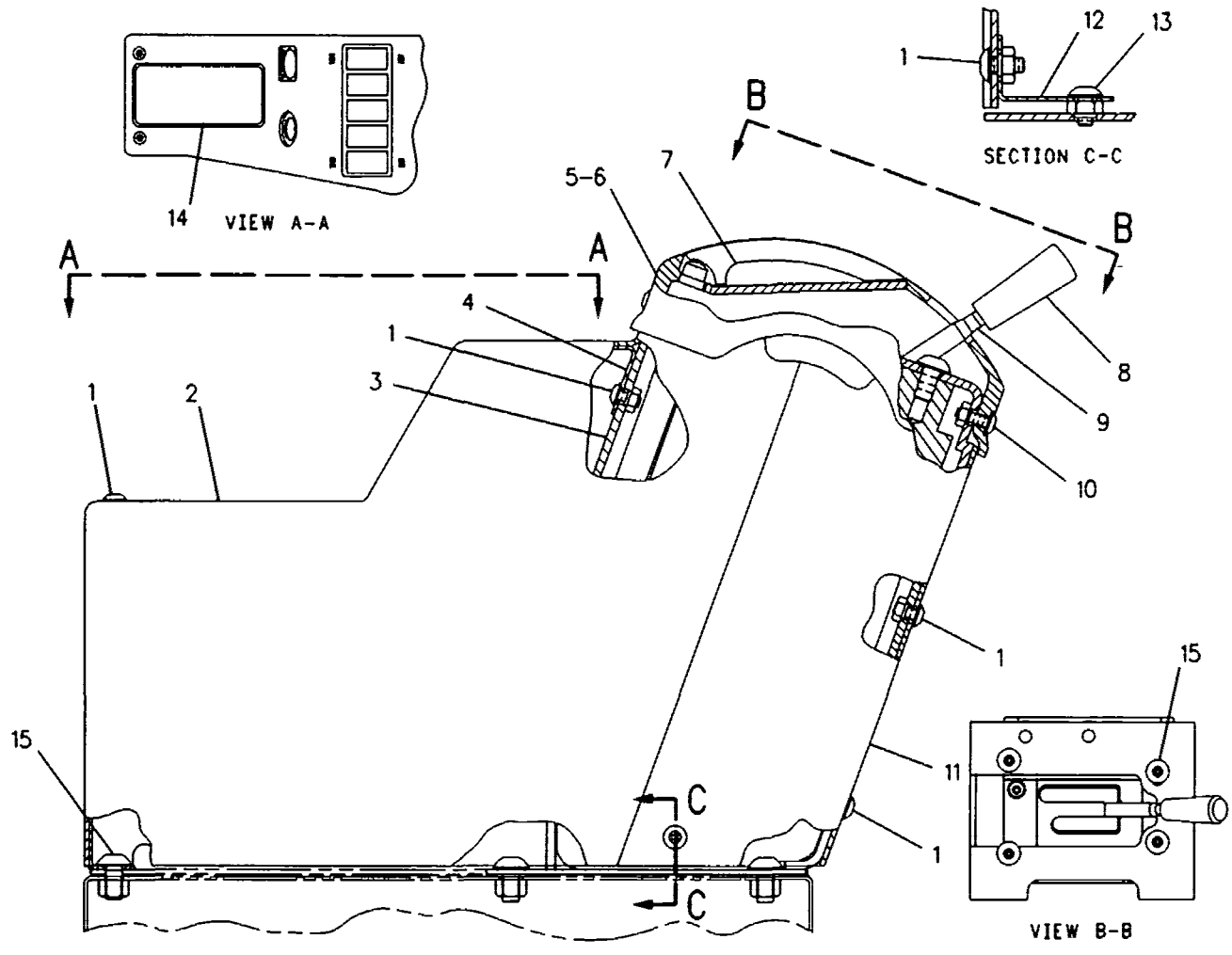

GRAPHIC #1 g00108820

POWER TRAIN

6Y-7821 CONTROL GP-TRANSMISSION HYD

S/N 7LX750-99999

PART OF 9W-7115 TRANSMISSION AR

SMCS-3073 **i00829585**

NOTE	REF NO	GRAPHIC REF	PART NUMBER	QTY	PART NAME 1 2 3 4 5 6 (PRODUCT LEVEL)	SEE PAGE
Y	1	1	**6Y-7822**	1	VALVE GP-TRANSMISSION CONTROL	338
M	2	1	**6V-3918**	5	BOLT (M8X1.25X50MM)	
	3	1	**9P-9150**	66	WASHER (.84MM THK)	
	4	1	**1T-0738**	33	WASHER (1.83MM THK)	
M	5	1	**8C-4984**	14	BOLT (M8X1.25X150MM)	
M	6	1	**3E-8005**	14	BOLT	
	7	1	**4S-5879**	1	SEAL-O-RING	
	8	1	**9U-9312**	1	HARNESS AS	
M	9	1	**8T-0639**	3	BOLT (M6X1.00X12MM)	
	10	1	**111-7088**	1	SWITCH AS-PRESSURE	
		1	**7N-7779**	1	SOCKET	
		1	**7N-7780**	1	PIN-CONNECTOR (BLADE)	
		1	**7N-9738**	1	HOUSING-RECEPTACLE	
	11	1	**9G-9150**	1	CLIP (10.2MM ID)	
	12	1	**9M-1974**	1	WASHER-HARD (2MM THK)	
M	13	1	**6V-5217**	3	BOLT (M8X1.25X20MM)	
	14	1	**3J-1907**	2	SEAL-O-RING (11.89MM ID)	
	15	1	**6V-0484**	1	ADAPTER-O-RING	

M-METRIC PART
Y-SEPARATE ILLUSTRATION

6Y-7821 CONTROL GP-TRANSMISSION HYD *(contd.)* i00829585

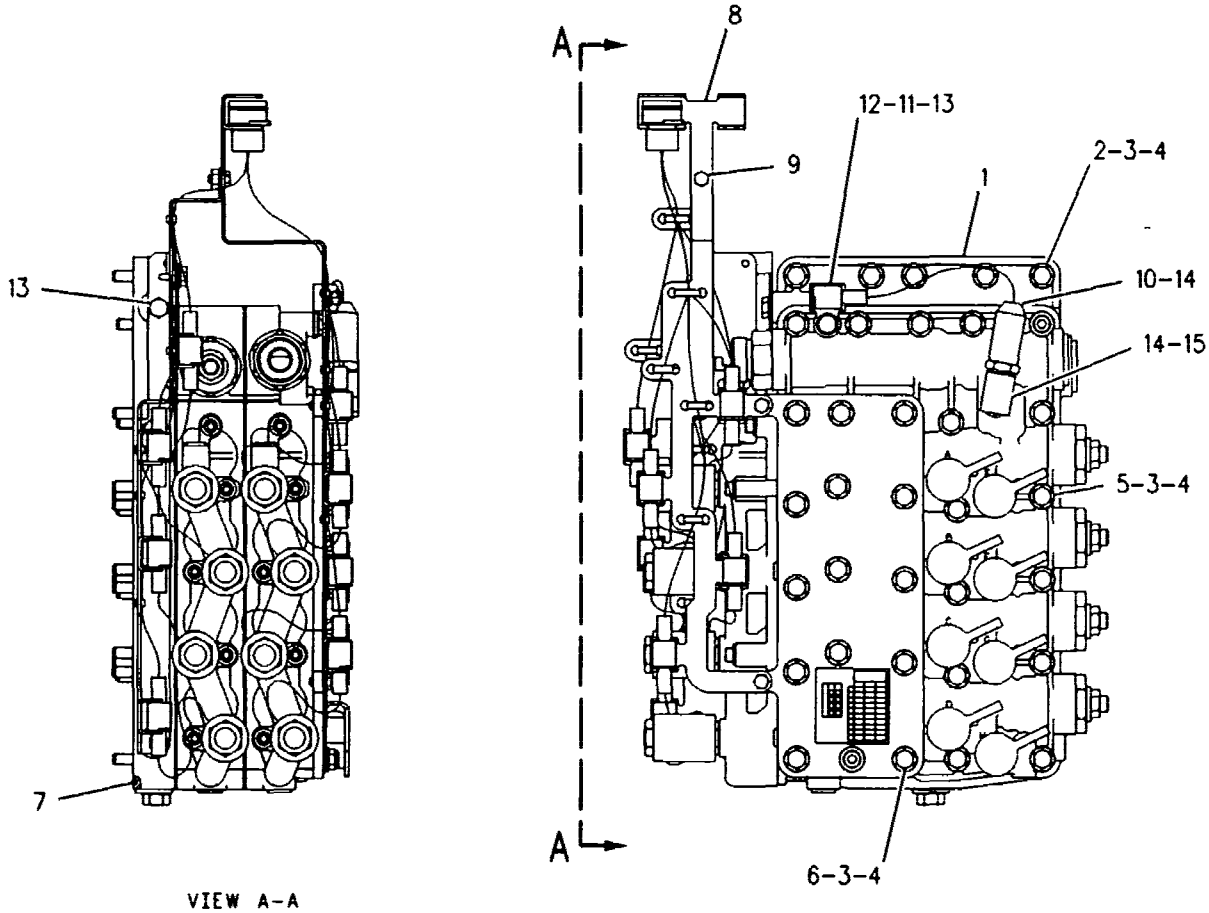

GRAPHIC #1 g00108811

POWER TRAIN

145-9531 CONTROL GP-TRANSMISSION HYD

S/N 4MY440-UP; 5AY527-99999

PART OF 144-2234, 149-6083 TRANSMISSION AR

SMCS-3073 **i00656081**

NOTE	REF NO	GRAPHIC REF	PART NUMBER	QTY	PART NAME 1 2 3 4 5 6 (PRODUCT LEVEL)	SEE PAGE
Y	1	1	*145-9533*	1	VALVE GP-TRANSMISSION CONTROL	340
M	2	1	**6V-3918**	5	BOLT (M8X1.25X50MM)	
	3	1	**9P-9150**	66	WASHER (.84MM THK)	
	4	1	**1T-0738**	33	WASHER (1.83MM THK)	
M	5	1	**8C-4984**	14	BOLT (M8X1.25X150MM)	
M	6	1	**3E-8005**	14	BOLT	
	7	1	**4S-5879**	1	SEAL-O-RING	
	8	1	**147-1771**	1	HARNESS AS	
M	9	1	**8T-0639**	3	BOLT (M6X1.00X12MM)	
	10	1	**111-7088**	1	SWITCH AS-PRESSURE (INCHING)	
		1	**7N-7779**	1	SOCKET	
		1	**7N-7780**	1	PIN-CONNECTOR (BLADE)	
		1	**7N-9738**	1	HOUSING-RECEPTACLE (1 PIN, 1 SOCKET)	
	11	1	**144-2231**	1	CLIP (10.5MM ID)	
	12	1	**9M-1974**	1	WASHER-HARD (2MM THK)	
M	13	1	**6V-5217**	3	BOLT (M8X1.25X20MM)	
	14	1	**3J-1907**	2	SEAL-O-RING (11.89MM ID)	
	15	1	**6V-0484**	1	ADAPTER-O-RING	

M-METRIC PART
Y-SEPARATE ILLUSTRATION

145-9531 CONTROL GP-TRANSMISSION HYD *(contd.)* i00656081

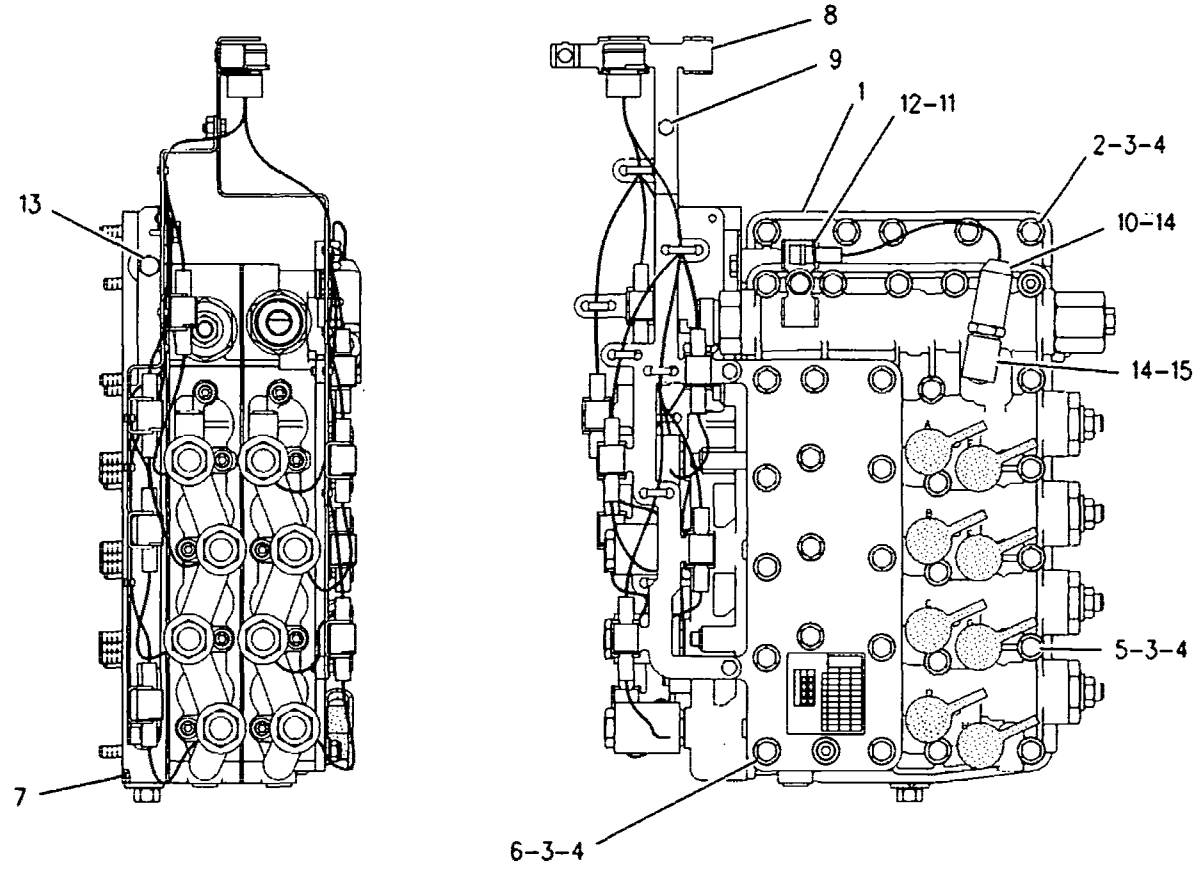

LEFT SIDE VIEW

FRONT VIEW

GRAPHIC #1 g00287494

POWER TRAIN

6Y-3978 COUPLING GP-TORSIONAL

PIN 5FM1-UP

PART OF 112-4119 POWER TRAIN AR

SMCS-3252, 3279 i00135735

NOTE	REF NO	GRAPHIC REF	PART NUMBER	QTY	PART NAME 1 2 3 4 5 6 (PRODUCT LEVEL)	SEE PAGE
	1	1	8E-1368	1	COUPLING AS	
M	2	1	6V-1820	12	BOLT (M10X1.50X30MM)	

M-METRIC PART

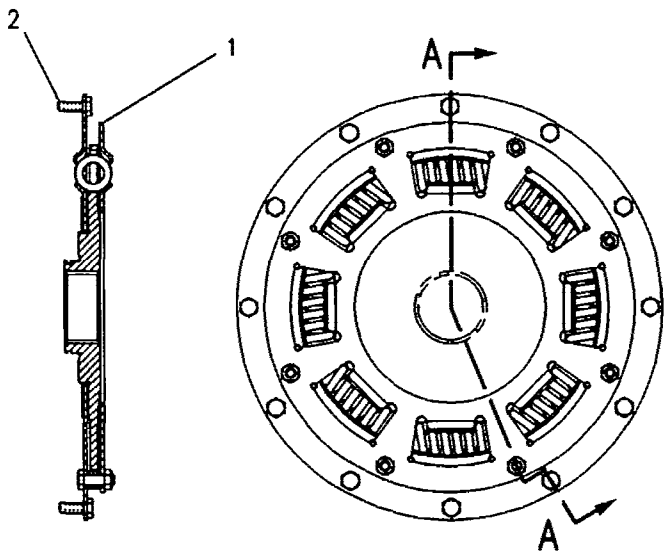

SECTION A-A

GRAPHIC #1 g00108540

MEMORANDA

POWER TRAIN

8W-5575 DIFFERENTIAL & BEVEL GEAR GP

PIN 5FM1-UP

PART OF 115-0629 DIFFERENTIAL AR-LOCK

AN ATTACHMENT

SMCS-3256, 3258, 3270, 3281, 3283, 3284 i00135230

NOTE	REF NO	GRAPHIC REF	PART NUMBER	QTY	PART NAME 1 2 3 4 5 6 (PRODUCT LEVEL)	SEE PAGE
	1	1	5D-9844	1	BOLT-LOCKING	
	2	1	5P-8247	20	WASHER-HARD (3.5MM THK)	
	3	1	034-3557	5	BOLT-LOCKING (3/8-16X1.125IN)	
	4	1	5M-2894	8	WASHER (2.5MM THK)	
	5	1	2K-5109	1	GASKET	
	6	1	8W-5279	1	RETAINER	
	7	1	5K-2595	1	SEAL-LIP	
	8	1	7S-4571	1	SEAL-O-RING	
	9	1	5P-5813	1	LOCKNUT-BEARING	
	10	1	9B-0143	1	LOCK-NUT	
	11	1	7D-8347	1	WASHER	
	12	1	8X-2316	1	HOUSING	
	13	1	5L-2031	1	CUP-ROLLER BEARING	
	14	1	5L-2030	1	CONE-ROLLER BEARING	
	15	1	0S-1587	8	BOLT (1/2-13X1.75IN)	
B	16	1	8V-3273	1	SHIM PACK (INCLUDES 10 SHIMS)	
	17	1	1F-7958	12	NUT-FULL (1/2-13 THD)	
	18	1	9F-1399	1	SEAL-O-RING (171.04MM ID)	
	19	1	1S-3184	1	CONE-ROLLER BEARING	
	20	1	2D-9454	1	CUP-ROLLER BEARING	
	21	1	9D-3306	1	CAGE	
	22	1	6G-4702	1	NUT	
	23	1	126-2728	1	CONE-TAPERED	
	24	1	2N-2138	1	CUP-ROLLER BEARING	
	25	1	6F-0698	1	DOWEL	
	26	1	8D-9784	2	LOCK	
	27	1	030-8535	2	BOLT-LOCKING (3/8-16X.875IN)	
	28	1	8X-2305	1	CARRIER AS	
	29	1	0S-1756	4	BOLT (3/4-10X4.25IN)	
	30	1	5P-8248	4	WASHER-HARD (3.5MM THK)	
	31	1	4D-5292	1	RING-RETAINING	
	32	1	1P-2662	1	CONE-ROLLER BEARING	
	33	1	1P-2636	1	CUP-ROLLER BEARING	
	34	1	6G-4701	1	NUT	
	35	1	8X-2308	1	CAGE AS	
		1	2D-6642	1	BALL	
	36	1	2H-5001	1	SEAL (5.94MM ID)	
	37	1	8W-5111	1	SLEEVE	
	38	1	8X-1206	1	SHAFT-PINION	
Y	39	1	8W-5587	1	DIFFERENTIAL GP	288
	40	1	9G-2991	2	RING-SEAL	

B-USE AS REQUIRED
Y-SEPARATE ILLUSTRATION

8W-5575 DIFFERENTIAL & BEVEL GEAR GP *(contd.)* i00135230

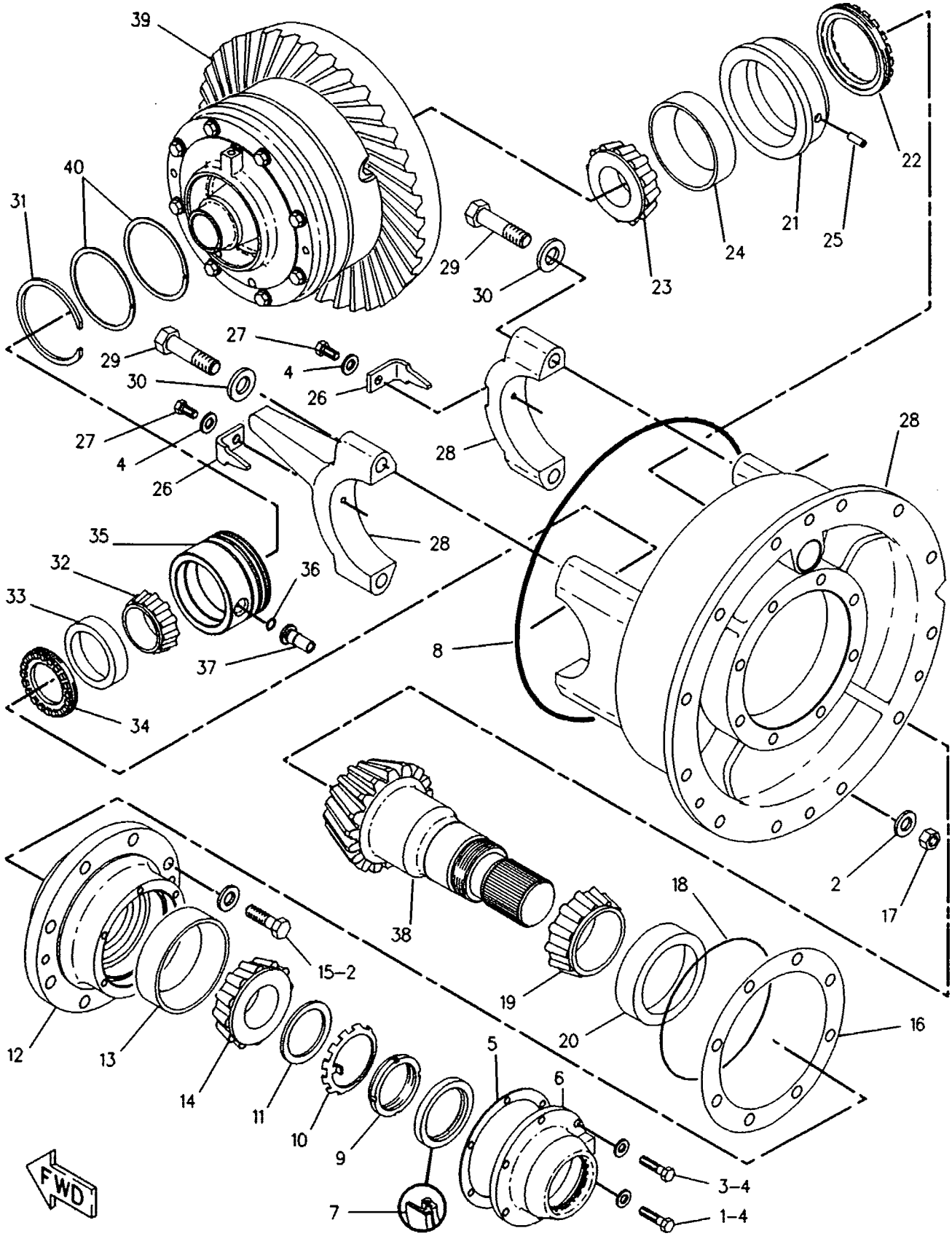

GRAPHIC #1 g00108677

POWER TRAIN

115-0629 DIFFERENTIAL AR-LOCK

PIN 5FM1-UP
DOUBLE
AN ATTACHMENT

SMCS-3264, 3266, 3270 **i00834891**

NOTE	PART NUMBER	QTY	PART NAME 1 2 3 4 5 6 (PRODUCT LEVEL)	SEE PAGE
Y	*127-8375*	1	CONTROL GP-DIFFERENTIAL LOCK	272
Y	*8W-5575*	1	DIFFERENTIAL & BEVEL GEAR GP	284

Y-SEPARATE ILLUSTRATION

MEMORANDA

POWER TRAIN

8W-5587 DIFFERENTIAL GP

PIN 5FM1-UP

PART OF 8W-5575 DIFFERENTIAL & BEVEL GEAR GP

AN ATTACHMENT

SMCS-3258, 3283, 3284 **i00135232**

NOTE	REF NO	GRAPHIC REF	PART NUMBER	QTY	PART NAME 1 2 3 4 5 6 (PRODUCT LEVEL)	SEE PAGE
	1	1	**8W-5578**	1	PISTON	
	2	1	**8D-9738**	1	SEAL-RING	
	3	1	**6T-0840**	1	RING-SEAL	
	4	1	**6Y-7955**	7	DISC-FRICTION	
	5	1	**8X-1205**	1	GEAR-BEVEL (50 TEETH)	
	6	1	**8X-2310**	1	HOUSING AS	
	7	1	**2D-6642**	1	BALL	
	8	1	**3D-6509**	2	DOWEL	
	9	1	**5P-8247**	18	WASHER-HARD (3.5MM THK)	
	10	1	**8D-9756**	2	WASHER-THRUST	
	11	1	**5B-0841**	18	BOLT (5/8-18X1.75IN)	
	12	1	**8X-4865**	1	HOUSING AS	
	13	1	**3D-6509**	2	DOWEL	
	15	1	**1B-2886**	9	BOLT (1/2-13X3.75IN)	
	16	1	**5P-8245**	9	WASHER (3MM THK)	
	17	1	**2B-0947**	8	BOLT (1/2-13X2.25IN)	
	18	1	**5P-8245**	8	WASHER (3MM THK)	
	19	1	**8W-5586**	1	SPIDER	
	20	1	**8X-4869**	3	SPACER	
	21	1	**8W-5589**	3	PINION AS-DIFFERENTIAL (11 TEETH)	
	22	1	**8D-9749**	1	BEARING-SLEEVE	
	23	1	**109-4580**	1	GEAR-DIFFERENTIAL BEVEL (18 TEETH)	
	24	1	**109-4581**	1	GEAR-DIFFERENTIAL BEVEL (18 TEETH)	
	25	1	**2G-1084**	1	DISC	
	26	1	**8D-9718**	8	DISC	

8W-5587 DIFFERENTIAL GP *(contd.)*

i00135232

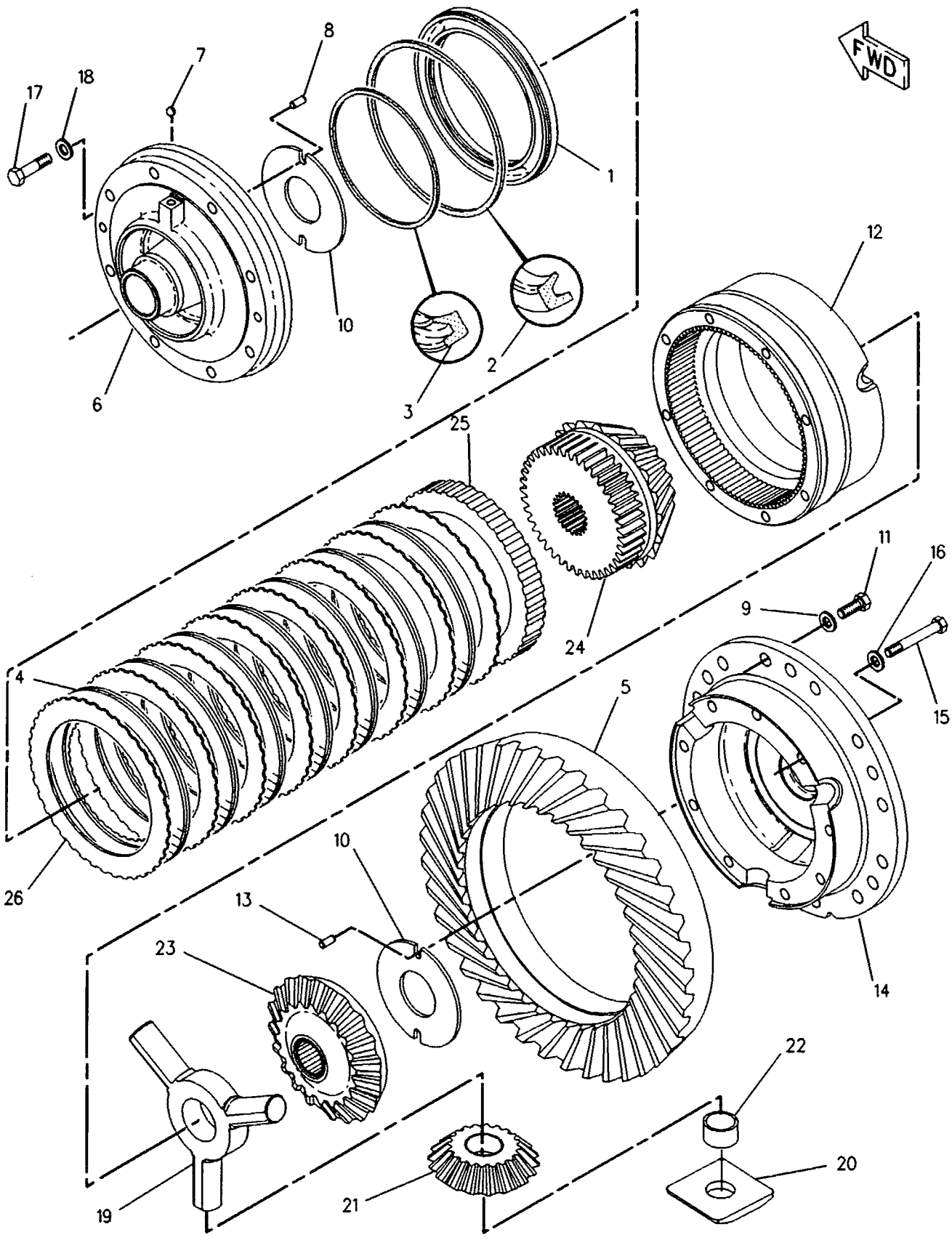

GRAPHIC #1

g00108721

POWER TRAIN

8W-5925 FILLER GP-POWER TRAIN OIL

PIN 5FM1-UP

PART OF 112-4119 POWER TRAIN AR

SMCS-3005, 3081 i00135236

NOTE	REF NO	GRAPHIC REF	PART NUMBER	QTY	PART NAME 1 2 3 4 5 6 (PRODUCT LEVEL)	SEE PAGE
	1	1	8X-4271	1	GAUGE AS	
	2	1	8X-8729	1	TUBE AS	
	3	1	8B-1615	1	GASKET	
	4	1	5D-0353	2	BOLT-LOCKING (3/8-16X1IN)	
	5	1	8T-4896	2	WASHER-HARD (2.5MM THK)	
	6	1	7J-8611	1	ELBOW	
	7	1	9G-5127	1	BREATHER (PRESSURE RELIEF)	

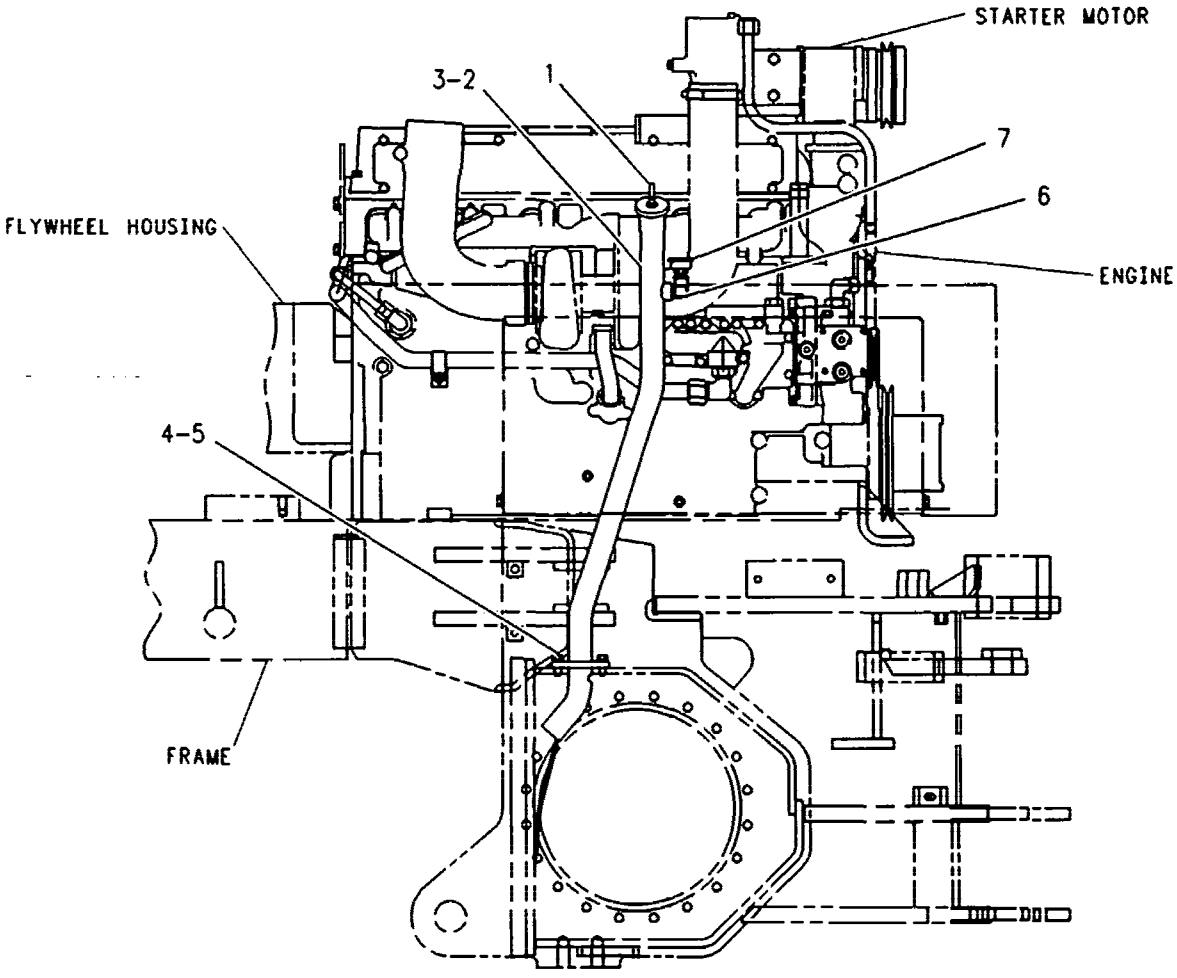

RIGHT SIDE VIEW

GRAPHIC #1 g00109204

125-3286 FILTER GP-TRANSMISSION

PIN 5FM1-UP

PART OF 8W-6215 LINES GP-TRANSMISSION OIL

SMCS-3067 i00134567

NOTE	REF NO	GRAPHIC REF	PART NUMBER	QTY	PART NAME 1 2 3 4 5 6 (PRODUCT LEVEL)	SEE PAGE
	1	1	3T-0688	1	SPOOL	
	2	1	9M-1986	1	SPRING	
	3	1	9S-8008	1	PLUG-O-RING (1 1/16-12 THD)	
	4	1	9S-4191	3	PLUG-O-RING (9/16-18 THD)	
	5	1	3J-1907	3	SEAL-O-RING (11.89MM ID)	
	6	1	125-0542	1	BASE-TMSN OIL FILTER	
	7	1	2S-8439	1	SEAL-O-RING (123.19MM ID)	
	8	1	3P-0887	1	HOUSING AS	
	9	1	7S-6745	1	RETAINER	
	10	1	3S-8652	1	SPRING	
	11	1	2J-6356	1	RING-RETAINING	
	12	1	3D-2824	1	SEAL-O-RING (23.47MM ID)	
	13	1	9S-4182	1	PLUG (7/16-20 THD)	
	14	1	3J-7354	1	SEAL-O-RING (8.92MM ID)	

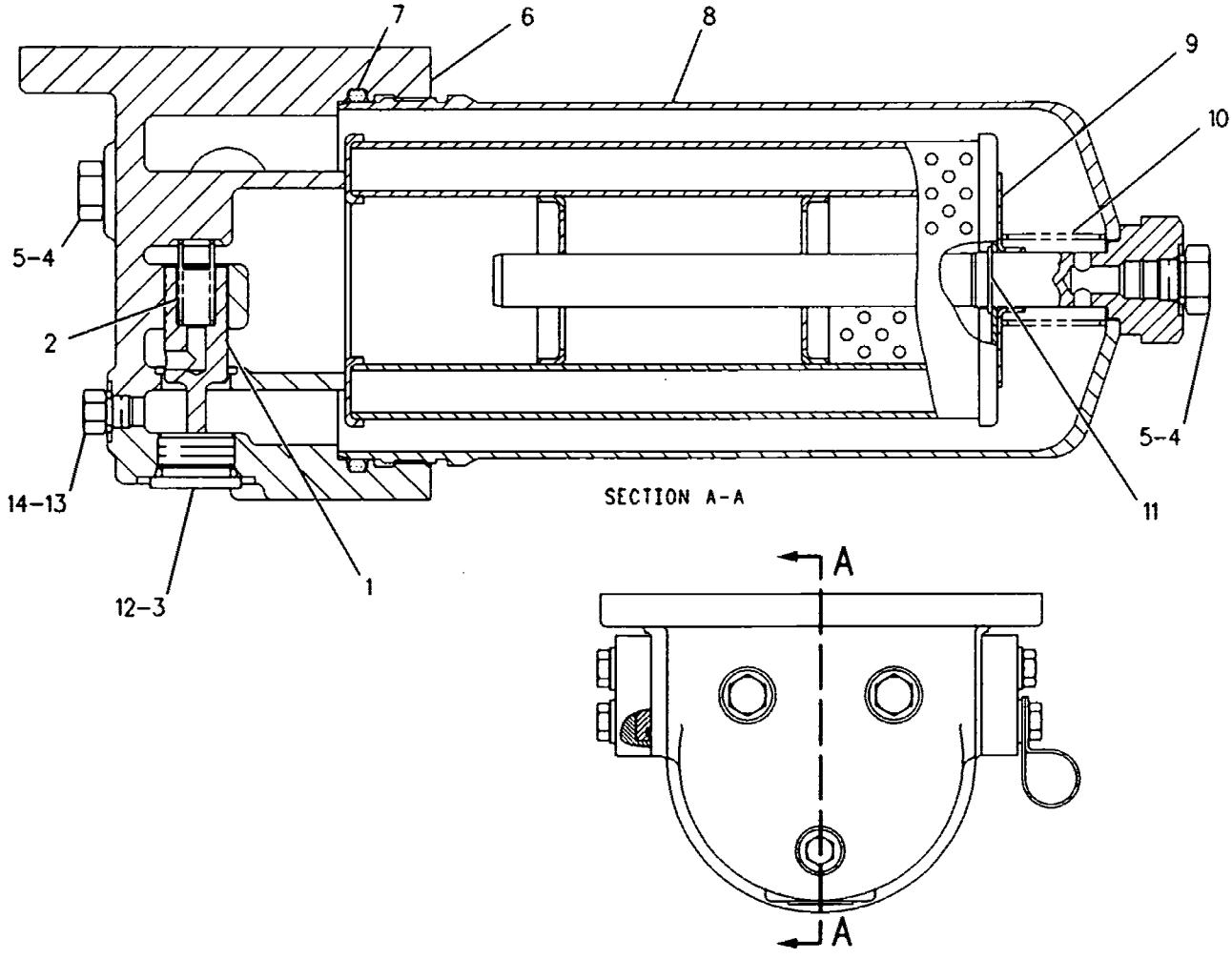

GRAPHIC #1 g00086034

POWER TRAIN

8W-4980 FINAL DRIVE GP

PIN 5FM1-UP

PART OF 112-4119 POWER TRAIN AR

SMCS-3259, 3278, 4050, 4054, 4055, 4056, 4059, 4068, 4084, 4091, 4092, 4093, 4094, 4205

i00135814

NOTE	REF NO	GRAPHIC REF	PART NUMBER	QTY	PART NAME 1 2 3 4 5 6 (PRODUCT LEVEL)	SEE PAGE
	1	1	**8W-4978**	2	SHAFT-SUN GEAR (17 TEETH)	
	2	1	**6G-7213**	2	CARRIER-PLANETARY	
	3	1	**7D-0028**	8	RETAINER	
	4	1	**8W-2307**	8	SHAFT-GOVERNOR CONTROL	
	5	1	**2M-5685**	16	BEARING	
	6	1	**8D-8634**	8	GEAR-PLANETARY (24 TEETH)	
	7	1	**8D-8639**	2	GEAR-RING (67 TEETH)	
	8	1	**5J-1086**	2	SEAL-O-RING (323.44MM ID)	
	9	1	**5D-0353**	16	BOLT-LOCKING (3/8-16X1IN)	
	10	1	**5M-2894**	18	WASHER (2.5MM THK)	
	11	1	**4K-0367**	40	NUT (5/8-11 THD)	
	12	1	**4D-3704**	40	WASHER-HARD (5MM THK)	
	13	1	**6V-8082**	2	SEAL-LIP	
	14	1	**9F-2247**	2	PLUG-PIPE	
	15	1	**8X-3276**	4	WASHER-THRUST	
	16	1	**8X-3221**	4	RING	
	17	1	**030-0061**	2	CONE-ROLLER BEARING	
	18	1	**030-0060**	2	CUP-ROLLER BEARING	
	19	1	**8X-3395**	2	HOUSING	
	20	1	**5P-8247**	32	WASHER-HARD (3.5MM THK)	
	21	1	**8S-9092**	32	BOLT (5/8-11X2.25IN)	
	22	1	**8W-8286**	4	SPROCKET	
	23	1	**5P-2545**	2	SEAL-O-RING	
	24	1	**030-8535**	2	BOLT-LOCKING (3/8-16X.875IN)	
	25	1	**8W-4981**	2	LOCK	
	26	1	**8W-4979**	2	SHAFT-DRIVE	
	27	1	**6K-8329**	2	CONE-ROLLER BEARING	
	28	1	**6F-2956**	2	CUP-ROLLER BEARING	
	29	1	**2G-6396**	2	NUT	
	30	1	**8X-3204**	2	RETAINER	
	31	1	**5P-6851**	48	BOLT-LOCKING	
	32	1	**8X-3364**	2	SHIM PACK (EA INCL 10 SHIM)	
	33	1	**8D-8628**	2	WASHER	
	34	1	**8D-8621**	2	RING-RETAINING	
	35	1	**4L-9822**	2	SEAL-LIP	
	36	1	**8X-2968**	2	HOUSING-AXLE	
	37	1	**8X-8376**	16	WASHER	
	38	1	**5P-8245**	48	WASHER (3MM THK)	

QUANTITIES SHOWN ARE THOSE REQUIRED FOR BOTH LH AND RH SIDES

8W-4980 FINAL DRIVE GP *(contd.)*

i00135814

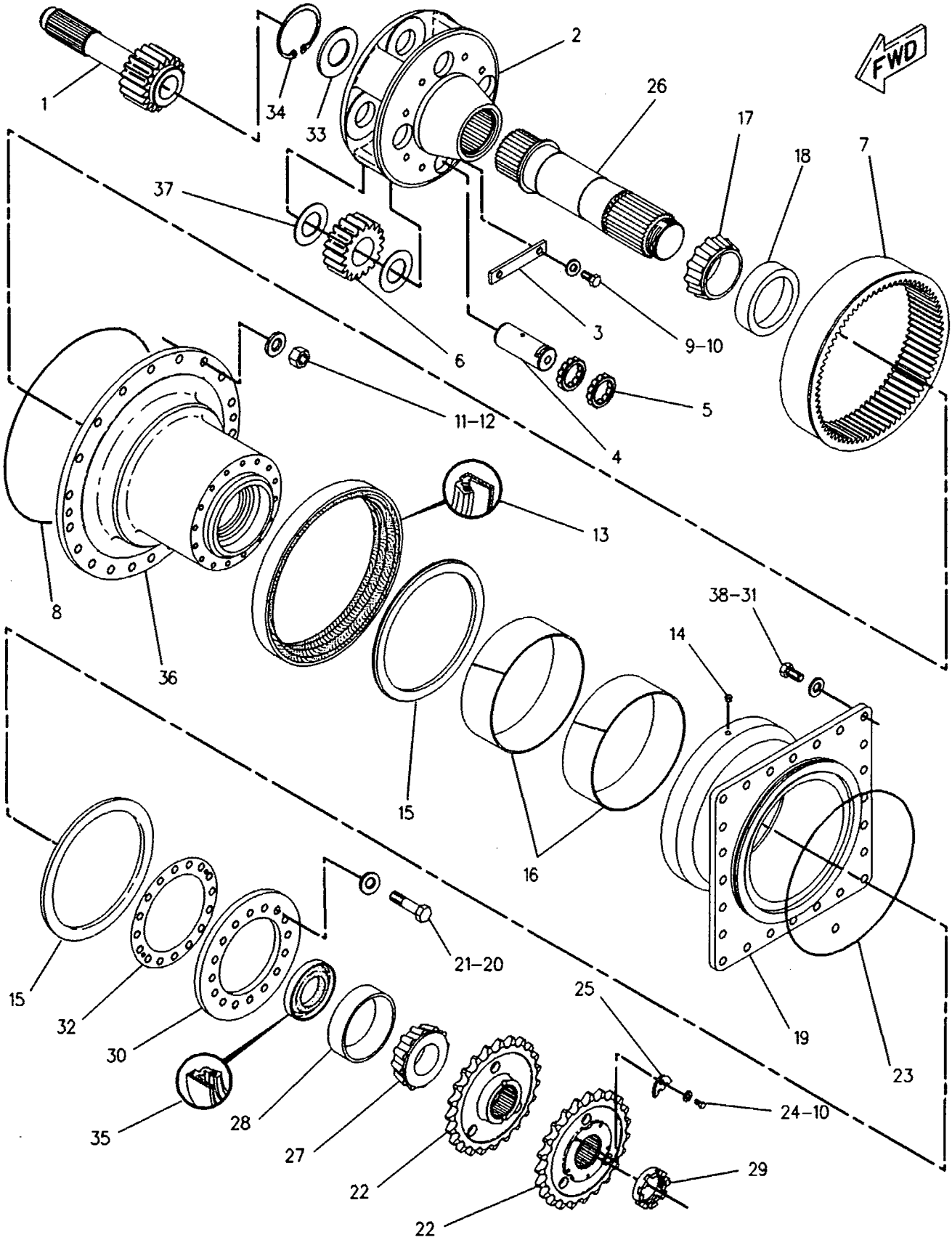

GRAPHIC #1

g00108678

POWER TRAIN

115-0631 GEAR GP-BEVEL

PIN 5FM1-UP

PART OF 112-4119 POWER TRAIN AR

SMCS-3254, 3256 **i00135846**

NOTE	REF NO	GRAPHIC REF	PART NUMBER	QTY	PART NAME 1 2 3 4 5 6 (PRODUCT LEVEL)	SEE PAGE
	1	1	1F-7958	12	NUT-FULL (1/2-13 THD)	
	2	1	5P-8245	20	WASHER (3MM THK)	
	3	1	9F-1399	1	SEAL-O-RING (171.04MM ID)	
	4	1	5L-2031	1	CUP-ROLLER BEARING	
	5	1	5L-2030	1	CONE-ROLLER BEARING	
	6	1	7D-8347	1	WASHER	
	7	1	9B-0143	1	LOCK-NUT	
	8	1	5P-5813	1	LOCKNUT-BEARING	
	9	1	5K-2595	1	SEAL-LIP	
	10	1	8W-5279	1	RETAINER	
	11	1	2K-5109	1	GASKET	
	12	1	8X-2316	1	HOUSING	
	13	1	0S-1587	8	BOLT (1/2-13X1.75IN)	
	14	1	8V-3273	1	SHIM PACK	
	15	1	2D-9454	1	CUP-ROLLER BEARING	
	16	1	1S-3184	1	CONE-ROLLER BEARING	
	17	1	8X-1206	1	SHAFT-PINION	
	18	1	115-0634	1	PLUG	
	19	1	1P-2662	1	CONE-ROLLER BEARING	
	20	1	1P-2636	1	CUP-ROLLER BEARING	
	21	1	110-6078	1	CAGE	
	22	1	110-8385	1	HOUSING	
	23	1	8X-1205	1	GEAR-BEVEL (50 TEETH)	
	24	1	5B-0841	18	BOLT (5/8-18X1.75IN)	
	25	1	5P-8247	18	WASHER-HARD (3.5MM THK)	
	26	1	9D-3306	1	CAGE	
	27	1	6G-4702	1	NUT	
	28	1	2N-2138	1	CUP-ROLLER BEARING	
	29	1	126-2728	1	CONE-TAPERED	
	30	1	6F-0698	1	DOWEL	
	31	1	8X-2305	1	CARRIER AS	
		1	0S-1756	4	BOLT (3/4-10X4.25IN)	
		1	5P-8248	4	WASHER-HARD (3.5MM THK)	
	32	1	7S-4571	1	SEAL-O-RING	
	33	1	034-3557	5	BOLT-LOCKING (3/8-16X1.125IN)	
	34	1	5M-2894	8	WASHER (2.5MM THK)	
	35	1	5D-9844	1	BOLT-LOCKING	
	36	1	6G-4701	1	NUT	
	37	1	8D-9784	2	LOCK	
	38	1	030-8535	2	BOLT-LOCKING (3/8-16X.875IN)	
	39	1	9S-4182	1	PLUG (7/16-20 THD)	
	40	1	3J-7354	1	SEAL-O-RING (8.92MM ID)	

115-0631 GEAR GP-BEVEL *(contd.)* i00135846

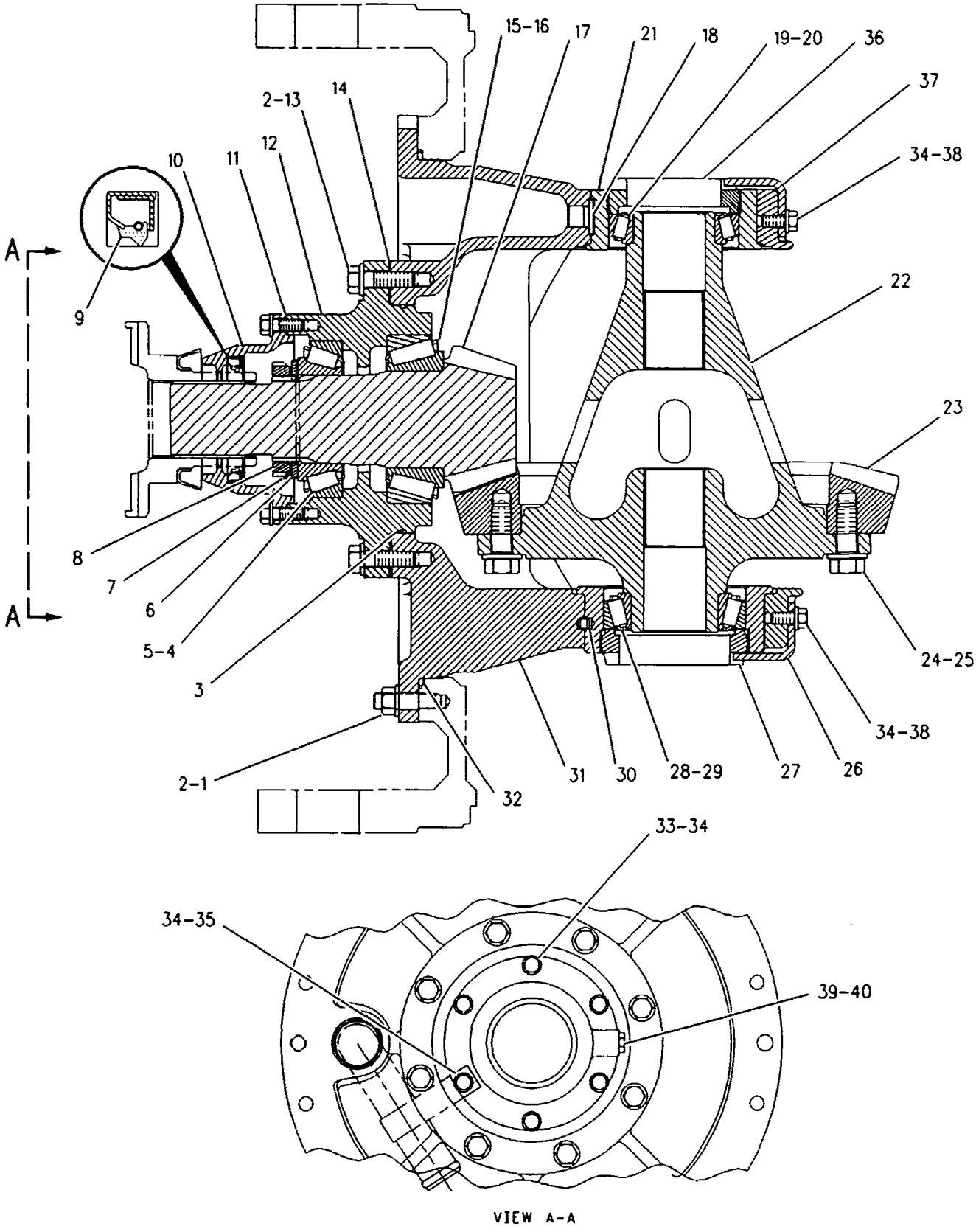

VIEW A-A

GRAPHIC #1 g00109573

POWER TRAIN

8W-6215 LINES GP-TRANSMISSION OIL

PIN 5FM1-UP

PART OF 112-4119 POWER TRAIN AR

SMCS-3154 **i00135241**

NOTE	REF NO	GRAPHIC REF	PART NUMBER	QTY	PART NAME 1 2 3 4 5 6 (PRODUCT LEVEL)	SEE PAGE
	1	1	8X-7283	1	HOSE AS	
	2	1	3D-2824	2	SEAL-O-RING (23.47MM ID)	
	3	1	6V-8716	2	CONNECTOR-SEAL	
	4	1	6V-9746	5	SEAL-O-RING (18.94MM ID)	
I	5	1	2T-2429	1	HOSE AS	
	6	1	4J-0520	7	SEAL-O-RING (32.92MM ID)	
	7	1	6V-0397	2	FLANGE-HALF	
	8	1	8T-4121	20	WASHER (2.5MM THK)	
M	9	1	8T-4910	4	BOLT (M12X1.75X60MM)	
I	10	1	8R-9762	1	HOSE AS	
	11	1	1R-0719	1	ELEMENT AS-HYDRAULIC	
	12	1	9C-5344	1	SPACER (18MM THK)	
M	13	1	8T-6466	4	BOLT (M10X1.50X60MM)	
	14	1	1P-4577	10	FLANGE-HALF	
	15	1	8T-4223	4	WASHER-HARD (3MM THK)	
	16	1	118-0424	1	ADAPTER	
	17	1	6V-8640	1	CONNECTOR-SEAL	
	18	1	2M-9780	2	SEAL-O-RING (19.18MM ID)	
	19	1	3E-7420	1	CONNECTOR	
Y	20	1	125-3286	1	FILTER GP-TRANSMISSION	291
I	21	1	118-8062	1	HOSE AS	
	22	1	8X-8916	1	PLATE	
	23	1	7X-0342	1	BOLT (5/8-11X.74IN)	
	24	1	4J-0522	1	SEAL-O-RING (37.69MM ID)	
	25	1	005-7898	2	CONNECTOR-HOSE	
	26	1	8T-8899	1	ELBOW-45 DEGREE	
	27	1	8X-7332	1	HOSE AS	
	28	1	5P-9938	4	BOLT-LOCKING	
	29	1	8X-5121	1	TUBE	
	30	1	4F-7389	2	SEAL-O-RING (37.47MM ID)	
BE	31	1	8X-7317		HOSE	
M	32	1	8T-4196	12	BOLT (M10X1.50X35MM)	
	33	1	8X-7487	1	ADAPTER	
	34	1	9C-9467	1	CLIP	
	35	1	9M-2904	2	CLAMP-HOSE	
	36	1	5D-1026	2	CLAMP-HOSE	
BE	37	1	5P-0765		HOSE	
	38	1	3B-7732	1	ELBOW-STREET	
	39	1	5P-4116	1	WASHER (2MM THK)	
	40	1	6V-1889	1	CLIP (28.58MM ID)	
	41	1	113-9048	1	BAFFLE	
	42	1	1L-0509	2	BOLT (3/8-16X.74IN)	
	43	1	8T-4896	6	WASHER-HARD (2.5MM THK)	
	44	1	6V-3965	1	NIPPLE AS	
		1	6V-0852	1	CAP-DUST	
	45	1	9S-4191	1	PLUG-O-RING (9/16-18 THD)	
	46	1	3J-1907	2	SEAL-O-RING (11.89MM ID)	
	47	1	4L-9337	4	BOLT (3/8-16X1.50IN)	
		1	7W-9094	4	SPACER (9MM THK)	

B-USE AS REQUIRED
E-ORDER BY THE CENTIMETER
I-SEE HOSE FABRICATION GUIDE
M-METRIC PART
Y-SEPARATE ILLUSTRATION

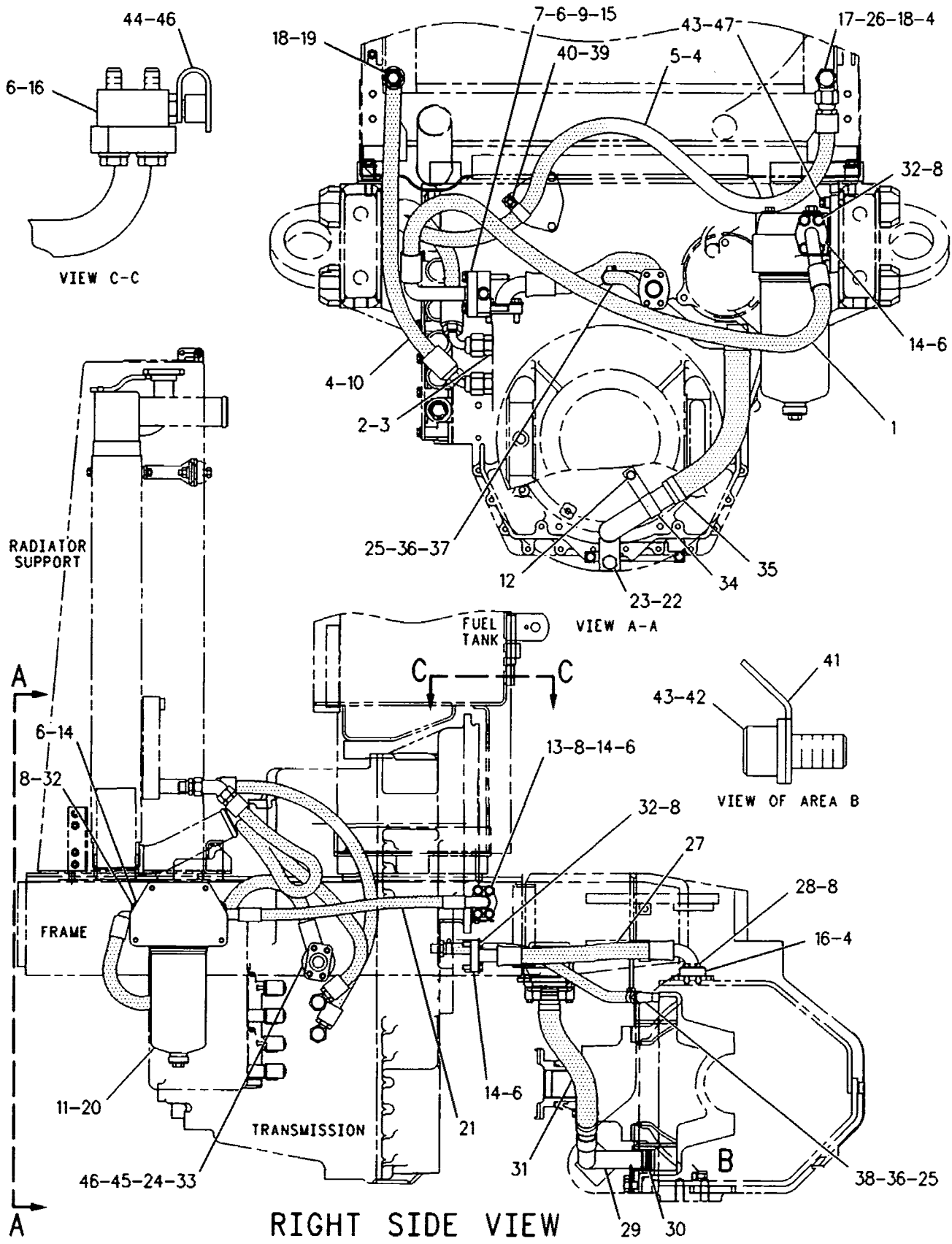

GRAPHIC #1 g00109093

POWER TRAIN

112-4119 POWER TRAIN AR

PIN 5FM1-UP

PART OF 112-3764 GENERAL AR

SMCS-3000 **i00683532**

NOTE	PART NUMBER	QTY	PART NAME 1 2 3 4 5 6 (PRODUCT LEVEL)	SEE PAGE
Y	*5T-8144*	1	BRAKE GP-SERVICE	526
Y	*112-4745*	1	CASE & FRAME GP	494
Y	*2G-0585*	1	CHAIN GP	253
Y	*6Y-3978*	1	COUPLING GP-TORSIONAL	282
Y	*8W-5925*	1	FILLER GP-POWER TRAIN OIL	290
Y	*8W-4980*	1	FINAL DRIVE GP	292
Y	*115-0631*	1	GEAR GP-BEVEL	294
Y	*8W-6215*	1	LINES GP-TRANSMISSION OIL	296
Y	*8W-5621*	1	SHAFT GP-DRIVE	303
Y	*8W-9293*	1	TANDEM & COVER GP	306
Y	*7D-9450*	1	TIRE GP (13 X 24,10 PL4)	308
Y	*9W-7115*	1	TRANSMISSION AR	314
			S/N 7LX750-99999	
Y	*149-6083*	1	TRANSMISSION AR	316
			S/N 5AY527-99999	
Y	*144-2234*	1	TRANSMISSION AR	315
			S/N 4MY750-UP	
Y	*123-5265*	1	WHEEL GP	474

Y-SEPARATE ILLUSTRATION

133-3291 PROTECTION GP-TMSN OIL FILLER

PIN 5FM1-UP

PART OF 133-3289 PROTECTION AR-VANDALISM

AN ATTACHMENT

SMCS-3005, 7315 i00834926

NOTE	REF NO	GRAPHIC REF	PART NUMBER	QTY	PART NAME 1 2 3 4 5 6 (PRODUCT LEVEL)	SEE PAGE
	1	1	4D-6716	1	RIVET-POP	
	2	1	2P-2717	1	HASP-OIL FILLER	
	3	1	5P-8502	1	PADLOCK GP	
A		1	5P-8500	1	KEY	
A		1	8Y-6364	1	SLEEVE	

A-NOT PART OF THIS GROUP

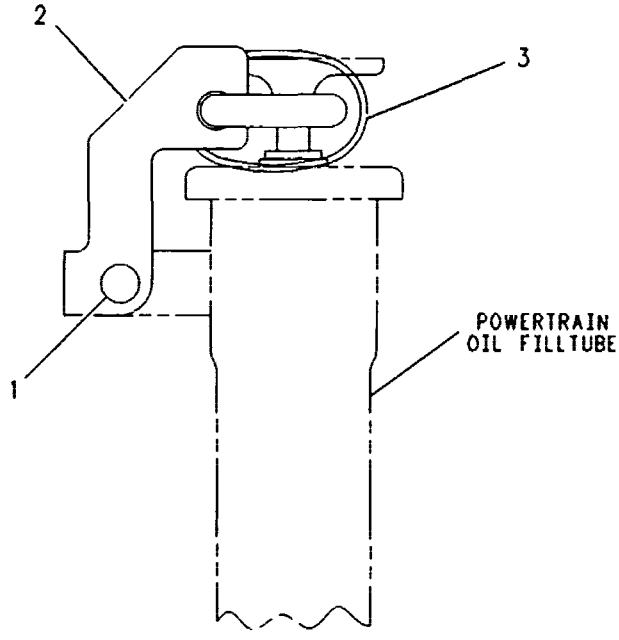

GRAPHIC #1 g00109326

POWER TRAIN

6Y-8764 PUMP GP-GEAR

S/N 7LX750-99999; 4MY440-UP; 5AY527-99999

2 SECTION

PART OF 6Y-8765 PUMP GP-GEAR

SMCS-3066 **i00683477**

NOTE	REF NO	GRAPHIC REF	PART NUMBER	QTY	PART NAME 1 2 3 4 5 6 (PRODUCT LEVEL)	SEE PAGE
	1	1	9N-4163	1	COVER AS-PUMP	
	2	1	1M-3780	2	BEARING (25.413 MM OD)	
	3	1	9N-4162	1	GEAR AS-OIL PUMP (12 TEETH)	
		1	2B-9373	1	KEY-WOODRUFF (.75X.25IN)	
	4	1	9N-4159	1	BODY AS-OIL PUMP	
	5	1	1M-3780	2	BEARING (25.413 MM OD)	
	6	1	5S-4385	1	BODY AS-OIL PUMP	
		1	8M-8489	4	DOWEL (12.54MM DIA)	
	7	1	9N-4158	2	GEAR-OIL PUMP (8 TEETH)	
	8	1	2B-9373	1	KEY-WOODRUFF (.75X.25IN)	
	9	1	2D-8009	3	SEAL-O-RING (142.47MM ID)	
	10	1	3S-0004	6	WASHER (2.29MM THK)	
M	11	1	8T-5030	2	BOLT (M10X1.5X120MM)	
	12	1	6Y-5010	8	WASHER (0.84MM THK)	
M	13	1	8C-2926	4	BOLT (M10X1.50X140MM)	
	14	1	9N-4161	1	GEAR AS-OIL PUMP (12 TEETH)	
		1	2B-9373	1	KEY-WOODRUFF (.75X.25IN)	
	15	1	9N-4156	1	MANIFOLD AS-PUMP	
		1	8M-8489	2	DOWEL (12.54MM DIA)	

M-METRIC PART

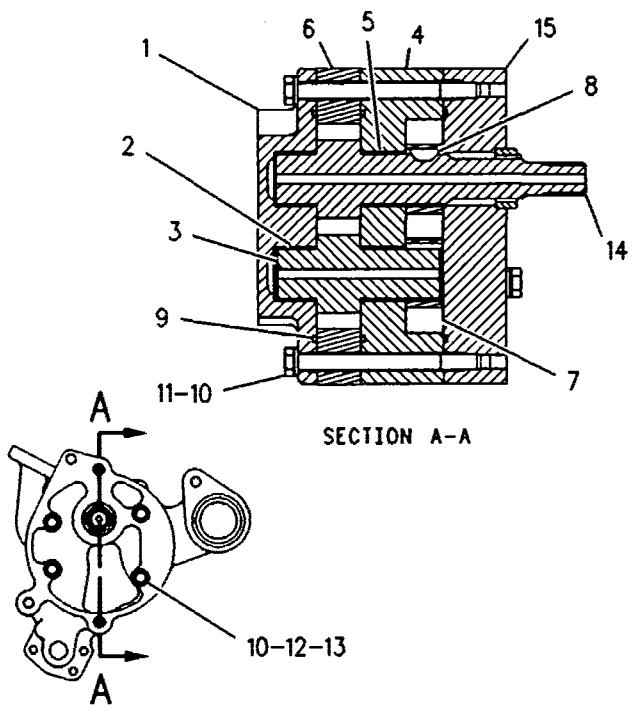

GRAPHIC #1 g00108548

6Y-8765 PUMP GP-GEAR

S/N 7LX750-99999; 4MY440-UP; 5AY527-99999
2 SECTION
PART OF 144-2234, 149-6083, 9W-7115 TRANSMISSION AR

SMCS-3066 i00683397

NOTE	REF NO	GRAPHIC REF	PART NUMBER	QTY	PART NAME 1 2 3 4 5 6 (PRODUCT LEVEL)	SEE PAGE
Y	1	1	*6Y-8764*	1	PUMP GP-GEAR	300
	2	1	**4F-7952**	1	SEAL-O-RING (37.7MM ID)	
	3	1	**7F-8268**	1	SEAL-O-RING (53.57MM ID)	
M	4	1	**6V-1820**	3	BOLT (M10X1.50X30MM)	

M-METRIC PART
Y-SEPARATE ILLUSTRATION

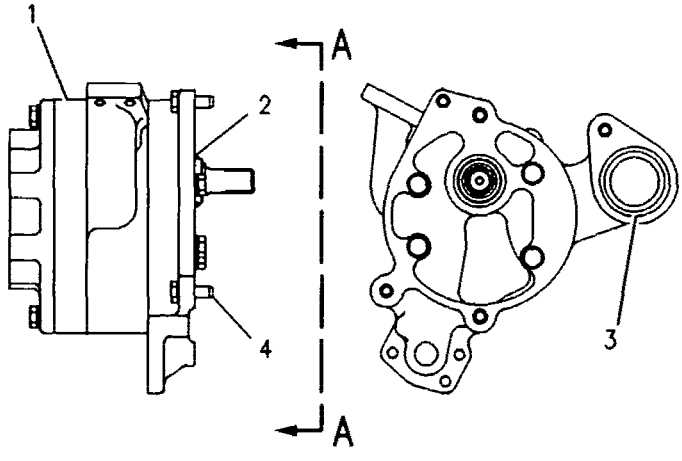

VIEW A-A

GRAPHIC #1 g00108547

POWER TRAIN

9W-5134 SCREEN GP-MAGNETIC

S/N 7LX750-99999; 4MY440-UP; 5AY527-99999

PART OF 144-2234, 149-6083, 9W-7115 TRANSMISSION AR

SMCS-3067, 3068 i00820399

NOTE	REF NO	GRAPHIC REF	PART NUMBER	QTY	PART NAME 1 2 3 4 5 6 (PRODUCT LEVEL)	SEE PAGE
	1	1	6Y-3861	1	COVER AS	
	2	1	6Y-3860	1	HOUSING-FILTER	
	3	1	8S-9130	1	SCREEN-SUCTION	
	4	1	8S-9129	1	FILTER-MAGNETIC (TRANSMISSION)	
	5	1	5P-3863	1	SEAL-O-RING (82.22MM ID)	
M	6	1	6V-5219	3	BOLT (M8X1.25X40MM)	
	7	1	5F-8000	1	SEAL-O-RING (50.39MM ID)	
M	8	1	8T-0355	3	BOLT (M10X1.50X110MM)	

M-METRIC PART

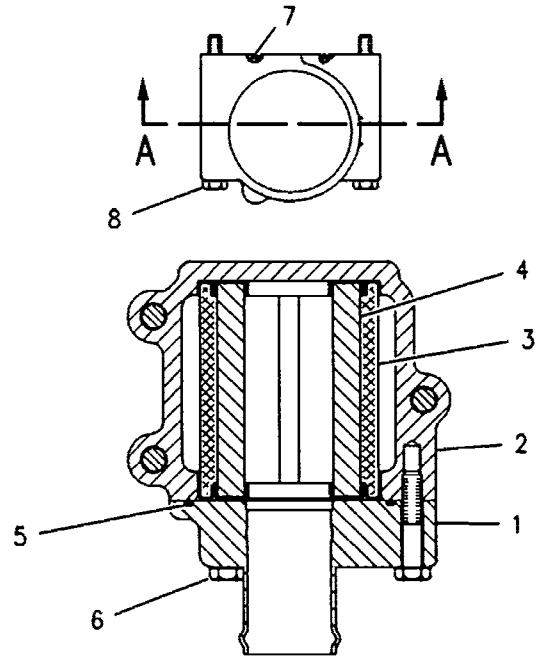

VIEW A-A

GRAPHIC #1 g00108551

8W-5621 SHAFT GP-DRIVE

PIN 5FM1-UP

PART OF 112-4119 POWER TRAIN AR

SMCS-3253 **i00135233**

NOTE	REF NO	GRAPHIC REF	PART NUMBER	QTY	PART NAME 1 2 3 4 5 6 (PRODUCT LEVEL)	SEE PAGE
	1	1	8X-5620	2	SHIELD AS	
M		1	8T-3597	1	NUT-WELD (M12X1.75 THD)	
	2	1	8W-1592	1	YOKE AS	
		1	3K-0986	1	PLUG	
	3	1	3K-0196	1	GUARD-DIRT	
	4	1	0S-1604	4	BOLT (1/2-20X2.5IN)	
	5	1	5P-7213	4	WASHER-HARD (2MM THK)	
	6	1	6B-6684	4	NUT-FULL (1/2-20 THD)	
	7	1	0S-1579	4	BOLT (1/2-20X2IN)	
Y	8	1	8X-5006	1	UNIVERSAL JOINT GP	317
M	9	1	8T-4179	2	BOLT (M12X1.75X20MM)	
	10	1	8T-4223	6	WASHER-HARD (3MM THK)	
M	11	1	8T-4192	4	BOLT (M12X1.75X25MM)	

M-METRIC PART
Y-SEPARATE ILLUSTRATION

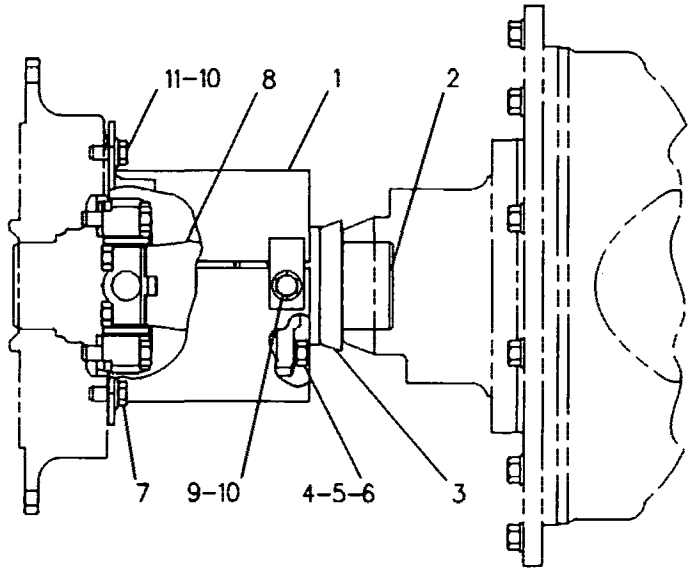

GRAPHIC #1 g00108676

POWER TRAIN

6Y-2300 SHAFT GP-INPUT

S/N 7LX750-99999; 4MY440-UP; 5AY527-99999
PART OF 144-2234, 149-6083, 9W-7115 TRANSMISSION AR

SMCS-3063 i00134456

NOTE	REF NO	GRAPHIC REF	PART NUMBER	QTY	PART NAME 1 2 3 4 5 6 (PRODUCT LEVEL)	SEE PAGE
	1	1	6Y-1870	1	SHAFT AS-INPUT	
	2	1	0L-1026	1	PLUG-CUP	
	3	1	6Y-0591	1	GEAR (45 TEETH)	
	4	1	6Y-0590	1	GEAR (38 TEETH)	
	5	1	2H-6490	1	BEARING-INNER	
	6	1	1M-4095	1	BEARING-INNER	
	7	1	3T-4377	2	SEAL-RING	

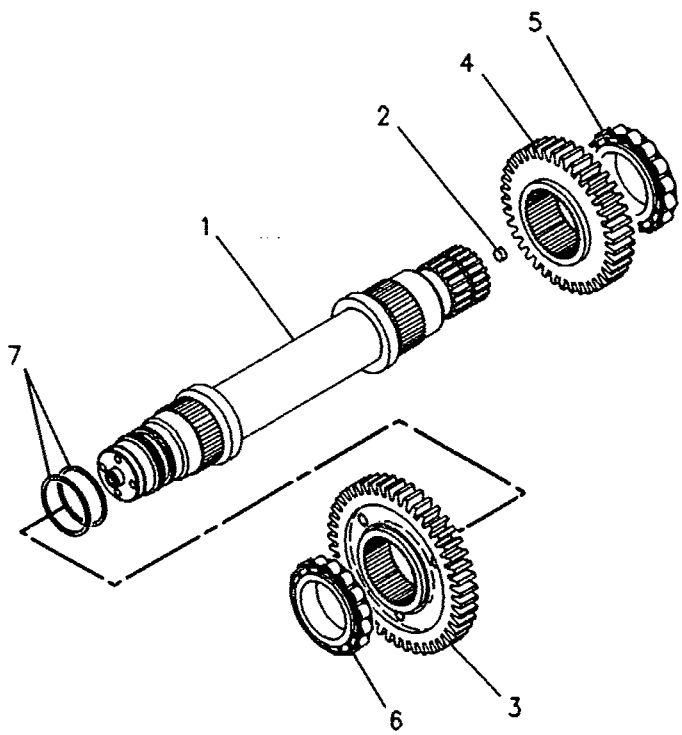

GRAPHIC #1 g00108544

MEMORANDA

POWER TRAIN

8W-9293 TANDEM & COVER GP

PIN 5FM1-UP

PART OF 112-4119 POWER TRAIN AR

SMCS-4062, 4064 i00787879

NOTE	REF NO	GRAPHIC REF	PART NUMBER	QTY	PART NAME 1 2 3 4 5 6 (PRODUCT LEVEL)	SEE PAGE
	1	1	8X-3617	1	HOUSING AS-TANDEM DRIVE (LH)	
	2	1	8X-3407	1	HOUSING AS-TANDEM DRIVE (RH)	
					(EA HOUSING AS INCL)	
	3	1	8D-6684	1	BAR	
	4	1	9D-0565	1	STEP	
	5	1	9D-0566	1	PLATE	
	6	1	8T-6468	48	BOLT (25.4MM)	
	7	1	5P-8245	32	WASHER (3MM THK)	
	8	1	8D-8807	4	COVER	
	9	1	2G-9789	4	GASKET	
	10	1	1F-8488	2	BREATHER (TANDEM)	
	11	1	002-6453	2	ELBOW-PIPE (1/2-14 NPTF)	
	12	1	6B-5072	2	BUSHING-TERMINAL	
	13	1	2B-3148	8	COVER	
	14	1	2B-3147	8	GASKET	
	15	1	2A-6938	2	COVER	
	16	1	2G-9791	2	GASKET	
	17	1	6E-5047	2	PLUG-HEX	
	18	1	9S-4190	2	PLUG-O-RING (7/16-20 THD)	
	19	1	2M-9780	2	SEAL-O-RING (19.18MM ID)	
	20	1	3K-0360	2	SEAL-O-RING (16.36MM ID)	

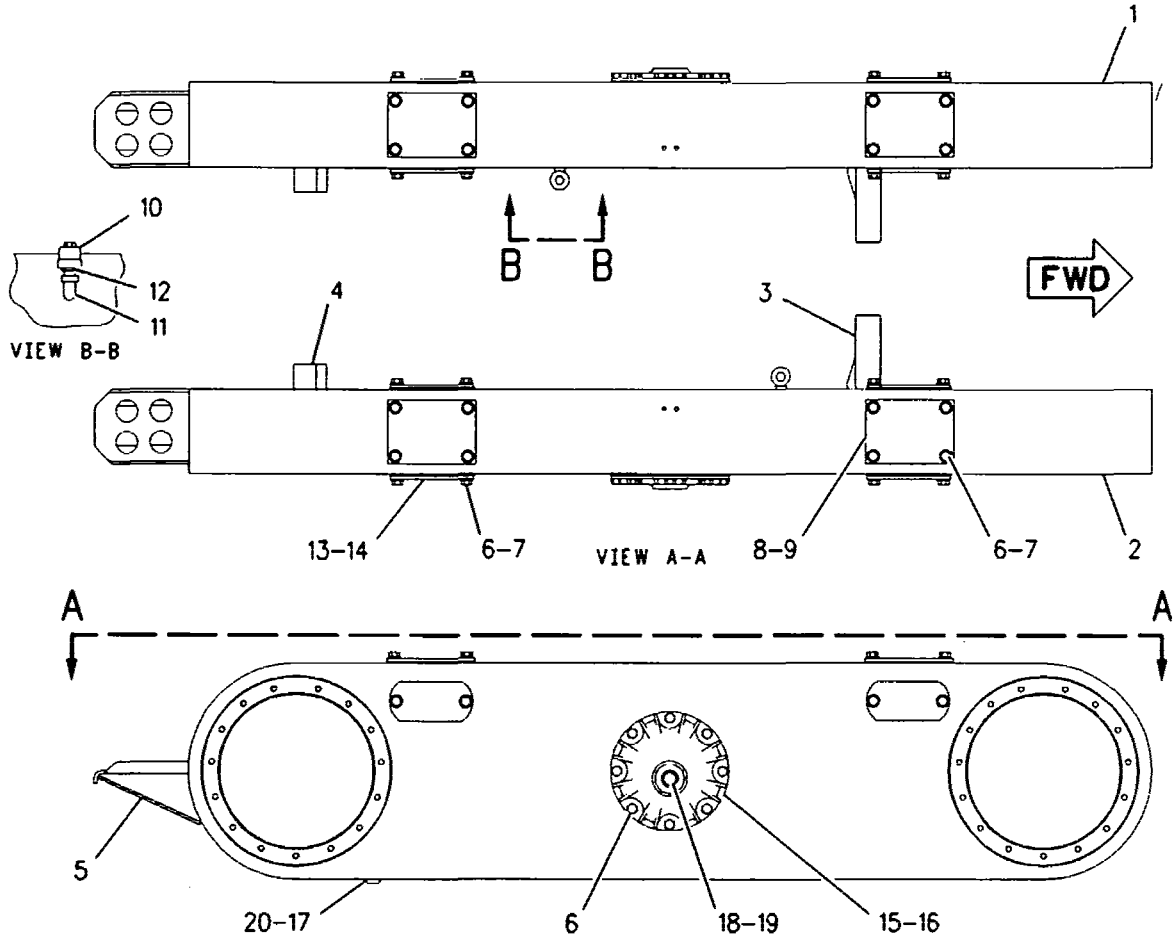

GRAPHIC #1 g00366012

POWER TRAIN

7D-9450 TIRE GP

PIN 5FM1-UP

13.00 X 24 10PR G-2

PART OF 112-4119 POWER TRAIN AR

SMCS-4203 i00631868

NOTE	PART NUMBER	QTY	PART NAME 1 2 3 4 5 6 (PRODUCT LEVEL)	SEE PAGE
			(INDIVIDUAL PARTS ARE NOT SERVICED SEPARATELY)	

POWER TRAIN

9D-5789 TIRE GP

PIN 5FM1-UP
13.00 X 24 12PR
AN ATTACHMENT

SMCS-4203 i00836326

NOTE	PART NUMBER	QTY	PART NAME 1 2 3 4 5 6 (PRODUCT LEVEL)	SEE PAGE
			(INDIVIDUAL PARTS ARE NOT SERVICED SEPARATELY)	

POWER TRAIN

9D-5791 TIRE GP

PIN 5FM1-UP

AN ATTACHMENT

SMCS-4203 i00659629

NOTE	PART NUMBER	QTY	PART NAME 1 2 3 4 5 6 (PRODUCT LEVEL)	SEE PAGE
			(INDIVIDUAL PARTS ARE NOT SERVICED SEPARATELY)	

POWER TRAIN

9D-5792 TIRE GP

PIN 5FM1-UP

AN ATTACHMENT

SMCS-4203 i00836327

NOTE	PART NUMBER	QTY	PART NAME 1 2 3 4 5 6 (PRODUCT LEVEL)	SEE PAGE
			(INDIVIDUAL PARTS ARE NOT SERVICED SEPARATELY)	

POWER TRAIN

112-9927 TIRE GP

PIN 5FM1-UP

13.00 R24 TG - XGLA2 G-2

AN ATTACHMENT

SMCS-4203 i00836286

NOTE	PART NUMBER	QTY	PART NAME 1 2 3 4 5 6 (PRODUCT LEVEL)	SEE PAGE
			(INDIVIDUAL PARTS ARE NOT SERVICED SEPARATELY)	

POWER TRAIN

112-9928 TIRE GP

PIN 5FM1-UP

AN ATTACHMENT

SMCS-4203 i00836329

NOTE	PART NUMBER	QTY	PART NAME 1 2 3 4 5 6 (PRODUCT LEVEL)	SEE PAGE
			(INDIVIDUAL PARTS ARE NOT SERVICED SEPARATELY)	

POWER TRAIN

9W-7115 TRANSMISSION AR

S/N 7LX750-99999

PART OF 112-4119 POWER TRAIN AR

SMCS-3030, 3063, 3064, 3155, 3160, 3169, 3170, 3187, 3190

i00819100

NOTE	REF NO	GRAPHIC REF	PART NUMBER	QTY	PART NAME 1 2 3 4 5 6 (PRODUCT LEVEL)	SEE PAGE
Y	1	1	*6Y-2300*	1	SHAFT GP-INPUT	304
Y	2	1	*6Y-2301*	1	CLUTCH GP-TRANSMISSION	254
Y	3	1	*6Y-2302*	1	CLUTCH GP-TRANSMISSION	258
Y	4	1	*6Y-2303*	1	CLUTCH GP-TRANSMISSION	262
Y	5	1	*8E-9316*	1	CLUTCH GP-TRANSMISSION	266
Y	6	1	*9W-5128*	1	CASE & PARTS GP-PLANETARY	236
Y	7	1	*9W-5132*	1	BRAKE GP-PARKING	234
Y	8	1	*9W-5134*	1	SCREEN GP-MAGNETIC	302
Y	9	1	*6Y-8765*	1	PUMP GP-GEAR	301
Y	10	1	*6Y-7821*	1	CONTROL GP-TRANSMISSION HYD	278

Y-SEPARATE ILLUSTRATION

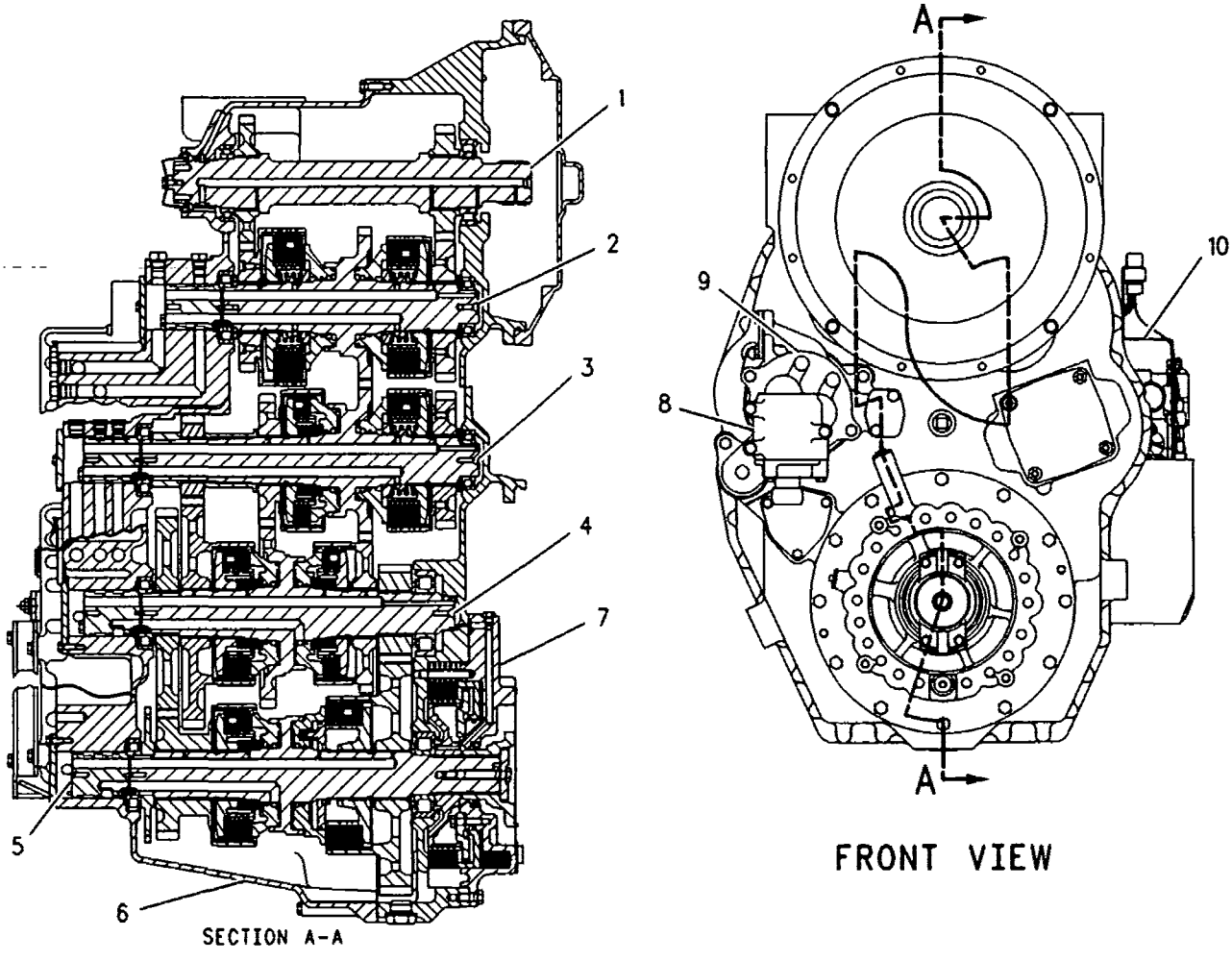

GRAPHIC #1

g00109365

POWER TRAIN

144-2234 TRANSMISSION AR

S/N 4MY440-UP

PART OF 112-4119 POWER TRAIN AR

SMCS-3030, 3063, 3064, 3155, 3160, 3169, 3170, 3187, 3190

i00793147

NOTE	REF NO	GRAPHIC REF	PART NUMBER	QTY	PART NAME 1 2 3 4 5 6 (PRODUCT LEVEL)	SEE PAGE
Y	1	1	*6Y-2300*	1	SHAFT GP-INPUT	304
Y	2	1	*6Y-2301*	1	CLUTCH GP-TRANSMISSION	254
Y	3	1	*6Y-2302*	1	CLUTCH GP-TRANSMISSION	258
Y	4	1	*6Y-2303*	1	CLUTCH GP-TRANSMISSION	262
Y	5	1	*8E-9316*	1	CLUTCH GP-TRANSMISSION	266
Y	6	1	*144-2205*	1	CASE & PARTS GP-PLANETARY	242
Y	7	1	*9W-5132*	1	BRAKE GP-PARKING	234
Y	8	1	*9W-5134*	1	SCREEN GP-MAGNETIC	302
Y	9	1	*6Y-8765*	1	PUMP GP-GEAR	301
Y	10	1	*145-9531*	1	CONTROL GP-TRANSMISSION HYD	280

Y-SEPARATE ILLUSTRATION

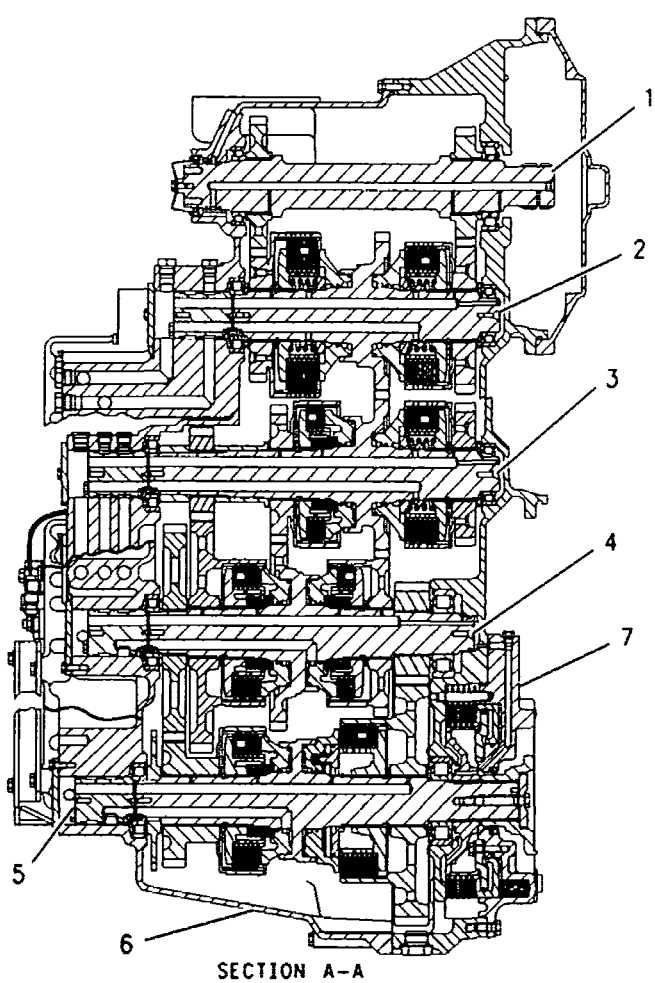

SECTION A-A

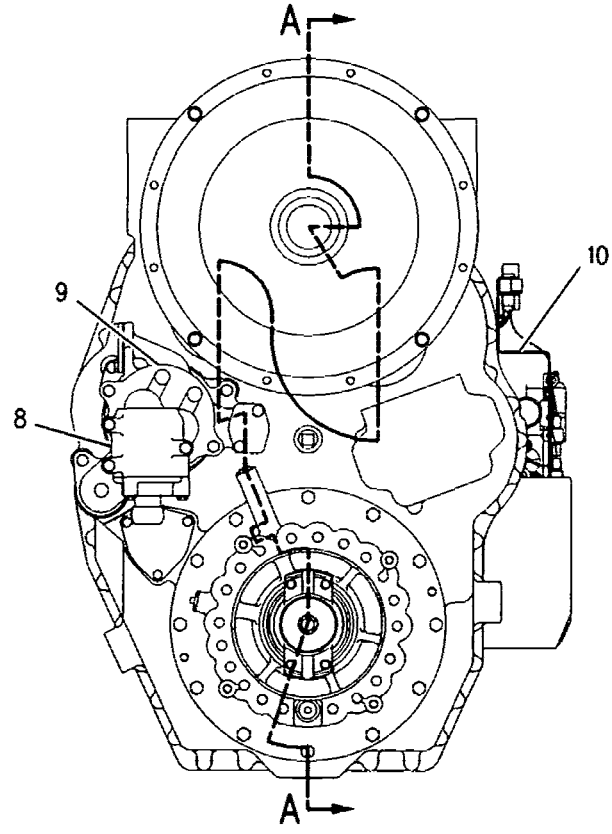

FRONT VIEW

GRAPHIC #1

g00374472

POWER TRAIN

149-6083 TRANSMISSION AR

S/N 5AY527-99999

PART OF 112-4119, 125-0535 POWER TRAIN AR

SMCS-3030, 3063, 3064, 3155, 3160, 3169, 3170, 3187, 3190

i00606976

NOTE	REF NO	GRAPHIC REF	PART NUMBER	QTY	PART NAME 1 2 3 4 5 6 (PRODUCT LEVEL)	SEE PAGE
Y	1	1	*6Y-2300*	1	SHAFT GP-INPUT	304
Y	2	1	*6Y-2301*	1	CLUTCH GP-TRANSMISSION	254
Y	3	1	*6Y-2302*	1	CLUTCH GP-TRANSMISSION	258
Y	4	1	*6Y-2303*	1	CLUTCH GP-TRANSMISSION	262
Y	5	1	*8E-9316*	1	CLUTCH GP-TRANSMISSION	266
Y	6	1	*149-6082*	1	CASE & PARTS GP-TRANSMISSION	248
Y	7	1	*9W-5132*	1	BRAKE GP-PARKING	234
Y	8	1	*9W-5134*	1	SCREEN GP-MAGNETIC	302
Y	9	1	*6Y-8765*	1	PUMP GP-GEAR	301
Y	10	1	*145-9531*	1	CONTROL GP-TRANSMISSION HYD	280

Y-SEPARATE ILLUSTRATION

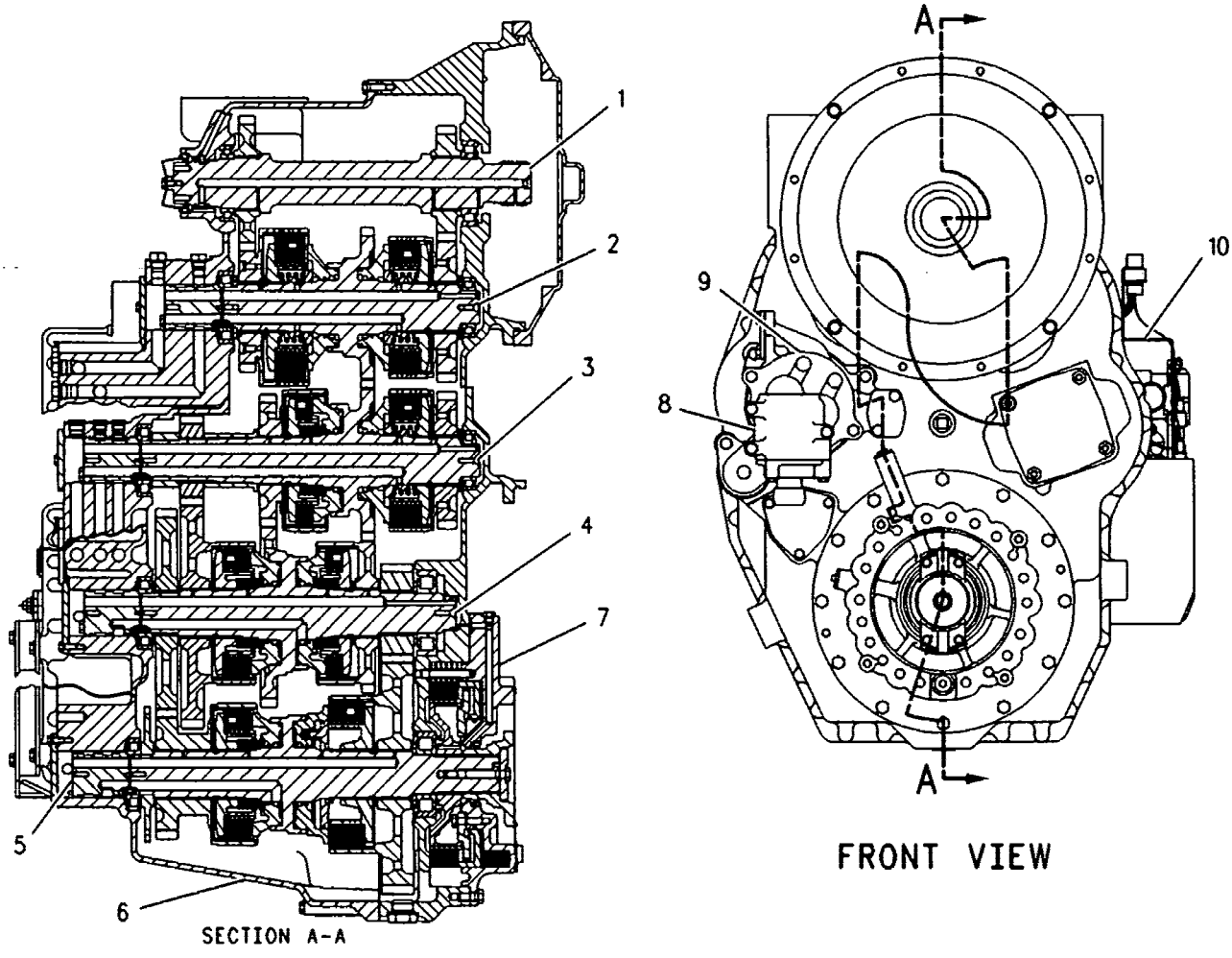

GRAPHIC #1

g00109358

POWER TRAIN

8X-5006 UNIVERSAL JOINT GP

PIN 5FM1-UP

PART OF 8W-5621 SHAFT GP-DRIVE

SMCS-3251, 3253 i00135695

NOTE	REF NO	GRAPHIC REF	PART NUMBER	QTY	PART NAME 1 2 3 4 5 6 (PRODUCT LEVEL)	SEE PAGE
	1	1	8X-5044	1	PLATE-COUPLING	
	2	1	9P-0356	2	SPIDER & BEARING AS	
	3	1	0S-1579	8	BOLT (1/2-20X2IN)	

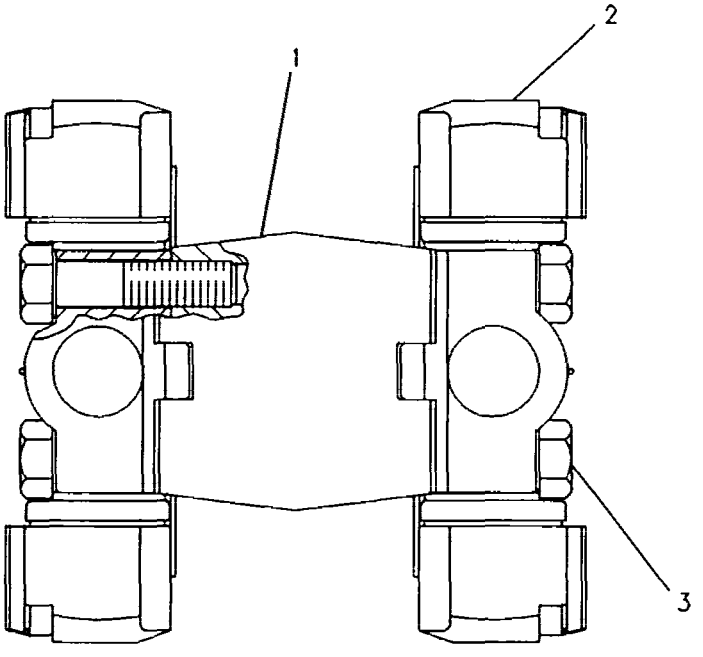

GRAPHIC #1 g00108712

7T-9073 VALVE & MTG GP-DIFF LOCK

PIN 5FM1-UP

PART OF 127-8375 CONTROL GP-DIFFERENTIAL LOCK

AN ATTACHMENT

SMCS-3272 i00607053

NOTE	PART NUMBER	QTY	PART NAME 1 2 3 4 5 6 (PRODUCT LEVEL)	SEE PAGE
Y	*9W-0706*	1	VALVE GP-SOLENOID	334
	6G-5979	1	KIT-CARTRIDGE SEAL (INCLUDES RINGS)	

Y-SEPARATE ILLUSTRATION

144-6295 VALVE & MTG GP-DIFF LOCK

PIN 5FM1-UP

PART OF 127-8375 CONTROL GP-DIFFERENTIAL LOCK

AN ATTACHMENT

SMCS-3272 i00681056

NOTE	REF NO	GRAPHIC REF	PART NUMBER	QTY	PART NAME 1 2 3 4 5 6 (PRODUCT LEVEL)	SEE PAGE
Y	1	1	*144-6294*	1	VALVE GP-SOLENOID	336
	2	1	**148-2516**	1	MANIFOLD	
					AVAILABLE REPAIR KIT(S):	
			6G-5979	1	KIT-CARTRIDGE SEAL	

Y-SEPARATE ILLUSTRATION

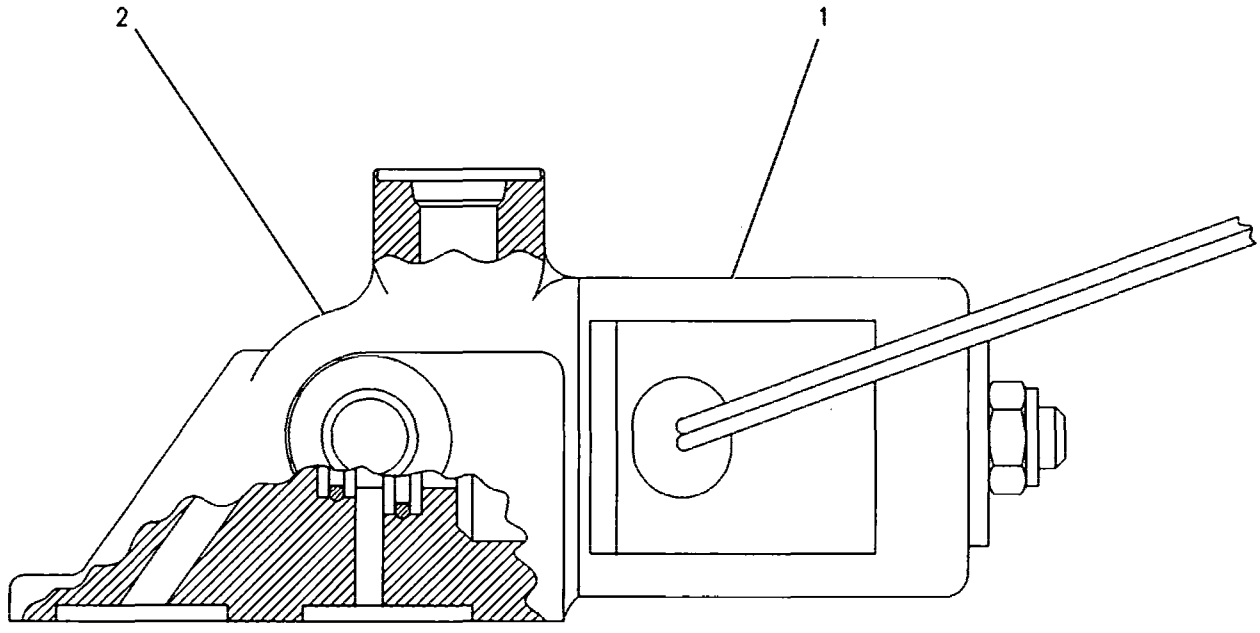

GRAPHIC #1 g00295280

POWER TRAIN

131-8350 VALVE GP

PIN 5FM407-UP

PART OF 9T-5957 VALVE GP-COMBINATION

SMCS-3073 **i00139150**

NOTE	REF NO	GRAPHIC REF	PART NUMBER	QTY	PART NAME 1 2 3 4 5 6 (PRODUCT LEVEL)	SEE PAGE
	1	1	109-1144	1	VALVE	
	2	1	130-5770	1	SLEEVE	

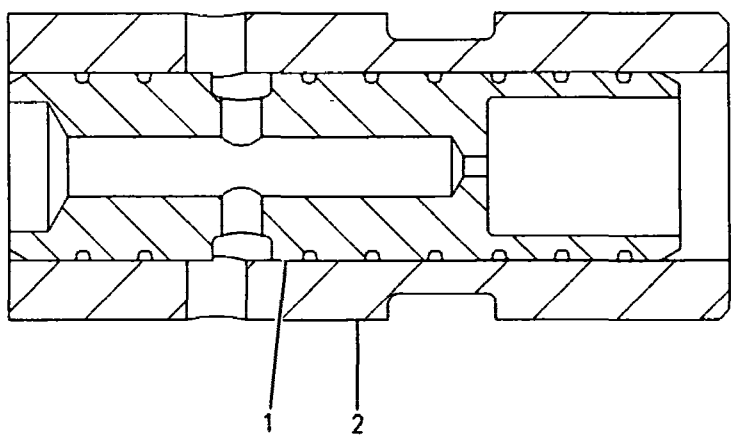

GRAPHIC #1 g00087876

MEMORANDA

POWER TRAIN

6Y-7823 VALVE GP-SELECTOR & PRESS CONT

S/N 7LX750-99999

PART OF 6Y-7822 VALVE GP-TRANSMISSION CONTROL

SMCS-3073 i00815870

NOTE	REF NO	GRAPHIC REF	PART NUMBER	QTY	PART NAME 1 2 3 4 5 6 (PRODUCT LEVEL)	SEE PAGE
	1	1	108-6523	4	ADJUSTER AS	
					(EACH INCLUDES)	
	2	1	4K-2039	1	SEAL-O-RING (12.42MM ID)	
	3	1	7M-8485	1	SEAL-O-RING (29.74MM ID)	
	4	1	8T-4223	1	WASHER-HARD (3MM THK)	
	5	1	9U-8069	1	PLUG	
M	6	1	095-1207	1	NUT	
	7	1	101-9754	1	SCREW-ADJUSTMENT	
	8	1	4J-7533	3	SEAL-O-RING (6.07MM ID)	
	9	1	3J-7354	1	SEAL-O-RING (8.92MM ID)	
	10	1	9S-8002	1	PLUG-O-RING (7/16-20 THD)	
	11	1	6T-8236	1	PLUG	
	12	1	9G-7132	2	PLUG-ORIFICE	
	13	1	9S-8004	1	PLUG-O-RING (9/16-18 THD)	
	14	1	3J-1907	1	SEAL-O-RING (11.89MM ID)	
	15	1	8E-6570	1	MANIFOLD	
	16	1	9W-2739	4	VALVE GP-SOLENOID	
		1	7T-4515	1	KIT-SEAL	
		1	9X-7876	1	COIL AS	
		1	1S-9593	2	STRAP-CABLE (0.62IN DIA)	
		1	7N-7779	2	SOCKET	
		1	7N-7780	1	PIN-CONNECTOR (BLADE)	
		1	7N-9737	1	HOUSING-PLUG (1 PIN,1 SOCKET)	
		1	104-3947	1	LOCKNUT (5/8-11 THD)	
	17	1	7B-3028	1	SCREW-DRIVE (#4X3/16IN)	
	18	1	9U-9324	1	PLATE-IDENTIFICATION	
M	19	1	8C-6965	4	BOLT-SOCKET HEAD (M6X1X45MM)	
	20	1	5P-0537	5	WASHER (2MM THK)	
M	21	1	8T-8442	1	BOLT-SOCKET HEAD (M6X1X30MM)	
	22	1	110-5157	1	BODY	
	23	1	6I-8444	1	PLUNGER AS	
	24	1	1W-6084	1	RING-RETAINING	
	25	1	4H-0094	1	RING-RETAINING	
	26	1	6I-8447	8	SPACER	
	27	1	6Y-2466	1	STOP	
	28	1	6Y-8237	1	PISTON	
	29	1	9U-8070	1	PLUNGER	
	30	1	9U-8072	1	RETAINER	
	31	1	9U-8613	1	SPRING	
	32	1	9W-7784	1	SPRING	
	33	2	121-9381	1	SPOOL	
	34	2	9U-8075	1	SLUG	
	35	2	6Y-4638	1	PLUG-HEX SOCKET	
	36	2	7M-8485	2	SEAL-O-RING (29.74MM ID)	
	37	2	8E-7714	1	ORIFICE	
	38	2	5F-9144	4	SEAL-O-RING (7.65MM ID)	
	39	2	8E-9894	4	SPOOL	
	40	2	9U-8068	4	SLUG	
	41	2	9U-9282	4	SPRING (OUTER)	
	42	2	9U-9316	4	SPRING (INNER)	
	43	2	3D-4245	4	SEAL-O-RING (25.07MM ID)	
	44	2	9U-8620	3	ORIFICE	
	45	2	9U-8067	4	RETAINER	
	46	2	9U-8614	1	SPRING (OUTER)	
	47	2	8E-9895	4	PISTON-LOAD	
	48	2	9W-7412	1	SPRING (OUTER)	

6Y-7823 VALVE GP-SELECTOR & PRESS CONT *(contd.)*

i00815870

NOTE	REF NO	GRAPHIC REF	PART NUMBER	QTY	PART NAME 1 2 3 4 5 6 (PRODUCT LEVEL)	SEE PAGE
	49	2	**4J-2506**	1	SEAL-O-RING (7.59MM ID)	
	50	2	**6F-4855**	4	SEAL-O-RING (13.94MM ID)	
	51	2	**5J-1036**	13	SHIM (0.80MM THK)	
	52	2	**6J-3993**	9	SHIM (0.25MM THK)	
	53	2	**8E-9896**	4	PISTON-SELECTOR	
	54	2	**9W-7411**	3	SPRING (OUTER)	
	55	2	**7T-0570**	3	SPRING (INNER)	
	56	2	**4M-1751**	2	SPACER	
	57	2	**7G-5453**	1	SPRING (INNER)	
	58	2	**9U-8073**	1	ADAPTER	

M-METRIC PART

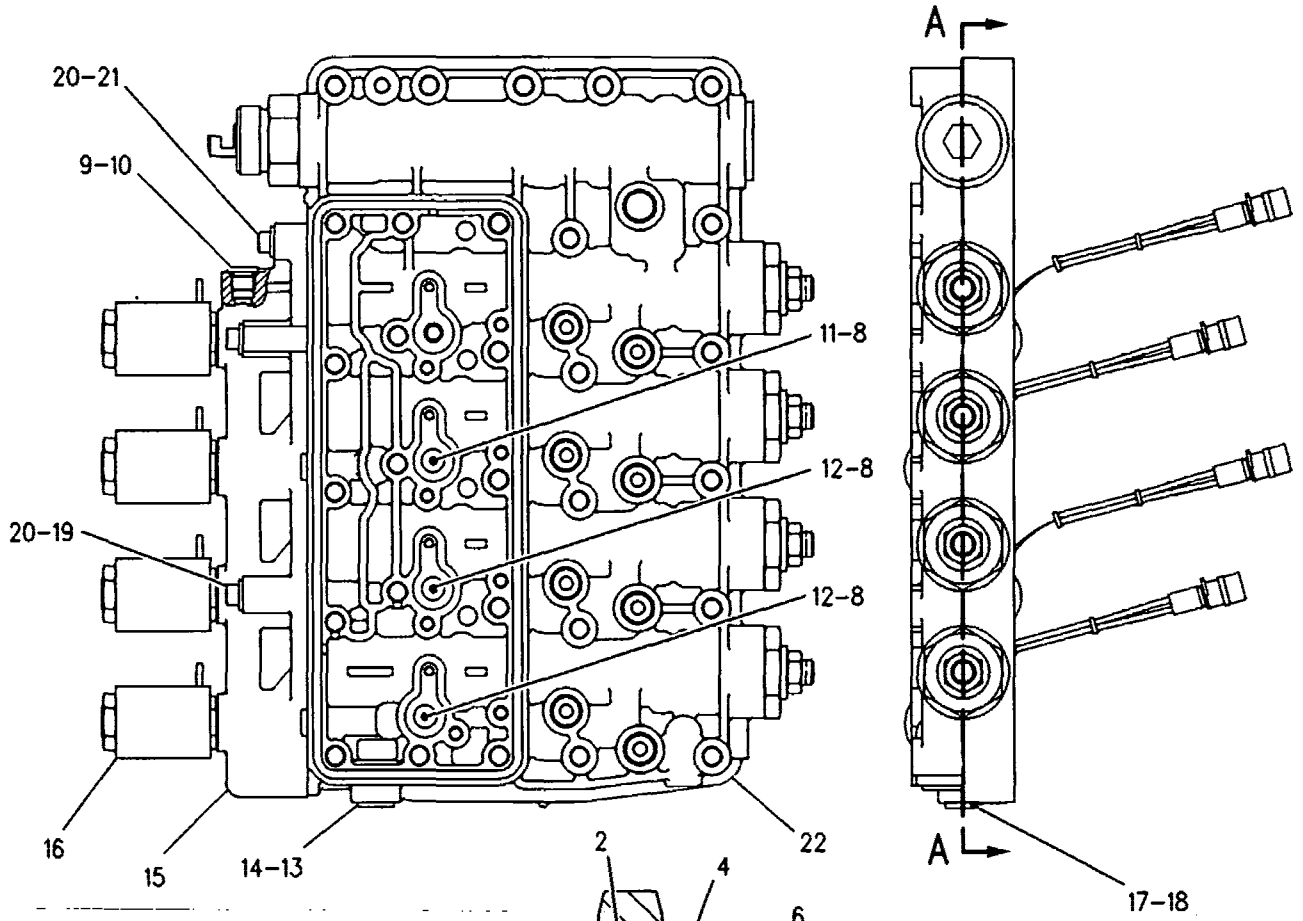

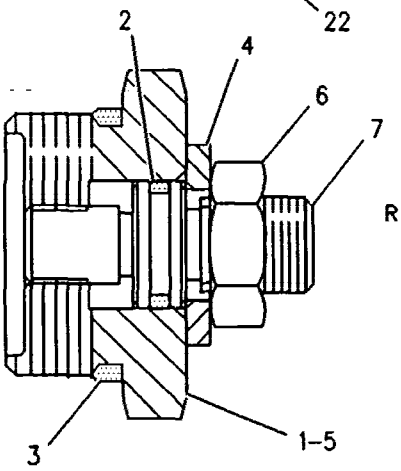

AREA B

REFER TO ALL ILLUSTRATIONS OF THIS GROUP FOR AUXILIARY VIEWS

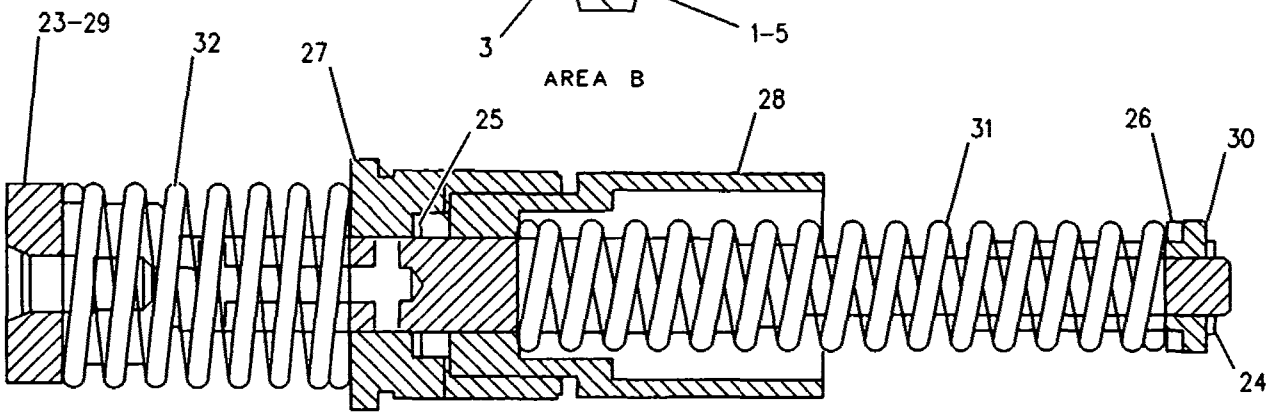

AREA C

GRAPHIC #1 g00108516

REFER TO ALL ILLUSTRATIONS OF
THIS GROUP FOR AUXILIARY VIEWS

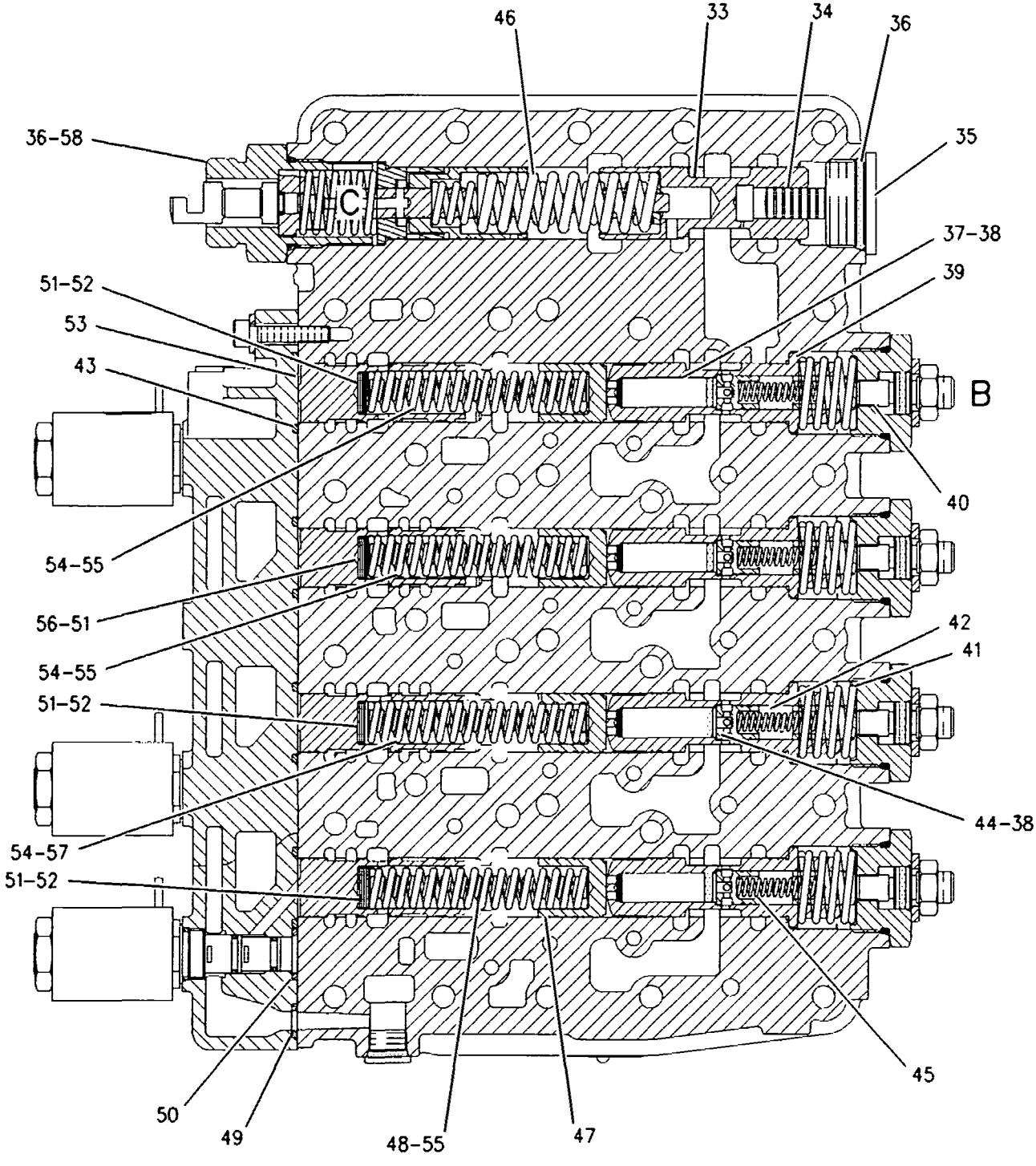

SECTION A-A

GRAPHIC #2 g00389252

POWER TRAIN

6Y-7824 VALVE GP-SELECTOR & PRESS CONT

S/N 7LX750-99999; 4MY440-UP; 5AY527-99999

PART OF 145-9533, 6Y-7822 VALVE GP-TRANSMISSION CONTROL

SMCS-3073 i00834866

NOTE	REF NO	GRAPHIC REF	PART NUMBER	QTY	PART NAME 1 2 3 4 5 6 (PRODUCT LEVEL)	SEE PAGE
	1	1	110-5158	1	BODY	
	2	1	8E-7714	2	ORIFICE	
	3	1	5F-9144	5	SEAL-O-RING (7.65MM ID)	
	4	1	8E-9894	4	SPOOL	
	5	1	9U-8068	4	SLUG	
	6	1	9U-9316	4	SPRING	
	7	1	9U-9282	4	SPRING	
	8	1	7M-8485	1	SEAL-O-RING (29.74MM ID)	
	9	1	9U-8067	4	RETAINER	
	10	1	8E-9895	4	PISTON-LOAD	
	11	1	4J-2506	1	SEAL-O-RING (7.59MM ID)	
	12	1	6F-4855	4	SEAL-O-RING (13.94MM ID)	
	13	1	8E-9896	4	PISTON-SELECTOR	
B	14	1	6J-3993	5	SHIM (0.25MM THK)	
B	15	1	4M-1751	4	SPACER	
	16	1	5J-1036	16	SHIM (0.80MM THK)	
	17	1	3D-4245	4	SEAL-O-RING (25.07MM ID)	
	18	1	9W-7410	2	SPRING (OUTER)	
	19	1	7T-0570	2	SPRING (INNER)	
	20	1	8E-1143	1	SLUG	
	21	1	7G-5453	1	SPRING (INNER)	
	22	1	9U-9595	1	SPRING	
	23	1	9N-4500	1	SPRING (OUTER)	
	24	1	9N-4498	1	SPRING (INNER)	
	25	1	8E-9897	1	SPOOL	
	26	1	9W-0898	1	SLUG	
	27	1	4J-7533	4	SEAL-O-RING (6.07MM ID)	
	28	1	8E-6570	1	MANIFOLD	
	29	1	9W-2739	4	VALVE GP-SOLENOID	
		1	7T-4515	1	KIT-SEAL (TRANSMISSION CONTROL)	
		1	9X-7876	1	COIL AS	
		1	1S-9593	2	STRAP-CABLE (0.62IN DIA)	
		1	7N-7779	1	SOCKET	
		1	7N-7780	1	PIN-CONNECTOR (BLADE)	
		1	7N-9737	1	HOUSING-PLUG (1 PIN,1 SOCKET)	
		1	104-3947	1	LOCKNUT (5/8-11 THD)	
	30	1	9U-9325	1	PLATE-IDENTIFICATION	
	31	1	7B-3028	1	SCREW-DRIVE (#4X3/16IN)	
M	32	1	8C-6965	4	BOLT-SOCKET HEAD (M6X1X45MM)	
	33	1	5P-0537	5	WASHER (2MM THK)	
M	34	1	8T-8442	1	BOLT-SOCKET HEAD (M6X1X30MM)	
	35	1	9U-8620	2	ORIFICE	
	36	1	9G-7132	3	PLUG-ORIFICE	
	37	1	6T-8236	1	PLUG	
	38	1	3J-7354	1	SEAL-O-RING (8.92MM ID)	
	39	1	9S-8002	1	PLUG-O-RING (7/16-20 THD)	
	40	1	9S-8004	1	PLUG-O-RING (9/16-18 THD)	
	41	1	3J-1907	1	SEAL-O-RING (11.89MM ID)	
	42	1	9W-7412	2	SPRING (OUTER)	
	43	1	6Y-4638	1	PLUG-HEX SOCKET	
	44	1	8E-7713	1	ORIFICE	
	45	1	108-3129	1	STOP	
	46	1	9U-8668	1	SPOOL AS	
		1	8E-9893	1	SPOOL-RELIEF	
	47	1	8T-7804	1	RING-RETAINING	
	48	1	9U-8669	1	RETAINER	

6Y-7824 VALVE GP-SELECTOR & PRESS CONT *(contd.)*

i00834866

NOTE	REF NO	GRAPHIC REF	PART NUMBER	QTY	PART NAME 1 2 3 4 5 6 (PRODUCT LEVEL)	SEE PAGE
	49	1	**4M-2381**	1	SPRING	
	50	1	**4B-9880**	1	BALL	
	51	1	**108-6523**	5	ADJUSTER AS	
					(EACH INCLUDES)	
M		1	**095-1207**	1	NUT	
	52	1	**4K-2039**	1	SEAL-O-RING (12.42MM ID)	
	53	1	**7M-8485**	1	SEAL-O-RING (29.74MM ID)	
	54	1	**8T-4223**	1	WASHER-HARD (3MM THK)	
	55	1	**9U-8069**	1	PLUG	
	56	1	**101-9754**	1	SCREW-ADJUSTMENT	

B-USE AS REQUIRED
M-METRIC PART

6Y-7824 VALVE GP-SELECTOR & PRESS CONT *(contd.)* i00834866

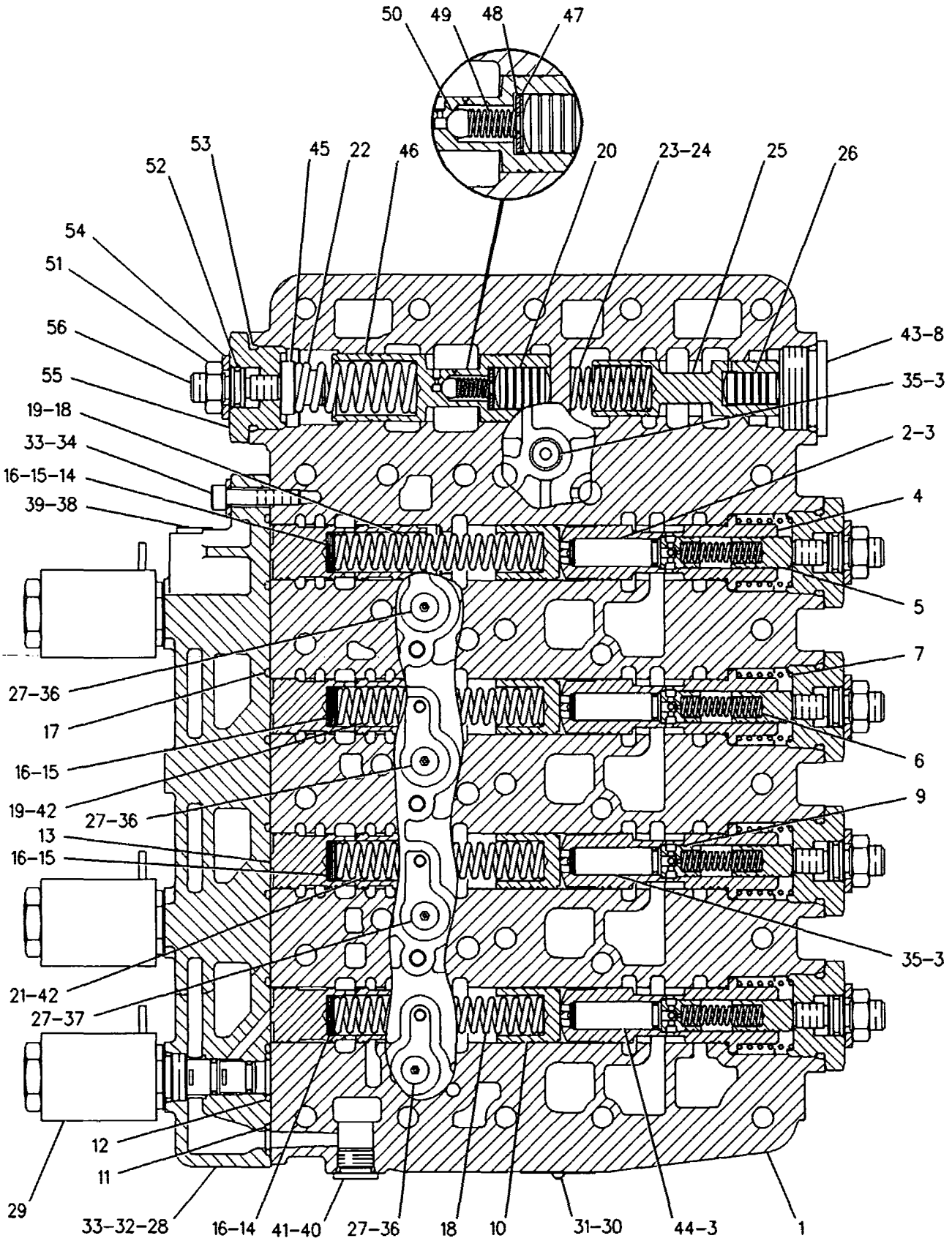

GRAPHIC #1 g00108515

MEMORANDA

POWER TRAIN

145-9534 VALVE GP-SELECTOR & PRESS CONT

S/N 4MY440-UP; 5AY527-99999

PART OF 145-9533 VALVE GP-TRANSMISSION CONTROL

SMCS-3073 i00816319

NOTE	REF NO	GRAPHIC REF	PART NUMBER	QTY	PART NAME 1 2 3 4 5 6 (PRODUCT LEVEL)	SEE PAGE
	1	2	110-5157	1	BODY	
	2	1	9U-8075	1	SLUG	
	3	1	139-6815	1	ADAPTER	
	4	1	7M-8485	2	SEAL-O-RING (29.74MM ID)	
	5	1	8E-7714	1	ORIFICE	
	6	1	5F-9144	4	SEAL-O-RING (7.65MM ID)	
	7	1	8E-9894	4	SPOOL	
	8	1	9U-8068	4	SLUG	
	9	1	9U-9282	4	SPRING	
	10	1	9U-9316	4	SPRING	
	11	1	108-6523	4	ADJUSTER AS	
		1	4K-2039	1	SEAL-O-RING (12.42MM ID)	
		1	7M-8485	1	SEAL-O-RING (29.74MM ID)	
		1	8T-4223	1	WASHER-HARD (3MM THK)	
		1	9U-8069	1	PLUG	
M		1	095-1207	1	NUT	
		1	101-9754	1	SCREW-ADJUSTMENT	
	12	1	9U-8620	3	ORIFICE	
	13	1	9U-8067	4	RETAINER	
	14	1	8E-9895	4	PISTON-LOAD	
	15	1	9W-7412	1	SPRING	
	16	1	4J-2506	1	SEAL-O-RING (7.59MM ID)	
	17	1	6F-4855	4	SEAL-O-RING (13.94MM ID)	
B	18	1	5J-1036	10	SHIM (0.80MM THK)	
	19	1	8E-9896	4	PISTON-SELECTOR	
	20	1	9W-7411	3	SPRING	
	21	1	7T-0570	3	SPRING	
B	22	1	4M-1751	7	SPACER	
	23	2	4J-7533	3	SEAL-O-RING (6.07MM ID)	
	24	1	133-1570	1	ADAPTER	
	25	1	3D-4245	4	SEAL-O-RING (25.07MM ID)	
	26	1	9U-8614	1	SPRING	
	27	1	121-9381	1	SPOOL	
	28	2	3J-7354	1	SEAL-O-RING (8.92MM ID)	
	29	2	9S-8002	1	PLUG-O-RING (7/16-20 THD)	
	30	2	6T-8236	1	PLUG	
	31	2	9G-7132	2	PLUG-ORIFICE	
	32	2	9S-8004	1	PLUG-O-RING (9/16-18 THD)	
	33	2	3J-1907	1	SEAL-O-RING (11.89MM ID)	
	34	2	8E-6570	1	MANIFOLD	
Y	35	2	*136-1678*	4	VALVE GP-SOLENOID	335
	36	2	7B-3028	1	SCREW-DRIVE (#4X3/16IN)	
	37	2	149-7380	1	PLATE-IDENTIFICATION	
M	38	2	8C-6965	4	BOLT-SOCKET HEAD (M6X1X45MM)	
	39	2	5P-0537	5	WASHER (2MM THK)	
M	40	2	8T-8442	1	BOLT-SOCKET HEAD (M6X1X30MM)	
	41	1	7G-5453	1	SPRING	
	42	1	6I-8444	1	PLUNGER AS	
	43	1,2	1W-6084	1	RING-RETAINING	
	44	1	4H-0094	1	RING-RETAINING	
	45	1	4J-7533	1	SEAL-O-RING (6.07MM ID)	
	46	2	6I-8447	8	SPACER	
	47	2	6Y-2466	1	STOP	
	48	2	6Y-8237	1	PISTON	
	49	2	9U-8070	1	PLUNGER	
	50	1	9U-8071	1	COUPLER	

145-9534 VALVE GP-SELECTOR & PRESS CONT *(contd.)* i00816319

NOTE	REF NO	GRAPHIC REF	PART NUMBER	QTY	PART NAME 1 2 3 4 5 6 (PRODUCT LEVEL)	SEE PAGE
	51	2	9U-8072	1	RETAINER	
	52	2	9U-8613	1	SPRING	
	53	2	9W-7784	1	SPRING	

B-USE AS REQUIRED
M-METRIC PART
Y-SEPARATE ILLUSTRATION

145-9534 VALVE GP-SELECTOR & PRESS CONT *(contd.)* i00816319

REFER TO ALL ILLUSTRATIONS OF
THIS GROUP FOR AUXILIARY VIEWS

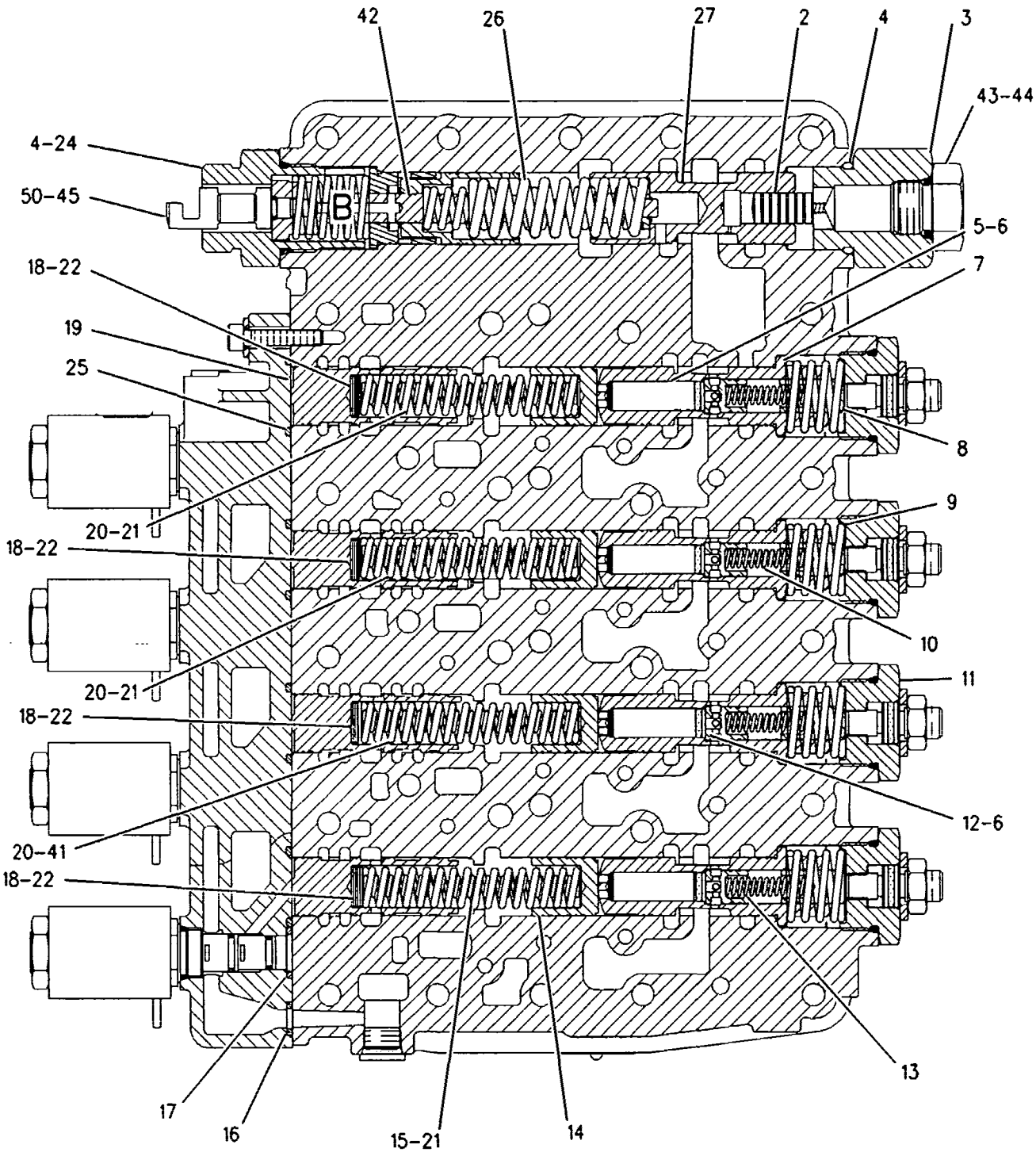

SECTION A-A

GRAPHIC #1 g00389512

145-9534 VALVE GP-SELECTOR & PRESS CONT *(contd.)* i00816319

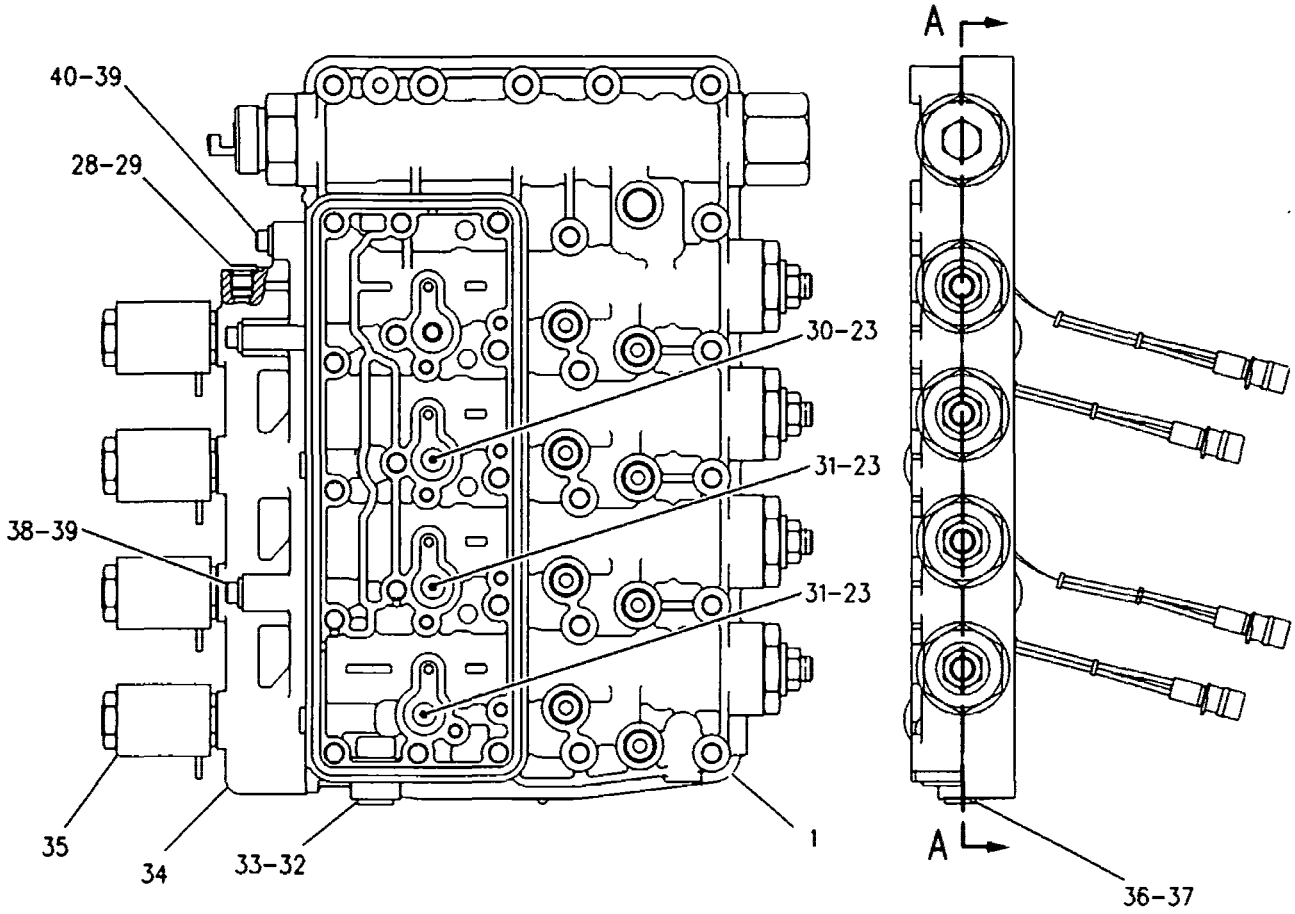

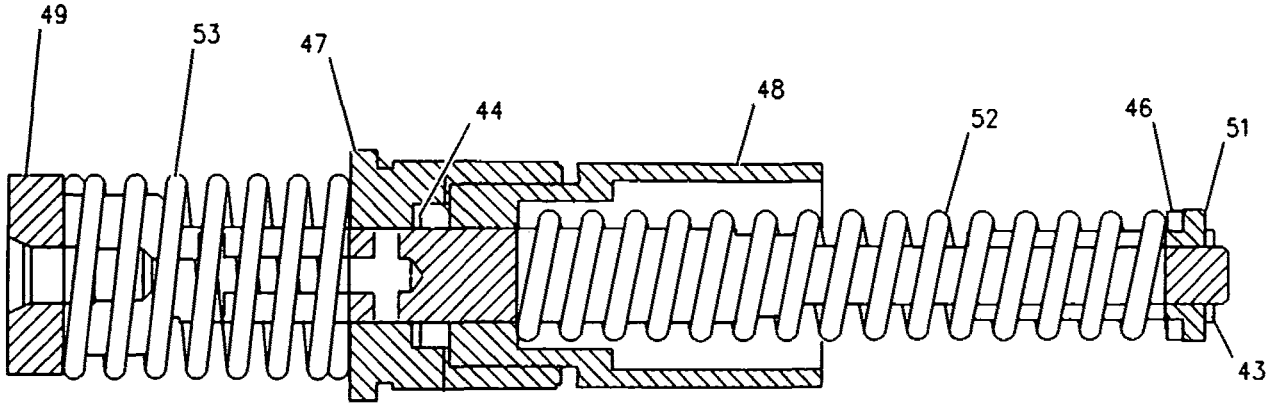

AREA B

REFER TO ALL ILLUSTRATIONS
OF THIS GROUP FOR
AUXILIARY VIEWS

GRAPHIC #2 g00277164

POWER TRAIN

9W-0706 VALVE GP-SOLENOID

PIN 5FM1-UP

PART OF 7T-9073 VALVE & MTG GP-DIFF LOCK

AN ATTACHMENT

SMCS-3174 **i00134382**

NOTE	REF NO	GRAPHIC REF	PART NUMBER	QTY	PART NAME 1 2 3 4 5 6 (PRODUCT LEVEL)	SEE PAGE
	1	1	**6G-5978**	1	CARTRIDGE	
	2	1	**2D-6235**	1	LOCKNUT (1/4-20 THD)	
		1	**4B-4276**	1	WASHER (1.6MM THK)	
	3	1	**6T-8500**	1	COIL AS	
	4	1	**1S-9593**	2	STRAP-CABLE (0.62IN DIA)	
	5	1	**7N-7779**	1	SOCKET	
	6	1	**7N-9737**	1	HOUSING-PLUG	
	7	1	**7N-7780**	1	PIN-CONNECTOR (BLADE)	
					AVAILABLE REPAIR KIT(S):	
			6G-5979	1	KIT-CARTRIDGE SEAL	
					(INCLUDES 3 O-RINGS)	

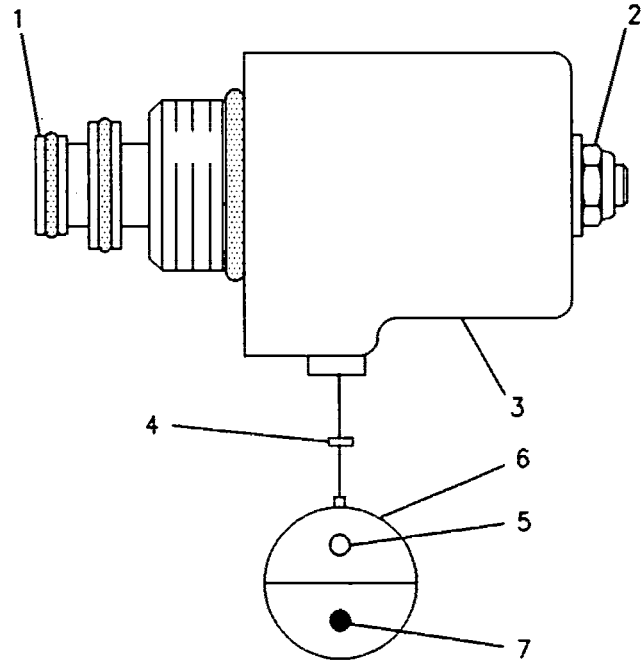

GRAPHIC #1 g00084760

POWER TRAIN

136-1678 VALVE GP-SOLENOID

S/N 4MY440-UP; 5AY527-99999

PART OF 145-9534 VALVE GP-SELECTOR & PRESS CONT

SMCS-3174 i00656025

NOTE	REF NO	GRAPHIC REF	PART NUMBER	QTY	PART NAME 1 2 3 4 5 6 (PRODUCT LEVEL)	SEE PAGE
	1	1	148-0358	1	COIL AS	
		1	1S-9593	2	STRAP-CABLE (0.62IN DIA)	
		1	7N-7779	1	SOCKET	
		1	7N-7780	1	PIN-CONNECTOR (BLADE)	
		1	7N-9737	1	HOUSING-PLUG (1 PIN, 1 SOCKET)	
	2	1	100-4915	1	CARTRIDGE AS	
	3	1	104-3947	1	LOCKNUT (5/8-11 THD)	
					AVAILABLE REPAIR KIT(S):	
			7T-4515	1	KIT-SEAL	
					(INCL 3 SEAL-O-RINGS)	

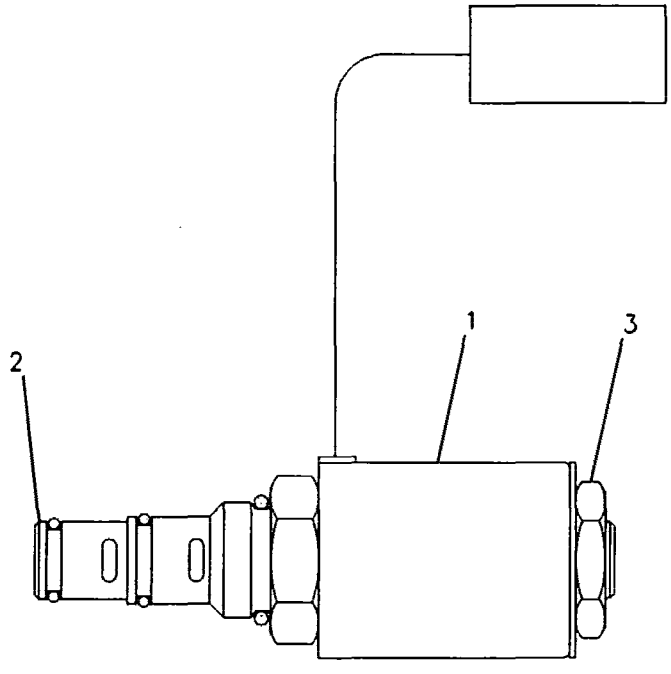

GRAPHIC #1 g00109095

POWER TRAIN

144-6294 VALVE GP-SOLENOID

PIN 5FM1-UP

PART OF 144-6295 VALVE & MTG GP-DIFF LOCK

AN ATTACHMENT

SMCS-3174 i00675814

NOTE	REF NO	GRAPHIC REF	PART NUMBER	QTY	PART NAME 1 2 3 4 5 6 (PRODUCT LEVEL)	SEE PAGE
	1	1	142-0350	1	CARTRIDGE AS	
	2	1	111-0343	1	LOCKNUT	
	3	1	8C-9987	1	WASHER (2.5MM THK)	
	4	1	141-8605	1	COIL AS	
		1	1S-9593	2	STRAP-CABLE (0.62IN DIA)	
		1	7N-7779	1	SOCKET	
		1	7N-7780	1	PIN-CONNECTOR (BLADE)	
		1	7N-9737	1	HOUSING-PLUG (1 PIN,1 SOCKET)	
					AVAILABLE REPAIR KIT(S):	
			6G-5979	1	KIT-CARTRIDGE SEAL	

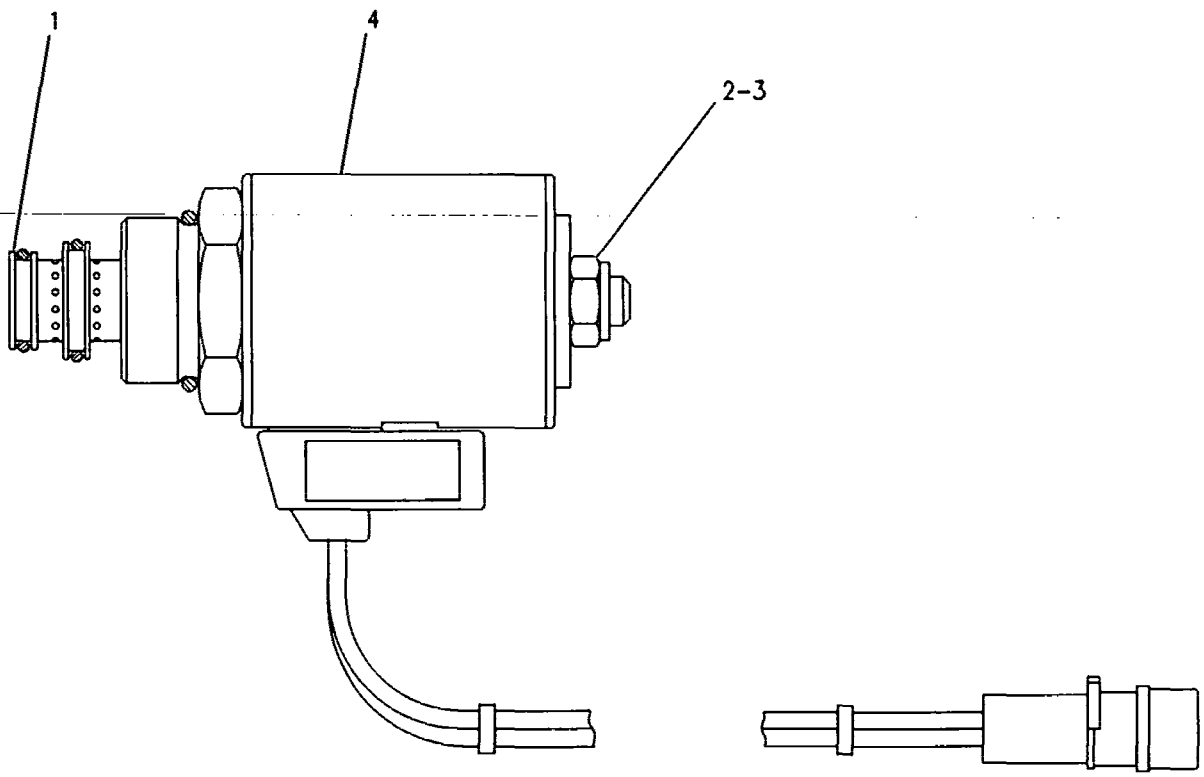

GRAPHIC #1 g00279018

MEMORANDA

POWER TRAIN

6Y-7822 VALVE GP-TRANSMISSION CONTROL

S/N 7LX750-99999

PART OF 6Y-7821 CONTROL GP-TRANSMISSION HYD

SMCS-3073 i00134583

NOTE	REF NO	GRAPHIC REF	PART NUMBER	QTY	PART NAME 1 2 3 4 5 6 (PRODUCT LEVEL)	SEE PAGE
Y	1	1	6Y-7823	1	VALVE GP-SELECTOR & PRESS CONT (TRANSMISSION)	322
	2	1	8E-9476	1	PLATE	
Y	3	1	6Y-7824	1	VALVE GP-SELECTOR & PRESS CONT (TRANSMISSION)	326
	4	1	110-5161	1	MANIFOLD	
	5	1	8E-9478	1	PLATE	
	6	1	8E-9474	1	COVER	
	7	1	6I-9395	1	SCREEN	
M	8	1	6V-5217	1	BOLT (M8X1.25X20MM)	
	9	1	6V-3965	8	NIPPLE AS	
	10	1	3J-1907	9	SEAL-O-RING (11.89MM ID)	
	11	1	6V-0852	8	CAP-DUST	
	12	1	9S-4191	1	PLUG-O-RING (9/16-18 THD)	
	13	1	6I-8823	1	PLATE-SOLENOID CHART	
	14	1	1T-0738	2	WASHER (1.83MM THK)	
	15	1	9P-9150	4	WASHER (.84MM THK)	
M	16	1	3E-8006	2	BOLT-HEX HEAD	
	17	1	3J-6956	1	SPRING	
	18	1	9L-9068	6	DOWEL	
	19	1	8F-6230	1	SEAL-O-RING	
	20	1	4D-6695	4	SEAL-O-RING	
	21	1	6Y-4978	1	POPPET	
	22	1	4D-1322	1	RING-RETAINING	
	23	1	6Y-2584	1	RETAINER	

M-METRIC PART
Y-SEPARATE ILLUSTRATION

6Y-7822 VALVE GP-TRANSMISSION CONTROL *(contd.)* i00134583

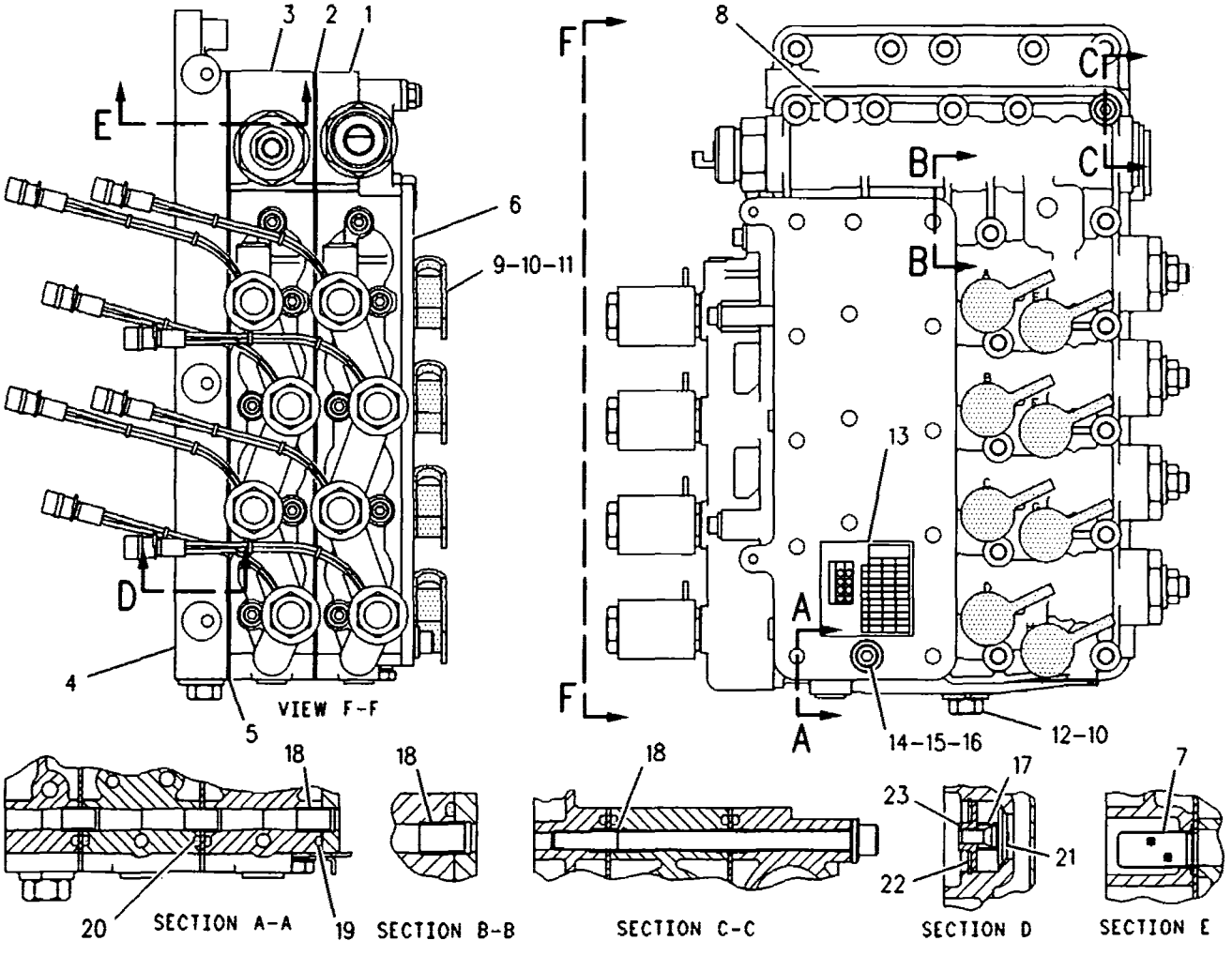

GRAPHIC #1 g00108812

POWER TRAIN

145-9533 VALVE GP-TRANSMISSION CONTROL

S/N 4MY440-UP; 5AY527-99999

PART OF 145-9531 CONTROL GP-TRANSMISSION HYD

SMCS-3073 **i00675022**

NOTE	REF NO	GRAPHIC REF	PART NUMBER	QTY	PART NAME 1 2 3 4 5 6 (PRODUCT LEVEL)	SEE PAGE
Y	1	1	*145-9534*	1	VALVE GP-SELECTOR & PRESS CONT	330
	2	1	**8E-9476**	1	PLATE	
Y	3	1	*6Y-7824*	1	VALVE GP-SELECTOR & PRESS CONT (TRANSMISSION)	326
	4	1	**110-5161**	1	MANIFOLD	
	5	1	**8E-9478**	1	PLATE	
	6	1	**8E-9474**	1	COVER	
	7	1	**6I-9395**	1	SCREEN	
M	8	1	**6V-5217**	1	BOLT (M8X1.25X20MM)	
	9	1	**6V-3965**	8	NIPPLE AS	
	10	1	**3J-1907**	9	SEAL-O-RING (11.89MM ID)	
	11	1	**6V-0852**	8	CAP-DUST	
	12	1	**6Y-2584**	1	RETAINER	
	13	1	**6I-8823**	1	PLATE-SOLENOID CHART	
	14	1	**1T-0738**	2	WASHER (1.83MM THK)	
	15	1	**9P-9150**	4	WASHER (.84MM THK)	
M	16	1	**3E-8006**	2	BOLT-HEX HEAD	
	17	1	**3J-6956**	1	SPRING	
	18	1	**9L-9068**	6	DOWEL	
	19	1	**8F-6230**	1	SEAL-O-RING	
	20	1	**4D-6695**	4	SEAL-O-RING	
	21	1	**142-1767**	1	POPPET	
	22	1	**4D-1322**	1	RING-RETAINING	
	23	1	**9S-4191**	1	PLUG-O-RING (9/16-18 THD)	

M-METRIC PART
Y-SEPARATE ILLUSTRATION

145-9533 VALVE GP-TRANSMISSION CONTROL *(contd.)* i00675022

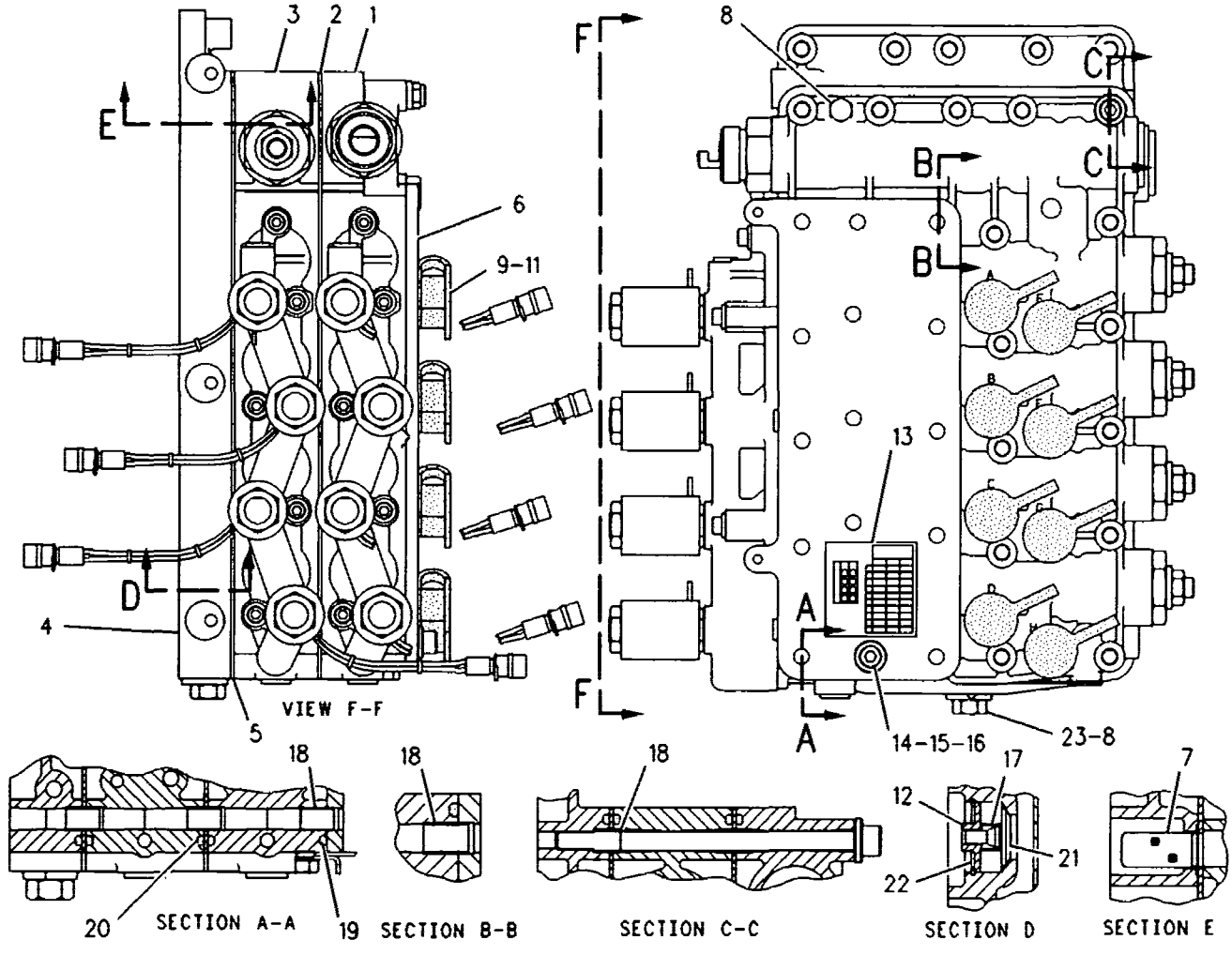

GRAPHIC #1 g00109596

POWER TRAIN

142-6390 WHEEL & TIRE AR

PIN 5FM1-UP

AN ATTACHMENT

SMCS-4201, 4202, 4203, 4208, 4209 i00753232

NOTE	PART NUMBER	QTY	PART NAME 1 2 3 4 5 6 (PRODUCT LEVEL)	SEE PAGE
Y	*142-6285*	6	WHEEL & TIRE GP	407

Y-SEPARATE ILLUSTRATION

POWER TRAIN

142-6391 WHEEL & TIRE AR

PIN 5FM1-UP

AN ATTACHMENT

SMCS-4201, 4202, 4203, 4208, 4209 **i00753236**

NOTE	PART NUMBER	QTY	PART NAME 1 2 3 4 5 6 (PRODUCT LEVEL)	SEE PAGE
Y	*142-6286*	6	WHEEL & TIRE GP	408

Y-SEPARATE ILLUSTRATION

POWER TRAIN

142-6392 WHEEL & TIRE AR

PIN 5FM1-UP

AN ATTACHMENT

SMCS-4201, 4202, 4203, 4208, 4209 **i00753233**

NOTE	PART NUMBER	QTY	PART NAME 1 2 3 4 5 6 (PRODUCT LEVEL)	SEE PAGE
Y	*142-6287*	6	WHEEL & TIRE GP	409

Y-SEPARATE ILLUSTRATION

POWER TRAIN

142-6393 WHEEL & TIRE AR

PIN 5FM1-UP

AN ATTACHMENT

SMCS-4201, 4202, 4203, 4208, 4209 i00753234

NOTE	PART NUMBER	QTY	PART NAME 1 2 3 4 5 6 (PRODUCT LEVEL)	SEE PAGE
Y	*142-6288*	6	WHEEL & TIRE GP	410

Y-SEPARATE ILLUSTRATION

POWER TRAIN

142-6394 WHEEL & TIRE AR

PIN 5FM1-UP

AN ATTACHMENT

SMCS-4201, 4202, 4203, 4208, 4209 i00753238

NOTE	PART NUMBER	QTY	PART NAME 1 2 3 4 5 6 (PRODUCT LEVEL)	SEE PAGE
Y	*142-6289*	6	WHEEL & TIRE GP	411

Y-SEPARATE ILLUSTRATION

POWER TRAIN

142-6395 WHEEL & TIRE AR

PIN 5FM1-UP

AN ATTACHMENT

SMCS-4201, 4202, 4203, 4208, 4209 i00753239

NOTE	PART NUMBER	QTY	PART NAME 1 2 3 4 5 6 (PRODUCT LEVEL)	SEE PAGE
Y	*142-6290*	6	WHEEL & TIRE GP	412

Y-SEPARATE ILLUSTRATION

POWER TRAIN

142-6439 WHEEL & TIRE AR

PIN 5FM1-UP

AN ATTACHMENT

SMCS-4201, 4202, 4203, 4208, 4209 i00753241

NOTE	PART NUMBER	QTY	PART NAME 1 2 3 4 5 6 (PRODUCT LEVEL)	SEE PAGE
Y	*142-6291*	6	WHEEL & TIRE GP	413

Y-SEPARATE ILLUSTRATION

POWER TRAIN

142-6440 WHEEL & TIRE AR

PIN 5FM1-UP

AN ATTACHMENT

SMCS-4201, 4202, 4203, 4208, 4209 i00751768

NOTE	PART NUMBER	QTY	PART NAME 1 2 3 4 5 6 (PRODUCT LEVEL)	SEE PAGE
Y	*142-6292*	6	WHEEL & TIRE GP	414

Y-SEPARATE ILLUSTRATION

POWER TRAIN

142-6441 WHEEL & TIRE AR

PIN 5FM1-UP

AN ATTACHMENT

SMCS-4201, 4202, 4203, 4208, 4209 **i00751982**

NOTE	PART NUMBER	QTY	PART NAME 1 2 3 4 5 6 (PRODUCT LEVEL)	SEE PAGE
Y	*142-6293*	6	WHEEL & TIRE GP	415

Y-SEPARATE ILLUSTRATION

POWER TRAIN

142-6442 WHEEL & TIRE AR

PIN 5FM1-UP

AN ATTACHMENT

SMCS-4201, 4202, 4203, 4208, 4209 i00751980

NOTE	PART NUMBER	QTY	PART NAME 1 2 3 4 5 6 (PRODUCT LEVEL)	SEE PAGE
Y	*142-6294*	6	WHEEL & TIRE GP	416

Y-SEPARATE ILLUSTRATION

POWER TRAIN

142-6443 WHEEL & TIRE AR

PIN 5FM1-UP

AN ATTACHMENT

SMCS-4201, 4202, 4203, 4208, 4209 i00751979

NOTE	PART NUMBER	QTY	PART NAME 1 2 3 4 5 6 (PRODUCT LEVEL)	SEE PAGE
Y	*142-6295*	6	WHEEL & TIRE GP	417

Y-SEPARATE ILLUSTRATION

POWER TRAIN

142-6444 WHEEL & TIRE AR

PIN 5FM1-UP

AN ATTACHMENT

SMCS-4201, 4202, 4203, 4208, 4209 i00751978

NOTE	PART NUMBER	QTY	PART NAME 1 2 3 4 5 6 (PRODUCT LEVEL)	SEE PAGE
Y	*142-6296*	6	WHEEL & TIRE GP	418

Y-SEPARATE ILLUSTRATION

POWER TRAIN

142-6445 WHEEL & TIRE AR

PIN 5FM1-UP

AN ATTACHMENT

SMCS-4201, 4202, 4203, 4208, 4209 **i00751976**

NOTE	PART NUMBER	QTY	PART NAME 1 2 3 4 5 6 (PRODUCT LEVEL)	SEE PAGE
Y	*142-6297*	6	WHEEL & TIRE GP	419

Y-SEPARATE ILLUSTRATION

POWER TRAIN

142-6446 WHEEL & TIRE AR

PIN 5FM1-UP

AN ATTACHMENT

SMCS-4201, 4202, 4203, 4208, 4209 **i00751969**

NOTE	PART NUMBER	QTY	PART NAME 1 2 3 4 5 6 (PRODUCT LEVEL)	SEE PAGE
Y	*142-6298*	6	WHEEL & TIRE GP	420

Y-SEPARATE ILLUSTRATION

POWER TRAIN

142-6448 WHEEL & TIRE AR

PIN 5FM1-UP

AN ATTACHMENT

SMCS-4201, 4202, 4203, 4208, 4209 i00758986

NOTE	PART NUMBER	QTY	PART NAME 1 2 3 4 5 6 (PRODUCT LEVEL)	SEE PAGE
Y	*142-6300*	6	WHEEL & TIRE GP	421

Y-SEPARATE ILLUSTRATION

POWER TRAIN

142-6449 WHEEL & TIRE AR

PIN 5FM1-UP

AN ATTACHMENT

SMCS-4201, 4202, 4203, 4208, 4209 **i00759108**

NOTE	PART NUMBER	QTY	PART NAME 1 2 3 4 5 6 (PRODUCT LEVEL)	SEE PAGE
Y	*142-6301*	6	WHEEL & TIRE GP	422

Y-SEPARATE ILLUSTRATION

POWER TRAIN

142-6454 WHEEL & TIRE AR

PIN 5FM1-UP

AN ATTACHMENT

SMCS-4201, 4202, 4203, 4208, 4209 i00758826

NOTE	PART NUMBER	QTY	PART NAME 1 2 3 4 5 6 (PRODUCT LEVEL)	SEE PAGE
Y	*142-6306*	6	WHEEL & TIRE GP	423

Y-SEPARATE ILLUSTRATION

142-6455 WHEEL & TIRE AR

PIN 5FM1-UP

AN ATTACHMENT

SMCS-4201, 4202, 4203, 4208, 4209 i00758972

NOTE	PART NUMBER	QTY	PART NAME 1 2 3 4 5 6 (PRODUCT LEVEL)	SEE PAGE
Y	142-6307	6	WHEEL & TIRE GP	424

Y-SEPARATE ILLUSTRATION

POWER TRAIN

142-6457 WHEEL & TIRE AR

PIN 5FM1-UP

AN ATTACHMENT

SMCS-4201, 4202, 4203, 4208, 4209 i00758987

NOTE	PART NUMBER	QTY	PART NAME 1 2 3 4 5 6 (PRODUCT LEVEL)	SEE PAGE
Y	*142-6309*	6	WHEEL & TIRE GP	425

Y-SEPARATE ILLUSTRATION

POWER TRAIN

142-6458 WHEEL & TIRE AR

PIN 5FM1-UP

AN ATTACHMENT

SMCS-4201, 4202, 4203, 4208, 4209 i00759110

NOTE	PART NUMBER	QTY	PART NAME 1 2 3 4 5 6 (PRODUCT LEVEL)	SEE PAGE
Y	*142-6310*	6	WHEEL & TIRE GP	426

Y-SEPARATE ILLUSTRATION

POWER TRAIN

142-6460 WHEEL & TIRE AR

PIN 5FM1-UP

AN ATTACHMENT

SMCS-4201, 4202, 4203, 4208, 4209 i00758825

NOTE	PART NUMBER	QTY	PART NAME 1 2 3 4 5 6 (PRODUCT LEVEL)	SEE PAGE
Y	*142-6312*	6	WHEEL & TIRE GP	427

Y-SEPARATE ILLUSTRATION

POWER TRAIN

142-6461 WHEEL & TIRE AR

PIN 5FM1-UP

AN ATTACHMENT

SMCS-4201, 4202, 4203, 4208, 4209 i00758822

NOTE	PART NUMBER	QTY	PART NAME 1 2 3 4 5 6 (PRODUCT LEVEL)	SEE PAGE
Y	*142-6313*	6	WHEEL & TIRE GP	428

Y-SEPARATE ILLUSTRATION

POWER TRAIN

142-6463 WHEEL & TIRE AR

PIN 5FM1-UP

AN ATTACHMENT

SMCS-4201, 4202, 4203, 4208, 4209 i00758971

NOTE	PART NUMBER	QTY	PART NAME 1 2 3 4 5 6 (PRODUCT LEVEL)	SEE PAGE
Y	142-6315	6	WHEEL & TIRE GP	429

Y-SEPARATE ILLUSTRATION

POWER TRAIN

142-6464 WHEEL & TIRE AR

PIN 5FM1-UP

AN ATTACHMENT

SMCS-4201, 4202, 4203, 4208, 4209 **i00758982**

NOTE	PART NUMBER	QTY	PART NAME 1 2 3 4 5 6 (PRODUCT LEVEL)	SEE PAGE
Y	*142-6316*	6	WHEEL & TIRE GP	430

Y-SEPARATE ILLUSTRATION

POWER TRAIN

142-6466 WHEEL & TIRE AR

PIN 5FM1-UP

AN ATTACHMENT

SMCS-4201, 4202, 4203, 4208, 4209 **i00766611**

NOTE	PART NUMBER	QTY	PART NAME 1 2 3 4 5 6 (PRODUCT LEVEL)	SEE PAGE
Y	*142-6318*	6	WHEEL & TIRE GP	431

Y-SEPARATE ILLUSTRATION

POWER TRAIN

142-6467 WHEEL & TIRE AR

PIN 5FM1-UP

AN ATTACHMENT

SMCS-4201, 4202, 4203, 4208, 4209 i00766609

NOTE	PART NUMBER	QTY	PART NAME 1 2 3 4 5 6 (PRODUCT LEVEL)	SEE PAGE
Y	*142-6319*	6	WHEEL & TIRE GP	432

Y-SEPARATE ILLUSTRATION

POWER TRAIN

142-6469 WHEEL & TIRE AR

PIN 5FM1-UP

AN ATTACHMENT

SMCS-4201, 4202, 4203, 4208, 4209 **i00766607**

NOTE	PART NUMBER	QTY	PART NAME 1 2 3 4 5 6 (PRODUCT LEVEL)	SEE PAGE
Y	*142-6321*	6	WHEEL & TIRE GP	433

Y-SEPARATE ILLUSTRATION

POWER TRAIN

142-6470 WHEEL & TIRE AR

PIN 5FM1-UP

AN ATTACHMENT

SMCS-4201, 4202, 4203, 4208, 4209 i00766617

NOTE	PART NUMBER	QTY	PART NAME 1 2 3 4 5 6 (PRODUCT LEVEL)	SEE PAGE
Y	*142-6322*	6	WHEEL & TIRE GP	434

Y-SEPARATE ILLUSTRATION

POWER TRAIN

142-6472 WHEEL & TIRE AR

PIN 5FM1-UP

AN ATTACHMENT

SMCS-4201, 4202, 4203, 4208, 4209 **i00766614**

NOTE	PART NUMBER	QTY	PART NAME 1 2 3 4 5 6 (PRODUCT LEVEL)	SEE PAGE
Y	*142-6324*	6	WHEEL & TIRE GP	435

Y-SEPARATE ILLUSTRATION

POWER TRAIN

142-6474 WHEEL & TIRE AR

PIN 5FM1-UP

AN ATTACHMENT

SMCS-4201, 4202, 4203, 4208, 4209 i00766612

NOTE	PART NUMBER	QTY	PART NAME 1 2 3 4 5 6 (PRODUCT LEVEL)	SEE PAGE
Y	*142-6325*	6	WHEEL & TIRE GP	436

Y-SEPARATE ILLUSTRATION

POWER TRAIN

142-6477 WHEEL & TIRE AR

PIN 5FM1-UP

AN ATTACHMENT

SMCS-4201, 4202, 4203, 4208, 4209 **i00766608**

NOTE	PART NUMBER	QTY	PART NAME 1 2 3 4 5 6 (PRODUCT LEVEL)	SEE PAGE
Y	*142-6328*	6	WHEEL & TIRE GP	437

Y-SEPARATE ILLUSTRATION

POWER TRAIN

142-6479 WHEEL & TIRE AR

PIN 5FM1-UP

AN ATTACHMENT

SMCS-4201, 4202, 4203, 4208, 4209 i00766605

NOTE	PART NUMBER	QTY	PART NAME 1 2 3 4 5 6 (PRODUCT LEVEL)	SEE PAGE
Y	*142-6330*	6	WHEEL & TIRE GP	438

Y-SEPARATE ILLUSTRATION

POWER TRAIN

151-0286 WHEEL & TIRE AR

PIN 5FM1-UP

AN ATTACHMENT

SMCS-4201, 4202, 4203, 4208, 4209 **i00759198**

NOTE	PART NUMBER	QTY	PART NAME 1 2 3 4 5 6 (PRODUCT LEVEL)	SEE PAGE
Y	*142-6283*	6	WHEEL & TIRE GP	405

Y-SEPARATE ILLUSTRATION

POWER TRAIN

151-0287 WHEEL & TIRE AR

PIN 5FM1-UP

AN ATTACHMENT

SMCS-4201, 4202, 4203, 4208, 4209 i00759199

NOTE	PART NUMBER	QTY	PART NAME 1 2 3 4 5 6 (PRODUCT LEVEL)	SEE PAGE
Y	142-6284	6	WHEEL & TIRE GP	406

Y-SEPARATE ILLUSTRATION

POWER TRAIN

151-0329 WHEEL & TIRE AR

PIN 5FM1-UP

AN ATTACHMENT

SMCS-4201, 4202, 4203, 4208, 4209 i00759189

NOTE	PART NUMBER	QTY	PART NAME 1 2 3 4 5 6 (PRODUCT LEVEL)	SEE PAGE
Y	*142-6335*	6	WHEEL & TIRE GP	440

Y-SEPARATE ILLUSTRATION

POWER TRAIN

151-0330 WHEEL & TIRE AR

PIN 5FM1-UP

AN ATTACHMENT

SMCS-4201, 4202, 4203, 4208, 4209 **i00759120**

NOTE	PART NUMBER	QTY	PART NAME 1 2 3 4 5 6 (PRODUCT LEVEL)	SEE PAGE
Y	*142-6338*	6	WHEEL & TIRE GP	443

Y-SEPARATE ILLUSTRATION

POWER TRAIN

151-0331 WHEEL & TIRE AR

PIN 5FM1-UP

AN ATTACHMENT

SMCS-4201, 4202, 4203, 4208, 4209 i00759122

NOTE	PART NUMBER	QTY	PART NAME 1 2 3 4 5 6 (PRODUCT LEVEL)	SEE PAGE
Y	*142-6341*	6	WHEEL & TIRE GP	445

Y-SEPARATE ILLUSTRATION

POWER TRAIN

151-0347 WHEEL & TIRE AR

PIN 5FM1-UP

AN ATTACHMENT

SMCS-4201, 4202, 4203, 4208, 4209 **i00759191**

NOTE	PART NUMBER	QTY	PART NAME 1 2 3 4 5 6 (PRODUCT LEVEL)	SEE PAGE
Y	*142-6336*	6	WHEEL & TIRE GP	441

Y-SEPARATE ILLUSTRATION

POWER TRAIN

151-0348 WHEEL & TIRE AR

PIN 5FM1-UP

AN ATTACHMENT

SMCS-4201, 4202, 4203, 4208, 4209 i00759196

NOTE	PART NUMBER	QTY	PART NAME 1 2 3 4 5 6 (PRODUCT LEVEL)	SEE PAGE
Y	*142-6339*	6	WHEEL & TIRE GP	444

Y-SEPARATE ILLUSTRATION

POWER TRAIN

151-0355 WHEEL & TIRE AR

PIN 5FM1-UP

AN ATTACHMENT

SMCS-4201, 4202, 4203, 4208, 4209 **i00759125**

NOTE	PART NUMBER	QTY	PART NAME 1 2 3 4 5 6 (PRODUCT LEVEL)	SEE PAGE
Y	*142-6337*	6	WHEEL & TIRE GP	442

Y-SEPARATE ILLUSTRATION

POWER TRAIN

151-0362 WHEEL & TIRE AR

PIN 5FM1-UP

AN ATTACHMENT

SMCS-4201, 4202, 4203, 4208, 4209 i00775616

NOTE	PART NUMBER	QTY	PART NAME 1 2 3 4 5 6 (PRODUCT LEVEL)	SEE PAGE
Y	*142-6332*	6	WHEEL & TIRE GP	439

Y-SEPARATE ILLUSTRATION

POWER TRAIN

151-0364 WHEEL & TIRE AR

PIN 5FM1-UP

AN ATTACHMENT

SMCS-4201, 4202, 4203, 4208, 4209 **i00759127**

NOTE	PART NUMBER	QTY	PART NAME 1 2 3 4 5 6 (PRODUCT LEVEL)	SEE PAGE
Y	*142-6353*	6	WHEEL & TIRE GP	446

Y-SEPARATE ILLUSTRATION

POWER TRAIN

151-0365 WHEEL & TIRE AR

PIN 5FM1-UP

AN ATTACHMENT

SMCS-4201, 4202, 4203, 4208, 4209 **i00759194**

NOTE	PART NUMBER	QTY	PART NAME 1 2 3 4 5 6 (PRODUCT LEVEL)	SEE PAGE
Y	*142-6360*	6	WHEEL & TIRE GP	452

Y-SEPARATE ILLUSTRATION

POWER TRAIN

151-0366 WHEEL & TIRE AR

PIN 5FM1-UP

AN ATTACHMENT

SMCS-4201, 4202, 4203, 4208, 4209 **i00759349**

NOTE	PART NUMBER	QTY	PART NAME 1 2 3 4 5 6 (PRODUCT LEVEL)	SEE PAGE
Y	*142-6363*	6	WHEEL & TIRE GP	454

Y-SEPARATE ILLUSTRATION

POWER TRAIN

151-0367 WHEEL & TIRE AR

PIN 5FM1-UP

AN ATTACHMENT

SMCS-4201, 4202, 4203, 4208, 4209 **i00759353**

NOTE	PART NUMBER	QTY	PART NAME 1 2 3 4 5 6 (PRODUCT LEVEL)	SEE PAGE
Y	*142-6366*	6	WHEEL & TIRE GP	456

Y-SEPARATE ILLUSTRATION

POWER TRAIN

151-0368 WHEEL & TIRE AR

PIN 5FM1-UP

AN ATTACHMENT

SMCS-4201, 4202, 4203, 4208, 4209 i00759354

NOTE	PART NUMBER	QTY	PART NAME 1 2 3 4 5 6 (PRODUCT LEVEL)	SEE PAGE
Y	*142-6371*	6	WHEEL & TIRE GP	458

Y-SEPARATE ILLUSTRATION

POWER TRAIN

151-0371 WHEEL & TIRE AR

PIN 5FM1-UP

AN ATTACHMENT

SMCS-4201, 4202, 4203, 4208, 4209 **i00759269**

NOTE	PART NUMBER	QTY	PART NAME 1 2 3 4 5 6 (PRODUCT LEVEL)	SEE PAGE
Y	*142-6354*	6	WHEEL & TIRE GP	447

Y-SEPARATE ILLUSTRATION

POWER TRAIN

151-0372 WHEEL & TIRE AR

PIN 5FM1-UP

AN ATTACHMENT

SMCS-4201, 4202, 4203, 4208, 4209 **i00759272**

NOTE	PART NUMBER	QTY	PART NAME 1 2 3 4 5 6 (PRODUCT LEVEL)	SEE PAGE
Y	*142-6372*	6	WHEEL & TIRE GP	459

Y-SEPARATE ILLUSTRATION

POWER TRAIN

151-0374 WHEEL & TIRE AR

PIN 5FM1-UP

AN ATTACHMENT

SMCS-4201, 4202, 4203, 4208, 4209 **i00759278**

NOTE	PART NUMBER	QTY	PART NAME 1 2 3 4 5 6 (PRODUCT LEVEL)	SEE PAGE
Y	*142-6355*	6	WHEEL & TIRE GP	448

Y-SEPARATE ILLUSTRATION

POWER TRAIN

151-0375 WHEEL & TIRE AR

PIN 5FM1-UP

AN ATTACHMENT

SMCS-4201, 4202, 4203, 4208, 4209 **i00759351**

NOTE	PART NUMBER	QTY	PART NAME 1 2 3 4 5 6 (PRODUCT LEVEL)	SEE PAGE
Y	*142-6373*	6	WHEEL & TIRE GP	460

Y-SEPARATE ILLUSTRATION

POWER TRAIN

151-0378 WHEEL & TIRE AR

PIN 5FM1-UP

AN ATTACHMENT

SMCS-4201, 4202, 4203, 4208, 4209 **i00759357**

NOTE	PART NUMBER	QTY	PART NAME 1 2 3 4 5 6 (PRODUCT LEVEL)	SEE PAGE
Y	*142-6356*	6	WHEEL & TIRE GP	449

Y-SEPARATE ILLUSTRATION

POWER TRAIN

151-0379 WHEEL & TIRE AR

PIN 5FM1-UP

AN ATTACHMENT

SMCS-4201, 4202, 4203, 4208, 4209 i00759358

NOTE	PART NUMBER	QTY	PART NAME 1 2 3 4 5 6 (PRODUCT LEVEL)	SEE PAGE
Y	142-6361	6	WHEEL & TIRE GP	453

Y-SEPARATE ILLUSTRATION

POWER TRAIN

151-0380 WHEEL & TIRE AR

PIN 5FM1-UP

AN ATTACHMENT

SMCS-4201, 4202, 4203, 4208, 4209 i00759275

NOTE	PART NUMBER	QTY	PART NAME 1 2 3 4 5 6 (PRODUCT LEVEL)	SEE PAGE
Y	*142-6364*	6	WHEEL & TIRE GP	455

Y-SEPARATE ILLUSTRATION

POWER TRAIN

151-0381 WHEEL & TIRE AR

PIN 5FM1-UP

AN ATTACHMENT

SMCS-4201, 4202, 4203, 4208, 4209 **i00760333**

NOTE	PART NUMBER	QTY	PART NAME 1 2 3 4 5 6 (PRODUCT LEVEL)	SEE PAGE
Y	*142-6367*	6	WHEEL & TIRE GP	457

Y-SEPARATE ILLUSTRATION

POWER TRAIN

151-0382 WHEEL & TIRE AR

PIN 5FM1-UP

AN ATTACHMENT

SMCS-4201, 4202, 4203, 4208, 4209 **i00760334**

NOTE	PART NUMBER	QTY	PART NAME 1 2 3 4 5 6 (PRODUCT LEVEL)	SEE PAGE
Y	*142-6374*	6	WHEEL & TIRE GP	461

Y-SEPARATE ILLUSTRATION

POWER TRAIN

151-0385 WHEEL & TIRE AR

PIN 5FM1-UP

AN ATTACHMENT

SMCS-4201, 4202, 4203, 4208, 4209 **i00775615**

NOTE	PART NUMBER	QTY	PART NAME 1 2 3 4 5 6 (PRODUCT LEVEL)	SEE PAGE
Y	*142-6385*	6	WHEEL & TIRE GP	464

Y-SEPARATE ILLUSTRATION

POWER TRAIN

151-0388 WHEEL & TIRE AR

PIN 5FM1-UP

AN ATTACHMENT

SMCS-4201, 4202, 4203, 4208, 4209 i00760579

NOTE	PART NUMBER	QTY	PART NAME 1 2 3 4 5 6 (PRODUCT LEVEL)	SEE PAGE
Y	*142-6357*	6	WHEEL & TIRE GP	450

Y-SEPARATE ILLUSTRATION

POWER TRAIN

151-0389 WHEEL & TIRE AR

PIN 5FM1-UP

AN ATTACHMENT

SMCS-4201, 4202, 4203, 4208, 4209 i00760599

NOTE	PART NUMBER	QTY	PART NAME 1 2 3 4 5 6 (PRODUCT LEVEL)	SEE PAGE
Y	*142-6375*	6	WHEEL & TIRE GP	462

Y-SEPARATE ILLUSTRATION

POWER TRAIN

151-0392 WHEEL & TIRE AR

PIN 5FM1-UP

AN ATTACHMENT

SMCS-4201, 4202, 4203, 4208, 4209 **i00760499**

NOTE	PART NUMBER	QTY	PART NAME 1 2 3 4 5 6 (PRODUCT LEVEL)	SEE PAGE
Y	*142-6358*	6	WHEEL & TIRE GP	451

Y-SEPARATE ILLUSTRATION

POWER TRAIN

151-0393 WHEEL & TIRE AR

PIN 5FM1-UP

AN ATTACHMENT

SMCS-4201, 4202, 4203, 4208, 4209 **i00760539**

NOTE	PART NUMBER	QTY	PART NAME 1 2 3 4 5 6 (PRODUCT LEVEL)	SEE PAGE
Y	*142-6376*	6	WHEEL & TIRE GP	463

Y-SEPARATE ILLUSTRATION

POWER TRAIN

153-5460 WHEEL & TIRE AR

PIN 5FM1-UP

AN ATTACHMENT

SMCS-4201, 4202, 4203, 4208, 4209 **i00767526**

NOTE	PART NUMBER	QTY	PART NAME 1 2 3 4 5 6 (PRODUCT LEVEL)	SEE PAGE
Y	*153-5459*	6	WHEEL & TIRE GP	465

Y-SEPARATE ILLUSTRATION

POWER TRAIN

153-5464 WHEEL & TIRE AR

PIN 5FM1-UP

AN ATTACHMENT

SMCS-4201, 4202, 4203, 4208, 4209 i00767583

NOTE	PART NUMBER	QTY	PART NAME 1 2 3 4 5 6 (PRODUCT LEVEL)	SEE PAGE
Y	*153-5463*	6	WHEEL & TIRE GP	466

Y-SEPARATE ILLUSTRATION

POWER TRAIN

153-5468 WHEEL & TIRE AR

PIN 5FM1-UP

AN ATTACHMENT

SMCS-4201, 4202, 4203, 4208, 4209 **i00767538**

NOTE	PART NUMBER	QTY	PART NAME 1 2 3 4 5 6 (PRODUCT LEVEL)	SEE PAGE
Y	*153-5467*	6	WHEEL & TIRE GP	467

Y-SEPARATE ILLUSTRATION

POWER TRAIN

142-6283 WHEEL & TIRE GP

PIN 5FM1-UP
9.00 X 24
PART OF 151-0286 WHEEL & TIRE AR
AN ATTACHMENT

SMCS-4201, 4202, 4203, 4208, 4209 i00756249

NOTE	PART NUMBER	QTY	PART NAME 1 2 3 4 5 6 (PRODUCT LEVEL)	SEE PAGE
	123-3420	1	RIM AS	
	142-6165	1	TIRE (13 X 24 - 10PR G-2)	
	2D-2511	1	VALVE GP-TIRE	
	9K-7951	1	CAP-VALVE	
	6F-3930	1	CORE-VALVE	
	7D-5252	1	SPUD AS	
	2D-2508	1	GROMMET	
	2D-2509	1	LOCKNUT	
	2D-2507	1	SPUD	

POWER TRAIN

142-6284 WHEEL & TIRE GP

PIN 5FM1-UP
13.00 - 24, 10PR G-2
PART OF 151-0287 WHEEL & TIRE AR
AN ATTACHMENT

SMCS-4201, 4202, 4203, 4208, 4209 i00756469

NOTE	PART NUMBER	QTY	PART NAME 1 2 3 4 5 6 (PRODUCT LEVEL)	SEE PAGE
	2D-2565	1	SEAL-O-RING	
	142-6165	1	TIRE (13.00-24 10PR G-2)	
	2G-6595	1	VALVE GP-TIRE	
	9K-7951	1	CAP-VALVE	
	6F-3930	1	CORE-VALVE	
	7D-5252	1	SPUD AS	
	2D-2507	1	SPUD	
	2D-2508	1	GROMMET	
	2D-2509	1	LOCKNUT	
Y	*142-6226*	1	WHEEL GP	476

Y-SEPARATE ILLUSTRATION

142-6285 WHEEL & TIRE GP

PIN 5FM1-UP
13.00-24, 10 PR G2
PART OF 142-6390 WHEEL & TIRE AR
AN ATTACHMENT

SMCS-4201, 4202, 4203, 4208, 4209 i00756288

NOTE	PART NUMBER	QTY	PART NAME 1 2 3 4 5 6 (PRODUCT LEVEL)	SEE PAGE
	123-3420	1	RIM AS	
	123-3419	1	RIM (9.00 X 24)	
	142-6166	1	TIRE (13.00-24 10PR G2/L2)	
	2D-2511	1	VALVE GP-TIRE	
	9K-7951	1	CAP-VALVE	
	6F-3930	1	CORE-VALVE	
	7D-5252	1	SPUD AS	
	2D-2508	1	GROMMET	
	2D-2509	1	LOCKNUT	
	2D-2507	1	SPUD	

POWER TRAIN

142-6286 WHEEL & TIRE GP

PIN 5FM1-UP

PART OF 142-6391 WHEEL & TIRE AR

AN ATTACHMENT

SMCS-4201, 4202, 4203, 4208, 4209 **i00756471**

NOTE	PART NUMBER	QTY	PART NAME 1 2 3 4 5 6 (PRODUCT LEVEL)	SEE PAGE
	2D-2565	1	SEAL-O-RING	
	142-6166	1	TIRE (13.00-24 10PR G2/L2)	
	2G-6595	1	VALVE GP-TIRE	
	9K-7951	1	CAP-VALVE	
	6F-3930	1	CORE-VALVE	
	7D-5252	1	SPUD AS	
	2D-2508	1	GROMMET	
	2D-2509	1	LOCKNUT	
	2D-2507	1	SPUD	
Y	*142-6226*	1	WHEEL GP	476

Y-SEPARATE ILLUSTRATION

POWER TRAIN

142-6287 WHEEL & TIRE GP

PIN 5FM1-UP
9.00 X 24
PART OF 142-6392 WHEEL & TIRE AR
AN ATTACHMENT

SMCS-4201, 4202, 4203, 4208, 4209 **i00756473**

NOTE	PART NUMBER	QTY	PART NAME 1 2 3 4 5 6 (PRODUCT LEVEL)	SEE PAGE
	123-3420	1	RIM AS	
	142-6167	1	TIRE (13 X 24 - 12PR G-2)	
	2D-2511	1	VALVE GP-TIRE	
	9K-7951	1	CAP-VALVE	
	6F-3930	1	CORE-VALVE	
	7D-5252		SPUD AS	
	2D-2508	1	GROMMET	
	2D-2509	1	LOCKNUT	
	2D-2507	1	SPUD	

POWER TRAIN

142-6288 WHEEL & TIRE GP

PIN 5FM1-UP
9.00 X 24
PART OF 142-6393 WHEEL & TIRE AR
AN ATTACHMENT

SMCS-4201, 4202, 4203, 4208, 4209 **i00756480**

NOTE	PART NUMBER	QTY	PART NAME 1 2 3 4 5 6 (PRODUCT LEVEL)	SEE PAGE
	123-3420	1	RIM AS (9.00X24)	
	142-6168	1	TIRE (13.00-24 12PR G2/L2)	
	2D-2511	1	VALVE GP-TIRE	
	9K-7951	1	CAP-VALVE	
	6F-3930	1	CORE-VALVE	
	7D-5252	1	SPUD AS	
	2D-2508	1	GROMMET	
	2D-2509	1	LOCKNUT	
	2D-2507	1	SPUD	

POWER TRAIN

142-6289 WHEEL & TIRE GP

PIN 5FM1-UP
9.00 X 24
PART OF 142-6394 WHEEL & TIRE AR
AN ATTACHMENT

SMCS-4201, 4202, 4203, 4208, 4209 i00756475

NOTE	PART NUMBER	QTY	PART NAME 1 2 3 4 5 6 (PRODUCT LEVEL)	SEE PAGE
	123-3420	1	RIM AS	
	142-6169	1	TIRE (13.00-24 12PR G-2)	
	2D-2511	1	VALVE GP-TIRE	
	9K-7951	1	CAP-VALVE	
	6F-3930	1	CORE-VALVE	
	7D-5252	1	SPUD AS	
	2D-2508	1	GROMMET	
	2D-2509	1	LOCKNUT	
	2D-2507	1	SPUD	

POWER TRAIN

142-6290 WHEEL & TIRE GP

PIN 5FM1-UP

PART OF 142-6395 WHEEL & TIRE AR

AN ATTACHMENT

SMCS-4201, 4202, 4203, 4208, 4209 **i00757114**

NOTE	PART NUMBER	QTY	PART NAME 1 2 3 4 5 6 (PRODUCT LEVEL)	SEE PAGE
	2D-2565	1	SEAL-O-RING	
	142-6167	1	TIRE (13.00-24 12PR G-2)	
	2G-6595	1	VALVE GP-TIRE	
	9K-7951	1	CAP-VALVE	
	6F-3930	1	CORE-VALVE	
	7D-5252	1	SPUD AS	
	2D-2508	1	GROMMET	
	2D-2509	1	LOCKNUT	
	2D-2507	1	SPUD	
Y	*142-6226*	1	WHEEL GP	476

Y-SEPARATE ILLUSTRATION

POWER TRAIN

142-6291 WHEEL & TIRE GP

PIN 5FM1-UP

PART OF 142-6439 WHEEL & TIRE AR

AN ATTACHMENT

SMCS-4201, 4202, 4203, 4208, 4209 **i00756668**

NOTE	PART NUMBER	QTY	PART NAME 1 2 3 4 5 6 (PRODUCT LEVEL)	SEE PAGE
	2D-2565	1	SEAL-O-RING	
	142-6168	1	TIRE (13.00-24 12PR G2/L2)	
	2G-6595	1	VALVE GP-TIRE	
	9K-7951	1	CAP-VALVE	
	6F-3930	1	CORE-VALVE	
	7D-5252	1	SPUD AS	
	2D-2508	1	GROMMET	
	2D-2509	1	LOCKNUT	
	2D-2507	1	SPUD	
Y	*142-6226*	1	WHEEL GP	476

Y-SEPARATE ILLUSTRATION

142-6292 WHEEL & TIRE GP

PIN 5FM1-UP

PART OF 142-6440 WHEEL & TIRE AR

AN ATTACHMENT

SMCS-4201, 4202, 4203, 4208, 4209 i00757118

NOTE	PART NUMBER	QTY	PART NAME 1 2 3 4 5 6 (PRODUCT LEVEL)	SEE PAGE
	2D-2565	1	SEAL-O-RING	
	142-6169	1	TIRE (13.00-24 12PR G-2)	
	2G-6595	1	VALVE GP-TIRE	
	9K-7951	1	CAP-VALVE	
	6F-3930	1	CORE-VALVE	
	7D-5252	1	SPUD AS	
	2D-2508	1	GROMMET	
	2D-2509	1	LOCKNUT	
	2D-2507	1	SPUD	
Y	*142-6226*	1	WHEEL GP	476

Y-SEPARATE ILLUSTRATION

142-6293 WHEEL & TIRE GP

PIN 5FM1-UP
9.00 X 24
PART OF 142-6441 WHEEL & TIRE AR
AN ATTACHMENT

SMCS-4201, 4202, 4203, 4208, 4209 i00757116

NOTE	PART NUMBER	QTY	PART NAME 1 2 3 4 5 6 (PRODUCT LEVEL)	SEE PAGE
	123-3420	1	RIM AS	
	112-9924	1	TIRE (13.0R24 T6 * XGLA2-G2)	
	2D-2511	1	VALVE GP-TIRE	
	9K-7951	1	CAP-VALVE	
	6F-3930	1	CORE-VALVE	
	7D-5252	1	SPUD AS	
	2D-2508	1	GROMMET	
	2D-2509	1	LOCKNUT	
	2D-2507	1	SPUD	

142-6294 WHEEL & TIRE GP

PIN 5FM1-UP

PART OF 142-6442 WHEEL & TIRE AR

AN ATTACHMENT

SMCS-4201, 4202, 4203, 4208, 4209 i00757189

NOTE	PART NUMBER	QTY	PART NAME 1 2 3 4 5 6 (PRODUCT LEVEL)	SEE PAGE
	2D-2565	1	SEAL-O-RING	
	112-9924	1	TIRE (13.0 R24 * XGLA2)	
	2G-6595	1	VALVE GP-TIRE	
	6F-3930	1	CORE-VALVE	
	9K-7951	1	CAP-VALVE	
	7D-5252	1	SPUD AS	
	2D-2507	1	SPUD	
	2D-2508	1	GROMMET	
	2D-2509	1	LOCKNUT	
Y	*142-6226*	1	WHEEL GP	476

Y-SEPARATE ILLUSTRATION

POWER TRAIN

142-6295 WHEEL & TIRE GP

PIN 5FM1-UP
9.00 X 24
PART OF 142-6443 WHEEL & TIRE AR
AN ATTACHMENT

SMCS-4201, 4202, 4203, 4208, 4209 **i00757190**

NOTE	PART NUMBER	QTY	PART NAME 1 2 3 4 5 6 (PRODUCT LEVEL)	SEE PAGE
	123-3420	1	RIM AS (9.00X24)	
	2A-7327	1	TIRE (15.5 R25 RL2F * L-2/E-2/G-2)	
	2D-2511	1	VALVE GP-TIRE	
	9K-7951	1	CAP-VALVE	
	6F-3930	1	CORE-VALVE	
	7D-5252	1	SPUD AS	
	2D-2508	1	GROMMET	
	2D-2509	1	LOCKNUT	
	2D-2507	1	SPUD	

POWER TRAIN

142-6296 WHEEL & TIRE GP

PIN 5FM1-UP

PART OF 142-6444 WHEEL & TIRE AR

AN ATTACHMENT

SMCS-4201, 4202, 4203, 4208, 4209 **i00756569**

NOTE	PART NUMBER	QTY	PART NAME 1 2 3 4 5 6 (PRODUCT LEVEL)	SEE PAGE
	2D-2565	1	SEAL-O-RING	
	2A-7327	1	TIRE (13.0 R24 * RL-2F)	
	2G-6595	1	VALVE GP-TIRE	
	6F-3930	1	CORE-VALVE	
	9K-7951	1	CAP-VALVE	
	7D-5252	1	SPUD AS	
	2D-2507	1	SPUD	
	2D-2508	1	GROMMET	
	2D-2509	1	LOCKNUT	
Y	*142-6226*	1	WHEEL GP	476

Y-SEPARATE ILLUSTRATION

POWER TRAIN

142-6297 WHEEL & TIRE GP

PIN 5FM1-UP
9.00 X 24
PART OF 142-6445 WHEEL & TIRE AR
AN ATTACHMENT

SMCS-4201, 4202, 4203, 4208, 4209 **i00835824**

NOTE	PART NUMBER	QTY	PART NAME 1 2 3 4 5 6 (PRODUCT LEVEL)	SEE PAGE
	123-3420	1	RIM AS	
	142-6170	1	TIRE (14.00-24 10PR G-2 GY)	
	2D-2511	1	VALVE GP-TIRE	
	9K-7951	1	CAP-VALVE	
	6F-3930	1	CORE-VALVE	
	7D-5252	1	SPUD AS	
	2D-2508	1	GROMMET	
	2D-2509	1	LOCKNUT	
	2D-2507	1	SPUD	

POWER TRAIN

142-6298 WHEEL & TIRE GP

PIN 5FM1-UP

PART OF 142-6446 WHEEL & TIRE AR

AN ATTACHMENT

SMCS-4201, 4202, 4203, 4208, 4209 **i00835825**

NOTE	PART NUMBER	QTY	PART NAME 1 2 3 4 5 6 (PRODUCT LEVEL)	SEE PAGE
	2D-2565	1	SEAL-O-RING	
	142-6170	1	TIRE (14.00-24 10PR G-2 GY)	
	2G-6595	1	VALVE GP-TIRE	
	6F-3930	1	CORE-VALVE	
	9K-7951	1	CAP-VALVE	
	7D-5252	1	SPUD AS	
	2D-2509	1	LOCKNUT	
	2D-2507	1	SPUD	
	2D-2508	1	GROMMET	
Y	**142-6226**	1	WHEEL GP	476

Y-SEPARATE ILLUSTRATION

POWER TRAIN

142-6300 WHEEL & TIRE GP

PIN 5FM1-UP
9.00 X 24
PART OF 142-6448 WHEEL & TIRE AR
AN ATTACHMENT

SMCS-4201, 4202, 4203, 4208, 4209 i00835826

NOTE	PART NUMBER	QTY	PART NAME 1 2 3 4 5 6 (PRODUCT LEVEL)	SEE PAGE
	123-3420	1	RIM AS	
	142-6171	1	TIRE (14.00-24 10PR G-2 FS)	
	2D-2511	1	VALVE GP-TIRE	
	9K-7951	1	CAP-VALVE	
	6F-3930	1	CORE-VALVE	
	7D-5252	1	SPUD AS	
	2D-2508	1	GROMMET	
	2D-2509	1	LOCKNUT	
	2D-2507	1	SPUD	

POWER TRAIN

142-6301 WHEEL & TIRE GP

PIN 5FM1-UP

PART OF 142-6449 WHEEL & TIRE AR

AN ATTACHMENT

SMCS-4201, 4202, 4203, 4208, 4209 **i00835828**

NOTE	PART NUMBER	QTY	PART NAME 1 2 3 4 5 6 (PRODUCT LEVEL)	SEE PAGE
	2D-2565	1	SEAL-O-RING	
	142-6171	1	TIRE (14.00-24 10PR G-2 FS)	
	2G-6595	1	VALVE GP-TIRE	
	9K-7951	1	CAP-VALVE	
	6F-3930	1	CORE-VALVE	
	7D-5252	1	SPUD AS	
	2D-2508	1	GROMMET	
	2D-2509	1	LOCKNUT	
	2D-2507	1	SPUD	
Y	*142-6226*	1	WHEEL GP	476

Y-SEPARATE ILLUSTRATION

142-6306 WHEEL & TIRE GP

PIN 5FM1-UP

9 X 24

PART OF 142-6454 WHEEL & TIRE AR

AN ATTACHMENT

SMCS-4201, 4202, 4203, 4208, 4209 i00835829

NOTE	PART NUMBER	QTY	PART NAME 1 2 3 4 5 6 (PRODUCT LEVEL)	SEE PAGE
	123-3420	1	RIM AS	
	142-6173	1	TIRE (14.00-24 12PR G-2 GY)	
	2D-2511	1	VALVE GP-TIRE	
	9K-7951	1	CAP-VALVE	
	6F-3930	1	CORE-VALVE	
	7D-5252	1	SPUD AS	
	2D-2508	1	GROMMET	
	2D-2509	1	LOCKNUT	
	2D-2507	1	SPUD	

POWER TRAIN

142-6307 WHEEL & TIRE GP

PIN 5FM1-UP

PART OF 142-6455 WHEEL & TIRE AR

AN ATTACHMENT

SMCS-4201, 4202, 4203, 4208, 4209 **i00835831**

NOTE	PART NUMBER	QTY	PART NAME 1 2 3 4 5 6 (PRODUCT LEVEL)	SEE PAGE
	2D-2565	1	SEAL-O-RING	
	142-6173	1	TIRE (14.00-24 12PR G-2 GY)	
	2G-6595	1	VALVE GP-TIRE	
	9K-7951	1	CAP-VALVE	
	6F-3930	1	CORE-VALVE	
	7D-5252	1	SPUD AS	
	2D-2508	1	GROMMET	
	2D-2509	1	LOCKNUT	
	2D-2507	1	SPUD	
Y	*142-6226*	1	WHEEL GP	476

Y-SEPARATE ILLUSTRATION

POWER TRAIN

142-6309 WHEEL & TIRE GP

PIN 5FM1-UP
9.00 X 24
PART OF 142-6457 WHEEL & TIRE AR
AN ATTACHMENT

SMCS-4201, 4202, 4203, 4208, 4209 i00835834

NOTE	PART NUMBER	QTY	PART NAME 1 2 3 4 5 6 (PRODUCT LEVEL)	SEE PAGE
	123-3420	1	RIM AS	
	142-6174	1	TIRE (14.00-24 12PR G-2 FS)	
	2D-2511	1	VALVE GP-TIRE	
	9K-7951	1	CAP-VALVE	
	6F-3930	1	CORE-VALVE	
	7D-5252	1	SPUD AS	
	2D-2508	1	GROMMET	
	2D-2509	1	LOCKNUT	
	2D-2507	1	SPUD	

POWER TRAIN

142-6310 WHEEL & TIRE GP

PIN 5FM1-UP

PART OF 142-6458 WHEEL & TIRE AR

AN ATTACHMENT

SMCS-4201, 4202, 4203, 4208, 4209 **i00835835**

NOTE	PART NUMBER	QTY	PART NAME 1 2 3 4 5 6 (PRODUCT LEVEL)	SEE PAGE
	2D-2565	1	SEAL-O-RING	
	142-6174	1	TIRE (14.00-24 12PR G-2 FS)	
	2G-6595	1	VALVE GP-TIRE	
	9K-7951	1	CAP-VALVE	
	6F-3930	1	CORE-VALVE	
	7D-5252	1	SPUD AS	
	2D-2508	1	GROMMET	
	2D-2509	1	LOCKNUT	
	2D-2507	1	SPUD	
Y	*142-6226*	1	WHEEL GP	476

Y-SEPARATE ILLUSTRATION

142-6312 WHEEL & TIRE GP

PIN 5FM1-UP
9.00 X 24
PART OF 142-6460 WHEEL & TIRE AR
AN ATTACHMENT

SMCS-4201, 4202, 4203, 4208, 4209 i00835836

NOTE	PART NUMBER	QTY	PART NAME 1 2 3 4 5 6 (PRODUCT LEVEL)	SEE PAGE
	123-3420	1	RIM AS	
	142-6175	1	TIRE (14.00-24 12PR G-2 GN)	
	2D-2511	1	VALVE GP-TIRE	
	9K-7951	1	CAP-VALVE	
	6F-3930	1	CORE-VALVE	
	7D-5252	1	SPUD AS	
	2D-2508	1	GROMMET	
	2D-2509	1	LOCKNUT	
	2D-2507	1	SPUD	

POWER TRAIN

142-6313 WHEEL & TIRE GP

PIN 5FM1-UP

PART OF 142-6461 WHEEL & TIRE AR

AN ATTACHMENT

SMCS-4201, 4202, 4203, 4208, 4209 **i00835838**

NOTE	PART NUMBER	QTY	PART NAME 1 2 3 4 5 6 (PRODUCT LEVEL)	SEE PAGE
	2D-2565	1	SEAL-O-RING	
	142-6175	1	TIRE (14.00-24 12PR G-2 GN)	
	2G-6595	1	VALVE GP-TIRE	
	9K-7951	1	CAP-VALVE	
	6F-3930	1	CORE-VALVE	
	7D-5252	1	SPUD AS	
	2D-2508	1	GROMMET	
	2D-2509	1	LOCKNUT	
	2D-2507	1	SPUD	
Y	*142-6226*	1	WHEEL GP	476

Y-SEPARATE ILLUSTRATION

POWER TRAIN

142-6315 WHEEL & TIRE GP

PIN 5FM1-UP
9.00 X 24
PART OF 142-6463 WHEEL & TIRE AR
AN ATTACHMENT

SMCS-4201, 4202, 4203, 4208, 4209 **i00835839**

NOTE	PART NUMBER	QTY	PART NAME 1 2 3 4 5 6 (PRODUCT LEVEL)	SEE PAGE
	123-3420	1	RIM AS	
	112-9813	1	TIRE (14.0 R24 * XGLA2 MX)	
	2D-2511	1	VALVE GP-TIRE	
	9K-7951	1	CAP-VALVE	
	6F-3930	1	CORE-VALVE	
	7D-5252	1	SPUD AS	
	2D-2508	1	GROMMET	
	2D-2509	1	LOCKNUT	
	2D-2507	1	SPUD	

POWER TRAIN

142-6316 WHEEL & TIRE GP

PIN 5FM1-UP

PART OF 142-6464 WHEEL & TIRE AR

AN ATTACHMENT

SMCS-4201, 4202, 4203, 4208, 4209 **i00835841**

NOTE	PART NUMBER	QTY	PART NAME 1 2 3 4 5 6 (PRODUCT LEVEL)	SEE PAGE
	2D-2565	1	SEAL-O-RING	
	112-9813	1	TIRE (14.0 R24 * XGLA2 MX)	
	2G-6595	1	VALVE GP-TIRE	
	9K-7951	1	CAP-VALVE	
	6F-3930	1	CORE-VALVE	
	7D-5252	1	SPUD AS	
	2D-2508	1	GROMMET	
	2D-2509	1	LOCKNUT	
	2D-2507	1	SPUD	
Y	*142-6226*	1	WHEEL GP	476

Y-SEPARATE ILLUSTRATION

POWER TRAIN

142-6318 WHEEL & TIRE GP

PIN 5FM1-UP

9.00 X 24

PART OF 142-6466 WHEEL & TIRE AR

AN ATTACHMENT

SMCS-4201, 4202, 4203, 4208, 4209 **i00835842**

NOTE	PART NUMBER	QTY	PART NAME 1 2 3 4 5 6 (PRODUCT LEVEL)	SEE PAGE
	123-3420	1	RIM AS	
	123-3178	1	TIRE (14.0 R24 * RL2F4S GY)	
	2D-2511	1	VALVE GP-TIRE	
	9K-7951	1	CAP-VALVE	
	6F-3930	1	CORE-VALVE	
	7D-5252	1	SPUD AS	
	2D-2508	1	GROMMET	
	2D-2509	1	LOCKNUT	
	2D-2507	1	SPUD	

POWER TRAIN

142-6319 WHEEL & TIRE GP

PIN 5FM1-UP

PART OF 142-6467 WHEEL & TIRE AR

AN ATTACHMENT

SMCS-4201, 4202, 4203, 4208, 4209 **i00835843**

NOTE	PART NUMBER	QTY	PART NAME 1 2 3 4 5 6 (PRODUCT LEVEL)	SEE PAGE
	2D-2565	1	SEAL-O-RING	
	123-3178	1	TIRE (14.0 R24 * RL-2F4S GY)	
	2G-6595	1	VALVE GP-TIRE	
	9K-7951	1	CAP-VALVE	
	6F-3930	1	CORE-VALVE	
	7D-5252	1	SPUD AS	
	2D-2508	1	GROMMET	
	2D-2509	1	LOCKNUT	
	2D-2507	1	SPUD	
Y	*142-6226*	1	WHEEL GP	476

Y-SEPARATE ILLUSTRATION

POWER TRAIN

142-6321 WHEEL & TIRE GP

PIN 5FM1-UP
9.00 X 24
PART OF 142-6469 WHEEL & TIRE AR
AN ATTACHMENT

SMCS-4201, 4202, 4203, 4208, 4209 **i00835887**

NOTE	PART NUMBER	QTY	PART NAME 1 2 3 4 5 6 (PRODUCT LEVEL)	SEE PAGE
	123-3420	1	RIM AS	
	106-1567	1	TIRE (14.0 R24 * XMPS MX)	
	2D-2511	1	VALVE GP-TIRE	
	9K-7951	1	CAP-VALVE	
	6F-3930	1	CORE-VALVE	
	7D-5252	1	SPUD AS	
	2D-2508	1	GROMMET	
	2D-2509	1	LOCKNUT	
	2D-2507	1	SPUD	

POWER TRAIN

142-6322 WHEEL & TIRE GP

PIN 5FM1-UP

PART OF 142-6470 WHEEL & TIRE AR

AN ATTACHMENT

SMCS-4201, 4202, 4203, 4208, 4209 **i00835889**

NOTE	PART NUMBER	QTY	PART NAME 1 2 3 4 5 6 (PRODUCT LEVEL)	SEE PAGE
	2D-2565	1	SEAL-O-RING	
	106-1567	1	TIRE (14.0 R24 * XMPS MX)	
	2G-6595	1	VALVE GP-TIRE	
	9K-7951	1	CAP-VALVE	
	6F-3930	1	CORE-VALVE	
	7D-5252	1	SPUD AS	
	2D-2508	1	GROMMET	
	2D-2509	1	LOCKNUT	
	2D-2507	1	SPUD	
Y	*142-6226*	1	WHEEL GP	476

Y-SEPARATE ILLUSTRATION

POWER TRAIN

142-6324 WHEEL & TIRE GP

PIN 5FM1-UP
9.00 X 24
PART OF 142-6472 WHEEL & TIRE AR
AN ATTACHMENT

SMCS-4201, 4202, 4203, 4208, 4209 **i00835891**

NOTE	PART NUMBER	QTY	PART NAME 1 2 3 4 5 6 (PRODUCT LEVEL)	SEE PAGE
	123-3420	1	RIM AS	
	129-5454	1	TIRE (14.0 R24 * SG-2B GY)	
	2D-2511	1	VALVE GP-TIRE	
	9K-7951	1	CAP-VALVE	
	6F-3930	1	CORE-VALVE	
	7D-5252	1	SPUD AS	
	2D-2508	1	GROMMET	
	2D-2509	1	LOCKNUT	
	2D-2507	1	SPUD	

POWER TRAIN

142-6325 WHEEL & TIRE GP

PIN 5FM1-UP

PART OF 142-6474 WHEEL & TIRE AR

AN ATTACHMENT

SMCS-4201, 4202, 4203, 4208, 4209 **i00835893**

NOTE	PART NUMBER	QTY	PART NAME 1 2 3 4 5 6 (PRODUCT LEVEL)	SEE PAGE
	2D-2565	1	SEAL-O-RING	
	129-5454	1	TIRE (14.0 R24 * SG-2B GY)	
	2G-6595	1	VALVE GP-TIRE	
	9K-7951	1	CAP-VALVE	
	6F-3930	1	CORE-VALVE	
	7D-5252	1	SPUD AS	
	2D-2508	1	GROMMET	
	2D-2509	1	LOCKNUT	
	2D-2507	1	SPUD	
Y	*142-6226*	1	WHEEL GP	476

Y-SEPARATE ILLUSTRATION

POWER TRAIN

142-6328 WHEEL & TIRE GP

PIN 5FM1-UP

PART OF 142-6477 WHEEL & TIRE AR

AN ATTACHMENT

SMCS-4201, 4202, 4203, 4208, 4209 **i00835894**

NOTE	PART NUMBER	QTY	PART NAME 1 2 3 4 5 6 (PRODUCT LEVEL)	SEE PAGE
	2D-2565	1	SEAL-O-RING	
	141-0360	1	TIRE (14.0 R24 * XSNO PLUS MX)	
	2G-6595	1	VALVE GP-TIRE	
	9K-7951	1	CAP-VALVE	
	6F-3930	1	CORE-VALVE	
	7D-5252	1	SPUD AS	
	2D-2508	1	GROMMET	
	2D-2509	1	LOCKNUT	
	2D-2507	1	SPUD	
Y	*142-6226*	1	WHEEL GP	476

Y-SEPARATE ILLUSTRATION

142-6330 WHEEL & TIRE GP

PIN 5FM1-UP

PART OF 142-6479 WHEEL & TIRE AR

AN ATTACHMENT

SMCS-4201, 4202, 4203, 4208, 4209 i00835895

NOTE	PART NUMBER	QTY	PART NAME 1 2 3 4 5 6 (PRODUCT LEVEL)	SEE PAGE
	2D-2565	1	SEAL-O-RING	
	140-3607	1	TIRE (14.0 R24 * VSW BS)	
	2G-6595	1	VALVE GP-TIRE	
	9K-7951	1	CAP-VALVE	
	6F-3930	1	CORE-VALVE	
	7D-5252	1	SPUD AS	
	2D-2508	1	GROMMET	
	2D-2509	1	LOCKNUT	
	2D-2507	1	SPUD	
Y	*142-6226*	1	WHEEL GP	476

Y-SEPARATE ILLUSTRATION

142-6332 WHEEL & TIRE GP

PIN 5FM1-UP

PART OF 151-0362 WHEEL & TIRE AR

AN ATTACHMENT

SMCS-4201, 4202, 4203, 4208, 4209 i00835901

NOTE	PART NUMBER	QTY	PART NAME 1 2 3 4 5 6 (PRODUCT LEVEL)	SEE PAGE
	2D-2565	1	SEAL-O-RING	
	8W-7957	1	TIRE (14.0 R24 * VKT BS)	
	2G-6595	1	VALVE GP-TIRE	
	9K-7951	1	CAP-VALVE	
	6F-3930	1	CORE-VALVE	
	7D-5252	1	SPUD AS	
	2D-2508	1	GROMMET	
	2D-2509	1	LOCKNUT	
	2D-2507	1	SPUD	
Y	*142-6226*	1	WHEEL GP	476

Y-SEPARATE ILLUSTRATION

POWER TRAIN

142-6335 WHEEL & TIRE GP

PIN 5FM1-UP
13.00 X 25
PART OF 151-0329 WHEEL & TIRE AR
AN ATTACHMENT

SMCS-4201, 4202, 4203, 4208, 4209 i00757868

NOTE	PART NUMBER	QTY	PART NAME 1 2 3 4 5 6 (PRODUCT LEVEL)	SEE PAGE
	8X-1160	1	RIM AS	
	142-6176	1	TIRE (15.5-25 25PR L-2)	
	2G-6595	1	VALVE GP-TIRE	
	9K-7951	1	CAP-VALVE	
	6F-3930	1	CORE-VALVE	
	7D-5252	1	SPUD AS	
	2D-2508	1	GROMMET	
	2D-2509	1	LOCKNUT	
	2D-2507	1	SPUD	

POWER TRAIN

142-6336 WHEEL & TIRE GP

PIN 5FM1-UP
13.00 X 25
PART OF 151-0347 WHEEL & TIRE AR
AN ATTACHMENT

SMCS-4201, 4202, 4203, 4208, 4209 i00758088

NOTE	PART NUMBER	QTY	PART NAME 1 2 3 4 5 6 (PRODUCT LEVEL)	SEE PAGE
	8X-1160	1	RIM AS	
	142-6177	1	TIRE (15.5-25 12PR L-2)	
	2G-6595	1	VALVE GP-TIRE	
	9K-7951	1	CAP-VALVE	
	6F-3930	1	CORE-VALVE	
	7D-5252	1	SPUD AS	
	2D-2508	1	GROMMET	
	2D-2509	1	LOCKNUT	
	2D-2507	1	SPUD	

POWER TRAIN

142-6337 WHEEL & TIRE GP

PIN 5FM1-UP
13.00 X 25
PART OF 151-0355 WHEEL & TIRE AR
AN ATTACHMENT

SMCS-4201, 4202, 4203, 4208, 4209 **i00758768**

NOTE	PART NUMBER	QTY	PART NAME 1 2 3 4 5 6 (PRODUCT LEVEL)	SEE PAGE
	8X-1160	1	RIM AS	
	142-6178	1	TIRE (15.50-25 12PR L-2)	
	2G-6595	1	VALVE GP-TIRE	
	9K-7951	1	CAP-VALVE	
	6F-3930	1	CORE-VALVE	
	7D-5252	1	SPUD AS	
	2D-2508	1	GROMMET	
	2D-2509	1	LOCKNUT	
	2D-2507	1	SPUD	

POWER TRAIN

142-6338 WHEEL & TIRE GP

PIN 5FM1-UP
13.00 X 25
PART OF 151-0330 WHEEL & TIRE AR
AN ATTACHMENT

SMCS-4201, 4202, 4203, 4208, 4209 **i00758788**

NOTE	PART NUMBER	QTY	PART NAME 1 2 3 4 5 6 (PRODUCT LEVEL)	SEE PAGE
	8X-1160	1	RIM AS	
	142-6179	1	TIRE (15.5-25 12PR L-3)	
	2G-6595	1	VALVE GP-TIRE	
	9K-7951	1	CAP-VALVE	
	6F-3930	1	CORE-VALVE	
	7D-5252	1	SPUD AS	
	2D-2508	1	GROMMET	
	2D-2509	1	LOCKNUT	
	2D-2507	1	SPUD	

POWER TRAIN

142-6339 WHEEL & TIRE GP

PIN 5FM1-UP
13.00 X 25
PART OF 151-0348 WHEEL & TIRE AR
AN ATTACHMENT

SMCS-4201, 4202, 4203, 4208, 4209 **i00758814**

NOTE	PART NUMBER	QTY	PART NAME 1 2 3 4 5 6 (PRODUCT LEVEL)	SEE PAGE
	8X-1160	1	RIM AS (13.00 X 25)	
	142-6180	1	TIRE (15.50-25 12PR L-3)	
	2G-6595	1	VALVE GP-TIRE	
	9K-7951	1	CAP-VALVE	
	6F-3930	1	CORE-VALVE	
	7D-5252	1	SPUD AS	
	2D-2508	1	GROMMET	
	2D-2509	1	LOCKNUT	
	2D-2507	1	SPUD	

142-6341 WHEEL & TIRE GP

PIN 5FM1-UP
13 X 25
PART OF 151-0331 WHEEL & TIRE AR
AN ATTACHMENT

SMCS-4201, 4202, 4203, 4208, 4209 i00753673

NOTE	PART NUMBER	QTY	PART NAME 1 2 3 4 5 6 (PRODUCT LEVEL)	SEE PAGE
	8X-1160	1	RIM AS	
	6C-3248	1	TIRE (15.5 R25 * L-3)	
	2G-6595	1	VALVE GP-TIRE	
	9K-7951	1	CAP-VALVE	
	6F-3930	1	CORE-VALVE	
	7D-5252	1	SPUD AS	
	2D-2508	1	GROMMET	
	2D-2509	1	LOCKNUT	
	2D-2507	1	SPUD	

POWER TRAIN

142-6353 WHEEL & TIRE GP

PIN 5FM1-UP
13 X 25
PART OF 151-0364 WHEEL & TIRE AR
AN ATTACHMENT

SMCS-4201, 4202, 4203, 4208, 4209 **i00835903**

NOTE	PART NUMBER	QTY	PART NAME 1 2 3 4 5 6 (PRODUCT LEVEL)	SEE PAGE
	8X-1160	1	RIM AS	
	142-6182	1	TIRE (17.50-25 12PR L-2 GY)	
	2G-6595	1	VALVE GP-TIRE	
	9K-7951	1	CAP-VALVE	
	6F-3930	1	CORE-VALVE	
	7D-5252	1	SPUD AS	
	2D-2508	1	GROMMET	
	2D-2509	1	LOCKNUT	
	2D-2507	1	SPUD	

POWER TRAIN

142-6354 WHEEL & TIRE GP

PIN 5FM1-UP
13 X 25
PART OF 151-0371 WHEEL & TIRE AR
AN ATTACHMENT

SMCS-4201, 4202, 4203, 4208, 4209 i00835946

NOTE	PART NUMBER	QTY	PART NAME 1 2 3 4 5 6 (PRODUCT LEVEL)	SEE PAGE
	8X-1160	1	RIM AS	
	142-6183	1	TIRE (17.50-25 12PR L-2 FS)	
	2G-6595	1	VALVE GP-TIRE	
	9K-7951	1	CAP-VALVE	
	6F-3930	1	CORE-VALVE	
	7D-5252	1	SPUD AS	
	2D-2508	1	GROMMET	
	2D-2509	1	LOCKNUT	
	2D-2507	1	SPUD	

POWER TRAIN

142-6355 WHEEL & TIRE GP

PIN 5FM1-UP
13 X 25
PART OF 151-0374 WHEEL & TIRE AR
AN ATTACHMENT

SMCS-4201, 4202, 4203, 4208, 4209 i00835947

NOTE	PART NUMBER	QTY	PART NAME 1 2 3 4 5 6 (PRODUCT LEVEL)	SEE PAGE
	8X-1160	1	RIM AS	
	142-6184	1	TIRE (17.50-25 12PR L-2 GN)	
	2G-6595	1	VALVE GP-TIRE	
	9K-7951	1	CAP-VALVE	
	6F-3930	1	CORE-VALVE	
	7D-5252	1	SPUD AS	
	2D-2508	1	GROMMET	
	2D-2509	1	LOCKNUT	
	2D-2507	1	SPUD	

POWER TRAIN

142-6356 WHEEL & TIRE GP

PIN 5FM1-UP

PART OF 151-0378 WHEEL & TIRE AR

AN ATTACHMENT

SMCS-4201, 4202, 4203, 4208, 4209 **i00835949**

NOTE	PART NUMBER	QTY	PART NAME 1 2 3 4 5 6 (PRODUCT LEVEL)	SEE PAGE
	8W-3686	1	SEAL-O-RING	
	142-6182	1	TIRE (17.50-25 12PR L-2 GY)	
	2G-6595	1	VALVE GP-TIRE	
	9K-7951	1	CAP-VALVE	
	6F-3930	1	CORE-VALVE	
	7D-5252	1	SPUD AS	
	2D-2508	1	GROMMET	
	2D-2509	1	LOCKNUT	
	2D-2507	1	SPUD	
Y	*142-6229*	1	WHEEL GP	477

Y-SEPARATE ILLUSTRATION

POWER TRAIN

142-6357 WHEEL & TIRE GP

PIN 5FM1-UP

PART OF 151-0388 WHEEL & TIRE AR

AN ATTACHMENT

SMCS-4201, 4202, 4203, 4208, 4209 **i00835950**

NOTE	PART NUMBER	QTY	PART NAME 1 2 3 4 5 6 (PRODUCT LEVEL)	SEE PAGE
	8W-3686	1	SEAL-O-RING	
	142-6183	1	TIRE (17.50-25 12PR L-2 FS)	
	2G-6595	1	VALVE GP-TIRE	
	9K-7951	1	CAP-VALVE	
	6F-3930	1	CORE-VALVE	
	7D-5252	1	SPUD AS	
	2D-2508	1	GROMMET	
	2D-2509	1	LOCKNUT	
	2D-2507	1	SPUD	
Y	*142-6229*	1	WHEEL GP	477

Y-SEPARATE ILLUSTRATION

POWER TRAIN

142-6358 WHEEL & TIRE GP

PIN 5FM1-UP

PART OF 151-0392 WHEEL & TIRE AR

AN ATTACHMENT

SMCS-4201, 4202, 4203, 4208, 4209 **i00835952**

NOTE	PART NUMBER	QTY	PART NAME 1 2 3 4 5 6 (PRODUCT LEVEL)	SEE PAGE
	8W-3686	1	SEAL-O-RING	
	142-6184	1	TIRE (17.50-25 12PR L-2 GN)	
	2G-6595	1	VALVE GP-TIRE	
	9K-7951	1	CAP-VALVE	
	6F-3930	1	CORE-VALVE	
	7D-5252	1	SPUD AS	
	2D-2508	1	GROMMET	
	2D-2509	1	LOCKNUT	
	2D-2507	1	SPUD	
Y	*142-6229*	1	WHEEL GP	477

Y-SEPARATE ILLUSTRATION

POWER TRAIN

142-6360 WHEEL & TIRE GP

PIN 5FM1-UP
13.00 X 25
PART OF 151-0365 WHEEL & TIRE AR
AN ATTACHMENT

SMCS-4201, 4202, 4203, 4208, 4209 i00835955

NOTE	PART NUMBER	QTY	PART NAME 1 2 3 4 5 6 (PRODUCT LEVEL)	SEE PAGE
	8X-1160	1	RIM AS	
	6C-7366	1	TIRE (17.5 R25 * GP2B6S GY)	
	2G-6595	1	VALVE GP-TIRE	
	6F-3930	1	CORE-VALVE	
	9K-7951	1	CAP-VALVE	
	7D-5252	1	SPUD AS	
	2D-2507	1	SPUD	
	2D-2508	1	GROMMET	
	2D-2509	1	LOCKNUT	

POWER TRAIN

142-6361 WHEEL & TIRE GP

PIN 5FM1-UP

PART OF 151-0379 WHEEL & TIRE AR

AN ATTACHMENT

SMCS-4201, 4202, 4203, 4208, 4209 **i00835958**

NOTE	PART NUMBER	QTY	PART NAME 1 2 3 4 5 6 (PRODUCT LEVEL)	SEE PAGE
	8W-3686	1	SEAL-O-RING	
	6C-7366	1	TIRE (17.5 R25 * L2/3 GY)	
	2G-6595	1	VALVE GP-TIRE	
	9K-7951	1	CAP-VALVE	
	6F-3930	1	CORE-VALVE	
	7D-5252	1	SPUD AS	
	2D-2508	1	GROMMET	
	2D-2509	11	LOCKNUT	
	2D-2507	1	SPUD	
Y	*142-6229*	1	WHEEL GP	477

Y-SEPARATE ILLUSTRATION

POWER TRAIN

142-6363 WHEEL & TIRE GP

PIN 5FM1-UP
13.00 X 25
PART OF 151-0366 WHEEL & TIRE AR
AN ATTACHMENT

SMCS-4201, 4202, 4203, 4208, 4209 i00835961

NOTE	PART NUMBER	QTY	PART NAME 1 2 3 4 5 6 (PRODUCT LEVEL)	SEE PAGE
	8X-1160	1	RIM AS	
	6C-3246	1	TIRE (17.5 R25 * XHA MX)	
	2G-6595	1	VALVE GP-TIRE	
	6F-3930	1	CORE-VALVE	
	9K-7951	1	CAP-VALVE	
	7D-5252	1	SPUD AS	
	2D-2507	1	SPUD	
	2D-2508	1	GROMMET	
	2D-2509	1	LOCKNUT	

142-6364 WHEEL & TIRE GP

PIN 5FM1-UP

PART OF 151-0380 WHEEL & TIRE AR

AN ATTACHMENT

SMCS-4201, 4202, 4203, 4208, 4209 i00835962

NOTE	PART NUMBER	QTY	PART NAME 1 2 3 4 5 6 (PRODUCT LEVEL)	SEE PAGE
	8W-3686	1	SEAL-O-RING	
	6C-3246	1	TIRE (17.5 R25 * XHA MX)	
	2G-6595	1	VALVE GP-TIRE	
	6F-3930	1	CORE-VALVE	
	9K-7951	1	CAP-VALVE	
	7D-5252	1	SPUD AS	
	2D-2507	1	SPUD	
	2D-2508	1	GROMMET	
	2D-2509	1	LOCKNUT	
Y	*142-6229*	1	WHEEL GP	477

Y-SEPARATE ILLUSTRATION

POWER TRAIN

142-6366 WHEEL & TIRE GP

PIN 5FM1-UP
13.00 X 25
PART OF 151-0367 WHEEL & TIRE AR
AN ATTACHMENT

SMCS-4201, 4202, 4203, 4208, 4209 i00835963

NOTE	PART NUMBER	QTY	PART NAME 1 2 3 4 5 6 (PRODUCT LEVEL)	SEE PAGE
	8X-1160	1	RIM AS	
	106-4835	1	TIRE (17.5 R25 * XTLA MX)	
	2G-6595	1	VALVE GP-TIRE	
	6F-3930	1	CORE-VALVE	
	9K-7951	1	CAP-VALVE	
	7D-5252	1	SPUD AS	
	2D-2507	1	SPUD	
	2D-2508	1	GROMMET	
	2D-2509	1	LOCKNUT	

142-6367 WHEEL & TIRE GP

PIN 5FM1-UP

PART OF 151-0381 WHEEL & TIRE AR

AN ATTACHMENT

SMCS-4201, 4202, 4203, 4208, 4209 i00835984

NOTE	PART NUMBER	QTY	PART NAME 1 2 3 4 5 6 (PRODUCT LEVEL)	SEE PAGE
	8W-3686	1	SEAL-O-RING	
	106-4835	1	TIRE (17.5 R25 * XTLA MX)	
	2G-6595	1	VALVE GP-TIRE	
	6F-3930	1	CORE-VALVE	
	9K-7951	1	CAP-VALVE	
	7D-5252	1	SPUD AS	
	2D-2507	1	SPUD	
	2D-2508	1	GROMMET	
	2D-2509	1	LOCKNUT	
Y	*142-6229*	1	WHEEL GP	477

Y-SEPARATE ILLUSTRATION

POWER TRAIN

142-6371 WHEEL & TIRE GP

PIN 5FM1-UP
13 X 25
PART OF 151-0368 WHEEL & TIRE AR
AN ATTACHMENT

SMCS-4201, 4202, 4203, 4208, 4209 **i00835985**

NOTE	PART NUMBER	QTY	PART NAME 1 2 3 4 5 6 (PRODUCT LEVEL)	SEE PAGE
	8X-1160	1	RIM AS	
	142-6185	1	TIRE (17.50-25 12PR L-3 GY)	
	2G-6595	1	VALVE GP-TIRE	
	9K-7951	1	CAP-VALVE	
	6F-3930	1	CORE-VALVE	
	7D-5252	1	SPUD AS	
	2D-2508	1	GROMMET	
	2D-2509	1	LOCKNUT	
	2D-2507	1	SPUD	

POWER TRAIN

142-6372 WHEEL & TIRE GP

PIN 5FM1-UP
13 X 25
PART OF 151-0372 WHEEL & TIRE AR
AN ATTACHMENT

SMCS-4201, 4202, 4203, 4208, 4209 i00835987

NOTE	PART NUMBER	QTY	PART NAME 1 2 3 4 5 6 (PRODUCT LEVEL)	SEE PAGE
	8X-1160	1	RIM AS	
	142-6186	1	TIRE (17.50-25 12PR L-3 FS)	
	2G-6595	1	VALVE GP-TIRE	
	9K-7951	1	CAP-VALVE	
	6F-3930	1	CORE-VALVE	
	7D-5252	1	SPUD AS	
	2D-2508	1	GROMMET	
	2D-2509	1	LOCKNUT	
	2D-2507	1	SPUD	

POWER TRAIN

142-6373 WHEEL & TIRE GP

PIN 5FM1-UP
13 X 25
PART OF 151-0375 WHEEL & TIRE AR
AN ATTACHMENT

SMCS-4201, 4202, 4203, 4208, 4209 i00835988

NOTE	PART NUMBER	QTY	PART NAME 1 2 3 4 5 6 (PRODUCT LEVEL)	SEE PAGE
	8X-1160	1	RIM AS	
	142-6187	1	TIRE (17.50-25 12PR L-3 GN)	
	2G-6595	1	VALVE GP-TIRE	
	9K-7951	1	CAP-VALVE	
	6F-3930	1	CORE-VALVE	
	7D-5252	1	SPUD AS	
	2D-2508	1	GROMMET	
	2D-2509	1	LOCKNUT	
	2D-2507	1	SPUD	

POWER TRAIN

142-6374 WHEEL & TIRE GP

PIN 5FM1-UP

PART OF 151-0382 WHEEL & TIRE AR

AN ATTACHMENT

SMCS-4201, 4202, 4203, 4208, 4209 i00835989

NOTE	PART NUMBER	QTY	PART NAME 1 2 3 4 5 6 (PRODUCT LEVEL)	SEE PAGE
	8W-3686	1	SEAL-O-RING	
	142-6185	1	TIRE (17.50-25 12PR L-3 GY)	
	2G-6595	1	VALVE GP-TIRE	
	9K-7951	1	CAP-VALVE	
	6F-3930	1	CORE-VALVE	
	7D-5252	1	SPUD AS	
	2D-2508	1	GROMMET	
	2D-2509	1	LOCKNUT	
	2D-2507	1	SPUD	
Y	*142-6229*	1	WHEEL GP	477

Y-SEPARATE ILLUSTRATION

POWER TRAIN

142-6375 WHEEL & TIRE GP

PIN 5FM1-UP

PART OF 151-0389 WHEEL & TIRE AR

AN ATTACHMENT

SMCS-4201, 4202, 4203, 4208, 4209 **i00835990**

NOTE	PART NUMBER	QTY	PART NAME 1 2 3 4 5 6 (PRODUCT LEVEL)	SEE PAGE
	8W-3686	1	SEAL-O-RING	
	142-6186	1	TIRE (17.50-25 12PR L-3 FS)	
	2G-6595	1	VALVE GP-TIRE	
	9K-7951	1	CAP-VALVE	
	6F-3930	1	CORE-VALVE	
	7D-5252	1	SPUD AS	
	2D-2508	1	GROMMET	
	2D-2509	1	LOCKNUT	
	2D-2507	1	SPUD	
Y	*142-6229*	1	WHEEL GP	477

Y-SEPARATE ILLUSTRATION

POWER TRAIN

142-6376 WHEEL & TIRE GP

PIN 5FM1-UP

PART OF 151-0393 WHEEL & TIRE AR

AN ATTACHMENT

SMCS-4201, 4202, 4203, 4208, 4209 **i00835991**

NOTE	PART NUMBER	QTY	PART NAME 1 2 3 4 5 6 (PRODUCT LEVEL)	SEE PAGE
	8W-3686	1	SEAL-O-RING	
	142-6187	1	TIRE (17.50-25 12PR L-3 GN)	
	2G-6595	1	VALVE GP-TIRE	
	9K-7951	1	CAP-VALVE	
	6F-3930	1	CORE-VALVE	
	7D-5252	1	SPUD AS	
	2D-2508	1	GROMMET	
	2D-2509	1	LOCKNUT	
	2D-2507	1	SPUD	
Y	*142-6229*	1	WHEEL GP	477

Y-SEPARATE ILLUSTRATION

POWER TRAIN

142-6385 WHEEL & TIRE GP

PIN 5FM1-UP

PART OF 151-0385 WHEEL & TIRE AR

AN ATTACHMENT

SMCS-4201, 4202, 4203, 4208, 4209 **i00835992**

NOTE	PART NUMBER	QTY	PART NAME 1 2 3 4 5 6 (PRODUCT LEVEL)	SEE PAGE
	8W-3686	1	SEAL-O-RING	
	105-3249	1	TIRE (17.5 R25 * VKT BS)	
	2G-6595	1	VALVE GP-TIRE	
	9K-7951	1	CAP-VALVE	
	6F-3930	1	CORE-VALVE	
	7D-5252	1	SPUD AS	
	2D-2508	1	GROMMET	
	2D-2509	1	LOCKNUT	
	2D-2507	1	SPUD	
Y	*142-6229*	1	WHEEL GP	477

Y-SEPARATE ILLUSTRATION

153-5459 WHEEL & TIRE GP

PIN 5FM1-UP
13.00 X 25
PART OF 153-5460 WHEEL & TIRE AR
AN ATTACHMENT

SMCS-4201, 4202, 4203, 4208, 4209 i00767525

NOTE	PART NUMBER	QTY	PART NAME 1 2 3 4 5 6 (PRODUCT LEVEL)	SEE PAGE
	8X-1160	1	RIM AS	
	153-5425	1	TIRE (15.50-25 12PR L-3)	
	2G-6595	1	VALVE GP-TIRE	
	9K-7951	1	CAP-VALVE	
	6F-3930	1	CORE-VALVE	
	7D-5252	1	SPUD AS	
	2D-2508	1	GROMMET	
	2D-2509	1	LOCKNUT	
	2D-2507	1	SPUD	

POWER TRAIN

153-5463 WHEEL & TIRE GP

PIN 5FM1-UP
13.00 X 25
PART OF 153-5464 WHEEL & TIRE AR
AN ATTACHMENT

SMCS-4201, 4202, 4203, 4208, 4209 i00767531

NOTE	PART NUMBER	QTY	PART NAME 1 2 3 4 5 6 (PRODUCT LEVEL)	SEE PAGE
	8X-1160	1	RIM AS	
	153-5427	1	TIRE (15.5R25 * XTLA G-2/L-2)	
	2G-6595	1	VALVE GP-TIRE	
	9K-7951	1	CAP-VALVE	
	6F-3930	1	CORE-VALVE	
	7D-5252	1	SPUD AS	
	2D-2508	1	GROMMET	
	2D-2509	1	LOCKNUT	
	2D-2507	1	SPUD	

POWER TRAIN

153-5467 WHEEL & TIRE GP

PIN 5FM1-UP
13.00 X 25
PART OF 153-5468 WHEEL & TIRE AR
AN ATTACHMENT

SMCS-4201, 4202, 4203, 4208, 4209 i00835993

NOTE	PART NUMBER	QTY	PART NAME 1 2 3 4 5 6 (PRODUCT LEVEL)	SEE PAGE
	8X-1160	1	RIM AS	
	105-3249	1	TIRE (17.5 R25 * VKT 8S)	
	2G-6595	1	VALVE GP-TIRE	
	9K-7951	1	CAP-VALVE	
	6F-3930	1	CORE-VALVE	
	7D-5252	1	SPUD AS	
	2D-2508	1	GROMMET	
	2D-2509	1	LOCKNUT	
	2D-2507	1	SPUD	

POWER TRAIN

142-6303 WHEEL AR

PIN 5FM1-UP

AN ATTACHMENT

SMCS-4208 i00761194

NOTE	PART NUMBER	QTY	PART NAME 1 2 3 4 5 6 (PRODUCT LEVEL)	SEE PAGE
Y	*142-6172*	6	WHEEL GP	475

Y-SEPARATE ILLUSTRATION

POWER TRAIN

142-6305 WHEEL AR

PIN 5FM1-UP

AN ATTACHMENT

SMCS-4208 **i00761196**

NOTE	PART NUMBER	QTY	PART NAME 1 2 3 4 5 6 (PRODUCT LEVEL)	SEE PAGE
Y	*142-6304*	6	WHEEL GP	478

Y-SEPARATE ILLUSTRATION

POWER TRAIN

148-2405 WHEEL AR

PIN 5FM1-UP

AN ATTACHMENT

SMCS-4208 **i00762410**

NOTE	PART NUMBER	QTY	PART NAME 1 2 3 4 5 6 (PRODUCT LEVEL)	SEE PAGE
Y	*148-2404*	6	WHEEL GP	479

Y-SEPARATE ILLUSTRATION

POWER TRAIN

148-2409 WHEEL AR

PIN 5FM1-UP

AN ATTACHMENT

SMCS-4208 **i00762414**

NOTE	PART NUMBER	QTY	PART NAME 1 2 3 4 5 6 (PRODUCT LEVEL)	SEE PAGE
Y	*148-2408*	6	WHEEL GP	480

Y-SEPARATE ILLUSTRATION

POWER TRAIN

8X-2481 WHEEL GP

PIN 5FM1-576
10 X 24 TUBELESS TIRES
AN ATTACHMENT

SMCS-4201, 4202, 4203, 4208, 4209, 4210, 4215 i00134524

NOTE	REF NO	GRAPHIC REF	PART NUMBER	QTY	PART NAME 1 2 3 4 5 6 (PRODUCT LEVEL)	SEE PAGE
	1	1	0S-1973	60	BOLT (7/8-9X2IN)	
	2	1	2D-2565	6	SEAL-O-RING	
	3	1	2D-2654	6	LOCKRING	
	4	1	116-1327	6	VALVE GP-TIRE	
					(EACH INCLUDES)	
		1	6F-3930	1	CORE-VALVE	
		1	9K-7951	1	CAP-VALVE	
		1	7D-5252	1	SPUD AS	
		1	2D-2508	1	GROMMET	
		1	2D-2509	1	LOCKNUT	
	5	1	4M-6953	60	WASHER-HARD	
	6	1	8W-9566	6	FLANGE AS	
	7	1	132-9681	6	RIM AS	

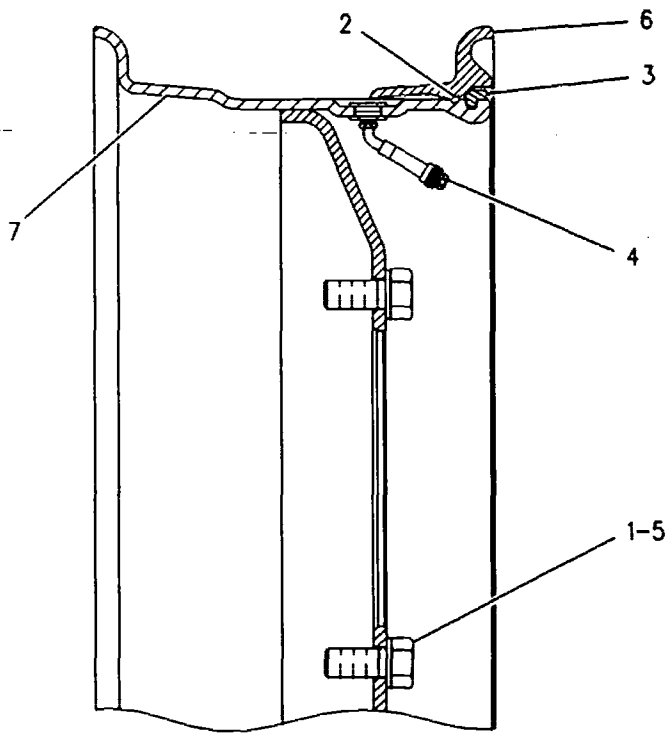

GRAPHIC #1 g00109254

POWER TRAIN

8X-2481 WHEEL GP

PIN 5FM577-UP
10 X 24 TUBELESS TIRES
AN ATTACHMENT

SMCS-4201, 4202, 4203, 4208, 4209, 4210, 4215 i00613004

NOTE	REF NO	GRAPHIC REF	PART NUMBER	QTY	PART NAME 1 2 3 4 5 6 (PRODUCT LEVEL)	SEE PAGE
	1	1	0S-1973	60	BOLT (7/8-9X2IN)	
		1	4M-6953	60	WASHER-HARD	
C	2	1	2G-5745	6	RIM AS	
	3	1	2D-2565	6	SEAL-O-RING	
	4	1	8W-9566	6	FLANGE AS	
	5	1	2D-2654	6	LOCKRING	
C	6	1	2G-6595	6	VALVE GP-TIRE	
					(EACH INCLUDES)	
		1	9K-7951		CAP-VALVE	
	7	1	6F-3930	1	CORE-VALVE	
	8	1	7D-5252	1	SPUD AS	
	9	1	2D-2508	1	GROMMET	
	10	1	2D-2509	1	LOCKNUT	

C-CHANGE FROM PREVIOUS TYPE

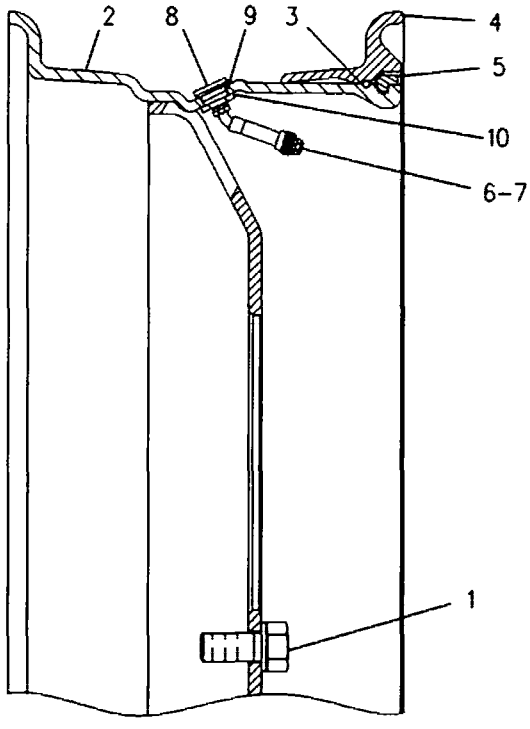

GRAPHIC #1 g00109666

POWER TRAIN

123-5265 WHEEL GP

PIN 5FM1-UP
9 X 24 TUBELESS TIRES
PART OF 112-4119 POWER TRAIN AR

SMCS-4201, 4202, 4203, 4208, 4209, 4210, 4215 **i00130911**

NOTE	REF NO	GRAPHIC REF	PART NUMBER	QTY	PART NAME 1 2 3 4 5 6 (PRODUCT LEVEL)	SEE PAGE
	1	1	**123-3420**	6	RIM AS	
	2	1	**2D-2511**	6	VALVE GP-TIRE	
					(EACH INCLUDES)	
		1	**6F-3930**	1	CORE-VALVE	
		1	**9K-7951**	1	CAP-VALVE	
		1	**7D-5252**	1	SPUD AS	
		1	**2D-2508**	1	GROMMET	
		1	**2D-2509**	1	LOCKNUT	
	3	1	**0S-1973**	60	BOLT (7/8-9X2IN)	
	4	1	**4M-6953**	60	WASHER-HARD	

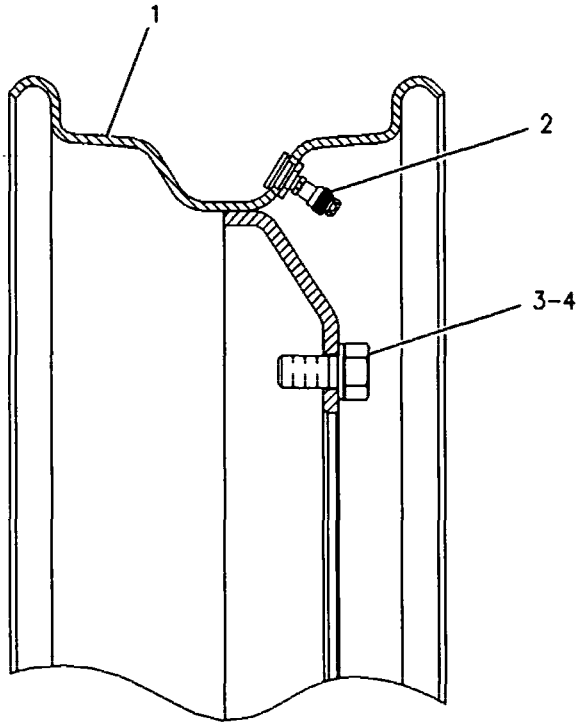

GRAPHIC #1 g00108779

142-6172 WHEEL GP

PIN 5FM1-UP
9.00 X 24
PART OF 142-6303 WHEEL AR
AN ATTACHMENT

SMCS-4201, 4202, 4203, 4208, 4209, 4210, 4215 i00761541

NOTE	PART NUMBER	QTY	PART NAME 1 2 3 4 5 6 (PRODUCT LEVEL)	SEE PAGE
	123-3420	1	RIM AS	
	2D-2511	1	VALVE GP-TIRE	
	9K-7951	1	CAP-VALVE	
	6F-3930	1	CORE-VALVE	
	7D-5252	1	SPUD AS	
	2D-2508	1	GROMMET	
	2D-2509	1	LOCKNUT	
	2D-2507	1	SPUD	

POWER TRAIN

142-6226 WHEEL GP

PIN 5FM1-UP

10.00 X 24

PART OF 142-6284, 142-6286, 142-6290, 142-6291, 142-6292, 142-6294, 142-6296, 142-6298, 142-6301, 142-6307, 142-6310, 142-6313, 142-6316, 142-6319, 142-6322, 142-6325, 142-6328, 142-6330, 142-6332 WHEEL & TIRE GP, 142-6304 WHEEL GP

AN ATTACHMENT

SMCS-4201, 4202, 4203, 4208, 4209, 4210, 4215 **i00758812**

NOTE	PART NUMBER	QTY	PART NAME 1 2 3 4 5 6 (PRODUCT LEVEL)	SEE PAGE
	8W-9566	1	FLANGE AS	
	2D-2654	1	LOCKRING	
	2G-5745	1	RIM AS	

142-6229 WHEEL GP

PIN 5FM1-UP

14.00 X 25

PART OF 142-6356, 142-6357, 142-6358, 142-6361, 142-6364, 142-6367, 142-6374, 142-6375, 142-6376, 142-6385 WHEEL & TIRE GP, 148-2408 WHEEL GP AN ATTACHMENT

SMCS-4201, 4202, 4203, 4208, 4209, 4210, 4215 i00756189

NOTE	PART NUMBER	QTY	PART NAME 1 2 3 4 5 6 (PRODUCT LEVEL)	SEE PAGE
	8W-9594	1	FLANGE AS	
	4K-4881	1	LOCKRING	
	6G-1528	1	WHEEL	

POWER TRAIN

142-6304 WHEEL GP

PIN 5FM1-UP
10 X 24
PART OF 142-6305 WHEEL AR
AN ATTACHMENT

SMCS-4201, 4202, 4203, 4208, 4209, 4210, 4215 **i00761540**

NOTE	PART NUMBER	QTY	PART NAME 1 2 3 4 5 6 (PRODUCT LEVEL)	SEE PAGE
	2D-2565	1	SEAL-O-RING	
	2G-6595	1	VALVE GP-TIRE	
	9K-7951	1	CAP-VALVE	
	6F-3930	1	CORE-VALVE	
	7D-5252	1	SPUD AS	
	2D-2508	1	GROMMET	
	2D-2509	1	LOCKNUT	
	2D-2507	1	SPUD	
Y	*142-6226*	1	WHEEL GP	476

Y-SEPARATE ILLUSTRATION

148-2404 WHEEL GP

PIN 5FM1-UP
13.00 X 25
PART OF 148-2405 WHEEL AR
AN ATTACHMENT

SMCS-4201, 4202, 4203, 4208, 4209, 4210, 4215 i00762522

NOTE	PART NUMBER	QTY	PART NAME 1 2 3 4 5 6 (PRODUCT LEVEL)	SEE PAGE
	8X-1160	1	RIM AS	
	2G-6595	1	VALVE GP-TIRE	
	9K-7951	1	CAP-VALVE	
	6F-3930	1	CORE-VALVE	
	7D-5252	1	SPUD AS	
	2D-2508	1	GROMMET	
	2D-2509	1	LOCKNUT	
	2D-2507	1	SPUD	

POWER TRAIN

148-2408 WHEEL GP

PIN 5FM1-UP
14 X 25
PART OF 148-2409 WHEEL AR
AN ATTACHMENT

SMCS-4201, 4202, 4203, 4208, 4209, 4210, 4215 **i00762412**

NOTE	PART NUMBER	QTY	PART NAME 1 2 3 4 5 6 (PRODUCT LEVEL)	SEE PAGE
	8W-3686	1	SEAL-O-RING	
	2G-6595	1	VALVE GP-TIRE	
	9K-7951	1	CAP-VALVE	
	6F-3930	1	CORE-VALVE	
	7D-5252	1	SPUD AS	
	2D-2508	1	GROMMET	
	2D-2509	1	LOCKNUT	
	2D-2507	1	SPUD	
Y	*142-6229*	1	WHEEL GP	477

Y-SEPARATE ILLUSTRATION

PART NUMBER INDEX

Part	Page
0	
0L-0478	619
	620
	627
0L-1026	49
	304
0L-1178	512
0L-1351	622
0S-0509	622
0S-1571	619
	620
0S-1573	551
	552
0S-1579	303
	317
0S-1585	576
	580
	621
0S-1587	284
	294
	518
0S-1591	622
0S-1592	482
	486
	558
0S-1594	622
0S-1595	526
0S-1604	303
0S-1617	10
0S-1618	10
0S-1621	555
0S-1756	284
	294
0S-1973	472
	473
	474
0V-0196	102
0V-0375	482
	486
1	
1A-0224	736
1A-1415	576
	580
1A-1460	518
1A-2457	102
1A-4350	845
1A-5822	612
1A-8063	736
1B-0676	102
	103
	270
	530
1B-0936	237
	242
1B-2578	270
	531
1B-2713	773
	774
1B-2886	288
	556
1B-3057	236
	242
	248
1B-4038	576
	580
1B-4046	576
	580
1B-4208	736
1B-4367	523
1B-5174	236
	243
	249
	576
	580
1B-8704	102
	270
1B-8705	14
	20
	148
	150
1B-8737	619
	620
1D-0503	719
	720
1D-1313	270
1D-4540	6
	12
1D-4612	722
	736
1D-4627	482
	486
1D-4628	551
	552
	554
1D-4689	525
1D-4717	87
1D-5119	722
1D-5120	619
	620
1F-0748	147
	583
	628
	630
	632
	634
	636
	638
	640
	642
	644
	646
	648
	720
1F-0750	78
	172
	186
	218
	489
	490
	492
	493
	496
	497
	500
	504
	506
	510
	520
	531
	730
	813
	854
	856
1F-1599	851
1F-4622	270
	530
1F-5339	30
	489
	504
	506
1F-7958	284
	294
	556
	576
	580
	736
1F-8488	306
1H-0337	662
	664
1H-1023	540
	614
	706
1H-3244	144
	150
	207
	213
	219
1H-3338	758
	760
	764
	766
1H-3340	828
	830
1H-7339	559
	560
	562
	563
	566
	568
	569
	576
	580
1H-7724	531
1H-8171	128
1H-8306	138
1H-8456	828
	830
1H-8720	602
1J-5929	44
1J-9671	27
	80
	128
	662
	664
1K-6870	138
1K-6872	525
	730
	734
1L-0509	296
1L-4349	622
1L-4775	559
	560
	569
1L-5072	622
1L-6931	734
1L-7388	580
1L-9048	148
1M-1230	773
	774
1M-3003	234
1M-3780	300
1M-4095	304
1M-6119	206
	207
	212
	218
	219
1M-6120	206
	212
	218
	219
1M-6718	705
1N-3887	110
	118
1N-5999	570
	572
1P-0436	128
1P-0604	254
	258
1P-2378	811
	813
1P-2636	284
	294
1P-2662	284
	294
1P-2807	886
1P-4577	296
1P-6872	616
1P-7009	200
1P-7115	536
	538
1P-7521	234
1R-0719	296
1R-0722	622
1R-0739	60
1R-0751	130
1R-0753	130
1S-0994	586
	590
	594
	598
	604
1S-2342	196
	200
1S-2563	63
1S-3184	284
	294
1S-4244	496
	500
1S-7057	65
1S-7251	183
	206
	207
	212
	213
	218
	219

► PRIMARY REFERENCE

PART NUMBER INDEX

Part	Page
1S-7252	183
	206
	207
	212
	213
	218
	219
1S-9593	141
	322
	326
	334
	335
	336
	706
1T-0738	278
	280
	338
	340
1T-1068	108
1U-3202	739
1U-3998	570
	572
1U-8698	482
	486
1U-8846	15
	16
	17
	36
	53
	236
	248
1V-6341	103
1W-0289	73
1W-0565	106
1W-2713	25
1W-2715	26
1W-3306	824
	826
1W-4476	89
1W-4795	97
	98
1W-6084	322
	330
1W-8407	21
	22
1W-8793	508
	510

2

Part	Page
2A-1538	556
2A-3211	702
	703
	704
2A-3398	494
2A-6801	497
	501
	520
2A-6908	754
2A-6926	876
	878
2A-6928	876
	878
2A-6929	876
	878
2A-6938	306
2A-6941	78
2A-6985	▶818
	837
	840
2A-7081	586
	598
2A-7184	754
2A-7304	82
2A-7326	508
2A-7327	417
	418
2B-0941	585
	586
	587
	590
	598
2B-0947	288
2B-2006	518
2B-2673	719
	720
2B-3147	306
2B-3148	306
2B-7410	576
	580
2B-8343	102
2B-9373	300
2D-2285	87
2D-2507	405
	406
	407
2D-2508	405
	406
	407
	408
	409
	410
	411
	412
	413
	414
	415
	416
	417
	418
	419
	420
	421
	422
	423
	424
	425
	426
	427
	428
	429
	430
	431
	432
	433
	434
	435
	436
	437
	438
	439
	440
	441
	442
	443
	444
	445
	446
	448
	449
	450
	451
	452
	453
	454
	455
	456
	457
	458
	459
	460
	461
	462
	463
	464
	465
	466
	467
	472
	473
	474
	475
	478
	479
	480
2D-2509	405
	406
	407
	408
	409
	410
	411
	412
	413
	414
	415
	416
	417
	418
	419
	420
	421
	422
	423
	424
	425
	426
	427
	428
	429
	430
	431
	432
	433
	434

▶ PRIMARY REFERENCE

PART NUMBER INDEX

Part	Page	Part	Page	Part	Page	Part	Page
	435		420	2G-5745	473	2G-6747	636
	436		422		476		638
	437		424	2G-6157	518		640
	438		426	2G-6285	541		642
	439		428	2G-6336	526		644
	440		430	2G-6396	292	2G-6748	628
	441		432	2G-6595	406		630
	442		434		408		632
	443		436		412		634
	444		437		413		636
	445		438		414		638
	446		439		416		640
	447		472		418		642
	448		473		420		644
	449		478		422		646
	450	2D-2654	472		424		648
	451		473		426	2G-6749	630
	452		476		428		636
	453	2D-4202	622		430		638
	454	2D-6006	541		432		640
	455	2D-6235	334		434		642
	456		706		436		644
	457		773		437		646
	458		774		438		648
	459	2D-6642	49		439	2G-6751	628
	460		55		440		630
	461		284		441		632
	462		288		442		634
	463	2D-7325	531		443		636
	464	2D-8009	300		444		638
	465	2D-8154	576		445		640
	466		580		446		642
	467	2D-8652	564		447		644
	472	2D-8822	494		448		646
	473	2D-9454	284		449		648
	474		294		450	2G-6752	628
	475	2F-8057	523		451		630
	478		557		452		632
	479	2G-0478	576		453		634
	480	2G-0585	▶253		454		636
2D-2511	405		298		455		638
	407	2G-0617	164		456		640
	409	2G-0988	164		457		642
	410	2G-1034	536		458		644
	411		538		459		646
	415	2G-1084	288		460		648
	417	2G-3219	717		461	2G-6753	632
	419		720		462		636
	421	2G-3221	717		463		640
	423		720		464		646
	425	2G-3865	482		465	2G-6754	640
	427		486		466		644
	429	2G-3967	553		467	2G-6755	628
	431	2G-4011	518		473		630
	433	2G-4332	736		478		632
	435	2G-5369	526		479		634
	474	2G-5493	586		480		636
	475		590	2G-6664	783		638
2D-2565	406		594		784		640
	408		598	2G-6695	576		642
	412	2G-5667	482		580		644
	413		486	2G-6740	634		646
	414		558		638		648
	416	2G-5673	482		644	2G-6756	628
	418		486		648		630

▶ **PRIMARY REFERENCE**

PART NUMBER INDEX

Part	Page	Part	Page	Part	Page	Part	Page
	632	2G-8741	482	2J-7761	622		234
	634		486	2J-8163	482		236
	636	2G-8742	482		486		242
	638		486	2K-0419	717		248
	640	2G-8767	796		719		296
	642		800		720		306
	644	2G-8768	482	2K-2773	102		586
	646		486	2K-2882	102		594
	648	2G-8777	482	2K-4233	730		598
2G-6757	628		486	2K-4821	144		662
	630	2G-9098	551		148		664
	632		552		150	2N-2138	284
	634		554	2K-4973	622		294
	636	2G-9103	551		730		526
	638		552		734	2N-2139	526
	640		554		742	2N-9421	103
	642	2G-9789	306		854	2P-0698	126
	644	2G-9791	306		856	2P-1279	701
	646	2H-1507	207	2K-5109	284		702
	648	2H-3429	180		294		703
2G-6788	722	2H-3740	482	2K-5830	754		704
2G-6793	722		486	2K-6061	854	2P-1294	35
2G-6794	722	2H-3746	736		856	2P-2537	60
2G-7097	816	2H-3764	722	2K-7471	736	2P-2717	66
	818	2H-3786	557	2K-7979	754		67
2G-7098	816	2H-3920	150	2K-8199	666		299
	818		164		668	2P-4339	745
2G-7309	736		188		670		781
2G-7387	483		880		672	2P-8540	733
	487		881		674	2R-0694	541
2G-7388	483	2H-3922	184		676	2R-0719	541
	487		826		678	2R-0724	541
2G-7728	736	2H-3928	621		680	2R-1922	826
2G-8096	232	2H-3931	608		682	2S-1382	102
2G-8233	726		609		684	2S-2923	6
2G-8241	811	2H-3940	536		686	2S-3029	237
	813		538		688		242
2G-8242	811	2H-4145	567	2L-0273	218		248
	813		574	2L-3331	531	2S-4078	602
2G-8572	754	2H-5001	284	2L-5893	742		662
	796	2H-6489	237	2L-7693	102		664
	800		242	2L-8509	32	2S-5100	622
	811		248	2M-0849	551	2S-7316	110
	813	2H-6490	304		552		118
2G-8573	754	2H-9091	536		726	2S-8439	291
	796		538	2M-1908	530	2S-9255	226
	800	2H-9247	576	2M-4009	497		228
	811		580		501	2T-2173	128
	813	2H-9889	586		824	2T-2429	296
2G-8609	558		590		826	2V-0099	745
2G-8615	482		594	2M-4453	81		781
	486		598	2M-5685	292	2V-4387	172
2G-8624	482	2J-0157	236	2M-6471	23	2V-7859	103
	486		242		24	2V-8259	226
2G-8626	482		248		27		228
	486	2J-3505	482	2M-9346	196		230
2G-8631	482		486	2M-9780	23	2W-0027	47
	486	2J-3506	576		24	2W-0712	80
	574		580		40	2W-2605	128
2G-8633	482		736		60	2W-6544	16
	486	2J-6089	702		72	2W-6546	15
2G-8641	752		703		111	2W-7211	23
	816		704		119		24
	818	2J-6274	234		122	2W-7212	76
	842	2J-6356	291		124	2W-7213	23

► **PRIMARY REFERENCE**

PART NUMBER INDEX

Part	Page
	24
2W-7381	48
2W-7566	34
2W-8077	69
	71
2W-8078	69
	71
2W-8079	69
	71
2W-8085	69
	71
2W-8087	71
2W-8090	71
2W-8091	71
2W-8143	506
2W-8147	20
2W-8476	34
2W-9128	47
2W-9162	56
2W-9746	3
	4
	▶21
	▶22
2Y-3209	809
2Y-5755	626
2Y-5829	49
2Y-9255	38
	42
3	
3B-4505	8
	10
3B-4508	717
3B-4607	102
	541
	754
3B-4610	541
3B-4615	496
	500
3B-4618	482
	486
	557
3B-4628	586
	598
3B-4632	739
3B-4647	556
3B-4897	550
3B-5320	719
	720
3B-5329	553
3B-6552	38
	42
	60
	90
3B-6769	522
3B-7721	531
3B-7732	296
3B-7733	522
3B-7740	512
3B-8485	551
	552
	554
3B-8488	482
3B-8489	482
3B-8822	528
3B-8921	262
	266
3C-1884	815
3D-2824	23
	24
	38
	42
	53
	60
	76
	80
	81
	85
	291
	296
	602
	622
	706
3D-4004	270
3D-4245	322
	326
	330
3D-4904	736
3D-6509	288
3D-8747	773
	774
3D-8748	773
	774
3D-8749	773
	774
3D-8752	773
	774
3D-8884	528
3D-8913	530
	536
	538
3D-9609	102
3E-0109	188
	226
	228
	230
	232
3E-0400	780
3E-3365	141
	274
3E-3368	174
3E-3890	781
3E-4048	818
	842
3E-4302	616
3E-4352	32
3E-4353	130
3E-5239	196
3E-5383	206
	212
3E-5454	144
3E-7279	207
	213
	219
3E-7410	130
3E-7417	616
3E-7420	296
3E-7440	60
3E-7449	42
3E-7852	180
3E-7853	180
3E-7855	180
3E-7857	180
3E-7858	180
3E-7859	180
3E-7860	181
3E-7861	181
3E-8005	278
	280
3E-8006	338
	340
3E-8017	96
	99
3E-8020	776
	824
	826
3E-8320	219
3E-8700	▶174
	218
3E-8763	170
	232
3E-8772	164
	172
3E-8776	176
3E-8782	170
3E-8815	168
	172
3E-8817	226
	228
	230
3E-8821	770
	771
	772
3E-8825	164
	168
	170
	172
	176
	226
	228
	230
	232
	272
	274
	770
	771
	772
3E-9326	164
3E-9327	226
	228
	230
3E-9330	770
	771
	772
3E-9367	196
	200
3E-9412	55
3E-9413	820
	821
3E-9865	754
3F-0379	180
3F-5108	712
	713
	714
	715
	716
	724
	725
3F-7514	754
3F-9556	628
	630
	632
	634
	636
	638
	640
	642
	644
	646
	648
3G-0361	622
3G-0471	734
3G-0472	728
3G-1701	786
	788
	790
3G-2692	622
3G-3265	796
	800
	804
	842
3G-3458	614
3G-3498	622
3G-3726	695
	696
	700
3G-6659	522
3G-6891	614
3G-6906	614
3G-6907	614
3G-8997	614
3H-0107	621
3H-2900	226
	228
	230
	516
	780
3H-5552	23
	24
3J-1907	60
	65
	76
	106
	128
	130
	192
	196
	200
	218
	236
	242
	248
	272

▶ PRIMARY REFERENCE

PART NUMBER INDEX

Part	Page	Part	Page	Part	Page	Part	Page
	274		594	3S-2093	164		190
	278		598		172		880
	280		602		176		881
	291		604		188	3T-6774	773
	296		606		190		774
	322		616		196	3T-7059	815
	326		662		200	3T-7068	▶815
	330		664		206		876
	338		666		207		878
	340		668		212		880
	546		670		213		881
	584		672		218		882
	602		674		219	3T-7086	815
	662		676		226	3T-8236	662
	664		678		228		664
	690		680		230	3V-0613	496
	694		682		232		500
	695		684		514	3V-3816	866
	696		686		516	3V-4694	188
	700		688		530		230
	701		692		590	3W-4871	754
	702		697		745	3W-7254	730
	703		808		780	3Y-2806	754
	704	3K-0986	303		790	3Y-7829	530
	705	3K-2527	719		864		
3J-5390	526	3K-2889	523		868	**4**	
3J-5696	742	3K-3257	183	3S-2173	236		
3J-6956	338	3K-6060	207	3S-2713	102	4B-1280	232
	340		213		103	4B-2043	144
3J-7354	53		219		531	4B-2049	180
	60		531	3S-6049	206		192
	85		754	3S-6050	206		824
	132	3K-8280	270	3S-7023	562		826
	234	3K-8460	136		563	4B-3388	786
	272	3K-8782	155		566		788
	274		168		567	4B-3604	722
	291		170	3S-8652	291	4B-4158	662
	294		172	3T-0049	494		664
	322		188		838	4B-4274	82
	326		190	3T-0050	196		137
	330		232		531		207
	602		272	3T-0688	291		213
	606		770	3T-0849	110		219
	662		771		118		508
	664		772		134		510
	697		794		618	4B-4276	334
3K-0196	303		880	3T-1887	148	4B-4283	876
3K-0360	23		881	3T-2662	164		878
	24	3K-9520	164	3T-3045	207		880
	38		745		213		881
	42	3N-3252	130		219		882
	76	3P-0337	266	3T-3048	196	4B-4314	755
	80	3P-0887	291		200	4B-5272	744
	94	3P-1156	64		790	4B-5275	783
	128	3P-1461	551	3T-4377	304		784
	132		552	3T-5760	206	4B-5324	232
	176	3P-3547	110		212	4B-9302	40
	236		118		218	4B-9880	327
	242	3P-3839	514	3T-5763	496	4D-0577	530
	248	3P-9498	661		500		531
	306		662	3T-6090	504	4D-0582	530
	549		664	3T-6352	▶144		531
	585	3R-4632	128		146	4D-0623	176
	586	3S-0004	300	3T-6354	144	4D-1138	540
	590	3S-1349	736	3T-6655	188	4D-1322	338

▶ **PRIMARY REFERENCE**

PART NUMBER INDEX

Part	Page
	340
4D-2297	694
	695
	696
	700
	701
	702
	703
	704
4D-2498	102
4D-2560	530
4D-2847	786
4D-3704	292
	482
	486
	558
4D-4064	102
4D-4375	719
	720
4D-4895	102
	270
4D-5292	284
4D-6086	736
4D-6293	494
	506
4D-6432	845
4D-6585	528
4D-6695	338
	340
4D-6716	66
	67
	299
4D-7246	576
4D-7388	62
	864
	866
	868
4D-7733	546
	584
4D-7794	164
	168
	172
	192
	196
	200
	207
	213
	219
	226
	228
	230
	522
	622
	790
	866
4D-8148	494
4D-9376	494
4D-9517	176
4D-9986	106
	666
	668
	670
	672
	674
	676
	678
	680
	682
	684
	686
	688
4E-0645	206
4E-4454	188
4F-3658	724
	725
4F-3714	32
4F-7115	701
4F-7389	296
4F-7390	234
4F-7391	65
4F-7952	301
4F-9503	102
4F-9653	60
	576
	580
4H-0094	322
	330
4H-6147	528
	530
	786
4H-6996	576
	580
4H-9105	234
4J-0520	296
4J-0521	602
4J-0522	296
4J-2506	272
	274
	322
	326
	330
4J-2667	270
4J-3914	531
4J-3915	762
	768
4J-5468	585
	586
	590
	594
	598
	606
4J-5477	128
	132
	602
	606
	662
	664
4J-7533	322
	326
	330
	650
	651
	652
	653
	654
	655
	656
	657
	658
	659
4J-8251	622
4J-8252	622
4J-8524	540
4J-8527	540
4J-8922	102
	103
	270
	531
4J-9224	567
	574
4J-9225	564
	570
	572
4J-9964	621
4K-0367	292
	494
	712
	713
	714
	715
	716
	724
	725
	752
	816
	818
	842
4K-1388	60
	137
	662
	664
4K-1493	621
4K-2039	322
	327
	330
	706
4K-3094	207
	213
	219
4K-4881	477
4K-5122	188
	770
	771
	772
	794
	880
	881
4K-7463	518
4K-8479	514
	516
4K-8603	237
	242
	248
4K-8659	518
4K-8864	128
	192
	196
4K-9097	103
	496
	500
4L-5966	781
4L-6454	74
	78
	82
	102
	103
	164
	172
	196
	200
	206
	212
	218
	219
	270
	496
	500
	504
	506
	514
	516
	520
	530
	531
	590
	606
	744
	754
	786
	788
	864
	901
4L-6459	520
	640
	644
4L-9337	296
4L-9564	56
4L-9822	292
4M-0061	176
	774
4M-0200	780
4M-1751	323
	326
	330
4M-1827	180
4M-1828	180
4M-1831	180
4M-2381	326
4M-5281	103
	200
	514
	516
	792
4M-6107	254
	258

▶ **PRIMARY REFERENCE**

PART NUMBER INDEX

Part	Page
4M-6108	237
	242
	248
4M-6109	242
	248
4M-6425	103
	531
4M-6921	622
4M-6953	472
	473
	474
4M-8973	530
4N-6404	110
	118
4N-6406	110
	118
4N-6407	110
	118
4N-9170	236
4P-0737	110
	118
4P-2102	3
	4
	▶29
4P-2457	21
	22
4P-2590	27
4P-2685	76
4P-3537	110
	118
4P-3538	106
4P-3539	110
	118
4P-3953	106
4P-3966	10
4P-3977	10
4P-4224	106
4P-4231	110
	118
4P-4372	3
	4
	▶55
4P-4455	90
4P-4456	90
4P-5605	114
	116
4P-5612	106
4P-6379	886
4P-6493	116
4P-7301	132
4P-7351	111
	119
4P-7591	3
	4
	▶132
4P-7738	55
4P-7790	49
4P-8253	106
4P-8263	▶26
	27
4P-8264	3
	4
	▶27
4P-8577	55
4P-8681	886
4P-8861	60
4P-8946	118
4P-8947	110
	118
4P-8948	110
	118
4P-9128	60
4P-9306	8
4P-9489	106
4P-9490	106
4P-9491	106
4P-9492	106
4P-9493	106
4P-9494	106
4P-9936	56
4R-9999	51
4S-4455	606
4S-5838	234
4S-5879	278
	280
4S-7529	528
4S-7558	530
4S-7606	528
4T-1700	697
4T-1860	662
	664
	▶705
4T-4509	697
4T-4935	662
	664
	▶692
4T-4942	692
4T-5070	705
4T-5071	705
4T-5074	697
4T-5613	562
	563
	566
	567
	574
4T-6780	564
4T-6907	559
	560
	568
	569
4T-7571	692
4T-8054	567
	608
	609
4T-8691	122
	124
4V-4770	38
	42
4V-7890	742
4V-7891	742
4V-9804	525
4V-9809	525
4V-9810	525
4W-0250	80
4W-0251	80
4W-0253	80
4W-0549	76
4W-1203	30
4W-1204	30
4W-1413	883
4W-1682	37
4W-1683	37
4W-2042	30
4W-2172	3
	4
	▶19
4W-2195	3
	▶68
4W-2197	3
	4
	▶20
4W-2232	64
4W-2515	3
	4
	▶37
4W-3462	3
	4
	▶15
4W-3480	3
	4
	▶94
4W-5428	3
	4
	▶32
4W-5429	3
	4
	▶48
4W-6620	3
	4
	▶76
4W-7592	80
4W-8661	94
4W-9972	192
5A-3604	30
5B-0577	736
5B-0841	288
	294
5B-1866	102
5B-6172	742
	846
	848
5B-9318	666
	668
	670
	672
	674
	676
	678
	680
	682
	684
	686
	688
5C-2874	110
	118
	148
5C-2890	207
	213
	219
	780
	824
	826
5C-6565	524
5C-7261	168
	170
	172
5C-7423	103
	876
	878
5C-8312	188
	190
	754
5C-9553	108
	226
	228
	815
	844
5D-0269	824
	826
5D-0353	290
	292
	482
	486
	622
5D-0398	719
5D-0399	719
5D-0768	541
5D-1026	74
	78
	296
	780
	808
5D-1260	272
	274
5D-1911	622
5D-2643	722
5D-2645	586
	590
	598
	606
5D-3636	541
5D-4382	528
	▶540
5D-4988	590
5D-5206	719
5D-6644	720
5D-6952	523
5D-6993	783
	784
5D-6994	783
	784
5D-6996	783
	784
5D-6997	783
	784
5D-6998	▶783
	786
5D-7778	540
5D-7780	540
5D-8159	736
5D-8161	736
5D-9553	712
	714
5D-9554	713
	715

5

▶ PRIMARY REFERENCE

PART NUMBER INDEX

Part	Page	Part	Page	Part	Page	Part	Page
	716	5K-1459	736		522		482
5D-9629	508	5K-2408	528		530		486
	510		786		604		496
	838		788		732		500
5D-9844	284	5K-2595	284		742		504
	294		294		762		506
5F-0149	726	5K-5068	90		768		508
5F-5434	6	5K-5129	482		808		510
	12		486		864		514
5F-7054	130		576		868		516
5F-8000	302		580	5M-6200	236		520
5F-9144	322	5K-5288	486		242		524
	326	5K-5552	553		248		530
	330	5K-7577	826	5M-6213	236		598
	614	5K-8454	576		242		624
5F-9657	60		580		248		628
5G-8760	730	5K-9090	60		528		630
	734		602		530		632
5H-0255	780	5K-9107	622	5M-6214	90		634
	860	5K-9238	530	5M-6687	206		636
5H-3593	627	5L-1100	614		212		638
5H-4778	528	5L-2030	284		218		640
	530		294	5M-8500	103		642
	786	5L-2031	284		754		644
	788		294	5M-8537	40		646
5H-4909	576	5L-2952	57	5M-9695	871		648
	580		58		872		732
5H-6005	622	5L-4507	207	5N-8780	29		754
5H-8848	564		213	5P-0537	19		762
	570		219		322		768
	572	5L-4758	111		326		780
5H-8985	254		119		330		781
	258	5L-7200	164		773		792
	262	5M-1932	494		774		811
	266	5M-2057	662		815		813
5H-9394	30		664	5P-0597	78		860
5J-0451	530	5M-2894	284	5P-0599	590		901
5J-1036	323		292	5P-0747	183	5P-1076	103
	326		294		206		147
	330		744		207		489
5J-1086	234		854		212		490
	292		856		213		525
5J-1246	621	5M-3062	82		218		628
5J-3658	531		102		219		630
5J-7010	564		128	5P-0761	206		632
5J-7013	574		164		212		634
5J-7333	732		168		218		636
5J-8150	564		172	5P-0763	89		638
	570		176	5P-0765	296		640
	572		196	5P-0767	74		642
5J-8175	559		200		78		644
	560		206		530		646
	568		207	5P-0811	796		648
	569		212	5P-1075	73	5P-1174	886
5J-8200	562		218		78	5P-1175	886
	563		219		82	5P-1293	78
	566		226		103	5P-1295	602
	567		228		186	5P-1436	886
	574		230		207	5P-1437	890
5J-8225	608		272		213	5P-1438	892
	609		501		219	5P-1439	894
5J-9602	530		504		236		898
5K-0906	176		506		242	5P-1838	808
5K-0984	518		508		248	5P-2199	706
5K-1458	736		510		270	5P-2230	89

▶ PRIMARY REFERENCE

PART NUMBER INDEX

Part	Page
5P-2424	497
	501
	520
	550
	624
	628
	630
	632
	634
	636
	638
	640
	642
	644
	646
	648
5P-2545	292
	526
5P-2566	512
	516
	550
5P-2675	128
5P-3422	192
5P-3602	796
5P-3863	236
	237
	242
	248
	302
5P-3924	242
	248
5P-3999	886
5P-4000	890
5P-4001	892
5P-4002	894
	898
5P-4077	886
5P-4084	890
5P-4085	892
5P-4086	894
	898
5P-4115	108
	226
	228
	514
	516
	792
	796
	800
	824
	864
	868
	876
	878
	880
	881
	882
5P-4116	29
	38
	40
	42
	296
5P-4143	526
5P-4483	236
	242
	248
5P-4868	78
	602
5P-5454	796
	800
5P-5627	871
	872
5P-5637	745
	755
	781
5P-5639	755
5P-5672	745
5P-5680	828
	830
5P-5768	752
	758
	760
	764
	766
	820
	821
	822
	842
5P-5813	284
	294
5P-5824	796
	800
5P-5923	732
5P-5927	824
	826
5P-5931	586
	590
5P-5969	504
	506
	758
	760
	762
	764
	766
	768
	792
	800
	804
	810
	860
	870
5P-5992	864
	866
	868
5P-6652	512
	722
	732
5P-6851	292
5P-6871	812
5P-6872	813
5P-6882	792
5P-6920	144
5P-6944	128
5P-7162	871
	872
5P-7213	303
5P-7704	103
	270
5P-7803	796
	800
	804
	842
5P-7813	130
5P-7814	136
5P-7957	846
	848
	851
5P-7981	272
	274
5P-7982	272
	274
5P-8167	128
	206
	212
	218
	504
	506
	590
	598
	754
	866
5P-8196	60
	72
5P-8197	886
5P-8198	890
5P-8199	892
5P-8200	894
	898
5P-8244	526
5P-8245	12
	33
	36
	288
	292
	294
	306
	508
	510
	518
	526
	555
	556
	558
	576
	580
	621
	622
	720
	736
	860
5P-8247	23
	24
	148
	150
	284
	288
	292
	294
	720
5P-8248	284
	294
	556
	576
	580
	619
5P-8249	551
	552
	554
5P-8250	736
5P-8291	722
5P-8347	94
5P-8394	164
5P-8439	497
	501
5P-8500	66
	67
	138
	299
	496
	500
	510
	624
	809
	850
	852
	901
5P-8501	776
5P-8502	66
	67
	138
	299
	496
	500
	510
	624
	850
	852
	901
5P-8525	772
5P-8842	482
	486
	558
5P-8843	482
	486
5P-8874	128
5P-8890	482
	486
5P-8998	536
	538
5P-9119	622
5P-9135	745
	780
5P-9299	38
	42
5P-9757	110
	118
5P-9761	896
5P-9909	508
	510
5P-9938	296
5R-4787	612
5S-0003	786
	788
5S-4246	226
	228
	230
5S-4385	300
5S-4578	78

► **PRIMARY REFERENCE**

PART NUMBER INDEX

Part	Page
5S-7349	180
	207
	213
	219
5S-7379	102
	168
	172
	207
	213
	482
	486
	514
	516
	524
	536
	538
	557
	576
	584
	586
	590
	594
	598
	604
	606
	732
	811
	813
5S-7382	44
	186
5S-7383	73
	102
	103
	172
	270
	536
	538
	587
	755
	854
	856
5S-9062	30
5T-0570	▶576
	709
5T-0731	253
5T-0735	253
5T-0906	482
	486
5T-1362	627
5T-1553	206
	212
	218
5T-1958	828
5T-1959	830
5T-1964	828
	830
5T-1967	828
	830
5T-1969	828
5T-1972	828
	830
5T-2925	722
5T-2926	722
5T-2998	758
	760
	764
	766
5T-3093	870
5T-3144	828
5T-3145	830
5T-3146	828
5T-3147	830
5T-4030	786
	788
	790
5T-5295	556
5T-7486	758
	760
	764
	766
5T-8144	298
	▶526
5T-8285	528
	530
5T-8366	717
	720
5T-8367	720
5T-8417	556
5T-9020	506
5T-9313	164
5T-9986	586
5V-5262	744
5V-5790	78
5V-7003	496
	500
	520
5Y-0766	626
5Y-0767	626
5Y-0768	626
5Y-0769	619
	▶626
6A-3591	536
	538
6A-9718	815
6B-0933	628
	630
	632
	634
	636
	638
	640
	642
	644
	646
	648
6B-3260	736
6B-4196	102
6B-4540	226
	228
	230
6B-5072	306
6B-5464	739
6B-6682	6
	12
6B-6684	303
6C-3246	454
	455
6C-3248	445
6C-7366	452
	453
6D-0458	102
6D-1432	528
6D-1641	808
6D-4054	754
6D-4244	74
	196
	200
	232
	586
	590
	594
	598
	606
6D-4246	196
	200
	207
	213
	219
6D-4247	585
	604
6D-4972	102
	128
	192
6D-6489	536
	538
6D-6581	758
	760
	764
	766
6D-7563	724
6D-7564	725
6D-9157	622
6D-9718	788
6D-9855	530
6D-9953	110
	118
6E-1131	562
	563
	566
6E-1549	553
	▶564
6E-1550	564
6E-1554	550
	▶559
6E-1555	559
6E-1634	566
6E-1754	554
	▶566
6E-1835	692
6E-1857	566
6E-1923	662
	664
6E-1924	662
	664
6E-1925	662
	664
6E-1926	602
6E-2169	622
6E-2266	622
6E-2267	622
6E-2269	622
6E-2447	567
6E-2866	▶661
	662
6E-3006	701
	702
	703
6E-3007	666
	668
	670
	672
	674
	676
	678
	680
	682
	684
	686
	688
6E-3013	666
	668
	670
	672
	674
	676
	678
	680
	688
6E-3019	666
	668
	670
	672
	674
	676
	678
	680
	688
6E-3028	654
	658
	▶666
6E-3029	654
	658
	▶668
6E-3030	654
	658
	▶670
6E-3033	682
	684
	688
	▶693
6E-3034	655
	659
	660
	▶672
6E-3035	650
	651
	652
	653
	655
	656
	657
	659
	660
	▶674
6E-3036	651
	655
	656

6

▶ PRIMARY REFERENCE

PART NUMBER INDEX

Part	Page
	657
	659
	660
	▶676
6E-3044	666
	668
	670
	674
6E-3058	676
6E-3136	612
	▶616
6E-4090	559
6E-4223	616
6E-4224	616
6E-4228	690
6E-4230	690
6E-4239	690
6E-4502	666
	668
	670
	672
	674
	676
	678
	680
	682
	684
	686
	688
6E-4581	567
6E-4599	672
	678
	680
	688
6E-4702	▶694
	698
6E-4703	662
	664
	▶695
6E-4704	693
	▶696
6E-4724	549
	▶567
6E-4725	567
6E-4828	697
6E-4940	564
6E-4948	559
	560
	568
	569
6E-4974	567
	574
6E-5047	306
6E-5153	666
	668
	670
	672
	674
	676
	678
	680
	682
	684
	686
	688
6E-5200	697
6E-5884	614
6E-5885	614
6E-5887	614
6E-6140	690
6E-6141	690
6E-6142	690
6E-6419	690
6E-6420	690
6E-6571	616
	▶618
6E-6594	616
6E-6596	616
6E-6597	616
6E-6599	616
6E-6600	616
6E-6601	616
6E-6602	616
6E-6603	616
6E-6604	618
6E-6605	618
6F-0253	783
	784
6F-0698	284
	294
6F-2956	292
6F-3930	405
	406
	407
	408
	409
	410
	411
	412
	413
	414
	415
	416
	417
	418
	419
	420
	421
	422
	423
	424
	425
	426
	427
	428
	429
	430
	431
	432
	433
	434
	435
	436
	437
	438
	439
	440
	441
	442
	443
6F-4855	323
	326
	330
6F-6673	108
6F-6992	736
6F-7045	184
6F-7062	23
	24
6G-0417	518
6G-0905	526
6G-1415	530
6G-1528	477
6G-1780	557
6G-1908	576
6G-2395	796
	800
	804
	842
6G-2396	796
	800
	804
	842
6G-2751	796
	800
6G-2914	755
	796
	800
6G-2946	720
6G-2947	719
	720
6G-2949	719
	720
6G-2959	830
6G-4357	627
6G-4358	627
6G-4524	722
6G-4701	284
	294
6G-4702	284
	294
6G-4848	722
6G-5214	804
6G-5442	722
6G-5532	576
6G-5533	576
6G-5534	576
6G-5537	576
6G-5538	576
6G-5539	576
6G-5542	576
6G-5543	576
6G-5544	576
6G-5547	576
6G-5548	576
6G-5978	334
6G-5979	318
	319
	334
	336
6G-5987	773
	774
6G-6122	576
6G-6623	627
6G-7187	555
	558
6G-7213	292
6G-7222	804
6G-8814	754
6G-8831	812
6G-9428	719
6G-9429	719
6H-0211	556
6H-1717	558
	576
	580
	717
	720
6H-7127	102
6H-9691	540
6I-0915	93
6I-0924	49
6I-1099	93
6I-1221	85
6I-1222	3
	4
	▶85
6I-1240	6
	12
6I-1241	55
6I-1418	200
6I-1564	111
	119
6I-2298	3
	4
	▶93
6I-2499	86
6I-2500	86
6I-2556	▶86
	87

▶ PRIMARY REFERENCE

PART NUMBER INDEX

Part	Page
6I-3033	93
6I-3034	93
6I-4466	86
6I-8444	322
	330
6I-8447	322
	330
6I-8641	254
	258
	262
	266
6I-8642	236
	237
6I-8823	338
	340
6I-8911	254
6I-8912	254
	258
	262
	266
6I-9395	338
	340
6J-0488	754
6J-0499	504
	506
6J-1889	270
6J-1972	559
	560
	562
	563
	566
	568
	569
6J-3993	323
	326
6J-5731	559
	560
	562
	563
	566
	568
	569
6J-5733	559
	560
	562
	563
	566
	568
	569
6J-6439	692
6K-0545	736
6K-3273	796
	800
6K-3632	719
6K-4185	518
6K-4186	518
6K-4187	518
6K-4190	518
6K-4191	518
6K-4193	518
6K-6826	530
6K-8179	176
6K-8329	292
6K-9632	866
	868
6L-1650	236
	242
	248
6L-1883	6
	12
6L-1962	628
	630
	632
	634
	636
	638
	640
	642
	644
	646
	648
6L-2479	206
	212
6L-2609	57
	58
6L-3929	76
6L-7751	103
6L-8598	106
6L-8617	84
6M-7939	494
6N-1172	60
6N-1872	144
6N-2011	66
	67
6N-9294	▶146
	147
6N-9995	176
6P-0205	740
	741
	796
	800
	804
6P-3236	745
	780
6P-5442	270
6P-5647	730
6S-7826	614
6S-7827	614
6T-0840	288
6T-2421	549
6T-2770	815
6T-5098	122
	124
6T-5345	781
6T-8115	794
6T-8236	322
	326
	330
6T-8500	334
	706
6V-0249	896
6V-0252	896
6V-0271	896
6V-0292	796
	800
	804
6V-0314	526
6V-0387	10
6V-0395	207
	213
	219
6V-0397	296
6V-0484	128
	278
	280
6V-0852	272
	274
	296
	338
	340
	602
	662
	664
6V-1322	103
6V-1668	780
6V-1720	242
6V-1819	254
	258
	262
	266
6V-1820	130
	236
	242
	248
	282
6V-1889	296
6V-1970	1
	▶809
6V-2202	144
6V-2315	19
6V-2317	16
	17
	32
	60
	130
6V-2480	230
6V-2686	176
6V-2687	514
	516
	746
	810
6V-2773	758
	760
	764
	766
6V-3265	168
	170
	172
6V-3342	786
	788
6V-3507	232
6V-3538	15
	21
	22
6V-3668	234
6V-3821	56
6V-3822	34
	130
6V-3834	616
6V-3918	36
	80
	130
	278
	280
6V-3928	796
	800
	804
	806
	842
6V-3940	14
	15
	16
	21
	22
	64
	65
	76
	237
	242
	248
6V-3964	200
6V-3965	272
	274
	296
	338
	340
	602
	662
	664
6V-4245	531
	826
6V-4248	37
	60
	236
	242
	248
6V-4249	60
	130
6V-4283	207
	213
	219
6V-4369	128
6V-4589	100
6V-4611	886
6V-4612	890
6V-4613	892
6V-4614	894
	898
6V-5100	110
	118
6V-5158	762
	768
6V-5163	762
	768
	796
6V-5164	800
6V-5213	106
	110
6V-5215	16
	32
	60
	69
	71
6V-5217	16
	36
	60
	62
	236
	237

▶ PRIMARY REFERENCE

PART NUMBER INDEX

Part	Page
	242
	248
	278
	280
	338
	340
6V-5218	56
	60
	65
	72
	94
	108
6V-5219	60
	69
	71
	85
	302
6V-5223	55
	94
6V-5230	76
	662
	664
6V-5556	697
6V-5586	705
6V-5651	780
	808
6V-5683	101
6V-5696	12
	54
	602
6V-5698	824
	826
6V-5815	68
	70
6V-5839	37
	60
	68
	70
	130
	183
	234
	236
	622
6V-5842	35
	234
6V-5843	34
6V-5845	564
	570
	572
6V-5849	880
6V-5853	876
	878
	881
	882
6V-6209	815
6V-6213	815
6V-6214	815
6V-6219	815
6V-6317	60
	130
6V-6467	868
6V-6563	624
6V-6703	152
6V-6888	815
	876
	878
6V-6889	815
	876
	878
6V-6893	206
	212
	218
6V-6923	139
6V-7529	60
6V-7535	38
6V-7636	758
	760
	764
	766
6V-7692	548
6V-7699	110
	118
6V-7726	780
6V-7744	87
	812
6V-7981	236
	242
	248
6V-8004	30
	616
6V-8082	292
6V-8133	559
	560
	568
6V-8178	54
6V-8182	726
6V-8183	270
	694
	754
6V-8185	103
	150
	207
	213
	219
	232
6V-8186	102
	628
	630
	632
	634
	636
	638
	640
	642
	644
	646
	648
6V-8187	103
	144
	270
6V-8188	82
	180
	207
	213
	219
	497
	501
	516
	520
	624
	628
	630
	632
	634
	636
	638
	640
	642
	644
	646
	648
6V-8189	102
	103
	111
	119
	128
	176
	496
	500
	531
6V-8212	236
	242
	248
6V-8214	616
6V-8237	559
	560
	568
6V-8255	870
6V-8257	880
6V-8258	876
	881
6V-8259	878
	882
6V-8336	36
	54
6V-8337	616
6V-8362	185
	780
6V-8365	207
	213
	219
6V-8369	188
	880
	881
6V-8373	232
6V-8376	164
	232
6V-8377	137
6V-8378	137
	196
6V-8397	65
	128
	130
	132
	546
	549
	584
	585
	586
	587
	590
	594
	598
	604
6V-8398	38
	42
	586
	590
	594
	598
	602
	606
	662
	664
6V-8624	586
	594
	598
6V-8625	586
	590
	594
	598
	602
	606
6V-8626	40
6V-8627	128
	602
6V-8628	606
6V-8634	585
	586
	590
	594
	598
6V-8636	128
	130
	546
	584
6V-8637	602
6V-8639	586
	594
	598
	606
6V-8640	296
6V-8647	132
	602
	606
	662
	664
6V-8716	296
6V-8723	128
	132
	585
	586
	590
	604
6V-8724	65
	128
	130
	546
	584
6V-8765	612
6V-8801	82
	102
	103
	164
	168
	172
	196
	200
	206
	207

▶ **PRIMARY REFERENCE**

PART NUMBER INDEX

Part	Page
	212
	213
	218
	219
	270
	272
	497
	501
	530
	536
	538
	586
	590
	594
	598
	606
	624
	781
	786
	790
	860
	864
6V-8831	896
6V-8918	8
	102
6V-8928	796
	800
6V-8980	549
	604
6V-9001	546
6V-9004	602
6V-9007	602
6V-9168	549
	604
6V-9632	188
	276
	514
	516
	752
	754
	758
	760
	764
	766
	780
	792
	797
	801
	804
	824
	826
	838
	842
	844
	860
6V-9746	296
	602
	606
6V-9748	30
6V-9835	602
6V-9836	590
6V-9837	606
6V-9851	606
6V-9875	602
6V-9876	549
	586
	587
	590
	594
	598
6W-0108	742
6W-0111	742
6W-0590	742
6W-1496	744
6W-1497	744
6W-1885	742
6W-1888	744
6W-1890	846
	848
6W-1895	846
	848
6W-2371	744
6W-2373	846
	848
6W-3309	846
	848
	851
6W-3628	744
	854
	856
6W-5698	864
	868
6W-5740	846
	848
6W-5757	846
	848
	851
6W-9693	846
	848
6Y-0590	304
6Y-0591	304
6Y-0976	258
6Y-0982	262
6Y-1000	262
6Y-1007	248
6Y-1114	254
	258
	262
	266
6Y-1115	254
	258
	262
	266
6Y-1116	254
6Y-1119	254
	258
6Y-1864	266
6Y-1870	304
6Y-1878	262
6Y-1885	254
6Y-1887	258
	262
	266
6Y-1890	266
6Y-1891	258
	262
6Y-1895	258
	262
6Y-2299	258
6Y-2300	▶304
	314
	315
	316
6Y-2301	▶254
	314
	315
	316
6Y-2302	▶258
	314
	315
	316
6Y-2303	▶262
	314
	315
	316
6Y-2307	258
6Y-2312	262
	266
6Y-2419	262
6Y-2424	258
6Y-2425	262
	266
6Y-2428	266
6Y-2429	266
6Y-2430	266
6Y-2466	322
	330
6Y-2584	338
	340
6Y-2932	610
6Y-2933	610
6Y-2934	610
6Y-2935	610
6Y-3849	234
6Y-3850	234
6Y-3852	234
6Y-3853	254
6Y-3855	258
6Y-3860	302
6Y-3861	302
6Y-3978	▶282
	298
6Y-4638	322
	326
6Y-4978	338
6Y-5010	300
6Y-5230	736
6Y-5352	234
6Y-5726	248
6Y-5728	236
	242
	248
6Y-7821	▶278
	314
6Y-7822	278
	▶338
6Y-7823	▶322
	338
6Y-7824	▶326
	338
	340
6Y-7915	526
6Y-7953	576
6Y-7955	288
6Y-7981	266
6Y-8237	322
	330
6Y-8285	262
6Y-8764	▶300
	301
6Y-8765	▶301
	314
	315
	316
6Y-9763	237
	242
	248
6Y-9765	248
6Y-9960	44
	7
7B-1598	38
	42
7B-2499	719
7B-3028	322
	326
	330
7B-3235	482
	486
	518
	622
7B-5037	719
	720
7B-7501	38
	42
7B-9323	541
7C-0111	47
7C-0115	47
7C-0358	16
	57
	58
7C-0752	90
7C-0952	62
7C-0989	114
	116
7C-1152	85
7C-1159	56
7C-1160	72
7C-1493	60
	72
7C-1631	28
7C-1770	3
	4
	▶53
7C-1905	5
	▶147
7C-2095	5
	▶75
7C-2096	5
	▶44
7C-2098	5
	▶82
7C-2099	82
	▶84
7C-2177	16
7C-2271	54
7C-2272	28
7C-2273	3
	4

▶ PRIMARY REFERENCE

PART NUMBER INDEX

Part	Page
	▶54
7C-2430	28
7C-2469	3
	4
	▶28
7C-2476	3
	4
	▶65
7C-2743	110
	118
7C-3179	6
	12
7C-3615	85
7C-3693	95
7C-3696	95
7C-3699	90
7C-3700	90
7C-3703	90
7C-3704	90
7C-3705	5
	▶87
7C-3706	5
	▶90
7C-3707	5
	▶95
7C-3760	65
7C-3776	110
	118
7C-3839	108
7C-4028	3
	4
	▶137
7C-4273	26
7C-4354	200
	206
	212
	218
	514
	516
7C-4466	114
	116
7C-4483	110
	118
7C-4983	60
7C-5148	110
	118
7C-5150	110
	118
7C-5232	47
7C-5294	106
7C-5478	6
	12
7C-5480	110
	118
7C-5541	110
	118
7C-5802	97
7C-5883	110
	118
7C-5884	110
	118
7C-5885	110
	118
7C-6078	55
7C-6213	3
	4
	▶92
7C-6214	92
7C-6443	87
7C-6670	97
	98
7C-6671	97
7C-6672	97
	98
7C-6966	20
7C-6967	20
7C-6969	20
7C-6970	20
7C-6976	47
7C-6977	47
7C-7301	4
	▶883
	886
7C-7431	96
	99
7C-7488	60
7C-7489	60
7C-7490	60
7C-7980	20
7C-8365	30
7C-8366	30
7C-8369	30
7C-8370	30
7C-8371	30
7C-8634	30
7C-8854	110
	118
7D-0028	292
7D-1151	504
	506
7D-1195	622
7D-1649	482
	486
	583
7D-2135	736
7D-2136	736
7D-2196	736
7D-3504	580
7D-3898	504
7D-3963	528
7D-4903	536
	538
7D-5252	405
	406
	407
	408
	409
	410
	411
	412
	413
	414
	415
	416
	417
	418
	419
	420
	421
	422
	423
	424
	425
	426
	427
	428
	429
	430
	431
	432
	433
	434
	435
	436
	437
	438
	439
	440
	441
	442
	443
	444
	445
	446
	447
	448
	449
	450
	451
	452
	453
	454
	455
	456
	457
	458
	459
	460
	461
	462
	463
	464
	465
	466
	467
	472
	473
	474
	475
	478
	479
	480
7D-7026	74
	808
7D-7095	717
7D-7419	530
7D-7496	512
7D-8245	736
7D-8347	284
	294
7D-8436	234
7D-8636	482
	486
7D-8637	482
	486
7D-8643	482
	486
7D-8875	726
7D-8876	726
7D-8877	726
7D-8878	726
7D-8879	726
7D-8881	726
7D-8882	726
7D-8883	726
7D-8884	726
7D-8889	726
7D-8891	726
7D-8912	482
	486
	▶523
7D-8983	576
	580
7D-8984	576
	580
7D-9212	270
7D-9267	619
	620
7D-9450	298
	▶308
7D-9600	1
	▶619
	▶620
7E-0156	106
7E-0844	108
7E-2968	23
	24
7E-3217	110
	118
7E-3352	2
	▶3
7E-3456	80
7E-3870	89
7E-3872	3
	▶38
7E-3943	106
7E-3944	106
7E-4891	3
	4
	▶60
7E-5189	130
7E-5190	130
7E-5196	65
7E-5346	128
7E-5385	3
	4
	▶33
7E-5386	33
7E-5536	69
7E-5786	47
7E-5984	55
7E-6302	3
	4
	▶64
7E-6427	64
7E-6476	60
7E-6477	60
7E-6794	55
7E-7251	38
7E-7252	5

▶ PRIMARY REFERENCE

PART NUMBER INDEX

Part	Page
	▶40
7E-7374	3
	▶6
7E-7398	▶80
	81
7E-7399	3
	4
	▶81
7E-7589	50
7E-7590	3
	▶50
7E-7779	26
7E-8794	▶106
	110
	118
7E-8923	10
7E-8925	10
7E-8926	10
7E-8928	10
7E-9505	5
	▶89
7E-9506	89
7E-9749	114
	116
7E-9817	72
7E-9898	106
7F-0192	87
7F-0482	717
7F-1327	736
7F-7621	144
7F-8267	81
	614
7F-8268	301
7F-9311	536
	538
7G-0437	234
7G-1060	207
	213
	219
7G-4326	864
7G-4822	254
	258
	262
	266
7G-4824	781
	796
	800
	860
7G-5453	323
	326
	330
7G-7053	226
	228
	230
7G-7919	514
	516
7H-1447	622
7H-2423	570
	572
7H-2444	726
7H-3641	102
	103
	628
	630
	632
	634
	636
	638
	640
	642
	644
	646
	648
7I-4610	1
	▶522
7I-4616	508
7I-4696	786
	788
	790
7I-4697	786
	788
	790
7I-4698	786
	788
	790
7I-4699	786
	788
	790
7I-4700	548
7I-4713	82
7I-4717	186
7I-4718	1
	▶548
7I-4749	624
7I-4750	624
7I-4881	82
7I-4890	755
7I-4949	497
	501
7I-4959	496
	500
7I-4960	496
	500
7I-4963	496
	500
7I-4965	496
	500
7I-4973	496
7I-4977	496
	520
7I-4979	496
	500
7I-4981	496
	500
7I-4982	496
	500
7I-4983	496
	500
	520
7I-4995	496
	500
	520
7I-5045	▶514
	751
	834
7I-5405	606
7I-5418	128
7J-0204	570
	572
7J-0637	103
7J-5311	886
7J-6729	272
	274
7J-6839	614
7J-8009	614
7J-8611	290
	531
7J-9108	40
	706
7J-9885	567
	574
7J-9933	666
	668
	670
	672
	674
	676
	678
	680
	682
	684
	686
	688
	692
7K-1181	196
	200
	219
	602
	606
7K-2135	102
	270
7K-4474	876
	878
7K-6128	550
7K-9201	550
7K-9202	555
	729
7K-9203	549
	726
	728
7L-0811	206
	212
	218
7L-2894	180
7L-3386	110
	118
7L-6363	734
7L-8316	773
	774
7L-9061	616
7M-0706	276
7M-1674	90
7M-2360	576
	580
7M-2697	103
7M-3361	226
	228
7M-5130	49
7M-7410	530
	531
7M-8485	236
	242
	248
	270
	322
	326
	327
	330
7N-0296	176
7N-0718	▶184
	207
	213
	219
7N-2059	176
7N-2171	111
	119
7N-2867	188
	770
	771
	772
	880
	881
7N-5274	206
	212
	218
7N-5683	21
	22
7N-5876	226
	228
	230
	824
	826
7N-7122	144
7N-7779	142
	162
	163
	176
	188
	192
	196
	200
	206
	218
	236
	242
	278
	280
	322
	326
	334
	335
	336
	706
	773
	774
	780
	814
	815
	862
	876
	878
7N-7780	142
	162
	163
	176
	188
	192
	196
	200
	206

▶ PRIMARY REFERENCE

PART NUMBER INDEX

Part	Page	Part	Page	Part	Page	Part	Page
	218		774		262	7W-9395	16
	236		780		266	7W-9415	47
	237		862	7T-6496	236	7W-9699	16
	242	7N-9738	176		242	7W-9737	34
	278		196		248	7W-9738	34
	280		200	7T-6799	185	7W-9740	34
	322		237	7T-8272	616	7W-9847	3
	326		242	7T-8273	616		4
	334		278	7T-8891	864		▶17
	335		280		866	7W-9930	34
	336	7N-9801	176		868	7X-0288	590
	706	7N-9943	188	7T-9073	272	7X-0289	585
	773	7P-7975	496		▶318		590
	774		500	7T-9074	528		594
	780	7S-0530	60		786		606
	814	7S-4571	284		788	7X-0291	103
	815		294		▶862		186
	862	7S-5005	106	7T-9302	188		270
	876	7S-6340	87		880		734
	878	7S-6745	291		881	7X-0293	730
7N-7781	192	7S-6798	106	7V-0446	102	7X-0296	82
7N-7782	162	7T-0020	188		103	7X-0325	82
	163	7T-0570	323		270	7X-0328	516
	188		326		530	7X-0331	730
7N-7795	144		330	7W-1440	110		734
7N-7796	144	7T-0582	773		118	7X-0334	583
7N-7798	144		774	7W-1691	111		720
7N-7800	144	7T-0816	148		119	7X-0339	147
7N-7801	144	7T-0969	790	7W-2398	65	7X-0342	296
7N-7802	144	7T-1099	276	7W-3773	48	7X-0346	608
7N-7804	144		754	7W-3780	80		609
7N-7805	144		780	7W-3871	16	7X-0351	726
7N-7806	144		838	7W-3872	16	7X-0354	752
7N-7807	144	7T-1961	864		108		816
7N-7808	144		868	7W-3983	49		818
7N-7809	144	7T-2790	150	7W-3989	55		842
7N-7810	144	7T-2791	150	7W-4070	14	7X-0375	44
7N-7811	144	7T-2792	150	7W-4117	49		752
7N-8204	514	7T-2793	150	7W-4137	49		816
	516	7T-2794	150	7W-4313	110		818
	815	7T-2795	150		118		842
	876	7T-2796	150	7W-5095	33	7X-0390	736
	878	7T-2797	150	7W-5324	111	7X-0401	491
7N-8205	196	7T-2798	150		119		493
	200	7T-2799	150	7W-5340	64	7X-0403	730
	206	7T-2800	150	7W-5499	8	7X-0440	200
7N-9021	144	7T-2801	150		10	7X-0447	128
7N-9023	144	7T-2802	150	7W-5561	110		150
7N-9024	144	7T-2803	150		118	7X-0452	720
7N-9720	146	7T-2804	150	7W-5591	110	7X-0490	780
	▶148	7T-2805	150		118	7X-0521	6
7N-9737	142	7T-2816	150	7W-5615	106		12
	176	7T-3269	180	7W-5672	586	7X-0550	496
	196	7T-3270	180		590		500
	218	7T-3451	180		594		520
	236	7T-3454	180		598		720
	322	7T-4003	770	7W-6552	17	7X-0562	178
	326		771	7W-7364	110		180
	334		772		118	7X-0575	186
	335	7T-4515	141	7W-7383	106		901
	336		322	7W-8993	110	7X-0578	536
	514		326		118		538
	516		335	7W-9027	72	7X-0590	82
	706	7T-4897	254	7W-9028	60	7X-0591	745
	773		258	7W-9094	296		860

▶ PRIMARY REFERENCE

PART NUMBER INDEX

Part	Page
7X-0602	624
7X-0608	87
7X-0618	497
	501
	520
7X-0620	148
7X-0818	40
7X-1387	496
	500
7X-1950	180
7X-1952	180
7X-2537	29
	128
7X-2546	650
	651
	652
	653
	654
	655
	656
	657
	658
	659
	660
7X-2553	30
7X-3182	876
	878
	880
	881
	882
7X-3229	886
7X-3373	180
7X-4736	528
7X-4776	662
	664
	706
7X-6315	152
7X-7644	886
7X-7661	828
	830
7X-7700	138
7X-7731	482
	486
7X-7739	846
	848
7X-7816	236
7X-7877	188
	190
	776
	846
	848
	851
7X-7961	33
7Y-5226	828
	830
	870

8

Part	Page
8B-1615	290
8B-8679	38
	40
	42
8C-0620	270
8C-2926	300
8C-3085	705
8C-3091	15
8C-3121	128
8C-3309	602
8C-3312	110
	118
8C-3334	243
	249
8C-3411	562
	563
	566
8C-3425	612
8C-3442	754
8C-3445	60
8C-3446	60
8C-3569	176
8C-3663	137
8C-3756	780
	860
8C-4436	489
	490
8C-4586	780
8C-4984	278
	280
8C-5060	880
8C-5061	110
	118
8C-5337	276
8C-5899	122
	124
8C-6207	▶162
	207
8C-6354	226
	228
	230
8C-6364	106
8C-6738	871
	872
8C-6857	732
8C-6869	130
8C-6872	38
	42
8C-6876	103
8C-6913	736
8C-6965	322
	326
	330
8C-7581	790
8C-8418	883
8C-8422	242
8C-8451	780
8C-8454	762
	768
8C-8545	110
	118
8C-8546	110
	118
8C-8842	726
8C-9122	564
	570
	572
8C-9123	559
	560
	568
	569
8C-9124	562
	563
	566
	567
	574
8C-9131	564
	570
	572
8C-9132	559
	560
	568
	569
8C-9133	562
	563
	566
	567
	574
8C-9587	102
8C-9660	232
8C-9678	188
	190
8C-9987	336
8D-1268	736
8D-1429	745
	780
8D-2429	557
8D-2638	557
8D-2811	482
	486
	557
8D-3508	494
8D-3786	496
	500
	520
	624
8D-3791	504
	506
8D-5467	719
8D-5632	628
	630
	632
	634
	636
	638
	640
	642
	644
	646
	648
8D-5633	628
	630
	632
	634
	636
	638
	640
	642
	644
	646
	648
8D-5634	628
	630
	632
	634
	636
	638
	640
	642
	644
	646
	648
8D-5636	628
	630
	632
	634
	636
	638
8D-5637	628
	630
	632
	634
	636
	638
8D-5640	628
	630
	632
	634
	636
	638
8D-5641	628
	630
	632
	634
	636
	638
	640
	642
	644
	646
	648
	755
8D-5949	720
8D-5996	102
8D-6684	306
8D-6687	553
8D-7225	555
8D-7423	576
	580
8D-7424	576
	580
8D-7425	576
	580
8D-7426	576

▶ PRIMARY REFERENCE

PART NUMBER INDEX

Part	Page	Part	Page	Part	Page	Part	Page
8D-7678	553		714	8F-1974	196	8K-0530	512
8D-7685	549		715		200	8K-1433	207
8D-7960	754		716	8F-3469	254		213
8D-7996	551	8E-5734	258		258		219
	552		262		262	8L-6005	531
8D-8168	726		266		266	8L-7905	755
8D-8621	292	8E-5736	266	8F-4102	553	8M-2770	196
8D-8628	292	8E-5742	254	8F-5340	614		200
8D-8634	292		258	8F-6230	338		206
8D-8639	292		262		340		212
8D-8791	526		266	8F-6437	628		218
8D-8792	526	8E-6140	254		630		226
8D-8794	526		258		632		228
8D-8795	234	8E-6208	739		634	8M-2772	132
	526	8E-6209	739		636		207
8D-8805	526	8E-6570	322		638		213
8D-8807	306		326		640		219
8D-8826	530		330		642	8M-2773	128
8D-8852	628	8E-7107	236		644		192
	630		242		646		196
	632		248		648		200
	634	8E-7713	326	8F-8151	74		207
	646	8E-7714	322		78		213
	648		326	8F-8513	40	8M-3175	662
8D-8879	504		330	8F-9836	276		664
	506	8E-7791	781		494	8M-3837	494
	531		796		722	8M-4295	266
8D-9092	586		800	8G-0452	504	8M-4437	666
	598		860	8G-0871	496		668
8D-9296	729	8E-8319	254		500		670
8D-9688	518		258	8G-0873	496		672
8D-9689	518		262		500		674
8D-9718	288		266	8G-2613	44		676
8D-9738	288	8E-9316	▶266	8H-1728	811		678
8D-9749	288		314	8H-3710	97		680
8D-9756	288		315	8H-4040	736		682
8D-9784	284		316	8H-5303	184		684
	294	8E-9474	338	8H-5306	184		686
8D-9814	550		340	8H-8648	207		688
8D-9815	550	8E-9476	338		213	8M-4438	272
8D-9909	518		340	8J-0112	564		274
8D-9969	103	8E-9478	338	8J-0331	701	8M-4445	72
	270		340	8J-0377	621	8M-4987	60
8D-9973	102	8E-9750	254	8J-0380	621	8M-5860	25
	270		258	8J-0386	621	8M-6176	814
8D-9974	103	8E-9893	326	8J-0484	562	8M-6521	236
	270	8E-9894	322		563		242
8E-1133	236		326		566	8M-7065	8
	242		330		567		10
	248	8E-9895	322		574	8M-7758	796
8E-1143	326		326	8J-2330	621		800
8E-1161	266		330	8J-2331	621	8M-8489	300
8E-1263	254	8E-9896	323	8J-3326	730	8M-8948	745
	258		326	8J-5299	739		777
8E-1368	282		330	8J-5313	734	8M-9024	60
8E-1908	258	8E-9897	326		▶739		130
8E-1909	262	8F-0492	796	8J-6384	562	8N-0869	206
8E-1910	262		800		563		212
8E-1913	266	8F-1434	144	8J-6815	661		218
8E-1914	266		178		662	8N-0984	111
8E-2390	236		180		664		119
	242		192	8J-7844	38	8N-1725	206
	248		196		42		212
8E-5531	712		824		176		218
	713		826	8J-8230	504	8N-2694	90

▶ PRIMARY REFERENCE

PART NUMBER INDEX

Part	Page
8N-4902	87
8N-5763	111
	119
8N-5764	111
	119
8N-6849	29
8N-6854	29
8N-7837	82
	496
	500
8N-8846	84
8P-2813	504
8P-5141	780
8R-2054	848
	851
8R-2057	848
	851
8R-4519	744
	854
	856
8R-9137	38
	42
8R-9762	296
8S-0934	845
8S-4790	744
	854
	856
8S-8158	883
8S-9092	292
8S-9129	236
	242
	248
	302
8S-9130	236
	242
	248
	302
8T-0076	585
	586
	590
	598
8T-0081	128
8T-0100	17
8T-0151	130
8T-0226	35
8T-0269	111
	119
8T-0276	72
	130
8T-0293	23
	24
8T-0328	144
	148
	178
	180
	828
	830
	870
8T-0335	870
8T-0336	576
	580
8T-0337	159
	160
	161
8T-0352	828
	830
	870
8T-0355	302
8T-0372	234
	616
8T-0533	482
	486
8T-0540	482
	486
8T-0639	278
	280
8T-0644	81
8T-0646	602
8T-0667	569
8T-0788	130
8T-1174	755
8T-1296	586
	590
	594
	598
8T-1460	110
	118
8T-1683	549
	590
	604
8T-1687	586
	590
	594
	598
8T-1698	610
8T-2223	28
8T-2275	622
8T-2501	272
	274
	586
8T-2502	66
	528
	530
	586
	598
8T-2561	497
	500
	754
8T-2604	103
8T-2861	526
8T-2901	864
8T-3282	27
	564
	570
	572
8T-3321	886
8T-3426	800
8T-3490	10
	130
	168
	170
	172
	237
	243
	249
	758
	760
	764
	766
	780
	781
	860
8T-3512	890
8T-3513	892
8T-3514	894
	898
8T-3517	896
8T-3597	303
8T-3612	130
8T-3666	48
8T-3957	602
8T-4009	733
	▶884
8T-4121	6
	12
	30
	38
	40
	42
	63
	75
	90
	95
	168
	170
	172
	178
	183
	192
	242
	248
	296
	628
	630
	632
	634
	636
	638
	640
	642
	644
	646
	648
	745
	754
	762
	768
	812
8T-4136	38
	42
	63
	95
	103
	192
	628
	630
	632
	634
	636
	638
	640
	642
	644
	646
	648
8T-4137	38
	42
	168
	170
	172
	236
	242
	248
	758
	760
	764
	766
	812
8T-4138	226
	228
	666
	668
	670
	672
	674
	676
	678
	680
	682
	684
	686
	688
	745
	780
	876
	878
8T-4154	102
8T-4179	303
8T-4181	758
	760
	764
	766
8T-4182	90
	796
	800
	812
8T-4185	30

▶ PRIMARY REFERENCE

PART NUMBER INDEX

Part	Page
8T-4186	75
	650
	651
	654
	655
8T-4189	42
	243
	249
	666
	668
	670
	672
	674
	676
	678
	680
	682
	684
	686
	688
8T-4191	183
8T-4192	303
8T-4195	6
	12
	628
	630
	632
	634
	636
	638
	640
	642
	644
	646
	648
	762
	768
	812
8T-4196	30
	40
	90
	296
8T-4197	38
8T-4199	192
8T-4200	236
8T-4205	103
	128
	144
	180
	196
	200
	206
	207
	212
	213
	218
	219
	232
	706
	745
	780
8T-4222	590
	598
8T-4223	6
	82
	147
	207
	213
	219
	296
	303
	322
	327
	330
	512
	516
	525
	550
	586
	598
	602
	608
	609
	624
	726
	732
8T-4224	30
	57
	58
	90
	95
	102
	103
	128
	168
	170
	172
	176
	192
	270
	496
	500
	531
	666
	668
	670
	672
	674
	676
	678
	680
	682
	684
	686
	688
	858
8T-4226	206
	212
	218
8T-4244	178
8T-4648	6
8T-4750	616
8T-4835	82
	496
	500
	508
	510
8T-4896	44
	74
	82
	102
	103
	128
	164
	168
	172
	176
	196
	200
	206
	207
	212
	218
	219
	226
	228
	230
	270
	272
	274
	290
	296
	504
	506
	508
	510
	514
	516
	522
	528
	530
	536
	538
	546
	557
	576
	584
	585
	586
	590
	594
	598
	604
	606
	622
	786
	788
	790
	808
	818
	842
	864
	866
	868
8T-4908	30
	57
	58
	192
8T-4910	296
8T-4956	602
8T-4971	128
8T-4994	44
	138
	586
	598
	726
8T-5030	27
	300
8T-5039	616
8T-5043	128
8T-5082	606
8T-5360	128
	148
8T-5361	44
	491
	492
	493
	730
8T-5429	38
	42
	602
8T-5435	110
	118
8T-5436	236
	242
	248
8T-5911	504
	506
8T-5912	504
	506
8T-6390	560
8T-6397	570
	572
8T-6430	44
8T-6466	296
8T-6468	306
8T-6675	90
8T-6703	92
8T-6757	12
8T-6764	10
8T-6870	38
	42
8T-6912	90
	95
	168
	170
	172
8T-7004	90
8T-7008	586
	598
	606
8T-7044	93
8T-7060	110
	118
8T-7547	128
8T-7565	846
	848
	851
8T-7804	326
8T-7876	616
8T-7971	524
8T-8442	55
	322
	326
	330
8T-8569	180
8T-8729	141
	274
8T-8730	174
8T-8806	546

► **PRIMARY REFERENCE**

PART NUMBER INDEX

Part	Page
8T-8807	706
8T-8808	546
	609
	▶706
8T-8890	780
8T-8899	296
8T-8908	103
8T-8916	128
8T-8917	147
	496
	500
	520
	608
	609
	732
8T-8919	525
	726
8T-8986	60
8T-8987	662
	664
8T-9006	754
8T-9043	103
	270
	628
	630
	632
	634
	636
	638
	640
	642
	644
	646
	648
8T-9056	530
8T-9101	546
8T-9311	138
8T-9364	206
	212
	218
8T-9367	196
	200
8T-9371	206
	212
8T-9377	546
	598
	624
8T-9378	730
	734
8T-9379	606
8T-9381	744
	845
	854
	856
8T-9389	586
	598
8T-9391	624
8T-9402	85
8T-9471	226
	228
8T-9530	886
8T-9543	85
8T-9655	200
8T-9884	181
8V-3208	851
8V-3273	284
	294
8V-6808	494
8W-0220	590
8W-0302	590
8W-0456	640
	644
8W-0663	736
8W-0681	718
8W-0684	718
8W-0789	526
8W-0934	864
	868
8W-0935	864
	868
8W-1028	828
8W-1029	830
8W-1592	303
8W-1614	530
	536
	538
8W-1749	717
	720
8W-1751	720
8W-1752	717
8W-1753	717
8W-1979	786
	788
	790
8W-2213	725
8W-2214	724
8W-2290	1
	▶557
8W-2307	292
8W-2357	482
	486
8W-2737	1
	▶558
8W-2761	713
	716
8W-2762	715
8W-2767	714
8W-2768	712
8W-2842	551
	552
8W-2913	▶555
	735
8W-3166	602
8W-3330	▶724
8W-3332	▶725
8W-3653	720
8W-3656	720
8W-3686	449
	450
	451
	453
	455
	457
	461
	462
	463
	464
	480
8W-3902	516
8W-4066	720
8W-4067	720
8W-4193	586
	598
8W-4194	586
	598
8W-4342	522
8W-4652	482
	486
8W-4653	482
	486
8W-4740	1
	▶530
8W-4743	1
	▶102
8W-4978	292
8W-4979	292
8W-4980	▶292
	298
8W-4981	292
8W-5092	576
	580
8W-5111	284
8W-5227	583
8W-5229	720
8W-5231	720
8W-5279	284
	294
8W-5293	482
	486
8W-5533	30
8W-5537	30
8W-5575	▶284
	286
8W-5578	288
8W-5586	288
8W-5587	284
	▶288
8W-5589	288
8W-5595	1
	▶276
8W-5597	736
8W-5621	298
	▶303
8W-5651	541
8W-5794	1
	▶74
8W-5820	44
8W-5870	1
	▶524
8W-5894	44
8W-5895	44
8W-5896	44
8W-5897	44
8W-5925	▶290
	298
8W-5927	747
	748
	▶792
	833
	835
8W-5934	1
	▶528
8W-6000	▶491
8W-6061	792
8W-6210	5
	▶78
8W-6215	▶296
	298
8W-6230	▶512
8W-6247	1
	▶504
8W-6252	1
	▶602
8W-6259	1
	▶536
	▶538
8W-6318	1
	▶860
8W-6431	103
8W-6433	103
8W-6466	486
8W-6469	487
8W-6473	482
8W-6476	483
	487
8W-6497	483
	487
8W-6584	546
8W-6626	512
8W-6627	512
8W-6693	78
8W-7030	▶583
	710
	711
8W-7136	206
	212
	218
8W-7346	504
8W-7388	525
8W-7445	778
	▶808
8W-7662	▶168
8W-7915	536
	538
8W-7957	439
8W-8125	526
8W-8286	292
8W-8289	526
8W-8412	512
8W-8496	536
	538
8W-8527	207
	212
	219
	530
	531
	604
8W-8528	207
	213
	219
	272
	274
	528
	530
	536
	538
	546
	584
8W-8532	530
8W-8537	530

▶ PRIMARY REFERENCE

PART NUMBER INDEX

Part	Page	Part	Page	Part	Page	Part	Page
8W-8575	536	8X-1945	▶608		▶811	8X-3965	754
	538		709		837	8X-4066	764
8W-8903	530	8X-1946	▶554		840		766
8W-8909	102		709		842	8X-4075	764
	192	8X-1948	▶551	8X-2810	840	8X-4076	766
	207		▶552		▶876	8X-4154	1
	213		709	8X-2815	837		▶516
	219	8X-2160	754		▶878	8X-4213	504
	270	8X-2161	754	8X-2881	726	8X-4243	758
8W-9002	530	8X-2226	514	8X-2893	754		764
8W-9003	530		792	8X-2899	276	8X-4244	760
8W-9293	298	8X-2228	821	8X-2900	276		766
	▶306		822	8X-2905	276	8X-4245	758
8W-9339	128	8X-2235	724	8X-2910	▶880		760
8W-9466	218	8X-2238	725	8X-2911	▶881		764
8W-9566	472	8X-2245	▶770	8X-2913	514		766
	473		▶771		516	8X-4262	758
	476	8X-2305	284		792		764
8W-9594	477		294	8X-2920	▶772	8X-4263	760
8X-0674	752	8X-2308	284	8X-2947	102		766
	816	8X-2310	288	8X-2948	102	8X-4271	290
	818	8X-2316	284	8X-2952	103	8X-4276	628
	842		294	8X-2953	103		630
8X-1030	1	8X-2330	1	8X-2954	103		632
	▶525		▶754	8X-2955	102		634
8X-1032	525	8X-2336	176	8X-2956	103		636
8X-1135	864	8X-2349	▶732	8X-2968	292		638
	868	8X-2366	732	8X-3121	103		640
8X-1160	440	8X-2369	1	8X-3122	102		642
	441		▶624	8X-3123	102		644
	442	8X-2375	▶820	8X-3124	103		646
	443		840	8X-3125	102		648
	444	8X-2379	1	8X-3200	504	8X-4317	▶758
	445		▶612		506		762
	446	8X-2385	750	8X-3204	292	8X-4318	▶760
	447		▶821	8X-3221	292		762
	448		837	8X-3261	103	8X-4413	750
	452	8X-2400	▶796	8X-3276	292		▶762
	454		840	8X-3364	292		837
	456	8X-2405	▶800	8X-3395	292	8X-4440	538
	458		837	8X-3407	306	8X-4446	764
	459	8X-2481	▶472	8X-3434	482		766
	460		▶473		487	8X-4448	758
	465	8X-2496	102	8X-3435	483		760
	466	8X-2497	270		487		764
	467		530	8X-3436	483		766
	479	8X-2498	270		487	8X-4467	612
8X-1205	288	8X-2499	530	8X-3437	483	8X-4525	▶764
	294	8X-2500	103		487		768
8X-1206	284	8X-2556	876	8X-3593	103	8X-4526	▶766
	294		878	8X-3595	102		768
8X-1805	30	8X-2646	541	8X-3617	306	8X-4527	▶768
8X-1904	754	8X-2650	531	8X-3663	736		840
8X-1907	754		▶541	8X-3749	608	8X-4644	726
8X-1908	754	8X-2651	792		609	8X-4649	726
8X-1910	754	8X-2653	792	8X-3789	754	8X-4650	726
8X-1911	754	8X-2663	876	8X-3798	276	8X-4741	551
8X-1913	754		878	8X-3805	270		552
8X-1914	754	8X-2680	531	8X-3806	758		554
8X-1915	754	8X-2694	722		760	8X-4865	288
8X-1917	754	8X-2765	792	8X-3936	758	8X-4869	288
8X-1921	754	8X-2791	800	8X-3937	760	8X-4879	276
8X-1943	▶553	8X-2795	749	8X-3938	758	8X-4884	726
	707		750		760	8X-5006	303
	708		752	8X-3951	754		▶317

▶ PRIMARY REFERENCE

PART NUMBER INDEX

Part	Page
8X-5021	726
8X-5044	317
8X-5110	726
8X-5121	296
8X-5123	754
8X-5154	164
8X-5155	496
	500
8X-5156	496
	500
8X-5160	528
8X-5280	864
	868
8X-5321	490
8X-5322	490
8X-5330	1
	▶489
8X-5379	520
8X-5414	796
	800
8X-5456	820
8X-5489	200
	207
	213
	219
8X-5492	272
	274
8X-5498	628
	630
	642
8X-5499	632
	634
	636
	638
	640
	644
	646
	648
8X-5534	860
8X-5535	780
	860
8X-5536	780
	860
8X-5538	781
	860
8X-5540	781
	860
8X-5620	303
8X-5680	276
8X-5705	276
8X-5731	624
8X-5732	624
8X-5733	624
8X-5734	622
8X-5735	622
8X-6070	▶585
	735
8X-6075	736
8X-6080	735
	▶736
8X-6131	816
	818
8X-6294	838
8X-6296	164
8X-6419	516
8X-6475	514
	516
8X-6478	514
	516
8X-6496	514
	516
8X-6603	130
8X-6779	754
8X-6998	796
8X-6999	800
8X-7283	296
8X-7317	296
8X-7332	296
8X-7360	536
8X-7487	296
8X-7564	▶546
	709
8X-7600	530
8X-7601	530
8X-7603	530
8X-7665	270
8X-7845	796
	800
	804
8X-7956	722
8X-7972	546
8X-7973	602
8X-7974	602
8X-7975	606
8X-7978	514
	516
8X-8011	707
	711
	▶712
8X-8016	708
	▶713
8X-8055	792
8X-8059	168
8X-8096	276
8X-8103	796
8X-8104	796
8X-8105	800
8X-8106	800
8X-8271	530
8X-8296	78
8X-8299	103
8X-8351	792
8X-8376	292
8X-8406	722
8X-8407	722
8X-8408	722
8X-8409	722
8X-8450	530
8X-8451	530
8X-8505	514
	516
8X-8506	44
8X-8507	44
8X-8729	290
8X-8790	804
8X-8794	44
8X-8916	296
8X-8921	530
8X-8940	748
	833
	835
	▶853
8X-9142	542
	543
	544
	545
	▶604
8X-9227	546
8X-9349	864
	868
8X-9387	786
	788
8X-9405	864
	868
8X-9464	516
8X-9675	833
	835
	▶864
8X-9680	▶866
8Y-3912	▶846
	854
8Y-3913	846
8Y-4005	▶848
	856
8Y-4030	850
8Y-4133	249
8Y-4398	758
	760
	764
	766
8Y-4399	760
	766
8Y-4400	758
	764
8Y-4401	758
	760
	764
	766
8Y-4408	864
8Y-4409	864
8Y-4512	811
8Y-4619	758
	760
	764
	766
8Y-4620	758
	760
	764
	766
8Y-4801	758
	760
	764
	766
8Y-6277	854
	856
8Y-6364	66
	67
	138
	299
	496
	500
	510
	624
	850
	852
	901
8Y-6388	746
	810
8Y-6851	853
	▶854
8Y-6852	852
	▶856
8Y-6981	871
	872
8Y-6982	871
	872
8Y-8606	188
	516
8Y-8608	514
8Y-9603	183
	9
9B-0143	284
	294
9B-1565	724
	725
9B-7233	137
	144
	164
	185
	780
	790
9B-7237	66
	78
	102
	128
	270
	510
	531
	586
	590
	594
	598
	624
	628
	630
	632
	634
	636
	638
	640
	642
	644
	646
	648
	790
9C-1067	602
9C-1587	846
	848
9C-2177	742
9C-2399	602
9C-5324	846
9C-5344	296
9C-5347	742
9C-5928	812
9C-9467	296
9D-0145	102
	270
9D-0178	504

▶ PRIMARY REFERENCE

PART NUMBER INDEX

Part	Page
	506
9D-0565	306
9D-0566	306
9D-0771	531
9D-0953	586
	587
	594
	598
	606
9D-1142	576
	580
9D-1491	576
	580
9D-1530	726
9D-1531	726
9D-1589	752
	816
	818
	842
9D-2549	536
	538
9D-2753	726
9D-3241	526
9D-3242	526
9D-3306	284
	294
9D-3311	504
	506
9D-3523	483
	487
9D-4029	526
9D-4049	▶784
	788
9D-5516	736
9D-5567	504
	506
9D-5568	504
	506
9D-5571	506
9D-5657	504
	506
9D-5659	504
	506
	514
	516
9D-5789	▶309
9D-5791	▶310
9D-5792	▶311
9D-6164	164
	504
	506
	732
9D-6166	504
	506
9D-6168	504
	506
9D-6425	710
	711
	▶717
9D-6521	523
9D-6523	523
9D-6524	523
9D-6584	504
	506
	608
9D-6663	536
	538
9D-7085	526
9D-7924	624
9D-7972	526
9D-8121	541
9D-8285	720
9D-8508	168
9D-9257	504
	506
9D-9797	482
	486
9F-1399	284
	294
9F-2247	6
	292
9F-2978	82
	168
	492
	496
	500
	508
	524
	732
9F-5124	736
9F-5644	184
9F-6445	196
	200
	497
	500
	504
	506
9F-6705	662
	664
9G-0747	232
9G-1950	780
9G-2264	188
	232
	770
	771
	772
9G-2265	188
	190
	196
	200
	226
	228
9G-2991	284
9G-3659	824
	826
9G-3667	514
	516
9G-3668	814
9G-3670	514
	516
9G-3695	176
	206
	514
	516
9G-4352	514
	516
9G-4365	176
9G-4574	146
	▶150
9G-5127	290
9G-5211	482
	486
9G-7132	322
	326
	330
9G-7548	148
9G-7549	148
9G-7551	148
9G-7552	148
9G-7553	148
9G-7554	148
9G-7555	148
9G-7556	148
9G-7558	148
9G-7559	148
9G-7560	148
9G-7561	148
9G-7562	148
9G-7565	148
9G-7566	148
9G-7567	148
9G-7568	148
9G-7641	▶185
	226
	228
	230
9G-8909	206
	212
	218
9G-9150	108
	168
	172
	176
	192
	196
	200
	206
	207
	212
	213
	218
	219
	226
	228
	230
	237
	272
	278
	514
	516
	780
	786
9G-9151	504
	506
	838
9G-9152	192
	196
	200
	207
	213
	219
	514
	516
9G-9153	504
	506
9G-9154	102
	196
	200
	206
	212
	218
	272
	274
	514
	516
	530
9G-9155	494
	504
	860
9G-9813	▶142
	226
	228
	230
9H-1031	722
9H-6454	622
9J-0090	730
9J-0403	666
	668
	670
	672
	674
	676
	678
	680
	682
	684
	686
	688
9J-0404	666
	668
	670
	672
	674
	676
	678
	680
	682
	684
	686
	688
9J-1979	622
9J-1985	622
9J-1988	622
9J-1991	622
9J-2935	614
9J-3047	622
9J-4963	610
9J-5442	614
9J-5498	526
9J-5686	614
9J-8076	614
9J-8783	270
	531
9K-2721	627
9K-3050	494
9K-4068	102
9K-7951	405
	406

▶ PRIMARY REFERENCE

PART NUMBER INDEX

Part	Page	Part	Page	Part	Page	Part	Page
	407		478		786	9R-8870	590
	408		479		788	9S-0174	213
	409		480	9M-1986	291		219
	410	9L-1566	102	9M-2042	237	9S-1240	147
	411		196		242	9S-1302	530
	412		200		248	9S-1322	722
	413		786	9M-2092	482	9S-1354	270
	414	9L-2137	144		486		783
	415	9L-2139	144	9M-2750	103		784
	416	9L-2140	144	9M-2904	62	9S-1366	726
	417	9L-2526	30		296	9S-2437	144
	418	9L-6770	144	9M-4335	234	9S-2544	144
	419		148	9M-4594	186		846
	420		150	9M-4849	65		848
	421	9L-7669	47	9M-5501	808		851
	422	9L-9068	338	9M-5590	754	9S-4180	650
	423		340	9M-5732	82		651
	424	9L-9188	60		508		652
	425		72		510		653
	426	9L-9814	854	9M-7173	38		654
	427		856		42		655
	428	9M-0385	8	9M-7394	622		656
	429	9M-0402	6	9M-7609	180		657
	430		12	9M-8406	196		658
	431	9M-1853	82		206		659
	432		628		207		660
	433		630		212	9S-4181	236
	434		632		218		243
	435		634		219		249
	436		636		226	9S-4182	35
	437		638		228		85
	438		640		230		234
	439		642		538		291
	440		644		780		294
	441		646	9M-8662	826	9S-4183	35
	442		648	9N-0869	56		622
	443	9M-1974	6	9N-1995	796	9S-4185	236
	444		10		800		242
	445		12	9N-3388	144		248
	446		15	9N-3832	47		616
	447		16	9N-4156	300	9S-4189	662
	448		32	9N-4158	300		664
	449		36	9N-4159	300	9S-4190	236
	450		56	9N-4161	300		242
	451		60	9N-4162	300		248
	452		62	9N-4163	300		306
	453		64	9N-4498	326	9S-4191	60
	454		65	9N-4500	326		236
	455		69	9N-6152	234		242
	456		71	9P-0356	317		248
	457		72	9P-2369	864		291
	458		76		868		296
	459		80	9P-7121	138		338
	460		85	9P-9150	278		340
	461		94		280		690
	462		108		338	9S-5517	147
	463		130		340	9S-8001	662
	464		132	9R-1183	586		664
	465		236	9R-1451	622	9S-8002	322
	466		243	9R-2620	230		326
	467		249		797		330
	472		278		801		662
	473		280	9R-2672	838		664
	474		773	9R-3852	168	9S-8003	27
	475		774		172		80

▶ **PRIMARY REFERENCE**

PART NUMBER INDEX

Part	Page
	662
	664
9S-8004	76
	130
	322
	326
	330
9S-8005	23
	24
	76
	80
	94
	236
	242
	248
	666
	668
	670
	672
	674
	676
	678
	680
	682
	684
	686
	688
9S-8006	23
	24
	236
	242
	248
9S-8008	23
	24
	76
	80
	81
	291
9S-8009	662
	664
9T-1633	616
9T-1636	616
9T-1652	616
9T-1699	616
9T-1710	616
9T-1857	690
9T-2186	690
9T-2197	616
9T-2387	570
	572
9T-2388	570
	572
9T-2392	570
9T-2393	557
	▶570
9T-2394	572
9T-2395	557
	▶572
9T-2446	560
9T-2456	564
9T-2457	564
9T-2482	569
9T-2664	568
9T-3727	570
	572
9T-4211	560
	568
	569
9T-4213	568
9T-4215	559
	560
9T-5241	774
9T-5603	621
9T-5604	586
	598
	▶621
9T-5934	662
	664
9T-5935	662
	664
9T-5957	602
	▶662
	▶664
9T-6951	555
	▶568
9T-7750	690
9T-7754	618
9T-7755	618
9T-7756	618
9T-7757	618
9T-7759	618
9T-7761	618
9T-7984	▶622
	624
9T-7985	622
9T-8051	610
9T-8053	610
9T-8054	610
9T-8056	610
9T-8058	610
9T-8059	610
9T-8061	610
9T-8063	610
9T-8065	610
9T-8067	610
9T-8069	610
9T-8070	610
9T-8560	614
9T-8785	550
	▶560
9T-9040	574
9T-9071	610
9T-9072	610
9U-8067	322
	326
	330
9U-8068	322
	326
	330
9U-8069	322
	327
	330
9U-8070	322
	330
9U-8071	330
9U-8072	322
	330
9U-8073	323
9U-8075	322
	330
9U-8613	322
	331
9U-8614	322
	330
9U-8620	322
	326
	330
9U-8668	326
9U-8669	326
9U-8815	254
	258
9U-9282	322
	326
	330
9U-9312	278
9U-9316	322
	326
	330
9U-9324	322
9U-9325	326
9U-9595	326
9U-9693	614
9U-9995	254
9V-0344	497
	501
9V-0450	496
	500
9V-0453	496
	500
9V-3043	742
9V-7437	846
	848
	851
9V-7440	742
	851
9V-7446	854
	856
9V-7447	854
	856
9V-7453	854
	856
9V-7454	854
	856
9V-7458	854
	856
9V-7943	742
9V-8788	851
9V-8789	851
9W-0335	794
9W-0706	318
	▶334
9W-0898	326
9W-1454	236
	237
	242
	248
9W-1835	724
	725
9W-2029	254
	258
9W-2739	322
	326
9W-3459	212
	219
9W-3460	212
	218
9W-4430	234
9W-4431	234
9W-4452	234
9W-4453	234
9W-5128	▶236
	314
9W-5132	▶234
	314
	315
	316
9W-5133	248
9W-5134	▶302
	314
	315
	316
9W-6465	237
	242
	248
9W-6467	266
9W-6582	44
9W-6584	44
9W-6645	482
	576
	580
9W-7038	237
	242
	248
9W-7115	298
	▶314
9W-7209	526
9W-7385	44
9W-7388	44
9W-7410	326
9W-7411	323
	330
9W-7412	322
	326
	330
9W-7784	322
	331
9W-9371	254
	258
9W-9901	254
	258
9W-9905	258
	262
	266
9W-9920	44
9X-0343	773
	774
9X-1046	188
	190
	754
	770
	771
	772
	824
	826
9X-1386	237
	242
9X-1813	174
	218
9X-1878	886
9X-1883	886

▶ PRIMARY REFERENCE

PART NUMBER INDEX

Part	Page
9X-2036	178
9X-2038	776
9X-2040	780
	860
9X-2041	276
	780
	850
	852
	853
	860
9X-2042	188
	276
	754
	758
	760
	764
	766
	868
9X-2043	102
	190
	276
	514
	516
	752
	792
	796
	800
	804
	806
	824
	826
9X-2045	276
	752
	762
	768
	772
	780
	796
	800
	804
	806
	860
	864
	868
9X-2046	796
	800
	811
	813
	864
9X-2126	780
9X-2185	780
9X-2205	138
9X-2305	34
9X-2447	886
9X-2498	155
	200
9X-2537	122
	124
9X-2546	758
	760
	764
	766
9X-2547	110
	118
9X-3064	162
	163
9X-3392	815
	876
	878
9X-3455	159
	160
	161
9X-3463	159
	160
	161
9X-4174	159
9X-4243	159
	160
	161
9X-4244	159
	160
	161
9X-4271	180
9X-4282	814
9X-4284	814
9X-4492	162
9X-4493	163
9X-4609	236
	242
	248
9X-4821	180
9X-4824	181
9X-4825	181
9X-4986	746
9X-5694	270
9X-6001	148
9X-6005	55
9X-6019	871
	872
9X-6258	232
9X-6395	692
	697
9X-6562	900
9X-6624	846
	848
9X-6775	▶159
	168
	170
	172
9X-7169	▶160
	164
9X-7170	▶161
	164
9X-7680	690
9X-7797	161
9X-7798	160
9X-7876	322
	326
9X-8256	103
	207
	213
	219
	226
	228
	740
	741
	758
	760
	762
	764
	766
	768
	796
	800
	804
	824
	826
	844
9X-8257	30
9X-8267	135
9X-8276	854
	856
9X-8277	846
	848
9X-8399	574
9X-8600	138
9X-8606	530
9X-8875	736
9X-8881	720
9X-8883	720
9X-8887	576
	580
9X-8898	719
9X-8902	106
9X-8916	23
	24
9X-9013	780
9X-9363	780
9X-9365	168
	172
9X-9632	168
	172
9X-9638	770
	771
	772
9X-9654	780
9X-9657	770
	772
	▶773
9X-9689	773
	774
9Y-0054	3
	4
	▶35
9Y-0081	63
9Y-1224	3
	4
	▶18
9Y-1582	49
9Y-1760	128
9Y-1837	110
	118
9Y-3107	106
9Y-4634	6
9Y-4832	49
9Y-4973	49
9Y-5295	108
9Y-8315	90
	95
9Y-8534	49
9Y-8848	26
9Y-9846	106

0

Part	Page
000-7246	126
002-6453	306
	536
	538
003-2143	78
003-7764	130
003-9514	74
004-5933	536
	538
004-9040	616
005-7898	296
005-8639	570
	572
006-8663	564
	616
008-6904	74
009-0008	103
009-2069	618
009-4184	786
	788
	790
009-4185	786
	788
	790
014-0816	880
	881
027-1287	627
030-0060	292
	482
	486
030-0061	292
	482
	486
030-6121	706
030-8535	284
	292
	294
	755
	818
	842
030-9612	144
031-2666	754
031-4155	774
	858
033-4121	851
033-4843	846
	848
033-5879	122
	124
033-6027	690
033-6032	122
	124
033-6033	139
033-6036	616
	690
033-6783	85
033-8248	207
	213
	219
034-1994	754
034-3557	284
	294

▶ PRIMARY REFERENCE

PART NUMBER INDEX

Part	Page
036-6775	32
036-9821	180
036-9823	180
038-3987	752
	816
	818
	842
039-2281	38
061-7661	206
	212
	218
065-1153	614
086-0507	622
089-7968	854
	856
091-1339	780
091-8488	796
091-9071	786
	788
	790
092-3200	548
095-0888	616
095-1207	322
	327
	330
096-6166	188
	190
	754
098-7467	786
	788
	790
099-0492	780
	804
099-0822	122
	124
099-2374	118
1	
100-3607	75
100-4336	590
100-4390	111
	119
100-4391	114
	116
100-4392	111
	119
100-4393	111
	119
100-4394	111
	119
100-4397	111
	119
100-4915	335
100-4948	21
	▶23
100-5732	111
	119
100-5733	111
	119
100-5736	122
	124
100-5737	111
	119
100-5738	111
	119
100-5739	111
	119
100-5740	111
	119
100-6021	662
	664
	▶697
100-6247	111
	119
100-6267	32
100-6270	72
100-6550	35
100-6762	97
100-6915	▶88
	97
101-0509	650
	651
	652
	653
	654
	655
	656
	657
101-0852	152
101-0892	111
	119
101-1148	666
101-1149	668
101-1151	674
101-1152	678
	680
101-1153	676
101-1154	670
101-1155	672
101-1966	680
101-1968	680
101-1970	666
	668
	670
	684
	686
	688
101-1971	666
	668
	670
	672
	674
	676
	678
	680
	682
	684
101-1973	666
	668
	670
	672
	674
	676
	678
	680
	682
	684
	686
	688
101-1978	666
	668
	670
	672
	674
	676
	678
	680
	682
	684
	686
	688
101-1982	672
	674
	676
	678
	680
	682
101-1983	666
	668
	670
	672
	674
	676
	678
	680
	682
	684
	686
	688
101-1984	666
	668
	670
	672
	674
	676
	678
	680
	688
101-2457	628
	630
	632
	634
	636
	638
	640
	642
	644
	646
	648
101-2458	636
	638
	640
	642
	644
101-2480	666
	668
	670
	672
	674
	676
	678
	680
	682
	684
	686
	688
101-1978	666
	668
	670
	672
	674
	676
	678
	680
	682
	684
	686
	688
101-2850	86
101-3055	796
	800
101-3120	73
101-3207	34
101-3208	34
101-4145	678
	▶698
101-4147	672
	676
	680
	▶699
101-4148	699
	▶700
101-4539	3
	4
	▶36
101-4540	3
	4
	▶34
101-8075	1
	▶482
101-8077	482
101-8161	188
101-8190	168
	170
	172
101-8192	168
	172
101-8193	168
	172
101-8197	164
101-9346	650
	651
	652
	653
	654
	655
	656
	657
	658
	659
	660
101-9520	514
	516
101-9754	322
	327
	330
102-1501	548
	▶614
102-2384	616
102-2385	616
102-2386	616
102-2804	614
102-3645	864
	868

▶ PRIMARY REFERENCE

PART NUMBER INDEX

Part	Page
102-3659	602
102-3981	188
102-4139	583
	720
102-5881	258
	262
	266
102-6238	654
	658
102-7412	666
	668
	670
	672
	674
	676
	678
	680
	682
	684
	686
	688
102-7459	101
102-8385	650
	651
	652
	653
	655
	656
	657
	659
	660
102-8802	141
	274
102-8808	174
102-8813	174
102-9372	752
	821
	822
	842
102-9381	820
102-9383	232
102-9863	180
103-0802	168
103-1031	272
103-1057	168
	170
	172
103-1596	508
	510
103-2529	128
103-4771	818
	842
103-4953	752
	816
	818
	842
103-5304	838
103-5417	524
103-5419	524
103-5515	752
	816
	818
	842
103-5516	752
	816
	818
103-5678	164
103-6263	800
103-9125	482
	486
103-9425	796
104-1956	508
104-2091	826
104-3122	616
	▶690
104-3124	616
104-3947	141
	322
	326
	335
104-4286	602
104-4522	730
104-4523	730
104-5958	871
	872
104-6046	6
	▶8
104-6347	8
104-6387	236
	242
	248
104-7419	628
	630
	632
	634
	636
	638
	640
	642
	644
	646
	648
104-7429	628
	630
	632
	634
	636
	638
	640
	642
	644
	646
	648
104-7740	628
	630
	632
	634
	636
	638
	640
	642
	644
	646
	648
104-7837	188
104-8588	236
104-8589	237
104-8672	628
	▶650
104-8673	630
	▶651
104-9726	504
	506
105-0585	106
105-1695	3
	4
	▶101
105-1725	20
105-1776	49
105-1779	26
105-1805	69
	71
105-2080	583
	720
105-3196	576
	580
	▶610
105-3249	464
	467
105-6491	494
105-8681	276
106-1567	433
	434
106-3658	666
	668
	670
	672
	674
	676
	678
	680
	682
	684
	686
	688
106-3659	666
	668
	670
	672
	674
	676
	678
	680
106-3660	684
106-4787	▶586
	707
	708
106-4835	456
	457
106-4883	1
	▶518
106-5840	780
	860
106-6553	762
	768
106-7128	580
106-7129	580
106-7130	580
106-7131	580
106-7149	180
106-7388	698
	▶701
106-7389	699
	▶702
106-7390	693
	▶703
106-7920	17
106-8557	▶178
	179
106-8558	▶179
	183
106-8559	179
	▶180
106-8704	274
106-9091	886
106-9092	886
106-9188	196
	200
106-9932	276
107-0512	666
107-0513	668
107-0515	670
107-0517	672
107-0518	674
107-0519	676
107-0521	678
107-0522	680
107-0543	652
	656
	659
	▶678
107-0545	653
	657
	660
	▶680
107-3773	5
	▶30
107-4865	864
	868
107-5014	796
	800
	804
107-6813	762
	768
107-7090	226
	228
	745
	780
107-7496	110
107-7497	111
	119
107-7498	110
	118
107-7563	47
107-7602	20
107-7611	36
107-7694	14
107-7708	20
107-7722	▶49
	55
107-7732	3
	4
	▶134
	▶135
107-7733	134
107-7787	47
107-7832	27
107-7872	116
107-8140	590

▶ PRIMARY REFERENCE

PART NUMBER INDEX

Part	Page	Part	Page	Part	Page	Part	Page
107-8141	590	108-5950	758	111-0351	78		▶653
107-8142	590		764	111-0570	122	112-3199	585
107-8143	587	108-5951	760		▶140	112-3200	585
107-8144	586		766	111-0871	206	112-3764	▶2
	598	108-5952	758		212	112-3837	604
107-8147	590		764		218	112-3980	836
107-8148	590	108-5953	758	111-1576	122		842
107-8149	586		760		124	112-4103	▶1
	594		764	111-1587	508		2
	598		766	111-1719	1	112-4105	2
107-8150	586	108-6523	322		▶901		▶709
	590		327	111-2125	109	112-4119	2
	594		330		115		▶298
	598	108-7808	183		▶133	112-4159	612
107-8151	598	108-8014	1	111-3815	122	112-4744	494
107-8374	736		▶508		124	112-4745	298
107-8375	736	108-8101	546	111-4275	5		▶494
107-9572	30	109-0146	871		▶183	112-4834	528
107-9641	758		872	111-5754	702	112-4844	496
	760	109-1144	320		703		500
	764		661	111-6813	122		520
	766	109-1301	122		124	112-5495	620
108-0702	606		124	111-7088	278		▶627
108-0703	606	109-2804	796		280	112-5575	556
108-0708	606		800	111-7092	78		▶569
108-0709	606	109-3953	531	111-7093	78	112-5819	2
108-0710	606	109-4580	288	111-7180	496		▶5
108-0711	606	109-4581	288		500	112-5852	732
108-0714	606	109-4587	111	111-7182	497	112-5853	732
108-1104	▶735		119		501	112-5855	732
108-1606	598	109-6776	734	111-7185	496	112-5952	1
108-1607	590	109-9771	602		500		▶192
108-1608	598	110-2985	▶590	111-7294	497	112-5960	1
108-1609	590		709		501		▶226
108-1610	586	110-3003	590	111-8233	666		▶228
	590	110-3326	530		668		▶230
108-1612	110	110-4652	580		670	112-5974	1
	118	110-4654	580		672		▶232
108-1613	110	110-4655	580		674	112-5978	1
	118	110-4656	▶580		676		▶196
108-2187	666		709		678		▶200
	668	110-5103	141		680	112-5983	1
	670	110-5157	322		682		▶206
	672		330		684		▶212
	674	110-5158	326		686		▶218
	676	110-5161	338		688	112-6080	▶188
	678		340	111-8992	496		750
	680	110-6078	294	111-9120	496		837
	682	110-6096	122	111-9121	496		840
	684		124	111-9321	650	112-6523	100
	686	110-6241	754		651	112-6795	▶628
	688	110-6399	207		652		709
108-3129	326		213		653	112-6799	▶630
108-3519	164		219		656	112-6804	▶632
108-4484	796	110-7006	504		657	112-6818	542
108-4814	690	110-7007	504	111-9632	662		▶634
108-4815	690	110-7618	16		664	112-6871	▶542
108-4816	690	110-7723	254	111-9959	73	112-7462	556
108-5157	697		258	112-1813	712	112-7463	▶556
108-5751	254		262	112-1814	713		707
108-5759	3		266	112-2404	196		708
	4	110-8325	496		200		710
	▶14		500	112-2580	632		711
108-5949	760	110-8385	294		▶652	112-9035	569
	766	111-0343	336	112-2581	634	112-9119	144

▶ PRIMARY REFERENCE

PART NUMBER INDEX

Part	Page
112-9164	102
	792
112-9401	136
112-9442	584
112-9555	746
112-9787	602
112-9813	429
	430
112-9924	415
	416
112-9927	▶312
112-9928	▶313
113-0993	730
113-0994	▶729
	734
113-0995	730
113-0996	734
113-0997	▶728
	734
113-0998	728
113-0999	549
113-1001	▶549
	733
113-1002	▶730
	733
113-1004	730
113-4251	780
	860
113-4254	1
	▶850
113-5335	29
113-5336	29
113-5756	1
	▶520
113-5758	1
	▶490
113-5760	▶496
	▶500
113-6118	69
113-6180	26
113-6250	94
113-7745	237
	243
	249
113-7753	207
	213
	219
113-8218	812
113-8465	98
113-9048	296
113-9306	709
	▶714
113-9307	▶715
113-9418	709
	▶719
113-9419	707
	708
	▶720
113-9432	122
	124
113-9439	111
	119
113-9517	497
	501
	508
	510
	520
113-9859	122
	124
114-2505	232
114-2897	111
	119
114-2899	111
	119
114-5065	111
	119
114-5075	614
114-5132	614
114-5168	614
114-5180	614
114-5190	614
114-5325	614
114-5326	614
114-5332	614
114-5337	614
114-5339	614
114-5342	614
114-5347	614
114-6567	128
114-6635	701
	702
	703
	704
114-8718	134
	135
114-9190	758
	760
	764
	766
114-9267	608
115-0540	608
	609
115-0541	608
	609
115-0629	▶286
115-0631	▶294
	298
115-0634	294
115-0804	▶636
115-0808	543
	▶638
115-0810	▶640
115-0811	▶642
115-0812	544
	▶644
115-1002	▶543
115-1011	▶544
115-1192	110
	118
115-2553	110
	118
115-4068	3
	▶96
115-4074	69
115-4084	3
	4
	▶47
115-4116	69
115-4119	3
	4
	▶46
115-4120	51
115-4123	▶69
	70
115-4138	4
	▶70
115-4144	93
115-4179	3
	4
	▶16
115-4204	32
115-4210	4
	▶51
115-5726	1
	▶550
115-5853	96
	▶97
115-6804	796
	800
	804
	806
115-6805	796
	800
	804
	806
115-6806	821
115-6807	796
	800
115-6908	206
115-6951	3
	4
	▶72
115-7103	192
115-7921	1
	▶492
115-8078	▶594
	709
115-8080	1
	▶606
115-8171	491
	493
115-8173	492
115-8174	492
115-8178	492
115-9840	122
	124
115-9841	1
	▶886
115-9922	796
	800
115-9923	796
	800
116-0023	886
116-0118	186
116-0379	▶718
	735
116-0459	97
116-1327	472
116-1965	▶845
	852
	853
116-2013	742
116-2014	742
116-2015	742
116-2016	742
116-2143	1
	▶824
116-2144	747
	748
	▶826
	837
	840
116-2145	1
	▶790
116-2327	742
116-2779	▶742
	854
	856
116-3211	602
116-4686	814
116-5842	833
	▶837
116-5876	▶833
116-5878	▶834
116-6270	497
116-6271	497
116-6272	497
116-6273	497
116-6276	886
116-6277	886
116-6501	3
	4
	▶62
116-6673	114
116-9359	▶890
116-9360	▶892
116-9361	▶894
116-9363	▶896
116-9937	192
117-0752	901
117-2311	740
	741
117-3163	▶710
117-3165	▶707
117-3171	▶708
117-3302	898
117-3536	▶711
117-3821	900
117-3829	898
117-3855	▶598
	710
	711
117-4089	136
117-4698	▶836
117-5215	824
	826
117-5686	709
	▶722
117-5689	722
117-7114	32
117-9099	111
	119
117-9364	200
	226
	228
117-9571	5
	▶73
118-0274	272
118-0424	296
118-1461	136

▶ PRIMARY REFERENCE

PART NUMBER INDEX

Part	Page
118-2556	▶838
	840
118-2557	820
118-2558	800
118-3421	206
	212
118-4660	614
118-7880	736
118-7881	736
118-8062	296
118-8118	136
118-8119	136
119-1733	155
119-1795	750
119-2921	50
	51
	▶52
119-2924	68
	▶71
119-2940	19
119-2942	65
119-2960	19
119-3036	26
119-3061	25
119-3065	▶25
	26
119-6172	742
119-6194	854
	856
119-8664	551
	▶562
119-8665	562
119-8666	562
	563
119-8960	497
120-6680	562
	566
121-1241	232
121-4480	136
121-7554	98
121-9242	558
	▶574
121-9245	574
121-9381	322
	330
121-9799	98
122-2009	38
	42
122-7045	826
122-8145	826
122-8146	826
122-8147	824
	826
122-8148	824
	826
122-8151	824
	826
122-8152	824
	826
122-8159	824
122-8346	824
122-8677	796
122-8795	796
	800
122-9033	130
123-1076	574
123-1201	754
123-3178	431
	432
123-3419	407
123-3420	405
	407
	409
	410
	411
	415
	417
	419
	421
	423
	425
	427
	429
	431
	433
	435
	474
	475
123-3688	206
	212
	218
123-3689	206
	212
	218
123-3692	206
	212
	218
123-3698	525
123-3699	525
123-3827	510
123-4354	876
	878
123-4355	876
	878
123-4358	▶812
123-4586	812
123-4587	812
123-4618	780
	860
123-4701	780
	860
123-5265	298
	▶474
123-5668	▶786
	▶788
123-5861	272
	274
123-5980	497
	501
123-6304	836
	837
	838
	840
	842
	886
	▶900
123-6374	176
123-6449	186
123-6806	816
	818
124-0360	726
124-0395	814
124-0544	89
124-1429	780
124-1431	780
124-1432	780
124-1433	780
124-1839	688
124-1840	682
	684
	686
124-2883	650
	651
	652
	653
	655
	656
	657
	659
	660
	▶682
124-2884	654
	658
	▶684
	▶686
124-2885	658
	▶688
124-2960	▶777
	778
124-3137	780
124-3240	518
124-3325	628
	630
	632
	634
	636
	638
	642
	646
	648
	▶654
124-3326	640
	644
	▶658
124-3327	642
	▶655
124-3328	636
	640
	▶659
124-3329	638
	644
	▶660
124-3385	682
	686
	688
124-6679	730
124-6691	206
	212
	218
124-8231	709
	▶726
124-8843	762
	768
124-9006	781
124-9007	781
124-9768	734
124-9781	▶733
124-9782	733
	▶734
125-0439	781
125-0542	291
125-3286	▶291
	296
125-4342	747
	748
	▶868
125-4344	749
	750
	▶816
125-4345	749
	750
	▶882
125-4346	750
	▶804
125-4388	804
125-4389	804
125-4530	5
	▶126
125-4644	710
	▶716
125-5321	541
125-5466	98
125-5520	804
125-6482	804
125-6483	804
125-7003	876
	878
125-7004	876
	878
125-8158	110
	118
125-8274	134
	135
125-8846	▶828
	870
125-8847	▶830
	870
125-9352	200
125-9584	804
125-9596	804
125-9662	777
	▶780
125-9757	▶778
125-9853	744
125-9854	▶744
	858
125-9855	▶851
	858
125-9856	850
	▶858
126-0208	828
	830
126-0209	828
	830
126-0210	828
	830
126-0228	828
	830
126-0447	76
126-0453	25

▶ PRIMARY REFERENCE

PART NUMBER INDEX

Part	Page
135-3891	776
135-3894	516
135-3895	776
135-5934	684
135-6367	886
135-6381	890
135-6382	892
135-6383	894
	898
135-6389	896
135-6636	98
135-6806	98
135-9819	12
135-9941	272
	274
136-1678	330
	▶335
136-1892	272
	274
136-3074	3
	4
	▶58
136-3153	207
	213
136-5154	824
136-5160	270
136-6331	606
137-1718	207
	213
137-1722	226
	228
137-4515	628
	630
	632
	634
	636
	638
	640
	642
	644
	646
	648
137-4516	628
	630
	632
	634
	636
	638
	640
	642
	644
	646
	648
137-5114	824
137-5503	844
137-6719	652
	653
	656
	657
	658
	659
	660
137-6720	650
	651
	652
	653
	654
	655
	656
	657
	658
	659
	660
137-6783	797
	800
137-7316	▶172
137-7317	172
137-7318	172
137-8065	797
	800
137-9410	164
138-2759	243
	249
138-3760	510
138-3777	82
138-3779	510
138-3780	510
138-4054	762
	768
138-7026	797
	801
138-7057	1
	▶510
138-7062	510
138-7063	510
138-7064	510
138-7065	740
138-9910	797
	801
139-0071	794
139-0178	794
139-1117	796
139-1118	800
139-1153	741
139-1430	745
139-2120	274
139-3171	746
139-3225	489
139-3226	489
139-3507	740
	741
139-3531	100
139-3593	796
	800
139-4605	844
139-4612	▶844
139-5925	135
139-6128	▶873
139-6129	▶874
139-6815	330
139-8474	686
	▶704
139-9132	871
	872
139-9133	872
139-9134	871
	872
139-9135	871
	872
139-9136	871
	872
139-9137	871
	872
139-9138	871
140-3607	438
140-6147	500
140-6149	500
140-6418	813
140-7377	4
	▶115
140-7386	4
	▶99
140-7720	489
140-8127	▶813
141-0360	437
141-2979	506
141-2980	1
	▶506
141-5445	200
141-5835	752
141-6348	93
141-8605	336
142-0350	336
142-0742	156
	▶740
142-0747	157
	▶741
142-1420	115
	▶116
142-1767	340
142-1814	506
142-5050	118
	▶124
142-5052	116
	▶118
142-5787	609
142-5835	230
142-6100	520
142-6165	405
	406
142-6166	407
	408
142-6167	409
	412
142-6168	410
	413
142-6169	411
	414
142-6170	419
	420
142-6171	421
	422
142-6172	468
	▶475
142-6173	423
	424
142-6174	425
	426
142-6175	427
	428
142-6176	440
142-6177	441
142-6178	442
142-6179	443
142-6180	444
142-6182	446
	449
142-6183	447
	450
142-6184	448
	451
142-6185	458
	461
142-6186	459
	462
142-6187	460
	463
142-6226	406
	408
	412
	413
	414
	416
	418
	420
	422
	424
	426
	428
	430
	432
	434
	436
	437
	438
	439
	▶476
	478
142-6229	449
	450
	451
	453
	455
	457
	461
	462
	463
	464
	▶477
	480
142-6283	374
	▶405
142-6284	375
	▶406
142-6285	342
	▶407
142-6286	343
	▶408
142-6287	344
	▶409
142-6288	345
	▶410
142-6289	346
	▶411
142-6290	347
	▶412
142-6291	348
	▶413
142-6292	349
	▶414

▶ PRIMARY REFERENCE

PART NUMBER INDEX

Part	Page
126-0468	3
	▶109
126-0961	▶870
126-1135	810
126-1136	810
126-1137	778
	▶810
126-1167	828
	830
126-1539	828
	830
126-2728	284
	294
126-2747	▶852
126-4220	824
	826
126-4966	762
	768
126-5869	76
126-5929	▶108
	109
	115
126-6084	1
	▶138
126-6085	138
126-6091	138
126-6631	834
	▶842
126-7238	207
	213
126-7240	745
126-7570	207
	213
126-8197	207
	213
126-9166	226
	228
127-0879	196
127-0908	188
127-1029	188
127-1030	188
127-1036	164
127-1562	▶170
127-1641	207
	213
127-1803	▶164
127-2246	192
127-2308	128
	▶136
127-2911	886
127-2912	886
127-2978	▶186
127-4471	76
127-4836	27
127-5119	824
	826
127-5706	520
127-5724	520
127-5726	520
127-7072	207
	213
	219
127-7087	▶176
127-8157	729
127-8216	135
127-8314	▶814
	824
	826
127-8315	814
127-8375	▶272
	▶274
	286
128-0037	758
	760
	764
	766
128-0474	38
128-4142	60
128-4786	110
	118
128-6021	▶898
128-6319	886
128-8614	136
129-1090	130
129-1095	22
	▶24
129-1101	100
	▶139
129-1102	▶100
	130
129-1142	100
129-1641	886
129-3173	103
	270
	531
129-3178	740
	741
	762
	768
	796
	800
129-3897	111
	119
129-4284	111
	119
129-4288	796
	800
129-4615	749
129-4618	749
	▶806
129-4622	806
129-4645	752
	806
129-4646	752
	806
129-4647	190
129-4935	781
129-5454	435
	436
129-7228	▶748
129-7229	▶747
129-7230	▶751
129-7261	726
129-7632	690
129-7705	141
129-7707	124
	▶141
129-8215	1
	▶270
129-8614	749
	▶822
130-0111	752
130-0115	752
130-0461	▶835
130-0463	▶545
130-0464	▶646
130-1396	190
130-2886	751
	▶752
130-2940	536
	538
130-3374	78
130-3452	▶163
	213
	219
130-3595	482
	486
130-4563	747
	▶749
130-4564	748
	▶750
130-4565	▶190
	749
130-4568	190
130-5770	320
130-6926	838
130-7603	545
	▶648
130-7754	646
	▶656
130-7755	648
	▶657
130-8097	130
130-8101	3
	4
	▶130
130-8103	3
	▶57
130-8104	63
131-0823	835
	▶840
131-1879	78
131-1934	3
	4
	▶63
131-4428	486
131-4810	3
	4
	▶56
131-6009	796
	800
131-6688	122
	124
131-6689	110
	▶122
131-6690	▶110
	114
131-7905	111
	119
131-8350	▶320
	664
131-8777	704
132-0113	196
132-0296	1
	▶128
132-2101	130
132-2148	▶152
	200
132-3067	602
132-4926	552
	▶563
132-4927	563
132-5242	36
132-5549	130
132-8428	▶493
132-9681	472
133-1570	330
133-2894	57
133-3021	886
133-3064	109
	▶114
133-3289	▶832
133-3291	▶299
	832
133-5377	▶776
133-9185	270
134-0165	496
	500
	520
134-0747	586
	590
	594
134-1080	1
	▶486
134-1081	486
134-1220	▶745
	746
134-1221	▶746
134-2314	726
134-3534	▶66
	832
134-3535	58
134-3536	66
	67
134-3537	66
	67
134-3987	243
	248
134-5276	14
134-6474	752
	806
134-6553	▶153
	226
134-7258	886
134-8232	▶871
	874
134-8233	▶872
	873
134-8273	860
135-0451	586
	594
135-0452	586
	594
135-1978	771
	▶774
135-1979	774
135-2650	▶98
	99
135-3884	776
135-3887	776

▶ PRIMARY REFERENCE

PART NUMBER INDEX

Part	Page
142-6293	350
	▶415
142-6294	351
	▶416
142-6295	352
	▶417
142-6296	353
	▶418
142-6297	354
	▶419
142-6298	355
	▶420
142-6300	356
	▶421
142-6301	357
	▶422
142-6303	▶468
142-6304	469
	▶478
142-6305	▶469
142-6306	358
	▶423
142-6307	359
	▶424
142-6309	360
	▶425
142-6310	361
	▶426
142-6312	362
	▶427
142-6313	363
	▶428
142-6315	364
	▶429
142-6316	365
	▶430
142-6318	366
	▶431
142-6319	367
	▶432
142-6321	368
	▶433
142-6322	369
	▶434
142-6324	370
	▶435
142-6325	371
	▶436
142-6328	372
	▶437
142-6330	373
	▶438
142-6332	382
	▶439
142-6335	376
	▶440
142-6336	379
	▶441
142-6337	381
	▶442
142-6338	377
	▶443
142-6339	380
	▶444
142-6341	378
	▶445
142-6353	383
	▶446
142-6354	388
	▶447
142-6355	390
	▶448
142-6356	392
	▶449
142-6357	398
	▶450
142-6358	400
	▶451
142-6360	384
	▶452
142-6361	393
	▶453
142-6363	385
	▶454
142-6364	394
	▶455
142-6366	386
	▶456
142-6367	395
	▶457
142-6371	387
	▶458
142-6372	389
	▶459
142-6373	391
	▶460
142-6374	396
	▶461
142-6375	399
	▶462
142-6376	401
	▶463
142-6385	397
	▶464
142-6390	▶342
142-6391	▶343
142-6392	▶344
142-6393	▶345
142-6394	▶346
142-6395	▶347
142-6439	▶348
142-6440	▶349
142-6441	▶350
142-6442	▶351
142-6443	▶352
142-6444	▶353
142-6445	▶354
142-6446	▶355
142-6448	▶356
142-6449	▶357
142-6454	▶358
142-6455	▶359
142-6457	▶360
142-6458	▶361
142-6460	▶362
142-6461	▶363
142-6463	▶364
142-6464	▶365
142-6466	▶366
142-6467	▶367
142-6469	▶368
142-6470	▶369
142-6472	▶370
142-6474	▶371
142-6477	▶372
142-6479	▶373
142-7038	826
142-7373	584
142-7374	584
142-7379	▶584
	709
142-7533	826
142-8205	▶609
	709
142-8470	790
143-2097	489
143-3580	230
143-4792	489
143-5372	249
143-5373	243
	249
143-5374	242
	248
143-5963	212
	218
143-7403	236
	242
143-9634	▶154
	228
144-0373	219
144-0382	219
144-0383	219
144-0389	219
144-2161	504
	506
144-2162	504
	506
144-2205	▶242
	315
144-2231	243
	248
	280
144-2234	298
	▶315
144-5724	500
144-5725	500
144-5903	10
144-6294	319
	▶336
144-6295	274
	▶319
144-8525	200
144-8622	▶158
	200
144-8651	158
144-9435	▶794
	833
	835
145-0162	20
145-0164	20
145-0168	20
145-0170	20
145-0320	42
145-0321	42
145-0840	▶10
	12
145-1261	▶155
	156
	157
145-1278	▶156
145-1279	▶157
145-3740	40
145-3993	4
	▶42
145-4539	4
	▶12
145-5966	506
145-5967	506
145-5999	219
145-8038	248
145-8039	243
	249
145-9077	103
	270
145-9531	▶280
	315
	316
145-9533	280
	▶340
145-9534	▶330
	340
145-9535	243
	249
146-8338	2
	▶4
147-1771	280
147-3309	526
148-0358	335
148-2404	470
	▶479
148-2405	▶470
148-2408	471
	▶480
148-2409	▶471
148-2516	319
148-2593	563
149-0725	754
149-1116	218
149-3409	820
	821
	822
149-5933	762
	768
149-6082	▶248
	316
149-6083	298
	▶316
149-7380	330
149-9129	243
150-1280	569
150-5146	10
151-0286	▶374
151-0287	▶375
151-0329	▶376
151-0330	▶377
151-0331	▶378
151-0347	▶379
151-0348	▶380
151-0355	▶381
151-0362	▶382

▶ PRIMARY REFERENCE

PART NUMBER INDEX

Part	Page	Part	Page	Part	Page	Part	Page
151-0364	▶383						
151-0365	▶384						
151-0366	▶385						
151-0367	▶386						
151-0368	▶387						
151-0371	▶388						
151-0372	▶389						
151-0374	▶390						
151-0375	▶391						
151-0378	▶392						
151-0379	▶393						
151-0380	▶394						
151-0381	▶395						
151-0382	▶396						
151-0385	▶397						
151-0388	▶398						
151-0389	▶399						
151-0392	▶400						
151-0393	▶401						
151-4142	232						
151-5829	5						
	▶67						
153-5425	465						
153-5427	466						
153-5459	402						
	▶465						
153-5460	▶402						
153-5463	403						
	▶466						
153-5464	▶403						
153-5467	404						
	▶467						
153-5468	▶404						
153-9480	218						
156-0235	93						

7

7X-0401	492

▶ PRIMARY REFERENCE

CATERPILLAR®

© 1998 Caterpillar
All Rights Reserved

Printed in U.S.A.