CATERPILLAR®

SEBP4989
September 2009

RUTHZIL TRATOR COMERCIAL DE PEÇAS LTDA 11 97083-6812 ROLANDO

Parts Manual

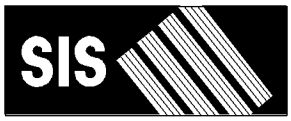

See "General Information" for New Parts Manual Features.

120K Motor Grader

JAP1-Up (Machine)
KHX1-Up (Engine)
DMJ1-Up (Transmission)

Powered By C7 Engine
This Parts Manual is also available in .PDF format on Compact Disc (CD-ROM) - Caterpillar Form No. SERP4989

Product and Dealer Information

Note: For product identification plate locations, see the section “Product Identification Information” in the Operation and Maintenance Manual.

Delivery Date: _____

Product Information

Model: _____

Product Identification Number: _____

Engine Serial Number: _____

Transmission Serial Number: _____

Generator Serial Number: _____

Attachment Serial Numbers: _____

Attachment Information: _____

Customer Equipment Number: _____

Dealer Equipment Number: _____

Dealer Information

Name: _____ Branch: _____

Address: _____

_____

_____

	Dealer Contact	Phone Number	Hours
Sales:	_____	_____	_____
Parts:	_____	_____	_____
Service:	_____	_____	_____

MEMORANDA

TABLE OF CONTENTS

Name	Page
GENERAL INFORMATION	A5
REPAIR ALTERNATIVES	A8
SUPPLEMENTAL COOLANT ADDITIVES	A9
MAINTENANCE PARTS	A10
INDEX	A14
MACHINE ARRANGEMENT	1
GENERAL AR	1
OPTION AR-CAB	2
OPTION AR-CONFIGURATION	4
OPTION AR-ENGINE	4
OPTION AR-RIPPER	4
OPTION AR-WORK TOOL	5
ROADING AR	5
ENGINE ARRANGEMENT	7
ENGINE AR-COMPLETE	7
ENGINE AR-CORE	9
BASIC ENGINE	10
AIR COMPRESSOR GP	10
CAMSHAFT GP	13
CARRIER GP-SEAL	14
COVER GP-CYLINDER BLOCK	15
COVER GP-FRONT HOUSING	16
COVER GP-VALVE MECHANISM	17
CRANKSHAFT GP	19
CYLINDER BLOCK GP	21
CYLINDER HEAD AS	25
CYLINDER HEAD GP	26
DAMPER & PULLEY GP	29
DRIVE GP-ACCESSORY	30
DRIVE GP-FAN	31
FASTENER GP-CYLINDER HEAD	33
FASTENER GP-ENGINE	34
FASTENER GP-FRONT HOUSING	35
FLYWHEEL GP	36
GEAR GP-FRONT	37
HOUSING GP-FLYWHEEL	38
HOUSING GP-FRONT	39
LIFTER GP-VALVE	40
LIFTING GP-ENGINE	41
MOUNTING GP-ENGINE	42
MOUNTING GP-ENGINE & XMSN	43
PAN GP-OIL	45
PISTON & ROD GP	48
PLUG GP-CYLINDER BLOCK	49
PLUG GP-ENGINE	51
PLUG GP-OIL PAN	52
ROCKER ARM GP	53
SEAL GP-CRANKSHAFT	55
VALVE MECHANISM GP	56
LUBRICATION SYSTEM	58
ADAPTER GP-OIL LINE	58
BREATHER GP	59
FILLER GP-ENGINE OIL	60
FILTER GP-ENGINE OIL	61
FUMES DISPOSAL GP	62
GAUGE GP-OIL LEVEL (DIPSTICK)	63
LINES GP-ENGINE OIL	65
LINES GP-ENGINE OIL DRAIN	67
LINES GP-TURBOCHARGER OIL	68
MANIFOLD GP-ENGINE OIL	70
PUMP GP-ENGINE OIL	71
COOLING SYSTEM	73
COOLER GP-ENGINE OIL	73
COOLING AR	74
FAN GP-BLOWER	75
GUARD GP-FAN	76
LINES GP-WATER	77
PUMP GP-WATER	81
RADIATOR GP	84
TANK GP-COOLANT	85
AIR INLET AND EXHAUST SYSTEM	87
AFTERCOOLER GP-AIR	87
AIR CLEANER GP	88
COVER GP-AIR INLET	91
ELBOW GP-AIR INLET	92
LINES GP-AIR	93
MANIFOLD GP-EXHAUST	94
MUFFLER GP	95
TURBOCHARGER GP	96
FUEL SYSTEM	100
CONTROL GP-GOVERNOR	100
FILTER GP-WATER SEP & FUEL	102
INJECTOR GP-FUEL	103
LINES GP-FUEL	104
LINES GP-INJECTOR HYD PUMP	108
PUMP & MTG GP-UNIT INJ HYD	109
PUMP GP-FUEL INJECTION	110
PUMP GP-FUEL PRM & WATER SEP	111
REGULATOR GP-FUEL PRESSURE	112
TANK GP-FUEL	113
ELECTRICAL AND STARTING SYSTEM	114
ALARM GP	114
ALTERNATOR GP-CHARGING	115
APPLICATION GP-POWER TRAIN	118
BATTERY & WIRING GP	119
CONTROL & MTG GP-ENGINE ELEK	126
CONTROL GP-POWER TRAIN	127
CONTROL GP-UNPROGRAMMED	128

TABLE OF CONTENTS

Name	Page
CONVERTER AR-ELECTRICAL	129
CONVERTER GP-ELECTRICAL	130
ELECTRONICS GP-COMMUNICATION	132
ELECTRONICS GP-IMPLEMENT	132
GRADE CONTROL AR	133
GROUND GP-ELECTRICAL	137
INSTALLATION AR-COMMUNICATION	138
INSTALLATION GP-COMMUNICATION	139
LAMP GP	141
LAMP GP-DOME	142
LAMP GP-FLOOD	143
LAMP GP-HEAD & SIGNAL	146
LAMP GP-REGISTRATION PLATE	148
LAMP GP-SIGNAL	149
LIGHTING AR-ROADING	152
LIGHTING GP-BACKUP	153
LIGHTING GP-FLOOD	155
LIGHTING GP-REGISTRATION PLATE	157
LIGHTING GP-ROADING	158
LIGHTING GP-SIGNAL	160
MOTOR GP-ELECTRIC	161
MOUNTING GP-GRADE CONTROL	162
PLUG GP-CONNECTOR	165
RADIO GP-COMMUNICATION	166
SENSOR GP-ENGINE	167
SENSOR GP-POSITION	169
SENSOR GP-PRESSURE	171
SENSOR GP-SPEED	177
SENSOR GP-TEMPERATURE	180
STARTING AID GP-ETHER	184
STARTING MOTOR GP-ELECTRIC	186
SWITCH GP-BYPASS	190
SWITCH GP-DISCONNECT	191
SWITCH GP-MAGNETIC	192
SWITCH GP-PRESSURE	193
SWITCH GP-WIPER	194
VALVE GP-ETHER STARTING	195
WIRING GP-AIR CONDITIONER	196
WIRING GP-AUXILIARY	197
WIRING GP-CAB	200
WIRING GP-CONSOLE	203
WIRING GP-ENGINE	205
WIRING GP-ETHER STARTING AID	207
WIRING GP-FRONT	208
WIRING GP-GRADE CONTROL	216
WIRING GP-REAR	225
WIRING GP-REAR LIGHTING	232
WIRING GP-STEERING CONSOLE	234
WIRING GP-TRANSMISSION	239
POWER TRAIN	240
BASE GP-OIL FILTER	240
CASE & PARTS GP-PLANETARY	241
CHAIN GP-DRIVE	246
CLUTCH GP-TRANSMISSION	247
CONTROL GP-DIFFERENTIAL LOCK	256
CONTROL GP-TRANSMISSION HYD	258
COOLER GP-TRANSMISSION OIL	259
COUPLING GP-TORSIONAL	260
DIFFERENTIAL & BEVEL GEAR GP	261
DIFFERENTIAL GP	263
DRIVE GP-FINAL	265
FILLER GP-POWER TRAIN OIL	267
FILTER GP-OIL	268
GEAR GP-BEVEL	269
GEAR GP-BEVEL & PINION	270
LINES GP-TRANSMISSION OIL	272
MOUNTING GP-WHEEL	276
PUMP GP-GEAR	277
SCREEN GP-MAGNETIC	280
SHAFT GP-DRIVE	281
SHAFT GP-INPUT	282
TANDEM & COVER GP	283
TRANSMISSION AR	285
UNIVERSAL JOINT GP	286
VALVE & MTG GP-DIFF LOCK	287
VALVE GP-SELECTOR & PRESS CONT	288
VALVE GP-SOLENOID	294
VALVE GP-TRANSMISSION CONTROL	296
WHEEL & TIRE AR	298
WHEEL & TIRE GP	299
WHEEL AR	300
WHEEL GP	302
FRAME AND BODY	306
AXLE GP-FRONT	306
BOSS GP-FRAME	309
BOX GP-BATTERY	313
BUMPER GP-REAR	314
CASE & FRAME GP	316
COVER GP-ACCESS	317
COVER GP-PROTECTION	318
ENCLOSURE GP-ENGINE	321
FRAME GP-FRONT	325
GUARD GP-BOTTOM	327
GUARD GP-DRIVE SHAFT	329
GUARD GP-PLATFORM	330
HITCH GP-ARTICULATING	334
LINES GP-LUBRICATION	336
LINK GP-STEERING	337
REFLECTOR GP	338
STEP GP	339
SUPPORT GP-BATTERY	340
SUPPORT GP-RADIATOR	341
BRAKING SYSTEM	343
AIR DRYER GP	343

TABLE OF CONTENTS

Name	Page
BRAKE GP-PARKING	348
BRAKE GP-SERVICE	350
CONTROL GP-PARKING BRAKE	352
CONTROL GP-SERVICE BRAKE	354
TANK GP-AIR	358
VALVE GP-SOLENOID	362
HYDRAULIC SYSTEM	363
CONTROL AR-HYDRAULIC	363
CYLINDER & LINES GP-RIPPER	364
CYLINDER & MTG GP-ARTICULATION	366
CYLINDER & MTG GP-BLADE LIFT	367
CYLINDER & MTG GP-BLADE TIP	368
CYLINDER & MTG GP-CENTERSHIFT	369
CYLINDER & MTG GP-SCARIFIER	370
CYLINDER & MTG GP-SIDESHIFT	371
CYLINDER & MTG GP-STEERING	372
CYLINDER & MTG GP-WHEEL LEAN	373
CYLINDER GP-ARTICULATION	374
CYLINDER GP-CENTERSHIFT	376
CYLINDER GP-HYDRAULIC	377
CYLINDER GP-LIFT	380
CYLINDER GP-SCARIFIER	381
CYLINDER GP-SIDESHIFT	382
CYLINDER GP-STEERING	383
CYLINDER GP-WHEEL LEAN	387
DETENT GP-CONTROL VALVE	388
DRIVE GP-CIRCLE	389
LINES GP-CENTERSHIFT LOCK	392
LINES GP-HYDRAULIC	394
LINES GP-PUMP	409
LINES GP-RIPPER	414
LINES GP-STEERING	416
LOCK GP-CENTERSHIFT	418
MANIFOLD GP-VALVE	419
MOTOR GP-GEROTOR	422
PUMP & MTG GP-STEERING	424
PUMP GP-PISTON	425
ROTATING GP-PUMP	429
SHAFT GP-PUMP DRIVE	431
SWASHPLATE GP	432
SWIVEL GP	433
TANK & FILTER GP-HYDRAULIC	435
TANK & MTG GP-HYDRAULIC	437
VALVE & LINKAGE GP	438
VALVE GP-BANK 3	457
VALVE GP-BANK 4	458
VALVE GP-BANK 5	462
VALVE GP-COMBINATION	466
VALVE GP-CONTROL	468
VALVE GP-PUMP CONTROL	494
VALVE GP-PURGE	496
VALVE GP-RELIEF	497
VALVE GP-SHUTTLE	506
VALVE GP-SOLENOID	507
IMPLEMENTS	508
BOSS GP-DRAWBAR	508
CIRCLE GP	509
CIRCLE AS	513
CIRCLE GP	514
DRAWBAR GP	518
LINK GP-LOWER	520
LINK GP-UPPER	521
PLATE GP-PUSH	522
OPERATOR STATION	523
ACCESSORY GP-CAB	523
ADJUSTER GP-SEAT	524
AIR CONDITIONER & HEATER GP	528
AIR CONDITIONER AR	532
AIR CONDITIONER GP	532
ARMREST GP	533
CAB AR	535
CAB GP	536
COMPRESSOR GP-REFRIGERANT	537
CONDENSER & MTG GP-REFRIGERANT	539
CONSOLE GP-OPERATOR	540
CONTROL GP-CLUTCH	545
CONTROL GP-STEERING	547
DOOR GP-CAB	548
DUCT & CONTROL GP	555
DUCT GP-CAB AIR	556
FAN GP-CIRCULATING	557
FILTER GP-CAB AIR	562
HORN GP-ELECTRIC	563
HOUSING GP-SEAT SUSPENSION	564
INSTALLATION AR-RADIO	567
INSTALLATION GP-RADIO	568
INSULATION GP-WEATHER	569
LINER GP-CAB	571
LINES GP-AIR CONDITIONER	578
LINES GP-HEATER	580
MIRROR GP-REAR VIEW	582
MODULE GP-QUAD GAUGE	586
MODULE GP-SPEEDOMETER & TACH	587
MOUNTING GP-CAB	589
MOUNTING GP-ROPS	590
PAN GP-BACKREST	592
PANEL GP-CAB	593
PANEL GP-INSTRUMENT	594
RECLINER GP-SEAT	601
ROPS AR	602
ROPS GP	604
SCREEN GP-SUN	608
SEAT BELT GP	609
SEAT GP	611
SEAT GP-STATIC	619
SEAT GP-SUSPENSION	622
SUPPORT GP-SEAT	624

TABLE OF CONTENTS

Name	Page	Name	Page
SUSPENSION GP-SEAT	626		
VALVE GP-AIR CONTROL	628		
WASHER GP-WINDOW	629		
WIPER AR-WINDOW	634		
WIPER GP-WINDOW	635		
WORK TOOLS	640		
BIT GP-END	640		
BLADE & TIP AR-POWER	641		
BLADE GP	642		
BLADE GP-BULLDOZER	643		
BRACKET GP-SCARIFIER	645		
CYLINDER GP-HYDRAULIC	646		
EDGE GP-CUTTING	648		
LIFT GP-BLADE	649		
MOUNTING GP-RIPPER	652		
RIPPER AR	653		
RIPPER GP	654		
SCARIFIER AR	655		
SCARIFIER GP	656		
TOOTH GP-RIPPER	659		
SERVICE EQUIPMENT AND SUPPLIES	660		
BOX GP-TOOL	660		
FILM GP	661		
PLATE & FILM GP	662		
PART NUMBER INDEX	B1		

GENERAL INFORMATION

1. MACHINE IDENTIFICATION

Caterpillar machines are identified by Product Identification Numbers (PIN). Some components included in a machine may be identified by Serial Numbers (S/N). Typical components that will be serialized include engines, transmissions, bulldozers, and rippers. The machine and engine are further identified by arrangement numbers and in some cases modification numbers. These numbers are shown on the product identification plate(s) and on the master plate in the operator's compartment.

Caterpillar dealers need all of these numbers to determine accurate parts identification.

SIS *New Feature*

Effective First Quarter 2001 the Caterpillar Product Identification Number (PIN) changed from 8 to 17 characters. In an effort to provide uniform equipment identification, Caterpillar and other construction equipment manufacturers are moving to comply with the latest version of the product identification numbering standard. Non-road machine PINs are defined by ISO 10261. The new PIN format will apply to all Caterpillar machines and generator sets. The PIN plates and frame marking will display the 17 character PIN. The new format will look like the following:

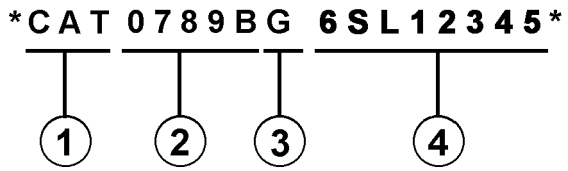

Where:

1. Caterpillar's World Manufacturing Code (characters 1-3)

2. Machine Descriptor (characters 4-8)

3. Check Character (character 9)

4. Machine Indicator Section (MIS) or Product Sequence Number (characters 10-17). These were previously referred to as the Serial Number.

Machines and generator sets produced before First Quarter 2001 will maintain their 8 character PIN format.

Components such as engines, transmissions, axles, etc. and work tools will continue to use an 8 character Serial Number (S/N).

2. ORDERING PARTS

⚠ WARNING

When replacement parts are required for this product Caterpillar recommends using Caterpillar replacement parts or parts with equivalent specifications including, but not limited to, physical dimensions, type, strength and material.

Failure to heed this warning can lead to premature failures, product damage, personal injury or death.

Quality Caterpillar replacement parts are available from Caterpillar dealers throughout the world. Their parts inventories are up to date and include all parts normally required to protect your investment in Caterpillar machines. Dealers may offer repair kits or remanufactured parts to allow selection of the most effective repair alternative for a particular situation. When ordering parts, your order should specify the quantity, part number, part name, and the serial number/product identification number of the machine for which the parts are needed.

3. PARTS MANUAL ORGANIZATION

Product information in this manual is presented as "information elements" that represent all of the components for the specific model. Engine Arrangement and Seat Group are examples of information elements. The information elements are organized alphabetically by part name and secondarily by part number within each major section of the manual.

4. TABLE OF CONTENTS

A table of contents (TOC) is found at the beginning of the manual. The TOC lists each section of the manual with a complete list of all information elements organized as they appear in the manual. Page numbers are provided for quick reference to detailed parts identification illustrations and serviceable consist lists.

5. MAINTENANCE PARTS INDEX

The Maintenance Parts Index, located near the beginning of the manual, references most frequently used maintenance part numbers, providing description, quantity, usage and page number. This information is organized alphabetically by part description.

GENERAL INFORMATION

6. INDEX

The index located near the front of the manual is an alphabetical listing of all information elements included in the manual. Page numbers are provided for quick reference to detailed parts identification illustrations and serviceable consist lists.

7. PART NUMBER INDEX

A numerical index listing all part numbers and the corresponding page number(s) appears at the back of the manual.

8. CAPTIONS

Captions located at the beginning of each information element identify the part number and part name along with additional descriptive information. PIN and S/N information found in each caption should be used to select correct information for a specific machine. Field replacement options, identification of optional attachment components, and where used ("part of") information is also provided.

The first line of a caption is shown in larger type font to indicate the beginning of an information element. Captions for additional pages that may be required to illustrate an information element will be shown in standard type font and will include the term *(contd.)* .

9. NON-SERVICED PARTS

In some instances it is necessary to display non-serviced parts that are a link to a lower level serviceable consist lists. These non-serviced part numbers are shown in *italic* type indicating that they are not available.

10. PARTS LIST REFERENCE NUMBERS

Numbers shown in the Ref No column correspond to numbers used in the associated graphic(s). An alphabetic suffix may be added to a reference number to identify lower level consist items. Numbers shown in the Graphic Ref column refer to the graphic number identifier displayed in the lower left corner of each illustration. The Graphic Ref number may be used in combination with the item Ref No to determine the correct part number. There may be intentional omission of a Ref No in a consist list as information is updated to reflect the latest serviceable part numbers.

11. INDENTED PART NAMES

When a part name is indented in a parts list, it is part of (included in) the group or assembly under which it is indented.

12. ILLUSTRATION REFERENCE LETTERS

When necessary, illustrations contain reference letters (A, B, C etc.) that are intended to track lines and harnesses from one point to another. They are also used to show where to reconnect illustrations that have been separated.

13. ABBREVIATIONS AND SYMBOLS

O.D. – Outside Diameter
I.D. – Inside Diameter
A – Not Part Of This Group
B – Use As Required
C – Change From Previous Type
D – Order By The Meter
E – Order By The Centimeter
F – Not Shown
G – Order By The Inch
I – Refer To Hydraulic Information System
M – Metric Part
R – Remfg Part May Be Available
Y – Separate Illustration
Z – Not Serviced Separately

SIS *New Feature*

14. DESCRIPTION OF TYPE CHANGES

Type - A type is defined as any configuration change that requires an additional Information Element for an Arrangement, Group, or Assembly. If serial number breaks for types are not available, a type # (Type 1, Type 2, etc.) will be displayed in the caption. These "type" changes are identified with a "C" note (change from previous type) in the Parts List. Only the "types" that apply to this Parts Manual will be included. Additional types may exist causing "C" notes to appear on an Information Element when no other types are shown.

15.<END>

This symbol indicates the end of an information element.

NOTE:

Continuing improvement and advancement of product design may cause changes to your machine which may not be included in this publication. Whenever a question arises regarding your Caterpillar product or this publication, please consult your Caterpillar dealer for the latest available information.

FRAME AND BODY

8E-3299 PLATFORM GP-CAB

PIN 3SK1-99999

SMCS-7253 100090751

NOTE	REF NO	GRAPHIC REF	PART NUMBER	QTY	PART NAME 1 2 3 4 5 6 (PRODUCT LEVEL)	SEE PAGE
	*	1	3T-3953	1	PLATE AS	
	2	1	6E-2992	25	BOLT (3/8-16X.750IN)	
	3	1	6P-1076	41	WASHER-HARD (38MM THK)	
	4	1	9P-1444	2	SUPPORT AS-FOOT	
	5	1	7P-2229	19	BOLT (1/2-13X1IN)	
		1	6P-[illegible]	19	WASHER-HARD (41MM THK)	
	6	1	6E-6136		COVER AS-LH	
		1	9F-2978	5	NUT-WELD (3/8-16 THD)	
		1	1P-0169	1	CLIP	
	7	1	7S-3411	4	COVER	
	8		9J-0498	18	SCREW-HEAD (3/8-16X.875IN)	
	9	1	[illegible]-4474	1	COVER	
		1	6E-[illegible]		GASKET	
	10	1	6E-3249	1	[illegible]	
		1	6E-3250	1	GASKET	
	11	1	3T-3638	1	HANDHOLD	
	12	1	6E-9979	1	COVER AS	
		1	9F-2978	8	NUT-WELD (3/8-16 THD)	
		1	6E-9978	1	GASKET	
	13	1	7T-0131	1	FLOORPLATE AS	
		1	1F-0748	4	NUT-WELD (1/2-13 THD)	
	14	1	7V-9067	1	PLUG-BUTTON	
	15	1	7T-0136	1	PLATE AS	
		1	9F-2978	5	NUT-WELD (3/8-16 THD)	
	16	1	7T-9066	1	COVER	
		1	7T-9779	1	GASKET	
	17	1	3T-3981	1	PLATE AS	
	18	1	6T-9264	4	BOLT (1/4-20X.625IN)	
M		1	9T-4205	4	WASHER-HARD (28MM THK)	
	19	1	6L-9494	1	FLOOR MAT	
	20	1	6E-6846	1	MODULE AS-OPERATOR	
	21	1	3T-3834	1	HANDHOLD	
	22	1	9P-6671	2	PLUG	
	23	2	6T-9264	4	BOLT (1/4-20X.625IN)	
M		2	9T-4205	4	WASHER-HARD (28MM THK)	
	24	2	6B-3062	17	BOLT (3/8-16X.750IN)	
	26	2	6P-1076	21	WASHER-HARD (38MM THK)	
	26	2	7T-0135	1	SEAL	
	27	2	7X-0075	2	BOLT (3/4-10X5IN)	
		2	7X-0682	2	WASHER-HARD (64MM THK)	
	28	2	3T-3452	2	PLATE	
	29	2	3T-3290	1	PLATE AS	
		2	7S-4828	8	SPACER	
	30	2	3T-6281	1	SEAL	
	31	2	7S-6817	1	GASKET	
	32	2	7S-9616	1	COVER AS	
		2	2R-3276	2	WASHER	
		2	6P-9626	2	SCREW-KNURLED	
	33	2	9W-3429	1	COVER	
	34	2	6E-9697	1	COVER	
	35	2	6D-3931	8	SCREW-SOCKET HEAD	
	36	2	9W-3142	8	MOUNTING	
	37	2	9W-9027	2	PLATE	
	38	2	7X-0990	2	BOLT (7/8-9X5IN)	
		2	7X-0672	2	WASHER-HARD	
	39	2	4L-6454	4	BOLT (3/8-16X1.0IN)	
	40	2	3T-4788	1	COVER	

12 FRAME AND BODY 1 of 4 SELP4570-01

FRAME AND BODY

8E-3299 PLATFORM GP-CAB (contd.)

100090751

NOTE	REF NO	GRAPHIC REF	PART NUMBER	QTY	PART NAME 1 2 3 4 5 6 (PRODUCT LEVEL)	SEE PAGE
	41	2	6E-2516	1	COVER	
	42	2	7T-0134	1	PLATE	
	43	2	7T-0138	1	GASKET	
	44	2	7S-9724	1	GASKET	
	45	2	7S-8723	1	COVER	
	46	2	6V-1950	2	PLUG-BUTTON	

M-METRIC PART

SELP4570-01 2 of 4 FRAME AND BODY 13

FRAME AND BODY

8E-3299 PLATFORM GP-CAB (contd.)

100090751

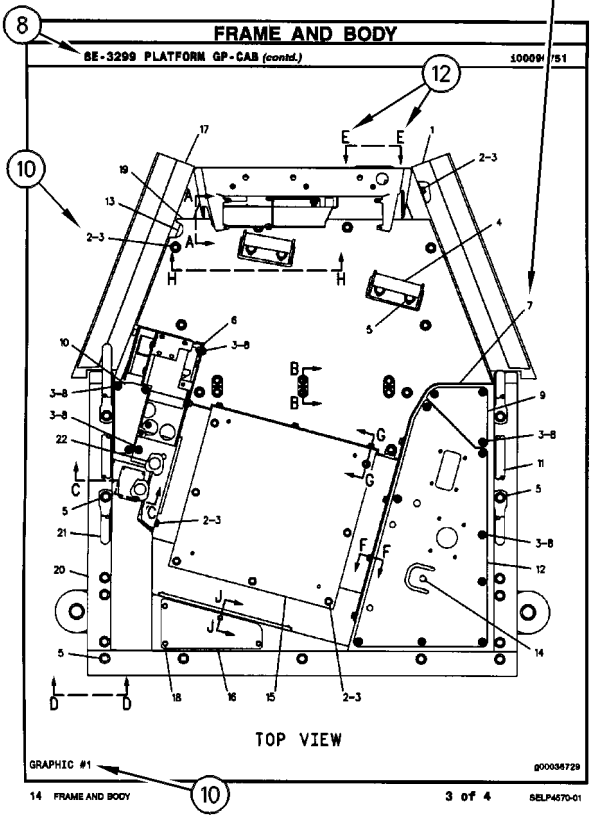

14 FRAME AND BODY 3 of 4 SELP4570-01

FRAME AND BODY

8E-3299 PLATFORM GP-CAB (contd.)

100090751

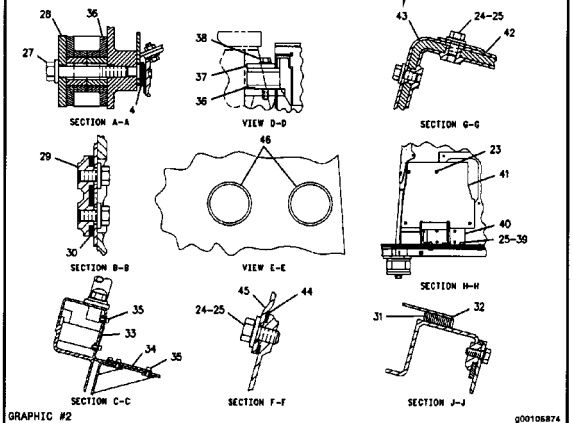

SELP4570-01 4 of 4 FRAME AND BODY 15

REPAIR ALTERNATIVES

REMANUFACTURED COMPONENTS

As an option when making repairs consider Caterpillar Remanufactured Components. Components that are available through the Caterpillar Remanufactured Program are identified three ways in the parts book:

- with the letter R in the note field of the parts list
- with an R* at the beginning of the first line of the caption
- with an *R at the end of the first line of the caption

Typical components included in the Remanufacturing Program include:

ALTERNATORS
CONNECTING RODS
CRANKSHAFTS - UNDERSIZE
CRANKSHAFTS - UPGRADE TO NEW
CYLINDER HEADS
ELECTRONIC CONTROL MODULES (ECM)
ELECTRONIC SENSORS
FUEL INJECTORS
FUEL NOZZLES
FUEL PUMPS
GOVERNORS
OIL PUMPS
PISTONS
SHORT BLOCKS
STARTERS
TURBOCHARGERS - COMPLETE
TURBOCHARGER CARTRIDGES
WATER PUMPS

Caterpillar Remanufactured engines for many engine arrangements are also available.

SUPPLEMENTAL COOLANT ADDITIVES

CUSTOMER BENEFITS:

Protects against cavitation, foam, erosion, corrosion, and scale buildup in cooling systems.

- Provides measured coolant conditioner.

DESCRIPTION:

Additives deplete from the coolant with normal operation. For this reason, Supplemental Coolant Additives (SCA) must be added to all heavy duty coolants at regular intervals. In addition, when not using a fully formulated, pre-charged antifreeze, like Caterpillar's DEAC, an initial charge of SCA must be added to the cooling system. The amount of SCA added to the system is dependent on the capacity of the system.

The SCA for initial fill is provided as a liquid. SCA's for maintenance intervals are available in liquid form and as a spin-on element. (No Spin-on available for 3600 Family of Engines)

NOTE:

The amount of SCA added at initial fill is not the same as the amount added at maintenance intervals.

The coolant additive elements can be used with any ethylene or propylene glycol type antifreeze which meets ASTM D4985 or ASTM D5345 Specifications.

NOTE:

For use with standard heavy duty coolant only, not for use with Extended Life Coolant.

PARTS NEEDED:

Cooling System Capacity		Liquid SCA at Initial Fill	Liquid SCA at Maintenance*	Spin-on SCA Maintenance Element*
Liters	Gallons			
22-30	(6-8)	3P-2044 (1)	6V-3542 (1)	111-2370 (1)
30-38	(8-10)	3P-2044 (1) 6V-3542 (1)	111-2372 (1)	111-2369 (1)
38-49	(10-13)	3P-2044 (1) 8T-1589 (1)	111-2372 (1)	111-2369 (1)
49-64	(13-17)	3P-2044 (2)	8T-1589 (1)	9N-3368 (1)
64-83	(17-22)	3P-2044 (2) 8T-1589 (1)	111-2372 (1) 6V-3542 (1)	111-2371 (1)
83-114	(22-30)	3P-2044 (3) 8T-1589 (1)	3P-2044 (1)	9N-3718 (1)
114-163	(30-43)	3P-2044 (5)	3P-2044 (1) 6V-3542 (1)	111-2371 (2)
163-242	(43-64)	3P-2044 (8)	3P-2044 (2)	9N-3718 (2)

** Normal maintenance period is 250 hrs. See your Operation and Maintenance Manual for complete coolant maintenance instructions.*

( ) Indicates quantity required.

MAINTENANCE PARTS

DESCRIPTION	PART NUMBER	QTY	WHERE USED	PAGE
AIR INLET AND EXHAUST SYSTEM				
FILTER ELEMENT AS-AIR (SECONDARY)	245-6376	1	AIR CLEANER GP	88
FILTER ELEMENT-AIR (PRIMARY)	245-6375	1	AIR CLEANER GP	88
BASIC ENGINE				
BELT-SERPENTINE	198-3611	1	MOUNTING GP-ENGINE & XMSN	43
PLUG AS-DRAIN (MAGNETIC) (ENGINE OIL PAN)	168-2288	1	PAN GP-OIL	46
PLUG-O-RING	9S-4185	1	PLUG GP-OIL PAN	52
SEAL-INTEGRAL	135-9819	1	AIR COMPRESSOR GP	11
SEAL-VALVE COVER	272-0388	1	COVER GP-VALVE MECHANISM	17
BRAKING SYSTEM				
FUSE (10-AMPERE)	9W-1442	1	AIR DRYER GP	344
COOLING SYSTEM				
CAP AS-COOLANT TANK	251-3227	1	TANK GP-COOLANT	85
GASKET (TEMPERATURE REGULATOR HOUSING)	222-5915	1	LINES GP-WATER	77
REGULATOR-WATER TEMPERATURE (97-DEG C)	115-4223	2	LINES GP-WATER	77

MAINTENANCE PARTS

DESCRIPTION	PART NUMBER	QTY	WHERE USED	PAGE
ELECTRICAL AND STARTING SYSTEM				
BATTERY (12-VOLT, 1400-CCA)	153-5710	2	BATTERY & WIRING GP	123
BATTERY (12-VOLT, MAINTENANCE FREE, WET)	3T-5760	2	BATTERY & WIRING GP	120
CIRCUIT BREAKER AS (105-AMPERE) (ALTERNATOR)	171-2212	1	WIRING GP-AUXILIARY	197
CIRCUIT BREAKER AS (105-AMPERE) (MAIN)	171-2212	1	WIRING GP-AUXILIARY	197
FLASHER AS (24-VOLT)	108-0358	1	LIGHTING GP-ROADING	158
FUSE (10-AMPERE)	9W-1442	1	CONVERTER GP-ELECTRICAL	131
		1	LIGHTING GP-ROADING	158
		9	WIRING GP-STEERING CONSOLE	234
		10	WIRING GP-STEERING CONSOLE	236
FUSE (10-AMPERE) (POWER CONVERTER)	9W-1442	1	CONVERTER GP-ELECTRICAL	130
FUSE (15-AMPERE)	9W-1441	1	LIGHTING GP-FLOOD	156
		1	LIGHTING GP-ROADING	158
		1	WIRING GP-CAB	200
		2	WIRING GP-STEERING CONSOLE	234
		3	WIRING GP-STEERING CONSOLE	236
KEY (BATTERY DISCONNECT)	8H-5306	1	SWITCH GP-DISCONNECT	191
LAMP (24-VOLT)	3E-8825	2	LIGHTING GP-FLOOD	156
		2	WIRING GP-CONSOLE	203
		1	WIRING GP-STEERING CONSOLE	234
		2	WIRING GP-STEERING CONSOLE	236
LAMP (24-VOLT) (DOME)	7N-9943	1	LAMP GP-DOME	142
LAMP (24-VOLT) (HEADLIGHTS, TAIL LIGHTS)	3E-8825	2	LIGHTING GP-ROADING	158
LAMP (24-VOLT, 0.2-AMPERE)	7N-5876	1	WIRING GP-CONSOLE	203
LAMP (24-VOLT, 21-WATT)	242-0588	1	LAMP GP-HEAD & SIGNAL	146
		1	LAMP GP-HEAD & SIGNAL	147
	9X-4493	1	LAMP GP	141
LAMP (24-VOLT, 3-WATT)	115-1748	1	WIRING GP-GRADE CONTROL	216
LAMP (24-VOLT, 5-WATT)	130-3515	1	LAMP GP-HEAD & SIGNAL	146
		1	LAMP GP-HEAD & SIGNAL	147
	5C-9583	1	LAMP GP-REGISTRATION PLATE	148
LAMP (24-VOLT, 75/70-WATT)	9X-3465	1	LAMP GP-HEAD & SIGNAL	146
		1	LAMP GP-HEAD & SIGNAL	147
LAMP GP-SIGNAL (24-VOLT, TURN) (LH)	199-3368	1	LIGHTING GP-SIGNAL	160
LAMP GP-SIGNAL (24-VOLT, TURN) (RH)	199-3368	1	LIGHTING GP-SIGNAL	160
LAMP-HALOGEN (24-VOLT, 70-WATT)	9X-3463	1	LAMP GP-FLOOD	143
		1	LAMP GP-FLOOD	144
LAMP-HALOGEN (24-VOLT, 70-WATT) (FLOODLIGHT)	9X-3463	1	LAMP GP-FLOOD	145
FRAME AND BODY				
PLUG-MAGNETIC (FINAL DRIVE OIL DRAIN)	8M-3837	1	CASE & FRAME GP	316

MAINTENANCE PARTS

DESCRIPTION	PART NUMBER	QTY	WHERE USED	PAGE
FUEL SYSTEM				
CAP AS-FILLER (FUEL TANK)	7X-7700	1	TANK GP-FUEL	113
FILTER AS-WATER SEP & FUEL (PRIMARY)	326-1644	1	FILTER GP-WATER SEP & FUEL	102
FILTER-FUEL (ADVANCED EFFICIENCY)	1R-0762	1	LINES GP-FUEL	106
STRAINER-FUEL (TANK FILLER)	9P-7121	1	TANK GP-FUEL	113
HYDRAULIC SYSTEM				
CAP-FILLER (HYDRAULIC TANK)	7H-1447	1	TANK & FILTER GP-HYDRAULIC	435
FILTER ELEMENT AS-OIL (ADVANCED EFFICIENCY)	1R-0774	1	TANK & FILTER GP-HYDRAULIC	435
STRAINER (HYDRAULIC)	9J-3047	1	TANK & FILTER GP-HYDRAULIC	435
LUBRICATION SYSTEM				
BREATHER AS (CRANKCASE)	164-0210	1	BREATHER GP	59
CAP-OIL FILLER (ENGINE)	068-4497	1	FILLER GP-ENGINE OIL	60
FILTER AS-ENGINE OIL (ADVANCED EFFICIENCY)	1R-1807	1	FILTER GP-ENGINE OIL	61
OPERATOR STATION				
BELT-SERPENTINE	185-5872	1	COMPRESSOR GP-REFRIGERANT	538
BLADE AS-WIPER (300-MM) (FRONT, LOWER)	123-4355	2	WIPER GP-WINDOW	635
BLADE AS-WIPER (450-MM)	6V-5853	1	WIPER GP-WINDOW	638
BLADE AS-WIPER (450-MM) (FRONT)	6V-5853	1	WIPER GP-WINDOW	635
		1	WIPER GP-WINDOW	637
FILTER ELEMENT AS-CAB AIR	231-4486	1	FILTER GP-CAB AIR	562
	231-4487	2	FILTER GP-CAB AIR	562
	232-1732	1	FILTER GP-CAB AIR	562
	7T-7358	1	FILTER GP-CAB AIR	562
FUSE (10-AMPERE)	9W-1442	1	FAN GP-CIRCULATING	560
		1	FAN GP-CIRCULATING	561
		1	WIPER GP-WINDOW	638
INDICATOR (ENGINE RPM)	336-6609	1	MODULE GP-SPEEDOMETER & TACH	587
INDICATOR (SPEED)	336-6608	1	MODULE GP-SPEEDOMETER & TACH	587
KEY	113-5805	1	HOUSING GP-SEAT SUSPENSION	564
LAMP (12-VOLT)	8M-6176	2	MODULE GP-QUAD GAUGE	586
LAMP (24-VOLT)	107-1983	4	PANEL GP-INSTRUMENT	594
		4	PANEL GP-INSTRUMENT	596
		4	PANEL GP-INSTRUMENT	597
		4	PANEL GP-INSTRUMENT	599
	3E-8825	1	FAN GP-CIRCULATING	560
		1	FAN GP-CIRCULATING	561
	8D-1429	1	AIR CONDITIONER & HEATER GP	528
LAMP (24-VOLT, 3-WATT)	115-1748	11	PANEL GP-INSTRUMENT	594
		10	PANEL GP-INSTRUMENT	596
		11	PANEL GP-INSTRUMENT	597
		11	PANEL GP-INSTRUMENT	599
SEAT BELT GP (ADJUSTABLE, 3-IN)	8Y-4030	1	SEAT GP	613
SEAT BELT GP (RETRACTABLE)	222-0345	1	SEAT GP	616

MAINTENANCE PARTS

DESCRIPTION	PART NUMBER	QTY	WHERE USED	PAGE
POWER TRAIN				
BREATHER (POWER TRAIN OIL FILLER)	9G-5127	1	FILLER GP-POWER TRAIN OIL	267
BREATHER (TANDEM)	4H-6112	1	TANDEM & COVER GP	283
FILTER ELEMENT AS-OIL (ADVANCED EFFICIENCY) (TRANSMISSION)	328-3655	1	FILTER GP-OIL	268
FILTER-MAGNETIC (TRANSMISSION)	8S-9129	1	CASE & PARTS GP-PLANETARY	241
		1	SCREEN GP-MAGNETIC	280
SCREEN-SUCTION (TRANSMISSION)	8S-9130	1	CASE & PARTS GP-PLANETARY	241
		1	SCREEN GP-MAGNETIC	280

INDEX

Name	Page
A	
ACCESSORY GP-CAB–HIGH PROFILE	523
ACCUMULATOR-REFRIGERANT	578
ADAPTER GP-OIL LINE–ENGINE	58
ADJUSTER GP-SEAT	524, 526, 527
AFTERCOOLER GP-AIR	87
AIR CLEANER GP	88, 89
AIR COMPRESSOR GP	10, 11
AIR CONDITIONER & HEATER GP	528
AIR CONDITIONER AR	532
AIR CONDITIONER GP	532
AIR DRYER GP	343, 344, 345, 346
ALARM GP (BACKUP)	153
ALARM GP–CATERPILLAR MONITORING SYSTEM	114
ALTERNATOR GP-CHARGING	115, 117
APPLICATION GP-POWER TRAIN	118
ARMREST GP–LH	534
ARMREST GP–RH	533
AXLE GP-FRONT	306
B	
BASE GP-OIL FILTER–TRANSMISSION	240
BATTERY & WIRING GP	119
BATTERY & WIRING GP–HEAVY DUTY	123, 125
BATTERY (12-VOLT, 1400-CCA)	123
BATTERY (12-VOLT, MAINTENANCE FREE, WET)	120
BEARING GP-MAIN	19
BELT-SERPENTINE	43, 538
BIT GP-END	640
BLADDER (ACCUMULATOR)	416
BLADE & TIP AR-POWER	641
BLADE AS-WIPER (300-MM) (FRONT, LOWER)	635
BLADE AS-WIPER (450-MM)	638
BLADE AS-WIPER (450-MM) (FRONT)	635, 637
BLADE GP	642
BLADE GP-BULLDOZER–FRONT	643
BOSS GP-DRAWBAR–ACCUGRADE	508
BOSS GP-FRAME	309
BOSS GP-FRAME–ACCUGRADE	311
BOX GP-BATTERY	313
BOX GP-TOOL	660
BRACKET GP-SCARIFIER	645
BRAKE GP-PARKING	348
BRAKE GP-SERVICE	350
BREATHER (POWER TRAIN OIL FILLER)	267
BREATHER (TANDEM)	283
BREATHER AS (CRANKCASE)	59
BREATHER GP	59
BUMPER GP-REAR	314, 315
C	
CAB AR–NON ROPS/FOPS	535
CAB GP–HIGH PROFILE	536
CAMSHAFT GP	13
CAP AS-COOLANT TANK	85
CAP AS-FILLER (FUEL TANK)	113
CAP-FILLER (HYDRAULIC TANK)	435
CAP-OIL FILLER (ENGINE)	60
CARRIER GP-SEAL	14
CASE & FRAME GP	316
CASE & PARTS GP-PLANETARY	241
CHAIN GP-DRIVE	246
CIRCLE AS	513
CIRCLE GP	509, 511, 514, 516
CIRCUIT BREAKER AS (105-AMPERE) (ALTERNATOR)	197
CIRCUIT BREAKER AS (105-AMPERE) (MAIN)	197
CLUTCH GP-TRANSMISSION–1ST & 3RD	247
CLUTCH GP-TRANSMISSION–FORWARD	252
CLUTCH GP-TRANSMISSION–HI & LO	250
CLUTCH GP-TRANSMISSION–REVERSE, SECOND	254
COMPRESSOR GP-REFRIGERANT	537, 538
CONDENSER & MTG GP-REFRIGERANT	539
CONSOLE GP-OPERATOR	540, 542
CONTROL & MTG GP-ENGINE ELEK	126
CONTROL AR-HYDRAULIC	363
CONTROL AR-HYDRAULIC–RIPPER	363
CONTROL GP-CLUTCH	545
CONTROL GP-DIFFERENTIAL LOCK	256
CONTROL GP-GOVERNOR	100
CONTROL GP-PARKING BRAKE	352
CONTROL GP-POWER TRAIN	127
CONTROL GP-SERVICE BRAKE	354
CONTROL GP-STEERING	547
CONTROL GP-TRANSMISSION	540

INDEX

Name	Page
CONTROL GP-TRANSMISSION HYD	258
CONTROL GP-UNPROGRAMMED (POWER TRAIN)	118, 127
CONTROL GP-UNPROGRAMMED–POWER TRAIN	128
CONVERTER AR-ELECTRICAL–HIGH PROFILE	129
CONVERTER GP-ELECTRICAL	130
CONVERTER GP-ELECTRICAL (24-VOLT TO 12-VOLT)	130, 131
CONVERTER GP-ELECTRICAL–RADIO	131
COOLER GP-ENGINE OIL	73
COOLER GP-TRANSMISSION OIL	259
COOLING AR	74
CORE AS-CONDENSER (REFRIGERANT)	539
CORE AS-ENGINE OIL COOLER	73
CORE AS-HYDRAULIC OIL COOLER	259
CORE AS-RADIATOR	84
COUPLING GP-TORSIONAL	260
COVER GP-ACCESS	317
COVER GP-AIR INLET	91
COVER GP-CYLINDER BLOCK	15
COVER GP-FRONT HOUSING	16
COVER GP-PROTECTION–ACCUGRADE	318
COVER GP-VALVE MECHANISM	17
CRANKSHAFT GP	19
CYLINDER & LINES GP-RIPPER	364
CYLINDER & MTG GP-ARTICULATION	366
CYLINDER & MTG GP-BLADE LIFT	367
CYLINDER & MTG GP-BLADE TIP	368
CYLINDER & MTG GP-CENTERSHIFT	369
CYLINDER & MTG GP-SCARIFIER	370
CYLINDER & MTG GP-SIDESHIFT	371
CYLINDER & MTG GP-STEERING	372
CYLINDER & MTG GP-WHEEL LEAN	373
CYLINDER BLOCK GP	21, 22, 23
CYLINDER GP-ARTICULATION–LH	374
CYLINDER GP-ARTICULATION–RH	375
CYLINDER GP-CENTERSHIFT	376
CYLINDER GP-HYDRAULIC	377, 379, 646
CYLINDER GP-LIFT	380
CYLINDER GP-SCARIFIER	381
CYLINDER GP-SIDESHIFT	382
CYLINDER GP-STEERING–LH	383
CYLINDER GP-STEERING–RH	385
CYLINDER GP-WHEEL LEAN	387
CYLINDER HEAD AS	25
CYLINDER HEAD GP	26, 27, 28

D

DAMPER & PULLEY GP	29
DETENT GP-CONTROL VALVE–PLOW, BULLDOZER LIFT	388
DIFFERENTIAL & BEVEL GEAR GP	261
DIFFERENTIAL GP	263
DOOR GP (AIR VENTED)	571, 573, 605
DOOR GP-CAB–HIGH PROFILE	553
DOOR GP-CAB–HIGH PROFILE–LH	551
DOOR GP-CAB–HIGH PROFILE–RH	548
DRAWBAR GP	518
DRIVE GP-ACCESSORY	30
DRIVE GP-CIRCLE	389
DRIVE GP-FAN	31, 32
DRIVE GP-FINAL	265
DUCT & CONTROL GP–A/C, HEATER DISTRIBUTOR	555
DUCT GP-CAB AIR–AIR CONDITIONER, HEATER	556

E

EDGE GP-CUTTING	648
ELBOW GP-AIR INLET	92
ELECTRONICS GP-COMMUNICATION–PRODUCT LINK 300	132
ELECTRONICS GP-IMPLEMENT	132
ENCLOSURE GP-ENGINE	321
ENGINE AR-COMPLETE	7
ENGINE AR-CORE	9
EXTENSION GP-BACKREST	616

F

FAN GP-BLOWER–RADIATOR	75
FAN GP-CIRCULATING–DEFROSTER, REAR	557, 561
FAN GP-CIRCULATING–FRONT DEFROSTER	558, 560
FASTENER GP-CYLINDER HEAD	27, 33
FASTENER GP-ENGINE	34
FASTENER GP-FRONT HOUSING	35
FILLER GP-ENGINE OIL	60
FILLER GP-POWER TRAIN OIL	267
FILM (SUN VISOR)	593
FILM GP	661
FILM-CERTIFICATION (OPS, READ OMM)	603

INDEX

Name	Page
	605
FILM-CONTROL (AIR CONDITIONER, HEATER)	528
FILM-COVER	540
FILM-FACE (HEADLIGHTS HIGH, LOW BEAM)	158 236
FILM-FACE (TURN SIGNAL, HAZARD)	158 236
FILM-FUSE (PANEL ACTION LAMPS)	200
FILM-IDENTIFICATION (AIR CONDITIONER)	528
FILM-IDENTIFICATION (DRAIN, ENGINE COOLANT)	662
FILM-IDENTIFICATION (FUSE BOX)	234
FILM-IDENTIFICATION (FUSE BOX) (LH)	236
FILM-IDENTIFICATION (FUSE BOX) (RH)	236
FILM-IDENTIFICATION (HAZARD WARNING LIGHTS)	597
FILM-IDENTIFICATION (HAZARD WARNING LIGHTS) (INSTRUMENT CLUSTER)	599
FILM-IDENTIFICATION (HYDRAULIC SYSTEM MALFUNCTION)	597
FILM-IDENTIFICATION (HYDRAULIC SYSTEM MALFUNCTION) (INSTRUMENT CLUSTER)	594 599
FILM-INFORMATION (ENGINE, HIGH IDLE, HOLD)	540
FILM-INFORMATION (ENGINE, LOW IDLE, HOLD)	540
FILM-INSTRUCTION (BELT ROUTING)	538
FILM-INSTRUCTION (BELT ROUTING) (A/C)	532
FILM-INSTRUCTION (ENGINE OIL DRAIN)	662
FILM-INSTRUCTION (ENGINE SHUTDOWN)	227
FILM-INSTRUCTION (SEAT ADJUSTMENT)	626
FILM-PANEL (LH)	597
FILM-PANEL (LH) (INSTRUMENT CLUSTER)	594 599
FILM-PANEL (RH)	597
FILM-PANEL (RH) (INSTRUMENT CLUSTER)	594 599
FILM-PANEL (SPEED CONTROL)	540
FILM-PANEL (TRANSMISSION, PARKING BRAKE)	540
FILM-WARNING (CRUSH HAZARD, STAY BACK, INTL)	317
FILM-WARNING (NO STEP)	662
FILM-WARNING (NO WELD, NO DRILL, READ OMM)	603 605
FILTER AS-ENGINE OIL (ADVANCED EFFICIENCY)	61
FILTER AS-WATER SEP & FUEL (PRIMARY)	102
FILTER ELEMENT AS-AIR (SECONDARY)	88
FILTER ELEMENT AS-CAB AIR	562
FILTER ELEMENT AS-OIL (ADVANCED EFFICIENCY)	435
FILTER ELEMENT AS-OIL (ADVANCED EFFICIENCY) (TRANSMISSION)	268
FILTER ELEMENT-AIR (PRIMARY)	88
FILTER GP-CAB AIR	562
FILTER GP-ENGINE OIL	61
FILTER GP-OIL	268
FILTER GP-WATER SEP & FUEL	102
FILTER-FUEL (ADVANCED EFFICIENCY)	106
FILTER-MAGNETIC (TRANSMISSION)	241 280
FINAL DRIVE GP	265
FLASHER AS	236
FLASHER AS (24-VOLT)	158
FLOOR MAT	330 332
FLOOR MAT (CAB)	569
FLYWHEEL GP	36
FRAME GP-FRONT	325
FUMES DISPOSAL GP	62
FUSE (10-AMPERE)	131 158 234 236 344 560 561 638
FUSE (10-AMPERE) (POWER CONVERTER)	130
FUSE (15-AMPERE)	156 158 200 234 236

G

GASKET (TEMPERATURE REGULATOR HOUSING)	77
GAUGE AS-OIL LEVEL (DIPSTICK) (ENGINE)	64
GAUGE AS-OIL LEVEL (DIPSTICK) (POWER TRAIN OIL)	267
GAUGE GP-AIR PRESSURE	596 597
GAUGE GP-AIR PRESSURE (BRAKE)	594 599
GAUGE GP-OIL LEVEL (DIPSTICK)	64
GAUGE GP-OIL LEVEL (DIPSTICK)–ENGINE	63
GAUGE-OIL LEVEL (DIPSTICK) (ENGINE)	63
GAUGE-SIGHT (HYDRAULIC)	435
GEAR GP-BEVEL & PINION	270
GEAR GP-BEVEL–STRAIGHT AXLE	269

INDEX

Name	Page
GEAR GP-FRONT	37
GENERAL AR	1
GRADE CONTROL AR	133
	135
GROUND GP-ELECTRICAL	137
GUARD GP-BOTTOM	327
	328
GUARD GP-DRIVE SHAFT	329
GUARD GP-FAN	76
GUARD GP-PLATFORM	330
	332
HARNESS AS-STARTING AID	207
HARNESS AS-TRANSMISSION	225
	239
HARNESS AS-WIRING	344
	587
HARNESS AS-WIRING (MAST)	217
HITCH GP-ARTICULATING	334
HORN GP-ELECTRIC	563
HOUSING GP-FLYWHEEL	38
HOUSING GP-FRONT	39
HOUSING GP-SEAT SUSPENSION	564

H

HARNESS AS-CAB	523
HARNESS AS-CAB (FRONT)	200
HARNESS AS-CAB (REAR)	200
HARNESS AS-CAB (SWITCH PANEL)	200
HARNESS AS-CHASSIS	217
HARNESS AS-CONSOLE	203
	234
	236
HARNESS AS-CONTROL (PRODUCT LINK)	138
HARNESS AS-ENGINE (ELECTRONIC CONTROL MODULE)	205
HARNESS AS-ENGINE (FUEL INJECTION)	205
HARNESS AS-FRAME	217
HARNESS AS-FRAME (RH)	220
HARNESS AS-FUEL TANK	197
HARNESS AS-HEATER & AIR COND	196
	528
HARNESS AS-LIGHTING	158
HARNESS AS-LIGHTING (BAR)	158
HARNESS AS-PANEL	213
	594
	596
	597
	599
HARNESS AS-PLATFORM	208
	212
HARNESS AS-RADIO (PRODUCT LINK)	138
HARNESS AS-REAR CHASSIS (LH)	226
HARNESS AS-REAR CHASSIS (RH)	226
HARNESS AS-REAR LIGHTING	155
	232
HARNESS AS-SENSOR (ANGLE)	217
	220
HARNESS AS-SENSOR (FUEL SYSTEM)	227
HARNESS AS-SENSOR (ROTATION)	217
	220
HARNESS AS-SENSOR (SPEED)	241
HARNESS AS-SENSOR (TRANSMISSION SPEED)	225
HARNESS AS-SOLENOID	156
	197

I

INDICATOR (ENGINE RPM)	587
INDICATOR (SPEED)	587
INDICATOR AS-ARTICULATION	586
INDICATOR AS-COOLANT TEMP	586
INDICATOR AS-FUEL LEVEL	586
INDICATOR GP-AIR FILTER CHANGE	89
INJECTOR GP-FUEL	103
INSTALLATION AR-COMMUNICATION–PRODUCT LINK 321SR	138
INSTALLATION AR-RADIO	567
INSTALLATION GP-COMMUNICATION–PRODUCT LINK	139
INSTALLATION GP-RADIO	568
INSULATION GP-WEATHER	569

K

KEY	564
KEY (BATTERY DISCONNECT)	191
KIT-AIR CONTROL VALVE	628

L

LAMP (12-VOLT)	586
LAMP (24-VOLT)	156
	203
	234
	236
	528
	560
	561
	594
	596
	597
	599
LAMP (24-VOLT) (DOME)	142
LAMP (24-VOLT) (HEADLIGHTS, TAIL LIGHTS)	158
LAMP (24-VOLT, 0.2-AMPERE)	203
LAMP (24-VOLT, 21-WATT)	141
	146

INDEX

Name	Page
	147
LAMP (24-VOLT, 3-WATT)	216
	594
	596
	597
	599
LAMP (24-VOLT, 5-WATT)	146
	147
	148
LAMP (24-VOLT, 75/70-WATT)	146
	147
LAMP GP	141
LAMP GP-DOME	142
LAMP GP-FLOOD	143
	144
	145
LAMP GP-HEAD & SIGNAL	146
	147
LAMP GP-REGISTRATION PLATE	148
LAMP GP-SIGNAL (24-VOLT, TURN) (LH)	160
LAMP GP-SIGNAL (24-VOLT, TURN) (RH)	160
LAMP GP-SIGNAL–PARK, TURN	150
LAMP GP-SIGNAL–STOP, TAIL	149
LAMP GP-SIGNAL–TURN	151
LAMP-HALOGEN (24-VOLT, 70-WATT)	143
	144
LAMP-HALOGEN (24-VOLT, 70-WATT) (FLOODLIGHT)	145
LIFT GP-BLADE	649
LIFTER GP-VALVE	40
LIFTING GP-ENGINE	41
LIGHTING AR-ROADING	152
LIGHTING GP-BACKUP	153
LIGHTING GP-FLOOD–FRONT	156
LIGHTING GP-FLOOD–RIPPER	155
LIGHTING GP-REGISTRATION PLATE	157
LIGHTING GP-ROADING	158
LIGHTING GP-SIGNAL–TURN	160
LINER GP-CAB–ENCLOSED, HIGH PROFILE	571
	573
LINES GP-AIR	93
LINES GP-AIR CONDITIONER–AIR CONDITIONER	578
LINES GP-CENTERSHIFT LOCK	392
LINES GP-ENGINE OIL	65
	66
LINES GP-ENGINE OIL DRAIN	67
LINES GP-FUEL	104
	105
LINES GP-HEATER	580
LINES GP-HYDRAULIC	408
LINES GP-HYDRAULIC–BULLDOZER LIFT, PLOW, LH	403
LINES GP-HYDRAULIC–FRONT	407
LINES GP-HYDRAULIC–LH	396
	404
LINES GP-HYDRAULIC–RH	400
LINES GP-HYDRAULIC–SCARIFIER	394
LINES GP-INJECTOR HYD PUMP	108
LINES GP-LUBRICATION	336
LINES GP-PUMP	409
	410
LINES GP-PUMP–HIGH CAPACITY	413
LINES GP-RIPPER	414
LINES GP-STEERING	416
LINES GP-TRANSMISSION OIL	272
LINES GP-TURBOCHARGER OIL	68
LINES GP-WATER	77
	79
LINK GP-LOWER–RIPPER	520
LINK GP-STEERING	337
LINK GP-UPPER–RIPPER	521
LOCK GP-CENTERSHIFT	418

M

MANIFOLD GP-ENGINE OIL	70
MANIFOLD GP-EXHAUST	94
MANIFOLD GP-VALVE–LH	419
MANIFOLD GP-VALVE–RH	421
METER GP-SERVICE	234
	236
MIRROR GP-REAR VIEW	585
MIRROR GP-REAR VIEW–DUAL INTERIOR	584
MIRROR GP-REAR VIEW–EXTERIOR	583
MIRROR GP-REAR VIEW–INSIDE	582
MODULE GP-INTERFACE	587
MODULE GP-QUAD GAUGE	586
MODULE GP-SPEEDOMETER & TACH	587
MOTOR GP-ELECTRIC–CIRCULATING FAN	161
MOTOR GP-GEROTOR	422
MOTOR GP-WINDOW WIPER (24-VOLT) (FRONT UPPER)	635
MOTOR GP-WINDOW WIPER (24-VOLT) (REAR)	638
MOTOR GP-WINDOW WIPER (24-VOLT, 2-SPEED)	635
	637
MOTOR GP-WINDOW WIPER (24-VOLT, 2-SPEED) (FRONT, LOWER)	635
MOTOR GP-WINDOW WIPER (24-VOLT, 2-SPEED) (REAR)	638
MOTOR GP-WINDOW WIPER (FRONT)	637
MOUNTING GP-CAB–NON-ROPS, ENCLOSED	589
MOUNTING GP-ENGINE	42
MOUNTING GP-ENGINE & XMSN	43
MOUNTING GP-GRADE CONTROL	162
	164
MOUNTING GP-GRADE CONTROL–CIRCLE	163

INDEX

Name	Page
MOUNTING GP-RIPPER	652
MOUNTING GP-ROPS–ENCLOSED	590
MOUNTING GP-WHEEL	2
	276
MUFFLER GP	95

O

OPTION AR-CAB	3
OPTION AR-CAB–HIGH PROFILE	2
	3
OPTION AR-CAB–WITH AIR CONDITIONER	3
OPTION AR-CAB–WITHOUT AIR CONDITIONER	3
OPTION AR-CONFIGURATION	4
OPTION AR-ENGINE–COLD WEATHER STARTING	4
OPTION AR-RIPPER–RIPPER	4
OPTION AR-WORK TOOL	5
ORIFICE AS-AIR CONDITIONER	578

P

PADLOCK GP	113
	313
	340
	437
	613
	615
PADLOCK GP (TOOL BOX)	660
PAN GP-BACKREST	592
PAN GP-OIL	45
	46
	47
PANEL GP-CAB–HIGH PROFILE	593
PANEL GP-INSTRUMENT (ENCLOSED)	535
	603
PANEL GP-INSTRUMENT–ENCLOSED	594
	599
PANEL GP-INSTRUMENT–OPEN	596
	597
PISTON & ROD GP	48
PLATE & FILM GP	662
PLATE GP-CERTIFICATION	604
PLATE GP-PUSH	522
PLATE-INSTRUCTION (AIR CONDITIONER)	528
PLATE-SERIAL NUMBER (TRANSMISSION)	242
PLATE-WARNING (ROPS, FOPS, OPS, READ OMM)	604
PLUG AS-DRAIN (MAGNETIC) (ENGINE OIL PAN)	46
PLUG GP-CONNECTOR–ENGINE HARNESS, PROTECTIVE COVER	165
PLUG GP-CYLINDER BLOCK	49
	50
PLUG GP-ENGINE	51
PLUG GP-OIL PAN	52
PLUG-MAGNETIC (FINAL DRIVE OIL DRAIN)	316
PLUG-O-RING	52
PUMP & MTG GP-STEERING	424
PUMP & MTG GP-UNIT INJ HYD	109
PUMP GP-ENGINE OIL	71
	72
PUMP GP-FUEL INJECTION	110
PUMP GP-FUEL PRM & WATER SEP	111
PUMP GP-GEAR	277
	279
PUMP GP-METERING (HMU)	547
PUMP GP-PISTON	425
	427
PUMP GP-UNIT INJECTOR HYD	109
PUMP GP-WATER	81
	82

R

RADIATOR GP	84
RADIO GP-COMMUNICATION–PRODUCT LINK 121SR	166
RECEIVER AS (AIR CONDITIONER)	578
RECLINER GP-SEAT	601
REFLECTOR GP	338
REGULATOR AS-VOLTAGE (24-VOLT)	115
REGULATOR GP-FUEL PRESSURE	112
REGULATOR-WATER TEMPERATURE (97-DEG C)	77
RELAY (24-VOLT)	217
RELAY (24-VOLT) (IMPLEMENT ENABLE)	222
RELAY (24-VOLT) (POWER MODULE)	222
RELAY AS (24-VOLT)	197
	203
	234
RELAY AS (24-VOLT) (BACKUP LIGHT)	153
RELAY AS (24-VOLT) (ETHER STARTING AID)	207
RELAY AS (24-VOLT) (FUEL PRIMING)	225
RELAY AS (24-VOLT) (TAIL, PANEL LAMPS, LH)	236
RELAY AS (24-VOLT) (TAIL, PANEL LAMPS, RH)	236
RIPPER AR	653
RIPPER GP	654
ROADING AR–WITH CAB	6
ROADING AR–WITHOUT CAB	5
ROCKER ARM GP–EXHAUST	53
ROCKER ARM GP–INLET	54
ROPS AR–ENCLOSED, HIGH PROFILE	603
ROPS AR–HIGH PROFILE, OPEN	602
ROPS GP–ENCLOSED	607
ROPS GP–HIGH PROFILE	604

INDEX

Name	Page
ROPS GP–HIGH PROFILE, OPEN	604, 605
ROTATING GP-PUMP	429, 430

S

Name	Page
SCARIFIER AR–VEE TYPE	655
SCARIFIER GP–VEE TYPE	656
SCREEN GP-MAGNETIC–TRANSMISSION	280
SCREEN GP-SUN	608
SCREEN GP-SUN–REAR	608
SCREEN-SUCTION (TRANSMISSION)	241, 280
SEAL GP-CRANKSHAFT	55
SEAL GP-DUO-CONE	389
SEAL-CRANKSHAFT (FRONT)	55
SEAL-INTEGRAL	11
SEAL-VALVE COVER	17
SEAT BELT GP (ADJUSTABLE, 3-IN)	613
SEAT BELT GP (RETRACTABLE)	616
SEAT BELT GP–RETRACTABLE	609, 610
SEAT GP	614
SEAT GP–CLOTH	616, 617
SEAT GP–VINYL	611, 613, 615
SEAT GP-STATIC	621
SEAT GP-STATIC–VINYL	619
SEAT GP-SUSPENSION–CLOTH	622, 623
SEGMENT-CIRCLE	509, 511
SENDER AS-FUEL LEVEL	197
SENDER AS-POSITION (ARTICULATION)	225
SENDER-TEMPERATURE (HYDRAULIC OIL)	225
SENSOR AS-PRESSURE	173
SENSOR AS-TEMPERATURE	181
SENSOR GP-ENGINE	167
SENSOR GP-POSITION	169, 170
SENSOR GP-POSITION (ROTARY) (CLUTCH CONTROL)	545
SENSOR GP-PRESSURE	171, 172, 173, 174, 175, 176
SENSOR GP-PRESSURE (ATMOSPHERIC AIR)	197
SENSOR GP-PRESSURE (ATMOSPHERIC)	167
SENSOR GP-PRESSURE (BOOST)	167
SENSOR GP-PRESSURE (ENGINE OIL)	167
SENSOR GP-PRESSURE (FUEL FILTER)	105
SENSOR GP-PRESSURE (RAIL)	167
SENSOR GP-SPEED	177, 178, 179
SENSOR GP-SPEED (ENGINE TIMING)	167
SENSOR GP-SPEED (MAGNETIC, HIGH OUTPUT) (TRANSMISSION)	227
SENSOR GP-SPEED (TRANSMISSION OUTPUT)	242
SENSOR GP-TEMPERATURE	180, 181, 182, 183
SENSOR GP-TEMPERATURE (FUEL)	105
SENSOR GP-TEMPERATURE (TRANSMISSION OIL)	242
SERVICE GP-COMMUNICATION (PRODUCT LINK 300)	132
SHAFT GP-DRIVE–TRANSMISSION	281
SHAFT GP-INPUT	282
SHAFT GP-PUMP DRIVE	431
SOFTWARE GP-COMMUNICATION (PRODUCT LINK 121SR)	166
SOFTWARE GP-COMMUNICATION (PRODUCT LINK 300)	132
STARTING AID GP-ETHER	184
STARTING MOTOR GP-ELECTRIC	186, 187, 189
STEP GP	339
STRAINER (HYDRAULIC)	435
STRAINER-FUEL (TANK FILLER)	113
SUPPORT GP-BATTERY	340
SUPPORT GP-RADIATOR	341
SUPPORT GP-SEAT	624
SUSPENSION GP-SEAT	626
SWASHPLATE GP	425
SWASHPLATE GP–VARIABLE	432
SWITCH AS (24-VOLT) (TAIL LIGHTS)	234
SWITCH AS (CENTERSHIFT PIN)	203
SWITCH AS (CIRCULATING FAN)	560, 561
SWITCH AS (THROTTLE HOLD MODE)	203
SWITCH AS-BALL (CENTERSHIFT INDICATOR)	208, 212
SWITCH AS-LIMIT	234
SWITCH AS-LIMIT (TRANSMISSION NEUTRALIZER)	236
SWITCH AS-PRESSURE (AIR BRAKE)	208, 212
SWITCH AS-PRESSURE (PARKING BRAKE)	208

INDEX

Name	Page
	212
SWITCH AS-PRESSURE (REFRIGERANT, HIGH, LOW)	578
SWITCH AS-PRESSURE (REFRIGERANT, LOW SIDE)	578
SWITCH AS-PRESSURE (STOP LIGHT)	208
	212
SWITCH AS-ROCKER (24-VOLT)	156
	234
	560
	561
SWITCH AS-ROCKER (24-VOLT) (THROTTLE HOLD MODE)	203
SWITCH AS-ROCKER (CENTERSHIFT PIN)	203
SWITCH AS-ROCKER (THROTTLE LOCK SET, RESET)	203
SWITCH AS-ROTARY	158
SWITCH AS-ROTARY (FAN SPEED)	528
SWITCH AS-ROTARY (HEADLIGHT DIMMER)	236
SWITCH AS-ROTARY (WIPER, WASHER) (FRONT)	200
SWITCH AS-START (KEY)	203
SWITCH AS-TOGGLE (GROUND LEVEL SHUTDOWN)	225
SWITCH GP-BYPASS	190
SWITCH GP-DISCONNECT–BATTERY	191
SWITCH GP-MAGNETIC	192
SWITCH GP-PRESSURE	193
SWITCH GP-ROTARY (TURN SIGNAL, HAZARD)	158
	236
SWITCH GP-WIPER (24-VOLT, INTERMITTENT) (REAR)	638
SWITCH GP-WIPER–INTERMITTENT	194
SWITCH-ROCKER (HEADLIGHTS)	236
SWITCH-ROCKER (HEADLIGHTS, TAIL LIGHTS)	158
SWITCH-ROCKER (WORK LIGHTS)	156
SWIVEL GP	433

T

Name	Page
TANDEM & COVER GP	283
TANK & FILTER GP-HYDRAULIC	435
TANK & MTG GP-HYDRAULIC	437
TANK GP-AIR	358
TANK GP-COOLANT	85
TANK GP-FUEL	113
TIE ROD GP (LH THREAD, RH)	337
TIE ROD GP (RH THREAD, LH)	337
TIE ROD GP (STEERING)	372
TIMER AS-ON DELAY (24-VOLT)	196
TOOTH GP-RIPPER	659
TRANSMISSION AR	285
TURBOCHARGER GP	96
	97
	98
	99

U

Name	Page
UNIVERSAL JOINT GP	286

V

Name	Page
VALVE & LINKAGE GP–4-BANK, RH; 3-BANK, LH	438
VALVE & LINKAGE GP–4-BANK, RH; 5-BANK, LH	440
	446
	450
VALVE & LINKAGE GP–4-BANK, RH, LH	444
	455
VALVE & LINKAGE GP–5-BANK, RH, LH	442
	452
VALVE & MTG GP-DIFF LOCK	287
VALVE AS-RELIEF (GOVERNOR, AIR COMPRESSOR)	11
VALVE GP-AIR CONTROL	628
VALVE GP-BANK 3–LH	457
VALVE GP-BANK 4–LH	459
	460
VALVE GP-BANK 4–RH	458
	461
VALVE GP-BANK 5–LH	463
	464
	465
VALVE GP-BANK 5–RH	462
VALVE GP-CHECK	468
	470
	472
	474
	476
	480
	482
	486
VALVE GP-CHECK E	419
	421
VALVE GP-COMBINATION	466
VALVE GP-CONTROL	419
	421
VALVE GP-CONTROL (AIR)	628
VALVE GP-CONTROL–ARTICULATION	468
VALVE GP-CONTROL–BLADE LIFT	474
	488
	490
VALVE GP-CONTROL–BLADE TIP	476
VALVE GP-CONTROL–BULLDOZER	482
VALVE GP-CONTROL–BULLDOZER LIFT, PLOW	492

INDEX

Name	Page
VALVE GP-CONTROL–CENTERSHIFT	470
VALVE GP-CONTROL–CIRCLE DRIVE	478
VALVE GP-CONTROL–RIPPER	486
VALVE GP-CONTROL–SCARIFIER	484
VALVE GP-CONTROL–SIDESHIFT	480
VALVE GP-CONTROL–WHEEL LEAN	472
VALVE GP-COUNTERBALANCE	421
VALVE GP-ETHER STARTING	195
VALVE GP-PUMP CONTROL–PRESSURE, FLOW COMPENSATOR	494
VALVE GP-PURGE	496
VALVE GP-RELIEF	484, 497, 498, 499, 500, 501, 502, 503, 504, 505
VALVE GP-SELECTOR & PRESS CONT	288, 291
VALVE GP-SHUTOFF (MANUAL)	105
VALVE GP-SHUTTLE	506
VALVE GP-SOLENOID	294, 295, 362, 507
VALVE GP-SOLENOID & MANIFOLD	419, 421
VALVE GP-SOLENOID (24-VOLT) (CENTERSHIFT LOCK)	418
VALVE GP-SOLENOID (24-VOLT) (SELECTOR & PRESSURE RANGE)	288
VALVE GP-SOLENOID (24-VOLT) (SPEED, RANGE, TRANSMISSION)	291
VALVE GP-SOLENOID (PARKING BRAKE)	352
VALVE GP-SOLENOID (PROPN SOL FOR CL PACK 1)	288
VALVE GP-SOLENOID (PROPN SOL FOR CL PACK 2)	288
VALVE GP-SOLENOID (PROPN SOL FOR CL PACK 3)	288
VALVE GP-TIRE	305
VALVE GP-TIRE (BASIC)	304
VALVE GP-TIRE (TIRE INFLATION)	304
VALVE GP-TRANSMISSION CONTROL	296
VALVE MECHANISM GP	56, 57
VALVE-RELIEF	241
VOLTMETER GP	586

W

Name	Page
WASHER GP-WINDOW–FRONT	629, 632
WASHER GP-WINDOW–REAR	631
WATER SEP & FUEL PRM PUMP GP	111
WHEEL & TIRE AR	298, 299
WHEEL & TIRE GP	299, 300
WHEEL AR	300, 301
WHEEL GP	302, 303, 304, 305
WIPER AR-WINDOW–REAR, HIGH PROFILE	634
WIPER GP-WINDOW–FRONT–HIGH PROFILE	635, 637
WIPER GP-WINDOW–REAR, HIGH PROFILE	638
WIRING AS	216
WIRING GP-AIR CONDITIONER	196
WIRING GP-AUXILIARY–FUEL TANK	197
WIRING GP-CAB	200
WIRING GP-CONSOLE	203
WIRING GP-ENGINE	205
WIRING GP-ETHER STARTING AID	207
WIRING GP-FRONT	208, 212
WIRING GP-GRADE CONTROL–ACCUGRADE	217, 220
WIRING GP-GRADE CONTROL–CAB, INDICATOR LAMP	216
WIRING GP-REAR	225
WIRING GP-REAR LIGHTING	232
WIRING GP-STEERING CONSOLE	234, 236
WIRING GP-TRANSMISSION	239

MACHINE ARRANGEMENT

348-3018 GENERAL AR

S/N: JAP1-UP

SMCS-7000 **i03660746**

NOTE	PART NUMBER	QTY	PART NAME 1 2 3 4 5 6 (PRODUCT LEVEL)	SEE PAGE
Y	*310-6459*	1	AIR CLEANER GP	89
Y	*313-2656*	1	AIR COMPRESSOR GP	11
Y	*345-7649*	1	ALTERNATOR GP-CHARGING	117
Y	*134-1080*	1	AXLE GP-FRONT	306
Y	*298-5591*	1	BATTERY & WIRING GP	119
Y	*320-9924*	1	BLADE GP	642
Y	*298-3519*	1	BOX GP-BATTERY	313
Y	*111-1719*	1	BOX GP-TOOL	660
Y	*5T-8144*	1	BRAKE GP-SERVICE	350
Y	*284-5378*	1	BUMPER GP-REAR	315
Y	*303-2159*	1	CASE & FRAME GP	316
Y	*2G-0585*	1	CHAIN GP-DRIVE	246
Y	*347-4645*	1	CIRCLE GP	516
Y	*167-9002*	1	CONSOLE GP-OPERATOR (TRANSMISSION DIRECTION, SPEED)	540
Y	*282-2475*	1	CONSOLE GP-OPERATOR	542
Y	*282-2473*	1	CONTROL GP-CLUTCH	545
Y	*303-3011*	1	CONTROL GP-DIFFERENTIAL LOCK	256
Y	*282-2472*	1	CONTROL GP-GOVERNOR	100
Y	*306-5499*	1	CONTROL GP-PARKING BRAKE	352
Y	*297-8948*	1	CONTROL GP-SERVICE BRAKE	354
Y	*7I-4718*	1	CONTROL GP-STEERING	547
Y	*281-5641*	1	COOLER GP-TRANSMISSION OIL	259
Y	*310-5881*	1	COOLING AR	74
Y	*337-3357*	1	COUPLING GP-TORSIONAL	260
Y	*115-5726*	1	CYLINDER & MTG GP-ARTICULATION	366
Y	*8X-1948*	1	CYLINDER & MTG GP-BLADE LIFT	367
Y	*8X-1946*	1	CYLINDER & MTG GP-CENTERSHIFT	369
Y	*112-7463*	1	CYLINDER & MTG GP-SIDESHIFT	371
Y	*8W-2290*	1	CYLINDER & MTG GP-STEERING	372
Y	*8W-2737*	1	CYLINDER & MTG GP-WHEEL LEAN	373
Y	*348-4955*	1	DIFFERENTIAL & BEVEL GEAR GP	261
Y	*341-8349*	1	DRAWBAR GP	518
Y	**253-4677**	1	DRIVE GP-CIRCLE	389
Y	*338-5871*	1	DRIVE GP-FAN	32
Y	*8W-4980*	1	DRIVE GP-FINAL	265
Y	*293-4833*	1	ENCLOSURE GP-ENGINE	321
Y	**325-9707**	1	ENGINE AR-COMPLETE	7
Y	*284-0824*	1	FAN GP-BLOWER (RADIATOR)	75
Y	**315-4118**	1	FILLER GP-POWER TRAIN OIL	267
Y	*309-4095*	1	FRAME GP-FRONT	325
Y	*347-2428*	1	GAUGE GP-OIL LEVEL (DIPSTICK)	64
Y	*8W-5870*	1	GUARD GP-DRIVE SHAFT	329
Y	*282-2469*	1	GUARD GP-PLATFORM	330
Y	*338-9747*	1	HITCH GP-ARTICULATING	334
Y	*295-4371*	1	HORN GP-ELECTRIC	563
Y	*265-1100*	1	LIFT GP-BLADE	649
Y	*284-5394*	1	LIGHTING GP-BACKUP	153
Y	*284-5362*	1	LIGHTING GP-FLOOD (RIPPER)	155
Y	*284-5376*	1	LIGHTING GP-FLOOD (FRONT)	156
Y	*311-0864*	1	LINES GP-AIR	93
Y	*293-4829*	1	LINES GP-CENTERSHIFT LOCK	392
Y	*310-6469*	1	LINES GP-ENGINE OIL DRAIN	67
Y	*325-7130*	1	LINES GP-FUEL	105
Y	*110-2985*	1	LINES GP-HYDRAULIC (RH)	400
Y	*117-3855*	1	LINES GP-HYDRAULIC (LH)	404
Y	*7I-4610*	1	LINES GP-LUBRICATION	336

MACHINE ARRANGEMENT

348-3018 **GENERAL AR** ***(contd.)*** **i03660746**

NOTE	PART NUMBER	QTY	PART NAME 1 2 3 4 5 6 (PRODUCT LEVEL)	SEE PAGE
Y	*322-2320*	1	LINES GP-PUMP	410
Y	*8X-1968*	1	LINES GP-STEERING	416
Y	*327-3854*	1	LINES GP-TRANSMISSION OIL	272
Y	*325-7448*	1	LINES GP-WATER	79
Y	*164-8462*	1	LOCK GP-CENTERSHIFT	418
Y	*310-6437*	1	MOUNTING GP-ENGINE & XMSN	43
Y	*337-0732*	1	MOUNTING GP-WHEEL	276
Y	*310-6472*	1	MUFFLER GP	95
Y	*316-5238*	1	PANEL GP-INSTRUMENT	596
Y	*302-4195*	1	PLATE & FILM GP	662
Y	*8X-2379*	1	PUMP & MTG GP-STEERING	424
Y	*113-4254*	1	SEAT GP (VINYL)	613
Y	*8W-5621*	1	SHAFT GP-DRIVE (TRANSMISSION)	281
Y	*293-8638*	1	SHAFT GP-PUMP DRIVE	431
Y	*295-2933*	1	STEP GP	339
Y	*299-8307*	1	SUPPORT GP-RADIATOR	341
Y	*174-4546*	1	SUPPORT GP-SEAT	624
Y	*193-1721*	1	TANDEM & COVER GP	283
Y	*214-1983*	1	TANK & MTG GP-HYDRAULIC	437
Y	*293-4830*	1	TANK GP-AIR	358
Y	*293-4832*	1	TANK GP-FUEL	113
Y	*325-7427*	1	TANK GP-COOLANT	85
Y	**275-6535**	1	TRANSMISSION AR	285
Y	*348-3301*	1	VALVE & LINKAGE GP	438
Y	*311-0802*	1	WIRING GP-AUXILIARY	197
Y	*284-5346*	1	WIRING GP-CONSOLE	203
Y	*284-5343*	1	WIRING GP-FRONT	208
Y	*284-5348*	1	WIRING GP-REAR LIGHTING	232
Y	*293-4828*	1	WIRING GP-REAR	225
Y	*284-5347*	1	WIRING GP-STEERING CONSOLE	234
	6V-1970	1	LITERATURE GP	
	5P-8500	2	KEY	
	5P-7958	1	SLEEVE-CABLE SPLICE	

Y-SEPARATE ILLUSTRATION

<END>

339-4968 OPTION AR-CAB—HIGH PROFILE

S/N: JAP1-UP

AN ATTACHMENT

SMCS-7000, 7301 **i03660749**

NOTE	PART NUMBER	QTY	PART NAME 1 2 3 4 5 6 (PRODUCT LEVEL)	SEE PAGE
Y	*286-4415*	1	FAN GP-CIRCULATING (FRONT DEFROSTER)	560
Y	*286-4416*	1	FAN GP-CIRCULATING (DEFROSTER, REAR)	561
Y	*139-4612*	1	SCREEN GP-SUN (REAR)	608
Y	*298-2426*	1	WIPER AR-WINDOW (REAR)	634

Y-SEPARATE ILLUSTRATION

<END>

MACHINE ARRANGEMENT

340-1191 OPTION AR-CAB—HIGH PROFILE

S/N: JAP1-UP

AN ATTACHMENT

SMCS-7000, 7301 **i03609760**

NOTE	PART NUMBER	QTY	PART NAME 1 2 3 4 5 6 (PRODUCT LEVEL)	SEE PAGE
Y	*286-4328*	1	CONVERTER AR-ELECTRICAL (HIGH PROFILE)	129
Y	*295-7991*	1	INSTALLATION AR-RADIO	567
Y	**197-2066**	1	MIRROR GP-REAR VIEW (DUAL INTERIOR)	584

Y-SEPARATE ILLUSTRATION

<END>

348-6940 OPTION AR-CAB

S/N: JAP1-UP

AN ATTACHMENT

SMCS-7000, 7301 **i03643280**

NOTE	PART NUMBER	QTY	PART NAME 1 2 3 4 5 6 (PRODUCT LEVEL)	SEE PAGE
Y	*320-0341*	1	CAB AR (NON ROPS/FOPS)	535
Y	*123-4358*	1	MIRROR GP-REAR VIEW	583
Y	*126-2747*	1	SEAT GP (VINYL)	615

Y-SEPARATE ILLUSTRATION

<END>

348-6941 OPTION AR-CAB—WITHOUT AIR CONDITIONER

S/N: JAP1-UP

AN ATTACHMENT

SMCS-7000, 7301 **i03643291**

NOTE	PART NUMBER	QTY	PART NAME 1 2 3 4 5 6 (PRODUCT LEVEL)	SEE PAGE
Y	*123-4358*	1	MIRROR GP-REAR VIEW	583
Y	*293-4153*	1	MODULE GP-SPEEDOMETER & TACH	587
Y	*320-0342*	1	ROPS AR (ENCLOSED)	603
Y	*126-2747*	1	SEAT GP (VINYL)	615

Y-SEPARATE ILLUSTRATION

<END>

348-6942 OPTION AR-CAB—WITH AIR CONDITIONER

S/N: JAP1-UP

AN ATTACHMENT

SMCS-7000, 7301 **i03643308**

NOTE	PART NUMBER	QTY	PART NAME 1 2 3 4 5 6 (PRODUCT LEVEL)	SEE PAGE
Y	*300-9979*	1	AIR CONDITIONER AR	532
Y	*320-0342*	1	ROPS AR (ENCLOSED)	603
Y	*123-4358*	1	MIRROR GP-REAR VIEW	583
Y	*293-4153*	1	MODULE GP-SPEEDOMETER & TACH	587
Y	*126-2747*	1	SEAT GP (VINYL)	615

Y-SEPARATE ILLUSTRATION

<END>

MACHINE ARRANGEMENT

349-2486 OPTION AR-CONFIGURATION

S/N: JAP1-UP

AN ATTACHMENT

SMCS-7000 **i03643594**

NOTE	PART NUMBER	QTY	PART NAME 1 2 3 4 5 6 (PRODUCT LEVEL)	SEE PAGE
Y	*336-4249*	1	GRADE CONTROL AR	133
Y	*322-2322*	1	LINES GP-PUMP	413
Y-SEPARATE ILLUSTRATION				

<END>

349-2487 OPTION AR-CONFIGURATION

S/N: JAP1-UP

AN ATTACHMENT

SMCS-7000 **i03633142**

NOTE	PART NUMBER	QTY	PART NAME 1 2 3 4 5 6 (PRODUCT LEVEL)	SEE PAGE
Y	*337-3100*	1	GRADE CONTROL AR	135
Y	*301-2237*	1	LINES GP-PUMP	409
Y-SEPARATE ILLUSTRATION				

<END>

348-6943 OPTION AR-ENGINE—COLD WEATHER STARTING

S/N: JAP1-UP

AN ATTACHMENT

SMCS-1000 **i03643339**

NOTE	PART NUMBER	QTY	PART NAME 1 2 3 4 5 6 (PRODUCT LEVEL)	SEE PAGE
Y	*304-9957*	1	BATTERY & WIRING GP	125
Y	*311-2771*	1	STARTING AID GP-ETHER	184
Y	*311-0801*	1	WIRING GP-ETHER STARTING AID	207
Y-SEPARATE ILLUSTRATION				

<END>

348-6936 OPTION AR-RIPPER—RIPPER

S/N: JAP1-UP

AN ATTACHMENT

SMCS-7000 **i03643187**

NOTE	PART NUMBER	QTY	PART NAME 1 2 3 4 5 6 (PRODUCT LEVEL)	SEE PAGE
Y	*301-7735*	1	GUARD GP-BOTTOM	327
Y	*336-1559*	1	PLATE GP-PUSH	522
Y	*301-8206*	1	RIPPER AR	653
Y-SEPARATE ILLUSTRATION				

<END>

MACHINE ARRANGEMENT

348-6937 OPTION AR-WORK TOOL

S/N: JAP1-UP

AN ATTACHMENT

SMCS-6700, 7000 **i03643348**

NOTE	PART NUMBER	QTY	PART NAME 1 2 3 4 5 6 (PRODUCT LEVEL)	SEE PAGE
Y	*347-8846*	1	BLADE GP-BULLDOZER (FRONT)	643
Y	*301-7735*	1	GUARD GP-BOTTOM	327
Y	*114-0025*	1	LINES GP-HYDRAULIC (BULLDOZER LIFT, PLOW, LH)	403
Y	*279-8138*	1	LINES GP-HYDRAULIC (BULLDOZER) (BLADE, FRONT)	407

Y-SEPARATE ILLUSTRATION

<END>

348-6939 OPTION AR-WORK TOOL

S/N: JAP1-UP

AN ATTACHMENT

SMCS-6700, 7000 **i03643274**

NOTE	PART NUMBER	QTY	PART NAME 1 2 3 4 5 6 (PRODUCT LEVEL)	SEE PAGE
Y	*107-3398*	1	BIT GP-END	640
Y	*329-3826*	1	BLADE & TIP AR-POWER	641
Y	*280-4072*	1	EDGE GP-CUTTING	648

Y-SEPARATE ILLUSTRATION

<END>

334-7636 ROADING AR—WITHOUT CAB

S/N: JAP1-UP

CANNOT BE USED WITH 335-9267—PAGE 6, 284-5400—PAGE 602, 320-0341—PAGE 535

AN ATTACHMENT

SMCS-7000 **i03661208**

NOTE	PART NUMBER	QTY	PART NAME 1 2 3 4 5 6 (PRODUCT LEVEL)	SEE PAGE
Y	*334-3348*	1	LIGHTING GP-REGISTRATION PLATE	157
Y	*284-5394*	1	LIGHTING GP-BACKUP	153
Y	*284-5363*	1	LIGHTING GP-SIGNAL (TURN)	160
Y	*332-8657*	1	MIRROR GP-REAR VIEW	585
Y	*334-3346*	1	PANEL GP-INSTRUMENT (OPEN)	597
Y	*332-1618*	1	REFLECTOR GP	338
Y	*334-3341*	1	WIRING GP-FRONT	212
Y	*334-3344*	1	WIRING GP-STEERING CONSOLE	236
	334-8166	1	PLATE-IDENTIFICATION (MACHINE)	
			ON BOTTOM OF PIN PLATE, FOR USE IN INDIA	

Y-SEPARATE ILLUSTRATION

<END>

MACHINE ARRANGEMENT

335-9267 ROADING AR—WITH CAB

S/N: JAP1-UP

CANNOT BE USED WITH 282-2469—PAGE 330, 334-7636—PAGE 5

AN ATTACHMENT

SMCS-7000 **i03661211**

NOTE	PART NUMBER	QTY	PART NAME 1 2 3 4 5 6 (PRODUCT LEVEL)	SEE PAGE
Y	*334-3348*	1	LIGHTING GP-REGISTRATION PLATE	157
Y	*284-5394*	1	LIGHTING GP-BACKUP	153
Y	*284-5363*	1	LIGHTING GP-SIGNAL	160
Y	*335-6989*	1	PANEL GP-INSTRUMENT (OPEN)	599
Y	*332-1618*	1	REFLECTOR GP	338
Y	*334-3341*	1	WIRING GP-FRONT	212
Y	*334-3344*	1	WIRING GP-STEERING CONSOLE	236

Y-SEPARATE ILLUSTRATION

<END>

ENGINE ARRANGEMENT

325-9707 ENGINE AR-COMPLETE

S/N: KHX13472-UP
118 BRAKE KW (158 BHP) AT 2000 RPM
PART OF 348-3018 GENERAL AR

SMCS-1000 **i03680465**

NOTE	PART NUMBER	QTY	PART NAME 1 2 3 4 5 6 (PRODUCT LEVEL)	SEE PAGE
Y	*222-5946*	1	BREATHER GP (CRANKCASE)	59
Y	*4W-3462*	1	CARRIER GP-SEAL	14
Y	**246-9345**	1	CONTROL & MTG GP-ENGINE ELEK	126
Y	*153-1794*	1	COVER GP-AIR INLET	91
Y	*229-8841*	1	COVER GP-CYLINDER BLOCK	15
Y	*118-1727*	1	COVER GP-FRONT HOUSING (ACCESSORY DRIVE)	16
Y	*307-1735*	1	COVER GP-VALVE MECHANISM	17
Y	*326-9045*	1	DAMPER & PULLEY GP	29
Y	*313-4384*	1	DRIVE GP-ACCESSORY	30
Y	*322-0245*	1	ELBOW GP-AIR INLET	92
Y	*330-9359*	1	ENGINE AR-CORE	9
Y	*258-8723*	1	FASTENER GP-CYLINDER HEAD	33
Y	*322-0246*	1	FASTENER GP-ENGINE	34
Y	*116-4556*	1	FASTENER GP-FRONT HOUSING	35
Y	*340-3745*	1	FILLER GP-ENGINE OIL	60
Y	*323-8936*	1	FILTER GP-ENGINE OIL	61
Y	*275-8387*	1	FLYWHEEL GP	36
Y	*220-1194*	1	FUMES DISPOSAL GP	62
Y	*276-3681*	1	GAUGE GP-OIL LEVEL (DIPSTICK) (ENGINE)	63
			S/N: KHX13472-17466	
Y	*135-2141*	1	PLUG GP-CYLINDER BLOCK (ENGINE OIL)	49
			S/N: KHX17467-UP	
Y	*297-6867*	1	GROUND GP-ELECTRICAL	137
Y	*197-5210*	1	HOUSING GP-FLYWHEEL	38
Y	*237-9822*	1	LIFTING GP-ENGINE	41
Y	*128-0316*	1	LINES GP-ENGINE OIL	65
			S/N: KHX13472-17466	
Y	*253-2589*	1	LINES GP-ENGINE OIL	66
			S/N: KHX17467-UP	
Y	*313-3967*	1	LINES GP-FUEL	104
Y	*187-6279*	1	LINES GP-TURBOCHARGER OIL	68
Y	*206-4228*	1	LINES GP-WATER (ENGINE)	77
Y	*237-8063*	1	MANIFOLD GP-ENGINE OIL	70
Y	*183-6845*	1	MANIFOLD GP-EXHAUST (DRY)	94
Y	*311-3542*	1	MOUNTING GP-ENGINE	42
Y	*122-8936*	1	PAN GP-OIL (ENGINE)	45
			S/N: KHX13472-17466	
Y	*193-6998*	1	PAN GP-OIL	47
			S/N: KHX17467-UP	
Y	*235-8200*	1	PLUG GP-CONNECTOR (ENGINE HARNESS, PROT COVER)	165
Y	*159-0303*	1	PLUG GP-CYLINDER BLOCK	50
Y	*162-8068*	1	PLUG GP-ENGINE	51
Y	*323-8959*	1	PLUG GP-OIL PAN	52
			S/N: KHX13472-17466	
Y	*318-2076*	1	PUMP GP-WATER	82
Y	*7E-7590*	1	SEAL GP-CRANKSHAFT	55
Y	*297-5355*	1	SENSOR GP-ENGINE	167
Y	*111-4275*	1	STARTING MOTOR GP-ELECTRIC	186
			S/N: KHX13472-17466	
Y	*347-7898*	1	STARTING MOTOR GP-ELECTRIC	189
Y	*198-2714*	1	WIRING GP-ENGINE	205
			PLEASE USE THE GASKET KIT LINK IN SIS OR CONTACT YOUR LOCAL DEALER FOR THE LATEST GASKET KIT INFORMATION	

ENGINE ARRANGEMENT

325-9707 **ENGINE AR-COMPLETE** *(contd.)* **i03680465**

Y-SEPARATE ILLUSTRATION

ENGINE ARRANGEMENT

330-9359 ENGINE AR-CORE

S/N: KHX13472-UP
118 BRAKE KW (158 BHP) AT 2000 RPM
PART OF 325-9707 ENGINE AR-COMPLETE

SMCS-1000 **i03680841**

NOTE	PART NUMBER	QTY	PART NAME 1 2 3 4 5 6 (PRODUCT LEVEL)	SEE PAGE
Y	*212-4289*	1	CAMSHAFT GP	13
Y	*117-3643*	1	COOLER GP-ENGINE OIL	73
Y	*210-5590*	1	CRANKSHAFT GP	19
Y	*221-4482*	1	CYLINDER BLOCK GP	21
Y	*219-5849*	1	CYLINDER HEAD GP	27
Y	*205-1321*	1	GEAR GP-FRONT	37
Y	*165-4446*	1	HOUSING GP-FRONT	39
Y	*191-0461*	1	LINES GP-INJECTOR HYD PUMP	108
YR	*210-5592*	6	PISTON & ROD GP	48
Y	*254-0095*	1	PUMP & MTG GP-UNIT INJ HYD	109
Y	*212-2270*	1	PUMP GP-ENGINE OIL	72
Y	*268-1839*	6	PUMP GP-FUEL INJECTION	110
Y	*258-2403*	1	TURBOCHARGER GP	97
			—OR—	
Y	*340-1812*	1	TURBOCHARGER GP	99
Y	*232-3717*	1	VALVE MECHANISM GP	56
	330-9441	1	ELECTRONICS GP-ENGINE RATINGS	

R-REMFG PART MAY BE AVAILABLE
Y-SEPARATE ILLUSTRATION

BASIC ENGINE

149-4915 AIR COMPRESSOR GP*R

S/N: JAP1-UP

PART OF 313-2656 AIR COMPRESSOR GP

SMCS-1803 **i03649115**

NOTE	REF NO	GRAPHIC REF	PART NUMBER	QTY	PART NAME 1 2 3 4 5 6 (PRODUCT LEVEL)	SEE PAGE
	1	1	**2P-4358**	1	FLANGE	
	2	1	**6D-1004**	1	GASKET	
	3	1	**8T-6757**	1	PLUG-PIPE	
	4	1	**141-1546**	1	PLUG-PIPE	
	5	1	**4P-3977**	1	GASKET-CYLINDER HEAD	
	6	1	**7E-8928**	1	GASKET	
M	7	1	**6V-1820**	2	BOLT (M10X1.5X30-MM)	
	8	1	**6V-5839**	2	WASHER (11X21X2.5-MM THK)	
	9	1	**4P-3966**	1	PISTON & ROD AS	
					AVAILABLE REPAIR KIT(S):	
			7E-8923	1	KIT-CRANKSHAFT BEARING (AIR COMPRESSOR)	
					(INCLUDES SEALS, BEARINGS, WASHERS, INSERTS, & GASKETS)	
			7E-8925	1	KIT-STANDARD RING (AIR COMPRESSOR)	
					(INCLUDES RINGS & SPACERS)	
			7E-8926	1	KIT-CYLINDER HEAD (AIR COMPRESSOR)	
					(INCLUDES PISTONS, SPRINGS, O-RING, GASKETS, & VALVES)	

M-METRIC PART

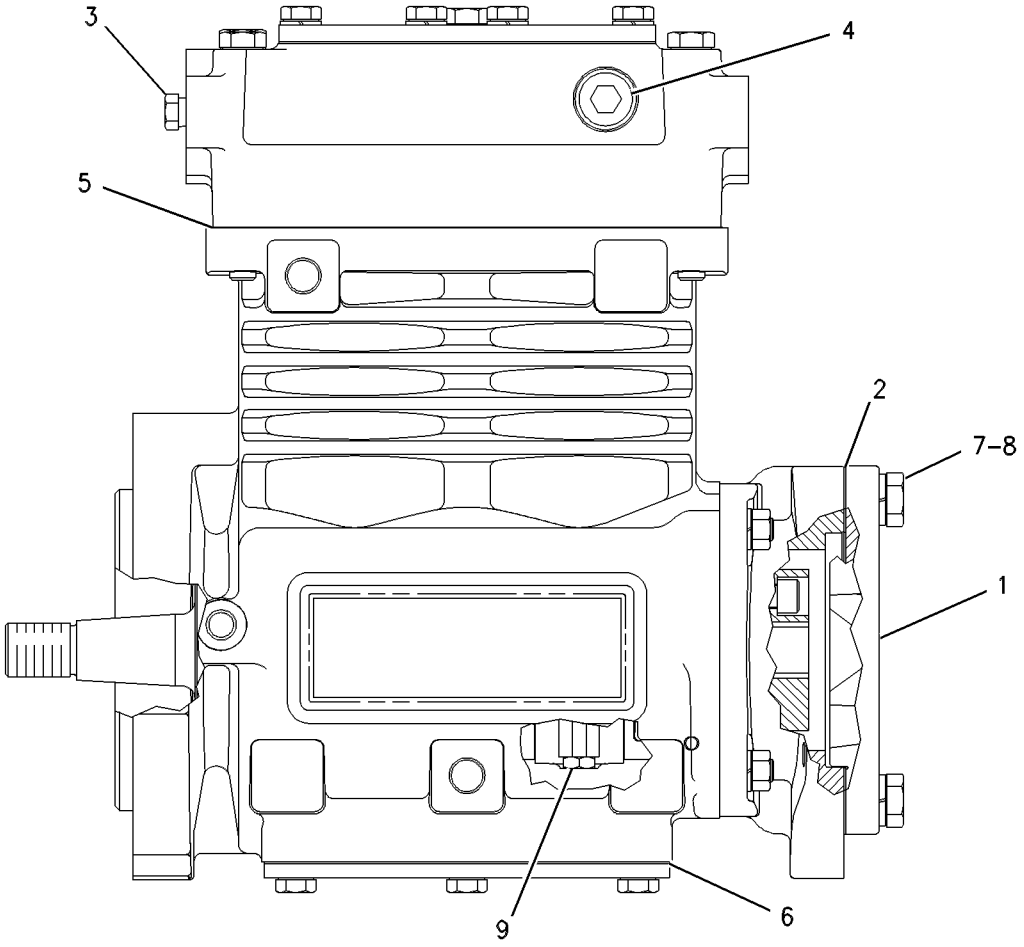

GRAPHIC #1 **<END>** g00292919

BASIC ENGINE

313-2656 AIR COMPRESSOR GP

S/N: JAP1-UP

PART OF 348-3018 GENERAL AR

SMCS-1803 **i03654696**

NOTE	REF NO	GRAPHIC REF	PART NUMBER	QTY	PART NAME 1 2 3 4 5 6 (PRODUCT LEVEL)	SEE PAGE
C	1	1	**124-5572**	1	VALVE AS-RELIEF (GOVERNOR, AIR COMPRESSOR)	
	2	1	**135-9819**	1	SEAL-INTEGRAL	
	3	1	**146-8121**	1	SPACER (10.5X14.5X25-MM THK)	
CYR	4	1	**149-4915**	1	AIR COMPRESSOR GP (AIR CONDITIONER)	10
C	5	1	*208-1628*	2	ELBOW AS	
					(EACH INCLUDES)	
		1	**2T-1922**	1	ELBOW	
		1	**6V-8398**	1	SEAL-O-RING	
CI	6	1	**341-8667**	1	HOSE AS	
CI	7	1	**341-8837**	1	HOSE AS	
C	8	1	**341-8841**	1	TUBE AS	
C	9	1	**341-8842**	1	TUBE AS	
	10	1	*148-8347*	1	ELBOW AS	
		1	**6V-9007**	1	ELBOW	
		1	**3D-2824**	1	SEAL-O-RING	
		1	**6V-9746**	1	SEAL-O-RING	
	11	1	*148-8364*	1	ELBOW AS	
		1	**6V-8625**	1	ELBOW	
		1	**3K-0360**	1	SEAL-O-RING	
		1	**6V-8398**	1	SEAL-O-RING	
	12	1	*148-8368*	1	ELBOW AS	
		1	**6V-8627**	1	ELBOW	
		1	**3J-1907**	1	SEAL-O-RING	
		1	**4J-5477**	1	SEAL-O-RING	
	13	1	*155-6258*	1	ELBOW AS	
		1	**127-1647**	1	ELBOW	
		1	**3D-2824**	1	SEAL-O-RING	
		1	**6V-8398**	1	SEAL-O-RING	
C	14	1	*175-4429*	1	ELBOW AS	
		1	**7X-7902**	1	ELBOW	
		1	**6V-9746**	1	SEAL-O-RING	
	15	1	**1B-3057**	2	CLIP	
C	16	1	**2N-1287**	1	ELBOW-FLARED	
C	17	1	**6B-6682**	1	NUT-FULL (3/4-16-THD)	
C	18	1	**7C-3179**	1	GEAR (50-TEETH)	
C	19	1	**7X-0521**	1	WASHER-HARD (20X36.5X5-MM THK)	
	20	1	**8T-4121**	1	WASHER-HARD (11X21X2.5-MM THK)	
M	21	1	**8T-4185**	1	BOLT (M10X1.5X50-MM)	
	22	1	**8T-4223**	2	WASHER-HARD (13.5X25.5X3-MM THK)	
M	23	1	**8T-6868**	2	BOLT (M12X1.75X80-MM)	

C-CHANGE FROM PREVIOUS TYPE
I-REFER TO HYDRAULIC INFORMATION SYSTEM
M-METRIC PART
R-REMFG PART MAY BE AVAILABLE
Y-SEPARATE ILLUSTRATION

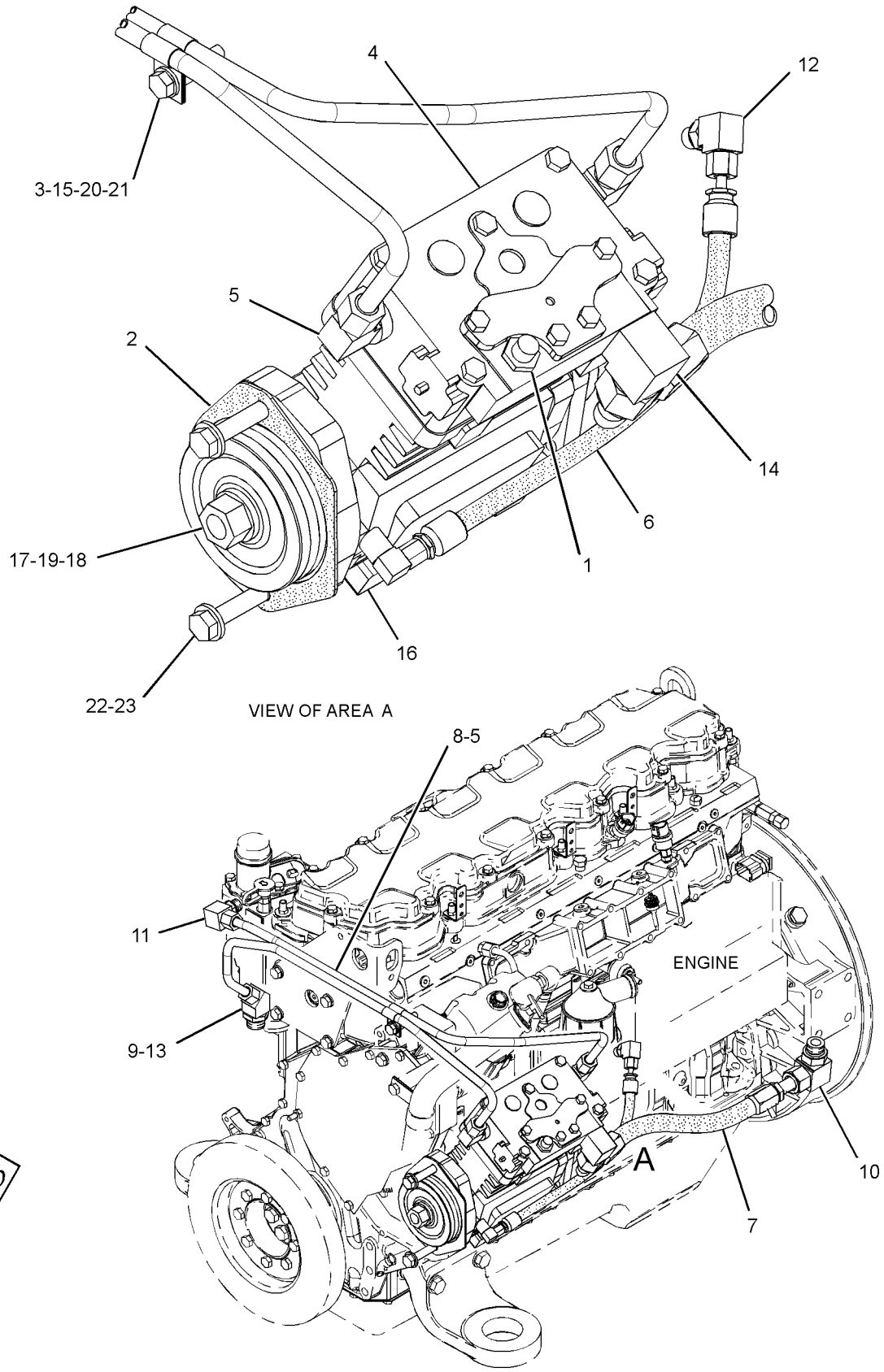

GRAPHIC #1 **<END>** g01961979

BASIC ENGINE

212-4289 CAMSHAFT GP

S/N: KHX13472-UP

PART OF 330-9359 ENGINE AR-CORE

SMCS-1210 **i02215726**

NOTE	REF NO	GRAPHIC REF	PART NUMBER	QTY	PART NAME 1 2 3 4 5 6 (PRODUCT LEVEL)	SEE PAGE
	1	1	**107-7694**	1	PLATE-THRUST	
R	2	1	**212-4288**	1	CAMSHAFT AS	
	2A	1	**1B-8705**	1	KEY-WOODRUFF	
	2B	1	**224-3247**	1	GEAR (100-TEETH)	
M	3	1	**6V-3940**	2	BOLT (M8X1.25X25-MM)	

M-METRIC PART
R-REMFG PART MAY BE AVAILABLE

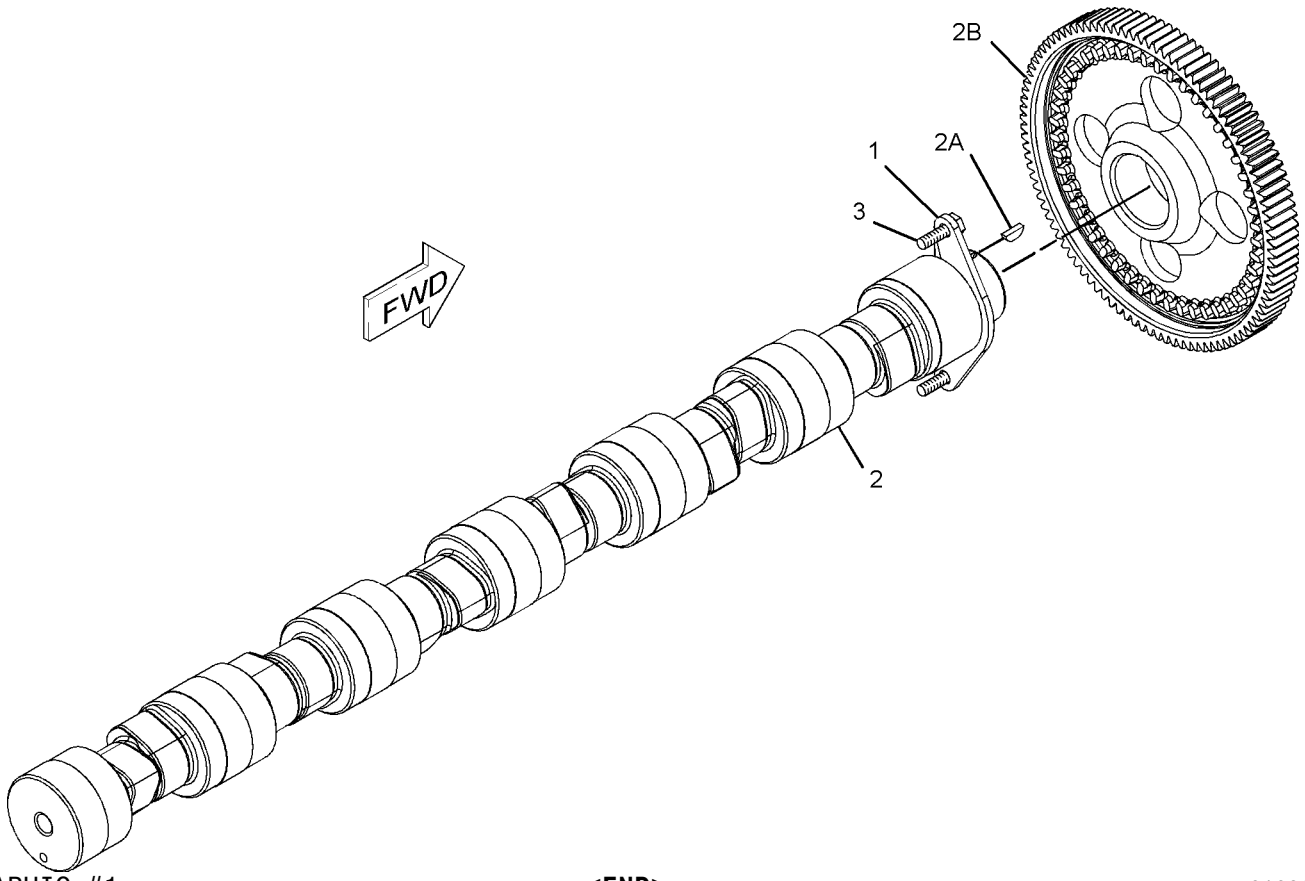

GRAPHIC #1 **<END>** g01099239

BASIC ENGINE

4W-3462 CARRIER GP-SEAL

S/N: KHX13472-UP

PART OF 325-9707 ENGINE AR-COMPLETE

SMCS-1161 **i02482079**

NOTE	REF NO	GRAPHIC REF	PART NUMBER	QTY	PART NAME 1 2 3 4 5 6 (PRODUCT LEVEL)	SEE PAGE
	1	1	**2W-6546**	1	COVER	
	2	1	**247-1876**	1	SEAL	
	3	1	**239-0583**	1	GASKET	
	4	1	**6V-3538**	2	DOWEL	
M	5	1	**6V-3940**	8	BOLT (M8X1.25X25-MM)	
	6	1	**9M-1974**	8	WASHER-HARD (8.8X16X2-MM THK)	
BF		1	**4C-9612**		SEALANT-SILICONE	

B-USE AS REQUIRED
F-NOT SHOWN
M-METRIC PART

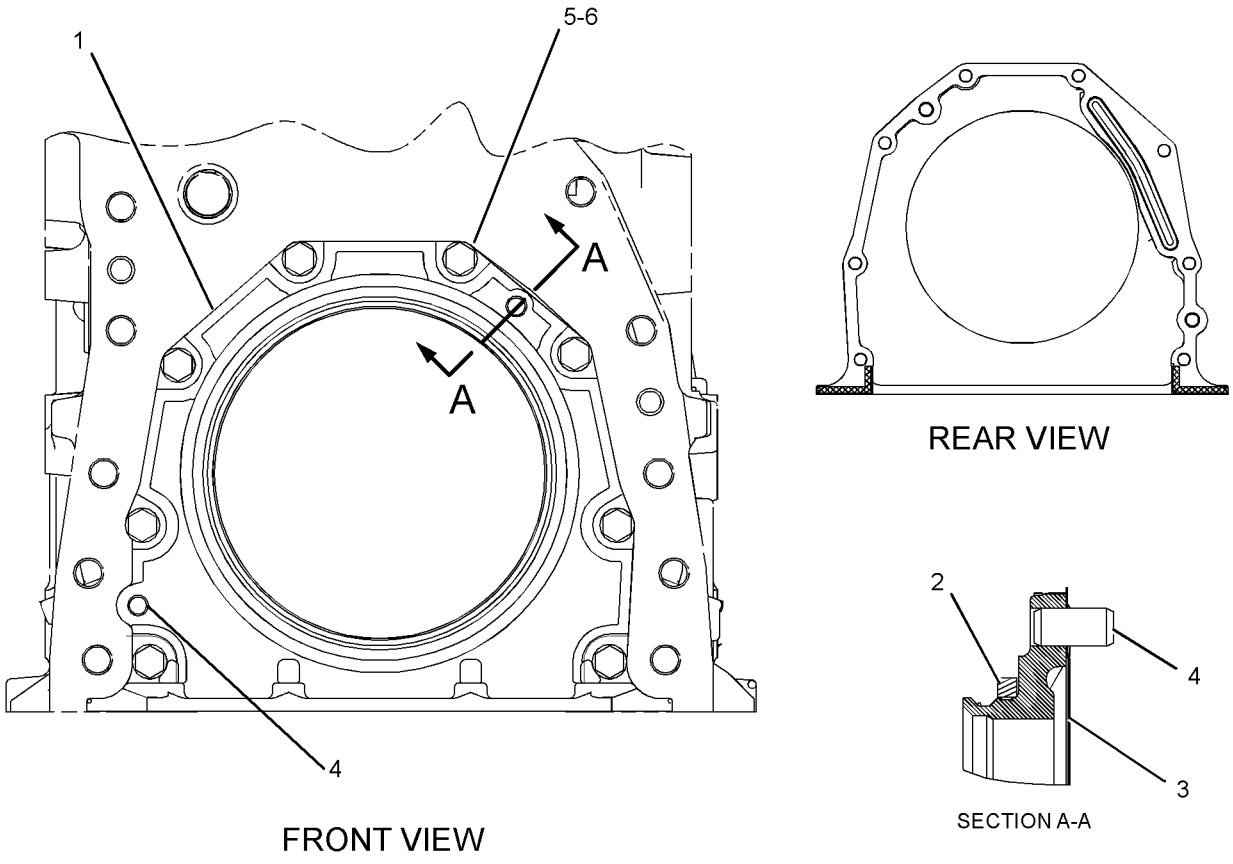

GRAPHIC #1 **<END>** g01239787

229-8841 COVER GP-CYLINDER BLOCK

S/N: KHX13472-UP

PART OF 325-9707 ENGINE AR-COMPLETE

SMCS-1201 **i03493980**

NOTE	REF NO	GRAPHIC REF	PART NUMBER	QTY	PART NAME 1 2 3 4 5 6 (PRODUCT LEVEL)	SEE PAGE
	1	1	**2W-6544**	1	COVER	
	2	1	**4P-5918**	3	CLIP	
	3	1	**4Y-9652**	3	GASKET	
	4	1	**342-4977**	2	COVER-SIDE	
	5	1	**7W-3872**	6	SLEEVE	
M	6	1	**110-7618**	4	BOLT AS (M8X1.25X10-MM)	
	8	1	**222-5893**	1	COVER AS	
M	8A	1	**6V-5698**	2	SCREW-BUTTON HEAD (M4X0.7X10-MM)	
	9	1	**210-3321**	1	STUD (M8X1.25-THD)	
M	10	1	**5C-7261**	1	NUT (M8X1.25-THD)	
M	11	1	**6V-2317**	23	BOLT (M8X1.25X30-MM)	
	12	1	**9M-1974**	22	WASHER-HARD (8.8X16X2-MM THK)	
B	13	1	**1U-8846**		SEALANT-GASKET	

B-USE AS REQUIRED
M-METRIC PART

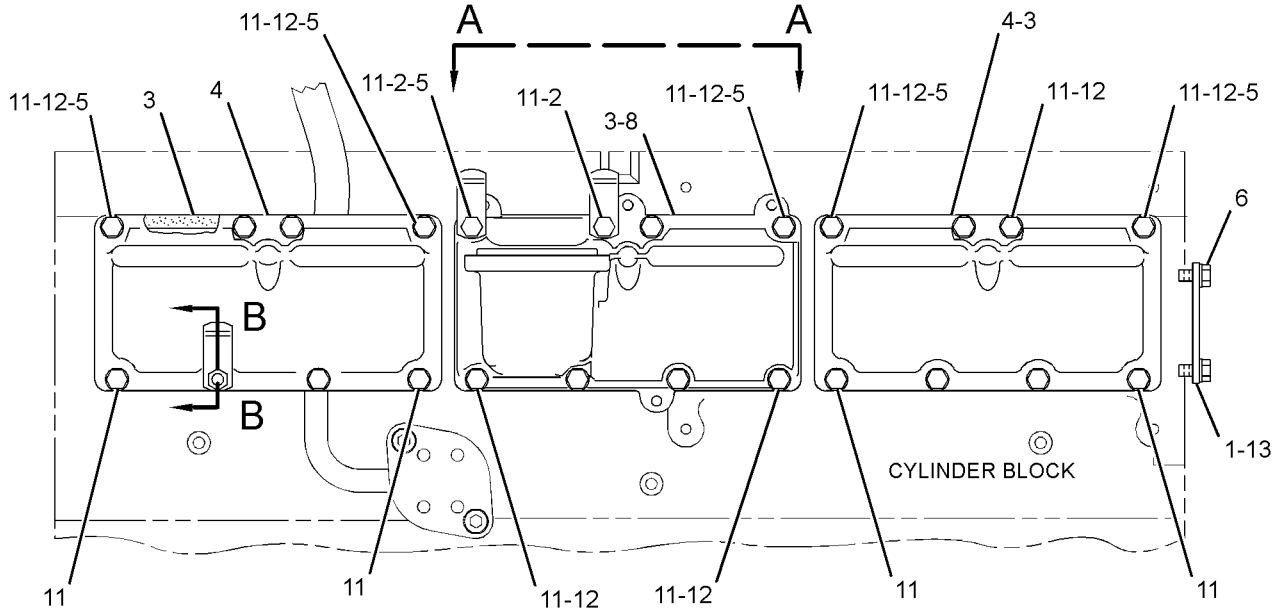

LEFT SIDE VIEW OF ENGINE

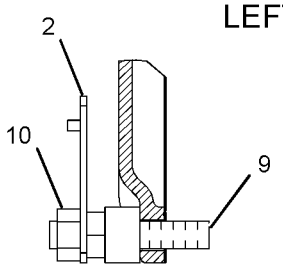

SECTION B-B

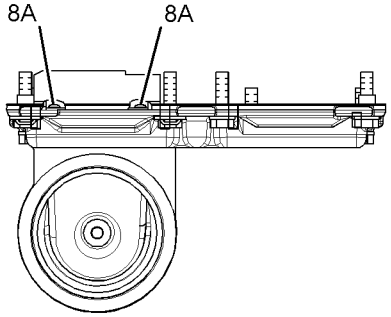

VIEW A-A

GRAPHIC #1 **<END>** g01830633

BASIC ENGINE

118-1727 COVER GP-FRONT HOUSING

S/N: KHX13472-UP

PART OF 325-9707 ENGINE AR-COMPLETE

SMCS-1151, 1166 **i01671188**

NOTE	REF NO	GRAPHIC REF	PART NUMBER	QTY	PART NAME 1 2 3 4 5 6 (PRODUCT LEVEL)	SEE PAGE
	1	1	**5P-8245**	4	WASHER-HARD (13.5X25.5X3-MM THK)	
M	2	1	**6V-5696**	2	BOLT (M12X1.75X80-MM)	
	3	1	**4W-2026**	1	COVER	
	4	1	**135-9819**	1	SEAL-INTEGRAL	
M	5	1	**6V-8149**	2	NUT (M12X1.75-THD)	

M-METRIC PART

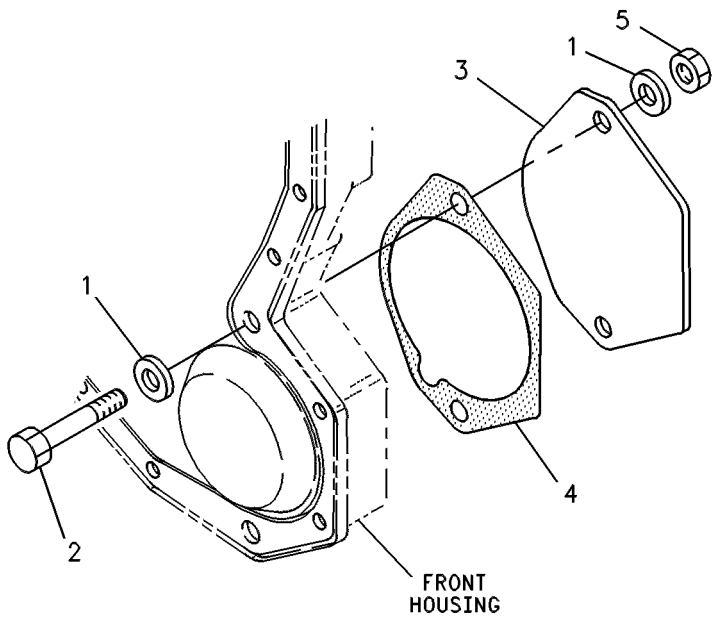

GRAPHIC #1 **<END>** g00245495

307-1735 COVER GP-VALVE MECHANISM

S/N: KHX13472-UP

PART OF 325-9707 ENGINE AR-COMPLETE

SMCS-1107, 1120 **i03494700**

NOTE	REF NO	GRAPHIC REF	PART NUMBER	QTY	PART NAME 1 2 3 4 5 6 (PRODUCT LEVEL)	SEE PAGE
	1	1	**310-9247**	1	COVER GP-VALVE MECHANISM	
	1A	1	**304-4924**	1	SEAL AS	
		1	**245-6796**	1	COVER AS-BASE	
	2	1	**307-1738**	1	COVER GP-VALVE MECHANISM	
	2A	1	**272-0388**	1	SEAL-VALVE COVER	
M	3	1	**099-3649**	13	BOLT (M8X1.25X40-MM)	
	4	1	**8T-4224**	13	WASHER-HARD (8.8X16X2-MM THK)	

M-METRIC PART

307-1735 **COVER GP-VALVE MECHANISM** *(contd.)* **i03494700**

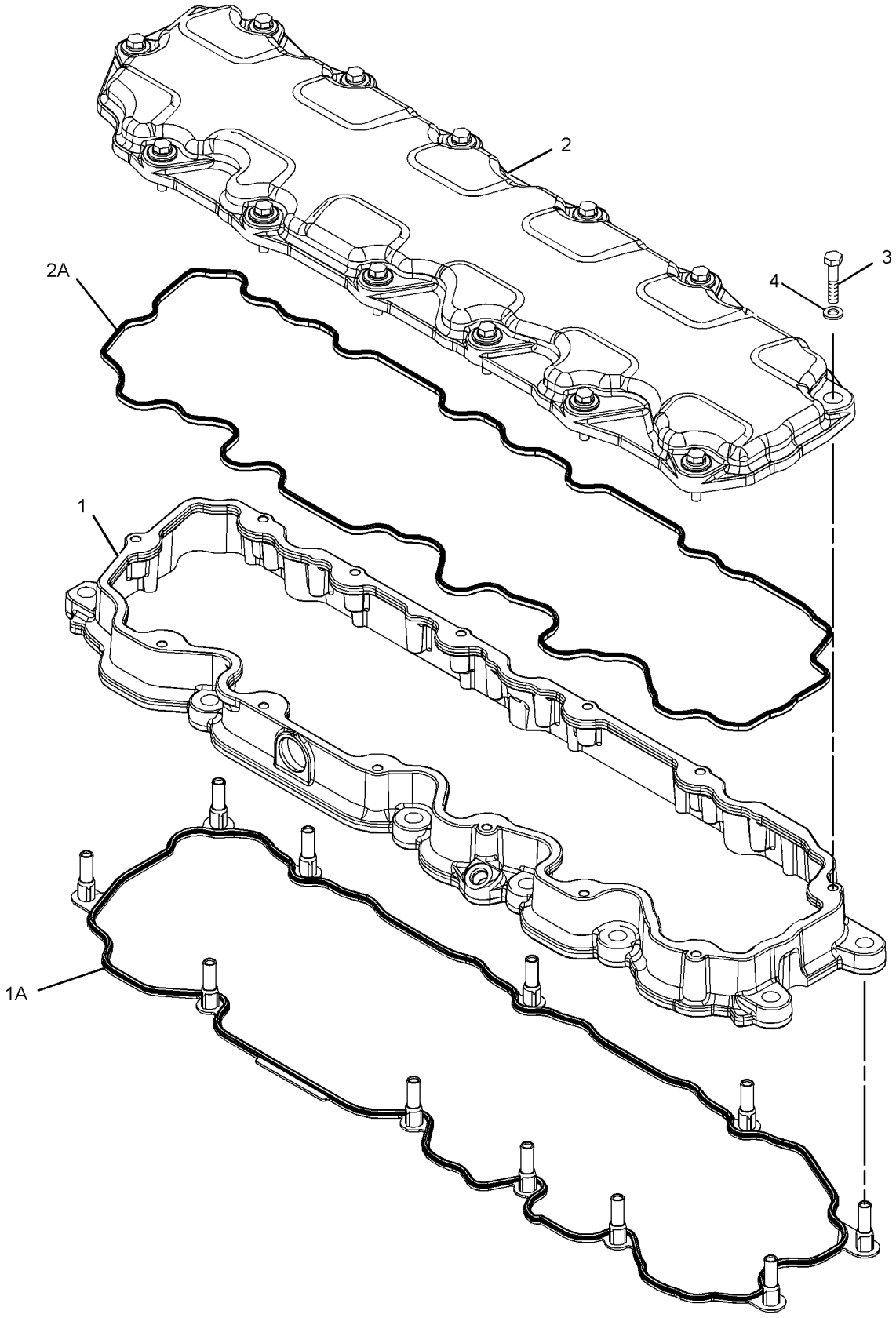

GRAPHIC #1 **<END>** g01348109

BASIC ENGINE

210-5590 CRANKSHAFT GP

S/N: KHX13472-UP

PART OF 330-9359 ENGINE AR-CORE

SMCS-1202, 1203, 1204, 1232 **i03571590**

NOTE	REF NO	GRAPHIC REF	PART NUMBER	QTY	PART NAME 1 2 3 4 5 6 (PRODUCT LEVEL)	SEE PAGE
	1	1	**271-5658**	1	CRANKSHAFT AS	
	1A	1	**1B-8705**	1	KEY-WOODRUFF	
	1B	1	**2W-8147**	1	GEAR (50-TEETH)	
J	2	1	**212-4893**	1	BEARING-THRUST (STANDARD)	
AB		1	**229-5153**		BEARING-THRUST (0.25-MM US)	
AB		1	**229-5154**		BEARING-THRUST (0.5-MM US)	
AB		1	**229-5155**		BEARING-THRUST (0.5-MM OS)	
AB		1	**229-5156**		BEARING-THRUST (0.5-MM US - 0.5-MM OS)	
J	3	1	**107-7708**	6	BEARING-MAIN (STANDARD)	
AB		1	**145-0168**		BEARING-MAIN (0.5-MM OS)	
AB		1	**145-0170**		BEARING-MAIN (0.5-MM US - 0.5-MM OS)	
AB		1	**145-0162**		BEARING-MAIN (0.25-MM US)	
AB		1	**145-0164**		BEARING-MAIN (0.5-MM US)	
ABF		1	**7C-7980**	1	SLEEVE-OIL SEAL	
					(THIS WEAR SLEEVE IS USED ONLY TO SALVAGE (REPAIR) THE REAR SEAL SURFACE OF THE CRANKSHAFT)	
					AVAILABLE REPAIR KIT(S):	
AJ			**196-9519**		BEARING GP-MAIN	

A-NOT PART OF THIS GROUP
B-USE AS REQUIRED
F-NOT SHOWN
J-KIT MARKED J SERVICES PARTS MARKED J

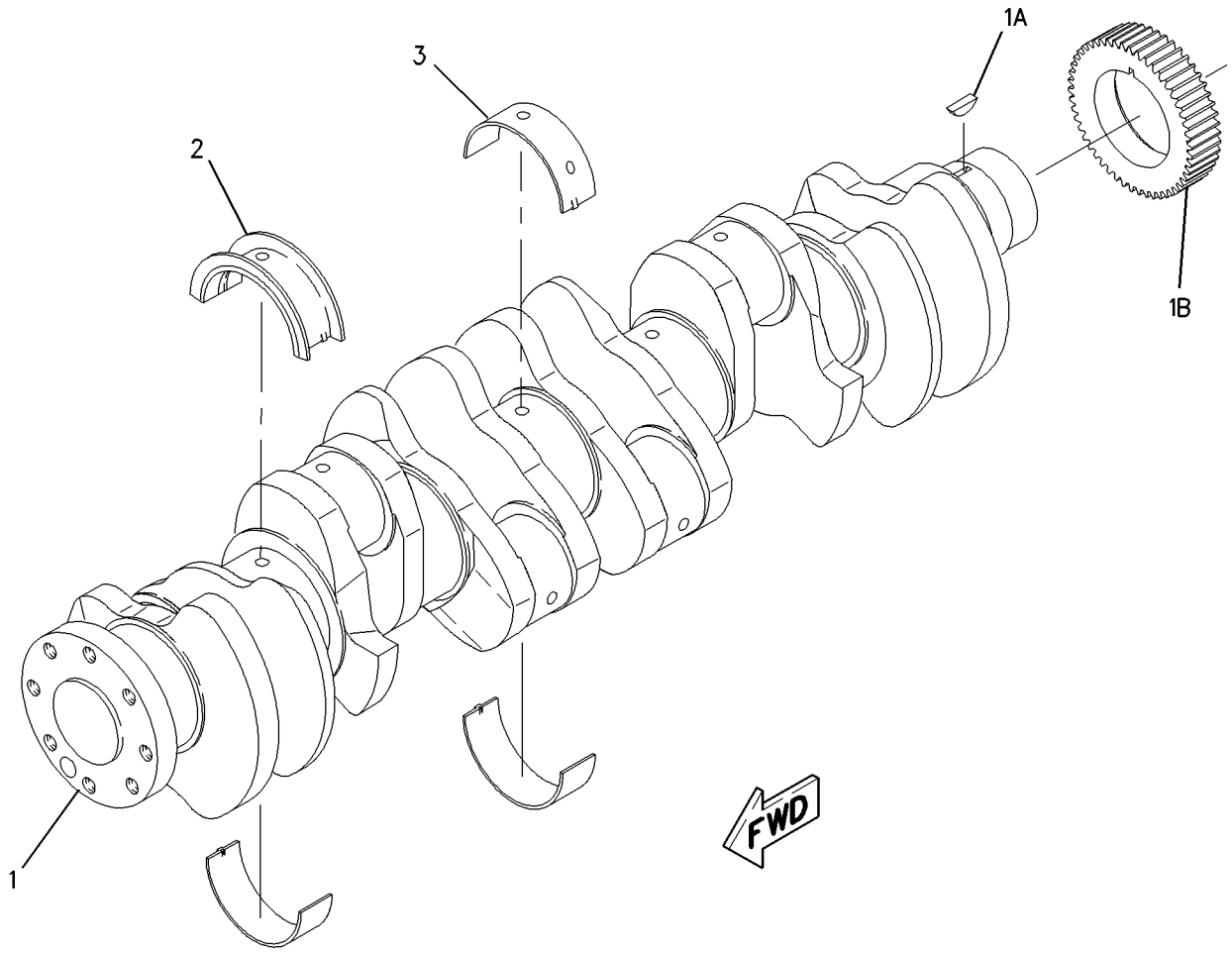

GRAPHIC #1 **<END>** g00977492

BASIC ENGINE

221-4482 CYLINDER BLOCK GP

S/N: KHX13472-UP

PART OF 330-9359 ENGINE AR-CORE

SMCS-1201 **i02690900**

NOTE	REF NO	GRAPHIC REF	PART NUMBER	QTY	PART NAME 1 2 3 4 5 6 (PRODUCT LEVEL)	SEE PAGE
CY	1	1	**305-8141**	1	CYLINDER BLOCK GP	23
	2	1	**7N-5683**	2	DOWEL	
	3	1	**1W-8407**	2	SLEEVE	
	4	1	**6V-3538**	2	DOWEL	

C-CHANGE FROM PREVIOUS TYPE
Y-SEPARATE ILLUSTRATION

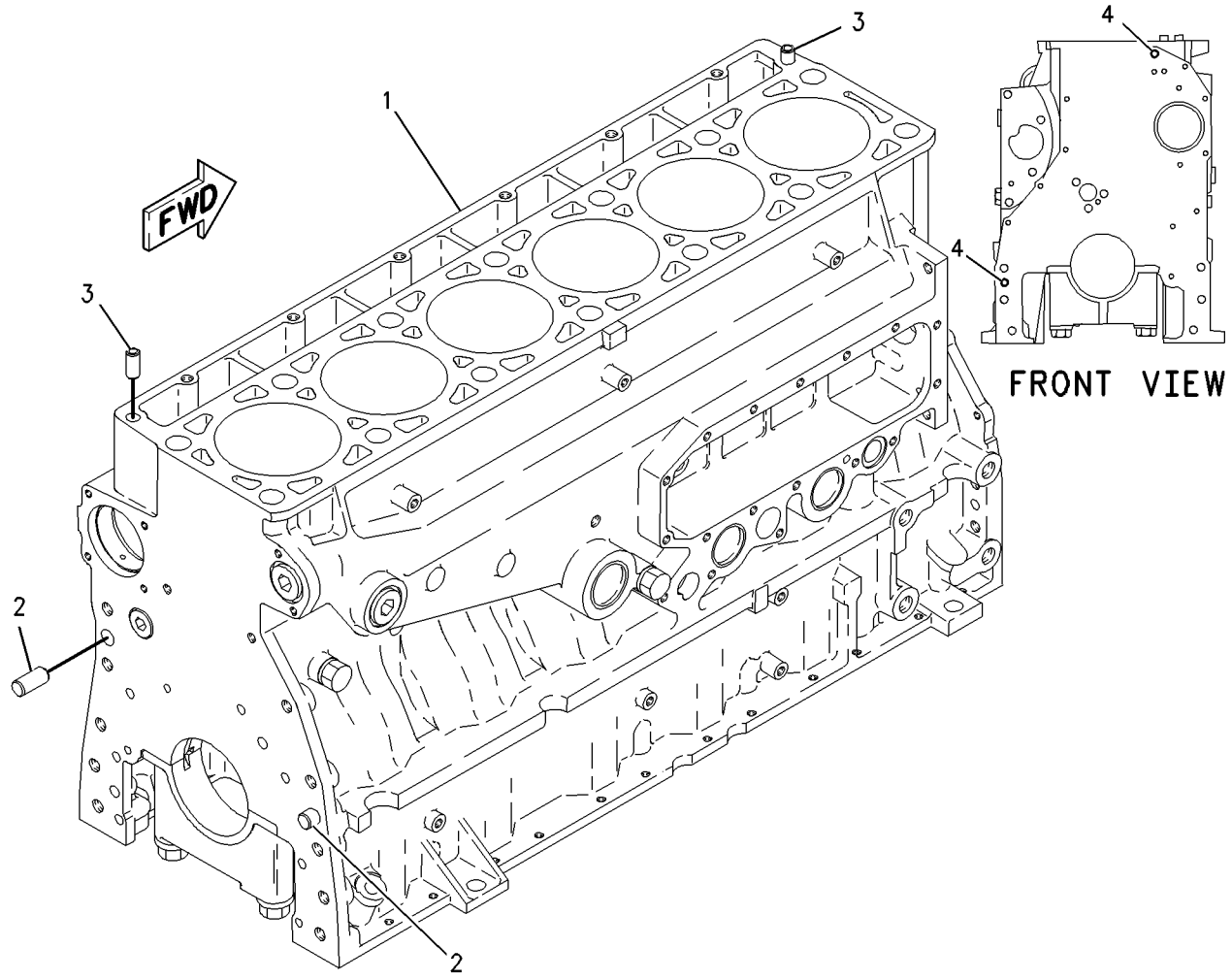

GRAPHIC #1 **<END>** g00800849

263-3774 CYLINDER BLOCK GP

S/N: KHX13472-UP

PART OF 305-8141 CYLINDER BLOCK GP

SMCS-1201 **i02696326**

NOTE	REF NO	GRAPHIC REF	PART NUMBER	QTY	PART NAME 1 2 3 4 5 6 (PRODUCT LEVEL)	SEE PAGE
	1	1	**7E-2968**	7	CAP-CRANKSHAFT BEARING	
M	2	1	**9X-8916**	14	BOLT (M16X2X140-MM)	
	3	1	**5P-8247**	14	WASHER-HARD (17X32X3.5-MM THK)	

M-METRIC PART

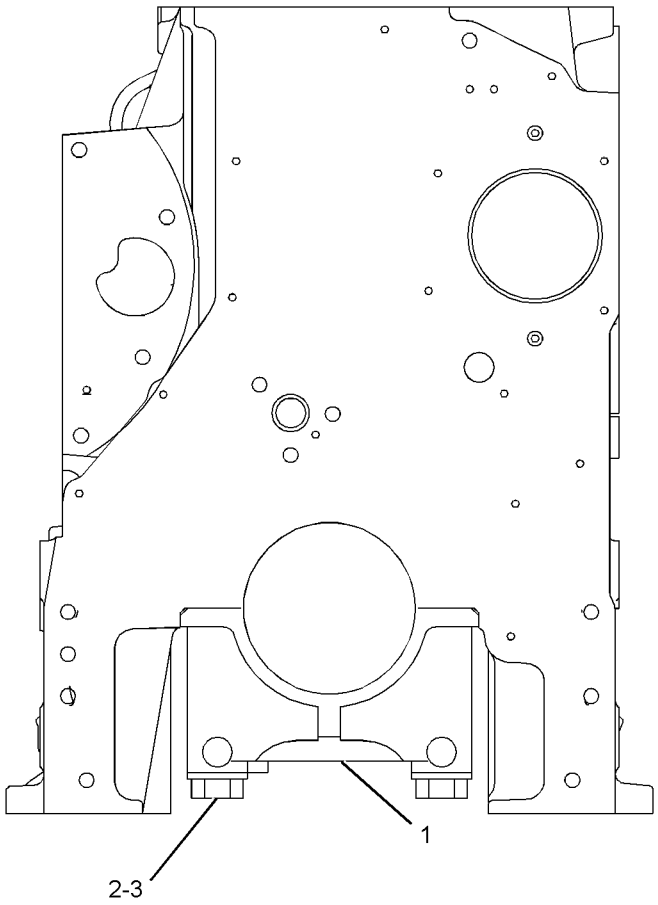

FRONT VIEW

GRAPHIC #1 **<END>** g01352581

305-8141 CYLINDER BLOCK GP*R

S/N: KHX13472-UP

PART OF 221-4482 CYLINDER BLOCK GP

SMCS-1201 **i03624297**

NOTE	REF NO	GRAPHIC REF	PART NUMBER	QTY	PART NAME 1 2 3 4 5 6 (PRODUCT LEVEL)	SEE PAGE
Y	1	1	*263-3774*	1	CYLINDER BLOCK GP	22
	2	1	**2M-6471**	2	PLUG-CUP	
	3	1	**3H-5552**	1	PLUG-CUP	
	4	1	**9S-8006**	1	PLUG-O-RING	
	5	1	**2M-9780**	1	SEAL-O-RING	
	6	1	**216-5586**	1	BEARING-SLEEVE (CAMSHAFT)	
	7	1	**2W-7213**	6	BEARING-SLEEVE (CAMSHAFT)	
		1	**107-7604**		SLEEVE-CYLINDER	
					(FOR SALVAGE OF CYLINDER BORE IN BLOCK. QUANTITY TO BE DETERMINED BY USER.)	

Y-SEPARATE ILLUSTRATION

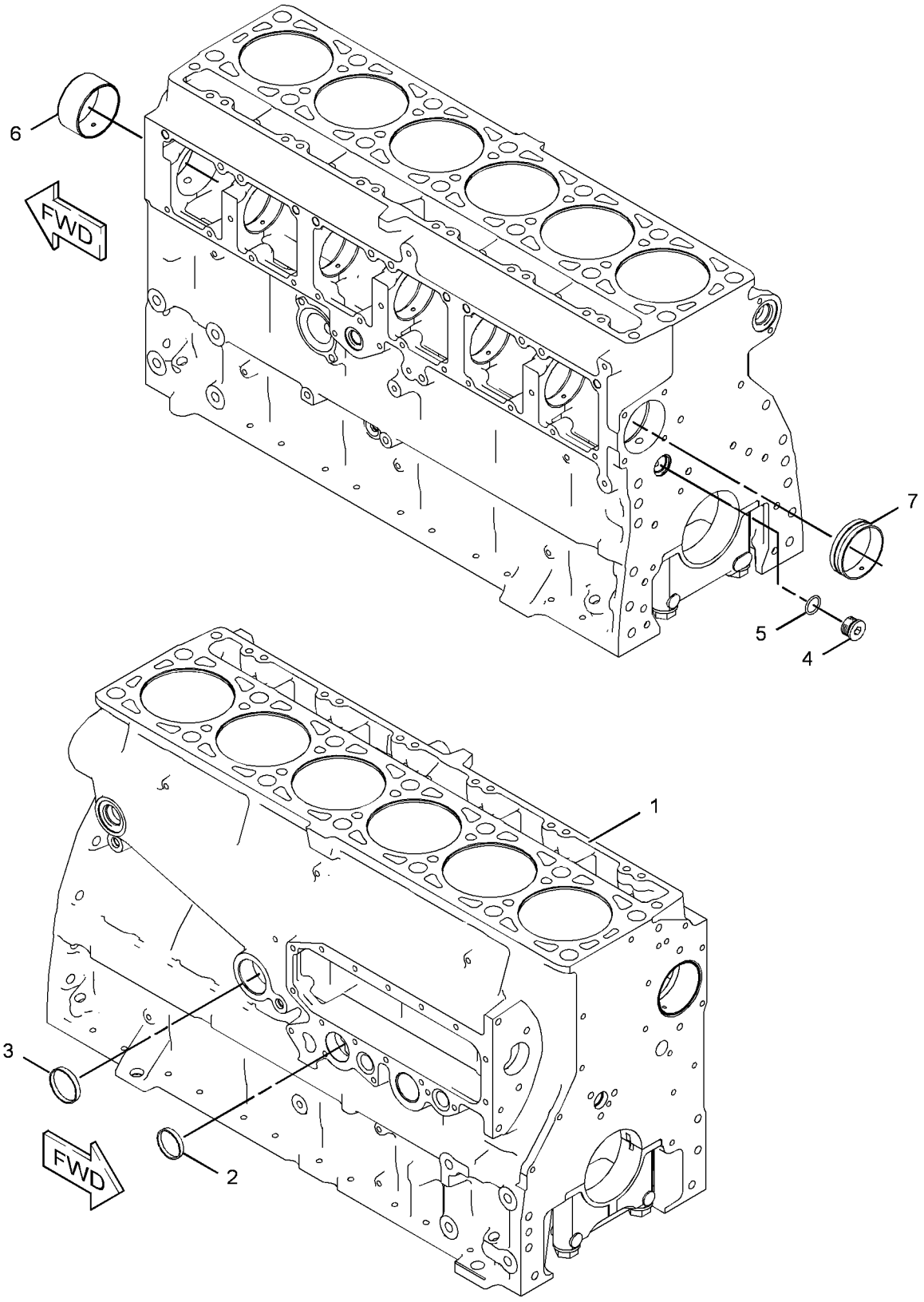

GRAPHIC #1 **<END>** g01348114

BASIC ENGINE

314-4184 CYLINDER HEAD AS

S/N: KHX13472-UP

PART OF 300-9550 CYLINDER HEAD GP

SMCS-1100 **i03680863**

NOTE	REF NO	GRAPHIC REF	PART NUMBER	QTY	PART NAME 1 2 3 4 5 6 (PRODUCT LEVEL)	SEE PAGE
	1	1	**310-7257**	6	SEAL-O-RING	
	2	1	**8M-5860**	12	PLUG-CUP	
	3	1	**4F-5695**	2	PLUG-CUP	
	4	1	**227-1200**	6	SLEEVE-INJECTOR	
	5	1	**232-1285**	6	INSERT-VALVE SEAT (STANDARD) (EXHAUST)	
AB		1	**319-3822**		SEAT-VALVE (EXHAUST 0.13-MM OS OD)	
AB		1	**319-3823**		SEAT-VALVE (EXHAUST 0.25-MM OS OD)	
AB		1	**319-3824**		SEAT-VALVE (EXHAUST 0.51-MM OS OD)	
	6	1	**264-6157**	12	INSERT-VALVE SEAT (STANDARD) (INLET)	
AB		1	**319-3819**		SEAT-VALVE (INLET 0.13-MM OS OD)	
AB		1	**319-3820**		SEAT-VALVE (INLET 0.25-MM OS OD)	
AB		1	**319-3821**		SEAT-VALVE (INLET 0.51-MM OS OD)	
	7	1	**310-7255**	6	SEAL-O-RING	

A-NOT PART OF THIS GROUP
B-USE AS REQUIRED

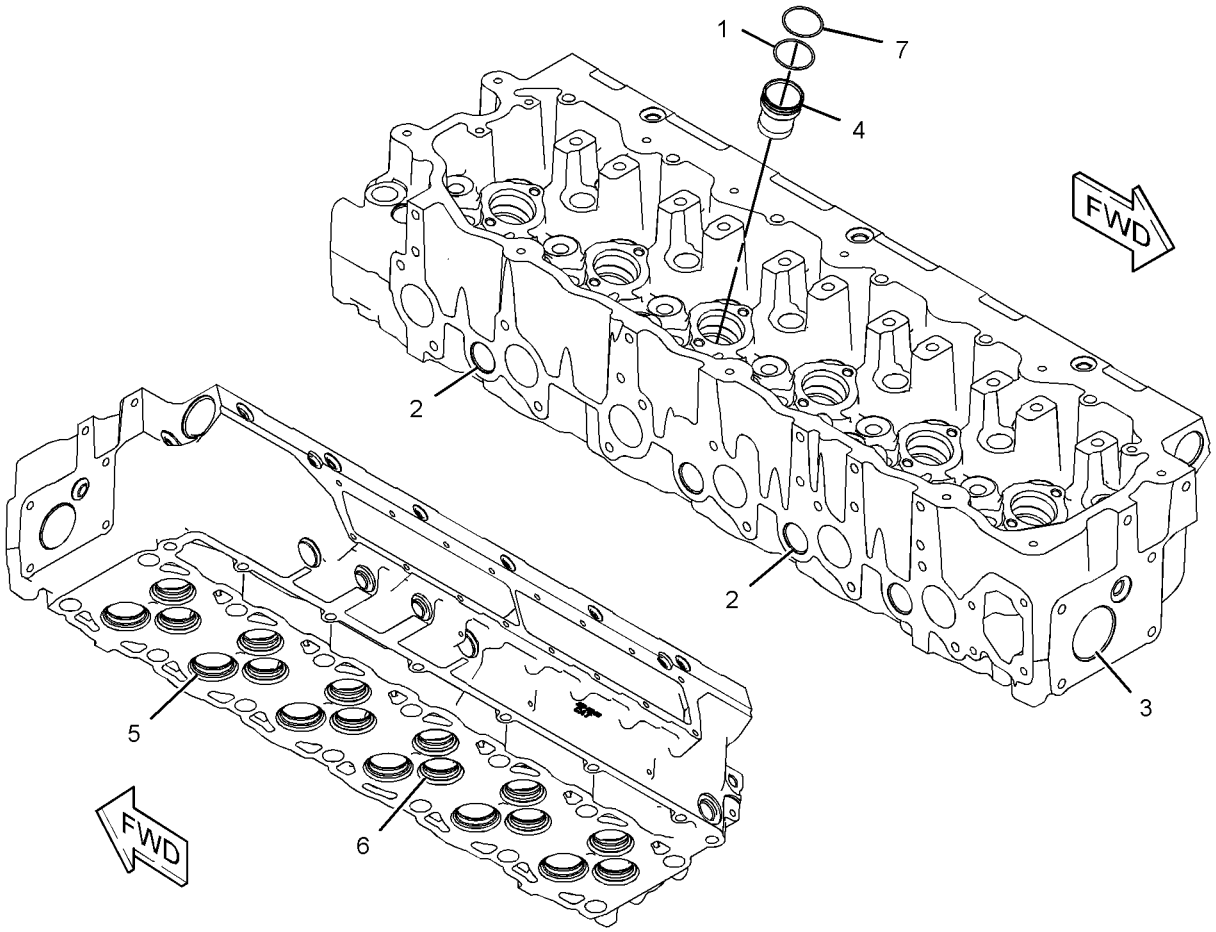

GRAPHIC #1 **<END>** g01581175

BASIC ENGINE

219-5847 CYLINDER HEAD GP*R

S/N: KHX13472-UP

PART OF 219-5849 CYLINDER HEAD GP

SMCS-1100 **i03258145**

NOTE	REF NO	GRAPHIC REF	PART NUMBER	QTY	PART NAME 1 2 3 4 5 6 (PRODUCT LEVEL)	SEE PAGE
CYR	1	1	**300-9550**	1	CYLINDER HEAD GP	28
	2	1	**1N-5999**	2	PLUG-O-RING	
	3	1	**2M-9780**	1	SEAL-O-RING	
	4	1	**3J-1907**	2	SEAL-O-RING	
	5	1	*319-6234*	2	PLUG AS	
					(EACH INCLUDES)	
	5A	1	**238-5084**	1	SEAL-O-RING	
		1	**9S-9334**	1	PLUG-O-RING	
	6	1	**7J-0204**	2	SEAL-O-RING	
	7	1	*307-2671*	6	PLUG AS	
					(EACH INCLUDES)	
	7A	1	**214-7566**	1	SEAL-O-RING	
		1	**9S-8002**	1	PLUG-O-RING	
	8	1	**9S-8004**	2	PLUG	
	9	1	**9S-8006**	1	PLUG-O-RING	

C-CHANGE FROM PREVIOUS TYPE
R-REMFG PART MAY BE AVAILABLE
Y-SEPARATE ILLUSTRATION

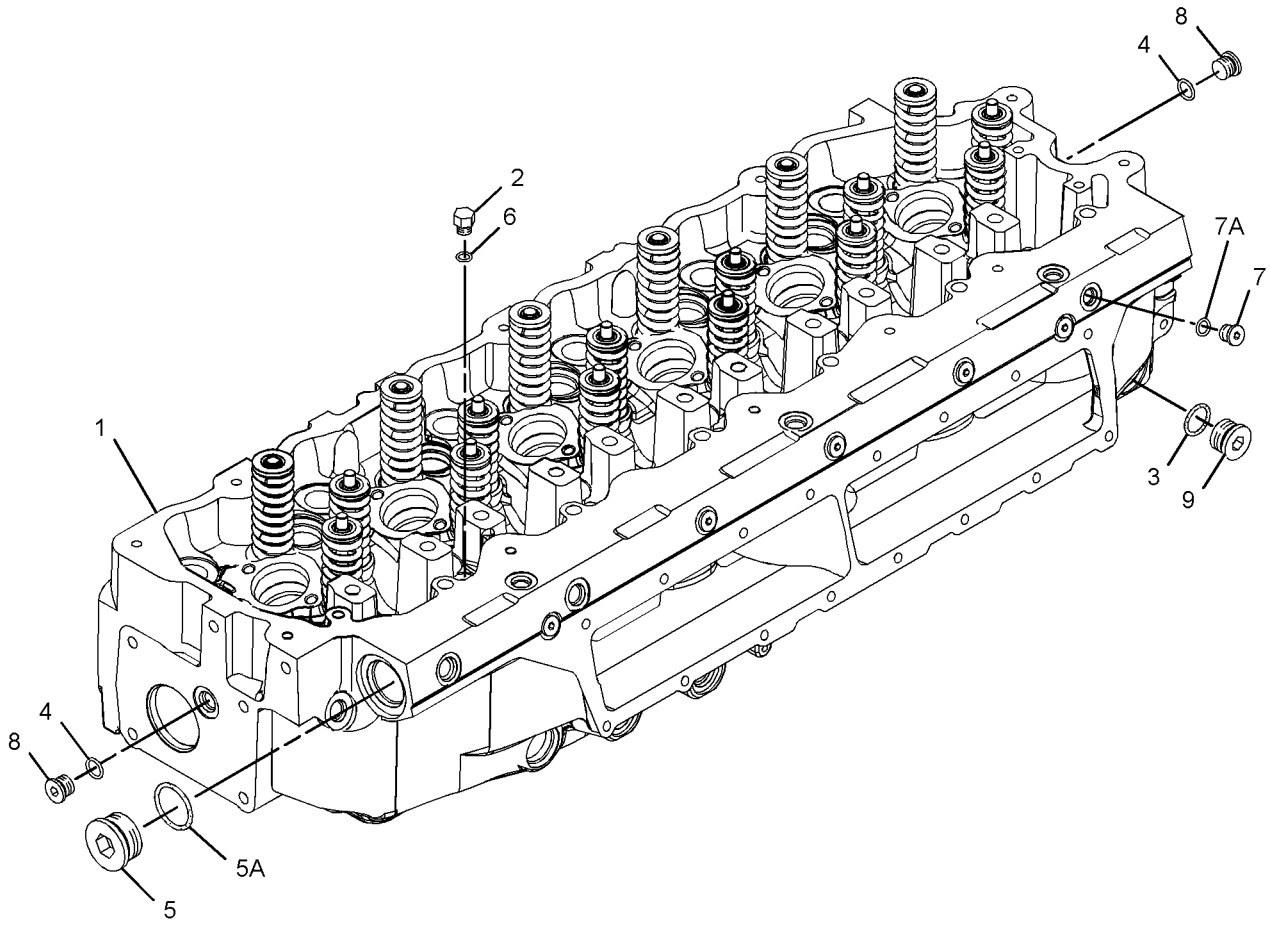

GRAPHIC #1 **<END>** g01579153

219-5849 CYLINDER HEAD GP

S/N: KHX13472-UP

PART OF 330-9359 ENGINE AR-CORE

SMCS-1100 **i02260856**

NOTE	REF NO	GRAPHIC REF	PART NUMBER	QTY	PART NAME 1 2 3 4 5 6 (PRODUCT LEVEL)	SEE PAGE
Y	1	1	*219-5847*	1	CYLINDER HEAD GP	26
	2	1	**133-4995**	1	GASKET-CYLINDER HEAD	
	3	1	*142-7289*	14	FASTENER GP-CYLINDER HEAD	
					(EACH INCLUDES)	
		1	**138-3252**	1	BOLT-12 POINT HEAD	
		1	**8T-3282**	1	WASHER-HARD (22X35X3.5-MM THK)	
M	4	1	**8T-7950**	6	BOLT (M10X1.5X180-MM)	
	5	1	**6V-5839**	6	WASHER (11X21X2.5-MM THK)	

M-METRIC PART
Y-SEPARATE ILLUSTRATION

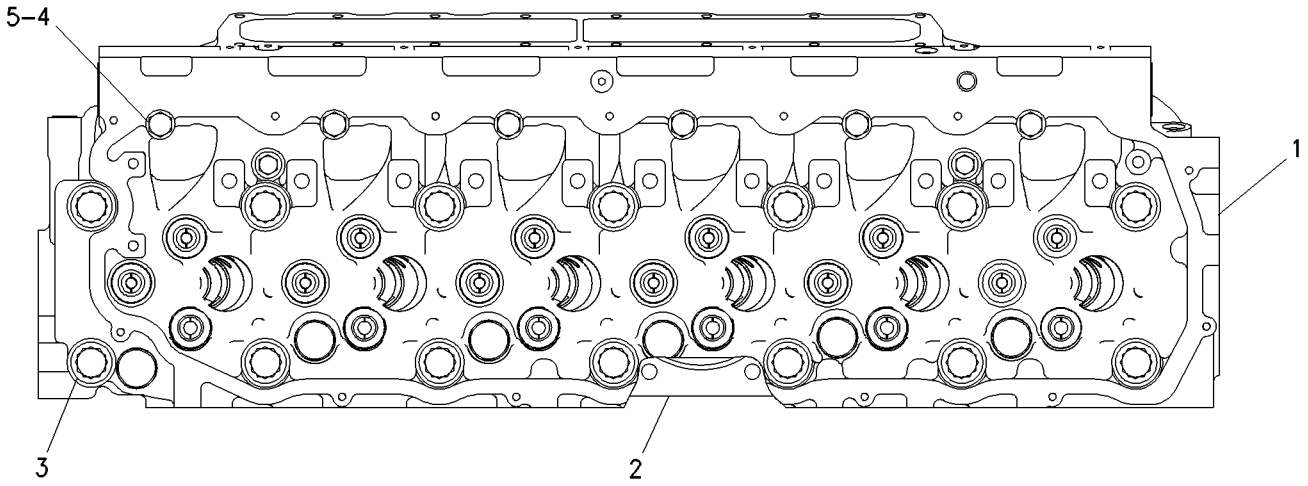

TOP VIEW

GRAPHIC #1 **<END>** g00760746

BASIC ENGINE

300-9550 CYLINDER HEAD GP*R

S/N: KHX13472-UP

PART OF 219-5847 CYLINDER HEAD GP

SMCS-1100 **i03680866**

NOTE	REF NO	GRAPHIC REF	PART NUMBER	QTY	PART NAME 1 2 3 4 5 6 (PRODUCT LEVEL)	SEE PAGE
	1	1	**1W-2715**	24	LOCK-RETAINER	
	2	1	**2A-4429**	12	LOCK-RETAINER	
	3	1	**137-6715**	6	SEAT-VALVE SPRING	
	4	1	**137-6718**	6	SPRING-VALVE (EXHAUST)	
	5	1	**140-6188**	12	SPRING-VALVE (INLET)	
	6	1	**147-8214**	12	SEAL-VALVE STEM (INLET)	
	7	1	**147-8220**	6	GUIDE-VALVE (STANDARD)	
AB		1	**187-8278**		GUIDE-VALVE (0.13-MM OS OD)	
AB		1	**187-8279**		GUIDE-VALVE (0.51-MM OS OD)	
	8	1	**163-2478**	6	SEAL-VALVE STEM (EXHAUST)	
	9	1	**252-7801**	12	VALVE-INLET	
Y	10	1	*314-4184*	1	CYLINDER HEAD AS	25
	11	1	**134-4483**	6	RETAINER-SPRING	
	12	1	**140-9670**	12	GUIDE-VALVE (STANDARD)	
AB		1	**187-8280**		GUIDE-VALVE (0.13-MM OS OD)	
AB		1	**187-8281**		GUIDE-VALVE (0.51-MM OS OD)	
	13	1	**147-8211**	6	VALVE-EXHAUST	
	14	1	**7E-7779**	12	RETAINER-SPRING	

A-NOT PART OF THIS GROUP
B-USE AS REQUIRED
Y-SEPARATE ILLUSTRATION

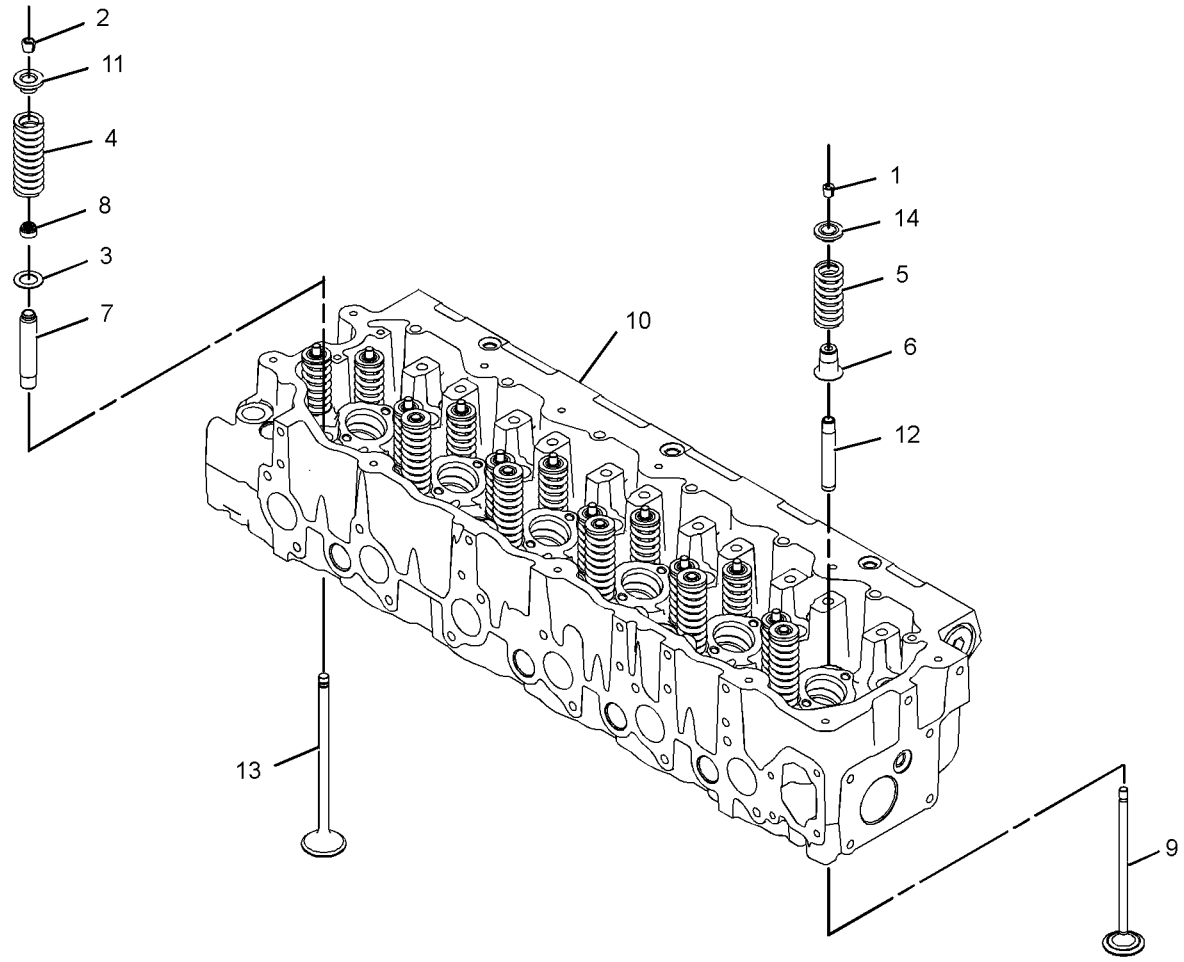

GRAPHIC #1 **<END>** g01384206

326-9045 DAMPER & PULLEY GP

S/N: KHX13472-UP

PART OF 325-9707 ENGINE AR-COMPLETE

SMCS-1205 **i03625943**

NOTE	REF NO	GRAPHIC REF	PART NUMBER	QTY	PART NAME 1 2 3 4 5 6 (PRODUCT LEVEL)	SEE PAGE
	1	1	**326-9040**	1	YOKE	
	2	1	**2W-7381**	1	PLATE-CLAMP	
	3	1	**167-8121**	1	DAMPER AS	
	4	1	**172-9367**	1	PULLEY-CRANKSHAFT	
	5	1	**6V-5839**	8	WASHER (11X21X2.5-MM THK)	
M	6	1	**6V-7981**	8	BOLT (M10X1.5X70-MM)	
M	7	1	**8T-3666**	4	BOLT (M14X2X60-MM)	

M-METRIC PART

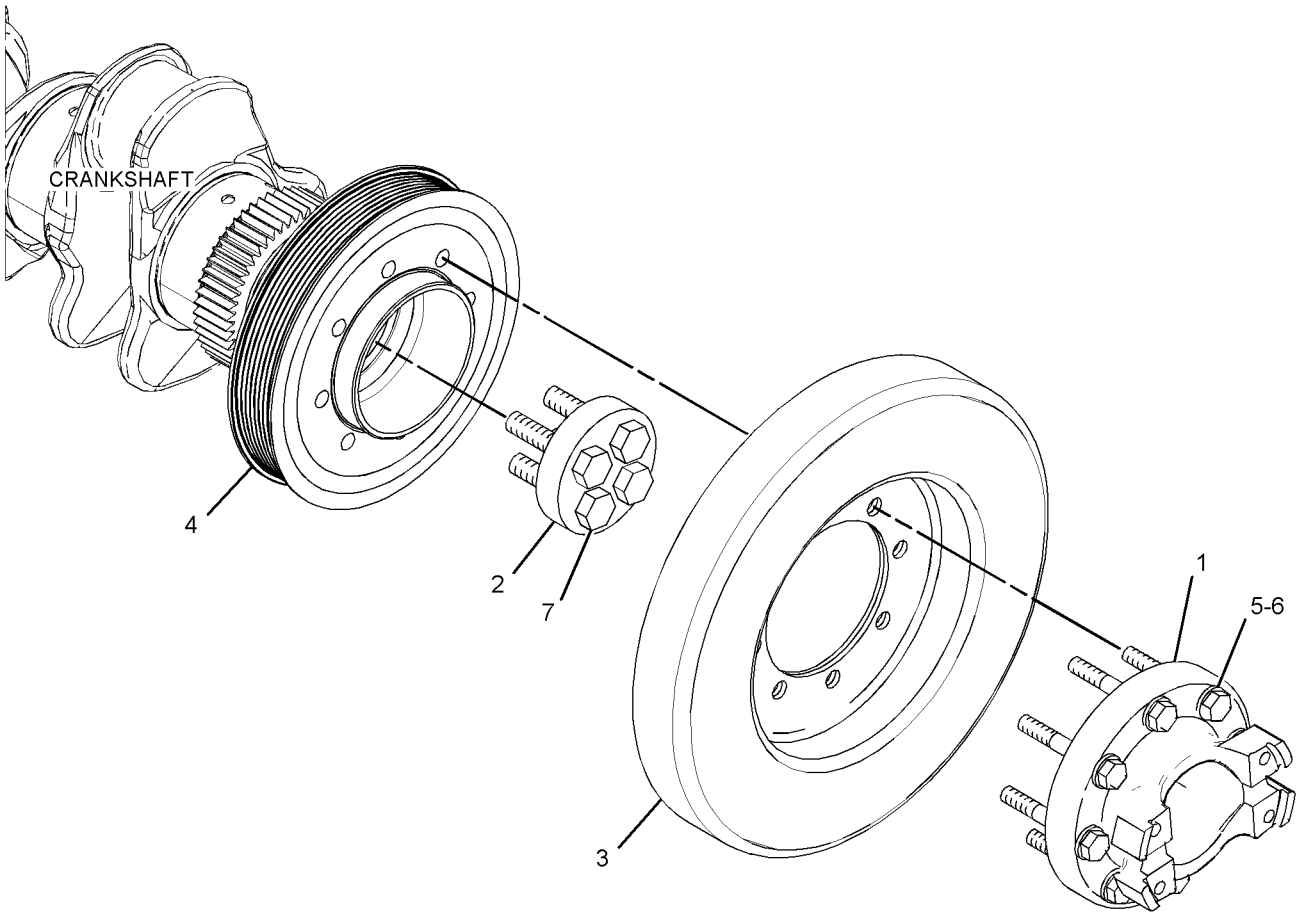

GRAPHIC #1 **<END>** g01945315

BASIC ENGINE

313-4384 DRIVE GP-ACCESSORY

S/N: KHX13472-UP

PART OF 325-9707 ENGINE AR-COMPLETE

SMCS-1207 **i03627005**

NOTE	REF NO	GRAPHIC REF	PART NUMBER	QTY	PART NAME 1 2 3 4 5 6 (PRODUCT LEVEL)	SEE PAGE
	1	1	**124-7792**	1	PULLEY AS-IDLER	
	2	1	**145-2901**	1	COVER-DUST	
	3	1	**220-1209**	1	BELT TENSIONER	
	4	1	**228-4766**	1	PLATE-LIFTING	
	5	1	**263-1786**	1	SPACER	
	6	1	**341-5000**	1	BRACKET AS	
	7	1	**285-9066**	1	BOLT (M8X1.25X65-MM)	
	8	1	**5P-4116**	1	WASHER-HARD (8.8X20.5X2-MM THK)	
	9	1	**8T-4121**	5	WASHER-HARD (11X21X2.5-MM THK)	
M	10	1	**8T-4172**	1	BOLT (M10X1.5X80-MM)	
M	11	1	**8T-4196**	4	BOLT (M10X1.5X35-MM)	

M-METRIC PART

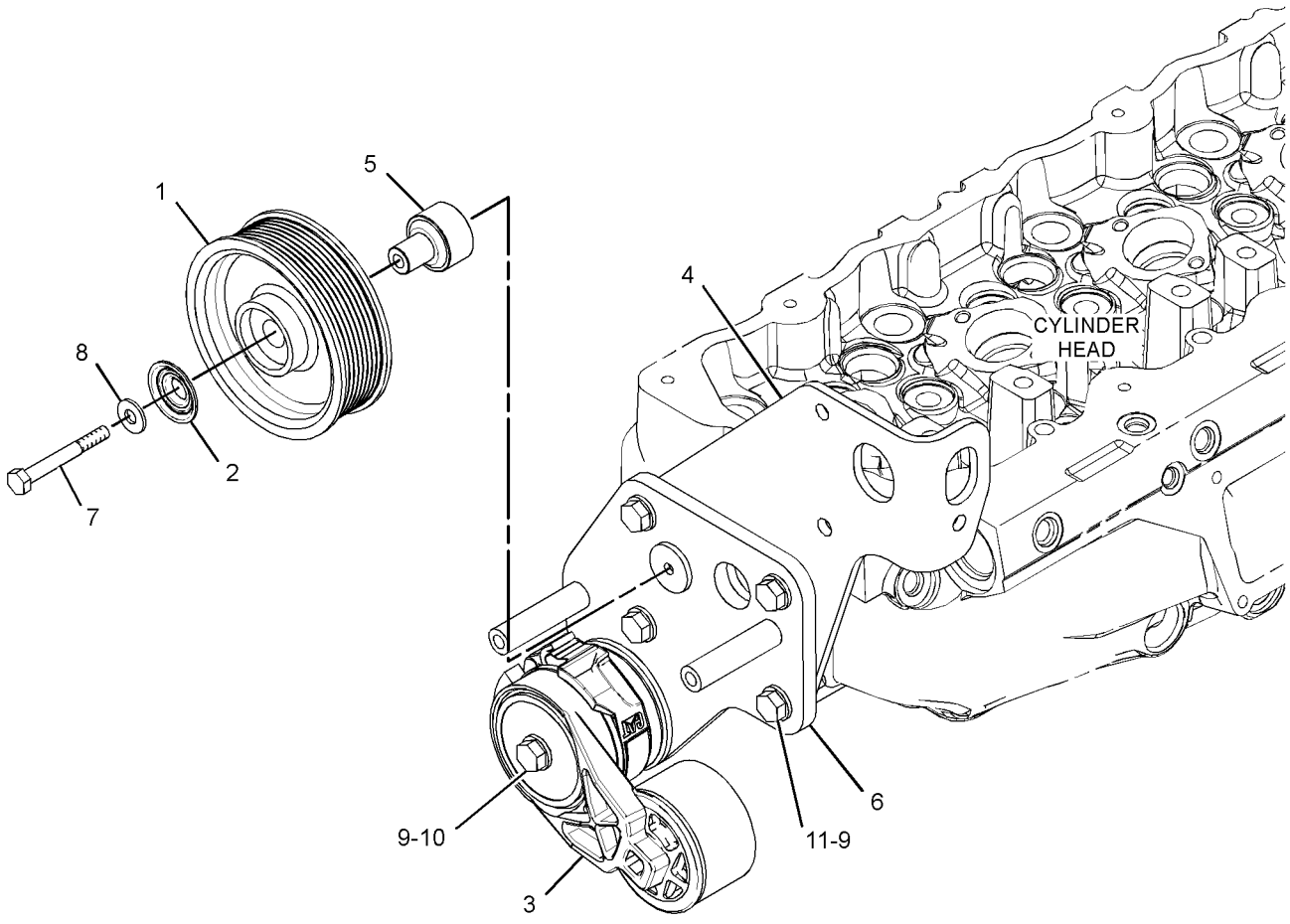

GRAPHIC #1 **<END>** g01947981

7C-8365 DRIVE GP-FAN

S/N: JAP1-UP

PART OF 338-5871 DRIVE GP-FAN

SMCS-1359 **i03432296**

NOTE	REF NO	GRAPHIC REF	PART NUMBER	QTY	PART NAME 1 2 3 4 5 6 (PRODUCT LEVEL)	SEE PAGE
	1	1	**5S-9062**	1	SPACER (35.032X50.8X15.88-MM THK)	
	2	1	**7C-8370**	1	CAP-DUST	
	3	1	**7C-8366**	1	BRACKET AS	
	4	1	**7C-8369**	1	HUB	
	5	1	**6V-9748**	1	SEAL-LIP TYPE	
	6	1	**4W-1203**	2	CUP-BEARING	
	7	1	**4W-1204**	2	CONE-BEARING	
	8	1	**4W-2042**	1	SPACER (35.3X45.5X38.331-MM THK)	
M	9	1	**6V-8004**	1	BOLT (M12X1.75X120-MM)	
	10	1	**7C-8634**	1	PLATE	

M-METRIC PART

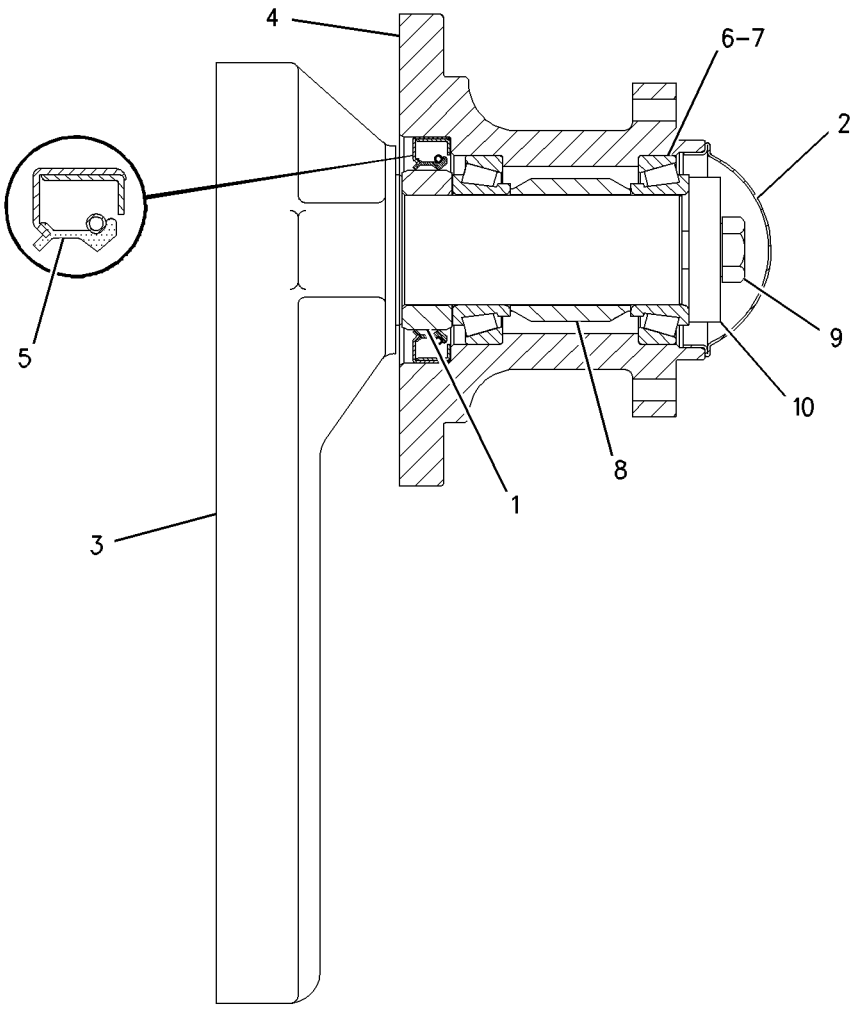

GRAPHIC #1 **<END>** g00799529

338-5871 DRIVE GP-FAN

S/N: JAP1-UP
BELT
PART OF 348-3018 GENERAL AR

SMCS-1359 **i03541295**

NOTE	REF NO	GRAPHIC REF	PART NUMBER	QTY	PART NAME 1 2 3 4 5 6 (PRODUCT LEVEL)	SEE PAGE
Y	1	1	**7C-8365**	1	DRIVE GP-FAN	31
	2	1	**7E-3372**	1	V-BELT SET (INCLUDES 3-BELTS)	
	3	1	**107-9579**	1	PULLEY	
	4	1	**276-7462**	1	ADAPTER-FAN	
	5	1	**294-1136**	1	SUPPORT AS	
	6	1	**294-1137**	1	PULLEY	
M	7	1	**7X-0818**	6	BOLT (M8X1.25X45-MM)	
M	8	1	**7X-2553**	4	BOLT (M16X2X40-MM)	
	9	1	**8T-4121**	8	WASHER-HARD (11X21X2.5-MM THK)	
M	10	1	**8T-4185**	4	BOLT (M10X1.5X50-MM)	
M	11	1	**8T-4196**	4	BOLT (M10X1.5X35-MM)	
	12	1	**8T-4224**	12	WASHER-HARD (8.8X16X2-MM THK)	
M	13	1	**8T-4908**	6	BOLT (M8X1.25X25-MM)	
	14	1	**9X-8257**	4	WASHER (17.5X30X3.5-MM THK)	

M-METRIC PART
Y-SEPARATE ILLUSTRATION

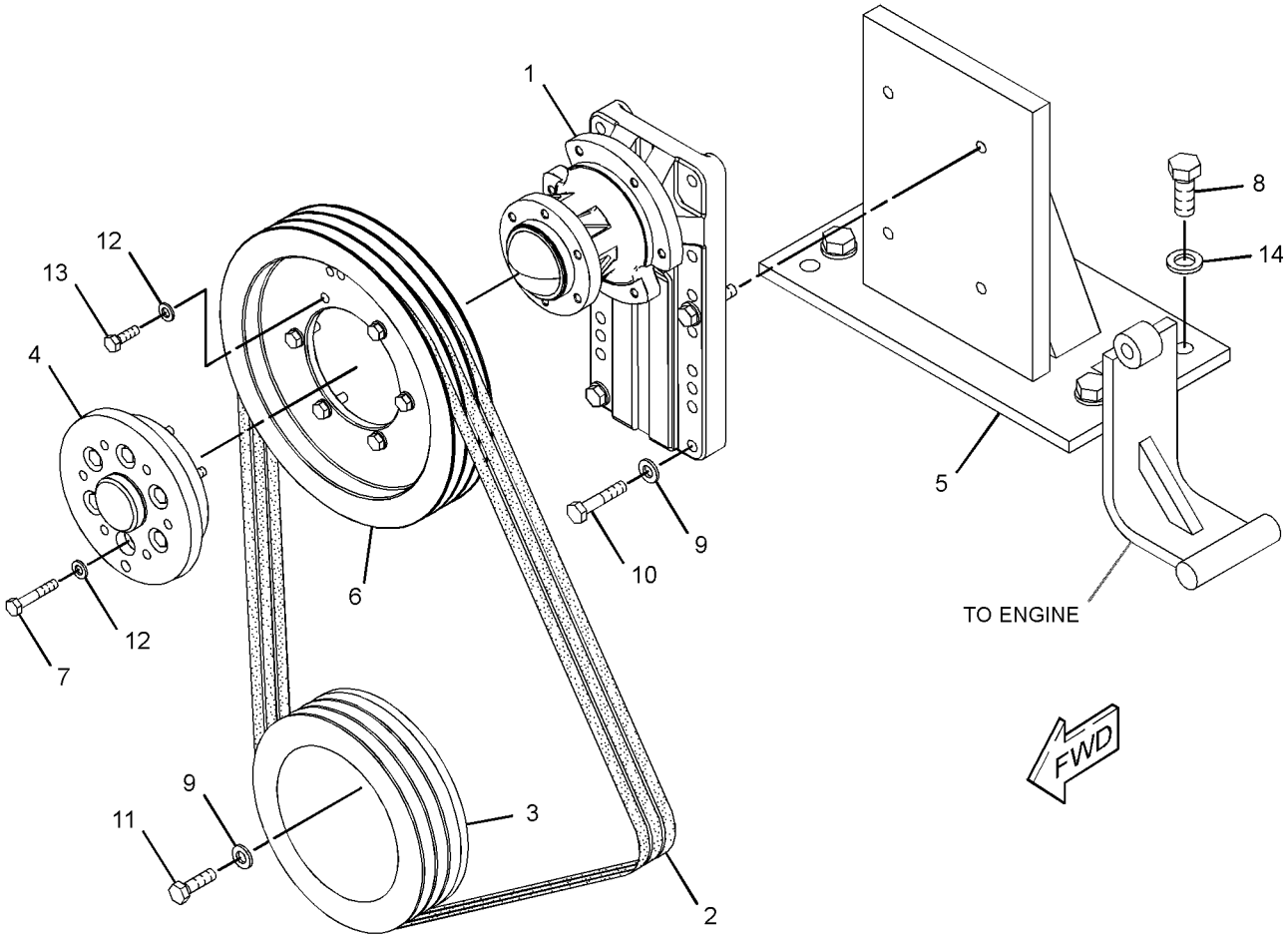

GRAPHIC #1 **<END>** g01927473

258-8723 FASTENER GP-CYLINDER HEAD

S/N: KHX13472-UP

PART OF 325-9707 ENGINE AR-COMPLETE

SMCS-1100 **i02310961**

NOTE	REF NO	GRAPHIC REF	PART NUMBER	QTY	PART NAME 1 2 3 4 5 6 (PRODUCT LEVEL)	SEE PAGE
	1	1	**229-8844**	3	CLIP	
	2	1	**244-4500**	11	SPRING	
M	3	1	**8T-0100**	11	BOLT (M8X1.25X60-MM)	
	4	1	**9N-0869**	11	WASHER-HARD (8.8X25.5X2-MM THK)	

M-METRIC PART

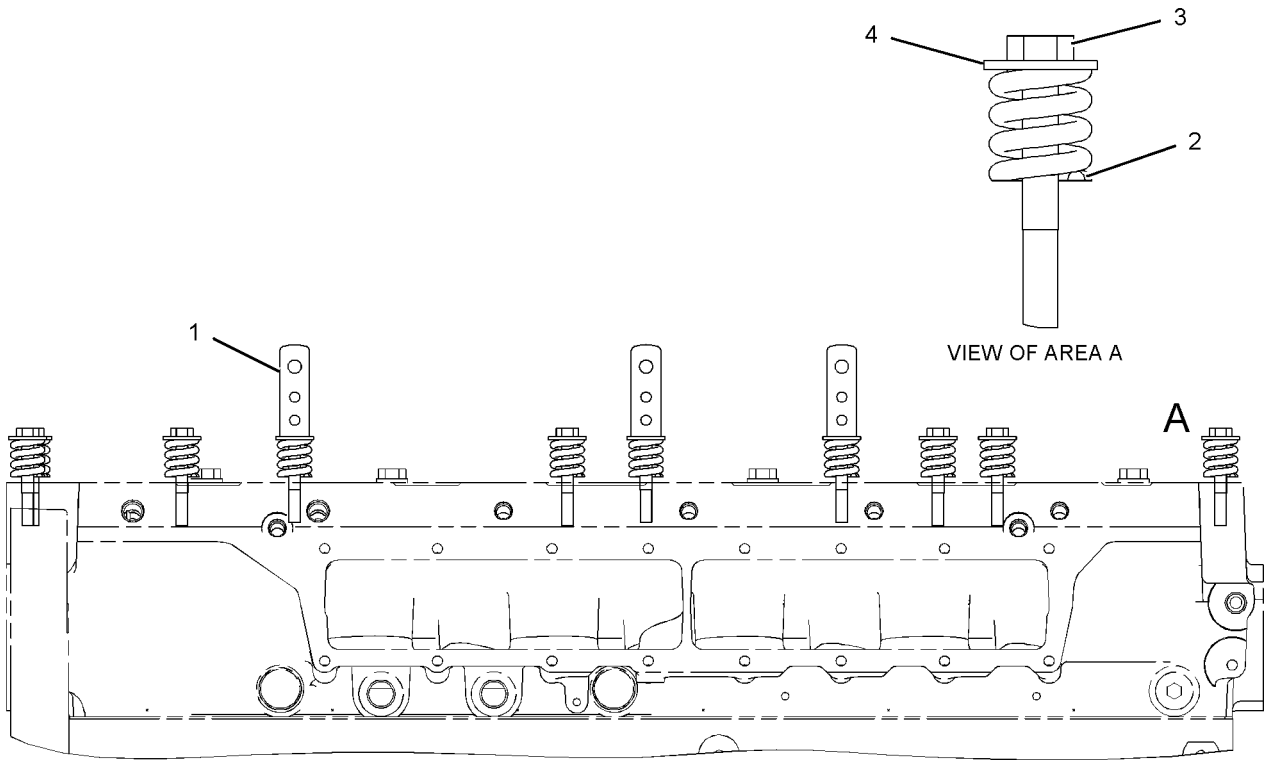

RIGHT SIDE VIEW

GRAPHIC #1 **<END>** g01125046

BASIC ENGINE

322-0246 FASTENER GP-ENGINE

S/N: KHX13472-UP

PART OF 325-9707 ENGINE AR-COMPLETE

SMCS-1000, 7553 **i02981180**

NOTE	REF NO	GRAPHIC REF	PART NUMBER	QTY	PART NAME 1 2 3 4 5 6 (PRODUCT LEVEL)	SEE PAGE
M	1	1	**6V-2317**	4	BOLT (M8X1.25X30-MM)	
M	2	1	**6V-5218**	2	BOLT (M8X1.25X35-MM)	
M	3	1	**6V-8337**	1	BOLT-SOCKET HEAD (M8X1.25X35-MM)	
	4	1	**9M-1974**	7	WASHER-HARD (8.8X16X2-MM THK)	

M-METRIC PART

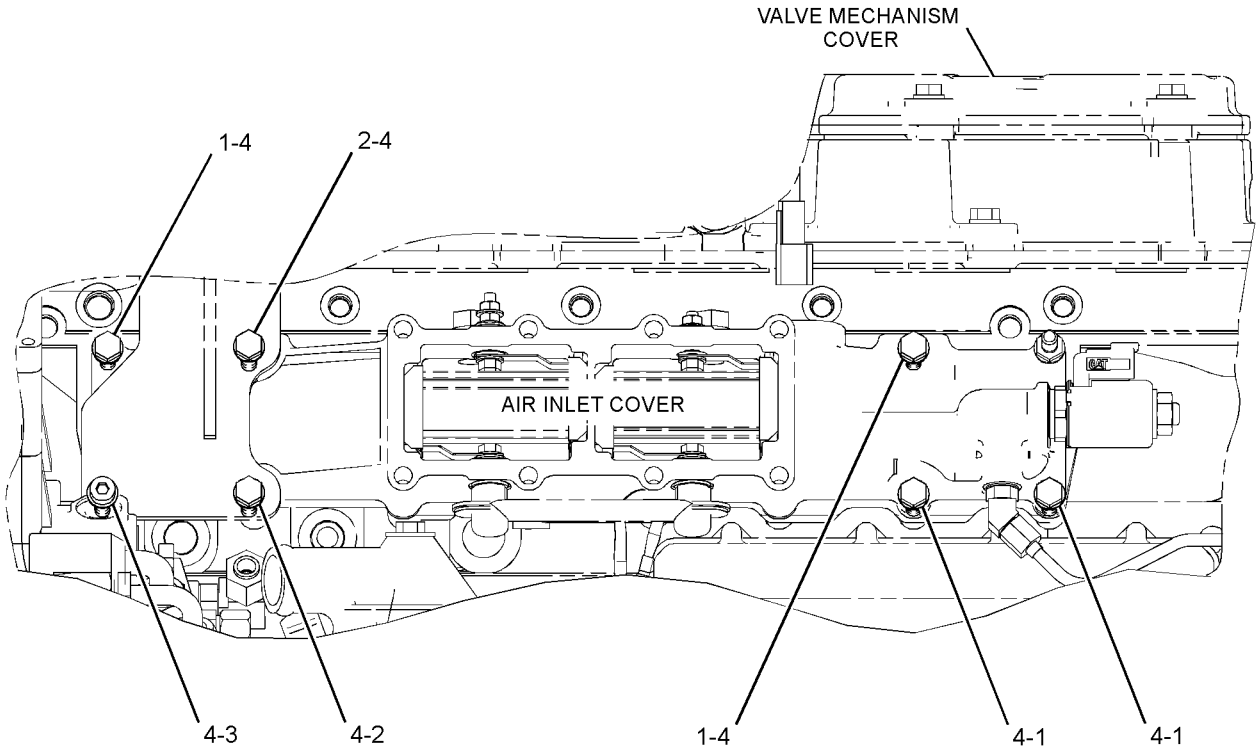

LEFT SIDE VIEW OF ENGINE

GRAPHIC #1 **<END>** g01528516

116-4556 FASTENER GP-FRONT HOUSING

S/N: KHX13472-UP

PART OF 325-9707 ENGINE AR-COMPLETE

SMCS-1151 **i01487429**

NOTE	REF NO	GRAPHIC REF	PART NUMBER	QTY	PART NAME 1 2 3 4 5 6 (PRODUCT LEVEL)	SEE PAGE
M	1	1	**6V-8336**	6	BOLT (M12X1.75X70-MM)	
		1	**5P-8245**	6	WASHER-HARD (13.5X25.5X3-MM THK)	

M-METRIC PART

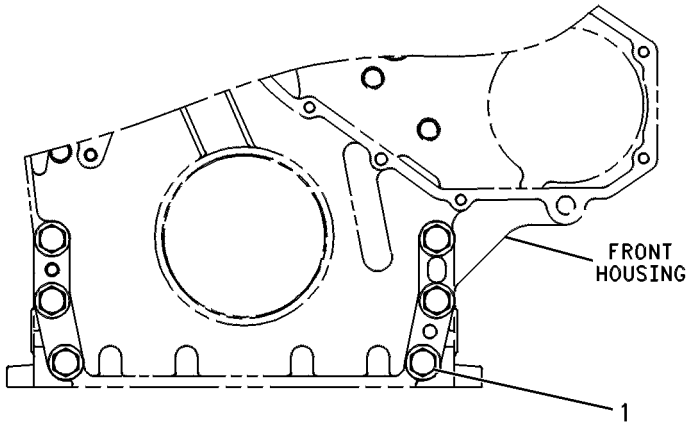

FRONT VIEW

GRAPHIC #1 **<END>** g00244671

BASIC ENGINE

275-8387 FLYWHEEL GP

S/N: KHX13472-UP

PART OF 325-9707 ENGINE AR-COMPLETE

SMCS-1156, 1158 **i03338762**

NOTE	REF NO	GRAPHIC REF	PART NUMBER	QTY	PART NAME 1 2 3 4 5 6 (PRODUCT LEVEL)	SEE PAGE
	1	1	**3E-3213**	1	PIN-SPRING	
M	2	1	**7X-7961**	8	BOLT-SELF-LOCKING (M12X1.75X100-MM)	
	3	1	**311-7210**	1	FLYWHEEL AS	
		1	**7W-5095**	1	GEAR-FLYWHEEL (134-TEETH)	
	4	1	**5P-8245**	8	WASHER-HARD (13.5X25.5X3-MM THK)	

M-METRIC PART

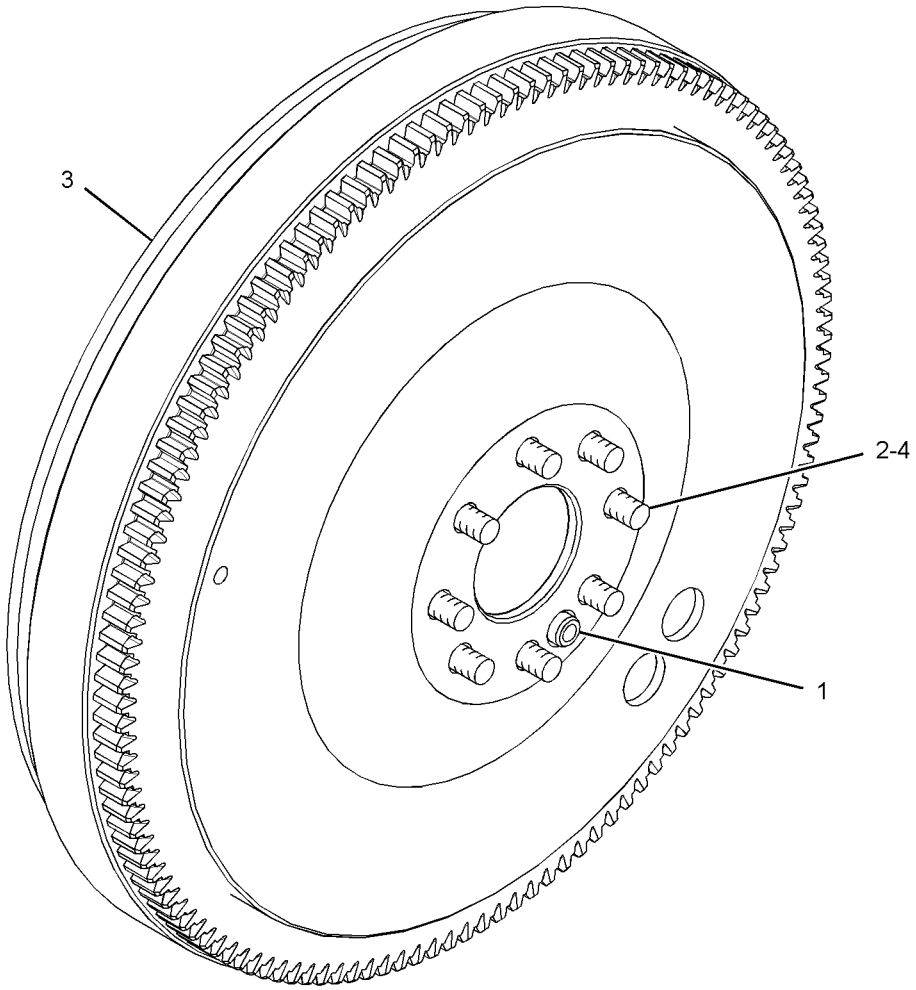

GRAPHIC #1 **<END>** g01717017

205-1321 GEAR GP-FRONT

S/N: KHX13472-UP

PART OF 330-9359 ENGINE AR-CORE

SMCS-1151, 1162, 1206 **i01696307**

NOTE	REF NO	GRAPHIC REF	PART NUMBER	QTY	PART NAME 1 2 3 4 5 6 (PRODUCT LEVEL)	SEE PAGE
	1	1	**113-6069**	1	PLATE-THRUST	
	2	1	**115-4219**	1	PLATE-RETAINING	
	3	1	**200-4495**	1	SHAFT-IDLER	
	4	1	**205-1320**	1	GEAR AS-IDLER (50 TEETH)	
	4A	1	**115-4072**	1	BEARING	
M	5	1	**136-4183**	1	BOLT-12 POINT HEAD (M10X1.5X30MM)	
M	6	1	**6V-5843**	2	BOLT (M10X1.50X45MM)	

M-METRIC PART

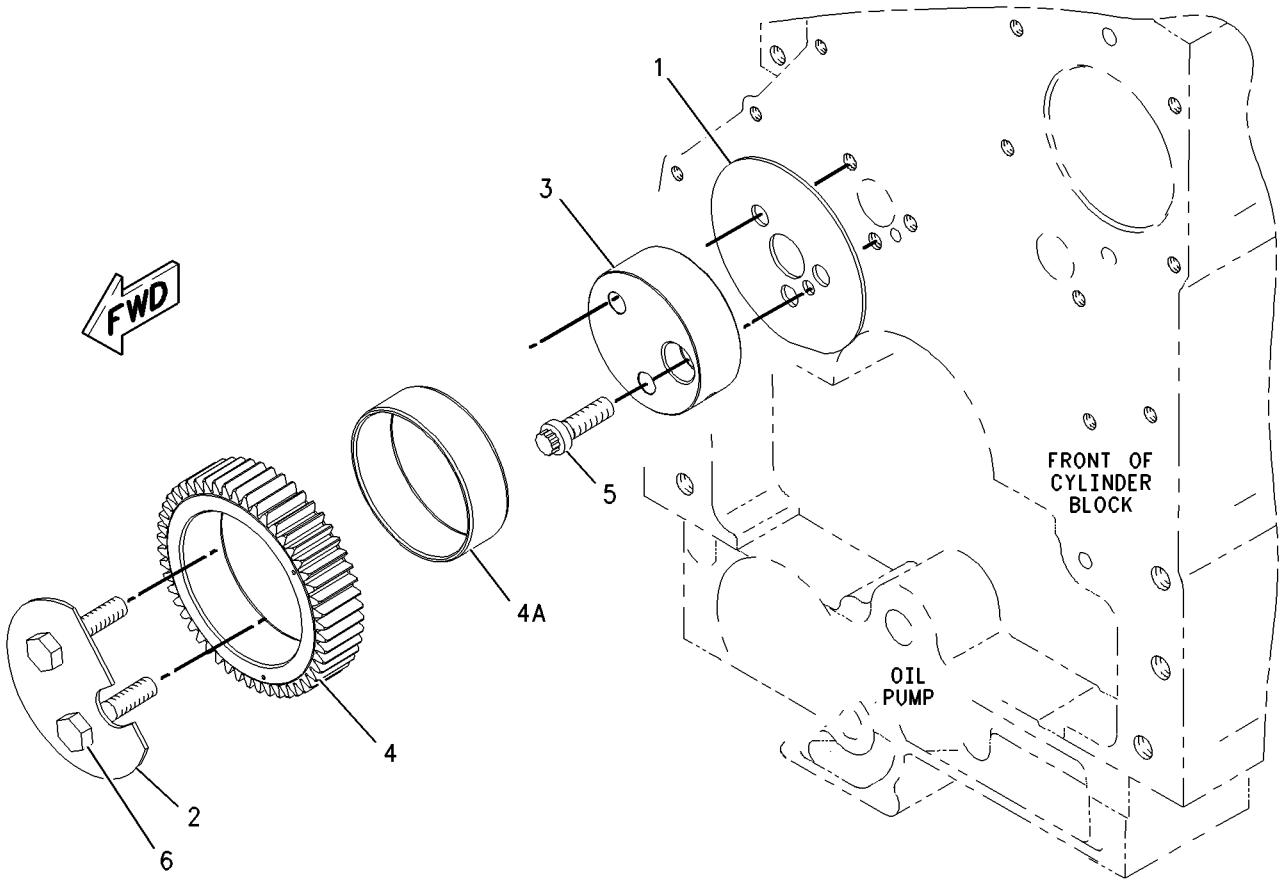

GRAPHIC #1 **<END>** g00873940

BASIC ENGINE

197-5210 HOUSING GP-FLYWHEEL

S/N: KHX13472-UP

PART OF 325-9707 ENGINE AR-COMPLETE

SMCS-1157 **i03499080**

NOTE	REF NO	GRAPHIC REF	PART NUMBER	QTY	PART NAME 1 2 3 4 5 6 (PRODUCT LEVEL)	SEE PAGE
	1	1	**5F-0304**	1	PLUG	
	2	1	**100-6551**	1	HOUSING-FLYWHEEL	
	4	1	**2A-1162**	1	GASKET	
	5	1	*148-8408*	1	PLUG AS	
	5A	1	**3D-2824**	1	SEAL-O-RING	
		1	**9S-4183**	1	PLUG-O-RING	
	6	1	*155-3624*	1	PLUG AS	
	6A	1	**3J-7354**	1	SEAL-O-RING	
		1	**9S-4182**	1	PLUG-O-RING	
M	7	1	**6V-5842**	2	BOLT (M10X1.5X40-MM)	
M	9	1	**8T-0226**	10	BOLT (M14X2X45-MM)	
BF			**1U-8846**		SEALANT-GASKET	

B-USE AS REQUIRED
F-NOT SHOWN
M-METRIC PART

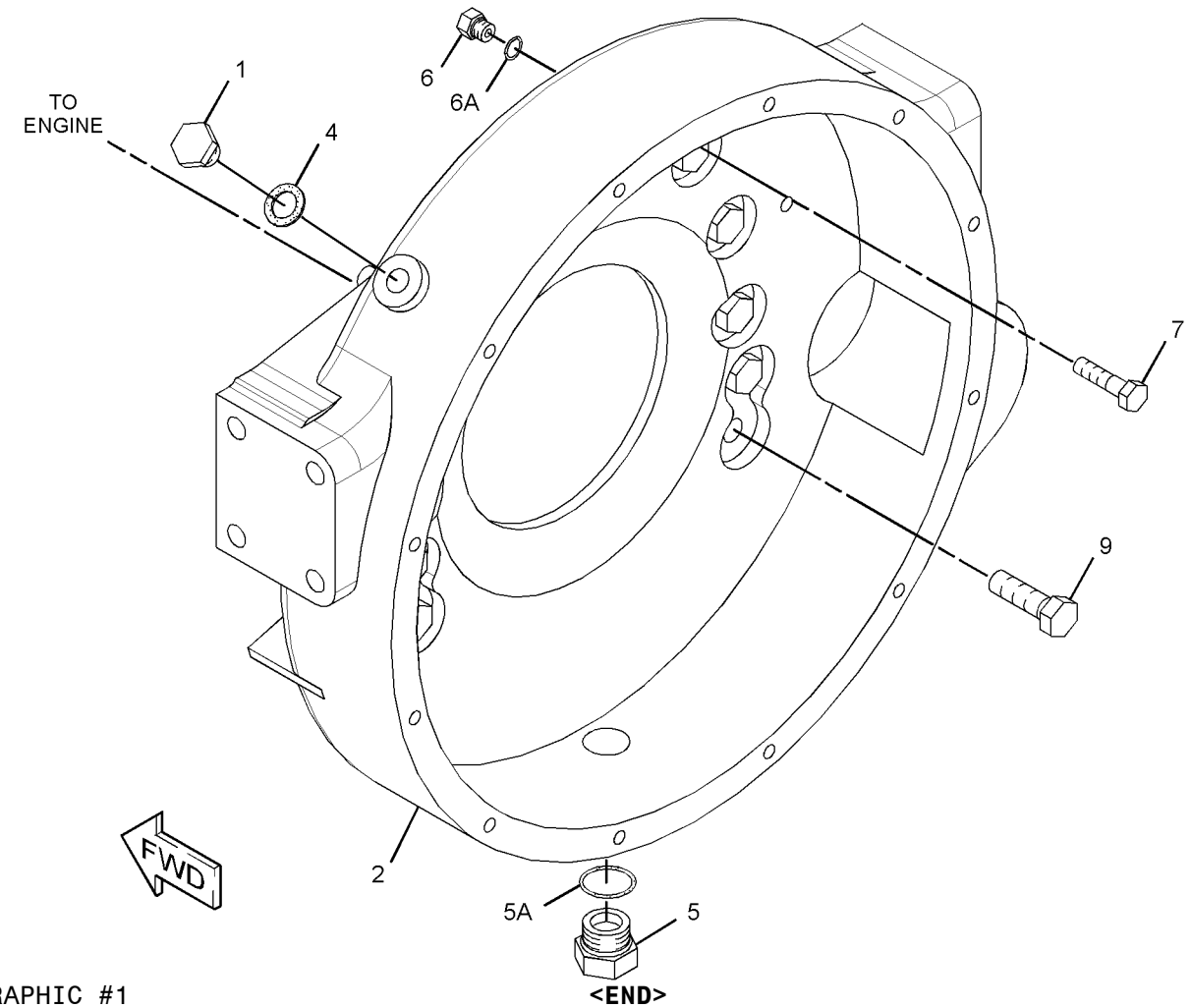

GRAPHIC #1 **<END>** g01448323

165-4446 HOUSING GP-FRONT

S/N: KHX13472-UP

PART OF 330-9359 ENGINE AR-CORE

SMCS-1151, 1162, 1206 **i03529802**

NOTE	REF NO	GRAPHIC REF	PART NUMBER	QTY	PART NAME 1 2 3 4 5 6 (PRODUCT LEVEL)	SEE PAGE
C	1	1	**245-3259**	1	HOUSING-FRONT	
M	2	1	**6V-3918**	4	BOLT (M8X1.25X50-MM)	
M	3	1	**6V-5217**	8	BOLT (M8X1.25X20-MM)	
	4	1	**9M-1974**	12	WASHER-HARD (8.8X16X2-MM THK)	
B	5	1	**1U-8846**		SEALANT-GASKET	

B-USE AS REQUIRED
C-CHANGE FROM PREVIOUS TYPE
M-METRIC PART

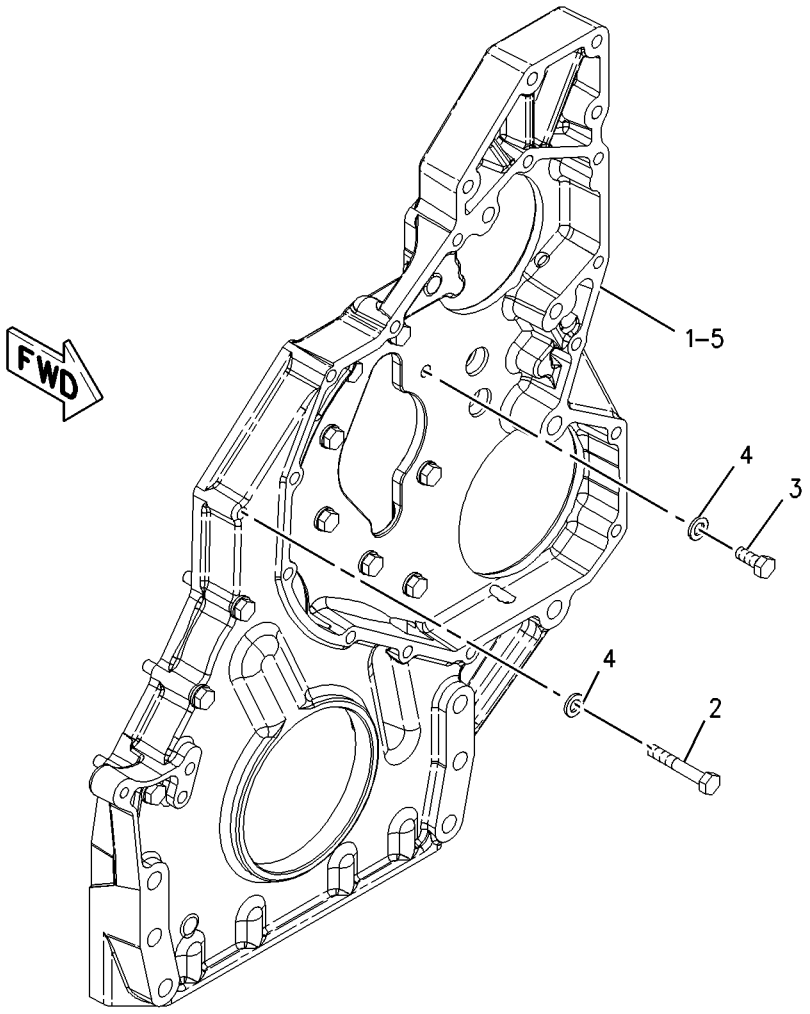

GRAPHIC #1 **<END>** g01005394

139-4081 LIFTER GP-VALVE

S/N: KHX13472-UP

PART OF 232-3717 VALVE MECHANISM GP

SMCS-1209 **i01615435**

NOTE	REF NO	GRAPHIC REF	PART NUMBER	QTY	PART NAME 1 2 3 4 5 6 (PRODUCT LEVEL)	SEE PAGE
	1	1	**139-9476**	1	SHAFT AS-LIFTER	
		1	**2D-6642**	2	BALL	
	2	1	**7E-6794**	4	ARM AS-LIFTER	
	3	1	**139-4084**	2	SPACER	

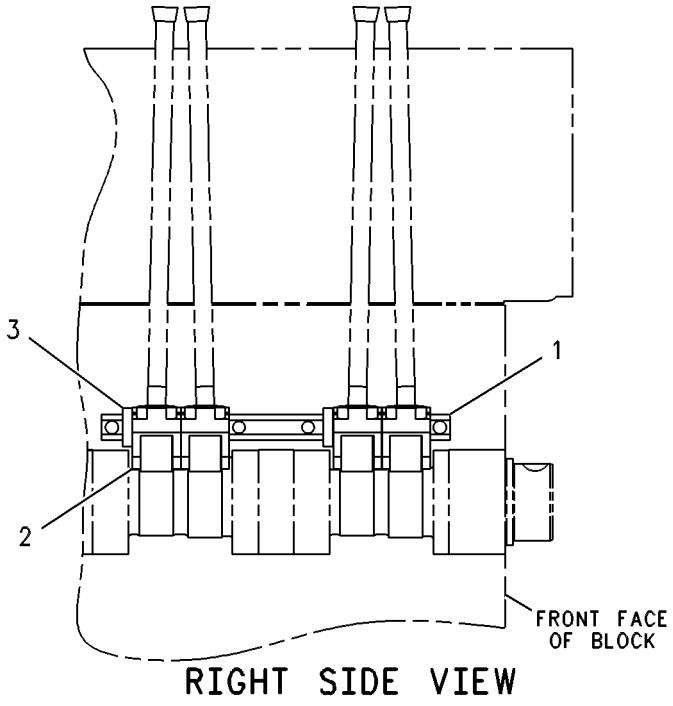

RIGHT SIDE VIEW

GRAPHIC #1 **<END>** g00288708

237-9822 LIFTING GP-ENGINE

S/N: KHX13472-UP

PART OF 325-9707 ENGINE AR-COMPLETE

SMCS-1122 **i02215501**

NOTE	REF NO	GRAPHIC REF	PART NUMBER	QTY	PART NAME 1 2 3 4 5 6 (PRODUCT LEVEL)	SEE PAGE
	1	1	**154-0896**	1	PLATE-LIFTING	
	2	1	**8T-4121**	4	WASHER-HARD (11X21X2.5-MM THK)	
M	3	1	**8T-4136**	4	BOLT (M10X1.5X25-MM)	

M-METRIC PART

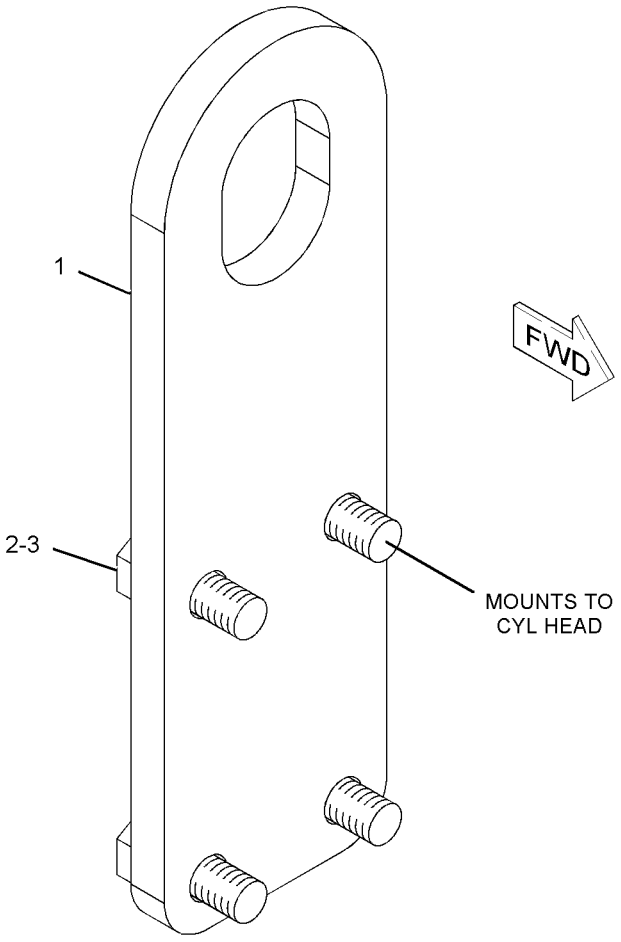

GRAPHIC #1 **<END>** g01118450

311-3542 MOUNTING GP-ENGINE

S/N: KHX13472-UP

PART OF 325-9707 ENGINE AR-COMPLETE

SMCS-1152, 1153, 1154 **i03338921**

NOTE	REF NO	GRAPHIC REF	PART NUMBER	QTY	PART NAME 1 2 3 4 5 6 (PRODUCT LEVEL)	SEE PAGE
M	1	1	**8T-3653**	4	BOLT (M14X2X80-MM)	
	2	1	**180-7344**	2	SUPPORT	
	3	1	**7X-0510**	8	WASHER-HARD (15.5X29X3-MM THK)	
M	4	1	**8C-3425**	4	BOLT (M14X2X35-MM)	

M-METRIC PART

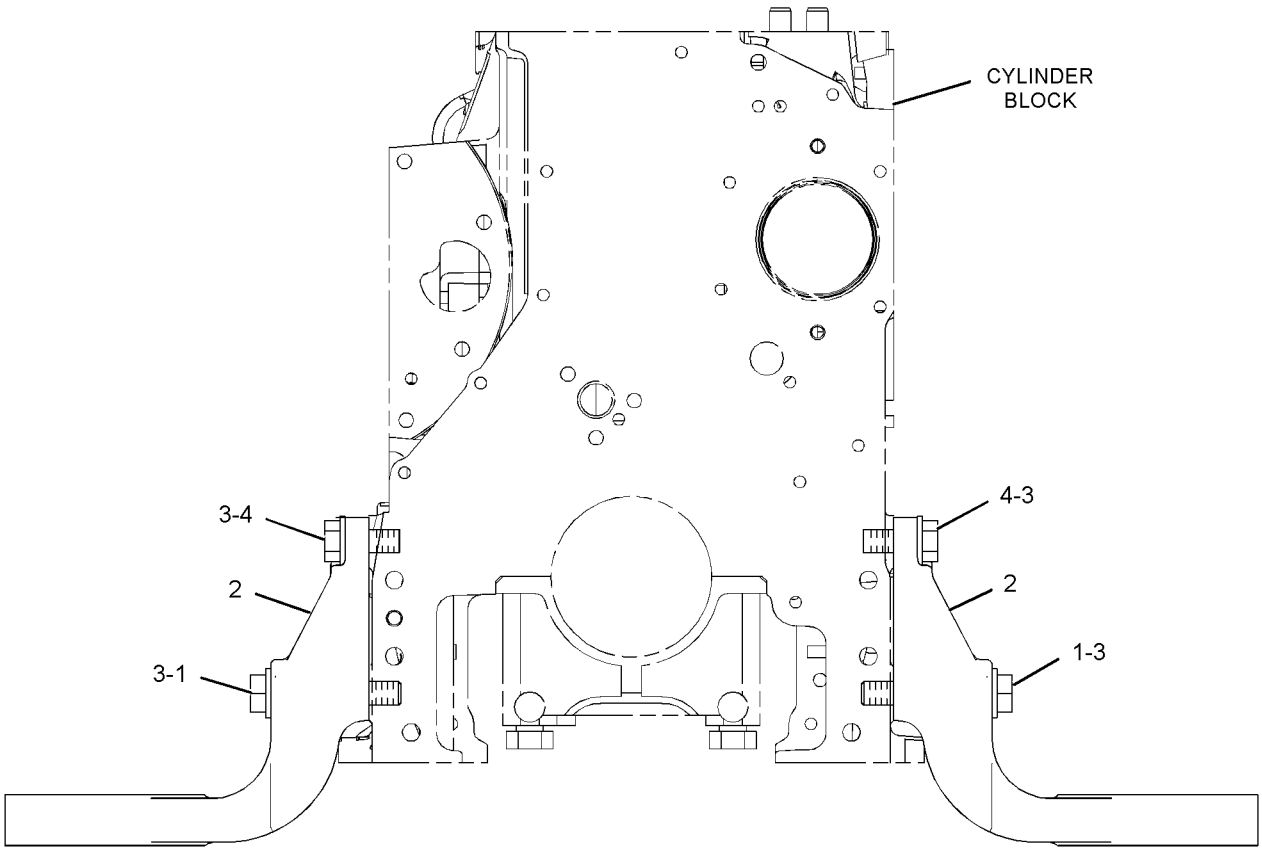

FRONT VIEW OF ENGINE

GRAPHIC #1 **<END>** g01722074

310-6437 MOUNTING GP-ENGINE & XMSN

S/N: JAP1-UP

PART OF 348-3018 GENERAL AR

SMCS-1152, 1153, 1154, 3082 **i03561101**

NOTE	REF NO	GRAPHIC REF	PART NUMBER	QTY	PART NAME 1 2 3 4 5 6 (PRODUCT LEVEL)	SEE PAGE
	1	1	**174-9529**	2	MOUNT AS	
					(EACH INCLUDES)	
		1	**6Y-9960**	1	MOUNT AS	
		1	**9W-7385**	1	SLEEVE	
		1	**9W-7388**	2	WASHER (26X144X12-MM THK)	
	2	1	*192-7357*	2	MOUNT AS	
					(EACH INCLUDES)	
		1	**9W-6582**	1	SLEEVE	
		1	**9W-6584**	1	WASHER (20.5X114X10-MM THK)	
		1	**9W-9920**	1	MOUNT AS	
	3	1	**211-9274**	1	SUPPORT (RH)	
	4	1	**211-9275**	1	SUPPORT (LH)	
	5	1	**198-3611**	1	BELT-SERPENTINE	
	6	1	**316-6682**	1	PLATE AS	
	7	1	**316-6686**	1	PLATE AS	
	8	1	**337-2233**	1	PLATE AS	
	9	1	**198-4776**	4	WASHER-HARD (8.8X20X8-MM THK)	
	10	1	**198-4777**	4	WASHER-HARD (11X25X10-MM THK)	
M	11	1	**8C-3290**	2	BOLT (M24X3X150-MM)	
	12	1	**8T-4121**	15	WASHER-HARD (11X21X2.5-MM THK)	
	13	1	**8T-4123**	10	WASHER (22X35X3.5-MM THK)	
M	14	1	**8T-4136**	4	BOLT (M10X1.5X25-MM)	
	15	1	**8T-4167**	2	WASHER-HARD (26X44X4-MM THK)	
M	16	1	**8T-4191**	3	BOLT (M10X1.5X16-MM)	
M	17	1	**8T-4196**	12	BOLT (M10X1.5X35-MM)	
M	18	1	**8T-4908**	4	BOLT (M8X1.25X25-MM)	
M	19	1	**8T-6381**	2	BOLT (M20X2.5X120-MM)	
M	20	1	**8T-6430**	8	BOLT (M20X2.5X50-MM)	

M-METRIC PART

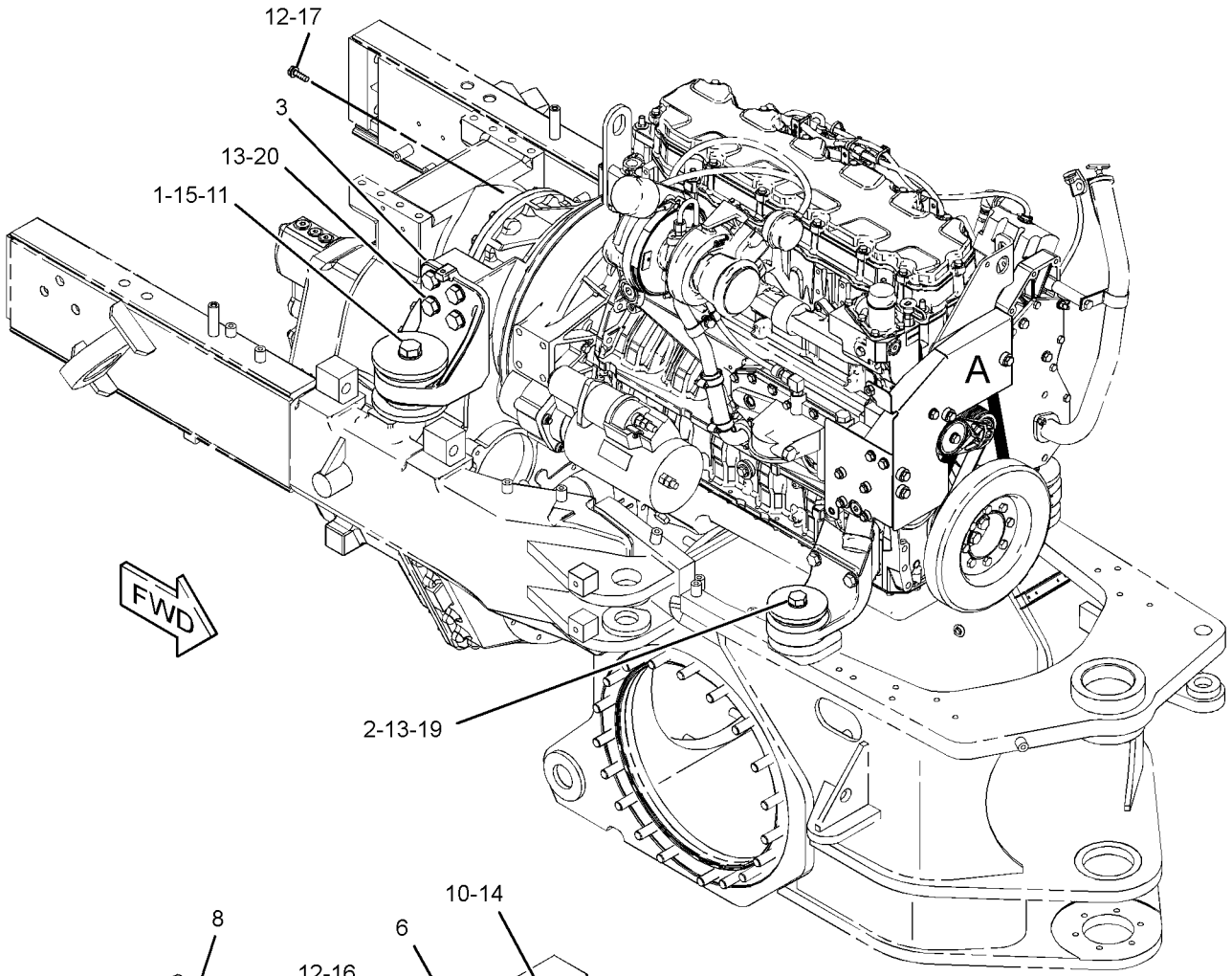

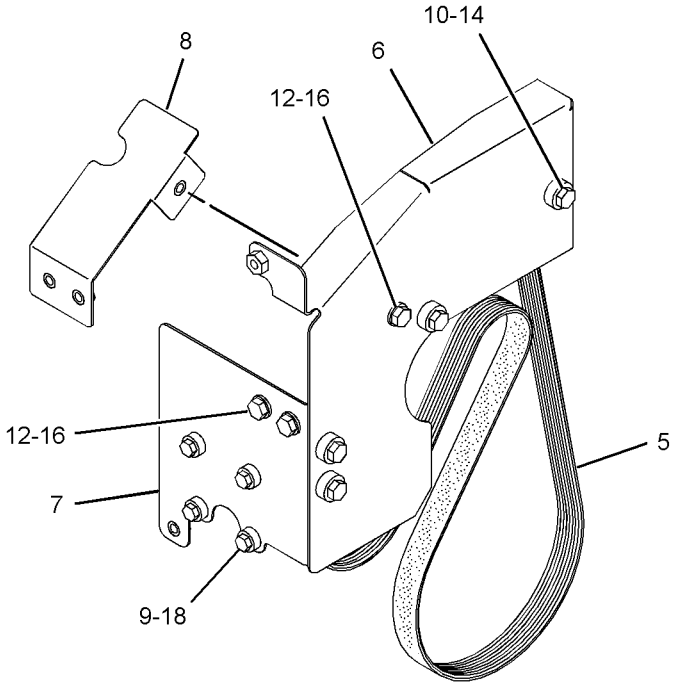

VIEW OF AREA A

GRAPHIC #1 **<END>** g01697633

122-8936 PAN GP-OIL

S/N: KHX13472-17466

PART OF 325-9707 ENGINE AR-COMPLETE

SMCS-1302 **i03338826**

NOTE	REF NO	GRAPHIC REF	PART NUMBER	QTY	PART NAME 1 2 3 4 5 6 (PRODUCT LEVEL)	SEE PAGE
	1	1	**115-4170**	1	PAN AS-OIL (ENGINE)	
	2	1	**217-9946**	36	BOLT AS	
	3	1	**261-3816**	1	GASKET-OIL PAN (ENGINE)	
	4	1	**9S-4191**	1	PLUG-O-RING	
	5	1	**3J-1907**	1	SEAL-O-RING	
B	6	1	**4C-9612**		SEALANT-SILICONE	

B-USE AS REQUIRED

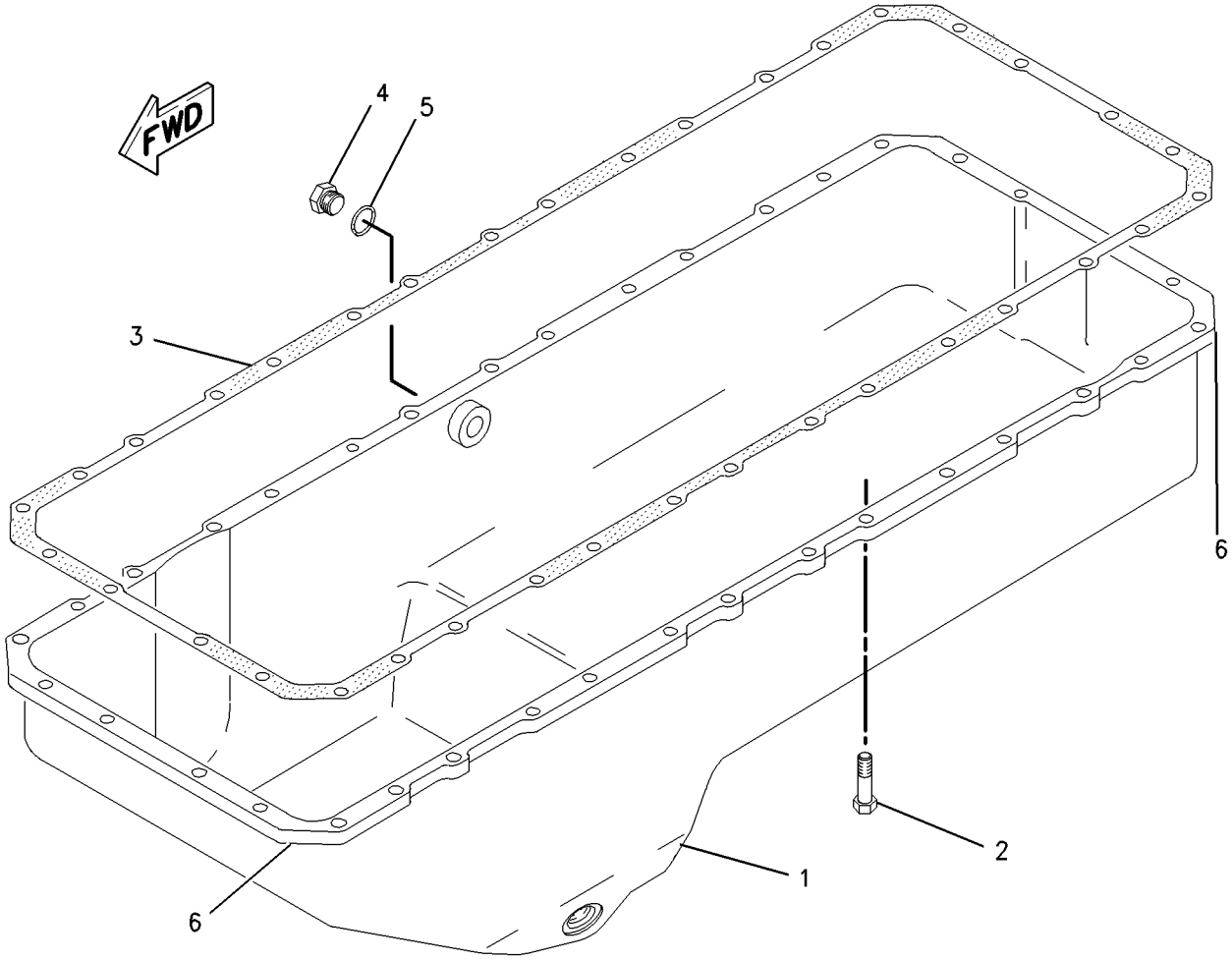

GRAPHIC #1 **<END>** g01005487

BASIC ENGINE

193-6996 PAN GP-OIL

S/N: KHX17467-UP

PART OF 193-6998 PAN GP-OIL

SMCS-1302 **i03636098**

NOTE	REF NO	GRAPHIC REF	PART NUMBER	QTY	PART NAME 1 2 3 4 5 6 (PRODUCT LEVEL)	SEE PAGE
	1	1	**191-6241**	1	PAN AS-OIL	
	2	1	**168-2288**	1	PLUG AS-DRAIN (MAGNETIC) (ENGINE OIL PAN)	
		1	**169-7487**	1	SEAL-O-RING	
	3	1	**9S-8004**	1	PLUG	
	4	1	**3J-1907**	1	SEAL-O-RING	

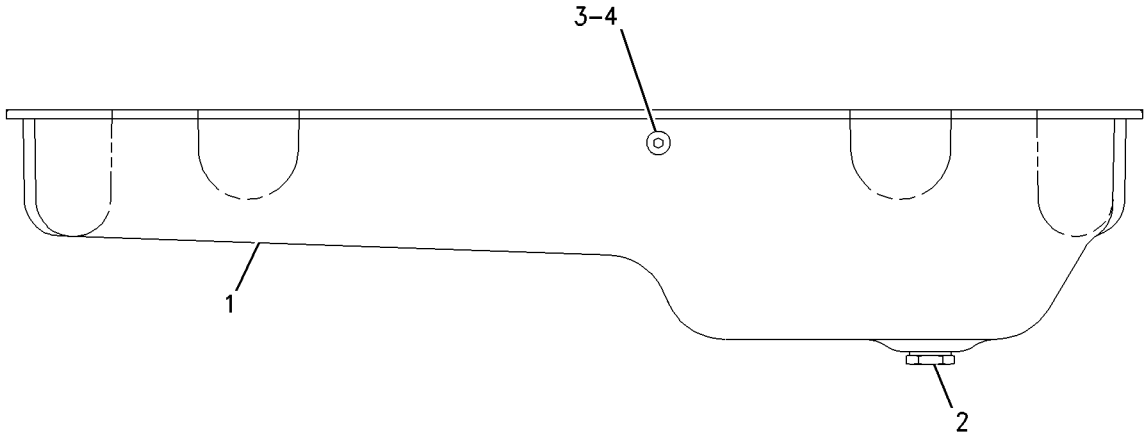

LEFT SIDE VIEW

GRAPHIC #1 **<END>** g00783675

193-6998 PAN GP-OIL

S/N: KHX17467-UP

PART OF 325-9707 ENGINE AR-COMPLETE

SMCS-1302 **i03506500**

NOTE	REF NO	GRAPHIC REF	PART NUMBER	QTY	PART NAME 1 2 3 4 5 6 (PRODUCT LEVEL)	SEE PAGE
Y	1	1	*193-6996*	1	PAN GP-OIL (ENGINE)	46
M	2	1	**175-3676**	36	BOLT (M8X1.25X19.5-MM)	
	3	1	**166-2905**	1	SEAL-INTEGRAL	
B	4	1	**4C-9612**		SEALANT-SILICONE	

B-USE AS REQUIRED
M-METRIC PART
Y-SEPARATE ILLUSTRATION

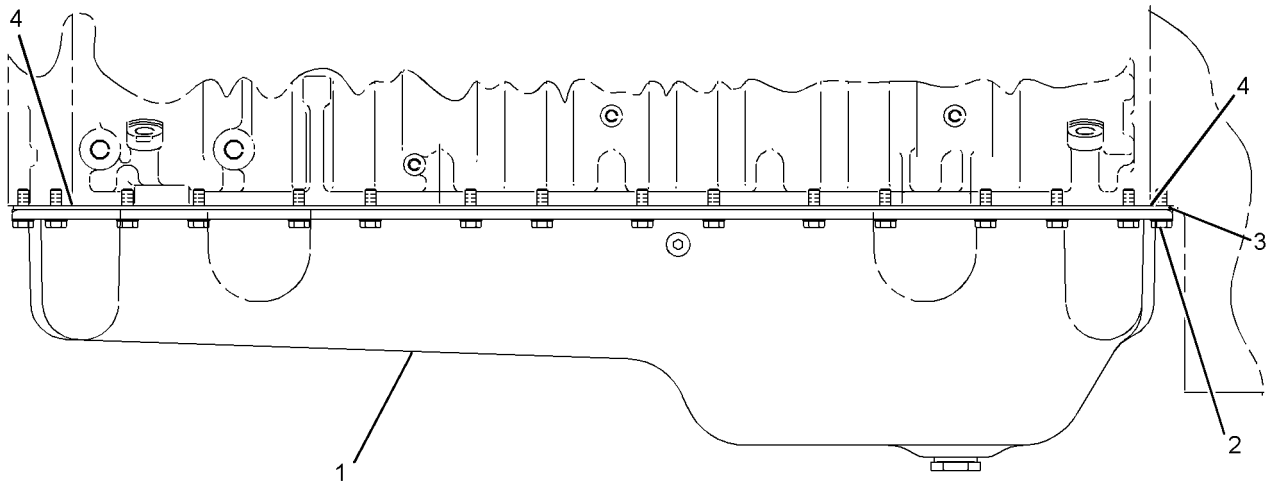

LEFT SIDE VIEW

GRAPHIC #1 **<END>** g01064655

BASIC ENGINE

210-5592 PISTON & ROD GP*R

S/N: KHX13472-UP

PART OF 330-9359 ENGINE AR-CORE

SMCS-1225 **i03626486**

NOTE	REF NO	GRAPHIC REF	PART NUMBER	QTY	PART NAME 1 2 3 4 5 6 (PRODUCT LEVEL)	SEE PAGE
R	1	1	**213-3193**	1	ROD AS-CONNECTING (NON-DRILLED)	
	1A	1	**2W-0027**	1	BEARING (EYE END)	
	1B	1	**195-0321**	2	BOLT	
	2	1	**224-6638**	1	BEARING-CONNECTING ROD (STANDARD)	
AB		1	**7C-6976**		BEARING-CONNECTING ROD (0.25-MM US)	
AB		1	**7C-6977**		BEARING-CONNECTING ROD (0.5-MM US)	
	3	1	**197-9354**	1	RING-PISTON (OIL CONTROL)	
	4	1	**197-9353**	1	RING-PISTON (INTERMEDIATE)	
	5	1	**197-9386**	1	RING-PISTON (TOP)	
	6	1	**168-7224**	1	PIN-PISTON	
	7	1	**173-0143**	1	JET AS-PISTON COOLING	
R	8	1	**238-2698**	1	BODY AS	
M	9	1	**6V-3940**	1	BOLT (M8X1.25X25-MM)	
	10	1	**7C-0111**	2	RETAINER-PIN	

A-NOT PART OF THIS GROUP
B-USE AS REQUIRED
M-METRIC PART
R-REMFG PART MAY BE AVAILABLE

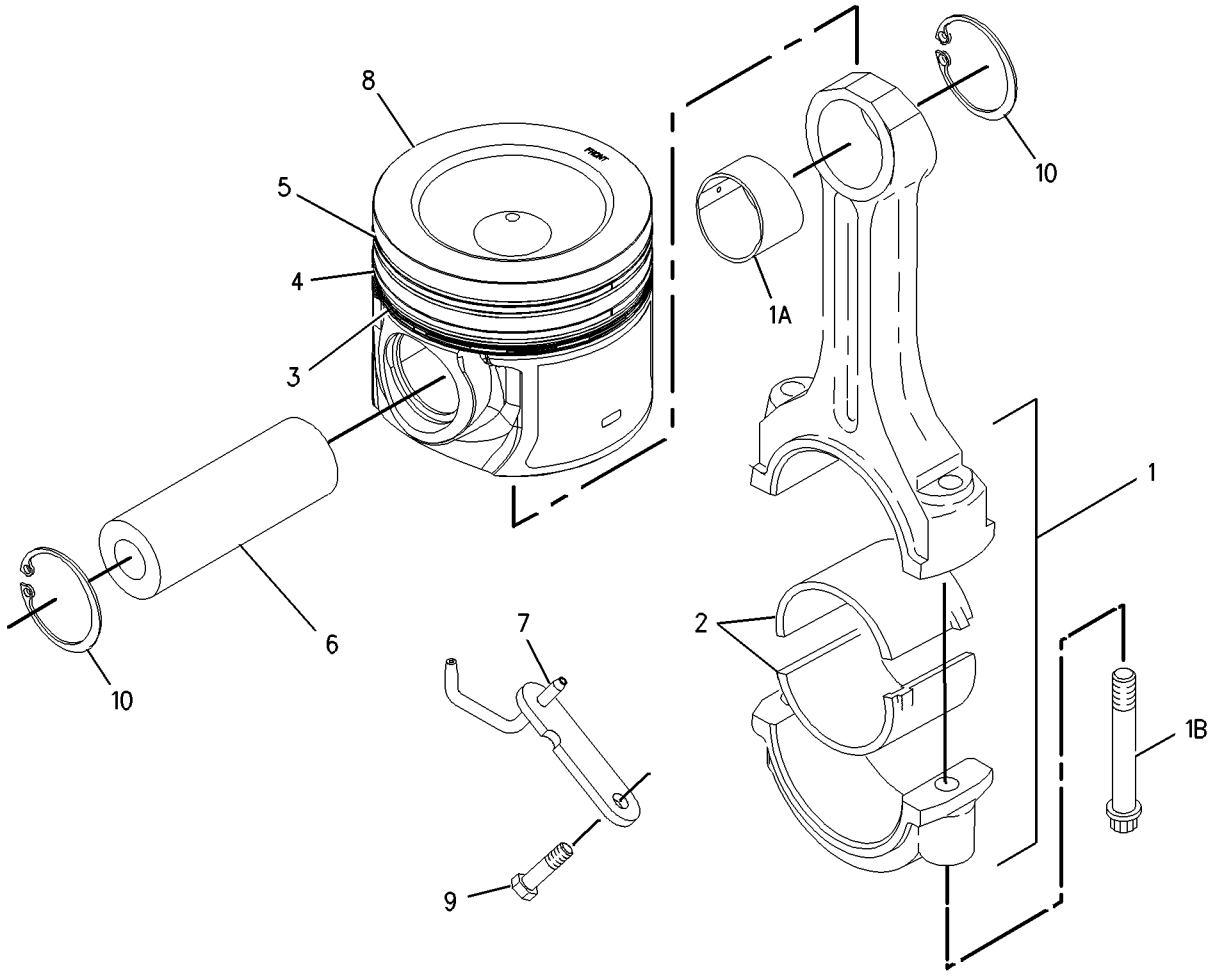

GRAPHIC #1 **<END>** g00903037

135-2141 PLUG GP-CYLINDER BLOCK

S/N: KHX17467-UP

PART OF 325-9707 ENGINE AR-COMPLETE

SMCS-1201 **i03630417**

NOTE	REF NO	GRAPHIC REF	PART NUMBER	QTY	PART NAME 1 2 3 4 5 6 (PRODUCT LEVEL)	SEE PAGE
	1	1	**1S-2563**	4	PLUG	

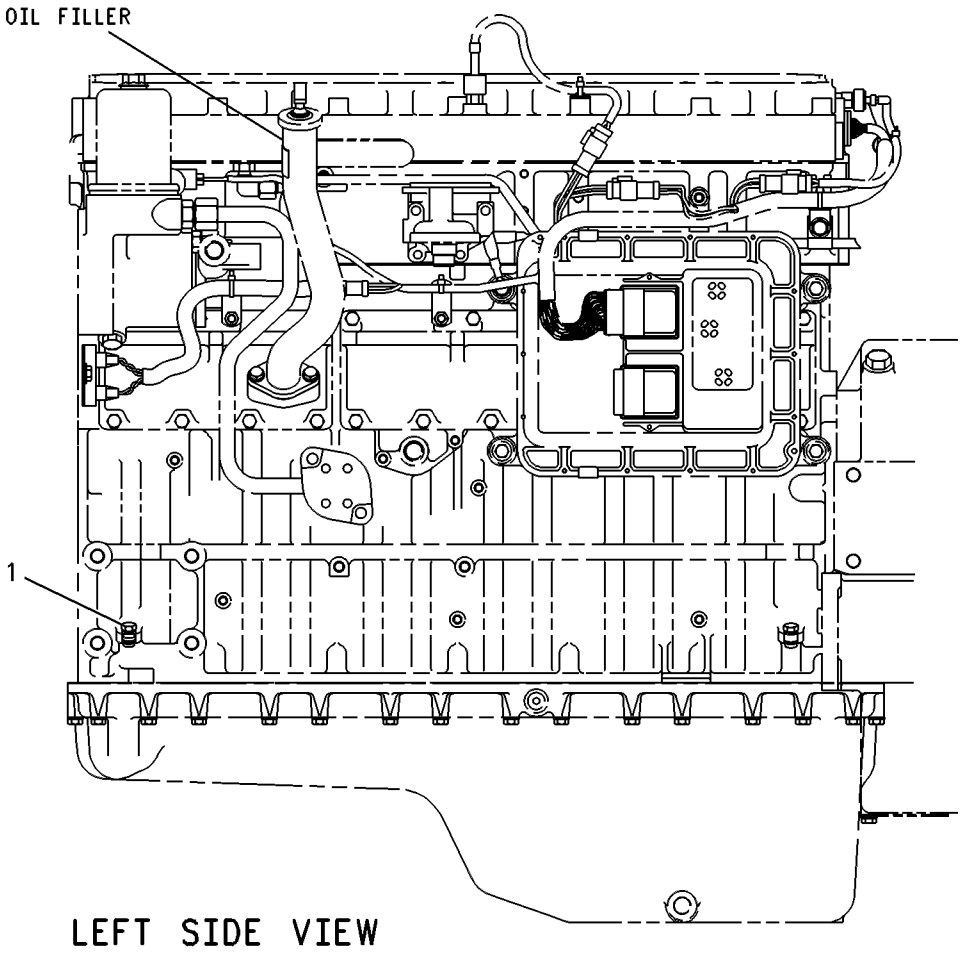

GRAPHIC #1 **<END>** g00265825

BASIC ENGINE

159-0303 PLUG GP-CYLINDER BLOCK

S/N: KHX13472-UP

PART OF 325-9707 ENGINE AR-COMPLETE

SMCS-1201 **i01370005**

NOTE	REF NO	GRAPHIC REF	PART NUMBER	QTY	PART NAME 1 2 3 4 5 6 (PRODUCT LEVEL)	SEE PAGE
M	1	1	**8T-0293**	1	BOLT (M12X1.75X20-MM)	
	2	1	**6F-7062**	1	WASHER (12.7X19.05X1.83-MM THK)	
	3	1	**9S-8008**	2	PLUG-O-RING	
	4	1	**3D-2824**	2	SEAL-O-RING	

M-METRIC PART

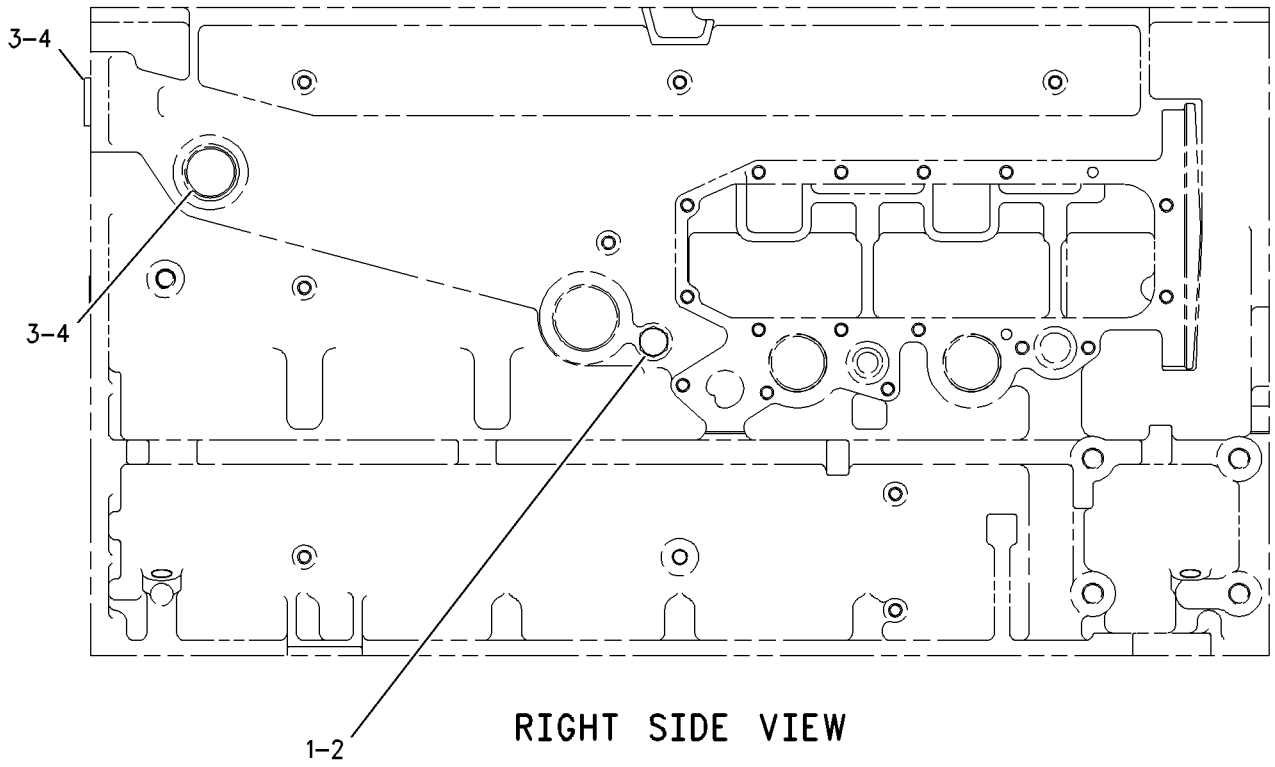

RIGHT SIDE VIEW

GRAPHIC #1 **<END>** g00677138

162-8068 PLUG GP-ENGINE

S/N: KHX13472-UP

PART OF 325-9707 ENGINE AR-COMPLETE

SMCS-1000, 1201 **i02940613**

NOTE	REF NO	GRAPHIC REF	PART NUMBER	QTY	PART NAME 1 2 3 4 5 6 (PRODUCT LEVEL)	SEE PAGE
	1	1	*148-8395*	1	PLUG AS	
		1	**9S-8005**	1	PLUG-O-RING	
		1	**3K-0360**	1	SEAL-O-RING	

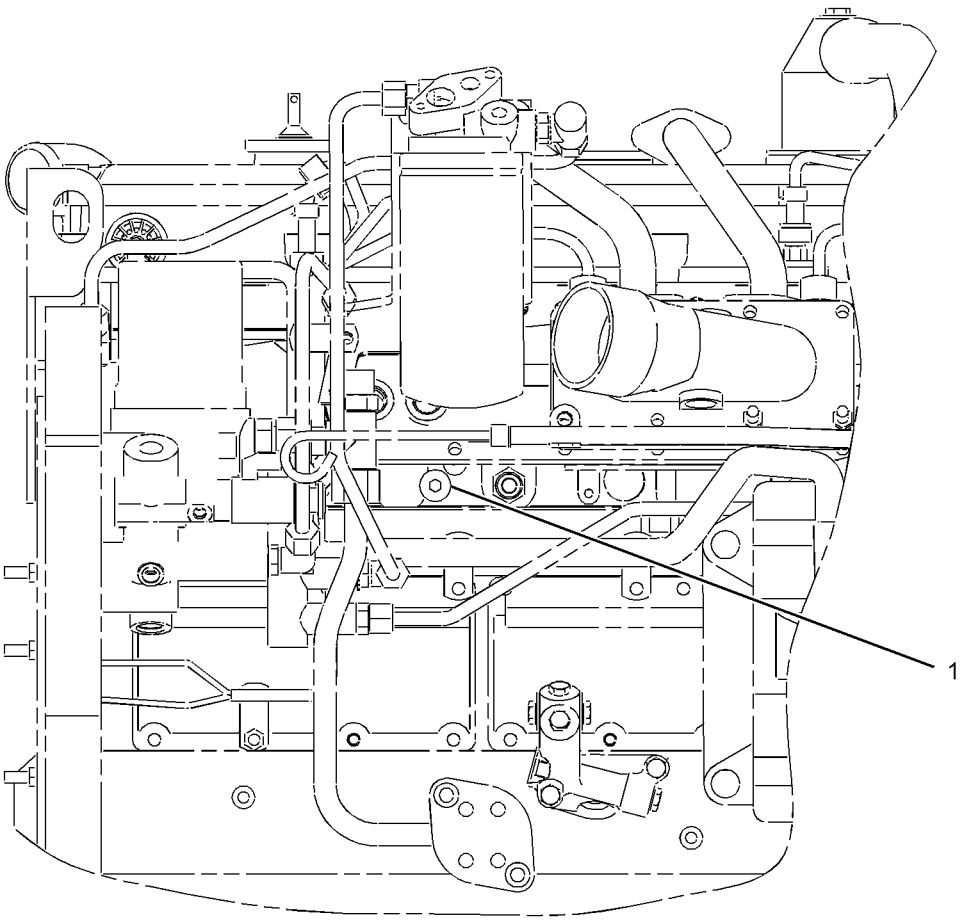

LEFT SIDE VIEW

GRAPHIC #1 **<END>** g01457732

BASIC ENGINE

323-8959 PLUG GP-OIL PAN

S/N: KHX13472-17466

PART OF 325-9707 ENGINE AR-COMPLETE

SMCS-1302 **i03339062**

NOTE	REF NO	GRAPHIC REF	PART NUMBER	QTY	PART NAME 1 2 3 4 5 6 (PRODUCT LEVEL)	SEE PAGE
	1	1	*148-8411*	1	PLUG AS	
		1	**3K-0360**	1	SEAL-O-RING	
		1	**9S-4185**	1	PLUG-O-RING	

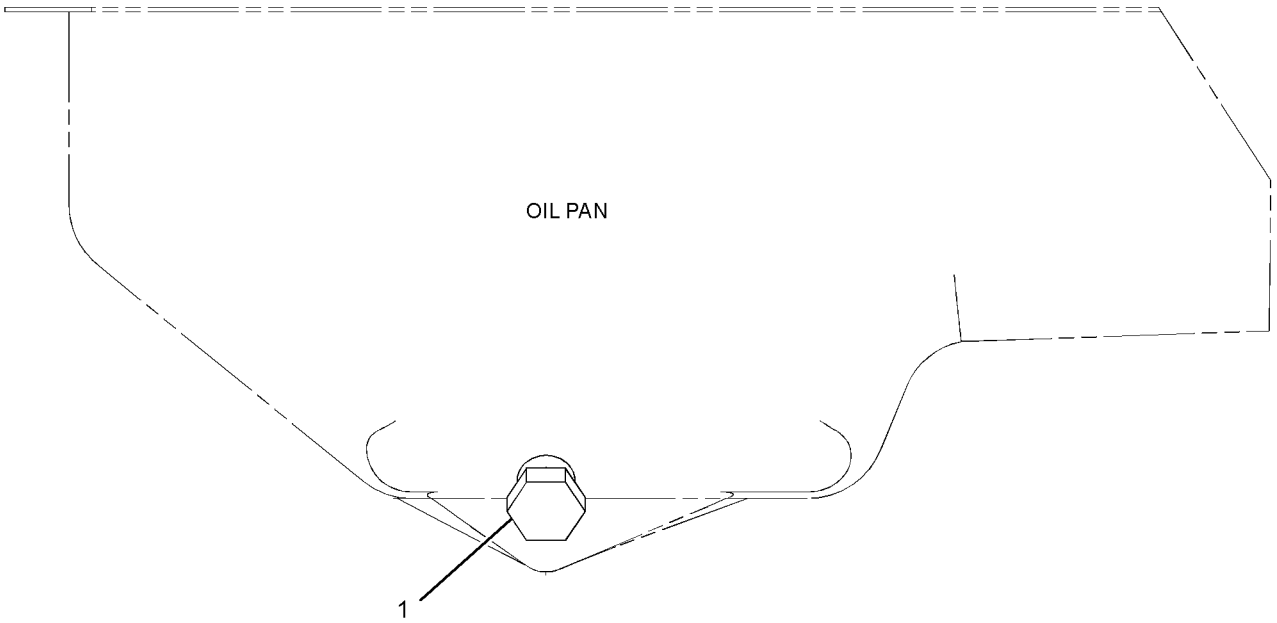

RIGHT SIDE VIEW OF ENGINE

GRAPHIC #1 **<END>** g01721918

256-3831 ROCKER ARM GP–EXHAUST

S/N: KHX13472-UP

PART OF 256-3830 VALVE MECHANISM GP

SMCS-1102, 1123 **i02598465**

NOTE	REF NO	GRAPHIC REF	PART NUMBER	QTY	PART NAME 1 2 3 4 5 6 (PRODUCT LEVEL)	SEE PAGE
R	1	1	**256-3832**	1	ROCKER ARM AS (EXHAUST)	
M	2	1	**260-7524**	1	SCREW-VALVE ADJUSTMENT (M10X1.5-THD)	
M	3	1	**2Y-5829**	1	NUT (M10X1.5-THD)	

M-METRIC PART
R-REMFG PART MAY BE AVAILABLE

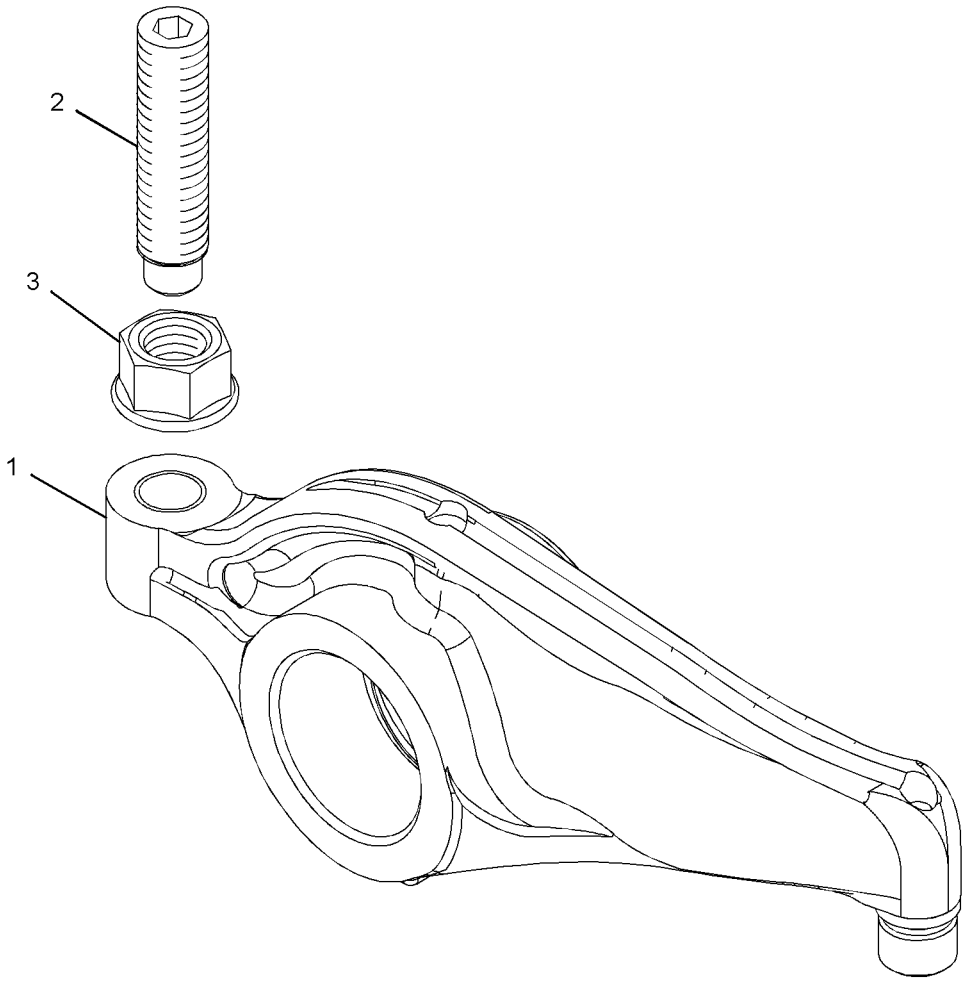

GRAPHIC #1 **<END>** g01293346

BASIC ENGINE

256-3834 ROCKER ARM GP–INLET

S/N: KHX13472-UP

PART OF 256-3830 VALVE MECHANISM GP

SMCS-1102, 1123 **i02598550**

NOTE	REF NO	GRAPHIC REF	PART NUMBER	QTY	PART NAME 1 2 3 4 5 6 (PRODUCT LEVEL)	SEE PAGE
M	1	1	**260-7524**	1	SCREW-VALVE ADJUSTMENT (M10X1.5-THD)	
R	2	1	**256-3835**	1	ROCKER ARM AS (INLET)	
M	3	1	**2Y-5829**	1	NUT (M10X1.5-THD)	

M-METRIC PART
R-REMFG PART MAY BE AVAILABLE

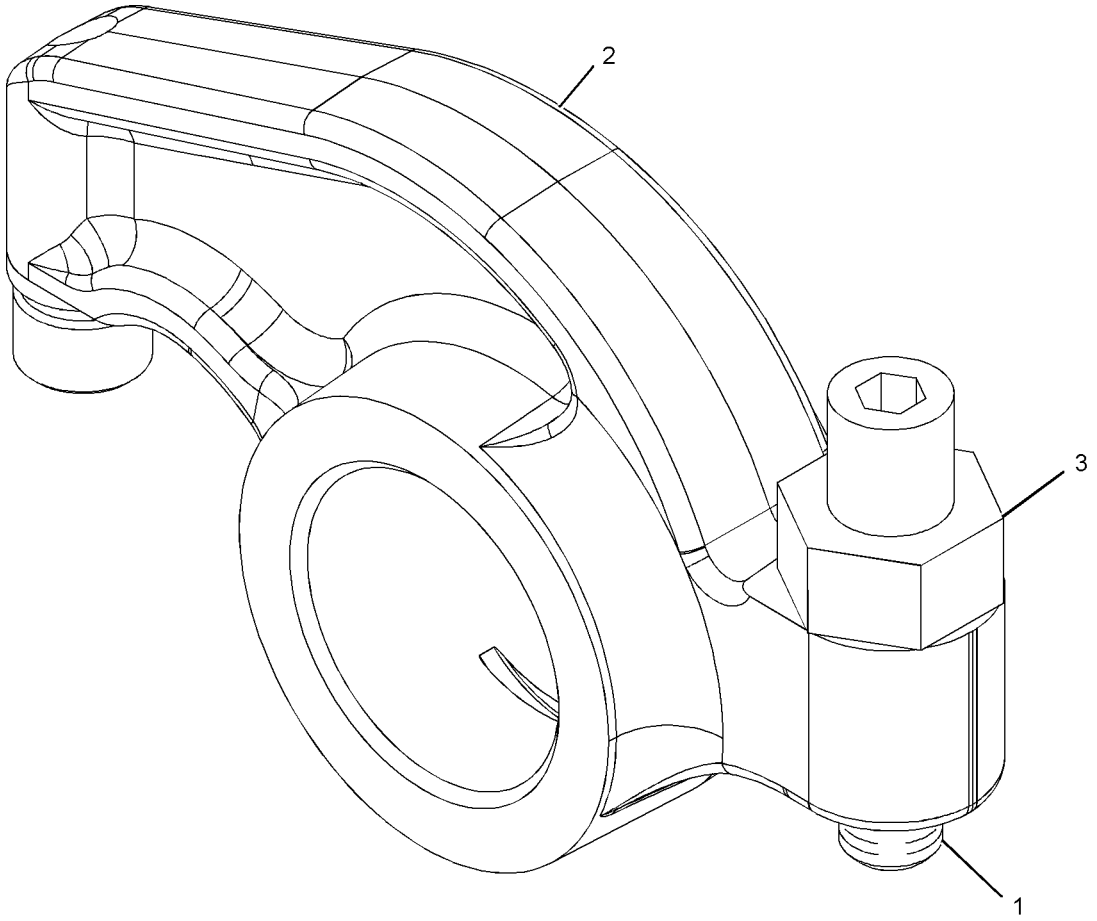

GRAPHIC #1 **<END>** g01056688

7E-7590 SEAL GP-CRANKSHAFT

S/N: KHX13472-UP

PART OF 325-9707 ENGINE AR-COMPLETE

SMCS-1160, 1161 **i03680900**

NOTE	REF NO	GRAPHIC REF	PART NUMBER	QTY	PART NAME 1 2 3 4 5 6 (PRODUCT LEVEL)	SEE PAGE
	1	1	**7E-7589**	1	SEAL GP-CRANKSHAFT (REAR)	
	2	1	**245-7339**	1	SEAL-CRANKSHAFT (FRONT)	

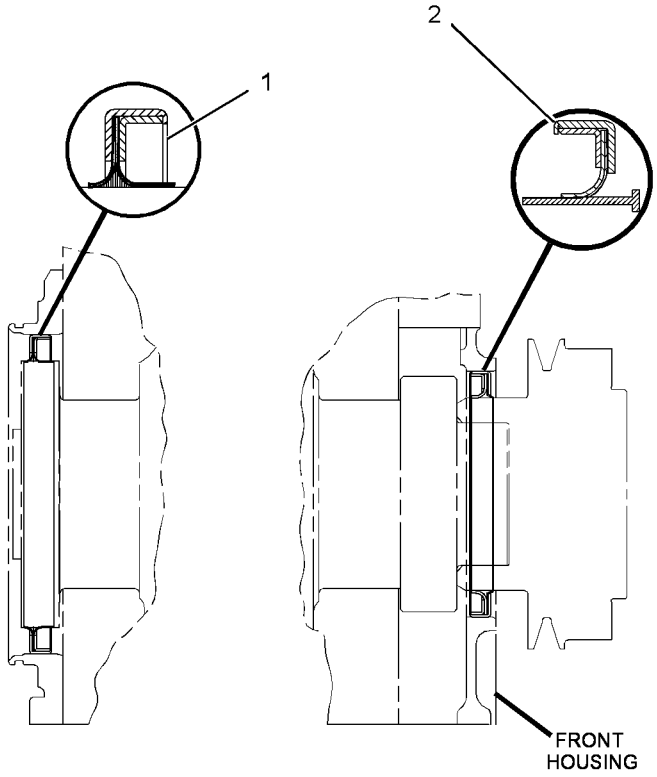

RIGHT SIDE VIEW

GRAPHIC #1 **<END>** g01438665

232-3717 VALVE MECHANISM GP

S/N: KHX13472-UP

PART OF 330-9359 ENGINE AR-CORE

SMCS-1102 **i03534882**

NOTE	REF NO	GRAPHIC REF	PART NUMBER	QTY	PART NAME 1 2 3 4 5 6 (PRODUCT LEVEL)	SEE PAGE
C	1	1	**264-6156**	12	ROD-VALVE PUSH	
	2	1	**219-3309**	6	BRIDGE-VALVE	
Y	3	1	*139-4081*	3	LIFTER GP-VALVE	40
M	4	1	**8T-8442**	12	BOLT-SOCKET HEAD (M6X1X30-MM)	
	5	1	**3E-9412**	6	DOWEL	
CY	6	1	**256-3830**	1	VALVE MECHANISM GP	57
M	7	1	**6V-5696**	11	BOLT (M12X1.75X80-MM)	
	8	1	**9M-1974**	2	WASHER-HARD (8.8X16X2-MM THK)	
	9	1	**3H-7654**	9	WASHER-HARD (13.5X22.5X3.0-MM THK)	
M	10	1	**8T-0100**	2	BOLT (M8X1.25X60-MM)	
	11	1	**232-1754**	1	CLIP	

C-CHANGE FROM PREVIOUS TYPE
M-METRIC PART
Y-SEPARATE ILLUSTRATION

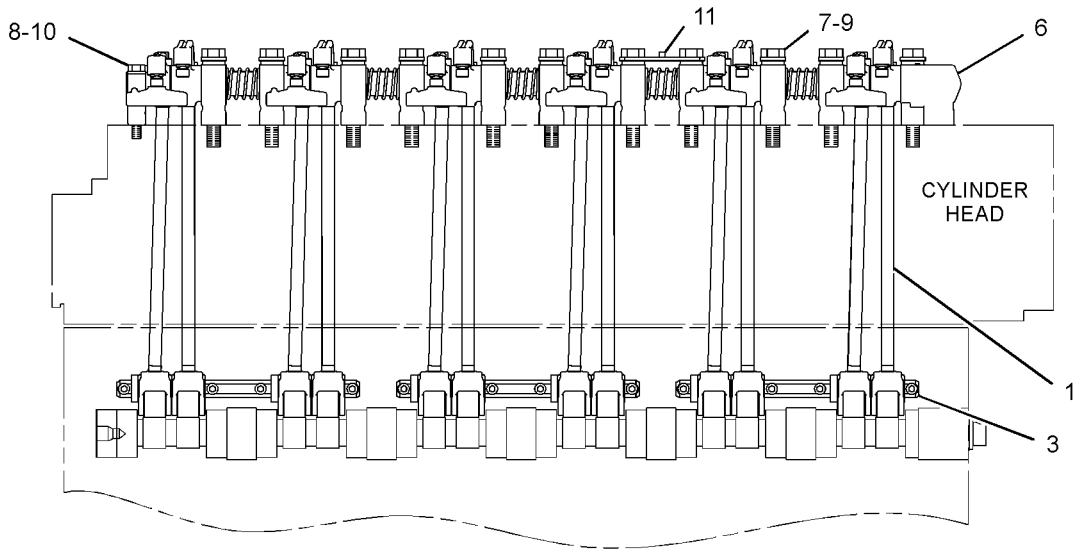

RIGHT SIDE VIEW

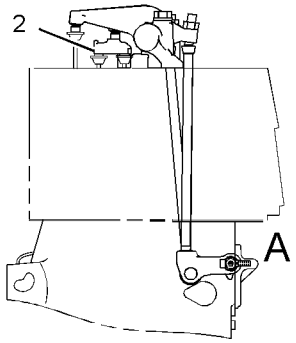

FRONT VIEW

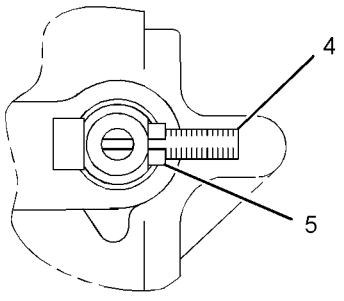

VIEW OF AREA A

GRAPHIC #1 **<END>** g01279672

256-3830 VALVE MECHANISM GP

S/N: KHX13472-UP

PART OF 232-3717 VALVE MECHANISM GP

SMCS-1102 **i02597721**

NOTE	REF NO	GRAPHIC REF	PART NUMBER	QTY	PART NAME 1 2 3 4 5 6 (PRODUCT LEVEL)	SEE PAGE
	1	1	**137-6717**	5	SPRING	
Y	2	1	*256-3834*	6	ROCKER ARM GP (INLET)	54
	3	1	**138-8403**	1	STAND	
Y	4	1	*256-3831*	6	ROCKER ARM GP (EXHAUST)	53
	5	1	**235-5527**	10	STAND	
	6	1	**138-8402**	1	STAND	
	7	1	**138-9868**	1	RING-RETAINING	
	8	1	**8H-5244**	1	DOWEL	
	9	1	**138-7198**	1	SHAFT AS	
	9A	1	**5B-1866**	1	PLUG-CUP	

Y-SEPARATE ILLUSTRATION

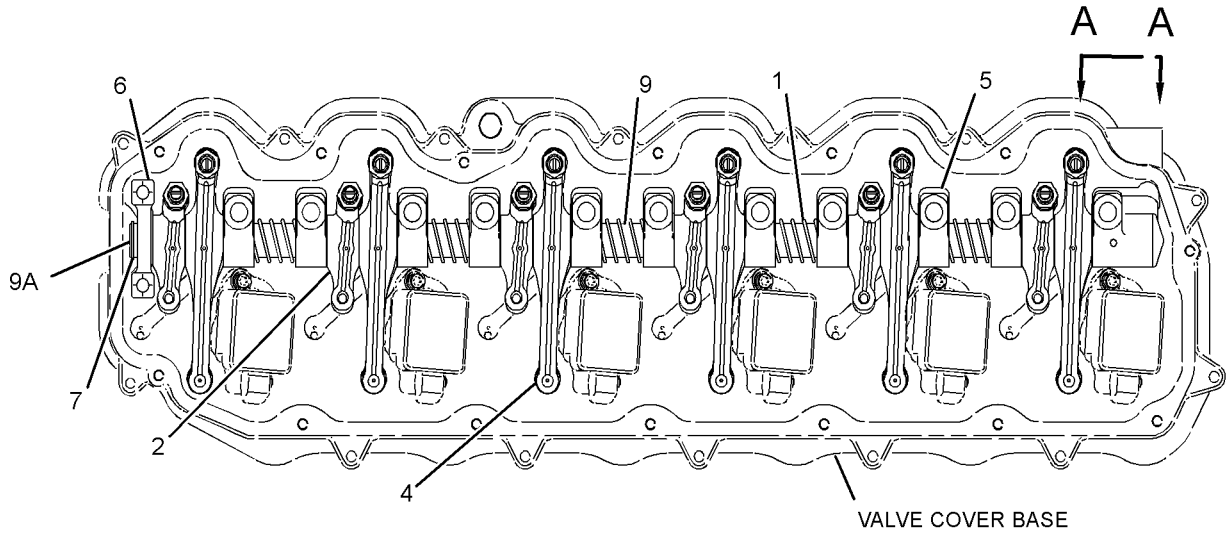

TOP VIEW OF ENGINE

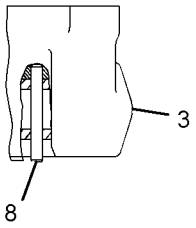

VIEW A-A

GRAPHIC #1 **<END>** g01300505

191-0523 ADAPTER GP-OIL LINE–ENGINE

S/N: KHX13472-UP

PART OF 191-0461 LINES GP-INJECTOR HYD PUMP

SMCS-1307 **i03363386**

NOTE	REF NO	GRAPHIC REF	PART NUMBER	QTY	PART NAME 1 2 3 4 5 6 (PRODUCT LEVEL)	SEE PAGE
	1	1	**191-0522**	1	ADAPTER	
	2	1	**033-6027**	1	SEAL-O-RING	

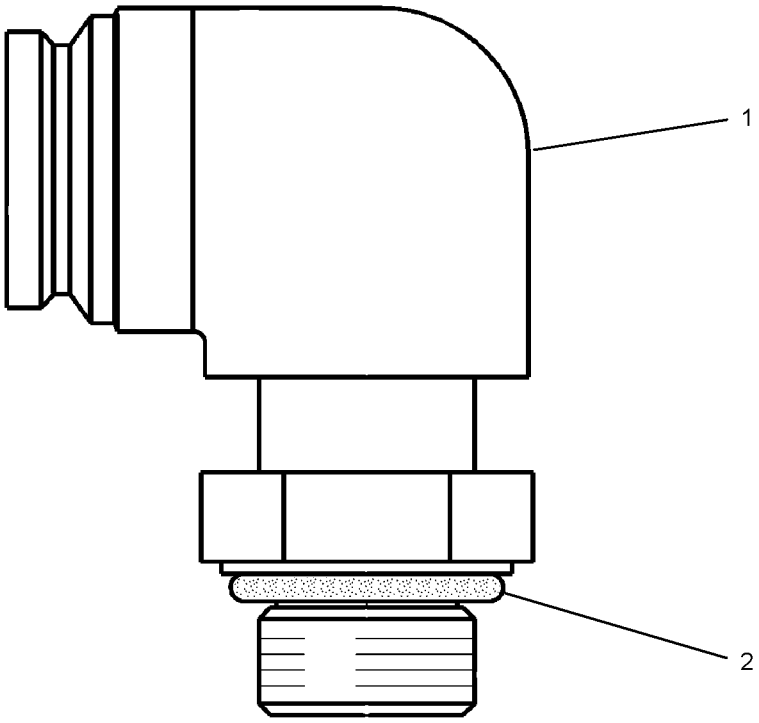

GRAPHIC #1 **<END>** g01735676

LUBRICATION SYSTEM

222-5946 BREATHER GP

S/N: KHX13472-UP

PART OF 325-9707 ENGINE AR-COMPLETE

SMCS-1317 **i02214598**

NOTE	REF NO	GRAPHIC REF	PART NUMBER	QTY	PART NAME 1 2 3 4 5 6 (PRODUCT LEVEL)	SEE PAGE
	1	1	**164-0210**	1	BREATHER AS (CRANKCASE)	
M	2	1	**143-4654**	1	BOLT (M8X1.25X105-MM)	
	3	1	**8H-2046**	1	SEAL-O-RING (BREATHER)	
	4	1	**9N-0869**	1	WASHER-HARD (8.8X25.5X2-MM THK)	

M-METRIC PART

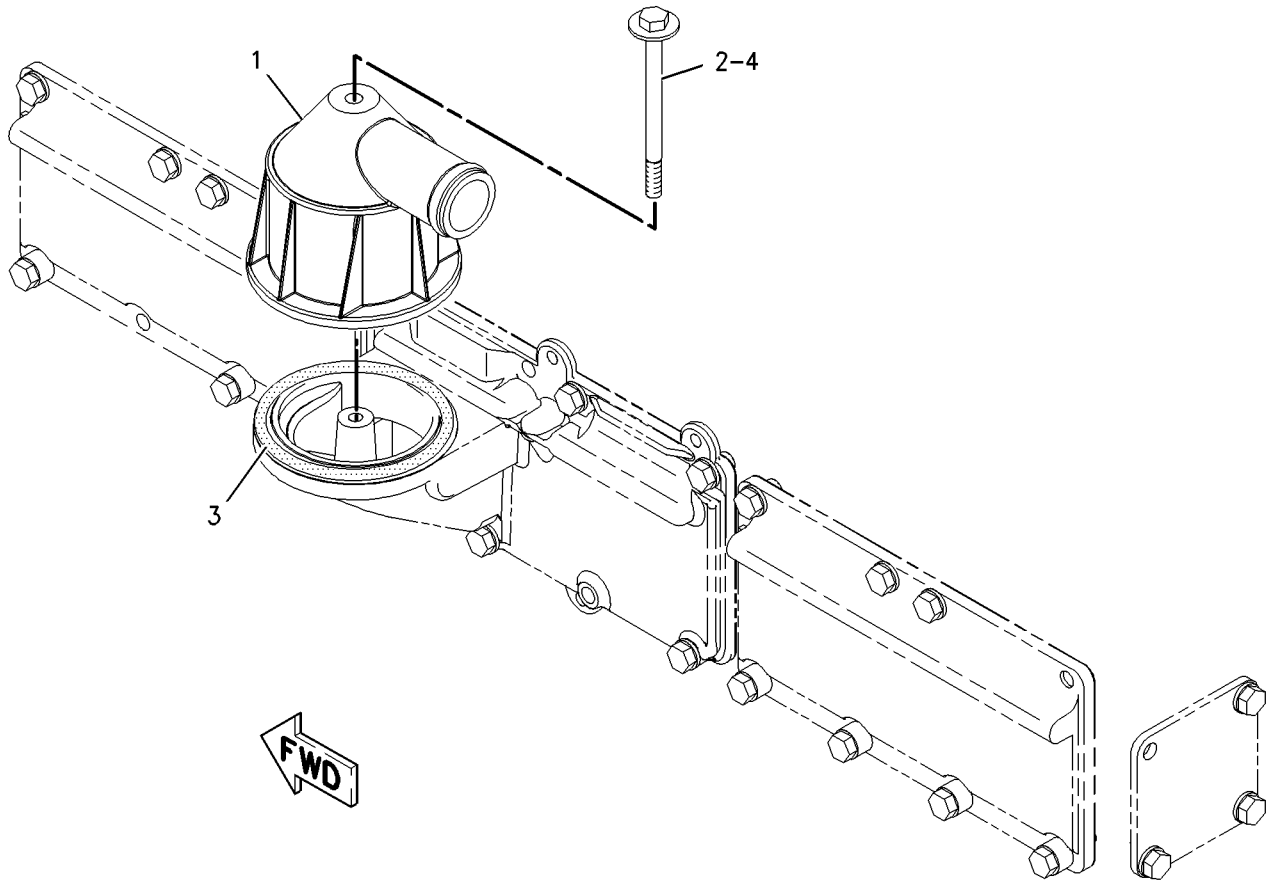

GRAPHIC #1 **<END>** g00947923

LUBRICATION SYSTEM

340-3745 FILLER GP-ENGINE OIL

S/N: KHX13472-UP

PART OF 325-9707 ENGINE AR-COMPLETE

SMCS-1316, 7513 **i03680903**

NOTE	REF NO	GRAPHIC REF	PART NUMBER	QTY	PART NAME 1 2 3 4 5 6 (PRODUCT LEVEL)	SEE PAGE
	1	1	**068-4497**	1	CAP-OIL FILLER (ENGINE)	
	2	1	**166-1776**	1	COVER AS-FRONT	
		1	**126-1757**	2	WASHER (10.85X19.3X1.27-MM THK)	
		1	**136-0822**	2	STUD	
	3	1	**166-1781**	1	GASKET	
	4	1	**340-3739**	1	TUBE AS-OIL FILLER (ENGINE)	
	5	1	**061-9455**	1	SEAL-O-RING	
	6	1	*148-8411*	2	PLUG AS	
					(EACH INCLUDES)	
		1	**3K-0360**	1	SEAL-O-RING	
		1	**9S-4185**	1	PLUG-O-RING	
	7	1	**190-4885**	1	SPACER (11X22X50-MM THK)	
M	8	1	**5P-7970**	2	NUT (M8X1.25-THD)	
M	9	1	**6V-2317**	12	BOLT (M8X1.25X30-MM)	
	10	1	**6V-5839**	1	WASHER (11X21X2.5-MM THK)	
M	11	1	**6V-7981**	1	BOLT (M10X1.5X70-MM)	
	12	1	**7D-7233**	1	CLIP	
M	13	1	**8T-0100**	2	BOLT (M8X1.25X60-MM)	
	14	1	**9M-1974**	16	WASHER-HARD (8.8X16X2-MM THK)	

M-METRIC PART

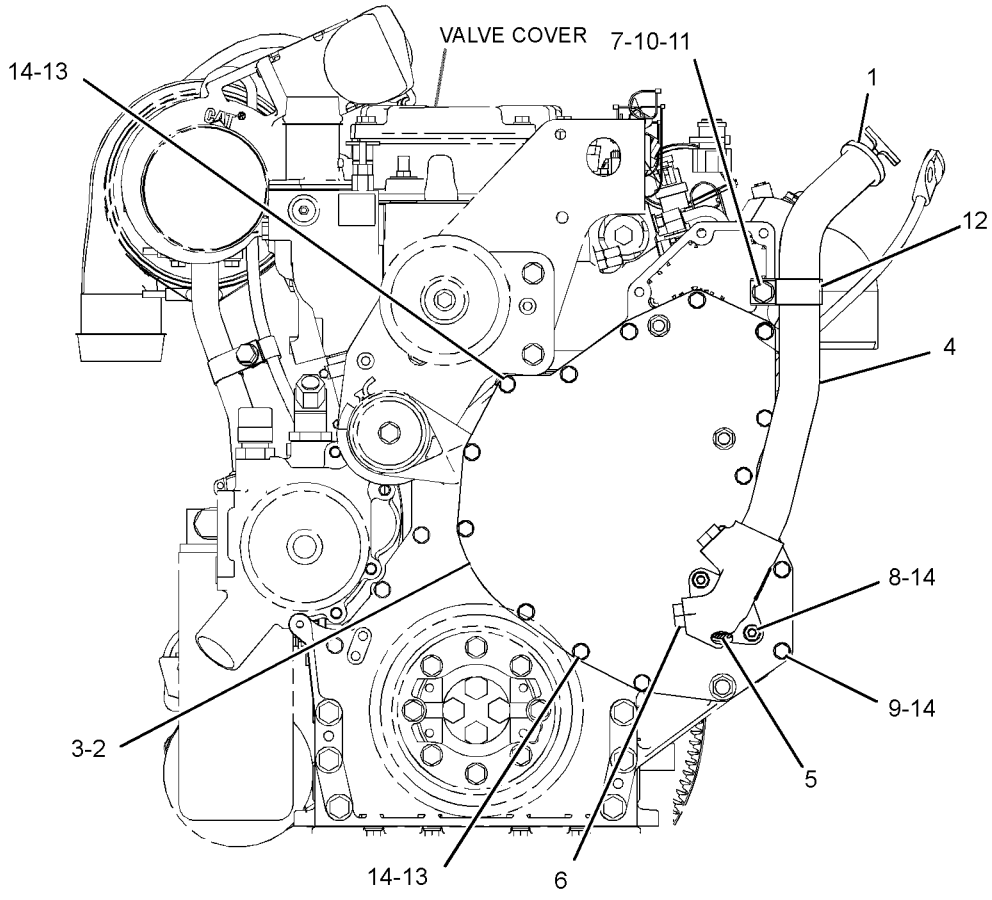

FRONT VIEW OF ENGINE

GRAPHIC #1 **<END>** g01947156

323-8936 FILTER GP-ENGINE OIL

S/N: KHX13472-UP

PART OF 325-9707 ENGINE AR-COMPLETE

SMCS-1306, 1308 **i03680905**

NOTE	REF NO	GRAPHIC REF	PART NUMBER	QTY	PART NAME 1 2 3 4 5 6 (PRODUCT LEVEL)	SEE PAGE
	1	1	**7C-1493**	2	VALVE AS-BYPASS	
	2	1	**201-9774**	1	BASE AS-OIL FILTER (ENGINE)	
	2A	1	**2P-2537**	1	STUD-HOLLOW	
	3	1	**242-3864**	2	SPRING	
	4	1	**300-7933**	1	GASKET	
	6	1	**1R-1807**	1	FILTER AS-ENGINE OIL (ADVANCED EFFICIENCY)	
	7	1	**2M-9780**	2	SEAL-O-RING	
M	8	1	**5P-8196**	2	PLUG	
M	9	1	**6V-2317**	10	BOLT (M8X1.25X30-MM)	
M	10	1	**8T-0276**	5	BOLT (M8X1.25X45-MM)	
	11	1	**9M-1974**	15	WASHER-HARD (8.8X16X2-MM THK)	
	12	1	**214-7566**	1	SEAL-O-RING	
	13	1	**112-5282**	1	SEAL-O-RING	
	14	1	**8C-3446**	1	VALVE-FLUID SAMPLING	
	15	1	**8C-3445**	1	CAP-DUST	
	16	1	**3P-1932**	1	ADAPTER	

M-METRIC PART

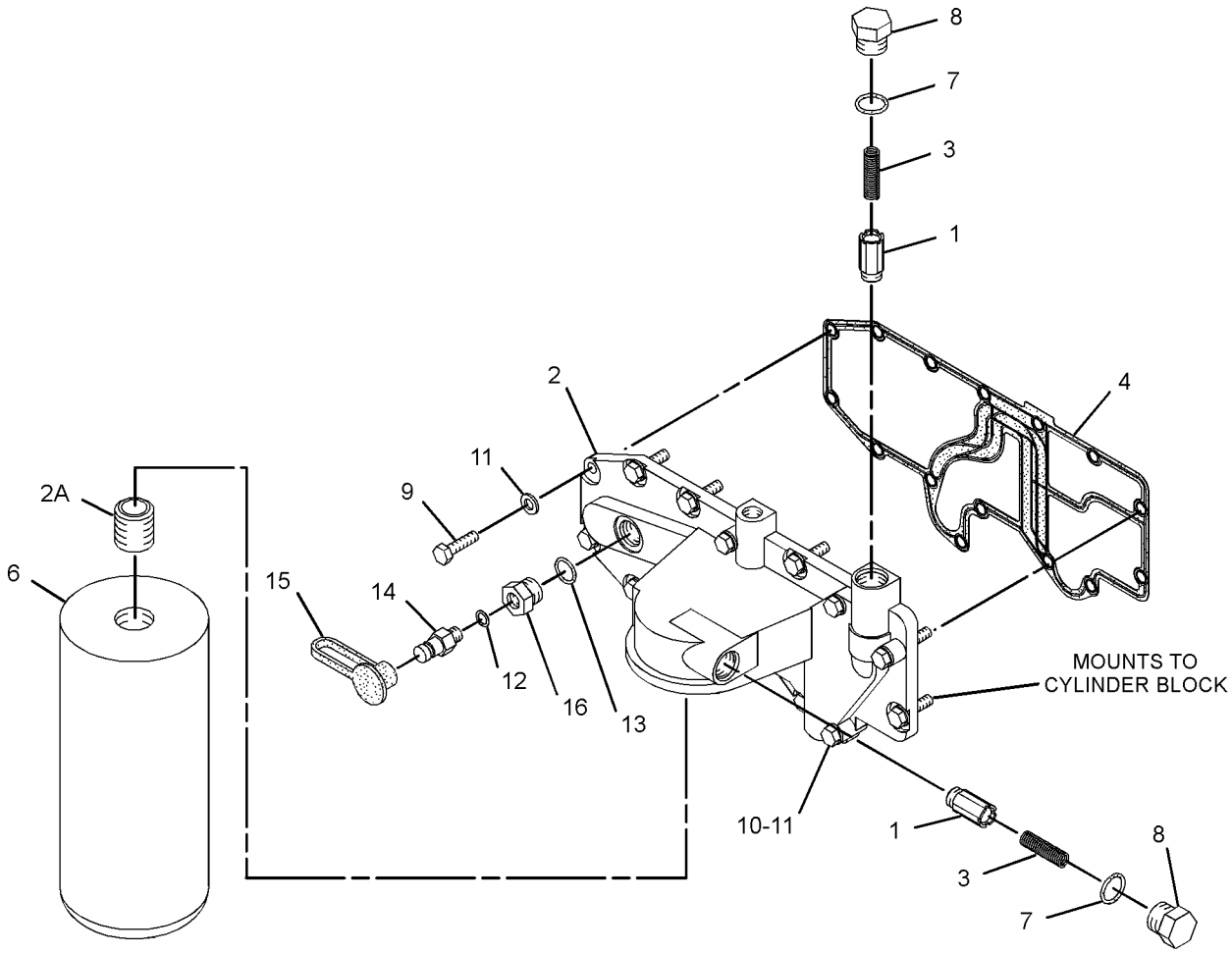

GRAPHIC #1 **<END>** g01949535

LUBRICATION SYSTEM

220-1194 FUMES DISPOSAL GP

S/N: KHX13472-UP

PART OF 325-9707 ENGINE AR-COMPLETE

SMCS-1317 **i02789603**

NOTE	REF NO	GRAPHIC REF	PART NUMBER	QTY	PART NAME 1 2 3 4 5 6 (PRODUCT LEVEL)	SEE PAGE
	1	1	**4P-4369**	1	SPACER (12X19X23.5-MM THK)	
	2	1	**9M-2904**	1	CLAMP-HOSE	
	3	1	**228-8510**	1	HOSE-DISPOSAL (FUMES)	
	4	1	**2S-2053**	1	CLIP	
	5	1	**3E-4352**	1	WASHER-HARD (8.8X20.5X2.5-MM THK)	
	6	1	**162-3148**	1	STUD (M8X1.25X40-MM, M8X1.25X17.5-MM)	

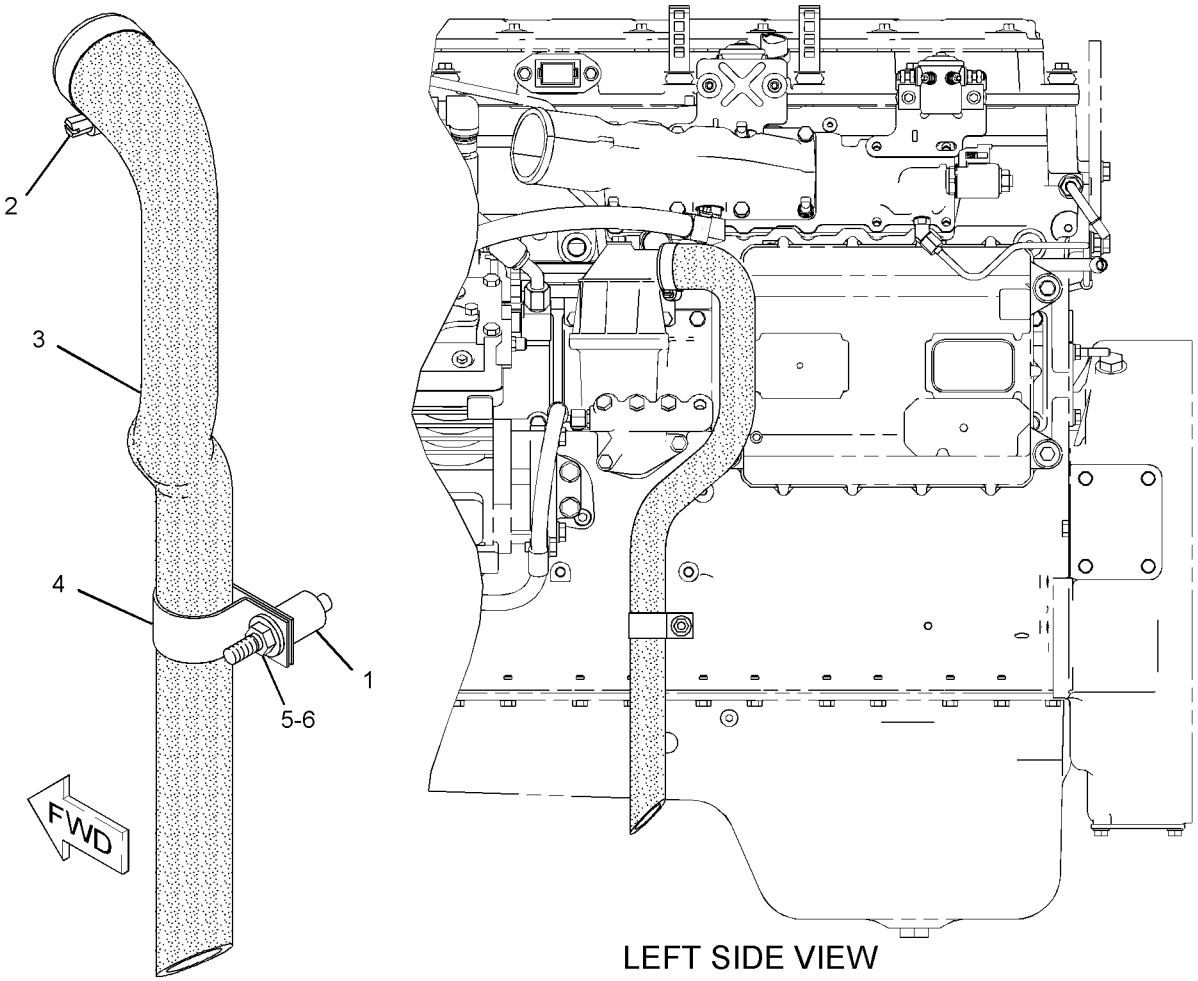

LEFT SIDE VIEW

GRAPHIC #1 **<END>** g01095248

276-3681 GAUGE GP-OIL LEVEL (DIPSTICK)—ENGINE

S/N: KHX13472-17466

PART OF 325-9707 ENGINE AR-COMPLETE

SMCS-1326 **i03633585**

NOTE	REF NO	GRAPHIC REF	PART NUMBER	QTY	PART NAME 1 2 3 4 5 6 (PRODUCT LEVEL)	SEE PAGE
	1	1	**1S-2563**	3	PLUG	
	2	1	**194-5131**	1	CLIP	
	3	1	**276-3674**	1	TUBE AS	
	4	1	**345-3661**	1	GAUGE-OIL LEVEL (DIPSTICK) (ENGINE)	
	5	1	**1F-7567**	1	CLIP	
M	6	1	**5P-7970**	2	NUT (M8X1.25-THD)	
M	8	1	**6V-5217**	1	BOLT (M8X1.25X20-MM)	
	9	1	**9M-1974**	3	WASHER-HARD (8.8X16X2-MM THK)	

M-METRIC PART

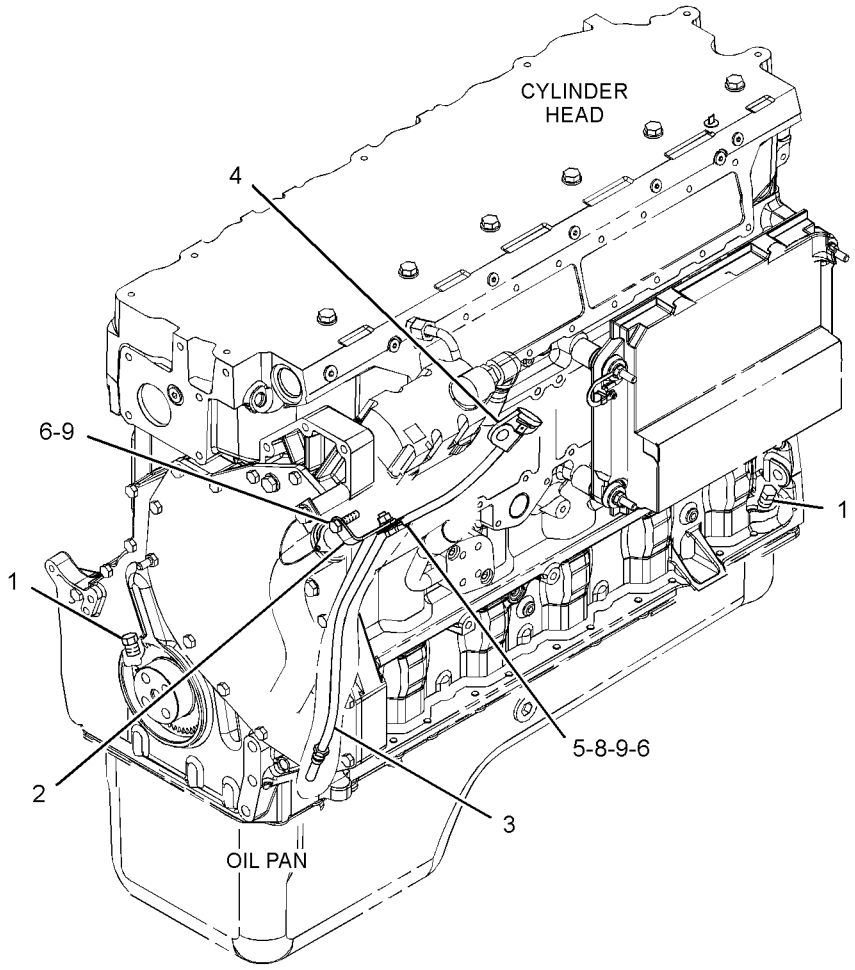

GRAPHIC #1 **<END>** g01384564

LUBRICATION SYSTEM

347-2428 GAUGE GP-OIL LEVEL (DIPSTICK)

S/N: JAP1-UP
ENGINE
PART OF 348-3018 GENERAL AR

SMCS-1326 **i03631092**

NOTE	REF NO	GRAPHIC REF	PART NUMBER	QTY	PART NAME 1 2 3 4 5 6 (PRODUCT LEVEL)	SEE PAGE
	1	1	*347-2427*	1	GAUGE GP-OIL LEVEL (DIPSTICK)	
		1	**347-2426**	1	TUBE AS-OIL GAUGE	
		1	**347-2429**	1	GAUGE AS-OIL LEVEL (DIPSTICK) (ENGINE)	
		1	**9M-1096**	1	RIVET	
	2	1	**347-2430**	1	BRACKET AS	
M		1	**8T-3490**	1	NUT-WELD (M10X1.5-THD)	
	3	1	**124-9633**	1	CLIP	
	4	1	**6V-5839**	1	WASHER (11X21X2.5-MM THK)	
M	5	1	**8T-4191**	1	BOLT (M10X1.5X16-MM)	

M-METRIC PART

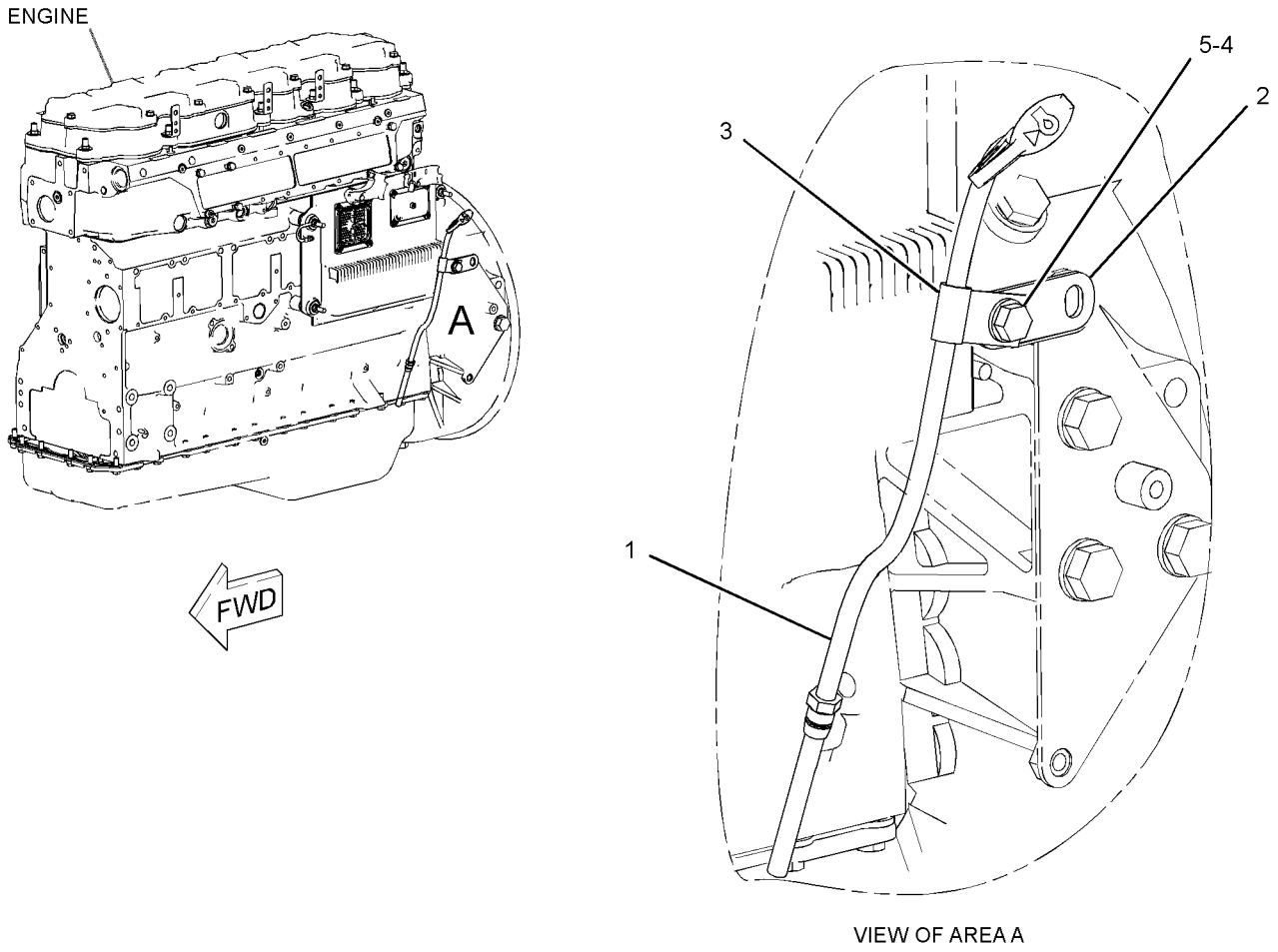

VIEW OF AREA A

GRAPHIC #1 **<END>** g01943553

128-0316 LINES GP-ENGINE OIL

S/N: KHX13472-17466

PART OF 325-9707 ENGINE AR-COMPLETE

SMCS-1307 **i03338829**

NOTE	REF NO	GRAPHIC REF	PART NUMBER	QTY	PART NAME 1 2 3 4 5 6 (PRODUCT LEVEL)	SEE PAGE
	1	1	**9Y-9854**	1	TUBE AS-OIL SUCTION (ENGINE)	
	2	1	**7W-5340**	1	GASKET	
M	3	1	**6V-3940**	4	BOLT (M8X1.25X25-MM)	
	4	1	**9M-1974**	2	WASHER-HARD (8.8X16X2-MM THK)	
	5	1	**4W-2232**	1	ELBOW-OUTLET	
	6	1	**3P-1156**	2	SEAL-O-RING	
M	7	1	**6V-4248**	2	BOLT (M10X1.5X25-MM)	
	8	1	**3E-4353**	2	WASHER-HARD (11X25X3-MM THK)	

M-METRIC PART

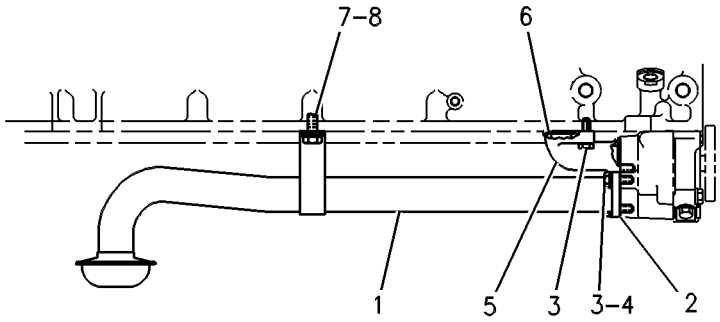

RIGHT SIDE VIEW

GRAPHIC #1 **<END>** g00256385

LUBRICATION SYSTEM

253-2589 LINES GP-ENGINE OIL

S/N: KHX17467-UP

PART OF 325-9707 ENGINE AR-COMPLETE

SMCS-1307 **i03506486**

NOTE	REF NO	GRAPHIC REF	PART NUMBER	QTY	PART NAME 1 2 3 4 5 6 (PRODUCT LEVEL)	SEE PAGE
	1	1	**4W-2232**	1	ELBOW-OUTLET	
	2	1	**7W-5340**	1	GASKET	
	3	1	**252-8213**	1	TUBE AS	
	4	1	**3P-1156**	2	SEAL-O-RING	
M	5	1	**6V-3940**	4	BOLT (M8X1.25X25-MM)	
M	6	1	**6V-4248**	2	BOLT (M10X1.5X25-MM)	
	7	1	**6V-5839**	2	WASHER (11X21X2.5-MM THK)	
	8	1	**9M-1974**	2	WASHER-HARD (8.8X16X2-MM THK)	

M-METRIC PART

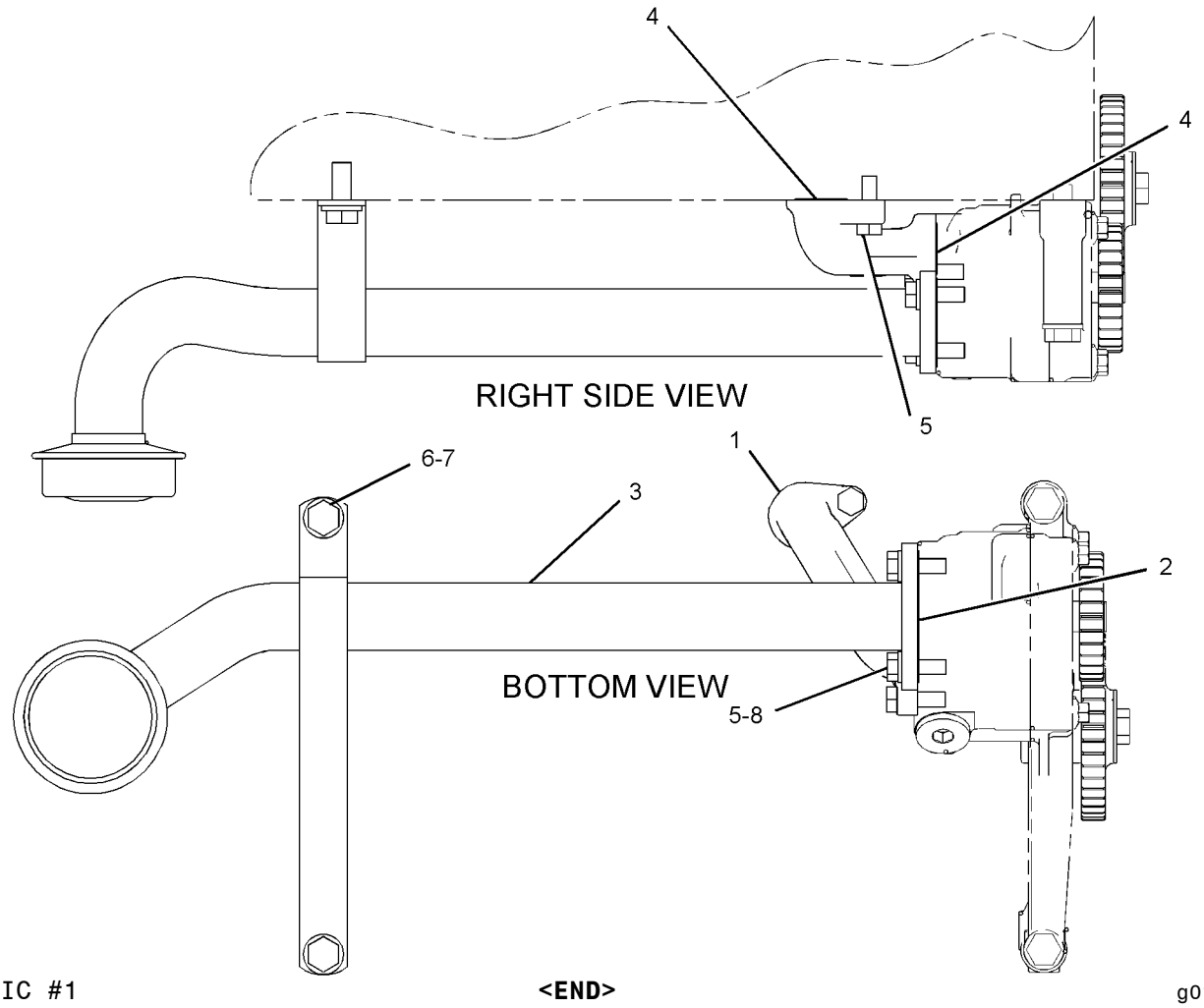

GRAPHIC #1 **<END>** g01075009

310-6469 LINES GP-ENGINE OIL DRAIN

S/N: JAP1-UP

PART OF 348-3018 GENERAL AR

SMCS-1307 **i03631530**

NOTE	REF NO	GRAPHIC REF	PART NUMBER	QTY	PART NAME 1 2 3 4 5 6 (PRODUCT LEVEL)	SEE PAGE
C	1	1	**124-6258**	1	CLAMP-HOSE	
	2	1	**206-4669**	1	VALVE-DRAIN	
	3	1	**212-4174**	1	LOCKWASHER	
I	4	1	**317-8063**	1	HOSE AS	
C	6	1	**033-6033**	1	SEAL-O-RING	
C	7	1	**1S-0994**	1	CLIP	
C	8	1	**228-7103**	1	SEAL-O-RING	
	9	1	**7X-7729**	1	WASHER (11X25X3-MM THK)	
C	10	1	**124-3109**	1	ELBOW	
	11	1	**8T-4121**	1	WASHER-HARD (11X21X2.5-MM THK)	
C	12	1	**5M-3062**	1	BOLT (3/8-16X0.75-IN)	
E	13	1	**146-7453**		HOSE (13-CM)	

C-CHANGE FROM PREVIOUS TYPE
E-ORDER BY THE CENTIMETER
I-REFER TO HYDRAULIC INFORMATION SYSTEM

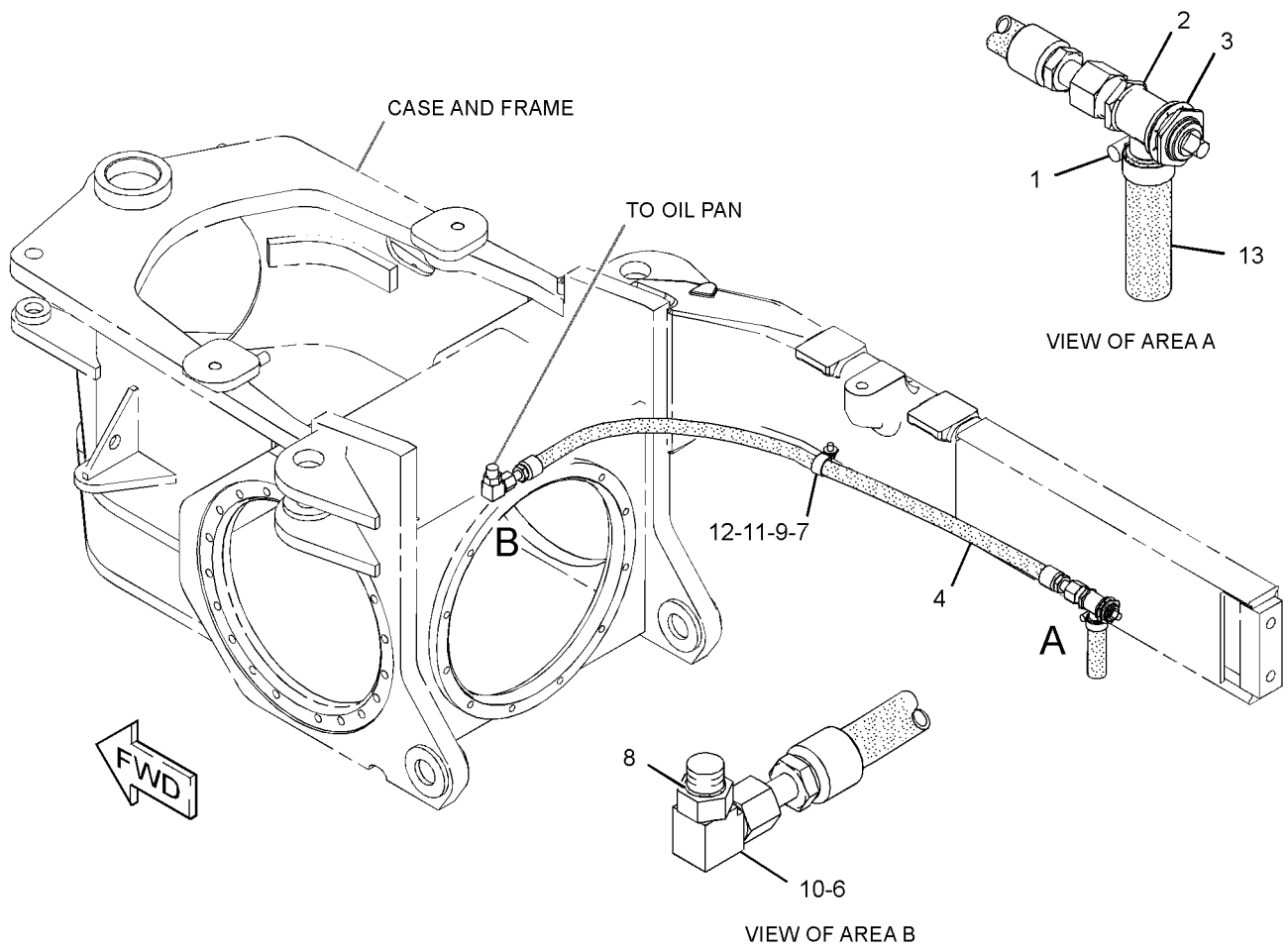

GRAPHIC #1 **<END>** g01896774

LUBRICATION SYSTEM

187-6279 LINES GP-TURBOCHARGER OIL

S/N: KHX13472-UP

PART OF 325-9707 ENGINE AR-COMPLETE

SMCS-1052, 1307 **i03523163**

NOTE	REF NO	GRAPHIC REF	PART NUMBER	QTY	PART NAME 1 2 3 4 5 6 (PRODUCT LEVEL)	SEE PAGE
	1	1	*183-3399*	1	CONNECTOR AS	
		1	**6V-8636**	1	CONNECTOR	
		1	**214-7568**	1	SEAL-O-RING (11.89MM ID)	
		1	**221-3494**	1	SEAL-O-RING (12.83MM OD)	
C	2	1	**246-6036**	1	HOSE	
	3	1	**187-6294**	1	HOSE AS-OIL SUPPLY	
	4	1	*148-8378*	1	ELBOW AS	
		1	**6V-8724**	1	ELBOW	
		1	**3J-1907**	1	SEAL-O-RING (11.89MM ID)	
		1	**6V-8397**	1	SEAL-O-RING (12.83MM OD)	
C	5	1	**197-8419**	1	GASKET (21.82MM ID)	
C	6	1	**210-9246**	1	SEAL-O-RING (32.92MM ID)	
M	7	1	**9X-2099**	2	STUD (M8X1.25X52.75-MM)	
	8	1	**8T-4224**	4	WASHER-HARD (8.8X16X2-MM THK)	
CM	9	1	**7X-2537**	2	BOLT (M8X1.25X35-MM)	
C	10	1	**260-8630**	1	TUBE AS-DRAIN	
C	11	1	**260-8631**	1	TUBE AS-DRAIN	
C	12	1	**269-8788**	2	CLAMP-BAND	
M	13	1	**2Y-5829**	1	NUT (M10X1.5-THD)	
M	14	1	**6V-4248**	1	BOLT (M10X1.5X25-MM)	
	15	1	**6V-5839**	2	WASHER (11X21X2.5-MM THK)	
	16	1	**7S-0530**	1	CLIP	
	17	1	**033-8248**	1	CLIP	

C-CHANGE FROM PREVIOUS TYPE
M-METRIC PART

187-6279 **LINES GP-TURBOCHARGER OIL** *(contd.)* **i03523163**

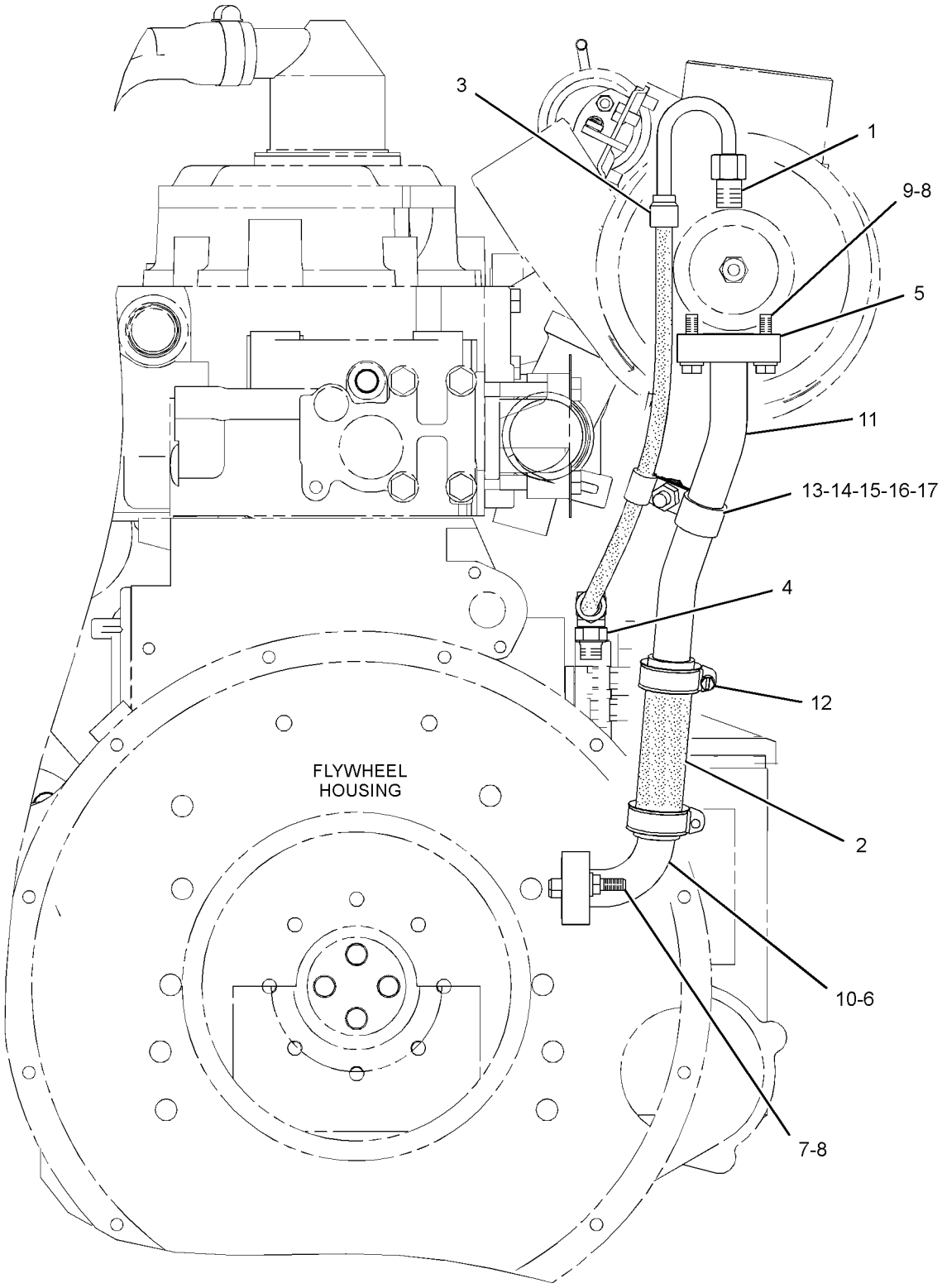

REAR VIEW OF ENGINE

GRAPHIC #1 **<END>** g01319683

LUBRICATION SYSTEM

237-8063 MANIFOLD GP-ENGINE OIL

S/N: KHX13472-UP

PART OF 325-9707 ENGINE AR-COMPLETE

SMCS-1307 **i02789607**

NOTE	REF NO	GRAPHIC REF	PART NUMBER	QTY	PART NAME 1 2 3 4 5 6 (PRODUCT LEVEL)	SEE PAGE
	1	1	**226-8696**	1	MANIFOLD-OIL (ENGINE)	
	2	1	**3J-1907**	4	SEAL-O-RING	
	3	1	**4F-9029**	1	SEAL	
M	4	1	**6V-5219**	2	BOLT (M8X1.25X40-MM)	
	5	1	**9S-4191**	4	PLUG-O-RING	

M-METRIC PART

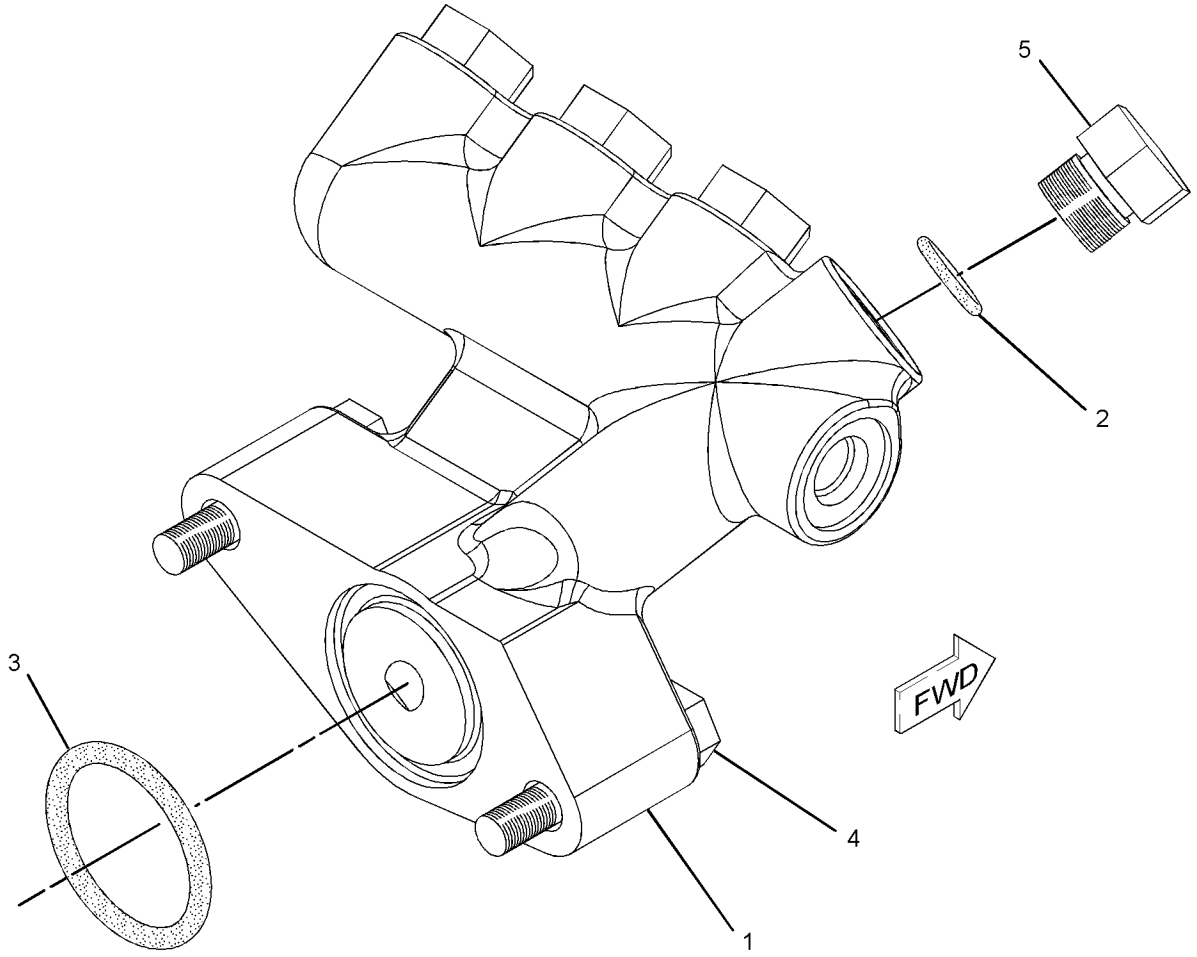

GRAPHIC #1 **<END>** g01099259

200-4497 PUMP GP-ENGINE OIL

S/N: KHX13472-UP

PART OF 212-2270 PUMP GP-ENGINE OIL

SMCS-1304, 1315 **i02120062**

NOTE	REF NO	GRAPHIC REF	PART NUMBER	QTY	PART NAME 1 2 3 4 5 6 (PRODUCT LEVEL)	SEE PAGE
	1	1	**7W-9737**	1	SHAFT	
	2	1	**7W-9738**	1	WASHER (10.5X38X1.6-MM THK)	
	3	1	**7W-9740**	1	GEAR AS-IDLER (43-TEETH)	
	3A	1	**7W-9930**	1	BEARING-SLEEVE	
M	4	1	**9X-2305**	1	BOLT-LOCKING (M10X1.5X50-MM)	
	5	1	**189-8777**	1	PUMP GP-ENGINE OIL	

M-METRIC PART

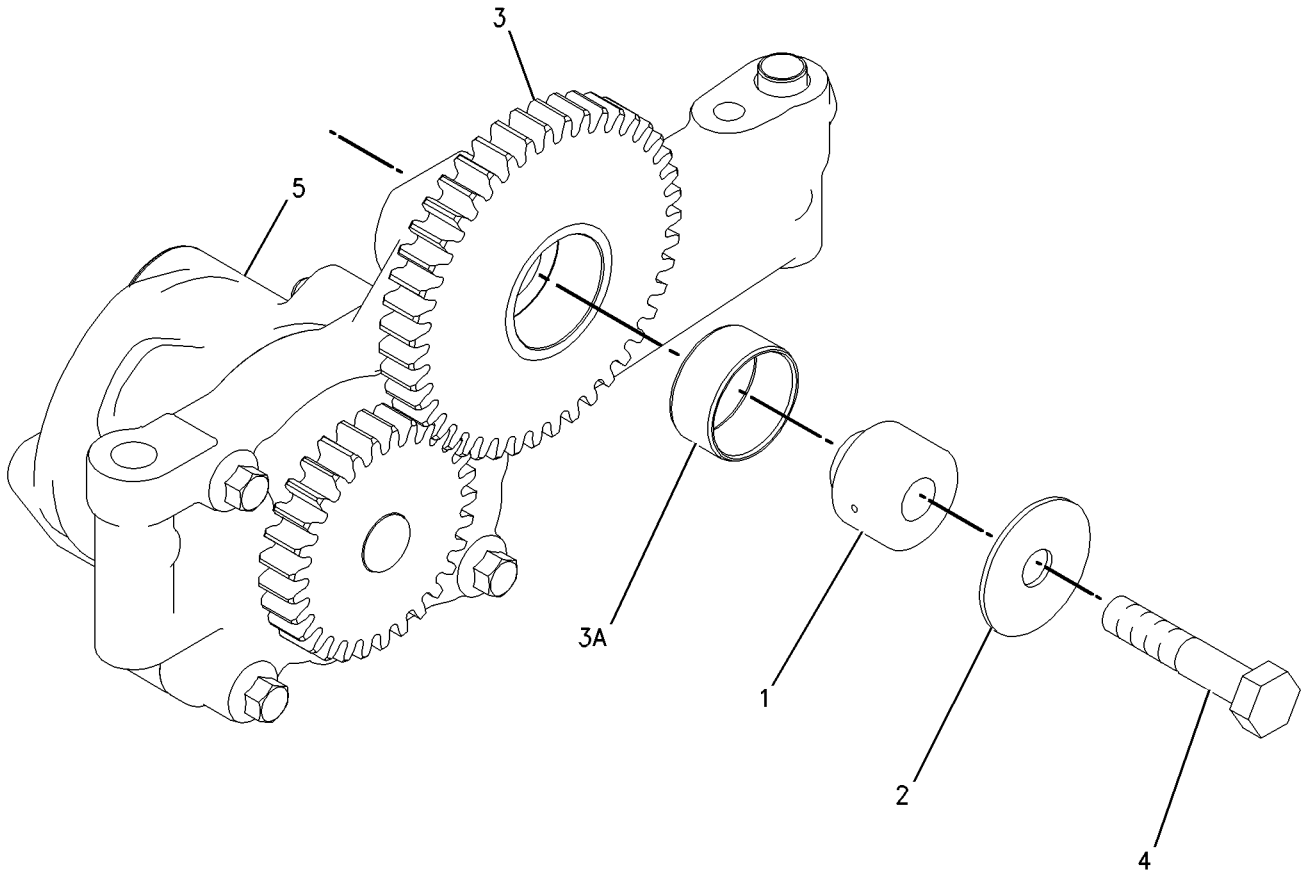

GRAPHIC #1 **<END>** g00775788

LUBRICATION SYSTEM

212-2270 PUMP GP-ENGINE OIL

S/N: KHX13472-UP

PART OF 330-9359 ENGINE AR-CORE

SMCS-1304, 1315 **i02294171**

NOTE	REF NO	GRAPHIC REF	PART NUMBER	QTY	PART NAME 1 2 3 4 5 6 (PRODUCT LEVEL)	SEE PAGE
Y	1	1	**200-4497**	1	PUMP GP-ENGINE OIL	71
M	2	1	**6V-5815**	2	BOLT (M10X1.5X75-MM)	
	3	1	**6V-5839**	2	WASHER (11X21X2.5-MM THK)	

M-METRIC PART
Y-SEPARATE ILLUSTRATION

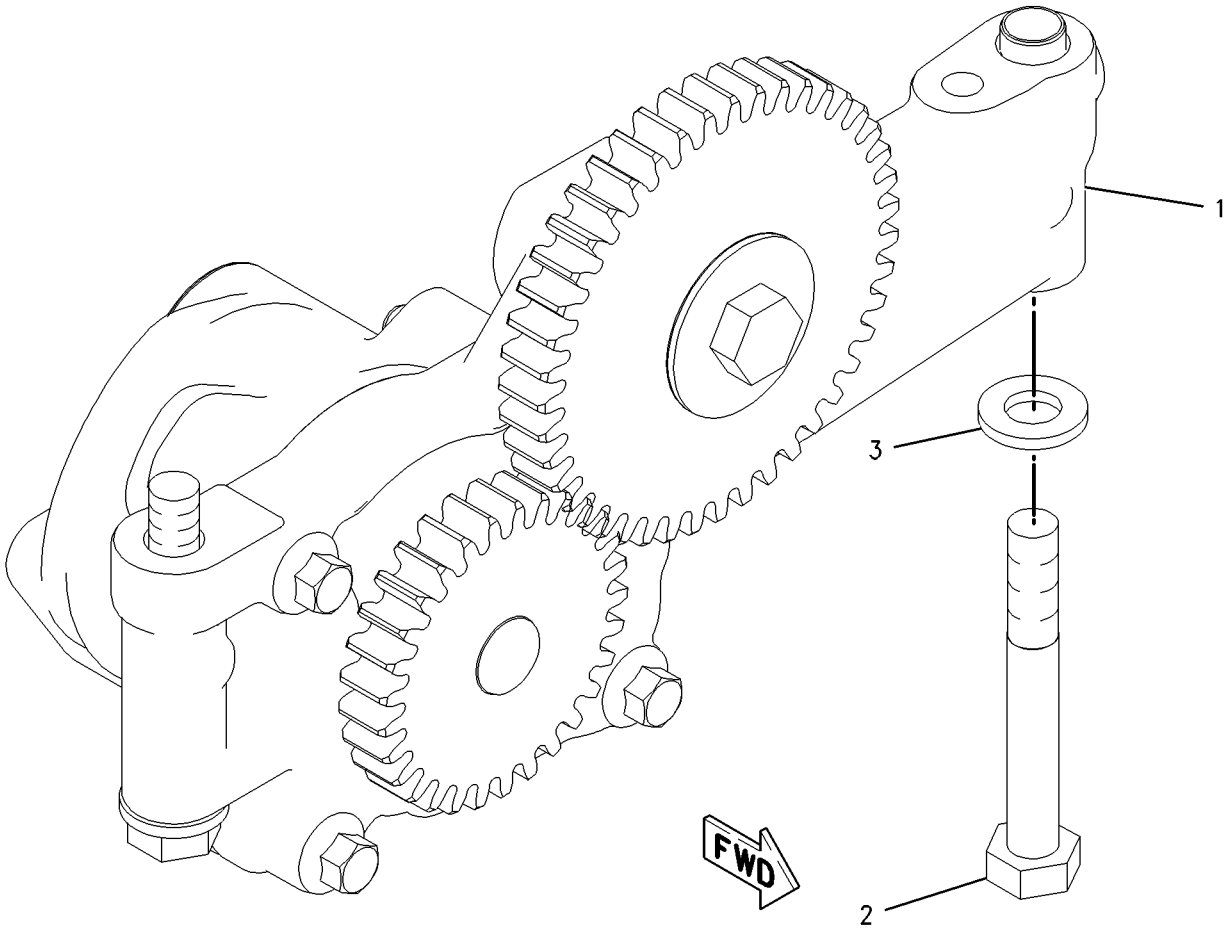

GRAPHIC #1 **<END>** g00849437

117-3643 COOLER GP-ENGINE OIL

S/N: KHX13472-UP

PART OF 330-9359 ENGINE AR-CORE

SMCS-1378 **i02835867**

NOTE	REF NO	GRAPHIC REF	PART NUMBER	QTY	PART NAME 1 2 3 4 5 6 (PRODUCT LEVEL)	SEE PAGE
R	1	1	**267-4743**	1	CORE AS-ENGINE OIL COOLER	
	2	1	**233-7655**	1	GASKET	
	3	1	**3P-1156**	2	SEAL-O-RING	

R-REMFG PART MAY BE AVAILABLE

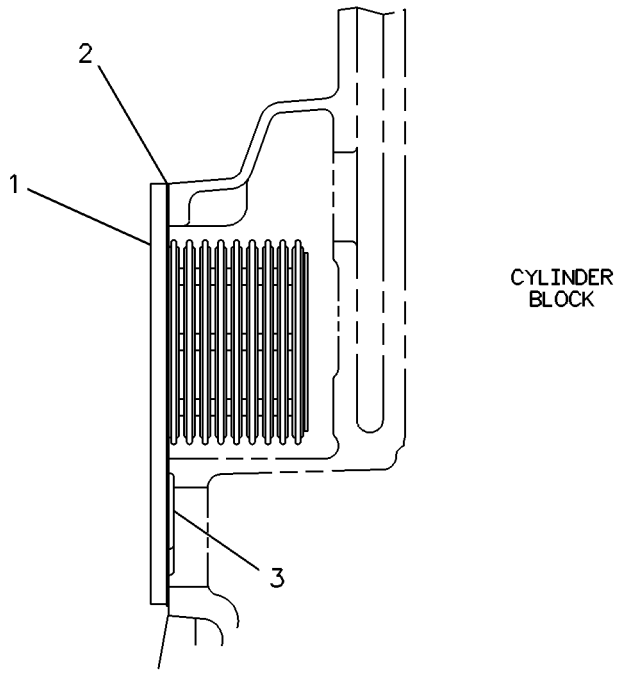

GRAPHIC #1 **<END>** g00117316

COOLING SYSTEM

310-5881 COOLING AR

S/N: JAP1-UP

PART OF 348-3018 GENERAL AR

SMCS-1350 **i03246252**

NOTE	REF NO	GRAPHIC REF	PART NUMBER	QTY	PART NAME 1 2 3 4 5 6 (PRODUCT LEVEL)	SEE PAGE
Y	1	1	*299-8311*	1	AFTERCOOLER GP-AIR	87
Y	2	1	*310-5882*	1	RADIATOR GP	84

Y-SEPARATE ILLUSTRATION

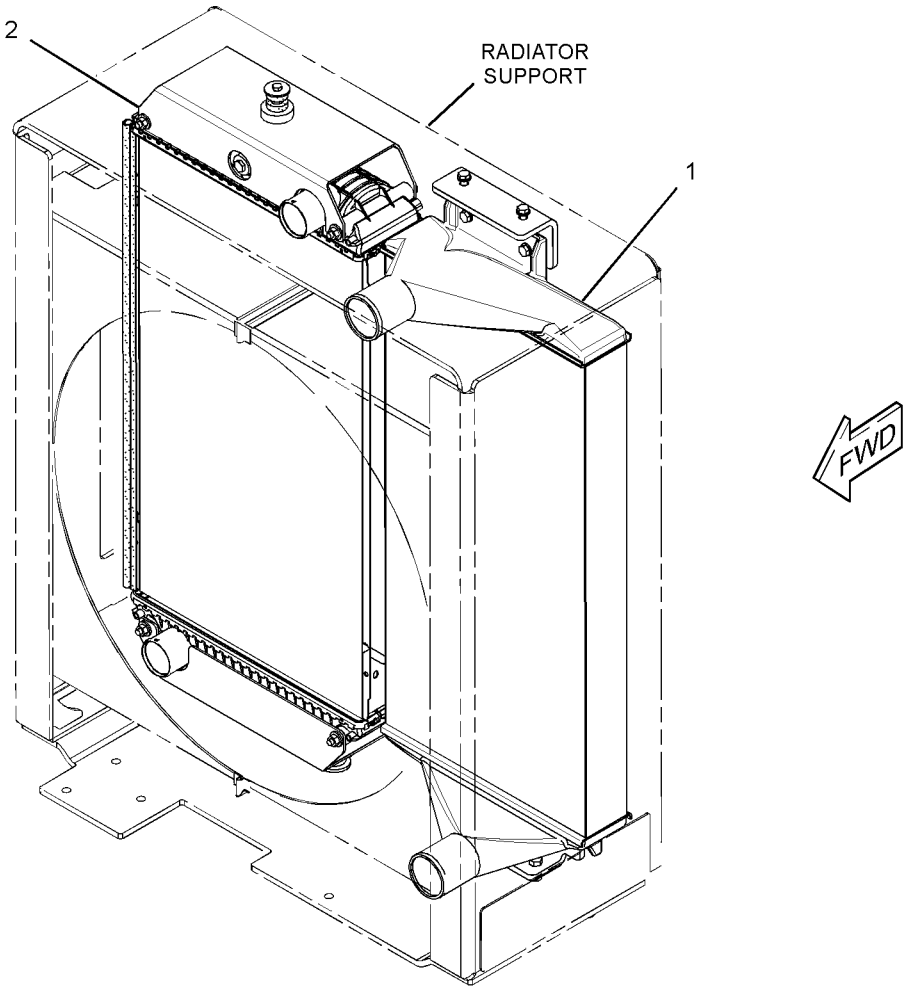

GRAPHIC #1 **<END>** g01691033

COOLING SYSTEM

284-0824 FAN GP-BLOWER—RADIATOR

S/N: JAP1-UP

PART OF 348-3018 GENERAL AR

SMCS-1356 **i03247411**

NOTE	REF NO	GRAPHIC REF	PART NUMBER	QTY	PART NAME 1 2 3 4 5 6 (PRODUCT LEVEL)	SEE PAGE
	1	1	**241-8534**	1	SPIDER AS (8-BLADE)	
	2	1	**8T-4121**	6	WASHER-HARD (11X21X2.5-MM THK)	
M	3	1	**8T-4195**	6	BOLT (M10X1.5X30-MM)	

M-METRIC PART

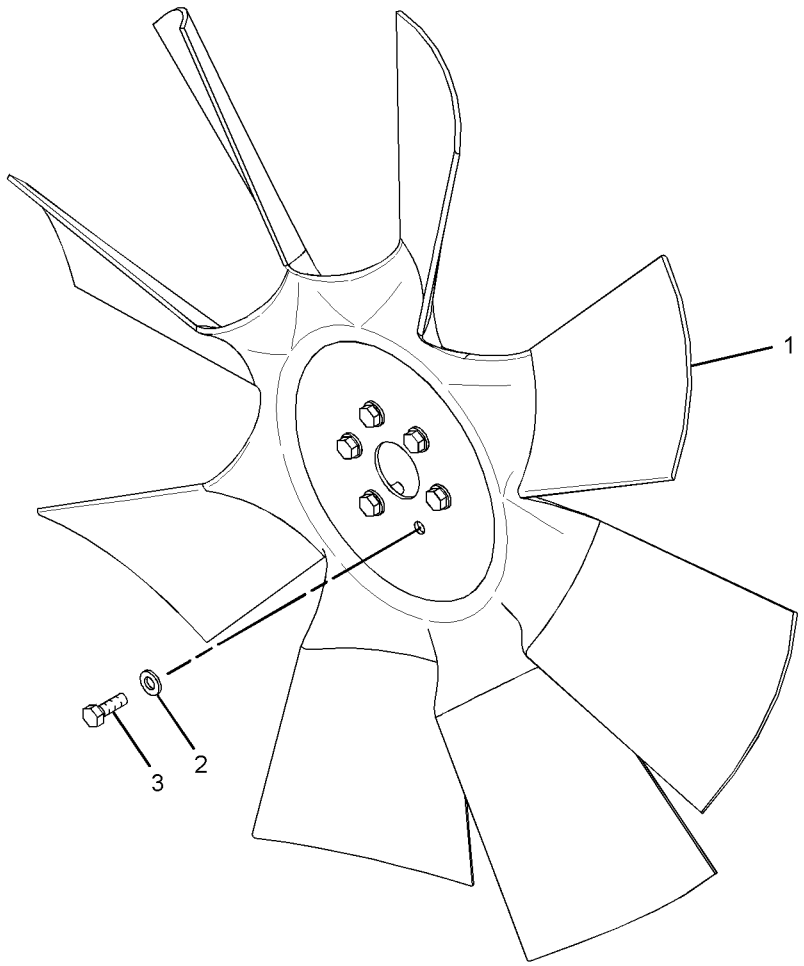

GRAPHIC #1 **<END>** g01687413

COOLING SYSTEM

303-6003 GUARD GP-FAN

S/N: JAP1-UP

PART OF 299-8307 SUPPORT GP-RADIATOR

SMCS-1360 **i03247380**

NOTE	REF NO	GRAPHIC REF	PART NUMBER	QTY	PART NAME 1 2 3 4 5 6 (PRODUCT LEVEL)	SEE PAGE
	1	1	**303-6009**	1	SHROUD AS (UPPER, LH)	
	2	1	**303-6010**	1	SHROUD AS (UPPER, RH)	
	3	1	**303-6011**	1	SHROUD AS (LOWER, RH)	
	4	1	**303-6012**	1	SHROUD AS (LOWER, LH)	
					(EACH SHROUD AS INCLUDES)	
		1	**6V-4604**	3	RIVET-POP	
M		1	**8T-3490**	3	NUT-WELD (M10X1.5-THD)	
	5	1	**303-6037**	2	BRUSH AS	
	6	1	**122-9764**	6	RIVET-POP	
E	7	1	**266-8568**		SEAL-BULK (17-CM EACH)	
E	7A	1	**266-8568**		SEAL-BULK (3.6-CM)	
E	7B	1	**266-8568**		SEAL-BULK (3-CM)	

E-ORDER BY THE CENTIMETER
M-METRIC PART

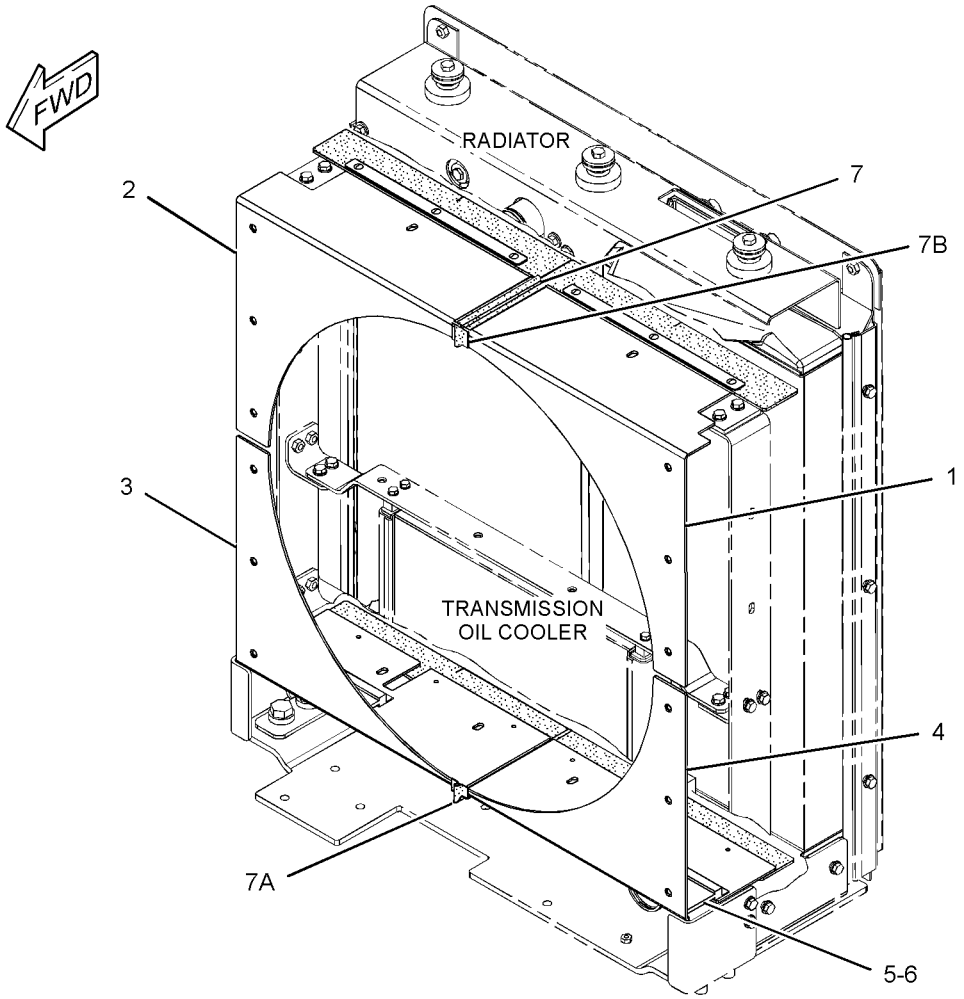

GRAPHIC #1 **<END>** g01696568

COOLING SYSTEM

206-4228 LINES GP-WATER

S/N: KHX13472-UP

PART OF 325-9707 ENGINE AR-COMPLETE

SMCS-1355, 1380, 1393 **i03680910**

NOTE	REF NO	GRAPHIC REF	PART NUMBER	QTY	PART NAME 1 2 3 4 5 6 (PRODUCT LEVEL)	SEE PAGE
	1	1	**7E-0759**	1	HOSE	
	3	1	**115-4223**	2	REGULATOR-WATER TEMPERATURE (97-DEG C)	
	4	1	**126-5466**	1	GASKET	
	5	1	**157-0670**	1	CAP-DUST	
	6	1	**160-5131**	1	PIPE (OUTLET)	
	7	1	*217-9060*	1	VALVE AS-FLUID SAMPLING (ENGINE COOLANT)	
	7A	1	**3J-7354**	1	SEAL-O-RING	
	7B	1	**154-9023**	1	VALVE-SAMPLING	
	8	1	**222-5915**	1	GASKET (TEMPERATURE REGULATOR HOUSING)	
	9	1	**227-5942**	1	HOUSING-WATER REGULATOR	
	10	1	**237-5176**	2	CLAMP-BAND	
	11	1	*148-8395*	1	PLUG AS	
		1	**3K-0360**	1	SEAL-O-RING	
		1	**9S-8005**	1	PLUG-O-RING	
M	12	1	**5P-8347**	2	BOLT (M8X1.25X70-MM)	
	13	1	**5P-9617**	1	ADAPTER	
	14	1	**6V-3250**	1	SEAL-O-RING	
M	15	1	**6V-3940**	6	BOLT (M8X1.25X25-MM)	
M	16	1	**6V-5223**	1	BOLT (M8X1.25X100-MM)	
	17	1	**6V-6609**	3	SEAL-O-RING	
	18	1	**6V-9027**	1	SEAL-O-RING	
	19	1	**9M-1974**	6	WASHER-HARD (8.8X16X2-MM THK)	
	20	1	**9S-4182**	1	PLUG-O-RING	
	21	1	**9S-4185**	3	PLUG-O-RING	

M-METRIC PART

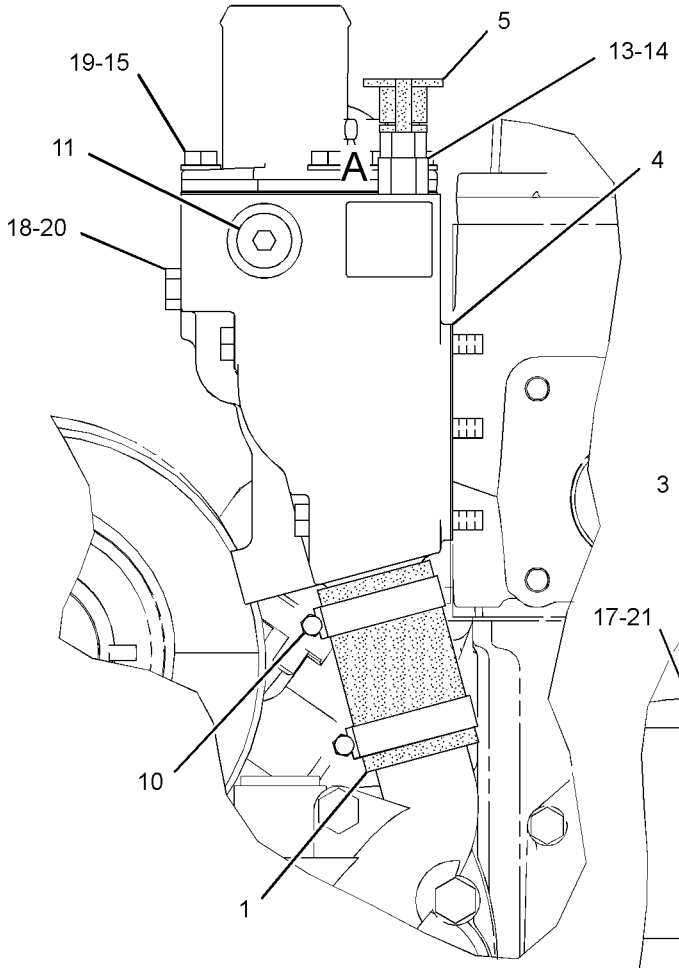

FRONT VIEW OF ENGINE

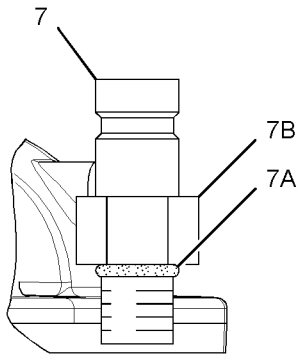

VIEW OF AREA A
(CAP REMOVED FOR CLARITY)

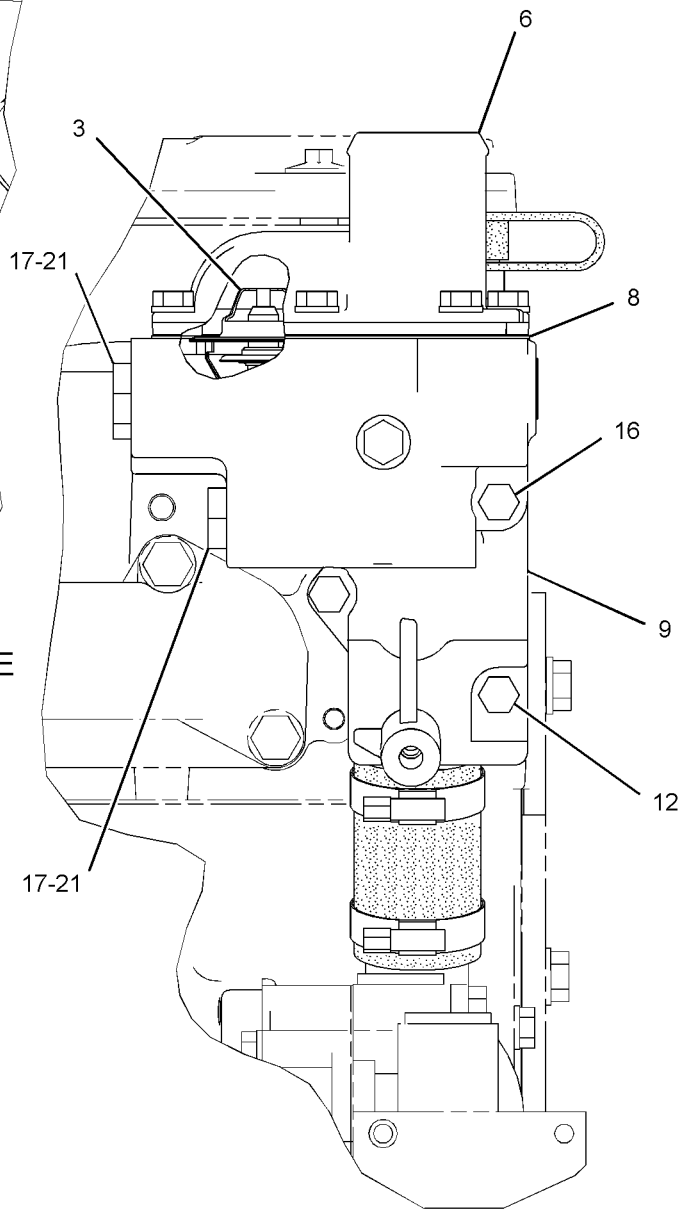

RIGHT SIDE VIEW OF ENGINE

GRAPHIC #1 **<END>** g01430061

COOLING SYSTEM

325-7448 LINES GP-WATER

S/N: JAP1-UP

PART OF 348-3018 GENERAL AR

SMCS-1355, 1380, 1393 **i03564940**

NOTE	REF NO	GRAPHIC REF	PART NUMBER	QTY	PART NAME 1 2 3 4 5 6 (PRODUCT LEVEL)	SEE PAGE
	1	1	**4S-5719**	1	SPACER (10.31X25X12.7-MM THK)	
	2	1	**5D-1026**	1	CLAMP-BAND	
	3	1	**5I-4376**	1	FITTING	
	4	1	**5P-4961**	4	CLAMP-HOSE	
	5	1	**157-0670**	1	CAP-DUST	
	6	1	*164-5562*	1	CONNECTOR AS	
		1	**3J-1907**	1	SEAL-O-RING	
		1	**5P-1046**	1	CONNECTOR	
	7	1	*184-2509*	1	VALVE GP-DRAIN (COOLANT)	
		1	**3K-0360**	1	SEAL-O-RING	
		1	**7E-4761**	1	VALVE-DRAIN	
	8	1	*215-7067*	3	ELBOW AS	
					(EACH INCLUDES)	
		1	**3J-1907**	1	SEAL-O-RING	
		1	**215-7066**	1	ELBOW	
	9	1	**263-6914**	1	HOSE	
	10	1	**265-5007**	1	HOSE	
	11	1	**266-7650**	1	ELBOW	
	12	1	**266-7651**	1	HOSE	
	13	1	**311-3026**	1	TUBE AS	
	14	1	**325-7447**	1	TUBE AS	
	15	1	**328-3496**	1	BRACKET	
	16	1	**154-9025**	1	VALVE-FLUID SAMPLING (ENGINE COOLANT)	
	17	1	*184-2420*	1	ADAPTER AS	
		1	**3E-7401**	1	ADAPTER	
		1	**6V-8397**	1	SEAL-O-RING	
	18	1	**1P-7009**	1	CLIP	
	19	1	**208-6054**	4	CLAMP	
	20	1	**212-6933**	4	CLAMP	
	21	1	**259-0017**	1	NUT (11/16-16-THD)	
	22	1	**2S-7010**	1	CLIP	
	23	1	**4D-7388**	1	CLIP	
	24	1	**6K-8178**	1	CLIP	
	25	1	**6V-2235**	1	CLIP	
	26	1	**6V-8367**	1	LOCKWASHER	
	27	1	**7J-8611**	1	ELBOW-PIPE (90-DEG)	
	28	1	**8M-2773**	1	CLIP	
	29	1	**8T-4121**	7	WASHER-HARD (11X21X2.5-MM THK)	
M	30	1	**8T-4133**	1	NUT (M10X1.5-THD)	
M	31	1	**8T-4137**	5	BOLT (M10X1.5X20-MM)	
M	32	1	**8T-4196**	1	BOLT (M10X1.5X35-MM)	
E	33	1	**5P-0767**		HOSE (16-CM)	
E	34	1	**6V-8523**		HOSE (37-CM)	
E	34A	1	**6V-8523**		HOSE (131-CM)	

E-ORDER BY THE CENTIMETER
M-METRIC PART

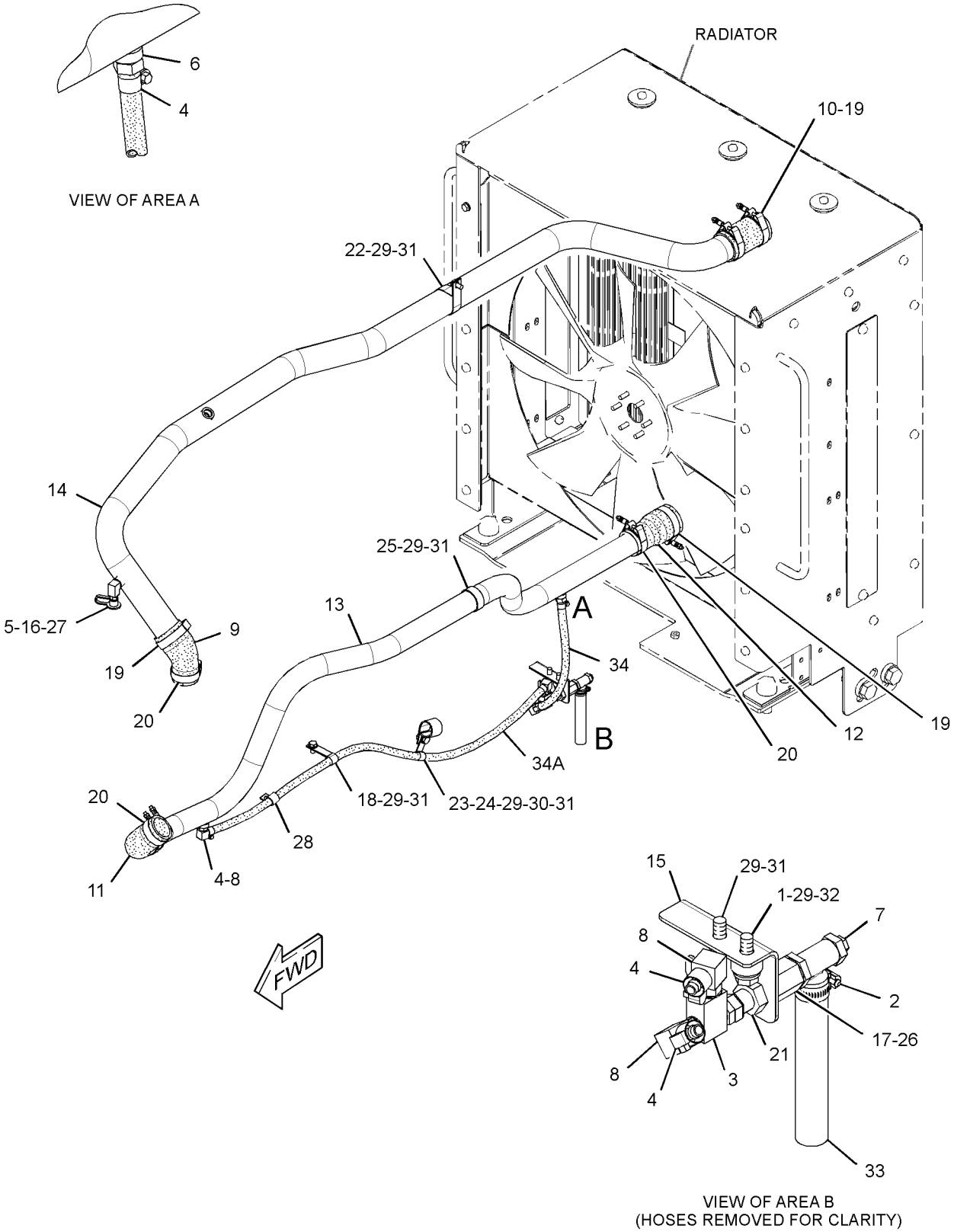

GRAPHIC #1 **<END>** g01927527

236-4413 PUMP GP-WATER*R

S/N: KHX13472-UP

PART OF 318-2076 PUMP GP-WATER

SMCS-1361 **i02871912**

NOTE	REF NO	GRAPHIC REF	PART NUMBER	QTY	PART NAME 1 2 3 4 5 6 (PRODUCT LEVEL)	SEE PAGE
	1	1	**4W-0253**	1	COVER	
	2	1	**4W-7592**	1	GASKET	
R	3	1	**236-4420**	1	PUMP AS-WATER	
		1	**117-3437**	1	PULLEY	
		1	**119-3025**	1	PLUG-FELT	
		1	**129-1170**	1	SHAFT AS	
		1	**147-5088**	1	SEAL AS-WATER PUMP	
		1	**152-3952**	1	IMPELLER-PUMP	
		1	**236-4421**	1	HOUSING-PUMP	
M	4	1	**6V-3918**	4	BOLT (M8X1.25X50-MM)	
	5	1	**9M-1974**	4	WASHER-HARD (8.8X16X2-MM THK)	

M-METRIC PART
R-REMFG PART MAY BE AVAILABLE

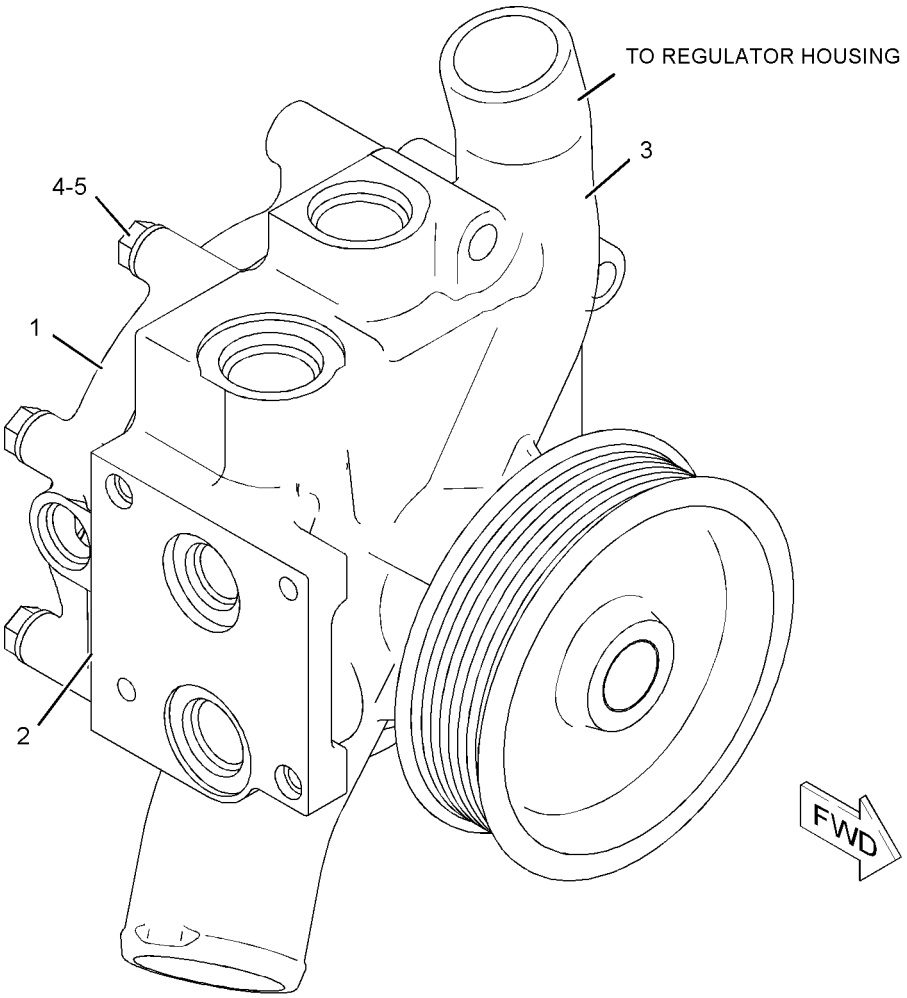

GRAPHIC #1 **<END>** g01040531

COOLING SYSTEM

318-2076 PUMP GP-WATER

S/N: KHX13472-UP

PART OF 325-9707 ENGINE AR-COMPLETE

SMCS-1361 **i03499632**

NOTE	REF NO	GRAPHIC REF	PART NUMBER	QTY	PART NAME 1 2 3 4 5 6 (PRODUCT LEVEL)	SEE PAGE
	1	1	**069-4269**	1	STEM	
YR	2	1	**236-4413**	1	PUMP GP-WATER	81
	3	1	*148-8395*	2	PLUG AS	
					(EACH INCLUDES)	
	3A	1	**3K-0360**	1	SEAL-O-RING	
		1	**9S-8005**	1	PLUG-O-RING	
	4	1	*155-6258*	1	ELBOW AS	
	4A	1	**3D-2824**	1	SEAL-O-RING	
	4B	1	**6V-8398**	1	SEAL-O-RING	
		1	**127-1647**	1	ELBOW	
	5	1	*164-5619*	1	PLUG AS	
	5A	1	**2M-9780**	1	SEAL-O-RING	
		1	**9S-8006**	1	PLUG-O-RING	
	6	1	**2M-4453**	1	SEAL-O-RING	
	7	1	**3D-2824**	1	SEAL-O-RING	
	8	1	*3J-3679*	1	PLUG AS	
	8A	1	**1J-9671**	1	SEAL-O-RING	
		1	**9S-8003**	1	PLUG	
	9	1	**4J-0524**	1	SEAL-O-RING	
M	10	1	**8T-0644**	4	BOLT (M10X1.5X90-MM)	

M-METRIC PART
R-REMFG PART MAY BE AVAILABLE
Y-SEPARATE ILLUSTRATION

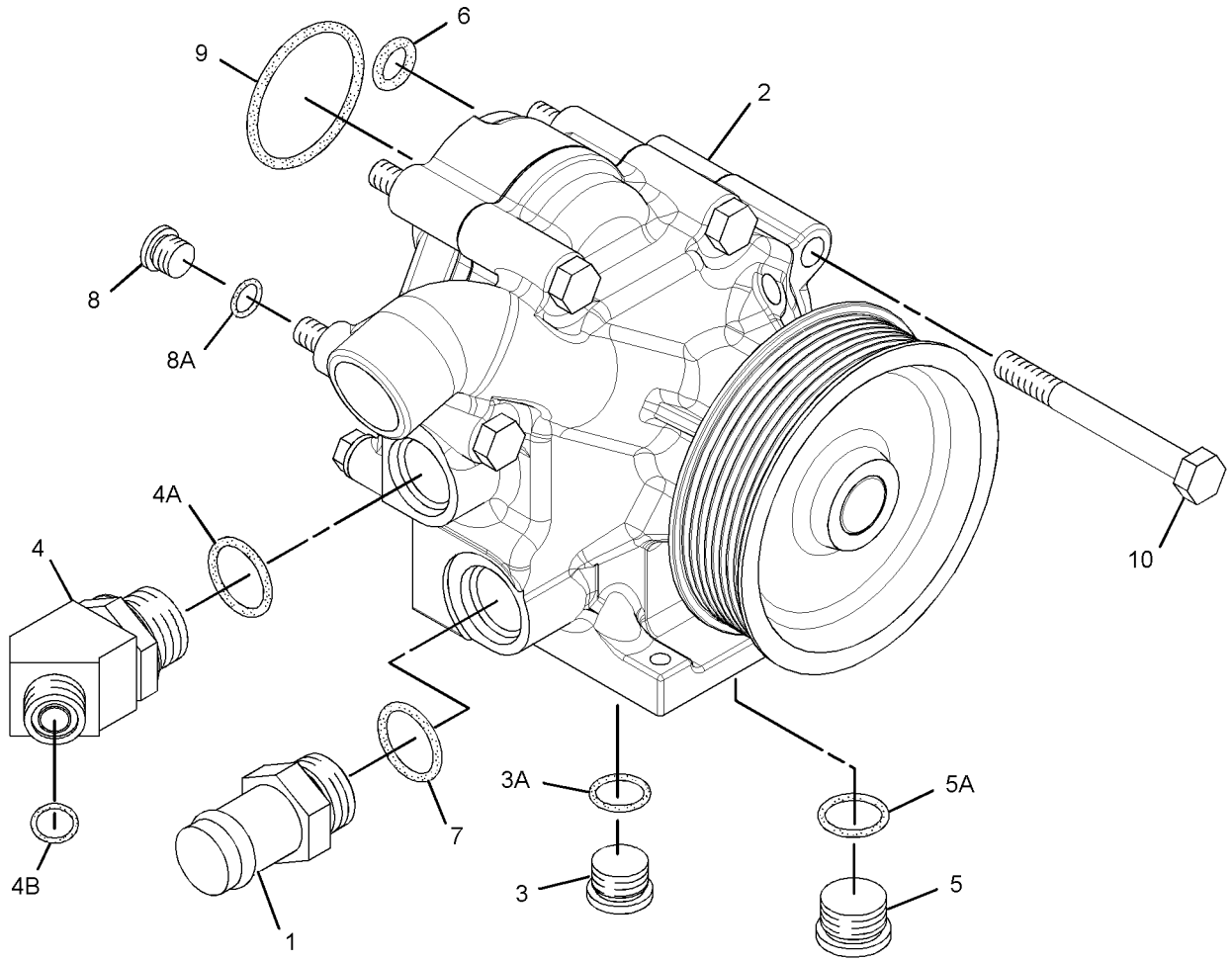

GRAPHIC #1 **<END>** g01722080

COOLING SYSTEM

310-5882 RADIATOR GP

S/N: JAP1-UP

PART OF 310-5881 COOLING AR

SMCS-1353 **i03246384**

NOTE	REF NO	GRAPHIC REF	PART NUMBER	QTY	PART NAME 1 2 3 4 5 6 (PRODUCT LEVEL)	SEE PAGE
	1	1	**6S-6251**	2	MOUNT	
	2	1	**121-3307**	1	MOUNT AS-RESILIENT	
M	3	1	**174-4181**	1	WASHER-HARD (8.5X40X3-MM THK)	
	4	1	**256-5308**	1	CORE AS-RADIATOR	
	5	1	**310-5883**	1	BRACKET AS	
	6	1	**310-5884**	1	BRACKET AS	
	7	1	**3J-5390**	1	PLUG	
M	8	1	**7X-2546**	4	BOLT (M10X1.5X180-MM)	
	9	1	**7X-7729**	8	WASHER (11X25X3-MM THK)	
M	10	1	**8T-4133**	4	NUT (M10X1.5-THD)	
M	11	1	**8T-4194**	2	BOLT (M12X1.75X50-MM)	
	12	1	**8T-4895**	2	WASHER (13.5X50X5-MM THK)	
M	13	1	**8T-6912**	1	BOLT (M8X1.25X50-MM)	
D	14	1	**5P-8309**		SEAL (1.8-M)	

D-ORDER BY THE METER
M-METRIC PART

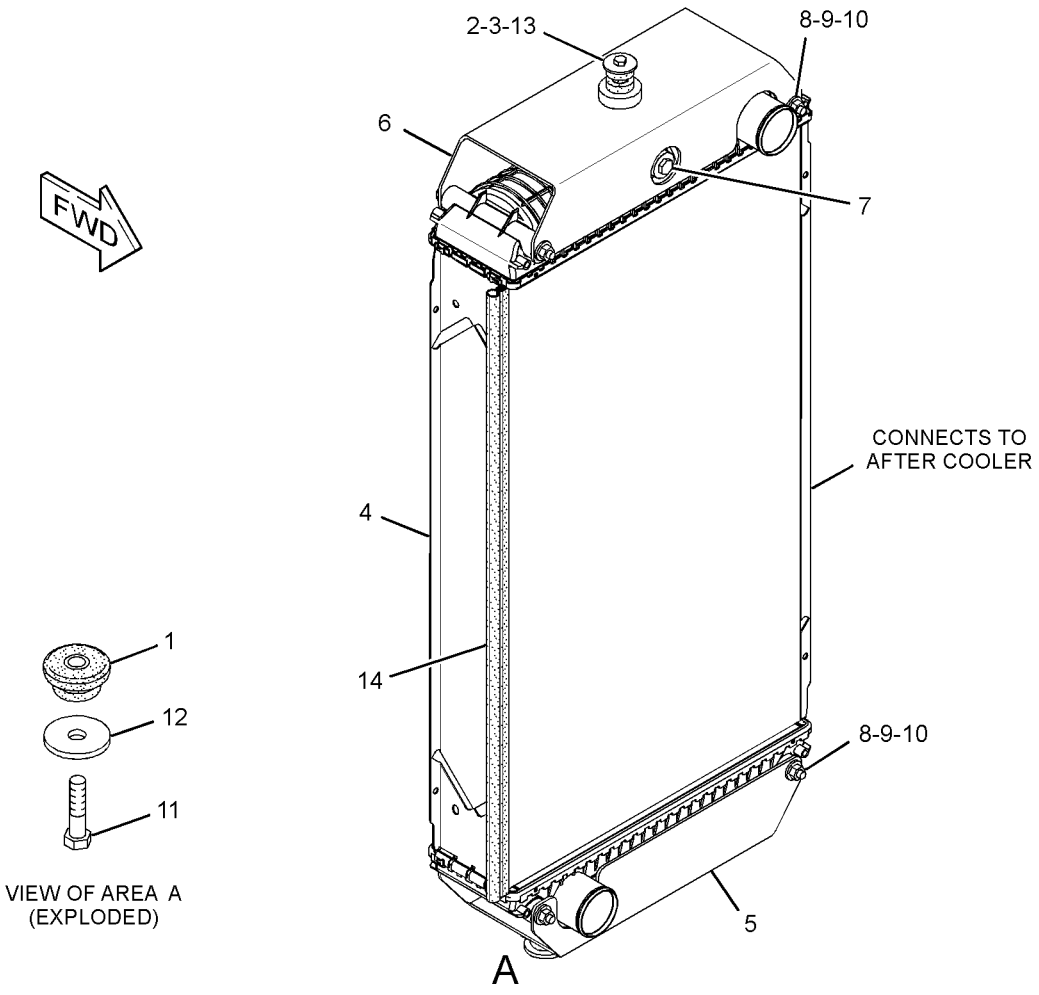

GRAPHIC #1 **<END>** g01661236

325-7427 TANK GP-COOLANT

S/N: JAP1-UP

PART OF 348-3018 GENERAL AR

SMCS-1354, 1377 **i03544241**

NOTE	REF NO	GRAPHIC REF	PART NUMBER	QTY	PART NAME 1 2 3 4 5 6 (PRODUCT LEVEL)	SEE PAGE
	1	1	*150-3026*	1	ELBOW AS	
		1	**6V-4292**	1	ELBOW	
		1	**3K-0360**	1	SEAL-O-RING	
	2	1	**277-4837**	1	TANK GP-COOLANT	
		1	**251-3227**	1	CAP AS-COOLANT TANK	
	3	1	**316-6689**	1	PLATE AS	
	4	1	**317-1529**	1	PLATE	
	5	1	**069-4269**	1	STEM	
	6	1	**198-4776**	4	WASHER-HARD (8.8X20X8-MM THK)	
	7	1	**198-4777**	2	WASHER-HARD (11X25X10-MM THK)	
	8	1	**1S-0994**	2	CLIP	
	9	1	**3D-2824**	1	SEAL-O-RING	
	10	1	**4D-7388**	2	CLIP	
	11	1	**5D-1026**	2	CLAMP-BAND	
	12	1	**8M-2773**	2	CLIP	
	13	1	**8T-1117**	2	CLAMP-HOSE	
	14	1	**8T-4121**	10	WASHER-HARD (11X21X2.5-MM THK)	
M	15	1	**8T-4133**	2	NUT (M10X1.5-THD)	
M	16	1	**8T-4137**	8	BOLT (M10X1.5X20-MM)	
M	17	1	**8T-4195**	2	BOLT (M10X1.5X30-MM)	
M	18	1	**8T-4908**	4	BOLT (M8X1.25X25-MM)	
E	19	1	**9X-2133**		HOSE (78-CM)	
E	20	1	**5P-1251**		HOSE (79-CM)	
E	21	1	**8C-3681**		HOSE (209-CM)	

E-ORDER BY THE CENTIMETER
M-METRIC PART

325-7427 **TANK GP-COOLANT** *(contd.)* **i03544241**

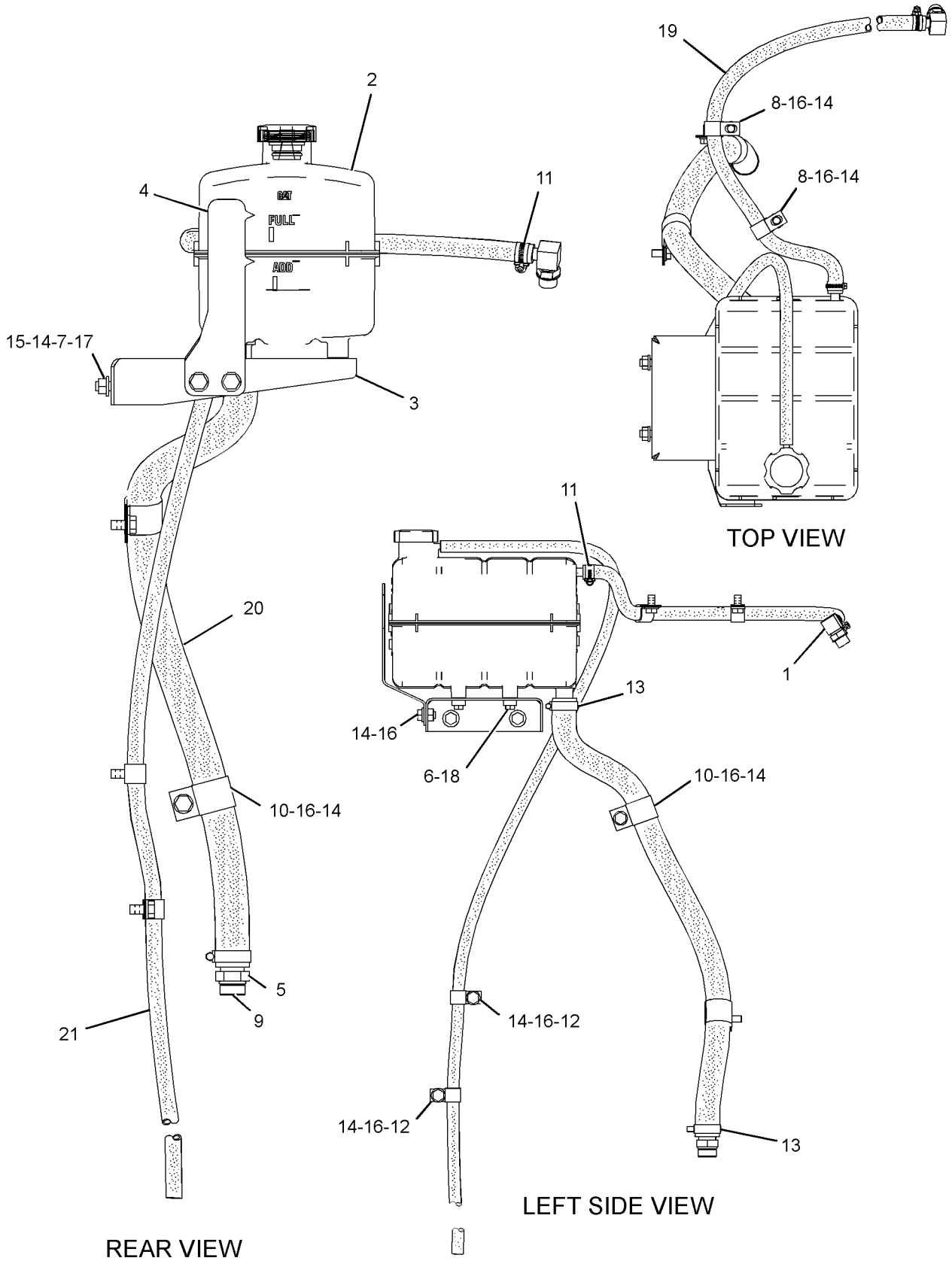

GRAPHIC #1 **<END>** g01929014

AIR INLET AND EXHAUST SYSTEM

299-8311 AFTERCOOLER GP-AIR

S/N: JAP1-UP

PART OF 310-5881 COOLING AR

SMCS-1063, 1064, 1079 **i03242667**

NOTE	REF NO	GRAPHIC REF	PART NUMBER	QTY	PART NAME 1 2 3 4 5 6 (PRODUCT LEVEL)	SEE PAGE
	1	1	**121-3307**	4	MOUNT AS-RESILIENT (RUBBER)	
	2	1	**243-5063**	1	AFTERCOOLER AS	
	3	1	**317-1538**	1	PLATE AS	
	4	1	**317-5601**	1	BRACKET AS	
	5	1	**8T-4121**	6	WASHER-HARD (11X21X2.5-MM THK)	
M	6	1	**8T-4133**	2	NUT (M10X1.5-THD)	
M	7	1	**8T-4196**	4	BOLT (M10X1.5X35-MM)	
	8	1	**8T-4226**	4	WASHER-PLATED (10.5X45X3-MM THK)	
M	9	1	**8T-6466**	4	BOLT (M10X1.5X60-MM)	

M-METRIC PART

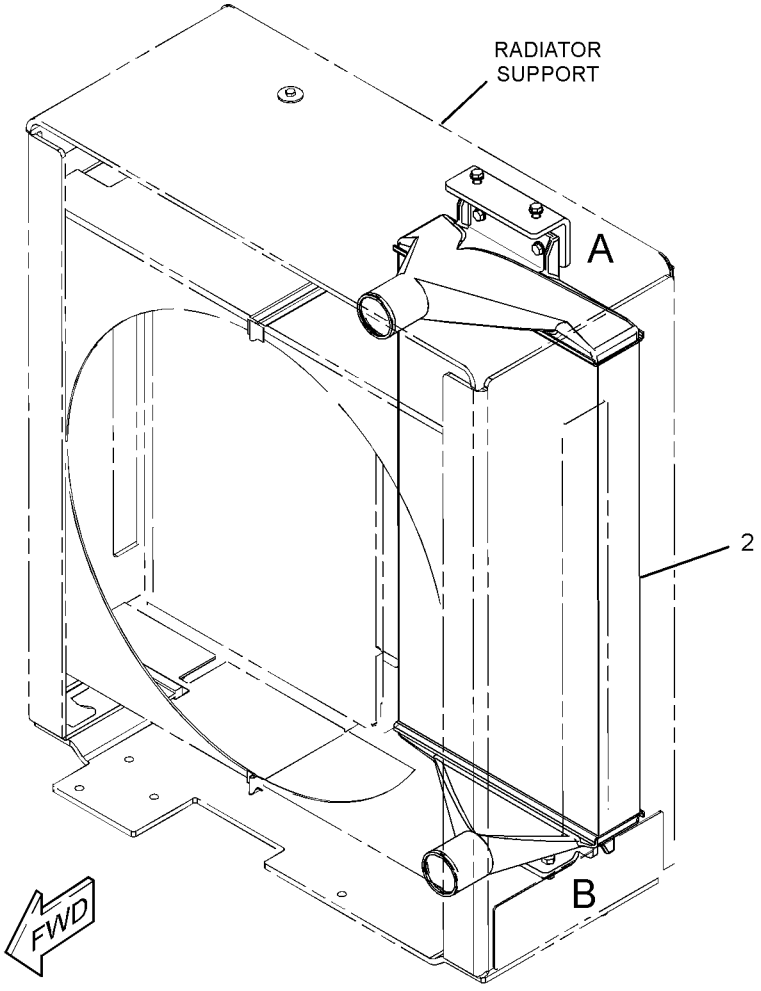

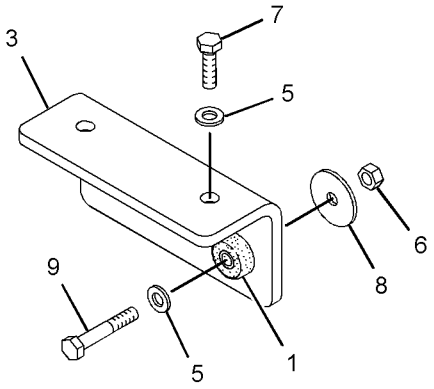

VIEW OF AREA A

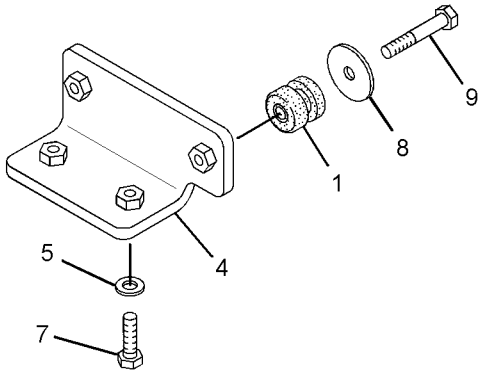

VIEW OF AREA B

GRAPHIC #1 **<END>** g01690853

AIR INLET AND EXHAUST SYSTEM

264-3762 AIR CLEANER GP

S/N: JAP1-UP

PART OF 310-6459 AIR CLEANER GP

SMCS-1051, 1054 **i03245923**

NOTE	REF NO	GRAPHIC REF	PART NUMBER	QTY	PART NAME 1 2 3 4 5 6 (PRODUCT LEVEL)	SEE PAGE
	1	1	**212-5081**	1	COVER AS	
	2	1	**245-6375**	1	FILTER ELEMENT-AIR (PRIMARY)	
	3	1	**245-6376**	1	FILTER ELEMENT AS-AIR (SECONDARY)	
	4	1	**246-4615**	2	BRACKET AS	
	5	1	**247-9730**	1	VALVE AS-CHECK	

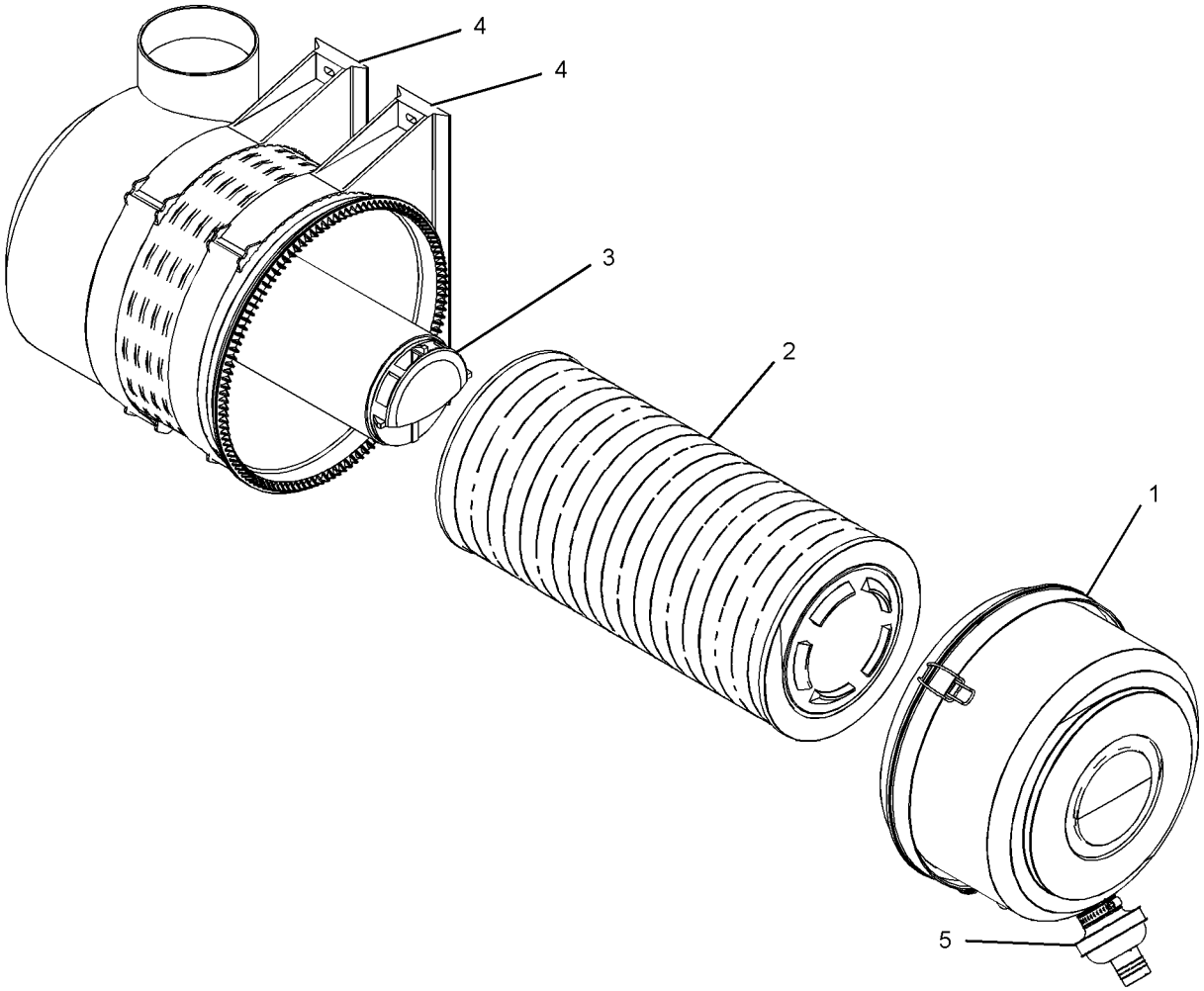

GRAPHIC #1 **<END>** g01691874

AIR INLET AND EXHAUST SYSTEM

310-6459 AIR CLEANER GP

S/N: JAP1-UP

PART OF 348-3018 GENERAL AR

SMCS-1051, 1054 **i03544083**

NOTE	REF NO	GRAPHIC REF	PART NUMBER	QTY	PART NAME 1 2 3 4 5 6 (PRODUCT LEVEL)	SEE PAGE
	1	1	**5P-2230**	2	CLAMP-HOSE	
	2	1	**8N-2694**	1	INDICATOR GP-AIR FILTER CHANGE	
	3	1	**119-6723**	1	FITTING	
	4	1	*150-3058*	1	TEE AS	
		1	**3J-1907**	1	SEAL-O-RING	
		1	**8C-8431**	1	TEE	
	5	1	**246-4611**	1	CAP AS-AIR CLEANER	
	6	1	**250-2984**	1	PIPE-EXTENSION	
Y	7	1	**264-3762**	1	AIR CLEANER GP	88
	8	1	**284-7774**	1	BRACKET	
	9	1	**311-4907**	1	HOSE AS	
I	10	1	**311-4908**	1	HOSE AS	
	11	1	**313-6096**	1	PLATE	
	12	1	**313-9542**	1	HOSE	
M	13	1	**099-3649**	4	BOLT (M8X1.25X40-MM)	
	14	1	*169-5862*	1	ELBOW AS	
		1	**3J-1907**	1	SEAL-O-RING	
		1	**8C-6712**	1	ELBOW	
	16	1	**219-0314**	1	CLAMP	
	17	1	**220-4125**	1	CLAMP	
	18	1	**224-0807**	1	CLAMP	
	19	1	**3J-7354**	1	SEAL-O-RING	
	20	1	**4D-7794**	1	CLIP	
M	21	1	**5C-2890**	2	NUT (M6X1-THD)	
	22	1	**7L-6326**	1	CLIP	
	23	1	**8T-4121**	6	WASHER-HARD (11X21X2.5-MM THK)	
M	24	1	**8T-4133**	1	NUT (M10X1.5-THD)	
M	25	1	**8T-4136**	1	BOLT (M10X1.5X25-MM)	
M	26	1	**8T-4137**	3	BOLT (M10X1.5X20-MM)	
M	27	1	**8T-4138**	2	BOLT (M6X1X20-MM)	
M	28	1	**8T-4191**	1	BOLT (M10X1.5X16-MM)	
	29	1	**5P-4116**	4	WASHER-HARD (8.8X20.5X2-MM THK)	
	30	1	**9X-8256**	4	WASHER (6.6X12X2-MM THK)	

I-REFER TO HYDRAULIC INFORMATION SYSTEM
M-METRIC PART
Y-SEPARATE ILLUSTRATION

310-6459 **AIR CLEANER GP** *(contd.)* **i03544083**

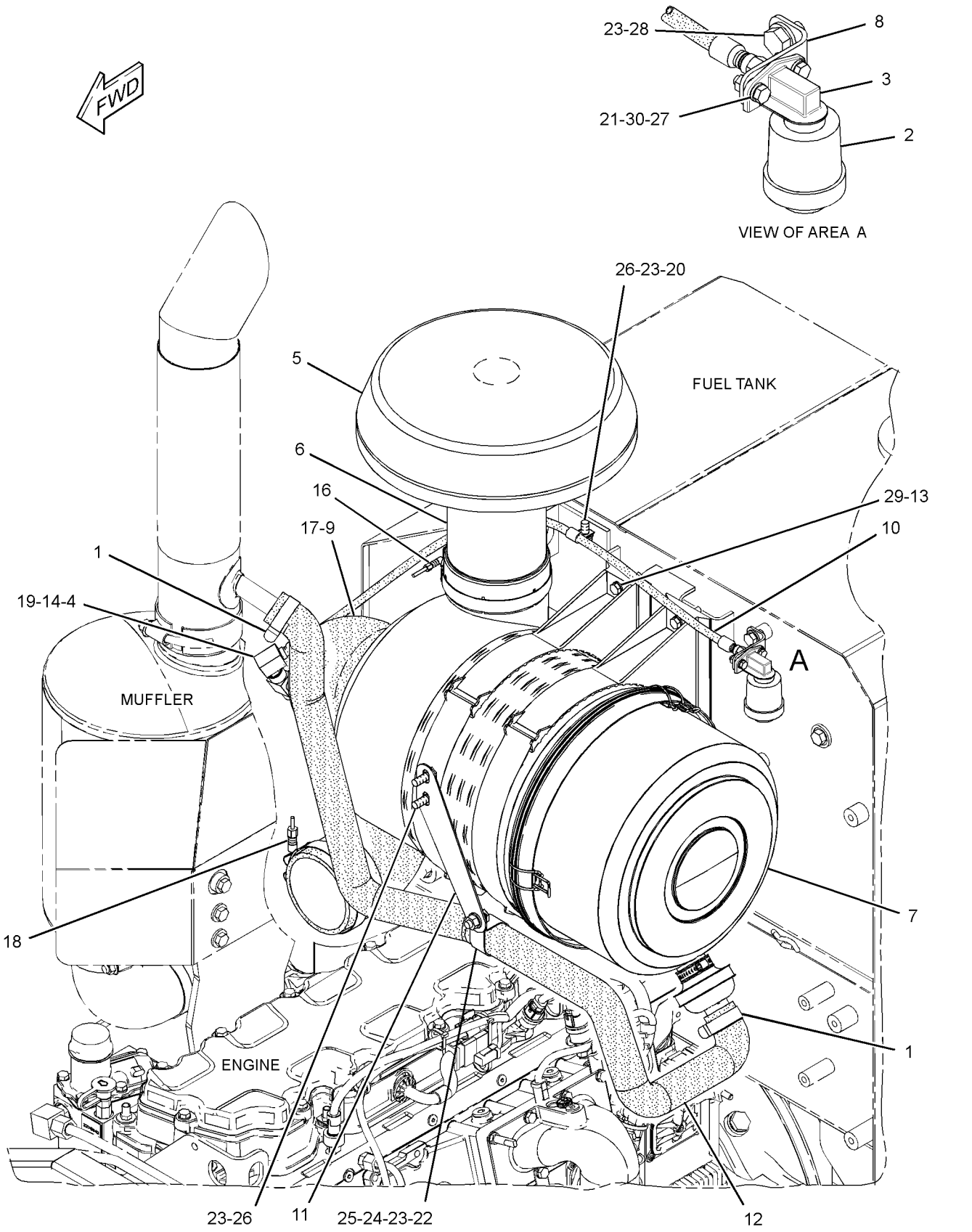

GRAPHIC #1 **<END>** g01872176

AIR INLET AND EXHAUST SYSTEM

153-1794 COVER GP-AIR INLET

S/N: KHX13472-UP

PART OF 325-9707 ENGINE AR-COMPLETE

SMCS-1087 **i03499680**

NOTE	REF NO	GRAPHIC REF	PART NUMBER	QTY	PART NAME 1 2 3 4 5 6 (PRODUCT LEVEL)	SEE PAGE
	1	1	**203-3769**	1	COVER	
B			**1U-8846**		SEALANT-GASKET	
	2	1	**9S-8005**	2	PLUG-O-RING	
	3	1	**3K-0360**	2	SEAL-O-RING	

B-USE AS REQUIRED

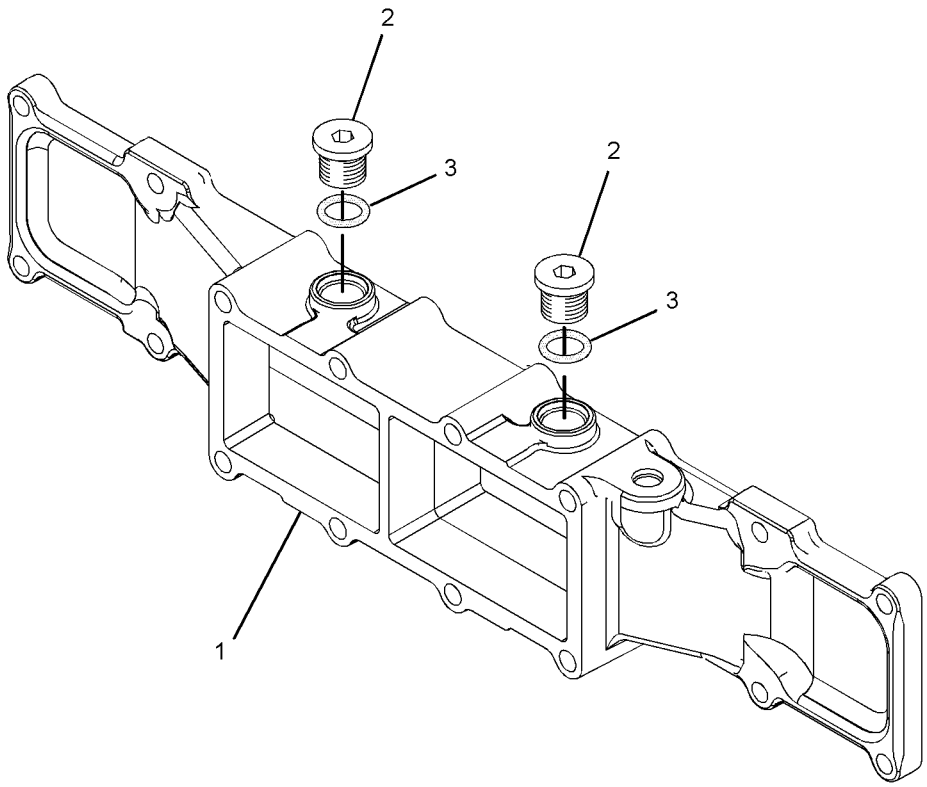

GRAPHIC #1 **<END>** g01835874

AIR INLET AND EXHAUST SYSTEM

322-0245 ELBOW GP-AIR INLET

S/N: KHX13472-UP

PART OF 325-9707 ENGINE AR-COMPLETE

SMCS-1087 **i03438862**

NOTE	REF NO	GRAPHIC REF	PART NUMBER	QTY	PART NAME 1 2 3 4 5 6 (PRODUCT LEVEL)	SEE PAGE
	1	1	**4P-5918**	1	CLIP	
	2	1	**7S-6369**	1	WASHER (0.344X0.75X0.188-IN THK)	
M	3	1	**123-4511**	4	STUD (M8X1.25-THD)	
	4	1	**197-0416**	1	ELBOW	
	5	1	*162-0177*	1	PLUG AS	
	5A	1	**3J-1907**	1	SEAL-O-RING	
	5B	1	**9S-8004**	1	PLUG	
M	6	1	**8T-0292**	4	BOLT (M8X1.25X90-MM)	
	7	1	**9M-1974**	7	WASHER-HARD (8.8X16X2-MM THK)	
B	8	1	**1U-8846**	1	SEALANT-GASKET	

B-USE AS REQUIRED
M-METRIC PART

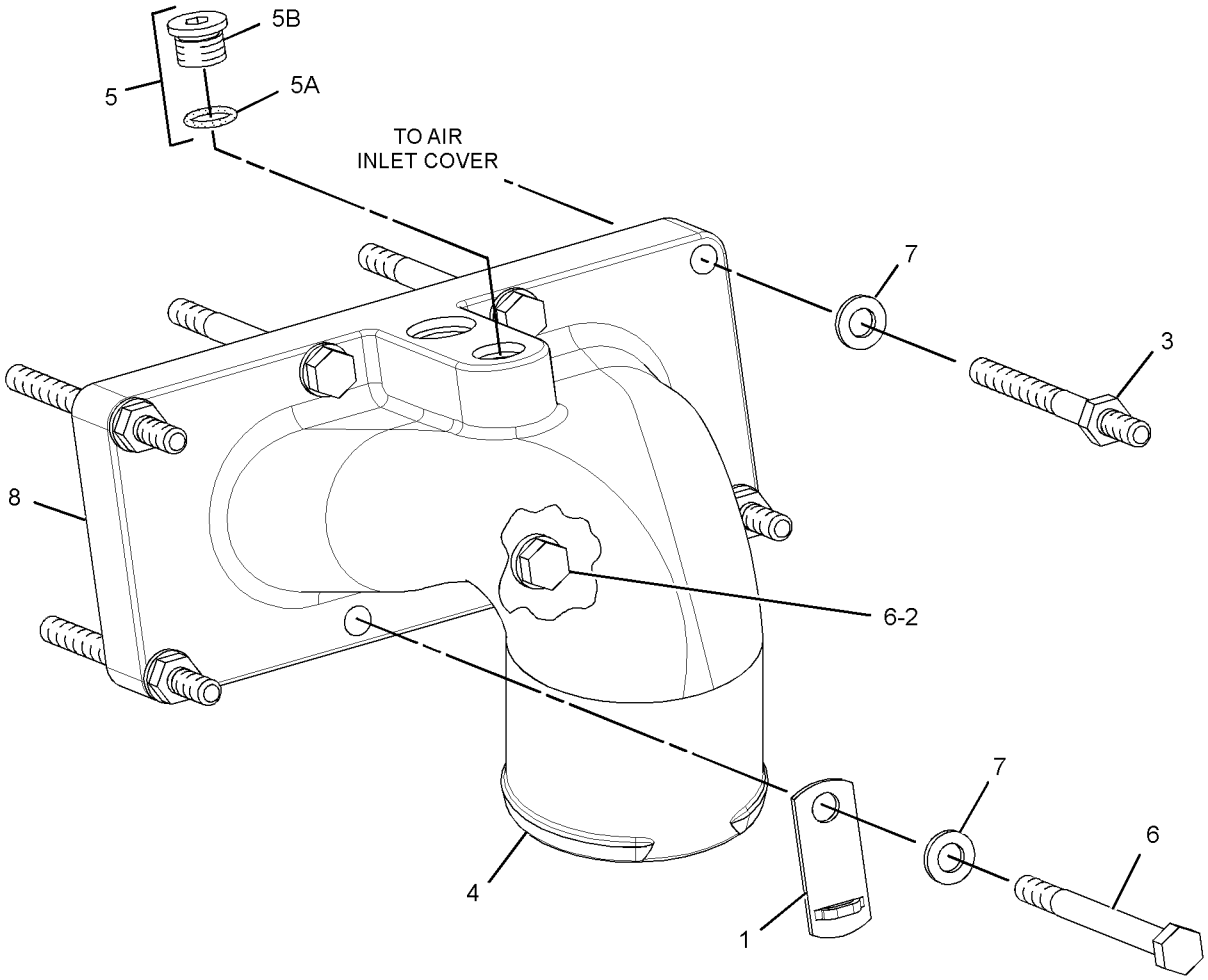

GRAPHIC #1 **<END>** g01721986

AIR INLET AND EXHAUST SYSTEM

311-0864 LINES GP-AIR

S/N: JAP1-UP

PART OF 348-3018 GENERAL AR

SMCS-1071 **i03353921**

NOTE	REF NO	GRAPHIC REF	PART NUMBER	QTY	PART NAME 1 2 3 4 5 6 (PRODUCT LEVEL)	SEE PAGE
	1	1	**177-0581**	2	HOSE	
	2	1	**209-4578**	8	CLAMP	
	3	1	**247-8602**	1	HOSE-ELBOW	
	4	1	**254-6802**	1	HOSE-ELBOW	
	5	1	**311-4959**	1	TUBE	
	6	1	**312-8434**	1	TUBE AS	
	7	1	**313-6098**	1	PLATE AS	
	8	1	**5L-3244**	2	CLIP	
M	9	1	**7X-2552**	3	BOLT (M16X2X30-MM)	
	10	1	**8T-4121**	2	WASHER-HARD (11X21X2.5-MM THK)	
M	11	1	**8T-4136**	1	BOLT (M10X1.5X25-MM)	
M	12	1	**8T-4195**	1	BOLT (M10X1.5X30-MM)	
	13	1	**9X-8257**	3	WASHER (17.5X30X3.5-MM THK)	

M-METRIC PART

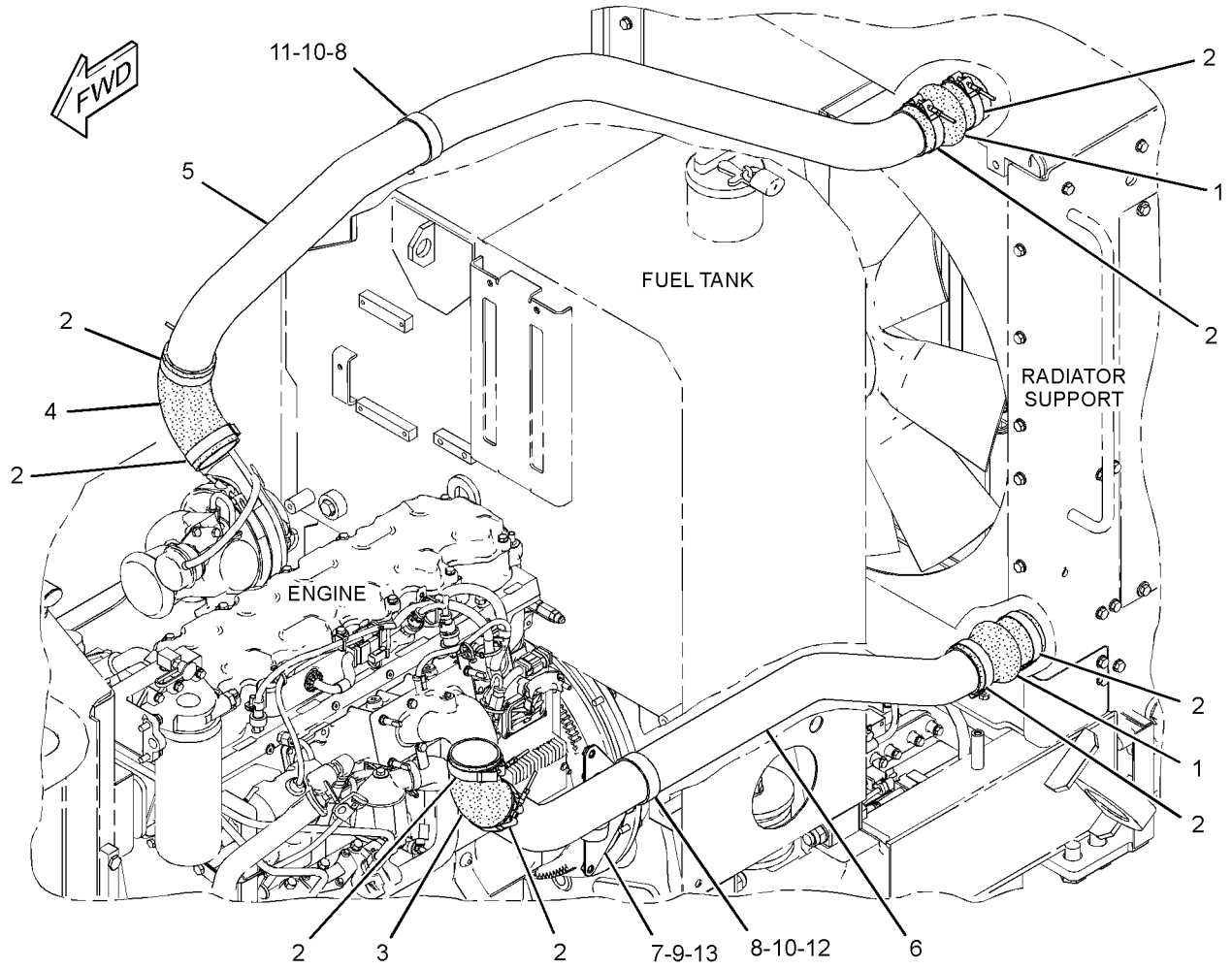

GRAPHIC #1 **<END>** g01704994

AIR INLET AND EXHAUST SYSTEM

183-6845 MANIFOLD GP-EXHAUST

S/N: KHX13472-UP

PART OF 325-9707 ENGINE AR-COMPLETE

SMCS-1059 **i02419842**

NOTE	REF NO	GRAPHIC REF	PART NUMBER	QTY	PART NAME 1 2 3 4 5 6 (PRODUCT LEVEL)	SEE PAGE
M	1	1	**8T-7044**	4	STUD-TAPERLOCK (M10X1.5X40-MM)	
	2	1	**272-1956**	6	GASKET	
M	3	1	**172-6298**	8	BOLT-FLANGE HEAD (M10)	
	4	1	**183-6854**	1	MANIFOLD-EXHAUST (CENTER)	
	5	1	**183-6856**	2	MANIFOLD-EXHAUST (END)	
	6	1	**189-8772**	8	SPACER (11X16X35-MM THK)	
	7	1	**203-3768**	4	SPACER (11X16X60-MM THK)	
	8	1	**210-7722**	4	BOLT-FLANGE HEAD (M10)	

M-METRIC PART

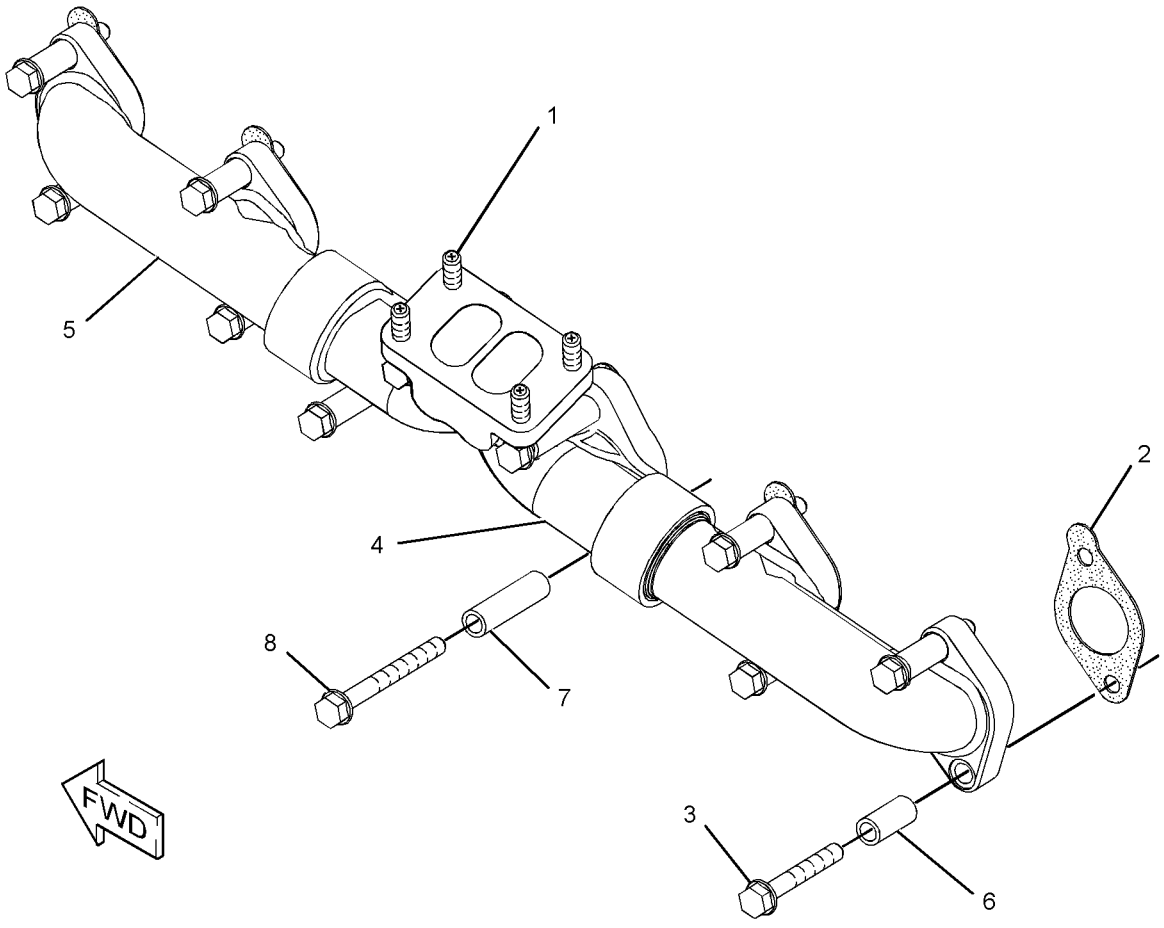

GRAPHIC #1 **<END>** g01211596

AIR INLET AND EXHAUST SYSTEM

310-6472 MUFFLER GP

S/N: JAP1-UP

PART OF 348-3018 GENERAL AR

SMCS-1062 **i03535964**

NOTE	REF NO	GRAPHIC REF	PART NUMBER	QTY	PART NAME 1 2 3 4 5 6 (PRODUCT LEVEL)	SEE PAGE
	1	1	**1W-2431**	1	CLAMP-BAND	
	2	1	**312-3542**	1	TUBE AS	
	3	1	**316-4806**	1	PLATE	
	4	1	**335-6122**	1	MUFFLER	
	5	1	**335-6123**	1	EJECTOR-EXHAUST	
	6	1	**198-4777**	6	WASHER-HARD (11X25X10-MM THK)	
M	7	1	**8T-4195**	4	BOLT (M10X1.5X30-MM)	
M	8	1	**8T-4196**	2	BOLT (M10X1.5X35-MM)	

M-METRIC PART

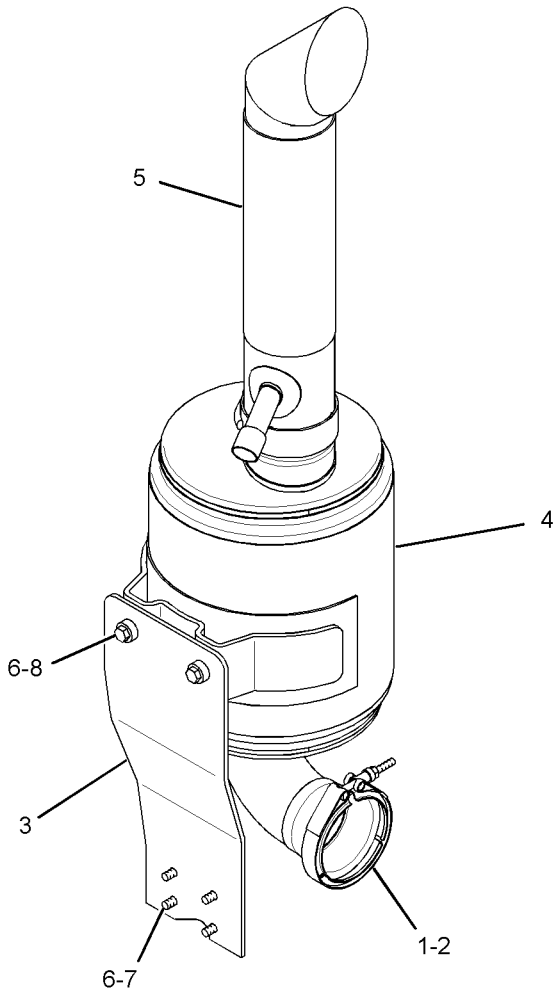

GRAPHIC #1 **<END>** g01846414

AIR INLET AND EXHAUST SYSTEM

250-0841 TURBOCHARGER GP*R

S/N: KHX13472-UP

PART OF 258-2403 TURBOCHARGER GP

SMCS-1052, 1053 **i03432285**

NOTE	REF NO	GRAPHIC REF	PART NUMBER	QTY	PART NAME 1 2 3 4 5 6 (PRODUCT LEVEL)	SEE PAGE
	1	1	**137-1602**	1	CLAMP AS (TURBINE)	
		1	**7M-9918**	1	LOCKNUT (1/4-28-THD)	
	2	1	**158-6072**	1	CLAMP AS (COMPRESSOR)	
	3	1	**161-6963**	2	CLAMP	
	4	1	**261-9287**	1	CARTRIDGE GP-TURBOCHARGER	
	5	1	**5P-4536**	1	ELBOW	
E	6	1	**242-3360**		HOSE (44-CM)	

E-ORDER BY THE CENTIMETER

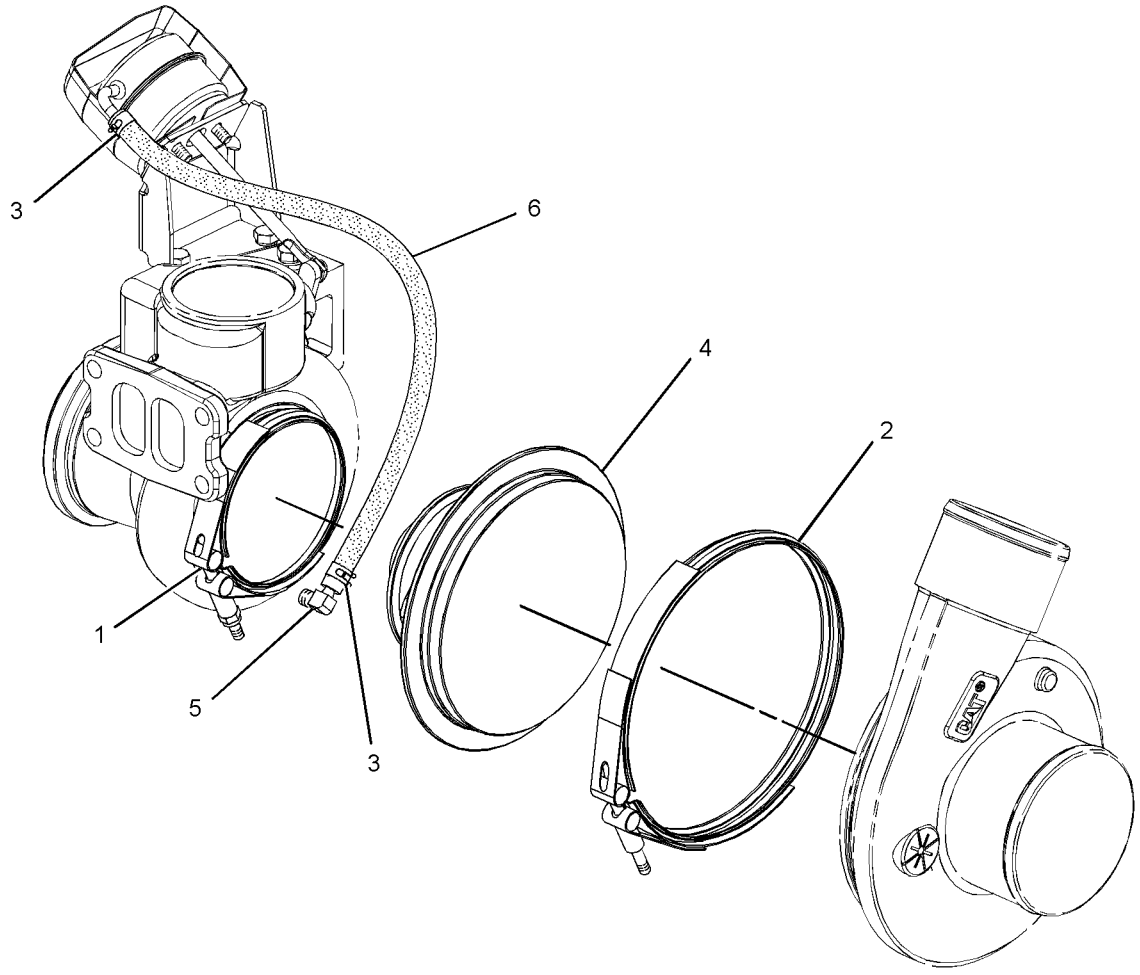

GRAPHIC #1 **<END>** g01370583

AIR INLET AND EXHAUST SYSTEM

258-2403 TURBOCHARGER GP

S/N: KHX13472-UP

PART OF 330-9359 ENGINE AR-CORE

SMCS-1052, 1053 **i03013756**

NOTE	REF NO	GRAPHIC REF	PART NUMBER	QTY	PART NAME 1 2 3 4 5 6 (PRODUCT LEVEL)	SEE PAGE
	1	1	**7C-7431**	1	GASKET	
Y	2	1	**250-0841**	1	TURBOCHARGER GP	96
M	3	1	**3E-8017**	4	LOCKNUT (M10X1.5-THD)	

M-METRIC PART
Y-SEPARATE ILLUSTRATION

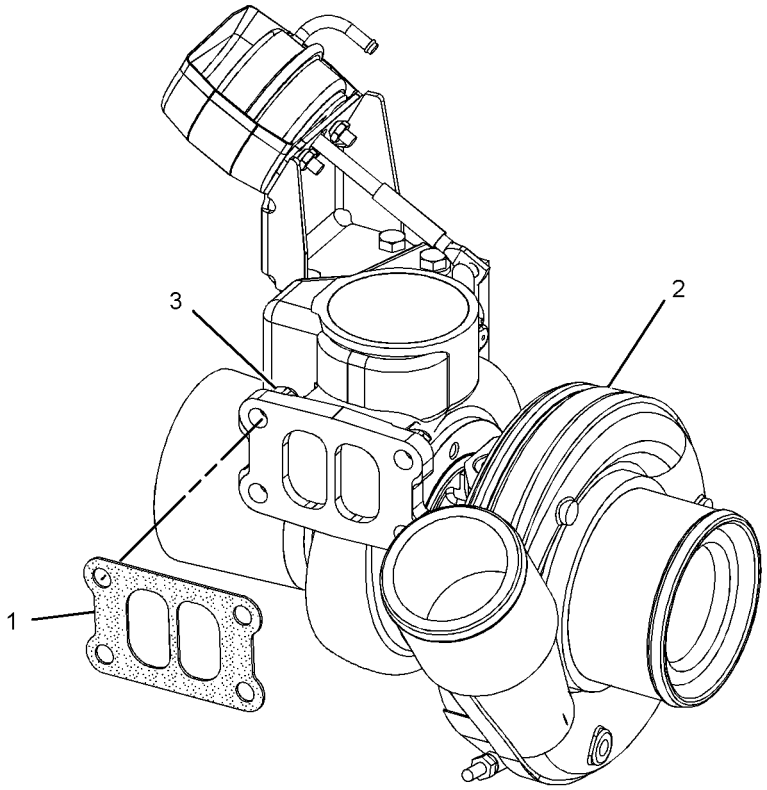

GRAPHIC #1 **<END>** g01118532

AIR INLET AND EXHAUST SYSTEM

338-1878 TURBOCHARGER GP

S/N: KHX13472-UP

PART OF 340-1812 TURBOCHARGER GP

SMCS-1052, 1053 **i03495526**

NOTE	REF NO	GRAPHIC REF	PART NUMBER	QTY	PART NAME 1 2 3 4 5 6 (PRODUCT LEVEL)	SEE PAGE
	1	1	**5P-4536**	1	ELBOW	
	2	1	**137-1602**	1	CLAMP AS (TURBINE)	
		1	**7M-9918**	1	LOCKNUT (1/4-28-THD)	
	3	1	**158-6072**	1	CLAMP AS (COMPRESSOR)	
	4	1	**161-6963**	2	CLAMP	
E	5	1	**242-3360**		HOSE (34-CM)	
	6	1	**261-9367**	1	CARTRIDGE GP-TURBOCHARGER	

E-ORDER BY THE CENTIMETER

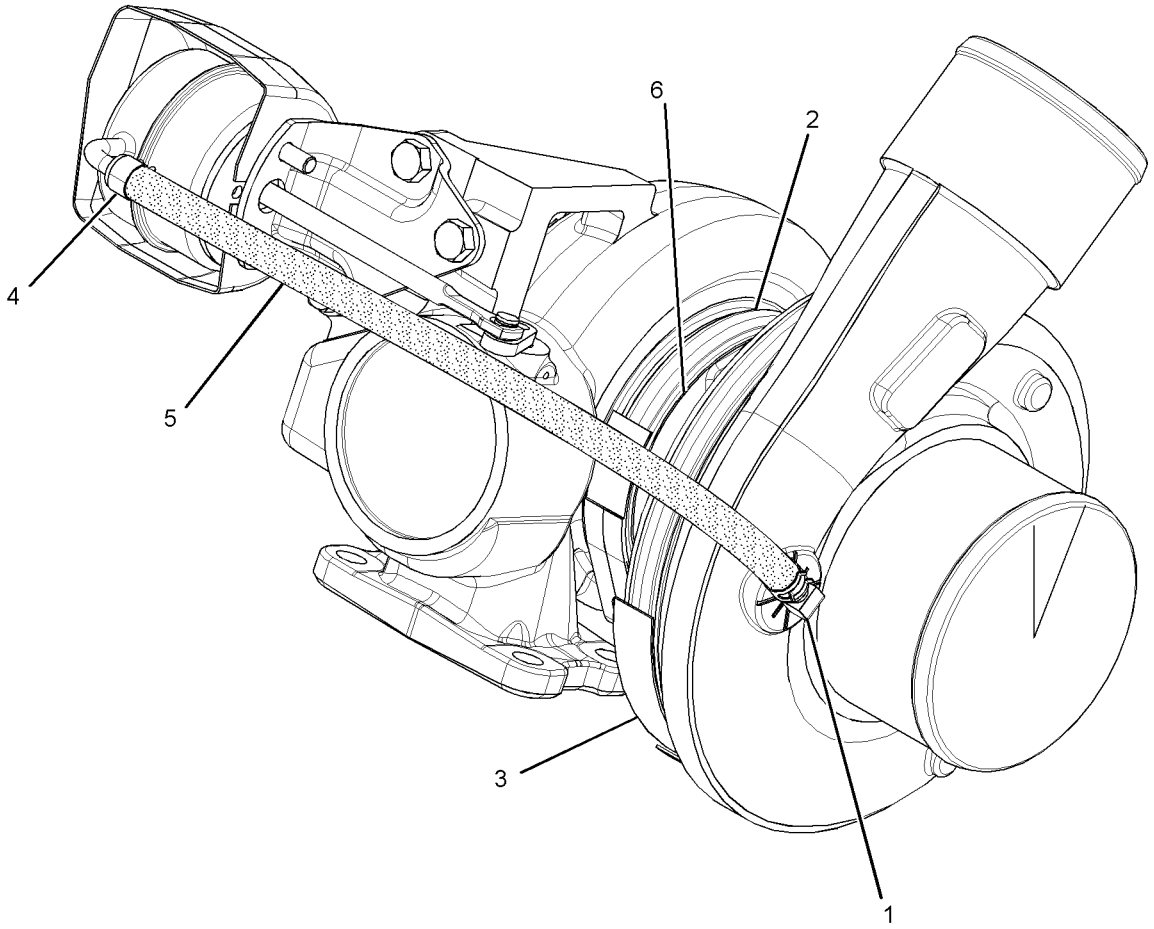

GRAPHIC #1 **<END>** g01844894

AIR INLET AND EXHAUST SYSTEM

340-1812 TURBOCHARGER GP

S/N: KHX13472-UP

PART OF 330-9359 ENGINE AR-CORE

SMCS-1052, 1053 **i03495205**

NOTE	REF NO	GRAPHIC REF	PART NUMBER	QTY	PART NAME 1 2 3 4 5 6 (PRODUCT LEVEL)	SEE PAGE
Y	1	1	**338-1878**	1	TURBOCHARGER GP	98
M	2	1	**3E-8017**	4	LOCKNUT (M10X1.5-THD)	
	3	1	**7C-7431**	1	GASKET	
E	7	1	**258-4524**		SLEEVE (34-CM)	

E-ORDER BY THE CENTIMETER
M-METRIC PART
Y-SEPARATE ILLUSTRATION

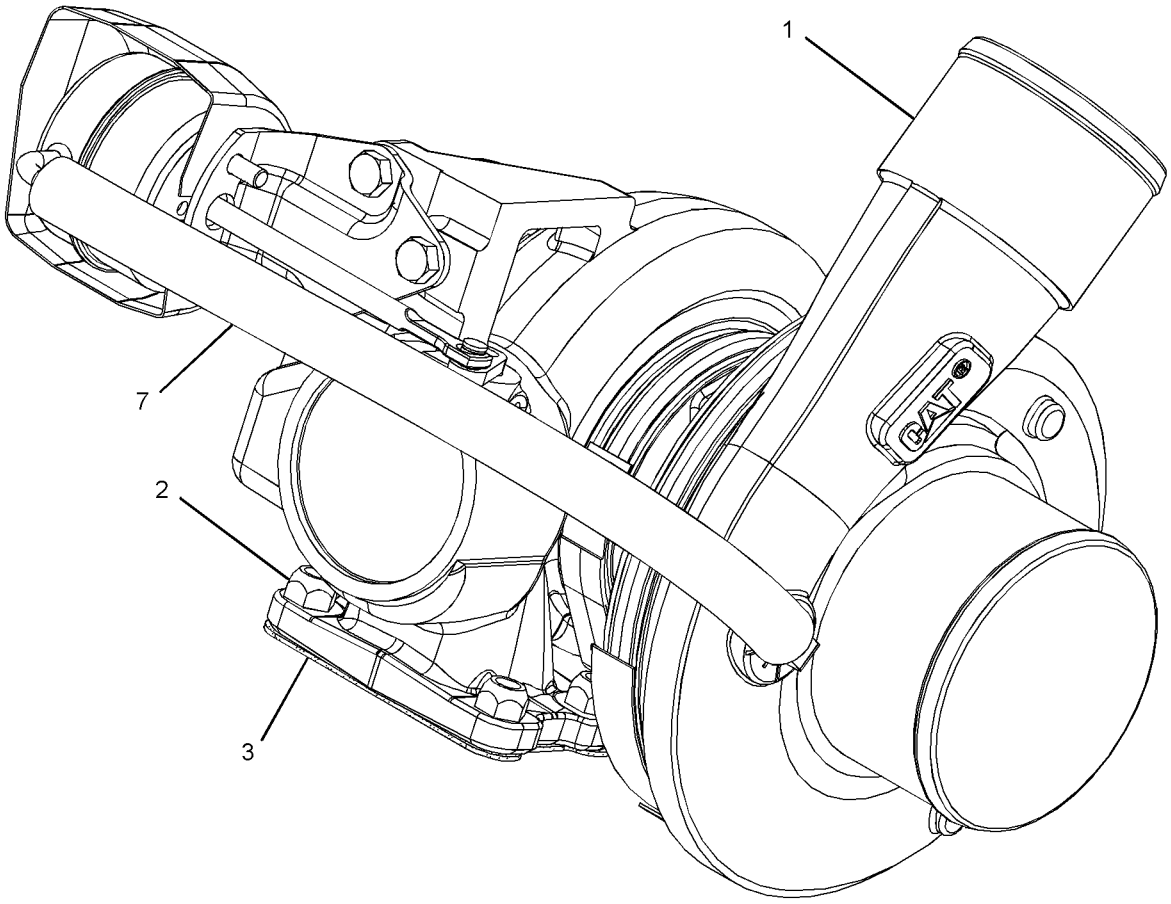

GRAPHIC #1 **<END>** g01836634

FUEL SYSTEM

282-2472 CONTROL GP-GOVERNOR

S/N: JAP1-UP

PART OF 348-3018 GENERAL AR

SMCS-1265, 1276 **i03247386**

NOTE	REF NO	GRAPHIC REF	PART NUMBER	QTY	PART NAME 1 2 3 4 5 6 (PRODUCT LEVEL)	SEE PAGE
	1	1	**2L-6267**	1	LOCKNUT (3/8-24-THD)	
B	2	1	**2N-9421**	2	SPRING-DISC	
	3	1	**4D-4064**	1	ROD END (3/8-24-THD)	
	4	1	**5P-9209**	2	BEARING AS-NEEDLE	
	5	1	**7F-0192**	1	BOLT (3/8-16X2-IN)	
	6	1	**7V-0446**	1	CLIP	
	7	1	**8X-3261**	1	LEVER	
	8	1	**116-5710**	1	GROMMET	
	9	1	**130-5300**	1	CLIP	
	10	1	**141-6343**	1	SPRING	
	11	1	**161-7062**	1	HOUSING	
	12	1	**162-8218**	1	GASKET	
	13	1	**162-8219**	1	COVER	
	14	1	**168-8683**	1	SHAFT	
	15	1	**169-0921**	1	ROD END-YOKE (3/8-24 LH-THD)	
	16	1	**169-0922**	1	ROD	
	17	1	**172-0165**	1	SHAFT	
	18	1	**172-4211**	1	SPACER (10.5X22X50.8-MM THK)	
	19	1	**206-3599**	1	LEVER	
	20	1	**206-3600**	1	LEVER	
	21	1	**207-4927**	1	PEDAL-GOVERNOR CONTROL	
Y	22	1	**266-1467**	1	SENSOR GP-POSITION (ROTARY) (GOVERNOR, BRAKE PEDAL)	170
	23	1	**009-0008**	1	SETSCREW-SOCKET (3/8-16X0.5-IN)	
	24	1	**129-3173**	1	BOLT-12 POINT HEAD (3/8-16X1.25-IN)	
M	25	1	**142-0485**	1	NUT (M10X1.5-THD)	
	26	1	**1B-0676**	1	PIN	
	27	1	**1B-8704**	3	KEY-WOODRUFF	
	28	1	**272-3089**	1	BOLT (M10X1.5X90-MM)	
	29	1	**5P-1075**	2	WASHER-HARD (10.2X22.5X3-MM THK)	
	30	1	**5P-1076**	1	WASHER-HARD (13.5X30X4-MM THK)	
M	31	1	**6V-2313**	2	BOLT (M5X0.8X30-MM)	
	32	1	**6V-8801**	2	NUT (3/8-16-THD)	
	33	1	**8T-0328**	2	WASHER-HARD (5.5X10X1-MM THK)	
	34	1	**8T-4121**	3	WASHER-HARD (11X21X2.5-MM THK)	
M	35	1	**8T-4133**	2	NUT (M10X1.5-THD)	
M	36	1	**8T-4136**	3	BOLT (M10X1.5X25-MM)	
M	37	1	**8T-4182**	2	BOLT (M10X1.5X45-MM)	
M	38	1	**8T-4196**	2	BOLT (M10X1.5X35-MM)	
	39	1	**8T-4226**	1	WASHER-PLATED (10.5X45X3-MM THK)	

B-USE AS REQUIRED
M-METRIC PART
Y-SEPARATE ILLUSTRATION

282-2472 **CONTROL GP-GOVERNOR** *(contd.)* **i03247386**

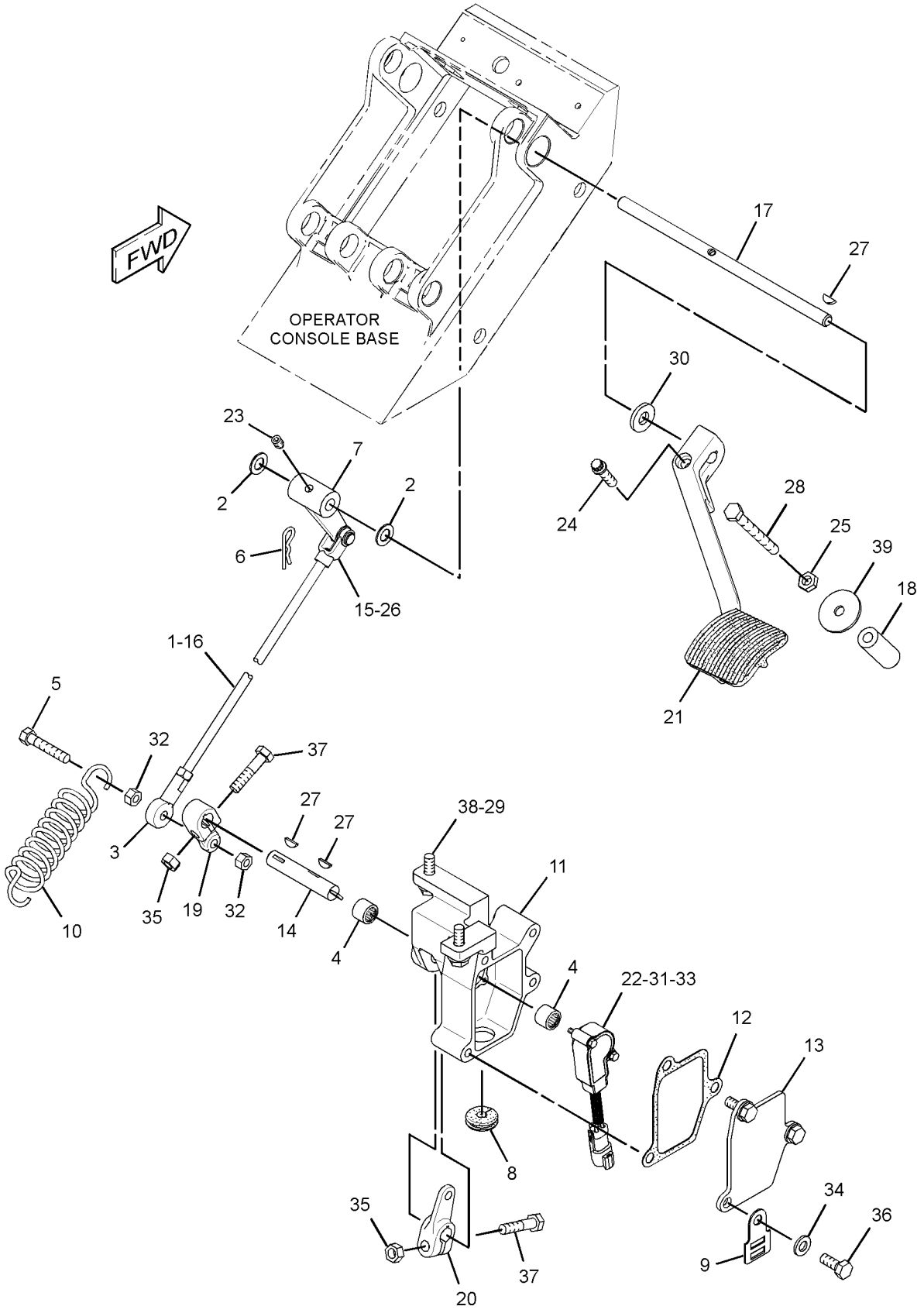

GRAPHIC #1 **<END>** g01705276

174-9570 FILTER GP-WATER SEP & FUEL

S/N: JAP1-UP

PART OF 190-8977 PUMP GP-FUEL PRM & WATER SEP

SMCS-1261, 1263 **i03671369**

NOTE	REF NO	GRAPHIC REF	PART NUMBER	QTY	PART NAME 1 2 3 4 5 6 (PRODUCT LEVEL)	SEE PAGE
	1	1	**326-1644**	1	FILTER AS-WATER SEP & FUEL (PRIMARY)	
	1A	1	**220-8678**	1	SEAL-RING (FUEL, WATER SEPARATOR)	
	2	1	**343-5527**	1	BOWL AS (FUEL, WATER SEPARATOR)	
		1	**3J-1907**	1	SEAL-O-RING	
		1	**5F-9144**	1	SEAL-O-RING	
		1	**8F-7219**	1	SEAL-O-RING	
		1	**9S-8004**	1	PLUG	

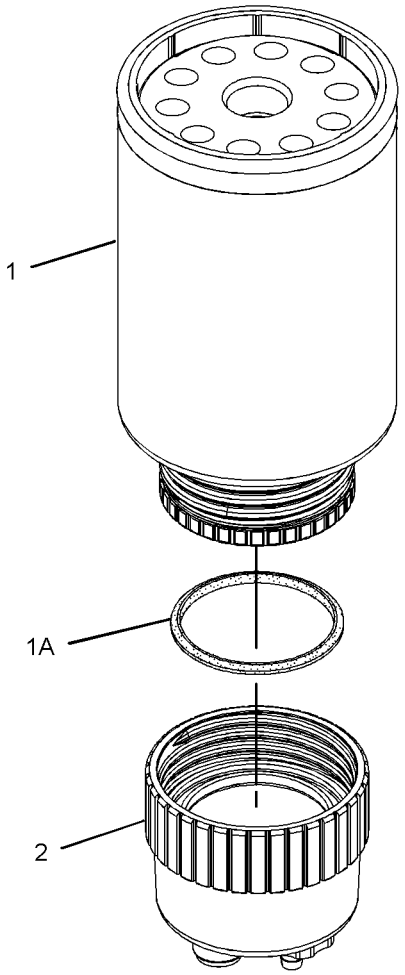

GRAPHIC #1 **<END>** g01179858

328-2585 INJECTOR GP-FUEL*R

S/N: KHX13472-UP

PART OF 268-1839 PUMP GP-FUEL INJECTION

SMCS-1251, 1254, 1290, 1713 **i03293520**

NOTE	REF NO	GRAPHIC REF	PART NUMBER	QTY	PART NAME 1 2 3 4 5 6 (PRODUCT LEVEL)	SEE PAGE
	1	1	**149-5240**	1	RING-BACKUP	
	2	1	*263-8218*	1	INJECTOR GP-FUEL	
	3	1	**293-0730**	1	RING-BACKUP	
	4	1	**109-3207**	1	SEAL-O-RING	
	5	1	**148-2903**	2	SEAL-O-RING (FUEL SYSTEM)	

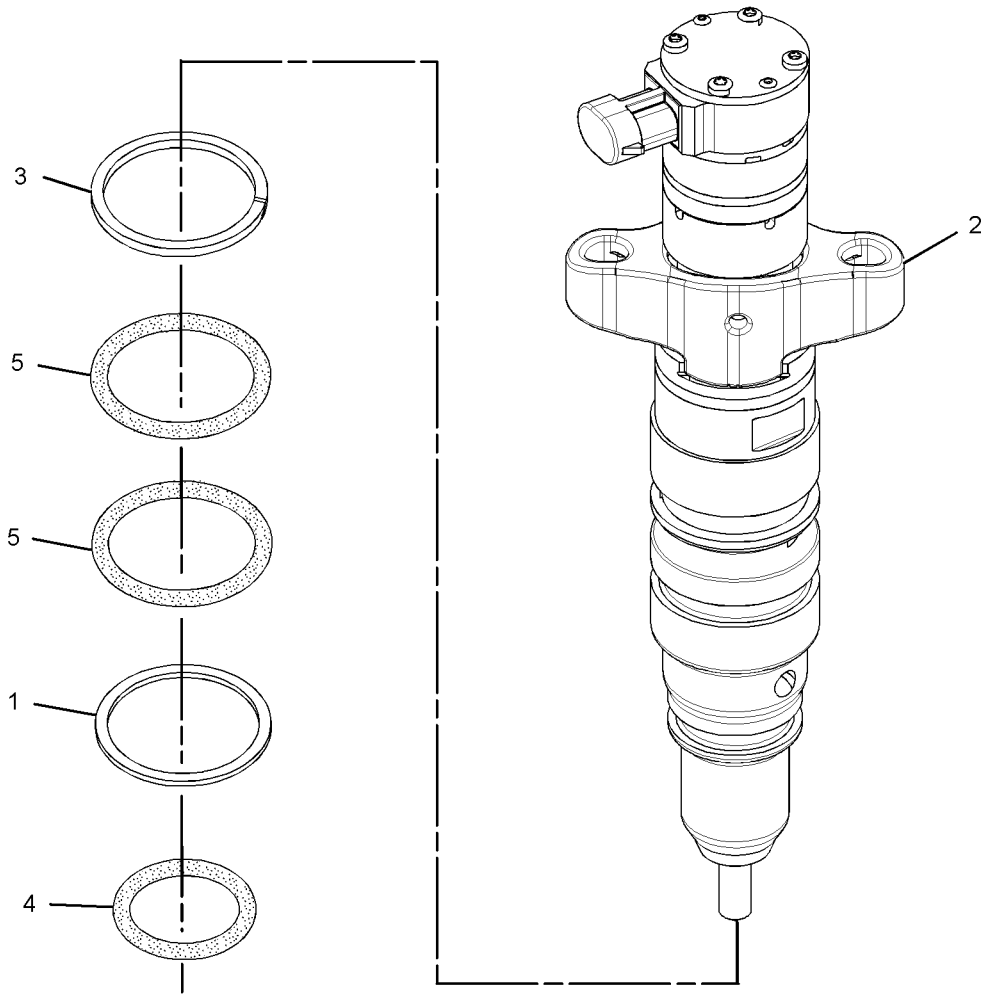

GRAPHIC #1 **<END>** g01684557

313-3967 LINES GP-FUEL

S/N: KHX13472-UP

PART OF 325-9707 ENGINE AR-COMPLETE

SMCS-1274 **i03435841**

NOTE	REF NO	GRAPHIC REF	PART NUMBER	QTY	PART NAME 1 2 3 4 5 6 (PRODUCT LEVEL)	SEE PAGE
	1	1	**164-6867**	2	CONNECTOR AS	
					(EACH INCLUDES)	
		1	**2R-6806**	1	CONNECTOR-O-RING	
		1	**3J-1907**	1	SEAL-O-RING	
Y	2	1	*232-0343*	1	REGULATOR GP-FUEL PRESSURE	112
	3	1	*162-0177*	1	PLUG AS	
		1	**3J-1907**	1	SEAL-O-RING	
		1	**9S-8004**	1	PLUG	

Y-SEPARATE ILLUSTRATION

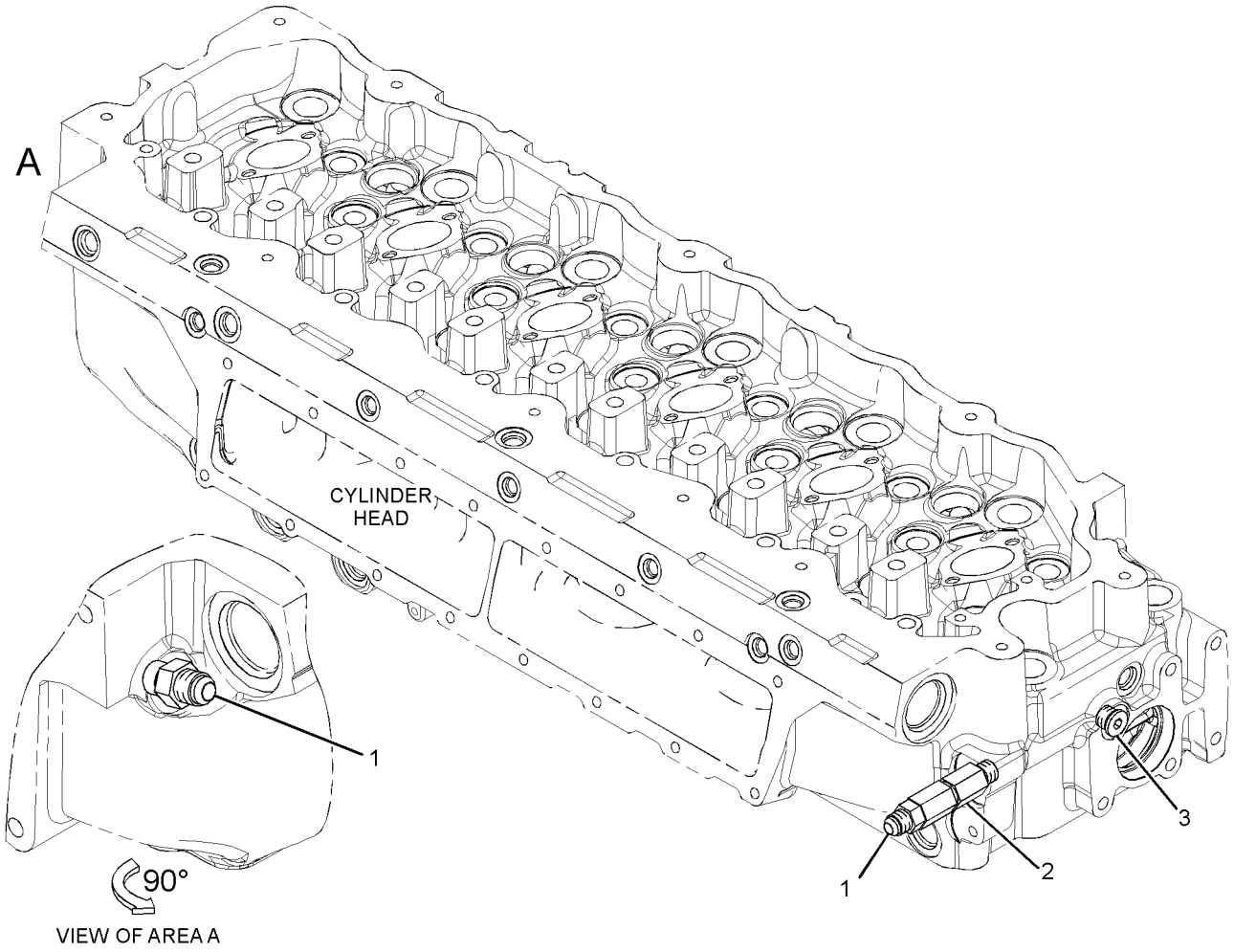

GRAPHIC #1 **<END>** g01717142

FUEL SYSTEM

325-7130 LINES GP-FUEL

S/N: JAP1-UP

PART OF 348-3018 GENERAL AR

SMCS-1274 **i03661230**

NOTE	REF NO	GRAPHIC REF	PART NUMBER	QTY	PART NAME 1 2 3 4 5 6 (PRODUCT LEVEL)	SEE PAGE
	1	1	**3S-2093**	1	STRAP-CABLE	
	2	1	**8T-9655**	6	MOUNT-ISOLATION	
	3	1	*161-9916*	1	ADAPTER AS	
		1	**6V-7420**	1	ADAPTER	
		1	**2M-9780**	1	SEAL-O-RING	
	4	1	*171-6729*	1	VALVE GP-SHUTOFF (MANUAL)	
		1	**3K-0360**	1	SEAL-O-RING	
		1	**8T-0081**	1	VALVE-BALL	
	5	1	*173-7223*	1	ADAPTER AS	
		1	**3J-1907**	1	SEAL-O-RING	
		1	**3J-7354**	1	SEAL-O-RING	
		1	**9X-0261**	1	ADAPTER	
Y	6	1	**190-8977**	1	PUMP GP-FUEL PRM & WATER SEP	111
	7	1	**191-1782**	1	SPACER (8.5X12.7X38.2-MM THK)	
	8	1	**191-1783**	2	SPACER (8.5X12.7X87.3-MM THK)	
	9	1	*194-2903*	1	ELBOW AS	
		1	**3K-0360**	1	SEAL-O-RING	
		1	**8T-0119**	1	ELBOW	
	10	1	**213-0064**	1	BASE AS (FUEL)	
Y	11	1	*234-5013*	1	SENSOR GP-TEMPERATURE (FUEL)	181
	12	1	**274-6719**	1	SENSOR GP-PRESSURE (FUEL FILTER)	
		1	**3J-7354**	1	SEAL-O-RING	
		1	**237-0227**	1	PLUG AS-CONNECTOR (3-PIN)	
		1	**264-7030**	1	SEAL-CONNECTOR	
Y	13	1	**275-1253**	1	SWITCH GP-PRESSURE (DIFFERENTIAL)	193
I	14	1	**311-8756**	1	HOSE AS	
	15	1	**317-1533**	1	TUBE AS	
	16	1	**325-7129**	1	PLATE AS	
I	17	1	**328-2786**	1	HOSE AS	
I	18	1	**328-2787**	1	HOSE AS	
I	19	1	**328-2788**	1	HOSE AS	
	20	1	**030-7962**	1	ELBOW	
	21	1	**033-8248**	1	CLIP	
	22	1	*148-8307*	1	ADAPTER AS	
		1	**3J-1907**	1	SEAL-O-RING	
		1	**5P-8874**	1	ADAPTER	
	23	1	*148-8336*	1	CONNECTOR AS	
		1	**3J-1907**	1	SEAL-O-RING	
		1	**6V-8397**	1	SEAL-O-RING	
		1	**6V-8636**	1	CONNECTOR	
	24	1	*148-8364*	2	ELBOW AS	
					(EACH INCLUDES)	
		1	**3K-0360**	1	SEAL-O-RING	
		1	**6V-8398**	1	SEAL-O-RING	
		1	**6V-8625**	1	ELBOW	
	25	1	*153-6258*	1	CONNECTOR AS	
		1	**8T-5050**	1	CONNECTOR	
		1	**3J-1907**	1	SEAL-O-RING	
		1	**6V-8398**	1	SEAL-O-RING	
	26	1	*164-5557*	1	CONNECTOR AS	
		1	**5I-4370**	1	CONNECTOR	
		1	**2M-9780**	1	SEAL-O-RING	
		1	**6V-8398**	1	SEAL-O-RING	
	27	1	*164-5570*	1	UNION AS	
		1	**6V-8397**	2	SEAL-O-RING	
		1	**6V-8730**	1	UNION (FACE SEAL)	

325-7130 **LINES GP-FUEL** *(contd.)* **i03661230**

NOTE	REF NO	GRAPHIC REF	PART NUMBER	QTY	PART NAME 1 2 3 4 5 6 (PRODUCT LEVEL)	SEE PAGE
	28	1	*164-5619*	2	PLUG AS	
					(EACH INCLUDES)	
		1	**2M-9780**	1	SEAL-O-RING	
		1	**9S-8006**	1	PLUG-O-RING	
	29	1	*183-3406*	2	PLUG AS	
					(EACH INCLUDES)	
		1	**214-7568**	1	SEAL-O-RING	
		1	**9S-4191**	1	PLUG-O-RING	
	30	1	**198-4777**	3	WASHER-HARD (11X25X10-MM THK)	
	31	1	**1F-7567**	1	CLIP	
	32	1	**1R-0762**	1	FILTER-FUEL (ADVANCED EFFICIENCY)	
	33	1	**239-5030**	1	ADAPTER AS	
		1	**9X-2493**	1	ADAPTER	
		1	**3K-0360**	1	SEAL-O-RING	
	34	1	*260-9171*	1	CONNECTOR AS	
		1	**3J-1907**	1	SEAL-O-RING	
		1	**6V-8397**	1	SEAL-O-RING	
		1	**8T-9041**	1	CONNECTOR	
	35	1	**3J-1907**	1	SEAL-O-RING	
	36	1	**5P-4116**	1	WASHER-HARD (8.8X20.5X2-MM THK)	
	37	1	**5P-7462**	3	CLIP (SLOT)	
	38	1	**5P-7463**	3	CLIP (TAB)	
	39	1	**6V-0683**	3	GROMMET	
	40	1	**6V-8397**	1	SEAL-O-RING	
	41	1	**6V-8724**	1	ELBOW	
	42	1	**7X-0579**	6	WASHER-HARD (8.8X25.5X2-MM THK)	
M	43	1	**7X-2539**	2	BOLT (M8X1.25X110-MM)	
	44	1	**8T-4121**	7	WASHER-HARD (11X21X2.5-MM THK)	
M	45	1	**8T-4136**	6	BOLT (M10X1.5X25-MM)	
M	46	1	**8T-4137**	1	BOLT (M10X1.5X20-MM)	
M	47	1	**8T-4195**	1	BOLT (M10X1.5X30-MM)	
M	48	1	**8T-4196**	3	BOLT (M10X1.5X35-MM)	
M	49	1	**8T-4200**	1	BOLT (M8X1.25X16-MM)	
	50	1	**8T-4223**	1	WASHER-HARD (13.5X25.5X3-MM THK)	
M	51	1	**8T-6869**	1	BOLT (M8X1.25X60-MM)	
E	52	1	**8C-6959**		HOSE (132-CM)	

E-ORDER BY THE CENTIMETER
I-REFER TO HYDRAULIC INFORMATION SYSTEM
M-METRIC PART
Y-SEPARATE ILLUSTRATION

325-7130 **LINES GP-FUEL** *(contd.)* **i03661230**

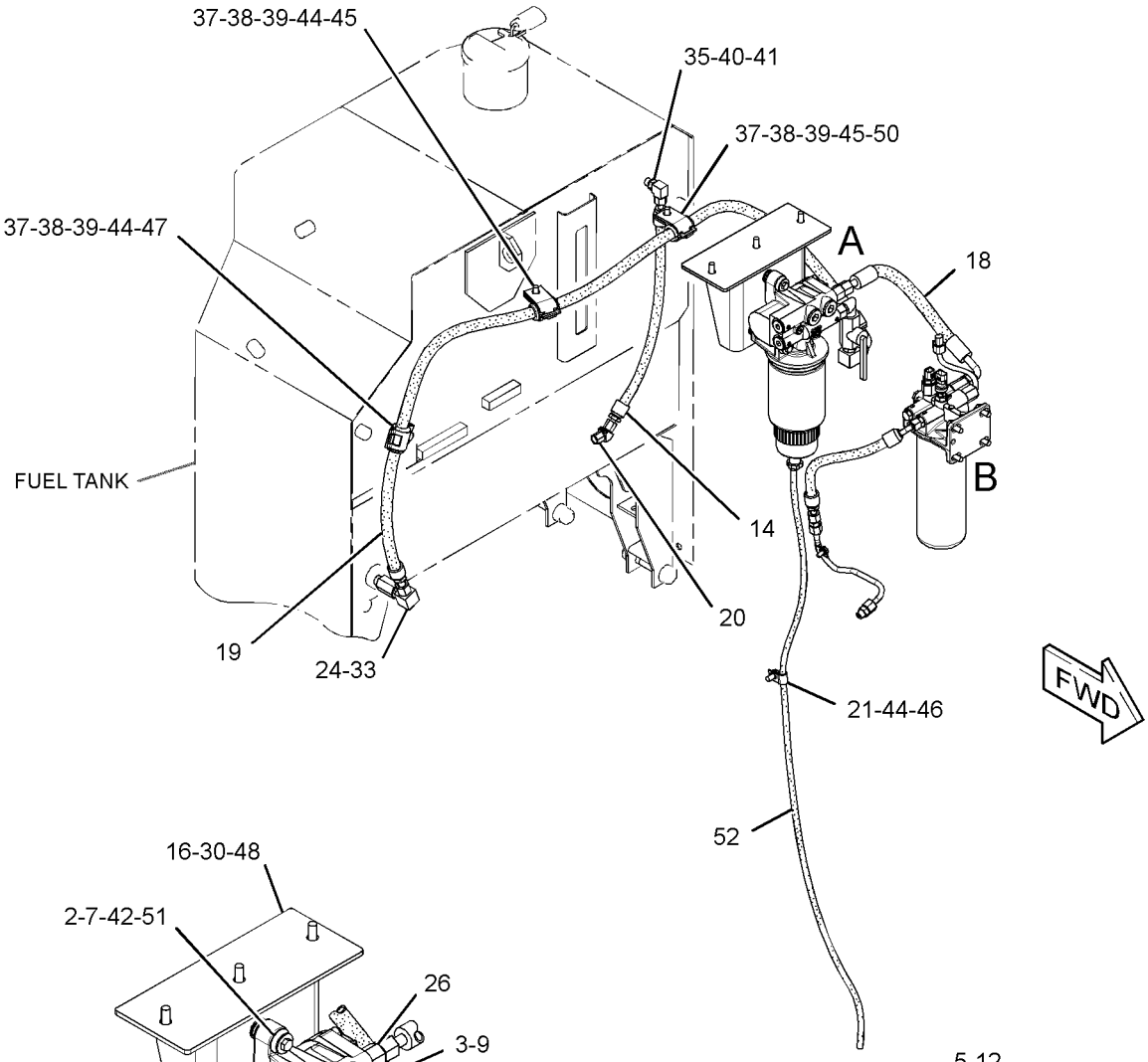

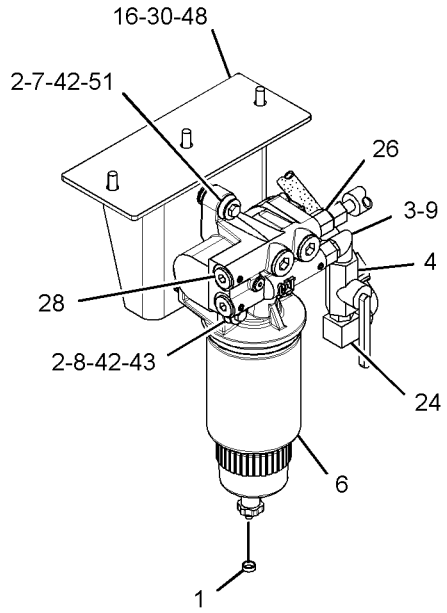

VIEW OF AREA A
(HOSE REMOVED FOR CLARITY AND EXPLODED)

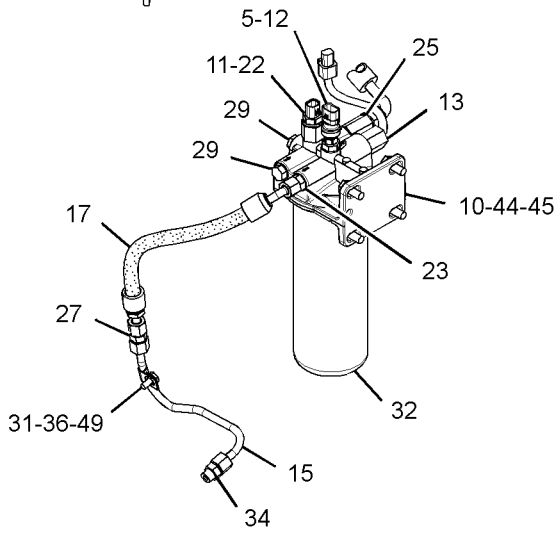

VIEW OF AREA B

GRAPHIC #1 **<END>** g01929136

FUEL SYSTEM

191-0461 LINES GP-INJECTOR HYD PUMP

S/N: KHX13472-UP

PART OF 330-9359 ENGINE AR-CORE

SMCS-1714 **i02215817**

NOTE	REF NO	GRAPHIC REF	PART NUMBER	QTY	PART NAME 1 2 3 4 5 6 (PRODUCT LEVEL)	SEE PAGE
	1	1	*183-3399*	2	CONNECTOR AS	
					(EACH INCLUDES)	
		1	**6V-8636**	1	CONNECTOR	
		1	**214-7568**	1	SEAL-O-RING	
		1	**221-3494**	1	SEAL-O-RING	
Y	2	1	*191-0523*	1	ADAPTER GP-OIL LINE	58
	3	1	**205-1280**	1	HOSE AS	
	4	1	**212-3706**	1	TUBE AS	
	5	1	**3V-2431**	2	WASHER (10.2X16X2-MM THK)	
	6	1	**4F-9653**	1	SEAL-O-RING	
M	7	1	**8T-1159**	2	BOLT-SOCKET HEAD (M10X1.5X25-MM)	

M-METRIC PART
Y-SEPARATE ILLUSTRATION

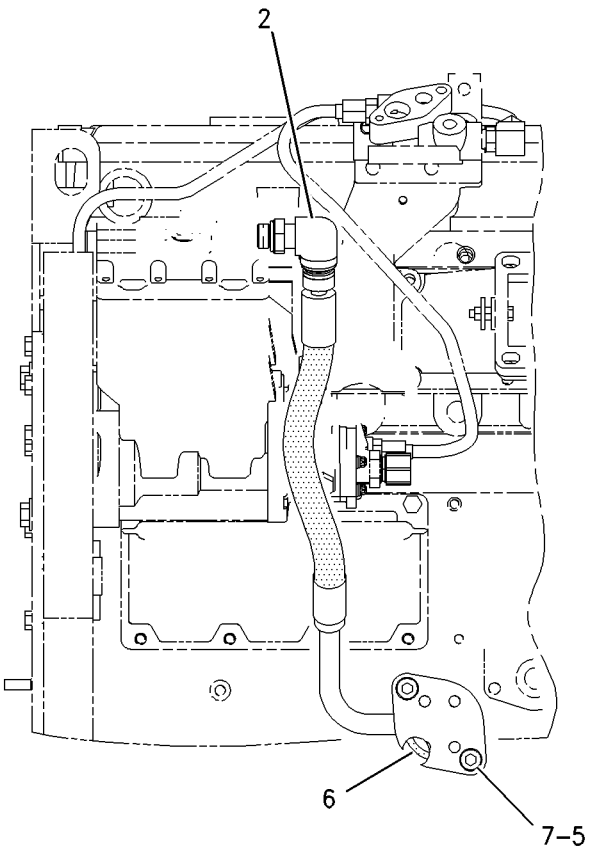

LEFT SIDE VIEW

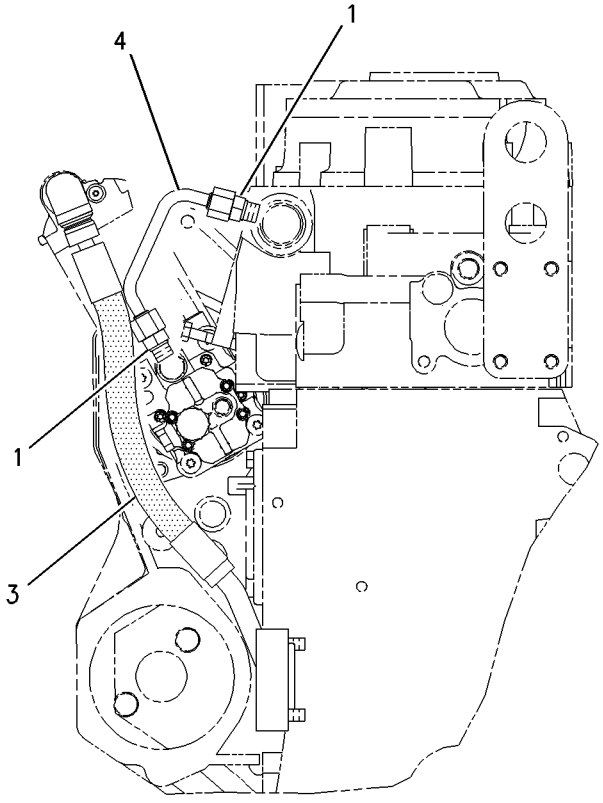

REAR VIEW

GRAPHIC #1 **<END>** g00881566

254-0095 PUMP & MTG GP-UNIT INJ HYD

S/N: KHX13472-UP

PART OF 330-9359 ENGINE AR-CORE

SMCS-1714 **i03531820**

NOTE	REF NO	GRAPHIC REF	PART NUMBER	QTY	PART NAME 1 2 3 4 5 6 (PRODUCT LEVEL)	SEE PAGE
	1	1	*321-8638*	2	PLUG AS	
					(EACH INCLUDES)	
		1	**214-7568**	1	SEAL-O-RING	
		1	**9S-8004**	1	PLUG	
	2	1	**227-5904**	1	SEAL-O-RING (UNIT INJECTION HYD PUMP)	
C	3	1	**319-0607**	1	PUMP GP-UNIT INJECTOR HYD	
	4	1	**3E-9412**	1	DOWEL	
	5	1	**6V-5839**	2	WASHER (11X21X2.5-MM THK)	
M	6	1	**6V-7981**	2	BOLT (M10X1.5X70-MM)	

C-CHANGE FROM PREVIOUS TYPE
M-METRIC PART

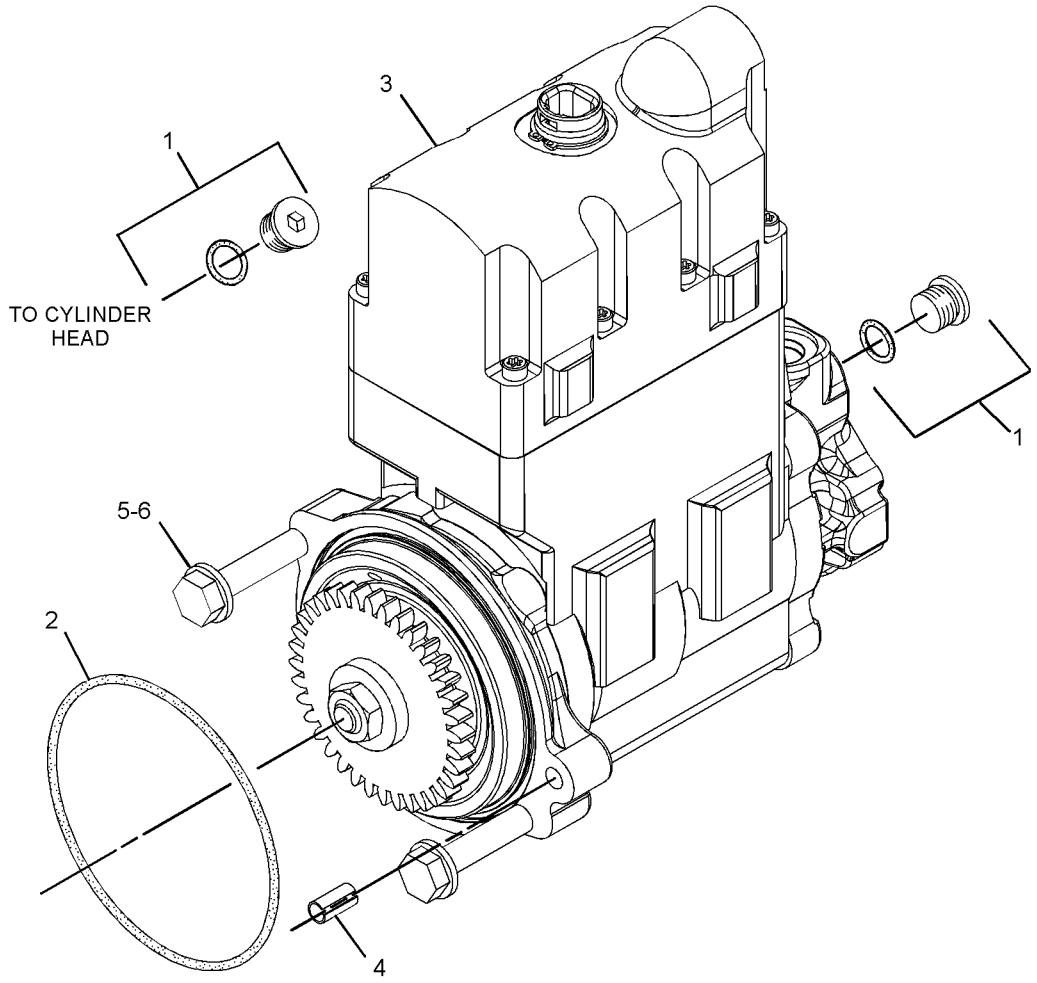

GRAPHIC #1 **<END>** g01789173

268-1839 PUMP GP-FUEL INJECTION

S/N: KHX13472-UP

PART OF 330-9359 ENGINE AR-CORE

SMCS-1251, 1290 **i03293388**

NOTE	REF NO	GRAPHIC REF	PART NUMBER	QTY	PART NAME 1 2 3 4 5 6 (PRODUCT LEVEL)	SEE PAGE
	1	1	**235-9651**	2	BOLT-SOCKET HEAD (M8X1.25X65-MM)	
YR	2	1	**328-2585**	1	INJECTOR GP-FUEL	103

R-REMFG PART MAY BE AVAILABLE
Y-SEPARATE ILLUSTRATION

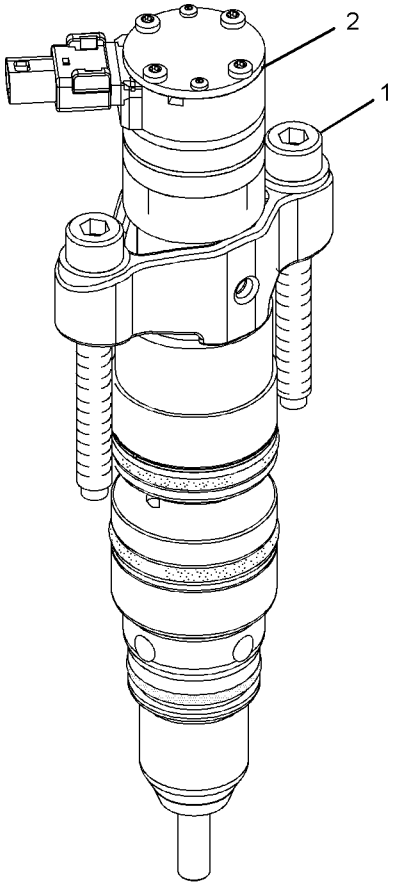

ISOMETRIC VIEW

GRAPHIC #1 **<END>** g01038652

190-8977 PUMP GP-FUEL PRM & WATER SEP

S/N: JAP1-UP

PART OF 325-7130 LINES GP-FUEL

SMCS-1258, 1261, 1263 **i01934929**

NOTE	REF NO	GRAPHIC REF	PART NUMBER	QTY	PART NAME 1 2 3 4 5 6 (PRODUCT LEVEL)	SEE PAGE
Y	1	1	*174-9570*	1	FILTER GP-WATER SEP & FUEL (PRIMARY)	102
	2	1	**190-8970**	1	PUMP AS-FUEL PRIMING	

Y-SEPARATE ILLUSTRATION

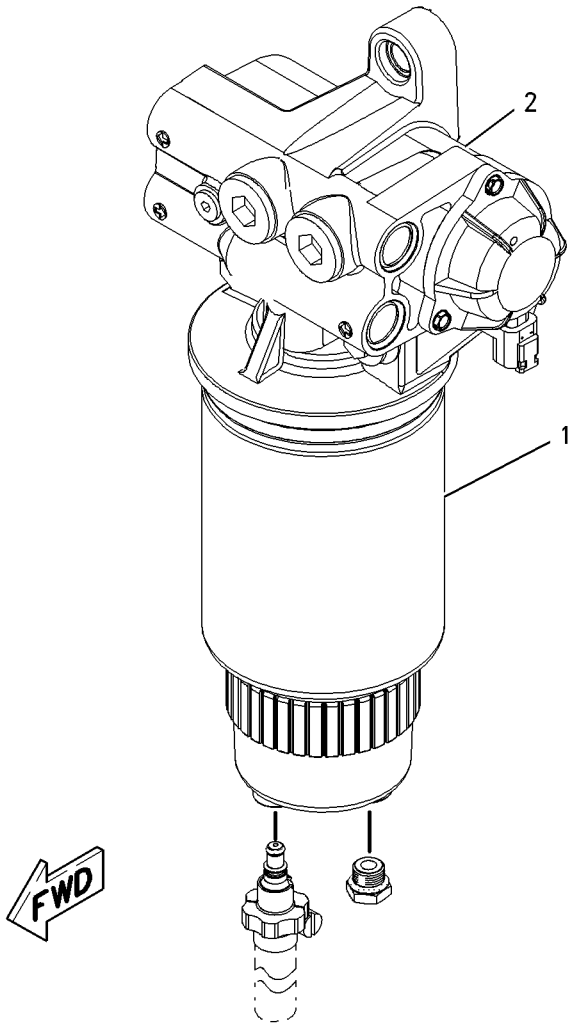

GRAPHIC #1 **<END>** g00904493

FUEL SYSTEM

232-0343 REGULATOR GP-FUEL PRESSURE

S/N: KHX13472-UP

PART OF 313-3967 LINES GP-FUEL

SMCS-1715 **i02676270**

NOTE	REF NO	GRAPHIC REF	PART NUMBER	QTY	PART NAME 1 2 3 4 5 6 (PRODUCT LEVEL)	SEE PAGE
	1	1	**6V-5049**	1	SEAL-O-RING	
	2	1	**294-8620**	1	REGULATOR AS (FUEL PRESSURE)	

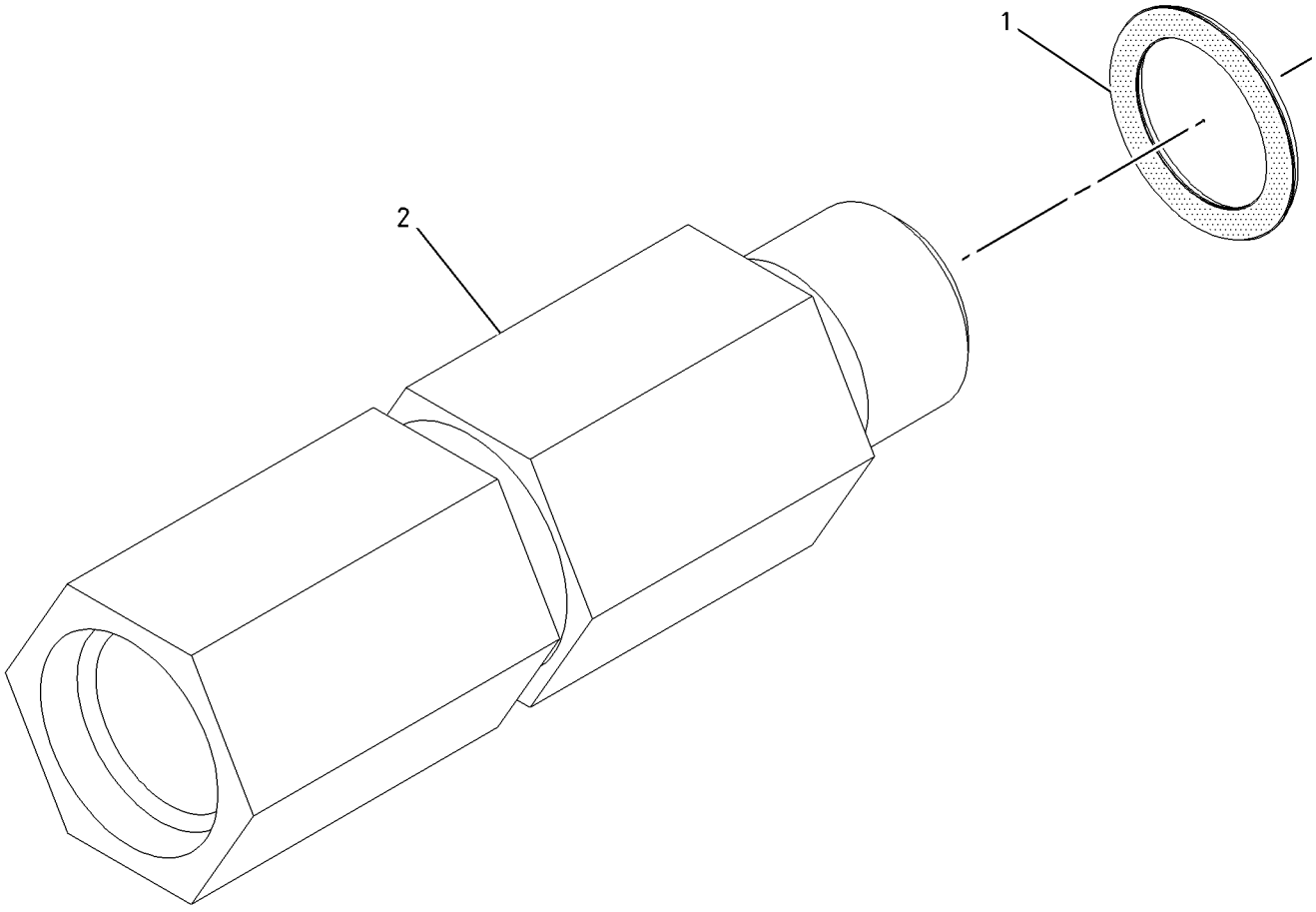

GRAPHIC #1 **<END>** g01004480

FUEL SYSTEM

293-4832 TANK GP-FUEL

S/N: JAP1-UP

PART OF 348-3018 GENERAL AR

SMCS-1273 **i03536443**

NOTE	REF NO	GRAPHIC REF	PART NUMBER	QTY	PART NAME 1 2 3 4 5 6 (PRODUCT LEVEL)	SEE PAGE
	1	1	**246-2641**	1	PADLOCK GP	
		1	**5P-8500**	1	KEY	
	2	1	**7X-7700**	1	CAP AS-FILLER (FUEL TANK)	
		1	**9X-2205**	1	KIT-CAP FILTER (FUEL TANK)	
					(INCLUDES FILTER AS, SCREWS, GASKETS & VALVE)	
		1	**9X-8600**	1	SEAL-O-RING	
	3	1	**9P-7121**	1	STRAINER-FUEL (TANK FILLER)	
	4	1	**006-6586**	1	CONNECTOR-HOSE	
	5	1	**327-7912**	1	TANK AS-FUEL	
	6	1	**1H-8306**	1	SCREW-PURGE (1/2-20X1.625-IN)	
	7	1	**5D-1026**	1	CLAMP-BAND	
M	8	1	**6V-7688**	4	LOCKNUT (M20X2.5-THD)	
M	9	1	**7X-2566**	4	BOLT (M20X2.5X110-MM)	
	10	1	**8T-4123**	8	WASHER (22X35X3.5-MM THK)	
E	11	1	**5P-0721**		HOSE (60-CM)	

E-ORDER BY THE CENTIMETER
M-METRIC PART

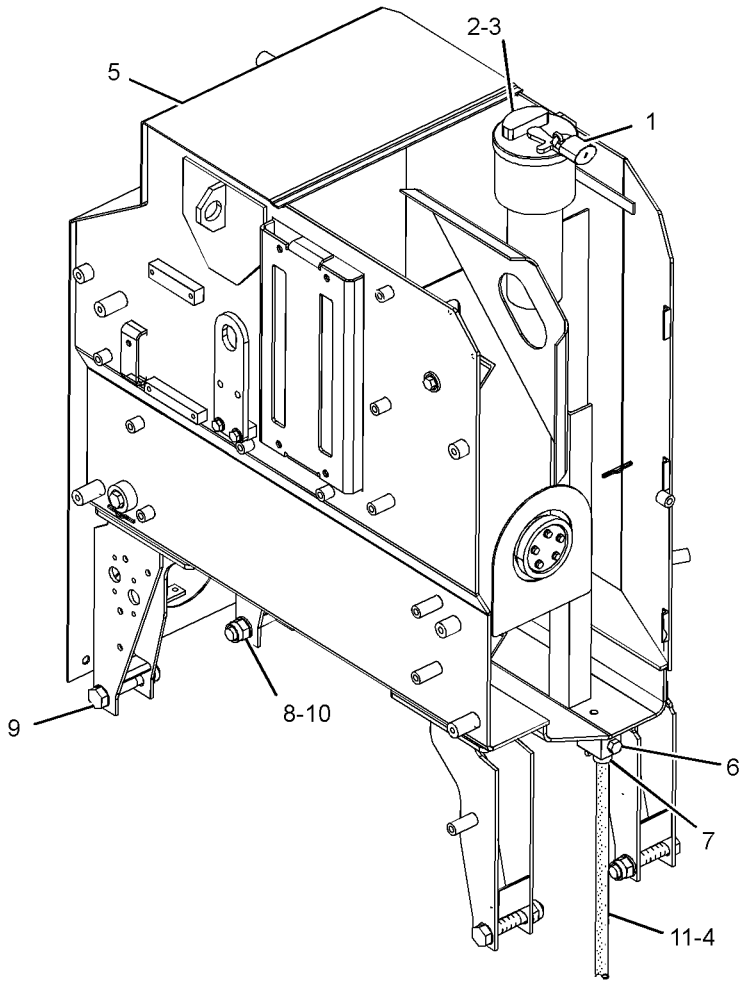

GRAPHIC #1 **<END>** g01923174

3E-6328 ALARM GP—CATERPILLAR MONITORING SYSTEM

S/N: JAP1-UP
24-VOLT
PART OF 284-5346 WIRING GP-CONSOLE

SMCS-7400, 7402, 7407 **i02942905**

NOTE	REF NO	GRAPHIC REF	PART NUMBER	QTY	PART NAME 1 2 3 4 5 6 (PRODUCT LEVEL)	SEE PAGE
	1	1	**102-8802**	1	KIT-RECEPTACLE (2-PIN)	
					(INCLUDES RECEPTACLE AS & WEDGE)	
	2	1	**186-3735**	2	PIN-CONNECTOR (16-GA TO 18-GA)	

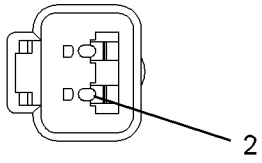

VIEW A–A

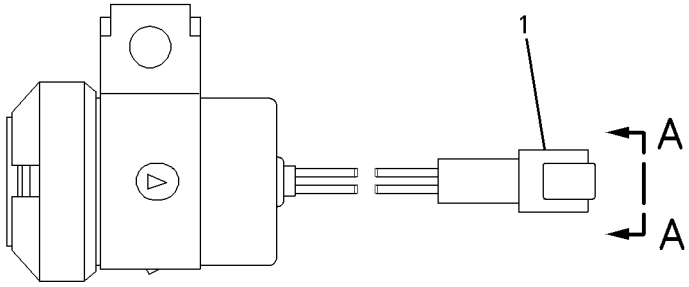

GRAPHIC #1 **<END>** g00697818

197-8820 ALTERNATOR GP-CHARGING*R

S/N: JAP1-UP
24-VOLT, 95-AMPERE
PART OF 345-7649 ALTERNATOR GP-CHARGING

SMCS-1405 **i03626650**

NOTE	REF NO	GRAPHIC REF	PART NUMBER	QTY	PART NAME 1 2 3 4 5 6 (PRODUCT LEVEL)	SEE PAGE
	1	1	**185-2653**	1	FRAME	
	2	1	**5S-7349**	1	BOLT (1/4-20X0.5-IN)	
	3	1	**185-2639**	1	FAN AS	
	4	1	**1H-3244**	1	LOCKWASHER	
	5	1	**185-2645**	1	FRAME	
	6	1	**2K-4821**	1	LOCKNUT (5/8-18-THD)	
	7	1	**5P-8247**	1	WASHER-HARD (17X32X3.5-MM THK)	
	8	1	**185-2651**	1	COVER	
	9	1	**8T-4205**	1	WASHER-HARD (7.2X14.5X2-MM THK)	
	10	1	**185-2647**	1	GROMMET	
	11	1	**9L-6770**	1	CAP-DUST (ALTERNATOR AC TAP)	
	12	1	**205-0626**	1	STATOR AS-ALTERNATOR	
	13	1	**185-2638**	2	COLLAR	
	14	1	**185-2654**	1	PLATE	
	15	1	**185-2650**	1	ROTOR AS	
	16	1	**185-2644**	1	COIL AS	
	17	1	**185-2648**	1	REGULATOR AS-VOLTAGE (24-VOLT)	
	18	1	**6V-8189**	1	NUT (5/16-18-THD)	
	19	1	**8T-4224**	1	WASHER-HARD (8.8X16X2-MM THK)	
	20	1	**3F-9556**	1	LOCKWASHER	
					AVAILABLE REPAIR KIT(S):	
			185-2655		KIT-BEARING (ALTERNATOR)	
					(INCLUDES BEARINGS)	
			199-8436		KIT-TERMINAL (ALTERNATOR)	
					(INCLUDES HOLDER AS, PLATE, INSULATOR, PIN, BOLTS, GROMMET, & NUT)	
			199-7891		KIT-TERMINAL (ALTERNATOR)	
					(INCLUDES INSULATORS, WASHERS, & NUTS)	
			185-2658		KIT-HARDWARE (ALTERNATOR)	
					(INCLUDES BOLTS)	

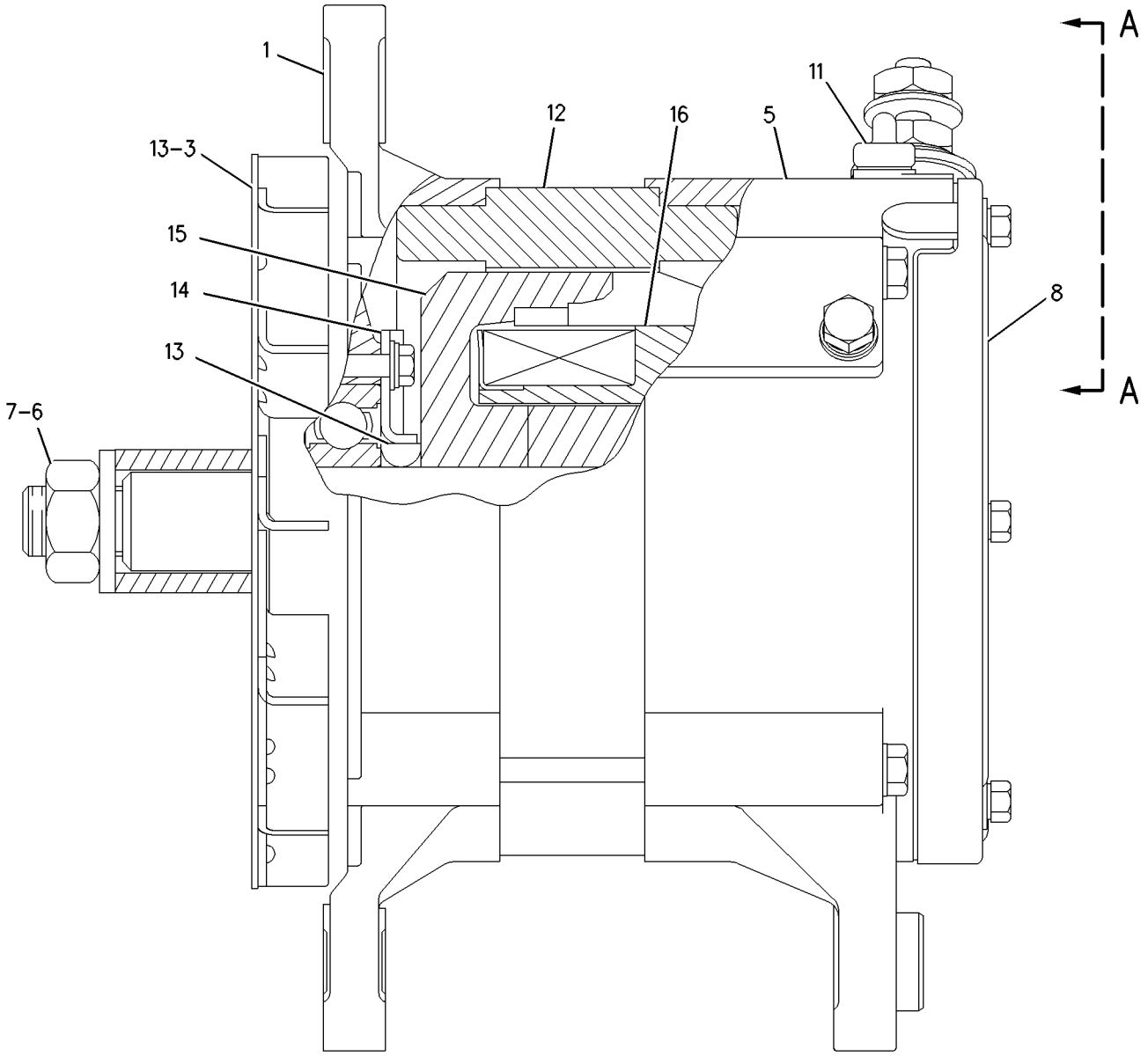

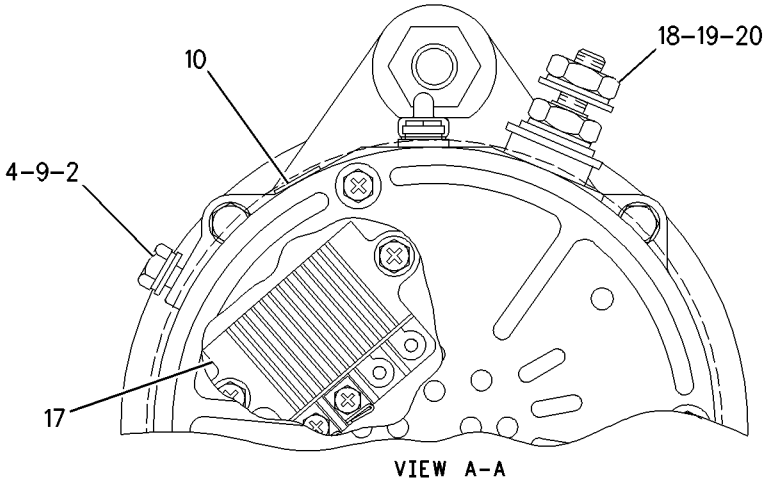

VIEW A-A

GRAPHIC #1 **<END>** g00873198

345-7649 ALTERNATOR GP-CHARGING

S/N: JAP1-UP
24-VOLT, 95-AMPERE
PART OF 348-3018 GENERAL AR

SMCS-1405 **i03575461**

NOTE	REF NO	GRAPHIC REF	PART NUMBER	QTY	PART NAME 1 2 3 4 5 6 (PRODUCT LEVEL)	SEE PAGE
	1	1	**8S-5383**	1	BLOCK	
	2	1	**8X-1805**	1	PULLEY	
	3	1	**9S-1240**	1	BRACKET AS	
YR	4	1	**197-8820**	1	ALTERNATOR GP-CHARGING (24-VOLT, 95-AMPERE)	115
	5	1	**4S-5780**	1	ROD	
	6	1	**5P-1076**	1	WASHER-HARD (13.5X30X4-MM THK)	
	7	1	**6V-8188**	1	NUT (1/2-13-THD)	
	8	1	**7X-0325**	1	BOLT (1/2-13X2.5-IN)	
	9	1	**7X-0339**	1	BOLT (1/2-13X6.25-IN)	
	10	1	**7X-0346**	1	BOLT (5/8-11X2-IN)	
	11	1	**7X-0448**	2	NUT (5/8-11-THD)	
	12	1	**8T-4122**	1	WASHER-HARD (17X32X3.5-MM THK)	
	13	1	**8T-4223**	2	WASHER-HARD (13.5X25.5X3-MM THK)	

R-REMFG PART MAY BE AVAILABLE
Y-SEPARATE ILLUSTRATION

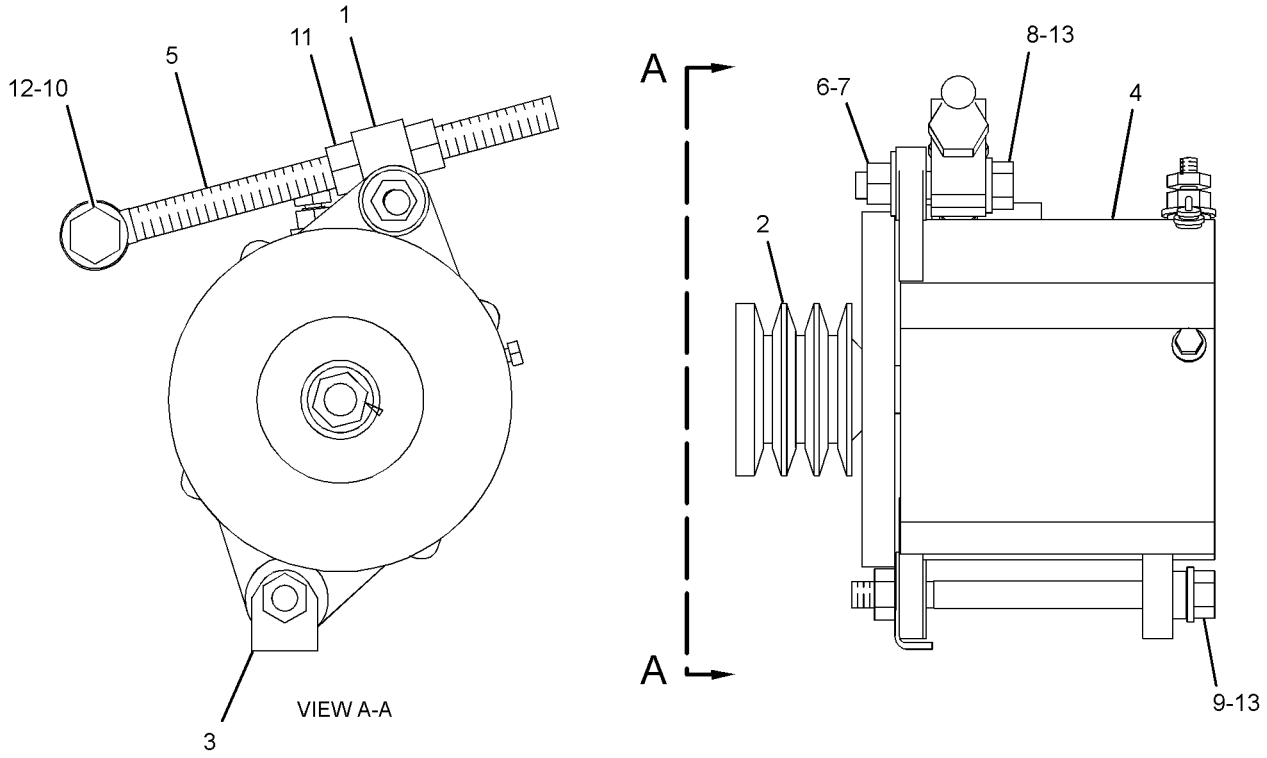

GRAPHIC #1 **<END>** g01931274

ELECTRICAL AND STARTING SYSTEM

260-7647 APPLICATION GP-POWER TRAIN

S/N: JAP1-UP

PART OF 294-3542, 336-9255 WIRING GP-GRADE CONTROL

AN ATTACHMENT

SMCS-7610 **i03193466**

NOTE	PART NUMBER	QTY	PART NAME 1 2 3 4 5 6 (PRODUCT LEVEL)	SEE PAGE
R	**304-5687**	1	CONTROL GP-UNPROGRAMMED (POWER TRAIN)	

R-REMFG PART MAY BE AVAILABLE

<END>

298-5591 BATTERY & WIRING GP

S/N: JAP1-UP

PART OF 348-3018 GENERAL AR

SMCS-1401, 1402, 1408 **i03645058**

NOTE	REF NO	GRAPHIC REF	PART NUMBER	QTY	PART NAME 1 2 3 4 5 6 (PRODUCT LEVEL)	SEE PAGE
	1	1	**2G-8767**	2	WASHER (10.5X60X3-MM THK)	
	2	1	**3S-2093**	4	STRAP-CABLE	
	3	1	**6G-2256**	1	CLAMP	
	4	1	**6G-2263**	1	SPACER (10.5X19X28.5-MM THK)	
	5	1	**6W-6672**	2	SPACER (10.5X20X38-MM THK)	
	6	2	**091-0081**	1	SPACER (10.5X20X10-MM THK)	
	7	1	**108-2949**	2	ROD	
	8	2	**177-2215**	1	STRAP-DUAL CLAMP	
	9	1	**295-1139**	1	HOLD-DOWN AS	
	10	1	**300-6152**	1	CABLE AS	
		1	**9G-0003**	1	COVER-TERMINAL (BLACK)	
		1	**9G-0004**	1	COVER-TERMINAL (RED)	
					(EACH COVER-TERMINAL INCLUDES)	
		1	**8L-8413**	1	STRAP-CABLE	
		1	**8C-5917**	1	TERMINAL AS-BATTERY (POSITIVE)	
		1	**8T-9757**	1	TERMINAL AS-BATTERY (NEGATIVE)	
					(EACH TERMINAL AS INCLUDES)	
		1	**1M-6119**	1	BOLT (5/16-18X1.375-IN)	
		1	**1M-6120**	1	NUT (5/16-18-THD)	
E		1	**159-8049**		CABLE (00-GA, RED) (9-CM)	
	11	2	**301-6664**	1	BRACKET	
	12	1	**310-7252**	1	CABLE AS	
		1	**1S-7251**	1	TERMINAL-CABLE (00-GA, 1/2-IN SCREW)	
		1	**1S-7252**	1	TERMINAL-CABLE (00-GA, 3/8-IN SCREW)	
D		1	**6V-2722**		TUBE-HEAT SHRINK (0.045-M EACH)	
E		1	**159-8050**		CABLE (00-GA, BLACK) (53-CM)	
	13	1	**310-7253**	1	CABLE AS	
		1	**1S-7252**	1	TERMINAL-CABLE (00-GA, 3/8-IN SCREW)	
D		1	**6V-2722**		TUBE-HEAT SHRINK (.045-M EACH)	
		1	**7N-5274**	1	COVER-TERMINAL (BLACK)	
		1	**8L-8413**	1	STRAP-CABLE	
		1	**9G-8909**	1	COVER-TERMINAL (BLACK)	
		1	**3S-6050**	1	TERMINAL AS-BATTERY (NEGATIVE)	
		1	**1M-6119**	1	BOLT (5/16-18X1.375-IN)	
		1	**1M-6120**	1	NUT (5/16-18-THD)	
E		1	**159-8050**		CABLE (00-GA, BLACK) (283-CM)	
	14	1	**310-7256**	1	CABLE AS	
D		1	**6V-2722**		TUBE-HEAT SHRINK (0.045-M)	
		1	**8N-1725**	1	COVER-TERMINAL (RED)	
		1	**194-4046**	1	COVER-TERMINAL (00-GA, POSITIVE, RED)	
					(EACH COVER-TERMINAL INCLUDES)	
		1	**8L-8413**	1	STRAP-CABLE	
		1	**3S-6049**	1	TERMINAL AS-BATTERY (POSITIVE)	
		1	**1M-6119**	1	BOLT (5/16-18X1.375-IN)	
		1	**1M-6120**	1	NUT (5/16-18-THD)	
E		1	**159-8049**		CABLE (00-GA, RED) (88-CM)	
		1	**208-4617**	1	TERMINAL-RING (00-GA, 1/2-IN SCREW)	
	15	2	**312-0377**	1	CABLE AS	
		2	**9G-4343**	1	TERMINAL-RING (4-GA, 1/4-IN SCREW)	
		2	**9G-4336**	1	TERMINAL-RING (4-GA)	
					(EACH TERMINAL INCLUDES)	
E		2	**125-7876**		TUBE-HEAT SHRINK (17.78-MM DIA) (4-CM)	
	16	1	**312-0378**	1	CABLE AS	
		1	**8T-8827**	1	BOOT (RED)	
		1	**135-2543**	1	BOOT (RED)	
		1	**9G-4343**	1	TERMINAL-RING (4-GA, 1/4-IN SCREW)	

298-5591 **BATTERY & WIRING GP** *(contd.)* **i03645058**

NOTE	REF NO	GRAPHIC REF	PART NUMBER	QTY	PART NAME 1 2 3 4 5 6 (PRODUCT LEVEL)	SEE PAGE
		1	**5P-3454**	1	TERMINAL-RING (4-GA, 5/16-IN SCREW)	
					(EACH TERMINAL INCLUDES)	
E		1	**125-7876**		TUBE-HEAT SHRINK (17.78-MM DIA) (4-CM)	
	17	2	**312-0379**	1	BRACKET AS	
	18	2	**318-2064**	1	CABLE AS	
		2	**1S-7252**	2	TERMINAL-CABLE (00-GA, 3/8-IN SCREW)	
D		2	**6V-2722**		TUBE-HEAT SHRINK (0.045-M)	
E		2	**159-8050**		CABLE (00-GA, BLACK) (60-CM)	
	19	2	**344-7734**	1	BRACKET AS	
	20	1	**345-0635**	1	BRACKET AS	
	21	2	**345-0637**	1	CABLE AS	
		2	**135-2543**	1	BOOT (RED)	
		2	**9G-4343**	1	TERMINAL-RING (4-GA, 1/4-IN SCREW)	
		2	**9G-4344**	1	TERMINAL-RING (4-GA, 1/2-IN SCREW)	
					(EACH TERMINAL INCLUDES)	
E		2	**125-7876**		TUBE-HEAT SHRINK (17.78-MM DIA) (4-CM)	
	22	1,2	**2V-1771**	17	GROMMET	
	23	2	**325-1242**	1	CLIP	
	24	2	**3S-8664**	3	CLIP	
	25	1	**3T-5760**	2	BATTERY (12-VOLT, MAINTENANCE FREE, WET)	
	26	2	**5P-4295**	5	CLIP	
	27	1,2	**6D-4246**	15	CLIP	
	28	2	**6V-8188**	1	NUT (1/2-13-THD)	
	29	2	**7X-7729**	1	WASHER (11X25X3-MM THK)	
	30	1,2	**8S-0948**	4	CLIP	
M	31	1	**8T-0389**	2	LOCKNUT (M10X1.5-THD)	
	32	1,2	**8T-4121**	29	WASHER-HARD (11X21X2.5-MM THK)	
M	33	1,2	**8T-4133**	4	NUT (M10X1.5-THD)	
M	34	2	**8T-4136**	1	BOLT (M10X1.5X25-MM)	
M	35	1,2	**8T-4137**	18	BOLT (M10X1.5X20-MM)	
M	36	1	**8T-4179**	1	BOLT (M12X1.75X20-MM)	
M	37	2	**8T-4195**	2	BOLT (M10X1.5X30-MM)	
M	38	2	**8T-4196**	1	BOLT (M10X1.5X35-MM)	
M	39	1	**8T-4198**	1	BOLT (M10X1.5X100-MM)	
	40	1,2	**8T-4223**	2	WASHER-HARD (13.5X25.5X3-MM THK)	
M	41	1	**8T-6466**	1	BOLT (M10X1.5X60-MM)	
	42	2	**8W-8909**	10	SLEEVE	

D-ORDER BY THE METER
E-ORDER BY THE CENTIMETER
M-METRIC PART

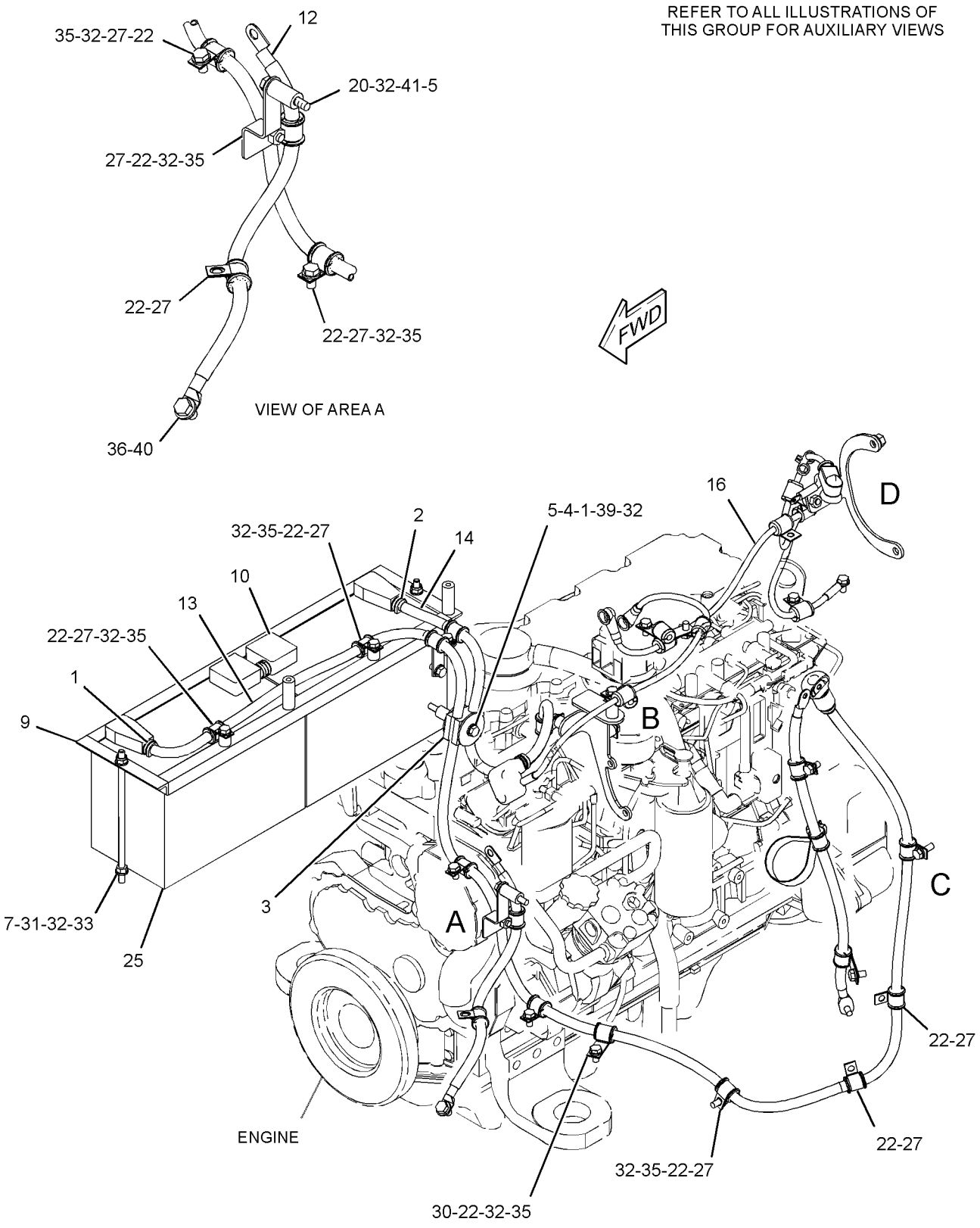

GRAPHIC #1 g01962048

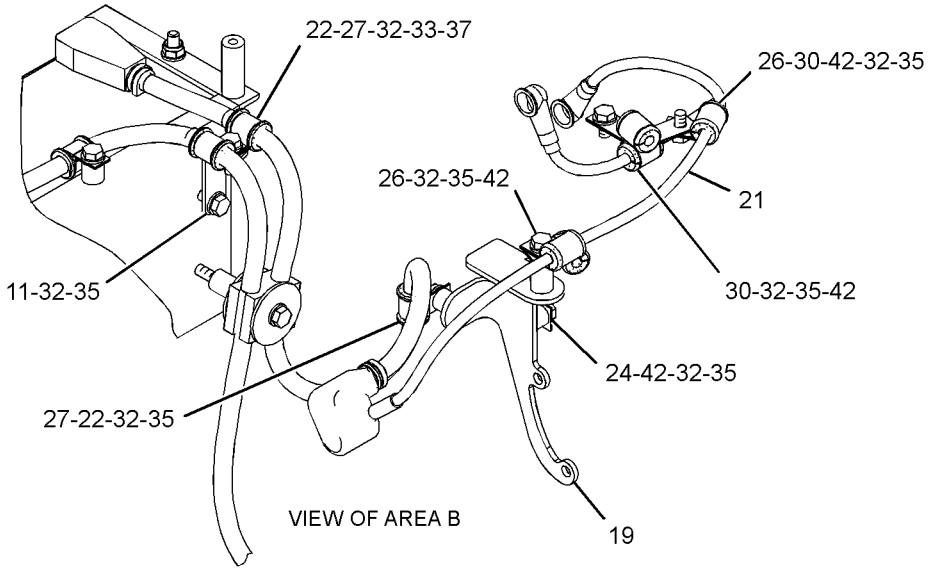

VIEW OF AREA B

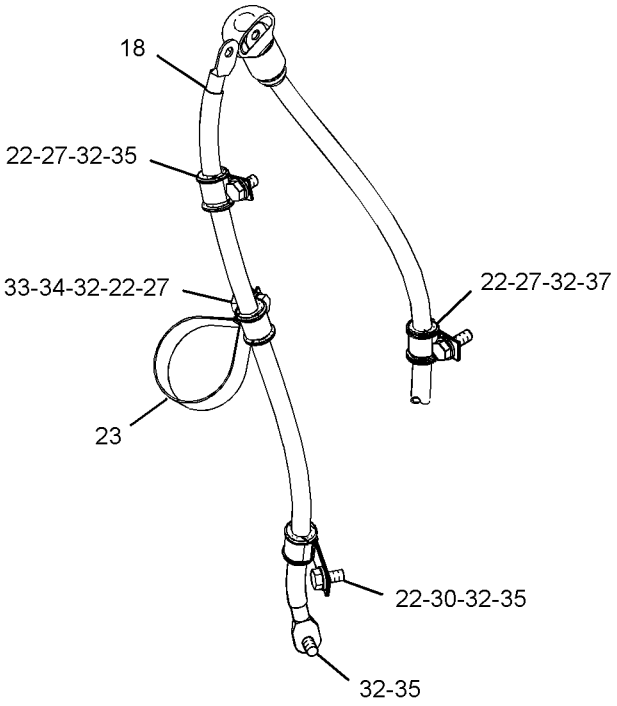

VIEW OF AREA C

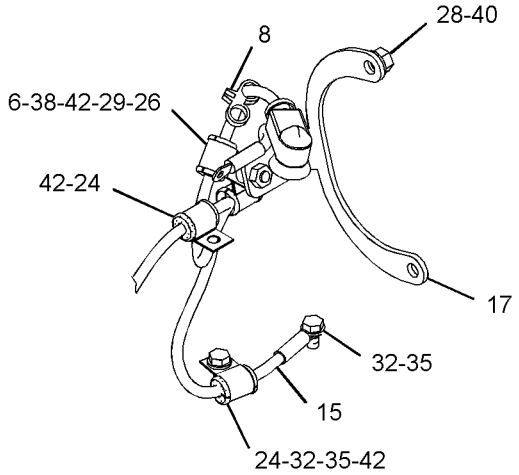

VIEW OF AREA D

GRAPHIC #2 **<END>** g01962047

ELECTRICAL AND STARTING SYSTEM

298-5592 BATTERY & WIRING GP—HEAVY DUTY

S/N: JAP1-UP
PART OF 304-9957 BATTERY & WIRING GP
AN ATTACHMENT

SMCS-1401, 1402, 1408 **i03316106**

NOTE	REF NO	GRAPHIC REF	PART NUMBER	QTY	PART NAME 1 2 3 4 5 6 (PRODUCT LEVEL)	SEE PAGE
	1	1	**108-2949**	2	ROD	
	2	1	**153-5710**	2	BATTERY (12-VOLT, 1400-CCA)	
	3	1	**301-6664**	1	BRACKET	
	4	1	**308-9112**	2	HOLD-DOWN AS	
	5	1	**308-9113**	1	CABLE AS	
		1	**1M-6119**	1	BOLT (5/16-18X1.375-IN)	
		1	**1M-6120**	1	NUT (5/16-18-THD)	
		1	**1M-6119**	1	BOLT (5/16-18X1.375-IN)	
		1	**1M-6120**	1	NUT (5/16-18-THD)	
		1	**9G-0003**	1	COVER-TERMINAL (BLACK)	
		1	**8L-8413**	1	STRAP-CABLE	
		1	**9G-0004**	1	COVER-TERMINAL (RED)	
		1	**8L-8413**	1	STRAP-CABLE	
E		1	**159-8049**		CABLE (00-GA, RED) (264-CM)	
E		1	**1P-0810**		TAPE-ELECTRICAL (45-CM)	
	6	1	**308-9114**	1	CABLE AS	
		1	**1S-7252**	1	TERMINAL-CABLE (00-GA, 3/8-IN SCREW)	
		1	**7N-5274**	1	COVER-TERMINAL (BLACK)	
		1	**8L-8413**	1	STRAP-CABLE	
		1	**9G-8909**	1	COVER-TERMINAL (BLACK)	
E		1	**159-8050**		CABLE (00-GA, BLACK) (70-CM)	
E		1	**1P-0810**		TAPE-ELECTRICAL (5-CM)	
	7	1	**311-1513**	1	CABLE AS	
		1	**8N-1725**	1	COVER-TERMINAL (RED)	
		1	**8L-8413**	1	STRAP-CABLE	
		1	**1M-6119**	1	BOLT (5/16-18X1.375-IN)	
		1	**1M-6120**	1	NUT (5/16-18-THD)	
		1	**194-4046**	1	COVER-TERMINAL (00-GA, POSITIVE, RED)	
		1	**8L-8413**	1	STRAP-CABLE	
		1	**208-4617**	1	TERMINAL-RING (00-GA, 1/2-IN SCREW)	
		1	**159-8049**		CABLE (00-GA, RED) (99-CM)	
E		1	**1P-0810**		TAPE-ELECTRICAL (10-CM)	
	8	1	**326-3121**	1	BRACKET AS	
	9	1	**2V-1771**	3	GROMMET	
	10	1	**6D-4246**	2	CLIP	
	11	1	**8S-0948**	1	CLIP	
M	12	1	**8T-0389**	2	LOCKNUT (M10X1.5-THD)	
	13	1	**8T-4121**	8	WASHER-HARD (11X21X2.5-MM THK)	
M	14	1	**8T-4133**	3	NUT (M10X1.5-THD)	
M	15	1	**8T-4137**	2	BOLT (M10X1.5X20-MM)	
M	16	1	**8T-4195**	1	BOLT (M10X1.5X30-MM)	

E-ORDER BY THE CENTIMETER
M-METRIC PART

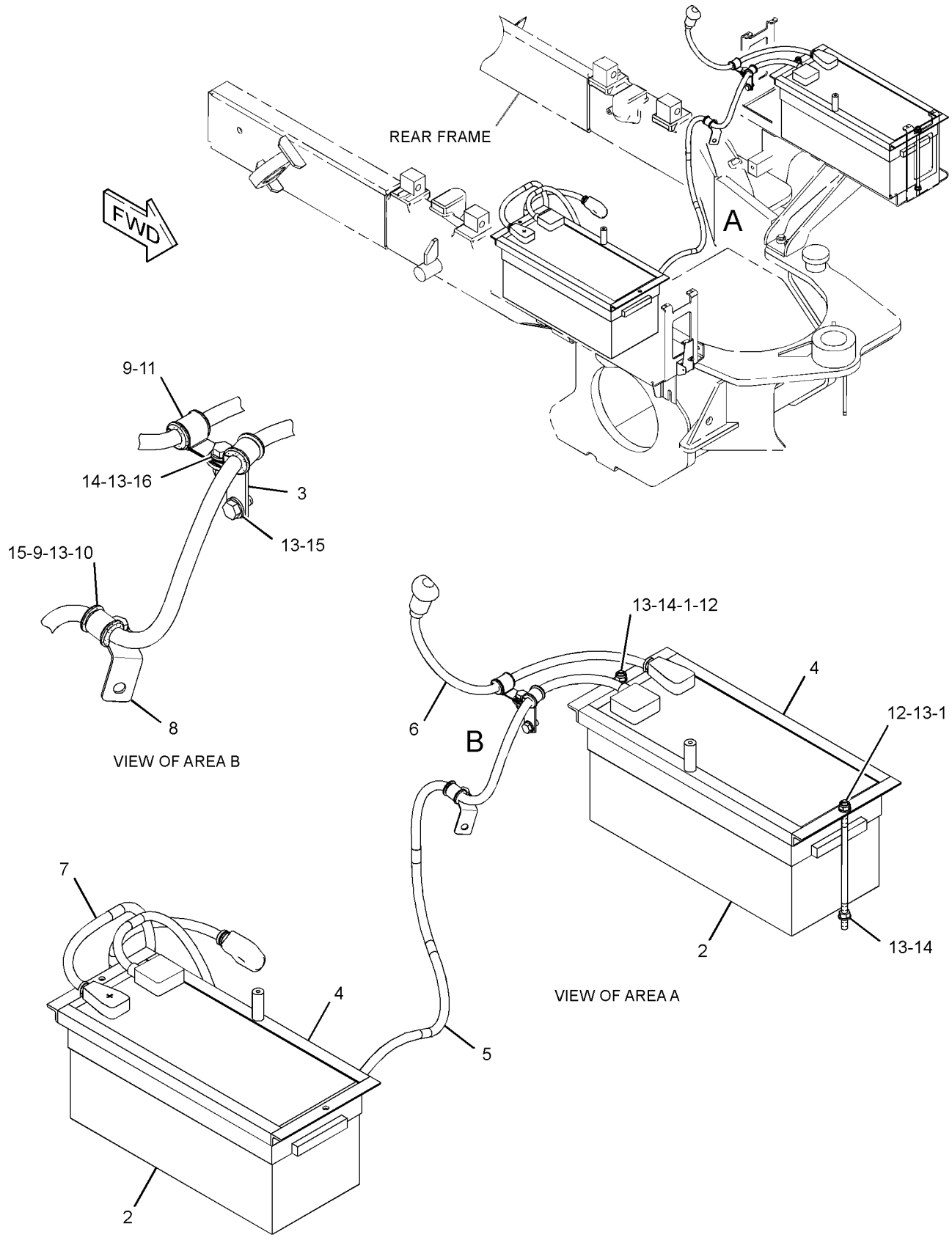

GRAPHIC #1 **<END>** g01757458

304-9957 BATTERY & WIRING GP–HEAVY DUTY

S/N: JAP1-UP
PART OF 348-6943 OPTION AR-ENGINE
AN ATTACHMENT

SMCS-1401, 1402, 1408 **i03316084**

NOTE	REF NO	GRAPHIC REF	PART NUMBER	QTY	PART NAME 1 2 3 4 5 6 (PRODUCT LEVEL)	SEE PAGE
Y	1	1	*298-3520*	1	SUPPORT GP-BATTERY	340
	2	1	**298-5315**	1	PLATE AS	
Y	3	1	*298-5592*	1	BATTERY & WIRING GP	123
	4	1	**7X-7729**	3	WASHER (11X25X3-MM THK)	
M	5	1	**8T-4136**	3	BOLT (M10X1.5X25-MM)	

M-METRIC PART
Y-SEPARATE ILLUSTRATION

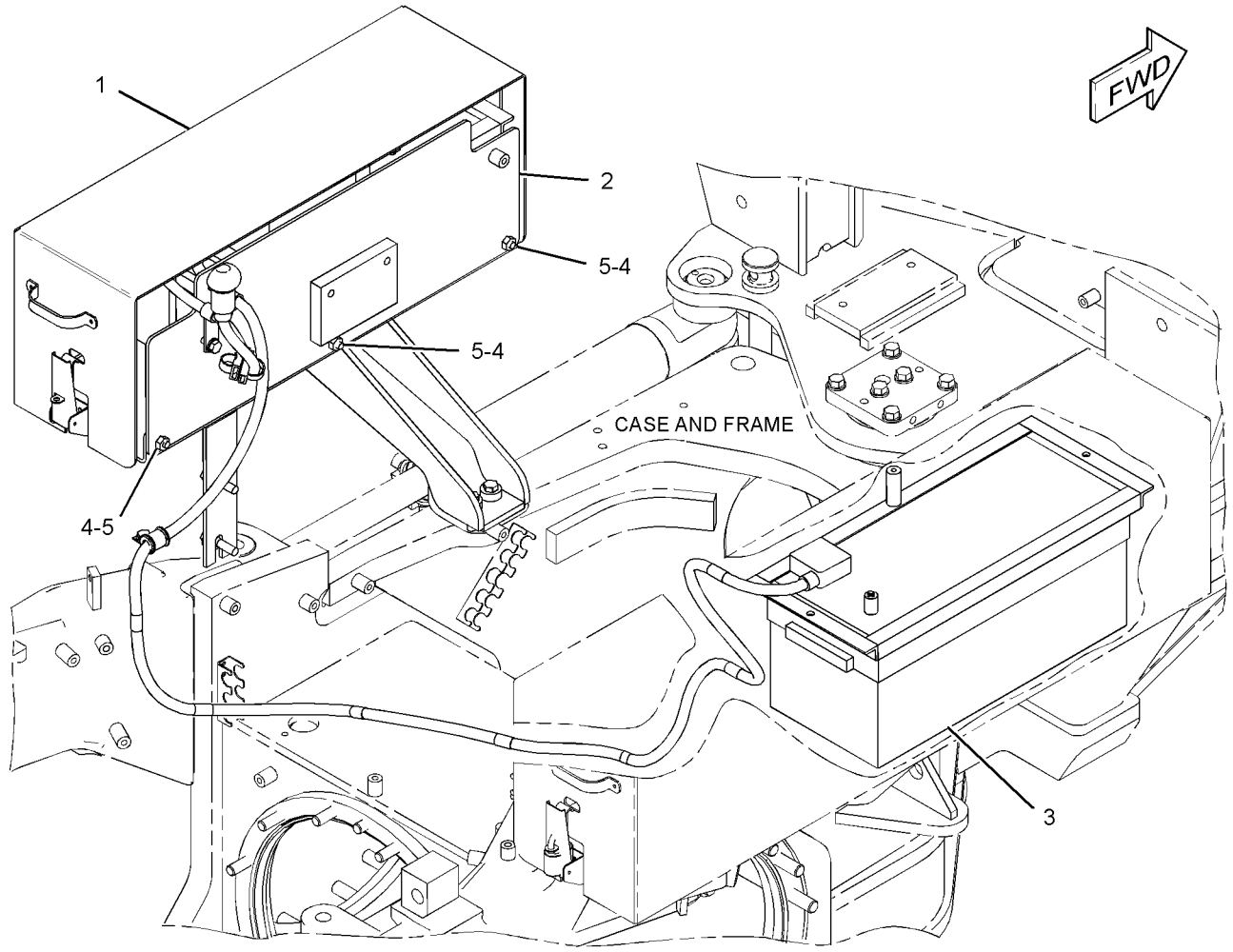

GRAPHIC #1 **<END>** g01757253

246-9345 CONTROL & MTG GP-ENGINE ELEK

S/N: KHX13472-UP

PART OF 325-9707 ENGINE AR-COMPLETE

SMCS-1901 **i02320629**

NOTE	REF NO	GRAPHIC REF	PART NUMBER	QTY	PART NAME 1 2 3 4 5 6 (PRODUCT LEVEL)	SEE PAGE
	1	1	**8T-9655**	8	MOUNT-ISOLATION	
	2	1	**101-3128**	4	SPACER-SPECIAL	
M	3	1	**143-9392**	4	STUD (M8X1.25-THD)	
	4	1	**255-5284**	1	CONTROL GP-UNPROGRAMMED (ENGINE)	
	6	1	**244-3168**	1	BRACKET AS	
	7	1	**233-0891**	1	BRACKET AS	
	8	1	**9M-1974**	4	WASHER-HARD (8.8X16X2-MM THK)	
	9	1	**9N-0869**	4	WASHER-HARD (8.8X25.5X2-MM THK)	

M-METRIC PART

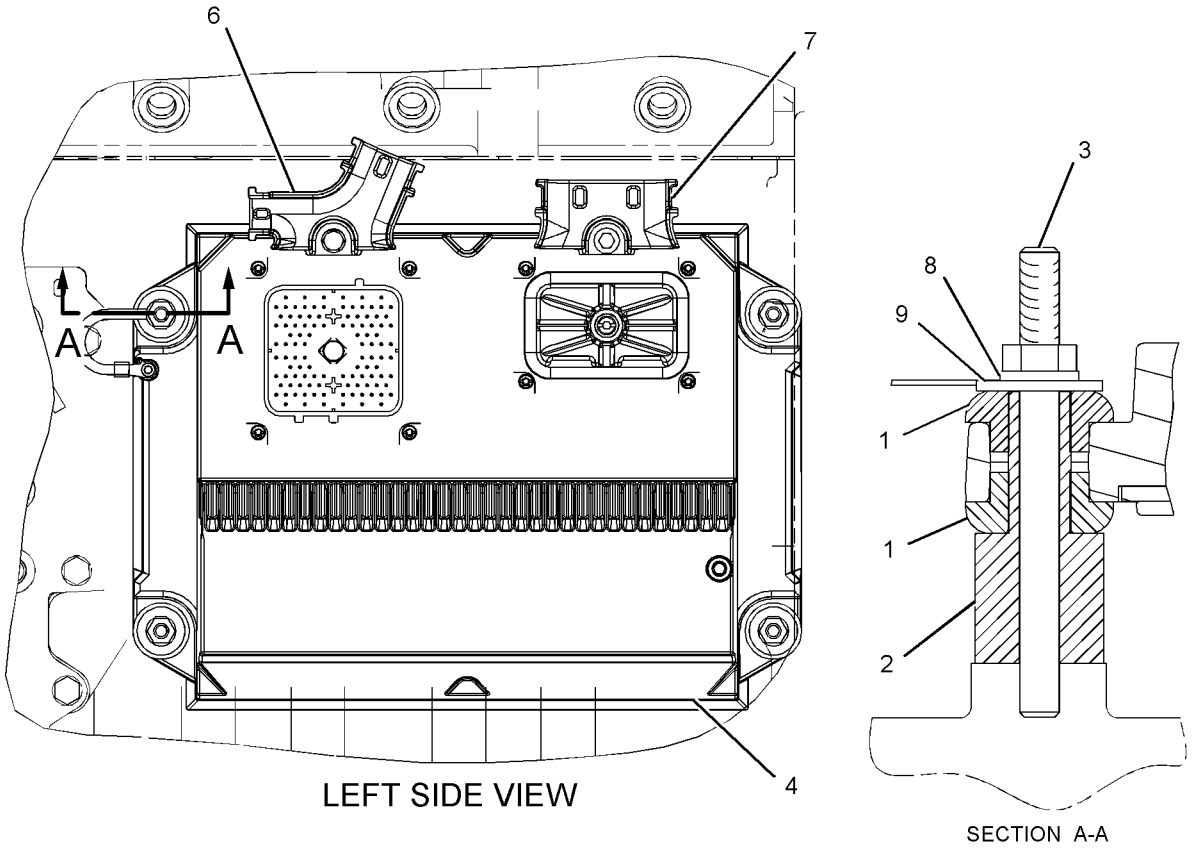

GRAPHIC #1 **<END>** g01093182

177-4493 CONTROL GP-POWER TRAIN

S/N: JAP1-UP

PART OF 284-5343, 334-3341 WIRING GP-FRONT

ALSO AN ATTACHMENT

SMCS-4808, 7610 **i01310536**

NOTE	REF NO	GRAPHIC REF	PART NUMBER	QTY	PART NAME 1 2 3 4 5 6 (PRODUCT LEVEL)	SEE PAGE
Y	1	1	**172-9389**	1	CONTROL GP-UNPROGRAMMED (POWER TRAIN)	128

Y-SEPARATE ILLUSTRATION

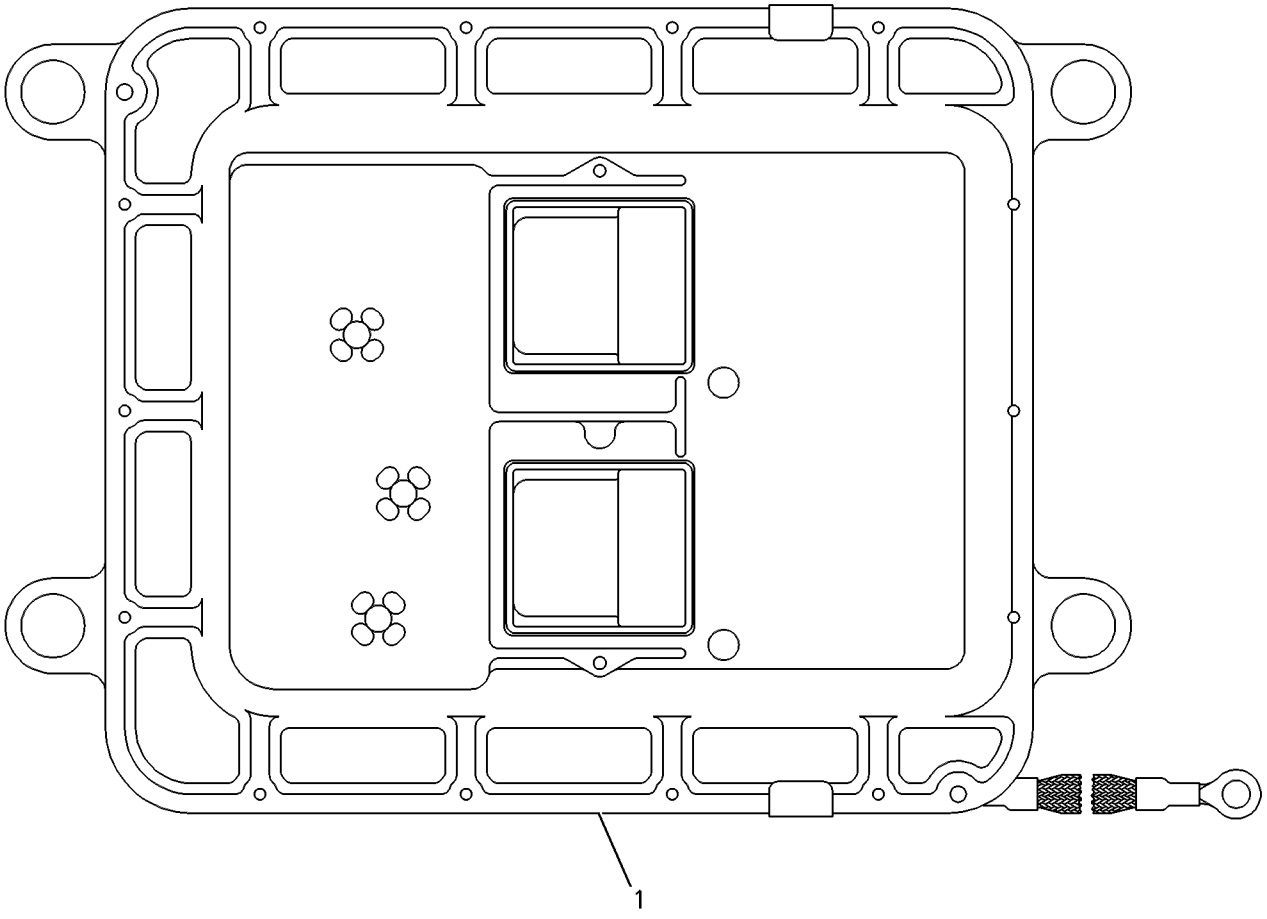

GRAPHIC #1 **<END>** g00415185

172-9389 CONTROL GP-UNPROGRAMMED–POWER TRAIN*R

S/N: JAP1-UP
12-VOLT
PART OF 177-4493 CONTROL GP-POWER TRAIN
ALSO AN ATTACHMENT

SMCS-7610 **i03558509**

NOTE	REF NO	GRAPHIC REF	PART NUMBER	QTY	PART NAME 1 2 3 4 5 6 (PRODUCT LEVEL)	SEE PAGE
	1	1	**7X-6315**	1	STRAP AS-GROUND	
	2	1	**101-0852**	1	SCREW-PAN HEAD (8-32X0.375-IN)	
M	3	1	**6V-6703**	2	KIT-RETAINING BOLT	
					(EACH INCLUDES BOLT, RING & SEALS)	
	4	1	**134-4126**	1	WASHER (4.52X8.28X0.76-MM THK)	

M-METRIC PART

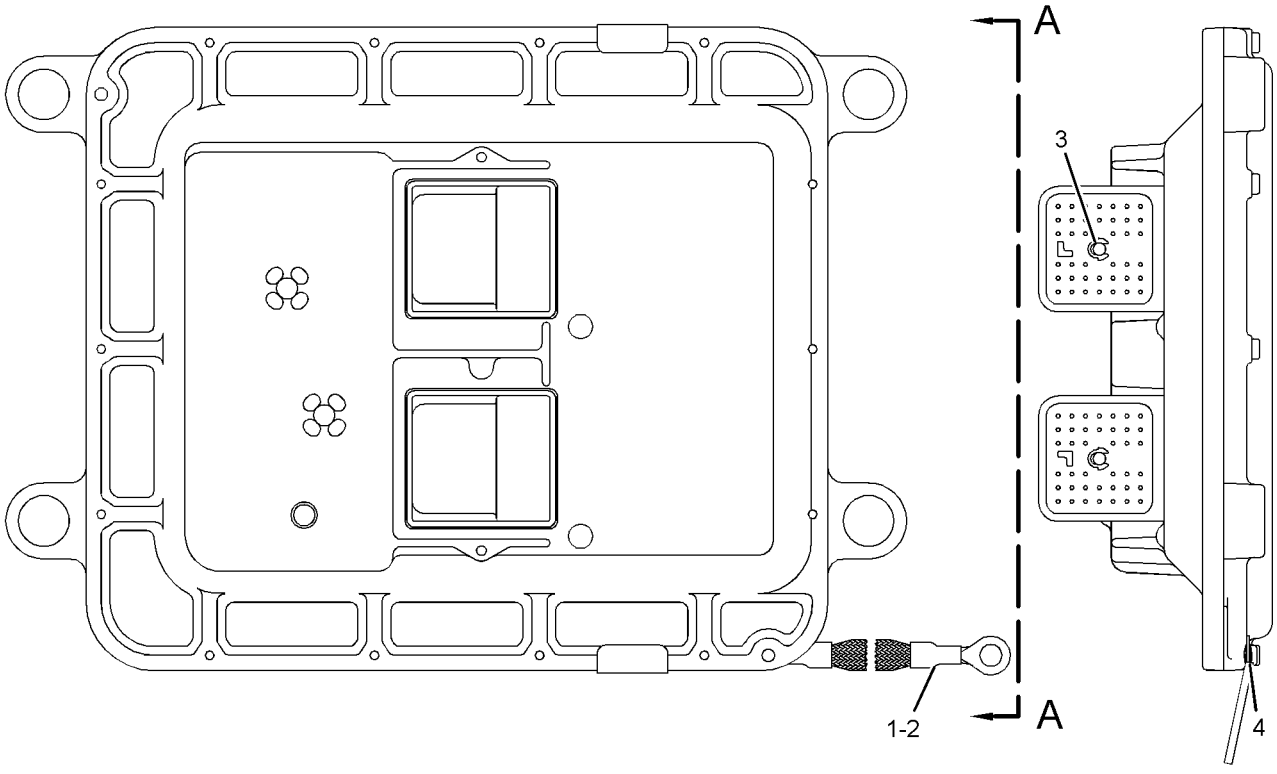

VIEW A-A

GRAPHIC #1 **<END>** g01859353

286-4328 CONVERTER AR-ELECTRICAL—HIGH PROFILE

S/N: JAP1-UP
12-VOLT
PART OF 340-1191 OPTION AR-CAB
AN ATTACHMENT

SMCS-1421 **i03641063**

NOTE	PART NUMBER	QTY	PART NAME 1 2 3 4 5 6 (PRODUCT LEVEL)	SEE PAGE
Y	*171-7186*	1	ACCESSORY GP-CAB (12-VOLT POWER PORT) (HIGH PROFILE)	523
Y	*180-4643*	1	CONVERTER GP-ELECTRICAL (12-VOLT)	130

Y-SEPARATE ILLUSTRATION

<END>

180-4643 CONVERTER GP-ELECTRICAL

S/N: JAP1-UP
12-VOLT
PART OF 286-4328 CONVERTER AR-ELECTRICAL
AN ATTACHMENT

SMCS-1421 **i01936021**

NOTE	REF NO	GRAPHIC REF	PART NUMBER	QTY	PART NAME 1 2 3 4 5 6 (PRODUCT LEVEL)	SEE PAGE
	1	1	**9W-1442**	1	FUSE (10-AMPERE) (POWER CONVERTER)	
	2	1	**205-4285**	1	CONVERTER GP-ELECTRICAL (24-VOLT TO 12-VOLT)	
	3	1	**208-7782**	1	PLATE AS	
	4	1	**096-6166**	2	WASHER-HARD (4.5X9X1-MM THK)	
	5	1	**8T-2501**	2	BOLT (3/8-16X2-IN)	
M	6	1	**8T-0285**	2	SCREW-MACHINE (M4X0.7X12-MM)	
	7	1	**8T-4896**	2	WASHER-HARD (10.2X18.5X2.5-MM THK)	
	8	1	**8X-1853**	2	SPACER (13.1X15.9X30.4-MM THK)	

M-METRIC PART

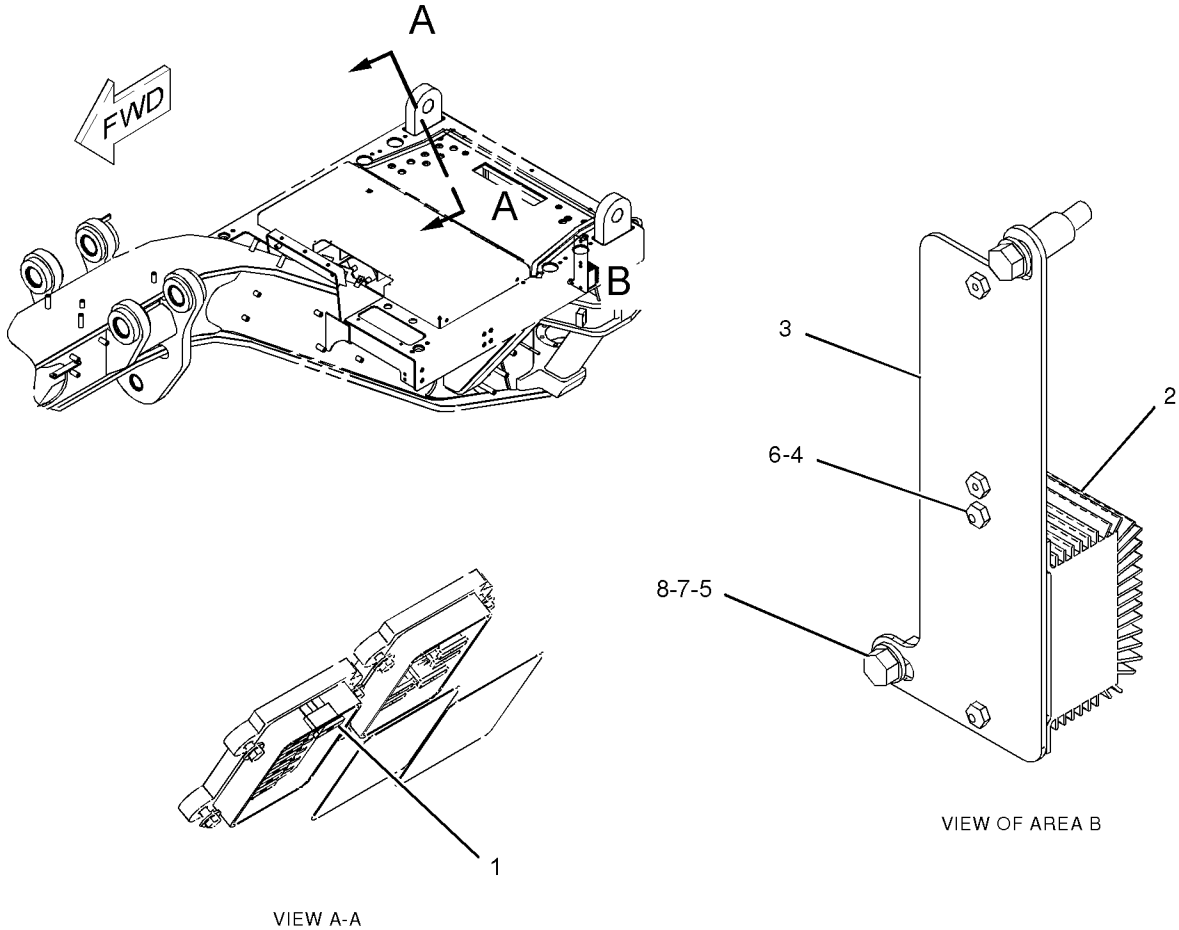

GRAPHIC #1 **<END>** g01010434

286-4330 CONVERTER GP-ELECTRICAL–RADIO

S/N: JAP1-UP
PART OF 295-7991 INSTALLATION AR-RADIO
AN ATTACHMENT

SMCS-1421 **i03256013**

NOTE	REF NO	GRAPHIC REF	PART NUMBER	QTY	PART NAME 1 2 3 4 5 6 (PRODUCT LEVEL)	SEE PAGE
	1	1	**8X-1853**	2	SPACER (13.1X15.9X30.4-MM THK)	
	2	1	**9W-1442**	1	FUSE (10-AMPERE)	
	3	1	**205-4285**	1	CONVERTER GP-ELECTRICAL (24-VOLT TO 12-VOLT)	
	4	1	**208-7782**	1	PLATE AS	
	5	1	**096-6166**	2	WASHER-HARD (4.5X9X1-MM THK)	
M	6	1	**8T-0285**	2	SCREW-MACHINE (M4X0.7X12-MM)	
	7	1	**8T-2501**	2	BOLT (3/8-16X2-IN)	
	8	1	**8T-4896**	2	WASHER-HARD (10.2X18.5X2.5-MM THK)	

M-METRIC PART

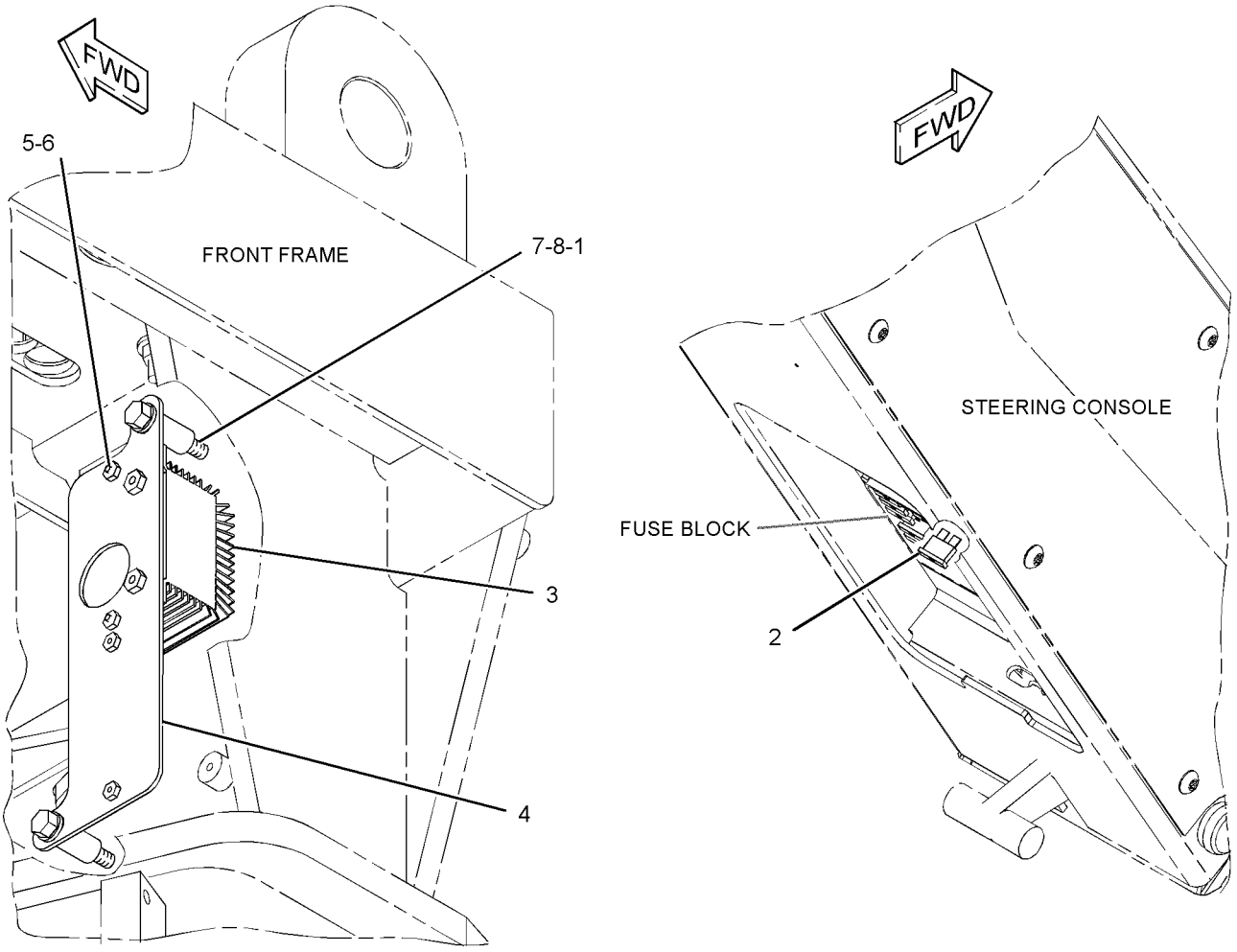

GRAPHIC #1 **<END>** g01689522

262-1421 ELECTRONICS GP-COMMUNICATION–

PRODUCT LINK 300

S/N: JAP1-UP

PART OF 302-5429 INSTALLATION AR-COMMUNICATION

AN ATTACHMENT

SMCS-7606, 7610, 7620 **i03601391**

NOTE	PART NUMBER	QTY	PART NAME 1 2 3 4 5 6 (PRODUCT LEVEL)	SEE PAGE
	330-3409	1	SOFTWARE GP-COMMUNICATION (PRODUCT LINK 300)	
			-OR-	
	330-3410	1	SERVICE GP-COMMUNICATION (PRODUCT LINK 300)	
			(OPTIONAL SERVICE REPLACEMENT)(INCLUDES CONTROL GP & SOFTWARE)	
	7X-6315	1	STRAP AS-GROUND	
	126-7574	1	SCREW-PAN HEAD (8-32X9.52-MM)	
	134-4126	1	WASHER (4.52X8.28X0.76-MM THK)	

<END>

253-2697 ELECTRONICS GP-IMPLEMENT

S/N: JAP1-UP

PART OF 336-4249, 337-3100 GRADE CONTROL AR

AN ATTACHMENT

SMCS-5701, 7610, 7620 **i03359962**

NOTE	PART NUMBER	QTY	PART NAME 1 2 3 4 5 6 (PRODUCT LEVEL)	SEE PAGE
	314-7803	1	SOFTWARE GP-IMPLEMENT	
			-OR-	
	335-2383	1	SERVICE GP-IMPLEMENT	
			(OPTIONAL SERVICE REPLACEMENT)	
			(INCLUDES CONTROL GP & SOFTWARE)	

<END>

336-4249 GRADE CONTROL AR

S/N: JAP1-UP
PART OF 349-2486 OPTION AR-CONFIGURATION
AN ATTACHMENT

SMCS-7220 **i03537809**

NOTE	REF NO	GRAPHIC REF	PART NUMBER	QTY	PART NAME 1 2 3 4 5 6 (PRODUCT LEVEL)	SEE PAGE
	1	1	**3S-2093**	6	STRAP-CABLE	
	2	1	**152-6824**	1	KNOB AS (BLADE LIFT, RH)	
		1	**8T-8737**	1	PLUG-SEAL	
		1	**102-8804**	1	KIT-RECEPTACLE (4-PIN)	
					(INCLUDES RECEPTACLE AS & WEDGE)	
		1	**186-3735**	3	PIN-CONNECTOR (16-GA TO 18-GA)	
	3	1	**152-6825**	1	KNOB AS (BLADE LIFT, LH)	
		1	**8T-8737**	1	PLUG-SEAL	
		1	**102-8804**	1	KIT-RECEPTACLE (4-PIN)	
					(INCLUDES RECEPTACLE AS & WEDGE)	
		1	**186-3735**	3	PIN-CONNECTOR (16-GA TO 18-GA)	
	4	1	**246-6561**	1	KNOB AS (RH) (ARTICULATION)	
		1	**102-8804**	1	KIT-RECEPTACLE (4-PIN)	
					(INCLUDES RECEPTACLE AS & WEDGE)	
		1	**186-3735**	4	PIN-CONNECTOR (16-GA TO 18-GA)	
	5	1	**246-6562**	1	KNOB AS (LH) (ARTICULATION)	
		1	**102-8804**	1	KIT-RECEPTACLE (4-PIN)	
					(INCLUDES RECEPTACLE AS & WEDGE)	
		1	**186-3735**	4	PIN-CONNECTOR (16-GA TO 18-GA)	
	6	1	**130-5300**	4	CLIP	
	7	1	**1V-7368**	2	SPACER (0.364X0.54X1.06-IN THK)	
	8	1	**8T-4896**	2	WASHER-HARD (10.2X18.5X2.5-MM THK)	
M	9	1	**9X-2480**	2	BOLT (M6X1X45-MM)	
FY			*336-9245*	1	BOSS GP-FRAME (ACCUGRADE)	311
FY			*336-5530*	1	COVER GP-ACCESS (PLATFORM)	317
FY			*253-2697*	1	ELECTRONICS GP-IMPLEMENT (GRADE CONTROL)	132
FY			*247-6450*	1	BOSS GP-DRAWBAR (ACCUGRADE)	508
FY			*254-5960*	1	MOUNTING GP-GRADE CONTROL (CIRCLE)	163
FY			*252-5709*	1	WIRING GP-GRADE CONTROL (CAB, INDICATOR LAMP)	216
FY			*336-9255*	1	WIRING GP-GRADE CONTROL	220

F-NOT SHOWN
M-METRIC PART
Y-SEPARATE ILLUSTRATION

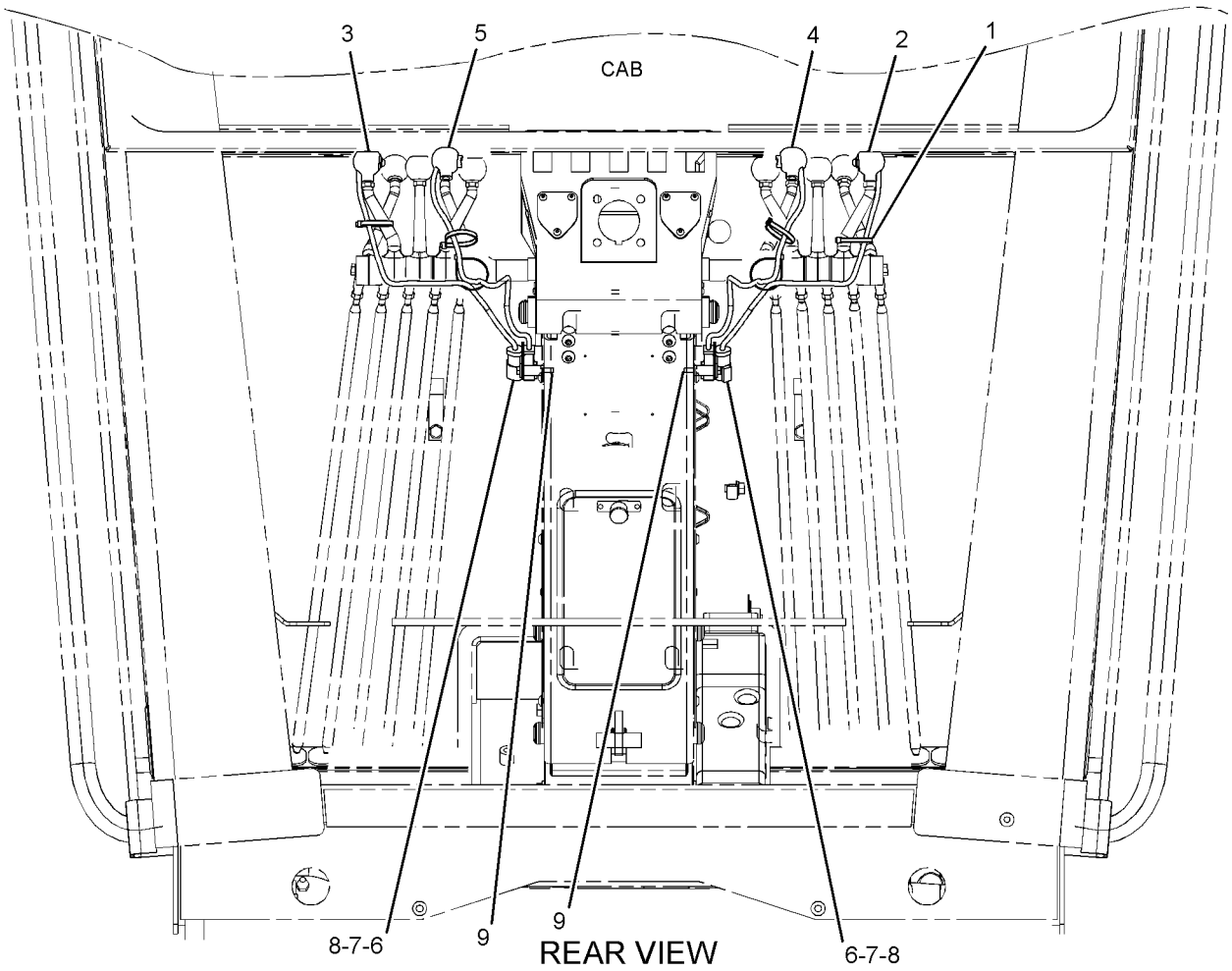

GRAPHIC #1 **<END>** g01930013

337-3100 GRADE CONTROL AR

S/N: JAP1-UP
PART OF 349-2487 OPTION AR-CONFIGURATION
AN ATTACHMENT

SMCS-7220 **i03473441**

NOTE	REF NO	GRAPHIC REF	PART NUMBER	QTY	PART NAME 1 2 3 4 5 6 (PRODUCT LEVEL)	SEE PAGE
	1	1	**3S-2093**	6	STRAP-CABLE	
Y	2	1	*126-6933*	1	COVER GP-PROTECTION (PLATFORM)	318
	3	1	**152-6824**	1	KNOB AS (BLADE LIFT, RH)	
		1	**8T-8737**	1	PLUG-SEAL	
		1	**102-8804**	1	KIT-RECEPTACLE (4-PIN)	
	4	1	**152-6825**	1	KNOB AS (BLADE LIFT, LH)	
		1	**8T-8737**	1	PLUG-SEAL	
		1	**102-8804**	1	KIT-RECEPTACLE (4-PIN)	
					(INCLUDES RECEPTACLE AS AND WEDGE)	
		1	**186-3735**	3	PIN-CONNECTOR (16-GA TO 18-GA)	
	5	1	**246-6561**	1	KNOB AS (RH) (ARTICULATION)	
		1	**102-8804**	1	KIT-RECEPTACLE (4-PIN)	
					(INCLUDES RECEPTACLE AS AND WEDGE)	
		1	**186-3735**	4	PIN-CONNECTOR (16-GA TO 18-GA)	
	6	1	**246-6562**	1	KNOB AS (LH) (ARTICULATION)	
		1	**102-8804**	1	KIT-RECEPTACLE (4-PIN)	
					(INCLUDES RECEPTACLE AS AND WEDGE)	
		1	**186-3735**	4	PIN-CONNECTOR (16-GA TO 18-GA)	
Y	7	1	*247-6449*	1	MOUNTING GP-GRADE CONTROL (DRAWBAR)	162
Y	8	1	*252-5709*	1	WIRING GP-GRADE CONTROL (CAB, INDICATOR LAMP)	216
Y	9	1	*255-2361*	1	MOUNTING GP-GRADE CONTROL (CIRCLE)	164
Y	10		*294-3542*	1	WIRING GP-GRADE CONTROL	217
Y	11		*297-8449*	1	BOSS GP-FRAME	309
	12		**130-5300**	4	CLIP	
	13		**1V-7368**	2	SPACER (0.364X0.54X1.06-IN THK)	
Y	14		*253-2697*	1	ELECTRONICS GP-IMPLEMENT	132
	15		**8T-4896**	2	WASHER-HARD (10.2X18.5X2.5-MM THK)	
M	16		**9X-2480**	2	BOLT (M6X1X45-MM)	

M-METRIC PART
Y-SEPARATE ILLUSTRATION

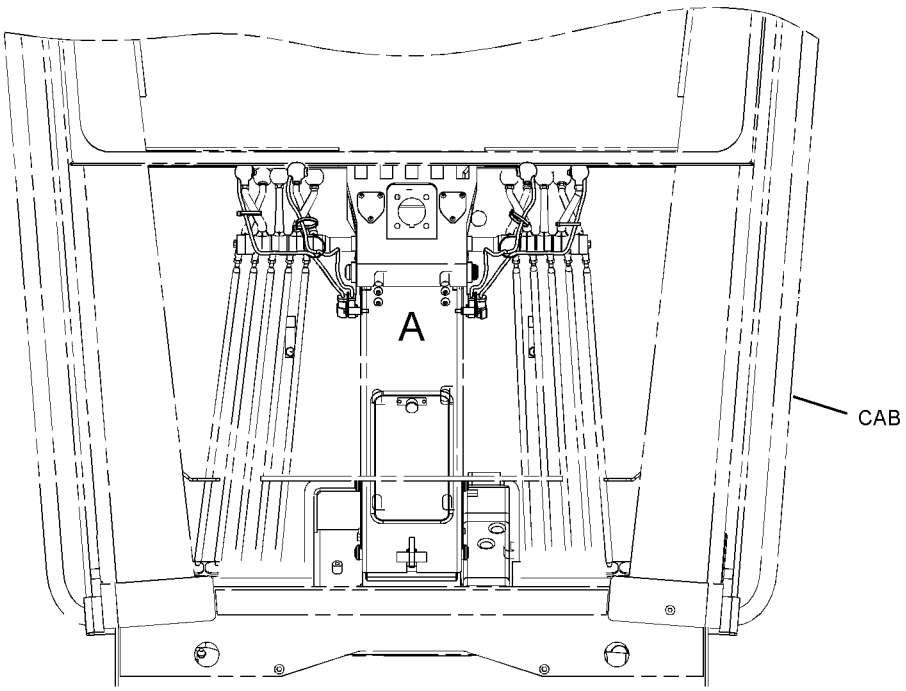

REAR VIEW

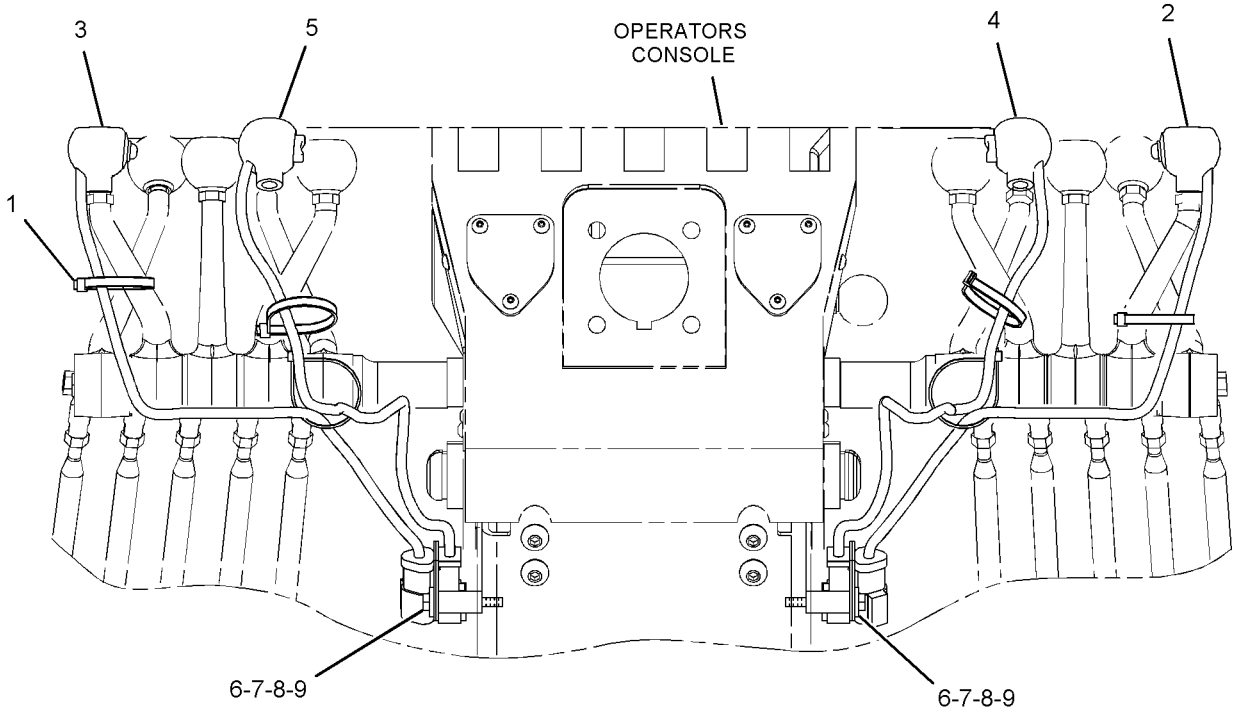

VIEW OF AREA A

GRAPHIC #1 **<END>** g01867653

297-6867 GROUND GP-ELECTRICAL

S/N: KHX13472-UP

PART OF 325-9707 ENGINE AR-COMPLETE

SMCS-1405, 1453 **i02789819**

NOTE	REF NO	GRAPHIC REF	PART NUMBER	QTY	PART NAME 1 2 3 4 5 6 (PRODUCT LEVEL)	SEE PAGE
M	1	1	**5C-7261**	1	NUT (M8X1.25-THD)	
	2	1	**8T-4224**	2	WASHER-HARD (8.8X16X2-MM THK)	

M-METRIC PART

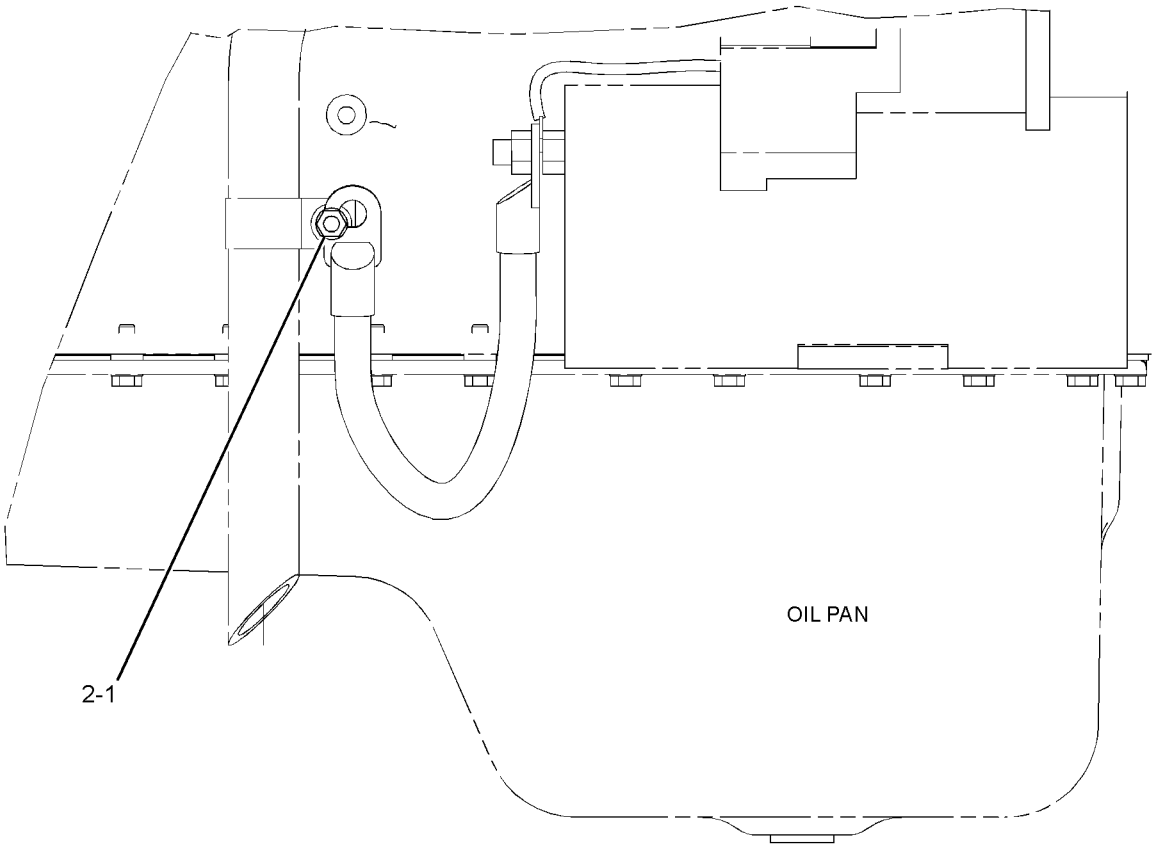

LEFT SIDE VIEW OF ENGINE

GRAPHIC #1 **<END>** g01352470

302-5429 INSTALLATION AR-COMMUNICATION–

PRODUCT LINK 321SR

S/N: JAP1-UP

AN ATTACHMENT

SMCS-7606 **i03661200**

NOTE	REF NO	GRAPHIC REF	PART NUMBER	QTY	PART NAME 1 2 3 4 5 6 (PRODUCT LEVEL)	SEE PAGE
	1	1	**256-6803**	1	HARNESS AS-RADIO (PRODUCT LINK)	
	2	1	**256-6804**	1	HARNESS AS-CONTROL (PRODUCT LINK)	
	3	1	**257-9363**	1	HARNESS AS-RADIO (PRODUCT LINK)	
Y	4	1	*262-1421*	1	ELECTRONICS GP-COMMUNICATION (PRODUCT LINK 300)	132
	5	1	*263-8948*	1	ANTENNA AS	
		1	**223-4296**	1	ANTENNA (FLEXIBLE)	
Y	6	1	**263-9088**	1	RADIO GP-COMMUNICATION (PRODUCT LINK 121SR)	166
Y	7	1	*302-5428*	1	INSTALLATION GP-COMMUNICATION (PRODUCT LINK)	139

Y-SEPARATE ILLUSTRATION

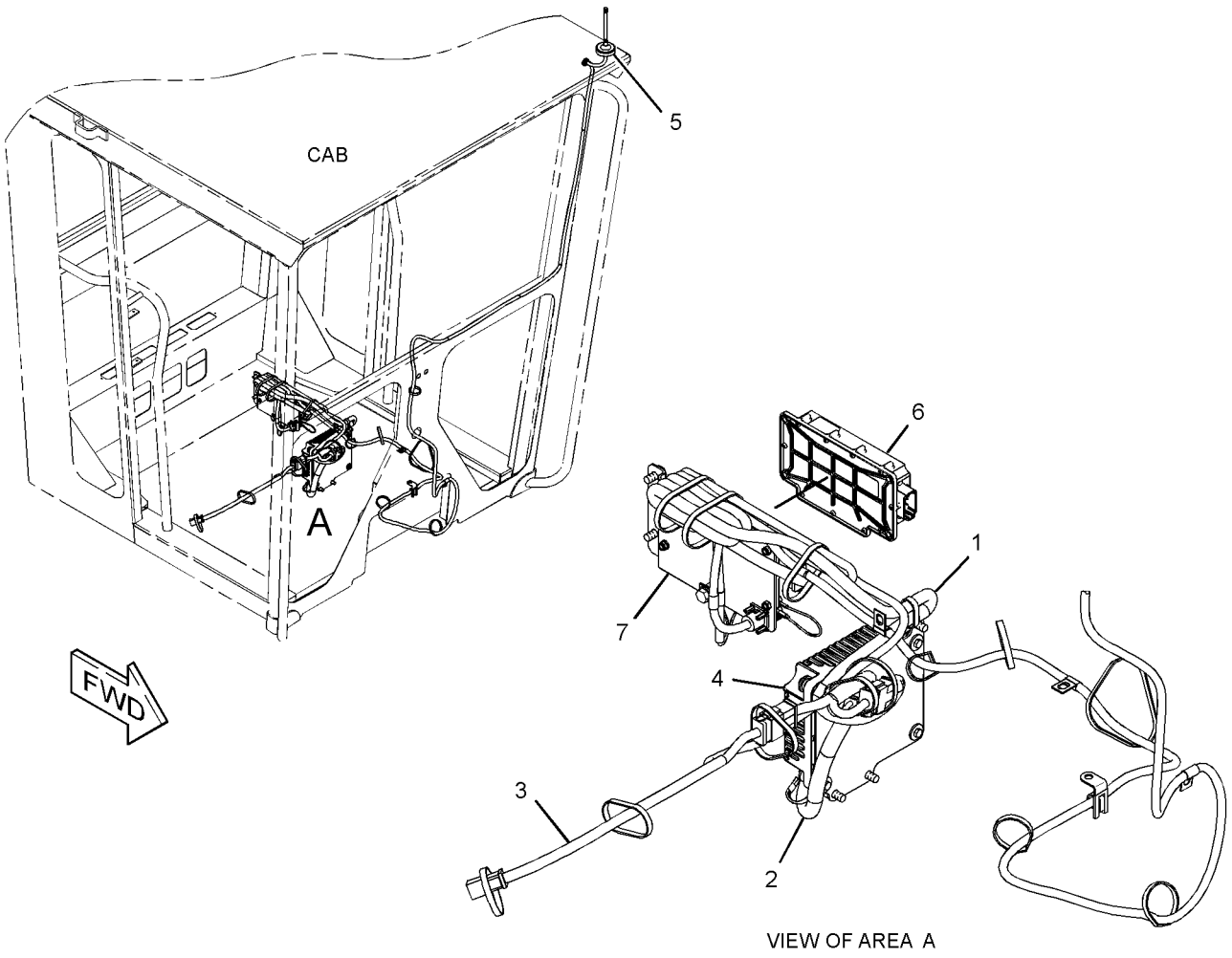

VIEW OF AREA A

GRAPHIC #1 **<END>** g01784959

302-5428 INSTALLATION GP-COMMUNICATION—PRODUCT LINK

S/N: JAP1-UP

PART OF 302-5429 INSTALLATION AR-COMMUNICATION

AN ATTACHMENT

SMCS-7606 **i03258960**

NOTE	REF NO	GRAPHIC REF	PART NUMBER	QTY	PART NAME 1 2 3 4 5 6 (PRODUCT LEVEL)	SEE PAGE
	1	1	**8C-5608**	4	SPACER (6.5X9.5X25.4-MM THK)	
	2	1	**090-8247**	1	BLOCK	
	3	1	**103-5304**	1	PLATE	
	4	1	**302-5210**	1	PLATE	
	5	1	**302-5211**	1	PLATE	
	6	1	**302-5212**	1	PLATE	
M	7	1	**129-3178**	8	LOCKNUT (M6X1-THD)	
	8	1	**174-5907**	3	CLIP	
	9	1	**5M-3062**	1	BOLT (3/8-16X0.75-IN)	
	10	1	**5S-4246**	4	LOCKWASHER	
M	11	1	**6V-8950**	4	NUT (M2.5X0.45-THD)	
M	12	1	**6V-9326**	4	SCREW-MACHINE (M2.5X0.45X10-MM)	
	13	1	**7K-1181**	10	STRAP-CABLE	
	14	1	**7T-1099**	2	LINK	
	15	1	**8J-1256**	1	CLIP	
	16	1	**8M-2770**	1	CLIP	
	17	1	**8T-4121**	10	WASHER-HARD (11X21X2.5-MM THK)	
M	18	1	**8T-4137**	10	BOLT (M10X1.5X20-MM)	
M	19	1	**8T-4138**	4	BOLT (M6X1X20-MM)	
	20	1	**8T-4896**	1	WASHER-HARD (10.2X18.5X2.5-MM THK)	
M	21	1	**9R-2613**	2	BOSS-WELD (M10X1.5X25-MM)	
M	22	1	**9R-2672**	3	BOSS (M10X1.5X20-MM)	
M	23	1	**9X-2480**	4	BOLT (M6X1X45-MM)	
	24	1	**9X-6165**	12	WASHER (6.5X22X2.5-MM THK)	
	25	1	**9X-8256**	8	WASHER (6.6X12X2-MM THK)	
	26	1	**9X-9896**	8	MOUNT (ISOLATION)	

M-METRIC PART

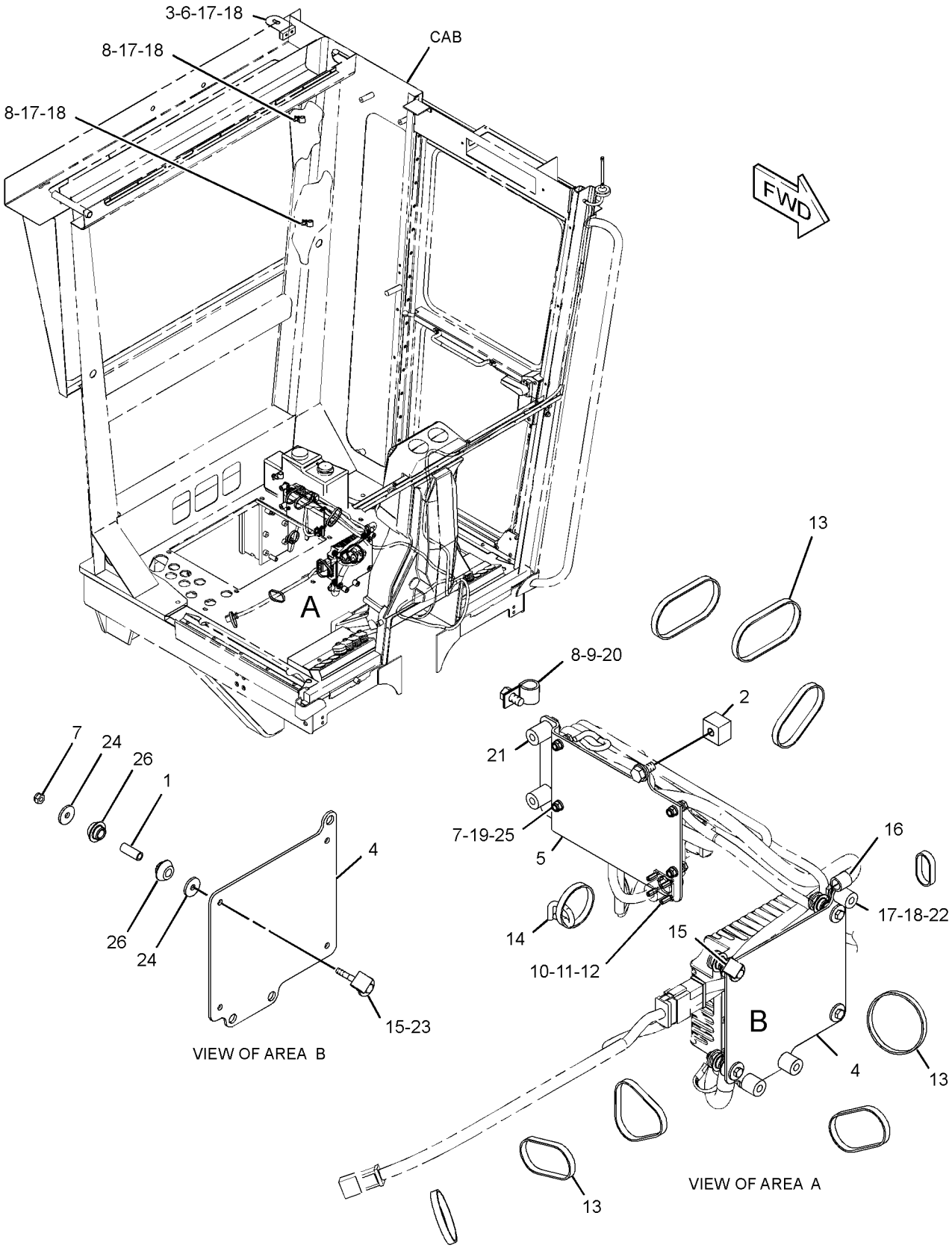

GRAPHIC #1 **<END>** g01697993

171-5672 LAMP GP

S/N: JAP1-UP
24-VOLT
PART OF 284-5394 LIGHTING GP-BACKUP
ALSO AN ATTACHMENT

SMCS-1429 **i03341367**

NOTE	REF NO	GRAPHIC REF	PART NUMBER	QTY	PART NAME 1 2 3 4 5 6 (PRODUCT LEVEL)	SEE PAGE
	1	1	**9X-3068**	1	LENS-CLEAR	
	2	1	**9X-4493**	1	LAMP (24-VOLT, 21-WATT)	
	3	1	**186-3735**	2	PIN-CONNECTOR (16-GA TO 18-GA)	
	4	1	**102-8802**	1	KIT-RECEPTACLE (2-PIN)	
					(INCLUDES RECEPTACLE AS & WEDGE)	
					PARTS SHOWN IN GRAPHIC(S) WITHOUT A REFERENCE NUMBER ARE NOT SERVICED SEPARATELY	

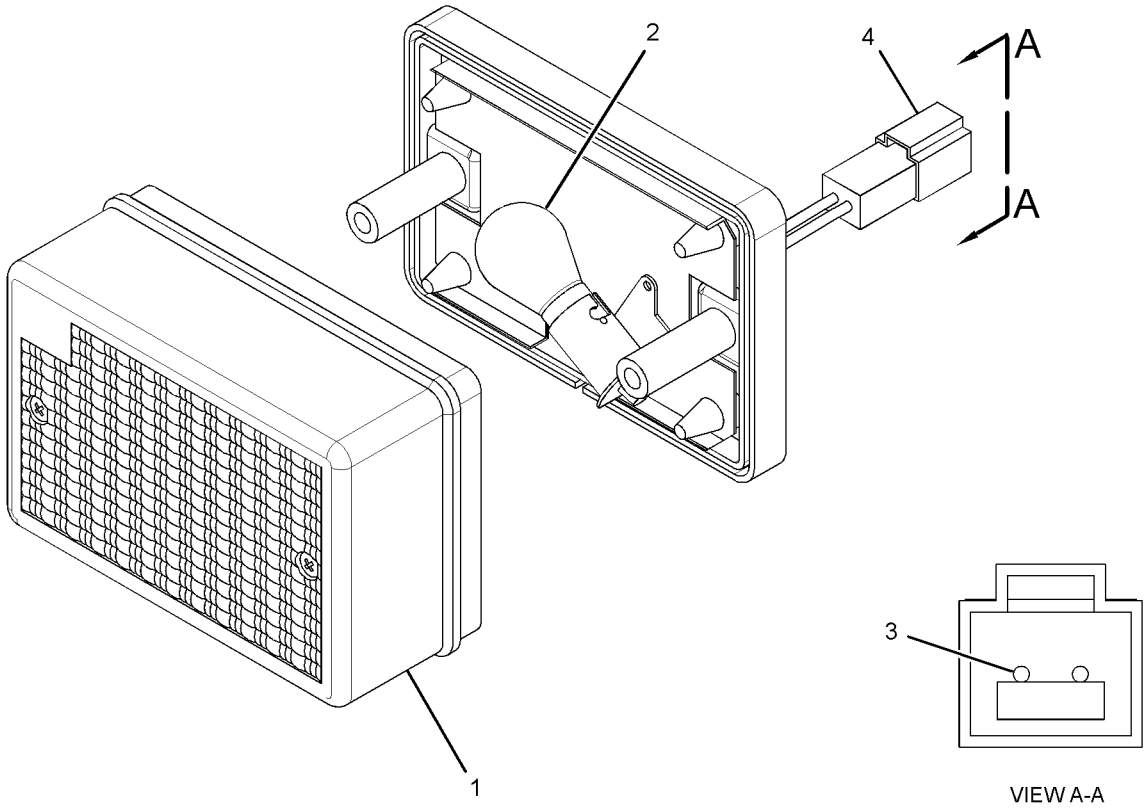

GRAPHIC #1 **<END>** g01676744

3E-6389 LAMP GP-DOME

S/N: JAP1-UP
24-VOLT, WITH SWITCH
PART OF 285-3361 WIRING GP-CAB
AN ATTACHMENT

SMCS-1433 **i02942903**

NOTE	REF NO	GRAPHIC REF	PART NUMBER	QTY	PART NAME 1 2 3 4 5 6 (PRODUCT LEVEL)	SEE PAGE
	1	1	**7N-9943**	1	LAMP (24-VOLT) (DOME)	
	2	1	**102-8803**	1	KIT-RECEPTACLE (3-PIN)	
					(INCLUDES RECEPTACLE AS & WEDGE)	
	3	1	**186-3735**	3	PIN-CONNECTOR (16-GA TO 18-GA)	
	4	1	**7T-0020**	1	LENS-DOME LAMP	

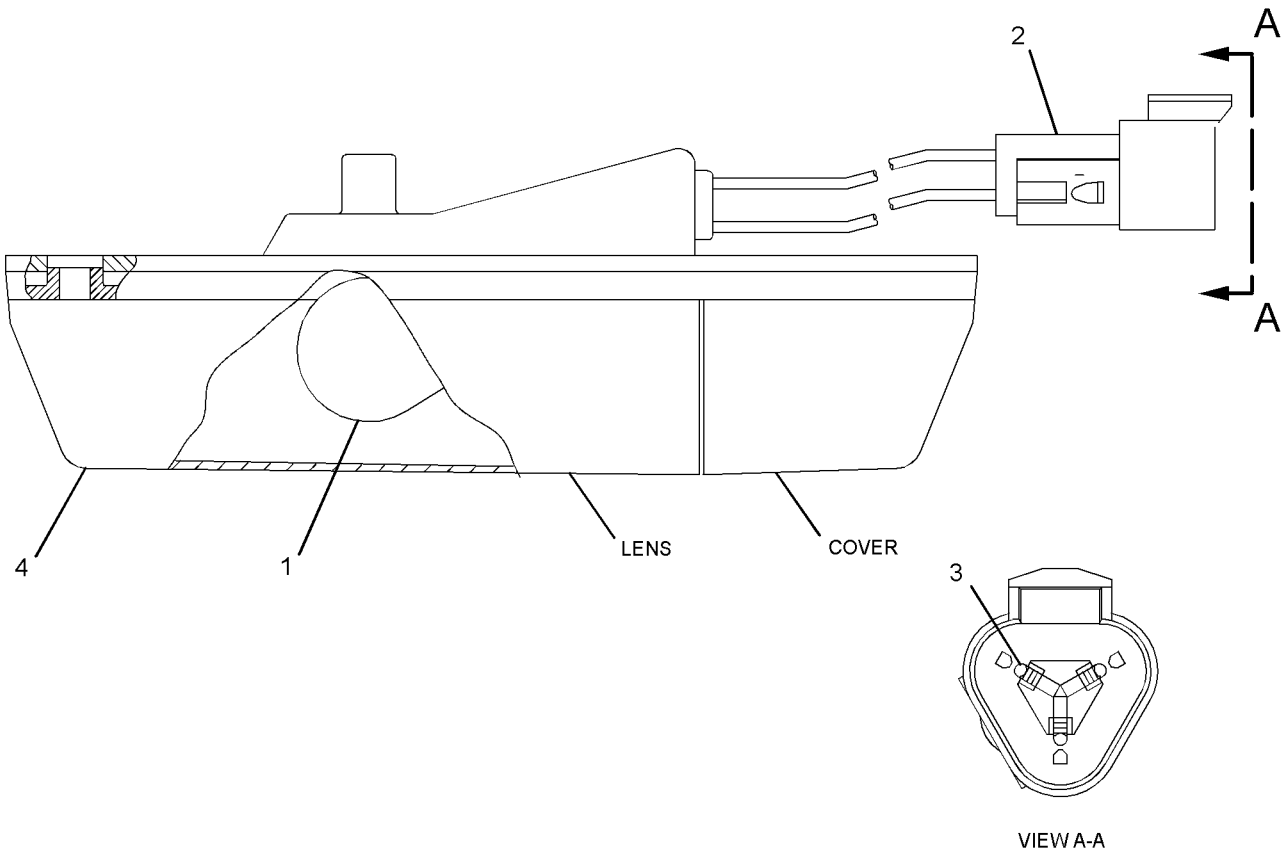

GRAPHIC #1 **<END>** g01270113

234-4323 LAMP GP-FLOOD

S/N: JAP1-UP
24-VOLT
PART OF 284-5362, 284-5376 LIGHTING GP-FLOOD, 284-5353 LIGHTING GP-ROADING
ALSO AN ATTACHMENT

SMCS-1434 **i02648056**

NOTE	REF NO	GRAPHIC REF	PART NUMBER	QTY	PART NAME 1 2 3 4 5 6 (PRODUCT LEVEL)	SEE PAGE
	1	1	**9X-3463**	1	LAMP-HALOGEN (24-VOLT, 70-WATT)	
	2	1	**9X-4244**	2	SCREW-SPECIAL (M4X1.79X25-MM)	
	3	1	**202-6614**	1	LENS AS	
	4	1	**234-7730**	1	BODY AS	
	5	1	**164-7556**	1	BRACKET (LAMP RETAINING)	
M	6	1	**8T-0389**	1	LOCKNUT (M10X1.5-THD)	
	7	1	**234-7731**	1	BRACKET AS	
	8	1	**8T-4121**	1	WASHER-HARD (11X21X2.5-MM THK)	

M-METRIC PART

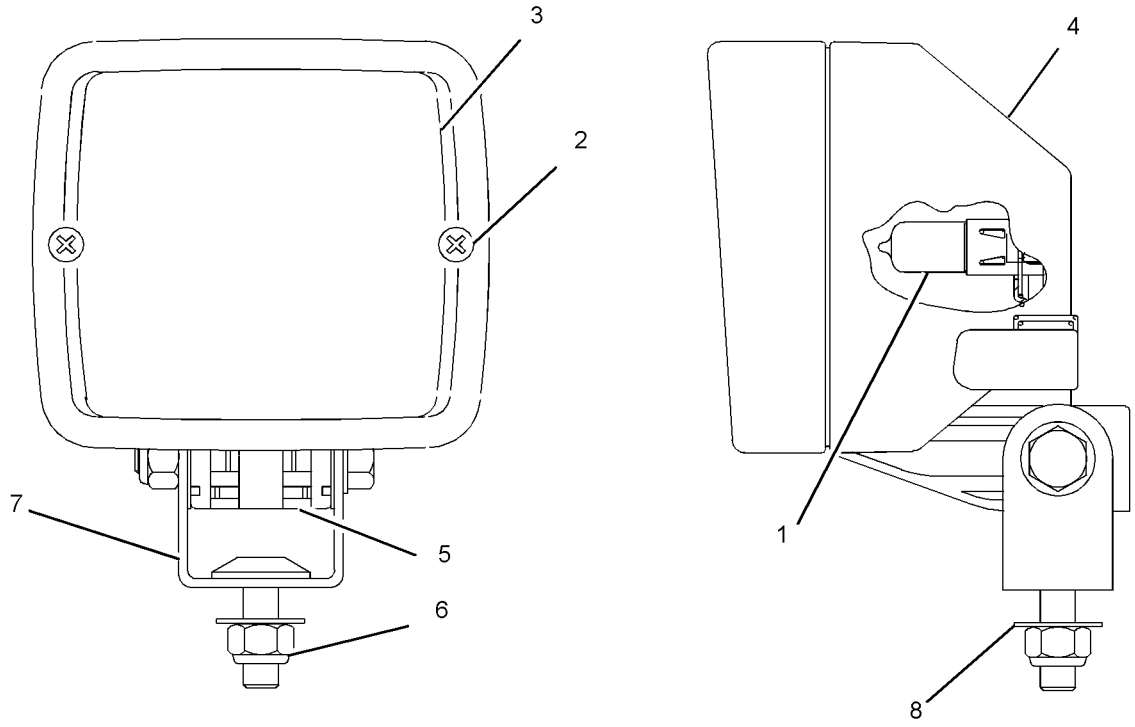

GRAPHIC #1 **<END>** g01329130

234-4324 LAMP GP-FLOOD

S/N: JAP1-UP
24-VOLT
PART OF 284-5353 LIGHTING GP-ROADING
AN ATTACHMENT

SMCS-1434 **i02549180**

NOTE	REF NO	GRAPHIC REF	PART NUMBER	QTY	PART NAME 1 2 3 4 5 6 (PRODUCT LEVEL)	SEE PAGE
	1	1	**9X-3463**	1	LAMP-HALOGEN (24-VOLT, 70-WATT)	
	2	1	**9X-4244**	2	SCREW-SPECIAL (M4X1.79X25-MM)	
	3	1	**202-6611**	1	LENS AS	
	4	1	**234-7730**	1	BODY AS	
	5	1	**164-7556**	1	BRACKET (LAMP RETAINING)	
M	6	1	**8T-0389**	1	LOCKNUT (M10X1.5-THD)	
	7	1	**234-7731**	1	BRACKET AS	
	8	1	**8T-4121**	1	WASHER-HARD (11X21X2.5-MM THK)	

M-METRIC PART

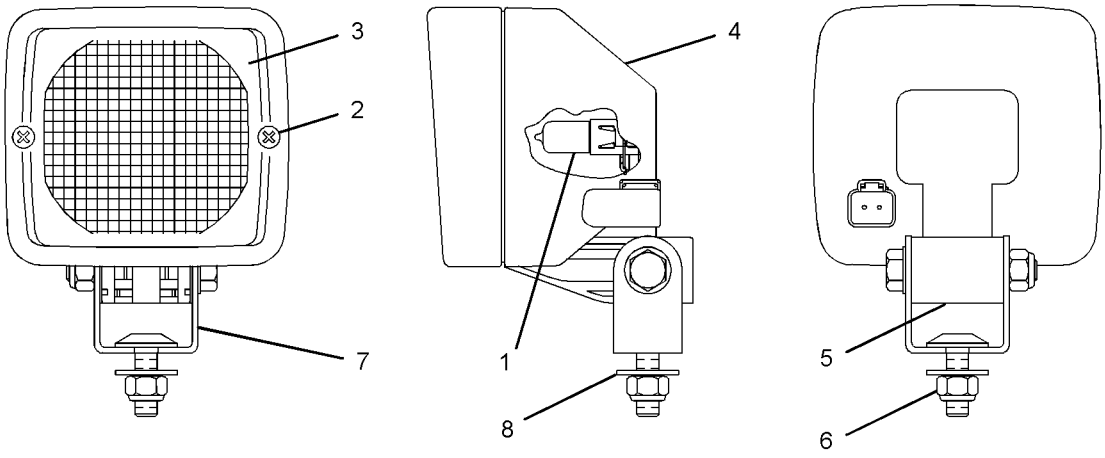

GRAPHIC #1 **<END>** g01276050

234-4325 LAMP GP-FLOOD

S/N: JAP1-UP
24-VOLT
PART OF 284-5376 LIGHTING GP-FLOOD

SMCS-1434 **i03537655**

NOTE	REF NO	GRAPHIC REF	PART NUMBER	QTY	PART NAME 1 2 3 4 5 6 (PRODUCT LEVEL)	SEE PAGE
	1	1	**9X-3463**	1	LAMP-HALOGEN (24-VOLT, 70-WATT) (FLOODLIGHT)	
M	2	1	**8T-0389**	1	LOCKNUT (M10X1.5-THD)	
	3	1	**9X-4244**	2	SCREW-SPECIAL (M4X1.79X25-MM)	
	4	1	**202-6614**	1	LENS AS (FLOODLIGHT)	
	5	1	**234-7730**	1	BODY AS (FLOODLIGHT)	
	6	1	**164-7556**	1	BRACKET (LAMP RETAINING)	
	7	1	**234-7731**	1	BRACKET AS	
	8	1	**8T-4121**	1	WASHER-HARD (11X21X2.5-MM THK)	

M-METRIC PART

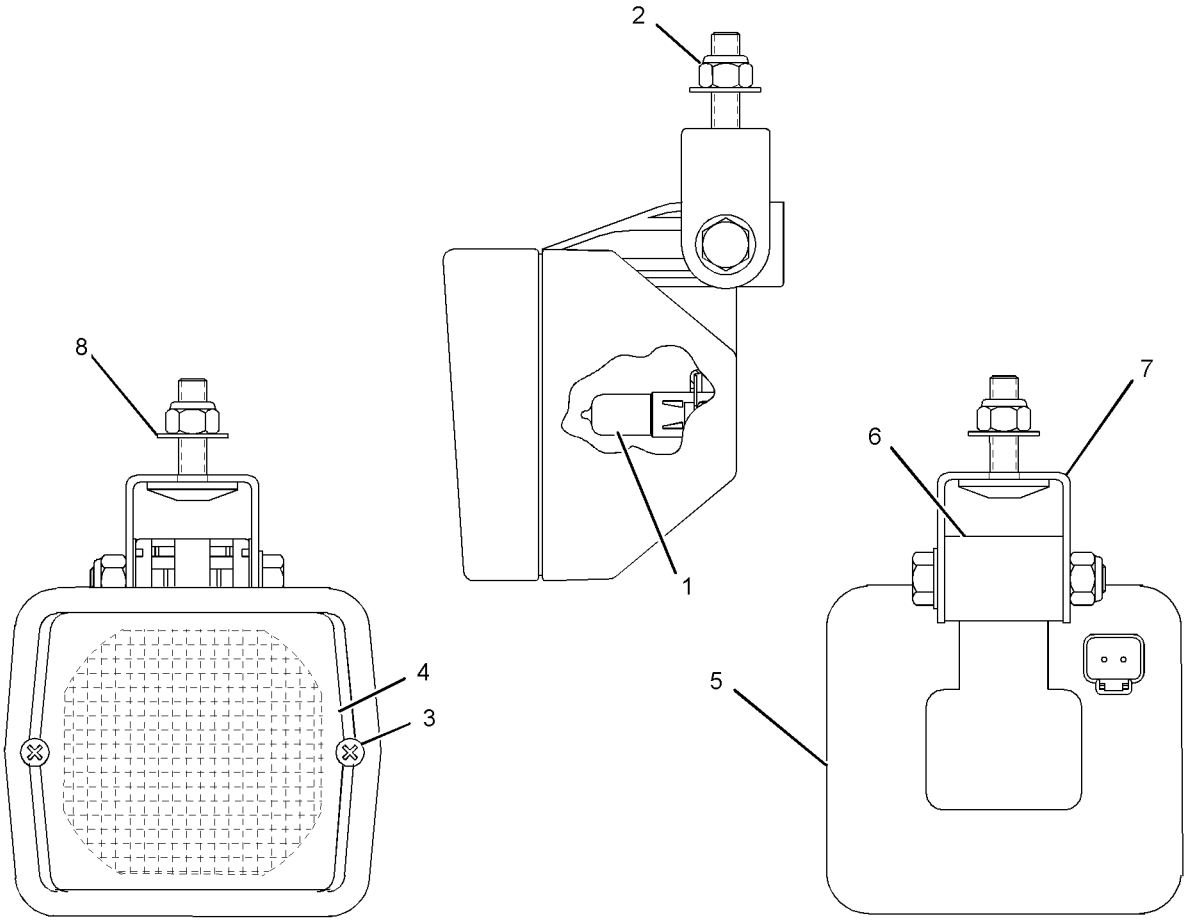

GRAPHIC #1 **<END>** g01329238

302-0412 LAMP GP-HEAD & SIGNAL

S/N: JAP1-UP
24-VOLTS
PART OF 334-3341 WIRING GP-FRONT
AN ATTACHMENT

SMCS-1429, 1430 **i03683321**

NOTE	REF NO	GRAPHIC REF	PART NUMBER	QTY	PART NAME 1 2 3 4 5 6 (PRODUCT LEVEL)	SEE PAGE
	1	1	**320-1515**	1	BODY AS	
	2	1	**228-6054**	1	BEZEL	
	3	1	**228-6050**	1	LENS AS (HEADLIGHT)	
	4	1	**228-6052**	1	LENS AS (TURN SIGNAL)	
	5	1	**228-6056**	6	SCREW (4-32X1.26-IN)	
	6	1	**9X-3465**	1	LAMP (24-VOLT, 75/70-WATT)	
	7	1	**130-3515**	1	LAMP (24-VOLT, 5-WATT)	
	8	1	**242-0588**	1	LAMP (24-VOLT, 21-WATT)	
M	9	1	**8T-0389**	1	LOCKNUT (M10X1.5-THD)	
	10	1	**100-3253**	1	SPACER	
	11	1	**100-3254**	1	SPACER	
	12	1	**100-3255**	1	WASHER (SPHERICAL)	
	13	1	**102-8805**	1	KIT-RECEPTACLE (6-PIN)	
					(INCLUDES RECEPTACLE AS & WEDGE)	
	14	1	**186-3735**	5	PIN-CONNECTOR (16-GA TO 18-GA)	
	15	1	**8T-8737**	1	PLUG-SEAL	

M-METRIC PART

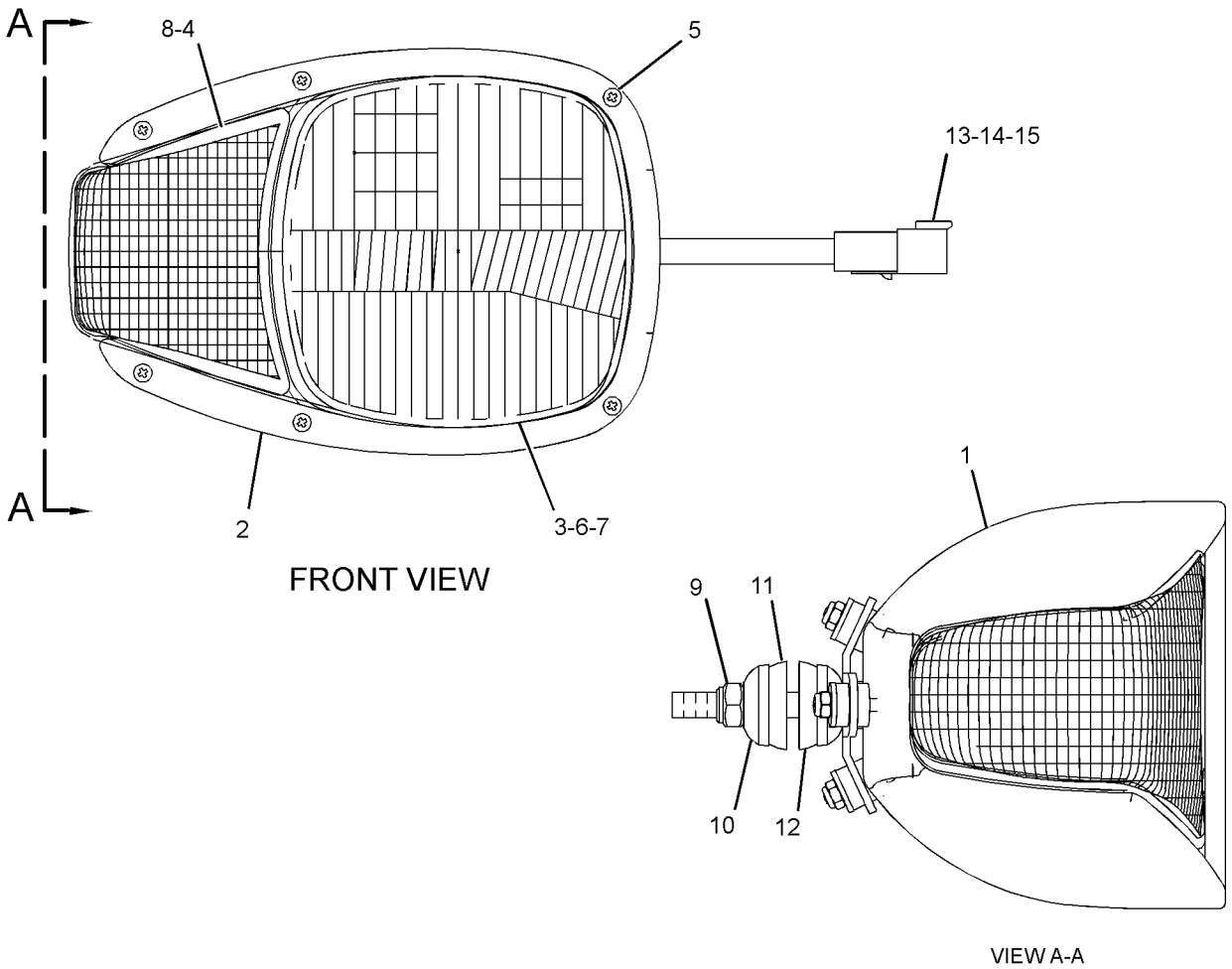

GRAPHIC #1 **<END>** g01927573

302-0413 LAMP GP-HEAD & SIGNAL

S/N: JAP1-UP
24-VOLT
PART OF 334-3341 WIRING GP-FRONT
AN ATTACHMENT

SMCS-1429, 1430 **i03595888**

NOTE	REF NO	GRAPHIC REF	PART NUMBER	QTY	PART NAME 1 2 3 4 5 6 (PRODUCT LEVEL)	SEE PAGE
	1	1	**320-1515**	1	BODY AS	
	2	1	**228-6054**	1	BEZEL	
	3	1	**228-6050**	1	LENS AS (HEADLIGHT)	
	4	1	**228-6052**	1	LENS AS (TURN SIGNAL)	
	5	1	**228-6056**	6	SCREW (4-32X1.26-IN)	
	6	1	**9X-3465**	1	LAMP (24-VOLT, 75/70-WATT)	
	7	1	**130-3515**	1	LAMP (24-VOLT, 5-WATT)	
	8	1	**242-0588**	1	LAMP (24-VOLT, 21-WATT)	
M	9	1	**8T-0389**	1	LOCKNUT (M10X1.5-THD)	
	10	1	**100-3253**	1	SPACER	
	11	1	**100-3254**	1	SPACER	
	12	1	**100-3255**	1	WASHER (SPHERICAL)	
	13	1	**102-8805**	1	KIT-RECEPTACLE (6-PIN)	
					(INCLUDES RECEPTACLE AS & WEDGE)	
	14	1	**186-3735**	5	PIN-CONNECTOR (16-GA TO 18-GA)	
	15	1	**8T-8737**	1	PLUG-SEAL	

M-METRIC PART

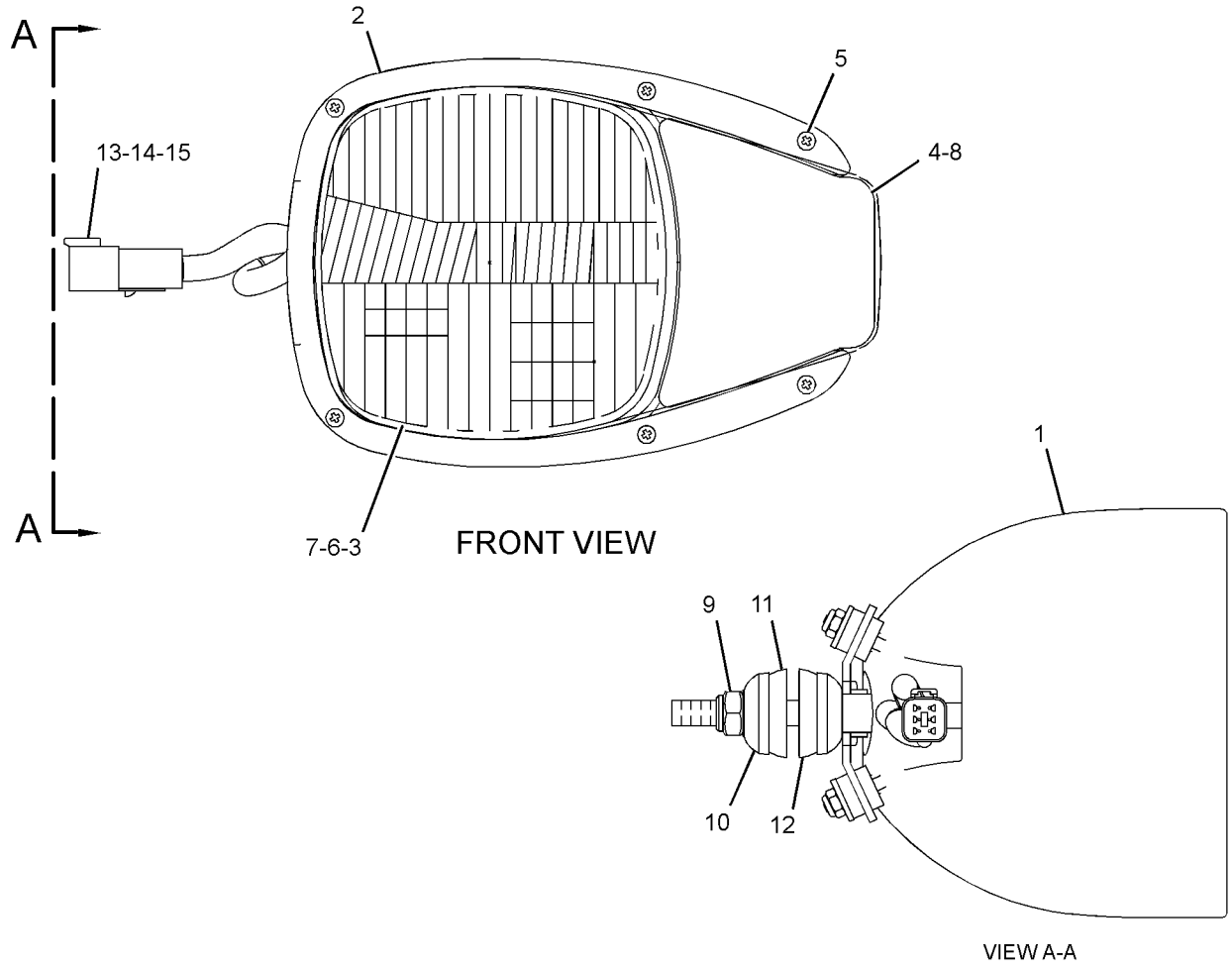

GRAPHIC #1 **<END>** g01927574

259-0134 LAMP GP-REGISTRATION PLATE

S/N: JAP1-UP
24-VOLT
PART OF 334-3348 LIGHTING GP-REGISTRATION PLATE
AN ATTACHMENT

SMCS-1429 **i03017977**

NOTE	REF NO	GRAPHIC REF	PART NUMBER	QTY	PART NAME 1 2 3 4 5 6 (PRODUCT LEVEL)	SEE PAGE
	1	1	**5C-9583**	1	LAMP (24-VOLT, 5-WATT)	
	2	1	**102-8802**	1	KIT-RECEPTACLE (2-PIN)	
					(INCLUDES RECEPTACLE AS & WEDGE)	
	3	1	**186-3735**	2	PIN-CONNECTOR (16-GA TO 18-GA)	

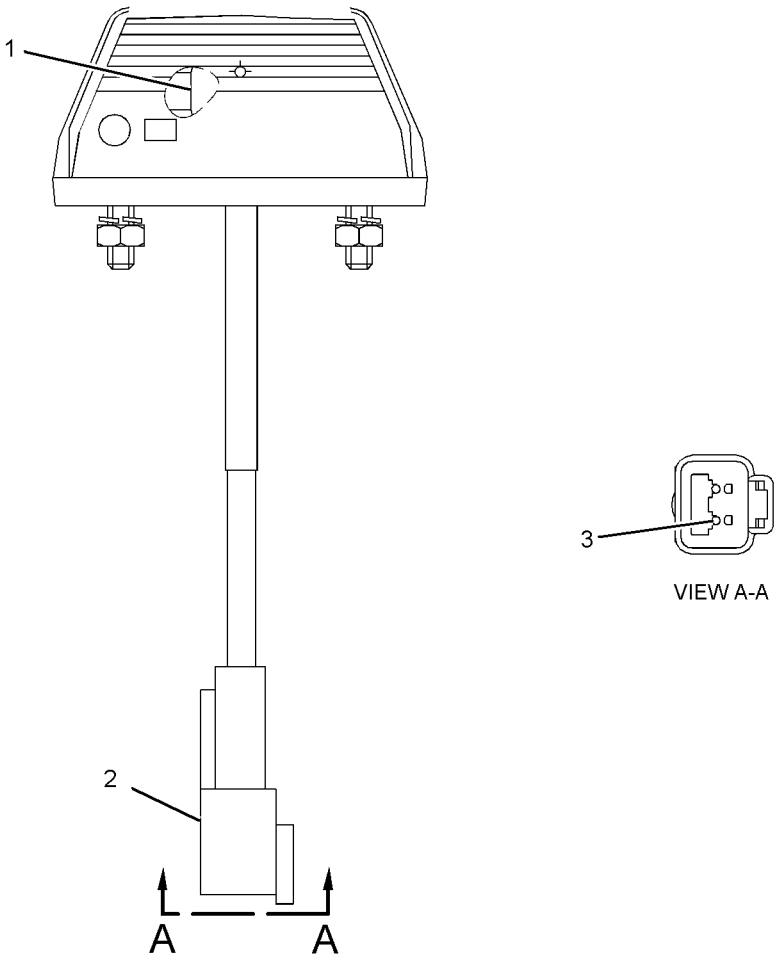

GRAPHIC #1 **<END>** g01201568

135-0426 LAMP GP-SIGNAL–STOP, TAIL

S/N: JAP1-UP
12-VOLT, 24-VOLT
PART OF 284-5348 WIRING GP-REAR LIGHTING

SMCS-1430 **i02443767**

NOTE	REF NO	GRAPHIC REF	PART NUMBER	QTY	PART NAME 1 2 3 4 5 6 (PRODUCT LEVEL)	SEE PAGE
	1	1	**102-8803**	1	KIT-RECEPTACLE (3-PIN)	
					(INCLUDES RECEPTACLE AS & WEDGE)	
	2	1	**186-3735**	3	PIN-CONNECTOR (16-GA TO 18-GA)	

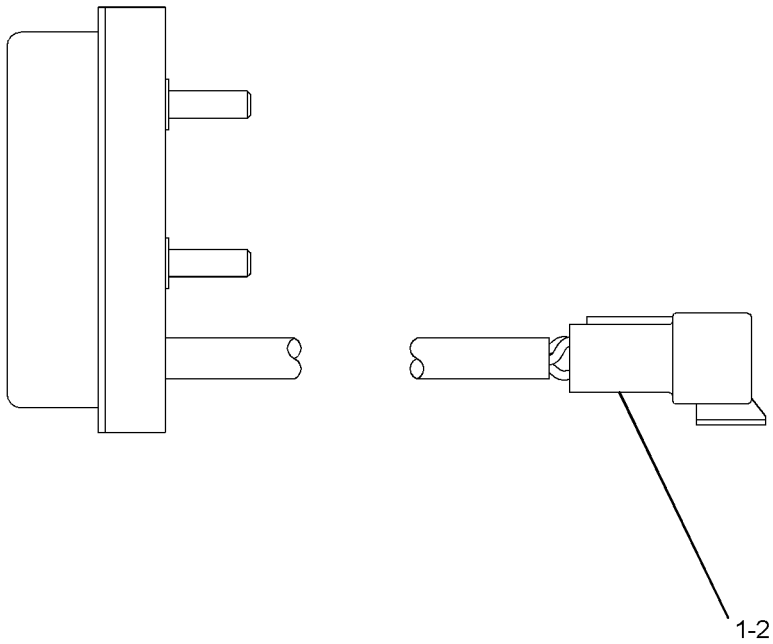

GRAPHIC #1 **<END>** g01213248

135-0427 LAMP GP-SIGNAL–PARK, TURN

S/N: JAP1-UP
24-VOLT
PART OF 284-5353 LIGHTING GP-ROADING
AN ATTACHMENT

SMCS-1430 **i02526811**

NOTE	REF NO	GRAPHIC REF	PART NUMBER	QTY	PART NAME 1 2 3 4 5 6 (PRODUCT LEVEL)	SEE PAGE
	1	1	**102-8803**	1	KIT-RECEPTACLE (3-PIN)	
					(INCLUDES RECEPTACLE AS & WEDGE)	
	2	1	**186-3735**	3	PIN-CONNECTOR (16-GA TO 18-GA)	

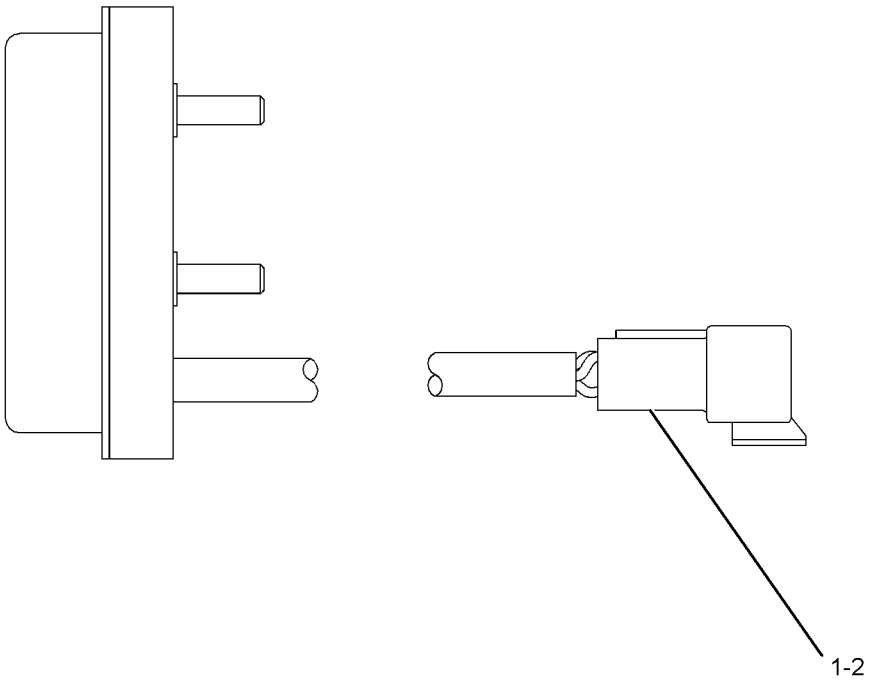

GRAPHIC #1 **<END>** g01273007

199-3368 LAMP GP-SIGNAL–TURN

S/N: JAP1-UP
24-VOLT
PART OF 284-5363 LIGHTING GP-SIGNAL
AN ATTACHMENT

SMCS-1430 **i03432182**

NOTE	REF NO	GRAPHIC REF	PART NUMBER	QTY	PART NAME 1 2 3 4 5 6 (PRODUCT LEVEL)	SEE PAGE
	1	1	**102-8802**	1	KIT-RECEPTACLE (2-PIN)	
					(INCLUDES RECEPTACLE AS & WEDGE)	
	2	1	**186-3735**	2	PIN-CONNECTOR (16-GA TO 18-GA)	

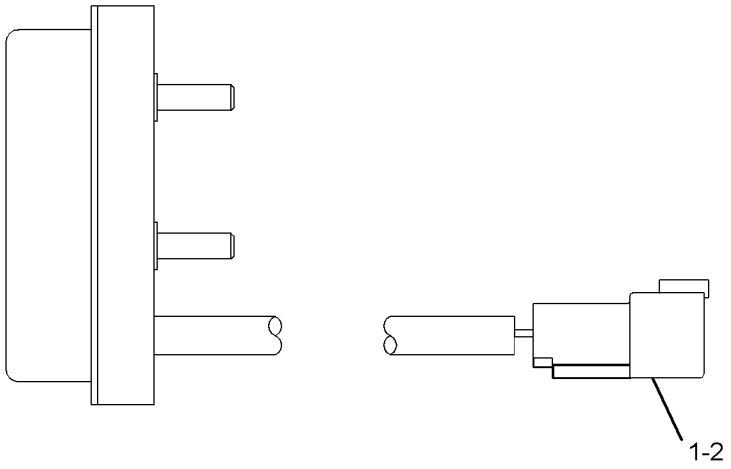

GRAPHIC #1 **<END>** g01217868

ELECTRICAL AND STARTING SYSTEM

294-8546 LIGHTING AR-ROADING

S/N: JAP1-UP

AN ATTACHMENT

SMCS-1408, 1429 **i03641045**

NOTE	PART NUMBER	QTY	PART NAME 1 2 3 4 5 6 (PRODUCT LEVEL)	SEE PAGE
Y	*284-5353*	1	LIGHTING GP-ROADING	158
Y	*284-5363*	1	LIGHTING GP-SIGNAL (TURN)	160

Y-SEPARATE ILLUSTRATION

<END>

284-5394 LIGHTING GP-BACKUP

S/N: JAP1-UP
PART OF 348-3018 GENERAL AR, 334-7636, 335-9267 ROADING AR
ALSO AN ATTACHMENT

SMCS-1408 **i03681443**

NOTE	REF NO	GRAPHIC REF	PART NUMBER	QTY	PART NAME 1 2 3 4 5 6 (PRODUCT LEVEL)	SEE PAGE
	1	1	**3E-5239**	1	RELAY AS (24-VOLT) (BACKUP LIGHT)	
	2	1	**7K-1181**	1	STRAP-CABLE	
	3	1	**213-9100**	1	ALARM GP (BACKUP)	
		1	**102-8802**	1	KIT-RECEPTACLE (2-PIN)	
					(INCLUDES RECEPTACLE AS & WEDGE)	
D		1	**5P-5623**		WIRE-ELECTRICAL (16-GA, BLACK) (0.4-M EACH)	
		1	**186-3735**		PIN-CONNECTOR (16-GA TO 18-GA)	
E		1	**9X-1813**		SLEEVE (29-CM)	
	4	1	**304-5794**	1	BRACKET AS	
	5	1	**344-6167**	1	COVER	
	6	1	**130-5300**	3	CLIP	
Y	7	1	**171-5672**	2	LAMP GP (24-VOLT) (BACKUP LIGHT)	141
M	8	1	**5C-2890**	6	NUT (M6X1-THD)	
	9	1	**7X-7729**	2	WASHER (11X25X3-MM THK)	
	10	1	**8T-4121**	4	WASHER-HARD (11X21X2.5-MM THK)	
M	11	1	**8T-4133**	2	NUT (M10X1.5-THD)	
M	12	1	**8T-4137**	4	BOLT (M10X1.5X20-MM)	
	13	1	**8T-4224**	6	WASHER-HARD (8.8X16X2-MM THK)	
M	14	1	**8T-4970**	1	BOLT (M6X1X14-MM)	
	15	1	**9X-8256**	1	WASHER (6.6X12X2-MM THK)	

D-ORDER BY THE METER
E-ORDER BY THE CENTIMETER
M-METRIC PART
Y-SEPARATE ILLUSTRATION

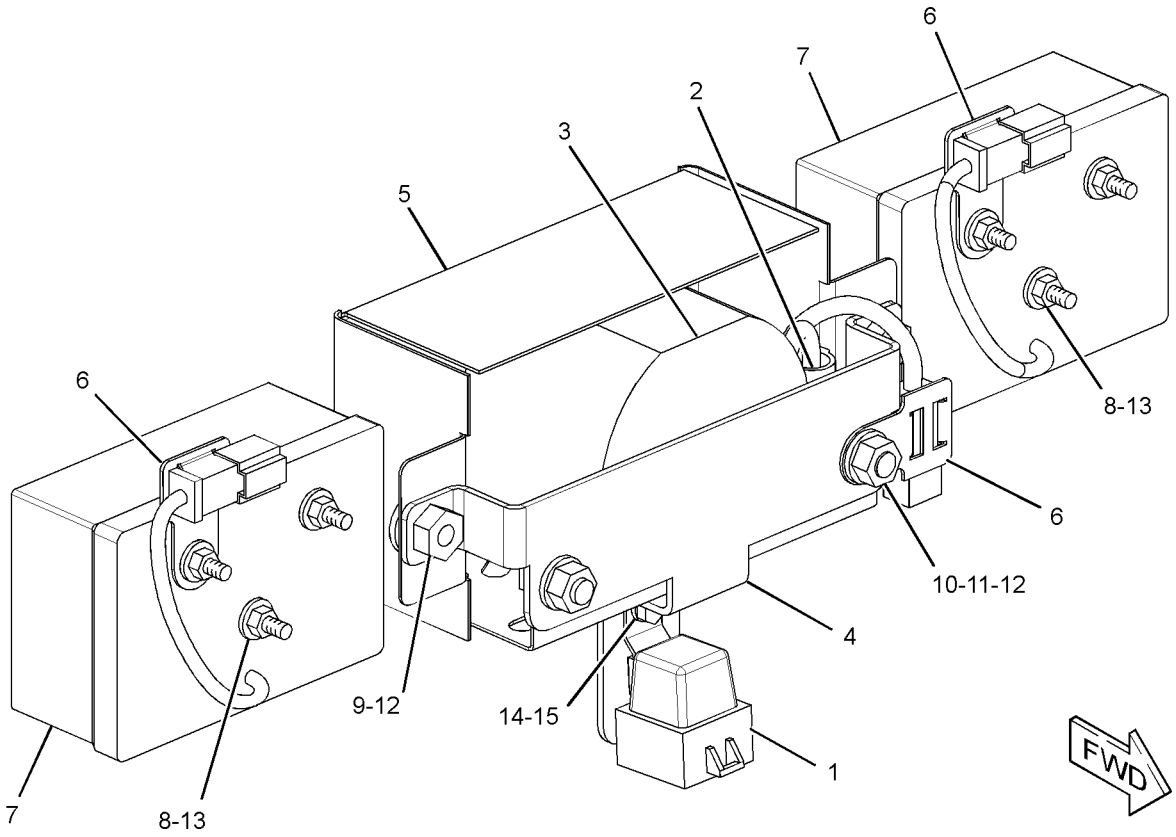

GRAPHIC #1 **<END>** g01916174

284-5362 LIGHTING GP-FLOOD—RIPPER

S/N: JAP1-UP

PART OF 348-3018 GENERAL AR

SMCS-1434 **i03258690**

NOTE	REF NO	GRAPHIC REF	PART NUMBER	QTY	PART NAME 1 2 3 4 5 6 (PRODUCT LEVEL)	SEE PAGE
	1	1	**9X-9365**	2	BRACKET	
Y	2	1	**234-4323**	2	LAMP GP-FLOOD (24-VOLT)	143
	3	1	**304-5880**	1	HARNESS AS-REAR LIGHTING	
	4	1	**6V-3265**	2	CLIP	
	5	1	**7G-7053**	2	GROMMET	
	6	1	**7K-1181**	9	STRAP-CABLE	
M	7	1	**8T-4195**	2	BOLT (M10X1.5X30-MM)	

M-METRIC PART
Y-SEPARATE ILLUSTRATION

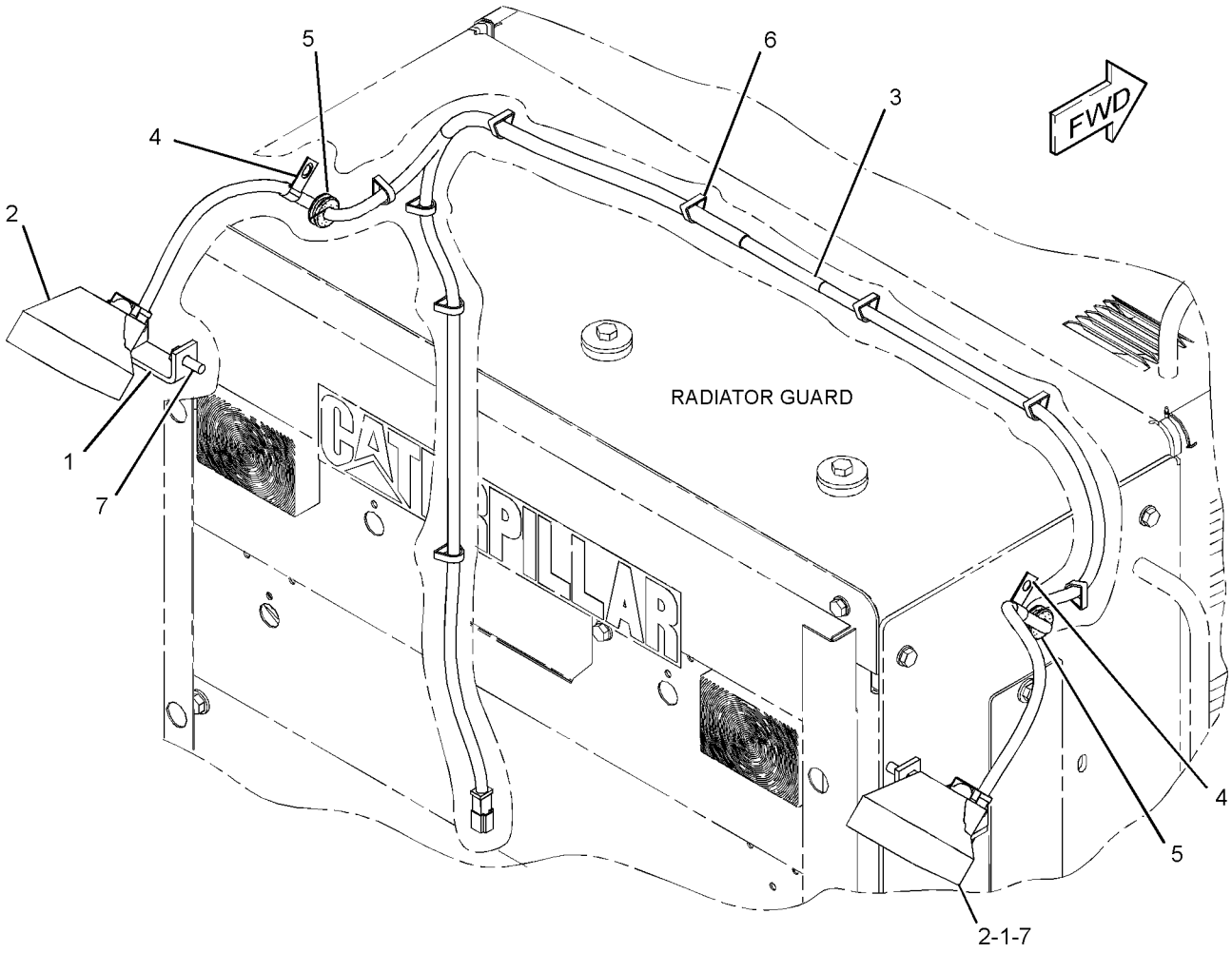

GRAPHIC #1 **<END>** g01755335

284-5376 LIGHTING GP-FLOOD—FRONT

S/N: JAP1-UP
24-VOLT
PART OF 348-3018 GENERAL AR

SMCS-1434 **i03641003**

NOTE	REF NO	GRAPHIC REF	PART NUMBER	QTY	PART NAME 1 2 3 4 5 6 (PRODUCT LEVEL)	SEE PAGE
	1	1	**9L-1566**	2	SUPPORT	
	2	1	**9W-1441**	1	FUSE (15-AMPERE)	
	3	1	**341-3192**	1	BOSS GP-FRAME	
	4	1	*9X-9632*	1	SWITCH AS-ROCKER (24-VOLT)	
		1	**3E-8772**	1	SWITCH-ROCKER (WORK LIGHTS)	
		1	**3E-8815**	1	ACTUATOR	
		1	**3E-8825**	2	LAMP (24-VOLT)	
Y	5	1	**234-4325**	2	LAMP GP-FLOOD (24-VOLT)	145
	6	1	**335-8402**	1	HARNESS AS-SOLENOID	
	7	1	**033-8248**	6	CLIP	
	8	1	**147-0385**	1	CLIP	
Y	9	1	**234-4323**	2	LAMP GP-FLOOD (24-VOLT)	143
	10	1	**5P-8167**	3	BOLT (3/8-16X0.625-IN)	
	11	1	**5S-7379**	2	BOLT (3/8-16X0.875-IN)	
	12	1	**7K-1181**	2	STRAP-CABLE	
	13	1	**8T-4121**	6	WASHER-HARD (11X21X2.5-MM THK)	
M	14	1	**8T-4133**	2	NUT (M10X1.5-THD)	
	15	1	**8T-4896**	3	WASHER-HARD (10.2X18.5X2.5-MM THK)	

M-METRIC PART
Y-SEPARATE ILLUSTRATION

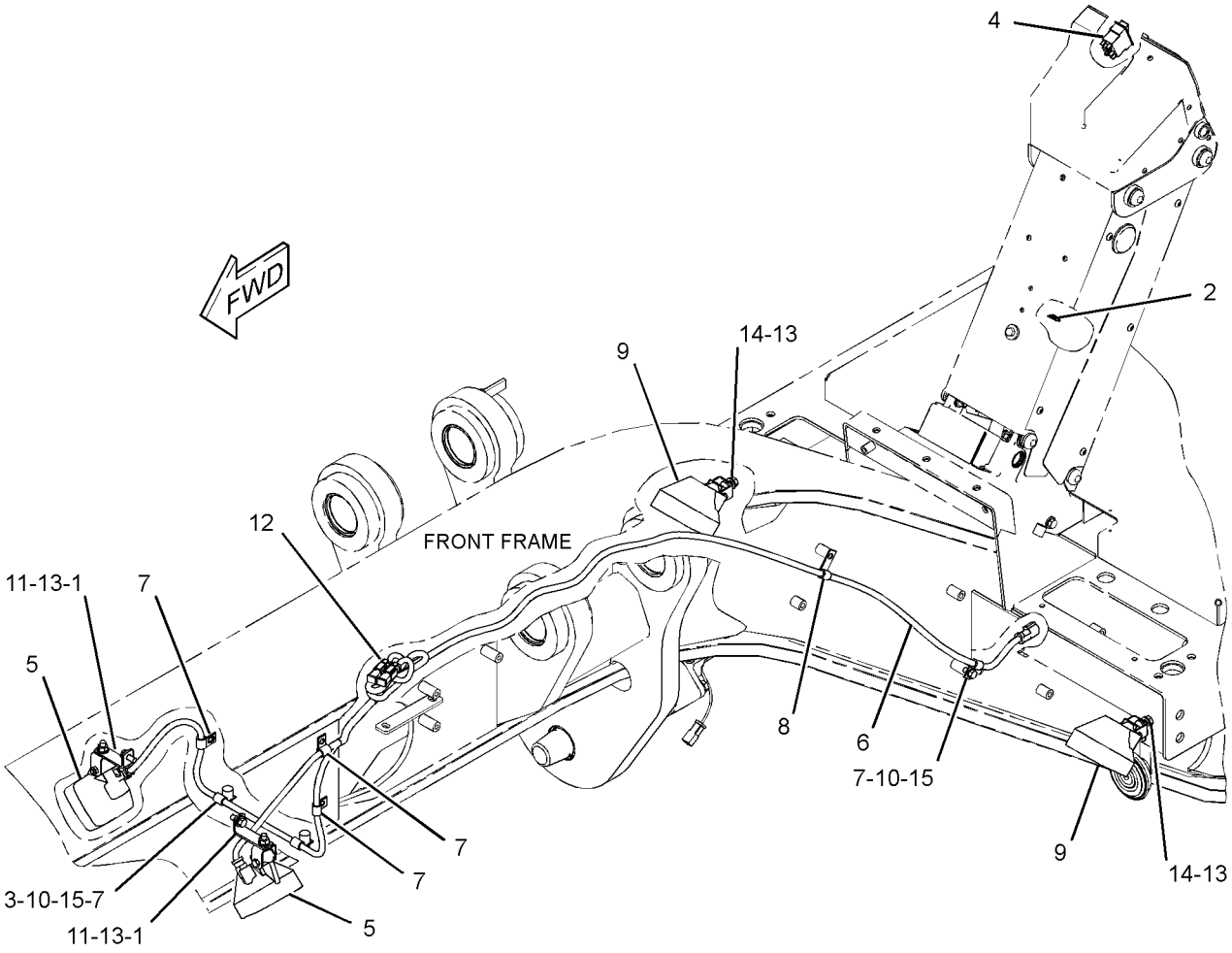

GRAPHIC #1 **<END>** g01831537

334-3348 LIGHTING GP-REGISTRATION PLATE

S/N: JAP1-UP
PART OF 334-7636, 335-9267 ROADING AR
AN ATTACHMENT

SMCS-1429 **i03400582**

NOTE	REF NO	GRAPHIC REF	PART NUMBER	QTY	PART NAME 1 2 3 4 5 6 (PRODUCT LEVEL)	SEE PAGE
Y	1	1	**259-0134**	1	LAMP GP-REGISTRATION PLATE (24-VOLT)	148
	2	1	**338-8415**	1	PLATE	
M	3	1	**5C-7261**	4	NUT (M8X1.25-THD)	
	4	1	**5P-4116**	8	WASHER-HARD (8.8X20.5X2-MM THK)	
M	5	1	**8T-4189**	4	BOLT (M8X1.25X20-MM)	

M-METRIC PART
Y-SEPARATE ILLUSTRATION

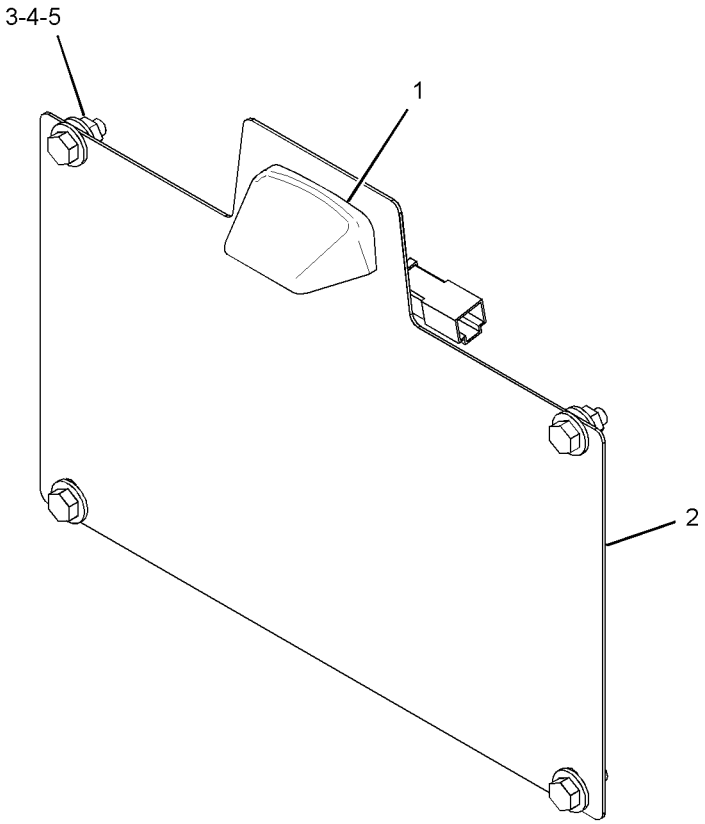

GRAPHIC #1 **<END>** g01689520

ELECTRICAL AND STARTING SYSTEM

284-5353 LIGHTING GP-ROADING

S/N: JAP1-UP
PART OF 294-8546 LIGHTING AR-ROADING
AN ATTACHMENT

SMCS-1429 **i03432040**

NOTE	REF NO	GRAPHIC REF	PART NUMBER	QTY	PART NAME 1 2 3 4 5 6 (PRODUCT LEVEL)	SEE PAGE
	1	1	**2G-0617**	4	CLAMP	
	2	1	**2G-0659**	2	BRACKET	
	3	1	**2G-0988**	2	CAP	
	4	1	**3K-9520**	3	GROMMET	
	5	1	**5T-9313**	1	TUBE	
	6	1	**8X-5153**	1	FILM-FACE (TURN SIGNAL, HAZARD)	
	7	1	**8X-5154**	1	FILM-FACE (HEADLIGHTS HIGH, LOW BEAM)	
	8	1	**9W-1441**	1	FUSE (15-AMPERE)	
	9	1	**9W-1442**	1	FUSE (10-AMPERE)	
	10	1	**103-1592**	2	PLATE	
	11	1	**108-0358**	1	FLASHER AS (24-VOLT)	
Y	12	1	**135-0427**	2	LAMP GP-SIGNAL (24-VOLT, PARK, TURN)	150
	13	1	**137-9410**	4	CLAMP	
	14	1	**173-3064**	1	SWITCH GP-ROTARY (TURN SIGNAL, HAZARD)	
		1	**5L-7200**	1	SCREW (8-32X0.375-IN)	
		1	**9B-7233**	1	LOCKWASHER	
	15	1	**179-1550**	2	CLAMP	
Y	16	1	**234-4323**	2	LAMP GP-FLOOD (24-VOLT)	143
Y	17	1	**234-4324**	2	LAMP GP-FLOOD (24-VOLT)	144
	18	1	**336-0959**	1	HARNESS AS-LIGHTING	
	19	1	**336-0961**	1	HARNESS AS-LIGHTING (BAR)	
	20	1	**103-5678**	1	SWITCH AS-ROTARY	
		1	**5L-7200**	1	SCREW (8-32X0.375-IN)	
		1	**9B-7233**	1	LOCKWASHER	
	21	1	**130-5300**	2	CLIP	
	22	1	*3E-9317*	1	SWITCH AS-ROCKER (24-VOLT) (HEADLIGHTS, TAIL LIGHTS)	
		1	**3E-8772**	1	SWITCH-ROCKER (HEADLIGHTS, TAIL LIGHTS)	
		1	**3E-8825**	2	LAMP (24-VOLT) (HEADLIGHTS, TAIL LIGHTS)	
		1	**3E-9326**	1	ACTUATOR	
	23	1	**4D-7794**	4	CLIP	
	24	1	**4K-8864**	2	CLIP	
	25	1	**4L-6454**	4	BOLT (3/8-16X1-IN)	
M	26	1	**5C-2890**	8	NUT (M6X1-THD)	
	27	1	**5M-3062**	1	BOLT (3/8-16X0.75-IN)	
	28	1	**6V-8801**	4	NUT (3/8-16-THD)	
	29	1	**7K-1181**	4	STRAP-CABLE	
	30	1	**8T-4205**	8	WASHER-HARD (7.2X14.5X2-MM THK)	
	31	1	**8T-4223**	4	WASHER-HARD (13.5X25.5X3-MM THK)	
M	32	1	**8T-4244**	4	NUT (M12X1.75-THD)	
	33	1	**8T-4896**	5	WASHER-HARD (10.2X18.5X2.5-MM THK)	
M	34	1	**8T-5412**	4	BOLT (M12X1.75X140-MM)	
	35	1	**8X-6296**	2	LEVER	
M	36	1	**9X-2043**	2	SCREW-TRUSS HEAD (M6X1X14-MM)	

M-METRIC PART
Y-SEPARATE ILLUSTRATION

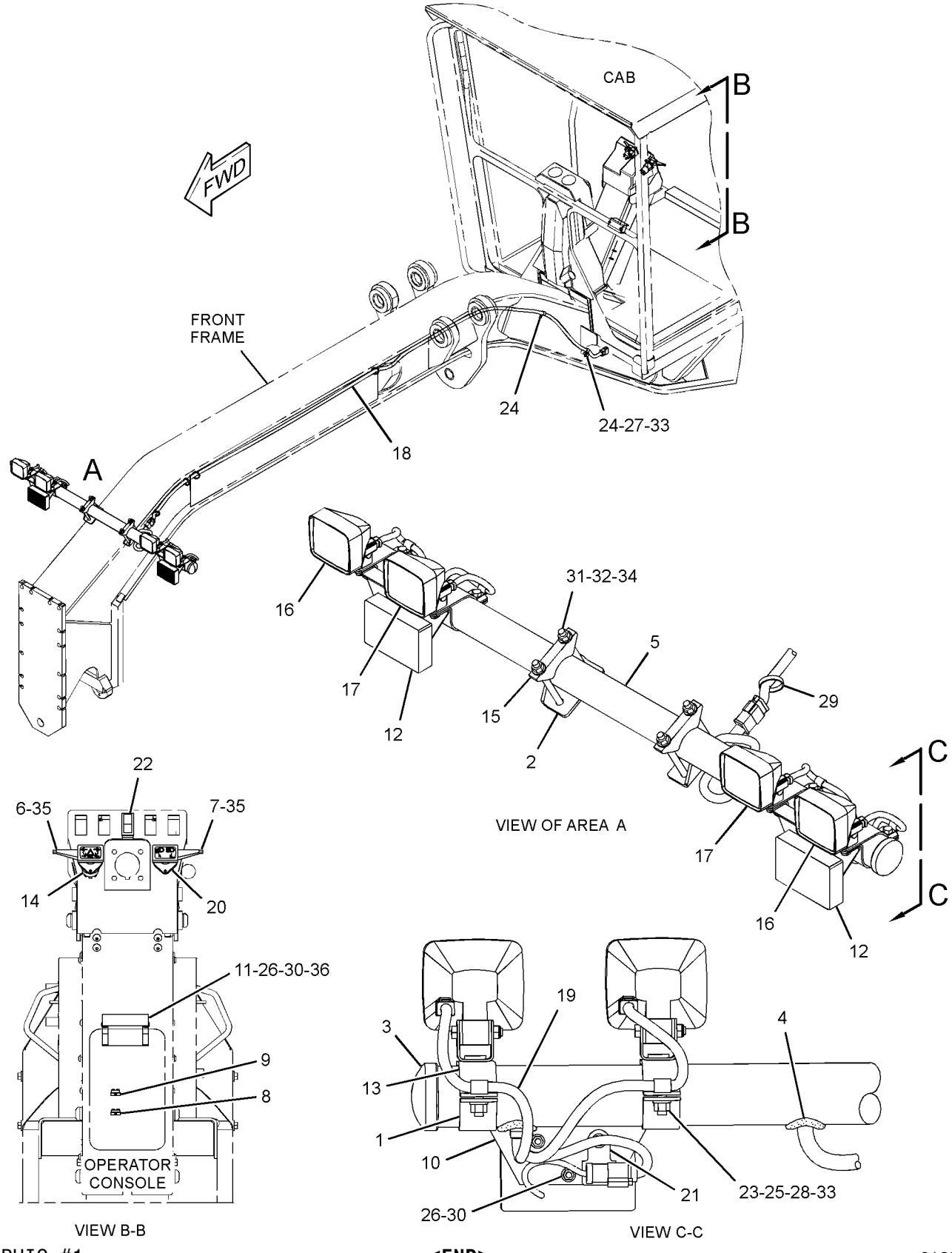

GRAPHIC #1

<END>

g01687683

284-5363 LIGHTING GP-SIGNAL–TURN

S/N: JAP1-UP

PART OF 294-8546 LIGHTING AR-ROADING, 334-7636, 335-9267 ROADING AR AN ATTACHMENT

SMCS-1430 **i03254704**

NOTE	REF NO	GRAPHIC REF	PART NUMBER	QTY	PART NAME 1 2 3 4 5 6 (PRODUCT LEVEL)	SEE PAGE
	1	1	**130-5300**	2	CLIP	
Y	2	1	**199-3368**	1	LAMP GP-SIGNAL (24-VOLT, TURN) (LH)	151
Y	2A	1	**199-3368**	1	LAMP GP-SIGNAL (24-VOLT, TURN) (RH)	151
M	3	1	**5C-2890**	6	NUT (M6X1-THD)	
	4	1	**8T-4205**	6	WASHER-HARD (7.2X14.5X2-MM THK)	

M-METRIC PART
Y-SEPARATE ILLUSTRATION

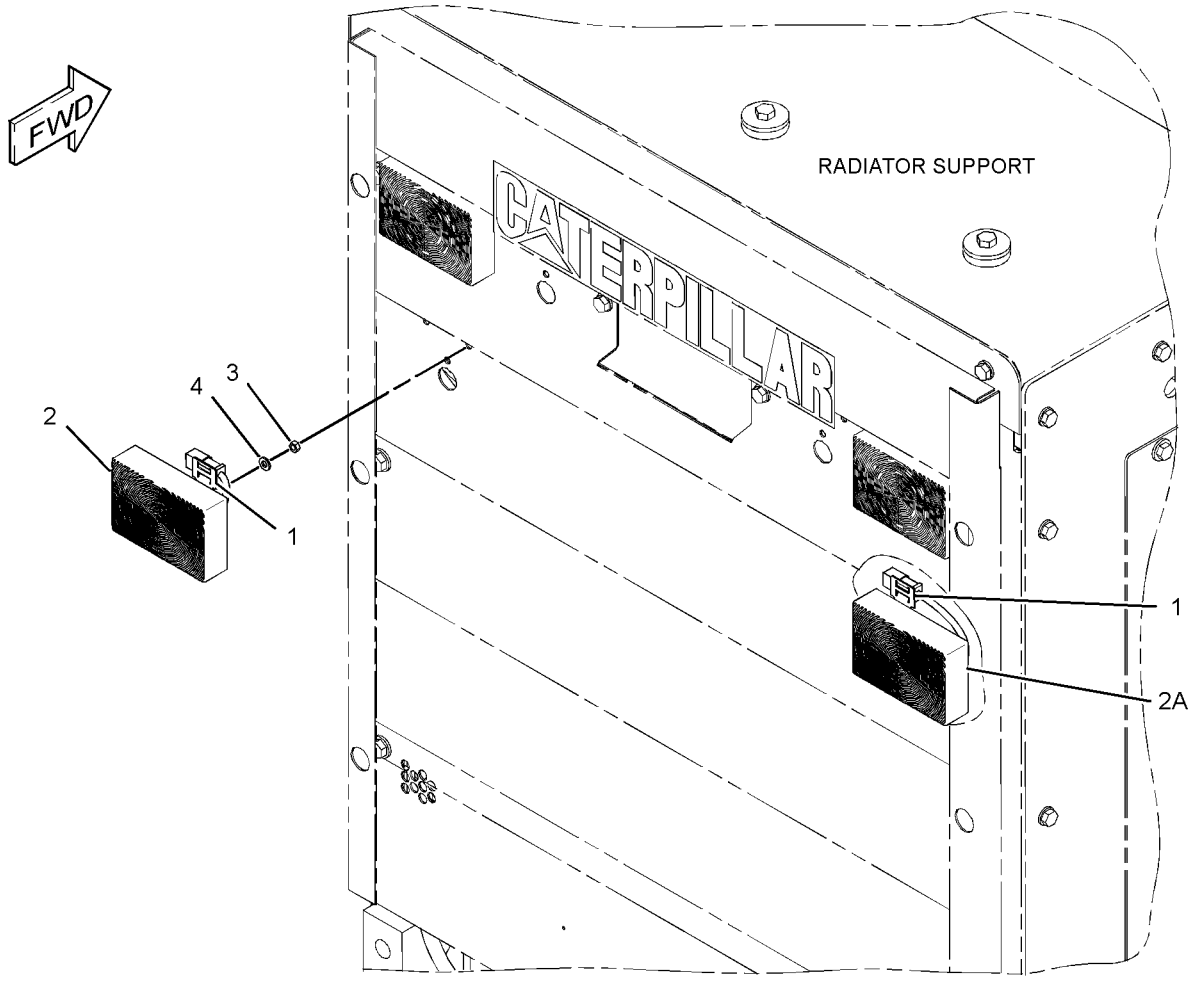

GRAPHIC #1 **<END>** g01705434

170-5335 MOTOR GP-ELECTRIC—CIRCULATING FAN

S/N: JAP1-UP
27-VOLT
PART OF 170-4820, 170-5334 FAN GP-CIRCULATING
AN ATTACHMENT

SMCS-5927 **i02463158**

NOTE	REF NO	GRAPHIC REF	PART NUMBER	QTY	PART NAME 1 2 3 4 5 6 (PRODUCT LEVEL)	SEE PAGE
	1	1	**102-8802**	1	KIT-RECEPTACLE (2-PIN)	
					(INCLUDES RECEPTACLE AS & WEDGE)	
	2	1	**9W-0852**	2	PIN-CONNECTOR (14-GA)	

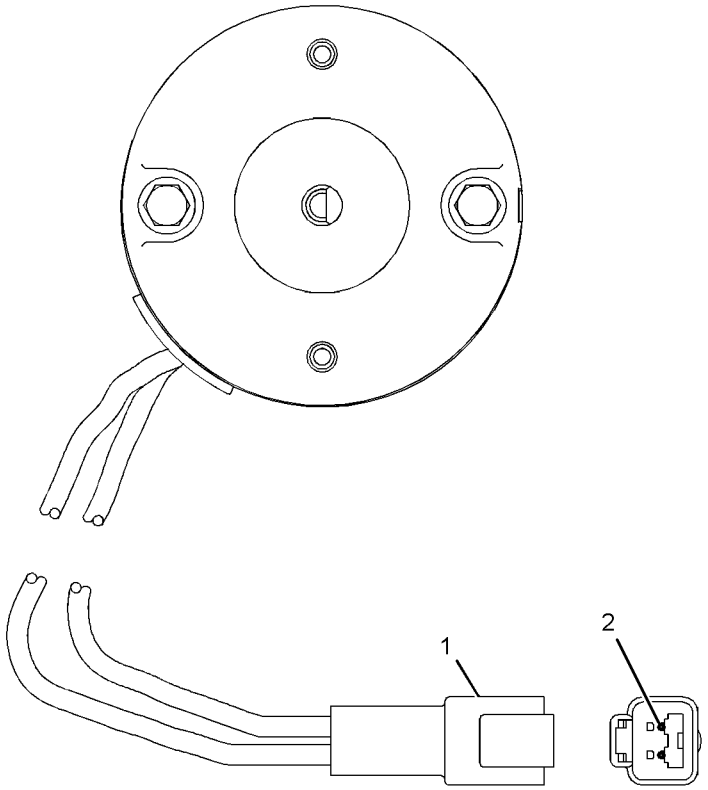

GRAPHIC #1 **<END>** g01240075

247-6449 MOUNTING GP-GRADE CONTROL

S/N: JAP1-UP
PART OF 337-3100 GRADE CONTROL AR
AN ATTACHMENT

SMCS-7220 **i02389804**

NOTE	PART NUMBER	QTY	PART NAME 1 2 3 4 5 6 (PRODUCT LEVEL)	SEE PAGE
	269-9322	1	DRAWBAR AS	
	8X-7951	1	DRAWBAR & YOKE AS	
	5T-6775	2	REINFORCEMENT	
	8F-9836	12	BOSS (3/8-16-THD)	
	8X-7956	1	SHAFT AS	

<END>

254-5960 MOUNTING GP-GRADE CONTROL–CIRCLE

S/N: JAP1-UP
PART OF 336-4249 GRADE CONTROL AR
AN ATTACHMENT

SMCS-7220 **i02457278**

NOTE	REF NO	GRAPHIC REF	PART NUMBER	QTY	PART NAME 1 2 3 4 5 6 (PRODUCT LEVEL)	SEE PAGE
	1	1	**187-7738**	2	WASHER-HARD (21X36.5X3.5-MM THK)	
	2	1	**236-1927**	1	BRACKET AS	
	3	1	**251-2382**	1	BOSS	
M	4	1	**9C-8895**	1	BOSS-TAPPED (M10X1.5-THD)	
Y	5	1	**153-9360**	1	CIRCLE GP	511

M-METRIC PART
Y-SEPARATE ILLUSTRATION

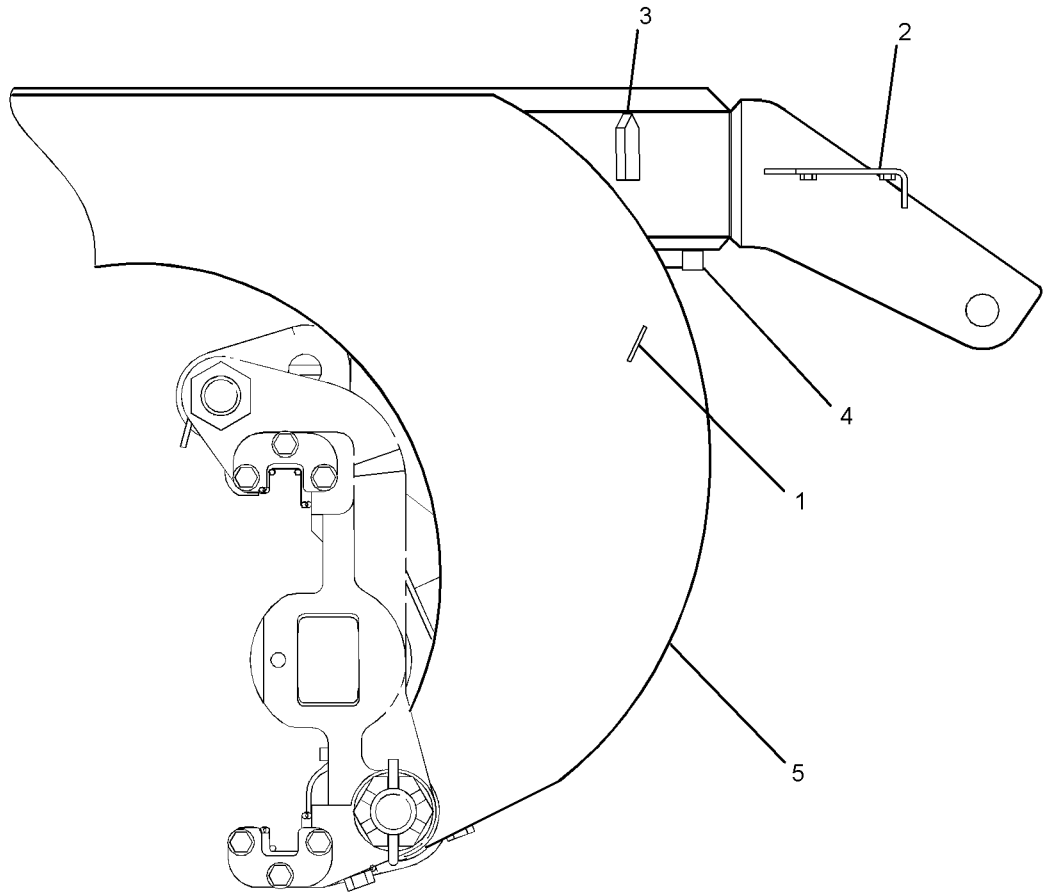

LEFT SIDE VIEW

GRAPHIC #1 **<END>** g01241625

ELECTRICAL AND STARTING SYSTEM

255-2361 MOUNTING GP-GRADE CONTROL

S/N: JAP1-UP
PART OF 337-3100 GRADE CONTROL AR
AN ATTACHMENT

SMCS-7220 **i02711524**

NOTE	PART NUMBER	QTY	PART NAME 1 2 3 4 5 6 (PRODUCT LEVEL)	SEE PAGE
Y	**269-9325**	1	CIRCLE AS	513

Y-SEPARATE ILLUSTRATION

<END>

235-8200 PLUG GP-CONNECTOR–
ENGINE HARNESS, PROTECTIVE COVER
S/N: KHX13472-UP
PART OF 325-9707 ENGINE AR-COMPLETE

SMCS-1403, 1408 **i02951921**

NOTE	REF NO	GRAPHIC REF	PART NUMBER	QTY	PART NAME 1 2 3 4 5 6 (PRODUCT LEVEL)	SEE PAGE
	1	1	**246-9353**	1	PLUG AS	
	1A	1	**8T-8737**	8	PLUG-SEAL	
	1B	1	**102-8806**	1	KIT-RECEPTACLE (8-PIN)	
					(INCLUDES RECEPTACLE AS & WEDGE)	
	2	1	**3S-2093**	1	STRAP-CABLE	

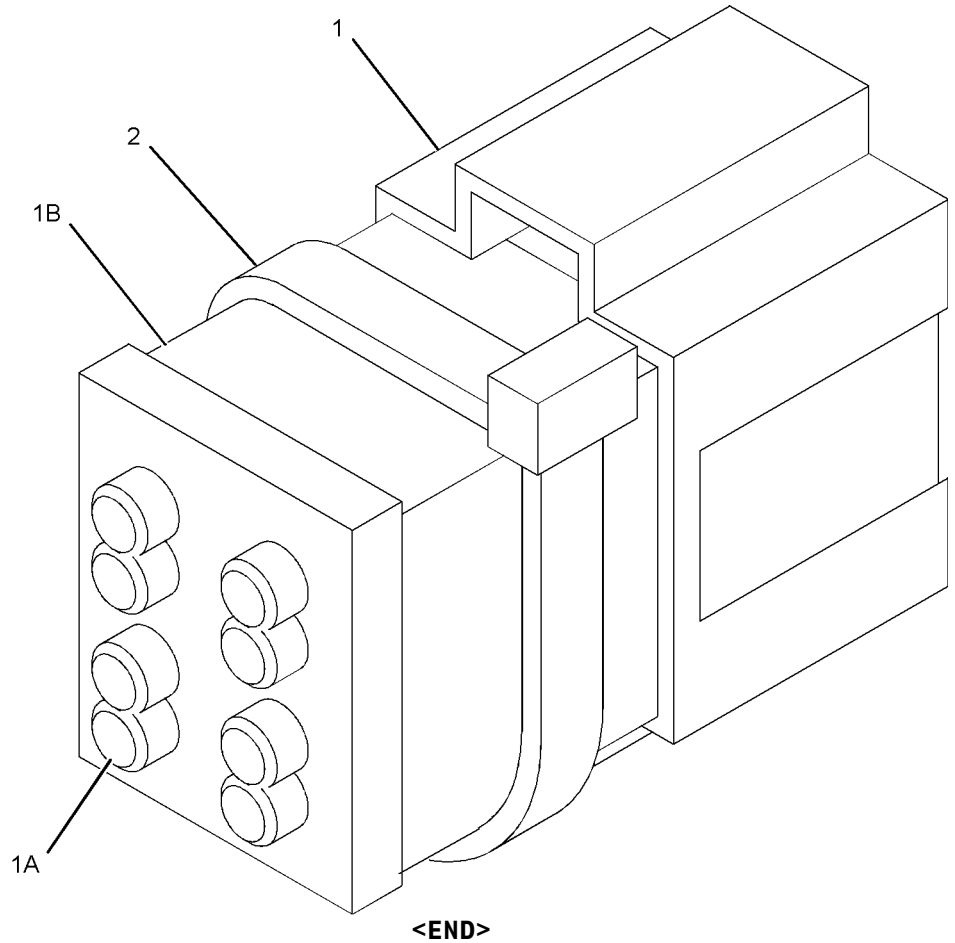

GRAPHIC #1 **<END>** g01105455

263-9088 RADIO GP-COMMUNICATION—PRODUCT LINK 121SR

S/N: JAP1-UP

PART OF 302-5429 INSTALLATION AR-COMMUNICATION

AN ATTACHMENT

SMCS-733T **i03194501**

NOTE	PART NUMBER	QTY	PART NAME 1 2 3 4 5 6 (PRODUCT LEVEL)	SEE PAGE
	330-3408	1	SOFTWARE GP-COMMUNICATION (PRODUCT LINK 121SR)	

<END>

297-5355 SENSOR GP-ENGINE

S/N: KHX13472-UP

PART OF 325-9707 ENGINE AR-COMPLETE

SMCS-1052, 1087, 1439, 1906, 1912, 1917, 1923, 1924, 1925

i02789817

NOTE	REF NO	GRAPHIC REF	PART NUMBER	QTY	PART NAME 1 2 3 4 5 6 (PRODUCT LEVEL)	SEE PAGE
	1	1	**9X-0262**	1	ADAPTER	
	2	1	**9X-8403**	1	ELBOW	
Y	3	1	*197-8393*	1	SENSOR GP-PRESSURE (ATMOSPHERIC)	172
Y	4	1	*197-8394*	1	SENSOR GP-PRESSURE (ENGINE OIL)	173
Y	5	1	*210-1747*	1	SENSOR GP-PRESSURE (BOOST)	174
Y	6	1	*236-6220*	1	SENSOR GP-PRESSURE (RAIL)	176
Y	7	1	*236-6221*	1	SENSOR GP-SPEED (ENGINE TIMING)	178
Y	8	1	*274-7395*	1	SENSOR GP-TEMPERATURE (AIR INLET MANIFOLD)	182
Y	9	1	*274-7396*	1	SENSOR GP-TEMPERATURE (ENGINE COOLANT)	183
	10	1	*169-5861*	1	PLUG AS	
		1	**3K-8460**	1	PLUG	
		1	**5P-7814**	1	SEAL-O-RING	
	11	1	*183-3406*	1	PLUG AS	
		1	**6V-5049**	1	SEAL-O-RING	
		1	**9S-4191**	1	PLUG-O-RING	
	12	1	*183-7263*	1	PLUG AS	
		1	**3J-7354**	1	SEAL-O-RING	
		1	**9S-8002**	1	PLUG-O-RING	
	13	1	**3E-4352**	1	WASHER-HARD (8.8X20.5X2.5-MM THK)	
M	14	1	**6V-3940**	1	BOLT (M8X1.25X25-MM)	
	15	1	**6V-5048**	2	SEAL-O-RING	
	16	1	**6V-5049**	1	SEAL-O-RING	
	17	1	**8T-2353**	1	ADAPTER	

M-METRIC PART
Y-SEPARATE ILLUSTRATION

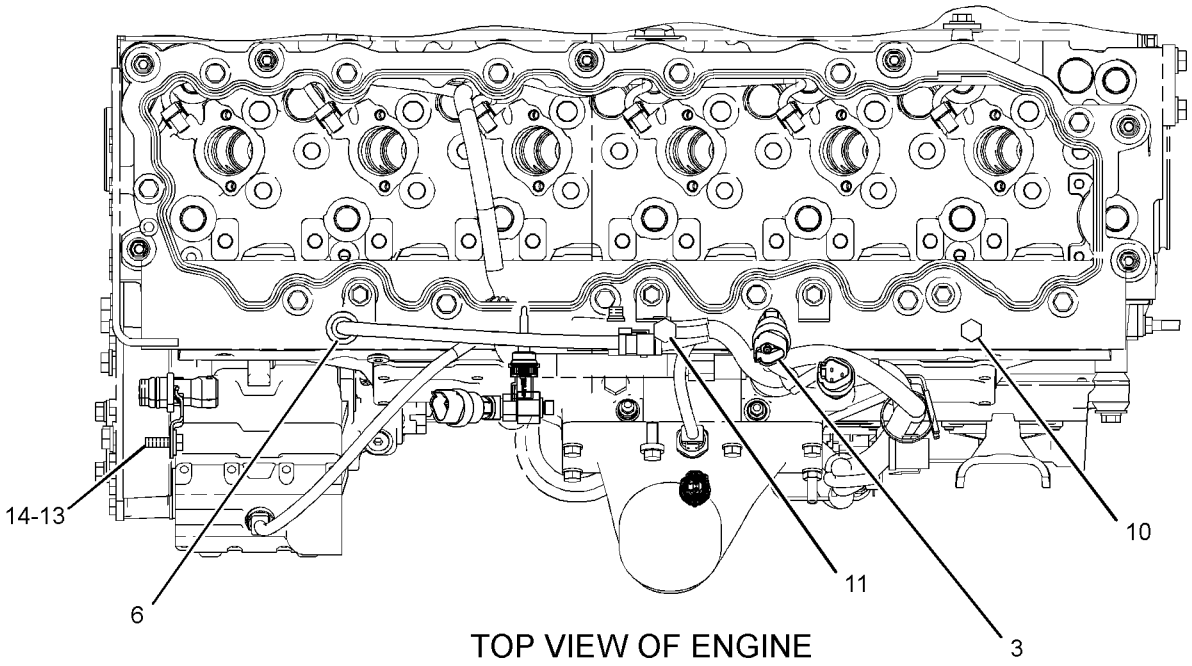

TOP VIEW OF ENGINE

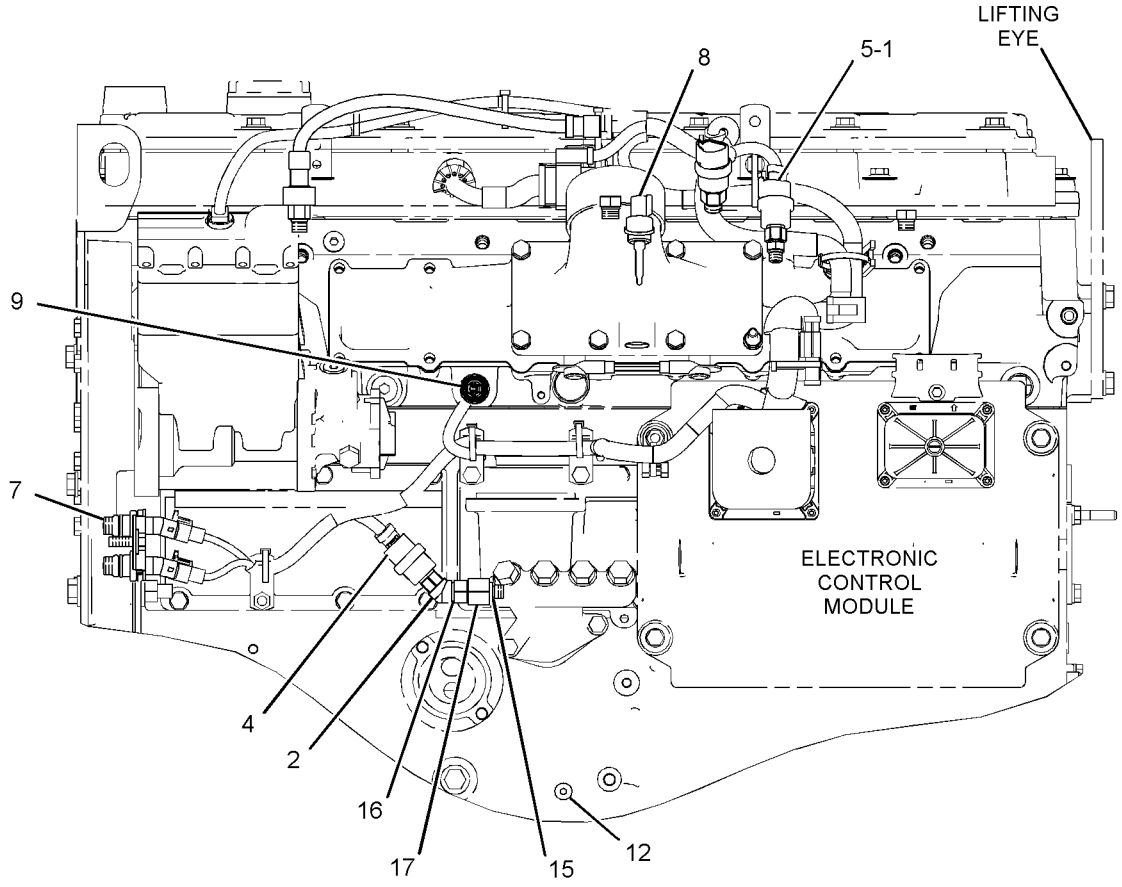

LEFT SIDE VIEW OF ENGINE

GRAPHIC #1 **<END>** g01335124

214-4863 SENSOR GP-POSITION

S/N: JAP1-UP
ROTARY
PART OF 282-2473 CONTROL GP-CLUTCH

SMCS-1408, 3168, 3175, 4269, 4809 **i01898168**

NOTE	REF NO	GRAPHIC REF	PART NUMBER	QTY	PART NAME 1 2 3 4 5 6 (PRODUCT LEVEL)	SEE PAGE
	1	1	**102-8803**	1	KIT-RECEPTACLE (3-PIN)	
					(INCLUDES RECEPTACLE AS & WEDGE)	
	2	1	**186-3735**	1	PIN-CONNECTOR (16-GA TO 18-GA)	
	3	1	**3E-3371**	1	WEDGE-RECEPTACLE LOCK (3-PIN)	

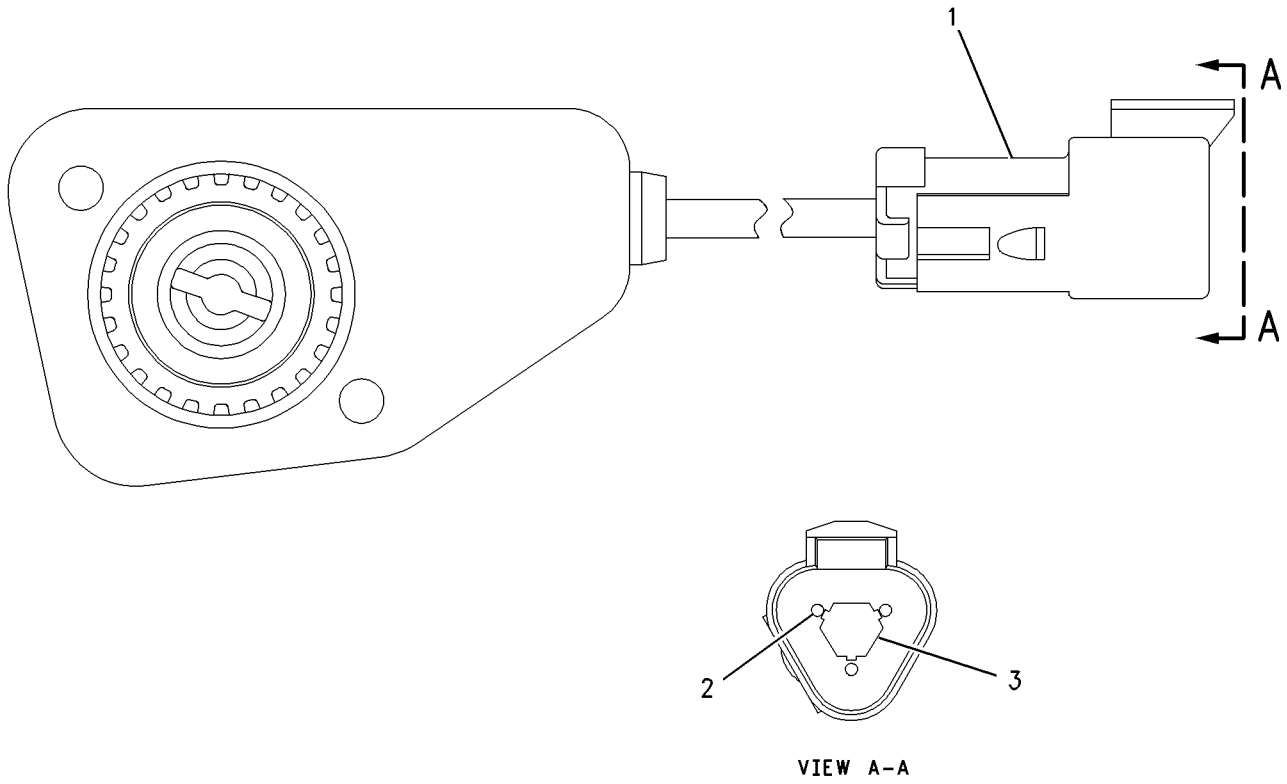

VIEW A-A

GRAPHIC #1 **<END>** g00925281

266-1467 SENSOR GP-POSITION

S/N: JAP1-UP

PART OF 282-2472 CONTROL GP-GOVERNOR

SMCS-1408, 3168, 3175, 4269, 4809 **i02987860**

NOTE	REF NO	GRAPHIC REF	PART NUMBER	QTY	PART NAME 1 2 3 4 5 6 (PRODUCT LEVEL)	SEE PAGE
	1	1	**9X-3401**	3	PIN-CONNECTOR (16-GA TO 18-GA)	
					—OR—	
		1	**126-1767**	3	PIN-CONNECTOR (14-GA)	
	2	1	**102-8803**	1	KIT-RECEPTACLE (3-PIN)	
					(INCLUDES RECEPTACLE AS & WEDGE)	
	3	1	**3E-3371**	1	WEDGE-RECEPTACLE LOCK (3-PIN)	

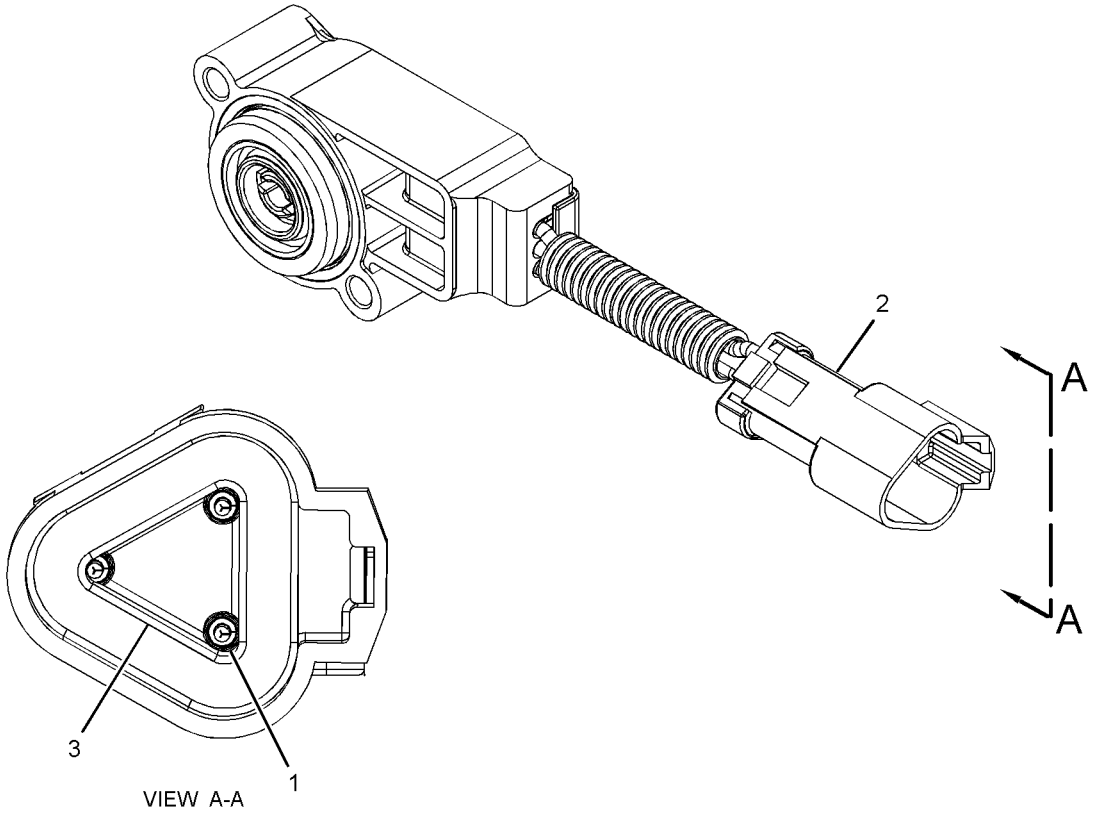

GRAPHIC #1 **<END>** g01514049

194-6722 SENSOR GP-PRESSURE

S/N: JAP1-UP

PART OF 311-0802 WIRING GP-AUXILIARY

SMCS-1052, 1058, 1439, 1718, 1917, 1923, 1924, 1925 **i03435061**

NOTE	REF NO	GRAPHIC REF	PART NUMBER	QTY	PART NAME 1 2 3 4 5 6 (PRODUCT LEVEL)	SEE PAGE
E	1	1	**9X-1813**		SLEEVE (34-CM)	
	2	1	**155-2260**	1	KIT-CONNECTING PLUG (3-PIN)	
					(INCLUDES PLUG AS, WEDGE & INTERFACE SEAL)	
	3	1	**180-9340**	3	SOCKET-CONNECTOR	

E-ORDER BY THE CENTIMETER

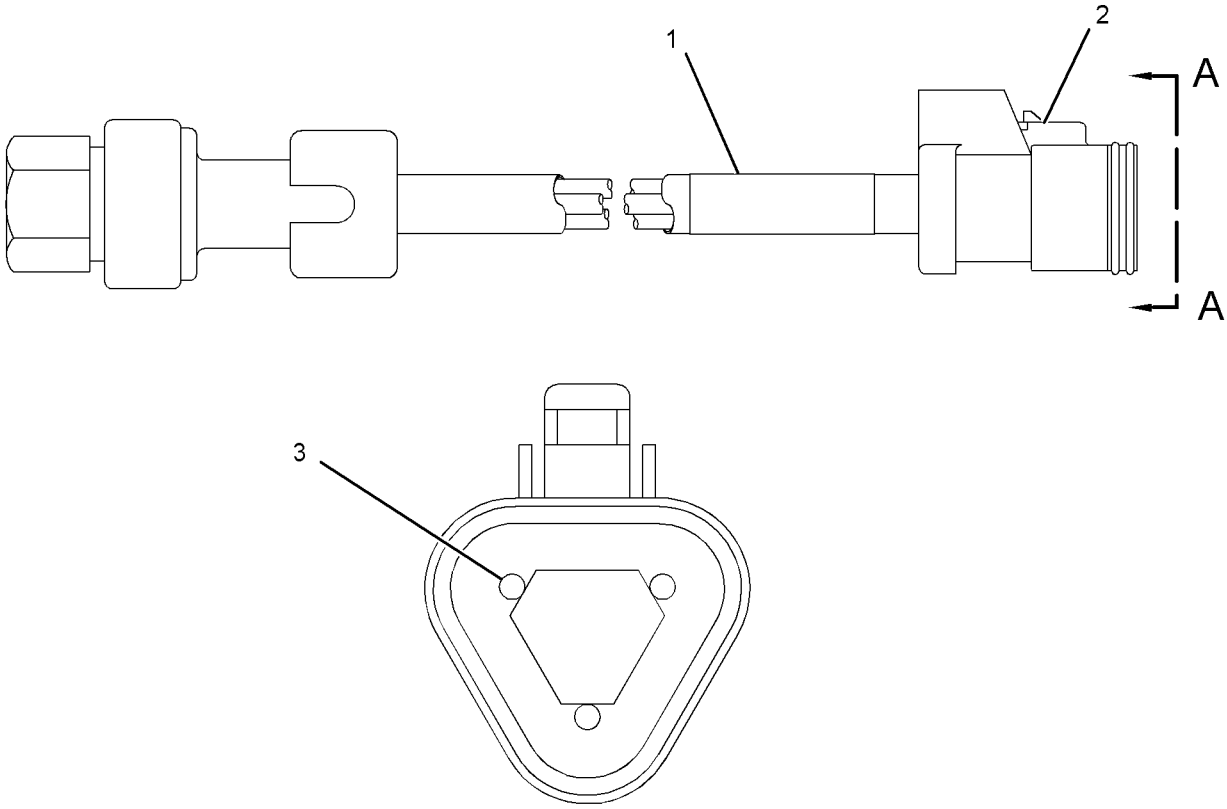

VIEW A-A

GRAPHIC #1 **<END>** g01381175

197-8393 SENSOR GP-PRESSURE

S/N: KHX13472-UP

PART OF 297-5355 SENSOR GP-ENGINE

SMCS-1052, 1058, 1439, 1718, 1917, 1923, 1924, 1925 **i03499761**

NOTE	REF NO	GRAPHIC REF	PART NUMBER	QTY	PART NAME 1 2 3 4 5 6 (PRODUCT LEVEL)	SEE PAGE
	1	1	**161-1703**	1	SENSOR GP-PRESSURE	
	2	1	**6V-5049**	1	SEAL-O-RING	

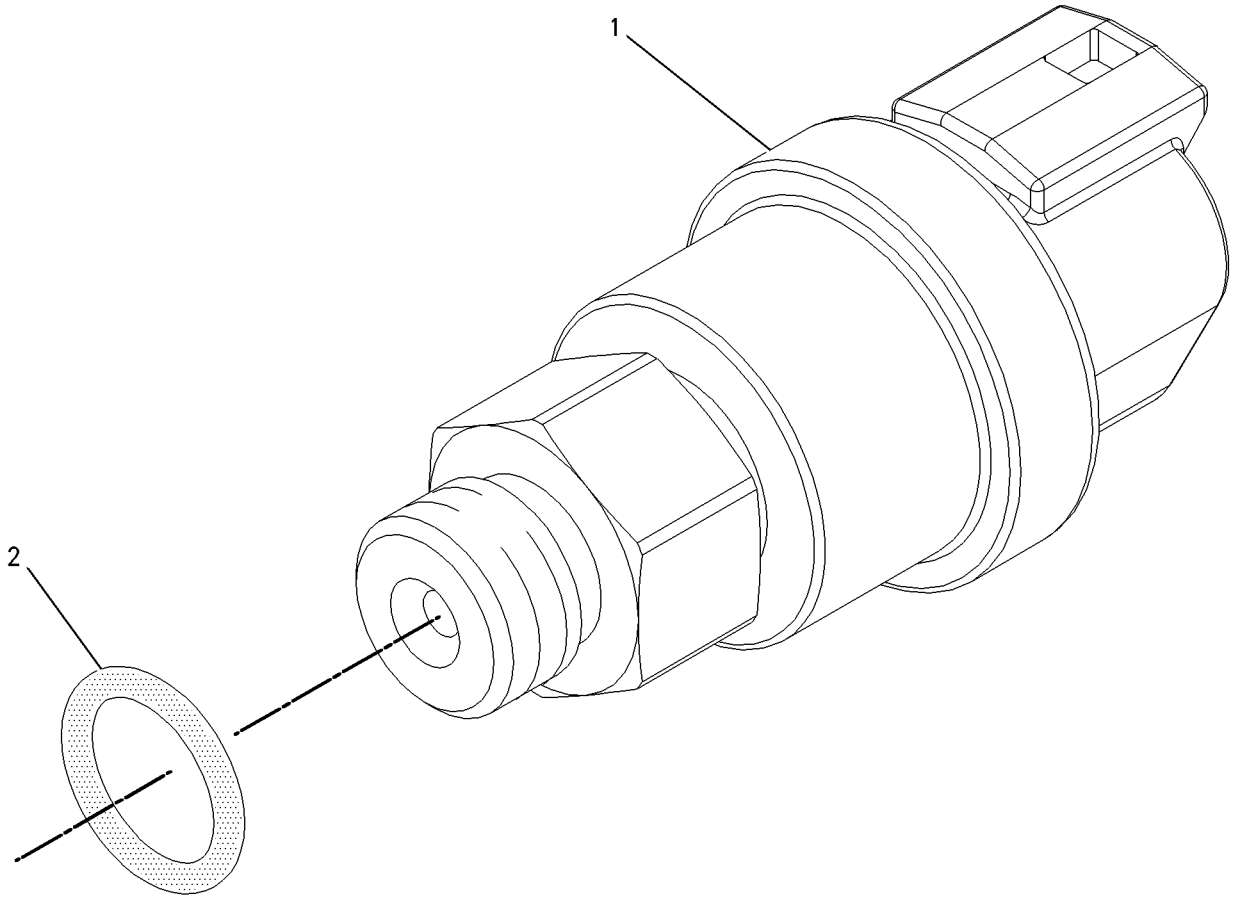

GRAPHIC #1 **<END>** g00855973

197-8394 SENSOR GP-PRESSURE

S/N: KHX13472-UP

PART OF 297-5355 SENSOR GP-ENGINE

SMCS-1052, 1058, 1439, 1718, 1917, 1923, 1924, 1925 **i03499862**

NOTE	REF NO	GRAPHIC REF	PART NUMBER	QTY	PART NAME 1 2 3 4 5 6 (PRODUCT LEVEL)	SEE PAGE
	1	1	**161-1705**	1	SENSOR AS-PRESSURE	
	2	1	**6V-5048**	1	SEAL-O-RING	

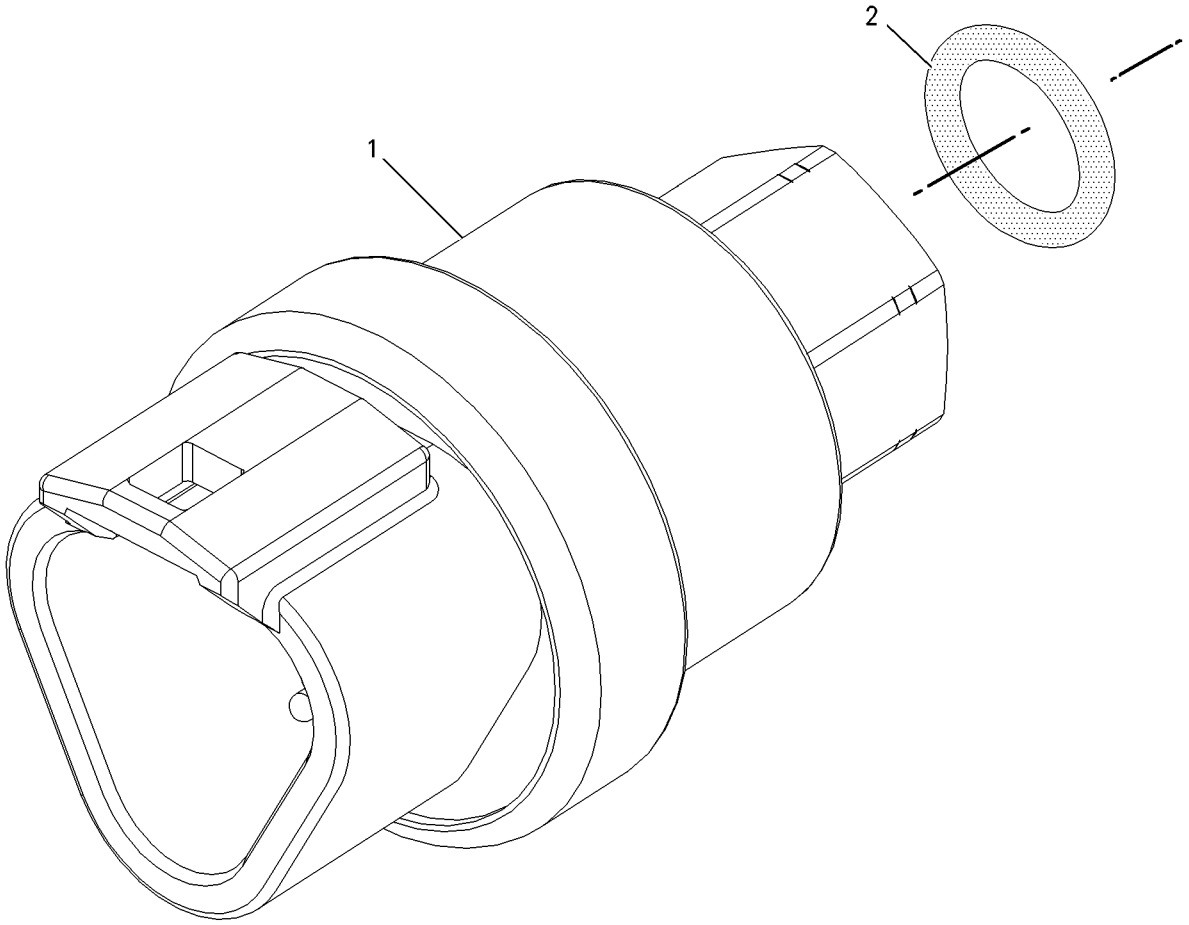

GRAPHIC #1 **<END>** g00856107

210-1747 SENSOR GP-PRESSURE

S/N: KHX13472-UP

PART OF 297-5355 SENSOR GP-ENGINE

SMCS-1052, 1058, 1439, 1718, 1917, 1923, 1924, 1925 **i03499901**

NOTE	REF NO	GRAPHIC REF	PART NUMBER	QTY	PART NAME 1 2 3 4 5 6 (PRODUCT LEVEL)	SEE PAGE
	1	1	**161-1704**	1	SENSOR GP-PRESSURE	
	2	1	**6V-5048**	1	SEAL-O-RING	

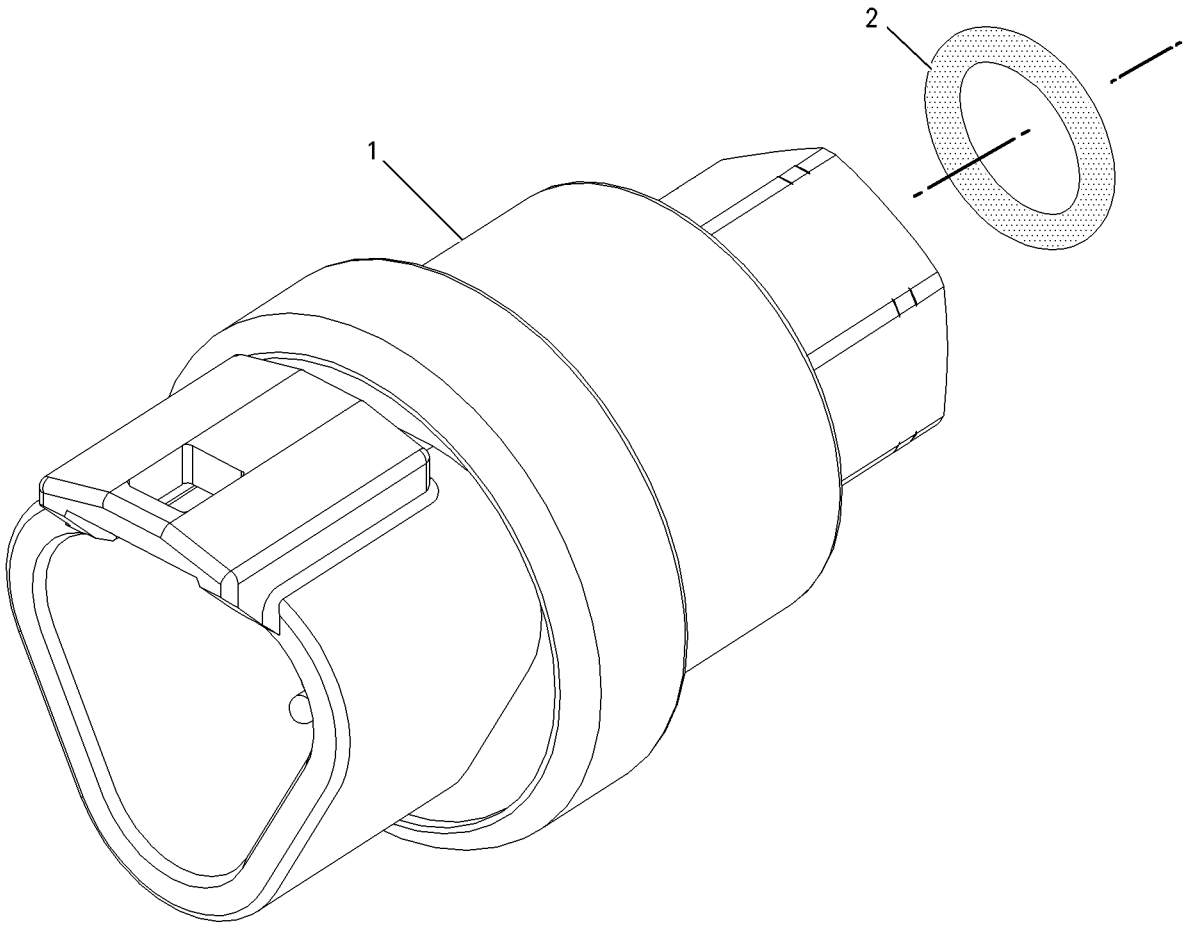

GRAPHIC #1 **<END>** g00856107

224-4536 SENSOR GP-PRESSURE

S/N: KHX13472-UP

PART OF 236-6220 SENSOR GP-PRESSURE

SMCS-1052, 1058, 1439, 1718, 1917, 1923, 1924, 1925 **i03172043**

NOTE	REF NO	GRAPHIC REF	PART NUMBER	QTY	PART NAME 1 2 3 4 5 6 (PRODUCT LEVEL)	SEE PAGE
BE	1	1	**9X-1813**		SLEEVE	
	2	1	**155-2260**	1	KIT-CONNECTING PLUG (3-PIN)	
					(INCLUDES PLUG AS, WEDGE, & INTERFACE SEAL)	
	3	1	**194-5226**	1	WIRE AS	
					—OR—	
		1	**194-5227**	1	WIRE AS (14-GA)	
	4	1	**155-2276**	1	WEDGE-PLUG LOCK (3-PIN)	

B-USE AS REQUIRED
E-ORDER BY THE CENTIMETER

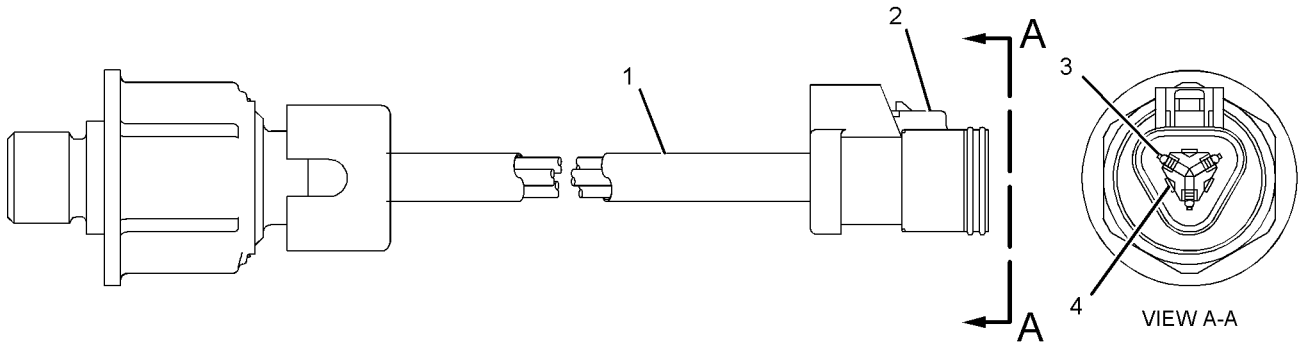

GRAPHIC #1 **<END>** g01040301

236-6220 SENSOR GP-PRESSURE

S/N: KHX13472-UP

PART OF 297-5355 SENSOR GP-ENGINE

SMCS-1052, 1058, 1439, 1718, 1917, 1923, 1924, 1925 **i03500600**

NOTE	REF NO	GRAPHIC REF	PART NUMBER	QTY	PART NAME 1 2 3 4 5 6 (PRODUCT LEVEL)	SEE PAGE
	1	1	**214-7567**	1	SEAL-O-RING	
Y	2	1	**224-4536**	1	SENSOR GP-PRESSURE	175

Y-SEPARATE ILLUSTRATION

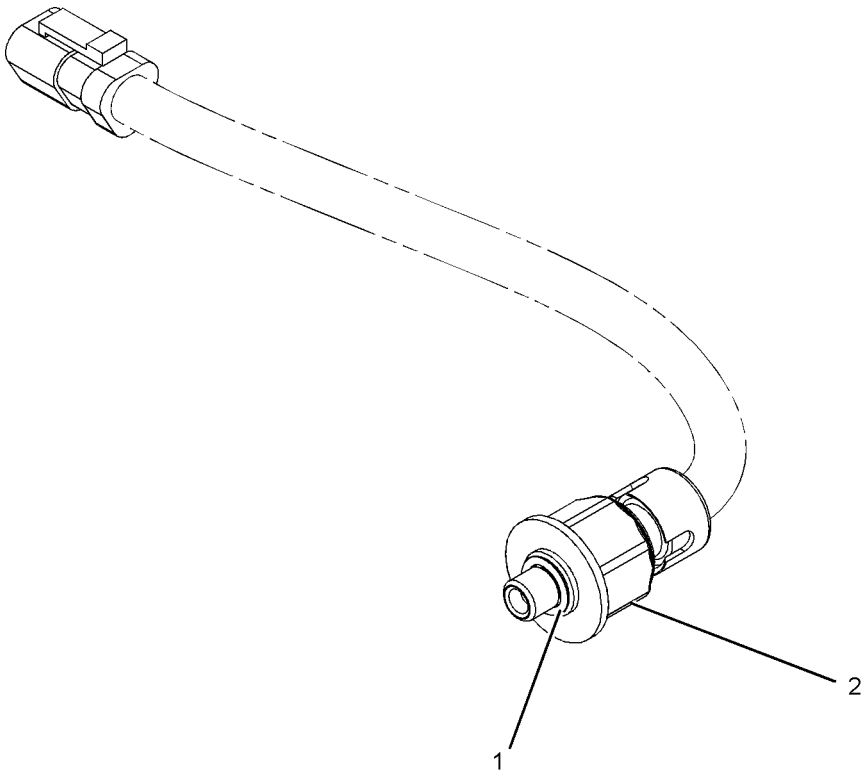

GRAPHIC #1 **<END>** g01054528

193-2550 SENSOR GP-SPEED

S/N: JAP1-UP

PART OF 293-4828 WIRING GP-REAR

SMCS-1439, 1907, 1912, 3141, 3175, 4803 **i02919909**

NOTE	REF NO	GRAPHIC REF	PART NUMBER	QTY	PART NAME 1 2 3 4 5 6 (PRODUCT LEVEL)	SEE PAGE
	1	1	**171-5349**	1	STRAP-MARKER	
	2	1	**102-8802**	1	KIT-RECEPTACLE (2-PIN)	
					(INCLUDES RECEPTACLE AS & WEDGE)	
	3	1	**9X-3401**	2	PIN-CONNECTOR (16-GA TO 18-GA)	
E	4	1	**9X-1813**		SLEEVE (14-CM)	

E-ORDER BY THE CENTIMETER

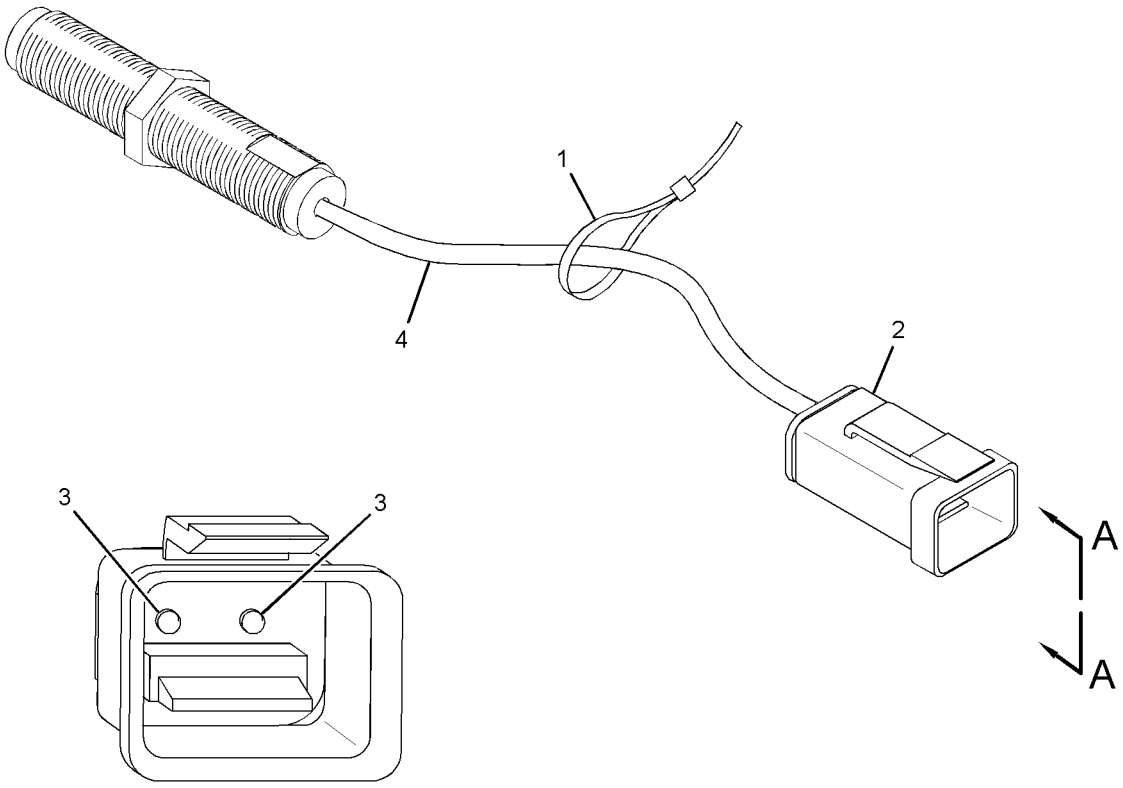

VIEW A-A

GRAPHIC #1 **<END>** g01454055

236-6221 SENSOR GP-SPEED

S/N: KHX13472-UP

PART OF 297-5355 SENSOR GP-ENGINE

SMCS-1439, 1907, 1912, 3141, 3175, 4803 **i03594258**

NOTE	REF NO	GRAPHIC REF	PART NUMBER	QTY	PART NAME 1 2 3 4 5 6 (PRODUCT LEVEL)	SEE PAGE
	1	1	**3P-0647**	2	SEAL-O-RING	
	2	1	**245-4630**	1	SENSOR GP-SPEED	

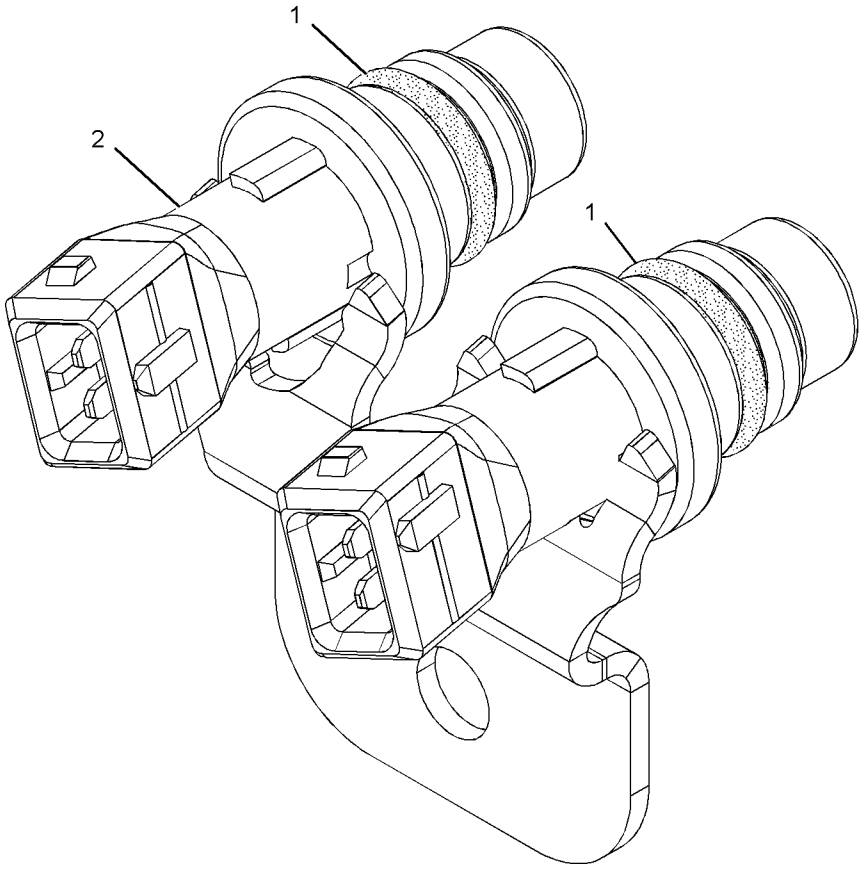

GRAPHIC #1 **<END>** g01013894

290-5792 SENSOR GP-SPEED

S/N: DMJ1-UP

PART OF 277-6433 CASE & PARTS GP-PLANETARY

SMCS-1439, 1907, 1912, 3141, 3175, 4803 **i03645015**

NOTE	REF NO	GRAPHIC REF	PART NUMBER	QTY	PART NAME 1 2 3 4 5 6 (PRODUCT LEVEL)	SEE PAGE
	1	1	**171-5349**	1	STRAP-MARKER	
	2	1	**102-8802**	1	KIT-RECEPTACLE (2-PIN)	
					(INCLUDES RECEPTACLE AS & WEDGE)	
	3	1	**144-1636**	2	PIN-CONNECTOR (14-GA TO 18-GA)	
E	4	1	**9X-1813**		SLEEVE (14-CM)	

E-ORDER BY THE CENTIMETER

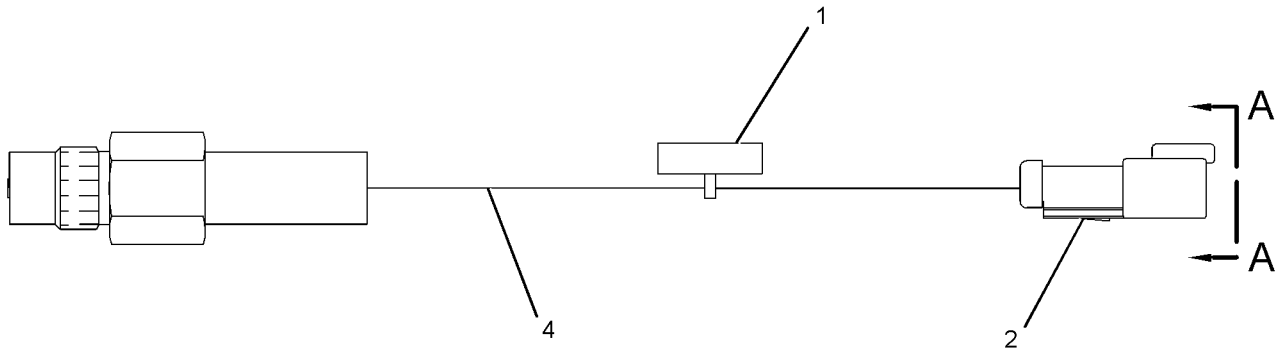

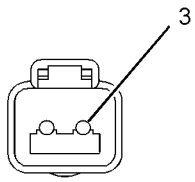

VIEW A-A

GRAPHIC #1 **<END>** g01409880

3E-8700 SENSOR GP-TEMPERATURE

S/N: DMJ1-UP

PART OF 277-6433 CASE & PARTS GP-PLANETARY

SMCS-1087, 1439, 1906, 1919, 1921, 1922, 1928, 1929, 192T, 1932, 301T, 3194, 3290, 429T, 509T, 7344 **i03537155**

NOTE	REF NO	GRAPHIC REF	PART NUMBER	QTY	PART NAME 1 2 3 4 5 6 (PRODUCT LEVEL)	SEE PAGE
	1	1	**186-3736**	3	SOCKET-CONNECTOR (16-GA TO 18-GA)	
	2	1	**155-2260**	1	KIT-CONNECTING PLUG (3-PIN)	
					(INCLUDES PLUG AS & WEDGE)	
E	3	1	**9X-1813**		SLEEVE (31-CM)	

E-ORDER BY THE CENTIMETER

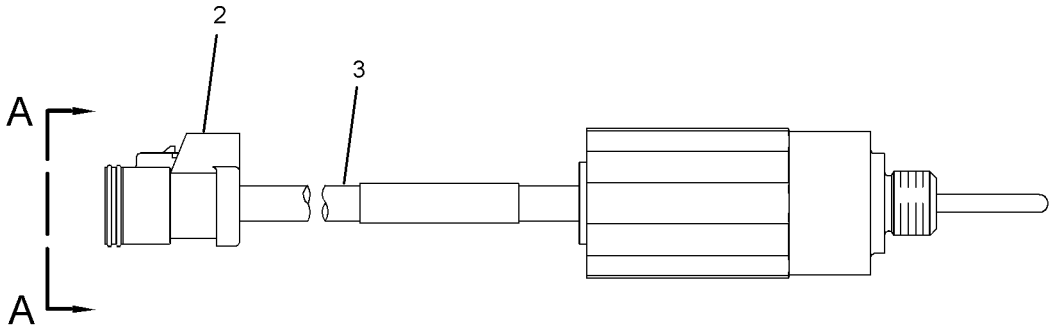

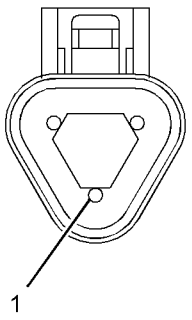

VIEW A-A

GRAPHIC #1 **<END>** g01871960

234-5013 SENSOR GP-TEMPERATURE

S/N: JAP1-UP
AMPSEAL CONNECTOR
PART OF 325-7130 LINES GP-FUEL

SMCS-1087, 1439, 1906, 1919, 1921, 1922, 1928, 1929, 192T, 1932, 301T, 3194, 3290, 429T, 509T, 7344

i03645027

NOTE	REF NO	GRAPHIC REF	PART NUMBER	QTY	PART NAME 1 2 3 4 5 6 (PRODUCT LEVEL)	SEE PAGE
	1	1	**256-6453**	1	SENSOR AS-TEMPERATURE	
	2	1	**238-5080**	1	SEAL-O-RING	

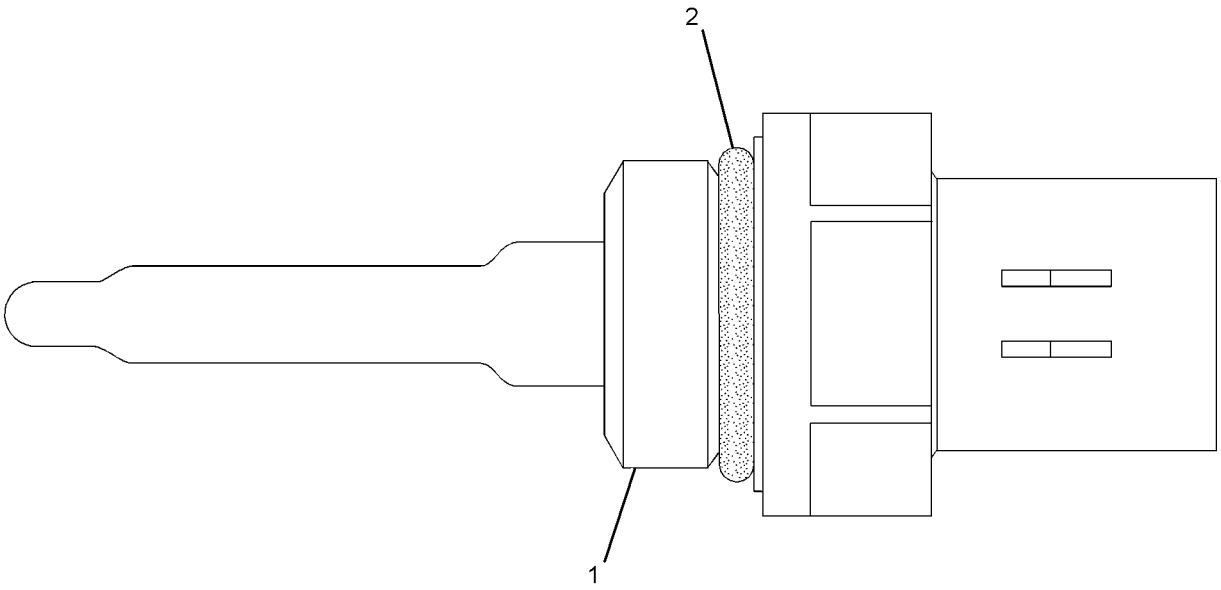

GRAPHIC #1

<END>

g01164268

274-7395 SENSOR GP-TEMPERATURE

S/N: KHX13472-UP

PART OF 297-5355 SENSOR GP-ENGINE

SMCS-1087, 1439, 1906, 1919, 1921, 1922, 1928, 1929, 192T, 1932, 301T, 3194, 3290, 429T, 509T, 7344 **i03435385**

NOTE	REF NO	GRAPHIC REF	PART NUMBER	QTY	PART NAME 1 2 3 4 5 6 (PRODUCT LEVEL)	SEE PAGE
	1	1	**264-4297**	1	SENSOR GP-TEMPERATURE	
		1	**137-6645**	1	PAD	
	2	1	**8L-2786**	1	SEAL-O-RING	

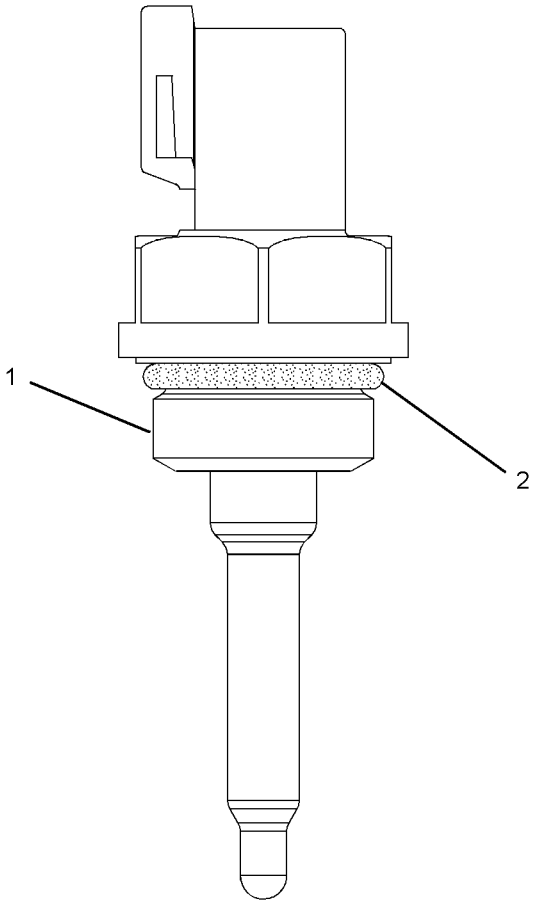

GRAPHIC #1 **<END>** g01353734

274-7396 SENSOR GP-TEMPERATURE

S/N: KHX13472-UP

PART OF 297-5355 SENSOR GP-ENGINE

SMCS-1087, 1439, 1906, 1919, 1921, 1922, 1928, 1929, 192T, 1932, 301T, 3194, 3290, 429T, 509T, 7344

i03435390

NOTE	REF NO	GRAPHIC REF	PART NUMBER	QTY	PART NAME 1 2 3 4 5 6 (PRODUCT LEVEL)	SEE PAGE
	1	1	**264-4297**	1	SENSOR GP-TEMPERATURE	
		1	**137-6645**	1	PAD	
	2	1	**6V-6609**	1	SEAL-O-RING	

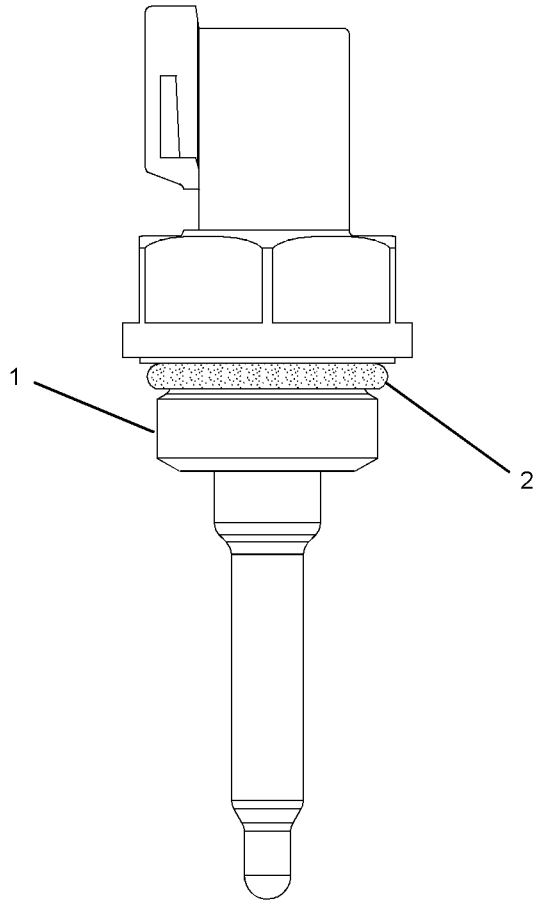

GRAPHIC #1

<END>

g01353734

ELECTRICAL AND STARTING SYSTEM

311-2771 STARTING AID GP-ETHER

S/N: JAP1-UP
PART OF 348-6943 OPTION AR-ENGINE
AN ATTACHMENT

SMCS-1456 **i03251801**

NOTE	REF NO	GRAPHIC REF	PART NUMBER	QTY	PART NAME 1 2 3 4 5 6 (PRODUCT LEVEL)	SEE PAGE
	1	1	**7N-2059**	1	CLAMP AS	
Y	2	1	**239-1134**	1	VALVE GP-ETHER STARTING (24-VOLT)	195
	3	1	**241-4194**	1	FITTING AS (CONTROL)	
	4	1	**258-0733**	1	ATOMIZER AS	
		1	**236-4545**	1	NUT-SLEEVE (5/16-24-THD)	
	5	1	**124-2528**	2	SPACER (11X20X10-MM THK)	
	6	1	**3J-1907**	1	SEAL-O-RING	
	7	1	**3Y-2888**	1	CONNECTOR	
	8	1	**5P-4116**	1	WASHER-HARD (8.8X20.5X2-MM THK)	
	9	1	**6V-2686**	3	CLIP	
M	10	1	**8T-4136**	2	BOLT (M10X1.5X25-MM)	
M	11	1	**8T-4200**	5	BOLT (M8X1.25X16-MM)	
	12	1	**8T-4224**	4	WASHER-HARD (8.8X16X2-MM THK)	
J	13	1	**5P-5630**		TUBE (9-DM)	
A			**275-3634**	1	CYLINDER AS-ETHER (U.S.)	
					(MUST BE PROCURED LOCALLY FROM YOUR CATERPILLAR DEALER)	

A-NOT PART OF THIS GROUP
J-ORDER BY THE DECIMETER
M-METRIC PART
Y-SEPARATE ILLUSTRATION

311-2771 **STARTING AID GP-ETHER** *(contd.)* **i03251801**

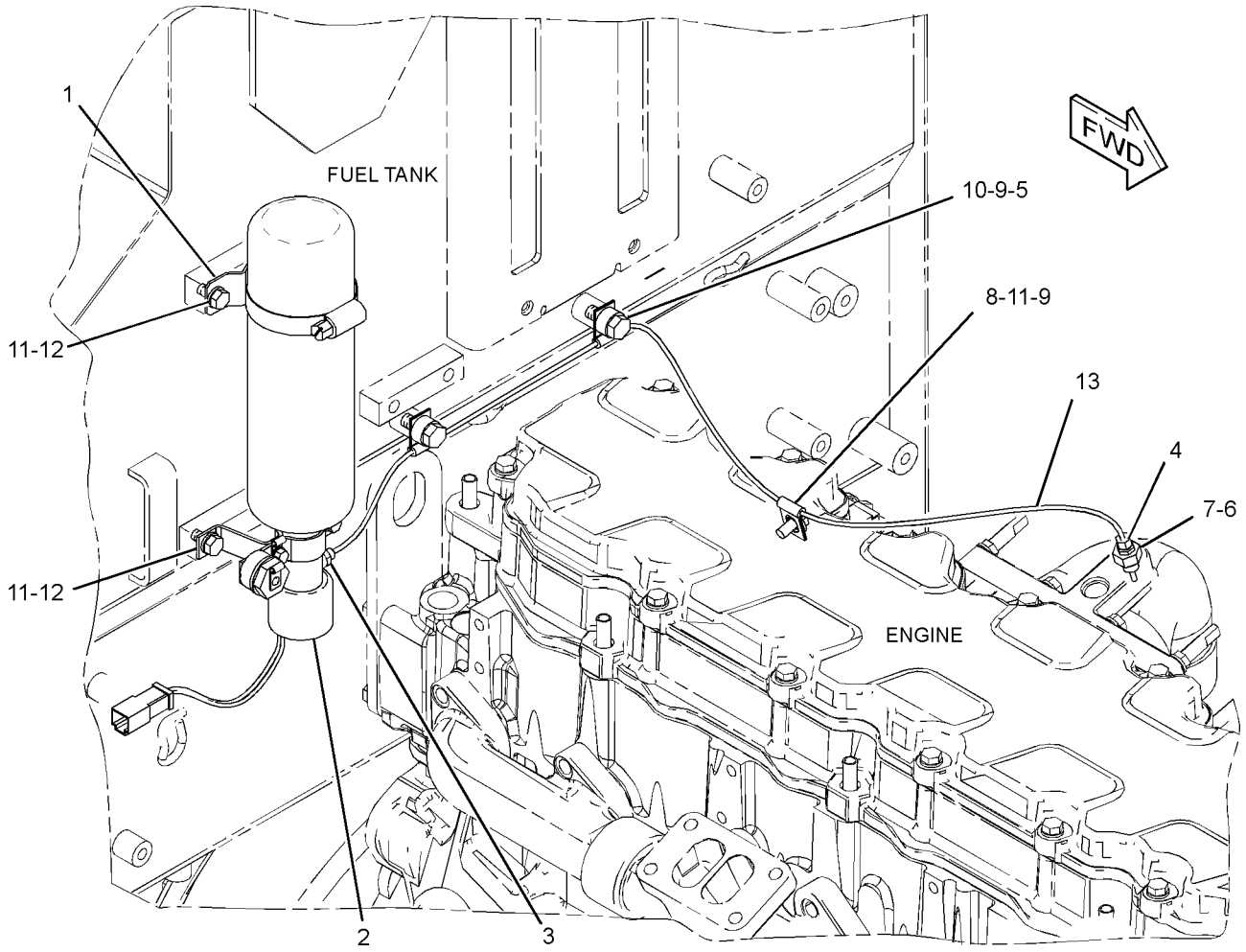

GRAPHIC #1 **<END>** g01731999

ELECTRICAL AND STARTING SYSTEM

111-4275 STARTING MOTOR GP-ELECTRIC

S/N: KHX13472-17466
24 VOLT
PART OF 325-9707 ENGINE AR-COMPLETE

SMCS-1453 **i01635526**

NOTE	REF NO	GRAPHIC REF	PART NUMBER	QTY	PART NAME 1 2 3 4 5 6 (PRODUCT LEVEL)	SEE PAGE
M	1	1	**118-9573**	3	BOLT-12 POINT HEAD (M10X1.5X35-MM)	
CYR	2	1	**207-1517**	1	STARTING MOTOR GP-ELECTRIC	187
	3	1	**3K-3257**	1	GASKET	
M	4	1	**8T-4191**	1	BOLT (M10X1.5X16-MM)	
	5	1	**8Y-9603**	1	CABLE AS-STARTING MOTOR	
		1	**1S-7251**	1	TERMINAL-CABLE (00-GA, 1/2-IN BOLT)	
		1	**1S-7252**	1	TERMINAL-CABLE (00-GA, 3/8-IN BOLT)	
E		1	**5P-0747**		CABLE (00-GA, BLACK) (28CM)	
	6	1	**8T-4121**	4	WASHER-HARD (11X21X2.5-MM THK)	

C-CHANGE FROM PREVIOUS TYPE
E-ORDER BY THE CENTIMETER
M-METRIC PART
R-REMFG PART MAY BE AVAILABLE
Y-SEPARATE ILLUSTRATION

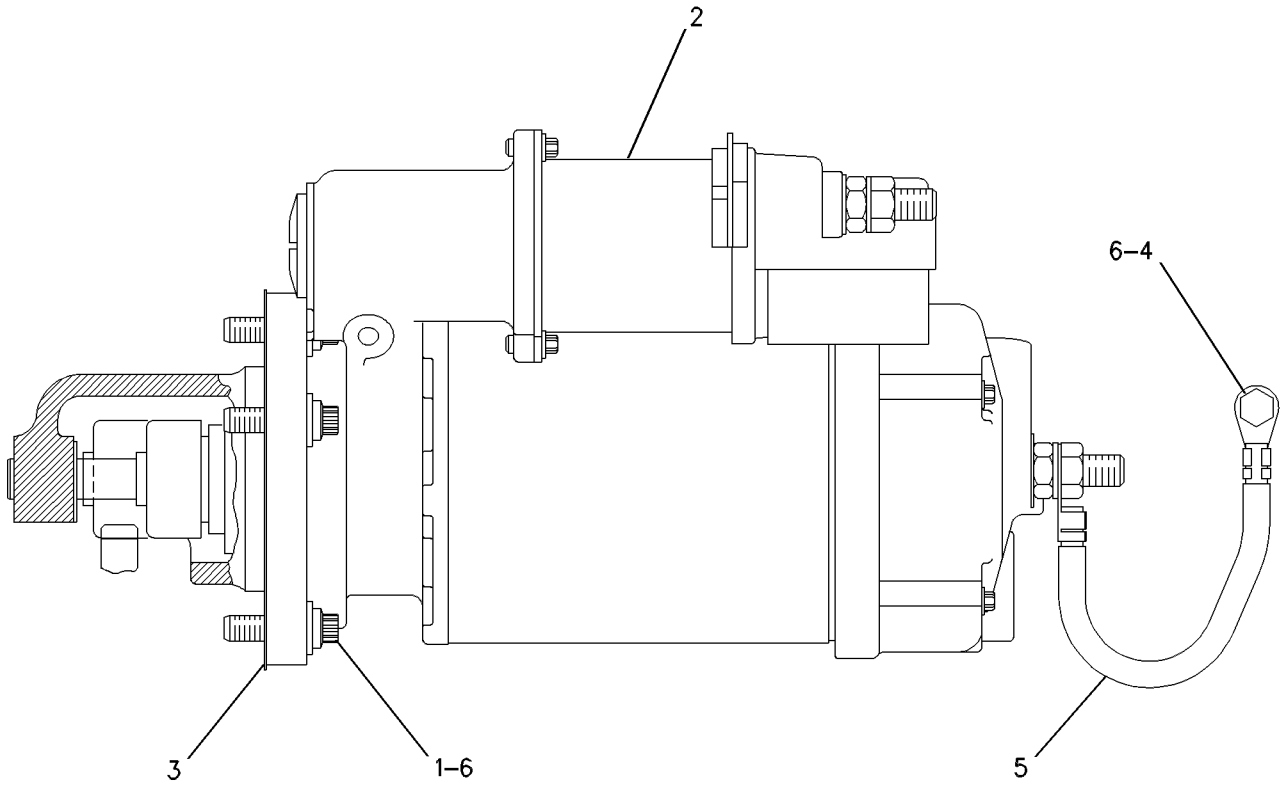

GRAPHIC #1 **<END>** g00613782

ELECTRICAL AND STARTING SYSTEM

207-1517 STARTING MOTOR GP-ELECTRIC*R

S/N: KHX13472-UP
24 VOLT
PART OF 111-4275 STARTING MOTOR GP-ELECTRIC

SMCS-1453 **i02946769**

NOTE	REF NO	GRAPHIC REF	PART NUMBER	QTY	PART NAME 1 2 3 4 5 6 (PRODUCT LEVEL)	SEE PAGE
	1	1	**8T-9884**	1	KIT-INSULATOR (STARTING MOTOR)	
					(INCLUDES INSULATORS & BUSHING)	
	2	1	**106-7149**	1	HOUSING AS	
	3	1	**102-9863**	1	TERMINAL AS	
	4	1	**6V-8188**	4	NUT (1/2-13-THD)	
	5	1	**7X-0562**	4	WASHER-HARD (13.5X19X0.8-MM THK)	
	6	1	**3E-7853**	1	TERMINAL	
	7	1	**9X-4821**	1	PLATE AS	
	8	1	**3E-7852**	1	COIL-STARTING MOTOR	
	9	1	**7T-3454**	1	INSULATOR	
	10	1	**9X-4271**	1	CONNECTOR	
	11	1	**7T-3451**	1	KIT-INSULATOR (TERMINAL)	
	12	1	**8T-8569**	1	INSULATOR-TERMINAL	
	13	1	**5S-7349**	4	BOLT (1/4-20X0.5-IN)	
	14	1	**8T-4205**	4	WASHER-HARD (7.2X14.5X2-MM THK)	
	15	1	**7X-1950**	4	SHOE-POLE	
	16	1	**3E-7861**	1	KIT-LEVER (STARTING MOTOR)	
					(INCLUDES LEVER AS, SHAFT AS, GASKET, O-RINGS, RING & NUT)	
	17	1	**3R-8797**	8	SCREW & WASHER AS (3/8-24X0.72-IN)	
	18	1	**3E-7855**	1	ARMATURE AS-STARTER (24-VOLT)	
	19	1	**7X-1952**	1	HOUSING AS-LEVER	
	20	1	**4M-1831**	1	PLUG-LEVER HOUSING	
	21	1	**7L-2894**	1	GASKET	
	22	1	**036-9823**	5	BOLT (1/4-28X1-IN)	
	23	1	**3E-7857**	1	DRIVE AS-STARTING MOTOR	
	24	1	**3E-7858**	1	HOUSING AS	
	25	1	**7X-3373**	6	BOLT (5/16-18X0.88-IN)	
	26	1	**206-8784**	1	KIT-SOLENOID (24-VOLT)	
					(INCLUDES SOLENOID AS, BOLT, CONNECTORS, NUT & NUT AS)	
	27	1	**6V-8378**	2	NUT (10-32-THD)	
	28	1	**8F-1434**	1	LOCKWASHER	
	29	1	**8T-0328**	2	WASHER-HARD (5.5X10X1-MM THK)	
	30	1	**9X-4824**	1	COVER-STARTING MOTOR	
	31	1	**9X-4825**	1	KIT-BRUSH (24-VOLT)	
					(INCLUDES O-RING, SCREWS, BRUSHES, AND SPRINGS)	
					AVAILABLE REPAIR KIT(S):	
			3E-7860	1	KIT-BUSHING (STARTING MOTOR)	
					(INCLUDES BUSHINGS, PLUGS, CUPS, SEAL, NUT, O-RINGS, GASKET, SPACER, WASHERS & SCREW ASSEMBLIES)	

207-1517 **STARTING MOTOR GP-ELECTRIC** *(contd.)* **i02946769**

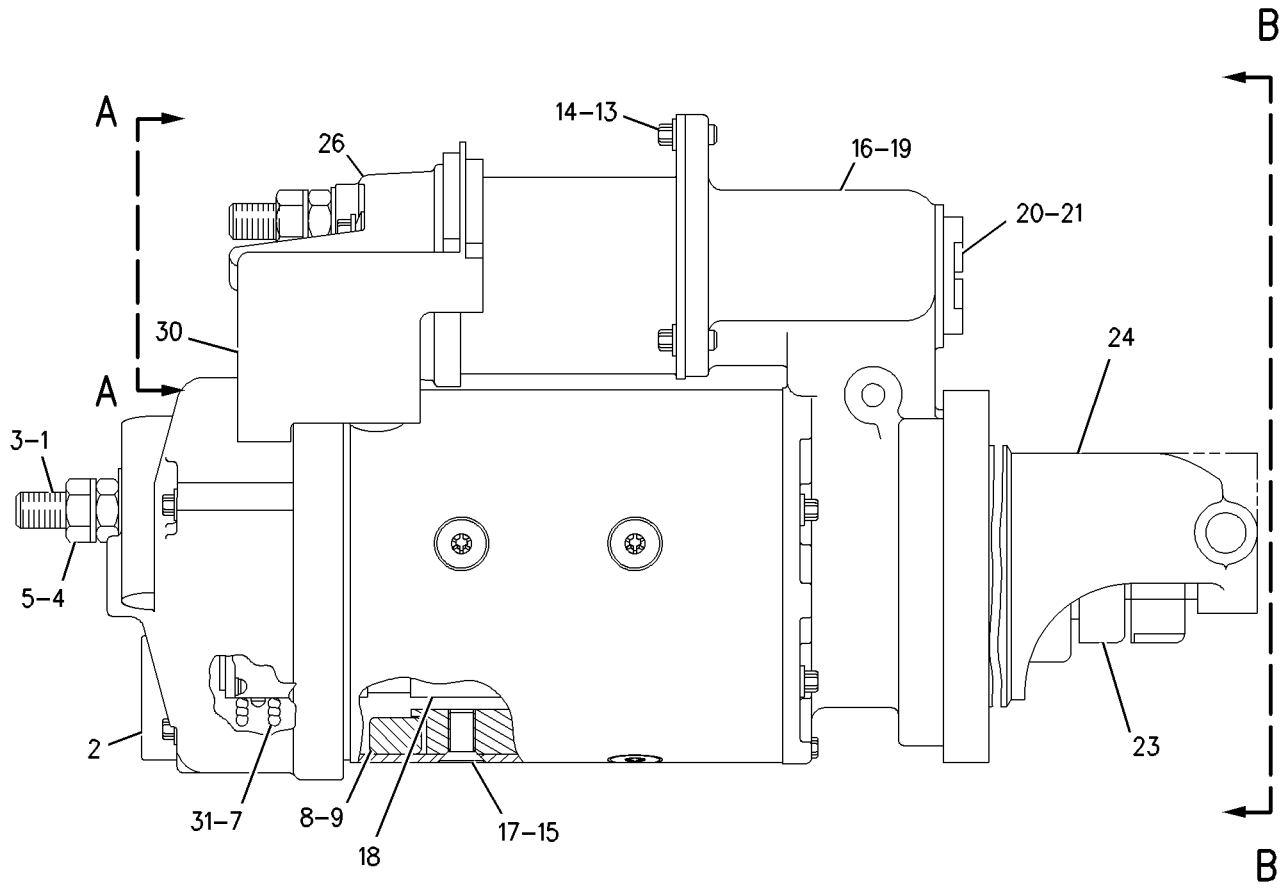

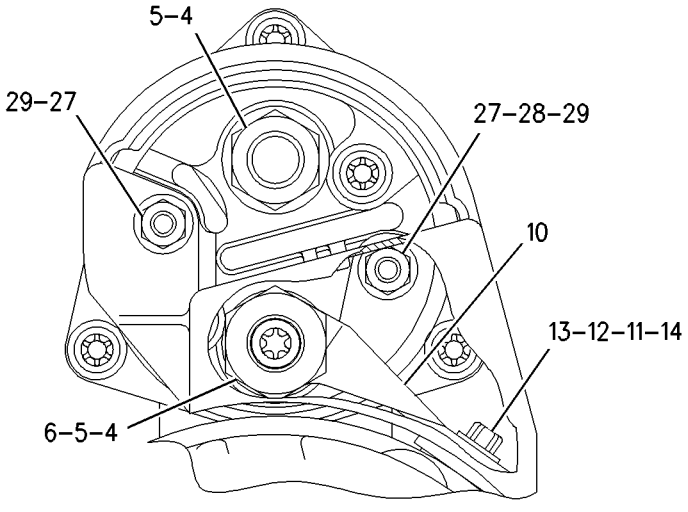

VIEW A-A

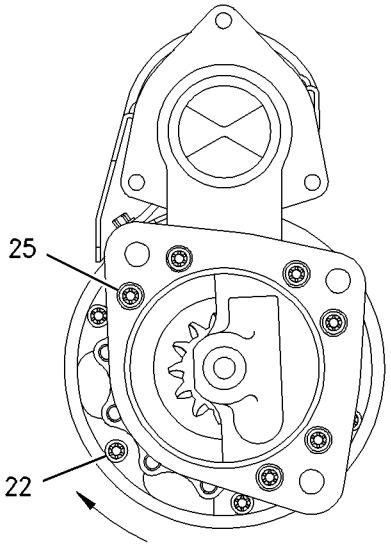

VIEW B-B

GRAPHIC #1 **<END>** g00839695

347-7898 STARTING MOTOR GP-ELECTRIC

S/N: KHX13472-UP

PART OF 325-9707 ENGINE AR-COMPLETE

SMCS-1453 **i03626999**

NOTE	REF NO	GRAPHIC REF	PART NUMBER	QTY	PART NAME 1 2 3 4 5 6 (PRODUCT LEVEL)	SEE PAGE
	1	1	**3K-3257**	1	GASKET	
	2	1	**134-2730**	1	WIRE AS	
	3	1	**339-5406**	1	STARTING MOTOR GP-ELECTRIC	
M	4	1	**118-9573**	3	BOLT-12 POINT HEAD (M10X1.5X35-MM)	
	5	1	**6V-5839**	3	WASHER (11X21X2.5-MM THK)	
	6	1	**8T-4121**	1	WASHER-HARD (11X21X2.5-MM THK)	
M	7	1	**8T-4191**	1	BOLT (M10X1.5X16-MM)	

M-METRIC PART

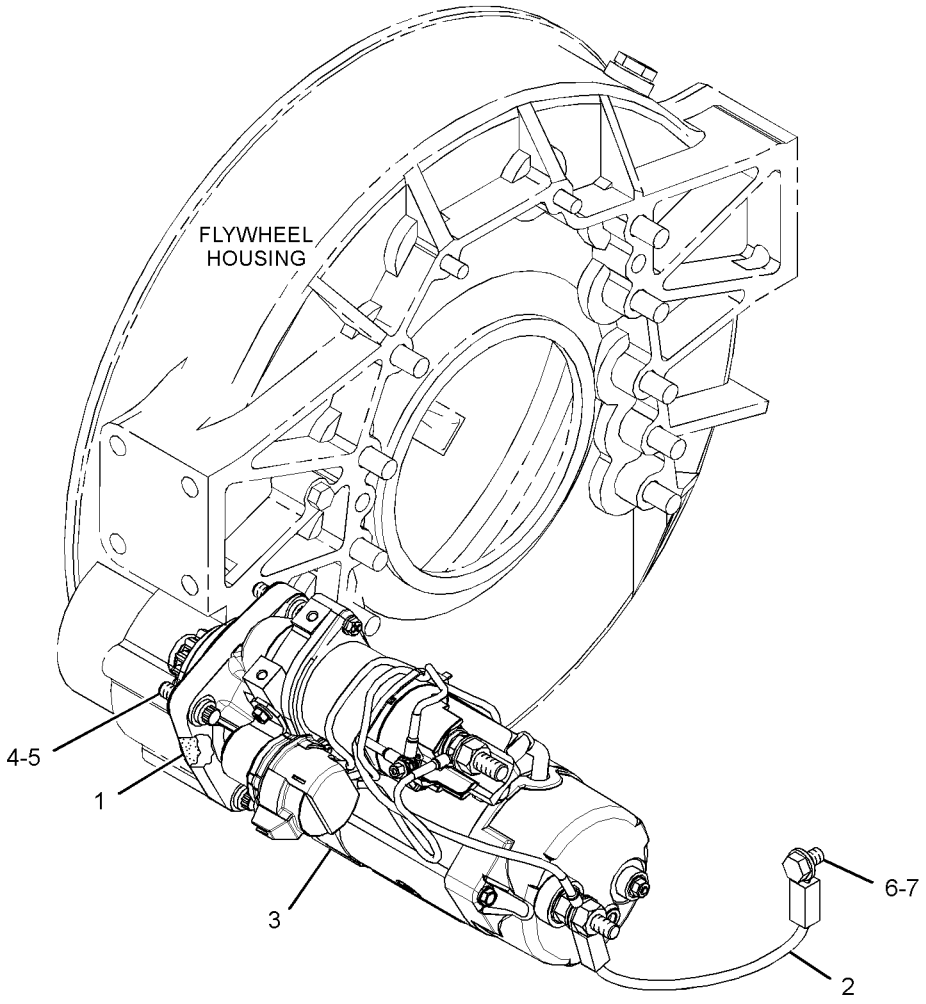

GRAPHIC #1 **<END>** g01947835

164-7577 SWITCH GP-BYPASS

S/N: JAP1-UP

PART OF 333-9308 BASE GP-OIL FILTER

SMCS-1408, 1435 **i02891455**

NOTE	REF NO	GRAPHIC REF	PART NUMBER	QTY	PART NAME 1 2 3 4 5 6 (PRODUCT LEVEL)	SEE PAGE
BE	1	1	**9X-1813**		SLEEVE	
	2	1	**102-8802**	1	KIT-RECEPTACLE (2-PIN)	
					(INCLUDES RECEPTACLE AS & WEDGE)	
	3	1	**186-3735**	2	PIN-CONNECTOR (16-GA TO 18-GA)	
	4	1	**3E-3365**	1	WEDGE-RECEPTACLE LOCK (2-PIN)	
	5	1	**3D-2824**	1	SEAL-O-RING	
Z	6	1		1	SWITCH AS	

B-USE AS REQUIRED
E-ORDER BY THE CENTIMETER
Z-NOT SERVICED SEPARATELY

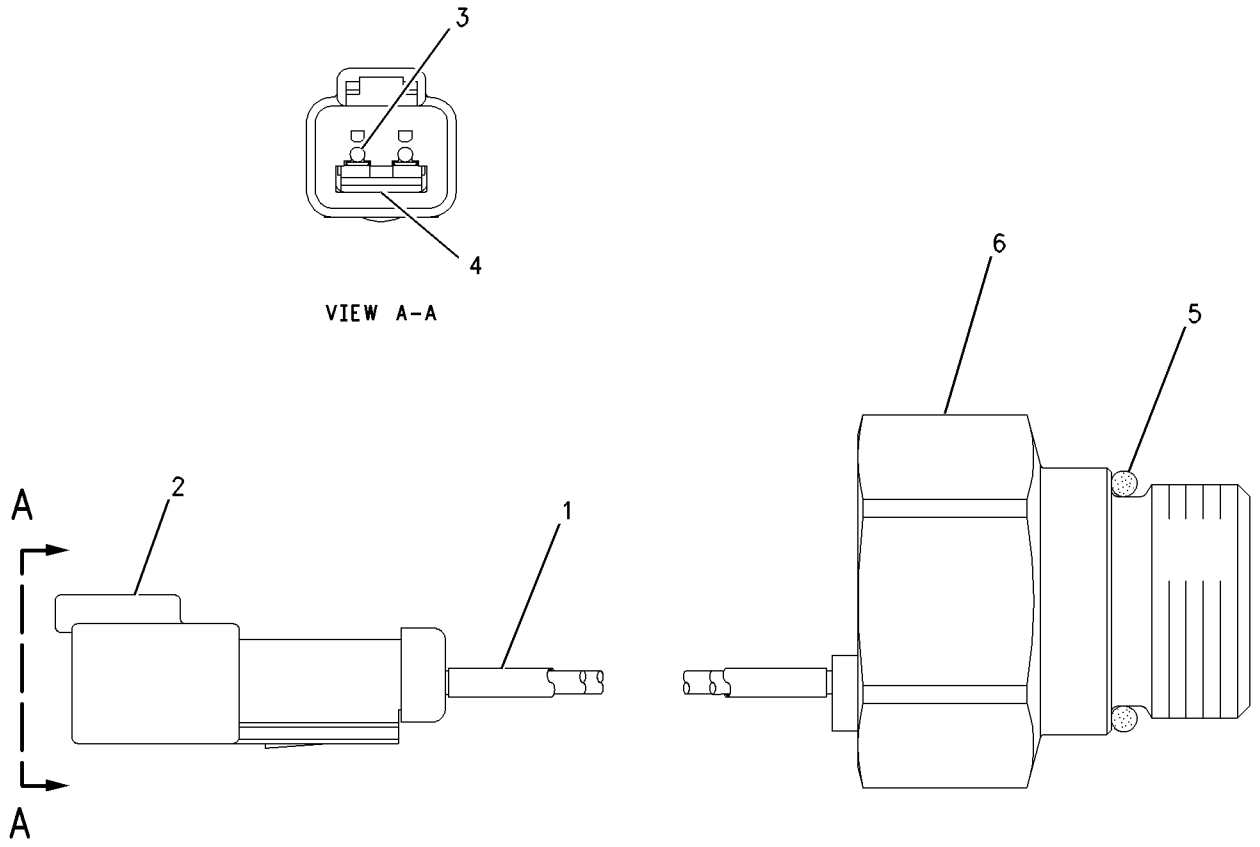

GRAPHIC #1 **<END>** g00750019

7N-0718 SWITCH GP-DISCONNECT–BATTERY

S/N: JAP1-UP
12-VOLT
PART OF 311-0802 WIRING GP-AUXILIARY

SMCS-1411 **i02587657**

NOTE	REF NO	GRAPHIC REF	PART NUMBER	QTY	PART NAME 1 2 3 4 5 6 (PRODUCT LEVEL)	SEE PAGE
	1	1	**8H-5306**	1	KEY (BATTERY DISCONNECT)	
	2	1	**8H-5303**	1	NUT (3/4-16-THD)	
	3	1	**2H-3922**	2	LOCKWASHER	
	4	1	**9F-5644**	2	LOCKWASHER	
	5	1	**6F-7045**	2	NUT-FULL (3/8-24-THD)	

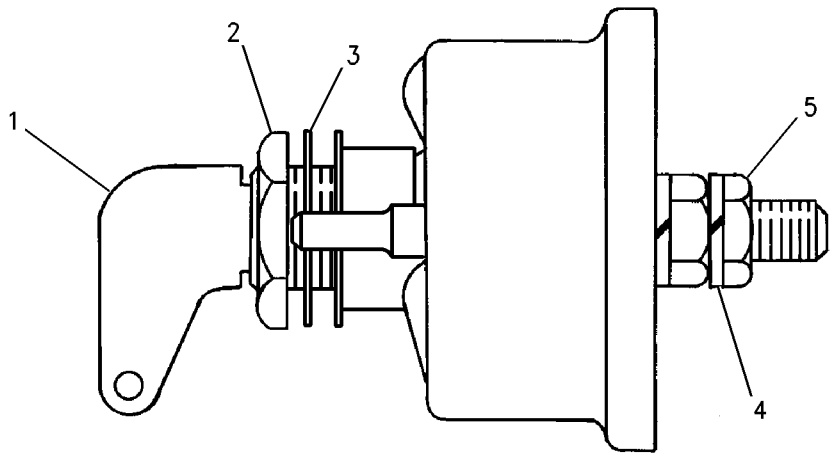

GRAPHIC #1 **<END>** g00715584

241-8368 SWITCH GP-MAGNETIC

S/N: JAP1-UP
24-VOLT
PART OF 311-0802 WIRING GP-AUXILIARY

SMCS-7499 **i02290099**

NOTE	REF NO	GRAPHIC REF	PART NUMBER	QTY	PART NAME 1 2 3 4 5 6 (PRODUCT LEVEL)	SEE PAGE
	1	1	**155-2270**	1	KIT-CONNECTING PLUG (2-PIN)	
					(INCLUDES PLUG AS, WEDGE & INTERFACE SEAL)	
	2	1	**4F-2294**	2	NUT-JAM (5/16-24-THD)	
	3	1	**186-3736**	2	SOCKET-CONNECTOR (16-GA TO 18-GA)	

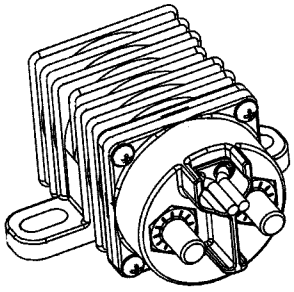

ISOMETRIC VIEW

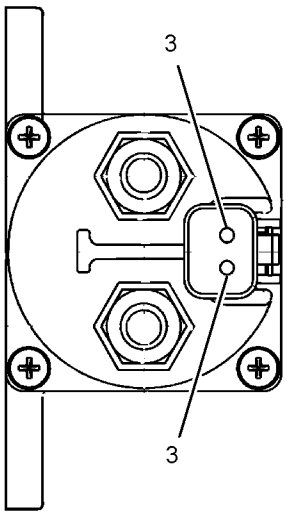

VIEW A-A

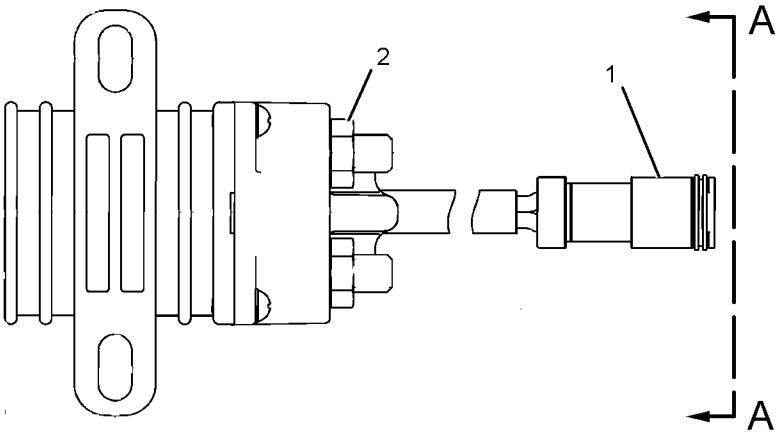

GRAPHIC #1 **<END>** g01077362

275-1253 SWITCH GP-PRESSURE

S/N: JAP1-UP

PART OF 325-7130 LINES GP-FUEL

SMCS-1435 **i03525026**

NOTE	REF NO	GRAPHIC REF	PART NUMBER	QTY	PART NAME 1 2 3 4 5 6 (PRODUCT LEVEL)	SEE PAGE
	1	1	**230-4011**	1	PLUG AS-CONNECTOR (2-PIN)	
		1	**264-7029**	1	SEAL-CONNECTOR	
E	2	1	**9X-1813**		SLEEVE (14-CM)	
	3	1	**6V-4589**	1	SEAL-O-RING	
	4	1	**9X-7737**	1	SEAL-O-RING	
	5	1	**9X-3401**	2	PIN-CONNECTOR (16-GA TO 18-GA)	

E-ORDER BY THE CENTIMETER

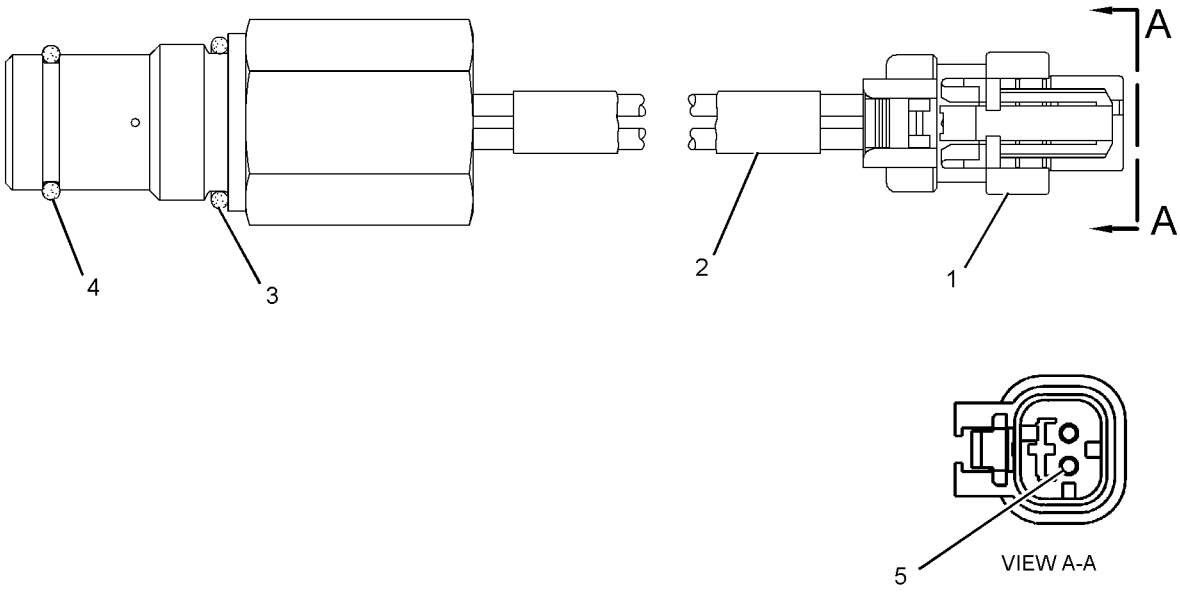

GRAPHIC #1 **<END>** g01238534

275-7741 SWITCH GP-WIPER–INTERMITTENT

S/N: JAP1-UP
24-VOLT
PART OF 286-4823 WIPER GP-WINDOW
AN ATTACHMENT

SMCS-7305, 7332 **i02992478**

NOTE	REF NO	GRAPHIC REF	PART NUMBER	QTY	PART NAME 1 2 3 4 5 6 (PRODUCT LEVEL)	SEE PAGE
	1	1	**6V-8369**	1	NUT (7/16-28-THD)	
	2	1	**2H-3920**	1	LOCKWASHER	
	3	1	**8T-8737**	2	PLUG-SEAL	
	4	1	**186-3735**	6	PIN-CONNECTOR (16-GA TO 18-GA)	
	5	1	**102-8806**	1	KIT-RECEPTACLE (8-PIN)	
					(INCLUDES RECEPTACLE AS & WEDGE)	

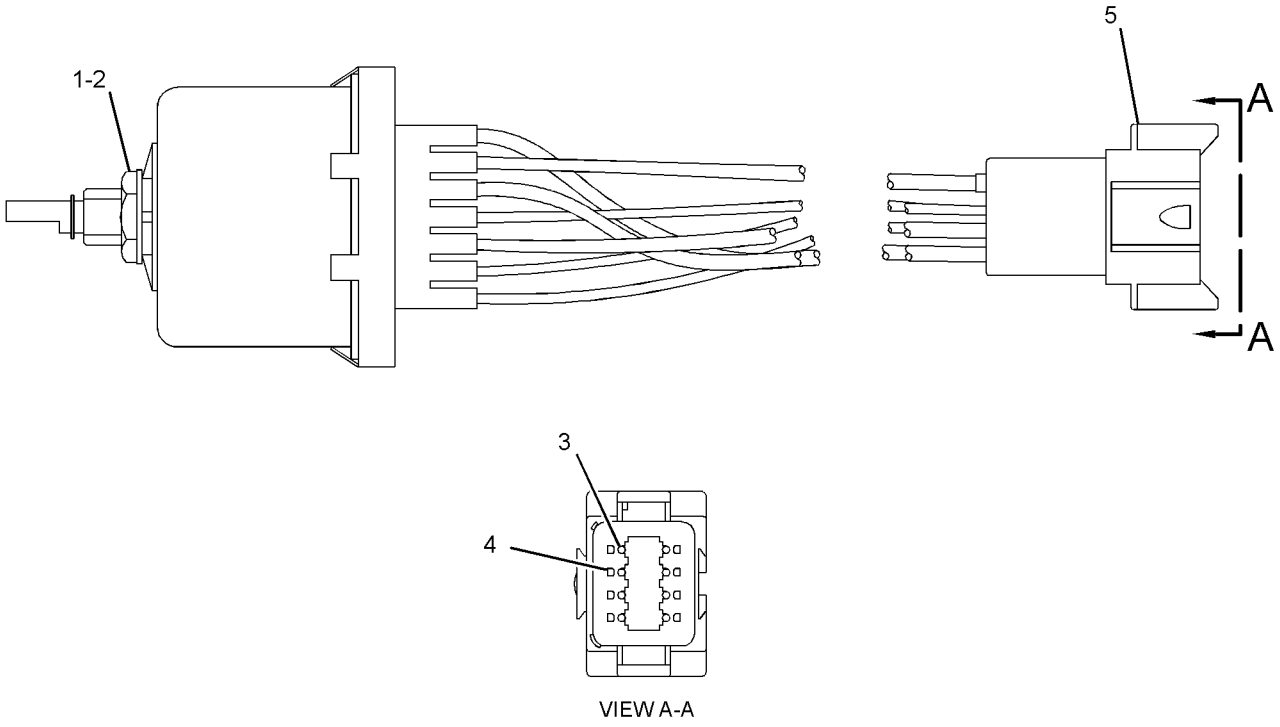

GRAPHIC #1 **<END>** g01445891

239-1134 VALVE GP-ETHER STARTING

S/N: JAP1-UP
24-VOLT
PART OF 311-2771 STARTING AID GP-ETHER
AN ATTACHMENT

SMCS-1456 **i03435882**

NOTE	REF NO	GRAPHIC REF	PART NUMBER	QTY	PART NAME 1 2 3 4 5 6 (PRODUCT LEVEL)	SEE PAGE
	1	1	**7N-9801**	1	GASKET	
	2	1	**102-8802**	1	KIT-RECEPTACLE (2-PIN)	
					(INCLUDES RECEPTACLE AS & WEDGE)	
	3	1	**186-3735**	2	PIN-CONNECTOR (16-GA TO 18-GA)	

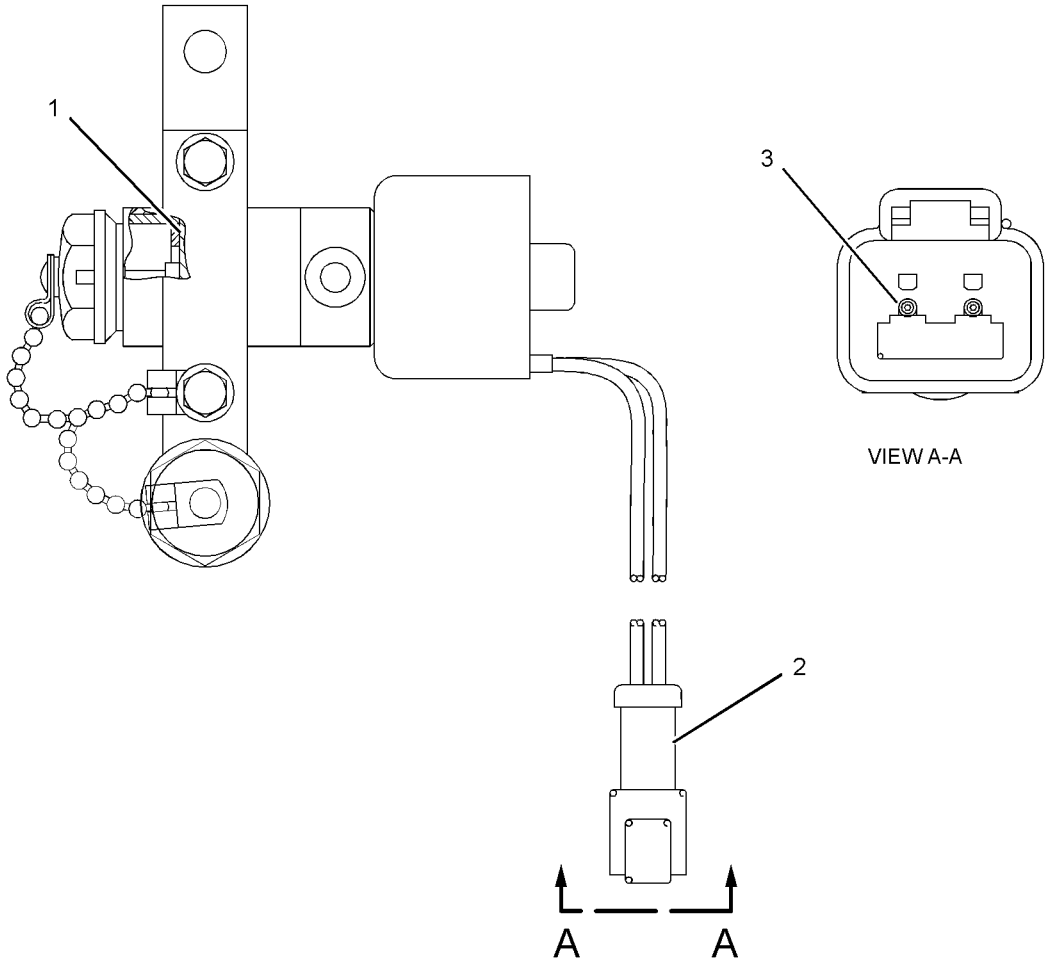

GRAPHIC #1 **<END>** g01375620

315-2614 WIRING GP-AIR CONDITIONER

S/N: JAP1-UP
PART OF 300-9979 AIR CONDITIONER AR
AN ATTACHMENT

SMCS-1408 **i03564880**

NOTE	REF NO	GRAPHIC REF	PART NUMBER	QTY	PART NAME 1 2 3 4 5 6 (PRODUCT LEVEL)	SEE PAGE
	1	1	**7K-1181**	4	STRAP-CABLE	
	2	1	**169-7443**	1	TIMER AS-ON DELAY (24-VOLT)	
		1	**102-8804**	1	KIT-RECEPTACLE (4-PIN)	
		1	**186-3735**	4	PIN-CONNECTOR (16-GA TO 18-GA)	
	3	1	**313-7755**	1	HARNESS AS-HEATER & AIR COND	
		1	**186-3736**	14	SOCKET-CONNECTOR (16-GA TO 18-GA)	
		1	**155-2270**	3	KIT-CONNECTING PLUG (2-PIN)	
		1	**155-2271**	2	KIT-CONNECTING PLUG (4-PIN)	
					EACH KIT INCLUDES PLUG AS, WEDGE & INTERFACE SEAL)	
	4	1	**317-8382**	1	BRACKET AS	
	5	1	**130-5300**	4	CLIP	
	6	1	**132-5789**	1	CLIP	
	7	1	**7D-1553**	1	CLIP	
	8	1	**8M-2770**	4	CLIP	
	9	1	**8T-4121**	6	WASHER-HARD (11X21X2.5-MM THK)	
M	10	1	**8T-4133**	1	NUT (M10X1.5-THD)	
M	11	1	**8T-4137**	5	BOLT (M10X1.5X20-MM)	

M-METRIC PART

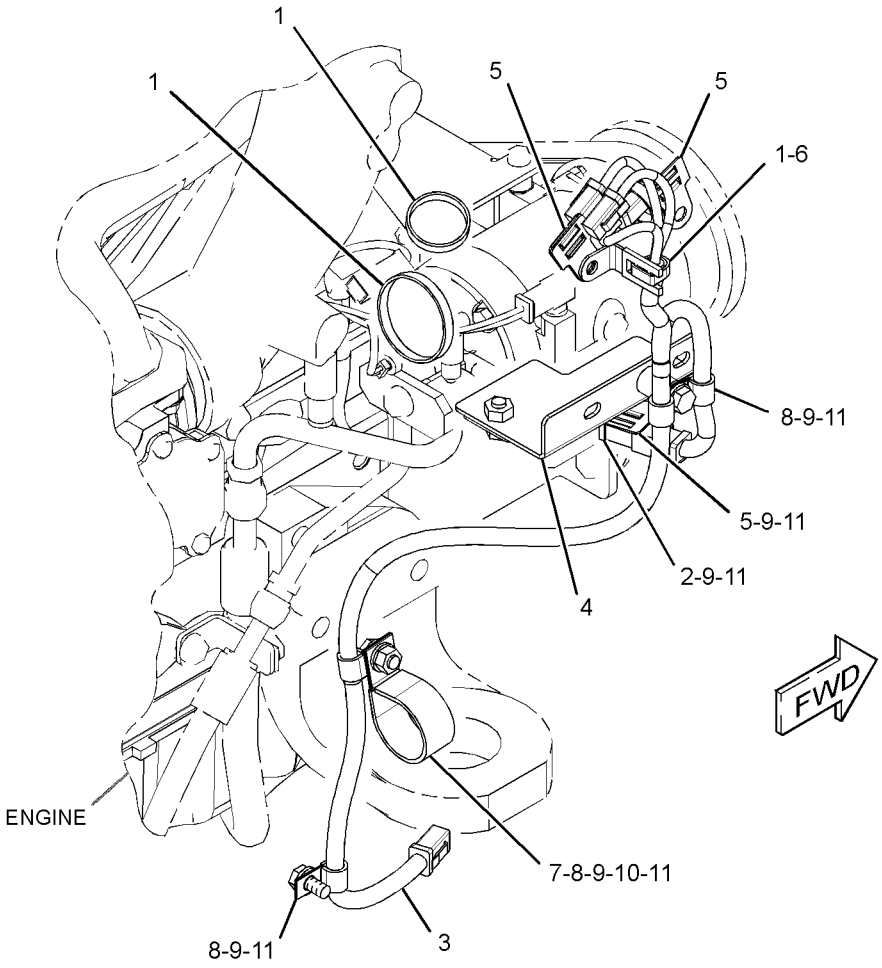

GRAPHIC #1 **<END>** g01923296

ELECTRICAL AND STARTING SYSTEM

311-0802 WIRING GP-AUXILIARY–FUEL TANK

S/N: JAP1-UP

PART OF 348-3018 GENERAL AR

SMCS-1408 **i03641513**

NOTE	REF NO	GRAPHIC REF	PART NUMBER	QTY	PART NAME 1 2 3 4 5 6 (PRODUCT LEVEL)	SEE PAGE
	1	1	**3E-5239**	1	RELAY AS (24-VOLT)	
	2	1	**4S-5719**	1	SPACER (10.31X25X12.7-MM THK)	
	3	1	**6V-4283**	1	PLATE-IDENTIFICATION (ALTERNATOR RESET)	
	4	1	**6V-7555**	1	STRAP-CABLE	
	5	1	**7K-1181**	11	STRAP-CABLE	
Y	6	1	**7N-0718**	1	SWITCH GP-DISCONNECT (BATTERY)	191
	7	1	**9C-5344**	1	SPACER (10.5X20X18-MM THK)	
	8	1	**9G-2758**	1	LOCKOUT AS-SWITCH	
	9	1	**135-2543**	2	BOOT (RED)	
	10	1	**171-2212**	1	CIRCUIT BREAKER AS (105-AMPERE) (MAIN)	
	10A	1	**171-2212**	1	CIRCUIT BREAKER AS (105-AMPERE) (ALTERNATOR)	
					(EACH INCLUDES)	
		1	**6V-8187**	2	NUT (1/4-28-THD)	
		1	**8T-4205**	2	WASHER-HARD (7.2X14.5X2-MM THK)	
		1	**253-2111**	2	LOCKWASHER	
	11	1	**186-3223**	1	PLATE AS	
	12	1	**189-0108**	1	PLATE	
Y	13	1	**194-6722**	1	SENSOR GP-PRESSURE (ATMOSPHERIC AIR)	171
	14	1	**204-8000**	1	MOUNT (TIE WRAP)	
Y	15	1	**241-8368**	1	SWITCH GP-MAGNETIC (24-VOLT)	192
	16	1	**289-9354**	1	CABLE AS	
		1	**6V-2369**	1	CABLE (4-GA, BLACK)	
		1	**9G-4343**	1	TERMINAL-RING (4-GA, 1/4-IN SCREW)	
		1	**5P-3454**	1	TERMINAL-RING (4-GA, 5/16-IN SCREW)	
		1	**135-2543**	2	BOOT (RED)	
	17	1	**311-9296**	1	HARNESS AS-FUEL TANK	
		1	**102-8802**	1	KIT-RECEPTACLE (2-PIN)	
		1	**102-8803**	1	KIT-RECEPTACLE (3-PIN)	
		1	**102-8804**	1	KIT-RECEPTACLE (4-PIN)	
		1	**102-8801**	1	KIT-RECEPTACLE (12-PIN)	
					(EACH KIT INCLUDES RECEPTACLE AS & WEDGE)	
		1	**186-3735**	12	PIN-CONNECTOR (16-GA TO 18-GA)	
		1	**186-3736**	9	SOCKET-CONNECTOR (16-GA TO 18-GA)	
		1	**8T-8737**	10	PLUG-SEAL	
E		1	**125-7875**		TUBE-HEAT SHRINK (7.44-MM DIA) (5-CM)	
		1	**155-2270**	1	KIT-CONNECTING PLUG (2-PIN)	
		1	**155-2271**	2	KIT-CONNECTING PLUG (4-PIN)	
					(EACH KIT INCLUDES PLUG AS, WEDGE, & INTERFACE SEAL)	
E		1	**1P-0810**		TAPE-ELECTRICAL (10-CM)	
	18	1	**335-0806**	1	BRACKET AS	
M		1	**8T-3490**	1	NUT-WELD (M10X1.5-THD)	
	19	1	**344-9564**	1	HARNESS AS-SOLENOID	
		1	**102-8802**	1	KIT-RECEPTACLE (2-PIN)	
					(INCLUDES RECEPTACLE AS & WEDGE)	
		1	**186-3735**	2	PIN-CONNECTOR (16-GA TO 18-GA)	
		1	**9X-1054**	1	PLUG AS-CONNECTOR (4-PIN)	
E		1	**125-7874**		TUBE-HEAT SHRINK (5.72-MM DIA) (5-CM)	
	20	1	**124-9633**	1	CLIP	
	21	1	**130-5300**	5	CLIP	
	22	1	**132-5789**	1	CLIP	
	23	1	**332-7657**	1	SENDER AS-FUEL LEVEL	
		1	**102-8802**	1	KIT-RECEPTACLE (2-PIN)	
					(INCLUDES RECEPTACLE AS & WEDGE)	
		1	**186-3735**	2	PIN-CONNECTOR (16-GA TO 18-GA)	
	24	1	**3J-1907**	1	SEAL-O-RING	

311-0802 **WIRING GP-AUXILIARY** *(contd.)* **i03641513**

NOTE	REF NO	GRAPHIC REF	PART NUMBER	QTY	PART NAME 1 2 3 4 5 6 (PRODUCT LEVEL)	SEE PAGE
	25	1	**4D-7794**	1	CLIP	
M	26	1	**5C-9553**	5	BOLT (M6X1X16-MM)	
	27	1	**5L-4507**	4	SCREW-MACHINE (10-32X0.875-IN)	
M	28	1	**6V-7357**	1	BOLT (M6X1X25-MM)	
	29	1	**6V-7699**	4	WASHER-HARD (5.5X13X1.6-MM THK)	
	30	1	**8T-4121**	8	WASHER-HARD (11X21X2.5-MM THK)	
M	31	1	**8T-4133**	1	NUT (M10X1.5-THD)	
M	32	1	**8T-4136**	2	BOLT (M10X1.5X25-MM)	
M	33	1	**8T-4137**	3	BOLT (M10X1.5X20-MM)	
M	34	1	**8T-4138**	2	BOLT (M6X1X20-MM)	
M	35	1	**8T-4196**	2	BOLT (M10X1.5X35-MM)	
	36	1	**8T-4205**	5	WASHER-HARD (7.2X14.5X2-MM THK)	
	37	1	**9X-8256**	3	WASHER (6.6X12X2-MM THK)	
B	38	1	**8C-8422**		SEALANT	

B-USE AS REQUIRED
E-ORDER BY THE CENTIMETER
M-METRIC PART
Y-SEPARATE ILLUSTRATION

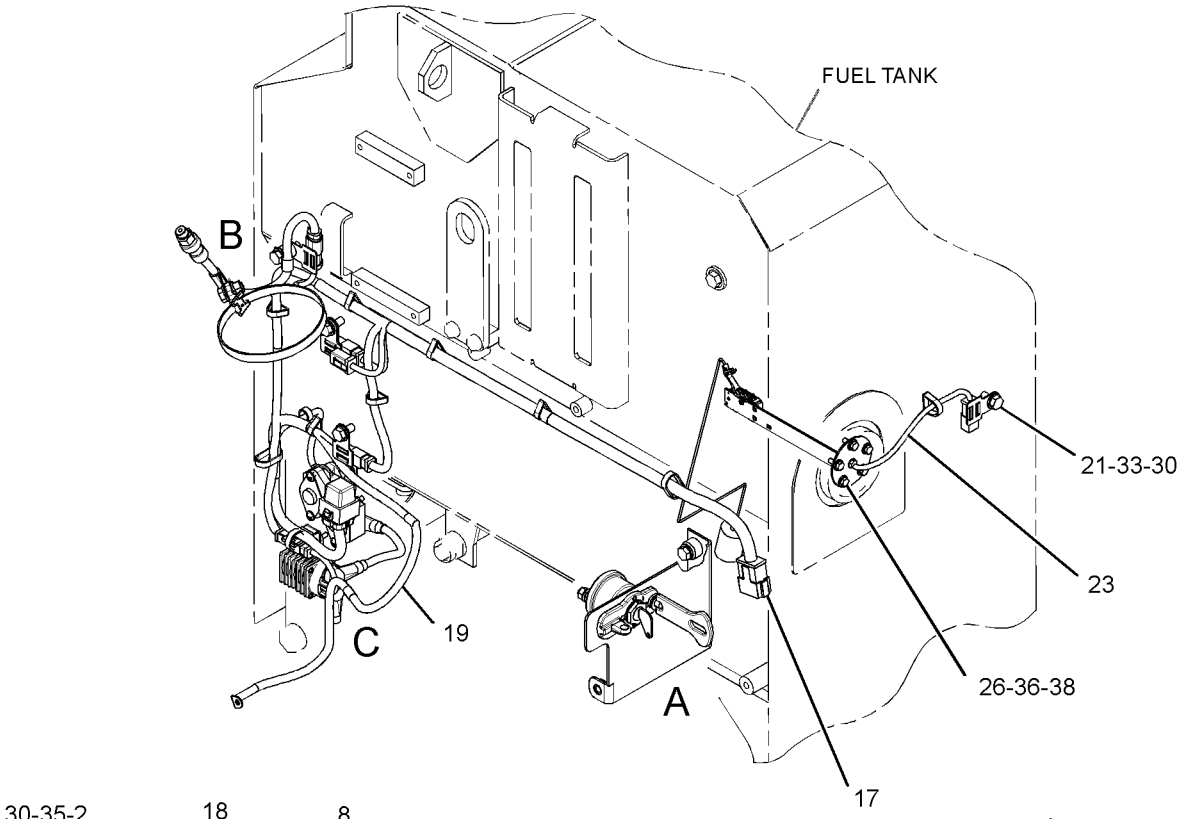

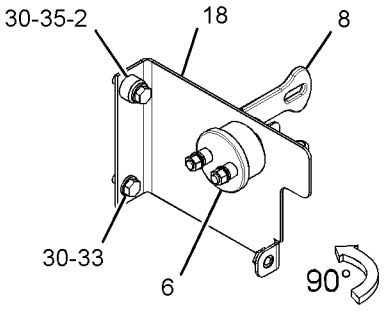

VIEW OF AREA A

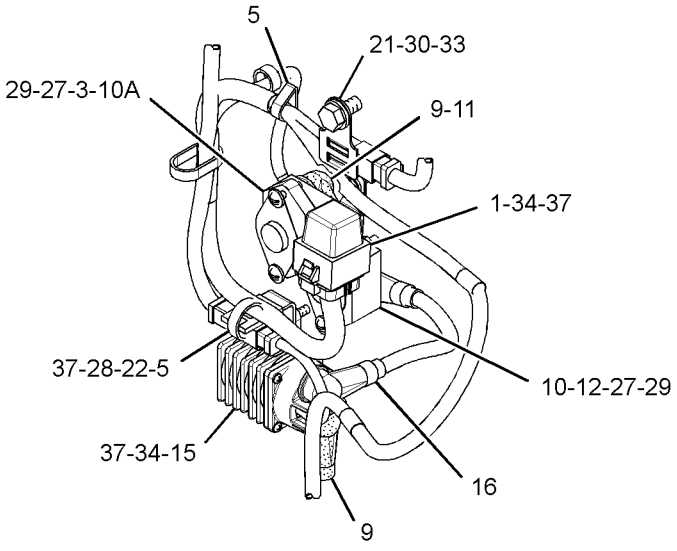

VIEW OF AREA C

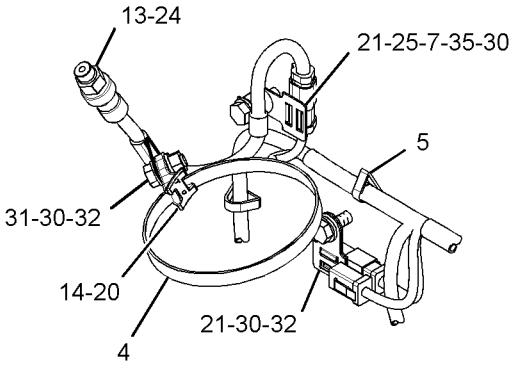

VIEW OF AREA B

GRAPHIC #1 **<END>** g01896753

ELECTRICAL AND STARTING SYSTEM

285-3361 WIRING GP-CAB

S/N: JAP1-UP
PART OF 320-0341 CAB AR, 320-0342 ROPS AR
AN ATTACHMENT

SMCS-1408, 7301 **i03251670**

NOTE	REF NO	GRAPHIC REF	PART NUMBER	QTY	PART NAME 1 2 3 4 5 6 (PRODUCT LEVEL)	SEE PAGE
	1	2	**3E-0109**	3	PLUG (ROCKER SWITCH)	
Y	2	2	**3E-6389**	1	LAMP GP-DOME (24-VOLT)	142
	3	1,2	**3S-2093**	23	STRAP-CABLE	
	4	2	**6V-6578**	2	RIVET-BLIND	
	5	2	**7T-9302**	2	KNOB AS-WIPER SWITCH	
		2	**014-0816**	1	SETSCREW (8-32X0.5-IN)	
	6	2	**9W-1441**	1	FUSE (15-AMPERE)	
	7	2	**112-6174**	2	SWITCH AS-ROTARY (WIPER, WASHER) (FRONT)	
					(EACH INCLUDES)	
		2	**2H-3920**	1	LOCKWASHER	
		2	**3E-3389**	1	WEDGE-RECEPTACLE LOCK	
		2	**6V-8369**	1	NUT (7/16-28-THD)	
		2	**186-3735**	6	PIN-CONNECTOR (16-GA TO 18-GA)	
		2	**8T-8737**	2	PLUG-SEAL	
		2	**102-8806**	1	KIT-RECEPTACLE (8-PIN)	
					(INCLUDES RECEPTACLE AS & WEDGE)	
	8	2	**131-5171**	1	CLIP	
	9	2	**160-6382**	1	GROMMET	
	10	1	**167-7504**	1	HARNESS AS-CAB (SWITCH PANEL)	
	11	1	**167-7505**	1	HARNESS AS-CAB (REAR)	
	12	1	**168-8248**	1	HARNESS AS-CAB (FRONT)	
	13	2	**169-8938**	1	PLATE AS	
	14	2	**172-6555**	1	PANEL	
	15	2	**172-8641**	1	PLATE	
	16	2	**172-9316**	1	FILM-FUSE (PANEL ACTION LAMPS)	
	17	2	**096-6166**	3	WASHER-HARD (4.5X9X1-MM THK)	
M	18	2	**5C-8312**	3	NUT (M4X0.7-THD)	
	19	2	**6V-5645**	4	SCREW-MACHINE (10-32X0.87-IN)	
	20	2	**6V-8801**	1	NUT (3/8-16-THD)	
	21	2	**8T-4896**	1	WASHER-HARD (10.2X18.5X2.5-MM THK)	
M	22	2	**9X-1046**	3	SCREW (M4X0.7X18-MM)	
M	23	2	**9X-2042**	4	SCREW-TRUSS HEAD (M6X1X12-MM)	
E	24	2	**7X-7877**		STRIP-EDGING (10-CM)	

E-ORDER BY THE CENTIMETER
M-METRIC PART
Y-SEPARATE ILLUSTRATION

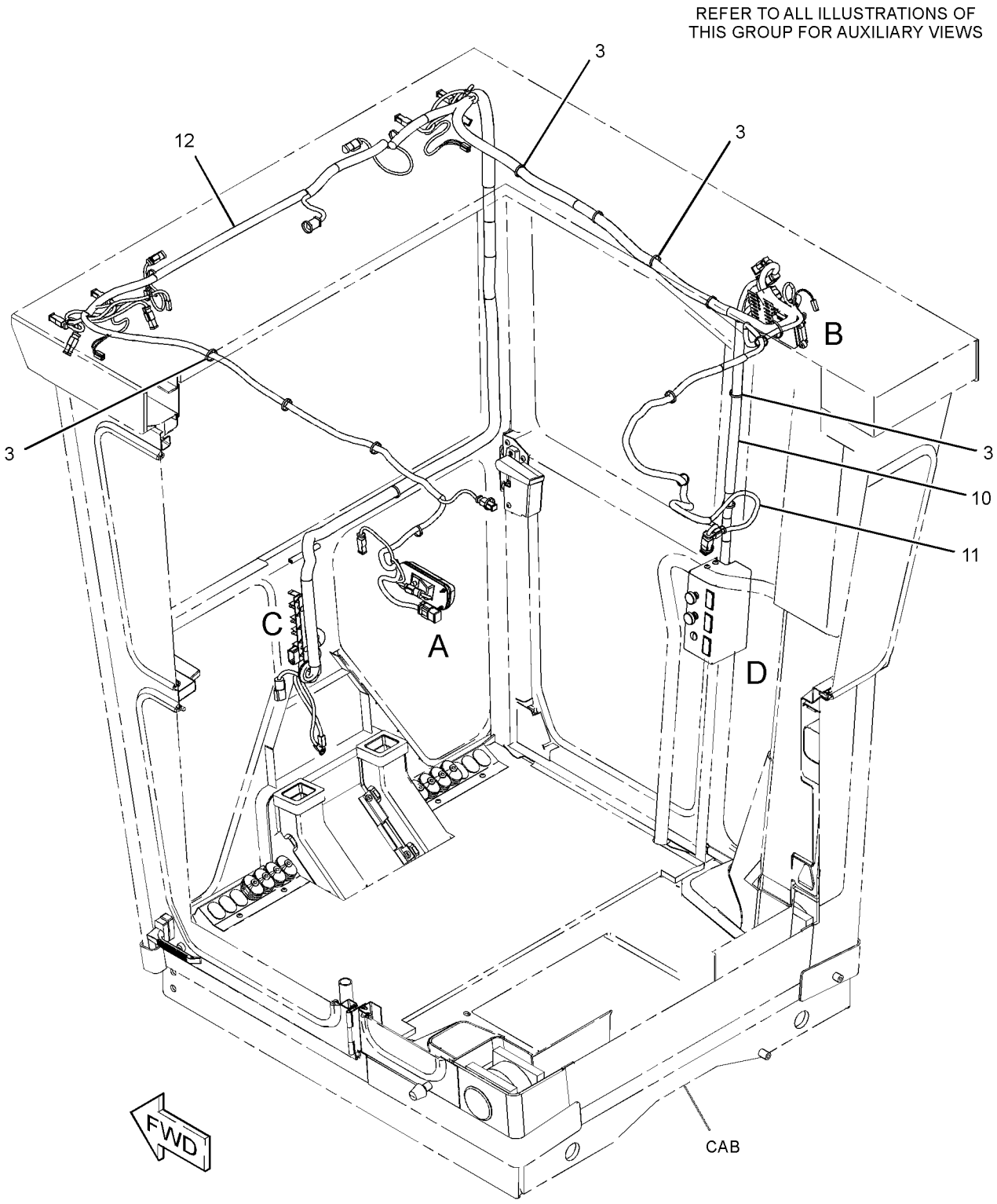

GRAPHIC #1 g01708016

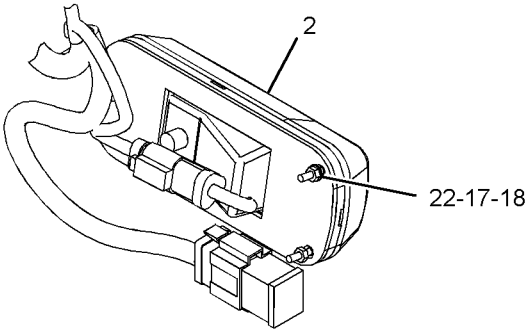

VIEW OF AREA A

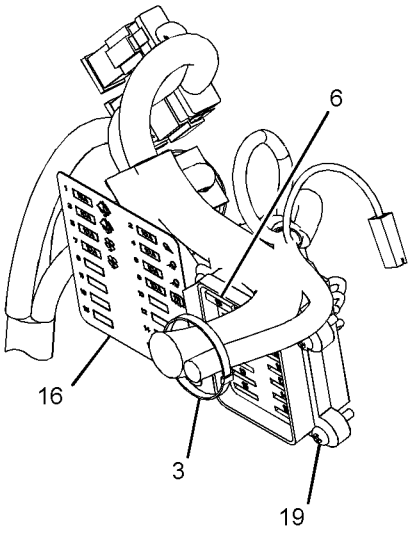

VIEW OF AREA B
(FUSE PANEL COVER REMOVED FOR CLARITY)

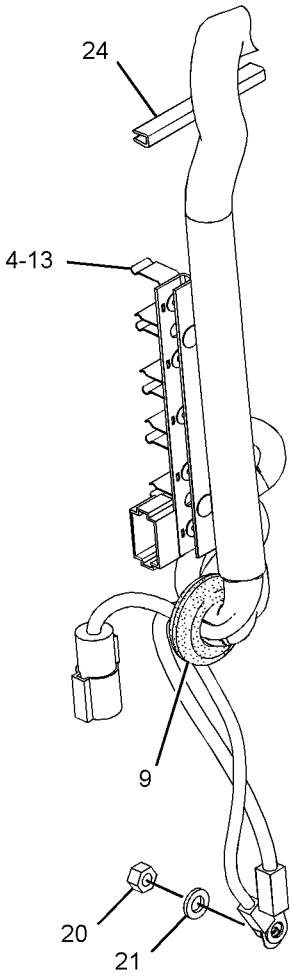

VIEW OF AREA C

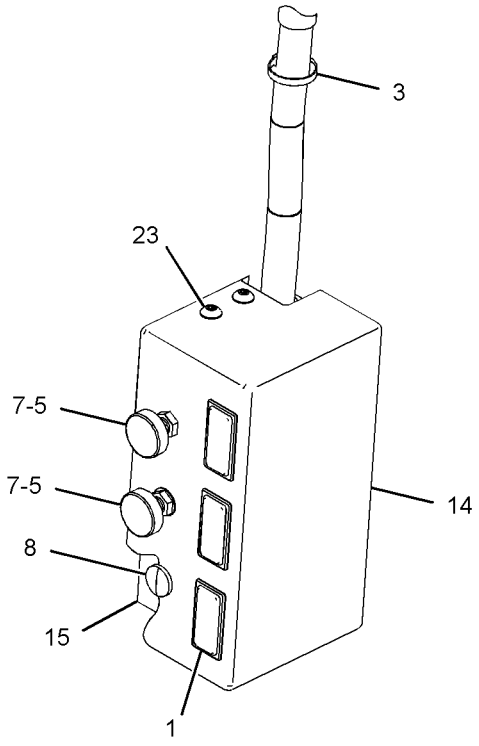

VIEW OF AREA D

GRAPHIC #2 **<END>** g01708015

284-5346 WIRING GP-CONSOLE

S/N: JAP1-UP

PART OF 348-3018 GENERAL AR

SMCS-1408 **i03431980**

NOTE	REF NO	GRAPHIC REF	PART NUMBER	QTY	PART NAME 1 2 3 4 5 6 (PRODUCT LEVEL)	SEE PAGE
	1	1	**3E-0109**	4	PLUG (ROCKER SWITCH)	
Y	2	1	**3E-6328**	1	ALARM GP (24-VOLT) (ACTION)	114
	3	1	**3S-2093**	4	STRAP-CABLE	
	4	1	**5M-3724**	1	BRACKET	
	5	1	**7N-5876**	1	LAMP (24-VOLT, 0.2-AMPERE)	
	6	1	**8C-6354**	1	CAP-RECEPTACLE	
	7	1	**110-7887**	1	SWITCH AS-START (KEY)	
		1	**7T-6799**	1	NUT-MOUNTING (1-32-THD)	
		1	**102-8804**	1	KIT-RECEPTACLE (4-PIN)	
					(INCLUDES RECEPTACLE AS & WEDGE)	
		1	**186-3735**	4	PIN-CONNECTOR (16-GA TO 18-GA)	
	9	1	**169-5414**	3	CLIP	
	10	1	*183-2151*	1	SWITCH AS-ROCKER (24-VOLT) (THROTTLE HOLD MODE)	
		1	**3E-8825**	2	LAMP (24-VOLT)	
		1	**183-2136**	1	ACTUATOR	
		1	**196-7268**	1	SWITCH AS (THROTTLE HOLD MODE)	
	11	1	**185-2197**	1	SWITCH AS-ROCKER (THROTTLE LOCK SET, RESET)	
	12	1	**335-1894**	1	HARNESS AS-CONSOLE	
	13	1	**335-1895**	1	HARNESS AS-CONSOLE	
	14	1	**130-5300**	1	CLIP	
	15	1	**2V-8259**	2	GROMMET	
	16	1	**3E-5239**	1	RELAY AS (24-VOLT)	
	17	1	**4D-7794**	1	CLIP	
	18	1	**4L-6454**	1	BOLT (3/8-16X1-IN)	
	19	1	**4P-7581**	1	CLIP	
M	20	1	**5C-2890**	1	NUT (M6X1-THD)	
M	21	1	**5C-9553**	2	BOLT (M6X1X16-MM)	
	22	1	**5M-3062**	2	BOLT (3/8-16X0.75-IN)	
	23	1	**5S-4246**	4	LOCKWASHER	
	24	1	**6B-4540**	4	NUT (4-40-THD)	
	25	1	**6V-2480**	4	SCREW (4-40X0.5-IN)	
	26	1	**6V-8801**	1	NUT (3/8-16-THD)	
	27	1	**7C-4354**	1	CLIP	
	28	1	**7G-7053**	1	GROMMET	
	29	1	**7X-4743**	1	GROMMET	
	30	1	**8T-4121**	1	WASHER-HARD (11X21X2.5-MM THK)	
M	31	1	**8T-4137**	2	BOLT (M10X1.5X20-MM)	
	32	1	**8T-4896**	5	WASHER-HARD (10.2X18.5X2.5-MM THK)	
	33	1	**9X-8256**	2	WASHER (6.6X12X2-MM THK)	
	34	1	*9X-9634*	1	SWITCH AS-ROCKER (CENTERSHIFT PIN)	
		1	**3E-8817**	1	ACTUATOR	
		1	**3E-8825**	1	LAMP (24-VOLT)	
		1	**3E-9327**	1	SWITCH AS (CENTERSHIFT PIN)	
	35	1	**9R-2620**	1	PLUG	

M-METRIC PART
Y-SEPARATE ILLUSTRATION

284-5346 **WIRING GP-CONSOLE** *(contd.)* **i03431980**

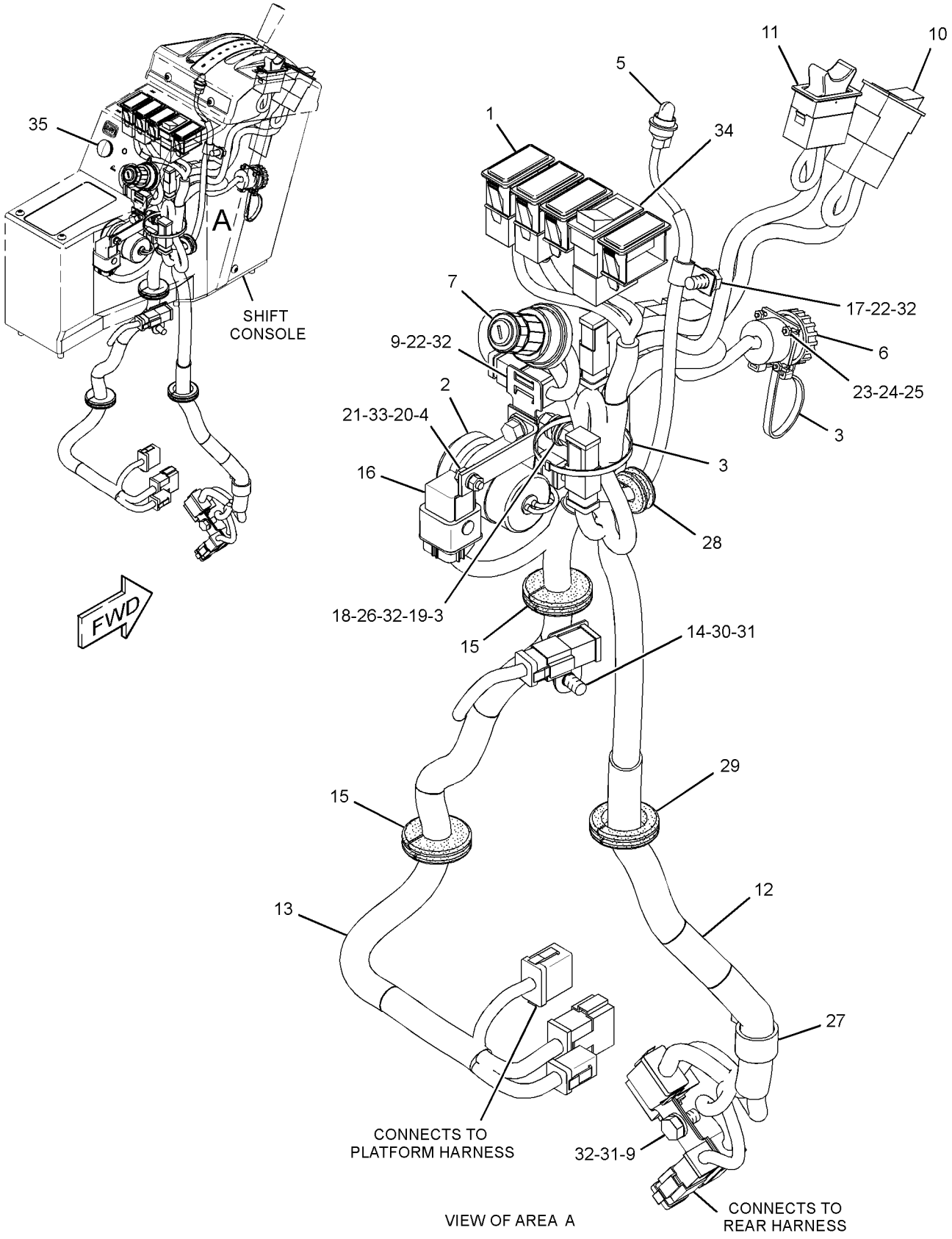

GRAPHIC #1

<END>

g01754234

198-2714 WIRING GP-ENGINE

S/N: KHX13472-UP

PART OF 325-9707 ENGINE AR-COMPLETE

SMCS-1408 **i03646293**

NOTE	REF NO	GRAPHIC REF	PART NUMBER	QTY	PART NAME 1 2 3 4 5 6 (PRODUCT LEVEL)	SEE PAGE
	1	1	**3S-2093**	12	STRAP-CABLE	
	2	1	**4P-5918**	1	CLIP	
	4	1	**198-2713**	1	HARNESS AS-ENGINE (ELECTRONIC CONTROL MODULE)	
		1	**305-5362**	4	TERMINAL AS (18-GA)	
		1	**180-9340**	60	SOCKET-CONNECTOR (14-GA TO 18-GA)	
		1	**9X-3401**	15	PIN-CONNECTOR (16-GA TO 18-GA)	
					—OR—	
		1	**126-1767**	15	PIN-CONNECTOR (14-GA)	
		1	**8T-8737**	77	PLUG-SEAL	
E		1	**119-3662**		TUBE-HEAT SHRINK (10.85-MM DIA) (33-CM)	
E		1	**125-7874**		TUBE-HEAT SHRINK (5.72-MM DIA) (5-CM)	
E		1	**125-7875**		TUBE-HEAT SHRINK (7.44-MM DIA) (10-CM)	
		1	**264-5732**	1	PLUG AS-CONNECTOR (120-PIN)	
		1	**211-6807**	1	COVER (CONNECTOR)	
		1	**155-2270**	5	KIT-CONNECTING PLUG (2-PIN)	
		1	**155-2260**	3	KIT-CONNECTING PLUG (3-PIN)	
		1	**155-2265**	1	KIT-CONNECTING PLUG (8-PIN)	
					(EACH PLUG KIT INCLUDES PLUG AS, & WEDGE)	
		1	**102-8802**	1	KIT-RECEPTACLE (2-PIN)	
		1	**102-8803**	1	KIT-RECEPTACLE (3-PIN)	
		1	**102-8801**	1	KIT-RECEPTACLE (12-PIN)	
					(EACH RECEPTACLE KIT INCLUDES RECEPTACLE AS & WEDGE)	
		1	**111-2416**	1	PLUG AS-CONNECTOR (2-PIN)	
		1	**100-3320**	1	PLUG AS-CONNECTOR (2-PIN)	
	5	1	**206-1345**	9	STRAP-CABLE	
	6	1	**222-5917**	1	HARNESS AS-ENGINE (FUEL INJECTION)	
		1	**6N-7523**	1	WASHER (6.48X11.9X1.57-MM THK)	
		1	**135-5975**	1	GROMMET-WIRING	
		1	**155-2255**	1	KIT-CONNECTING PLUG (12-PIN)	
					(INCLUDES PLUG AS & WEDGE)	
	7	1	**4P-8134**	1	CLIP	
M	8	1	**6V-2317**	1	BOLT (M8X1.25X30-MM)	
	9	1	**9M-1974**	1	WASHER-HARD (8.8X16X2-MM THK)	

E-ORDER BY THE CENTIMETER
M-METRIC PART

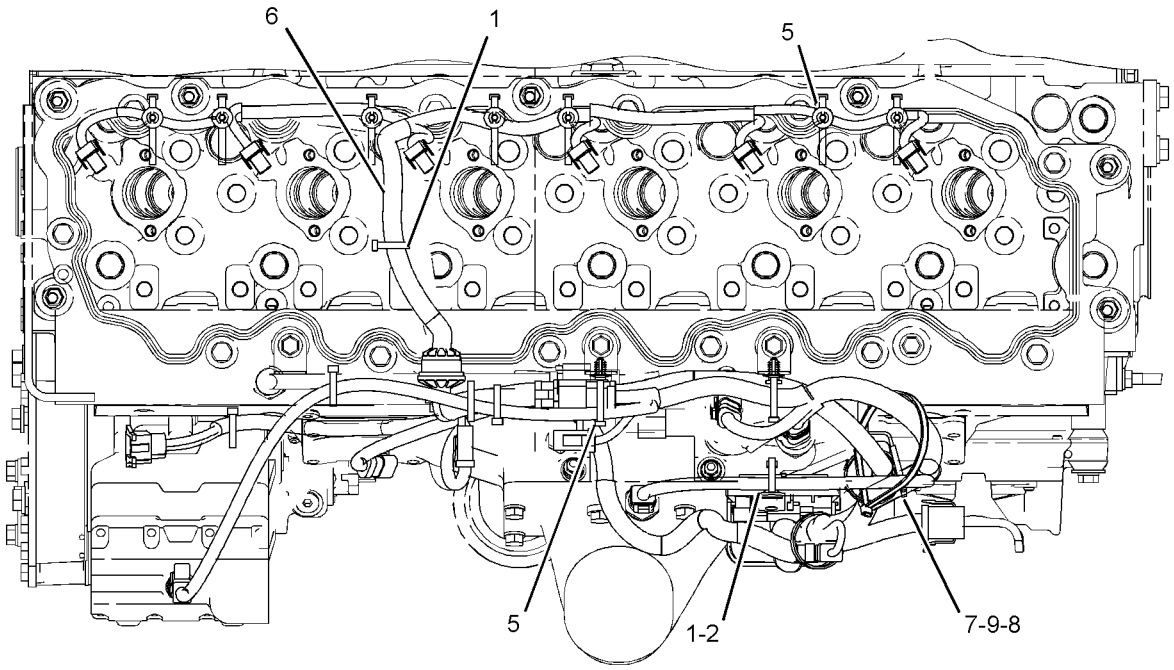

TOP VIEW OF ENGINE

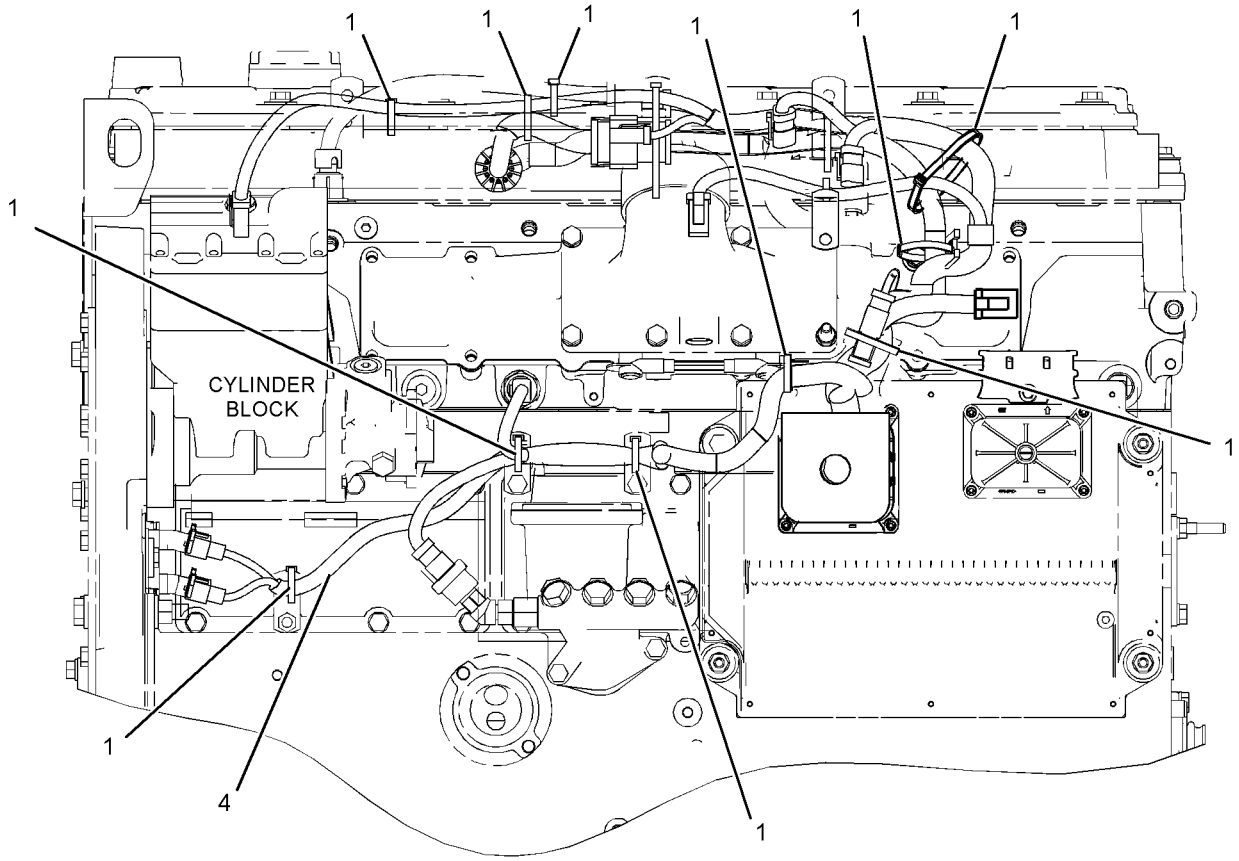

LEFT SIDE VIEW OF THE ENGINE

GRAPHIC #1 **<END>** g01958685

311-0801 WIRING GP-ETHER STARTING AID

S/N: JAP1-UP
PART OF 348-6943 OPTION AR-ENGINE
AN ATTACHMENT

SMCS-1408 **i03251663**

NOTE	REF NO	GRAPHIC REF	PART NUMBER	QTY	PART NAME 1 2 3 4 5 6 (PRODUCT LEVEL)	SEE PAGE
	1	1	**334-6872**	1	HARNESS AS-STARTING AID	
	2	1	**132-5789**	1	CLIP	
	3	1	**3E-5239**	1	RELAY AS (24-VOLT) (ETHER STARTING AID)	
M	4	1	**5C-9553**	1	BOLT (M6X1X16-MM)	
	5	1	**7K-1181**	1	STRAP-CABLE	
	6	1	**9X-8256**	1	WASHER (6.6X12X2-MM THK)	

M-METRIC PART

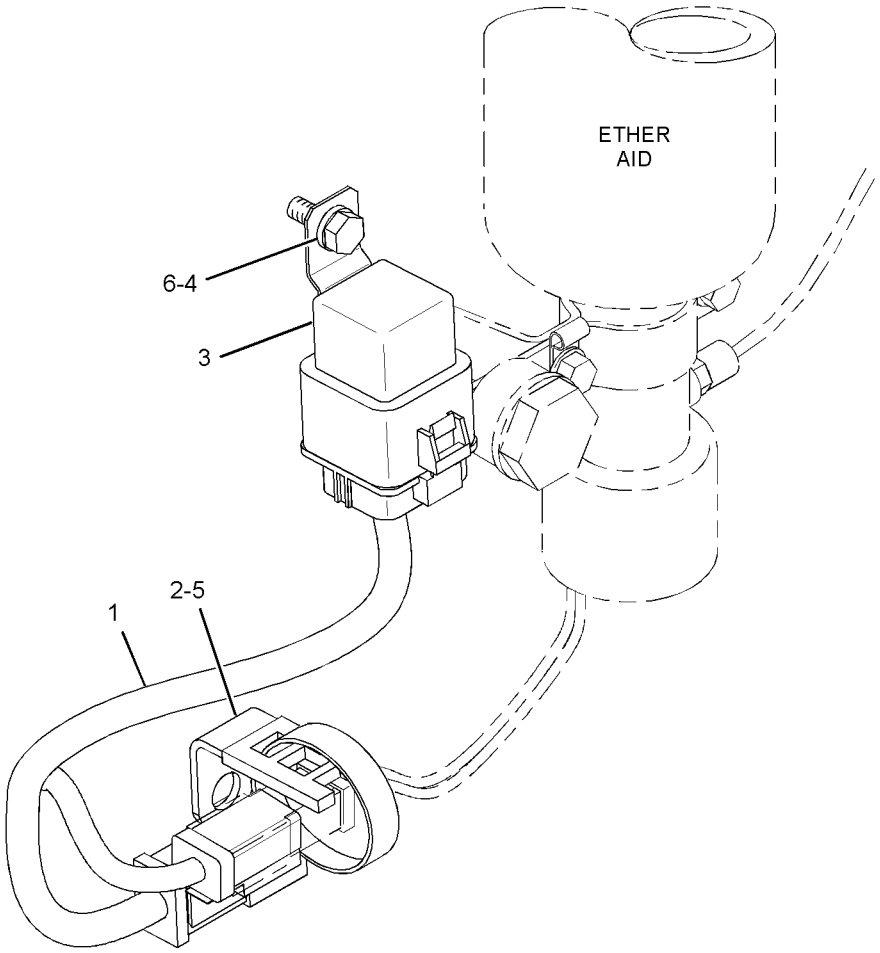

GRAPHIC #1 **<END>** g01703353

ELECTRICAL AND STARTING SYSTEM

284-5343 WIRING GP-FRONT

S/N: JAP1-UP

PART OF 348-3018 GENERAL AR

SMCS-1408 **i03247447**

NOTE	REF NO	GRAPHIC REF	PART NUMBER	QTY	PART NAME 1 2 3 4 5 6 (PRODUCT LEVEL)	SEE PAGE
	1	1	**1S-2342**	1	STRAP AS-GROUND	
	2	2	**3E-2026**	1	SWITCH AS-PRESSURE (STOP LIGHT)	
		2	**102-8802**	1	KIT-RECEPTACLE (2-PIN)	
					(INCLUDES RECEPTACLE AS & WEDGE)	
		2	**186-3735**	2	PIN-CONNECTOR (16-GA TO 18-GA)	
	3	2	**3E-3636**	1	SWITCH AS-BALL (CENTERSHIFT INDICATOR)	
		2	**186-3735**	4	PIN-CONNECTOR (16-GA TO 18-GA)	
		2	**102-8804**	1	KIT-RECEPTACLE (4-PIN)	
					(INCLUDES RECEPTACLE AS & WEDGE)	
	4	2	**6I-1418**	4	SPACER (8.2X12.7X28.7-MM THK)	
	5	2	**8T-9655**	8	MOUNT-ISOLATION	
	6	2	**9L-1566**	2	SUPPORT	
	7	1	**9L-6331**	1	BRACKET	
	8	2	**114-9281**	2	SWITCH AS-PRESSURE (AIR BRAKE)	
					(EACH INCLUDES)	
		2	**102-8802**	1	KIT-RECEPTACLE (2-PIN)	
					(INCLUDES RECEPTACLE AS & WEDGE)	
		2	**186-3735**	2	PIN-CONNECTOR (16-GA TO 18-GA)	
	9	1,2	**169-5414**	5	CLIP	
Y	10	2	**177-4493**	1	CONTROL GP-POWER TRAIN	127
	11	2	**297-1140**	1	SWITCH AS-PRESSURE (PARKING BRAKE)	
		2	**102-8802**	1	KIT-RECEPTACLE (2-PIN)	
					(INCLUDES RECEPTACLE AS & WEDGE)	
		2	**186-3735**	2	PIN-CONNECTOR (16-GA TO 18-GA)	
	12	2	**320-8203**	1	PLATE AS	
	13	1	**334-9745**	1	HARNESS AS-PLATFORM	
	14	2	**096-6166**	4	WASHER-HARD (4.5X9X1-MM THK)	
	15	1,2	**130-5300**	6	CLIP	
	16	2	**174-5907**	2	CLIP	
	17	2	**3J-1907**	1	SEAL-O-RING	
	18	1,2	**4D-7388**	4	CLIP	
	19	1,2	**4D-7794**	8	CLIP	
	20	1	**4K-8864**	1	CLIP	
	21	1	**4L-6454**	1	BOLT (3/8-16X1-IN)	
	22	1,2	**4P-8134**	2	CLIP	
	23	1,2	**5M-3062**	4	BOLT (3/8-16X0.75-IN)	
	24	1	**6D-4246**	1	CLIP	
	25	2	**6D-4636**	1	CLIP	
	26	1	**6V-1889**	1	CLIP	
	27	1,2	**6V-3265**	6	CLIP	
	28	2	**7X-0613**	4	WASHER-HARD (8.8X25.5X5-MM THK)	
	29	1	**6V-8801**	1	NUT (3/8-16-THD)	
	30	1	**7C-4354**	1	CLIP	
	31	1,2	**7K-1181**	19	STRAP-CABLE	
	32	2	**7N-3718**	1	CLIP	
M	33	2	**7X-0818**	4	BOLT (M8X1.25X45-MM)	
B	34	2	**8F-1974**	10	SHIM (0.13-MM THK)	
	35	2	**8M-2770**	1	CLIP	
	36	1	**8M-2773**	1	CLIP	
	37	1,2	**8T-4121**	33	WASHER-HARD (11X21X2.5-MM THK)	
M	38	1,2	**8T-4133**	4	NUT (M10X1.5-THD)	
M	39	2	**8T-4136**	2	BOLT (M10X1.5X25-MM)	
M	40	1,2	**8T-4137**	24	BOLT (M10X1.5X20-MM)	
M	41	1,2	**8T-4195**	3	BOLT (M10X1.5X30-MM)	
M	42	2	**8T-4647**	4	SCREW-MACHINE (M4X0.7X20-MM)	
	43	1,2	**8T-4896**	6	WASHER-HARD (10.2X18.5X2.5-MM THK)	

284-5343 **WIRING GP-FRONT** ***(contd.)*** **i03247447**

B-USE AS REQUIRED
M-METRIC PART
Y-SEPARATE ILLUSTRATION

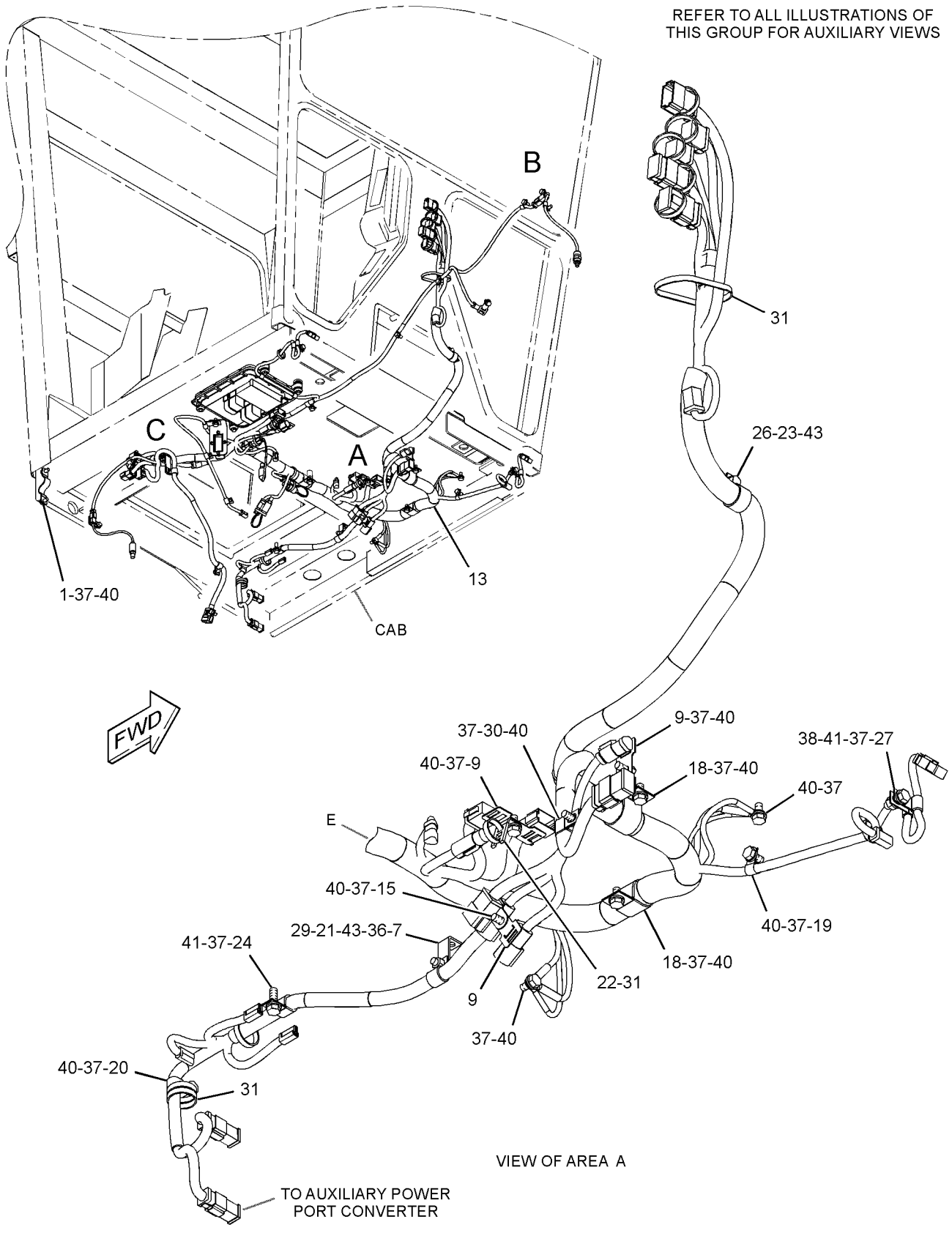

GRAPHIC #1

g01712254

284-5343 **WIRING GP-FRONT** *(contd.)* **i03247447**

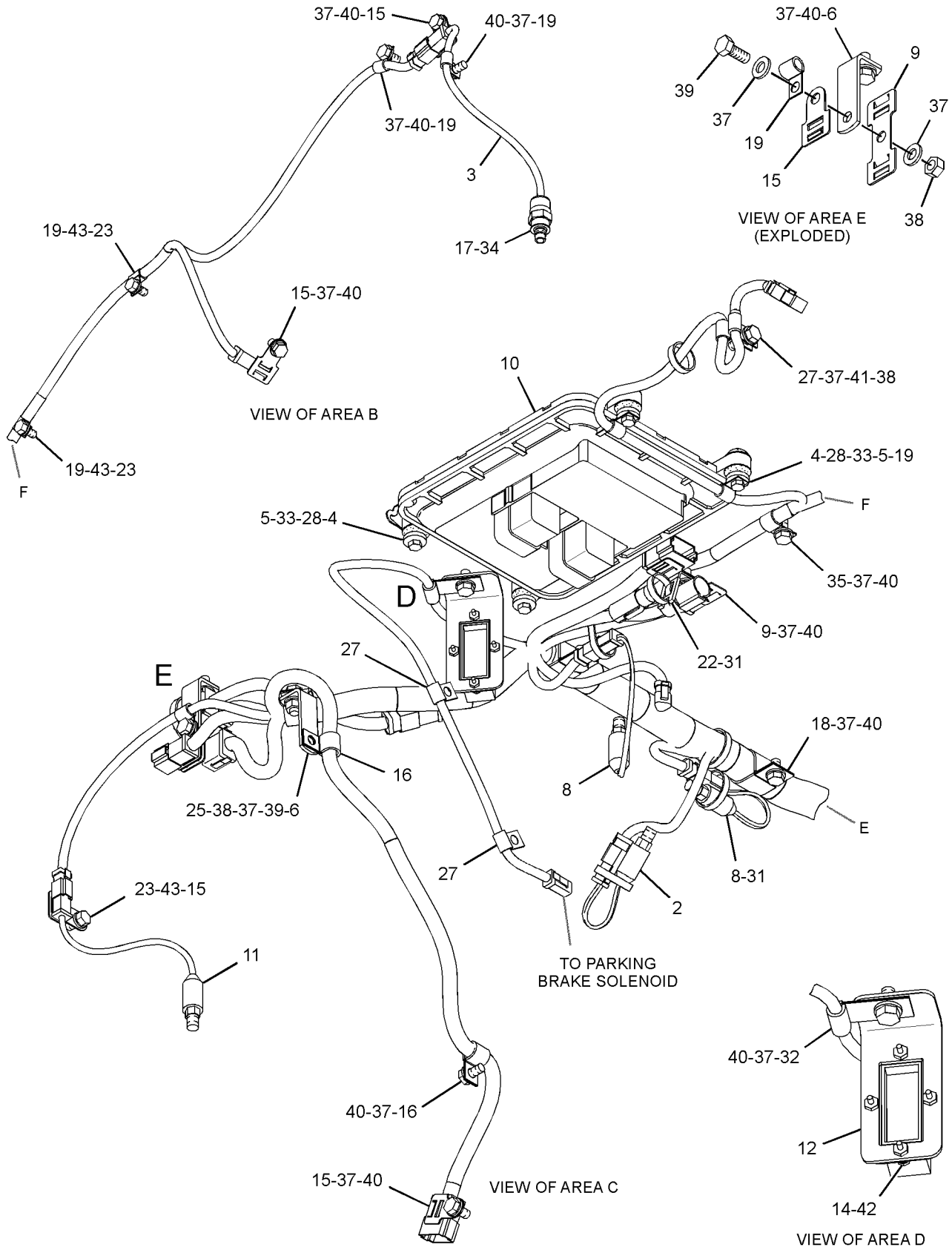

GRAPHIC #2 **<END>** g01712255

ELECTRICAL AND STARTING SYSTEM

334-3341 WIRING GP-FRONT

S/N: JAP1-UP
PART OF 334-7636, 335-9267 ROADING AR
AN ATTACHMENT

SMCS-1408 **i03681581**

NOTE	REF NO	GRAPHIC REF	PART NUMBER	QTY	PART NAME 1 2 3 4 5 6 (PRODUCT LEVEL)	SEE PAGE
	1	2	**1S-2342**	1	STRAP AS-GROUND	
	2	1	**2G-0617**	2	CLAMP	
	3	1	**2G-0659**	2	BRACKET	
	4	1	**2G-0988**	2	CAP	
	5	2	**3E-2026**	1	SWITCH AS-PRESSURE (STOP LIGHT)	
		2	**102-8802**	1	KIT-RECEPTACLE (2-PIN)	
					(INCLUDES RECEPTACLE AS & WEDGE)	
		2	**186-3735**	2	PIN-CONNECTOR (16-GA TO 18-GA)	
	6	2	**3E-3636**	1	SWITCH AS-BALL (CENTERSHIFT INDICATOR)	
		2	**186-3736**	4	SOCKET-CONNECTOR (16-GA TO 18-GA)	
		2	**102-8804**	1	KIT-RECEPTACLE (4-PIN)	
					(INCLUDES RECEPTACLE AS & WEDGE)	
	7	1	**3K-9520**	3	GROMMET	
	8	1	**5T-9313**	1	TUBE	
	9	2	**6I-1418**	4	SPACER (8.2X12.7X28.7-MM THK)	
	10	2	**8T-9655**	8	MOUNT-ISOLATION	
	11	2	**9L-1566**	2	SUPPORT	
	12	2	**9L-6331**	1	BRACKET	
	13	2	**114-9281**	2	SWITCH AS-PRESSURE (AIR BRAKE)	
					(EACH INCLUDES)	
		2	**102-8802**	1	KIT-RECEPTACLE (2-PIN)	
					(INCLUDES RECEPTACLE AS & WEDGE)	
		2	**186-3735**	2	PIN-CONNECTOR (16-GA TO 18-GA)	
	14	1	**137-9410**	2	CLAMP	
	15	2	**169-5414**	5	CLIP	
Y	16	2	**177-4493**	1	CONTROL GP-POWER TRAIN	127
	17	1	**179-1550**	2	CLAMP	
	18	2	**297-1140**	1	SWITCH AS-PRESSURE (PARKING BRAKE)	
		2	**102-8802**	1	KIT-RECEPTACLE (2-PIN)	
		2	**186-3735**	2	PIN-CONNECTOR (16-GA TO 18-GA)	
Y	19	1	**302-0412**	1	LAMP GP-HEAD & SIGNAL (24-VOLT)	146
	20	2	**320-8203**	1	PLATE AS	
	21	2	**334-3342**	1	HARNESS AS-PLATFORM	
		2	**102-8802**	2	KIT-RECEPTACLE (2-PIN)	
		2	**102-8803**	1	KIT-RECEPTACLE (3-PIN)	
		2	**102-8805**	5	KIT-RECEPTACLE (6-PIN)	
		2	**102-8801**	8	KIT-RECEPTACLE (12-PIN)	
					(EACH KIT INCLUDES RECEPTACLE AS & WEDGE)	
		2	**5P-4571**	6	TERMINAL-BLADE (14-GA TO 16-GA)	
		2	**7G-7920**	1	PLUG-SEAL	
		2	**9X-0196**	3	TERMINAL AS	
		2	**8N-1546**	3	PIN-CONNECTOR (6-GA)	
		2	**8N-1547**	3	SOCKET-CONNECTOR (6-GA)	
		2	**186-3735**	68	PIN-CONNECTOR (16-GA TO 18-GA)	
		2	**186-3736**	80	SOCKET-CONNECTOR (16-GA TO 18-GA)	
		2	**8T-8737**	100	PLUG-SEAL	
		2	**9W-0844**	7	SOCKET-CONNECTOR (14-GA)	
		2	**9W-0852**	8	PIN-CONNECTOR (14-GA)	
		2	**9W-0852**	8	PIN-CONNECTOR (14-GA)	
		2	**9X-1343**	1	RECEPTACLE AS-CONNECTOR (40-PIN)	
		2	**9X-3401**	30	PIN-CONNECTOR (16-GA TO 18-GA)	
		2	**9X-3402**	27	SOCKET-CONNECTOR (16-GA TO 18-GA)	
E		2	**119-3662**		TUBE-HEAT SHRINK (10.85-MM DIA) (20-CM)	
E		2	**125-7874**		TUBE-HEAT SHRINK (5.72-MM DIA) (45-CM)	
E		2	**125-7875**		TUBE-HEAT SHRINK (7.44-MM DIA) (60-CM)	

334-3341 **WIRING GP-FRONT** *(contd.)* **i03681581**

NOTE	REF NO	GRAPHIC REF	PART NUMBER	QTY	PART NAME 1 2 3 4 5 6 (PRODUCT LEVEL)	SEE PAGE
		2	**127-5483**	3	PLUG AS-CONNECTOR (1-PIN)	
		2	**127-5484**	4	RECEPTACLE AS-CONNECTOR (1-PIN)	
		2	**131-1490**	3	TERMINAL AS (6-GA TO 8-GA)	
					(EACH INCLUDES)	
		2	**6H-3587**	1	TERMINAL-RING (6-GA TO 8-GA, 3/8-IN SCREW)	
E		2	**119-3662**		TUBE-HEAT SHRINK (10.85-MM DIA) (4-CM)	
		2	**131-1498**	2	TERMINAL AS	
					(EACH INCLUDES)	
		2	**2L-8069**	1	TERMINAL-RING (2-GA TO 10-GA, 3/8-IN SCREW)	
E		2	**125-7875**		TUBE-HEAT SHRINK (7.44-MM DIA) (4-CM)	
		2	**131-1506**	1	TERMINAL AS	
		2	**2L-8079**	1	TERMINAL-RING (14-GA TO 16-GA, 3/8-IN SCREW)	
E		2	**125-7874**		TUBE-HEAT SHRINK (5.72-MM DIA) (3-CM)	
		2	**155-2255**	6	KIT-CONNECTING PLUG (12-PIN)	
		2	**155-2265**	1	KIT-CONNECTING PLUG (8-PIN)	
		2	**155-2260**	3	KIT-CONNECTING PLUG (3-PIN)	
		2	**155-2270**	9	KIT-CONNECTING PLUG (2-PIN)	
		2	**155-2271**	1	KIT-CONNECTING PLUG (4-PIN)	
		2	**155-2274**	6	KIT-CONNECTING PLUG (6-PIN)	
					(EACH KIT INCLUDES PLUG AS, WEDGE, & INTERFACE SEAL)	
E		2	**1P-0810**		TAPE-ELECTRICAL (20-CM)	
	22	1	**334-3343**	1	HARNESS AS-PANEL	
		1	**102-8805**	1	KIT-RECEPTACLE (6-PIN)	
					(INCLUDES RECEPTACLE AS & WEDGE)	
		1	**186-3735**	5	PIN-CONNECTOR (16-GA TO 18-GA)	
		1	**186-3736**	8	SOCKET-CONNECTOR (16-GA TO 18-GA)	
		1	**8T-8737**	2	PLUG-SEAL	
		1	**9W-0844**	2	SOCKET-CONNECTOR (14-GA)	
		1	**9W-0852**	1	PIN-CONNECTOR (14-GA)	
E		1	**125-7874**		TUBE-HEAT SHRINK (5.72-MM DIA) (5-CM)	
E		1	**125-7875**		TUBE-HEAT SHRINK (7.44-MM DIA) (15-CM)	
		1	**155-2274**	2	KIT-CONNECTING PLUG (6-PIN)	
					(EACH KIT INCLUDES PLUG AS, WEDGE, & INTERFACE SEAL)	
	23	2	**096-6166**	4	WASHER-HARD (4.5X9X1-MM THK)	
	24	1,2	**130-5300**	8	CLIP	
	25	2	**174-5907**	2	CLIP	
Y	26	1	**302-0413**	1	LAMP GP-HEAD & SIGNAL (LH)	147
	27	2	**3J-1907**	1	SEAL-O-RING	
	28	2	**4D-7388**	4	CLIP	
	29	2	**4D-7794**	8	CLIP	
	30	2	**4K-8864**	3	CLIP	
	31	2	**4L-6454**	1	BOLT (3/8-16X1-IN)	
	32	2	**4P-8134**	2	CLIP	
	33	2	**5M-3062**	5	BOLT (3/8-16X0.75-IN)	
	34	2	**6D-4246**	1	CLIP	
	35	2	**6D-4636**	1	CLIP	
	36	2	**6V-1889**	1	CLIP	
	37	2	**6V-3265**	6	CLIP	
	38	2	**6V-3964**	4	WASHER-HARD (8.8X25.5X5-MM THK)	
	39	2	**6V-8801**	1	NUT (3/8-16-THD)	
	40	2	**7C-4354**	1	CLIP	
	41	1,2	**7K-1181**	23	STRAP-CABLE	
	42	2	**7N-3718**	1	CLIP	
M	43	2	**7X-0818**	4	BOLT (M8X1.25X45-MM)	
B	44	2	**8F-1974**	10	SHIM (0.13-MM THK)	

334-3341 **WIRING GP-FRONT** *(contd.)* **i03681581**

NOTE	REF NO	GRAPHIC REF	PART NUMBER	QTY	PART NAME 1 2 3 4 5 6 (PRODUCT LEVEL)	SEE PAGE
	45	2	**8M-2770**	1	CLIP	
	46	2	**8M-2773**	1	CLIP	
	47	1,2	**8T-4121**	35	WASHER-HARD (11X21X2.5-MM THK)	
M	48	1,2	**8T-4133**	6	NUT (M10X1.5-THD)	
M	49	1,2	**8T-4136**	4	BOLT (M10X1.5X25-MM)	
M	50	2	**8T-4137**	24	BOLT (M10X1.5X20-MM)	
M	51	2	**8T-4195**	3	BOLT (M10X1.5X30-MM)	
	52	1	**8T-4223**	4	WASHER-HARD (13.5X25.5X3-MM THK)	
M	53	1	**8T-4244**	4	NUT (M12X1.75-THD)	
M	54	2	**8T-4647**	4	SCREW-MACHINE (M4X0.7X20-MM)	
	55	2	**8T-4896**	7	WASHER-HARD (10.2X18.5X2.5-MM THK)	
M	56	1	**8T-5412**	4	BOLT (M12X1.75X140-MM)	

B-USE AS REQUIRED
E-ORDER BY THE CENTIMETER
M-METRIC PART
Y-SEPARATE ILLUSTRATION

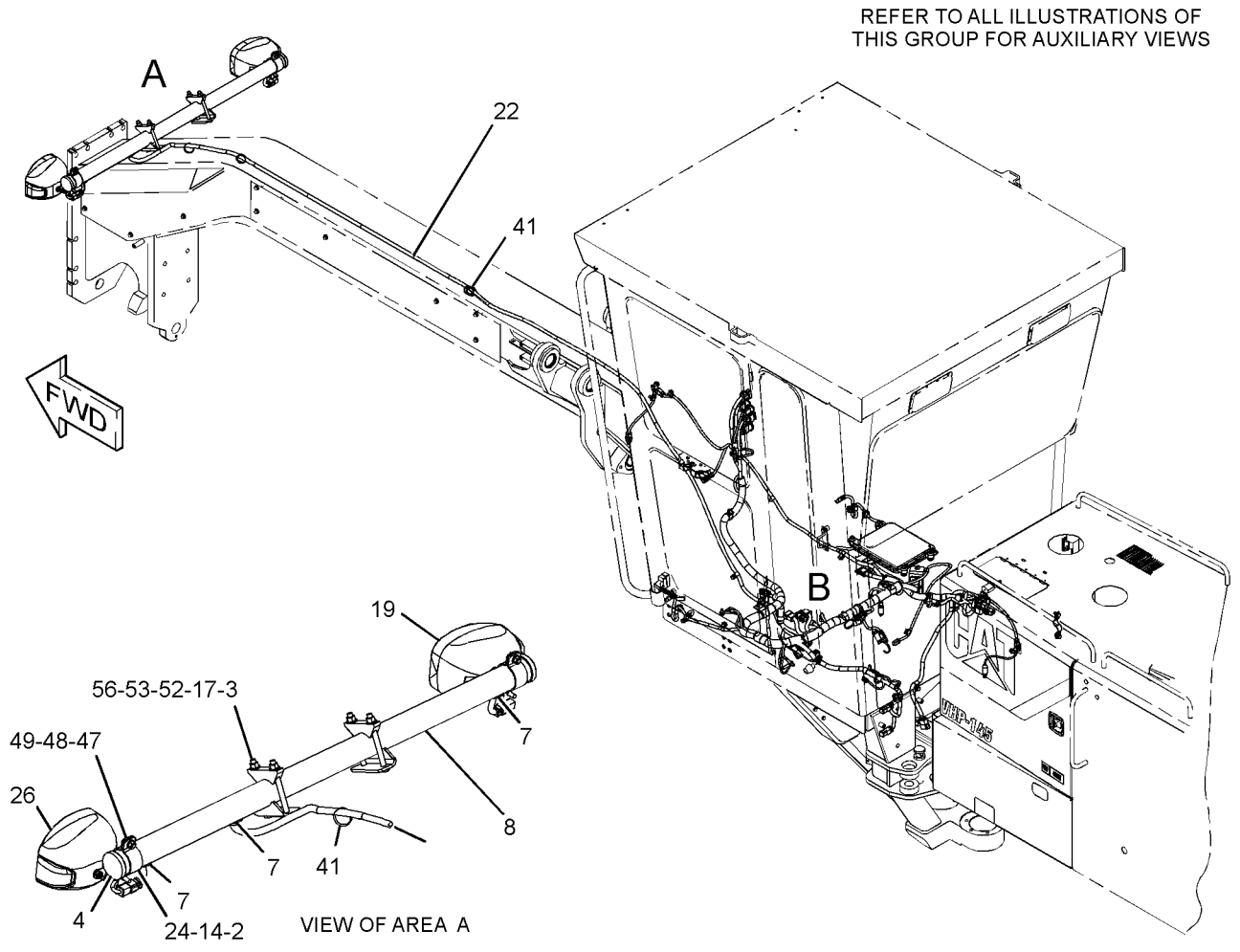

GRAPHIC #1 g01925056

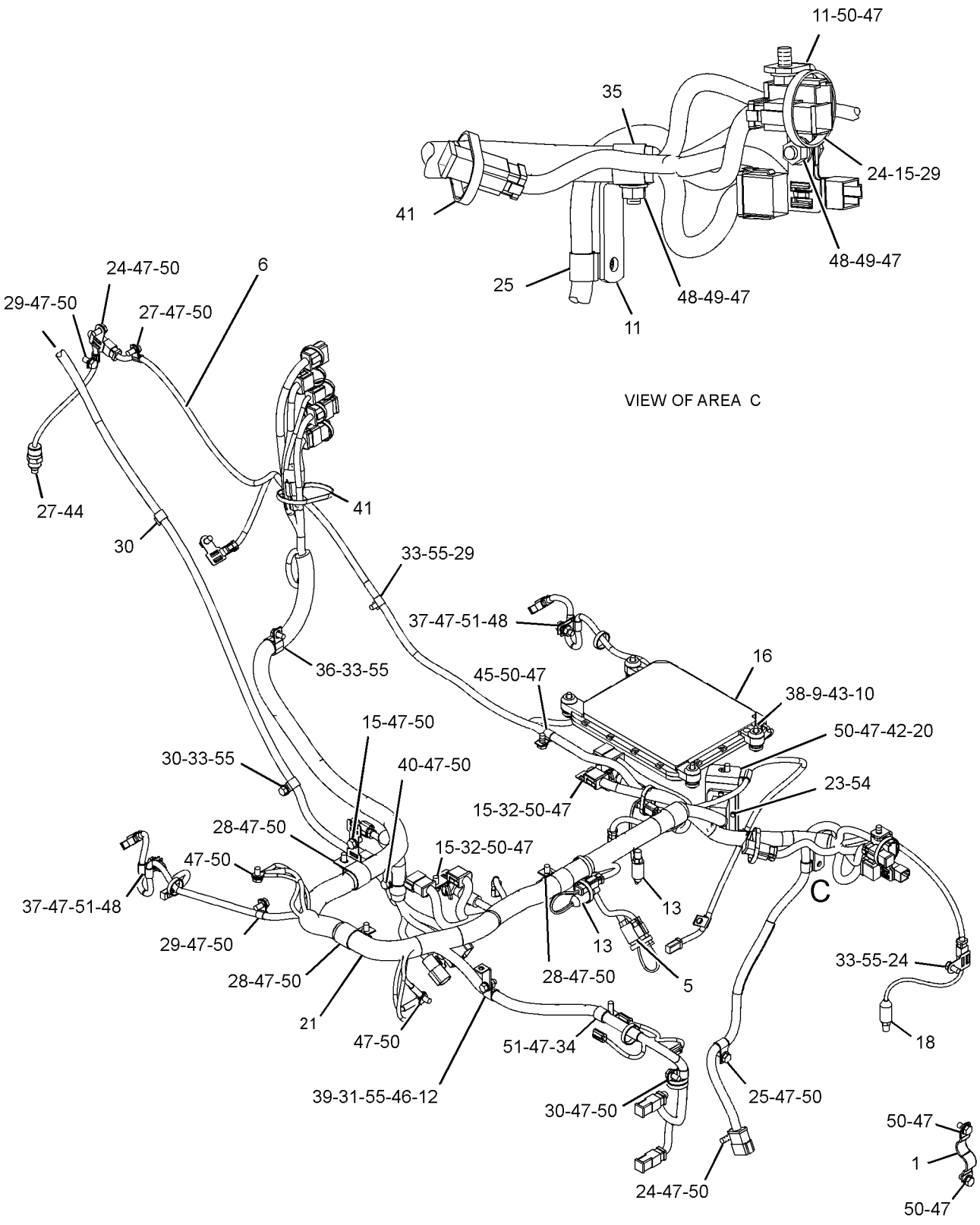

GRAPHIC #2 **<END>** g01925057

252-5709 WIRING GP-GRADE CONTROL–CAB, INDICATOR LAMP

S/N: JAP1-UP
PART OF 336-4249, 337-3100 GRADE CONTROL AR
AN ATTACHMENT

SMCS-1408 **i02397347**

NOTE	REF NO	GRAPHIC REF	PART NUMBER	QTY	PART NAME 1 2 3 4 5 6 (PRODUCT LEVEL)	SEE PAGE
	1	1	**115-1748**	1	LAMP (24-VOLT, 3-WATT)	
	2	1	**247-6457**	1	WIRING AS	

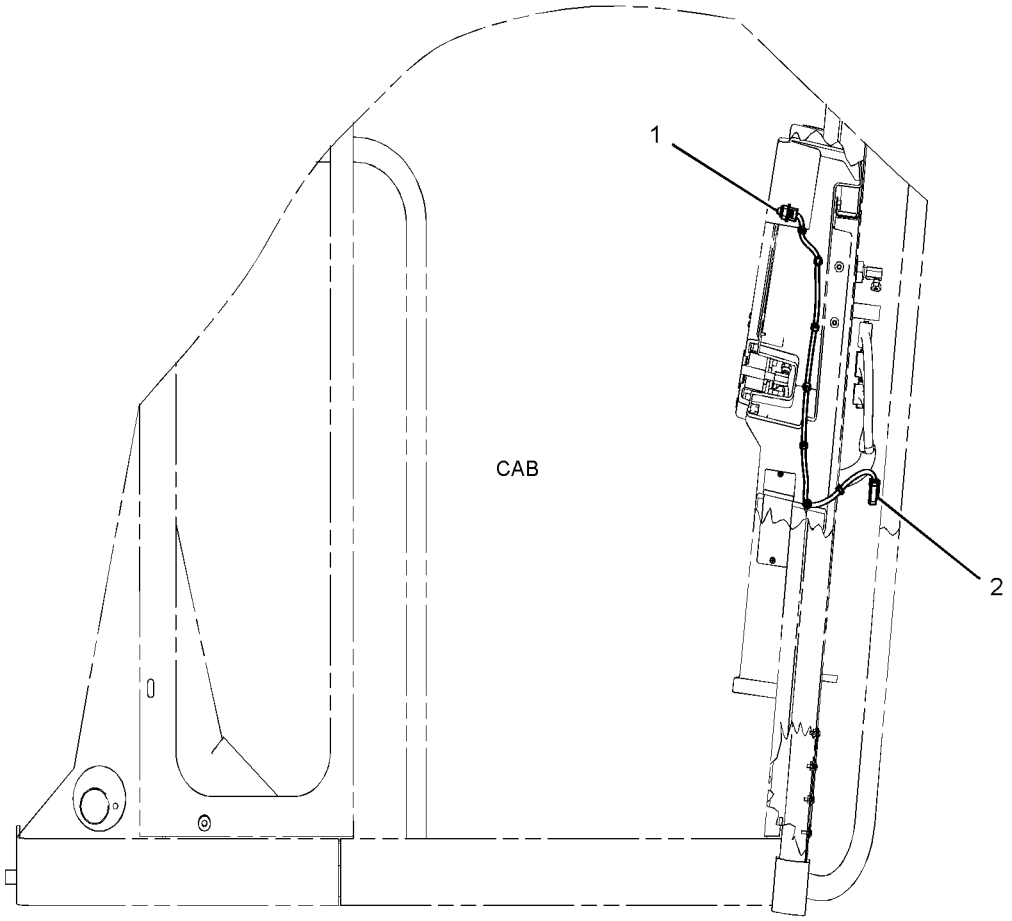

RIGHT SIDE VIEW

GRAPHIC #1 **<END>** g01239581

ELECTRICAL AND STARTING SYSTEM

294-3542 WIRING GP-GRADE CONTROL–ACCUGRADE

S/N: JAP1-UP
PART OF 337-3100 GRADE CONTROL AR
AN ATTACHMENT

SMCS-1408 **i03266020**

NOTE	REF NO	GRAPHIC REF	PART NUMBER	QTY	PART NAME 1 2 3 4 5 6 (PRODUCT LEVEL)	SEE PAGE
	1	1	**6D-3033**	16	SCREW-SOCKET HEAD (4-40X0.5-IN)	
	2	1	**8T-9655**	8	MOUNT-ISOLATION	
	3	1	**9L-1566**	2	SUPPORT	
	4	1	**132-8487**	4	NUT-RING	
	5	1	**169-5414**	1	CLIP	
	6	1	**236-2356**	1	HARNESS AS-SENSOR (ANGLE)	
	7	1	**236-8826**	4	BOSS (1-1/8-18X0.708-IN)	
	8	1	**243-3250**	1	HARNESS AS-SENSOR (ROTATION)	
	9	1	**244-5880**	1	BRACKET	
	10	1	**251-2383**	1	BRACKET	
Y	11	1	*260-7647*	1	APPLICATION GP-POWER TRAIN	118
	12	1	**288-5508**	1	BRACKET AS (LH)	
	13	1	**288-5509**	1	BRACKET AS (RH)	
	14	1	**336-9456**	1	HARNESS AS-CHASSIS	
	15	1	**313-4670**	1	BRACKET AS	
M		1	**8T-3612**	2	NUT-WELD (M8X1.25-THD)	
		1	**7T-1099**	1	LINK	
M		1	**6V-9632**	2	NUT-WELD (M6X1-THD)	
	16	1	**323-0327**	1	HARNESS AS-WIRING (MAST)	
	17	1	**323-5592**	1	HARNESS AS-FRAME	
	18	1	**324-3364**	1	PLATE	
	19	1	**324-3366**	1	PLATE AS	
	20	1	**327-0560**	1	BRACKET (RH)	
	21	1	**327-0561**	1	BRACKET (LH)	
	22	1	**331-1102**	1	BRACKET AS	
	23	1	**033-8248**	1	CLIP	
	24	1	**067-2551**	1	CLIP	
	25	1	**111-4871**	2	RELAY (24-VOLT)	
	26	1	**130-5300**	4	CLIP	
	27	1	**147-0385**	2	CLIP	
	28	1	**174-9692**	4	SPACER (20.5X35X16-MM THK)	
M	29	1	**188-9644**	4	SCREW-FLAT HEAD (M8X1.25X25-MM)	
	30	1	**1J-6762**	4	BOLT-PLOW (3/4-10X3-IN)	
	31	1	**1K-6870**	1	LOCKNUT (3/4-10-THD)	
	32	1	**1P-7009**	2	CLIP	
	33	1	**6V-8182**	4	NUT (3/4-10-THD)	
	34	1	**2Y-3812**	1	CLIP	
	35	1	**3P-2404**	1	CLIP	
	36	1	**4D-7794**	1	CLIP	
	37	1	**4K-8302**	2	CLIP	
	38	1	**4K-8864**	1	CLIP	
	39	1	**4S-1962**	6	CLIP	
M	40	1	**5C-7261**	2	NUT (M8X1.25-THD)	
M	41	1	**5C-9553**	2	BOLT (M6X1X16-MM)	
	42	1	**5M-3062**	28	BOLT (3/8-16X0.75-IN)	
	43	1	**5P-4135**	1	BOLT (3/4-10X8-IN)	
	44	1	**5P-9085**	1	CLIP	
	45	1	**5S-7379**	2	BOLT (3/8-16X0.875-IN)	
	46	1	**6D-4244**	8	CLIP	
	47	1	**6K-8178**	1	CLIP	
	48	1	**6V-1889**	7	CLIP	
	49	1	**6V-8801**	2	NUT (3/8-16-THD)	
	50	1	**7K-1181**	18	STRAP-CABLE	
	51	1	**7X-0550**	8	WASHER-HARD (13.5X32X5-MM THK)	
	52	1	**7X-0579**	8	WASHER-HARD (8.8X25.5X2-MM THK)	

294-3542 **WIRING GP-GRADE CONTROL** *(contd.)* **i03266020**

NOTE	REF NO	GRAPHIC REF	PART NUMBER	QTY	PART NAME 1 2 3 4 5 6 (PRODUCT LEVEL)	SEE PAGE
	53	1	**7X-0619**	4	WASHER-HARD (20X30X2.5-MM THK)	
M	54	1	**7Y-0589**	2	BOLT (M12X1.75X90-MM)	
	55	1	**8C-6857**	4	BOLT (3/4-10X2.75-IN)	
	56	1	**8M-2773**	4	CLIP	
	57	1	**8T-4121**	18	WASHER-HARD (11X21X2.5-MM THK)	
	58	1	**8T-4123**	4	WASHER (22X35X3.5-MM THK)	
M	59	1	**8T-4133**	1	NUT (M10X1.5-THD)	
M	60	1	**8T-4137**	14	BOLT (M10X1.5X20-MM)	
M	61	1	**8T-4191**	3	BOLT (M10X1.5X16-MM)	
	62	1	**8T-4223**	2	WASHER-HARD (13.5X25.5X3-MM THK)	
	63	1	**8T-4224**	4	WASHER-HARD (8.8X16X2-MM THK)	
M	64	1	**8T-4244**	2	NUT (M12X1.75-THD)	
	65	1	**8T-4835**	4	BOLT (1/2-13X2-IN)	
	66	1	**8T-4896**	32	WASHER-HARD (10.2X18.5X2.5-MM THK)	
M	67	1	**8T-6869**	4	BOLT (M8X1.25X60-MM)	
	68	1	**8T-9658**	4	SPACER (8.2X12.7X25.4-MM THK)	
	69	1	**9M-8406**	4	CLIP	
	70	1	**9X-8256**	2	WASHER (6.6X12X2-MM THK)	

M-METRIC PART
Y-SEPARATE ILLUSTRATION

294-3542 **WIRING GP-GRADE CONTROL** *(contd.)* **i03266020**

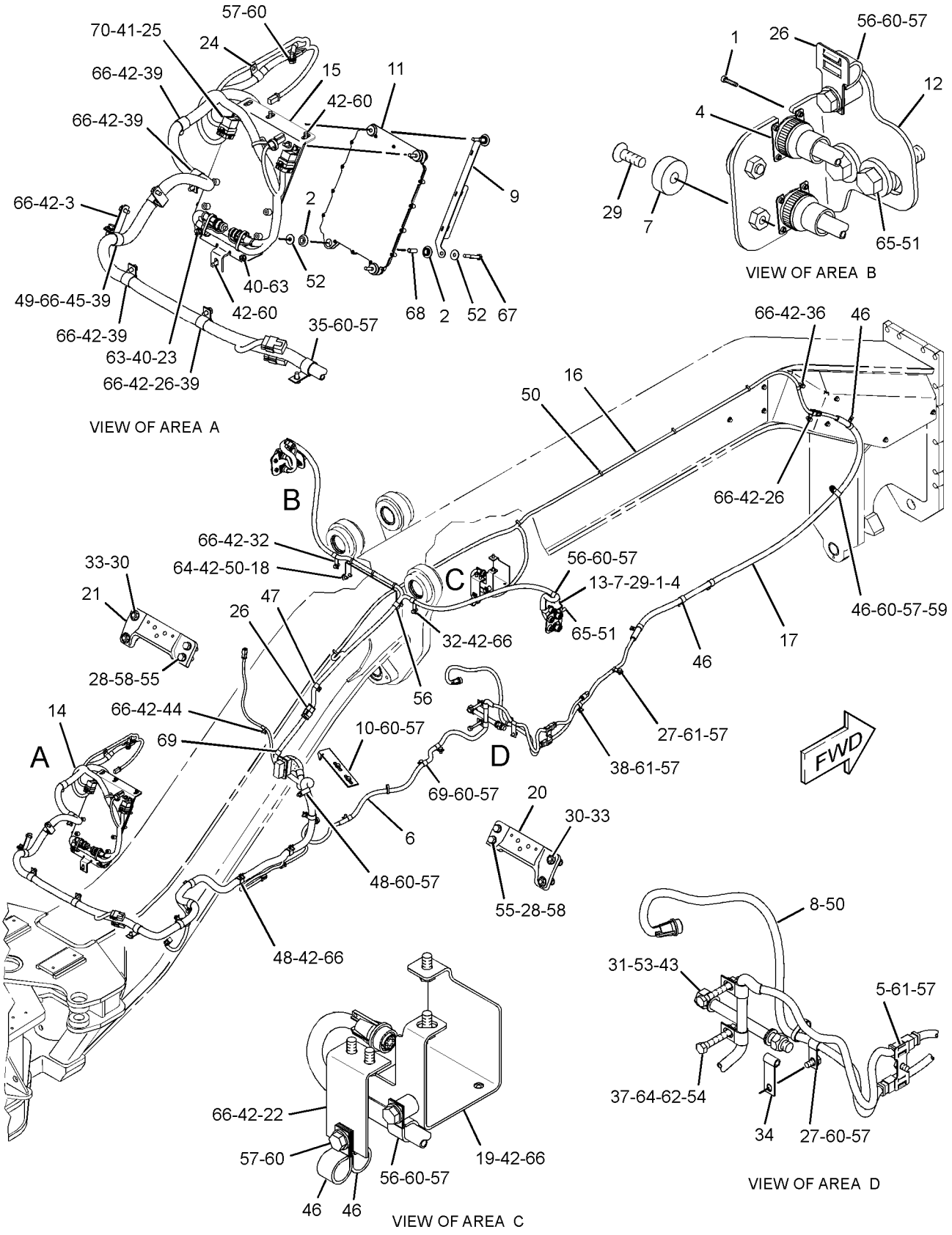

GRAPHIC #1 **<END>** g01716922

ELECTRICAL AND STARTING SYSTEM

336-9255 WIRING GP-GRADE CONTROL–ACCUGRADE

S/N: JAP1-UP
PART OF 336-4249 GRADE CONTROL AR
AN ATTACHMENT

SMCS-1408 **i03682131**

NOTE	REF NO	GRAPHIC REF	PART NUMBER	QTY	PART NAME 1 2 3 4 5 6 (PRODUCT LEVEL)	SEE PAGE
	1	2	**6D-3033**	16	SCREW-SOCKET HEAD (4-40X0.5-IN)	
	2	1,2	**7K-1181**	21	STRAP-CABLE	
	3	1	**8T-9655**	8	MOUNT-ISOLATION	
	4	1	**9L-1566**	2	SUPPORT	
	5	2	**132-8487**	4	NUT-RING	
	6	2	**169-5414**	1	CLIP	
	7	1	**236-2356**	1	HARNESS AS-SENSOR (ANGLE)	
		1	**102-8804**	1	KIT-RECEPTACLE (4-PIN)	
					(INCLUDES RECEPTACLE AS & WEDGE)	
		1	**3E-3377**	1	WEDGE-RECEPTACLE LOCK (4-PIN)	
E		1	**9X-2383**		HOSE (127-CM)	
		1	**9X-3401**	4	PIN-CONNECTOR (16-GA TO 18-GA)	
		1	**9X-4385**	1	PLUG AS-CONNECTOR (6-PIN)	
E		1	**114-8843**		SLEEVE-PLASTIC (20-CM)	
E		1	**125-7875**		TUBE-HEAT SHRINK (7.44-MM DIA) (5-CM)	
		1	**243-5362**	1	CAP-DUST	
	8	2	**236-8826**	4	BOSS (1-1/8-18X0.708-IN)	
	9	1	**243-3250**	1	HARNESS AS-SENSOR (ROTATION)	
		1	**9X-3402**	4	SOCKET-CONNECTOR (16-GA TO 18-GA)	
		1	**9X-4385**	1	PLUG AS-CONNECTOR (6-PIN)	
E		1	**125-7875**		TUBE-HEAT SHRINK (7.44-MM DIA) (5-CM)	
		1	**155-2271**	2	KIT-CONNECTING PLUG (4-PIN)	
					(EACH PLUG KIT INCLUDES PLUG AS, WEDGE & INTERFACE SEAL)	
		1	**243-5362**	1	CAP-DUST	
	10	1	**244-5880**	1	BRACKET	
	11	2	**251-2383**	1	BRACKET	
Y	12	1	*260-7647*	1	APPLICATION GP-POWER TRAIN	118
	13	2	**288-5508**	1	BRACKET AS (LH)	
	14	2	**288-5509**	1	BRACKET AS (RH)	
	15	1	**313-4670**	1	BRACKET AS	
	16	1	**323-5592**	1	HARNESS AS-FRAME (RH)	
		1	**102-8804**	1	KIT-RECEPTACLE (4-PIN)	
					(INCLUDES RECEPTACLE AS & WEDGE)	
		1	**3E-3377**	1	WEDGE-RECEPTACLE LOCK (4-PIN)	
E		1	**5P-1424**		HOSE (194-CM)	
		1	**8T-8737**	1	PLUG-SEAL	
		1	**9X-3401**	4	PIN-CONNECTOR (16-GA TO 18-GA)	
		1	**9X-3402**	10	SOCKET-CONNECTOR (16-GA TO 18-GA)	
E		1	**125-7875**		TUBE-HEAT SHRINK (7.44-MM DIA) (30-CM)	
		1	**134-2540**	1	RESISTOR AS-CONNECTION (3-PIN)	
		1	**155-2271**	4	KIT-CONNECTING PLUG (4-PIN)	
		1	**174-0503**	2	KIT-CONNECTING PLUG (3-PIN)	
					(EACH PLUG KIT INCLUDES PLUG AS, WEDGE & INTERFACE SEAL)	
	17	2	**324-3364**	1	PLATE	
	18	2	**324-3366**	1	PLATE AS	
M		2	**9R-2672**	1	BOSS (M10X1.5X20-MM)	
	19	1	**327-0560**	1	BRACKET (RH)	
	20	1	**327-0561**	1	BRACKET (LH)	
	21	2	**331-1102**	1	BRACKET AS	
	22	1	**339-5505**	1	HARNESS AS-CHASSIS (FRONT FRAME, REAR)	
		1	**102-8802**	2	KIT-RECEPTACLE (2-PIN)	
		1	**102-8803**	1	KIT-RECEPTACLE (3-PIN)	

336-9255 **WIRING GP-GRADE CONTROL** *(contd.)* **i03682131**

NOTE	REF NO	GRAPHIC REF	PART NUMBER	QTY	PART NAME 1 2 3 4 5 6 (PRODUCT LEVEL)	SEE PAGE
		1	**190-7614**	2	KIT-RECEPTACLE (12-PIN)	
					(EACH RECEPTACLE KIT INCLUDES RECEPTACLE AS & WEDGE)	
		1	**3E-3371**	2	WEDGE-RECEPTACLE LOCK (3-PIN)	
		1	**3R-9965**	1	PLUG AS-CONNECTOR (8-PIN)	
		1	**3S-2093**	2	STRAP-CABLE	
		1	**6D-5257**	1	PLUG AS-CONNECTOR (8-PIN)	
		1	**6I-4348**	1	BOOT (40-PIN)	
		1	**7K-1181**	4	STRAP-CABLE	
		1	**8N-1540**	1	PIN-CONNECTOR (12-GA TO 14-GA)	
		1	**186-3735**	26	PIN-CONNECTOR (16-GA TO 18-GA)	
		1	**186-3736**	9	SOCKET-CONNECTOR (16-GA TO 18-GA)	
		1	**8T-8737**	158	PLUG-SEAL	
		1	**9W-0844**	4	SOCKET-CONNECTOR (14-GA)	
		1	**9W-0852**	5	PIN-CONNECTOR (14-GA)	
		1	**9X-1343**	1	RECEPTACLE AS-CONNECTOR (40-PIN)	
		1	**9X-3402**	58	SOCKET-CONNECTOR (16-GA TO 18-GA)	
		1	**104-6871**	2	CAP-DUST	
		1	**111-4875**	2	HOUSING	
E		1	**119-3662**		TUBE-HEAT SHRINK (10.85-MM DIA) (65-CM)	
E		1	**125-7874**		TUBE-HEAT SHRINK (5.72-MM DIA) (20-CM)	
E		1	**125-7875**		TUBE-HEAT SHRINK (7.44-MM DIA) (80-CM)	
		1	**126-1768**	8	SOCKET-CONNECTOR (14-GA)	
		1	**126-1774**	2	COVER-CONNECTOR (1)	
		1	**129-7164**	1	RECEPTACLE AS-CONNECTOR (1-PIN)	
		1	**134-2540**	2	RESISTOR AS-CONNECTION (3-PIN)	
		1	**147-1445**	1	PLUG AS-CONNECTOR (70-PIN)	
		1	**159-9322**	1	SEAL-O-RING	
		1	**147-1446**	1	PLUG AS-CONNECTOR (70-PIN)	
		1	**159-9322**	1	SEAL-O-RING	
		1	**155-2258**	3	WEDGE-PLUG LOCK (12-PIN)	
		1	**155-2263**	1	WEDGE-PLUG LOCK (6-PIN)	
		1	**155-2255**	1	KIT-CONNECTING PLUG (12-PIN)	
		1	**155-2256**	2	KIT-CONNECTING PLUG (12-PIN)	
		1	**155-2270**	8	KIT-CONNECTING PLUG (2-PIN)	
		1	**174-0503**	3	KIT-CONNECTING PLUG (3-PIN)	
		1	**155-2260**	3	KIT-CONNECTING PLUG (3-PIN)	
		1	**155-2274**	1	KIT-CONNECTING PLUG (6-PIN)	
					(EACH PLUG KIT INCLUDES PLUG AS, WEDGE & INTERFACE SEAL)	
		1	**290-4752**	1	PLUG AS-CONNECTOR	
	23	1	**339-5506**	1	HARNESS AS-CHASSIS (FRONT FRAME, LH) (FRONT FRAME, LH)	
		1	**102-8804**	1	KIT-RECEPTACLE (4-PIN)	
		1	**102-8801**	2	KIT-RECEPTACLE (12-PIN)	
					(EACH RECEPTACLE KIT INCLUDES RECEPTACLE AS & WEDGE)	
		1	**7R-3029**	4	CAP-DUST	
		1	**8T-8737**	3	PLUG-SEAL	
		1	**9W-0852**	4	PIN-CONNECTOR (14-GA)	
		1	**9X-3401**	10	PIN-CONNECTOR (16-GA TO 18-GA)	
		1	**9X-3402**	2	SOCKET-CONNECTOR (16-GA TO 18-GA)	
		1	**9X-4385**	1	PLUG AS-CONNECTOR (6-PIN)	
E		1	**119-3662**		TUBE-HEAT SHRINK (10.85-MM DIA) (33-CM)	
E		1	**125-7875**		TUBE-HEAT SHRINK (7.44-MM DIA) (120-CM)	
		1	**134-2540**	1	RESISTOR AS-CONNECTION (3-PIN)	
		1	**174-0503**	2	KIT-CONNECTING PLUG (3-PIN)	
					(EACH PLUG KIT INCLUDES PLUG AS, WEDGE & INTERFACE SEAL)	
		1	**228-3323**	4	CLIP-SPRING	

336-9255 WIRING GP-GRADE CONTROL *(contd.)* i03682131

NOTE	REF NO	GRAPHIC REF	PART NUMBER	QTY	PART NAME 1 2 3 4 5 6 (PRODUCT LEVEL)	SEE PAGE
		1	**243-5362**	1	CAP-DUST	
	24	1	**033-8248**	1	CLIP	
	25	1	**067-2551**	1	CLIP	
	26	1	**111-4871**	1	RELAY (24-VOLT) (IMPLEMENT ENABLE)	
	26A	1	**111-4871**	1	RELAY (24-VOLT) (POWER MODULE)	
	27	1,2	**130-5300**	4	CLIP	
	28	1,2	**147-0385**	2	CLIP	
	29	1	**174-9692**	4	SPACER (20.5X35X16-MM THK)	
M	30	2	**188-9644**	4	SCREW-FLAT HEAD (M8X1.25X25-MM)	
	31	1	**1J-6762**	4	BOLT-PLOW (3/4-10X3-IN)	
	32	2	**1K-6870**	1	LOCKNUT (3/4-10-THD)	
	33	2	**1P-7009**	2	CLIP	
	34	2	**2Y-3812**	1	CLIP	
	35	1	**3P-2404**	1	CLIP	
	36	1	**4D-7794**	1	CLIP	
	37	2	**4K-8302**	2	CLIP	
	38	1	**4K-8864**	1	CLIP	
	39	1	**4S-1962**	6	CLIP	
M	40	1	**5C-7261**	2	NUT (M8X1.25-THD)	
M	41	1	**5C-9553**	2	BOLT (M6X1X16-MM)	
	42	1,2	**5M-3062**	28	BOLT (3/8-16X0.75-IN)	
	43	2	**5P-4135**	1	BOLT (3/4-10X8-IN)	
	44	2	**5P-9085**	1	CLIP	
	45	1	**5S-7379**	2	BOLT (3/8-16X0.875-IN)	
	46	1,2	**6D-4244**	8	CLIP	
	47	2	**6K-8178**	1	CLIP	
	48	1,2	**6V-1889**	7	CLIP	
	49	1	**6V-8182**	4	NUT (3/4-10-THD)	
	50	1	**6V-8801**	2	NUT (3/8-16-THD)	
	52	2	**7X-0550**	8	WASHER-HARD (13.5X32X5-MM THK)	
	53	1	**7X-0579**	8	WASHER-HARD (8.8X25.5X2-MM THK)	
	54	2	**7X-0619**	4	WASHER-HARD (20X30X2.5-MM THK)	
M	55	2	**7Y-0589**	2	BOLT (M12X1.75X90-MM)	
	56	1	**8C-6857**	4	BOLT (3/4-10X2.75-IN)	
	57	2	**8M-2773**	4	CLIP	
	58	1,2	**8T-4121**	18	WASHER-HARD (11X21X2.5-MM THK)	
	59	1	**8T-4123**	4	WASHER (22X35X3.5-MM THK)	
M	60	1	**8T-4133**	1	NUT (M10X1.5-THD)	
M	61	1,2	**8T-4137**	14	BOLT (M10X1.5X20-MM)	
M	62	1,2	**8T-4191**	3	BOLT (M10X1.5X16-MM)	
	63	2	**8T-4223**	2	WASHER-HARD (13.5X25.5X3-MM THK)	
	64	1	**8T-4224**	4	WASHER-HARD (8.8X16X2-MM THK)	
M	65	2	**8T-4244**	2	NUT (M12X1.75-THD)	
	66	2	**8T-4835**	4	BOLT (1/2-13X2-IN)	
	67	1,2	**8T-4896**	32	WASHER-HARD (10.2X18.5X2.5-MM THK)	
M	68	1	**8T-6869**	4	BOLT (M8X1.25X60-MM)	
	69	1	**8T-9658**	4	SPACER (8.2X12.7X25.4-MM THK)	
	70	2	**9M-8406**	4	CLIP	
	71	1	**9X-8256**	2	WASHER (6.6X12X2-MM THK)	

E-ORDER BY THE CENTIMETER
M-METRIC PART
Y-SEPARATE ILLUSTRATION

336-9255 **WIRING GP-GRADE CONTROL** *(contd.)* **i03682131**

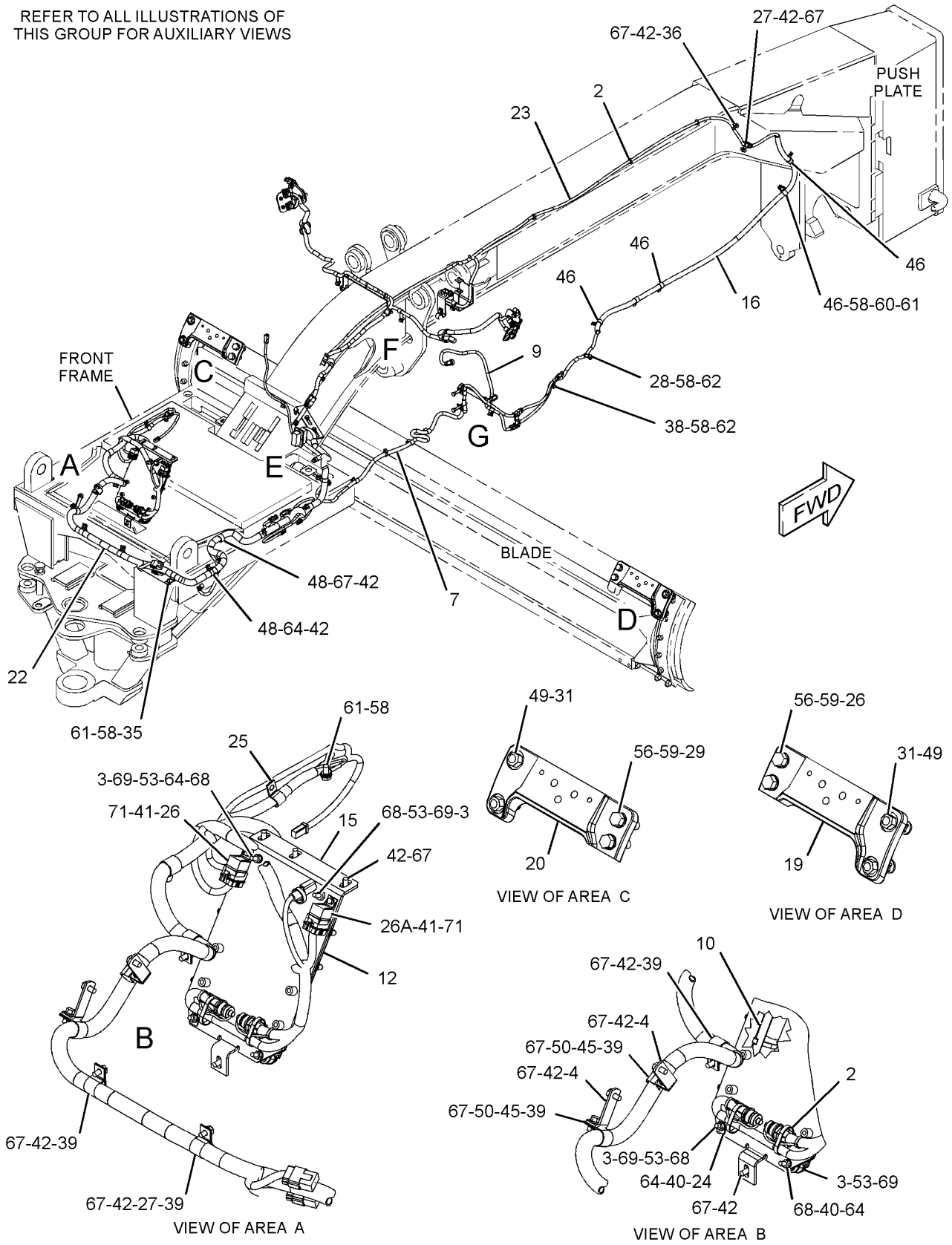

GRAPHIC #1 g01924179

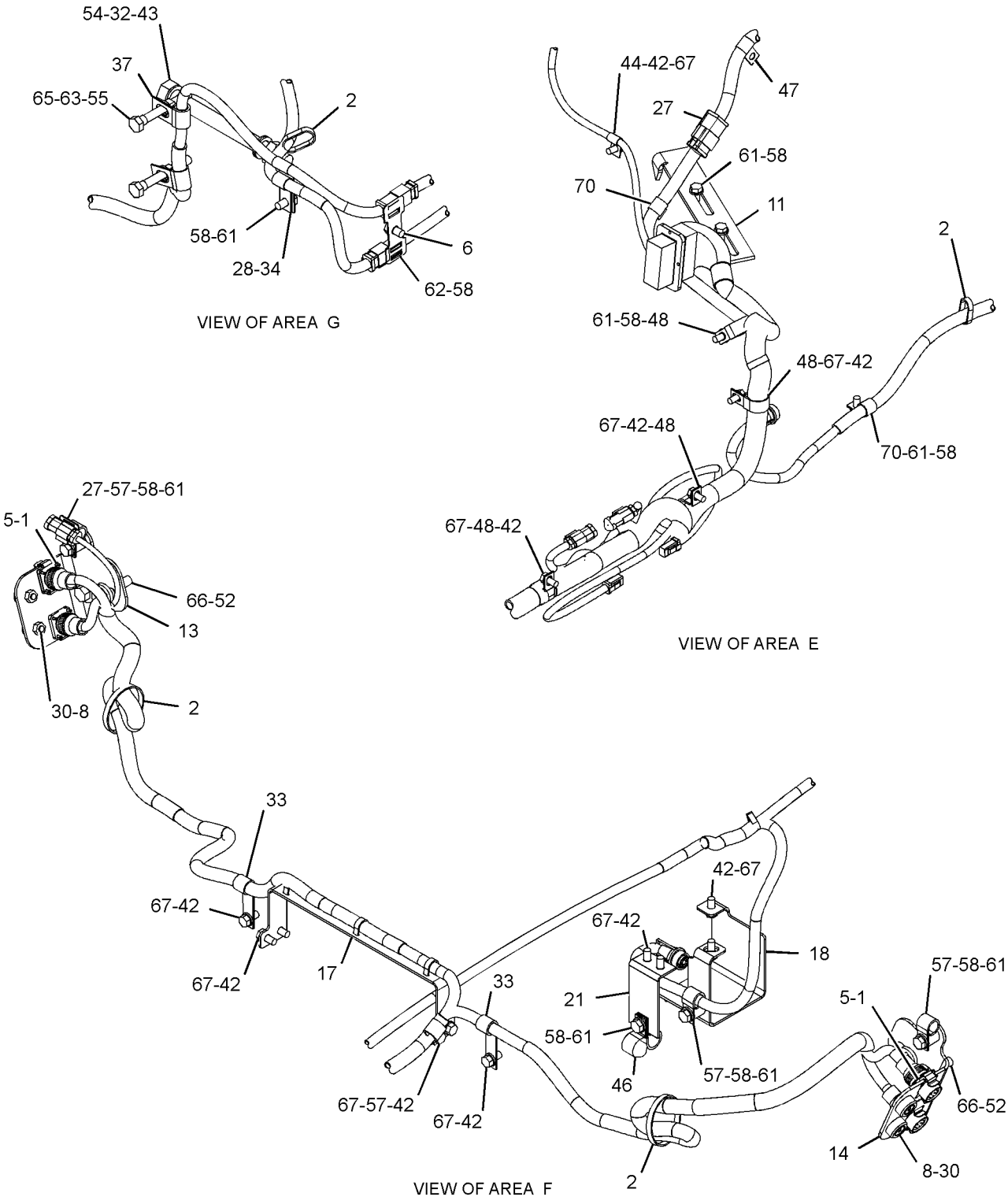

GRAPHIC #2 **<END>** g01925060

ELECTRICAL AND STARTING SYSTEM

293-4828 WIRING GP-REAR

S/N: JAP1-UP

PART OF 348-3018 GENERAL AR

SMCS-1408 **i03564900**

NOTE	REF NO	GRAPHIC REF	PART NUMBER	QTY	PART NAME 1 2 3 4 5 6 (PRODUCT LEVEL)	SEE PAGE
	1	1	**3E-5239**	1	RELAY AS (24-VOLT) (FUEL PRIMING)	
	2	2	**7G-1060**	1	STRAP AS-GROUND	
	3	1,3	**7K-1181**	18	STRAP-CABLE	
	4	2	**7W-9943**	1	SENDER-TEMPERATURE (HYDRAULIC OIL)	
	5	2	**8W-8527**	1	SLEEVE	
	6	3	**091-0081**	1	SPACER (10.5X20X10-MM THK)	
	7	3	**123-3688**	1	PLATE AS	
		3	**7L-0811**	1	DOWEL	
	8	3	**123-3689**	1	PLATE AS	
	9	3	**123-3692**	1	ARM	
	10	3	**123-3695**	1	PLATE	
M	11	1	**130-2792**	1	SCREW (M6X1X16-MM)	
	12	3	**139-2116**	1	SWITCH AS-TOGGLE (GROUND LEVEL SHUTDOWN)	
		3	**102-8803**	1	KIT-RECEPTACLE (3-PIN)	
					(INCLUDES RECEPTACLE AS & WEDGE)	
		3	**6T-3631**	2	NUT-HEX (15/32-32-THD)	
		3	**6T-3632**	1	LOCKWASHER	
		3	**6T-3633**	1	RING-LOCKING	
		3	**186-3735**	3	PIN-CONNECTOR (16-GA TO 18-GA)	
	13	1	**177-2215**	3	STRAP-DUAL CLAMP	
	14	3	**187-1008**	1	SENDER AS-POSITION (ARTICULATION)	
		3	**102-8802**	1	KIT-RECEPTACLE (2-PIN)	
					(INCLUDES RECEPTACLE AS & WEDGE)	
		3	**186-3735**	2	PIN-CONNECTOR (16-GA TO 18-GA)	
E		3	**9X-1813**		SLEEVE (15-CM)	
	15	3	**308-0291**	1	HARNESS AS-SENSOR (TRANSMISSION SPEED)	
		3	**102-8802**	1	KIT-RECEPTACLE (2-PIN)	
					(INCLUDES RECEPTACLE AS & WEDGE)	
		3	**126-1766**	2	SOCKET-CONNECTOR (14-GA TO 18-GA)	
		3	**155-2270**	1	KIT-CONNECTING PLUG (2-PIN)	
					(INCLUDES PLUG AS, WEDGE & INTERFACE SEAL)	
	16	3	**308-6403**	1	BRACKET AS	
	17	3	**322-7341**	1	BRACKET AS	
	18	2	**326-3117**	1	HARNESS AS-TRANSMISSION	
E		2	**231-9897**		CONDUIT-FLEXIBLE (36-MM ID) (80-CM)	
E		2	**125-7874**		TUBE-HEAT SHRINK (5.72-MM DIA) (45-CM)	
E		2	**125-7875**		TUBE-HEAT SHRINK (7.44-MM DIA) (20-CM)	
E		2	**119-3662**		TUBE-HEAT SHRINK (10.85-MM DIA) (20-CM)	
		2	**126-1766**	32	SOCKET-CONNECTOR (14-GA TO 18-GA)	
		2	**126-1768**	8	SOCKET-CONNECTOR (14-GA)	
		2	**126-1774**	1	COVER-CONNECTOR	
		2	**2L-8069**	2	TERMINAL-RING (2-GA TO 10-GA, 3/8-IN SCREW)	
		2	**2L-8076**	1	TERMINAL-RING (14-GA TO 16-GA, NO. 10 SCREW)	
		2	**131-1506**	1	TERMINAL AS	
		2	**2L-8079**		TERMINAL-RING (14-GA TO 16-GA, 3/8-IN SCREW)	
E		2	**125-7874**		TUBE-HEAT SHRINK (5.72-MM DIA) (3-CM)	
		2	**155-2255**	4	KIT-CONNECTING PLUG (12-PIN)	
		2	**155-2260**	2	KIT-CONNECTING PLUG (3-PIN)	
		2	**155-2270**	2	KIT-CONNECTING PLUG (2-PIN)	
		2	**155-2274**	1	KIT-CONNECTING PLUG (6-PIN)	
					(EACH KIT INCLUDES PLUG AS, WEDGE, & INTERFACE SEAL)	
		2	**160-7689**	1	PLUG AS-CONNECTOR (70-PIN)	
		2	**159-9322**	1	SEAL-O-RING	

293-4828 **WIRING GP-REAR** ***(contd.)*** **i03564900**

NOTE	REF NO	GRAPHIC REF	PART NUMBER	QTY	PART NAME 1 2 3 4 5 6 (PRODUCT LEVEL)	SEE PAGE
E		2	**1P-0810**		TAPE-ELECTRICAL (13-CM)	
		2	**186-3735**	7	PIN-CONNECTOR (16-GA TO 18-GA)	
		2	**186-3736**	67	SOCKET-CONNECTOR (16-GA TO 18-GA)	
		2	**8T-8737**	69	PLUG-SEAL	
		2	**9W-0844**	4	SOCKET-CONNECTOR (14-GA)	
		2	**9X-0141**	1	PLUG AS-CONNECTOR (40-PIN)	
		2	**3E-4367**		RING-RETAINING	
M		2	**3E-8557**	1	BOLT (M5X0.8X39.37-MM)	
		2	**9X-3490**	2	SEAL-CONNECTOR (40-PIN)	
		2	**9X-3401**	25	PIN-CONNECTOR (16-GA TO 18-GA)	
		2	**9X-3402**	77	SOCKET-CONNECTOR (16-GA TO 18-GA)	
		2	**9X-6772**	2	STRAP-CABLE	
		2	**110-6848**	1	PLUG AS-CONNECTOR (40-PIN)	
		2	**110-6844**	1	SEAL	
		2	**102-8803**	1	KIT-RECEPTACLE (3-PIN)	
		2	**102-8806**	1	KIT-RECEPTACLE (8-PIN)	
		2	**102-8801**	2	KIT-RECEPTACLE (12-PIN)	
					(EACH KIT INCLUDES RECEPTACLE AS & WEDGE)	
		2	**110-6846**	1	PLUG AS-CONNECTOR (40-PIN)	
		2	**110-6844**	1	SEAL	
	19	2	**326-3118**	1	HARNESS AS-REAR CHASSIS (RH)	
		2	**102-8802**	1	KIT-RECEPTACLE (2-PIN)	
		2	**102-8804**	2	KIT-RECEPTACLE (4-PIN)	
		2	**8N-1547**	2	SOCKET-CONNECTOR (6-GA)	
		2	**186-3735**	7	PIN-CONNECTOR (16-GA TO 18-GA)	
		2	**186-3736**	8	SOCKET-CONNECTOR (16-GA TO 18-GA)	
		2	**8T-8737**	10	PLUG-SEAL	
		2	**9X-3402**	5	SOCKET-CONNECTOR (16-GA TO 18-GA)	
		2	**110-8769**		WIRE AS	
		2	**127-5483**	2	PLUG AS-CONNECTOR (1-PIN)	
		2	**131-1489**	2	TERMINAL AS (6-GA TO 8-GA)	
					(EACH INCLUDES)	
		2	**6H-3592**	1	TERMINAL-RING (6-GA TO 8-GA, 5/16-IN SCREW)	
E		2	**119-3662**		TUBE-HEAT SHRINK (10.85-MM DIA) (4-CM)	
		2	**131-1506**	3	TERMINAL AS	
					(EACH INCLUDES)	
		2	**2L-8079**	1	TERMINAL-RING (14-GA TO 16-GA, 3/8-IN SCREW)	
E		2	**125-7874**		TUBE-HEAT SHRINK (5.72-MM DIA) (3-CM)	
		2	**155-2255**	1	KIT-CONNECTING PLUG (12-PIN)	
		2	**155-2270**	2	KIT-CONNECTING PLUG (2-PIN)	
		2	**155-2271**	1	KIT-CONNECTING PLUG (4-PIN) (13-CM)	
					(EACH KIT INCLUDES PLUG AS, WEDGE & INTERFACE SEAL)	
E		2	**1P-0810**		TAPE-ELECTRICAL	
E		2	**235-2765**		CONDUIT-FLEXIBLE (27.6-MM ID) (83-CM)	
	20	3	**326-3120**	1	BRACKET AS	
	21	3	**336-9085**	1	HARNESS AS-REAR CHASSIS (LH)	
		3	**102-8802**	3	KIT-RECEPTACLE (2-PIN)	
					(EACH INCLUDES RECEPTACLE AS & WEDGE)	
		3	**186-3736**	24	SOCKET-CONNECTOR (16-GA TO 18-GA)	
		3	**8T-8737**	11	PLUG-SEAL	
		3	**9W-0844**	1	SOCKET-CONNECTOR (14-GA)	
E		3	**125-7874**		TUBE-HEAT SHRINK (5.72-MM DIA) (5-CM)	
E		3	**125-7875**		TUBE-HEAT SHRINK (7.44-MM DIA) (5-CM)	
		3	**2L-8071**	1	TERMINAL-RING (10-GA TO 12-GA, 1/2-IN SCREW)	
		3	**155-2255**	2	KIT-CONNECTING PLUG (12-PIN)	

293-4828 **WIRING GP-REAR** ***(contd.)*** **i03564900**

NOTE	REF NO	GRAPHIC REF	PART NUMBER	QTY	PART NAME 1 2 3 4 5 6 (PRODUCT LEVEL)	SEE PAGE
		3	**155-2270**	3	KIT-CONNECTING PLUG (2-PIN)	
					(EACH KIT INCLUDES PLUG AS, WEDGE & INTERFACE SEAL)	
E		3	**1P-0810**		TAPE-ELECTRICAL (13-CM)	
E		3	**235-2765**		CONDUIT-FLEXIBLE (27.6-MM ID) (78-CM)	
	22	2	**337-6814**	1	HARNESS AS-SENSOR (FUEL SYSTEM)	
		2	**102-8801**	1	KIT-RECEPTACLE (12-PIN)	
					(INCLUDES RECEPTACLE AS & WEDGE)	
		2	**186-3735**	9	PIN-CONNECTOR (16-GA TO 18-GA)	
		2	**8T-8737**	1	PLUG-SEAL	
		2	**9W-0844**	2	SOCKET-CONNECTOR (14-GA)	
		2	**9W-0852**	2	PIN-CONNECTOR (14-GA)	
		2	**9X-1054**	1	PLUG AS-CONNECTOR (4-PIN)	
		2	**9X-1056**	4	TERMINAL-RECEPTACLE (14-GA TO 16-GA)	
		2	**9X-3401**	2	PIN-CONNECTOR (16-GA TO 18-GA)	
		2	**9X-3402**	5	SOCKET-CONNECTOR (16-GA TO 18-GA)	
		2	**155-2270**		KIT-CONNECTING PLUG (2-PIN)	
					(INCLUDES RECEPTACLE AS & WEDGE)	
E		2	**1P-0810**		TAPE-ELECTRICAL (3-CM)	
		2	**230-4011**	1	PLUG AS-CONNECTOR (2-PIN)	
		2	**264-7029**	1	SEAL-CONNECTOR	
		2	**230-4012**	1	RECEPTACLE AS-CONNECTOR (2-PIN)	
		2	**237-0227**	1	PLUG AS-CONNECTOR (3-PIN)	
		2	**264-7030**	1	SEAL-CONNECTOR	
	23	1	**344-0050**	1	BRACKET AS	
M		1	**8T-3490**	1	NUT-WELD (M10X1.5-THD)	
	24	3	**109-0361**	1	FILM-INSTRUCTION (ENGINE SHUTDOWN)	
	25	1,3	**130-5300**	8	CLIP	
	26	3	**132-5789**	2	CLIP	
	27	1	**132-7551**	1	SPACER (11X19X6-MM THK)	
	28	1	**133-3260**	1	SPACER (11X19X10-MM THK)	
	29	1	**134-2540**	1	RESISTOR AS-CONNECTION (3-PIN)	
	30	1	**147-0385**	1	CLIP	
Y	31	3	**193-2550**	1	SENSOR GP-SPEED (MAGNETIC, HIGH OUTPUT) (TRANSMISSION)	177
		3	**102-8802**	1	KIT-RECEPTACLE (2-PIN)	
					(INCLUDES RECEPTACLE AS & WEDGE)	
E		3	**9X-1813**		SLEEVE (14-CM)	
		3	**144-1636**	2	PIN-CONNECTOR (14-GA TO 18-GA)	
		3	**171-5349**	1	STRAP-MARKER	
	32	1	**277-1873**	1	CLIP	
	33	3	**2A-1162**	1	GASKET	
	34	3	**3E-5169**	1	GUARD-SWITCH	
	35	3	**3S-8665**	1	CLIP	
	36	3	**4D-7794**	8	CLIP	
	37	1,3	**4D-8123**	2	CLIP	
	38	1,3	**4K-8864**	4	CLIP	
	39	1	**4P-8134**	1	CLIP	
	40	1	**4S-1936**	1	CLIP	
	41	1	**4S-1962**	2	CLIP	
	42	1,2,3	**4S-4455**	7	CLIP	
	43	3	**5P-8167**	3	BOLT (3/8-16X0.625-IN)	
	44	3	**5P-9085**	2	CLIP	
	45	1	**5P-9297**	3	CLIP	
	46	1	**6D-3479**	5	CLIP	
	47	1,2,3	**6D-4244**	6	CLIP	
	48	1,2,3	**6D-4246**	5	CLIP	
	49	1	**6D-4636**	1	CLIP	
	50	2	**6V-1889**	2	CLIP	
	51	3	**6V-3265**	2	CLIP	

293-4828 **WIRING GP-REAR** ***(contd.)*** **i03564900**

NOTE	REF NO	GRAPHIC REF	PART NUMBER	QTY	PART NAME 1 2 3 4 5 6 (PRODUCT LEVEL)	SEE PAGE
	52	3	**6V-6893**	3	BOLT (6-32X0.375-IN)	
	53	3	**6V-8801**	1	NUT (3/8-16-THD)	
	54	2	**6W-6672**	1	SPACER (10.5X20X38-MM THK)	
	55	1	**7C-4354**	2	CLIP	
	56	1	**7D-7233**	1	CLIP	
	57	3	**7N-3718**	1	CLIP	
	58	1	**8D-9671**	1	CLIP	
	59	1	**8M-2773**	1	CLIP	
	60	1,2,3	**8T-4121**	60	WASHER-HARD (11X21X2.5-MM THK)	
M	61	1,3	**8T-4133**	5	NUT (M10X1.5-THD)	
M	62	1	**8T-4136**	1	BOLT (M10X1.5X25-MM)	
M	63	1,2,3	**8T-4137**	51	BOLT (M10X1.5X20-MM)	
M	64	1,3	**8T-4195**	2	BOLT (M10X1.5X30-MM)	
M	65	1	**8T-4196**	1	BOLT (M10X1.5X35-MM)	
	66	3	**8T-4205**	2	WASHER-HARD (7.2X14.5X2-MM THK)	
	67	3	**8T-4226**	1	WASHER-PLATED (10.5X45X3-MM THK)	
	68	3	**8T-4896**	2	WASHER-HARD (10.2X18.5X2.5-MM THK)	
M	69	2	**8T-6466**	1	BOLT (M10X1.5X60-MM)	
	70	3	**8T-9364**	2	BOLT (1/4-20X0.625-IN)	
	71	1	**8W-8909**	1	SLEEVE	
	72	1,3	**8X-5489**	3	SLEEVE	
	73	1	**9X-8256**	1	WASHER (6.6X12X2-MM THK)	

E-ORDER BY THE CENTIMETER
M-METRIC PART
Y-SEPARATE ILLUSTRATION

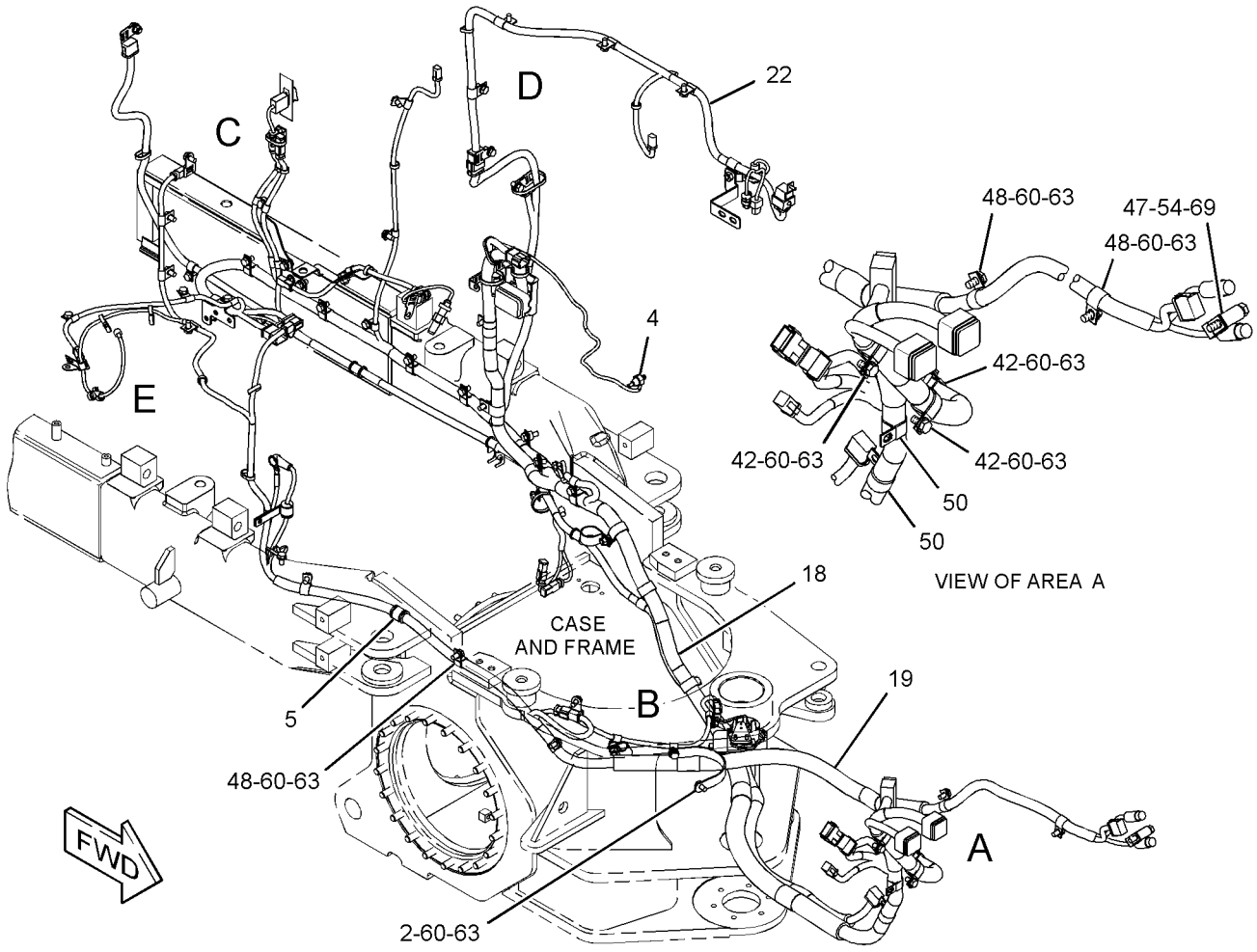

GRAPHIC #1 g01931393

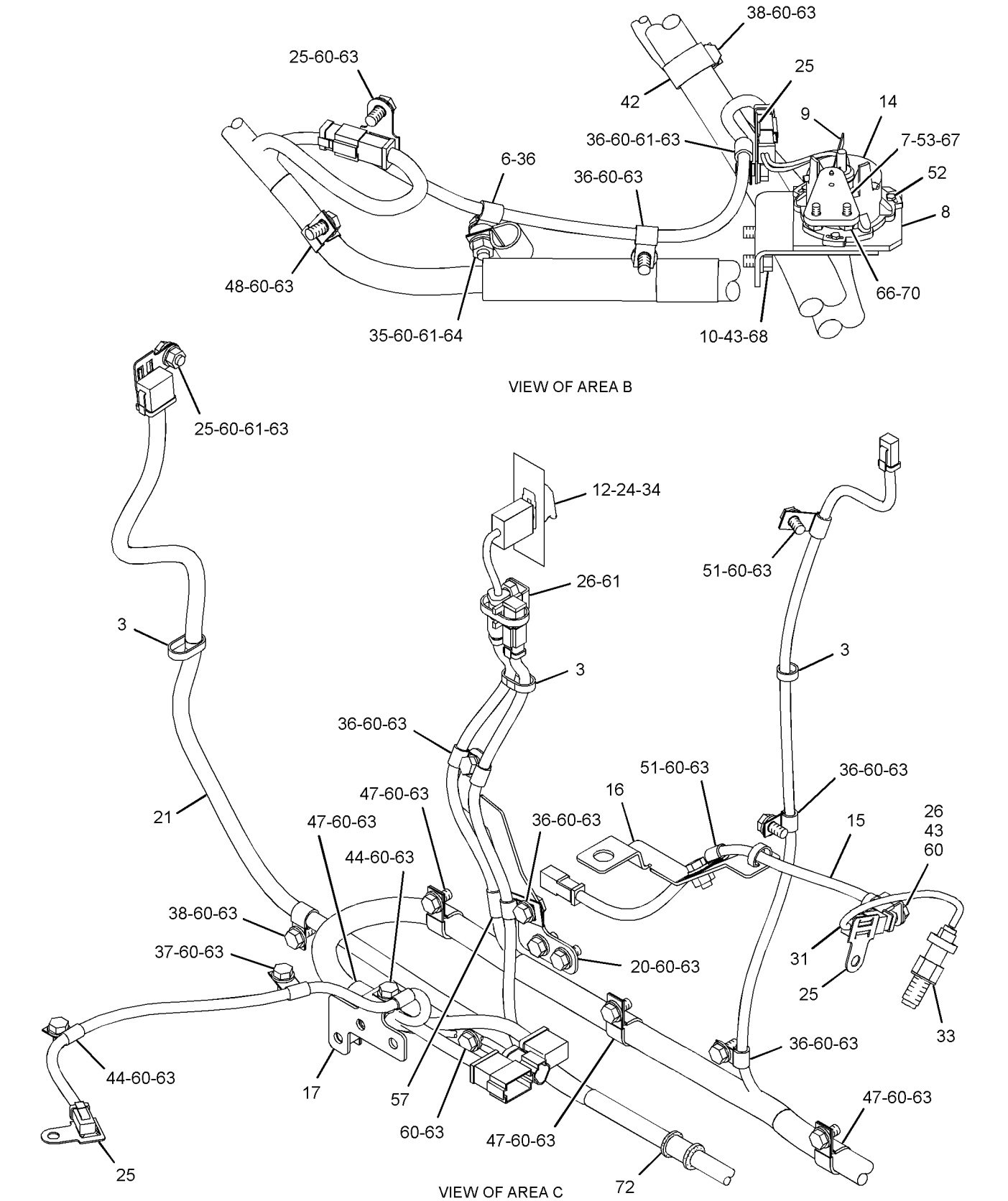

GRAPHIC #2

g01931413

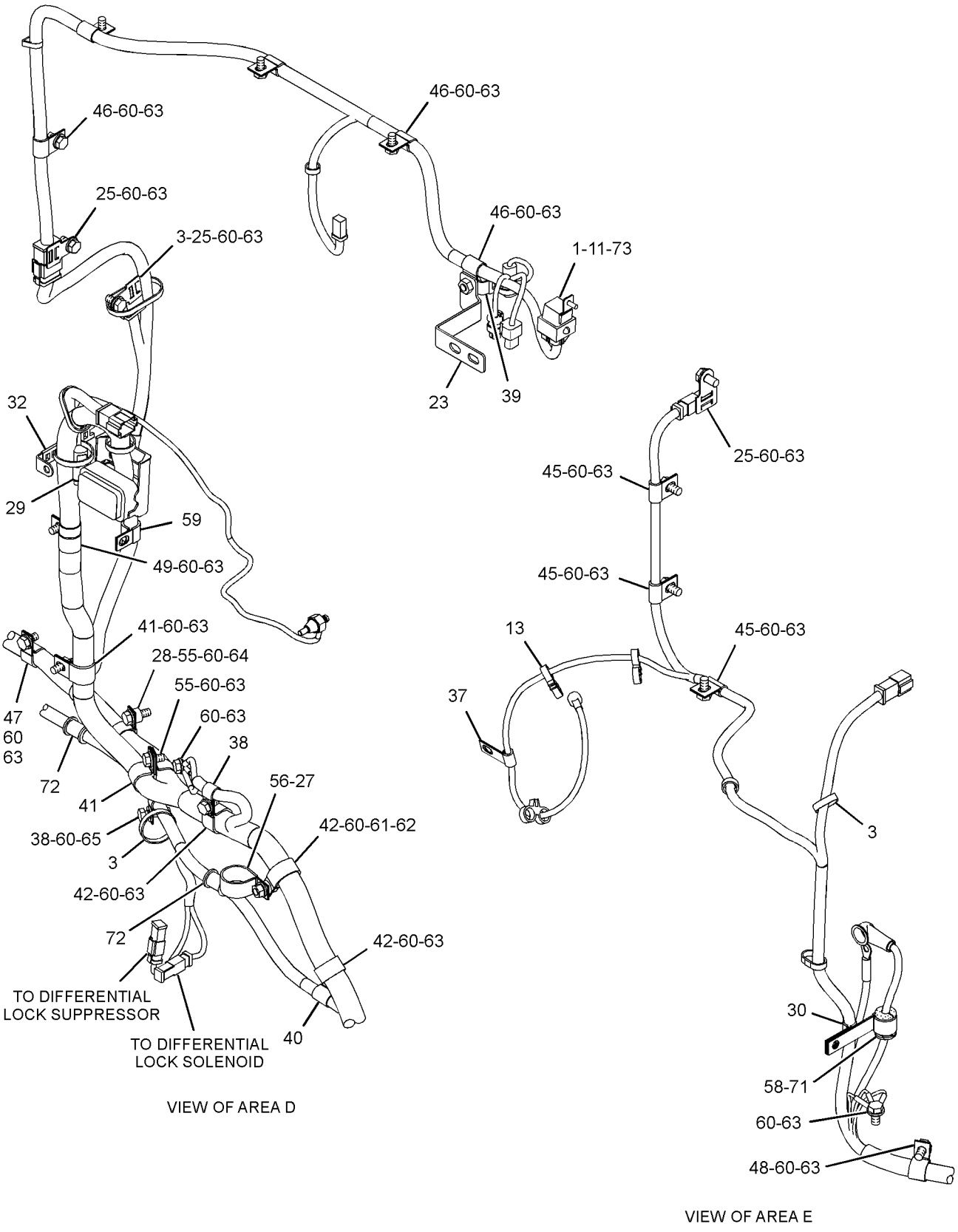

GRAPHIC #3 **<END>** g01931414

ELECTRICAL AND STARTING SYSTEM

284-5348 WIRING GP-REAR LIGHTING

S/N: JAP1-UP

PART OF 348-3018 GENERAL AR

SMCS-1408, 1429 **i03538999**

NOTE	REF NO	GRAPHIC REF	PART NUMBER	QTY	PART NAME 1 2 3 4 5 6 (PRODUCT LEVEL)	SEE PAGE
	1	1	**7K-1181**	9	STRAP-CABLE	
	2	1	**334-7633**	1	HARNESS AS-REAR LIGHTING	
		1	**102-8802**	3	KIT-RECEPTACLE (2-PIN)	
		1	**102-8801**	1	KIT-RECEPTACLE (12-PIN)	
					(EACH KIT INCLUDES RECEPTACLE AS & WEDGE)	
		1	**186-3735**	9	PIN-CONNECTOR (16-GA TO 18-GA)	
		1	**186-3736**	18	SOCKET-CONNECTOR (16-GA TO 18-GA)	
		1	**8T-8737**	9	PLUG-SEAL	
		1	**9X-1054**	1	PLUG AS-CONNECTOR (4-PIN)	
		1	**100-5041**	4	TERMINAL-RECEPTACLE (18-GA TO 20-GA)	
E		1	**119-3662**		TUBE-HEAT SHRINK (10.85-MM DIA) (7-CM)	
E		1	**125-7874**		TUBE-HEAT SHRINK (5.72-MM DIA) (5-CM)	
E		1	**125-7875**		TUBE-HEAT SHRINK (7.44-MM DIA) (5-CM)	
		1	**155-2260**	2	KIT-CONNECTING PLUG (3-PIN)	
		1	**155-2270**	6	KIT-CONNECTING PLUG (2-PIN)	
					(EACH KIT INCLUDES PLUG AS,WEDGE & INTERFACE SEAL)	
	3	1	**130-5300**	2	CLIP	
Y	4	1	**135-0426**	2	LAMP GP-SIGNAL (24-VOLT, STOP, TAIL)	149
M	5	1	**5C-2890**	6	NUT (M6X1-THD)	
	6	1	**8T-4224**	6	WASHER-HARD (8.8X16X2-MM THK)	

E-ORDER BY THE CENTIMETER
M-METRIC PART
Y-SEPARATE ILLUSTRATION

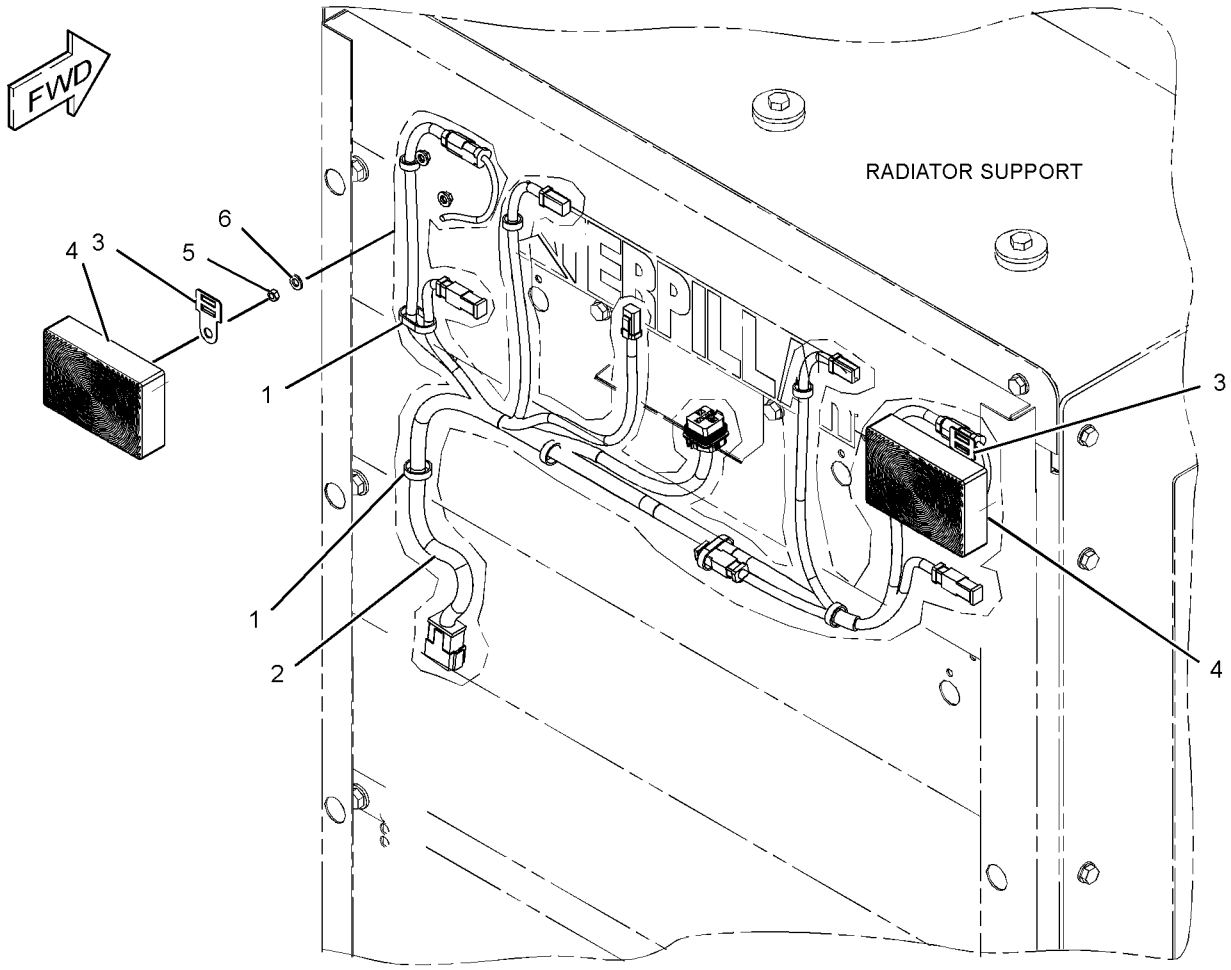

GRAPHIC #1 **<END>** g01923076

ELECTRICAL AND STARTING SYSTEM

284-5347 WIRING GP-STEERING CONSOLE

S/N: JAP1-UP

PART OF 348-3018 GENERAL AR

SMCS-4334 **i03643723**

NOTE	REF NO	GRAPHIC REF	PART NUMBER	QTY	PART NAME 1 2 3 4 5 6 (PRODUCT LEVEL)	SEE PAGE
	1	1	**3E-0109**	5	PLUG (ROCKER SWITCH)	
	2	1	**3E-6477**	2	RELAY AS (24-VOLT)	
	3	1	**3S-2093**	7	STRAP-CABLE	
	4	1	**9W-1441**	2	FUSE (15-AMPERE)	
	5	1	**9W-1442**	9	FUSE (10-AMPERE)	
	6	1	*112-6175*	2	SWITCH AS-LIMIT	
					(EACH INCLUDES)	
		1	**6V-8376**	3	SCREW-MACHINE (8-32X0.25-IN)	
		1	**9B-7233**	3	LOCKWASHER	
	7	1	*161-3932*	1	METER GP-SERVICE	
M		1	**5C-8312**	2	NUT (M4X0.7-THD)	
		1	**9B-7233**	2	LOCKWASHER	
		1	**096-6166**	2	WASHER-HARD (4.5X9X1-MM THK)	
	8	1	**180-4028**	2	BRACKET	
	9	1	**180-7033**	1	COVER	
	10	1	**228-5009**	4	CLIP	
	11	1	**338-8423**	1	HARNESS AS-CONSOLE	
	12	1	**295-1834**	1	FILM-IDENTIFICATION (FUSE BOX)	
	13	1	**295-1835**	1	FILM-IDENTIFICATION (FUSE BOX)	
	14	1	**130-5300**	1	CLIP	
M	15	1	**151-4957**	4	BOLT-SOCKET HEAD (M3X0.5X25-MM)	
M	16	1	**174-8131**	2	SCREW-TRUSS HEAD (M4X0.7X12-MM)	
	17	1	**1H-3244**	2	LOCKWASHER	
M	18	1	**3C-6969**	4	NUT (M3X0.5-THD)	
	19	1	*3E-9319*	1	SWITCH AS-ROCKER (24-VOLT)	
		1	**3E-8763**	1	SWITCH AS (24-VOLT) (TAIL LIGHTS)	
		1	**3E-8825**	1	LAMP (24-VOLT)	
		1	**3E-9323**	1	ACTUATOR	
	20	1	**3L-8187**	4	LOCKWASHER	
	21	1	**4B-1281**	1	SCREW-MACHINE (1/4-20X0.625-IN)	
	22	1	**4B-4274**	16	WASHER (5.5X13X1.2-MM THK)	
	23	1	**4D-1212**	1	GROMMET	
M	24	1	**5C-2890**	3	NUT (M6X1-THD)	
M	25	1	**5C-8312**	2	NUT (M4X0.7-THD)	
M	26	1	**5C-9553**	2	BOLT (M6X1X16-MM)	
	27	1	**5P-4115**	1	WASHER-HARD (7.2X19X2-MM THK)	
	28	1	**6D-4244**	2	CLIP	
	29	1	**6V-8185**	1	NUT (1/4-20-THD)	
	30	1	**8C-7508**	2	LOCKWASHER	
	31	1	**8L-6521**	8	BOLT (10-32X0.5-IN)	
M	32	1	**8T-4971**	1	BOLT (M6X1X30-MM)	
	33	1	**9P-2553**	1	SPACER (6.83X10.28X11-MM THK)	
M	34	1	**9X-1046**	6	SCREW (M4X0.7X18-MM)	
M	35	1	**9X-2042**	1	SCREW-TRUSS HEAD (M6X1X12-MM)	
	36	1	**9X-8256**	6	WASHER (6.6X12X2-MM THK)	

M-METRIC PART

284-5347 **WIRING GP-STEERING CONSOLE** *(contd.)* **i03643723**

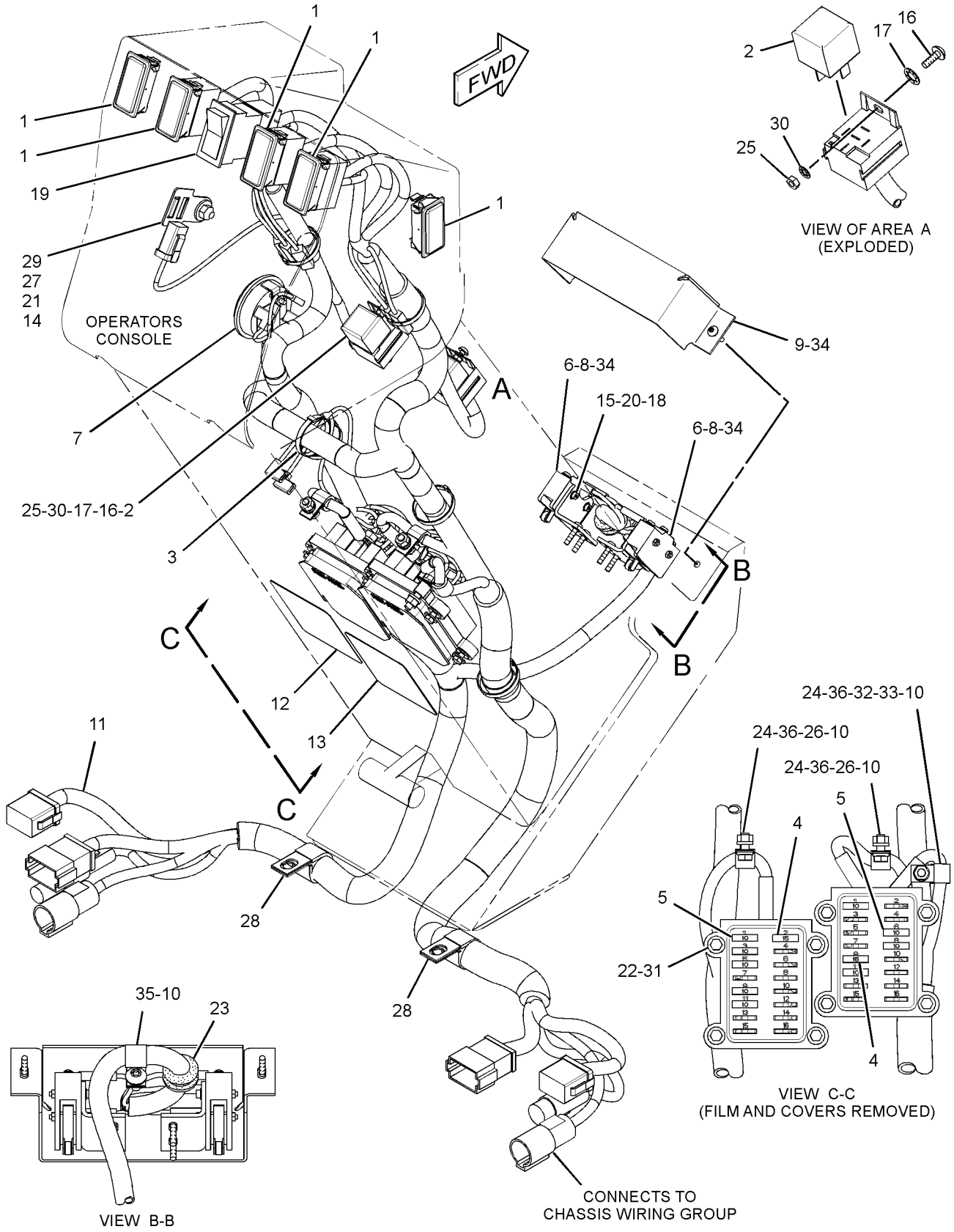

GRAPHIC #1 **<END>** g01753515

334-3344 WIRING GP-STEERING CONSOLE

S/N: JAP1-UP
PART OF 334-7636, 335-9267 ROADING AR
AN ATTACHMENT

SMCS-4334 **i03297918**

NOTE	REF NO	GRAPHIC REF	PART NUMBER	QTY	PART NAME 1 2 3 4 5 6 (PRODUCT LEVEL)	SEE PAGE
	1	1	**3E-0109**	5	PLUG (ROCKER SWITCH)	
	2	1	**3E-6477**	1	RELAY AS (24-VOLT) (TAIL, PANEL LAMPS, RH)	
	2A	1	**3E-6477**	1	RELAY AS (24-VOLT) (TAIL, PANEL LAMPS, LH)	
	3	1	**3S-2093**	5	STRAP-CABLE	
	4	1	**8X-5153**	1	FILM-FACE (TURN SIGNAL, HAZARD)	
	5	1	**8X-5154**	1	FILM-FACE (HEADLIGHTS HIGH, LOW BEAM)	
	6	1	**9W-1441**	3	FUSE (15-AMPERE)	
	7	1	**9W-1442**	10	FUSE (10-AMPERE)	
	8	1	**112-6175**	2	SWITCH AS-LIMIT (TRANSMISSION NEUTRALIZER)	
					(EACH INCLUDES)	
		1	**6V-8376**	3	SCREW-MACHINE (8-32X0.25-IN)	
		1	**9B-7233**	3	LOCKWASHER	
	9	1	*161-3932*	1	METER GP-SERVICE	
M		1	**5C-8312**	2	NUT (M4X0.7-THD)	
		1	**9B-7233**	2	LOCKWASHER	
		1	**096-6166**	2	WASHER-HARD (4.5X9X1-MM THK)	
	10	1	**173-3064**	1	SWITCH GP-ROTARY (TURN SIGNAL, HAZARD)	
		1	**5L-7200**	1	SCREW (8-32X0.375-IN)	
		1	**9B-7233**	1	LOCKWASHER	
	11	1	**173-4490**	1	FLASHER AS	
	12	1	**180-4028**	2	BRACKET	
	13	1	**180-7033**	1	COVER	
	14	1	**295-1834**	1	FILM-IDENTIFICATION (FUSE BOX) (RH)	
	15	1	**295-1835**	1	FILM-IDENTIFICATION (FUSE BOX) (LH)	
	16	1	**334-3345**	1	HARNESS AS-CONSOLE	
	17	1	**089-7960**	2	WASHER (5.3X25X1.6-MM THK)	
	18	1	**103-5678**	1	SWITCH AS-ROTARY (HEADLIGHT DIMMER)	
		1	**5L-7200**	1	SCREW (8-32X0.375-IN)	
		1	**9B-7233**	1	LOCKWASHER	
	19	1	**130-5300**	1	CLIP	
M	20	1	**151-4957**	4	BOLT-SOCKET HEAD (M3X0.5X25-MM)	
M	21	1	**174-8131**	2	SCREW-TRUSS HEAD (M4X0.7X12-MM)	
	22	1	**1H-3244**	2	LOCKWASHER	
	23	1	**228-5009**	4	CLIP	
M	24	1	**3C-6969**	4	NUT (M3X0.5-THD)	
	25	1	*3E-9317*	1	SWITCH AS-ROCKER (24-VOLT) (HEADLIGHTS)	
		1	**3E-8772**	1	SWITCH-ROCKER (HEADLIGHTS)	
		1	**3E-8825**	2	LAMP (24-VOLT)	
		1	**3E-9326**	1	ACTUATOR	
	26	1	**3L-8187**	4	LOCKWASHER	
	27	1	**4B-1281**	1	SCREW-MACHINE (1/4-20X0.625-IN)	
	28	1	**4B-2047**	2	NUT (10-24-THD)	
	29	1	**4B-4274**	18	WASHER (5.5X13X1.2-MM THK)	
	30	1	**4D-1212**	1	GROMMET	
M	31	1	**5C-2890**	3	NUT (M6X1-THD)	
M	32	1	**5C-8312**	2	NUT (M4X0.7-THD)	
M	33	1	**5C-9553**	2	BOLT (M6X1X16-MM)	
	34	1	**5M-6755**	2	SCREW-MACHINE (10-24X0.562-IN)	
	35	1	**5P-4115**	1	WASHER-HARD (7.2X19X2-MM THK)	
	36	1	**6D-4244**	2	CLIP	
	37	1	**6V-8185**	1	NUT (1/4-20-THD)	
	38	1	**8C-7508**	2	LOCKWASHER	
	39	1	**8L-6521**	8	BOLT (10-32X0.5-IN)	
M	40	1	**8T-4971**	1	BOLT (M6X1X30-MM)	
	41	1	**8X-6296**	2	LEVER	

334-3344 WIRING GP-STEERING CONSOLE *(contd.)* i03297918

NOTE	REF NO	GRAPHIC REF	PART NUMBER	QTY	PART NAME 1 2 3 4 5 6 (PRODUCT LEVEL)	SEE PAGE
	42	1	**9P-2553**	1	SPACER (6.83X10.28X11-MM THK)	
M	43	1	**9X-1046**	6	SCREW (M4X0.7X18-MM)	
M	44	1	**9X-2042**	1	SCREW-TRUSS HEAD (M6X1X12-MM)	
	45	1	**9X-8256**	6	WASHER (6.6X12X2-MM THK)	

M-METRIC PART

334-3344 **WIRING GP-STEERING CONSOLE** *(contd.)* **i03297918**

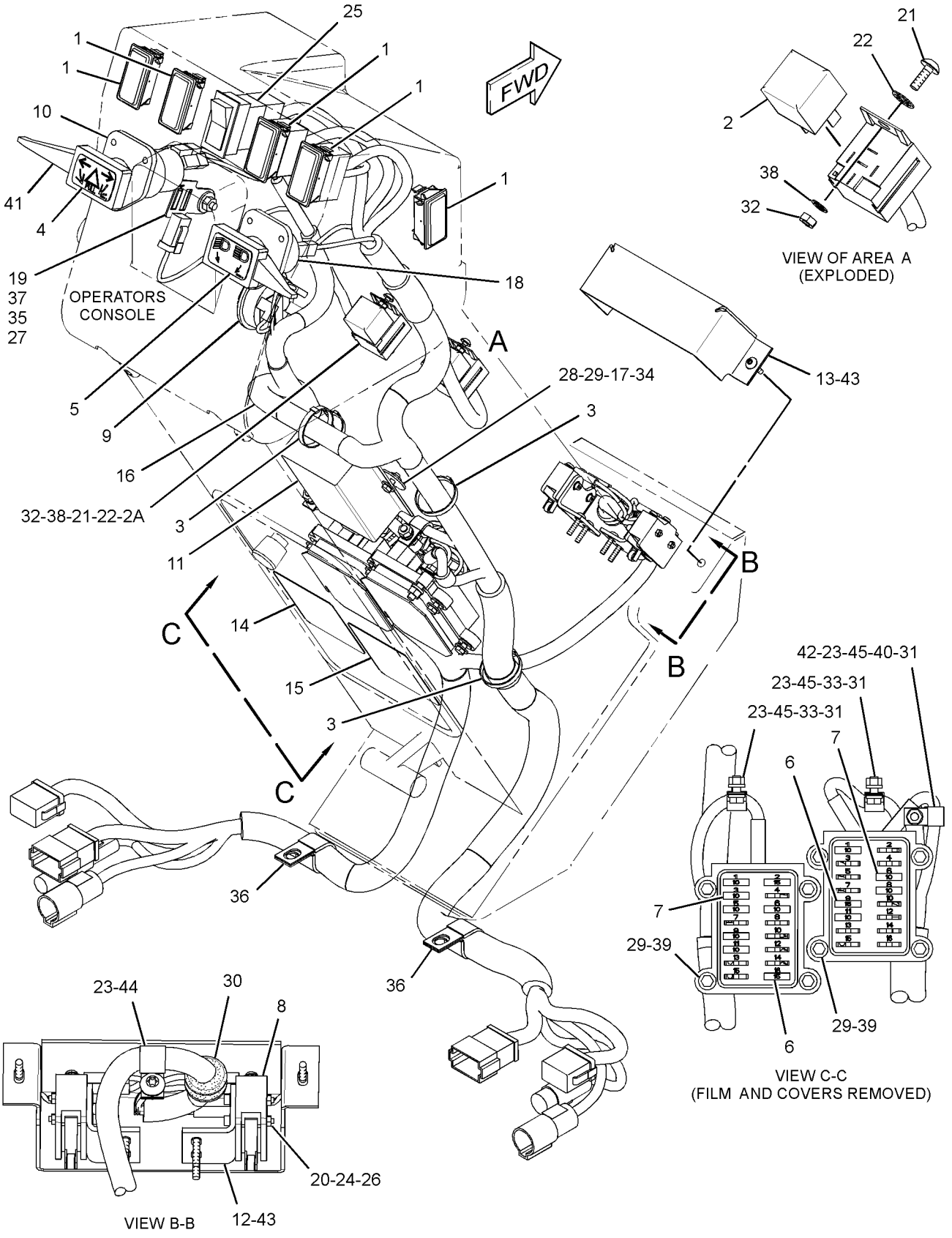

GRAPHIC #1 **<END>** g01757713

180-9324 WIRING GP-TRANSMISSION

S/N: DMJ1-UP

PART OF 281-3165 CONTROL GP-TRANSMISSION HYD

SMCS-3104 **i02502591**

NOTE	REF NO	GRAPHIC REF	PART NUMBER	QTY	PART NAME 1 2 3 4 5 6 (PRODUCT LEVEL)	SEE PAGE
	1	1	**213-9842**	1	HARNESS AS-TRANSMISSION	
		1	**102-8801**	1	KIT-RECEPTACLE (12-PIN)	
					(INCLUDES RECEPTACLE AS & WEDGE)	
		1	**155-2270**	8	KIT-CONNECTING PLUG (2-PIN)	
					(EACH INCLUDES PLUG AS, WEDGE, & INTERFACE SEAL)	
	2	1	**207-6034**	1	PLATE AS	
	3	1	**205-8847**	1	PLATE AS	
	4	1	**3S-2093**	7	STRAP-CABLE	
	5	1	**205-8839**	1	CLIP AS	
M	6	1	**8T-0639**	1	BOLT (M6X1X12-MM)	

M-METRIC PART

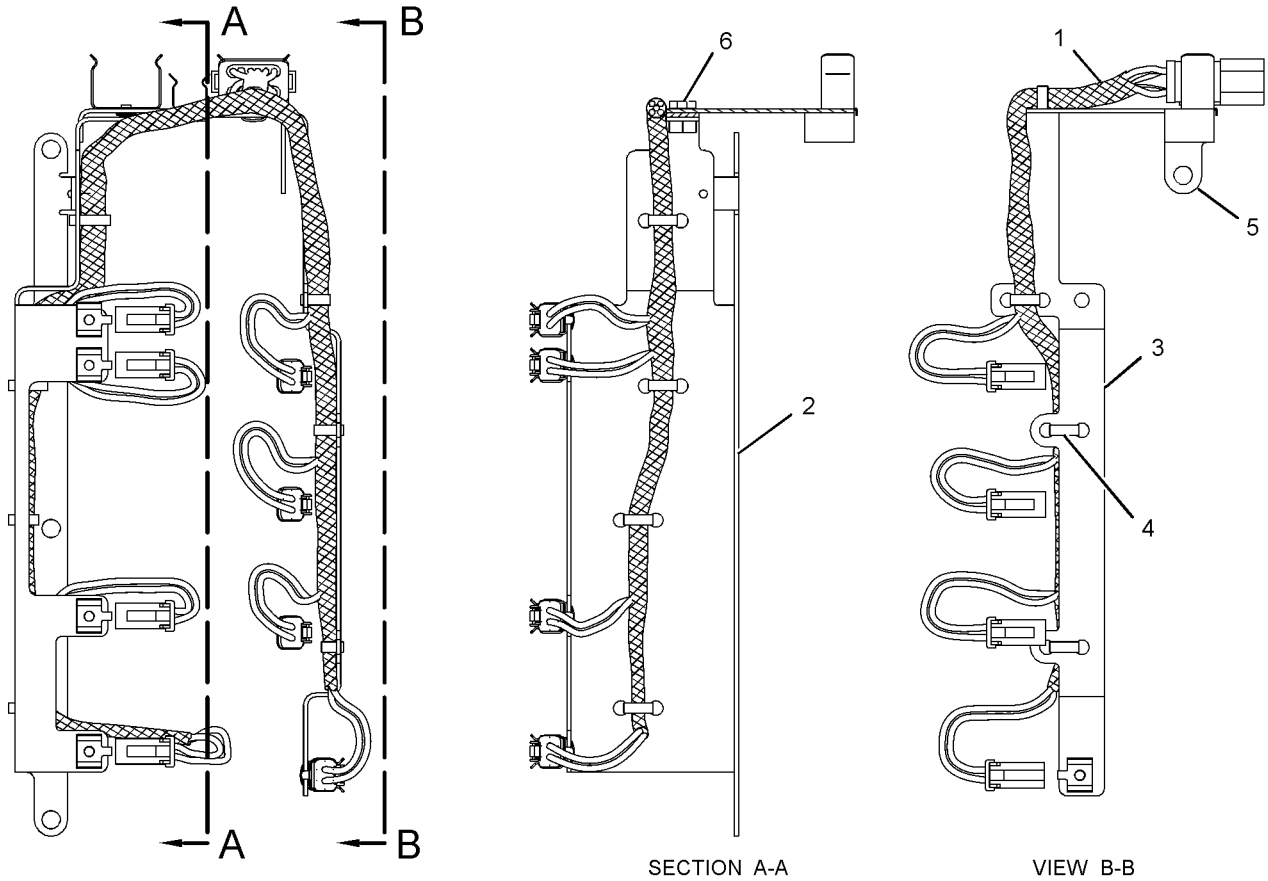

SECTION A-A VIEW B-B

GRAPHIC #1 **<END>** g01256130

333-9308 BASE GP-OIL FILTER–TRANSMISSION

S/N: JAP1-UP

PART OF 333-6436 FILTER GP-OIL

SMCS-3004, 3067 **i03630674**

NOTE	REF NO	GRAPHIC REF	PART NUMBER	QTY	PART NAME 1 2 3 4 5 6 (PRODUCT LEVEL)	SEE PAGE
	1	1	**3T-9549**	1	ADAPTER	
	2	1	**7G-4998**	1	SPOOL-BYPASS	
Y	3	1	**164-7577**	1	SWITCH GP-BYPASS (POWER TRAIN OIL FILTER)	190
	4	1	**334-2679**	1	SPRING	
	5	1	**334-2680**	1	SPRING	
	6	1	**5P-7815**	1	SEAL-O-RING	
	7	1	**6V-5050**	1	SEAL-O-RING	
	8	1	**9S-8008**	1	PLUG-O-RING	
					PARTS SHOWN IN GRAPHIC(S) WITHOUT A REFERENCE NUMBER ARE NOT SERVICED SEPARATELY	

Y-SEPARATE ILLUSTRATION

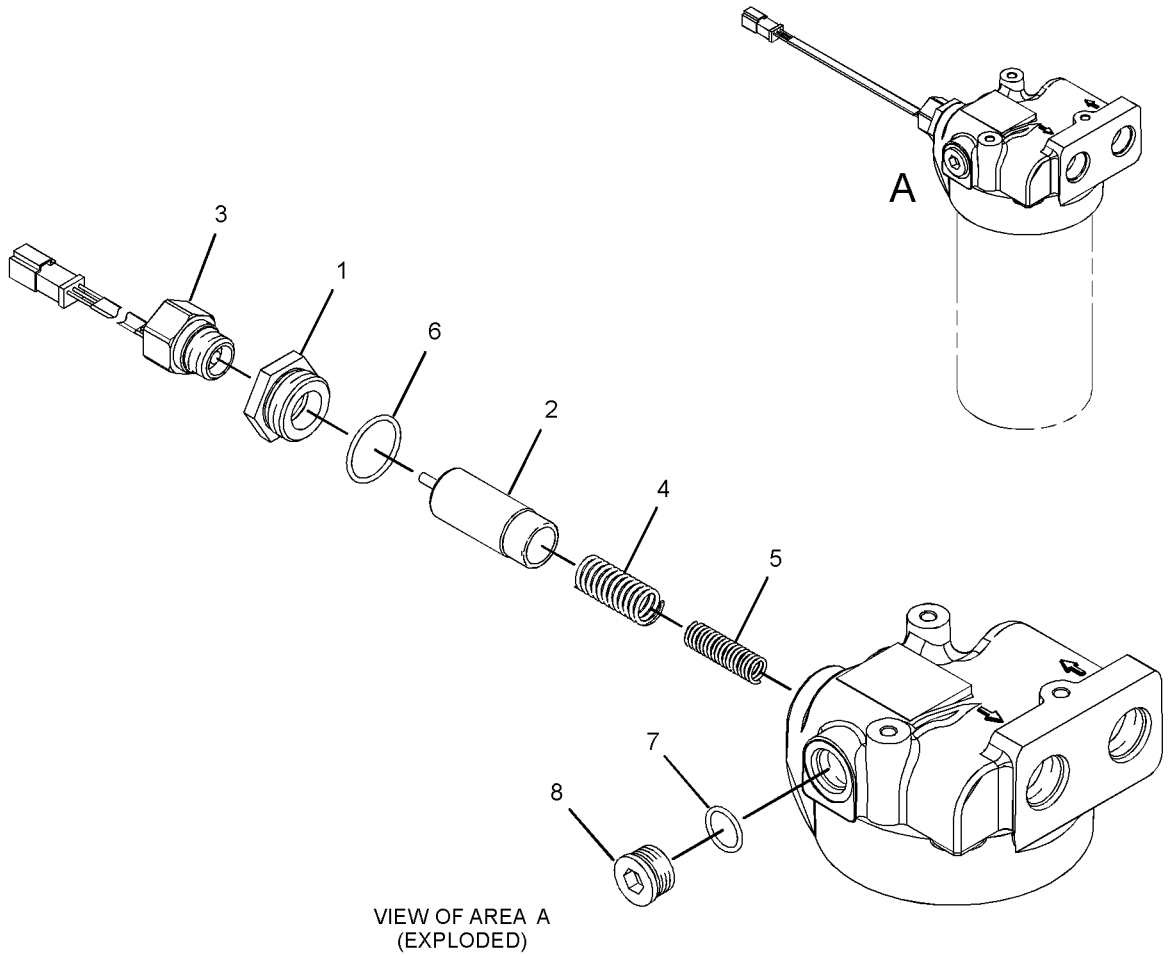

VIEW OF AREA A
(EXPLODED)

GRAPHIC #1 **<END>** g01863853

POWER TRAIN

277-6433 CASE & PARTS GP-PLANETARY

S/N: DMJ1-UP

PART OF 275-6535 TRANSMISSION AR

SMCS-3030, 3064, 3160 **i03304315**

NOTE	REF NO	GRAPHIC REF	PART NUMBER	QTY	PART NAME 1 2 3 4 5 6 (PRODUCT LEVEL)	SEE PAGE
	1	1	**277-6430**	1	CASE AS-TRANSMISSION	
		1	**7T-6496**	7	PLUG	
		1	**8M-6521**	2	DOWEL	
	2	1	**277-6432**	1	COVER AS-TRANSMISSION	
		1	**7T-6496**	1	PLUG	
M	3	1	**6V-1820**	37	BOLT (M10X1.5X30-MM)	
M	4	1	**8T-5436**	2	BOLT (M10X1.5X130-MM)	
	5	1,2	*148-8395*	4	PLUG AS	
					(EACH INCLUDES)	
		1,2	**9S-8005**	1	PLUG-O-RING	
		1,2	**3K-0360**	1	SEAL-O-RING	
	6	2	**3K-0360**	2	SEAL-O-RING	
	7	1	**2J-0157**	1	SEAL-O-RING	
B	8	2	**1U-8846**		SEALANT-GASKET	
	9	1	**8T-6765**	1	PLUG-PIPE	
	10	1	**5M-6200**	1	SEAL-O-RING	
	11	1	**8E-1133**	1	TUBE AS	
	12	1	**6L-1650**	1	SEAL-O-RING	
M	13	1,2,3	**6V-5217**	15	BOLT (M8X1.25X20-MM)	
	14	1,2,3	**5P-3863**	5	SEAL-O-RING	
	15	1,2,3	**9W-1454**	5	COVER	
	16	1	**8S-9129**	1	FILTER-MAGNETIC (TRANSMISSION)	
	17	1	**8S-9130**	1	SCREEN-SUCTION (TRANSMISSION)	
	18	3	**4M-6108**	2	RACE-BEARING OUTER	
	19	1	**148-1925**	2	VALVE-RELIEF	
	20	1	**9X-4609**	2	SEAL-O-RING	
	21	3	**9W-7038**	1	RING-SNAP	
M	22	3	**6V-3940**	4	BOLT (M8X1.25X25-MM)	
	23	3	**6Y-9763**	1	GEAR AS	
		3	**6Y-1007**	1	GEAR (38-TEETH)	
		3	**4K-8603**	1	PLUG-CUP	
	24	3	**2S-3029**	1	BALL BEARING	
	25	3	**9W-6465**	1	RETAINER-BEARING	
	26	2	*164-5619*	6	PLUG AS	
					(EACH INCLUDES)	
		2	**9S-8006**	1	PLUG-O-RING	
		2	**2M-9780**	1	SEAL-O-RING	
	28	2	*162-0177*	1	PLUG AS	
		2	**9S-8004**	1	PLUG	
		2	**3J-1907**	1	SEAL-O-RING	
	29	1	**3J-1907**	1	SEAL-O-RING	
	30	1,2	**8T-4121**	10	WASHER-HARD (11X21X2.5-MM THK)	
	31	2	**190-1684**	1	PLATE AS	
M	32	2	**6V-8212**	1	BOLT (M10X1.5X16-MM)	
	33	2	*197-4977*	1	PLUG AS	
		2	**5P-4483**	1	PLUG-O-RING	
		2	**7M-8485**	1	SEAL-O-RING	
M	35	2	**6V-7981**	5	BOLT (M10X1.5X70-MM)	
M	36	2	**6V-4248**	7	BOLT (M10X1.5X25-MM)	
	39	2,3	**6I-8642**	4	RACE-BEARING OUTER	
	40	3	**5P-3924**	2	RACE-BEARING OUTER	
	41	3	**9M-2042**	1	RACE-BEARING OUTER	
	42	3	**2H-6489**	1	RACE-BEARING OUTER	
	43	2	**226-6621**	1	HARNESS AS-SENSOR (SPEED)	
	44	2	**191-9256**	2	CLIP	
M	45	1,2	**8T-4137**	4	BOLT (M10X1.5X20-MM)	

277-6433 CASE & PARTS GP-PLANETARY *(contd.)* i03304315

NOTE	REF NO	GRAPHIC REF	PART NUMBER	QTY	PART NAME 1 2 3 4 5 6 (PRODUCT LEVEL)	SEE PAGE
	46	2	**6V-1720**	1	PLATE-SERIAL NUMBER (TRANSMISSION)	
Y	47	2	**290-5792**	2	SENSOR GP-SPEED (TRANSMISSION OUTPUT)	179
	48	2	**201-0387**	1	CLIP AS	
M	49	2	**8T-4133**	1	NUT (M10X1.5-THD)	
	50	2	**143-5373**	1	GUARD AS	
	51	1	**5P-9299**	1	CLIP	
Y	52	1	**3E-8700**	1	SENSOR GP-TEMPERATURE (TRANSMISSION OIL)	180
	53	1	**4P-7581**	1	CLIP	
	54	1	*164-4180*	3	PLUG AS	
					(EACH INCLUDES)	
		1	**9S-4181**	1	PLUG-O-RING	
		1	**7M-8485**	1	SEAL-O-RING	
	55	1	**1B-5174**	1	PLUG-PIPE	
	56	2	**113-7745**	1	PLATE AS	
	57	1	**7K-1181**	1	STRAP-CABLE	
	58	2	**145-8039**	3	LOCK	
	59	1	**130-5300**	1	CLIP	
	60	3	**278-0642**	1	SEAL-LIP TYPE	

B-USE AS REQUIRED
M-METRIC PART
Y-SEPARATE ILLUSTRATION

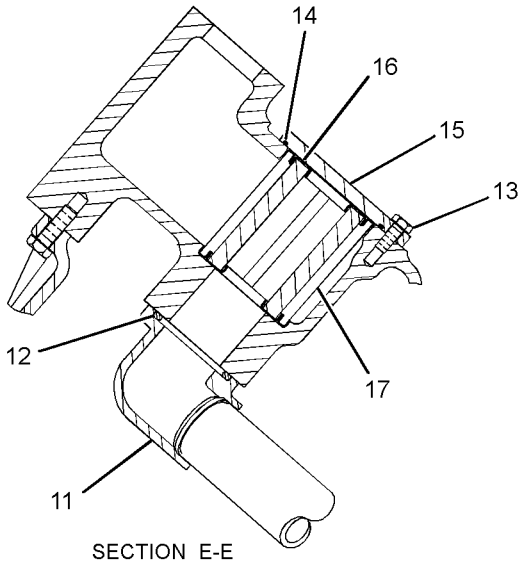

SECTION E-E

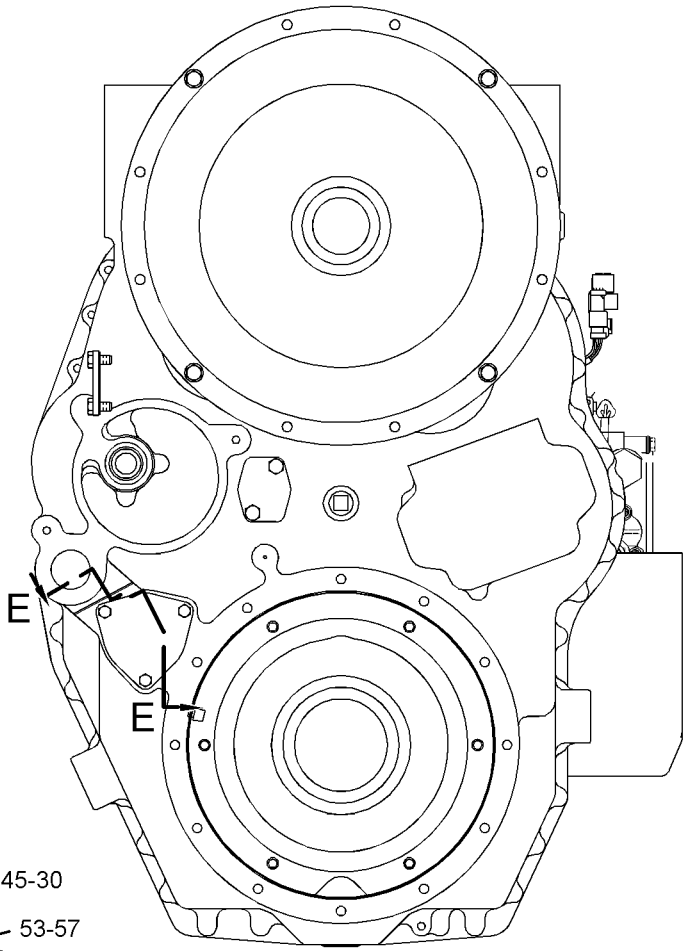

FRONT VIEW

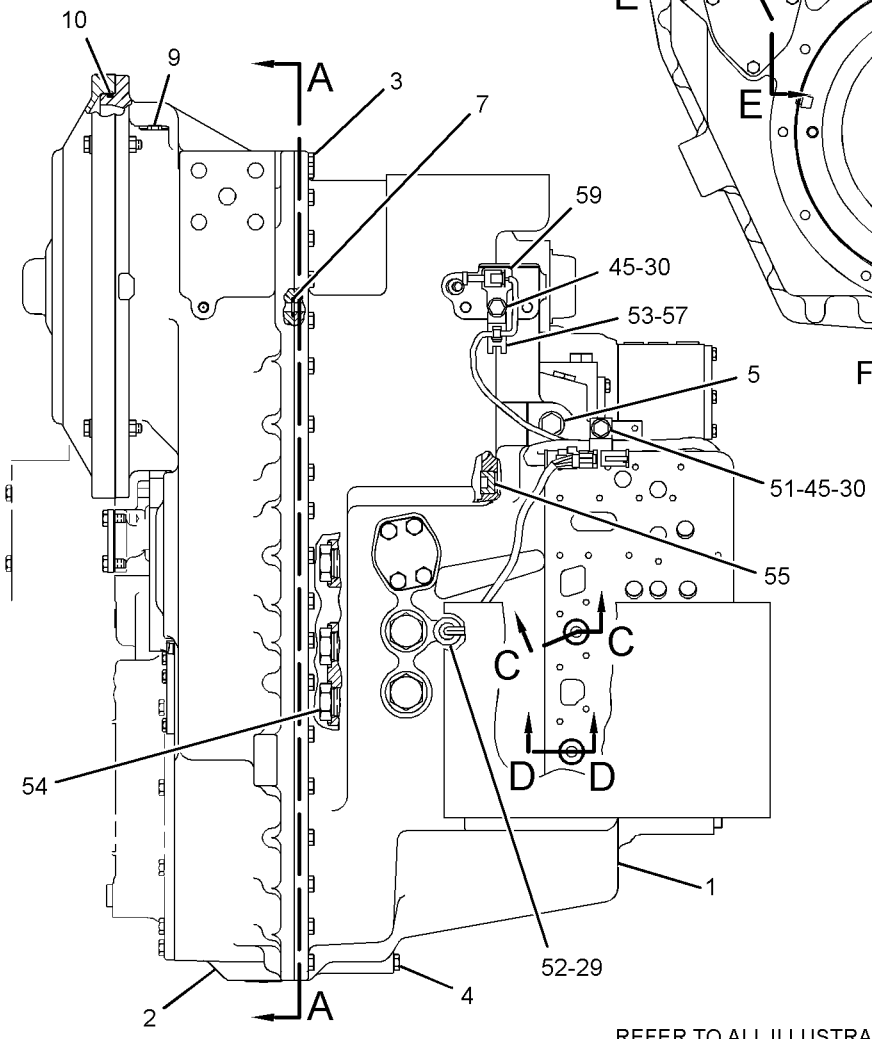

LEFT SIDE VIEW

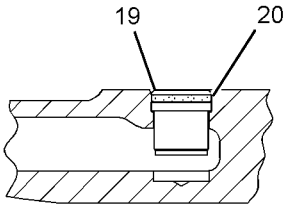

SECTION C-C

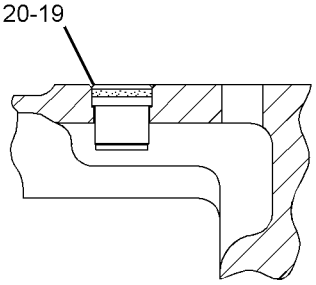

SECTION D-D

REFER TO ALL ILLUSTRATIONS OF THIS GROUP FOR AUXILIARY VIEWS

GRAPHIC #1

g01772113

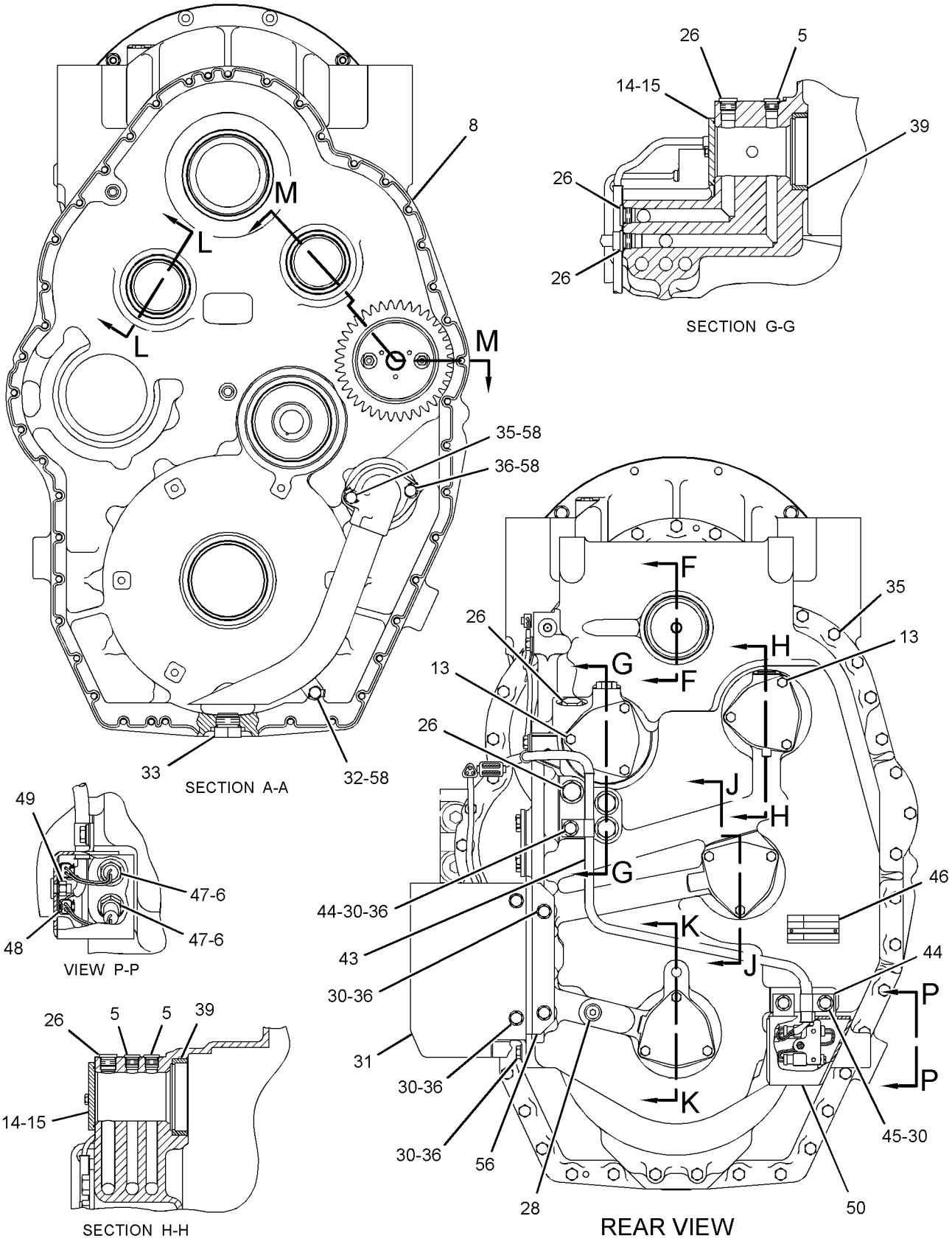

GRAPHIC #2

g01789333

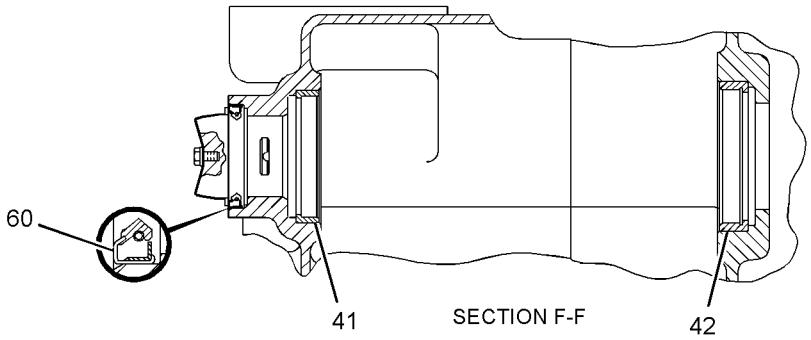

SECTION F-F

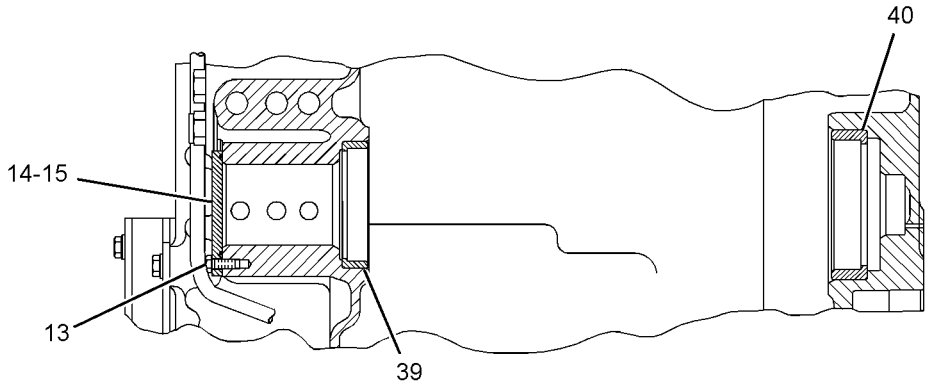

SECTION J-J

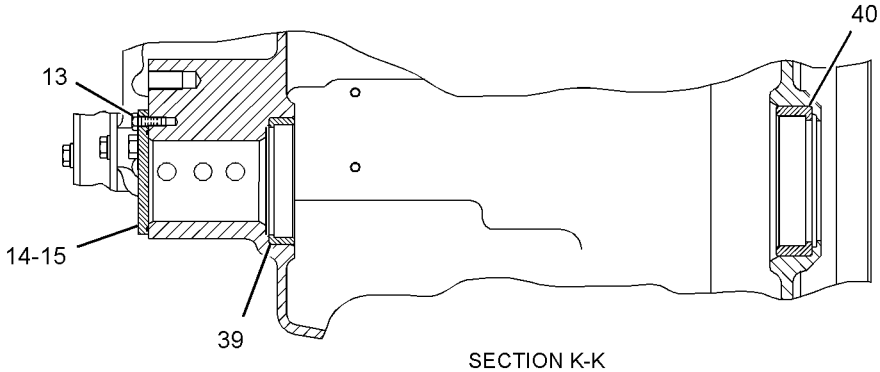

SECTION K-K

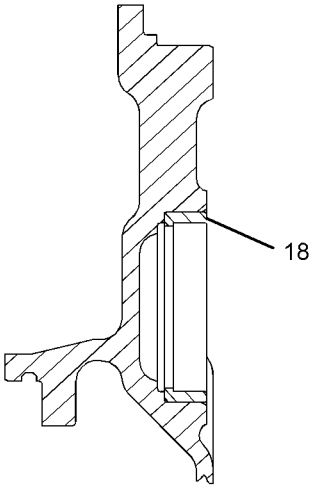

SECTION L-L

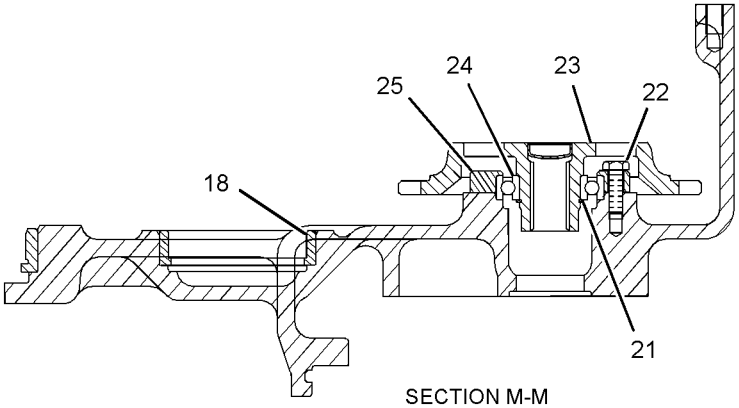

SECTION M-M

GRAPHIC #3 **<END>** g01772115

2G-0585 CHAIN GP-DRIVE

S/N: JAP1-UP

PART OF 348-3018 GENERAL AR

SMCS-3261, 4063 **i00819104**

NOTE	REF NO	GRAPHIC REF	PART NUMBER	QTY	PART NAME 1 2 3 4 5 6 (PRODUCT LEVEL)	SEE PAGE
	1	1	**5T-0735**	4	CHAIN GP	
					(EACH INCLUDES)	
	2	1	**5T-0731**	1	LINK-CONNECTING	

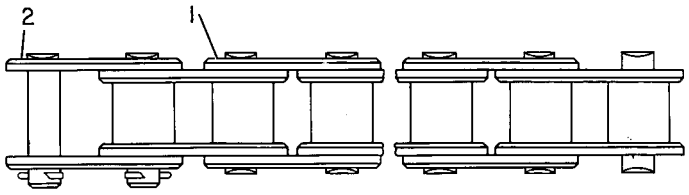

GRAPHIC #1 **<END>** g00108306

6Y-2303 CLUTCH GP-TRANSMISSION–1ST & 3RD

S/N: DMJ1-UP

PART OF 275-6535 TRANSMISSION AR

SMCS-3063, 3155, 3170 **i03576180**

NOTE	REF NO	GRAPHIC REF	PART NUMBER	QTY	PART NAME 1 2 3 4 5 6 (PRODUCT LEVEL)	SEE PAGE
	1	1,2	**6Y-1878**	1	SHAFT AS (64-TEETH)	
	2	1,2	**6Y-1000**	1	GEAR (69-TEETH)	
	3	1,2	**132-9630**	1	GEAR AS (54-TEETH)	
	4	1,2	**6Y-1895**	1	BEARING-SLEEVE	
	5	1,2	**3B-8921**	1	BEARING-INNER	
	6	1,2	**265-5287**	1	RING-SEAL	
	7	1,2	**7T-4897**	2	DISC-THRUST	
	8	1,2	**6Y-1891**	1	HUB AS	
	9	1,2	**8E-5734**	2	RING-SEAL EXTENSION	
	10	1,2	**6Y-1887**	2	PISTON	
	11	1,2	**5H-8985**	1	PIN-SPRING	
	12	1,2	**6I-8912**	10	DISC-FRICTION	
	13	1,2	**6I-9502**	8	PLATE-CLUTCH	
	14	1,2	**6Y-2312**	1	HUB AS	
	15	1,2	**132-9633**	1	GEAR AS (79-TEETH)	
	16	1,2	**6Y-2419**	1	BEARING-SLEEVE	
	17	1,2	**131-3919**	1	BEARING-ROLLER	
	18	1,2	**7G-4822**	3	RING-SEAL	
M	19	1,2	**6V-1819**	2	BOLT (M10X1.5X100-MM)	
	20	1,2	**6Y-2425**	1	CARRIER-SEAL	
	21	1,2	**8F-3469**	3	SEAL-O-RING	
	22	1,2	**8E-8319**	4	DISC-THRUST	
	23	1,2	**6Y-1115**	4	RING-HALF	
	24	1,2	**6Y-1114**	2	LOCKWASHER	
	25	1,2	**9W-9905**	4	RING-LOCK	
	26	1,2	**102-5881**	2	SPRING-WAVE	
	27	1,2	**8E-5742**	2	RING-SEAL	
	28	1,2	**6Y-0982**	1	GEAR (30-TEETH)	

M-METRIC PART

6Y-2303 **CLUTCH GP-TRANSMISSION** *(contd.)* **i03576180**

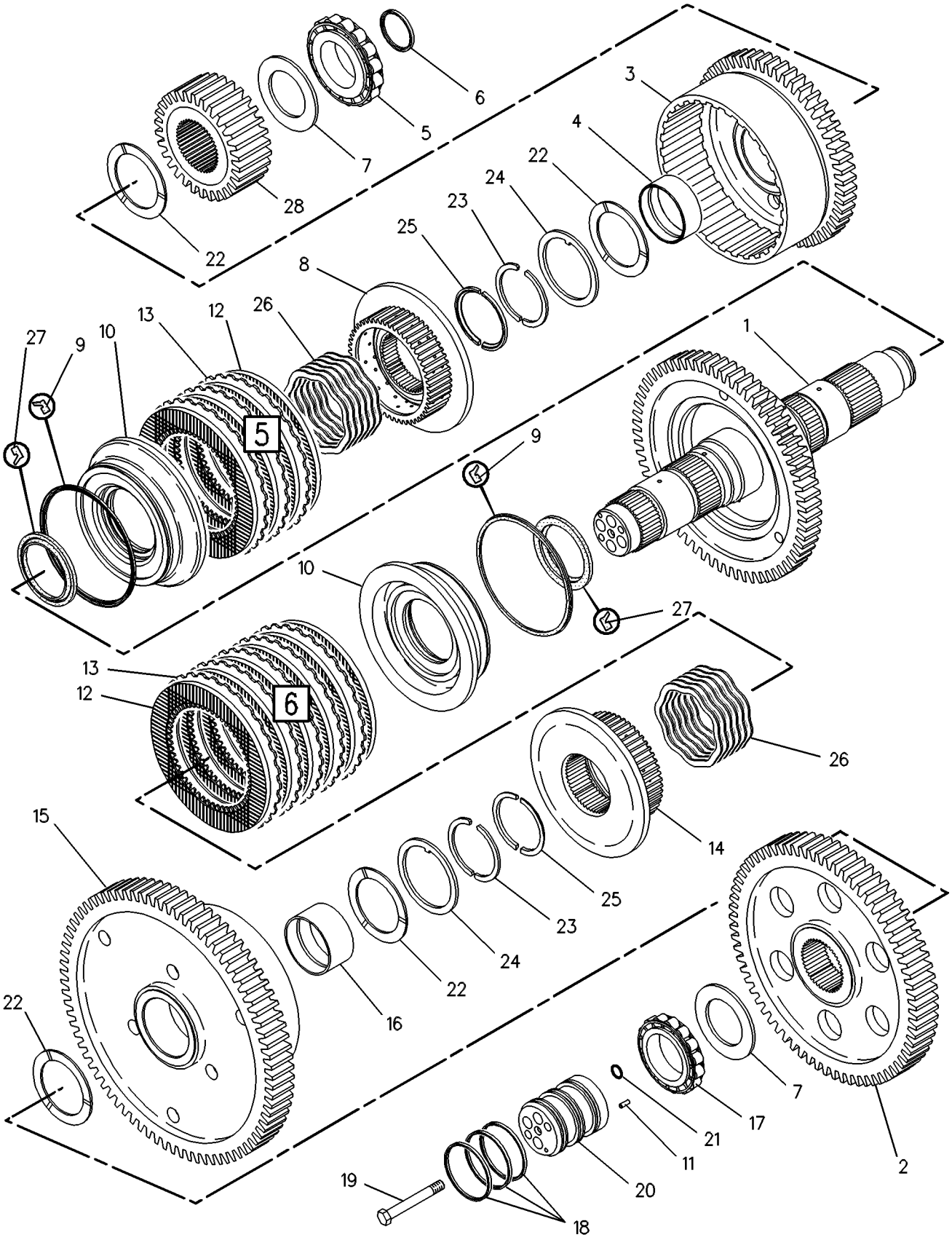

GRAPHIC #1 g00108910

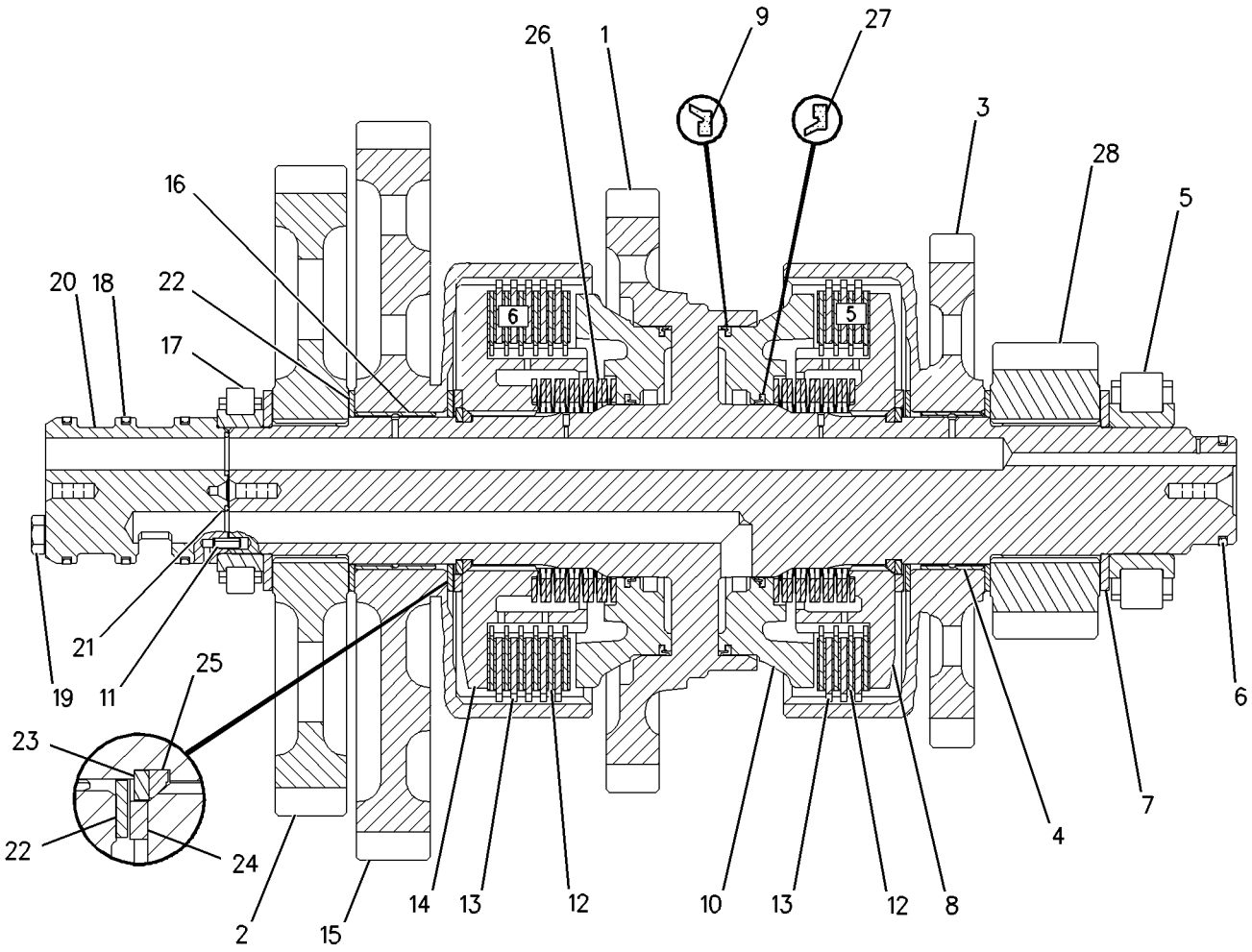

GRAPHIC #2 **<END>** g00775655

8E-9316 CLUTCH GP-TRANSMISSION—HI & LO

S/N: DMJ1-UP

PART OF 275-6535 TRANSMISSION AR

SMCS-3063, 3155, 3170 **i02826169**

NOTE	REF NO	GRAPHIC REF	PART NUMBER	QTY	PART NAME 1 2 3 4 5 6 (PRODUCT LEVEL)	SEE PAGE
	1	1	**307-6260**	1	SHAFT AS	
	2	1	**8M-4295**	15	SPRING	
	3	1	**6Y-2428**	1	PISTON	
	4	1	**6Y-1890**	1	RING-RETAINING	
	5	1	**9W-9905**	4	RING-LOCK	
	6	1	**6Y-1114**	2	LOCKWASHER	
	7	1	**6Y-1115**	4	RING-HALF	
	8	1	**8E-8319**	4	DISC-THRUST	
	9	1	**7T-4897**	1	DISC-THRUST	
	10	1	**3B-8921**	1	BEARING-INNER	
	11	1	**8E-1913**	1	GEAR AS (84-TEETH)	
	12	1	**9W-6467**	2	BEARING-SLEEVE	
	13	1	**6Y-7981**	7	DISC-FRICTION	
	14	1	**3P-0337**	8	PLATE-CLUTCH	
	15	1	**8E-5736**	2	RING-SEAL EXTENSION	
	16	1	**6Y-2429**	1	PISTON-BALANCE	
	17	1	**102-5881**	1	SPRING-WAVE	
	18	1	**8E-5742**	2	RING-SEAL	
	19	1	**8E-5734**	1	RING-SEAL EXTENSION	
	20	1	**6I-9502**	5	PLATE-CLUTCH	
	21	1	**6I-8912**	6	DISC-FRICTION	
	22	1	**132-9635**	1	GEAR AS (45-TEETH)	
	23	1	**9W-6467**	2	BEARING-SLEEVE	
	24	1	**131-3919**	1	BEARING-ROLLER	
	25	1	**6Y-2425**	1	CARRIER-SEAL	
M	26	1	**6V-1819**	2	BOLT (M10X1.5X100-MM)	
	27	1	**7G-4822**	3	RING-SEAL	
	28	1	**8F-3469**	3	SEAL-O-RING	
	29	1	**6Y-2312**	1	HUB AS	
	30	1	**5H-8985**	1	PIN-SPRING	
	31	1	**6Y-1887**	1	PISTON	
	32	1	**218-3339**	1	HUB AS	
	33	1	**8E-1161**	1	ROTOR	

M-METRIC PART

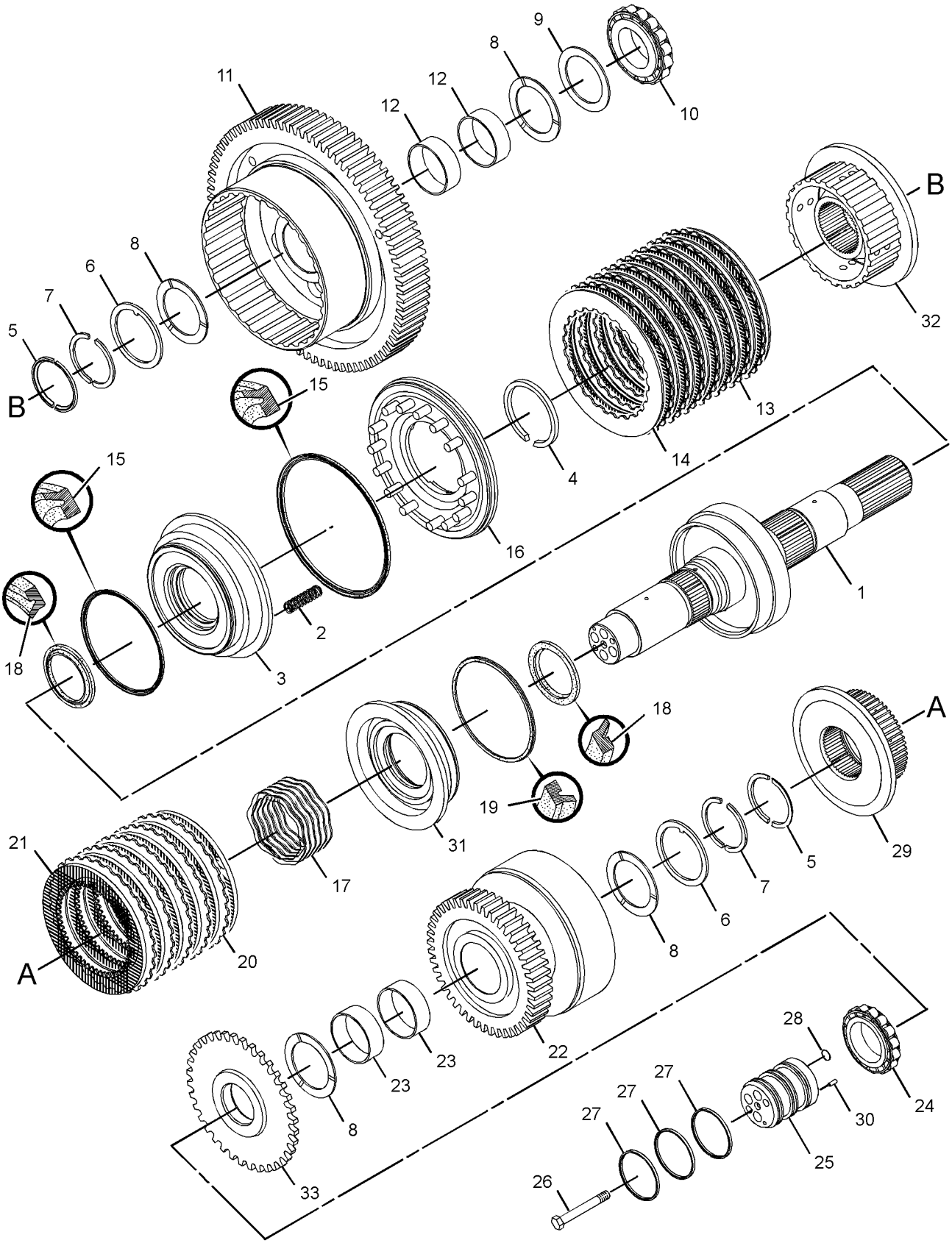

GRAPHIC #1 **<END>** g01525201

235-2412 CLUTCH GP-TRANSMISSION—FORWARD

S/N: DMJ1-UP

PART OF 275-6535 TRANSMISSION AR

SMCS-3063, 3155, 3170 **i02774944**

NOTE	REF NO	GRAPHIC REF	PART NUMBER	QTY	PART NAME 1 2 3 4 5 6 (PRODUCT LEVEL)	SEE PAGE
	1	1	**6I-8911**	5	DISC-FRICTION	
	2	1	**6I-8912**	6	DISC-FRICTION	
	3	1	**6I-9502**	6	PLATE-CLUTCH	
	4	1	**6Y-1115**	4	RING-HALF	
	5	1	**6Y-1116**	1	GEAR AS (43-TEETH)	
	6	1	**6Y-1119**	1	CARRIER-SEAL	
	7	1	**7G-4822**	3	RING-SEAL	
	8	1	**7T-4897**	2	DISC-THRUST	
	9	1	**8E-5742**	2	RING-SEAL	
	10	1	**8E-8319**	4	DISC-THRUST	
	11	1	**8F-3469**	4	SEAL-O-RING	
	12	1	**9U-8815**	2	SPRING	
	13	1	**9U-9995**	6	PLATE-CLUTCH	
	14	1	**9W-2029**	1	RACE-THRUST BEARING	
	15	1	**9W-9371**	2	RING-SEAL	
	16	1	**9W-9905**	4	RING-LOCK	
	17	1	**108-5751**	2	DISC-FRICTION	
	18	1	**132-9625**	1	GEAR AS (50-TEETH)	
	19	1	**159-0308**	2	PISTON	
	20	1	**159-0927**	1	DISC-FRICTION	
	21	1	**161-6713**	2	PLATE-LOCK	
	22	1	**171-7091**	1	SHAFT AS	
	23	1	**247-8629**	2	VALVE AS	
	24	1	**247-9711**	2	HUB AS	
	25	1	**2K-1738**	1	BEARING-INNER	
	26	1	**4M-6107**	1	BEARING-INNER	
M	27	1	**5C-7423**	4	SCREW (M6X1X16-MM)	
	28	1	**5H-8985**	1	PIN-SPRING	
M	29	1	**6V-1819**	2	BOLT (M10X1.5X100-MM)	
	30	1	**8E-1263**	2	BEARING-ROLLER	

M-METRIC PART

235-2412 **CLUTCH GP-TRANSMISSION** *(contd.)* **i02774944**

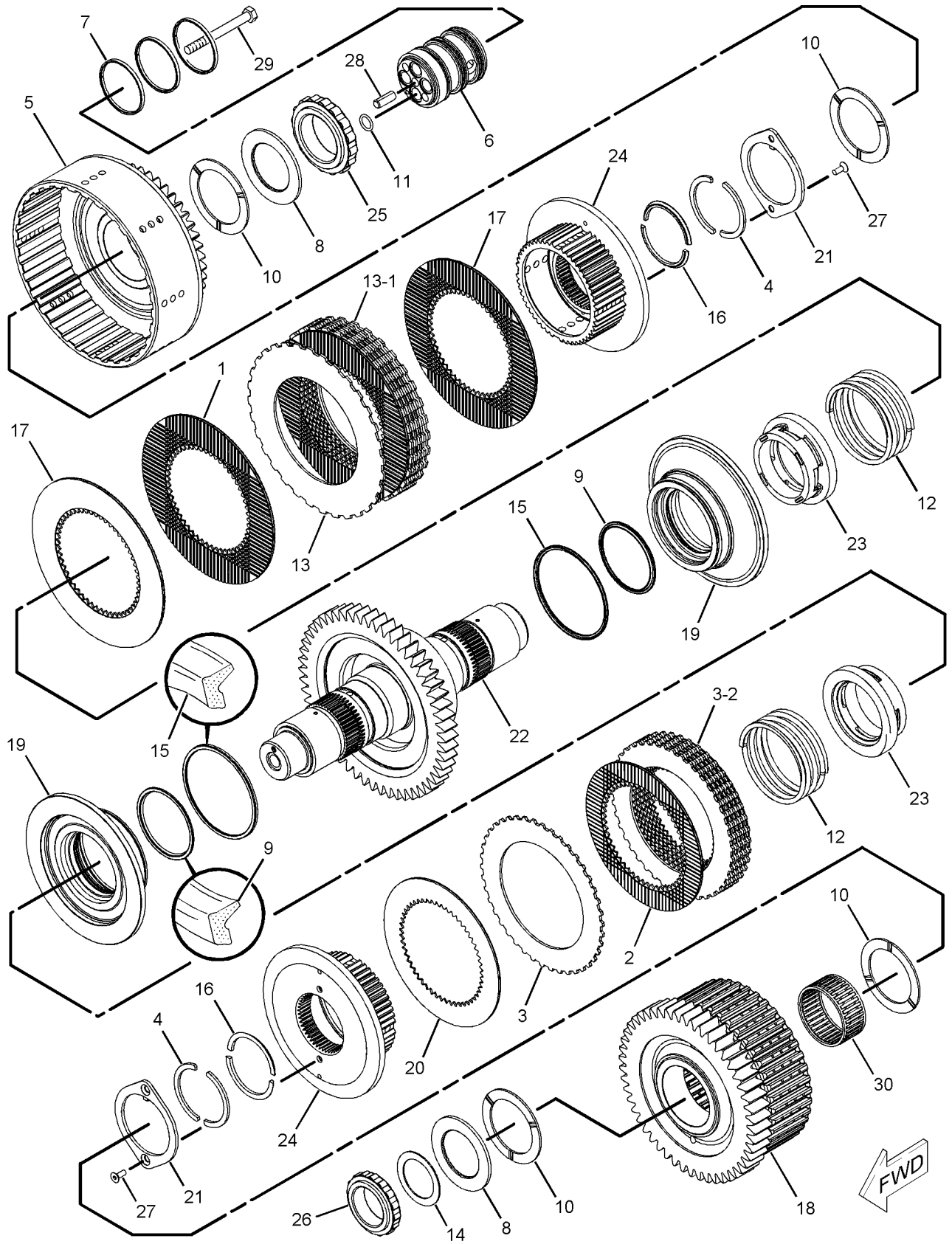

GRAPHIC #1 **<END>** g01137840

235-2413 CLUTCH GP-TRANSMISSION–REVERSE, SECOND

S/N: DMJ1-UP

PART OF 275-6535 TRANSMISSION AR

SMCS-3063, 3155, 3170 **i02774946**

NOTE	REF NO	GRAPHIC REF	PART NUMBER	QTY	PART NAME 1 2 3 4 5 6 (PRODUCT LEVEL)	SEE PAGE
	1	1	**131-3919**	1	BEARING-ROLLER	
	2	1	**4M-6107**	1	BEARING-INNER	
	3	1	**8E-1263**	1	BEARING-ROLLER	
	4	1	**6I-8912**	10	DISC-FRICTION	
	5	1	**6I-9502**	9	PLATE-CLUTCH	
	6	1	**6Y-0976**	1	GEAR (29-TEETH)	
	7	1	**6Y-1114**	1	LOCKWASHER	
	8	1	**6Y-1115**	4	RING-HALF	
	9	1	**6Y-1119**	1	CARRIER-SEAL	
	10	1	**6Y-1887**	1	PISTON	
	11	1	**6Y-1888**	1	PLATE-CLUTCH	
	12	1	**6Y-1891**	1	HUB AS	
	13	1	**6Y-2307**	1	SPACER (61X82.55X43.88-MM THK)	
	14	1	**7G-4822**	3	RING-SEAL	
	15	1	**7T-4897**	1	DISC-THRUST	
	16	1	**8E-5734**	1	RING-SEAL EXTENSION	
	17	1	**8E-5742**	2	RING-SEAL	
	18	1	**8E-8319**	4	DISC-THRUST	
	19	1	**8F-3469**	4	SEAL-O-RING	
	20	1	**9U-8815**	1	SPRING	
	21	1	**9W-2029**	1	RACE-THRUST BEARING	
	22	1	**9W-9371**	1	RING-SEAL	
	23	1	**9W-9905**	4	RING-LOCK	
	24	1	**102-5881**	1	SPRING-WAVE	
	25	1	**132-9628**	1	GEAR AS (44-TEETH)	
		1	**6Y-1895**	1	BEARING-SLEEVE	
	26	1	**159-0308**	1	PISTON	
	27	1	**159-0927**	1	DISC-FRICTION	
	28	1	**161-6713**	1	PLATE-LOCK	
	29	1	**171-7095**	1	SHAFT AS	
	30	1	**247-8629**	1	VALVE AS	
	31	1	**247-9711**	1	HUB AS	
	32	1	**248-2886**	1	GEAR AS (46-TEETH)	
M	33	1	**5C-7423**	2	SCREW (M6X1X16-MM)	
	34	1	**5H-8985**	1	PIN-SPRING	
M	35	1	**6V-1819**	2	BOLT (M10X1.5X100-MM)	

M-METRIC PART

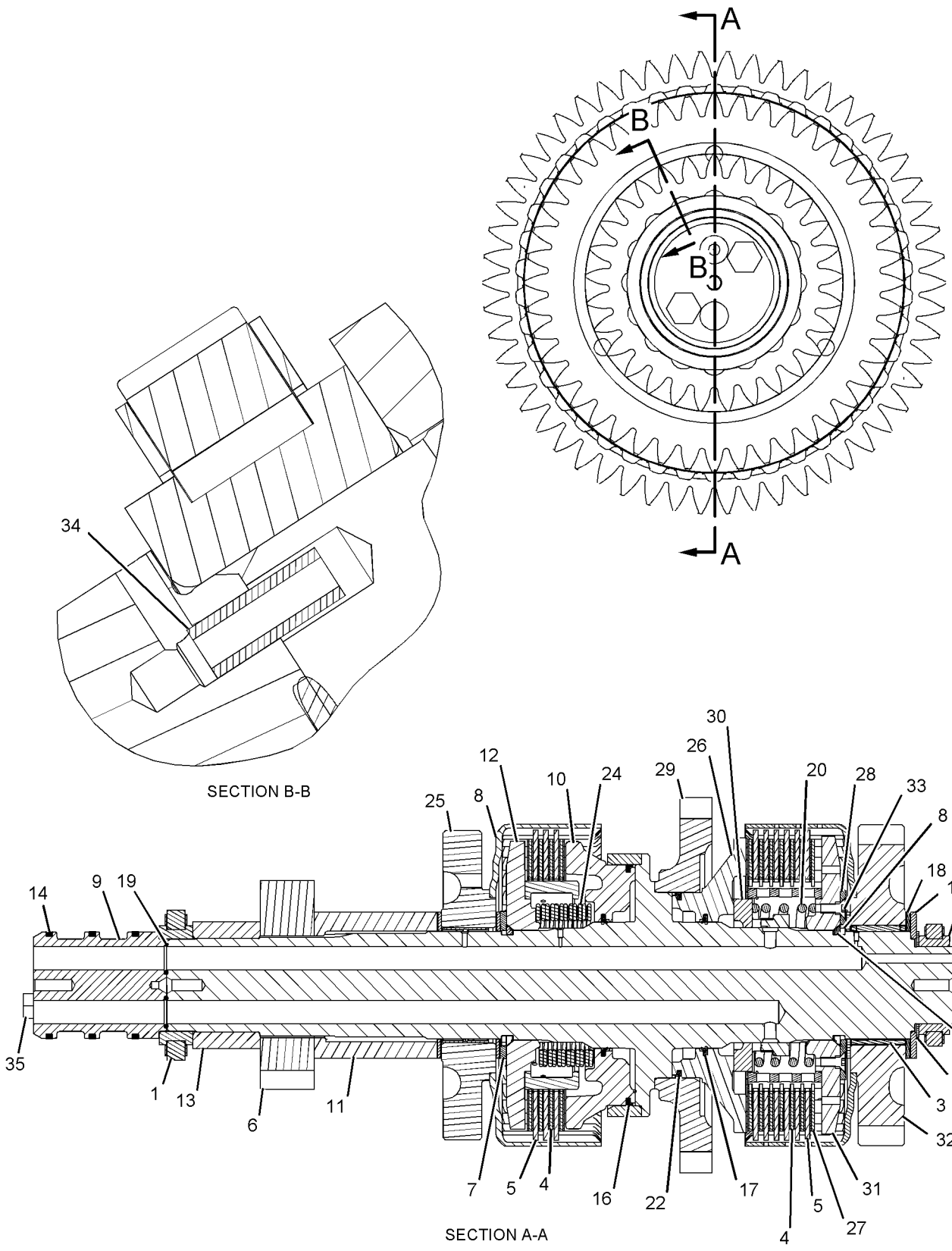

GRAPHIC #1 **<END>** g01132487

303-3011 CONTROL GP-DIFFERENTIAL LOCK

S/N: JAP1-UP

PART OF 348-3018 GENERAL AR

SMCS-3264 **i03564989**

NOTE	REF NO	GRAPHIC REF	PART NUMBER	QTY	PART NAME 1 2 3 4 5 6 (PRODUCT LEVEL)	SEE PAGE
	1	1	**6V-0852**	1	CAP-DUST	
	2	1	**8X-5492**	1	TUBE	
	3	1	**130-5300**	1	CLIP	
	4	1	*156-4281*	1	TEE AS	
		1	**7X-0838**	1	TEE-O-RING	
		1	**3J-7354**	1	SEAL-O-RING	
		1	**6V-8397**	2	SEAL-O-RING	
	5	1	**165-9928**	1	PLATE	
Y	6	1	**174-3705**	1	VALVE & MTG GP-DIFF LOCK	287
	7	1	*180-9933*	1	ADAPTER GP (90-DEG)	
		1	**135-9941**	1	ADAPTER	
		1	**3J-7354**	1	SEAL-O-RING	
I	8	1	**124-9675**	1	HOSE AS	
I	9	1	**328-1673**	1	HOSE AS	
	10	1	*148-8316*	1	CONNECTOR AS	
		1	**6V-8647**	1	CONNECTOR	
		1	**3J-7354**	1	SEAL-O-RING	
		1	**4J-5477**	1	SEAL-O-RING	
	11	1	*148-8369*	1	ELBOW AS	
		1	**6V-8628**	1	ELBOW	
		1	**3J-7354**	1	SEAL-O-RING	
		1	**4J-5477**	1	SEAL-O-RING	
	12	1	*164-5567*	1	COUPLER AS-QUICK DISCONNECT	
		1	**6V-3965**	1	FITTING (QUICK DISCONNECT)	
		1	**214-7568**	1	SEAL-O-RING	
	13	1	**1S-6420**	1	CLIP	
	14	1	**4J-2506**	2	SEAL-O-RING	
	15	1	**202-2762**	2	CLIP	
	16	1	**4P-8134**	1	CLIP	
	17	1	**3E-6909**	1	CLIP	
I	18	1	**7T-1159**	1	HOSE AS	
	19	1	**8M-4438**	2	SEAL-O-RING	
	20	1	**8T-2501**	2	BOLT (3/8-16X2-IN)	
	21	1	**8T-4121**	5	WASHER-HARD (11X21X2.5-MM THK)	
M	22	1	**8T-4133**	2	NUT (M10X1.5-THD)	
M	23	1	**8T-4136**	2	BOLT (M10X1.5X25-MM)	
	24	1	**8T-4896**	2	WASHER-HARD (10.2X18.5X2.5-MM THK)	
	25	1	**9X-6772**	1	STRAP-CABLE	
	26	1	**189-3158**	1	SUPPRESSOR-ARC	
	27	1	*148-8367*	1	ELBOW AS	
		1	**6V-9850**	1	ELBOW	
		1	**6V-8397**	1	SEAL-O-RING	
M	28	1	**8T-4195**	1	BOLT (M10X1.5X30-MM)	

I-REFER TO HYDRAULIC INFORMATION SYSTEM
M-METRIC PART
Y-SEPARATE ILLUSTRATION

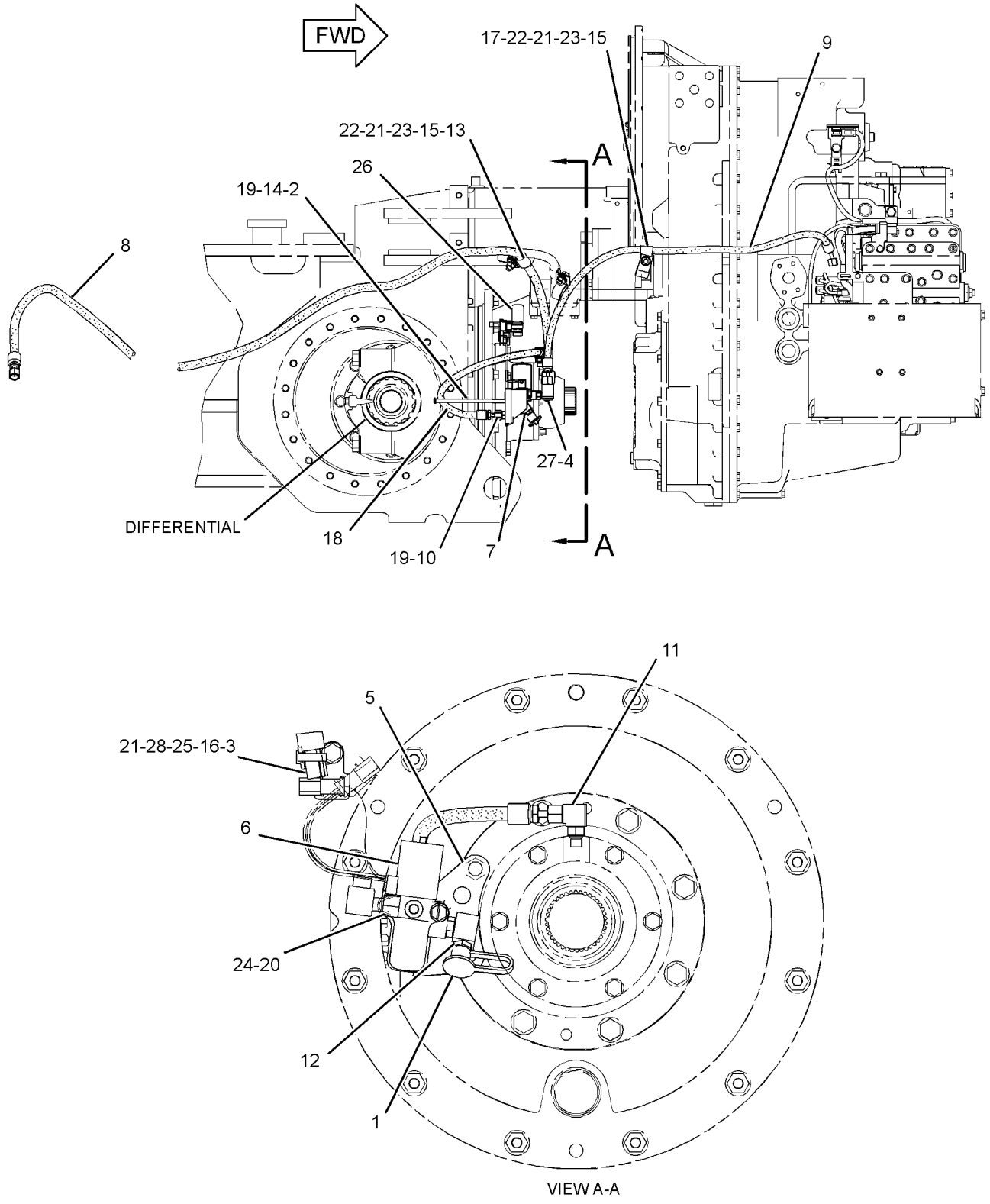

GRAPHIC #1 **<END>** g01926034

281-3165 CONTROL GP-TRANSMISSION HYD

S/N: DMJ1-UP

PART OF 275-6535 TRANSMISSION AR

SMCS-3073, 3167 **i02490493**

NOTE	REF NO	GRAPHIC REF	PART NUMBER	QTY	PART NAME 1 2 3 4 5 6 (PRODUCT LEVEL)	SEE PAGE
Y	1	1	**281-3163**	1	VALVE GP-TRANSMISSION CONTROL	296
M	2	1	**6V-3918**	5	BOLT (M8X1.25X50-MM)	
	3	1	**9P-9150**	66	WASHER (8.25X18X0.84-MM THK)	
	4	1	**1T-0738**	31	WASHER (8.4X19X1.83-MM THK)	
M	5	1	**8C-4984**	14	BOLT (M8X1.25X150-MM)	
M	6	1	**3E-8005**	14	BOLT (M8X1.25X160-MM)	
	7	1	**4S-5879**	1	SEAL-O-RING	
Y	8	1	*180-9324*	1	WIRING GP-TRANSMISSION	239
M	9	1	**8T-0639**	2	BOLT (M6X1X12-MM)	
M	10	1	**6V-5217**	3	BOLT (M8X1.25X20-MM)	
	11	1	**198-7657**	1	BLOCK	

M-METRIC PART
Y-SEPARATE ILLUSTRATION

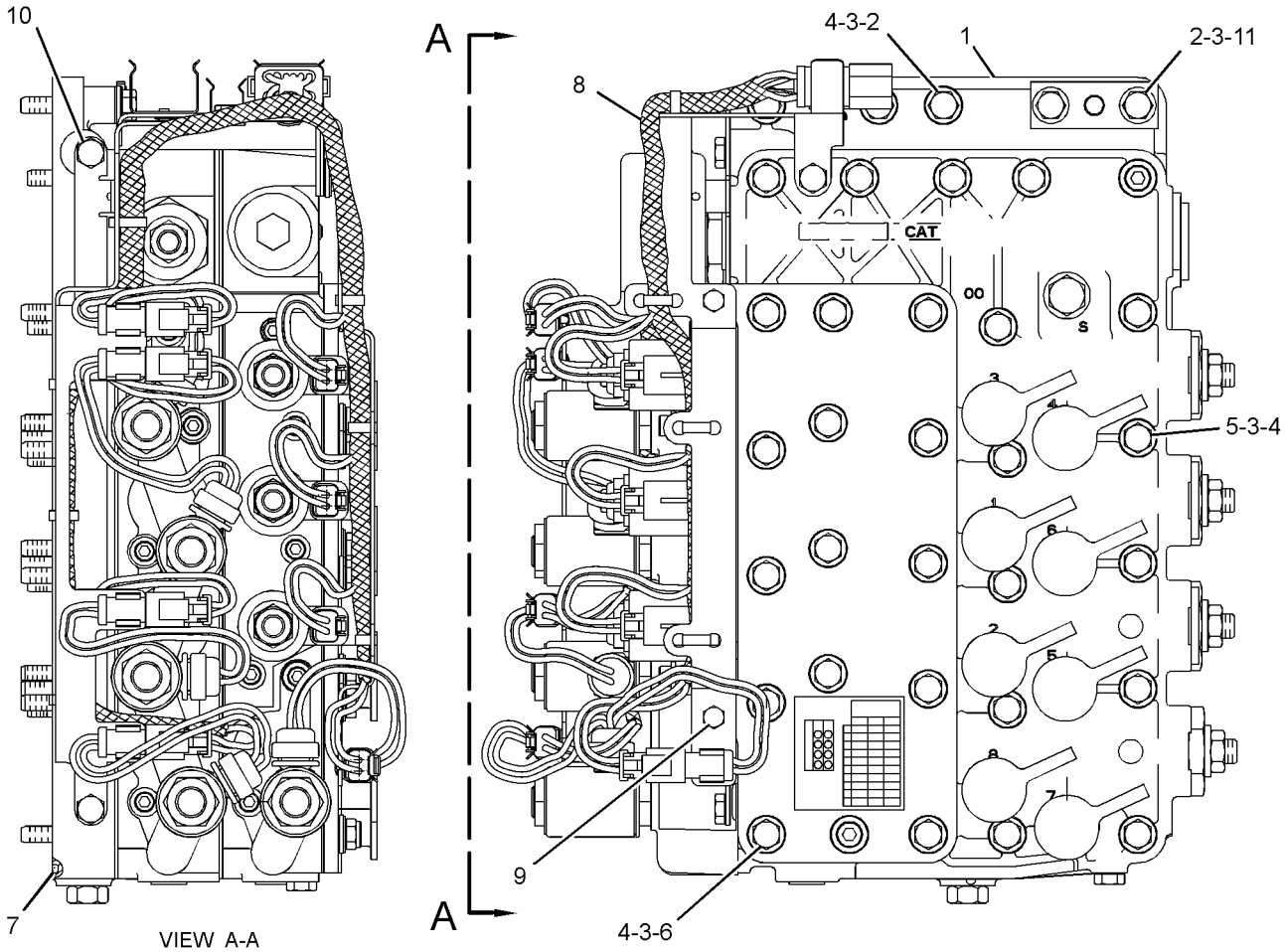

GRAPHIC #1 **<END>** g01254682

281-5641 COOLER GP-TRANSMISSION OIL

S/N: JAP1-UP

PART OF 348-3018 GENERAL AR

SMCS-1375 **i03247481**

NOTE	REF NO	GRAPHIC REF	PART NUMBER	QTY	PART NAME 1 2 3 4 5 6 (PRODUCT LEVEL)	SEE PAGE
	1	1	**242-7417**	1	CORE AS-HYDRAULIC OIL COOLER	
	2	1	**293-4277**	4	BRACKET AS	
	3	1	**303-6008**	2	BRACKET AS	
	4	1	*241-6185*	2	PLUG AS	
					(EACH INCLUDES)	
		1	**3D-2824**	1	SEAL-O-RING	
		1	**5P-9436**	1	PLUG	
	5	1	**8T-4121**	24	WASHER-HARD (11X21X2.5-MM THK)	
M	6	1	**8T-4133**	8	NUT (M10X1.5-THD)	
M	7	1	**8T-4189**	8	BOLT (M8X1.25X20-MM)	
M	8	1	**8T-4195**	16	BOLT (M10X1.5X30-MM)	
	9	1	**8T-4224**	8	WASHER-HARD (8.8X16X2-MM THK)	

M-METRIC PART

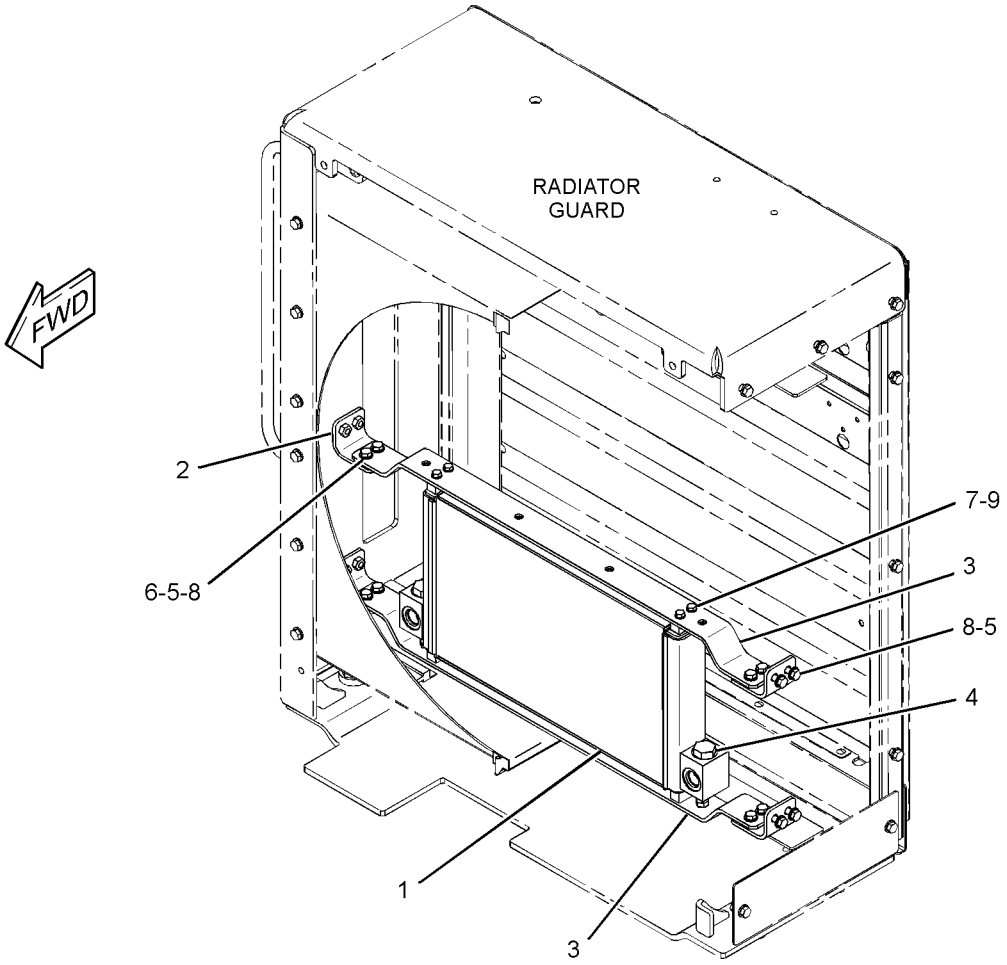

GRAPHIC #1 **<END>** g01699678

337-3357 COUPLING GP-TORSIONAL

S/N: JAP1-UP

PART OF 348-3018 GENERAL AR

SMCS-3252, 3279 **i03316061**

NOTE	REF NO	GRAPHIC REF	PART NUMBER	QTY	PART NAME 1 2 3 4 5 6 (PRODUCT LEVEL)	SEE PAGE
	1	1	**283-1099**	1	COUPLING AS	
M	2	1	**266-4360**	12	BOLT (M10X1.5X30-MM)	
	3	1	**6V-5839**	12	WASHER (11X21X2.5-MM THK)	

M-METRIC PART

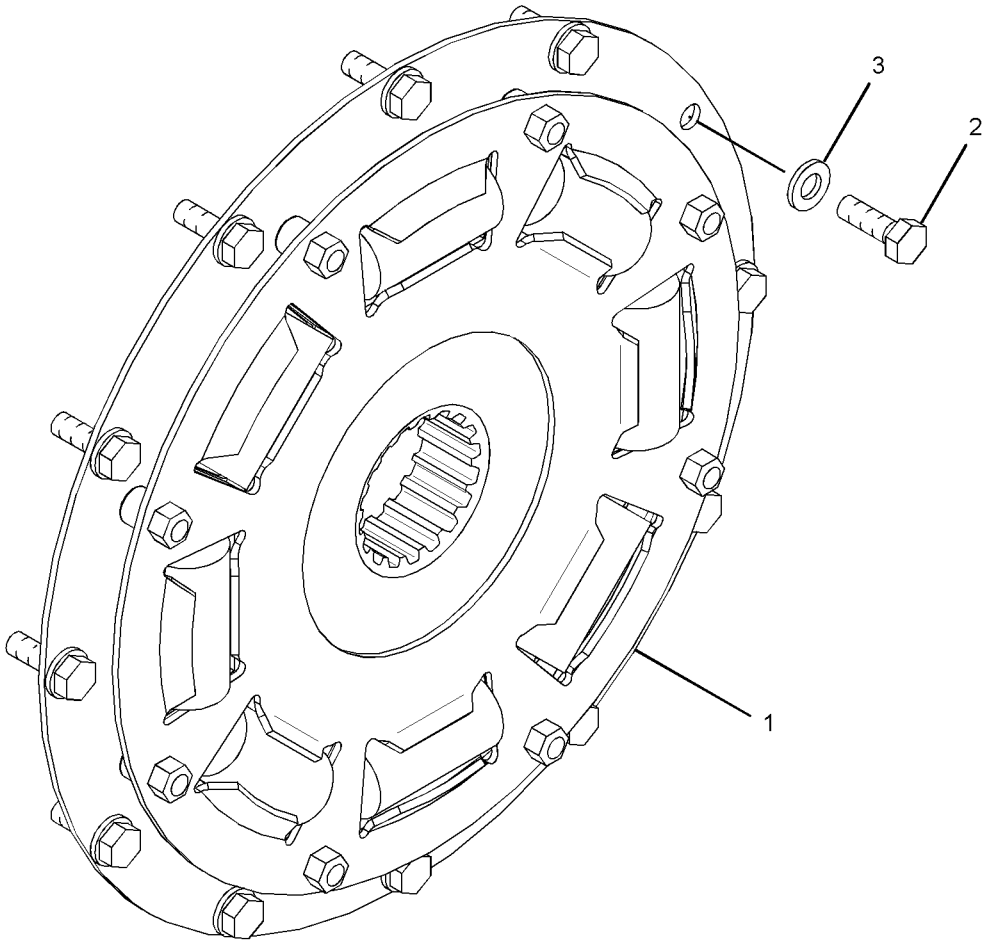

GRAPHIC #1 **<END>** g01769594

348-4955 DIFFERENTIAL & BEVEL GEAR GP

S/N: JAP1-UP

PART OF 348-3018 GENERAL AR

SMCS-3256, 3258 **i03645016**

NOTE	REF NO	GRAPHIC REF	PART NUMBER	QTY	PART NAME 1 2 3 4 5 6 (PRODUCT LEVEL)	SEE PAGE
	1	1	**5D-9844**	1	BOLT-LOCKING (3/8-16X2-IN)	
	2	1	**5P-8245**	8	WASHER-HARD (13.5X25.5X3-MM THK)	
	3	1	**034-3557**	5	BOLT-LOCKING (3/8-16X1.125-IN)	
	4	1	**5M-2894**	8	WASHER-HARD (10.2X18.5X2.5-MM THK)	
	5	1	**2K-5109**	1	GASKET	
	6	1	**8W-5279**	1	RETAINER	
	7	1	**123-4003**	1	SEAL-LIP TYPE	
	8	1	**7S-4571**	1	SEAL-O-RING	
	9	1	**5P-5813**	1	LOCKNUT-BEARING (2.751-18-THD)	
	10	1	**9B-0143**	1	LOCKWASHER	
	11	1	**7D-8347**	1	WASHER-TAB	
	12	1	**8X-2316**	1	HOUSING	
	13	1	**5L-2031**	1	CUP-BEARING	
	14	1	**5L-2030**	1	CONE-BEARING	
	15	1	**0S-1587**	8	BOLT (1/2-13X1.75-IN)	
B	16	1	**8V-3273**	1	SHIM PACK (INCLUDES 10-SHIMS)	
	17	1	**299-3330**	12	NUT (1/2-13-THD)	
	18	1	**9F-1399**	1	SEAL-O-RING	
	19	1	**1S-3184**	1	CONE-BEARING	
	20	1	**2D-9454**	1	CUP-BEARING (TAPERED ROLLER)	
	21	1	**9D-3306**	1	CAGE	
	22	1	**6G-4702**	1	NUT (4-1/4-12-THD)	
	23	1	**126-2728**	1	CONE	
	24	1	**2N-2138**	1	CUP-BEARING	
	25	1	**6F-0698**	1	DOWEL	
	26	1	**8D-9784**	2	LOCK	
	27	1	**030-8535**	2	BOLT-LOCKING (3/8-16X0.875-IN)	
	28	1	**8X-2305**	1	CARRIER AS	
	28A	1	**0S-1756**	4	BOLT (3/4-10X4.25-IN)	
	28B	1	**5P-8248**	4	WASHER-HARD (20X36.5X3.5-MM THK)	
	31	1	**4D-5292**	1	RING-RETAINING	
	32	1	**1P-2662**	1	CONE-BEARING	
	33	1	**1P-2636**	1	CUP-BEARING	
	34	1	**6G-4701**	1	NUT-BEARING (4-1/4-12-THD)	
	35	1	**8X-2308**	1	CAGE AS	
		1	**2D-6642**	1	BALL	
	36	1	**2H-5001**	1	SEAL-O-RING	
	37	1	**8W-5111**	1	SLEEVE	
	38	1	**8X-1206**	1	SHAFT-PINION	
Y	39	1	**8W-5587**	1	DIFFERENTIAL GP	263
	40	1	**9G-2991**	2	RING-SEAL	
	41	1	**279-6632**	12	WASHER (13.5X25.5X3-MM THK)	

B-USE AS REQUIRED
Y-SEPARATE ILLUSTRATION

348-4955 **DIFFERENTIAL & BEVEL GEAR GP** *(contd.)* **i03645016**

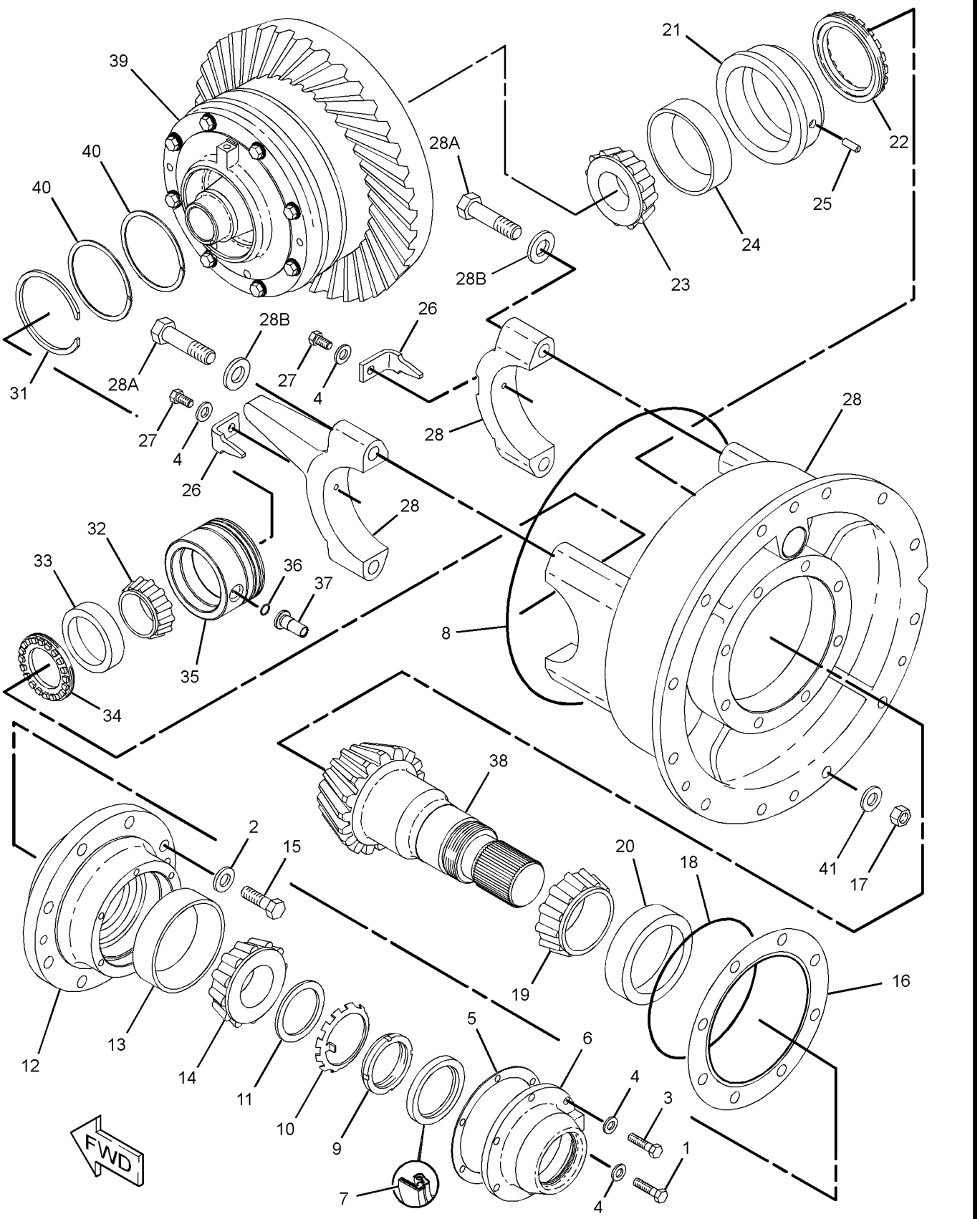

GRAPHIC #1 **<END>** g01961826

8W-5587 DIFFERENTIAL GP

S/N: JAP1-UP

PART OF 348-4955 DIFFERENTIAL & BEVEL GEAR GP

SMCS-3258 **i00135232**

NOTE	REF NO	GRAPHIC REF	PART NUMBER	QTY	PART NAME 1 2 3 4 5 6 (PRODUCT LEVEL)	SEE PAGE
	1	1	**8W-5578**	1	PISTON	
	2	1	**8D-9738**	1	SEAL-RING	
	3	1	**6T-0840**	1	RING-SEAL (INTERNAL)	
	4	1	**6Y-7955**	7	DISC-FRICTION	
	5	1	**8X-1205**	1	GEAR-BEVEL (50 TEETH)	
	6	1	**8X-2310**	1	HOUSING AS	
	7	1	**2D-6642**	1	BALL	
	8	1	**3D-6509**	2	DOWEL	
	9	1	**5P-8247**	18	WASHER-HARD (17X32X3.5-MM THK)	
	10	1	**8D-9756**	2	WASHER-THRUST	
	11	1	**5B-0841**	18	BOLT (5/8-18X1.75-IN)	
	12	1	**8X-4865**	1	HOUSING AS	
	13	1	**3D-6509**	2	DOWEL	
	15	1	**1B-2886**	9	BOLT (1/2-13X3.75-IN)	
	16	1	**5P-8245**	9	WASHER-HARD (13.5X25.5X3-MM THK)	
	17	1	**2B-0947**	8	BOLT (1/2-13X2.25-IN)	
	18	1	**5P-8245**	8	WASHER-HARD (13.5X25.5X3-MM THK)	
	19	1	**8W-5586**	1	SPIDER	
	20	1	**8X-4869**	3	SPACER	
	21	1	**8W-5589**	3	PINION AS (11 TEETH)	
	22	1	**8D-9749**	1	BEARING-SLEEVE	
	23	1	**109-4580**	1	GEAR-DIFFERENTIAL BEVEL (18 TEETH)	
	24	1	**109-4581**	1	GEAR-DIFFERENTIAL BEVEL (18 TEETH)	
	25	1	**2G-1084**	1	DISC	
	26	1	**8D-9718**	8	DISC	

8W-5587 DIFFERENTIAL GP *(contd.)* i00135232

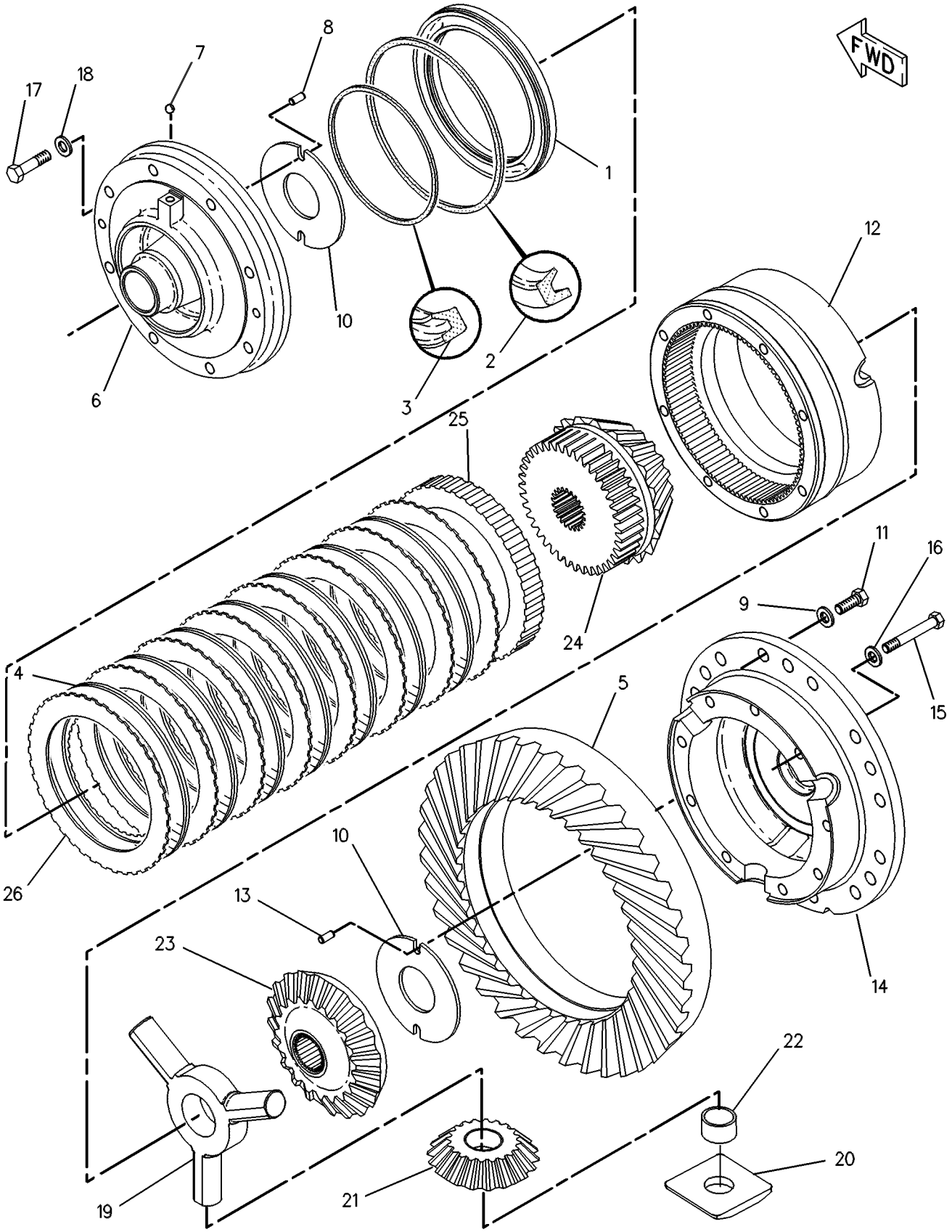

GRAPHIC #1 **<END>** g00108721

POWER TRAIN

8W-4980 DRIVE GP-FINAL

S/N: JAP1-UP

PART OF 348-3018 GENERAL AR

SMCS-4050 **i03655035**

NOTE	REF NO	GRAPHIC REF	PART NUMBER	QTY	PART NAME 1 2 3 4 5 6 (PRODUCT LEVEL)	SEE PAGE
	1	1	**195-8553**	2	GEAR-SUN (17-TEETH)	
	2	1	**6G-7213**	2	CARRIER-PLANETARY (52-TEETH)	
	3	1	**265-9125**	8	RETAINER	
	4	1	**8W-2307**	8	SHAFT	
	5	1	**2M-5685**	16	BEARING	
	6	1	**8D-8634**	8	GEAR-PLANETARY (24-TEETH)	
	7	1	**8D-8639**	2	GEAR-RING (67-TEETH)	
	8	1	**5J-1086**	2	SEAL-O-RING	
	9	1	**5D-0353**	16	BOLT-LOCKING (3/8-16X1-IN)	
	10	1	**5M-2894**	18	WASHER-HARD (10.2X18.5X2.5-MM THK)	
	11	1	**340-4515**	40	NUT (5/8-11-THD)	
	12	1	**340-4518**	40	WASHER-HARD	
	13	1	**282-4351**	2	SEAL-LIP TYPE	
	14	1	**9F-2247**	2	PLUG-PIPE	
	15	1	**8X-3276**	4	WASHER-THRUST (247X281.28X6.97-MM THK)	
	16	1	**219-2434**	4	RING-WEAR	
	17	1	**030-0061**	2	CONE-BEARING	
	18	1	**030-0060**	2	CUP-BEARING (TAPERED ROLLER)	
	19	1	**8X-3395**	2	HOUSING	
	21	1	**8S-9092**	32	BOLT (5/8-11X2.25-IN)	
	22	1	**2G-6377**	4	SPROCKET (20-TEETH)	
	23	1	**5P-2545**	2	SEAL-O-RING	
	24	1	**030-8535**	2	BOLT-LOCKING (3/8-16XO.875-IN)	
	25	1	**8W-4981**	2	LOCK	
	26	1	**8W-4979**	2	SHAFT-DRIVE	
	27	1	**6K-8329**	2	CONE-BEARING	
	28	1	**6F-2956**	2	CUP-BEARING	
	29	1	**2G-6396**	2	NUT (2-7/8-12-THD)	
	30	1	**219-2437**	2	RETAINER	
	31	1	**5P-6851**	48	BOLT-LOCKING (1/2-13X38.1)	
B	32	1	**8X-3364**	2	SHIM PACK (INCLUDES 10-SHIMS)	
	33	1	**8D-8628**	2	WASHER (49.3X91.29X6.35-MM THK)	
	34	1	**8D-8621**	2	RING-RETAINING	
	35	1	**4L-9822**	2	SEAL-LIP TYPE	
	36	1	**8X-2968**	2	HOUSING-AXLE	
	37	1	**8X-8376**	16	WASHER (44.78X79.25X2.92-MM THK)	
	38	1	**5P-8245**	48	WASHER-HARD (13.5X25.5X3-MM THK)	
	39	1	**5P-8247**	32	WASHER-HARD (17X32X3.5-MM THK)	

QUANTITIES SHOWN ARE THOSE REQUIRED FOR BOTH LH AND RH SIDES
B-USE AS REQUIRED

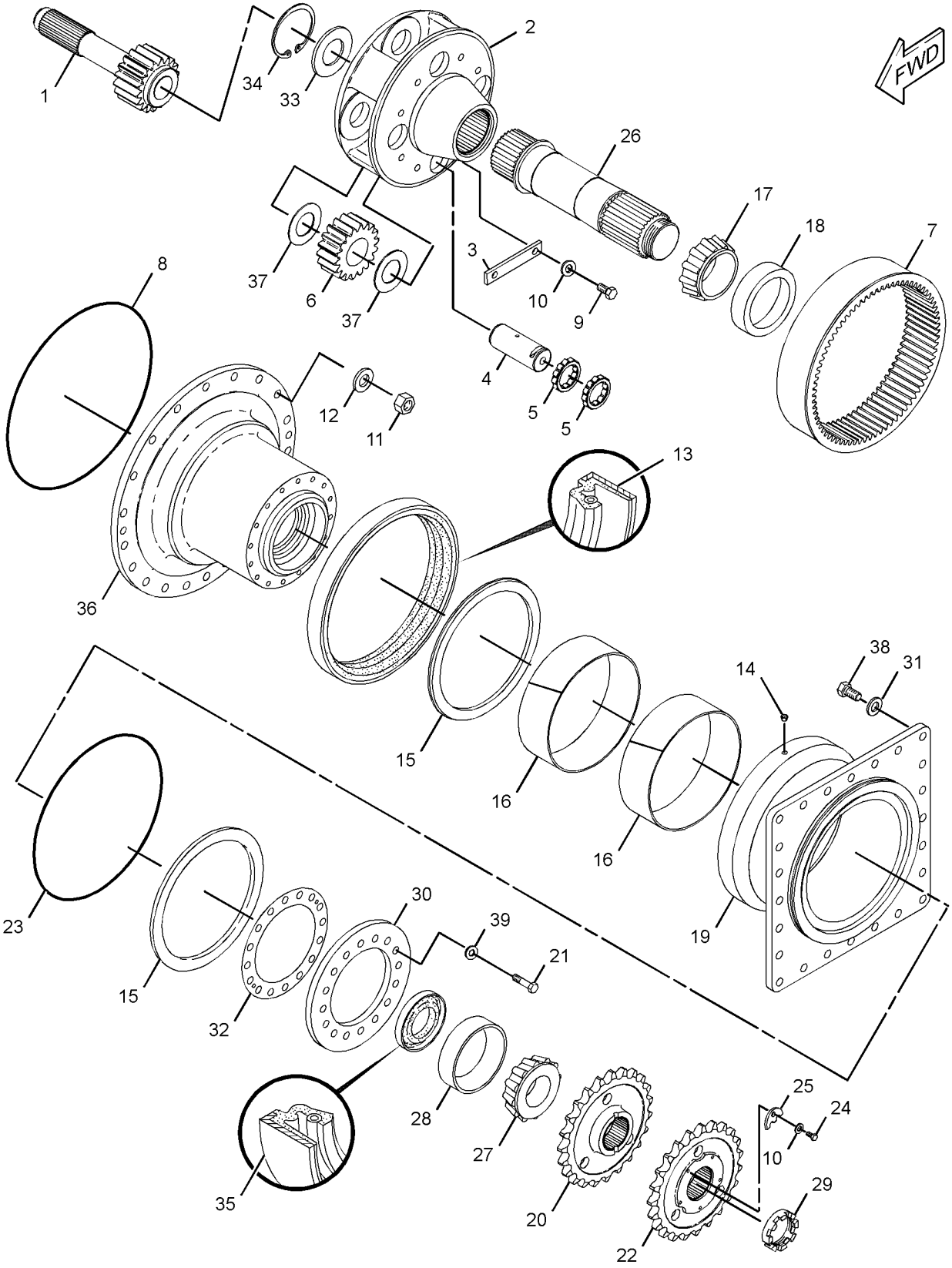

GRAPHIC #1 **<END>** g01352270

315-4118 FILLER GP-POWER TRAIN OIL

S/N: JAP1-UP

PART OF 348-3018 GENERAL AR

SMCS-3005, 3081, 7513 **i03643727**

NOTE	REF NO	GRAPHIC REF	PART NUMBER	QTY	PART NAME 1 2 3 4 5 6 (PRODUCT LEVEL)	SEE PAGE
	1	1	**7J-8611**	1	ELBOW-PIPE (90-DEG)	
	2	1	**9G-5127**	1	BREATHER (POWER TRAIN OIL FILLER)	
	3	1	**8T-4896**	2	WASHER-HARD (10.2X18.5X2.5-MM THK)	
	4	1	**315-6148**	1	GAUGE AS-OIL LEVEL (DIPSTICK) (POWER TRAIN OIL)	
	5	1	**5D-0353**	2	BOLT-LOCKING (3/8-16X1-IN)	
	6	1	**8B-1615**	1	GASKET	
					PARTS SHOWN IN GRAPHIC(S) WITHOUT A REFERENCE NUMBER ARE NOT SERVICED SEPARATELY	

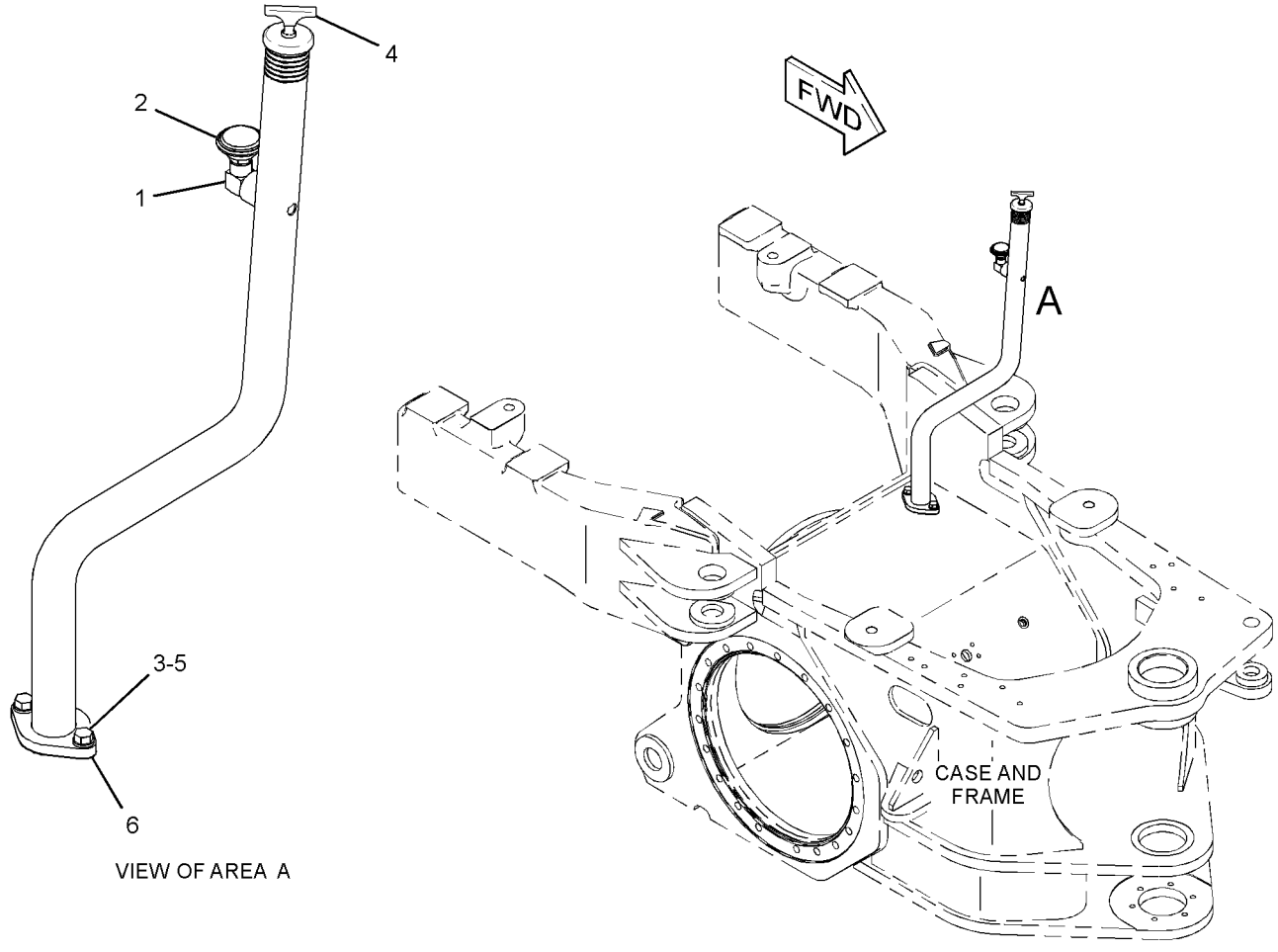

GRAPHIC #1 **<END>** g01690113

333-6436 FILTER GP-OIL

S/N: JAP1-UP
WITH HOUSING BYPASS
PART OF 327-3854 LINES GP-TRANSMISSION OIL

SMCS-3004, 3067 **i03641486**

NOTE	REF NO	GRAPHIC REF	PART NUMBER	QTY	PART NAME 1 2 3 4 5 6 (PRODUCT LEVEL)	SEE PAGE
	1	1	*244-3712*	1	PLUG AS	
		1	**9S-4191**	1	PLUG-O-RING	
		1	**214-7568**	1	SEAL-O-RING	
	2	1	**321-5967**	1	HOUSING GP-FILTER	
		1	**9S-8004**	1	PLUG	
		1	**214-7568**	1	SEAL-O-RING	
	3	1	**328-3655**	1	FILTER ELEMENT AS-OIL (ADVANCED EFFICIENCY) (TRANSMISSION)	
Y	4	1	**333-9308**	1	BASE GP-OIL FILTER (TRANSMISSION)	240
	5	1	*155-3624*	1	PLUG AS	
		1	**3J-7354**	1	SEAL-O-RING	
		1	**9S-4182**	1	PLUG-O-RING	
	6	1	**130-0229**	1	SEAL-O-RING	

Y-SEPARATE ILLUSTRATION

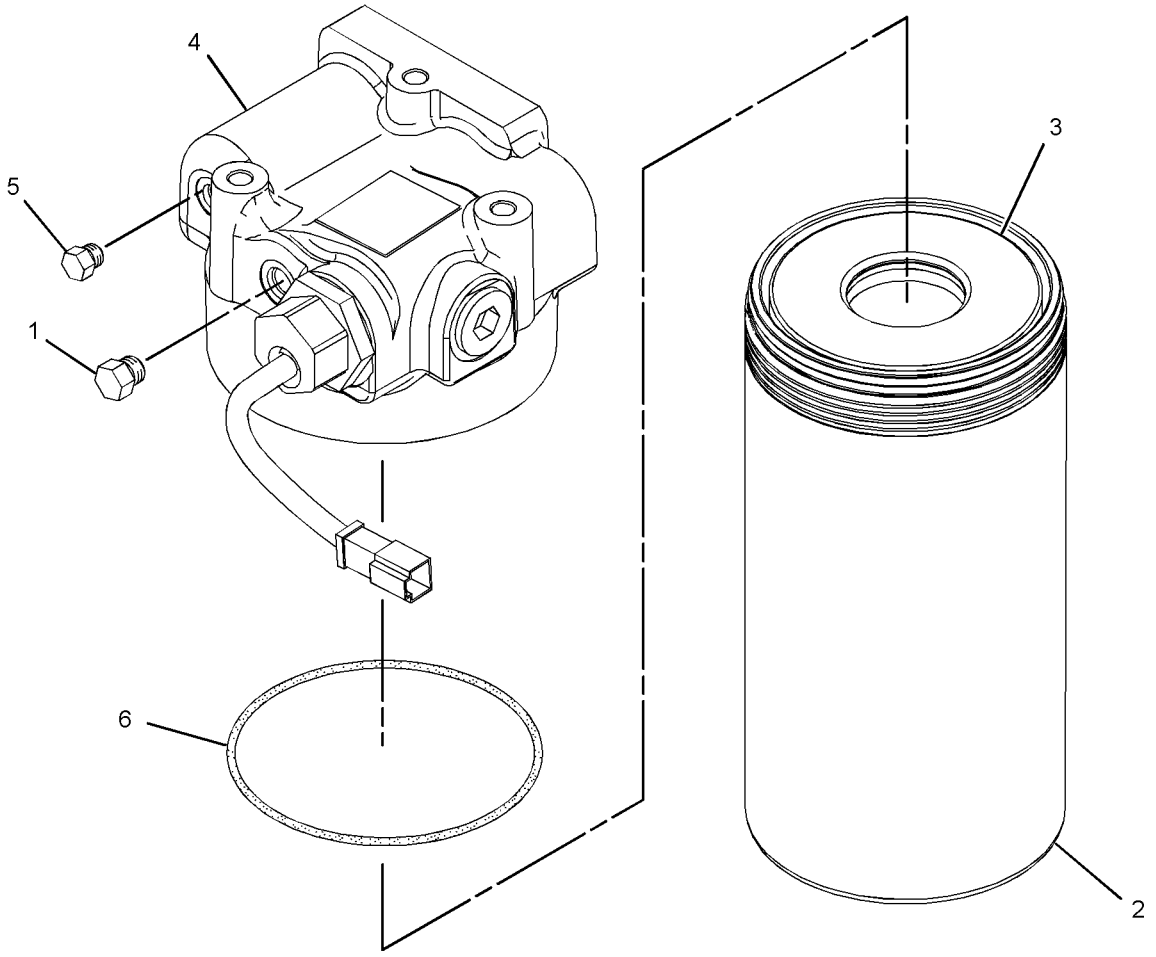

GRAPHIC #1 **<END>** g01849294

348-3335 GEAR GP-BEVEL–STRAIGHT AXLE

S/N: JAP1-UP

AN ATTACHMENT

SMCS-3256 **i03643141**

NOTE	PART NUMBER	QTY	PART NAME 1 2 3 4 5 6 (PRODUCT LEVEL)	SEE PAGE
Y	*115-0631*	1	GEAR GP-BEVEL & PINION	270
Y	*348-3315*	1	LINES GP-HYDRAULIC (STRAIGHT AXLE)	408

Y-SEPARATE ILLUSTRATION

<END>

115-0631 GEAR GP-BEVEL & PINION

S/N: JAP1-UP
PART OF 348-3335 GEAR GP-BEVEL
AN ATTACHMENT

SMCS-3254, 3256 **i03538422**

NOTE	REF NO	GRAPHIC REF	PART NUMBER	QTY	PART NAME 1 2 3 4 5 6 (PRODUCT LEVEL)	SEE PAGE
	1	1	**299-3330**	12	NUT (1/2-13-THD)	
	2	1	**5P-8245**	8	WASHER-HARD (13.5X25.5X3-MM THK)	
	3	1	**9F-1399**	1	SEAL-O-RING	
	4	1	**5L-2031**	1	CUP-BEARING	
	5	1	**5L-2030**	1	CONE-BEARING	
	6	1	**7D-8347**	1	WASHER-TAB	
	7	1	**9B-0143**	1	LOCKWASHER	
	8	1	**5P-5813**	1	LOCKNUT-BEARING (2.751-18-THD)	
	9	1	**123-4003**	1	SEAL-LIP TYPE	
	10	1	**8W-5279**	1	RETAINER	
	11	1	**2K-5109**	1	GASKET	
	12	1	**8X-2316**	1	HOUSING	
	13	1	**0S-1587**	8	BOLT (1/2-13X1.75-IN)	
B	14	1	**8V-3273**	1	SHIM PACK (INCLUDES 10-SHIMS)	
	15	1	**2D-9454**	1	CUP-BEARING (TAPERED ROLLER)	
	16	1	**1S-3184**	1	CONE-BEARING	
	17	1	**8X-1206**	1	SHAFT-PINION	
	18	1	**115-0634**	1	PLUG	
	19	1	**1P-2662**	1	CONE-BEARING	
	20	1	**1P-2636**	1	CUP-BEARING	
	21	1	**110-6078**	1	CAGE	
	22	1	**110-8385**	1	HOUSING	
	23	1	**8X-1205**	1	GEAR-BEVEL (50 TEETH)	
	24	1	**5B-0841**	18	BOLT (5/8-18X1.75-IN)	
	25	1	**5P-8247**	18	WASHER-HARD (17X32X3.5-MM THK)	
	26	1	**9D-3306**	1	CAGE	
	27	1	**6G-4702**	1	NUT (4-1/4-12-THD)	
	28	1	**2N-2138**	1	CUP-BEARING	
	29	1	**126-2728**	1	CONE	
	30	1	**6F-0698**	1	DOWEL	
	31	1	**8X-2305**	1	CARRIER AS	
		1	**0S-1756**	4	BOLT (3/4-10X4.25-IN)	
		1	**5P-8248**	4	WASHER-HARD (20X36.5X3.5-MM THK)	
	32	1	**7S-4571**	1	SEAL-O-RING	
	33	1	**034-3557**	5	BOLT-LOCKING (3/8-16X1.125-IN)	
	34	1	**5M-2894**	8	WASHER-HARD (10.2X18.5X2.5-MM THK)	
	35	1	**5D-9844**	1	BOLT-LOCKING (3/8-16X2-IN)	
	36	1	**6G-4701**	1	NUT-BEARING (4-1/4-12-THD)	
	37	1	**8D-9784**	2	LOCK	
	38	1	**030-8535**	2	BOLT-LOCKING (3/8-16X0.875-IN)	
	39	1	**9S-4182**	1	PLUG-O-RING	
	40	1	**3J-7354**	1	SEAL-O-RING	
	41	1	**279-6632**	12	WASHER (13.5X25.5X3-MM THK)	

B-USE AS REQUIRED

115-0631 **GEAR GP-BEVEL & PINION** *(contd.)* **i03538422**

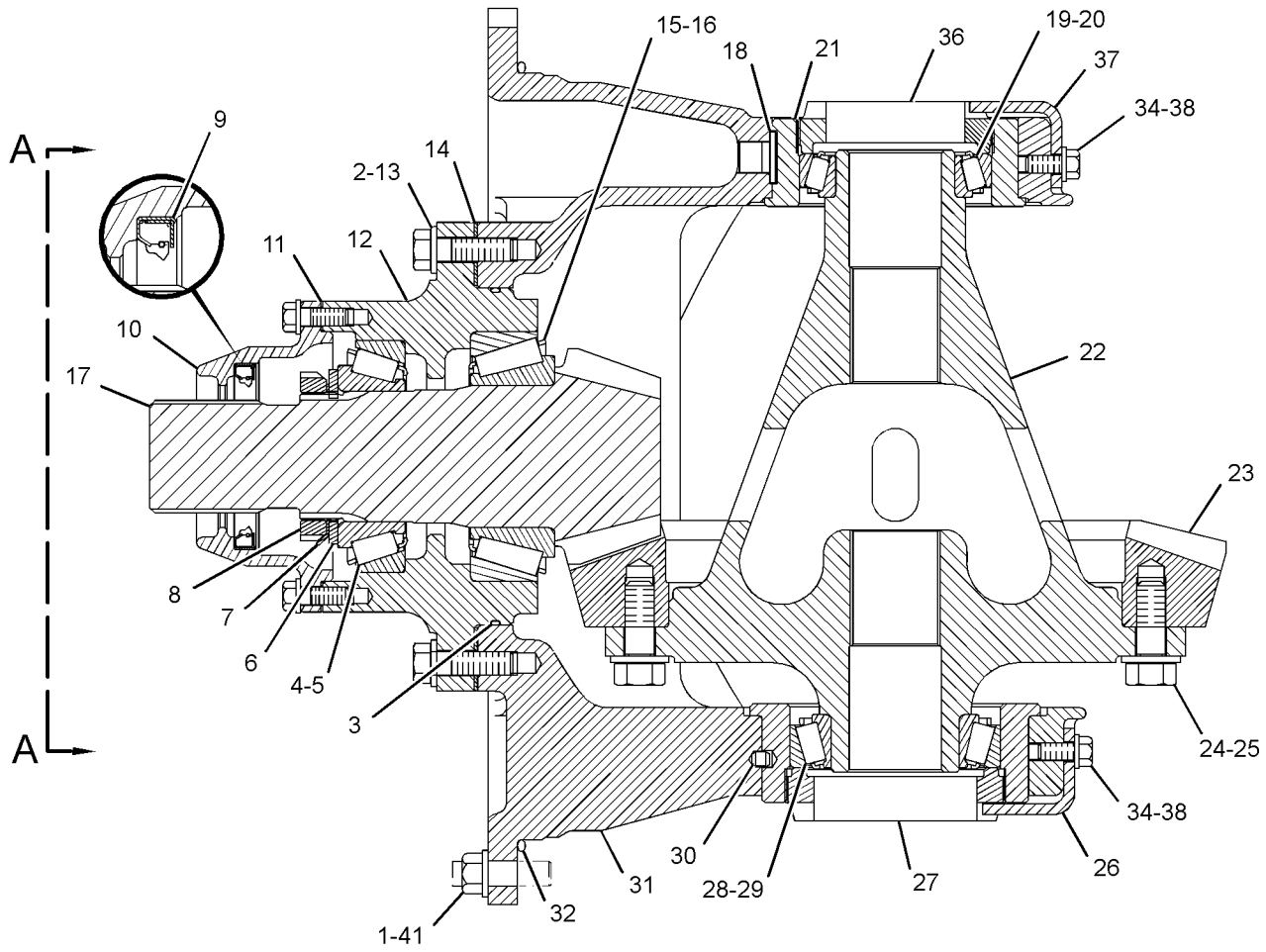

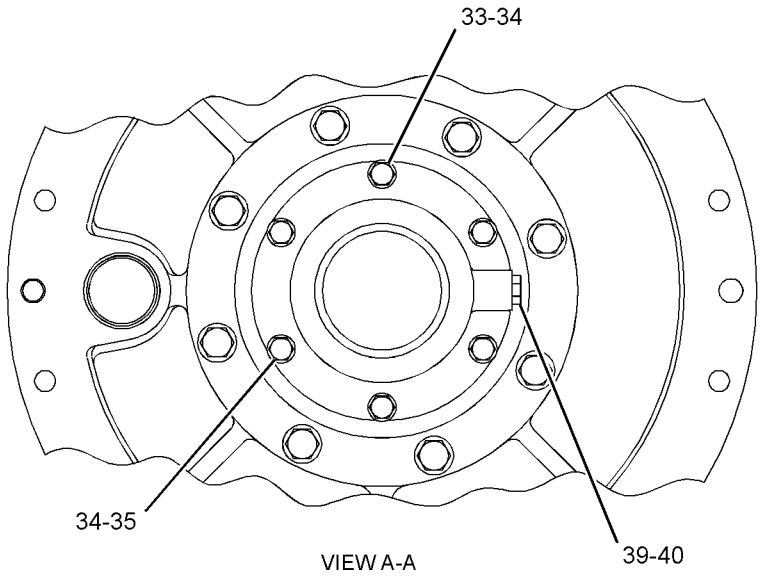

VIEW A-A

GRAPHIC #1 **<END>** g01927595

POWER TRAIN

327-3854 LINES GP-TRANSMISSION OIL

S/N: JAP1-UP

PART OF 348-3018 GENERAL AR

SMCS-3154 **i03548221**

NOTE	REF NO	GRAPHIC REF	PART NUMBER	QTY	PART NAME 1 2 3 4 5 6 (PRODUCT LEVEL)	SEE PAGE
	1	2	**5D-1026**	2	CLAMP-BAND	
	2	1,2	**8T-4983**	2	CLAMP-HOSE	
	3	1	**8X-5121**	1	TUBE	
	4	1	**8X-7317**	1	HOSE	
	5	1	**8X-8916**	1	PLATE	
	6	1	**9C-5344**	1	SPACER (10.5X20X18-MM THK)	
	7	2	**005-7898**	2	CONNECTOR-HOSE	
	8	1	**113-9048**	1	BAFFLE	
	9	1	**118-0424**	1	ADAPTER	
	10	1	*164-5567*	1	COUPLER AS-QUICK DISCONNECT	
		1	**6V-3965**	1	FITTING (QUICK DISCONNECT)	
		1	**214-7568**	1	SEAL-O-RING	
	11	2	**178-3695**	1	ADAPTER	
	12	2	*244-3712*	1	PLUG AS	
		2	**9S-4191**	1	PLUG-O-RING	
		2	**214-7568**	1	SEAL-O-RING	
I	13	1	**266-6793**	1	HOSE AS	
	14	2	**285-6570**	1	TUBE AS	
I	15	1	**293-4285**	1	HOSE AS	
	16	2	**299-8264**	1	TUBE AS	
I	17	1	**299-8270**	1	HOSE AS	
I	18	2	**303-6032**	1	HOSE AS	
Y	19	1	*333-6436*	1	FILTER GP-OIL (WITH HOUSING)	268
I	20	1	**316-6688**	1	HOSE AS	
	21	2	**000-7246**	1	ELBOW	
	22	1,2	*148-8327*	2	CONNECTOR AS	
					(EACH INCLUDES)	
		1,2	**6V-8637**	1	CONNECTOR	
		1,2	**3D-2824**	1	SEAL-O-RING	
		1,2	**6V-9746**	1	SEAL-O-RING	
	23	2	*148-8335*	2	CONNECTOR AS	
					(EACH INCLUDES)	
		2	**6V-8635**	1	CONNECTOR	
		2	**5K-9090**	1	SEAL-O-RING	
		2	**7M-8485**	1	SEAL-O-RING	
	24	1	*148-8339*	1	CONNECTOR AS	
		1	**6V-8716**	1	CONNECTOR	
		1	**6V-9746**	1	SEAL-O-RING	
		1	**7M-8485**	1	SEAL-O-RING	
	25	1	*148-8357*	1	ELBOW AS	
		1	**6V-9008**	1	ELBOW	
		1	**5K-9090**	1	SEAL-O-RING	
		1	**7M-8485**	1	SEAL-O-RING	
	26	1	**189-8772**	1	SPACER (11X16X35-MM THK)	
	27	1	**1L-0509**	2	BOLT (3/8-16X0.74-IN)	
	28	1,2	**1P-4577**	6	FLANGE-HALF	
	29	2	**1P-4578**	2	FLANGE-HALF	
	30	1	**242-6099**	1	CLIP	
	31	1	**4F-7389**	2	SEAL-O-RING	
	32	1,2	**4J-0520**	4	SEAL-O-RING	
	33	2	**4J-0522**	1	SEAL-O-RING	
	34	2	**5K-9090**	1	SEAL-O-RING	
	35	1	**5P-1075**	1	WASHER-HARD (10.2X22.5X3-MM THK)	
	36	2	**5P-9938**	4	BOLT-LOCKING (3/8-16X1.375-IN)	
	37	1,2	**6V-1889**	4	CLIP	
	38	2	**6V-9746**	1	SEAL-O-RING	

327-3854 LINES GP-TRANSMISSION OIL *(contd.)* i03548221

NOTE	REF NO	GRAPHIC REF	PART NUMBER	QTY	PART NAME 1 2 3 4 5 6 (PRODUCT LEVEL)	SEE PAGE
	39	1	**7X-0342**	1	BOLT (5/8-11X0.75-IN)	
M	40	2	**7X-2552**	2	BOLT (M16X2X30-MM)	
	41	1	**8C-3447**	1	CAP-DUST	
	42	2	**8M-2769**	2	CLIP	
	43	1,2	**8T-4121**	19	WASHER-HARD (11X21X2.5-MM THK)	
M	44	1	**8T-4195**	3	BOLT (M10X1.5X30-MM)	
M	45	2	**8T-4196**	4	BOLT (M10X1.5X35-MM)	
M	46	1,2	**8T-4200**	3	BOLT (M8X1.25X16-MM)	
	47	1,2	**8T-4224**	3	WASHER-HARD (8.8X16X2-MM THK)	
	48	1	**8T-4896**	2	WASHER-HARD (10.2X18.5X2.5-MM THK)	
M	49	1,2	**8T-6466**	9	BOLT (M10X1.5X60-MM)	
	50	1	**9C-9467**	1	CLIP	
	51	2	**9X-8257**	2	WASHER (17.5X30X3.5-MM THK)	
E	53	2	**5P-0765**		HOSE (53-CM)	

E-ORDER BY THE CENTIMETER
I-REFER TO HYDRAULIC INFORMATION SYSTEM
M-METRIC PART
Y-SEPARATE ILLUSTRATION

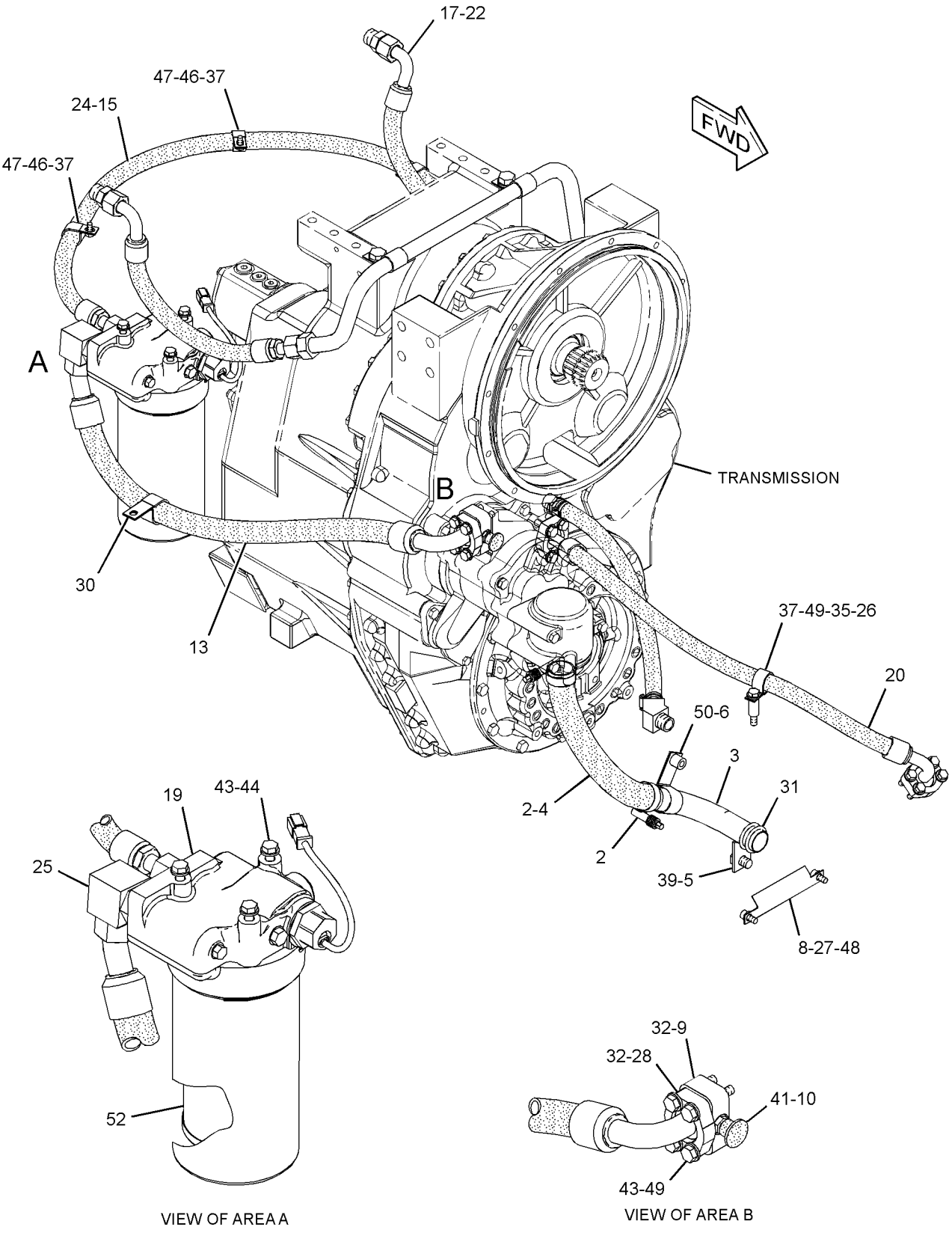

GRAPHIC #1

g01928504

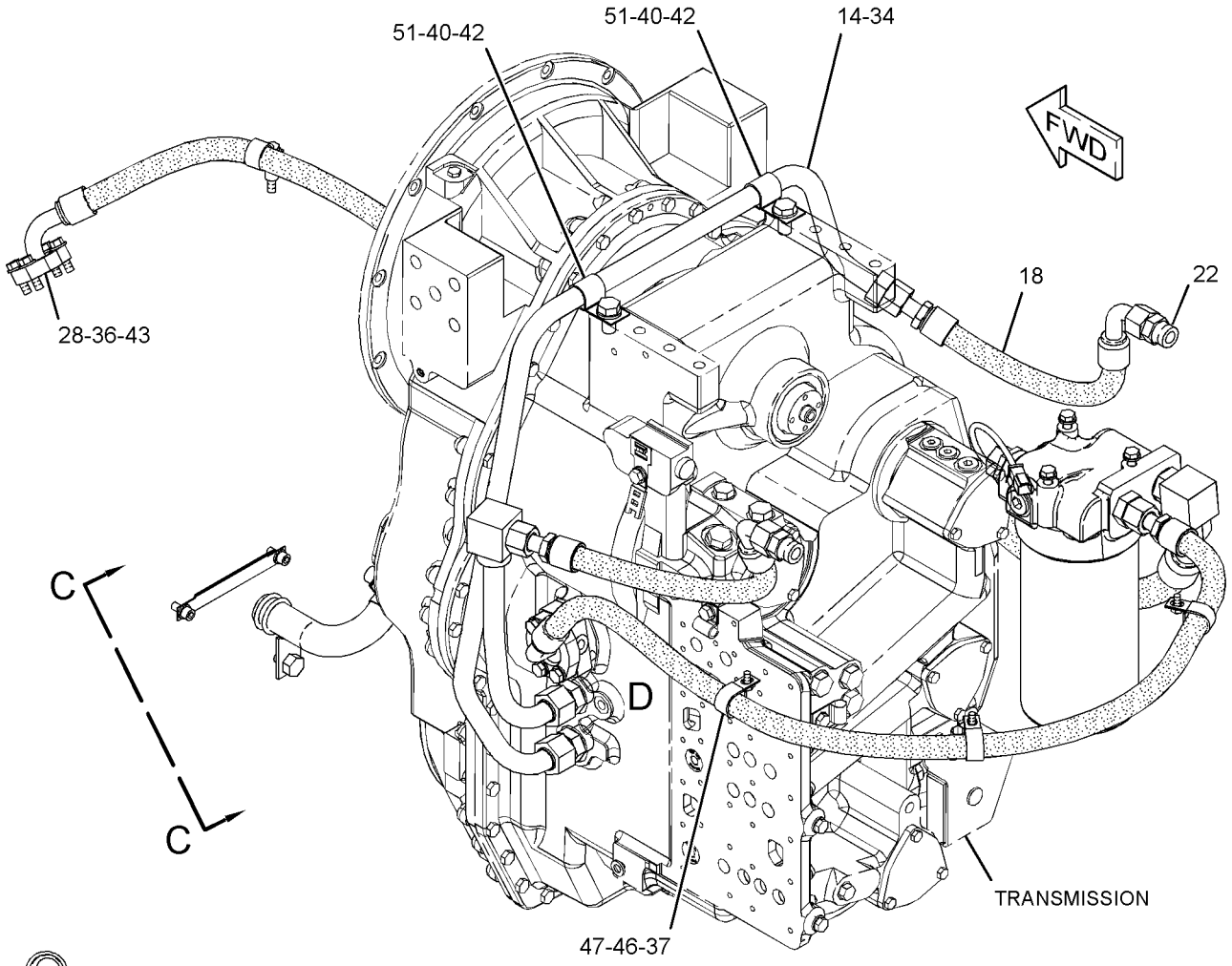

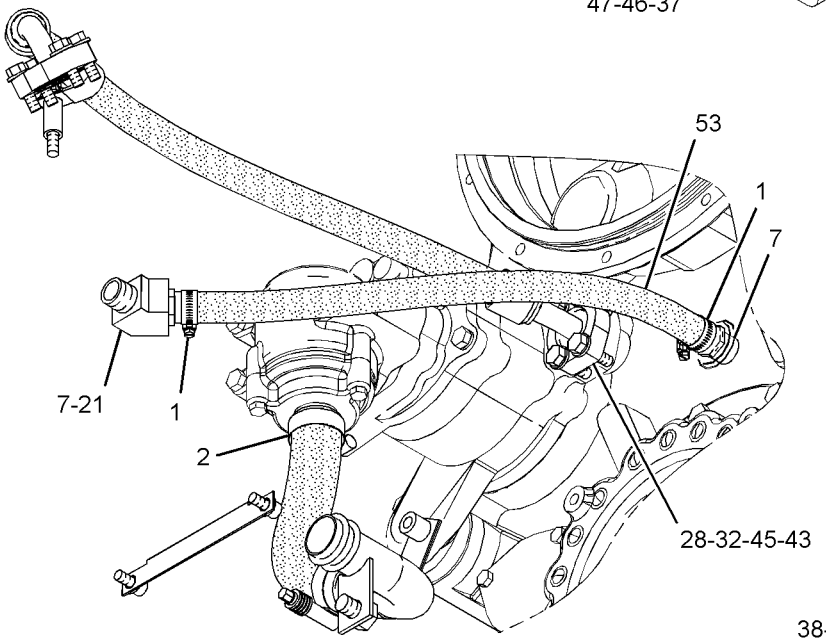

VIEW C-C

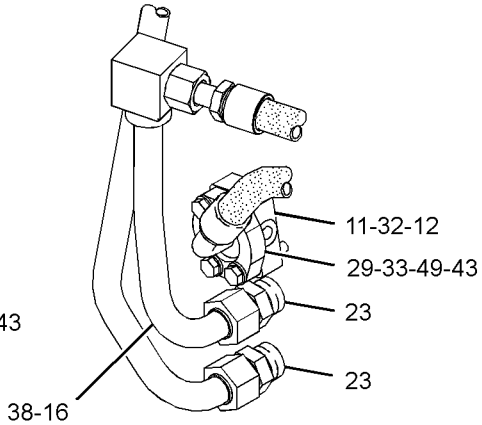

VIEW OF AREA D

GRAPHIC #2 **<END>** g01928505

337-0732 MOUNTING GP-WHEEL

S/N: JAP1-UP

PART OF 348-3018 GENERAL AR

SMCS-4201 **i03536419**

NOTE	REF NO	GRAPHIC REF	PART NUMBER	QTY	PART NAME 1 2 3 4 5 6 (PRODUCT LEVEL)	SEE PAGE
	1	1	**267-3507**	60	WASHER-HARD (26X47X12-MM THK)	
	2	1	**338-8484**	60	BOLT (7/8-9X2.5-IN)	

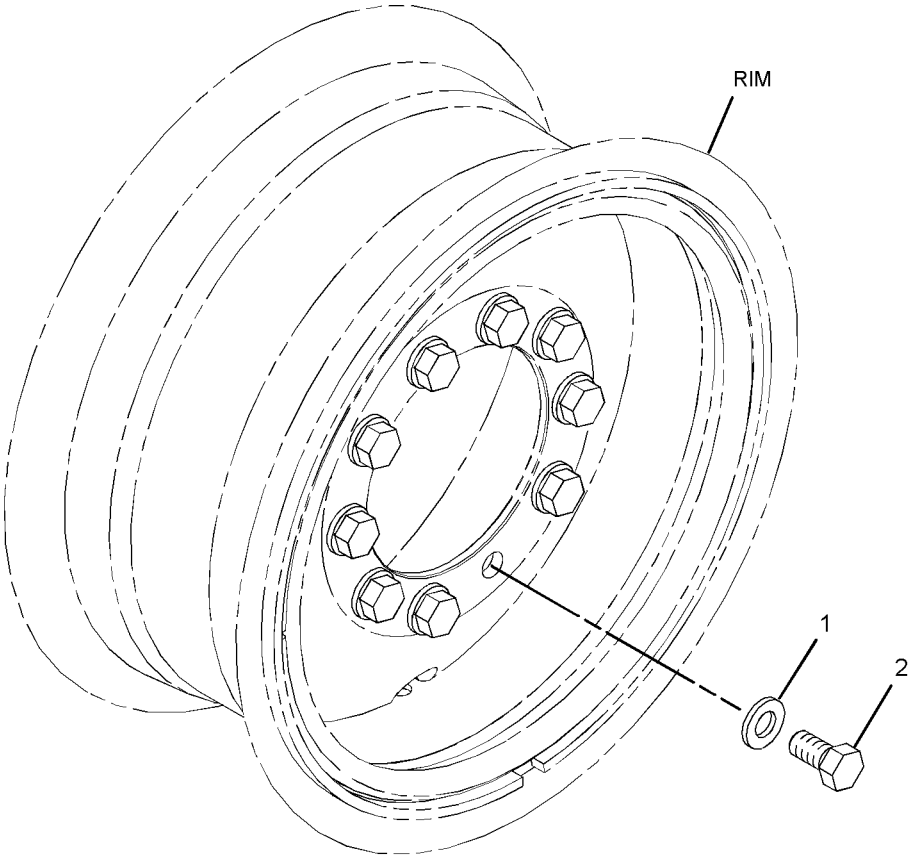

GRAPHIC #1 **<END>** g01841155

6Y-8764 PUMP GP-GEAR*R

S/N: DMJ1-UP
2-SECTION
PART OF 6Y-8765 PUMP GP-GEAR

SMCS-3066, 3115, 3203, 5073 **i03623743**

NOTE	REF NO	GRAPHIC REF	PART NUMBER	QTY	PART NAME 1 2 3 4 5 6 (PRODUCT LEVEL)	SEE PAGE
	1	1	**9N-4163**	1	COVER AS-PUMP	
	1A	1	**1M-3780**	2	BEARING-SLEEVE	
	2	1	**9N-4161**	1	GEAR AS-OIL PUMP (12-TEETH)	
	3	1	**9N-4162**	1	GEAR AS-OIL PUMP (12-TEETH)	
	4	1	**9N-4159**	1	BODY AS-OIL PUMP	
	4A	1	**1M-3780**	2	BEARING-SLEEVE	
	5	1	**9N-4156**	1	MANIFOLD AS-PUMP	
		1	**9N-4155**	1	ADAPTER	
		1	**8M-8489**	2	DOWEL	
	6	1	**5S-4385**	1	BODY AS-OIL PUMP	
		1	**8M-8489**	4	DOWEL	
	7	1	**9N-4158**	2	GEAR (8-TEETH)	
	8	1	**2B-9373**	1	KEY-WOODRUFF	
	9	1	**2D-8009**	3	SEAL-O-RING	
	10	1	**3S-0004**	6	WASHER (0.406X0.728X0.09-IN THK)	
M	11	1	**8T-5030**	2	BOLT (M10X1.5X120-MM)	
	12	1	**6Y-5010**	8	WASHER (10.16X19X0.84-MM THK)	
M	13	1	**8C-2926**	4	BOLT (M10X1.5X140-MM)	
F			**7B-3028**		SCREW-DRIVE (NO 4X0.187-IN)	
					PARTS SHOWN IN GRAPHIC(S) WITHOUT A REFERENCE NUMBER ARE NOT SERVICED SEPARATELY	

F-NOT SHOWN
M-METRIC PART

6Y-8764 **PUMP GP-GEAR** ***(contd.)*** **i03623743**

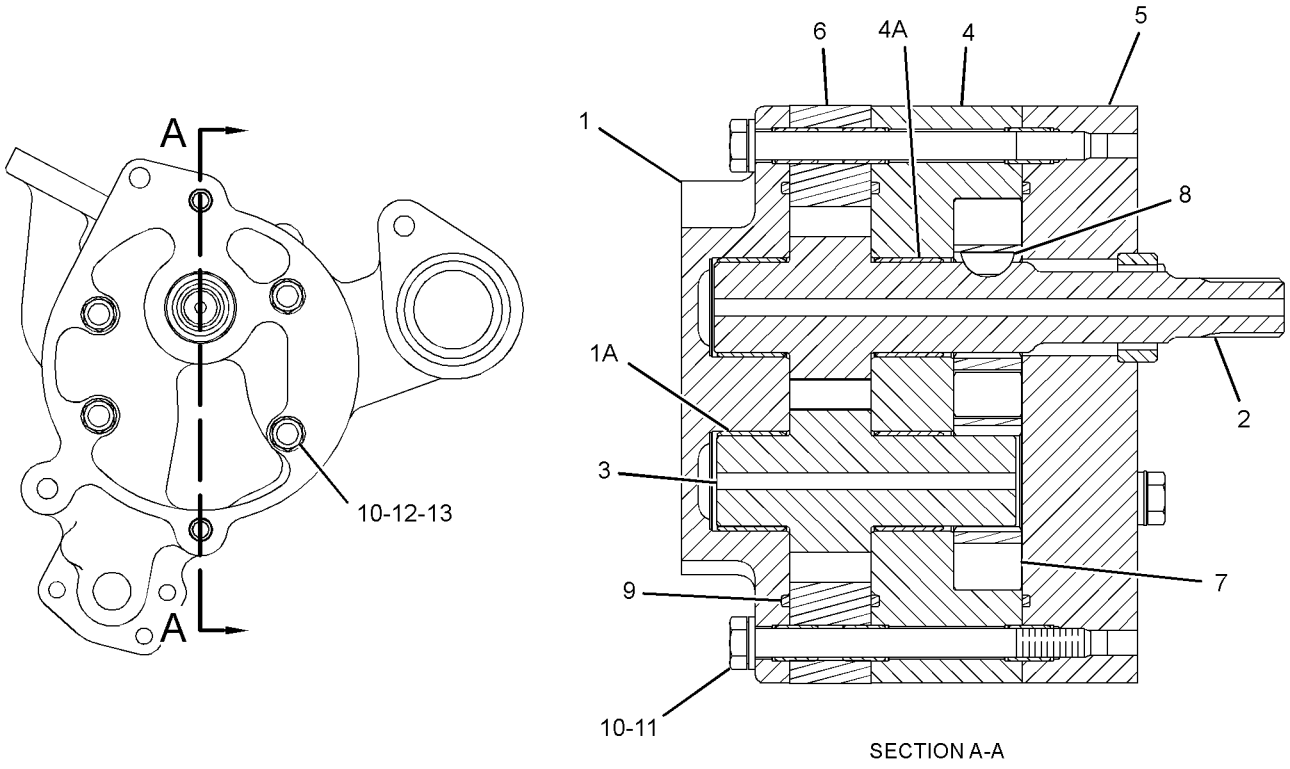

GRAPHIC #1 **<END>** g01943707

6Y-8765 PUMP GP-GEAR

S/N: DMJ1-UP
2-SECTION
PART OF 275-6535 TRANSMISSION AR

SMCS-3066, 3115, 3203, 5073 **i02588346**

NOTE	REF NO	GRAPHIC REF	PART NUMBER	QTY	PART NAME 1 2 3 4 5 6 (PRODUCT LEVEL)	SEE PAGE
YR	1	1	**6Y-8764**	1	PUMP GP-GEAR (TRANSMISSION)	277
	2	1	**4F-7952**	1	SEAL-O-RING	
	3	1	**7F-8268**	1	SEAL-O-RING	
M	4	1	**6V-1820**	3	BOLT (M10X1.5X30-MM)	

M-METRIC PART
R-REMFG PART MAY BE AVAILABLE
Y-SEPARATE ILLUSTRATION

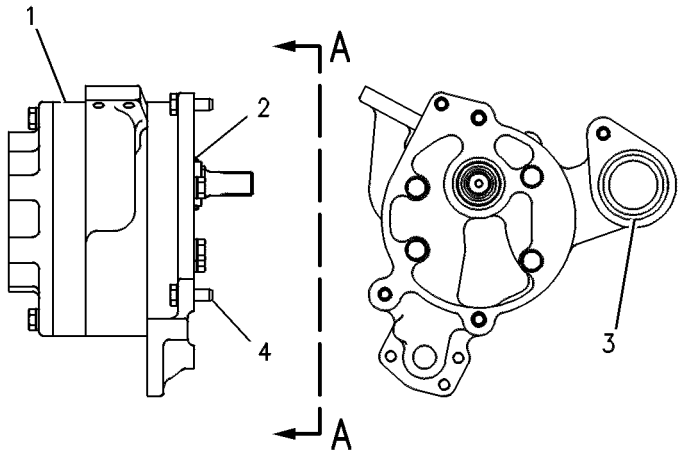

VIEW A-A

GRAPHIC #1 **<END>** g00108547

9W-5134 SCREEN GP-MAGNETIC–TRANSMISSION

S/N: DMJ1-UP

PART OF 275-6535 TRANSMISSION AR

SMCS-3067 **i01623693**

NOTE	REF NO	GRAPHIC REF	PART NUMBER	QTY	PART NAME 1 2 3 4 5 6 (PRODUCT LEVEL)	SEE PAGE
	1	1	**6Y-3861**	1	COVER AS	
	2	1	**6Y-3860**	1	HOUSING-FILTER	
	3	1	**8S-9130**	1	SCREEN-SUCTION (TRANSMISSION)	
	4	1	**8S-9129**	1	FILTER-MAGNETIC (TRANSMISSION)	
	5	1	**5P-3863**	1	SEAL-O-RING	
M	6	1	**6V-5219**	3	BOLT (M8X1.25X40-MM)	
	7	1	**5F-8000**	1	SEAL-O-RING	
M	8	1	**8T-0355**	3	BOLT (M10X1.5X110-MM)	

M-METRIC PART

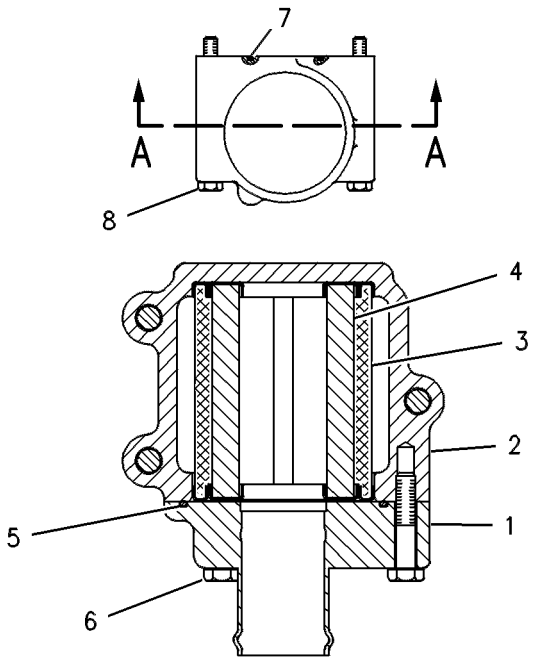

VIEW A–A

GRAPHIC #1 **<END>** g00108551

8W-5621 SHAFT GP-DRIVE–TRANSMISSION

S/N: JAP1-UP

PART OF 348-3018 GENERAL AR

SMCS-3253 **i03537265**

NOTE	REF NO	GRAPHIC REF	PART NUMBER	QTY	PART NAME 1 2 3 4 5 6 (PRODUCT LEVEL)	SEE PAGE
	1	1	**3K-0196**	1	GUARD	
	2	1	**8W-1592**	1	YOKE AS	
		1	**3K-0986**	1	PLUG	
Y	3	1	**8X-5006**	1	UNIVERSAL JOINT GP	286
	4	1	**0S-1604**	4	BOLT (1/2-20X2.5-IN)	
	5	1	**5P-7213**	4	WASHER-HARD (13.5X20.5X2-MM THK)	
	6	1	**6B-6684**	4	NUT-FULL (1/2-20-THD)	
	7	1	**6V-1911**	4	BOLT-LOCKING (1/2-20X2-IN)	

Y-SEPARATE ILLUSTRATION

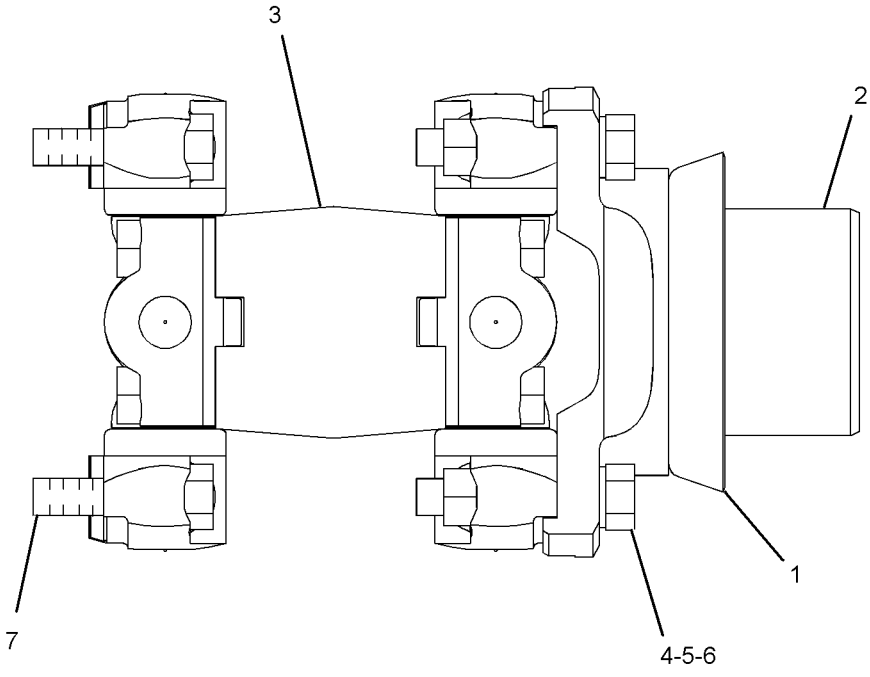

GRAPHIC #1 **<END>** g01923053

6Y-2300 SHAFT GP-INPUT

S/N: DMJ1-UP

PART OF 275-6535 TRANSMISSION AR

SMCS-3063 **i00134456**

NOTE	REF NO	GRAPHIC REF	PART NUMBER	QTY	PART NAME 1 2 3 4 5 6 (PRODUCT LEVEL)	SEE PAGE
	1	1	**6Y-1870**	1	SHAFT AS-INPUT	
	2	1	**0L-1026**	1	PLUG-CUP	
	3	1	**6Y-0591**	1	GEAR (45 TEETH)	
	4	1	**6Y-0590**	1	GEAR (38 TEETH)	
	5	1	**2H-6490**	1	BEARING-INNER	
	6	1	**1M-4095**	1	BEARING-INNER	
	7	1	**3T-4377**	2	SEAL-RING	

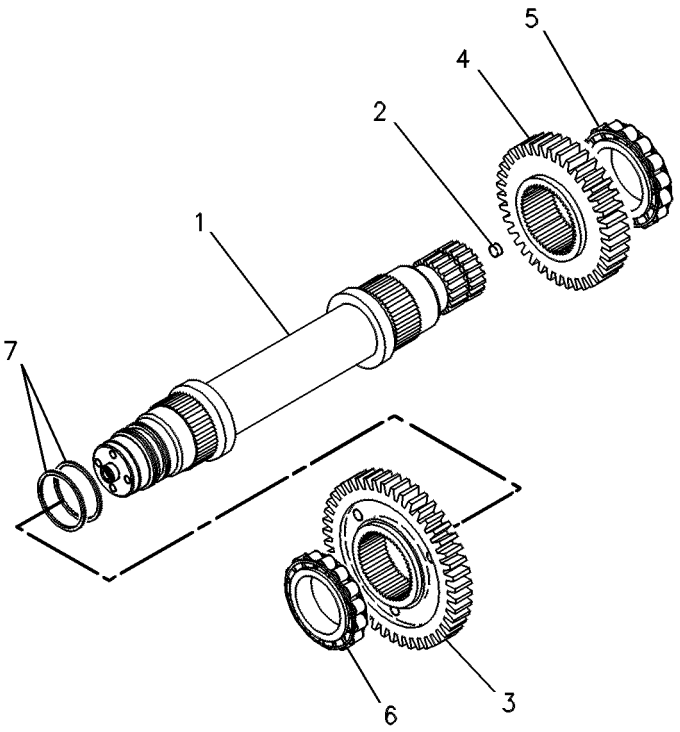

GRAPHIC #1 **<END>** g00108544

193-1721 TANDEM & COVER GP

S/N: JAP1-UP

PART OF 348-3018 GENERAL AR

SMCS-4062, 4064 **i02459290**

NOTE	REF NO	GRAPHIC REF	PART NUMBER	QTY	PART NAME 1 2 3 4 5 6 (PRODUCT LEVEL)	SEE PAGE
	1	1	**2A-6938**	2	COVER	
	2	1	**2B-3147**	8	GASKET	
C	3	1	**2B-3148**	6	COVER	
	4	1	**2G-9789**	4	GASKET	
	5	1	**2G-9791**	2	GASKET	
	6	1	**194-2877**	1	HOUSING AS-TANDEM DRIVE (RH)	
		1	**8D-6684**	1	BAR	
		1	**9D-0566**	1	PLATE	
		1	**199-2627**	1	STEP	
		1	**199-2628**	1	STEP	
	7	1	**194-2878**	1	HOUSING AS-TANDEM DRIVE (LH)	
		1	**8D-6684**	1	BAR	
		1	**9D-0566**	1	PLATE	
		1	**199-2627**	1	STEP	
		1	**205-2191**	1	STEP	
C	8	1	**248-1377**	2	COVER AS	
					(EACH INCLUDES)	
		1	**6B-5072**	1	BUSHING-REDUCING	
		1	**4H-6112**	1	BREATHER (TANDEM)	
		1	**002-6453**	1	ELBOW	
	9	1	**2M-9780**	2	SEAL-O-RING	
	10	1	**3K-0360**	2	SEAL-O-RING	
	11	1	**5P-8245**	32	WASHER-HARD (13.5X25.5X3-MM THK)	
	12	1	**6E-5047**	2	PLUG	
	13	1	**8D-8807**	4	COVER	
	14	1	**8T-6468**	48	BOLT (1/2-13X1-IN)	
	15	1	**9S-4190**	2	PLUG-O-RING	

C-CHANGE FROM PREVIOUS TYPE

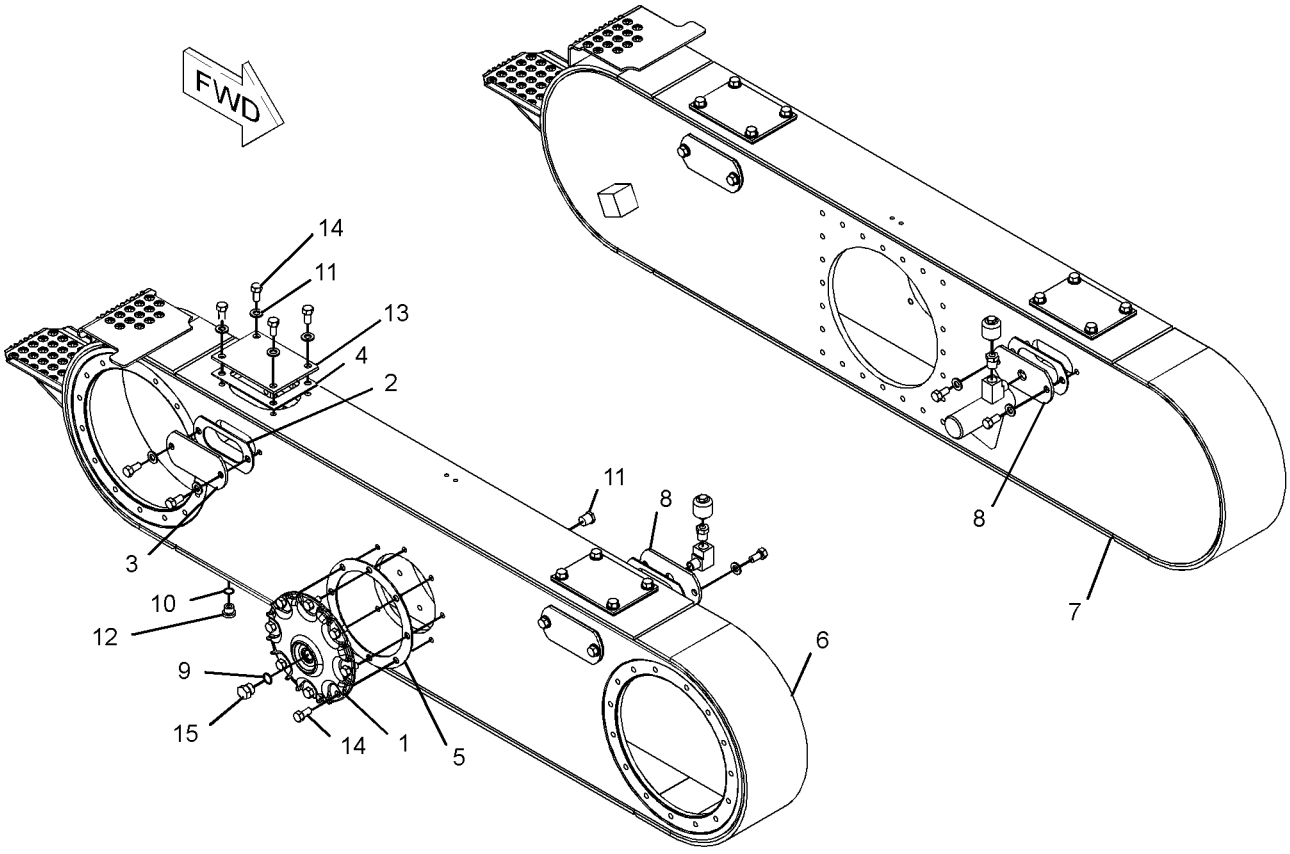

GRAPHIC #1 **<END>** g01227324

275-6535 TRANSMISSION AR

S/N: DMJ1-UP

PART OF 348-3018 GENERAL AR

SMCS-3030 **i03304191**

NOTE	REF NO	GRAPHIC REF	PART NUMBER	QTY	PART NAME 1 2 3 4 5 6 (PRODUCT LEVEL)	SEE PAGE
Y	1	1	*6Y-2300*	1	SHAFT GP-INPUT	282
Y	2	1	*235-2412*	1	CLUTCH GP-TRANSMISSION (FORWARD)	252
Y	3	1	*235-2413*	1	CLUTCH GP-TRANSMISSION (REVERSE, 2ND)	254
Y	4	1	*6Y-2303*	1	CLUTCH GP-TRANSMISSION (FIRST, THIRD)	247
Y	5	1	*8E-9316*	1	CLUTCH GP-TRANSMISSION (HIGH, LOW)	250
Y	6	1	*277-6433*	1	CASE & PARTS GP-PLANETARY	241
Y	7	1	*9W-5132*	1	BRAKE GP-PARKING	348
Y	8	1	*9W-5134*	1	SCREEN GP-MAGNETIC (TRANSMISSION)	280
Y	9	1	*6Y-8765*	1	PUMP GP-GEAR	279
Y	10	1	*281-3165*	1	CONTROL GP-TRANSMISSION HYD	258

Y-SEPARATE ILLUSTRATION

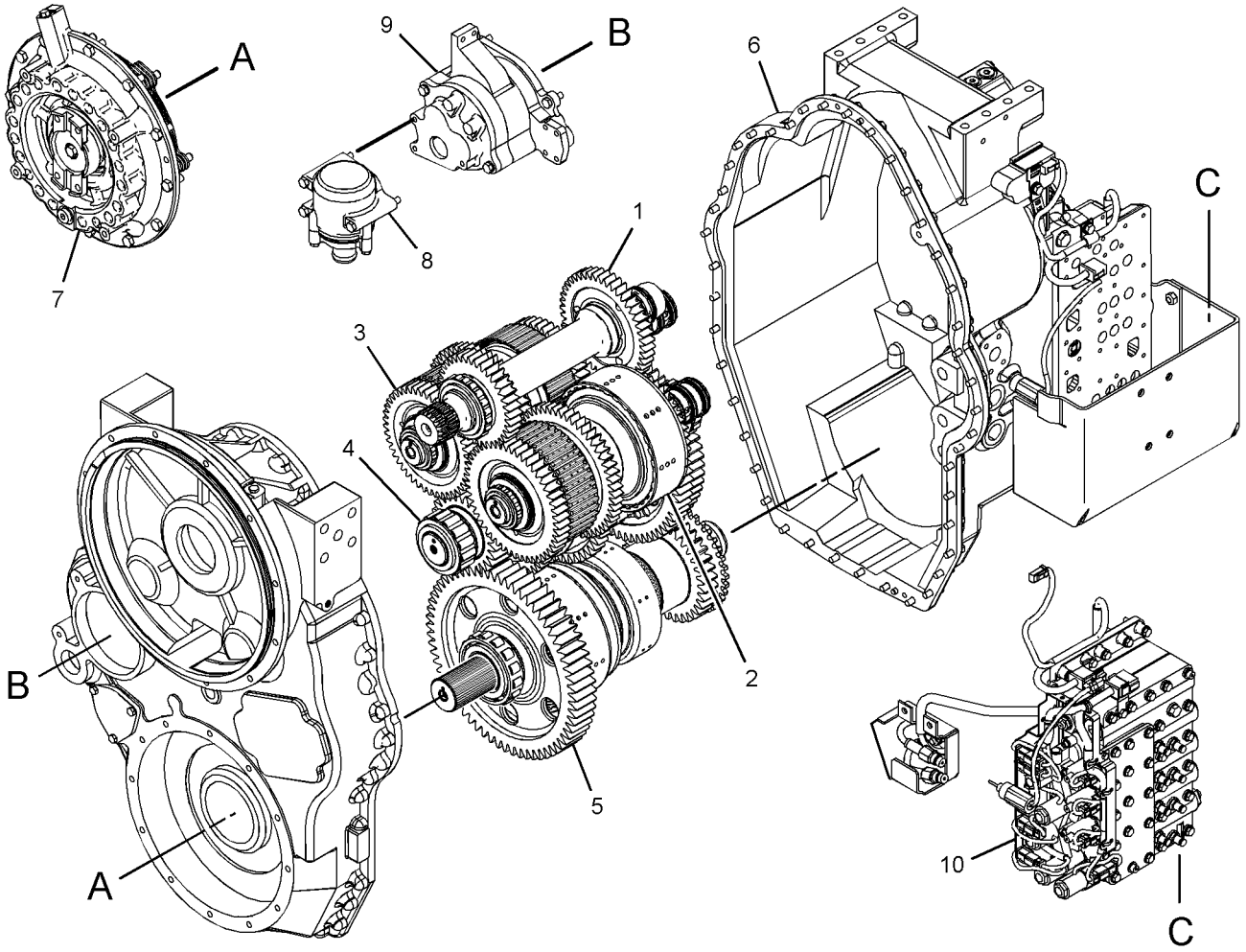

GRAPHIC #1 **<END>** g01770733

8X-5006 UNIVERSAL JOINT GP

S/N: JAP1-UP

PART OF 8W-5621 SHAFT GP-DRIVE

SMCS-3251, 3253 **i00135695**

NOTE	REF NO	GRAPHIC REF	PART NUMBER	QTY	PART NAME 1 2 3 4 5 6 (PRODUCT LEVEL)	SEE PAGE
	1	1	**8X-5044**	1	PLATE-COUPLING	
	2	1	**9P-0356**	2	SPIDER & BEARING AS	
	3	1	**0S-1579**	8	BOLT (1/2-20X2IN)	

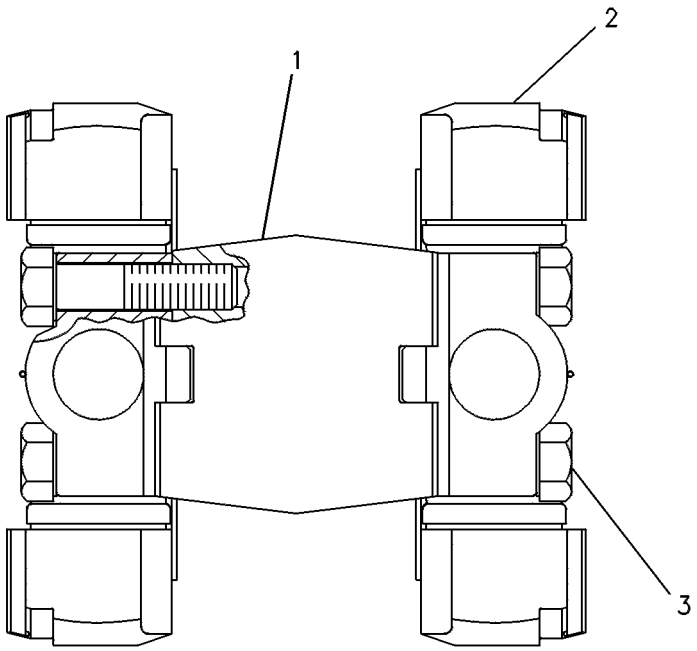

GRAPHIC #1 **<END>** g00108712

174-3705 VALVE & MTG GP-DIFF LOCK

S/N: JAP1-UP
24-VOLT. WITH HOUSING BYPASS
PART OF 303-3011 CONTROL GP-DIFFERENTIAL LOCK

SMCS-3272 **i03182460**

NOTE	REF NO	GRAPHIC REF	PART NUMBER	QTY	PART NAME 1 2 3 4 5 6 (PRODUCT LEVEL)	SEE PAGE
	1	1	**6G-5979**	1	KIT-SEAL (DIFFERENTIAL LOCK)	
					(INCLUDES O-RINGS)	
Y	2	1	**154-3064**	1	VALVE GP-SOLENOID (DIFFERENTIAL LOCK)	294
	3	1	**148-2516**	1	MANIFOLD	
Y-SEPARATE ILLUSTRATION						

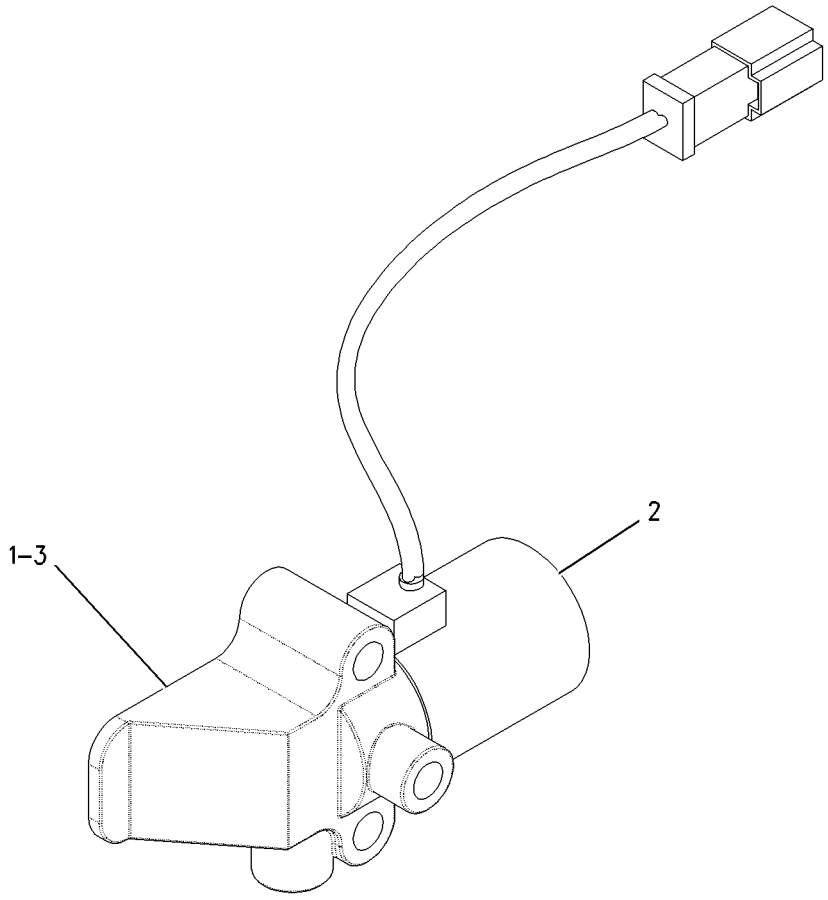

GRAPHIC #1 **<END>** g00806911

184-1130 VALVE GP-SELECTOR & PRESS CONT

S/N: DMJ1-UP

PART OF 281-3163 VALVE GP-TRANSMISSION CONTROL

SMCS-3083 **i03643729**

NOTE	REF NO	GRAPHIC REF	PART NUMBER	QTY	PART NAME 1 2 3 4 5 6 (PRODUCT LEVEL)	SEE PAGE
	1	1	**154-6309**	1	BODY	
M	2	1	**6V-5683**	5	BOLT (M6X1X16-MM)	
	4	1	**3D-4245**	1	SEAL-O-RING	
	6	1	**8E-9894**	1	SPOOL	
	7	1	**9U-8068**	1	SLUG	
	8	1	**9U-9282**	1	SPRING	
	9	1	**9U-9316**	1	SPRING	
	10	1	**108-6523**	1	ADJUSTER AS	
		1	**4K-2039**	1	SEAL-O-RING	
		1	**7M-8485**	1	SEAL-O-RING	
		1	**8T-4223**	1	WASHER-HARD (13.5X25.5X3-MM THK)	
		1	**9U-8069**	1	PLUG	
M		1	**095-1207**	1	NUT (M12X1.75-THD)	
		1	**101-9754**	1	SCREW-ADJUSTMENT (M12X1.75X18-MM)	
	11	1	*309-1877*	1	ORIFICE AS	
		1	**5F-9144**	1	SEAL-O-RING	
		1	**9U-8620**	1	ORIFICE	
	12	1	**9U-8067**	1	RETAINER	
	13	1	**8E-9895**	1	PISTON-LOAD	
	14	1	**9W-7412**	1	SPRING	
	15	1	**4J-2506**	1	SEAL-O-RING	
	16	1	**6F-4855**	1	SEAL-O-RING	
B	17	1	**5J-1036**	4	SHIM (0.8-MM THK)	
	18	1	**8E-9896**	1	PISTON-SELECTOR	
	19	1	**179-1298**	3	SPACER	
	20	1	**7T-0570**	1	SPRING	
B	21	1	**4M-1751**	2	SPACER (15.09X0.4-MM THK)	
Y	23	1	**186-1526**	1	VALVE GP-SOLENOID (24-VOLT) (SELECTOR & PRESSURE RANGE)	295
	25	1	*309-2995*	1	PLUG AS	
		1	**4J-7533**	1	SEAL-O-RING	
		1	**9G-7132**	1	PLUG-ORIFICE	
	26	1	*162-0177*	1	PLUG AS	
		1	**3J-1907**	1	SEAL-O-RING	
		1	**9S-8004**	1	PLUG	
	28	1	**180-9327**	1	MANIFOLD	
	30	1	**3K-6116**	1	WASHER (0.266X0.47X0.031-IN THK)	
M	31	1	**8T-8442**	1	BOLT-SOCKET HEAD (M6X1X30-MM)	
	32	1	**5P-0537**	6	WASHER-HARD (7.2X14.5X2-MM THK)	
	33	1	**9X-7384**	3	SEAL-O-RING	
	34	1	**175-3893**	1	VALVE GP-SOLENOID (PROPN SOL FOR CL PACK 1)	
	34A	1	**175-3893**	1	VALVE GP-SOLENOID (PROPN SOL FOR CL PACK 2)	
	34B	1	**175-3893**	1	VALVE GP-SOLENOID (PROPN SOL FOR CL PACK 3)	
					(EACH VALVE GP INCLUDES)	
		1	**226-9622**	1	COIL AS-SOLENOID (24-VOLT)	
		1	**164-2108**	1	WASHER (13.03X25.4X2.38-MM THK)	
		1	**167-9524**	1	NUT-SELF-LOCKING (1/2-28-THD)	
	35	1	**183-6774**	1	PLATE	
M	36	1	**8C-6965**	1	BOLT-SOCKET HEAD (M6X1X45-MM)	
	37	1	**154-7172**	1	SPOOL	
	38	1	*309-2996*	5	PLUG AS	
					(EACH INCLUDES)	
		1	**6Y-4638**	1	PLUG-HEX SOCKET (1-5/16-12-THD)	
		1	**7M-8485**	1	SEAL-O-RING	
	39	1	**183-6775**	3	SPOOL AS	
					(EACH INCLUDES)	

184-1130 VALVE GP-SELECTOR & PRESS CONT *(contd.)* i03643729

NOTE	REF NO	GRAPHIC REF	PART NUMBER	QTY	PART NAME 1 2 3 4 5 6 (PRODUCT LEVEL)	SEE PAGE
		1	**167-0566**	1	CARTRIDGE	
	40	1	**154-7175**	3	SLUG	
	41	1	**154-7176**	3	SPRING	
	42	1	**154-7177**	3	SPRING	

B-USE AS REQUIRED
M-METRIC PART
Y-SEPARATE ILLUSTRATION

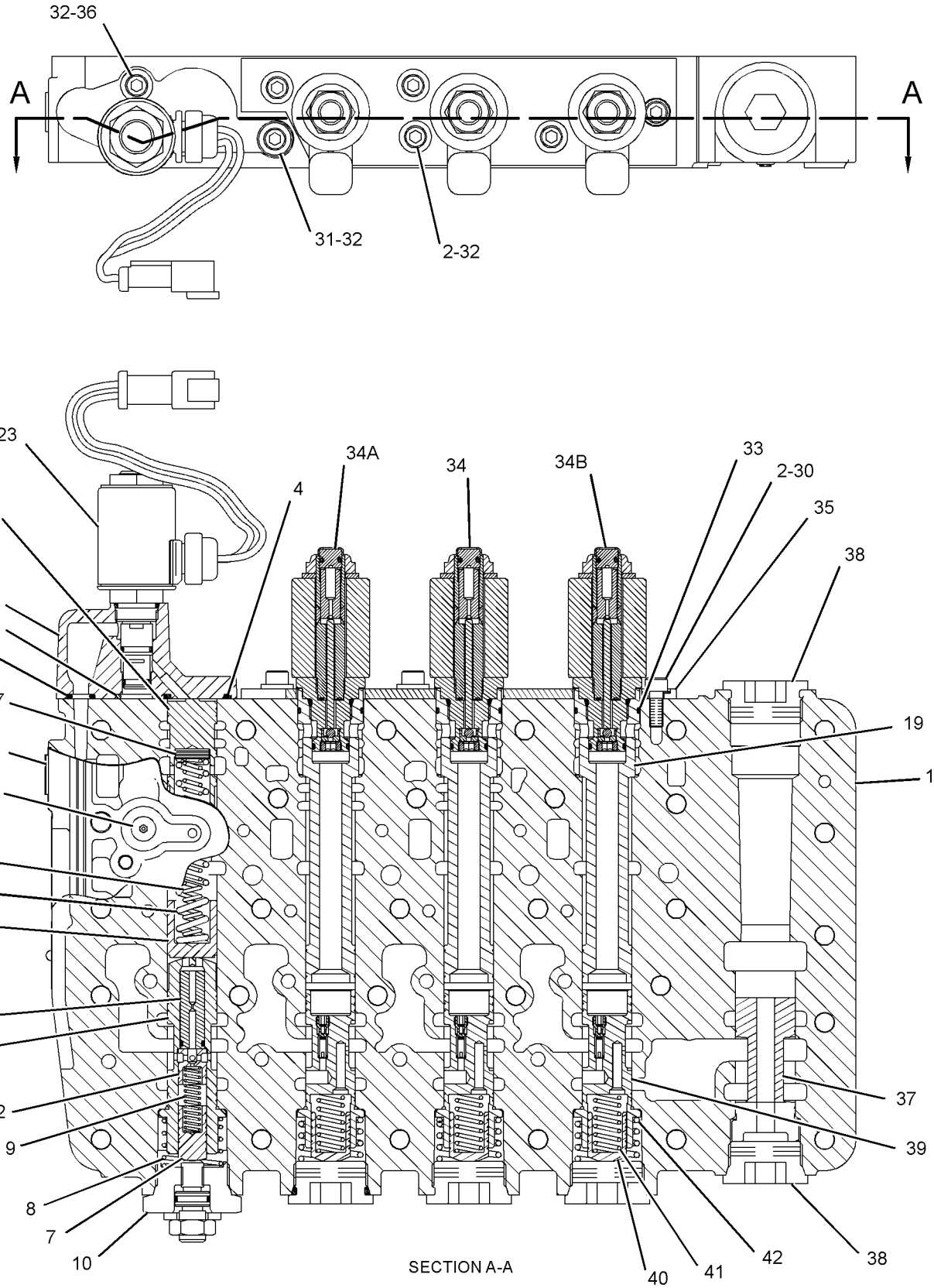

GRAPHIC #1 **<END>** g01415135

281-3160 VALVE GP-SELECTOR & PRESS CONT

S/N: DMJ1-UP

PART OF 281-3163 VALVE GP-TRANSMISSION CONTROL

SMCS-3083 **i02840144**

NOTE	REF NO	GRAPHIC REF	PART NUMBER	QTY	PART NAME 1 2 3 4 5 6 (PRODUCT LEVEL)	SEE PAGE
	1	1	**161-7055**	1	BODY	
	2	1	*309-1876*	2	ORIFICE AS	
					(EACH INCLUDES)	
		1	**5F-9144**	1	SEAL-O-RING	
		1	**8E-7714**	1	ORIFICE	
	4	1	**8E-9894**	4	SPOOL	
	5	1	**9U-8068**	4	SLUG	
	6	1	**9U-9316**	4	SPRING	
	7	1	**9U-9282**	4	SPRING	
	9	1	**9U-8067**	4	RETAINER	
	10	1	**8E-9895**	4	PISTON-LOAD	
	11	1	**4J-2506**	1	SEAL-O-RING	
	12	1	**6F-4855**	4	SEAL-O-RING	
	13	1	**8E-9896**	4	PISTON-SELECTOR	
B	14	1	**4M-1751**	4	SPACER (15.09X0.4-MM THK)	
B	15	1	**5J-1036**	15	SHIM (0.8-MM THK)	
	16	1	**3D-4245**	4	SEAL-O-RING	
	17	1	**9W-7410**	1	SPRING	
	18	1	**7T-0570**	3	SPRING	
	19	1	**8E-1143**	1	SLUG	
	20	1	**9U-8668**	1	SPOOL AS	
		1	**3D-8317**	1	RING-RETAINING	
		1	**4B-9880**	1	BALL	
		1	**4M-2381**	1	SPRING	
		1	**8E-9893**	1	SPOOL-RELIEF	
		1	**9U-8669**	1	RETAINER	
	21	1	**9U-9595**	1	SPRING	
	22	1	**9N-4500**	1	SPRING	
	23	1	**9N-4498**	1	SPRING	
	24	1	**8E-9897**	1	SPOOL	
	25	1	**9W-0898**	1	SLUG	
	27	1	**8E-6570**	1	MANIFOLD	
Y	28	1	**186-1526**	4	VALVE GP-SOLENOID (24-VOLT) (SPEED, RANGE, TRANSMISSION)	295
M	31	1	**8C-6965**	4	BOLT-SOCKET HEAD (M6X1X45-MM)	
	32	1	**5P-0537**	5	WASHER-HARD (7.2X14.5X2-MM THK)	
M	33	1	**8T-8442**	1	BOLT-SOCKET HEAD (M6X1X30-MM)	
	34	1	*309-1877*	1	ORIFICE AS	
		1	**5F-9144**	1	SEAL-O-RING	
		1	**9U-8620**	1	ORIFICE	
	35	1	*309-2995*	4	PLUG AS	
					(EACH INCLUDES)	
		1	**4J-7533**	1	SEAL-O-RING	
		1	**9G-7132**	1	PLUG-ORIFICE	
	37	1	*183-7263*	1	PLUG AS	
		1	**3J-7354**	1	SEAL-O-RING	
		1	**9S-8002**	1	PLUG-O-RING	
	38	1	*162-0177*	1	PLUG AS	
		1	**3J-1907**	1	SEAL-O-RING	
		1	**9S-8004**	1	PLUG	
	40	1	**108-6523**	5	ADJUSTER AS	
					(EACH INCLUDES)	
		1	**4K-2039**	1	SEAL-O-RING	
		1	**7M-8485**	1	SEAL-O-RING	
		1	**8T-4223**	1	WASHER-HARD (13.5X25.5X3-MM THK)	
		1	**9U-8069**	1	PLUG	

281-3160 VALVE GP-SELECTOR & PRESS CONT *(contd.)* i02840144

NOTE	REF NO	GRAPHIC REF	PART NUMBER	QTY	PART NAME 1 2 3 4 5 6 (PRODUCT LEVEL)	SEE PAGE
M		1	**095-1207**	1	NUT (M12X1.75-THD)	
		1	**101-9754**	1	SCREW-ADJUSTMENT (M12X1.75X18-MM)	
	41	1	*309-2996*	1	PLUG AS	
		1	**6Y-4638**	1	PLUG-HEX SOCKET (1-5/16-12-THD)	
		1	**7M-8485**	1	SEAL-O-RING	
	42	1	*309-1878*	1	ORIFICE AS	
		1	**5F-9144**	1	SEAL-O-RING	
		1	**8E-7713**	1	ORIFICE	
	43	1	**9W-7412**	3	SPRING	
	44	1	**7G-5453**	1	SPRING	
	45	1	**108-3129**	1	STOP	

B-USE AS REQUIRED
M-METRIC PART
Y-SEPARATE ILLUSTRATION

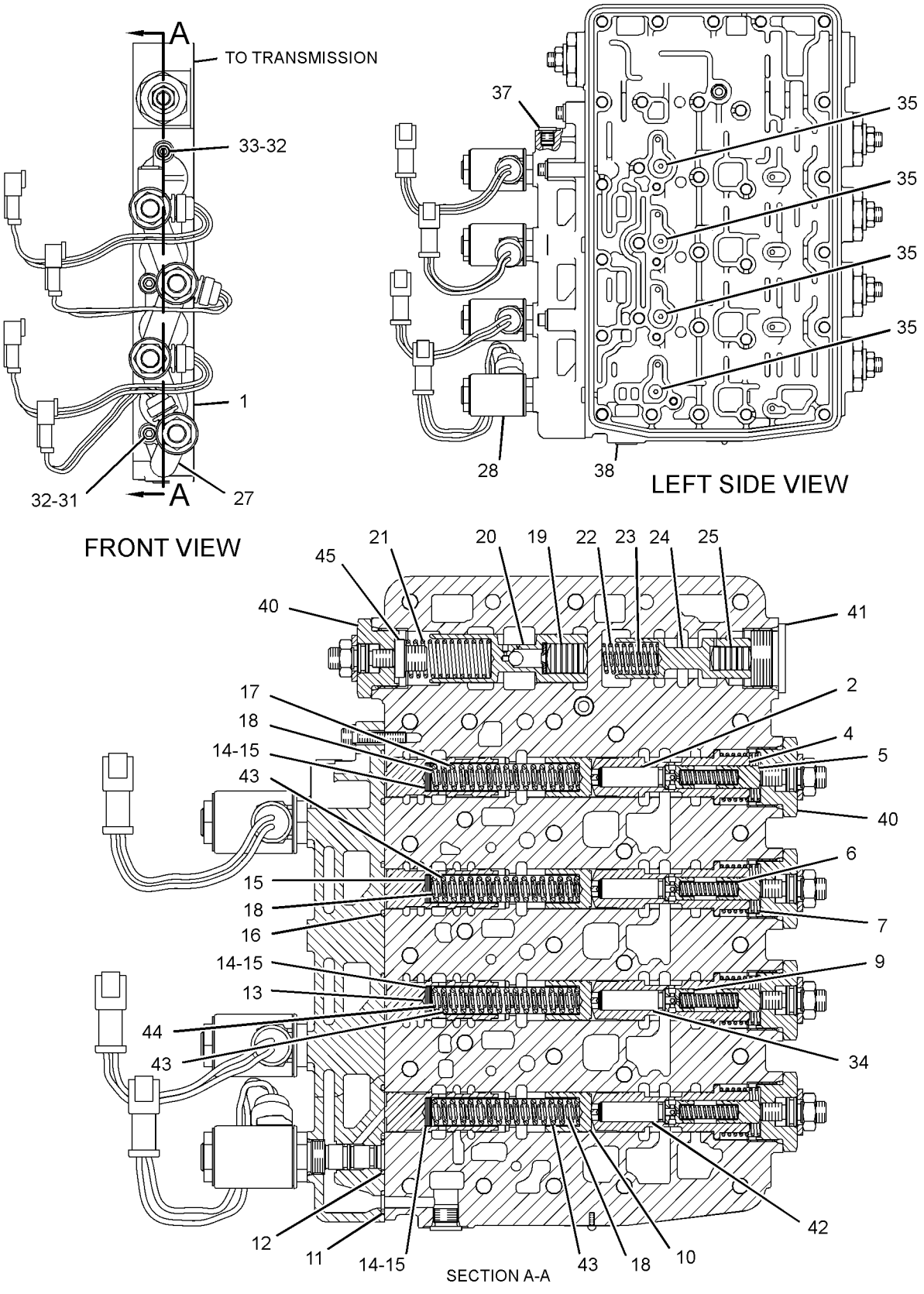

GRAPHIC #1 **<END>** g01419350

154-3064 VALVE GP-SOLENOID

S/N: JAP1-UP
24-VOLT
PART OF 174-3705 VALVE & MTG GP-DIFF LOCK

SMCS-5479 **i02204767**

NOTE	REF NO	GRAPHIC REF	PART NUMBER	QTY	PART NAME 1 2 3 4 5 6 (PRODUCT LEVEL)	SEE PAGE
	1	1	**8C-9987**	1	WASHER (8.3X28X2.5-MM THK)	
	2	1	**111-0343**	1	LOCKNUT (5/16-18-THD)	
	3	1	**142-0350**	1	CARTRIDGE AS	
		1	**8C-9987**	1	WASHER (8.3X28X2.5-MM THK)	
		1	**111-0343**	1	LOCKNUT (5/16-18-THD)	
	4	1	**189-0189**	1	COIL AS (24-VOLT)	
		1	**1S-9593**	2	STRAP-CABLE	
		1	**102-8802**	1	KIT-RECEPTACLE (2-PIN)	
					(INCLUDES RECEPTACLE AS & WEDGE)	
		1	**3E-3365**	1	WEDGE-RECEPTACLE LOCK (2-PIN)	
		1	**186-3735**	2	PIN-CONNECTOR (16-GA TO 18-GA)	
					AVAILABLE REPAIR KIT(S):	
			6G-5979	1	KIT-SEAL (DIFFERENTIAL LOCK VALVE)	

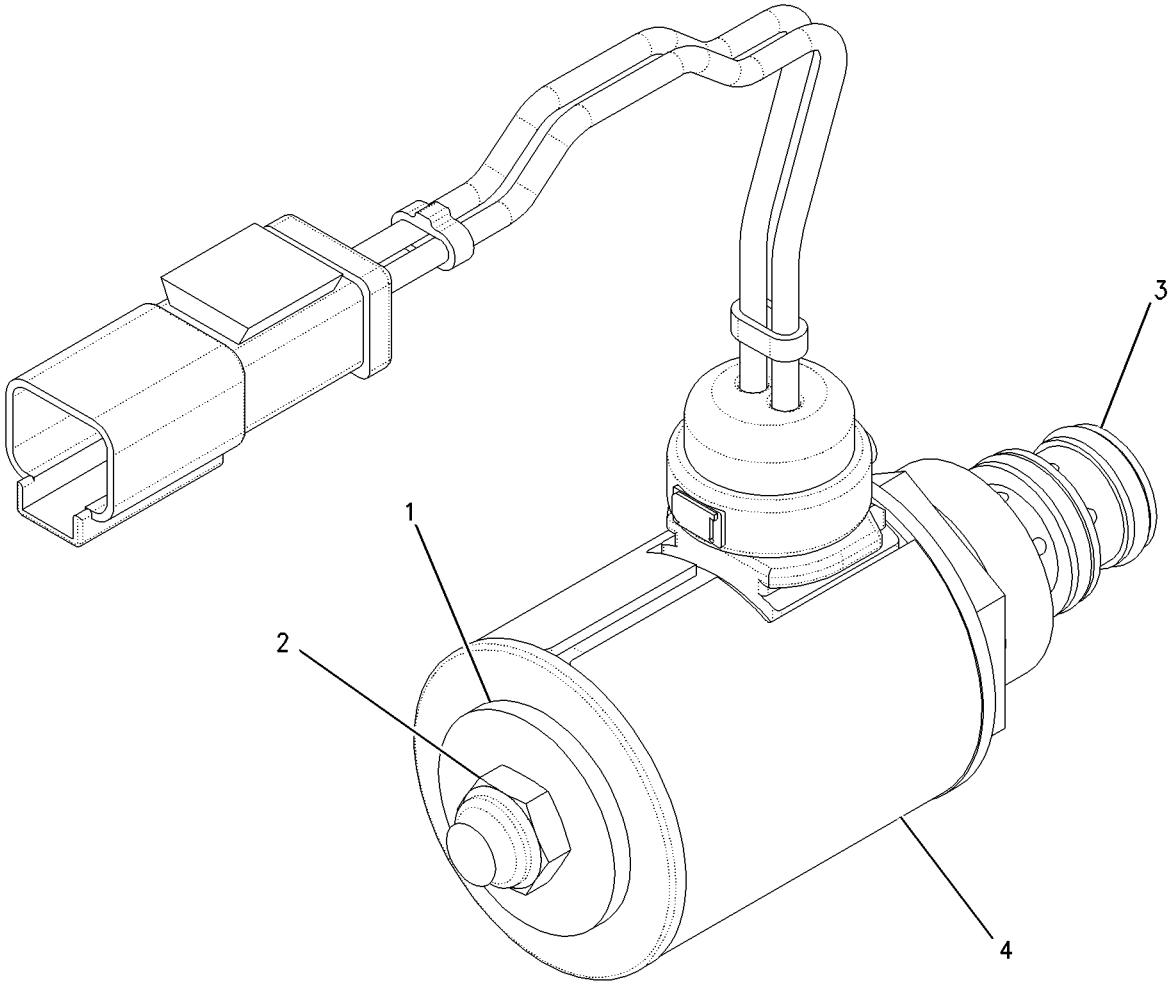

GRAPHIC #1 **<END>** g00877963

186-1526 VALVE GP-SOLENOID

S/N: DMJ1-UP

24-VOLT

PART OF 184-1130, 281-3160 VALVE GP-SELECTOR & PRESS CONT

SMCS-5479 **i03195180**

NOTE	REF NO	GRAPHIC REF	PART NUMBER	QTY	PART NAME 1 2 3 4 5 6 (PRODUCT LEVEL)	SEE PAGE
	1	1	**104-3947**	1	LOCKNUT (5/8-11-THD)	
J	2	1	**234-6666**	1	CARTRIDGE AS-VALVE	
	3	1	**301-3118**	1	COIL AS	
	3A	1	**1S-9593**	2	STRAP-CABLE	
	3B	1	**102-8802**	1	KIT-RECEPTACLE (2-PIN)	
					(INCLUDES RECEPTACLE AS & WEDGE)	
	3C	1	**186-3735**	2	PIN-CONNECTOR (16-GA TO 18-GA)	
					AVAILABLE REPAIR KIT(S):	
J			**7T-4515**	1	KIT-SEAL (TRANSMISSION SOLENOID)	
					(INCLUDES SEAL-O-RINGS)	

J-KIT MARKED J SERVICES PART MARKED J

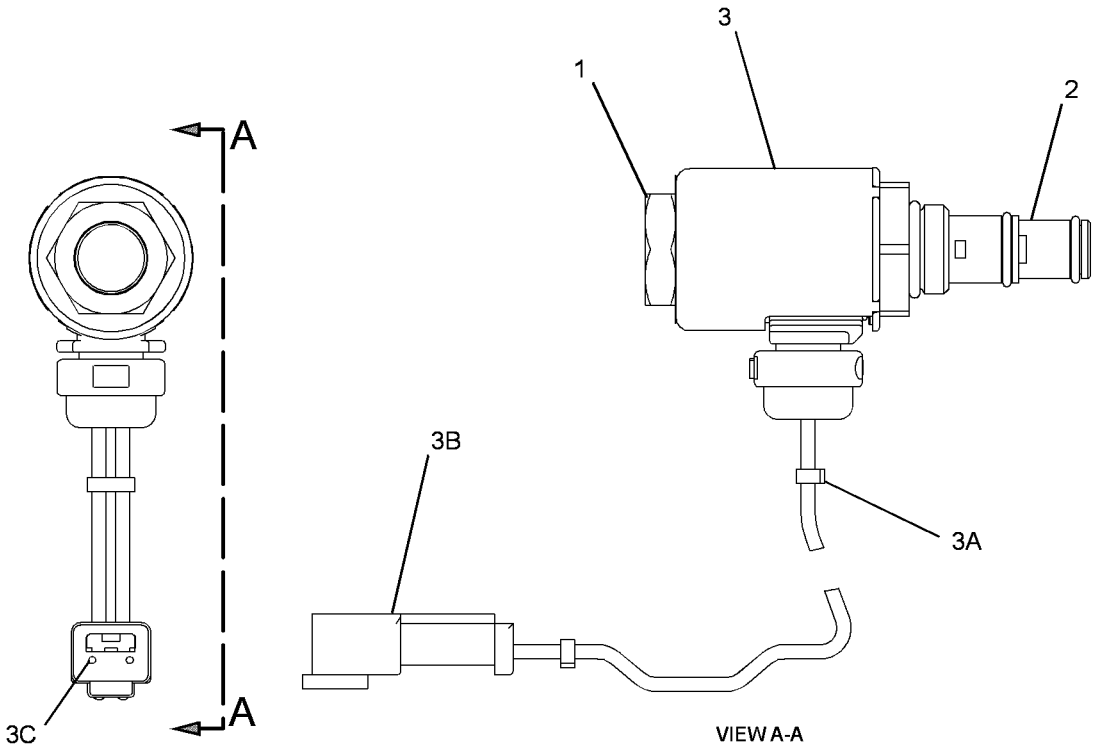

GRAPHIC #1 **<END>** g01628276

281-3163 VALVE GP-TRANSMISSION CONTROL

S/N: DMJ1-UP

PART OF 281-3165 CONTROL GP-TRANSMISSION HYD

SMCS-3073 **i02840282**

NOTE	REF NO	GRAPHIC REF	PART NUMBER	QTY	PART NAME 1 2 3 4 5 6 (PRODUCT LEVEL)	SEE PAGE
Y	1	1	**184-1130**	1	VALVE GP-SELECTOR & PRESS CONT (DIRECTION, RANGE, TRANSMISSION)	288
	2	1	**154-6306**	1	PLATE	
Y	3	1	**281-3160**	1	VALVE GP-SELECTOR & PRESS CONT (SPEED, RANGE, TRANSMISSION)	291
	4	1	**110-5161**	1	MANIFOLD	
	5	1	**154-6307**	1	PLATE	
	6	1	**8E-9474**	1	COVER	
	7	1	*164-5567*	8	COUPLER AS-QUICK DISCONNECT	
					(EACH INCLUDES)	
		1	**3J-1907**	1	SEAL-O-RING	
		1	**6V-3965**	1	FITTING (QUICK DISCONNECT)	
	8	1	*148-8407*	2	PLUG AS	
					(EACH INCLUDES)	
		1	**3J-1907**	1	SEAL-O-RING	
		1	**9S-4191**	1	PLUG-O-RING	
	9	1	**6V-0852**	8	CAP-DUST	
	11	1	**1T-0738**	2	WASHER (8.4X19X1.83-MM THK)	
	12	1	**9P-9150**	4	WASHER (8.25X18X0.84-MM THK)	
M	13	1	**3E-8006**	2	BOLT (M8X1.25X130-MM)	
	15	1	**9L-9068**	6	DOWEL	
	16	1	**8F-6230**	1	SEAL-O-RING	
	17	1	**4D-6695**	4	SEAL-O-RING	
	18	1	**142-1767**	1	POPPET	
	19	1	**4D-1322**	1	RING-RETAINING	
	20	1	**6Y-2584**	1	RETAINER	
	21	1	**3J-6956**	1	SPRING	
	22	1	**6I-9395**	1	SCREEN (TRANSMISSION CONTROL VALVE)	
M	23	1	**6V-5217**	1	BOLT (M8X1.25X20-MM)	

M-METRIC PART
Y-SEPARATE ILLUSTRATION

281-3163 **VALVE GP-TRANSMISSION CONTROL** *(contd.)* **i02840282**

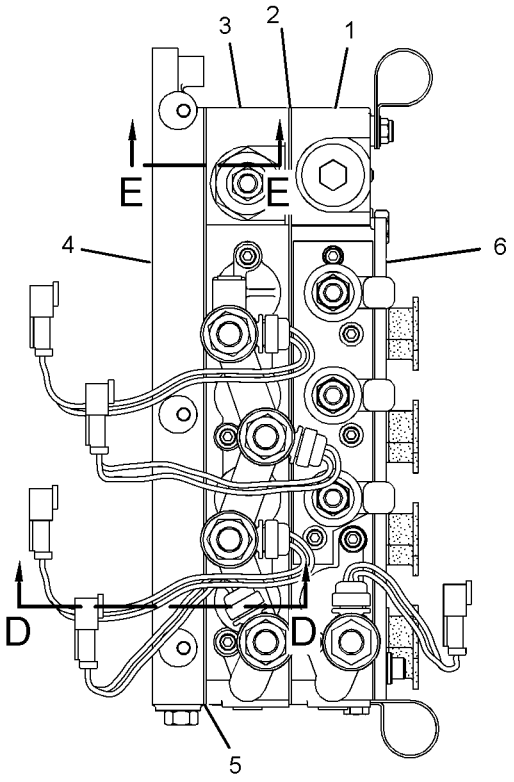

FRONT VIEW

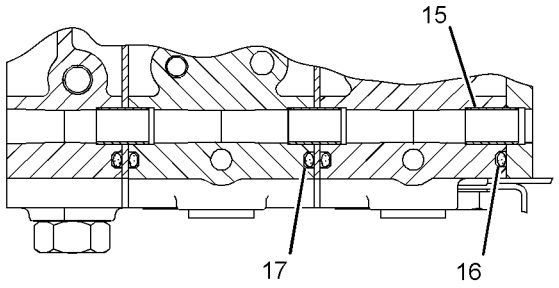

SECTION A-A

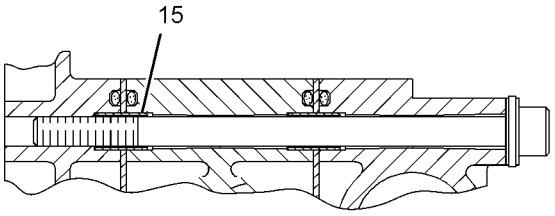

SECTION C-C

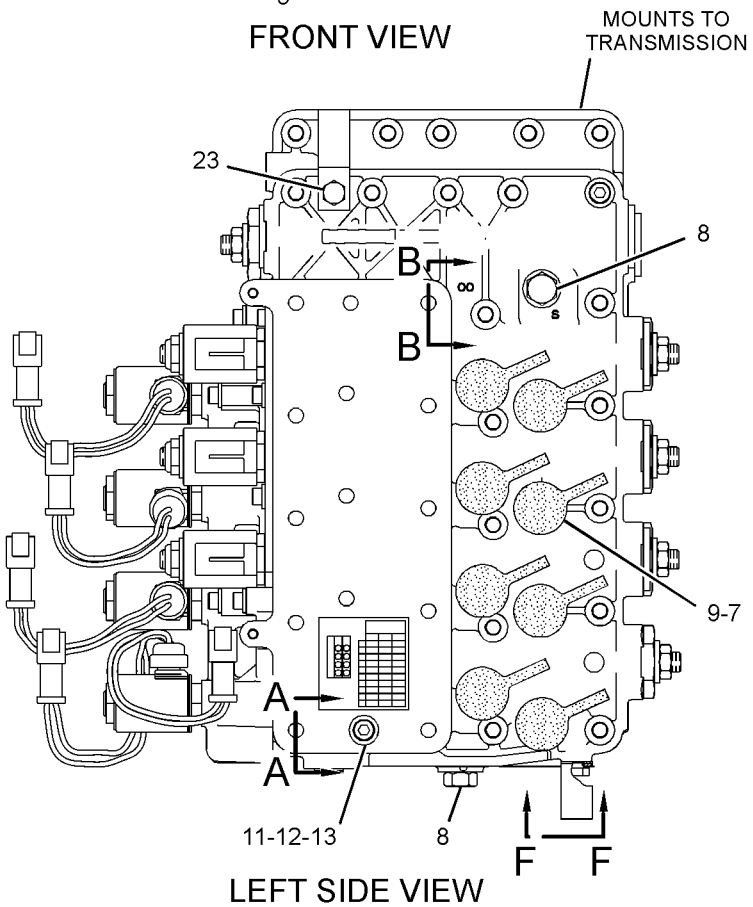

LEFT SIDE VIEW

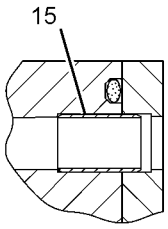

SECTION B-B

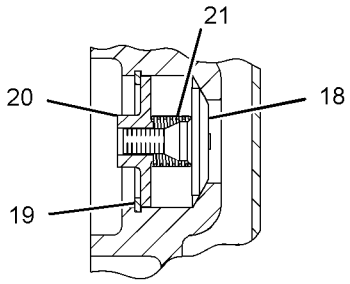

SECTION D-D

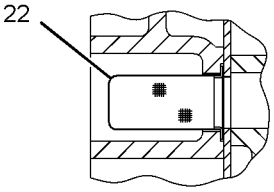

SECTION E-E

GRAPHIC #1 **<END>** g01419381

252-0731 WHEEL & TIRE AR

S/N: JAP1-UP
AN ATTACHMENT

SMCS-4200 **i02784689**

NOTE	PART NUMBER	QTY	PART NAME 1 2 3 4 5 6 (PRODUCT LEVEL)	SEE PAGE
Y	*252-0730*	6	WHEEL & TIRE GP	299
Y-SEPARATE ILLUSTRATION				

<END>

254-7964 WHEEL & TIRE AR

S/N: JAP1-UP
AN ATTACHMENT

SMCS-4200 **i02787646**

NOTE	PART NUMBER	QTY	PART NAME 1 2 3 4 5 6 (PRODUCT LEVEL)	SEE PAGE
Y	*254-7948*	6	WHEEL & TIRE GP	299
Y-SEPARATE ILLUSTRATION				

<END>

254-8061 WHEEL & TIRE AR

S/N: JAP1-UP
AN ATTACHMENT

SMCS-4200 **i02828235**

NOTE	PART NUMBER	QTY	PART NAME 1 2 3 4 5 6 (PRODUCT LEVEL)	SEE PAGE
Y	*254-8053*	6	WHEEL & TIRE GP	299
Y-SEPARATE ILLUSTRATION				

<END>

305-6159 WHEEL & TIRE AR

S/N: JAP1-UP
AN ATTACHMENT

SMCS-4200 **i02788599**

NOTE	PART NUMBER	QTY	PART NAME 1 2 3 4 5 6 (PRODUCT LEVEL)	SEE PAGE
Y	*305-6155*	6	WHEEL & TIRE GP	300
Y-SEPARATE ILLUSTRATION				

<END>

340-2602 WHEEL & TIRE AR

S/N: JAP1-UP
AN ATTACHMENT

SMCS-4200 **i03519141**

NOTE	PART NUMBER	QTY	PART NAME 1 2 3 4 5 6 (PRODUCT LEVEL)	SEE PAGE
Y	*340-2614*	6	WHEEL & TIRE GP	300
Y-SEPARATE ILLUSTRATION				

<END>

340-2603 WHEEL & TIRE AR

S/N: JAP1-UP
AN ATTACHMENT

SMCS-4200 **i03519126**

NOTE	PART NUMBER	QTY	PART NAME 1 2 3 4 5 6 (PRODUCT LEVEL)	SEE PAGE
Y	*340-2615*	6	WHEEL & TIRE GP	300

Y-SEPARATE ILLUSTRATION

<END>

252-0730 WHEEL & TIRE GP

S/N: JAP1-UP
PART OF 252-0731 WHEEL & TIRE AR
AN ATTACHMENT

SMCS-4200 **i02784687**

NOTE	PART NUMBER	QTY	PART NAME 1 2 3 4 5 6 (PRODUCT LEVEL)	SEE PAGE
Y	*252-0112*	1	WHEEL GP	305
	142-6183	1	TIRE (17.5-25)	

Y-SEPARATE ILLUSTRATION

<END>

254-7948 WHEEL & TIRE GP

S/N: JAP1-UP
PART OF 254-7964 WHEEL & TIRE AR
AN ATTACHMENT

SMCS-4200 **i02787563**

NOTE	PART NUMBER	QTY	PART NAME 1 2 3 4 5 6 (PRODUCT LEVEL)	SEE PAGE
Y	*252-0111*	1	WHEEL GP	305
	142-6183	1	TIRE (17.5-25)	

Y-SEPARATE ILLUSTRATION

<END>

254-8053 WHEEL & TIRE GP

S/N: JAP1-UP
PART OF 254-8061 WHEEL & TIRE AR
AN ATTACHMENT

SMCS-4200 **i02828128**

NOTE	PART NUMBER	QTY	PART NAME 1 2 3 4 5 6 (PRODUCT LEVEL)	SEE PAGE
Y	*252-0108*	1	WHEEL GP	304
	142-6168	1	TIRE (13-24)	

Y-SEPARATE ILLUSTRATION

<END>

POWER TRAIN

305-6155 WHEEL & TIRE GP

S/N: JAP1-UP
PART OF 305-6159 WHEEL & TIRE AR
AN ATTACHMENT

SMCS-4200 **i02787784**

NOTE	PART NUMBER	QTY	PART NAME 1 2 3 4 5 6 (PRODUCT LEVEL)	SEE PAGE
Y	*252-0108*	1	WHEEL GP	304
	150-7955	1	TIRE (14-24)	

Y-SEPARATE ILLUSTRATION

<END>

340-2614 WHEEL & TIRE GP

S/N: JAP1-UP
PART OF 340-2602 WHEEL & TIRE AR
AN ATTACHMENT

SMCS-4200 **i03519143**

NOTE	PART NUMBER	QTY	PART NAME 1 2 3 4 5 6 (PRODUCT LEVEL)	SEE PAGE
Y	*252-0106*	1	WHEEL GP	304
	142-6167	1	TIRE (13-24)	

Y-SEPARATE ILLUSTRATION

<END>

340-2615 WHEEL & TIRE GP

S/N: JAP1-UP
PART OF 340-2603 WHEEL & TIRE AR
AN ATTACHMENT

SMCS-4200 **i03519127**

NOTE	PART NUMBER	QTY	PART NAME 1 2 3 4 5 6 (PRODUCT LEVEL)	SEE PAGE
Y	*252-0108*	1	WHEEL GP	304
	142-6167	1	TIRE (13-24)	

Y-SEPARATE ILLUSTRATION

<END>

252-0114 WHEEL AR

S/N: JAP1-UP
AN ATTACHMENT

SMCS-4208 **i02781349**

NOTE	PART NUMBER	QTY	PART NAME 1 2 3 4 5 6 (PRODUCT LEVEL)	SEE PAGE
Y	*252-0106*	6	WHEEL GP	304

Y-SEPARATE ILLUSTRATION

<END>

POWER TRAIN

252-0118 WHEEL AR

S/N: JAP1-UP

AN ATTACHMENT

SMCS-4208 **i02781890**

NOTE	PART NUMBER	QTY	PART NAME 1 2 3 4 5 6 (PRODUCT LEVEL)	SEE PAGE
Y	*252-0112*	6	WHEEL GP	305

Y-SEPARATE ILLUSTRATION

<END>

252-0102 WHEEL GP

S/N: JAP1-UP
(10X24)
PART OF 252-0108 WHEEL GP
AN ATTACHMENT

SMCS-4006, 4201, 4208 **i02781649**

NOTE	REF NO	GRAPHIC REF	PART NUMBER	QTY	PART NAME 1 2 3 4 5 6 (PRODUCT LEVEL)	SEE PAGE
	1	1	**2D-2654**	1	RING-LOCK	
	2	1	**8W-9566**	1	FLANGE AS	
	3	1	**290-1505**	1	RIM AS	

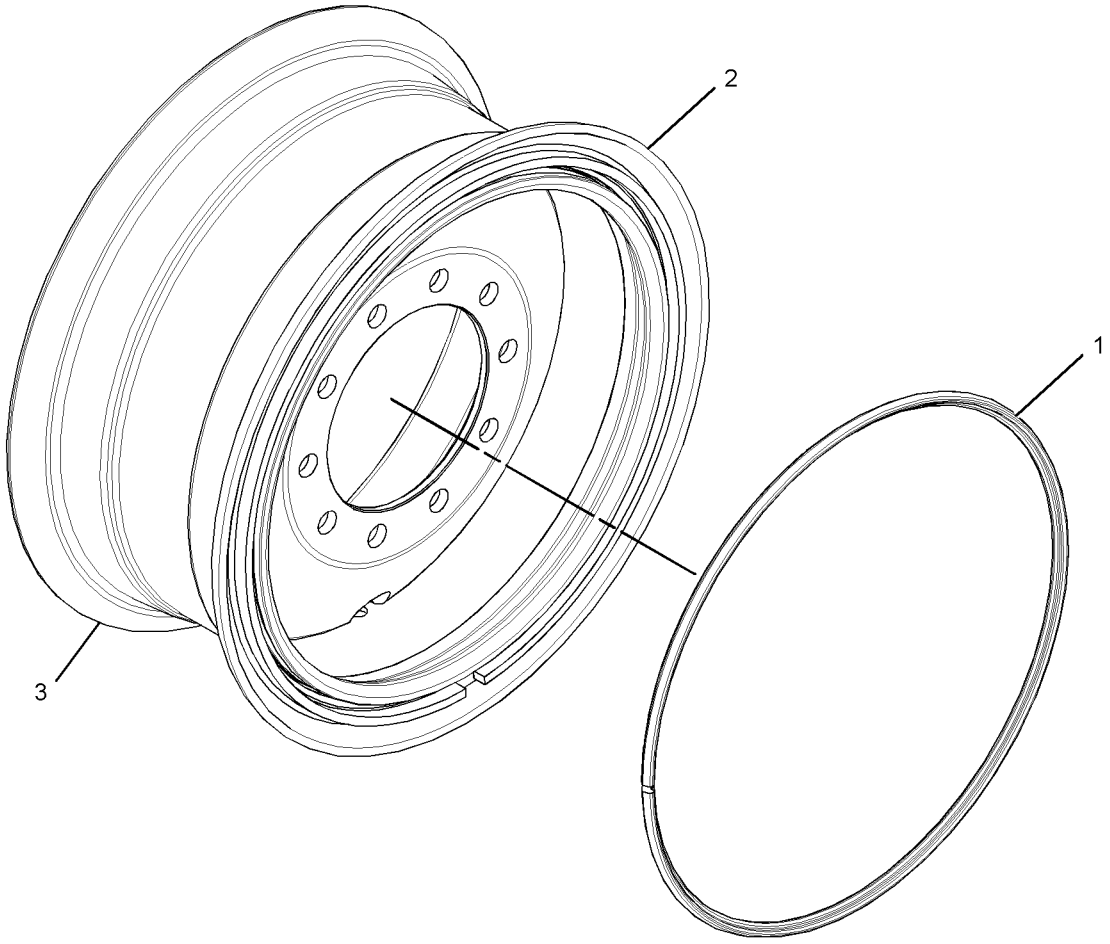

GRAPHIC #1 **<END>** g01393131

252-0104 WHEEL GP

S/N: JAP1-UP
(14X25)
PART OF 252-0112 WHEEL GP
AN ATTACHMENT

SMCS-4006, 4201, 4208 **i02781823**

NOTE	REF NO	GRAPHIC REF	PART NUMBER	QTY	PART NAME 1 2 3 4 5 6 (PRODUCT LEVEL)	SEE PAGE
	1	1	**4K-4881**	1	RING-LOCK	
	2	1	**8W-9594**	1	FLANGE AS	
	3	1	**289-9726**	1	RIM AS	

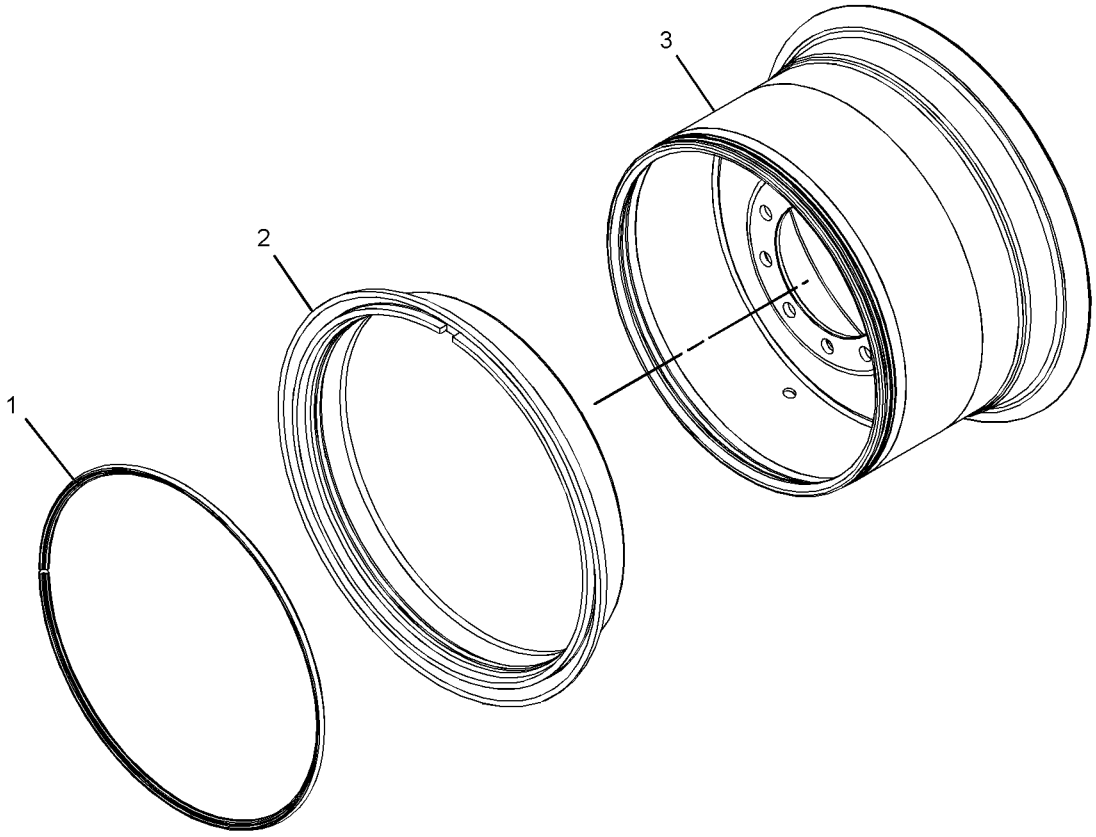

GRAPHIC #1 **<END>** g01392485

252-0106 WHEEL GP

S/N: JAP1-UP
(9X24)
PART OF 340-2614 WHEEL & TIRE GP, 252-0114 WHEEL AR
AN ATTACHMENT

SMCS-4006, 4201, 4208 **i02781471**

NOTE	PART NUMBER	QTY	PART NAME 1 2 3 4 5 6 (PRODUCT LEVEL)	SEE PAGE
	252-0098	1	RIM AS	
	2D-2511	1	VALVE GP-TIRE (BASIC)	
	3D-2239	1	VALVE AS-TIRE (TIRE INFLATION)	
	6F-3930	1	CORE-VALVE	
	9K-7951	1	CAP-VALVE (STEM)	
	7D-5252	1	SPUD AS	
	2D-2507	1	SPUD	
	2D-2508	1	GROMMET	
	2D-2509	1	LOCKNUT (11/16-16-THD)	

<END>

252-0108 WHEEL GP

S/N: JAP1-UP
PART OF 254-8053, 305-6155, 340-2615 WHEEL & TIRE GP
AN ATTACHMENT

SMCS-4006, 4201, 4208 **i02781628**

NOTE	PART NUMBER	QTY	PART NAME 1 2 3 4 5 6 (PRODUCT LEVEL)	SEE PAGE
Y	*252-0102*	1	WHEEL GP	302
	2D-2565	1	SEAL-O-RING	
	110-4213	1	VALVE GP-TIRE (TIRE INFLATION)	
	7D-5252	1	SPUD AS	
	2D-2507	1	SPUD	
	2D-2508	1	GROMMET	
	2D-2509	1	LOCKNUT (11/16-16-THD)	
	110-4214	1	STEM AS	
	6F-3930	1	CORE-VALVE	
	9K-7951	1	CAP-VALVE (STEM)	

Y-SEPARATE ILLUSTRATION

<END>

252-0111 WHEEL GP

S/N: JAP1-UP
(13X25)
PART OF 254-7948 WHEEL & TIRE GP
AN ATTACHMENT

SMCS-4006, 4201, 4208 **i02781762**

NOTE	PART NUMBER	QTY	PART NAME 1 2 3 4 5 6 (PRODUCT LEVEL)	SEE PAGE
	252-0100	1	RIM AS	
	2G-6595	1	VALVE GP-TIRE	
	6F-3930	1	CORE-VALVE	
	9K-7951	1	CAP-VALVE (STEM)	
	7D-5252	1	SPUD AS	
	2D-2507	1	SPUD	
	2D-2508	1	GROMMET	
	2D-2509	1	LOCKNUT (11/16-16-THD)	

<END>

252-0112 WHEEL GP

S/N: JAP1-UP
PART OF 252-0730 WHEEL & TIRE GP, 252-0118 WHEEL AR
AN ATTACHMENT

SMCS-4006, 4201, 4208 **i02781820**

NOTE	PART NUMBER	QTY	PART NAME 1 2 3 4 5 6 (PRODUCT LEVEL)	SEE PAGE
Y	*252-0104*	1	WHEEL GP	303
	4K-4879	1	SEAL-O-RING	
	2G-6595	1	VALVE GP-TIRE	
	6F-3930	1	CORE-VALVE	
	9K-7951	1	CAP-VALVE (STEM)	
	7D-5252	1	SPUD AS	
	2D-2507	1	SPUD	
	2D-2508	1	GROMMET	
	2D-2509	1	LOCKNUT (11/16-16-THD)	

Y-SEPARATE ILLUSTRATION

<END>

FRAME AND BODY

134-1080 AXLE GP-FRONT

S/N: JAP1-UP

PART OF 348-3018 GENERAL AR

SMCS-4305, 4313, 5225 **i03518581**

NOTE	REF NO	GRAPHIC REF	PART NUMBER	QTY	PART NAME 1 2 3 4 5 6 (PRODUCT LEVEL)	SEE PAGE
R	1	1	**5K-5288**	2	SEAL GP-DUO-CONE	
					(EACH INCLUDES)	
		1	**5K-5129**	2	RING-SEALING	
	2	1	**2G-8626**	2	WASHER-THRUST (2.02X3.63X0.16-IN THK)	
	3	1	**3B-8489**	11	FITTING-GREASE	
	4	1	**4D-3704**	2	WASHER-HARD (17X30X5-MM THK)	
	5	1	**2G-8615**	4	WASHER-THRUST (2.015X3.625X0.11-IN THK)	
	6	1	**2G-8742**	2	WASHER-HARD (20X65X5-MM THK)	
	7	1	**2H-3740**	4	BOLT (3/4-16X1.25-IN)	
	8	1	**2G-8741**	4	RING-METAL SEAL	
	9	1	**2G-8777**	4	SEAL	
	10	1	**9M-2092**	4	SEAL-O-RING	
	11	1	**8W-5293**	4	PIN	
	12	1	**8W-4652**	1	HOUSING-SPINDLE	
	13	1	**8W-4653**	1	HOUSING-SPINDLE	
	14	1	**8D-2811**	2	WASHER (1.25X1.94X0.032-IN THK)	
	15	1	**2G-8633**	2	PIN	
	16	1	**1D-4627**	2	BOLT (7/8-9X3-IN)	
	17	1	**2J-3505**	2	NUT-FULL (7/8-9-THD)	
	18	1	**7X-7731**	2	PLUG-PIPE	
	19	1	**5P-8842**	8	SEAL-LIP TYPE	
	20	1	**9D-3523**	1	WASHER (2.062X4X0.188-MM THK)	
	21	1	**5P-1075**	4	WASHER-HARD (10.2X22.5X3-MM THK)	
	22	1	**5S-7379**	4	BOLT (3/8-16X0.875-IN)	
	23	1	**2G-8768**	4	WASHER (10.5X53.8X3-MM THK)	
	24	1	**103-9125**	1	BAR AS	
		1	**2G-8624**	2	BEARING-SLEEVE	
	25	1	**5P-8890**	2	SEAL-LIP TYPE	
	26	1	**030-0060**	2	CUP-BEARING	
	27	1	**030-0061**	2	CONE-BEARING	
	28	1	**7D-8637**	2	CUP-BEARING	
	29	1	**7D-8636**	2	CONE-BEARING	
	30	1	**3B-4618**	2	PIN-COTTER	
	31	1	**7D-8643**	2	RETAINER	
B	32	1	**2G-3865**	6	SHIM (0.127-MM THK)	
	33	1	**0V-0375**	6	BOLT (1/2-13X3.25-IN)	
	34	1	**9D-9797**	2	LOCK	
	35	1	**5T-0906**	2	COVER	
	36	1	**2J-8163**	2	SEAL-O-RING	
	37	1	**5D-0353**	4	BOLT-LOCKING (3/8-16X1-IN)	
	38	1	**5P-2566**	1	BOLT (1/2-13X1.5-IN)	
	39	1	**5P-1076**	1	WASHER-HARD (13.5X30X4-MM THK)	
	40	1	**5P-8843**	2	SEAL-LIP TYPE	
B	41	1	**2G-5673**	2	WASHER (2.031X4X0.06-IN THK)	
	42	1	**9G-5211**	1	SPACER (12.95X19.05X9-MM THK)	
	43	1	**130-3595**	1	PIN AS	
	44	1	**147-3400**	2	SPINDLE	
	45	1	**0S-1592**	2	BOLT (5/8-11X1.25-IN)	
	46	1	**2G-5667**	2	RETAINER	
Y	47	1	*131-3740*	1	LINK GP-STEERING	337
	48	1	**134-1081**	1	AXLE AS-FRONT	
	49	1	**2G-8631**	4	BEARING-SLEEVE	
	50	1	**131-4428**	2	BEARING-SLEEVE	
	51	1	**8X-3434**	1	ARM AS-LEANING (LH)	
	52	1	**146-1842**	1	BEARING-SLEEVE	
	53	1	**146-1843**	1	BEARING-SLEEVE	

134-1080 **AXLE GP-FRONT** ***(contd.)*** **i03518581**

NOTE	REF NO	GRAPHIC REF	PART NUMBER	QTY	PART NAME 1 2 3 4 5 6 (PRODUCT LEVEL)	SEE PAGE
	54	1	**8W-6476**	1	PIN	
	56	1	**8X-3435**	1	ARM AS-LEANING (RH)	
	57	1	**146-1842**	1	BEARING-SLEEVE	
	58	1	**146-1843**	1	BEARING-SLEEVE	
	59	1	**8W-6497**	1	PIN	

B-USE AS REQUIRED
R-REMFG PART MAY BE AVAILABLE
Y-SEPARATE ILLUSTRATION

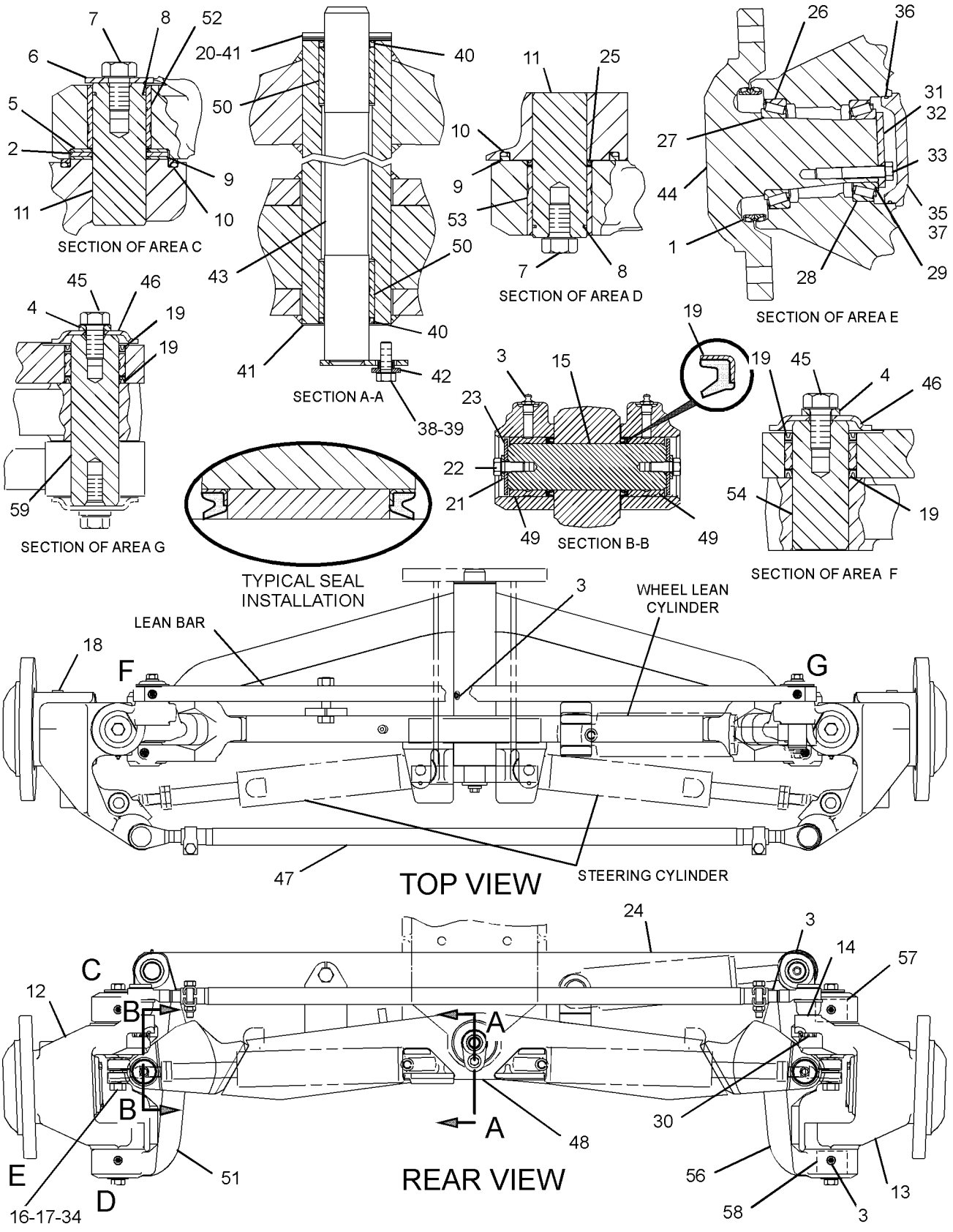

GRAPHIC #1 **<END>** g01857954

FRAME AND BODY

297-8449 BOSS GP-FRAME

S/N: JAP1-UP
PART OF 337-3100 GRADE CONTROL AR
AN ATTACHMENT

SMCS-7051 **i03349981**

NOTE	REF NO	GRAPHIC REF	PART NUMBER	QTY	PART NAME 1 2 3 4 5 6 (PRODUCT LEVEL)	SEE PAGE
	1	1	**5D-9629**	5	ROD	
	2	1	**1F-5339**	4	LUG (3/8-16-THD)	
	3	1	**3G-9190**	3	PLATE	
	4	1	**4D-8128**	2	COUPLING	
	5	1	**8X-5147**	1	BLOCK	
	6	1	**9D-5196**	1	BOSS (3/8-16X3.06-IN)	
	7	1	**9D-5567**	3	BOSS (3/8-16X2.44-IN)	
	8	1	**9D-5659**	6	BOSS (3/8-16X1.19-IN)	
	9	1	**9D-6164**	2	BOSS (3/8-16X1.44-IN)	
	10	1	**8D-3508**	1	BOSS (3/8-16X1-IN)	

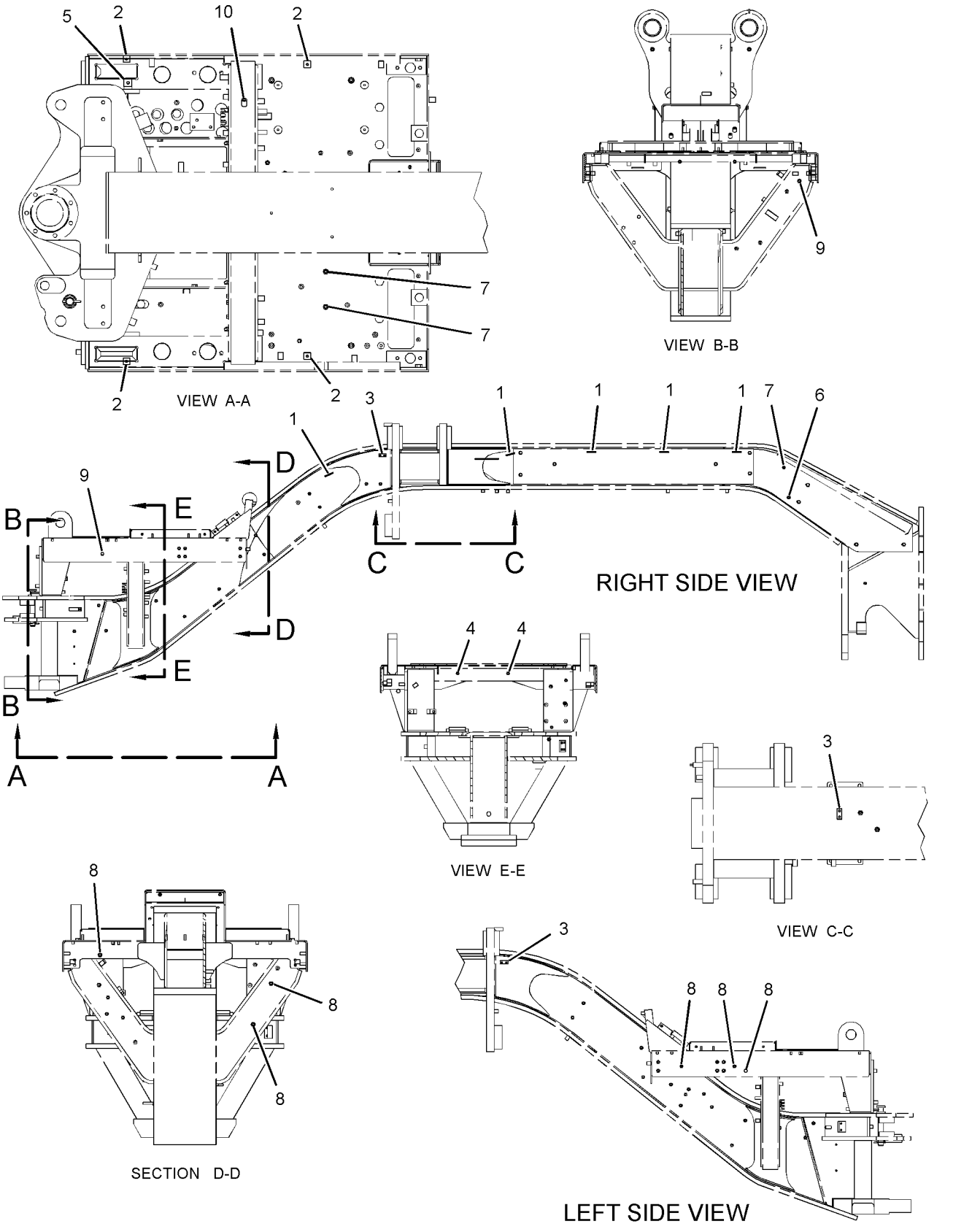

GRAPHIC #1 **<END>** g01768173

336-9245 BOSS GP-FRAME–ACCUGRADE

S/N: JAP1-UP
PART OF 336-4249 GRADE CONTROL AR
AN ATTACHMENT

SMCS-7051 **i03537829**

NOTE	REF NO	GRAPHIC REF	PART NUMBER	QTY	PART NAME 1 2 3 4 5 6 (PRODUCT LEVEL)	SEE PAGE
	1	1	**5D-9629**	5	ROD	
	2	1	**1F-5339**	4	LUG (3/8-16-THD)	
	3	1	**3G-9190**	3	PLATE	
	4	1	**4D-8128**	2	COUPLING	
	5	1	**8D-3508**	1	BOSS (3/8-16X1-IN)	
	6	1	**8X-5147**	1	BLOCK	
	7	1	**9D-5196**	1	BOSS (3/8-16X3.06-IN)	
	8	1	**9D-5567**	3	BOSS (3/8-16X2.44-IN)	
	9	1	**9D-5659**	6	BOSS (3/8-16X1.19-IN)	
	10	1	**9D-6164**	2	BOSS (3/8-16X1.44-IN)	

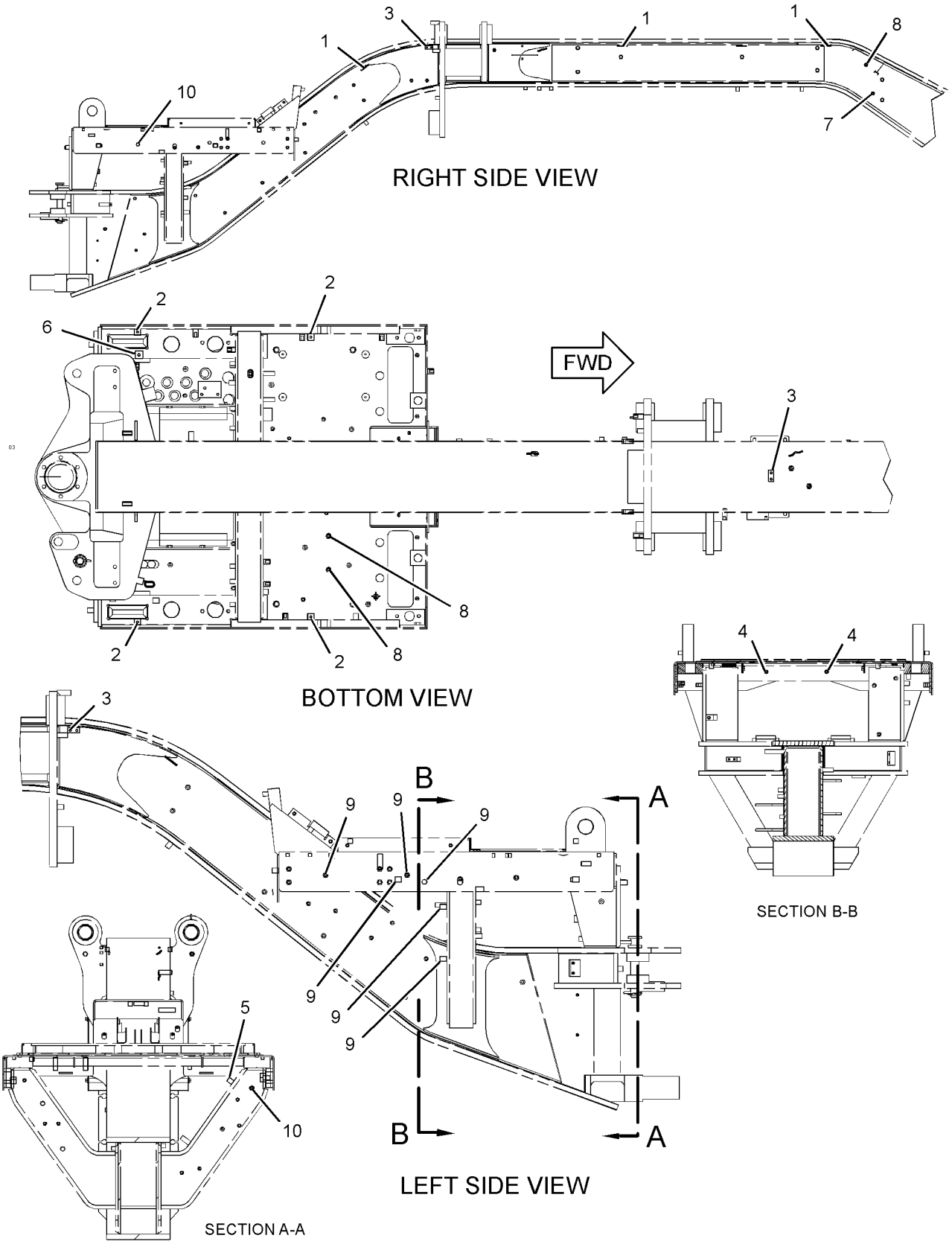

GRAPHIC #1 **<END>** g01929900

FRAME AND BODY

298-3519 BOX GP-BATTERY

S/N: JAP1-UP

PART OF 348-3018 GENERAL AR

SMCS-7257 **i03539403**

NOTE	REF NO	GRAPHIC REF	PART NUMBER	QTY	PART NAME 1 2 3 4 5 6 (PRODUCT LEVEL)	SEE PAGE
	1	1	**246-2641**	2	PADLOCK GP	
					(EACH INCLUDES)	
		1	**5P-8500**	1	KEY	
	2	1	**143-4792**	4	BUMPER	
	3	1	**298-3522**	1	SUPPORT AS	
M		1	**8T-3490**	3	NUT-WELD (M10X1.5-THD)	
		1	**034-7044**	6	RIVET	
		1	**161-4423**	2	LATCH AS	
	4	1	**298-3523**	1	COVER AS	
		1	**6F-7013**	2	HANDLE	
	5	1	**198-4778**	4	WASHER-HARD (13.5X30X12-MM THK)	
M	6	1	**6V-5684**	2	BOLT (M12X1.75X45-MM)	
M	7	1	**6V-7673**	2	BOLT (M12X1.75X50-MM)	

M-METRIC PART

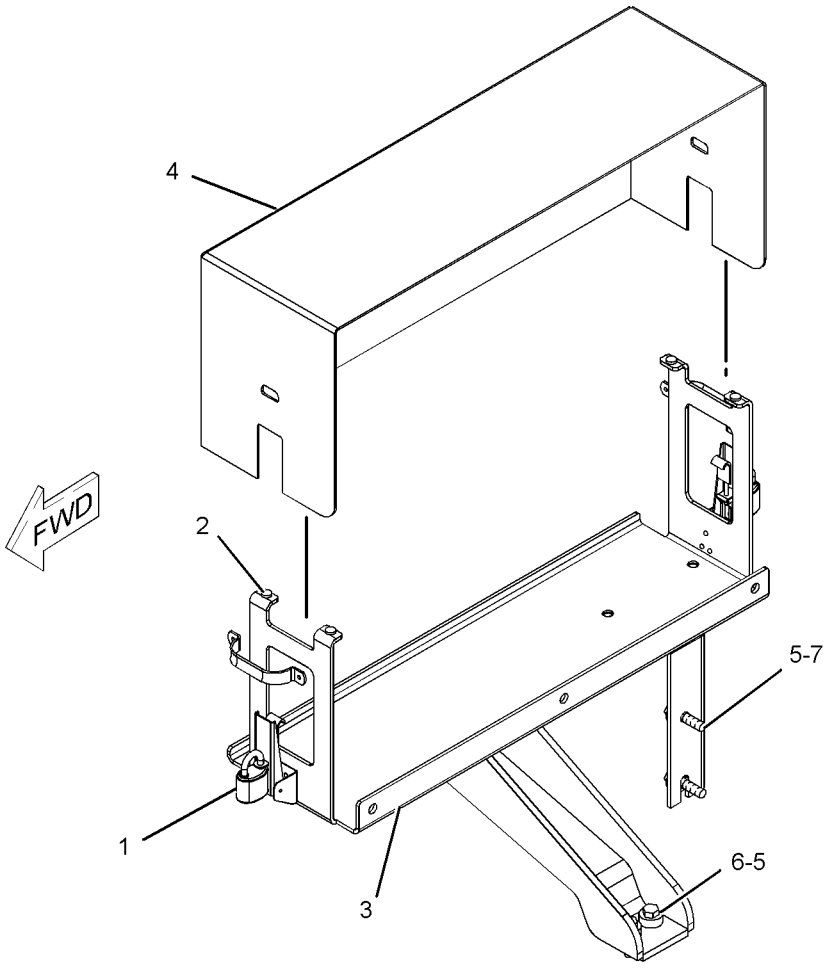

GRAPHIC #1 **<END>** g01923302

FRAME AND BODY

283-7190 BUMPER GP-REAR

S/N: JAP1-UP
AN ATTACHMENT

SMCS-7156 **i03258504**

NOTE	REF NO	GRAPHIC REF	PART NUMBER	QTY	PART NAME 1 2 3 4 5 6 (PRODUCT LEVEL)	SEE PAGE
	1	1	**291-6693**	1	BUMPER AS-TOW	
M	2	1	**7X-2575**	8	BOLT (M24X3X60-MM)	
	3	1	**8T-5361**	8	WASHER-HARD (28X49X5-MM THK)	

M-METRIC PART

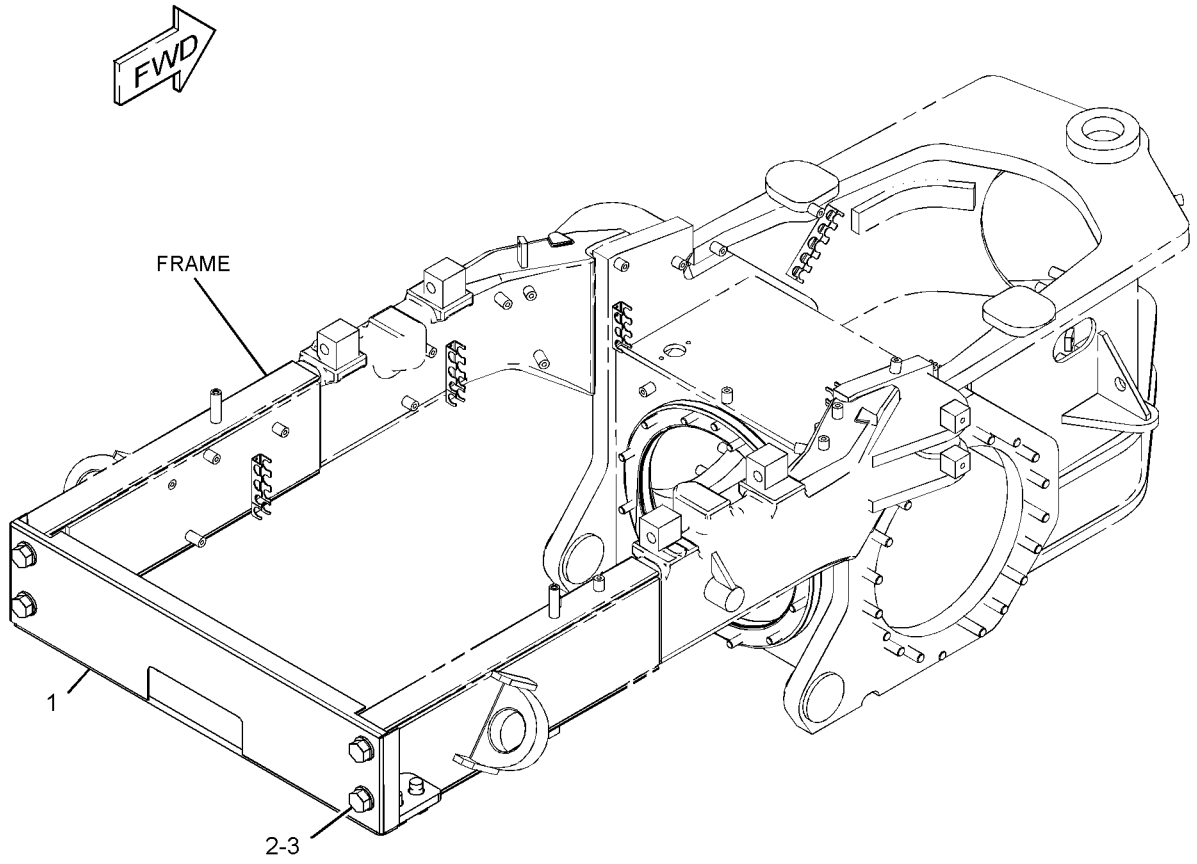

GRAPHIC #1 **<END>** g01667374

FRAME AND BODY

284-5378 BUMPER GP-REAR

S/N: JAP1-UP

PART OF 348-3018 GENERAL AR

SMCS-7156 **i03260160**

NOTE	REF NO	GRAPHIC REF	PART NUMBER	QTY	PART NAME 1 2 3 4 5 6 (PRODUCT LEVEL)	SEE PAGE
	1	1	**284-5379**	1	BUMPER AS	
M	2	1	**7X-2575**	6	BOLT (M24X3X60-MM)	
	3	1	**8T-5361**	6	WASHER-HARD (28X49X5-MM THK)	

M-METRIC PART

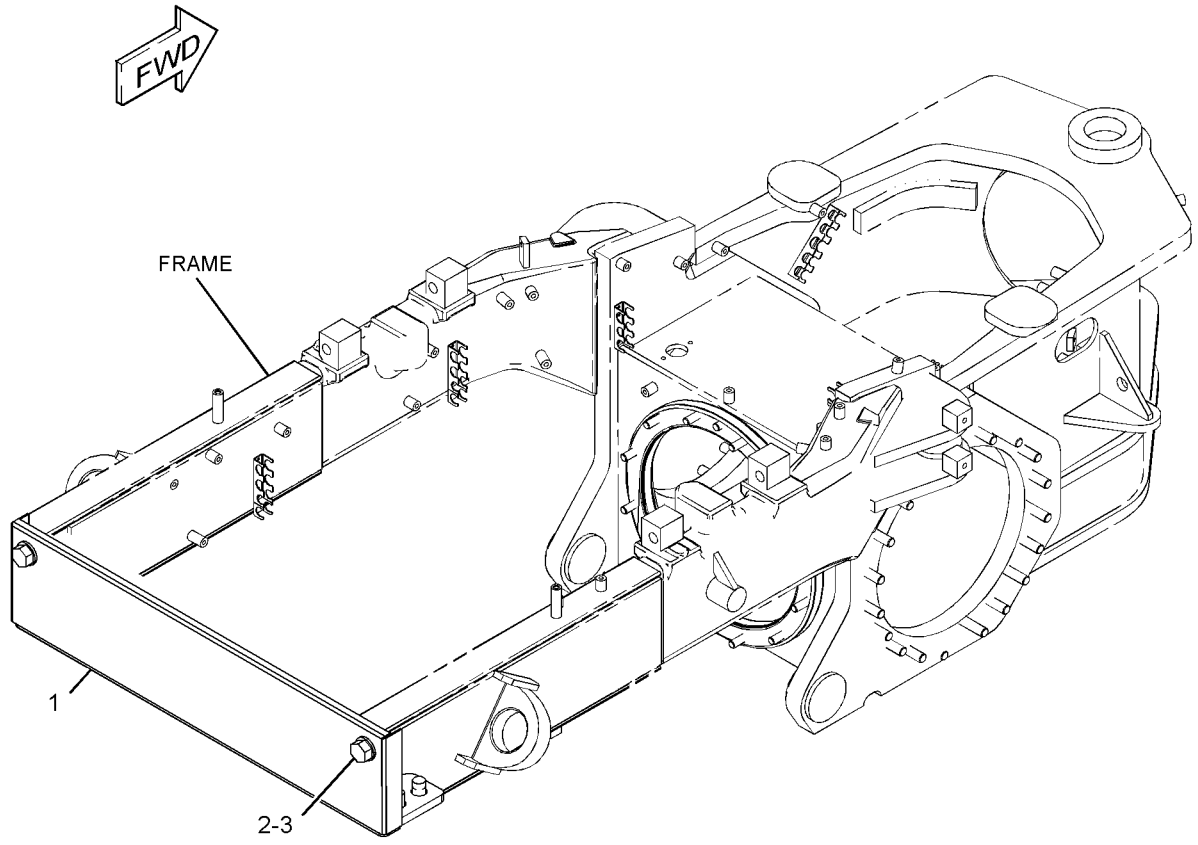

GRAPHIC #1 **<END>** g01667394

FRAME AND BODY

303-2159 CASE & FRAME GP

S/N: JAP1-UP

PART OF 348-3018 GENERAL AR

SMCS-7051 **i03539922**

NOTE	REF NO	GRAPHIC REF	PART NUMBER	QTY	PART NAME 1 2 3 4 5 6 (PRODUCT LEVEL)	SEE PAGE
	1	1	**2A-3398**	1	GASKET	
	2	1	**8M-3837**	1	PLUG-MAGNETIC (FINAL DRIVE OIL DRAIN)	
	3	1	**105-6491**	1	BOLT-ADJUSTMENT (5/8-11X3.15-IN)	
	4	1	**293-4835**	1	CASE & FRAME AS	
	5	1	**340-3687**	12	STUD-TAPERLOCK (1/2-13X2.17-IN)	
	6	1	**340-3689**	40	STUD-TAPERLOCK (5/8-11X2.36-IN)	
	7	1	**4D-8148**	1	DOWEL	
	8	1	**4K-0367**	1	NUT-FULL (5/8-11-THD)	

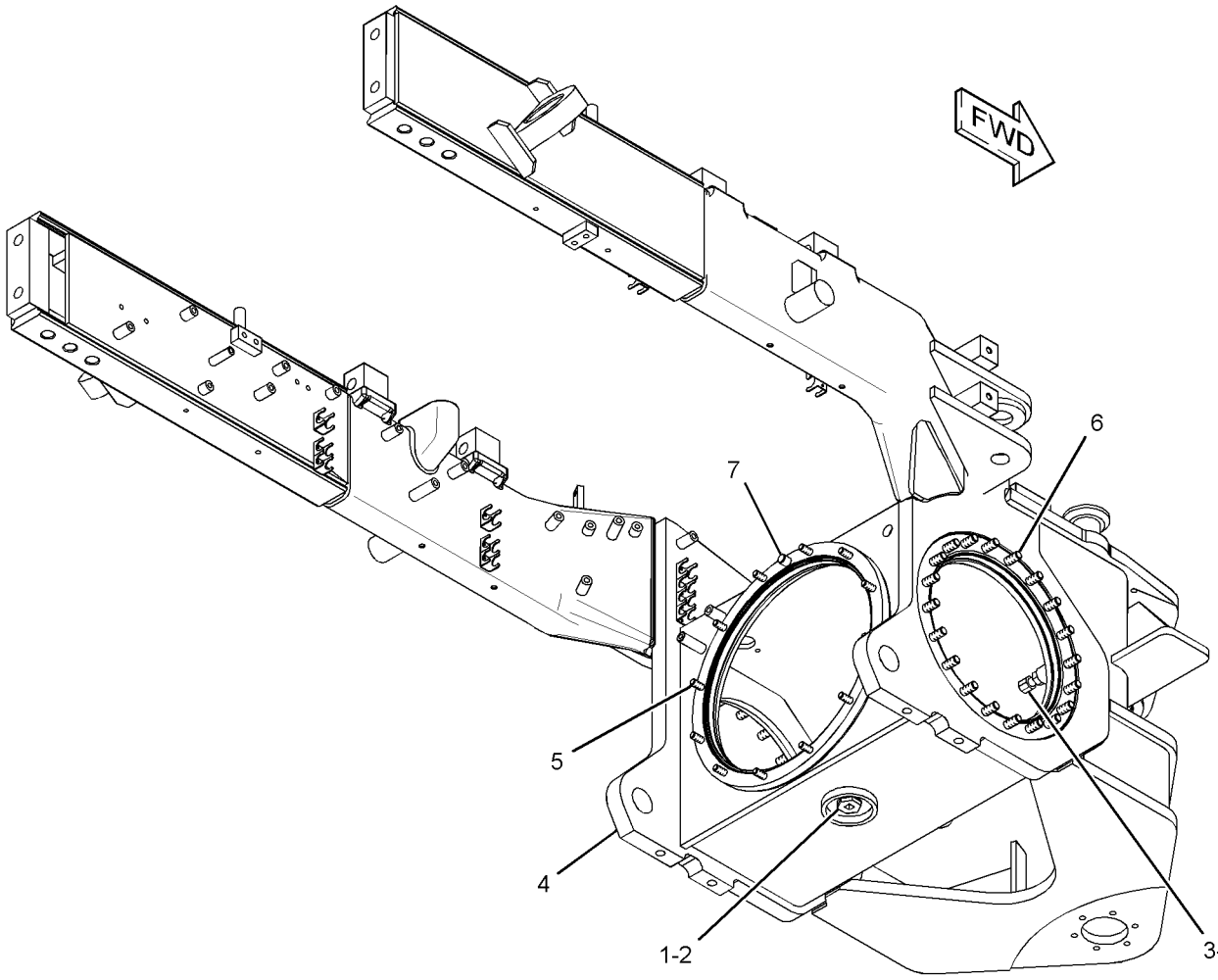

GRAPHIC #1 **<END>** g01950779

336-5530 COVER GP-ACCESS

S/N: JAP1-UP
PART OF 336-4249 GRADE CONTROL AR
AN ATTACHMENT

SMCS-726A **i03564962**

NOTE	REF NO	GRAPHIC REF	PART NUMBER	QTY	PART NAME 1 2 3 4 5 6 (PRODUCT LEVEL)	SEE PAGE
	1	1	**4T-8050**	1	SPACER (11X19X57-MM THK)	
	2	1	**129-5049**	4	BRACKET AS	
	3	1	**224-5912**	1	BRACKET	
	4	1	**226-1240**	2	FILM-WARNING (CRUSH HAZARD, STAY BACK, INTL)	
	5	1	**231-5251**	1	BRACKET	
	6	1	**245-3930**	1	COVER (RH)	
	7	1	**245-3933**	1	COVER (LH)	
	8	1	**5M-3062**	4	BOLT (3/8-16X0.75-IN)	
	9	1	**5P-1075**	12	WASHER-HARD (10.2X22.5X3-MM THK)	
	10	1	**5S-7382**	2	BOLT (3/8-16X1.375-IN)	
	11	1	**6V-1889**	1	CLIP	
	12	1	**6V-8801**	2	NUT (3/8-16-THD)	
	13	1	**8T-8915**	5	BOLT (3/8-16X3.25-IN)	

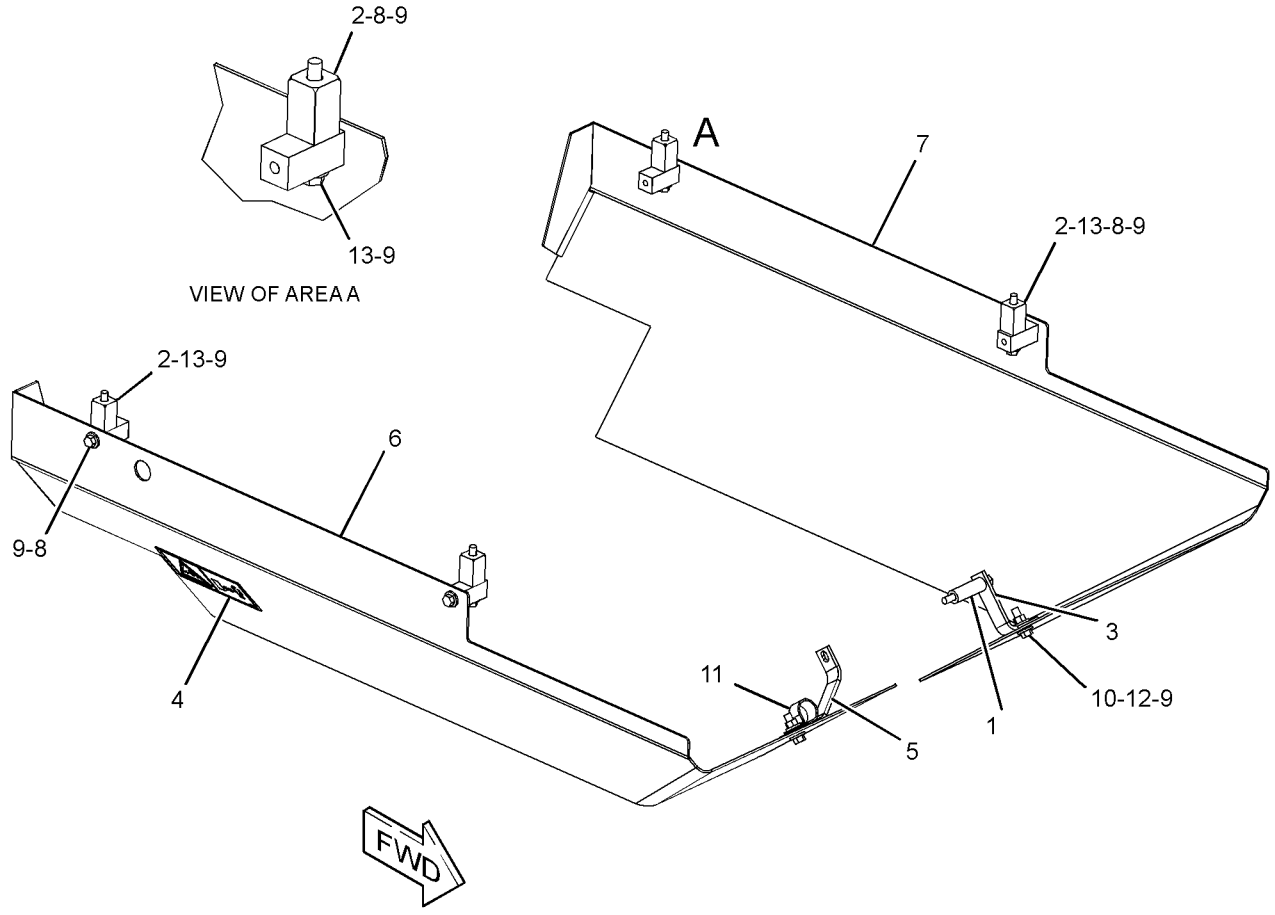

GRAPHIC #1 **<END>** g01927588

126-6933 COVER GP-PROTECTION–ACCUGRADE

S/N: JAP1-UP
PART OF 337-3100 GRADE CONTROL AR
AN ATTACHMENT

SMCS-7315, 795C **i02230061**

NOTE	REF NO	GRAPHIC REF	PART NUMBER	QTY	PART NAME 1 2 3 4 5 6 (PRODUCT LEVEL)	SEE PAGE
	1	1	**4T-8050**	1	SPACER (11X19X57-MM THK)	
	2	1,2	**129-5049**	4	BRACKET AS	
	3	2	**224-5912**	1	BRACKET	
	4	1	**226-1240**	2	FILM-WARNING (CRUSH HAZARD, STAY BACK, INTL)	
	5	2	**231-5251**	1	BRACKET	
C	6	1	**245-3930**	1	COVER (RH)	
C	7	1	**245-3933**	1	COVER (LH)	
	8	1,2	**1F-5339**	4	LUG (3/8-16-THD)	
	9	1,2	**5M-3062**	4	BOLT (3/8-16X0.75-IN)	
	10	1,2	**5P-1075**	12	WASHER-HARD (10.2X22.5X3-MM THK)	
	11	1,2	**5S-7382**	2	BOLT (3/8-16X1.375-IN)	
	12	2	**6V-1889**	1	CLIP	
	13	1,2	**6V-8801**	2	NUT (3/8-16-THD)	
	14	1,2	**8T-8915**	5	BOLT (3/8-16X3.25-IN)	

C-CHANGE FROM PREVIOUS TYPE

REFER TO ALL ILLUSTRATIONS OF THIS GROUP FOR AUXILIARY VIEWS

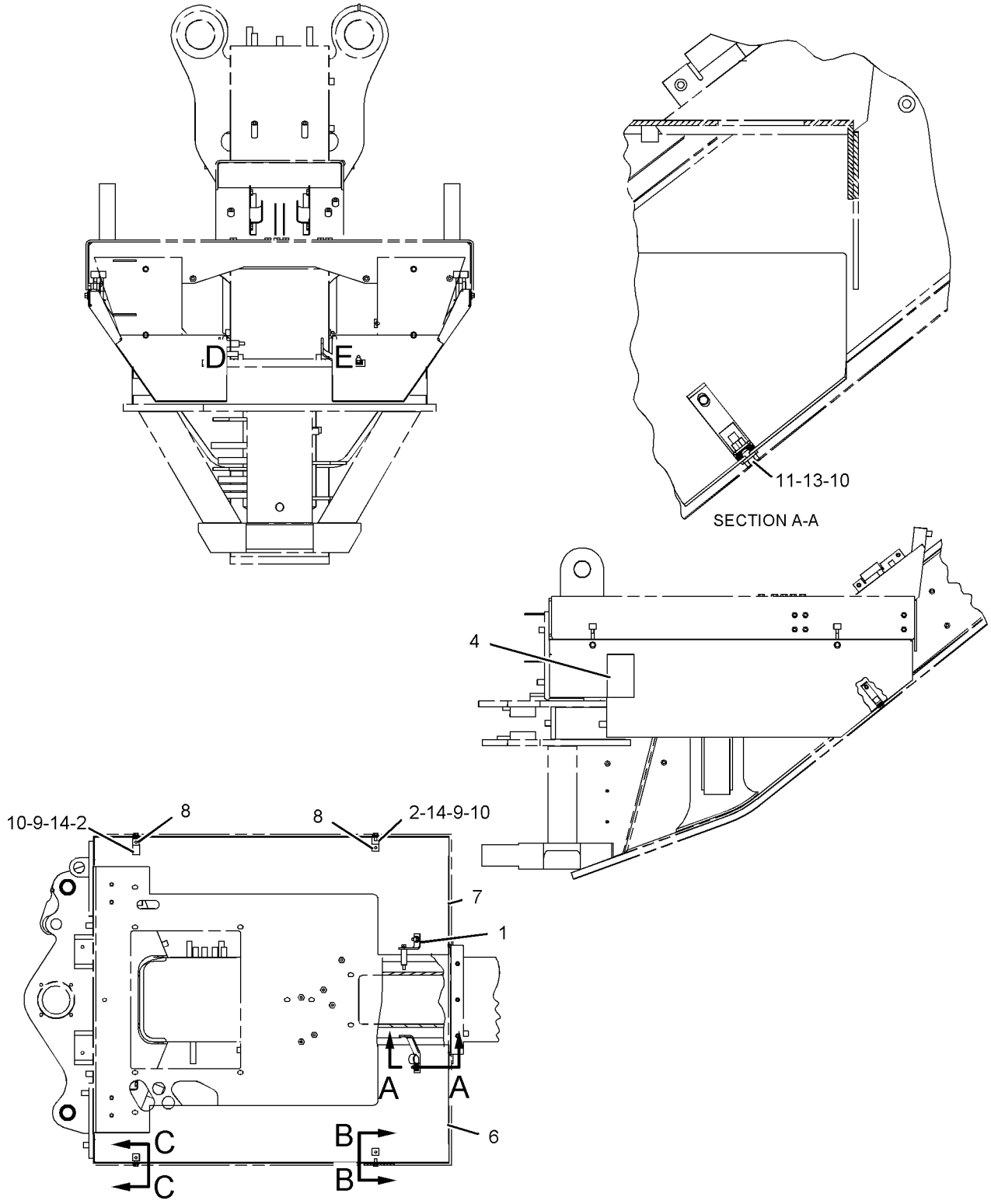

GRAPHIC #1

g01119645

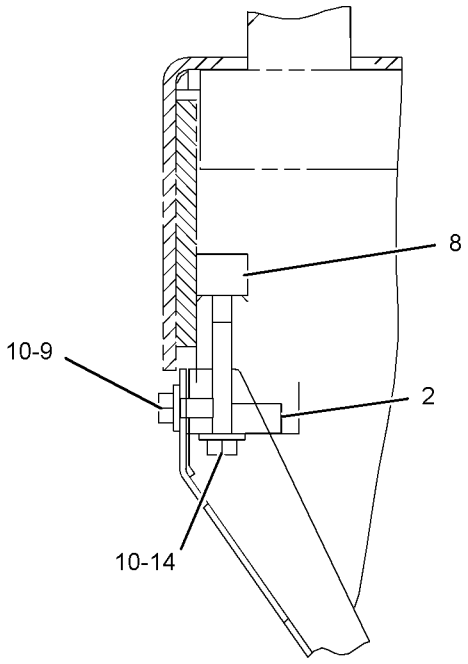

SECTION C-C

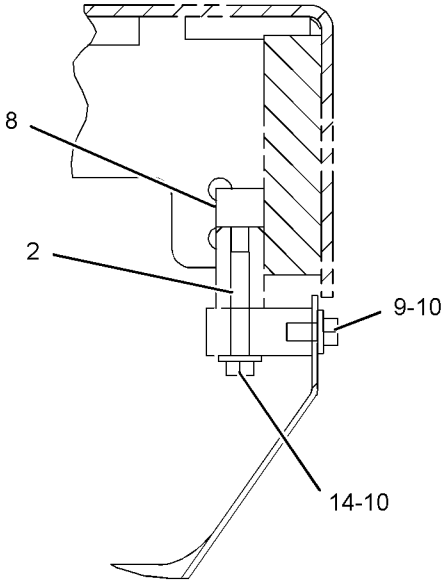

SECTION B-B

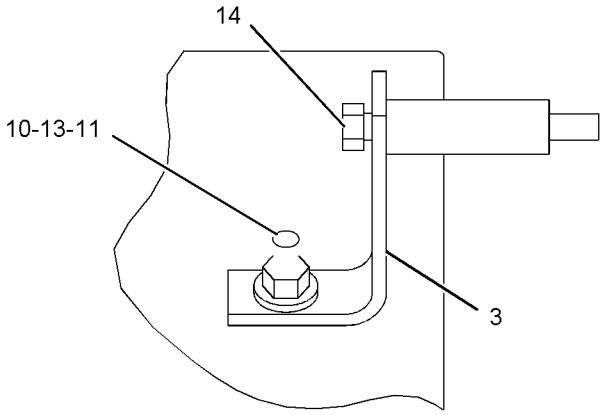

VIEW OF AREA E

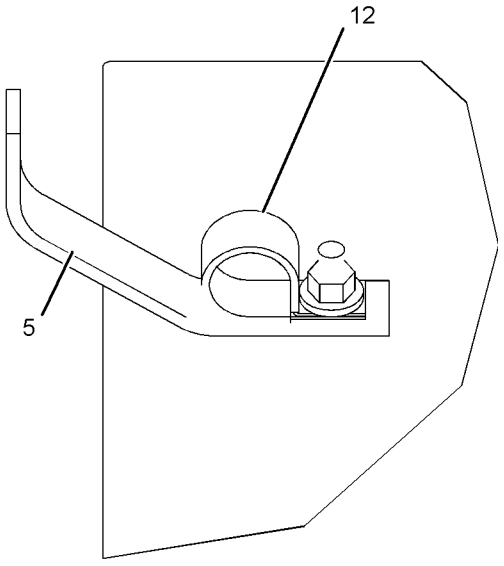

VIEW OF AREA D

GRAPHIC #2 **<END>** g01119647

FRAME AND BODY

293-4833 ENCLOSURE GP-ENGINE

S/N: JAP1-UP

PART OF 348-3018 GENERAL AR

SMCS-7263 **i03539112**

NOTE	REF NO	GRAPHIC REF	PART NUMBER	QTY	PART NAME 1 2 3 4 5 6 (PRODUCT LEVEL)	SEE PAGE
	1	1	**3T-5763**	2	BUMPER	
	2	1,2	**7I-4959**	4	PLATE	
	3	2	**7I-4960**	2	HINGE AS	
	4	2	**7I-4979**	2	HINGE AS	
	5	1	**7I-4981**	2	HINGE AS	
	6	1	**7I-4982**	2	HINGE AS	
	7	2	**7X-1387**	4	WASHER (10.26X22.22X1.9-MM THK)	
	8	2	**8D-3786**	4	MOUNTING	
	9	2	**123-5980**	2	ROD	
	10	2	**134-0165**	6	WASHER (13.8X45X3-MM THK)	
	11	1	**177-4119**	2	HANDRAIL	
	12	2	**177-4120**	2	HANDHOLD	
	13	1	**194-7015**	2	HANDRAIL	
J	14	1	**275-0572**	1	LATCH AS	
	15	1	**294-4619**	1	PANEL AS (LH)	
	16	1	**294-4621**	1	PANEL AS (RH)	
	17	1	**295-3839**	2	PAWL	
	18	1	**298-7785**	1	HOOD AS	
	19	1	**298-7787**	1	DASH AS	
	20	2	**298-8562**	1	PLATE AS	
	21	1	**298-8563**	1	PLATE AS	
	23	2	**304-7252**	2	BRACKET AS	
	24	1,2	**304-7417**	2	PLATE AS	
	25	1,2	**304-7418**	8	PLATE AS	
	26	1	**304-7419**	2	PLATE AS	
	27	2	**305-7827**	2	PLATE	
	28	1	**310-6534**	1	DOOR AS-ACCESS (RH)	
	29	1	**310-6535**	1	DOOR AS-ACCESS (LH)	
	30	2	**312-8529**	1	BRACKET AS (RH)	
	31	1	**312-8530**	1	BRACKET AS (LH)	
					(EACH INCLUDES)	
		1	**4K-9097**	1	NUT-WELD (5/16-18-THD)	
	32	2	**313-4374**	2	BRACKET	
	33	1	**316-5743**	1	COVER AS	
		1	**3R-9322**	1	HINGE	
M		1	**6V-9632**	3	NUT-WELD (M6X1-THD)	
	34	1	**317-7250**	1	CAM-LATCH	
	35	1	**326-0610**	2	LATCH AS	
	36	1	**336-4754**	1	SUPPORT AS (LH)	
	37	1	**336-4756**	1	SUPPORT AS (RH)	
	38	2	**3B-4615**	4	PIN-COTTER	
	39	1	**3V-0613**	6	BUMPER	
M	40	1	**5C-9553**	3	BOLT (M6X1X16-MM)	
	41	2	**5P-8439**	2	GROMMET	
	42	1	**6V-8189**	2	NUT (5/16-18-THD)	
	43	2	**7X-0550**	4	WASHER-HARD (13.5X32X5-MM THK)	
	44	2	**7X-0618**	2	WASHER-HARD (13.5X40X5-MM THK)	
	45	1,2	**7X-7729**	75	WASHER (11X25X3-MM THK)	
	46	1	**8T-2561**	4	WASHER-HARD (10.5X28.5X5-MM THK)	
M	47	1	**8T-4133**	2	NUT (M10X1.5-THD)	
M	48	1,2	**8T-4136**	59	BOLT (M10X1.5X25-MM)	
M	49	1	**8T-4137**	10	BOLT (M10X1.5X20-MM)	
M	50	2	**8T-4183**	4	BOLT (M12X1.75X40-MM)	
M	51	2	**8T-4194**	2	BOLT (M12X1.75X50-MM)	
M	52	1,2	**8T-4195**	8	BOLT (M10X1.5X30-MM)	
	53	1	**8T-4224**	2	WASHER-HARD (8.8X16X2-MM THK)	

293-4833 **ENCLOSURE GP-ENGINE** *(contd.)* **i03539112**

NOTE	REF NO	GRAPHIC REF	PART NUMBER	QTY	PART NAME 1 2 3 4 5 6 (PRODUCT LEVEL)	SEE PAGE
M	54	2	**8T-4244**	2	NUT (M12X1.75-THD)	
M	55	2	**8T-4910**	2	BOLT (M12X1.75X60-MM)	
	56	2	**8X-5155**	2	PLATE	
	57	1	**9X-8256**	3	WASHER (6.6X12X2-MM THK)	

J-REQUIRES CORPORATE KEY
M-METRIC PART

293-4833 **ENCLOSURE GP-ENGINE** *(contd.)* **i03539112**

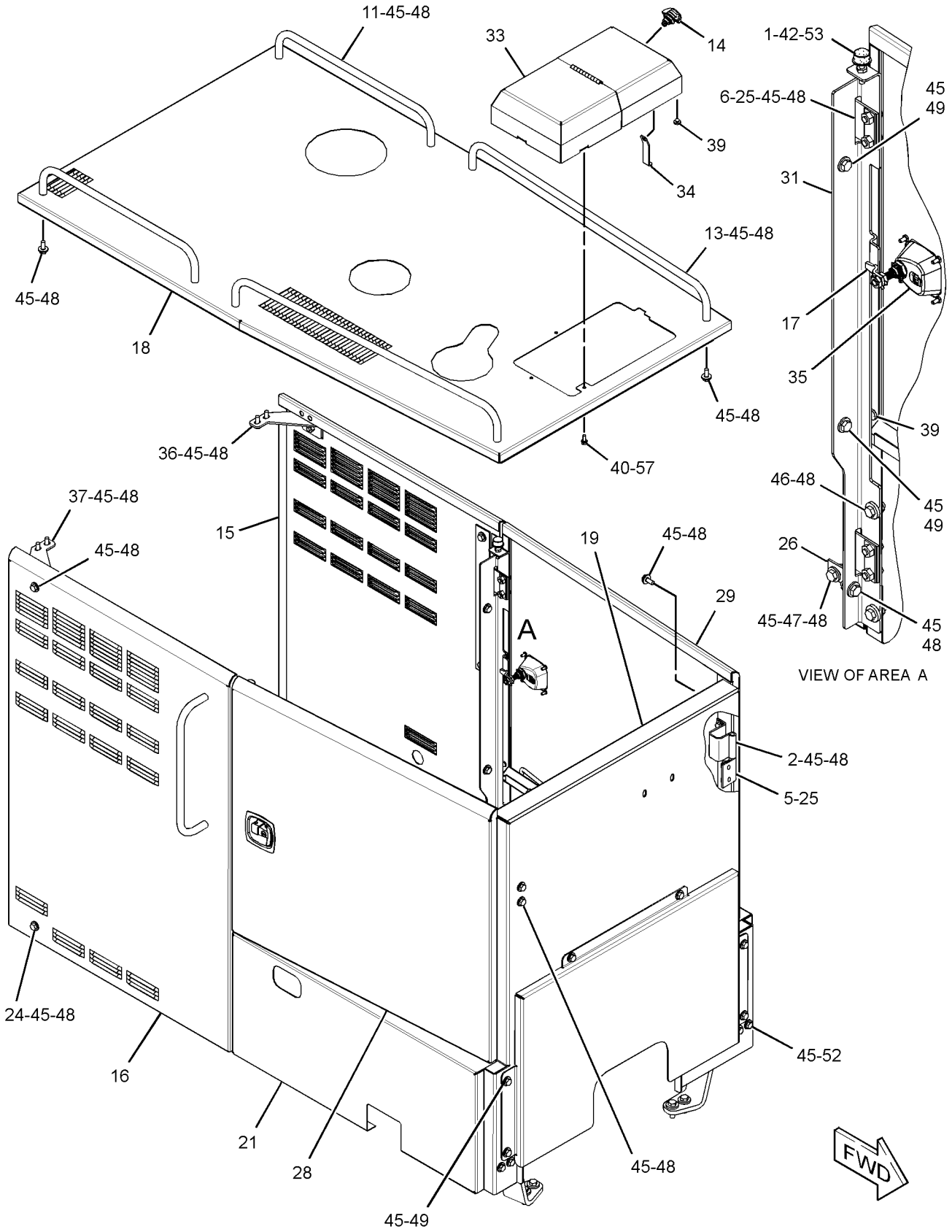

GRAPHIC #1 g01928479

293-4833 **ENCLOSURE GP-ENGINE** *(contd.)* **i03539112**

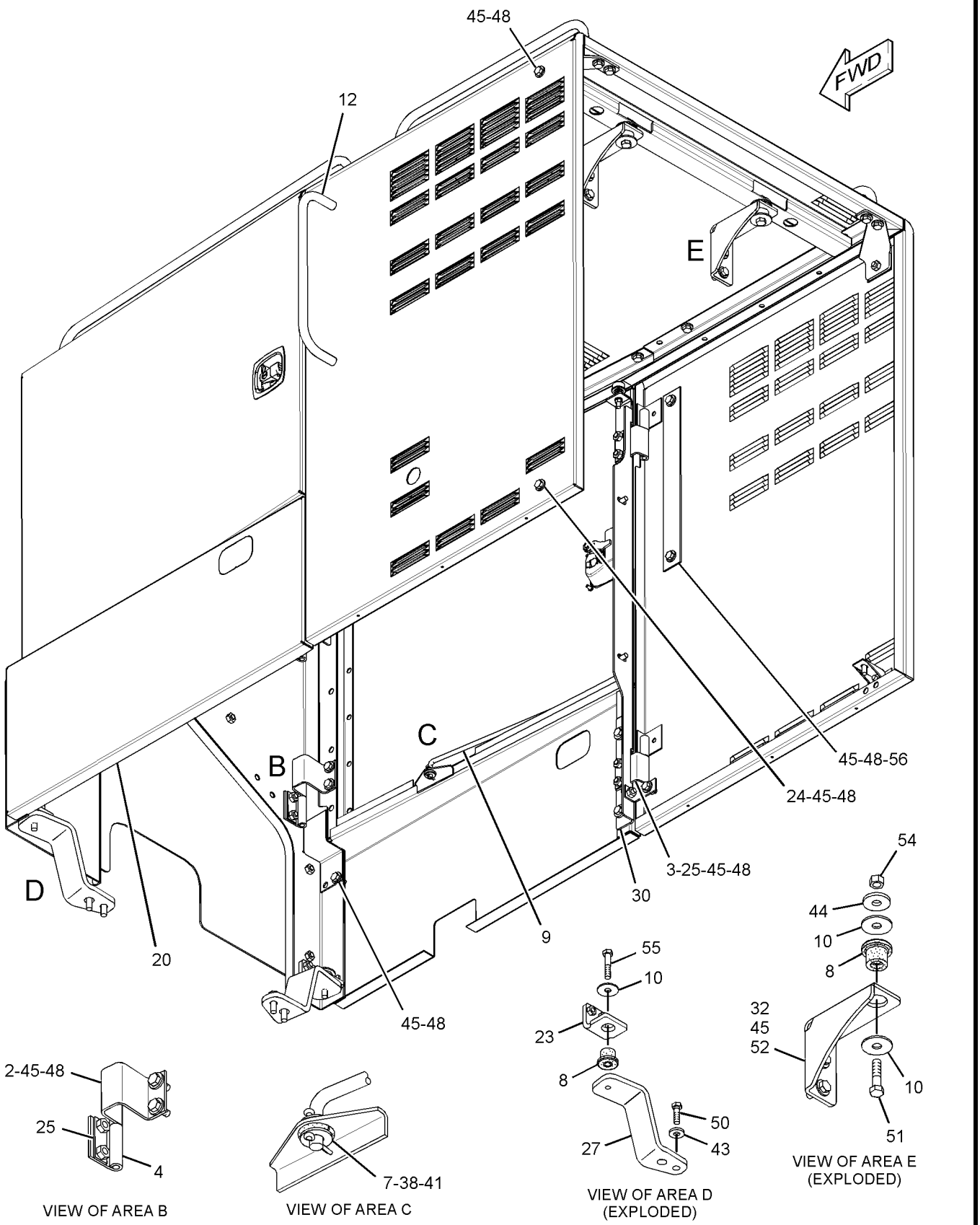

GRAPHIC #2 **<END>** g01928493

FRAME AND BODY

309-4095 FRAME GP-FRONT

S/N: JAP1-UP

PART OF 348-3018 GENERAL AR

SMCS-7050, 7051 **i03564960**

NOTE	REF NO	GRAPHIC REF	PART NUMBER	QTY	PART NAME 1 2 3 4 5 6 (PRODUCT LEVEL)	SEE PAGE
	1	1	**8D-3791**	1	PIN	
	2	1	**9D-6584**	9	SEAL-LIP TYPE	
	3	1	**9D-9257**	1	PIN	
	4	1	**142-1814**	2	COVER	
	5	1	**144-2161**	1	PLATE	
	6	1	**144-2162**	1	INSULATION	
	7	1	**145-5966**	1	COVER	
	8	1	**145-5967**	1	COVER	
	9	1	**283-0644**	1	PLATE AS	
	10	1	**309-4096**	1	FRAME AS	
	11	1	**5M-3062**	20	BOLT (3/8-16X0.75-IN)	
	12	1	**5P-1075**	20	WASHER-HARD (10.2X22.5X3-MM THK)	
	13	1	**7X-7729**	7	WASHER (11X25X3-MM THK)	
M	14	1	**8T-4136**	7	BOLT (M10X1.5X25-MM)	
	15	1	**8T-4896**	16	WASHER-HARD (10.2X18.5X2.5-MM THK)	
	16	1	**9D-0178**	4	BEARING	
	17	1	**9D-3311**	1	BEARING-SLEEVE	
E	18	1	**144-7620**		TAPE (50-CM EACH)	
E	18A	1	**144-7620**		TAPE (87-CM)	
E	18B	1	**144-7620**		TAPE (26.5-CM EACH)	
D	19	1	**5P-5969**		SEAL (0.1-M)	
D	19A	1	**5P-5969**		SEAL (0.05-M)	

D-ORDER BY THE METER
E-ORDER BY THE CENTIMETER
M-METRIC PART

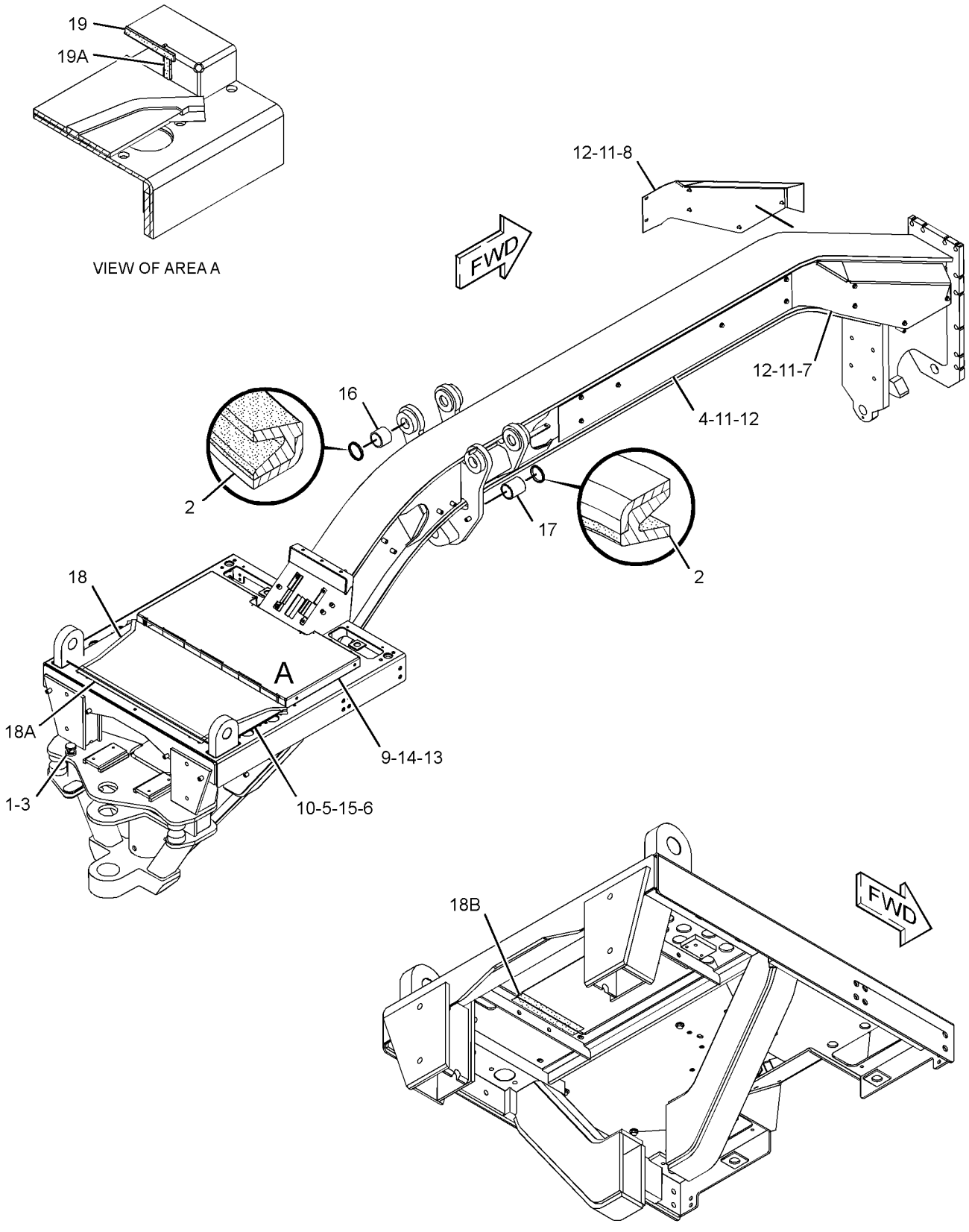

GRAPHIC #1 **<END>** g01947043

301-7735 GUARD GP-BOTTOM

S/N: JAP1-UP

PART OF 348-6936 OPTION AR-RIPPER, 348-6937 OPTION AR-WORK TOOL AN ATTACHMENT

SMCS-7153 **i03537524**

NOTE	REF NO	GRAPHIC REF	PART NUMBER	QTY	PART NAME 1 2 3 4 5 6 (PRODUCT LEVEL)	SEE PAGE
	1	1	**7D-7496**	2	PIN AS	
	2	1	**8W-6626**	2	CAP	
	3	1	**8W-6627**	1	SUPPORT AS	
		1	**1F-0750**	3	NUT-WELD (3/8-16-THD)	
	4	1	**302-8711**	1	GUARD AS	
	5	1	**3B-7740**	2	NIPPLE-PIPE	
	6	1	**8K-0530**	2	PIN-CABLE SOCKET	
M	7	1	**8T-4183**	8	BOLT (M12X1.75X40-MM)	
	8	1	**8T-4223**	8	WASHER-HARD (13.5X25.5X3-MM THK)	
	9	1	**8T-5439**	4	WASHER-HARD (21.5X45X6-MM THK)	
M	10	1	**8T-6430**	4	BOLT (M20X2.5X50-MM)	

M-METRIC PART

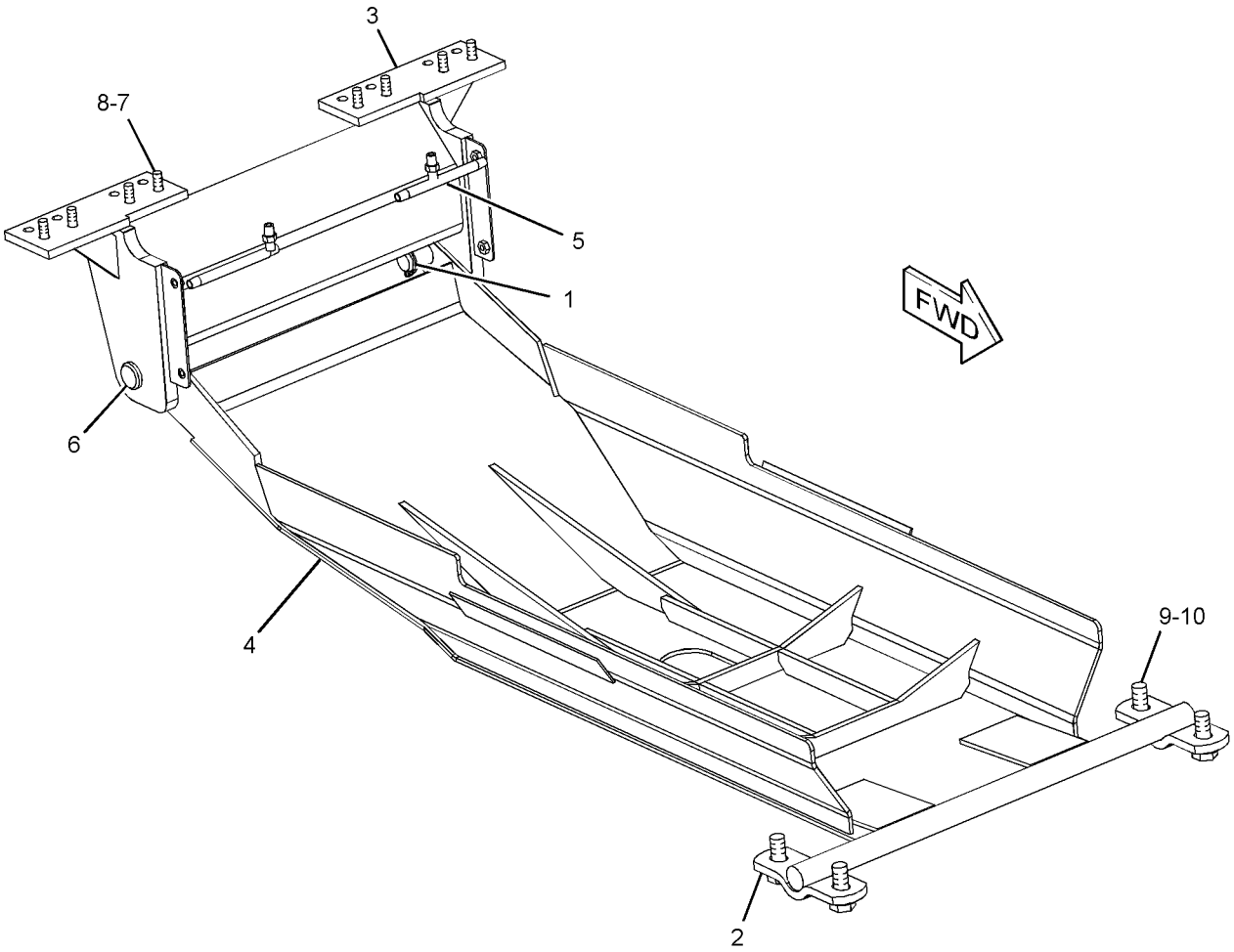

GRAPHIC #1 **<END>** g01927453

FRAME AND BODY

334-5760 GUARD GP-BOTTOM

S/N: JAP1-UP
AN ATTACHMENT

SMCS-7153 **i03400520**

NOTE	REF NO	GRAPHIC REF	PART NUMBER	QTY	PART NAME 1 2 3 4 5 6 (PRODUCT LEVEL)	SEE PAGE
	1	1	**7D-7496**	2	PIN AS	
	2	1	**8W-6626**	2	CAP	
	3	1	**8W-6627**	1	SUPPORT AS	
		1	**1F-0750**	3	NUT-WELD (3/8-16-THD)	
	4	1	**8W-8412**	1	GUARD AS	
	5	1	**3B-7740**	2	NIPPLE-PIPE	
	6	1	**8K-0530**	2	PIN-CABLE SOCKET	
M	7	1	**8T-4183**	8	BOLT (M12X1.75X40-MM)	
	8	1	**8T-4223**	8	WASHER-HARD (13.5X25.5X3-MM THK)	
	9	1	**8T-5439**	4	WASHER-HARD (21.5X45X6-MM THK)	
M	10	1	**8T-6430**	4	BOLT (M20X2.5X50-MM)	

M-METRIC PART

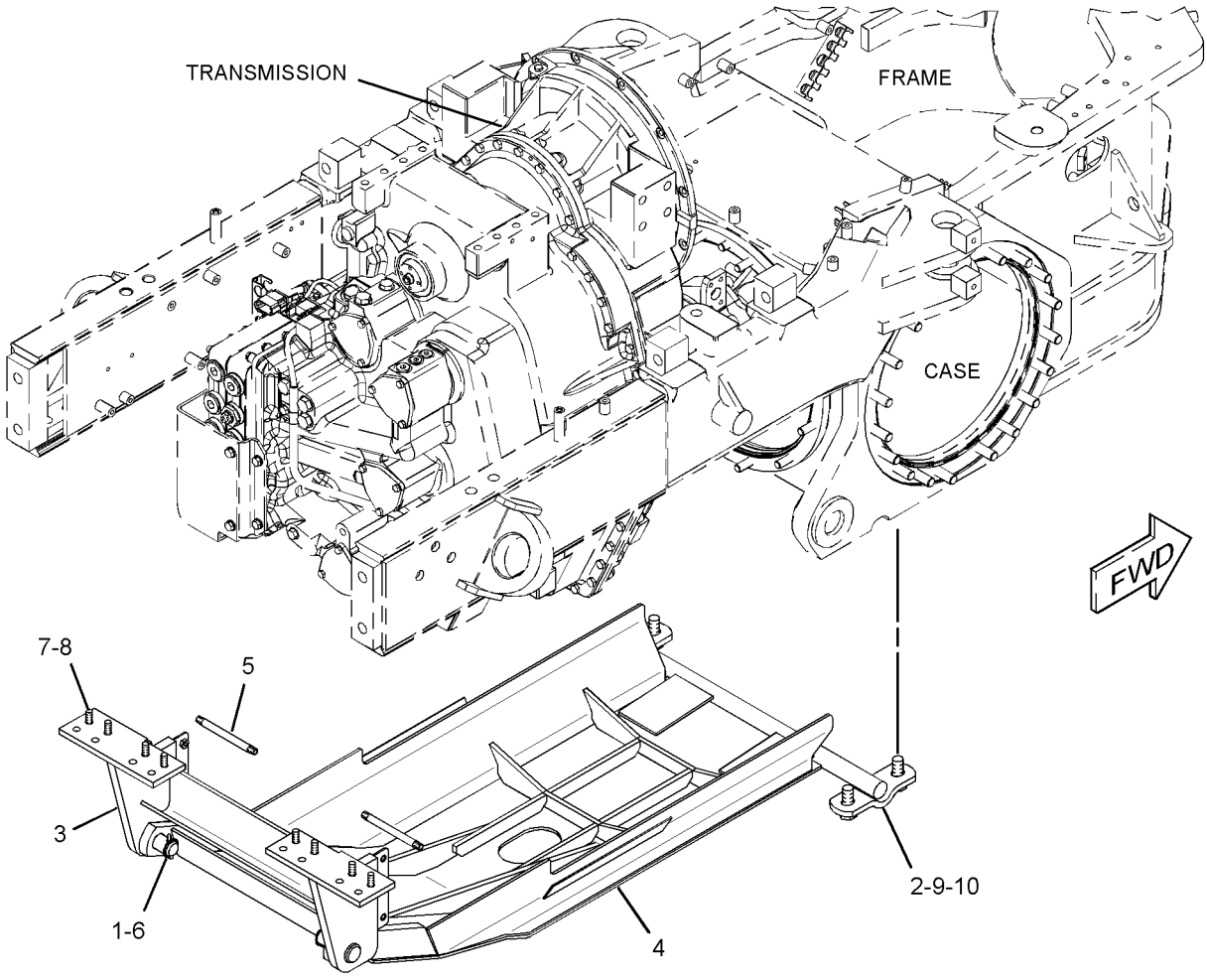

GRAPHIC #1 **<END>** g01768816

8W-5870 GUARD GP-DRIVE SHAFT

S/N: JAP1-UP

PART OF 348-3018 GENERAL AR

SMCS-7153 **i02871980**

NOTE	REF NO	GRAPHIC REF	PART NUMBER	QTY	PART NAME 1 2 3 4 5 6 (PRODUCT LEVEL)	SEE PAGE
	1	1	**5P-1075**	2	WASHER-HARD (10.2X22.5X3-MM THK)	
	2	1	**8T-7971**	4	WASHER-HARD (13.5X25.5X5-MM THK)	
	3	1	**5S-7379**	2	BOLT (3/8-16X0.875-IN)	
	4	1	**5C-6565**	4	BOLT (1/2-13X1.125-IN)	
	5	1	**103-5419**	1	GUARD AS	
		1	**9F-2978**	2	NUT-WELD (3/8-16-THD)	
	6	1	**103-5417**	1	GUARD	

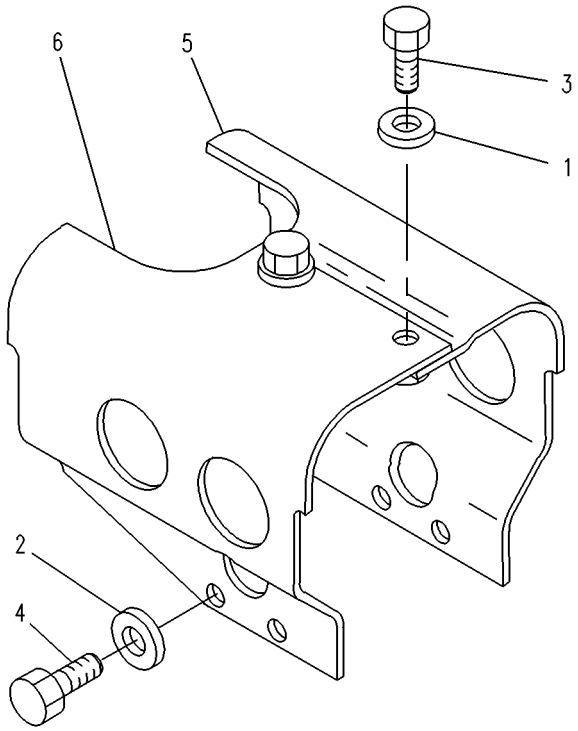

GRAPHIC #1 **<END>** g00108482

FRAME AND BODY

282-2469 GUARD GP-PLATFORM

S/N: JAP1-UP

PART OF 348-3018 GENERAL AR

SMCS-7150, 7253 **i03247405**

NOTE	REF NO	GRAPHIC REF	PART NUMBER	QTY	PART NAME 1 2 3 4 5 6 (PRODUCT LEVEL)	SEE PAGE
	1	1	**8W-3902**	1	SUPPORT AS	
	2	1	**8X-2913**	2	COVER AS	
					(EACH INCLUDES)	
M		1	**6V-9632**	2	NUT-WELD (M6X1-THD)	
	3	1	**8X-6419**	1	FLOOR MAT	
	4	1	**8X-6475**	2	PLATE	
	5	1	**8X-8505**	2	PLATE	
	6	1	**8X-9464**	2	STEP AS	
	7	1	**135-3894**	1	PIPE AS	
	8	1	**160-6382**	1	GROMMET	
	9	1	**169-5414**	1	CLIP	
	10	1	**198-8588**	1	PANEL	
	11	1	**200-3967**	1	PANEL AS	
	12	1	**115-3072**	1	CLIP AS-CONNECTOR (8-PIN)	
	13	1	**3P-3839**	1	GROMMET	
	14	1	**5P-1075**	7	WASHER-HARD (10.2X22.5X3-MM THK)	
	15	1	**5P-4115**	4	WASHER-HARD (7.2X19X2-MM THK)	
	16	1	**5P-9085**	2	CLIP	
	17	1	**6V-2687**	4	SCREW-PAN HEAD (10-24X1-IN)	
	18	1	**8T-4121**	2	WASHER-HARD (11X21X2.5-MM THK)	
M	19	1	**8T-4137**	2	BOLT (M10X1.5X20-MM)	
M	20	1	**8T-4138**	4	BOLT (M6X1X20-MM)	
M	21	1	**8T-4176**	4	BOLT (M12X1.75X90-MM)	
M	22	1	**8T-4183**	8	BOLT (M12X1.75X40-MM)	
	23	1	**8T-4223**	16	WASHER-HARD (13.5X25.5X3-MM THK)	
M	24	1	**8T-4244**	4	NUT (M12X1.75-THD)	
M	25	1	**9X-2043**	12	SCREW-TRUSS HEAD (M6X1X14-MM)	
M	26	1	**9X-2125**	7	BOLT-LOCKING (M10X1.5X25-MM)	

M-METRIC PART

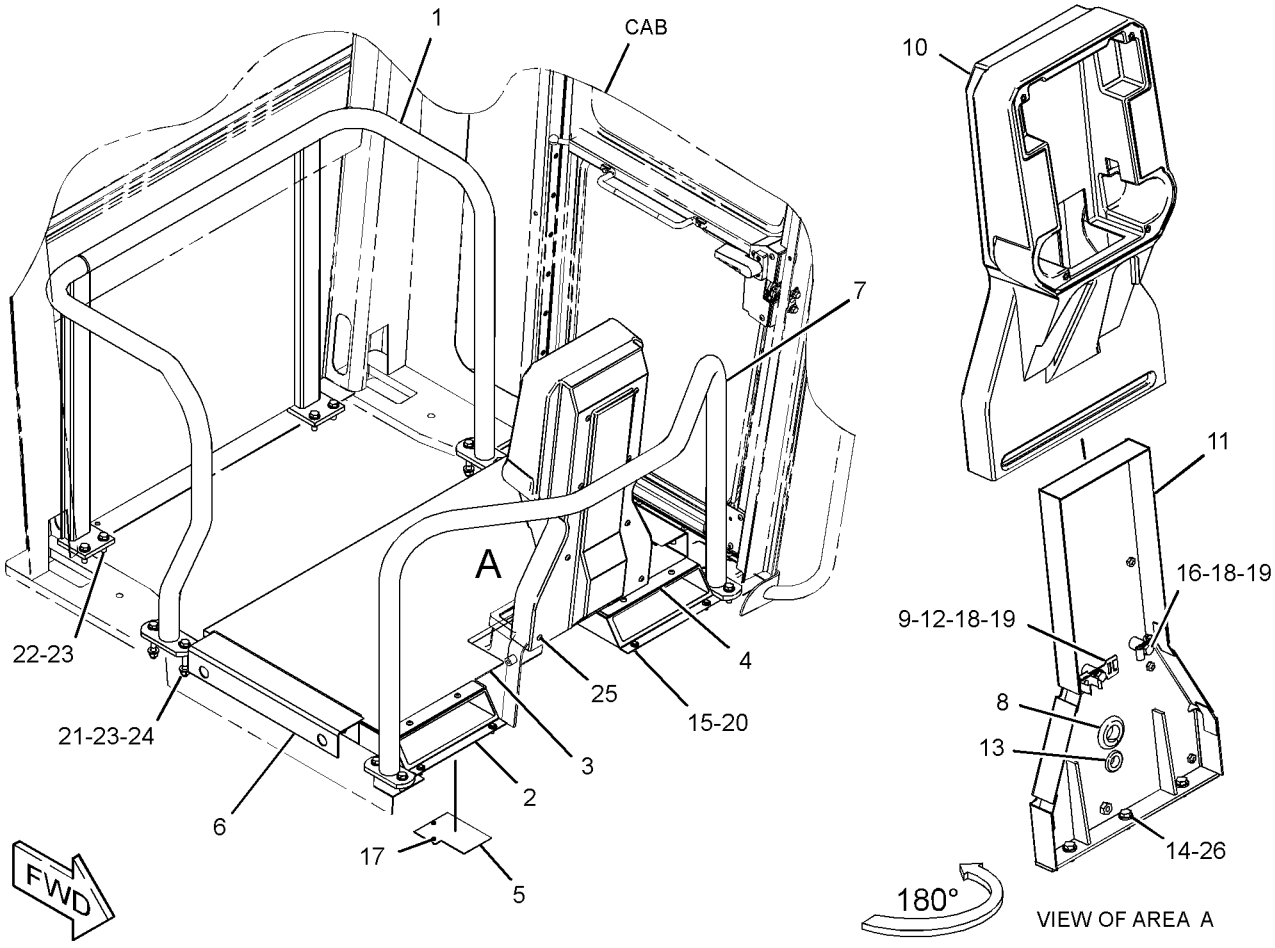

GRAPHIC #1 **<END>** g01700178

FRAME AND BODY

290-1148 GUARD GP-PLATFORM

S/N: JAP1-UP
PART OF 284-5400 ROPS AR
AN ATTACHMENT

SMCS-7150, 7253 **i03261504**

NOTE	REF NO	GRAPHIC REF	PART NUMBER	QTY	PART NAME 1 2 3 4 5 6 (PRODUCT LEVEL)	SEE PAGE
	1	1	**8X-2226**	2	PLATE	
	2	1	**8X-2913**	2	COVER AS	
					(EACH INCLUDES)	
M		1	**6V-9632**	2	NUT-WELD (M6X1-THD)	
	3	1	**8X-6475**	2	PLATE	
	4	1	**8X-8505**	2	PLATE	
	5	1	**124-8949**	1	FLOOR MAT	
	6	1	**160-6382**	1	GROMMET	
	7	1	**169-5414**	1	CLIP	
	8	1	**198-8588**	1	PANEL	
	9	1	**200-3967**	1	PANEL AS	
	10	1	**115-3072**	1	CLIP AS-CONNECTOR (8-PIN)	
	11	1	**3P-3839**	1	GROMMET	
	12	1	**5P-1075**	3	WASHER-HARD (10.2X22.5X3-MM THK)	
	13	1	**5P-4115**	4	WASHER-HARD (7.2X19X2-MM THK)	
	14	1	**5P-9085**	2	CLIP	
	15	1	**6V-2687**	4	SCREW-PAN HEAD (10-24X1-IN)	
M	16	1	**6V-7732**	3	BOLT (M10X1.5X25-MM)	
M	17	1	**6V-8214**	4	BOLT (M6X1X20-MM)	
	18	1	**8T-4121**	2	WASHER-HARD (11X21X2.5-MM THK)	
M	19	1	**8T-4137**	2	BOLT (M10X1.5X20-MM)	
M	20	1	**9X-2043**	22	SCREW-TRUSS HEAD (M6X1X14-MM)	

M-METRIC PART

290-1148 **GUARD GP-PLATFORM** *(contd.)* **i03261504**

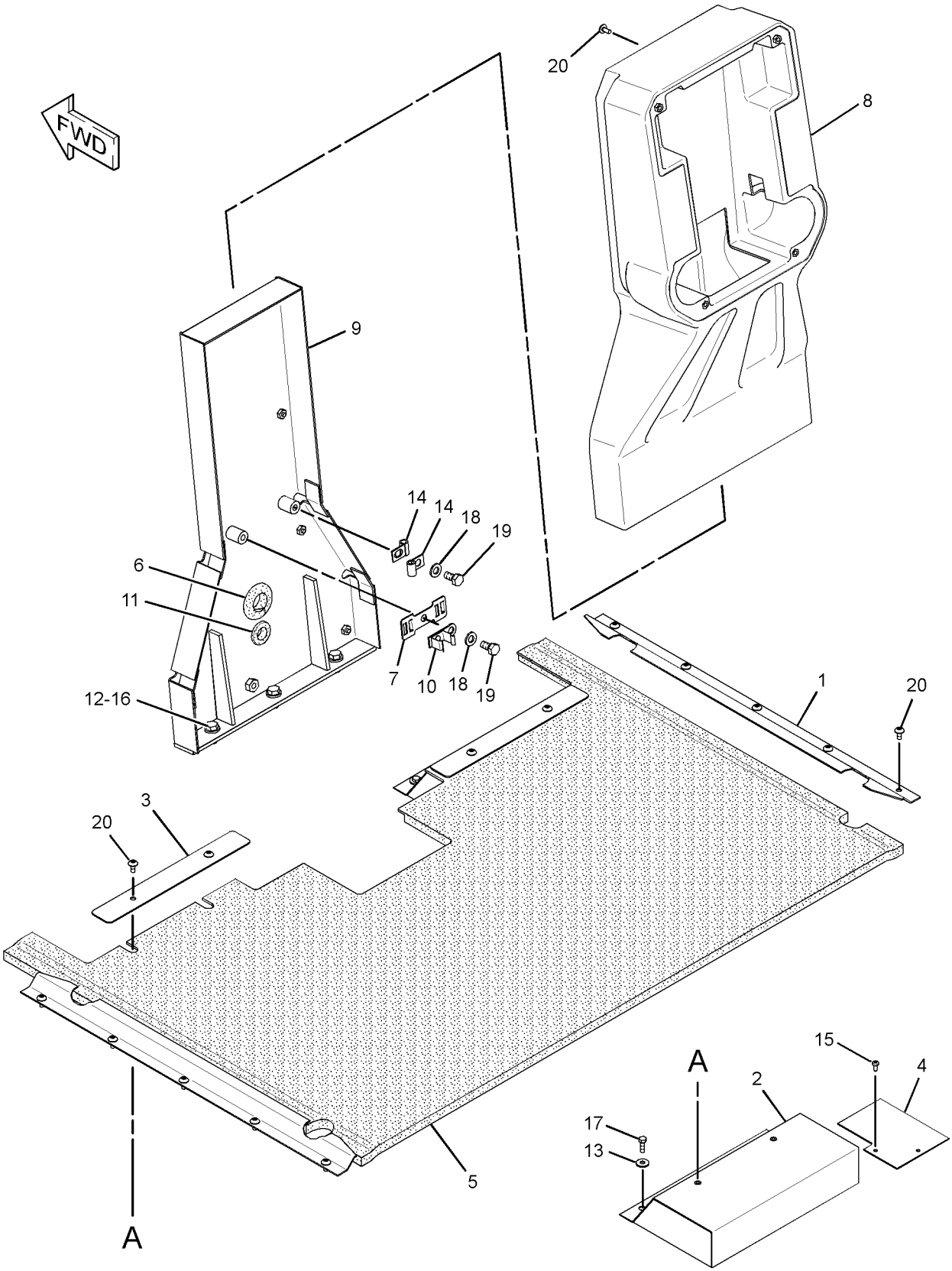

GRAPHIC #1 **<END>** g01671593

FRAME AND BODY

338-9747 HITCH GP-ARTICULATING

S/N: JAP1-UP

PART OF 348-3018 GENERAL AR

SMCS-7057, 7100 **i03541323**

NOTE	REF NO	GRAPHIC REF	PART NUMBER	QTY	PART NAME 1 2 3 4 5 6 (PRODUCT LEVEL)	SEE PAGE
	1	1	**2G-4011**	1	COLLAR	
	2	1	**2G-6157**	1	PIN	
	3	1	**6G-0417**	1	COVER	
	4	1	**6K-4185**	1	SPACER (1.44-IN THK)	
	5	1	**6K-4186**	2	SEAL-LIP TYPE	
B	6	1	**6K-4187**	1	SHIM PACK (INCLUDES 19-SHIMS)	
	7	1	**6K-4190**	1	CAP-LOWER	
	8	1	**6K-4191**	1	CAP-UPPER	
	9	1	**6K-4193**	1	PLATE-LOCK	
	10	1	**8D-9688**	1	SPACER	
B	11	1	**8D-9689**	1	SHIM PACK (INCLUDES 24-SHIMS)	
	12	1	**8D-9909**	1	BEARING AS-ROLLER	
	13	1	**124-3240**	1	PIN	
	14	1	**4K-7463**	2	SEAL-LIP TYPE	
	15	1	**4K-8659**	1	BEARING-SLEEVE	
	16	1	**5K-0984**	1	BEARING-SLEEVE	
	17	1	**7X-0331**	6	BOLT (1/2-13X4.25-IN)	
	18	1	**8C-4436**	10	BOLT (1/2-13X1.375-IN)	
	19	1	**8T-4223**	22	WASHER-HARD (13.5X25.5X3-MM THK)	
	20	1	**8T-4835**	4	BOLT (1/2-13X2-IN)	
	21	1	**8T-8919**	2	BOLT (1/2-13X1.75-IN)	

B-USE AS REQUIRED

338-9747 **HITCH GP-ARTICULATING** *(contd.)* **i03541323**

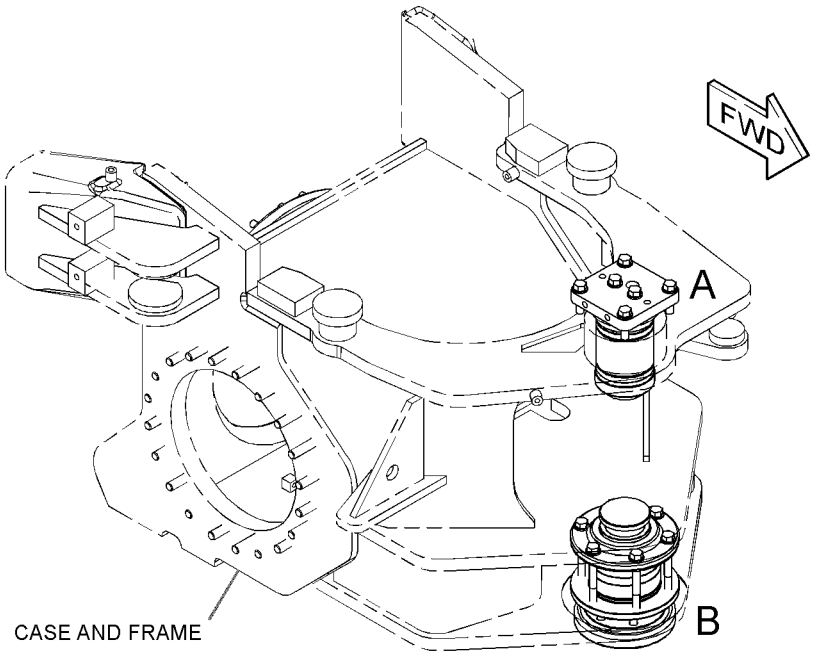

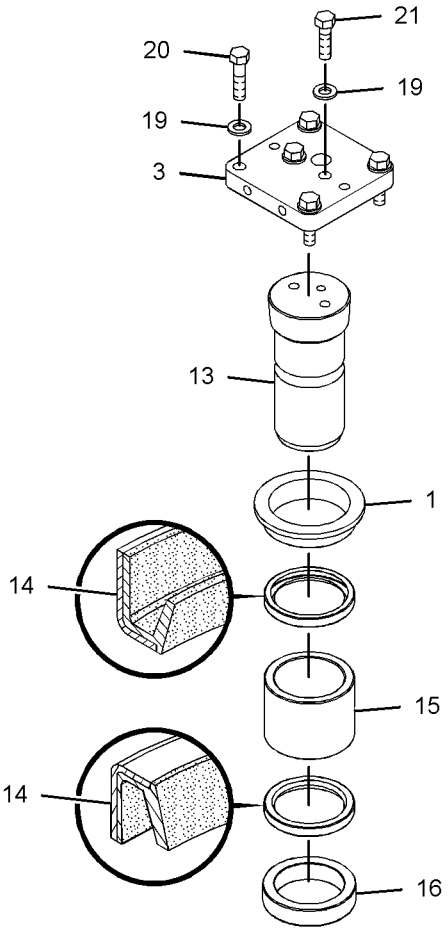

VIEW OF AREA A
(EXPLODED)

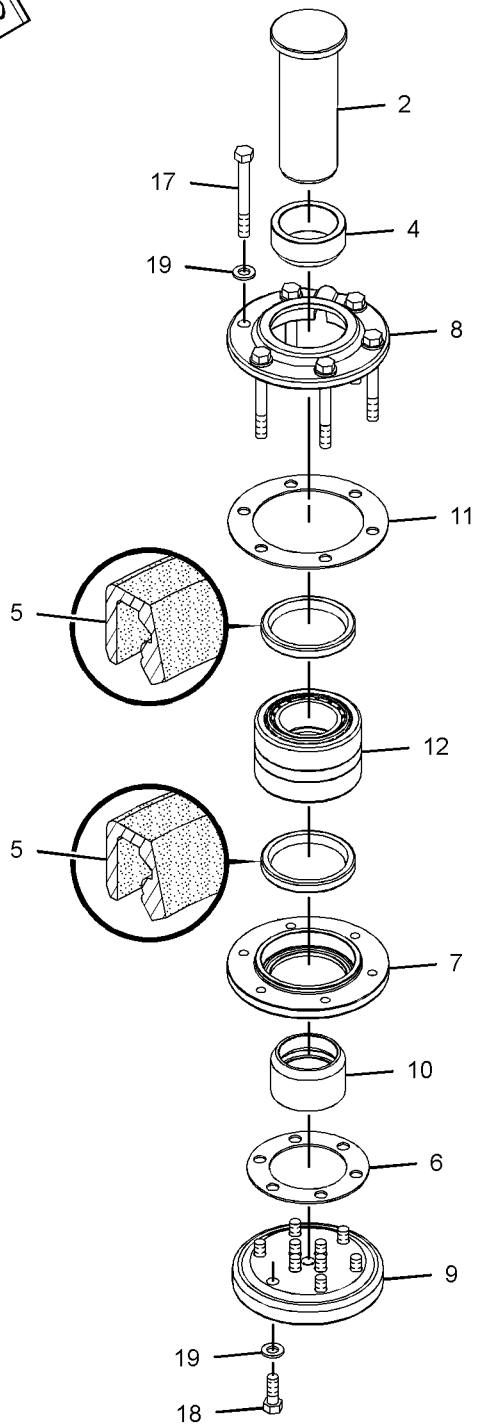

VIEW OF AREA B
(EXPLODED)

GRAPHIC #1 **<END>** g01929235

7I-4610 LINES GP-LUBRICATION

S/N: JAP1-UP

PART OF 348-3018 GENERAL AR

SMCS-7510, 7540 **i01456162**

NOTE	REF NO	GRAPHIC REF	PART NUMBER	QTY	PART NAME 1 2 3 4 5 6 (PRODUCT LEVEL)	SEE PAGE
	1	1	**3B-7733**	1	FITTING	
	2	1	**3B-6769**	2	ELBOW	
	3	1	**3B-8489**	2	FITTING-GREASE (ARTICULATION HITCH)	
	4	1	**4D-7794**	1	CLIP	
	5	1	**5H-7826**	1	NIPPLE-PIPE	
I	6	1	**3G-6659**	2	HOSE AS	

I-REFER TO HYDRAULIC INFORMATION SYSTEM

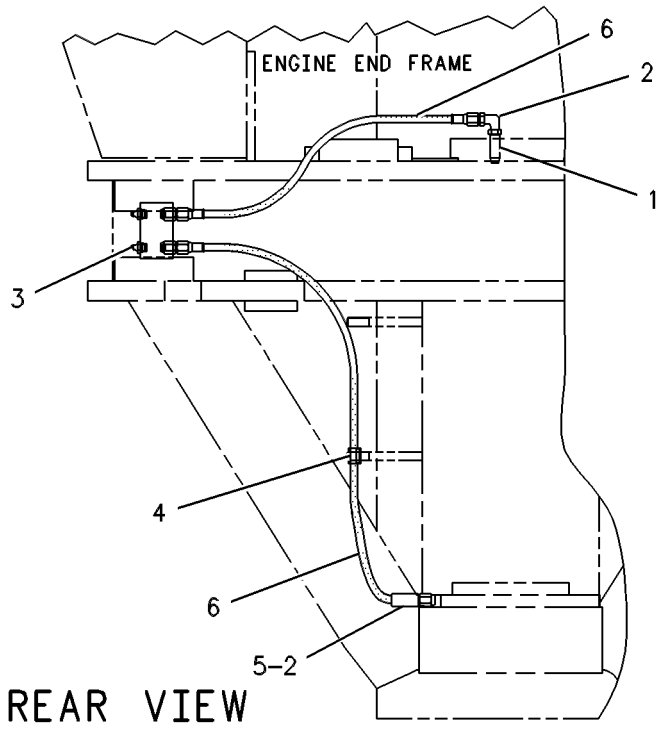

GRAPHIC #1 **<END>** g00109092

131-3740 LINK GP-STEERING

S/N: JAP1-UP

PART OF 134-1080 AXLE GP-FRONT

SMCS-4305 **i03643735**

NOTE	REF NO	GRAPHIC REF	PART NUMBER	QTY	PART NAME 1 2 3 4 5 6 (PRODUCT LEVEL)	SEE PAGE
	1	1	**131-3739**	1	TIE ROD	
	2	1	**131-3738**	1	TIE ROD GP (LH THREAD, RH)	
		1	**2F-8057**	1	NUT-SLOTTED	
		1	**132-1143**	1	SEAL-BOOT	
	3	1	**131-3737**	1	TIE ROD GP (RH THREAD, LH)	
		1	**2F-8057**	1	NUT-SLOTTED	
		1	**132-1143**	1	SEAL-BOOT	
	4	1	**132-1144**	2	CLAMP	
	5	1	**1B-4367**	2	BOLT (5/8-11X3-IN)	
	6	1	**3K-2889**	2	LOCKNUT (5/8-11-THD)	

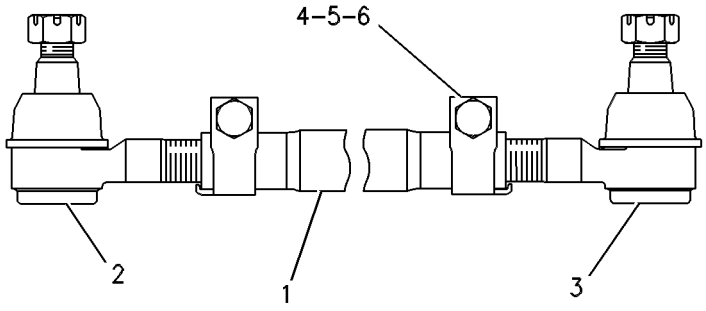

GRAPHIC #1 **<END>** g00109239

332-1618 REFLECTOR GP

S/N: JAP1-UP
PART OF 334-7636, 335-9267 ROADING AR
AN ATTACHMENT

SMCS-7430 **i03320861**

NOTE	REF NO	GRAPHIC REF	PART NUMBER	QTY	PART NAME 1 2 3 4 5 6 (PRODUCT LEVEL)	SEE PAGE
	1	1	**238-4523**	2	REFLECTOR-RED	
	2	1	**238-4524**	8	REFLECTOR-AMBER	
	3	1	**238-4525**	2	REFLECTOR	
	4	1	**332-1550**	2	PLATE	
BE	5	1	**238-4527**		TAPE-REFLECTIVE (85-CM)	
BE	6	1	**238-4528**		TAPE-REFLECTIVE (40-CM EACH)	

B-USE AS REQUIRED
E-ORDER BY THE CENTIMETER

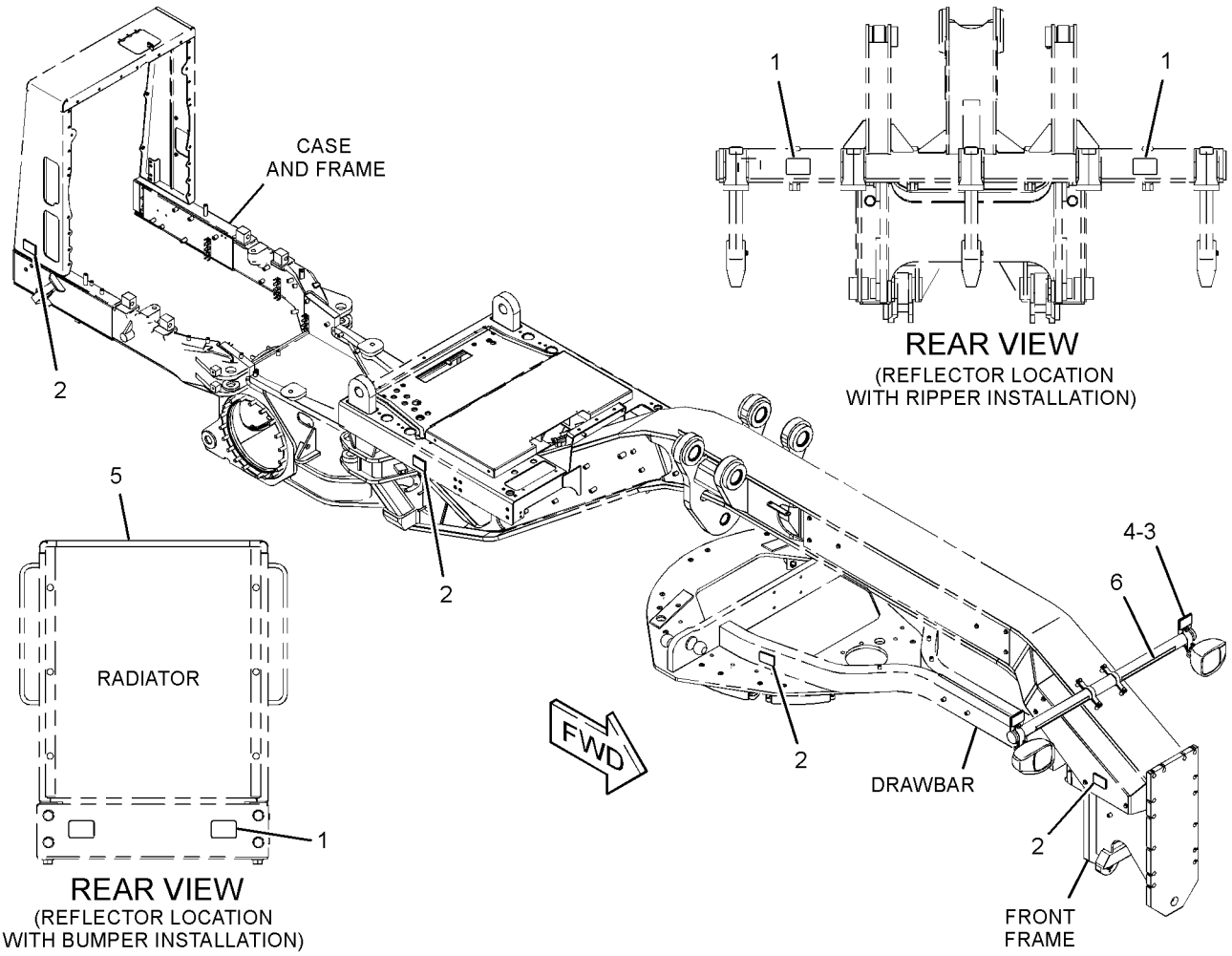

GRAPHIC #1 **<END>** g01703955

FRAME AND BODY

295-2933 STEP GP

S/N: JAP1-UP

PART OF 348-3018 GENERAL AR

SMCS-7254 **i03247345**

NOTE	REF NO	GRAPHIC REF	PART NUMBER	QTY	PART NAME 1 2 3 4 5 6 (PRODUCT LEVEL)	SEE PAGE
	1	1	**4V-9804**	8	PLATE	
	2	1	**4V-9809**	2	STEP AS	
					(EACH INCLUDES)	
		1	**4V-9803**	2	PLATE	
	3	1	**8X-1032**	4	SUPPORT-STEP (RUBBER)	
	4	1	**123-3698**	2	PLATE	
	5	1	**123-3699**	2	PLATE	
	6	1	**198-7379**	2	STEP AS	
					(EACH INCLUDES)	
		1	**4V-9803**	2	PLATE	
	7	1	**198-7380**	2	STEP AS	
					(EACH INCLUDES)	
		1	**4V-9803**	2	PLATE	
	8	1	**1D-4689**	24	BOLT (1/2-13X1.75-IN)	
	9	1	**1K-6872**	24	LOCKNUT (1/2-13-THD)	
	10	1	**5P-1076**	8	WASHER-HARD (13.5X30X4-MM THK)	
M	11	1	**8T-4183**	8	BOLT (M12X1.75X40-MM)	
	12	1	**8T-4223**	24	WASHER-HARD (13.5X25.5X3-MM THK)	

M-METRIC PART

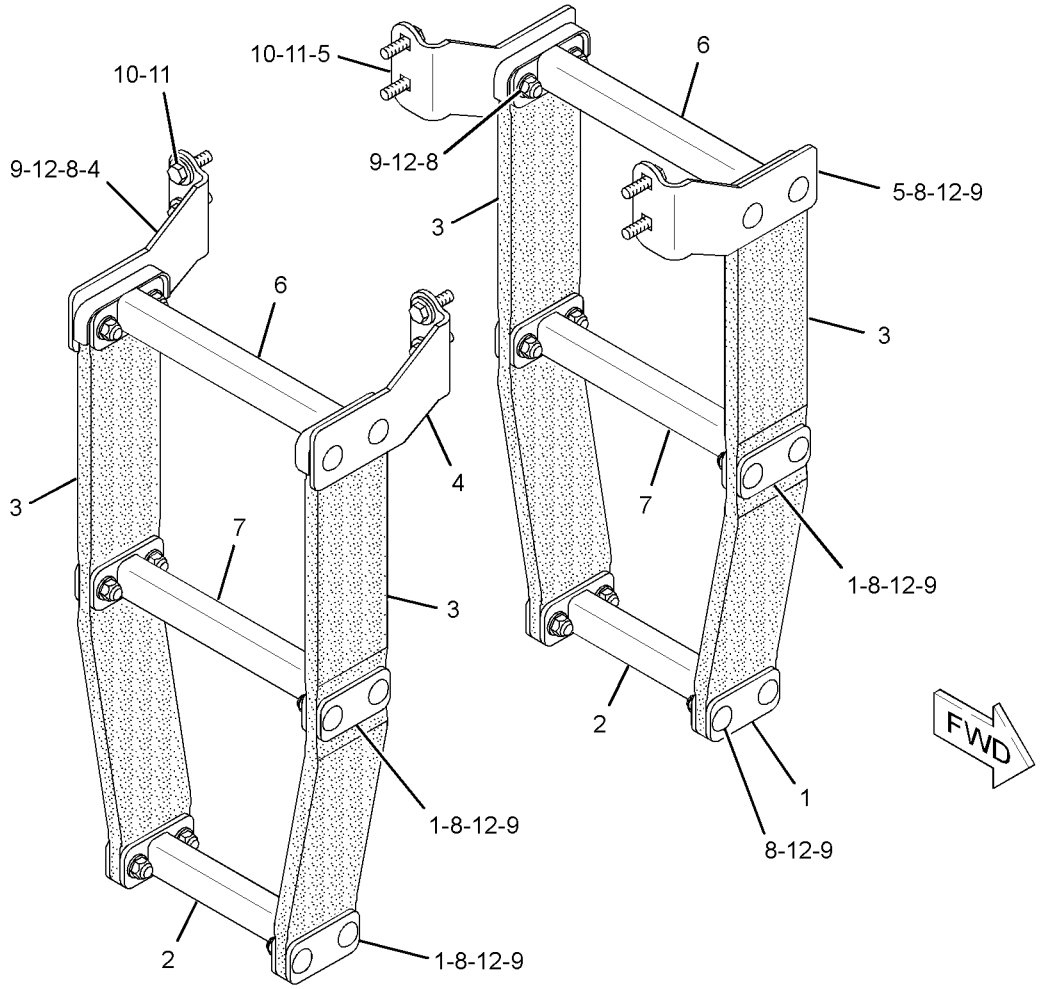

GRAPHIC #1 **<END>** g01708139

298-3520 SUPPORT GP-BATTERY

S/N: JAP1-UP
PART OF 304-9957 BATTERY & WIRING GP
AN ATTACHMENT

SMCS-7257 **i03316103**

NOTE	REF NO	GRAPHIC REF	PART NUMBER	QTY	PART NAME 1 2 3 4 5 6 (PRODUCT LEVEL)	SEE PAGE
	1	1	**246-2641**	1	PADLOCK GP	
		1	**5P-8500**	1	KEY	
	2	1	**143-4792**	4	BUMPER	
	3	1	**298-3523**	1	COVER AS	
		1	**6F-7013**	2	HANDLE	
	4	1	**298-3529**	1	SUPPORT AS	
M		1	**8T-3490**	4	NUT-WELD (M10X1.5-THD)	
		1	**034-7044**	6	RIVET	
		1	**161-4423**	2	LATCH AS	
	5	1	**198-4778**	4	WASHER-HARD (13.5X30X12-MM THK)	
M	6	1	**6V-5684**	2	BOLT (M12X1.75X45-MM)	
M	7	1	**6V-7673**	2	BOLT (M12X1.75X50-MM)	

M-METRIC PART

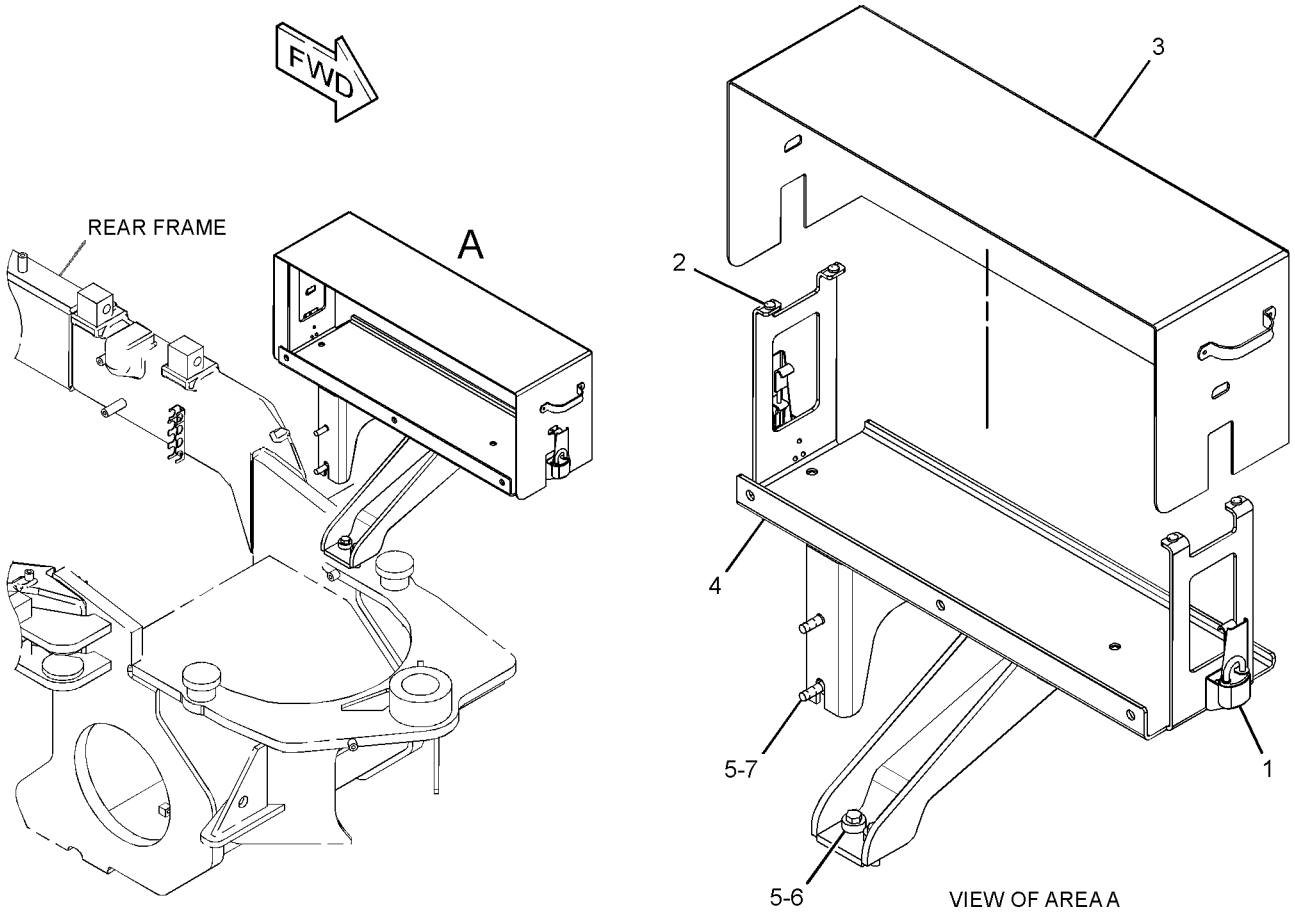

GRAPHIC #1 **<END>** g01758753

FRAME AND BODY

299-8307 SUPPORT GP-RADIATOR

S/N: JAP1-UP

PART OF 348-3018 GENERAL AR

SMCS-1353 **i03572578**

NOTE	REF NO	GRAPHIC REF	PART NUMBER	QTY	PART NAME 1 2 3 4 5 6 (PRODUCT LEVEL)	SEE PAGE
	1	1	**274-1704**	2	HANDHOLD	
	2	1	**299-8306**	1	BRACKET AS	
	3	1	**299-8318**	1	PLATE AS	
	4	1	**299-9478**	2	PLATE	
	5	1	**303-5996**	1	BRACKET AS	
	6	1	**303-5998**	1	BRACKET AS	
	7	1	**303-5999**	1	SUPPORT AS	
Y	8	1	*303-6003*	1	GUARD GP-FAN	76
	9	1	**303-6013**	1	BRACKET	
	10	1	**303-6014**	1	PLATE AS	
	11	1	**303-6015**	1	PLATE AS	
	12	1	**303-6017**	1	BRACKET AS	
	14	1	**317-1534**	1	PLATE AS	
		1	**5D-9629**	1	ROD	
		1	**6V-4604**	5	RIVET-POP	
	15	1	**317-1537**	2	PLATE	
	16	1	**320-0924**	1	PLATE	
	17	1	**198-4782**	4	WASHER-HARD (26X47X12-MM THK)	
M	18	1	**7X-2575**	4	BOLT (M24X3X60-MM)	
	19	1	**7X-7729**	8	WASHER (11X25X3-MM THK)	
C	20	1	**8T-4121**	56	WASHER-HARD (11X21X2.5-MM THK)	
M	21	1	**8T-4136**	39	BOLT (M10X1.5X25-MM)	
CM	22	1	**8T-4137**	14	BOLT (M10X1.5X20-MM)	
M	23	1	**8T-4195**	10	BOLT (M10X1.5X30-MM)	
M	24	1	**8T-4196**	1	BOLT (M10X1.5X35-MM)	
	25	1	**9D-3767**	1	PLUG-BUTTON	
D	26	1	**5P-8309**		SEAL (1.1-M EACH)	

C-CHANGE FROM PREVIOUS TYPE
D-ORDER BY THE METER
M-METRIC PART
Y-SEPARATE ILLUSTRATION

299-8307 **SUPPORT GP-RADIATOR** *(contd.)* **i03572578**

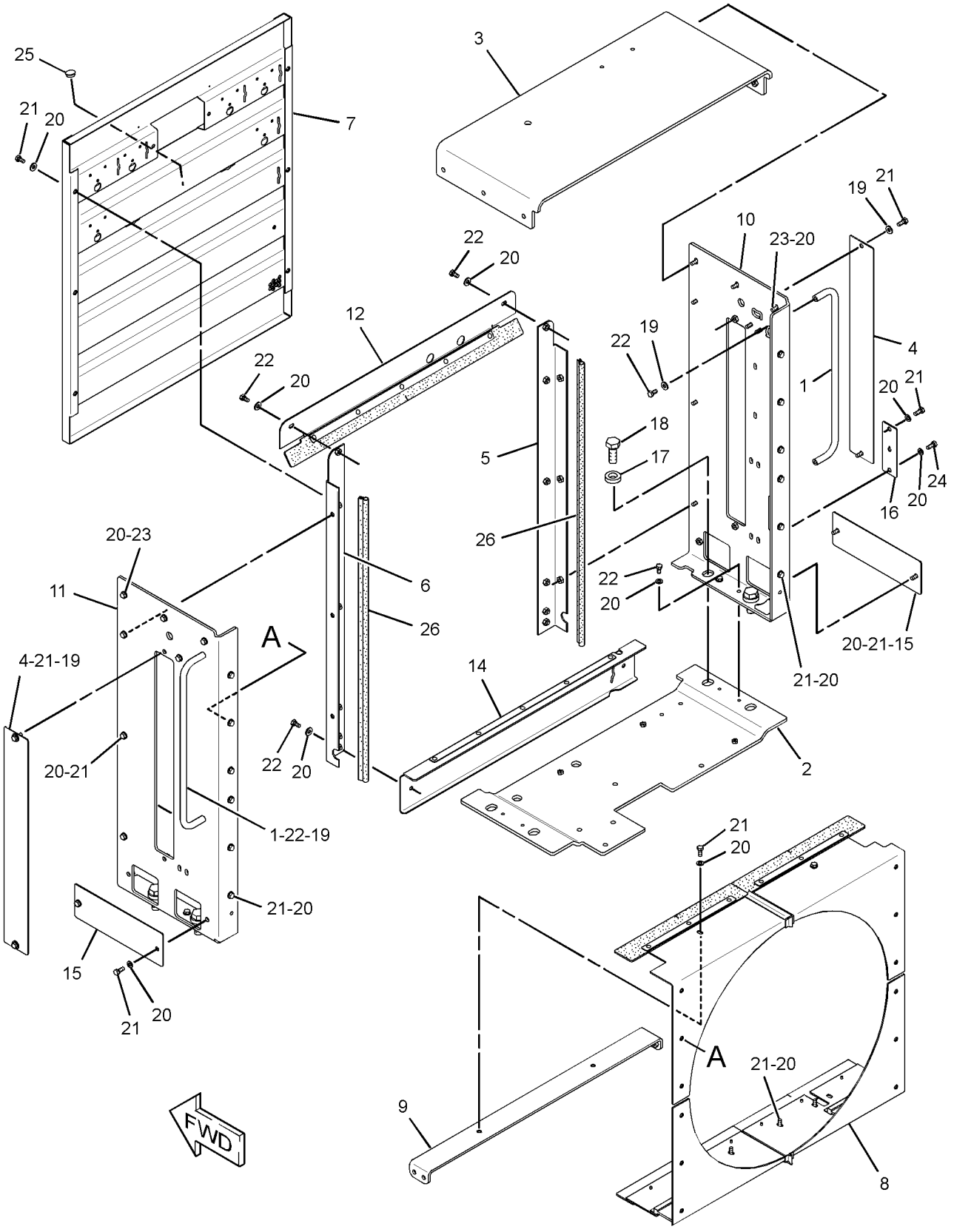

GRAPHIC #1 **<END>** g01914723

BRAKING SYSTEM

215-3005 AIR DRYER GP

S/N: JAP1-UP
PART OF 303-2035 AIR DRYER GP
AN ATTACHMENT

SMCS-4285 **i03661401**

NOTE	REF NO	GRAPHIC REF	PART NUMBER	QTY	PART NAME 1 2 3 4 5 6 (PRODUCT LEVEL)	SEE PAGE
	1	1	**203-2390**	1	KIT-VALVE (CUTOFF)	
	2	1	**203-2391**	1	KIT-CHECK VALVE	
	3	1	**203-2423**	1	KIT-HEATING ELEMENT (AIR DRYER)	
	4	1	**203-2389**	1	KIT-CARTRIDGE (DESICCANT) (AIR DRYER)	
	5	1	**218-2971**	1	KIT-VALVE (PURGE) (AIR DRYER)	

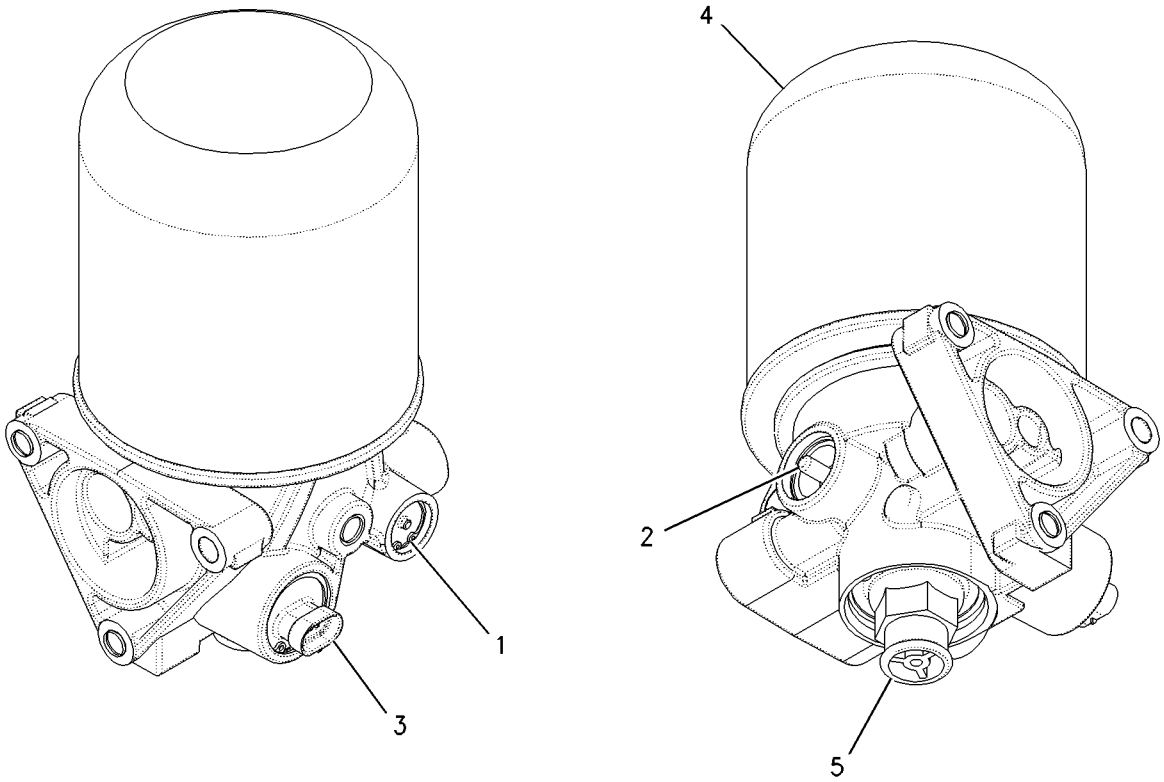

GRAPHIC #1 **<END>** g00945969

BRAKING SYSTEM

303-2033 AIR DRYER GP

S/N: JAP1-UP

AN ATTACHMENT

SMCS-4285 **i03570777**

NOTE	REF NO	GRAPHIC REF	PART NUMBER	QTY	PART NAME 1 2 3 4 5 6 (PRODUCT LEVEL)	SEE PAGE
	1	1	**9W-1442**	1	FUSE (10-AMPERE)	
	2	1	**300-1377**	1	HARNESS AS-WIRING	
		1	**102-8802**	1	KIT-RECEPTACLE (2-PIN)	
					(INCLUDES RECETACLE AS & WEDGE)	
		1	**186-3735**	2	PIN-CONNECTOR (16-GA TO 18-GA)	
		1	**196-2412**	2	TERMINAL AS	
					(EACH INCLUDES)	
		1	**101-8105**	1	SOCKET-CONNECTOR (16-GA TO 18-GA)	
		1	**7R-2750**	1	SEAL-CONNECTOR	
		1	**101-8106**	1	LOCK-CONNECTOR	
		1	**101-8108**	1	PLUG-CONNECTOR	
E		1	**114-8843**		SLEEVE-PLASTIC (40-CM)	
Y	3	1	*303-2034*	1	AIR DRYER GP	345

E-ORDER BY THE CENTIMETER
Y-SEPARATE ILLUSTRATION

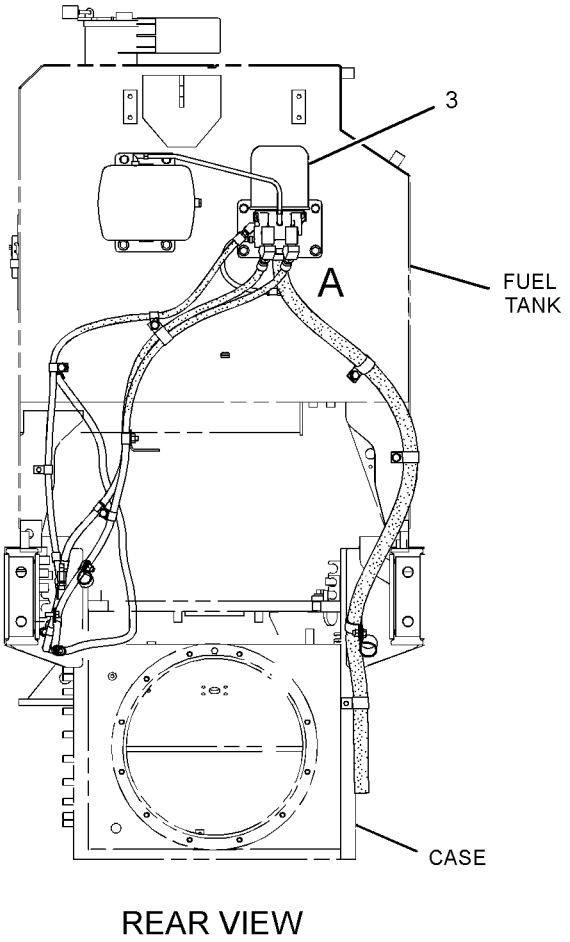

REAR VIEW

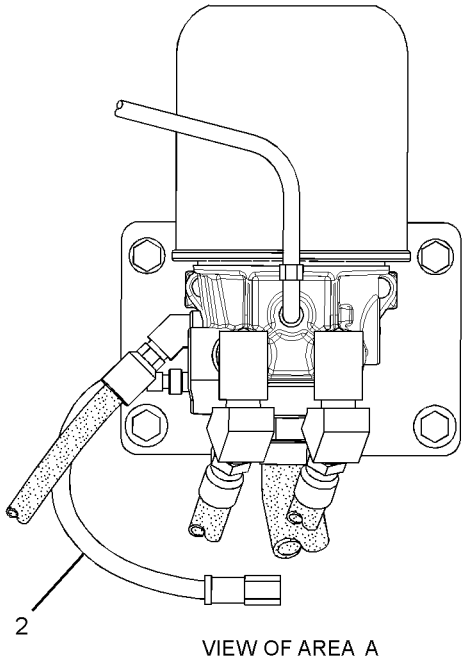

VIEW OF AREA A

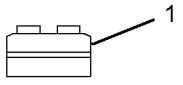

LOCATED IN STEERING CONSOLE GROUP

GRAPHIC #1 **<END>** g01929253

303-2034 AIR DRYER GP

S/N: JAP1-UP
PART OF 303-2033 AIR DRYER GP
AN ATTACHMENT

SMCS-4285 **i03570781**

NOTE	REF NO	GRAPHIC REF	PART NUMBER	QTY	PART NAME 1 2 3 4 5 6 (PRODUCT LEVEL)	SEE PAGE
Y	1	1	*303-2035*	1	AIR DRYER GP	346
	2	1	**342-1630**	1	HOSE AS	
	3	1	**174-5907**	4	CLIP	
	4	1	**205-7299**	1	CLIP	
	5	1	**4K-8864**	1	CLIP	
	6	1	**8T-4121**	6	WASHER-HARD (11X21X2.5-MM THK)	
M	7	1	**8T-4133**	3	NUT (M10X1.5-THD)	
M	8	1	**8T-4136**	3	BOLT (M10X1.5X25-MM)	

M-METRIC PART
Y-SEPARATE ILLUSTRATION

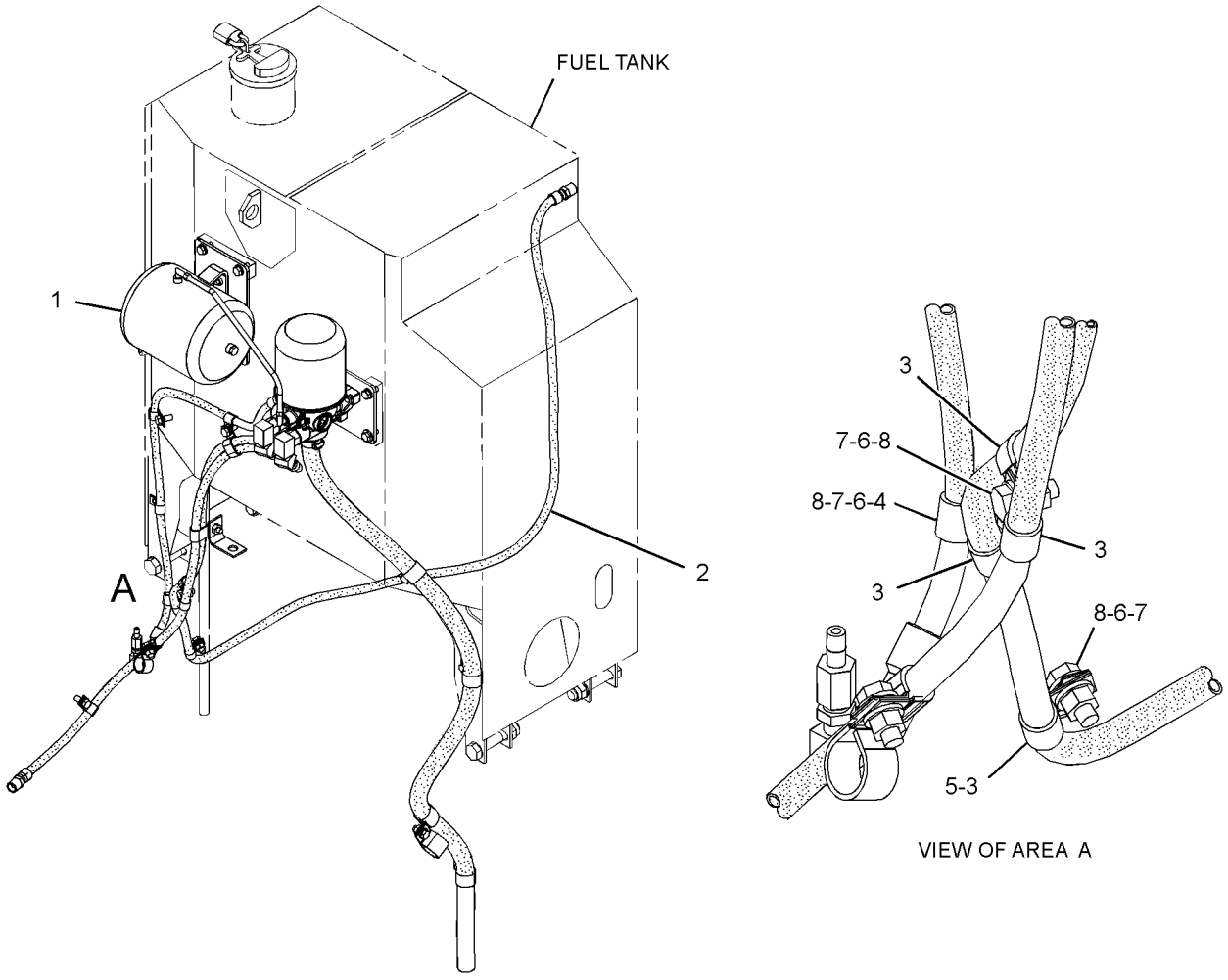

GRAPHIC #1 **<END>** g01923513

BRAKING SYSTEM

303-2035 AIR DRYER GP

S/N: JAP1-UP
PART OF 303-2034 AIR DRYER GP
FOR USE WITH 303-2033—PAGE 344
AN ATTACHMENT

SMCS-4285 **i03542766**

NOTE	REF NO	GRAPHIC REF	PART NUMBER	QTY	PART NAME 1 2 3 4 5 6 (PRODUCT LEVEL)	SEE PAGE
	1	1	**2S-3440**	1	CLAMP-HOSE	
	2	1	**5P-4424**	2	ELBOW-AIR BRAKE	
	3	1	**6V-2610**	1	FITTING	
	4	1	**327-0726**	1	PLATE	
	5	1	**191-3645**	1	RESERVOIR	
Y	6	1	**215-3005**	1	AIR DRYER GP	343
	7	1	**327-0727**	1	PLATE	
I	8	1	**327-0731**	1	HOSE AS	
	9	1	**327-0730**	1	HOSE AS	
	10	1	**303-2348**	1	TUBE	
	11	1	**327-0728**	1	PLATE AS	
	12	1	**004-7617**	1	ELBOW-PIPE	
	13	1	**174-5907**	1	CLIP	
	14	1	**8T-8917**	3	BOLT (1/2-13X1.25-IN)	
	15	1	**5K-8451**	2	CLIP	
	16	1	**5P-7854**	4	CLIP	
	17	1	**6L-5652**	2	ADAPTER	
	18	1	**7D-0215**	1	CONNECTOR-PIPE	
	19	1	**8T-4121**	14	WASHER-HARD (11X21X2.5-MM THK)	
M	20	1	**8T-4133**	2	NUT (M10X1.5-THD)	
M	21	1	**8T-4136**	16	BOLT (M10X1.5X25-MM)	
	22	1	**205-7299**	3	CLIP	
	23	1	**3B-6772**	2	ELBOW-STREET	
	24	1	**8T-4223**	3	WASHER-HARD (13.5X25.5X3-MM THK)	
	25	1	**8T-4224**	2	WASHER-HARD (8.8X16X2-MM THK)	
M	26	1	**8T-4908**	2	BOLT (M8X1.25X25-MM)	
	27	1	**9L-3560**	2	ELBOW	
	28	1	**9M-8406**	1	CLIP	
	29	1	**3J-5390**	1	PLUG	
	30	1	**4D-7388**	1	CLIP	
	31	1	**5B-1585**	2	ELBOW	
	32	1	**6V-1889**	1	CLIP	
	33	1	**7X-7729**	4	WASHER (11X25X3-MM THK)	
E	34	1	**8I-1362**		HOSE (148-CM)	

E-ORDER BY THE CENTIMETER
I-REFER TO HYDRAULIC INFORMATION SYSTEM
M-METRIC PART
Y-SEPARATE ILLUSTRATION

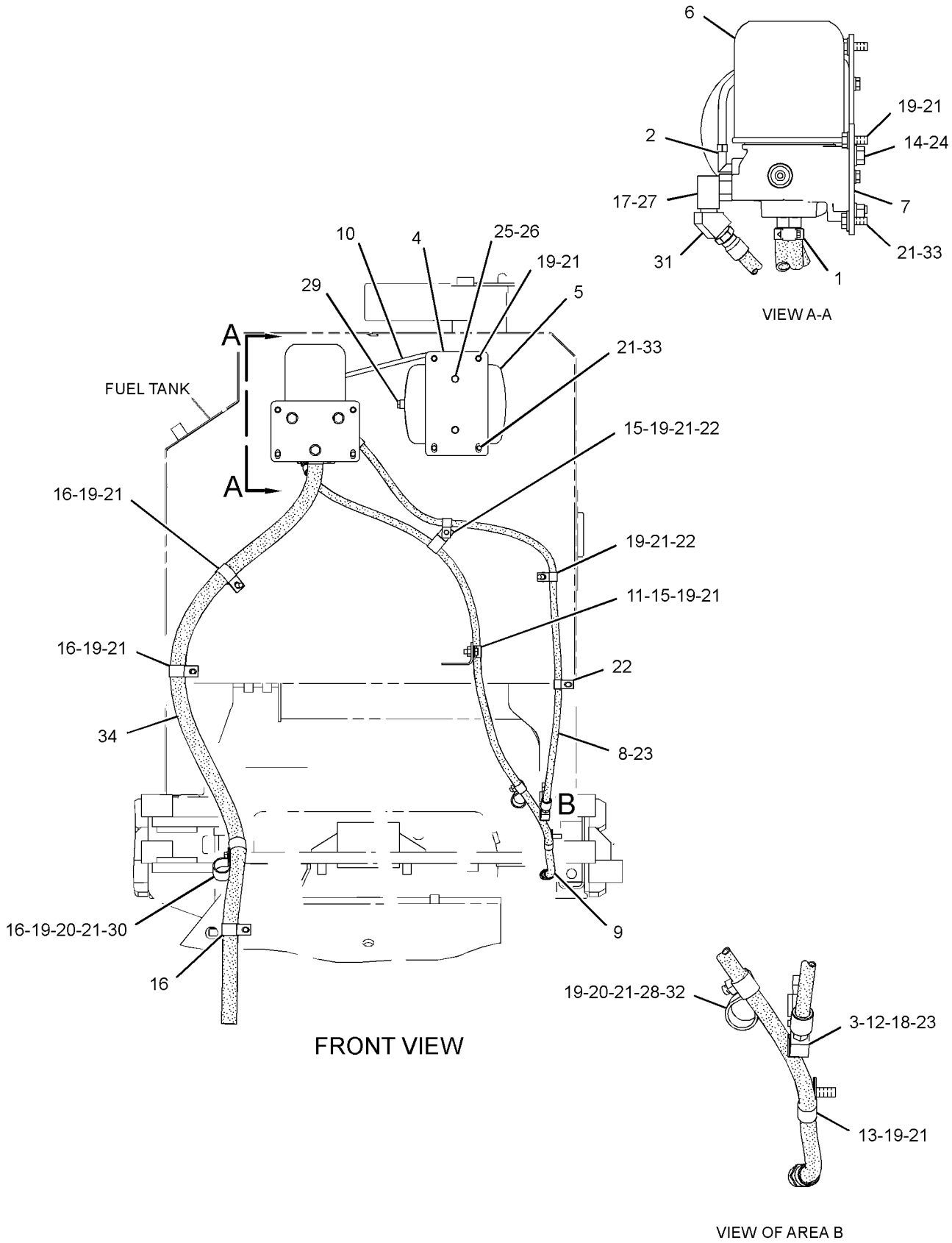

GRAPHIC #1 **<END>** g01927572

BRAKING SYSTEM

9W-5132 BRAKE GP-PARKING

S/N: DMJ1-UP

PART OF 275-6535 TRANSMISSION AR

SMCS-3077, 4267 **i02024329**

NOTE	REF NO	GRAPHIC REF	PART NUMBER	QTY	PART NAME 1 2 3 4 5 6 (PRODUCT LEVEL)	SEE PAGE
M	1	1	**6V-5842**	6	BOLT (M10X1.5X40-MM)	
	2	1	**6V-5839**	6	WASHER (11X21X2.5-MM THK)	
	3	1	**6Y-3849**	1	HUB-CLUTCH	
	4	1	**9M-4335**	6	DOWEL-REACTION	
	5	1	**5J-1086**	1	SEAL-O-RING	
	6	1	**6Y-3850**	1	HOUSING-BRAKE	
	7	1	**4S-5838**	1	RETAINER	
M	8	1	**8T-0372**	1	BOLT (M12X1.75X90-MM)	
	9	1	**4F-7390**	1	SEAL-O-RING	
	10	1	**1P-7521**	1	YOKE	
	11	1	**203-5957**	1	SEAL	
	12	1	**9W-4431**	20	SPRING	
	13	1	**9W-4430**	20	SPRING	
M	14	1	**6V-3668**	12	BOLT (M12X1.75X30-MM)	
	15	1	**7G-0437**	6	PLATE-CLUTCH	
	16	1	**6Y-5352**	5	DISC-FRICTION	
	17	1	**2J-6274**	1	SEAL-O-RING	
	18	1	**9S-4182**	1	PLUG-O-RING	
	19	1	**3J-7354**	1	SEAL-O-RING	
	20	1	**203-5958**	1	SEAL	
	21	1	**9W-4452**	1	PISTON	
	22	1	**9W-4453**	1	PISTON	
	23	1	**4H-9105**	1	SEAL-O-RING	
	24	1	**6Y-3852**	1	PLUG	
	25	1	**9N-6152**	1	PLUG	
	26	1	**2M-9780**	1	SEAL-O-RING	
	27	1	**9X-7743**	1	SEAL-LIP TYPE	

M-METRIC PART

9W-5132 **BRAKE GP-PARKING** *(contd.)* **i02024329**

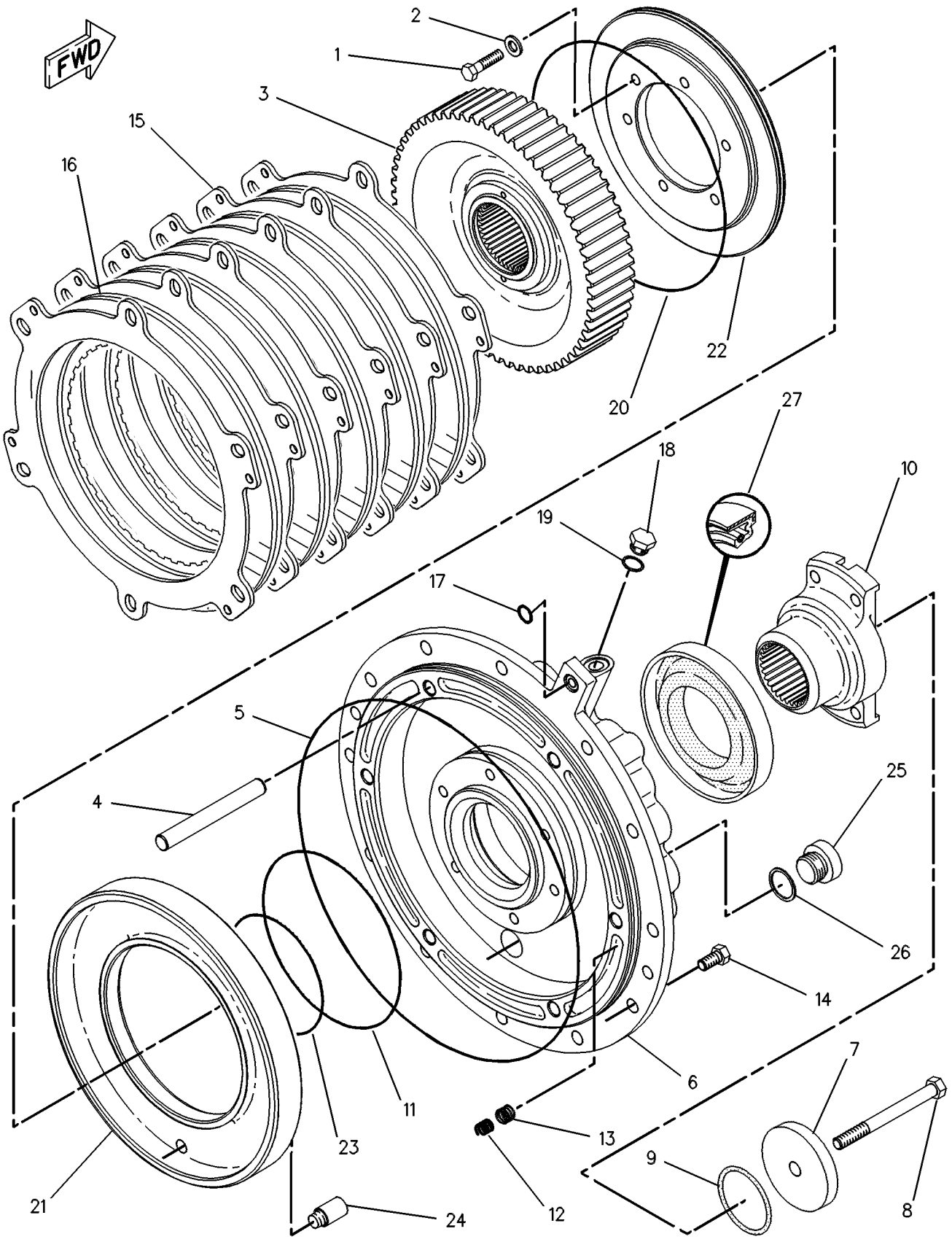

GRAPHIC #1 **<END>** g00108550

BRAKING SYSTEM

5T-8144 BRAKE GP-SERVICE

S/N: JAP1-UP

PART OF 348-3018 GENERAL AR

SMCS-4251 **i01943587**

NOTE	REF NO	GRAPHIC REF	PART NUMBER	QTY	PART NAME 1 2 3 4 5 6 (PRODUCT LEVEL)	SEE PAGE
	1	1	**8T-2861**	8	BOLT	
	2	1	**5P-8245**	72	WASHER-HARD (13.5X25.5X3-MM THK)	
	3	1	**8W-8289**	2	SPROCKET	
	4	1	**9D-4029**	4	SPACER (3.014X3.75X0.75-IN THK)	
	5	1	**3J-5390**	4	PLUG	
B	6	1	**6V-0314**	12	BOLT-LOCKING (1/2-13X2-IN)	
B	7	1	**8D-8791**	24	SHIM (.20MM THK)	
B		1	**8D-8792**	24	SHIM (.13MM THK)	
B		1	**9D-7085**	8	SHIM (.51MM THK)	
	8	1	**8W-0789**	4	RETAINER	
	9	1	**8W-8289**	2	SPROCKET (REAR MTG.)	
	10	1	**147-3309**	4	SPINDLE-WHEEL	
	11	1	**5P-4143**	52	BOLT-LOCKING (1/2-13X2-IN)	
C	12	1	**0S-1595**	12	BOLT (1/2-13X1.25-IN)	
	13	1	**6Y-7915**	36	DISC-FRICTION	
	14	1	**8D-8794**	40	DISC	
	15	1	**8D-8795**	4	SEAL-D-RING	
	16	1	**5P-8244**	24	WASHER-HARD (12X22.5X2.5-MM THK)	
	17	1	**2G-5369**	4	PISTON	
	18	1	**9J-5498**	24	SPRING	
	19	1	**9D-7972**	4	SEAL-D-RING	
	20	1	**6G-0905**	24	BOLT (7/16-14X4.37-IN)	
	21	1	**9D-3241**	4	CUP-BEARING	
		1	**9D-3242**	4	CONE-BEARING	
	22	1	**2G-6336**	4	HUB-BRAKE	
	23	1	**234-0225**	4	HOUSING	
	24	1	**5P-2545**	8	SEAL-O-RING	
	25	1	**8D-8805**	4	COVER	
	26	1	**2N-2138**	4	CUP-BEARING	
		1	**2N-2139**	4	CONE-BEARING	
	27	1	**3S-0303**	4	SEAL GP-DUO-CONE	

B-USE AS REQUIRED
C-CHANGE FROM PREVIOUS TYPE

5T-8144 **BRAKE GP-SERVICE** *(contd.)* **i01943587**

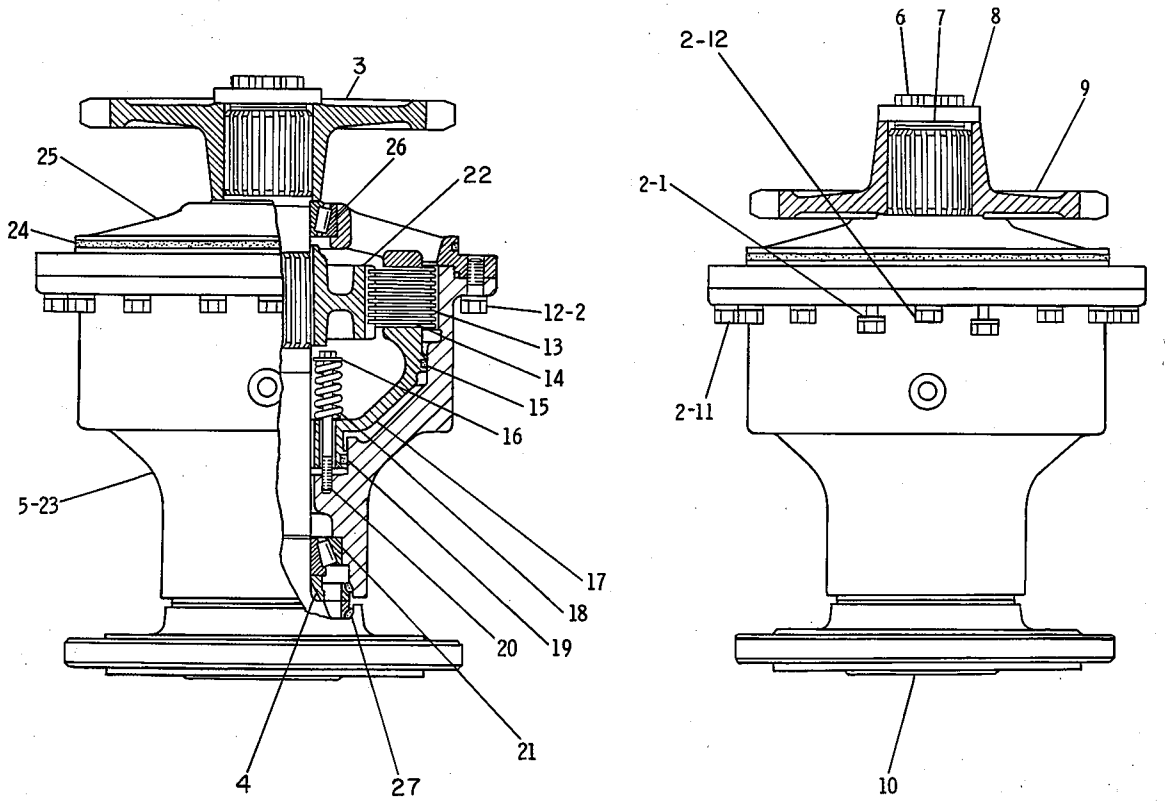

GRAPHIC #1 **<END>** g00108348

BRAKING SYSTEM

306-5499 CONTROL GP-PARKING BRAKE

S/N: JAP1-UP

PART OF 348-3018 GENERAL AR

SMCS-4282, 4284 **i03540660**

NOTE	REF NO	GRAPHIC REF	PART NUMBER	QTY	PART NAME 1 2 3 4 5 6 (PRODUCT LEVEL)	SEE PAGE
	1	1	**3B-8822**	1	ELBOW	
	2	1	**4S-7606**	2	ELBOW	
	3	1	**5K-2408**	2	FITTING	
	4	1	**5T-8285**	1	JUNCTION BLOCK	
	5	1	**6D-1432**	1	VALVE-CHECK (PARKING BRAKE)	
	6	1	**7X-4736**	1	GROMMET	
	7	1	**8W-8528**	3	SLEEVE	
	8	1	**8X-5160**	1	GROMMET	
I	9	1	**112-4834**	2	HOSE AS	
Y	10	1	**185-0008**	1	VALVE GP-SOLENOID (PARKING BRAKE)	362
	11	1	**253-4347**	1	VALVE AS-AIR (PARKING BRAKE)	
		1	**1H-1023**	1	SEAL-O-RING	
		1	**6H-9691**	1	SEAL-O-RING	
	12	1	**205-7299**	2	CLIP	
I	13	1	**306-5505**	1	HOSE AS	
	14	1	**3D-8884**	1	ELBOW	
	15	1	**4D-6585**	1	ELBOW-PIPE	
	16	1	**4H-6147**	1	CONNECTOR	
	17	1	**5H-4778**	2	ELBOW	
	18	1	**5K-1094**	1	LOCKWASHER	
	19	1	**5M-6213**	2	PLUG-PIPE	
	20	1	**7J-8611**	1	ELBOW-PIPE (90-DEG)	
	21	1	**8G-1815**	1	PLATE	
	22	1	**8T-2502**	2	BOLT (3/8-16X1.125-IN)	
	23	1	**8T-4121**	2	WASHER-HARD (11X21X2.5-MM THK)	
M	24	1	**8T-4133**	1	NUT (M10X1.5-THD)	
M	25	1	**8T-4136**	1	BOLT (M10X1.5X25-MM)	
	26	1	**8T-4896**	2	WASHER-HARD (10.2X18.5X2.5-MM THK)	

I-REFER TO HYDRAULIC INFORMATION SYSTEM
M-METRIC PART
Y-SEPARATE ILLUSTRATION

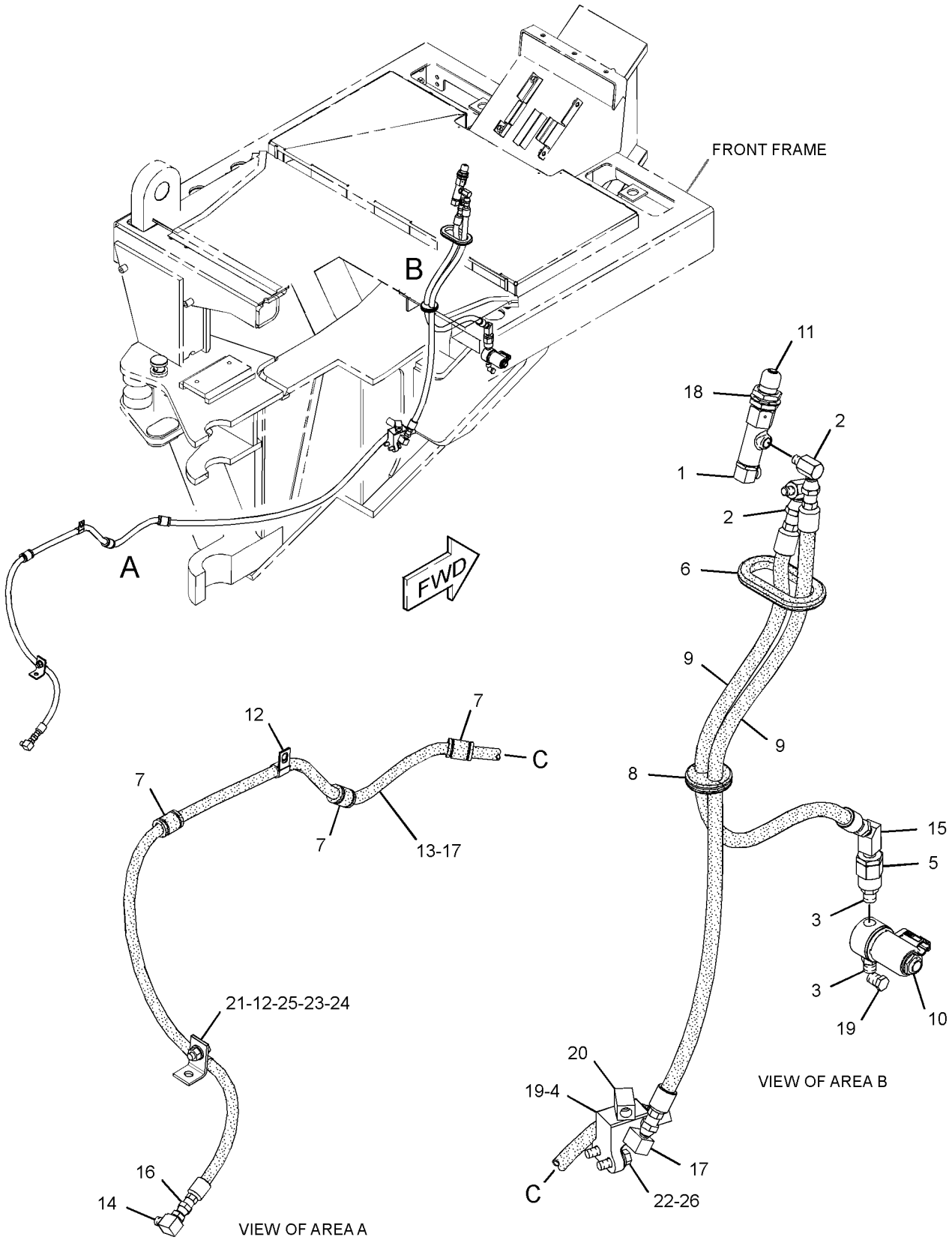

GRAPHIC #1 **<END>** g01929143

BRAKING SYSTEM

297-8948 CONTROL GP-SERVICE BRAKE

S/N: JAP1-UP

PART OF 348-3018 GENERAL AR

SMCS-4265, 4269 **i03661408**

NOTE	REF NO	GRAPHIC REF	PART NUMBER	QTY	PART NAME 1 2 3 4 5 6 (PRODUCT LEVEL)	SEE PAGE
	1	1	**1F-4622**	2	BEARING AS-NEEDLE	
	2	1	**2D-7325**	1	TEE-PIPE	
	3	1,2	**2L-3331**	4	CONNECTOR-PIPE	
	4	1	**3S-2713**	1	NUT-FULL (3/8-24-THD)	
	5	2	**3T-0050**	2	CLIP	
	6	2	**5K-9238**	4	CONNECTOR	
	7	1	**5T-8285**	1	JUNCTION BLOCK	
	8	1	**6K-6826**	4	ELBOW (45-DEG)	
	9	1	**6W-5817**	1	SPRING	
	10	1	**7V-0446**	2	CLIP	
	11	1	**8D-8826**	4	GUARD	
	12	1	**8L-6005**	3	TEE-PIPE	
	13	1,2	**8W-8527**	15	SLEEVE	
	14	1	**8W-8903**	2	CLIP	
Y	15	1	*8X-2650*	1	VALVE GP-AIR CONTROL (SERVICE BRAKE)	628
	16	1	**8X-2680**	1	BRACKET AS	
	17	1	**9J-8783**	1	SHIM (0.508-MM THK)	
	18	1	**9S-7706**	2	ELBOW-FLARED	
	19	1	**9X-8606**	8	CLIP	
	20	2	**110-3326**	1	PLATE AS	
		2	**3S-0391**	1	BOSS (3/8-16-THD)	
		2	**8X-8450**	1	PLATE	
	21	1	**169-0921**	1	ROD END-YOKE (3/8-24 LH-THD)	
	22	1	**172-4211**	1	SPACER (10.5X22X50.8-MM THK)	
	23	1,2	**176-2945**	2	FITTING-BULKHEAD	
	24	1	**177-1713**	1	ROD	
	25	1	**180-4027**	1	CAM	
	26	1	**180-7147**	1	LEVER	
	27	1	**185-1122**	1	BRACKET	
	28	2	**198-5438**	2	BLOCK	
	29	1	**204-8736**	1	TUBE AS	
	30	1	**204-8737**	1	TUBE AS	
	31	1	**204-8738**	1	TUBE AS	
	32	1	**204-8739**	1	TUBE AS	
	33	1	**204-8740**	1	TUBE AS	
	34	1	**204-8741**	1	TUBE AS	
I	35	1	**207-4773**	2	HOSE AS	
	36	1	**270-4924**	1	PLATE	
	37	1	**242-9245**	2	HOSE AS	
I	38	1	**306-4107**	2	HOSE AS	
	39	2	**307-6241**	2	BLOCK-CLAMP	
	40	2	**307-6242**	2	BLOCK-CLAMP	
	41	2	**307-6243**	4	BLOCK-CLAMP	
	42	2	**307-6568**	1	BRACKET AS	
	43	2	**307-7500**	2	BLOCK-CLAMP	
	44	2	**307-7501**	1	PLATE AS	
	45	2	**307-7502**	1	PLATE	
M	46	2	**096-4883**	4	LOCKNUT (M10X1.5-THD)	
	47	1	**129-3173**	1	BOLT-12 POINT HEAD (3/8-16X1.25-IN)	
	48	1,2	**190-4375**	2	WASHER (26X40X2-MM THK)	
	49	1	**1B-0676**	1	PIN	
	50	1	**1H-7724**	3	BUSHING-REDUCER	
	51	1	**3B-7721**	1	BUSHING-REDUCER	
	52	1	**3D-8913**	2	ELBOW	
	53	2	**3K-6060**	4	LOCKNUT (3/8-16-THD)	
	54	1	**3K-8280**	1	PIN-CLEVIS	

297-8948 CONTROL GP-SERVICE BRAKE *(contd.)* i03661408

NOTE	REF NO	GRAPHIC REF	PART NUMBER	QTY	PART NAME 1 2 3 4 5 6 (PRODUCT LEVEL)	SEE PAGE
	55	1	**4B-6060**	1	SETSCREW-SOCKET (1/4-20X0.375-IN)	
	56	1	**4D-0577**	1	ELBOW	
	57	1,2	**4D-0582**	5	ELBOW	
	58	1	**4D-7735**	2	CLIP	
	59	1	**4J-3914**	1	ELBOW	
	60	1	**4J-8922**	1	ROD END-YOKE (3/8-24-THD)	
	61	1	**4M-6425**	1	BOLT (5/16-18X1-IN)	
	62	1	**4S-4455**	1	CLIP	
M	63	1	**5C-2890**	3	NUT (M6X1-THD)	
	64	1	**5H-4778**	1	ELBOW	
	65	1	**5K-5338**	1	CLIP	
	66	2	**5M-3062**	2	BOLT (3/8-16X0.75-IN)	
	67	1	**5M-6213**	1	PLUG-PIPE	
	68	1	**6D-4244**	2	CLIP	
I	69	1	**6D-9855**	1	HOSE AS	
	70	1	**6V-4245**	1	ELBOW	
M	71	1	**6V-7357**	1	BOLT (M6X1X25-MM)	
	72	1	**6V-8189**	3	NUT (5/16-18-THD)	
	73	2	**6V-8801**	2	NUT (3/8-16-THD)	
	74	1	**6V-8918**	2	BOLT (5/16-18X1.25-IN)	
	75	1,2	**7M-7410**	6	PLUG-PIPE	
	76	1	**7X-7729**	2	WASHER (11X25X3-MM THK)	
	77	1	**8M-2773**	1	CLIP	
	78	1,2	**8T-4121**	19	WASHER-HARD (11X21X2.5-MM THK)	
M	79	1	**8T-4133**	4	NUT (M10X1.5-THD)	
M	80	1	**8T-4136**	5	BOLT (M10X1.5X25-MM)	
M	81	1,2	**8T-4137**	7	BOLT (M10X1.5X20-MM)	
M	82	1	**8T-4178**	1	BOLT (M10X1.5X90-MM)	
M	83	1	**8T-4195**	2	BOLT (M10X1.5X30-MM)	
	84	1	**8T-4224**	5	WASHER-HARD (8.8X16X2-MM THK)	
	85	1	**8T-4226**	1	WASHER-PLATED (10.5X45X3-MM THK)	
	86	1,2	**8T-4896**	13	WASHER-HARD (10.2X18.5X2.5-MM THK)	
	87	2	**8T-9056**	4	BOLT (3/8-16X1.25-IN)	
	88	1	**8X-7603**	2	HOSE AS	
	89	2	**8X-8450**	1	PLATE	
	90	1	**9M-4972**	2	CLIP	
	91	1	**9X-8256**	1	WASHER (6.6X12X2-MM THK)	
E	92	1	**5P-0767**		HOSE (74-CM)	

E-ORDER BY THE CENTIMETER
I-REFER TO HYDRAULIC INFORMATION SYSTEM
M-METRIC PART
Y-SEPARATE ILLUSTRATION

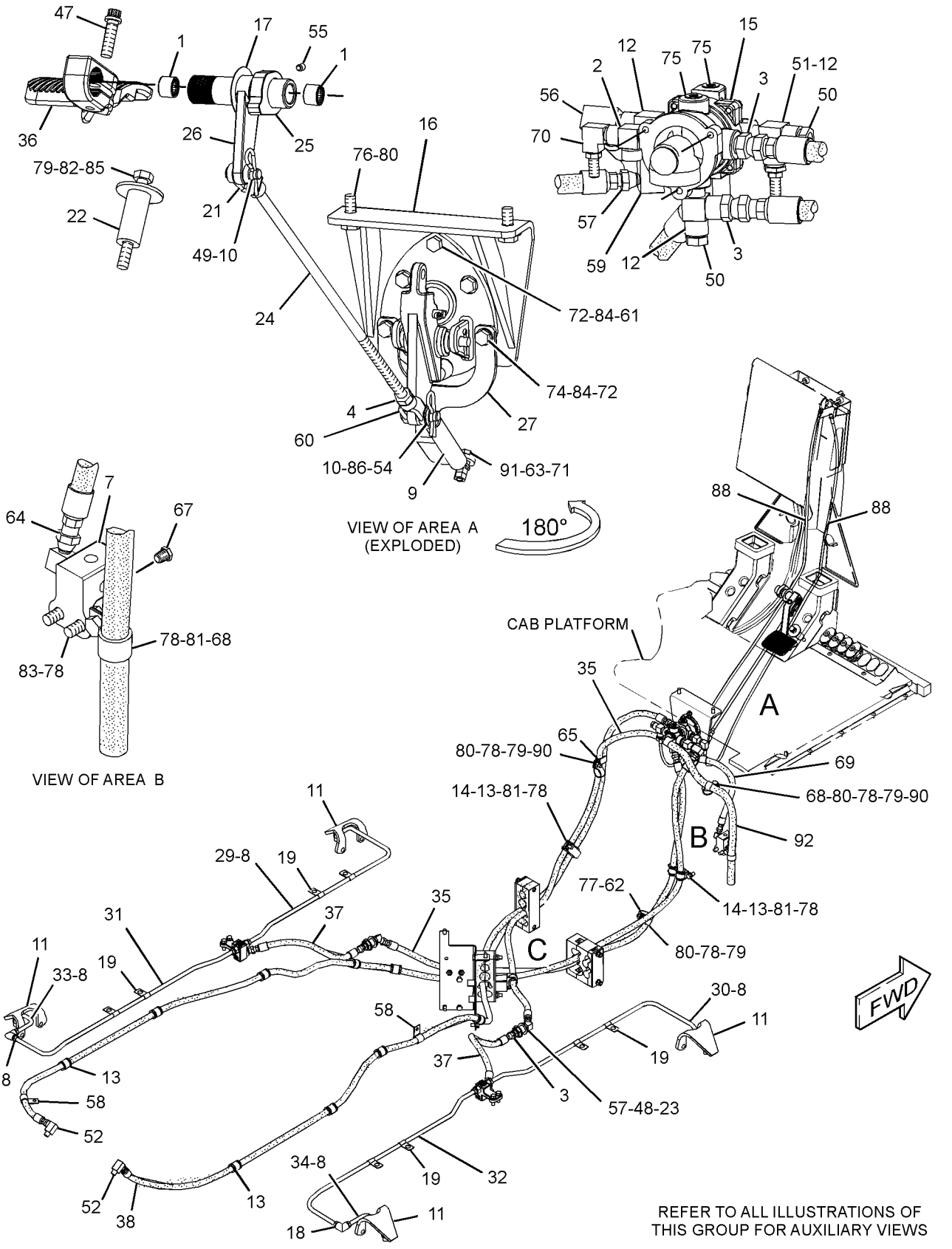

GRAPHIC #1

g01930295

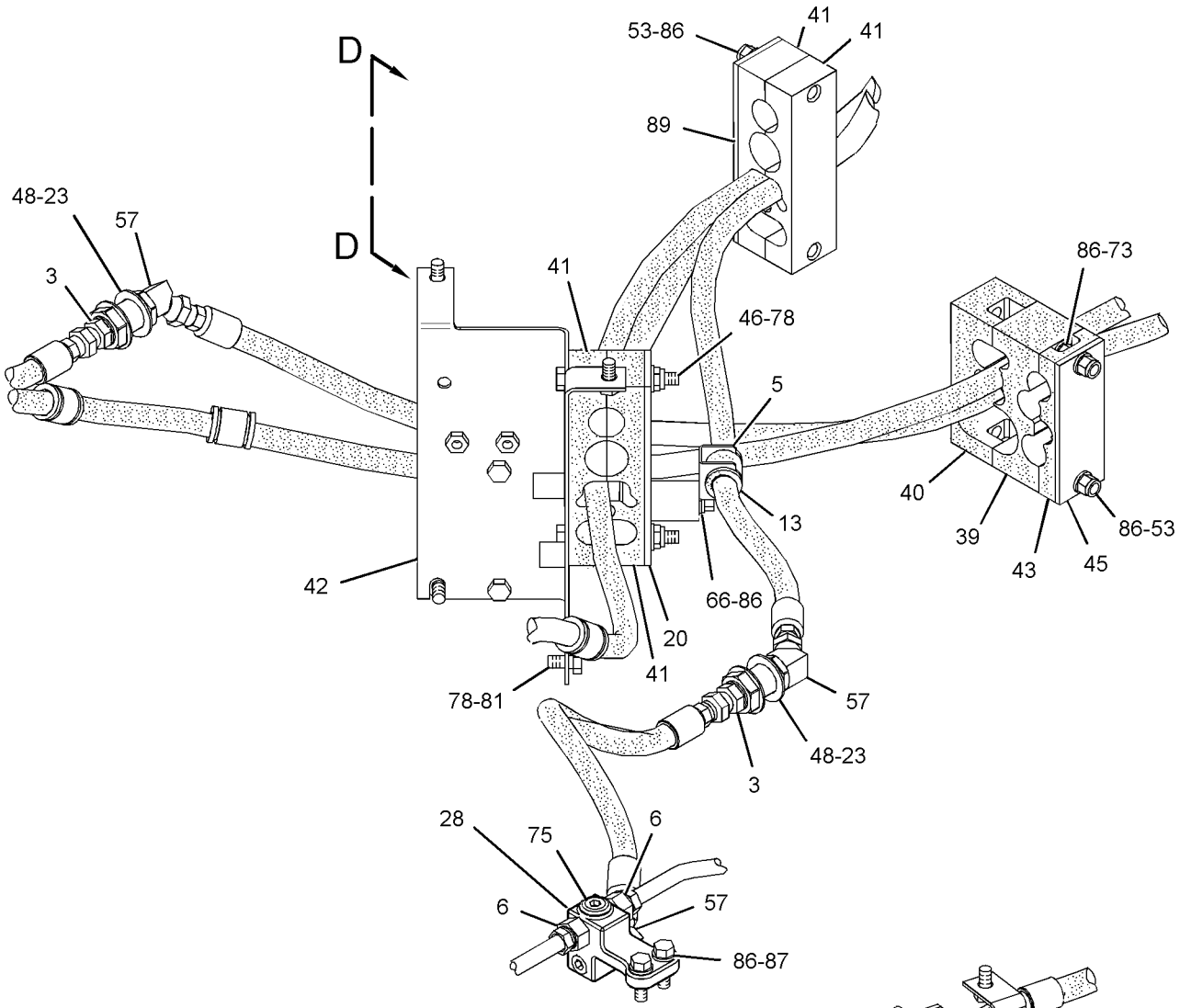

VIEW OF AREA C

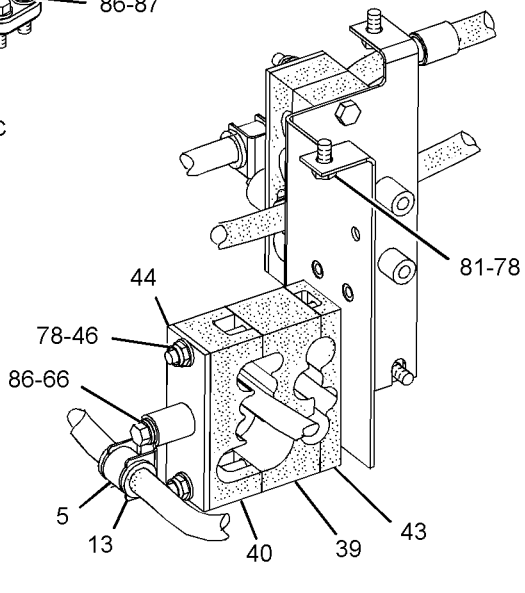

VIEW D-D

GRAPHIC #2 **<END>** g01930296

BRAKING SYSTEM

293-4830 TANK GP-AIR

S/N: JAP1-UP

PART OF 348-3018 GENERAL AR

SMCS-4272 **i03539041**

NOTE	REF NO	GRAPHIC REF	PART NUMBER	QTY	PART NAME 1 2 3 4 5 6 (PRODUCT LEVEL)	SEE PAGE
	1	2	**1P-7115**	4	GROMMET AS	
	2	1,2	**2G-1034**	2	VALVE-AIR RELIEF	
	3	2	**2H-3940**	1	ELBOW	
	4	2	**2H-9091**	1	CONNECTOR-PIPE	
	5	1	**3D-7587**	2	ELBOW	
	6	1	**5F-5434**	1	VALVE AS-VENT	
	7	2	**6A-3591**	1	TEE-PIPE	
	8	2	**8M-3368**	2	VALVE-CHECK	
	9	2	**8W-7915**	2	SHIM (2-MM THK)	
	10	2	**8W-8496**	2	PLATE	
	11	1	**8W-8528**	2	SLEEVE	
	12	2	**8W-8575**	1	RESERVOIR	
	13	2	**9D-6663**	2	VALVE-DRAIN	
	14	2	**9M-4594**	1	SPACER (0.406X0.875X0.75-IN THK)	
	15	2	**004-5933**	1	TEE-PIPE	
J	16	1	**205-7187**	1	GOVERNOR AS (AIR COMPRESSOR)	
		1	**2S-2923**	1	COVER AS	
		1	**2K-8198**		SEAL-O-RING	
	17	2	**217-4369**	1	BRACKET AS	
	18	1	**292-4772**	1	PLATE-SUPPORT	
I	19	1	**327-3973**	1	HOSE AS	
	20	1	**334-5268**	1	HOSE AS	
I	21	1	**342-0725**	1	HOSE AS	
	22	1	**342-1624**	1	HOSE AS	
	23	2	**002-6453**	2	ELBOW	
	24	2	**124-1479**	1	CLIP	
	25	1,2	**174-5907**	6	CLIP	
	26	1,2	**202-2762**	4	CLIP	
	27	1,2	**205-7299**	2	CLIP	
	28	2	**3D-8913**	2	ELBOW	
	29	2	**3E-6909**	1	CLIP	
	30	2	**4D-0577**	1	ELBOW	
	31	1,2	**4D-2560**	2	CONNECTOR-PIPE	
	32	2	**4D-7388**	1	CLIP	
	33	2	**4D-7733**	1	CLIP	
	34	1	**4S-7606**	2	ELBOW	
M	35	1	**5C-2890**	2	NUT (M6X1-THD)	
	36	2	**5P-8998**	2	FITTING	
	37	2	**5S-7383**	4	BOLT (3/8-16X1.75-IN)	
	38	2	**6L-5652**	1	ADAPTER	
	39	2	**6V-8801**	4	NUT (3/8-16-THD)	
	40	1	**7C-6921**	1	SPACER (11X20X22.8-MM THK)	
	41	2	**7D-4903**	1	ADAPTER	
	42	2	**7D-7233**	1	CLIP	
	43	2	**7F-9311**	4	FITTING	
	44	2	**7X-0578**	8	WASHER-HARD (10.2X32X2.5-MM THK)	
	45	1	**7X-7729**	2	WASHER (11X25X3-MM THK)	
	46	2	**8L-5008**	1	ELBOW-PIPE	
	47	1,2	**8T-4121**	18	WASHER-HARD (11X21X2.5-MM THK)	
M	48	1,2	**8T-4133**	6	NUT (M10X1.5-THD)	
M	49	1,2	**8T-4136**	11	BOLT (M10X1.5X25-MM)	
M	50	2	**8T-4182**	1	BOLT (M10X1.5X45-MM)	
M	51	1	**8T-4186**	1	BOLT (M10X1.5X40-MM)	
M	52	2	**8T-4195**	1	BOLT (M10X1.5X30-MM)	
	53	2	**8T-4896**	4	WASHER-HARD (10.2X18.5X2.5-MM THK)	
	54	1	**8T-6757**	3	PLUG-PIPE	

293-4830 **TANK GP-AIR** *(contd.)* **i03539041**

NOTE	REF NO	GRAPHIC REF	PART NUMBER	QTY	PART NAME 1 2 3 4 5 6 (PRODUCT LEVEL)	SEE PAGE
M	55	1	**8T-6974**	2	BOLT (M6X1X80-MM)	
	56	1	**9X-8256**	4	WASHER (6.6X12X2-MM THK)	
					AVAILABLE REPAIR KIT(S):	
J			**9M-0402**	1	KIT-GOVERNOR OVERHAUL (AIR COMPRESSOR)	
					(INCLUDES GROMMETS, FILTERS, SPRING, VALVE, COVER, RING, & GASKET)	

I-REFER TO HYDRAULIC INFORMATION SYSTEM
J-KIT MARKED J SERVICES PARTS MARKED J
M-METRIC PART

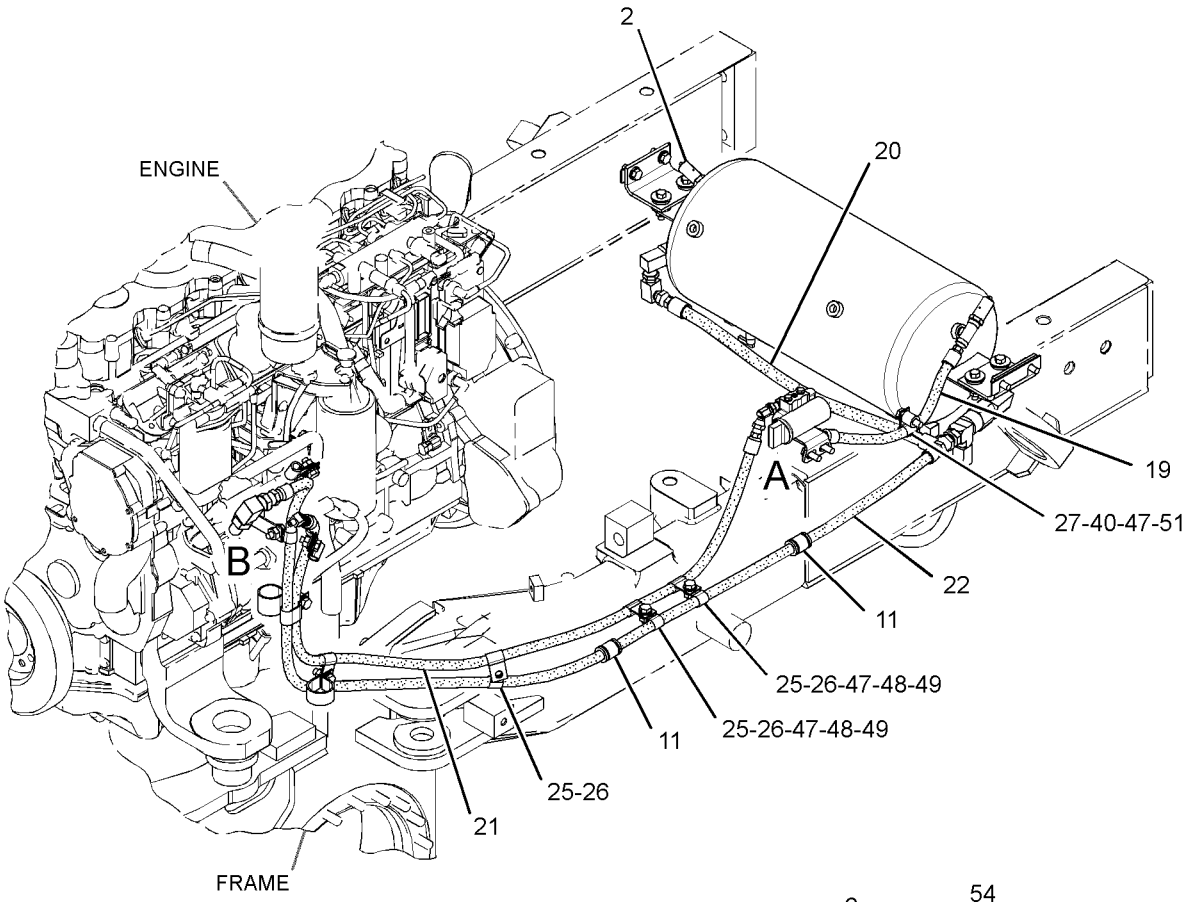



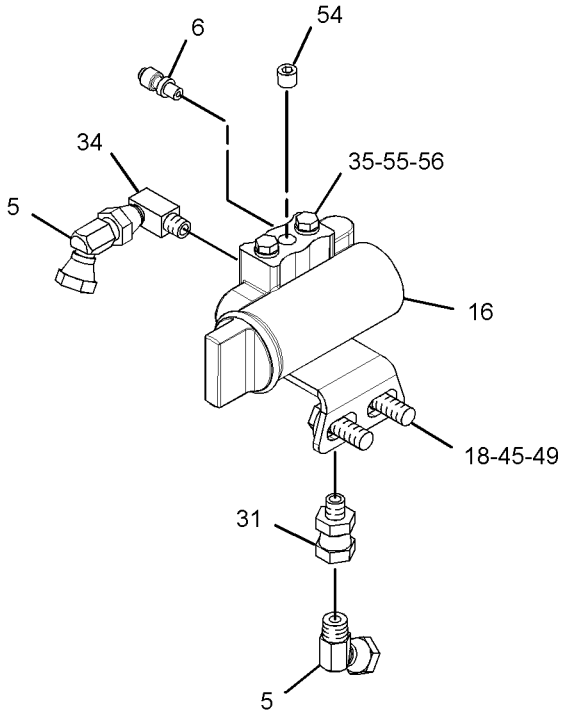

VIEW OF AREA A
(HOSES REMOVED FOR CLARITY AND EXPLODED)

GRAPHIC #1

g01928233

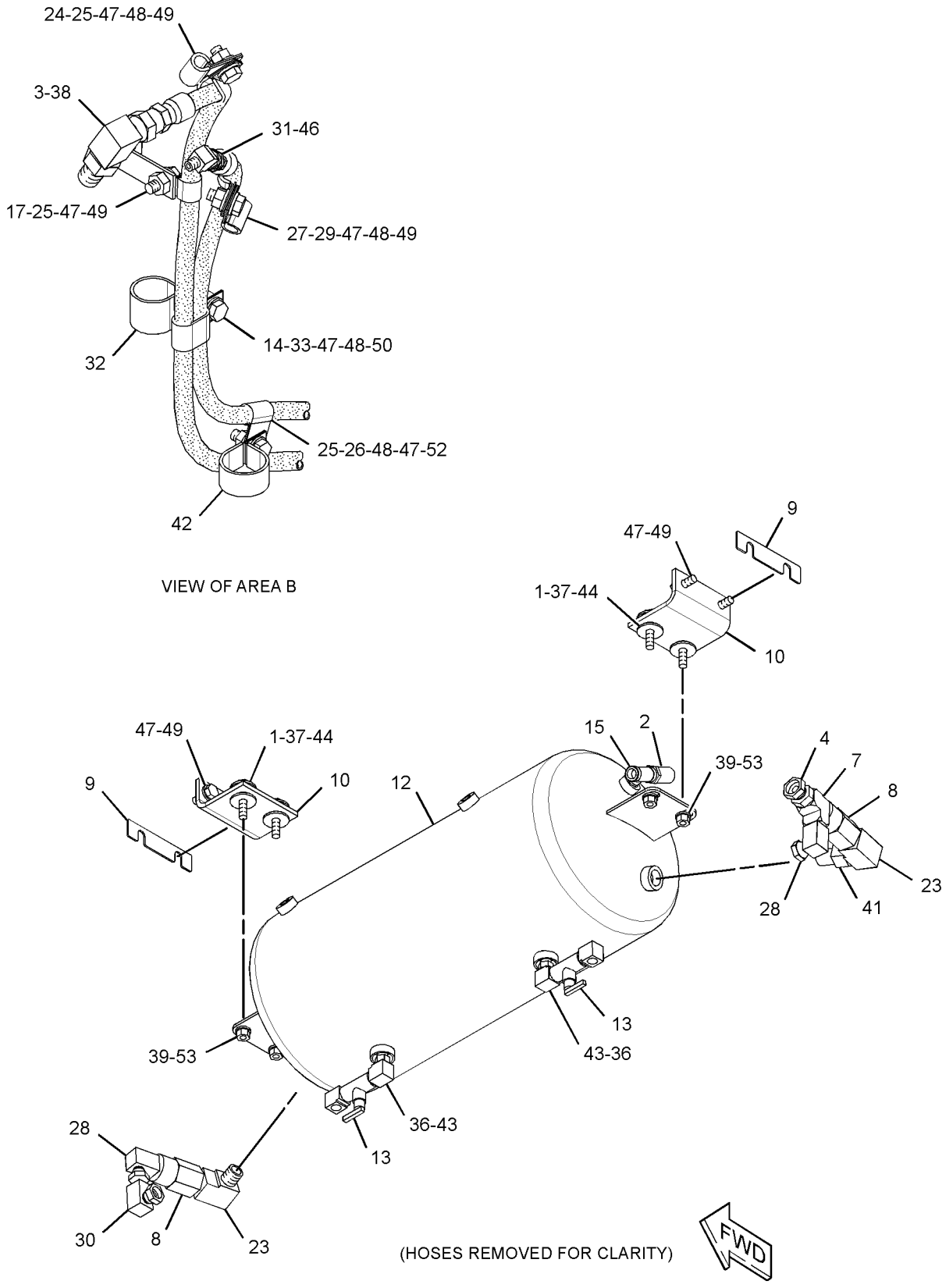

GRAPHIC #2 **<END>** g01928234

BRAKING SYSTEM

185-0008 VALVE GP-SOLENOID

S/N: JAP1-UP
24-VOLT
PART OF 306-5499 CONTROL GP-PARKING BRAKE

SMCS-5479 **i03252107**

NOTE	REF NO	GRAPHIC REF	PART NUMBER	QTY	PART NAME 1 2 3 4 5 6 (PRODUCT LEVEL)	SEE PAGE
	1	1	**156-5970**	1	NUT (1/2-20-THD)	
	2	1	**164-2108**	1	WASHER (13.03X25.4X2.38-MM THK)	
	3	1	**314-7646**	1	COIL AS	

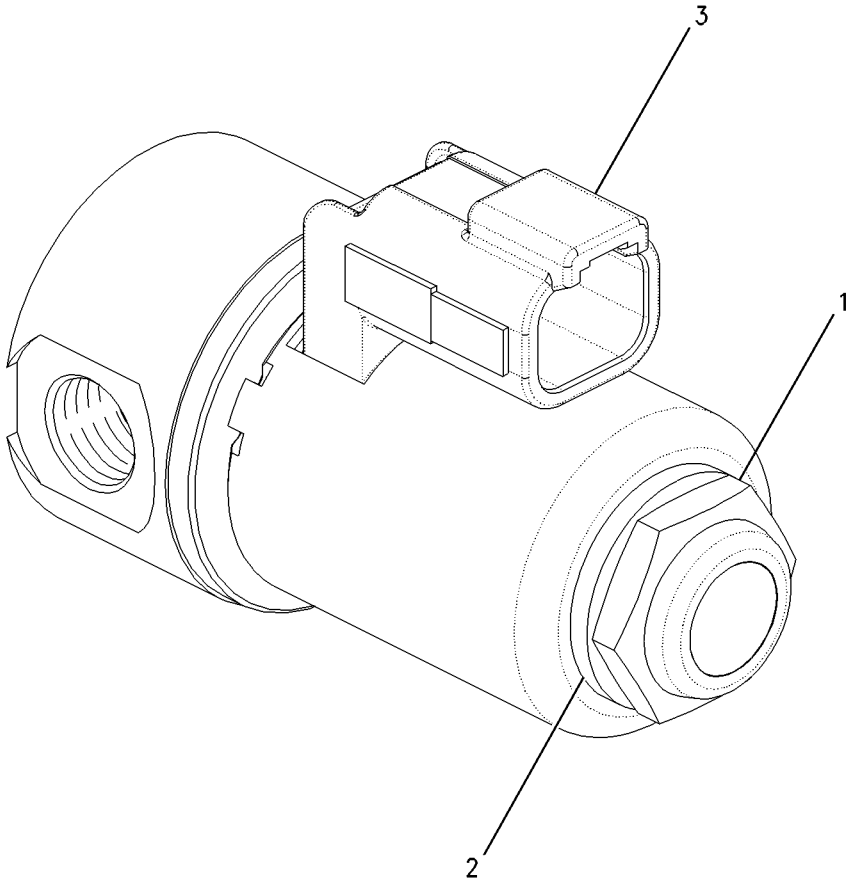

GRAPHIC #1 **<END>** g00925213

348-7029 CONTROL AR-HYDRAULIC—RIPPER

S/N: JAP1-UP
AN ATTACHMENT

SMCS-5050 **i03643549**

NOTE	PART NUMBER	QTY	PART NAME 1 2 3 4 5 6 (PRODUCT LEVEL)	SEE PAGE
Y	*303-1978*	1	LINES GP-RIPPER	414
Y	*348-7520*	1	VALVE & LINKAGE GP (4-BANK, RH; 5-BANK, LH)	450

Y-SEPARATE ILLUSTRATION

<END>

348-7032 CONTROL AR-HYDRAULIC

S/N: JAP1-UP
AN ATTACHMENT

SMCS-5050 **i03643568**

NOTE	PART NUMBER	QTY	PART NAME 1 2 3 4 5 6 (PRODUCT LEVEL)	SEE PAGE
Y	*303-1978*	1	LINES GP-RIPPER	414
Y	*348-7523*	1	VALVE & LINKAGE GP (5-BANK, RH, LH)	452

Y-SEPARATE ILLUSTRATION

<END>

348-7033 CONTROL AR-HYDRAULIC—RIPPER

S/N: JAP1-UP
AN ATTACHMENT

SMCS-5050 **i03643582**

NOTE	PART NUMBER	QTY	PART NAME 1 2 3 4 5 6 (PRODUCT LEVEL)	SEE PAGE
Y	*303-1978*	1	LINES GP-RIPPER	414
Y	*348-7527*	1	VALVE & LINKAGE GP (4-BANK, RH, LH)	455

Y-SEPARATE ILLUSTRATION

<END>

HYDRAULIC SYSTEM

208-9698 CYLINDER & LINES GP-RIPPER

S/N: JAP1-UP
PART OF 301-8206 RIPPER AR
AN ATTACHMENT

SMCS-5352 **i03661413**

NOTE	REF NO	GRAPHIC REF	PART NUMBER	QTY	PART NAME 1 2 3 4 5 6 (PRODUCT LEVEL)	SEE PAGE
Y	1	1	**6E-4724**	1	CYLINDER GP-HYDRAULIC (RIPPER)	377
I	2	1	**6T-2421**	2	HOSE AS	
	3	1	*148-8363*	1	ELBOW AS	
		1	**6V-9876**	1	ELBOW	
		1	**3K-0360**	1	SEAL-O-RING	
		1	**6V-8397**	1	SEAL-O-RING	
	4	1	*148-8383*	1	ELBOW AS	
		1	**8T-1683**	1	ELBOW	
		1	**3K-0360**	1	SEAL-O-RING	
		1	**6V-8397**	1	SEAL-O-RING	
	5	1	**7K-9203**	4	SEAL-LIP TYPE	
	6	1	**8D-7685**	2	BEARING	

I-REFER TO HYDRAULIC INFORMATION SYSTEM
Y-SEPARATE ILLUSTRATION

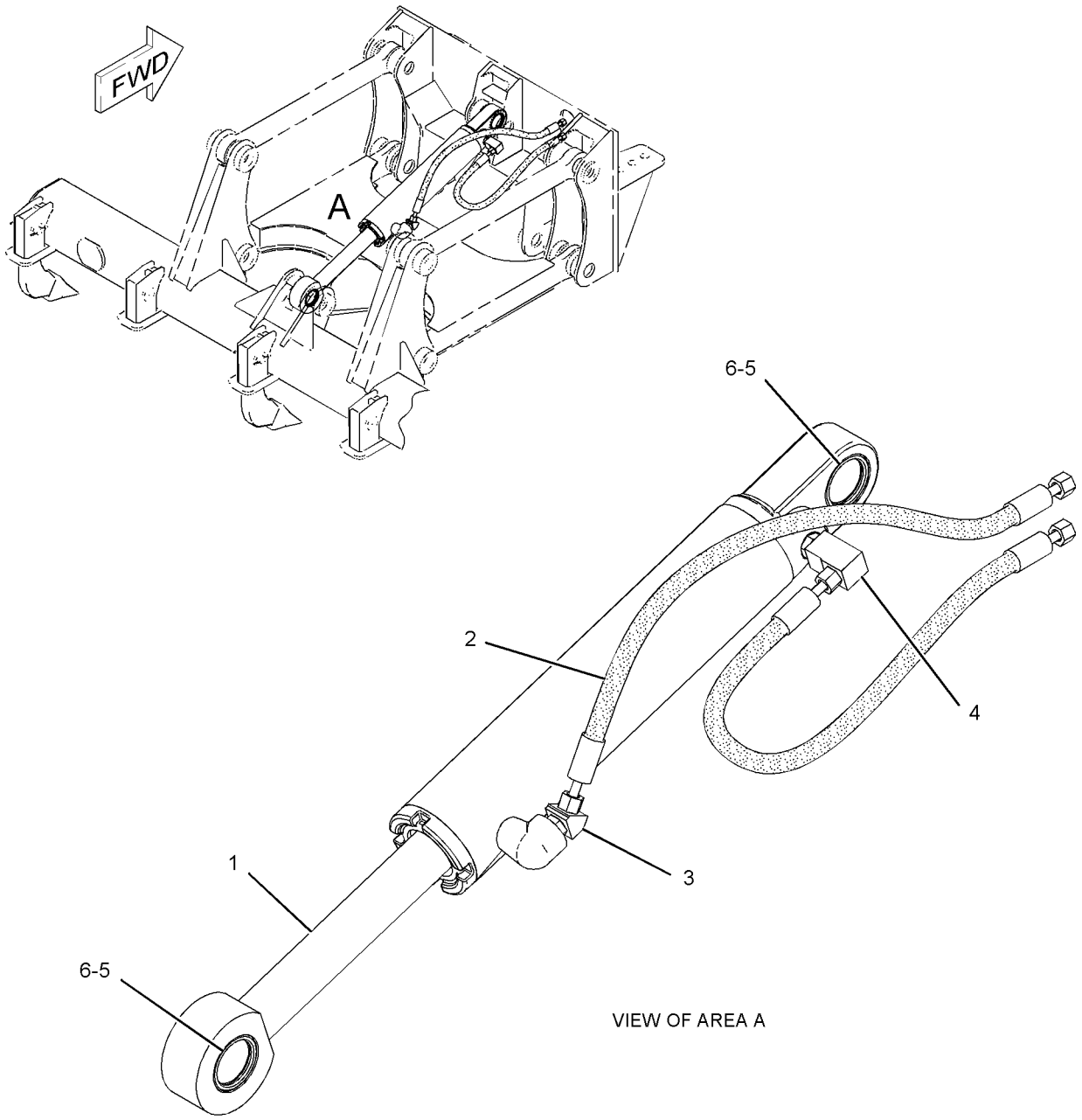

GRAPHIC #1 **<END>** g01048713

HYDRAULIC SYSTEM

115-5726 CYLINDER & MTG GP-ARTICULATION

S/N: JAP1-UP

PART OF 348-3018 GENERAL AR

SMCS-5265 **i00135998**

NOTE	REF NO	GRAPHIC REF	PART NUMBER	QTY	PART NAME 1 2 3 4 5 6 (PRODUCT LEVEL)	SEE PAGE
	1	1	**8D-9815**	4	PIN-CYLINDER	
B	2	1	**3B-4897**	10	WASHER (1.531X2.875X0.049-IN THK)	
	3	1	**7K-6128**	4	WASHER (0.531X1.75X0.312-IN THK) (44.45MM)	
	4	1	**8T-4223**	4	WASHER-HARD (13.5X25.5X3-MM THK)	
	5	1	**5P-2566**	2	BOLT (1/2-13X1.5-IN)	
	6	1	**5P-2424**	2	BOLT (1/2-13X2.25-IN)	
	7	1	**7K-9201**	8	SEAL-LIP TYPE	
	8	1	**8D-9814**	4	BEARING	
Y	9	1	**9T-8785**	1	CYLINDER GP-ARTICULATION (RH)	375
Y	10	1	**6E-1554**	1	CYLINDER GP-ARTICULATION (LH)	374

B-USE AS REQUIRED
Y-SEPARATE ILLUSTRATION

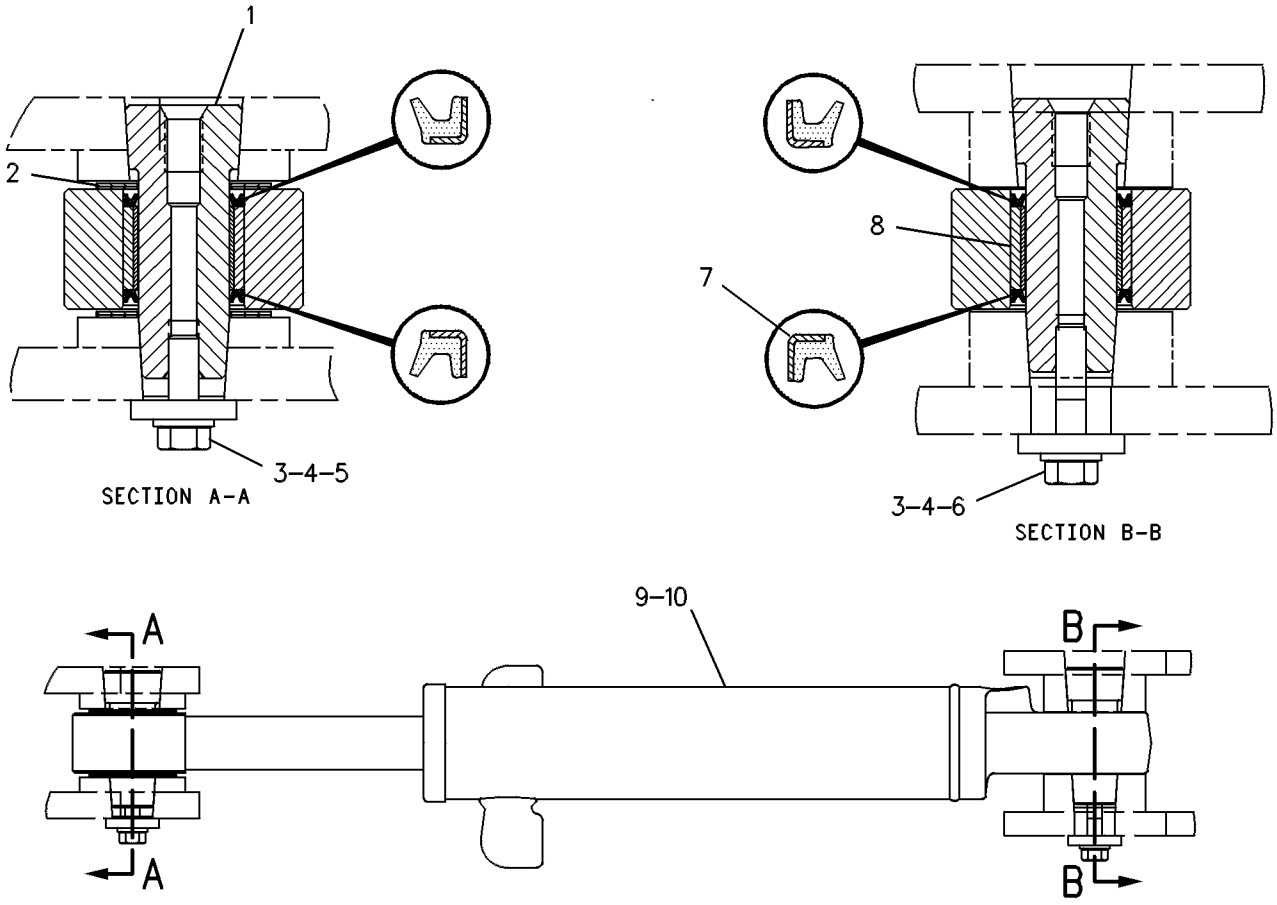

GRAPHIC #1 **<END>** g00108680

8X-1948 CYLINDER & MTG GP-BLADE LIFT

S/N: JAP1-UP

PART OF 348-3018 GENERAL AR

SMCS-5102 **i03538285**

NOTE	REF NO	GRAPHIC REF	PART NUMBER	QTY	PART NAME 1 2 3 4 5 6 (PRODUCT LEVEL)	SEE PAGE
	1	1	**2G-9098**	2	CAP	
B	2	1	**2G-9103**	8	SHIM (0.5-MM THK)	
	3	1	**3B-8485**	2	FITTING-GREASE	
	4	1	**8W-2842**	4	CAP AS	
					(EACH INCLUDES)	
	4A	1	**8D-7996**	1	BEARING-SLEEVE	
	4B	1	**3P-1461**	1	SEAL-LIP TYPE	
	5	1	**8X-4741**	4	INSERT	
CY	6	1	**132-4926**	2	CYLINDER GP-LIFT	380
	7	1	**279-6631**	8	BOLT (M12X1.75X100-MM)	
	8	1	**279-6632**	8	WASHER (13.5X25.5X3-MM THK)	
	9	1	**299-3436**	4	BOLT (7/8-9X3.5-IN)	
	10	1	**299-3439**	4	WASHER-HARD (24X41.5X6-MM THK)	

QUANTITIES SHOWN ARE THOSE REQUIRED FOR BOTH LH AND RH SIDES
B-USE AS REQUIRED
C-CHANGE FROM PREVIOUS TYPE
Y-SEPARATE ILLUSTRATION

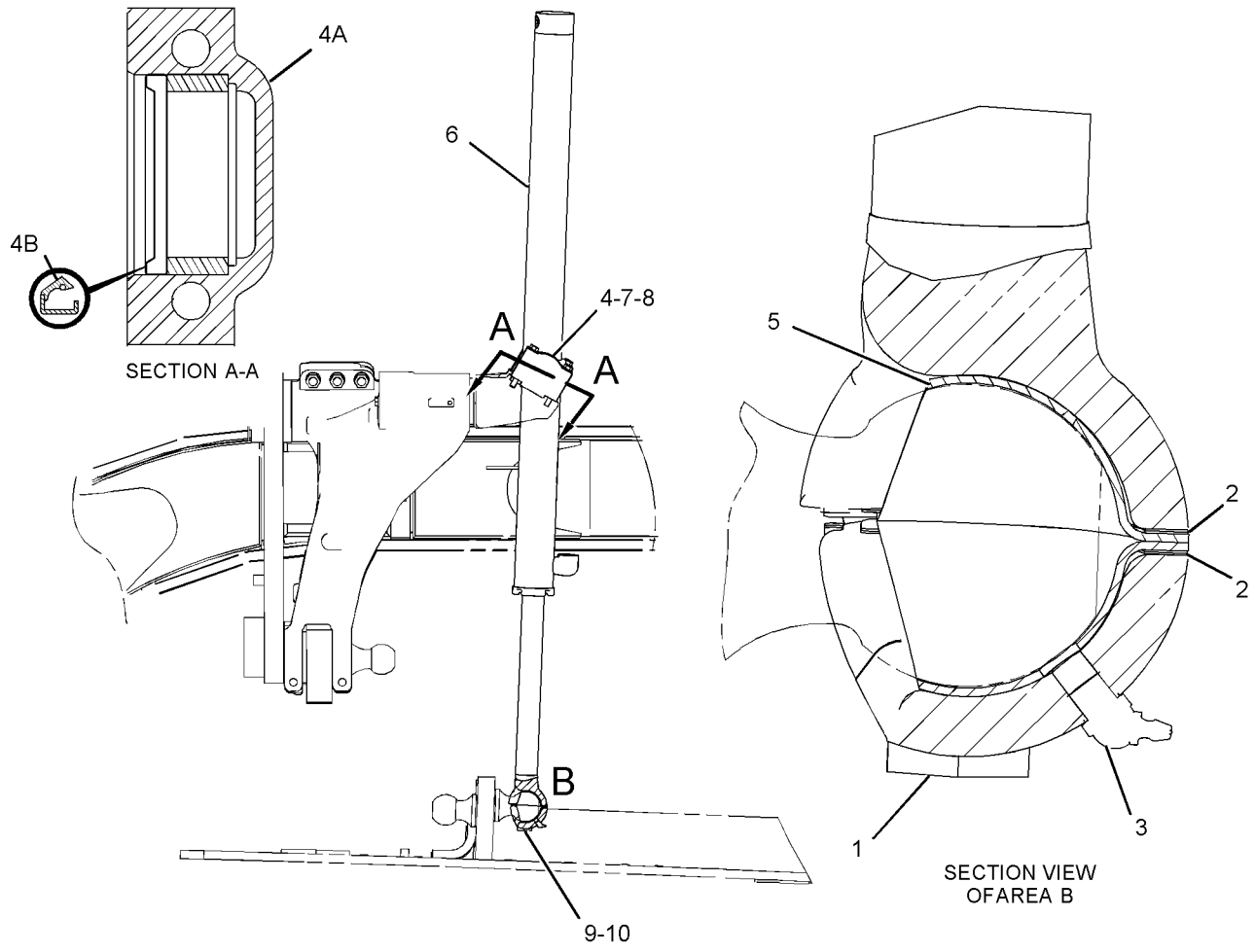

GRAPHIC #1 **<END>** g01924274

8X-1943 CYLINDER & MTG GP-BLADE TIP

S/N: JAP1-UP
PART OF 329-3826 BLADE & TIP AR-POWER
AN ATTACHMENT

SMCS-5106 **i03178160**

NOTE	REF NO	GRAPHIC REF	PART NUMBER	QTY	PART NAME 1 2 3 4 5 6 (PRODUCT LEVEL)	SEE PAGE
	1	1	**3B-5329**	1	PIN-COTTER	
	2	1	**8D-7678**	1	PIN	
CY	3	1	**131-7191**	1	CYLINDER GP-HYDRAULIC (BLADE TIP)	379
	4	1	**2G-3967**	2	SPACER (1.266X3X0.781-IN)	
	5	1	**5K-5552**	1	BOLT-LOCKING (3/8-16X3-IN)	
	6	1	**8D-6687**	1	PIN	
	7	1	**8F-4102**	2	PLATE-SEAL	

C-CHANGE FROM PREVIOUS TYPE
Y-SEPARATE ILLUSTRATION

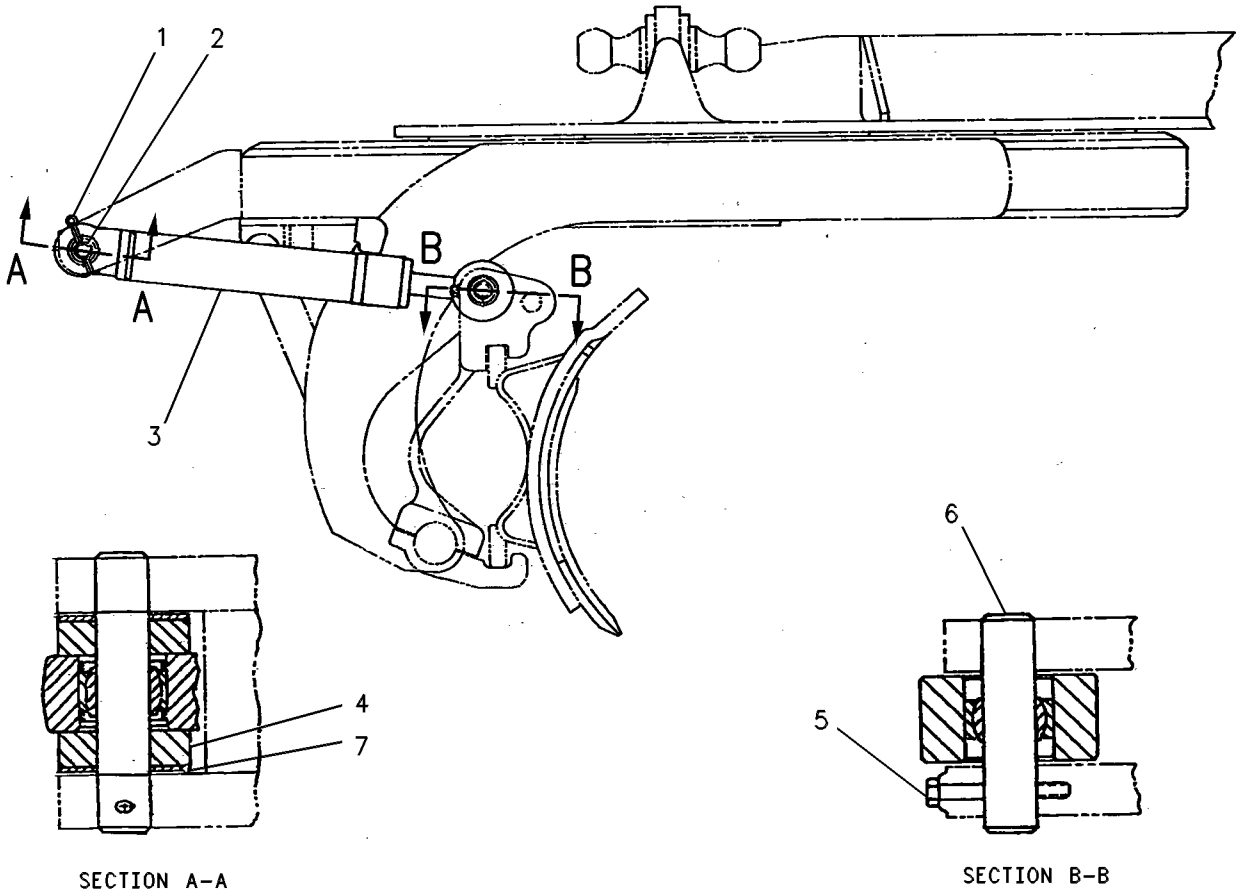

GRAPHIC #1 **<END>** g00108521

8X-1946 CYLINDER & MTG GP-CENTERSHIFT

S/N: JAP1-UP

PART OF 348-3018 GENERAL AR

SMCS-5223 **i00135244**

NOTE	REF NO	GRAPHIC REF	PART NUMBER	QTY	PART NAME 1 2 3 4 5 6 (PRODUCT LEVEL)	SEE PAGE
Y	1	1	**6E-1754**	1	CYLINDER GP-CENTERSHIFT	376
	2	1	**2G-9098**	2	CAP	
	3	1	**3B-8485**	2	FITTING-HYDRAULIC	
B	4	1	**2G-9103**	8	SHIM (.5MM THK)	
	5	1	**8X-4741**	4	INSERT	
	6	1	**1D-4628**	4	BOLT (7/8-9X3.25IN)	
	7	1	**5P-8249**	4	WASHER (4.0MM THK)	

B-USE AS REQUIRED
Y-SEPARATE ILLUSTRATION

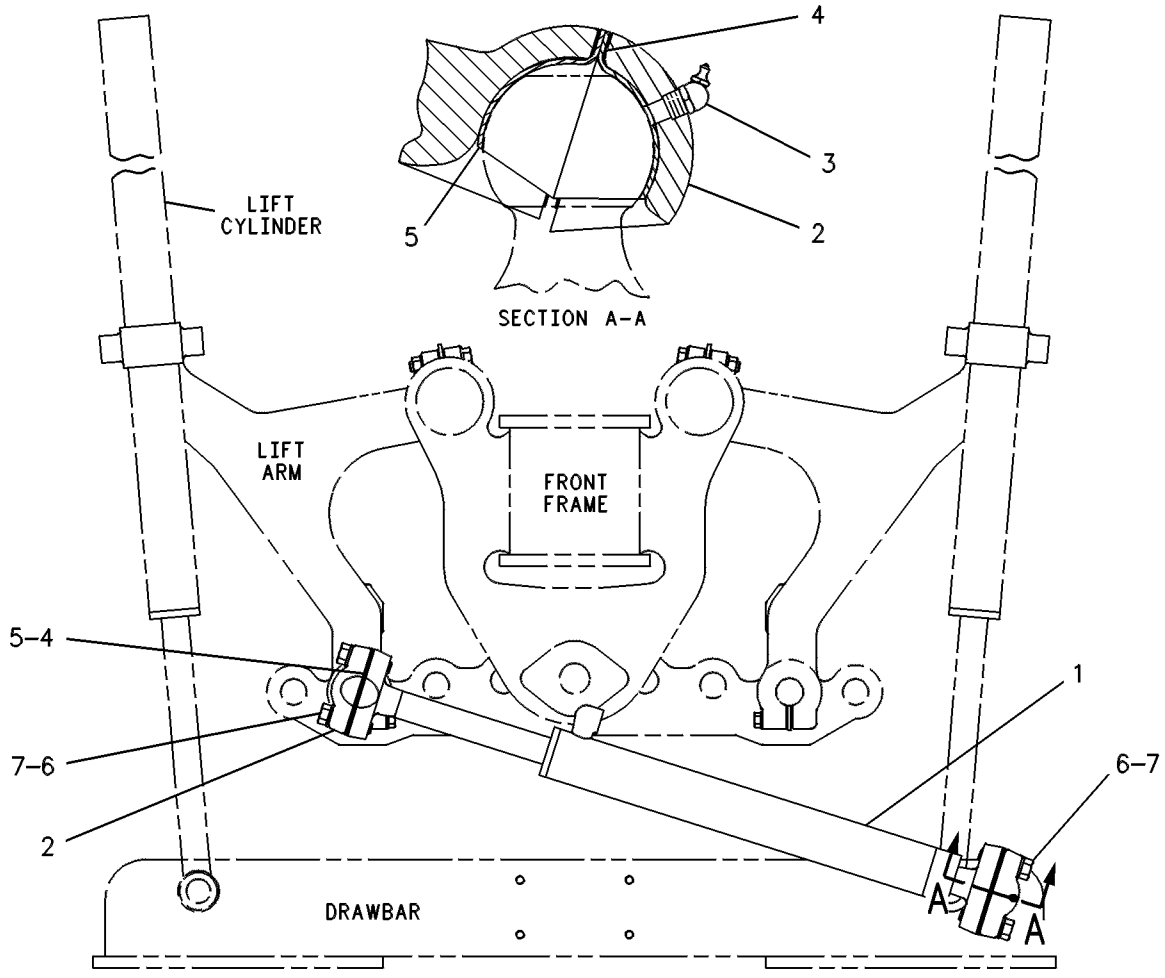

GRAPHIC #1 **<END>** g00108522

HYDRAULIC SYSTEM

8W-2913 CYLINDER & MTG GP-SCARIFIER

S/N: JAP1-UP
PART OF 340-5008 SCARIFIER AR
AN ATTACHMENT

SMCS-5213, 6165 **i03301191**

NOTE	REF NO	GRAPHIC REF	PART NUMBER	QTY	PART NAME 1 2 3 4 5 6 (PRODUCT LEVEL)	SEE PAGE
	1	1	**7K-9202**	4	SEAL-LIP TYPE	
	2	1	**8D-7086**	2	BEARING	
Y	3	1	**165-2510**	1	CYLINDER GP-SCARIFIER	381
	4	1	**6G-7187**	2	LOCK	
	5	1	**8D-7225**	2	PIN	
	6	1	**5P-2228**	4	BOLT (1/2-13X1-IN)	
	7	1	**8T-4223**	4	WASHER-HARD (13.5X25.5X3-MM THK)	

Y-SEPARATE ILLUSTRATION

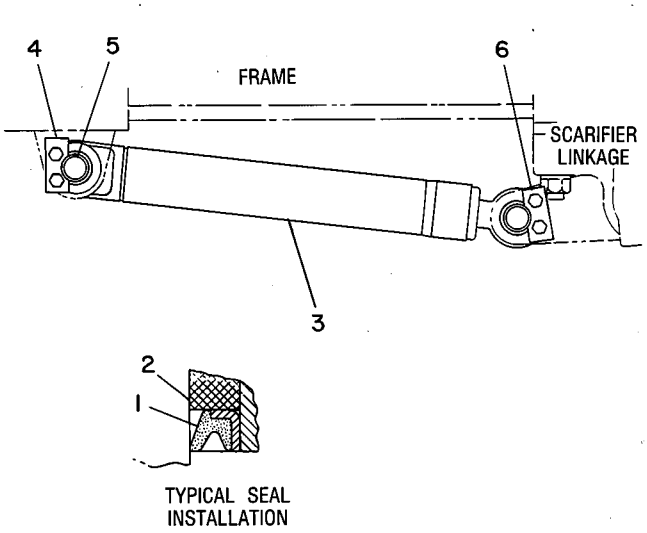

GRAPHIC #1 **<END>** g00108274

112-7463 CYLINDER & MTG GP-SIDESHIFT

S/N: JAP1-UP

PART OF 329-3826 BLADE & TIP AR-POWER, 348-3018 GENERAL AR

ALSO AN ATTACHMENT

SMCS-5229 **i03543663**

NOTE	REF NO	GRAPHIC REF	PART NUMBER	QTY	PART NAME 1 2 3 4 5 6 (PRODUCT LEVEL)	SEE PAGE
	1	1	**6H-0211**	2	WASHER (1.563X2.75X0.06-IN THK)	
	2	1	**5T-5295**	1	PIN	
	3	1	**8T-9391**	1	BOLT (1/2-13X3.75-IN)	
	5	1	**1K-6872**	1	LOCKNUT (1/2-13-THD)	
	6	1	**3B-4647**	1	PIN-COTTER	
	7	1	**5T-8417**	1	PIN	
	8	1	**112-7462**	1	BRACKET	
	9	1	**201-2184**	4	BOLT (3/4-10X2.25-IN)	
	10	1	**299-3427**	4	WASHER-HARD (20X36.5X3.5-MM THK)	
Y	11	1	**112-5575**	1	CYLINDER GP-SIDESHIFT	382

Y-SEPARATE ILLUSTRATION

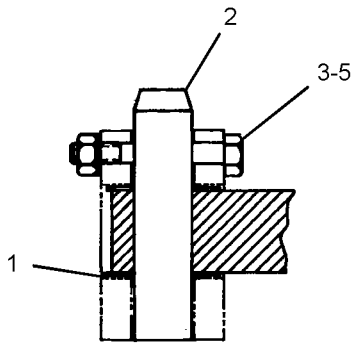

SECTION A-A

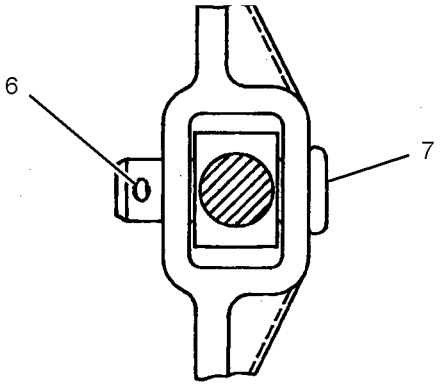

SECTION B-B

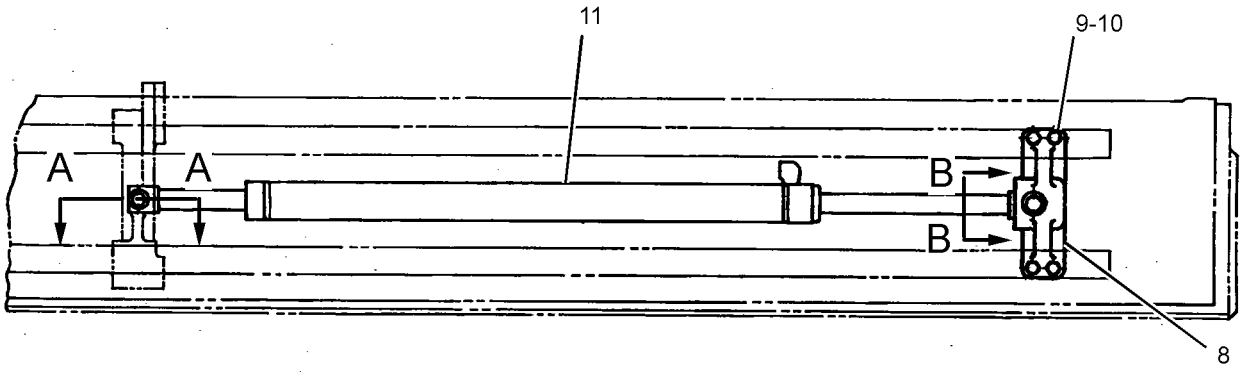

GRAPHIC #1 **<END>** g01827437

HYDRAULIC SYSTEM

8W-2290 CYLINDER & MTG GP-STEERING

S/N: JAP1-UP

PART OF 348-3018 GENERAL AR

SMCS-4303 **i03478201**

NOTE	REF NO	GRAPHIC REF	PART NUMBER	QTY	PART NAME 1 2 3 4 5 6 (PRODUCT LEVEL)	SEE PAGE
	1	1	**2H-3786**	2	NUT-JAM (1-14-THD)	
	2	1	**8D-2429**	2	PIN AS	
	3	1	**8D-2638**	4	SPACER (1.016X1.25X0.39-IN THK)	
CY	4	1	**130-9041**	1	CYLINDER GP-STEERING (LH)	383
CY	5	1	**130-9042**	1	CYLINDER GP-STEERING (RH)	385
	6	1	**131-3736**	2	TIE ROD GP (STEERING)	
					(EACH INCLUDES)	
		1	**2F-8057**	1	NUT-SLOTTED	
		1	**132-1143**	1	SEAL-BOOT	
	7	1	**3B-4618**	2	PIN-COTTER	
	8	1	**5S-7379**	2	BOLT (3/8-16X0.875-IN)	
	9	1	**8D-2811**	2	WASHER (1.25X1.94X0.032-IN THK)	
	10	1	**8T-4896**	2	WASHER-HARD (10.2X18.5X2.5-MM THK)	

C-CHANGE FROM PREVIOUS TYPE
Y-SEPARATE ILLUSTRATION

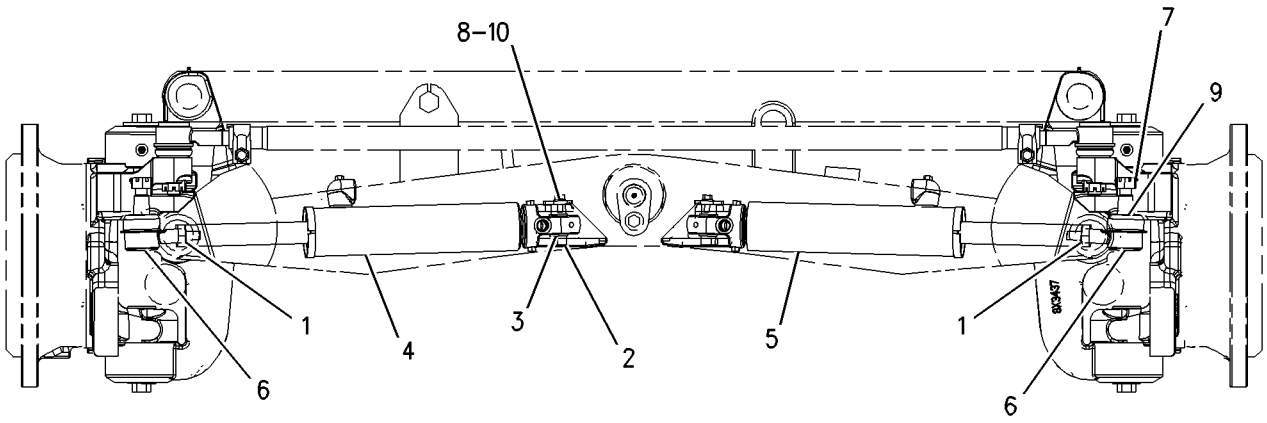

GRAPHIC #1 **<END>** g00743415

8W-2737 CYLINDER & MTG GP-WHEEL LEAN

S/N: JAP1-UP

PART OF 348-3018 GENERAL AR

SMCS-5211 **i01458451**

NOTE	REF NO	GRAPHIC REF	PART NUMBER	QTY	PART NAME 1 2 3 4 5 6 (PRODUCT LEVEL)	SEE PAGE
	1	1	**6H-1717**	2	BOLT (1/2-13X1.125-IN)	
		1	**5P-8245**	2	WASHER-HARD (13.5X25.5X3-MM THK)	
	2	1	**3B-8489**	2	FITTING-GREASE (WHEEL LEAN)	
	3	1	**2G-8609**	1	PIN	
	4	1	**6G-7187**	1	LOCK	
Y	5	1	**121-9242**	1	CYLINDER GP-WHEEL LEAN	387
	6	1	**2G-5667**	1	RETAINER	
	7	1	**0S-1592**	1	BOLT (5/8-11X1.25-IN)	
		1	**4D-3704**	1	WASHER-HARD (17X30X5-MM THK)	
	8	1	**5P-8842**	4	SEAL-LIP TYPE	

Y-SEPARATE ILLUSTRATION

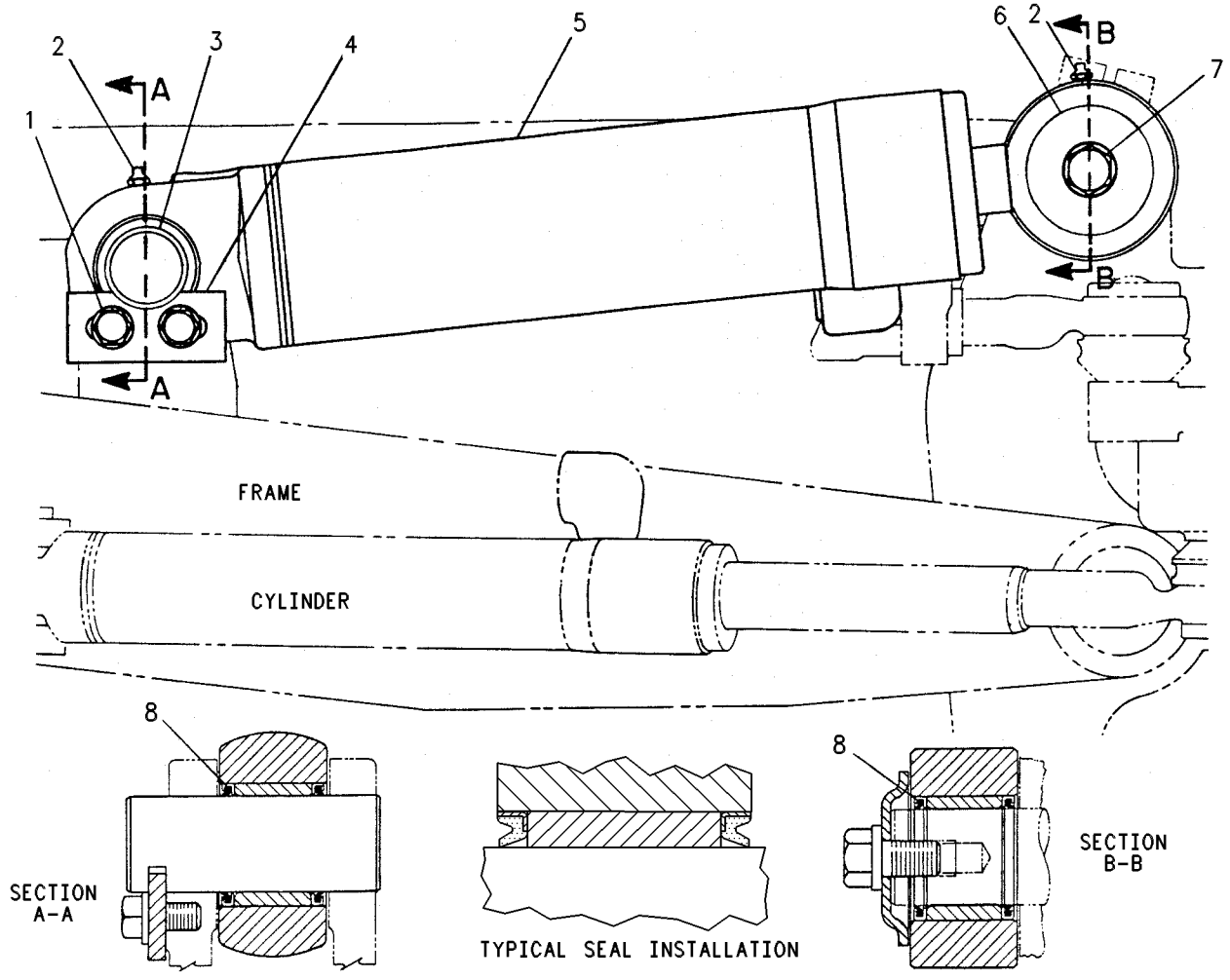

GRAPHIC #1 **<END>** g00108800

6E-1554 CYLINDER GP-ARTICULATION–LH

S/N: JAP1-UP
76.2 MM BORE X 284.3 MM STROKE
PART OF 115-5726 CYLINDER & MTG GP-ARTICULATION

SMCS-5265 **i01449292**

NOTE	REF NO	GRAPHIC REF	PART NUMBER	QTY	PART NAME 1 2 3 4 5 6 (PRODUCT LEVEL)	SEE PAGE
	1	1	**6E-4090**	1	PISTON	
	2	1	**9T-4215**	1	ROD AS	
	3	1	**184-9843**	1	HEAD	
	4	1	**167-2190**	1	SEAL AS-BUFFER	
	5	1	**167-2300**	1	SEAL-U-CUP	
	6	1	**167-2452**	1	SEAL-WIPER	
M	7	1	**173-9779**	1	BOLT (M24X3X80-MM)	
	8	1	**175-7896**	1	SEAL-O-RING	
	9	1	**4T-6907**	1	RING-WEAR	
	10	1	**6E-1555**	1	CYLINDER AS	
	11	1	**6J-1972**	1	SEAL AS	
	12	1	**6J-5731**	1	RING-BACKUP	
	13	1	**6J-5733**	1	RING-WEAR	
	14	1	**6V-8237**	1	WASHER (26X44X4-MM THK)	

M-METRIC PART

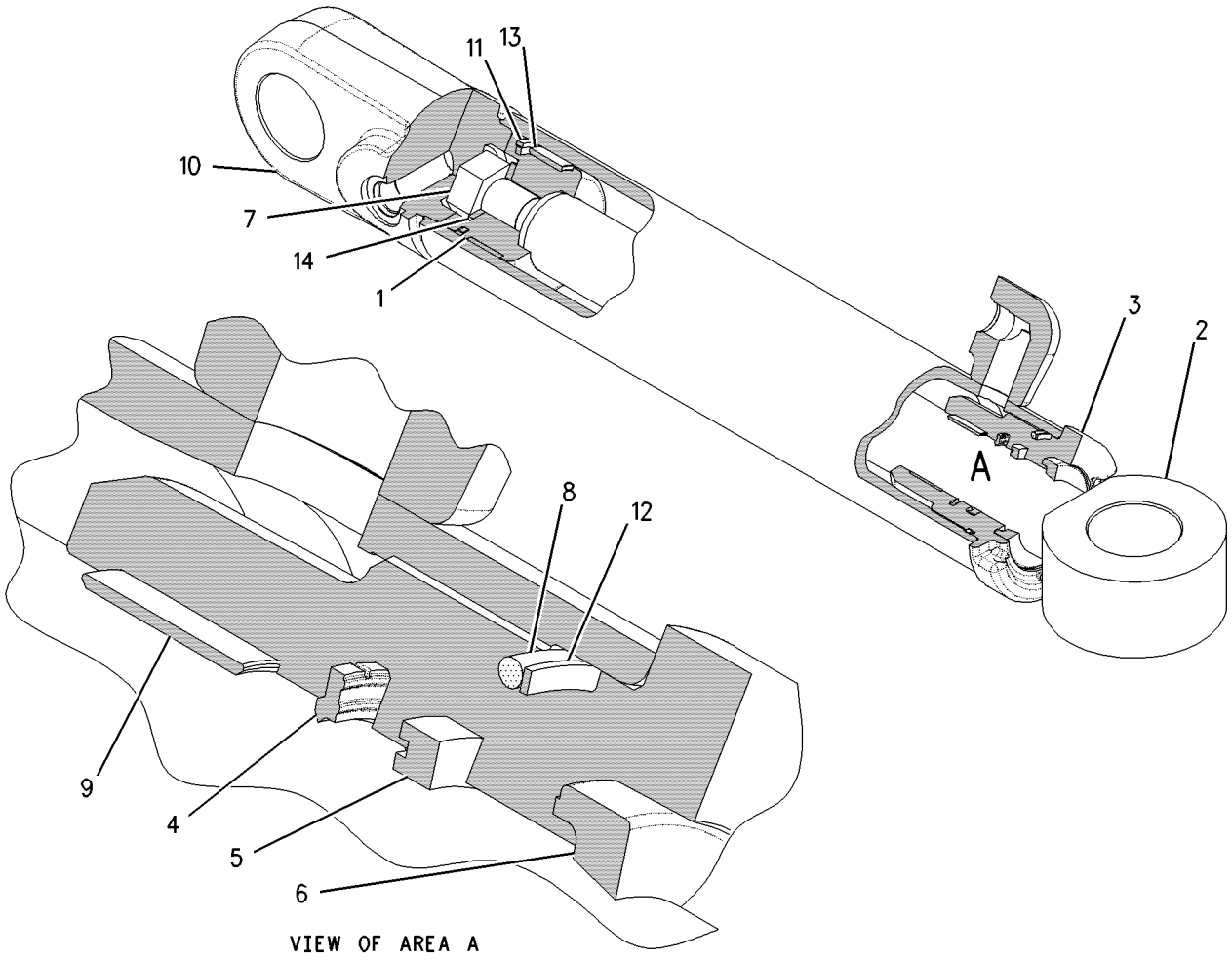

GRAPHIC #1 **<END>** g00758257

9T-8785 CYLINDER GP-ARTICULATION–RH

S/N: JAP1-UP
76 MM BORE X 284 MM STROKE
PART OF 115-5726 CYLINDER & MTG GP-ARTICULATION

SMCS-5265 **i01449455**

NOTE	REF NO	GRAPHIC REF	PART NUMBER	QTY	PART NAME 1 2 3 4 5 6 (PRODUCT LEVEL)	SEE PAGE
	1	1	**6E-4090**	1	PISTON	
	2	1	**9T-2446**	1	CYLINDER AS	
	3	1	**9T-4215**	1	ROD AS	
	4	1	**184-9843**	1	HEAD	
	5	1	**167-2190**	1	SEAL AS-BUFFER	
	6	1	**167-2300**	1	SEAL-U-CUP	
	7	1	**167-2452**	1	SEAL-WIPER	
M	8	1	**173-9779**	1	BOLT (M24X3X80-MM)	
	9	1	**175-7896**	1	SEAL-O-RING	
	10	1	**4T-6907**	1	RING-WEAR	
	11	1	**6J-1972**	1	SEAL AS	
	12	1	**6J-5731**	1	RING-BACKUP	
	13	1	**6J-5733**	1	RING-WEAR	
	14	1	**6V-8237**	1	WASHER (26X44X4-MM THK)	

M-METRIC PART

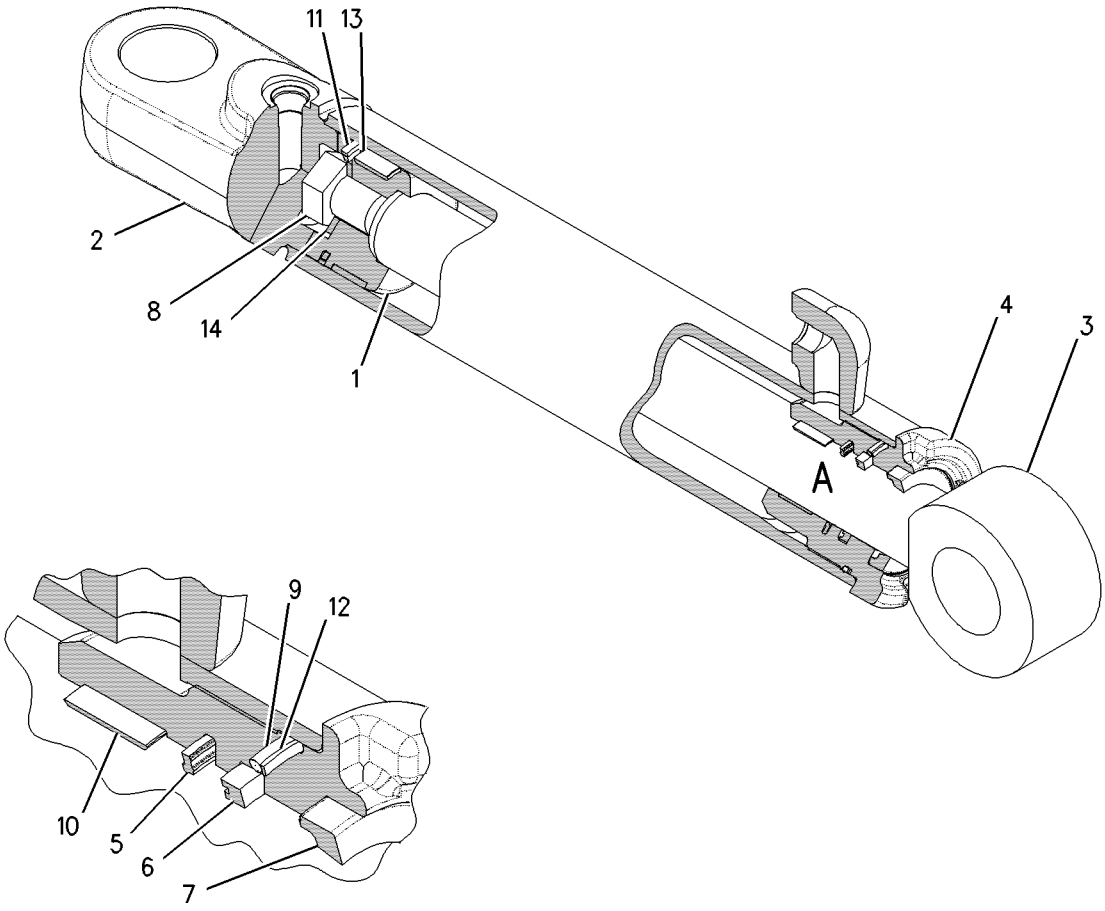

VIEW OF AREA A

GRAPHIC #1 **<END>** g00758242

HYDRAULIC SYSTEM

6E-1754 CYLINDER GP-CENTERSHIFT

S/N: JAP1-UP
76.2 MM BORE X 590 MM STROKE
PART OF 8X-1946 CYLINDER & MTG GP-CENTERSHIFT

SMCS-5223 **i01990557**

NOTE	REF NO	GRAPHIC REF	PART NUMBER	QTY	PART NAME 1 2 3 4 5 6 (PRODUCT LEVEL)	SEE PAGE
	1	1	**6E-1634**	1	CYLINDER AS	
M	2	1	**173-9683**	1	BOLT (M30X3.5X90-MM)	
	3	1	**3S-7023**	1	WASHER (34X57X6-MM THK)	
	4	1	**6E-1131**	1	PISTON	
	5	1	**6E-1857**	1	ROD AS	
J	6	1	**175-7896**	1	SEAL-O-RING	
J	7	1	**6J-5731**	1	RING-BACKUP	
	8	1	**120-6680**	1	HEAD	
J	9	1	**6J-5733**	1	RING-WEAR	
J	10	1	**6J-1972**	1	SEAL AS	
J	11	1	**229-9382**	1	SEAL-WIPER	
J	12	1	**167-2304**	1	SEAL-U-CUP	
J	13	1	**167-2195**	1	SEAL AS-BUFFER	
J	14	1	**4T-5613**	1	RING-WEAR	
					AVAILABLE REPAIR KIT(S):	
J			**238-4462**	1	KIT-SEAL	

J-KIT MARKED J INCLUDES PARTS MARKED J
M-METRIC PART

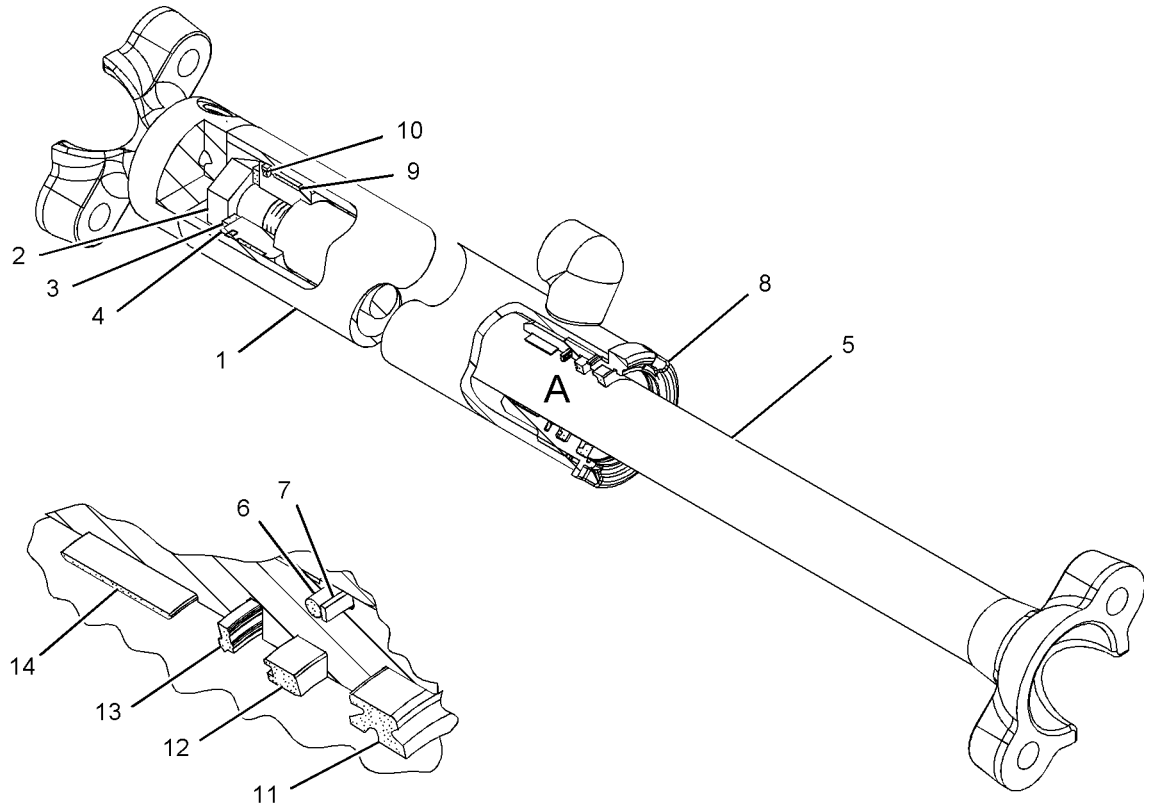

VIEW OF AREA A

GRAPHIC #1 **<END>** g01069251

HYDRAULIC SYSTEM

6E-4724 CYLINDER GP-HYDRAULIC

S/N: JAP1-UP
88.9-MM (3.5-IN)BORE X 329.3-MM (12.9-IN) STROKE
PART OF 208-9698 CYLINDER & LINES GP-RIPPER
AN ATTACHMENT

SMCS-7562 **i01862277**

NOTE	REF NO	GRAPHIC REF	PART NUMBER	QTY	PART NAME 1 2 3 4 5 6 (PRODUCT LEVEL)	SEE PAGE
R	1	1	**6E-4725**	1	CYLINDER AS	
M	2	1	**173-9683**	1	BOLT (M30X3.5X90-MM)	
	3	1	**3S-7023**	1	WASHER (34X57X6-MM THK)	
	4	1	**6E-4581**	1	PISTON	
J	5	1	**4T-8054**	1	SEAL AS	
					(INCLUDES EXPANDER RING & SEAL RING)	
J	6	1	**7J-9885**	1	RING-WEAR	
J	7	1	**4T-5613**	1	RING-WEAR	
J	8	1	**167-2195**	1	SEAL AS-BUFFER	
					(INCLUDES BUFFER SEAL & BACK-UP RING)	
J	9	1	**167-2304**	1	SEAL-U-CUP	
J	10	1	**167-2457**	1	SEAL-WIPER	
	11	1	**6E-2447**	1	ROD AS	
	12	1	**6E-4974**	1	HEAD	
J	13	1	**175-7898**	1	SEAL-O-RING	
J	14	1	**4J-9224**	1	RING-BACKUP	
					AVAILABLE REPAIR KIT(S):	
AJ			**185-7674**	1	KIT-SEAL	
					(INCLUDES BACK-UP RING)	

A-NOT PART OF THIS GROUP
J-KIT MARKED J INCLUDES PARTS MARKED J
M-METRIC PART
R-REMFG PART MAY BE AVAILABLE

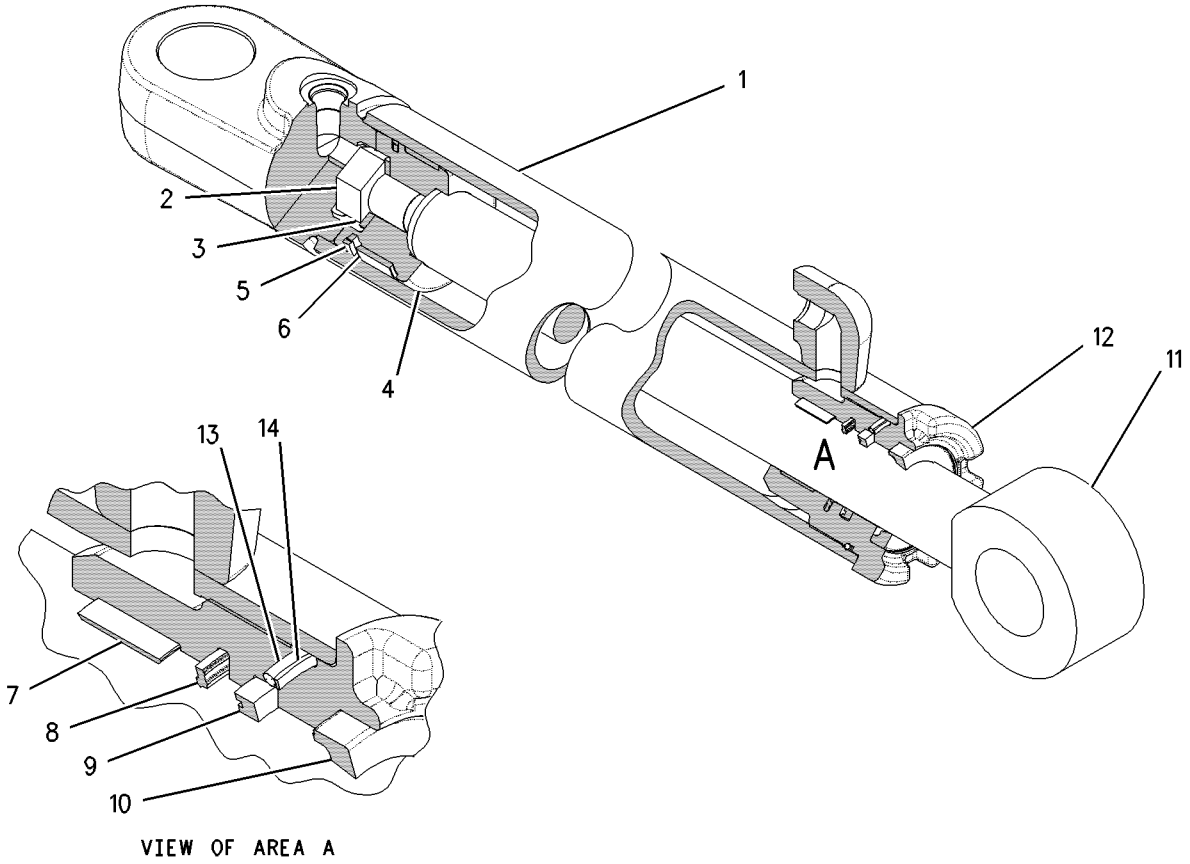

GRAPHIC #1 **<END>** g00777840

131-7191 CYLINDER GP-HYDRAULIC

S/N: JAP1-UP
69.85-MM (2.75-IN) BORE X 307-MM (12.09-IN) STROKE
PART OF 8X-1943 CYLINDER & MTG GP-BLADE TIP
AN ATTACHMENT

SMCS-7562 **i03490120**

NOTE	REF NO	GRAPHIC REF	PART NUMBER	QTY	PART NAME 1 2 3 4 5 6 (PRODUCT LEVEL)	SEE PAGE
	1	1	**131-7194**	1	CYLINDER AS	
		1	**2D-8652**	1	BEARING	
M	2	1	**173-9685**	1	BOLT (M20X2.5X70-MM)	
	3	1	**8T-3282**	1	WASHER-HARD (22X35X3.5-MM THK)	
	4	1	**5J-7010**	1	SEAL AS	
	5	1	**8J-0112**	1	RING-WEAR	
	6	1	**9T-2457**	1	PISTON	
	7	1	**175-7895**	1	SEAL-O-RING	
	8	1	**4J-9225**	1	RING-BACKUP	
	9	1	**6E-4940**	1	HEAD	
	10	1	**131-7195**	1	ROD AS	
		1	**2D-8652**	1	BEARING	
	11	1	**4T-6780**	1	RING-WEAR	
	12	1	**167-2186**	1	SEAL AS-BUFFER	
	13	1	**167-2294**	1	SEAL-U-CUP	
	14	1	**226-8202**	1	SEAL-WIPER	

M-METRIC PART

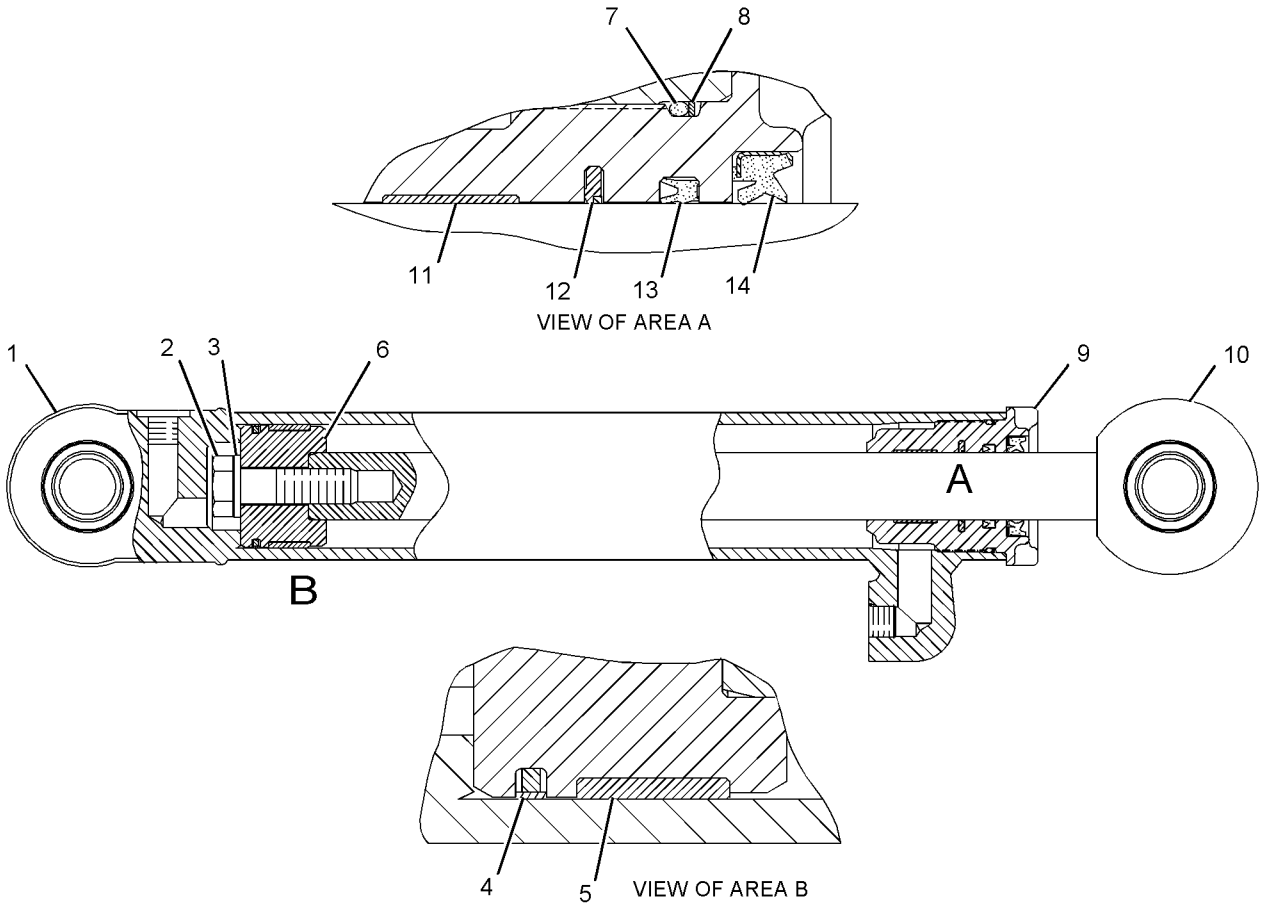

GRAPHIC #1

<END>

g01097877

HYDRAULIC SYSTEM

132-4926 CYLINDER GP-LIFT

S/N: JAP1-UP
76.2 MM BORE X 1170.0 MM STROKE
PART OF 8X-1948 CYLINDER & MTG GP-BLADE LIFT

SMCS-5102 **i01988095**

NOTE	REF NO	GRAPHIC REF	PART NUMBER	QTY	PART NAME 1 2 3 4 5 6 (PRODUCT LEVEL)	SEE PAGE
	1	1	**132-4927**	1	CYLINDER AS	
		1	**8J-6384**	2	BEARING-SLEEVE	
M	2	1	**173-9683**	1	BOLT (M30X3.5X90-MM)	
	3	1	**3S-7023**	1	WASHER (34X57X6-MM THK)	
	4	1	**6J-1972**	1	SEAL AS	
	5	1	**6J-5733**	1	RING-WEAR	
	6	1	**6E-1131**	1	PISTON	
	7	1	**175-7896**	1	SEAL-O-RING	
	8	1	**6J-5731**	1	RING-BACKUP	
	9	1	**148-2593**	1	HEAD	
	10	1	**119-8666**	1	ROD AS	
	11	1	**229-9382**	1	SEAL-WIPER	
	12	1	**167-2304**	1	SEAL-U-CUP	
	13	1	**167-2195**	1	SEAL AS-BUFFER	
	14	1	**4T-5613**	1	RING-WEAR	

M-METRIC PART

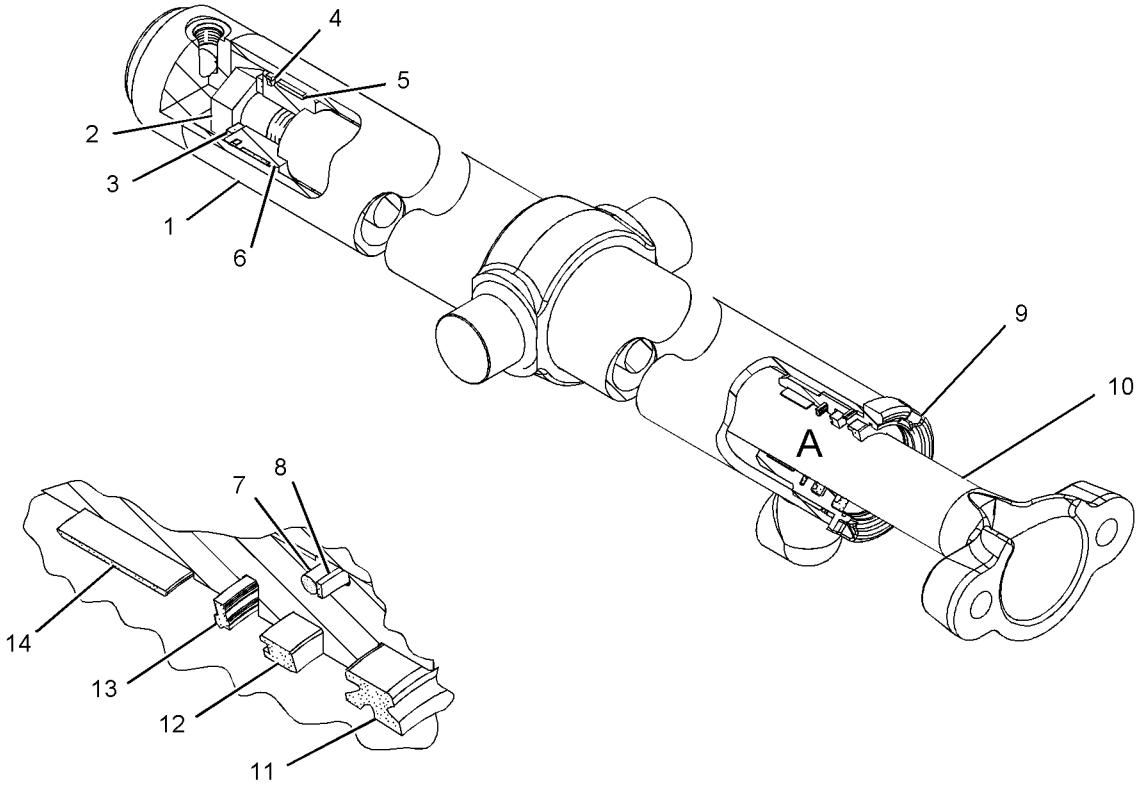

VIEW OF AREA A

GRAPHIC #1 **<END>** g01069226

165-2510 CYLINDER GP-SCARIFIER

S/N: JAP1-UP
76.2-MM (3-IN) BORE X 406.5-MM (16-IN) STROKE
PART OF 8W-2913 CYLINDER & MTG GP-SCARIFIER
AN ATTACHMENT

SMCS-5213 **i03490141**

NOTE	REF NO	GRAPHIC REF	PART NUMBER	QTY	PART NAME 1 2 3 4 5 6 (PRODUCT LEVEL)	SEE PAGE
	1	1	**9T-4211**	1	PISTON	
	2	1	**168-9108**	1	CYLINDER AS	
	3	1	**168-9110**	1	ROD AS	
	4	1	**184-9843**	1	HEAD	
	5	1	**167-2190**	1	SEAL AS-BUFFER	
	6	1	**167-2300**	1	SEAL-U-CUP	
	7	1	**231-3539**	1	SEAL-WIPER	
M	8	1	**173-9779**	1	BOLT (M24X3X80-MM)	
	9	1	**175-7896**	1	SEAL-O-RING	
	10	1	**4T-6907**	1	RING-WEAR	
	11	1	**6J-1972**	1	SEAL AS	
	12	1	**6J-5731**	1	RING-BACKUP	
	13	1	**6J-5733**	1	RING-WEAR	
	14	1	**6V-8237**	1	WASHER (26X44X4-MM THK)	

M-METRIC PART

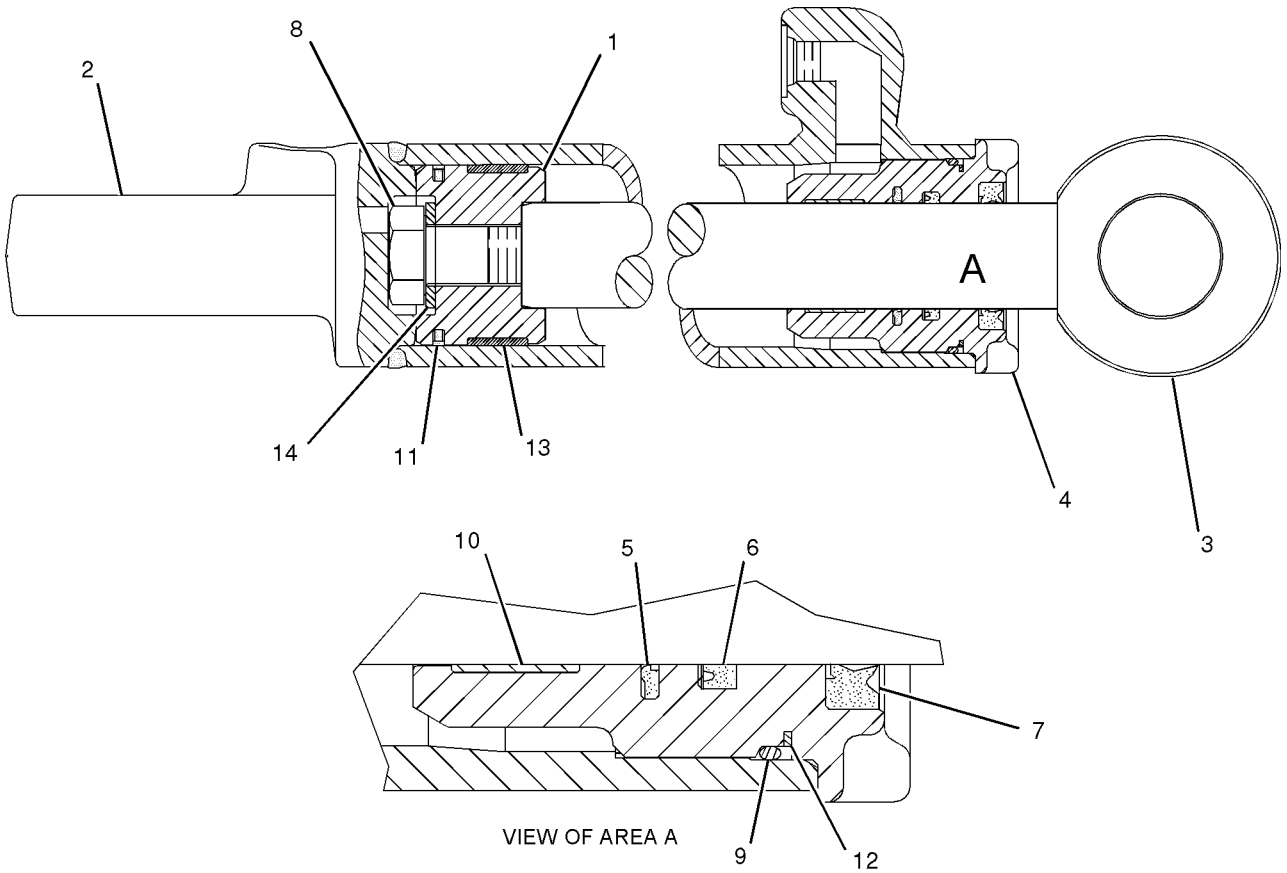

GRAPHIC #1 **<END>** g01045248

HYDRAULIC SYSTEM

112-5575 CYLINDER GP-SIDESHIFT

S/N: JAP1-UP
76.2-MM (3-IN) BORE X 1185-MM (46.66-IN) STROKE
PART OF 112-7463 CYLINDER & MTG GP-SIDESHIFT
ALSO AN ATTACHMENT

SMCS-5229 **i02503930**

NOTE	REF NO	GRAPHIC REF	PART NUMBER	QTY	PART NAME 1 2 3 4 5 6 (PRODUCT LEVEL)	SEE PAGE
R	1	1	**9T-2482**	1	CYLINDER AS	
M	2	1	**8T-0667**	1	BOLT (M24X3X100-MM)	
	3	1	**150-1280**	1	WASHER-HARD (26X44X22-MM THK)	
	4	1	**9T-4211**	1	PISTON	
	5	1	**175-7896**	1	SEAL-O-RING	
	6	1	**6J-5731**	1	RING-BACKUP	
R	7	1	**112-9035**	1	ROD AS	
	8	1	**184-9843**	1	HEAD	
	9	1	**231-3539**	1	SEAL-WIPER	
	10	1	**167-2300**	1	SEAL-U-CUP	
	11	1	**167-2190**	1	SEAL AS-BUFFER	
	12	1	**4T-6907**	1	RING-WEAR	
	13	1	**6J-5733**	1	RING-WEAR	
	14	1	**6J-1972**	1	SEAL AS	

M-METRIC PART
R-REMFG PART MAY BE AVAILABLE

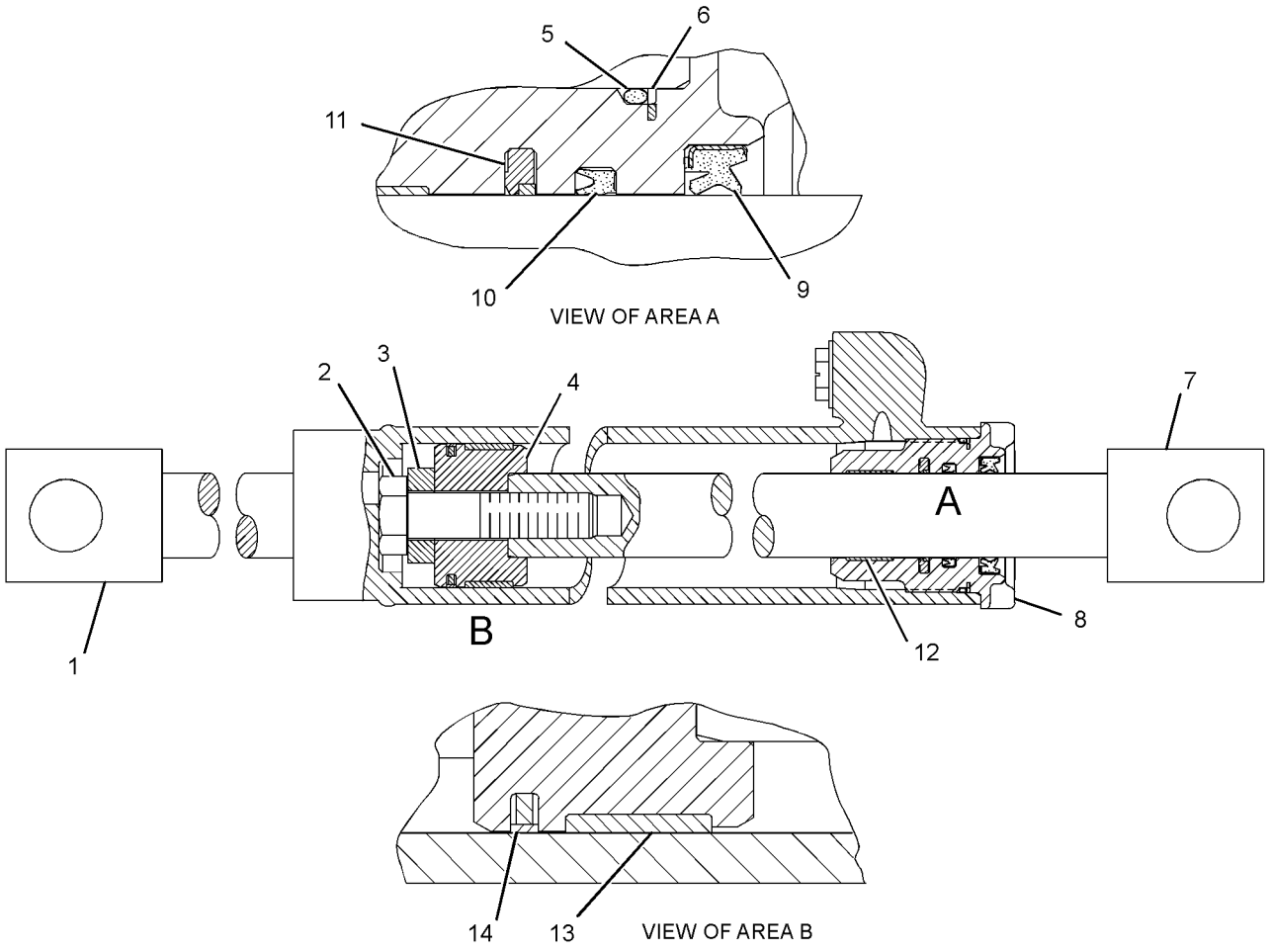

GRAPHIC #1 **<END>** g01259478

130-9041 CYLINDER GP-STEERING–LH

S/N: JAP1-UP
57.15-MM (2.25-IN) BORE X 267-MM (10.51-IN) STROKE
PART OF 8W-2290 CYLINDER & MTG GP-STEERING

SMCS-4303 **i03468227**

NOTE	REF NO	GRAPHIC REF	PART NUMBER	QTY	PART NAME 1 2 3 4 5 6 (PRODUCT LEVEL)	SEE PAGE
	1	1	**9T-2388**	1	PISTON	
R	2	1	**130-9044**	1	CYLINDER AS (LH)	
		1	*172-6876*	1	CAP AS	
		1	**005-8639**	1	BEARING-ALIGNING	
		1	**148-2592**	1	BOSS AS	
		1	**1N-5999**	1	PLUG-O-RING	
		1	**7J-0204**	1	SEAL-O-RING	
	3	1	**154-6579**	1	ROD	
	4	1	*162-6448*	2	PLUG AS	
					(EACH INCLUDES)	
		1	**1N-5999**	1	PLUG-O-RING	
		1	**7J-0204**	1	SEAL-O-RING	
	5	1	**167-2186**	1	SEAL AS-BUFFER	
	6	1	**167-2294**	1	SEAL-U-CUP	
M	7	1	**173-9685**	1	BOLT (M20X2.5X70-MM)	
	8	1	**175-7895**	1	SEAL-O-RING	
	9	1	**1U-3998**	1	SEAL AS	
	10	1	**226-8202**	1	SEAL-WIPER	
	11	1	**4J-9225**	1	RING-BACKUP	
	12	1	**7H-2423**	1	RING-WEAR	
	13	1	**8T-3282**	1	WASHER-HARD (22X35X3.5-MM THK)	
	14	1	**9T-3727**	1	HEAD	

M-METRIC PART
R-REMFG PART MAY BE AVAILABLE

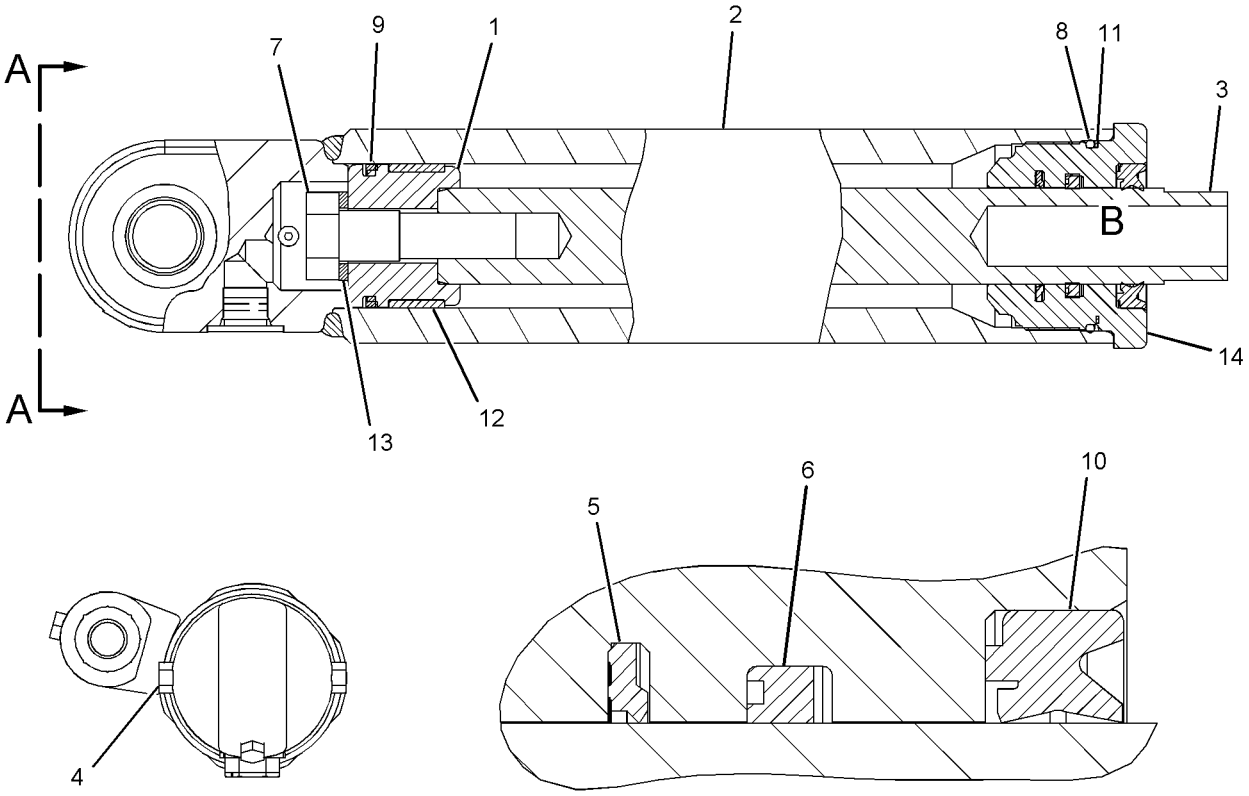

VIEW A-A

VIEW OF AREA B

GRAPHIC #1 **<END>** g01069447

130-9042 CYLINDER GP-STEERING–RH

S/N: JAP1-UP
57.15-MM (2.25-IN) BORE X 267-MM (10.51-IN) STROKE
PART OF 8W-2290 CYLINDER & MTG GP-STEERING

SMCS-4303 **i03618640**

NOTE	REF NO	GRAPHIC REF	PART NUMBER	QTY	PART NAME 1 2 3 4 5 6 (PRODUCT LEVEL)	SEE PAGE
	1	1	**9T-2388**	1	PISTON	
	2	1	**130-9045**	1	CYLINDER AS (RH)	
		1	**148-2592**	1	BOSS AS	
		1	**1N-5999**	1	PLUG-O-RING	
		1	**7J-0204**	1	SEAL-O-RING	
		1	*172-6876*	1	CAP AS	
		1	**005-8639**	1	BEARING-ALIGNING	
	3	1	**154-6579**	1	ROD	
	4	1	**167-2186**	1	SEAL AS-BUFFER	
	5	1	**167-2294**	1	SEAL-U-CUP	
	6	1	**226-8202**	1	SEAL-WIPER	
M	7	1	**173-9685**	1	BOLT (M20X2.5X70-MM)	
	8	1	**175-7895**	1	SEAL-O-RING	
	9	1	*162-6448*	2	PLUG AS	
					(EACH INCLUDES)	
		1	**1N-5999**	1	PLUG-O-RING	
		1	**7J-0204**	1	SEAL-O-RING	
	10	1	**1U-3998**	1	SEAL AS	
	11	1	**4J-9225**	1	RING-BACKUP	
	12	1	**7H-2423**	1	RING-WEAR	
	13	1	**8T-3282**	1	WASHER-HARD (22X35X3.5-MM THK)	
	14	1	**9T-3727**	1	HEAD	

M-METRIC PART

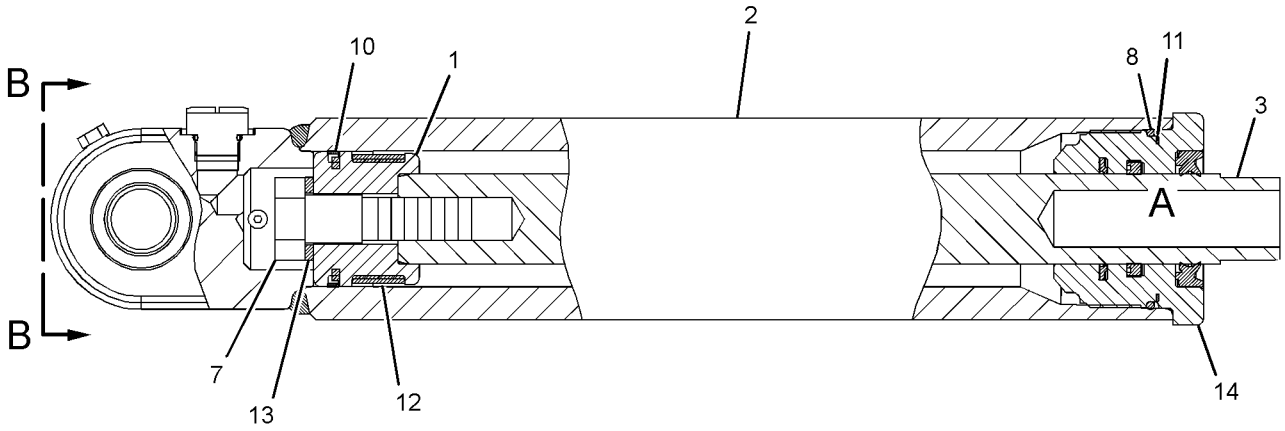

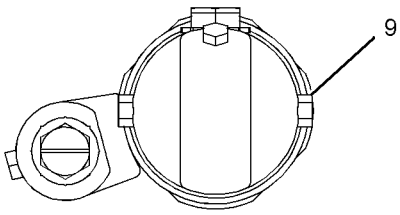

VIEW B-B

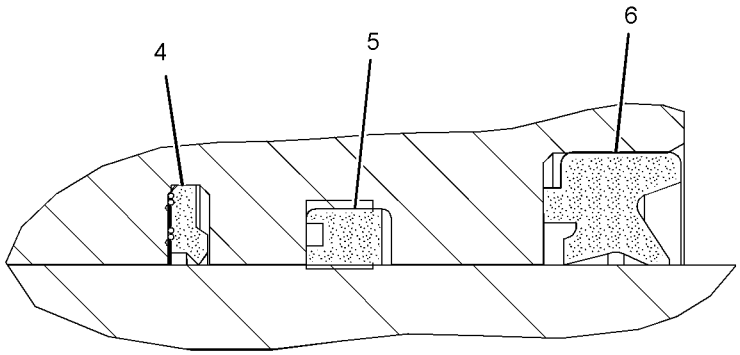

VIEW OF AREA A

GRAPHIC #1 **<END>** g01935793

HYDRAULIC SYSTEM

121-9242 CYLINDER GP-WHEEL LEAN

S/N: JAP1-UP
88.9-MM (3.5-IN) BORE X 149-MM (5.87-IN) STROKE
PART OF 8W-2737 CYLINDER & MTG GP-WHEEL LEAN

SMCS-5211 **i02108923**

NOTE	REF NO	GRAPHIC REF	PART NUMBER	QTY	PART NAME 1 2 3 4 5 6 (PRODUCT LEVEL)	SEE PAGE
	1	1	**123-1076**	1	CYLINDER AS	
M	2	1	**173-9683**	1	BOLT (M30X3.5X90-MM)	
	3	1	**9X-8399**	1	WASHER (33X56X6-MM THK)	
	4	1	**4T-8054**	1	SEAL AS	
	5	1	**7J-9885**	1	RING-WEAR	
	6	1	**9T-9040**	1	PISTON	
	7	1	**175-7898**	1	SEAL-O-RING	
	8	1	**4J-9224**	1	RING-BACKUP	
	9	1	**6E-4974**	1	HEAD	
	10	1	**121-9245**	1	ROD AS	
		1	**2G-8631**	1	BEARING-SLEEVE	
	11	1	**229-9382**	1	SEAL-WIPER	
	12	1	**167-2304**	1	SEAL-U-CUP	
	13	1	**167-2195**	1	SEAL AS-BUFFER	
	14	1	**4T-5613**	1	RING-WEAR	

M-METRIC PART

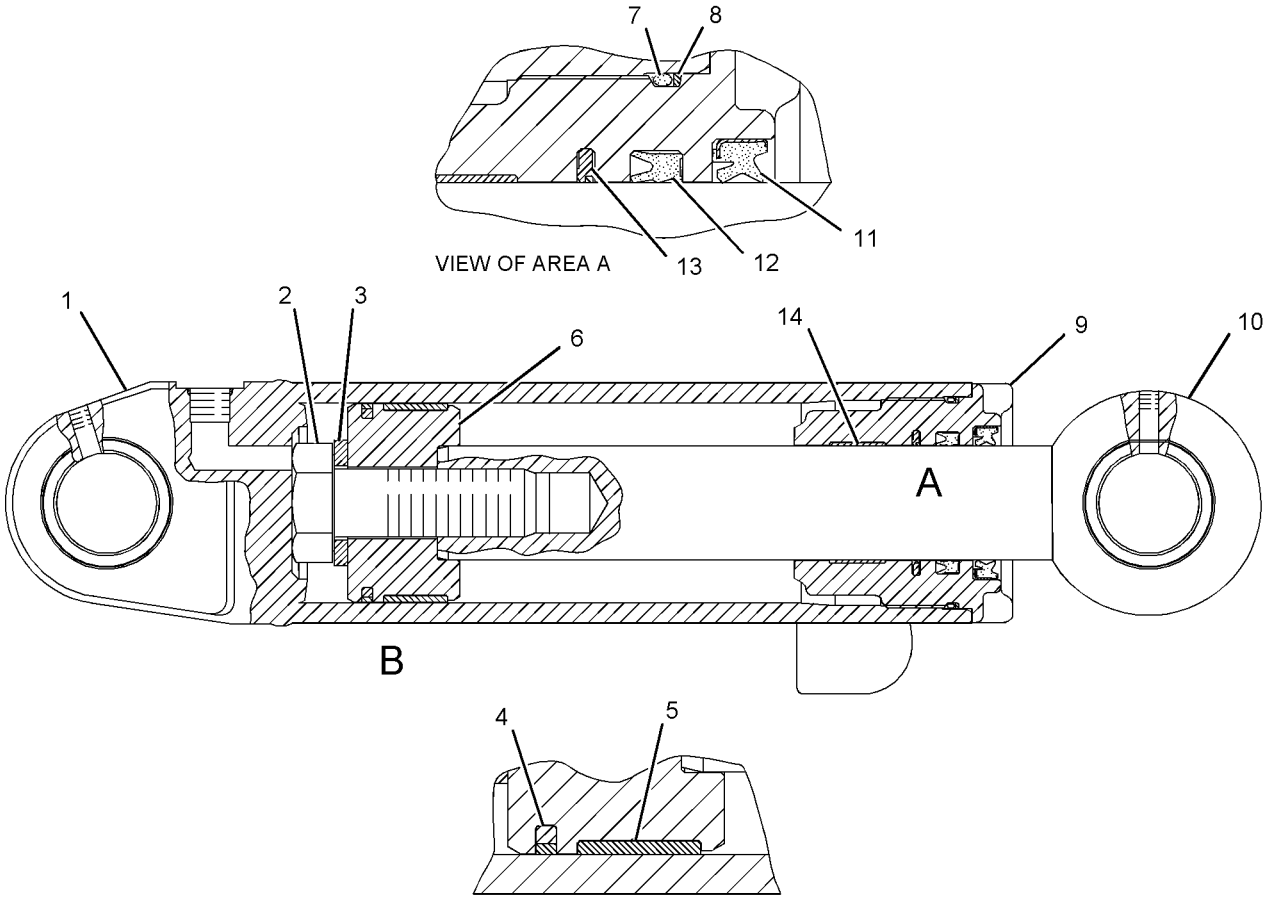

GRAPHIC #1

<END>

g01098821

108-4916 DETENT GP-CONTROL VALVE–PLOW, BULLDOZER LIFT

S/N: JAP1-UP
PART OF 6E-3031, 6E-3037 VALVE GP-CONTROL
AN ATTACHMENT

SMCS-5051 **i00131376**

NOTE	REF NO	GRAPHIC REF	PART NUMBER	QTY	PART NAME 1 2 3 4 5 6 (PRODUCT LEVEL)	SEE PAGE
	1	1	**101-1974**	1	RETAINER	
	2	1	**101-1975**	1	RETAINER	
	3	1	**102-7423**	1	SPRING	
	4	1	**5B-9318**	6	BALL	

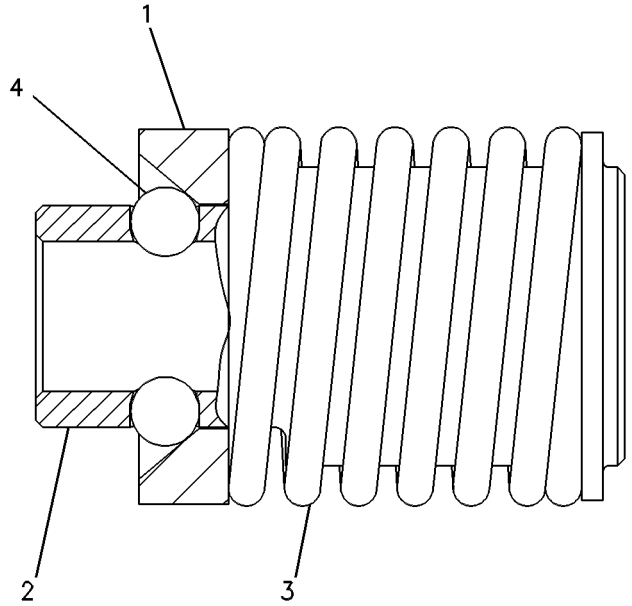

GRAPHIC #1 **<END>** g00108519

HYDRAULIC SYSTEM

253-4677 DRIVE GP-CIRCLE

S/N: JAP1-UP

PART OF 348-3018 GENERAL AR

SMCS-5207 **i03362502**

NOTE	REF NO	GRAPHIC REF	PART NUMBER	QTY	PART NAME 1 2 3 4 5 6 (PRODUCT LEVEL)	SEE PAGE
	1	2	**1B-4038**	2	CUP-BEARING	
	2	2	**1B-4046**	2	CONE-BEARING	
	3	1	**2G-0478**	5	DISC-FRICTION	
	4	2	**2G-6695**	1	BRACKET	
R	5	1	**5K-5288**	1	SEAL GP-DUO-CONE	
		1	**5K-5129**	2	RING-SEALING	
	6	1	**323-8674**	1	GEAR-WORM	
	7	1	**6G-5534**	1	COVER AS	
		1	**6G-5537**	1	BEARING	
	8	1	**6G-5538**	1	COVER	
	9	1	**6G-5542**	2	SPACER (119.2X178X9.3-MM THK)	
	10	1	**6G-6122**	1	SPRING-DISC	
	11	1	**6Y-7953**	6	DISC-FRICTION	
B	12	2	**7D-8983**	10	SHIM (0.005-IN THK)	
B	13	2	**7D-8984**	6	SHIM (0.007-IN THK)	
	14	1	**8D-7423**	1	WASHER-SPECIAL (1.906X3.19X1.6-MM THK)	
	15	1	**8D-7424**	1	SPACER (48X81X6-MM THK)	
	16	1	**8T-0336**	1	FITTING-PRESSURE RELIEF	
	17	2	**323-8675**	1	WORM-CIRCLE DRIVE	
	18	2	**9D-1491**	1	COUPLING	
Y	19	2	**105-3196**	1	MOTOR GP-GEROTOR (CIRCLE DRIVE)	422
	20	1	**253-4678**	1	HOUSING AS-DRIVE	
		1	**2D-8154**	4	STUD-TAPERLOCK (1/2-13X2.36-IN)	
		1	**8D-7426**	1	BEARING-SLEEVE	
		1	**286-2631**	4	STUD-TAPERLOCK	
	21	1	**261-8553**	1	PINION-CIRCLE DRIVE	
	22	1	**307-1958**	1	SHAFT-PINION DRIVE	
B	23	1	**307-1959**	6	SHIM (0.13-MM THK)	
B	24	1	**307-1960**	1	SHIM (0.25-MM THK)	
	25	1	**307-1961**	1	PLATE	
B	26	1	**307-1962**	4	SHIM (0.5-MM THK)	
	27	2	**0S-1585**	4	BOLT (1/2-13X1.5-IN)	
	28	1	**1A-1415**	1	NUT (23/4X17/8-THD)	
	29	1	**1B-5174**	1	PLUG-PIPE	
	30	2	**1F-7958**	4	NUT-FULL (1/2-13-THD)	
	31	2	**1H-7339**	1	SEAL-O-RING	
	32	1	**2B-0858**	1	PLUG-PIPE (OIL DRAIN)	
	33	2	**2H-9247**	1	SEAL-O-RING	
	34	1	**4F-9653**	1	SEAL-O-RING	
	35	2	**4H-6996**	1	PIN-SPRING	
	36	1	**5H-4909**	1	SEAL-O-RING	
	37	1	**5K-8454**	3	BOLT (1/2-13X1.12-IN)	
	38	1,2	**5P-8245**	16	WASHER-HARD (13.5X25.5X3-MM THK)	
	39	1	**5S-7379**	4	BOLT (3/8-16X0.875-IN)	
	40	1	**6G-5539**	1	GASKET	
	41	1	**6G-5548**	1	SPACER (69.5X89X0.8-MM THK)	
	42	1	**6H-1717**	5	BOLT (1/2-13X1.125-IN)	
M	43	1	**6V-5686**	3	BOLT (M16X2X50-MM)	
	44	1	**8D-5054**	3	WASHER-HARD (17X30X3-MM THK)	
	45	1	**8D-7425**	2	WASHER-THRUST (2.8X4.25X0.12-MM THK)	
	46	1	**8T-4896**	4	WASHER-HARD (10.2X18.5X2.5-MM THK)	

B-USE AS REQUIRED
M-METRIC PART
R-REMFG PART MAY BE AVAILABLE
Y-SEPARATE ILLUSTRATION

253-4677 DRIVE GP-CIRCLE *(contd.)* i03362502

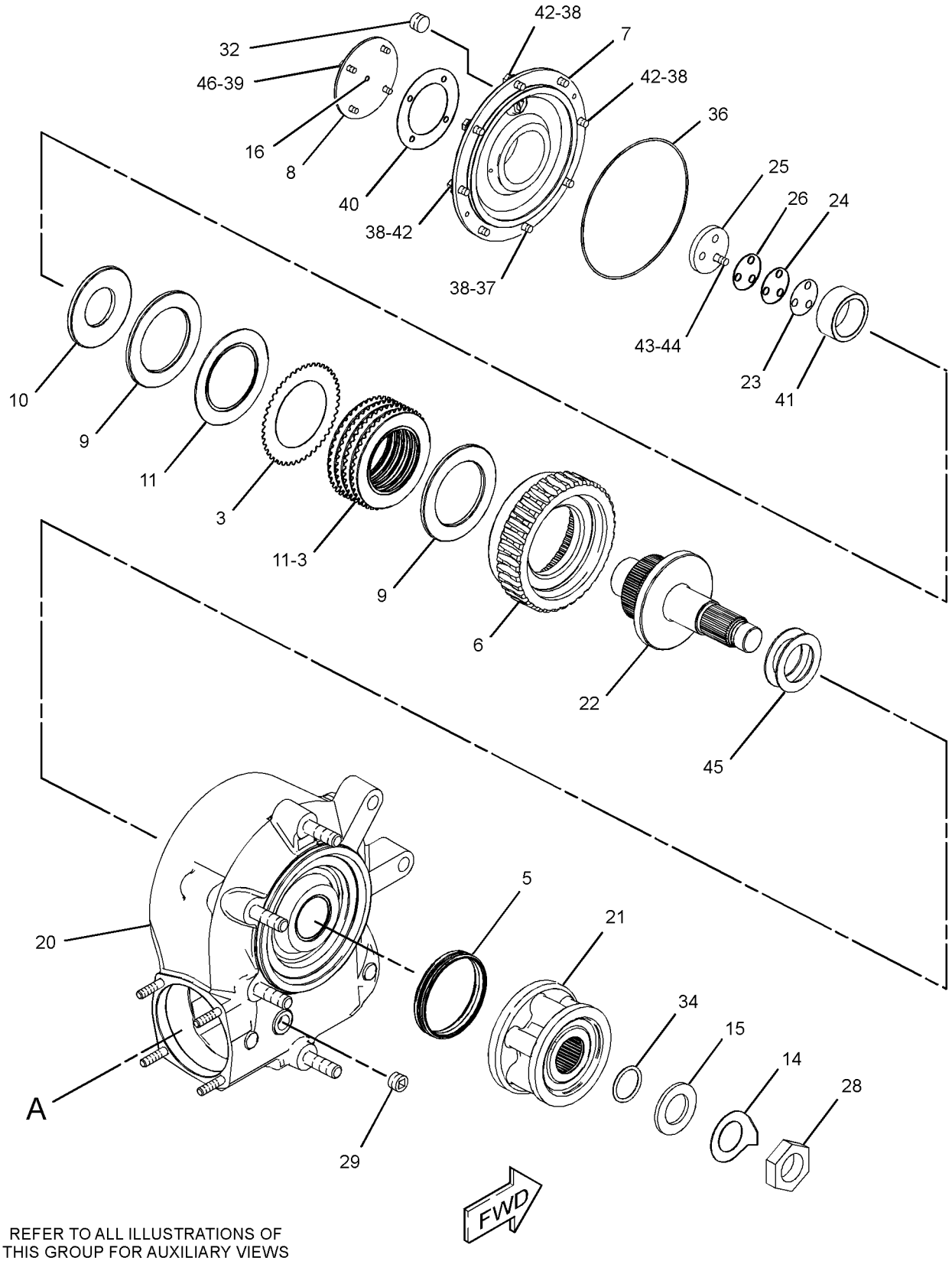

REFER TO ALL ILLUSTRATIONS OF
THIS GROUP FOR AUXILIARY VIEWS

GRAPHIC #1 g01426054

253-4677 DRIVE GP-CIRCLE *(contd.)* **i03362502**

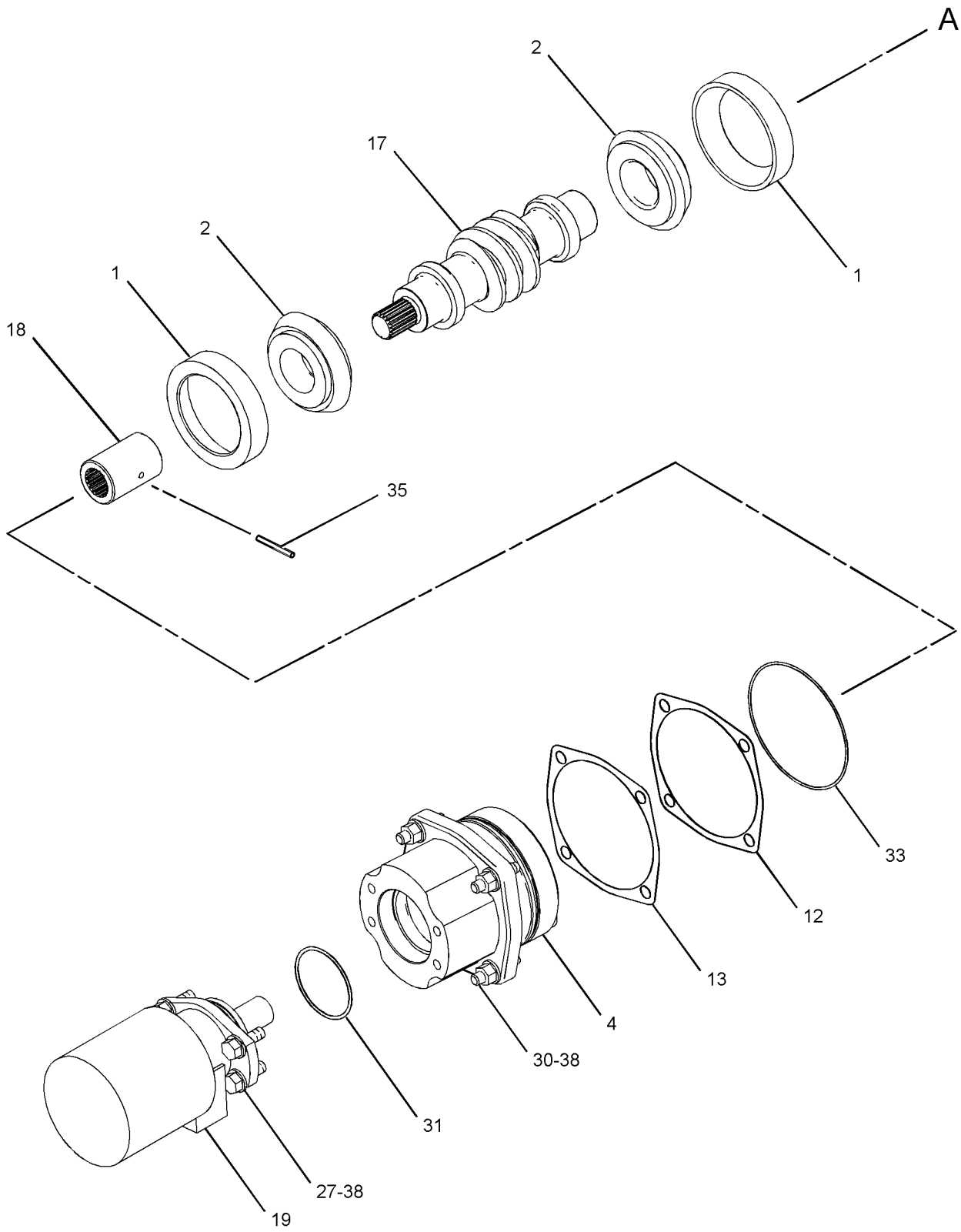

GRAPHIC #2 **<END>** g01426070

HYDRAULIC SYSTEM

293-4829 LINES GP-CENTERSHIFT LOCK

S/N: JAP1-UP

PART OF 348-3018 GENERAL AR

SMCS-5057, 5221 **i03536403**

NOTE	REF NO	GRAPHIC REF	PART NUMBER	QTY	PART NAME 1 2 3 4 5 6 (PRODUCT LEVEL)	SEE PAGE
	1	1	**8W-8528**	3	SLEEVE	
I	2	1	**148-7027**	1	HOSE AS	
	3	1	**300-6203**	1	PLATE	
I	4	1	**310-8005**	1	HOSE AS	
I	5	1	**328-1672**	1	HOSE AS	
I	6	1	**123-4994**	1	HOSE AS	
	7	1	*148-8336*	3	CONNECTOR AS	
					(EACH INCLUDES)	
		1	**3J-1907**	1	SEAL-O-RING	
		1	**6V-8397**	1	SEAL-O-RING	
		1	**6V-8636**	1	CONNECTOR	
	8	1	*148-8367*	2	ELBOW AS	
					(EACH INCLUDES)	
		1	**6V-8397**	1	SEAL-O-RING	
		1	**6V-9850**	1	ELBOW	
	9	1	*148-8368*	1	ELBOW AS	
		1	**3J-1907**	1	SEAL-O-RING	
		1	**4J-5477**	1	SEAL-O-RING	
		1	**6V-8627**	1	ELBOW	
	10	1	*148-8377*	1	ELBOW AS	
		1	**6V-8397**	2	SEAL-O-RING	
		1	**6V-8980**	1	ELBOW	
	11	1	*148-8378*	2	ELBOW AS	
					(EACH INCLUDES)	
		1	**3J-1907**	1	SEAL-O-RING	
		1	**6V-8397**	1	SEAL-O-RING	
		1	**6V-8724**	1	ELBOW	
	12	1	**1S-6420**	1	CLIP	
	13	1	**3E-6909**	2	CLIP	
	14	1	**4D-7733**	5	CLIP	
	15	1	**4S-1962**	1	CLIP	
	16	1	**6V-8823**	2	WASHER-HARD (19.25X27X2-MM THK)	
	17	1	**6V-9168**	1	NUT (11/16-16-THD)	
	18	1	**8T-4121**	6	WASHER-HARD (11X21X2.5-MM THK)	
M	19	1	**8T-4133**	1	NUT (M10X1.5-THD)	
M	20	1	**8T-4136**	3	BOLT (M10X1.5X25-MM)	
M	21	1	**8T-4137**	2	BOLT (M10X1.5X20-MM)	

I-REFER TO HYDRAULIC INFORMATION SYSTEM
M-METRIC PART

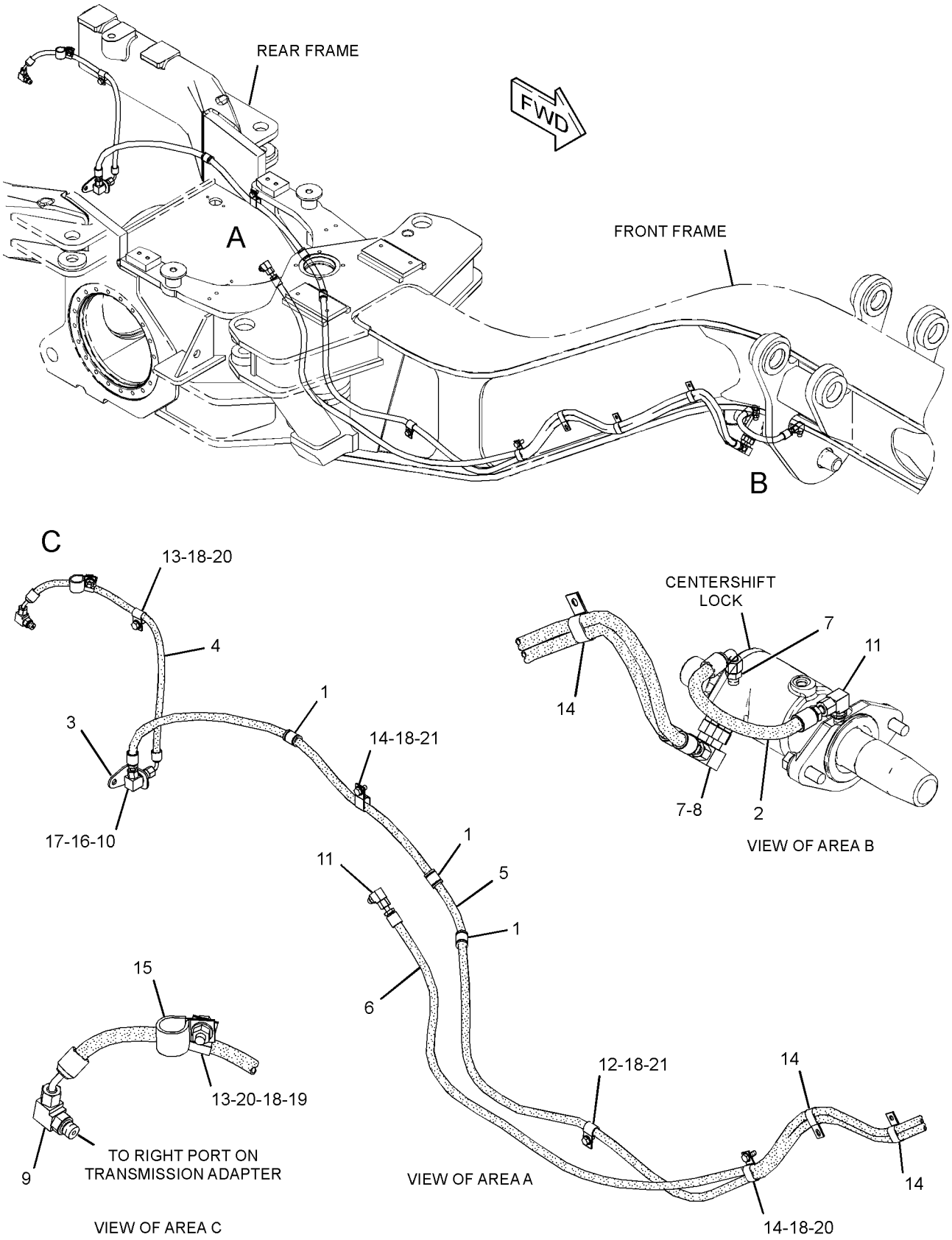

GRAPHIC #1 **<END>** g01947019

HYDRAULIC SYSTEM

8X-6070 LINES GP-HYDRAULIC—SCARIFIER

S/N: JAP1-UP
1-CIRCUIT
PART OF 340-5008 SCARIFIER AR
AN ATTACHMENT

SMCS-5057 **i01459260**

NOTE	REF NO	GRAPHIC REF	PART NUMBER	QTY	PART NAME 1 2 3 4 5 6 (PRODUCT LEVEL)	SEE PAGE
	1	1	**2B-0941**	1	SPACER (10.5X19X19-MM THK)	
	2	1	**4J-5468**	1	CLAMP	
I	3	1	**112-3199**	1	HOSE AS	
I	4	1	**112-3200**	1	HOSE AS	
	5	1	*164-5605*	1	CONNECTOR AS	
		1	**3K-0360**	1	SEAL-O-RING	
		1	**6V-8397**	1	SEAL-O-RING	
		1	**8T-0076**		CONNECTOR	
	6	1	*148-8318*	2	CONNECTOR AS	
					(EACH INCLUDES)	
		1	**3K-0360**	1	SEAL-O-RING	
		1	**6V-8397**	1	SEAL-O-RING	
		1	**6V-8634**	1	CONNECTOR	
	7	1	*148-8374*	1	ELBOW AS	
		1	**3K-0360**	1	SEAL-O-RING	
		1	**6V-8397**	1	SEAL-O-RING	
		1	**6V-8723**	1	ELBOW	
	8	1	**6D-4247**	1	CLIP	
	9	1	**7X-0289**	1	BOLT (3/8-16X1.875-IN)	
	10	1	**8T-4896**	1	WASHER-HARD (10.2X18.5X2.5-MM THK)	

I-REFER TO HYDRAULIC INFORMATION SYSTEM

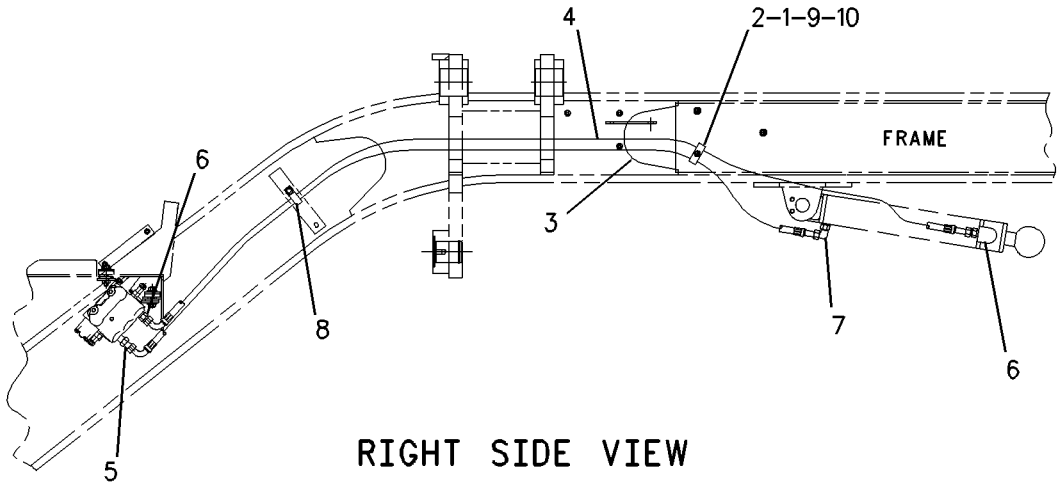

RIGHT SIDE VIEW

GRAPHIC #1 **<END>** g00633579

HYDRAULIC SYSTEM

106-4787 LINES GP-HYDRAULIC–LH

S/N: JAP1-UP
4 CIRCUITS
PART OF 329-3826 BLADE & TIP AR-POWER
AN ATTACHMENT

SMCS-5057 **i03543650**

NOTE	REF NO	GRAPHIC REF	PART NUMBER	QTY	PART NAME 1 2 3 4 5 6 (PRODUCT LEVEL)	SEE PAGE
	1	2	**2A-7081**	1	GUIDE AS-HOSE	
	2	1	**2B-0941**	3	SPACER (10.5X19X19-MM THK)	
	3	2	**2G-5493**	1	CLAMP	
	4	1	**4J-5468**	6	CLAMP	
	5	1	**5D-2645**	3	CLAMP	
I	6	2	**5T-9986**	1	HOSE AS	
I	7	1	**8W-4193**	1	HOSE AS	
I	8	2	**8W-4194**	1	HOSE AS	
	9	1	**9D-0953**	4	SPACER (0.406X0.75X0.88-IN THK)	
I	10	2	**9R-1183**	1	HOSE AS	
I	11	2	**107-8143**	2	HOSE AS	
I	12	2	**107-8144**	2	HOSE AS	
I	13	2	**107-8149**	2	HOSE AS	
I	14	2	**107-8150**	1	HOSE AS	
	15	1	**108-1610**	4	CLAMP	
I	16	2	**134-0747**	1	HOSE AS	
	17	1	**135-0451**	1	PLATE	
	18	1	**135-0452**	2	PLATE	
	19	2	**163-4195**	1	SLEEVE	
	20	2	*164-5605*	1	CONNECTOR AS	
		2	**3K-0360**	1	SEAL-O-RING	
		2	**6V-8397**	1	SEAL-O-RING	
		2	**8T-0076**	1	CONNECTOR	
	21	2	*164-5608*	2	CONNECTOR AS	
					(EACH INCLUDES)	
		2	**3K-0360**	1	SEAL-O-RING	
		2	**6V-8398**	1	SEAL-O-RING	
		2	**8T-1687**	1	CONNECTOR	
CY	22	2	**260-6502**	1	SWIVEL GP	433
	23	1,2	*148-8318*	8	CONNECTOR AS	
					(EACH INCLUDES)	
		1,2	**3K-0360**	1	SEAL-O-RING	
		1,2	**6V-8397**	1	SEAL-O-RING	
		1,2	**6V-8634**	1	CONNECTOR	
	24	2	*148-8340*	1	CONNECTOR AS	
		2	**3K-0360**	1	SEAL-O-RING	
		2	**6V-8398**	1	SEAL-O-RING	
		2	**6V-8639**	1	CONNECTOR	
	25	1	*148-8358*	2	ELBOW AS	
					(EACH INCLUDES)	
		1	**2M-9780**	1	SEAL-O-RING	
		1	**6V-8398**	1	SEAL-O-RING	
		1	**6V-8624**	1	ELBOW	
	26	1,2	*148-8363*	6	ELBOW AS	
					(EACH INCLUDES)	
		1,2	**3K-0360**	1	SEAL-O-RING	
		1,2	**6V-9876**	1	ELBOW	
		1,2	**6V-8397**	1	SEAL-O-RING	
	27	1	*148-8364*	1	ELBOW AS	
		1	**3K-0360**	1	SEAL-O-RING	
		1	**6V-8398**	1	SEAL-O-RING	
		1	**6V-8625**	1	ELBOW	
	28	2	*148-8374*	3	ELBOW AS	
					(EACH INCLUDES)	

106-4787 **LINES GP-HYDRAULIC** *(contd.)* **i03543650**

NOTE	REF NO	GRAPHIC REF	PART NUMBER	QTY	PART NAME 1 2 3 4 5 6 (PRODUCT LEVEL)	SEE PAGE
		2	**3K-0360**	1	SEAL-O-RING	
		2	**6V-8397**	1	SEAL-O-RING	
		2	**6V-8723**	1	ELBOW	
	29	1,2	**1S-0994**	8	CLIP	
	30	2	**3B-4628**	2	PIN-COTTER	
B	31	2	**5P-1075**	4	WASHER-HARD (10.2X22.5X3-MM THK)	
	32	1,2	**5S-7379**	6	BOLT (3/8-16X0.875-IN)	
	33	1	**5S-7383**	3	BOLT (3/8-16X1.75-IN)	
	34	2	**6D-4244**	2	CLIP	
	35	1,2	**6V-8801**	6	NUT (3/8-16-THD)	
	36	2	**8D-9092**	1	PIN	
	37	1	**8T-2501**	2	BOLT (3/8-16X2-IN)	
	38	2	**8T-2502**	2	BOLT (3/8-16X1.125-IN)	
	39	2	**8T-4223**	4	WASHER-HARD (13.5X25.5X3-MM THK)	
CM	40	2	**8T-4648**	4	BOLT (M12X1.75X70-MM)	
	41	1,2	**8T-4896**	20	WASHER-HARD (10.2X18.5X2.5-MM THK)	
	42	2	**8T-4994**	2	WASHER-HARD (20X36.5X3.5-MM THK)	
	43	1	**8T-7008**	1	BOLT (3/8-16X3-IN)	
	44	2	**8T-9378**	1	BOLT (3/8-16X4-IN)	
	45	2	**9B-7237**	1	BOLT (3/8-16X1.25-IN)	
D	46	1	**5P-5931**		SEAL (0.45-M EACH)	

B-USE AS REQUIRED
C-CHANGE FROM PREVIOUS TYPE
D-ORDER BY THE METER
I-REFER TO HYDRAULIC INFORMATION SYSTEM
M-METRIC PART
Y-SEPARATE ILLUSTRATION

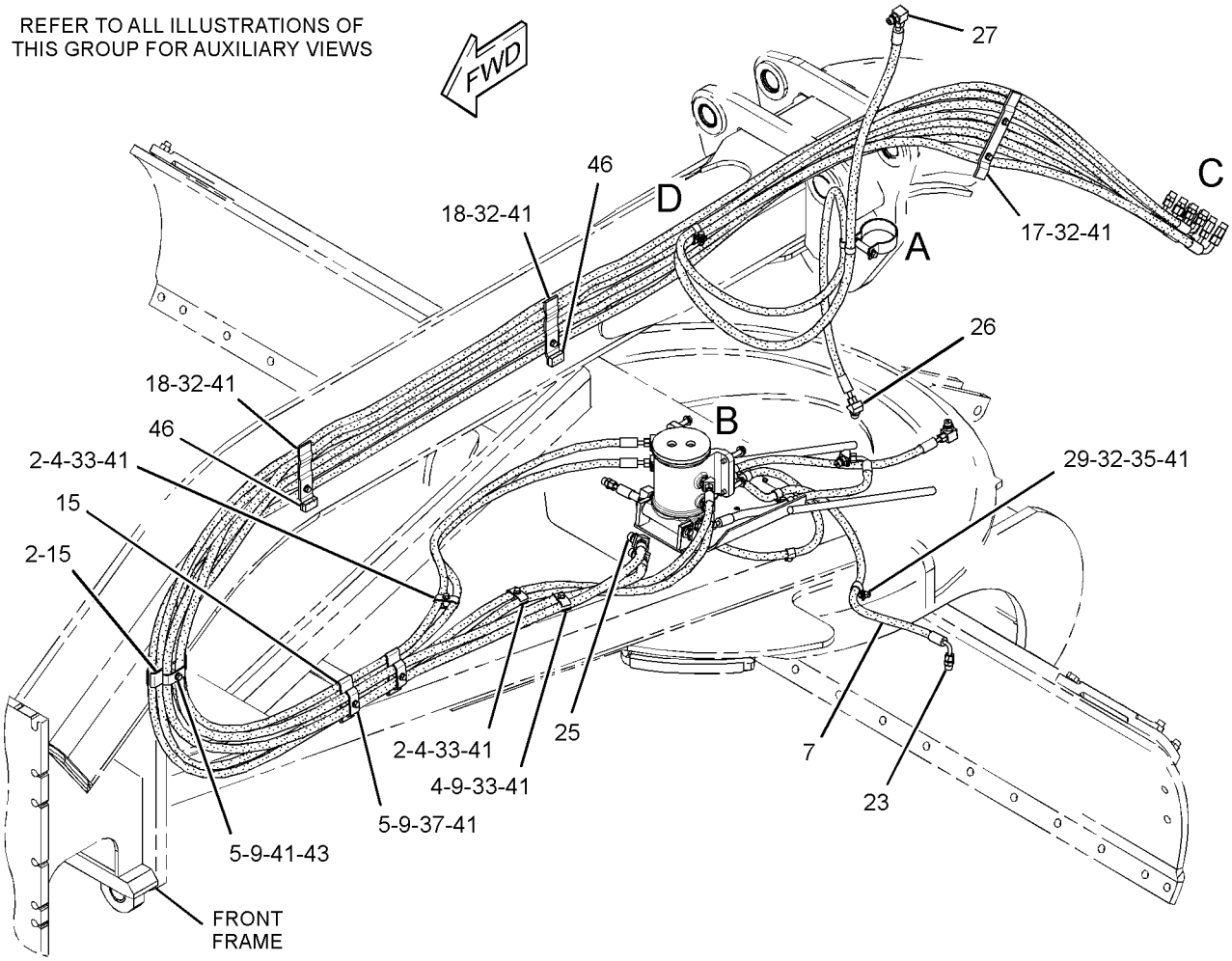

GRAPHIC #1 g01852953

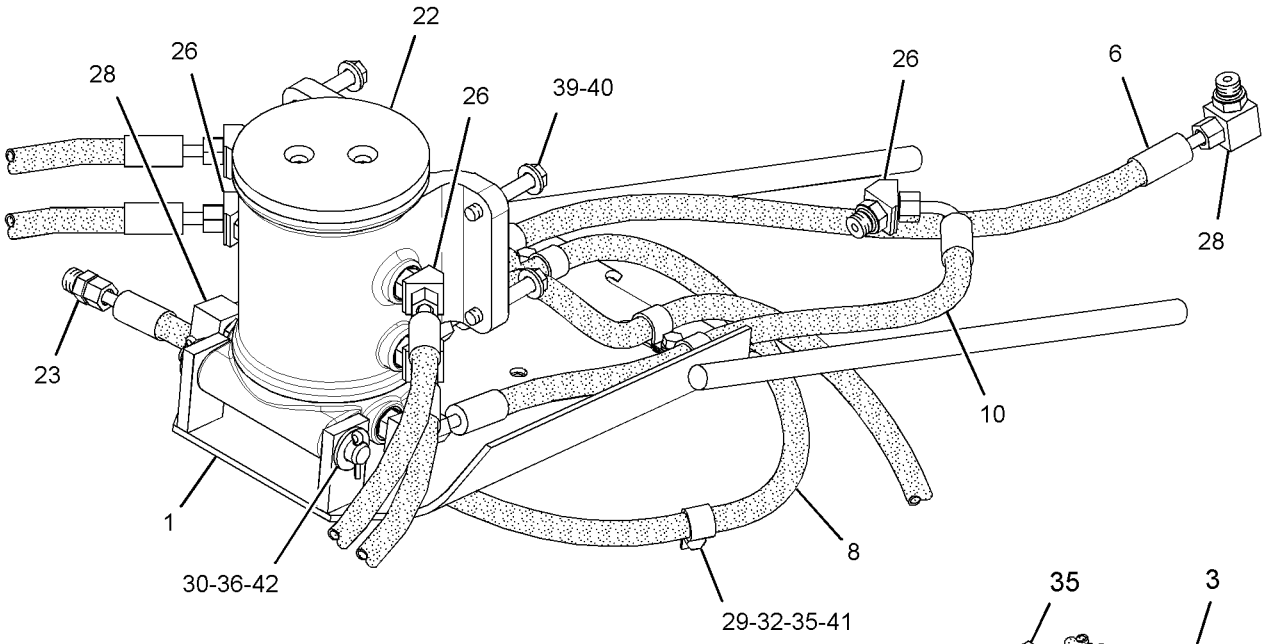

VIEW OF AREA B

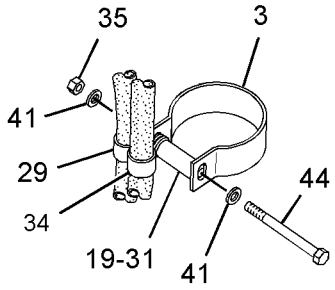

VIEW OF AREA A

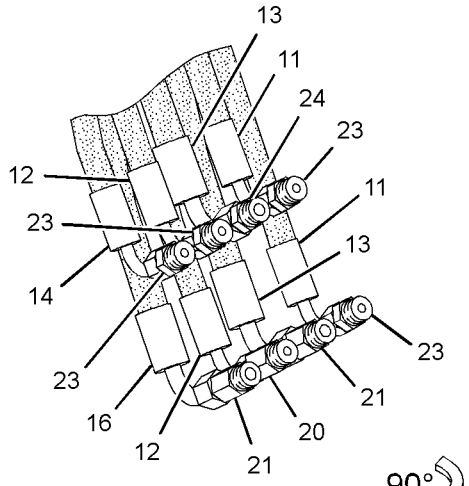

VIEW OF AREA C

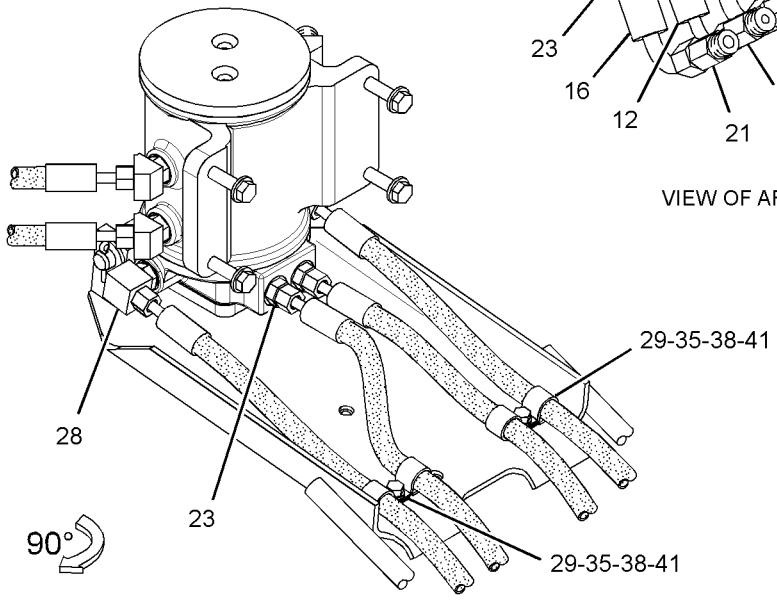

VIEW OF AREA B

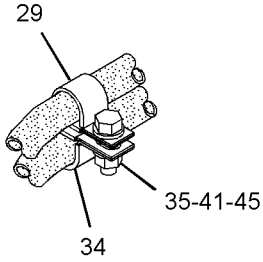

VIEW OF AREA D

GRAPHIC #2 **<END>** g01852974

HYDRAULIC SYSTEM

110-2985 LINES GP-HYDRAULIC–RH

S/N: JAP1-UP
4 CIRCUITS
PART OF 348-3018 GENERAL AR

SMCS-5057 **i03518584**

NOTE	REF NO	GRAPHIC REF	PART NUMBER	QTY	PART NAME 1 2 3 4 5 6 (PRODUCT LEVEL)	SEE PAGE
	1	2	**2B-0941**	4	SPACER (10.5X19X19-MM THK)	
	2	2	**2G-5493**	1	CLAMP	
	3	2	**3S-2093**	1	STRAP-CABLE	
	4	2	**4J-5468**	3	CLAMP	
	5	2	**5D-2645**	2	CLAMP	
	6	2	**5D-4988**	4	CLAMP	
	7	2	**5P-0599**	1	CLAMP-BAND	
I	8	2	**8W-0302**	1	HOSE AS	
	9	2	**9R-8870**	1	BLOCK	
I	10	2	**107-8147**	1	HOSE AS	
I	11	2	**107-8148**	1	HOSE AS	
I	12	2	**107-8150**	1	HOSE AS	
	13	2	**108-1610**	2	CLAMP	
I	14	2	**110-3003**	1	HOSE AS	
I	15	2	**134-0747**	1	HOSE AS	
	16	2	**135-0450**	2	PLATE	
	17	2	**135-0453**	1	PLATE	
	18	2	**163-4195**	1	SLEEVE	
	19	2	*164-5605*	3	CONNECTOR AS	
					(EACH INCLUDES)	
		2	**3K-0360**	1	SEAL-O-RING	
		2	**6V-8397**	1	SEAL-O-RING	
		2	**8T-0076**	1	CONNECTOR	
	20	2	*164-5608*	1	CONNECTOR AS	
		2	**3K-0360**	1	SEAL-O-RING	
		2	**6V-8398**	1	SEAL-O-RING	
		2	**8T-1687**	1	CONNECTOR	
	21	2	**100-4336**	1	CLIP	
I	22	2	**107-8140**	1	HOSE AS	
I	23	2	**107-8141**	1	HOSE AS	
I	24	2	**107-8142**	1	HOSE AS	
	25	2	*148-8318*	4	CONNECTOR AS	
					(EACH INCLUDES)	
		2	**3K-0360**	1	SEAL-O-RING	
		2	**6V-8397**	1	SEAL-O-RING	
		2	**6V-8634**	1	CONNECTOR	
	26	2	*148-8363*	3	ELBOW AS	
					(EACH INCLUDES)	
		2	**3K-0360**	1	SEAL-O-RING	
		2	**6V-8397**	1	SEAL-O-RING	
		2	**6V-9876**	1	ELBOW	
	27	2	*148-8364*	1	ELBOW AS	
		2	**3K-0360**	1	SEAL-O-RING	
		2	**6V-8398**	1	SEAL-O-RING	
		2	**6V-8625**	1	ELBOW	
	28	2	*148-8374*	4	ELBOW AS	
					(EACH INCLUDES)	
		2	**3K-0360**	1	SEAL-O-RING	
		2	**6V-8397**	1	SEAL-O-RING	
		2	**6V-8723**	1	ELBOW	
	29	2	*148-8383*	2	ELBOW AS	
					(EACH INCLUDES)	
		2	**3K-0360**	1	SEAL-O-RING	
		2	**6V-8397**	1	SEAL-O-RING	
		2	**8T-1683**	1	ELBOW	

110-2985 **LINES GP-HYDRAULIC** *(contd.)* **i03518584**

NOTE	REF NO	GRAPHIC REF	PART NUMBER	QTY	PART NAME 1 2 3 4 5 6 (PRODUCT LEVEL)	SEE PAGE
	30	2	*148-8433*	2	TEE AS	
					(EACH INCLUDES)	
		2	**6V-8397**	2	SEAL-O-RING	
		2	**6V-9836**	1	TEE-SWIVEL	
	31	2	**1S-0994**	6	CLIP	
	32	2	**4L-6454**	1	BOLT (3/8-16X1-IN)	
	33	2	**5P-1075**	4	WASHER-HARD (10.2X22.5X3-MM THK)	
	34	2	**5S-7379**	10	BOLT (3/8-16X0.875-IN)	
	35	2	**5S-7383**	1	BOLT (3/8-16X1.75-IN)	
	36	2	**6D-4244**	2	CLIP	
	37	2	**6V-8801**	3	NUT (3/8-16-THD)	
	38	2	**7X-0288**	1	BOLT (3/8-16X1.625-IN)	
	39	2	**7X-0289**	1	BOLT (3/8-16X1.875-IN)	
	40	2	**8T-2501**	1	BOLT (3/8-16X2-IN)	
	41	2	**8T-4896**	20	WASHER-HARD (10.2X18.5X2.5-MM THK)	
	42	2	**8T-9378**	1	BOLT (3/8-16X4-IN)	
I	43	2	**8W-0220**	1	HOSE AS	
	44	2	**9B-7237**	1	BOLT (3/8-16X1.25-IN)	
D	45	2	**5P-5931**		SEAL (0.1-M EACH)	

D-ORDER BY THE METER
I-REFER TO HYDRAULIC INFORMATION SYSTEM

REFER TO ALL ILLUSTRATIONS OF
THIS GROUP FOR AUXILIARY VIEWS

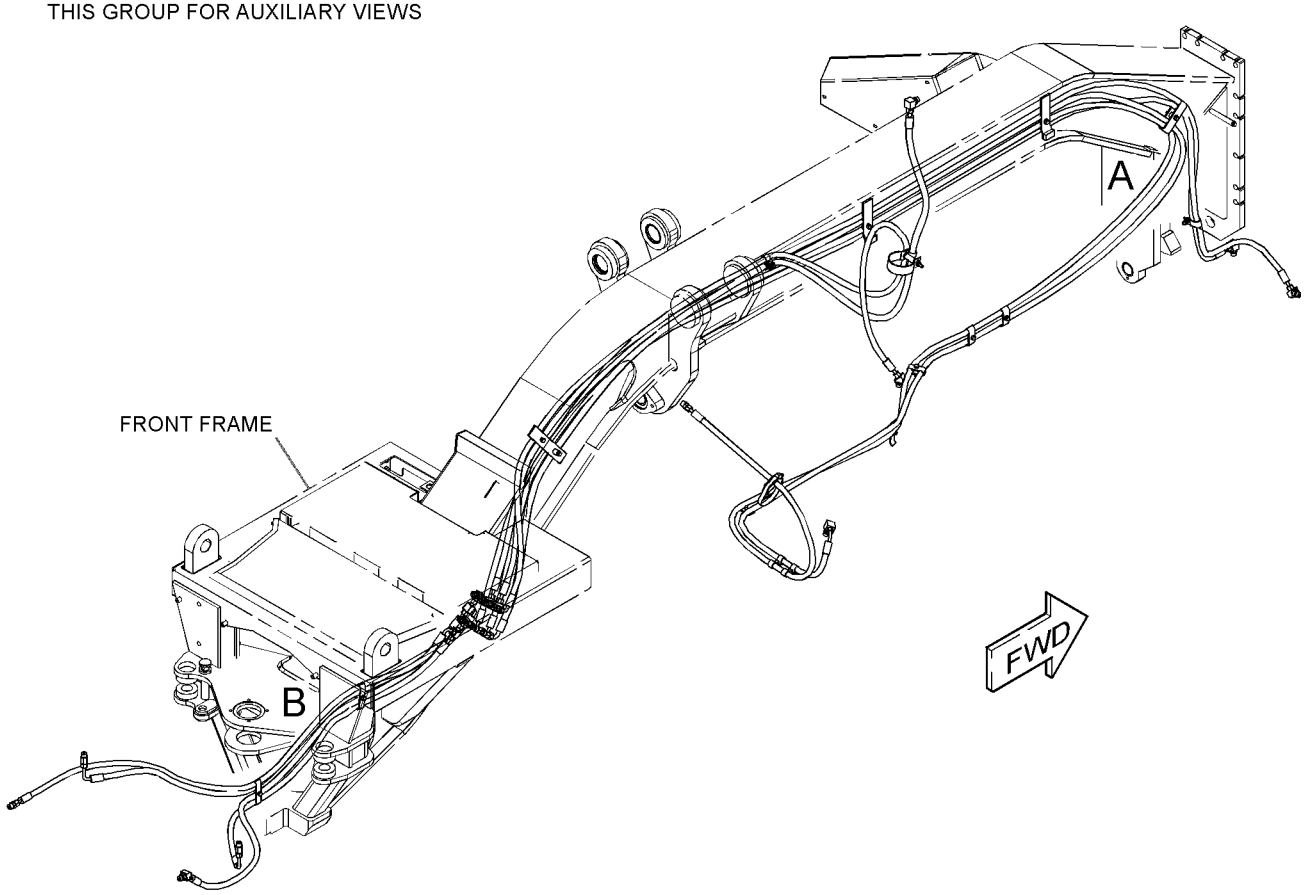

GRAPHIC #1 g01845337

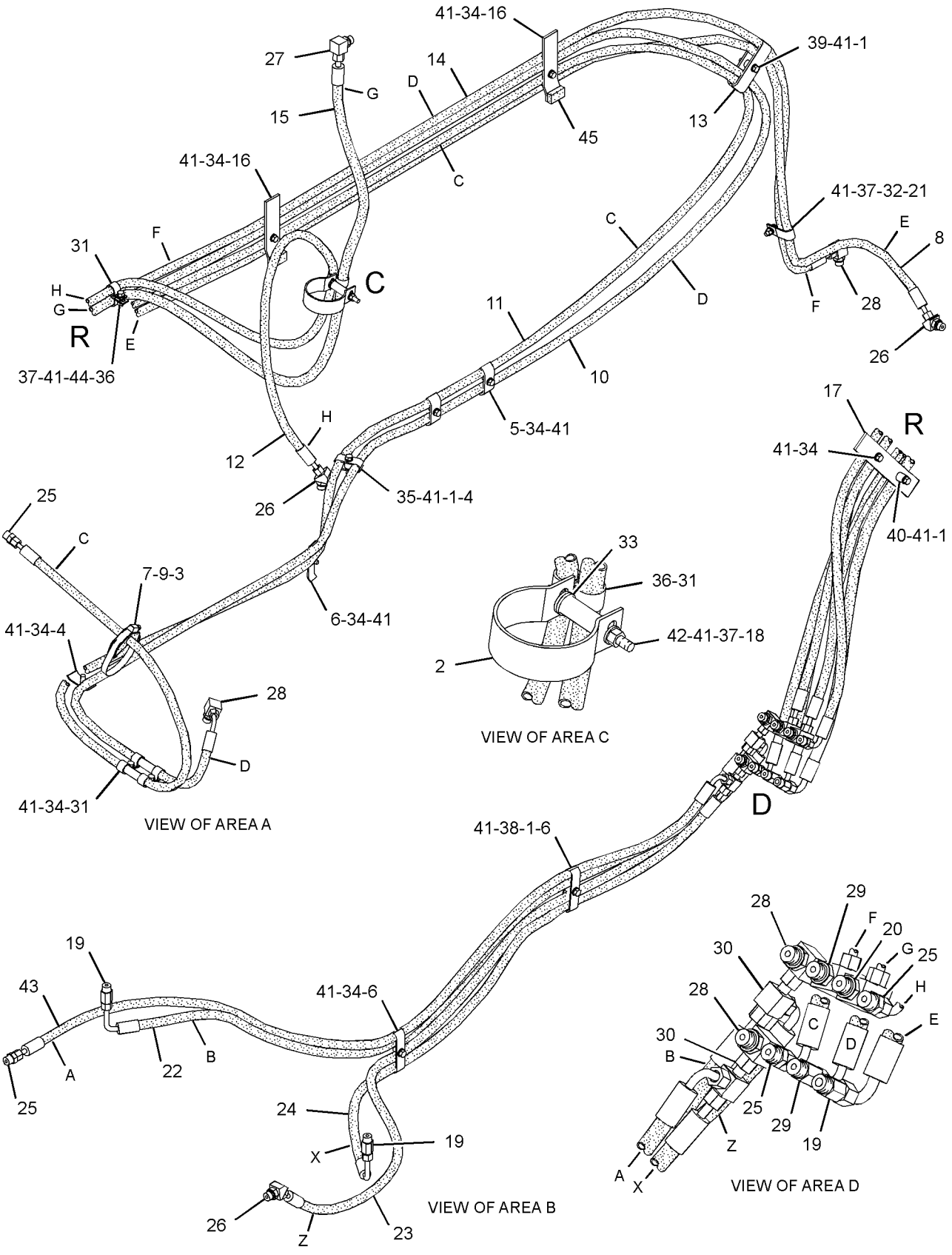

GRAPHIC #2 **<END>** g01845335

114-0025 LINES GP-HYDRAULIC—BULLDOZER LIFT, PLOW, LH

S/N: JAP1-UP
1-CIRCUIT
PART OF 348-6937 OPTION AR-WORK TOOL
AN ATTACHMENT

SMCS-5057 **i02585616**

NOTE	REF NO	GRAPHIC REF	PART NUMBER	QTY	PART NAME 1 2 3 4 5 6 (PRODUCT LEVEL)	SEE PAGE
I	1	1	**114-0027**	2	HOSE AS	
	2	1	*164-5605*	1	CONNECTOR AS	
		1	**8T-0076**	1	CONNECTOR	
		1	**3K-0360**	1	SEAL-O-RING	
		1	**6V-8397**	1	SEAL-O-RING	
	3	1	*148-8318*	1	CONNECTOR AS	
		1	**6V-8634**	1	CONNECTOR	
		1	**3K-0360**	1	SEAL-O-RING	
		1	**6V-8397**	1	SEAL-O-RING	

I-REFER TO HYDRAULIC INFORMATION SYSTEM

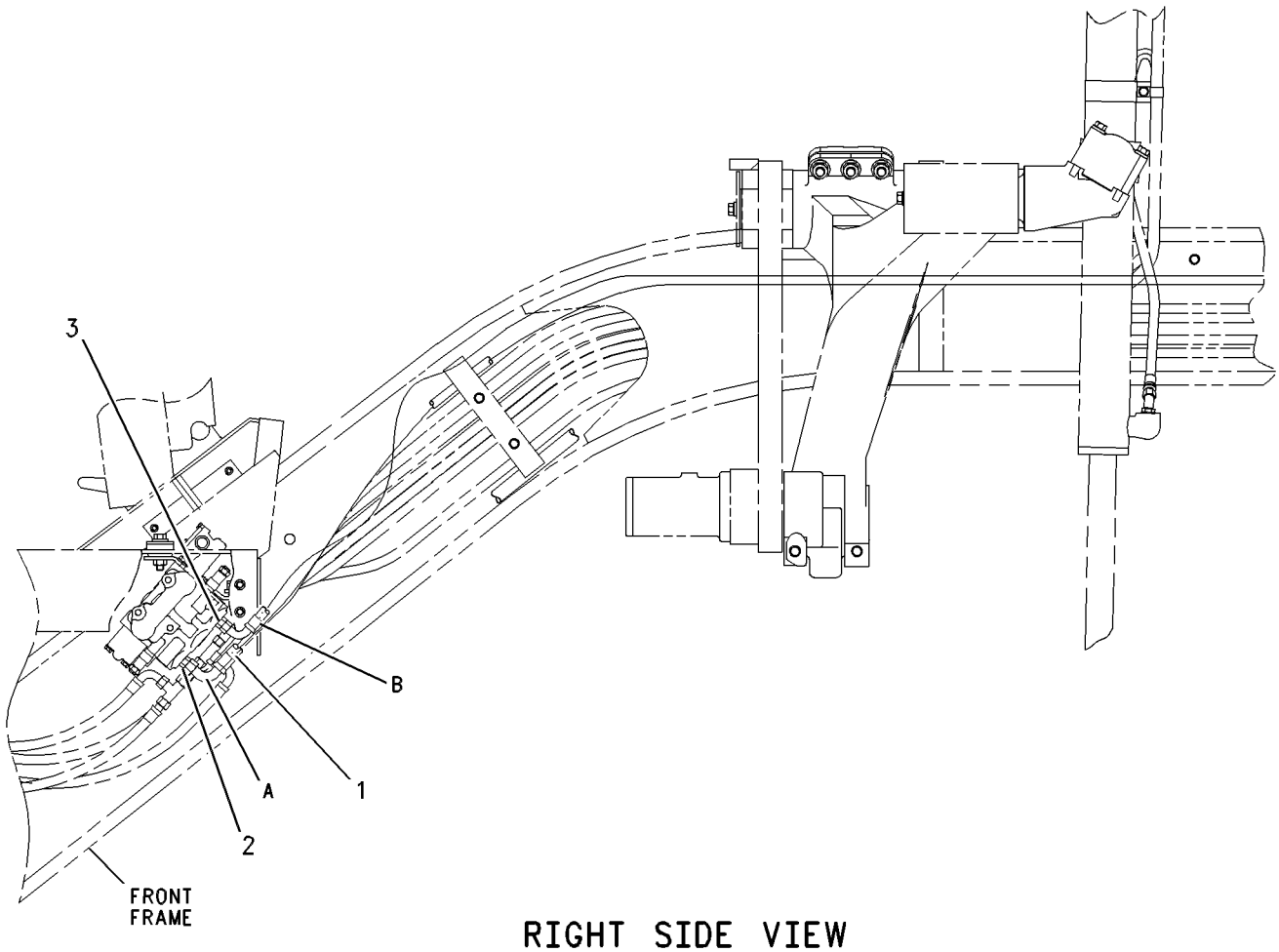

RIGHT SIDE VIEW

GRAPHIC #1 **<END>** g00636139

HYDRAULIC SYSTEM

117-3855 LINES GP-HYDRAULIC–LH

S/N: JAP1-UP
3-CIRCUITS
PART OF 348-3018 GENERAL AR

SMCS-5057 **i03546404**

NOTE	REF NO	GRAPHIC REF	PART NUMBER	QTY	PART NAME 1 2 3 4 5 6 (PRODUCT LEVEL)	SEE PAGE
	1	1	**2A-7081**	1	GUIDE AS-HOSE	
	2	1	**2B-0941**	2	SPACER (10.5X19X19-MM THK)	
	3	1	**2G-5493**	1	CLAMP	
	4	1	**4J-5468**	8	CLAMP	
	5	1	**5D-2645**	3	CLAMP	
I	6	1	**8W-4193**	1	HOSE AS	
I	7	1	**8W-4194**	1	HOSE AS	
	8	1	**9D-0953**	4	SPACER (0.406X0.75X0.88-IN THK)	
I	9	1	**107-8144**	2	HOSE AS	
I	10	1	**107-8149**	2	HOSE AS	
I	11	1	**107-8150**	1	HOSE AS	
I	12	1	**134-0747**	1	HOSE AS	
	13	1	**135-0451**	1	PLATE	
	14	1	**135-0452**	2	PLATE	
	15	1	**163-4195**	1	SLEEVE	
	16	1	*164-5605*	1	CONNECTOR AS	
		1	**8T-0076**	1	CONNECTOR	
		1	**3K-0360**	1	SEAL-O-RING	
		1	**6V-8397**	1	SEAL-O-RING	
	17	1	*164-5608*	2	CONNECTOR AS	
					(EACH INCLUDES)	
		1	**8T-1687**	1	CONNECTOR	
		1	**3K-0360**	1	SEAL-O-RING	
		1	**6V-8398**	1	SEAL-O-RING	
CY	18	1	**260-6502**	1	SWIVEL GP	433
	19	1	*148-8318*	6	CONNECTOR AS	
					(EACH INCLUDES)	
		1	**6V-8634**	1	CONNECTOR	
		1	**3K-0360**	1	SEAL-O-RING	
		1	**6V-8397**	1	SEAL-O-RING	
	20	1	*148-8340*	1	CONNECTOR AS	
		1	**6V-8639**	1	CONNECTOR	
		1	**3K-0360**	1	SEAL-O-RING	
		1	**6V-8398**	1	SEAL-O-RING	
	21	1	*148-8358*	2	ELBOW AS	
					(EACH INCLUDES)	
		1	**6V-8624**	1	ELBOW	
		1	**2M-9780**	1	SEAL-O-RING	
		1	**6V-8398**	1	SEAL-O-RING	
	22	1	*148-8363*	5	ELBOW AS	
					(EACH INCLUDES)	
		1	**6V-9876**	1	ELBOW	
		1	**3K-0360**	1	SEAL-O-RING	
		1	**6V-8397**	1	SEAL-O-RING	
	23	1	*148-8364*	1	ELBOW AS	
		1	**6V-8625**	1	ELBOW	
		1	**3K-0360**	1	SEAL-O-RING	
		1	**6V-8398**	1	SEAL-O-RING	
	24	1	**1S-0994**	6	CLIP	
	25	1	**3B-4628**	2	PIN-COTTER	
B	26	1	**5P-1075**	4	WASHER-HARD (10.2X22.5X3-MM THK)	
	27	1	**5S-7379**	6	BOLT (3/8-16X0.875-IN)	
	28	1	**5S-7383**	2	BOLT (3/8-16X1.75-IN)	
	29	1	**6D-4244**	2	CLIP	
	30	1	**6V-8801**	6	NUT (3/8-16-THD)	

117-3855 **LINES GP-HYDRAULIC** *(contd.)* **i03546404**

NOTE	REF NO	GRAPHIC REF	PART NUMBER	QTY	PART NAME 1 2 3 4 5 6 (PRODUCT LEVEL)	SEE PAGE
	31	1	**8D-9092**	1	PIN	
	32	1	**8T-2501**	2	BOLT (3/8-16X2-IN)	
	33	1	**8T-2502**	2	BOLT (3/8-16X1.125-IN)	
	34	1	**8T-4223**	4	WASHER-HARD (13.5X25.5X3-MM THK)	
M	35	1	**8T-4648**	4	BOLT (M12X1.75X70-MM)	
	36	1	**8T-4896**	19	WASHER-HARD (10.2X18.5X2.5-MM THK)	
	37	1	**8T-4994**	2	WASHER-HARD (20X36.5X3.5-MM THK)	
	38	1	**8T-7008**	1	BOLT (3/8-16X3-IN)	
	39	1	**8T-9378**	1	BOLT (3/8-16X4-IN)	
	40	1	**9B-7237**	1	BOLT (3/8-16X1.25-IN)	
D	41	1	**5P-5931**		SEAL (0.05-M EACH)	

B-USE AS REQUIRED
C-CHANGE FROM PREVIOUS TYPE
D-ORDER BY THE METER
I-REFER TO HYDRAULIC INFORMATION SYSTEM
M-METRIC PART
Y-SEPARATE ILLUSTRATION

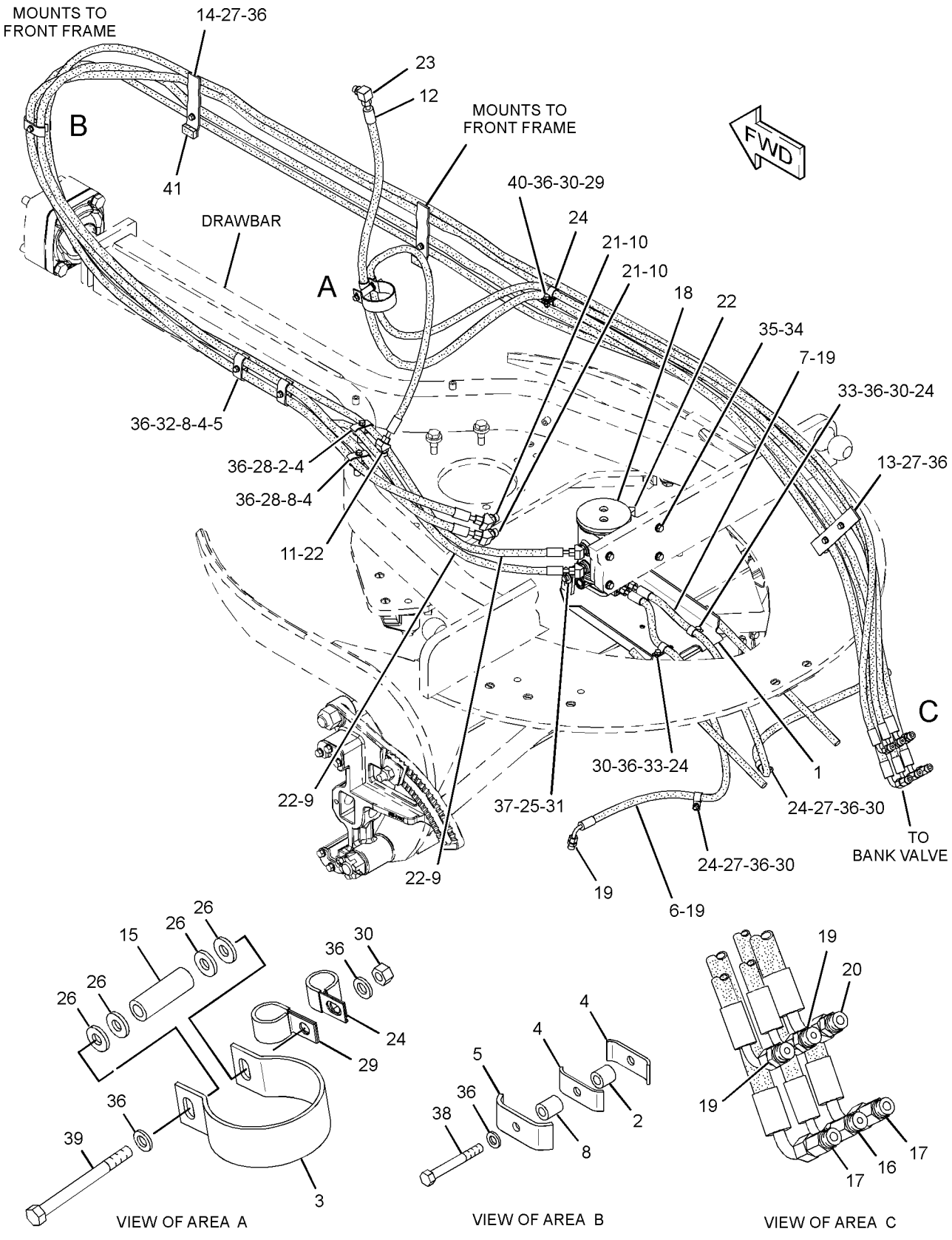

GRAPHIC #1 **<END>** g01952590

HYDRAULIC SYSTEM

279-8138 LINES GP-HYDRAULIC–FRONT

S/N: JAP1-UP
PART OF 348-6937 OPTION AR-WORK TOOL
AN ATTACHMENT

SMCS-5057 **i03553229**

NOTE	REF NO	GRAPHIC REF	PART NUMBER	QTY	PART NAME 1 2 3 4 5 6 (PRODUCT LEVEL)	SEE PAGE
I	1	1	**113-0999**	2	HOSE AS	
	2	1	*150-3028*	2	ELBOW AS	
					(EACH INCLUDES)	
		1	**6V-9343**	1	ELBOW	
		1	**3D-2824**	1	SEAL-O-RING	
		1	**6V-8397**	1	SEAL-O-RING	
	3	1	**6V-8397**	2	SEAL-O-RING	
	4	1	**6V-8987**	2	ELBOW	
	5	1	**6V-9168**	2	NUT (11/16-16-THD)	

I-REFER TO HYDRAULIC INFORMATION SYSTEM

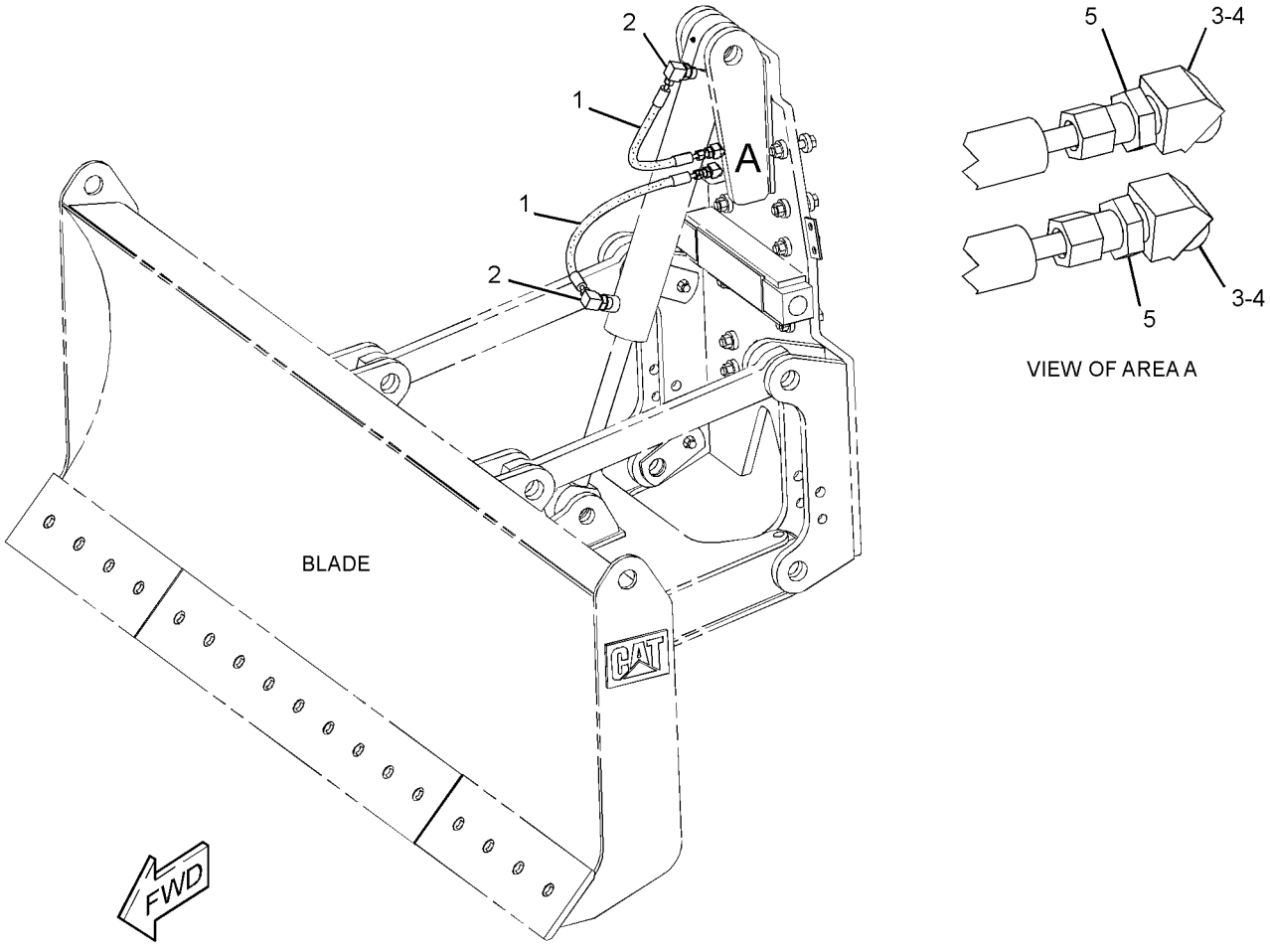

GRAPHIC #1 **<END>** g01935733

HYDRAULIC SYSTEM

348-3315 LINES GP-HYDRAULIC

S/N: JAP1-UP
PART OF 348-3335 GEAR GP-BEVEL
AN ATTACHMENT

SMCS-5057 **i03643164**

NOTE	PART NUMBER	QTY	PART NAME 1 2 3 4 5 6 (PRODUCT LEVEL)	SEE PAGE
M	**8T-4136**	1	BOLT (M10X1.5X25-MM)	
M	**8T-4192**	1	BOLT (M12X1.75X25-MM)	
M	**8T-4195**	1	BOLT (M10X1.5X30-MM)	
	3E-6909	2	CLIP	
	4S-1962	1	CLIP	
	148-8368	1	ELBOW AS	
	6V-8627	1	ELBOW	
	3J-1907	1	SEAL-O-RING	
	4J-5477	1	SEAL-O-RING	
	148-8377	1	ELBOW AS	
	6V-8980	1	ELBOW	
	6V-8397	2	SEAL-O-RING	
I	**310-8005**	1	HOSE AS	
I	**328-1672**	1	HOSE AS	
	6V-9168	1	NUT (11/16-16-THD)	
M	**8T-4133**	1	NUT (M10X1.5-THD)	
	300-6203	1	PLATE	
	7X-0619	2	WASHER-HARD (20X30X2.5-MM THK)	
	8T-4121	3	WASHER-HARD (11X21X2.5-MM THK)	
	8T-4223	1	WASHER-HARD (13.5X25.5X3-MM THK)	

I-REFER TO HYDRAULIC INFORMATION SYSTEM
M-METRIC PART

<END>

HYDRAULIC SYSTEM

301-2237 LINES GP-PUMP

S/N: JAP1-UP
PART OF 349-2487 OPTION AR-CONFIGURATION
AN ATTACHMENT

SMCS-5057 **i03575664**

NOTE	REF NO	GRAPHIC REF	PART NUMBER	QTY	PART NAME 1 2 3 4 5 6 (PRODUCT LEVEL)	SEE PAGE
YR	1	1	**6E-3137**	1	PUMP GP-PISTON	427
	2	1	**8X-8813**	1	ELBOW	
	3	1	*148-8347*	2	ELBOW AS	
					(EACH INCLUDES)	
		1	**6V-9007**	1	ELBOW	
		1	**3D-2824**	1	SEAL-O-RING	
		1	**6V-9746**	1	SEAL-O-RING	
I	4	1	**270-3277**	1	HOSE AS	
	5	1	**5H-8848**	1	SEAL-O-RING	

I-REFER TO HYDRAULIC INFORMATION SYSTEM
R-REMFG PART MAY BE AVAILABLE
Y-SEPARATE ILLUSTRATION

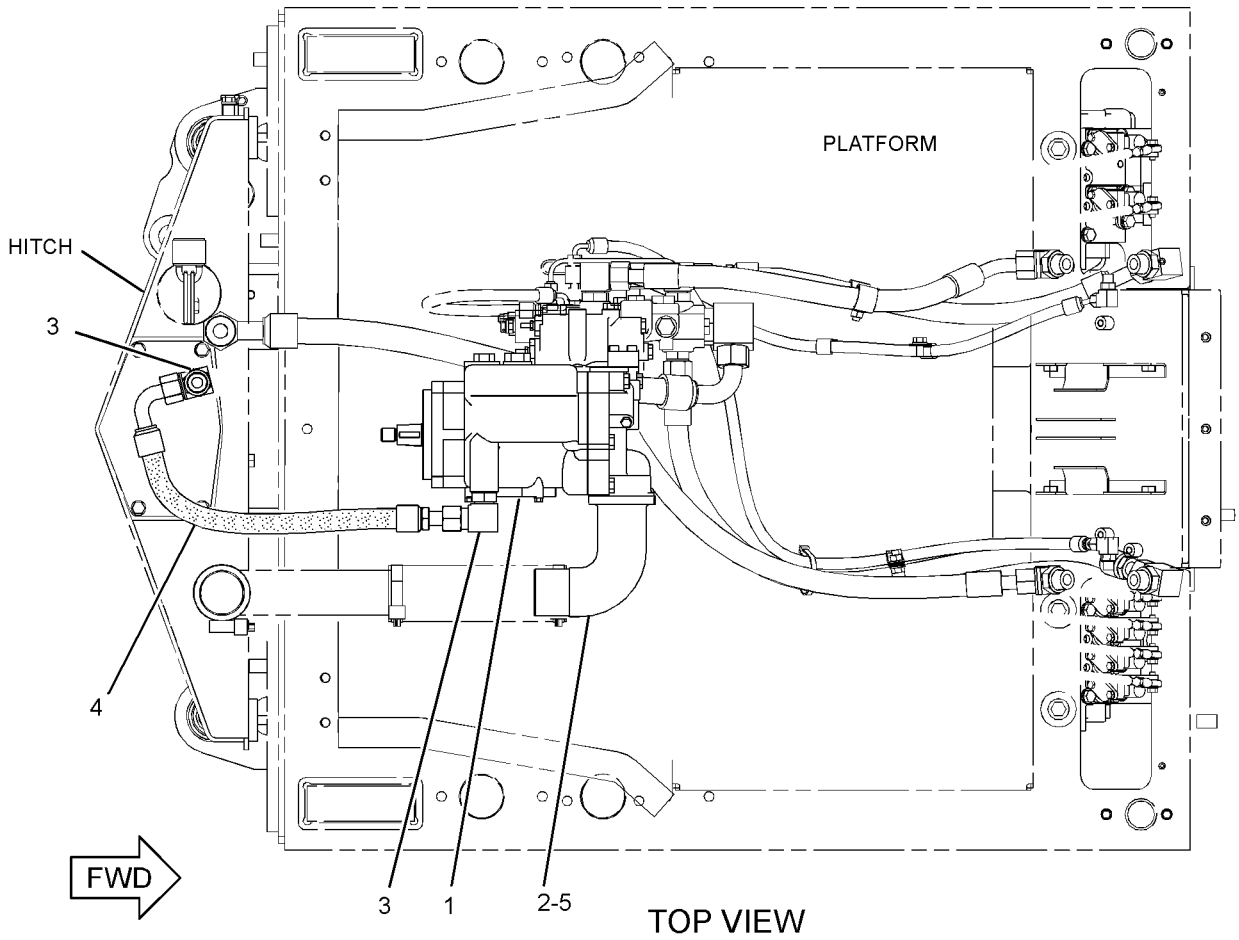

GRAPHIC #1

<END>

g01861121

HYDRAULIC SYSTEM

322-2320 LINES GP-PUMP

S/N: JAP1-UP

PART OF 348-3018 GENERAL AR

SMCS-5057 **i03544625**

NOTE	REF NO	GRAPHIC REF	PART NUMBER	QTY	PART NAME 1 2 3 4 5 6 (PRODUCT LEVEL)	SEE PAGE
	1	1	**5P-4868**	4	CLAMP-HOSE	
	2	1	**6E-1926**	1	ADAPTER	
E	3	1	**5P-1295**	1	HOSE (13-CM)	
E	3A	1	**5P-1295**	1	HOSE (10-CM)	
	4	1	**6V-0852**	1	CAP-DUST	
	5	1	**7K-1181**	2	STRAP-CABLE	
I	7	1	**8W-3166**	1	HOSE AS	
I	8	1	**8X-7974**	1	HOSE AS	
	9	1	**9C-5344**	1	SPACER (10.5X20X18-MM THK)	
Y	10	1	**9T-5957**	1	VALVE GP-COMBINATION	466
	11	1	**102-3659**	1	ELBOW	
	12	1	**104-4286**	1	TUBE	
	13	1	*165-7014*	1	TEE AS	
		1	**8C-3309**	1	TEE	
		1	**3J-1907**	1	SEAL-O-RING	
		1	**4J-5477**	1	SEAL-O-RING	
I	14	1	**180-7303**	1	HOSE AS	
I	15	1	**251-4390**	1	HOSE AS	
I	16	1	**253-0912**	1	HOSE AS	
I	17	1	**261-1108**	1	HOSE AS	
	18	1	**067-3045**	1	CLIP	
	19	1	**092-7385**	1	CLIP	
I	20	1	**109-9771**	1	HOSE AS	
I	21	1	**112-9787**	1	HOSE AS	
	22	1	*148-8316*	2	CONNECTOR AS	
					(EACH INCLUDES)	
		1	**6V-8647**	1	CONNECTOR	
		1	**3J-7354**	1	SEAL-O-RING	
		1	**4J-5477**	1	SEAL-O-RING	
	23	1	*148-8323*	1	CONNECTOR AS	
		1	**6V-9875**	1	CONNECTOR	
		1	**2S-4078**	1	SEAL-O-RING	
		1	**5K-9090**	1	SEAL-O-RING	
	24	1	*148-8327*	1	CONNECTOR AS	
		1	**6V-8637**	1	CONNECTOR	
		1	**3D-2824**	1	SEAL-O-RING	
		1	**6V-9746**	1	SEAL-O-RING	
	25	1	*148-8347*	5	ELBOW AS	
					(EACH INCLUDES)	
		1	**6V-9007**	1	ELBOW	
		1	**3D-2824**	1	SEAL-O-RING	
		1	**6V-9746**	1	SEAL-O-RING	
	26	1	*148-8364*	1	ELBOW AS	
		1	**6V-8625**	1	ELBOW	
		1	**3K-0360**	1	SEAL-O-RING	
		1	**6V-8398**	1	SEAL-O-RING	
	27	1	*148-8368*	2	ELBOW AS	
					(EACH INCLUDES)	
		1	**6V-8627**	1	ELBOW	
		1	**3J-1907**	1	SEAL-O-RING	
		1	**4J-5477**	1	SEAL-O-RING	
	28	1	*148-8381*	1	ELBOW AS	
		1	**8T-5429**	1	ELBOW	
		1	**3D-2824**	1	SEAL-O-RING	
		1	**6V-8398**	1	SEAL-O-RING	
	29	1	*150-5968*	1	TEE AS	

322-2320 **LINES GP-PUMP** ***(contd.)*** **i03544625**

NOTE	REF NO	GRAPHIC REF	PART NUMBER	QTY	PART NAME 1 2 3 4 5 6 (PRODUCT LEVEL)	SEE PAGE
		1	**6V-9835**	1	TEE-SWIVEL	
		1	**4J-5477**	2	SEAL-O-RING	
	30	1	*153-6237*	2	ELBOW AS	
					(EACH INCLUDES)	
		1	**6V-9004**	1	ELBOW	
		1	**3D-2824**	1	SEAL-O-RING	
		1	**6V-9746**	1	SEAL-O-RING	
	31	1	**1H-8720**	1	SEAL-O-RING	
	32	1	**1S-6420**	1	CLIP	
	33	1	**205-7299**	4	CLIP	
	34	1	**302-3908**	1	SPACER (11X20X30-MM THK)	
	35	1	**3J-1907**	1	SEAL-O-RING	
	36	1	**4J-0521**	2	SEAL-O-RING	
	37	1	**4K-8864**	1	CLIP	
	38	1	**5P-7854**	1	CLIP	
	39	1	**6D-4244**	2	CLIP	
	40	1	**6K-8178**	1	CLIP	
	41	1	**6V-3965**	1	FITTING (QUICK DISCONNECT)	
M	42	1	**6V-5696**	1	BOLT (M12X1.75X80-MM)	
M	43	1	**8T-0646**	3	BOLT (M12X1.75X110-MM)	
M	44	1	**8T-3957**	1	BOLT-SOCKET HEAD (M12X1.75X30-MM)	
	45	1	**8T-4121**	11	WASHER-HARD (11X21X2.5-MM THK)	
M	46	1	**8T-4133**	4	NUT (M10X1.5-THD)	
M	47	1	**8T-4136**	4	BOLT (M10X1.5X25-MM)	
M	48	1	**8T-4137**	1	BOLT (M10X1.5X20-MM)	
M	49	1	**8T-4185**	2	BOLT (M10X1.5X50-MM)	
	50	1	**8T-4223**	8	WASHER-HARD (13.5X25.5X3-MM THK)	
M	51	1	**8T-4956**	4	BOLT (M12X1.75X35-MM)	
I	52	1	**9C-2399**	1	HOSE AS	

E-ORDER BY THE CENTIMETER
I-REFER TO HYDRAULIC INFORMATION SYSTEM
M-METRIC PART
Y-SEPARATE ILLUSTRATION

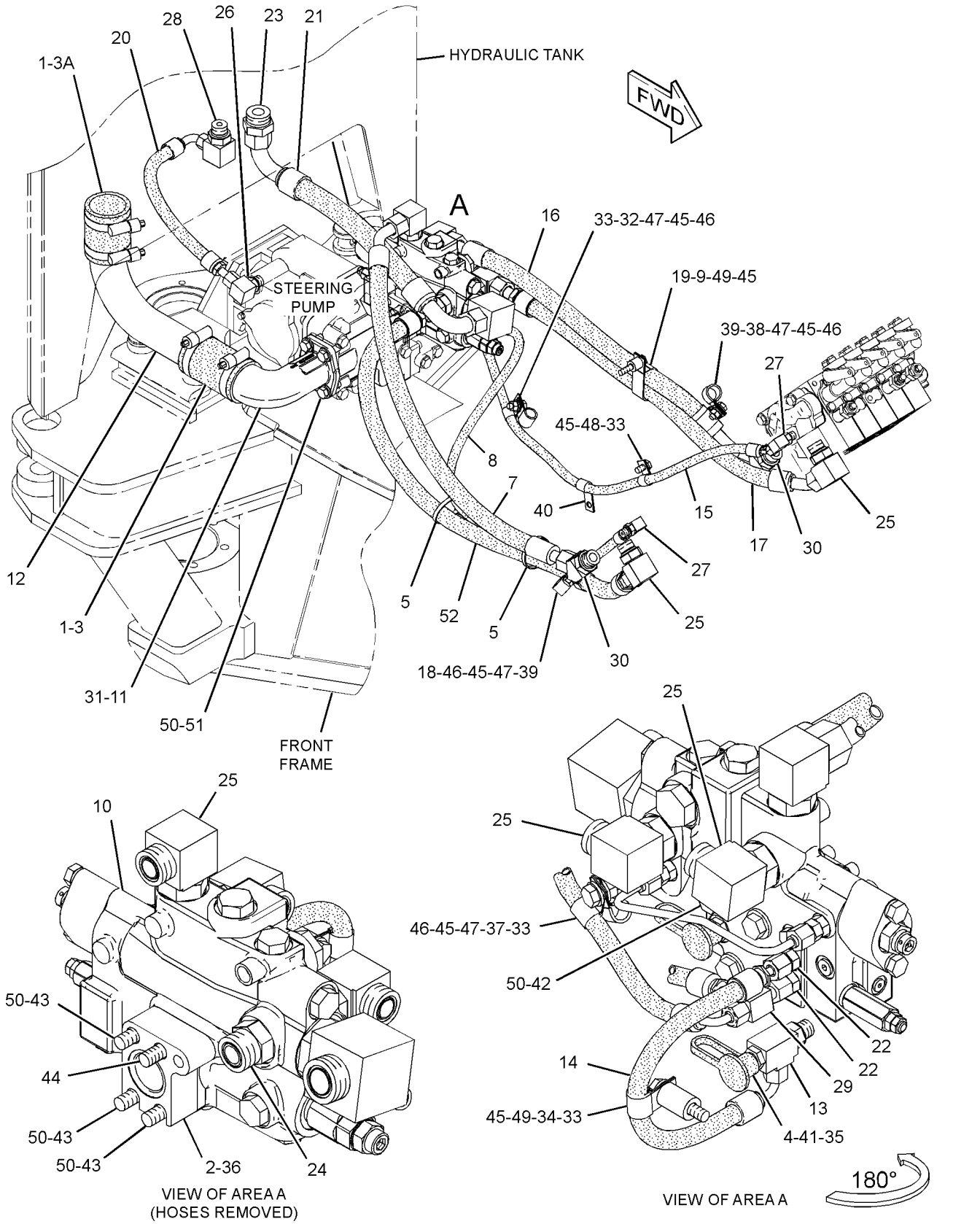

GRAPHIC #1 **<END>** g01932574

HYDRAULIC SYSTEM

322-2322 LINES GP-PUMP–HIGH CAPACITY

S/N: JAP1-UP
PART OF 349-2486 OPTION AR-CONFIGURATION
AN ATTACHMENT

SMCS-5057 **i03630198**

NOTE	REF NO	GRAPHIC REF	PART NUMBER	QTY	PART NAME 1 2 3 4 5 6 (PRODUCT LEVEL)	SEE PAGE
YR	1	1	**6E-3137**	1	PUMP GP-PISTON	427
I	2	1	**8X-7820**	1	HOSE AS	
	3	1	**8X-8813**	1	ELBOW	
	4	1	*148-8347*	2	ELBOW AS	
					(EACH INCLUDES)	
		1	**6V-9007**	1	ELBOW	
		1	**3D-2824**	1	SEAL-O-RING	
		1	**6V-9746**	1	SEAL-O-RING	
	5	1	**5H-8848**	1	SEAL-O-RING	

I-REFER TO HYDRAULIC INFORMATION SYSTEM
R-REMFG PART MAY BE AVAILABLE
Y-SEPARATE ILLUSTRATION

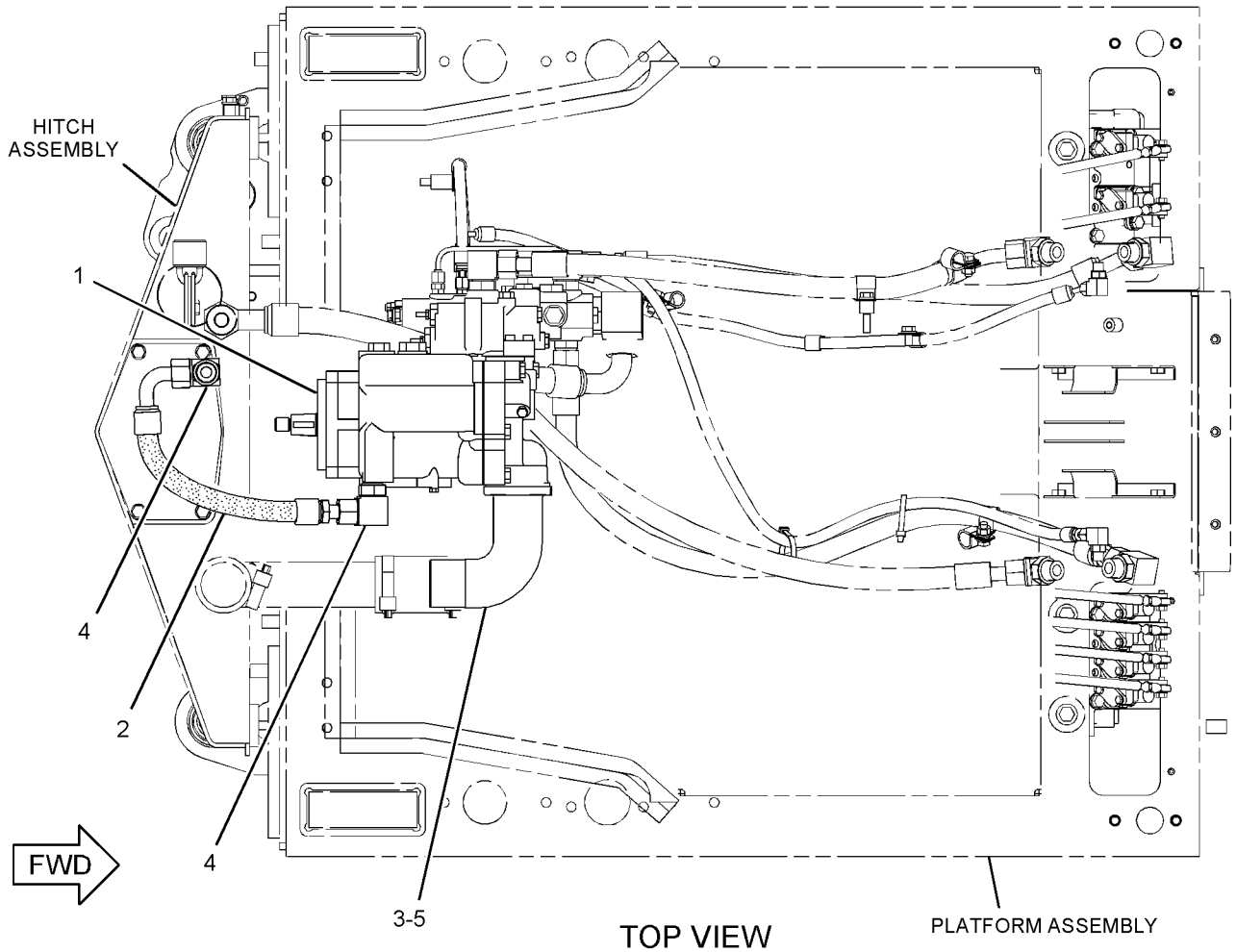

TOP VIEW

GRAPHIC #1

<END>

g01951874

HYDRAULIC SYSTEM

303-1978 LINES GP-RIPPER

S/N: JAP1-UP
PART OF 348-7029, 348-7032, 348-7033 CONTROL AR-HYDRAULIC
AN ATTACHMENT

SMCS-5057 **i03537543**

NOTE	REF NO	GRAPHIC REF	PART NUMBER	QTY	PART NAME 1 2 3 4 5 6 (PRODUCT LEVEL)	SEE PAGE
	1	1	**7F-4617**	1	SPACER (0.41X0.75X1.31-IN THK)	
	2	1	**8W-8527**	8	SLEEVE	
	3	1	*105-7167*	2	FITTING GP	
					(EACH INCLUDES)	
		1	**6V-8397**	2	SEAL-O-RING	
		1	**8T-5890**	1	UNION	
	4	1	**309-1905**	1	STUD-TAPERLOCK (M10X1.5X100-MM)	
I	5	1	**328-1674**	2	HOSE AS	
	6	1	**100-4336**	1	CLIP	
	7	1	*148-8374*	1	ELBOW AS	
		1	**3K-0360**	1	SEAL-O-RING	
		1	**6V-8397**	1	SEAL-O-RING	
		1	**6V-8723**	1	ELBOW	
	8	1	*148-8383*	1	ELBOW AS	
		1	**3K-0360**	1	SEAL-O-RING	
		1	**6V-8397**	1	SEAL-O-RING	
		1	**8T-1683**	1	ELBOW	
FI			**306-5009**	2	HOSE AS	
	9	1	**1S-0994**	2	CLIP	
	10	1	**6D-4247**	1	CLIP	
	11	1	**6V-9168**	2	NUT (11/16-16-THD)	
	12	1	**8T-4121**	3	WASHER-HARD (11X21X2.5-MM THK)	
M	13	1	**8T-4133**	1	NUT (M10X1.5-THD)	
M	14	1	**8T-4137**	2	BOLT (M10X1.5X20-MM)	

F-NOT SHOWN
I-REFER TO HYDRAULIC INFORMATION SYSTEM
M-METRIC PART

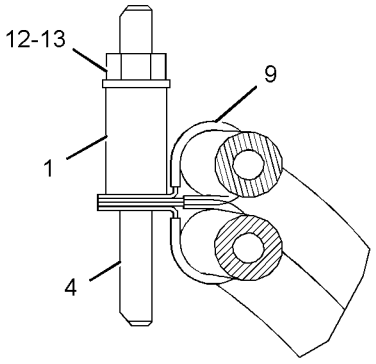

SECTION A-A

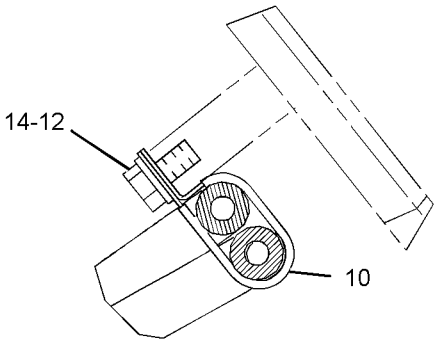

SECTION B-B

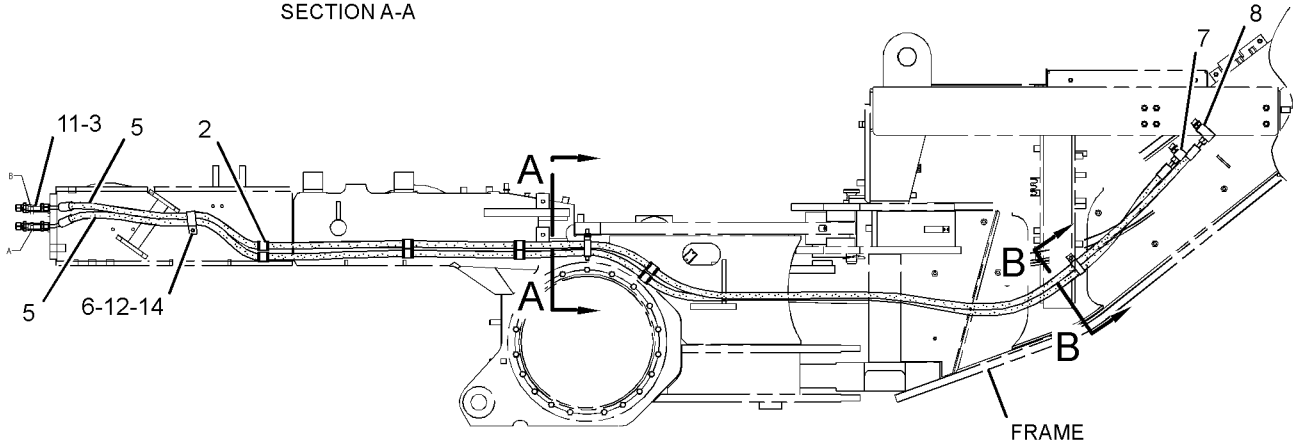

LEFT SIDE VIEW

GRAPHIC #1 **<END>** g01926283

HYDRAULIC SYSTEM

8X-1968 LINES GP-STEERING

S/N: JAP1-UP

PART OF 348-3018 GENERAL AR

SMCS-4304 **i01743845**

NOTE	REF NO	GRAPHIC REF	PART NUMBER	QTY	PART NAME 1 2 3 4 5 6 (PRODUCT LEVEL)	SEE PAGE
	1	1	**6V-8639**	6	CONNECTOR	
CI	2	1	**8W-0225**	1	HOSE AS	
I	3	1	**150-4868**	1	HOSE AS	
CI	4	1	**4E-2392**	1	HOSE AS	
	5	1	**6V-8625**	2	ELBOW	
C	6	1	**6D-4244**	13	CLIP	
C	7	1	**8T-4896**	10	WASHER-HARD (10.2X18.5X2.5-MM THK)	
C	8	1	**5S-7379**	5	BOLT (3/8-16X0.875-IN)	
C	9	1	**3P-1932**	1	ADAPTER	
C	10	1	**108-1610**	2	CLAMP	
	11	1	**6V-9837**	2	TEE-SWIVEL	
	12	1	**8T-5082**	4	UNION	
C	13	1	**6V-9002**	2	ELBOW	
CI	14	1	**108-0702**	3	HOSE AS	
I	15	1	**8X-7975**	1	HOSE AS	
I	16	1	**108-0703**	1	HOSE AS	
I	17	1	**108-0714**	2	HOSE AS	
C	18	1	**3K-0360**	11	SEAL-O-RING	
	19	1	**6V-8398**	18	SEAL-O-RING	
	20	1	**6V-9746**	4	SEAL-O-RING	
CI	21	1	**5T-9903**	1	HOSE AS	
C	22	1	**6V-9849**	1	ELBOW	
C	23	1	**4J-5477**	3	SEAL-O-RING	
C	24	1	**3J-7354**	3	SEAL-O-RING	
C	25	1	**6V-8647**	2	CONNECTOR	
	26	1	**4J-5468**	2	CLAMP	
	27	1	**9D-0953**	1	SPACER (0.406X0.75X0.88-IN THK)	
	28	1	**6V-8801**	3	NUT (3/8-16-THD)	
	29	1	**136-6330**	1	SEAL	
	30	1	**136-6331**	2	SEAL	
C	35	1	**7X-0289**	1	BOLT (3/8-16X1.875-IN)	
C	36	1	**4S-4455**	3	CLIP	
	37	1	**4L-6454**	5	BOLT (3/8-16X1-IN)	
C	38	1	**8C-3446**	1	VALVE-FLUID SAMPLING	
C	39	1	**8C-3451**	1	CAP-DUST	
C	40	1	**3S-2093**	2	STRAP-CABLE	
	41	1	**5P-1075**	4	WASHER-HARD (10.2X22.5X3-MM THK)	
					AVAILABLE REPAIR KIT(S):	
			130-7084	1	BLADDER (ACCUMULATOR)	

C-CHANGE FROM PREVIOUS TYPE
I-REFER TO HYDRAULIC INFORMATION SYSTEM

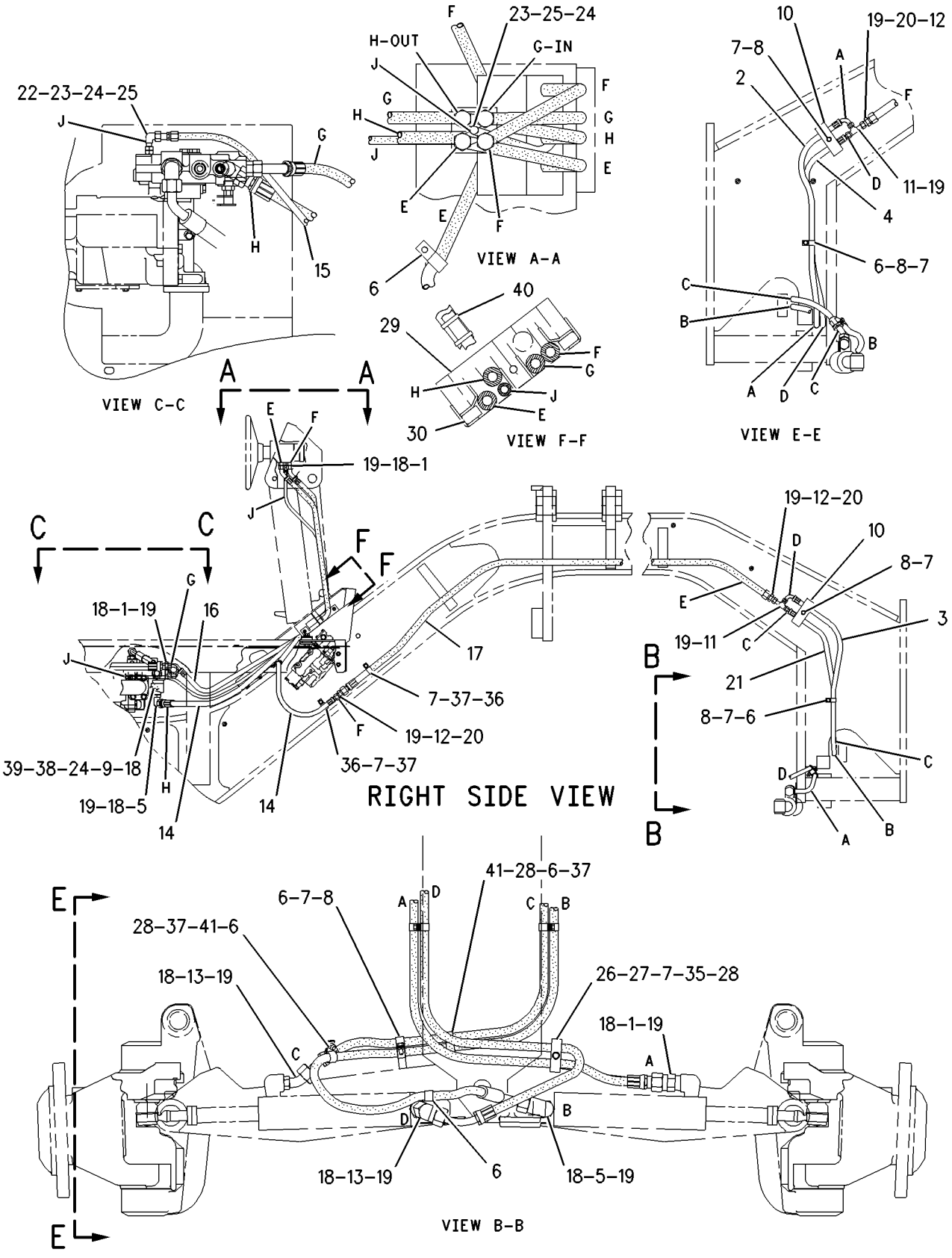

GRAPHIC #1 **<END>** g00987677

HYDRAULIC SYSTEM

164-8462 LOCK GP-CENTERSHIFT

S/N: JAP1-UP

PART OF 348-3018 GENERAL AR

SMCS-5221 **i03291816**

NOTE	REF NO	GRAPHIC REF	PART NUMBER	QTY	PART NAME 1 2 3 4 5 6 (PRODUCT LEVEL)	SEE PAGE
	1	1	**2H-3931**	1	SEAL-O-RING	
	2	1	**4T-8054**	1	SEAL AS	
	3	1	**8X-3749**	1	PISTON	
	4	1	**9D-6584**	1	SEAL-LIP TYPE	
	5	1	**297-6979**	1	CYLINDER	
	6	1	**115-0541**	1	PIN	
	7	1	**142-5787**	1	CAP	
Y	8	1	**152-8346**	1	VALVE GP-SOLENOID (24-VOLT) (CENTERSHIFT LOCK)	507
	9	1	**167-2307**	1	SEAL-U-CUP	
	10	1	**7X-0346**	1	BOLT (5/8-11X2-IN)	
	11	1	**8T-4122**	1	WASHER-HARD (17X32X3.5-MM THK)	
	12	1	**8T-4223**	2	WASHER-HARD (13.5X25.5X3-MM THK)	
	13	1	**8T-8917**	2	BOLT (1/2-13X1.25-IN)	
	14	1	**7X-0350**	2	BOLT (5/8-11X3.5-IN)	
	15	1	**198-4780**	2	WASHER-HARD (17.5X32X8-MM THK)	

Y-SEPARATE ILLUSTRATION

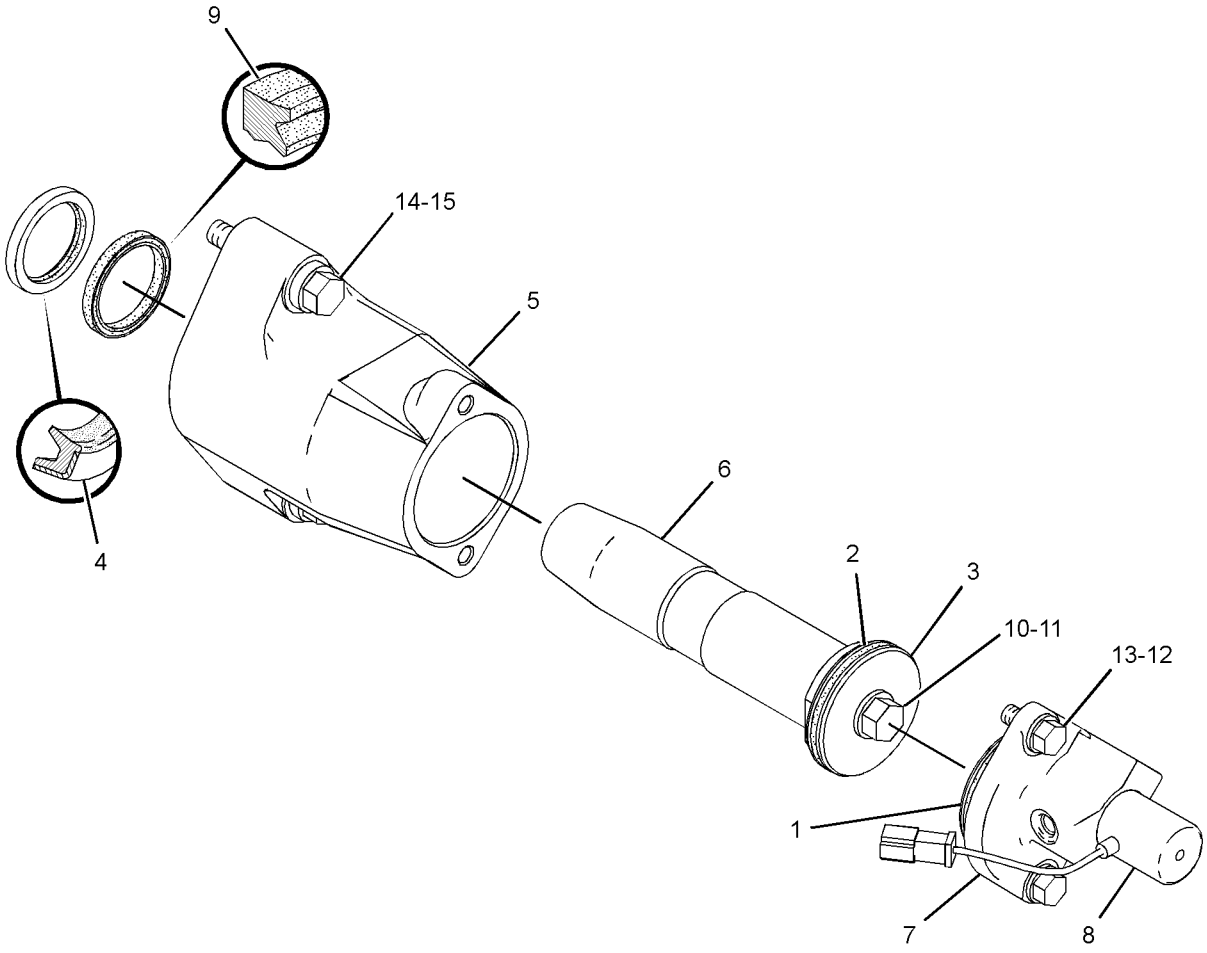

GRAPHIC #1 **<END>** g01702853

239-9893 MANIFOLD GP-VALVE–LH

S/N: JAP1-UP

PART OF 262-7291 VALVE GP-BANK 5

AN ATTACHMENT

SMCS-5264 **i03643737**

NOTE	REF NO	GRAPHIC REF	PART NUMBER	QTY	PART NAME 1 2 3 4 5 6 (PRODUCT LEVEL)	SEE PAGE
J	1	1	**284-0815**	1	VALVE GP-CHECK E	
	2	1	**249-3251**	1	VALVE GP-CONTROL	
	3	1	**275-9638**	1	VALVE GP-CONTROL	
	4	1	**8C-6512**	4	BOLT-SOCKET HEAD (10-24X2-IN)	
	5	1	**241-5889**	1	VALVE GP-SHUTTLE	
	6	1	**266-1600**	1	VALVE GP-SOLENOID & MANIFOLD	
	7	1	**266-1599**	1	VALVE GP-SOLENOID & MANIFOLD	
	8	1	**9S-8003**	1	PLUG (HEX)	
	9	1	**3J-7354**	1	SEAL-O-RING	
	10	1	**9S-8001**	12	PLUG-O-RING (STRAIGHT THREAD O-RING)	
	11	1	**4J-7533**	12	SEAL-O-RING	
					AVAILABLE REPAIR KIT(S):	
J			**284-3045**	1	KIT-SEAL	

J-(KIT MARKED J SERVICES PARTS MARKED J)

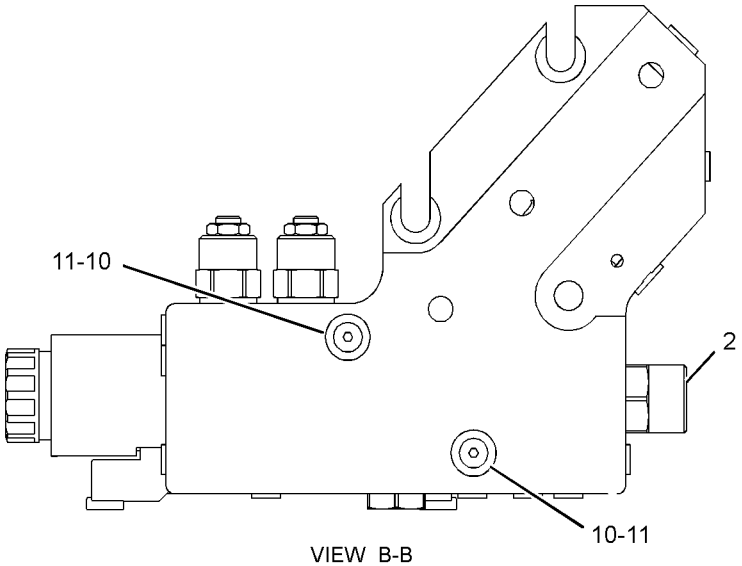

VIEW B-B

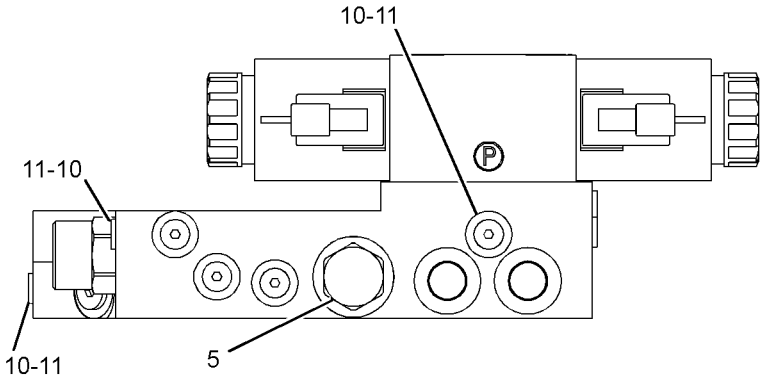

VIEW C-C

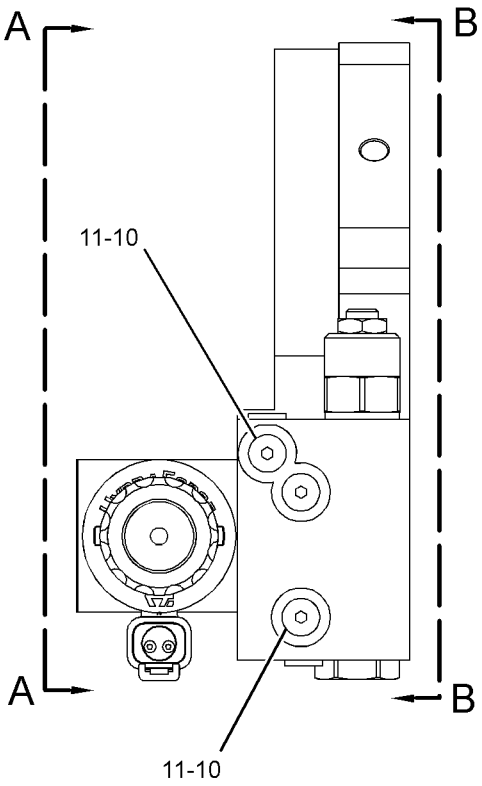

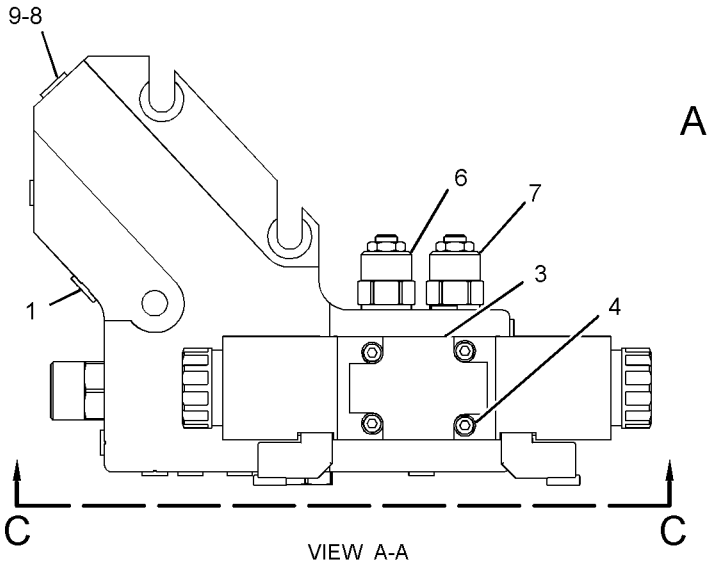

VIEW A-A

GRAPHIC #1 **<END>** g01249469

239-9894 MANIFOLD GP-VALVE–RH

S/N: JAP1-UP
PART OF 250-0544 VALVE GP-BANK 4
AN ATTACHMENT

SMCS-5264 **i03643741**

NOTE	REF NO	GRAPHIC REF	PART NUMBER	QTY	PART NAME 1 2 3 4 5 6 (PRODUCT LEVEL)	SEE PAGE
J	1	1	**284-0815**	1	VALVE GP-CHECK E	
		1	**3J-7354**	1	SEAL-O-RING	
	2	1	**249-3251**	1	VALVE GP-CONTROL	
	3	1	**275-9638**	1	VALVE GP-CONTROL	
	4	1	**8C-6512**	4	BOLT-SOCKET HEAD (10-24X2-IN)	
	5	1	**241-5889**	1	VALVE GP-SHUTTLE	
	6	1	**266-1599**	1	VALVE GP-SOLENOID & MANIFOLD	
	7	1	**266-1598**	1	VALVE GP-COUNTERBALANCE	
	8	1	**9S-8003**	1	PLUG (HEX)	
	9	1	**3J-7354**	1	SEAL-O-RING	
	10	1	**9S-8001**	12	PLUG-O-RING (STRAIGHT THREAD O-RING)	
	11	1	**4J-7533**	12	SEAL-O-RING	
					AVAILABLE REPAIR KIT(S):	
J			**284-3045**	1	KIT-SEAL	

J-KIT MARKED J ICLUDES PARTS MARKED J

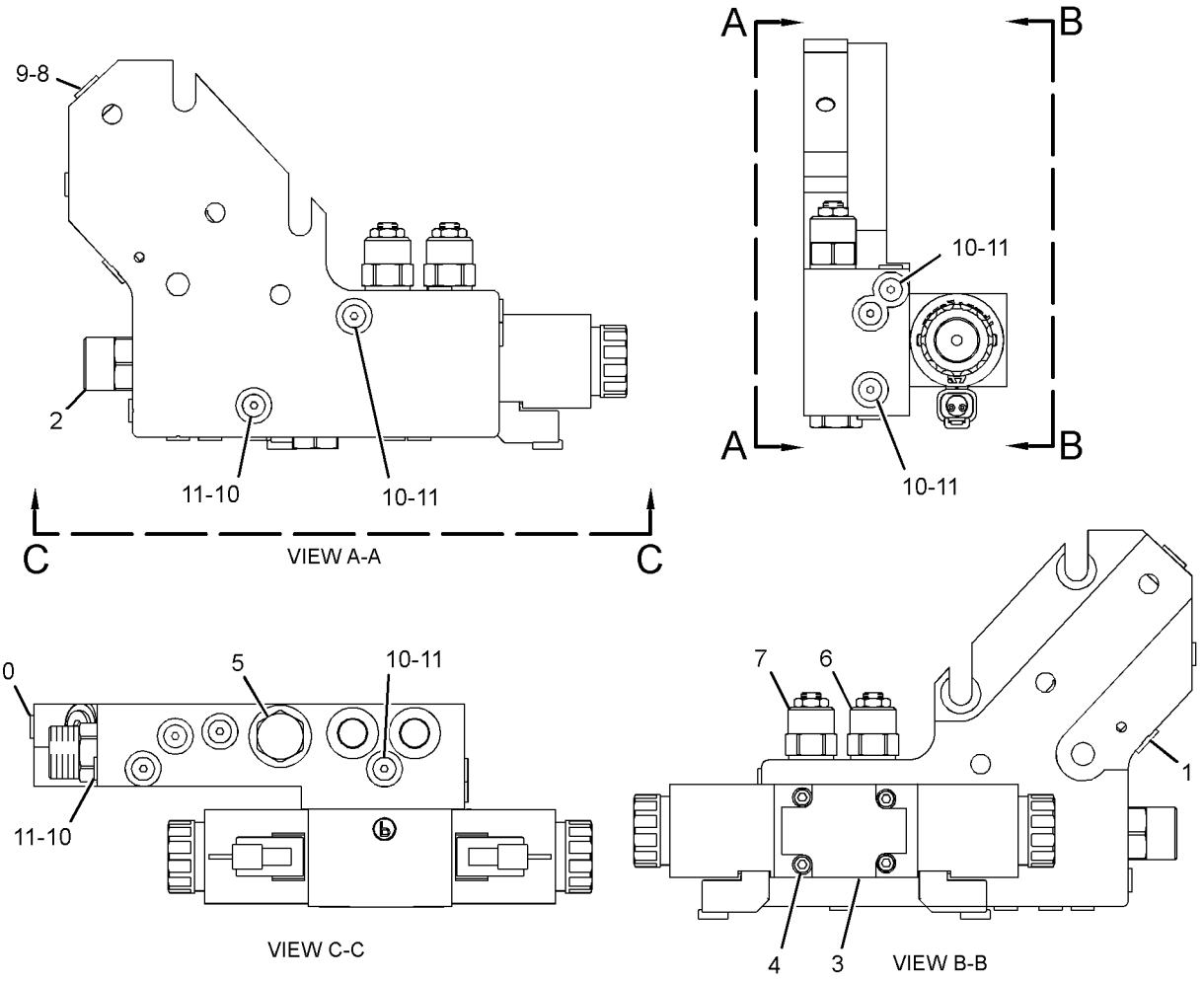

GRAPHIC #1 **<END>** g01249909

HYDRAULIC SYSTEM

105-3196 MOTOR GP-GEROTOR

S/N: JAP1-UP

PART OF 253-4677 DRIVE GP-CIRCLE

SMCS-5082 **i02205130**

NOTE	REF NO	GRAPHIC REF	PART NUMBER	QTY	PART NAME 1 2 3 4 5 6 (PRODUCT LEVEL)	SEE PAGE
	1	1	**9T-8051**	7	BOLT (3/8-24X4.12-IN)	
	2	1	**9T-8070**	1	HOUSING AS	
	3	1	**6Y-2934**	1	BEARING-ROLLER	
	4	1	**6Y-2933**	2	RING-THRUST	
	5	1	**6Y-2932**	1	BEARING-THRUST	
	6	1	**8T-1698**	1	BEARING AS-NEEDLE	
	7	1	**9T-9071**	1	SHIM	
	8	1	**9T-8058**	1	BACKUP	
	9	1	**9T-8059**	1	SEAL	
	10	1	**9T-8056**	1	SHAFT	
	11	1	**6Y-2935**	1	BEARING	
	12	1	**9T-8053**	5	SEAL	
	13	1	**9T-8054**	1	LINK	
	14	1	**9T-8061**	1	PLATE	
	15	1	**9T-8063**	1	ROTOR SET	
	16	1	**9T-8065**	1	MANIFOLD	
	17	1	**9J-4963**	1	RING	
	18	1	**9T-8069**	1	PLATE AS	
	19	1	**9T-8067**	1	COVER	
					AVAILABLE REPAIR KIT(S):	
			9T-9072	1	KIT-SEAL (MOTOR) (CIRCLE DRIVE)	
					(INCLUDES RING, SHIM, SEALS & GREASE PACK)	

105-3196 **MOTOR GP-GEROTOR** *(contd.)* **i02205130**

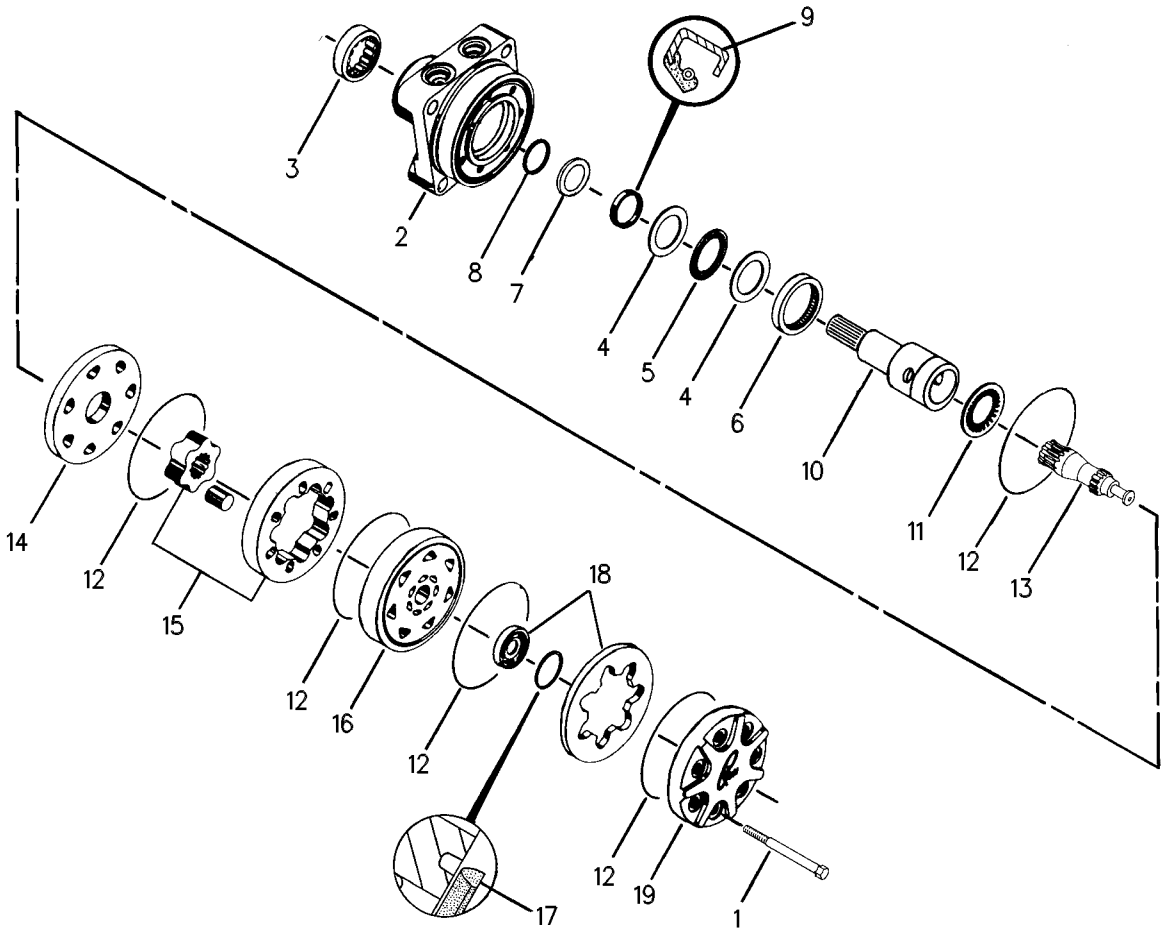

GRAPHIC #1 **<END>** g00108578

HYDRAULIC SYSTEM

8X-2379 PUMP & MTG GP-STEERING

S/N: JAP1-UP

PART OF 348-3018 GENERAL AR

SMCS-4306, 4344 **i03100644**

NOTE	REF NO	GRAPHIC REF	PART NUMBER	QTY	PART NAME 1 2 3 4 5 6 (PRODUCT LEVEL)	SEE PAGE
	1	1	**1D-5120**	1	NUT-JAM (3/4-16-THD)	
	2	1	**5R-4787**	4	PLATE	
YR	3	1	**6E-3136**	1	PUMP GP-PISTON	425
	4	1	**8X-4467**	1	PLATE AS	
	5	1	**112-4159**	4	MOUNTING AS	
	6	1	**1A-5822**	4	BOLT (1/2-13X2.75-IN)	
	7	1	**1B-8737**	1	KEY-WOODRUFF	
	8	1	**5P-8248**	1	WASHER-HARD (20X36.5X3.5-MM THK)	
	9	1	**6V-8765**	4	WASHER-HARD (15X26X3-MM THK)	
M	10	1	**8C-3425**	4	BOLT (M14X2X35-MM)	

M-METRIC PART
R-REMFG PART MAY BE AVAILABLE
Y-SEPARATE ILLUSTRATION

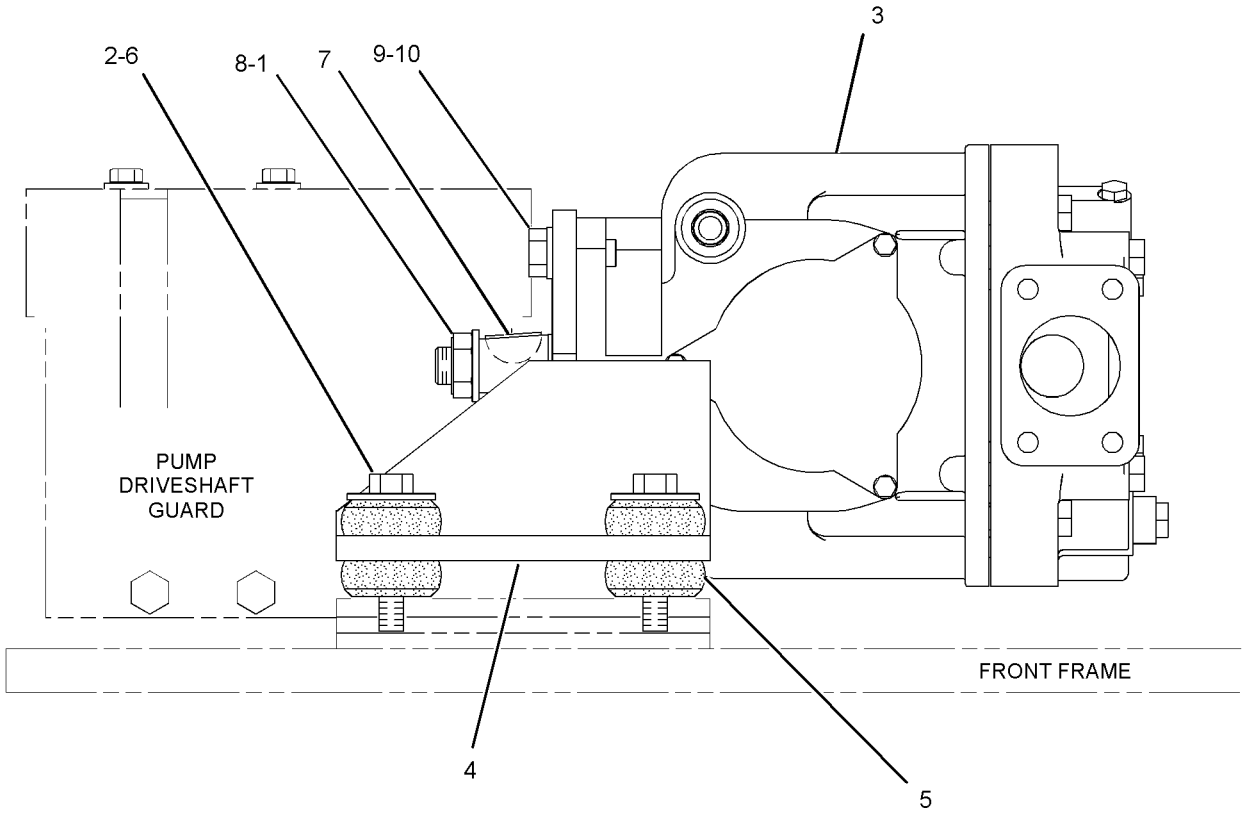

GRAPHIC #1 **<END>** g01583016

HYDRAULIC SYSTEM

6E-3136 PUMP GP-PISTON*R

S/N: JAP1-UP

PART OF 8X-2379 PUMP & MTG GP-STEERING

SMCS-5070 **i03682665**

NOTE	REF NO	GRAPHIC REF	PART NUMBER	QTY	PART NAME 1 2 3 4 5 6 (PRODUCT LEVEL)	SEE PAGE
	1	1	**6E-6594**	1	BEARING-SWASH	
	2	1	**6E-4224**	1	PLUG-SWASHPLATE	
	3	1	**033-6036**	1	SEAL-O-RING	
	4	1	**102-2386**	1	HEAD-PUMP	
	5	1	**9T-1699**	1	SPRING	
	6	1	**9T-1710**	1	POPPET	
	7	1	**9T-1636**	1	SEAT	
	8	1	**6E-6596**	1	COVER-TRUNNION	
	9	1	**6V-3834**	1	SEAL-O-RING	
M	10	1	**3E-4302**	2	SCREW-FLAT HEAD (M4X0.7X10-MM)	
M	11	1	**6V-8214**	3	BOLT (M6X1X20-MM)	
	12	1	**6E-6597**	1	BEARING-SWASH	
M	13	1	**6V-7673**	2	BOLT (M12X1.75X50-MM)	
M	14	1	**8T-0372**	4	BOLT (M12X1.75X90-MM)	
Y	15	1	**104-3122**	1	VALVE GP-PUMP CONTROL (PRESSURE, FLOW COMPENSATOR)	494
	16	1	**109-3204**	3	SEAL-O-RING	
M	17	1	**6V-8337**	4	BOLT-SOCKET HEAD (M8X1.25X35-MM)	
	18	1	**095-0888**	2	PIN-SPRING	
	19	1	**102-2385**	1	SHAFT-PUMP	
	20	1	**102-2384**	1	HOUSING-PUMP	
	21	1	**006-8663**	1	RING	
	22	1	**8T-4750**	1	SEAL-LIP TYPE	
	23	1	**6E-6599**	1	KIT-BIAS PISTON	
					(INCLUDES SPRING,ROD,PISTON,SEAL)	
	24	1	**6E-6600**	1	SPRING-BIAS	
Y	25	1	**6E-6571**	1	ROTATING GP-PUMP (STEERING)	429
	26	1	**6E-6601**	1	GASKET	
	27	1	**7L-9061**	2	SEAL-O-RING	
	28	1	**3E-7417**	2	PLUG	
	29	1	**8T-7876**	2	SEAL-O-RING	
	30	1	**9T-1633**	1	PLATE	
B	31	1	**9T-2197**	1	SHIM PACK (INCLUDES 17-SHIMS)	
	32	1	**1P-6872**	1	CUP-BEARING	
	33	1	**004-9040**	1	CONE-BEARING	
	34	1	**9T-1652**	1	PIN	
	35	1	**6E-6602**	1	KIT-PISTON CONTROL	
					(INCLUDES ROD,PISTON,SEAL)	
	36	1	**167-1802**	1	SWASHPLATE GP	
		1	**167-1801**	2	STOP-SWASHPLATE	
		1	**1H-3937**	2	PIN	
	37	1	**7T-8273**	1	CUP-BEARING	
	38	1	**7T-8272**	1	CONE-BEARING	
	39	1	**3K-0360**	1	SEAL-O-RING	
	40	1	**9S-4185**	1	PLUG-O-RING	
	41	1	**104-3124**	1	SHIELD	

B-USE AS REQUIRED
M-METRIC PART
Y-SEPARATE ILLUSTRATION

6E-3136 **PUMP GP-PISTON** *(contd.)* **i03682665**

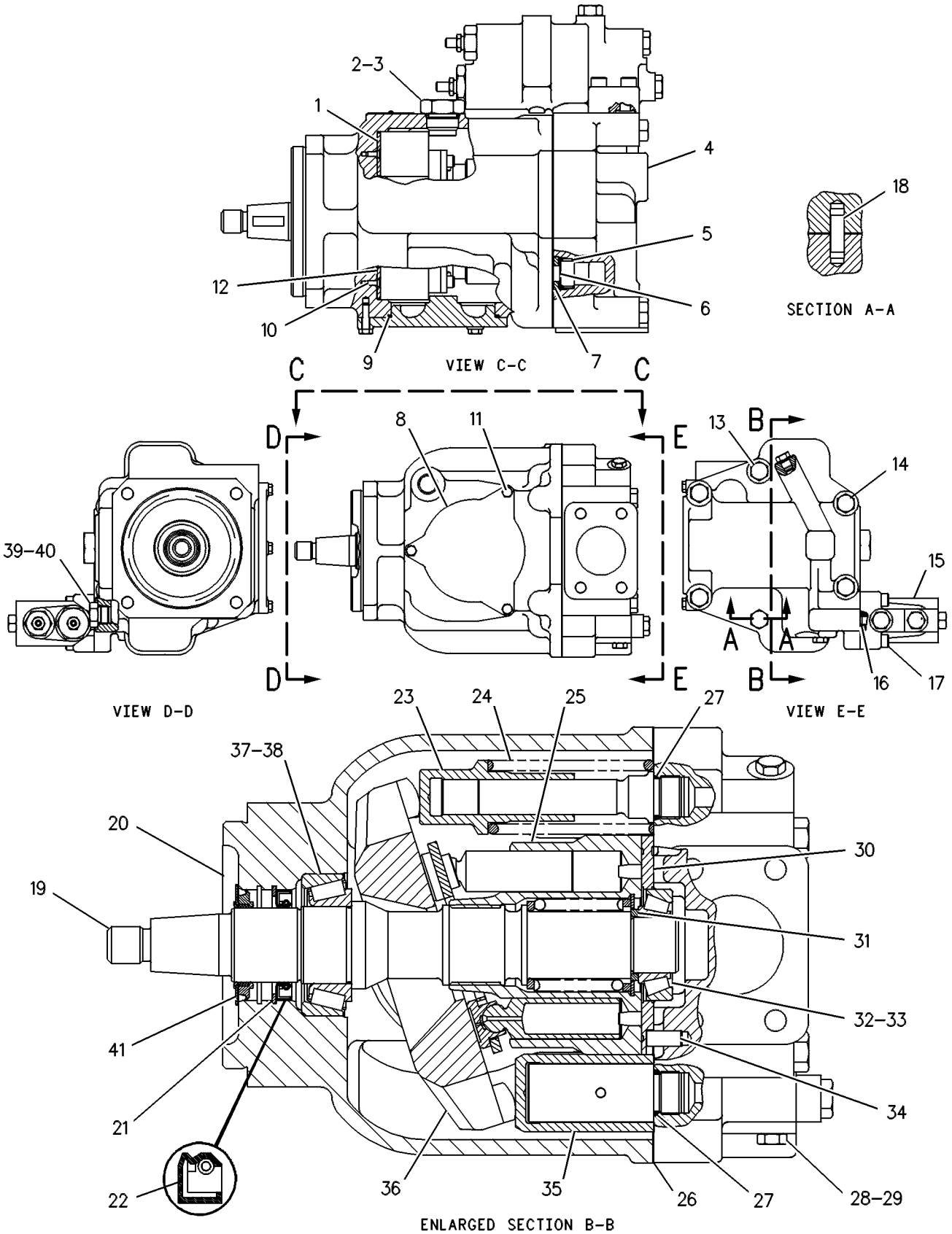

GRAPHIC #1 **<END>** g00108685

HYDRAULIC SYSTEM

6E-3137 PUMP GP-PISTON*R

S/N: JAP1-UP
PART OF 301-2237, 322-2322 LINES GP-PUMP
AN ATTACHMENT

SMCS-5070 **i03179021**

NOTE	REF NO	GRAPHIC REF	PART NUMBER	QTY	PART NAME 1 2 3 4 5 6 (PRODUCT LEVEL)	SEE PAGE
	1	1	**6E-4224**	1	PLUG-SWASHPLATE	
	2	1	**033-6036**	1	SEAL-O-RING	
	3	1	**100-3402**	1	BEARING-SWASH	
	4	1	**100-3405**	1	BEARING-SWASH	
M	5	1	**6V-8837**	3	BOLT (M6X1X16-MM)	
	6	1	**4F-4097**	1	SEAL-O-RING	
M	7	1	**3E-4302**	2	SCREW-FLAT HEAD (M4XO.7X1O-MM)	
	8	1	**100-3404**	1	COVER-TRUNNION	
	9	1	**9T-1636**	1	SEAT	
	10	1	**9T-1710**	1	POPPET	
	11	1	**9T-1699**	1	SPRING	
	12	1	**100-3403**	1	HEAD-PUMP	
B	13	1	**6E-1436**	1	SHIM PACK (INCLUDES 17-SHIMS)	
	14	1	**6Y-4280**	1	CONE-BEARING	
	15	1	**7T-9755**	1	CUP-BEARING	
	16	1	**9T-7775**	1	PLATE-VALVE	
	17	1	**3E-7417**	2	PLUG	
	18	1	**8T-7876**	2	SEAL-O-RING	
	19	1	**7L-9061**	2	SEAL-O-RING	
	20	1	**100-3413**	1	GASKET	
Y	21	1	**100-3412**	1	ROTATING GP-PUMP (STEERING)	430
	22	1	**100-3409**	1	SPRING-BIAS	
	23	1	**100-3408**	1	KIT-BIAS PISTON	
					(INCLUDES SPRING, ROD, PISTON, SEAL)	
	24	1	**002-1212**	1	CUP-BEARING	
	25	1	**2F-8509**	1	CONE-BEARING	
	26	1	**100-3401**	1	SHAFT-PUMP	
	27	1	**100-3407**	1	HOUSING-PUMP	
	28	1	**006-8663**	1	RING	
	29	1	**8T-4750**	1	SEAL-LIP TYPE	
Y	30	1	**100-3416**	1	SWASHPLATE GP	432
	31	1	**100-3415**	1	KIT-CONTROL PISTON	
					(INCLUDES SPRING, ROD, PISTON, SEAL)	
	32	1	**9T-1652**	1	PIN	
M	33	1	**6V-8336**	1	BOLT (M12X1.75X7O-MM)	
M	34	1	**6V-7673**	4	BOLT (M12X1.75X5O-MM)	
M	35	1	**8T-0372**	1	BOLT (M12X1.75X9O-MM)	
M	36	1	**6V-8337**	4	BOLT-SOCKET HEAD (M8X1.25X35-MM)	
Y	37	1	**104-3122**	1	VALVE GP-PUMP CONTROL (PRESSURE, FLOW COMPENSATOR)	494
	38	1	**9S-4190**	1	PLUG-O-RING	
	39	1	**033-6027**	1	SEAL-O-RING	
	40	1	**095-0888**	2	PIN-SPRING	
	41	1	**8T-5039**	3	SEAL-O-RING	
	42	1	**104-3124**	1	SHIELD	

B-USE AS REQUIRED
M-METRIC PART
Y-SEPARATE ILLUSTRATION

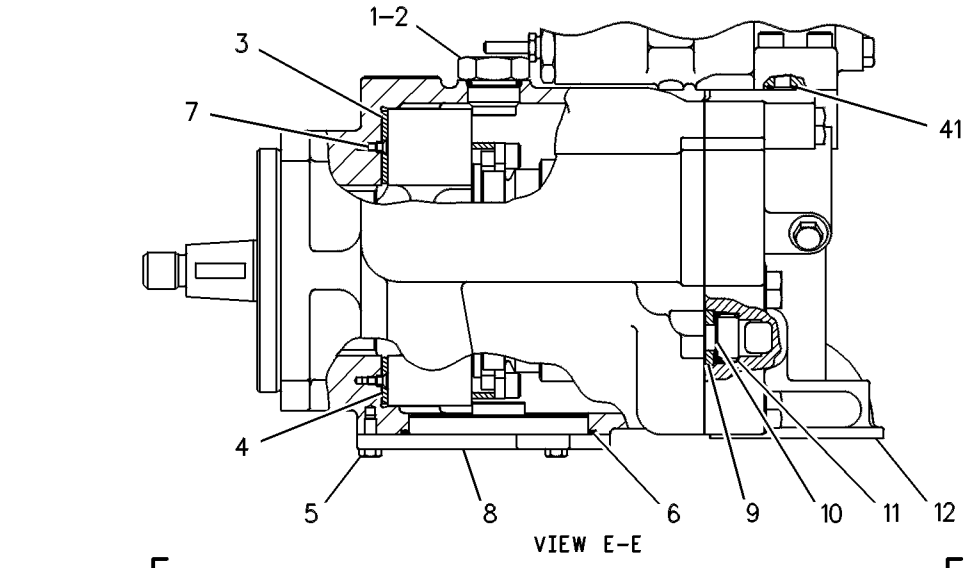

VIEW E-E

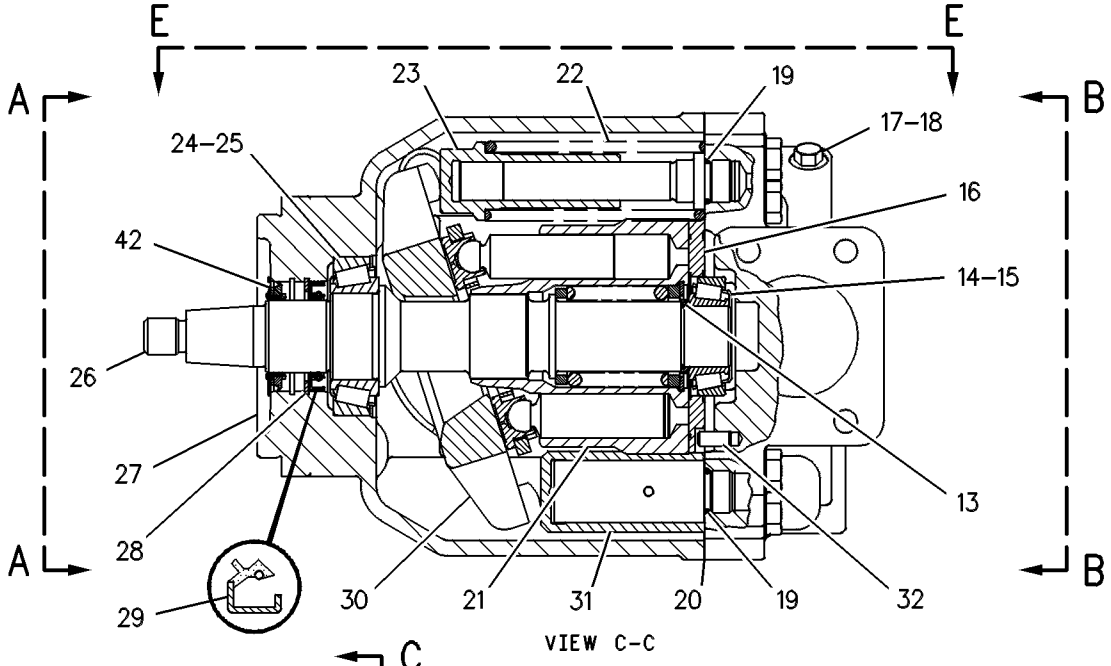

VIEW C-C

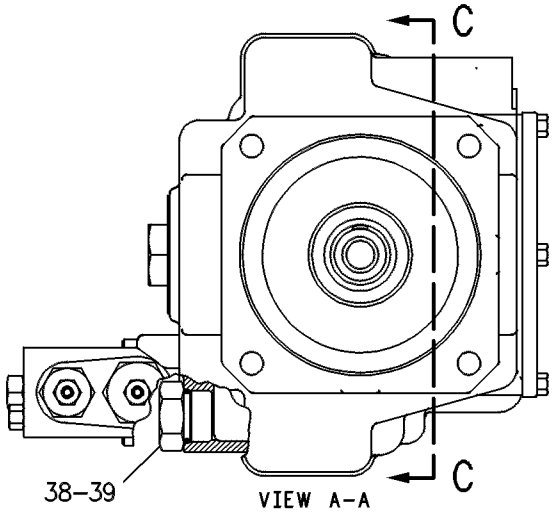

VIEW A-A

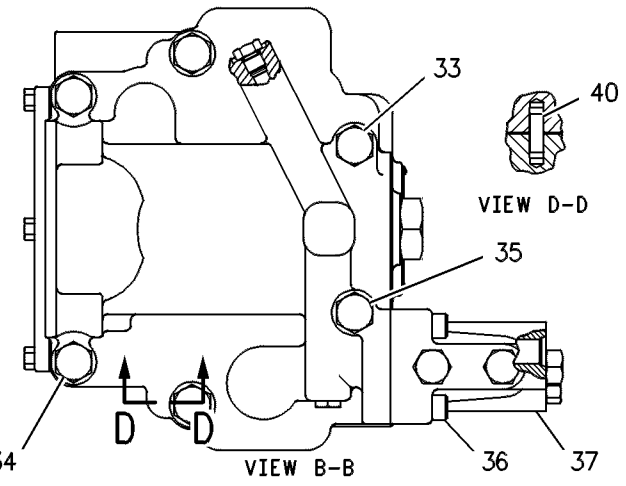

VIEW D-D

VIEW B-B

GRAPHIC #1 **<END>** g00108598

6E-6571 ROTATING GP-PUMP

S/N: JAP1-UP

PART OF 6E-3136 PUMP GP-PISTON

SMCS-5070 **i00131155**

NOTE	REF NO	GRAPHIC REF	PART NUMBER	QTY	PART NAME 1 2 3 4 5 6 (PRODUCT LEVEL)	SEE PAGE
	1	1	**6E-6604**	2	PLATE-SPACER	
	2	1	**6E-6605**	2	PLATE-LIMITER	
M	3	1	**3T-0849**	4	BOLT-SOCKET HEAD (M6X1X25-MM)	
	4	1	**9T-7755**	1	SPRING	
	5	1	**009-2069**	1	RING	
	6	1	**9T-7754**	1	GUIDE-OUTER	
	7	1	**9T-7757**	1	BARREL	
	8	1	**9T-7756**	1	GUIDE-INNER	
	9	1	**9T-7759**	1	PLATE-RETAINING	
	10	1	**9T-7761**	9	PISTON	

M-METRIC PART

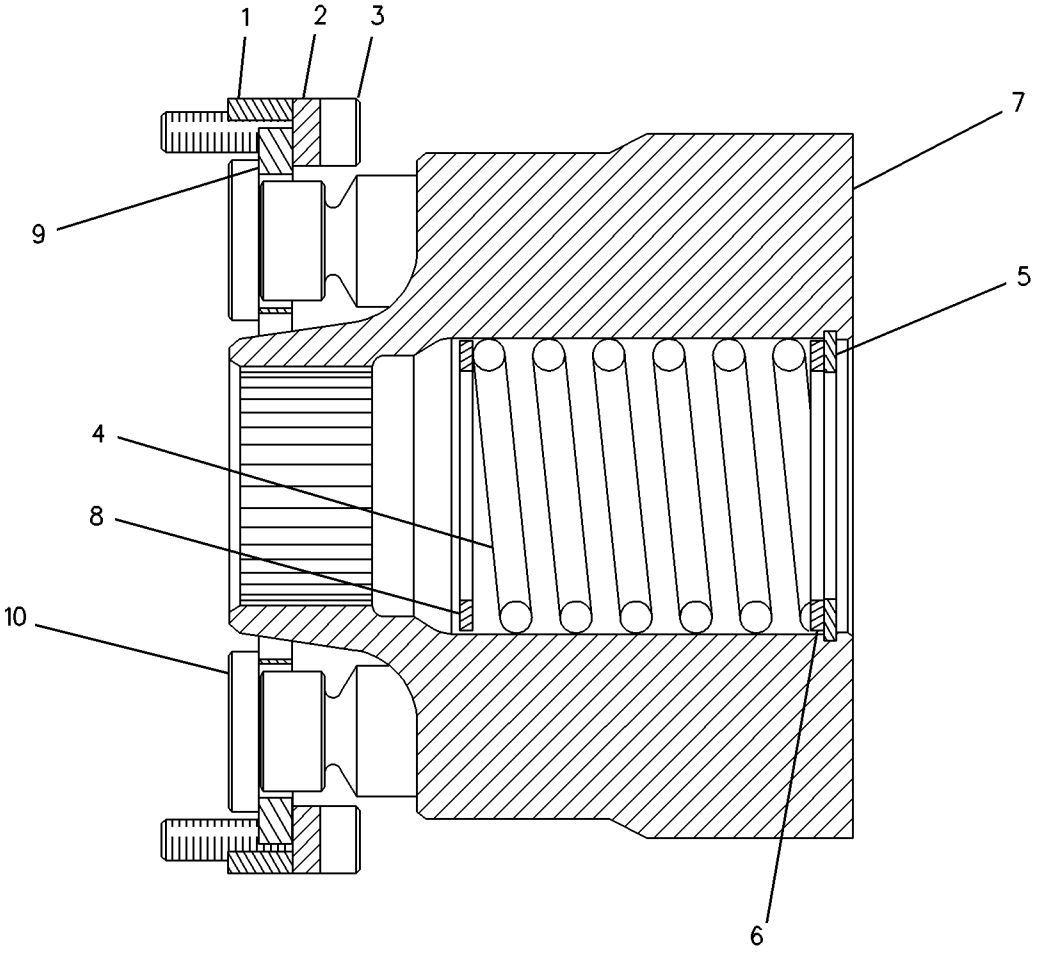

GRAPHIC #1 **<END>** g00083480

HYDRAULIC SYSTEM

100-3412 ROTATING GP-PUMP

S/N: JAP1-UP
PART OF 6E-3137 PUMP GP-PISTON
AN ATTACHMENT

SMCS-5070 **i00130809**

NOTE	REF NO	GRAPHIC REF	PART NUMBER	QTY	PART NAME 1 2 3 4 5 6 (PRODUCT LEVEL)	SEE PAGE
	1	1	**9T-7774**	1	BARREL	
	2	1	**3J-8500**	1	RING-RETAINING	
	3	1	**9T-7769**	1	GUIDE-OUTER	
M	4	1	**6V-5192**	4	BOLT-SOCKET HEAD (M8X1.25X30-MM)	
	5	1	**100-3410**	2	PLATE	
	6	1	**100-3411**	2	PLATE-SPACER	
	7	1	**9T-7765**	9	PISTON	
	8	1	**9T-7767**	1	PLATE-RETRACTION	
	9	1	**9T-7773**	1	GUIDE-INNER	
	10	1	**9T-7771**	1	SPRING	

M-METRIC PART

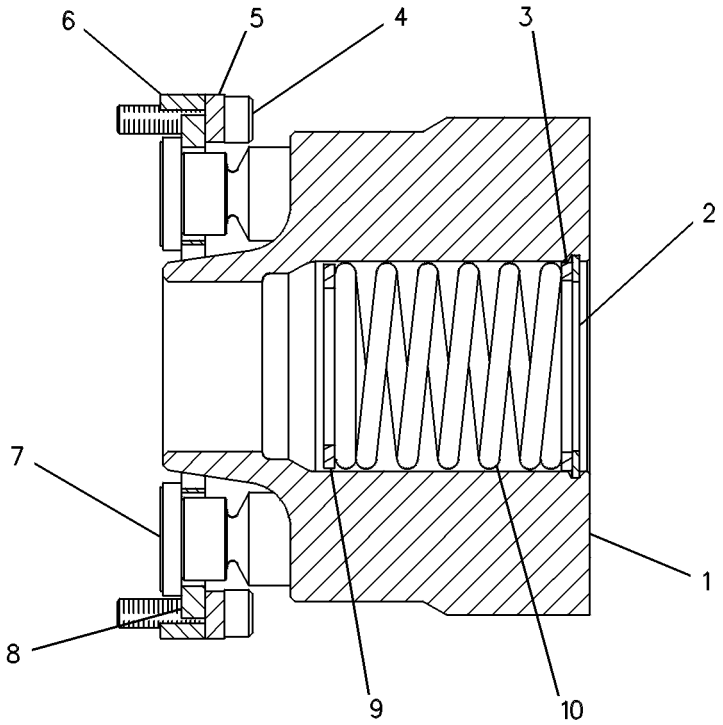

GRAPHIC #1 **<END>** g00084780

HYDRAULIC SYSTEM

293-8638 SHAFT GP-PUMP DRIVE

S/N: JAP1-UP

PART OF 348-3018 GENERAL AR

SMCS-3108 **i03539162**

NOTE	REF NO	GRAPHIC REF	PART NUMBER	QTY	PART NAME 1 2 3 4 5 6 (PRODUCT LEVEL)	SEE PAGE
	1	1	**7D-9267**	1	YOKE	
	2	1	**306-8891**	1	SLIP JOINT GP	
		1	**0L-0478**	8	BOLT (3/8-24X1.75-IN)	
		1	**5T-1362**	2	SPIDER & BEARING AS	
		1	**306-8893**	1	YOKE AS	
	3	1	**0L-0478**	4	BOLT (3/8-24X1.75-IN)	
	4	1	**0S-1571**	4	BOLT (3/8-16X1.75-IN)	

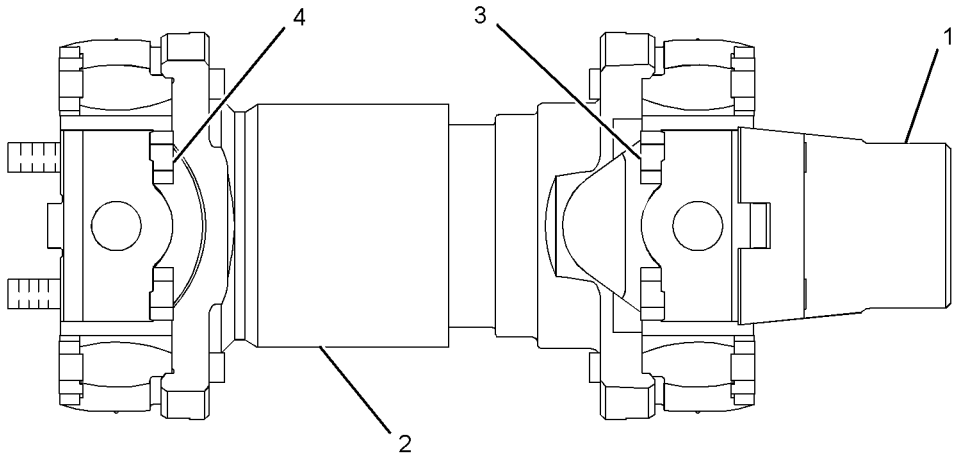

GRAPHIC #1 **<END>** g01922936

HYDRAULIC SYSTEM

100-3416 SWASHPLATE GP–VARIABLE

S/N: JAP1-UP
PART OF 6E-3137 PUMP GP-PISTON
AN ATTACHMENT

SMCS-5070 **i01093811**

NOTE	REF NO	GRAPHIC REF	PART NUMBER	QTY	PART NAME 1 2 3 4 5 6 (PRODUCT LEVEL)	SEE PAGE
	1	1	**139-0532**	2	BLOCK-STOP	
	2	1	**8F-7219**	2	SEAL-O-RING	

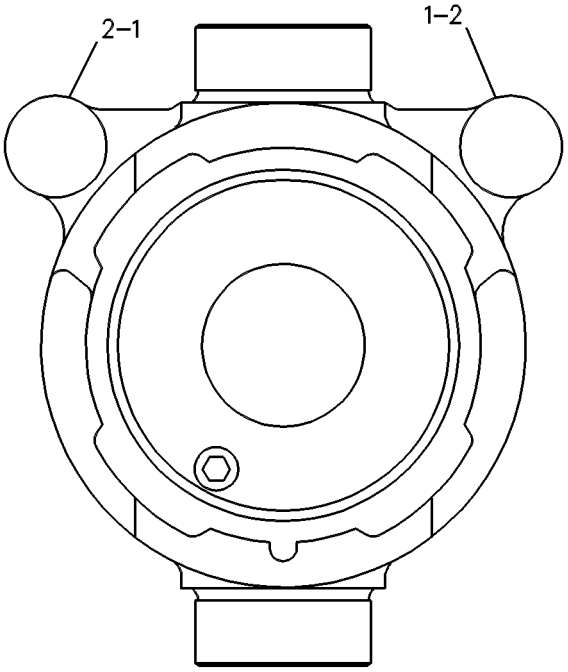

GRAPHIC #1 **<END>** g00088794

260-6502 SWIVEL GP

S/N: JAP1-UP

PART OF 106-4787, 117-3855 LINES GP-HYDRAULIC

ALSO AN ATTACHMENT

SMCS-5060 **i02322216**

NOTE	REF NO	GRAPHIC REF	PART NUMBER	QTY	PART NAME 1 2 3 4 5 6 (PRODUCT LEVEL)	SEE PAGE
B	1	1	**5J-1246**	6	SHIM (0.13-MM THK)	
	2	1	**8J-2331**	7	SEAL	
	3	1	**173-1008**	1	ROTOR	
	4	1	**173-1009**	1	RETAINER	
	5	1	**223-0580**	1	COVER	
	7	1	**260-6501**	1	BODY	
	8	1	**173-1007**	2	SEAL	
	9	1	**1P-3700**	4	SEAL-RECTANGULAR	
	10	1	**2H-3928**	7	SEAL-O-RING	
	11	1	**4J-9964**	2	SEAL	
	12	1	**5P-2566**	6	BOLT (1/2-13X1.5-IN)	
	13	1	**8T-4223**	4	WASHER-HARD (13.5X25.5X3-MM THK)	

B-USE AS REQUIRED

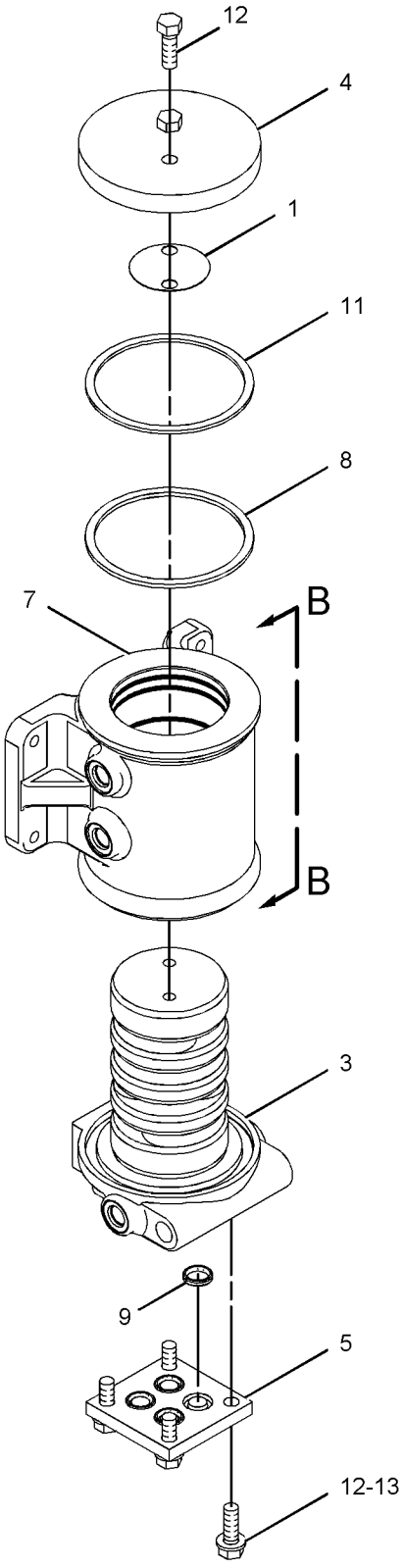

VIEW OF AREA A

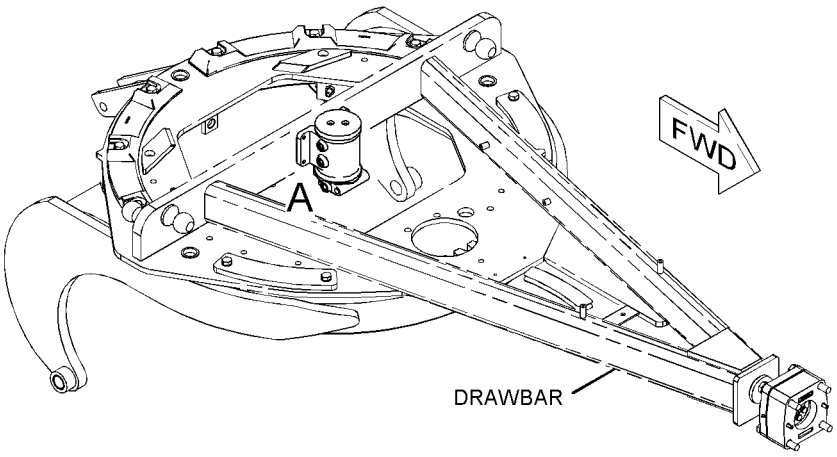

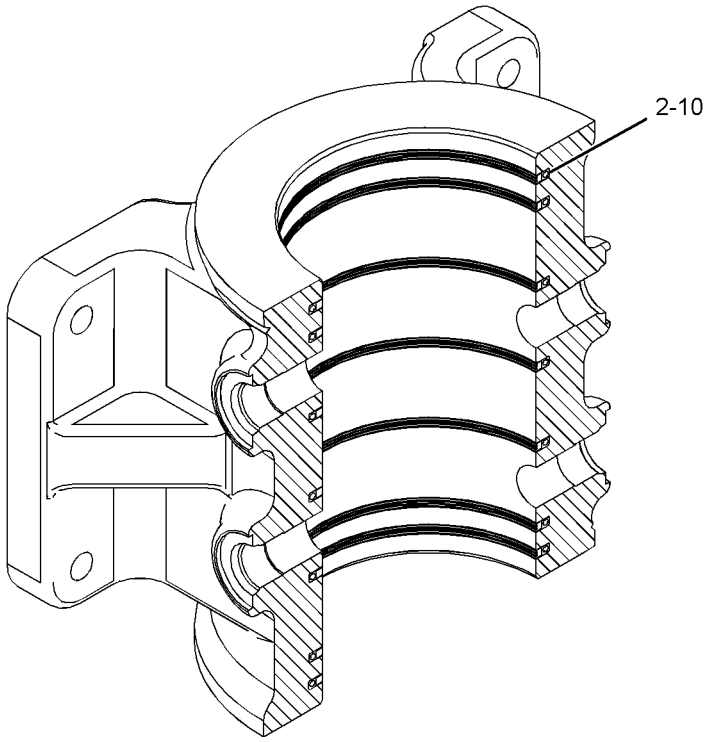

SECTION B-B

GRAPHIC #1 **<END>** g01142114

214-1984 TANK & FILTER GP-HYDRAULIC

S/N: JAP1-UP

PART OF 214-1983 TANK & MTG GP-HYDRAULIC

SMCS-4332, 5056, 5068 **i02938304**

NOTE	REF NO	GRAPHIC REF	PART NUMBER	QTY	PART NAME 1 2 3 4 5 6 (PRODUCT LEVEL)	SEE PAGE
	1	1	**4B-2913**	1	PIN-CLEVIS	
	2	1	**1R-0774**	1	FILTER ELEMENT AS-OIL (ADVANCED EFFICIENCY)	
	3	1	**2S-5100**	1	VALVE AS-MANUAL (HYDRAULIC TANK)	
	4	1	**3F-1547**	1	SEAL-O-RING	
	6	1	**4M-6921**	1	WASHER-SPRING	
	7	1	**5D-1911**	1	COVER-HYDRAULIC CAP	
	8	1	**226-2871**	1	ROD	
	9	1	**9J-1979**	1	RETAINER AS	
	12	1	**9J-3047**	1	STRAINER (HYDRAULIC)	
	13	1	**9M-7394**	1	LEVER	
	14	1	**141-9661**	1	SPACER (20X128X6-MM THK)	
	15	1	**226-2870**	1	CAP AS (HYDRAULIC TANK)	
	16	1	**214-1982**	1	TANK AS	
	17	1	**217-2661**	1	GAUGE-SIGHT (HYDRAULIC)	
	18	1	**086-0507**	1	PIN	
	19	1	**1L-5072**	1	DOWEL	
	20	1	**2D-4202**	1	PLATE	
	21	1	**2J-7761**	1	RING-RETAINING	
	22	1	**3K-6060**	1	LOCKNUT (3/8-16-THD)	
	23	1	**3G-0361**	1	GASKET (HYDRAULIC TANK FILL CAP)	
	25	1	**7D-1195**	1	SEAL-O-RING	
	26	1	**7H-1447**	1	CAP-FILLER (HYDRAULIC TANK)	
	27	1	**8T-2275**	1	BALL	
	28	1	**8T-4121**	4	WASHER-HARD (11X21X2.5-MM THK)	
M	29	1	**8T-4195**	4	BOLT (M10X1.5X30-MM)	
	30	1	**9H-6454**	1	GASKET	
	31	1	**3B-4610**	1	PIN-COTTER	

M-METRIC PART

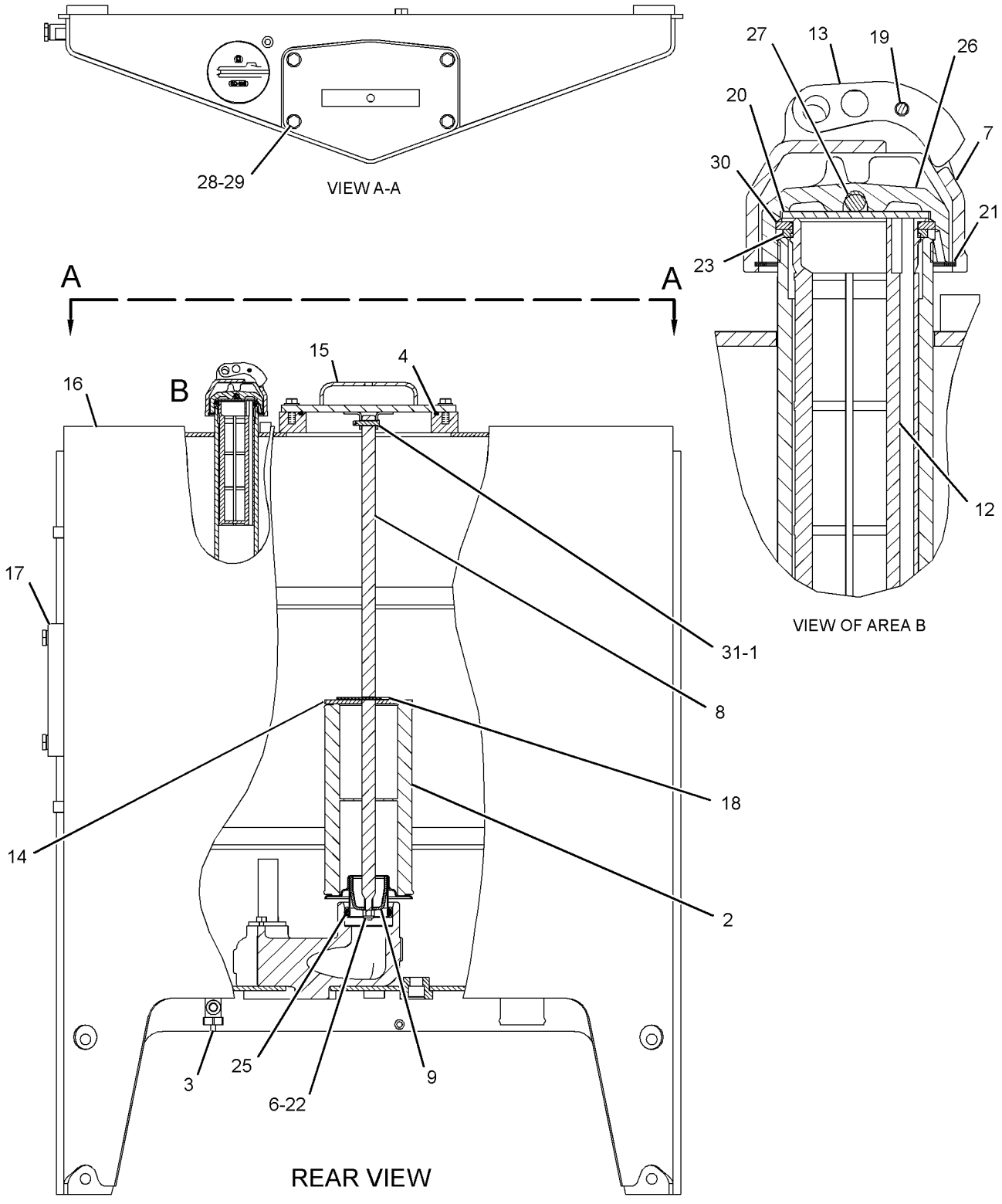

GRAPHIC #1 **<END>** g01514468

HYDRAULIC SYSTEM

214-1983 TANK & MTG GP-HYDRAULIC

S/N: JAP1-UP

PART OF 348-3018 GENERAL AR

SMCS-4332, 5056, 5068 **i03501061**

NOTE	REF NO	GRAPHIC REF	PART NUMBER	QTY	PART NAME 1 2 3 4 5 6 (PRODUCT LEVEL)	SEE PAGE
Y	1	1	*214-1984*	1	TANK & FILTER GP-HYDRAULIC	435
	2	1	**4D-7794**	3	CLIP	
	3	1	**246-2641**	1	PADLOCK GP	
		1	**5P-8500**	1	KEY	
	4	1	**7X-0325**	4	BOLT (1/2-13X2.5-IN)	
	5	1	**8T-4121**	3	WASHER-HARD (11X21X2.5-MM THK)	
M	6	1	**8T-4191**	3	BOLT (M10X1.5X16-MM)	
	7	1	**8T-4223**	4	WASHER-HARD (13.5X25.5X3-MM THK)	

M-METRIC PART
Y-SEPARATE ILLUSTRATION

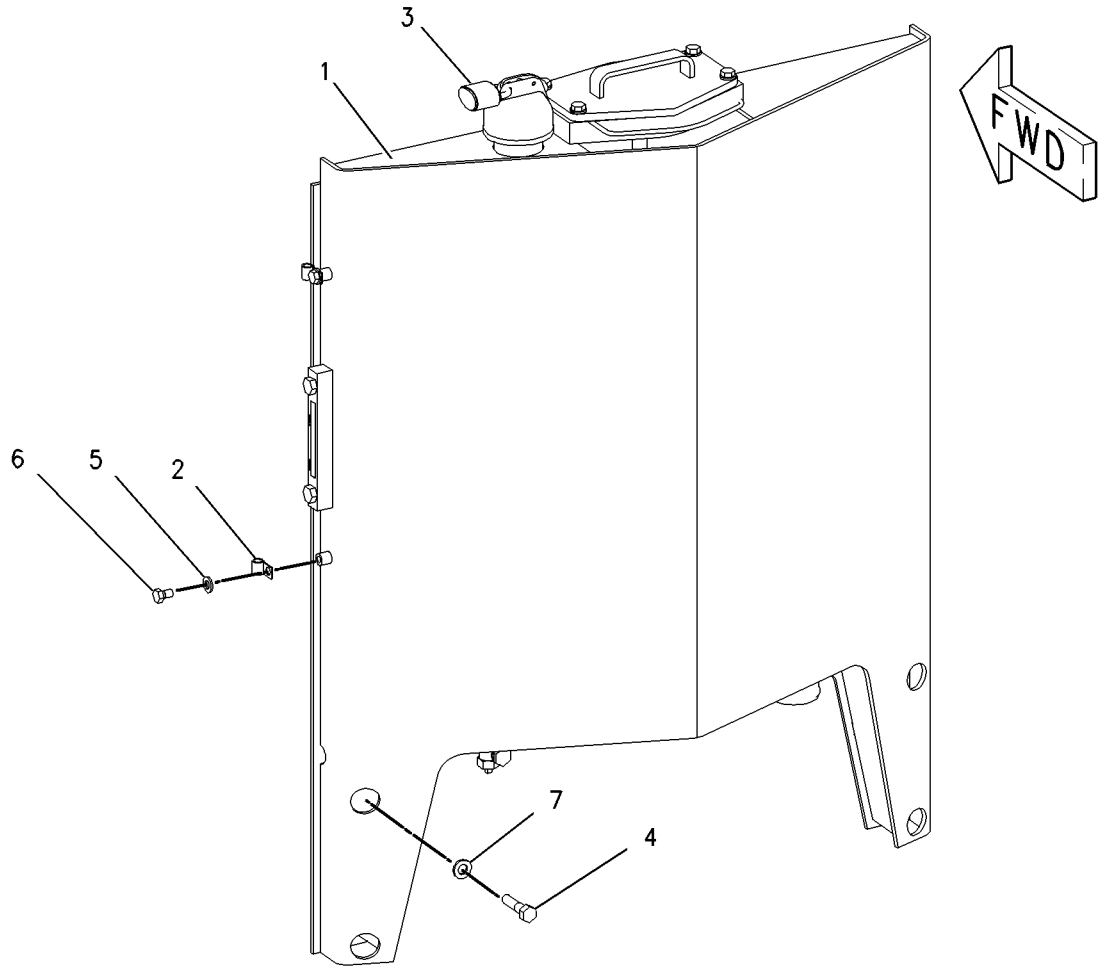

GRAPHIC #1 **<END>** g00894365

HYDRAULIC SYSTEM

348-3301 VALVE & LINKAGE GP—4-BANK, RH; 3-BANK, LH

S/N: JAP1-UP

PART OF 348-3018 GENERAL AR

SMCS-5051, 5063 **i03645008**

NOTE	REF NO	GRAPHIC REF	PART NUMBER	QTY	PART NAME 1 2 3 4 5 6 (PRODUCT LEVEL)	SEE PAGE
Y	1	1	**124-3325**	1	VALVE GP-BANK 4 (RH)	458
Y	2	1	**104-8673**	1	VALVE GP-BANK 3 (LH)	457
	3	1	**8X-5498**	2	RETAINER	
	4	1	**101-2457**	1	LEVER (ARTICULATION)	
	5	1	**8D-5634**	1	LEVER (CENTERSHIFT)	
	6	1	**8X-4277**	7	ROD AS	
		1	**6V-8186**	1	NUT-FULL (5/16-24-THD)	
		1	**7H-3641**	1	END-ROD (5/16-24-THD)	
		1	**8L-8598**	1	ROD END	
		1	**146-0705**	1	ROD	
	7	1	**8D-5633**	1	LEVER (WHEEL LEAN)	
	8	1	**8D-8852**	1	SPACER (0.78X1.5X1.344-IN THK)	
	9	1	**137-4515**	2	BUSHING	
	10	1	**8D-5640**	10	BEARING	
B	11	1	**8D-5636**	4	SHIM (0.254-MM THK)	
B	12	1	**8D-5637**	4	SHIM (0.762-MM THK)	
	13	1	**6L-1962**	7	NUT-JAM (3/8-24-THD)	
	14	1	**8T-9043**	14	BOLT (5/16-18X0.875-IN)	
	15	1	**3F-9556**	14	LOCKWASHER	
	16	1	**9B-7237**	2	BOLT (3/8-16X1.25-IN)	
	17	1	**8D-5641**	8	BEARING	
	18	1	**2G-6757**	1	KNOB-BLADE LIFT (LH)	
M	19	1	**8T-4136**	4	BOLT (M10X1.5X25-MM)	
	20	1	**2G-6749**	1	KNOB-SIDESHIFT	
	21	1	**8D-5632**	2	LEVER (BLADE LIFT, RH)	
	22	1	**2G-6751**	1	KNOB-CIRCLE DRIVE	
	23	1	**2G-6748**	1	KNOB-BLADE LIFT	
	24	1	**2G-6756**	1	KNOB-WHEEL LEAN	
	25	1	**2G-6752**	1	KNOB-ARTICULATION	
	26	1	**2G-6755**	1	KNOB-CENTERSHIFT	
	27	1	**5P-1075**	2	WASHER-HARD (10.2X22.5X3-MM THK)	
	28	1	**9M-1853**	6	MOUNTING	
	29	1	**5P-1076**	6	WASHER-HARD (13.5X30X4-MM THK)	
	30	1	**104-7740**	1	PLATE AS (LH)	
		1	**1F-0748**	2	NUT-WELD (1/2-13-THD)	
	31	1	**104-7419**	1	PLATE AS (RH)	
		1	**1F-0748**	2	NUT-WELD (1/2-13-THD)	
	32	1	**104-7429**	2	PLATE	
	33	1	**137-4516**	1	SHAFT	
	34	1	**8T-4121**	8	WASHER-HARD (11X21X2.5-MM THK)	
	35	1	**6B-0933**	4	SPACER (10.31X19.05X6.35-MM THK)	
	36	1	**5P-2424**	6	BOLT (1/2-13X2.25-IN)	
	37	1	**6V-8188**	2	NUT (1/2-13-THD)	
M	38	1	**8T-4195**	4	BOLT (M10X1.5X30-MM)	
	39	1	**8F-6437**	6	WASHER (13.5X50.8X4.76-MM THK)	
	40	1	**8D-5633**	1	LEVER (SIDESHIFT)	
	41	1	**8D-5632**	1	LEVER (CIRCLE DRIVE)	
	42	1	**8D-5634**	1	LEVER (BLADE LIFT, LH)	

B-USE AS REQUIRED
M-METRIC PART
Y-SEPARATE ILLUSTRATION

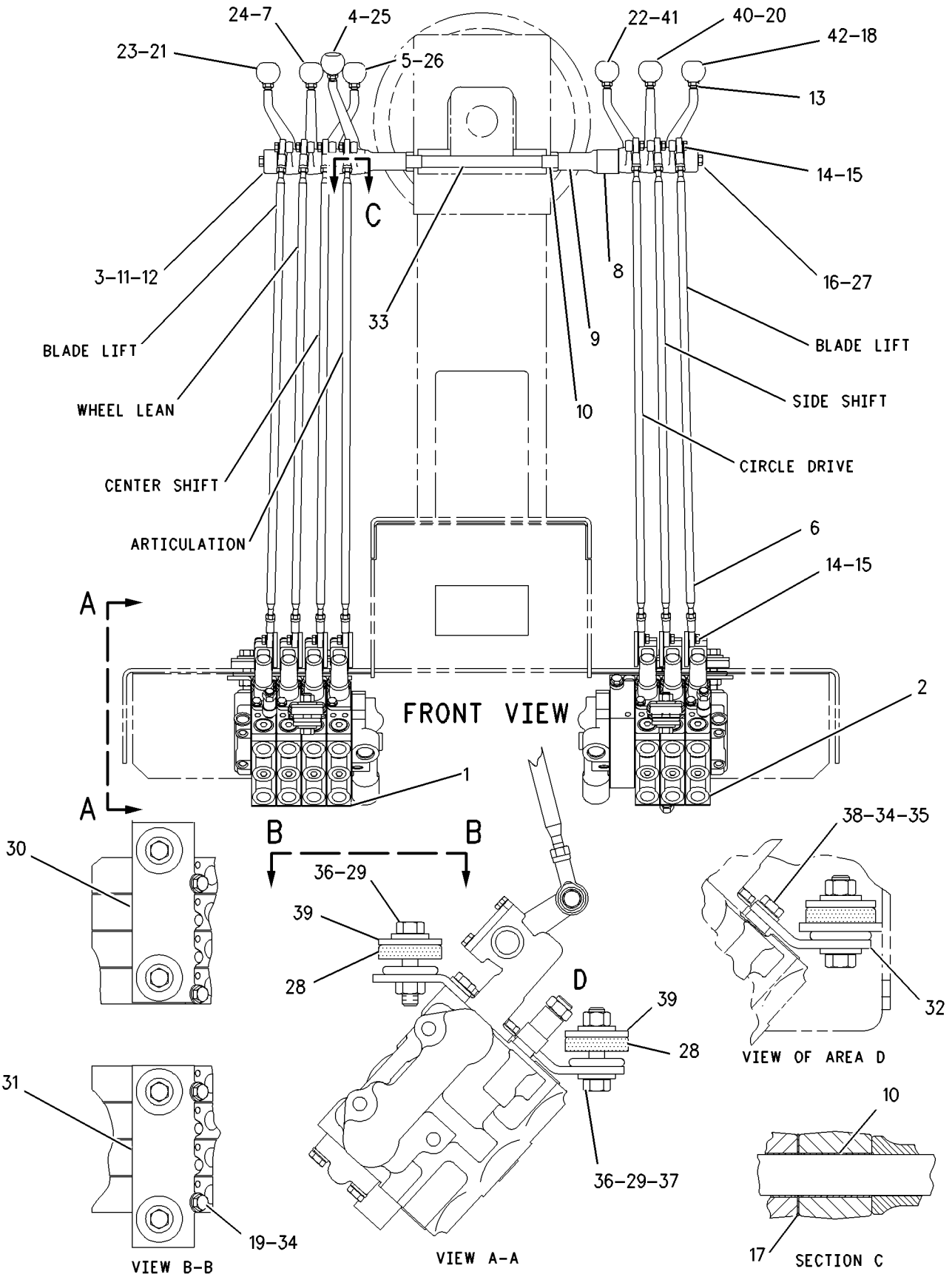

GRAPHIC #1

<END>

g00721500

HYDRAULIC SYSTEM

348-7027 VALVE & LINKAGE GP—4-BANK, RH; 5-BANK, LH

S/N: JAP1-UP
AN ATTACHMENT

SMCS-5051, 5063 **i03643532**

NOTE	REF NO	GRAPHIC REF	PART NUMBER	QTY	PART NAME 1 2 3 4 5 6 (PRODUCT LEVEL)	SEE PAGE
Y	1	1	**124-3325**	1	VALVE GP-BANK 4 (RH)	458
Y	2	1	**124-3328**	1	VALVE GP-BANK 5 (LH)	463
	3	1	**8X-5499**	2	RETAINER	
	4	1	**101-2457**	1	LEVER (ARTICULATION)	
	4A	1	**101-2457**	1	LEVER (SCARIFIER)	
	5	1	**8D-5634**	1	LEVER (CENTER SHIFT)	
	5A	1	**8D-5634**	1	LEVER (BLADE LIFT-LH)	
	6	1	*8X-4277*	9	ROD AS	
		1	**6V-8186**	1	NUT-FULL (5/16-24-THD)	
		1	**7H-3641**	1	END-ROD (5/16-24-THD)	
		1	**8L-8598**	1	ROD END	
		1	**146-0705**	1	ROD	
	7	1	**8D-5633**	1	LEVER (WHEEL LEAN)	
	7A	1	**8D-5633**	1	LEVER (SIDE SHIFT)	
	8	1	**101-2458**	1	LEVER (BLADE TIP)	
	9	1	**137-4515**	2	BUSHING	
	10	1	**8D-5640**	11	BEARING	
B	11	1	**8D-5636**	4	SHIM (0.254-MM THK)	
B	12	1	**8D-5637**	4	SHIM (0.762-MM THK)	
	13	1	**6L-1962**	9	NUT-JAM (3/8-24-THD)	
	14	1	**8T-9043**	18	BOLT (5/16-18X0.875-IN)	
	15	1	**3F-9556**	18	LOCKWASHER	
	16	1	**9B-7237**	2	BOLT (3/8-16X1.25-IN)	
	17	1	**8D-5641**	9	BEARING	
	18	1	**2G-6757**	1	KNOB-BLADE LIFT (LH)	
M	19	1	**8T-4136**	4	BOLT (M10X1.5X25-MM)	
	20	1	**2G-6749**	1	KNOB-SIDESHIFT	
	21	1	**2G-6747**	1	KNOB-BLADE TIP	
	22	1	**8D-5632**	1	LEVER (BLADE LIFT-RH)	
	22A	1	**8D-5632**	1	LEVER (CIRCLE DRIVE)	
	23	1	**2G-6751**	1	KNOB-CIRCLE DRIVE	
	24	1	**2G-6748**	1	KNOB-BLADE LIFT (RH)	
	25	1	**2G-6756**	1	KNOB-WHEEL LEAN	
	26	1	**2G-6752**	1	KNOB-ARTICULATION	
	27	1	**2G-6755**	1	KNOB-CENTERSHIFT	
	28	1	**5P-1075**	2	WASHER-HARD (10.2X22.5X3-MM THK)	
	29	1	**9M-1853**	6	MOUNTING	
	30	1	**5P-1076**	6	WASHER-HARD (13.5X30X4-MM THK)	
	31	1	**104-7740**	1	PLATE AS (LH)	
		1	**1F-0748**	2	NUT-WELD (1/2-13-THD)	
	32	1	**104-7419**	1	PLATE AS (RH)	
		1	**1F-0748**	2	NUT-WELD (1/2-13-THD)	
	33	1	**104-7429**	2	PLATE	
	34	1	**137-4516**	1	SHAFT	
	35	1	**8T-4121**	8	WASHER-HARD (11X21X2.5-MM THK)	
	36	1	**6B-0933**	4	SPACER (10.31X19.05X6.35-MM THK)	
	37	1	**5P-2424**	6	BOLT (1/2-13X2.25-IN)	
	38	1	**6V-8188**	2	NUT (1/2-13-THD)	
M	39	1	**8T-4195**	4	BOLT (M10X1.5X30-MM)	
	40	1	**2G-6753**	1	KNOB-SCARIFIER	
	41	1	**8F-6437**	6	WASHER (13.5X50.8X4.76-MM THK)	

B-USE AS REQUIRED
M-METRIC PART
Y-SEPARATE ILLUSTRATION

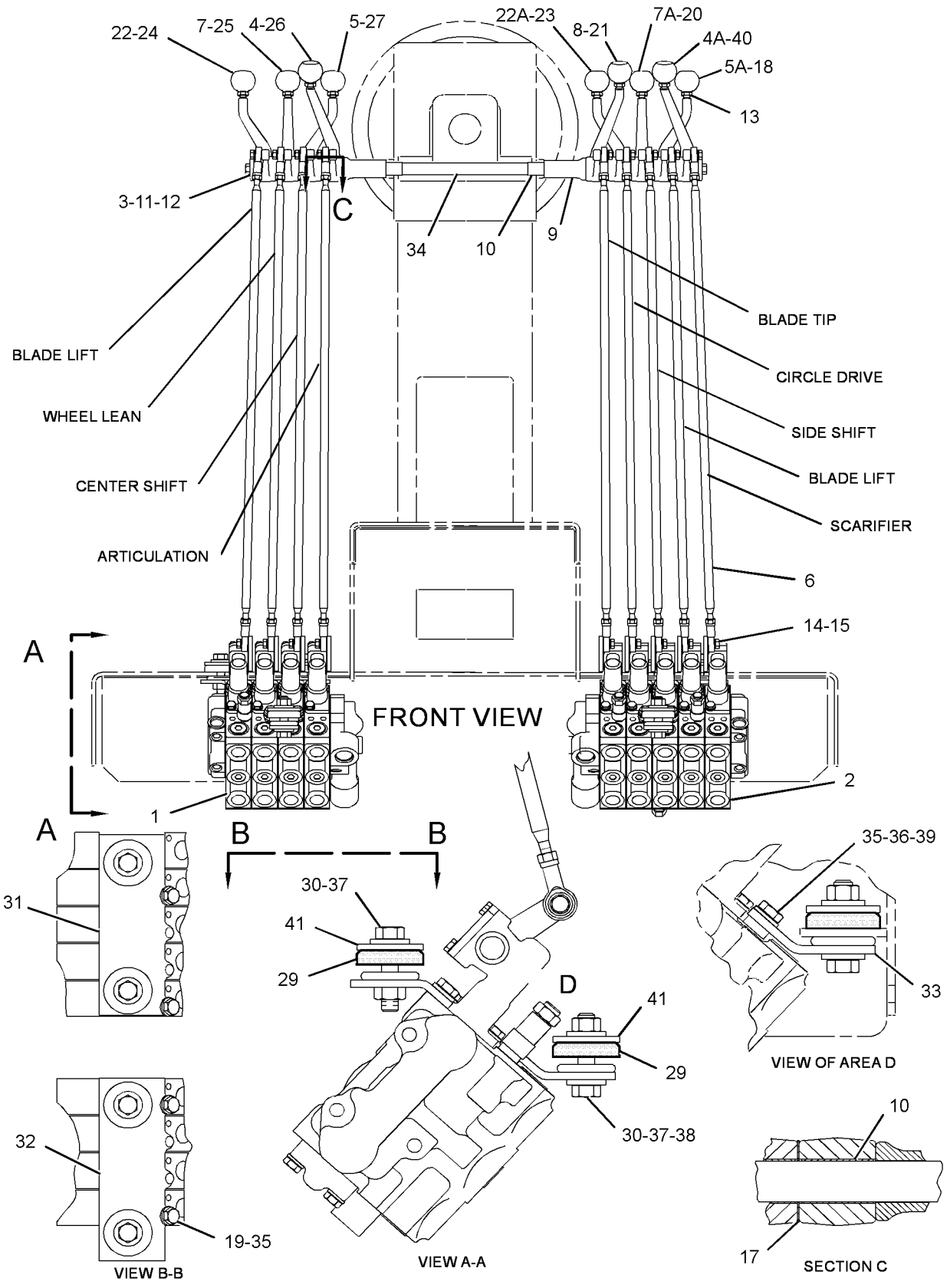

GRAPHIC #1 **<END>** g01965413

HYDRAULIC SYSTEM

348-7028 VALVE & LINKAGE GP—5-BANK, RH, LH

S/N: JAP1-UP

AN ATTACHMENT

SMCS-5051, 5063 **i03643543**

NOTE	REF NO	GRAPHIC REF	PART NUMBER	QTY	PART NAME 1 2 3 4 5 6 (PRODUCT LEVEL)	SEE PAGE
	1	1	**8X-5499**	2	RETAINER	
	2	1	**101-2457**	1	LEVER (ARTICULATION)	
	2A	1	**101-2457**	1	LEVER (SCARIFIER)	
	3	1	**8D-5634**	1	LEVER (CENTER SHIFT)	
	3A	1	**8D-5634**	1	LEVER (BLADE LIFT-LH)	
	4	1	**4L-6459**	1	BOLT (3/8-16X2.5-IN)	
	5	1	**8W-0456**	1	SHAFT	
	6	1	*8X-4277*	10	ROD AS	
					(EACH INCLUDES)	
		1	**6V-8186**	1	NUT-FULL (5/16-24-THD)	
		1	**7H-3641**	1	END-ROD (5/16-24-THD)	
		1	**8L-8598**	1	ROD END	
		1	**146-0705**	1	ROD	
	7	1	**8D-5633**	1	LEVER (WHEEL LEAN)	
	7A	1	**8D-5633**	1	LEVER (SIDE SHIFT)	
	8	1	**101-2458**	1	LEVER (PLOW & BULLDOZER LIFT)	
	8A	1	**101-2458**	1	LEVER (BLADE TIP)	
	9	1	**137-4515**	2	BUSHING	
	10	1	**8D-5640**	12	BEARING	
B	11	1	**8D-5636**	4	SHIM (0.254-MM THK)	
B	12	1	**8D-5637**	4	SHIM (0.762-MM THK)	
	13	1	**6L-1962**	10	NUT-JAM (3/8-24-THD)	
	14	1	**8T-9043**	20	BOLT (5/16-18X0.875-IN)	
	15	1	**3F-9556**	20	LOCKWASHER	
	16	1	**9B-7237**	1	BOLT (3/8-16X1.25-IN)	
	17	1	**8D-5641**	10	BEARING	
	18	1	**2G-6757**	1	KNOB-BLADE LIFT (LH)	
M	19	1	**8T-4136**	4	BOLT (M10X1.5X25-MM)	
	20	1	**2G-6749**	1	KNOB-SIDESHIFT	
	21	1	**2G-6747**	1	KNOB-BLADE TIP	
	22	1	**8D-5632**	1	LEVER (BLADE LIFT-RH)	
	22A	1	**8D-5632**	1	LEVER (CENTER SHIFT)	
	23	1	**2G-6751**	1	KNOB-CIRCLE DRIVE	
	24	1	**2G-6748**	1	KNOB-BLADE LIFT (RH)	
	25	1	**2G-6756**	1	KNOB-WHEEL LEAN	
	26	1	**2G-6752**	1	KNOB-ARTICULATION	
	27	1	**2G-6755**	1	KNOB-CENTERSHIFT	
	28	1	**5P-1075**	2	WASHER-HARD (10.2X22.5X3-MM THK)	
	29	1	**9M-1853**	6	MOUNTING	
	30	1	**5P-1076**	6	WASHER-HARD (13.5X30X4-MM THK)	
	31	1	**104-7740**	1	PLATE AS (LH)	
		1	**1F-0748**	2	NUT-WELD (1/2-13-THD)	
	32	1	**104-7419**	1	PLATE AS (RH)	
		1	**1F-0748**	2	NUT-WELD (1/2-13-THD)	
	33	1	**104-7429**	2	PLATE	
	34	1	**137-4516**	1	SHAFT	
	35	1	**2G-6753**	1	KNOB-SCARIFIER	
	36	1	**2G-6754**	1	KNOB (BULLDOZER LIFT, PLOW)	
	37	1	**6V-8188**	2	NUT (1/2-13-THD)	
M	38	1	**8T-4195**	4	BOLT (M10X1.5X30-MM)	
	39	1	**8T-4121**	8	WASHER-HARD (11X21X2.5-MM THK)	
	40	1	**6B-0933**	4	SPACER (10.31X19.05X6.35-MM THK)	
	41	1	**8F-6437**	6	WASHER (13.5X50.8X4.76-MM THK)	
	42	1	**5P-2424**	6	BOLT (1/2-13X2.25-IN)	
Y	43	1	**124-3326**	1	VALVE GP-BANK 5 (RH)	462
Y	44	1	**124-3328**	1	VALVE GP-BANK 5 (LH)	463

348-7028 **VALVE & LINKAGE GP** *(contd.)* **i03643543**

B-USE AS REQUIRED
M-METRIC PART
Y-SEPARATE ILLUSTRATION

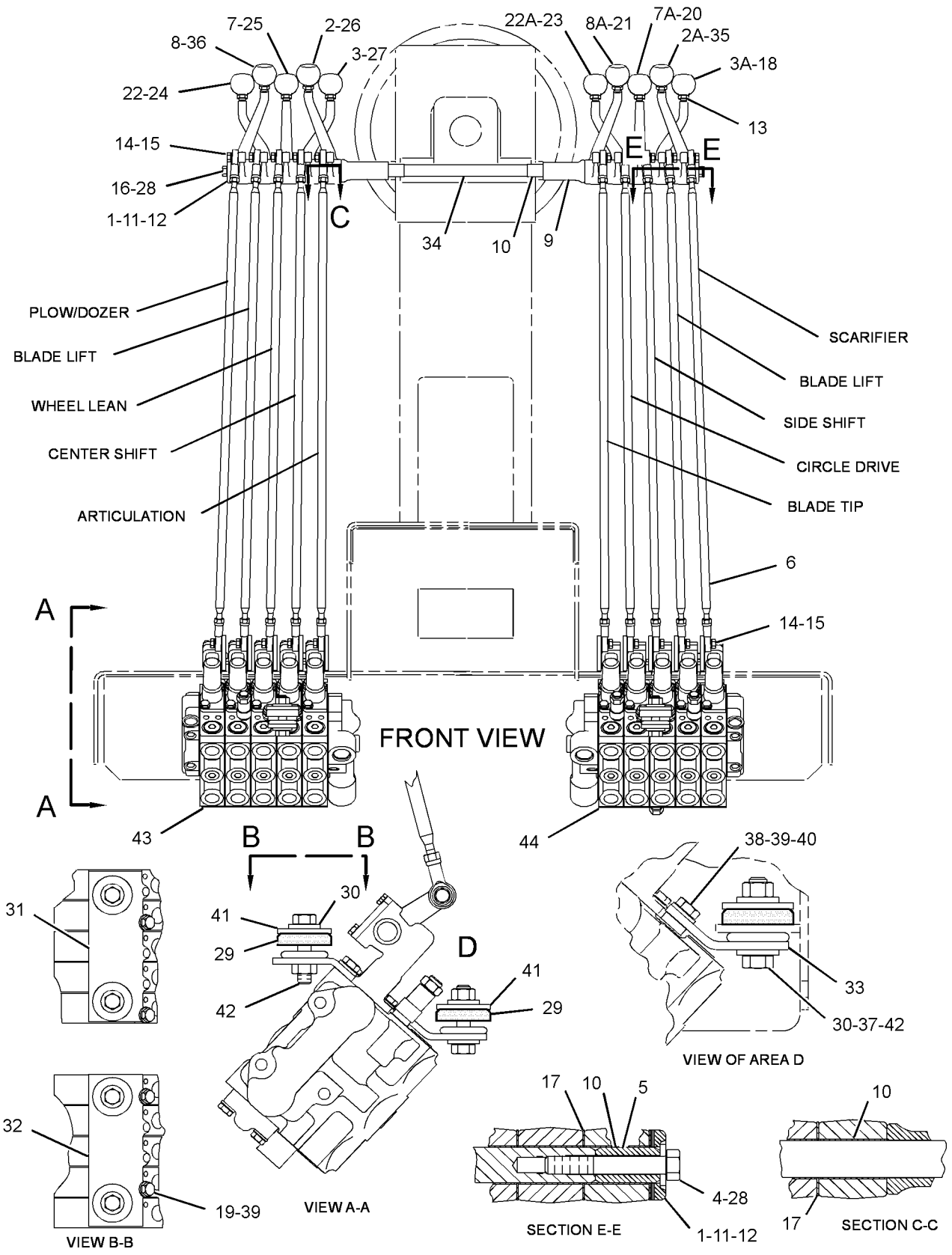

GRAPHIC #1 **<END>** g01965573

HYDRAULIC SYSTEM

348-7030 VALVE & LINKAGE GP—4-BANK, RH, LH

S/N: JAP1-UP
AN ATTACHMENT

SMCS-5051, 5063 **i03643557**

NOTE	REF NO	GRAPHIC REF	PART NUMBER	QTY	PART NAME 1 2 3 4 5 6 (PRODUCT LEVEL)	SEE PAGE
Y	1	1	**124-3325**	1	VALVE GP-BANK 4 (RH)	458
Y	2	1	**130-7754**	1	VALVE GP-BANK 4 (LH)	459
	3	1	**8X-5499**	2	RETAINER	
	4	1	**101-2457**	1	LEVER (ARTICULATION)	
	4A	1	**101-2457**	1	LEVER (SCARIFIER)	
	5	1	**8D-5634**	1	LEVER (CENTERSHIFT)	
	5A	1	**8D-5634**	1	LEVER (BLADE LIFT, LH)	
	6	1	*8X-4277*	8	ROD AS	
					(EACH INCLUDES)	
		1	**6V-8186**	1	NUT-FULL (5/16-24-THD)	
		1	**7H-3641**	1	END-ROD (5/16-24-THD)	
		1	**8L-8598**	1	ROD END	
		1	**146-0705**	1	ROD	
	7	1	**8D-5633**	1	LEVER (WHEEL LEAN)	
	7A	1	**8D-5633**	1	LEVER (SIDESHIFT)	
	8	1	**8D-8852**	1	SPACER (0.78X1.5X1.344-IN THK)	
	9	1	**137-4515**	2	BUSHING	
	10	1	**8D-5640**	11	BEARING	
B	11	1	**8D-5636**	4	SHIM (0.254-MM THK)	
B	12	1	**8D-5637**	4	SHIM (0.762-MM THK)	
	13	1	**6L-1962**	8	NUT-JAM (3/8-24-THD)	
	14	1	**8T-9043**	16	BOLT (5/16-18X0.875-IN)	
	15	1	**3F-9556**	16	LOCKWASHER	
	16	1	**9B-7237**	2	BOLT (3/8-16X1.25-IN)	
	17	1	**8D-5641**	9	BEARING	
	18	1	**2G-6757**	1	KNOB-BLADE LIFT	
M	19	1	**8T-4136**	4	BOLT (M10X1.5X25-MM)	
	20	1	**2G-6749**	1	KNOB-SIDESHIFT	
	21	1	**8D-5632**	1	LEVER (BLADE LIFT, RH)	
	21A	1	**8D-5632**	1	LEVER (CIRCLE DRIVE)	
	22	1	**2G-6751**	1	KNOB-CIRCLE DRIVE	
	23	1	**2G-6748**	1	KNOB-BLADE LIFT	
	24	1	**2G-6756**	1	KNOB-WHEEL LEAN	
	25	1	**2G-6752**	1	KNOB-ARTICULATION	
	26	1	**2G-6755**	1	KNOB-CENTERSHIFT	
	27	1	**5P-1075**	2	WASHER-HARD (10.2X22.5X3-MM THK)	
	28	1	**9M-1853**	6	MOUNTING	
	29	1	**5P-1076**	6	WASHER-HARD (13.5X30X4-MM THK)	
	30	1	**104-7740**	1	PLATE AS (LH)	
		1	**1F-0748**	2	NUT-WELD (1/2-13-THD)	
	31	1	**104-7419**	1	PLATE AS (RH)	
		1	**1F-0748**	2	NUT-WELD (1/2-13-THD)	
	32	1	**104-7429**	2	PLATE	
	33	1	**137-4516**	1	SHAFT	
	34	1	**8T-4121**	8	WASHER-HARD (11X21X2.5-MM THK)	
	35	1	**6B-0933**	4	SPACER (10.31X19.05X6.35-MM THK)	
	36	1	**5P-2424**	6	BOLT (1/2-13X2.25-IN)	
	37	1	**6V-8188**	2	NUT (1/2-13-THD)	
M	38	1	**8T-4195**	4	BOLT (M10X1.5X30-MM)	
	39	1	**2G-6753**	1	KNOB-SCARIFIER	
	40	1	**8F-6437**	6	WASHER (13.5X50.8X4.76-MM THK)	

B-USE AS REQUIRED
M-METRIC PART
Y-SEPARATE ILLUSTRATION

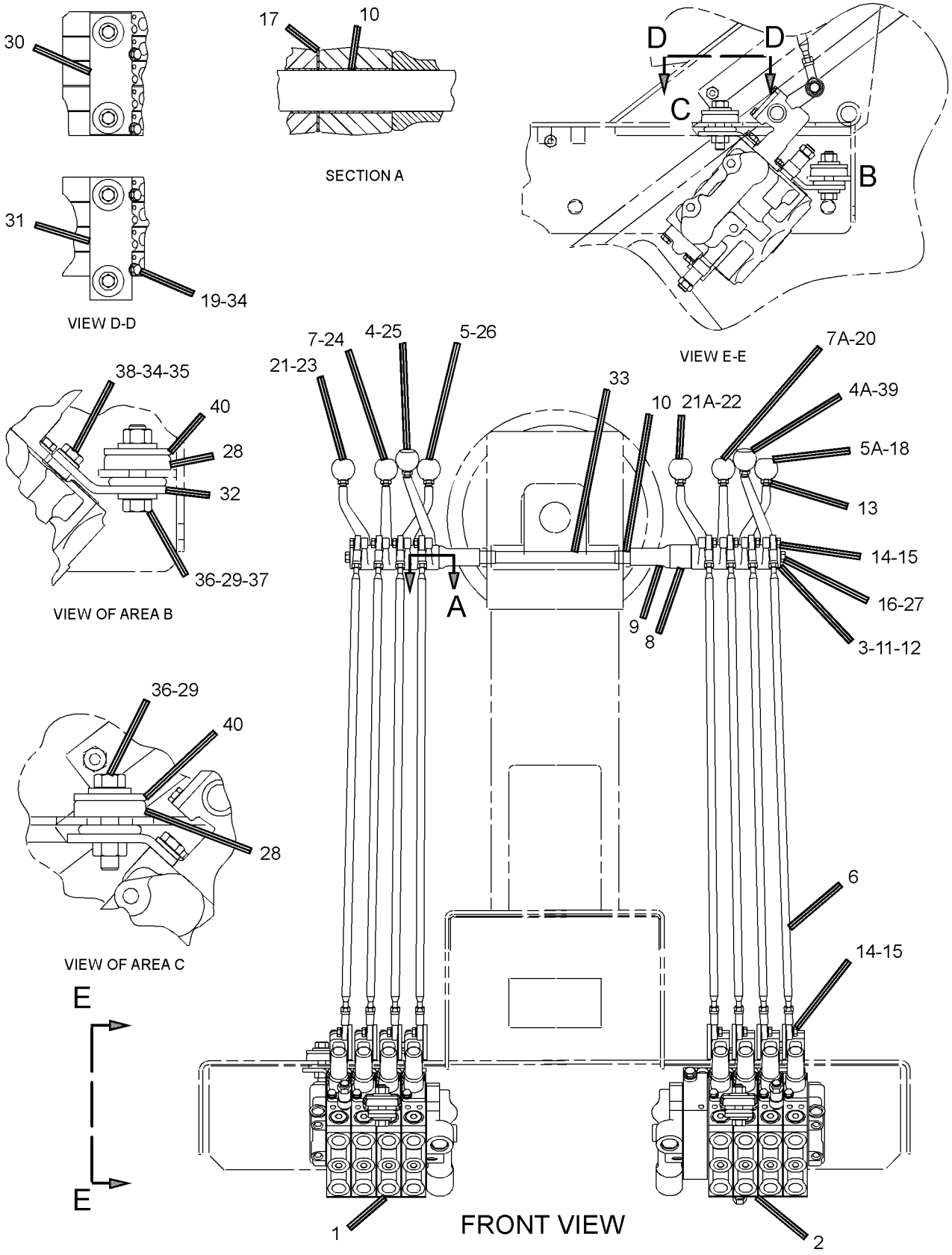

GRAPHIC #1 **<END>** g01963775

HYDRAULIC SYSTEM

348-7031 VALVE & LINKAGE GP—4-BANK, RH; 5-BANK, LH

S/N: JAP1-UP

AN ATTACHMENT

SMCS-5051, 5063 **i03643562**

NOTE	REF NO	GRAPHIC REF	PART NUMBER	QTY	PART NAME 1 2 3 4 5 6 (PRODUCT LEVEL)	SEE PAGE
	1	1	**3F-9556**	18	LOCKWASHER	
	2	2	**6B-0933**	4	SPACER (10.31X19.05X6.35-MM THK)	
	3	1	**6L-1962**	9	NUT-JAM (3/8-24-THD)	
	4	1	**8D-5632**	1	LEVER (BLADE LIFT, RH)	
	4A	1	**8D-5632**	1	LEVER (CIRCLE DRIVE)	
	5	1	**8D-5633**	1	LEVER (WHEEL LEAN)	
	5A	1	**8D-5633**	1	LEVER (SIDESHIFT)	
	6	1	**8D-5634**	1	LEVER (CENTERSHIFT)	
	6A	1	**8D-5634**	1	LEVER (BLADE LIFT, LH)	
B	7	2	**8D-5636**	4	SHIM (0.254-MM THK)	
B	8	2	**8D-5637**	4	SHIM (0.762-MM THK)	
	9	1,2	**8D-5640**	11	BEARING	
	10	2	**8D-5641**	9	BEARING	
	11	1	*8X-4277*	9	ROD AS	
					(EACH INCLUDES)	
		1	**6V-8186**	2	NUT-FULL (5/16-24-THD)	
		1	**7H-3641**	1	END-ROD (5/16-24-THD)	
		1	**8L-8598**	1	ROD END	
		1	**146-0705**	1	ROD	
	12	2	**8X-5499**	2	RETAINER	
	13	2	**9M-1853**	6	MOUNTING	
	14	1	**101-2457**	1	LEVER (ARTICULATION)	
	14A	1	**101-2457**	1	LEVER (SCARIFIER)	
	15	1	**101-2458**	1	LEVER (BLADE TIP)	
	16	2	**104-7419**	1	PLATE AS (RH)	
		2	**1F-0748**	2	NUT-WELD (1/2-13-THD)	
	17	2	**104-7429**	2	PLATE	
	18	2	**104-7740**	1	PLATE AS (LH)	
		2	**1F-0748**	2	NUT-WELD (1/2-13-THD)	
	19	1	**137-4515**	2	BUSHING	
	20	1	**137-4516**	1	SHAFT	
	21	2	*164-5608*	2	CONNECTOR AS	
					(EACH INCLUDES)	
		2	**3K-0360**	1	SEAL-O-RING	
		2	**6V-8398**	1	SEAL-O-RING	
		2	**8T-1687**	1	CONNECTOR	
	22	1	**244-2585**	1	TUBE AS	
	23	1	**244-2589**	1	TUBE AS	
	24	1	**244-2592**	1	TUBE AS	
	25	1	**244-2596**	1	TUBE AS	
Y	26	1	**250-0544**	1	VALVE GP-BANK 4 (RH)	461
	27	2	*148-8318*	2	CONNECTOR AS	
					(EACH INCLUDES)	
		2	**6V-8634**	1	CONNECTOR	
		2	**3K-0360**	1	SEAL-O-RING	
		2	**6V-8397**	1	SEAL-O-RING	
	28	2	**153-1818**	1	ELBOW	
	29	2	*206-5123*	2	TEE AS	
					(EACH INCLUDES)	
		2	**206-5122**	1	TEE	
		2	**6V-8397**	1	SEAL-O-RING	
		2	**6V-8398**	1	SEAL-O-RING	
Y	30	1	**262-7291**	1	VALVE GP-BANK 5 (LH)	465
	31	1	**2G-6747**	1	KNOB-BLADE TIP	
	32	1	**2G-6748**	1	KNOB-BLADE LIFT	
	33	1	**2G-6749**	1	KNOB-SIDESHIFT	

348-7031 **VALVE & LINKAGE GP** *(contd.)* **i03643562**

NOTE	REF NO	GRAPHIC REF	PART NUMBER	QTY	PART NAME 1 2 3 4 5 6 (PRODUCT LEVEL)	SEE PAGE
	34	1	**2G-6751**	1	KNOB-CIRCLE DRIVE	
	35	1	**2G-6752**	1	KNOB-ARTICULATION	
	36	1	**2G-6753**	1	KNOB-SCARIFIER	
	37	1	**2G-6755**	1	KNOB-CENTERSHIFT	
	38	1	**2G-6756**	1	KNOB-WHEEL LEAN	
	39	1	**2G-6757**	1	KNOB-BLADE LIFT	
	40	2	**3J-1907**	4	SEAL-O-RING	
	41	2	**5P-1075**	2	WASHER-HARD (10.2X22.5X3-MM THK)	
	42	2	**5P-1076**	6	WASHER-HARD (13.5X30X4-MM THK)	
	43	2	**5P-2424**	6	BOLT (1/2-13X2.25-IN)	
	44	2	**6V-8188**	2	NUT (1/2-13-THD)	
	45	1,2	**6V-8397**	8	SEAL-O-RING	
	46	2	**6V-9836**	2	TEE-SWIVEL	
	47	2	**8F-6437**	6	WASHER (13.5X50.8X4.76-MM THK)	
	48	2	**8T-4121**	8	WASHER-HARD (11X21X2.5-MM THK)	
M	49	2	**8T-4136**	4	BOLT (M10X1.5X25-MM)	
M	50	2	**8T-4195**	4	BOLT (M10X1.5X30-MM)	
	51	2	**8T-9041**	3	CONNECTOR	
	52	1	**8T-9043**	18	BOLT (5/16-18X0.875-IN)	
	53	2	**9B-7237**	2	BOLT (3/8-16X1.25-IN)	

B-USE AS REQUIRED
M-METRIC PART
Y-SEPARATE ILLUSTRATION

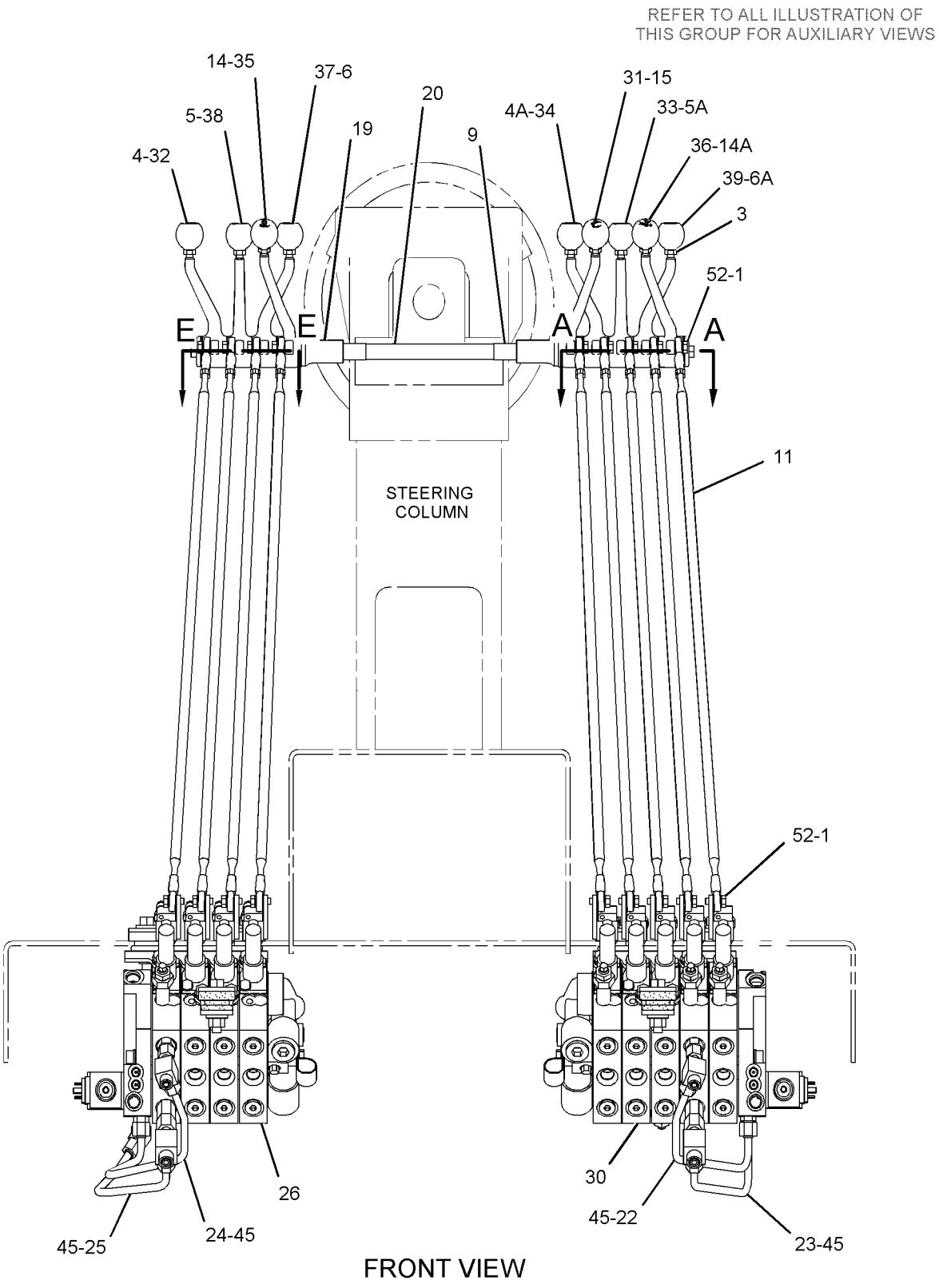

GRAPHIC #1

g01963777

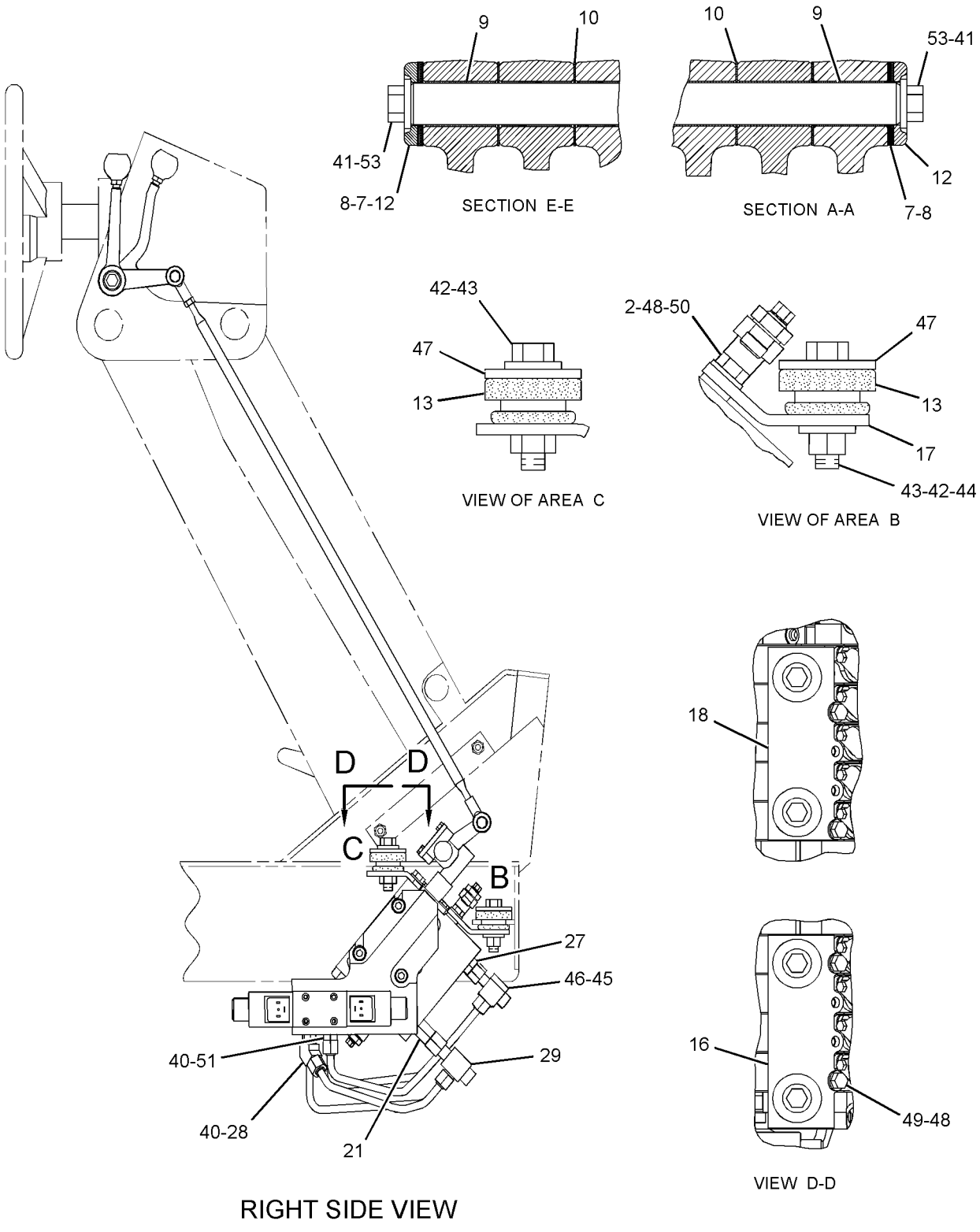

GRAPHIC #2 **<END>** g01256593

HYDRAULIC SYSTEM

348-7520 VALVE & LINKAGE GP—4-BANK, RH; 5-BANK, LH

S/N: JAP1-UP
PART OF 348-7029 CONTROL AR-HYDRAULIC
AN ATTACHMENT

SMCS-5051, 5063 **i03682721**

NOTE	REF NO	GRAPHIC REF	PART NUMBER	QTY	PART NAME 1 2 3 4 5 6 (PRODUCT LEVEL)	SEE PAGE
Y	1	1	**124-3325**	1	VALVE GP-BANK 4 (RH)	458
Y	2	1	**124-3329**	1	VALVE GP-BANK 5 (LH)	464
	3	1	**8X-5499**	2	RETAINER	
	4	1	**101-2457**	1	LEVER (ARTICULATION)	
	4A	1	**101-2457**	1	LEVER (RIPPER)	
	5	1	**8D-5634**	1	LEVER (CENTERSHIFT)	
	5A	1	**8D-5634**	1	LEVER (BLADE LIFT, LH)	
	6	1	*8X-4277*	9	ROD AS	
					(EACH INCLUDES)	
		1	**6V-8186**	1	NUT-FULL (5/16-24-THD)	
		1	**7H-3641**	1	END-ROD (5/16-24-THD)	
		1	**8L-8598**	1	ROD END	
		1	**146-0705**	1	ROD	
	7	1	**8D-5633**	1	LEVER (WHEEL LEAN)	
	7A	1	**8D-5633**	1	LEVER (SIDESHIFT)	
	8	1	**101-2458**	1	LEVER (BLADE TIP)	
	9	1	**137-4515**	2	BUSHING	
	10	1	**8D-5640**	11	BEARING	
B	11	1	**8D-5636**	4	SHIM (0.254-MM THK)	
B	12	1	**8D-5637**	4	SHIM (0.762-MM THK)	
	13	1	**6L-1962**	9	NUT-JAM (3/8-24-THD)	
	14	1	**8T-9043**	18	BOLT (5/16-18X0.875-IN)	
	15	1	**3F-9556**	18	LOCKWASHER	
	16	1	**9B-7237**	2	BOLT (3/8-16X1.25-IN)	
	17	1	**8D-5641**	9	BEARING	
	18	1	**2G-6757**	1	KNOB-BLADE LIFT	
M	19	1	**8T-4136**	4	BOLT (M10X1.5X25-MM)	
	20	1	**2G-6749**	1	KNOB-SIDESHIFT	
	21	1	**2G-6747**	1	KNOB-BLADE TIP	
	22	1	**8D-5632**	1	LEVER (BLADE LIFT, RH)	
	22A	1	**8D-5632**	1	LEVER (CIRCLE DRIVE)	
	23	1	**2G-6751**	1	KNOB-CIRCLE DRIVE	
	24	1	**2G-6748**	1	KNOB-BLADE LIFT	
	25	1	**2G-6756**	1	KNOB-WHEEL LEAN	
	26	1	**2G-6752**	1	KNOB-ARTICULATION	
	27	1	**2G-6755**	1	KNOB-CENTERSHIFT	
	28	1	**5P-1075**	2	WASHER-HARD (10.2X22.5X3-MM THK)	
	29	1	**9M-1853**	6	MOUNTING	
	30	1	**5P-1076**	6	WASHER-HARD (13.5X30X4-MM THK)	
	31	1	**104-7740**	1	PLATE AS (LH)	
		1	**1F-0748**	2	NUT-WELD (1/2-13-THD)	
	32	1	**104-7419**	1	PLATE AS (RH)	
		1	**1F-0748**	2	NUT-WELD (1/2-13-THD)	
	33	1	**104-7429**	2	PLATE	
	34	1	**137-4516**	1	SHAFT	
	35	1	**2G-6740**	1	KNOB-RIPPER	
	36	1	**6B-0933**	4	SPACER (10.31X19.05X6.35-MM THK)	
	37	1	**5P-2424**	6	BOLT (1/2-13X2.25-IN)	
	38	1	**6V-8188**	2	NUT (1/2-13-THD)	
M	39	1	**8T-4195**	4	BOLT (M10X1.5X30-MM)	
	40	1	**8T-4121**	8	WASHER-HARD (11X21X2.5-MM THK)	
	41	1	**8F-6437**	6	WASHER (13.5X50.8X4.76-MM THK)	

B-USE AS REQUIRED
M-METRIC PART
Y-SEPARATE ILLUSTRATION

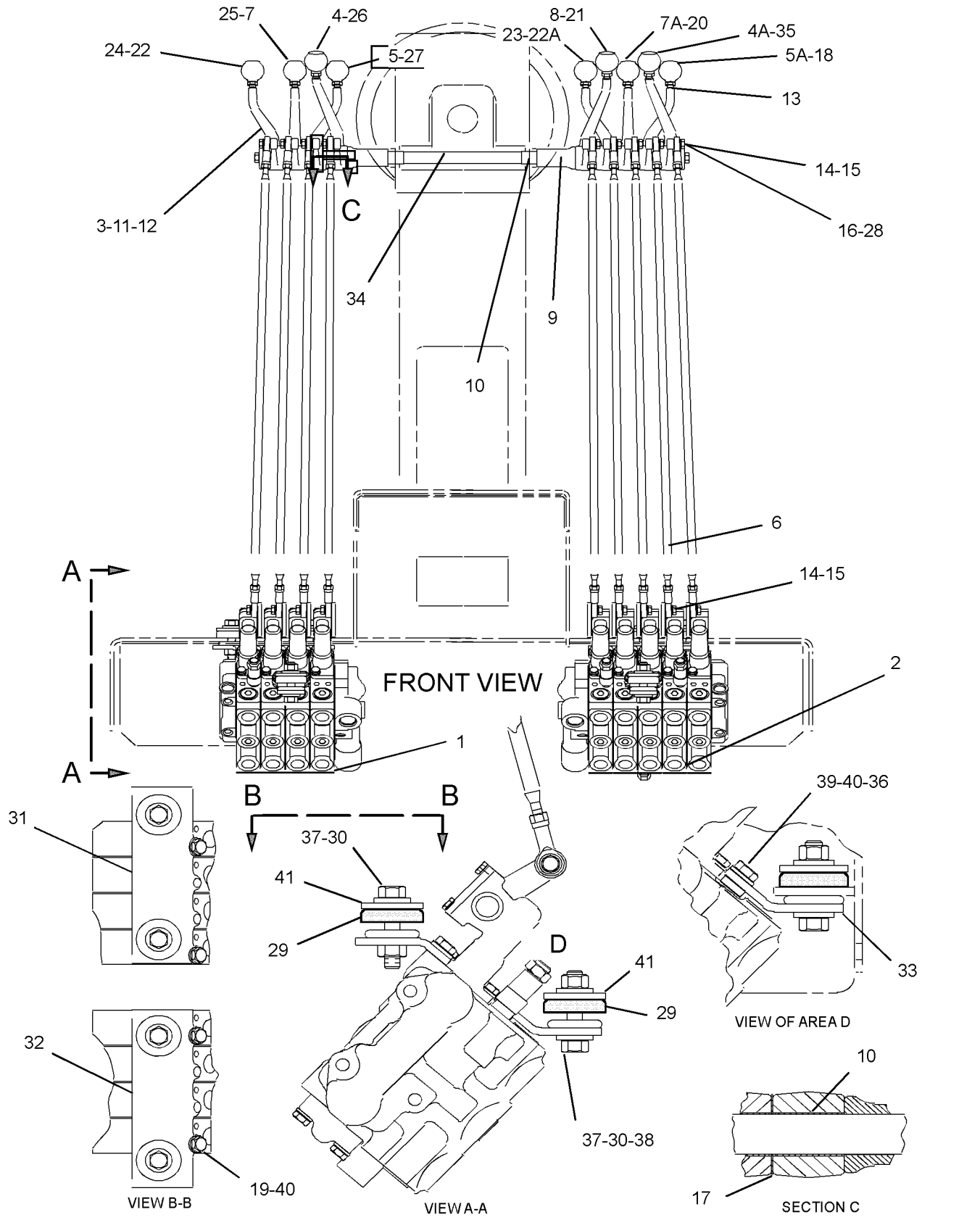

GRAPHIC #1

<END>

g01963797

HYDRAULIC SYSTEM

348-7523 VALVE & LINKAGE GP–5-BANK, RH, LH

S/N: JAP1-UP

PART OF 348-7032 CONTROL AR-HYDRAULIC

AN ATTACHMENT

SMCS-5051, 5063 **i03643571**

NOTE	REF NO	GRAPHIC REF	PART NUMBER	QTY	PART NAME 1 2 3 4 5 6 (PRODUCT LEVEL)	SEE PAGE
	1	1	**8X-5499**	2	RETAINER	
	2	1	**101-2457**	1	LEVER (ARTICULATION)	
	2A	1	**101-2457**	1	LEVER (RIPPER)	
	3	1	**8D-5634**	1	LEVER (CENTERSHIFT)	
	3A	1	**8D-5634**	1	LEVER (BLADE LIFT, LH)	
	4	1	**4L-6459**	1	BOLT (3/8-16X2.5-IN)	
	5	1	**8W-0456**	1	SHAFT	
	6	1	*8X-4277*	10	ROD AS	
					(EACH INCLUDES)	
		1	**6V-8186**	1	NUT-FULL (5/16-24-THD)	
		1	**7H-3641**	1	END-ROD (5/16-24-THD)	
		1	**8L-8598**	1	ROD END	
		1	**146-0705**	1	ROD	
	7	1	**8D-5633**	1	LEVER (WHEEL LEAN)	
	7A	1	**8D-5633**	1	LEVER (SIDESHIFT)	
	8	1	**101-2458**	1	LEVER (BULLDOZER LIFT, PLOW)	
	8A	1	**101-2458**	1	LEVER (BLADE TIP)	
	9	1	**137-4515**	2	BUSHING	
	10	1	**8D-5640**	12	BEARING	
B	11	1	**8D-5636**	4	SHIM (0.254-MM THK)	
B	12	1	**8D-5637**	4	SHIM (0.762-MM THK)	
	13	1	**6L-1962**	10	NUT-JAM (3/8-24-THD)	
	14	1	**8T-9043**	20	BOLT (5/16-18X0.875-IN)	
	15	1	**3F-9556**	20	LOCKWASHER	
	16	1	**9B-7237**	1	BOLT (3/8-16X1.25-IN)	
	17	1	**8D-5641**	10	BEARING	
	18	1	**2G-6757**	1	KNOB-BLADE LIFT	
M	19	1	**8T-4136**	4	BOLT (M10X1.5X25-MM)	
	20	1	**2G-6749**	1	KNOB-SIDESHIFT	
	21	1	**2G-6747**	1	KNOB-BLADE TIP	
	22	1	**8D-5632**	1	LEVER (BLADE LIFT, RH)	
	22A	1	**8D-5632**	1	LEVER (CIRCLE DRIVE)	
	23	1	**2G-6751**	1	KNOB-CIRCLE DRIVE	
	24	1	**2G-6748**	1	KNOB-BLADE LIFT	
	25	1	**2G-6756**	1	KNOB-WHEEL LEAN	
	26	1	**2G-6752**	1	KNOB-ARTICULATION	
	27	1	**2G-6755**	1	KNOB-CENTERSHIFT	
	28	1	**5P-1075**	2	WASHER-HARD (10.2X22.5X3-MM THK)	
	29	1	**9M-1853**	6	MOUNTING	
	30	1	**5P-1076**	6	WASHER-HARD (13.5X30X4-MM THK)	
	31	1	**104-7740**	1	PLATE AS (LH)	
		1	**1F-0748**	2	NUT-WELD (1/2-13-THD)	
	32	1	**104-7419**	1	PLATE AS (RH)	
		1	**1F-0748**	2	NUT-WELD (1/2-13-THD)	
	33	1	**104-7429**	2	PLATE	
	34	1	**137-4516**	1	SHAFT	
	35	1	**2G-6740**	1	KNOB-RIPPER	
	36	1	**2G-6754**	1	KNOB (BULLDOZER LIFT, PLOW)	
	37	1	**6V-8188**	2	NUT (1/2-13-THD)	
M	38	1	**8T-4195**	4	BOLT (M10X1.5X30-MM)	
	39	1	**8F-6437**	6	WASHER (13.5X50.8X4.76-MM THK)	
	40	1	**5P-2424**	6	BOLT (1/2-13X2.25-IN)	
	41	1	**6B-0933**	4	SPACER (10.31X19.05X6.35-MM THK)	
	42	1	**8T-4121**	8	WASHER-HARD (11X21X2.5-MM THK)	
Y	43	1	**124-3326**	1	VALVE GP-BANK 5	462

348-7523 VALVE & LINKAGE GP *(contd.)* i03643571

NOTE	REF NO	GRAPHIC REF	PART NUMBER	QTY	PART NAME 1 2 3 4 5 6 (PRODUCT LEVEL)	SEE PAGE
Y	44	1	**124-3329**	1	VALVE GP-BANK 5 (LH)	464

B-USE AS REQUIRED
M-METRIC PART
Y-SEPARATE ILLUSTRATION

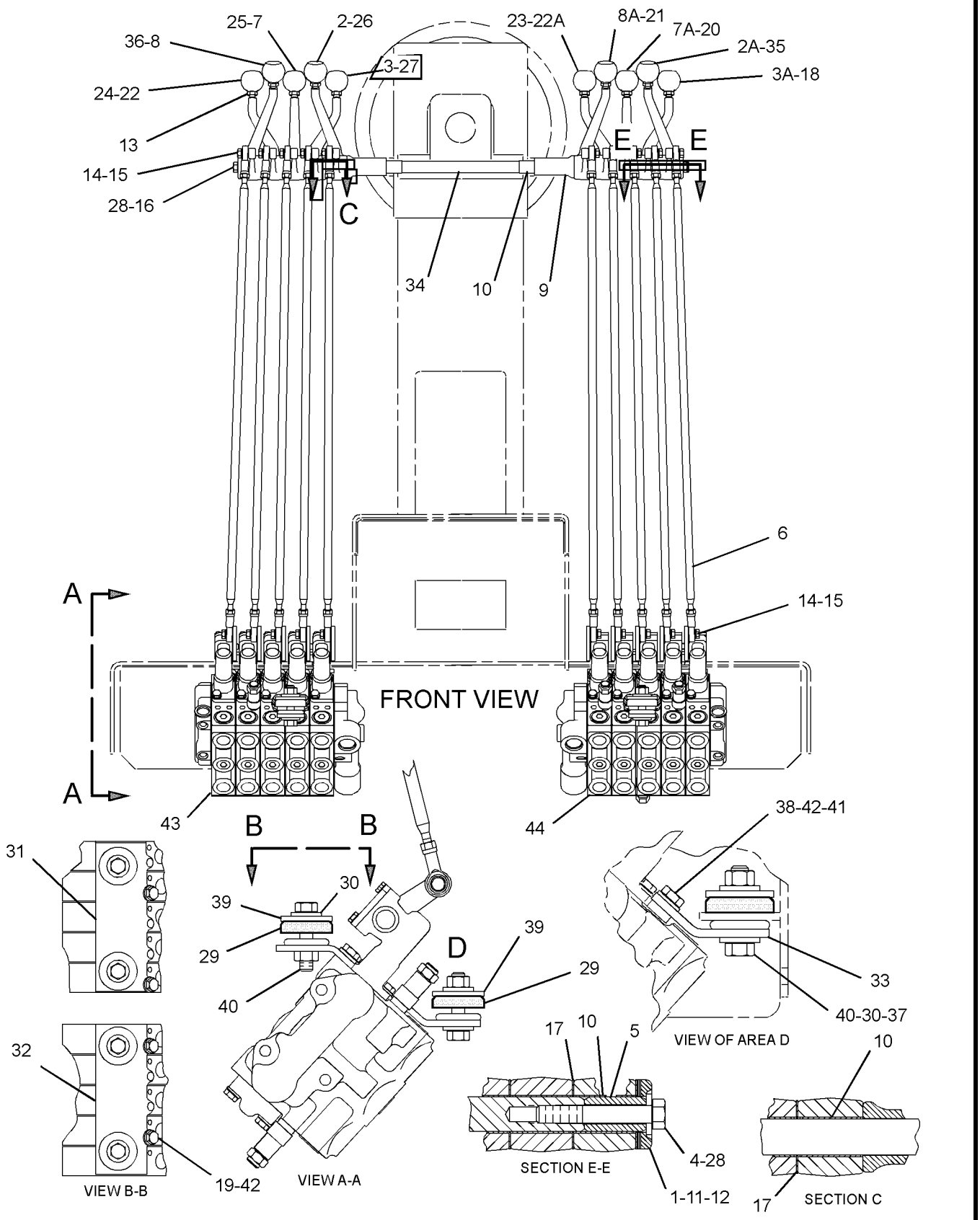

GRAPHIC #1 **<END>** g01963796

HYDRAULIC SYSTEM

348-7527 VALVE & LINKAGE GP—4-BANK, RH, LH

S/N: JAP1-UP
PART OF 348-7033 CONTROL AR-HYDRAULIC
AN ATTACHMENT

SMCS-5051, 5063 **i03682776**

NOTE	REF NO	GRAPHIC REF	PART NUMBER	QTY	PART NAME 1 2 3 4 5 6 (PRODUCT LEVEL)	SEE PAGE
Y	1	1	**124-3325**	1	VALVE GP-BANK 4 (RH)	458
Y	2	1	**130-7755**	1	VALVE GP-BANK 4	460
	3	1	**8X-5499**	2	RETAINER	
	4	1	**101-2457**	1	LEVER (ARTICULATION)	
	4A	1	**101-2457**	1	LEVER (RIPPER)	
	5	1	**8D-5634**	1	LEVER (CENTERSHIFT)	
	5A	1	**8D-5634**	1	LEVER (BLADE LIFT)	
	6	1	*8X-4277*	8	ROD AS	
					(EACH INCLUDES)	
		1	**6V-8186**	1	NUT-FULL (5/16-24-THD)	
		1	**7H-3641**	1	END-ROD (5/16-24-THD)	
		1	**8L-8598**	1	ROD END	
		1	**146-0705**	1	ROD	
	7	1	**8D-5633**	1	LEVER (WHEEL LEAN)	
	7A	1	**8D-5633**	1	LEVER (SIDESHIFT)	
	8	1	**8D-8852**	1	SPACER (0.78X1.5X1.344-IN THK)	
	9	1	**137-4515**	2	BUSHING	
	10	1	**8D-5640**	11	BEARING	
B	11	1	**8D-5636**	4	SHIM (0.254-MM THK)	
B	12	1	**8D-5637**	4	SHIM (0.762-MM THK)	
	13	1	**6L-1962**	8	NUT-JAM (3/8-24-THD)	
	14	1	**8T-9043**	16	BOLT (5/16-18X0.875-IN)	
	15	1	**3F-9556**	16	LOCKWASHER	
	16	1	**9B-7237**	2	BOLT (3/8-16X1.25-IN)	
	17	1	**8D-5641**	9	BEARING	
	18	1	**2G-6757**	1	KNOB-BLADE LIFT	
M	19	1	**8T-4136**	4	BOLT (M10X1.5X25-MM)	
	20	1	**2G-6749**	1	KNOB-SIDESHIFT	
	21	1	**8D-5632**	1	LEVER (BLADE LIFT)	
	21A	1	**8D-5632**	1	LEVER (CIRCLE DRIVE)	
	22	1	**2G-6751**	1	KNOB-CIRCLE DRIVE	
	23	1	**2G-6748**	1	KNOB-BLADE LIFT	
	24	1	**2G-6756**	1	KNOB-WHEEL LEAN	
	25	1	**2G-6752**	1	KNOB-ARTICULATION	
	26	1	**2G-6755**	1	KNOB-CENTERSHIFT	
	27	1	**5P-1075**	2	WASHER-HARD (10.2X22.5X3-MM THK)	
	28	1	**9M-1853**	6	MOUNTING	
	29	1	**5P-1076**	6	WASHER-HARD (13.5X30X4-MM THK)	
	30	1	**104-7740**	1	PLATE AS (LH)	
		1	**1F-0748**	2	NUT-WELD (1/2-13-THD)	
	31	1	**104-7419**	1	PLATE AS (RH)	
		1	**1F-0748**	2	NUT-WELD (1/2-13-THD)	
	32	1	**104-7429**	2	PLATE	
	33	1	**137-4516**	1	SHAFT	
	34	1	**2G-6740**	1	KNOB-RIPPER	
	35	1	**6B-0933**	4	SPACER (10.31X19.05X6.35-MM THK)	
	36	1	**5P-2424**	6	BOLT (1/2-13X2.25-IN)	
	37	1	**6V-8188**	2	NUT (1/2-13-THD)	
M	38	1	**8T-4195**	4	BOLT (M10X1.5X30-MM)	
	39	1	**8T-4121**	8	WASHER-HARD (11X21X2.5-MM THK)	
	40	1	**8F-6437**	6	WASHER (13.5X50.8X4.76-MM THK)	

B-USE AS REQUIRED
M-METRIC PART
Y-SEPARATE ILLUSTRATION

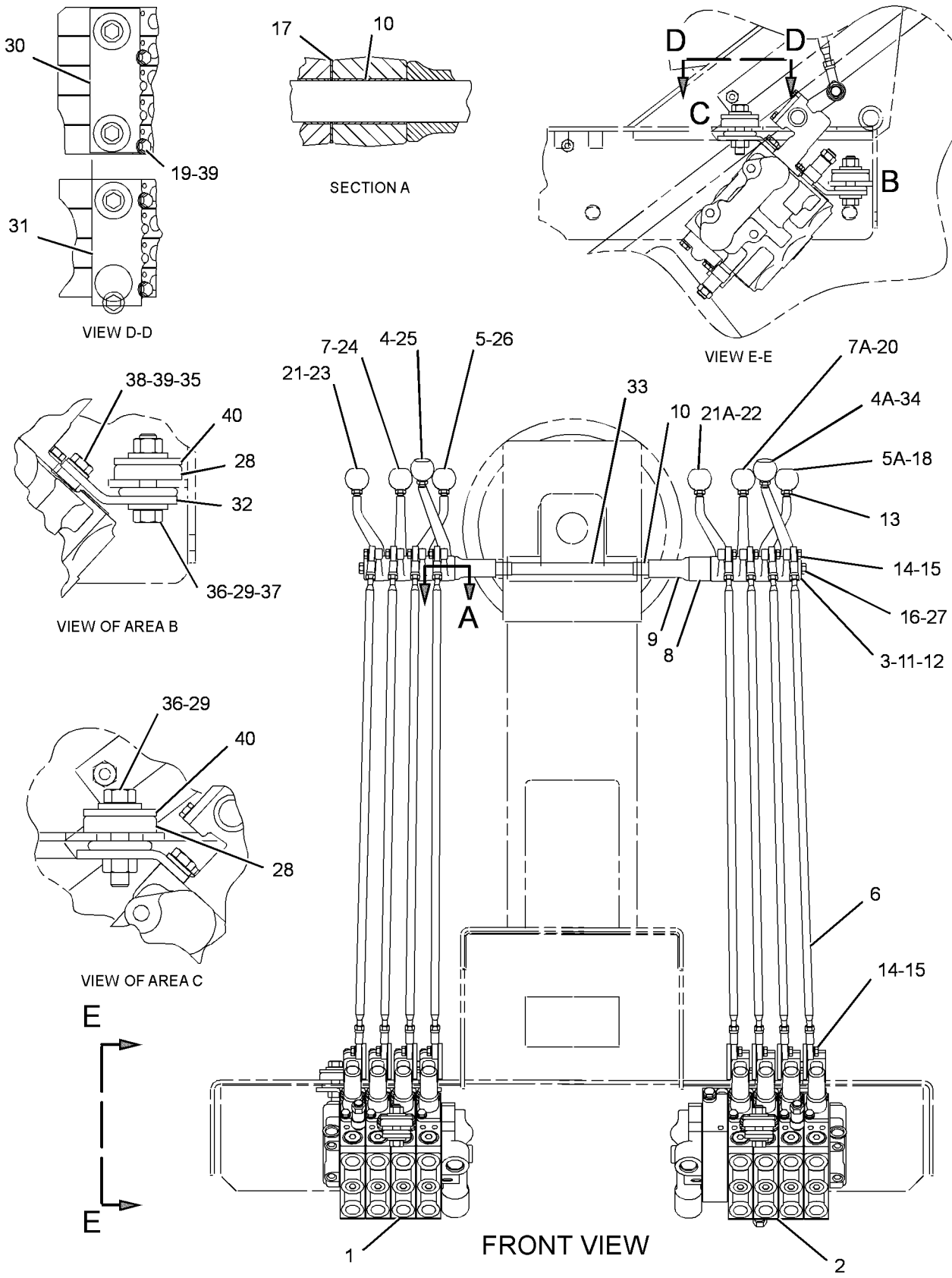

GRAPHIC #1 **<END>** g01979293

104-8673 VALVE GP-BANK 3–LH

S/N: JAP1-UP

PART OF 348-3301 VALVE & LINKAGE GP

SMCS-5051 **i00857866**

NOTE	REF NO	GRAPHIC REF	PART NUMBER	QTY	PART NAME 1 2 3 4 5 6 (PRODUCT LEVEL)	SEE PAGE
M	1	1	**7X-2546**	2	BOLT (M10X1.5X180-MM)	
M	2	1	**137-6720**	1	BOLT (M10X1.5X160-MM)	
	3	1	**102-8385**	1	MANIFOLD	
	4	1	**101-0509**	5	SEAL-INTEGRAL	
Y	5	1	**124-2883**	1	VALVE GP-CONTROL (BLADE LIFT)	488
Y	6	1	**6E-3036**	1	VALVE GP-CONTROL (SIDESHIFT)	480
Y	7	1	**6E-3035**	1	VALVE GP-CONTROL (CIRCLE DRIVE)	478
	8	1	**111-9321**	1	SPACER	
	9	1	**101-9346**	1	COVER	
M	10	1	**8T-4186**	3	BOLT (M10X1.5X40-MM)	
	11	1	**4J-7533**	1	SEAL-O-RING	
	12	1	**9S-4180**	1	PLUG	

M-METRIC PART
Y-SEPARATE ILLUSTRATION

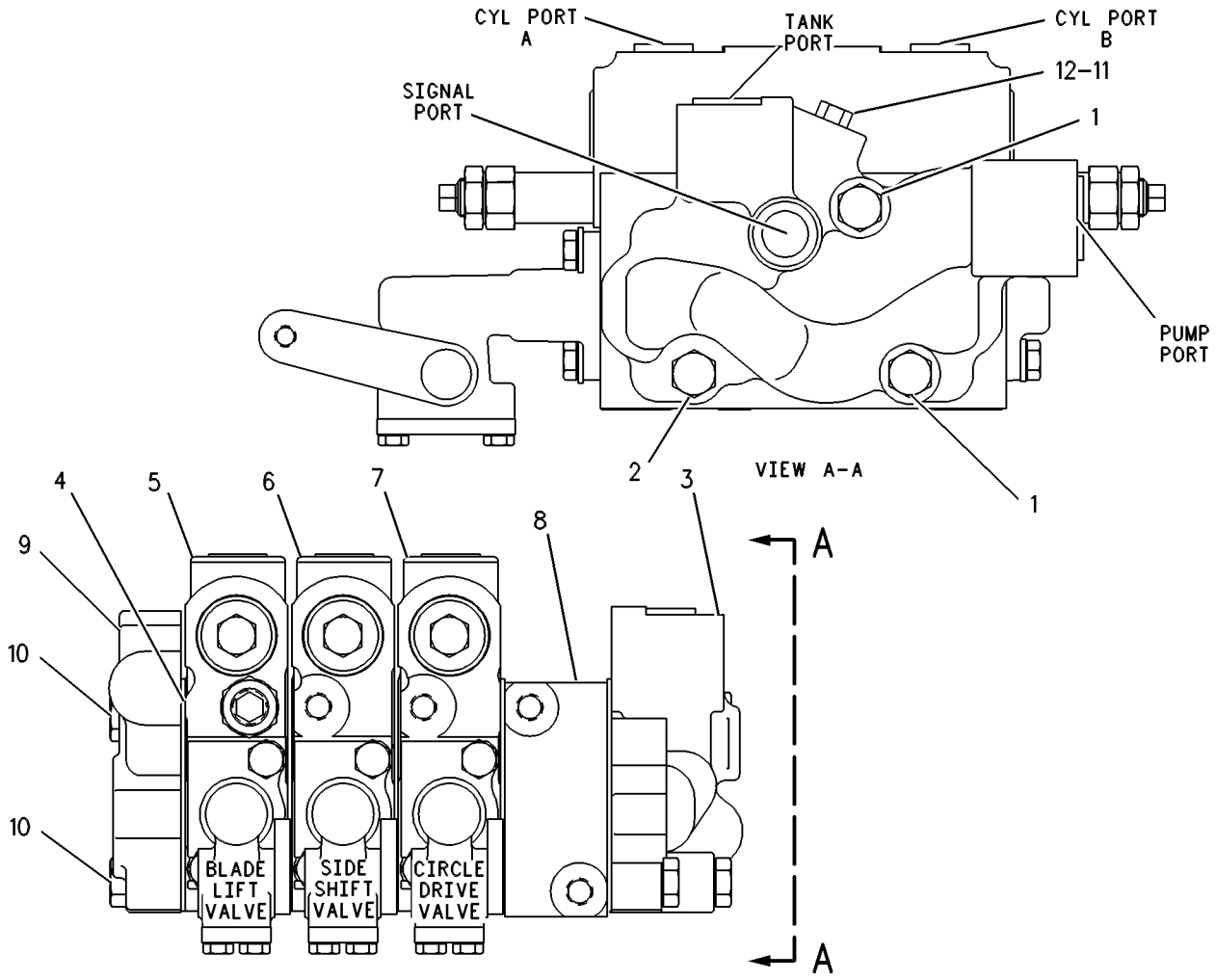

GRAPHIC #1 **<END>** g00272766

HYDRAULIC SYSTEM

124-3325 VALVE GP-BANK 4–RH

S/N: JAP1-UP

PART OF 348-3301, 348-7027, 348-7030, 348-7520, 348-7527 VALVE & LINKAGE GP

ALSO AN ATTACHMENT

SMCS-5051 **i03644929**

NOTE	REF NO	GRAPHIC REF	PART NUMBER	QTY	PART NAME 1 2 3 4 5 6 (PRODUCT LEVEL)	SEE PAGE
M	1	1	**7X-2546**	2	BOLT (M10X1.5X180-MM)	
M	2	1	**137-6720**	1	BOLT (M10X1.5X160-MM)	
	3	1	**102-6238**	1	MANIFOLD	
	4	1	**101-0509**	5	SEAL-INTEGRAL	
Y	5	1	**6E-3028**	1	VALVE GP-CONTROL (ARTICULATION)	468
Y	6	1	**6E-3029**	1	VALVE GP-CONTROL (CENTERSHIFT)	470
Y	7	1	**6E-3030**	1	VALVE GP-CONTROL (WHEEL LEAN)	472
Y	8	1	**124-2884**	1	VALVE GP-CONTROL (BLADE LIFT)	490
	9	1	**101-9346**	1	COVER	
M	10	1	**8T-4186**	3	BOLT (M10X1.5X40-MM)	
	11	1	*222-4737*	1	PLUG AS	
		1	**9S-4180**	1	PLUG	
		1	**4J-7533**	1	SEAL-O-RING	
	12	1	**8T-4896**	1	WASHER-HARD (10.2X18.5X2.5-MM THK)	

M-METRIC PART
Y-SEPARATE ILLUSTRATION

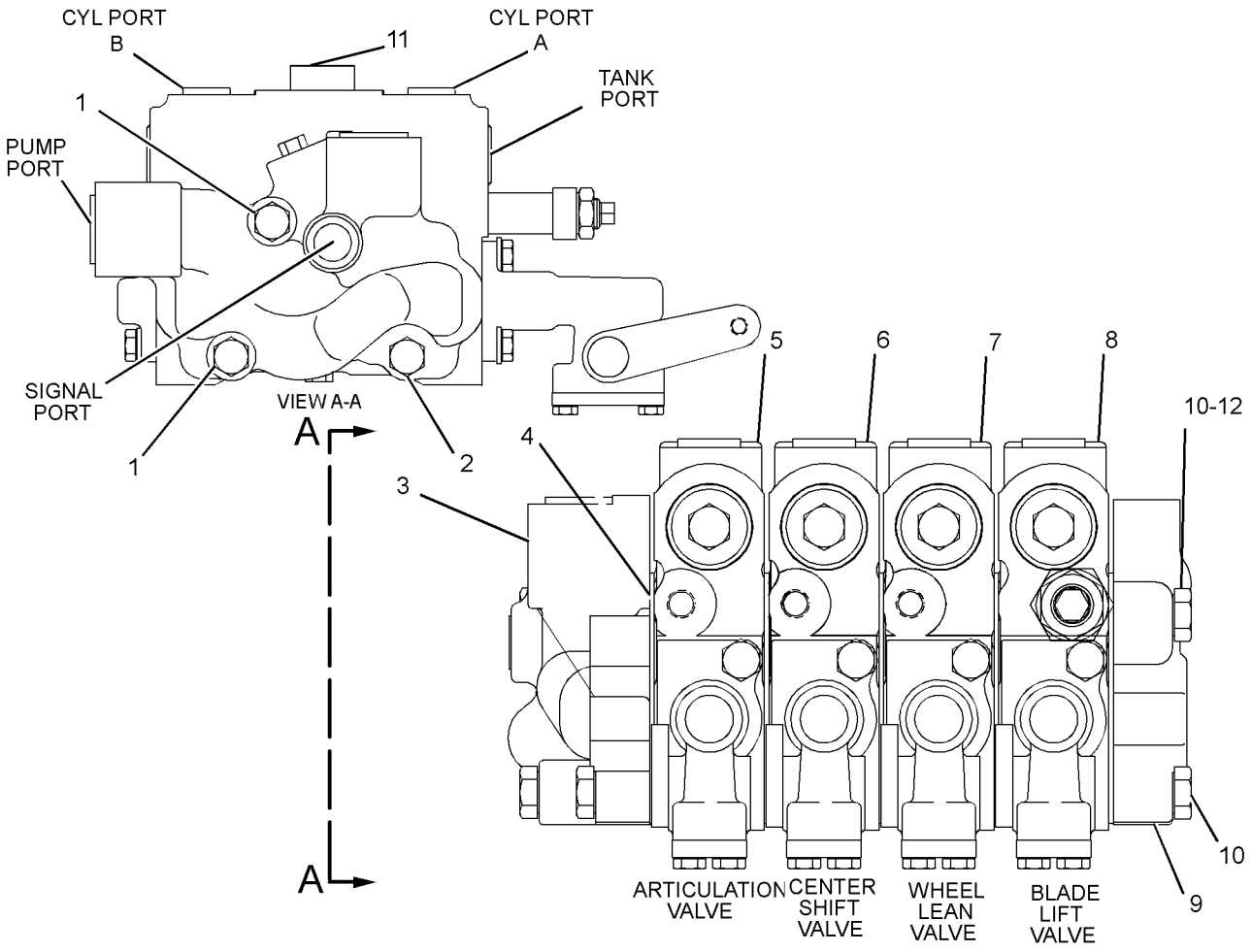

GRAPHIC #1 **<END>** g01962918

130-7754 VALVE GP-BANK 4–LH

S/N: JAP1-UP
PART OF 348-7030 VALVE & LINKAGE GP
AN ATTACHMENT

SMCS-5051 **i03179206**

NOTE	REF NO	GRAPHIC REF	PART NUMBER	QTY	PART NAME 1 2 3 4 5 6 (PRODUCT LEVEL)	SEE PAGE
M	1	1	**7X-2546**	2	BOLT (M10X1.5X180-MM)	
M	2	1	**137-6720**	1	BOLT (M10X1.5X160-MM)	
	3	1	**102-8385**	1	MANIFOLD	
	4	1	**101-0509**	6	SEAL-INTEGRAL	
	5	1	**111-9321**	1	SPACER	
Y	6	1	**6E-3035**	1	VALVE GP-CONTROL (CIRCLE DRIVE)	478
Y	7	1	**6E-3036**	1	VALVE GP-CONTROL (SIDESHIFT)	480
Y	8	1	**124-2883**	1	VALVE GP-CONTROL (BLADE LIFT)	488
Y	9	1	**107-0543**	1	VALVE GP-CONTROL (SCARIFIER)	484
	10	1	**101-9346**	1	COVER	
M	11	1	**137-6719**	1	BOLT (M10X1.5X80-MM)	
	12	1	**9S-4180**	1	PLUG	
	13	1	**4J-7533**	1	SEAL-O-RING	

M-METRIC PART
Y-SEPARATE ILLUSTRATION

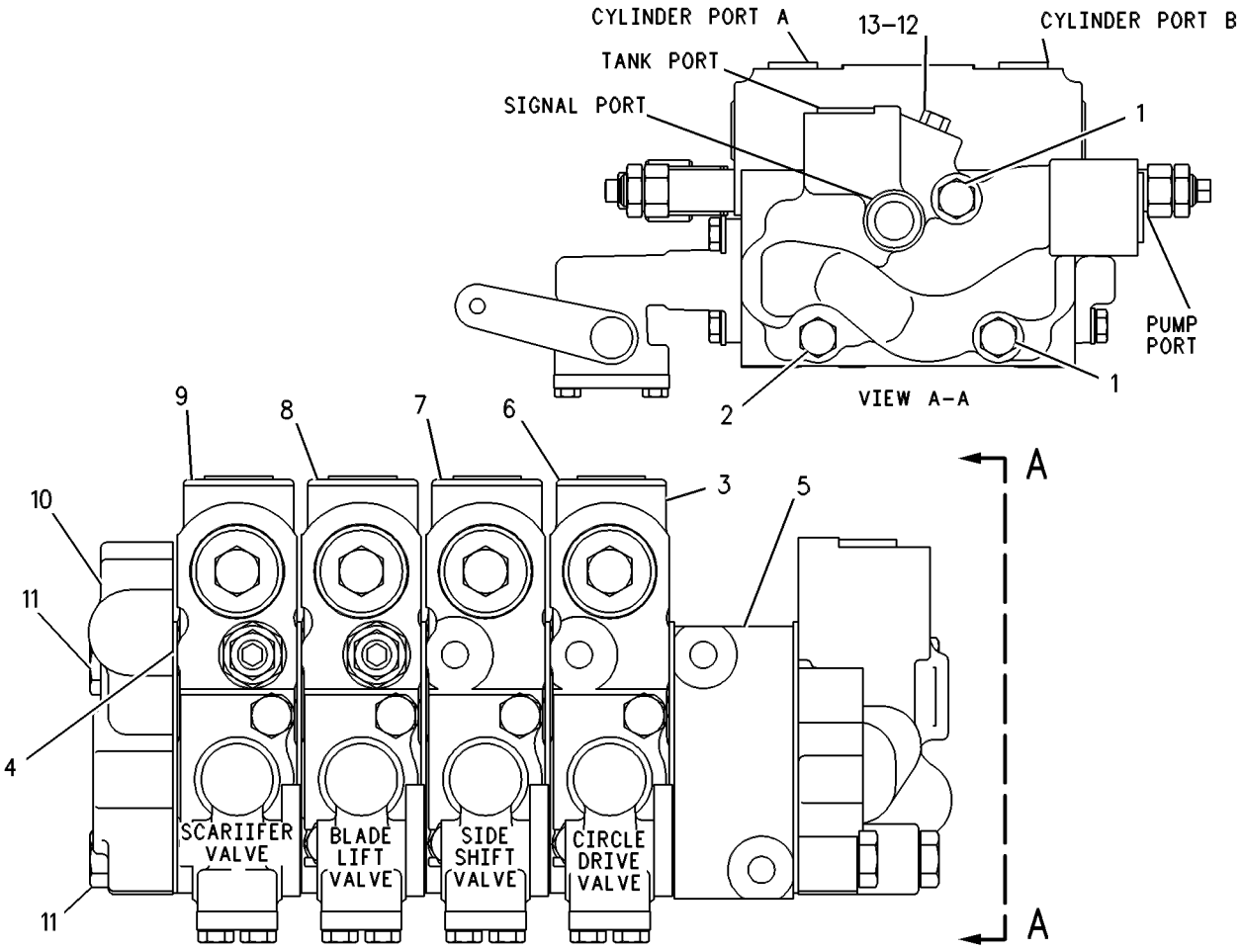

GRAPHIC #1 **<END>** g00109316

HYDRAULIC SYSTEM

130-7755 VALVE GP-BANK 4–LH

S/N: JAP1-UP
PART OF 348-7527 VALVE & LINKAGE GP
AN ATTACHMENT

SMCS-5051 **i00158976**

NOTE	REF NO	GRAPHIC REF	PART NUMBER	QTY	PART NAME 1 2 3 4 5 6 (PRODUCT LEVEL)	SEE PAGE
M	1	1	**7X-2546**	2	BOLT (M10X1.5X180-MM)	
M	2	1	**137-6720**	1	BOLT (M10X1.5X160-MM)	
	3	1	**102-8385**	1	MANIFOLD	
	4	1	**101-0509**	6	SEAL-INTEGRAL	
	5	1	**111-9321**	1	SPACER	
Y	6	1	**6E-3035**	1	VALVE GP-CONTROL (CIRCLE DRIVE)	478
Y	7	1	**6E-3036**	1	VALVE GP-CONTROL (SIDESHIFT)	480
Y	8	1	**124-2883**	1	VALVE GP-CONTROL (BLADE LIFT)	488
Y	9	1	**107-0545**	1	VALVE GP-CONTROL (RIPPER)	486
	10	1	**101-9346**	1	COVER	
	11	1	**9S-4180**	1	PLUG	
	12	1	**4J-7533**	1	SEAL-O-RING	
M	13	1	**137-6719**	3	BOLT (M10X1.5X80-MM)	

M-METRIC PART
Y-SEPARATE ILLUSTRATION

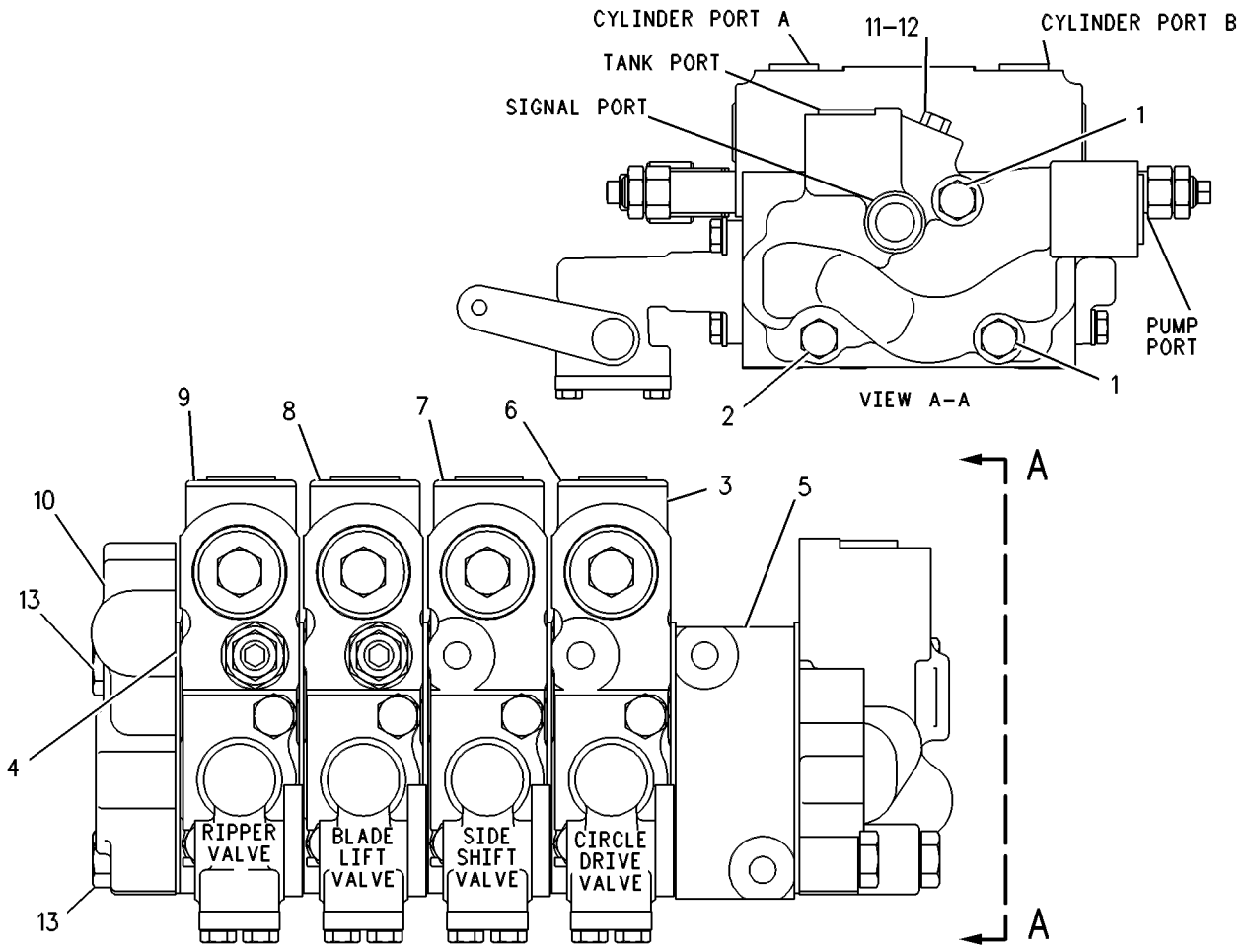

GRAPHIC #1 **<END>** g00109314

250-0544 VALVE GP-BANK 4–RH

S/N: JAP1-UP
PART OF 348-7031 VALVE & LINKAGE GP
AN ATTACHMENT

SMCS-5051 **i03255862**

NOTE	REF NO	GRAPHIC REF	PART NUMBER	QTY	PART NAME 1 2 3 4 5 6 (PRODUCT LEVEL)	SEE PAGE
Y	1	1	**6E-3028**	1	VALVE GP-CONTROL (ARTICULATION)	468
Y	2	1	**6E-3029**	1	VALVE GP-CONTROL (CENTERSHIFT)	470
Y	3	1	**6E-3030**	1	VALVE GP-CONTROL (WHEEL LEAN)	472
Y	4	1	**6E-3031**	1	VALVE GP-CONTROL (BLADE LIFT)	474
	5	1	**101-0509**	5	SEAL-INTEGRAL	
	6	1	*222-4737*	1	PLUG AS	
		1	**4J-7533**	1	SEAL-O-RING	
		1	**9S-4180**	1	PLUG	
Y	7	1	**239-9894**	1	MANIFOLD GP-VALVE (RH)	421
	8	1	**8T-4896**	1	WASHER-HARD (10.2X18.5X2.5-MM THK)	
	9	1	**102-6238**	1	MANIFOLD	
M	10	1	**137-6720**	1	BOLT (M10X1.5X160-MM)	
	11	1	**3K-6113**	3	WASHER-HARD (12X18.5X3-MM THK)	
M	12	1	**7X-2546**	2	BOLT (M10X1.5X180-MM)	
M	13	1	**8T-4186**	3	BOLT (M10X1.5X40-MM)	

M-METRIC PART
Y-SEPARATE ILLUSTRATION

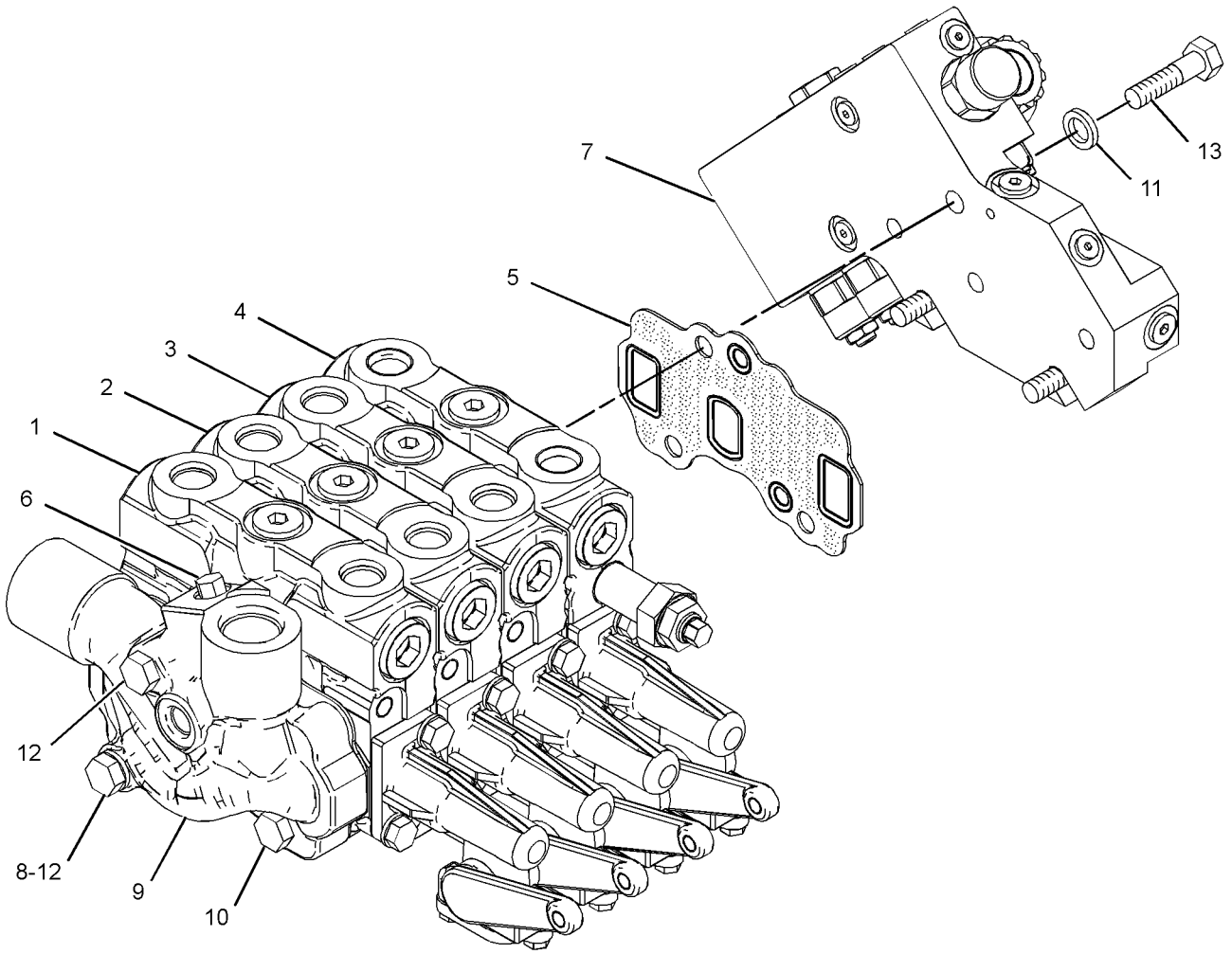

GRAPHIC #1 **<END>** g01693095

HYDRAULIC SYSTEM

124-3326 VALVE GP-BANK 5–RH

S/N: JAP1-UP
PART OF 348-7028, 348-7523 VALVE & LINKAGE GP
AN ATTACHMENT

SMCS-5051 **i03435261**

NOTE	REF NO	GRAPHIC REF	PART NUMBER	QTY	PART NAME 1 2 3 4 5 6 (PRODUCT LEVEL)	SEE PAGE
M	1	1	**7X-2546**	2	BOLT (M10X1.5X180-MM)	
M	2	1	**137-6720**	1	BOLT (M10X1.5X160-MM)	
	3	1	**102-6238**	1	MANIFOLD	
	4	1	**101-0509**	6	SEAL-INTEGRAL	
Y	5	1	**6E-3028**	1	VALVE GP-CONTROL (ARTICULATION)	468
Y	6	1	**6E-3029**	1	VALVE GP-CONTROL (CENTERSHIFT)	470
Y	7	1	**6E-3030**	1	VALVE GP-CONTROL (WHEEL LEAN)	472
Y	8	1	**124-2884**	1	VALVE GP-CONTROL (BLADE LIFT) (BLADE LIFT)	490
Y	9	1	**124-2885**	1	VALVE GP-CONTROL (BULLDOZER LIFT, PLOW) (BULLDOZER LIFT, PLOW)	492
	10	1	**101-9346**	1	COVER	
M	11	1	**137-6719**	3	BOLT (M10X1.5X80-MM)	
	12	1	**4J-7533**	1	SEAL-O-RING	
	13	1	**9S-4180**	1	PLUG	

M-METRIC PART
Y-SEPARATE ILLUSTRATION

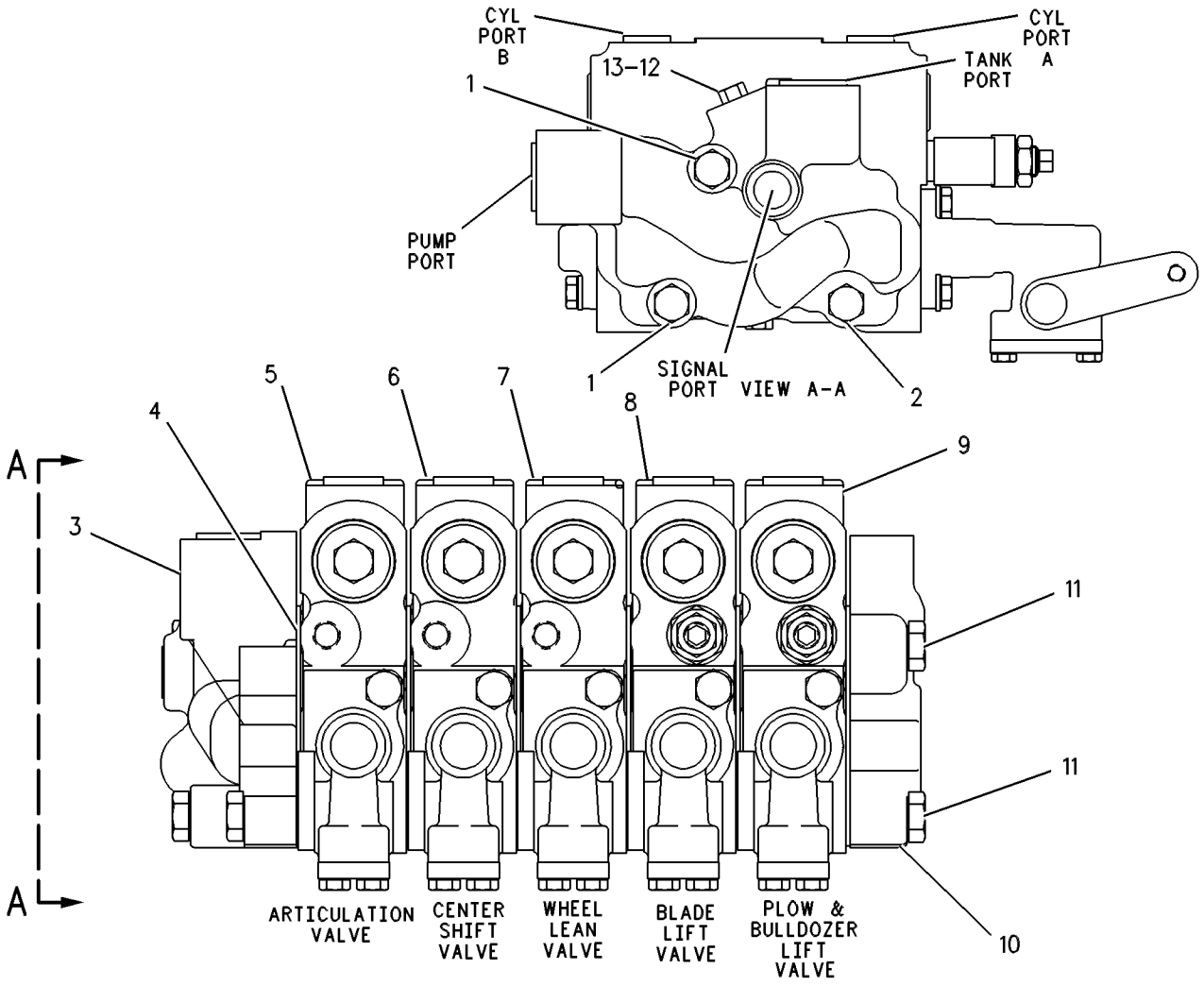

GRAPHIC #1 **<END>** g00109160

HYDRAULIC SYSTEM

124-3328 VALVE GP-BANK 5–LH

S/N: JAP1-UP
PART OF 348-7027, 348-7028 VALVE & LINKAGE GP
AN ATTACHMENT

SMCS-5051 **i03179224**

NOTE	REF NO	GRAPHIC REF	PART NUMBER	QTY	PART NAME 1 2 3 4 5 6 (PRODUCT LEVEL)	SEE PAGE
M	1	1	**7X-2546**	2	BOLT (M10X1.5X180-MM)	
M	2	1	**137-6720**	1	BOLT (M10X1.5X160-MM)	
	3	1	**102-8385**	1	MANIFOLD	
	4	1	**101-0509**	6	SEAL-INTEGRAL	
Y	5	1	**6E-3034**	1	VALVE GP-CONTROL (BLADE TIP)	476
Y	6	1	**6E-3035**	1	VALVE GP-CONTROL (CIRCLE DRIVE)	478
Y	7	1	**6E-3036**	1	VALVE GP-CONTROL (SIDESHIFT)	480
Y	8	1	**124-2883**	1	VALVE GP-CONTROL (BLADE LIFT)	488
Y	9	1	**107-0543**	1	VALVE GP-CONTROL (SCARIFIER)	484
	10	1	**101-9346**	1	COVER	
M	11	1	**137-6719**	3	BOLT (M10X1.5X80-MM)	
	12	1	**9S-4180**	1	PLUG	
	13	1	**4J-7533**	1	SEAL-O-RING	

M-METRIC PART
Y-SEPARATE ILLUSTRATION

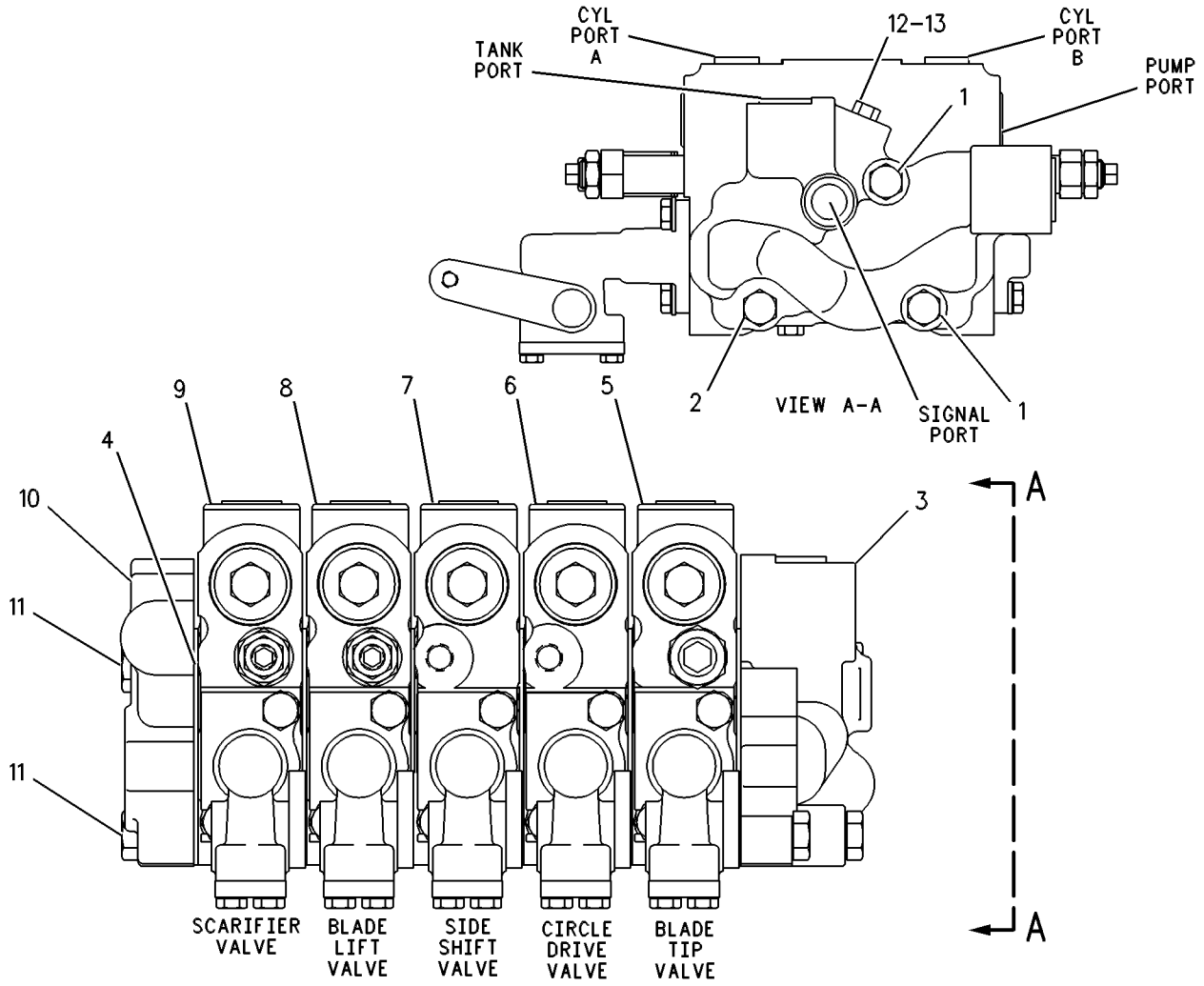

GRAPHIC #1 **<END>** g00252767

HYDRAULIC SYSTEM

124-3329 VALVE GP-BANK 5–LH

S/N: JAP1-UP
PART OF 348-7520, 348-7523 VALVE & LINKAGE GP
AN ATTACHMENT

SMCS-5051 **i00857872**

NOTE	REF NO	GRAPHIC REF	PART NUMBER	QTY	PART NAME 1 2 3 4 5 6 (PRODUCT LEVEL)	SEE PAGE
M	1	1	**7X-2546**	2	BOLT (M10X1.5X180-MM)	
M	2	1	**137-6720**	1	BOLT (M10X1.5X160-MM)	
	3	1	**102-8385**	1	MANIFOLD	
	4	1	**101-0509**	6	SEAL-INTEGRAL	
Y	5	1	**6E-3034**	1	VALVE GP-CONTROL (BLADE TIP)	476
Y	6	1	**6E-3035**	1	VALVE GP-CONTROL (CIRCLE DRIVE)	478
Y	7	1	**6E-3036**	1	VALVE GP-CONTROL (SIDESHIFT)	480
Y	8	1	**124-2883**	1	VALVE GP-CONTROL (BLADE LIFT)	488
Y	9	1	**107-0545**	1	VALVE GP-CONTROL (RIPPER)	486
	10	1	**101-9346**	1	COVER	
	11	1	**9S-4180**	1	PLUG	
	12	1	**4J-7533**	1	SEAL-O-RING	
M	13	1	**137-6719**	3	BOLT (M10X1.5X80-MM)	

M-METRIC PART
Y-SEPARATE ILLUSTRATION

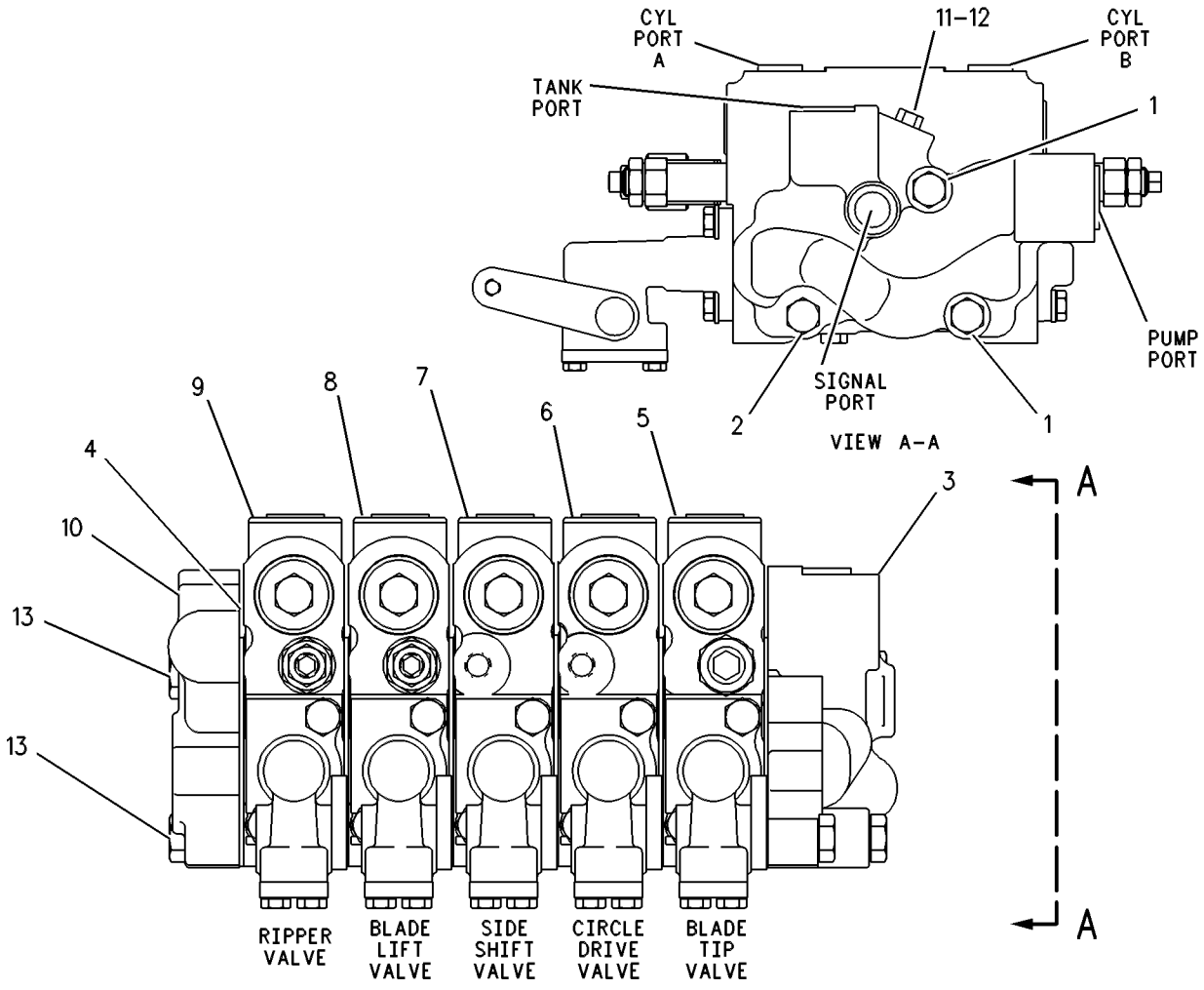

GRAPHIC #1 **<END>** g00252814

262-7291 VALVE GP-BANK 5–LH

S/N: JAP1-UP
PART OF 348-7031 VALVE & LINKAGE GP
AN ATTACHMENT

SMCS-5051 **i03266524**

NOTE	REF NO	GRAPHIC REF	PART NUMBER	QTY	PART NAME 1 2 3 4 5 6 (PRODUCT LEVEL)	SEE PAGE
Y	1	1	**6E-3034**	1	VALVE GP-CONTROL (BLADE TIP)	476
Y	2	1	**6E-3035**	1	VALVE GP-CONTROL (CIRCLE DRIVE)	478
Y	3	1	**6E-3036**	1	VALVE GP-CONTROL (SIDESHIFT)	480
Y	4	1	**6E-3037**	1	VALVE GP-CONTROL (BLADE LIFT)	482
	5	1	**101-0509**	6	SEAL-INTEGRAL	
	6	1	**102-8385**	1	MANIFOLD	
Y	7	1	**107-0543**	1	VALVE GP-CONTROL (SCARIFIER)	484
Y	8	1	**239-9893**	1	MANIFOLD GP-VALVE (LH)	419
M	10	1	**137-6719**	3	BOLT (M10X1.5X80-MM)	
M	11	1	**137-6720**	1	BOLT (M10X1.5X160-MM)	
	12	1	*222-4737*	1	PLUG AS	
		1	**9S-4180**	1	PLUG	
		1	**4J-7533**	1	SEAL-O-RING	
	13	1	**3K-6113**	3	WASHER-HARD (12X18.5X3-MM THK)	
M	14	1	**7X-2546**	2	BOLT (M10X1.5X180-MM)	
	15	1	**8T-4896**	1	WASHER-HARD (10.2X18.5X2.5-MM THK)	

M-METRIC PART
Y-SEPARATE ILLUSTRATION

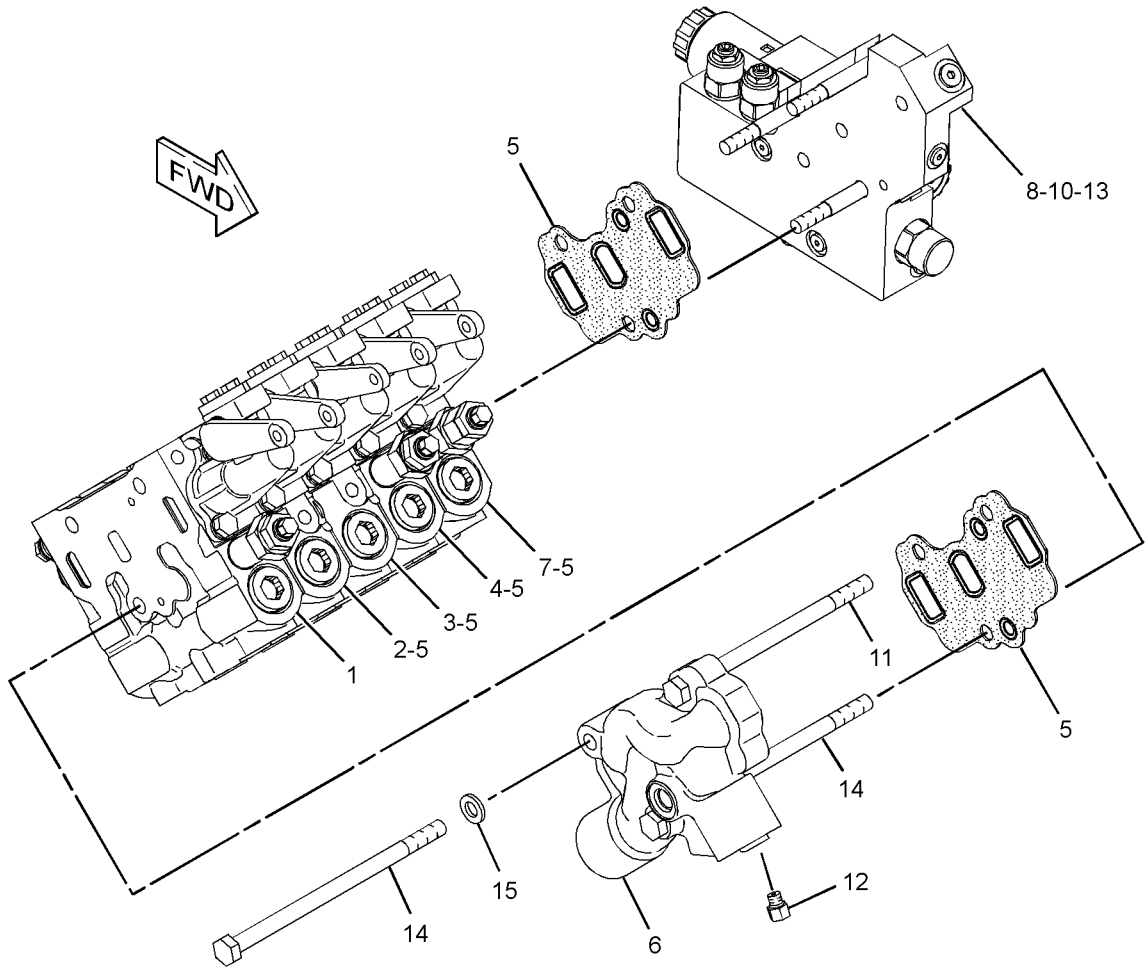

GRAPHIC #1 **<END>** g01770576

HYDRAULIC SYSTEM

9T-5957 VALVE GP-COMBINATION

S/N: JAP1-UP

PART OF 322-2320 LINES GP-PUMP

SMCS-5064 **i03641554**

NOTE	REF NO	GRAPHIC REF	PART NUMBER	QTY	PART NAME 1 2 3 4 5 6 (PRODUCT LEVEL)	SEE PAGE
C	1	1	**9T-5935**	1	BODY	
Y	2	1	**100-6021**	1	VALVE GP-RELIEF (STEERING)	501
	3	1	*3J-3679*	1	PLUG AS	
		1	**1J-9671**	1	SEAL-O-RING	
		1	**9S-8003**	1	PLUG	
	4	1	**3T-8236**	1	SPRING	
M	5	1	**6V-5230**	2	BOLT (M10X1.5X60-MM)	
	6	1	**6V-3965**	1	FITTING (QUICK DISCONNECT)	
	7	1	**3J-1907**	1	SEAL-O-RING	
	8	1	**6V-8647**	2	CONNECTOR	
	9	1	**3J-7354**	2	SEAL-O-RING	
	10	1	**6E-1923**	1	TUBE AS	
	11	1	**4J-5477**	2	SEAL-O-RING	
Y	12	1	**4T-4935**	1	VALVE GP-RELIEF (MAIN)	497
	13	1	**8T-8987**	1	ELBOW	
	14	1	**2M-9780**	1	SEAL-O-RING	
	15	1	**1H-0337**	1	VALVE	
	16	1	**9F-6705**	1	SPRING	
	17	1	**9S-4189**	1	PLUG	
	18	1	**6E-1924**	1	SPRING (OUTER)	
	19	1	**6E-1925**	1	SPRING (INNER)	
	20	1	**5M-2057**	1	SEAL-O-RING	
	21	1	**8M-3175**	2	WASHER-HARD (10.2X16X3-MM THK)	
	22	1	**6V-0852**	1	CAP-DUST	
Y	23	1	**6E-4703**	1	VALVE GP-RELIEF (IMPLEMENT SIGNAL)	499
C	24	1	**3K-0360**	1	SEAL-O-RING	
	25	1	*173-3993*	2	PLUG AS	
					(EACH INCLUDES)	
		1	**4J-7533**	1	SEAL-O-RING	
		1	**9S-8001**	1	PLUG-O-RING	
Y	27	1	**4T-1860**	1	VALVE GP-SHUTTLE (IMPLEMENT, STEERING)	506
	30	1	**2S-4078**	1	SEAL-O-RING	
	31	1	*3R-2437*	1	PLUG AS	
		1	**4K-1388**	1	SEAL-O-RING	
		1	**9S-8009**	1	PLUG-O-RING	
C	32	1	**6V-8398**	1	SEAL-O-RING	
C	33	1	**7X-4776**	2	RING-BACKUP	
	34	1	*183-7263*	1	PLUG AS	
		1	**3J-7354**	1	SEAL-O-RING	
		1	**9S-8002**	1	PLUG-O-RING	
CY	35	1	**131-8350**	1	VALVE GP-PURGE (IMPLEMENT SIGNAL)	496
C	36	1	**3P-9498**	1	PLUG-ORIFICE	
C	37	1	**9T-5934**	1	VALVE	
C	38	1	**8J-6815**	2	PLUG-ORIFICE	
	39	1	*148-8408*	3	PLUG AS	
					(EACH INCLUDES)	
		1	**9S-4183**	1	PLUG-O-RING	
		1	**3D-2824**	1	SEAL-O-RING	

C-CHANGE FROM PREVIOUS TYPE
M-METRIC PART
Y-SEPARATE ILLUSTRATION

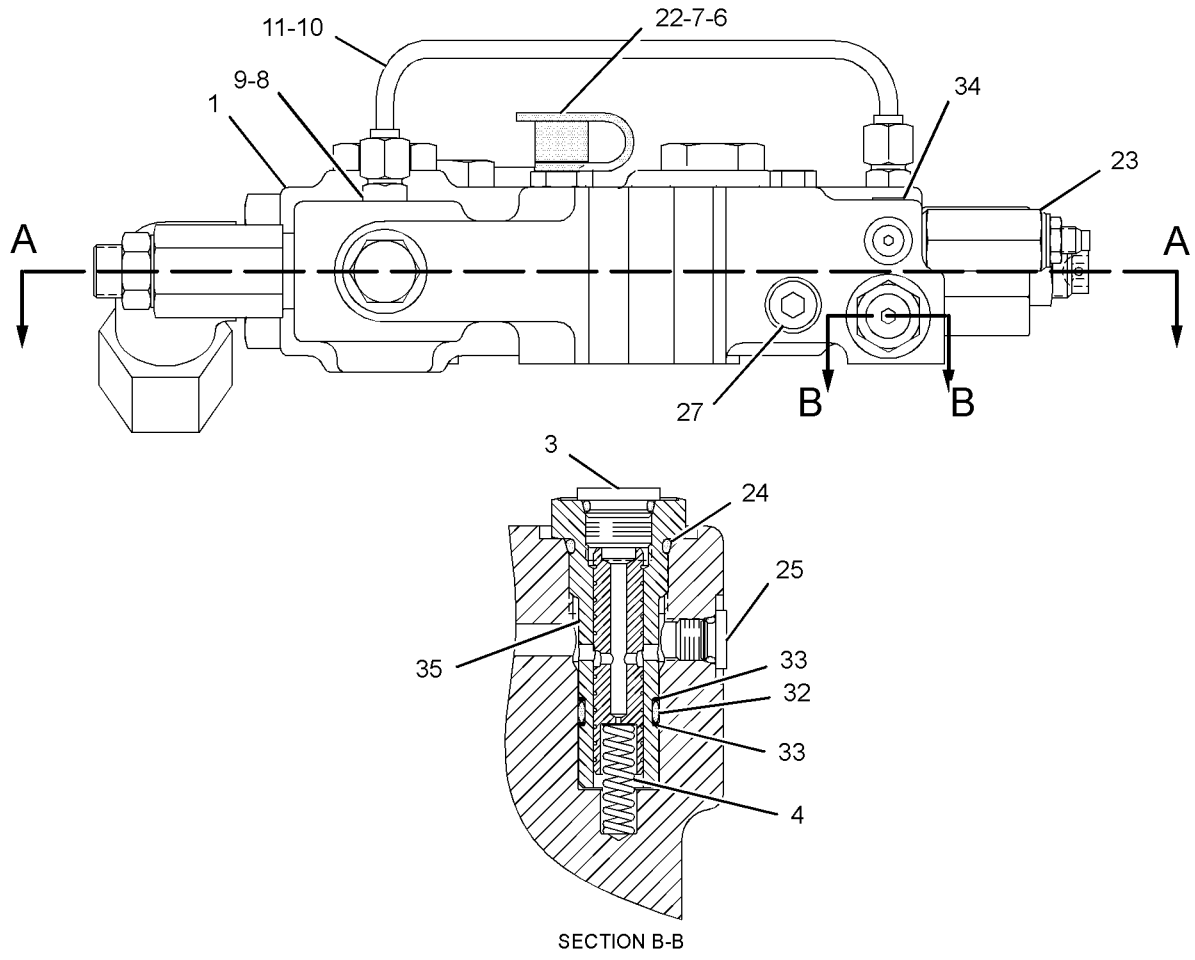

GRAPHIC #1 **<END>** g01297579

HYDRAULIC SYSTEM

6E-3028 VALVE GP-CONTROL—ARTICULATION

S/N: JAP1-UP

PART OF 124-3325, 250-0544 VALVE GP-BANK 4, 124-3326 VALVE GP-BANK 5

ALSO AN ATTACHMENT

SMCS-5051 **i03372403**

NOTE	REF NO	GRAPHIC REF	PART NUMBER	QTY	PART NAME 1 2 3 4 5 6 (PRODUCT LEVEL)	SEE PAGE
	1	1	**6E-3044**	1	BODY	
	2	1	**101-1148**	1	STEM	
	3	1	**101-1978**	1	COVER	
	4	1	**2K-8199**	2	SEAL-O-RING	
M	5	1	**8T-4189**	4	BOLT (M8X1.25X20-MM)	
	6	1	**8T-4224**	4	WASHER-HARD (8.8X16X2-MM THK)	
	7	1	**101-1984**	1	BODY	
	8	1	**102-7412**	1	SPRING	
	9	1	**101-1973**	4	RETAINER	
	10	1	**101-1971**	1	LEVER	
	11	1	**101-1970**	1	LEVER AS	
C	12	1	**325-6423**	2	VALVE GP-CHECK	
					(EACH INCLUDES)	
		1	**3K-0360**	1	SEAL-O-RING	
		1	**7J-9933**	1	SEAL-O-RING	
	13	1	**101-1983**	2	RING-BACKUP	
	14	1	**101-2480**	1	COVER	
	15	1	**4D-9986**	1	SEAL-O-RING	
M	16	1	**8T-4138**	2	BOLT (M6X1X20-MM)	
	17	1	**5B-9318**	1	BALL	
	18	1	**6E-3007**	1	SPRING	
	19	1	**6E-4502**	1	PLUG	
	20	1	**4J-7533**	1	SEAL-O-RING	
	21	1	**6E-3019**	1	VALVE	
	22	1	**6E-5153**	1	SPRING	
	23	1	**108-2187**	1	PLUG-PIPE	
	24	1	**106-3659**	1	PISTON	
	26	1	**111-8233**	1	SPRING	
	27	1	*148-8395*	1	PLUG AS	
		1	**9S-8005**	1	PLUG-O-RING	
		1	**3K-0360**	1	SEAL-O-RING	
	28	1	**8M-4437**	2	SEAL-O-RING	

C-CHANGE FROM PREVIOUS TYPE
M-METRIC PART

6E-3028 **VALVE GP-CONTROL** *(contd.)* **i03372403**

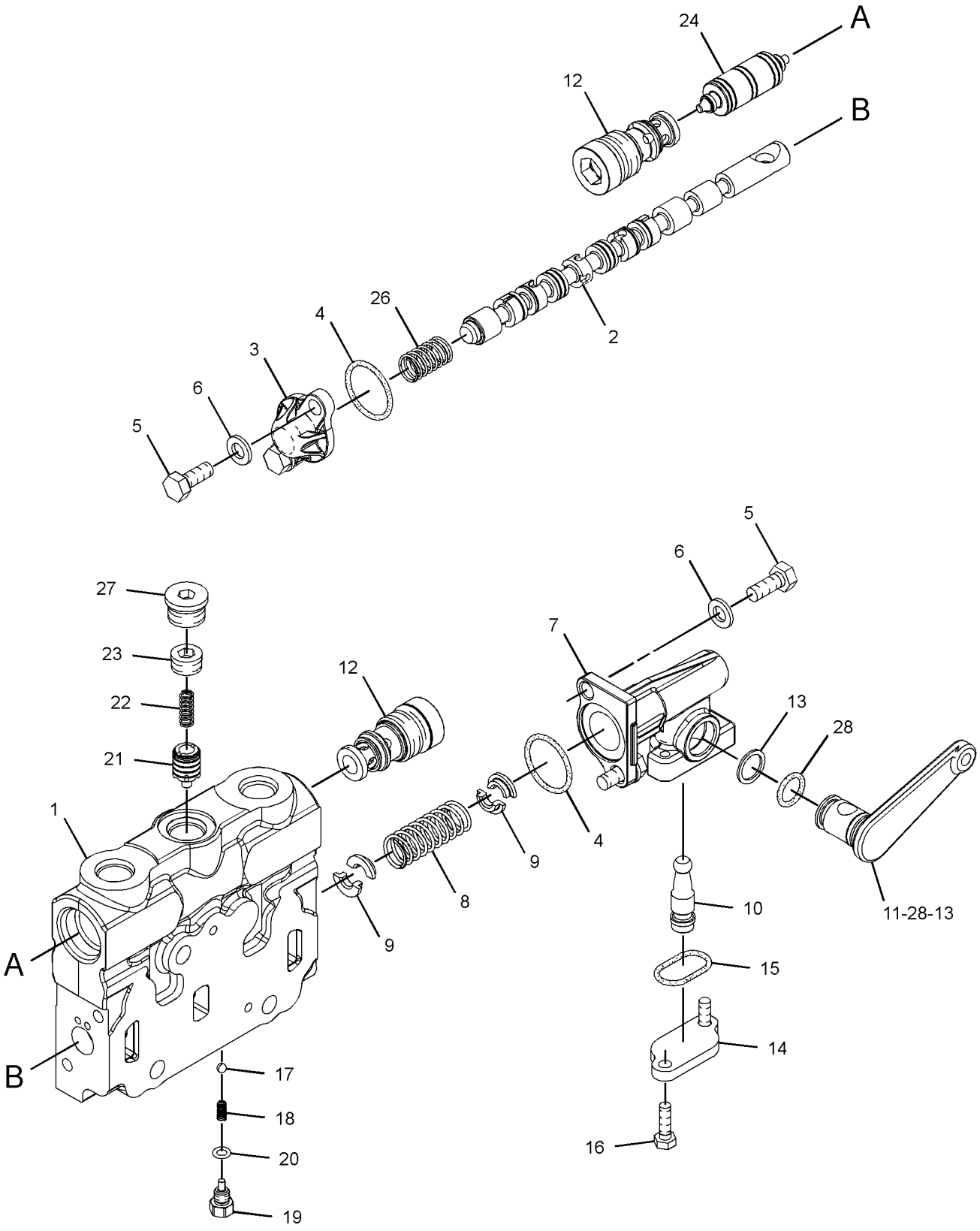

GRAPHIC #1 **<END>** g01748193

HYDRAULIC SYSTEM

6E-3029 VALVE GP-CONTROL—CENTERSHIFT

S/N: JAP1-UP

PART OF 124-3325, 250-0544 VALVE GP-BANK 4, 124-3326 VALVE GP-BANK 5

ALSO AN ATTACHMENT

SMCS-5051 **i03372660**

NOTE	REF NO	GRAPHIC REF	PART NUMBER	QTY	PART NAME 1 2 3 4 5 6 (PRODUCT LEVEL)	SEE PAGE
	1	1	**4D-9986**	1	SEAL-O-RING	
	2	1	**6E-3007**	1	SPRING	
	3	1	**6E-3019**	1	VALVE (COMPENSATOR)	
	4	1	**6E-3044**	1	BODY	
	5	1	**6E-4502**	1	PLUG	
	6	1	**6E-5153**	1	SPRING	
	7	1	**101-1970**	1	LEVER AS	
	8	1	**101-1971**	1	LEVER	
	9	1	**101-1973**	4	RETAINER	
	10	1	**101-1978**	1	COVER	
	11	1	**101-1984**	1	BODY	
	12	1	**101-2480**	1	COVER	
	13	1	**102-7412**	1	SPRING	
	14	1	**106-3659**	1	PISTON	
	15	1	**101-1149**	1	STEM	
	17	1	**111-8233**	1	SPRING	
C	18	1	**325-6423**	2	VALVE GP-CHECK	
					(EACH INCLUDES)	
		1	**3K-0360**	1	SEAL-O-RING	
		1	**7J-9933**	1	SEAL-O-RING	
	19	1	**101-1983**	2	RING-BACKUP	
	20	1	**108-2187**	1	PLUG-PIPE	
C	21	1	*148-8395*	1	PLUG AS	
		1	**9S-8005**	1	PLUG-O-RING	
		1	**3K-0360**	1	SEAL-O-RING	
	22	1	**2K-8199**	2	SEAL-O-RING	
	23	1	**4J-7533**	1	SEAL-O-RING	
	24	1	**5B-9318**	1	BALL	
	25	1	**8M-4437**	2	SEAL-O-RING	
M	26	1	**8T-4138**	2	BOLT (M6X1X20-MM)	
M	27	1	**8T-4189**	4	BOLT (M8X1.25X20-MM)	
	28	1	**8T-4224**	4	WASHER-HARD (8.8X16X2-MM THK)	

C-CHANGE FROM PREVIOUS TYPE
M-METRIC PART

6E-3029 **VALVE GP-CONTROL** *(contd.)* **i03372660**

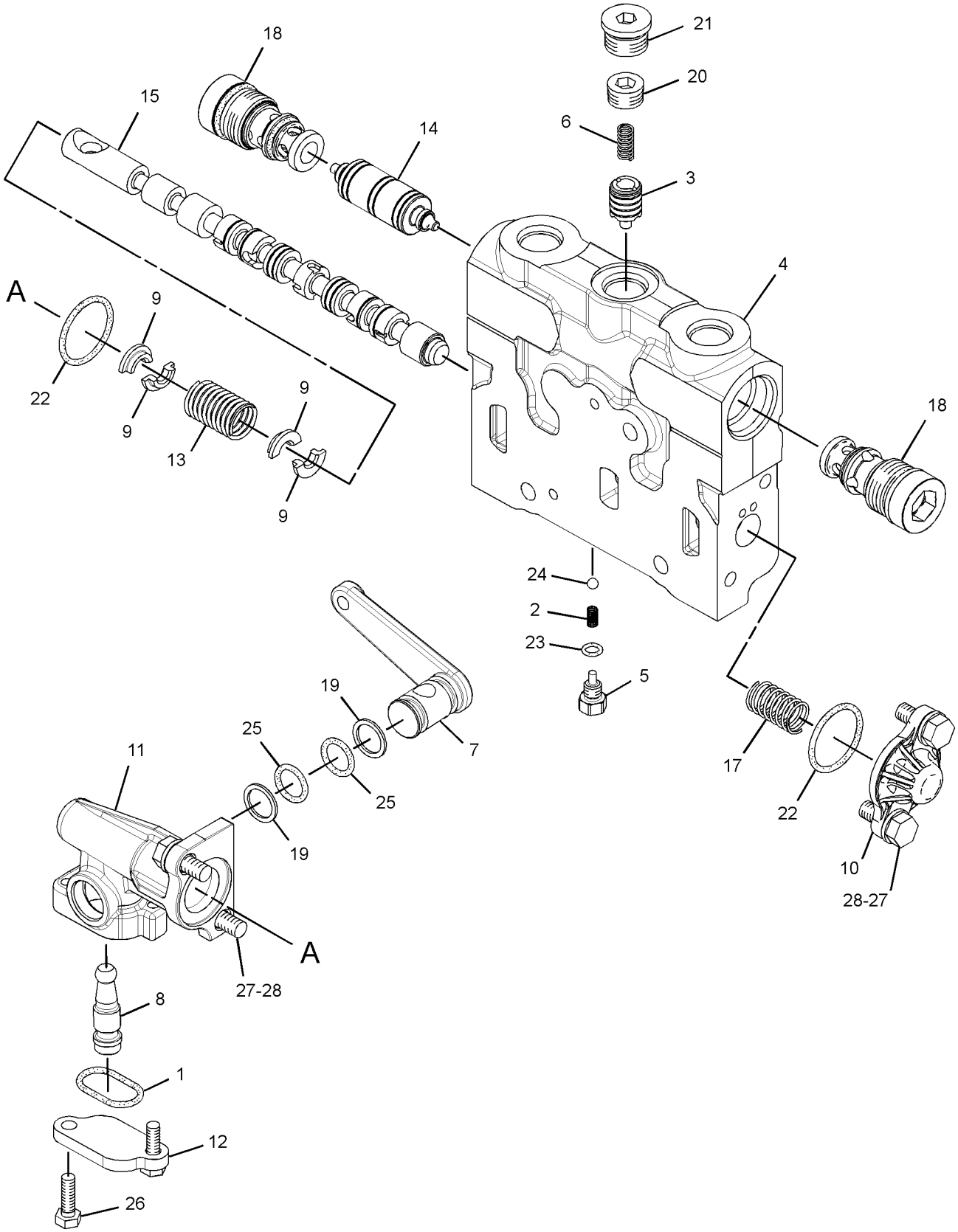

GRAPHIC #1 **<END>** g01688982

HYDRAULIC SYSTEM

6E-3030 VALVE GP-CONTROL—WHEEL LEAN

S/N: JAP1-UP

PART OF 124-3325, 250-0544 VALVE GP-BANK 4, 124-3326 VALVE GP-BANK 5

ALSO AN ATTACHMENT

SMCS-5051 **i03563860**

NOTE	REF NO	GRAPHIC REF	PART NUMBER	QTY	PART NAME 1 2 3 4 5 6 (PRODUCT LEVEL)	SEE PAGE
	1	1	**4D-9986**	1	SEAL-O-RING	
	2	1	**6E-3007**	1	SPRING	
	3	1	**6E-3019**	1	VALVE	
	4	1	**6E-3044**	1	BODY	
	5	1	**6E-4502**	1	PLUG	
	6	1	**6E-5153**	1	SPRING	
	7	1	**101-1154**	1	STEM	
	8	1	**101-1970**	1	LEVER AS	
	9	1	**101-1971**	1	LEVER	
	10	1	**101-1973**	4	RETAINER	
	11	1	**101-1978**	1	COVER	
	12	1	**101-1984**	1	BODY	
	13	1	**101-2480**	1	COVER	
	14	1	**102-7412**	1	SPRING	
	15	1	**106-3659**	1	PISTON	
	17	1	**111-8233**	1	SPRING	
C	18	1	**325-6423**	2	VALVE GP-CHECK	
					(EACH INCLUDES)	
		1	**3K-0360**	1	SEAL-O-RING	
		1	**7J-9933**	1	SEAL-O-RING	
	19	1	**101-1983**	2	RING-BACKUP	
	20	1	**108-2187**	1	PLUG-PIPE	
	21	1	*148-8395*	1	PLUG AS	
		1	**9S-8005**	1	PLUG-O-RING	
		1	**3K-0360**	1	SEAL-O-RING	
	22	1	**8M-4437**	2	SEAL-O-RING	
	23	1	**2K-8199**	2	SEAL-O-RING	
	24	1	**4J-7533**	1	SEAL-O-RING	
	25	1	**5B-9318**	1	BALL	
M	26	1	**8T-4138**	2	BOLT (M6X1X20-MM)	
M	27	1	**8T-4189**	4	BOLT (M8X1.25X20-MM)	
	28	1	**8T-4224**	4	WASHER-HARD (8.8X16X2-MM THK)	

C-CHANGE FROM PREVIOUS TYPE
M-METRIC PART

6E-3030 **VALVE GP-CONTROL** *(contd.)* **i03563860**

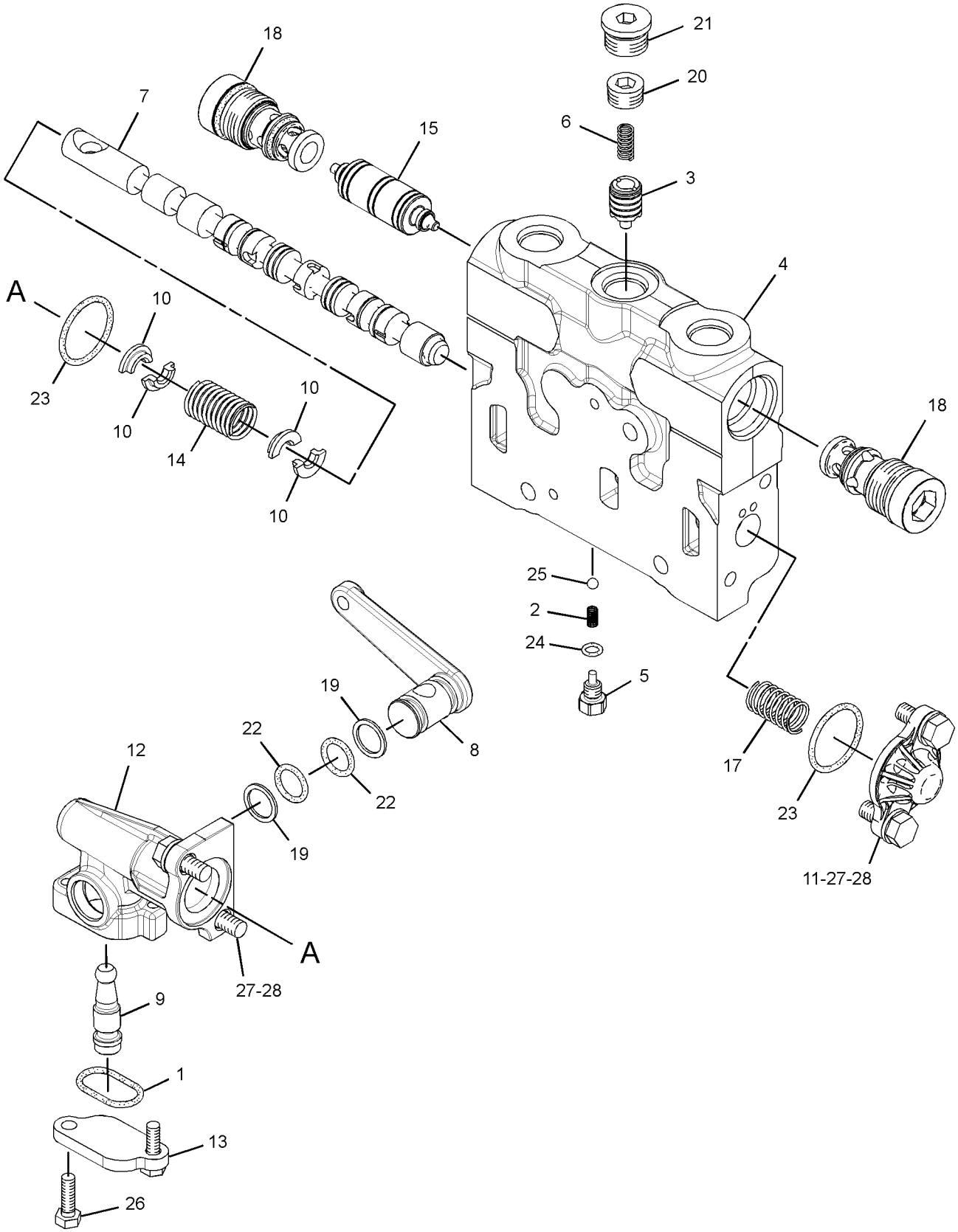

GRAPHIC #1 **<END>** g01668515

HYDRAULIC SYSTEM

6E-3031 VALVE GP-CONTROL—BLADE LIFT

S/N: JAP1-UP
PART OF 250-0544 VALVE GP-BANK 4
AN ATTACHMENT

SMCS-5051 **i03373022**

NOTE	REF NO	GRAPHIC REF	PART NUMBER	QTY	PART NAME 1 2 3 4 5 6 (PRODUCT LEVEL)	SEE PAGE
	1	1	**6E-3043**	1	BODY	
	2	1	**221-3676**	1	STEM	
	3	1	**101-1980**	1	HOUSING	
Y	4	1	**108-4916**	1	DETENT GP-CONTROL VALVE (BLADE LIFT)	388
	5	1	**5B-9318**	1	BALL	
M	6	1	**8T-6869**	2	BOLT (M8X1.25X60-MM)	
	7	1	**2K-8199**	2	SEAL-O-RING	
M	8	1	**8T-4189**	2	BOLT (M8X1.25X20-MM)	
	9	1	**8T-4224**	4	WASHER-HARD (8.8X16X2-MM THK)	
	10	1	**101-1984**	1	BODY	
	11	1	**102-7412**	1	SPRING	
	12	1	**101-1973**	4	RETAINER	
	13	1	**101-1971**	1	LEVER	
	14	1	**101-1970**	1	LEVER AS	
C	15	1	**325-6423**	2	VALVE GP-CHECK	
					(EACH INCLUDES)	
		1	**3K-0360**	1	SEAL-O-RING	
		1	**7J-9933**	1	SEAL-O-RING	
	16	1	**101-1983**	2	RING-BACKUP	
	17	1	**4D-9986**	1	SEAL-O-RING	
	18	1	**101-2480**	1	COVER	
M	19	1	**8T-4138**	2	BOLT (M6X1X20-MM)	
	20	1	**6E-3007**	1	SPRING	
	21	1	**6E-4502**	1	PLUG	
	22	1	**4J-7533**	1	SEAL-O-RING	
	23	1	**6E-3019**	1	VALVE	
	24	1	**6E-5153**	1	SPRING	
	25	1	**108-2187**	1	PLUG-PIPE	
	26	1	**106-3660**	2	PISTON	
Y	27	1	**222-7774**	1	VALVE GP-RELIEF (BLADE LIFT)	505
	29	1	**111-8234**	1	SPRING	
					SPRING MUST HAVE LIGHT BLUE STRIPE	
	30	1	*148-8395*	1	PLUG AS	
		1	**9S-8005**	1	PLUG-O-RING	
		1	**3K-0360**	1	SEAL-O-RING	
	31	1	**203-3940**	2	SEAL-O-RING	

C-CHANGE FROM PREVIOUS TYPE
M-METRIC PART
Y-SEPARATE ILLUSTRATION

6E-3031 **VALVE GP-CONTROL** *(contd.)* **i03373022**

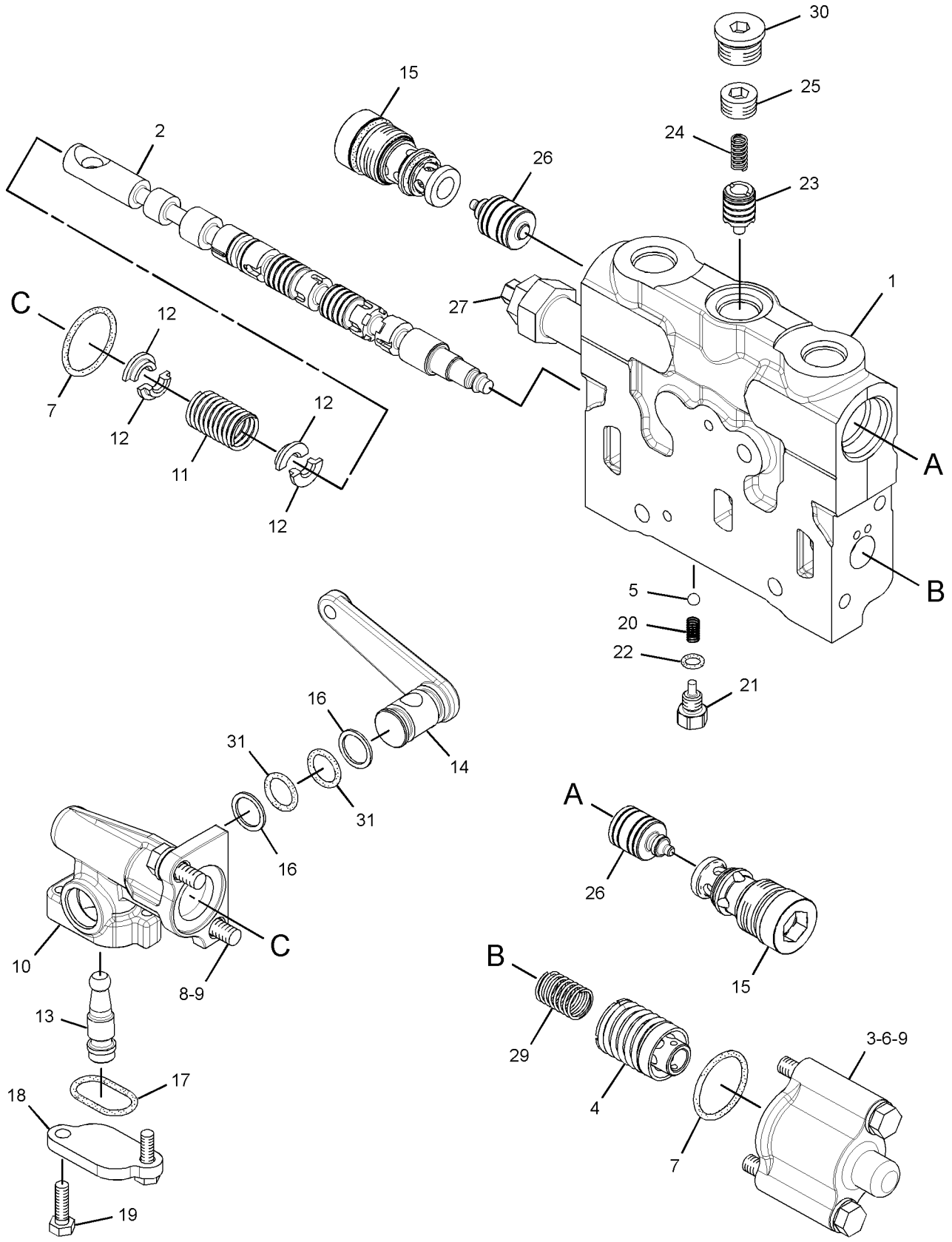

GRAPHIC #1 **<END>** g01668513

HYDRAULIC SYSTEM

6E-3034 VALVE GP-CONTROL—BLADE TIP

S/N: JAP1-UP

PART OF 124-3328, 124-3329, 262-7291 VALVE GP-BANK 5

AN ATTACHMENT

SMCS-5051 **i03496421**

NOTE	REF NO	GRAPHIC REF	PART NUMBER	QTY	PART NAME 1 2 3 4 5 6 (PRODUCT LEVEL)	SEE PAGE
	1	1	**6E-4599**	1	BODY	
	2	1	**101-1155**	1	STEM	
	3	1	**101-1978**	1	COVER	
	4	1	**2K-8199**	2	SEAL-O-RING	
M	5	1	**8T-4189**	4	BOLT (M8X1.25X20-MM)	
	6	1	**8T-4224**	4	WASHER-HARD (8.8X16X2-MM THK)	
	7	1	**101-1984**	1	BODY	
Y	8	1	**139-8472**	1	VALVE GP-RELIEF (BLADE TIP)	503
	10	1	**102-7412**	1	SPRING	
	11	1	**101-1973**	4	RETAINER	
	12	1	**101-1971**	1	LEVER	
	13	1	**340-5472**	1	LEVER AS	
	14	1	**8M-4437**	2	SEAL-O-RING	
	16	1	**4D-9986**	1	SEAL-O-RING	
	17	1	**101-2480**	1	COVER	
M	18	1	**8T-4138**	2	BOLT (M6X1X20-MM)	
	19	1	**5B-9318**	1	BALL	
	20	1	**6E-3007**	1	SPRING	
	21	1	**6E-4502**	1	PLUG	
	22	1	**4J-7533**	1	SEAL-O-RING	
	23	1	**6E-3019**	1	VALVE	
	24	1	**6E-5153**	1	SPRING	
	25	1	**108-2187**	1	PLUG-PIPE	
	26	1	*148-8395*	1	PLUG AS	
		1	**9S-8005**	1	PLUG-O-RING	
		1	**3K-0360**	1	SEAL-O-RING	
	27	1	**106-3659**	1	PISTON	
	28	1	**111-8233**	1	SPRING	
C	29	1	**325-6423**	2	VALVE GP-CHECK	
					(EACH INCLUDES)	
		1	**3K-0360**	1	SEAL-O-RING	
		1	**7J-9933**	1	SEAL-O-RING	

C-CHANGE FROM PREVIOUS TYPE
M-METRIC PART
Y-SEPARATE ILLUSTRATION

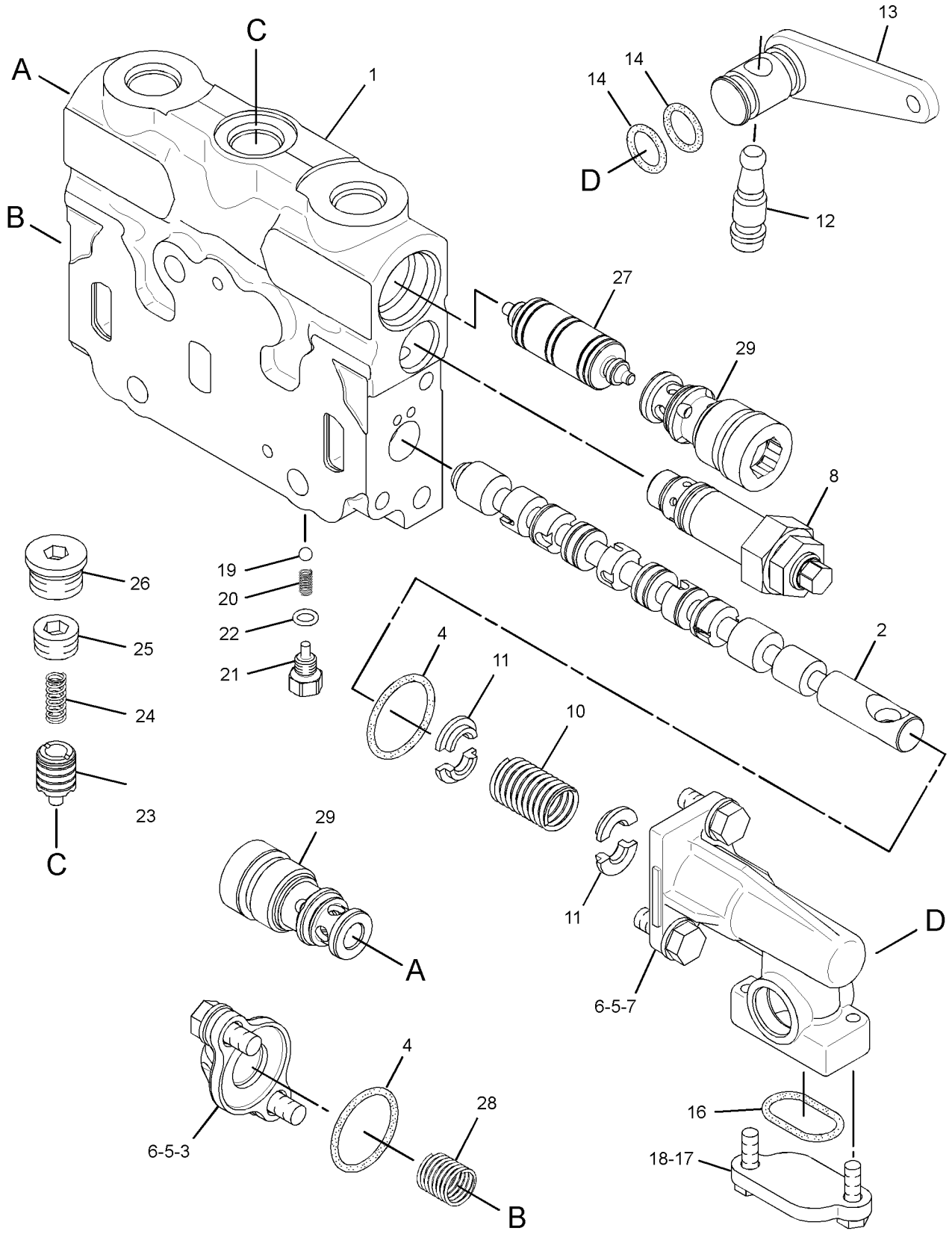

GRAPHIC #1 **<END>** g01833173

HYDRAULIC SYSTEM

6E-3035 VALVE GP-CONTROL—CIRCLE DRIVE

S/N: JAP1-UP

PART OF 104-8673 VALVE GP-BANK 3, 130-7754, 130-7755 VALVE GP-BANK 4, 124-3328, 124-3329, 262-7291 VALVE GP-BANK 5

ALSO AN ATTACHMENT

SMCS-5051 **i03179442**

NOTE	REF NO	GRAPHIC REF	PART NUMBER	QTY	PART NAME 1 2 3 4 5 6 (PRODUCT LEVEL)	SEE PAGE
	1	1	**6E-3044**	1	BODY	
	2	1	**148-7906**	1	STEM	
	3	1	**101-1978**	1	COVER	
	4	1	**2K-8199**	2	SEAL-O-RING	
M	5	1	**8T-4189**	4	BOLT (M8X1.25X20-MM)	
	6	1	**8T-4224**	4	WASHER-HARD (8.8X16X2-MM THK)	
	7	1	**101-1984**	1	BODY	
	8	1	**102-7412**	1	SPRING	
	9	1	**101-1973**	4	RETAINER	
	10	1	**101-1971**	1	LEVER	
	11	1	**101-1982**	1	LEVER AS	
	12	1	**8M-4437**	2	SEAL-O-RING	
	13	1	**101-1983**	2	RING-BACKUP	
	14	1	**4D-9986**	1	SEAL-O-RING	
	15	1	**101-2480**	1	COVER	
M	16	1	**8T-4138**	2	BOLT (M6X1X20-MM)	
	17	1	**5B-9318**	1	BALL	
	18	1	**6E-3007**	1	SPRING	
	19	1	**6E-4502**	1	PLUG	
	20	1	**4J-7533**	1	SEAL-O-RING	
	21	1	**6E-3019**	1	VALVE	
	22	1	**6E-5153**	1	SPRING	
	23	1	**108-2187**	1	PLUG-PIPE	
	24	1	*148-8395*	1	PLUG AS	
		1	**9S-8005**	1	PLUG-O-RING	
		1	**3K-0360**	1	SEAL-O-RING	
	25	1	**3K-0360**	2	SEAL-O-RING	
	26	1	**106-3659**	1	PISTON	
	27	1	**6E-3013**	2	SEAT	
	28	1	**106-3658**	2	VALVE	
	29	1	**9J-0403**	2	SPRING	
	30	1	**9J-0404**	2	PLUG	
	31	1	**7J-9933**	2	SEAL-O-RING	
	32	1	**111-8233**	1	SPRING	

M-METRIC PART

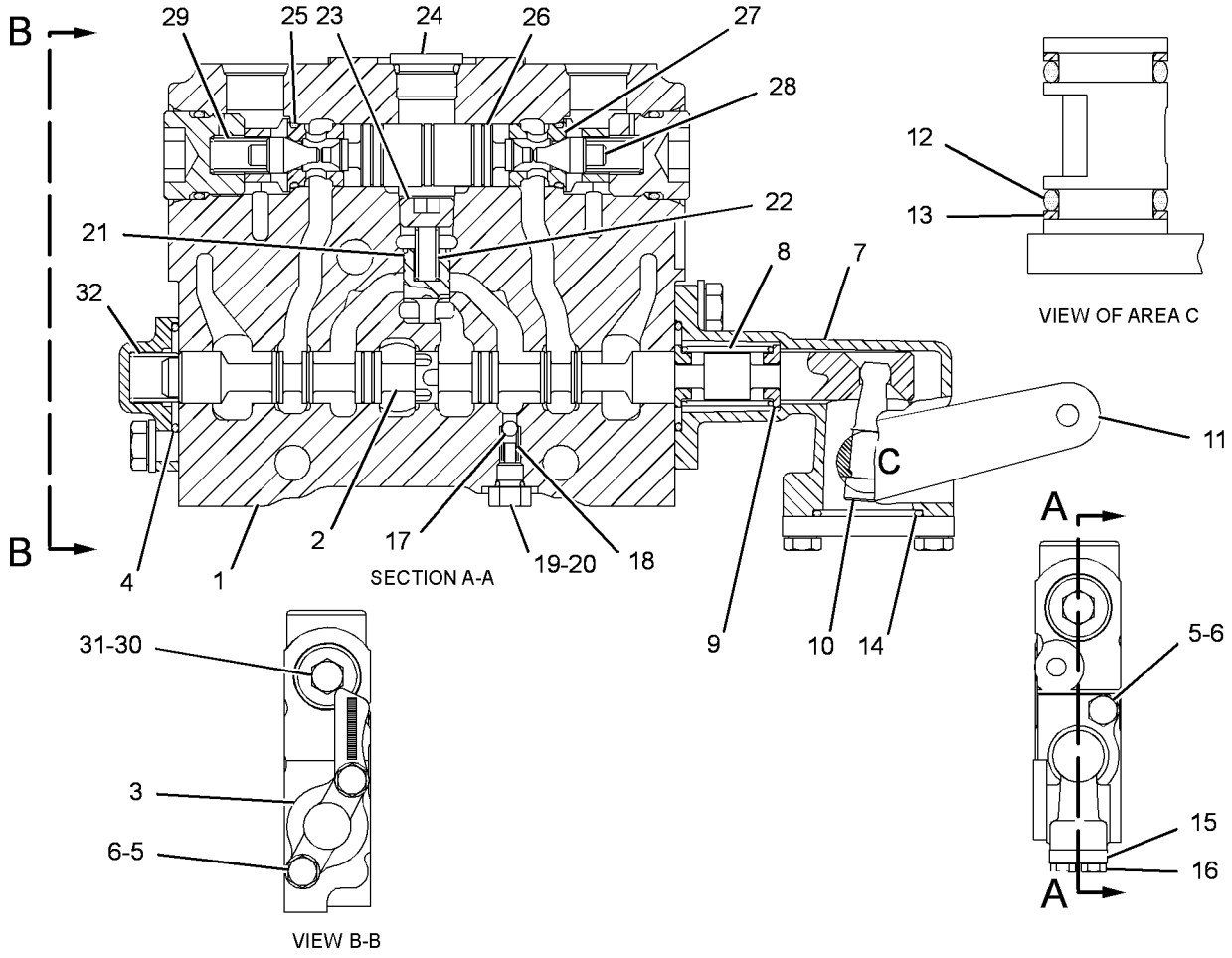

GRAPHIC #1 **<END>** g01625258

HYDRAULIC SYSTEM

6E-3036 VALVE GP-CONTROL—SIDESHIFT

S/N: JAP1-UP

PART OF 104-8673 VALVE GP-BANK 3, 130-7754, 130-7755 VALVE GP-BANK 4, 124-3328, 124-3329, 262-7291 VALVE GP-BANK 5

ALSO AN ATTACHMENT

SMCS-5051 **i03496424**

NOTE	REF NO	GRAPHIC REF	PART NUMBER	QTY	PART NAME 1 2 3 4 5 6 (PRODUCT LEVEL)	SEE PAGE
	1	1	**4D-9986**	1	SEAL-O-RING	
	2	1	**6E-3007**	1	SPRING	
	3	1	**6E-3019**	1	VALVE	
	4	1	**6E-3058**	1	BODY	
	5	1	**6E-4502**	1	PLUG	
	6	1	**6E-5153**	1	SPRING	
	7	1	**101-1971**	1	LEVER	
	8	1	**101-1973**	4	RETAINER	
	9	1	**101-1978**	1	COVER	
	10	1	**340-5472**	1	LEVER AS	
	11	1	**101-1984**	1	BODY	
	12	1	**101-2480**	1	COVER	
	13	1	**102-4577**	1	STEM	
	14	1	**102-7412**	1	SPRING	
	15	1	**106-3659**	1	PISTON	
	17	1	**111-8233**	1	SPRING	
Y	18	1	**139-8472**	1	VALVE GP-RELIEF (SIDESHIFT)	503
C	19	1	**325-6423**	2	VALVE GP-CHECK	
					(EACH INCLUDES)	
		1	**3K-0360**	1	SEAL-O-RING	
		1	**7J-9933**	1	SEAL-O-RING	
	21	1	**108-2187**	1	PLUG-PIPE	
	22	1	*148-8395*	1	PLUG AS	
		1	**9S-8005**	1	PLUG-O-RING	
		1	**3K-0360**	1	SEAL-O-RING	
	23	1	**2K-8199**	2	SEAL-O-RING	
	24	1	**4J-7533**	1	SEAL-O-RING	
	25	1	**5B-9318**	1	BALL	
	26	1	**8M-4437**	2	SEAL-O-RING	
M	27	1	**8T-4138**	2	BOLT (M6X1X20-MM)	
M	28	1	**8T-4189**	4	BOLT (M8X1.25X20-MM)	
	29	1	**8T-4224**	4	WASHER-HARD (8.8X16X2-MM THK)	

C-CHANGE FROM PREVIOUS TYPE
M-METRIC PART
Y-SEPARATE ILLUSTRATION

6E-3036 **VALVE GP-CONTROL** *(contd.)* **i03496424**

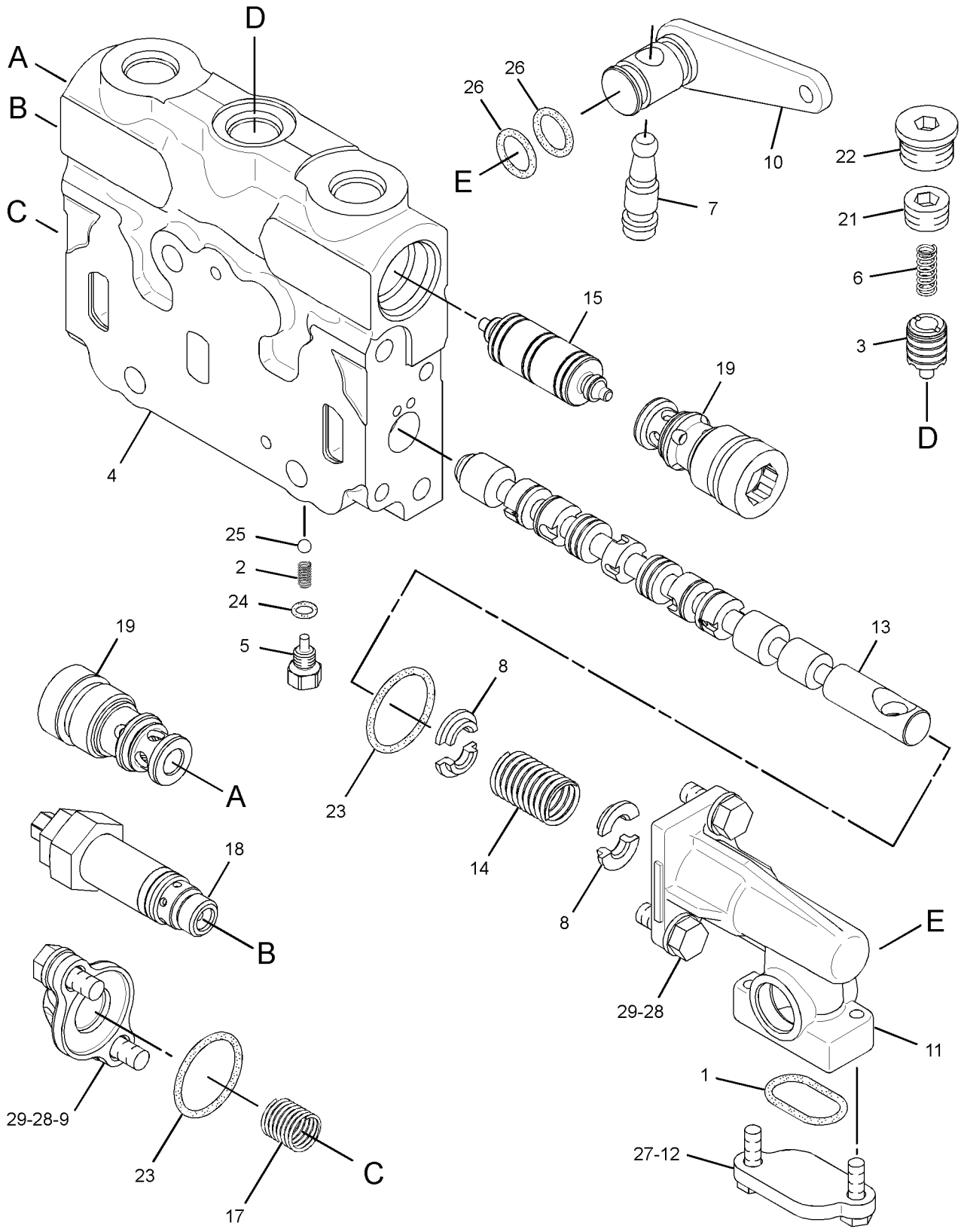

GRAPHIC #1 **<END>** g01833732

HYDRAULIC SYSTEM

6E-3037 VALVE GP-CONTROL—BULLDOZER

S/N: JAP1-UP
PART OF 262-7291 VALVE GP-BANK 5
AN ATTACHMENT

SMCS-5051 **i02872563**

NOTE	REF NO	GRAPHIC REF	PART NUMBER	QTY	PART NAME 1 2 3 4 5 6 (PRODUCT LEVEL)	SEE PAGE
	1	1	**6E-3043**	1	BODY	
	2	1	**221-3676**	1	STEM	
	3	1	**101-1980**	1	HOUSING	
	5	1	**5B-9318**	1	BALL	
M	6	1	**8T-6869**	2	BOLT (M8X1.25X60-MM)	
	7	1	**2K-8199**	2	SEAL-O-RING	
M	8	1	**8T-4189**	2	BOLT (M8X1.25X20-MM)	
	9	1	**8T-4224**	4	WASHER-HARD (8.8X16X2-MM THK)	
	10	1	**101-1984**	1	BODY	
	11	1	**102-7412**	1	SPRING	
	12	1	**101-1973**	4	RETAINER	
	13	1	**101-1971**	1	LEVER	
	14	1	**101-1982**	1	LEVER AS	
	15	1	**8M-4437**	2	SEAL-O-RING	
	16	1	**101-1983**	2	RING-BACKUP	
	17	1	**4D-9986**	1	SEAL-O-RING	
	18	1	**101-2480**	1	COVER	
M	19	1	**8T-4138**	2	BOLT (M6X1X20-MM)	
	20	1	**6E-3007**	1	SPRING	
	21	1	**6E-4502**	1	PLUG	
	22	1	**4J-7533**	1	SEAL-O-RING	
	23	1	**6E-3019**	1	VALVE	
	24	1	**6E-5153**	1	SPRING	
	25	1	**108-2187**	1	PLUG-PIPE	
	26	1	*148-8395*	1	PLUG AS	
		1	**3K-0360**	1	SEAL-O-RING	
		1	**9S-8005**	1	PLUG-O-RING	
	27	1	**3K-0360**	2	SEAL-O-RING	
	28	1	**106-3660**	2	PISTON	
	29	1	**229-5010**	2	VALVE GP-CHECK	
	31	1	**9J-0403**	2	SPRING	
	32	1	**9J-0404**	2	PLUG	
	33	1	**7J-9933**	2	SEAL-O-RING	
CY	34	1	**222-7774**	1	VALVE GP-RELIEF (BLADE LIFT)	505
Y	36	1	**108-4916**	1	DETENT GP-CONTROL VALVE (BLADE LIFT)	388
	37	1	**111-8234**	1	SPRING	

C-CHANGE FROM PREVIOUS TYPE
M-METRIC PART
Y-SEPARATE ILLUSTRATION

6E-3037 **VALVE GP-CONTROL** *(contd.)* **i02872563**

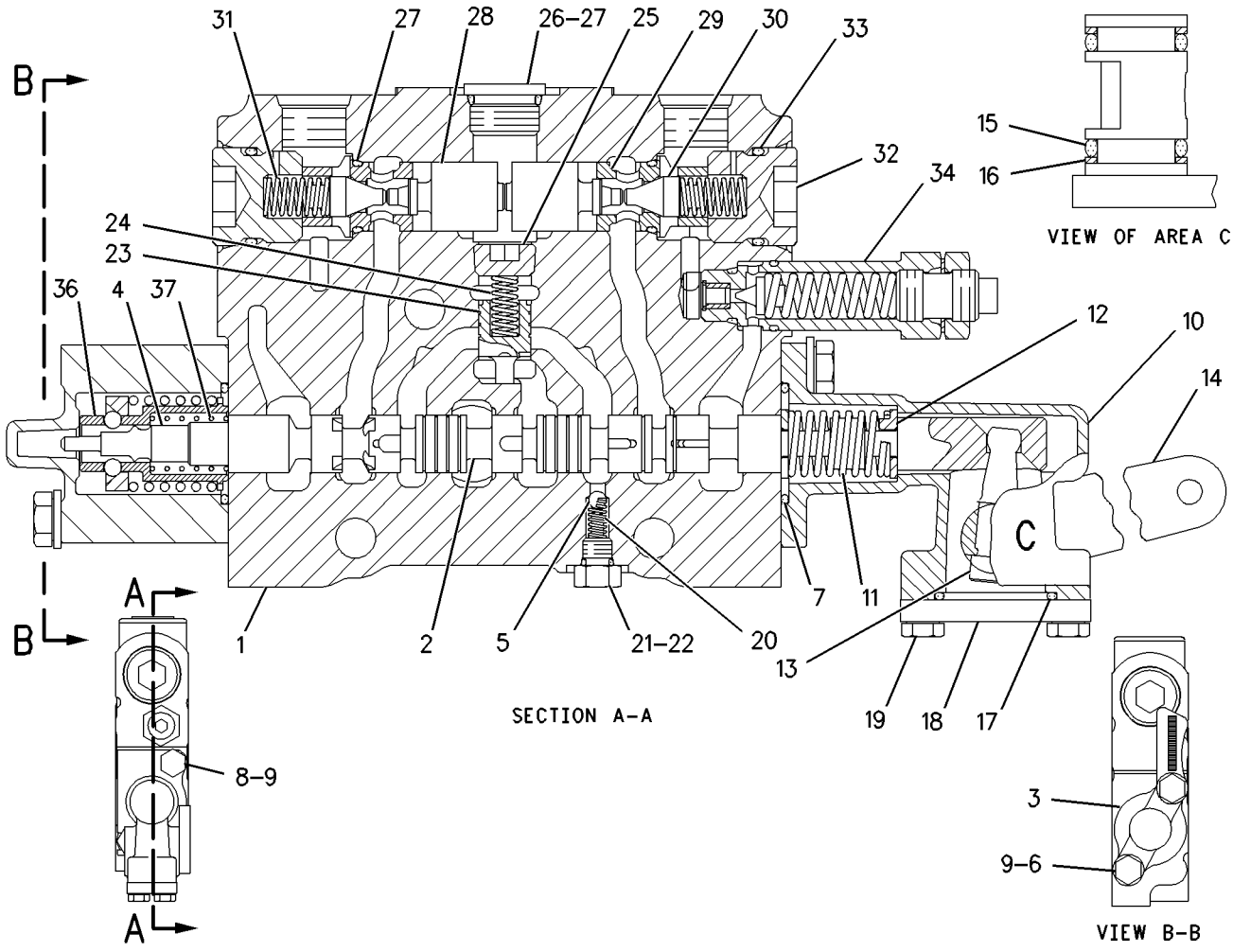

GRAPHIC #1 **<END>** g00922337

HYDRAULIC SYSTEM

107-0543 VALVE GP-CONTROL—SCARIFIER

S/N: JAP1-UP

PART OF 130-7754 VALVE GP-BANK 4, 124-3328, 262-7291 VALVE GP-BANK 5

AN ATTACHMENT

SMCS-5051 **i03418922**

NOTE	REF NO	GRAPHIC REF	PART NUMBER	QTY	PART NAME 1 2 3 4 5 6 (PRODUCT LEVEL)	SEE PAGE
	1	1	**4D-9986**	1	SEAL-O-RING	
	2	1	**6E-3007**	1	SPRING	
	3	1	**6E-3019**	1	VALVE	
	4	1	**6E-4502**	1	PLUG	
	5	1	**6E-4599**	1	BODY	
	6	1	**6E-5153**	1	SPRING	
	7	1	**101-1148**	1	STEM	
	8	1	**101-1971**	1	LEVER	
	9	1	**101-1973**	4	RETAINER	
	10	1	**101-1978**	1	COVER	
	11	1	**101-1982**	1	LEVER AS	
	12	1	**101-1984**	1	BODY	
	13	1	**101-2480**	1	COVER	
	14	1	**102-7412**	1	SPRING	
	15	1	**106-3659**	1	PISTON	
	17	1	**111-8233**	1	SPRING	
C	18	1	**325-6423**	2	VALVE GP-CHECK	
					(EACH INCLUDES)	
		1	**3K-0360**	1	SEAL-O-RING	
		1	**7J-9933**	1	SEAL-O-RING	
	19	1	**101-1983**	2	RING-BACKUP	
	20	1	**108-2187**	1	PLUG-PIPE	
	21	1	*148-8395*	1	PLUG AS	
		1	**9S-8005**	1	PLUG-O-RING	
		1	**3K-0360**	1	SEAL-O-RING	
	22	1	**263-9657**	1	VALVE GP-RELIEF	
		1	**3J-1907**	1	SEAL-O-RING	
		1	**4D-2297**	1	SEAL-O-RING	
	23	1	**2K-8199**	2	SEAL-O-RING	
	24	1	**4J-7533**	1	SEAL-O-RING	
	25	1	**5B-9318**	1	BALL	
	26	1	**8M-4437**	2	SEAL-O-RING	
M	27	1	**8T-4138**	2	BOLT (M6X1X20-MM)	
M	28	1	**8T-4189**	4	BOLT (M8X1.25X20-MM)	
	29	1	**8T-4224**	4	WASHER-HARD (8.8X16X2-MM THK)	

C-CHANGE FROM PREVIOUS TYPE
M-METRIC PART

107-0543 **VALVE GP-CONTROL** *(contd.)* **i03418922**

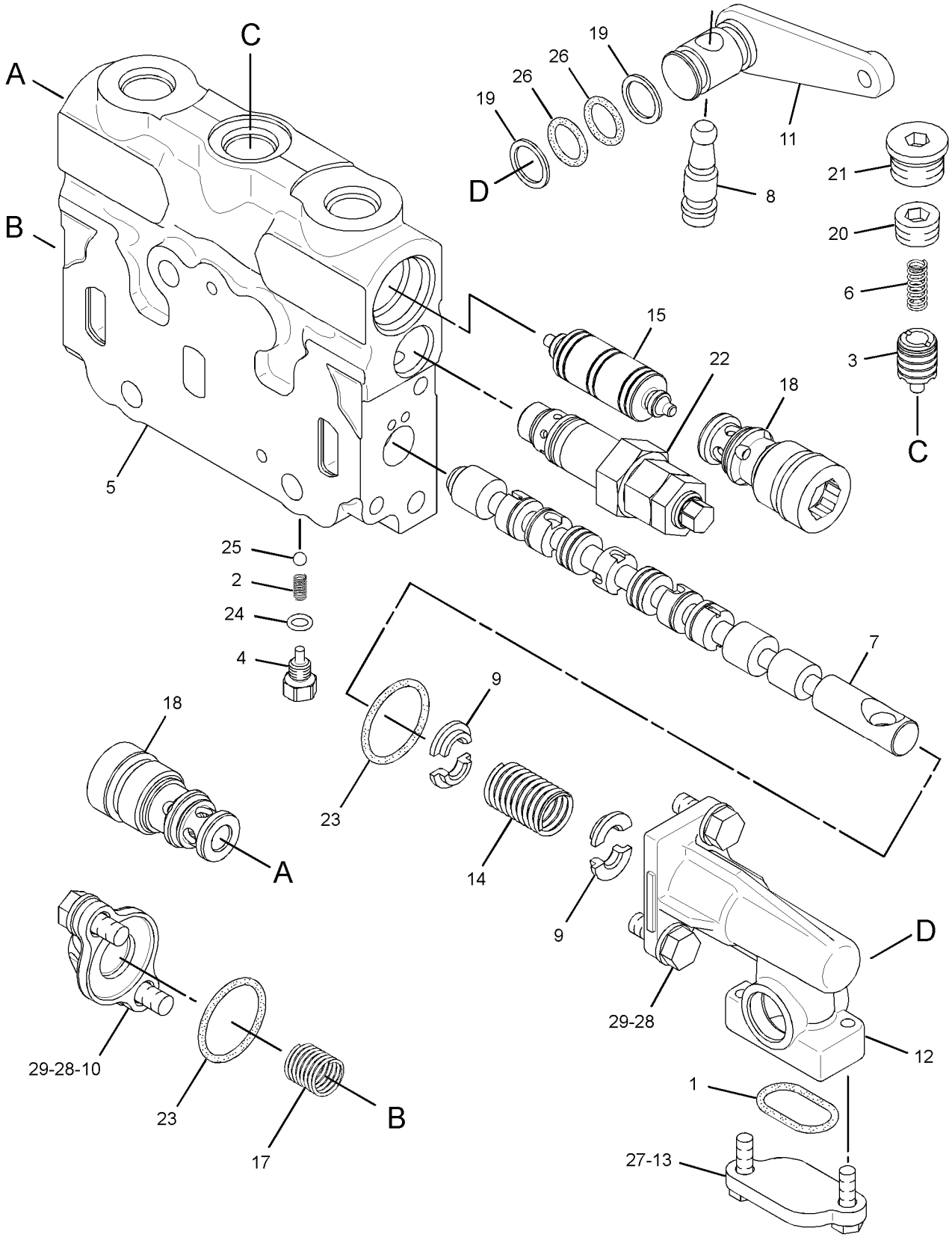

GRAPHIC #1 **<END>** g01674494

HYDRAULIC SYSTEM

107-0545 VALVE GP-CONTROL–RIPPER

S/N: JAP1-UP

PART OF 130-7755 VALVE GP-BANK 4, 124-3329 VALVE GP-BANK 5

AN ATTACHMENT

SMCS-5051 **i03338460**

NOTE	REF NO	GRAPHIC REF	PART NUMBER	QTY	PART NAME 1 2 3 4 5 6 (PRODUCT LEVEL)	SEE PAGE
	1	1	**6E-4599**	1	BODY	
	2	1	**101-1148**	1	STEM	
	3	1	**101-1978**	1	COVER	
	4	1	**2K-8199**	2	SEAL-O-RING	
M	5	1	**8T-4189**	4	BOLT (M8X1.25X20-MM)	
	6	1	**8T-4224**	4	WASHER-HARD (8.8X16X2-MM THK)	
	7	1	**101-1984**	1	BODY	
C	8	1	**325-6423**	2	VALVE GP-CHECK	
					(EACH INCLUDES)	
		1	**3K-0360**	1	SEAL-O-RING	
		1	**7J-9933**	1	SEAL-O-RING	
Y	9	1	**139-8472**	1	VALVE GP-RELIEF (RIPPER)	503
	11	1	**102-7412**	1	SPRING	
	12	1	**101-1973**	4	RETAINER	
	13	1	**101-1971**	1	LEVER	
	14	1	**101-1982**	1	LEVER AS	
C	15	1	**8M-4437**	2	SEAL-O-RING	
	16	1	**101-1983**	2	RING-BACKUP	
	17	1	**4D-9986**	1	SEAL-O-RING	
	18	1	**101-2480**	1	COVER	
M	19	1	**8T-4138**	2	BOLT (M6X1X20-MM)	
	20	1	**5B-9318**	1	BALL	
	21	1	**6E-3007**	1	SPRING	
	22	1	**6E-4502**	1	PLUG	
	23	1	**4J-7533**	1	SEAL-O-RING	
	24	1	**6E-3019**	1	VALVE	
	25	1	**6E-5153**	1	SPRING	
	26	1	**108-2187**	1	PLUG-PIPE	
	29	1	*148-8395*	1	PLUG AS	
		1	**3K-0360**	1	SEAL-O-RING	
		1	**9S-8005**	1	PLUG-O-RING	
	31	1	**106-3659**	1	PISTON	
	34	1	**111-8233**	1	SPRING	

C-CHANGE FROM PREVIOUS TYPE
M-METRIC PART
Y-SEPARATE ILLUSTRATION

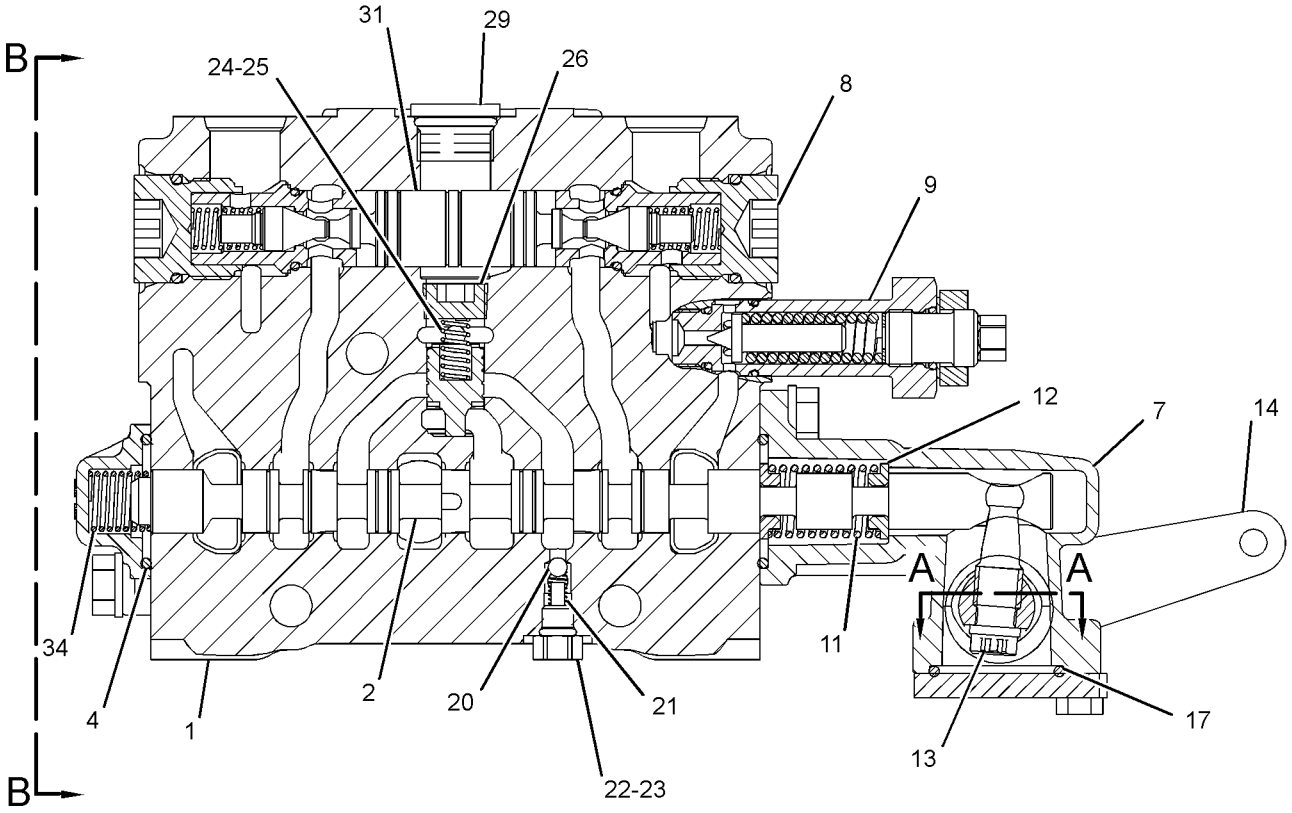

SECTION C-C

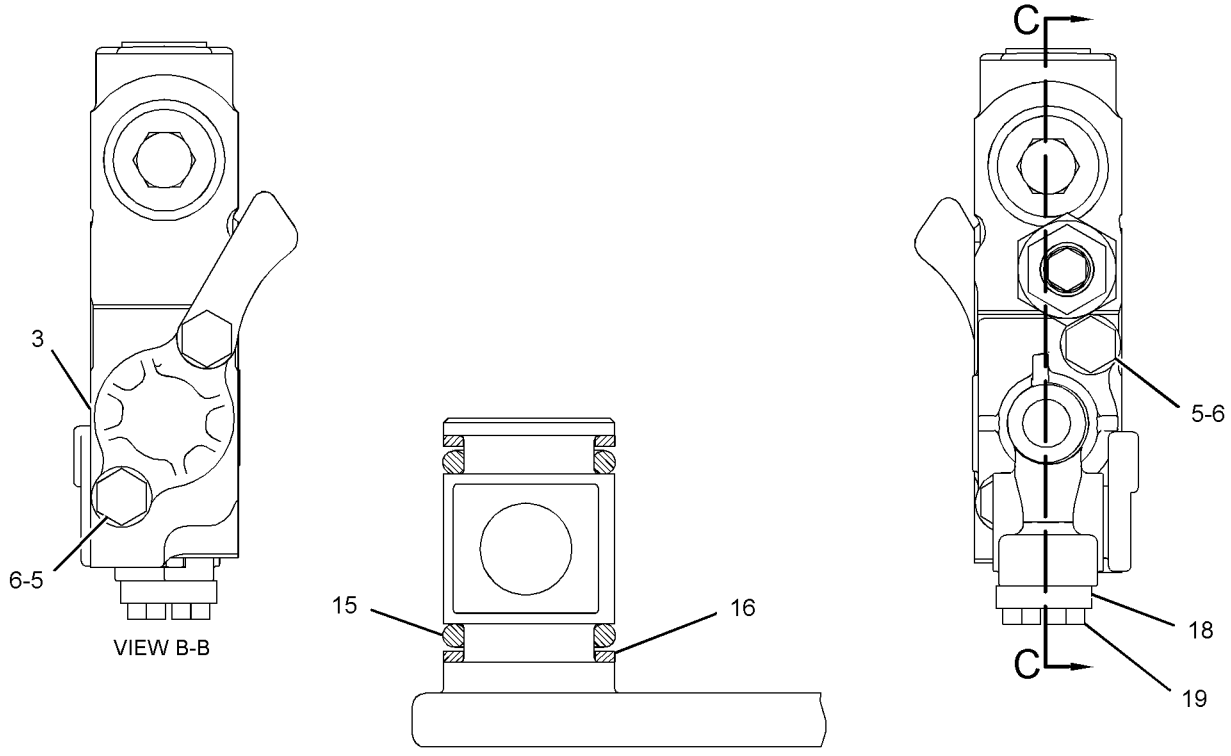

VIEW B-B

SECTION A-A

GRAPHIC #1 **<END>** g01619681

124-2883 VALVE GP-CONTROL—BLADE LIFT

S/N: JAP1-UP

PART OF 104-8673 VALVE GP-BANK 3, 130-7754, 130-7755 VALVE GP-BANK 4, 124-3328, 124-3329 VALVE GP-BANK 5

ALSO AN ATTACHMENT

SMCS-5051 **i03483861**

NOTE	REF NO	GRAPHIC REF	PART NUMBER	QTY	PART NAME 1 2 3 4 5 6 (PRODUCT LEVEL)	SEE PAGE
	1	1	**111-8233**	1	SPRING	
	2	1	**124-1840**	1	STEM-BLADE LIFT	
	3	1	**101-1978**	1	COVER	
	4	1	**2K-8199**	2	SEAL-O-RING	
M	5	1	**8T-4189**	4	BOLT (M8X1.25X20-MM)	
	6	1	**8T-4224**	4	WASHER-HARD (8.8X16X2-MM THK)	
	7	1	**106-3658**	2	VALVE	
	8	1	**7J-9933**	2	SEAL-O-RING	
Y	9	1	**6E-3033**	1	VALVE GP-RELIEF (BLADE LIFT)	498
	10	1	**124-3385**	1	PISTON	
	11	1	**102-7412**	1	SPRING	
	12	1	**101-1973**	4	RETAINER	
	13	1	**101-1971**	1	LEVER	
	14	1	**101-1982**	1	LEVER AS	
	15	1	**8M-4437**	2	SEAL-O-RING	
	16	1	**101-1983**	2	RING-BACKUP	
	17	1	**4D-9986**	1	SEAL-O-RING	
	18	1	**101-2480**	1	COVER	
M	19	1	**8T-4138**	2	BOLT (M6X1X20-MM)	
	20	1	**5B-9318**	1	BALL	
	21	1	**6E-3007**	1	SPRING	
	22	1	**6E-4502**	1	PLUG	
	23	1	**4J-7533**	1	SEAL-O-RING	
	24	1	**3K-0360**	3	SEAL-O-RING	
	25	1	**6E-5153**	1	SPRING	
	26	1	**108-2187**	1	PLUG-PIPE	
	27	1	**9J-0403**	2	SPRING	
	28	1	**9J-0404**	2	PLUG	
	29	1	**9S-8005**	1	PLUG-O-RING	

M-METRIC PART
Y-SEPARATE ILLUSTRATION

124-2883 VALVE GP-CONTROL *(contd.)* **i03483861**

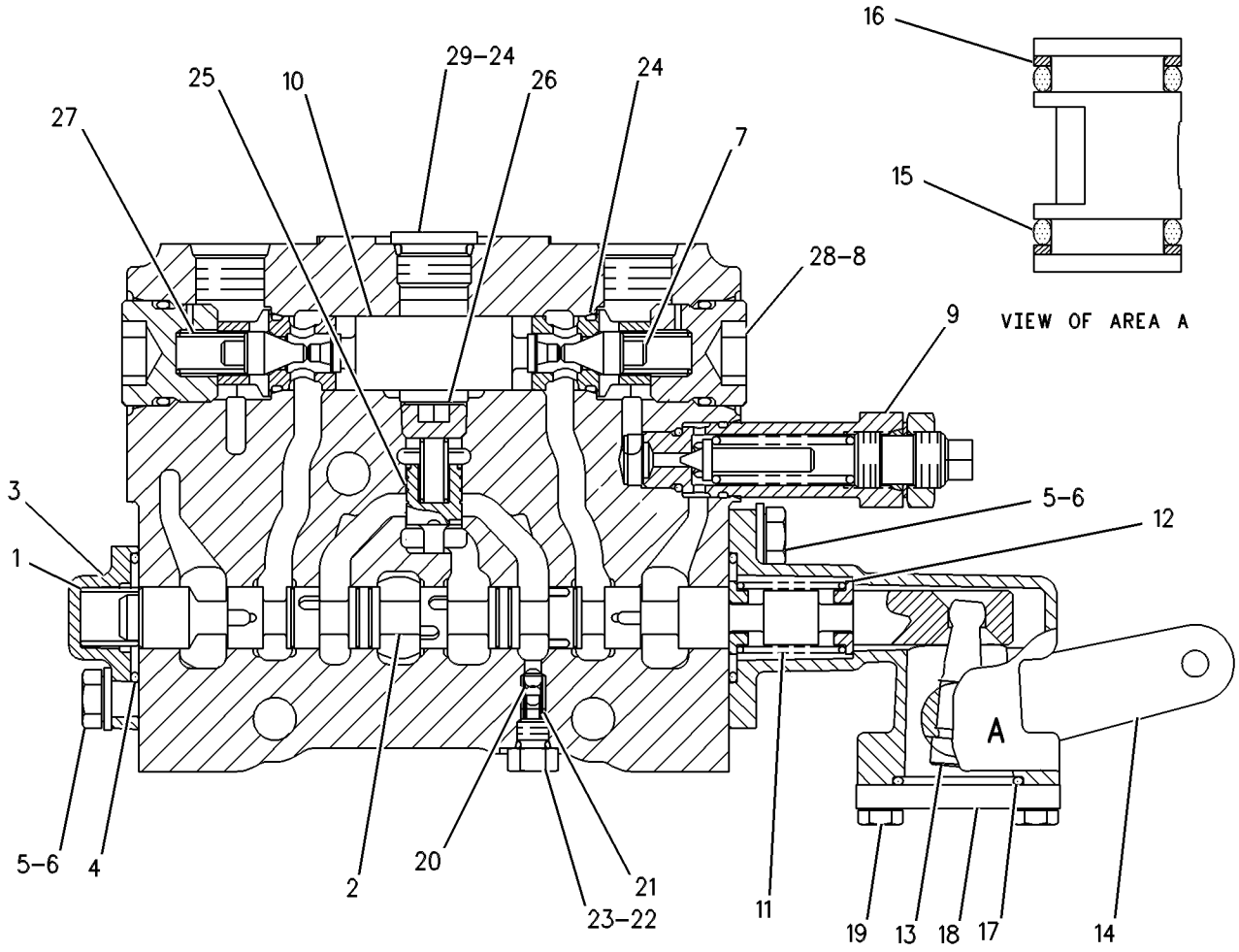

GRAPHIC #1 **<END>** g00109193

HYDRAULIC SYSTEM

124-2884 VALVE GP-CONTROL–BLADE LIFT

S/N: JAP1-UP

PART OF 124-3325 VALVE GP-BANK 4, 124-3326 VALVE GP-BANK 5

ALSO AN ATTACHMENT

SMCS-5051 **i03179703**

NOTE	REF NO	GRAPHIC REF	PART NUMBER	QTY	PART NAME 1 2 3 4 5 6 (PRODUCT LEVEL)	SEE PAGE
	1	1	**111-8233**	1	SPRING	
	2	1	**124-1840**	1	STEM-BLADE LIFT	
	3	1	**101-1978**	1	COVER	
	4	1	**2K-8199**	2	SEAL-O-RING	
M	5	1	**8T-4189**	4	BOLT (M8X1.25X20-MM)	
	6	1	**8T-4224**	4	WASHER-HARD (8.8X16X2-MM THK)	
	7	1	**106-3658**	2	VALVE	
	8	1	**7J-9933**	2	SEAL-O-RING	
YC	9	1	**139-8474**	1	VALVE GP-RELIEF (BLADE LIFT)	504
C	10	1	**124-3385**	1	PISTON	
	11	1	**102-7412**	1	SPRING	
	12	1	**101-1973**	4	RETAINER	
	13	1	**101-1971**	1	LEVER	
	14	1	**101-1970**	1	LEVER AS	
	15	1	**8M-4437**	2	SEAL-O-RING	
	16	1	**101-1983**	2	RING-BACKUP	
	17	1	**4D-9986**	1	SEAL-O-RING	
	18	1	**101-2480**	1	COVER	
M	19	1	**8T-4138**	2	BOLT (M6X1X20-MM)	
	20	1	**5B-9318**	1	BALL	
	21	1	**6E-3007**	1	SPRING	
	22	1	**6E-4502**	1	PLUG	
	23	1	**4J-7533**	1	SEAL-O-RING	
	24	1	**3K-0360**	3	SEAL-O-RING	
	25	1	**6E-5153**	1	SPRING	
	26	1	**108-2187**	1	PLUG-PIPE	
	27	1	**9J-0403**	2	SPRING	
	28	1	**9J-0404**	2	PLUG	
	29	1	**9S-8005**	1	PLUG-O-RING	

C-CHANGE FROM PREVIOUS TYPE
M-METRIC PART
Y-SEPARATE ILLUSTRATION

124-2884 **VALVE GP-CONTROL** *(contd.)* **i03179703**

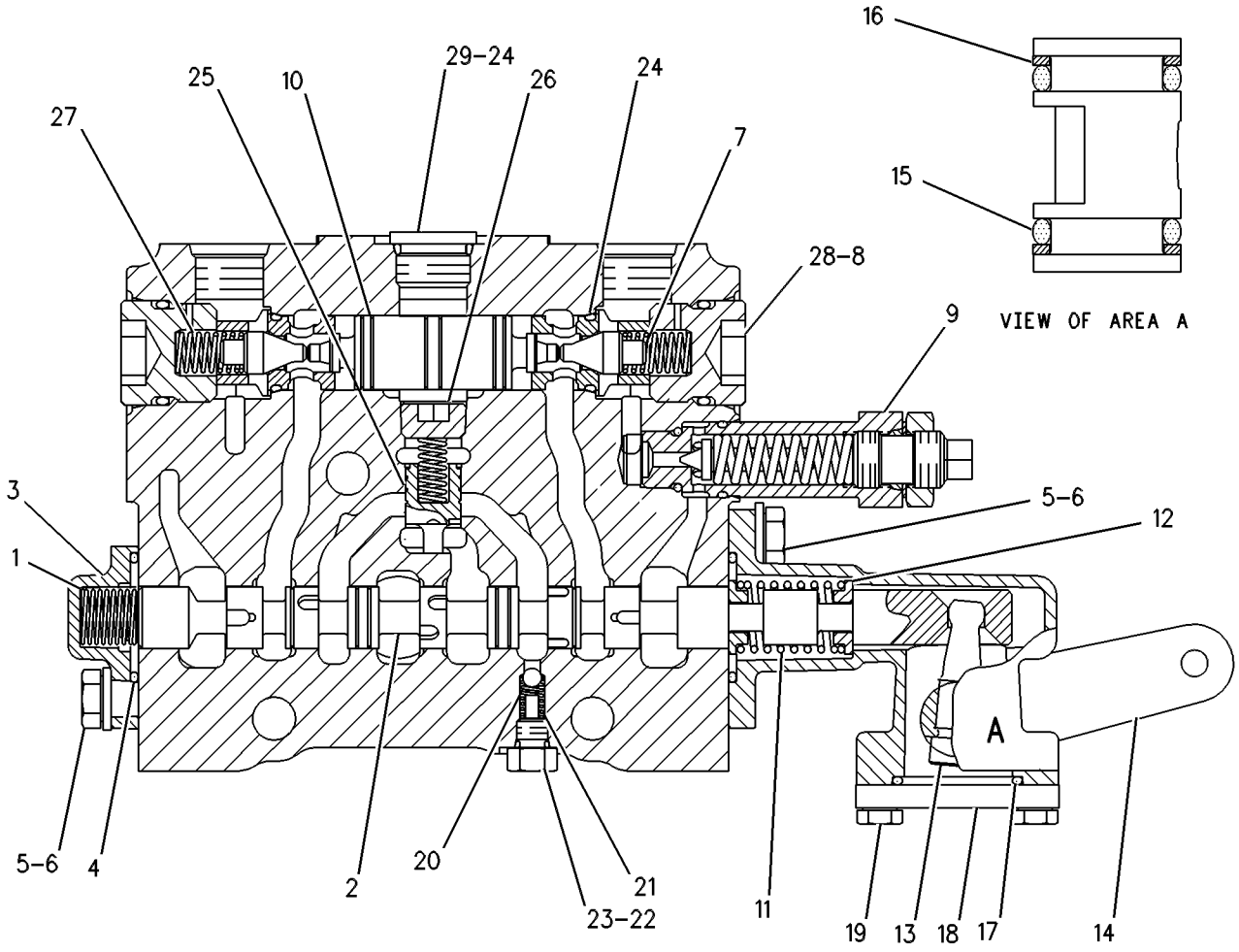

GRAPHIC #1 **<END>** g00273297

HYDRAULIC SYSTEM

124-2885 VALVE GP-CONTROL—BULLDOZER LIFT, PLOW

S/N: JAP1-UP

PART OF 124-3326 VALVE GP-BANK 5

AN ATTACHMENT

SMCS-5051 **i03483900**

NOTE	REF NO	GRAPHIC REF	PART NUMBER	QTY	PART NAME 1 2 3 4 5 6 (PRODUCT LEVEL)	SEE PAGE
	1	1	**6E-4599**	1	BODY	
	2	1	**124-1839**	1	STEM	
	3	1	**101-1978**	1	COVER	
	4	1	**2K-8199**	2	SEAL-O-RING	
M	5	1	**8T-4189**	4	BOLT (M8X1.25X20-MM)	
	6	1	**8T-4224**	4	WASHER-HARD (8.8X16X2-MM THK)	
	7	1	**101-1984**	1	BODY	
	8	1	**7J-9933**	2	SEAL-O-RING	
	9	1	**111-8233**	1	SPRING	
Y	10	1	**6E-3033**	1	VALVE GP-RELIEF (BULLDOZER LIFT, PLOW)	498
	11	1	**102-7412**	1	SPRING	
	12	1	**101-1973**	4	RETAINER	
	13	1	**101-1971**	1	LEVER	
	14	1	**101-1970**	1	LEVER AS	
	15	1	**8M-4437**	2	SEAL-O-RING	
	16	1	**101-1983**	2	RING-BACKUP	
	17	1	**4D-9986**	1	SEAL-O-RING	
	18	1	**101-2480**	1	COVER	
M	19	1	**8T-4138**	2	BOLT (M6X1X20-MM)	
	20	1	**5B-9318**	1	BALL	
	21	1	**6E-3007**	1	SPRING	
	22	1	**6E-4502**	1	PLUG	
	23	1	**4J-7533**	1	SEAL-O-RING	
	24	1	**6E-3019**	1	VALVE	
	25	1	**6E-5153**	1	SPRING	
	26	1	**108-2187**	1	PLUG-PIPE	
	27	1	**9J-0403**	2	SPRING	
	28	1	**9J-0404**	2	PLUG	
	29	1	**9S-8005**	1	PLUG-O-RING	
	30	1	**3K-0360**	3	SEAL-O-RING	
	31	1	**124-3385**	1	PISTON	
	32	1	**6E-3013**	2	SEAT	
	33	1	**106-3658**	2	VALVE	

M-METRIC PART
Y-SEPARATE ILLUSTRATION

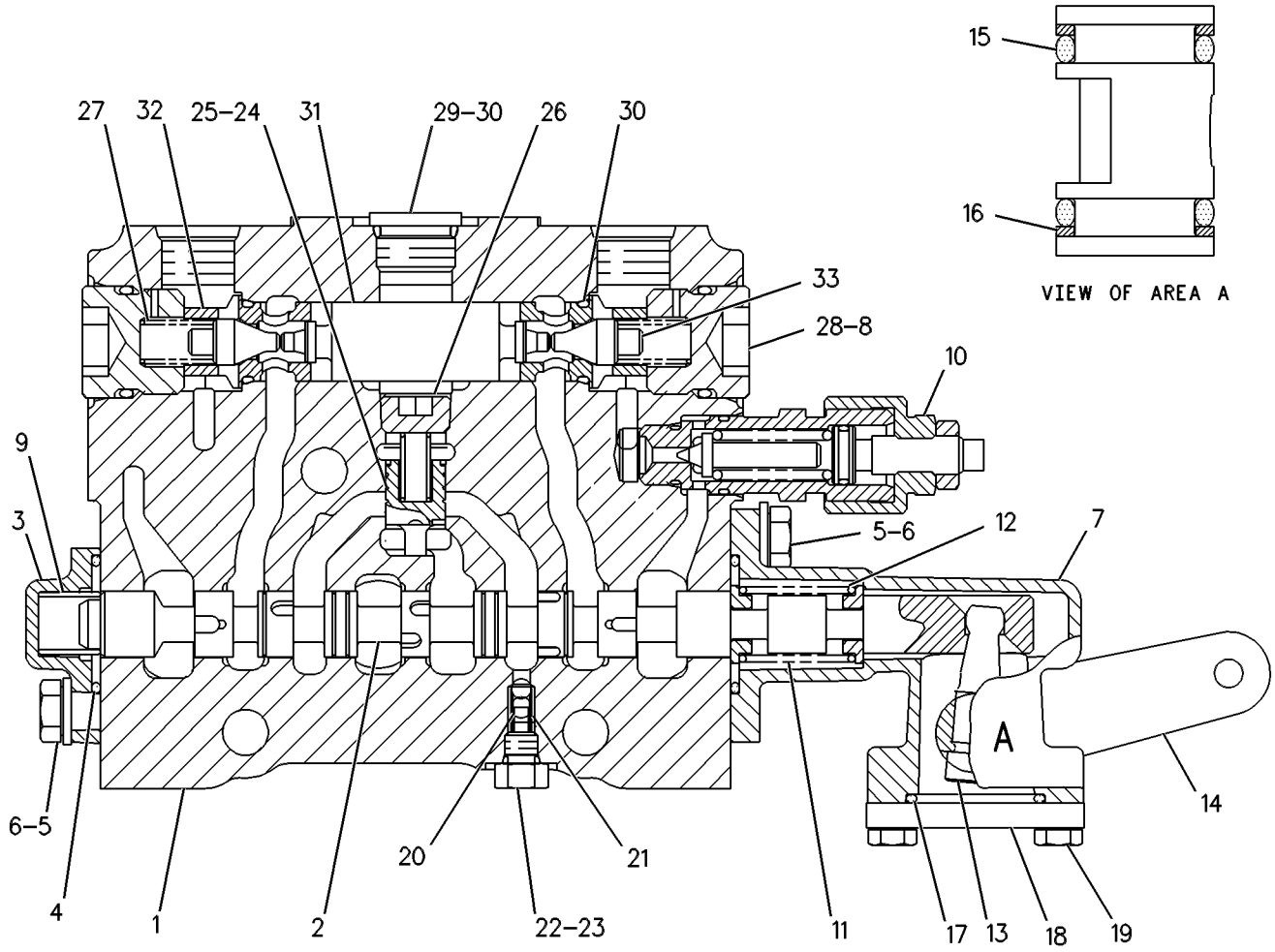

GRAPHIC #1 **<END>** g00108897

104-3122 VALVE GP-PUMP CONTROL–
PRESSURE, FLOW COMPENSATOR
S/N: JAP1-UP
PART OF 6E-3136, 6E-3137 PUMP GP-PISTON
ALSO AN ATTACHMENT

SMCS-5455 **i03614881**

NOTE	REF NO	GRAPHIC REF	PART NUMBER	QTY	PART NAME 1 2 3 4 5 6 (PRODUCT LEVEL)	SEE PAGE
	1	1	**9X-7680**	1	SEAL-O-RING	
	2	1	**9S-4191**	1	PLUG-O-RING	
	3	1	**3J-1907**	3	SEAL-O-RING	
	4	1	**9T-2186**	2	PLUG	
	5	1	**6E-4230**	2	GUIDE-SPRING	
	6	1	**6E-4228**	1	SPRING	
	7	1	**6E-6140**	1	PLUG-COMPENSATOR	
	8	1	**033-6036**	1	SEAL-O-RING	
	9	1	**6E-6141**	2	LOCKNUT-SEALING	
M	10	1	**129-7632**	2	SETSCREW-SOCKET (M8X1.25X45-MM)	
	11	1	**6E-6142**	1	PLUG-MARGIN	
	12	1	**033-6027**	1	SEAL-O-RING	
	13	1	**9T-7750**	1	SPRING	
	14	1	**108-4816**	1	PIN-SPRING STOP	
	15	1	**9T-1857**	2	GUIDE	
	16	1	**6E-6420**	1	VALVE-NEEDLE	
	17	1	**6E-6419**	1	RING	

PARTS SHOWN IN GRAPHIC(S) WITHOUT A REFERENCE NUMBER ARE NOT SERVICED SEPARATELY

M-METRIC PART

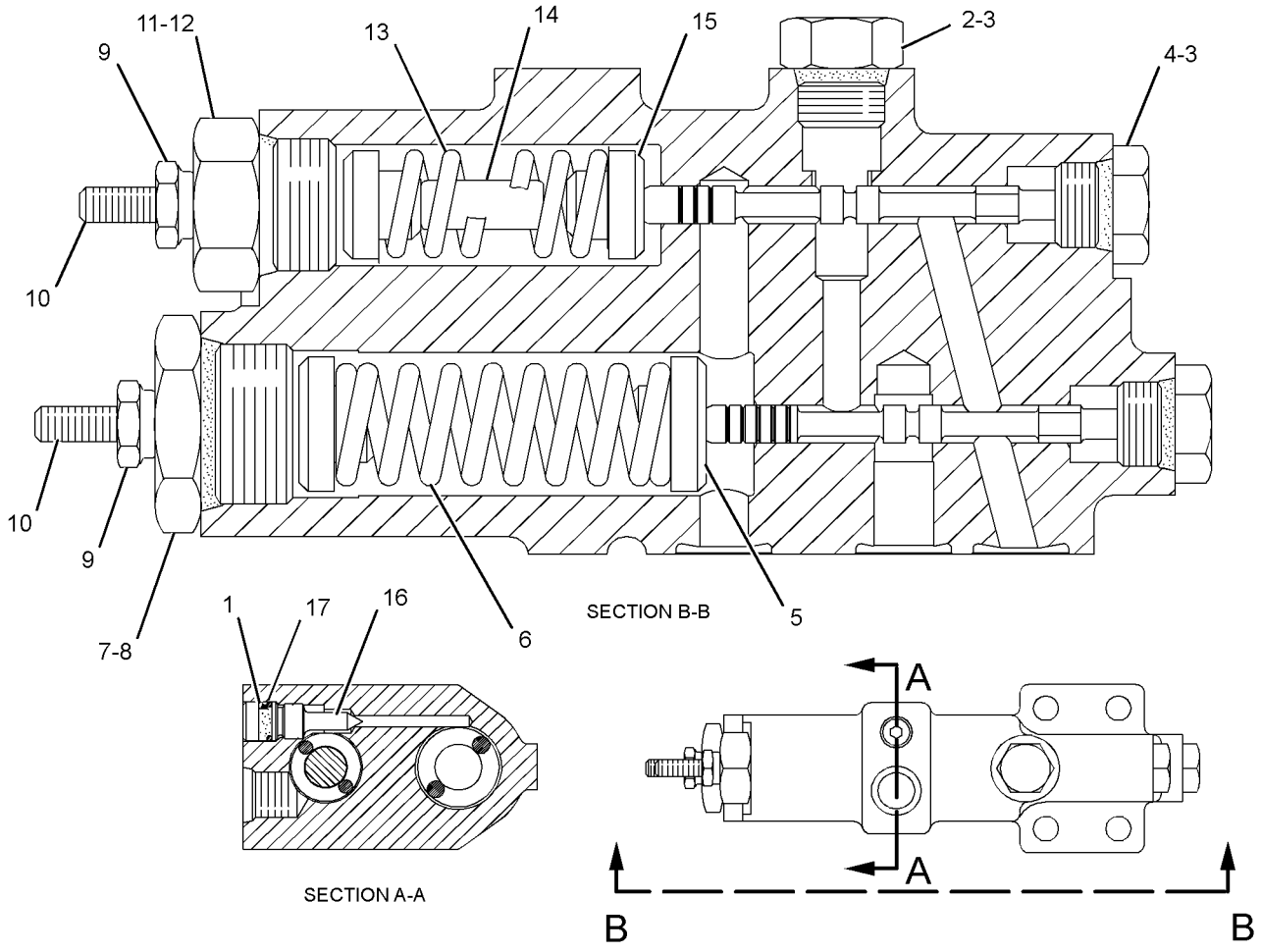

GRAPHIC #1 **<END>** g01938673

131-8350 VALVE GP-PURGE

S/N: JAP1-UP

PART OF 9T-5957 VALVE GP-COMBINATION

SMCS-4293 **i00139150**

NOTE	REF NO	GRAPHIC REF	PART NUMBER	QTY	PART NAME 1 2 3 4 5 6 (PRODUCT LEVEL)	SEE PAGE
	1	1	**109-1144**	1	VALVE	
	2	1	**130-5770**	1	SLEEVE	

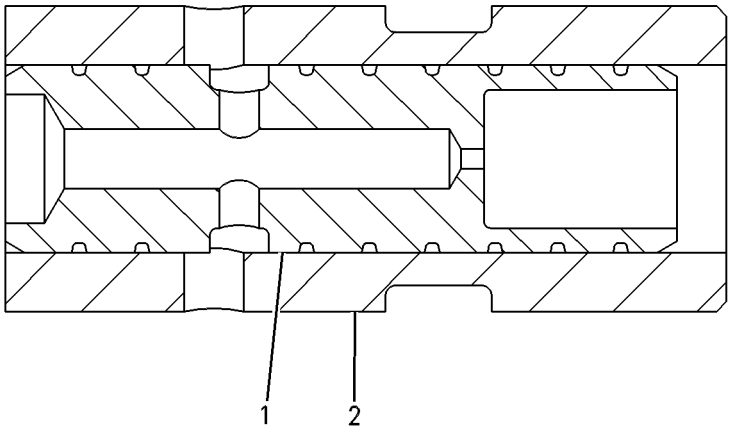

GRAPHIC #1 **<END>** g00087876

4T-4935 VALVE GP-RELIEF

S/N: JAP1-UP

PART OF 9T-5957 VALVE GP-COMBINATION

SMCS-4322, 5069, 5072, 5117 **i00131002**

NOTE	REF NO	GRAPHIC REF	PART NUMBER	QTY	PART NAME 1 2 3 4 5 6 (PRODUCT LEVEL)	SEE PAGE
	1	1	**6E-1835**	1	RETAINER AS	
	2	1	**9X-6395**	1	NUT (3/4-16-THD)	
	3	1	**7J-9933**	1	SEAL-O-RING	
	4	1	**4T-7571**	1	PLATE	
	5	1	**6J-6439**	1	VALVE-POPPET	
	6	1	**3K-0360**	2	SEAL-O-RING	
	7	1	**4T-4942**	1	SPRING	

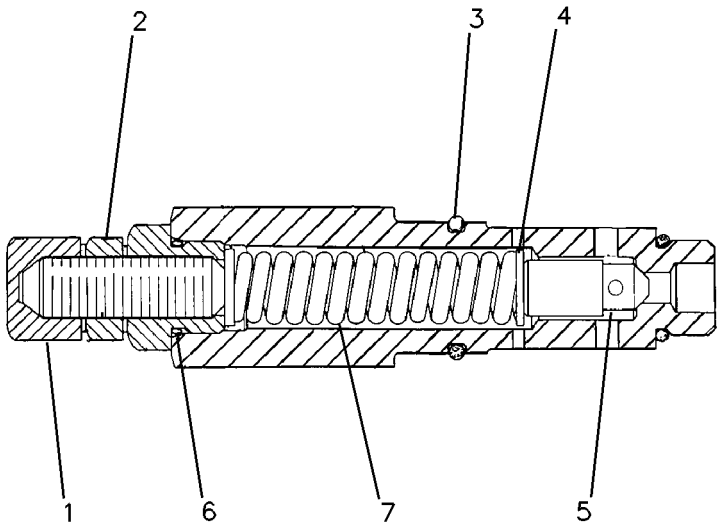

GRAPHIC #1 **<END>** g00082648

HYDRAULIC SYSTEM

6E-3033 VALVE GP-RELIEF

S/N: JAP1-UP
PART OF 124-2883, 124-2885 VALVE GP-CONTROL
FIELD REPLACEMENT FOR 6E-4704—PAGE 500, 106-7390—PAGE 502
ALSO AN ATTACHMENT

SMCS-4322, 5069, 5072, 5117 **i03498800**

NOTE	PART NUMBER	QTY	PART NAME 1 2 3 4 5 6 (PRODUCT LEVEL)	SEE PAGE
Y	*106-7390*	1	VALVE GP-RELIEF (HYDRAULIC)	502
			—OR—	
Y	*6E-4704*	1	VALVE GP-RELIEF (HYDRAULIC)	500
Y-SEPARATE ILLUSTRATION				

<END>

6E-4703 VALVE GP-RELIEF

S/N: JAP1-UP

PART OF 9T-5957 VALVE GP-COMBINATION

SMCS-4322, 5069, 5072, 5117 **i00131105**

NOTE	REF NO	GRAPHIC REF	PART NUMBER	QTY	PART NAME 1 2 3 4 5 6 (PRODUCT LEVEL)	SEE PAGE
	1	1	**4D-2297**	1	SEAL-O-RING	
	2	1	**3J-1907**	1	SEAL-O-RING	
	3	1	**3G-3726**	1	NUT (3/8-40-THD)	

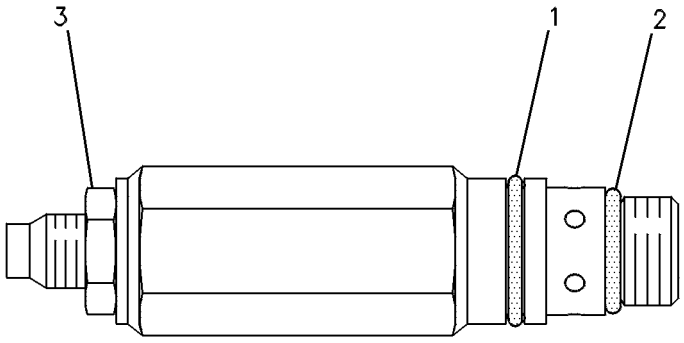

GRAPHIC #1 **<END>** g00084814

6E-4704 VALVE GP-RELIEF

S/N: JAP1-UP
PART OF 6E-3033 VALVE GP-RELIEF
FIELD REPLACEMENT ORDER 6E-3033—PAGE 498
ALSO AN ATTACHMENT

SMCS-4322, 5069, 5072, 5117 **i00131106**

NOTE	REF NO	GRAPHIC REF	PART NUMBER	QTY	PART NAME 1 2 3 4 5 6 (PRODUCT LEVEL)	SEE PAGE
	1	1	**4D-2297**	1	SEAL-O-RING	
	2	1	**3J-1907**	1	SEAL-O-RING	
	3	1	**3G-3726**	1	NUT (3/8-40-THD)	

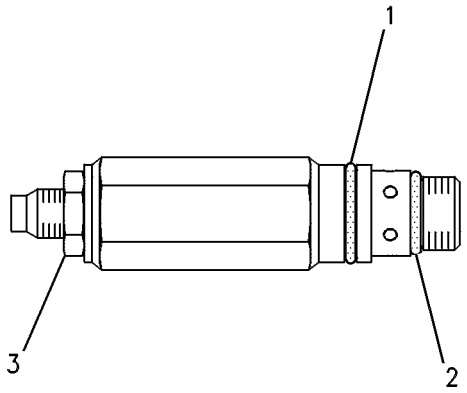

GRAPHIC #1 **<END>** g00084654

HYDRAULIC SYSTEM

100-6021 VALVE GP-RELIEF

S/N: JAP1-UP

PART OF 9T-5957 VALVE GP-COMBINATION

SMCS-4322, 5069, 5072, 5117 **i01853030**

NOTE	REF NO	GRAPHIC REF	PART NUMBER	QTY	PART NAME 1 2 3 4 5 6 (PRODUCT LEVEL)	SEE PAGE
	1	1	**4T-1700**	1	SPRING	
	2	1	**4T-4509**	1	SEAT	
	3	1	**4T-5074**	1	RING-BACKUP	
	4	1	**6E-5200**	1	RETAINER AS	
	5	1	**123-6661**	1	HOUSING	
	6	1	**108-5157**	1	VALVE	
	7	1	**3J-7354**	1	SEAL-O-RING	
	8	1	**3K-0360**	1	SEAL-O-RING	
	9	1	**6V-5556**	1	SEAL-O-RING	
	10	1	**9X-6395**	1	NUT (3/4-16-THD)	

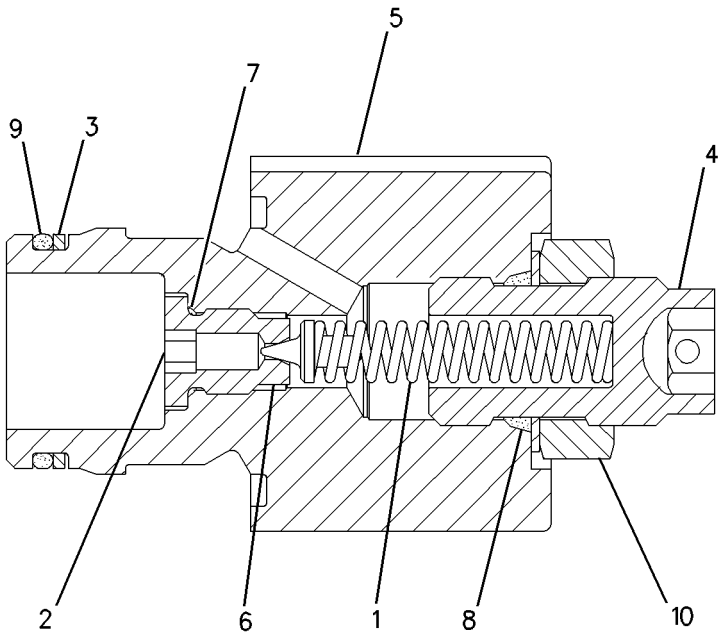

GRAPHIC #1 **<END>** g00949717

HYDRAULIC SYSTEM

106-7390 VALVE GP-RELIEF

S/N: JAP1-UP
PART OF 6E-3033 VALVE GP-RELIEF
FIELD REPLACEMENT ORDER 6E-3033—PAGE 498
ALSO AN ATTACHMENT

SMCS-4322, 5069, 5072, 5117 **i01197997**

NOTE	REF NO	GRAPHIC REF	PART NUMBER	QTY	PART NAME 1 2 3 4 5 6 (PRODUCT LEVEL)	SEE PAGE
	1	1	**114-6635**	1	RETAINER AS	
	2	1	**2P-1279**	1	LOCKNUT (9/16-18-THD)	
	3	1	**3J-1907**	2	SEAL-O-RING	
	4	1	**2J-6089**	1	SPRING	
	6	1	**111-5754**	1	VALVE	
	7	1	**4D-2297**	1	SEAL-O-RING	

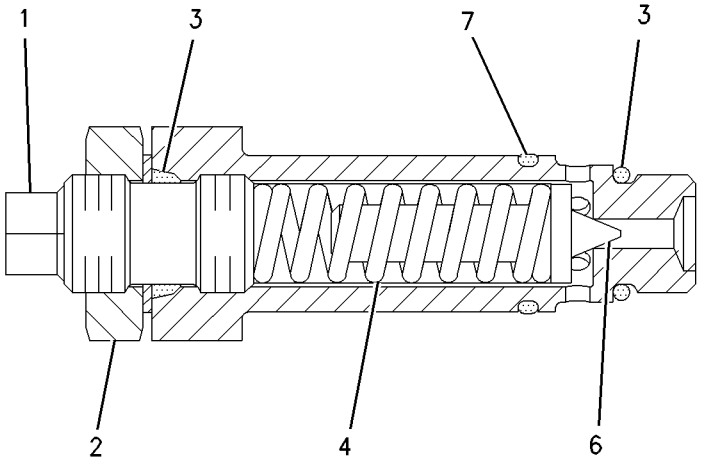

GRAPHIC #1 **<END>** g00638990

139-8472 VALVE GP-RELIEF

S/N: JAP1-UP

PART OF 107-0545, 6E-3034, 6E-3036 VALVE GP-CONTROL

ALSO AN ATTACHMENT

SMCS-4322, 5069, 5072, 5117 **i03528308**

NOTE	REF NO	GRAPHIC REF	PART NUMBER	QTY	PART NAME 1 2 3 4 5 6 (PRODUCT LEVEL)	SEE PAGE
	1	1	**114-6635**	1	RETAINER AS	
	2	1	**2P-1279**	1	LOCKNUT (9/16-18-THD)	
	3	1	**3J-1907**	2	SEAL-O-RING	
	4	1	**2J-6089**	1	SPRING	
	5	1		1	BODY	
	6	1	**131-8777**	1	VALVE	
	7	1	**4D-2297**	1	SEAL-O-RING	
	8	1	**2A-3211**	1	WASHER (5.5X12.3X0.8-MM THK)	

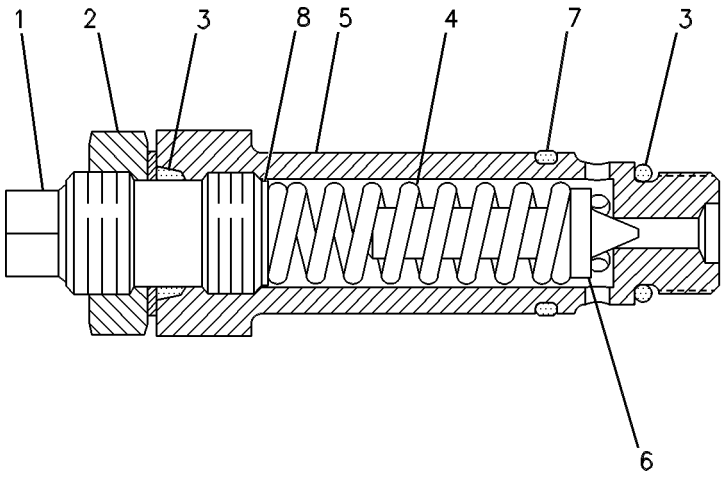

GRAPHIC #1 **<END>** g00109400

HYDRAULIC SYSTEM

139-8474 VALVE GP-RELIEF

S/N: JAP1-UP
PART OF 124-2884 VALVE GP-CONTROL
ALSO AN ATTACHMENT

SMCS-4322, 5069, 5072, 5117 **i00606809**

NOTE	REF NO	GRAPHIC REF	PART NUMBER	QTY	PART NAME 1 2 3 4 5 6 (PRODUCT LEVEL)	SEE PAGE
	1	1	**114-6635**	1	RETAINER AS	
	2	1	**2P-1279**	1	LOCKNUT (9/16-18-THD)	
	3	1	**3J-1907**	2	SEAL-O-RING	
	4	1	**2J-6089**	1	SPRING	
	5	1	**2A-3211**	1	WASHER (5.5X12.3X0.8-MM THK)	
	6	1	**131-8777**	1	VALVE	
	7	1	**4D-2297**	1	SEAL-O-RING	

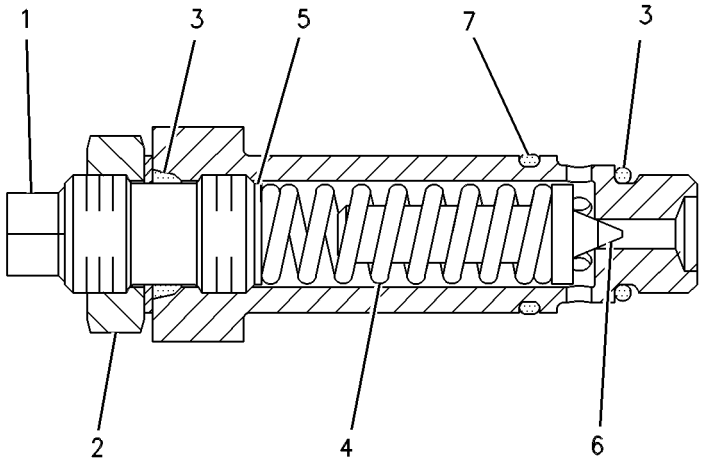

GRAPHIC #1 **<END>** g00089282

HYDRAULIC SYSTEM

222-7774 VALVE GP-RELIEF

S/N: JAP1-UP

PART OF 6E-3031, 6E-3037 VALVE GP-CONTROL

AN ATTACHMENT

SMCS-4322, 5069, 5072, 5117 **i03435404**

NOTE	REF NO	GRAPHIC REF	PART NUMBER	QTY	PART NAME 1 2 3 4 5 6 (PRODUCT LEVEL)	SEE PAGE
	1	1	**2J-6089**	1	SPRING	
	2	1	**114-6635**	1	RETAINER AS	
	3	1	**131-8777**	1	VALVE	
	5	1	**2A-3211**	1	WASHER (5.5X12.3X0.8-MM THK)	
	6	1	**2P-1279**	1	LOCKNUT (9/16-18-THD)	
	7	1	**3J-1907**	2	SEAL-O-RING	
	8	1	**4D-2297**	1	SEAL-O-RING	

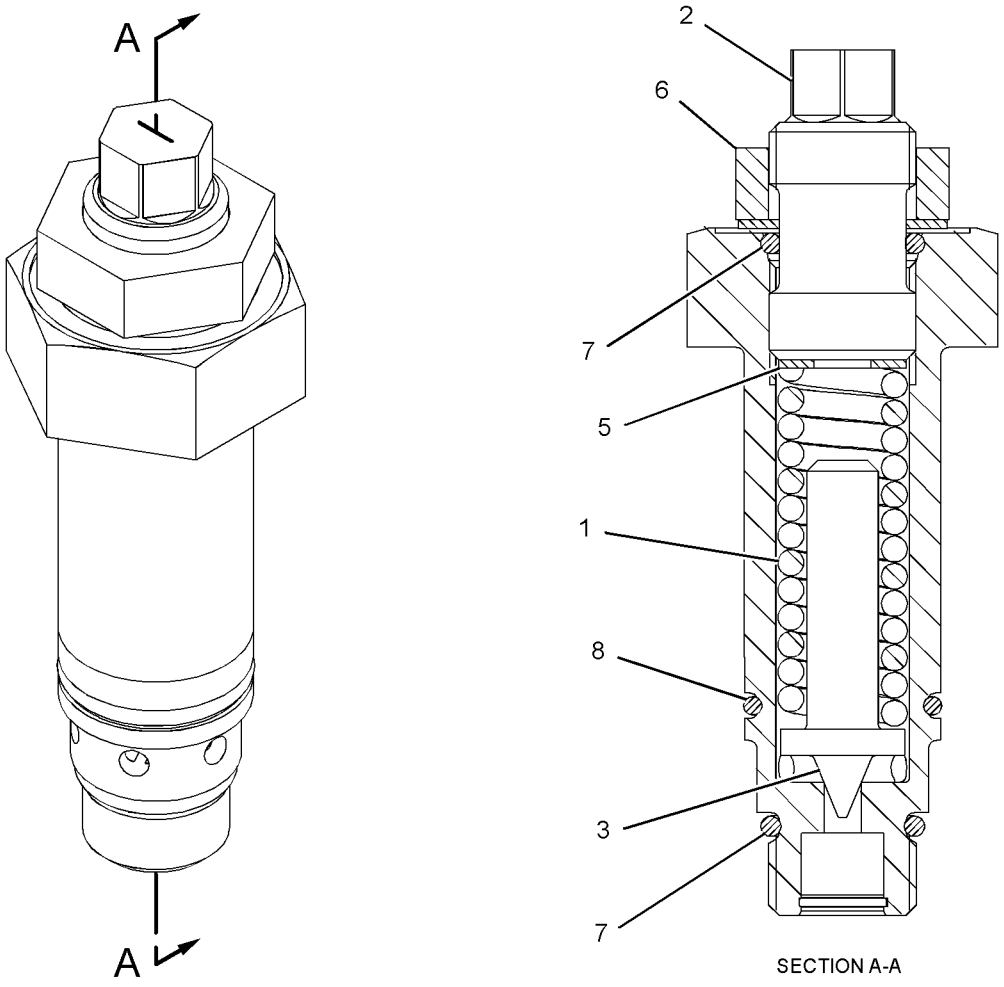

SECTION A-A

GRAPHIC #1 **<END>** g01785893

HYDRAULIC SYSTEM

4T-1860 VALVE GP-SHUTTLE

S/N: JAP1-UP

PART OF 9T-5957 VALVE GP-COMBINATION

SMCS-5079 **i02400665**

NOTE	REF NO	GRAPHIC REF	PART NUMBER	QTY	PART NAME 1 2 3 4 5 6 (PRODUCT LEVEL)	SEE PAGE
Z	1	1		1	SEAT	
	2	1	**1M-6718**	1	BALL	
Z	3	1		1	VALVE	
	4	1	**6V-5324**	1	SEAL-O-RING	
	5	1	**147-6603**	1	SEAL-O-RING	
	6	1	**3J-1907**	1	SEAL-O-RING	
	7	1	**147-6604**	2	RING-BACKUP	
	8	1	**147-6605**	2	RING-BACKUP	

Z-NOT SERVICED SEPARATELY

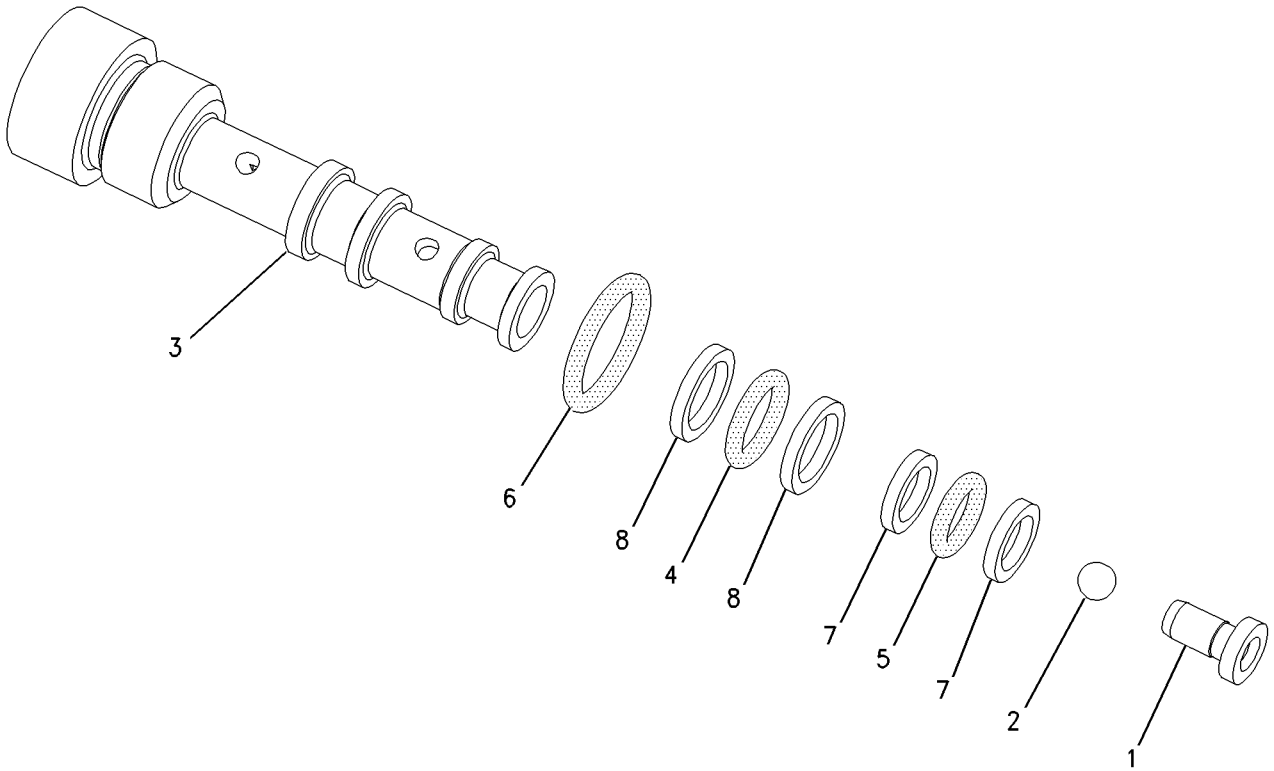

GRAPHIC #1 **<END>** g00775006

152-8346 VALVE GP-SOLENOID

S/N: JAP1-UP
24-VOLT
PART OF 164-8462 LOCK GP-CENTERSHIFT

SMCS-5479 **i03645112**

NOTE	REF NO	GRAPHIC REF	PART NUMBER	QTY	PART NAME 1 2 3 4 5 6 (PRODUCT LEVEL)	SEE PAGE
	1	1	**218-9894**	1	COIL AS (24-VOLT)	
	1A	1	**102-8802**	1	KIT-RECEPTACLE (2-PIN)	
					(INCLUDES RECEPTACLE AS AND WEDGE)	
	1B	1	**8T-8729**	2	PIN-CONNECTOR (16-GA TO 18-GA)	
	1C	1	**1S-9593**	2	STRAP-CABLE	
	2	1	**170-7485**	1	SPOOL AS-VALVE	
	2A	1	**111-0343**	1	LOCKNUT (5/16-18-THD)	
	2B	1	**8C-9987**	1	WASHER (8.3X28X2.5-MM THK)	
					AVAILABLE REPAIR KIT(S):	
			109-3036	1	KIT-SEAL	
					(INCLUDES SEALS & RINGS)	

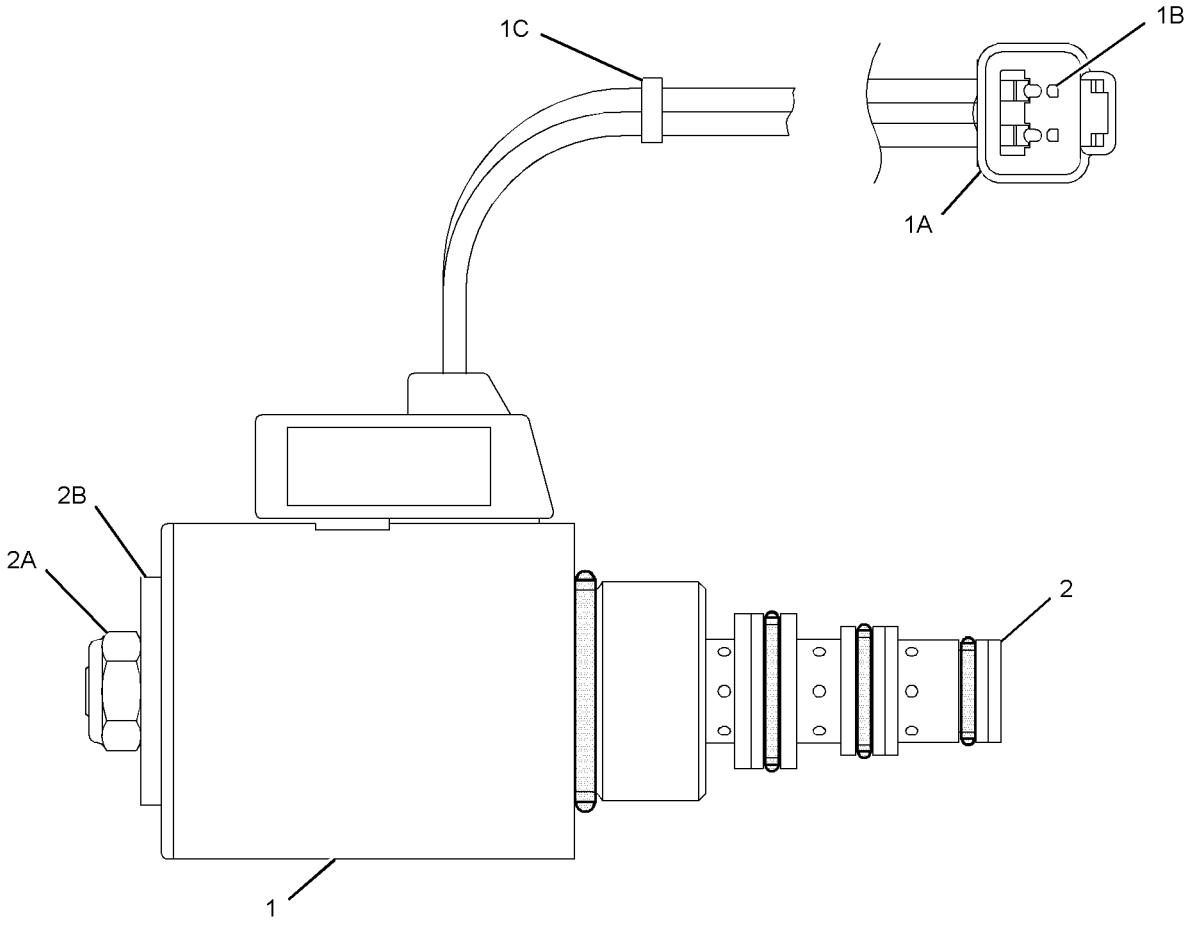

GRAPHIC #1 **<END>** g01965381

IMPLEMENTS

247-6450 BOSS GP-DRAWBAR–ACCUGRADE

S/N: JAP1-UP

PART OF 336-4249 GRADE CONTROL AR

AN ATTACHMENT

SMCS-6153 **i02397479**

NOTE	PART NUMBER	QTY	PART NAME 1 2 3 4 5 6 (PRODUCT LEVEL)	SEE PAGE
	269-9321	1	DRAWBAR AS	
	8X-4266	1	DRAWBAR & YOKE AS	
	5T-6775	2	REINFORCEMENT	
	8F-9836	12	BOSS (3/8-16-THD)	
	8X-7956	1	SHAFT AS	
M	**9C-8895**	5	BOSS-TAPPED (M10X1.5-THD)	

M-METRIC PART

<END>

110-8078 CIRCLE GP

S/N: JAP1-UP
PART OF 269-9325 CIRCLE GP
AN ATTACHMENT

SMCS-6152, 6154, 6155 **i02200408**

NOTE	REF NO	GRAPHIC REF	PART NUMBER	QTY	PART NAME 1 2 3 4 5 6 (PRODUCT LEVEL)	SEE PAGE
	1	1	**127-8879**	1	BRACE	
Z	2	1		2	BLOCK	
	3	1	**6G-2946**	2	STOP	
Z	4	1		2	PLATE	
Z	5	1		1	CIRCLE	
	6	1	**110-8087**	1	PLATE	
	7	1	**110-8088**	1	PLATE	
Z	8	1		2	BLOCK	
Z	9	1		1	PLATE AS	
Z	10	1		2	PLATE	
Z	11	1		2	PLATE	
Z	12	1		1	BEAM-BLADE	
Z	13	1		1	BEAM-BLADE	
	14	1	**149-1044**		PLATE-LH	
	15	1	**149-1045**	1	PLATE-RH	
AF			**5T-4267**	1	SEGMENT-CIRCLE	
					(4 TEETH-SERVICE REPAIR FOR WORN OR DAMAGED TEETH)	

A-NOT PART OF THIS GROUP
F-NOT SHOWN
Z-NOT SERVICED SEPARATELY

110-8078 CIRCLE GP *(contd.)* **i02200408**

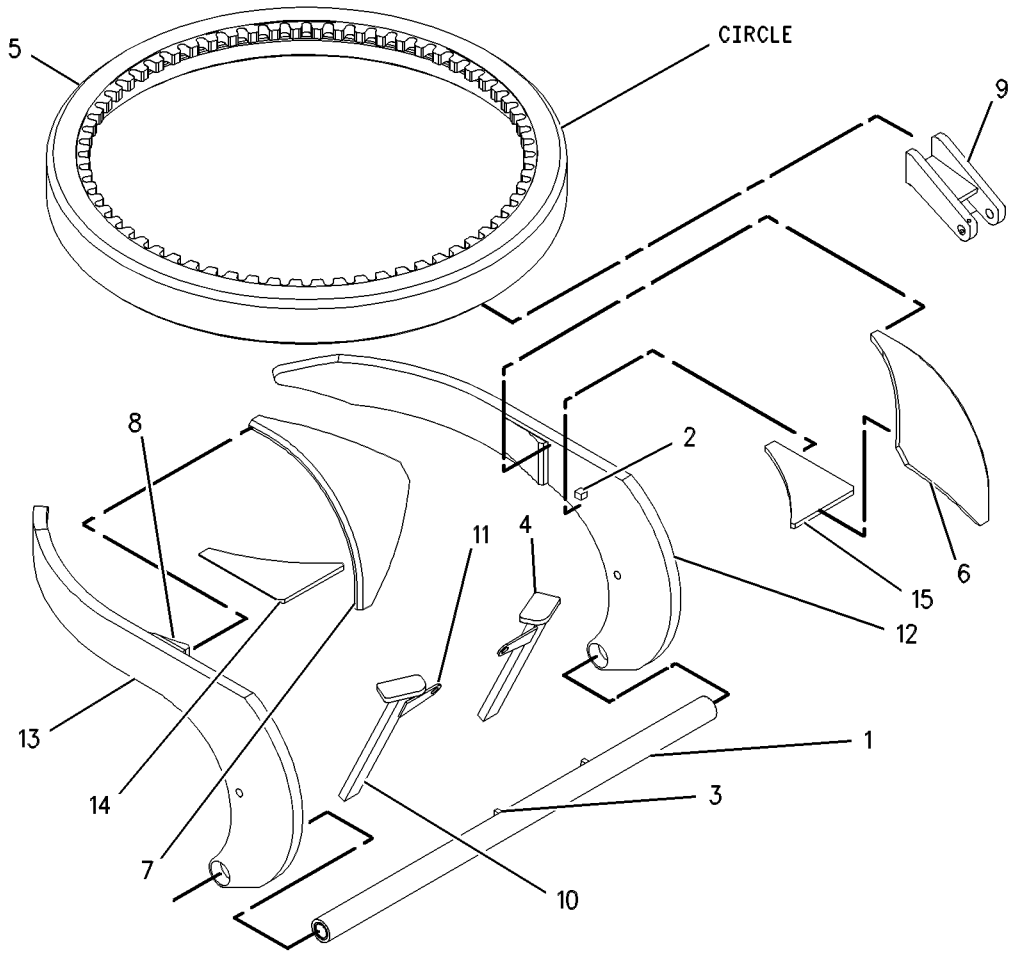

GRAPHIC #1 **<END>** g00566155

153-9360 CIRCLE GP

S/N: JAP1-UP
PART OF 254-5960 MOUNTING GP-GRADE CONTROL
AN ATTACHMENT

SMCS-6152, 6154, 6155 **i02075546**

NOTE	REF NO	GRAPHIC REF	PART NUMBER	QTY	PART NAME 1 2 3 4 5 6 (PRODUCT LEVEL)	SEE PAGE
	1	1	**2G-3971**	1	BRACKET AS	
	2	1	**4D-4375**	2	LUG	
	3	1	**5T-3889**	1	BRACE	
	4	1	**5T-3890**	1	BRACE	
	5	1	**6G-2946**	2	STOP	
	7	1	**8D-9882**	2	BLOCK-FILLER	
	8	1	**8D-9886**	1	BRACE	
	9	1	**8D-9887**	1	BRACE	
	11	1	**132-1340**	1	BRACE AS	
		1	**2A-7089**	2	BEARING-SLEEVE	
	12	1	**147-6143**	1	PLATE-LH	
	13	1	**147-6144**	1	PLATE-RH	
	14	1	**153-0185**	1	BEAM-BLADE	
	15	1	**153-0187**	1	BEAM-BLADE	
AF		1	**5T-4267**		SEGMENT-CIRCLE	
					(4 TEETH) SERVICE REPAIR FOR WORN OR DAMAGED TEETH	

A-NOT PART OF THIS GROUP
F-NOT SHOWN

153-9360 CIRCLE GP *(contd.)* **i02075546**

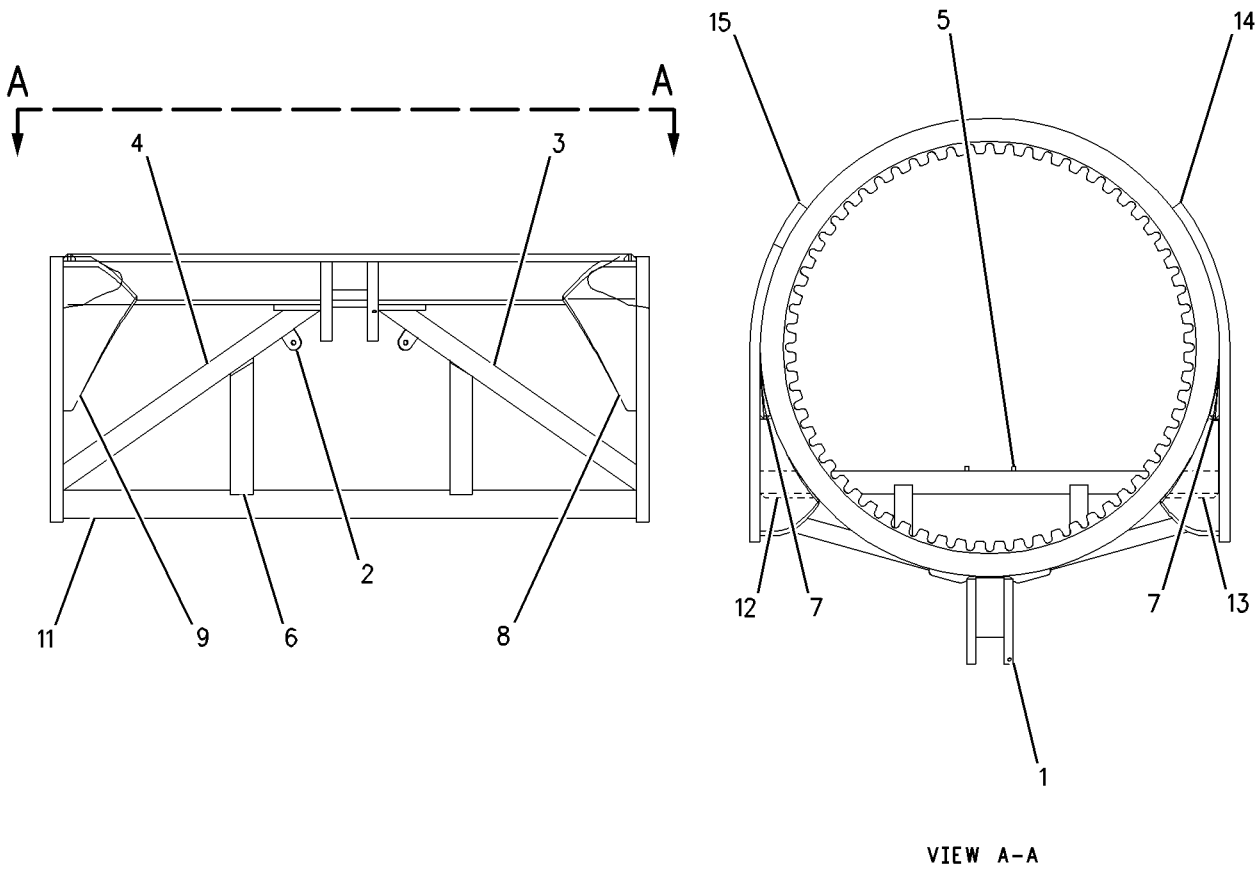

VIEW A-A

GRAPHIC #1 **<END>** g00665278

269-9325 CIRCLE AS

S/N: JAP1-UP
PART OF 255-2361 MOUNTING GP-GRADE CONTROL
AN ATTACHMENT

SMCS-6152, 6154, 6155 **i02711532**

NOTE	REF NO	GRAPHIC REF	PART NUMBER	QTY	PART NAME 1 2 3 4 5 6 (PRODUCT LEVEL)	SEE PAGE
	1	1	**187-7738**	2	WASHER-HARD (21X36.5X3.5-MM THK)	
	2	1	**251-2382**	1	BOSS	
	3	1	**255-3431**	1	BRACKET	
M	4	1	**9C-8895**	1	BOSS-TAPPED (M10X1.5-THD)	
Y	5	1	**110-8078**	1	CIRCLE GP	509

M-METRIC PART
Y-SEPARATE ILLUSTRATION

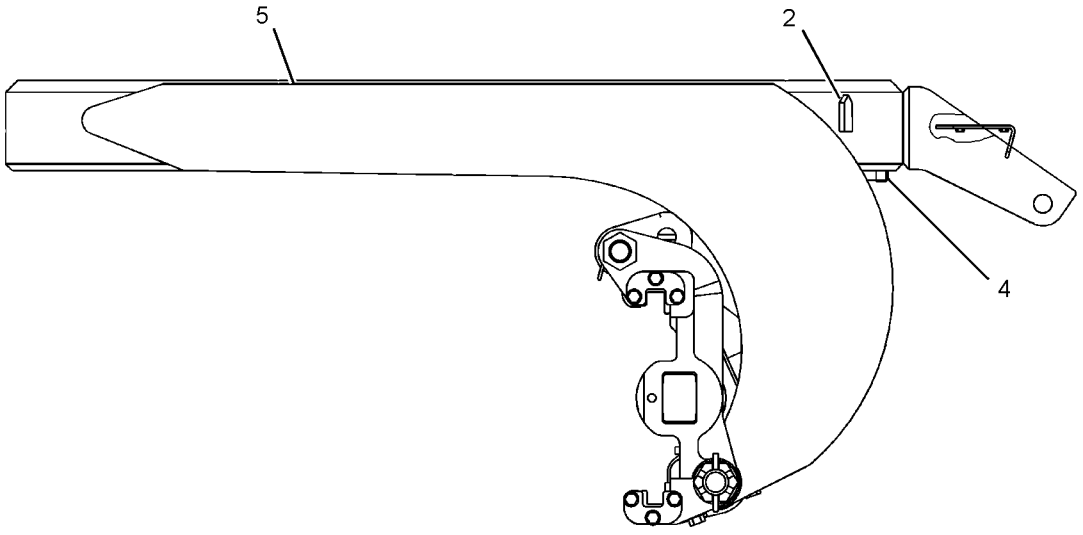

LEFT SIDE VIEW

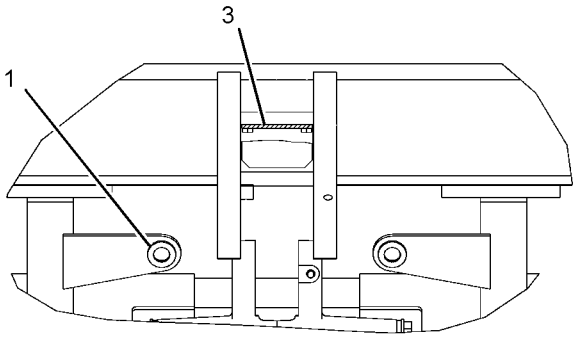

REAR VIEW

GRAPHIC #1 **<END>** g01370052

IMPLEMENTS

338-7508 CIRCLE GP

S/N: JAP1-UP
PART OF 329-3826 BLADE & TIP AR-POWER
AN ATTACHMENT

SMCS-6152, 6154, 6155 **i03589305**

NOTE	REF NO	GRAPHIC REF	PART NUMBER	QTY	PART NAME 1 2 3 4 5 6 (PRODUCT LEVEL)	SEE PAGE
	1	1	**2B-2673**	2	NUT-CASTLE (1-3/4-5-THD)	
B	2	1	**2G-3219**	4	SHIM (0.8-MM THK)	
B	3	1	**2G-3221**	4	SHIM (1.6-MM THK)	
	4	1	**2K-0419**	4	WASHER (0.766X3.5X0.065-IN THK)	
B	5	1	**5D-6644**	10	SHIM (0.762-MM THK)	
	6	1	**5T-8366**	4	STRIP-WEAR	
	7	1	**6G-2947**	1	SHAFT	
	8	1	**8D-5949**	1	BAR-SPREADER	
	9	1	**8W-1749**	10	PLATE	
	10	1	**8W-3656**	1	CIRCLE AS	
		1	**4D-4375**	2	LUG	
		1	**6G-2946**	2	STOP	
		1	**6G-2949**	1	BRACE	
		1	**7B-5037**	2	LOCK-BOLT	
		1	**8W-3653**	1	BRACKET AS	
	11	1	**102-4139**	8	SPACER (18.85X26.67X78-MM THK)	
	12	1	**163-6074**	2	SHIM (0.381-MM THK)	
	13	1	**178-1685**	1	STRIP-WEAR	
B	14	1	**178-1686**	2	SHIM (0.8-MM THK)	
B	15	1	**178-1688**	2	SHIM (1.8-MM THK)	
B	16	1	**178-8455**	2	SHIM (0.4-MM THK)	
	17	1	**338-7445**	1	BRACKET AS	
	18	1	**338-7446**	1	BRACKET-RAIL	
	19	1	**338-7447**	1	BRACKET	
	20	1	**105-2080**	4	BRACKET AS	
		1	**1F-0748**	2	NUT-WELD (1/2-13-THD)	
	21	1	**163-4720**	1	GUARD (LH)	
	22	1	**163-4721**	1	GUARD (RH)	
	23	1	**299-3443**	2	WASHER (45.25X76.2X6.35-MM THK)	
	24	1	**3B-5320**	2	PIN-COTTER	
	25	1	**7X-0334**	8	BOLT (1/2-13X5-IN)	
	26	1	**7X-0452**	4	NUT-FULL (1-1/2-6-THD)	
	27	1	**7X-0550**	8	WASHER-HARD (13.5X32X5-MM THK)	
	28	1	**7X-3392**	30	WASHER-HARD (13.5X22.5X3-MM THK)	
M	29	1	**8T-4139**	30	BOLT (M12X1.75X30-MM)	

B-USE AS REQUIRED
M-METRIC PART

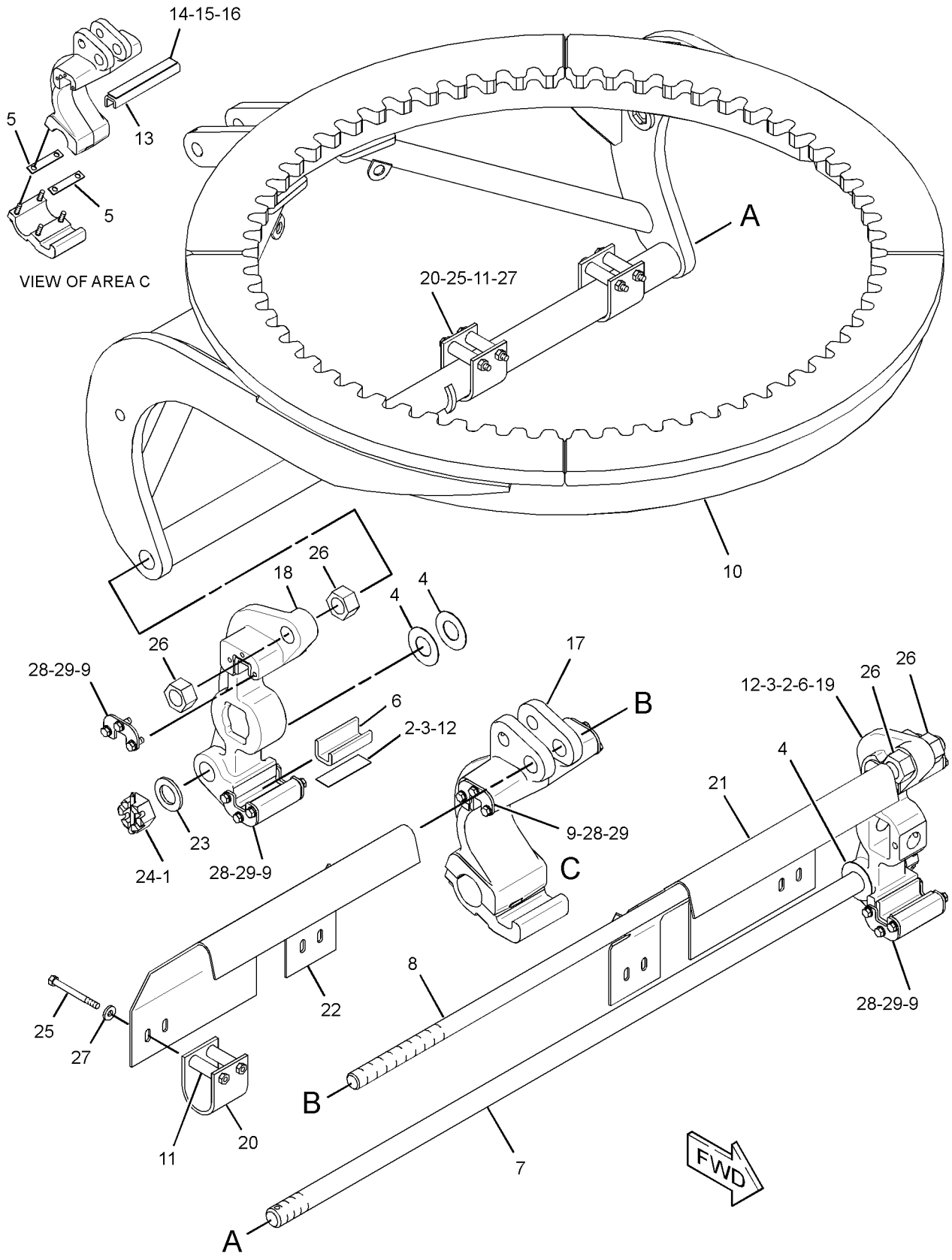

GRAPHIC #1 **<END>** g01864481

IMPLEMENTS

347-4645 CIRCLE GP

S/N: JAP1-UP

PART OF 348-3018 GENERAL AR

SMCS-6152, 6154, 6155 **i03653311**

NOTE	REF NO	GRAPHIC REF	PART NUMBER	QTY	PART NAME 1 2 3 4 5 6 (PRODUCT LEVEL)	SEE PAGE
B	1	1	**2G-3219**	4	SHIM (0.8-MM THK)	
B	2	1	**2G-3221**	4	SHIM (1.6-MM THK)	
B	3	1	**2K-0419**	8	WASHER (0.766X3.5X0.065-IN THK)	
	4	1	**5D-5206**	2	WASHER-NOTCHED	
	5	1	**5T-8366**	4	STRIP-WEAR	
	6	1	**6G-2947**	1	SHAFT	
	7	1	**8D-5467**	2	WASHER-NOTCHED	
	8	1	**8D-5949**	1	BAR-SPREADER	
	9	1	**8W-1749**	8	PLATE	
	10	1	**8W-1752**	1	BRACKET-RAIL	
	11	1	**8W-1753**	1	BRACKET-RAIL	
	12	1	**8W-5227**	1	GUARD AS	
	13	1	**102-4139**	4	SPACER (18.85X26.67X78-MM THK)	
	14	1	**105-2080**	2	BRACKET AS	
		1	**1F-0748**	2	NUT-WELD (1/2-13-THD)	
		1	**102-4140**	1	BRACKET	
	15	1	**341-8347**	1	CIRCLE AS	
M	16	1	**112-3928**	2	BOLT (M24X3X130-MM)	
	17	1	**299-3443**	2	WASHER (45.25X76.2X6.35-MM THK)	
	18	1	**2B-2673**	2	NUT-CASTLE (1-3/4-5-THD)	
	19	1	**317-1117**	2	LOCKNUT	
	20	1	**3B-5320**	2	PIN-COTTER	
	21	1	**5P-8245**	24	WASHER-HARD (13.5X25.5X3-MM THK)	
	22	1	**6H-1717**	24	BOLT (1/2-13X1.125-IN)	
	23	1	**7D-1649**	4	WASHER-HARD (13.5X32X5-MM THK)	
	24	1	**7X-0334**	4	BOLT (1/2-13X5-IN)	
	25	1	**7X-0452**	4	NUT-FULL (1-1/2-6-THD)	

B-USE AS REQUIRED
M-METRIC PART

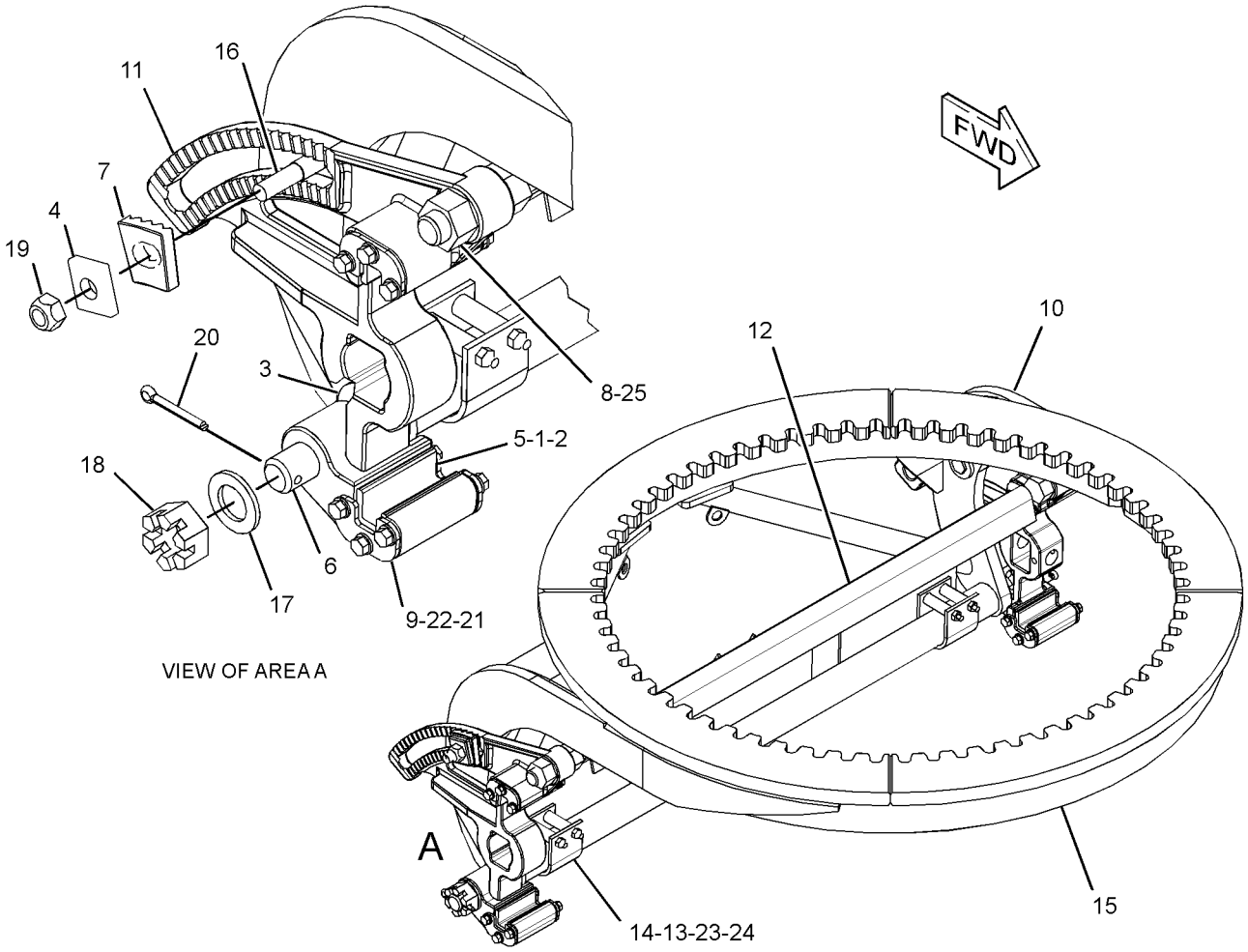

GRAPHIC #1 **<END>** g01962024

341-8349 DRAWBAR GP

S/N: JAP1-UP

PART OF 348-3018 GENERAL AR

SMCS-6153 **i03631120**

NOTE	REF NO	GRAPHIC REF	PART NUMBER	QTY	PART NAME 1 2 3 4 5 6 (PRODUCT LEVEL)	SEE PAGE
B	1	1	**2G-6793**	36	SHIM	
B	2	1	**2G-6794**	12	SHIM	
	3	1	**3B-8489**	1	FITTING-GREASE	
	4	1	**5T-2925**	4	STRIP-WEAR	
	5	1	**5T-2926**	4	SHOE-CIRCLE GUIDE	
	6	1	**6G-4848**	4	PLATE	
	7	1	**6G-5442**	1	BALL	
	8	1	**128-9654**	9	STRIP-WEAR	
	9	1	**261-4672**	1	CAP	
	10	1	**261-4673**	1	ADAPTER	
B	11	1	**261-4674**	4	SHIM (0.8-MM THK)	
B	12	1	**261-4675**	6	SHIM (0.25-MM THK)	
B	13	1	**261-4676**	1	SHIM (0.12-MM THK)	
	14	1	**283-1578**	14	WASHER-HARD (22X45X10-MM THK)	
	15	1	**341-8350**	1	DRAWBAR & YOKE AS	
		1	**2G-6788**	4	PLATE	
		1	**8F-9836**	12	BOSS (3/8-16-THD)	
		1	**178-3086**	3	STUD-BALL	
		1	**8X-7956**	1	SHAFT AS	
M	16	1	**147-5112**	4	BOLT (M24X3X150-MM)	
	17	1	**1D-5119**	8	NUT (3/4-10-THD)	
M	18	1	**213-5007**	2	BOLT (M20X2.5X88-MM)	
	19	1	**267-3506**	4	WASHER-HARD (26X44X4-MM THK)	
	20	1	**267-3508**	4	WASHER-HARD (22X35X3.5-MM THK)	
	21	1	**286-0466**	12	BOLT (M20X2.5X100-MM)	
M	22	1	**286-0742**	4	NUT (M20X2.5-THD)	
	23	1	**289-0580**	8	SETSCREW (3/4-10X2.5-IN)	
	24	1	**5P-8291**	5	BOLT (3/4-16X2-IN)	
M	25	1	**6V-8653**	2	BOLT-SOCKET HEAD (M6X1X40-MM)	

B-USE AS REQUIRED
M-METRIC PART

341-8349 **DRAWBAR GP** *(contd.)* **i03631120**

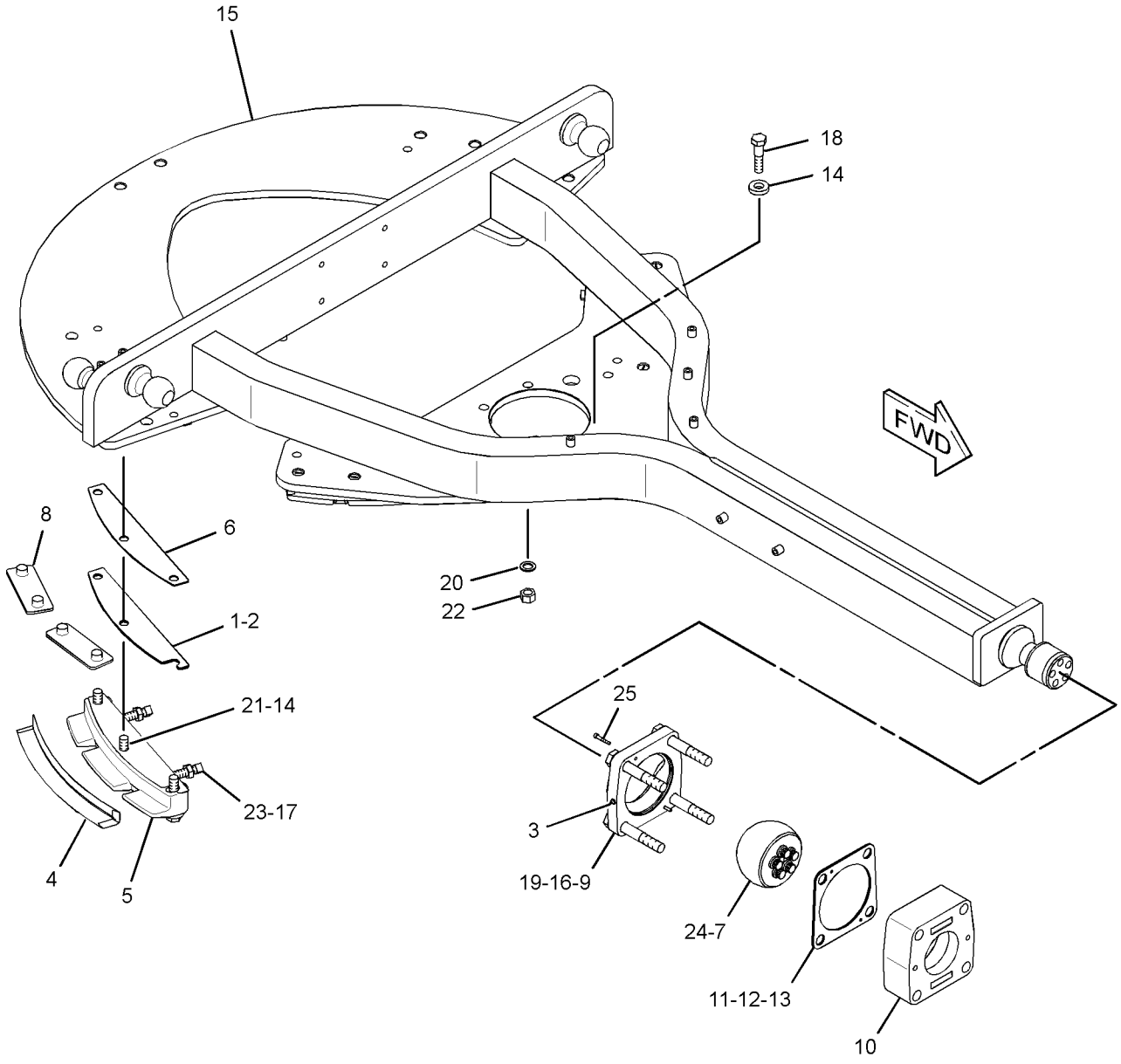

GRAPHIC #1 **<END>** g01948280

113-0997 LINK GP-LOWER–RIPPER

S/N: JAP1-UP
PART OF 299-2511 RIPPER GP
AN ATTACHMENT

SMCS-6313 **i00834888**

NOTE	REF NO	GRAPHIC REF	PART NUMBER	QTY	PART NAME 1 2 3 4 5 6 (PRODUCT LEVEL)	SEE PAGE
	1	1	**113-0998**	1	LINK AS	
	2	1	**3G-0472**	4	BEARING	
	3	1	**7K-9203**	8	SEAL-LIP	

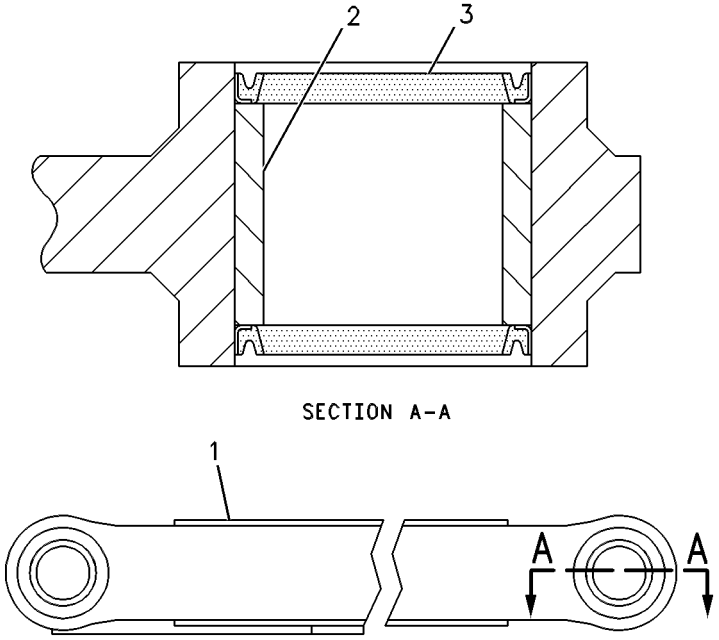

GRAPHIC #1 **<END>** g00109099

113-0994 LINK GP-UPPER–RIPPER

S/N: JAP1-UP
PART OF 299-2511 RIPPER GP
AN ATTACHMENT

SMCS-6313 **i00834887**

NOTE	REF NO	GRAPHIC REF	PART NUMBER	QTY	PART NAME 1 2 3 4 5 6 (PRODUCT LEVEL)	SEE PAGE
	1	1	**127-8157**	1	LINK	
	2	1	**8D-9296**	2	BEARING	
	3	1	**7K-9202**	4	SEAL-LIP	

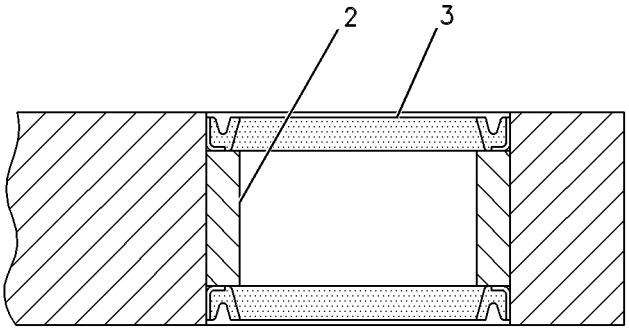

SECTION A-A

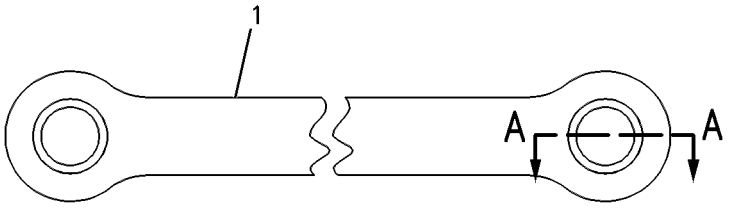

GRAPHIC #1 **<END>** g00109098

IMPLEMENTS

336-1559 PLATE GP-PUSH

S/N: JAP1-UP
PART OF 348-6936 OPTION AR-RIPPER
AN ATTACHMENT

SMCS-6077 **i03519312**

NOTE	REF NO	GRAPHIC REF	PART NUMBER	QTY	PART NAME 1 2 3 4 5 6 (PRODUCT LEVEL)	SEE PAGE
	1	1	**112-5853**	1	PLATE	
M	2	1	**166-1880**	8	BOLT (M20X2.5X75-MM)	
	3	1	**336-1561**	1	PLATE AS-PUSH	
		1	**5J-7333**	2	HOOK	
	4	1	**336-1963**	1	PLATE AS	
M		1	**8T-3490**	4	NUT-WELD (M10X1.5-THD)	
	5	1	**336-1964**	1	BRACKET AS	
	6	1	**283-1578**	8	WASHER-HARD (22X45X10-MM THK)	
	7	1	**8T-4121**	8	WASHER-HARD (11X21X2.5-MM THK)	
M	8	1	**8T-4136**	2	BOLT (M10X1.5X25-MM)	
M	9	1	**8T-4137**	6	BOLT (M10X1.5X20-MM)	
M	10	1	**8T-4139**	2	BOLT (M12X1.75X30-MM)	
	11	1	**8T-4223**	2	WASHER-HARD (13.5X25.5X3-MM THK)	
D	12	1	**5P-5923**		SEAL (0.4-M)	

D-ORDER BY THE METER
M-METRIC PART

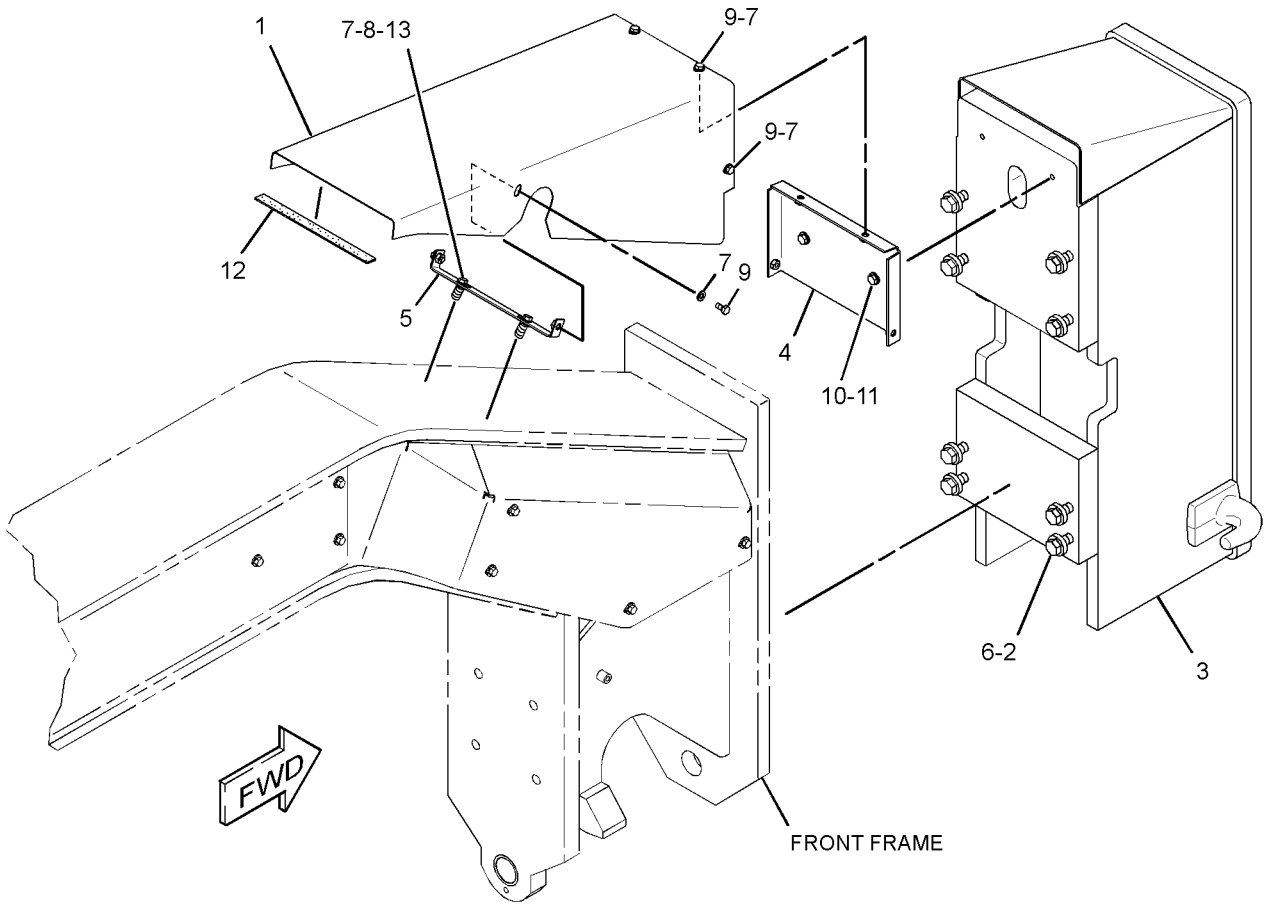

GRAPHIC #1 **<END>** g01917514

171-7186 ACCESSORY GP-CAB–HIGH PROFILE

S/N: JAP1-UP
12-VOLT
PART OF 286-4328 CONVERTER AR-ELECTRICAL
AN ATTACHMENT

SMCS-1408, 1421 **i01689402**

NOTE	REF NO	GRAPHIC REF	PART NUMBER	QTY	PART NAME 1 2 3 4 5 6 (PRODUCT LEVEL)	SEE PAGE
	1	1	**117-2311**	1	SOCKET-AUXILIARY POWER (12-VOLT)	
	2	1	**169-3264**	1	HARNESS AS-CAB	
		1	**102-8802**	1	KIT-RECEPTACLE (2-PIN) (12V POWER PORT)	
					(INCLUDES RECEPTACLE AS & WEDGE)	
M	3	1	**129-3178**	2	LOCKNUT (M6X1-THD)	
	4	1	**139-1153**	1	PLATE	
	5	1	**6P-0205**	2	SPACER (0.269X0.405X0.656-IN THK)	
	6	1	**9X-8256**	2	WASHER (6.6X12X2-MM THK)	

M-METRIC PART

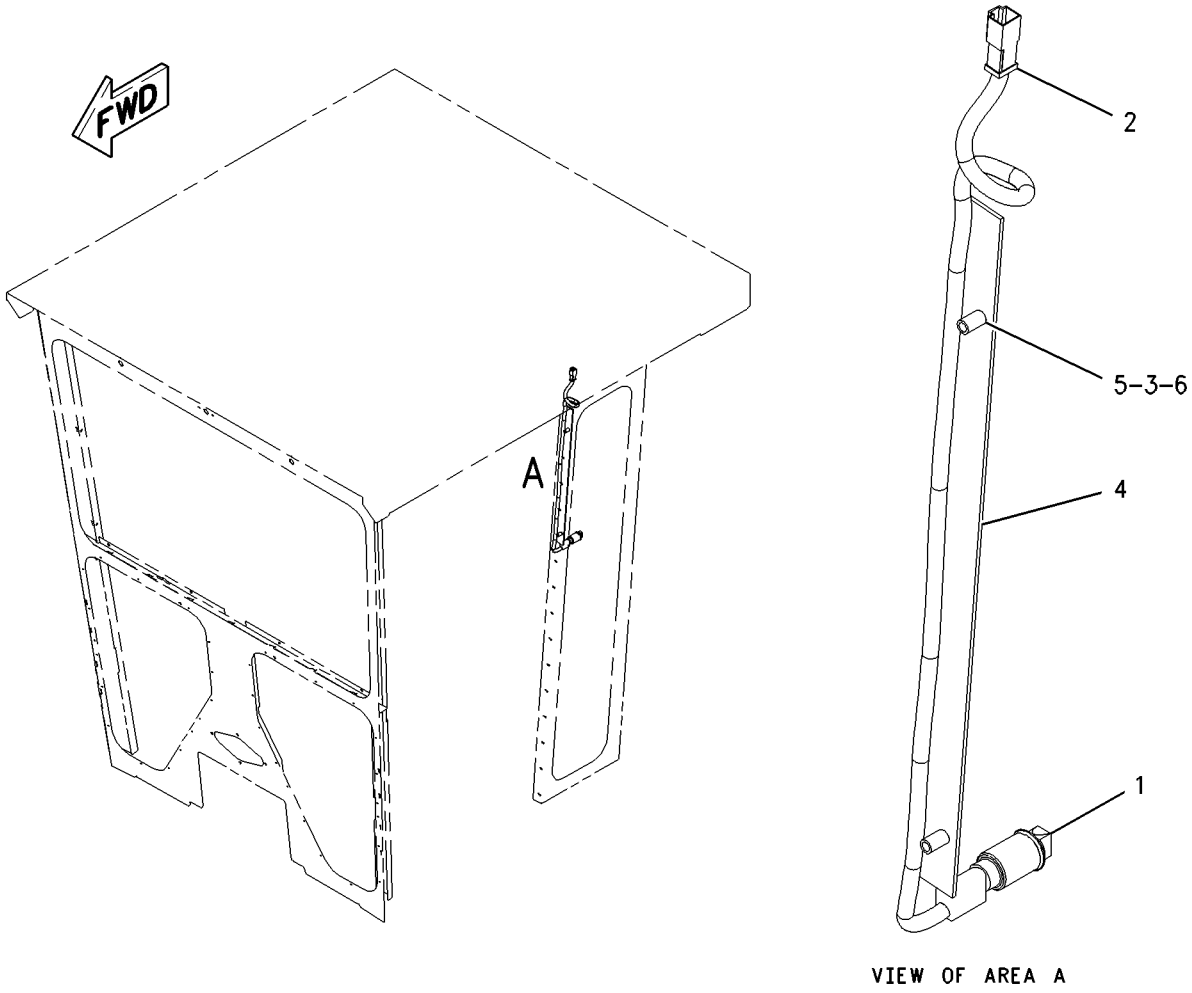

GRAPHIC #1 **<END>** g00890902

OPERATOR STATION

116-2779 ADJUSTER GP-SEAT

S/N: JAP1-UP

PART OF 8Y-6852 SEAT GP-STATIC

AN ATTACHMENT

SMCS-7321 **i02847571**

NOTE	REF NO	GRAPHIC REF	PART NUMBER	QTY	PART NAME 1 2 3 4 5 6 (PRODUCT LEVEL)	SEE PAGE
	1	1	**9C-5347**	4	BOLT (1/2-13X0.75-IN)	
	2	1	**9V-7943**	2	SPRING	
	3	1	**116-2327**	1	SUPPORT AS	
	4	1	**9C-2177**	1	CAP	
	5	1	**6W-0590**	1	LEVER (SEAT ADJUST)	
	6	1	**3J-5696**	1	PIPE	
	7	1	**4V-7890**	1	SPRING	
	8	1	**6W-0111**	2	LINK	
	9	1	**2L-5893**	1	PIN-SPRING	
	10	1	**4V-7891**	1	LATCH AS	
	11	1	**5B-6172**	8	WASHER (9.7X19X0.8-MM THK)	
	12	1	**2K-4973**	8	LOCKNUT (3/8-16-THD)	
	13	1	**9V-3043**	1	LINK AS	
	14	1	**6W-0108**	1	LINK AS	
	15	1	**116-2016**	1	ANGLE AS (LH)	
	16	1	**116-2015**	1	ANGLE AS (RH)	
	17	1	**6W-1885**	1	CHANNEL AS	
		1	**9V-7440**	4	NUT-WELD	
	18	1	**5M-3062**	4	BOLT (3/8-16X0.75-IN)	

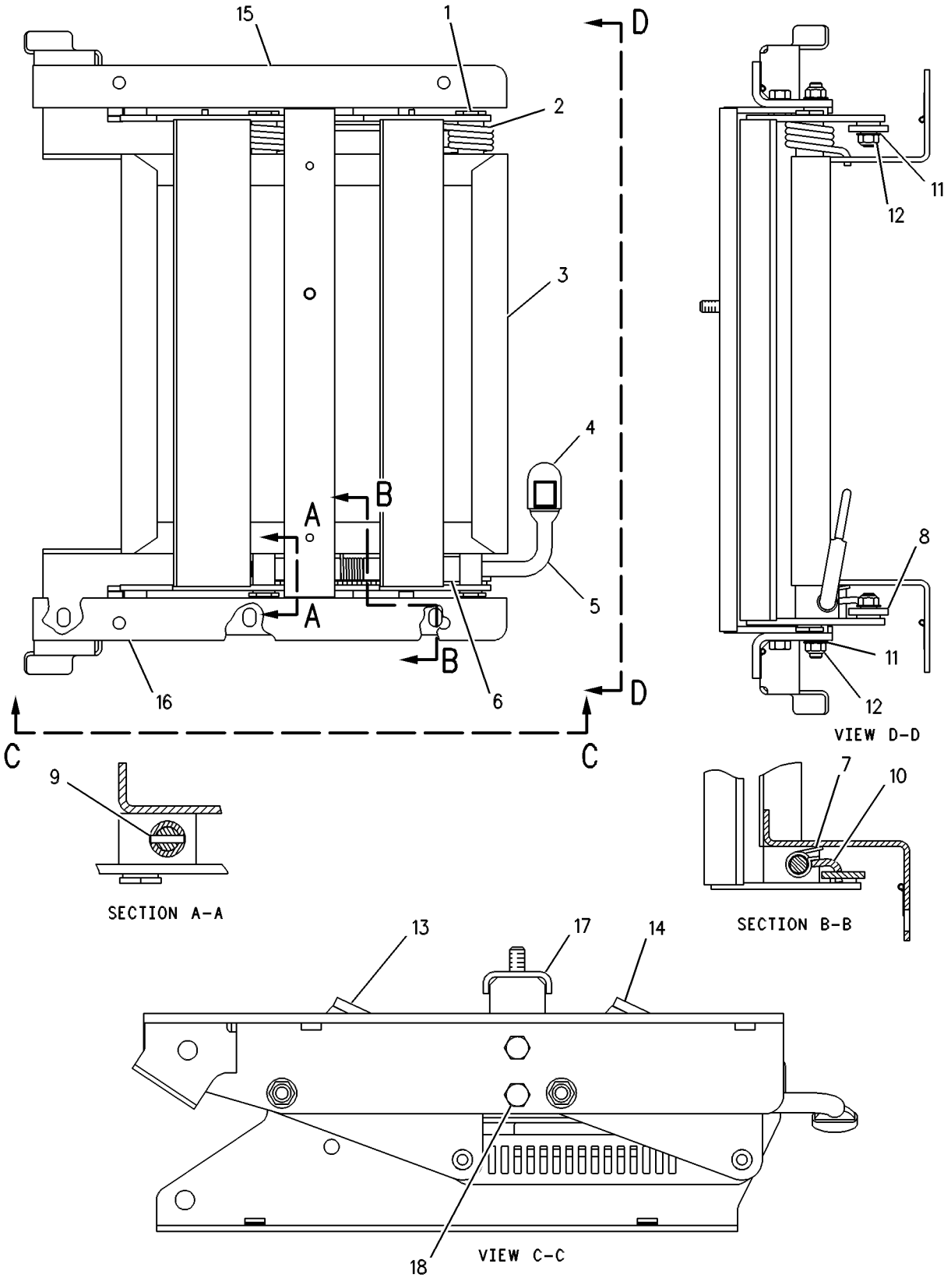

GRAPHIC #1 **<END>** g00108773

OPERATOR STATION

125-9854 ADJUSTER GP-SEAT

S/N: JAP1-UP

PART OF 125-9856 SEAT GP-STATIC

SMCS-7321 **i03438960**

NOTE	REF NO	GRAPHIC REF	PART NUMBER	QTY	PART NAME 1 2 3 4 5 6 (PRODUCT LEVEL)	SEE PAGE
	1	1	**125-9853**	1	BASE AS	
	2	1	**6W-1497**	1	SUPPORT AS	
	3	1	**6W-1496**	1	SUPPORT AS	
	4	1	**6W-1888**	1	SHEET	
	5	1	**6W-2371**	1	PLATE AS	
	6	1	**6W-3628**	2	CABLE	
	7	1	**8T-9381**	2	BOLT (7/16-20X1-IN)	
	8	1	**8S-4790**	4	SPACER (0.459X0.625X0.25-IN THK)	
	9	1	**4B-5272**	4	WASHER (12.7X31.7X2-MM THK)	
	10	1	**8R-4519**	4	LOCKNUT (7/16-20-THD)	
	11	1	**5V-5262**	2	BOLT-SHOULDER (7/16-20X1.26-IN)	
	12	1	**4L-6454**	4	BOLT (3/8-16X1-IN)	
	13	1	**5M-2894**	4	WASHER-HARD (10.2X18.5X2.5-MM THK)	

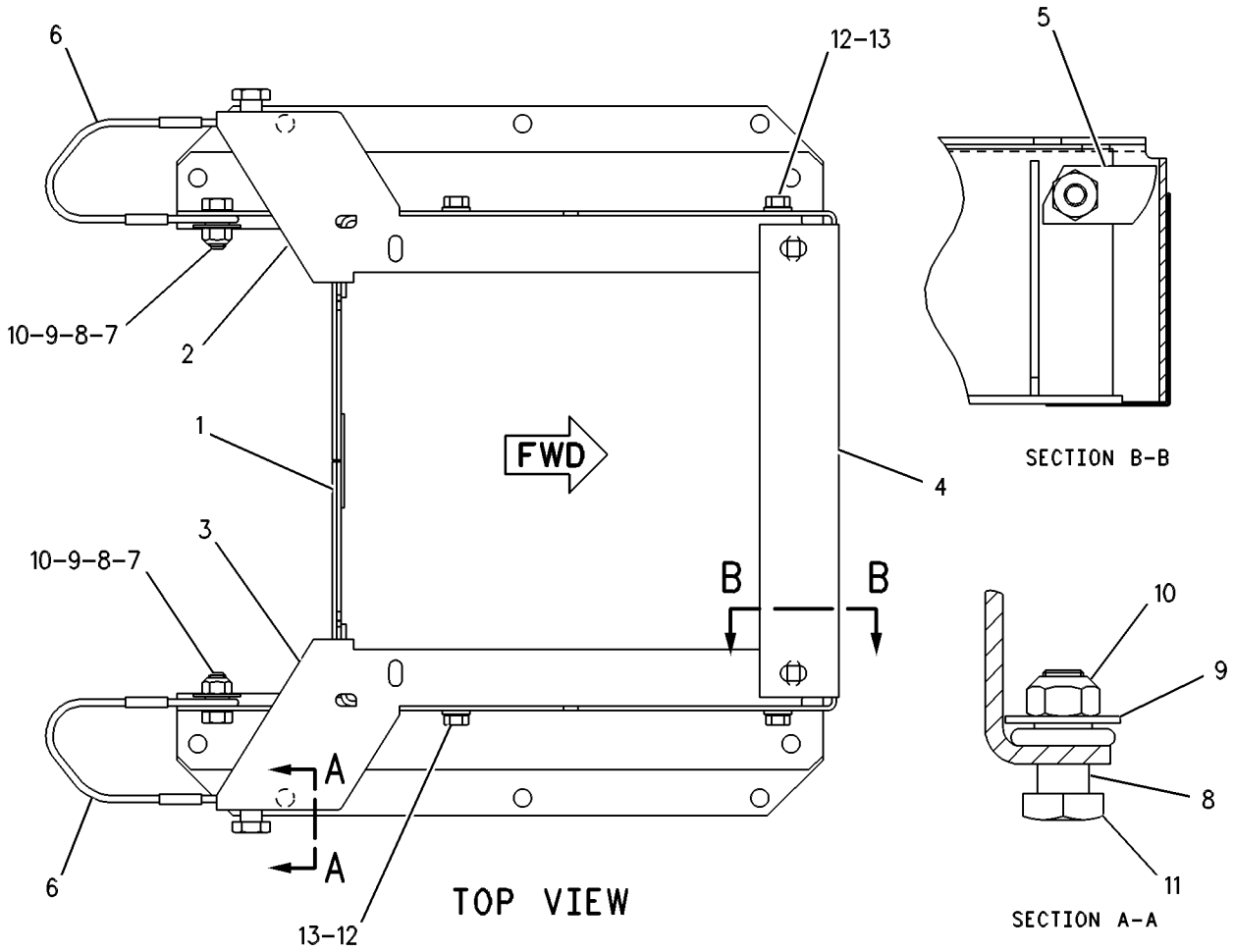

GRAPHIC #1 **<END>** g00109161

OPERATOR STATION

173-1028 ADJUSTER GP-SEAT

S/N: JAP1-UP
PART OF 301-4174 SEAT GP
AN ATTACHMENT

SMCS-7321 **i01437574**

NOTE	REF NO	GRAPHIC REF	PART NUMBER	QTY	PART NAME 1 2 3 4 5 6 (PRODUCT LEVEL)	SEE PAGE
	1	1	**4V-8256**	4	SPRING	
	2	1	**117-4486**	1	ANCHOR	
	3	1	**117-4492**	1	ROD	
	4	1	**132-0338**	2	WASHER-PLASTIC (13X31.7X0.8-MM THK)	
	5	1	**136-1544**	1	LATCH AS (LH)	
	6	1	**143-1288**	1	LOCKNUT-FLANGE (3/8-16-THD)	
	7	1	**156-5545**	1	LATCH AS-RH	
	8	1	**164-4531**	1	ROD	
	9	1	**9M-1974**	1	WASHER-HARD (8.8X16X2-MM THK)	
	10	1	**170-1114**	1	HANDLE (SLIDE ADJUSTMENT)	
	11	1	**170-1115**	1	HANDLE (TILT ADJUSTMENT)	
	12	1	**172-4001**	1	BRACKET	
	13	1	**1D-4675**	1	BOLT-CARRIAGE (3/8-16X0.75-IN)	
	14	1	**2K-4973**	2	LOCKNUT (3/8-16-THD)	
	15	1	**7L-8170**	1	NUT-FULL (5/16-18-THD)	
	16	1	**7X-0608**	2	WASHER-HARD (10.2X16X2-MM THK)	
	17	1	**170-1112**	1	PLATE AS	

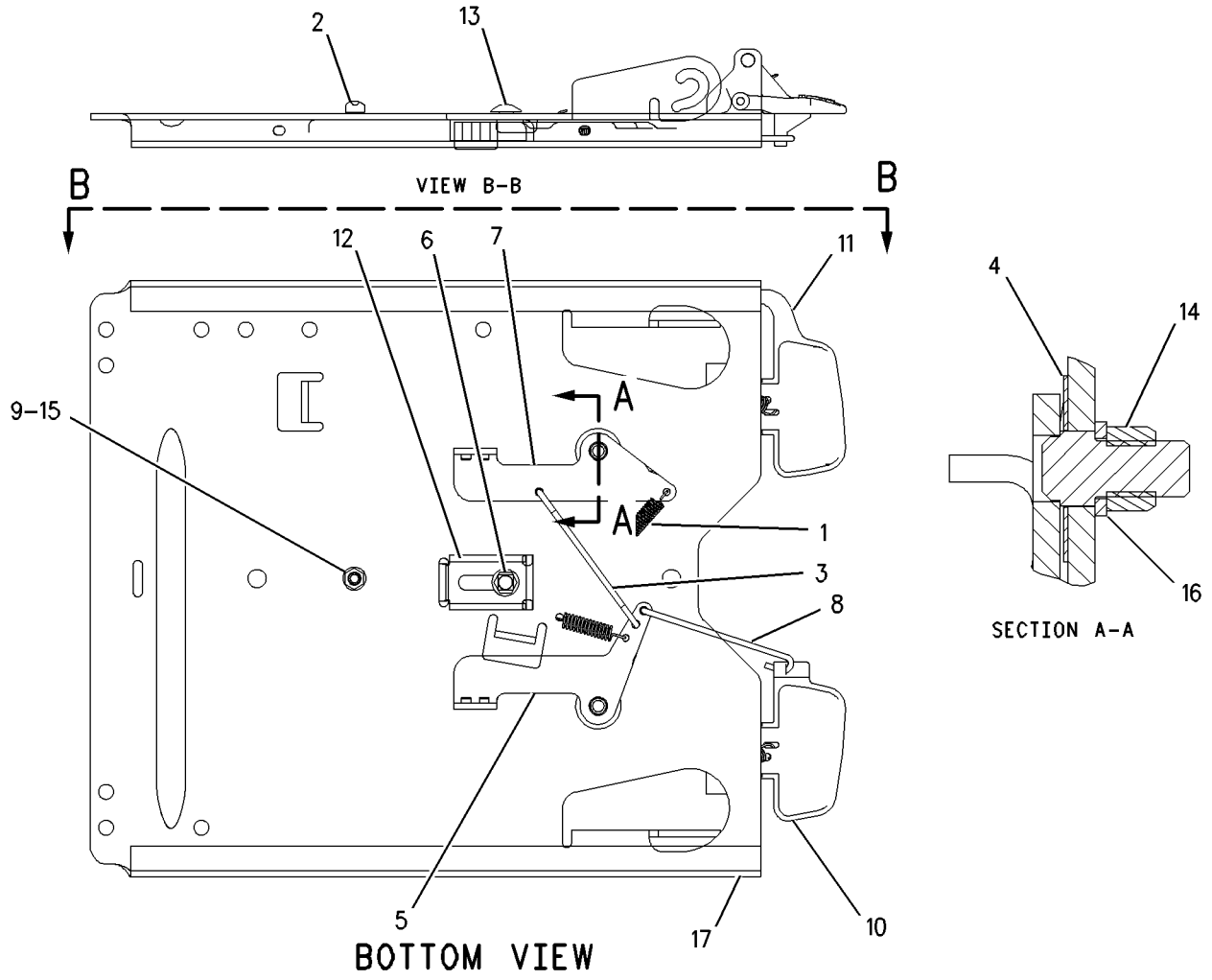

GRAPHIC #1 **<END>** g00686297

OPERATOR STATION

308-5633 AIR CONDITIONER & HEATER GP

S/N: JAP1-UP

PART OF 289-7545 AIR CONDITIONER GP

AN ATTACHMENT

SMCS-7304, 7320 **i03258804**

NOTE	REF NO	GRAPHIC REF	PART NUMBER	QTY	PART NAME 1 2 3 4 5 6 (PRODUCT LEVEL)	SEE PAGE
	1	1	**2P-4339**	1	NUT-JAM (7/16-28-THD)	
	2	1	**2V-0099**	1	KNOB-CONTROL (FAN SPEED)	
	2A	1	**2V-0099**	1	KNOB-CONTROL (TEMPERATURE CONTROL)	
	3	2	**3E-0400**	2	BLOWER AS	
					(EACH INCLUDES)	
		2	**037-4838**	1	CLAMP	
	4	1	**3E-3890**	1	FILM-CONTROL (AIR CONDITIONER, HEATER)	
	5	1	**3E-5464**	1	THERMOSTAT (HVAC) (REFRIGERANT)	
	6	2	**3S-2093**	2	STRAP-CABLE	
	7	2	**3T-3197**	1	GROMMET	
	8	2	**3T-3198**	1	GROMMET	
	9	1	**5P-7803**	2	PLUG-BUTTON	
	10	1	**6P-3236**	1	SWITCH AS-ROTARY (FAN SPEED)	
		1	**6V-8362**	5	SCREW-MACHINE (8-32X0.31-IN)	
		1	**9B-7233**	5	LOCKWASHER	
	11	1	**6T-5345**	1	BUSHING-TERMINAL	
	12	2	**6T-6708**	2	WASHER (7X28.6X4.1-MM THK)	
	13	1	**7G-4824**	1	STRAP	
	14	1	**8C-3756**	1	FILM-IDENTIFICATION (AIR CONDITIONER)	
	15	2	**8C-4586**	2	CLAMP	
	16	1	**8D-1429**	1	LAMP (24-VOLT)	
	17	1	**8E-7791**	1	STRAP	
	18	2	**8P-5141**	2	PLATE-ORIFICE	
	19	1	**8X-5536**	1	COVER	
	20	1	**8X-5538**	1	COVER AS	
M		1	**8T-3490**	4	NUT-WELD (M10X1.5-THD)	
	21	1	**8X-5540**	1	COVER	
	22	1	**8Y-6388**	4	LOUVER AS-VENT	
	23	2	**9G-1950**	1	RESISTOR	
	24	2	**9X-2185**	4	SCREW (8-15X0.44-IN)	
	25	2	**9X-2488**	4	CLAMP-HOSE	
	26	2	**9X-9653**	1	COIL AS-EVAPORATOR	
	27	1	**110-6393**	1	PLATE-INSTRUCTION (AIR CONDITIONER)	
	28	1	**123-4618**	1	COVER	
	29	1	**123-4701**	1	SEAL	
	30	2	**124-1431**	1	BRACKET	
	31	2	**124-1432**	1	HOUSING AS	
		2	**7T-1099**	1	LINK	
		2	**8P-5141**	2	PLATE-ORIFICE	
	32	2	**124-3137**	1	BRACKET	
	33	2	**124-3138**	1	SEAL	
	34	1	**124-9006**	1	SHAFT	
	35	2	**124-9007**	1	SHAFT AS	
		2	**4L-5966**	2	SETSCREW (NO 10X0.19-IN)	
	36	1	**125-0438**	1	GASKET	
	37	2	**129-4935**	1	SEAL	
	38	2	**142-4940**	1	PLATE AS	
	39	1	**174-4492**	1	COVER	
	40	2	**174-4971**	1	SUPPORT AS	
M		2	**3E-4304**	6	INSERT-THREADED (M6X1-THD)	
	41	1	**174-6353**	1	PLATE	
	42	1	**176-5507**	1	PAD	
	43	2	**177-7858**	1	HARNESS AS-HEATER & AIR COND	
	44	1	**191-0027**	1	PAD	
	45	2	**204-4376**	1	CAP-PROTECTIVE	

308-5633 AIR CONDITIONER & HEATER GP *(contd.)* i03258804

NOTE	REF NO	GRAPHIC REF	PART NUMBER	QTY	PART NAME 1 2 3 4 5 6 (PRODUCT LEVEL)	SEE PAGE
	46	2	**238-0415**	1	VALVE AS-WATER	
	47	2	**238-0417**	1	CORE AS-HEATER	
	48	2	**248-6772**	4	SCREW-MACHINE (8-16X7.75-IN)	
	49	1	**255-6261**	2	PLATE	
I	50	2	**308-5632**	1	HOSE AS	
I	51	2	**313-6224**	1	HOSE AS	
	52	2	**316-1927**	1	MOTOR AS-BLOWER (24-VOLT, A/C, HEATER)	
		2	**9W-0852**	2	PIN-CONNECTOR (14-GA)	
		2	**102-8802**	1	KIT-RECEPTACLE (2-PIN)	
					(INCLUDES RECEPTACLE AS & WEDGE)	
	53	1	**104-2091**	8	SCREW-FLAT HEAD (NO 6X0.5-IN)	
M	54	2	**129-3178**	4	LOCKNUT (M6X1-THD)	
	55	2	**130-5300**	1	CLIP	
M	56	2	**141-9784**	1	BOLT (M6X1X190-MM)	
	57	1	**3B-4501**	2	LOCKWASHER	
	58	1	**3H-2900**	1	GROMMET	
	59	1	**3S-9557**	8	SCREW-PAN HEAD (4-40X0.5-IN)	
	60	2	**4M-6582**	1	SEAL-O-RING	
M	61	2	**5C-2890**	7	NUT (M6X1-THD)	
	62	1,2	**5P-1075**	13	WASHER-HARD (10.2X22.5X3-MM THK)	
	63	2	**5P-9135**	1	GROMMET	
	64	2	**6V-1668**	2	WASHER (6.5X29.1X3-MM THK)	
M	65	2	**6V-7728**	1	BOLT (M6X1X45-MM)	
	66	1,2	**6V-8801**	13	NUT (3/8-16-THD)	
	67	1	**7T-9793**	2	VALVE-CHECK (EVAPORATOR DRAIN)	
	68	1	**7X-0591**	2	WASHER-HARD (17X29X3-MM THK)	
M	69	2	**8T-4171**	2	BOLT (M6X1X12-MM)	
	70	2	**8T-4205**	15	WASHER-HARD (7.2X14.5X2-MM THK)	
	71	1	**8T-6631**	2	SCREW-MACHINE (8-32X0.5-IN)	
	72	2	**9M-8406**	1	CLIP	
M	73	1	**9X-2040**	4	SCREW-TRUSS HEAD (M10X1.5X25-MM)	
M	74	1	**9X-2041**	5	SCREW-TRUSS HEAD (M10X1.5X20-MM)	
M	75	1	**9X-2045**	6	SCREW-TRUSS HEAD (M6X1X20-MM)	
	76	2	**9X-7381**	1	SEAL-O-RING	
	77	2	**9X-7382**	1	SEAL-O-RING	
E	78	2	**136-1953**		HOSE (17-CM EACH)	
J	79	2	**5P-0878**		SEAL (2-DM)	
D	80	2	**5P-5637**		SEAL (0.2-M)	
D	80A	2	**5P-5637**		SEAL (0.1-M)	
D	80B	2	**5P-5637**		SEAL (0.9-M)	
D	80C	2	**5P-5637**		SEAL (0.8-M)	
D	80D	2	**5P-5637**		SEAL (0.5-M EACH)	
D	80E	2	**5P-5637**		SEAL (0.2-M)	
D	80F	2	**5P-5637**		SEAL (0.4-M)	
E	81	2	**9X-2126**		SEAL (20.5-CM)	
E	81A	2	**9X-2126**		SEAL (28.5-CM)	
J	82	1	**5P-6129**		TUBE (9-DM EACH)	

D-ORDER BY THE METER
E-ORDER BY THE CENTIMETER
I-REFER TO HYDRAULIC INFORMATION SYSTEM
J-ORDER BY THE DECIMETER
M-METRIC PART

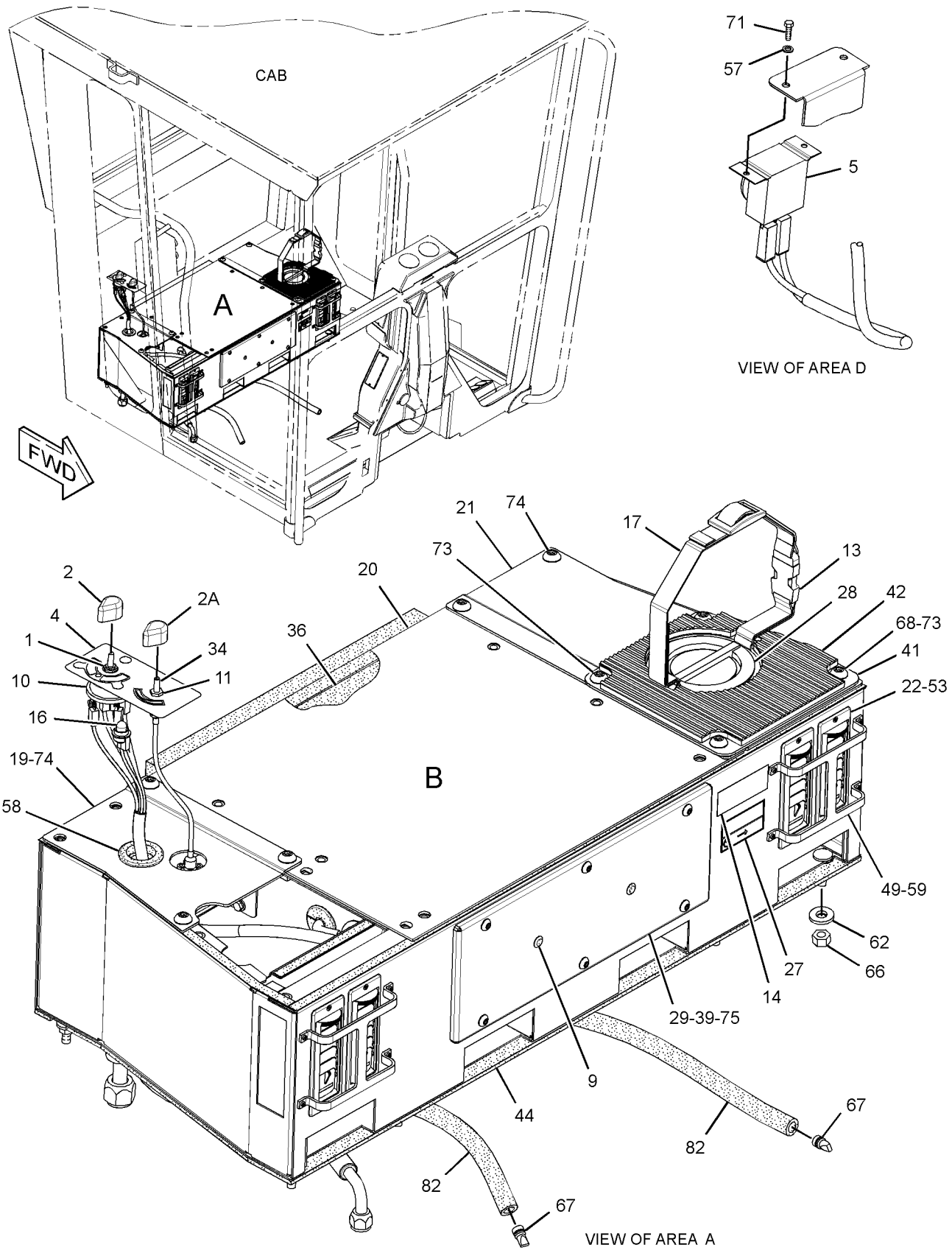

GRAPHIC #1

g01676295

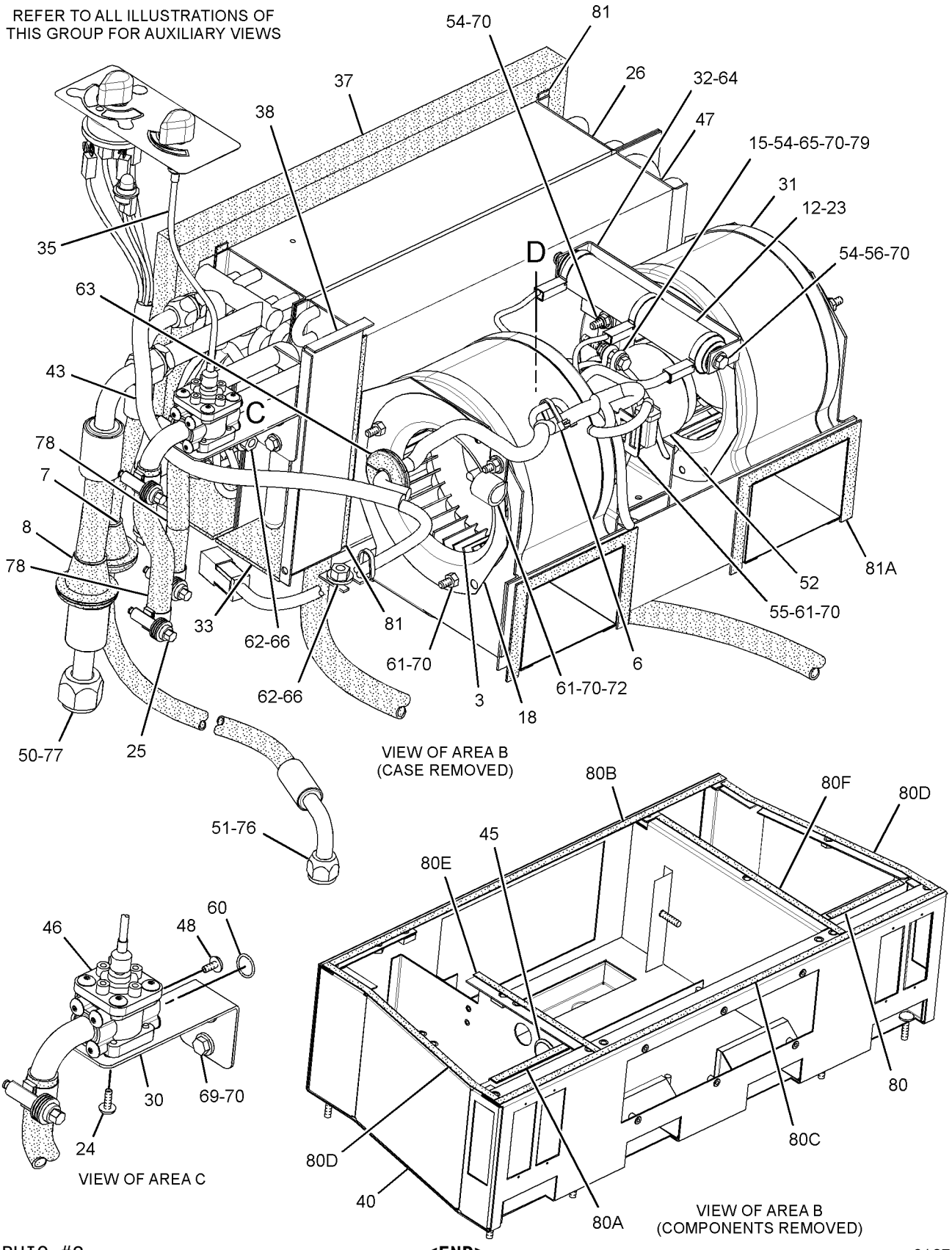

GRAPHIC #2

<END>

g01676313

OPERATOR STATION

300-9979 AIR CONDITIONER AR

S/N: JAP1-UP
PART OF 348-6942 OPTION AR-CAB
AN ATTACHMENT

SMCS-7320 **i03681880**

NOTE	PART NUMBER	QTY	PART NAME 1 2 3 4 5 6 (PRODUCT LEVEL)	SEE PAGE
Y	*289-7545*	1	AIR CONDITIONER GP	532
Y	*328-2062*	1	COMPRESSOR GP-REFRIGERANT	538
Y	*295-4431*	1	CONDENSER & MTG GP-REFRIGERANT	539
Y	*177-7891*	1	DUCT & CONTROL GP (A/C, HEATER DISTRIBUTOR)	555
Y	*7I-5015*	1	DUCT GP-CAB AIR	556
Y	**8X-2925**	1	FILTER GP-CAB AIR	562
Y	*325-7481*	1	LINES GP-AIR CONDITIONER	578
Y	*325-8635*	1	LINES GP-HEATER	580
Y	*315-2614*	1	WIRING GP-AIR CONDITIONER	196
	335-6210	1	FILM-INSTRUCTION (BELT ROUTING) (A/C)	

Y-SEPARATE ILLUSTRATION

<END>

289-7545 AIR CONDITIONER GP

S/N: JAP1-UP
PART OF 300-9979 AIR CONDITIONER AR
AN ATTACHMENT

SMCS-7320 **i03258366**

NOTE	PART NUMBER	QTY	PART NAME 1 2 3 4 5 6 (PRODUCT LEVEL)	SEE PAGE
Y	**308-5633**	1	AIR CONDITIONER & HEATER GP	528
	5M-3062	1	BOLT (3/8-16X0.75-IN)	
	5D-1026	2	CLAMP-BAND	
	8M-2773	2	CLIP	
	123-0872	1	PAD	
	191-5236	1	PAD	
	8T-4896	1	WASHER-HARD (10.2X18.5X2.5-MM THK)	

Y-SEPARATE ILLUSTRATION

<END>

OPERATOR STATION

202-7666 ARMREST GP–RH

S/N: JAP1-UP
PART OF 175-1504 SEAT GP
AN ATTACHMENT

SMCS-7307 **i02947634**

NOTE	REF NO	GRAPHIC REF	PART NUMBER	QTY	PART NAME 1 2 3 4 5 6 (PRODUCT LEVEL)	SEE PAGE
	1	1	**143-1288**	1	LOCKNUT-FLANGE (3/8-16-THD)	
	2	1	**166-9914**	1	BRACKET AS	
	3	1	**219-2000**	1	PAD AS	
		1	**1F-0750**	1	NUT-WELD (3/8-16-THD)	
	4	1	**294-5042**	2	SPACER (11.1X19.5X9.67-MM THK)	
	5	1	**2K-4973**	1	LOCKNUT (3/8-16-THD)	
	6	1	**2K-6061**	1	SCREW-MACHINE (3/8-16X1.5-IN)	
	7	1	**4L-6454**	1	BOLT (3/8-16X1-IN)	
	8	1	**5S-7383**	1	BOLT (3/8-16X1.75-IN)	
	9	1	**8T-4121**	1	WASHER-HARD (11X21X2.5-MM THK)	

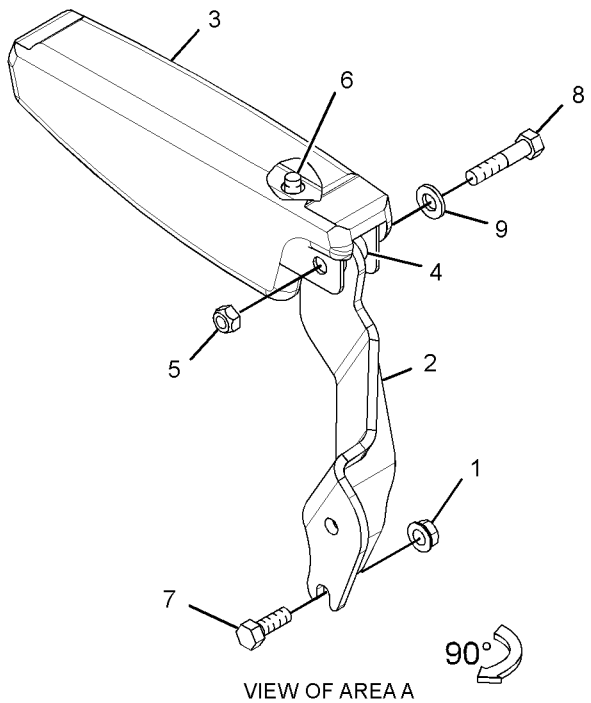

VIEW OF AREA A
(EXPLODED)

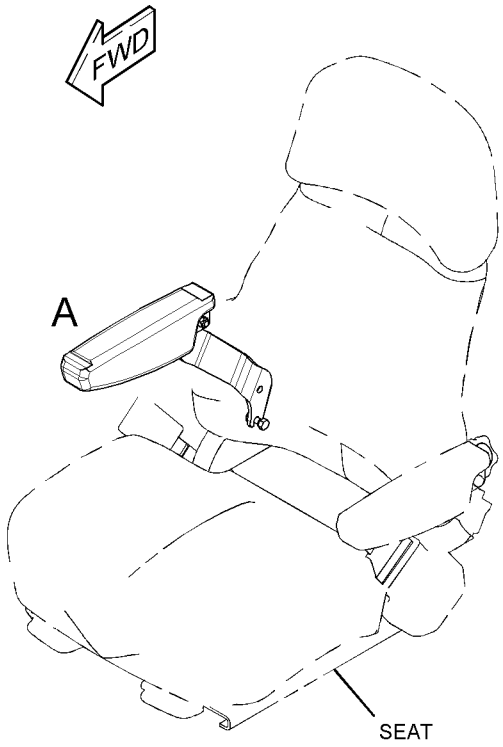

GRAPHIC #1 **<END>** g01487833

OPERATOR STATION

202-7668 ARMREST GP–LH

S/N: JAP1-UP
PART OF 175-1504 SEAT GP
AN ATTACHMENT

SMCS-7307 **i02947633**

NOTE	REF NO	GRAPHIC REF	PART NUMBER	QTY	PART NAME 1 2 3 4 5 6 (PRODUCT LEVEL)	SEE PAGE
	1	1	**143-1288**	1	LOCKNUT-FLANGE (3/8-16-THD)	
	2	1	**166-9913**	1	BRACKET AS	
	3	1	**219-2000**	1	PAD AS	
		1	**1F-0750**	1	NUT-WELD (3/8-16-THD)	
	4	1	**294-5042**	2	SPACER (11.1X19.5X9.67-MM THK)	
	5	1	**2K-4973**	1	LOCKNUT (3/8-16-THD)	
	6	1	**2K-6061**	1	SCREW-MACHINE (3/8-16X1.5-IN)	
	7	1	**4L-6454**	1	BOLT (3/8-16X1-IN)	
	8	1	**5S-7383**	1	BOLT (3/8-16X1.75-IN)	
	9	1	**8T-4121**	1	WASHER-HARD (11X21X2.5-MM THK)	

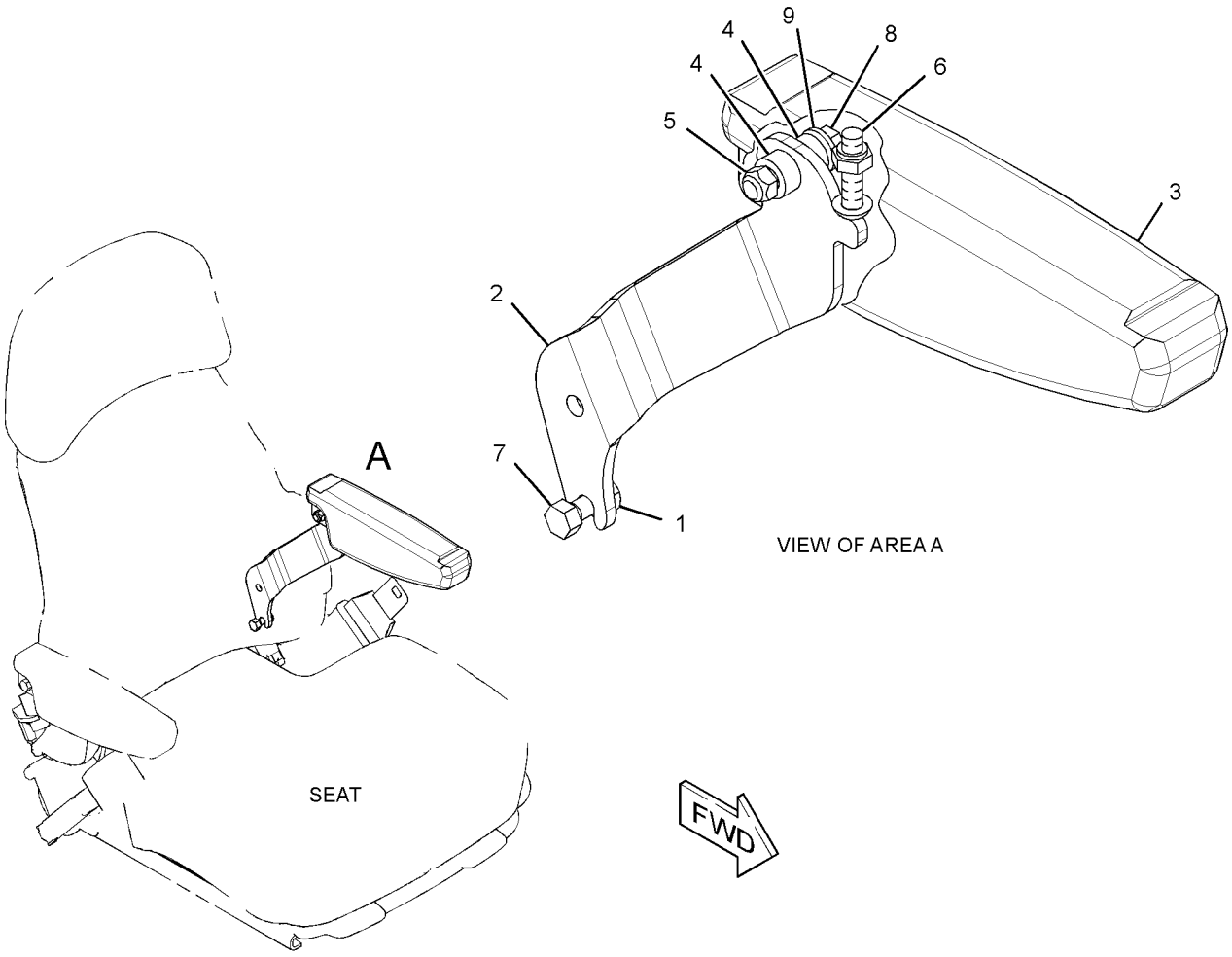

GRAPHIC #1 **<END>** g01487758

OPERATOR STATION

320-0341 CAB AR—NON ROPS/FOPS

S/N: JAP1-UP

PART OF 348-6940 OPTION AR-CAB

AN ATTACHMENT

SMCS-7301 **i03630132**

NOTE	REF NO	GRAPHIC REF	PART NUMBER	QTY	PART NAME 1 2 3 4 5 6 (PRODUCT LEVEL)	SEE PAGE
Y	1	1	*8X-2385*	1	PANEL GP-CAB (HIGH PROFILE)	593
Y	2	1	**8X-2795**	1	MIRROR GP-REAR VIEW (DUAL INSIDE)	582
Y	3	1	*125-4342*	1	WASHER GP-WINDOW (FRONT)	632
Y	4	1	*125-4344*	1	MOUNTING GP-CAB (NON-ROPS) (ENCLOSED)	589
Y	5	1	*211-4913*	1	WIPER GP-WINDOW (FRONT) (HIGH PROFILE)	637
Y	6	1	*172-5378*	1	INSULATION GP-WEATHER	569
Y	7	1	*285-3361*	1	WIRING GP-CAB	200
Y	8	1	*290-1127*	1	CAB GP (HIGH PROFILE)	536
Y	9	1	*294-8588*	1	LINER GP-CAB (HIGH PROFILE)	571
Y	10	1	*316-5237*	1	PANEL GP-INSTRUMENT (ENCLOSED)	594

Y-SEPARATE ILLUSTRATION

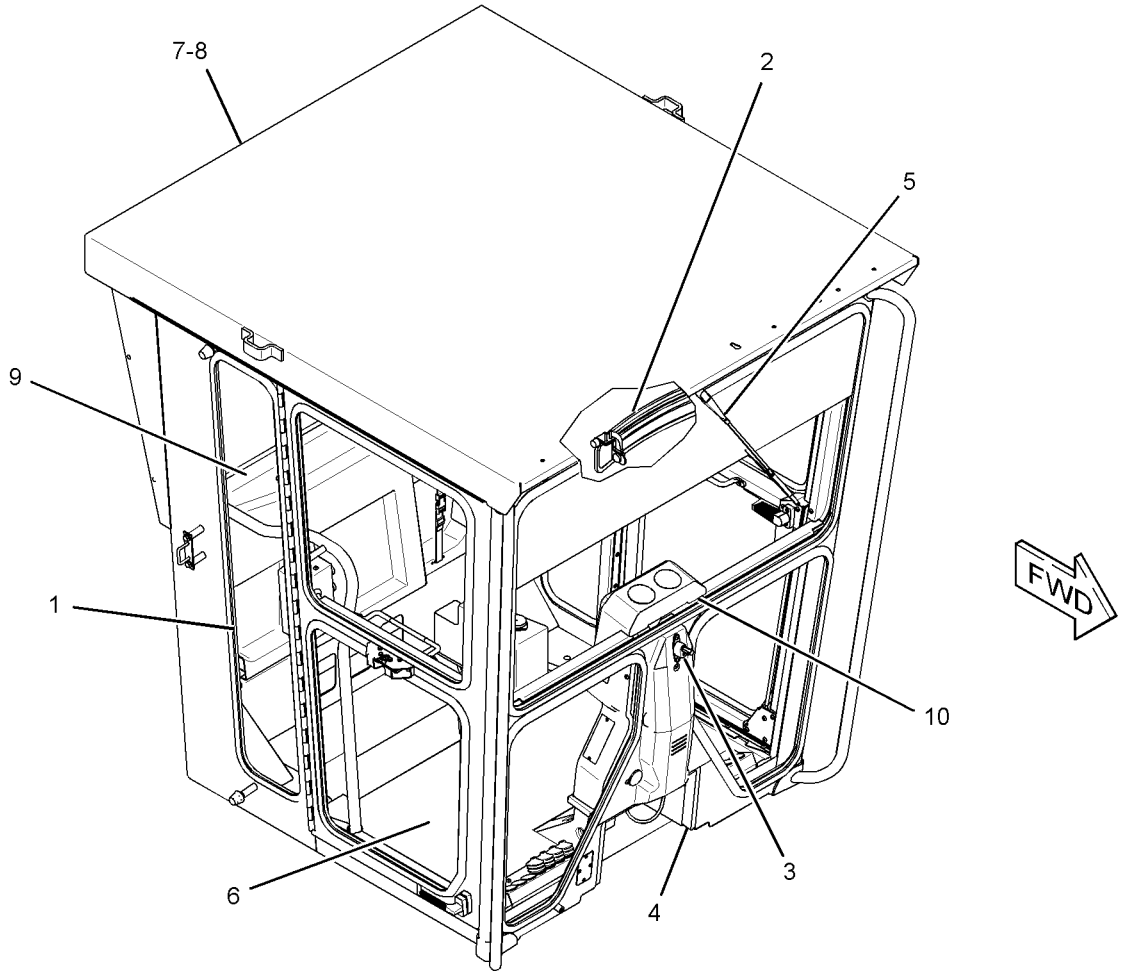

GRAPHIC #1 **<END>** g01759313

OPERATOR STATION

290-1127 CAB GP–HIGH PROFILE

S/N: JAP1-UP
PART OF 320-0341 CAB AR
AN ATTACHMENT

SMCS-7301 **i03251963**

NOTE	REF NO	GRAPHIC REF	PART NUMBER	QTY	PART NAME 1 2 3 4 5 6 (PRODUCT LEVEL)	SEE PAGE
Y	1	1	*8X-4413*	1	DOOR GP-CAB (HIGH PROFILE)	553
	2	1	**211-4908**	1	CAB AS (NON-ROPS)	

Y-SEPARATE ILLUSTRATION

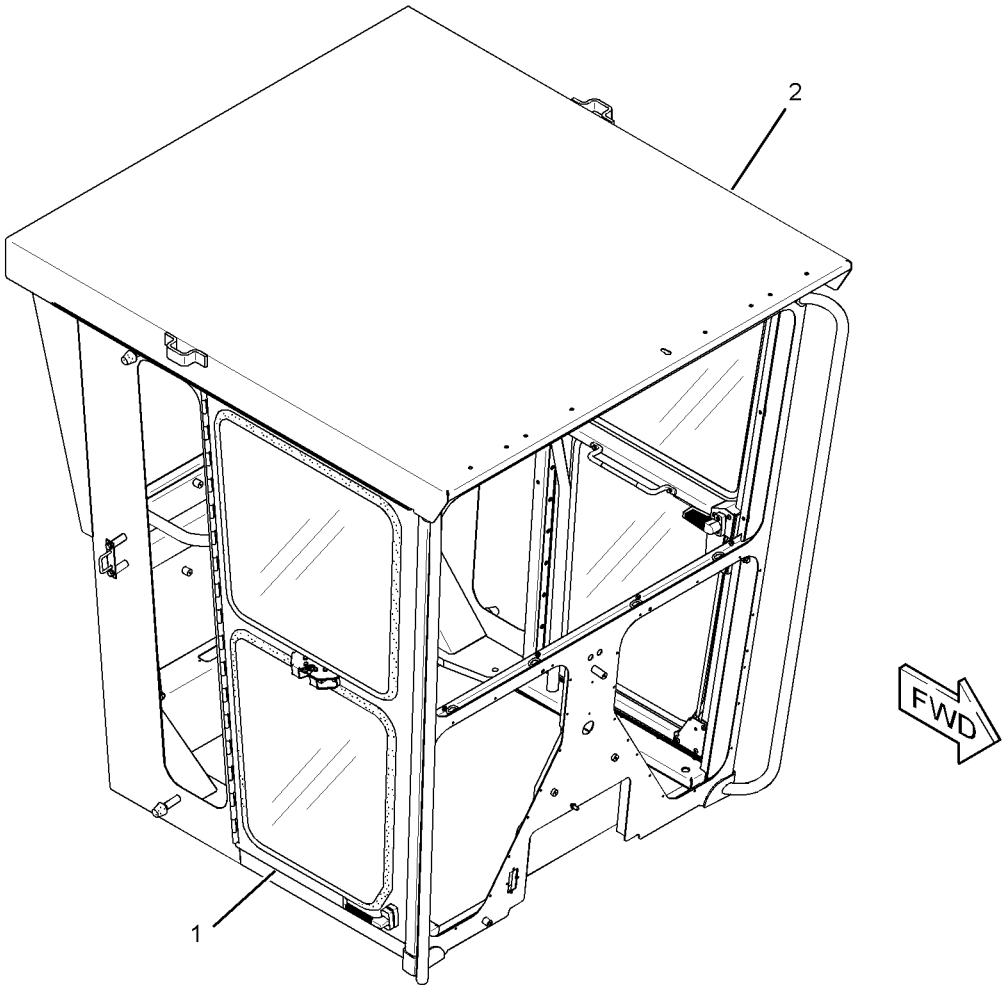

GRAPHIC #1 **<END>** g01676373

163-0872 COMPRESSOR GP-REFRIGERANT

S/N: JAP1-UP
PART OF 328-2062 COMPRESSOR GP-REFRIGERANT
AN ATTACHMENT

SMCS-1802 **i02997522**

NOTE	REF NO	GRAPHIC REF	PART NUMBER	QTY	PART NAME 1 2 3 4 5 6 (PRODUCT LEVEL)	SEE PAGE
	1	1	**126-1767**	2	PIN-CONNECTOR (14-GA)	
	2	1	**102-8802**	1	KIT-RECEPTACLE (2-PIN)	
					(INCLUDES RECEPTACLE AS AND WEDGE)	
	3	1	**314-4018**	1	VALVE AS (REFRIGERANT COMPRESSOR)	
	4	1	**7T-4532**	1	PLUG AS	
	5	1	**9X-7385**	2	SEAL-O-RING	

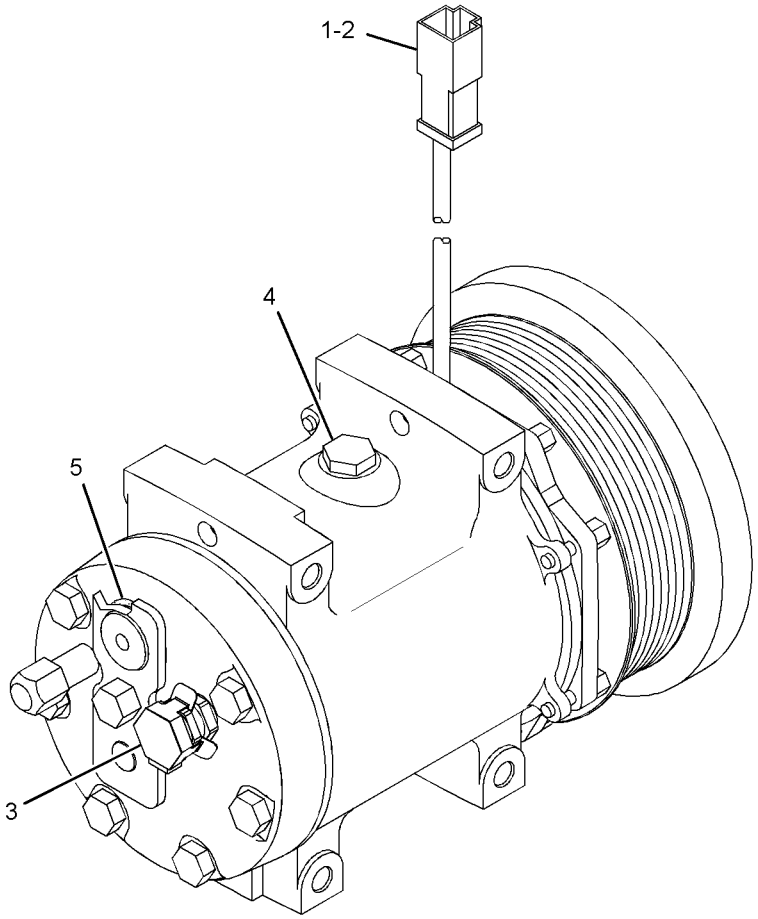

GRAPHIC #1 **<END>** g01524106

OPERATOR STATION

328-2062 COMPRESSOR GP-REFRIGERANT

S/N: JAP1-UP
PART OF 300-9979 AIR CONDITIONER AR
AN ATTACHMENT

SMCS-1802 **i03565005**

NOTE	REF NO	GRAPHIC REF	PART NUMBER	QTY	PART NAME 1 2 3 4 5 6 (PRODUCT LEVEL)	SEE PAGE
	1	1	**7W-3872**	2	SLEEVE	
Y	2	1	**163-0872**	1	COMPRESSOR GP-REFRIGERANT	537
	3	1	**185-5872**	1	BELT-SERPENTINE	
	4	1	**266-6026**	1	SUPPORT	
	5	1	**328-2060**	1	GUARD	
	6	1	**198-4776**	4	WASHER-HARD (8.8X20X8-MM THK)	
	7	1	**335-6210**	1	FILM-INSTRUCTION (BELT ROUTING)	
M	8	1	**7X-2537**	4	BOLT (M8X1.25X35-MM)	
M	9	1	**7X-2538**	2	BOLT (M8X1.25X100-MM)	
M	10	1	**7X-2539**	2	BOLT (M8X1.25X110-MM)	
	11	1	**8T-4121**	2	WASHER-HARD (11X21X2.5-MM THK)	
M	12	1	**8T-4137**	2	BOLT (M10X1.5X20-MM)	
	13	1	**8T-4224**	4	WASHER-HARD (8.8X16X2-MM THK)	

M-METRIC PART
Y-SEPARATE ILLUSTRATION

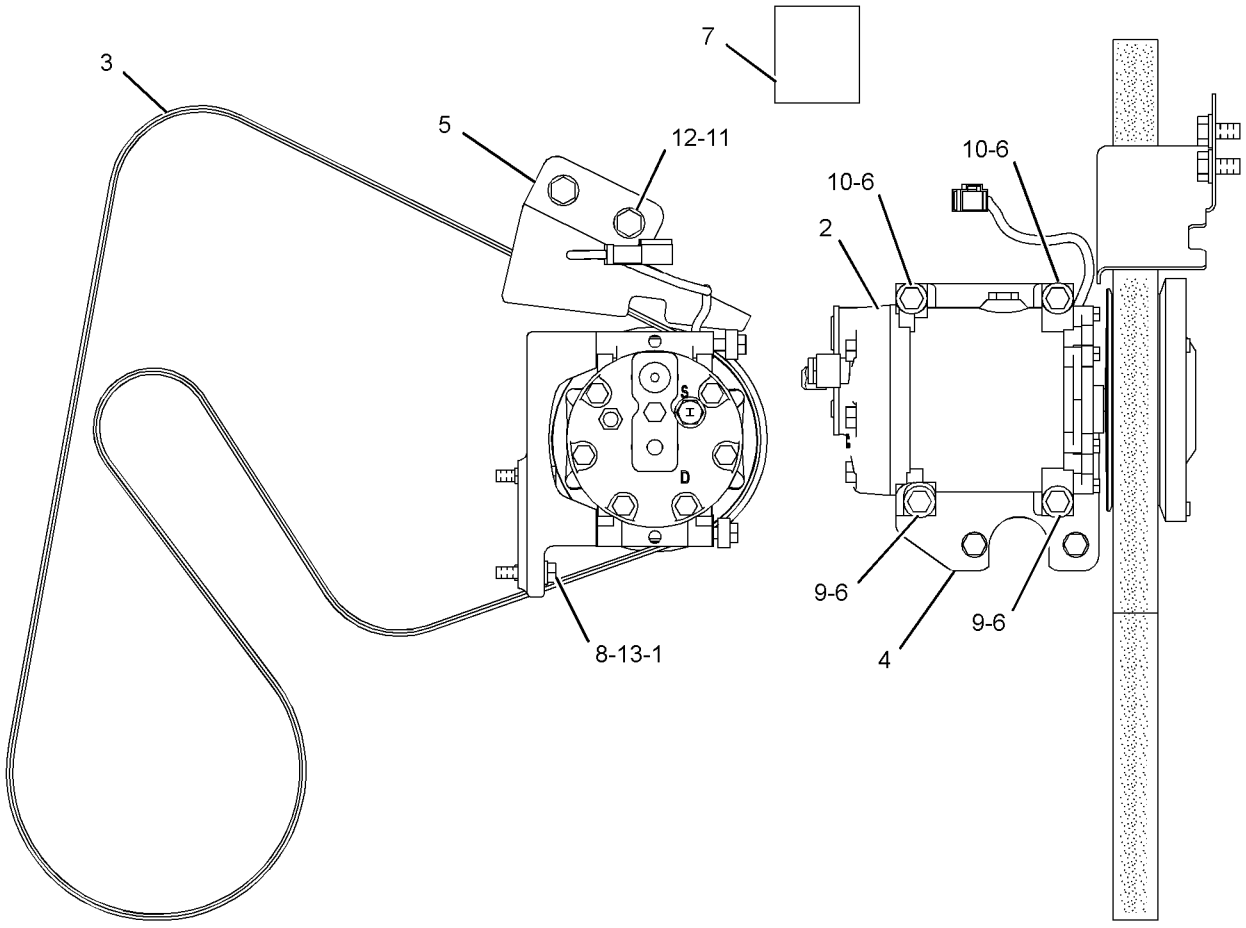

GRAPHIC #1 **<END>** g01924175

OPERATOR STATION

295-4431 CONDENSER & MTG GP-REFRIGERANT

S/N: JAP1-UP
PART OF 300-9979 AIR CONDITIONER AR
AN ATTACHMENT

SMCS-1805 **i03258484**

NOTE	REF NO	GRAPHIC REF	PART NUMBER	QTY	PART NAME 1 2 3 4 5 6 (PRODUCT LEVEL)	SEE PAGE
	1	1	**251-0982**	1	CORE AS-CONDENSER (REFRIGERANT)	
	2	1	**293-4500**	1	BRACKET	
	3	1	**303-6034**	1	BRACKET	
	4	1	**8T-4121**	16	WASHER-HARD (11X21X2.5-MM THK)	
M	5	1	**8T-4133**	8	NUT (M10X1.5-THD)	
M	6	1	**8T-4136**	4	BOLT (M10X1.5X25-MM)	
M	7	1	**8T-4195**	4	BOLT (M10X1.5X30-MM)	

M-METRIC PART

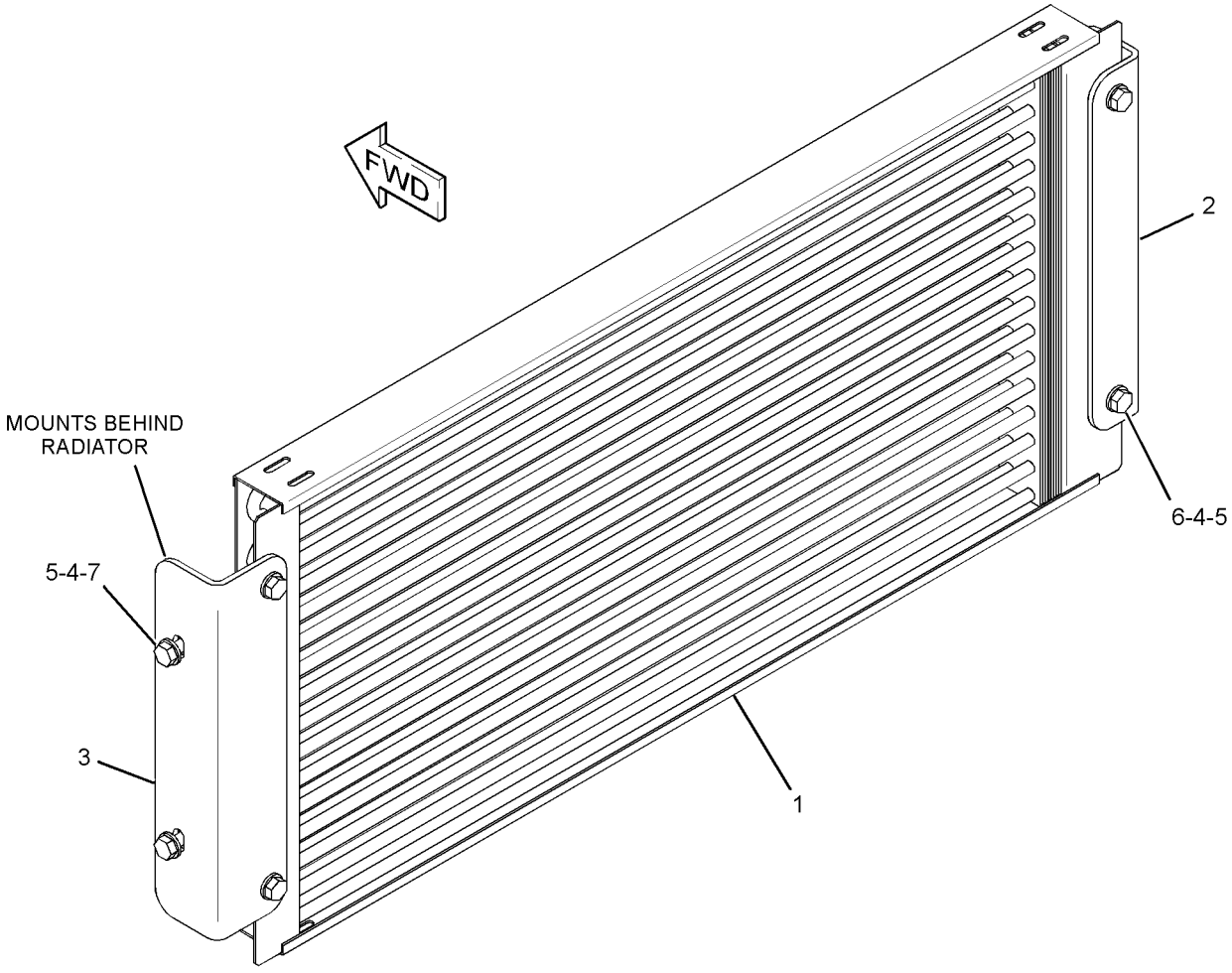

GRAPHIC #1 **<END>** g01673584

OPERATOR STATION

167-9002 CONSOLE GP-OPERATOR

S/N: JAP1-UP

PART OF 348-3018 GENERAL AR

SMCS-5258 **i03438962**

NOTE	REF NO	GRAPHIC REF	PART NUMBER	QTY	PART NAME 1 2 3 4 5 6 (PRODUCT LEVEL)	SEE PAGE
	1	1	**7M-0706**	1	KNOB (TRANSMISSION DIRECTION, SPEED)	
	2	1	**8X-4879**	2	BRACKET AS	
					(EACH INCLUDES)	
M		1	**6V-9632**	1	NUT-WELD (M6X1-THD)	
	3	1	**8X-8096**	1	FILM-COVER	
	4	1	**143-9290**	1	PLATE AS	
	5	1	**169-2621**	1	GATE AS	
	6	1	**169-3380**	1	PLATE AS	
C	7	1	**253-4019**	1	CONTROL GP-TRANSMISSION	
	8	1	**171-2122**	1	COVER	
	9	1	**172-7105**	1	FILM-PANEL (TRANSMISSION, PARKING BRAKE)	
	10	1	**172-7106**	1	FILM-PANEL (SPEED CONTROL)	
	11	1	**185-2274**	1	FILM-INFORMATION (ENGINE, HIGH IDLE, HOLD)	
	12	1	**185-2287**	1	FILM-INFORMATION (ENGINE, LOW IDLE, HOLD)	
	13	1	**187-0491**	1	COVER	
M	14	1	**9X-2041**	10	SCREW-TRUSS HEAD (M10X1.5X20-MM)	
M	15	1	**9X-2042**	2	SCREW-TRUSS HEAD (M6X1X12-MM)	
M	16	1	**9X-2043**	10	SCREW-TRUSS HEAD (M6X1X14-MM)	
M	17	1	**9X-2045**	4	SCREW-TRUSS HEAD (M6X1X20-MM)	

C-CHANGE FROM PREVIOUS TYPE
M-METRIC PART

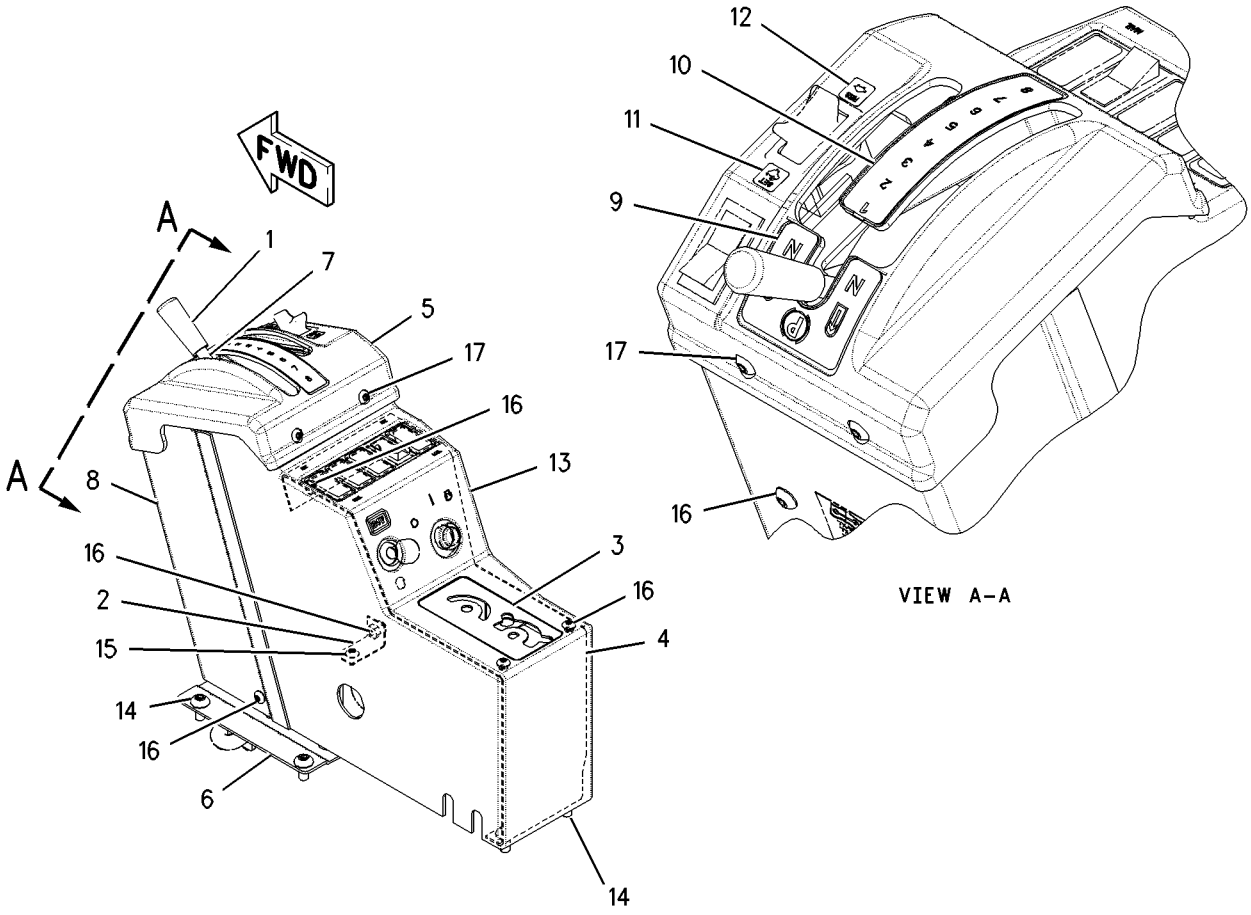

GRAPHIC #1 **<END>** g00882073

OPERATOR STATION

282-2475 CONSOLE GP-OPERATOR

S/N: JAP1-UP

PART OF 348-3018 GENERAL AR

SMCS-5258 **i03247296**

NOTE	REF NO	GRAPHIC REF	PART NUMBER	QTY	PART NAME 1 2 3 4 5 6 (PRODUCT LEVEL)	SEE PAGE
	1	1	**2G-8572**	8	WASHER-SPECIAL (10X27.81X2.54-MM THK)	
	2	1	**2G-8573**	8	CAP	
	3	1	**3Y-2806**	1	SPRING	
	4	1	**6G-2914**	1	LATCH	
	5	1	**6G-8814**	2	BRACKET	
	6	1	**6L-1962**	1	NUT-JAM (3/8-24-THD)	
	7	1	**6V-8183**	1	NUT-FULL (3/8-24-THD)	
	8	1	**7I-4890**	1	PLATE AS	
	9	1	**8C-3442**	1	SPRING-COIL	
	10	1	**8D-7960**	2	PLATE	
	11	1	**8L-7905**	2	RIVET-POP	
M	12	1	**8T-9006**	2	BOLT-SOCKET HEAD (M3X0.5X20-MM)	
	13	1	**8X-1904**	1	SPACER (20X35X26-MM THK)	
	14	1	**8X-1908**	1	PANEL	
	15	1	**8X-1913**	6	SPACER (10.5X32X19.5-MM THK)	
	16	1	**8X-1914**	1	SHAFT	
	17	1	**8X-1921**	1	HOOD	
	18	1	**8X-2160**	1	LEVER (STEERING WHEEL TILT CONTROL)	
	19	1	**8X-2161**	1	LEVER (STEERING COLUMN TILT)	
	20	1	**8X-2893**	10	NUT (M4X0.7-THD)	
	21	1	**8X-3951**	1	PANEL	
	22	1	**8X-3965**	1	RATCHET	
	23	1	**8X-5123**	1	RETAINER	
	24	1	**031-2666**	1	ROD	
	25	1	**110-6241**	1	BRACKET	
	26	1	**123-1201**	1	PLATE	
	27	1	**177-7448**	1	CHANNEL AS	
	28	1	**206-4097**	8	FASTENER	
	29	1	**206-9651**	1	PLATE	
	30	1	**236-0737**	1	CYLINDER	
	31	1	**030-8535**	1	BOLT-LOCKING (3/8-16X0.875-IN)	
	32	1	**034-1994**	1	PIN	
	33	1	**096-6166**	6	WASHER-HARD (4.5X9X1-MM THK)	
M	34	1	**174-8131**	16	SCREW-TRUSS HEAD (M4X0.7X12-MM)	
	35	1	**183-1425**	1	BASE	
	36	1	**204-6488**	1	CHANNEL AS	
	37	1	**2A-7184**	2	PLATE	
	38	1	**2K-5830**	2	BEARING AS-NEEDLE	
	39	1	**2K-7979**	13	BEARING-SLEEVE	
	40	1	**3E-9865**	1	LOCKNUT (1/4-20-THD)	
	41	1	**3F-7514**	4	PIN	
	42	1	**3K-6060**	6	LOCKNUT (3/8-16-THD)	
	43	1	**4B-4314**	1	RIVET	
M	44	1	**5C-8312**	6	NUT (M4X0.7-THD)	
	45	1	**5M-8500**	1	KNOB	
	46	1	**5P-1075**	8	WASHER-HARD (10.2X22.5X3-MM THK)	
	47	1	**5P-8167**	2	BOLT (3/8-16X0.625-IN)	
	48	1	**5S-7383**	6	BOLT (3/8-16X1.75-IN)	
	49	1	**6J-0488**	4	SCREW-BUTTON HEAD (3/8-16X0.875-IN)	
	50	1	**8D-5641**	14	BEARING	
	51	1	**8T-1174**	4	SEAL-LIP TYPE	
	52	1	**8T-2561**	11	WASHER-HARD (10.5X28.5X5-MM THK)	
M	53	1	**8T-4133**	1	NUT (M10X1.5-THD)	
M	54	1	**8T-4196**	4	BOLT (M10X1.5X35-MM)	
	55	1	**8X-1907**	1	SHAFT	
	56	1	**8X-1911**	1	PANEL	

282-2475 **CONSOLE GP-OPERATOR** *(contd.)* **i03247296**

NOTE	REF NO	GRAPHIC REF	PART NUMBER	QTY	PART NAME 1 2 3 4 5 6 (PRODUCT LEVEL)	SEE PAGE
	57	1	**8X-3789**	1	PANEL	
	58	1	**9M-5590**	1	BALL	
M	59	1	**9X-2042**	12	SCREW-TRUSS HEAD (M6X1X12-MM)	
D	60	1	**5P-5639**		SEAL (0.4-M)	
D	61	1	**5P-5637**		SEAL (1.2-M)	

D-ORDER BY THE METER
M-METRIC PART

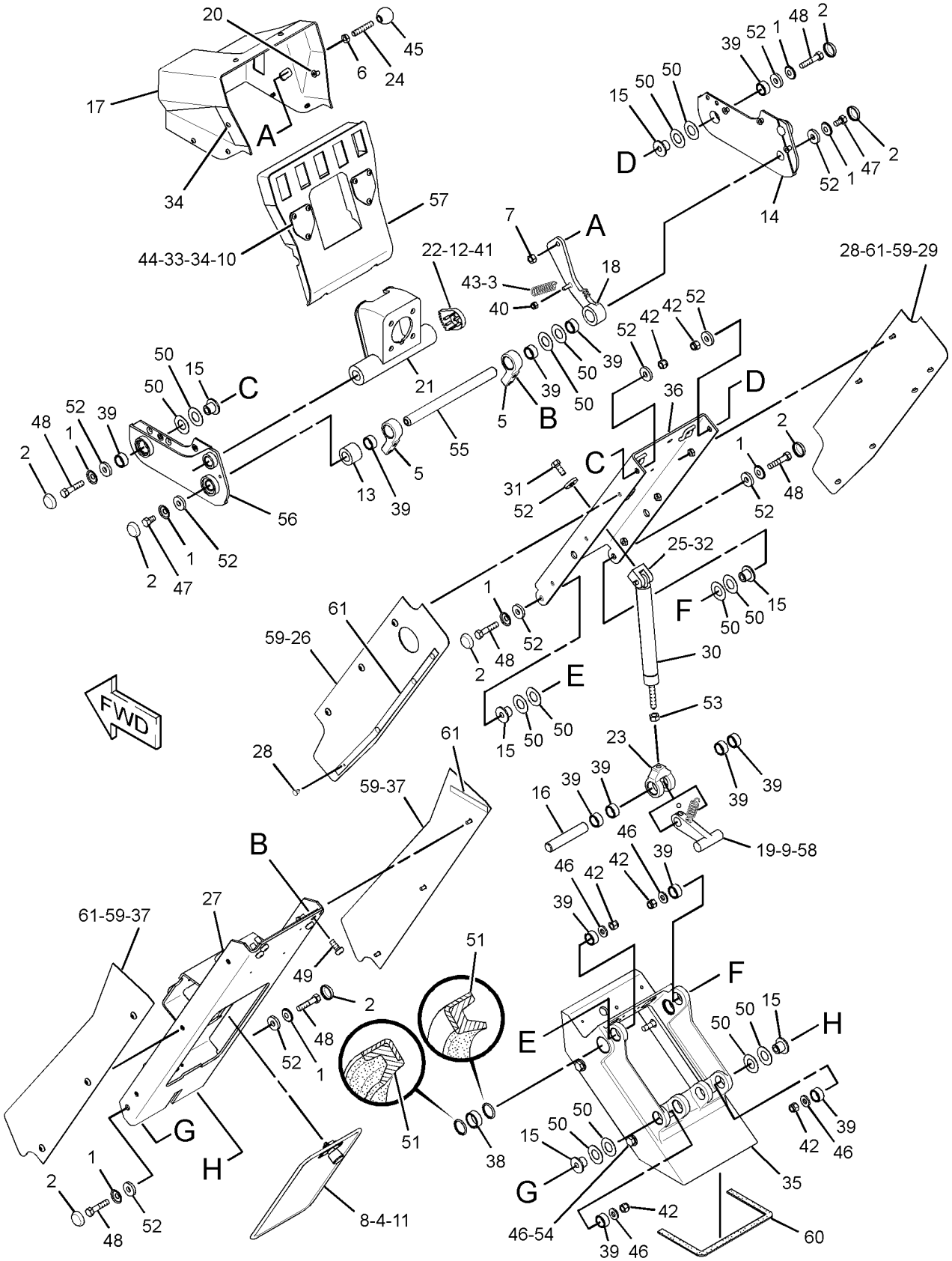

GRAPHIC #1 **<END>** g01694257

OPERATOR STATION

282-2473 CONTROL GP-CLUTCH

S/N: JAP1-UP

PART OF 348-3018 GENERAL AR

SMCS-5157 **i03247392**

NOTE	REF NO	GRAPHIC REF	PART NUMBER	QTY	PART NAME 1 2 3 4 5 6 (PRODUCT LEVEL)	SEE PAGE
	1	1	**1F-4622**	2	BEARING AS-NEEDLE	
	2	1	**5P-9209**	2	BEARING AS-NEEDLE	
	3	1	**7V-0446**	2	CLIP	
	4	1	**9J-8783**	1	SHIM (0.508-MM THK)	
	5	1	**116-5710**	1	GROMMET	
	6	1	**130-5300**	1	CLIP	
	7	1	**149-2065**	1	SPRING	
	8	1	**161-7062**	1	HOUSING	
	9	1	**161-7063**	1	SHAFT	
	10	1	**162-8218**	1	GASKET	
	11	1	**162-8219**	1	COVER	
	12	1	**169-0921**	1	ROD END-YOKE (3/8-24 LH-THD)	
	13	1	**169-0922**	1	ROD	
	14	1	**172-4211**	1	SPACER (10.5X22X50.8-MM THK)	
	15	1	**180-4027**	1	CAM	
	16	1	**180-7147**	1	LEVER	
	17	1	**190-3043**	1	BRACKET AS	
	18	1	**206-3599**	1	LEVER	
	19	1	**207-4922**	1	PEDAL-CLUTCH	
Y	20	1	**214-4863**	1	SENSOR GP-POSITION (ROTARY) (CLUTCH CONTROL)	169
	21	1	**129-3173**	1	BOLT-12 POINT HEAD (3/8-16X1.25-IN)	
M	22	1	**142-0485**	1	NUT (M10X1.5-THD)	
	23	1	**1B-0676**	1	PIN	
	24	1	**1B-8704**	1	KEY-WOODRUFF	
	25	1	**272-3089**	1	BOLT (M10X1.5X90-MM)	
	26	1	**3H-8538**	1	PIN	
	27	1	**3S-2713**	1	NUT-FULL (3/8-24-THD)	
	28	1	**4B-6060**	1	SETSCREW-SOCKET (1/4-20X0.375-IN)	
	29	1	**4J-8922**	1	ROD END-YOKE (3/8-24-THD)	
	30	1	**5P-1075**	2	WASHER-HARD (10.2X22.5X3-MM THK)	
	31	1	**6V-0894**	1	SEAL-O-RING	
M	32	1	**6V-2313**	2	BOLT (M5X0.8X30-MM)	
	33	1	**8T-0328**	2	WASHER-HARD (5.5X10X1-MM THK)	
	34	1	**8T-4121**	5	WASHER-HARD (11X21X2.5-MM THK)	
M	35	1	**8T-4133**	1	NUT (M10X1.5-THD)	
M	36	1	**8T-4136**	3	BOLT (M10X1.5X25-MM)	
M	37	1	**8T-4182**	1	BOLT (M10X1.5X45-MM)	
M	38	1	**8T-4195**	2	BOLT (M10X1.5X30-MM)	
M	39	1	**8T-4196**	2	BOLT (M10X1.5X35-MM)	
	40	1	**8T-4226**	1	WASHER-PLATED (10.5X45X3-MM THK)	
	41	1	**8T-4896**	1	WASHER-HARD (10.2X18.5X2.5-MM THK)	

M-METRIC PART
Y-SEPARATE ILLUSTRATION

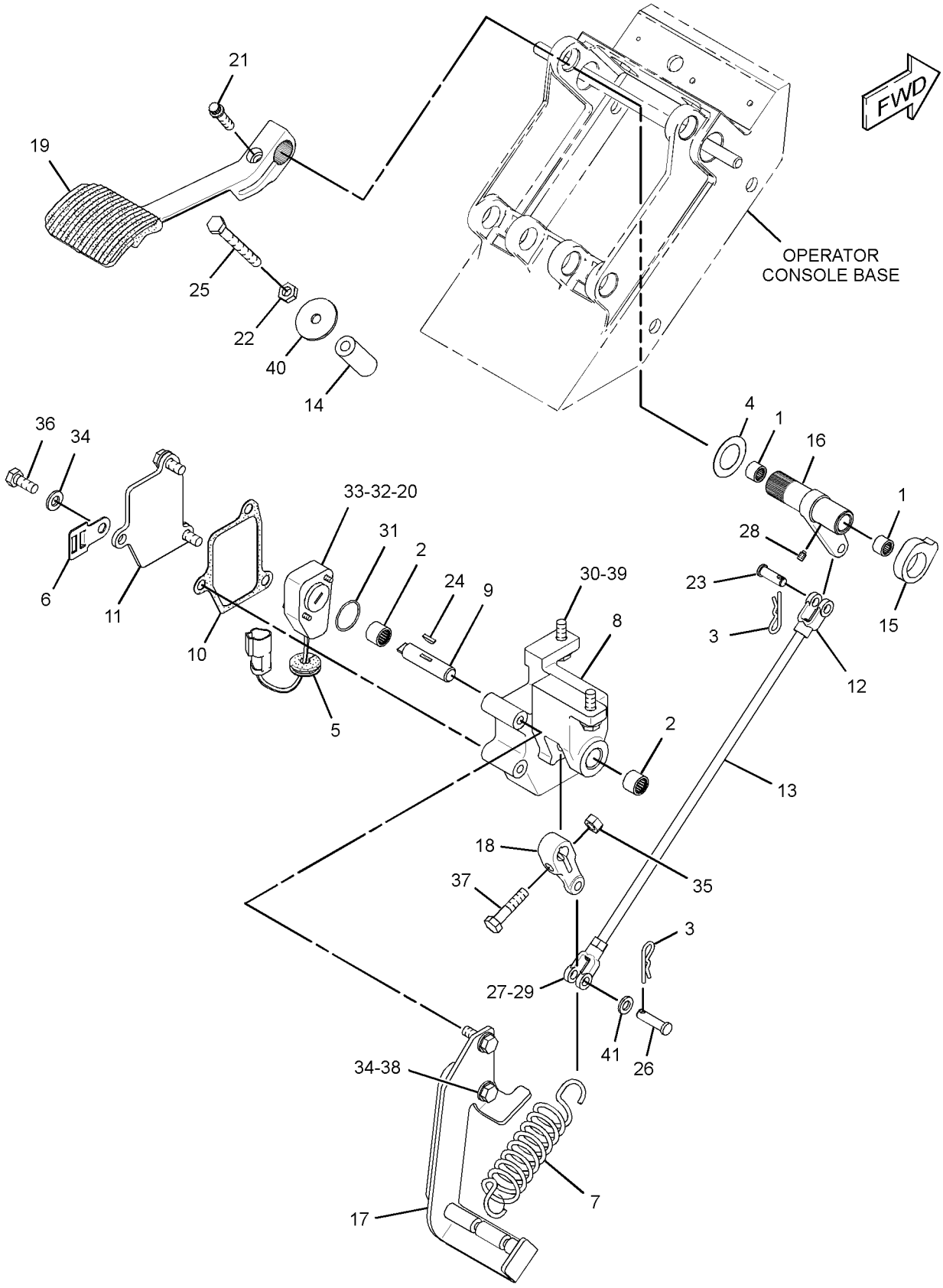

GRAPHIC #1 **<END>** g01706436

OPERATOR STATION

7I-4718 CONTROL GP-STEERING

S/N: JAP1-UP

PART OF 348-3018 GENERAL AR

SMCS-4309, 4310, 4338, 4343 **i02237701**

NOTE	REF NO	GRAPHIC REF	PART NUMBER	QTY	PART NAME 1 2 3 4 5 6 (PRODUCT LEVEL)	SEE PAGE
CJ	1	1	**222-3769**	1	PUMP GP-METERING (HMU)	
	2	1	**092-3200**	1	STEERING WHEEL	
	3	1	**144-6695**	1	NUT (13/16-20-THD)	
M	4	1	**118-9573**	4	BOLT-12 POINT HEAD (M10X1.5X35-MM)	
					AVAILABLE REPAIR KIT(S):	
J			**257-8471**	1	KIT-SEAL (HMU)	
					(INCLUDES SEALS & INSTALLATION TOOL)	

C-CHANGE FROM PREVIOUS TYPE
J-KIT MARKED J SERVICES PART MARKED J
M-METRIC PART

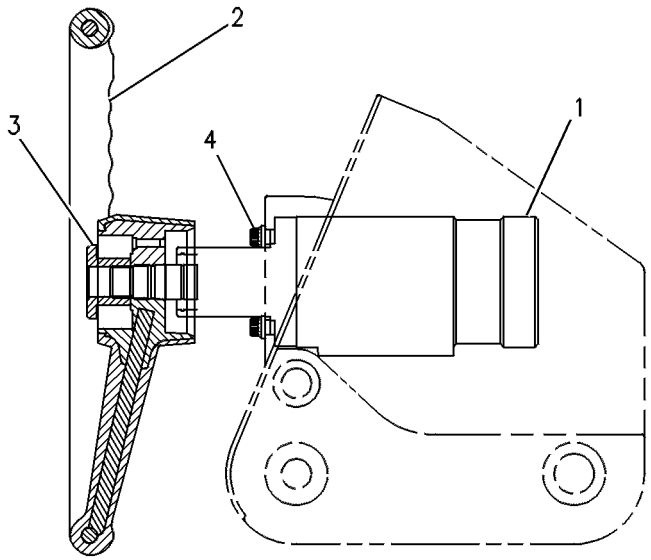

GRAPHIC #1 **<END>** g00108618

OPERATOR STATION

8X-4317 DOOR GP-CAB—HIGH PROFILE—RH

S/N: JAP1-UP

PART OF 8X-4413 DOOR GP-CAB

AN ATTACHMENT

SMCS-7308 **i02158613**

NOTE	REF NO	GRAPHIC REF	PART NUMBER	QTY	PART NAME 1 2 3 4 5 6 (PRODUCT LEVEL)	SEE PAGE
	1	1	**199-2677**	1	LINK (RELEASE)	
	2	1	**1H-3338**	1	LOCKWASHER (EXTERNAL TOOTH)	
	3	1	**5T-7486**	1	RETAINER-SPRING	
	4	2	**6D-6581**	16	RIVET-POP	
	5	1	**6V-2773**	2	PLUG	
	6	1	**6V-7636**	4	PIN AS-SPRING	
	7	2	**8X-3806**	1	HINGE	
	8	1	**8X-4243**	1	COVER (RH)	
	9	1	**8X-4262**	1	COVER (RH)	
	10	1	**8X-3938**	1	GLASS (UPPER)	
	11	1	**8X-4448**	1	GLASS (LOWER)	
	12	1	**8Y-4398**	1	LINK-CONNECTING	
	13	1	**8Y-4400**	1	LATCH AS-DOOR	
	14	1	**8Y-4401**	1	HANDLE AS (INSIDE)	
	15	2	**8Y-4619**	1	HANDLE AS (OUTSIDE)	
	16	1	**8Y-4620**	1	LINK-CONNECTING	
J	17	2	**8Y-4801**	1	LOCK AS-CYLINDER	
		2	**226-0295**	1	LOCK AS	
		2	**226-0342**	1	CAM	
M	18	1,2	**9X-2546**	4	BOLT (M6X1X20-MM)	
	19	2	**107-9641**	1	PLATE AS	
	20	2	**108-5950**	1	LATCH AS-RH	
	21	1	**108-5952**	1	LINK (RH)	
	22	1	**114-9190**	1	SEAL	
	23	1	**128-0037**	1	KNOB-BALL	
	24	1	**199-2712**	1	HANDLE	
	25	1	**199-2739**	1	DOOR AS (RH) (HIGH PROFILE)	
M		1	**6V-9632**	8	NUT-WELD (M6X1-THD)	
M		1	**8T-3490**	2	NUT-WELD (M10X1.5-THD)	
	26	2	**8T-4121**	2	WASHER-HARD (11X21X2.5-MM THK)	
M	27	2	**8T-4137**	2	BOLT (M10X1.5X20-MM)	
M	28	1	**8T-4181**	6	BOLT (M6X1X20-MM)	
M	29	1	**8X-4245**	1	BOSS (M6X1X18-MM)	
M	30	1	**9X-2042**	7	SCREW-TRUSS HEAD (M6X1X12-MM)	
	31	1	**9X-8256**	2	WASHER (6.6X12X2-MM THK)	
BD	32	1	**5P-5678**		SEAL	
M	33	2	**9X-2045**	4	SCREW-TRUSS HEAD (M6X1X20-MM)	

B-USE AS REQUIRED
D-ORDER BY THE METER
J-REQUIRES 5P8500 KEY
M-METRIC PART

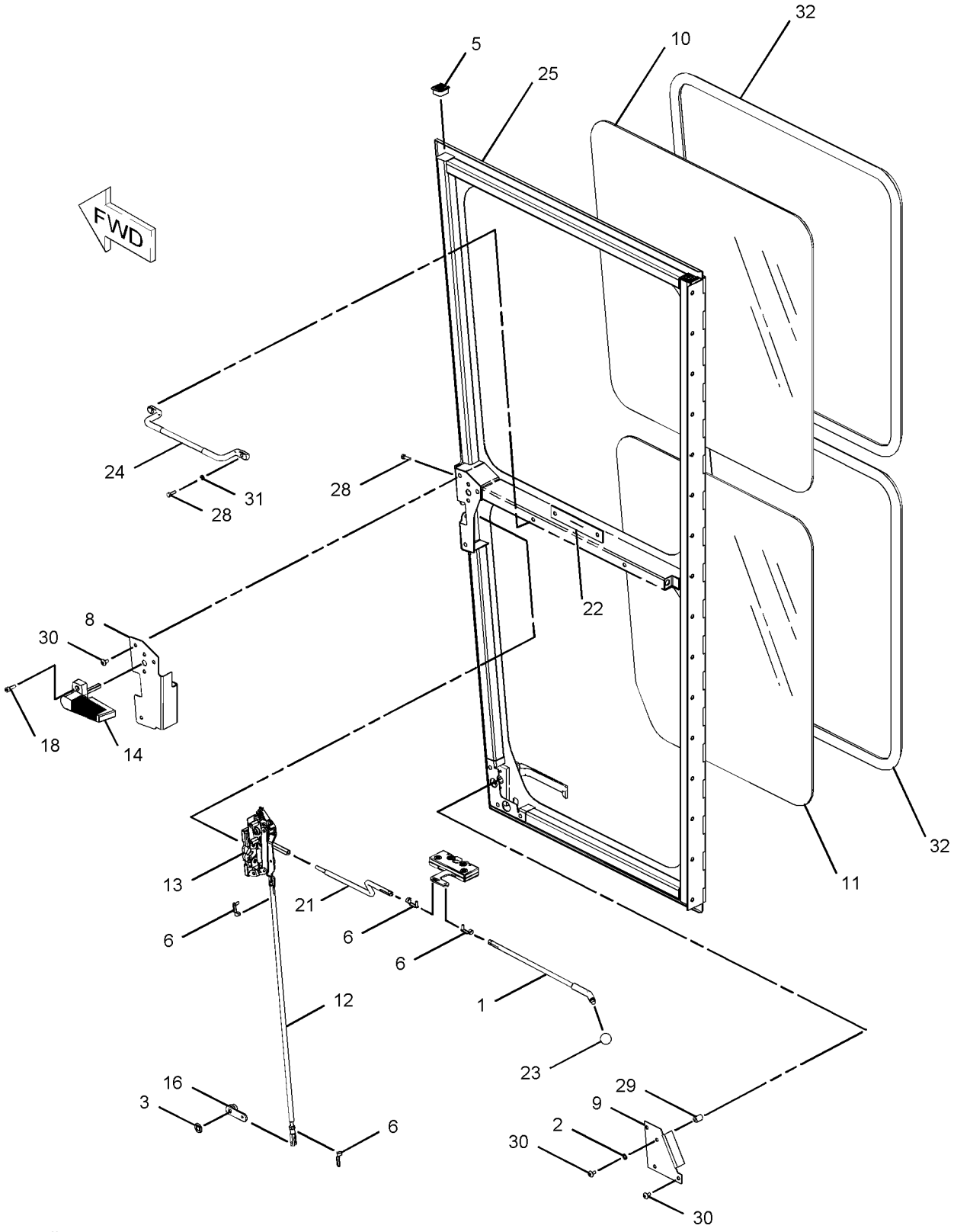

GRAPHIC #1 g01071777

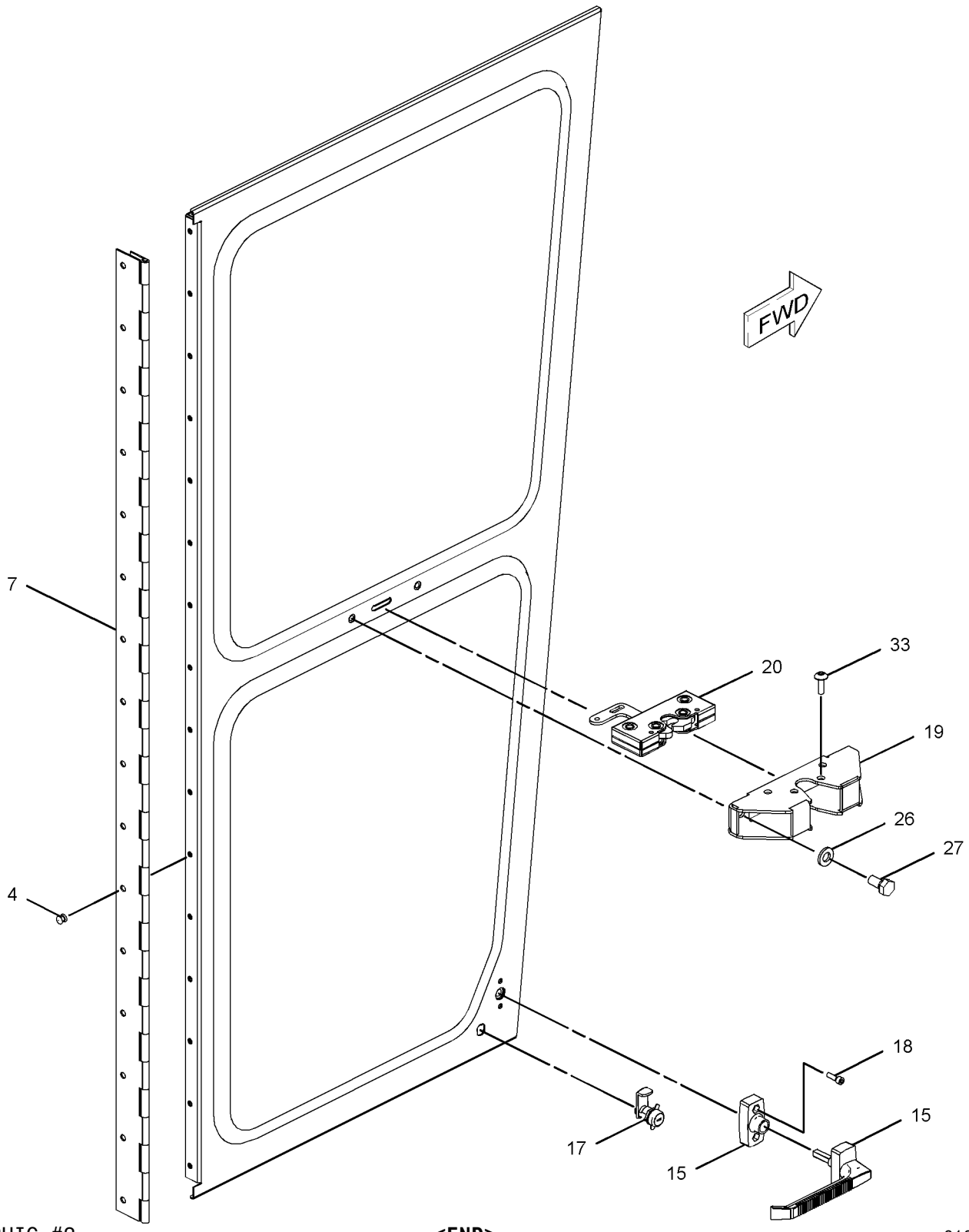

GRAPHIC #2 **<END>** g01071781

OPERATOR STATION

8X-4318 DOOR GP-CAB—HIGH PROFILE—LH

S/N: JAP1-UP
PART OF 8X-4413 DOOR GP-CAB
AN ATTACHMENT

SMCS-7308 **i02158611**

NOTE	REF NO	GRAPHIC REF	PART NUMBER	QTY	PART NAME 1 2 3 4 5 6 (PRODUCT LEVEL)	SEE PAGE
	1	1	**199-2677**	1	LINK (RELEASE)	
	2	1	**1H-3338**	1	LOCKWASHER (EXTERNAL TOOTH)	
	3	1	**5T-7486**	1	RETAINER-SPRING	
	4	1	**6D-6581**	16	RIVET-POP	
	5	1	**6V-2773**	2	PLUG	
	6	1	**6V-7636**	4	PIN AS-SPRING	
	7	1	**8X-3806**	1	HINGE	
	8	1	**8X-4244**	1	COVER (LH)	
	9	1	**8X-4263**	1	COVER (LH)	
	10	1	**8X-3938**	1	GLASS (UPPER)	
	11	1	**8X-4448**	1	GLASS (LOWER)	
	12	1	**8Y-4398**	1	LINK-CONNECTING	
	13	1	**8Y-4399**	1	LATCH AS-DOOR	
	14	1	**8Y-4401**	1	HANDLE AS (INSIDE)	
	15	1	**8Y-4619**	1	HANDLE AS (OUTSIDE)	
	16	1	**8Y-4620**	1	LINK-CONNECTING	
J	17	1	**8Y-4801**	1	LOCK AS-CYLINDER	
		1	**226-0295**	1	LOCK AS	
		1	**226-0342**	1	CAM	
M	18	1	**9X-2546**	4	BOLT (M6X1X20-MM)	
	19	1	**107-9641**	1	PLATE AS	
	20	1	**108-5949**	1	LATCH AS (LH)	
	21	1	**108-5951**	1	LINK (LH)	
	22	1	**114-9190**	1	SEAL	
	23	1	**128-0037**	1	KNOB-BALL	
	24	1	**199-2712**	1	HANDLE	
	25	1	**199-2740**	1	DOOR AS (LH) (HIGH PROFILE)	
	26	1	**8T-4121**	2	WASHER-HARD (11X21X2.5-MM THK)	
M	27	1	**8T-4137**	2	BOLT (M10X1.5X20-MM)	
M	28	1	**8T-4181**	6	BOLT (M6X1X20-MM)	
M	29	1	**8X-4245**	1	BOSS (M6X1X18-MM)	
M	30	1	**9X-2042**	7	SCREW-TRUSS HEAD (M6X1X12-MM)	
M	31	1	**9X-2045**	4	SCREW-TRUSS HEAD (M6X1X20-MM)	
	32	1	**9X-8256**	2	WASHER (6.6X12X2-MM THK)	
BD	33	1	**5P-5768**		SEAL	

B-USE AS REQUIRED
D-ORDER BY THE METER
J-REQUIRES 5P8500 KEY
M-METRIC PART

8X-4318 DOOR GP-CAB *(contd.)* i02158611

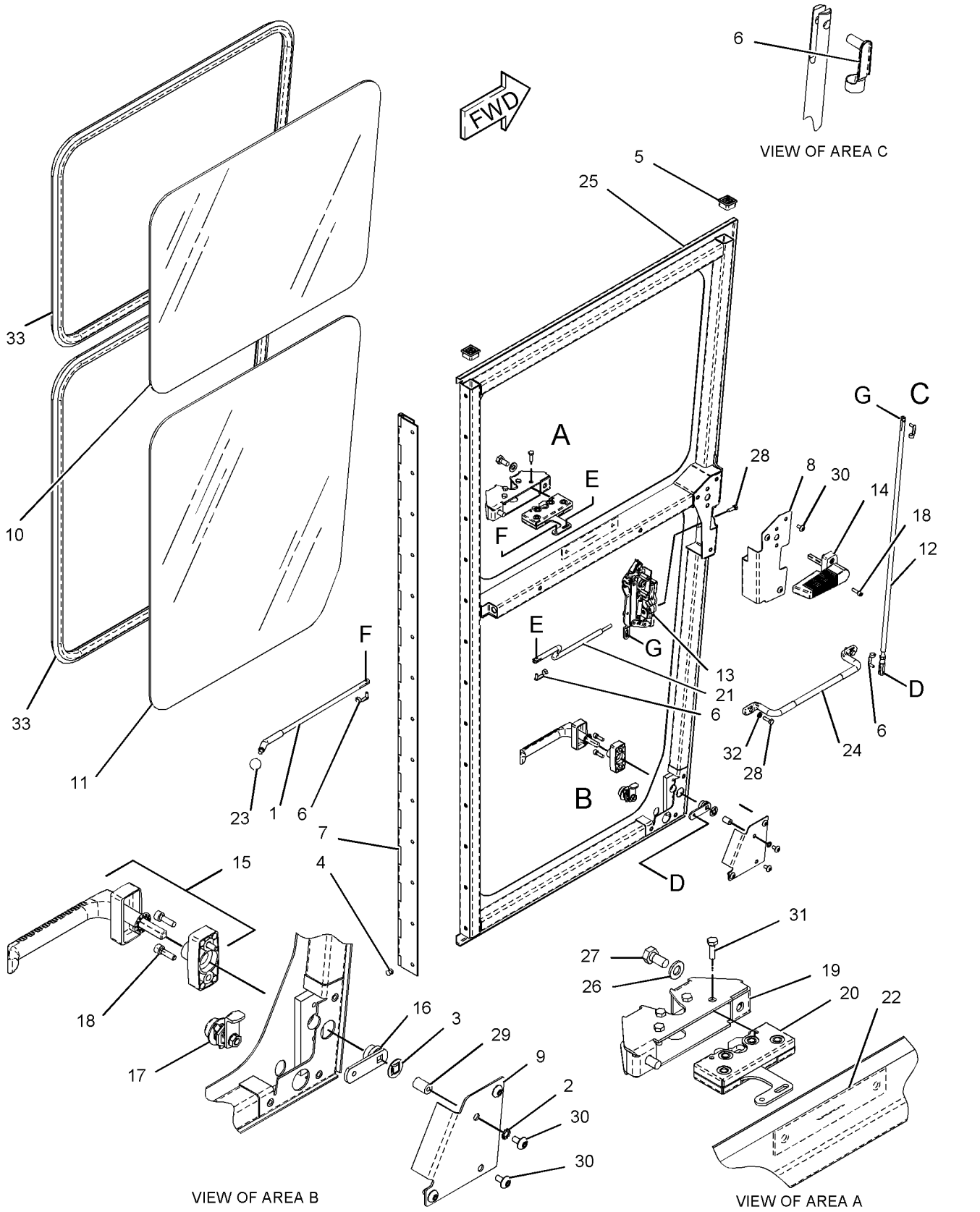

GRAPHIC #1

<END>

g01097693

OPERATOR STATION

8X-4413 DOOR GP-CAB—HIGH PROFILE

S/N: JAP1-UP
PART OF 290-1127 CAB GP, 290-0349 ROPS GP
AN ATTACHMENT

SMCS-7308 **i03479722**

NOTE	REF NO	GRAPHIC REF	PART NUMBER	QTY	PART NAME 1 2 3 4 5 6 (PRODUCT LEVEL)	SEE PAGE
	1	1	**6V-5158**	2	STRIKER AS-BODY	
Y	2	1	**8X-4317**	1	DOOR GP-CAB (RH) (HIGH PROFILE)	548
Y	3	1	**8X-4318**	1	DOOR GP-CAB (LH) (HIGH PROFILE)	551
	4	1	**106-6553**	4	BUMPER-CONICAL	
	5	1	**107-6813**	2	PLATE AS	
	6	1	**124-8843**	2	PLATE AS	
	7	1	**126-4966**	2	PLATE	
M	8	1	**129-3178**	32	LOCKNUT (M6X1-THD)	
M	9	1	**138-4054**	5	SCREW-FLAT HEAD (M6X1X45-MM)	
	10	1	**5M-3062**	4	BOLT (3/8-16X0.75-IN)	
	11	1	**5P-1075**	4	WASHER-HARD (10.2X22.5X3-MM THK)	
B	12	1	**7X-0605**	8	WASHER-HARD (13X28X1.6-MM THK)	
M	13	1	**8C-8454**	27	SCREW-MACHINE (M6X1X20-MM)	
	14	1	**8T-4121**	4	WASHER-HARD (11X21X2.5-MM THK)	
M	15	1	**8T-4133**	4	NUT (M10X1.5-THD)	
M	16	1	**8T-4195**	4	BOLT (M10X1.5X30-MM)	
M	17	1	**9X-2045**	4	SCREW-TRUSS HEAD (M6X1X20-MM)	
	18	1	**9X-8256**	32	WASHER (6.6X12X2-MM THK)	
D	19	1	**5P-5969**		SEAL (1.6-M EACH)	
E	20	1	**122-2228**		SEAL (172-CM EACH)	
E	21	1	**178-8894**		SEAL (335-CM EACH)	

B-USE AS REQUIRED
D-ORDER BY THE METER
E-ORDER BY THE CENTIMETER
M-METRIC PART
Y-SEPARATE ILLUSTRATION

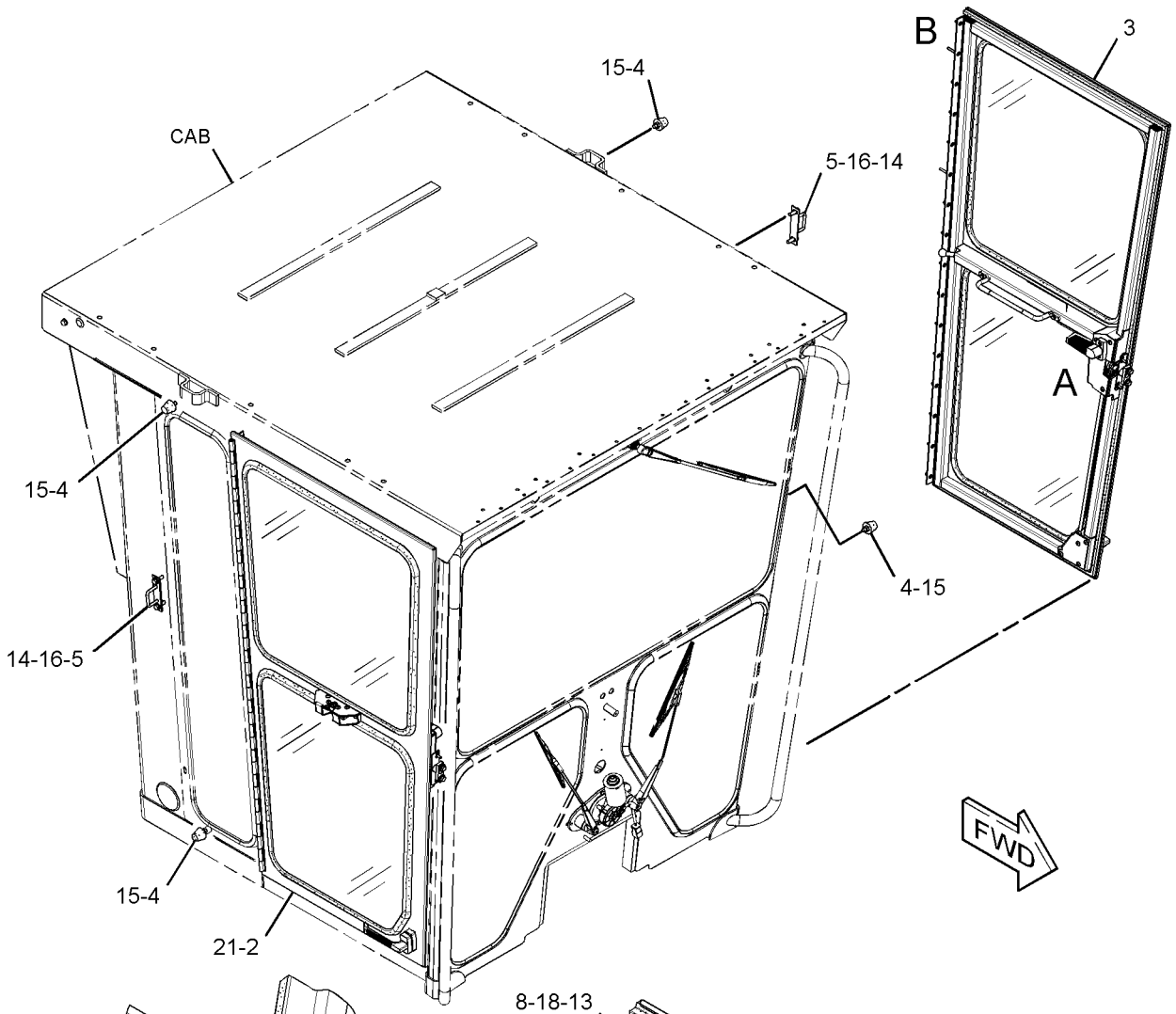

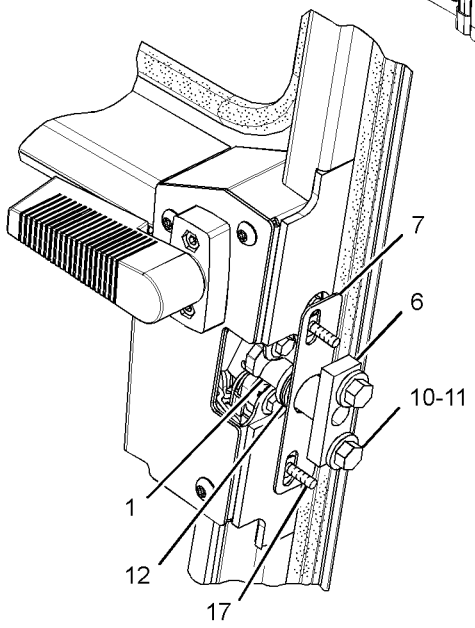

VIEW OF AREA A

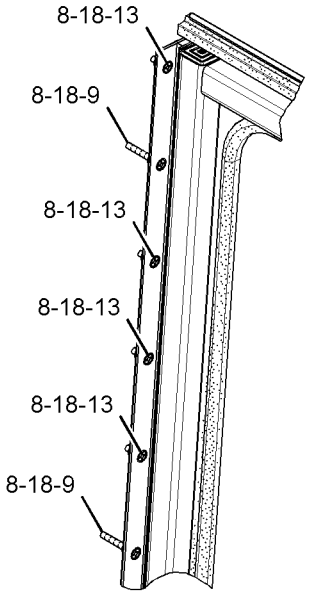

VIEW OF AREA B

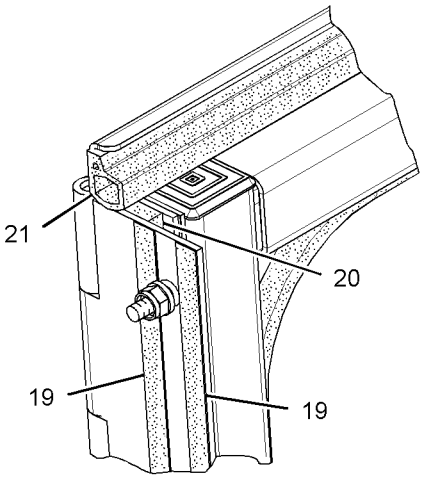

VIEW OF AREA B

GRAPHIC #1

<END>

g01563178

OPERATOR STATION

177-7891 DUCT & CONTROL GP–A/C, HEATER DISTRIBUTOR

S/N: JAP1-UP

PART OF 300-9979 AIR CONDITIONER AR

AN ATTACHMENT

SMCS-7337, 734D **i01679811**

NOTE	REF NO	GRAPHIC REF	PART NUMBER	QTY	PART NAME 1 2 3 4 5 6 (PRODUCT LEVEL)	SEE PAGE
	1	1	**8Y-6388**	6	LOUVER AS-VENT	
	2	1	**139-3595**	1	PANEL AS	
		1	**7K-4201**	2	NUT-SPEED	
		1	**8S-7566**	4	RIVET-POP	
	3	1	**164-8474**	2	LOUVER AS-VENT	
M	4	1	**9X-2043**	2	SCREW-TRUSS HEAD (M6X1X14-MM)	

M-METRIC PART

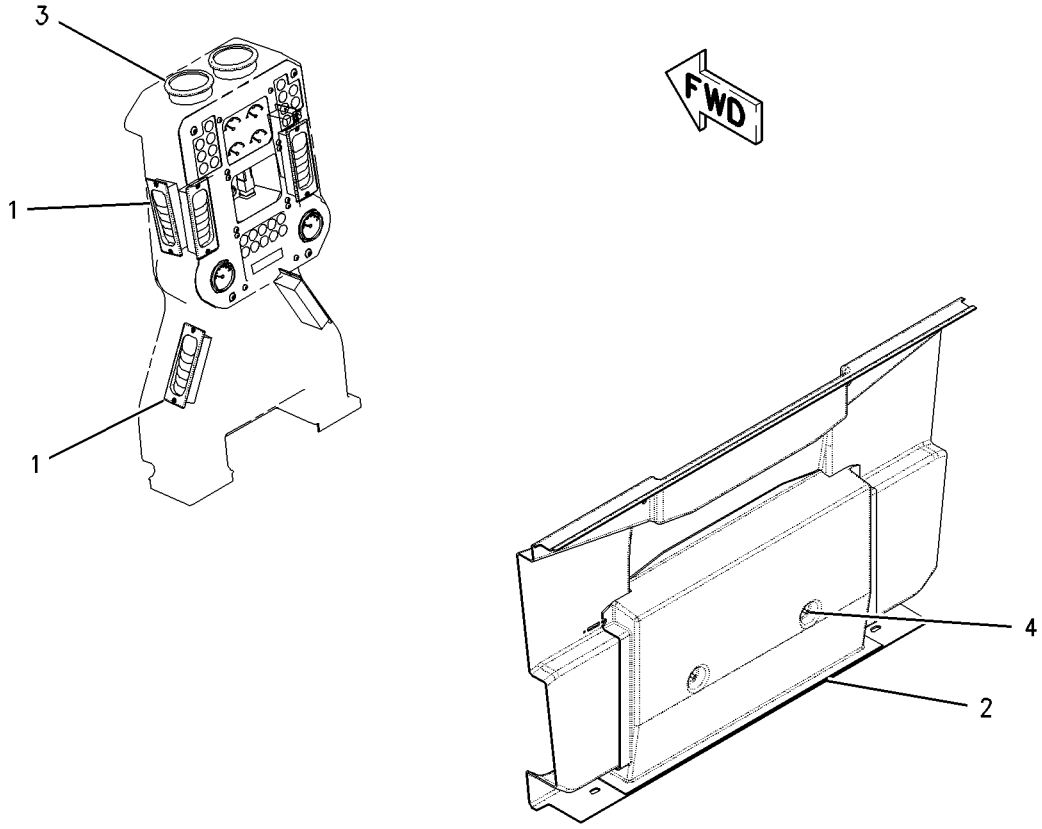

GRAPHIC #1 **<END>** g00796998

7I-5015 DUCT GP-CAB AIR–AIR CONDITIONER, HEATER

S/N: JAP1-UP
PART OF 300-9979 AIR CONDITIONER AR
AN ATTACHMENT

SMCS-734D **i00135943**

NOTE	REF NO	GRAPHIC REF	PART NUMBER	QTY	PART NAME 1 2 3 4 5 6 (PRODUCT LEVEL)	SEE PAGE
	1	1	**104-2091**	8	SCREW-FLAT HEAD (NO 6X0.5-IN)	
	2	1	**106-4496**	6	BRACKET AS	
					(EACH INCLUDES)	
M	3	1	**6V-9632**	1	NUT-WELD (M6X1-THD)	
	4	1	**8X-5102**	2	SEAL	
	5	1	**8Y-6388**	4	LOUVER AS-VENT	
	6	1	**122-8155**	1	DUCT	
	7	1	**122-8154**	1	DUCT	
M	8	1	**9X-2043**	8	SCREW-TRUSS HEAD (M6X1X14-MM)	
	9	1	**8T-4205**	2	WASHER-HARD (7.2X14.5X2-MM THK)	
M	10	1	**5C-2890**	2	NUT (M6X1-THD)	

M-METRIC PART

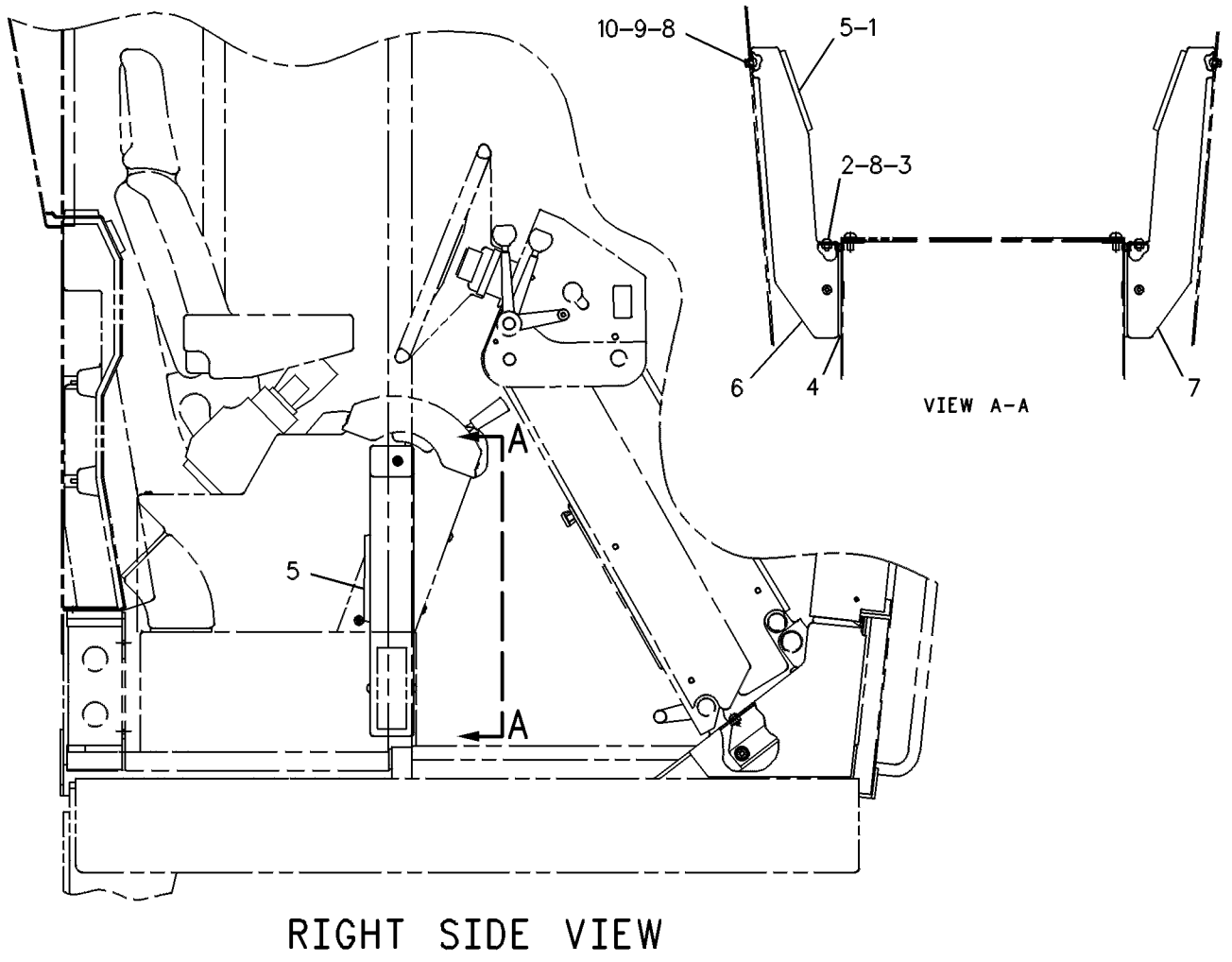

RIGHT SIDE VIEW

GRAPHIC #1 **<END>** g00108768

170-4820 FAN GP-CIRCULATING–DEFROSTER, REAR

S/N: JAP1-UP
24-VOLT
PART OF 286-4416 FAN GP-CIRCULATING
AN ATTACHMENT

SMCS-7316 **i02863989**

NOTE	REF NO	GRAPHIC REF	PART NUMBER	QTY	PART NAME 1 2 3 4 5 6 (PRODUCT LEVEL)	SEE PAGE
	1	1	**1M-1230**	2	NUT & LOCK AS (10-32-THD)	
	2	1	**3D-8747**	1	BRACKET	
	3	1	**3D-8748**	1	FAN AS (4-BLADE)	
	4	1	**3D-8749**	1	GUARD	
	5	1	**3T-6774**	1	GROMMET	
	6	1	**9X-9689**	1	BASE-FAN	
Y	7	1	**170-5335**	1	MOTOR GP-ELECTRIC (27-VOLTS) (CIRCULATING FAN)	161
	8	1	**1B-2713**	1	BOLT (1/4-20X1.75-IN)	
	9	1	**2D-6235**	1	LOCKNUT (1/4-20-THD)	
	10	1	**3D-8752**	1	LOCKNUT (5/16-24-THD)	
	11	1	**5P-0537**	4	WASHER-HARD (7.2X14.5X2-MM THK)	
	12	1	**6G-5987**	1	BRACKET	
	13	1	**7L-8316**	1	SETSCREW-SOCKET (10-32X2.54-IN)	
	14	1	**7T-0582**	1	BOLT	
	15	1	**9M-1974**	2	WASHER-HARD (8.8X16X2-MM THK)	

Y-SEPARATE ILLUSTRATION

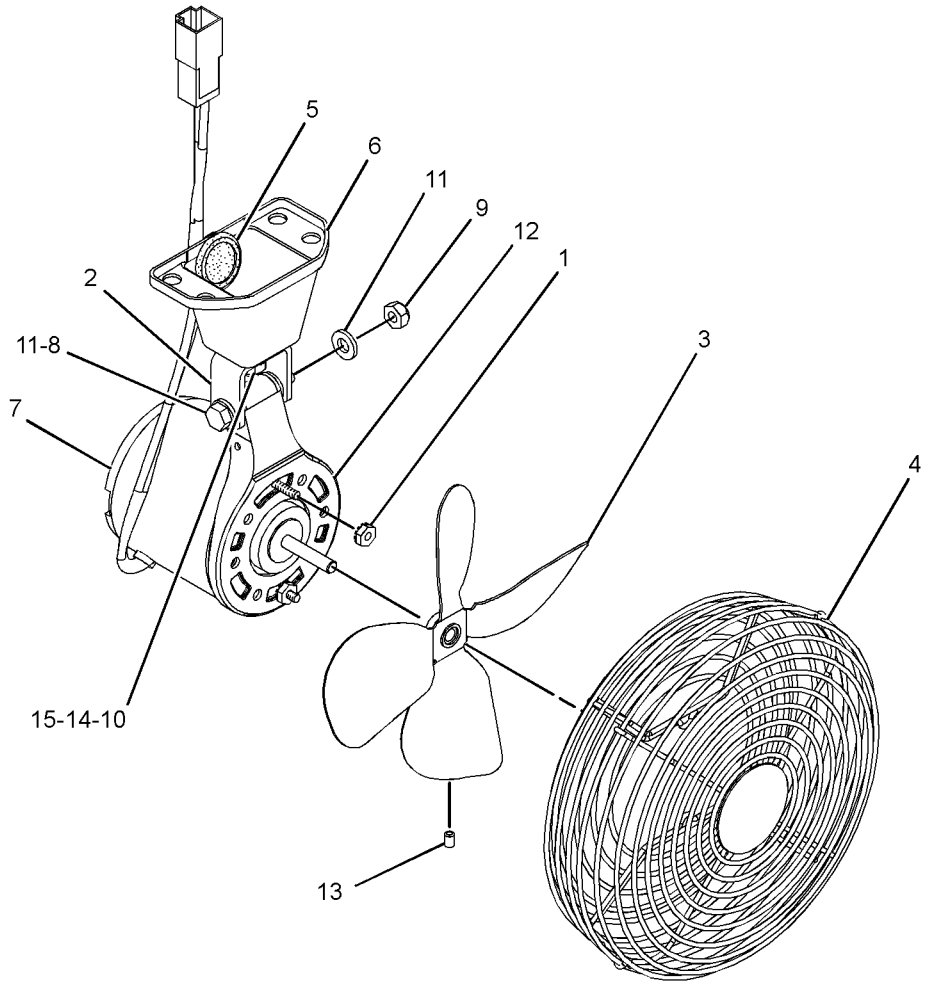

GRAPHIC #1 **<END>** g01256496

OPERATOR STATION

170-5334 FAN GP-CIRCULATING—FRONT DEFROSTER

S/N: JAP1-UP
24-VOLT
PART OF 286-4415 FAN GP-CIRCULATING
AN ATTACHMENT

SMCS-7316 **i03641571**

NOTE	REF NO	GRAPHIC REF	PART NUMBER	QTY	PART NAME 1 2 3 4 5 6 (PRODUCT LEVEL)	SEE PAGE
	1	1	**3D-8747**	1	BRACKET	
	2	1	**3D-8748**	1	FAN AS (4-BLADE)	
	3	1	**3D-8749**	1	GUARD	
	4	1	**3T-6774**	1	GROMMET	
	5	1	**9X-9689**	1	BASE-FAN	
	6	1	**135-1979**	1	BRACKET	
Y	7	1	**170-5335**	1	MOTOR GP-ELECTRIC (27-VOLTS) (CIRCULATING FAN)	161
	8	1	**031-4155**	1	LOCKNUT (5/16-18-THD)	
	9	1	**1B-2713**	1	BOLT (1/4-20X1.75-IN)	
	10	1	**1M-1230**	2	NUT & LOCK AS (10-32-THD)	
	11	1	**2D-6235**	1	LOCKNUT (1/4-20-THD)	
	12	1	**3D-8752**	1	LOCKNUT (5/16-24-THD)	
	13	1	**4M-0061**	1	BOLT (5/16-18X0.75-IN)	
	14	1	**5P-0537**	4	WASHER-HARD (7.2X14.5X2-MM THK)	
	15	1	**6G-5987**	1	BRACKET	
	16	1	**7L-8316**	1	SETSCREW-SOCKET (10-32X2.54-IN)	
	17	1	**7T-0582**	1	BOLT	
	18	1	**9M-1974**	3	WASHER-HARD (8.8X16X2-MM THK)	
	19	1	**9T-5241**	2	WASHER (9.53X18X1-MM THK)	

Y-SEPARATE ILLUSTRATION

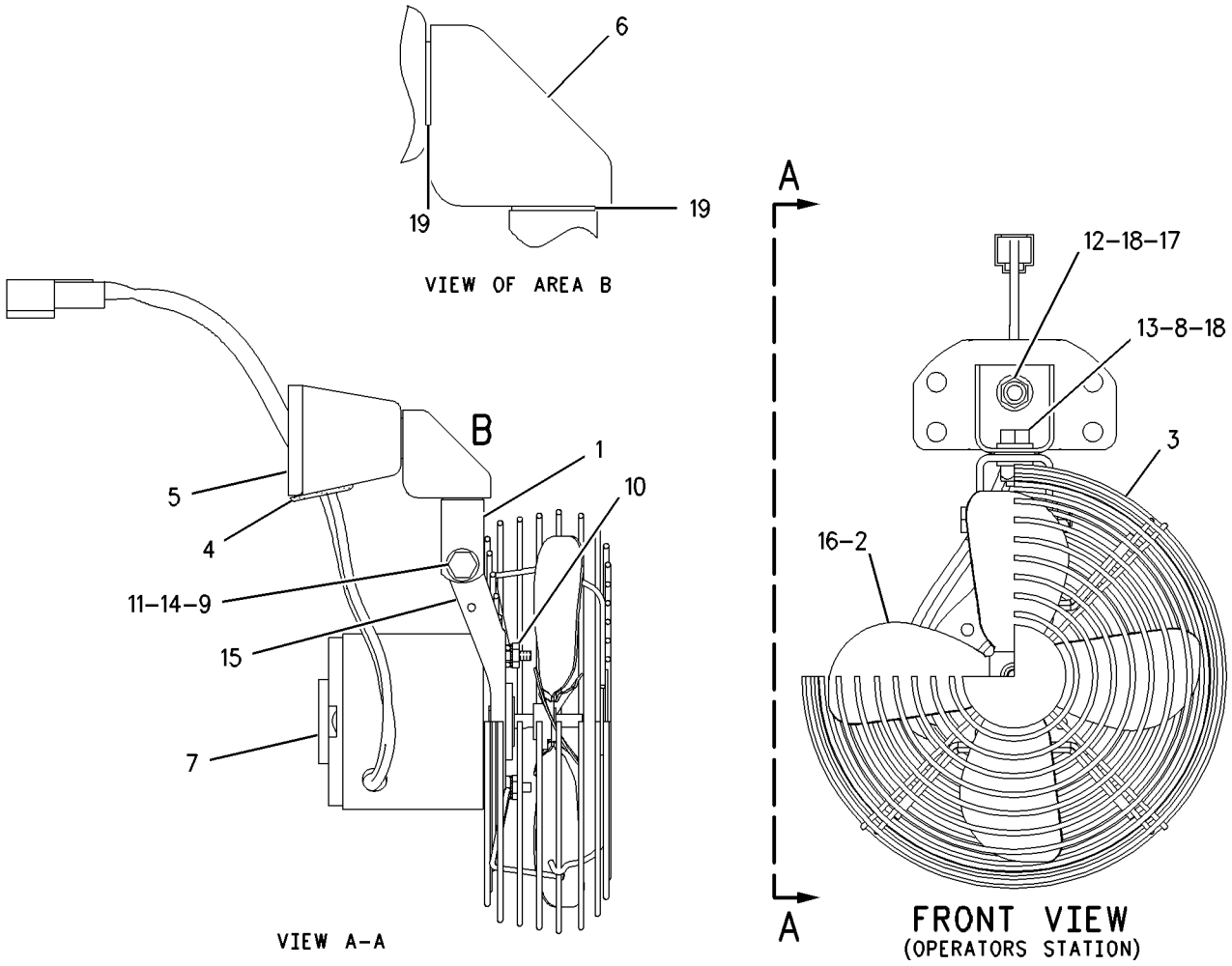

GRAPHIC #1 **<END>** g00761361

OPERATOR STATION

286-4415 FAN GP-CIRCULATING—FRONT DEFROSTER

S/N: JAP1-UP
PART OF 339-4968 OPTION AR-CAB
AN ATTACHMENT

SMCS-7316 **i03641614**

NOTE	REF NO	GRAPHIC REF	PART NUMBER	QTY	PART NAME 1 2 3 4 5 6 (PRODUCT LEVEL)	SEE PAGE
	1	1	**7T-4003**	1	RESISTOR	
	2	1	**9W-1442**	1	FUSE (10-AMPERE)	
Y	3	1	**170-5334**	1	FAN GP-CIRCULATING (FRONT DEFROSTER)	558
M	4	1	**9X-1046**	2	SCREW (M4X0.7X18-MM)	
	5	1	*9X-9638*	1	SWITCH AS-ROCKER (24-VOLT)	
		1	**3E-9330**	1	SWITCH AS (CIRCULATING FAN)	
		1	**3E-8821**	1	ACTUATOR	
		1	**3E-8825**	1	LAMP (24-VOLT)	

M-METRIC PART
Y-SEPARATE ILLUSTRATION

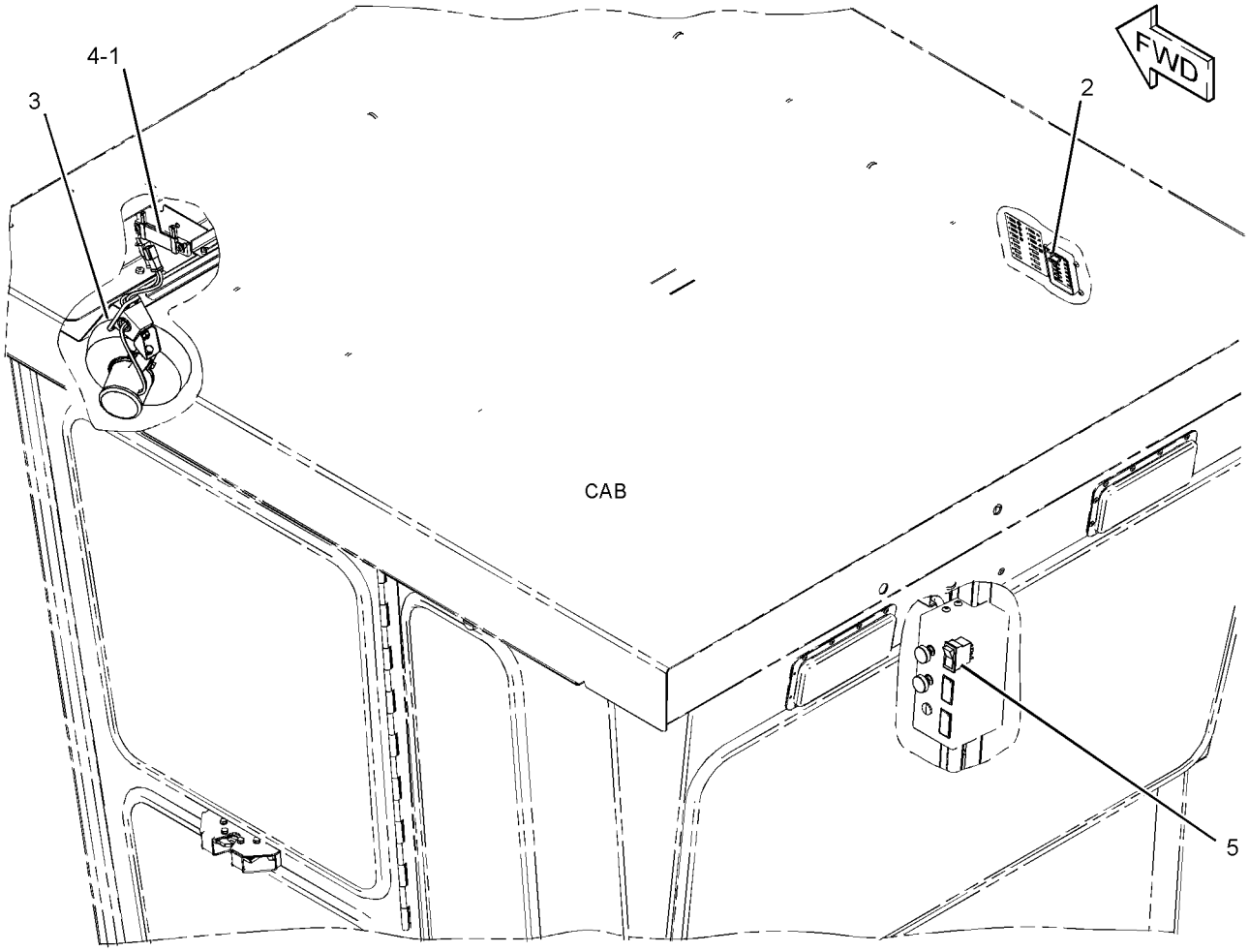

GRAPHIC #1 **<END>** g01671553

OPERATOR STATION

286-4416 FAN GP-CIRCULATING—DEFROSTER, REAR

S/N: JAP1-UP
PART OF 339-4968 OPTION AR-CAB
AN ATTACHMENT

SMCS-7316 **i03641627**

NOTE	REF NO	GRAPHIC REF	PART NUMBER	QTY	PART NAME 1 2 3 4 5 6 (PRODUCT LEVEL)	SEE PAGE
	1	1	**7T-4003**	1	RESISTOR	
	2	1	**9W-1442**	1	FUSE (10-AMPERE)	
Y	3	1	**170-4820**	1	FAN GP-CIRCULATING (DEFROSTER, REAR)	557
	4	1	**5P-8525**	1	GROMMET	
M	5	1	**9X-1046**	2	SCREW (M4X0.7X18-MM)	
M	6	1	**9X-2045**	4	SCREW-TRUSS HEAD (M6X1X20-MM)	
	7	1	*9X-9638*	1	SWITCH AS-ROCKER (24-VOLT)	
		1	**3E-8821**	1	ACTUATOR	
		1	**3E-8825**	1	LAMP (24-VOLT)	
		1	**3E-9330**	1	SWITCH AS (CIRCULATING FAN)	

M-METRIC PART
Y-SEPARATE ILLUSTRATION

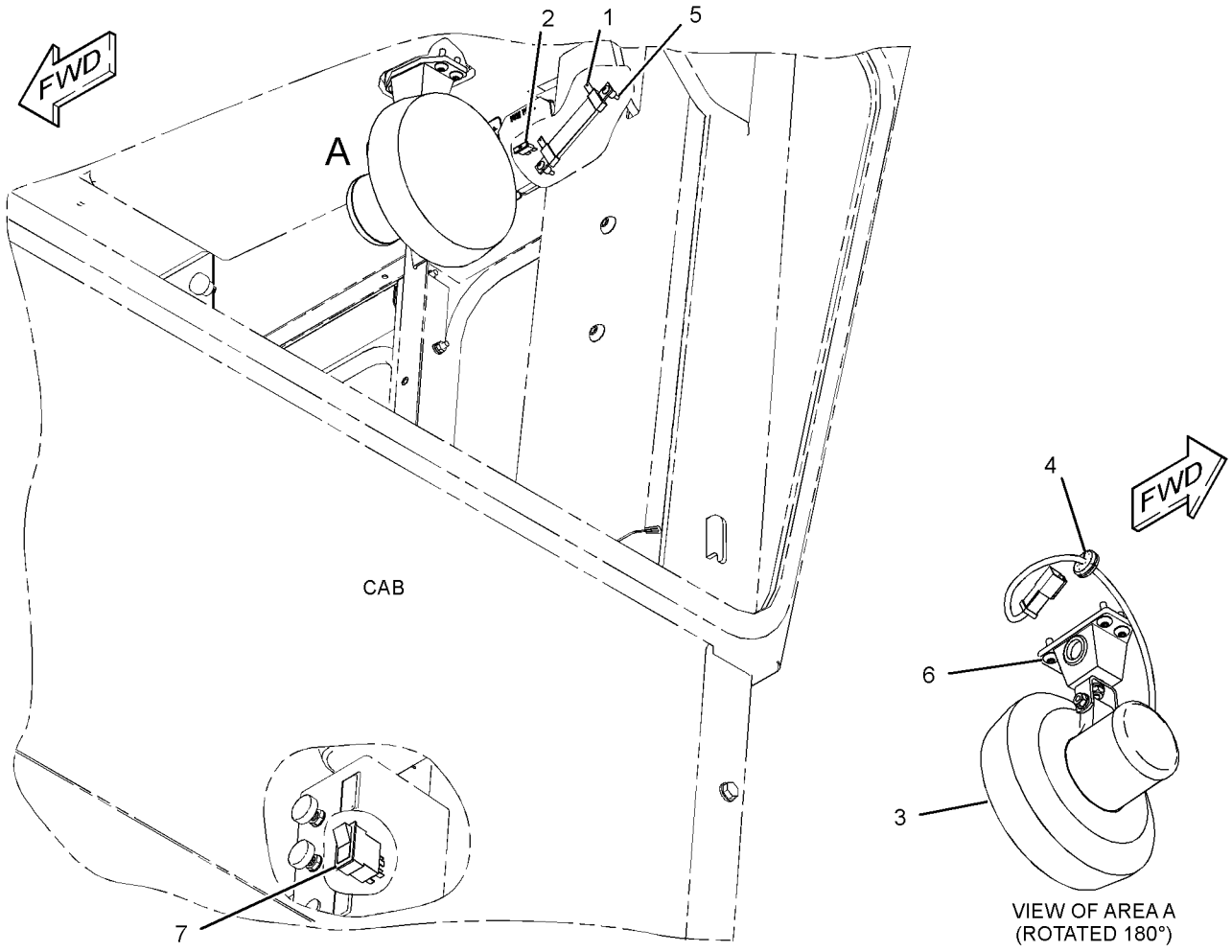

GRAPHIC #1 **<END>** g01754113

OPERATOR STATION

8X-2925 FILTER GP-CAB AIR

S/N: JAP1-UP
PART OF 300-9979 AIR CONDITIONER AR
AN ATTACHMENT

SMCS-7342 **i03641635**

NOTE	REF NO	GRAPHIC REF	PART NUMBER	QTY	PART NAME 1 2 3 4 5 6 (PRODUCT LEVEL)	SEE PAGE
	1	1	**7T-7358**	1	FILTER ELEMENT AS-CAB AIR	
	2	1	**9X-8122**	1	PLATE AS	
		1	**7K-4199**	2	THUMBSCREW	
		1	**8R-1778**	1	COVER-FILTER	
		1	**131-5492**	2	RETAINER-CAPTIVE	
	3	1	**112-9555**	4	SPRING-FILTER	
	4	1	*231-4487*	2	FILTER ELEMENT AS-CAB AIR	
					(EACH INCLUDES)	
		1	**231-4486**	1	FILTER ELEMENT AS-CAB AIR	
		1	**232-1732**	1	FILTER ELEMENT AS-CAB AIR	

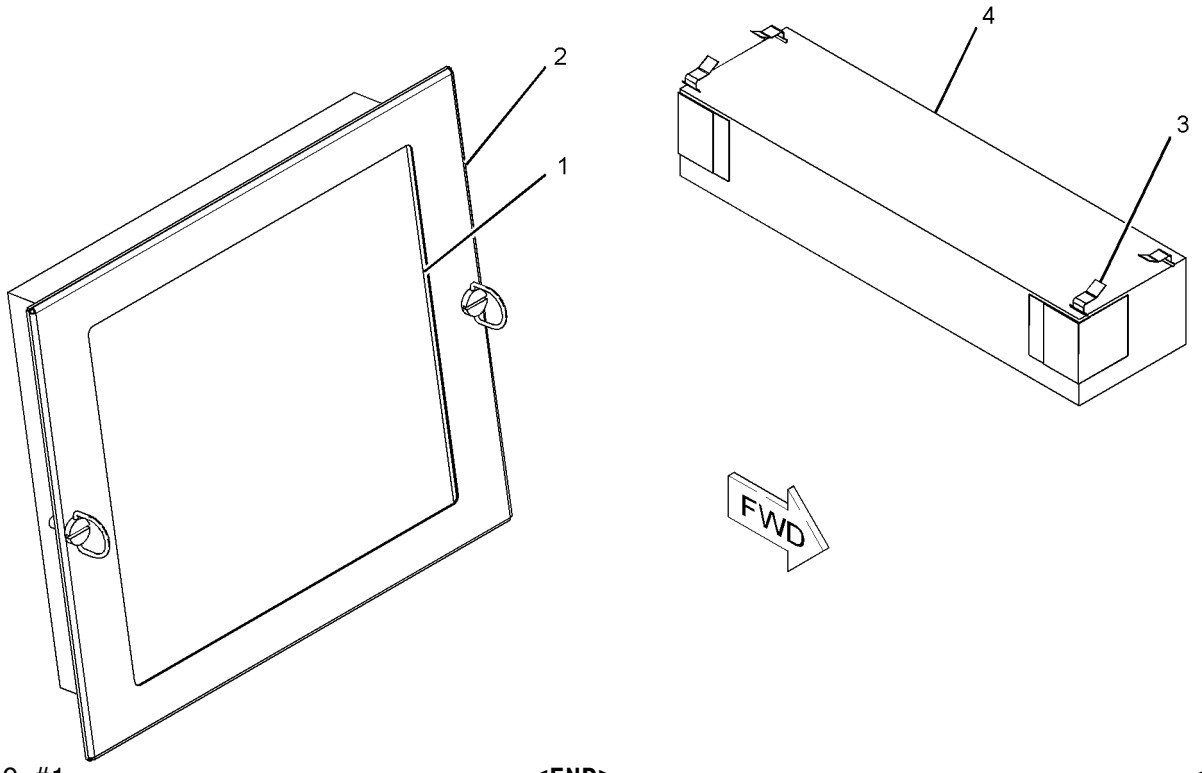

GRAPHIC #1 **<END>** g01070812

OPERATOR STATION

295-4371 HORN GP-ELECTRIC

S/N: JAP1-UP

PART OF 348-3018 GENERAL AR

SMCS-7402 **i03260122**

NOTE	REF NO	GRAPHIC REF	PART NUMBER	QTY	PART NAME 1 2 3 4 5 6 (PRODUCT LEVEL)	SEE PAGE
	1	1	**3G-1701**	1	SPRING	
	2	1	**5T-4030**	1	BRACKET	
	3	1	**7I-4696**	1	RETAINER	
	4	1	**7I-4698**	1	RING	
	5	1	**7I-4699**	1	INSULATOR	
	6	1	**009-4184**	4	SPRING-HORN	
	7	1	**009-4185**	4	BRUSH-HORN	
	8	1	**091-9071**	1	SEAL-HORN BUTTON	
	9	1	**098-7467**	1	BUTTON	
	10	1	**163-1201**	1	HORN AS (24-VOLT, LOW TONE)	
	11	1	**169-3145**	1	WIRE AS	
	12	1	**179-4814**	3	PIN	
	13	1	**8T-4121**	2	WASHER-HARD (11X21X2.5-MM THK)	
M	14	1	**8T-4133**	1	NUT (M10X1.5-THD)	
M	15	1	**8T-4195**	1	BOLT (M10X1.5X30-MM)	

M-METRIC PART

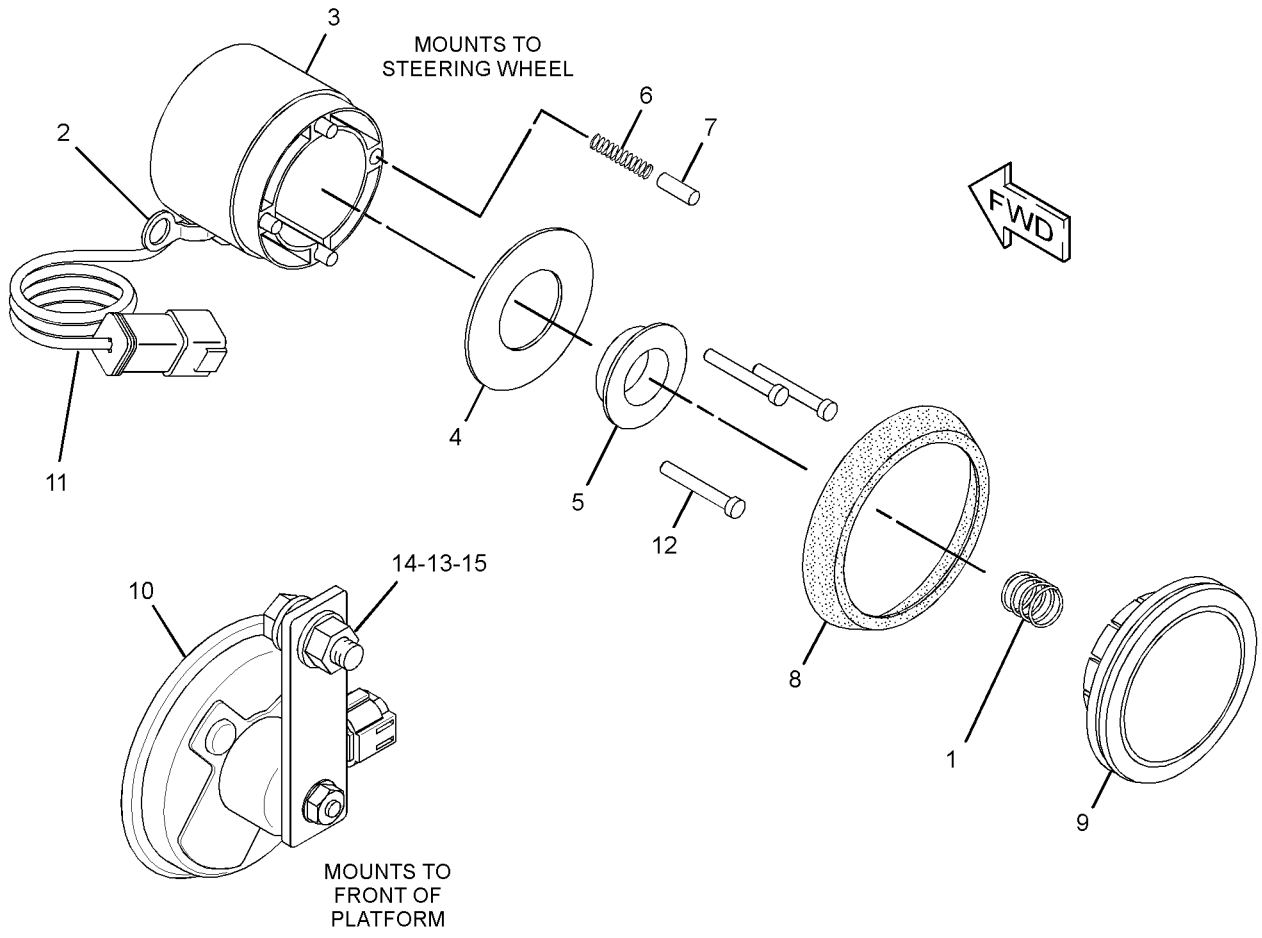

GRAPHIC #1 **<END>** g01685675

OPERATOR STATION

113-5808 HOUSING GP-SEAT SUSPENSION

S/N: JAP1-UP
PART OF 302-7458 SUSPENSION GP-SEAT
AN ATTACHMENT

SMCS-7321, 7324 **i03435560**

NOTE	REF NO	GRAPHIC REF	PART NUMBER	QTY	PART NAME 1 2 3 4 5 6 (PRODUCT LEVEL)	SEE PAGE
	1	1	**119-5026**	1	SCREW-PAN HEAD (10-16X0.63-IN)	
	2	1	**113-5807**	1	KNOB (SLIDE)	
	3	1	**113-5806**	1	ROD	
	4	1	**161-5967**	1	SHAFT	
	5	1	**8Y-6066**	1	SPRING	
	6	1	**8Y-6069**	1	ADJUSTER AS	
	7	1	**8Y-6068**	1	NUT (3/8X16-THD)	
	8	1	**113-5801**	1	HOUSING AS	
	9	1	**8Y-6047**	2	PIN	
	10	1	**2M-7819**	4	RING-RETAINING	
	11	1	**8Y-6041**	1	ARM AS	
	12	1	**8Y-6045**	1	CAM	
	13	1	**8Y-6046**	1	PIN	
	14	1	**5V-0770**	2	BOLT-CARRIAGE (1/4-20X0.74-IN)	
	15	1	**2D-6235**	2	LOCKNUT (1/4-20-THD)	
	16	1	**8S-7803**	4	RING-RETAINING	
	17	1	**7M-7219**	1	BEARING-THRUST	
	18	1	**4N-2927**	2	RACE-THRUST BEARING	
	19	1	**095-0878**	1	PIN-SPRING	
	20	1	**5P-8445**	4	RING-RETAINING	
	21	1	**4B-5059**	6	WASHER (15X29.5X2.5-MM THK)	
	22	1	**8Y-6060**	2	ROLLER	
	23	1	**1Y-7927**	1	PIN	
	24	1	**7V-5191**	2	SPACER (28X10X7.1-MM THK)	
	25	1	**5D-4822**	2	RING-RETAINING	
	26	1	**8Y-6062**	1	LINK-ACTUATOR	
	27	1	**8Y-6063**	1	LINK-ACTUATOR	
	28	1	**8Y-6064**	2	ROLLER-SLIDER	
	29	1	**113-5805**	1	KEY	
	30	1	**131-5167**	1	KNOB AS-ADJUSTMENT	
		1	**4V-7875**	1	HANDLE	
		1	**4V-7877**	1	SPRING	
		1	**6V-3259**	1	PIN-SPRING	
		1	**149-7226**	1	SCREW-PAN HEAD (10-16X0.625-IN)	
	31	1	**131-4242**	1	BOLT (3/8-16X5.18-IN) (SPECIAL)	
	32	1	**8Y-6067**	1	SPACER (10.54-MM THK)	
	33	1	**3D-2975**	2	RING-RETAINING	
	34	1	**8L-8413**	2	STRAP-CABLE	
					AVAILABLE REPAIR KIT(S):	
			100-5179	1	KIT-BUMPER (WEIGHT ADJUSTMENT)	
					(INCLUDES BUMPERS)	
			8Y-6860	1	KIT-SPRING (HEIGHT ADJUSTMENT)	
					(INCLUDES SPRINGS, SPACERS, BUSHING-GUIDES, & ROD HEIGHT ADJUSTERS)	
			8Y-6859	1	KIT-SPRING	
					(INCLUDES RING-RETAININGS, SPRINGS, & BUSHINGS)	
			108-4086	1	KIT-FOLLOWER	
					(INCLUDES PIN & FOLLOWER-CAM)	
			100-3224	1	KIT-INDICATOR (WEIGHT ADJUSTMENT)	
					(INCLUDES STRAP-CABLES, TAPE-INDICATOR, & GUIDE)	
			108-4087	1	KIT-FOLLOWER	
					(INCLUDES PIN & FOLLOWER-CAM)	

113-5808 **HOUSING GP-SEAT SUSPENSION** *(contd.)* **i03435560**

NOTE	REF NO	GRAPHIC REF	PART NUMBER	QTY	PART NAME 1 2 3 4 5 6 (PRODUCT LEVEL)	SEE PAGE
			108-4103	1	KIT-BEARING	
					(INCLUDES ROLLER ASSEMBLIES)	

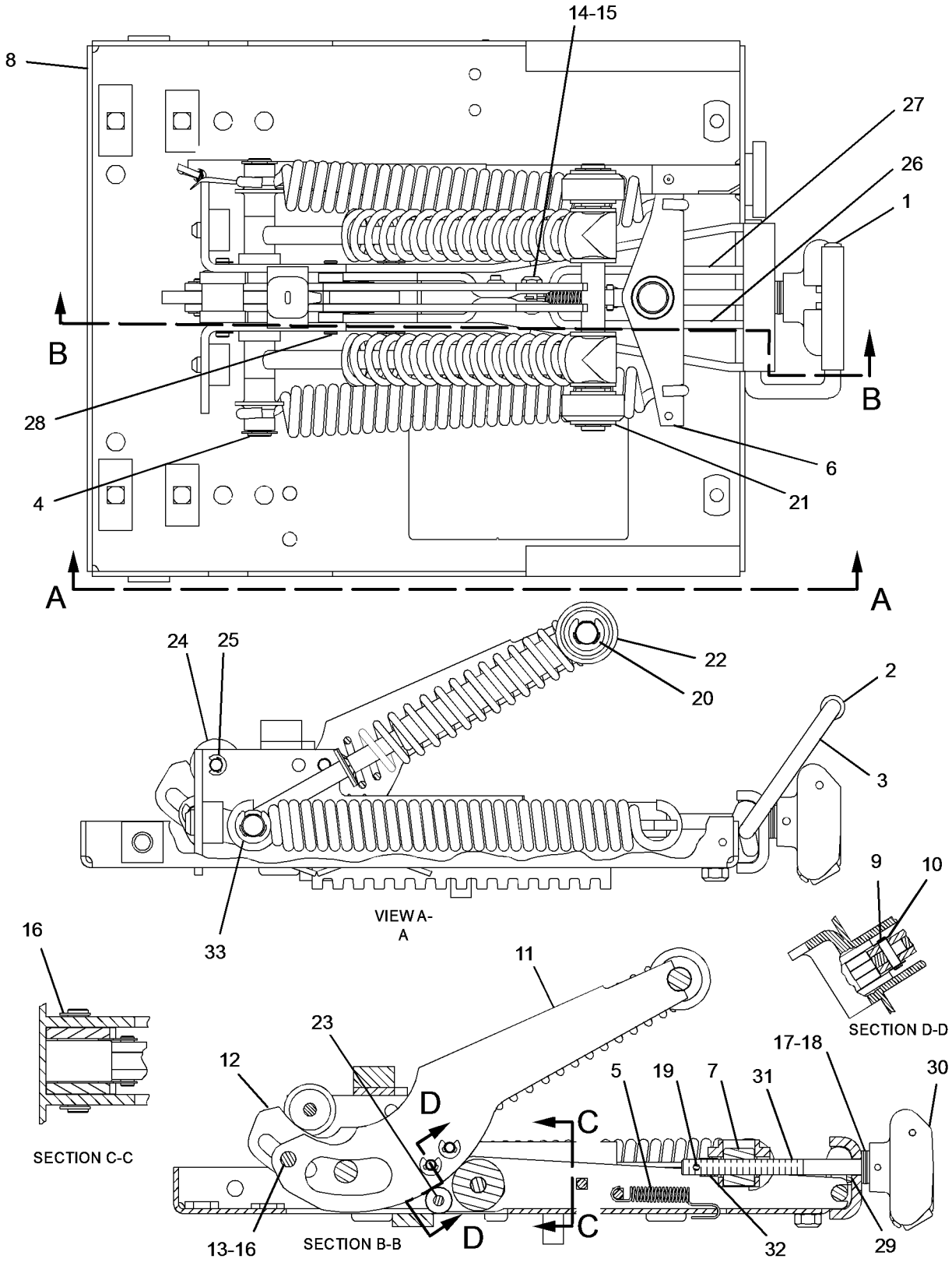

GRAPHIC #1 **<END>** g01786054

OPERATOR STATION

295-7991 INSTALLATION AR-RADIO

S/N: JAP1-UP

PART OF 340-1191 OPTION AR-CAB

AN ATTACHMENT

SMCS-7338 **i03641645**

NOTE	PART NUMBER	QTY	PART NAME 1 2 3 4 5 6 (PRODUCT LEVEL)	SEE PAGE
Y	*286-4330*	1	CONVERTER GP-ELECTRICAL (RADIO)	131
Y	*293-6529*	1	INSTALLATION GP-RADIO	568

Y-SEPARATE ILLUSTRATION

<END>

OPERATOR STATION

293-6529 INSTALLATION GP-RADIO

S/N: JAP1-UP

PART OF 295-7991 INSTALLATION AR-RADIO

AN ATTACHMENT

SMCS-7338 **i03255428**

NOTE	REF NO	GRAPHIC REF	PART NUMBER	QTY	PART NAME 1 2 3 4 5 6 (PRODUCT LEVEL)	SEE PAGE
	1	1	**2A-6684**	1	BRACKET	
	2	1	**2G-8767**	1	WASHER (10.5X60X3-MM THK)	
	3	1	**3S-2093**	1	STRAP-CABLE	
	4	1	**6T-7695**	2	SPEAKER AS-RADIO	
	5	1	**8X-9884**	1	BRACKET AS	
	6	1	**9U-8263**	1	COVER	
	7	1	**9W-3072**	1	ANTENNA AS	
	8	1	**293-7533**	1	CABLE AS	
	9	1	**5P-8525**	1	GROMMET	
	10	1	**6V-5834**	3	SCREW-HEAD (10-14X0.75-IN)	
	11	1	**8T-4121**	2	WASHER-HARD (11X21X2.5-MM THK)	
M	12	1	**8T-4137**	2	BOLT (M10X1.5X20-MM)	

M-METRIC PART

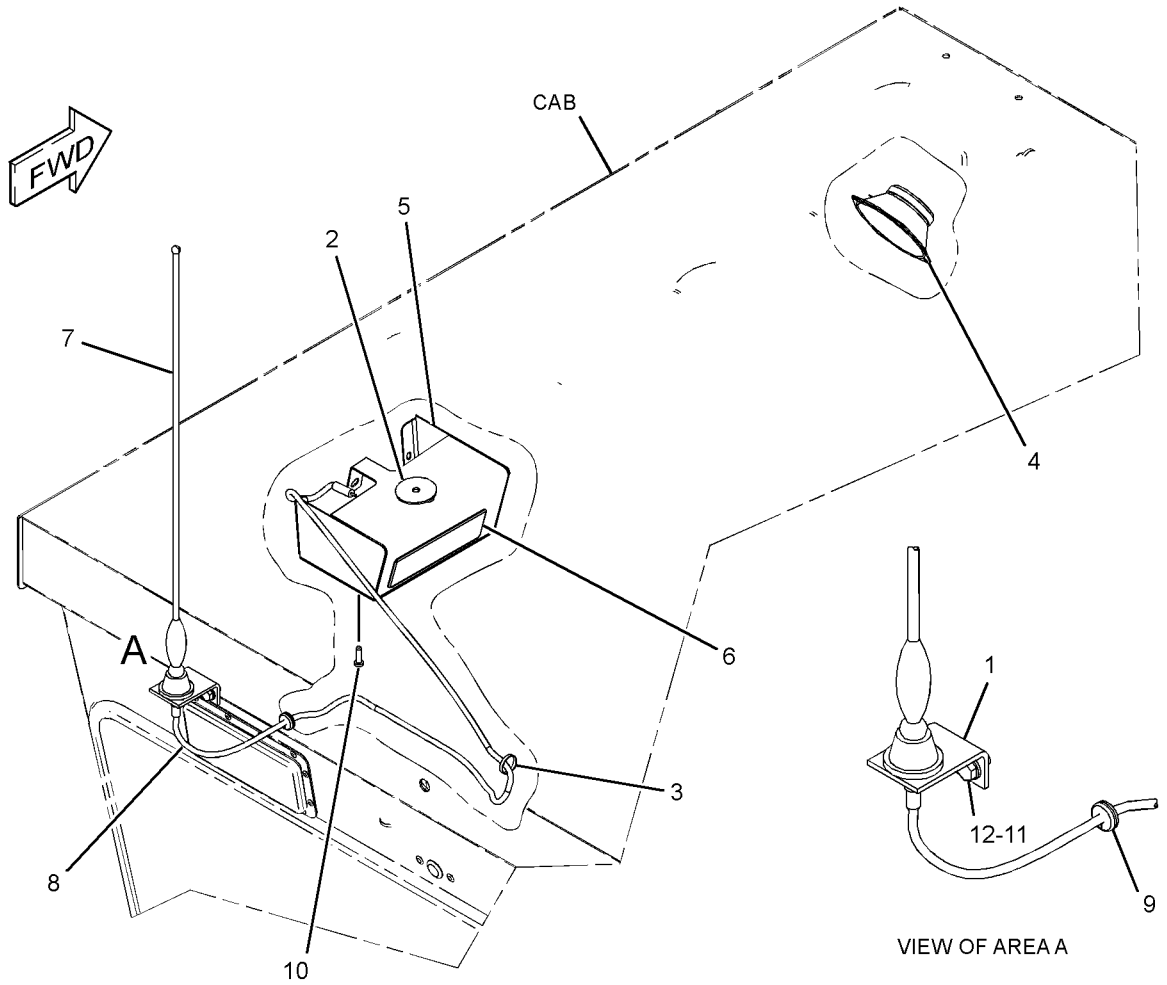

GRAPHIC #1 **<END>** g01687773

OPERATOR STATION

172-5378 INSULATION GP-WEATHER

S/N: JAP1-UP
PART OF 320-0341 CAB AR, 320-0342 ROPS AR
AN ATTACHMENT

SMCS-7329 **i03435582**

NOTE	REF NO	GRAPHIC REF	PART NUMBER	QTY	PART NAME 1 2 3 4 5 6 (PRODUCT LEVEL)	SEE PAGE
	1	1	**8X-2226**	2	PLATE	
	2	1	**8X-2913**	2	COVER AS	
					(EACH INCLUDES)	
M		1	**6V-9632**	2	NUT-WELD (M6X1-THD)	
B	3	1	**8X-8055**	6	PLUG	
	4	1	**8X-8351**	2	PLATE AS	
	5	1	**8W-6061**	1	FLOOR MAT (CAB)	
	6	1	**171-6165**	2	DUCT	
	7	1	**178-4190**	2	SEAL	
	8	1	**179-2138**	2	SEAL	
	9	1	**179-2139**	1	FOAM (RH)	
	10	1	**179-2140**	1	FOAM (LH)	
	11	1	**4M-5281**	4	BOLT (1/4-20X0.75-IN)	
	12	1	**5P-4115**	4	WASHER-HARD (7.2X19X2-MM THK)	
M	13	1	**9X-2043**	14	SCREW-TRUSS HEAD (M6X1X14-MM)	
BD	14	1	**5P-6882**		SEAL	
BD	15	1	**5P-5969**		SEAL	
	16	1	**112-9164**	8	BOOT	

B-USE AS REQUIRED
D-ORDER BY THE METER
M-METRIC PART

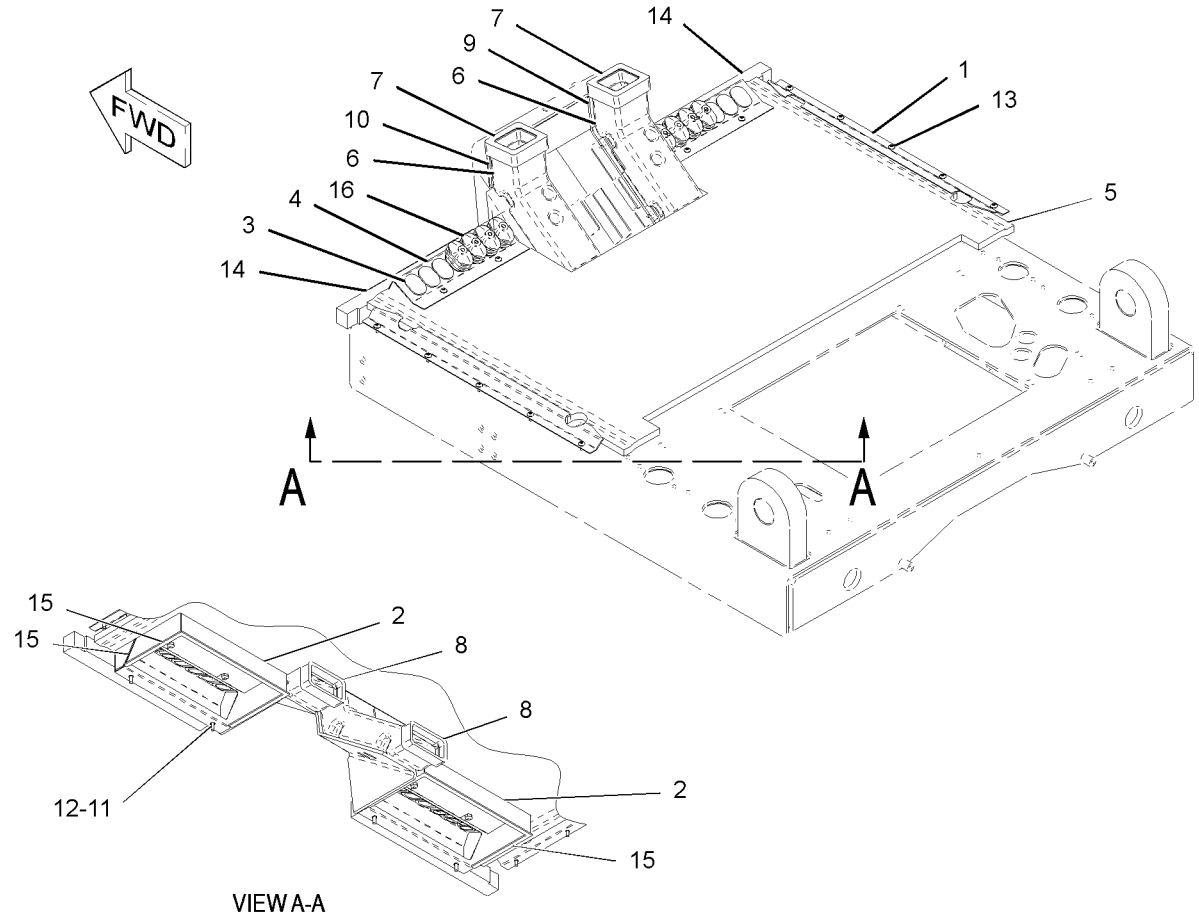

GRAPHIC #1 **<END>** g01786093

OPERATOR STATION

294-8588 LINER GP-CAB—ENCLOSED, HIGH PROFILE

S/N: JAP1-UP
PART OF 320-0341 CAB AR
AN ATTACHMENT

SMCS-7329 **i03501765**

NOTE	REF NO	GRAPHIC REF	PART NUMBER	QTY	PART NAME 1 2 3 4 5 6 (PRODUCT LEVEL)	SEE PAGE
	1	1	**3G-3265**	22	RIVET	
D	2	1	**5P-5969**		SEAL (2-M)	
	3	1	**5P-7803**	2	PLUG-BUTTON	
	4	1	**6G-2395**	2	DOOR GP (AIR VENTED)	
					(EACH INCLUDES)	
		1	**6G-7222**	2	ROLLER	
	5	1	**6G-2396**	2	GASKET	
	6	1	**6V-0292**	1	PLUG	
	7	1	**6V-3928**	3	PLUG-BUTTON	
	8	1	**8X-7845**	2	COVER	
	9	1	**8X-8790**	1	PLATE	
	10	1	**107-5014**	4	KNOB	
	11	1	**125-4388**	1	INSULATION	
	12	1	**125-4389**	1	INSULATION	
	13	1	**125-5520**	1	PANEL AS-CAB	
M		1	**6V-9632**	4	NUT-WELD (M6X1-THD)	
	14	1	**125-6483**	1	PLATE	
	15	1	**125-9584**	1	INSULATION	
	16	1	**197-8611**	1	COVER (RH)	
	17	1	**197-8624**	1	COVER (LH)	
	18	1	**294-8587**	1	COVER	
M		1	**6V-9632**	4	NUT-WELD (M6X1-THD)	
	19	1	**303-6203**	1	COVER (LH)	
M	20	1	**099-0492**	2	LOCKNUT (M6X1-THD)	
	21	1	**6G-5214**	5	WASHER (7.5X40X3-MM THK)	
	22	1	**6P-0205**	2	SPACER (0.269X0.405X0.656-IN THK)	
M	23	1	**9X-2043**	20	SCREW-TRUSS HEAD (M6X1X14-MM)	
M	24	1	**9X-2045**	7	SCREW-TRUSS HEAD (M6X1X20-MM)	
	25	1	**9X-8256**	2	WASHER (6.6X12X2-MM THK)	

D-ORDER BY THE METER
M-METRIC PART

294-8588 **LINER GP-CAB** *(contd.)* **i03501765**

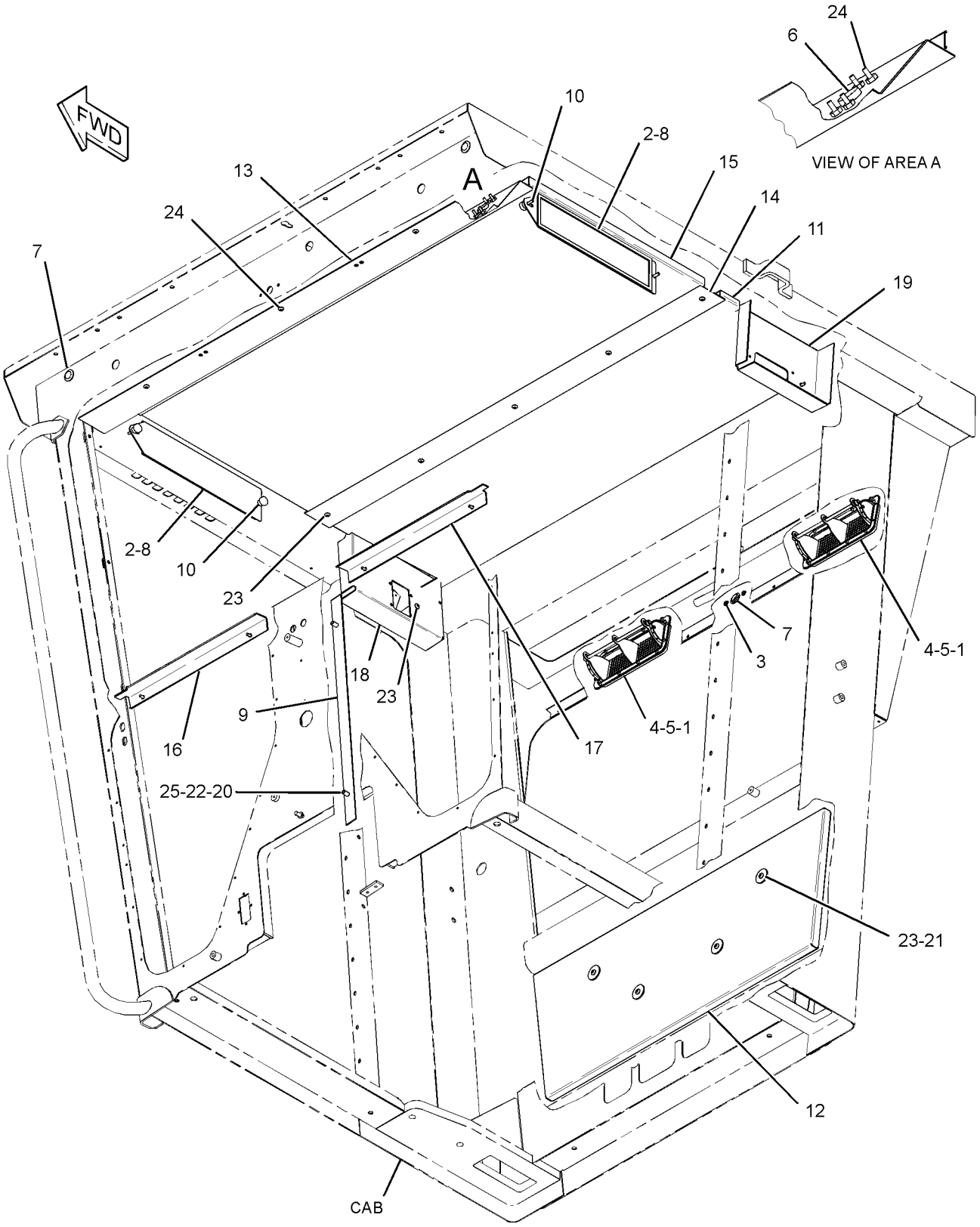

GRAPHIC #1 **<END>** g01757658

OPERATOR STATION

337-7998 LINER GP-CAB—ENCLOSED, HIGH PROFILE

S/N: JAP1-UP
PART OF 320-0342 ROPS AR
AN ATTACHMENT

SMCS-7329 **i03471060**

NOTE	REF NO	GRAPHIC REF	PART NUMBER	QTY	PART NAME 1 2 3 4 5 6 (PRODUCT LEVEL)	SEE PAGE
	1	1	**2G-8572**	2	WASHER-SPECIAL (10X27.81X2.54-MM THK)	
	2	1	**2G-8573**	2	CAP	
	3	1	**2G-8767**	1	WASHER (10.5X60X3-MM THK)	
	4	1,3	**3G-3265**	24	RIVET	
	5	1	**5P-5454**	1	ASHTRAY	
	6	1	**5P-5824**	1	HOLDER	
	7	1	**5P-7803**	2	PLUG-BUTTON	
	8	1,3	**6G-2395**	2	DOOR GP (AIR VENTED)	
					(EACH INCLUDES)	
		1,3	**6G-7222**	2	ROLLER	
	9	1,3	**6G-2396**	2	GASKET	
	10	3	**6G-2751**	4	HINGE	
	11	3	**6G-2914**	2	LATCH	
	12	2	**6K-3273**	4	RIVET-POP	
	13	1	**6P-0205**	3	SPACER (0.269X0.405X0.656-IN THK)	
	14	3	**6V-0292**	1	PLUG	
	15	1,3	**6V-3928**	5	PLUG-BUTTON	
	16	2	**6V-8928**	1	HOOK-COAT	
	17	2	**7G-4824**	1	STRAP	
	18	2	**8E-7791**	1	STRAP	
	19	1	**8F-0492**	1	SPACER (0.531X1.125X0.625-IN THK)	
	20	2	**8T-5401**	5	PLUG-BUTTON	
	21	1	**8X-5414**	1	PLATE	
	22	1	**8X-6999**	1	INSULATION	
	23	2	**8X-7845**	2	COVER	
	24	3	**9N-1995**	20	RIVET-POP	
	25	3	**101-3055**	2	COVER-SPEAKER	
	26	2	**107-5014**	4	KNOB (AIR FILTER)	
	27	3	**109-2804**	2	DOOR	
	28	1	**115-6807**	1	PLATE	
	29	2	**115-9923**	1	COVER (LH)	
	30	3	**118-2558**	1	PANEL	
	31	3	**122-8795**	2	PLATE	
	32	2	**137-6783**	1	HOLDER	
	33	1	**137-8065**	1	COVER	
	34	2	**138-7026**	1	PLATE	
	35	1	**138-9910**	1	PLATE AS	
	36	1	**139-1118**	1	PLATE	
	37	1	**139-3593**	1	PANEL	
	38	1,2	**144-4107**	6	FASTENER	
	39	1	**172-1239**	1	COVER (RH)	
	40	1	**174-4140**	1	PANEL	
	41	1	**179-2176**	1	COVER	
	42	2	**179-2179**	1	PLATE AS	
	43	1	**197-8611**	1	COVER (RH)	
	44	1,2	**197-8624**	1	COVER (LH)	
	45	2	**197-8629**	1	COVER (RH)	
	46	1	**197-8630**	1	COVER (LH)	
	47	3	**200-8623**	8	NUT-RETAINER	
	48	1	**251-7350**	1	PLATE	
	49	3	**103-9425**	8	SCREW-MACHINE (8-32X1-IN)	
M	50	1	**129-3178**	3	LOCKNUT (M6X1-THD)	
	51	2	**131-6009**	2	PIN	
M	52	1	**225-3109**	4	SCREW-TRUSS HEAD (M4X0.7X14-MM)	
	53	1	**5P-4115**	2	WASHER-HARD (7.2X19X2-MM THK)	

337-7998 **LINER GP-CAB** ***(contd.)*** **i03471060**

NOTE	REF NO	GRAPHIC REF	PART NUMBER	QTY	PART NAME 1 2 3 4 5 6 (PRODUCT LEVEL)	SEE PAGE
	54	1,3	**8T-4121**	1	WASHER-HARD (11X21X2.5-MM THK)	
M	55	1,2	**8T-4137**	4	BOLT (M10X1.5X20-MM)	
M	56	1	**8T-4182**	2	BOLT (M10X1.5X45-MM)	
M	57	3	**8T-4195**	1	BOLT (M10X1.5X30-MM)	
	58	2	**9R-2620**	1	PLUG	
M	59	1,2	**9X-2041**	4	SCREW-TRUSS HEAD (M10X1.5X20-MM)	
M	60	1,2,3	**9X-2043**	33	SCREW-TRUSS HEAD (M6X1X14-MM)	
M	61	1,2,3	**9X-2045**	6	SCREW-TRUSS HEAD (M6X1X20-MM)	
M	62	3	**9X-2046**	4	SCREW-TRUSS HEAD (M6X1X35-MM)	
	63	1	**9X-8256**	3	WASHER (6.6X12X2-MM THK)	
D	64	1,2	**8T-3426**		CHANNEL-TRIM (0.8-M EACH)	
D	64A	1	**8T-3426**		CHANNEL-TRIM (1.5-M)	
D	65	1,2	**6V-0505**		SEAL (0.03-M EACH)	
D	66	2	**5P-5969**		SEAL (1-M EACH)	
D	67	1,2	**6V-5163**		SEAL (1.4-M)	
D	67A	1	**6V-5163**		SEAL (1.3-M)	

D-ORDER BY THE METER
M-METRIC PART

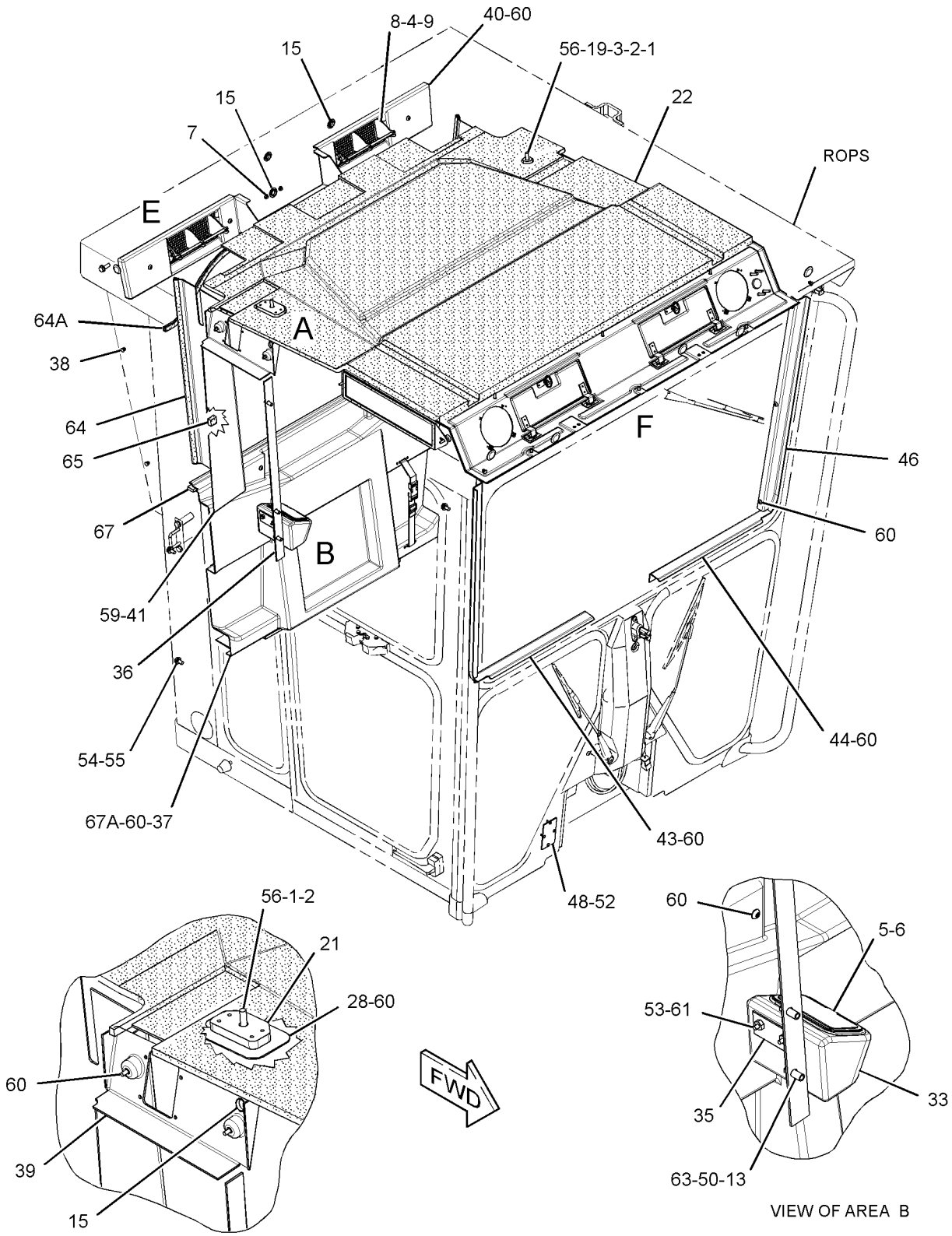

VIEW OF AREA A

VIEW OF AREA B

REFER TO ALL ILLUSTRATIONS OF THIS GROUP FOR AUXILIARY VIEWS

GRAPHIC #1

g01945182

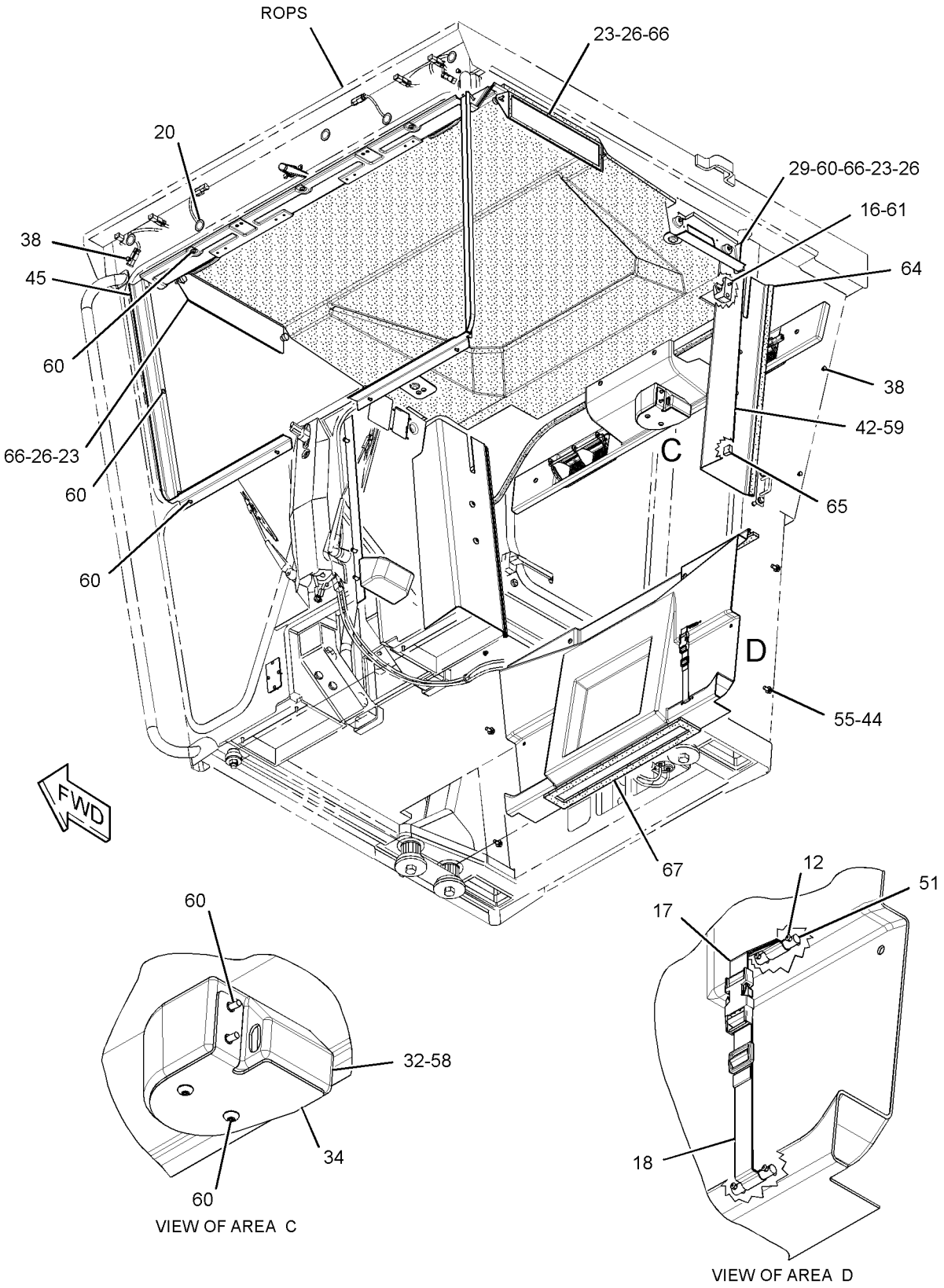

GRAPHIC #2

g01945398

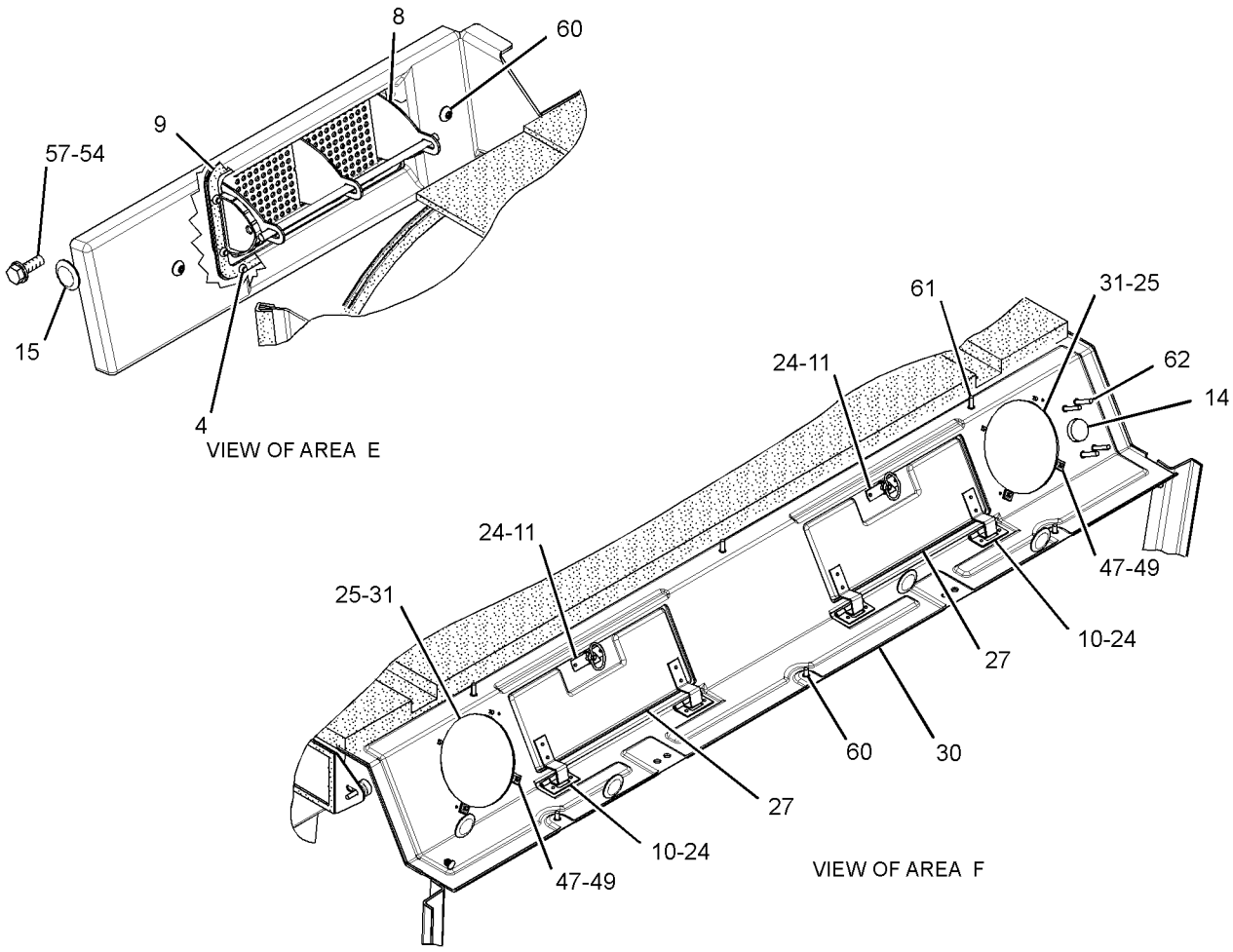

GRAPHIC #3 **<END>** g01945399

OPERATOR STATION

325-7481 LINES GP-AIR CONDITIONER—AIR CONDITIONER

S/N: JAP1-UP
PART OF 300-9979 AIR CONDITIONER AR
AN ATTACHMENT

SMCS-1808, 7320 **i03681980**

NOTE	PART NUMBER	QTY	PART NAME 1 2 3 4 5 6 (PRODUCT LEVEL)	SEE PAGE
	274-5909	1	ACCUMULATOR-REFRIGERANT	
	4L-6454	1	BOLT (3/8-16X1-IN)	
M	**8T-4136**	2	BOLT (M10X1.5X25-MM)	
M	**8T-4137**	1	BOLT (M10X1.5X20-MM)	
M	**8T-4195**	1	BOLT (M10X1.5X30-MM)	
M	**8T-4196**	1	BOLT (M10X1.5X35-MM)	
M	**8T-5005**	1	BOLT (M10X1.5X70-MM)	
M	**8T-6466**	1	BOLT (M10X1.5X60-MM)	
	9B-7237	1	BOLT (3/8-16X1.25-IN)	
M	**085-8091**	1	BOLT (M10X1.5X55-MM)	
	4B-0418	1	CLIP	
	4B-9302	1	CLIP	
	4K-8864	2	CLIP	
	4S-1962	2	CLIP	
	7X-7910	1	CLIP (SLOT)	
	7X-7911	1	CLIP (TAB)	
	8M-2773	1	CLIP	
	8S-6109	1	CLIP (SLOT)	
	8S-6110	1	CLIP (TAB)	
	067-2551	3	CLIP	
	202-2762	1	CLIP	
	217-7742	1	GROMMET	
I	**313-4127**	1	HOSE AS	
I	**313-4128**	1	HOSE AS	
	342-6387	1	HOSE AS	
M	**8T-4133**	3	NUT (M10X1.5-THD)	
	1P-6356	1	PLATE	
	257-3227	1	RECEIVER AS (AIR CONDITIONER)	
	189-1707	1	ORIFICE AS-AIR CONDITIONER	
	9X-7380	1	SEAL-O-RING	
	9X-7381	4	SEAL-O-RING	
	9X-7382	1	SEAL-O-RING	
	9X-7383	1	SEAL-O-RING	
	9X-7385	2	SEAL-O-RING	
	8W-8527	2	SLEEVE	
	8W-8528	3	SLEEVE	
	9G-7101	1	SPACER (10.5X20X30-MM THK)	
	130-1433	1	SPACER (11X25X17-MM THK)	
	132-7551	1	SPACER (11X19X6-MM THK)	
	172-4211	1	SPACER (10.5X22X50.8-MM THK)	
	7K-1181	1	STRAP-CABLE	
	114-5333	1	SWITCH AS-PRESSURE (REFRIGERANT, HIGH, LOW)	
	102-8802	1	KIT-RECEPTACLE (2-PIN)	
			(INCLUDES RECEPTACLE AS & WEDGE)	
	186-3735	2	PIN-CONNECTOR (16-GA TO 18-GA)	
E	**9X-1386**		SLEEVE (25-CM)	
	149-6371	1	SWITCH AS-PRESSURE (REFRIGERANT, LOW SIDE)	
	102-8802	1	KIT-RECEPTACLE (2-PIN)	
			(INCLUDES RECEPTACLE AS & WEDGE)	
	186-3735	2	PIN-CONNECTOR (16-GA TO 18-GA)	
	313-4131	1	TUBE AS	
	313-4132	1	TUBE AS	
	5P-1075	3	WASHER-HARD (10.2X22.5X3-MM THK)	
	8T-4121	10	WASHER-HARD (11X21X2.5-MM THK)	

E-ORDER BY THE CENTIMETER

I-REFER TO HYDRAULIC INFORMATION SYSTEM
M-METRIC PART

<END>

OPERATOR STATION

325-8635 LINES GP-HEATER

S/N: JAP1-UP
PART OF 300-9979 AIR CONDITIONER AR
AN ATTACHMENT

SMCS-1812, 7304 **i03571518**

NOTE	REF NO	GRAPHIC REF	PART NUMBER	QTY	PART NAME 1 2 3 4 5 6 (PRODUCT LEVEL)	SEE PAGE
	1	1	**2H-1743**	1	CLIP	
	2	1	**5D-1026**	4	CLAMP-BAND	
	3	1	**091-0081**	1	SPACER (10.5X20X10-MM THK)	
	4	1	*161-9916*	1	ADAPTER AS	
		1	**2M-9780**	1	SEAL-O-RING	
		1	**6V-7420**	1	ADAPTER	
	5	1	*170-0967*	1	ELBOW AS	
		1	**3K-0360**	1	SEAL-O-RING	
		1	**5P-4906**	1	ELBOW	
	6	1	**313-6546**	1	TUBE AS	
	7	1	**313-6547**	1	TUBE AS	
	8	1	*150-3037*	1	ELBOW AS	
		1	**3K-0360**	1	SEAL-O-RING	
		1	**7J-9108**	1	SEAL-O-RING	
		1	**8T-2530**	1	ELBOW	
	9	1	*208-0423*	2	CONNECTOR AS	
					(EACH INCLUDES)	
		1	**136-7226**	1	SEAL-O-RING	
		1	**150-7158**	1	CONNECTOR	
	10	1	**223-5916**	1	VALVE AS-MANUAL	
	11	1	**3S-8665**	1	CLIP	
	12	1	**8D-9671**	2	CLIP	
	13	1	**8T-4121**	2	WASHER-HARD (11X21X2.5-MM THK)	
M	14	1	**8T-4136**	1	BOLT (M10X1.5X25-MM)	
M	15	1	**8T-4195**	1	BOLT (M10X1.5X30-MM)	
	16	1	**9X-8250**	3	CLIP	
E	17	1	**5P-0767**		HOSE (211-CM EACH)	

E-ORDER BY THE CENTIMETER
M-METRIC PART

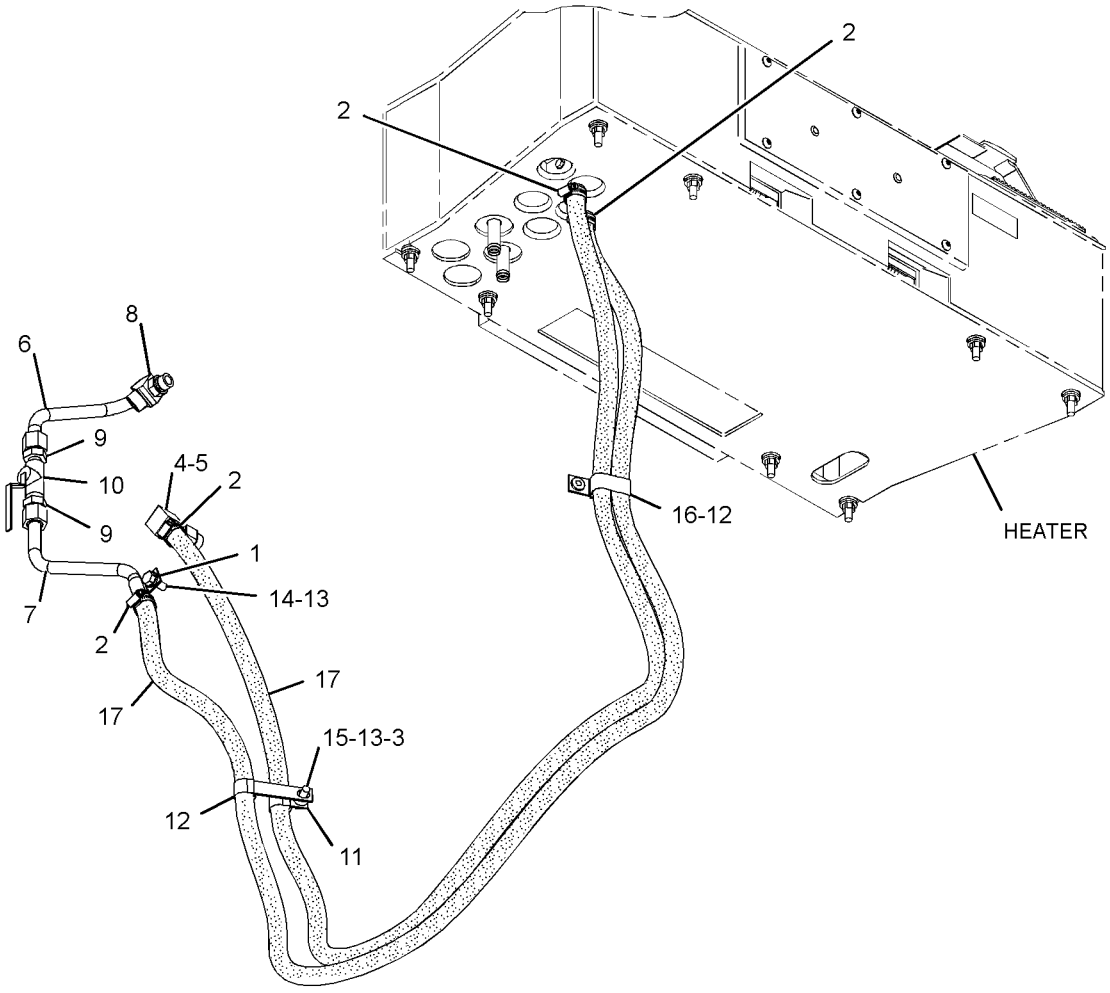

GRAPHIC #1 **<END>** g01924058

OPERATOR STATION

8X-2795 MIRROR GP-REAR VIEW—INSIDE

S/N: JAP1-UP
PART OF 320-0341 CAB AR, 284-5397 ROPS GP
AN ATTACHMENT

SMCS-7319 **i02585443**

NOTE	REF NO	GRAPHIC REF	PART NUMBER	QTY	PART NAME 1 2 3 4 5 6 (PRODUCT LEVEL)	SEE PAGE
	1	1	**8Y-4512**	1	MIRROR	
	2	1	**2G-8241**	2	CLAMP	
M	3	1	**9X-2046**	4	SCREW-TRUSS HEAD (M6X1X35-MM)	
	4	1	**2G-8572**	2	WASHER-SPECIAL (10X27.81X2.54-MM THK)	
	5	1	**2G-8573**	2	CAP	
	6	1	**2G-8242**	2	ARM	
	7	1	**5P-1075**	2	WASHER-HARD (10.2X22.5X3-MM THK)	
	8	1	**8H-1728**	2	NUT-ACORN (3/8-16-THD)	
	9	1	**5S-7379**	2	BOLT (3/8-16X0.875-IN)	
	10	1	**1P-2378**	2	CAP	

M-METRIC PART

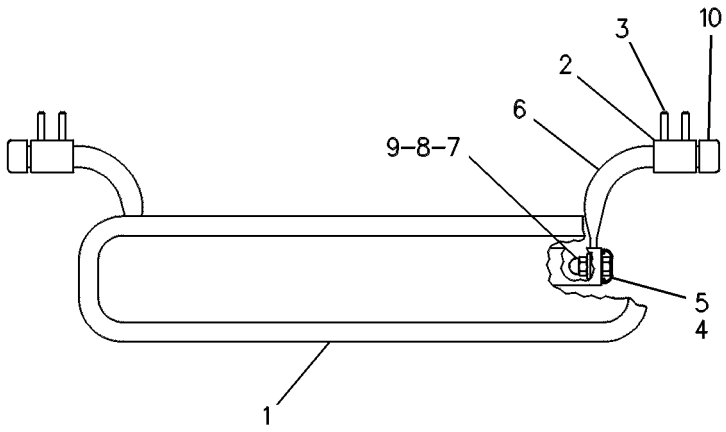

GRAPHIC #1 **<END>** g00084778

123-4358 MIRROR GP-REAR VIEW–EXTERIOR

S/N: JAP1-UP

PART OF 348-6940, 348-6941, 348-6942 OPTION AR-CAB

AN ATTACHMENT

SMCS-7319 **i00130904**

NOTE	REF NO	GRAPHIC REF	PART NUMBER	QTY	PART NAME 1 2 3 4 5 6 (PRODUCT LEVEL)	SEE PAGE
M	1	1	**8T-4133**	8	NUT (M10X1.5-THD)	
M	2	1	**8T-4137**	8	BOLT (M10X1.5X20-MM)	
	3	1	**8T-4121**	24	WASHER-HARD (11X21X2.5-MM THK)	
	4	1	**6G-8831**	4	CLAMP	
	5	1	**5P-6871**	2	MIRROR	
	6	1	**113-8218**	2	ARM	
	7	1	**123-4586**	4	BLOCK	
	8	1	**123-4587**	4	BRACKET	
M	9	1	**8T-4182**	8	BOLT (M10X1.5X45-MM)	
M	10	1	**8T-4195**	4	BOLT (M10X1.5X30-MM)	
M	11	1	**6V-7744**	4	LOCKNUT (M10X1.5-THD)	
	12	1	**9C-5928**	4	SPACER (10X19X5.15-MM THK)	

M-METRIC PART

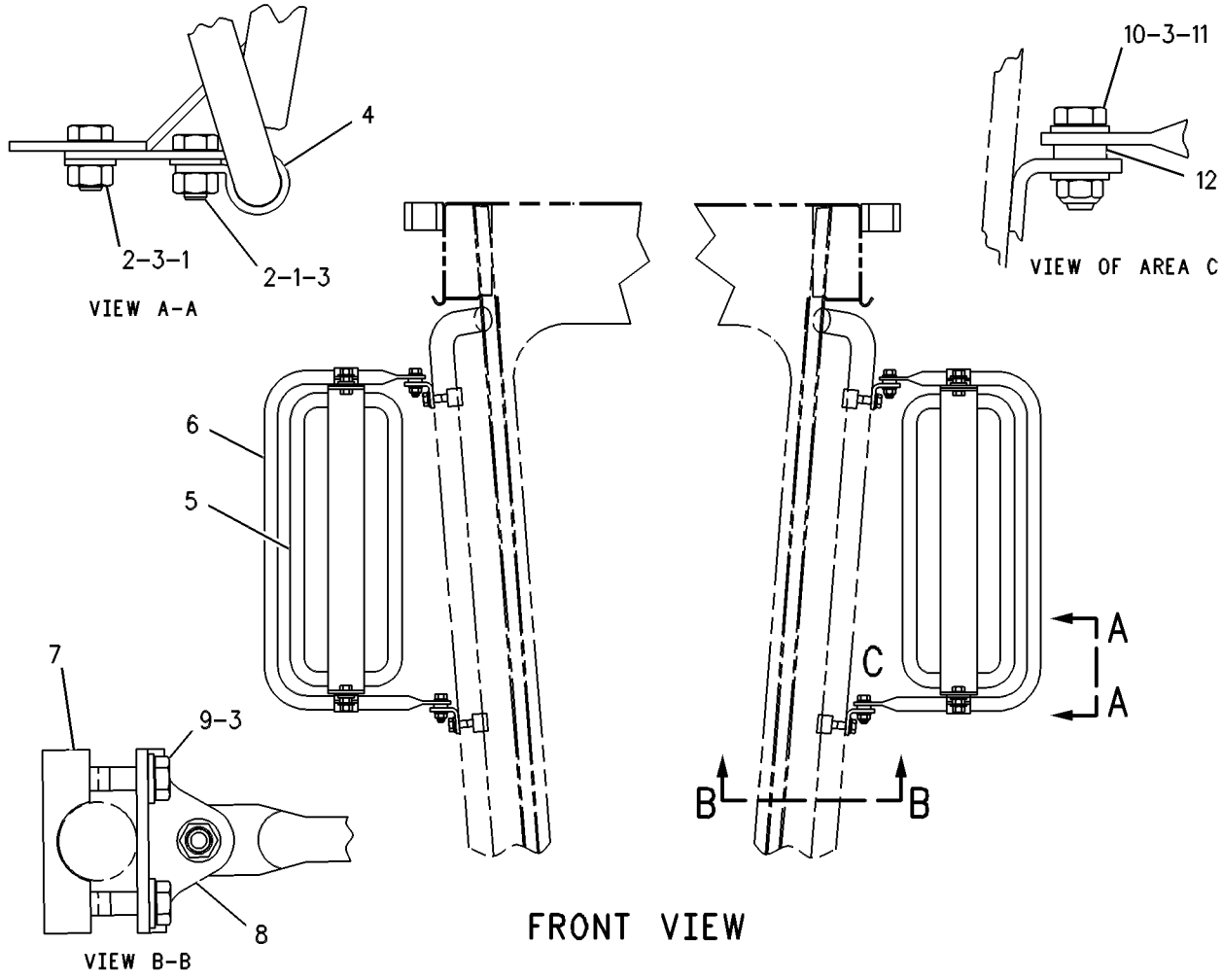

GRAPHIC #1 **<END>** g00109253

OPERATOR STATION

197-2066 MIRROR GP-REAR VIEW—DUAL INTERIOR

S/N: JAP1-UP
EUROPEAN MARKET
PART OF 332-8657 MIRROR GP-REAR VIEW, 340-1191 OPTION AR-CAB
AN ATTACHMENT

SMCS-7319 **i02304669**

NOTE	REF NO	GRAPHIC REF	PART NUMBER	QTY	PART NAME 1 2 3 4 5 6 (PRODUCT LEVEL)	SEE PAGE
	1	1	**1P-2378**	4	CAP	
	2	1	**2G-8241**	2	CLAMP	
	3	1	**232-6114**	2	MIRROR AS (RH, LH)	
					(EACH INCLUDES)	
		1	**203-0780**	1	MIRROR	
M	4	1	**9X-2046**	4	SCREW-TRUSS HEAD (M6X1X35-MM)	

M-METRIC PART

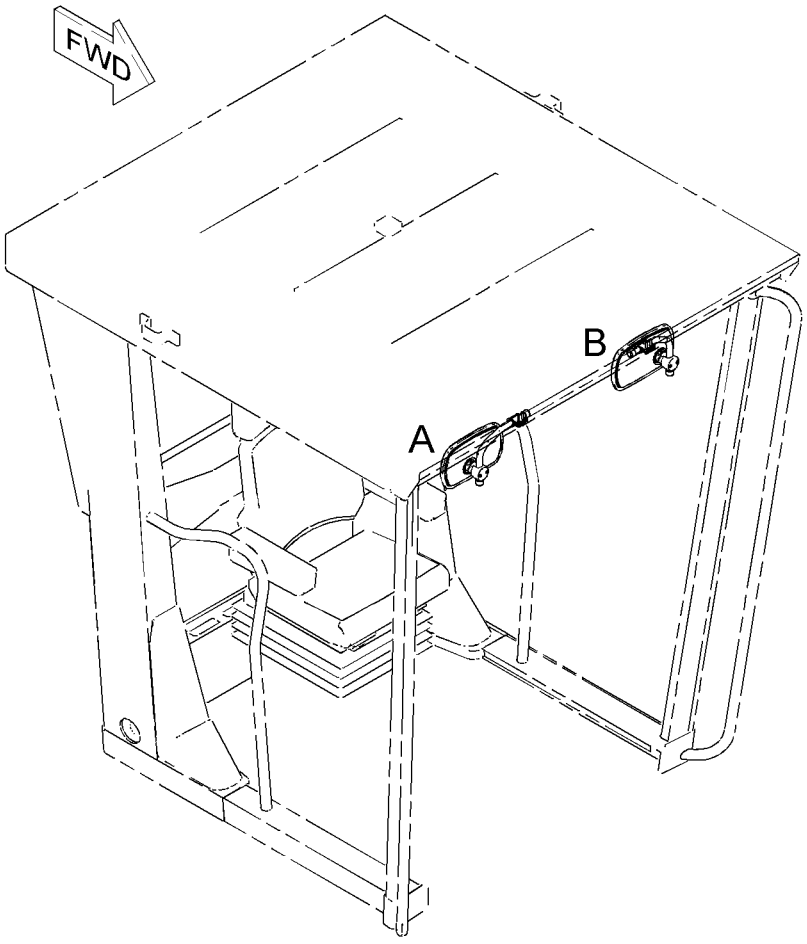

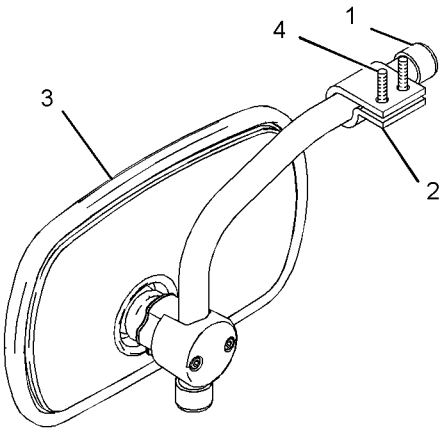

VIEW OF AREA A

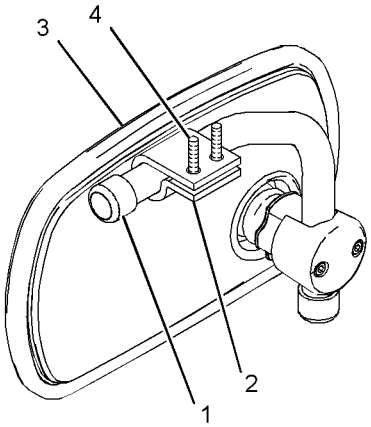

VIEW OF AREA B

GRAPHIC #1 **<END>** g01118616

OPERATOR STATION

332-8657 MIRROR GP-REAR VIEW

S/N: JAP1-UP
PART OF 334-7636 ROADING AR
AN ATTACHMENT

SMCS-7319 **i03201600**

NOTE	REF NO	GRAPHIC REF	PART NUMBER	QTY	PART NAME 1 2 3 4 5 6 (PRODUCT LEVEL)	SEE PAGE
Y	1	1	**197-2066**	1	MIRROR GP-REAR VIEW (DUAL INTERIOR)	584
	2	1	**332-6594**	1	MOUNT AS	
	3	1	**332-6597**	8	CLAMP	
M	4	1	**129-3180**	8	LOCKNUT (M12X1.75-THD)	
M	5	1	**8T-4183**	8	BOLT (M12X1.75X40-MM)	
	6	1	**8T-4223**	16	WASHER-HARD (13.5X25.5X3-MM THK)	

M-METRIC PART
Y-SEPARATE ILLUSTRATION

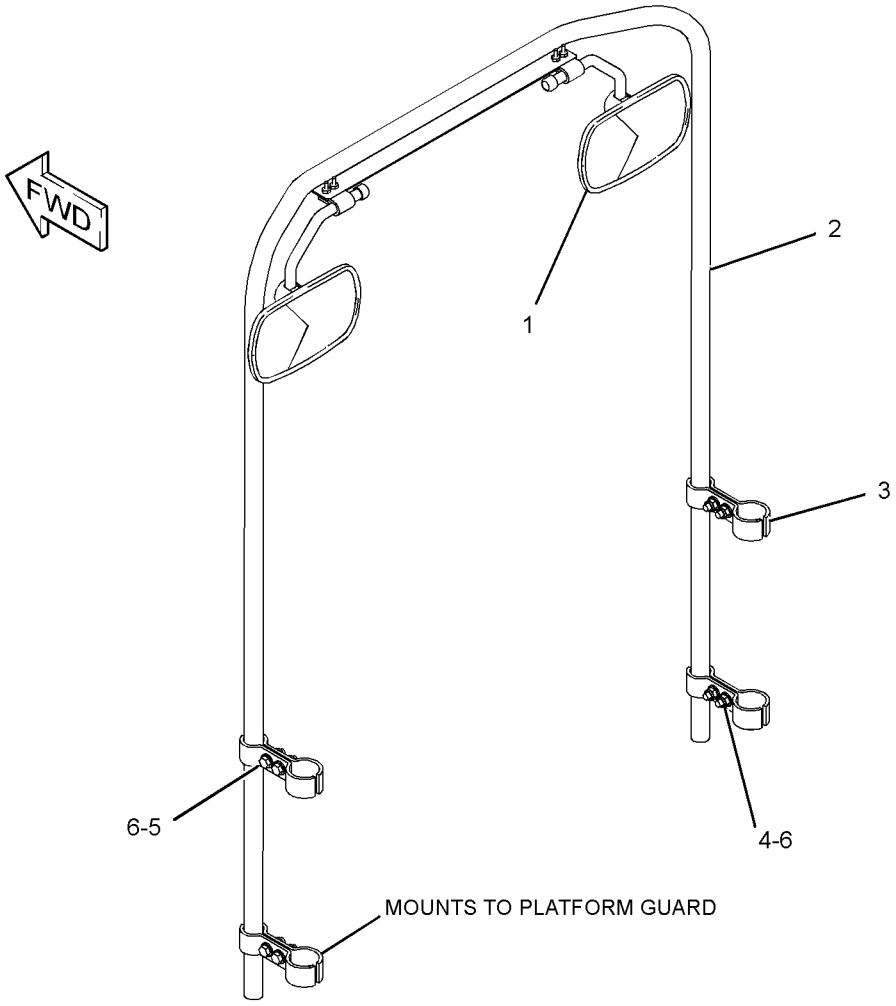

GRAPHIC #1 **<END>** g01794357

OPERATOR STATION

287-3260 MODULE GP-QUAD GAUGE

S/N: JAP1-UP
24-VOLT
PART OF 316-5237, 316-5238, 334-3346, 335-6989 PANEL GP-INSTRUMENT
ALSO AN ATTACHMENT

SMCS-7451, 7490 **i03246295**

NOTE	REF NO	GRAPHIC REF	PART NUMBER	QTY	PART NAME 1 2 3 4 5 6 (PRODUCT LEVEL)	SEE PAGE
	1	1	**9X-4284**	1	INDICATOR AS-COOLANT TEMP	
	2	1	**180-3833**	1	VOLTMETER GP	
	3	1	**180-3834**	1	INDICATOR AS-ARTICULATION	
	4	1	**180-3836**	1	INDICATOR AS-FUEL LEVEL	
	5	1	**186-3735**	6	PIN-CONNECTOR (16-GA TO 18-GA)	
	6	1	**102-8805**	1	KIT-RECEPTACLE (6-PIN)	
					(INCLUDES RECEPTACLE AS & WEDGE)	
F			**8M-6176**	2	LAMP (12-VOLT)	
					AVAILABLE REPAIR KIT(S):	
			116-4686	1	KIT-GAUGE CLUSTER BEZEL (QUAD GAUGE MODULE)	
					(INCLUDES BEZEL AS, PIPE, SEAL & SCREWS)	

F-NOT SHOWN

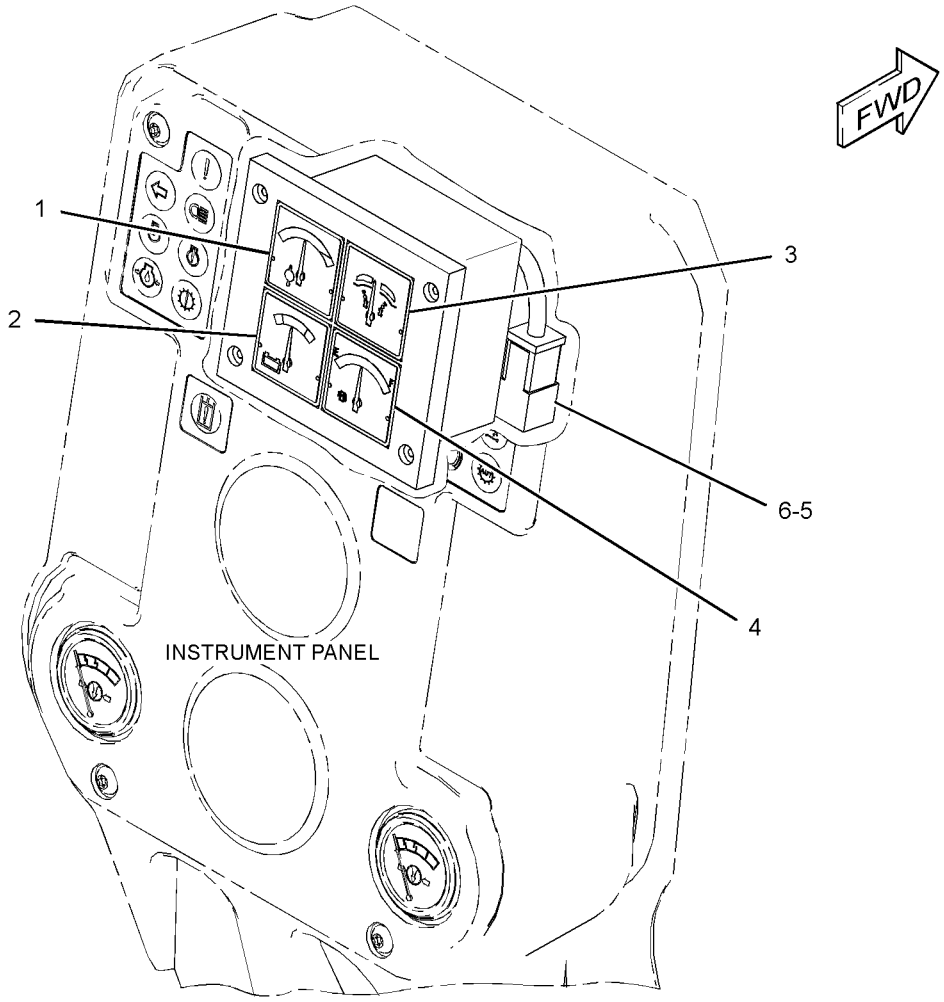

GRAPHIC #1

<END>

g01701214

OPERATOR STATION

293-4153 MODULE GP-SPEEDOMETER & TACH

S/N: JAP1-UP

PART OF 348-6941, 348-6942 OPTION AR-CAB

AN ATTACHMENT

SMCS-7451, 7462, 7463, 7490 **i03538289**

NOTE	REF NO	GRAPHIC REF	PART NUMBER	QTY	PART NAME 1 2 3 4 5 6 (PRODUCT LEVEL)	SEE PAGE
	1	1	**274-8068**	1	MODULE GP-INTERFACE	
	2	1	**336-6608**	1	INDICATOR (SPEED)	
		1	**4B-2043**	2	NUT (8-32-THD)	
		1	**9B-7233**	2	LOCKWASHER	
	3	1	**293-4495**	1	PLATE	
	4	1	**335-8961**	1	HARNESS AS-WIRING	
		1	**186-3736**	6	SOCKET-CONNECTOR (16-GA TO 18-GA)	
		1	**8T-8737**	6	PLUG-SEAL	
		1	**9X-3402**	6	SOCKET-CONNECTOR (16-GA TO 18-GA)	
E		1	**125-7874**		TUBE-HEAT SHRINK (5.72-MM DIA) (20-CM)	
		1	**155-2274**	3	KIT-CONNECTING PLUG (6-PIN)	
					(INCLUDES PLUG AS,WEDGE & INTERFACE SEAL)	
	5	1	**336-6609**	1	INDICATOR (ENGINE RPM)	
		1	**4B-2043**	2	NUT (8-32-THD)	
		1	**9B-7233**	2	LOCKWASHER	
	6	1	**4B-4863**	2	WASHER (4.7X11X1.2-MM THK)	
M	7	1	**5C-8312**	2	NUT (M4X0.7-THD)	
M	8	1	**6V-9493**	2	SCREW-MACHINE (M4X0.7X45-MM)	
	9	1	**7K-1181**	1	STRAP-CABLE	

E-ORDER BY THE CENTIMETER
M-METRIC PART

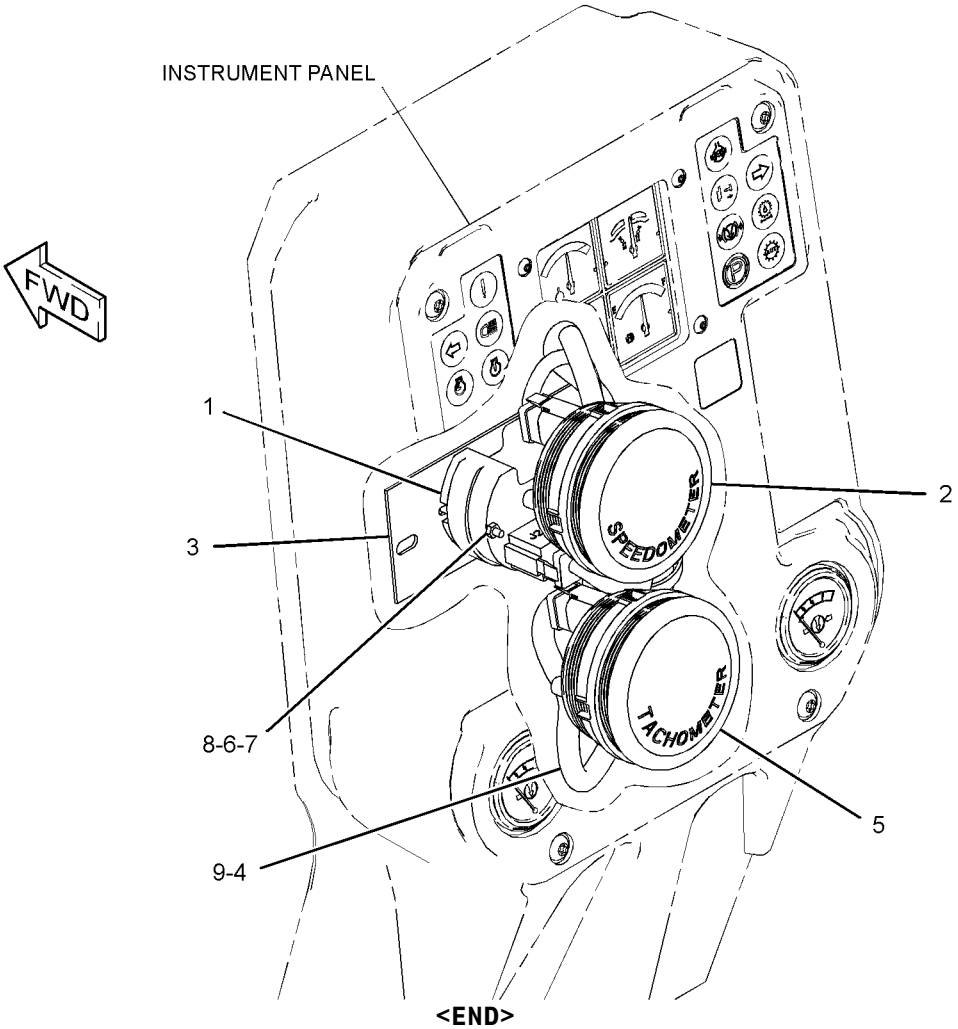

GRAPHIC #1 **<END>** g01756375

OPERATOR STATION

125-4344 MOUNTING GP-CAB—NON-ROPS, ENCLOSED

S/N: JAP1-UP
PART OF 320-0341 CAB AR
AN ATTACHMENT

SMCS-7266, 7301 **i02327863**

NOTE	REF NO	GRAPHIC REF	PART NUMBER	QTY	PART NAME 1 2 3 4 5 6 (PRODUCT LEVEL)	SEE PAGE
	1	1	**103-5515**	1	PAD-RH	
	2	1	**103-5516**	1	PAD-LH	
	3	1	**103-4953**	4	MOUNTING	
	4	1	**7X-0375**	4	BOLT (3/4-10X5-IN)	
	5	1	**8X-0674**	4	WASHER (22X100X10-MM THK)	
	6	1	**3V-9244**	2	WASHER (16.5X50X5-MM THK)	
	7	1	**4K-0367**	2	NUT-FULL (5/8-11-THD)	
	8	1	**7X-0354**	2	BOLT (5/8-11X4.5-IN)	
	9	1	**8T-4122**	2	WASHER-HARD (17X32X3.5-MM THK)	
	10	1	**8X-6131**	2	SEAL	
	11	1	**164-2465**	2	PAD	
	12	1	**9D-1589**	2	MOUNTING	
	13	1	**2G-7098**	2	PAD	
	14	1	**2G-7097**	1	PAD	
E	15	1	**123-6806**		SEAL (87-CM)	

E-ORDER BY THE CENTIMETER

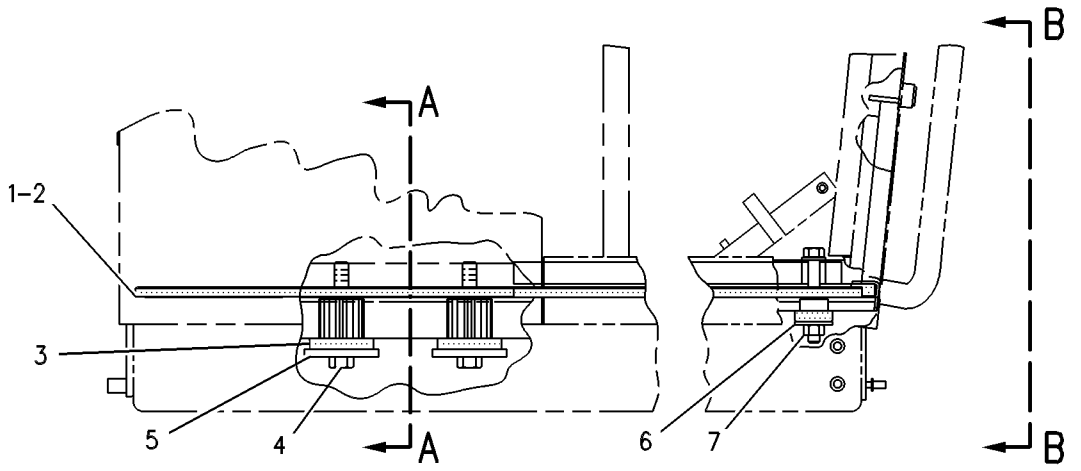

RIGHT SIDE VIEW

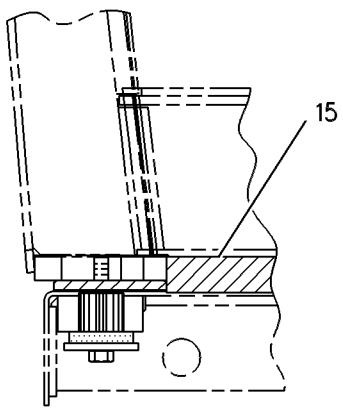

SECTION A-A

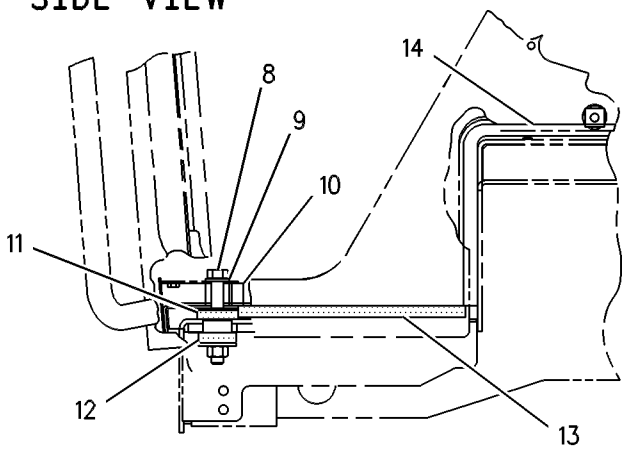

VIEW B-B

GRAPHIC #1 **<END>** g00109328

OPERATOR STATION

2A-6985 MOUNTING GP-ROPS—ENCLOSED

S/N: JAP1-UP
PART OF 320-0342 ROPS AR
AN ATTACHMENT

SMCS-7266 **i01938112**

NOTE	REF NO	GRAPHIC REF	PART NUMBER	QTY	PART NAME 1 2 3 4 5 6 (PRODUCT LEVEL)	SEE PAGE
	1	1	**3E-4048**	2	CAP-PLUG	
	2	1	**103-5515**	1	PAD-RH	
	3	1	**103-5516**	1	PAD-LH	
	4	1	**103-4953**	4	MOUNTING	
	5	1	**7X-0375**	4	BOLT (3/4-10X5-IN)	
	6	1	**8X-0674**	4	WASHER (22X100X10-MM THK)	
	7	1	**3V-9244**	2	WASHER (16.5X50X5-MM THK)	
	8	1	**4K-0367**	2	NUT-FULL (5/8-11-THD)	
	9	1	**7X-0354**	2	BOLT (5/8-11X4.5-IN)	
	10	1	**8T-4122**	4	WASHER-HARD (17X32X3.5-MM THK)	
	11	1	**8X-6131**	2	SEAL	
	12	1	**164-2465**	2	PAD	
	13	1	**9D-1589**	2	MOUNTING	
	14	1	**2G-7098**	2	PAD	
	15	1	**2G-7097**	1	PAD	
	16	1	**103-4771**	2	PIN AS	
	17	1	**030-8535**	2	BOLT-LOCKING (3/8-16X0.875-IN)	
	18	1	**8T-4896**	2	WASHER-HARD (10.2X18.5X2.5-MM THK)	
B	19	1	**166-1999**	2	SHIM (2.28-MM THK)	
BE	20	1	**123-6806**		SEAL (87-CM)	
B	21	1	**166-1997**	2	SHIM (1.2-MM THK)	

B-USE AS REQUIRED
E-ORDER BY THE CENTIMETER

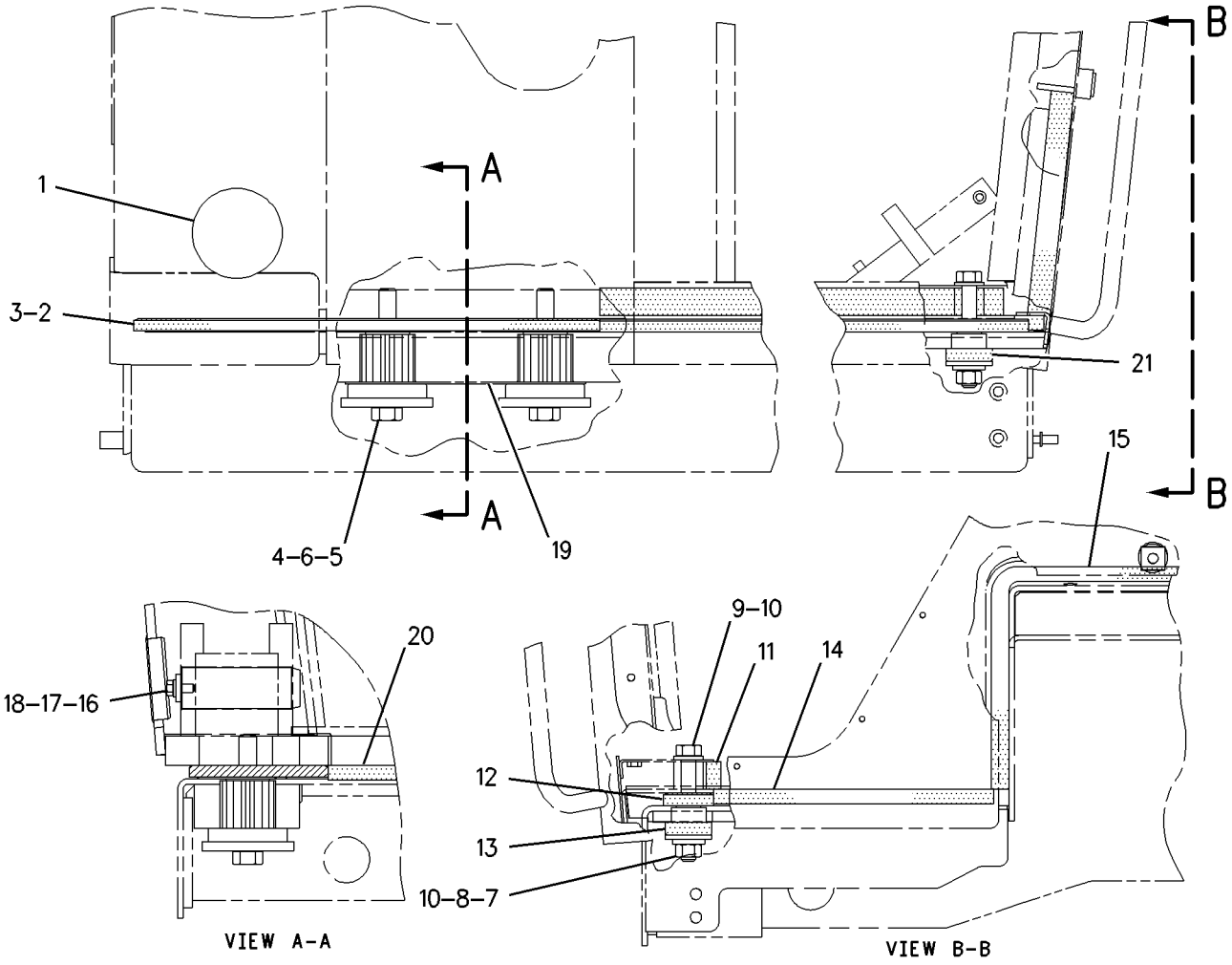

GRAPHIC #1 **<END>** g00752004

OPERATOR STATION

301-4173 PAN GP-BACKREST

S/N: JAP1-UP
PART OF 301-4174 SEAT GP
AN ATTACHMENT

SMCS-7312 **i02947678**

NOTE	REF NO	GRAPHIC REF	PART NUMBER	QTY	PART NAME 1 2 3 4 5 6 (PRODUCT LEVEL)	SEE PAGE
	1	1	**164-4883**	1	KNOB-LUMBAR	
	2	1	**250-4628**	3	PLUG	
	3	1	**292-6099**	1	CUSHION AS-BACK	
	4	1	*299-2277*	1	PAN GP-BACKREST	
		1	**4K-9429**	2	RIVET-POP	
		1	**136-1543**	1	PLATE AS-LUMBAR	
		1	**261-5694**	1	PAN AS-BACKREST	
	5	1	**5P-0537**	2	WASHER-HARD (7.2X14.5X2-MM THK)	
	6	1	**6V-8969**	2	SCREW-BUTTON HEAD (1/4-20X0.5-IN)	
	7	1	**8T-7566**	1	PIN-SPRING	

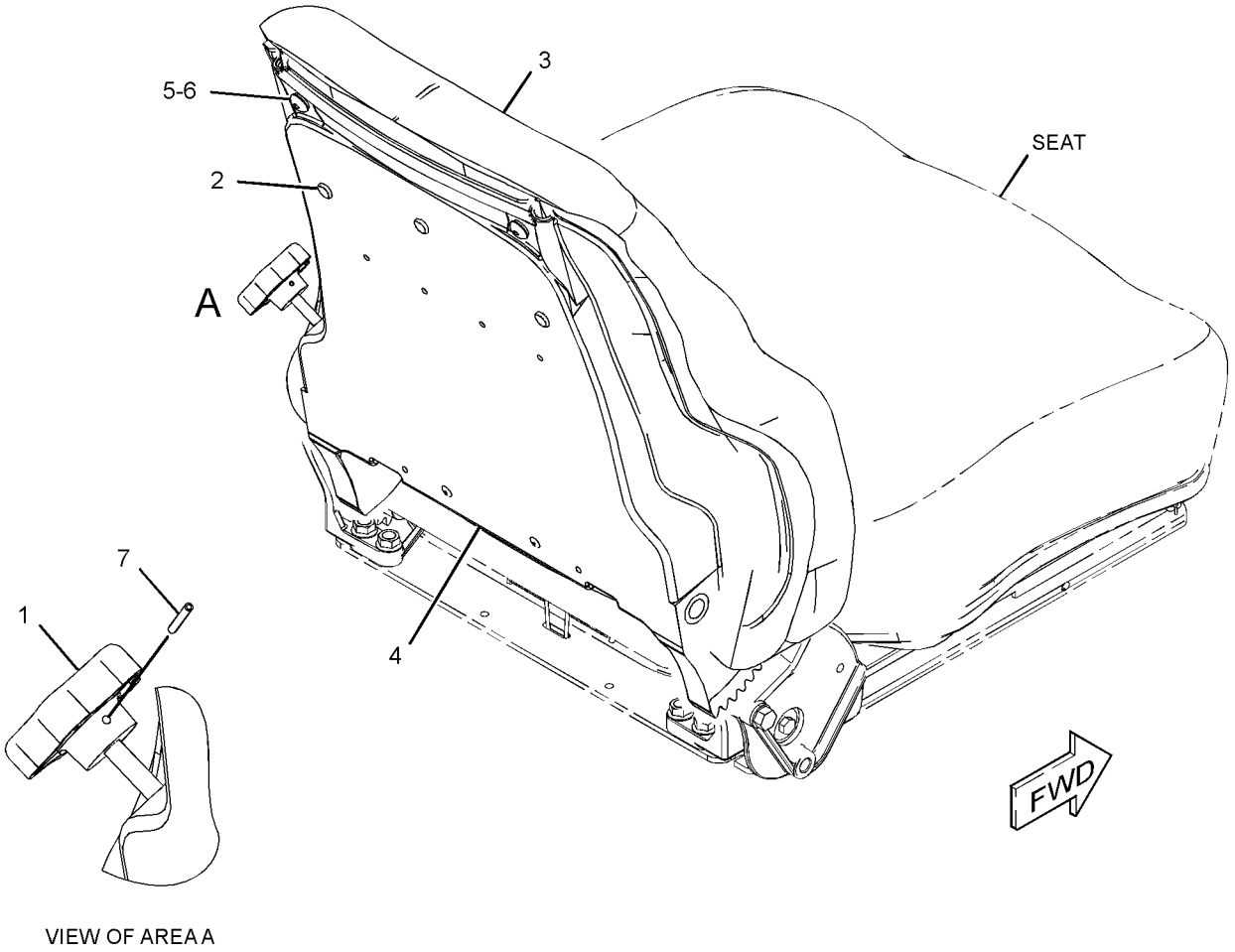

VIEW OF AREA A

GRAPHIC #1 **<END>** g01417150

OPERATOR STATION

8X-2385 PANEL GP-CAB—HIGH PROFILE

S/N: JAP1-UP
PART OF 320-0341 CAB AR, 320-0342 ROPS AR
AN ATTACHMENT

SMCS-7301 **i03484460**

NOTE	REF NO	GRAPHIC REF	PART NUMBER	QTY	PART NAME 1 2 3 4 5 6 (PRODUCT LEVEL)	SEE PAGE
	1	1	**115-6806**	2	GLASS (SIDE)	
	2	1	**8X-2228**	1	GLASS-FRONT	
D	3	1	**5P-5768**		SEAL (11.9-M)	
	4	1	**102-9372**	1	GLASS (REAR)	
	5	1	**149-3409**	2	GLASS (LOWER FRONT)	
E	6	1	**3E-9413**		SEAL (963-CM)	
	7	1	**166-2830**	1	FILM (SUN VISOR)	

D-ORDER BY THE METER
E-ORDER BY THE CENTIMETER

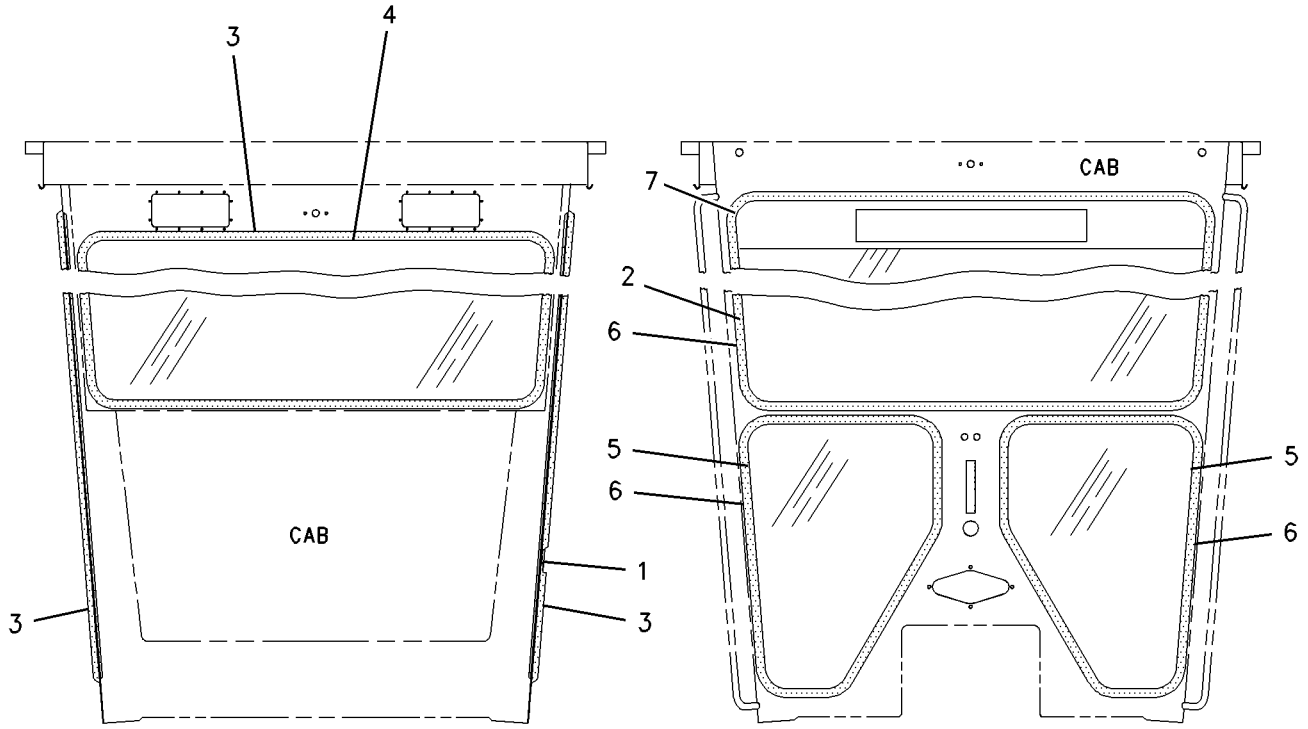

REAR VIEW FRONT VIEW

GRAPHIC #1 **<END>** g00693201

OPERATOR STATION

316-5237 PANEL GP-INSTRUMENT—ENCLOSED

S/N: JAP1-UP
PART OF 320-0341 CAB AR, 320-0342 ROPS AR
AN ATTACHMENT

SMCS-7450, 7451 **i03434760**

NOTE	REF NO	GRAPHIC REF	PART NUMBER	QTY	PART NAME 1 2 3 4 5 6 (PRODUCT LEVEL)	SEE PAGE
	1	1	**5D-0269**	2	ELBOW	
	2	1	**5K-7577**	2	HOSE AS	
	3	1	**9M-8662**	2	COUPLING	
	4	1	**107-1983**	4	LAMP (24-VOLT)	
	5	1	**115-1748**	11	LAMP (24-VOLT, 3-WATT)	
	6	1	**117-9966**	2	PLUG	
	7	1	**122-7045**	6	COVER	
	8	1	**122-8146**	2	PLATE AS	
					(EACH INCLUDES)	
M		1	**6V-9632**	2	NUT-WELD (M6X1-THD)	
	9	1	**196-4150**	1	PANEL	
	10	1	**202-1138**	4	ELBOW	
Y	11	1	**287-3260**	1	MODULE GP-QUAD GAUGE	586
	13	1	**288-5756**	1	FILM-PANEL (LH) (INSTRUMENT CLUSTER)	
	14	1	**288-5757**	1	FILM-PANEL (RH) (INSTRUMENT CLUSTER)	
	16	1	**304-6958**	2	GAUGE GP-AIR PRESSURE (BRAKE)	
					(EACH INCLUDES)	
		1	**4B-2049**	2	NUT (10-32-THD)	
		1	**8F-1434**	2	LOCKWASHER	
	17	1	**335-9387**	1	HARNESS AS-PANEL	
	18	1	**096-6166**	4	WASHER-HARD (4.5X9X1-MM THK)	
	19	1	**104-2091**	12	SCREW-FLAT HEAD (NO 6X0.5-IN)	
	20	1	**134-2540**	1	RESISTOR AS-CONNECTION (3-PIN)	
M	22	1	**213-7315**	4	SCREW-TRUSS HEAD (M4X0.7X25-MM)	
	23	1	**2H-3922**	2	LOCKWASHER	
	24	1	**310-1640**	1	FILM-IDENTIFICATION (HYDRAULIC SYSTEM MALFUNCTION) (INSTRUMENT CLUSTER)	
	25	1	**310-3568**	1	FILM-CONSOLE (BLANK) (INSTRUMENT CLUSTER)	
M	26	1	**3E-8020**	10	SCREW-TRUSS HEAD (M6X1X25-MM)	
M	27	1	**5C-8312**	4	NUT (M4X0.7-THD)	
	28	1	**9S-4968**	4	SLEEVE	
M	29	1	**9X-2043**	4	SCREW-TRUSS HEAD (M6X1X14-MM)	

M-METRIC PART
Y-SEPARATE ILLUSTRATION

316-5237 **PANEL GP-INSTRUMENT** *(contd.)* **i03434760**

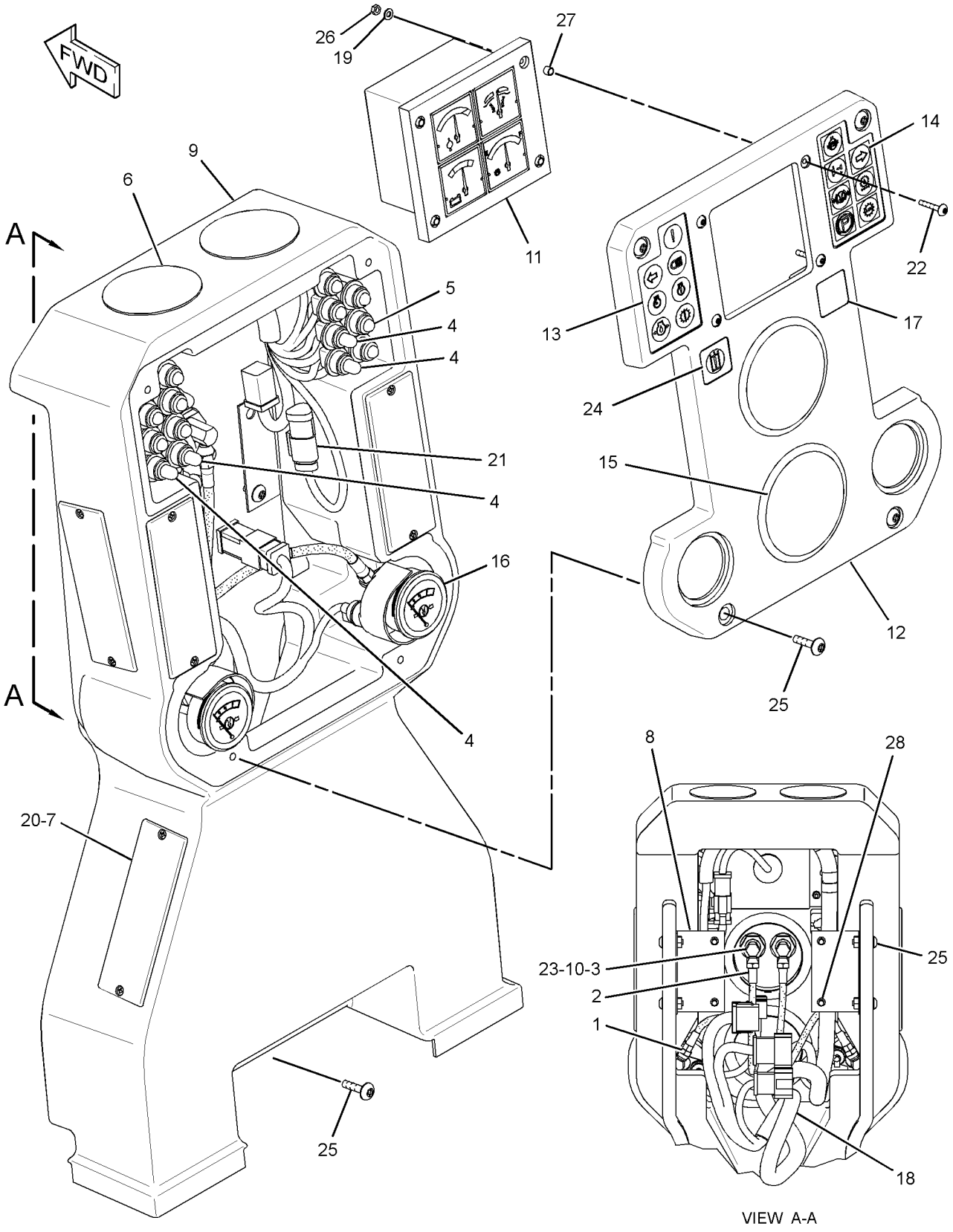

GRAPHIC #1 **<END>** g01786073

OPERATOR STATION

316-5238 PANEL GP-INSTRUMENT–OPEN

S/N: JAP1-UP

PART OF 348-3018 GENERAL AR

SMCS-7450, 7451 **i03636750**

NOTE	REF NO	GRAPHIC REF	PART NUMBER	QTY	PART NAME 1 2 3 4 5 6 (PRODUCT LEVEL)	SEE PAGE
	1	1	**5D-0269**	2	ELBOW	
	2	1	**107-1983**	4	LAMP (24-VOLT)	
	3	1	**115-1748**	10	LAMP (24-VOLT, 3-WATT)	
Y	4	1	**287-3260**	1	MODULE GP-QUAD GAUGE	586
	9	1	**304-6958**	2	GAUGE GP-AIR PRESSURE	
					(EACH INCLUDES)	
		1	**4B-2049**	2	NUT (10-32-THD)	
		1	**8F-1434**	2	LOCKWASHER	
	11	1	**335-9387**	1	HARNESS AS-PANEL	
	12	1	**096-6166**	4	WASHER-HARD (4.5X9X1-MM THK)	
	13	1	**134-2540**	1	RESISTOR AS-CONNECTION (3-PIN)	
M	14	1	**213-7315**	4	SCREW-TRUSS HEAD (M4X0.7X25-MM)	
M	16	1	**3E-8020**	4	SCREW-TRUSS HEAD (M6X1X25-MM)	
M	17	1	**5C-8312**	4	NUT (M4X0.7-THD)	
	18	1	**9S-4968**	4	SLEEVE	

M-METRIC PART
Y-SEPARATE ILLUSTRATION

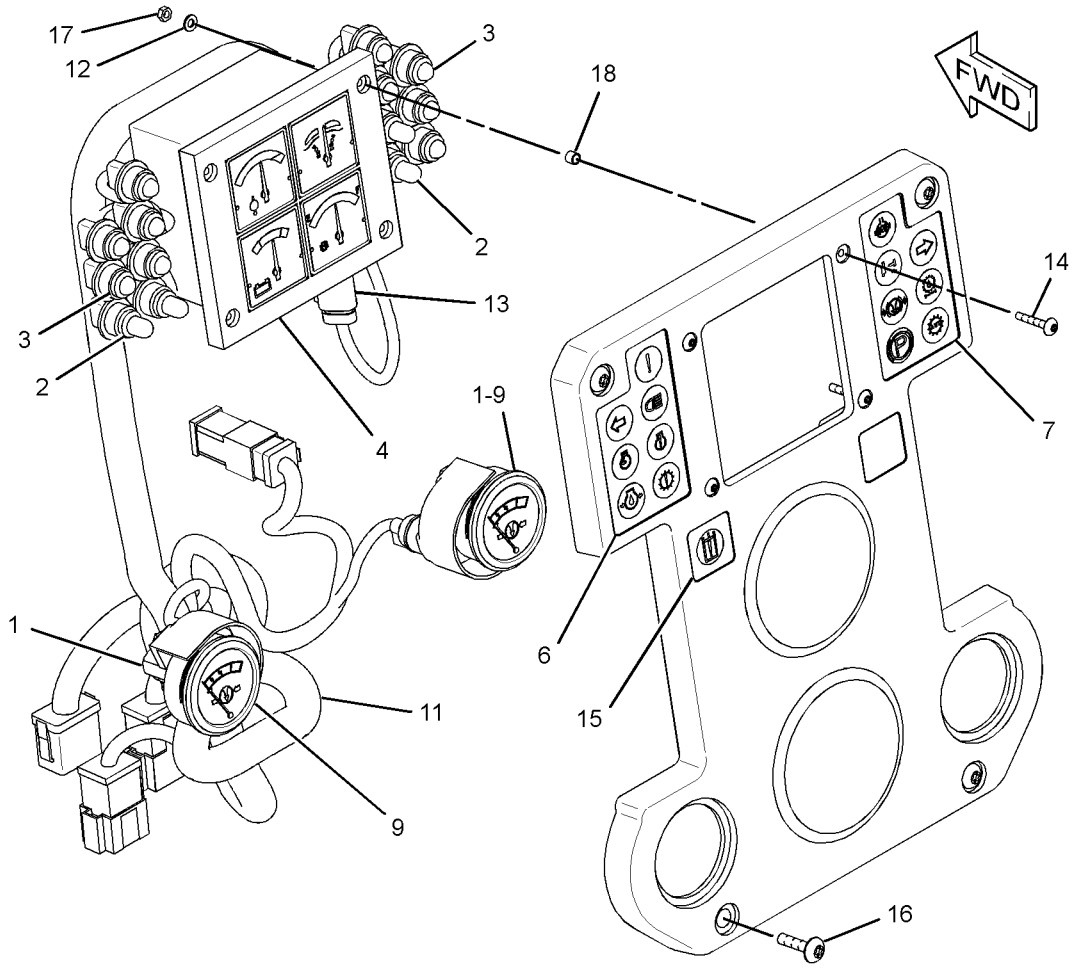

GRAPHIC #1 **<END>** g01846973

OPERATOR STATION

334-3346 PANEL GP-INSTRUMENT–OPEN

S/N: JAP1-UP
PART OF 334-7636 ROADING AR
AN ATTACHMENT

SMCS-7450, 7451 **i03539393**

NOTE	REF NO	GRAPHIC REF	PART NUMBER	QTY	PART NAME 1 2 3 4 5 6 (PRODUCT LEVEL)	SEE PAGE
	1	1	**5D-0269**	2	ELBOW	
	2	1	**107-1983**	4	LAMP (24-VOLT)	
	3	1	**115-1748**	11	LAMP (24-VOLT, 3-WATT)	
Y	4	1	**287-3260**	1	MODULE GP-QUAD GAUGE	586
	5	1	**9S-4968**	4	SLEEVE	
	6	1	**288-5756**	1	FILM-PANEL (LH)	
	7	1	**288-5757**	1	FILM-PANEL (RH)	
M	8	1	**5C-8312**	4	NUT (M4X0.7-THD)	
	9	1	**304-6958**	2	GAUGE GP-AIR PRESSURE	
		1	**4B-2049**	2	NUT (10-32-THD)	
		1	**8F-1434**	2	LOCKWASHER	
	10	1	**334-3347**	1	HARNESS AS-PANEL	
	11	1	**096-6166**	4	WASHER-HARD (4.5X9X1-MM THK)	
	12	1	**134-2540**	1	RESISTOR AS-CONNECTION (3-PIN)	
	13	1	**189-3158**	2	SUPPRESSOR-ARC	
M	14	1	**213-7315**	4	SCREW-TRUSS HEAD (M4X0.7X25-MM)	
	15	1	**310-1640**	1	FILM-IDENTIFICATION (HYDRAULIC SYSTEM MALFUNCTION)	
	16	1	**334-3741**	1	FILM-IDENTIFICATION (HAZARD WARNING LIGHTS)	
M	17	1	**3E-8020**	4	SCREW-TRUSS HEAD (M6X1X25-MM)	

M-METRIC PART
Y-SEPARATE ILLUSTRATION

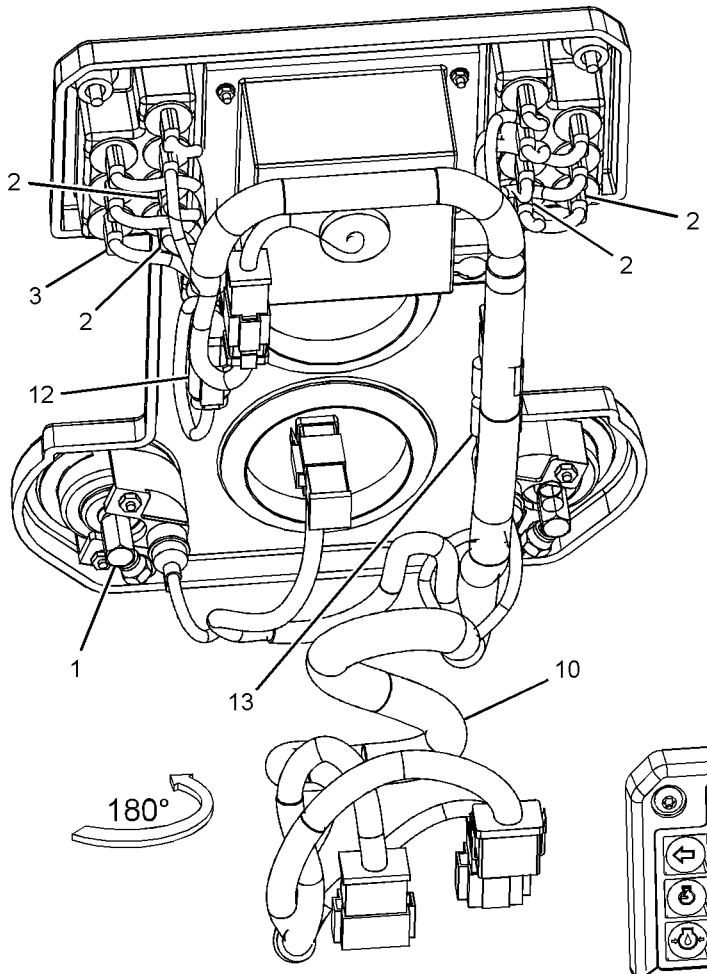

VIEW FROM OPERATOR'S SEAT

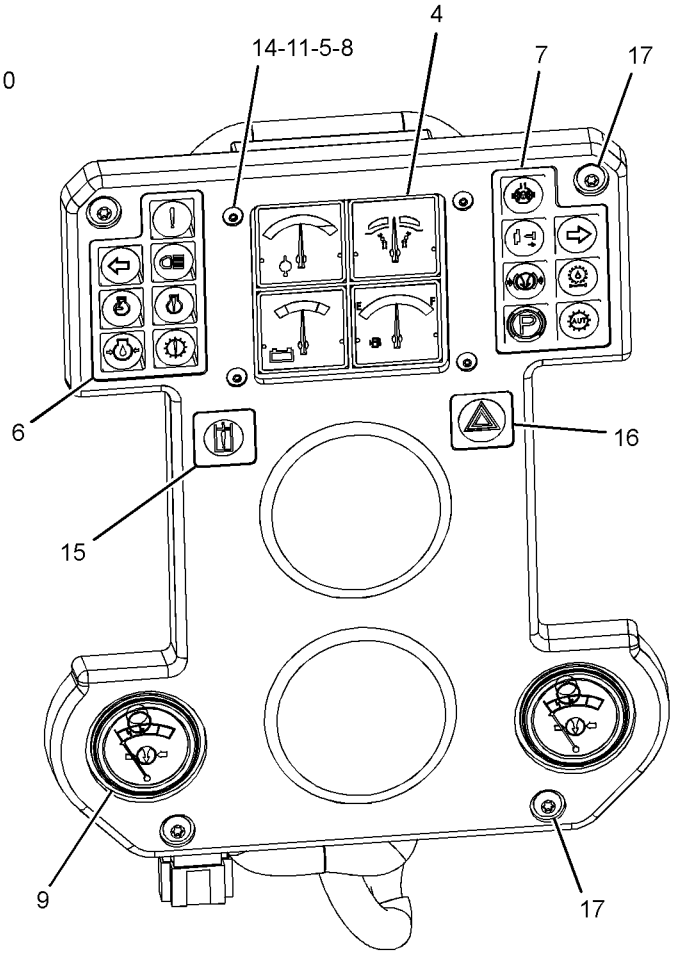

VIEW FROM OPERATOR'S SEAT

GRAPHIC #1 **<END>** g01890916

OPERATOR STATION

335-6989 PANEL GP-INSTRUMENT—ENCLOSED

S/N: JAP1-UP
PART OF 335-9267 ROADING AR
AN ATTACHMENT

SMCS-7450, 7451 **i03400540**

NOTE	REF NO	GRAPHIC REF	PART NUMBER	QTY	PART NAME 1 2 3 4 5 6 (PRODUCT LEVEL)	SEE PAGE
	1	1	**5D-0269**	2	ELBOW	
	2	1	**5K-7577**	2	HOSE AS	
	3	1	**9M-8662**	2	COUPLING	
	4	1	**107-1983**	4	LAMP (24-VOLT)	
	5	1	**115-1748**	11	LAMP (24-VOLT, 3-WATT)	
	6	1	**117-9966**	2	PLUG	
	7	1	**122-7045**	6	COVER	
	8	1	**122-8146**	2	PLATE AS	
					(EACH INCLUDES)	
M		1	**6V-9632**	2	NUT-WELD (M6X1-THD)	
	9	1	**196-4150**	1	PANEL	
	10	1	**202-1138**	4	ELBOW	
Y	11	1	**287-3260**	1	MODULE GP-QUAD GAUGE	586
	13	1	**288-5756**	1	FILM-PANEL (LH) (INSTRUMENT CLUSTER)	
	14	1	**288-5757**	1	FILM-PANEL (RH) (INSTRUMENT CLUSTER)	
	16	1	**304-6958**	2	GAUGE GP-AIR PRESSURE (BRAKE)	
					(EACH INCLUDES)	
		1	**4B-2049**	2	NUT (10-32-THD)	
		1	**8F-1434**	2	LOCKWASHER	
	17	1	**334-3347**	1	HARNESS AS-PANEL	
	18	1	**096-6166**	4	WASHER-HARD (4.5X9X1-MM THK)	
	19	1	**104-2091**	12	SCREW-FLAT HEAD (NO 6X0.5-IN)	
	20	1	**134-2540**	1	RESISTOR AS-CONNECTION (3-PIN)	
	21	1	**189-3158**	2	SUPPRESSOR-ARC	
M	22	1	**213-7315**	4	SCREW-TRUSS HEAD (M4X0.7X25-MM)	
	23	1	**2H-3922**	2	LOCKWASHER	
	24	1	**310-1640**	1	FILM-IDENTIFICATION (HYDRAULIC SYSTEM MALFUNCTION) (INSTRUMENT CLUSTER)	
	25	1	**334-3741**	1	FILM-IDENTIFICATION (HAZARD WARNING LIGHTS) (INSTRUMENT CLUSTER)	
M	26	1	**3E-8020**	10	SCREW-TRUSS HEAD (M6X1X25-MM)	
M	27	1	**5C-8312**	4	NUT (M4X0.7-THD)	
	28	1	**9S-4968**	4	SLEEVE	
M	29	1	**9X-2043**	4	SCREW-TRUSS HEAD (M6X1X14-MM)	

M-METRIC PART
Y-SEPARATE ILLUSTRATION

335-6989 **PANEL GP-INSTRUMENT** *(contd.)* **i03400540**

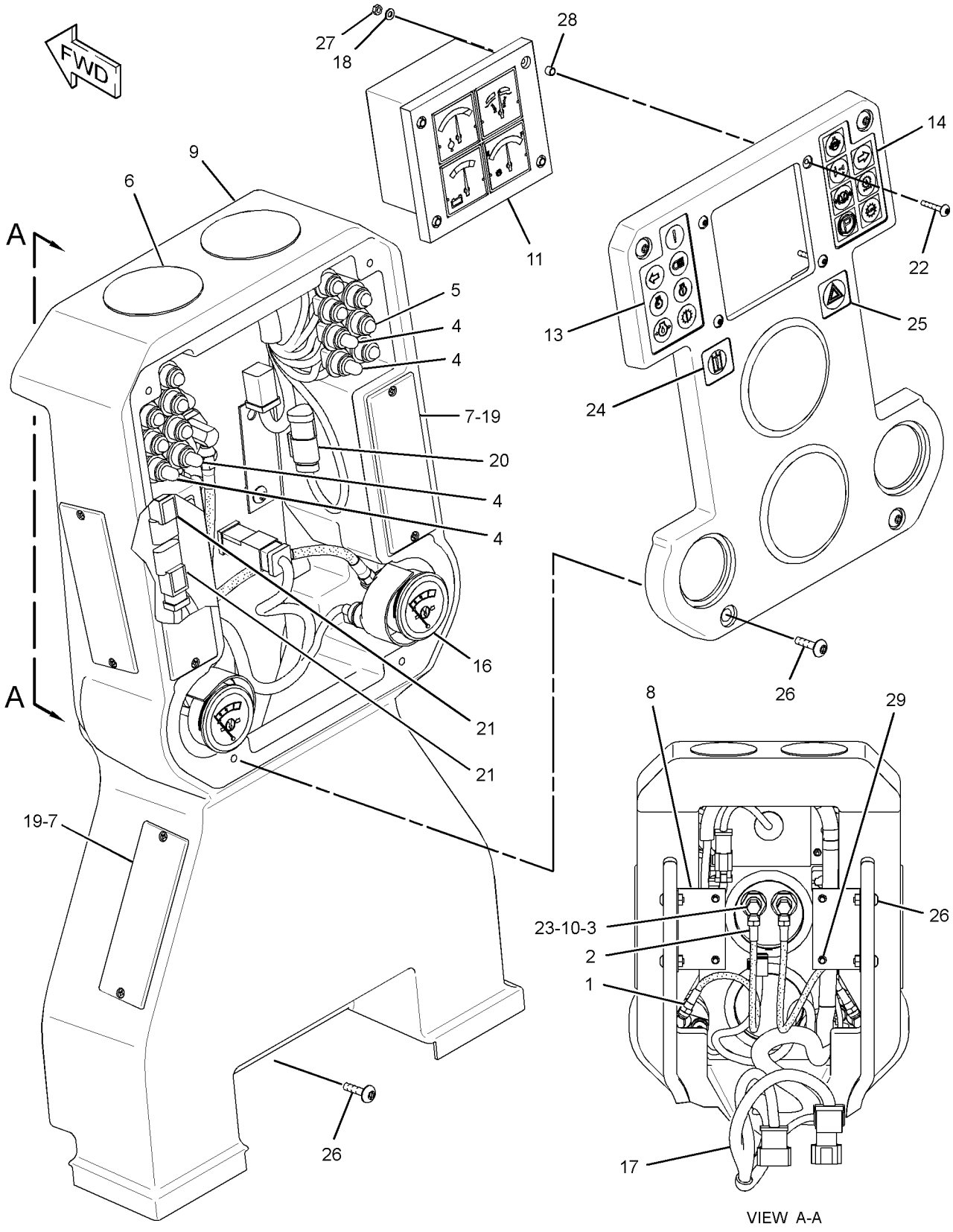

GRAPHIC #1 **<END>** g01771454

OPERATOR STATION

210-2270 RECLINER GP-SEAT

S/N: JAP1-UP
PART OF 301-4174 SEAT GP
AN ATTACHMENT

SMCS-7312 **i03643750**

NOTE	REF NO	GRAPHIC REF	PART NUMBER	QTY	PART NAME 1 2 3 4 5 6 (PRODUCT LEVEL)	SEE PAGE
	1	1	**177-1862**	1	BRACKET (SEAT BELT)	
	2	1	**210-2262**	1	BRACKET AS (LH)	
	3	1	**210-2263**	1	BRACKET AS (RH)	
	4	1	**210-2266**	1	GEAR-LOCK (14-TEETH)	
	5	1	**293-2911**	1	SHAFT AS	
		1	**2L-5893**	2	PIN-SPRING	
		1	**170-8590**	1	SPRING	
	6	1	**217-7933**	1	LATCH	
	7	1	**236-5197**	1	SPRING	
	8	1	**031-0214**	1	BOLT-LOCKING (1/4-20X0.5-IN)	
	9	1	**101-2867**	1	WASHER-HARD (7.2X25X2-MM THK)	
	10	1	**4M-6425**	1	BOLT (5/16-18X1-IN)	
	11	1	**5M-2894**	1	WASHER-HARD (10.2X18.5X2.5-MM THK)	
	12	1	**5S-7383**	1	BOLT (3/8-16X1.75-IN)	
	13	1	**8T-4224**	1	WASHER-HARD (8.8X16X2-MM THK)	

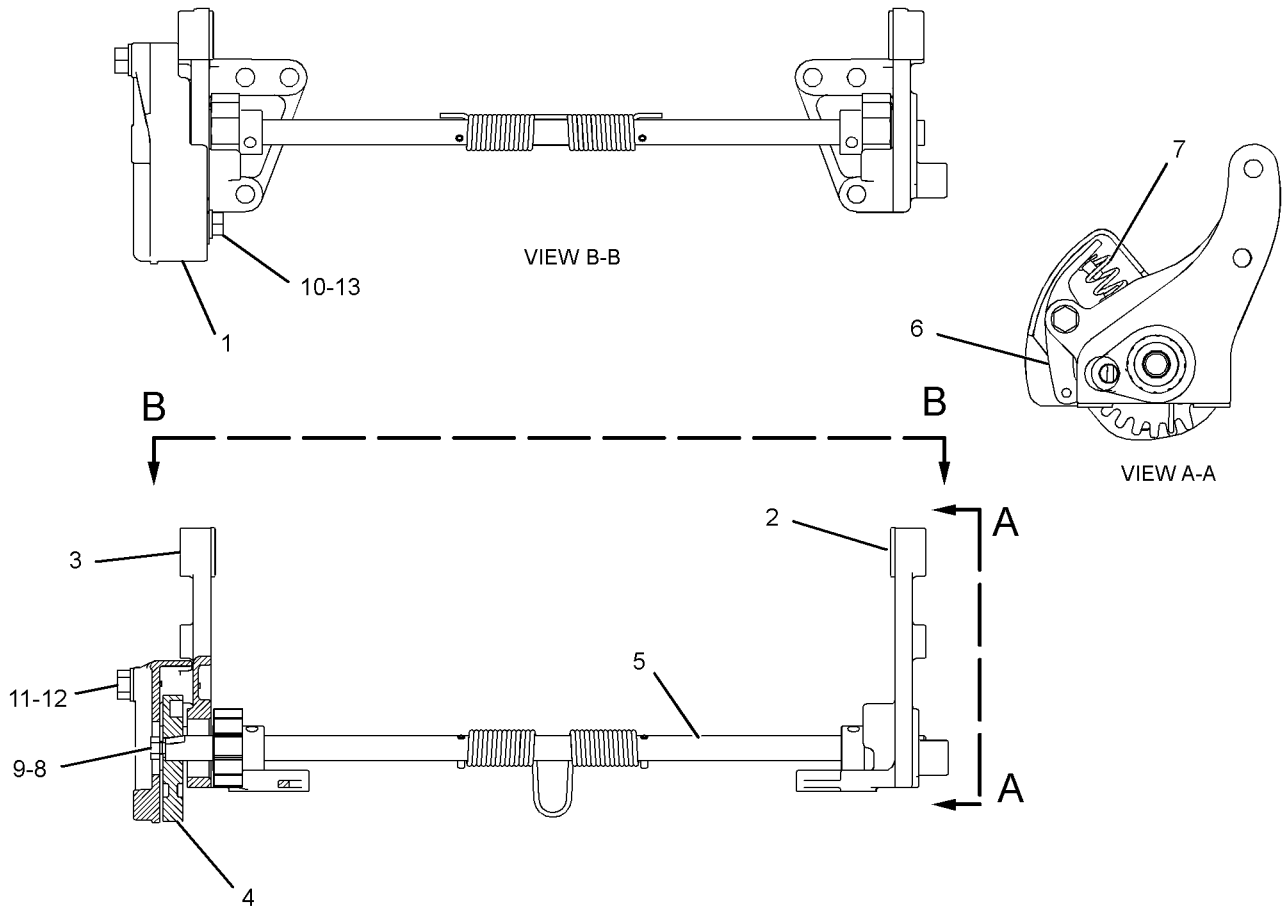

GRAPHIC #1 **<END>** g01296294

OPERATOR STATION

284-5400 ROPS AR—HIGH PROFILE, OPEN

S/N: JAP1-UP

AN ATTACHMENT

SMCS-7177, 7323 **i03643749**

NOTE	REF NO	GRAPHIC REF	PART NUMBER	QTY	PART NAME 1 2 3 4 5 6 (PRODUCT LEVEL)	SEE PAGE
Y	1	1	*284-5397*	1	ROPS GP (HIGH PROFILE, OPEN)	605
Y	2	1	*290-1148*	1	GUARD GP-PLATFORM	332

Y-SEPARATE ILLUSTRATION

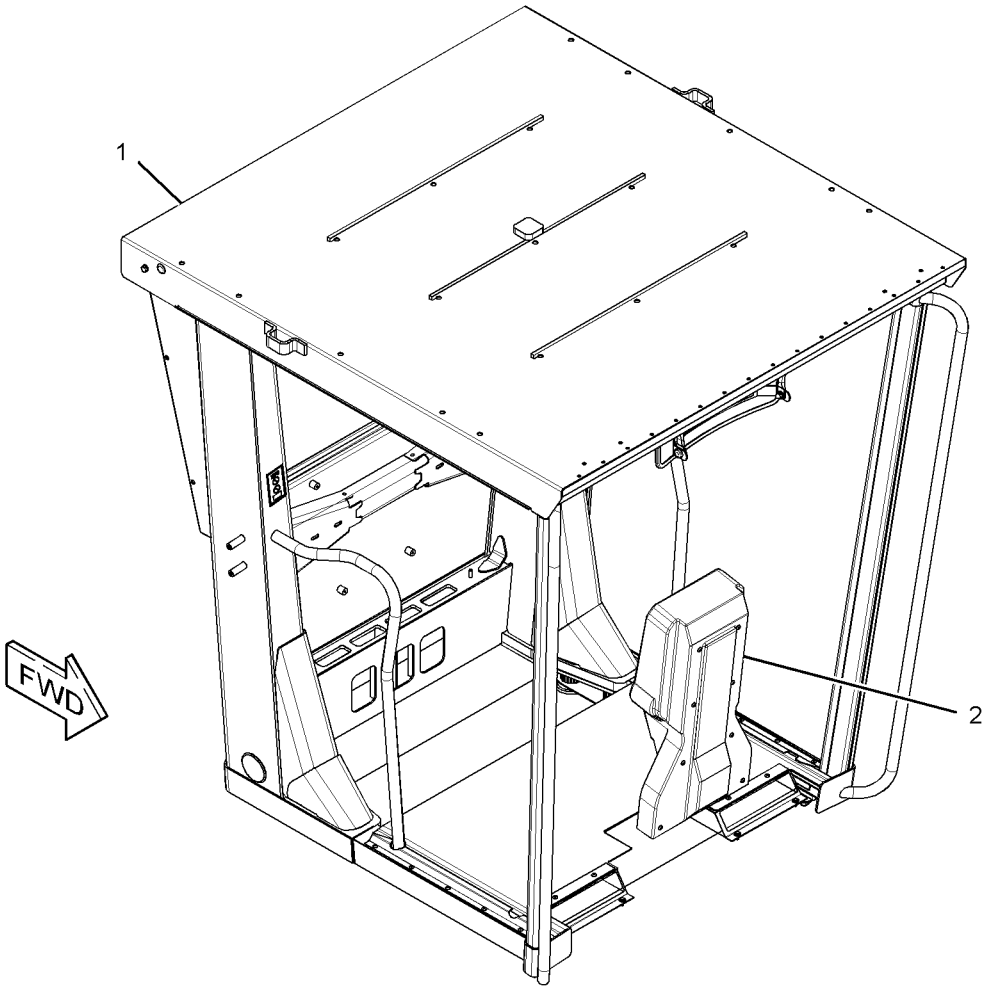

GRAPHIC #1 **<END>** g01664733

OPERATOR STATION

320-0342 ROPS AR—ENCLOSED, HIGH PROFILE

S/N: JAP1-UP

PART OF 348-6941, 348-6942 OPTION AR-CAB

AN ATTACHMENT

SMCS-7177, 7323 **i03641661**

NOTE	REF NO	GRAPHIC REF	PART NUMBER	QTY	PART NAME 1 2 3 4 5 6 (PRODUCT LEVEL)	SEE PAGE
Y	1	1	*2A-6985*	1	MOUNTING GP-ROPS (ENCLOSED)	590
Y	3	1	*8X-2385*	1	PANEL GP-CAB (HIGH PROFILE)	593
Y	4	1	*8X-9675*	1	WASHER GP-WINDOW (FRONT)	629
Y	5	1	*172-5378*	1	INSULATION GP-WEATHER	569
Y	6	1	*172-6831*	1	WIPER GP-WINDOW (FRONT) (HIGH PROFILE)	635
	7	1	**219-0302**	2	FILM-WARNING (NO WELD, NO DRILL, READ OMM)	
Y	8	1	*285-3361*	1	WIRING GP-CAB	200
Y	9	1	*290-0349*	1	ROPS GP (ENCLOSED)	607
Y	10	1	*316-5237*	1	PANEL GP-INSTRUMENT (ENCLOSED)	594
	11	1	**323-8857**	1	FILM-CERTIFICATION (OPS, READ OMM)	
Y	12	1	*337-7998*	1	LINER GP-CAB (ENCLOSED, HIGH PROFILE)	573

Y-SEPARATE ILLUSTRATION

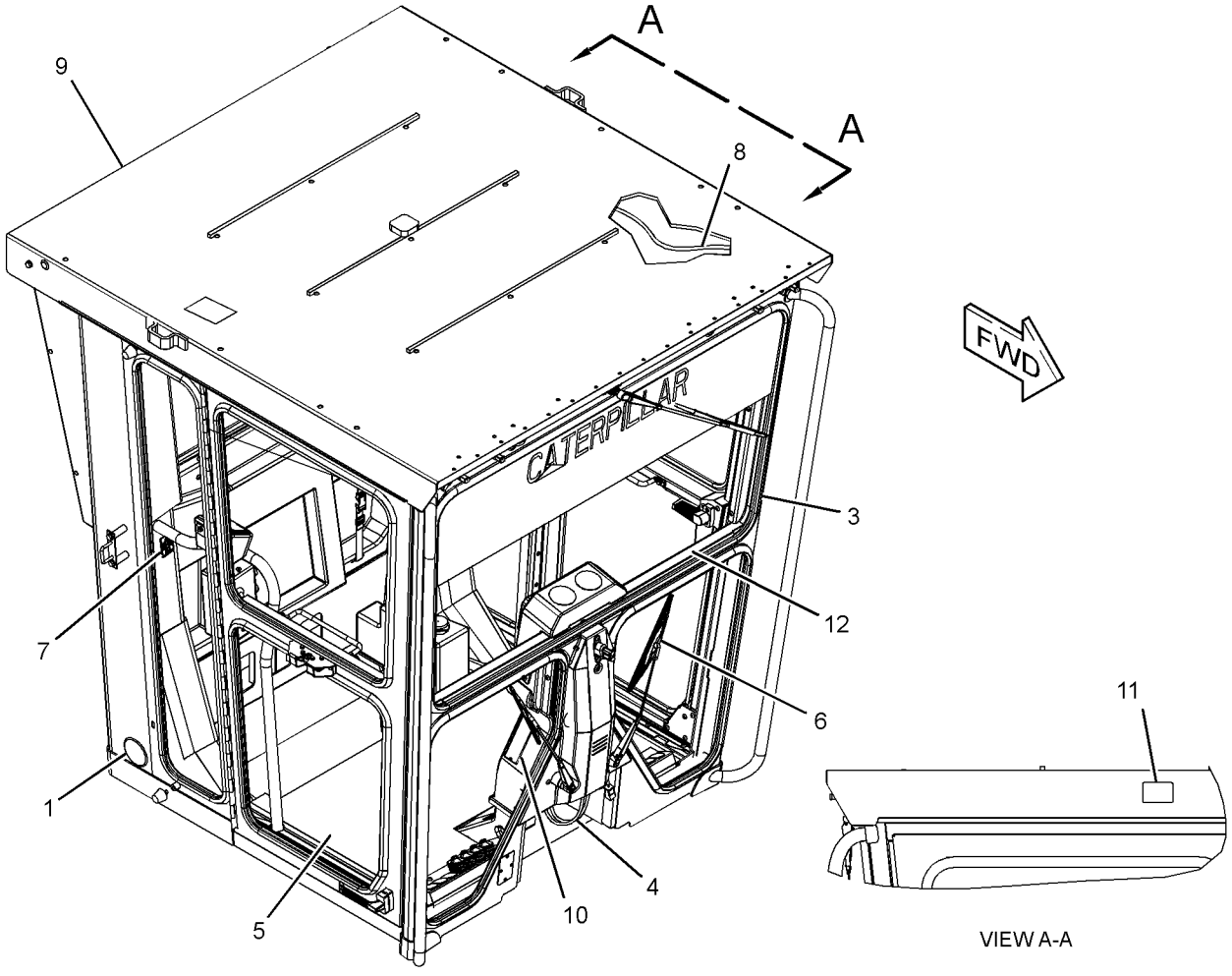

GRAPHIC #1 **<END>** g01936873

OPERATOR STATION

117-4698 ROPS GP—HIGH PROFILE, OPEN

S/N: JAP1-UP
PART OF 284-5397 ROPS GP
AN ATTACHMENT

SMCS-7177, 7323 **i03096184**

NOTE	PART NUMBER	QTY	PART NAME 1 2 3 4 5 6 (PRODUCT LEVEL)	SEE PAGE
	180-4656	1	PLATE GP-CERTIFICATION	
	4B-4158	4	SCREW-DRIVE (NO 4X0.25-IN)	
	156-6312	1	PLATE-WARNING (ROPS, FOPS, OPS, READ OMM)	

<END>

173-6756 ROPS GP—HIGH PROFILE

S/N: JAP1-UP
PART OF 290-0349 ROPS GP
AN ATTACHMENT

SMCS-7177, 7323 **i03192986**

NOTE	PART NUMBER	QTY	PART NAME 1 2 3 4 5 6 (PRODUCT LEVEL)	SEE PAGE
	180-4656	1	PLATE GP-CERTIFICATION	
	156-6312	1	PLATE-WARNING (ROPS, FOPS, OPS, READ OMM)	
			(ON LH SIDE OF ROOF PANEL)	
	4B-4158	4	SCREW-DRIVE (NO 4X0.25-IN)	

<END>

OPERATOR STATION

284-5397 ROPS GP—HIGH PROFILE, OPEN

S/N: JAP1-UP
PART OF 284-5400 ROPS AR
AN ATTACHMENT

SMCS-7177, 7323 **i03682145**

NOTE	REF NO	GRAPHIC REF	PART NUMBER	QTY	PART NAME 1 2 3 4 5 6 (PRODUCT LEVEL)	SEE PAGE
	1	1	**3E-4048**	2	CAP-PLUG	
	2	1	**3G-3265**	24	RIVET	
	3	1	**144-4107**	9	FASTENER	
	5	1	**5P-7803**	2	PLUG-BUTTON	
	6	1	**6G-2395**	2	DOOR GP (AIR VENTED)	
					(EACH INCLUDES)	
		1	**6G-7222**	2	ROLLER	
	7	1	**6G-2396**	2	GASKET	
	8	1	**6V-3928**	4	PLUG-BUTTON	
Y	9	1	**8X-2795**	1	MIRROR GP-REAR VIEW (INSIDE)	582
	10	1	**9D-1589**	2	MOUNTING	
	11	1	**102-9372**	1	GLASS (REAR)	
	12	1	**103-4771**	2	PIN AS	
	13	1	**103-4953**	4	MOUNTING	
	14	1	**103-5515**	1	PAD-RH	
	15	1	**103-5516**	1	PAD-LH	
Y	16	1	**117-4698**	1	ROPS GP (HIGH PROFILE, OPEN)	604
	17	1	**164-2465**	2	PAD	
B	18	1	**166-1997**	2	SHIM (1.2-MM THK)	
B	19	1	**166-1999**	2	SHIM (2.28-MM THK)	
	20	1	**219-0302**	2	FILM-WARNING (NO WELD, NO DRILL, READ OMM)	
	21	1	**323-8857**	1	FILM-CERTIFICATION (OPS, READ OMM)	
	22	1	**030-8535**	2	BOLT-LOCKING (3/8-16X0.875-IN)	
	23	1	**3V-9244**	2	WASHER (16.5X50X5-MM THK)	
	24	1	**4K-0367**	2	NUT-FULL (5/8-11-THD)	
	25	1	**7X-0354**	2	BOLT (5/8-11X4.5-IN)	
	26	1	**7X-0375**	4	BOLT (3/4-10X5-IN)	
	27	1	**8T-4122**	4	WASHER-HARD (17X32X3.5-MM THK)	
	28	1	**8T-4896**	2	WASHER-HARD (10.2X18.5X2.5-MM THK)	
	29	1	**8X-0674**	4	WASHER (22X100X10-MM THK)	
D	30	1	**5P-5768**		SEAL (4.3-M)	

B-USE AS REQUIRED
D-ORDER BY THE METER
Y-SEPARATE ILLUSTRATION

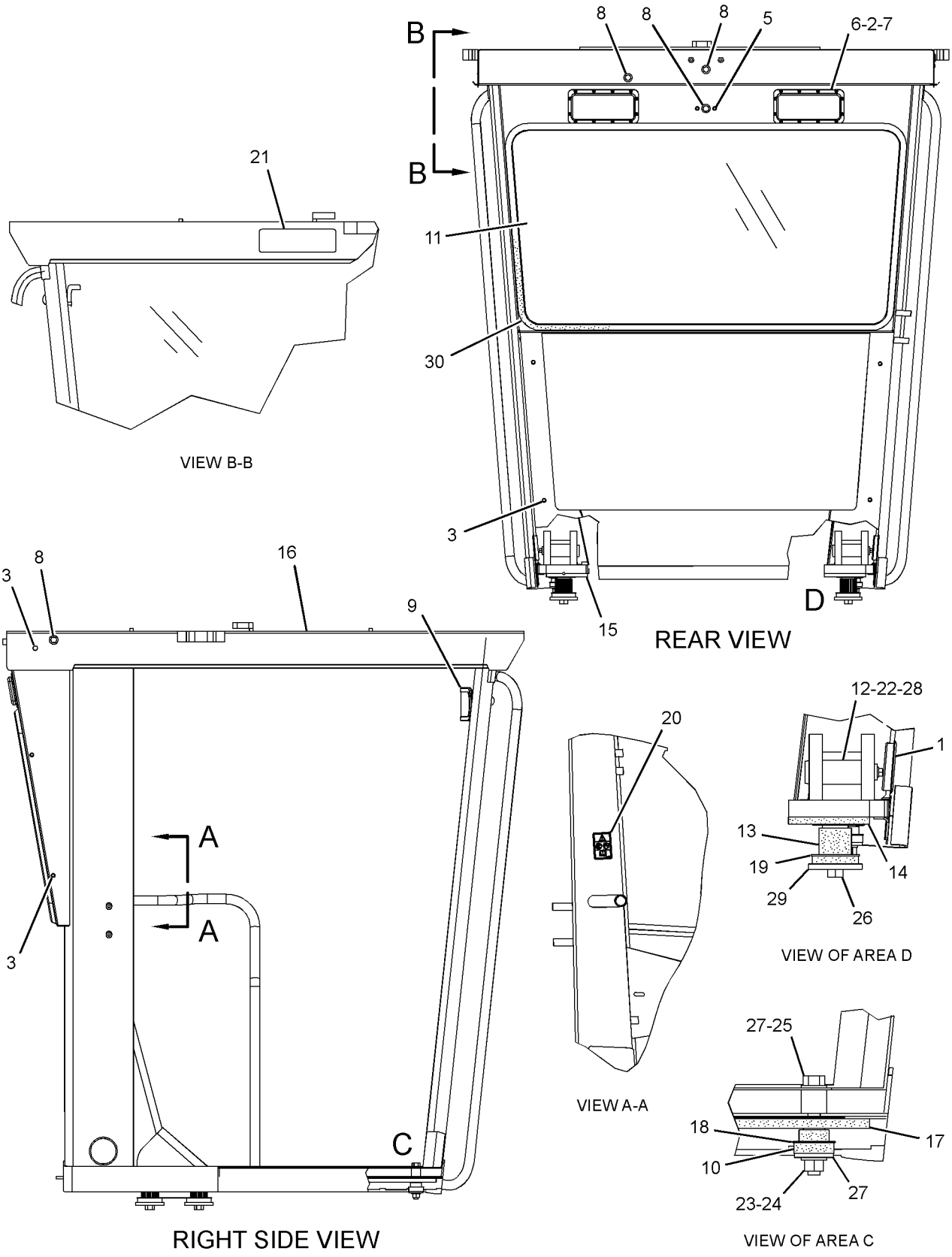

GRAPHIC #1 **<END>** g01940735

OPERATOR STATION

290-0349 ROPS GP–ENCLOSED

S/N: JAP1-UP
PART OF 320-0342 ROPS AR
AN ATTACHMENT

SMCS-7177, 7323 **i03641793**

NOTE	REF NO	GRAPHIC REF	PART NUMBER	QTY	PART NAME 1 2 3 4 5 6 (PRODUCT LEVEL)	SEE PAGE
Y	1	1	*8X-4413*	1	DOOR GP-CAB (HIGH PROFILE)	553
Y	2	1	**173-6756**	1	ROPS GP (HIGH PROFILE)	604

Y-SEPARATE ILLUSTRATION

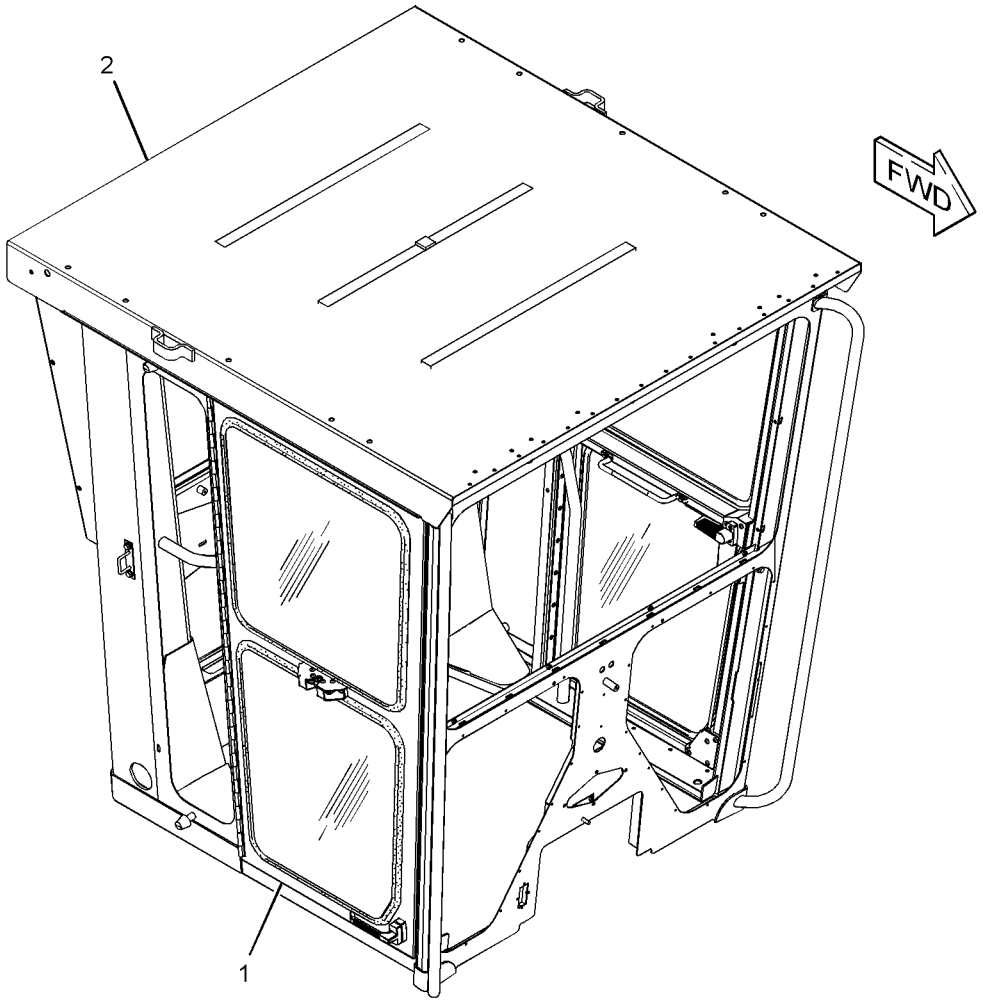

GRAPHIC #1 **<END>** g01763834

OPERATOR STATION

139-4612 SCREEN GP-SUN–REAR

S/N: JAP1-UP
PART OF 339-4968 OPTION AR-CAB
AN ATTACHMENT

SMCS-7165 **i02200406**

NOTE	REF NO	GRAPHIC REF	PART NUMBER	QTY	PART NAME 1 2 3 4 5 6 (PRODUCT LEVEL)	SEE PAGE
BJ	1	1	**6V-5164**		SEAL	
	2	1	**137-5503**	1	SCREEN GP-SUN	
	3	1	**139-4605**	1	PLATE AS	
M		1	**6V-9632**	4	NUT-WELD (M6X1-THD)	
M	4	1	**5C-9553**	4	BOLT (M6X1X16-MM)	
	5	1	**9X-8256**	4	WASHER (6.6X12X2-MM THK)	

B-USE AS REQUIRED
J-SOLD BY THE DECIMETER
M-METRIC PART

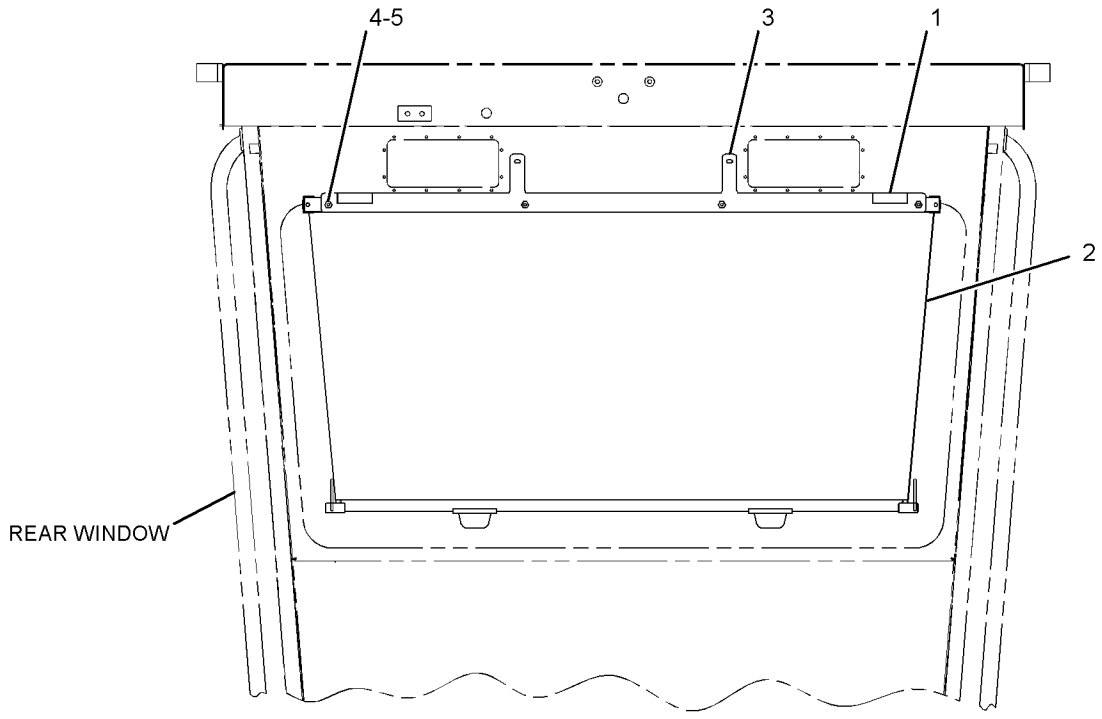

REAR VIEW

GRAPHIC #1 **<END>** g01070840

OPERATOR STATION

116-1965 SEAT BELT GP–RETRACTABLE

S/N: JAP1-UP
PART OF 126-2747 SEAT GP
AN ATTACHMENT

SMCS-7327 **i03182243**

NOTE	REF NO	GRAPHIC REF	PART NUMBER	QTY	PART NAME 1 2 3 4 5 6 (PRODUCT LEVEL)	SEE PAGE
	1	1	**1A-4350**	1	BOLT (7/16-20X1.75-IN)	
	2	1	**4D-6432**	1	LOCKNUT (7/16-20-THD)	
	3	1	**8S-0934**	2	LOCKNUT-FLANGE (7/16-20-THD)	
	4	1	**8T-9381**	1	BOLT (7/16-20X1-IN)	

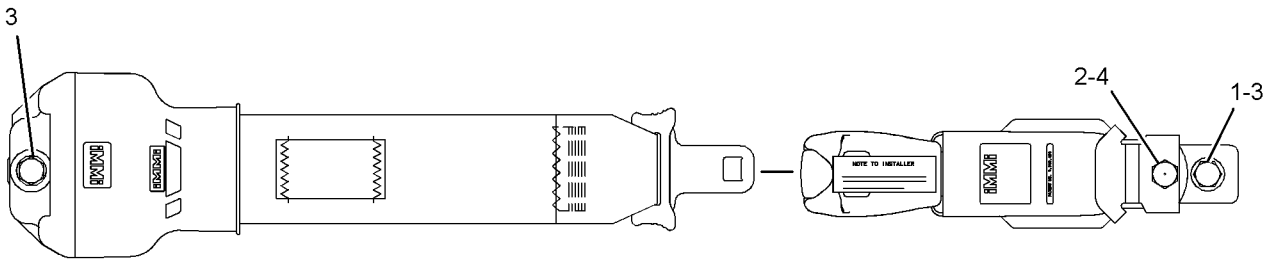

GRAPHIC #1 **<END>** g01286454

OPERATOR STATION

222-0345 SEAT BELT GP–RETRACTABLE

S/N: JAP1-UP
PART OF 175-1504 SEAT GP
AN ATTACHMENT

SMCS-7327 **i02947636**

NOTE	REF NO	GRAPHIC REF	PART NUMBER	QTY	PART NAME 1 2 3 4 5 6 (PRODUCT LEVEL)	SEE PAGE
					(NO SERVICED PARTS)	

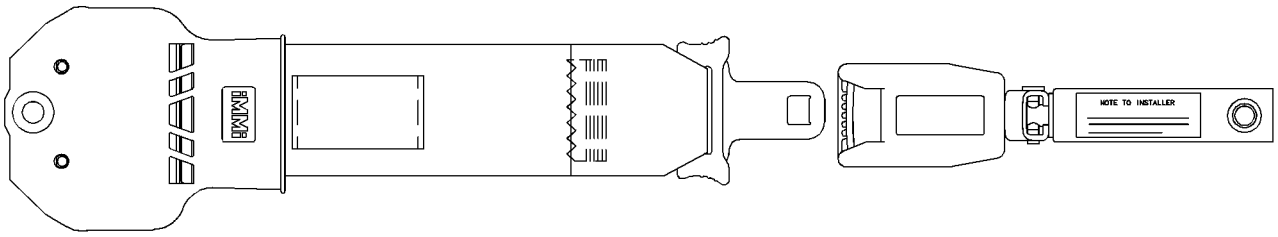

GRAPHIC #1 **<END>** g01196135

OPERATOR STATION

8Y-4005 SEAT GP—VINYL

S/N: JAP1-UP
PART OF 8Y-6852 SEAT GP-STATIC
AN ATTACHMENT

SMCS-7312 **i02845646**

NOTE	REF NO	GRAPHIC REF	PART NUMBER	QTY	PART NAME 1 2 3 4 5 6 (PRODUCT LEVEL)	SEE PAGE
BE	1	1	**7X-7877**		STRIP-EDGING	
	2	1	**8R-2057**	1	CUSHION AS-SEAT	
	3	1	**8R-2054**	1	CUSHION AS-BACK	
	4	1	**6W-1895**	1	BAR	
	5	1	**6W-1890**	1	BAR AS	
	6	1	**9C-1587**	1	LEVER	
	7	1	**8T-9043**	4	BOLT (5/16-18X0.875-IN)	
	8	1	**033-4843**	4	NUT (5/16-18-THD)	
	9	1	**6W-9693**	2	ADJUSTER AS	
	10	1	**6W-2373**	1	SPRING	
	11	1	**119-0036**	4	SCREW-FLAT HEAD (5/16-18X0.875-IN)	
	12	1	**9V-7437**	1	SHELL AS	
	13	1	**9S-2544**	4	SCREW-HEX HEAD (8-32X11.13-MM)	
	14	1	**6W-5757**	1	CLIP	
	15	1	**6W-3309**	1	HOLDER	
	16	1	**8T-7565**	7	RIVET-POP	
	17	1	**5P-7957**	1	LANYARD	
	18	1	**6W-5740**	1	CAP	
	19	1	**5B-6172**	4	WASHER (9.7X19X0.8-MM THK)	
	20	1	**7X-7739**	4	WASHER (9.7X25.4 X4-MM THK)	

B-USE AS REQUIRED
E-ORDER BY THE CENTIMETER

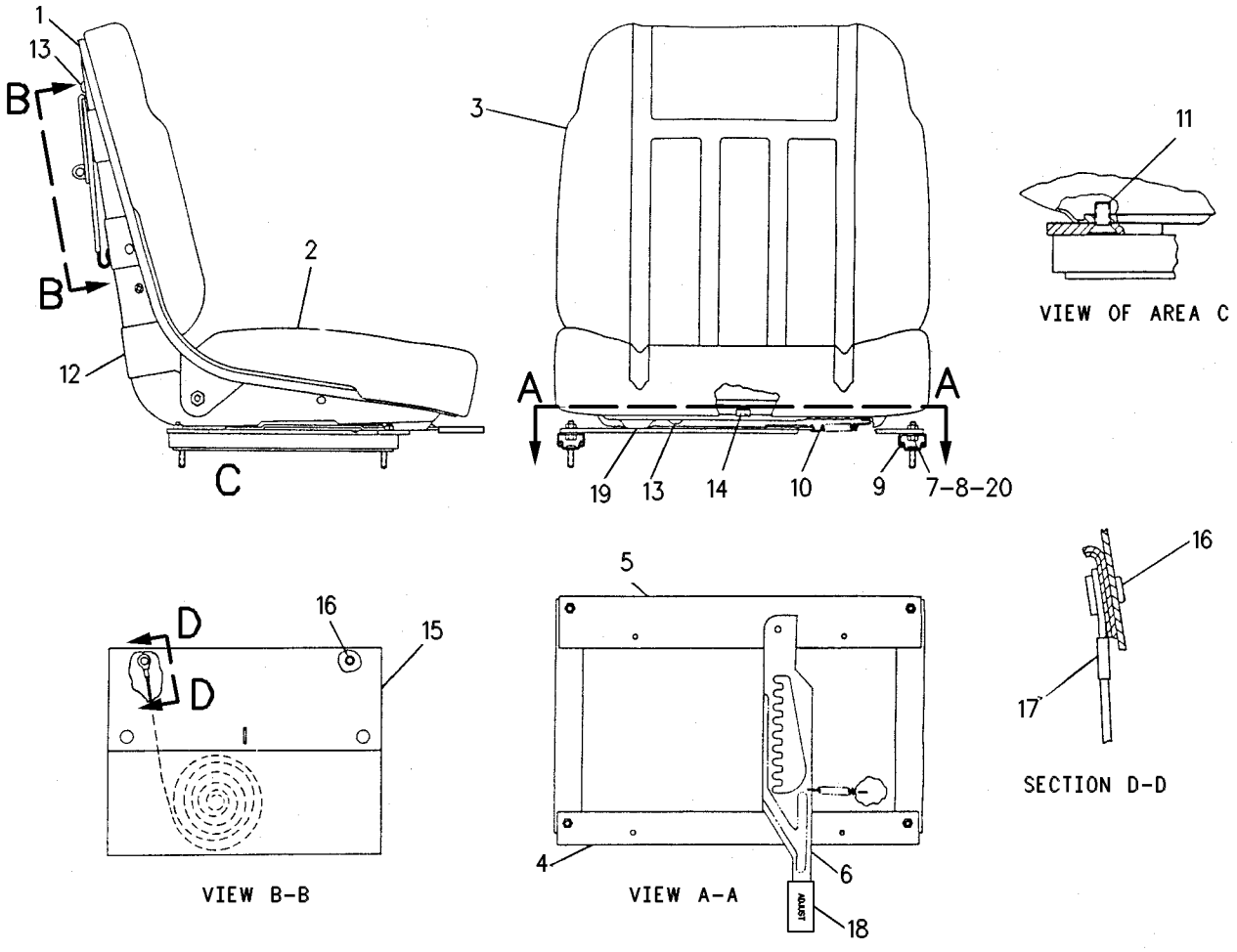

GRAPHIC #1 **<END>** g00109668

OPERATOR STATION

113-4254 SEAT GP–VINYL

S/N: JAP1-UP

PART OF 348-3018 GENERAL AR

SMCS-7312 **i03469942**

NOTE	PART NUMBER	QTY	PART NAME 1 2 3 4 5 6 (PRODUCT LEVEL)	SEE PAGE
	246-2641	1	PADLOCK GP	
	5P-8500	1	KEY	
	8Y-4030	1	SEAT BELT GP (ADJUSTABLE, 3-IN)	
Y	*125-9856*	1	SEAT GP-STATIC	621
M	**9X-2041**	6	SCREW-TRUSS HEAD (M10X1.5X20-MM)	

M-METRIC PART
Y-SEPARATE ILLUSTRATION

<END>

OPERATOR STATION

125-9855 SEAT GP

S/N: JAP1-UP

PART OF 125-9856 SEAT GP-STATIC

SMCS-7312 **i00131050**

NOTE	REF NO	GRAPHIC REF	PART NUMBER	QTY	PART NAME 1 2 3 4 5 6 (PRODUCT LEVEL)	SEE PAGE
	1	1	**6W-5757**	1	CLIP	
	2	1	**1F-1599**	2	RIVET-HEAD	
	3	1	**9V-8788**	1	ROD	
	4	1	**8V-3208**	1	LEVER	
	5	1	**8R-2054**	1	CUSHION AS-BACK	
	6	1	**8R-2057**	1	CUSHION AS-SEAT	
	7	1	**033-4121**	4	BOLT (5/16-18X0.625-IN)	
	8	1	**9V-7437**	1	SHELL AS	
		1	**9V-7440**	4	NUT-WELD	
BE	9	1	**7X-7877**		STRIP-EDGING	
	10	1	**9S-2544**	4	SCREW-HEX HEAD (8-32X11.13-MM)	
	11	1	**6W-3309**	1	HOLDER	
	12	1	**8T-7565**	7	RIVET-POP	
	13	1	**5P-7957**	1	LANYARD	
	14	1	**9V-8789**	2	ADJUSTER AS	

B-USE AS REQUIRED
E-ORDER BY THE CENTIMETER

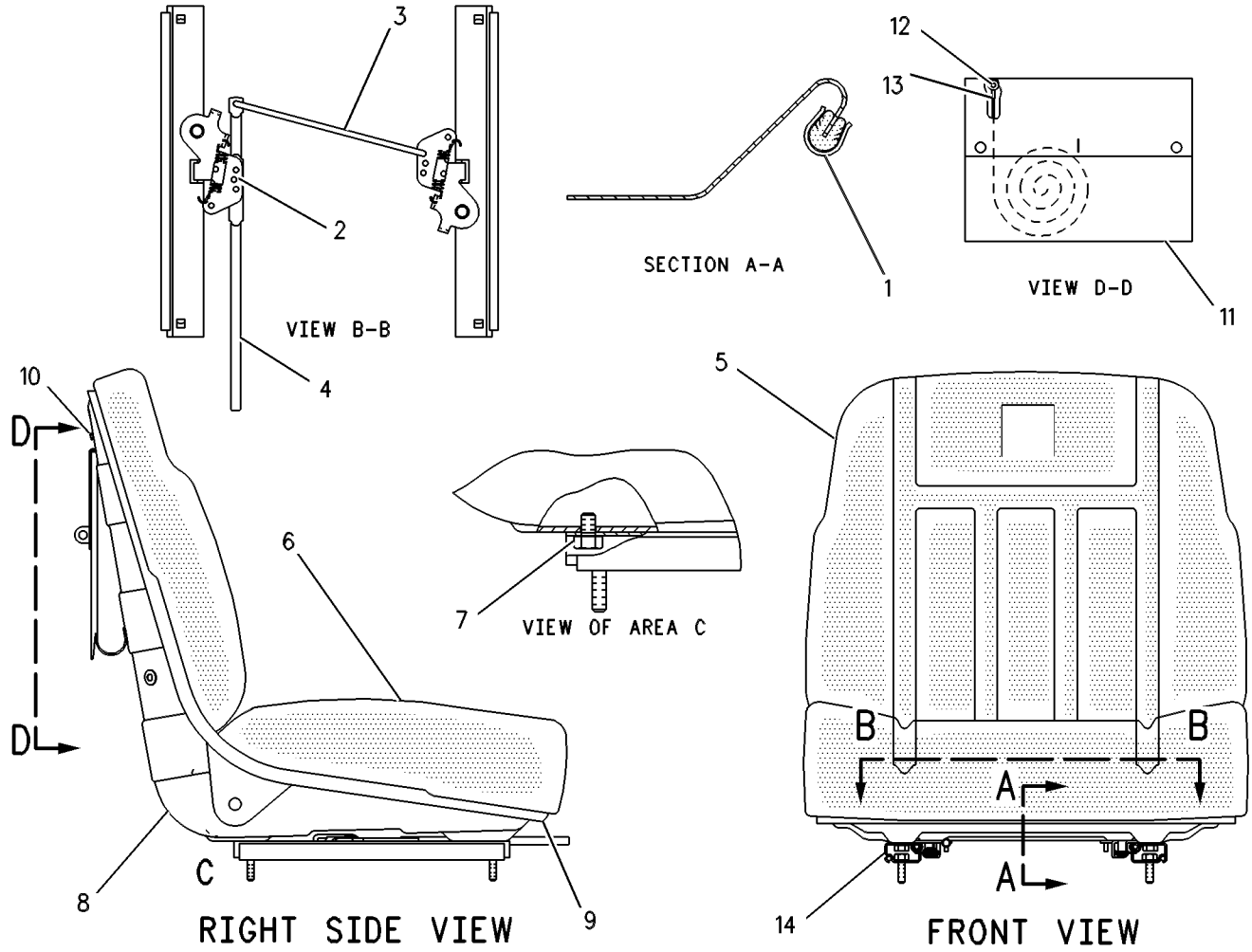

GRAPHIC #1 **<END>** g00109164

OPERATOR STATION

126-2747 SEAT GP—VINYL

S/N: JAP1-UP
PART OF 348-6940, 348-6941, 348-6942 OPTION AR-CAB
AN ATTACHMENT

SMCS-7312 **i03480373**

NOTE	PART NUMBER	QTY	PART NAME 1 2 3 4 5 6 (PRODUCT LEVEL)	SEE PAGE
	246-2641	1	PADLOCK GP	
A	**5P-8500**	1	KEY	
M	**9X-2041**	6	SCREW-TRUSS HEAD (M10X1.5X20-MM)	
Y	**116-1965**	1	SEAT BELT GP (RETRACTABLE)	609
Y	**8Y-6852**	1	SEAT GP-STATIC (VINYL)	619

A-NOT PART OF THIS GROUP
M-METRIC PART
Y-SEPARATE ILLUSTRATION

<END>

OPERATOR STATION

175-1504 SEAT GP–CLOTH

S/N: JAP1-UP
PART OF 302-8814 SEAT GP-SUSPENSION
AN ATTACHMENT

SMCS-7312 **i02947579**

NOTE	REF NO	GRAPHIC REF	PART NUMBER	QTY	PART NAME 1 2 3 4 5 6 (PRODUCT LEVEL)	SEE PAGE
	1	1	**173-3084**	1	EXTENSION GP-BACKREST	
	2	1	**177-4937**	1	SPACER (11.7X19.8X20.3-MM THK)	
Y	3	1	**202-7666**	1	ARMREST GP (RH)	533
Y	4	1	**202-7668**	1	ARMREST GP (LH)	534
Y	5	1	**222-0345**	1	SEAT BELT GP (RETRACTABLE)	610
Y	6	1	**301-4174**	1	SEAT GP (CLOTH)	617
	7	1	**0T-0244**	1	BOLT (7/16-20X1.25-IN)	
	8	1	**205-6388**	1	BOLT (7/16-20X1.75-IN)	

Y-SEPARATE ILLUSTRATION

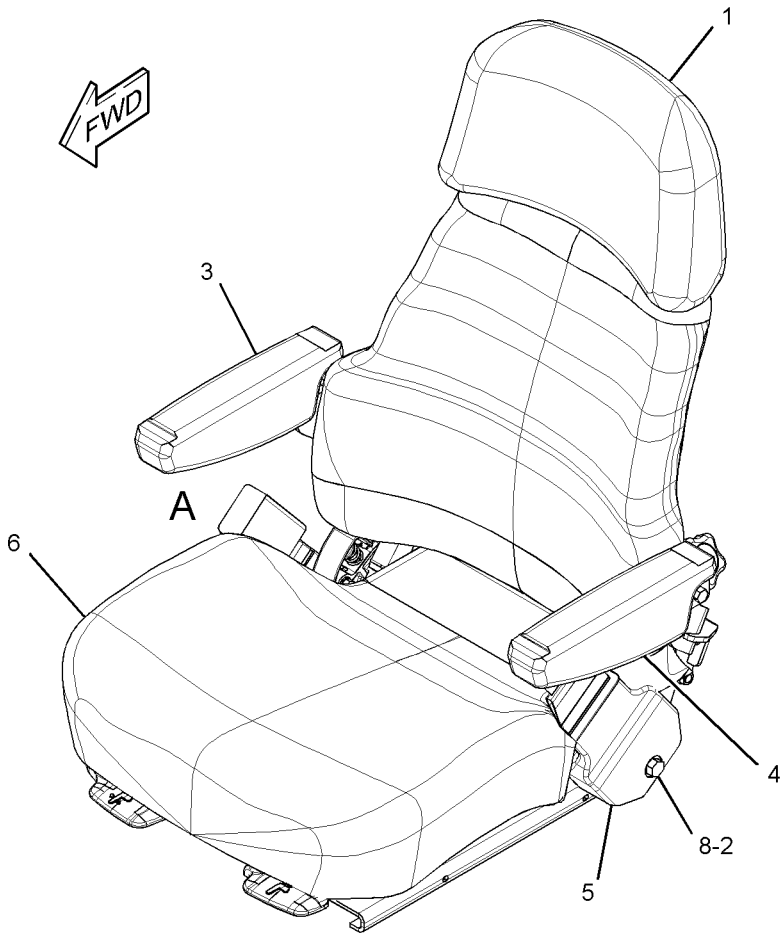

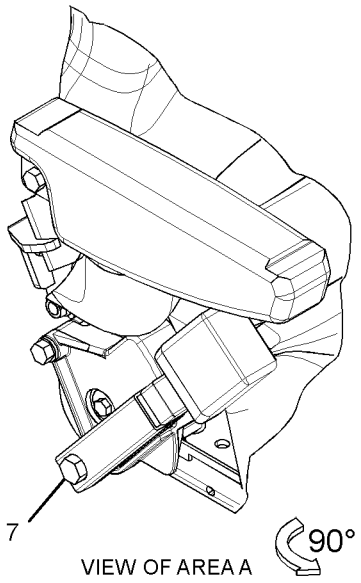

GRAPHIC #1 **<END>** g01415163

OPERATOR STATION

301-4174 SEAT GP–CLOTH

S/N: JAP1-UP
PART OF 175-1504 SEAT GP
AN ATTACHMENT

SMCS-7312 **i02947637**

NOTE	REF NO	GRAPHIC REF	PART NUMBER	QTY	PART NAME 1 2 3 4 5 6 (PRODUCT LEVEL)	SEE PAGE
	1	1	**143-1288**	8	LOCKNUT-FLANGE (3/8-16-THD)	
	2	1	**171-1230**	6	SCREW-BUTTON HEAD (3/8-16X1-IN)	
	3	1	**171-6682**	1	BAR	
	4	1	**172-2416**	2	PIN	
	5	1	**172-6581**	1	PAN AS	
		1	**6K-3273**	5	RIVET-POP	
		1	**169-1025**	1	CUSHION AS	
Y	6	1	*173-1028*	1	ADJUSTER GP-SEAT	527
	7	1	**177-1863**	2	BOLT-PIVOT (3/8-16X2.89-IN)	
	8	1	**184-2298**	1	ROD	
	9	1	**184-2299**	4	WASHER (7X25.4X2.54-MM THK)	
Y	10	1	*210-2270*	1	RECLINER GP-SEAT	601
	11	1	**294-5042**	2	SPACER (11.1X19.5X9.67-MM THK)	
Y	12	1	*301-4173*	1	PAN GP-BACKREST	592
	13	1	**095-0843**	2	PIN-COTTER	
	14	1	**5V-1496**	2	RETAINER	
	15	1	**6V-7646**	2	WASHER-HARD (7.2X25X2-MM THK)	
	16	1	**8T-0328**	1	WASHER-HARD (5.5X10X1-MM THK)	
	17	1	**8T-4205**	1	WASHER-HARD (7.2X14.5X2-MM THK)	

Y-SEPARATE ILLUSTRATION

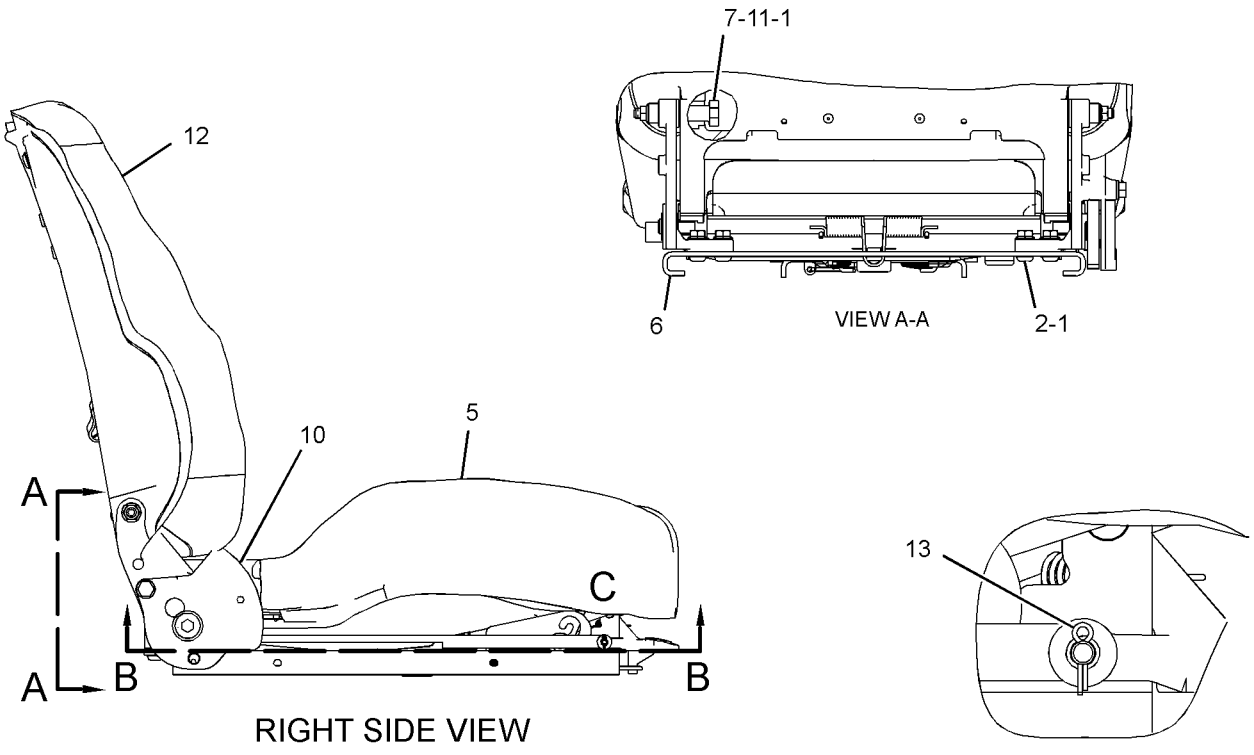

GRAPHIC #1 **<END>** g01416932

OPERATOR STATION

8Y-6852 SEAT GP-STATIC—VINYL

S/N: JAP1-UP
PART OF 126-2747 SEAT GP
AN ATTACHMENT

SMCS-7312 **i03682147**

NOTE	REF NO	GRAPHIC REF	PART NUMBER	QTY	PART NAME 1 2 3 4 5 6 (PRODUCT LEVEL)	SEE PAGE
Y	1	1	**116-2779**	1	ADJUSTER GP-SEAT	524
Y	2	1	**8Y-4005**	1	SEAT GP (VINYL)	611
	3	1	**9L-9814**	4	LOCKNUT	
	4	1	**8S-4790**	2	SPACER (0.459X0.625X0.25-IN THK)	
	5	1	**119-6194**	1	BOOT AS	
	6	1	**089-7968**	2	WASHER (13X27.5X2.5-MM THK)	
	7	1	**8R-4519**	2	LOCKNUT (7/16-20-THD)	
	8	1	**6W-3628**	2	CABLE	
	9	1	**5M-2894**	4	WASHER-HARD (10.2X18.5X2.5-MM THK)	
	10	1	**9V-7446**	1	ARMREST AS (RH)	
		1	**2K-4973**	1	LOCKNUT (3/8-16-THD)	
		1	**2K-6061**	1	SCREW-MACHINE (3/8-16X1.5-IN)	
		1	**5S-7383**	1	BOLT (3/8-16X1.75-IN)	
		1	**8Y-6277**	2	SPACER (10.5X28.6X10-MM THK)	
		1	**9V-7447**	1	PAD AS	
		1	**1F-0750**	1	NUT-WELD (3/8-16-THD)	
		1	**9V-7453**	1	BRACKET (RH)	
	11	1	**9V-7454**	1	ARMREST AS (LH)	
		1	**2K-4973**	1	LOCKNUT (3/8-16-THD)	
		1	**2K-6061**	1	SCREW-MACHINE (3/8-16X1.5-IN)	
		1	**5S-7383**	1	BOLT (3/8-16X1.75-IN)	
		1	**8Y-6277**	2	SPACER (10.5X28.6X10-MM THK)	
		1	**9V-7447**	1	PAD AS	
		1	**1F-0750**	1	NUT-WELD (3/8-16-THD)	
		1	**9V-7458**	1	BRACKET (LH)	
	12	1	**8T-9381**	2	BOLT (7/16-20X1-IN)	
M	13	1	**9X-8276**	4	BOLT (3/8-16X0.75-IN)	

M-METRIC PART
Y-SEPARATE ILLUSTRATION

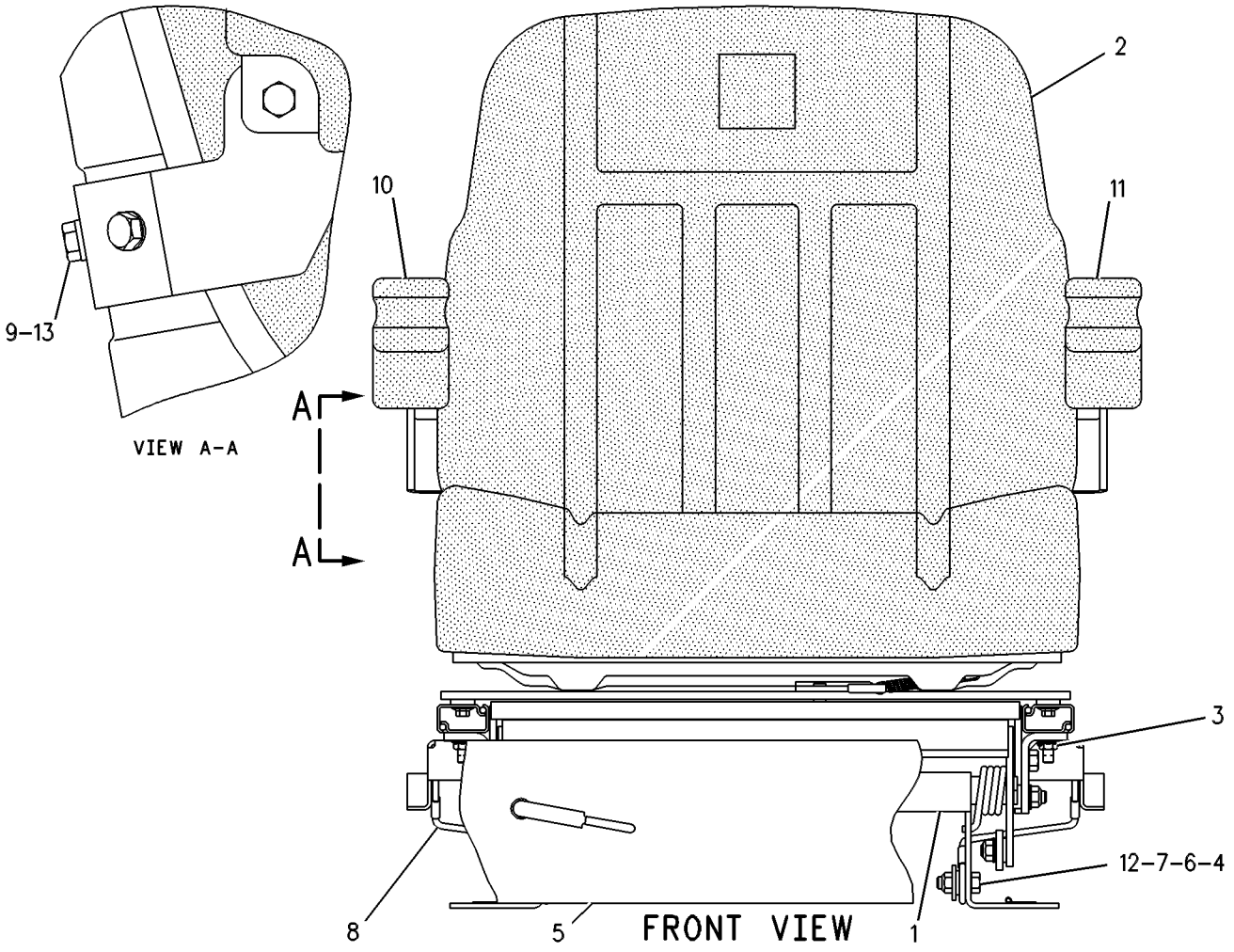

GRAPHIC #1 **<END>** g00109321

OPERATOR STATION

125-9856 SEAT GP-STATIC

S/N: JAP1-UP

PART OF 113-4254 SEAT GP

SMCS-7312 **i00131056**

NOTE	REF NO	GRAPHIC REF	PART NUMBER	QTY	PART NAME 1 2 3 4 5 6 (PRODUCT LEVEL)	SEE PAGE
Y	1	1	**125-9855**	1	SEAT GP	614
Y	2	1	**125-9854**	1	ADJUSTER GP-SEAT	526
	3	1	**031-4155**	4	LOCKNUT (5/16-18 THD)	
	4	1	**8T-4224**	4	WASHER-HARD (2MM THK)	

Y-SEPARATE ILLUSTRATION

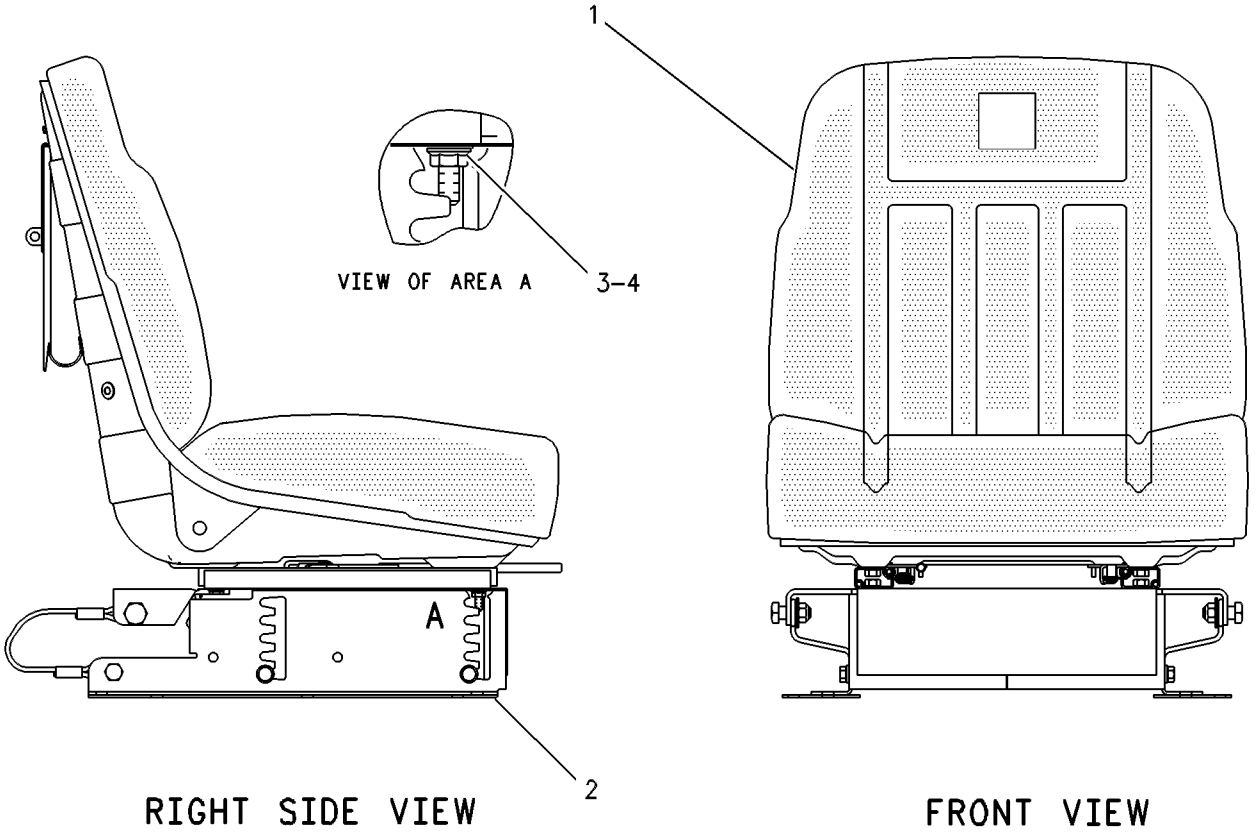

GRAPHIC #1 **<END>** g00109154

OPERATOR STATION

302-8814 SEAT GP-SUSPENSION—CLOTH

S/N: JAP1-UP
PART OF 322-8548 SEAT GP-SUSPENSION
AN ATTACHMENT

SMCS-7312 **i02946650**

NOTE	REF NO	GRAPHIC REF	PART NUMBER	QTY	PART NAME 1 2 3 4 5 6 (PRODUCT LEVEL)	SEE PAGE
J	1	1	**161-9289**	4	BLOCK-SLIDER	
J	2	1	**173-5787**	4	SETSCREW (1/4-20-THD)	
Y	3	1	**175-1504**	1	SEAT GP (CLOTH)	616
J	4	1	**203-7703**	2	WASHER-HARD (10.2X22.22X2.38-MM THK)	
Y	5	1	**302-7458**	1	SUSPENSION GP-SEAT	626
J	6	1	**4F-4879**	1	BOLT (3/8-16X0.5-IN)	
					AVAILABLE REPAIR KIT(S):	
J			**173-7035**	1	KIT-SLIDER BLOCK (SUSPENSION SEAT)	
					(INCLUDES BOLT, BLOCK-SLIDERS, SETSCREWS, & WASHERS)	

J-(KIT MARKED J SERVICES PART(S) MARKED J)
Y-SEPARATE ILLUSTRATION

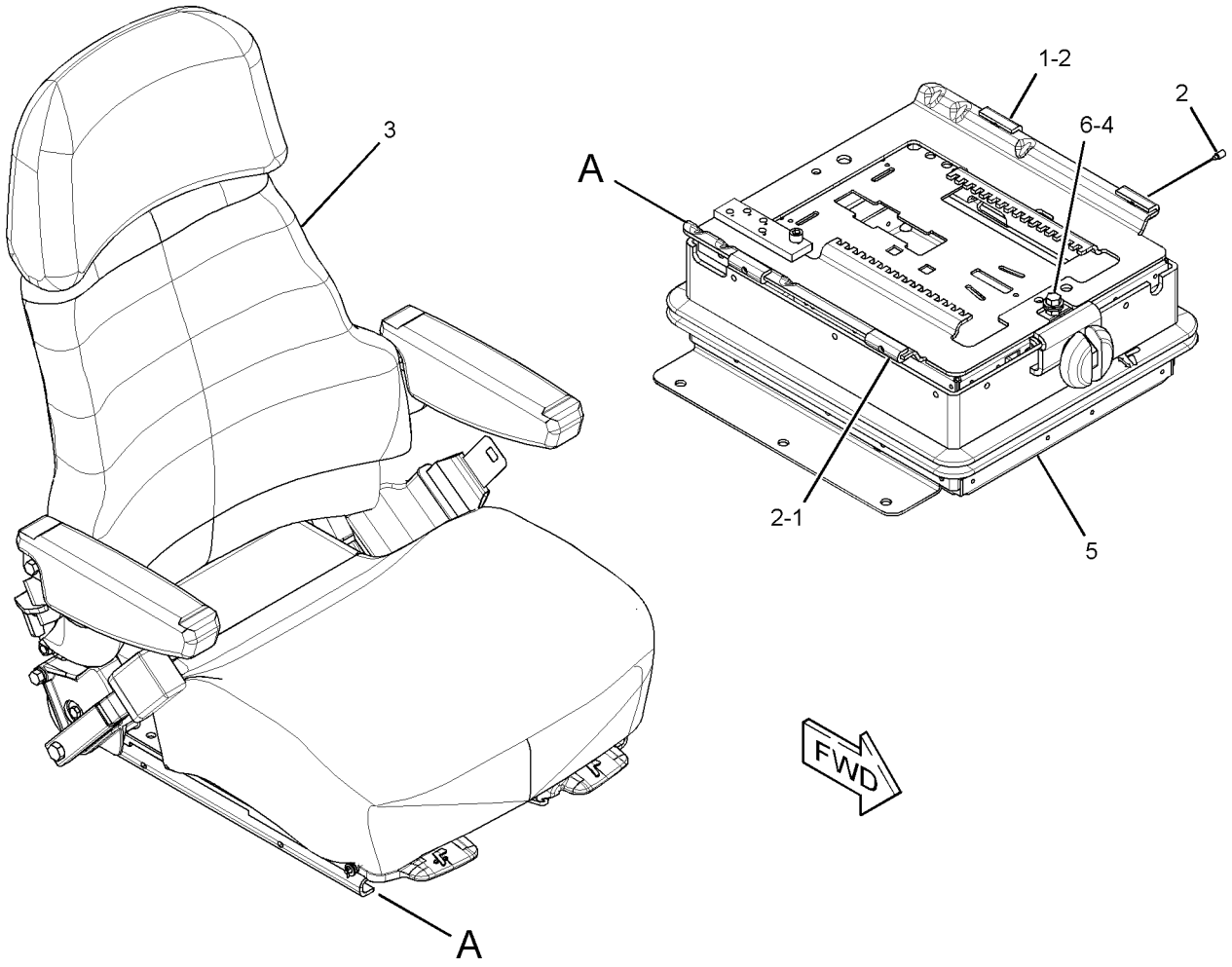

GRAPHIC #1 **<END>** g01451371

322-8548 SEAT GP-SUSPENSION—CLOTH

S/N: JAP1-UP

AN ATTACHMENT

SMCS-7312 **i03641797**

NOTE	REF NO	GRAPHIC REF	PART NUMBER	QTY	PART NAME 1 2 3 4 5 6 (PRODUCT LEVEL)	SEE PAGE
	1	1	**5P-7957**	1	LANYARD	
	2	1	**9M-5732**	4	RIVET-POP	
	3	1	**173-2052**	1	RETAINER	
	4	1	**178-7907**	1	HOLDER	
Y	5	1	**302-8814**	1	SEAT GP-SUSPENSION (CLOTH)	622
	6	1	**4B-4863**	4	WASHER (4.7X11X1.2-MM THK)	
M	7	1	**9X-2041**	6	SCREW-TRUSS HEAD (M10X1.5X20-MM)	

M-METRIC PART
Y-SEPARATE ILLUSTRATION

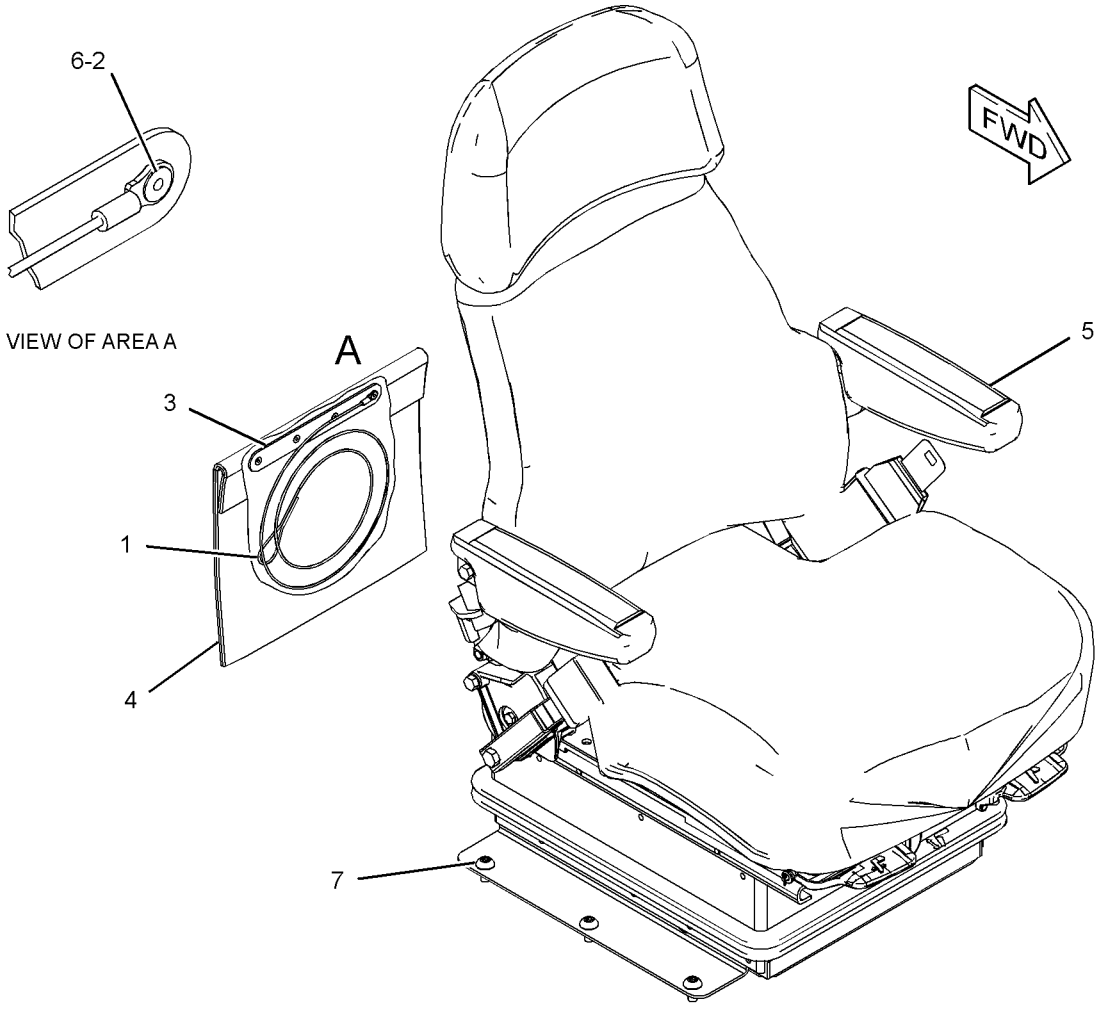

GRAPHIC #1 **<END>** g01662814

OPERATOR STATION

174-4546 SUPPORT GP-SEAT

S/N: JAP1-UP

PART OF 348-3018 GENERAL AR

SMCS-7321 **i01674709**

NOTE	REF NO	GRAPHIC REF	PART NUMBER	QTY	PART NAME 1 2 3 4 5 6 (PRODUCT LEVEL)	SEE PAGE
	1	1	**5P-7803**	2	PLUG-BUTTON	
	2	1	**7G-4824**	1	STRAP	
	4	1	**8E-7791**	1	STRAP	
	5	1	**8X-5536**	1	COVER	
	6	1	**8X-5538**	1	COVER AS	
M		1	**8T-3490**	4	NUT-WELD (M10X1.5-THD)	
	7	1	**8X-5540**	1	COVER	
	8	1	**123-4618**	1	COVER	
	9	1	**123-4701**	1	SEAL	
	10	1	**174-4492**	1	COVER	
	11	1	**174-6051**	1	SUPPORT AS	
		1	**5P-1075**	8	WASHER-HARD (10.2X22.5X3-MM THK)	
M		1	**6V-9632**	6	NUT-WELD (M6X1-THD)	
M		1	**8T-3490**	13	NUT-WELD (M10X1.5-THD)	
M		1	**9T-6001**	2	BOSS (M10X1.5-THD)	
		1	**123-8408**	2	TUBE AS	
	12	1	**174-6353**	1	PLATE	
	13	1	**176-5507**	1	PAD	
	14	1	**191-0027**	1	PAD	
	15	1	**5P-1075**	8	WASHER-HARD (10.2X22.5X3-MM THK)	
	16	1	**6V-8801**	8	NUT (3/8-16-THD)	
	17	1	**7X-0591**	2	WASHER-HARD (17X29X3-MM THK)	
M	18	1	**9X-2040**	4	SCREW-TRUSS HEAD (M10X1.5X25-MM)	
M	19	1	**9X-2041**	5	SCREW-TRUSS HEAD (M10X1.5X20-MM)	
M	20	1	**9X-2045**	6	SCREW-TRUSS HEAD (M6X1X20-MM)	

M-METRIC PART

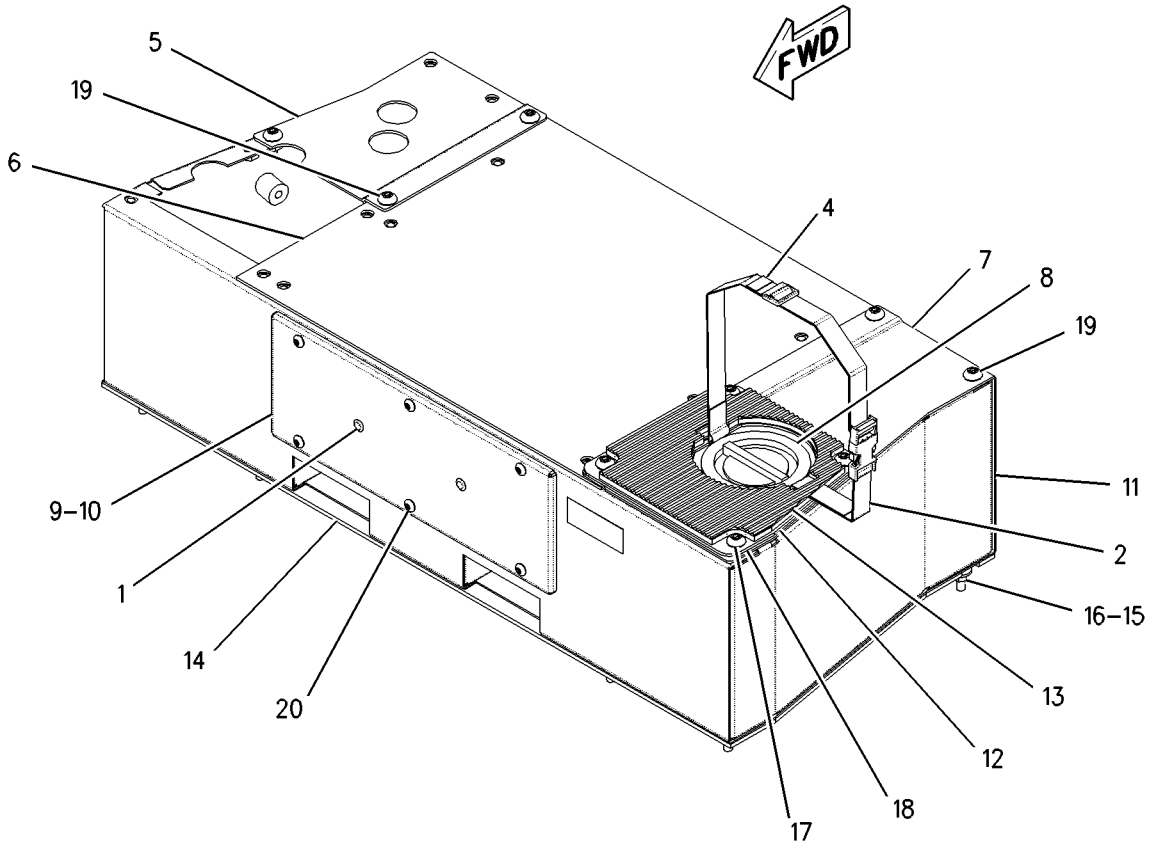

GRAPHIC #1 **<END>** g00865561

OPERATOR STATION

302-7458 SUSPENSION GP-SEAT

S/N: JAP1-UP
PART OF 302-8814 SEAT GP-SUSPENSION
AN ATTACHMENT

SMCS-7324 **i02947098**

NOTE	REF NO	GRAPHIC REF	PART NUMBER	QTY	PART NAME 1 2 3 4 5 6 (PRODUCT LEVEL)	SEE PAGE
	1	1	**2K-4973**	2	LOCKNUT (3/8-16-THD)	
	2	1	**4V-7884**	2	BEARING	
	3	1	**4V-8577**	4	BEARING	
	4	1	**5V-1497**	1	RETAINER	
	5	1	**124-0507**	1	ABSORBER AS-SHOCK	
	6	1	**8Y-6012**	1	ARM AS-SUSPENSION	
Y	7	1	**113-5808**	1	HOUSING GP-SEAT SUSPENSION	564
	8	1	**8Y-6024**	2	SHAFT AS	
J	9	1	**101-0003**	20	FASTENER	
J	10	1	**166-6781**	6	FASTENER	
J	11	1	**163-1146**	3	FASTENER	
	12	1	**145-0326**	1	FILM-INSTRUCTION (SEAT ADJUSTMENT)	
	13	1	**169-7380**	1	BOLT-SOCKET HEAD (3/8-16X0.375-IN)	
J	14	1	**197-7689**	3	FASTENER	
					AVAILABLE REPAIR KIT(S):	
J			**8Y-5944**	1	KIT-SUSPENSION BOOT (SEAT)	
					(INCLUDES BOOT, RETAINERS, & FASTENERS)	
			101-4194	1	BELT-TETHER (SUSPENSION SEAT)	
					(INCLUDES BELTS)	
			101-4195	1	KIT-SUSPENSION ROLLER (SUSPENSION SEAT)	
					(INCLUDES ROLLERS)	

J-(KIT MARKED J SERVICES PART(S) MARKED J)
Y-SEPARATE ILLUSTRATION

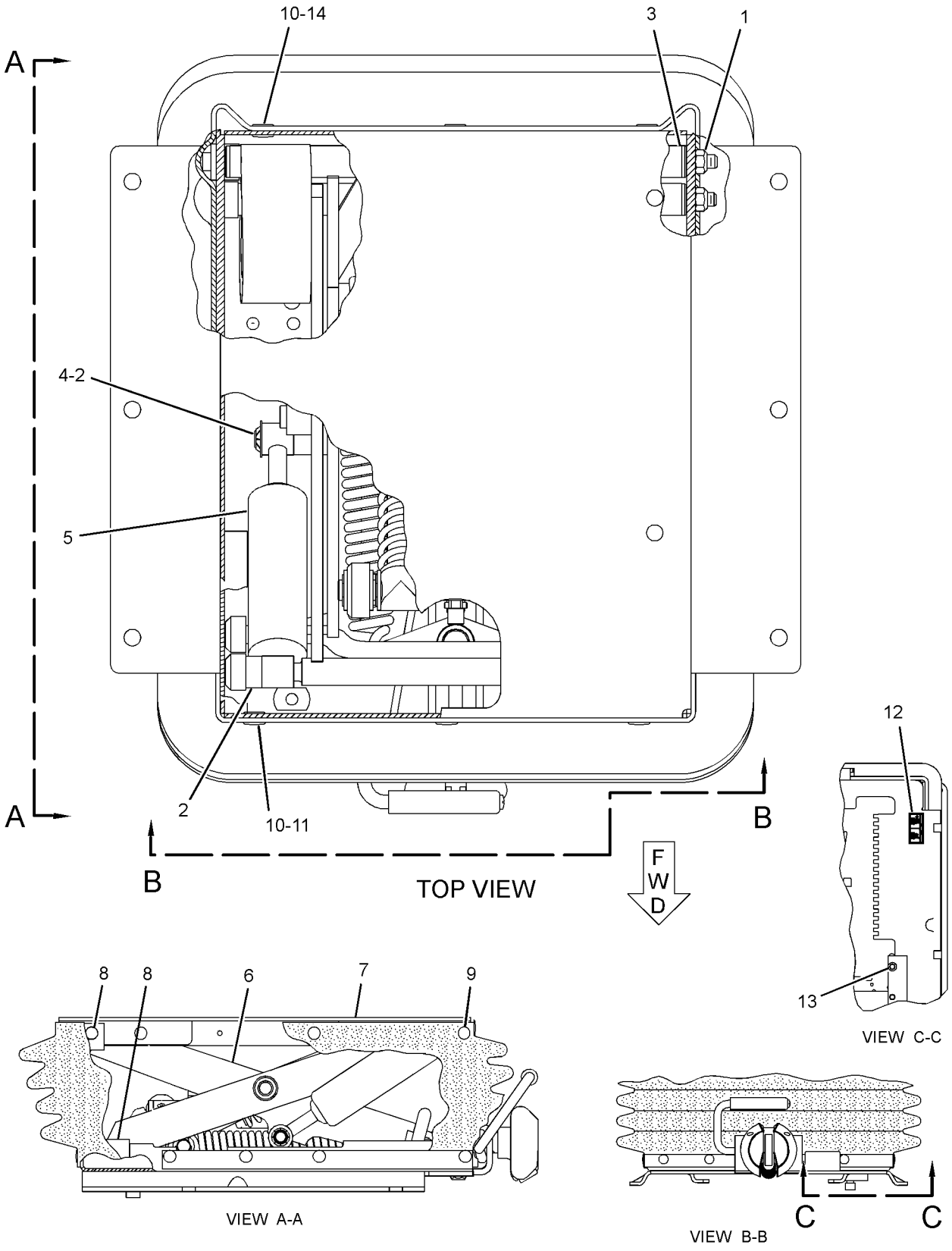

GRAPHIC #1 **<END>** g01453634

OPERATOR STATION

8X-2650 VALVE GP-AIR CONTROL

S/N: JAP1-UP

PART OF 297-8948 CONTROL GP-SERVICE BRAKE

SMCS-3123, 3272, 4265, 4282, 5506 **i02200392**

NOTE	REF NO	GRAPHIC REF	PART NUMBER	QTY	PART NAME 1 2 3 4 5 6 (PRODUCT LEVEL)	SEE PAGE
	1	1	**8X-2646**	1	LEVER AS	
	2	1	**9D-8121**	1	ROLLER	
	3	1	**3B-4607**	1	PIN-COTTER	
		1	**7B-9323**	1	PIN	
	4	1	**5D-3636**	1	BOOT	
	5	1	**2R-0719**	1	PLUNGER	
	6	1	**125-5321**	3	BOLT	
	7	1	**2R-0694**	1	PLATE-BRAKE VALVE	
	8	1	**2R-0724**	1	BUTTON-STOP	
	9	1	**2D-6006**	1	PIN	
	10	1	**3B-4610**	1	PIN-COTTER	
J	11	1	**8W-5651**	1	VALVE GP-CONTROL (AIR)	
		1	**5D-0768**	1	SPRING	
					AVAILABLE REPAIR KIT(S):	
J			**2G-6285**	1	KIT-AIR CONTROL VALVE	
					(INCLUDES SPRINGS, INLET & EXHAUST VALVES,O-RINGS, BOOT,SCREW,	
					LOCKNUT & FILTER)	

J-KIT MARKED J IS AVAILABLE FOR PART MARKED J

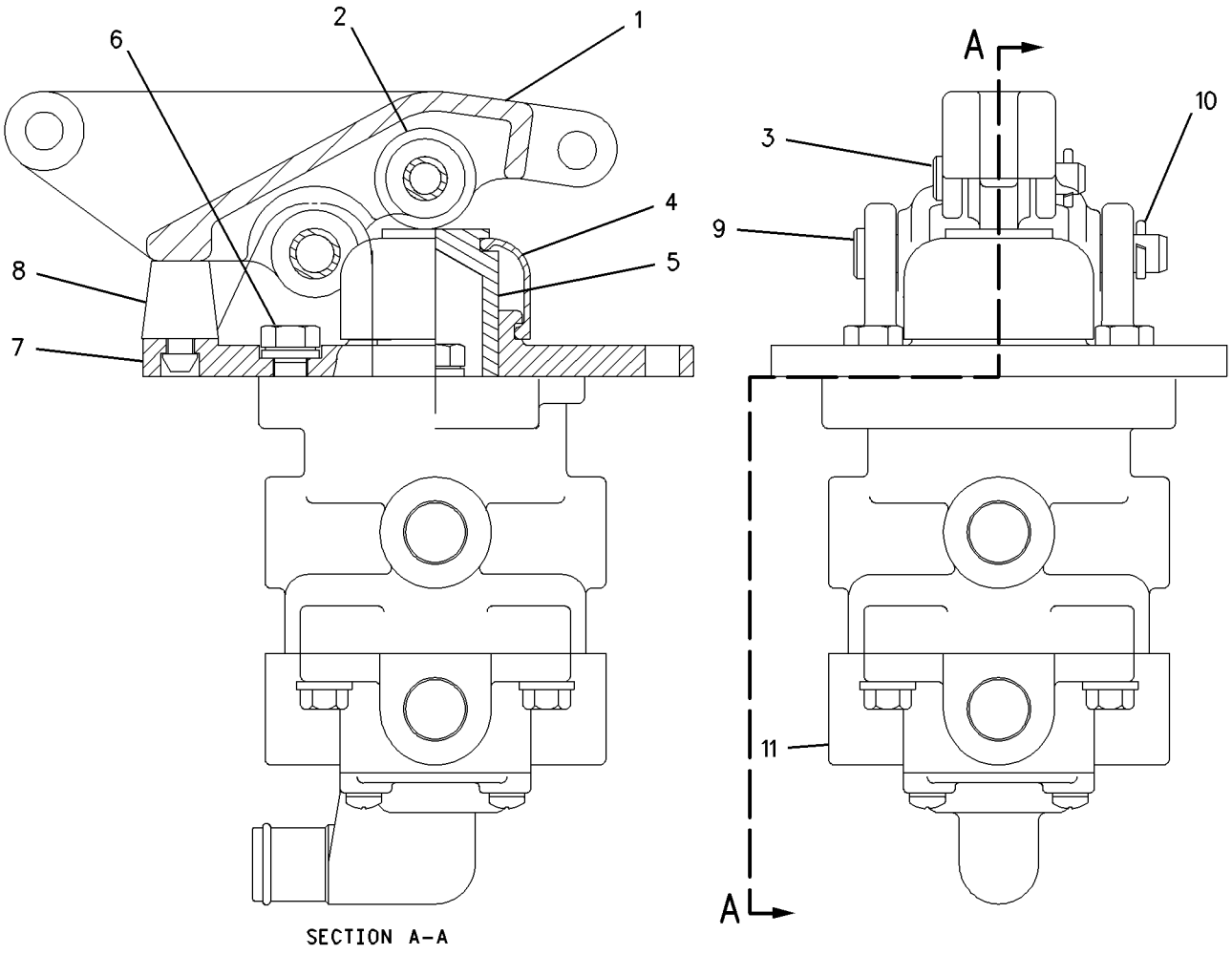

GRAPHIC #1 **<END>** g00688575

OPERATOR STATION

8X-9675 WASHER GP-WINDOW—FRONT

S/N: JAP1-UP
PART OF 320-0342 ROPS AR
AN ATTACHMENT

SMCS-7306 **i03524723**

NOTE	REF NO	GRAPHIC REF	PART NUMBER	QTY	PART NAME 1 2 3 4 5 6 (PRODUCT LEVEL)	SEE PAGE
E	1	1	**144-0195**		HOSE (250-CM EACH)	
E	1A	1	**144-0195**		HOSE (40-CM EACH)	
	2	1	**8W-0935**	1	GASKET	
	3	1	**8W-0934**	1	BRACKET	
	4	1	**9P-2369**	1	JET AS-WASHER	
		1	**8Y-4408**	1	NOZZLE AS-JET	
	5	1	**8T-2901**	1	NOZZLE AS	
		1	**8Y-4409**	1	NOZZLE AS-JET	
M	7	1	**5C-2890**	2	NUT (M6X1-THD)	
	8	1	**5P-4115**	2	WASHER-HARD (7.2X19X2-MM THK)	
	9	1	**3S-2093**	3	STRAP-CABLE	
	10	1	**102-3645**	1	COVER	
M	11	1	**9X-2045**	5	SCREW-TRUSS HEAD (M6X1X20-MM)	
	12	1	**4D-7388**	2	CLIP	
	13	1	**5M-3062**	1	BOLT (3/8-16X0.75-IN)	
	14	1	**8T-4896**	2	WASHER-HARD (10.2X18.5X2.5-MM THK)	
	15	1	**7T-8891**	2	PUMP AS-WASHER	
	16	1	**8X-9405**	1	RESERVOIR AS	
	17	1	**261-3345**	2	CONNECTOR	
	18	1	**6W-5698**	2	GROMMET	
	19	1	**7T-1961**	1	CAP	
	20	1	**8X-1135**	1	GASKET	
	21	1	**8X-9349**	1	PAD	
	22	1	**107-4865**	1	PAD	
	24	1	**4L-6454**	1	BOLT (3/8-16X1-IN)	
	25	1	**6V-8801**	1	NUT (3/8-16-THD)	
	26	1	**7G-4326**	1	PLATE	

E-ORDER BY THE CENTIMETER
M-METRIC PART

8X-9675 **WASHER GP-WINDOW** *(contd.)* **i03524723**

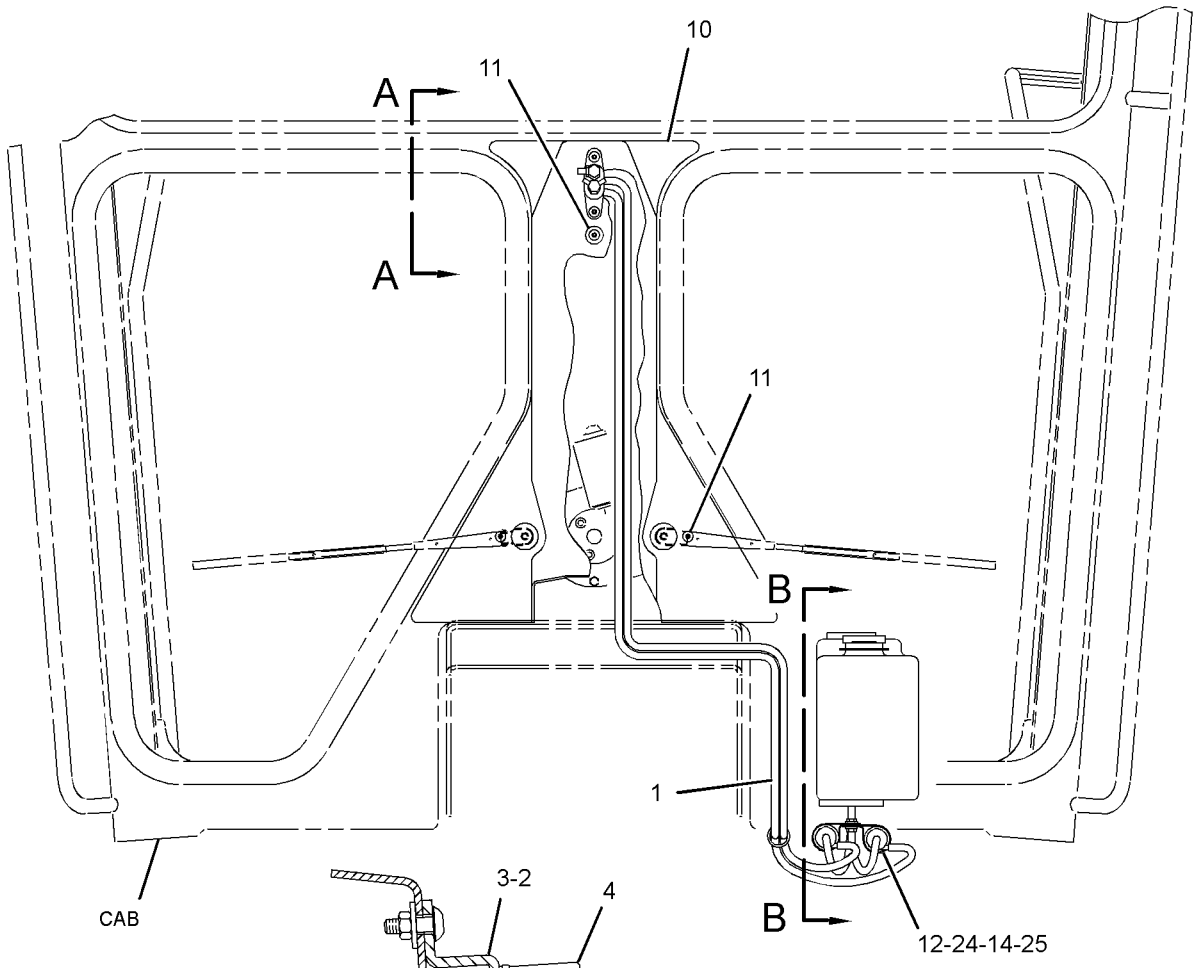

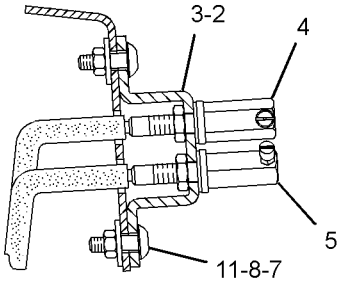

VIEW A-A

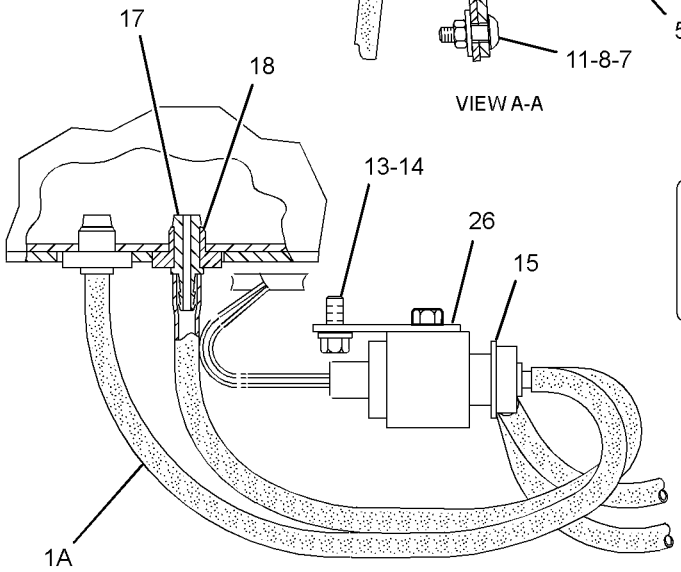

VIEW OF AREA C

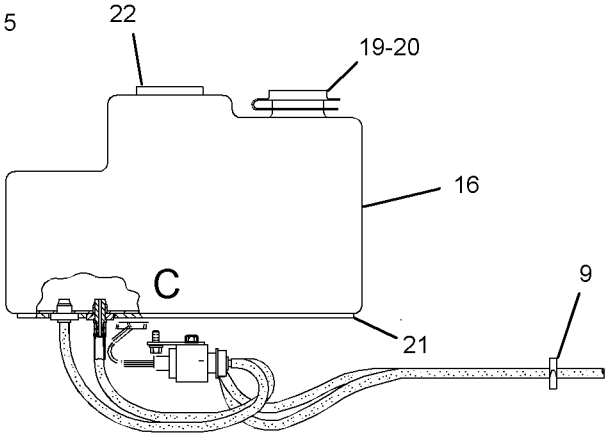

VIEW B-B

GRAPHIC #1 **<END>** g01852313

8X-9680 WASHER GP-WINDOW–REAR

S/N: JAP1-UP
PART OF 298-2426 WIPER AR-WINDOW
AN ATTACHMENT

SMCS-7306 **i02380619**

NOTE	REF NO	GRAPHIC REF	PART NUMBER	QTY	PART NAME 1 2 3 4 5 6 (PRODUCT LEVEL)	SEE PAGE
	1	1	**3V-3816**	1	NOZZLE AS	
	2	1	**7T-8891**	1	PUMP AS-WASHER	
	3	1	**4D-7388**	1	CLIP	
	4	1	**4D-7794**	4	CLIP	
	5	1	**5P-8167**	2	BOLT (3/8-16X0.625-IN)	
	6	1	**6K-9632**	1	TEE	
	7	1	**8T-4121**	3	WASHER-HARD (11X21X2.5-MM THK)	
M	8	1	**8T-4191**	3	BOLT (M10X1.5X16-MM)	
	9	1	**8T-4896**	2	WASHER-HARD (10.2X18.5X2.5-MM THK)	
E	10	1	**144-0195**		HOSE (188-CM)	
E	10A	1	**144-0195**		HOSE (20-CM)	
E	10B	1	**144-0195**		HOSE (10-CM)	

E-ORDER BY THE CENTIMETER
M-METRIC PART

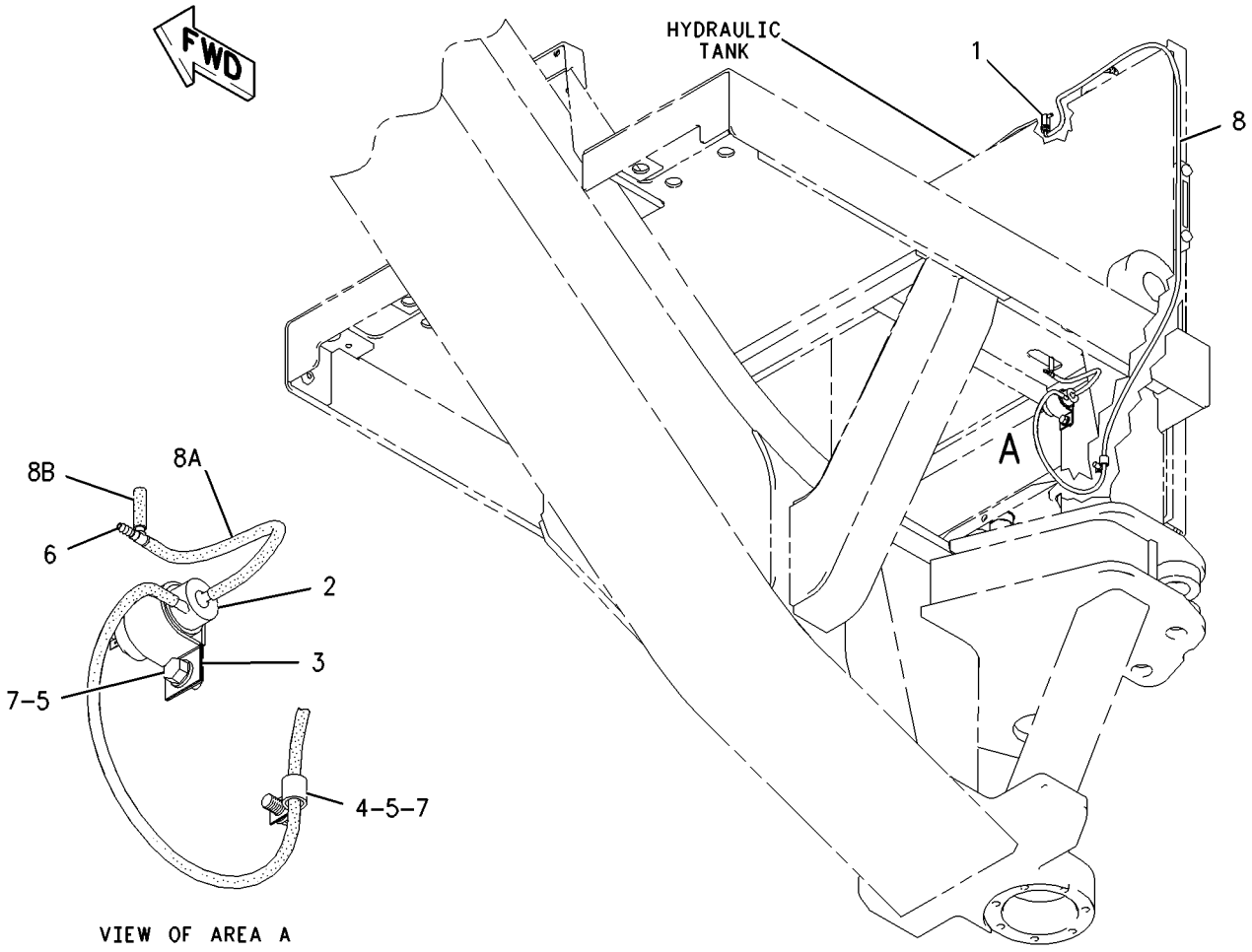

GRAPHIC #1 **<END>** g00898012

OPERATOR STATION

125-4342 WASHER GP-WINDOW—FRONT

S/N: JAP1-UP
PART OF 320-0341 CAB AR
AN ATTACHMENT

SMCS-7306 **i03558966**

NOTE	REF NO	GRAPHIC REF	PART NUMBER	QTY	PART NAME 1 2 3 4 5 6 (PRODUCT LEVEL)	SEE PAGE
	1	1	**8X-9405**	1	RESERVOIR AS	
		1	**6W-5698**	2	GROMMET	
		1	**7T-1961**	1	CAP	
		1	**8X-1135**	1	GASKET	
		1	**261-3345**	2	CONNECTOR	
		1	**8X-9349**	1	PAD (RECTANGULAR)	
		1	**107-4865**	1	PAD (ROUND)	
	2	1	**8W-0935**	1	GASKET	
	3	1	**8W-0934**	1	BRACKET	
	4	1	**9P-2369**	1	JET AS-WASHER	
		1	**8Y-4408**	1	NOZZLE AS-JET	
M	5	1	**9X-2042**	2	SCREW-TRUSS HEAD (M6X1X12-MM)	
M	6	1	**5C-2890**	2	NUT (M6X1-THD)	
	7	1	**5P-4115**	2	WASHER-HARD (7.2X19X2-MM THK)	
	8	1	**3S-2093**	3	STRAP-CABLE	
	9	1	**102-3645**	1	COVER	
M	10	1	**9X-2045**	3	SCREW-TRUSS HEAD (M6X1X20-MM)	
	11	1	**4D-7388**	1	CLIP	
	12	1	**5M-3062**	1	BOLT (3/8-16X0.75-IN)	
	13	1	**6K-9632**	1	TEE	
	14	1	**7T-8891**	1	PUMP AS-WASHER	
E	15	1	**144-0195**		HOSE (30-CM)	
E	15A	1	**144-0195**		HOSE (10-CM EACH)	
E	15B	1	**144-0195**		HOSE (220-CM)	
	16	1	**6V-6467**	2	PLUG	
	17	1	**8T-4896**	1	WASHER-HARD (10.2X18.5X2.5-MM THK)	

E-ORDER BY THE CENTIMETER
M-METRIC PART

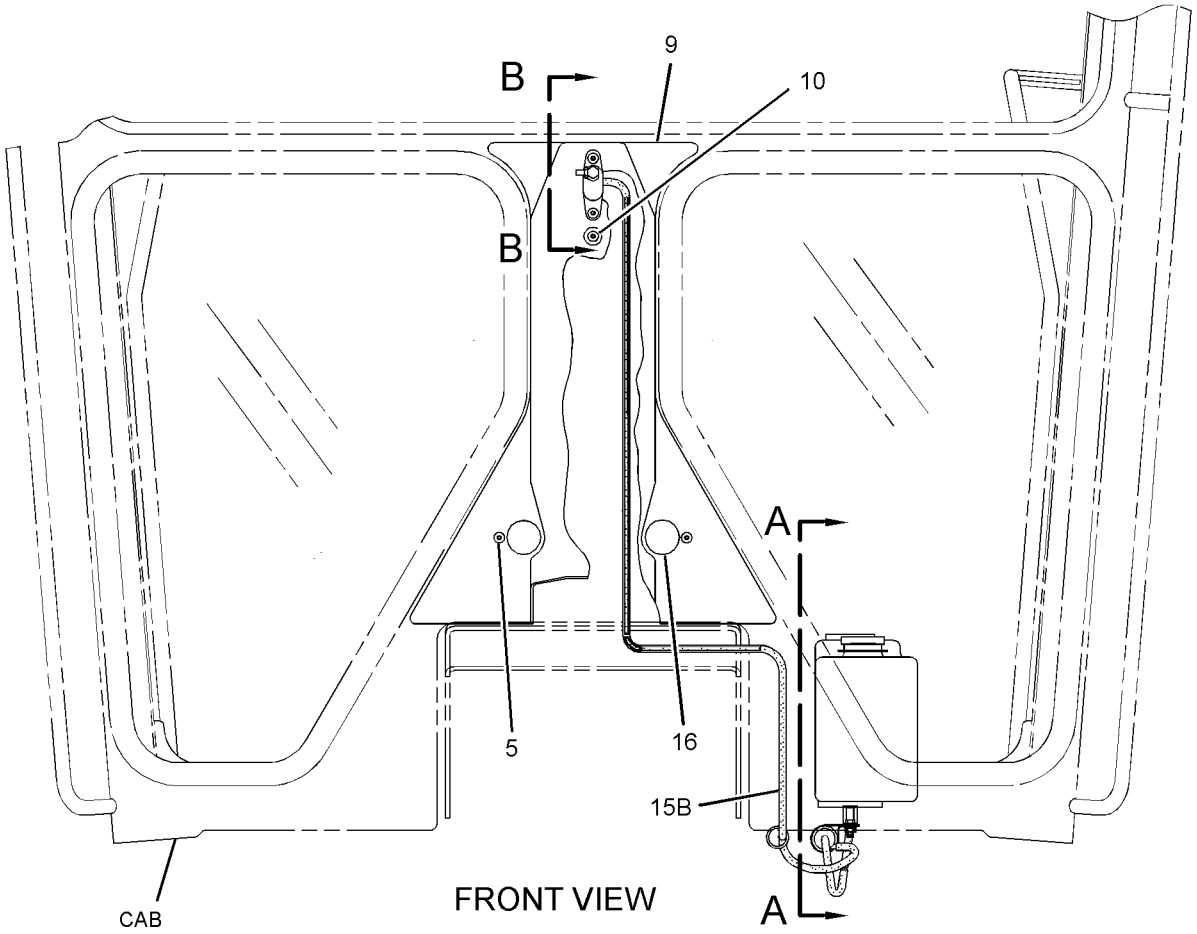

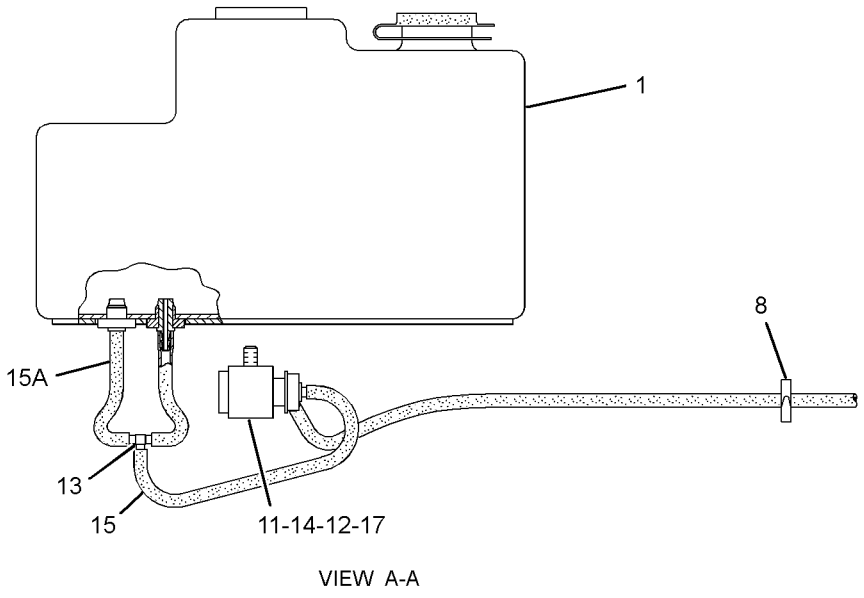

VIEW A-A

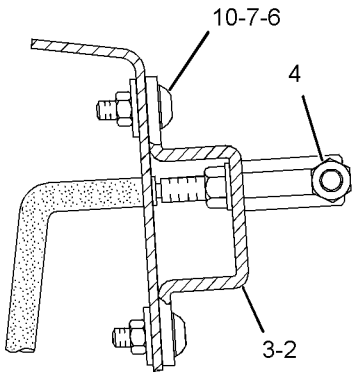

SECTION B-B

GRAPHIC #1 **<END>** g01859953

OPERATOR STATION

298-2426 WIPER AR-WINDOW—REAR, HIGH PROFILE

S/N: JAP1-UP

PART OF 339-4968 OPTION AR-CAB

AN ATTACHMENT

SMCS-7305, 7306 **i03251442**

NOTE	REF NO	GRAPHIC REF	PART NUMBER	QTY	PART NAME 1 2 3 4 5 6 (PRODUCT LEVEL)	SEE PAGE
Y	1	1	*8X-9680*	1	WASHER GP-WINDOW (REAR)	631
Y	2	1	*286-4823*	1	WIPER GP-WINDOW (REAR) (HIGH PROFILE)	638

PARTS SHOWN IN GRAPHIC(S) WITHOUT A REFERENCE NUMBER ARE NOT SERVICED SEPARATELY

Y-SEPARATE ILLUSTRATION

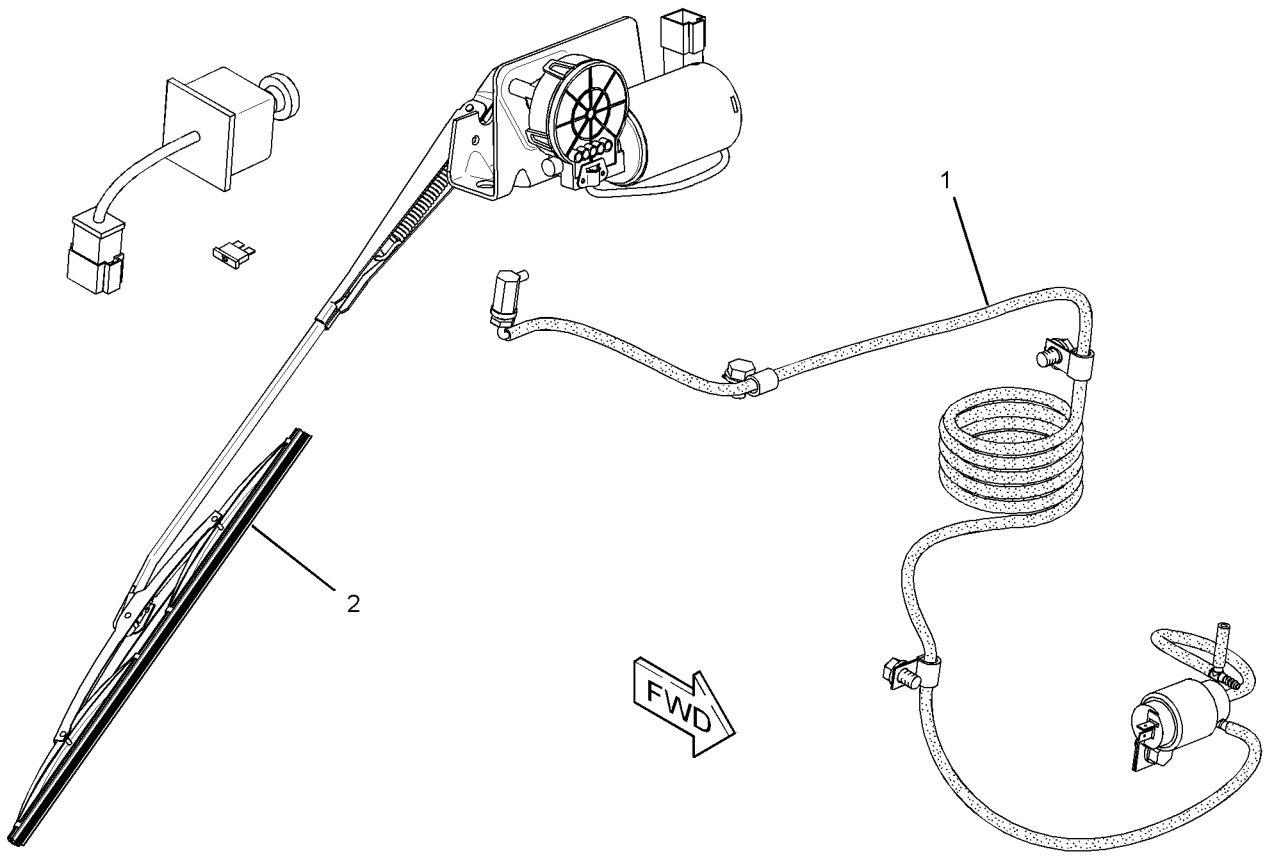

GRAPHIC #1 **<END>** g01685233

OPERATOR STATION

172-6831 WIPER GP-WINDOW—FRONT—HIGH PROFILE

S/N: JAP1-UP
PART OF 320-0342 ROPS AR
AN ATTACHMENT

SMCS-7305 **i02558327**

NOTE	REF NO	GRAPHIC REF	PART NUMBER	QTY	PART NAME 1 2 3 4 5 6 (PRODUCT LEVEL)	SEE PAGE
	1	1	**2A-6926**	1	LEVER AS	
	2	1	**2A-6928**	1	LINK	
	3	1	**2A-6929**	1	LINK	
C	4	1	**135-0611**	1	MOTOR GP-WINDOW WIPER (24-VOLT, 2-SPEED) (FRONT, LOWER)	
		1	**8T-8737**	1	PLUG-SEAL	
		1	**186-3735**	5	PIN-CONNECTOR (16-GA TO 18-GA)	
		1	**102-8805**	1	KIT-RECEPTACLE (6-PIN)	
					(INCLUDES RECEPTACLE AS & WEDGE)	
B	5	1	**4B-4283**	2	WASHER (20.6X37.5X3.5-MM THK)	
	6	1	**6V-5853**	1	BLADE AS-WIPER (450-MM) (FRONT)	
	7	1	**6V-6888**	1	WASHER-SPRING	
M	8	1	**6V-6889**	1	NUT (M8X1.25-THD)	
	9	1	**6V-8259**	1	ARM AS-WIPER (UPPER)	
	10	1	**8X-2556**	1	FLANGE	
	11	1	**8X-2663**	1	GASKET	
C	12	1	**203-1124**	1	MOTOR GP-WINDOW WIPER (24-VOLT) (FRONT UPPER)	
		1	**3F-9556**	1	LOCKWASHER	
M		1	**5C-7261**	1	NUT (M8X1.25-THD)	
		1	**135-0611**	1	MOTOR GP-WINDOW WIPER (24-VOLT, 2-SPEED)	
		1	**8T-8737**	1	PLUG-SEAL	
		1	**186-3735**	5	PIN-CONNECTOR (16-GA TO 18-GA)	
		1	**102-8805**	1	KIT-RECEPTACLE (6-PIN)	
					(INCLUDES RECEPTACLE AS & WEDGE)	
		1	**206-5823**	1	CAP	
	13	1	**123-4354**	2	ARM-WINDOW WIPER (LOWER)	
	14	1	**123-4355**	2	BLADE AS-WIPER (300-MM) (FRONT, LOWER)	
	15	1	**125-7003**	1	SHAFT AS	
		1	**3F-9556**	1	LOCKWASHER	
M		1	**5C-7261**	1	NUT (M8X1.25-THD)	
		1	**206-5823**	1	CAP	
	16	1	**125-7004**	1	SHAFT AS	
		1	**3F-9556**	1	LOCKWASHER	
M		1	**5C-7261**	1	NUT (M8X1.25-THD)	
		1	**206-5823**	1	CAP	
M	17	1	**5C-7423**	3	SCREW (M6X1X16-MM)	
	18	1	**5P-4115**	2	WASHER-HARD (7.2X19X2-MM THK)	
CM	19	1	**8T-4171**	2	BOLT (M6X1X12-MM)	
M	20	1	**8T-4138**	2	BOLT (M6X1X20-MM)	

B-USE AS REQUIRED
C-CHANGE FROM PREVIOUS TYPE
M-METRIC PART

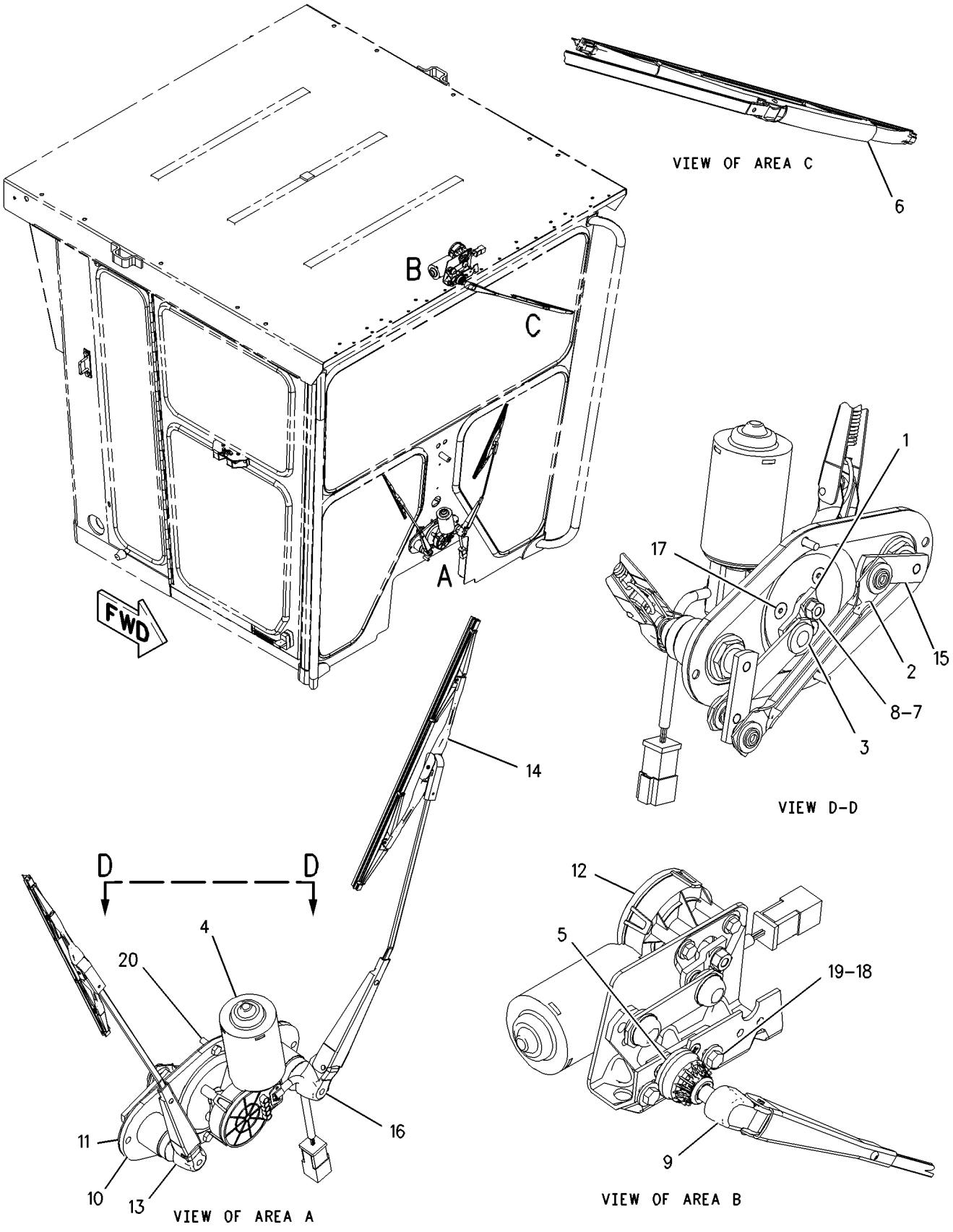

GRAPHIC #1 **<END>** g00913478

211-4913 WIPER GP-WINDOW—FRONT—HIGH PROFILE

S/N: JAP1-UP
PART OF 320-0341 CAB AR
AN ATTACHMENT

SMCS-7305 **i02426669**

NOTE	REF NO	GRAPHIC REF	PART NUMBER	QTY	PART NAME 1 2 3 4 5 6 (PRODUCT LEVEL)	SEE PAGE
	1	1	**203-1124**	1	MOTOR GP-WINDOW WIPER (FRONT)	
		1	**3F-9556**	1	LOCKWASHER	
M		1	**5C-7261**	1	NUT (M8X1.25-THD)	
		1	**135-0611**	1	MOTOR GP-WINDOW WIPER (24-VOLT, 2-SPEED)	
		1	**8T-8737**	1	PLUG-SEAL	
		1	**186-3735**	5	PIN-CONNECTOR (16-GA TO 18-GA)	
		1	**102-8805**	1	KIT-RECEPTACLE (6-PIN)	
					(INCLUDES RECEPTACLE AS & WEDGE)	
		1	**206-5823**	1	CAP	
M	2	1	**8T-4171**	2	BOLT (M6X1X12-MM)	
	3	1	**5P-4115**	2	WASHER-HARD (7.2X19X2-MM THK)	
	4	1	**6V-8259**	1	ARM AS-WIPER (FRONT)	
	5	1	**6V-5853**	1	BLADE AS-WIPER (450-MM) (FRONT)	
	6	1	**4B-4283**	2	WASHER (20.6X37.5X3.5-MM THK)	

M-METRIC PART

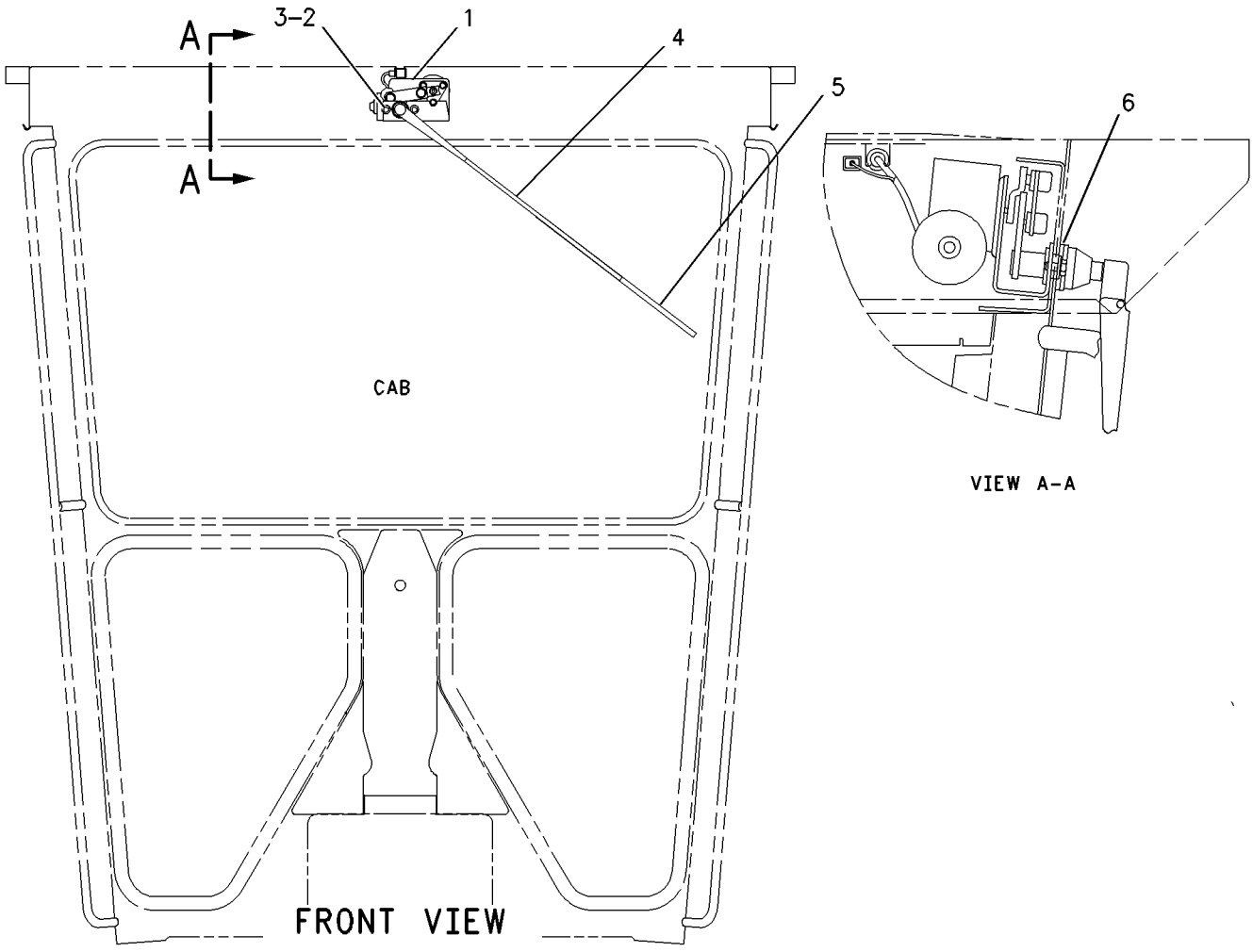

GRAPHIC #1 **<END>** g00949975

OPERATOR STATION

286-4823 WIPER GP-WINDOW—REAR, HIGH PROFILE

S/N: JAP1-UP

PART OF 298-2426 WIPER AR-WINDOW

AN ATTACHMENT

SMCS-7305 **i03251443**

NOTE	REF NO	GRAPHIC REF	PART NUMBER	QTY	PART NAME 1 2 3 4 5 6 (PRODUCT LEVEL)	SEE PAGE
B	1	1	**4B-4283**	2	WASHER (20.6X37.5X3.5-MM THK)	
	2	1	**6V-5853**	1	BLADE AS-WIPER (450-MM)	
	3	1	**6V-8258**	1	ARM AS-WIPER	
	4	1	**9W-1442**	1	FUSE (10-AMPERE)	
	5	1	**110-7885**	1	KNOB AS-WIPER SWITCH	
		1	**014-0816**	1	SETSCREW (8-32X0.5-IN)	
	6	1	**203-1124**	1	MOTOR GP-WINDOW WIPER (24-VOLT) (REAR)	
		1	**3F-9556**	1	LOCKWASHER	
M		1	**5C-7261**	1	NUT (M8X1.25-THD)	
		1	**135-0611**	1	MOTOR GP-WINDOW WIPER (24-VOLT, 2-SPEED) (REAR)	
		1	**8T-8737**	1	PLUG-SEAL	
		1	**186-3735**	5	PIN-CONNECTOR (16-GA TO 18-GA)	
		1	**102-8805**	1	KIT-RECEPTACLE (6-PIN)	
					(INCLUDES RECEPTACLE AS & WEDGE)	
		1	**206-5823**	1	CAP	
Y	7	1	**275-7741**	1	SWITCH GP-WIPER (24-VOLT, INTERMITTENT) (REAR)	194
	8	1	**5P-4115**	2	WASHER-HARD (7.2X19X2-MM THK)	
M	9	1	**8T-4171**	2	BOLT (M6X1X12-MM)	

B-USE AS REQUIRED
M-METRIC PART
Y-SEPARATE ILLUSTRATION

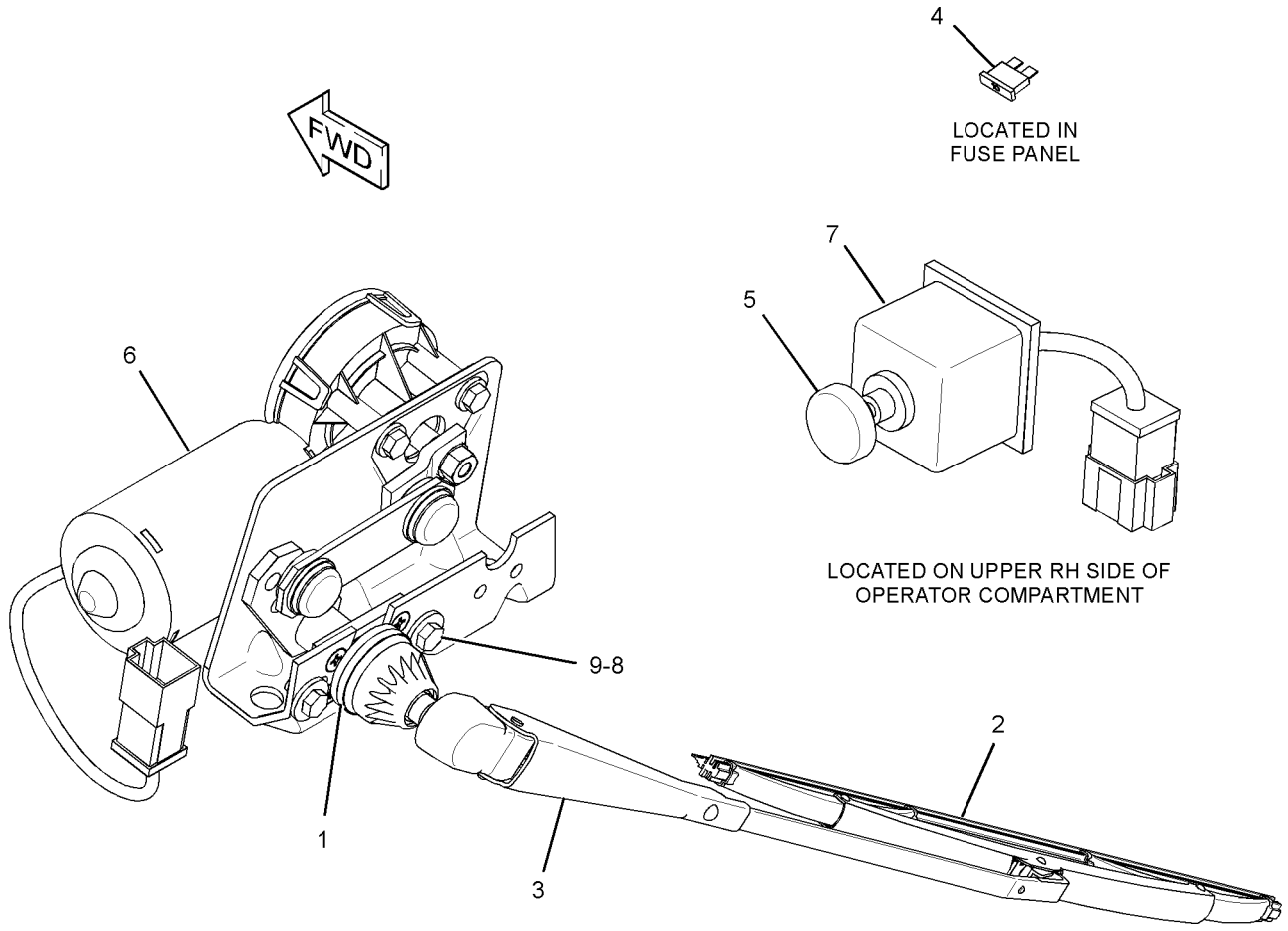

GRAPHIC #1 **<END>** g01694314

WORK TOOLS

107-3398 BIT GP-END

S/N: JAP1-UP

PART OF 329-3826 BLADE & TIP AR-POWER, 348-6939 OPTION AR-WORK TOOL

AN ATTACHMENT

SMCS-6804 **i03287221**

NOTE	REF NO	GRAPHIC REF	PART NUMBER	QTY	PART NAME 1 2 3 4 5 6 (PRODUCT LEVEL)	SEE PAGE
	1	1	**6Y-2805**	2	BIT-END	
	2	1	**1J-6762**	10	BOLT-PLOW (3/4-10X3-IN)	
	3	1	**5F-8933**	6	BOLT-PLOW (3/4-10X3.75-IN)	

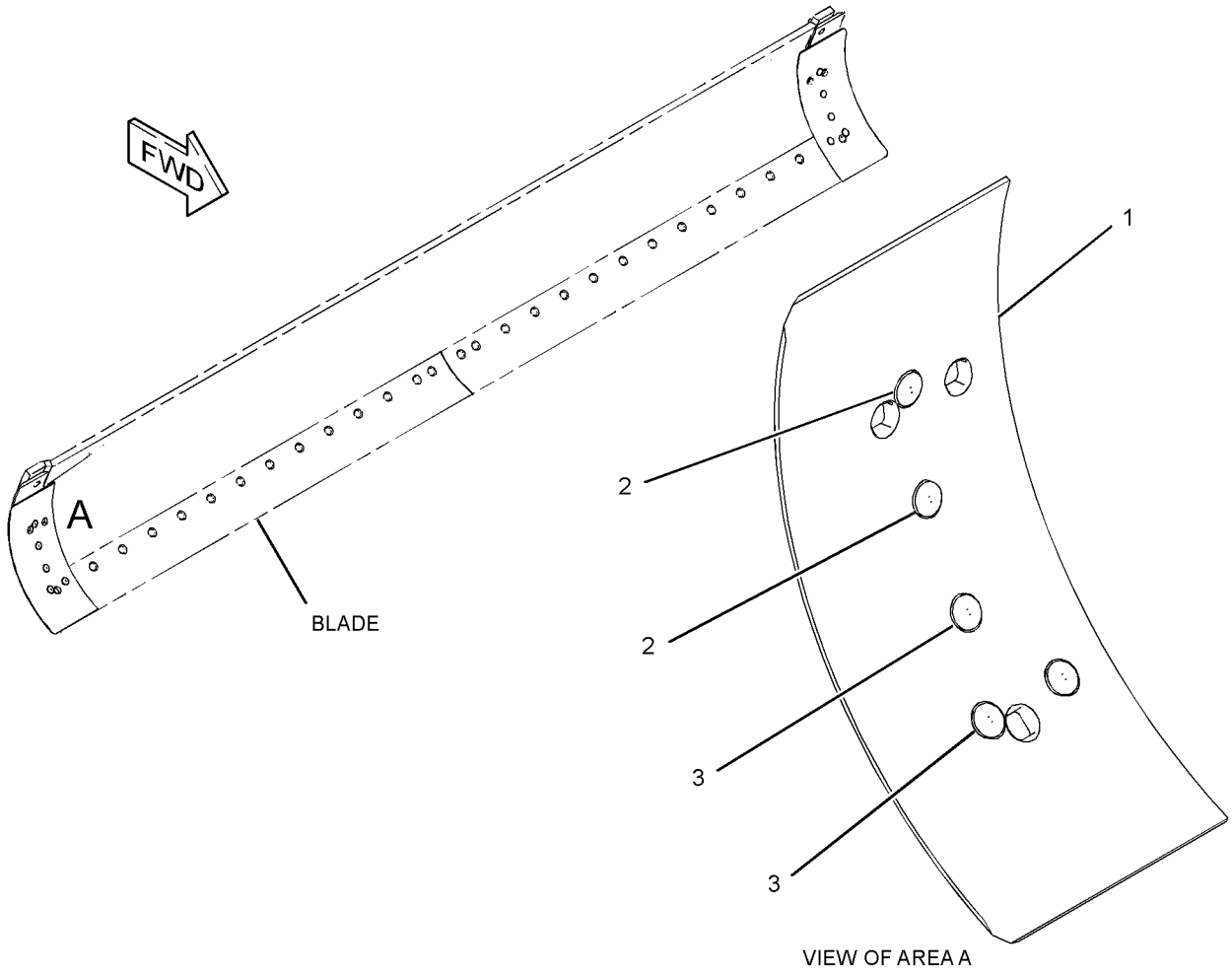

GRAPHIC #1 **<END>** g01682214

WORK TOOLS

329-3826 BLADE & TIP AR-POWER

S/N: JAP1-UP
PART OF 348-6939 OPTION AR-WORK TOOL
AN ATTACHMENT

SMCS-6151 **i03657759**

NOTE	PART NUMBER	QTY	PART NAME 1 2 3 4 5 6 (PRODUCT LEVEL)	SEE PAGE
Y	*107-3398*	1	BIT GP-END	640
Y	*338-7508*	1	CIRCLE GP	514
Y	*8X-1943*	1	CYLINDER & MTG GP-BLADE TIP	368
Y	*112-7463*	1	CYLINDER & MTG GP-SIDESHIFT	371
Y	*280-4072*	1	EDGE GP-CUTTING	648
Y	*106-4787*	1	LINES GP-HYDRAULIC (LH)	396

Y-SEPARATE ILLUSTRATION

<END>

WORK TOOLS

320-9924 BLADE GP

S/N: JAP1-UP

12-FT

PART OF 348-3018 GENERAL AR

SMCS-6151 **i03257564**

NOTE	REF NO	GRAPHIC REF	PART NUMBER	QTY	PART NAME 1 2 3 4 5 6 (PRODUCT LEVEL)	SEE PAGE
	1	1	**9J-3657**	2	EDGE-CUTTING	
	2	1	**320-2749**	1	MOLDBOARD AS	
		1	**112-1813**	1	RAIL-MOLDBOARD	
	3	1	**2J-3506**	36	NUT-FULL (3/4-10-THD)	
	4	1	**5J-4773**	36	BOLT-PLOW (3/4-10X2.5-IN)	
	5	1	**8E-5529**	2	BIT-END	

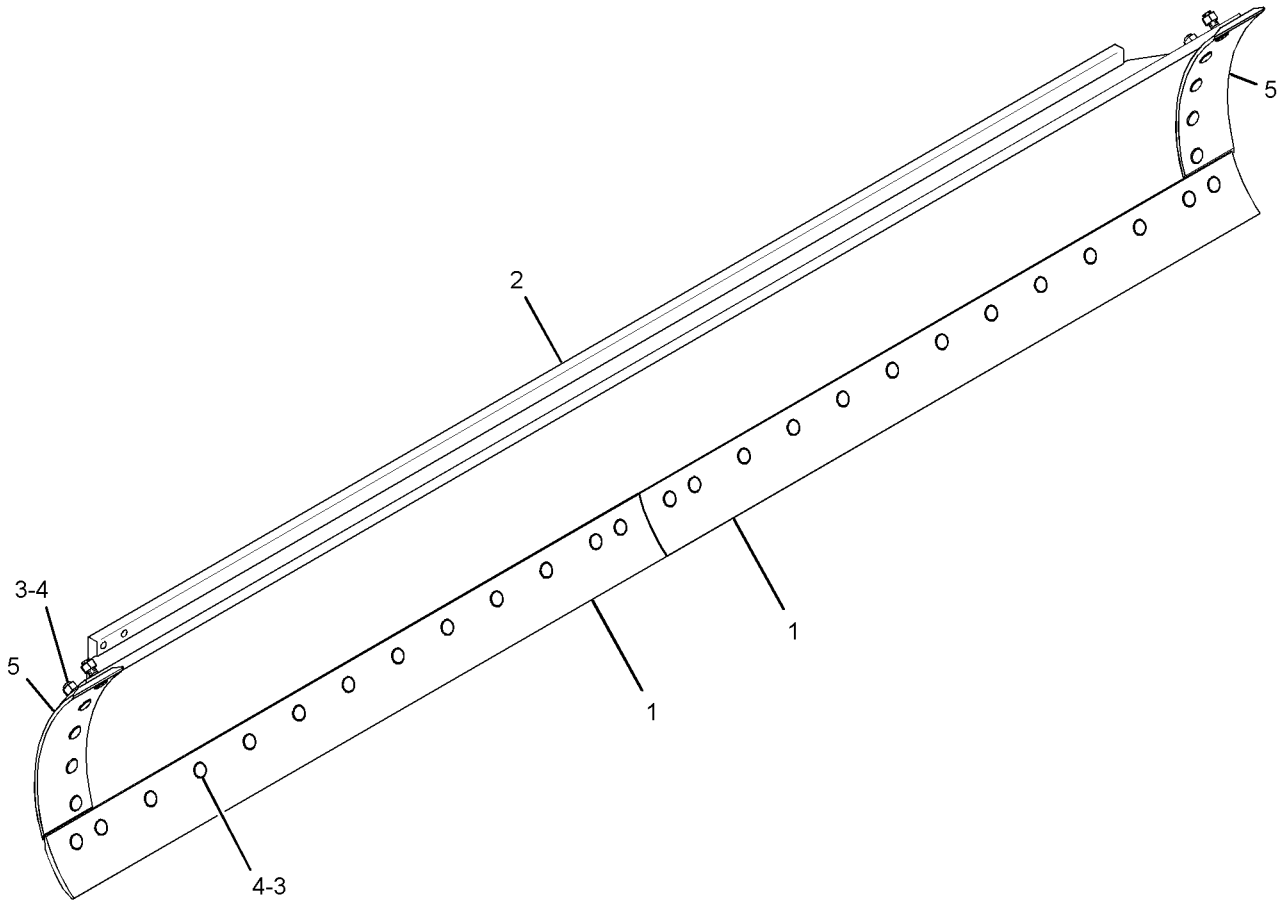

GRAPHIC #1 **<END>** g01698078

WORK TOOLS

347-8846 BLADE GP-BULLDOZER—FRONT

S/N: JAP1-UP
PART OF 348-6937 OPTION AR-WORK TOOL
AN ATTACHMENT

SMCS-6060 **i03628549**

NOTE	REF NO	GRAPHIC REF	PART NUMBER	QTY	PART NAME 1 2 3 4 5 6 (PRODUCT LEVEL)	SEE PAGE
	1	1	**2K-2306**	2	LINK	
	2	1	**3B-8489**	2	FITTING-GREASE	
	3	1	**3B-8491**	8	FITTING-GREASE	
	4	1	**4T-3010**	2	EDGE-CUTTING	
	5	1	**7P-1577**	8	PIN AS	
	6	1	**136-1711**	2	PIN AS	
	7	1	**169-4088**	1	LINK AS	
	8	1	**169-4089**	1	EDGE-CUTTING	
	9	1	**169-4090**	1	PLATE AS	
	10	1	**169-4092**	1	MOLDBOARD AS	
	11	1	**247-4412**	1	PLATE AS	
	12	1	**283-1578**	24	WASHER-HARD (22X45X10-MM THK)	
Y	13	1	**314-9338**	1	CYLINDER GP-HYDRAULIC (BULLDOZER LIFT, PLOW)	646
	14	1	**2J-3506**	17	NUT-FULL (3/4-10-THD)	
M	15	1	**4F-7827**	17	BOLT-PLOW (3/4-10X2.25-IN)	
	16	1	**5M-6214**	4	PLUG-PIPE	
B	17	1	**5V-6454**	18	WASHER (52X120X1.6-MM THK)	
B	18	1	**5V-6455**	20	WASHER (52X120X3-MM THK)	
	19	1	**7G-8839**	10	SPACER (13.5X57X6-MM THK)	
M	20	1	**7X-2553**	8	BOLT (M16X2X40-MM)	
M	21	1	**7X-2565**	12	BOLT (M20X2.5X100-MM)	
M	22	1	**8T-4131**	12	NUT (M20X2.5-THD)	
M	23	1	**8T-4139**	10	BOLT (M12X1.75X30-MM)	
	24	1	**9X-8257**	8	WASHER (17.5X30X3.5-MM THK)	

B-USE AS REQUIRED
M-METRIC PART
Y-SEPARATE ILLUSTRATION

347-8846 **BLADE GP-BULLDOZER** *(contd.)* **i03628549**

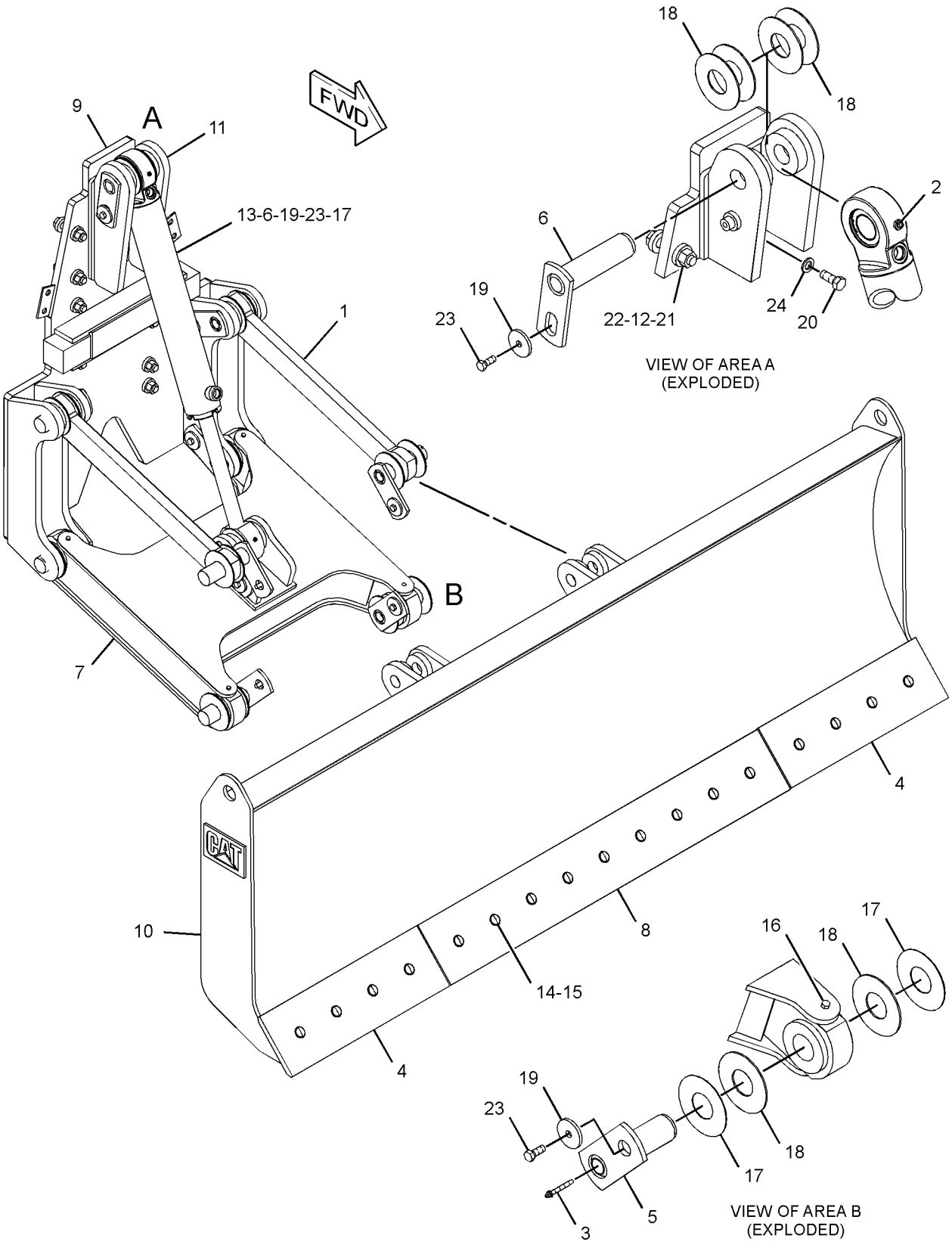

GRAPHIC #1 **<END>** g01936696

WORK TOOLS

339-7734 BRACKET GP-SCARIFIER

S/N: JAP1-UP
PART OF 340-5008 SCARIFIER AR
AN ATTACHMENT

SMCS-6162 **i03537888**

NOTE	REF NO	GRAPHIC REF	PART NUMBER	QTY	PART NAME 1 2 3 4 5 6 (PRODUCT LEVEL)	SEE PAGE
	1	1	**8W-0681**	1	PLATE	
	2	1	**8W-0684**	1	BRACKET AS	

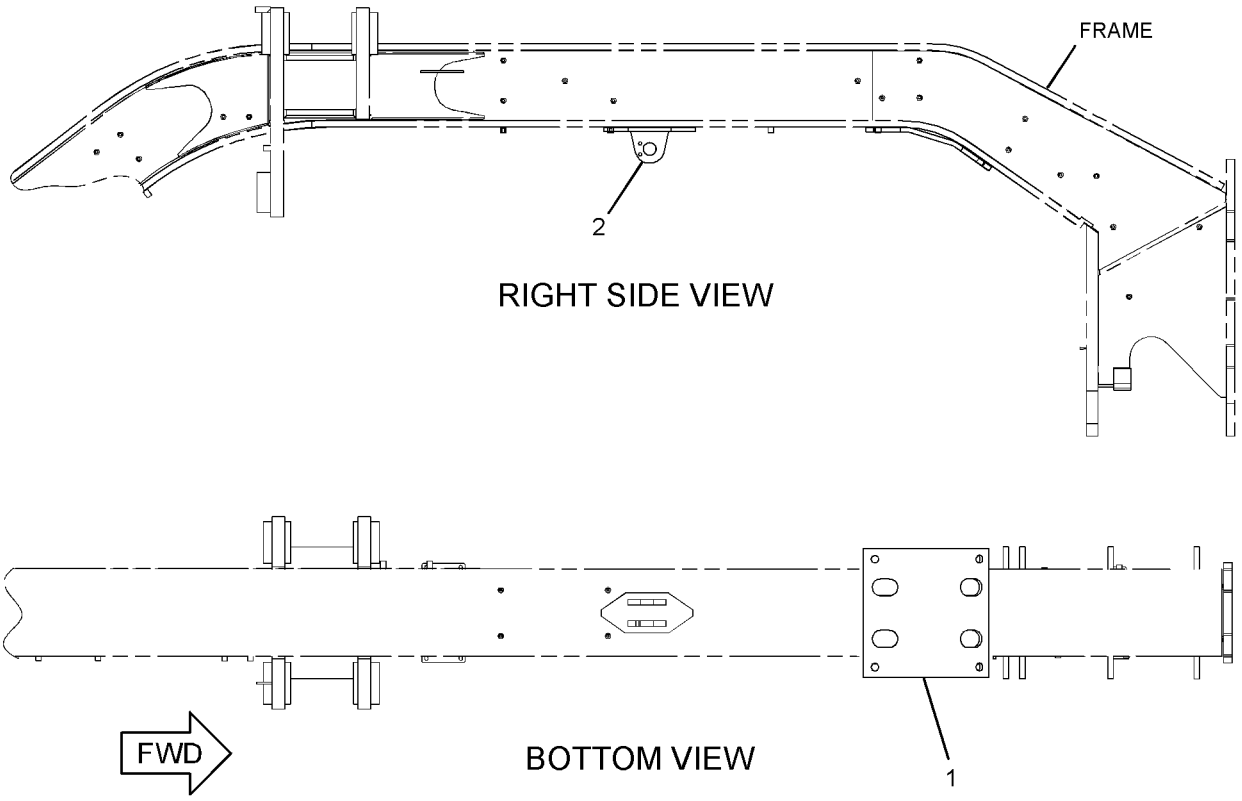

GRAPHIC #1 **<END>** g01929877

WORK TOOLS

314-9338 CYLINDER GP-HYDRAULIC

S/N: JAP1-UP
88.9-MM (3.5-IN) BORE X 549-MM (21.6-IN) STROKE
PART OF 347-8846 BLADE GP-BULLDOZER
AN ATTACHMENT

SMCS-7562 **i03200421**

NOTE	REF NO	GRAPHIC REF	PART NUMBER	QTY	PART NAME 1 2 3 4 5 6 (PRODUCT LEVEL)	SEE PAGE
R	1	1	**163-0325**	1	CYLINDER AS	
	2	1	**163-0326**	1	PISTON	
R	3	1	**163-0327**	1	ROD AS	
		1	**1K-6985**	2	RING-RETAINING	
		1	**9M-1328**	1	BEARING	
	4	1	**314-9339**	1	HEAD	
M	5	1	**173-9779**	1	BOLT (M24X3X80-MM)	
J	6	1	**175-7898**	1	SEAL-O-RING	
J	7	1	**308-1880**	1	SEAL-WIPER	
J	8	1	**308-1883**	1	SEAL AS	
J	9	1	**308-1884**	1	SEAL AS	
J	10	1	**4J-9224**	1	RING-BACKUP	
J	11	1	**4T-6907**	1	RING-WEAR	
J	12	1	**4T-8054**	1	SEAL AS	
	13	1	**6V-8237**	1	WASHER (26X44X4-MM THK)	
J	14	1	**7J-9885**	1	RING-WEAR	
					AVAILABLE REPAIR KIT(S):	
J			**326-0503**	1	KIT-SEAL	

J-KIT MARKED J SERVICES PARTS MARKED J
M-METRIC PART
R-REMFG PART MAY BE AVAILABLE

314-9338 CYLINDER GP-HYDRAULIC *(contd.)* i03200421

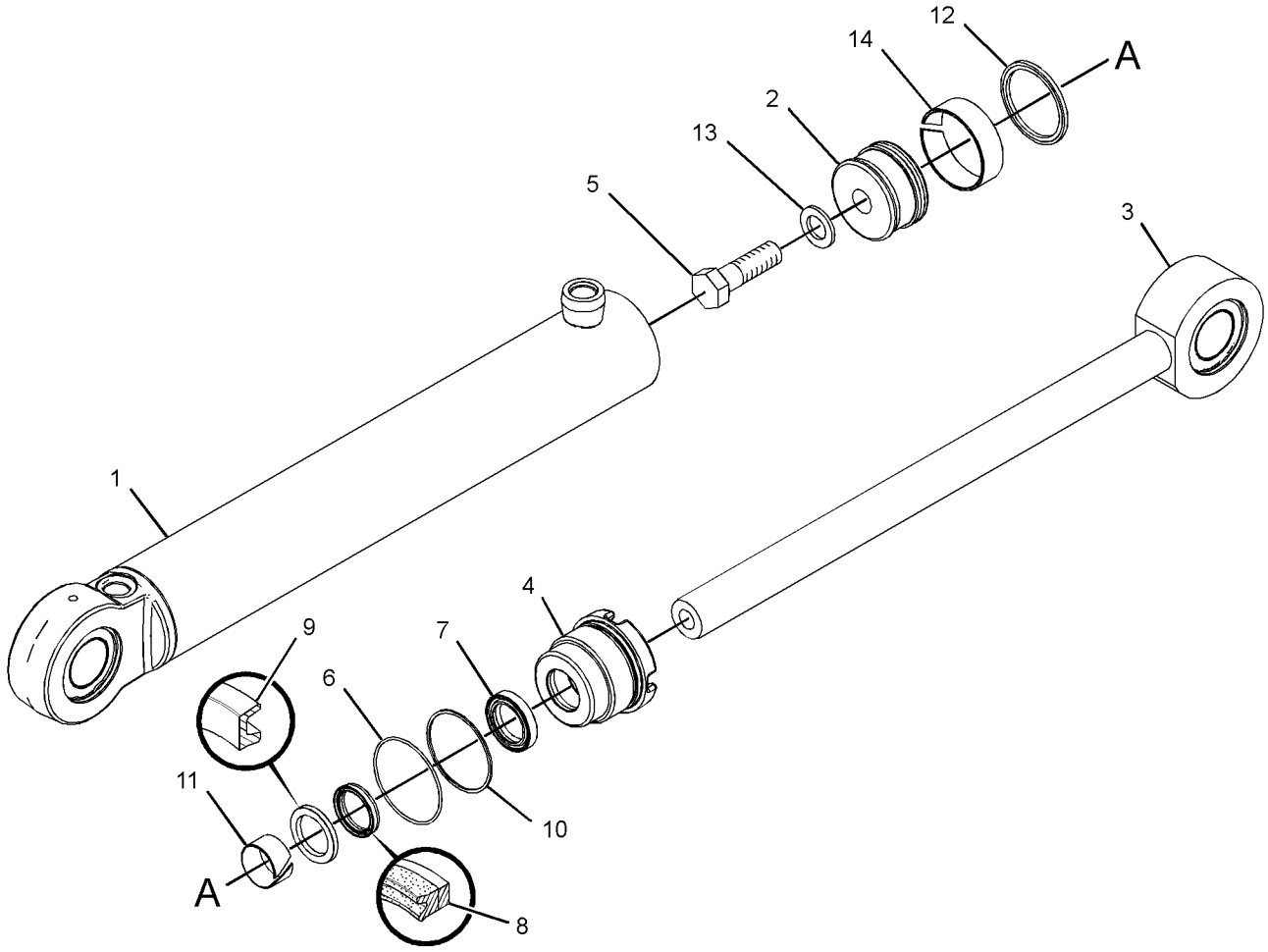

GRAPHIC #1 **<END>** g01518744

WORK TOOLS

280-4072 EDGE GP-CUTTING

S/N: JAP1-UP
12-FOOT
PART OF 329-3826 BLADE & TIP AR-POWER, 348-6939 OPTION AR-WORK TOOL
AN ATTACHMENT

SMCS-6801 **i03291833**

NOTE	REF NO	GRAPHIC REF	PART NUMBER	QTY	PART NAME 1 2 3 4 5 6 (PRODUCT LEVEL)	SEE PAGE
	1	1	**7D-1576**	2	EDGE-CUTTING	

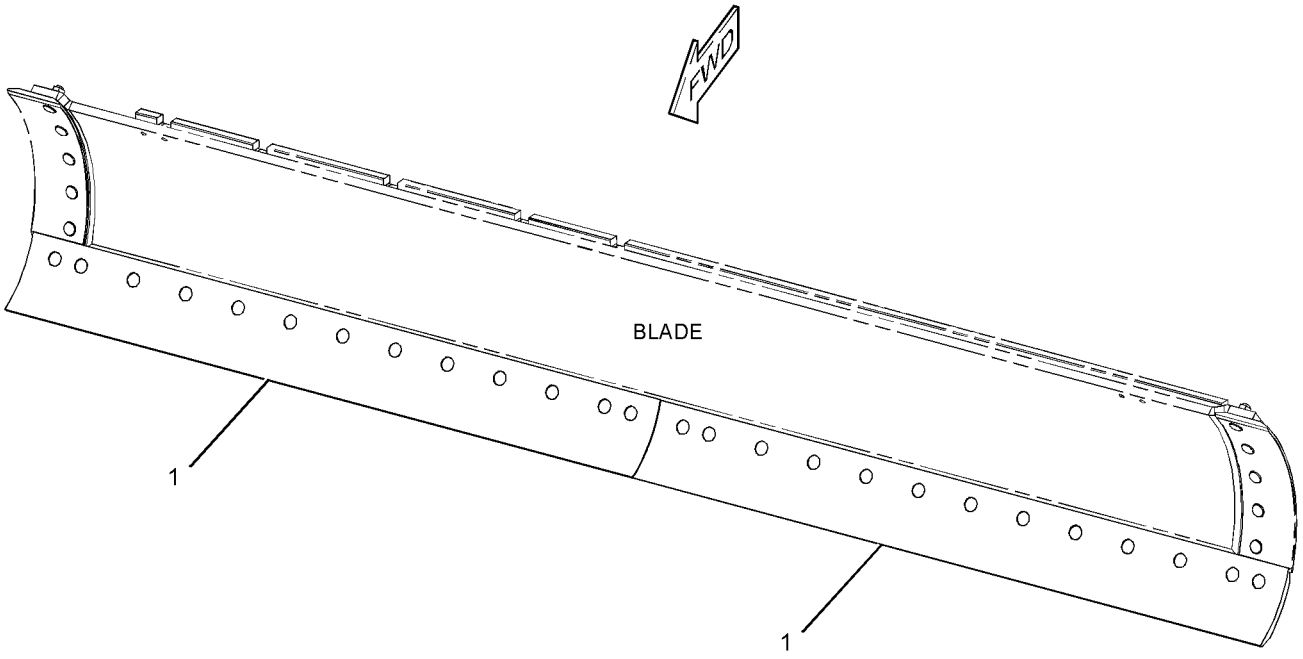

GRAPHIC #1 **<END>** g01701895

WORK TOOLS

265-1100 LIFT GP-BLADE

S/N: JAP1-UP

PART OF 348-3018 GENERAL AR

SMCS-6151 **i02793412**

NOTE	REF NO	GRAPHIC REF	PART NUMBER	QTY	PART NAME 1 2 3 4 5 6 (PRODUCT LEVEL)	SEE PAGE
	1	1,2	**7D-8875**	4	WASHER-THRUST (2.515X3.62X0.075-IN THK)	
	2	1,2	**7D-8878**	4	WASHER-THRUST (3.015X4.22X0.075-IN THK)	
B	3	1,2	**7D-8879**	8	SHIM (0.127-MM THK)	
B	4	1,2	**7D-8881**	6	SHIM (0.254-MM THK)	
B	5	1,2	**7D-8882**	2	SHIM (0.508-MM THK)	
	6	1,2	**8X-2881**	2	LOCK	
	7	2	**8X-4644**	1	STUD-BALL	
	8	1	**8X-4884**	1	PIN	
	9	1	**8X-5028**	1	BAR AS	
		1	**8X-5021**	2	BEARING	
B	10	2	**9D-1530**	2	WASHER-THRUST (2.265X4.5X0.075-IN THK)	
	11	2	**9D-2753**	2	LOCK	
B	12	2	**124-0360**	2	WASHER-THRUST (57.5X114.3X1-MM THK)	
	13	1,2	**261-8541**	2	YOKE AS	
					(EACH INCLUDES)	
		1,2	**2G-8233**	1	RING	
	14	1,2	**261-8543**	2	RETAINER	
	15	1	**265-1094**	1	ARM AS (LH)	
	16	1	**265-1095**	1	ARM AS (RH)	
					(EACH ARM AS INCLUDES)	
		1	**7D-8889**	1	BEARING (76.35-MM ID)	
		1	**8D-8168**	1	BEARING (63.65-MM ID)	
	17	2	**265-1096**	2	PIN	
M	18	2	**288-0735**	1	BOLT (M12X1.75X60-MM)	
	19	2	**129-7261**	1	PLATE	
	20	2	**279-6632**	1	WASHER (13.5X25.5X3-MM THK)	
	21	1,2	**5F-0149**	2	SEAL-O-RING	
M	22	1,2	**6V-5684**	4	BOLT (M12X1.75X45-MM)	
	23	1,2	**7D-8876**	2	WASHER-THRUST (65.07X92.08X2.39-MM THK)	
	24	1,2	**7D-8877**	2	WASHER-THRUST (77.77X107.19X2.39-MM THK)	
	25	1,2	**7D-8883**	2	SEAL	
	26	1,2	**7D-8884**	2	SEAL	
	27	1,2	**7H-2444**	2	SEAL	
	28	1,2	**7K-9203**	4	SEAL-LIP TYPE	
M	29	2	**7X-2565**	4	BOLT (M20X2.5X100-MM)	
	30	1,2	**8T-4122**	4	WASHER-HARD (17X32X3.5-MM THK)	
	31	2	**8T-4123**	8	WASHER (22X35X3.5-MM THK)	
M	32	2	**8T-4131**	4	NUT (M20X2.5-THD)	
M	33	1,2	**8T-4175**	4	BOLT (M16X2X90-MM)	
	34	1,2	**8T-4223**	4	WASHER-HARD (13.5X25.5X3-MM THK)	

B-USE AS REQUIRED
M-METRIC PART

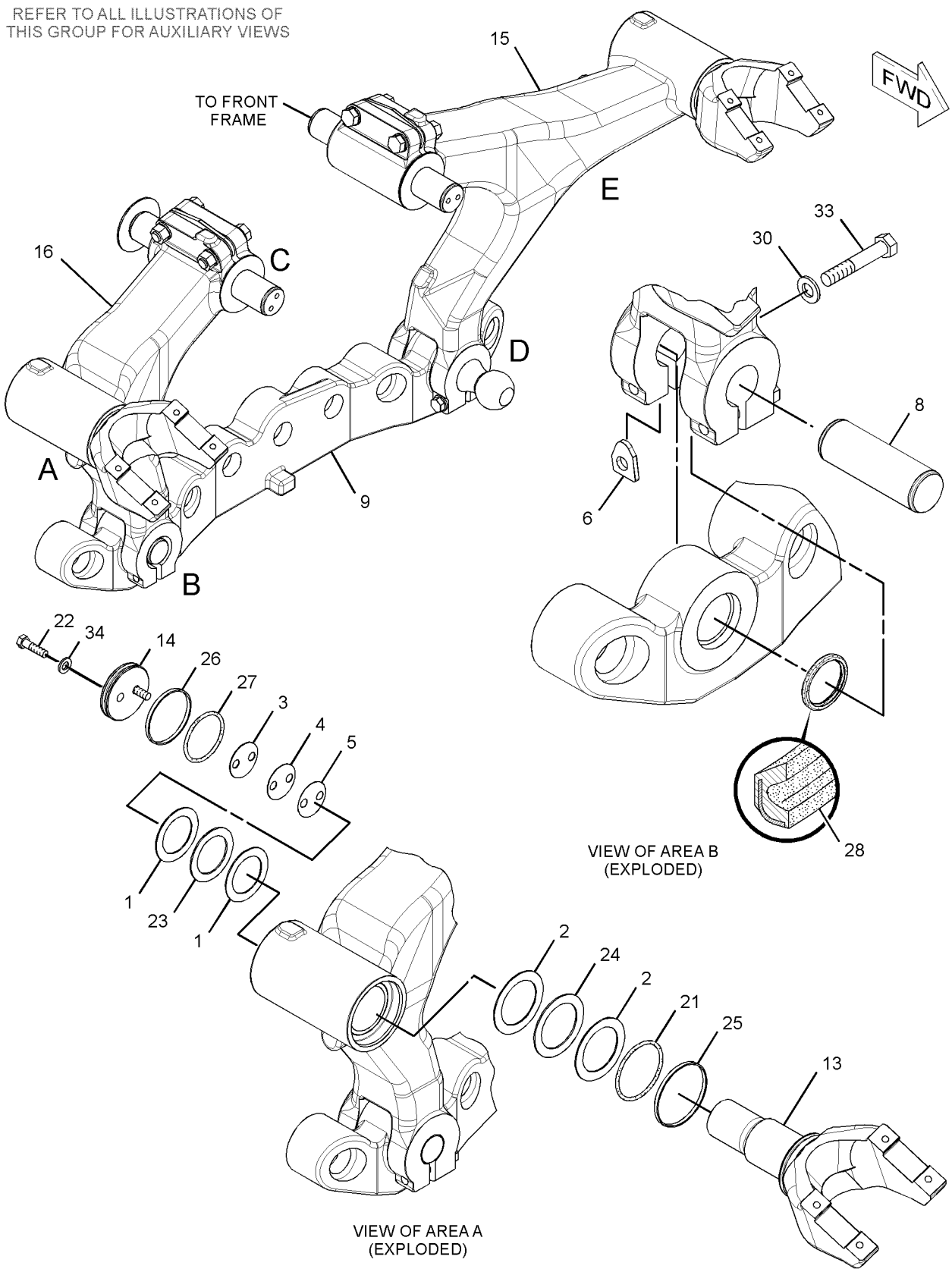

GRAPHIC #1

g01379845

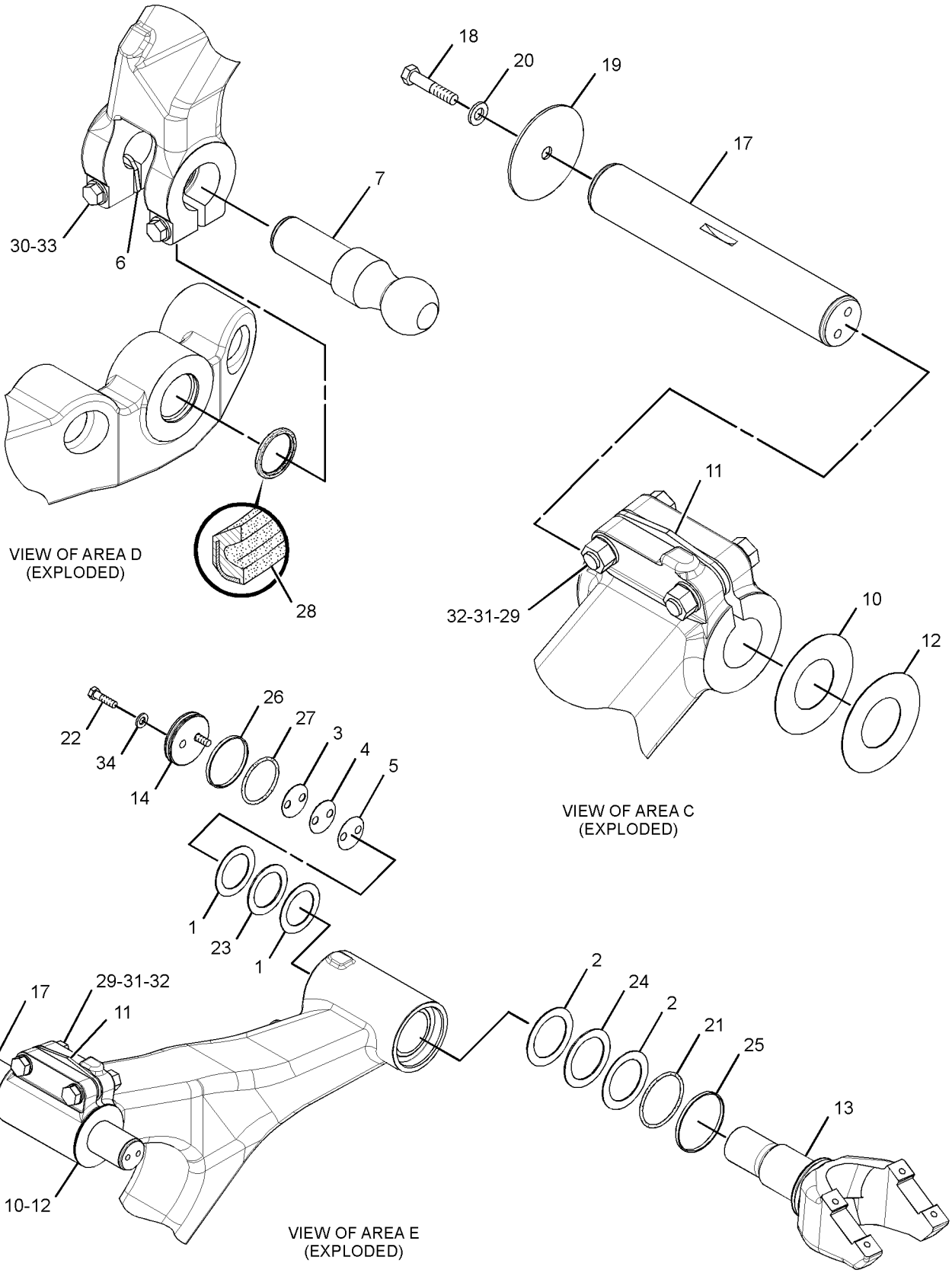

GRAPHIC #2 **<END>** g01379846

WORK TOOLS

301-8205 MOUNTING GP-RIPPER

S/N: JAP1-UP
PART OF 301-8206 RIPPER AR
AN ATTACHMENT

SMCS-6324 **i03564901**

NOTE	REF NO	GRAPHIC REF	PART NUMBER	QTY	PART NAME 1 2 3 4 5 6 (PRODUCT LEVEL)	SEE PAGE
	1	1	**3W-7254**	2	SPACER (47X80X20-MM THK)	
	2	1	**104-4523**	2	CAM AS	
	3	1	**144-8001**	2	SHIM (3-MM THK)	
	4	1	**301-8207**	2	LINK AS	
	5	1	**304-0267**	1	PLATE AS	
	6	1	**307-0769**	2	BOSS	
	7	1	**109-6776**	2	PIN	
	8	1	**113-0993**	1	PIN	
	9	1	**124-6679**	2	PIN	
M	10	1	**129-3180**	3	LOCKNUT (M12X1.75-THD)	
M	11	1	**7X-2543**	2	BOLT (M10X1.5X120-MM)	
M	12	1	**7X-2549**	3	BOLT (M12X1.75X100-MM)	
M	13	1	**7X-2575**	10	BOLT (M24X3X60-MM)	
M	14	1	**8T-0389**	4	LOCKNUT (M10X1.5-THD)	
	15	1	**8T-1482**	10	WASHER-HARD (26X50X8-MM THK)	
M	16	1	**8T-6685**	2	BOLT (M10X1.5X110-MM)	
	17	1	**9J-0090**	2	PIN	

M-METRIC PART

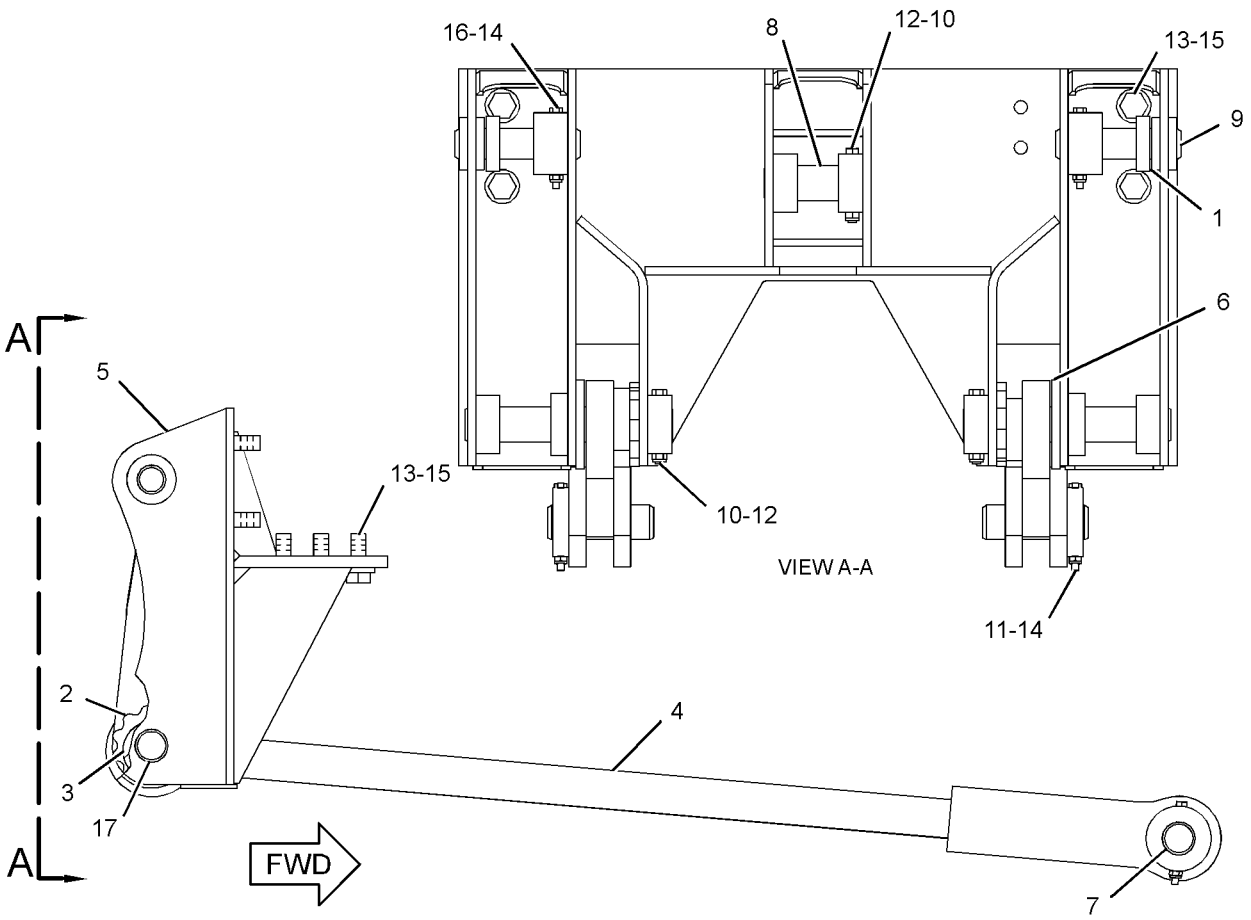

GRAPHIC #1 **<END>** g01926201

301-8206 RIPPER AR

S/N: JAP1-UP

PART OF 348-6936 OPTION AR-RIPPER

AN ATTACHMENT

SMCS-6325 **i03635951**

NOTE	REF NO	GRAPHIC REF	PART NUMBER	QTY	PART NAME 1 2 3 4 5 6 (PRODUCT LEVEL)	SEE PAGE
Y	1	1	*299-2511*	1	RIPPER GP	654
Y	2	1	*208-9698*	1	CYLINDER & LINES GP-RIPPER	364
Y	3	1	*301-8205*	1	MOUNTING GP-RIPPER	652

Y-SEPARATE ILLUSTRATION

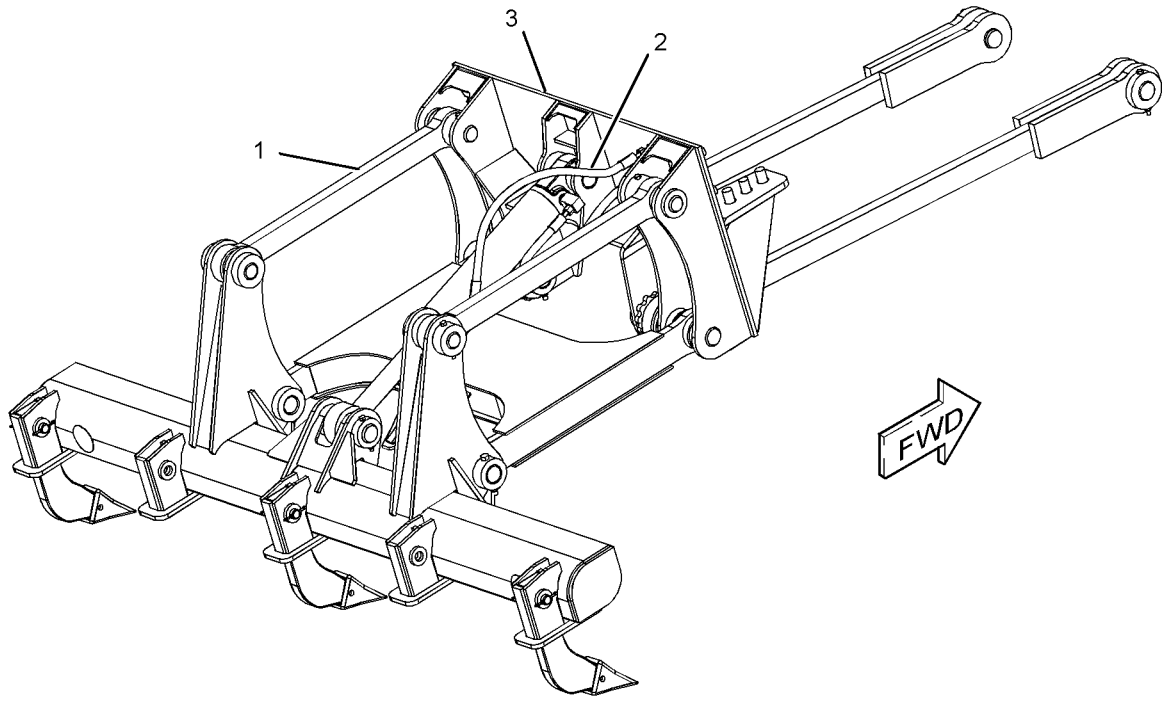

GRAPHIC #1 **<END>** g01934433

WORK TOOLS

299-2511 RIPPER GP

S/N: JAP1-UP
PART OF 301-8206 RIPPER AR
AN ATTACHMENT

SMCS-6325 **i02829611**

NOTE	REF NO	GRAPHIC REF	PART NUMBER	QTY	PART NAME 1 2 3 4 5 6 (PRODUCT LEVEL)	SEE PAGE
Y	1	1	*8J-5313*	3	TOOTH GP-RIPPER	659
Y	2	1	**113-0994**	2	LINK GP-UPPER	521
Y	3	1	**113-0997**	1	LINK GP-LOWER	520
	4	1	**124-9768**	1	CARRIAGE AS	
		1	**5G-8760**	6	BOSS	
		1	**113-1009**	5	HOLDER AS	
	5	1	**190-5386**	2	FILM-STRIPE (ROUND RED REFLECTIVE) (RIPPER)	
	6	1	**109-6776**	2	PIN	
	7	1	**113-0996**	2	PIN	
M	8	1	**129-3180**	2	LOCKNUT (M12X1.75-THD)	
	9	1	**3G-0471**	1	PIN	
M	10	1	**7X-2549**	2	BOLT (M12X1.75X100-MM)	
M	11	1	**8T-0389**	3	LOCKNUT (M10X1.5-THD)	
M	12	1	**8T-4198**	3	BOLT (M10X1.5X100-MM)	

M-METRIC PART
Y-SEPARATE ILLUSTRATION

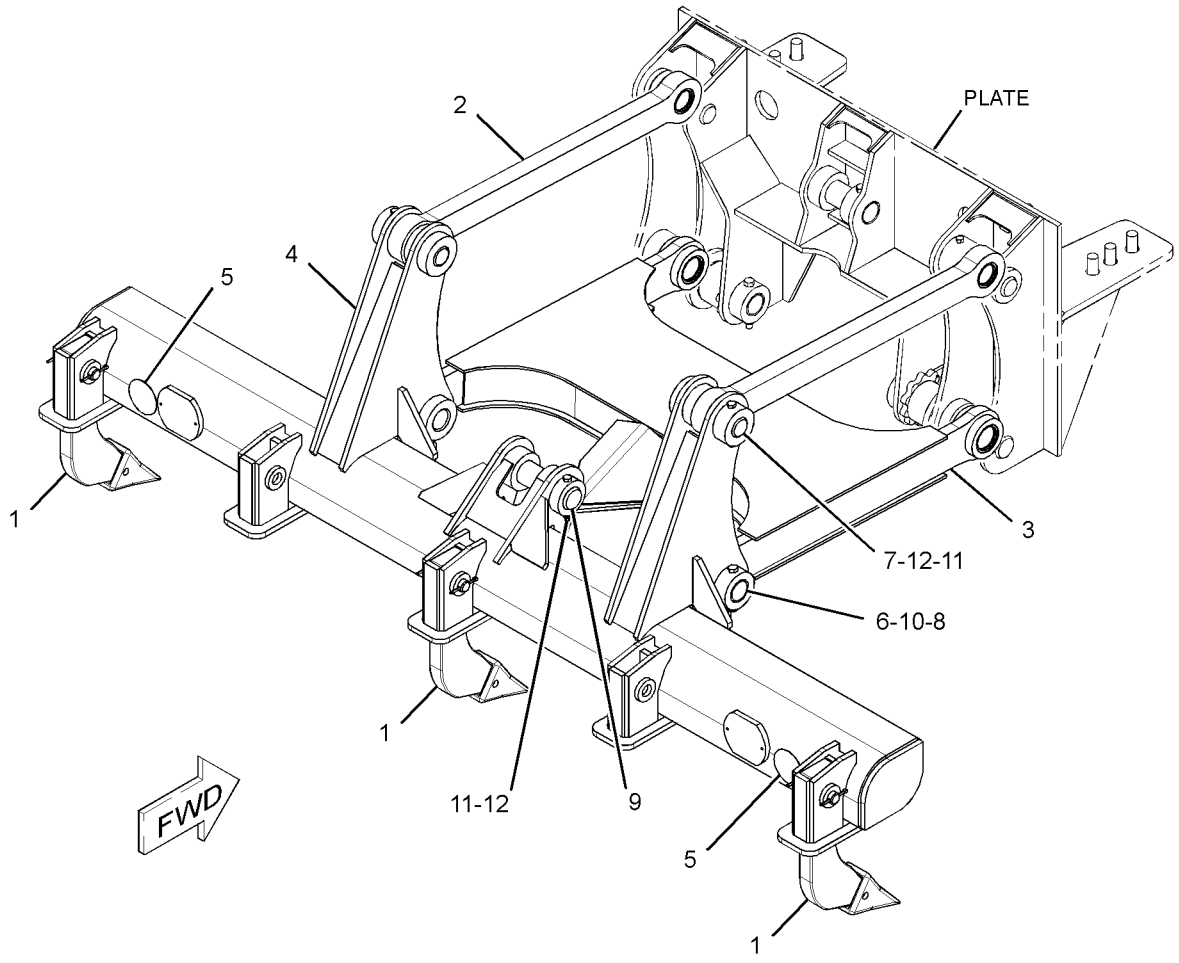

GRAPHIC #1 **<END>** g01372959

WORK TOOLS

340-5008 SCARIFIER AR—VEE TYPE

S/N: JAP1-UP

AN ATTACHMENT

SMCS-6162, 6325, 6811 **i03538001**

NOTE	PART NUMBER	QTY	PART NAME 1 2 3 4 5 6 (PRODUCT LEVEL)	SEE PAGE
Y	*339-7734*	1	BRACKET GP-SCARIFIER	645
Y	*8W-2913*	1	CYLINDER & MTG GP-SCARIFIER	370
Y	*8X-6070*	1	LINES GP-HYDRAULIC (SCARIFIER)	394
Y	*310-9428*	1	SCARIFIER GP (VEE TYPE)	656

Y-SEPARATE ILLUSTRATION

<END>

WORK TOOLS

310-9428 SCARIFIER GP—VEE TYPE

S/N: JAP1-UP

PART OF 340-5008 SCARIFIER AR

AN ATTACHMENT

SMCS-6162, 6325, 6811 **i03317223**

NOTE	REF NO	GRAPHIC REF	PART NUMBER	QTY	PART NAME 1 2 3 4 5 6 (PRODUCT LEVEL)	SEE PAGE
	1	1	**7X-0386**	2	BOLT (7/8-9X3.5-IN)	
	3	1	**2G-4332**	1	BLOCK AS-SCARIFIER	
		1	**7D-8825**	11	SPACER	
		1	**7D-8826**	11	SPACER	
	4	1	**6K-3632**	4	LOCKNUT (1-8-THD)	
	5	1	**3B-8489**	4	FITTING-GREASE	
	6	1	**7X-0450**	4	NUT-FULL (1-1/8-7-THD)	
	7	1	**4D-6086**	2	KEY	
	8	1	**5B-0577**	2	COLLAR	
	9	1	**5D-8159**	2	PIN AS	
	10	1	**5K-1458**	11	GROMMET	
	11	1	**5K-1459**	11	LOCK PIN	
	12	1	**6B-3260**	1	TOOL	
	13	1	**6F-6992**	4	CAP-BALL SOCKET	
	14	1	**6Y-5230**	11	TOOTH-SCARIFIER	
	15	1	**7D-2196**	2	SLEEVE AS-LINK	
					(EACH INCLUDES)	
		1	**7D-2136**	1	SOCKET-BALL	
B	16	1	**7F-1327**	32	SHIM (0.03-IN THK)	
	17	1	**8D-1268**	2	ARM AS-LIFT	
					(EACH INCLUDES)	
		1	**7D-8245**	1	STUD-BALL	
	18	1	**7X-0443**	4	BOLT (1-8X5.5-IN)	
	19	1	**7X-0423**	4	BOLT (1-1/8-7X4.5-IN)	
	20	1	**8W-0663**	2	BRACKET AS	
					(EACH INCLUDES)	
		1	**3B-8489**	1	FITTING-GREASE	
		1	**107-8374**	2	BEARING	
	21	1	**8X-6075**	1	BOLSTER AS	
	22	1	**9D-5516**	2	LINK AS-LIFT	
					(EACH INCLUDES)	
		1	**7D-2135**	1	SOCKET-BALL	
	23	1	**107-8375**	1	SHAFT AS	
	24	1	**118-7880**	1	DRAWBAR AS	
		1	**2G-7728**	2	COLLAR	
		1	**8W-5597**	1	STUD-BALL	
	25	1	**118-7881**	1	DRAWBAR AS	
		1	**2G-7728**	2	COLLAR	
		1	**8W-5597**	1	STUD-BALL	
	26	1	**195-7218**	11	SHANK	
B	27	1	**198-9811**	16	SPACER (83X145X3-MM THK)	
B	28	1	**198-9812**	3	SPACER (83X145X2-MM THK)	
	29	1	**8T-8924**	8	BOLT (3/4-10X2.5-IN)	
	30	1	**8C-8842**	4	BOLT (3/4-10X4-IN)	
	31	1	**6V-8188**	2	NUT (1/2-13-THD)	
	32	1	**330-6877**	1	SHAFT	
	33	1	**6V-8182**	4	NUT (3/4-10-THD)	
	34	1	**282-0882**	4	WASHER-HARD (33X56X6-MM THK)	
	35	1	**5D-8161**	2	PIN	
	36	1	**8T-4223**	2	WASHER-HARD (13.5X25.5X3-MM THK)	
	37	1	**8T-4994**	8	WASHER-HARD (20X36.5X3.5-MM THK)	
	38	1	**8T-5361**	8	WASHER-HARD (28X49X5-MM THK)	
	39	1	**6K-0545**	6	LOCKNUT (7/8X19-THD)	
	40	1	**7X-0390**	4	BOLT (7/8-9X5-IN)	
	41	1	**8C-6913**	4	WASHER-HARD (24X41.5X4-MM THK)	

310-9428 **SCARIFIER GP** *(contd.)* **i03317223**

NOTE	REF NO	GRAPHIC REF	PART NUMBER	QTY	PART NAME 1 2 3 4 5 6 (PRODUCT LEVEL)	SEE PAGE
	42	1	**198-4782**	8	WASHER-HARD (26X47X12-MM THK)	
	43	1	**7X-0328**	2	BOLT (1/2-13X3.5-IN)	
B-USE AS REQUIRED						

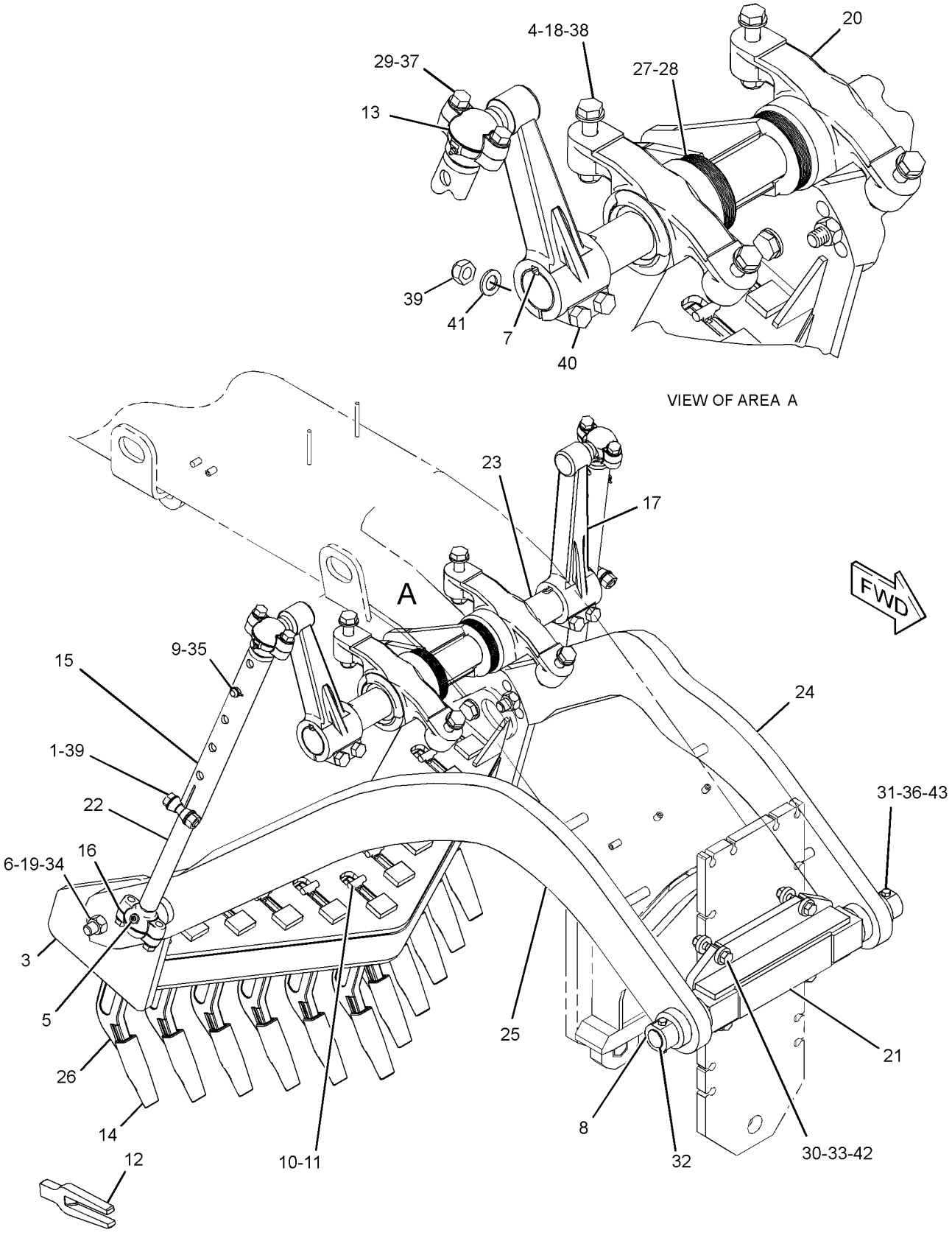

GRAPHIC #1 **<END>** g01753714

WORK TOOLS

8J-5313 TOOTH GP-RIPPER

S/N: JAP1-UP
PART OF 299-2511 RIPPER GP
AN ATTACHMENT

SMCS-6808 **i00834867**

NOTE	REF NO	GRAPHIC REF	PART NUMBER	QTY	PART NAME 1 2 3 4 5 6 (PRODUCT LEVEL)	SEE PAGE
	1	1	**6B-5464**	1	PIN	
	2	1	**8J-5299**	1	SHANK-RIPPER	
C	3	1	**8E-6208**	1	PIN	
C		1	**8E-6209**	1	RETAINER AS	
C	4	1	**1U-3202**	1	TIP-LONG	
	5	1	**3B-4632**	2	PIN-COTTER	

C-CHANGE FROM PREVIOUS TYPE

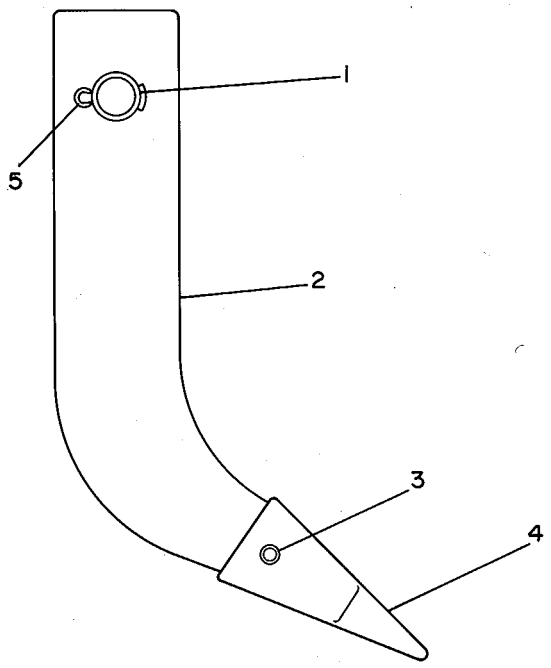

GRAPHIC #1 **<END>** g00108181

SERVICE EQUIPMENT AND SUPPLIES

111-1719 BOX GP-TOOL

S/N: JAP1-UP

PART OF 348-3018 GENERAL AR

SMCS-7259 **i03503263**

NOTE	REF NO	GRAPHIC REF	PART NUMBER	QTY	PART NAME 1 2 3 4 5 6 (PRODUCT LEVEL)	SEE PAGE
	1	1	**129-7249**	1	TOOL BOX	
	2	1	**246-2641**	1	PADLOCK GP (TOOL BOX)	
		1	**5P-8500**	1	KEY	
	3	1	**5K-9107**	4	BOLT-LOCKING (3/8-16X0.75-IN)	
	4	1	**5P-1075**	4	WASHER-HARD (10.2X22.5X3-MM THK)	

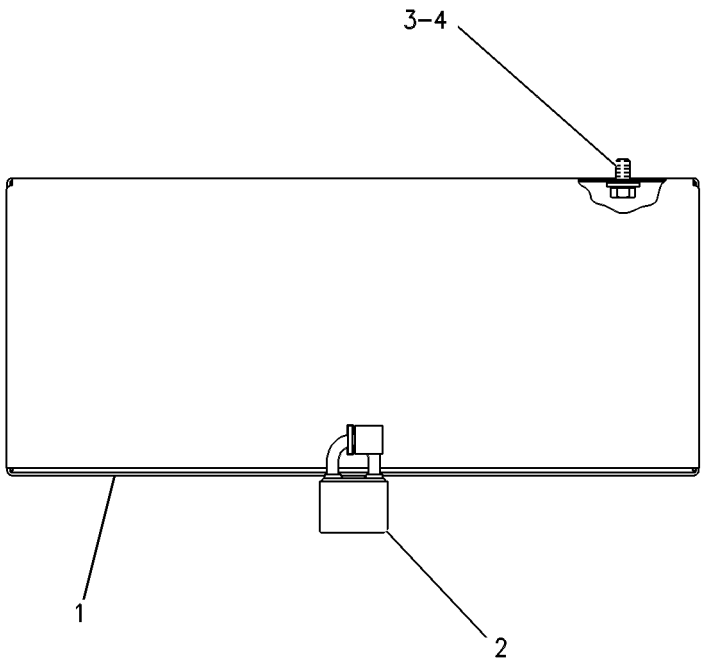

GRAPHIC #1 **<END>** g00109173

302-4192 FILM GP

S/N: JAP1-UP

PART OF 302-4195 PLATE & FILM GP

SMCS-0375, 7000, 7405, 7557 **i03535424**

NOTE	REF NO	GRAPHIC REF	PART NUMBER	QTY	PART NAME 1 2 3 4 5 6 (PRODUCT LEVEL)	SEE PAGE
	1	1	**253-0861**	2	FILM-INFORMATION (CAT POWER, ACERT TECHNOLOGY)	
	2	1	**280-1480**	1	FILM-IDENTIFICATION (CATERPILLAR)	
	3	1	**296-6764**	1	FILM-IDENTIFICATION (CAT, RH)	
	4	1	**296-6765**	1	FILM-IDENTIFICATION (CAT, LH)	
	5	1	**296-6768**	2	FILM-IDENTIFICATION (VHP 145)	
	6	1	**302-1331**	2	FILM-IDENTIFICATION (120K)	

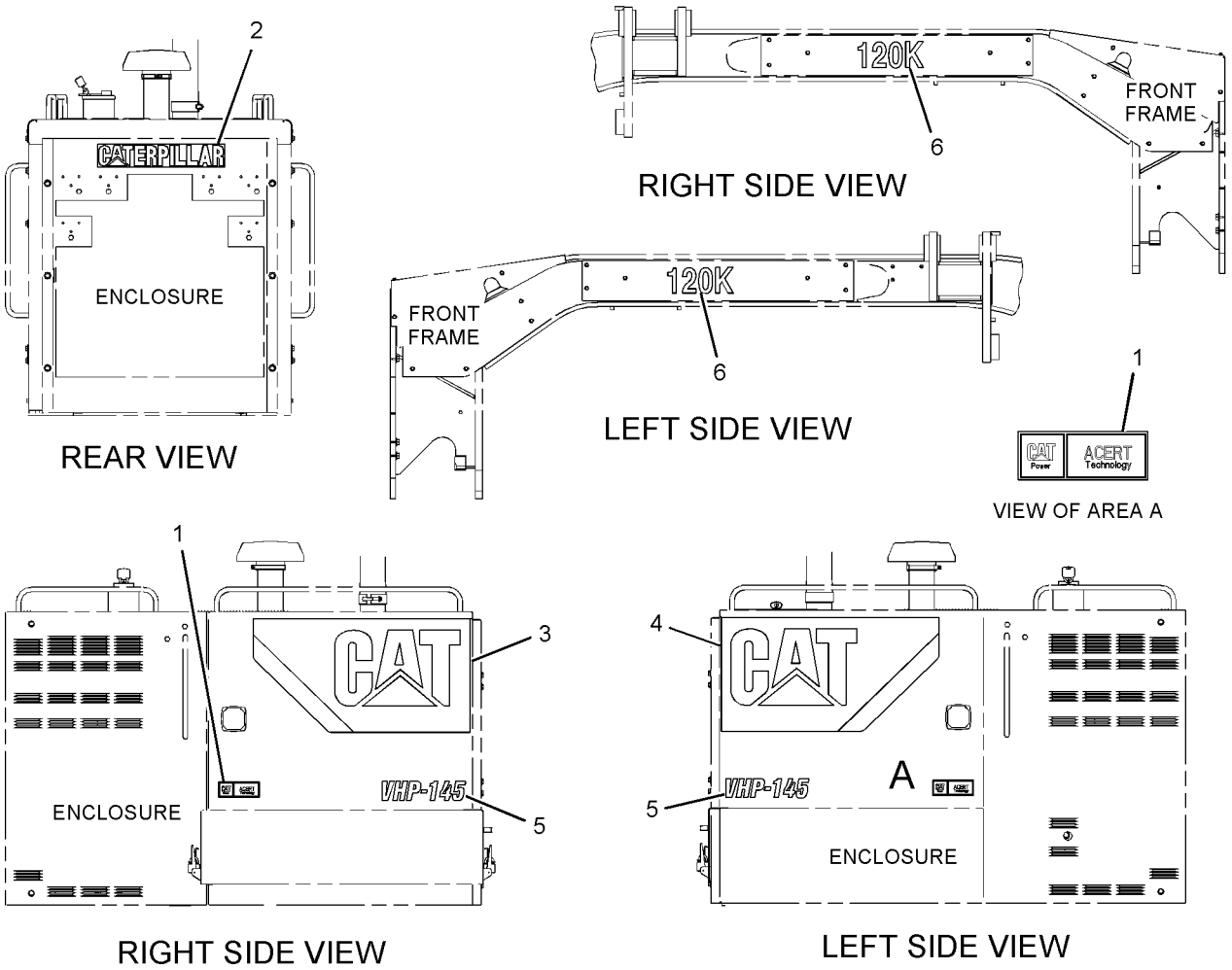

GRAPHIC #1 **<END>** g01924216

SERVICE EQUIPMENT AND SUPPLIES

302-4195 PLATE & FILM GP

S/N: JAP1-UP

PART OF 348-3018 GENERAL AR

SMCS-7405, 7557 **i03536296**

NOTE	REF NO	GRAPHIC REF	PART NUMBER	QTY	PART NAME 1 2 3 4 5 6 (PRODUCT LEVEL)	SEE PAGE
	1	1	**3E-1552**	1	FILM-INSTRUCTION (TRANSMISSION FILTER)	
	2	3	**5P-1174**	1	FILM-IDENTIFICATION (TRANSMISSION OIL FILL CAP)	
	3	3	**5P-1175**	1	FILM-IDENTIFICATION (ENGINE OIL FILL)	
	4	1	**8C-5897**	1	FILM-IDENTIFICATION (SIGHT GAUGE)	
	5	1	**125-2210**	1	FILM-IDENTIFICATION (BLADE CENTERSHIFT)	
	6	1	**129-7679**	1	FILM-INSTRUCTION (ENGINE OIL DRAIN)	
	7	3	**129-7680**	1	FILM-INSTRUCTION (HYDRAULIC TANK OIL DRAIN)	
	8	2	**134-7258**	1	FILM-INFORMATION (EXTENDED LIFE COOLANT,READ OMM)	
	10	1	**220-3634**	1	FILM-IDENTIFICATION (DRAIN, ENGINE COOLANT)	
	11	3	**221-8045**	1	FILM-WARNING (SEAT BELT, INTERNATIONAL)	
	12	3	**224-0554**	1	FILM-WARNING (UNIVERSAL, READ OMM, INTL)	
	13	1	**225-0312**	2	FILM-WARNING (JUMP START, READ OMM)	
	14	1	**225-4150**	1	PLATE-SERVICE INFORMATION (MACHINE)	
	15	2	**225-4257**	1	FILM-WARNING (HOT FLUID UNDER PRESS, INTL)	
	16	3	**226-1240**	2	FILM-WARNING (CRUSH HAZARD, STAY BACK, INTL)	
	17	3	**226-1274**	1	FILM-WARNING (CRUSH HAZARD, READ OMM, INTL)	
	18	2	**230-4477**	1	FILM-WARNING (NO STEP)	
	21	3	**239-4991**	1	FILM-WARNING (HIGH PRESSURE CYLINDER)	
	23	1	**248-5245**	2	FILM-INFORMATION (LIFT EYE, TIE-DOWN LOCATION)	
	25	1	**249-8575**	1	FILM-WARNING (NO DRILL, WELD, READ OMM)	
	26	1	**252-2156**	2	FILM-INSTRUCTION (LIFT EYE LOCATION)	
	27	1	**252-2157**	2	FILM-INFORMATION (TIE-DOWN)	
	28	3	**254-6136**	2	FILM-INSTRUCTION (AIR TANK, DRAIN)	
	29	1,3	**281-0547**	4	FILM-WARNING (FAN, READ OMM)	
	30	3	**286-1089**	1	FILM-INFORMATION (FLUID LEVEL)	
	31	3	**293-3824**	1	FILM-IDENTIFICATION (ARTICULATION LOCK)	
Y	34	1	*302-4192*	1	FILM GP	661
	35	3	**329-5707**	1	FILM-IDENTIFICATION (OIL GRADE, READ OMM)	
	36	3	**331-3892**	1	FILM-INSTRUCTION (WASHER FILL)	
	37	2	**336-0057**	1	FILM-INSTRUCTION (ALTERNATOR BELT MOUNTING)	
AF			**239-6989**	1	PLATE-SERIAL NUMBER (MACHINE)	
					(ON LH SIDE OF FRONT FRAME IN FRONT OF LIFT CYLINDER BRACKET)	

A-NOT PART OF THIS GROUP
F-NOT SHOWN
Y-SEPARATE ILLUSTRATION

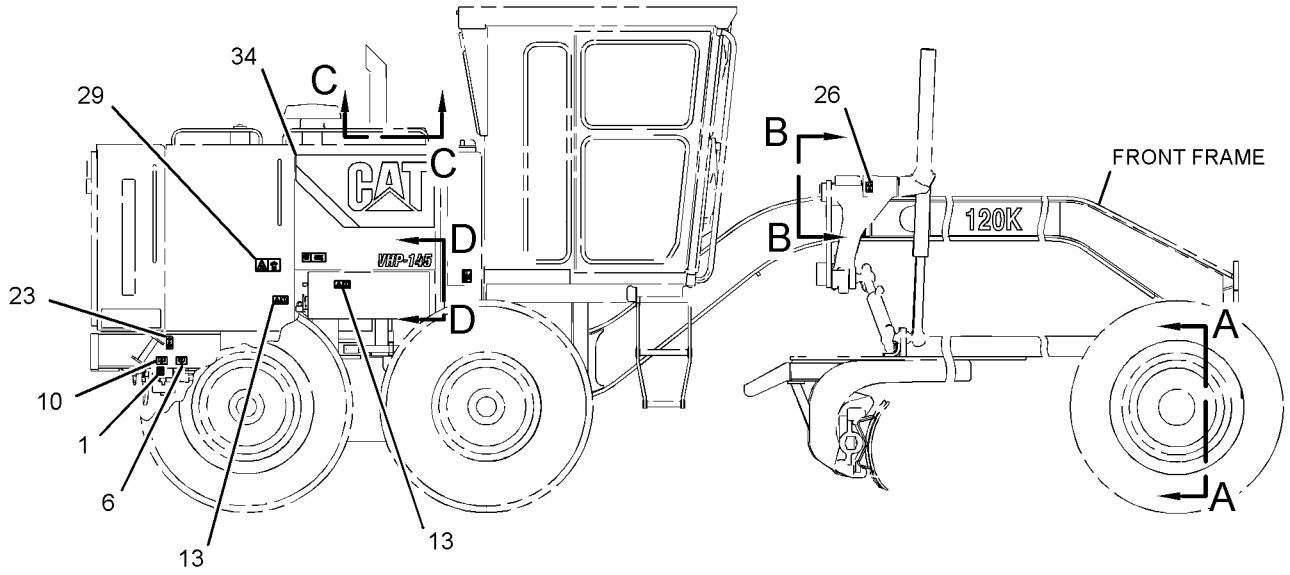

RIGHT SIDE VIEW

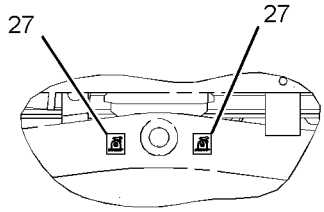

VIEW A-A

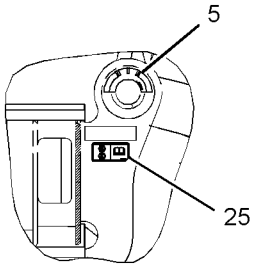

VIEW B-B

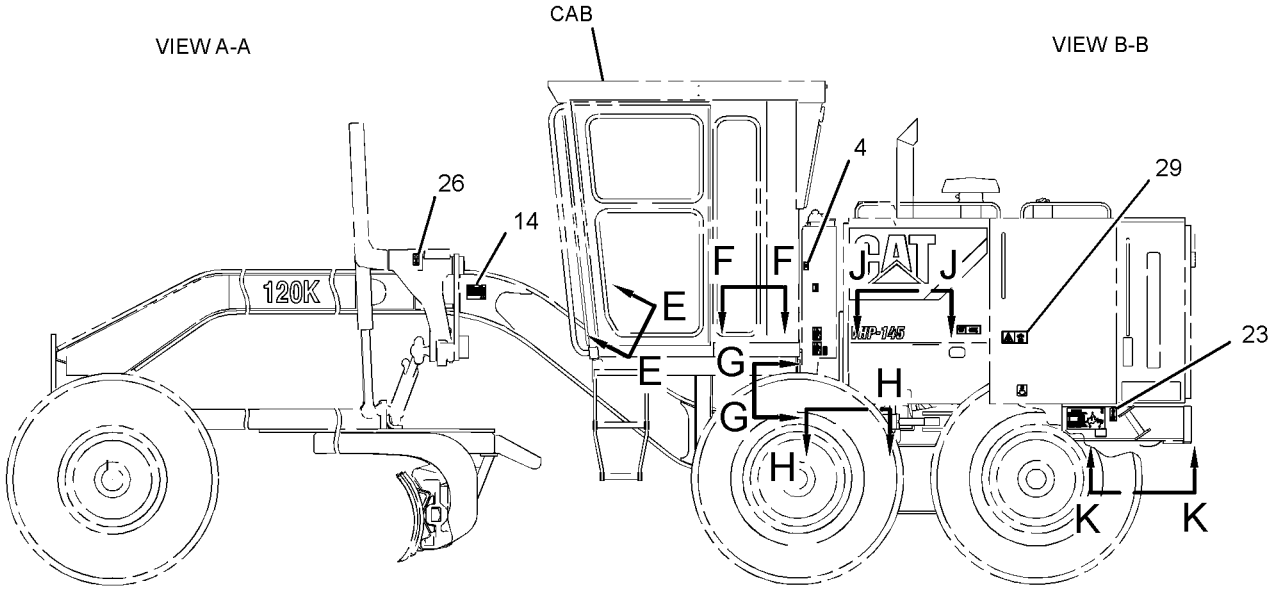

LEFT SIDE VIEW

REFER TO ALL ILLUSTRATIONS OF
THIS GROUP FOR AUXILIARY VIEWS

GRAPHIC #1 g01930233

REFER TO ALL ILLUSTRATIONS OF
THIS GROUP FOR AUXILIARY VIEWS

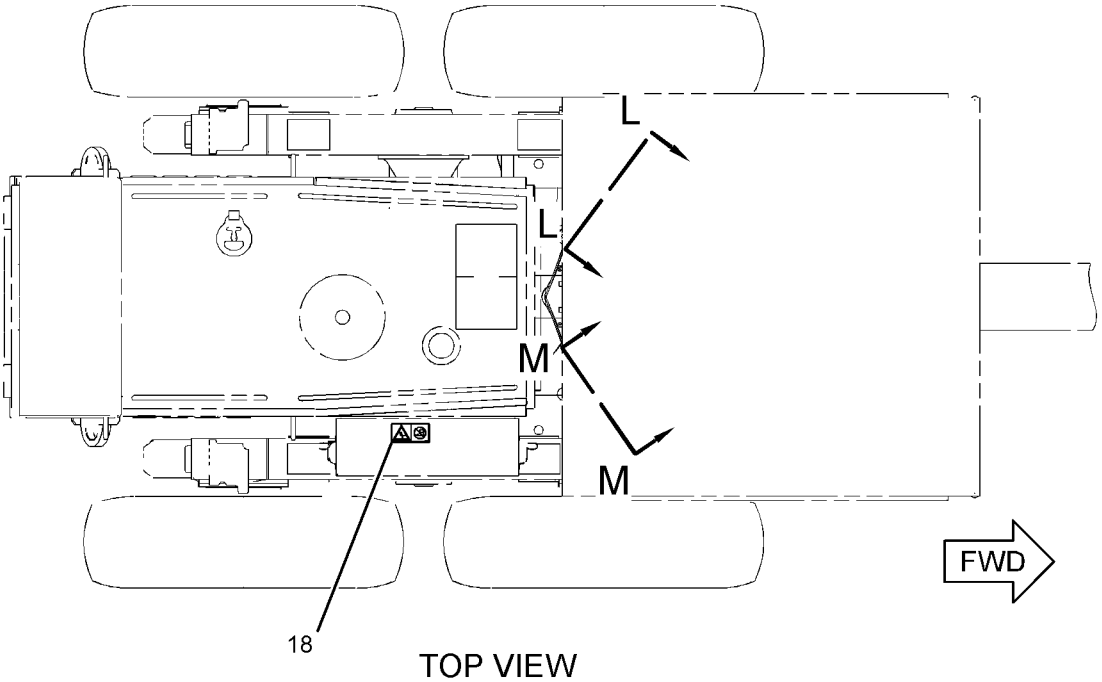

TOP VIEW

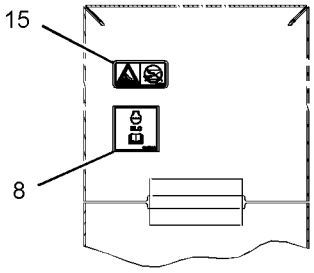

VIEW C-C

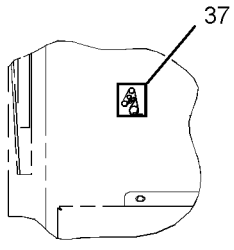

VIEW D-D

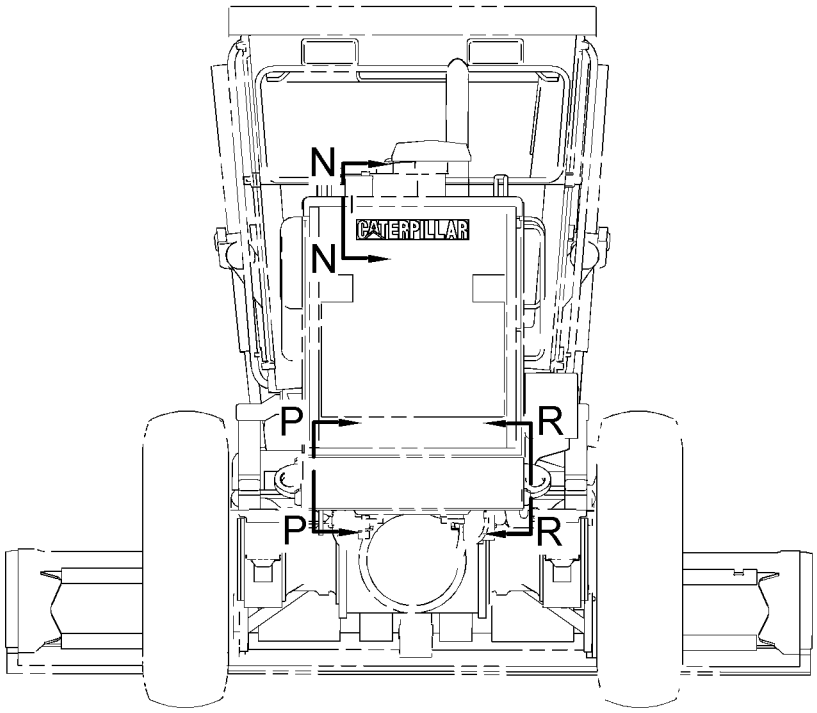

REAR VIEW

GRAPHIC #2

g01930253

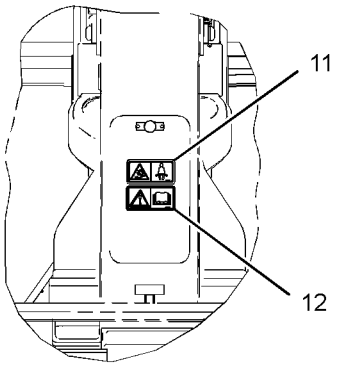

VIEW E-E

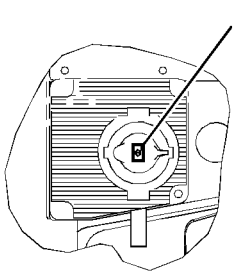

VIEW F-F

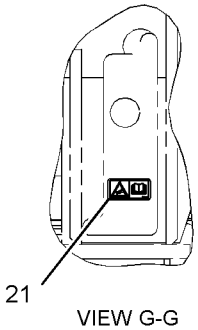

VIEW G-G

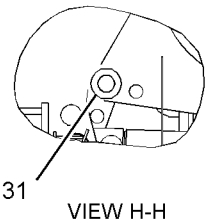

VIEW H-H

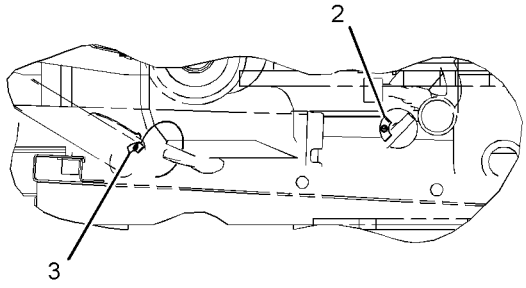

VIEW J-J

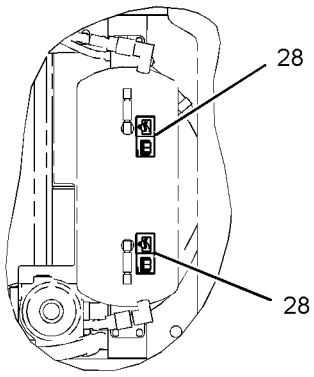

VIEW K-K

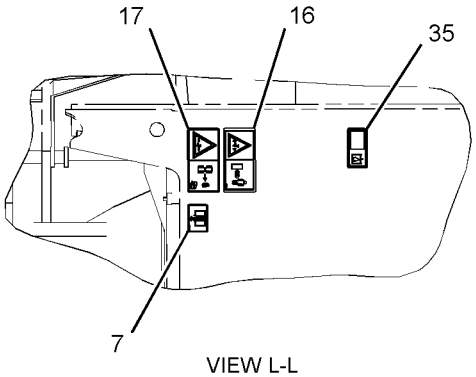

VIEW L-L

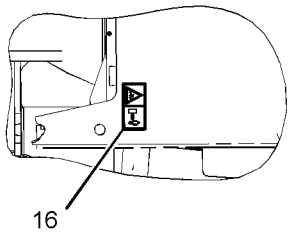

VIEW M-M

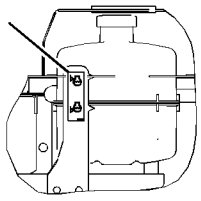

VIEW N-N

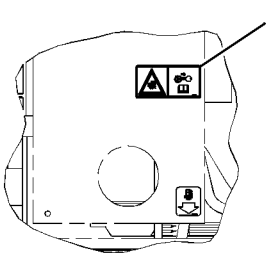

VIEW P-P

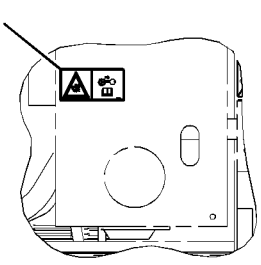

VIEW R-R

GRAPHIC #3 **<END>** g01930255

MEMORANDA

PART NUMBER INDEX

Part	Page
0	
0L-0478	431
0L-1026	282
0S-1571	431
0S-1579	286
0S-1585	389
0S-1587	261
	270
0S-1592	306
	373
0S-1595	350
0S-1604	281
0S-1756	261
	270
0T-0244	616
0V-0375	306
1	
1A-1415	389
1A-4350	609
1A-5822	424
1B-0676	100
	354
	545
1B-2713	557
	558
1B-2886	263
1B-3057	11
1B-4038	389
1B-4046	389
1B-4367	337
1B-5174	242
	389
1B-8704	100
	545
1B-8705	13
	19
1B-8737	424
1D-4627	306
1D-4628	369
1D-4675	527
1D-4689	339
1D-5119	518
1D-5120	424
1F-0748	438
	440
	442
	444
	446
	450
	452
	455
	514
	516
1F-0750	327
	328
	533
	534
	619
1F-1599	614
1F-4622	354
	545
1F-5339	309
	311
	318
1F-7567	63
	106
1F-7958	389
1H-0337	466
1H-1023	352
1H-3244	115
	234
	236
1H-3338	548
	551
1H-3937	425
1H-7339	389
1H-7724	354
1H-8306	113
1H-8720	411
1J-6762	217
	222
	640
1J-9671	82
	466
1K-6870	217
	222
1K-6872	339
	371
1K-6985	646
1L-0509	272
1L-5072	435
1M-1230	557
	558
1M-3780	277
1M-4095	282
1M-6119	119
	123
1M-6120	119
	123
1M-6718	506
1N-5999	26
	383
	385
1P-0810	123
	197
	213
	226
	227
1P-2378	582
	584
1P-2636	261
	270
1P-2662	261
	270
1P-3700	433
1P-4577	272
1P-4578	272
1P-6356	578
1P-6872	425
1P-7009	79
	217
	222
1P-7115	358
1P-7521	348
1R-0762	106
1R-0774	435
1R-1807	61
1S-0994	67
	85
	397
	401
	404
	414
1S-2342	208
	212
1S-2563	49
	63
1S-3184	261
	270
1S-6420	256
	392
	411
1S-7251	119
	186
1S-7252	119
	120
	123
	186
1S-9593	294
	295
	507
1T-0738	258
	296
1U-3202	659
1U-3998	383
	385
1U-8846	15
	38
	39
	91
	92
	241
1V-7368	133
	135
1W-2431	95
1W-2715	28
1W-8407	21
1Y-7927	564
2	
2A-1162	38
	227
2A-3211	503
	504
	505
2A-3398	316
2A-4429	28
2A-6684	568
2A-6926	635
2A-6928	635
2A-6929	635
2A-6938	283
2A-6985	▶590
	603
2A-7081	396
	404
2A-7089	511
2A-7184	542
2B-0858	389
2B-0941	394
	396
	400
	404
2B-0947	263
2B-2673	514
	516
2B-3147	283
2B-3148	283
2B-9373	277
2D-2507	304
	305
2D-2508	304
	305
2D-2509	304
	305
2D-2511	304
2D-2565	304
2D-2654	302
2D-4202	435
2D-6006	628
2D-6235	557
	558
	564
2D-6642	40
	261
	263
2D-7325	354
2D-8009	277
2D-8154	389
2D-8652	379
2D-9454	261
	270
2F-8057	337
	372
2F-8509	427
2G-0478	389
2G-0585	1
	▶246
2G-0617	158
	212
2G-0659	158
	212
2G-0988	158
	212
2G-1034	358
2G-1084	263
2G-3219	514
	516
2G-3221	514
	516
2G-3865	306
2G-3967	368
2G-3971	511
2G-4011	334
2G-4332	656
2G-5369	350
2G-5493	396
	400
	404
2G-5667	306
	373
2G-5673	306
2G-6157	334
2G-6285	628

▶ **PRIMARY REFERENCE**

PART NUMBER INDEX

Part	Page
2G-6336	350
2G-6377	265
2G-6396	265
2G-6595	305
2G-6695	389
2G-6740	450
	452
	455
2G-6747	440
	442
	446
	450
	452
2G-6748	438
	440
	442
	444
	446
	450
	452
	455
2G-6749	438
	440
	442
	444
	446
	450
	452
	455
2G-6751	438
	440
	442
	444
	447
	450
	452
	455
2G-6752	438
	440
	442
	444
	447
	450
	452
	455
2G-6753	440
	442
	444
	447
2G-6754	442
	452
2G-6755	438
	440
	442
	444
	447
	450
	452
	455
2G-6756	438
	440
	442
	444
	447
	450
	452
2G-6757	438
	440
	442
	444
	447
	450
	452
	455
2G-6788	518
2G-6793	518
2G-6794	518
2G-7097	589
	590
2G-7098	589
	590
2G-7728	656
2G-8233	649
2G-8241	582
	584
2G-8242	582
2G-8572	542
	573
	582
2G-8573	542
	573
	582
2G-8609	373
2G-8615	306
2G-8624	306
2G-8626	306
2G-8631	306
	387
2G-8633	306
2G-8741	306
2G-8742	306
2G-8767	119
	568
	573
2G-8768	306
2G-8777	306
2G-9098	367
	369
2G-9103	367
	369
2G-9789	283
2G-9791	283
2H-1743	580
2H-3740	306
2H-3786	372
2H-3920	194
	200
2H-3922	191
	594
	599
2H-3928	433
2H-3931	418
2H-3940	358
2H-5001	261
2H-6489	241
2H-6490	282
2H-9091	358
2H-9247	389
2J-0157	241
2J-3505	306
2J-3506	642
	643
2J-6089	502
	503
	504
	505
2J-6274	348
2J-7761	435
2J-8163	306
2K-0419	514
	516
2K-1738	252
2K-2306	643
2K-4821	115
2K-4973	524
	527
	533
	534
	619
	626
2K-5109	261
	270
2K-5830	542
2K-6061	533
	534
	619
2K-7979	542
2K-8198	358
2K-8199	468
	470
	472
	474
	476
	478
	480
	482
	484
	486
	488
	490
	492
2L-3331	354
2L-5893	524
	601
2L-6267	100
2L-8069	213
	225
2L-8071	226
2L-8076	225
2L-8079	213
	225
	226
2M-4453	82
2M-5685	265
2M-6471	23
2M-7819	564
2M-9780	23
	26
	61
	82
	105
	106
	241
	283
2N-1287	11
2N-2138	261
	270
2N-2139	350
2N-9421	100
2P-1279	502
	503
	504
	505
2P-2537	61
2P-4339	528
2P-4358	10
2R-0694	628
2R-0719	628
2R-0724	628
2R-6806	104
2S-2053	62
2S-2923	358
2S-3029	241
2S-3440	346
2S-4078	410
	466
2S-5100	435
2S-7010	79
2T-1922	11
2V-0099	528
2V-1771	120
	123
2V-8259	203
2W-0027	48
2W-6544	15
2W-6546	14
2W-7213	23
2W-7381	29
2W-8147	19
2Y-3812	217
	222
2Y-5829	53
	54
	68
	3
3B-4501	529
3B-4607	628
3B-4610	435
	628
3B-4615	321
3B-4618	306
	372
3B-4628	397
	404
3B-4632	659
3B-4647	371
3B-4897	366
3B-5320	514
	516
3B-5329	368

► **PRIMARY REFERENCE**

PART NUMBER INDEX

Part	Page	Part	Page	Part	Page	Part	Page
3B-6769	336		221		236		291
3B-6772	346	3E-3377	220		560		296
3B-7721	354	3E-3389	200		561		392
3B-7733	336	3E-3636	208	3E-9317	158		408
3B-7740	327		212		236		410
	328	3E-3890	528	3E-9319	234		411
3B-8485	367	3E-4048	590	3E-9323	234		447
	369		605	3E-9326	158		466
3B-8489	306	3E-4302	425		236		484
	336		427	3E-9327	203		494
	373	3E-4304	528	3E-9330	560		499
	518	3E-4352	62		561		500
	643		167	3E-9412	56		502
	656	3E-4353	65		109		503
3B-8491	643	3E-4367	226	3E-9413	593		504
3B-8822	352	3E-5169	227	3E-9865	542		505
3B-8921	247	3E-5239	153	3F-1547	435		506
	250		197	3F-7514	542	3J-3679	82
3C-6969	234		203	3F-9556	115		466
	236		207		438	3J-5390	84
3D-2239	304		225		440		346
3D-2824	11	3E-5464	528		442		350
	38	3E-6328	▶114		444	3J-5696	524
	50		203		446	3J-6956	296
	82	3E-6389	▶142		450	3J-7354	38
	85		200		452		77
	190	3E-6477	234		455		89
	259		236		635		105
	272	3E-6909	256		637		167
	407		358		638		256
	409		392	3G-0361	435		268
	410		408	3G-0471	654		270
	411	3E-7401	79	3G-0472	520		291
	413	3E-7417	425	3G-1701	563		348
	466		427	3G-3265	571		410
3D-2975	564	3E-7852	187		573		416
3D-4245	288	3E-7853	187		605		419
	291	3E-7855	187	3G-3726	499		421
3D-6509	263	3E-7857	187		500		466
3D-7587	358	3E-7858	187	3G-6659	336		501
3D-8317	291	3E-7860	187	3G-9190	309	3J-8500	430
3D-8747	557	3E-7861	187		311	3K-0196	281
	558	3E-8005	258	3H-2900	529	3K-0360	11
3D-8748	557	3E-8006	296	3H-5552	23		51
	558	3E-8017	97	3H-7654	56		52
3D-8749	557		99	3H-8538	545		60
	558	3E-8020	594	3J-1907	11		77
3D-8752	557		596		26		79
	558		597		45		82
3D-8884	352		599		46		85
3D-8913	354	3E-8557	226		68		91
	358	3E-8700	▶180		70		105
3E-0109	200		242		79		106
	203	3E-8763	234		89		241
	234	3E-8772	156		92		283
	236		158		102		364
3E-0400	528		236		104		394
3E-1552	662	3E-8815	156		105		396
3E-2026	208	3E-8817	203		106		397
	212	3E-8821	560		184		400
3E-3213	36		561		197		403
3E-3365	190	3E-8825	156		208		404
	294		158		213		410
3E-3371	169		203		241		414
	170		234		288		416

▶ **PRIMARY REFERENCE**

PART NUMBER INDEX

Part	Page	Part	Page	Part	Page	Part	Page
	425		236		545		482
	446		239	4B-9302	578		484
	466		400	4B-9880	291		486
	468		416	4C-9612	14		488
	470		528		45		490
	472		568		47		492
	474		629	4D-0577	355	4E-2392	416
	476		632		358	4F-2294	192
	478	3S-2713	354	4D-0582	355	4F-4097	427
	480		545	4D-1212	234	4F-4879	622
	482	3S-6049	119		236	4F-5695	25
	484	3S-6050	119	4D-1322	296	4F-7389	272
	486	3S-7023	376	4D-2297	484	4F-7390	348
	488		377		499	4F-7827	643
	490		380		500	4F-7952	279
	492	3S-8664	120		502	4F-9029	70
	497	3S-8665	227		503	4F-9653	108
	501		580		504		389
	580	3S-9557	529		505	4H-6112	283
3K-0986	281	3T-0050	354	4D-2560	358	4H-6147	352
3K-2889	337	3T-0849	429	4D-3704	306	4H-6996	389
3K-3257	186	3T-3197	528		373	4H-9105	348
	189	3T-3198	528	4D-4064	100	4J-0520	272
3K-6060	354	3T-4377	282	4D-4375	511	4J-0521	411
	435	3T-5760	120		514	4J-0522	272
	542	3T-5763	321	4D-5292	261	4J-0524	82
3K-6113	461	3T-6774	557	4D-6086	656	4J-2506	256
	465		558	4D-6432	609		288
3K-6116	288	3T-8236	466	4D-6585	352		291
3K-8280	354	3T-9549	240	4D-6695	296	4J-3914	355
3K-8460	167	3V-0613	321	4D-7388	79	4J-5468	394
3K-9520	158	3V-2431	108		85		396
	212	3V-3816	631		208		400
3L-8187	234	3V-9244	589		213		404
	236		590		346		416
3P-0337	250		605		358	4J-5477	11
3P-0647	178	3W-7254	652		629		256
3P-1156	65	3Y-2806	542		631		392
	66	3Y-2888	184		632		408
	73			4D-7733	358		410
3P-1461	367				392		411
3P-1932	61	**4**		4D-7735	355		416
	416			4D-7794	89		466
3P-2404	217	4B-0418	578		158	4J-7533	288
	222	4B-1281	234		198		291
3P-3839	330		236		203		419
	332	4B-2043	587		208		421
3P-9498	466	4B-2047	236		213		457
3R-2437	466	4B-2049	594		217		458
3R-8797	187		596		222		459
3R-9322	321		597		227		460
3R-9965	221		599		336		461
3S-0004	277	4B-2913	435		437		462
3S-0303	350	4B-4158	604		631		463
3S-0391	354	4B-4274	234	4D-8123	227		464
3S-2093	105		236	4D-8128	309		465
	119	4B-4283	635		311		466
	133		637	4D-8148	316		468
	135		638	4D-9986	468		470
	165	4B-4314	542		470		472
	200	4B-4863	587		472		474
	203		623		474		476
	205	4B-5059	564		476		478
	221	4B-5272	526		478		480
	234	4B-6060	355		480		482

PART NUMBER INDEX

Part	Page
	484
	486
	488
	490
	492
4J-8922	355
	545
4J-9224	377
	387
	646
4J-9225	379
	383
	385
4J-9964	433
4K-0367	316
	589
	590
	605
4K-1388	466
4K-2039	288
	291
4K-4879	305
4K-4881	303
4K-7463	334
4K-8302	217
	222
4K-8603	241
4K-8659	334
4K-8864	158
	208
	213
	217
	222
	227
	345
	411
	578
4K-9097	321
4K-9429	592
4L-5966	528
4L-6454	158
	203
	208
	213
	401
	416
	526
	533
	534
	578
	629
4L-6459	442
	452
4L-9822	265
4M-0061	558
4M-1751	288
	291
4M-1831	187
4M-2381	291
4M-5281	569
4M-6107	252
	254
4M-6108	241
4M-6425	355
	601
4M-6582	529
4M-6921	435
4N-2927	564
4P-3966	10
4P-3977	10
4P-4369	62
4P-5918	15
	92
	205
4P-7581	203
	242
4P-8134	205
	208
	213
	227
	256
4S-1936	227
4S-1962	217
	222
	227
	392
	408
	578
4S-4455	227
	355
	416
4S-5719	79
	197
4S-5780	117
4S-5838	348
4S-5879	258
4S-7606	352
	358
4T-1700	501
4T-1860	466
	▶506
4T-3010	643
4T-4509	501
4T-4935	466
	▶497
4T-4942	497
4T-5074	501
4T-5613	376
	377
	380
	387
4T-6780	379
4T-6907	374
	375
	381
	382
	646
4T-7571	497
4T-8050	317
	318
4T-8054	377
	387
	418
	646
4V-7875	564
4V-7877	564
4V-7884	626
4V-7890	524
4V-7891	524
4V-8256	527
4V-8577	626
4V-9803	339
4V-9804	339
4V-9809	339
4W-0253	81
4W-1203	31
4W-1204	31
4W-2026	16
4W-2042	31
4W-2232	65
	66
4W-3462	7
	▶14
4W-7592	81
4Y-9652	15
	5
5B-0577	656
5B-0841	263
	270
5B-1585	346
5B-1866	57
5B-6172	524
	611
5B-9318	388
	468
	470
	472
	474
	476
	478
	480
	482
	484
	486
	488
	490
	492
5C-2890	89
	153
	158
	160
	203
	232
	234
	236
	355
	358
	529
	556
	629
	632
5C-6565	329
5C-7261	15
	137
	157
	217
	222
	635
5C-7423	252
	254
5C-8312	200
	234
	236
	542
	587
	594
	596
	597
	599
5C-9553	198
	203
	207
	217
	222
	234
	236
	321
	608
5C-9583	148
5D-0269	594
	596
	597
	599
5D-0353	265
	267
	306
5D-0768	628
5D-1026	79
	85
	113
	272
	532
	580
5D-1911	435
5D-2645	396
	400
	404
5D-3636	628
5D-4822	564
5D-4988	400
5D-5206	516
5D-6644	514
5D-8159	656
5D-8161	656
5D-9629	309
	311
	341
5D-9844	261
	270
5F-0149	649
5F-0304	38
5F-5434	358
5F-8000	280
5F-8933	640
5F-9144	102
	288
	291
	292
5G-8760	654
5H-4778	352
	355
5H-4909	389
5H-7826	336
5H-8848	409

▶ **PRIMARY REFERENCE**

PART NUMBER INDEX

Part	Page	Part	Page	Part	Page	Part	Page
	413		632	5P-1251	85	5P-5923	522
5H-8985	247	5M-3724	203	5P-1295	410	5P-5931	397
	250	5M-6200	241	5P-1424	220		401
	252	5M-6213	352	5P-2228	370		405
	254		355	5P-2230	89	5P-5969	325
5I-4370	105	5M-6214	643	5P-2424	366		553
5I-4376	79	5M-6755	236		438		569
5J-1036	288	5M-8500	542		440		571
	291	5P-0537	288		442		574
5J-1086	265		291		444	5P-6129	529
	348		557		447	5P-6851	265
5J-1246	433		558		450	5P-6871	583
5J-4773	642		592		452	5P-6882	569
5J-7010	379	5P-0599	400		455	5P-7213	281
5J-7333	522	5P-0721	113	5P-2545	265	5P-7462	106
5K-0984	334	5P-0747	186		350	5P-7463	106
5K-1094	352	5P-0765	273	5P-2566	306	5P-7803	528
5K-1458	656	5P-0767	79		366		571
5K-1459	656		355		433		573
5K-2408	352		580	5P-3454	120		605
5K-5129	306	5P-0878	529		197		624
	389	5P-1046	79	5P-3863	241	5P-7814	167
5K-5288	306	5P-1075	100		280	5P-7815	240
	389		272	5P-3924	241	5P-7854	346
5K-5338	355		306	5P-4115	234		411
5K-5552	368		317		236	5P-7957	611
5K-7577	594		318		330		614
	599		325		332		623
5K-8451	346		329		569	5P-7958	2
5K-8454	389		330		573	5P-7970	60
5K-9090	272		332		629		63
	410		397		632	5P-8167	156
5K-9107	660		401		635		227
5K-9238	354		404		637		542
5L-2030	261		416		638		631
	270		438	5P-4116	30	5P-8196	61
5L-2031	261		440		89	5P-8244	350
	270		442		106	5P-8245	16
5L-3244	93		444		157		35
5L-4507	198		447		184		36
5L-7200	158		450	5P-4135	217		261
	236		452		222		263
5M-2057	466		455	5P-4143	350		265
5M-2894	261		529	5P-4295	120		270
	265		542	5P-4424	346		283
	270		545	5P-4483	241		350
	526		553	5P-4536	96		373
	601		578		98		389
	619		582	5P-4571	212		516
5M-3062	67		624	5P-4868	410	5P-8247	22
	139		660	5P-4906	580		115
	158	5P-1076	100	5P-4961	79		263
	203		117	5P-5454	573		265
	208		306	5P-5623	153		270
	213		339	5P-5630	184	5P-8248	261
	217		438	5P-5637	529		270
	222		440		543		424
	317		442	5P-5639	543	5P-8249	369
	318		444	5P-5678	548	5P-8291	518
	325		447	5P-5768	551	5P-8309	84
	355		450		593		341
	524		452		605	5P-8347	77
	532		455	5P-5813	261	5P-8439	321
	553	5P-1174	662		270	5P-8445	564
	629	5P-1175	662	5P-5824	573	5P-8500	2

PART NUMBER INDEX

Part	Page
	113
	313
	340
	437
	613
	615
	660
5P-8525	561
	568
5P-8842	306
	373
5P-8843	306
5P-8874	105
5P-8890	306
5P-8998	358
5P-9085	217
	222
	227
	330
	332
5P-9135	529
5P-9209	100
	545
5P-9297	227
5P-9299	242
5P-9436	259
5P-9617	77
5P-9938	272
5R-4787	424
5S-4246	139
	203
5S-4385	277
5S-7349	115
	187
5S-7379	156
	217
	222
	306
	329
	372
	389
	397
	401
	404
	416
	582
5S-7382	317
	318
5S-7383	358
	397
	401
	404
	533
	534
	542
	601
	619
5S-9062	31
5T-0731	246
5T-0735	246
5T-0906	306
5T-1362	431
5T-2925	518
5T-2926	518
5T-3889	511
5T-3890	511
5T-4030	563
5T-4267	509
	511
5T-5295	371
5T-6775	162
	508
5T-7486	548
	551
5T-8144	1
	▶350
5T-8285	352
	354
5T-8366	514
	516
5T-8417	371
5T-9313	158
	212
5T-9903	416
5T-9986	396
5V-0770	564
5V-1496	617
5V-1497	626
5V-5262	526
5V-6454	643
5V-6455	643
6A-3591	358
6B-0933	438
	440
	442
	444
	446
	450
	452
	455
6B-3260	656
6B-4540	203
6B-5072	283
6B-5464	659
6B-6682	11
6B-6684	281
6D-1004	10
6D-1432	352
6D-3033	217
	220
6D-3479	227
6D-4244	217
	222
	227
	234
	236
	355
	397
	401
	404
	411
	416
6D-4246	120
	123
	208
	213
	227
6D-4247	394
	414
6D-4636	208
	213
	227
6D-5257	221
6D-6581	548
	551
6D-9855	355
6E-1131	376
	380
6E-1436	427
6E-1554	366
	▶374
6E-1555	374
6E-1634	376
6E-1754	369
	▶376
6E-1835	497
6E-1857	376
6E-1923	466
6E-1924	466
6E-1925	466
6E-1926	410
6E-2447	377
6E-3007	468
	470
	472
	474
	476
	478
	480
	482
	484
	486
	488
	490
	492
6E-3013	478
	492
6E-3019	468
	470
	472
	474
	476
	478
	480
	482
	484
	486
	488
	490
	492
	▶468
6E-3029	458
	461
	462
	▶470
6E-3030	458
	461
	462
	▶472
6E-3031	461
6E-3033	▶474
	488
	492
	▶498
6E-3034	463
	464
	465
	▶476
6E-3035	457
	459
	460
	463
	464
	465
	▶478
6E-3036	457
	459
	460
	463
	464
	465
	▶480
6E-3037	465
	▶482
6E-3043	474
	482
6E-3044	468
	470
	472
	478
6E-3058	480
6E-3136	424
	▶425
6E-3137	409
	413
	▶427
6E-4090	374
	375
6E-4224	425
	427
6E-4228	494
6E-4230	494
6E-4502	468
	470
	472
	474
	476
	478
	480
	482
	484
	486
	488
	490
	492
6E-4581	377
6E-4599	476
	484
	486
	492
6E-4703	466
	▶499
6E-4704	498
	▶500
6E-4724	364

6

▶ **PRIMARY REFERENCE**

PART NUMBER INDEX

Part	Page
	▶377
6E-4725	377
6E-4940	379
6E-4974	377
	387
6E-5047	283
6E-5153	468
	470
	472
	474
	476
	478
	480
	482
	484
	486
	488
	490
	492
6E-5200	501
6E-6140	494
6E-6141	494
6E-6142	494
6E-6419	494
6E-6420	494
6E-6571	425
	▶429
6E-6594	425
6E-6596	425
6E-6597	425
6E-6599	425
6E-6600	425
6E-6601	425
6E-6602	425
6E-6604	429
6E-6605	429
6F-0698	261
	270
6F-2956	265
6F-3930	304
	305
6F-4855	288
	291
6F-6992	656
6F-7013	313
	340
6F-7045	191
6F-7062	50
6G-0417	334
6G-0905	350
6G-2256	119
6G-2263	119
6G-2395	571
	573
	605
6G-2396	571
	573
	605
6G-2751	573
6G-2914	542
	573
6G-2946	509
	511
	514
6G-2947	514
6G-2949	514
6G-4701	261
	270
6G-4702	261
	270
6G-4848	518
6G-5214	571
6G-5442	518
6G-5534	389
6G-5537	389
6G-5538	389
6G-5539	389
6G-5542	389
6G-5548	389
6G-5979	287
	294
6G-5987	557
	558
6G-6122	389
6G-7187	370
	373
6G-7213	265
6G-7222	571
	573
	605
6G-8814	542
6G-8831	583
6H-0211	371
6H-1717	373
	389
	516
6H-3587	213
6H-3592	226
6H-9691	352
6I-1418	208
	212
6I-4348	221
6I-8642	241
6I-8911	252
6I-8912	247
	250
	252
	254
6I-9395	296
6I-9502	247
	250
	252
	254
6J-0488	542
6J-1972	374
	375
	376
	380
	381
	382
6J-5731	374
	375
	376
	380
	381
	382
6J-5733	374
	375
	376
6J-6439	497
6K-0545	656
6K-3273	573
	617
6K-3632	656
6K-4185	334
6K-4186	334
6K-4187	334
6K-4190	334
6K-4191	334
6K-4193	334
6K-6826	354
6K-8178	79
	217
	222
	411
6K-8329	265
6K-9632	631
	632
6L-1650	241
6L-1962	438
	440
	442
	444
	446
	450
	452
	455
	542
6L-5652	346
	358
6N-7523	205
6P-0205	523
	571
	573
6P-3236	528
6S-6251	84
6T-0840	263
6T-2421	364
6T-3631	225
6T-3632	225
6T-3633	225
6T-5345	528
6T-6708	528
6T-7695	568
6V-0292	571
	573
6V-0314	350
6V-0505	574
6V-0683	106
6V-0852	256
	296
	410
	466
6V-0894	545
6V-1668	529
6V-1720	242
6V-1819	247
	250
	252
	254
6V-1820	10
6V-1889	208
	213
	217
	222
	227
	272
	317
	318
	346
6V-1911	281
6V-1970	2
6V-2235	79
6V-2313	100
	545
6V-2317	15
	34
	60
	61
	205
6V-2369	197
6V-2480	203
6V-2610	346
6V-2686	184
6V-2687	330
	332
6V-2722	119
	120
6V-2773	548
	551
6V-3250	77
6V-3259	564
6V-3265	155
	208
	213
	227
6V-3538	14
	21
6V-3668	348
6V-3834	425
6V-3918	39
	81
	258
6V-3928	571
	573
	605
6V-3940	13
	14
	48
	65
	66
	77
	167
	241
6V-3964	213
6V-3965	256
	272
	296
	411
	466
6V-4245	355
6V-4248	65
	66
	68

▶ **PRIMARY REFERENCE**

PART NUMBER INDEX

Part	Page	Part	Page	Part	Page	Part	Page
	241	6V-6889	635	6V-8336	35		108
6V-4283	197	6V-6893	228		427		392
6V-4292	85	6V-7357	198	6V-8337	34	6V-8637	272
6V-4589	193		355		425		410
6V-4604	76	6V-7420	105		427	6V-8639	396
	341		580	6V-8362	528		404
6V-5048	167	6V-7555	197	6V-8367	79		416
	173	6V-7636	548	6V-8369	194	6V-8647	256
	174		551		200		410
6V-5049	112	6V-7646	617	6V-8376	234		416
	167	6V-7673	313		236		466
	172		340	6V-8378	187	6V-8653	518
6V-5050	240		425	6V-8397	68	6V-8716	272
6V-5158	553		427		79	6V-8723	394
6V-5163	574	6V-7688	113		105		397
6V-5164	608	6V-7699	198		106		400
6V-5192	430	6V-7728	529		256		414
6V-5217	39	6V-7732	332		364	6V-8724	68
	63	6V-7744	583		392		106
	241	6V-7981	29		394		392
	258		60		396	6V-8730	105
	296		109		397	6V-8765	424
6V-5218	34		241		400	6V-8801	100
6V-5219	70	6V-8004	31		401		158
	280	6V-8149	16		403		200
6V-5223	77	6V-8182	217		404		203
6V-5230	466		222		407		208
6V-5324	506		656		408		213
6V-5556	501	6V-8183	542		414		217
6V-5645	200	6V-8185	234		446		222
6V-5683	288		236		447		228
6V-5684	313	6V-8186	438	6V-8398	11		317
	340		440		82		318
	649		442		105		355
6V-5686	389		444		396		358
6V-5696	16		446		400		397
	56		450		404		401
	411		452		410		404
6V-5698	15		455		416		416
6V-5815	72	6V-8187	197		446		529
6V-5834	568	6V-8188	117		466		624
6V-5839	10		120	6V-8523	79		629
	27		187	6V-8624	396	6V-8823	392
	29		438		404	6V-8837	427
	60		440	6V-8625	11	6V-8918	355
	64		442		105	6V-8928	573
	66		444		396	6V-8950	139
	68		447		400	6V-8969	592
	72		450		404	6V-8980	392
	109		452		410		408
	189		455		416	6V-8987	407
	260		656	6V-8627	11	6V-9002	416
	348	6V-8189	115		392	6V-9004	411
6V-5842	38		321		408	6V-9007	11
	348		355		410		409
6V-5843	37	6V-8212	241	6V-8628	256		410
6V-5853	635	6V-8214	332	6V-8634	394		413
	637		425		396	6V-9008	272
	638	6V-8237	374		400	6V-9027	77
6V-6467	632		375		403	6V-9168	392
6V-6578	200		381		404		407
6V-6609	77		646		446		408
	183	6V-8258	638	6V-8635	272		414
6V-6703	128	6V-8259	635	6V-8636	68	6V-9326	139
6V-6888	635		637		105	6V-9343	407

► **PRIMARY REFERENCE**

PART NUMBER INDEX

Part	Page	Part	Page	Part	Page	Part	Page
6V-9493	587		250	7B-9323	628	7E-7779	28
6V-9632	217		254	7C-0111	48	7E-8923	10
	321	6Y-1115	247	7C-1493	61	7E-8925	10
	330		250	7C-3179	11	7E-8926	10
	332		252	7C-4354	203	7E-8928	10
	540		254		208	7F-0192	100
	548	6Y-1116	252		213	7F-1327	656
	556	6Y-1119	252		228	7F-4617	414
	569		254	7C-6921	358	7F-8268	279
	571	6Y-1870	282	7C-6976	48	7F-9311	358
	594	6Y-1878	247	7C-6977	48	7G-0437	348
	599	6Y-1887	247	7C-7431	97	7G-1060	225
	608		250		99	7G-4326	629
	624		254	7C-7980	19	7G-4822	247
6V-9746	11	6Y-1888	254	7C-8365	▶31		250
	272	6Y-1890	250		32		252
	409	6Y-1891	247	7C-8366	31		254
	410		254	7C-8369	31	7G-4824	528
	411	6Y-1895	247	7C-8370	31		573
	413		254	7C-8634	31		624
	416	6Y-2300	▶282	7D-0215	346	7G-4998	240
6V-9748	31		285	7D-1195	435	7G-5453	292
6V-9835	411	6Y-2303	▶247	7D-1553	196	7G-7053	155
6V-9836	401		285	7D-1576	648		203
	447	6Y-2307	254	7D-1649	516	7G-7920	212
6V-9837	416	6Y-2312	247	7D-2135	656	7G-8839	643
6V-9849	416		250	7D-2136	656	7H-1447	435
6V-9850	256	6Y-2419	247	7D-2196	656	7H-2423	383
	392	6Y-2425	247	7D-4903	358		385
6V-9875	410		250	7D-5252	304	7H-2444	649
6V-9876	364	6Y-2428	250		305	7H-3641	438
	396	6Y-2429	250	7D-7233	60		440
	400	6Y-2584	296		228		442
	404	6Y-2805	640		358		444
6W-0108	524	6Y-2932	422	7D-7496	327		446
6W-0111	524	6Y-2933	422		328		450
6W-0590	524	6Y-2934	422	7D-8245	656		452
6W-1496	526	6Y-2935	422	7D-8347	261		455
6W-1497	526	6Y-3849	348		270	7I-4610	1
6W-1885	524	6Y-3850	348	7D-8636	306		▶336
6W-1888	526	6Y-3852	348	7D-8637	306	7I-4696	563
6W-1890	611	6Y-3860	280	7D-8643	306	7I-4698	563
6W-1895	611	6Y-3861	280	7D-8825	656	7I-4699	563
6W-2371	526	6Y-4280	427	7D-8826	656	7I-4718	1
6W-2373	611	6Y-4638	288	7D-8875	649		▶547
6W-3309	611		292	7D-8876	649	7I-4890	542
	614	6Y-5010	277	7D-8877	649	7I-4959	321
6W-3628	526	6Y-5230	656	7D-8878	649	7I-4960	321
	619	6Y-5352	348	7D-8879	649	7I-4979	321
6W-5698	629	6Y-7915	350	7D-8881	649	7I-4981	321
	632	6Y-7953	389	7D-8882	649	7I-4982	321
6W-5740	611	6Y-7955	263	7D-8883	649	7I-5015	532
6W-5757	611	6Y-7981	250	7D-8884	649		▶556
	614	6Y-8764	▶277	7D-8889	649	7J-0204	26
6W-5817	354		279	7D-8983	389		383
6W-6672	119	6Y-8765	▶279	7D-8984	389		385
	228		285	7D-9267	431	7J-8611	79
6W-9693	611	6Y-9763	241	7E-0759	77		267
6Y-0590	282	6Y-9960	43	7E-2968	22		352
6Y-0591	282			7E-3372	32	7J-9108	580
6Y-0976	254			7E-4761	79	7J-9885	377
6Y-0982	247			7E-6794	40		387
6Y-1000	247			7E-7589	55		646
6Y-1007	241	7B-3028	277	7E-7590	7	7J-9933	468
6Y-1114	247	7B-5037	514		▶55		470

7

▶ PRIMARY REFERENCE

PART NUMBER INDEX

Part	Page	Part	Page	Part	Page	Part	Page
	472	7N-5274	119	7X-0328	657		465
	474		123	7X-0331	334	7X-2549	652
	476	7N-5683	21	7X-0334	514		654
	478	7N-5876	203		516	7X-2552	93
	480	7N-9801	195	7X-0339	117		273
	482	7N-9943	142	7X-0342	273	7X-2553	32
	484	7P-1577	643	7X-0346	117		643
	486	7R-2750	344		418	7X-2565	643
	488	7R-3029	221	7X-0350	418		649
	490	7S-0530	68	7X-0354	589	7X-2566	113
	492	7S-4571	261		590	7X-2575	314
	497		270		605		315
7K-1181	139	7S-6369	92	7X-0375	589		341
	153	7T-0020	142		590		652
	155	7T-0570	288		605	7X-3373	187
	156		291	7X-0386	656	7X-3392	514
	158	7T-0582	557	7X-0390	656	7X-4736	352
	196		558	7X-0423	656	7X-4743	203
	197	7T-1099	139	7X-0443	656	7X-4776	466
	207		217	7X-0448	117	7X-6315	128
	208		528	7X-0450	656		132
	213	7T-1159	256	7X-0452	514	7X-7700	113
	217	7T-1961	629		516	7X-7729	67
	220		632	7X-0510	42		84
	221	7T-3451	187	7X-0521	11		120
	225	7T-3454	187	7X-0550	217		125
	232	7T-4003	560		222		153
	242		561		321		321
	410	7T-4515	295		514		325
	578	7T-4532	537	7X-0562	187		341
	587	7T-4897	247	7X-0578	358		346
7K-4199	562		250	7X-0579	106		355
7K-4201	555		252		217		358
7K-6128	366		254		222	7X-7731	306
7K-9201	366	7T-6496	241	7X-0591	529	7X-7739	611
7K-9202	370	7T-6799	203		624	7X-7877	200
	521	7T-7358	562	7X-0605	553		611
7K-9203	364	7T-8272	425	7X-0608	527		614
	520	7T-8273	425	7X-0613	208	7X-7902	11
	649	7T-8891	629	7X-0618	321	7X-7910	578
7L-0811	225		631	7X-0619	218	7X-7911	578
7L-2894	187		632		222	7X-7961	36
7L-6326	89	7T-9302	200		408	7Y-0589	218
7L-8170	527	7T-9755	427	7X-0818	32		222
7L-8316	557	7T-9793	529		208		
	558	7V-0446	100		213		
7L-9061	425		354	7X-0838	256		
	427		545	7X-1387	321		
7M-0706	540	7V-5191	564	7X-1950	187	8B-1615	267
7M-7219	564	7W-3872	15	7X-1952	187	8C-2926	277
7M-7410	355		538	7X-2537	68	8C-3290	43
7M-8485	241	7W-5095	36		538	8C-3309	410
	242	7W-5340	65	7X-2538	538	8C-3425	42
	272		66	7X-2539	106		424
	288	7W-9737	71		538	8C-3442	542
	291	7W-9738	71	7X-2543	652	8C-3445	61
	292	7W-9740	71	7X-2546	84	8C-3446	61
7M-9918	96	7W-9930	71		457		416
	98	7W-9943	225		458	8C-3447	273
7N-0718	▶191	7X-0288	401		459	8C-3451	416
	197	7X-0289	394		460	8C-3681	85
7N-2059	184		401		461	8C-3756	528
7N-3718	208		416		462	8C-4436	334
	213	7X-0325	117		463	8C-4586	528
	228		437		464	8C-4984	258

8

▶ **PRIMARY REFERENCE**

PART NUMBER INDEX

Part	Page
8C-5608	139
8C-5897	662
8C-5917	119
8C-6354	203
8C-6512	419
	421
8C-6712	89
8C-6857	218
	222
8C-6913	656
8C-6959	106
8C-6965	288
	291
8C-7508	234
	236
8C-8422	198
8C-8431	89
8C-8454	553
8C-8842	656
8C-9987	294
	507
8D-1268	656
8D-1429	528
8D-2429	372
8D-2638	372
8D-2811	306
	372
8D-3508	309
	311
8D-3786	321
8D-3791	325
8D-5054	389
8D-5467	516
8D-5632	438
	440
	442
	444
	446
	450
	452
	455
8D-5633	438
	440
	442
	444
	446
	450
	452
	455
8D-5634	438
	440
	442
	444
	446
	450
	452
	455
8D-5636	438
	440
	442
	444
	446
	450
	452
	455
8D-5637	438
	440
	442
	444
	446
	450
	452
	455
8D-5640	438
	440
	442
	444
	446
	450
	452
	455
8D-5641	438
	440
	442
	444
	446
	450
	452
	455
8D-5949	514
	516
8D-6684	283
8D-6687	368
8D-7086	370
8D-7225	370
8D-7423	389
8D-7424	389
8D-7425	389
8D-7426	389
8D-7678	368
8D-7685	364
8D-7960	542
8D-7996	367
8D-8168	649
8D-8621	265
8D-8628	265
8D-8634	265
8D-8639	265
8D-8791	350
8D-8792	350
8D-8794	350
8D-8795	350
8D-8805	350
8D-8807	283
8D-8826	354
8D-8852	438
	444
	455
8D-9092	397
	405
8D-9296	521
8D-9671	228
	580
8D-9688	334
8D-9689	334
8D-9718	263
8D-9738	263
8D-9749	263
8D-9756	263
8D-9784	261
	270
8D-9814	366
8D-9815	366
8D-9882	511
8D-9886	511
8D-9887	511
8D-9909	334
8E-1133	241
8E-1143	291
8E-1161	250
8E-1263	252
	254
8E-1913	250
8E-5529	642
8E-5734	247
	250
	254
8E-5736	250
8E-5742	247
	250
	252
	254
8E-6208	659
8E-6209	659
8E-6570	291
8E-7713	292
8E-7714	291
8E-7791	528
	573
	624
8E-8319	247
	250
	252
	254
8E-9316	▶250
	285
8E-9474	296
8E-9893	291
8E-9894	288
	291
8E-9895	288
	291
8E-9896	288
	291
8E-9897	291
8F-0492	573
8F-1434	187
	594
	596
	597
	599
8F-1974	208
	213
8F-3469	247
	250
	252
	254
8F-4102	368
8F-6230	296
8F-6437	438
	440
	442
	444
	447
	450
	452
	455
8F-7219	102
	432
8F-9836	162
	508
	518
8G-1815	352
8H-1728	582
8H-2046	59
8H-5244	57
8H-5303	191
8H-5306	191
8I-1362	346
8J-0112	379
8J-1256	139
8J-2331	433
8J-5299	659
8J-5313	654
	▶659
8J-6384	380
8J-6815	466
8K-0530	327
	328
8L-2786	182
8L-5008	358
8L-6005	354
8L-6521	234
	236
8L-7905	542
8L-8413	119
	123
	564
8L-8598	438
	440
	442
	444
	446
	450
	452
	455
8M-2769	273
8M-2770	139
	196
	208
	214
8M-2773	79
	85
	208
	214
	218
	222
	228
	355
	532
	578
8M-3175	466
8M-3368	358
8M-3837	316
8M-4295	250
8M-4437	468
	470
	472
	476

▶ **PRIMARY REFERENCE**

PART NUMBER INDEX

Part	Page	Part	Page	Part	Page	Part	Page
	478	8T-0372	348		30		553
	480		425		32		563
	482		427		41		568
	484	8T-0389	120		43		574
	486		123		67		578
	488		143		75		580
	490		144		79		583
	492		145		85		631
8M-4438	256		146		87	8T-4122	117
8M-5860	25		147		89		418
8M-6176	586		652		93		589
8M-6521	241		654		100		590
8M-8489	277	8T-0639	239		106		605
8N-1540	221		258		120		649
8N-1546	212	8T-0644	82		123	8T-4123	43
8N-1547	212	8T-0646	411		139		113
	226	8T-0667	382		143		218
8N-1725	119	8T-1117	85		144		222
	123	8T-1159	108		145		649
8N-2694	89	8T-1174	542		153	8T-4131	643
8P-5141	528	8T-1482	652		156		649
8R-1778	562	8T-1683	364		186	8T-4133	79
8R-2054	611		400		189		84
	614		414		196		85
8R-2057	611	8T-1687	396		198		87
	614		400		203		89
8R-4519	526		404		208		100
	619		446		214		120
8S-0934	609	8T-1698	422		218		123
8S-0948	120	8T-2275	435		222		153
	123	8T-2353	167		228		156
8S-4790	526	8T-2501	130		241		196
	619		131		256		198
8S-5383	117		256		259		208
8S-6109	578		397		273		214
8S-6110	578		401		330		218
8S-7566	555		405		332		222
8S-7803	564	8T-2502	352		341		228
8S-9092	265		397		345		242
8S-9129	241		405		346		256
	280	8T-2530	580		352		259
8S-9130	241	8T-2561	321		355		321
	280		542		358		345
8T-0076	394	8T-2861	350		392		346
	396	8T-2901	629		408		352
	400	8T-3282	27		411		355
	403		379		414		358
	404		383		435		392
8T-0081	105		385		437		408
8T-0100	33	8T-3426	574		438		411
	56	8T-3490	64		440		414
	60		76		442		539
8T-0119	105		197		444		542
8T-0226	38		227		447		545
8T-0276	61		313		450		553
8T-0285	130		340		452		563
	131		522		455		578
8T-0292	92		528		522		583
8T-0293	50		548		533	8T-4136	41
8T-0328	100		624		534		43
	187	8T-3612	217		538		89
	545	8T-3653	42		539		93
	617	8T-3666	29		545		100
8T-0336	389	8T-3957	411		548		106
8T-0355	280	8T-4121	11		551		120

► **PRIMARY REFERENCE**

PART NUMBER INDEX

Part	Page
	125
	184
	198
	208
	214
	228
	256
	321
	325
	341
	345
	346
	352
	355
	358
	392
	408
	411
	438
	440
	442
	444
	447
	450
	452
	455
	522
	539
	545
	578
	580
8T-4137	79
	85
	89
	106
	120
	123
	139
	153
	196
	198
	203
	208
	214
	218
	222
	228
	241
	321
	330
	332
	341
	355
	392
	411
	414
	522
	538
	548
	551
	568
	574
	578
	583
8T-4138	89
	139
	198
	330
	468
	470
	472
	474
	476
	478
	480
	482
	484
	486
	488
	490
	492
	635
8T-4139	514
	522
	643
8T-4167	43
8T-4171	529
	635
	637
	638
8T-4172	30
8T-4175	649
8T-4176	330
8T-4178	355
8T-4179	120
8T-4181	548
	551
8T-4182	100
	358
	545
	574
	583
8T-4183	321
	327
	328
	330
	339
	585
8T-4185	11
	32
	411
8T-4186	358
	457
	458
	461
8T-4189	157
	259
	468
	470
	472
	474
	476
	478
	480
	482
	484
	486
	488
	490
	492
8T-4191	43
	64
	89
	186
	189
	218
	222
	437
	631
8T-4192	408
8T-4194	84
	321
8T-4195	75
	85
	93
	95
	106
	120
	123
	155
	208
	214
	228
	256
	259
	273
	321
	341
	355
	358
	408
	435
	438
	440
	442
	444
	447
	450
	452
	455
	539
	545
	553
	563
	574
	578
	580
	583
8T-4196	30
	32
	43
	79
	87
	95
	100
	106
	120
	198
	228
	273
	341
	542
	545
	578
8T-4198	120
	654
8T-4200	106
	184
	273
8T-4205	115
	158
	160
	187
	197
	198
	228
	529
	556
	617
8T-4223	11
	106
	117
	120
	158
	214
	218
	222
	288
	291
	327
	328
	330
	334
	339
	346
	366
	370
	397
	405
	408
	411
	418
	433
	437
	522
	585
	649
	656
8T-4224	17
	32
	68
	115
	137
	153
	184
	218
	222
	232
	259
	273
	321
	346
	355
	468
	470
	472
	474
	476
	478
	480

► **PRIMARY REFERENCE**

PART NUMBER INDEX

Part	Page	Part	Page	Part	Page	Part	Page
	482		629	8T-8442	56	8V-3273	261
	484		631		288		270
	486		632		291	8W-0220	401
	488	8T-4908	32	8T-8569	187	8W-0225	416
	490		43	8T-8729	507	8W-0302	400
	492		85	8T-8737	133	8W-0456	442
	538		346		135		452
	601	8T-4910	322		146	8W-0663	656
	621	8T-4956	411		147	8W-0681	645
8T-4226	87	8T-4970	153		165	8W-0684	645
	100	8T-4971	234		194	8W-0789	350
	228		236		197	8W-0934	629
	355	8T-4983	272		200		632
	545	8T-4994	397		205	8W-0935	629
8T-4244	158		405		212		632
	214		656		213	8W-1592	281
	218	8T-5005	578		220	8W-1749	514
	222	8T-5030	277		221		516
	322	8T-5039	427		226	8W-1752	516
	330	8T-5050	105		227	8W-1753	516
8T-4647	208	8T-5082	416		232	8W-2290	1
	214	8T-5361	314		587		▶372
8T-4648	397		315		635	8W-2307	265
	405		656		637	8W-2737	1
8T-4750	425	8T-5401	573		638		▶373
	427	8T-5412	158	8T-8827	119	8W-2842	367
8T-4835	218		214	8T-8915	317	8W-2913	▶370
	222	8T-5429	410		318		655
	334	8T-5436	241	8T-8917	346	8W-3166	410
8T-4895	84	8T-5439	327		418	8W-3653	514
8T-4896	130		328	8T-8919	334	8W-3656	514
	131	8T-5890	414	8T-8924	656	8W-3902	330
	133	8T-6381	43	8T-8987	466	8W-4193	396
	135	8T-6430	43	8T-9006	542		404
	139		327	8T-9041	106	8W-4194	396
	156		328		447		404
	158	8T-6466	87	8T-9043	438	8W-4652	306
	200		120		440	8W-4653	306
	203		228		442	8W-4979	265
	208		273		444	8W-4980	1
	214		578		447		▶265
	218	8T-6468	283		450	8W-4981	265
	222	8T-6631	529		452	8W-5111	261
	228	8T-6685	652		455	8W-5227	516
	256	8T-6757	10		611	8W-5279	261
	267		358	8T-9056	355		270
	273	8T-6765	241	8T-9364	228	8W-5293	306
	325	8T-6868	11	8T-9378	397	8W-5578	263
	352	8T-6869	106		401	8W-5586	263
	355		218		405	8W-5587	261
	358		222	8T-9381	526		▶263
	372		474		609	8W-5589	263
	389		482		619	8W-5597	656
	394	8T-6912	84	8T-9391	371	8W-5621	2
	397	8T-6974	359	8T-9655	105		▶281
	401	8T-7008	397		126	8W-5651	628
	405		405		208	8W-5870	1
	416	8T-7044	94		212		▶329
	458	8T-7565	611		217	8W-6061	569
	461		614		220	8W-6476	307
	465	8T-7566	592	8T-9658	218	8W-6497	307
	532	8T-7876	425		222	8W-6626	327
	545		427	8T-9757	119		328
	590	8T-7950	27	8T-9884	187	8W-6627	327
	605	8T-7971	329	8V-3208	614		328

▶ **PRIMARY REFERENCE**

PART NUMBER INDEX

Part	Page
8W-7915	358
8W-8289	350
8W-8412	328
8W-8496	358
8W-8527	225
	354
	414
	578
8W-8528	352
	358
	392
	578
8W-8575	358
8W-8903	354
8W-8909	120
	228
8W-9566	302
8W-9594	303
8X-0674	589
	590
	605
8X-1032	339
8X-1135	629
	632
8X-1205	263
	270
8X-1206	261
	270
8X-1805	117
8X-1853	130
	131
8X-1904	542
8X-1907	542
8X-1908	542
8X-1911	542
8X-1913	542
8X-1914	542
8X-1921	542
8X-1943	▶368
	641
8X-1946	1
	▶369
8X-1948	1
	▶367
8X-1968	2
	▶416
8X-2160	542
8X-2161	542
8X-2226	332
	569
8X-2228	593
8X-2305	261
	270
8X-2308	261
8X-2310	263
8X-2316	261
	270
8X-2379	2
	▶424
8X-2385	535
	▶593
	603
8X-2556	635
8X-2646	628
8X-2650	354
	▶628
8X-2663	635
8X-2680	354
8X-2795	535
	▶582
	605
8X-2881	649
8X-2893	542
8X-2913	330
	332
	569
8X-2925	532
	▶562
8X-2968	265
8X-3261	100
8X-3276	265
8X-3364	265
8X-3395	265
8X-3434	306
8X-3435	307
8X-3749	418
8X-3789	543
8X-3806	548
	551
8X-3938	548
	551
8X-3951	542
8X-3965	542
8X-4243	548
8X-4244	551
8X-4245	548
	551
8X-4262	548
8X-4263	551
8X-4266	508
8X-4277	438
	440
	442
	444
	446
	450
	452
	455
8X-4317	▶548
	553
8X-4318	▶551
	553
8X-4413	536
	▶553
	607
8X-4448	548
	551
8X-4467	424
8X-4644	649
8X-4741	367
	369
8X-4865	263
8X-4869	263
8X-4879	540
8X-4884	649
8X-5006	281
	▶286
8X-5021	649
8X-5028	649
8X-5044	286
8X-5102	556
8X-5121	272
8X-5123	542
8X-5147	309
	311
8X-5153	158
	236
8X-5154	158
	236
8X-5155	322
8X-5160	352
8X-5414	573
8X-5489	228
8X-5492	256
8X-5498	438
8X-5499	440
	442
	444
	446
	450
	452
	455
8X-5536	528
	624
8X-5538	528
	624
8X-5540	528
	624
8X-6070	▶394
	655
8X-6075	656
8X-6131	589
	590
8X-6296	158
	236
8X-6419	330
8X-6475	330
	332
8X-6999	573
8X-7317	272
8X-7603	355
8X-7820	413
8X-7845	571
	573
8X-7951	162
8X-7956	162
	508
	518
8X-7974	410
8X-7975	416
8X-8055	569
8X-8096	540
8X-8351	569
8X-8376	265
8X-8450	354
	355
8X-8505	330
	332
8X-8790	571
8X-8813	409
	413
8X-8916	272
8X-9349	629
	632
8X-9405	629
	632
8X-9464	330
8X-9675	603
	▶629
8X-9680	▶631
	634
8X-9884	568
8Y-4005	▶611
	619
8Y-4030	613
8Y-4398	548
	551
8Y-4399	551
8Y-4400	548
8Y-4401	548
	551
8Y-4408	629
	632
8Y-4409	629
8Y-4512	582
8Y-4619	548
	551
8Y-4620	548
	551
8Y-4801	548
	551
8Y-5944	626
8Y-6012	626
8Y-6024	626
8Y-6041	564
8Y-6045	564
8Y-6046	564
8Y-6047	564
8Y-6060	564
8Y-6062	564
8Y-6063	564
8Y-6064	564
8Y-6066	564
8Y-6067	564
8Y-6068	564
8Y-6069	564
8Y-6277	619
8Y-6388	528
	555
	556
8Y-6852	615
	▶619
8Y-6859	564
8Y-6860	564
8Y-9603	186
9B-0143	261
	270
9B-7233	158
	234
	236
	528
	587
9B-7237	397
	401
	405
	438

9

▶ **PRIMARY REFERENCE**

PART NUMBER INDEX

Part	Page	Part	Page	Part	Page	Part	Page
	440		123		61		463
	442	9G-1950	528		63		464
	444	9G-2758	197		65		465
	447	9G-2991	261		66	9S-4181	242
	450	9G-4336	119		77	9S-4182	38
	452	9G-4343	119		81		77
	455		120		92		268
	578		197		126		270
9C-1587	611	9G-4344	120		205		348
9C-2177	524	9G-5127	267		527	9S-4183	38
9C-2399	411	9G-5211	306		557		466
9C-5344	197	9G-7101	578		558	9S-4185	52
	272	9G-7132	288	9M-2042	241		60
	410		291	9M-2092	306		77
9C-5347	524	9G-8909	119	9M-2904	62		425
9C-5928	583		123	9M-4335	348	9S-4189	466
9C-8895	163	9H-6454	435	9M-4594	358	9S-4190	283
	508	9J-0090	652	9M-4972	355		427
	513	9J-0403	478	9M-5590	543	9S-4191	45
9C-9467	273		482	9M-5732	623		70
9D-0178	325		488	9M-7394	435		106
9D-0566	283		490	9M-8406	218		167
9D-0953	396		492		222		268
	404	9J-0404	478		346		272
	416		482		529		296
9D-1491	389		488	9M-8662	594		494
9D-1530	649		490		599	9S-4968	594
9D-1589	589		492	9N-0869	33		596
	590	9J-1979	435		59		597
	605	9J-3047	435		126		599
9D-2753	649	9J-3657	642	9N-1995	573	9S-7706	354
9D-3241	350	9J-4963	422	9N-4155	277	9S-8001	419
9D-3242	350	9J-5498	350	9N-4156	277		421
9D-3306	261	9J-8783	354	9N-4158	277		466
	270		545	9N-4159	277	9S-8002	26
9D-3311	325	9K-7951	304	9N-4161	277		167
9D-3523	306		305	9N-4162	277		291
9D-3767	341	9L-1566	156	9N-4163	277		466
9D-4029	350		208	9N-4498	291	9S-8003	82
9D-5196	309		212	9N-4500	291		419
	311		217	9N-6152	348		421
9D-5516	656		220	9P-0356	286		466
9D-5567	309	9L-3560	346	9P-2369	629	9S-8004	26
	311	9L-6331	208		632		46
9D-5659	309		212	9P-2553	234		92
	311	9L-6770	115		237		102
9D-6164	309	9L-9068	296	9P-7121	113		104
	311	9L-9814	619	9P-9150	258		109
9D-6584	325	9M-0402	359		296		241
	418	9M-1096	64	9R-1183	396		268
9D-6663	358	9M-1328	646	9R-2613	139		288
9D-7085	350	9M-1853	438	9R-2620	203		291
9D-7972	350		440		574	9S-8005	51
9D-8121	628		442	9R-2672	139		77
9D-9257	325		444		220		82
9D-9797	306		446	9R-8870	400		91
9F-1399	261		450	9S-1240	117		241
	270		452	9S-2544	611		468
9F-2247	265		455		614		470
9F-2978	329	9M-1974	14	9S-4180	457		472
9F-5644	191		15		458		474
9F-6705	466		34		459		476
9G-0003	119		39		460		478
	123		56		461		480
9G-0004	119		60		462		482

► **PRIMARY REFERENCE**

PART NUMBER INDEX

Part	Page
	484
	486
	488
	490
	492
9S-8006	23
	26
	82
	106
	241
9S-8008	50
	240
9S-8009	466
9S-9334	26
9T-1633	425
9T-1636	425
	427
9T-1652	425
	427
9T-1699	425
	427
9T-1710	425
	427
9T-1857	494
9T-2186	494
9T-2197	425
9T-2388	383
	385
9T-2446	375
9T-2457	379
9T-2482	382
9T-3727	383
	385
9T-4211	381
	382
9T-4215	374
	375
9T-5241	558
9T-5934	466
9T-5935	466
9T-5957	410
	▶466
9T-6001	624
9T-7750	494
9T-7754	429
9T-7755	429
9T-7756	429
9T-7757	429
9T-7759	429
9T-7761	429
9T-7765	430
9T-7767	430
9T-7769	430
9T-7771	430
9T-7773	430
9T-7774	430
9T-7775	427
9T-8051	422
9T-8053	422
9T-8054	422
9T-8056	422
9T-8058	422
9T-8059	422
9T-8061	422
9T-8063	422
9T-8065	422
9T-8067	422
9T-8069	422
9T-8070	422
9T-8785	366
	▶375
9T-9040	387
9T-9071	422
9T-9072	422
9U-8067	288
	291
9U-8068	288
	291
9U-8069	288
	291
9U-8263	568
9U-8620	288
	291
9U-8668	291
9U-8669	291
9U-8815	252
	254
9U-9282	288
	291
9U-9316	288
	291
9U-9595	291
9U-9995	252
9V-3043	524
9V-7437	611
	614
9V-7440	524
	614
9V-7446	619
9V-7447	619
9V-7453	619
9V-7454	619
9V-7458	619
9V-7943	524
9V-8788	614
9V-8789	614
9W-0844	212
	213
	221
	226
	227
9W-0852	161
	212
	213
	221
	227
	529
9W-0898	291
9W-1441	156
	158
	200
	234
	236
9W-1442	130
	131
	158
	234
	236
	344
	560
	561
	638
9W-1454	241
9W-2029	252
	254
9W-3072	568
9W-4430	348
9W-4431	348
9W-4452	348
9W-4453	348
9W-5132	285
	▶348
9W-5134	▶280
	285
9W-6465	241
9W-6467	250
9W-6582	43
9W-6584	43
9W-7038	241
9W-7385	43
9W-7388	43
9W-7410	291
9W-7412	288
	292
9W-9371	252
	254
9W-9905	247
	250
	252
	254
9W-9920	43
9X-0141	226
9X-0196	212
9X-0261	105
9X-0262	167
9X-1046	200
	234
	237
	560
	561
9X-1054	197
	227
	232
9X-1056	227
9X-1343	212
	221
9X-1386	578
9X-1813	153
	171
	175
	177
	179
	180
	190
	193
	225
	227
9X-2040	529
	624
9X-2041	529
	540
	574
	613
	615
	623
	624
9X-2042	200
	234
	237
	540
	543
	548
	551
	632
9X-2043	158
	330
	332
	540
	555
	556
	569
	571
	574
	594
	599
9X-2045	529
	540
	548
	551
	553
	561
	571
	574
	624
	629
	632
9X-2046	574
	582
	584
9X-2099	68
9X-2125	330
9X-2126	529
9X-2133	85
9X-2185	528
9X-2205	113
9X-2305	71
9X-2383	220
9X-2480	133
	135
	139
9X-2488	528
9X-2493	106
9X-2546	548
	551
9X-3068	141
9X-3401	170
	177
	193
	205
	212
	220
	221
	226
	227
9X-3402	212
	220
	221
	226
	227
	587

▶ **PRIMARY REFERENCE**

PART NUMBER INDEX

Part	Page
9X-3463	143
	144
	145
9X-3465	146
	147
9X-3490	226
9X-4244	143
	144
	145
9X-4271	187
9X-4284	586
9X-4385	220
	221
9X-4493	141
9X-4609	241
9X-4821	187
9X-4824	187
9X-4825	187
9X-6165	139
9X-6395	497
	501
9X-6772	226
	256
9X-7380	578
9X-7381	529
	578
9X-7382	529
	578
9X-7383	578
9X-7384	288
9X-7385	537
	578
9X-7680	494
9X-7737	193
9X-7743	348
9X-8122	562
9X-8250	580
9X-8256	89
	139
	153
	198
	203
	207
	218
	222
	228
	234
	237
	322
	355
	359
	523
	548
	551
	553
	571
	574
	608
9X-8257	32
	93
	273
	643
9X-8276	619
9X-8399	387
9X-8403	167
9X-8600	113
9X-8606	354
9X-8916	22
9X-9365	155
9X-9632	156
9X-9634	203
9X-9638	560
	561
9X-9653	528
9X-9689	557
	558
9X-9896	139
9Y-9854	65

0

Part	Page
000-7246	272
002-1212	427
002-6453	283
	358
004-5933	358
004-7617	346
004-9040	425
005-7898	272
005-8639	383
	385
006-6586	113
006-8663	425
	427
009-0008	100
009-2069	429
009-4184	563
009-4185	563
014-0816	200
	638
030-0060	265
	306
030-0061	265
	306
030-7962	105
030-8535	261
	265
	270
	542
	590
	605
031-0214	601
031-2666	542
031-4155	558
	621
033-4121	614
033-4843	611
033-6027	58
	427
	494
033-6033	67
033-6036	425
	427
	494
033-8248	68
	105
	156
	217
	222
034-1994	542
034-3557	261
	270
034-7044	313
	340
036-9823	187
037-4838	528
061-9455	60
067-2551	217
	222
	578
067-3045	410
068-4497	60
069-4269	82
	85
085-8091	578
086-0507	435
089-7960	236
089-7968	619
090-8247	139
091-0081	119
	225
	580
091-9071	563
092-3200	547
092-7385	410
095-0843	617
095-0878	564
095-0888	425
	427
095-1207	288
	292
096-4883	354
096-6166	130
	131
	200
	208
	213
	234
	236
	542
	594
	596
	597
	599
098-7467	563
099-0492	571
099-3649	17
	89

1

Part	Page
100-3224	564
100-3253	146
	147
100-3254	146
	147
100-3255	146
	147
100-3320	205
100-3401	427
100-3402	427
100-3403	427
100-3404	427
100-3405	427
100-3407	427
100-3408	427
100-3409	427
100-3410	430
100-3411	430
100-3412	427
	►430
100-3413	427
100-3415	427
100-3416	427
	►432
100-4336	400
	414
100-5041	232
100-5179	564
100-6021	466
	►501
100-6551	38
101-0003	626
101-0509	457
	458
	459
	460
	461
	462
	463
	464
	465
101-0852	128
101-1148	468
	484
	486
101-1149	470
101-1154	472
101-1155	476
101-1970	468
	470
	472
	474
	490
	492
101-1971	468
	470
	472
	474
	476
	478
	480
	482
	484
	486
	488
	490
	492
101-1973	468
	470
	472
	474
	476
	478
	480
	482
	484
	486

► **PRIMARY REFERENCE**

PART NUMBER INDEX

Part	Page
	488
	490
	492
101-1974	388
101-1975	388
101-1978	468
	470
	472
	476
	478
	480
	484
	486
	488
	490
	492
101-1980	474
	482
101-1982	478
	482
	484
	486
	488
101-1983	468
	470
	472
	474
	478
	482
	484
	486
	488
	490
	492
101-1984	468
	470
	472
	474
	476
	478
	480
	482
	484
	486
	492
101-2457	438
	440
	442
	444
	446
	450
	452
	455
101-2458	440
	442
	446
	450
	452
101-2480	468
	470
	472
	474
	476
	478
	480
	482
	484
	486
	488
	490
	492
101-2867	601
101-3055	573
101-3128	126
101-4194	626
101-4195	626
101-8105	344
101-8106	344
101-8108	344
101-9346	457
	458
	459
	460
	462
	463
	464
101-9754	288
	292
102-2384	425
102-2385	425
102-2386	425
102-3645	629
	632
102-3659	410
102-4139	514
	516
102-4140	516
102-4577	480
102-5881	247
	250
	254
102-6238	458
	461
	462
102-7412	468
	470
	472
	474
	476
	478
	480
	482
	484
	486
	488
	490
	492
102-7423	388
102-8385	457
	459
	460
	463
	464
	465
102-8801	197
	205
	212
	221
	226
	227
102-8802	114
	141
	148
	151
	153
	161
	177
	179
	190
	195
	197
	205
	208
	212
	220
	225
	226
	227
	232
	239
	114
	141
	148
	151
	153
	161
	177
	179
	190
	195
	197
	205
	208
	212
	220
	225
	226
102-8803	142
	149
	150
	169
	170
	197
	205
	212
	220
	225
	226
102-8804	133
	135
	196
	197
	203
	208
	212
	220
	221
	226
102-8805	146
	147
	212
	213
	586
	635
	637
	638
102-8806	165
	194
	200
	226
102-9372	593
	605
102-9863	187
103-1592	158
103-4771	590
	605
103-4953	589
	590
	605
103-5304	139
103-5417	329
103-5419	329
103-5515	589
	590
	605
103-5516	589
	590
	605
103-5678	158
	236
103-9125	306
103-9425	573
104-2091	529
	556
	594
	599
104-3122	425
	427
	▶494
104-3124	425
	427
104-3947	295
104-4286	410
104-4523	652
104-6871	221
104-7419	438
	440
	442
	444
	446
	450
	452
	455
104-7429	438
	440
	442
	444
	446
	450
	452
	455
104-7740	438
	440
	442
	444
	446
	450
	452
	455
104-8673	438
	▶457
105-2080	514
	516
105-3196	389
	▶422
105-6491	316
105-7167	414
106-3658	478

▶ **PRIMARY REFERENCE**

PART NUMBER INDEX

Part	Page	Part	Page	Part	Page	Part	Page
	488		400	110-8769	226		626
	490		416	111-0343	294	113-6069	37
	492	108-2187	468		507	113-7745	242
106-3659	468		470	111-1719	1	113-8218	583
	470		472		▶660	113-9048	272
	472		474	111-2416	205	114-0025	5
	476		476	111-4275	7		▶403
	478		478		▶186	114-0027	403
	480		480	111-4871	217	114-5333	578
	484		482		222	114-6635	502
	486		484	111-4875	221		503
106-3660	474		486	111-5754	502		504
	482		488	111-8233	468		505
106-4496	556		490		470	114-8843	220
106-4787	▶396		492		472		344
	641	108-2949	119		476	114-9190	548
106-6553	553		123		478		551
106-7149	187	108-3129	292		480	114-9281	208
106-7390	498	108-4086	564		484		212
	▶502	108-4087	564		486	115-0541	418
107-0543	459	108-4103	565		488	115-0631	269
	463	108-4816	494		490		▶270
	465	108-4916	▶388		492	115-0634	270
	▶484		474	111-8234	474	115-1748	216
107-0545	460		482		482		594
	464	108-5157	501	111-9321	457		596
	▶486	108-5751	252		459		597
107-1983	594	108-5949	551		460		599
	596	108-5950	548	112-1813	642	115-3072	330
	597	108-5951	551	112-3199	394		332
	599	108-5952	548	112-3200	394	115-4072	37
107-3398	5	108-6523	288	112-3928	516	115-4170	45
	▶640		291	112-4159	424	115-4219	37
	641	109-0361	227	112-4834	352	115-4223	77
107-4865	629	109-1144	496	112-5282	61	115-5726	1
	632	109-2804	573	112-5575	371		▶366
107-5014	571	109-3036	507		▶382	115-6806	593
	573	109-3204	425	112-5853	522	115-6807	573
107-6813	553	109-3207	103	112-6174	200	115-9923	573
107-7604	23	109-4580	263	112-6175	234	116-1965	▶609
107-7694	13	109-4581	263		236		615
107-7708	19	109-6776	652	112-7462	371	116-2015	524
107-8140	400		654	112-7463	1	116-2016	524
107-8141	400	109-9771	410		▶371	116-2327	524
107-8142	400	110-2985	1		641	116-2779	▶524
107-8143	396		▶400	112-9035	382		619
107-8144	396	110-3003	400	112-9164	569	116-4556	7
	404	110-3326	354	112-9555	562		▶35
107-8147	400	110-4213	304	112-9787	410	116-4686	586
107-8148	400	110-4214	304	113-0993	652	116-5710	100
107-8149	396	110-5161	296	113-0994	▶521		545
	404	110-6078	270		654	117-2311	523
107-8150	396	110-6241	542	113-0996	654	117-3437	81
	400	110-6393	528	113-0997	▶520	117-3643	9
	404	110-6844	226		654		▶73
107-8374	656	110-6846	226	113-0998	520	117-3855	1
107-8375	656	110-6848	226	113-0999	407		▶404
107-9579	32	110-7618	15	113-1009	654	117-4486	527
107-9641	548	110-7885	638	113-4254	2	117-4492	527
	551	110-7887	203		▶613	117-4698	▶604
108-0358	158	110-8078	▶509	113-5801	564		605
108-0702	416		513	113-5805	564	117-9966	594
108-0703	416	110-8087	509	113-5806	564		599
108-0714	416	110-8088	509	113-5807	564	118-0424	272
108-1610	396	110-8385	270	113-5808	▶564	118-1727	7

▶ **PRIMARY REFERENCE**

PART NUMBER INDEX

Part	Page	Part	Page	Part	Page	Part	Page
	▶16	124-0360	649	125-7003	635		523
118-2558	573	124-0507	626	125-7004	635		529
118-7880	656	124-1431	528	125-7874	197		553
118-7881	656	124-1432	528		205		573
118-9573	186	124-1479	358		212	129-3180	585
	189	124-1839	492		213		652
	547	124-1840	488		221		654
119-0036	611		490		225	129-4935	528
119-3025	81	124-2528	184		226	129-5049	317
119-3662	205	124-2883	457		232		318
	212		459		587	129-7164	221
	213		460	125-7875	197	129-7249	660
	221		463		205	129-7261	649
	225		464		212	129-7632	494
	226		▶488		213	129-7679	662
	232	124-2884	458		220	129-7680	662
119-5026	564		462		221	130-0229	268
119-6194	619		▶490		225	130-1433	578
119-6723	89	124-2885	462		226	130-2792	225
119-8666	380		▶492		232	130-3515	146
120-6680	376	124-3109	67	125-7876	119		147
121-3307	84	124-3137	528		120	130-3595	306
	87	124-3138	528	125-9584	571	130-5300	100
121-9242	373	124-3240	334	125-9853	526		133
	▶387	124-3325	438	125-9854	▶526		135
121-9245	387		440		621		153
122-2228	553		444	125-9855	▶614		158
122-7045	594		450		621		160
	599		455	125-9856	613		196
122-8146	594		▶458		▶621		197
	599	124-3326	442	126-1757	60		203
122-8154	556		452	126-1766	225		208
122-8155	556		▶462	126-1767	170		213
122-8795	573	124-3328	440		205		217
122-8936	7		442		537		222
	▶45		▶463	126-1768	221		227
122-9764	76	124-3329	450		225		232
123-0872	532		453	126-1774	221		234
123-1076	387		▶464		225		236
123-1201	542	124-3385	488	126-2728	261		242
123-3688	225		490		270		256
123-3689	225		492	126-2747	3		529
123-3692	225	124-5572	11		▶615		545
123-3695	225	124-6258	67	126-4966	553	130-5770	496
123-3698	339	124-6679	652	126-5466	77	130-7084	416
123-3699	339	124-7792	30	126-6933	135	130-7754	444
123-4003	261	124-8843	553		▶318		▶459
	270	124-8949	332	126-7574	132	130-7755	455
123-4354	635	124-9006	528	127-1647	11		▶460
123-4355	635	124-9007	528		82	130-9041	372
123-4358	3	124-9633	64	127-5483	213		▶383
	▶583		197		226	130-9042	372
123-4511	92	124-9675	256	127-5484	213		▶385
123-4586	583	124-9768	654	127-8157	521	130-9044	383
123-4587	583	125-0438	528	127-8879	509	130-9045	385
123-4618	528	125-2210	662	128-0037	548	131-1489	226
	624	125-4342	535		551	131-1490	213
123-4701	528		▶632	128-0316	7	131-1498	213
	624	125-4344	535		▶65	131-1506	213
123-4994	392		▶589	128-9654	518		225
123-5980	321	125-4388	571	129-1170	81		226
123-6661	501	125-4389	571	129-3173	100	131-3736	372
123-6806	589	125-5321	628		354	131-3737	337
	590	125-5520	571		545	131-3738	337
123-8408	624	125-6483	571	129-3178	139	131-3739	337

▶ **PRIMARY REFERENCE**

PART NUMBER INDEX

Part	Page
131-3740	306
	▶337
131-3919	247
	250
	254
131-4242	564
131-4428	306
131-5167	564
131-5171	200
131-5492	562
131-6009	573
131-7191	368
	▶379
131-7194	379
131-7195	379
131-8350	466
	▶496
131-8777	503
	504
	505
132-0338	527
132-1143	337
	372
132-1144	337
132-1340	511
132-4926	367
	▶380
132-4927	380
132-5789	196
	197
	207
	227
132-7551	227
	578
132-8487	217
	220
132-9625	252
132-9628	254
132-9630	247
132-9633	247
132-9635	250
133-3260	227
133-4995	27
134-0165	321
134-0747	396
	400
	404
134-1080	1
	▶306
134-1081	306
134-2540	220
	221
	227
	594
	596
	597
	599
134-2730	189
134-4126	128
	132
134-4483	28
134-7258	662
135-0426	▶149
	232
135-0427	▶150
	158
135-0450	400
135-0451	396
	404
135-0452	396
	404
135-0453	400
135-0611	635
	637
	638
135-1979	558
135-2141	7
	▶49
135-2543	119
	120
	197
135-3894	330
135-5975	205
135-9819	11
	16
135-9941	256
136-0822	60
136-1543	592
136-1544	527
136-1711	643
136-1953	529
136-4183	37
136-6330	416
136-6331	416
136-7226	580
137-1602	96
	98
137-4515	438
	440
	442
	444
	446
	450
	452
	455
137-4516	438
	440
	442
	444
	446
	450
	452
	455
137-5503	608
137-6645	182
	183
137-6715	28
137-6717	57
137-6718	28
137-6719	459
	460
	462
	463
	464
	465
137-6720	457
	458
	459
	460
	461
	462
	463
	464
	465
137-6783	573
137-8065	573
137-9410	158
	212
138-3252	27
138-4054	553
138-7026	573
138-7198	57
138-8402	57
138-8403	57
138-9868	57
138-9910	573
139-0532	432
139-1118	573
139-1153	523
139-2116	225
139-3593	573
139-3595	555
139-4081	▶40
	56
139-4084	40
139-4605	608
139-4612	2
	▶608
139-8472	476
	480
	486
	▶503
139-8474	490
	▶504
139-9476	40
140-6188	28
140-9670	28
141-1546	10
141-6343	100
141-9661	435
141-9784	529
142-0350	294
142-0485	100
	545
142-1767	296
142-1814	325
142-4940	528
142-5787	418
142-6167	300
142-6168	299
142-6183	299
142-7289	27
143-1288	527
	533
	534
	617
143-4654	59
143-4792	313
	340
143-5373	242
143-9290	540
143-9392	126
144-0195	629
	631
	632
144-1636	179
	227
144-2161	325
144-2162	325
144-4107	573
	605
144-6695	547
144-7620	325
144-8001	652
145-0162	19
145-0164	19
145-0168	19
145-0170	19
145-0326	626
145-2901	30
145-5966	325
145-5967	325
145-8039	242
146-0705	438
	440
	442
	444
	446
	450
	452
	455
146-1842	306
	307
146-1843	306
	307
146-7453	67
146-8121	11
147-0385	156
	217
	222
	227
147-1445	221
147-1446	221
147-3309	350
147-3400	306
147-5088	81
147-5112	518
147-6143	511
147-6144	511
147-6603	506
147-6604	506
147-6605	506
147-8211	28
147-8214	28
147-8220	28
148-1925	241
148-2516	287
148-2592	383
	385
148-2593	380
148-2903	103
148-7027	392
148-7906	478
148-8307	105
148-8316	256
	410
148-8318	394
	396
	400
	403

▶ **PRIMARY REFERENCE**

PART NUMBER INDEX

Part	Page
	404
	446
148-8323	410
148-8327	272
	410
148-8335	272
148-8336	105
	392
148-8339	272
148-8340	396
	404
148-8347	11
	409
	410
	413
148-8357	272
148-8358	396
	404
148-8363	364
	396
	400
	404
148-8364	11
	105
	396
	400
	404
	410
148-8367	256
	392
148-8368	11
	392
	408
	410
148-8369	256
148-8374	394
	396
	400
	414
148-8377	392
	408
148-8378	68
	392
148-8381	410
148-8383	364
	400
	414
148-8395	51
	77
	82
	241
	468
	470
	472
	474
	476
	478
	480
	482
	484
	486
148-8407	296
148-8408	38
	466
148-8411	52
	60
148-8433	401
149-1044	509
149-1045	509
149-2065	545
149-3409	593
149-4915	▶10
	11
149-5240	103
149-6371	578
149-7226	564
150-1280	382
150-3026	85
150-3028	407
150-3037	580
150-3058	89
150-4868	416
150-5968	410
150-7158	580
150-7955	300
151-4957	234
	236
152-3952	81
152-6824	133
	135
152-6825	133
	135
152-8346	418
	▶507
153-0185	511
153-0187	511
153-1794	7
	▶91
153-1818	446
153-5710	123
153-6237	411
153-6258	105
153-9360	163
	▶511
154-0896	41
154-3064	287
	▶294
154-6306	296
154-6307	296
154-6309	288
154-6579	383
	385
154-7172	288
154-7175	289
154-7176	289
154-7177	289
154-9023	77
154-9025	79
155-2255	205
	213
	221
	225
	226
155-2256	221
155-2258	221
155-2260	171
	175
	180
	205
	213
	221
	225
	232
155-2263	221
155-2265	205
	213
155-2270	192
	196
	197
	205
	213
	221
	225
	226
	227
	232
	239
155-2271	196
	197
	213
	220
	226
155-2274	213
	221
	225
	587
155-2276	175
155-3624	38
	268
155-6258	11
	82
156-4281	256
156-5545	527
156-5970	362
156-6312	604
157-0670	77
	79
158-6072	96
	98
159-0303	7
	▶50
159-0308	252
	254
159-0927	252
	254
159-8049	119
	123
159-8050	119
	120
	123
159-9322	221
	225
160-5131	77
160-6382	200
	330
	332
160-7689	225
161-1703	172
161-1704	174
161-1705	173
161-3932	234
	236
161-4423	313
	340
161-5967	564
161-6713	252
	254
161-6963	96
	98
161-7055	291
161-7062	100
	545
161-7063	545
161-9289	622
161-9916	105
	580
162-0177	92
	104
	241
	288
	291
162-3148	62
162-6448	383
	385
162-8068	7
	▶51
162-8218	100
	545
162-8219	100
	545
163-0325	646
163-0326	646
163-0327	646
163-0872	▶537
	538
163-1146	626
163-1201	563
163-2478	28
163-4195	396
	400
	404
163-4720	514
163-4721	514
163-6074	514
164-0210	59
164-2108	288
	362
164-2465	589
	590
	605
164-4180	242
164-4531	527
164-4883	592
164-5557	105
164-5562	79
164-5567	256
	272
	296
164-5570	105
164-5605	394
	396
	400
	403
	404
164-5608	396
	400
	404
	446
164-5619	82
	106

▶ **PRIMARY REFERENCE**

PART NUMBER INDEX

Part	Page
	241
164-6867	104
164-7556	143
	144
	145
164-7577	▶190
	240
164-8462	2
	▶418
164-8474	555
165-2510	370
	▶381
165-4446	9
	▶39
165-7014	410
165-9928	256
166-1776	60
166-1781	60
166-1880	522
166-1997	590
	605
166-1999	590
	605
166-2830	593
166-2905	47
166-6781	626
166-9913	534
166-9914	533
167-0566	289
167-1801	425
167-1802	425
167-2186	379
	383
	385
167-2190	374
	375
	381
	382
167-2195	376
	377
	380
	387
167-2294	379
	383
	385
167-2300	374
	375
	381
	382
167-2304	376
	377
	380
	387
167-2307	418
167-2452	374
	375
167-2457	377
167-7504	200
167-7505	200
167-8121	29
167-9002	1
	▶540
167-9524	288
168-2288	46
168-7224	48
168-8248	200
168-8683	100
168-9108	381
168-9110	381
169-0921	100
	354
	545
169-0922	100
	545
169-1025	617
169-2621	540
169-3145	563
169-3264	523
169-3380	540
169-4088	643
169-4089	643
169-4090	643
169-4092	643
169-5414	203
	208
	212
	217
	220
	330
	332
169-5861	167
169-5862	89
169-7380	626
169-7443	196
169-7487	46
169-8938	200
170-0967	580
170-1112	527
170-1114	527
170-1115	527
170-4820	▶557
	561
170-5334	▶558
	560
170-5335	▶161
	557
	558
170-7485	507
170-8590	601
171-1230	617
171-2122	540
171-2212	197
171-5349	177
	179
	227
171-5672	▶141
	153
171-6165	569
171-6682	617
171-6729	105
171-7091	252
171-7095	254
171-7186	129
	▶523
172-0165	100
172-1239	573
172-2416	617
172-4001	527
172-4211	100
	354
	545
	578
172-5378	535
	▶569
	603
172-6298	94
172-6555	200
172-6581	617
172-6831	603
	▶635
172-6876	383
	385
172-7105	540
172-7106	540
172-8641	200
172-9316	200
172-9367	29
172-9389	127
	▶128
173-0143	48
173-1007	433
173-1008	433
173-1009	433
173-1028	▶527
	617
173-2052	623
173-3064	158
	236
173-3084	616
173-3993	466
173-4490	236
173-5787	622
173-6756	▶604
	607
173-7035	622
173-7223	105
173-9683	376
	377
	380
	387
173-9685	379
	383
	385
173-9779	374
	375
	381
	646
174-0503	220
	221
174-3705	256
	▶287
174-4140	573
174-4181	84
174-4492	528
	624
174-4546	2
	▶624
174-4971	528
174-5907	139
	208
	213
	345
	346
	358
174-6051	624
174-6353	528
	624
174-8131	234
	236
	542
174-9529	43
174-9570	▶102
	111
174-9692	217
	222
175-1504	▶616
	622
175-3676	47
175-3893	288
175-4429	11
175-7895	379
	383
	385
175-7896	374
	375
	376
	380
	381
	382
175-7898	377
	387
	646
176-2945	354
176-5507	528
	624
177-0581	93
177-1713	354
177-1862	601
177-1863	617
177-2215	119
	225
177-4119	321
177-4120	321
177-4493	▶127
	208
	212
177-4937	616
177-7448	542
177-7858	528
177-7891	532
	▶555
178-1685	514
178-1686	514
178-1688	514
178-3086	518
178-3695	272
178-4190	569
178-7907	623
178-8455	514
178-8894	553
179-1298	288
179-1550	158
	212
179-2138	569
179-2139	569
179-2140	569
179-2176	573
179-2179	573
179-4814	563
180-3833	586

▶ **PRIMARY REFERENCE**

PART NUMBER INDEX

Part	Page
180-3834	586
180-3836	586
180-4027	354
	545
180-4028	234
	236
180-4643	129
	▶130
180-4656	604
180-7033	234
	236
180-7147	354
	545
180-7303	410
180-7344	42
180-9324	▶239
	258
180-9327	288
180-9340	171
	205
180-9933	256
183-1425	542
183-2136	203
183-2151	203
183-3399	68
	108
183-3406	106
	167
183-6774	288
183-6775	288
183-6845	7
	▶94
183-6854	94
183-6856	94
183-7263	167
	291
	466
184-1130	▶288
	296
184-2298	617
184-2299	617
184-2420	79
184-2509	79
184-9843	374
	375
	381
	382
185-0008	352
	▶362
185-1122	354
185-2197	203
185-2274	540
185-2287	540
185-2638	115
185-2639	115
185-2644	115
185-2645	115
185-2647	115
185-2648	115
185-2650	115
185-2651	115
185-2653	115
185-2654	115
185-2655	115
185-2658	115
185-5872	538
185-7674	377
186-1526	288
	291
	▶295
186-3223	197
186-3735	114
	133
	135
	141
	142
	146
	147
	148
	149
	150
	151
	153
	169
	190
	194
	195
	196
	197
	200
	203
	208
	212
	213
	221
	225
	226
	227
	232
	294
	295
	344
	578
	586
	635
	637
	638
186-3736	180
	192
	196
	197
	212
	213
	221
	226
	232
	587
187-0491	540
187-1008	225
187-6279	7
	▶68
187-6294	68
187-7738	163
	513
187-8278	28
187-8279	28
187-8280	28
187-8281	28
188-9644	217
	222
189-0108	197
189-0189	294
189-1707	578
189-3158	256
	597
	599
189-8772	94
	272
189-8777	71
190-1684	241
190-3043	545
190-4375	354
190-4885	60
190-5386	654
190-7614	221
190-8970	111
190-8977	105
	▶111
191-0027	528
	624
191-0461	9
	▶108
191-0522	58
191-0523	▶58
	108
191-1782	105
191-1783	105
191-3645	346
191-5236	532
191-6241	46
191-9256	241
192-7357	43
193-1721	2
	▶283
193-2550	▶177
	227
193-6996	▶46
	47
193-6998	7
	▶47
194-2877	283
194-2878	283
194-2903	105
194-4046	119
	123
194-5131	63
194-5226	175
194-5227	175
194-6722	▶171
	197
194-7015	321
195-0321	48
195-7218	656
195-8553	265
196-2412	344
196-4150	594
	599
196-7268	203
196-9519	19
197-0416	92
197-2066	3
	▶584
	585
197-4977	241
197-5210	7
	▶38
197-7689	626
197-8393	167
	▶172
197-8394	167
	▶173
197-8419	68
197-8611	571
	573
197-8624	571
	573
197-8629	573
197-8630	573
197-8820	▶115
	117
197-9353	48
197-9354	48
197-9386	48
198-2713	205
198-2714	7
	▶205
198-3611	43
198-4776	43
	85
	538
198-4777	43
	85
	95
	106
198-4778	313
	340
198-4780	418
198-4782	341
	657
198-5438	354
198-7379	339
198-7380	339
198-7657	258
198-8588	330
	332
198-9811	656
198-9812	656
199-2627	283
199-2628	283
199-2677	548
	551
199-2712	548
	551
199-2739	548
199-2740	551
199-3368	▶151
	160
199-7891	115
199-8436	115
	2
200-3967	330
	332
200-4495	37
200-4497	▶71
	72
200-8623	573
201-0387	242

▶ **PRIMARY REFERENCE**

PART NUMBER INDEX

Part	Page	Part	Page	Part	Page	Part	Page
201-2184	371		637		545	223-4296	138
201-9774	61		638	214-7566	26	223-5916	580
202-1138	594	206-8784	187		61	224-0554	662
	599	206-9651	542	214-7567	176	224-0807	89
202-2762	256	207-1517	186	214-7568	68	224-3247	13
	358		▶187		106	224-4536	▶175
	578	207-4773	354		108		176
202-6611	144	207-4922	545		109	224-5912	317
202-6614	143	207-4927	100		256		318
	145	207-6034	239		268	224-6638	48
202-7666	▶533	208-0423	580		272	225-0312	662
	616	208-1628	11	215-3005	▶343	225-3109	573
202-7668	▶534	208-4617	119		346	225-4150	662
	616		123	215-7066	79	225-4257	662
203-0780	584	208-6054	79	215-7067	79	226-0295	548
203-1124	635	208-7782	130	216-5586	23		551
	637		131	217-2661	435	226-0342	548
	638	208-9698	▶364	217-4369	358		551
203-2389	343		653	217-7742	578	226-1240	317
203-2390	343	209-4578	93	217-7933	601		318
203-2391	343	210-1747	167	217-9060	77		662
203-2423	343		▶174	217-9946	45	226-1274	662
203-3768	94	210-2262	601	218-2971	343	226-2870	435
203-3769	91	210-2263	601	218-3339	250	226-2871	435
203-3940	474	210-2266	601	218-9894	507	226-6621	241
203-5957	348	210-2270	▶601	219-0302	603	226-8202	379
203-5958	348		617		605		383
203-7703	622	210-3321	15	219-0314	89		385
204-4376	528	210-5590	9	219-2000	533	226-8696	70
204-6488	542		▶19		534	226-9622	288
204-8000	197	210-5592	9	219-2434	265	227-1200	25
204-8736	354		▶48	219-2437	265	227-5904	109
204-8737	354	210-7722	94	219-3309	56	227-5942	77
204-8738	354	210-9246	68	219-5847	▶26	228-3323	221
204-8739	354	211-4908	536		27	228-4766	30
204-8740	354	211-4913	535	219-5849	9	228-5009	234
204-8741	354		▶637		▶27		236
205-0626	115	211-6807	205	220-1194	7	228-6050	146
205-1280	108	211-9274	43		▶62		147
205-1320	37	211-9275	43	220-1209	30	228-6052	146
205-1321	9	212-2270	9	220-3634	662		147
	▶37		▶72	220-4125	89	228-6054	146
205-2191	283	212-3706	108	220-8678	102		147
205-4285	130	212-4174	67	221-3494	68	228-6056	146
	131	212-4288	13		108		147
205-6388	616	212-4289	9	221-3676	474	228-7103	67
205-7187	358		▶13		482	228-8510	62
205-7299	345	212-4893	19	221-4482	9	229-5010	482
	346	212-5081	88		▶21	229-5153	19
	352	212-6933	79	221-8045	662	229-5154	19
	358	213-0064	105	222-0345	▶610	229-5155	19
	411	213-3193	48		616	229-5156	19
205-8839	239	213-5007	518	222-3769	547	229-8841	7
205-8847	239	213-7315	594	222-4737	458		▶15
206-1345	205		596		461	229-8844	33
206-3599	100		597		465	229-9382	376
	545		599	222-5893	15		380
206-3600	100	213-9100	153	222-5915	77		387
206-4097	542	213-9842	239	222-5917	205	230-4011	193
206-4228	7	214-1982	435	222-5946	7		227
	▶77	214-1983	2		▶59	230-4012	227
206-4669	67		▶437	222-7774	474	230-4477	662
206-5122	446	214-1984	▶435		482	231-3539	381
206-5123	446		437		▶505		382
206-5823	635	214-4863	▶169	223-0580	433	231-4486	562

▶ **PRIMARY REFERENCE**

PART NUMBER INDEX

Part	Page	Part	Page	Part	Page	Part	Page
231-4487	562	238-0415	529		613	252-0730	298
231-5251	317	238-0417	529		615		▶299
	318	238-2698	48		660	252-0731	▶298
231-9897	225	238-4462	376	246-4611	89	252-2156	662
232-0343	104	238-4523	338	246-4615	88	252-2157	662
	▶112	238-4524	338	246-6036	68	252-5709	133
232-1285	25	238-4525	338	246-6561	133		135
232-1732	562	238-4527	338		135		▶216
232-1754	56	238-4528	338	246-6562	133	252-7801	28
232-3717	9	238-5080	181		135	252-8213	66
	▶56	238-5084	26	246-9345	7	253-0861	661
232-6114	584	239-0583	14		▶126	253-0912	410
233-0891	126	239-1134	184	246-9353	165	253-2111	197
233-7655	73		▶195	247-1876	14	253-2589	7
234-0225	350	239-4991	662	247-4412	643		▶66
234-4323	▶143	239-5030	106	247-6449	135	253-2697	▶132
	155	239-6989	662		▶162		133
	156	239-9893	▶419	247-6450	133		135
	158		465		▶508	253-4019	540
234-4324	▶144	239-9894	▶421	247-6457	216	253-4347	352
	158		461	247-8602	93	253-4677	1
234-4325	▶145	241-4194	184	247-8629	252		▶389
	156	241-5889	419		254	253-4678	389
234-5013	105		421	247-9711	252	254-0095	9
	▶181	241-6185	259		254		▶109
234-6666	295	241-8368	▶192	247-9730	88	254-5960	133
234-7730	143		197	248-1377	283		▶163
	144	241-8534	75	248-2886	254	254-6136	662
	145	242-0588	146	248-5245	662	254-6802	93
234-7731	143		147	248-6772	529	254-7948	298
	144	242-3360	96	249-3251	419		▶299
	145		98		421	254-7964	▶298
235-2412	▶252	242-3864	61	249-8575	662	254-8053	298
	285	242-6099	272	250-0544	446		▶299
235-2413	▶254	242-7417	259		▶461	254-8061	▶298
	285	242-9245	354	250-0841	▶96	255-2361	135
235-2765	226	243-3250	217		97		▶164
	227		220	250-2984	89	255-3431	513
235-5527	57	243-5063	87	250-4628	592	255-5284	126
235-8200	7	243-5362	220	251-0982	539	255-6261	529
	▶165		222	251-2382	163	256-3830	56
235-9651	110	244-2585	446		513		▶57
236-0737	542	244-2589	446	251-2383	217	256-3831	▶53
236-1927	163	244-2592	446		220		57
236-2356	217	244-2596	446	251-3227	85	256-3832	53
	220	244-3168	126	251-4390	410	256-3834	▶54
236-4413	▶81	244-3712	268	251-7350	573		57
	82		272	252-0098	304	256-3835	54
236-4420	81	244-4500	33	252-0100	305	256-5308	84
236-4421	81	244-5880	217	252-0102	▶302	256-6453	181
236-4545	184		220		304	256-6803	138
236-5197	601	245-3259	39	252-0104	▶303	256-6804	138
236-6220	167	245-3930	317		305	257-3227	578
	▶176		318	252-0106	300	257-8471	547
236-6221	167	245-3933	317		▶304	257-9363	138
	▶178		318	252-0108	299	258-0733	184
236-8826	217	245-4630	178		300	258-2403	9
	220	245-6375	88		▶304		▶97
237-0227	105	245-6376	88	252-0111	299	258-4524	99
	227	245-6796	17		▶305	258-8723	7
237-5176	77	245-7339	55	252-0112	299		▶33
237-8063	7	246-2641	113		301	259-0017	79
	▶70		313		▶305	259-0134	▶148
237-9822	7		340	252-0114	▶300		157
	▶41		437	252-0118	▶301	260-6501	433

▶ **PRIMARY REFERENCE**

PART NUMBER INDEX

Part	Page	Part	Page	Part	Page	Part	Page
260-6502	396	266-6026	538	281-0547	662	286-0466	518
	404	266-6793	272	281-3160	▶291	286-0742	518
	▶433	266-7650	79		296	286-1089	662
260-7524	53	266-7651	79	281-3163	258	286-2631	389
	54	266-8568	76		▶296	286-4328	3
260-7647	▶118	267-3506	518	281-3165	▶258		▶129
	217	267-3507	276		285	286-4330	▶131
	220	267-3508	518	281-5641	1		567
260-8630	68	267-4743	73		▶259	286-4415	2
260-8631	68	268-1839	9	282-0882	656		▶560
260-9171	106		▶110	282-2469	1	286-4416	2
261-1108	410	269-8788	68		▶330		▶561
261-3345	629	269-9321	508	282-2472	1	286-4823	634
	632	269-9322	162		▶100		▶638
261-3816	45	269-9325	164	282-2473	1	287-3260	▶586
261-4672	518		▶513		▶545		594
261-4673	518	270-3277	409	282-2475	1		596
261-4674	518	270-4924	354		▶542		597
261-4675	518	271-5658	19	282-4351	265		599
261-4676	518	272-0388	17	283-0644	325	288-0735	649
261-5694	592	272-1956	94	283-1099	260	288-5508	217
261-8541	649	272-3089	100	283-1578	518		220
261-8543	649		545		522	288-5509	217
261-8553	389	274-1704	341		643		220
261-9287	96	274-5909	578	283-7190	▶314	288-5756	594
261-9367	98	274-6719	105	284-0815	419		597
262-1421	▶132	274-7395	167		421		599
	138		▶182	284-0824	1	288-5757	594
262-7291	446	274-7396	167		▶75		597
	▶465		▶183	284-3045	419		599
263-1786	30	274-8068	587		421	289-0580	518
263-3774	▶22	275-0572	321	284-5343	2	289-7545	▶532
	23	275-1253	105		▶208	289-9354	197
263-6914	79		▶193	284-5346	2	289-9726	303
263-8218	103	275-3634	184		▶203	290-0349	603
263-8948	138	275-6535	2	284-5347	2		▶607
263-9088	138		▶285		▶234	290-1127	535
	▶166	275-7741	▶194	284-5348	2		▶536
263-9657	484		638		▶232	290-1148	▶332
264-3762	▶88	275-8387	7	284-5353	152		602
	89		▶36		▶158	290-1505	302
264-4297	182	275-9638	419	284-5362	1	290-4752	221
	183		421		▶155	290-5792	▶179
264-5732	205	276-3674	63	284-5363	5		242
264-6156	56	276-3681	7		6	291-6693	314
264-6157	25		▶63		152	292-4772	358
264-7029	193	276-7462	32		▶160	292-6099	592
	227	277-1873	227	284-5376	1	293-0730	103
264-7030	105	277-4837	85		▶156	293-2911	601
	227	277-6430	241	284-5378	1	293-3824	662
265-1094	649	277-6432	241		▶315	293-4153	3
265-1095	649	277-6433	▶241	284-5379	315		▶587
265-1096	649		285	284-5394	1	293-4277	259
265-1100	1	278-0642	242		5	293-4285	272
	▶649	279-6631	367		6	293-4495	587
265-5007	79	279-6632	261		▶153	293-4500	539
265-5287	247		270	284-5397	602	293-4828	2
265-9125	265		367		▶605		▶225
266-1467	100		649	284-5400	▶602	293-4829	1
	▶170	279-8138	5	284-7774	89		▶392
266-1598	421		▶407	285-3361	▶200	293-4830	2
266-1599	419	280-1480	661		535		▶358
	421	280-4072	5		603	293-4832	2
266-1600	419		641	285-6570	272		▶113
266-4360	260		▶648	285-9066	30	293-4833	1

▶ **PRIMARY REFERENCE**

PART NUMBER INDEX

Part	Page
	▶321
293-4835	316
293-6529	567
	▶568
293-7533	568
293-8638	2
	▶431
294-1136	32
294-1137	32
294-3542	135
	▶217
294-4619	321
294-4621	321
294-5042	533
	534
	617
294-8546	▶152
294-8587	571
294-8588	535
	▶571
294-8620	112
295-1139	119
295-1834	234
	236
295-1835	234
	236
295-2933	2
	▶339
295-3839	321
295-4371	1
	▶563
295-4431	532
	▶539
295-7991	3
	▶567
296-6764	661
296-6765	661
296-6768	661
297-1140	208
	212
297-5355	7
	▶167
297-6867	7
	▶137
297-6979	418
297-8449	135
	▶309
297-8948	1
	▶354
298-2426	2
	▶634
298-3519	1
	▶313
298-3520	125
	▶340
298-3522	313
298-3523	313
	340
298-3529	340
298-5315	125
298-5591	1
	▶119
298-5592	▶123
	125
298-7785	321
298-7787	321
298-8562	321
298-8563	321
299-2277	592
299-2511	653
	▶654
299-3330	261
	270
299-3427	371
299-3436	367
299-3439	367
299-3443	514
	516
299-8264	272
299-8270	272
299-8306	341
299-8307	2
	▶341
299-8311	74
	▶87
299-8318	341
299-9478	341
300-1377	344
300-6152	119
300-6203	392
	408
300-7933	61
300-9550	26
	▶28
300-9979	3
	▶532
301-2237	4
	▶409
301-3118	295
301-4173	▶592
	617
301-4174	616
	▶617
301-6664	119
	123
301-7735	4
	5
	▶327
301-8205	▶652
	653
301-8206	4
	▶653
301-8207	652
302-0412	▶146
	212
302-0413	▶147
	213
302-1331	661
302-3908	411
302-4192	▶661
	662
302-4195	2
	▶662
302-5210	139
302-5211	139
302-5212	139
302-5428	138
	▶139
302-5429	▶138
302-7458	622
	▶626
302-8711	327
302-8814	▶622
	623
303-1978	363
	▶414
303-2033	▶344
303-2034	344
	▶345
303-2035	345
	▶346
303-2159	1
	▶316
303-2348	346
303-3011	1
	▶256
303-5996	341
303-5998	341
303-5999	341
303-6003	▶76
	341
303-6008	259
303-6009	76
303-6010	76
303-6011	76
303-6012	76
303-6013	341
303-6014	341
303-6015	341
303-6017	341
303-6032	272
303-6034	539
303-6037	76
303-6203	571
304-0267	652
304-4924	17
304-5687	118
304-5794	153
304-5880	155
304-6958	594
	596
	597
	599
304-7252	321
304-7417	321
304-7418	321
304-7419	321
304-9957	4
	▶125
305-5362	205
305-6155	298
	▶300
305-6159	▶298
305-7827	321
305-8141	21
	▶23
306-4107	354
306-5009	414
306-5499	1
	▶352
306-5505	352
306-8891	431
306-8893	431
307-0769	652
307-1735	7
	▶17
307-1738	17
307-1958	389
307-1959	389
307-1960	389
307-1961	389
307-1962	389
307-2671	26
307-6241	354
307-6242	354
307-6243	354
307-6260	250
307-6568	354
307-7500	354
307-7501	354
307-7502	354
308-0291	225
308-1880	646
308-1883	646
308-1884	646
308-5632	529
308-5633	▶528
	532
308-6403	225
308-9112	123
308-9113	123
308-9114	123
309-1876	291
309-1877	288
	291
309-1878	292
309-1905	414
309-2995	288
	291
309-2996	288
	292
309-4095	1
	▶325
309-4096	325
310-1640	594
	597
	599
310-3568	594
310-5881	1
	▶74
310-5882	74
	▶84
310-5883	84
310-5884	84
310-6437	2
	▶43
310-6459	1
	▶89
310-6469	1
	▶67
310-6472	2
	▶95
310-6534	321
310-6535	321
310-7252	119
310-7253	119

▶ **PRIMARY REFERENCE**

PART NUMBER INDEX

Part	Page
310-7255	25
310-7256	119
310-7257	25
310-8005	392
	408
310-9247	17
310-9428	655
	▶656
311-0801	4
	▶207
311-0802	2
	▶197
311-0864	1
	▶93
311-1513	123
311-2771	4
	▶184
311-3026	79
311-3542	7
	▶42
311-4907	89
311-4908	89
311-4959	93
311-7210	36
311-8756	105
311-9296	197
312-0377	119
312-0378	119
312-0379	120
312-3542	95
312-8434	93
312-8529	321
312-8530	321
313-2656	1
	▶11
313-3967	7
	▶104
313-4127	578
313-4128	578
313-4131	578
313-4132	578
313-4374	321
313-4384	7
	▶30
313-4670	217
	220
313-6096	89
313-6098	93
313-6224	529
313-6546	580
313-6547	580
313-7755	196
313-9542	89
314-4018	537
314-4184	▶25
	28
314-7646	362
314-7803	132
314-9338	643
	▶646
314-9339	646
315-2614	▶196
	532
315-4118	1
	▶267
315-6148	267
316-1927	529
316-4806	95
316-5237	535
	▶594
	603
316-5238	2
	▶596
316-5743	321
316-6682	43
316-6686	43
316-6688	272
316-6689	85
317-1117	516
317-1529	85
317-1533	105
317-1534	341
317-1537	341
317-1538	87
317-5601	87
317-7250	321
317-8063	67
317-8382	196
318-2064	120
318-2076	7
	▶82
319-0607	109
319-3819	25
319-3820	25
319-3821	25
319-3822	25
319-3823	25
319-3824	25
319-6234	26
320-0341	3
	▶535
320-0342	3
	▶603
320-0924	341
320-1515	146
	147
320-2749	642
320-8203	208
	212
320-9924	1
	▶642
321-5967	268
321-8638	109
322-0245	7
	▶92
322-0246	7
	▶34
322-2320	2
	▶410
322-2322	4
	▶413
322-7341	225
322-8548	▶623
323-0327	217
323-5592	217
	220
323-8674	389
323-8675	389
323-8857	603
	605
323-8936	7
	▶61
323-8959	7
	▶52
324-3364	217
	220
324-3366	217
	220
325-1242	120
325-6423	468
	470
	472
	474
	476
	480
	484
	486
325-7129	105
325-7130	1
	▶105
325-7427	2
	▶85
325-7447	79
325-7448	2
	▶79
325-7481	532
	▶578
325-8635	532
	▶580
325-9707	1
	▶7
326-0503	646
326-0610	321
326-1644	102
326-3117	225
326-3118	226
326-3120	226
326-3121	123
326-9040	29
326-9045	7
	▶29
327-0560	217
	220
327-0561	217
	220
327-0726	346
327-0727	346
327-0728	346
327-0730	346
327-0731	346
327-3854	2
	▶272
327-3973	358
327-7912	113
328-1672	392
	408
328-1673	256
328-1674	414
328-2060	538
328-2062	532
	▶538
328-2585	▶103
	110
328-2786	105
328-2787	105
328-2788	105
328-3496	79
328-3655	268
329-3826	5
	▶641
329-5707	662
330-3408	166
330-3409	132
330-3410	132
330-6877	656
330-9359	7
	▶9
330-9441	9
331-1102	217
	220
331-3892	662
332-1550	338
332-1618	5
	6
	▶338
332-6594	585
332-6597	585
332-7657	197
332-8657	5
	▶585
333-6436	▶268
	272
333-9308	▶240
	268
334-2679	240
334-2680	240
334-3341	5
	6
	▶212
334-3342	212
334-3343	213
334-3344	5
	6
	▶236
334-3345	236
334-3346	5
	▶597
334-3347	597
	599
334-3348	5
	6
	▶157
334-3741	597
	599
334-5268	358
334-5760	▶328
334-6872	207
334-7633	232
334-7636	▶5
334-8166	5
334-9745	208
335-0806	197
335-1894	203
335-1895	203
335-2383	132
335-6122	95
335-6123	95
335-6210	532
	538
335-6989	6

▶ **PRIMARY REFERENCE**

PART NUMBER INDEX

Part	Page	Part	Page	Part	Page	Part	Page
	▶599	340-2615	299	348-7028	▶442		
335-8402	156		▶300	348-7029	▶363		
335-8961	587	340-3687	316	348-7030	▶444		
335-9267	▶6	340-3689	316	348-7031	▶446		
335-9387	594	340-3739	60	348-7032	▶363		
	596	340-3745	7	348-7033	▶363		
336-0057	662		▶60	348-7520	363		
336-0959	158	340-4515	265		▶450		
336-0961	158	340-4518	265	348-7523	363		
336-1559	4	340-5008	▶655		▶452		
	▶522	340-5472	476	348-7527	363		
336-1561	522		480		▶455		
336-1963	522	341-3192	156	349-2486	▶4		
336-1964	522	341-5000	30	349-2487	▶4		
336-4249	4	341-8347	516				
	▶133	341-8349	1				
336-4754	321		▶518				
336-4756	321	341-8350	518				
336-5530	133	341-8667	11				
	▶317	341-8837	11				
336-6608	587	341-8841	11				
336-6609	587	341-8842	11				
336-9085	226	342-0725	358				
336-9245	133	342-1624	358				
	▶311	342-1630	345				
336-9255	133	342-4977	15				
	▶220	342-6387	578				
336-9456	217	343-5527	102				
337-0732	2	344-0050	227				
	▶276	344-6167	153				
337-2233	43	344-7734	120				
337-3100	4	344-9564	197				
	▶135	345-0635	120				
337-3357	1	345-0637	120				
	▶260	345-3661	63				
337-6814	227	345-7649	1				
337-7998	▶573		▶117				
	603	347-2426	64				
338-1878	▶98	347-2427	64				
	99	347-2428	1				
338-5871	1		▶64				
	▶32	347-2429	64				
338-7445	514	347-2430	64				
338-7446	514	347-4645	1				
338-7447	514		▶516				
338-7508	▶514	347-7898	7				
	641		▶189				
338-8415	157	347-8846	5				
338-8423	234		▶643				
338-8484	276	348-3018	▶1				
338-9747	1	348-3301	2				
	▶334		▶438				
339-4968	▶2	348-3315	269				
339-5406	189		▶408				
339-5505	220	348-3335	▶269				
339-5506	221	348-4955	1				
339-7734	▶645		▶261				
	655	348-6936	▶4				
340-1191	▶3	348-6937	▶5				
340-1812	9	348-6939	▶5				
	▶99	348-6940	▶3				
340-2602	▶298	348-6941	▶3				
340-2603	▶299	348-6942	▶3				
340-2614	298	348-6943	▶4				
	▶300	348-7027	▶440				

▶ **PRIMARY REFERENCE**



© 2009 CATERPILLAR
ALL RIGHTS
RESERVED

CAT, CATERPILLAR, THEIR RESPECTIVE LOGOS, “CATERPILLAR YELLOW” AND THE POWER EDGE TRADE DRESS, AS WELL AS CORPORATE AND PRODUCT IDENTITY USED HEREIN, ARE TRADEMARKS OF CATERPILLAR AND MAY NOT BE USED WITHOUT PERMISSION.

PRINTED IN
U.S.A.