SEBP6015-14 (en-us)
March 2017

VOLUME I
Pages 1-768

RUTHZIL TRATOR COMERCIAL DE PEÇAS LTDA 11 97083-6812 ROLANDO

Parts Manual

120K Series 2 Motor Grader

SZS1-UP (Machine)
KHX1-UP (Engine)
TX71-UP (Engine)
CK41-UP (Transmission)
DMJ1-UP (Transmission)
JSE1-UP (Transmission)

Powered By C7 Engine

Product and Dealer Information

Note: For product identification plate locations, see the section “Product Identification Information” in the Operation and Maintenance Manual.

Delivery Date: _____

Product Information

Model: _____

Product Identification Number: _____

Engine Serial Number: _____

Transmission Serial Number: _____

Generator Serial Number: _____

Attachment Serial Numbers: _____

Attachment Information: _____

Customer Equipment Number: _____

Dealer Equipment Number: _____

Dealer Information

Name: _____ Branch: _____

Address: _____

_____

_____

	Dealer Contact	Phone Number	Hours
Sales:	_____	_____	_____
Parts:	_____	_____	_____
Service:	_____	_____	_____

MEMORANDA

TABLE OF CONTENTS

NAME PAGE

GENERAL INFORMATION. A5

REPAIR ALTERNATIVES. A8

SUPPLEMENTAL COOLANT ADDITIVES. A9

MAINTENANCE PARTS A10

INDEX A17

MACHINE ARRANGEMENT 1
- CERTIFICATION AR-MACHINE 1
- CHASSIS AR. 1
- COMMON AR 1
- DISTRIBUTION AR 2
- GENERAL AR 3
- INSTALLATION AR 6
- OPTION AR. 6
- OPTION AR-CAB 6
- OPTION AR-COLD WEATHER. 14
- OPTION AR-GRADE CONTROL 15
- OPTION AR-GUARD 16
- OPTION AR-HYDRAULIC. 16
- OPTION AR-LIGHTING. 17
- OPTION AR-REGIONAL 17
- OPTION AR-ROADING 19
- OPTION AR-WORK TOOL 19
- ROADING AR 21
- SPECIAL AR 23

ENGINE ARRANGEMENT 24
- ENGINE AR. 24
- ENGINE AR-COMPLETE 25
- ENGINE AR-CORE 27

BASIC ENGINE 29
- AIR COMPRESSOR GP. 29
- BELT TENSIONER GP. 36
- CAMSHAFT GP 38
- CARRIER GP-SEAL. 39
- COVER GP-CYLINDER BLOCK. 40
- COVER GP-VALVE MECHANISM 41
- CRANKSHAFT GP. 44
- CYLINDER BLOCK GP 46
- CYLINDER HEAD AS 50
- CYLINDER HEAD GP. 52
- DAMPER & PULLEY GP 60
- DRIVE GP-ACCESSORY 61
- DRIVE GP-FAN. 62
- FASTENER GP-CYLINDER HEAD 65
- FASTENER GP-ENGINE 66
- FASTENER GP-FRONT HOUSING. 67
- FLYWHEEL GP. 68
- GEAR GP-FRONT 69
- HOUSING GP-FLYWHEEL. 71
- HOUSING GP-FRONT 72
- KIT-ENGINE GASKET. 73
- KIT-FRONT COVER GASKET 75
- KIT-REAR COVER GASKET. 75
- LIFTER GP-VALVE 77
- LIFTING GP-ENGINE 78
- MOUNTING GP-ENGINE 79
- MOUNTING GP-ENGINE & XMSN 80
- PAN GP-OIL 84
- PISTON & ROD GP 86
- PLUG GP-CYLINDER BLOCK 88
- PLUG GP-ENGINE. 90
- ROCKER ARM GP 91
- SEAL GP-CRANKSHAFT 93
- VALVE MECHANISM GP. 94

LUBRICATION SYSTEM 96
- ADAPTER GP-OIL LINE. 96
- BREATHER GP 97
- FILLER GP-ENGINE OIL 98
- FILTER GP-ENGINE OIL 100
- FUMES DISPOSAL GP 102
- GAUGE GP-OIL LEVEL (DIPSTICK) 103
- LINES GP-ENGINE OIL 104
- LINES GP-ENGINE OIL DRAIN 105
- LINES GP-TURBOCHARGER OIL. 108
- MANIFOLD GP-ENGINE OIL 110
- OIL CHANGE GP-HIGH SPEED 111
- PUMP GP-ENGINE OIL 113

COOLING SYSTEM. 116
- COOLER GP-ENGINE OIL 116
- FAN GP-BLOWER 117
- KIT-OIL COOLER & LINES GASKET 118
- KIT-WATER PUMP GASKET 118
- LINES GP-WATER. 120
- PUMP AS-WATER 126
- PUMP GP-WATER. 127
- RADIATOR & HYD OIL COOLER GP 130
- RADIATOR GP 132
- TANK GP-COOLANT. 136

AIR INLET AND EXHAUST SYSTEM 140
- AFTERCOOLER GP-AIR 140
- AIR CLEANER GP. 141
- CARTRIDGE GP-TURBOCHARGER 144
- COVER GP-AIR INLET. 145
- ELBOW GP-AIR INLET 147
- KIT-TURBOCHARGER GASKET 149
- LINES GP-AFTERCOOLER AIR. 150
- MANIFOLD GP-EXHAUST 152
- MUFFLER GP 153
- PRECLEANER GP 155
- TURBOCHARGER GP 156

TABLE OF CONTENTS

NAME	PAGE
VALVE GP-AIR CONTROL	158
FUEL SYSTEM	160
CONTROL GP-GOVERNOR	160
FILTER GP-WATER SEP & FUEL	164
INJECTOR GP-FUEL	165
KIT-FUEL PUMP	167
LINES GP-FUEL	168
LINES GP-INJECTOR HYD PUMP	176
PUMP & MTG GP-UNIT INJ HYD	179
PUMP GP-FUEL INJECTION	182
PUMP GP-FUEL PRM & WATER SEP	184
PUMP GP-UNIT INJECTOR HYD	185
REGULATOR GP-FUEL PRESSURE	189
TANK GP-FUEL	190
ELECTRICAL AND STARTING SYSTEM	191
ALARM GP	191
ALTERNATOR GP-CHARGING	192
APPLICATION GP-POWER TRAIN	196
BATTERY & BOX GP-HEAVY-DUTY	197
BATTERY & WIRING GP	202
BATTERY GP	215
CONTROL & MTG GP-ENGINE ELEK	219
CONTROL GP-ENGINE ELECTRONIC	220
CONTROL GP-POWER TRAIN	221
CONTROL GP-UNPROGRAMMED	222
CONVERTER AR-ELECTRICAL	226
CONVERTER GP-ELECTRICAL	228
ELECTRICAL AR	232
ELECTRONICS GP-COMMUNICATION	232
ELECTRONICS GP-IMPLEMENT	232
ELECTRONICS GP-MONITOR	232
ELECTRONICS GP-POWER TRAIN	233
GRADE CONTROL AR	234
HARNESS AS-CHASSIS	249
HARNESS AS-CONSOLE	254
HARNESS AS-ENGINE	255
HARNESS AS-HEATER & AIR COND	256
HARNESS AS-PANEL	257
HARNESS AS-PLATFORM	258
HARNESS AS-REAR CHASSIS	260
HARNESS AS-SENSOR	261
HARNESS AS-STEERING	263
HARNESS AS-TRANSMISSION	264
HARNESS AS-WIRING	266
INSTALLATION AR-COMMUNICATION	268
INSTALLATION GP-COMMUNICATION	283
LAMP GP	288
LAMP GP-DOME	289
LAMP GP-FLOOD	290
LAMP GP-HEAD & SIGNAL	295
LAMP GP-REGISTRATION PLATE	300
LAMP GP-SIGNAL	301
LIGHTING AR-ROADING	305
LIGHTING GP-BACKUP	306
LIGHTING GP-FLOOD	308
LIGHTING GP-REGISTRATION PLATE	311
LIGHTING GP-ROADING	313
LIGHTING GP-SIGNAL	319
MOTOR GP-ELECTRIC	323
MOUNTING GP-GRADE CONTROL	326
PLUG GP-CONNECTOR	331
PROTECTION GP-WIRING	332
RADIO GP-COMMUNICATION	333
SENSOR GP-ENGINE	334
SENSOR GP-POSITION	338
SENSOR GP-PRESSURE	341
SENSOR GP-SPEED	345
SENSOR GP-TEMPERATURE	350
STARTING AID GP-ETHER	353
STARTING MOTOR GP-ELECTRIC	355
SWITCH GP-BYPASS	358
SWITCH GP-DISCONNECT	359
SWITCH GP-LIGHT	360
SWITCH GP-MAGNETIC	361
SWITCH GP-PRESSURE	365
SWITCH GP-ROCKER	367
SWITCH GP-ROTARY	368
SWITCH GP-WIPER	369
VALVE GP-ETHER STARTING	370
WIRING GP-AIR CONDITIONER	371
WIRING GP-CAB	375
WIRING GP-CONSOLE	397
WIRING GP-ENGINE	412
WIRING GP-ETHER STARTING AID	414
WIRING GP-FRONT	416
WIRING GP-GRADE CONTROL	473
WIRING GP-REAR	508
WIRING GP-REAR LIGHTING	541
WIRING GP-STEERING CONSOLE	542
POWER TRAIN	577
AXLE GP-FRONT	577
BASE GP-OIL FILTER	580
CASE & PARTS GP-PLANETARY	581
CHAIN GP-DRIVE	590
CLUTCH GP-TRANSMISSION	592
CONTROL GP-DIFFERENTIAL LOCK	600
CONTROL GP-TRANSMISSION HYD	604
COOLER GP-TRANSMISSION OIL	610
COUPLING GP-TORSIONAL	612

TABLE OF CONTENTS

NAME PAGE

DIFFERENTIAL & BEVEL GEAR GP 613
DIFFERENTIAL GP 615
DRIVE GP-FINAL 617
FILLER GP-POWER TRAIN OIL 619
FILTER GP-OIL 620
KIT-TRANSMISSION BEARING 624
KIT-TRANSMISSION GASKET 625
LINES GP-LUBRICATION 626
LINES GP-TRANSMISSION OIL 627
MOUNTING GP-WHEEL 635
POWER TRAIN AR 636
PUMP GP-GEAR 637
SCREEN GP-MAGNETIC 640
SHAFT GP-DRIVE 641
SHAFT GP-INPUT 642
TANDEM & COVER GP 643
TRANSMISSION AR 645
UNIVERSAL JOINT GP 647
VALVE & MTG GP-DIFF LOCK 648
VALVE & MTG GP-SOLENOID 649
VALVE GP-RELIEF 650
VALVE GP-SELECTOR & PRESS CONT 652
VALVE GP-SOLENOID 658
VALVE GP-TRANSMISSION CONTROL 660
WHEEL & TIRE AR 662
WHEEL & TIRE GP 668
WHEEL AR 673
WHEEL GP 674

FRAME AND BODY 678
BOSS GP-FRAME 678
BOX GP-BATTERY 682
BRACKET GP-MOUNTING 683
BUMPER GP-REAR 684
CASE & FRAME GP 686
COVER GP-ACCESS 687
ENCLOSURE GP-ENGINE 690
FRAME AR 698
FRAME GP-FRONT 699
GUARD GP-BOTTOM 701
GUARD GP-DRIVE SHAFT 703
GUARD GP-PLATFORM 704
HITCH GP-ARTICULATING 712
HITCH GP-TOWING 714
LINES GP-LUBRICATION 715
LINK GP-STEERING 717
LUBRICATION AR-CENTRAL 718
MOUNTING GP 719
PLATE GP-PUSH 720
REFLECTOR GP 722
STEP GP 723
SUPPORT GP-BATTERY 729
SUPPORT GP-RADIATOR 730

NAME PAGE

BRAKING SYSTEM 734
AIR DRYER GP 734
BRAKE GP-PARKING 746
BRAKE GP-SERVICE 748
CONTROL GP-PARKING BRAKE 750
CONTROL GP-SERVICE BRAKE 752
DRYER & LINES GP-AIR 762
LINES GP-AIR TANK 764
TANK GP-AIR 766
VALVE GP-SOLENOID 768

HYDRAULIC SYSTEM 769
CONTROL AR-HYDRAULIC 769
CYLINDER & LINES GP-RIPPER 771
CYLINDER & MTG GP-ARTICULATION 773
CYLINDER & MTG GP-BLADE LIFT 774
CYLINDER & MTG GP-BLADE TIP 776
CYLINDER & MTG GP-CENTERSHIFT 777
CYLINDER & MTG GP-SCARIFIER 778
CYLINDER & MTG GP-SIDESHIFT 779
CYLINDER & MTG GP-STEERING 780
CYLINDER & MTG GP-WHEEL LEAN 782
CYLINDER GP-ARTICULATION 783
CYLINDER GP-CENTERSHIFT 787
CYLINDER GP-HYDRAULIC 789
CYLINDER GP-LIFT 795
CYLINDER GP-SCARIFIER 797
CYLINDER GP-SIDESHIFT 799
CYLINDER GP-STEERING 801
CYLINDER GP-WHEEL LEAN 805
DETENT GP-CONTROL VALVE 807
DRIVE GP-CIRCLE 808
HYDRAULIC AR 816
LINES GP-CENTERSHIFT LOCK 817
LINES GP-HYDRAULIC 821
LINES GP-PUMP 866
LINES GP-RIPPER 874
LINES GP-STEERING 876
LOCK AR-CENTERSHIFT 880
LOCK GP-CENTERSHIFT 881
MANIFOLD GP-VALVE 884
MOTOR GP-GEROTOR 887
PUMP & LINES AR 889
PUMP & MTG GP-STEERING 890
PUMP GP-PISTON 892
ROD AS-ADJUSTING 897
ROTATING GP-PUMP 898
SHAFT GP-PUMP DRIVE 900
SWASHPLATE GP 901
SWIVEL GP 902
TANK & FILTER GP-HYDRAULIC 904
TANK & MTG GP-HYDRAULIC 906
VALVE & LINKAGE GP 907

TABLE OF CONTENTS

NAME	PAGE
VALVE GP-BANK 3	978
VALVE GP-BANK 4	980
VALVE GP-BANK 5	987
VALVE GP-COMBINATION	995
VALVE GP-CONTROL	1001
VALVE GP-PUMP CONTROL	1027
VALVE GP-PURGE	1029
VALVE GP-RELIEF	1030
VALVE GP-SHUTTLE	1038
IMPLEMENTS	1039
BOSS GP-DRAWBAR	1039
CIRCLE GP	1041
DRAWBAR GP	1054
LINK GP-LOWER	1064
LINK GP-UPPER	1065
SEGMENT-CIRCLE	1066
OPERATOR STATION	1067
ACCESSORY GP-CAB	1067
ADJUSTER GP-SEAT	1072
AIR CONDITIONER & HEATER GP	1076
AIR CONDITIONER & MOUNTING GP	1081
AIR CONDITIONER AR	1083
AIR CONDITIONER GP	1089
ARMREST GP	1100
ASHTRAY GP	1102
CAB AR	1103
CAB GP	1110
CANOPY AR	1114
COMPRESSOR GP-REFRIGERANT	1115
CONDENSER & MTG GP-REFRIGERANT	1122
CONSOLE GP-OPERATOR	1124
CONTROL GP-CLUTCH	1138
CONTROL GP-HYDRAULIC LOCKOUT	1146
CONTROL GP-STEERING	1149
COVER AS	1150
DOOR GP-CAB	1157
DUCT & CONTROL GP	1176
DUCT GP-CAB AIR	1178
FAN GP-CIRCULATING	1180
FILTER GP-CAB AIR	1194
HEATER & MTG GP-CAB	1196
HEATER AR-CAB	1198
HEATER GP-CAB	1199
HORN GP-ELECTRIC	1207
HOUSING GP-SEAT SUSPENSION	1208
INSTALLATION AR-RADIO	1214
INSTALLATION GP-RADIO	1215
INSULATION GP-WEATHER	1218
LINER GP-CAB	1224
LINES GP-AIR CONDITIONER	1247
LINES GP-HEATER	1253
LOUVER GP-CAB	1257
MIRROR GP-REAR VIEW	1258
MODULE GP-QUAD GAUGE	1271
MODULE GP-SPEEDOMETER & TACH	1272
MOUNTING GP-CAB	1275
MOUNTING GP-ROPS	1277
PAN GP-BACKREST	1279
PANEL GP-INSTRUMENT	1280
RECLINER GP-SEAT	1323
ROPS AR	1324
ROPS GP	1329
SCREEN GP-SUN	1344
SEAT BELT GP	1345
SEAT GP	1346
SEAT GP-STATIC	1354
SEAT GP-SUSPENSION	1358
SUPPORT GP-SEAT	1365
SUSPENSION GP-SEAT	1371
WASHER GP-WINDOW	1375
WINDOW GP-CAB	1380
WIPER AR-WINDOW	1381
WIPER GP-WINDOW	1383
WORK TOOLS	1390
ADAPTER-MOLDBOARD	1390
BIT GP-END	1391
BLADE & TIP AR-POWER	1392
BLADE AR	1392
BLADE GP	1393
BLADE GP-BULLDOZER	1396
BLADE GP-STRAIGHT	1398
BRACKET GP-SCARIFIER	1400
CYLINDER GP-HYDRAULIC	1401
EDGE GP-CUTTING	1403
EDGE-CUTTING	1404
LIFT GP-BLADE	1415
MOUNTING GP-RIPPER	1428
RIPPER AR	1429
RIPPER GP	1431
SCARIFIER AR	1432
SCARIFIER GP	1434
TOOTH GP-RIPPER	1440
SERVICE EQUIPMENT AND SUPPLIES	1441
BOX GP-TOOL	1441
CERTIFICATION AR	1442
FILM GP	1443
KIT-GASKET	1446
PLATE & FILM GP	1450
TANK GP-AIR	1461
PART NUMBER INDEX	B1

1. MACHINE IDENTIFICATION

Cat machines are identified by Product Identification Numbers (PIN). Some components included in a machine may be identified by Serial Numbers (S/N). Typical components that will be serialized include engines, transmissions, bulldozers, and rippers. The machine and engine are further identified by arrangement numbers and in some cases modification numbers. These numbers are shown on the product identification plate(s) and on the master plate in the operator's compartment.

Cat dealers need all of these numbers to determine accurate parts identification.

Effective First Quarter 2001 the Cat Product Identification Number (PIN) changed from 8 to 17 characters. In an effort to provide uniform equipment identification, Caterpillar and other construction equipment manufacturers are moving to comply with the latest version of the product identification numbering standard. Non-road machine PINs are defined by ISO 10261. The new PIN format will apply to all Cat machines and generator sets. The PIN plates and frame marking will display the 17 character PIN. The new format will look like the following:

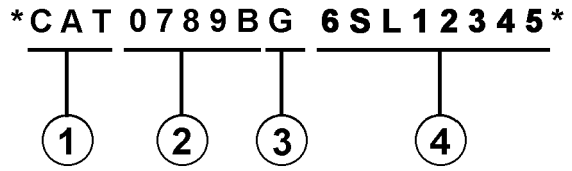

Where:

1. Caterpillar's World Manufacturing Code (characters 1-3)

2. Machine Descriptor (characters 4-8)

3. Check Character (character 9)

4. Machine Indicator Section (MIS) or Product Sequence Number (characters 10-17). These were previously referred to as the Serial Number.

Machines and generator sets produced before First Quarter 2001 will maintain their 8 character PIN format.

Components such as engines, transmissions, axles, etc. and work tools will continue to use an 8 character Serial Number (S/N).

2. ORDERING PARTS

⚠ WARNING

When replacement parts are required for this product Caterpillar recommends using Caterpillar replacement parts or parts with equivalent specifications including, but not limited to, physical dimensions, type, strength and material.

Failure to heed this warning can lead to premature failures, product damage, personal injury or death.

Quality Cat replacement parts are available from Cat dealers throughout the world. Their parts inventories are up to date and include all parts normally required to protect your investment in Cat machines. Dealers may offer repair kits or remanufactured parts to allow selection of the most effective repair alternative for a particular situation. When ordering parts, your order should specify the quantity, part number, part name, and the serial number/product identification number of the machine for which the parts are needed.

3. PARTS MANUAL ORGANIZATION

Product information in this manual is presented as "information elements" that represent all of the components for the specific model. Engine Arrangement and Seat Group are examples of information elements. The information elements are organized alphabetically by part name and secondarily by part number within each major section of the manual.

4. TABLE OF CONTENTS

A table of contents (TOC) is found at the beginning of the manual. The TOC lists each section of the manual with a complete list of all information elements organized as they appear in the manual. Page numbers are provided for quick reference to detailed parts identification illustrations and serviceable consist lists.

5. MAINTENANCE PARTS INDEX

The Maintenance Parts Index, located near the beginning of the manual, references most frequently used maintenance part numbers, providing description, quantity, usage and page number. This information is organized alphabetically by part description.

6. INDEX

The index located near the front of the manual is an alphabetical listing of all information elements included in the manual. Page numbers are provided for quick reference to detailed parts identification illustrations and serviceable consist lists.

7. PART NUMBER INDEX

A numerical index listing all part numbers and the corresponding page number(s) appears at the back of the manual.

8. CAPTIONS

Captions located at the beginning of each information element identify the part number and part name along with additional descriptive information. PIN and S/N information found in each caption should be used to select correct information for a specific machine. Field replacement options, identification of optional attachment components, and where used ("part of") information is also provided.

The first line of a caption is shown in larger type font to indicate the beginning of an information element. Captions for additional pages that may be required to illustrate an information element will be shown in standard type font and will include the term (contd.).

9. NON-SERVICED PARTS

In some instances it is necessary to display non-serviced parts that are a link to a lower level serviceable consist lists. These non-serviced part numbers are shown in italic type indicating that they are not available.

10. PARTS LIST REFERENCE NUMBERS

Numbers shown in the Ref No column correspond to numbers used in the associated graphic(s). An alphabetic suffix may be added to a reference number to identify lower level consist items. Numbers shown in the Graphic Ref column refer to the graphic number identifier displayed in the lower left corner of each illustration. The Graphic Ref number may be used in combination with the item Ref No to determine the correct part number. There may be intentional omission of a Ref No in a consist list as information is updated to reflect the latest serviceable part numbers.

11. INDENTED PART NAMES

When a part name is indented in a parts list, it is part of (included in) the group or assembly under which it is indented.

12. ILLUSTRATION REFERENCE LETTERS

When necessary, illustrations contain reference letters (A, B, C etc.) that are intended to track lines and harnesses from one point to another. They are also used to show where to reconnect illustrations that have been separated.

13. ABBREVIATIONS AND SYMBOLS

O.D. – Outside Diameter
I.D. – Inside Diameter
A – Not Part Of This Group
B – Use As Required
C – Change From Previous Type
D – Order By The Meter
E – Order By The Centimeter
F – Not Shown
G – Order By The Inch
I – Refer To Hydraulic Information System
M – Metric Part
R – Remfg Part May Be Available
Y – Separate Illustration
Z – Not Serviced Separately

14. DESCRIPTION OF TYPE CHANGES

Type - A type is defined as any configuration change that requires an additional Information Element for an Arrangement, Group, or Assembly. If serial number breaks for types are not available, a type # (Type 1, Type 2, etc.) will be displayed in the caption. These "type" changes are identified with a "C" note (change from previous type) in the Parts List. Only the "types" that apply to this Parts Manual will be included. Additional types may exist causing "C" notes to appear on an Information Element when no other types are shown.

15.<END>

This symbol indicates the end of an information element.

NOTE:

Continuing improvement and advancement of product design may cause changes to your machine which may not be included in this publication. Whenever a question arises regarding your Cat product or this publication, please consult your Cat dealer for the latest available information.

FRAME AND BODY

8E-3299 PLATFORM GP-CAB

PIN 38K1-99999

SMCS-7283 100090751

NOTE	REF NO	GRAPHIC REF	PART NUMBER	QTY	PART NAME (1 2 3 4 5 6 PRODUCT LEVEL)	SEE PAGE
	1	1	3T-3963	1	PLATE AS	
	2	1	5H-2962	25	BOLT (3/8-16X.750IN)	
	3	1	6P-1078	41	WASHER-HARD (3MM THK)	
	4	1	9F-1444	2	SUPPORT AS-FOOT	
	5	1	5P-2229	18	BOLT (1/2-13X1IN)	
		1	9J-[illegible]	18	WASHER-HARD (4MM THK)	
	6	1	9E-8134	1	COVER AS-LH	
		1	9F-2979	6	NUT-WELD (3/8-16 THD)	
		1	1F-9189	1	CLIP	
	7	1	7S-2411	4	COVER	
	8	1	5J-0468	19	SCREW-HEAD (3/8-16X.87SIN)	
	9	1	[illegible]074	1	COVER	
		1	9E-8[illegible]	1	GASKET	
	10	1	9E-3248	1	[illegible]	
		1	9E-3250	1	GASKET	
	11	1	3T-3830	1	HANDHOLD	
	12	1	9E-8078	1	COVER AS	
		1	9F-2979	6	NUT-WELD (3/8-16 THD)	
		1	9E-8079	1	GASKET	
	13	1	7T-0131	1	FLOORPLATE AS	
		1	1F-0748	4	NUT-WELD (1/2-13 THD)	
	14	1	7V-8067	1	PLUG-BUTTON	
	15	1	7T-0136	1	PLATE AS	
		1	9F-2978	5	NUT-WELD (3/8-16 THD)	
	16	1	7T-8066	1	COVER	
		1	7T-0779	1	GASKET	
	17	1	3T-3951	1	PLATE AS	
	18	1	9T-9364	4	BOLT (1/4-20X.62SIN)	
M		1	9T-4286	4	WASHER-HARD (2MM THK)	
	19	1	6I-8464	1	FLOOR MAT	
	20	1	9E-8846	1	MODULE AS-OPERATOR	
	21	1	3T-3834	1	HANDHOLD	
	22	1	9P-8571	2	PLUG	
	23	2	9T-9364	4	BOLT (1/4-20X.62SIN)	
M		2	9T-4286	4	WASHER-HARD (2MM THK)	
	24	2	5H-2962	17	BOLT (3/8-16X.750IN)	
	25	2	6P-1078	21	WASHER-HARD (3MM THK)	
	26	2	7T-0136	1	SEAL	
	27	2	7X-0378	2	BOLT (3/4-10X5IN)	
		2	7X-0682	2	WASHER-HARD (6MM THK)	
	28	2	3T-3482	2	PLATE	
	29	2	3T-8280	1	PLATE AS	
		2	7S-4828	6	SPACER	
	30	2	3T-8281	1	SEAL	
	31	2	7S-8017	1	GASKET	
	32	2	7S-8016	1	COVER AS	
		2	2R-2376	2	WASHER	
		2	6P-8626	2	SCREW-KNURLED	
	33	2	9W-3429	1	COVER	
	34	2	8E-9697	1	COVER	
	35	2	9D-3091	8	SCREW-SOCKET HEAD	
	36	2	9W-3142	8	MOUNTING	
	37	2	9W-9527	2	PLATE	
	38	2	7X-0390	2	BOLT (7/8-9X6IN)	
		2	7X-0672	2	WASHER-HARD	
	39	2	4L-8454	4	BOLT (3/8-16X1.0IN)	
	40	2	3T-4788	1	COVER	

12 FRAME AND BODY 1 of 4 SELP4570-01

FRAME AND BODY

8E-3299 PLATFORM GP-CAB (contd.)

100090751

NOTE	REF NO	GRAPHIC REF	PART NUMBER	QTY	PART NAME (1 2 3 4 5 6 PRODUCT LEVEL)	SEE PAGE
	41	2	8E-2515	1	COVER	
	42	2	7T-0134	1	PLATE	
	43	2	7T-0128	1	GASKET	
	44	2	7S-8724	1	GASKET	
	45	2	7S-8723	1	COVER	
	46	2	6V-1960	2	PLUG-BUTTON	

M-METRIC PART

SELP4570-01 2 of 4 FRAME AND BODY 13

FRAME AND BODY

8E-3299 PLATFORM GP-CAB (contd.)

100090751

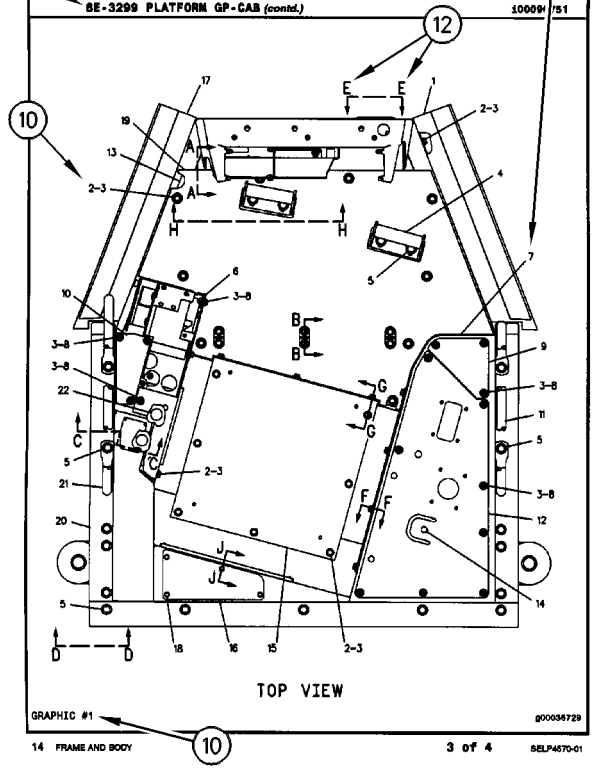

14 FRAME AND BODY 3 of 4 SELP4570-01

FRAME AND BODY

8E-3299 PLATFORM GP-CAB (contd.)

100090751

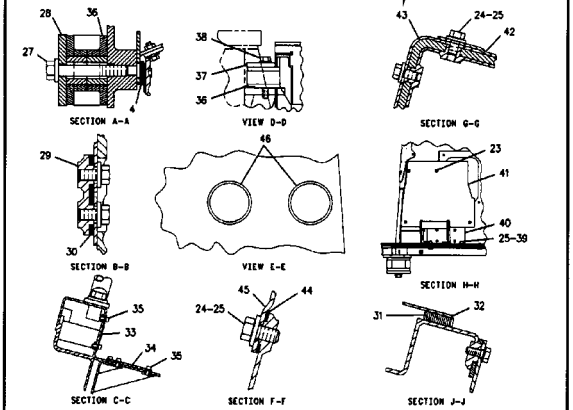

SELP4570-01 4 of 4 FRAME AND BODY 15

REMANUFACTURED COMPONENTS

As an option when making repairs consider Cat Remanufactured Components. Components that are available through the Cat Remanufactured Program are identified three ways in the parts book:

- with the letter R in the note field of the parts list
- with an R* at the beginning of the first line of the caption
- with an *R at the end of the first line of the caption

Typical components included in the Remanufacturing Program include:

ALTERNATORS
CONNECTING RODS
CRANKSHAFTS - UNDERSIZE
CRANKSHAFTS - UPGRADE TO NEW
CYLINDER HEADS
ELECTRONIC CONTROL MODULES (ECM)
ELECTRONIC SENSORS
FUEL INJECTORS
FUEL NOZZLES
FUEL PUMPS
GOVERNORS
OIL PUMPS
PISTONS
SHORT BLOCKS
STARTERS
TURBOCHARGERS - COMPLETE
TURBOCHARGER CARTRIDGES
WATER PUMPS

Cat Remanufactured engines for many engine arrangements are also available.

SUPPLEMENTAL COOLANT ADDITIVES

CUSTOMER BENEFITS:

Protects against cavitation, foam, erosion, corrosion, and scale buildup in cooling systems.

- Provides measured coolant conditioner.

DESCRIPTION:

Additives deplete from the coolant with normal operation. For this reason, Supplemental Coolant Additives (SCA) must be added to all heavy duty coolants at regular intervals. In addition, when not using a fully formulated, pre-charged antifreeze, like Cat DEAC, an initial charge of SCA must be added to the cooling system. The amount of SCA added to the system is dependent on the capacity of the system.

The SCA for initial fill is provided as a liquid. SCA's for maintenance intervals are available in liquid form and as a spin-on element. (No Spin-on available for 3600 Family of Engines)

NOTE:

The amount of SCA added at initial fill is not the same as the amount added at maintenance intervals.

The coolant additive elements can be used with any ethylene or propylene glycol type antifreeze which meets ASTM D4985 or ASTM D5345 Specifications.

NOTE:

For use with standard heavy duty coolant only, not for use with Extended Life Coolant.

PARTS NEEDED:

Cooling System Capacity		Liquid SCA at Initial Fill	Liquid SCA at Maintenance*	Spin-on SCA Maintenance Element*
Liters	Gallons			
22-30	(6-8)	3P-2044 (1)	6V-3542 (1)	111-2370 (1)
30-38	(8-10)	3P-2044 (1) 6V-3542 (1)	111-2372 (1)	111-2369 (1)
38-49	(10-13)	3P-2044 (1) 8T-1589 (1)	111-2372 (1)	111-2369 (1)
49-64	(13-17)	3P-2044 (2)	8T-1589 (1)	9N-3368 (1)
64-83	(17-22)	3P-2044 (2) 8T-1589 (1)	111-2372 (1) 6V-3542 (1)	111-2371 (1)
83-114	(22-30)	3P-2044 (3) 8T-1589 (1)	3P-2044 (1)	9N-3718 (1)
114-163	(30-43)	3P-2044 (5)	3P-2044 (1) 6V-3542 (1)	111-2371 (2)
163-242	(43-64)	3P-2044 (8)	3P-2044 (2)	9N-3718 (2)

* Normal maintenance period is 250 hrs. See your Operation and Maintenance Manual for complete coolant maintenance instructions.

( ) Indicates quantity required.

MAINTENANCE PARTS

DESCRIPTION	PART NUMBER	QTY	WHERE USED	PAGE
AIR INLET AND EXHAUST SYSTEM				
FILTER ELEMENT AS-AIR (SECONDARY)	245-6376	1	AIR CLEANER GP	141
FILTER ELEMENT-AIR (PRIMARY)	245-6375	1	AIR CLEANER GP	141
BASIC ENGINE				
BELT-SERPENTINE	198-3611	1	BELT TENSIONER GP	36
		1	MOUNTING GP-ENGINE & XMSN	80
SEAL-INTEGRAL	135-9819	1	AIR COMPRESSOR GP	31
		1	AIR COMPRESSOR GP	33
		1	KIT-FRONT COVER GASKET	75
		1	KIT-FRONT COVER GASKET	75
	166-2905	1	PAN GP-OIL	84
		1	PAN GP-OIL	85
SEAL-VALVE COVER	272-0388	1	COVER GP-VALVE MECHANISM	43
		1	KIT-ENGINE GASKET	74
V-BELT SET (INCLUDES 3-BELTS)	9L-1630	1	DRIVE GP-FAN	62
BRAKING SYSTEM				
FUSE (10-AMPERE)	9W-1442	1	AIR DRYER GP	735
		1	AIR DRYER GP	745
COOLING SYSTEM				
CAP AS-COOLANT TANK	251-3227	1	TANK GP-COOLANT	136
		1	TANK GP-COOLANT	138
REGULATOR-WATER TEMPERATURE (97-DEG C) (COOLANT)	115-4223	2	LINES GP-WATER	120
		2	LINES GP-WATER	124
ELECTRICAL AND STARTING SYSTEM				
BATTERY GP (12-VOLT, 750-CCA)	3T-5760	2	BATTERY & WIRING GP	203
BATTERY GP (12-VOLT, 750-CCA) (MAINTENANCE FREE)	3T-5760	2	BATTERY & WIRING GP	212
		2	BATTERY GP	216
BATTERY GP (12-VOLT, MAINTENANCE FREE, WET)	153-5710	2	BATTERY & BOX GP-HEAVY-DUTY	197
		2	BATTERY & WIRING GP	207
CAP AS-FILLER (7/8-9-THD)	123-1373	6	BATTERY & BOX GP-HEAVY-DUTY	197
		6	BATTERY & WIRING GP	212
		6	BATTERY GP	216
CAP AS-FILLER (M18X2-MM)	461-5232	6	BATTERY & BOX GP-HEAVY-DUTY	197
CIRCUIT BREAKER AS (105-AMPERE)	171-2212	1	WIRING GP-REAR	518
CIRCUIT BREAKER AS (105-AMPERE) (ALTERNATOR)	171-2212	1	WIRING GP-REAR	515
CIRCUIT BREAKER AS (105-AMPERE) (MAIN POWER)	171-2212	1	WIRING GP-REAR	531
CIRCUIT BREAKER AS (105-AMPERE) (MAIN)	171-2212	1	WIRING GP-REAR	515
CIRCUIT BREAKER AS (135-AMPERE)	171-2213	1	WIRING GP-REAR	518

DESCRIPTION	PART NUMBER	QTY	WHERE USED	PAGE
CIRCUIT BREAKER AS (135-AMPERE) (ALTERNATOR)	171-2213	1	WIRING GP-REAR	531
FILTER (ETHER START)	358-4889	1	VALVE GP-ETHER STARTING	370
FLASHER AS (24-VOLT)	108-0358	1	LIGHTING GP-ROADING	313
		1	LIGHTING GP-ROADING	316
	217-8166	1	WIRING GP-STEERING CONSOLE	550
		1	WIRING GP-STEERING CONSOLE	554
		1	WIRING GP-STEERING CONSOLE	561
		1	WIRING GP-STEERING CONSOLE	573
FUSE (10-AMPERE)	9W-1442	1	CONVERTER GP-ELECTRICAL	229
		2	CONVERTER GP-ELECTRICAL	230
		2	CONVERTER GP-ELECTRICAL	231
		1	INSTALLATION AR-COMMUNICATION	275
		1	INSTALLATION GP-COMMUNICATION	283
		1	INSTALLATION GP-COMMUNICATION	285
		1	INSTALLATION GP-COMMUNICATION	287
		1	LIGHTING GP-ROADING	313
		1	LIGHTING GP-ROADING	316
		10	WIRING GP-STEERING CONSOLE	542
		10	WIRING GP-STEERING CONSOLE	546
		11	WIRING GP-STEERING CONSOLE	550
		11	WIRING GP-STEERING CONSOLE	554
		10	WIRING GP-STEERING CONSOLE	558
		12	WIRING GP-STEERING CONSOLE	561
		10	WIRING GP-STEERING CONSOLE	564
		12	WIRING GP-STEERING CONSOLE	567
		12	WIRING GP-STEERING CONSOLE	570
		12	WIRING GP-STEERING CONSOLE	573
FUSE (10-AMPERE) (POWER CONVERTER)	9W-1442	1	CONVERTER GP-ELECTRICAL	228
FUSE (15-AMPERE)	9W-1441	1	LIGHTING GP-ROADING	313
		1	LIGHTING GP-ROADING	316
		1	LIGHTING GP-SIGNAL	319
		1	LIGHTING GP-SIGNAL	320
		1	LIGHTING GP-SIGNAL	322
		1	WIRING GP-CAB	375
		1	WIRING GP-CAB	378
		1	WIRING GP-CAB	383
		1	WIRING GP-CAB	388
		3	WIRING GP-STEERING CONSOLE	542
		3	WIRING GP-STEERING CONSOLE	546
		4	WIRING GP-STEERING CONSOLE	550
		4	WIRING GP-STEERING CONSOLE	554
		4	WIRING GP-STEERING CONSOLE	558
		5	WIRING GP-STEERING CONSOLE	561
		4	WIRING GP-STEERING CONSOLE	564
		5	WIRING GP-STEERING CONSOLE	567
		5	WIRING GP-STEERING CONSOLE	570
		5	WIRING GP-STEERING CONSOLE	573

MAINTENANCE PARTS

DESCRIPTION	PART NUMBER	QTY	WHERE USED	PAGE
FUSE (20-AMPERE)	9W-1446	1	WIRING GP-GRADE CONTROL	474
		1	WIRING GP-GRADE CONTROL	477
		1	WIRING GP-GRADE CONTROL	483
		1	WIRING GP-GRADE CONTROL	489
		1	WIRING GP-GRADE CONTROL	494
		1	WIRING GP-GRADE CONTROL	498
		1	WIRING GP-GRADE CONTROL	502
		1	WIRING GP-GRADE CONTROL	505
KEY (BATTERY DISCONNECT)	8H-5306	1	SWITCH GP-DISCONNECT	359
LAMP (24-VOLT, 0.17-AMPERE)	100-3245	1	LAMP GP-HEAD & SIGNAL	298
		1	LAMP GP-HEAD & SIGNAL	299
		1	WIRING GP-CONSOLE	407
		1	WIRING GP-CONSOLE	410
LAMP (24-VOLT, 0.2-AMPERE)	7N-5876	1	WIRING GP-CONSOLE	397
		1	WIRING GP-CONSOLE	400
		1	WIRING GP-CONSOLE	403
LAMP (24-VOLT, 21-WATT)	8U-2622	1	LAMP GP	288
		1	LAMP GP-HEAD & SIGNAL	298
		1	LAMP GP-HEAD & SIGNAL	299
		1	LAMP GP-SIGNAL	302
LAMP (24-VOLT, 3-WATT)	115-1748	1	WIRING GP-GRADE CONTROL	473
LAMP (24-VOLT, 5-WATT)	130-3515	1	LAMP GP-HEAD & SIGNAL	295
		1	LAMP GP-HEAD & SIGNAL	297
LAMP (24-VOLT, 5-WATT) (REGISTRATION PLATE)	5C-9583	1	LAMP GP-REGISTRATION PLATE	300
LAMP (24-VOLT, 75/70-WATT)	9X-3465	1	LAMP GP-HEAD & SIGNAL	295
		1	LAMP GP-HEAD & SIGNAL	297
		1	LAMP GP-HEAD & SIGNAL	298
		1	LAMP GP-HEAD & SIGNAL	299
LAMP (24-VOLT)	3E-8825	2	WIRING GP-CONSOLE	397
		1	WIRING GP-CONSOLE	398
		2	WIRING GP-CONSOLE	403
		1	WIRING GP-CONSOLE	404
		1	WIRING GP-STEERING CONSOLE	543
		2	WIRING GP-STEERING CONSOLE	543
		2	WIRING GP-STEERING CONSOLE	551
LAMP (24-VOLT) (DOME LIGHT)	7N-9943	1	LAMP GP-DOME	289
LAMP-HALOGEN (24-VOLT, 70-WATT)	351-9918	1	LAMP GP-FLOOD	290
		1	LAMP GP-FLOOD	291
		1	LAMP GP-FLOOD	292
		1	LAMP GP-FLOOD	293
		1	LAMP GP-FLOOD	294
LAMP-TURN SIGNAL (24-VOLT, 21-WATT)	242-0588	1	LAMP GP-HEAD & SIGNAL	295
		1	LAMP GP-HEAD & SIGNAL	297
FRAME AND BODY				
PLUG-MAGNETIC (CASE DRAIN) (FINAL DRIVE OIL DRAIN)	8M-3837	1	CASE & FRAME GP	686

MAINTENANCE PARTS

DESCRIPTION	PART NUMBER	QTY	WHERE USED	PAGE
FUEL SYSTEM				
CAP AS-FUEL (LOCKABLE, VENTED)	349-7059	1	TANK GP-FUEL	190
FILTER AS-WATER SEP & FUEL (PRIMARY)	326-1644	1	FILTER GP-WATER SEP & FUEL	164
FILTER-FUEL (ADVANCED EFFICIENCY)	1R-0749	2	LINES GP-FUEL	173
	1R-0762	1	LINES GP-FUEL	170
STRAINER-FUEL (FUEL TANK)	9P-7121	1	TANK GP-FUEL	190
HYDRAULIC SYSTEM				
CAP AS	8W-2842	4	CYLINDER & MTG GP-BLADE LIFT	774
		4	CYLINDER & MTG GP-BLADE LIFT	775
CAP GP-PROTECTION	380-6949	1	LOCK GP-CENTERSHIFT	881
CAP-FILLER (HYDRAULIC TANK)	7H-1447	1	TANK & FILTER GP-HYDRAULIC	904
FILTER ELEMENT AS-OIL (ADVANCED EFFICIENCY)	1R-0774	1	TANK & FILTER GP-HYDRAULIC	904
SEAL-INTEGRAL	101-0509	5	VALVE GP-BANK 3	978
		5	VALVE GP-BANK 3	979
		5	VALVE GP-BANK 4	980
		6	VALVE GP-BANK 4	981
		6	VALVE GP-BANK 4	982
		5	VALVE GP-BANK 4	983
		6	VALVE GP-BANK 4	984
		6	VALVE GP-BANK 4	985
		5	VALVE GP-BANK 4	986
		6	VALVE GP-BANK 5	987
		6	VALVE GP-BANK 5	988
		6	VALVE GP-BANK 5	989
		6	VALVE GP-BANK 5	990
		6	VALVE GP-BANK 5	991
		6	VALVE GP-BANK 5	992
		6	VALVE GP-BANK 5	994
STRAINER (HYDRAULIC)	9J-3047	1	TANK & FILTER GP-HYDRAULIC	904
LUBRICATION SYSTEM				
BREATHER (CRANKCASE)	164-0210	1	BREATHER GP	97
CAP-OIL FILLER (ENGINE)	068-4497	1	FILLER GP-ENGINE OIL	98
FILTER AS-ENGINE OIL (ADVANCED EFFICIENCY)	1R-1807	1	FILTER GP-ENGINE OIL	100
OPERATOR STATION				
BELT-SERPENTINE	185-5872	1	COMPRESSOR GP-REFRIGERANT	1116
		1	COMPRESSOR GP-REFRIGERANT	1117
		1	COMPRESSOR GP-REFRIGERANT	1119
BLADE AS-WIPER (335-MM) (HIGH PROFILE FRONT LOWER)	123-4355	2	WIPER GP-WINDOW	1383
BLADE AS-WIPER (450-MM)	6V-5853	1	WIPER GP-WINDOW	1386
		1	WIPER GP-WINDOW	1388
BLADE AS-WIPER (450-MM) (FRONT)	6V-5853	1	WIPER GP-WINDOW	1385

MAINTENANCE PARTS

DESCRIPTION	PART NUMBER	QTY	WHERE USED	PAGE
BLADE AS-WIPER (450-MM) (HIGH PROFILE FRONT UPPER)	6V-5853	1	WIPER GP-WINDOW	1383
DRYER AS-REFRIGERANT (IN-LINE)	257-3226	1	LINES GP-AIR CONDITIONER	1247
		1	LINES GP-AIR CONDITIONER	1250
FILTER ELEMENT AS-CAB AIR	231-4486	1	FILTER GP-CAB AIR	1194
		1	FILTER GP-CAB AIR	1195
	231-4487	2	FILTER GP-CAB AIR	1194
		2	FILTER GP-CAB AIR	1195
	232-1732	1	FILTER GP-CAB AIR	1194
		1	FILTER GP-CAB AIR	1195
	7T-7358	1	FILTER GP-CAB AIR	1194
		1	FILTER GP-CAB AIR	1195
FUSE (10-AMPERE)	9W-1442	1	FAN GP-CIRCULATING	1190
		1	FAN GP-CIRCULATING	1191
		1	FAN GP-CIRCULATING	1192
		1	FAN GP-CIRCULATING	1193
		2	MIRROR GP-REAR VIEW	1267
		1	WIPER GP-WINDOW	1386
		1	WIPER GP-WINDOW	1388
FUSE (15-AMPERE)	9W-1441	1	AIR CONDITIONER AR	1083
		1	AIR CONDITIONER AR	1084
		1	AIR CONDITIONER AR	1085
		1	AIR CONDITIONER AR	1086
		1	AIR CONDITIONER AR	1087
FUSE (15-AMPERE) (HEATER)	9W-1441	1	HEATER & MTG GP-CAB	1196
		1	HEATER & MTG GP-CAB	1197
KEY	113-5805	1	HOUSING GP-SEAT SUSPENSION	1208
		1	HOUSING GP-SEAT SUSPENSION	1211
LAMP (12-VOLT)	8M-6176	2	MODULE GP-QUAD GAUGE	1271
LAMP (24-VOLT, 0.17-AMPERE)	100-3245	1	AIR CONDITIONER GP	1091
		1	AIR CONDITIONER GP	1095
		2	PANEL GP-INSTRUMENT	1301
		2	PANEL GP-INSTRUMENT	1303
		2	PANEL GP-INSTRUMENT	1312
		2	PANEL GP-INSTRUMENT	1315
		2	PANEL GP-INSTRUMENT	1317
		2	PANEL GP-INSTRUMENT	1320
LAMP (24-VOLT, 0.17-AMPERE) (INDICATOR)	100-3245	2	PANEL GP-INSTRUMENT	1306
		2	PANEL GP-INSTRUMENT	1309
LAMP (24-VOLT, 0.2-AMPERE)	7N-5876	2	PANEL GP-INSTRUMENT	1281
		2	PANEL GP-INSTRUMENT	1284
		2	PANEL GP-INSTRUMENT	1286
		2	PANEL GP-INSTRUMENT	1288
		2	PANEL GP-INSTRUMENT	1290
		2	PANEL GP-INSTRUMENT	1293
		2	PANEL GP-INSTRUMENT	1295
		2	PANEL GP-INSTRUMENT	1298
LAMP (24-VOLT)	107-1983	14	PANEL GP-INSTRUMENT	1280

DESCRIPTION	PART NUMBER	QTY	WHERE USED	PAGE
		14	PANEL GP-INSTRUMENT	1283
		14	PANEL GP-INSTRUMENT	1286
		14	PANEL GP-INSTRUMENT	1288
		15	PANEL GP-INSTRUMENT	1290
		15	PANEL GP-INSTRUMENT	1292
		15	PANEL GP-INSTRUMENT	1295
		15	PANEL GP-INSTRUMENT	1298
		14	PANEL GP-INSTRUMENT	1301
		14	PANEL GP-INSTRUMENT	1303
		14	PANEL GP-INSTRUMENT	1312
		14	PANEL GP-INSTRUMENT	1315
		15	PANEL GP-INSTRUMENT	1317
		15	PANEL GP-INSTRUMENT	1320
	8D-1429	1	AIR CONDITIONER & HEATER GP	1076
		1	HEATER GP-CAB	1199
		1	HEATER GP-CAB	1203
LAMP (24-VOLT) (INSTRUMENT PANEL)	107-1983	15	PANEL GP-INSTRUMENT	1306
		15	PANEL GP-INSTRUMENT	1309
SCREEN AS	466-1003	1	SCREEN GP-SUN	1344
SEAT BELT GP (ADJUSTABLE, 3-IN)	8Y-4030	1	SEAT GP	1346
SEAT BELT GP (RETRACTABLE, 3-IN)	222-0345	1	SEAT GP	1349
SEAT BELT GP (RETRACTABLE)	116-1965	1	SEAT GP	1348
		1	SEAT GP-STATIC	1355
		1	SEAT GP-SUSPENSION	1360
		1	SEAT GP-SUSPENSION	1362
POWER TRAIN				
BREATHER (POWER TRAIN OIL FILLER)	183-3873	1	FILLER GP-POWER TRAIN OIL	619
BREATHER (TANDEM HOUSING)	4H-6112	1	TANDEM & COVER GP	643
FILTER ELEMENT AS-OIL (ADVANCED EFFICIENCY, WITH SEAL)	328-3655	1	LINES GP-TRANSMISSION OIL	627
FILTER ELEMENT AS-OIL (ADVANCED EFFICIENCY, WITH SEAL) (TRANSMISSION)	328-3655	1	FILTER GP-OIL	621
FILTER ELEMENT AS-OIL (TRANSMISSION)	337-5270	1	FILTER GP-OIL	623
FILTER-MAGNETIC (TRANSMISSION)	8S-9129	1	CASE & PARTS GP-PLANETARY	581
		1	CASE & PARTS GP-PLANETARY	586
		1	SCREEN GP-MAGNETIC	640
PLUG AS	197-4977	1	CASE & PARTS GP-PLANETARY	581
		1	CASE & PARTS GP-PLANETARY	586
PLUG-MAGNETIC	304-8032	2	TANDEM & COVER GP	643
SCREEN-SUCTION (TRANSMISSION)	8S-9130	1	CASE & PARTS GP-PLANETARY	581
		1	CASE & PARTS GP-PLANETARY	586
		1	SCREEN GP-MAGNETIC	640
SERVICE EQUIPMENT AND SUPPLIES				
SEAL-INTEGRAL	166-2905	1	KIT-GASKET	1446
SEAL-VALVE COVER	272-0388	1	KIT-GASKET	1447

DESCRIPTION	PART NUMBER	QTY	WHERE USED	PAGE
		1	KIT-GASKET	1449

INDEX

NAME PAGE

A

ACCESSORY GP-CAB 1070
ACCESSORY GP-CAB–HIGH PROFILE 1067
1068
ACCUMULATOR-REFRIGERANT 1247
1250
ADAPTER AS 29
ADAPTER GP-OIL LINE–FUEL INJECTION PUMP 96
ADAPTER-MOLDBOARD 1390
ADJUSTER GP-SEAT 1072
1074
1075
AFTERCOOLER GP-AIR 140
AIR CLEANER GP 141
142
AIR COMPRESSOR GP 29
31
33
35
AIR CONDITIONER & HEATER GP 1076
AIR CONDITIONER & MOUNTING GP 1081
1082
AIR CONDITIONER AR 1083
1084
1085
1086
1087
AIR CONDITIONER GP 1089
1090
1091
1095
AIR DRYER GP 734
735
736
737
738
740
742
744
745
ALARM GP 191
ALTERNATOR GP-CHARGING 192
194
195
APPLICATION GP-POWER TRAIN 196
ARMREST GP (LH) 1364
ARMREST GP (RH) 1364
ARMREST GP–LH 1101
ARMREST GP–RH 1100
ASHTRAY GP 1102
AXLE GP-FRONT 577

B

BASE GP-OIL FILTER–TRANSMISSION 580
BASE GP-VALVE COVER 41
BATTERY & BOX GP-HEAVY-DUTY 197
BATTERY & WIRING GP 202
211
BATTERY & WIRING GP–EXTREME-DUTY 207
210
BATTERY GP 215
BATTERY GP (12-VOLT, 750-CCA) 203
BATTERY GP (12-VOLT, 750-CCA) (MAINTENANCE FREE) 212
216
BATTERY GP (12-VOLT, MAINTENANCE FREE, WET) 197
207
BEARING GP-MAIN (CRANKSHAFT) 44
BELT TENSIONER GP 36
BELT-SERPENTINE 36
80
1116
1117
1119
BIT GP-END 1391
BLADDER (ACCUMULATOR) 877
BLADE & TIP AR-POWER 1392
BLADE AR 1392
BLADE AS-WIPER (335-MM) (HIGH PROFILE FRONT LOWER) 1383
BLADE AS-WIPER (450-MM) 1386
1388
BLADE AS-WIPER (450-MM) (FRONT) 1385
BLADE AS-WIPER (450-MM) (HIGH PROFILE FRONT UPPER) 1383
BLADE GP 1393
1394
1395
BLADE GP-BULLDOZER–FRONT 1396
BLADE GP-STRAIGHT–FRONT 1398
BOSS GP-DRAWBAR–ACCUGRADE 1039
1040
BOSS GP-FRAME–ACCUGRADE 678
680
BOX GP-BATTERY 682
BOX GP-TOOL 1441
BRACKET GP-MOUNTING 234
236
238
240
242
244
246
683
BRACKET GP-SCARIFIER 1400
BRAKE GP-PARKING 746
BRAKE GP-SERVICE 748
BREATHER (CRANKCASE) 97
BREATHER (POWER TRAIN OIL FILLER) 619
BREATHER (TANDEM HOUSING) 643
BREATHER GP–CRANKCASE 97
BUMPER GP-REAR 684
685

INDEX

NAME PAGE

C

CAB AR 1105
1107
CAB AR–CANOPY 1106
1109
CAB AR–NON-ROPS 1103
1104
1105
1108
CAB AR–ROPS 1106
1109
CAB GP 1112
1113
CAB GP–HIGH PROFILE 1110
1111
CAMSHAFT GP 38
CANOPY AR 1114
CAP AS 774
775
CAP AS-COOLANT TANK 136
138
CAP AS-FILLER (7/8-9-THD) 197
212
216
CAP AS-FILLER (M18X2-MM) 197
CAP AS-FUEL (LOCKABLE, VENTED) 190
CAP GP-PROTECTION 881
CAP-FILLER (HYDRAULIC TANK) 904
CAP-OIL FILLER (ENGINE) 98
CARRIER GP-SEAL 39
CARTRIDGE GP-TURBOCHARGER 144
CASE & FRAME GP 686
CASE & PARTS GP-PLANETARY 581
586
CERTIFICATION AR 1442
CERTIFICATION AR-MACHINE–CHINESE 1
CHAIN GP-DRIVE 591
CHAIN GP-DRIVE–TANDEM 590
CHASSIS AR 1
CIRCLE GP 1041
1043
1045
1046
1047
1049
1051
1052
CIRCUIT BREAKER AS (105-AMPERE) 518
CIRCUIT BREAKER AS (105-AMPERE) (ALTERNATOR) 515
CIRCUIT BREAKER AS (105-AMPERE) (MAIN POWER) 531
CIRCUIT BREAKER AS (105-AMPERE) (MAIN) 515
CIRCUIT BREAKER AS (135-AMPERE) 518
CIRCUIT BREAKER AS (135-AMPERE) (ALTERNATOR) 531
CLUTCH GP-TRANSMISSION–FIRST, THIRD . . . 596
CLUTCH GP-TRANSMISSION–FORWARD 592
CLUTCH GP-TRANSMISSION–HIGH, LOW 598
CLUTCH GP-TRANSMISSION–REVERSE, 2ND 594
COMMON AR 1
COMPRESSOR GP-REFRIGERANT 1115
1116
1117
1118
1119
1121
CONDENSER & MTG GP-REFRIGERANT 1122
1123
CONSOLE GP-OPERATOR 1125
1129
1133
1136
CONSOLE GP-OPERATOR–TRANSMISSION DIRECTION, SPEED 1124
CONTROL & MTG GP-ENGINE ELEK 219
CONTROL AR-HYDRAULIC–RIPPER 769
770
CONTROL GP-CLUTCH 1138
1140
1142
1144
CONTROL GP-DIFFERENTIAL LOCK 600
602
CONTROL GP-ENGINE ELECTRONIC 220
CONTROL GP-GOVERNOR 160
162
CONTROL GP-HYDRAULIC LOCKOUT 1146
1147
1148
CONTROL GP-PARKING BRAKE 750
CONTROL GP-POWER TRAIN 221
CONTROL GP-SERVICE BRAKE 752
757
CONTROL GP-STEERING 1149
CONTROL GP-TRANSMISSION HYD 604
606
CONTROL GP-UNPROGRAMMED 428
451
456
460
465
469
CONTROL GP-UNPROGRAMMED (PL641E CELLULAR) 226
CONTROL GP-UNPROGRAMMED (POWER TRAIN) 196
424
433
438
442
447
CONTROL GP-UNPROGRAMMED (PRODUCT LINK 300) 232
274
CONTROL GP-UNPROGRAMMED–HIGH PROFILE 222

INDEX

NAME PAGE

CONTROL GP-UNPROGRAMMED–PL641E CELLULAR . . . 225, 226
CONTROL GP-UNPROGRAMMED–PRODUCT LINK 522 . . . 223
CONTROL GP-UNPROGRAMMED–PRODUCT LINK 522, CHINA . . . 224
CONTROL-TRANSMISSION . . . 1124, 1136
CONVERTER AR-ELECTRICAL . . . 227
CONVERTER AR-ELECTRICAL–HIGH PROFILE . . . 226
CONVERTER GP-ELECTRICAL . . . 228, 230, 231
CONVERTER GP-ELECTRICAL–RADIO . . . 229
COOLER GP-ENGINE OIL . . . 116
COOLER GP-TRANSMISSION OIL . . . 610, 611
CORE AS-CONDENSER (REFRIGERANT) . . . 1122
CORE AS-ENGINE OIL COOLER . . . 116
CORE AS-HEATER . . . 1077, 1092, 1095, 1200, 1203
CORE AS-OIL COOLER (TRANSMISSION OIL) . . . 610, 611
CORE AS-RADIATOR . . . 132
COUPLING GP-TORSIONAL . . . 612
COVER AS . . . 1150, 1151, 1152, 1153, 1154, 1155, 1156
COVER GP-ACCESS . . . 688, 689
COVER GP-ACCESS–PLATFORM . . . 687
COVER GP-AIR INLET . . . 145, 146
COVER GP-CYLINDER BLOCK . . . 40
COVER GP-VALVE MECHANISM . . . 41, 43
CRANKSHAFT GP . . . 44
CYLINDER & LINES GP-RIPPER . . . 771
CYLINDER & MTG GP-ARTICULATION . . . 773
CYLINDER & MTG GP-BLADE LIFT . . . 774, 775
CYLINDER & MTG GP-BLADE TIP . . . 776
CYLINDER & MTG GP-CENTERSHIFT . . . 777
CYLINDER & MTG GP-SCARIFIER . . . 778
CYLINDER & MTG GP-SIDESHIFT–BLADE . . . 779
CYLINDER & MTG GP-STEERING . . . 780
CYLINDER & MTG GP-WHEEL LEAN . . . 782
CYLINDER BLOCK GP . . . 46, 47, 48
CYLINDER GP-ARTICULATION–LH . . . 783
CYLINDER GP-ARTICULATION–RH . . . 785
CYLINDER GP-CENTERSHIFT . . . 787
CYLINDER GP-HYDRAULIC . . . 789, 791, 793, 1401
CYLINDER GP-LIFT . . . 795
CYLINDER GP-SCARIFIER . . . 797
CYLINDER GP-SIDESHIFT . . . 799
CYLINDER GP-STEERING–LH . . . 801
CYLINDER GP-STEERING–RH . . . 803
CYLINDER GP-WHEEL LEAN . . . 805
CYLINDER HEAD AS . . . 50, 51
CYLINDER HEAD GP . . . 52, 54, 56, 57, 59

D

DAMPER & PULLEY GP . . . 60
DETENT GP-CONTROL VALVE–BULLDOZER LIFT, PLOW . . . 807
DIFFERENTIAL & BEVEL GEAR GP . . . 613
DIFFERENTIAL GP . . . 615
DISTRIBUTION AR . . . 2
DOOR GP (AIR VENTED) . . . 1224, 1227, 1232, 1237, 1239, 1242, 1244
DOOR GP-CAB–HIGH PROFILE . . . 1161, 1163, 1174
DOOR GP-CAB–HIGH PROFILE, LH . . . 1159, 1167, 1172
DOOR GP-CAB–HIGH PROFILE, RH . . . 1157, 1165, 1169
DRAWBAR GP . . . 1054, 1056, 1058, 1060, 1063
DRIVE GP-ACCESSORY . . . 61
DRIVE GP-CIRCLE . . . 808, 812
DRIVE GP-FAN . . . 62, 63, 64
DRIVE GP-FINAL . . . 617
DRYER & LINES GP-AIR . . . 762
DRYER AS-REFRIGERANT (IN-LINE) . . . 1247, 1250

INDEX

NAME PAGE

DUCT & CONTROL GP–A/C, HEATER DISTRIBUTOR. 1176
DUCT & CONTROL GP–HEATER, AIR CONDITIONER 1177
DUCT GP-CAB AIR. 1178
DUCT GP-CAB AIR–AIR CONDITIONER, HEATER 1179

E

EDGE GP-CUTTING 1403
EDGE-CUTTING 1404
1405
1407
1408
1409
1410
1411
1412
1413
1414
EDGE-CUTTING–SERRATED 1406
ELBOW GP-AIR INLET 147
148
ELECTRICAL AR 232
ELECTRONICS GP-COMMUNICATION–PRODUCT LINK 300 232
ELECTRONICS GP-IMPLEMENT (ACCUGRADE) 244
246
248
ELECTRONICS GP-IMPLEMENT (ACCUGRADE) (GRADE CONTROL) 234
236
238
240
242
ELECTRONICS GP-IMPLEMENT–ACCUGRADE 232
ELECTRONICS GP-MONITOR 233
ELECTRONICS GP-MONITOR–PRODUCT LINK 522 232
233
ELECTRONICS GP-POWER TRAIN 233
ENCLOSURE GP-ENGINE 690
694
ENGINE AR. 24
ENGINE AR-COMPLETE 25
26
ENGINE AR-CORE 27
28
EXTENSION GP-BACKREST 1349

F

FAN GP-BLOWER–RADIATOR. 117
FAN GP-CIRCULATING–DEFROSTER, REAR. 1180
1182
FAN GP-CIRCULATING–FRONT 1192
FAN GP-CIRCULATING–FRONT DEFROSTER. 1184
1186
1188
1190
FAN GP-CIRCULATING–REAR 1193
FAN GP-CIRCULATING–REAR DEFROSTER. 1191
FASTENER GP-CYLINDER HEAD 56
65
FASTENER GP-ENGINE 66
FASTENER GP-FRONT HOUSING. 67
FILLER GP-ENGINE OIL 98
FILLER GP-POWER TRAIN OIL 619
FILM (SUN VISOR) 1380
FILM GP. 1443
1444
FILM-CONSOLE (BLANK) 1280
1283
FILM-COVER. 1136
FILM-COVER (OPERATOR CONSOLE) 1124
FILM-FACE (HEADLIGHTS HIGH, LOW BEAM) 313
316
550
554
561
573
FILM-FACE (TURN SIGNAL, HAZARD). 313
316
550
554
561
573
FILM-FUSE. 389
FILM-FUSE (PANEL ACTION LAMPS) 375
379
384
FILM-IDENTIFICATION (AIR CONDITIONER) 1076
1203
FILM-IDENTIFICATION (AIR CONDITIONER) (HEATER). 1199
FILM-IDENTIFICATION (CAT). 224
FILM-IDENTIFICATION (CATERPILLAR) 274
FILM-IDENTIFICATION (DRAIN, ENGINE COOLANT) 1450
1456
FILM-IDENTIFICATION (ENGINE OIL FILL) 1450
1456
FILM-IDENTIFICATION (FAN SPEED, TEMPERATURE) 1095
1199
1203
FILM-IDENTIFICATION (FAN SPEED, TEMPERATURE) (AIR CONDITIONER, HEATER) 1076
1091
FILM-IDENTIFICATION (FUSE BOX) 564

INDEX

NAME PAGE

FILM-IDENTIFICATION (FUSE BOX) (LH) 543
547
550
554
559
FILM-IDENTIFICATION (FUSE BOX) (RH) 543
547
550
554
FILM-IDENTIFICATION (FUSE PANEL) 561
565
567
570
573
FILM-IDENTIFICATION (FUSE PANEL) (RH) 559
FILM-IDENTIFICATION (HAZARD WARNING LIGHTS) 1290
1293
1307
1310
1318
1321
FILM-IDENTIFICATION (HAZARD WARNING LIGHTS) (INSTRUMENT CLUSTER) 1296
1299
FILM-IDENTIFICATION (HYDRAULIC SYSTEM MALFUNCTION) 1281
1284
1286
1288
1290
1292
1301
1304
1307
1310
1313
1315
1318
1321
FILM-IDENTIFICATION (HYDRAULIC SYSTEM MALFUNCTION) (INSTRUMENT CLUSTER) 1296
1299
FILM-IDENTIFICATION (LH) 1280
1283
1286
1288
1290
1292
1301
1303
1306
1309
1312
1315
1317
1320
FILM-IDENTIFICATION (LH) (INSTRUMENT CLUSTER) 1295
1298
FILM-IDENTIFICATION (POWER RECEPTACLE, 12-VOLT) 1102
1232
1239
FILM-IDENTIFICATION (RH) 1280
1283
1286
1288
1290
1292
1301
1303
1306
1309
1312
1315
1317
1320
FILM-IDENTIFICATION (RH) (INSTRUMENT CLUSTER) 1295
1298
FILM-IDENTIFICATION (ROUND RED REFLECTIVE) 1456
FILM-IDENTIFICATION (ROUND RED REFLECTIVE) (RIPPER) 1431
FILM-IDENTIFICATION (SERVICE METER) 542
570
FILM-INFORMATION (ENGINE OIL) 1454
FILM-INFORMATION (FUSE BOX) 561
567
570
573
FILM-INFORMATION (LIFT EYE, TIE-DOWN LOCATION) 1450
1456
FILM-INFORMATION (PRODUCT LINK, READ OMM) 275
281
285
287
FILM-INSTRUCTION (ALTERNATOR BELT MOUNTING) 36
1450
FILM-INSTRUCTION (BELT ROUTING) 1116
1117
1119
FILM-INSTRUCTION (ENGINE OIL DRAIN) 1450
1456
FILM-INSTRUCTION (ENGINE SHUTDOWN) . . . 510
521
526
535
FILM-INSTRUCTION (SEAT ADJUSTMENT) . . . 1371
1373
FILM-PANEL (SPEED CONTROL) 1124
1136
FILM-PANEL (TRANSMISSION, PARKING BRAKE) 1124
1136

INDEX

NAME PAGE

FILM-WARNING (HIGH PRESSURE CYLINDER) 1450
1456
FILM-WARNING (NO DRILL, WELD, READ OMM). 1450
1456
FILM-WARNING (NO WELD, NO DRILL, READ OMM). 1106
1109
1325
1326
1327
1328
1330
1332
1334
1340
1342
FILM-WARNING (PRODUCT LINK RADIO, INTL) 274
281
285
287
FILM-WARNING (UNIVERSAL, READ OMM). . . 1450
1454
1456
FILTER (ETHER START). 370
FILTER AS-ENGINE OIL (ADVANCED EFFICIENCY). 100
FILTER AS-WATER SEP & FUEL (PRIMARY). 164
FILTER ELEMENT AS-AIR (SECONDARY) 141
FILTER ELEMENT AS-CAB AIR 1194
1195
FILTER ELEMENT AS-OIL (ADVANCED EFFICIENCY, WITH SEAL). 627
FILTER ELEMENT AS-OIL (ADVANCED EFFICIENCY, WITH SEAL) (TRANSMISSION). 621
FILTER ELEMENT AS-OIL (ADVANCED EFFICIENCY). 904
FILTER ELEMENT AS-OIL (TRANSMISSION). . . 623
FILTER ELEMENT-AIR (PRIMARY) 141
FILTER GP-CAB AIR 1194
1195
FILTER GP-ENGINE OIL. 100
FILTER GP-OIL 623
FILTER GP-OIL–MEDIUM PRESSURE 620
FILTER GP-OIL–TRANSMISSION 621
FILTER GP-WATER SEP & FUEL 164
FILTER-FUEL (ADVANCED EFFICIENCY) 170
173
FILTER-MAGNETIC (TRANSMISSION) 581
586
640
FLASHER AS (24-VOLT). 313
316
550
554
561
573

NAME PAGE

FLOOR MAT 704
706
708
1218
1220
1222
FLYWHEEL GP 68
FRAME AR 698
FRAME GP-FRONT. 699
FUMES DISPOSAL GP 102
FUSE (10-AMPERE) 229
230
231
275
283
285
287
313
316
542
546
550
554
558
561
564
567
570
573
735
745
1190
1191
1192
1193
1267
1386
1388
FUSE (10-AMPERE) (POWER CONVERTER). . . 228

NAME PAGE

FUSE (15-AMPERE) 313
316
319
320
322
375
378
383
388
542
546
550
554
558
561
564
567
570
573
1083
1084
1085
1086
1087
FUSE (15-AMPERE) (HEATER). 1196
1197
FUSE (20-AMPERE) 474
477
483
489
494
498
502
505

G

GAUGE AS (CLUSTER). 1288
1292
1298
1301
1306
1309
1312
1315
1317
1320
GAUGE AS (CLUSTER) (24-VOLT) 1303
GAUGE AS-OIL LEVEL (DIPSTICK) (ENGINE) 103
GAUGE AS-OIL LEVEL (DIPSTICK) (POWER TRAIN OIL) 619
GAUGE GP-AIR PRESSURE (BRAKE) 1280
1283
1286
1288
1290
1292
1295
1298
1301
1303
1306
1309
1312
1315
1317
1320
GAUGE GP-CLUSTER 1283
1288
1292
1298
1301
1303
1306
1309
1312
1315
1317
1320
GAUGE GP-OIL LEVEL (DIPSTICK)–ENGINE. . . 103
GAUGE-SIGHT (HYDRAULIC) 904
GEAR GP-FRONT 69
GENERAL AR. 3
GRADE CONTROL AR–ACCUGRADE. 234
236
238
240
242
244
246
248
GUARD GP-BOTTOM. 702
GUARD GP-BOTTOM–TRANSMISSION. 701
GUARD GP-DRIVE SHAFT. 703
GUARD GP-PLATFORM 704
706
708
710

H

HARDWARE GP-MOUNTING (BATTERY BOX) 197
210
HARNESS AS-CAB 393
395
1067
1068
1070

INDEX

NAME	PAGE
HARNESS AS-CAB (FRONT)	375
	378
	383
	388
HARNESS AS-CAB (REAR)	375
	378
	383
	388
HARNESS AS-CAB (SWITCH PANEL)	375
	378
	383
HARNESS AS-CHASSIS	252
HARNESS AS-CHASSIS (FRONT FRAME, LH)	474
	478
	485
	491
	494
	498
	502
	505
HARNESS AS-CHASSIS (FRONT FRAME, REAR)	474
	478
	484
	490
	494
	498
	502
	505
HARNESS AS-CHASSIS (PLATFORM)	428
	451
	460
HARNESS AS-CHASSIS (RH)	474
	477
	483
	489
	494
	498
	502
	505
HARNESS AS-CHASSIS–FRONT FRAME, LH	251
HARNESS AS-CHASSIS–FRONT FRAME, REAR	250
HARNESS AS-CHASSIS–RH	249
HARNESS AS-CONSOLE	397
	400
	404
	407
	550
	554
	558
	564
HARNESS AS-CONSOLE (KEY SWITCH)	397
	403
HARNESS AS-CONSOLE (KEY SWITCH)	407
HARNESS AS-CONSOLE–SHIFT	254
HARNESS AS-CONSOLE–TRANSMISSION	255
HARNESS AS-CONTROL (PRODUCT LINK)	268
	270
	272
	274
	277
	279
HARNESS AS-ENGINE	255
HARNESS AS-FUEL TANK	515
	518
	531
HARNESS AS-HEATER & AIR COND	256
	371
	373
	1077
	1092
	1095
	1200
	1203
HARNESS AS-LIGHTING (BAR)	313
	316
HARNESS AS-LIGHTING (WORK LIGHTS, FRONT)	313
	316
HARNESS AS-PANEL	257
	421
	1280
	1283
	1286
	1288
	1290
	1292
	1295
	1298
	1306
	1309
	1317
	1320
HARNESS AS-PANEL (INSTRUMENT)	1301
	1303
	1312
	1315
HARNESS AS-PANEL (JUMPER)	1288
	1292
	1298
	1301
	1303
	1306
	1309
	1312
	1315
	1317
	1320
HARNESS AS-PANEL (LIGHT BAR)	428
	451
	456
	460
	465
	469

INDEX

NAME PAGE

HARNESS AS-PLATFORM 259
416
420
424
433
442
HARNESS AS-PLATFORM–PLATFORM 258
HARNESS AS-POWER (PRODUCT LINK) 268
270
272
274
277
279
HARNESS AS-REAR CHASSIS 260
HARNESS AS-REAR CHASSIS (LH) 510
521
526
535
HARNESS AS-REAR CHASSIS (RH) 509
HARNESS AS-REAR LIGHTING 308
541
HARNESS AS-SENSOR 262
HARNESS AS-SENSOR (FUEL SYSTEM) 510
522
HARNESS AS-SENSOR (SPEED) 582
HARNESS AS-SENSOR (TRANSMISSION SPEED) 508
521
526
535
HARNESS AS-SENSOR–ANGLE 261
HARNESS AS-SENSOR–ROTATION 261
HARNESS AS-SOLENOID 309
HARNESS AS-STARTING AID 414
HARNESS AS-STARTING AID (ETHER) 415
HARNESS AS-STEERING 263
HARNESS AS-TRANSMISSION 264
265
508
604
606
HARNESS AS-WIRING 266
267
649
735
745
1273
HARNESS AS-WIRING–EXTENSION 267
HEATER & MTG GP-CAB 1196
1197
HEATER AR-CAB 1198
HEATER GP-CAB 1199
1203
HITCH GP-ARTICULATING 712
HITCH GP-TOWING 714
HORN GP-ELECTRIC 1207
HOUSING GP-FILTER 621
HOUSING GP-FLYWHEEL 71
HOUSING GP-FRONT 72
HOUSING GP-SEAT SUSPENSION 1208
1211

NAME PAGE

HYDRAULIC AR 816

I

INDICATOR AS 1274
INDICATOR AS-ARTICULATION 1271
INDICATOR AS-COOLANT TEMP 1271
INDICATOR AS-FUEL LEVEL 1271
INDICATOR-AIR FILTER CHANGE 142
INJECTOR GP-FUEL 165
166
INSTALLATION AR 6
INSTALLATION AR-COMMUNICATION 268
270
272
274
277
279
INSTALLATION AR-COMMUNICATION–PRODUCT LINK 281
INSTALLATION AR-RADIO 1214
INSTALLATION GP-COMMUNICATION 287
INSTALLATION GP-COMMUNICATION–PRODUCT LINK 283
285
INSTALLATION GP-RADIO 1215
1216
1217
INSULATION GP-WEATHER 1218
1220
1222

K

KEY 1208
1211
KEY (BATTERY DISCONNECT) 359
KIT-ENGINE GASKET 74
KIT-ENGINE GASKET–SINGLE FUEL INJECTOR 73
KIT-FRONT COVER GASKET 75
KIT-FUEL PUMP–FUEL TRANSFER PUMP 167
KIT-GASKET 1446
1449
KIT-GASKET–SINGLE CYLINDER HEAD 1447
KIT-GASKET–TURBOCHARGER 1448
KIT-OIL COOLER & LINES GASKET 118
KIT-REAR COVER GASKET 75
76
KIT-TRANSMISSION BEARING 624
KIT-TRANSMISSION GASKET 625
KIT-TURBOCHARGER GASKET 149
KIT-WATER PUMP GASKET 118
119

L

LAMP (12-VOLT) 1271

INDEX

NAME	PAGE
LAMP (24-VOLT, 0.17-AMPERE)	298 299 407 410 1091 1095 1301 1303 1312 1315 1317 1320
LAMP (24-VOLT, 0.17-AMPERE) (INDICATOR)	1306 1309
LAMP (24-VOLT, 0.2-AMPERE)	397 400 403 1281 1284 1286 1288 1290 1293 1295 1298
LAMP (24-VOLT, 21-WATT)	288 298 299 302
LAMP (24-VOLT, 3-WATT)	473
LAMP (24-VOLT, 5-WATT)	295 297
LAMP (24-VOLT, 5-WATT) (REGISTRATION PLATE)	300
LAMP (24-VOLT, 75/70-WATT)	295 297 298 299
LAMP (24-VOLT)	397 398 403 404 543 551 552 1076 1199 1203 1280 1283 1286 1288 1290 1292 1295 1298 1301 1303 1312 1315 1317 1320
LAMP (24-VOLT) (DOME LIGHT)	289
LAMP (24-VOLT) (INSTRUMENT PANEL)	1306 1309
LAMP GP	288
LAMP GP-DOME	289
LAMP GP-DOME (24-VOLT)	375 378 383 388
LAMP GP-FLOOD	290 291 292 293 294
LAMP GP-HEAD & SIGNAL	295 297 298 299
LAMP GP-HEAD & SIGNAL (24-VOLT)	456 465
LAMP GP-REGISTRATION PLATE–EUROPEAN MARKET	300
LAMP GP-SIGNAL (12-VOLT, 24-VOLT, TURN) (LH)	319 321
LAMP GP-SIGNAL (12-VOLT, 24-VOLT, TURN) (RH)	319 321
LAMP GP-SIGNAL–PARK, TURN	303
LAMP GP-SIGNAL–REAR TURN	302
LAMP GP-SIGNAL–STOP, TAIL	301
LAMP GP-SIGNAL–TURN	304
LAMP-HALOGEN (24-VOLT, 70-WATT)	290 291 292 293 294

INDEX

NAME PAGE

LAMP-TURN SIGNAL (24-VOLT, 21-WATT). 295
297
LIFT GP-BLADE 1415
1418
1421
1423
1424
1426
LIFTER GP-VALVE 77
LIFTING GP-ENGINE 78
LIGHTING AR-ROADING 305
LIGHTING AR-ROADING–TURN SIGNAL 305
LIGHTING GP-BACKUP 306
LIGHTING GP-FLOOD 308
LIGHTING GP-FLOOD–FRONT 309
LIGHTING GP-REGISTRATION PLATE. 311
312
LIGHTING GP-ROADING 313
316
LIGHTING GP-SIGNAL–TURN 319
320
LIGHTING GP-SIGNAL–TURN SIGNAL 321
322
LINER GP-CAB. 1237
1239
1242
1244
LINER GP-CAB–ENCLOSED, HIGH PROFILE. 1224
1227
1232
LINES GP-AFTERCOOLER AIR 150
LINES GP-AIR CONDITIONER 1247
1250
LINES GP-AIR TANK 764
LINES GP-CENTERSHIFT LOCK 817
819
LINES GP-ENGINE OIL 104
LINES GP-ENGINE OIL DRAIN. 105
106
LINES GP-FUEL. 168
169
172
LINES GP-HEATER. 1253
1255
LINES GP-HYDRAULIC 845
848
851
854
857
LINES GP-HYDRAULIC–BLADE, FRONT 833
LINES GP-HYDRAULIC–BULLDOZER LIFT, PLOW 829
LINES GP-HYDRAULIC–LH. 821
830
834
841
LINES GP-HYDRAULIC–RH 825
837
861
LINES GP-HYDRAULIC–SCARIFIER. 864

NAME PAGE

LINES GP-INJECTOR HYD PUMP 176
177
178
LINES GP-LUBRICATION 626
715
LINES GP-PUMP 866
867
870
871
LINES GP-RIPPER 874
LINES GP-STEERING. 876
LINES GP-TRANSMISSION OIL 627
631
LINES GP-TURBOCHARGER OIL. 108
LINES GP-WATER. 120
122
124
LINK GP-LOWER. 1064
LINK GP-STEERING 717
LINK GP-UPPER 1065
LOCK AR-CENTERSHIFT 880
LOCK GP-CENTERSHIFT 881
882
883
LOUVER GP-CAB 1257
LUBRICATION AR-CENTRAL 718

M

MANIFOLD GP-ENGINE OIL 110
MANIFOLD GP-EXHAUST. 152
MANIFOLD GP-VALVE–LH 884
MANIFOLD GP-VALVE–RH 886
METER GP-SERVICE. 546
550
554
564
567
MIRROR GP-REAR VIEW. 1261
1262
1263
1264
1268
1269
MIRROR GP-REAR VIEW–DUAL INSIDE. 1267
MIRROR GP-REAR VIEW–DUAL INTERIOR. . . 1259
MIRROR GP-REAR VIEW–DUAL, INTERIOR. 1260
MIRROR GP-REAR VIEW–EXTERIOR. 1258
MIRROR GP-REAR VIEW–EXTERIOR, LH 1266
MIRROR GP-REAR VIEW–EXTERIOR, RH 1265
MIRROR GP-REAR VIEW–INSIDE 1270
MODULE GP-INTERFACE. 1272
MODULE GP-INTERFACE (INSTRUMENT PANEL) 1273
MODULE GP-QUAD GAUGE 1271
MODULE GP-SPEEDOMETER & TACH 1272
1273
1274

INDEX

NAME PAGE

MOTOR GP-ELECTRIC–CIRCULATING FAN.... 323
324
325
MOTOR GP-GEROTOR..... 887
MOTOR GP-WINDOW WIPER (24-VOLT, 2-SPEED)..... 1383
1385
MOTOR GP-WINDOW WIPER (24-VOLT, 2-SPEED) (FRONT LOWER)..... 1383
MOTOR GP-WINDOW WIPER (24-VOLT, 2-SPEED) (REAR)..... 1386
1388
MOTOR GP-WINDOW WIPER (24-VOLT) (FRONT UPPER)..... 1383
MOTOR GP-WINDOW WIPER (24-VOLT) (FRONT)..... 1385
MOTOR GP-WINDOW WIPER (24-VOLT) (REAR)..... 1386
1388
MOUNTING GP..... 719
MOUNTING GP-CAB–ENCLOSED, NON-ROPS..... 1275
MOUNTING GP-ENGINE..... 79
MOUNTING GP-ENGINE & XMSN..... 80
82
MOUNTING GP-GRADE CONTROL–CIRCLE... 327
328
329
MOUNTING GP-GRADE CONTROL–DRAWBAR..... 326
330
MOUNTING GP-RIPPER..... 1428
MOUNTING GP-ROPS–ENCLOSED..... 1277
MOUNTING GP-WHEEL..... 4
635
636
MUFFLER GP..... 153
154

O

OIL CHANGE GP-HIGH SPEED..... 111
OPTION AR-CAB..... 6
7
10
13
14
OPTION AR-CAB–ACCUGRADE..... 7
8
9
10
OPTION AR-CAB–CANOPY, ROPS..... 12
OPTION AR-CAB–NON-ROPS..... 12
OPTION AR-CAB–ROPS..... 11
OPTION AR-COLD WEATHER..... 14
15
OPTION AR-GRADE CONTROL–ACCUGRADE.. 15
OPTION AR-GUARD–FRONT BLADE..... 16
OPTION AR-HYDRAULIC..... 16
17

NAME PAGE

OPTION AR-LIGHTING..... 17
OPTION AR-REGIONAL..... 18
OPTION AR-REGIONAL–ACCUGRADE..... 17
OPTION AR-ROADING..... 19
OPTION AR-WORK TOOL..... 20
21
OPTION AR-WORK TOOL–BLADE..... 19
20
OPTION AR-WORK TOOL–BLADE TIP..... 20
OPTION AR-WORK TOOL–RIPPER..... 19
20
OPTION AR–SOUND SUPPRESSION..... 6
ORIFICE AS-AIR CONDITIONER..... 1247
1250

P

PADLOCK GP..... 190
682
729
906
1346
1348
1355
1360
1362
1441
PAN GP-BACKREST..... 1279
PAN GP-OIL..... 84
85
PANEL GP-INSTRUMENT..... 1312
PANEL GP-INSTRUMENT (ENCLOSED)..... 1103
1325
1326
PANEL GP-INSTRUMENT–ENCLOSED..... 1280
1283
1295
1298
1303
1306
1315
1320
PANEL GP-INSTRUMENT–OPEN..... 1286
1288
1290
1292
1301
1309
1317
PEDAL-GOVERNOR CONTROL..... 160
PISTON & ROD GP..... 86
PLATE & FILM GP..... 1450
1454
1456
PLATE & FILM GP–CHINESE..... 1460
PLATE GP-CERTIFICATION..... 1329
PLATE GP-PUSH..... 720
721
PLATE-SERIAL NUMBER (TRANSMISSION).... 582
586

NAME PAGE

PLATE-WARNING (ROPS, FOPS, OPS, READ OMM). 1329
PLUG AS 581 586
PLUG GP-CONNECTOR–ENGINE HARNESS, PROTECTIVE COVER 331
PLUG GP-CYLINDER BLOCK 88 89
PLUG GP-ENGINE 90
PLUG-MAGNETIC 643
PLUG-MAGNETIC (CASE DRAIN) (FINAL DRIVE OIL DRAIN) 686
POWER TRAIN AR. 636
PRECLEANER GP. 155
PROTECTION GP-WIRING 332
PUMP & LINES AR 889
PUMP & MTG GP-STEERING. 890 891
PUMP & MTG GP-UNIT INJ HYD 179 180 181
PUMP AS-WATER. 126
PUMP GP-ENGINE OIL. 113 114 115
PUMP GP-FUEL INJECTION 182 183
PUMP GP-FUEL PRM & WATER SEP. 184
PUMP GP-GEAR 637
PUMP GP-GEAR–TRANSMISSION 639
PUMP GP-METERING (HMU) 1149
PUMP GP-PISTON 892 895
PUMP GP-UNIT INJECTOR HYD 179 185 187
PUMP GP-WATER. 129
PUMP GP-WATER–COOLANT 127

R

RADIATOR & HYD OIL COOLER GP. 130 131
RADIATOR GP 132 133 134
RADIO GP-COMMUNICATION–PRODUCT LINK 121SR 333
RECLINER GP-SEAT 1323
REFLECTOR GP 722
REGULATOR AS-VOLTAGE (24-VOLT) (ALTERNATOR) 192
REGULATOR GP-FUEL PRESSURE 189
REGULATOR-WATER TEMPERATURE (97-DEG C) (COOLANT) 120 124
RELAY (24-VOLT) 474 485
RELAY (24-VOLT) (IMPLEMENT ENABLE) 479 494 498
RELAY (24-VOLT) (IMPLEMENT) 491 502 505
RELAY (24-VOLT) (POWER MODULE). 479 491 494 498 502 505
RELAY AS (24-VOLT) 403 407 542 546 558 564 567 570
RELAY AS (24-VOLT) (ALARM) 410
RELAY AS (24-VOLT) (BACKUP LIGHT) 306
RELAY AS (24-VOLT) (ETHER STARTING AID) 414 415
RELAY AS (24-VOLT) (FUEL PRIMING PUMP). 535
RELAY AS (24-VOLT) (FUEL PRIMING) 508 521 526
RELAY AS (24-VOLT) (KEY SWITCH) 398 401
RELAY AS (24-VOLT) (TAIL, PANEL LAMPS, LH) 550 554 561 573
RELAY AS (24-VOLT) (TAIL, PANEL LAMPS, RH). 550 554 561 573
RIPPER AR 1430
RIPPER AR–REAR 1429
RIPPER GP. 1431
ROADING AR 21 22 23
ROADING AR–INDIA. 22
ROCKER ARM GP 91 92
ROD AS-ADJUSTING 897
ROPS AR–ENCLOSED, HIGH PROFILE. 1325 1326 1327 1328
ROPS AR–HIGH PROFILE, OPEN 1324
ROPS GP. 1340 1342

INDEX

NAME PAGE

ROPS GP–ENCLOSED. 1336
1338
1339
ROPS GP–ENCLOSED, HIGH PROFILE 1329
ROPS GP–HIGH PROFILE, OPEN. 1330
1332
1334
1337
ROTATING GP-PUMP 898
899

S

SCARIFIER AR–VEE TYPE 1432
1433
SCARIFIER GP–VEE TYPE 1434
1437
SCREEN AS 1344
SCREEN GP-MAGNETIC–TRANSMISSION 640
SCREEN GP-SUN–REAR 1344
SCREEN-SUCTION (TRANSMISSION). 581
586
640
SEAL GP-CRANKSHAFT 75
93
SEAL GP-CRANKSHAFT (CLOCKWISE ROTATION) 76
SEAL-CRANKSHAFT (FRONT). 75
93
SEAL-INTEGRAL 31
33
75
84
85
978
979
980
981
982
983
984
985
986
987
988
989
990
991
992
994
1446
SEAL-VALVE COVER. 43
74
1447
1449
SEAT BELT GP 1364
SEAT BELT GP (ADJUSTABLE, 3-IN) 1346
SEAT BELT GP (RETRACTABLE, 3-IN). 1349

NAME PAGE

SEAT BELT GP (RETRACTABLE) 1348
1355
1360
1362
SEAT BELT GP–RETRACTABLE 1345
1346
SEAT GP 1347
SEAT GP-STATIC 1354
1355
1356
SEAT GP-SUSPENSION 1360
1361
1362
1364
SEAT GP-SUSPENSION–CLOTH 1358
1359
1363
SEAT GP–CLOTH 1349
1350
SEAT GP–VINYL 1346
1348
1352
SEGMENT-CIRCLE 1066
SENDER AS-FUEL LEVEL 516
519
532
SENDER AS-POSITION (ARTICULATION). 508
521
526
535
SENDER-TEMPERATURE 336
SENDER-TEMPERATURE (HYDRAULIC OIL) . . . 508
SENSOR AS-TEMPERATURE (TRANSMISSION OIL) 606
SENSOR GP-ENGINE 334
336
SENSOR GP-POSITION. 338
339
340
SENSOR GP-POSITION (ROTARY). 160
SENSOR GP-POSITION (ROTARY) (CLUTCH CONTROL). 1138
1140
1142
SENSOR GP-POSITION (ROTARY) (CLUTCH). 1144
SENSOR GP-POSITION (ROTARY) (THROTTLE) 162
SENSOR GP-PRESSURE 341
342
343
344
SENSOR GP-PRESSURE (ATMOSPHERIC AIR) 515
SENSOR GP-PRESSURE (ATMOSPHERIC) 334
336
SENSOR GP-PRESSURE (BOOST). 334
336
SENSOR GP-PRESSURE (OIL). 336
SENSOR GP-PRESSURE (OIL) (ENGINE). 334

INDEX

NAME PAGE

SENSOR GP-PRESSURE (OIL) (FUEL FILTER). 169
172
SENSOR GP-PRESSURE (RAIL) 334
336
SENSOR GP-SPEED 345
346
347
348
349
SENSOR GP-SPEED (ENGINE TIMING) 334
336
SENSOR GP-SPEED (MAGNETIC, HIGH OUTPUT) 535
SENSOR GP-SPEED (MAGNETIC, HIGH OUTPUT) (TRANSMISSION). 510
521
526
SENSOR GP-SPEED (TRANSMISSION OUTPUT, HIGH) 586
SENSOR GP-SPEED (TRANSMISSION OUTPUT, LOW) 586
SENSOR GP-SPEED (TRANSMISSION OUTPUT) 582
SENSOR GP-SPEED–ENGINE TIMING. 347
SENSOR GP-TEMPERATURE 350
351
352
SENSOR GP-TEMPERATURE (AIR INLET). 336
SENSOR GP-TEMPERATURE (COOLANT TEMPERATURE) 334
336
SENSOR GP-TEMPERATURE (FUEL). 169
172
SENSOR GP-TEMPERATURE (INLET AIR). 334
SENSOR GP-TEMPERATURE (TRANSMISSION OIL) 582
SENSOR-PRESSURE 518
SENSOR-PRESSURE (TURBOCHARGER INLET). 531
SENSOR-TEMPERATURE 350
351
SERVICE GP-COMMUNICATION (PRODUCT LINK 300) 274
SHAFT GP-DRIVE–TRANSMISSION. 641
SHAFT GP-INPUT 642
SHAFT GP-PUMP DRIVE 900
SOFTWARE GP-COMMUNICATION 232
SOFTWARE GP-COMMUNICATION (PL522). . . . 232
SOFTWARE GP-COMMUNICATION (PL641 CELLULAR) 233
SOFTWARE GP-COMMUNICATION (PRODUCT LINK 121SR). 333
SOFTWARE GP-COMMUNICATION (PRODUCT LINK 300). 274
SOFTWARE GP-COMMUNICATION (PRODUCT LINK 522, CHINA). 233
SOFTWARE GP-MONITOR. 223
224
SOFTWARE GP-MONITOR (TELEMATICS). 233
SOFTWARE GP-POWER TRAIN. 233

NAME PAGE

SPECIAL AR. 23
STARTING AID GP-ETHER 353
STARTING MOTOR GP-ELECTRIC 355
356
STEP GP 723
724
725
726
727
728
STRAINER (HYDRAULIC) 904
STRAINER-FUEL (FUEL TANK) 190
SUPPORT GP-BATTERY–HEAVY-DUTY. 729
SUPPORT GP-RADIATOR. 730
732
SUPPORT GP-SEAT. 1365
1367
1368
1369
1370
SUSPENSION GP-SEAT 1371
1373
SWASHPLATE GP. 892
901
SWITCH AS. 403
404
SWITCH AS (24-VOLT) (TAIL LIGHTS) 543
SWITCH AS (CENTERSHIFT PIN). 398
SWITCH AS (THROTTLE HOLD MODE) 397
SWITCH AS-BALL 367
SWITCH AS-BALL (CENTERSHIFT INDICATOR) 416
420
424
428
433
438
442
447
451
456
460
465
SWITCH AS-LIMIT (BRAKE PEDAL) 542
546
558
561
564
567
570
573
SWITCH AS-LIMIT (TRANSMISSION NEUTRALIZER). 550
554
SWITCH AS-MAGNETIC (24-VOLT) (START RELAY). 363
SWITCH AS-PRESSURE (A/C COMPRESSOR CLUTCH) (REFRIGERANT, LOW SIDE). 1247
1250

INDEX

NAME PAGE

SWITCH AS-PRESSURE (AIR BRAKE) 416 420 424 428 433 438 442 447 451 456 460 465 469
SWITCH AS-PRESSURE (HIGH, LOW) (REFRIGERANT, HIGH, LOW) 1250
SWITCH AS-PRESSURE (PARKING BRAKE) . . . 416 420 424 429 433 438 442 447 452 456 461 465 469
SWITCH AS-PRESSURE (REFRIGERANT, HIGH, LOW) 1247
SWITCH AS-PRESSURE (STOP LIGHT) 416 420 424 428 433 438 442 447 451 456 460 465 469
SWITCH AS-ROCKER 398 403 404
SWITCH AS-ROCKER (24-VOLT) 367 397 403 407 408 543
SWITCH AS-ROCKER (24-VOLT) (CENTERSHIFT LOCK) 410
SWITCH AS-ROCKER (24-VOLT) (CENTERSHIFT PIN) 401
SWITCH AS-ROCKER (24-VOLT) (CIRCULATING FAN) 1190 1191 1192 1193
SWITCH AS-ROCKER (24-VOLT) (FLOODLIGHTS) 543 552
SWITCH AS-ROCKER (24-VOLT) (HEADLIGHTS, TAIL LIGHTS) 314 317 561 573
SWITCH AS-ROCKER (24-VOLT) (HEADLIGHTS) 551
SWITCH AS-ROCKER (24-VOLT) (SPEED CONTROL REGULATOR) 400 410
SWITCH AS-ROCKER (24-VOLT) (THROTTLE) 400 410
SWITCH AS-ROCKER (DIFFERENTIAL LOCK ON, OFF) 573
SWITCH AS-ROCKER (DIFFERENTIAL LOCK) 547 556 559 561 564 567 570
SWITCH AS-ROCKER (FLOODLIGHT) 547 556 559 561 564 567 570 573
SWITCH AS-ROCKER (HEADLIGHTS) 555
SWITCH AS-ROCKER (PANEL LIGHT, TAIL LIGHT) 547 559 564
SWITCH AS-ROCKER (TAIL LIGHTS) 360
SWITCH AS-ROCKER (THROTTLE LOCK SET, RESET) 397
SWITCH AS-ROTARY (AIR CONDITIONER, BLOWER) 1096
SWITCH AS-ROTARY (FAN SPEED) 1076 1091 1199 1203
SWITCH AS-ROTARY (HEADLIGHT DIMMER) 551 555
SWITCH AS-ROTARY (HIGH, LOW BEAM) 313 316 561 573
SWITCH AS-START (KEY) 397 400 403 407 410

NAME PAGE

SWITCH AS-TOGGLE (ENGINE SHUTDOWN) . . . 522, 527, 535
SWITCH GP-BYPASS . . . 358
SWITCH GP-DISCONNECT–BATTERY . . . 359
SWITCH GP-LIGHT–TAIL LIGHTS . . . 360
SWITCH GP-MAGNETIC . . . 361, 362, 363, 364
SWITCH GP-MAGNETIC (24-VOLT) (START RELAY) . . . 361, 515
SWITCH GP-MAGNETIC (24-VOLT) (STARTING MOTOR) . . . 518, 532
SWITCH GP-PRESSURE . . . 366
SWITCH GP-PRESSURE–FUEL FILTER . . . 365
SWITCH GP-ROCKER . . . 367
SWITCH GP-ROTARY . . . 368
SWITCH GP-ROTARY (TURN SIGNAL, HAZARD) . . . 313, 316, 550, 554, 561, 573
SWITCH GP-WIPER–INTERMITTENT . . . 369
SWITCH-ROCKER (24-VOLT) (FLOODLIGHTS) . . . 543, 552
SWITCH-ROCKER (24-VOLT) (HEADLIGHTS) . . . 551
SWITCH-TEMPERATURE . . . 1076, 1095
SWITCH-TEMPERATURE (REFRIGERANT) . . . 1091
SWIVEL GP–CIRCLE DRIVE . . . 902

T

TANDEM & COVER GP . . . 643
TANK & FILTER GP-HYDRAULIC . . . 904
TANK & MTG GP-HYDRAULIC . . . 906
TANK GP-AIR . . . 766, 1461, 1465, 1466
TANK GP-COOLANT . . . 136, 138
TANK GP-FUEL . . . 190
TIE ROD GP (LH THREAD, RH) . . . 717
TIE ROD GP (RH THREAD, LH) . . . 717
TIE ROD GP (STEERING) . . . 780
TOOTH GP-RIPPER . . . 1440
TRANSMISSION AR . . . 645, 646
TURBOCHARGER GP . . . 156, 157

U

UNIVERSAL JOINT GP . . . 647

V

V-BELT SET (INCLUDES 3-BELTS) . . . 62
VALVE & LINKAGE GP . . . 934, 937, 940, 943, 952, 955, 958, 962, 966, 969, 972, 975
VALVE & LINKAGE GP–4-BANK, RH, LH . . . 918, 931
VALVE & LINKAGE GP–4-BANK, RH; 3-BANK, LH . . . 907, 910
VALVE & LINKAGE GP–4-BANK, RH; 5-BANK, LH . . . 912, 921, 925
VALVE & LINKAGE GP–5-BANK, RH, LH . . . 915, 928
VALVE & LINKAGE GP–RIPPER . . . 946, 949
VALVE & MTG GP-DIFF LOCK . . . 648
VALVE & MTG GP-SOLENOID . . . 649
VALVE AS-PRESSURE RELIEF . . . 1121
VALVE AS-PRESSURE RELIEF (REFRIGERANT COMPRESSOR) . . . 1115, 1118
VALVE AS-RELIEF (PRESSURE RELIEF) (AIR COMPRESSOR) . . . 31, 33
VALVE AS-SOLENOID (DIFFERENTIAL LOCK) . . . 649
VALVE GP-AIR CONTROL . . . 158
VALVE GP-BANK 3–LH . . . 978, 979
VALVE GP-BANK 4–LH . . . 981, 982, 984, 985
VALVE GP-BANK 4–RH . . . 980, 983, 986
VALVE GP-BANK 5–LH . . . 987, 988, 990, 991, 992
VALVE GP-BANK 5–RH . . . 989, 994

INDEX

NAME PAGE

VALVE GP-CHECK 884
886
1001
1003
1005
1007
1009
1011
1013
1015
1017
1019
1023
1025
VALVE GP-COMBINATION 995
998
VALVE GP-CONTROL 884
886
VALVE GP-CONTROL (AIR). 158
VALVE GP-CONTROL–ARTICULATION. 1011
VALVE GP-CONTROL–BLADE LIFT. 1005
1007
1017
VALVE GP-CONTROL–BLADE LIFT 1025
VALVE GP-CONTROL–BLADE TIP. 1019
VALVE GP-CONTROL–BULLDOZER LIFT, PLOW 1009
VALVE GP-CONTROL–CENTERSHIFT 1013
VALVE GP-CONTROL–CIRCLE DRIVE 1021
VALVE GP-CONTROL–RIPPER 1003
VALVE GP-CONTROL–SCARIFIER. 1001
VALVE GP-CONTROL–SIDESHIFT 1023
VALVE GP-CONTROL–WHEEL LEAN 1015
VALVE GP-COUNTERBALANCE 886
VALVE GP-ETHER STARTING 370
VALVE GP-PUMP CONTROL–PRESSURE, FLOW COMPENSATOR 1027
VALVE GP-PURGE 1029
VALVE GP-RELIEF 650
1001
1030
1031
1032
1033
1034
1035
1036
1037
VALVE GP-SELECTOR & PRESS CONT. 652
655
VALVE GP-SHUTOFF (MANUAL) 169
172
VALVE GP-SHUTTLE 1038
VALVE GP-SOLENOID 658
659
768
VALVE GP-SOLENOID (24-VOLT) 652
VALVE GP-SOLENOID (24-VOLT) (SPEED, RANGE, TRANSMISSION). 655
VALVE GP-SOLENOID (CENTERSHIFT LOCK) 881
VALVE GP-SOLENOID (DIFFERENTIAL LOCK) 648
VALVE GP-SOLENOID (PROPN SOL FOR CL PACK 1) 652
VALVE GP-SOLENOID (PROPN SOL FOR CL PACK 2) 652
VALVE GP-SOLENOID (PROPN SOL FOR CL PACK 3) 652
VALVE GP-SOLENOID (TRANSMISSION CONTROL). 606
VALVE GP-SOLENOID & MANIFOLD 884
886
VALVE GP-TIRE. 667
677
VALVE GP-TIRE (TIRE INFLATION) 667
676
VALVE GP-TRANSMISSION CONTROL 660
VALVE MECHANISM GP. 94
95
VOLTMETER GP 1271

W

WASHER GP-WINDOW–FRONT 1375
1377
WASHER GP-WINDOW–REAR 1379
WHEEL & TIRE AR 662
663
664
665
666
667
WHEEL & TIRE GP 668
669
670
671
672
673
WHEEL AR 673
WHEEL GP 674
675
676
677
WINDOW GP-CAB–HIGH PROFILE 1380
WIPER AR-WINDOW–HIGH PROFILE, REAR. 1381
1382
WIPER GP-WINDOW–HIGH PROFILE, FRONT 1383
1385
WIPER GP-WINDOW–HIGH PROFILE, REAR. 1386
WIPER GP-WINDOW–REAR. 1388
WIRING AS 473
WIRING GP-AIR CONDITIONER. 371
373

INDEX

NAME	PAGE	NAME	PAGE
WIRING GP-CAB	375		
	378		
	383		
	388		
WIRING GP-CAB–ACCUGRADE	391		
WIRING GP-CAB–SWITCH PANEL	393		
	395		
WIRING GP-CONSOLE	397		
	400		
	403		
	407		
	410		
WIRING GP-ENGINE	412		
WIRING GP-ETHER STARTING AID	414		
	415		
WIRING GP-FRONT	416		
	420		
	424		
	428		
	451		
	456		
WIRING GP-FRONT–CANOPY	442		
	447		
	460		
	465		
	469		
WIRING GP-FRONT–WITH CAB	433		
	438		
WIRING GP-GRADE CONTROL–ACCUGRADE	474		
	477		
	483		
	489		
	494		
	498		
	502		
	505		
WIRING GP-GRADE CONTROL–CAB, INDICATOR LAMP	473		
WIRING GP-REAR	508		
	521		
	526		
	535		
WIRING GP-REAR LIGHTING–RADIATOR	541		
WIRING GP-REAR–FUEL TANK	515		
	518		
	531		
WIRING GP-STEERING CONSOLE	542		
	546		
	550		
	554		
	558		
	561		
	564		
	567		
	570		
	573		

MEMORANDA

MACHINE ARRANGEMENT

384-3405 CERTIFICATION AR-MACHINE–CHINESE

S/N: SZS1-UP
AN ATTACHMENT

SMCS-7000 **i04936162**

NOTE	PART NUMBER	QTY	PART NAME 1 2 3 4 5 6 (PRODUCT LEVEL)	SEE PAGE
	340-1166	1	PLATE-IDENTIFICATION (SERIAL NUMBER)	
			(BELOW PIN PLATE)	
	383-6302	1	FILM-ROPS (ROPS, FOPS, READ OMM)	
			<END>	

436-7761 CHASSIS AR

S/N: SZS624-UP
PART OF 435-1521 COMMON AR

SMCS-7000 **i06904807**

NOTE	PART NUMBER	QTY	PART NAME 1 2 3 4 5 6 (PRODUCT LEVEL)	SEE PAGE
Y	*111-1719*	1	BOX GP-TOOL	1441
Y	*293-4833*	1	ENCLOSURE GP-ENGINE	690
Y	*295-2933*	1	STEP GP	723
			S/N: SZS624-10099	
Y	*293-4832*	1	TANK GP-FUEL	190
Y - SEPARATE ILLUSTRATION				
			<END>	

435-1521 COMMON AR

S/N: SZS624-UP

SMCS-7000 **i06902783**

NOTE	PART NUMBER	QTY	PART NAME 1 2 3 4 5 6 (PRODUCT LEVEL)	SEE PAGE
Y	*437-0626*	1	CAB AR	1105
			S/N: SZS624-10099	
Y	*516-7917*	1	CAB AR	1107
			S/N: SZS10100-UP	
Y	*436-7761*	1	CHASSIS AR	1
Y	*436-7621*	1	ELECTRICAL AR	232
Y	**395-0487**	1	ENGINE AR-COMPLETE	26
Y	*514-5810*	1	FILM GP	1444
Y	*434-3510*	1	FRAME AR	698
Y	*347-2428*	1	GAUGE GP-OIL LEVEL (DIPSTICK) (ENGINE)	103
Y	*435-8193*	1	HYDRAULIC AR	816
Y	*425-5590*	1	INSTALLATION AR	6
Y	*435-1544*	1	PLATE & FILM GP	1456
Y	*436-8767*	1	POWER TRAIN AR	636
Y	*335-2118*	1	RADIATOR & HYD OIL COOLER GP	130
Y	*436-8770*	1	SPECIAL AR	23
Y	**365-6500**	1	TRANSMISSION AR	646
	6V-1970	1	LITERATURE GP (STANDARD CAB)	
	5P-8500	2	KEY	
Y - SEPARATE ILLUSTRATION				
			<END>	

465-8777 DISTRIBUTION AR

S/N: SZS1-UP
PANAMA
AN ATTACHMENT

SMCS-7000 **i06264282**

NOTE	PART NUMBER	QTY	PART NAME 1 2 3 4 5 6 (PRODUCT LEVEL)	SEE PAGE
Y	*434-4115*	1	BATTERY GP	215
Y	*436-3473*	1	BLADE GP	1395
Y	*435-1559*	1	CONTROL AR-HYDRAULIC	770
Y	*437-0690*	1	COVER AS	1153
Y	*439-5724*	1	GUARD GP-BOTTOM	702
Y	*302-5429*	1	INSTALLATION AR-COMMUNICATION (PRODUCT LINK 321SR)	268
Y	*387-2851*	1	MIRROR GP-REAR VIEW	1264
Y	*462-7246*	1	OPTION AR (SOUND SUPPRESSION)	6
Y	*458-5959*	1	OPTION AR-CAB	11
Y	*424-8612*	1	OPTION AR-HYDRAULIC	16
Y	*435-1537*	1	OPTION AR-LIGHTING	17
Y	*447-6840*	1	OPTION AR-REGIONAL	18
Y	*461-0560*	1	OPTION AR-ROADING	19
Y	*458-5955*	1	OPTION AR-WORK TOOL (RIPPER)	20
Y	*461-2764*	1	OPTION AR-WORK TOOL (BLADE)	21
Y	*437-0672*	1	SEAT GP-SUSPENSION	1361
Y	*434-8087*	1	TANK GP-AIR	766

Y - SEPARATE ILLUSTRATION

<END>

368-3025 GENERAL AR

S/N: SZS1-623

SMCS-7000 **i06559045**

NOTE	PART NUMBER	QTY	PART NAME 1 2 3 4 5 6 (PRODUCT LEVEL)	SEE PAGE
Y	*310-6459*	1	AIR CLEANER GP	142
Y	*303-2033*	1	AIR DRYER GP	735
			S/N: SZS489-623	
Y	*345-7649*	1	ALTERNATOR GP-CHARGING	194
			S/N: SZS1-488	
Y	*421-4022*	1	ALTERNATOR GP-CHARGING	195
			S/N: SZS489-623	
Y	*134-1080*	1	AXLE GP-FRONT	577
Y	*298-5591*	1	BATTERY & WIRING GP	202
			S/N: SZS1-488	
Y	*421-1527*	1	BATTERY & WIRING GP	211
			S/N: SZS489-623	
Y	*320-9924*	1	BLADE GP	1394
Y	*298-3519*	1	BOX GP-BATTERY	682
Y	*111-1719*	1	BOX GP-TOOL	1441
Y	*351-0580*	1	BRAKE GP-SERVICE	748
Y	*284-5378*	1	BUMPER GP-REAR	685
Y	*303-2159*	1	CASE & FRAME GP	686
Y	*332-6415*	1	CHAIN GP-DRIVE (TANDEM)	590
			S/N: SZS1-525	
Y	*453-0259*	1	CHAIN GP-DRIVE (TANDEM)	591
			S/N: SZS526-623	
Y	*347-4645*	1	CIRCLE GP	1043
			S/N: SZS1-488	
Y	*421-5047*	1	CIRCLE GP	1047
			S/N: SZS489-623	
Y	*167-9002*	1	CONSOLE GP-OPERATOR (TRANSMISSION DIRECTION, SPEED)	1124
Y	*282-2475*	1	CONSOLE GP-OPERATOR	1125
Y	*282-2473*	1	CONTROL GP-CLUTCH	1138
Y	*303-3011*	1	CONTROL GP-DIFFERENTIAL LOCK	600
Y	*282-2472*	1	CONTROL GP-GOVERNOR	160
Y	*306-5499*	1	CONTROL GP-PARKING BRAKE	750
Y	*297-8948*	1	CONTROL GP-SERVICE BRAKE	752
Y	*7I-4718*	1	CONTROL GP-STEERING	1149
Y	*337-3357*	1	COUPLING GP-TORSIONAL	612
Y	*115-5726*	1	CYLINDER & MTG GP-ARTICULATION	773
Y	*8X-1948*	1	CYLINDER & MTG GP-BLADE LIFT	774
Y	*8X-1946*	1	CYLINDER & MTG GP-CENTERSHIFT	777
Y	*112-7463*	1	CYLINDER & MTG GP-SIDESHIFT	779
Y	*8W-2290*	1	CYLINDER & MTG GP-STEERING	780
Y	*8W-2737*	1	CYLINDER & MTG GP-WHEEL LEAN	782
Y	*348-4955*	1	DIFFERENTIAL & BEVEL GEAR GP	613
Y	*341-8349*	1	DRAWBAR GP	1054
			—OR—	
Y	*374-0614*	1	DRAWBAR GP	1056
			—OR—	
Y	*417-8161*	1	DRAWBAR GP	1060
Y	**253-4677**	1	DRIVE GP-CIRCLE	808

368-3025 **GENERAL AR (**contd.**)** **i06559045**

NOTE	PART NUMBER	QTY	PART NAME 1 2 3 4 5 6 (PRODUCT LEVEL)	SEE PAGE
			S/N: SZS1-488	
Y	**423-9923**	1	DRIVE GP-CIRCLE	812
			S/N: SZS489-623	
Y	*338-5871*	1	DRIVE GP-FAN	62
Y	*8W-4980*	1	DRIVE GP-FINAL	617
Y	*293-4833*	1	ENCLOSURE GP-ENGINE	690
Y	**364-7493**	1	ENGINE AR-COMPLETE	25
			—OR—	
Y	**395-0487**	1	ENGINE AR-COMPLETE	26
Y	*284-0824*	1	FAN GP-BLOWER (RADIATOR)	117
Y	**315-4118**	1	FILLER GP-POWER TRAIN OIL	619
Y	*309-4095*	1	FRAME GP-FRONT	699
Y	*347-2428*	1	GAUGE GP-OIL LEVEL (DIPSTICK) (ENGINE)	103
Y	*8W-5870*	1	GUARD GP-DRIVE SHAFT	703
Y	*282-2469*	1	GUARD GP-PLATFORM	704
Y	*338-9747*	1	HITCH GP-ARTICULATING	712
Y	*295-4371*	1	HORN GP-ELECTRIC	1207
Y	*265-1100*	1	LIFT GP-BLADE	1415
			S/N: SZS1-488	
Y	*383-6008*	1	LIFT GP-BLADE	1423
			S/N: SZS489-623	
Y	*284-5394*	1	LIGHTING GP-BACKUP	306
Y	*284-5362*	1	LIGHTING GP-FLOOD (RIPPER)	308
Y	*284-5376*	1	LIGHTING GP-FLOOD (FRONT)	309
Y	*311-0864*	1	LINES GP-AFTERCOOLER AIR	150
Y	*293-4829*	1	LINES GP-CENTERSHIFT LOCK	817
Y	*362-1559*	1	LINES GP-ENGINE OIL DRAIN	105
Y	*325-7130*	1	LINES GP-FUEL	169
Y	*110-2985*	1	LINES GP-HYDRAULIC (RH)	825
			—OR—	
Y	*372-3880*	1	LINES GP-HYDRAULIC (RH)	837
Y	*117-3855*	1	LINES GP-HYDRAULIC (LH)	830
			—OR—	
Y	*377-0662*	1	LINES GP-HYDRAULIC (LH)	841
Y	*7I-4610*	1	LINES GP-LUBRICATION (ARTICULATION HITCH BEARING)	626
Y	*322-2320*	1	LINES GP-PUMP	867
Y	*8X-1968*	1	LINES GP-STEERING	876
Y	*348-8157*	1	LINES GP-TRANSMISSION OIL	627
Y	*325-7448*	1	LINES GP-WATER	122
Y	*164-8462*	1	LOCK GP-CENTERSHIFT	881
Y	*310-6437*	1	MOUNTING GP-ENGINE & XMSN	80
Y	*337-0732*	1	MOUNTING GP-WHEEL	635
Y	*310-6472*	1	MUFFLER GP	153
Y	*316-5238*	1	PANEL GP-INSTRUMENT	1286
			S/N: SZS1-488	
Y	*421-1520*	1	PANEL GP-INSTRUMENT	1301
			S/N: SZS489-623	
Y	*368-3034*	1	PLATE & FILM GP	1450
Y	*8X-2379*	1	PUMP & MTG GP-STEERING	891
Y	*335-2118*	1	RADIATOR & HYD OIL COOLER GP	130
Y	*113-4254*	1	SEAT GP (VINYL)	1346

368-3025 **GENERAL AR (**contd.**)** **i06559045**

NOTE	PART NUMBER	QTY	PART NAME 1 2 3 4 5 6 (PRODUCT LEVEL)	SEE PAGE
Y	*8W-5621*	1	SHAFT GP-DRIVE (TRANSMISSION)	641
Y	*293-8638*	1	SHAFT GP-PUMP DRIVE	900
Y	*295-2933*	1	STEP GP	723
Y	*174-4546*	1	SUPPORT GP-SEAT	1365
Y	*193-1721*	1	TANDEM & COVER GP	643
Y	*214-1983*	1	TANK & MTG GP-HYDRAULIC	906
Y	*293-4830*	1	TANK GP-AIR	1461
Y	*325-7427*	1	TANK GP-COOLANT	136
Y	*293-4832*	1	TANK GP-FUEL	190
Y	**275-6535**	1	TRANSMISSION AR	645
			S/N: SZS1-488	
Y	**365-6500**	1	TRANSMISSION AR	646
			S/N: SZS489-623	
Y	*348-3301*	1	VALVE & LINKAGE GP	907
Y	*284-5346*	1	WIRING GP-CONSOLE	397
			S/N: SZS1-488	
Y	*386-5925*	1	WIRING GP-CONSOLE	403
			S/N: SZS489-623	
Y	*284-5343*	1	WIRING GP-FRONT	416
			S/N: SZS1-488	
Y	*373-6940*	1	WIRING GP-FRONT	424
			S/N: SZS489-623	
Y	*293-4828*	1	WIRING GP-REAR	508
			S/N: SZS1-488	
Y	*388-2517*	1	WIRING GP-REAR	521
			S/N: SZS489-623	
Y	*311-0802*	1	WIRING GP-REAR	515
			S/N: SZS1-488	
Y	*373-6945*	1	WIRING GP-REAR	518
			S/N: SZS489-623	
Y	*284-5348*	1	WIRING GP-REAR LIGHTING (RADIATOR)	541
Y	*284-5347*	1	WIRING GP-STEERING CONSOLE	542
			S/N: SZS1-488	
Y	*373-6938*	1	WIRING GP-STEERING CONSOLE	558
			S/N: SZS489-623	
	6V-1970	1	LITERATURE GP (STANDARD CAB)	
	5P-7958	1	SLEEVE-CABLE SPLICE	
	5P-8500	2	KEY	

Y - SEPARATE ILLUSTRATION

<END>

425-5590 INSTALLATION AR

S/N: SZS624-UP

PART OF 435-1521 COMMON AR

SMCS-7000 **i06107416**

NOTE	PART NUMBER	QTY	PART NAME 1 2 3 4 5 6 (PRODUCT LEVEL)	SEE PAGE
Y	*310-6459*	1	AIR CLEANER GP	142
Y	*421-4022*	1	ALTERNATOR GP-CHARGING	195
Y	*337-3357*	1	COUPLING GP-TORSIONAL	612
Y	*284-0824*	1	FAN GP-BLOWER (RADIATOR)	117
Y	**315-4118**	1	FILLER GP-POWER TRAIN OIL	619
Y	*311-0864*	1	LINES GP-AFTERCOOLER AIR	150
Y	*362-1559*	1	LINES GP-ENGINE OIL DRAIN	105
Y	*325-7130*	1	LINES GP-FUEL	169
Y	*348-8157*	1	LINES GP-TRANSMISSION OIL	627
Y	*325-7448*	1	LINES GP-WATER	122
Y	*425-5541*	1	MOUNTING GP-ENGINE & XMSN	82
Y	*310-6472*	1	MUFFLER GP	153
Y	*325-7427*	1	TANK GP-COOLANT	136

Y - SEPARATE ILLUSTRATION

<END>

462-7246 OPTION AR—SOUND SUPPRESSION

S/N: SZS1-UP

CHINA

PART OF 465-8777 DISTRIBUTION AR

AN ATTACHMENT

SMCS-7000 **i06024225**

NOTE	PART NUMBER	QTY	PART NAME 1 2 3 4 5 6 (PRODUCT LEVEL)	SEE PAGE
Y	*338-5871*	1	DRIVE GP-FAN	62
Y	*335-2118*	1	RADIATOR & HYD OIL COOLER GP	130

Y - SEPARATE ILLUSTRATION

<END>

339-4968 OPTION AR-CAB

S/N: SZS1-UP

AN ATTACHMENT

SMCS-7301 **i05358780**

NOTE	PART NUMBER	QTY	PART NAME 1 2 3 4 5 6 (PRODUCT LEVEL)	SEE PAGE
Y	*286-4415*	1	FAN GP-CIRCULATING (FRONT DEFROSTER)	1190
Y	*286-4416*	1	FAN GP-CIRCULATING (DEFROSTER, REAR)	1191
Y	*139-4612*	1	SCREEN GP-SUN (REAR)	1344
Y	*298-2426*	1	WIPER AR-WINDOW (HIGH PROFILE, REAR)	1381

Y - SEPARATE ILLUSTRATION

<END>

340-1191 OPTION AR-CAB

S/N: SZS1-UP
AN ATTACHMENT

SMCS-7301 **i05253377**

NOTE	PART NUMBER	QTY	PART NAME 1 2 3 4 5 6 (PRODUCT LEVEL)	SEE PAGE
Y	*286-4328*	1	CONVERTER AR-ELECTRICAL (HIGH PROFILE)	226
Y	**197-2066**	1	MIRROR GP-REAR VIEW (DUAL INTERIOR)	1259

Y - SEPARATE ILLUSTRATION

<END>

348-2557 OPTION AR-CAB–ACCUGRADE

S/N: SZS1-UP
HEAT
AN ATTACHMENT

SMCS-7301 **i05848720**

NOTE	PART NUMBER	QTY	PART NAME 1 2 3 4 5 6 (PRODUCT LEVEL)	SEE PAGE
Y	*284-5399*	1	HEATER AR-CAB	1198
Y	*320-0342*	1	ROPS AR (ENCLOSED)	1325
Y	*123-4358*	1	MIRROR GP-REAR VIEW (EXTERIOR)	1258
			–OR–	
Y	*387-2851*	1	MIRROR GP-REAR VIEW (EXTERIOR)	1264
Y	*293-4153*	1	MODULE GP-SPEEDOMETER & TACH	1272
			–OR–	
Y	*434-8047*	1	MODULE GP-SPEEDOMETER & TACH	1274
Y	*126-2747*	1	SEAT GP (VINYL)	1348
	7T-9302	2	KNOB AS-WIPER SWITCH (WIPER, WASHER)	
	014-0816	1	SETSCREW (8-32X0.5-IN)	
	112-6174	2	SWITCH GP-ROTARY (WIPER, WASHER)	
	2H-3920	1	LOCKWASHER	
	6V-8369	1	NUT (7/16-28-THD)	
	8T-8729	6	PIN-CONNECTOR (16-GA TO 18-GA)	
	8T-8737	2	PLUG-SEAL	
	102-8806	1	KIT-RECEPTACLE (8-PIN)	
			(INCLUDES RECEPTACLE AS & WEDGE)	
	139-3593	1	PANEL	

Y - SEPARATE ILLUSTRATION

<END>

348-6940 OPTION AR-CAB—ACCUGRADE

S/N: SZS1-UP
NON-ROPS
AN ATTACHMENT

SMCS-7301 **i05285579**

NOTE	PART NUMBER	QTY	PART NAME 1 2 3 4 5 6 (PRODUCT LEVEL)	SEE PAGE
Y	*320-0341*	1	CAB AR (NON-ROPS/FOPS)	1103
Y	*123-4358*	1	MIRROR GP-REAR VIEW (EXTERIOR)	1258
			—OR—	
Y	*387-2851*	1	MIRROR GP-REAR VIEW (EXTERIOR)	1264
Y	*126-2747*	1	SEAT GP (VINYL)	1348
	112-6174	1	SWITCH GP-ROTARY (WIPER, WASHER)	
	102-8806	1	KIT-RECEPTACLE (8-PIN)	
			(INCLUDES RECEPTACLE AS & WEDGE)	
	8T-8737	2	PLUG-SEAL	
	2H-3920	1	LOCKWASHER	
	6V-8369	1	NUT (7/16-28-THD)	
	8T-8729	6	PIN-CONNECTOR (16-GA TO 18-GA)	
	131-5171	1	CLIP	
	8X-7845	2	COVER	
	122-7045	6	COVER (LOUVER)	
	7T-9302	1	KNOB AS-WIPER SWITCH (WIPER, WASHER)	
	139-3593	1	PANEL	
	117-9966	2	PLUG	
	5P-5969		SEAL (1.0-M)	

Y - SEPARATE ILLUSTRATION

<END>

348-6941 OPTION AR-CAB–ACCUGRADE

S/N: SZS1-UP
WITHOUT AIR CONDITIONER AND HEATER
AN ATTACHMENT

SMCS-7301 **i06949044**

NOTE	PART NUMBER	QTY	PART NAME 1 2 3 4 5 6 (PRODUCT LEVEL)	SEE PAGE
Y	*123-4358*	1	MIRROR GP-REAR VIEW (EXTERIOR)	1258
			–OR–	
Y	*387-2851*	1	MIRROR GP-REAR VIEW (EXTERIOR)	1264
Y	*293-4153*	1	MODULE GP-SPEEDOMETER & TACH	1272
			–OR–	
Y	*434-8047*	1	MODULE GP-SPEEDOMETER & TACH	1274
Y	*320-0342*	1	ROPS AR (ENCLOSED)	1325
Y	*126-2747*	1	SEAT GP (VINYL)	1348
	112-6174	2	SWITCH GP-ROTARY (WIPER, WASHER)	
			(EACH INCLUDES)	
	102-8806	1	KIT-RECEPTACLE (8-PIN)	
			(INCLUDES RECEPTACLE AS & WEDGE)	
	8T-8737	2	PLUG-SEAL	
	2H-3920	1	LOCKWASHER	
	6V-8369	1	NUT (7/16-28-THD)	
	8T-8729	6	PIN-CONNECTOR (16-GA TO 18-GA)	
	8X-7845	2	COVER	
	122-7045	6	COVER (LOUVER)	
	7T-9302	2	KNOB AS-WIPER SWITCH (WIPER, WASHER)	
	139-3593	1	PANEL	
	117-9966	2	PLUG	
D	**5P-5969**		SEAL (1.0-M)	

D - ORDER BY THE METER
Y - SEPARATE ILLUSTRATION

<END>

348-6942 OPTION AR-CAB—ACCUGRADE

S/N: SZS1-UP
WITH AIR CONDITIONER AND HEATER
AN ATTACHMENT

SMCS-7301 **i06949046**

NOTE	PART NUMBER	QTY	PART NAME 1 2 3 4 5 6 (PRODUCT LEVEL)	SEE PAGE
Y	*300-9979*	1	AIR CONDITIONER AR	1083
Y	*320-0342*	1	ROPS AR (ENCLOSED)	1325
Y	*123-4358*	1	MIRROR GP-REAR VIEW (EXTERIOR)	1258
			—OR—	
Y	*387-2851*	1	MIRROR GP-REAR VIEW (EXTERIOR)	1264
Y	*293-4153*	1	MODULE GP-SPEEDOMETER & TACH	1272
			—OR—	
Y	*434-8047*	1	MODULE GP-SPEEDOMETER & TACH	1274
Y	*126-2747*	1	SEAT GP (VINYL)	1348
	112-6174	2	SWITCH GP-ROTARY (WIPER, WASHER)	
			(EACH INCLUDES)	
	102-8806	1	KIT-RECEPTACLE (8-PIN)	
			(INCLUDES RECEPTACLE AS & WEDGE)	
	8T-8737	2	PLUG-SEAL	
	2H-3920	1	LOCKWASHER	
	6V-8369	1	NUT (7/16-28-THD)	
	8T-8729	6	PIN-CONNECTOR (16-GA TO 18-GA)	
	8X-7845	2	COVER	
	7T-9302	2	KNOB AS-WIPER SWITCH (WIPER, WASHER)	
D	**5P-5969**		SEAL (1.0-M)	

D - ORDER BY THE METER
Y - SEPARATE ILLUSTRATION

<END>

435-1534 OPTION AR-CAB

S/N: SZS1-UP
FOR USE WITH 437-0650—PAGE: 1105, 437-0677—PAGE: 1106
CANNOT BE USED WITH 437-0660—PAGE: 1106
PART OF 461-0561, 461-0562, 462-7250 OPTION AR-CAB
AN ATTACHMENT

SMCS-7301 **i05865253**

NOTE	PART NUMBER	QTY	PART NAME 1 2 3 4 5 6 (PRODUCT LEVEL)	SEE PAGE
Y	*434-8045*	1	FAN GP-CIRCULATING (FRONT)	1192
Y	*434-8046*	1	FAN GP-CIRCULATING (REAR)	1193
Y	*139-4612*	1	SCREEN GP-SUN	1344
Y	*435-1536*	1	WIPER AR-WINDOW (REAR)	1382

Y - SEPARATE ILLUSTRATION

<END>

458-5959 OPTION AR-CAB–ROPS

S/N: SZS1-UP
CANNOT BE USED WITH 113-4254–PAGE: 1346
PART OF 465-8777 DISTRIBUTION AR
AN ATTACHMENT

SMCS-7301 **i06908283**

NOTE	PART NUMBER	QTY	PART NAME 1 2 3 4 5 6 (PRODUCT LEVEL)	SEE PAGE
Y	*437-0682*	1	AIR CONDITIONER AR	1086
			S/N: SZS1-10099	
Y	*516-7930*	1	AIR CONDITIONER AR	1087
			S/N: SZS10100-UP	
Y	*437-0677*	1	CAB AR	1106
			S/N: SZS1-10099	
Y	*516-7931*	1	CAB AR	1109
			S/N: SZS10100-UP	
Y	*425-5544*	1	COMPRESSOR GP-REFRIGERANT	1119
Y	*434-8047*	1	MODULE GP-SPEEDOMETER & TACH	1274
Y - SEPARATE ILLUSTRATION				

<END>

458-5977 OPTION AR-CAB–ROPS

S/N: SZS1-UP
CANNOT BE USED WITH 113-4254–PAGE: 1346
AN ATTACHMENT

SMCS-7301 **i06909681**

NOTE	PART NUMBER	QTY	PART NAME 1 2 3 4 5 6 (PRODUCT LEVEL)	SEE PAGE
Y	*425-5542*	1	BELT TENSIONER GP	36
Y	*437-0677*	1	CAB AR	1106
			S/N: SZS1-10099	
Y	*516-7931*	1	CAB AR	1109
			S/N: SZS10100-UP	
Y	*434-8047*	1	MODULE GP-SPEEDOMETER & TACH	1274
Y	*434-6740*	1	SUPPORT GP-SEAT	1368
			S/N: SZS1-10099	
Y	*516-7928*	1	SUPPORT GP-SEAT	1370
			S/N: SZS10100-UP	
Y - SEPARATE ILLUSTRATION				

<END>

458-5984 OPTION AR-CAB—NON-ROPS

S/N: SZS1-UP
CANNOT BE USED WITH 113-4254—PAGE: 1346
AN ATTACHMENT

SMCS-7301 **i06910382**

NOTE	PART NUMBER	QTY	PART NAME 1 2 3 4 5 6 (PRODUCT LEVEL)	SEE PAGE
Y	*425-5542*	1	BELT TENSIONER GP	36
Y	*437-0650*	1	CAB AR	1105
			S/N: SZS1-10099	
Y	*516-7920*	1	CAB AR	1108
			S/N: SZS10100-UP	
Y	*434-6741*	1	COVER AS	1150
Y	*434-6740*	1	SUPPORT GP-SEAT	1368
			S/N: SZS1-10099	
Y	*516-7928*	1	SUPPORT GP-SEAT	1370
			S/N: SZS10100-UP	

Y - SEPARATE ILLUSTRATION

<END>

458-5988 OPTION AR-CAB—CANOPY, ROPS

S/N: SZS1-UP
FOR USE WITH 113-4254—PAGE: 1346
AN ATTACHMENT

SMCS-7301 **i06903196**

NOTE	PART NUMBER	QTY	PART NAME 1 2 3 4 5 6 (PRODUCT LEVEL)	SEE PAGE
Y	*425-5542*	1	BELT TENSIONER GP	36
Y	*437-0660*	1	CAB AR (CANOPY)	1106
			S/N: SZS1-10099	
Y	*516-7921*	1	CAB AR (CANOPY)	1109
			S/N: SZS10100-UP	
Y	*434-6741*	1	COVER AS	1150
Y	*174-4546*	1	SUPPORT GP-SEAT	1365
			S/N: SZS1-10099	
Y	*516-7924*	1	SUPPORT GP-SEAT	1369
			S/N: SZS10100-UP	

Y - SEPARATE ILLUSTRATION

<END>

461-0561 OPTION AR-CAB

S/N: SZS1-UP
CANNOT BE USED WITH 458-5988—PAGE: 12
AN ATTACHMENT

SMCS-7301 **i06911110**

NOTE	PART NUMBER	QTY	PART NAME 1 2 3 4 5 6 (PRODUCT LEVEL)	SEE PAGE
Y	*434-6743*	1	COVER GP-ACCESS	688
			S/N: SZS1-10099	
Y	*518-3381*	1	COVER GP-ACCESS	689
			S/N: SZS10100-UP	
Y	**8X-2795**	1	MIRROR GP-REAR VIEW	1270
Y	*435-1534*	1	OPTION AR-CAB	10

Y - SEPARATE ILLUSTRATION

<END>

461-0562 OPTION AR-CAB

S/N: SZS1-UP
CANNOT BE USED WITH 458-5988—PAGE: 12
AN ATTACHMENT

SMCS-7301 **i06907399**

NOTE	PART NUMBER	QTY	PART NAME 1 2 3 4 5 6 (PRODUCT LEVEL)	SEE PAGE
Y	*434-8346*	1	CONVERTER AR-ELECTRICAL	226
			S/N: SZS1-10099	
Y	*520-3154*	1	CONVERTER AR-ELECTRICAL	227
			S/N: SZS10100-UP	
Y	*437-0673*	1	MIRROR GP-REAR VIEW	1267
Y	*435-1534*	1	OPTION AR-CAB	10

Y - SEPARATE ILLUSTRATION

<END>

462-7250 OPTION AR-CAB

S/N: SZS1-UP
AN ATTACHMENT

SMCS-7301 **i06863597**

NOTE	PART NUMBER	QTY	PART NAME 1 2 3 4 5 6 (PRODUCT LEVEL)	SEE PAGE
Y	**8X-2795**	1	MIRROR GP-REAR VIEW	1270
Y	*435-1534*	1	OPTION AR-CAB	10

Y - SEPARATE ILLUSTRATION

<END>

464-8591 OPTION AR-CAB

S/N: SZS1-UP

AN ATTACHMENT

SMCS-7301 **i06908859**

NOTE	PART NUMBER	QTY	PART NAME 1 2 3 4 5 6 (PRODUCT LEVEL)	SEE PAGE
Y	*425-5542*	1	BELT TENSIONER GP	36
Y	*437-0660*	1	CAB AR	1106
			S/N: SZS1-10099	
Y	*516-7921*	1	CAB AR	1109
			S/N: SZS10100-UP	
Y	*434-8047*	1	MODULE GP-SPEEDOMETER & TACH	1274
Y	*174-4546*	1	SUPPORT GP-SEAT	1365
			S/N: SZS1-10099	
Y	*516-7924*	1	SUPPORT GP-SEAT	1369
			S/N: SZS10100-UP	

Y - SEPARATE ILLUSTRATION

<END>

464-8592 OPTION AR-CAB

S/N: SZS1-UP

AN ATTACHMENT

SMCS-7301 **i06907249**

NOTE	PART NUMBER	QTY	PART NAME 1 2 3 4 5 6 (PRODUCT LEVEL)	SEE PAGE
Y	*425-5542*	1	BELT TENSIONER GP	36
Y	*437-0650*	1	CAB AR	1105
			S/N: SZS1-10099	
Y	*516-7920*	1	CAB AR	1108
			S/N: SZS10100-UP	
Y	*434-8047*	1	MODULE GP-SPEEDOMETER & TACH	1274
Y	*434-6740*	1	SUPPORT GP-SEAT	1368
			S/N: SZS1-10099	
Y	*516-7928*	1	SUPPORT GP-SEAT	1370
			S/N: SZS10100-UP	

Y - SEPARATE ILLUSTRATION

<END>

348-6943 OPTION AR-COLD WEATHER

S/N: SZS1-UP

AN ATTACHMENT

SMCS-7000 **i03886471**

NOTE	PART NUMBER	QTY	PART NAME 1 2 3 4 5 6 (PRODUCT LEVEL)	SEE PAGE
Y	*304-9957*	1	BATTERY & WIRING GP (HEAVY-DUTY)	210
Y	*311-2771*	1	STARTING AID GP-ETHER	353
Y	*311-0801*	1	WIRING GP-ETHER STARTING AID	414

Y - SEPARATE ILLUSTRATION

<END>

435-1535 OPTION AR-COLD WEATHER

S/N: SZS1-UP
AN ATTACHMENT

SMCS-7000 **i05884764**

NOTE	PART NUMBER	QTY	PART NAME 1 2 3 4 5 6 (PRODUCT LEVEL)	SEE PAGE
Y	*434-4117*	1	BATTERY & BOX GP-HEAVY-DUTY	197
Y	*311-2771*	1	STARTING AID GP-ETHER	353
Y	*434-8054*	1	WIRING GP-ETHER STARTING AID	415

Y - SEPARATE ILLUSTRATION

<END>

394-4973 OPTION AR-GRADE CONTROL—ACCUGRADE

S/N: SZS1-UP
Y-FRAME
FOR USE WITH 394-4972—PAGE: 1432
AN ATTACHMENT

SMCS-7000 **i05358781**

NOTE	PART NUMBER	QTY	PART NAME 1 2 3 4 5 6 (PRODUCT LEVEL)	SEE PAGE
Y	*394-0862*	1	GRADE CONTROL AR (ACCUGRADE)	244
Y	*322-2322*	1	LINES GP-PUMP	870

Y - SEPARATE ILLUSTRATION

<END>

461-2769 OPTION AR-GRADE CONTROL—ACCUGRADE

S/N: SZS1-UP
FOR USE WITH 434-6591—PAGE: 958
CANNOT BE USED WITH 458-5941—PAGE: 16, 460-7649—PAGE: 17
AN ATTACHMENT

SMCS-7000 **i05865012**

NOTE	PART NUMBER	QTY	PART NAME 1 2 3 4 5 6 (PRODUCT LEVEL)	SEE PAGE
Y	*435-1551*	1	CIRCLE GP	1051
Y	*435-1548*	1	GRADE CONTROL AR	248
Y	*435-8241*	1	PUMP & LINES AR	889

Y - SEPARATE ILLUSTRATION

<END>

461-2792 OPTION AR-GRADE CONTROL—ACCUGRADE

S/N: SZS1-UP
FOR USE WITH 460-7649—PAGE: 17, 434-6591—PAGE: 958
CANNOT BE USED WITH 458-5941—PAGE: 16
AN ATTACHMENT

SMCS-7000 **i05865088**

NOTE	PART NUMBER	QTY	PART NAME 1 2 3 4 5 6 (PRODUCT LEVEL)	SEE PAGE
Y	*435-1551*	1	CIRCLE GP	1051
Y	*435-1526*	1	GRADE CONTROL AR	248
Y	*435-8241*	1	PUMP & LINES AR	889

Y - SEPARATE ILLUSTRATION

<END>

348-6937 OPTION AR-GUARD–FRONT BLADE

S/N: SZS1-UP
AN ATTACHMENT

SMCS-7000 **i03855903**

NOTE	PART NUMBER	QTY	PART NAME 1 2 3 4 5 6 (PRODUCT LEVEL)	SEE PAGE
Y	*347-8846*	1	BLADE GP-BULLDOZER (FRONT)	1396
Y	*334-5760*	1	GUARD GP-BOTTOM	701
Y	*114-0025*	1	LINES GP-HYDRAULIC (BULLDOZER LIFT, PLOW, LH)	829
Y	*279-8138*	1	LINES GP-HYDRAULIC (BULLDOZER) (BLADE, FRONT)	833

Y - SEPARATE ILLUSTRATION

<END>

424-8612 OPTION AR-HYDRAULIC

S/N: SZS1-UP
FOR USE WITH 435-1558–PAGE: 769, 435-1559–PAGE: 770
CANNOT BE USED WITH 458-5941–PAGE: 16, 460-7649–PAGE: 17
PART OF 465-8777 DISTRIBUTION AR
AN ATTACHMENT

SMCS-7000 **i05871737**

NOTE	PART NUMBER	QTY	PART NAME 1 2 3 4 5 6 (PRODUCT LEVEL)	SEE PAGE
Y	*435-1511*	1	DRAWBAR GP	1063
Y	*434-8089*	1	LINES GP-HYDRAULIC	854

Y - SEPARATE ILLUSTRATION

<END>

458-5941 OPTION AR-HYDRAULIC

S/N: SZS1-UP
FOR USE WITH 434-6584–PAGE: 940, 434-6589–PAGE: 952, 434-6593–PAGE: 966
CANNOT BE USED WITH 458-5980–PAGE: 16, 424-8612–PAGE: 16
AN ATTACHMENT

SMCS-7000 **i05870627**

NOTE	PART NUMBER	QTY	PART NAME 1 2 3 4 5 6 (PRODUCT LEVEL)	SEE PAGE
Y	*434-8085*	1	LINES GP-HYDRAULIC	848
Y	*435-1515*	1	SCARIFIER AR	1433

Y - SEPARATE ILLUSTRATION

<END>

458-5980 OPTION AR-HYDRAULIC

S/N: SZS1-UP
FOR USE WITH 348-3301–PAGE: 907, 435-1558–PAGE: 769, 435-1559–PAGE: 770, 435-1561–PAGE: 770
CANNOT BE USED WITH 458-5941–PAGE: 16, 460-7649–PAGE: 17
AN ATTACHMENT

SMCS-7000 **i05871932**

NOTE	PART NUMBER	QTY	PART NAME 1 2 3 4 5 6 (PRODUCT LEVEL)	SEE PAGE
Y	*435-1511*	1	DRAWBAR GP	1063
Y	*434-8084*	1	LINES GP-HYDRAULIC	845

Y - SEPARATE ILLUSTRATION

<END>

460-7649 OPTION AR-HYDRAULIC

S/N: SZS1-UP
FOR USE WITH 434-6589—PAGE: 952, 434-6591—PAGE: 958, 434-6593—PAGE: 966
CANNOT BE USED WITH 458-5980—PAGE: 16, 424-8612—PAGE: 16
AN ATTACHMENT

SMCS-7000 **i05870643**

NOTE	PART NUMBER	QTY	PART NAME 1 2 3 4 5 6 (PRODUCT LEVEL)	SEE PAGE
Y	*434-8088*	1	LINES GP-HYDRAULIC	851
Y	*435-1515*	1	SCARIFIER AR	1433

Y - SEPARATE ILLUSTRATION

<END>

435-1537 OPTION AR-LIGHTING

S/N: SZS1-UP
PART OF 465-8777 DISTRIBUTION AR
AN ATTACHMENT

SMCS-7000 **i05883671**

NOTE	PART NUMBER	QTY	PART NAME 1 2 3 4 5 6 (PRODUCT LEVEL)	SEE PAGE
Y	*434-6744*	1	COVER AS	1152
Y	*434-8339*	1	LIGHTING AR-ROADING	305

Y - SEPARATE ILLUSTRATION

<END>

349-2486 OPTION AR-REGIONAL—ACCUGRADE

S/N: SZS1-UP
AN ATTACHMENT

SMCS-7000 **i05076983**

NOTE	PART NUMBER	QTY	PART NAME 1 2 3 4 5 6 (PRODUCT LEVEL)	SEE PAGE
Y	*336-4249*	1	GRADE CONTROL AR (ACCUGRADE)	234
Y	*322-2322*	1	LINES GP-PUMP	870

Y - SEPARATE ILLUSTRATION

<END>

349-2487 OPTION AR-REGIONAL—ACCUGRADE

S/N: SZS1-UP
AN ATTACHMENT

SMCS-7000 **i05076984**

NOTE	PART NUMBER	QTY	PART NAME 1 2 3 4 5 6 (PRODUCT LEVEL)	SEE PAGE
Y	*337-3100*	1	GRADE CONTROL AR (ACCUGRADE)	240
Y	*301-2237*	1	LINES GP-PUMP	866

Y - SEPARATE ILLUSTRATION

<END>

447-6839 OPTION AR-REGIONAL

S/N: SZS1-UP
CANOPY
FOR USE WITH 437-0660—PAGE: 1106
AN ATTACHMENT

SMCS-7000 **i06907543**

NOTE	PART NUMBER	QTY	PART NAME 1 2 3 4 5 6 (PRODUCT LEVEL)	SEE PAGE
Y	*421-1520*	1	PANEL GP-INSTRUMENT	1301
			S/N: SZS1-10099	
Y	*518-6847*	1	PANEL GP-INSTRUMENT	1312
			S/N: SZS10100-UP	
Y	*434-4109*	1	WIRING GP-FRONT (CANOPY)	442
Y	*434-4114*	1	WIRING GP-STEERING CONSOLE	564
			S/N: SZS1-10099	
Y	*518-6846*	1	WIRING GP-STEERING CONSOLE	570
			S/N: SZS10100-UP	

Y - SEPARATE ILLUSTRATION

<END>

447-6840 OPTION AR-REGIONAL

S/N: SZS1-UP
WITH CAB
FOR USE WITH 437-0677—PAGE: 1106, 437-0650—PAGE: 1105
CANNOT BE USED WITH 437-0660—PAGE: 1106
PART OF 465-8777 DISTRIBUTION AR
AN ATTACHMENT

SMCS-7000 **i06908192**

NOTE	PART NUMBER	QTY	PART NAME 1 2 3 4 5 6 (PRODUCT LEVEL)	SEE PAGE
Y	*421-1521*	1	PANEL GP-INSTRUMENT	1303
			S/N: SZS1-10099	
Y	*518-6848*	1	PANEL GP-INSTRUMENT	1315
			S/N: SZS10100-UP	
Y	*434-4108*	1	WIRING GP-FRONT (WITH CAB)	433
Y	*434-4114*	1	WIRING GP-STEERING CONSOLE	564
			S/N: SZS1-10099	
Y	*518-6846*	1	WIRING GP-STEERING CONSOLE	570
			S/N: SZS10100-UP	

Y - SEPARATE ILLUSTRATION

<END>

461-0560 OPTION AR-ROADING

S/N: SZS1-UP
CANNOT BE USED WITH 458-5988—PAGE: 12
PART OF 465-8777 DISTRIBUTION AR
AN ATTACHMENT

SMCS-7000 **i06908107**

NOTE	PART NUMBER	QTY	PART NAME 1 2 3 4 5 6 (PRODUCT LEVEL)	SEE PAGE
Y	*434-6742*	1	COVER AS	1151
Y	*434-6743*	1	COVER GP-ACCESS	688
			S/N: SZS1-10099	
Y	*518-3381*	1	COVER GP-ACCESS	689
			S/N: SZS10100-UP	
Y	**8X-2795**	1	MIRROR GP-REAR VIEW	1270

Y - SEPARATE ILLUSTRATION

<END>

462-7244 OPTION AR-ROADING

S/N: SZS1-UP
AN ATTACHMENT

SMCS-7000 **i06865138**

NOTE	PART NUMBER	QTY	PART NAME 1 2 3 4 5 6 (PRODUCT LEVEL)	SEE PAGE
Y	*434-6742*	1	COVER AS	1151
Y	**8X-2795**	1	MIRROR GP-REAR VIEW	1270

Y - SEPARATE ILLUSTRATION

<END>

339-4978 OPTION AR-WORK TOOL—BLADE

S/N: SZS1-UP
AN ATTACHMENT

SMCS-6700, 7000 **i05069234**

NOTE	PART NUMBER	QTY	PART NAME 1 2 3 4 5 6 (PRODUCT LEVEL)	SEE PAGE
Y	*320-7431*	1	BLADE GP (14-FT)	1393

Y - SEPARATE ILLUSTRATION

<END>

348-6936 OPTION AR-WORK TOOL—RIPPER

S/N: SZS1-UP
PUSH PLATE
AN ATTACHMENT

SMCS-6700, 7000 **i06561539**

NOTE	PART NUMBER	QTY	PART NAME 1 2 3 4 5 6 (PRODUCT LEVEL)	SEE PAGE
Y	*334-5760*	1	GUARD GP-BOTTOM	701
Y	*336-1559*	1	PLATE GP-PUSH	720
Y	*301-8206*	1	RIPPER AR	1429

Y - SEPARATE ILLUSTRATION

<END>

348-6939 OPTION AR-WORK TOOL—BLADE TIP

S/N: SZS1-UP
FOR USE WITH 394-4972—PAGE: 1432
AN ATTACHMENT

SMCS-6700, 7000 **i03798889**

NOTE	PART NUMBER	QTY	PART NAME 1 2 3 4 5 6 (PRODUCT LEVEL)	SEE PAGE
Y	*329-3826*	1	BLADE & TIP AR-POWER	1392
Y - SEPARATE ILLUSTRATION				

<END>

424-8613 OPTION AR-WORK TOOL

S/N: SZS1-UP
AN ATTACHMENT

SMCS-6700, 7000 **i05865297**

NOTE	PART NUMBER	QTY	PART NAME 1 2 3 4 5 6 (PRODUCT LEVEL)	SEE PAGE
Y	*421-5047*	1	CIRCLE GP	1047
Y	*435-1538*	1	MOUNTING GP (WITHOUT GRADE CONTROL)	719
Y	*435-8242*	1	PUMP & LINES AR	889
Y - SEPARATE ILLUSTRATION				

<END>

458-5943 OPTION AR-WORK TOOL—BLADE

S/N: SZS1-UP
FOR USE WITH 434-6593—PAGE: 966, 435-1558—PAGE: 769
CANNOT BE USED WITH 458-5955—PAGE: 20
AN ATTACHMENT

SMCS-6700, 7000 **i05864847**

NOTE	PART NUMBER	QTY	PART NAME 1 2 3 4 5 6 (PRODUCT LEVEL)	SEE PAGE
Y	*435-1519*	1	BLADE AR	1392
Y	*435-1511*	1	DRAWBAR GP	1063
Y	*434-8089*	1	LINES GP-HYDRAULIC	854
Y - SEPARATE ILLUSTRATION				

<END>

458-5955 OPTION AR-WORK TOOL—RIPPER

S/N: SZS1-UP
FOR USE WITH 435-1558—PAGE: 769, 435-1559—PAGE: 770, 435-1561—PAGE: 770
CANNOT BE USED WITH 458-5943—PAGE: 20
PART OF 465-8777 DISTRIBUTION AR
AN ATTACHMENT

SMCS-6700, 7000 **i05871327**

NOTE	PART NUMBER	QTY	PART NAME 1 2 3 4 5 6 (PRODUCT LEVEL)	SEE PAGE
Y	*336-1559*	1	PLATE GP-PUSH	720
Y	*439-9104*	1	RIPPER AR	1430
Y - SEPARATE ILLUSTRATION				

<END>

461-2764 OPTION AR-WORK TOOL

S/N: SZS1-UP
PART OF 465-8777 DISTRIBUTION AR
AN ATTACHMENT

SMCS-6700, 7000 **i05864951**

NOTE	PART NUMBER	QTY	PART NAME 1 2 3 4 5 6 (PRODUCT LEVEL)	SEE PAGE
Y	*435-1513*	1	CIRCLE GP	1051
Y	*435-1538*	1	MOUNTING GP (WITHOUT GRADE CONTROL)	719
Y	*435-8242*	1	PUMP & LINES AR	889

Y - SEPARATE ILLUSTRATION

<END>

358-9496 ROADING AR

S/N: SZS1-UP
WITH CANOPY
CANNOT BE USED WITH 320-0342—PAGE: 1325, 320-0341—PAGE: 1103, 282-2469—PAGE: 704, 294-8546—PAGE: 305
AN ATTACHMENT

SMCS-7000 **i06539663**

NOTE	PART NUMBER	QTY	PART NAME 1 2 3 4 5 6 (PRODUCT LEVEL)	SEE PAGE
Y	*334-3348*	1	LIGHTING GP-REGISTRATION PLATE	311
Y	*359-1046*	1	LIGHTING GP-SIGNAL (TURN)	320
Y	*293-4153*	1	MODULE GP-SPEEDOMETER & TACH	1272
			—OR—	
Y	*434-8047*	1	MODULE GP-SPEEDOMETER & TACH	1274
Y	*334-3346*	1	PANEL GP-INSTRUMENT (OPEN)	1290
			—OR—	
Y	*450-7136*	1	PANEL GP-INSTRUMENT (OPEN)	1309
Y	*332-1618*	1	REFLECTOR GP	722
Y	*334-3341*	1	WIRING GP-FRONT	420
			—OR—	
Y	*384-7614*	1	WIRING GP-FRONT	428
Y	*334-3344*	1	WIRING GP-STEERING CONSOLE	550
			—OR—	
Y	*384-7616*	1	WIRING GP-STEERING CONSOLE	561

Y - SEPARATE ILLUSTRATION

<END>

359-1519 ROADING AR

S/N: SZS1-UP
WITHOUT CAB OR CANOPY
CANNOT BE USED WITH 358-9496—PAGE: 21, 359-1520—PAGE: 22, 320-0342—PAGE: 1325, 320-0341—PAGE: 1103, 284-5400—PAGE: 1324, 294-8546—PAGE: 305
AN ATTACHMENT

SMCS-7000 **i06034250**

NOTE	PART NUMBER	QTY	PART NAME 1 2 3 4 5 6 (PRODUCT LEVEL)	SEE PAGE
Y	*334-3348*	1	LIGHTING GP-REGISTRATION PLATE	311
Y	*359-1046*	1	LIGHTING GP-SIGNAL (TURN)	320
Y	*332-8657*	1	MIRROR GP-REAR VIEW (DUAL, INTERIOR)	1260
Y	*293-4153*	1	MODULE GP-SPEEDOMETER & TACH	1272
			—OR—	
Y	*434-8047*	1	MODULE GP-SPEEDOMETER & TACH	1274
Y	*334-3346*	1	PANEL GP-INSTRUMENT (OPEN)	1290
Y	*332-1618*	1	REFLECTOR GP	722
Y	*334-3341*	1	WIRING GP-FRONT	420
Y	*334-3344*	1	WIRING GP-STEERING CONSOLE	550

Y - SEPARATE ILLUSTRATION

<END>

359-1520 ROADING AR—INDIA

S/N: SZS1-UP
WITH CAB
AN ATTACHMENT

SMCS-7000 **i06539682**

NOTE	PART NUMBER	QTY	PART NAME 1 2 3 4 5 6 (PRODUCT LEVEL)	SEE PAGE
Y	*334-3348*	1	LIGHTING GP-REGISTRATION PLATE	311
Y	*359-1046*	1	LIGHTING GP-SIGNAL (TURN)	320
Y	*293-4153*	1	MODULE GP-SPEEDOMETER & TACH	1272
			—OR—	
Y	*434-8047*	1	MODULE GP-SPEEDOMETER & TACH	1274
Y	*335-6989*	1	PANEL GP-INSTRUMENT (ENCLOSED)	1295
			—OR—	
Y	*450-7134*	1	PANEL GP-INSTRUMENT (ENCLOSED)	1306
Y	*332-1618*	1	REFLECTOR GP	722
Y	*334-3341*	1	WIRING GP-FRONT	420
			—OR—	
Y	*384-7614*	1	WIRING GP-FRONT	428
Y	*334-3344*	1	WIRING GP-STEERING CONSOLE	550
			—OR—	
Y	*384-7616*	1	WIRING GP-STEERING CONSOLE	561

Y - SEPARATE ILLUSTRATION

<END>

458-5990 ROADING AR

S/N: SZS1-UP
AN ATTACHMENT

SMCS-7000 **i06014939**

NOTE	PART NUMBER	QTY	PART NAME 1 2 3 4 5 6 (PRODUCT LEVEL)	SEE PAGE
Y	*434-8339*	1	LIGHTING AR-ROADING	305
Y	*434-8039*	1	LIGHTING GP-REGISTRATION PLATE	312

Y - SEPARATE ILLUSTRATION

<END>

460-6436 ROADING AR

S/N: SZS1-UP
AN ATTACHMENT

SMCS-7000 **i05944227**

NOTE	PART NUMBER	QTY	PART NAME 1 2 3 4 5 6 (PRODUCT LEVEL)	SEE PAGE
Y	*434-8039*	1	LIGHTING GP-REGISTRATION PLATE	312
Y	*436-7624*	1	LIGHTING GP-SIGNAL (TURN SIGNAL)	322
Y	*332-1618*	1	REFLECTOR GP	722

Y - SEPARATE ILLUSTRATION

<END>

462-7252 ROADING AR

S/N: SZS1-UP
FOR USE WITH 461-2964—PAGE: 1114
AN ATTACHMENT

SMCS-7000 **i06190864**

NOTE	PART NUMBER	QTY	PART NAME 1 2 3 4 5 6 (PRODUCT LEVEL)	SEE PAGE
Y	*434-6744*	1	COVER AS	1152
Y	*434-8039*	1	LIGHTING GP-REGISTRATION PLATE	312
Y	*436-7624*	1	LIGHTING GP-SIGNAL (TURN SIGNAL)	322
Y	*332-1618*	1	REFLECTOR GP	722

Y - SEPARATE ILLUSTRATION

<END>

436-8770 SPECIAL AR

S/N: SZS624-UP
PART OF 435-1521 COMMON AR

SMCS-7000 **i06197556**

NOTE	PART NUMBER	QTY	PART NAME 1 2 3 4 5 6 (PRODUCT LEVEL)	SEE PAGE
Y	**423-9923**	1	DRIVE GP-CIRCLE	812
Y	**444-5323**	1	LIFT GP-BLADE	1423

Y - SEPARATE ILLUSTRATION

<END>

ENGINE ARRANGEMENT

397-1172 ENGINE AR

S/N: TX71-UP; KHX1-99999

PART OF 395-0487 ENGINE AR-COMPLETE

SMCS-1000 **i05353112**

NOTE	PART NUMBER	QTY	PART NAME 1 2 3 4 5 6 (PRODUCT LEVEL)	SEE PAGE
Y	*387-8505*	1	ENGINE AR-CORE	28
Y	*415-3517*	1	PLATE & FILM GP	1454
	365-7756	1	ELECTRONICS GP	

Y - SEPARATE ILLUSTRATION

<END>

364-7493 ENGINE AR-COMPLETE

S/N: KHX29829-UP
FRONT EXHAUST TURBOCHARGER, REAR SUMP
PART OF 368-3025 GENERAL AR

SMCS-1000 **i04506229**

NOTE	PART NUMBER	QTY	PART NAME 1 2 3 4 5 6 (PRODUCT LEVEL)	SEE PAGE
Y	*360-2196*	1	AIR COMPRESSOR GP	31
Y	*222-5946*	1	BREATHER GP (CRANKCASE) (CRANKCASE)	97
Y	*4W-3462*	1	CARRIER GP-SEAL	39
Y	**246-9345**	1	CONTROL & MTG GP-ENGINE ELEK	219
Y	*153-1794*	1	COVER GP-AIR INLET	145
Y	*229-8841*	1	COVER GP-CYLINDER BLOCK	40
Y	*307-1735*	1	COVER GP-VALVE MECHANISM	41
Y	*326-9045*	1	DAMPER & PULLEY GP	60
Y	*313-4384*	1	DRIVE GP-ACCESSORY	61
Y	*322-0245*	1	ELBOW GP-AIR INLET	148
Y	*365-3500*	1	ENGINE AR-CORE	27
Y	*258-8723*	1	FASTENER GP-CYLINDER HEAD	65
Y	*322-0246*	1	FASTENER GP-ENGINE	66
Y	*116-4556*	1	FASTENER GP-FRONT HOUSING	67
Y	*340-3745*	1	FILLER GP-ENGINE OIL	98
Y	*323-8936*	1	FILTER GP-ENGINE OIL	100
Y	*275-8387*	1	FLYWHEEL GP	68
Y	*220-1194*	1	FUMES DISPOSAL GP	102
Y	*197-5210*	1	HOUSING GP-FLYWHEEL	71
Y	*237-9822*	1	LIFTING GP-ENGINE	78
Y	*253-2589*	1	LINES GP-ENGINE OIL	104
Y	*313-3967*	1	LINES GP-FUEL	168
Y	*187-6279*	1	LINES GP-TURBOCHARGER OIL	108
Y	*206-4228*	1	LINES GP-WATER (ENGINE)	120
			S/N: KHX29829-35843	
Y	*370-5761*	1	LINES GP-WATER	124
			S/N: KHX35844-UP	
Y	*227-5926*	1	MANIFOLD GP-ENGINE OIL	110
Y	*183-6845*	1	MANIFOLD GP-EXHAUST (DRY)	152
Y	*311-3542*	1	MOUNTING GP-ENGINE	79
Y	*358-7822*	1	PAN GP-OIL	84
Y	*235-8200*	1	PLUG GP-CONNECTOR (ENGINE HARNESS, PROT COVER)	331
Y	*135-2141*	1	PLUG GP-CYLINDER BLOCK (ENGINE OIL)	88
Y	*159-0303*	1	PLUG GP-CYLINDER BLOCK (COOLANT CONDITIONER)	89
Y	*162-8068*	1	PLUG GP-ENGINE	90
Y	*129-1173*	1	PUMP GP-WATER	127
Y	*7E-7590*	1	SEAL GP-CRANKSHAFT	93
Y	*330-6038*	1	SENSOR GP-ENGINE	334
Y	*111-4275*	1	STARTING MOTOR GP-ELECTRIC (COLD WEATHER)	355
Y	*330-6022*	1	WIRING GP-ENGINE	412
			PLEASE USE THE GASKET KIT LINK IN SIS OR CONTACT YOUR LOCAL DEALER FOR THE LATEST GASKET KIT INFORMATION	

Y - SEPARATE ILLUSTRATION

<END>

395-0487 ENGINE AR-COMPLETE

S/N: TX71-UP; KHX1-99999

PART OF 435-1521 COMMON AR, 368-3025 GENERAL AR

SMCS-1000 **i06937601**

NOTE	PART NUMBER	QTY	PART NAME 1 2 3 4 5 6 (PRODUCT LEVEL)	SEE PAGE
Y	*360-2196*	1	AIR COMPRESSOR GP	31
Y	*222-5946*	1	BREATHER GP (CRANKCASE)	97
Y	*4W-3462*	1	CARRIER GP-SEAL	39
Y	**246-9345**	1	CONTROL & MTG GP-ENGINE ELEK	219
Y	*117-3643*	1	COOLER GP-ENGINE OIL	116
Y	*153-1794*	1	COVER GP-AIR INLET	145
			S/N: KHX1-54223	
Y	*440-1605*	1	COVER GP-AIR INLET	146
			S/N: KHX54224-99999	
Y	*229-8841*	1	COVER GP-CYLINDER BLOCK	40
Y	*307-1735*	1	COVER GP-VALVE MECHANISM	41
Y	*326-9045*	1	DAMPER & PULLEY GP	60
Y	*313-4384*	1	DRIVE GP-ACCESSORY	61
Y	*322-0245*	1	ELBOW GP-AIR INLET	148
			S/N: KHX1-54223	
Y	*246-2931*	1	ELBOW GP-AIR INLET	147
			S/N: KHX54224-99999	
Y	*397-1172*	1	ENGINE AR	24
Y	*258-8723*	1	FASTENER GP-CYLINDER HEAD	65
Y	*322-0246*	1	FASTENER GP-ENGINE	66
Y	*116-4556*	1	FASTENER GP-FRONT HOUSING	67
Y	*340-3745*	1	FILLER GP-ENGINE OIL	98
Y	*323-8936*	1	FILTER GP-ENGINE OIL	100
Y	*275-8387*	1	FLYWHEEL GP	68
Y	*220-1194*	1	FUMES DISPOSAL GP	102
Y	*197-5210*	1	HOUSING GP-FLYWHEEL	71
Y	*165-4446*	1	HOUSING GP-FRONT	72
Y	*237-9822*	1	LIFTING GP-ENGINE	78
Y	*253-2589*	1	LINES GP-ENGINE OIL	104
Y	*313-3967*	1	LINES GP-FUEL	168
Y	*187-6279*	1	LINES GP-TURBOCHARGER OIL	108
Y	*370-5761*	1	LINES GP-WATER	124
Y	*227-5926*	1	MANIFOLD GP-ENGINE OIL	110
Y	*183-6845*	1	MANIFOLD GP-EXHAUST (DRY)	152
Y	*311-3542*	1	MOUNTING GP-ENGINE	79
Y	*358-7822*	1	PAN GP-OIL	84
			—OR—	
Y	*514-6534*	1	PAN GP-OIL	85
Y	*235-8200*	1	PLUG GP-CONNECTOR (ENGINE HARNESS, PROT COVER)	331
Y	*135-2141*	1	PLUG GP-CYLINDER BLOCK (ENGINE OIL)	88
Y	*159-0303*	1	PLUG GP-CYLINDER BLOCK (COOLANT CONDITIONER)	89
Y	*393-3590*	1	PROTECTION GP-WIRING	332
Y	*7E-7590*	1	SEAL GP-CRANKSHAFT	93
Y	*111-4275*	1	STARTING MOTOR GP-ELECTRIC (COLD WEATHER)	355
Y	*372-3738*	1	TURBOCHARGER GP	157
Y	*330-6022*	1	WIRING GP-ENGINE	412

395-0487 **ENGINE AR-COMPLETE (**contd.**)** **i06937601**

NOTE	PART NUMBER	QTY	PART NAME 1 2 3 4 5 6 (PRODUCT LEVEL)	SEE PAGE
Y - SEPARATE ILLUSTRATION				

<END>

365-3500 ENGINE AR-CORE

S/N: KHX29829-UP

PART OF 364-7493 ENGINE AR-COMPLETE

SMCS-1000 **i04604649**

NOTE	PART NUMBER	QTY	PART NAME 1 2 3 4 5 6 (PRODUCT LEVEL)	SEE PAGE
Y	*212-4289*	1	CAMSHAFT GP	38
Y	*117-3643*	1	COOLER GP-ENGINE OIL	116
Y	*210-5590*	1	CRANKSHAFT GP	44
Y	*221-4482*	1	CYLINDER BLOCK GP	46
Y	*219-5849*	1	CYLINDER HEAD GP	56
Y	*205-1321*	1	GEAR GP-FRONT	69
Y	*165-4446*	1	HOUSING GP-FRONT	72
Y	*191-0461*	1	LINES GP-INJECTOR HYD PUMP	176
			—OR—	
Y	*381-8868*	1	LINES GP-INJECTOR HYD PUMP	177
YR	*210-5592*	6	PISTON & ROD GP	86
Y	*254-0095*	1	PUMP & MTG GP-UNIT INJ HYD	179
Y	*212-2270*	1	PUMP GP-ENGINE OIL	115
Y	*268-1839*	6	PUMP GP-FUEL INJECTION	182
Y	*372-3738*	1	TURBOCHARGER GP	157
Y	*232-3717*	1	VALVE MECHANISM GP	94
	365-7756	1	ELECTRONICS GP	
R - REMANUFACTURED PART MAY BE AVAILABLE Y - SEPARATE ILLUSTRATION				

<END>

387-8505 ENGINE AR-CORE

S/N: TX71-UP; KHX1-UP

PART OF 397-1172 ENGINE AR

SMCS-1000 **i05850485**

NOTE	PART NUMBER	QTY	PART NAME 1 2 3 4 5 6 (PRODUCT LEVEL)	SEE PAGE
Y	*212-4289*	1	CAMSHAFT GP	38
Y	*210-5590*	1	CRANKSHAFT GP	44
Y	*221-4482*	1	CYLINDER BLOCK GP	46
Y	*219-5849*	1	CYLINDER HEAD GP	56
Y	*205-1321*	1	GEAR GP-FRONT	69
Y	*396-8415*	1	LINES GP-INJECTOR HYD PUMP	178
YR	*210-5592*	6	PISTON & ROD GP	86
Y	*389-1183*	1	PUMP & MTG GP-UNIT INJ HYD	180
Y	*212-2270*	1	PUMP GP-ENGINE OIL	115
			—OR—	
Y	*192-2981*	1	PUMP GP-ENGINE OIL	113
Y	*268-1839*	6	PUMP GP-FUEL INJECTION	182
Y	*129-1173*	1	PUMP GP-WATER	127
Y	*424-7124*	1	SENSOR GP-ENGINE	336
Y	*232-3717*	1	VALVE MECHANISM GP	94

R - REMANUFACTURED PART MAY BE AVAILABLE
Y - SEPARATE ILLUSTRATION

<END>

149-4915 AIR COMPRESSOR GP*R

S/N: TX71-UP; KHX1-UP

PART OF 389-9576 AIR COMPRESSOR GP

SMCS-1803 **i05272256**

NOTE	REF NO	GRAPHIC REF	PART NUMBER	QTY	PART NAME 1 2 3 4 5 6 (PRODUCT LEVEL)	SEE PAGE
	1	1	**2P-4358**	1	FLANGE	
	2	1	**6D-1004**	1	GASKET	
	3	1	**8T-6757**	1	PLUG-PIPE	
	4	1	**141-1546**	1	PLUG-PIPE	
	5	1	**4P-3977**	1	GASKET-CYLINDER HEAD	
	6	1	**7E-8928**	1	GASKET	
M	7	1	**6V-1820**	2	BOLT (M10X1.5X30-MM)	
	8	1	**6V-5839**	2	WASHER (11X21X2.5-MM THK)	
	9	1	**4P-3966**	1	PISTON & ROD AS	
	10	1	**128-7759**	1	ADAPTER AS	
		1	**128-7761**	3	BOLT	
					AVAILABLE REPAIR KIT(S):	
			7E-8923	1	KIT-CRANKSHAFT BEARING (AIR COMPRESSOR)	
					(INCLUDES FRONT COVER SEAL, FRONT MAIN & REAR BEARINGS, FRONT & REAR WASHERS, BEARING INSERTS, SLOTTED INSERTS, O-RING SEAL, CYLINDER HEAD & BASE GASKETS)	
			164-7572	1	KIT-RING (AIR COMPRESSOR)	
					(INCLUDES PISTON RINGS & SPACERS)	
			7E-8926	1	KIT-CYLINDER HEAD (AIR COMPRESSOR)	
					(INCLUDES UNLOADER PISTONS, UNLOADER SPRINGS, UNLOADER O-RING, UNLOADER GASKET, INLET VALVES, INLET VALVE STOPS, INLET VALVE SEATS, INLET SPRINGS, INLET GASKETS, DISCHARGE VALVES, DISCHARGE VALVE SEATS, DISCHARGE VALVE SPRINGS, DISCHARGE GASKET, GOVERNOR GASKET, STRAINER GASKET, & CYLINDER HEAD GASKET)	

M - METRIC PART

149-4915 **AIR COMPRESSOR GP (**contd.**)** **i05272256**

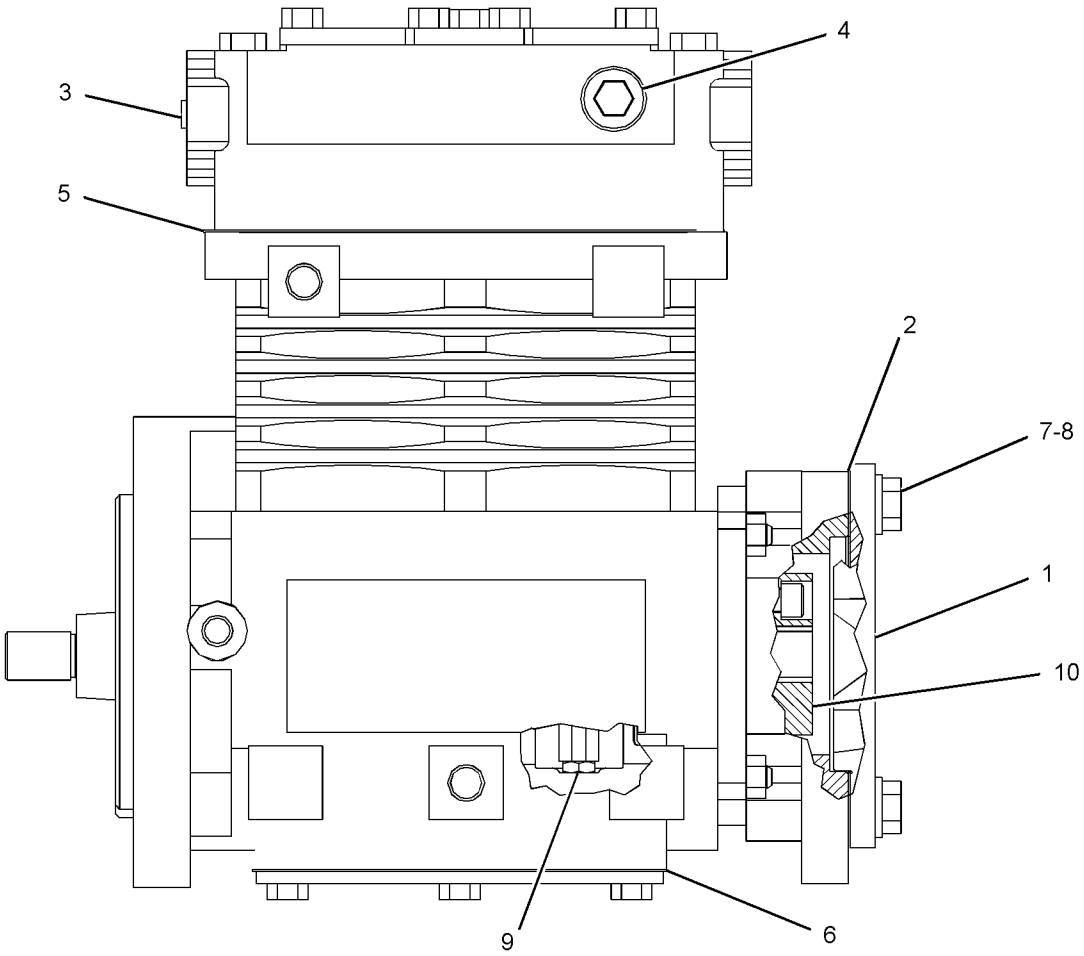

GRAPHIC #1 <END> g03355090

360-2196 AIR COMPRESSOR GP

S/N: TX71-3460; KHX1-UP

PART OF 364-7493, 395-0487 ENGINE AR-COMPLETE

SMCS-1803 **i05944409**

NOTE	REF NO	GRAPHIC REF	PART NUMBER	QTY	PART NAME 1 2 3 4 5 6 (PRODUCT LEVEL)	SEE PAGE
	1	1	**4P-5106**	1	BRACKET	
	3	1	**8Y-1816**	1	SPACER (12.5X25X25-MM THK)	
	4	1	**124-5572**	1	VALVE AS-RELIEF (PRESSURE RELIEF) (AIR COMPRESSOR)	
	5	1	**135-9819**	1	SEAL-INTEGRAL	
Y	6	1	**389-9576**	1	AIR COMPRESSOR GP	35
M	7	1	**8T-6868**	2	BOLT (M12X1.75X80-MM)	
	8	1	**202-2762**	2	CLIP	
	9	1	*389-3737*	1	ELBOW AS	
		1	**2T-1922**	1	ELBOW	
		1	**228-7090**	1	SEAL-O-RING	
I	10	1	**341-8667**	1	HOSE AS	
	11	1	**341-8841**	1	TUBE AS	
	12	1	**360-2197**	1	TUBE AS	
	13	1	*319-6225*	1	ELBOW AS	
		1	**228-7090**	1	SEAL-O-RING	
		1	**238-5080**	1	SEAL-O-RING	
		1	**6V-8625**	1	ELBOW	
	14	1	*335-3982*	1	ELBOW AS	
		1	**214-7568**	1	SEAL-O-RING	
		1	**228-7088**	1	SEAL-O-RING	
		1	**6V-8627**	1	ELBOW	
	15	1	*353-5097*	1	ELBOW AS	
		1	**228-7090**	1	SEAL-O-RING	
		1	**238-5082**	1	SEAL-O-RING	
		1	**127-1647**	1	ELBOW	
	16	1	*330-9763*	1	CONNECTOR AS	
		1	**228-7090**	1	SEAL-O-RING	
		1	**8C-6872**	1	CONNECTOR	
	17	1	**2N-1287**	1	ELBOW-FLARED	
	18	1	**3J-5389**	1	PLUG	
	19	1	**5L-5502**	1	FITTING	
	22	1	**8T-4121**	5	WASHER-HARD (11X21X2.5-MM THK)	
M	23	1	**6V-4248**	2	BOLT (M10X1.5X25-MM)	
M	24	1	**8T-6466**	1	BOLT (M10X1.5X60-MM)	
M	25	1	**8T-4195**	2	BOLT (M10X1.5X30-MM)	
	26	1	**8T-4223**	2	WASHER-HARD (13.5X25.5X3-MM THK)	

I - REFER TO HYDRAULIC INFORMATION SYSTEM
M - METRIC PART
Y - SEPARATE ILLUSTRATION

360-2196 **AIR COMPRESSOR GP (**contd.**)** **i05944409**

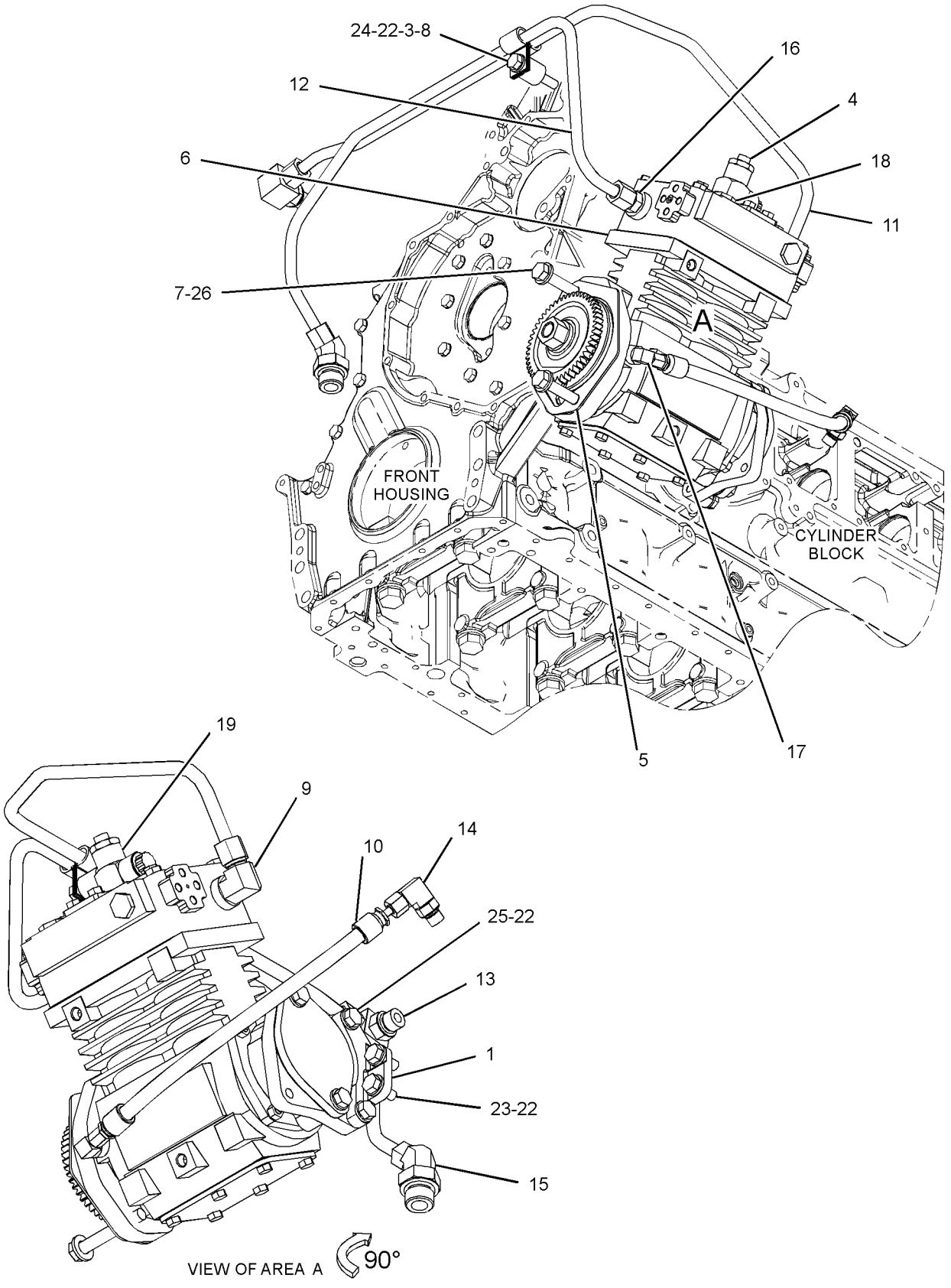

GRAPHIC #1 <END> g03733433

360-2196 AIR COMPRESSOR GP

S/N: TX73461-UP

PART OF 395-0487 ENGINE AR-COMPLETE

SMCS-1803 **i06689002**

NOTE	REF NO	GRAPHIC REF	PART NUMBER	QTY	PART NAME 1 2 3 4 5 6 (PRODUCT LEVEL)	SEE PAGE
	1	1	**4P-5106**	1	BRACKET	
C	2	1	**112-6032**	1	SPACER (10.5X22X8-MM THK)	
C	3	1	**6B-6205**	1	SPACER (0.438X0.875X1.281-IN THK)	
	4	1	**124-5572**	1	VALVE AS-RELIEF (PRESSURE RELIEF) (AIR COMPRESSOR)	
	5	1	**135-9819**	1	SEAL-INTEGRAL	
Y	6	1	**389-9576**	1	AIR COMPRESSOR GP	35
M	7	1	**8T-6868**	2	BOLT (M12X1.75X80-MM)	
	8	1	**202-2762**	2	CLIP	
	9	1	*389-3737*	1	ELBOW AS	
		1	**2T-1922**	1	ELBOW	
		1	**228-7090**	1	SEAL-O-RING	
I	10	1	**341-8667**	1	HOSE AS	
C	11	1	**485-7243**	1	TUBE AS	
C	12	1	**485-7242**	1	TUBE AS	
	13	1	*319-6225*	1	ELBOW AS	
		1	**228-7090**	1	SEAL-O-RING	
		1	**238-5080**	1	SEAL-O-RING	
		1	**6V-8625**	1	ELBOW	
	14	1	*335-3982*	1	ELBOW AS	
		1	**214-7568**	1	SEAL-O-RING	
		1	**228-7088**	1	SEAL-O-RING	
		1	**6V-8627**	1	ELBOW	
	15	1	*353-5097*	1	ELBOW AS	
		1	**228-7090**	1	SEAL-O-RING	
		1	**238-5082**	1	SEAL-O-RING	
		1	**127-1647**	1	ELBOW	
	16	1	*330-9763*	1	CONNECTOR AS	
		1	**228-7090**	1	SEAL-O-RING	
		1	**8C-6872**	1	CONNECTOR	
	17	1	**2N-1287**	1	ELBOW-FLARED	
	18	1	**3J-5389**	1	PLUG	
	19	1	**5L-5502**	1	FITTING	
	22	1	**8T-4121**	5	WASHER-HARD (11X21X2.5-MM THK)	
M	23	1	**6V-4248**	2	BOLT (M10X1.5X25-MM)	
CM	24	1	**8T-5005**	1	BOLT (M10X1.5X70-MM)	
M	25	1	**8T-4195**	2	BOLT (M10X1.5X30-MM)	
	26	1	**8T-4223**	2	WASHER-HARD (13.5X25.5X3-MM THK)	

C - CHANGE FROM PREVIOUS TYPE
I - REFER TO HYDRAULIC INFORMATION SYSTEM
M - METRIC PART
Y - SEPARATE ILLUSTRATION

360-2196 **AIR COMPRESSOR GP (**contd.**)** **i06689002**

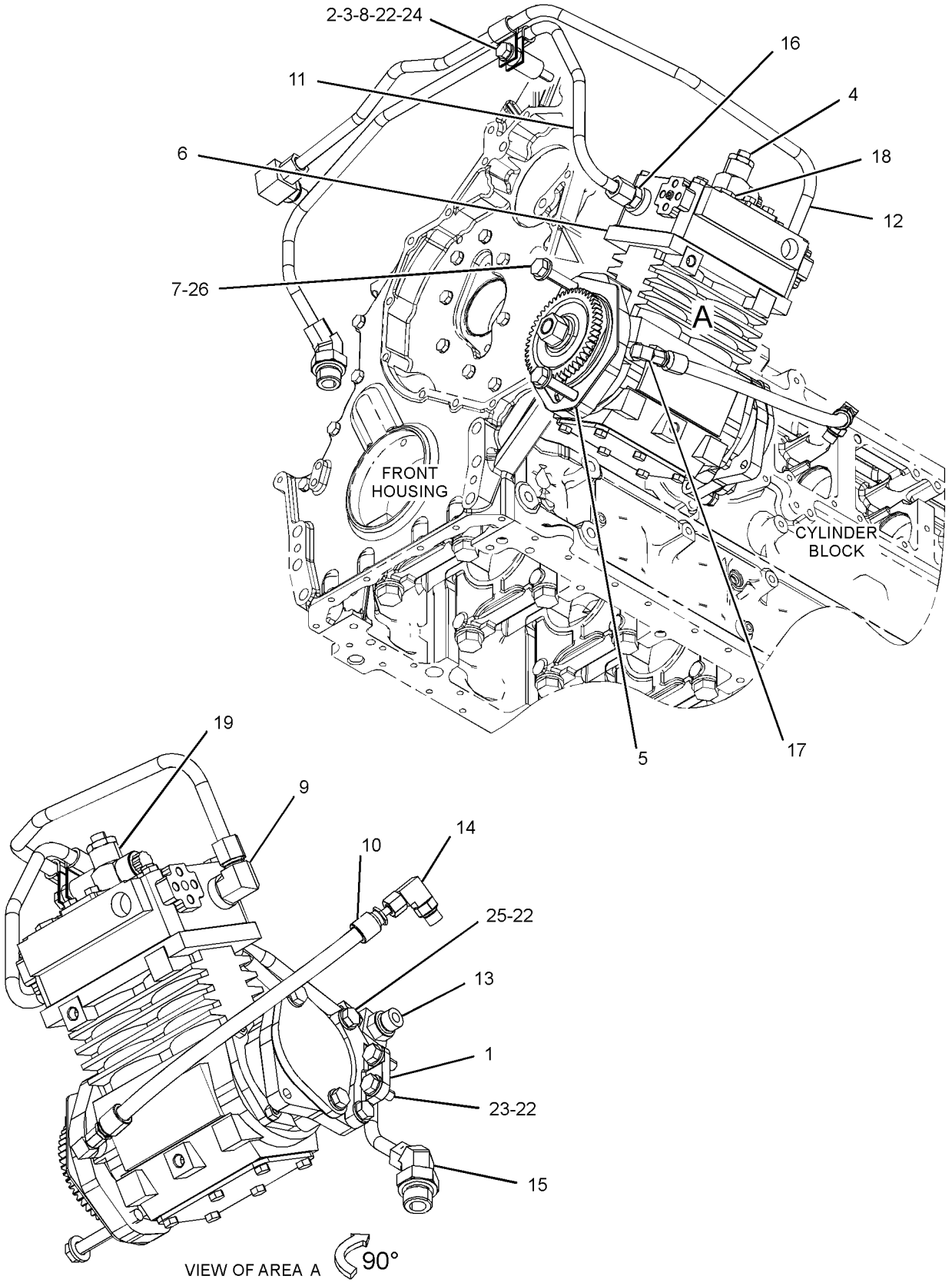

GRAPHIC #1 <END> g06087619

389-9576 AIR COMPRESSOR GP

S/N: TX71-UP; KHX1-UP

PART OF 360-2196 AIR COMPRESSOR GP

SMCS-1803 **i05944430**

NOTE	REF NO	GRAPHIC REF	PART NUMBER	QTY	PART NAME 1 2 3 4 5 6 (PRODUCT LEVEL)	SEE PAGE
	1	1	**7C-3179**	1	GEAR (50-TEETH)	
YR	2	1	**149-4915**	1	AIR COMPRESSOR GP	29
	3	1	**6B-6682**	1	NUT-FULL (3/4-16-THD)	
	4	1	**7X-0521**	1	WASHER-HARD (20X36.5X5-MM THK)	

R - REMANUFACTURED PART MAY BE AVAILABLE
Y - SEPARATE ILLUSTRATION

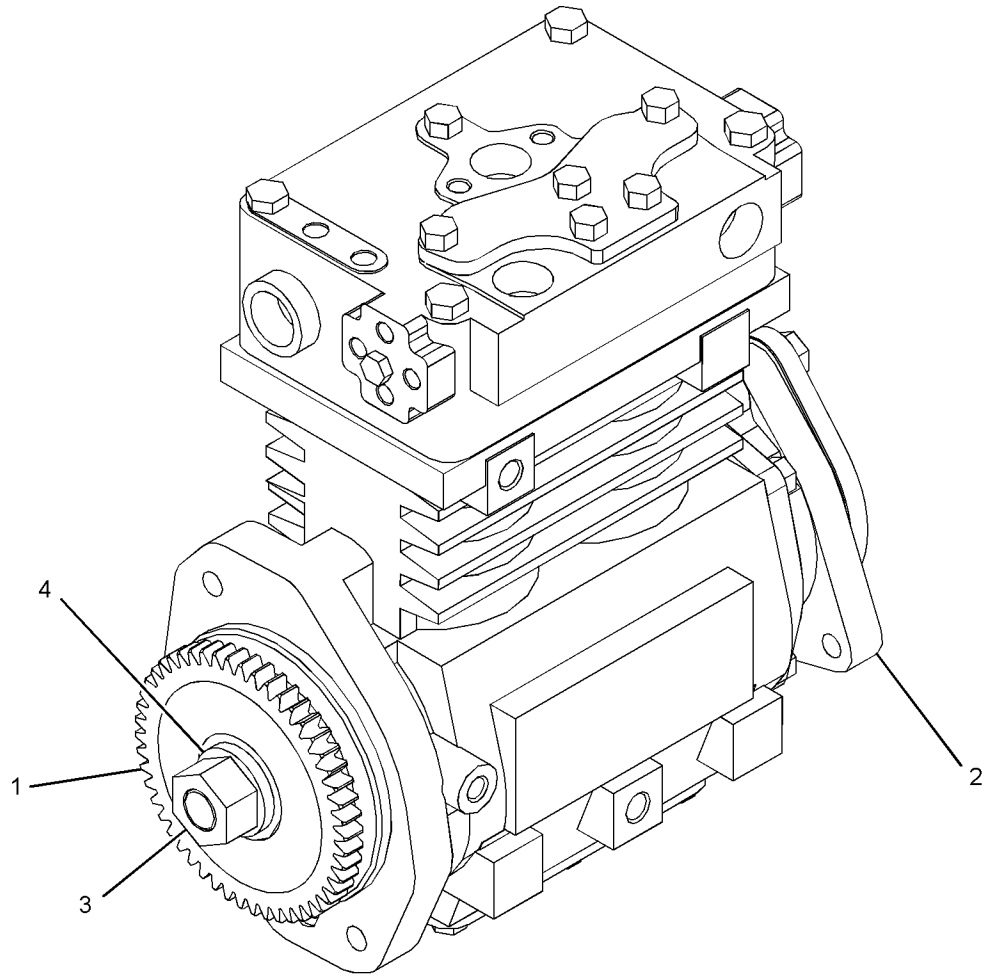

GRAPHIC #1 <END> g03322629

425-5542 BELT TENSIONER GP

S/N: SZS1-UP

PART OF 458-5977, 458-5984, 458-5988, 464-8591, 464-8592 OPTION AR-CAB

AN ATTACHMENT

SMCS-1357, 1358, 1397

i05864883

NOTE	REF NO	GRAPHIC REF	PART NUMBER	QTY	PART NAME 1 2 3 4 5 6 (PRODUCT LEVEL)	SEE PAGE
	1	1	**198-3611**	1	BELT-SERPENTINE	
	2	1	**336-0057**	1	FILM-INSTRUCTION (ALTERNATOR BELT MOUNTING)	
	3	1	**347-1266**	1	GUARD AS	
	4	1	**198-4776**	4	WASHER-HARD (8.8X20X8-MM THK)	
	5	1	**198-4777**	2	WASHER-HARD (11X25X10-MM THK)	
M	6	1	**8T-4136**	2	BOLT (M10X1.5X25-MM)	
M	7	1	**8T-4908**	4	BOLT (M8X1.25X25-MM)	

M - METRIC PART

425-5542 **BELT TENSIONER GP** (contd.) **i05864883**

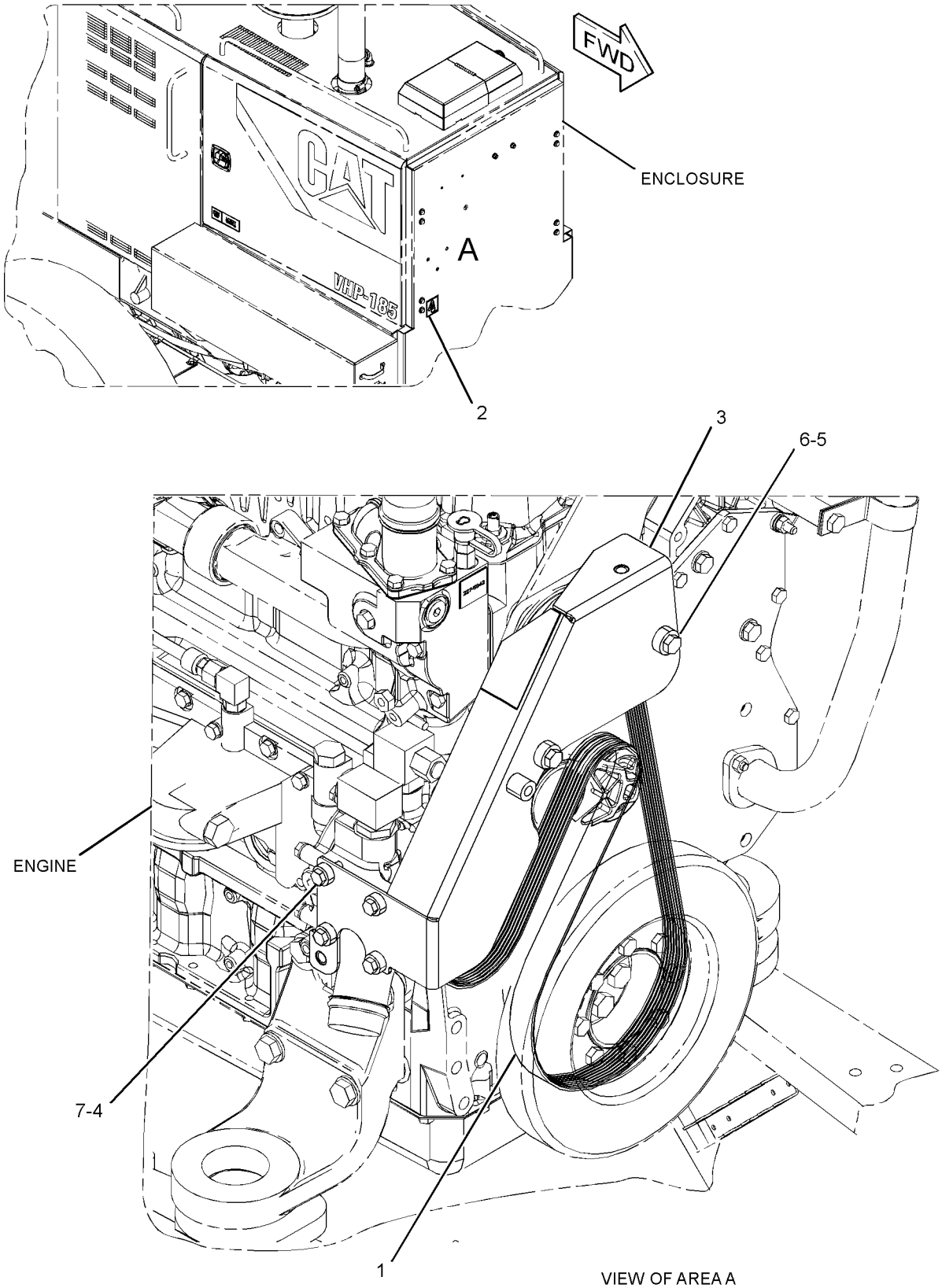

VIEW OF AREA A
(PARTS REMOVED FOR CLARITY)

GRAPHIC #1 <END> g03704077

212-4289 CAMSHAFT GP

S/N: TX71-UP; KHX1-UP

PART OF 365-3500, 387-8505 ENGINE AR-CORE

SMCS-1210 **i03515423**

NOTE	REF NO	GRAPHIC REF	PART NUMBER	QTY	PART NAME 1 2 3 4 5 6 (PRODUCT LEVEL)	SEE PAGE
	1	1	**107-7694**	1	PLATE-THRUST	
R	2	1	**212-4288**	1	CAMSHAFT AS	
	2A	1	**1B-8705**	1	KEY-WOODRUFF	
	2B	1	**224-3247**	1	GEAR (100-TEETH)	
M	3	1	**6V-3940**	2	BOLT (M8X1.25X25-MM)	

M - METRIC PART
R - REMANUFACTURED PART MAY BE AVAILABLE

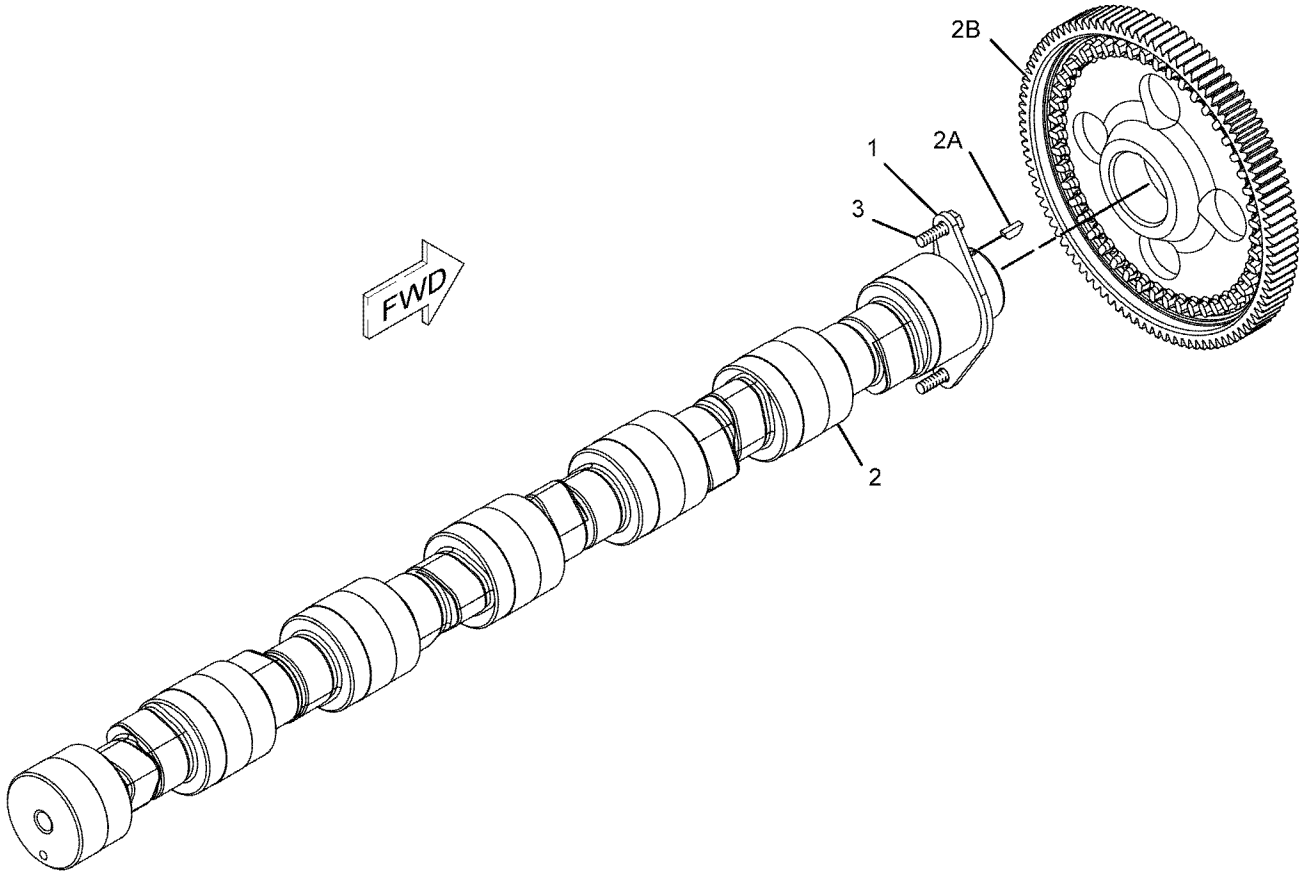

GRAPHIC #1 <END> g01099239

4W-3462 CARRIER GP-SEAL

S/N: TX71-UP; KHX1-UP

PART OF 364-7493, 395-0487 ENGINE AR-COMPLETE

SMCS-1161 **i05908474**

NOTE	REF NO	GRAPHIC REF	PART NUMBER	QTY	PART NAME 1 2 3 4 5 6 (PRODUCT LEVEL)	SEE PAGE
	1	1	**2W-6546**	1	COVER	
	2	1	**247-1876**	1	SEAL	
	3	1	**239-0583**	1	GASKET	
	4	1	**6V-3538**	2	DOWEL	
M	5	1	**6V-3940**	8	BOLT (M8X1.25X25-MM)	
	6	1	**9M-1974**	8	WASHER-HARD (8.8X16X2-MM THK)	

M - METRIC PART

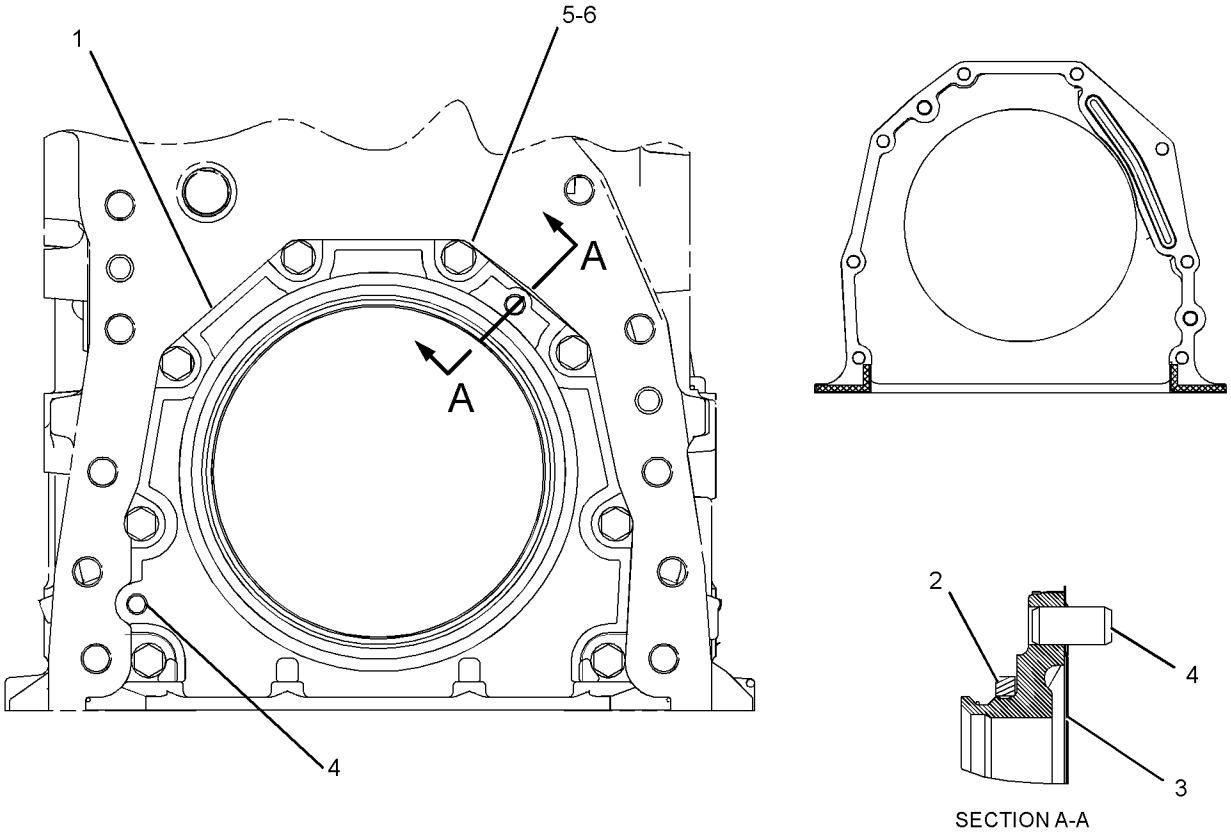

GRAPHIC #1 <END> g02774700

229-8841 COVER GP-CYLINDER BLOCK

S/N: TX71-UP; KHX1-UP

PART OF 364-7493, 395-0487 ENGINE AR-COMPLETE

SMCS-1201 **i04283389**

NOTE	REF NO	GRAPHIC REF	PART NUMBER	QTY	PART NAME 1 2 3 4 5 6 (PRODUCT LEVEL)	SEE PAGE
	1	1	**2W-6544**	1	COVER	
	2	1	**4P-5918**	3	CLIP	
	3	1	**4Y-9652**	3	GASKET	
	4	1	**342-4977**	2	COVER-SIDE	
	5	1	**7W-3872**	6	SLEEVE	
M	6	1	**110-7618**	4	BOLT AS	
	8	1	**222-5893**	1	COVER AS	
M	8A	1	**6V-5698**	2	SCREW-BUTTON HEAD (M4X0.7X10-MM)	
M	9	1	**210-3321**	1	STUD (M8X1.25-THD)	
M	10	1	**5C-7261**	1	NUT (M8X1.25-THD)	
M	11	1	**6V-2317**	23	BOLT (M8X1.25X30-MM)	
	12	1	**9M-1974**	14	WASHER-HARD (8.8X16X2-MM THK)	
B	13	1	**1U-8846**		SEALANT-GASKET	

B - USE AS REQUIRED
M - METRIC PART

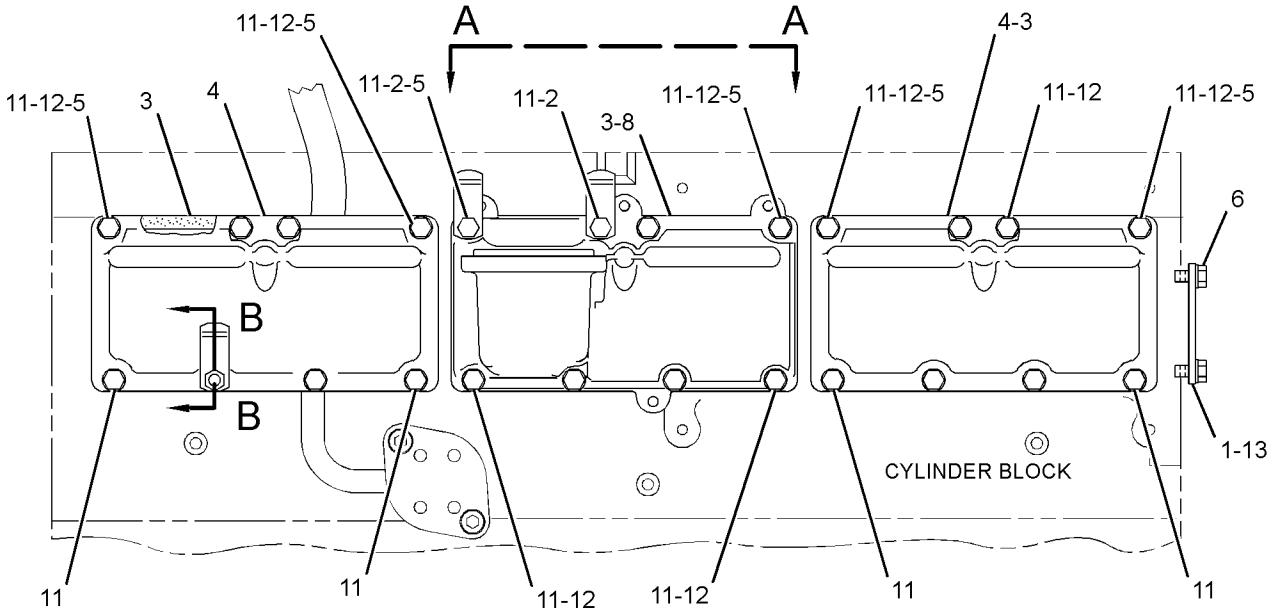

LEFT SIDE VIEW OF ENGINE

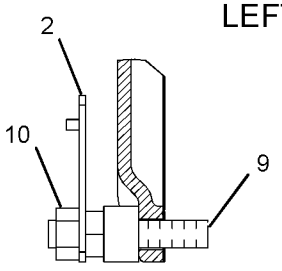

SECTION B-B

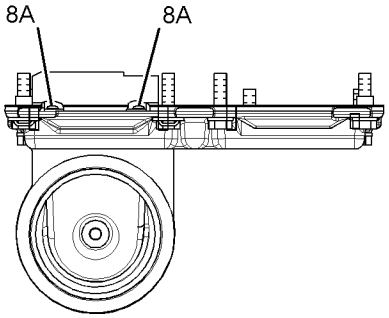

VIEW A-A

GRAPHIC #1 <END> g01830633

307-1735 COVER GP-VALVE MECHANISM

S/N: TX71-UP; KHX1-UP

PART OF 364-7493, 395-0487 ENGINE AR-COMPLETE

SMCS-1107, 1120

i04641050

NOTE	REF NO	GRAPHIC REF	PART NUMBER	QTY	PART NAME 1 2 3 4 5 6 (PRODUCT LEVEL)	SEE PAGE
	1	1	**310-9247**	1	BASE GP-VALVE COVER	
	1A	1	**304-4924**	1	SEAL AS	
CY	2	1	**356-5748**	1	COVER GP-VALVE MECHANISM	43
M	3	1	**099-3649**	13	BOLT (M8X1.25X40-MM)	
	4	1	**8T-4224**	13	WASHER-HARD (8.8X16X2-MM THK)	

C - CHANGE FROM PREVIOUS TYPE
M - METRIC PART
Y - SEPARATE ILLUSTRATION

307-1735 **COVER GP-VALVE MECHANISM (**contd.**)** **i04641050**

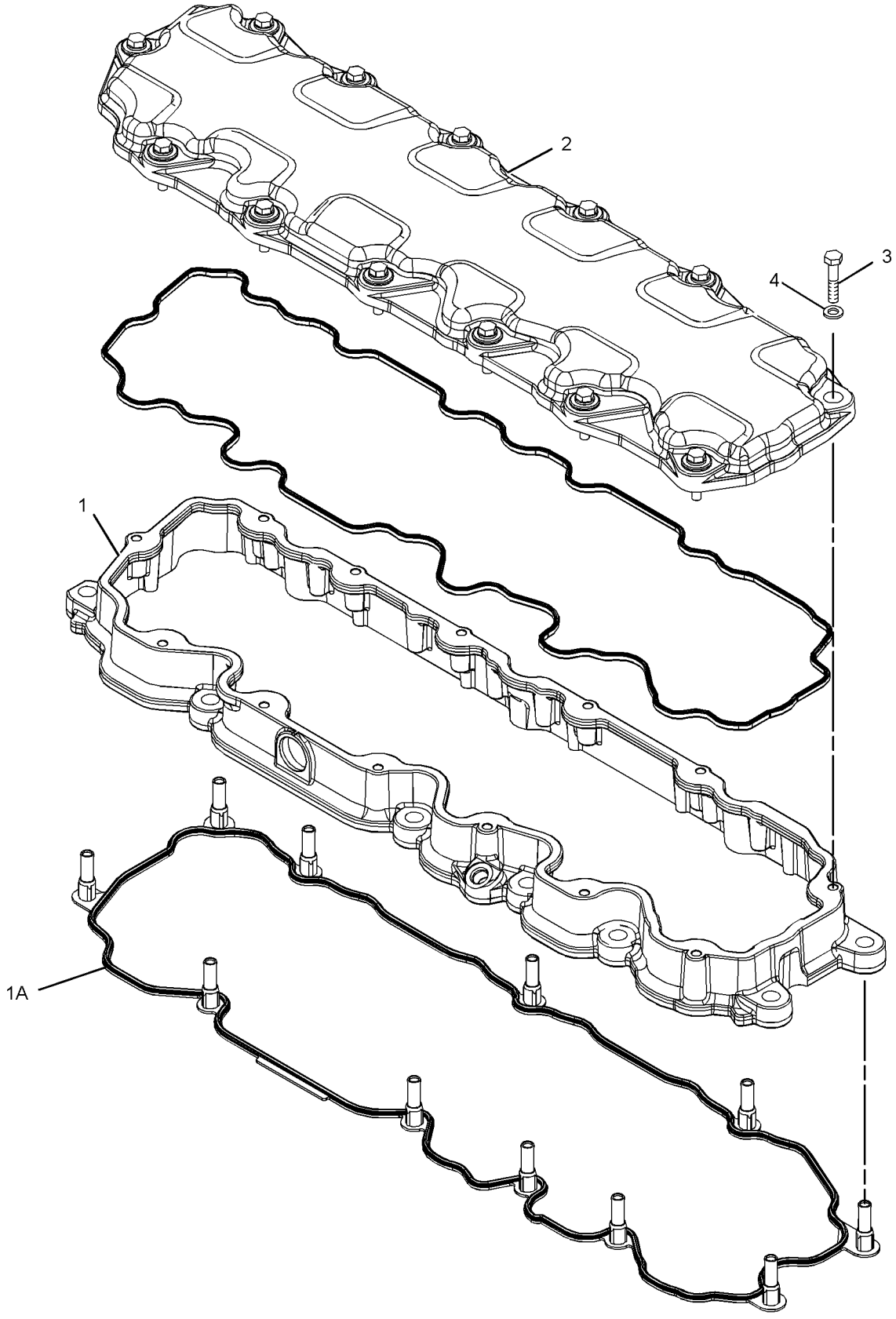

GRAPHIC #1 <END> g02791461

356-5748 COVER GP-VALVE MECHANISM

S/N: TX71-UP; KHX1-UP
NO OIL FILL
PART OF 307-1735 COVER GP-VALVE MECHANISM

SMCS-1107, 1120

i04641249

NOTE	REF NO	GRAPHIC REF	PART NUMBER	QTY	PART NAME 1 2 3 4 5 6 (PRODUCT LEVEL)	SEE PAGE
	1	1	**272-0388**	1	SEAL - VALVE COVER	

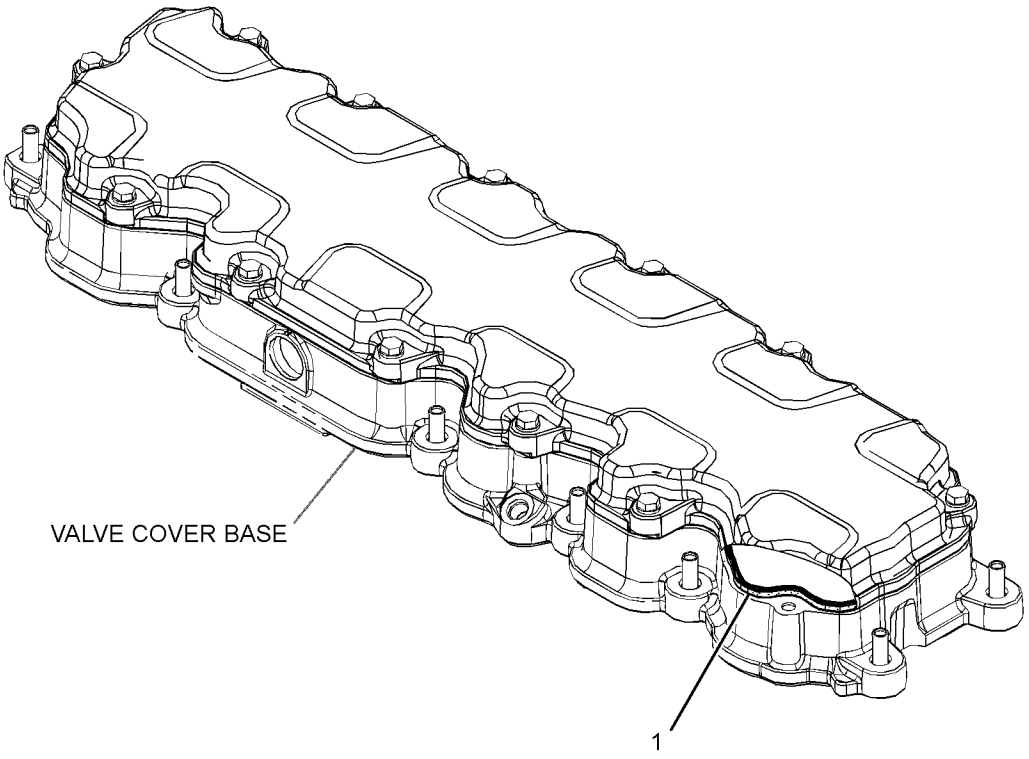

GRAPHIC #1

<END>

g02925357

210-5590 CRANKSHAFT GP

S/N: TX71-UP; KHX1-UP

PART OF 365-3500, 387-8505 ENGINE AR-CORE

SMCS-1202, 1203, 1204, 1232 **i03571589**

NOTE	REF NO	GRAPHIC REF	PART NUMBER	QTY	PART NAME 1 2 3 4 5 6 (PRODUCT LEVEL)	SEE PAGE
R	1	1	**271-5658**	1	CRANKSHAFT AS	
	1A	1	**1B-8705**	1	KEY-WOODRUFF	
	1B	1	**2W-8147**	1	GEAR (50-TEETH)	
J	2	1	**212-4893**	1	BEARING-THRUST (STANDARD)	
AB		1	**229-5153**		BEARING-THRUST (0.25-MM US)	
AB		1	**229-5154**		BEARING-THRUST (0.5-MM US)	
AB		1	**229-5155**		BEARING-THRUST (0.5-MM OS)	
AB		1	**229-5156**		BEARING-THRUST (0.5-MM OS, 0.5-MM US)	
J	3	1	**107-7708**	6	BEARING-MAIN (STANDARD)	
AB		1	**145-0168**		BEARING-MAIN (0.5-MM OS)	
AB		1	**145-0170**		BEARING-MAIN (0.5-MM OS, 0.5-MM US)	
AB		1	**145-0162**		BEARING-MAIN (0.25-MM US)	
AB		1	**145-0164**		BEARING-MAIN (0.5-MM US)	
ABF		1	**7C-7980**	1	SLEEVE-OIL SEAL	
					(THIS WEAR SLEEVE IS USED ONLY TO SALVAGE (REPAIR) THE REAR SEAL SURFACE OF THE CRANKSHAFT)	
					AVAILABLE REPAIR KIT(S):	
AJ			**196-9519**		BEARING GP-MAIN (CRANKSHAFT)	

A - NOT PART OF THIS GROUP
B - USE AS REQUIRED
F - NOT SHOWN
J - KIT MARKED J SERVICES PART(S) MARKED J
R - REMANUFACTURED PART MAY BE AVAILABLE

210-5590 **CRANKSHAFT GP (**contd.**)** **i03571589**

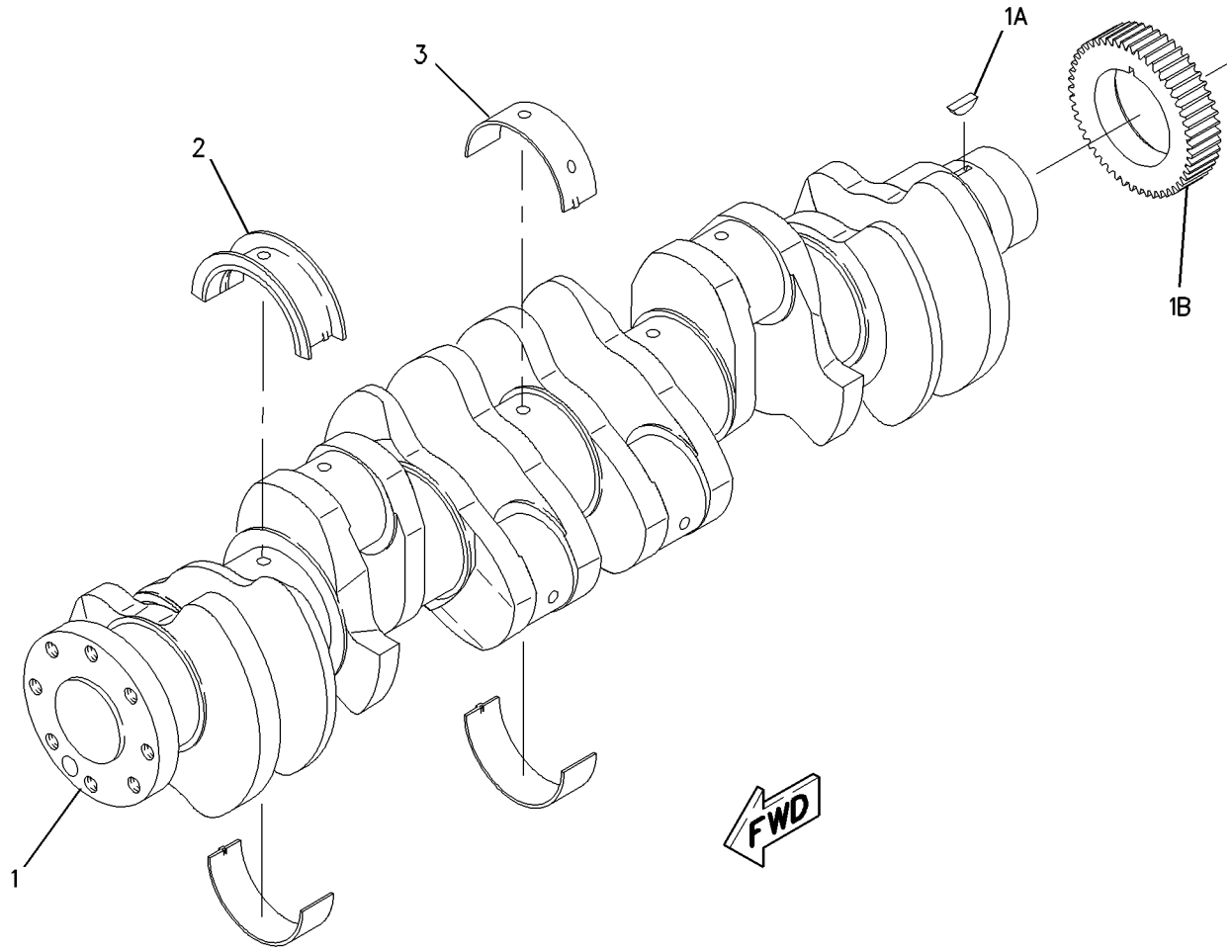

GRAPHIC #1 <END> g00977492

221-4482 CYLINDER BLOCK GP

S/N: TX71-UP; KHX1-UP

PART OF 365-3500, 387-8505 ENGINE AR-CORE

SMCS-1201 **i05329752**

NOTE	REF NO	GRAPHIC REF	PART NUMBER	QTY	PART NAME 1 2 3 4 5 6 (PRODUCT LEVEL)	SEE PAGE
CYR	1	1	**305-8141**	1	CYLINDER BLOCK GP	48
	2	1	**7N-5683**	2	DOWEL	
	3	1	**1W-8407**	2	SLEEVE	
	4	1	**6V-3538**	2	DOWEL	

C - CHANGE FROM PREVIOUS TYPE
R - REMANUFACTURED PART MAY BE AVAILABLE
Y - SEPARATE ILLUSTRATION

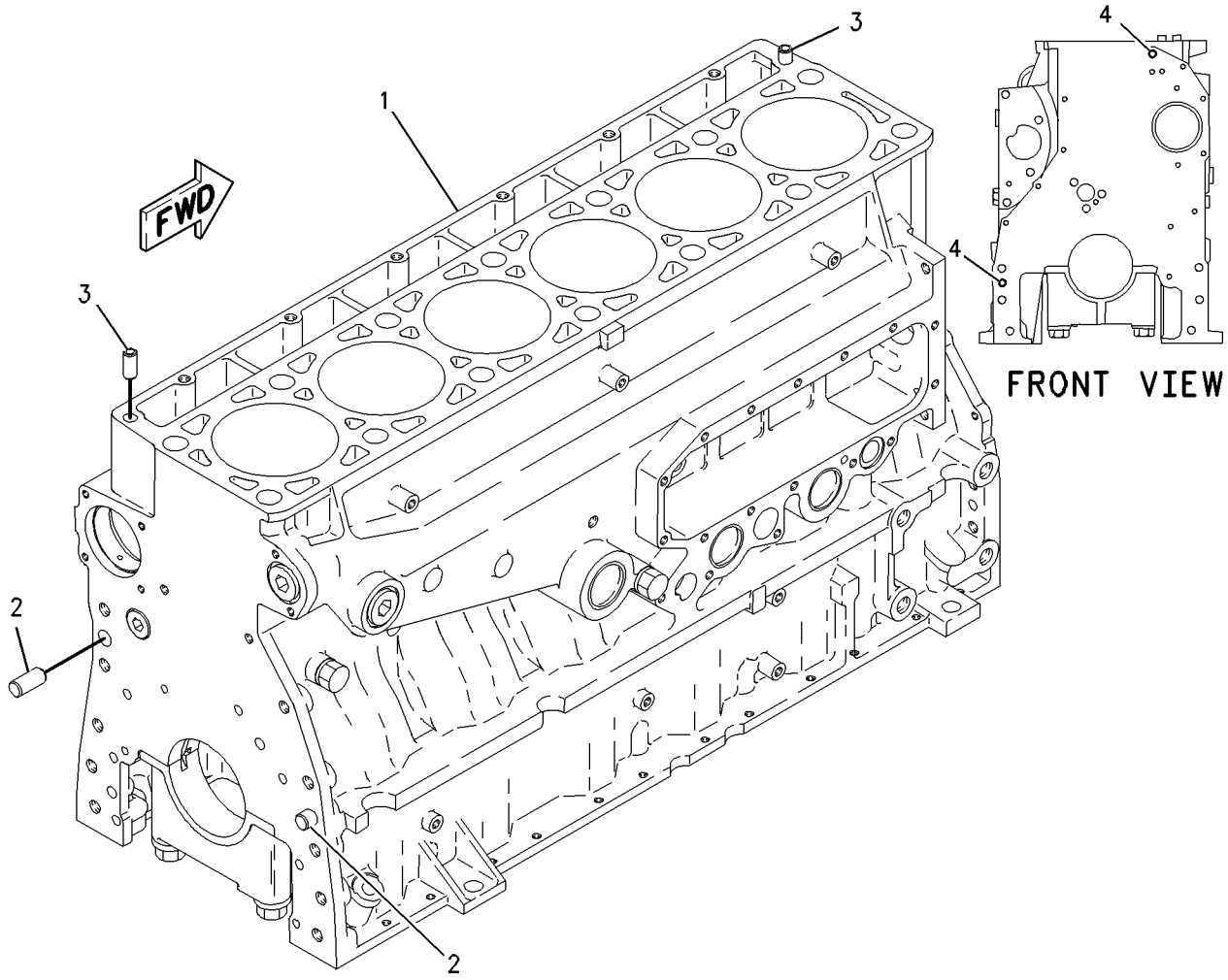

GRAPHIC #1 <END> g00800849

263-3774 CYLINDER BLOCK GP

S/N: TX71-UP; KHX29829-UP

PART OF 305-8141 CYLINDER BLOCK GP

SMCS-1201 **i03938812**

NOTE	REF NO	GRAPHIC REF	PART NUMBER	QTY	PART NAME 1 2 3 4 5 6 (PRODUCT LEVEL)	SEE PAGE
	1	1	**7E-2968**	7	CAP-CRANKSHAFT BEARING	
M	2	1	**9X-8916**	14	BOLT (M16X2X140-MM)	
	3	1	**5P-8247**	14	WASHER-HARD (17X32X3.5-MM THK)	

M - METRIC PART

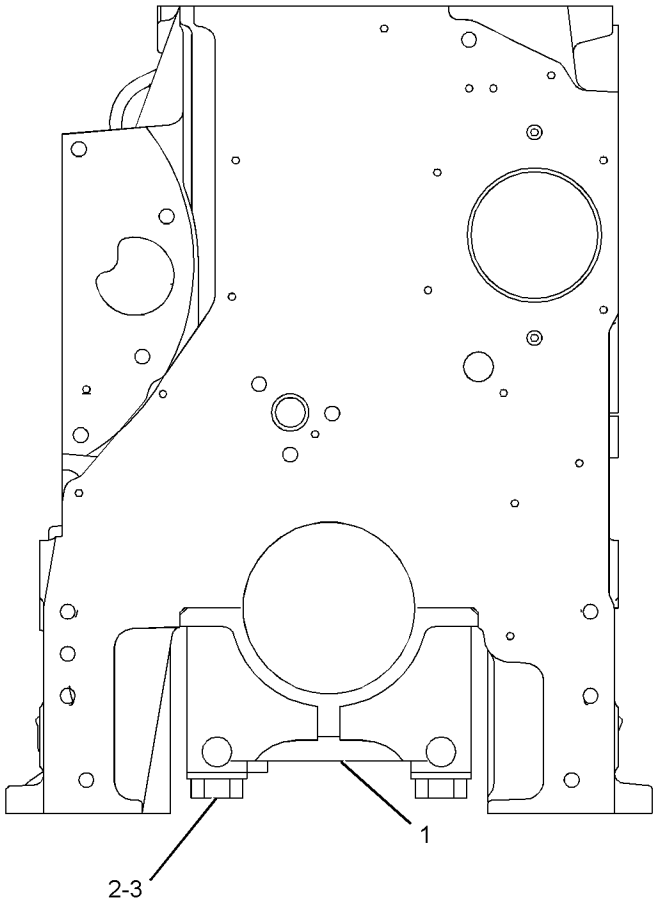

FRONT VIEW

GRAPHIC #1 <END> g01352581

305-8141 CYLINDER BLOCK GP*R

S/N: TX71-UP; KHX29829-UP

PART OF 221-4482 CYLINDER BLOCK GP

SMCS-1201 **i06184564**

NOTE	REF NO	GRAPHIC REF	PART NUMBER	QTY	PART NAME 1 2 3 4 5 6 (PRODUCT LEVEL)	SEE PAGE
Y	1	1	*263-3774*	1	CYLINDER BLOCK GP	47
	2	1	**2M-6471**	2	PLUG-CUP	
	3	1	**3H-5552**	1	PLUG-CUP	
	4	1	*309-5131*	1	PLUG AS	
		1	**9S-8006**	1	PLUG (7/8-14-THD)	
		1	**238-5081**	1	SEAL-O-RING	
	5	1	**2W-7213**	6	BUSHING (CAMSHAFT)	
	6	1	**216-5586**	1	BUSHING (CAMSHAFT)	
ABF			**107-7604**		SLEEVE-CYLINDER	
					(FOR SALVAGE OF CYLINDER BORE IN BLOCK.	

A - NOT PART OF THIS GROUP
B - USE AS REQUIRED
F - NOT SHOWN
Y - SEPARATE ILLUSTRATION

305-8141 **CYLINDER BLOCK GP (**contd.**)** **i06184564**

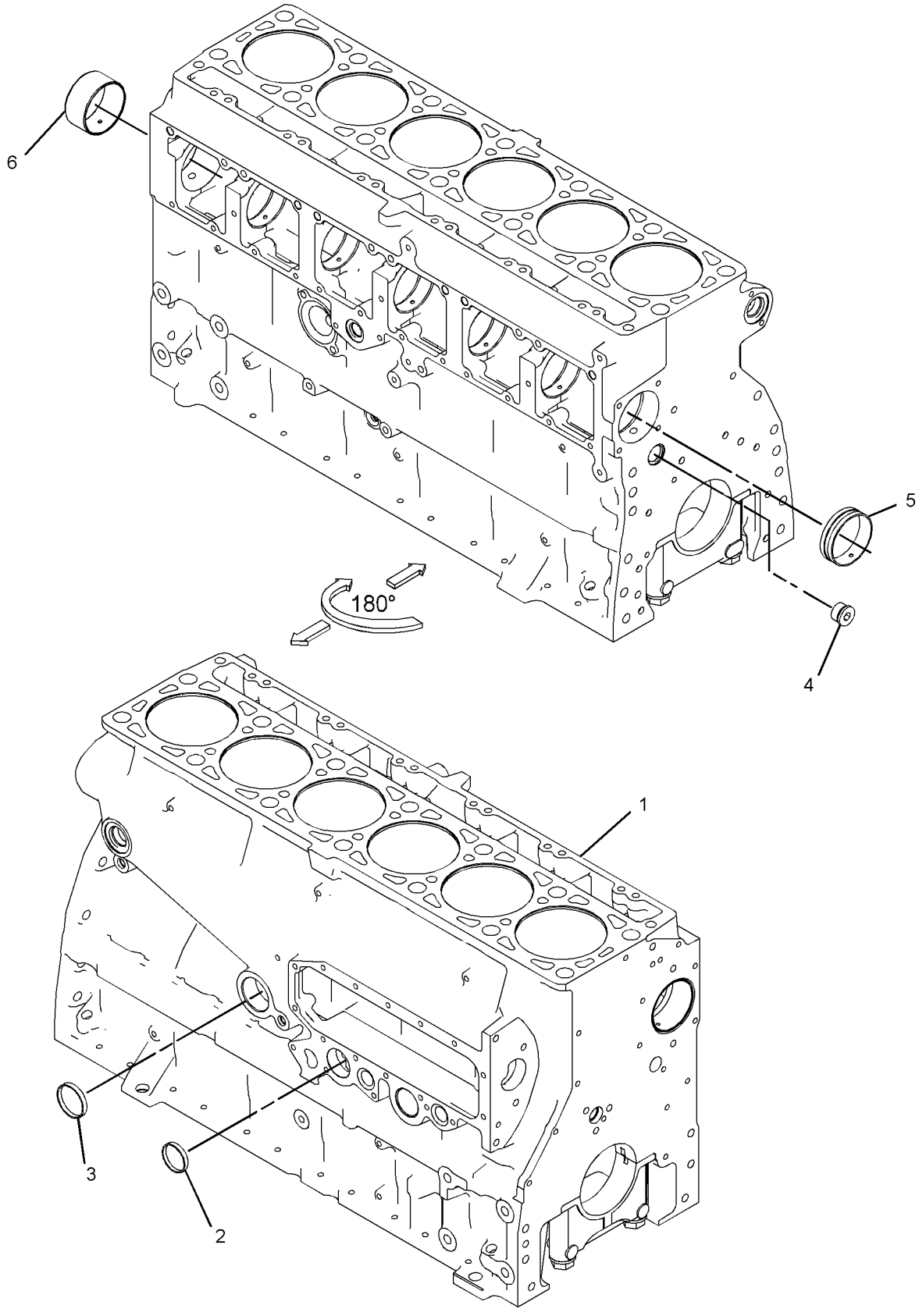

GRAPHIC #1 <END> g03408535

314-4184 CYLINDER HEAD AS

S/N: TX71-UP; KHX29829-UP

PART OF 300-9550 CYLINDER HEAD GP

SMCS-1100 **i03521360**

NOTE	REF NO	GRAPHIC REF	PART NUMBER	QTY	PART NAME 1 2 3 4 5 6 (PRODUCT LEVEL)	SEE PAGE
	1	1	**310-7257**	6	SEAL-O-RING	
	2	1	**8M-5860**	12	PLUG-CUP	
	3	1	**4F-5695**	2	PLUG-CUP	
	4	1	**227-1200**	6	SLEEVE-INJECTOR	
	5	1	**232-1285**	6	INSERT-VALVE SEAT (STANDARD) (EXHAUST)	
AB		1	**319-3822**		SEAT-VALVE (0.13-MM OS, EXHAUST)	
AB		1	**319-3823**		SEAT-VALVE (0.25-MM OS, EXHAUST)	
AB		1	**319-3824**		SEAT-VALVE (0.51-MM OS, EXHAUST)	
	6	1	**264-6157**	12	INSERT-VALVE SEAT (STANDARD) (INLET)	
AB		1	**319-3819**		SEAT-VALVE (0.13-MM OS, INLET)	
AB		1	**319-3820**		SEAT-VALVE (0.25-MM OS, INLET)	
AB		1	**319-3821**		SEAT-VALVE (0.51-MM OS, INLET)	
	7	1	**310-7255**	6	SEAL-O-RING	

A - NOT PART OF THIS GROUP
B - USE AS REQUIRED

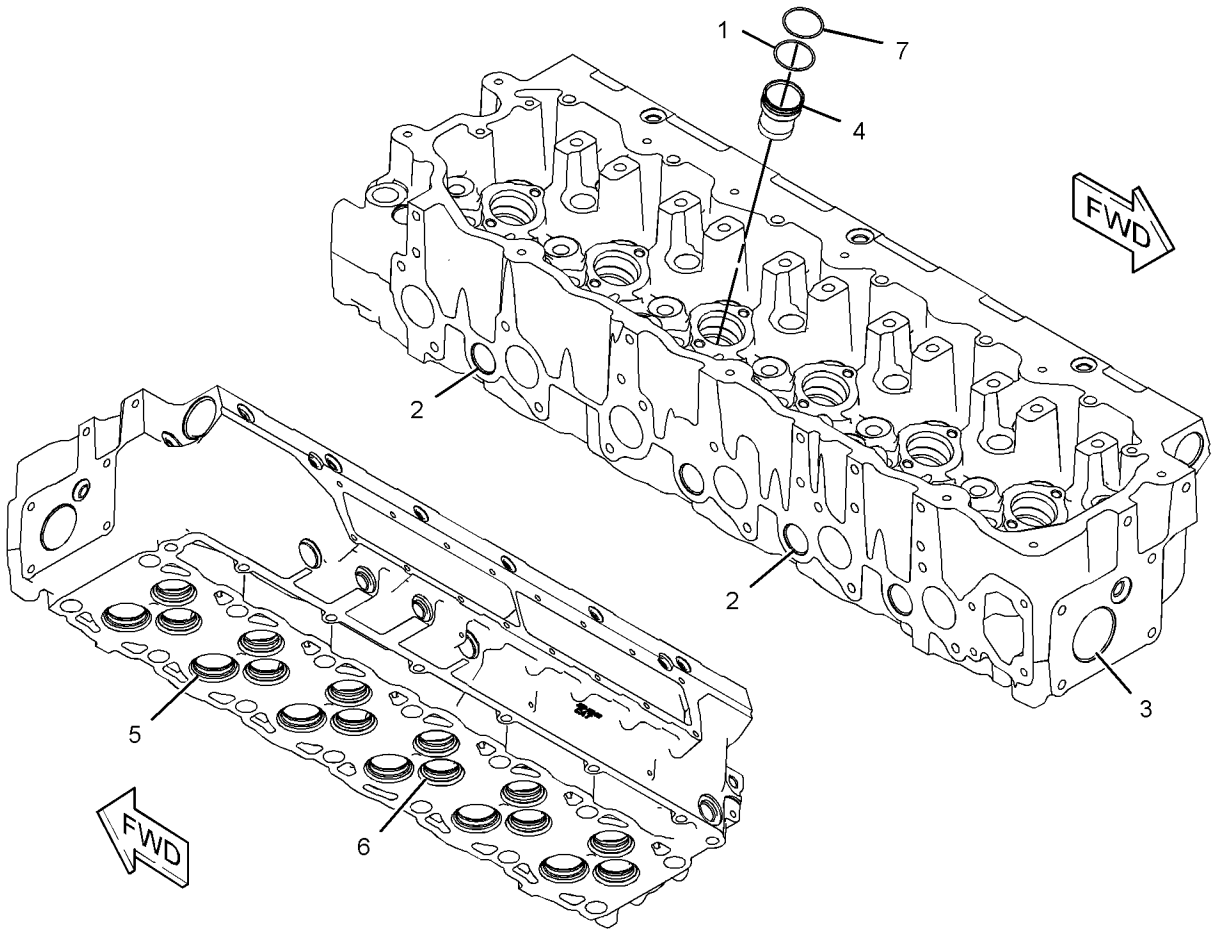

GRAPHIC #1 <END> g01581175

487-2810 CYLINDER HEAD AS

S/N: TX71-UP; KHX29829-UP

PART OF 487-2807 CYLINDER HEAD GP

SMCS-1100 **i06511914**

NOTE	REF NO	GRAPHIC REF	PART NUMBER	QTY	PART NAME 1 2 3 4 5 6 (PRODUCT LEVEL)	SEE PAGE
	1	1	**310-7257**	6	SEAL-O-RING	
	2	1	**8M-5860**	12	PLUG-CUP	
	3	1	**4F-5695**	2	PLUG-CUP	
	4	1	**227-1200**	6	SLEEVE-INJECTOR	
	5	1	**147-8218**	6	INSERT-VALVE SEAT	
	6	1	**264-6157**	12	INSERT-VALVE SEAT (STANDARD)	
	7	1	**310-7255**	6	SEAL-O-RING	

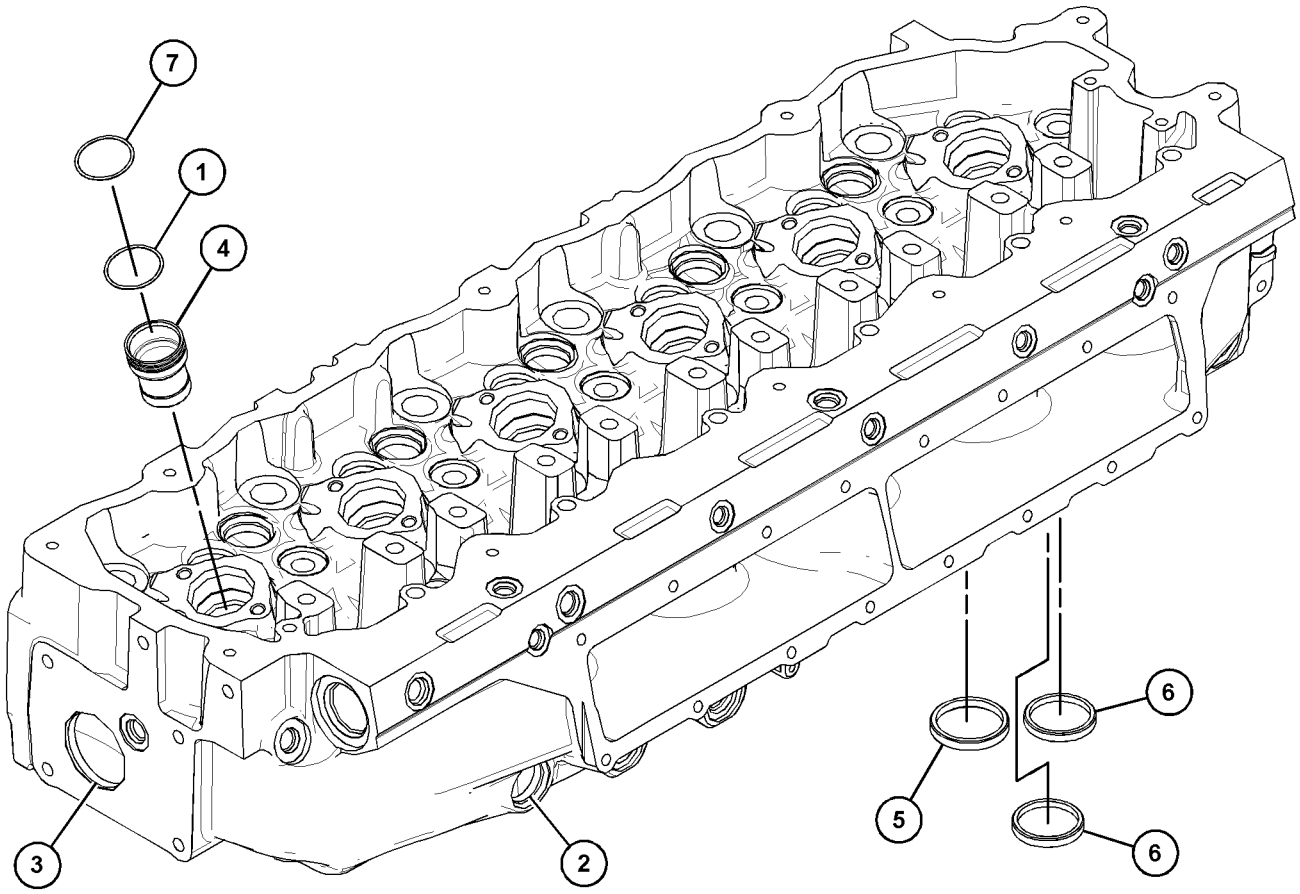

GRAPHIC #1 <END> g06005506

219-5847 CYLINDER HEAD GP*R

S/N: TX71-UP; KHX29829-UP
PART OF 219-5849 CYLINDER HEAD GP
TYPE 1

SMCS-1100 **i06040992**

NOTE	REF NO	GRAPHIC REF	PART NUMBER	QTY	PART NAME 1 2 3 4 5 6 (PRODUCT LEVEL)	SEE PAGE
CYR	1	1	**300-9550**	1	CYLINDER HEAD GP	57
	2	1	*353-5125*	1	PLUG AS	
		1	**6V-3251**	1	SEAL-O-RING	
		1	**9S-8006**	1	PLUG (7/8-14-THD)	
	3	1	*353-5124*	1	PLUG AS	
		1	**6V-3250**	1	SEAL-O-RING	
		1	**9S-8004**	1	PLUG (9/16-18-THD)	
	4	1	*319-6234*	2	PLUG AS	
					(EACH INCLUDES)	
		1	**9S-9334**	1	PLUG-O-RING	
		1	**238-5084**	1	SEAL-O-RING	
	5	1	*315-9843*	2	PLUG AS	
					(EACH INCLUDES)	
		1	**1N-5999**	1	PLUG-O-RING	
		1	**238-5079**	1	SEAL-O-RING	
	6	1	*307-2671*	6	PLUG AS	
					(EACH INCLUDES)	
		1	**9S-8002**	1	PLUG (7/16-20-THD)	
		1	**214-7566**	1	SEAL-O-RING	
	7	1	*183-3407*	1	PLUG AS	
		1	**9S-8004**	1	PLUG (9/16-18-THD)	
		1	**214-7568**	1	SEAL-O-RING	

C - CHANGE FROM PREVIOUS TYPE
R - REMANUFACTURED PART MAY BE AVAILABLE
Y - SEPARATE ILLUSTRATION

219-5847 **CYLINDER HEAD GP (**contd.**)** **i06040992**

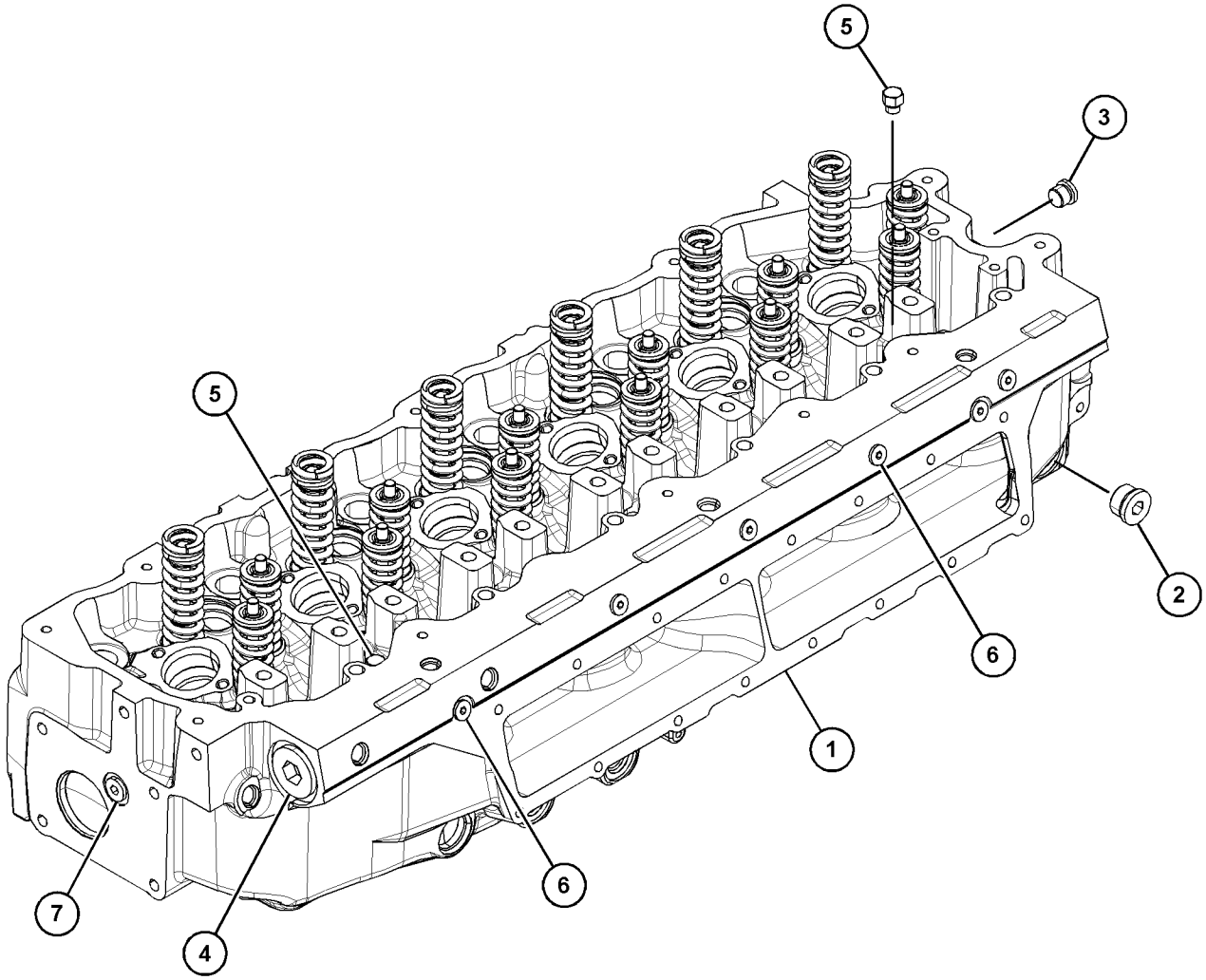

GRAPHIC #1 <END> g03799328

219-5847 CYLINDER HEAD GP*R

S/N: TX71-UP; KHX29829-UP
PART OF 219-5849 CYLINDER HEAD GP
TYPE 2

SMCS-1100 **i06510984**

NOTE	REF NO	GRAPHIC REF	PART NUMBER	QTY	PART NAME 1 2 3 4 5 6 (PRODUCT LEVEL)	SEE PAGE
CY	1	1	**487-2807**	1	CYLINDER HEAD GP	59
	2	1	*353-5125*	1	PLUG AS	
		1	**6V-3251**	1	SEAL-O-RING	
		1	**9S-8006**	1	PLUG (7/8-14-THD)	
	3	1	*353-5124*	1	PLUG AS	
		1	**6V-3250**	1	SEAL-O-RING	
		1	**9S-8004**	1	PLUG (9/16-18-THD)	
	4	1	*319-6234*	2	PLUG AS	
					(EACH INCLUDES)	
		1	**9S-9334**	1	PLUG-O-RING	
		1	**238-5084**	1	SEAL-O-RING	
	5	1	*315-9843*	2	PLUG AS	
					(EACH INCLUDES)	
		1	**1N-5999**	1	PLUG-O-RING	
		1	**238-5079**	1	SEAL-O-RING	
	6	1	*307-2671*	6	PLUG AS	
					(EACH INCLUDES)	
		1	**9S-8002**	1	PLUG (7/16-20-THD)	
		1	**214-7566**	1	SEAL-O-RING	
	7	1	*183-3407*	1	PLUG AS	
		1	**9S-8004**	1	PLUG (9/16-18-THD)	
		1	**214-7568**	1	SEAL-O-RING	

C - CHANGE FROM PREVIOUS TYPE
Y - SEPARATE ILLUSTRATION

219-5847 **CYLINDER HEAD GP (**contd.**)** **i06510984**

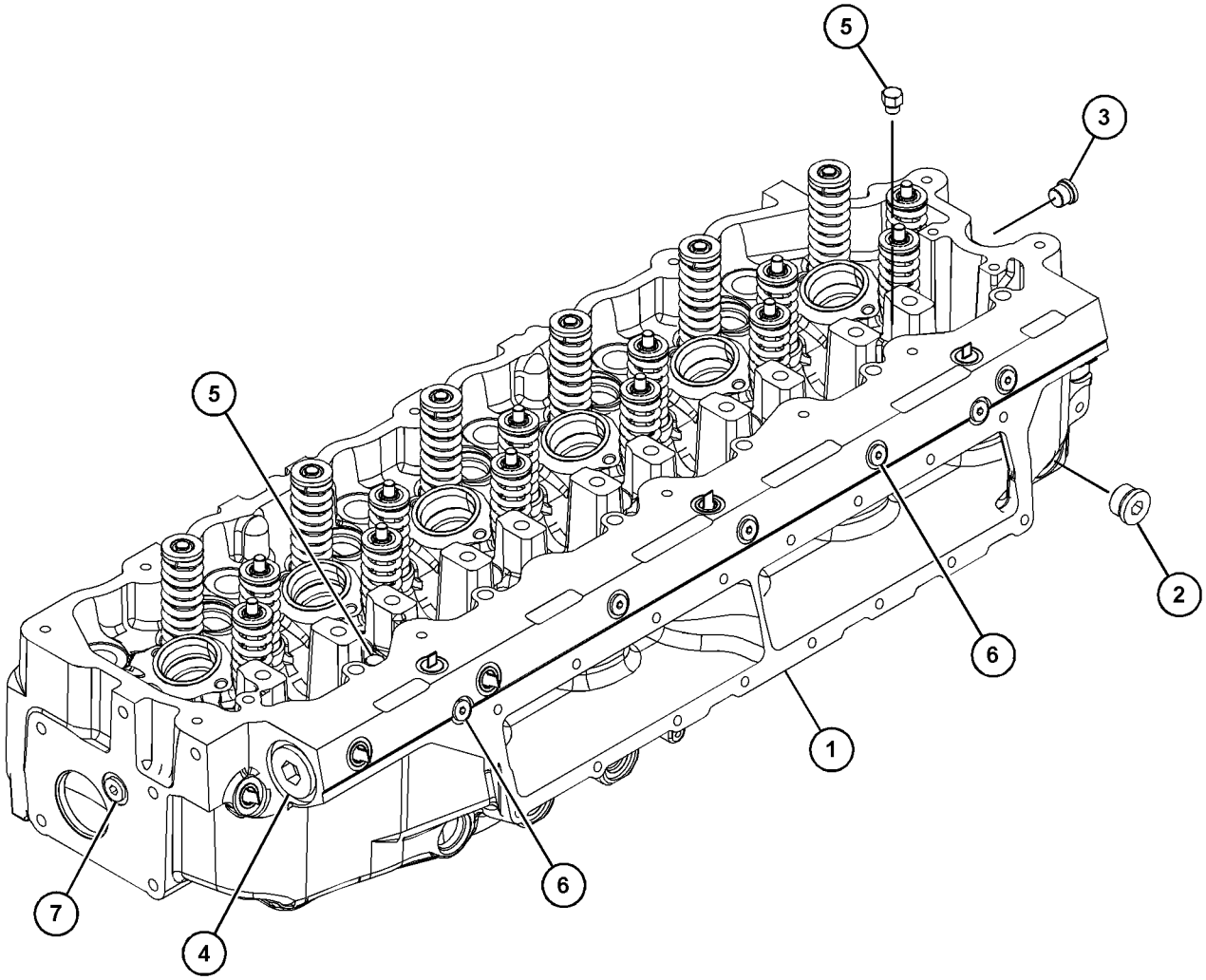

GRAPHIC #1 <END> g06003090

219-5849 CYLINDER HEAD GP

S/N: TX71-UP; KHX1-UP

PART OF 365-3500, 387-8505 ENGINE AR-CORE

SMCS-1100 **i05329693**

NOTE	REF NO	GRAPHIC REF	PART NUMBER	QTY	PART NAME 1 2 3 4 5 6 (PRODUCT LEVEL)	SEE PAGE
YR	1	1	*219-5847*	1	CYLINDER HEAD GP	52
	2	1	**133-4995**	1	GASKET AS-CYLINDER HEAD	
	3	1	*142-7289*	14	FASTENER GP-CYLINDER HEAD	
					(EACH INCLUDES)	
		1	**138-3252**	1	BOLT-12 POINT HEAD	
		1	**8T-3282**	1	WASHER-HARD (22X35X3.5-MM THK)	
M	4	1	**8T-7950**	6	BOLT (M10X1.5X180-MM)	
	5	1	**6V-5839**	6	WASHER (11X21X2.5-MM THK)	

M - METRIC PART
R - REMANUFACTURED PART MAY BE AVAILABLE
Y - SEPARATE ILLUSTRATION

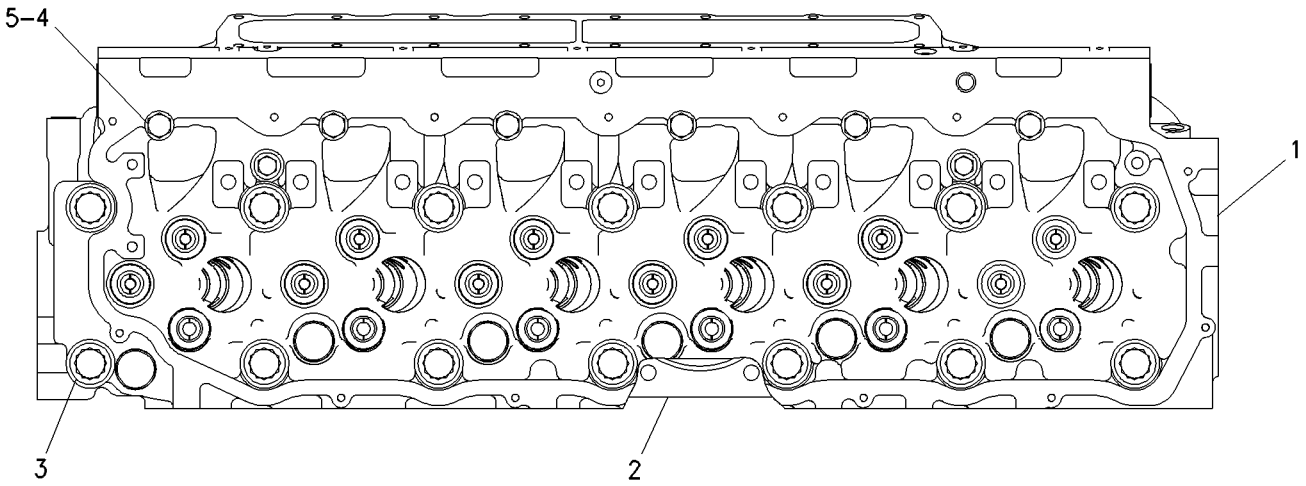

TOP VIEW

GRAPHIC #1 <END> g00760746

300-9550 CYLINDER HEAD GP*R

S/N: TX71-UP; KHX29829-UP

PART OF 219-5847 CYLINDER HEAD GP

SMCS-1100 **i06506776**

NOTE	REF NO	GRAPHIC REF	PART NUMBER	QTY	PART NAME 1 2 3 4 5 6 (PRODUCT LEVEL)	SEE PAGE
	1	1	**1W-2715**	24	LOCK-RETAINER	
	2	1	**2A-4429**	12	LOCK-RETAINER	
	3	1	**137-6715**	6	SEAT-VALVE SPRING	
	4	1	**137-6718**	6	SPRING-VALVE (EXHAUST)	
	5	1	**140-6188**	12	SPRING-VALVE (INLET)	
	6	1	**147-8214**	12	SEAL-VALVE STEM (INLET)	
	7	1	**147-8220**	6	GUIDE-VALVE (STANDARD)	
AB		1	**187-8278**		GUIDE-VALVE (0.13-MM OS)	
AB		1	**187-8279**		GUIDE-VALVE (0.51-MM OS)	
	8	1	**163-2478**	6	SEAL-VALVE STEM (EXHAUST)	
	9	1	**252-7801**	12	VALVE-INLET	
Y	10	1	*314-4184*	1	CYLINDER HEAD AS	50
	11	1	**134-4483**	6	RETAINER-SPRING	
	12	1	**140-9670**	12	GUIDE-VALVE (STANDARD)	
AB		1	**187-8280**		GUIDE-VALVE (0.13-MM OS)	
AB		1	**187-8281**		GUIDE-VALVE (0.51-MM OS)	
	13	1	**147-8211**	6	VALVE-EXHAUST	
	14	1	**7E-7779**	12	RETAINER-SPRING	

A - NOT PART OF THIS GROUP
B - USE AS REQUIRED
Y - SEPARATE ILLUSTRATION

300-9550 **CYLINDER HEAD GP (**contd.**)** **i06506776**

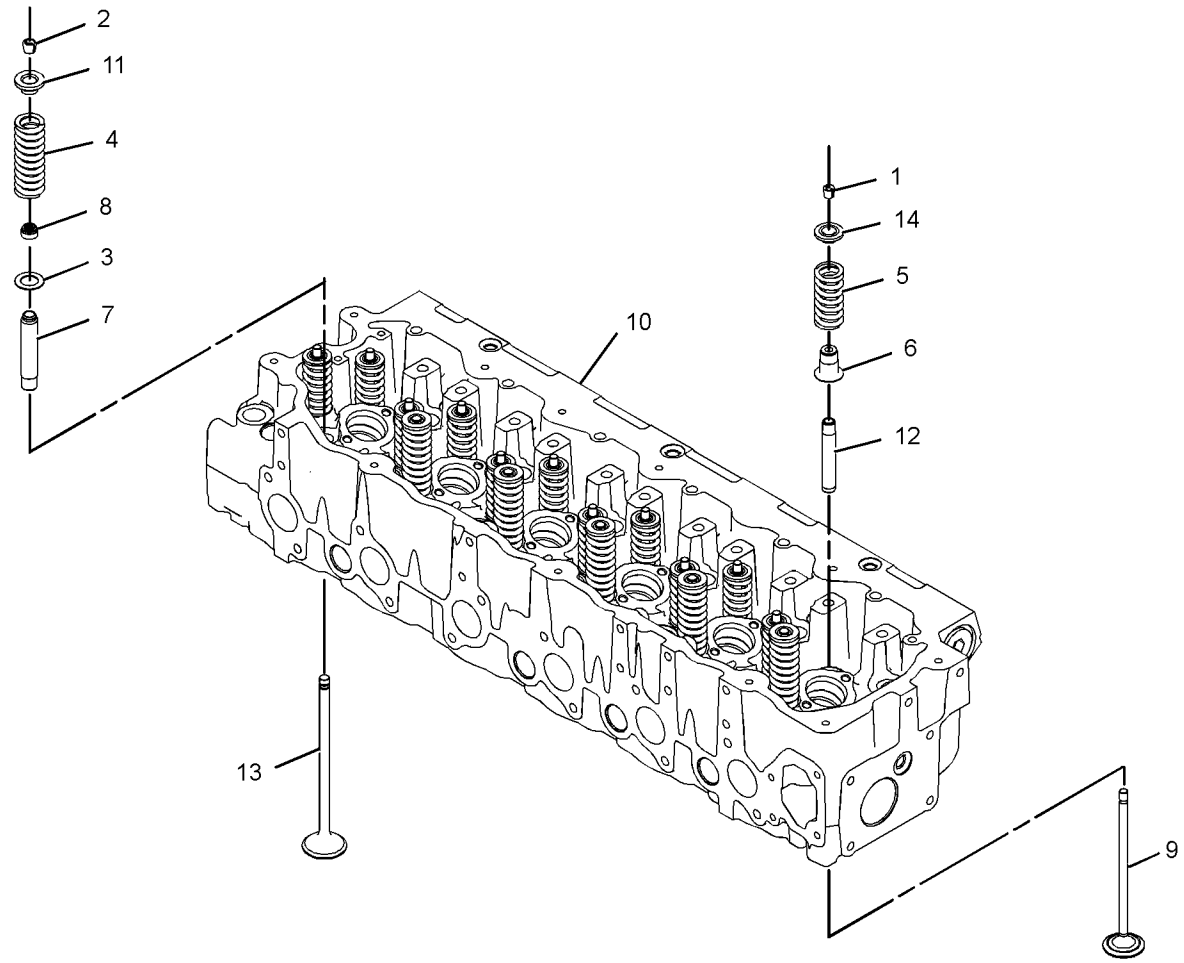

GRAPHIC #1 <END> g01384206

487-2807 CYLINDER HEAD GP

S/N: TX71-UP; KHX29829-UP

PART OF 219-5847 CYLINDER HEAD GP

SMCS-1100 **i06507975**

NOTE	REF NO	GRAPHIC REF	PART NUMBER	QTY	PART NAME 1 2 3 4 5 6 (PRODUCT LEVEL)	SEE PAGE
	1	1	**1W-2715**	24	LOCK-RETAINER	
	2	1	**2A-4429**	12	LOCK-RETAINER	
	3	1	**7E-7779**	12	RETAINER-SPRING	
	4	1	**134-4483**	6	RETAINER-SPRING	
	5	1	**137-6715**	6	SEAT-VALVE SPRING	
	6	1	**137-6718**	6	SPRING-VALVE	
	7	1	**140-6188**	12	SPRING-VALVE	
	8	1	**147-8214**	12	SEAL-VALVE STEM	
	9	1	**147-8220**	6	GUIDE-VALVE	
	10	1	**157-7130**	6	VALVE-EXHAUST	
	11	1	**163-2478**	6	SEAL-VALVE STEM	
	12	1	**252-7801**	12	VALVE-INLET	
Y	13	1	*487-2810*	1	CYLINDER HEAD AS	51
	14	1	**140-9670**	12	GUIDE-VALVE	

Y - SEPARATE ILLUSTRATION

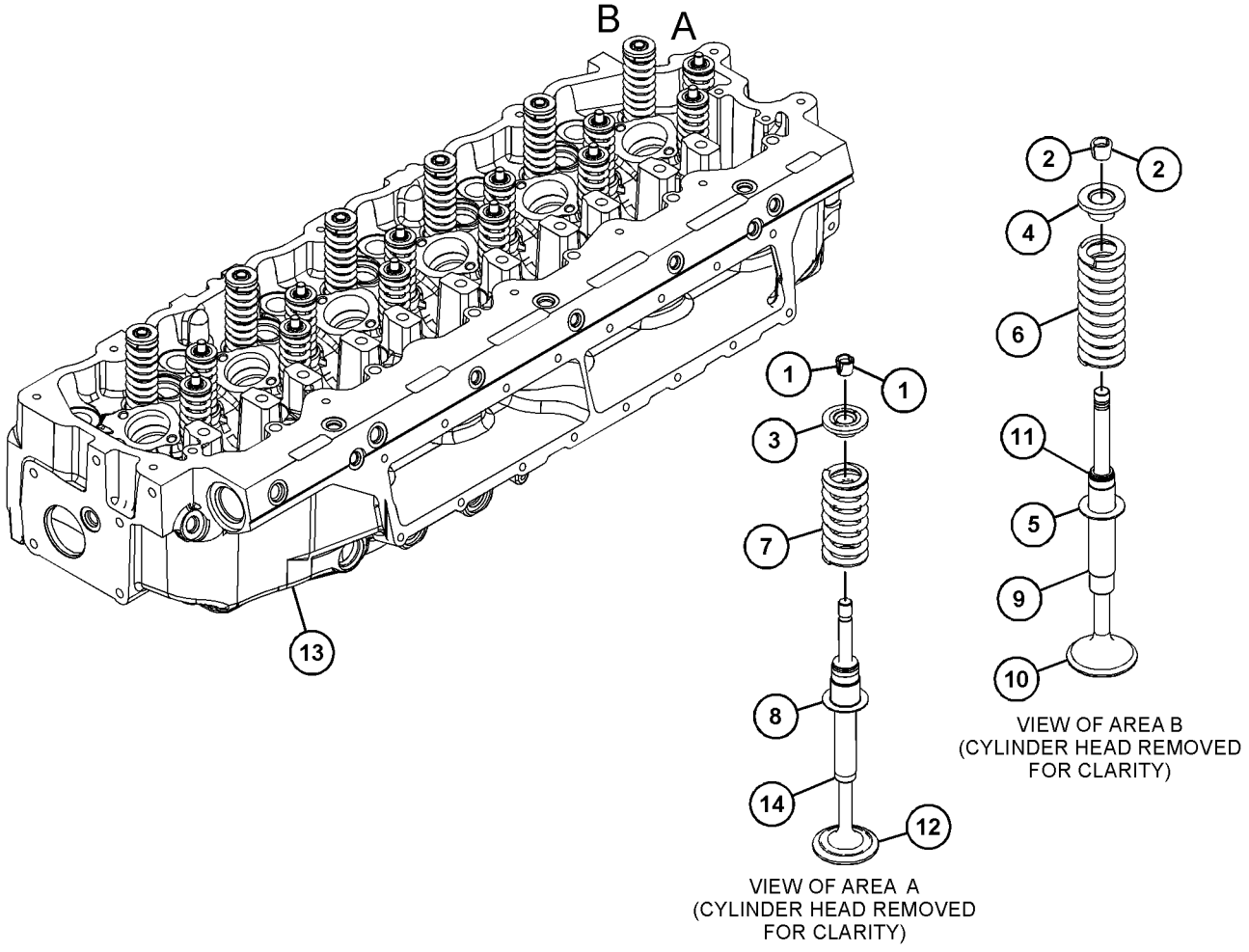

GRAPHIC #1 <END> g06003087

326-9045 DAMPER & PULLEY GP

S/N: TX71-UP; KHX1-UP

PART OF 364-7493, 395-0487 ENGINE AR-COMPLETE

SMCS-1205 **i03929670**

NOTE	REF NO	GRAPHIC REF	PART NUMBER	QTY	PART NAME 1 2 3 4 5 6 (PRODUCT LEVEL)	SEE PAGE
	1	1	**326-9040**	1	YOKE	
	2	1	**2W-7381**	1	PLATE-CLAMP	
	3	1	**167-8121**	1	DAMPER AS	
	4	1	**172-9367**	1	PULLEY-CRANKSHAFT (8-GROOVE)	
	5	1	**6V-5839**	8	WASHER (11X21X2.5-MM THK)	
M	6	1	**6V-7981**	8	BOLT (M10X1.5X70-MM)	
M	7	1	**8T-3666**	4	BOLT (M14X2X60-MM)	

M - METRIC PART

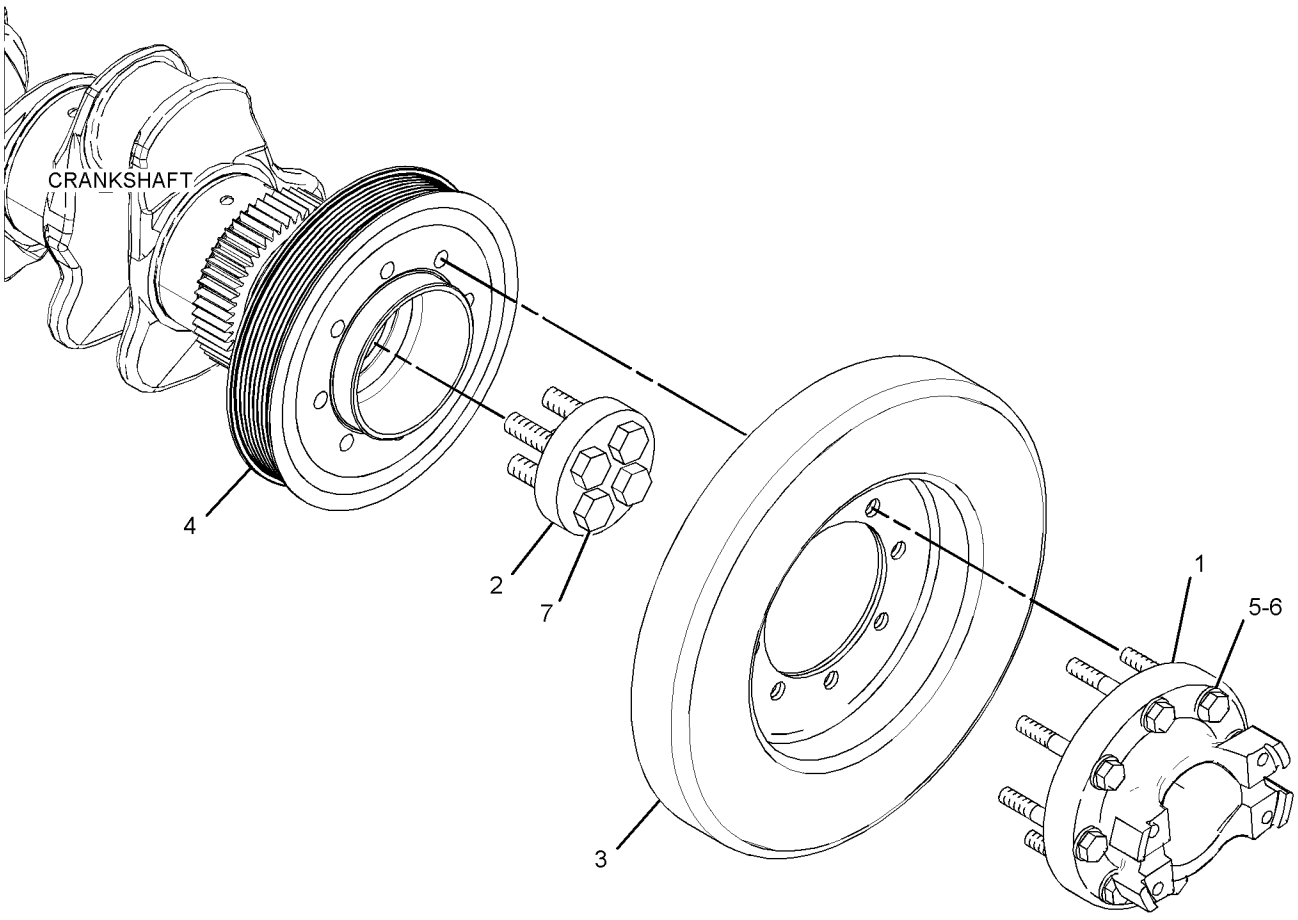

GRAPHIC #1 <END> g01945315

313-4384 DRIVE GP-ACCESSORY

S/N: TX71-UP; KHX1-UP

PART OF 364-7493, 395-0487 ENGINE AR-COMPLETE

SMCS-1207 **i06261096**

NOTE	REF NO	GRAPHIC REF	PART NUMBER	QTY	PART NAME 1 2 3 4 5 6 (PRODUCT LEVEL)	SEE PAGE
	1	1	**145-2901**	1	COVER-DUST	
	2	1	**220-1209**	1	BELT TENSIONER	
	3	1	**228-4766**	1	PLATE-LIFTING	
	4	1	**263-1786**	1	SPACER	
	5	1	**435-8654**	1	BRACKET AS	
	6	1	**124-7792**	1	PULLEY AS-IDLER (8-GROOVE)	
	7	1	**3E-4352**	1	WASHER-HARD (8.8X20.5X2.5-MM THK)	
M	8	1	**6V-3822**	4	BOLT (M10X1.5X35-MM)	
M	9	1	**6V-5220**	1	BOLT (M8X1.25X65-MM)	
	10	1	**6V-5839**	5	WASHER (11X21X2.5-MM THK)	
M	11	1	**8T-0643**	1	BOLT (M10X1.5X80-MM)	

M - METRIC PART

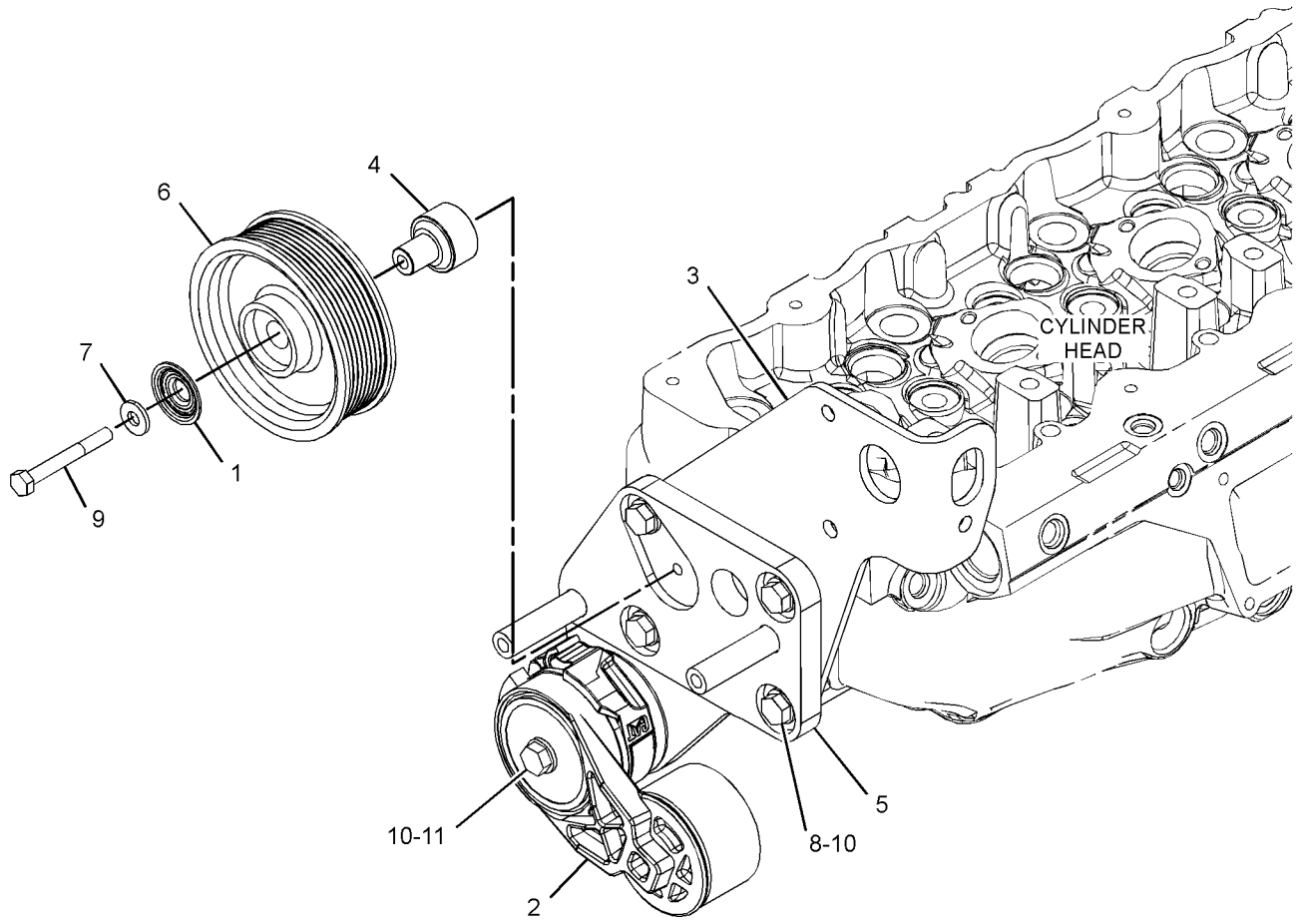

GRAPHIC #1 <END> g03387356

338-5871 DRIVE GP-FAN

S/N: SZS1-623

BELT

PART OF 465-6950 DRIVE GP-FAN, 368-3025 GENERAL AR, 462-7246 OPTION AR

ALSO AN ATTACHMENT

SMCS-1359 **i06592341**

NOTE	REF NO	GRAPHIC REF	PART NUMBER	QTY	PART NAME 1 2 3 4 5 6 (PRODUCT LEVEL)	SEE PAGE
Y	1	1	**7C-8365**	1	DRIVE GP-FAN	64
	2	1	**9L-1630**	1	V-BELT SET (INCLUDES 3-BELTS)	
	3	1	**107-9579**	1	PULLEY	
	4	1	**276-7462**	1	ADAPTER-FAN	
	5	1	**294-1136**	1	SUPPORT AS	
	6	1	**294-1137**	1	PULLEY	
M	7	1	**7X-0818**	6	BOLT (M8X1.25X45-MM)	
M	8	1	**7X-2553**	4	BOLT (M16X2X40-MM)	
	9	1	**8T-4121**	8	WASHER-HARD (11X21X2.5-MM THK)	
M	10	1	**8T-4185**	4	BOLT (M10X1.5X50-MM)	
M	11	1	**8T-4196**	4	BOLT (M10X1.5X35-MM)	
	12	1	**8T-4224**	12	WASHER-HARD (8.8X16X2-MM THK)	
M	13	1	**8T-4908**	6	BOLT (M8X1.25X25-MM)	
	14	1	**9X-8257**	4	WASHER (17.5X30X3.5-MM THK)	

M - METRIC PART
Y - SEPARATE ILLUSTRATION

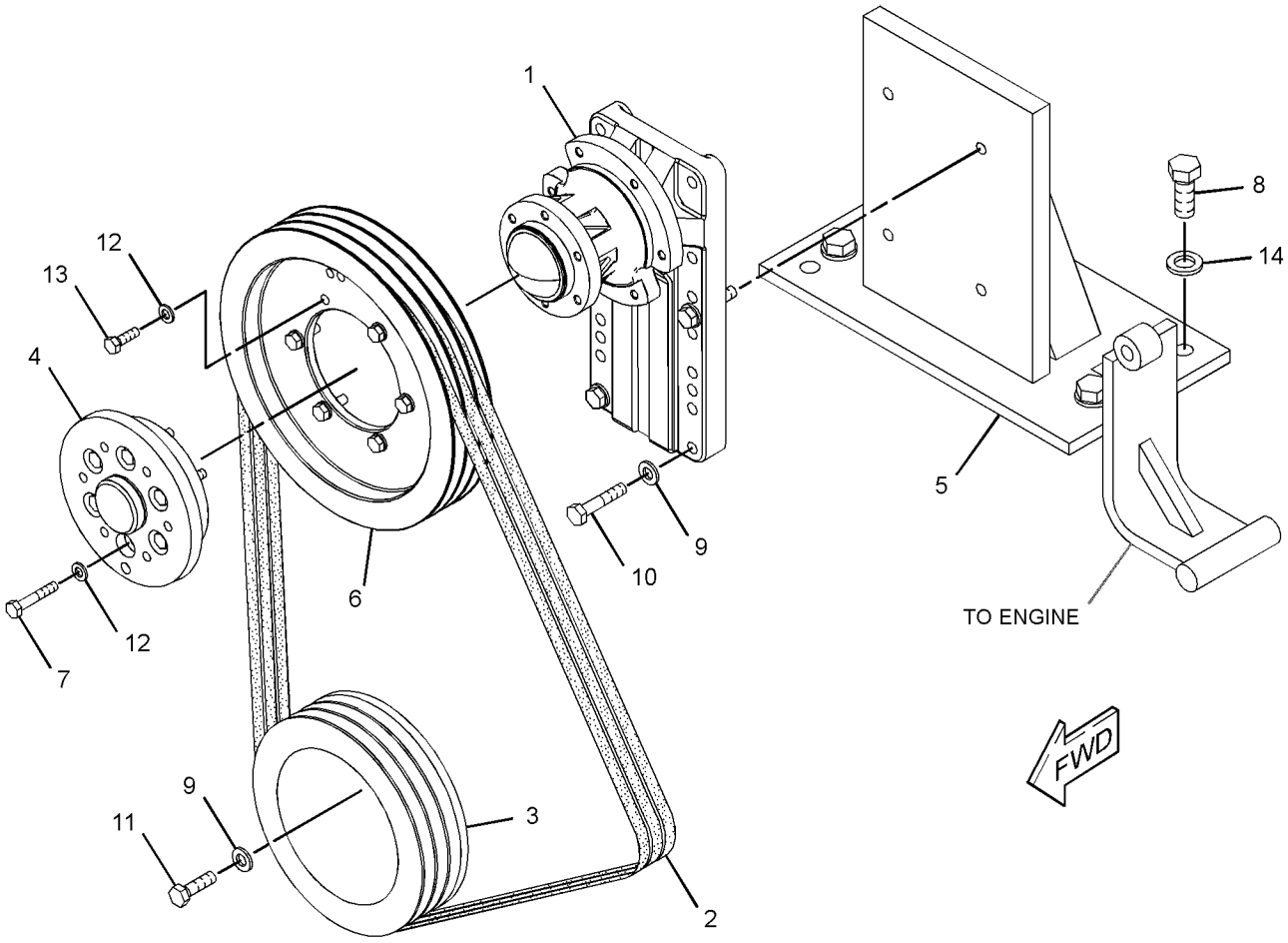

GRAPHIC #1 <END> g01927473

465-6950 DRIVE GP-FAN

S/N: SZS1-UP

AN ATTACHMENT

SMCS-1359 **i05944211**

NOTE	PART NUMBER	QTY	PART NAME 1 2 3 4 5 6 (PRODUCT LEVEL)	SEE PAGE
Y	*338-5871*	1	DRIVE GP-FAN	62

Y - SEPARATE ILLUSTRATION

<END>

7C-8365 DRIVE GP-FAN

S/N: SZS1-UP
PART OF 338-5871 DRIVE GP-FAN
ALSO AN ATTACHMENT

SMCS-1359 **i03511261**

NOTE	REF NO	GRAPHIC REF	PART NUMBER	QTY	PART NAME 1 2 3 4 5 6 (PRODUCT LEVEL)	SEE PAGE
	1	1	**5S-9062**	1	SPACER (35.032X50.8X15.88-MM THK)	
	2	1	**7C-8370**	1	CAP-DUST	
	3	1	**7C-8366**	1	BRACKET AS	
	4	1	**7C-8369**	1	HUB	
	5	1	**6V-9748**	1	SEAL-LIP TYPE	
	6	1	**4W-1203**	2	CUP-BEARING	
	7	1	**4W-1204**	2	CONE-BEARING	
	8	1	**4W-2042**	1	SPACER (35.3X45.5X38.331-MM THK)	
M	9	1	**6V-8004**	1	BOLT (M12X1.75X120-MM)	
	10	1	**7C-8634**	1	PLATE	

M - METRIC PART

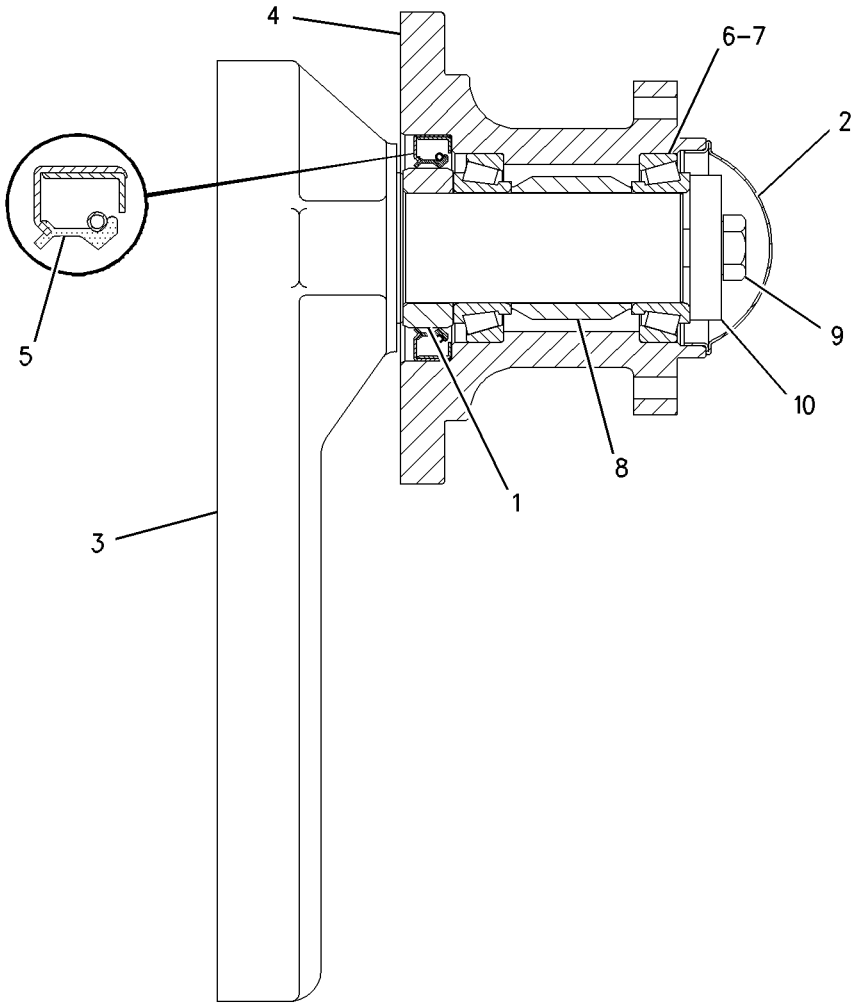

GRAPHIC #1 <END> g00799529

258-8723 FASTENER GP-CYLINDER HEAD

S/N: TX71-UP; KHX1-UP

PART OF 364-7493, 395-0487 ENGINE AR-COMPLETE

SMCS-1100 **i05908409**

NOTE	REF NO	GRAPHIC REF	PART NUMBER	QTY	PART NAME 1 2 3 4 5 6 (PRODUCT LEVEL)	SEE PAGE
	1	1	**229-8844**	3	CLIP	
	2	1	**244-4500**	11	SPRING	
M	3	1	**8T-0100**	11	BOLT (M8X1.25X60-MM)	
	4	1	**9N-0869**	11	WASHER-HARD (8.8X25.5X2-MM THK)	

M - METRIC PART

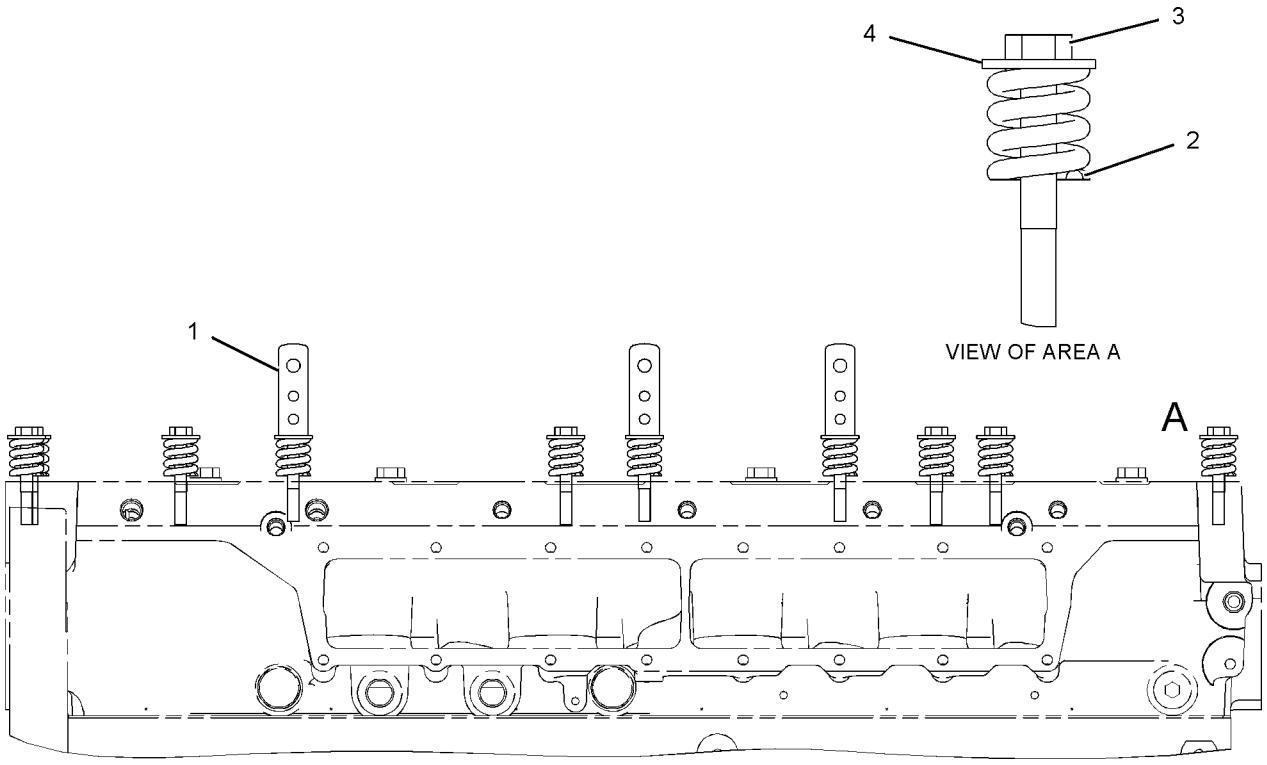

VIEW OF AREA A

RIGHT SIDE VIEW

GRAPHIC #1 <END> g01125046

322-0246 FASTENER GP-ENGINE

S/N: TX71-UP; KHX1-UP

PART OF 364-7493, 395-0487 ENGINE AR-COMPLETE

SMCS-1000, 7553

i06261241

NOTE	REF NO	GRAPHIC REF	PART NUMBER	QTY	PART NAME 1 2 3 4 5 6 (PRODUCT LEVEL)	SEE PAGE
M	1	1	**6V-2317**	6	BOLT (M8X1.25X30-MM)	
	2	1	**9M-1974**	7	WASHER-HARD (8.8X16X2-MM THK)	
M	3	1	**6V-5192**	1	BOLT-SOCKET HEAD (M8X1.25X30-MM)	

M - METRIC PART

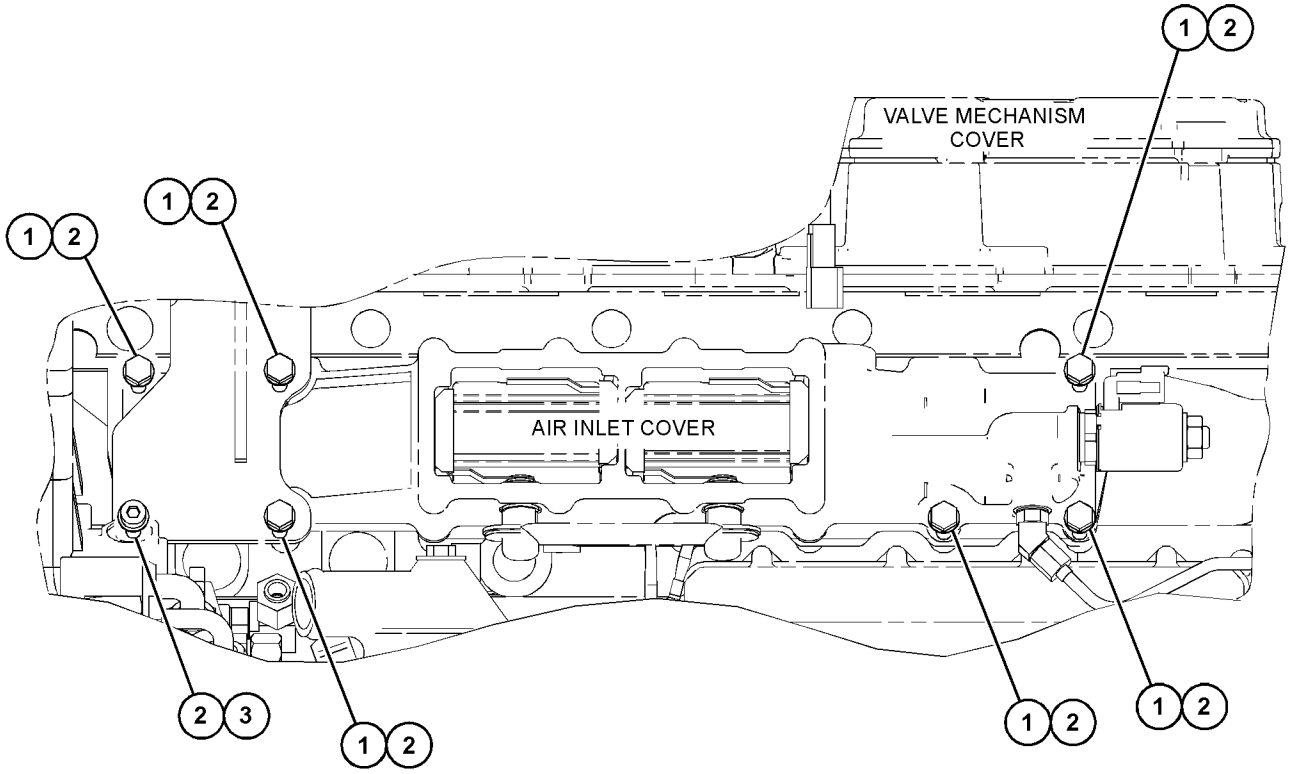

LEFT SIDE VIEW OF ENGINE

(BACKGROUND GEOMETRY OF ILLUSTRATION MAY NOT REPRESENT ALL MODELS WHERE USED)

GRAPHIC #1 <END> g03879161

116-4556 FASTENER GP-FRONT HOUSING

S/N: TX71-UP; KHX1-UP

PART OF 364-7493, 395-0487 ENGINE AR-COMPLETE

SMCS-1151 **i03496860**

NOTE	REF NO	GRAPHIC REF	PART NUMBER	QTY	PART NAME 1 2 3 4 5 6 (PRODUCT LEVEL)	SEE PAGE
M	1	1	**6V-8336**	6	BOLT (M12X1.75X70-MM)	
	2	1	**5P-8245**	6	WASHER-HARD (13.5X25.5X3-MM THK)	

M - METRIC PART

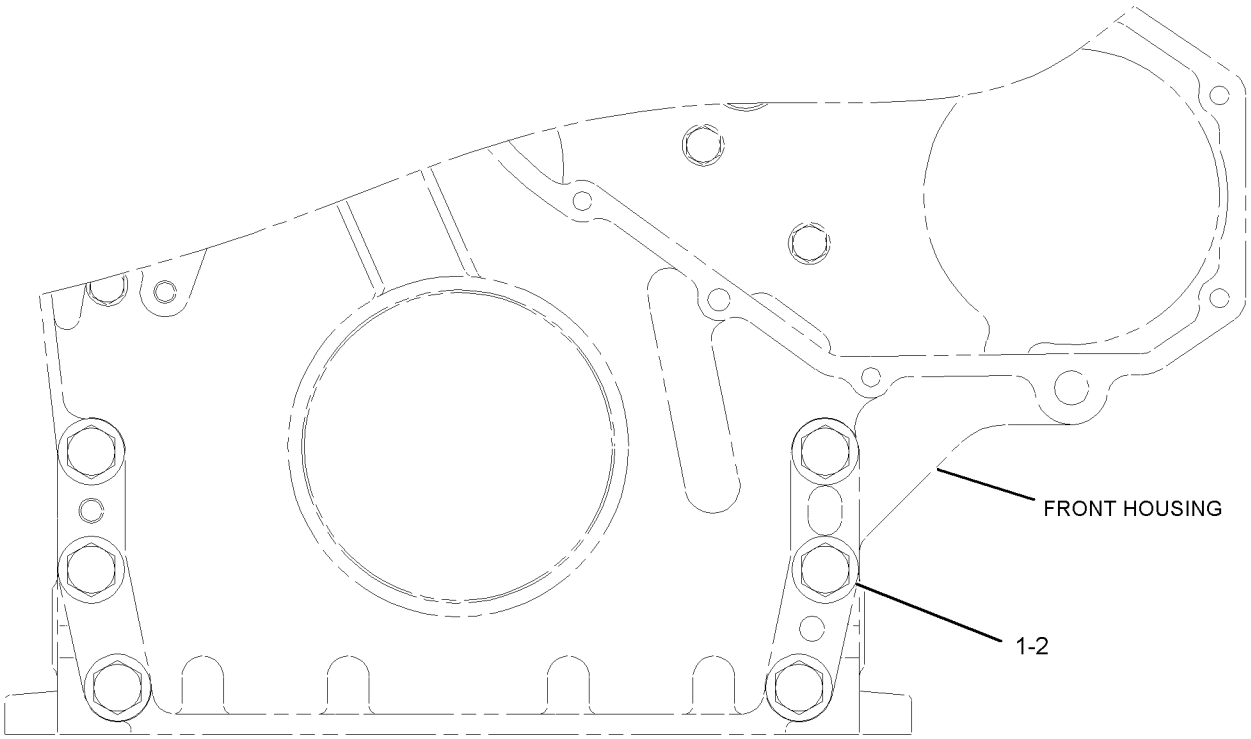

FRONT VIEW OF ENGINE

GRAPHIC #1 <END> g01380997

275-8387 FLYWHEEL GP

S/N: TX71-UP; KHX1-UP

PART OF 364-7493, 395-0487 ENGINE AR-COMPLETE

SMCS-1156, 1158 **i05856490**

NOTE	REF NO	GRAPHIC REF	PART NUMBER	QTY	PART NAME 1 2 3 4 5 6 (PRODUCT LEVEL)	SEE PAGE
	1	1	**3E-3213**	1	PIN-SPRING	
M	2	1	**7X-7961**	8	BOLT-SELF-LOCKING (M12X1.75X100-MM)	
	3	1	**311-7210**	1	FLYWHEEL AS	
		1	**163-1387**	1	GEAR-FLYWHEEL (134-TEETH)	
	4	1	**5P-8245**	8	WASHER-HARD (13.5X25.5X3-MM THK)	

M - METRIC PART

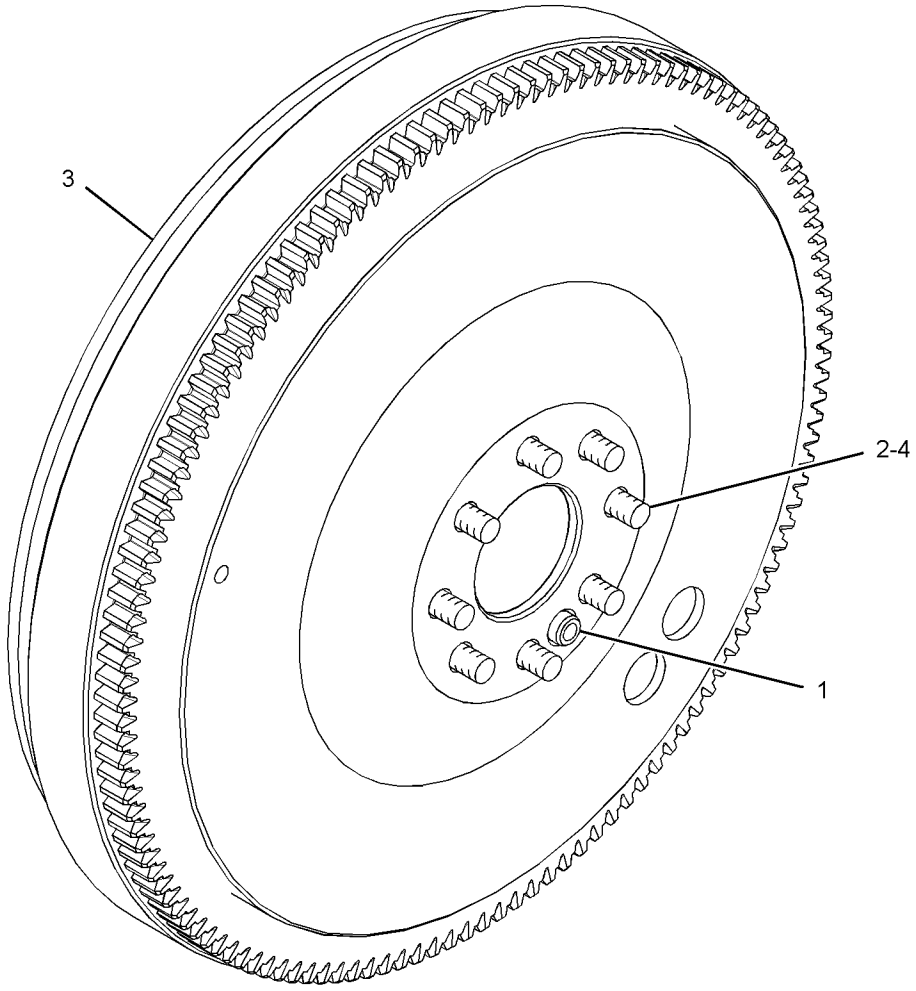

GRAPHIC #1 <END> g01717017

205-1321 GEAR GP-FRONT

S/N: TX71-UP; KHX1-UP

PART OF 365-3500, 387-8505 ENGINE AR-CORE

SMCS-1151, 1162, 1206

i03529486

NOTE	REF NO	GRAPHIC REF	PART NUMBER	QTY	PART NAME 1 2 3 4 5 6 (PRODUCT LEVEL)	SEE PAGE
	1	1	**113-6069**	1	PLATE-THRUST	
	2	1	**115-4219**	1	PLATE-RETAINING	
	3	1	**200-4495**	1	SHAFT-IDLER	
	4	1	**205-1320**	1	GEAR AS-IDLER (50-TEETH)	
	4A	1	**115-4072**	1	BEARING	
M	5	1	**136-4183**	1	BOLT-12 POINT HEAD (M10X1.5X30-MM)	
M	6	1	**6V-5843**	2	BOLT (M10X1.5X45-MM)	

M - METRIC PART

205-1321 **GEAR GP-FRONT (**contd.**)** **i03529486**

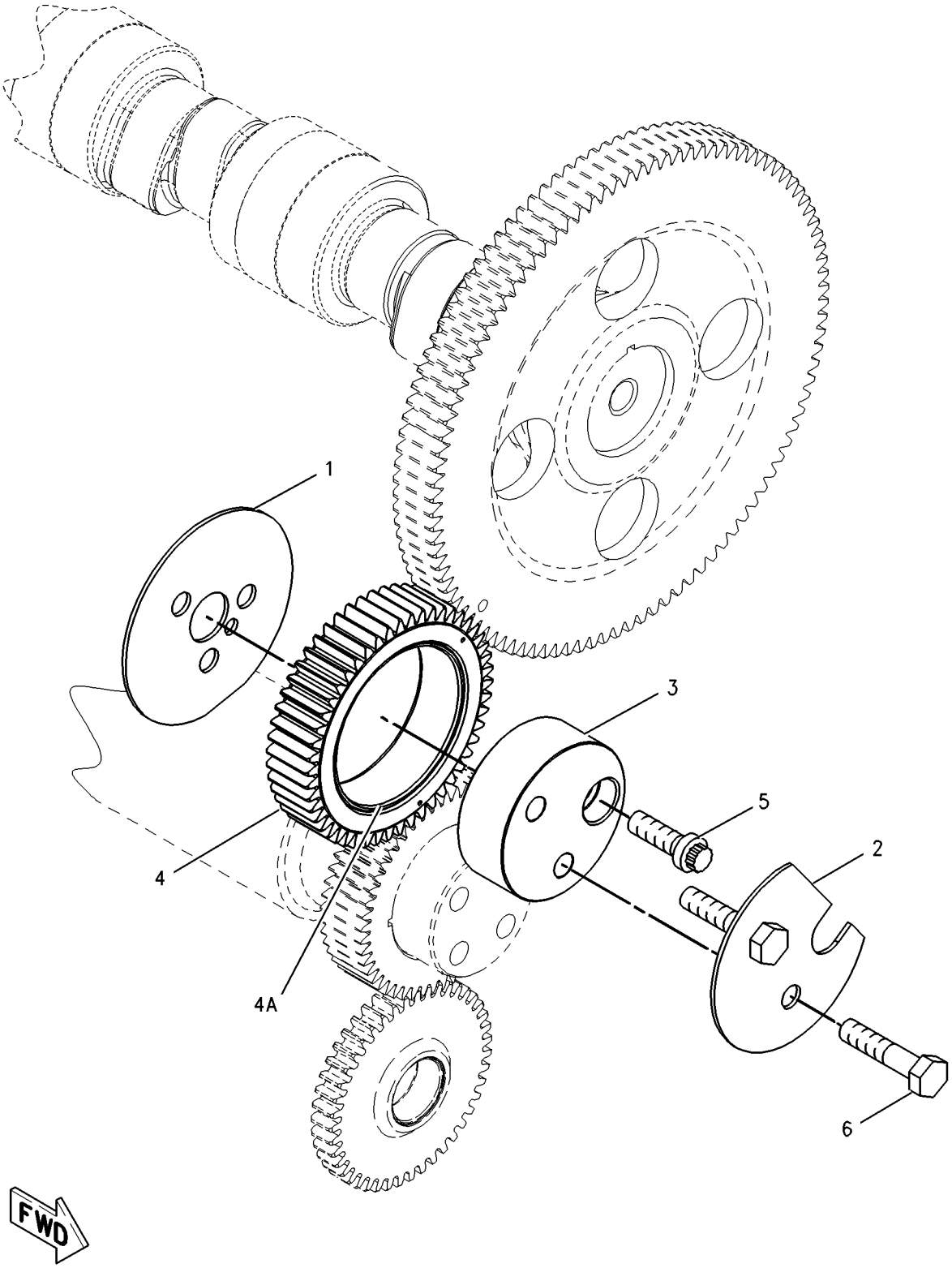

GRAPHIC #1 <END> g00870175

197-5210 HOUSING GP-FLYWHEEL

S/N: TX71-UP; KHX1-UP

PART OF 364-7493, 395-0487 ENGINE AR-COMPLETE

SMCS-1157 **i05908429**

NOTE	REF NO	GRAPHIC REF	PART NUMBER	QTY	PART NAME 1 2 3 4 5 6 (PRODUCT LEVEL)	SEE PAGE
	1	1	**5F-0304**	1	PLUG	
	2	1	**100-6551**	1	HOUSING-FLYWHEEL	
	4	1	**2A-1162**	1	GASKET	
	5	1	*389-3709*	1	PLUG AS	
	5A	1	**238-5082**	1	SEAL-O-RING	
		1	**360-3682**	1	PLUG-O-RING	
	6	1	*396-0393*	1	PLUG AS	
	6A	1	**214-7566**	1	SEAL-O-RING	
		1	**360-3677**	1	PLUG (7/16-20-THD)	
M	7	1	**6V-5842**	2	BOLT (M10X1.5X40-MM)	
M	9	1	**8T-0226**	10	BOLT (M14X2X45-MM)	
BF			**1U-8846**		SEALANT-GASKET	

B - USE AS REQUIRED
F - NOT SHOWN
M - METRIC PART

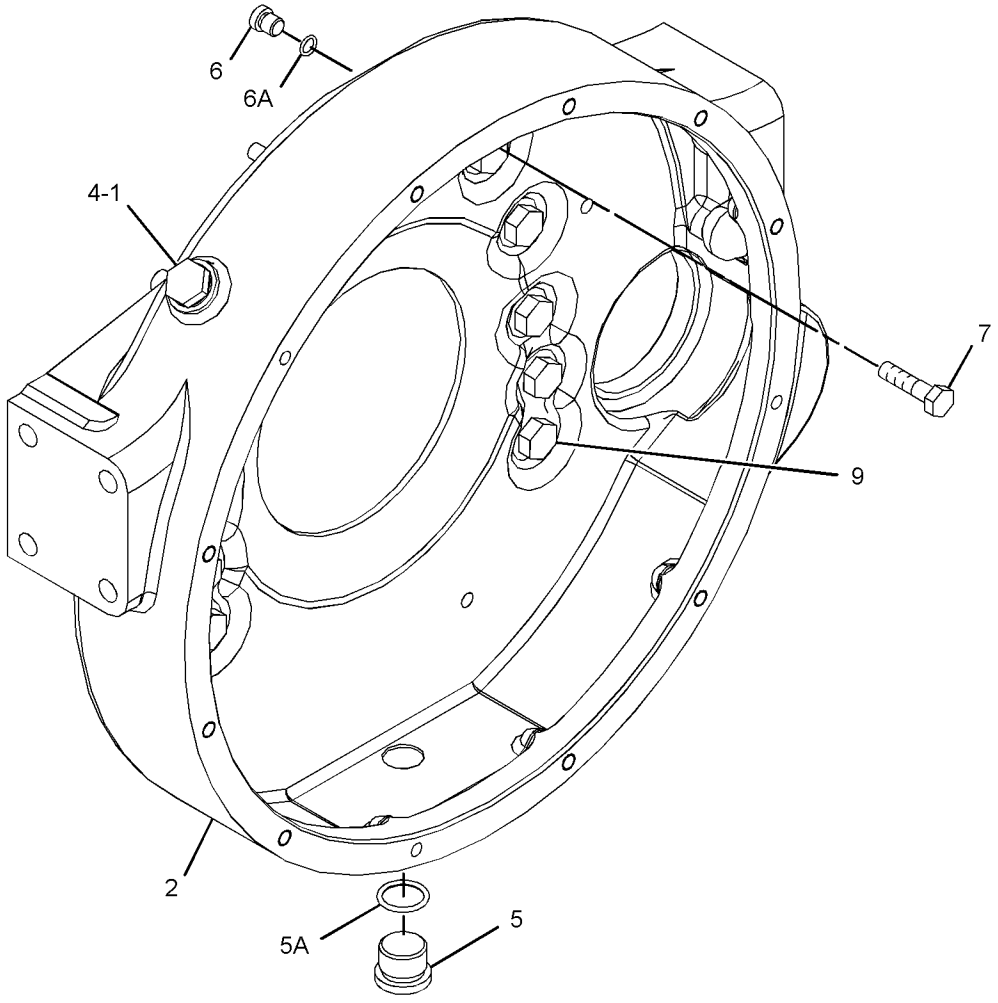

GRAPHIC #1 <END> g03379060

165-4446 HOUSING GP-FRONT

S/N: TX71-UP; KHX1-UP

PART OF 395-0487 ENGINE AR-COMPLETE, 365-3500 ENGINE AR-CORE

SMCS-1151, 1162, 1206 **i03529680**

NOTE	REF NO	GRAPHIC REF	PART NUMBER	QTY	PART NAME 1 2 3 4 5 6 (PRODUCT LEVEL)	SEE PAGE
C	1	1	**245-3259**	1	HOUSING-FRONT	
M	2	1	**6V-3918**	4	BOLT (M8X1.25X50-MM)	
M	3	1	**6V-5217**	8	BOLT (M8X1.25X20-MM)	
	4	1	**9M-1974**	12	WASHER-HARD (8.8X16X2-MM THK)	
B	5	1	**1U-8846**		SEALANT-GASKET	

B - USE AS REQUIRED
C - CHANGE FROM PREVIOUS TYPE
M - METRIC PART

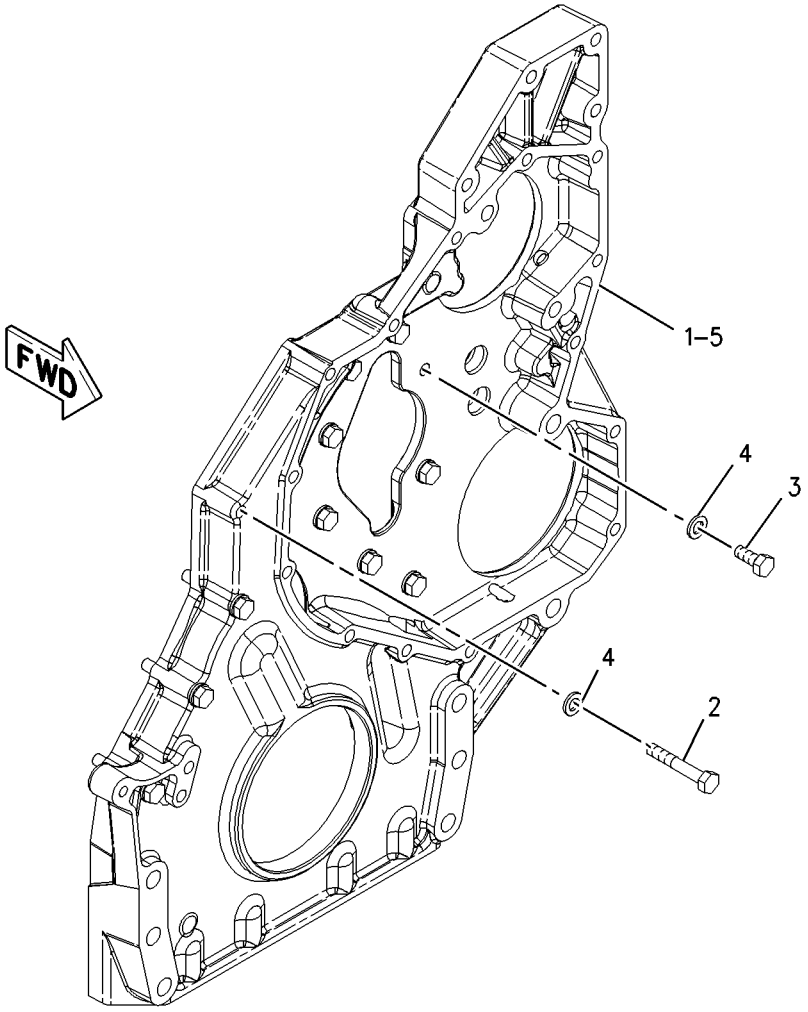

GRAPHIC #1 <END> g01005394

297-4841 KIT-ENGINE GASKET—SINGLE FUEL INJECTOR

S/N: SZS1-UP
FOR USE WITH 395-0487—PAGE: 26
FIELD INSTALLATION

SMCS-1000, 7555

i05843051

NOTE	PART NUMBER	QTY	PART NAME 1 2 3 4 5 6 (PRODUCT LEVEL)	SEE PAGE
	149-5240	1	RING-BACKUP	
	293-0730	1	RING-BACKUP	
	109-3207	1	SEAL-O-RING	
	148-2903	2	SEAL-O-RING	

<END>

465-9256 KIT-ENGINE GASKET

S/N: SZS1-UP

KIT CONTAINS GASKETS, SEAL, AND BENDABLE LOCKS TO REBUILD AND REINSTALL A CYLINDER HEAD. KIT INCLUDES TURBO GASKETS. KIT DOES NOT INCLUDE THE FUEL INJECTOR SEALS. ORDER A SINGLE INJECTOR SEAL KIT AS NEEDED. FOR IN-LINE 4 AND 6 CYLINDER ENGINE WITH ONE CYLINDER HEAD ONLY. KIT INCLUDES TURBO MOUNTING HARDWARE
FIELD INSTALLATION

SMCS-1000, 7555 **i06890227**

NOTE	PART NUMBER	QTY	PART NAME 1 2 3 4 5 6 (PRODUCT LEVEL)	SEE PAGE
	7C-7431	1	GASKET	
	126-5466	1	GASKET	
	197-8419	1	GASKET (TURBOCHARGER)	
	222-5915	1	GASKET	
	272-1956	6	GASKET	
	133-4995	1	GASKET AS-CYLINDER HEAD	
M	**375-2467**	4	LOCKNUT-FLANGE (M10X1.5-THD)	
	304-4924	1	SEAL AS	
	6V-3250	3	SEAL-O-RING	
	6V-3251	1	SEAL-O-RING	
	3P-1156	1	SEAL-O-RING	
	6V-6609	3	SEAL-O-RING	
	8H-2046	1	SEAL-O-RING	
	8L-2786	1	SEAL-O-RING	
	214-7566	8	SEAL-O-RING	
	214-7567	2	SEAL-O-RING	
	214-7568	15	SEAL-O-RING	
	228-7089	4	SEAL-O-RING	
	228-7090	2	SEAL-O-RING	
	238-5079	2	SEAL-O-RING	
	238-5080	3	SEAL-O-RING	
	238-5084	2	SEAL-O-RING	
	7F-8268	1	SEAL-O-RING	
	272-0388	1	SEAL-VALVE COVER	
M	**418-6781**	4	STUD-TAPERLOCK (M10X1.5X40-MM)	
			FOR A LIST OF RELATED PARTS THAT MAY BE REQUIRED FOR THE ENGINE REBUILD TO THE KIT CONSIST, PLEASE VISIT	
			HTTP://DEALER.CAT.COM/RELATED	

M - METRIC PART

<END>

455-1107 KIT-FRONT COVER GASKET

S/N: SZS1-UP
FOR USE WITH 395-0487—PAGE: 26
FIELD INSTALLATION

SMCS-1000, 7555 **i05899667**

NOTE	PART NUMBER	QTY	PART NAME 1 2 3 4 5 6 (PRODUCT LEVEL)	SEE PAGE
	166-1781	1	GASKET	
	245-7339	1	SEAL-CRANKSHAFT (FRONT)	
	135-9819	1	SEAL-INTEGRAL	
	3J-1907	2	SEAL-O-RING	
	061-9455	1	SEAL-O-RING	
	214-7568	2	SEAL-O-RING	
	227-5904	1	SEAL-O-RING	
	228-4947	2	SEAL-O-RING	
	238-5080	1	SEAL-O-RING	
	126-1757	2	WASHER (10.85X19.3X1.27-MM THK)	

<END>

494-7120 KIT-FRONT COVER GASKET

S/N: SZS1-UP
FIELD INSTALLATION

SMCS-1000, 7555 **i06890247**

NOTE	PART NUMBER	QTY	PART NAME 1 2 3 4 5 6 (PRODUCT LEVEL)	SEE PAGE
	166-1781	1	GASKET	
	245-7339	1	SEAL-CRANKSHAFT (FRONT)	
	135-9819	1	SEAL-INTEGRAL	
	061-9455	1	SEAL-O-RING	
	227-5904	1	SEAL-O-RING	
	228-4947	2	SEAL-O-RING	
	126-1757	2	WASHER (10.85X19.3X1.27-MM THK)	

<END>

453-1662 KIT-REAR COVER GASKET

S/N: SZS10100-UP
FIELD INSTALLATION

SMCS-1000, 7555 **i06915247**

NOTE	PART NUMBER	QTY	PART NAME 1 2 3 4 5 6 (PRODUCT LEVEL)	SEE PAGE
	2A-1162	1	GASKET	
	3K-3257	1	GASKET	
	239-0583	1	GASKET	
	247-1876	1	SEAL	
	222-3910	1	SEAL GP-CRANKSHAFT	
	214-7566	2	SEAL-O-RING	
	238-5082	2	SEAL-O-RING	

<END>

455-1109 KIT-REAR COVER GASKET

S/N: SZS1-UP

KIT CONTAINS GASKETS, SEALS, AND BENDABLE LOCKS TO REINSTALL THE REAR COVER. KIT DOES NOT INCLUDE THE OIL PAN GASKET.

FOR USE WITH 395-0487—PAGE: 26

FIELD INSTALLATION

SMCS-1000, 7555

i05958370

NOTE	REF NO	GRAPHIC REF	PART NUMBER	QTY	PART NAME 1 2 3 4 5 6 (PRODUCT LEVEL)	SEE PAGE
	1	1	**2A-1162**	1	GASKET (DRAIN PLUG)	
	2	1	**3K-3257**	1	GASKET	
	3	1	**7L-2894**	1	GASKET	
	4	1	**239-0583**	1	GASKET	
	5	1	**2P-1294**	1	PLUG-SEAL	
	6	1	**247-1876**	1	SEAL	
	7	1	**222-3910**	1	SEAL GP-CRANKSHAFT (CLOCKWISE ROTATION)	
	8	1	**214-7566**	2	SEAL-O-RING	
	9	1	**238-5082**	2	SEAL-O-RING	
					FOR A LIST OF RELATED PARTS THAT REQUIRED FOR THE ENGINE REBUILD TO THE KIT CONSIST, PLEASE VISIT	
					HTTP://DEALER.CAT.COM/RELATED	

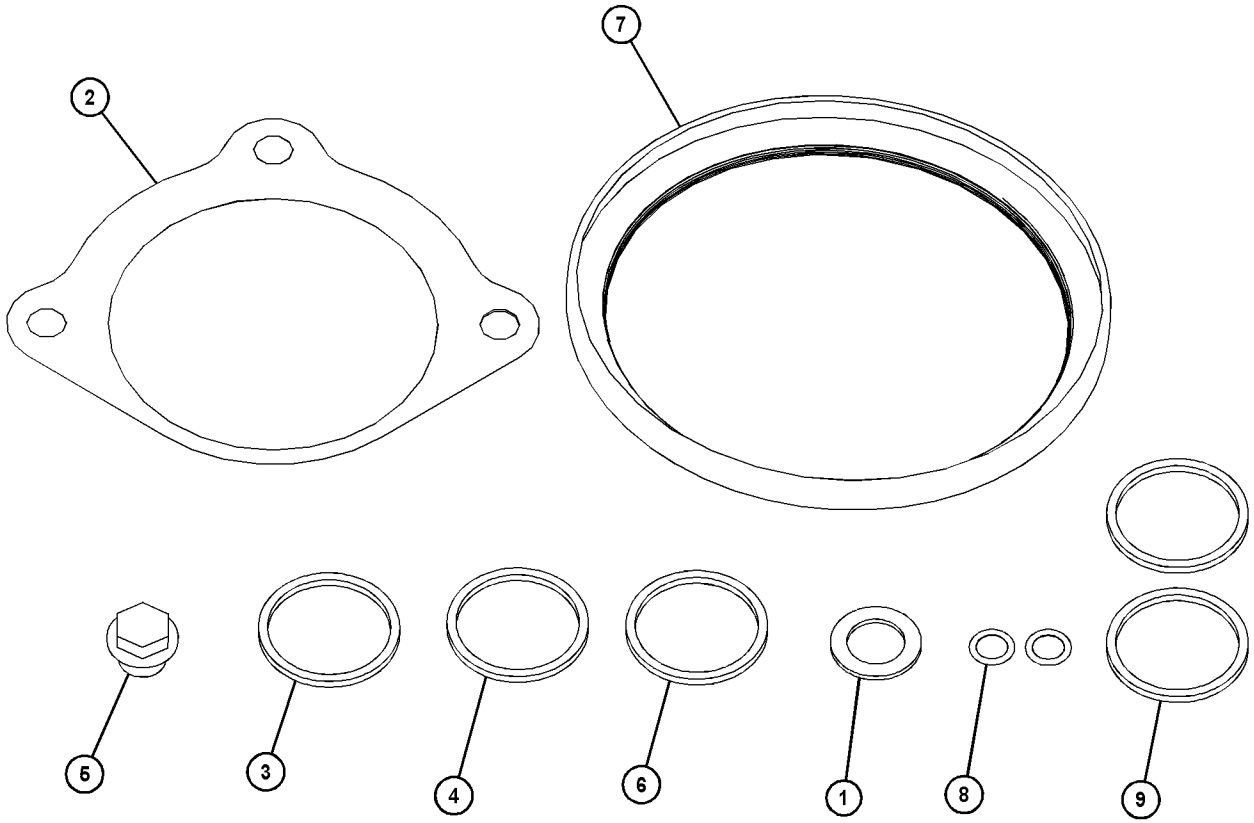

GRAPHIC #1

<END>

g03739662

139-4081 LIFTER GP-VALVE

S/N: TX71-UP; KHX29829-UP

PART OF 232-3717 VALVE MECHANISM GP

SMCS-1209 **i06888932**

NOTE	REF NO	GRAPHIC REF	PART NUMBER	QTY	PART NAME 1 2 3 4 5 6 (PRODUCT LEVEL)	SEE PAGE
	1	1	**492-1813**	1	SHAFT AS-LIFTER	
		1	**2D-6642**	2	BALL	
	2	1	**7E-6794**	4	ARM AS-LIFTER	
	3	1	**139-4084**	2	SPACER (15.9X24X6-MM THK)	

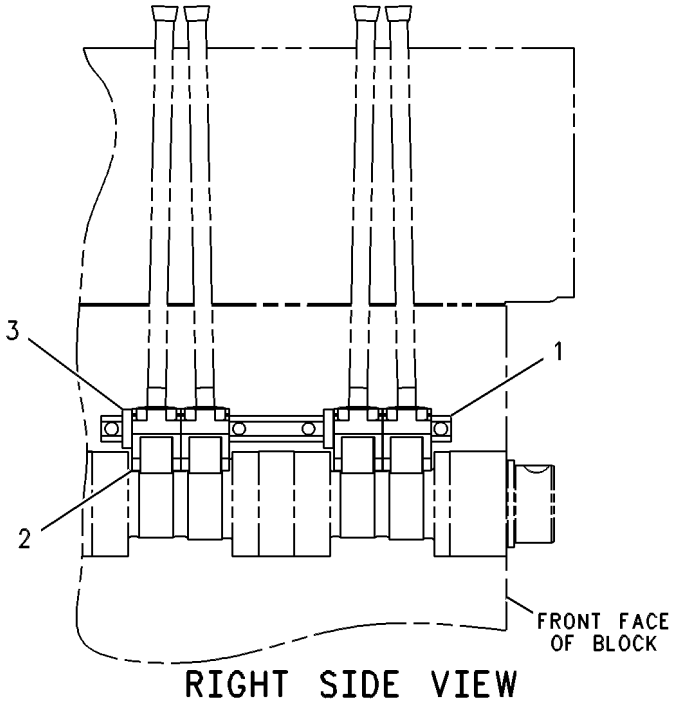

RIGHT SIDE VIEW

GRAPHIC #1 <END> g00288708

237-9822 LIFTING GP-ENGINE

S/N: TX71-UP; KHX1-UP

PART OF 364-7493, 395-0487 ENGINE AR-COMPLETE

SMCS-1122 **i05908420**

NOTE	REF NO	GRAPHIC REF	PART NUMBER	QTY	PART NAME 1 2 3 4 5 6 (PRODUCT LEVEL)	SEE PAGE
	1	1	**154-0896**	1	PLATE-LIFTING	
	2	1	**6V-5839**	4	WASHER (11X21X2.5-MM THK)	
M	3	1	**6V-4248**	4	BOLT (M10X1.5X25-MM)	

M - METRIC PART

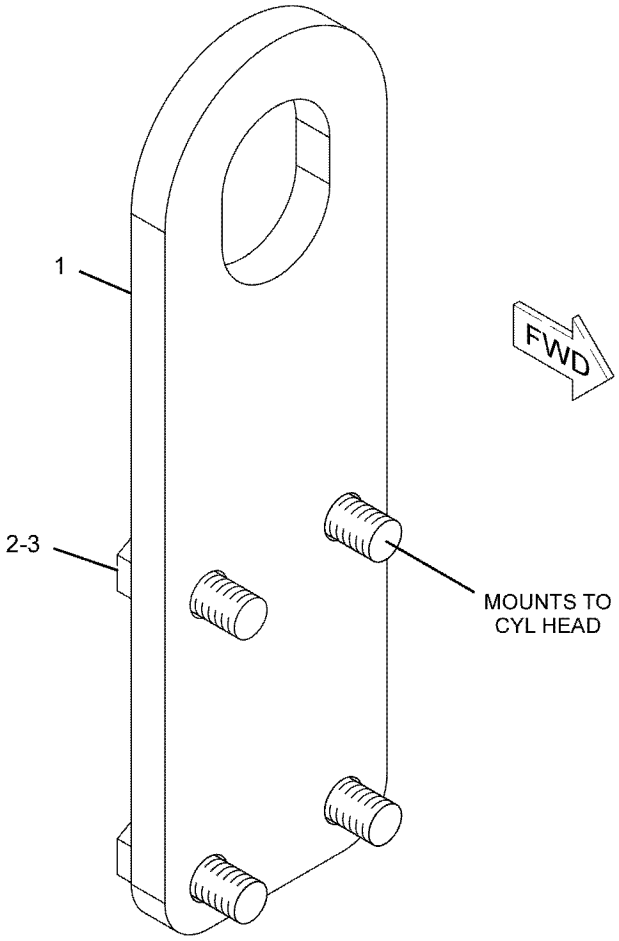

GRAPHIC #1 <END> g01118450

311-3542 MOUNTING GP-ENGINE

S/N: TX71-UP; KHX1-UP

PART OF 364-7493, 395-0487 ENGINE AR-COMPLETE

SMCS-1152, 1153, 1154

i05333229

NOTE	REF NO	GRAPHIC REF	PART NUMBER	QTY	PART NAME 1 2 3 4 5 6 (PRODUCT LEVEL)	SEE PAGE
M	1	1	**8T-3653**	4	BOLT (M14X2X80-MM)	
	2	1	**180-7344**	2	SUPPORT	
	3	1	**7X-0510**	8	WASHER-HARD (15.5X29X3-MM THK)	
M	4	1	**8C-3425**	4	BOLT (M14X2X35-MM)	

M - METRIC PART

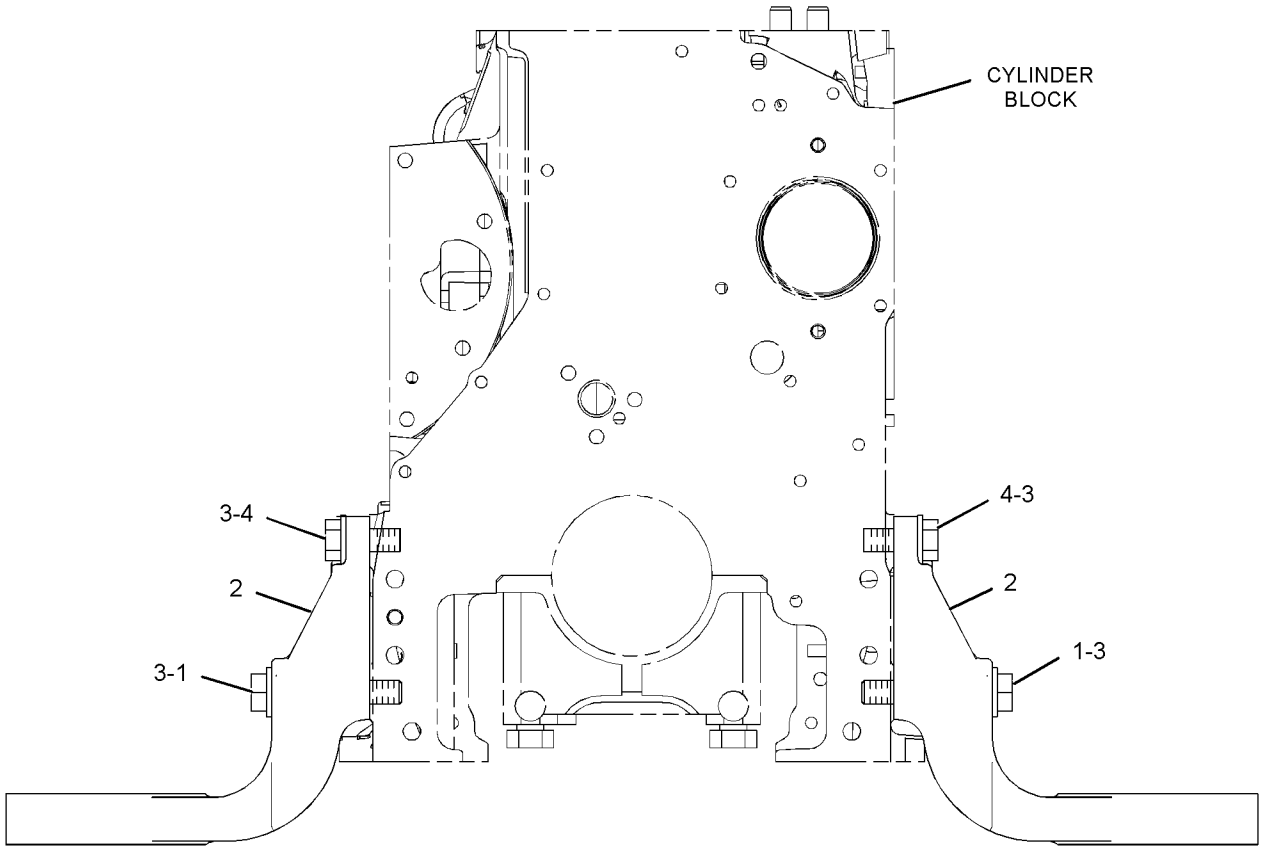

FRONT VIEW OF ENGINE

GRAPHIC #1

<END>

g01722074

310-6437 MOUNTING GP-ENGINE & XMSN

S/N: SZS1-623

PART OF 368-3025 GENERAL AR

SMCS-1152, 1153, 1154, 3082 **i04144809**

NOTE	REF NO	GRAPHIC REF	PART NUMBER	QTY	PART NAME 1 2 3 4 5 6 (PRODUCT LEVEL)	SEE PAGE
	1	1	**174-9529**	2	MOUNT AS	
					(EACH INCLUDES)	
		1	**6Y-9960**	1	MOUNT AS	
		1	**9W-7385**	1	SLEEVE	
		1	**9W-7388**	2	WASHER (26X144X12-MM THK)	
	2	1	*192-7357*	2	MOUNT AS	
					(EACH INCLUDES)	
		1	**9W-9920**	1	MOUNTING AS-VIBRATION ISOLATOR	
		1	**9W-6582**	1	SLEEVE	
		1	**9W-6584**	1	WASHER (20.5X114X10-MM THK)	
	3	1	**198-3611**	1	BELT-SERPENTINE	
	4	1	**356-7637**	1	SUPPORT AS (RH)	
		1	**211-9275**	1	SUPPORT	
	5	1	**356-7636**	1	SUPPORT AS (LH)	
		1	**211-9274**	1	SUPPORT	
	6	1	**347-1266**	1	GUARD AS	
	7	1	**198-4776**	4	WASHER-HARD (8.8X20X8-MM THK)	
	8	1	**198-4777**	2	WASHER-HARD (11X25X10-MM THK)	
M	9	1	**8C-3290**	2	BOLT (M24X3X150-MM)	
	10	1	**8T-4121**	12	WASHER-HARD (11X21X2.5-MM THK)	
	11	1	**8T-4123**	10	WASHER (3.62X5.75X0.375-MM THK)	
M	12	1	**8T-4136**	2	BOLT (M10X1.5X25-MM)	
	13	1	**8T-4167**	2	WASHER-HARD (26X44X4-MM THK)	
M	14	1	**8T-4196**	12	BOLT (M10X1.5X35-MM)	
M	15	1	**8T-4908**	4	BOLT (M8X1.25X25-MM)	
M	16	1	**8T-6381**	2	BOLT (M20X2.5X120-MM)	
M	17	1	**8T-6430**	8	BOLT (M20X2.5X50-MM)	

M - METRIC PART

310-6437 **MOUNTING GP-ENGINE & XMSN (**contd.**)** **i04144809**

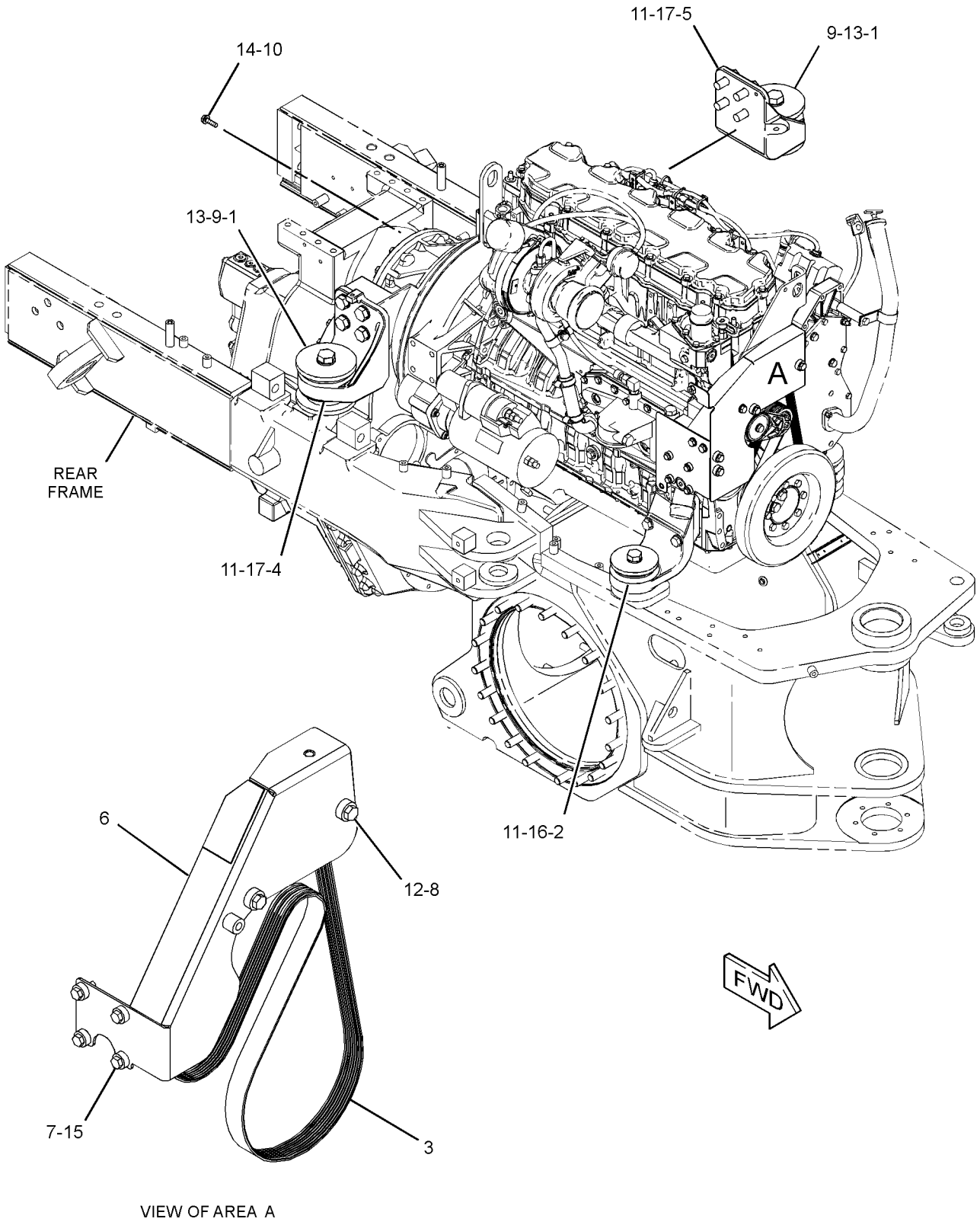

VIEW OF AREA A

GRAPHIC #1 <END> g02151336

425-5541 MOUNTING GP-ENGINE & XMSN

S/N: SZS624-UP

PART OF 425-5590 INSTALLATION AR

SMCS-1152, 1153, 1154, 3082 **i06107311**

NOTE	REF NO	GRAPHIC REF	PART NUMBER	QTY	PART NAME 1 2 3 4 5 6 (PRODUCT LEVEL)	SEE PAGE
	1	1	**174-9529**	2	MOUNT AS	
					(EACH INCLUDES)	
		1	**6Y-9960**	1	MOUNT AS	
		1	**9W-7385**	1	SLEEVE	
		1	**8Y-7119**	2	WASHER (26X144X12-MM THK)	
	2	1	*192-7357*	2	MOUNT AS	
					(EACH INCLUDES)	
		1	**9W-6582**	1	SLEEVE	
		1	**9W-6584**	1	WASHER (20.5X114X10-MM THK)	
		1	**9W-9920**	1	MOUNTING AS-VIBRATION ISOLATOR	
	3	1	**356-7636**	1	SUPPORT AS (RH)	
	4	1	**356-7637**	1	SUPPORT AS (LH)	
M	5	1	**8C-3290**	2	BOLT (M24X3X150-MM)	
	6	1	**8T-4121**	12	WASHER-HARD (11X21X2.5-MM THK)	
	7	1	**8T-4123**	10	WASHER (3.62X5.75X0.375-MM THK)	
	8	1	**8T-4167**	2	WASHER-HARD (26X44X4-MM THK)	
M	9	1	**8T-4196**	12	BOLT (M10X1.5X35-MM)	
M	10	1	**8T-6381**	2	BOLT (M20X2.5X120-MM)	
M	11	1	**8T-6430**	8	BOLT (M20X2.5X50-MM)	

M - METRIC PART

425-5541 **MOUNTING GP-ENGINE & XMSN (**contd.**)** **i06107311**

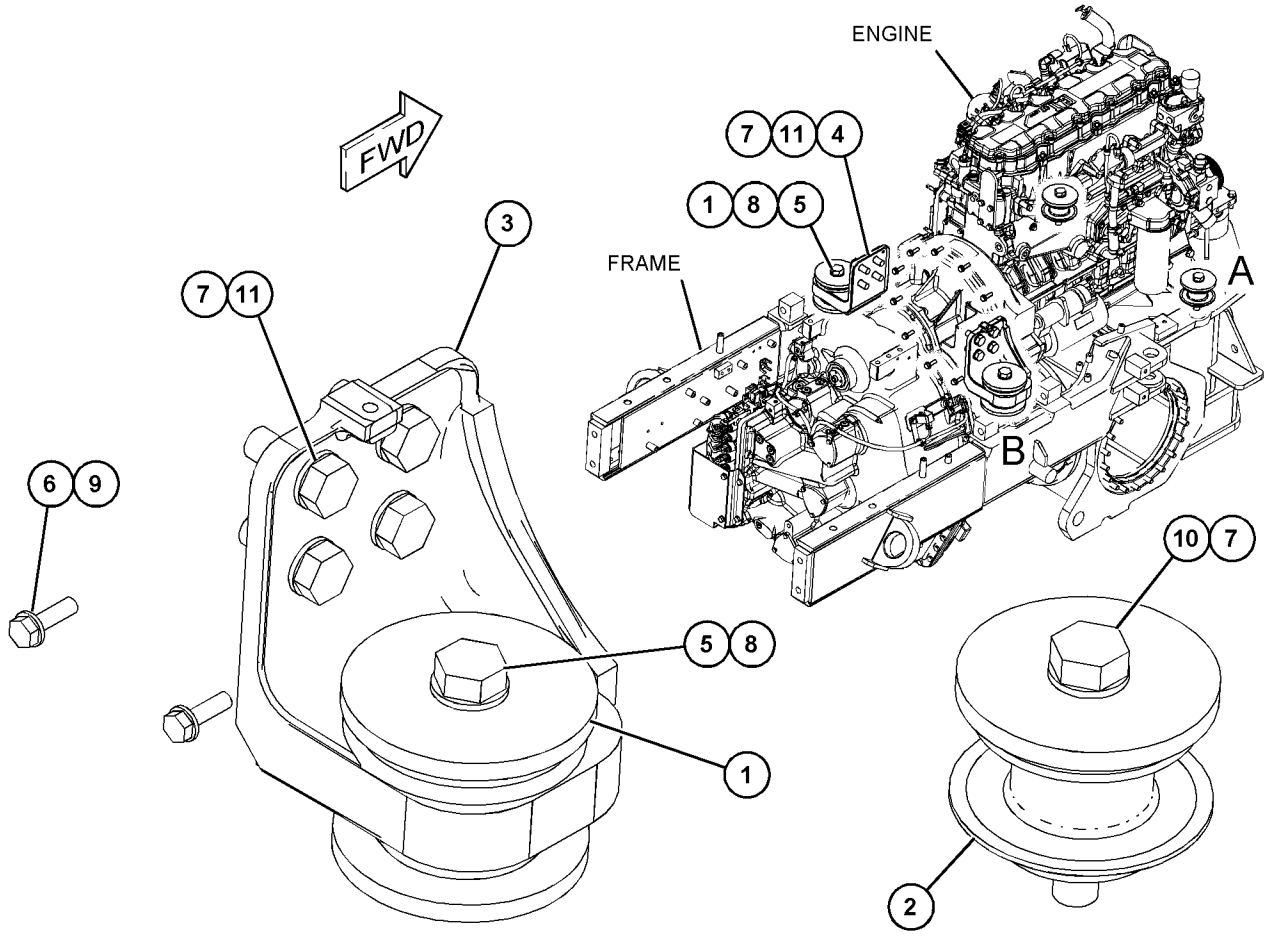

VIEW OF AREA B

VIEW OF AREA A

GRAPHIC #1

<END>

g03819785

358-7822 PAN GP-OIL

S/N: TX71-4585; KHX1-UP

PART OF 364-7493, 395-0487 ENGINE AR-COMPLETE

SMCS-1302 **i05430057**

NOTE	REF NO	GRAPHIC REF	PART NUMBER	QTY	PART NAME 1 2 3 4 5 6 (PRODUCT LEVEL)	SEE PAGE
	1	1	**166-2905**	1	SEAL-INTEGRAL	
	2	1	*389-3708*	1	PLUG AS	
		1	**214-7568**	1	SEAL-O-RING	
		1	**360-3679**	1	PLUG-CONNECTOR (9/16-18-THD)	
	3	1	**428-7471**	1	PAN AS-OIL	
M	4	1	**175-3676**	36	BOLT (M8X1.25X19.5-MM)	
	5	1	*307-2670*	1	PLUG AS	
		1	**9S-4185**	1	PLUG (3/4-16-THD)	
		1	**238-5080**	1	SEAL-O-RING	
B	6	1	**230-6262**		SEALANT	

B - USE AS REQUIRED
M - METRIC PART

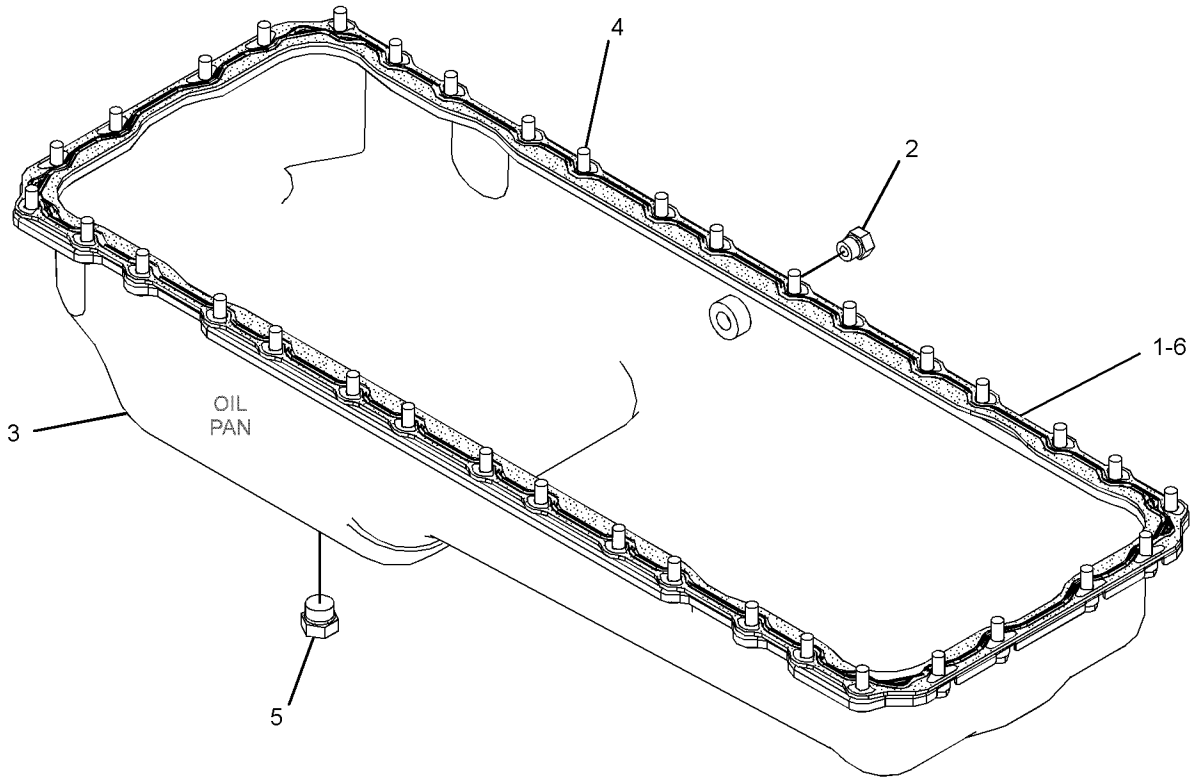

GRAPHIC #1 <END> g02420624

514-6534 PAN GP-OIL

S/N: TX74586-UP

PART OF 395-0487 ENGINE AR-COMPLETE

SMCS-1302 **i06806371**

NOTE	REF NO	GRAPHIC REF	PART NUMBER	QTY	PART NAME 1 2 3 4 5 6 (PRODUCT LEVEL)	SEE PAGE
	1	1	**166-2905**	1	SEAL-INTEGRAL	
	2	1	*389-3708*	1	PLUG AS	
		1	**214-7568**	1	SEAL-O-RING	
		1	**360-3679**	1	PLUG-CONNECTOR (9/16-18-THD)	
	3	1	*398-5596*	1	PLUG AS	
		1	**238-5080**	1	SEAL-O-RING	
		1	**360-3680**	1	PLUG	
	4	1	**428-7471**	1	PAN AS-OIL	
	5	1	**507-5209**	1	PLATE	
M	6	1	**175-3676**	36	BOLT (M8X1.25X19.5-MM)	
M	7	1	**6V-1820**	9	BOLT (M10X1.5X30-MM)	
	8	1	**9X-2027**	9	WASHER (11X18X2-MM THK)	
B	9	1	**230-6262**		SEALANT	

B - USE AS REQUIRED
M - METRIC PART

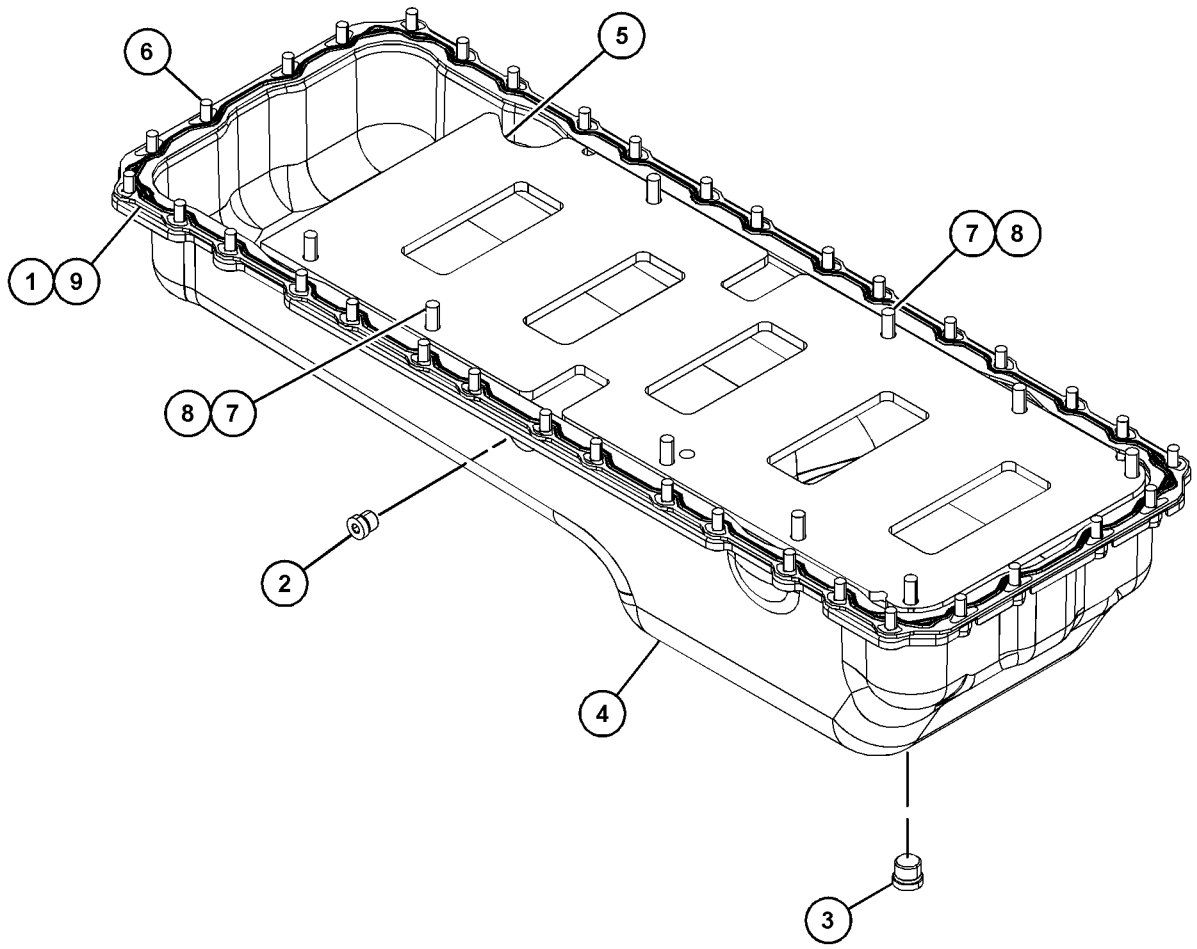

GRAPHIC #1 <END> g06122960

210-5592 PISTON & ROD GP*R

S/N: TX71-UP; KHX1-UP
16.5:1 RATIO
PART OF 365-3500, 387-8505 ENGINE AR-CORE

SMCS-1225 **i03585490**

NOTE	REF NO	GRAPHIC REF	PART NUMBER	QTY	PART NAME 1 2 3 4 5 6 (PRODUCT LEVEL)	SEE PAGE
R	1	1	**213-3193**	1	ROD AS-CONNECTING (NON-DRILLED)	
	1A	1	**2W-0027**	1	BEARING (EYE END)	
	1B	1	**195-0321**	2	BOLT	
	2	1	**224-6638**	1	BEARING-CONNECTING ROD (STANDARD)	
AB		1	**7C-6976**		BEARING-CONNECTING ROD (0.25-MM US)	
AB		1	**7C-6977**		BEARING-CONNECTING ROD (0.5-MM US)	
	3	1	**197-9354**	1	RING-PISTON (OIL CONTROL)	
	4	1	**197-9353**	1	RING-PISTON (INTERMEDIATE)	
	5	1	**197-9386**	1	RING-PISTON (TOP)	
	6	1	**168-7224**	1	PIN-PISTON	
	7	1	**173-0143**	1	JET AS-PISTON COOLING	
R	8	1	**238-2698**	1	BODY AS	
M	9	1	**6V-3940**	1	BOLT (M8X1.25X25-MM)	
	10	1	**7C-0111**	2	RETAINER-PIN	

A - NOT PART OF THIS GROUP
B - USE AS REQUIRED
M - METRIC PART
R - REMANUFACTURED PART MAY BE AVAILABLE

210-5592 **PISTON & ROD GP (**contd.**)** **i03585490**

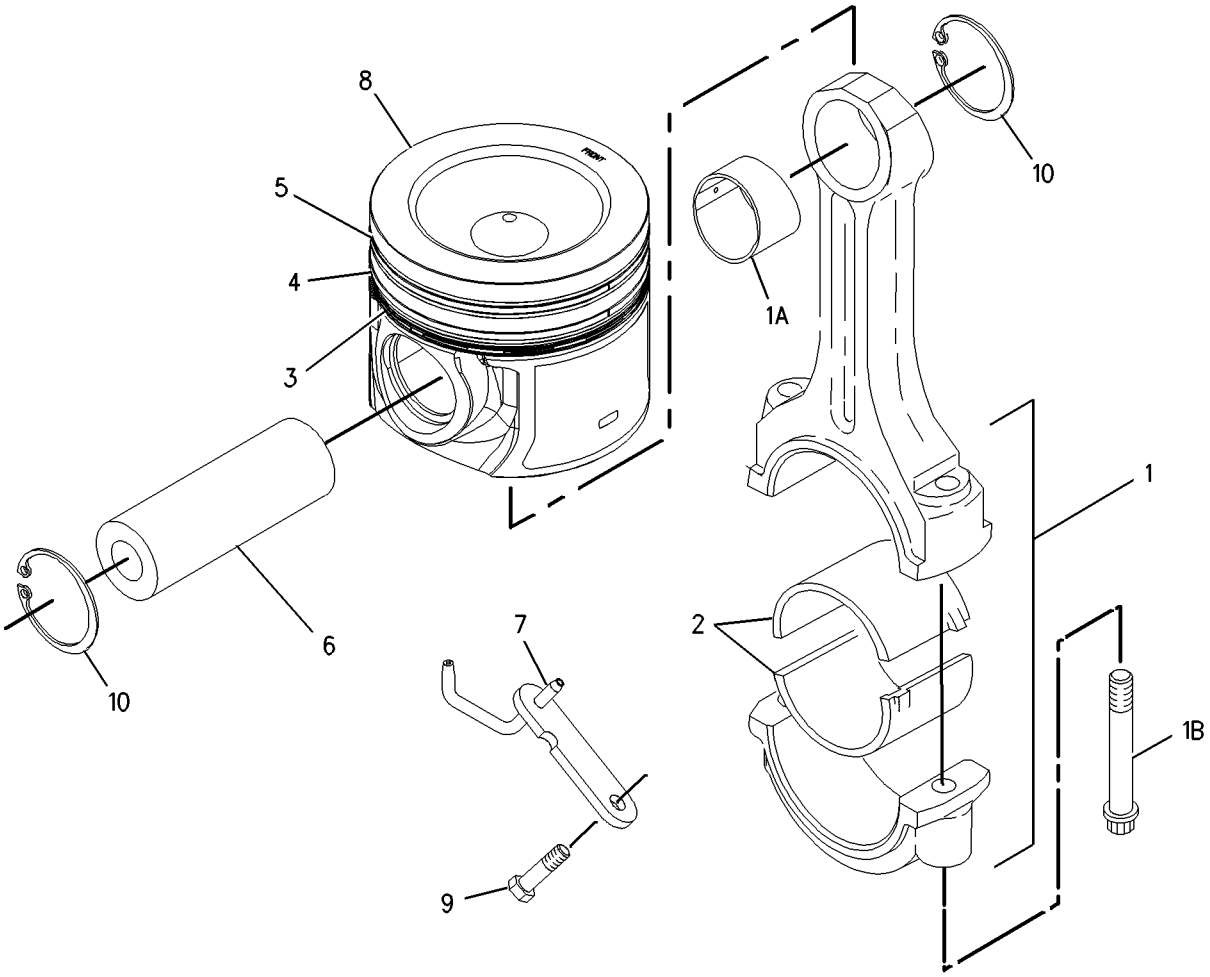

GRAPHIC #1 <END> g00903037

135-2141 PLUG GP-CYLINDER BLOCK

S/N: TX71-UP; KHX1-UP

PART OF 364-7493, 395-0487 ENGINE AR-COMPLETE

SMCS-1201 **i03633659**

NOTE	REF NO	GRAPHIC REF	PART NUMBER	QTY	PART NAME 1 2 3 4 5 6 (PRODUCT LEVEL)	SEE PAGE
	1	1	**1S-2563**	4	PLUG	

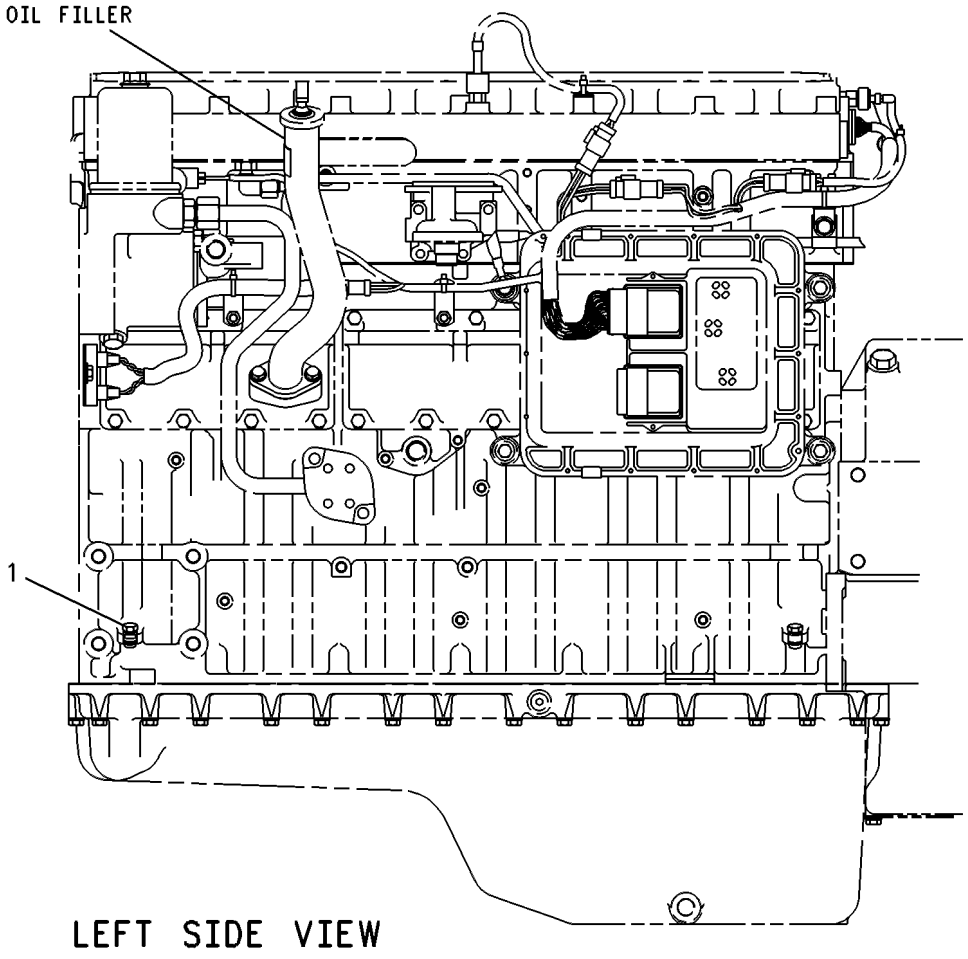

GRAPHIC #1 <END> g00265825

159-0303 PLUG GP-CYLINDER BLOCK

S/N: TX71-UP; KHX1-UP

PART OF 364-7493, 395-0487 ENGINE AR-COMPLETE

SMCS-1201 **i05908464**

NOTE	REF NO	GRAPHIC REF	PART NUMBER	QTY	PART NAME 1 2 3 4 5 6 (PRODUCT LEVEL)	SEE PAGE
M	1	1	**8T-0293**	1	BOLT (M12X1.75X20-MM)	
	2	1	**6F-7062**	1	WASHER (12.7X19.05X1.83-MM THK)	
	3	1	*398-5612*	2	PLUG AS	
					(EACH INCLUDES)	
		1	**6V-5063**	1	SEAL-O-RING	
		1	**360-3682**	1	PLUG-O-RING	

M - METRIC PART

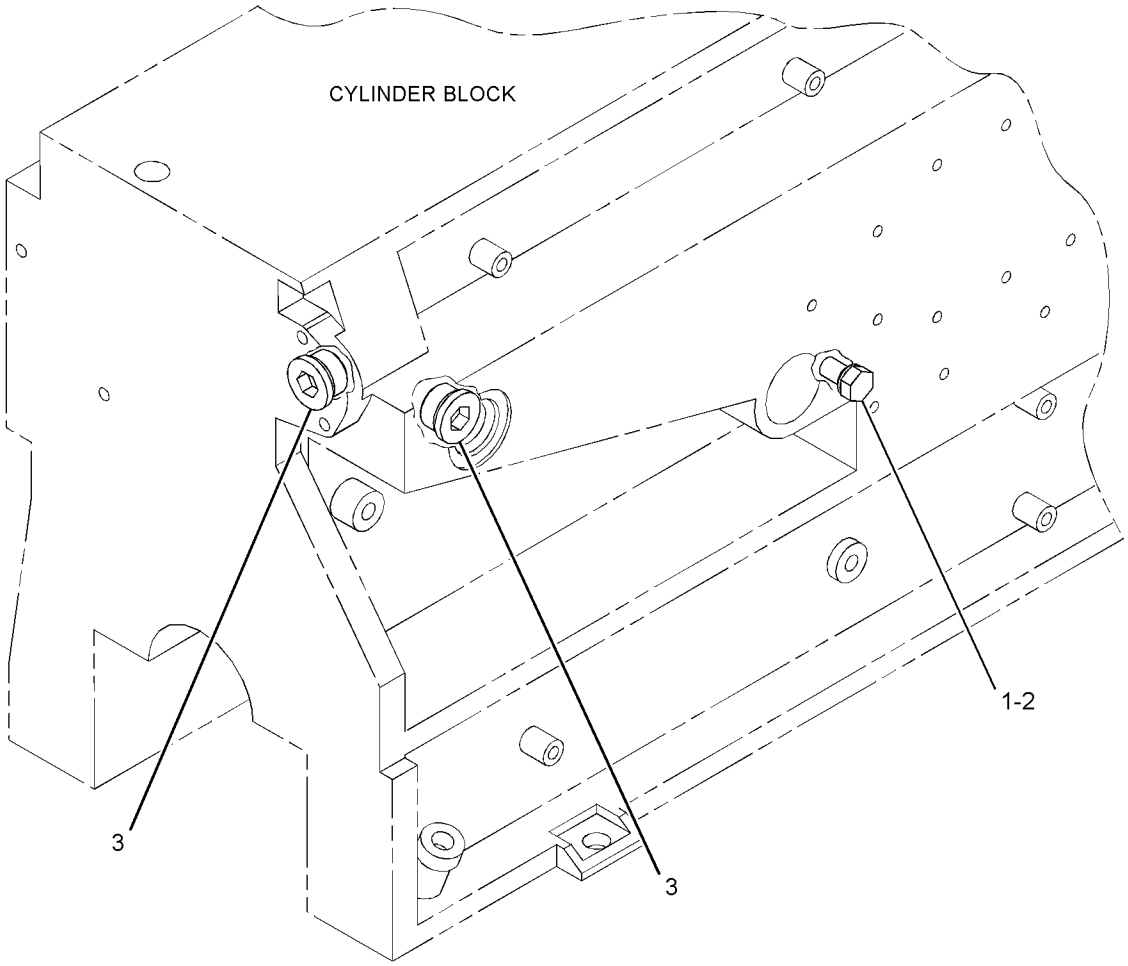

GRAPHIC #1 <END> g02925198

162-8068 PLUG GP-ENGINE

S/N: KHX29829-UP

PART OF 364-7493 ENGINE AR-COMPLETE

SMCS-1000, 1201 **i05908463**

NOTE	REF NO	GRAPHIC REF	PART NUMBER	QTY	PART NAME 1 2 3 4 5 6 (PRODUCT LEVEL)	SEE PAGE
	1	1	*396-0405*	1	PLUG AS	
		1	**6V-6609**	1	SEAL-O-RING	
		1	**360-3680**	1	PLUG	

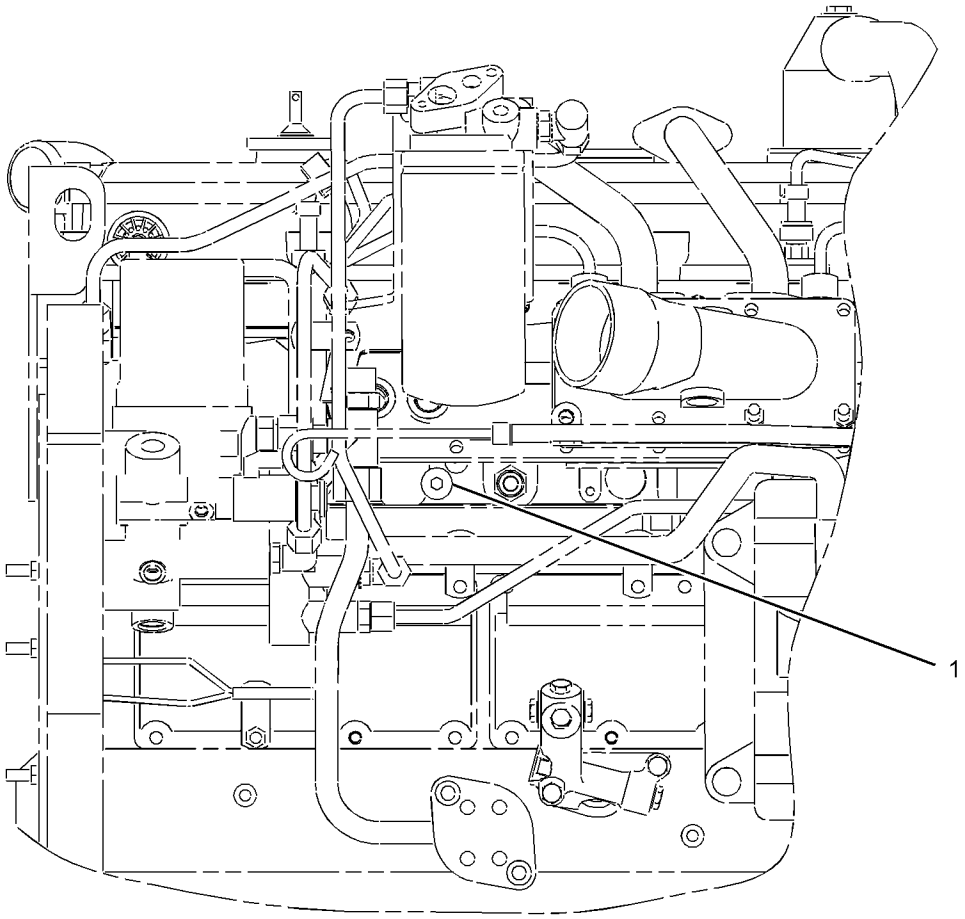

LEFT SIDE VIEW

GRAPHIC #1 <END> g01457732

256-3831 ROCKER ARM GP

S/N: TX71-UP; KHX29829-UP

PART OF 256-3830 VALVE MECHANISM GP

SMCS-1102, 1123

i03602320

NOTE	REF NO	GRAPHIC REF	PART NUMBER	QTY	PART NAME 1 2 3 4 5 6 (PRODUCT LEVEL)	SEE PAGE
R	1	1	**256-3832**	1	ROCKER ARM AS (EXHAUST)	
M	2	1	**260-7524**	1	SCREW-VALVE ADJUSTMENT (M10X1.5-THD)	
M	3	1	**2Y-5829**	1	NUT (M10X1.5-THD)	

M - METRIC PART
R - REMANUFACTURED PART MAY BE AVAILABLE

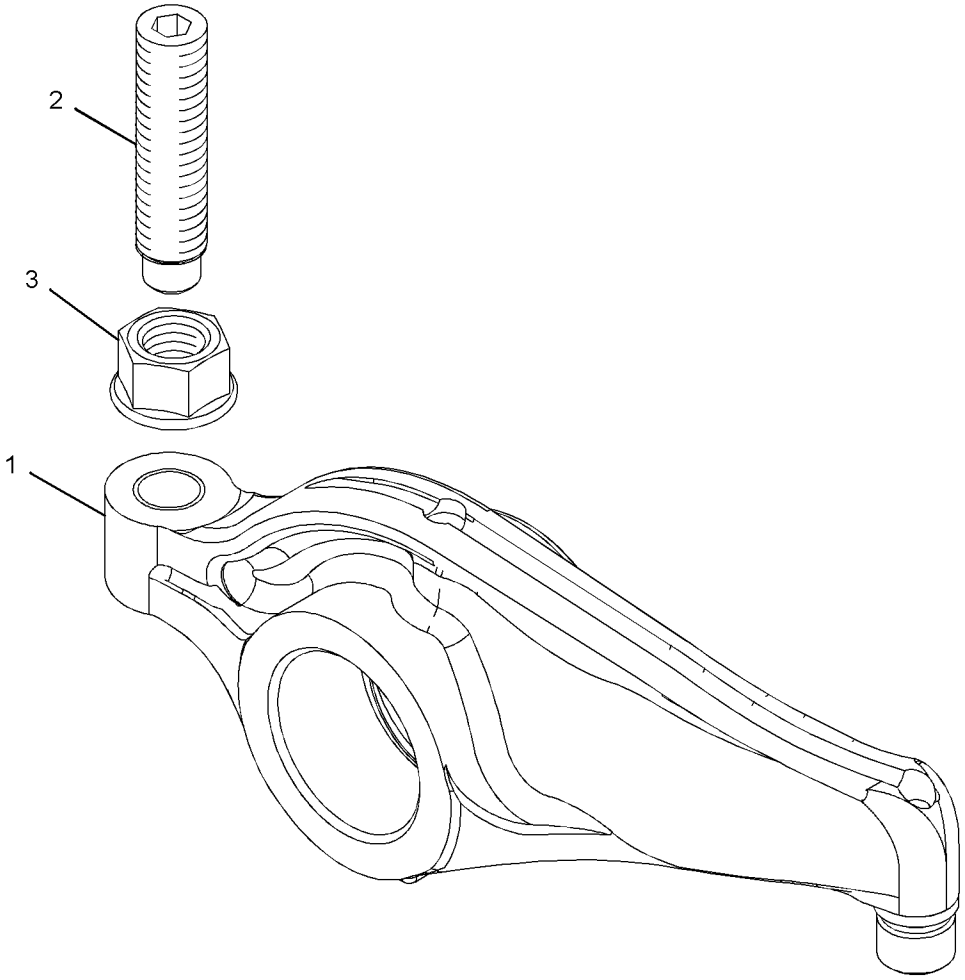

GRAPHIC #1 <END> g01293346

256-3834 ROCKER ARM GP

S/N: TX71-UP; KHX29829-UP

PART OF 256-3830 VALVE MECHANISM GP

SMCS-1102, 1123

i03602327

NOTE	REF NO	GRAPHIC REF	PART NUMBER	QTY	PART NAME 1 2 3 4 5 6 (PRODUCT LEVEL)	SEE PAGE
M	1	1	**260-7524**	1	SCREW-VALVE ADJUSTMENT (M10X1.5-THD)	
R	2	1	**256-3835**	1	ROCKER ARM AS (INLET)	
M	3	1	**2Y-5829**	1	NUT (M10X1.5-THD)	

M - METRIC PART
R - REMANUFACTURED PART MAY BE AVAILABLE

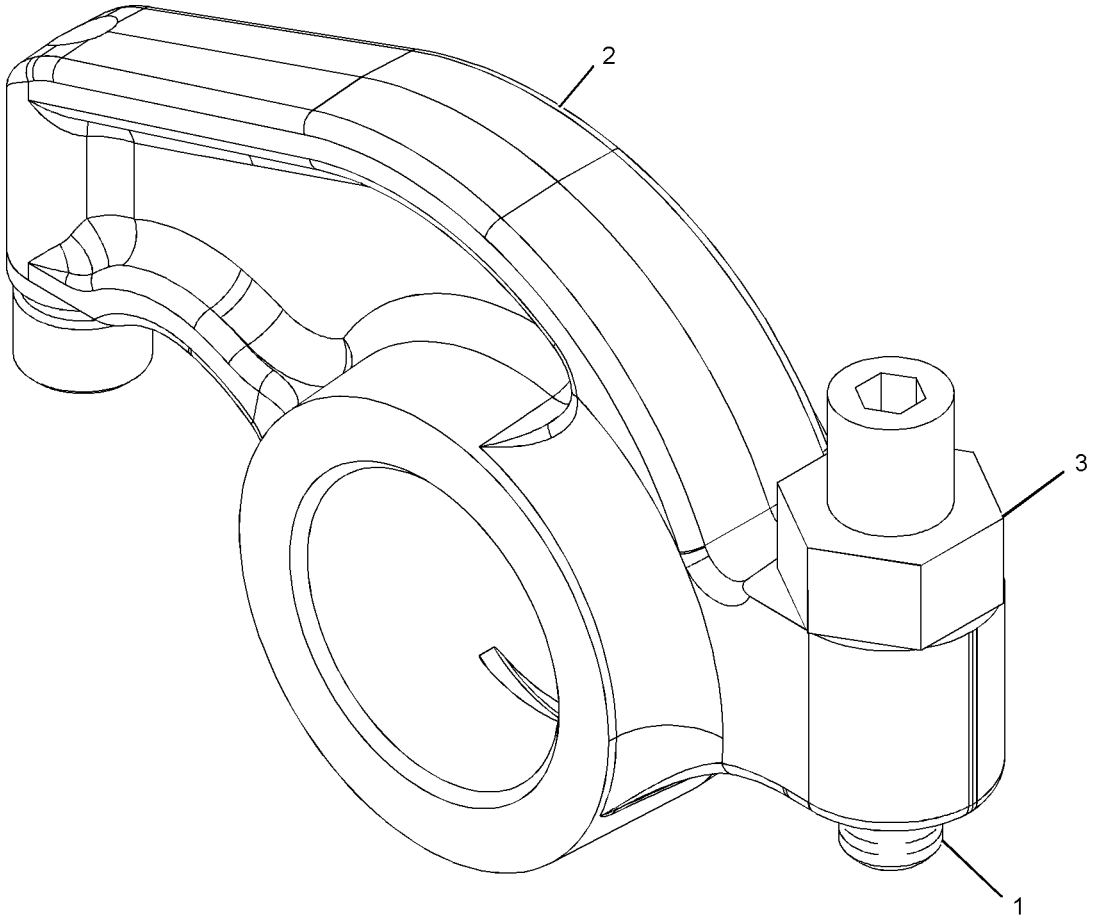

GRAPHIC #1 <END> g01056688

7E-7590 SEAL GP-CRANKSHAFT

S/N: TX71-UP; KHX1-UP

PART OF 364-7493, 395-0487 ENGINE AR-COMPLETE

SMCS-1160, 1161

i03503381

NOTE	REF NO	GRAPHIC REF	PART NUMBER	QTY	PART NAME 1 2 3 4 5 6 (PRODUCT LEVEL)	SEE PAGE
	1	1	**7E-7589**	1	SEAL GP-CRANKSHAFT (REAR)	
	2	1	**245-7339**	1	SEAL-CRANKSHAFT (FRONT)	

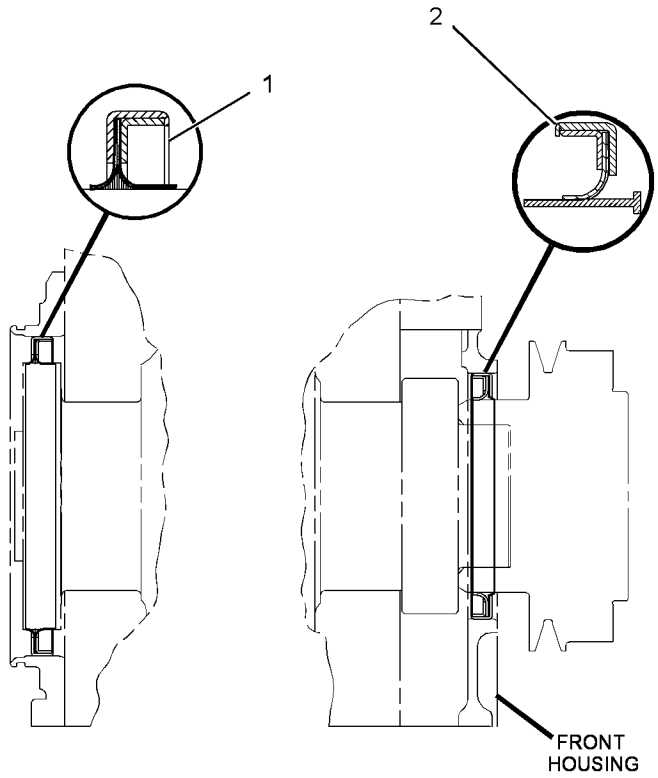

RIGHT SIDE VIEW

GRAPHIC #1

<END>

g01438665

232-3717 VALVE MECHANISM GP

S/N: TX71-UP; KHX1-UP

PART OF 365-3500, 387-8505 ENGINE AR-CORE

SMCS-1102 **i05351186**

NOTE	REF NO	GRAPHIC REF	PART NUMBER	QTY	PART NAME 1 2 3 4 5 6 (PRODUCT LEVEL)	SEE PAGE
C	1	1	**264-6156**	12	ROD-VALVE PUSH	
	2	1	**219-3309**	6	BRIDGE-VALVE	
Y	3	1	*139-4081*	3	LIFTER GP-VALVE	77
M	4	1	**8T-8442**	12	BOLT-SOCKET HEAD (M6X1X30-MM)	
	5	1	**3E-9412**	6	DOWEL	
CY	6	1	**256-3830**	1	VALVE MECHANISM GP	95
M	7	1	**6V-5696**	11	BOLT (M12X1.75X80-MM)	
	8	1	**9M-1974**	2	WASHER-HARD (8.8X16X2-MM THK)	
	9	1	**3H-7654**	9	WASHER-HARD (13.5X22.5X3-MM THK)	
M	10	1	**8T-0100**	2	BOLT (M8X1.25X60-MM)	
	11	1	**232-1754**	1	CLIP	

C - CHANGE FROM PREVIOUS TYPE
M - METRIC PART
Y - SEPARATE ILLUSTRATION

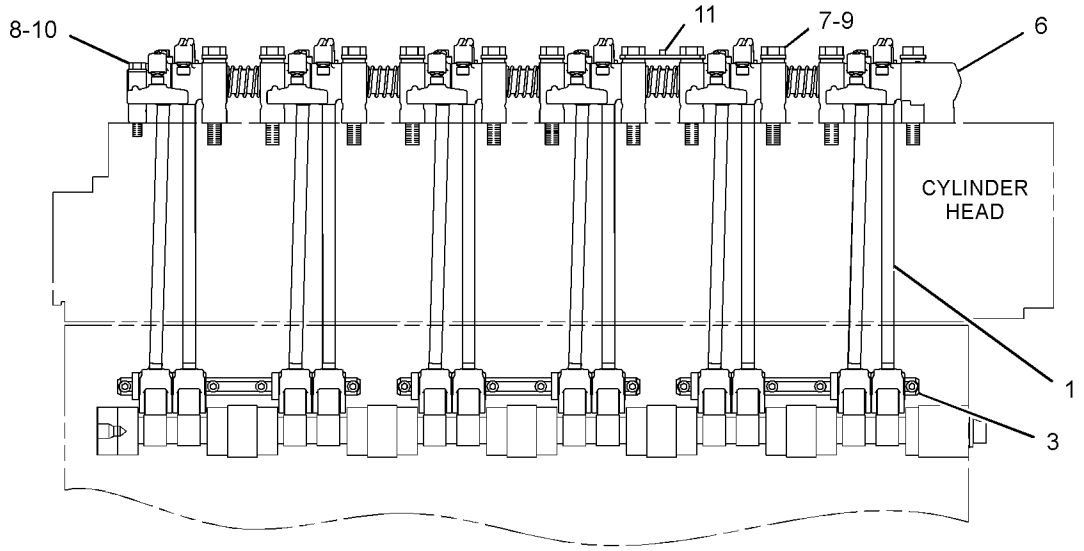

RIGHT SIDE VIEW

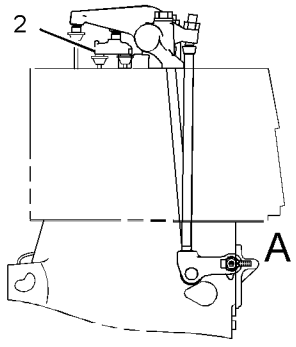

FRONT VIEW

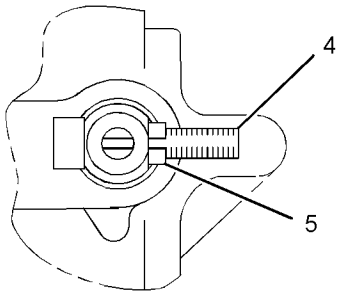

VIEW OF AREA A

GRAPHIC #1 <END> g01279672

256-3830 VALVE MECHANISM GP

S/N: TX71-UP; KHX29829-UP

PART OF 232-3717 VALVE MECHANISM GP

SMCS-1102 **i03535446**

NOTE	REF NO	GRAPHIC REF	PART NUMBER	QTY	PART NAME 1 2 3 4 5 6 (PRODUCT LEVEL)	SEE PAGE
	1	1	**137-6717**	5	SPRING	
Y	2	1	**256-3834**	6	ROCKER ARM GP (INLET)	92
	3	1	**138-8403**	1	STAND (END)	
Y	4	1	**256-3831**	6	ROCKER ARM GP (EXHAUST)	91
	5	1	**235-5527**	10	STAND	
	6	1	**138-8402**	1	STAND (END)	
	7	1	**138-9868**	1	RING-RETAINING	
	8	1	**8H-5244**	1	DOWEL	
	9	1	**138-7198**	1	SHAFT AS	
		1	**5B-1866**	1	PLUG-CUP	

Y - SEPARATE ILLUSTRATION

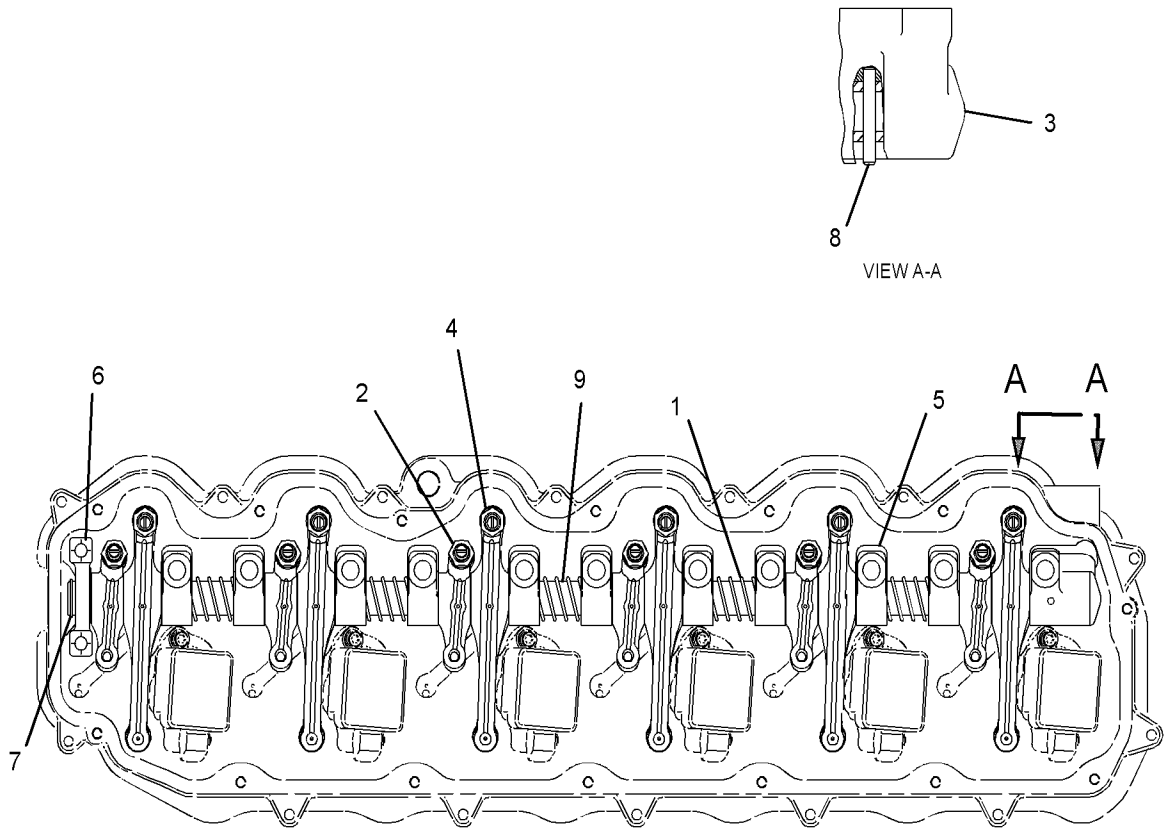

TOP VIEW

GRAPHIC #1 <END> g01175038

191-0523 ADAPTER GP-OIL LINE–FUEL INJECTION PUMP

S/N: TX71-UP; KHX1-UP

PART OF 191-0461, 381-8868, 396-8415 LINES GP-INJECTOR HYD PUMP

SMCS-1307 **i03531160**

NOTE	REF NO	GRAPHIC REF	PART NUMBER	QTY	PART NAME 1 2 3 4 5 6 (PRODUCT LEVEL)	SEE PAGE
	1	1	**191-0522**	1	ADAPTER	
	2	1	**033-6027**	1	SEAL-O-RING	

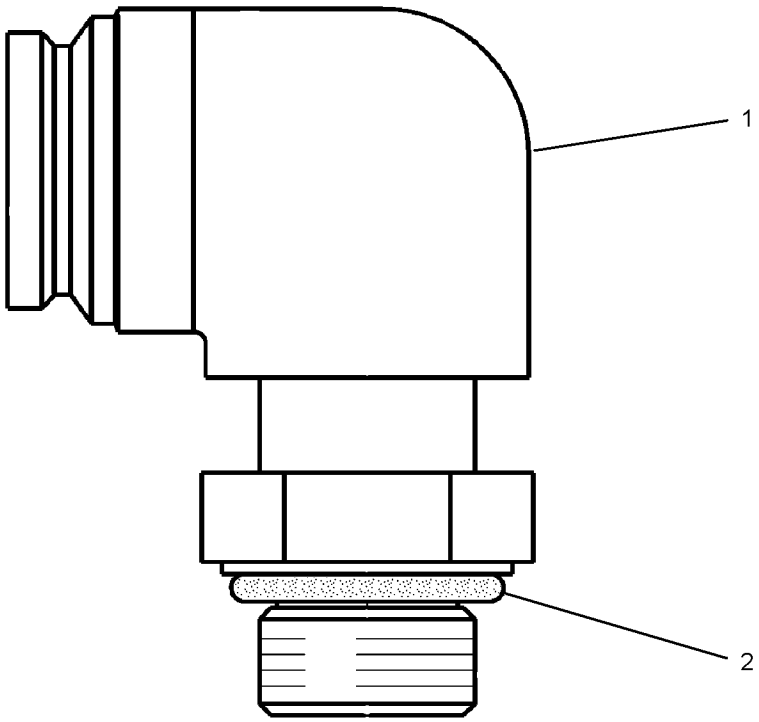

GRAPHIC #1 <END> g01735676

222-5946 BREATHER GP–CRANKCASE

S/N: TX71-UP; KHX1-UP

PART OF 364-7493, 395-0487 ENGINE AR-COMPLETE

SMCS-1317 **i03491602**

NOTE	REF NO	GRAPHIC REF	PART NUMBER	QTY	PART NAME 1 2 3 4 5 6 (PRODUCT LEVEL)	SEE PAGE
	1	1	**164-0210**	1	BREATHER (CRANKCASE)	
M	2	1	**143-4654**	1	BOLT (M8X1.25X105-MM)	
	3	1	**8H-2046**	1	SEAL-O-RING	
	4	1	**5N-4185**	1	WASHER-SPECIAL	

M - METRIC PART

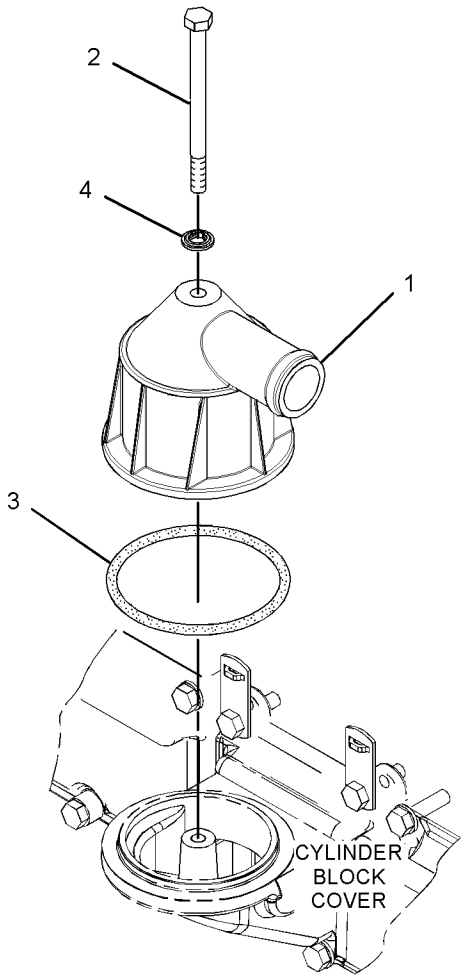

GRAPHIC #1 <END> g01426131

340-3745 FILLER GP-ENGINE OIL

S/N: TX71-UP; KHX1-UP

PART OF 364-7493, 395-0487 ENGINE AR-COMPLETE

SMCS-1316, 7513

i05351223

NOTE	REF NO	GRAPHIC REF	PART NUMBER	QTY	PART NAME 1 2 3 4 5 6 (PRODUCT LEVEL)	SEE PAGE
	1	1	**068-4497**	1	CAP-OIL FILLER (ENGINE)	
	2	1	**166-1776**	1	COVER AS-FRONT	
		1	**126-1757**	2	WASHER (10.85X19.3X1.27-MM THK)	
		1	**136-0822**	2	STUD	
	3	1	**166-1781**	1	GASKET	
	4	1	**340-3739**	1	TUBE AS-OIL FILLER (ENGINE)	
	5	1	**061-9455**	1	SEAL-O-RING	
	6	1	*398-5596*	2	PLUG AS	
					(EACH INCLUDES)	
		1	**214-7568**	1	SEAL-O-RING	
		1	**360-3679**	1	PLUG-CONNECTOR (9/16-18-THD)	
	7	1	**190-4885**	1	SPACER (11X22X50-MM THK)	
M	8	1	**5P-7970**	2	NUT (M8X1.25-THD)	
M	9	1	**6V-2317**	12	BOLT (M8X1.25X30-MM)	
	10	1	**6V-5839**	1	WASHER (11X21X2.5-MM THK)	
M	11	1	**6V-7981**	1	BOLT (M10X1.5X70-MM)	
	12	1	**7D-7233**	1	CLIP	
M	13	1	**8T-0100**	2	BOLT (M8X1.25X60-MM)	
	14	1	**9M-1974**	16	WASHER-HARD (8.8X16X2-MM THK)	

M - METRIC PART

340-3745 **FILLER GP-ENGINE OIL (**contd.**)** **i05351223**

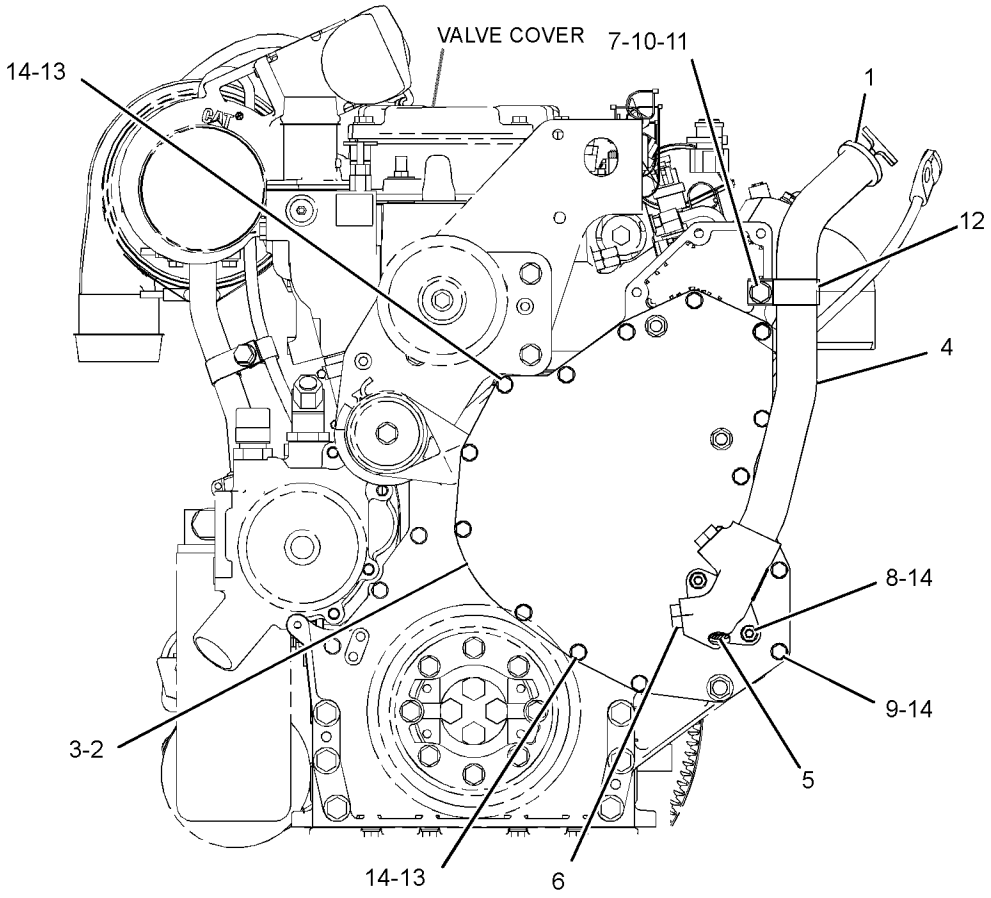

FRONT VIEW OF ENGINE

GRAPHIC #1 <END> g01947156

323-8936 FILTER GP-ENGINE OIL

S/N: TX71-UP; KHX1-UP

PART OF 364-7493, 395-0487 ENGINE AR-COMPLETE

SMCS-1306, 1308 **i05218836**

NOTE	REF NO	GRAPHIC REF	PART NUMBER	QTY	PART NAME 1 2 3 4 5 6 (PRODUCT LEVEL)	SEE PAGE
	1	1	**7C-1493**	2	VALVE AS-BYPASS (ENGINE OIL)	
	2	1	**242-3864**	2	SPRING	
	3	1	**300-7933**	1	GASKET	
	4	1	*377-9593*	2	PLUG AS	
					(EACH INCLUDES)	
		1	**9N-6152**	1	PLUG	
		1	**238-5081**	1	SEAL-O-RING	
	5	1	**392-5357**	1	BASE AS-OIL FILTER	
	6	1	**1R-1807**	1	FILTER AS-ENGINE OIL (ADVANCED EFFICIENCY)	
	7	1	*321-8649*	1	VALVE AS-FLUID SAMPLING (ENGINE OIL)	
		1	**8C-3446**	1	VALVE-SAMPLING (ENGINE OIL)	
		1	**214-7566**	1	SEAL-O-RING	
	8	1	*321-8654*	1	ADAPTER AS	
		1	**3P-1932**	1	ADAPTER	
		1	**238-5080**	1	SEAL-O-RING	
M	9	1	**6V-2317**	10	BOLT (M8X1.25X30-MM)	
	10	1	**8C-3445**	1	CAP-DUST	
M	11	1	**8T-0276**	5	BOLT (M8X1.25X45-MM)	
	12	1	**9M-1974**	15	WASHER-HARD (8.8X16X2-MM THK)	

M - METRIC PART

323-8936 **FILTER GP-ENGINE OIL (**contd.**)** **i05218836**

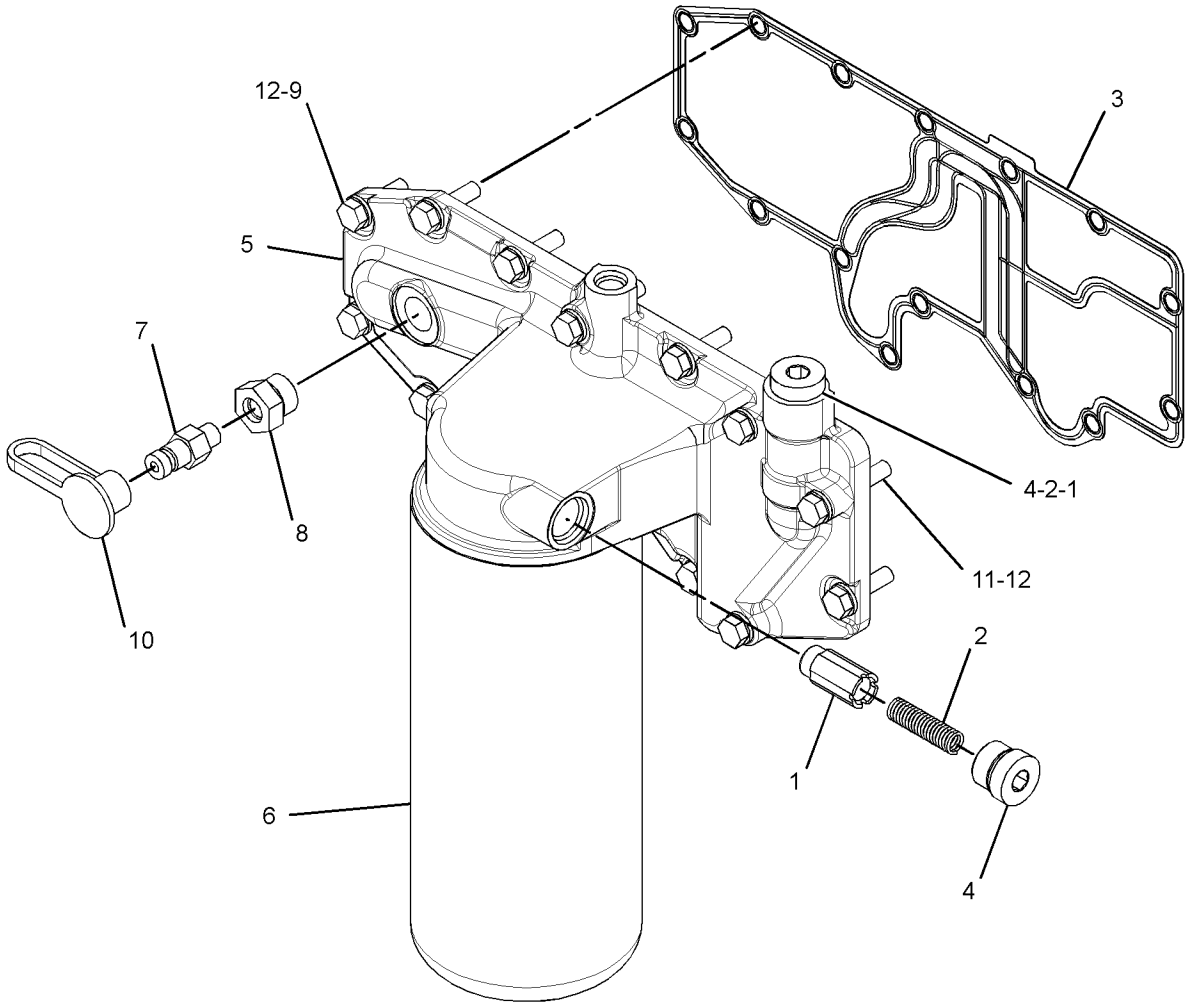

GRAPHIC #1 <END> g03341730

220-1194 FUMES DISPOSAL GP

S/N: TX71-UP; KHX1-UP

PART OF 364-7493, 395-0487 ENGINE AR-COMPLETE

SMCS-1317 **i06227003**

NOTE	REF NO	GRAPHIC REF	PART NUMBER	QTY	PART NAME 1 2 3 4 5 6 (PRODUCT LEVEL)	SEE PAGE
	1	1	**7C-6921**	1	SPACER (11X20X22.8-MM THK)	
	2	1	**9M-2904**	1	CLAMP-HOSE	
	3	1	**228-8510**	1	HOSE-DISPOSAL (FUMES)	
	4	1	**2S-2053**	1	CLIP	
	5	1	**3E-4352**	1	WASHER-HARD (8.8X20.5X2.5-MM THK)	
M	6	1	**162-3148**	1	STUD (M8X1.25X62.75-MM)	

M - METRIC PART

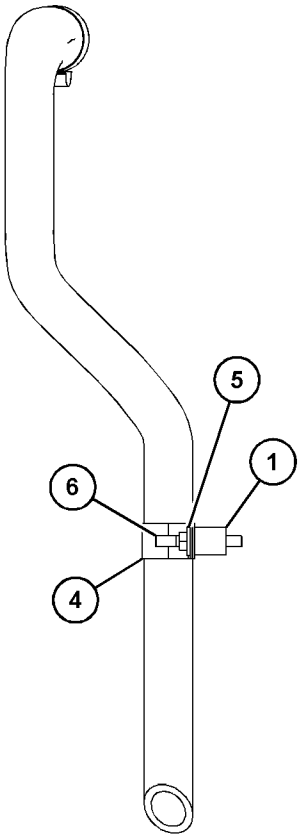

REAR VIEW OF ENGINE

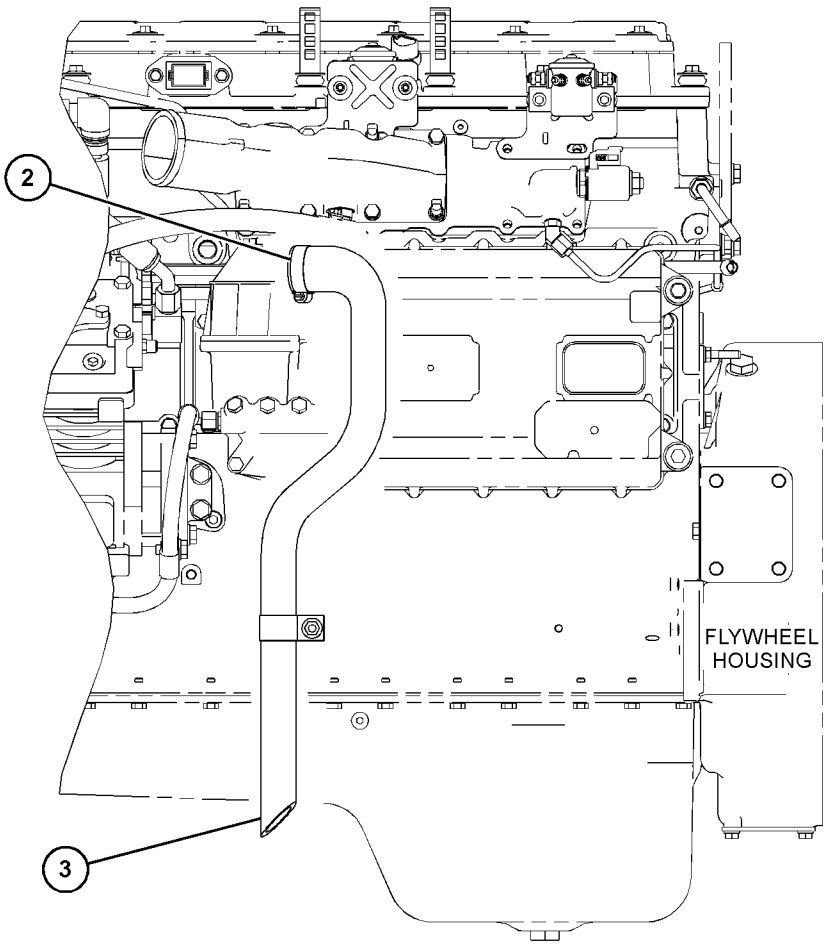

LEFT SIDE VIEW OF ENGINE

GRAPHIC #1

<END>

g03863728

347-2428 GAUGE GP-OIL LEVEL (DIPSTICK)—ENGINE

S/N: SZS1-UP

PART OF 435-1521 COMMON AR, 368-3025 GENERAL AR

SMCS-1326 **i05365944**

NOTE	REF NO	GRAPHIC REF	PART NUMBER	QTY	PART NAME 1 2 3 4 5 6 (PRODUCT LEVEL)	SEE PAGE
	1	1	**347-2426**	1	TUBE AS-OIL GAUGE	
	2	1	**416-4678**	1	BRACKET AS	
M		1	**8T-3490**	1	NUT-WELD (M10X1.5-THD)	
	3	1	**5P-9297**	1	CLIP	
	4	1	**8T-4121**	1	WASHER-HARD (11X21X2.5-MM THK)	
M	5	1	**8T-4191**	1	BOLT (M10X1.5X16-MM)	
	6	1	**347-2429**	1	GAUGE AS-OIL LEVEL (DIPSTICK) (ENGINE)	

M - METRIC PART

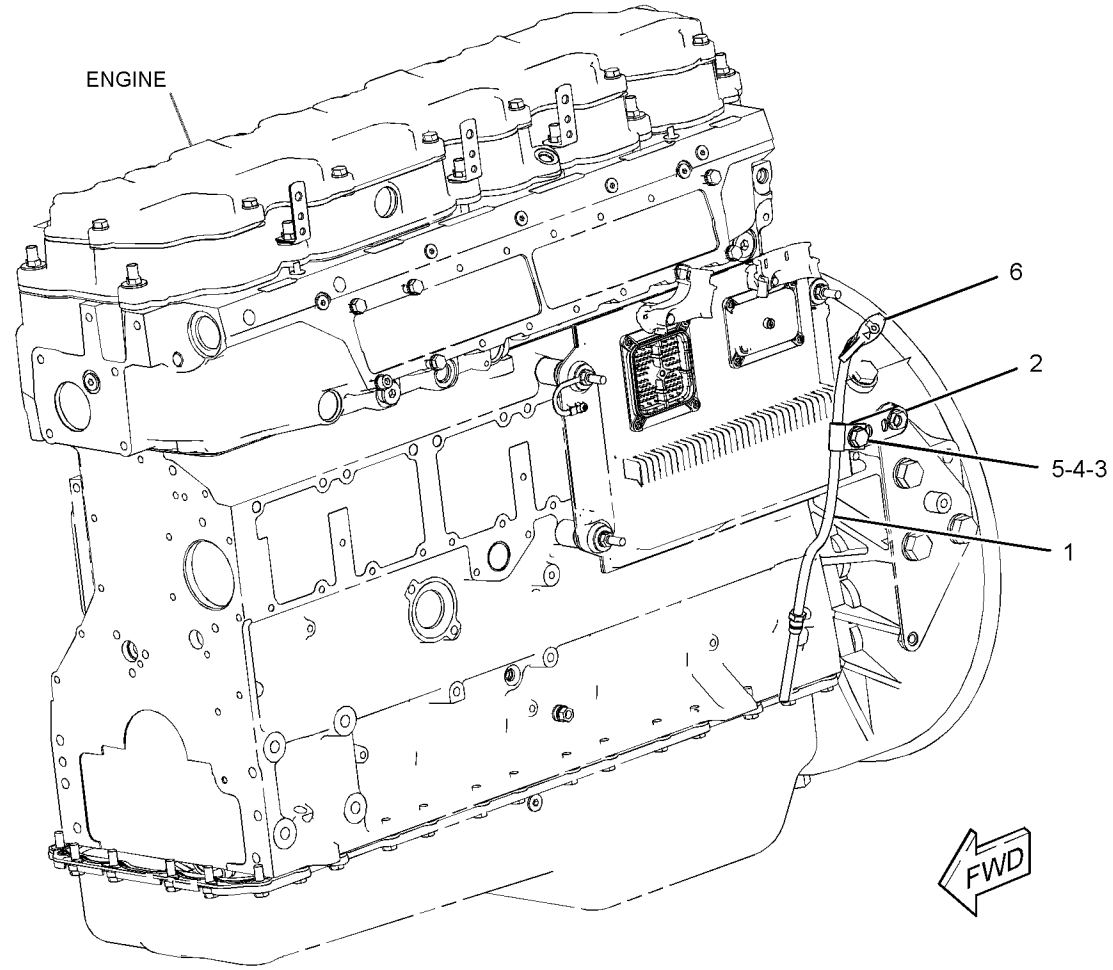

GRAPHIC #1 <END> g03403206

253-2589 LINES GP-ENGINE OIL

S/N: TX71-UP; KHX1-UP

PART OF 364-7493, 395-0487 ENGINE AR-COMPLETE

SMCS-1307 **i05968681**

NOTE	REF NO	GRAPHIC REF	PART NUMBER	QTY	PART NAME 1 2 3 4 5 6 (PRODUCT LEVEL)	SEE PAGE
	1	1	**438-8638**	1	ELBOW-OUTLET	
	2	1	**7W-5340**	1	GASKET	
	3	1	**252-8213**	1	TUBE AS	
	4	1	**3P-1156**	2	SEAL-O-RING	
M	5	1	**6V-3940**	4	BOLT (M8X1.25X25-MM)	
M	6	1	**6V-4248**	2	BOLT (M10X1.5X25-MM)	
	7	1	**6V-5839**	2	WASHER (11X21X2.5-MM THK)	
	8	1	**9M-1974**	4	WASHER-HARD (8.8X16X2-MM THK)	

M - METRIC PART

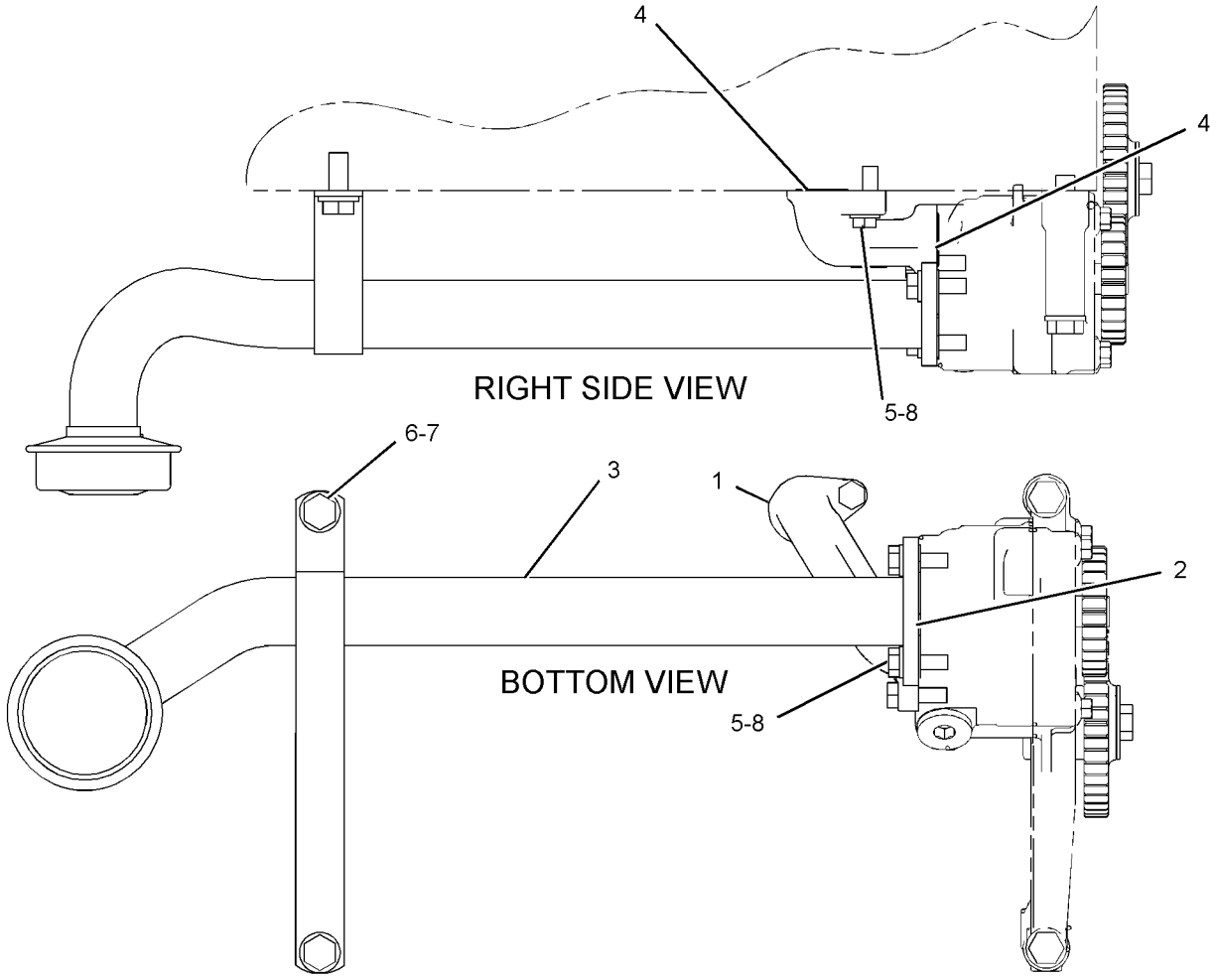

GRAPHIC #1 <END> g03444000

362-1559 LINES GP-ENGINE OIL DRAIN

S/N: SZS1-217

PART OF 368-3025 GENERAL AR

SMCS-1307 **i04176425**

NOTE	REF NO	GRAPHIC REF	PART NUMBER	QTY	PART NAME 1 2 3 4 5 6 (PRODUCT LEVEL)	SEE PAGE
	1	1	**206-4669**	1	VALVE-DRAIN	
	2	1	**212-4174**	1	LOCKWASHER	
I	3	1	**363-8142**	1	HOSE AS	
	4	1	**124-6258**	1	CLAMP-HOSE	
	5	1	**1S-0994**	1	CLIP	
	6	1	**3K-0360**	1	SEAL-O-RING	
	7	1	**5M-3062**	1	BOLT (3/8-16X0.75-IN)	
	8	1	**7X-7729**	1	WASHER (11X25X3-MM THK)	
	9	1	**8T-4121**	1	WASHER-HARD (11X21X2.5-MM THK)	
E	10	1	**146-7453**		HOSE (13-CM)	

E - ORDER BY THE CENTIMETER
I - REFER TO HYDRAULIC INFORMATION SYSTEM

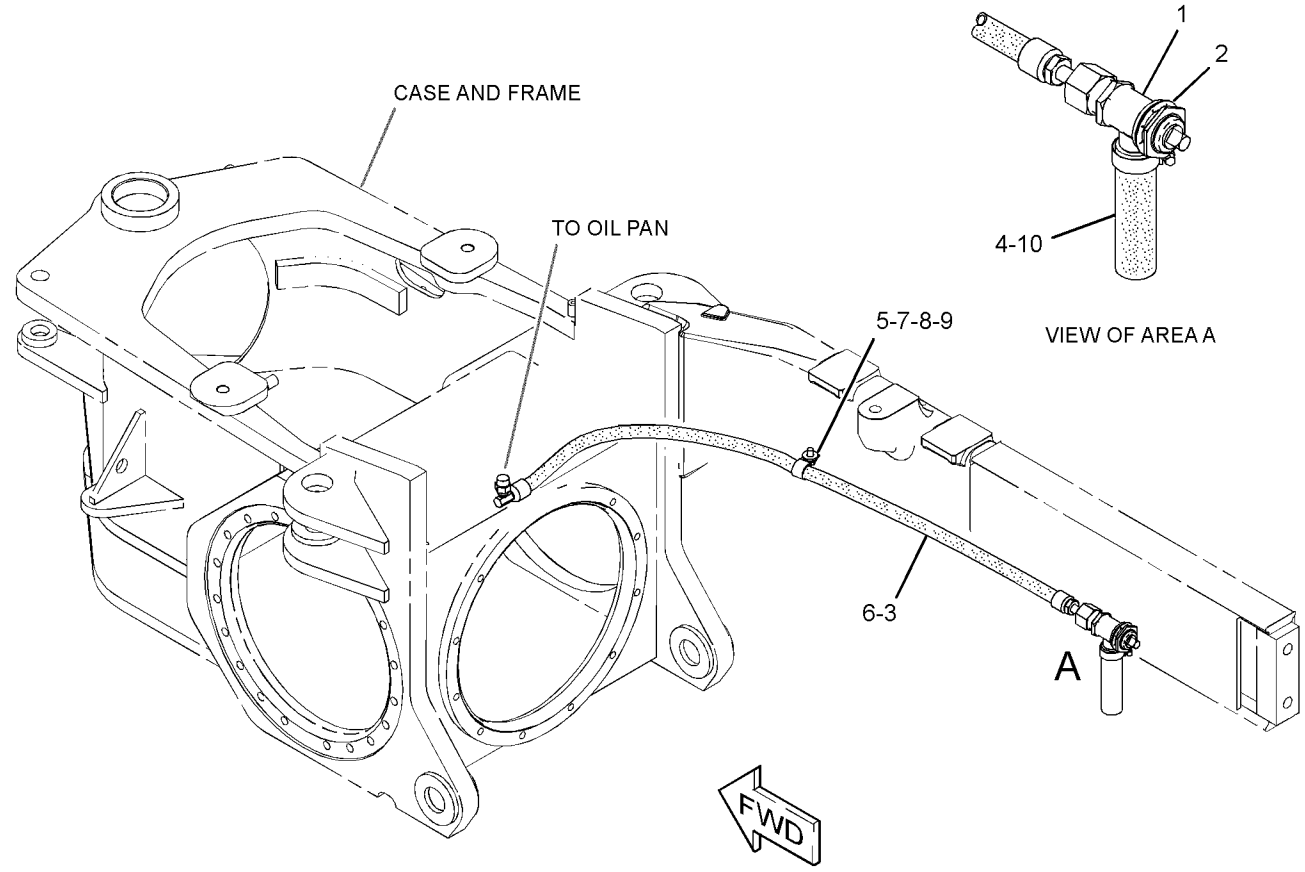

GRAPHIC #1 <END> g02398199

362-1559 LINES GP-ENGINE OIL DRAIN

S/N: SZS218-UP

PART OF 368-3025 GENERAL AR, 425-5590 INSTALLATION AR

SMCS-1307 **i06714653**

NOTE	REF NO	GRAPHIC REF	PART NUMBER	QTY	PART NAME 1 2 3 4 5 6 (PRODUCT LEVEL)	SEE PAGE
	1	1	*165-2273*	1	VALVE GP-SHUTOFF	
		1	**6V-7238**	1	VALVE-SHUTOFF	
		1	**3K-0360**	1	SEAL-O-RING	
	2	1	**2P-1293**	1	LOCKNUT (1-3/16-12-THD)	
I	3	1	**317-8063**	1	HOSE AS	
	4	1	**5D-1026**	1	CLAMP-BAND	
	5	1	**1S-0994**	1	CLIP	
	6	1	**6V-9746**	1	SEAL-O-RING	
M	7	1	**8T-4137**	1	BOLT (M10X1.5X20-MM)	
	8	1	**7X-7729**	1	WASHER (11X25X3-MM THK)	
	9	1	**8T-4121**	1	WASHER-HARD (11X21X2.5-MM THK)	
E	10	1	**5P-0743**		HOSE (13-CM)	
	11	1	**106-5074**	1	ADAPTER	
	12	1	*148-8364*	1	ELBOW AS	
		1	**6V-8625**	1	ELBOW	
		1	**3K-0360**	1	SEAL-O-RING	
		1	**6V-8398**	1	SEAL-O-RING	

E - ORDER BY THE CENTIMETER
I - REFER TO HYDRAULIC INFORMATION SYSTEM
M - METRIC PART

362-1559 **LINES GP-ENGINE OIL DRAIN (**contd.**)** **i06714653**

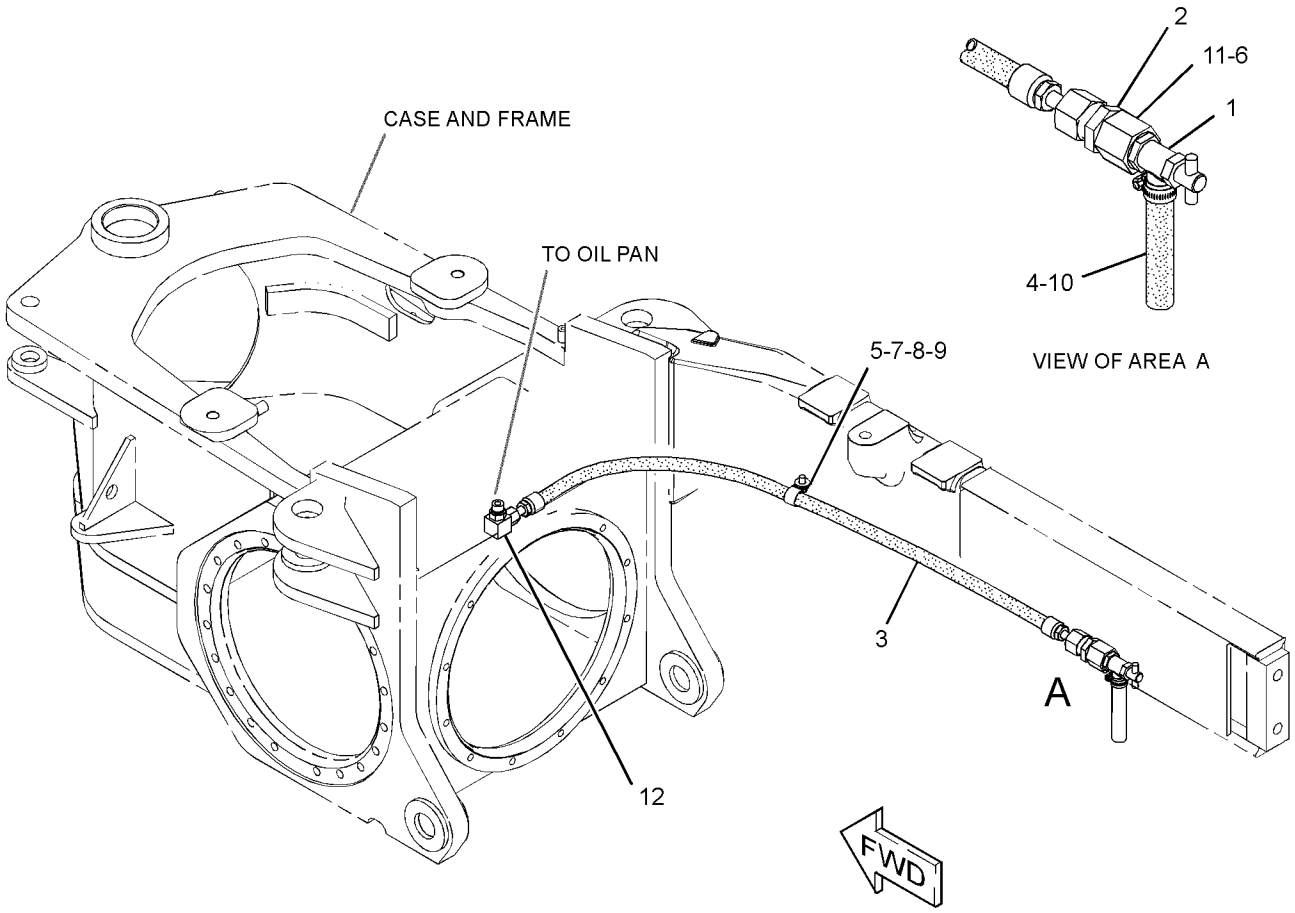

GRAPHIC #1 <END> g03164959

187-6279 LINES GP-TURBOCHARGER OIL

S/N: TX71-UP; KHX1-UP

PART OF 364-7493, 395-0487 ENGINE AR-COMPLETE

SMCS-1052, 1307

i05908456

NOTE	REF NO	GRAPHIC REF	PART NUMBER	QTY	PART NAME 1 2 3 4 5 6 (PRODUCT LEVEL)	SEE PAGE
	1	1	*183-3399*	1	CONNECTOR AS	
		1	**6V-8636**	1	CONNECTOR	
		1	**214-7568**	1	SEAL-O-RING (11.89MM ID)	
		1	**221-3494**	1	SEAL-O-RING (12.83MM OD)	
C	2	1	**246-6036**	1	HOSE	
	3	1	**187-6294**	1	HOSE AS-OIL SUPPLY	
	4	1	*250-1424*	1	ELBOW AS	
		1	**6V-8724**	1	ELBOW	
		1	**214-7568**	1	SEAL-O-RING (11.89MM ID)	
		1	**228-7089**	1	SEAL-O-RING (12.83MM OD)	
C	5	1	**197-8419**	1	GASKET (TURBOCHARGER) (21.82MM ID)	
C	6	1	**210-9246**	1	SEAL-O-RING (32.92MM ID)	
M	7	1	**9X-2099**	2	STUD (M8X1.25X52.75-MM)	
	8	1	**8T-4224**	2	WASHER-HARD (8.8X16X2-MM THK)	
CM	9	1	**6V-5218**	2	BOLT (M8X1.25X35-MM)	
C	10	1	**260-8630**	1	TUBE AS-DRAIN	
C	11	1	**260-8631**	1	TUBE AS-DRAIN	
C	12	1	**284-3502**	2	CLAMP-BAND	
M	13	1	**2Y-5829**	1	NUT (M10X1.5-THD)	
M	14	1	**6V-4248**	1	BOLT (M10X1.5X25-MM)	
	15	1	**6V-5839**	2	WASHER (11X21X2.5-MM THK)	
	16	1	**7S-0530**	1	CLIP	
	17	1	**033-8248**	1	CLIP	
	18	1	**9M-1974**	2	WASHER-HARD (8.8X16X2-MM THK)	

C - CHANGE FROM PREVIOUS TYPE
M - METRIC PART

187-6279 **LINES GP-TURBOCHARGER OIL (**contd.**)** **i05908456**

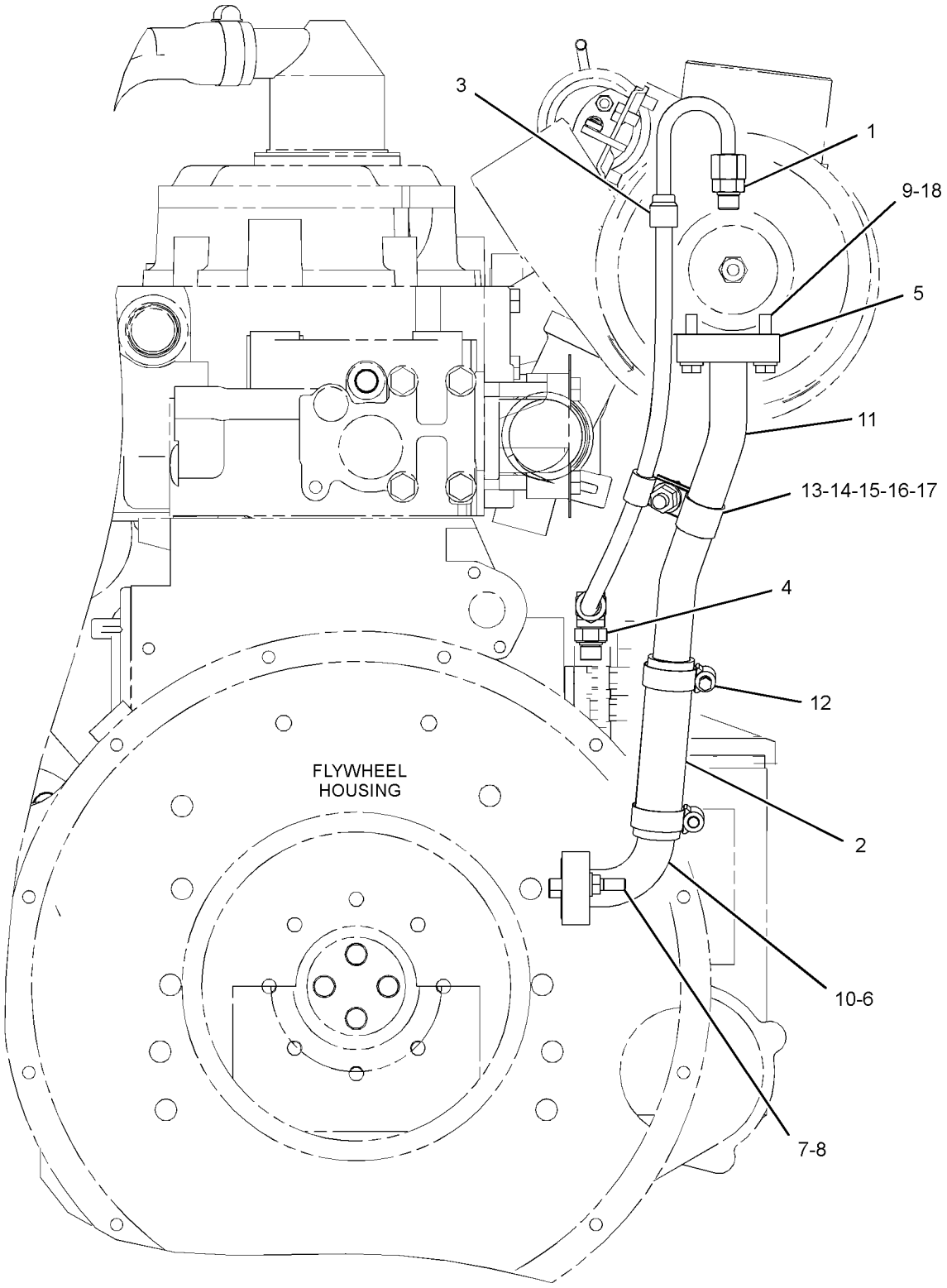

REAR VIEW OF ENGINE

GRAPHIC #1 <END> g03377931

227-5926 MANIFOLD GP-ENGINE OIL

S/N: TX71-UP; KHX1-UP

PART OF 364-7493, 395-0487 ENGINE AR-COMPLETE

SMCS-1307 **i05287958**

NOTE	REF NO	GRAPHIC REF	PART NUMBER	QTY	PART NAME 1 2 3 4 5 6 (PRODUCT LEVEL)	SEE PAGE
	1	1	**226-8696**	1	MANIFOLD-OIL (ENGINE)	
	2	1	*389-3708*	3	PLUG AS	
					(EACH INCLUDES)	
		1	**360-3679**	1	PLUG-CONNECTOR (9/16-18-THD)	
	2A	1	**214-7568**	1	SEAL-O-RING	
	3	1	**4F-9029**	1	SEAL	
M	4	1	**6V-5219**	2	BOLT (M8X1.25X40-MM)	

M - METRIC PART

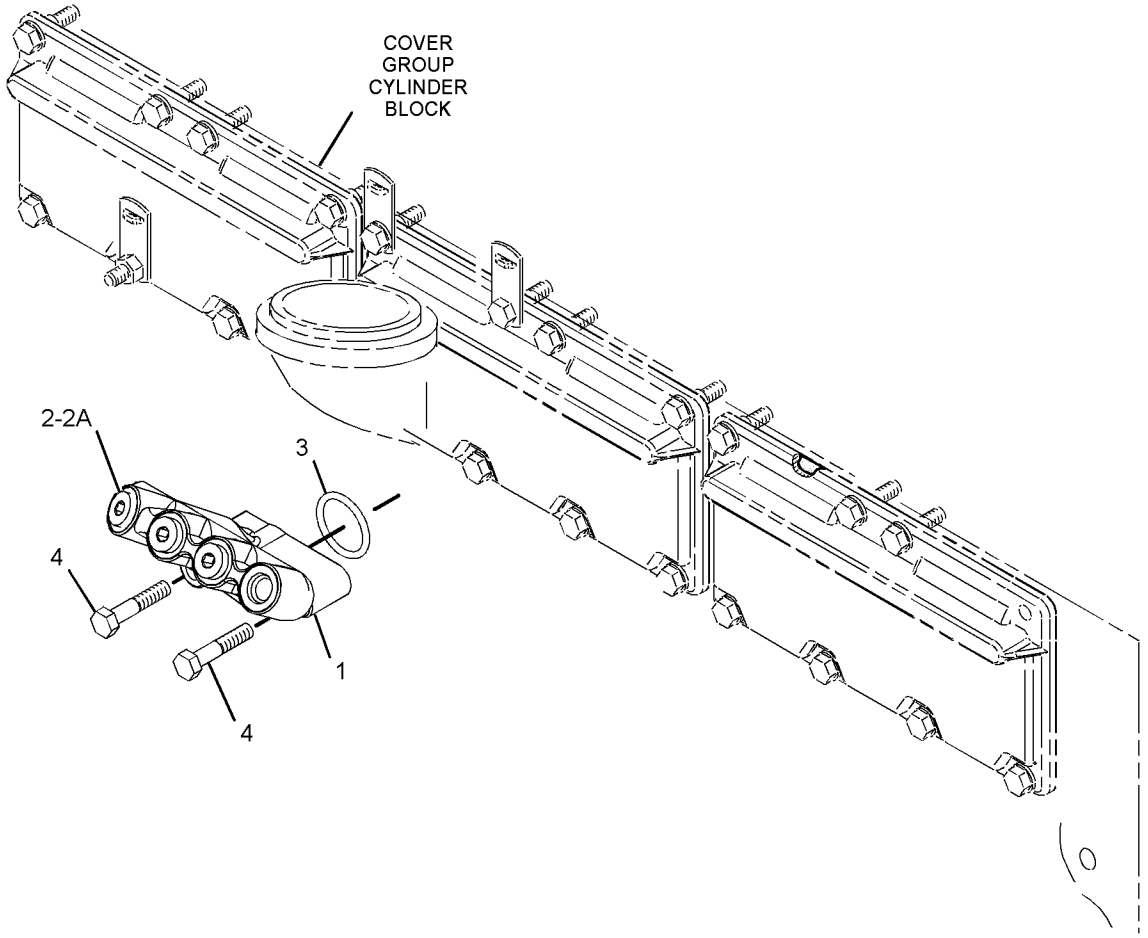

GRAPHIC #1 <END> g03358966

501-1161 OIL CHANGE GP-HIGH SPEED

S/N: SZS1-UP

CANNOT BE USED WITH 362-1559—PAGE: 105

AN ATTACHMENT

SMCS-1325 **i06740715**

NOTE	REF NO	GRAPHIC REF	PART NUMBER	QTY	PART NAME 1 2 3 4 5 6 (PRODUCT LEVEL)	SEE PAGE
	1	1	*164-5569*	1	COUPLING AS	
		1	**4I-6140**	1	COUPLING	
		1	**7M-8485**	1	SEAL-O-RING	
	2	1	*165-2273*	1	VALVE GP-SHUTOFF	
		1	**3K-0360**	1	SEAL-O-RING	
		1	**6V-7238**	1	VALVE-SHUTOFF	
I	3	1	**501-1168**	1	HOSE AS	
	4	1	**106-5074**	1	ADAPTER	
	5	1	**110-8827**	1	FITTING (QUICK DISCONNECT, MALE)	
	6	1	*148-8364*	1	ELBOW AS	
		1	**3K-0360**	1	SEAL-O-RING	
		1	**6V-8398**	1	SEAL-O-RING	
		1	**6V-8625**	1	ELBOW	
	7	1	*148-8449*	1	TEE AS-SWIVEL	
		1	**6V-9746**	2	SEAL-O-RING	
		1	**6V-9839**	1	TEE-SWIVEL	
	8	1	**1S-0994**	1	CLIP	
	9	1	**2P-1293**	1	LOCKNUT (1-3/16-12-THD)	
	10	1	**5D-1026**	1	CLAMP-BAND	
	11	1	**6V-9746**	1	SEAL-O-RING	
	12	1	**7X-7729**	1	WASHER (11X25X3-MM THK)	
	13	1	**8T-4121**	1	WASHER-HARD (11X21X2.5-MM THK)	
M	14	1	**8T-4137**	1	BOLT (M10X1.5X20-MM)	
G	15	1	**423-1984**		HOSE (5.2-IN)	

G - ORDER BY THE INCH
I - REFER TO HYDRAULIC INFORMATION SYSTEM
M - METRIC PART

501-1161 **OIL CHANGE GP-HIGH SPEED (**contd.**)** **i06740715**

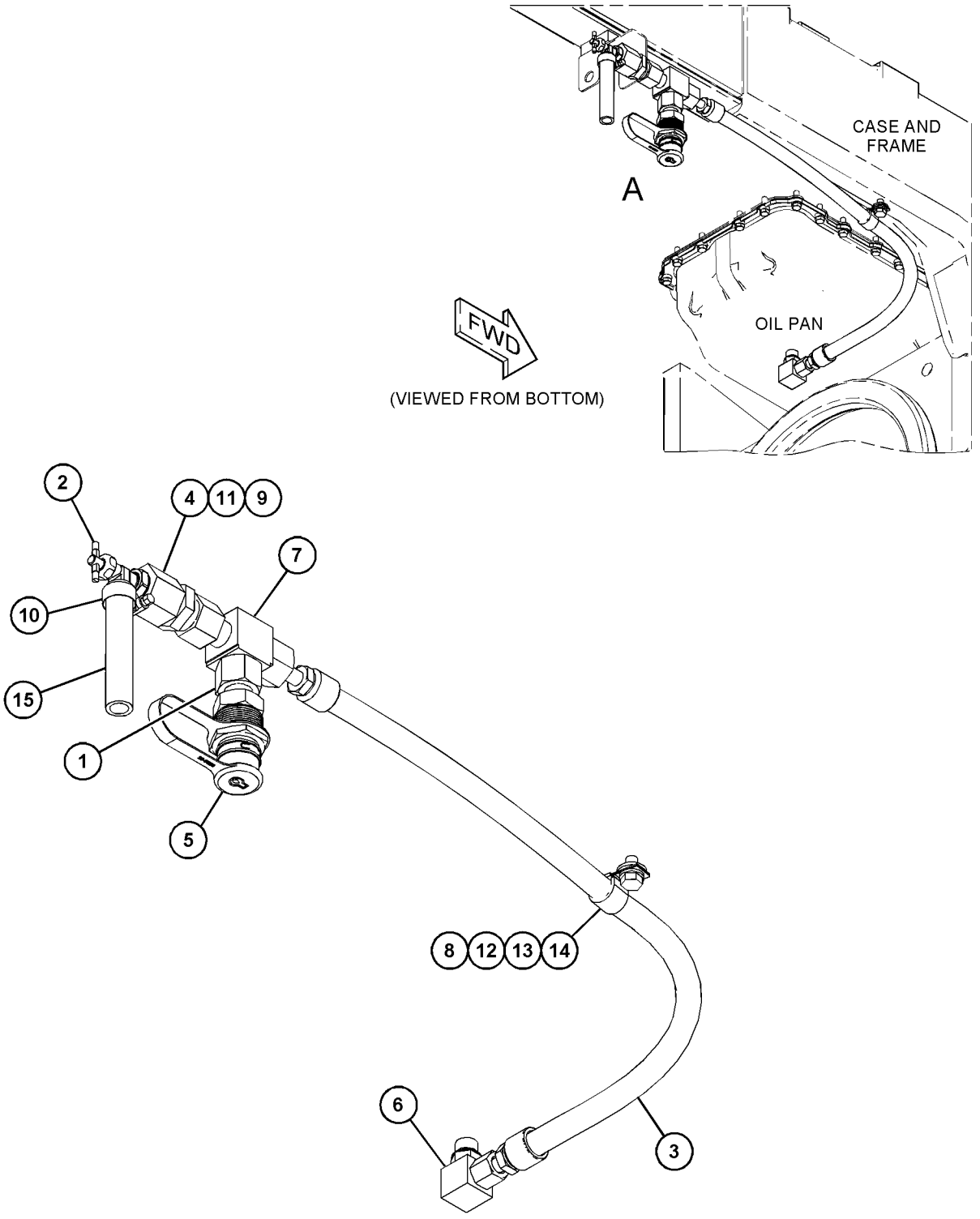

GRAPHIC #1 <END> g06160477

192-2981 PUMP GP-ENGINE OIL

S/N: TX71-UP
GEROTOR OIL PUMP, DROP IN DESIGN
PART OF 387-8505 ENGINE AR-CORE

SMCS-1304, 1315

i05976506

NOTE	REF NO	GRAPHIC REF	PART NUMBER	QTY	PART NAME 1 2 3 4 5 6 (PRODUCT LEVEL)	SEE PAGE
Y	1	1	*200-4497*	1	PUMP GP-ENGINE OIL	114
M	2	1	**6V-5815**	2	BOLT (M10X1.5X75-MM)	
	3	1	**6V-5839**	2	WASHER (11X21X2.5-MM THK)	

M - METRIC PART
Y - SEPARATE ILLUSTRATION

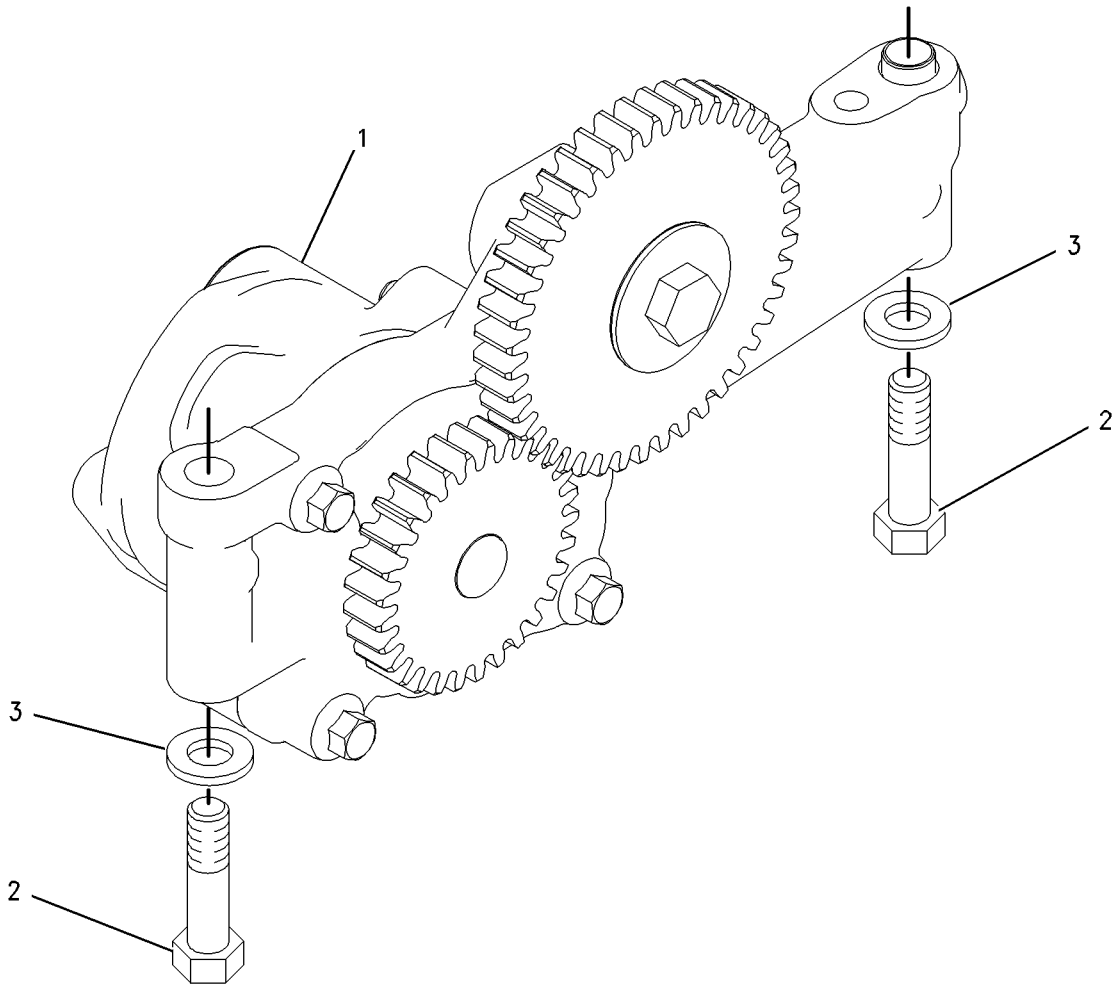

GRAPHIC #1 <END> g00775811

200-4497 PUMP GP-ENGINE OIL

S/N: TX71-UP; KHX29829-UP

PART OF 192-2981, 212-2270 PUMP GP-ENGINE OIL

SMCS-1304, 1315 **i03533502**

NOTE	REF NO	GRAPHIC REF	PART NUMBER	QTY	PART NAME 1 2 3 4 5 6 (PRODUCT LEVEL)	SEE PAGE
	1	1	**7W-9737**	1	SHAFT	
	2	1	**7W-9738**	1	WASHER (10.5X38X1.6-MM THK)	
	3	1	**7W-9740**	1	GEAR AS-IDLER (43-TEETH)	
	3A	1	**7W-9930**	1	BUSHING	
M	4	1	**9X-2305**	1	BOLT-LOCKING (M10X1.5X50-MM)	
R	5	1	**189-8777**	1	PUMP GP-ENGINE OIL	

M - METRIC PART
R - REMANUFACTURED PART MAY BE AVAILABLE

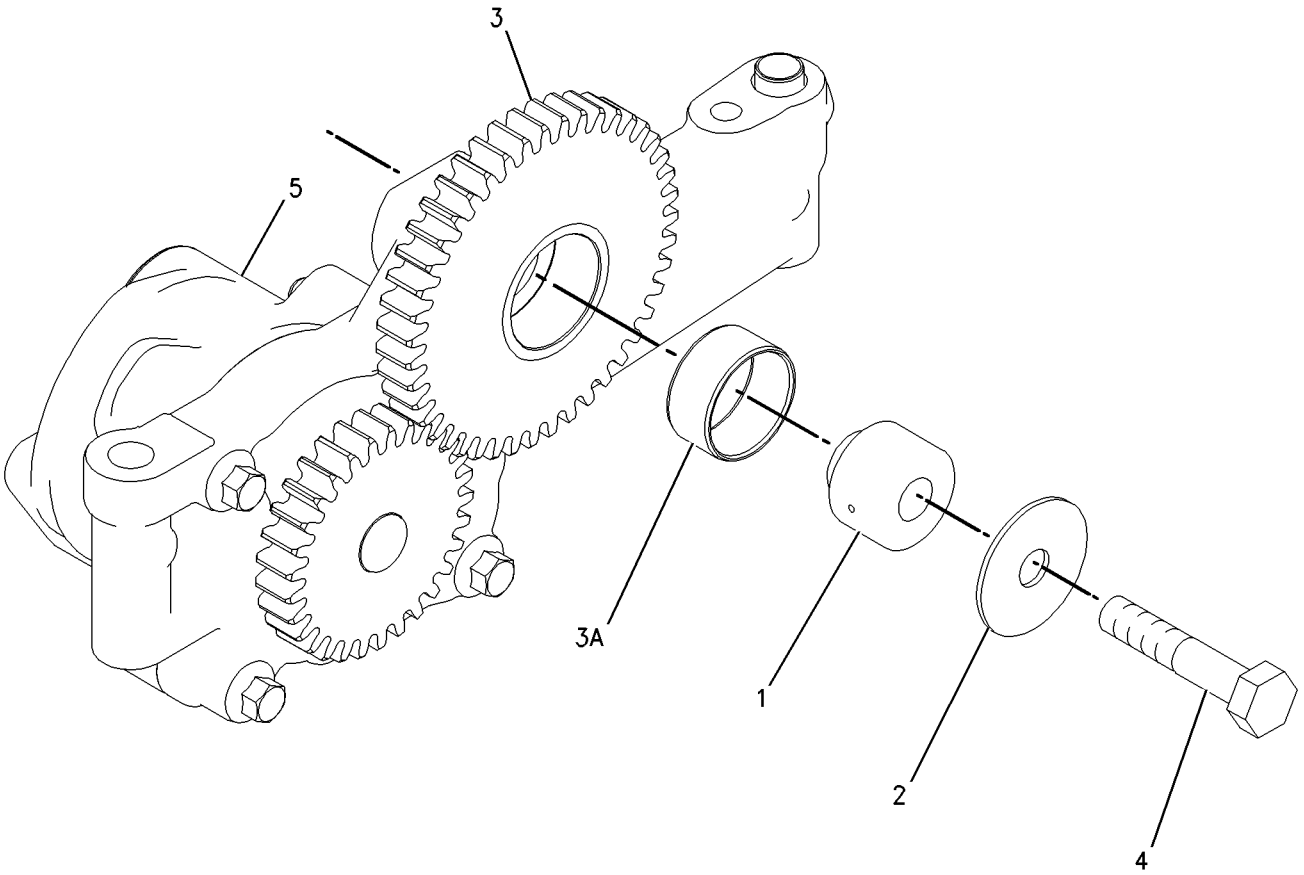

GRAPHIC #1 <END> g00775788

212-2270 PUMP GP-ENGINE OIL

S/N: KHX1-UP

PART OF 365-3500, 387-8505 ENGINE AR-CORE

SMCS-1304, 1315

i05979990

NOTE	REF NO	GRAPHIC REF	PART NUMBER	QTY	PART NAME 1 2 3 4 5 6 (PRODUCT LEVEL)	SEE PAGE
CY	1	1	**200-4497**	1	PUMP GP-ENGINE OIL	114
M	2	1	**6V-5815**	2	BOLT (M10X1.5X75-MM)	
	3	1	**6V-5839**	2	WASHER (11X21X2.5-MM THK)	

C - CHANGE FROM PREVIOUS TYPE
M - METRIC PART
Y - SEPARATE ILLUSTRATION

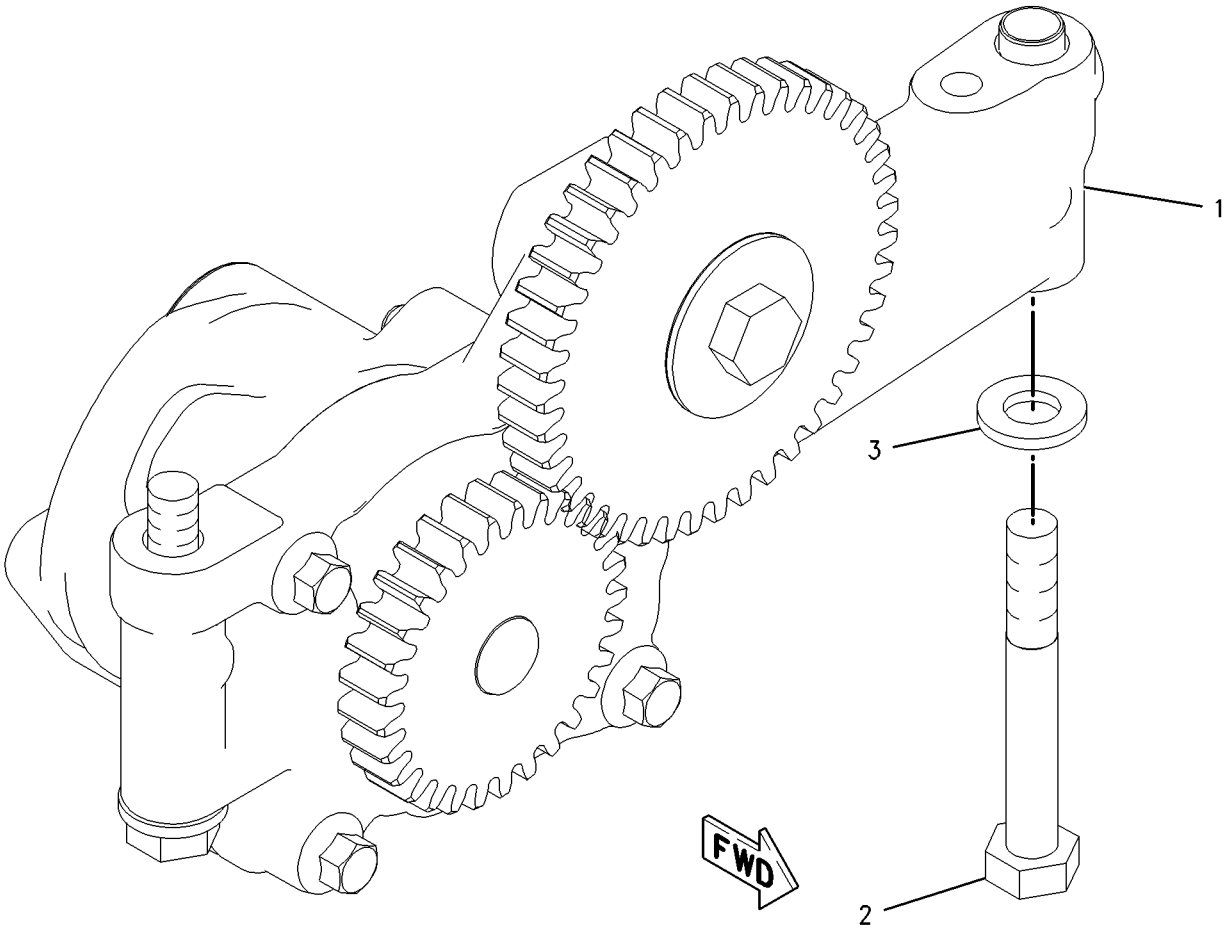

GRAPHIC #1 <END> g00849437

117-3643 COOLER GP-ENGINE OIL

S/N: TX71-UP; KHX1-UP

PART OF 395-0487 ENGINE AR-COMPLETE, 365-3500 ENGINE AR-CORE

SMCS-1378 **i03515463**

NOTE	REF NO	GRAPHIC REF	PART NUMBER	QTY	PART NAME 1 2 3 4 5 6 (PRODUCT LEVEL)	SEE PAGE
R	1	1	**267-4743**	1	CORE AS-ENGINE OIL COOLER	
	2	1	**233-7655**	1	GASKET	
	3	1	**3P-1156**	2	SEAL-O-RING	

R - REMANUFACTURED PART MAY BE AVAILABLE

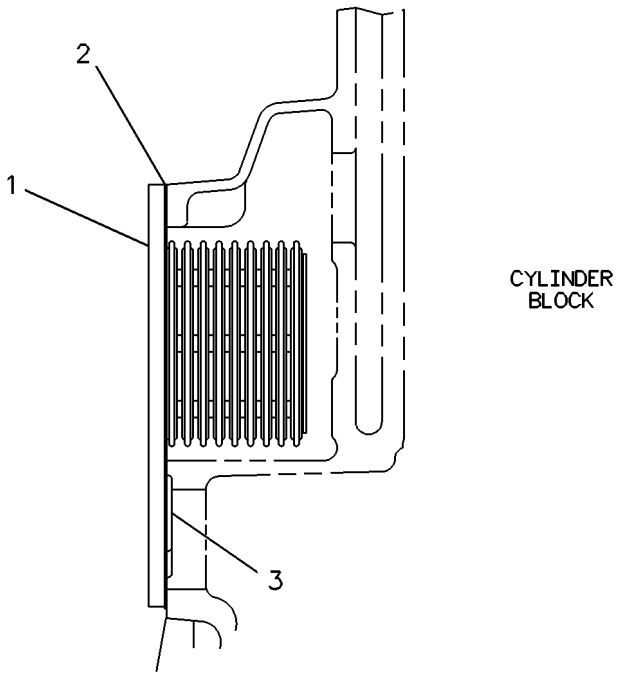

GRAPHIC #1 <END> g00117316

284-0824 FAN GP-BLOWER—RADIATOR

S/N: SZS1-UP

PART OF 368-3025 GENERAL AR, 425-5590 INSTALLATION AR

SMCS-1356 **i03516366**

NOTE	REF NO	GRAPHIC REF	PART NUMBER	QTY	PART NAME 1 2 3 4 5 6 (PRODUCT LEVEL)	SEE PAGE
	1	1	**241-8534**	1	SPIDER AS (8-BLADE)	
	2	1	**8T-4121**	6	WASHER-HARD (11X21X2.5-MM THK)	
M	3	1	**8T-4195**	6	BOLT (M10X1.5X30-MM)	

M - METRIC PART

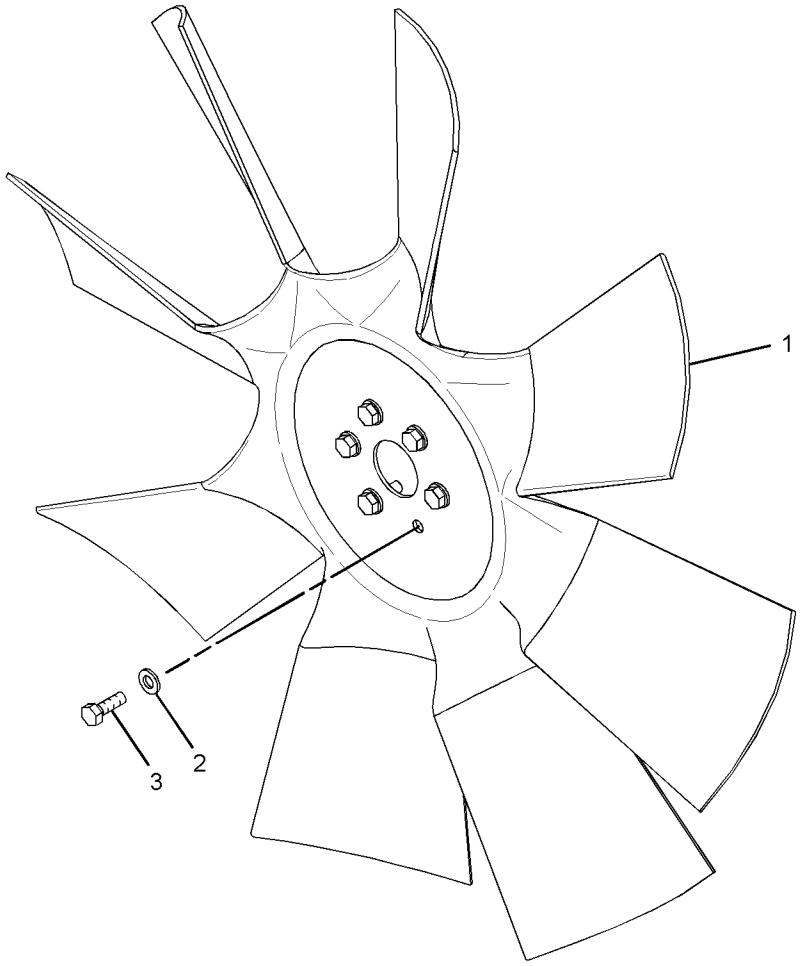

GRAPHIC #1 <END> g01687413

455-1108 KIT-OIL COOLER & LINES GASKET

S/N: SZS1-UP

KIT CONTAINS GASKETS AND SEALS TO ASSEMBLE AND REINSTALL THE OIL COOLERS, OIL FILTER BASE, AND ATTACHING LINES.

FOR USE WITH 395-0487—PAGE: 26

FIELD INSTALLATION

SMCS-1378, 7555

i06782666

NOTE	PART NUMBER	QTY	PART NAME 1 2 3 4 5 6 (PRODUCT LEVEL)	SEE PAGE
	233-7655	1	GASKET	
	300-7933	1	GASKET	
	3J-1907	1	SEAL-O-RING	
	3K-0360	1	SEAL-O-RING	
	3P-1156	2	SEAL-O-RING	
	6V-8397	1	SEAL-O-RING	
	214-7566	1	SEAL-O-RING	
	238-5080	1	SEAL-O-RING	
	238-5081	2	SEAL-O-RING	
			FOR A LIST OF RELATED PARTS THAT MAY BE REQUIRED FOR THE ENGINE REBUILD TO THE KIT CONSIST, PLEASE VISIT	
			HTTP://DEALER.CAT.COM/RELATED	
			<END>	

264-3565 KIT-WATER PUMP GASKET

S/N: SZS1-UP

KIT CONTAINS GASKETS AND SEALS TO REINSTALL WATER PUMP AND ATTACHING LINES.

FOR USE WITH 395-0487—PAGE: 26

FIELD INSTALLATION

SMCS-1361, 1380, 7555

i06569663

NOTE	PART NUMBER	QTY	PART NAME 1 2 3 4 5 6 (PRODUCT LEVEL)	SEE PAGE
	200-2258	1	GASKET	
	4W-7592	1	GASKET	
	6V-5063	1	SEAL-O-RING	
	3D-2824	2	SEAL-O-RING	
	2M-4453	1	SEAL-O-RING	
	6V-6609	1	SEAL-O-RING	
	384-9992	1	SEAL-O-RING	
	147-0182	1	SEAL-O-RING	
	238-5082	1	SEAL-O-RING	
	3K-0360	3	SEAL-O-RING	
	4J-0524	1	SEAL-O-RING	
			FOR A LIST OF RELATED PARTS THAT MAY BE REQUIRED FOR THE ENGINE REBUILD TO THE KIT CONSIST, PLEASE VISIT	
			HTTP://DEALER.CAT.COM/RELATED	
			<END>	

461-3386 KIT-WATER PUMP GASKET

S/N: SZS10100-UP
FIELD INSTALLATION

SMCS-1361, 1380, 7555

i06861728

NOTE	PART NUMBER	QTY	PART NAME 1 2 3 4 5 6 (PRODUCT LEVEL)	SEE PAGE
	4W-7592	1	GASKET	
	4J-0524	1	SEAL-O-RING	
	147-0182	1	SEAL-O-RING	
	238-5080	1	SEAL-O-RING	
	238-5082	1	SEAL-O-RING	

<END>

206-4228 LINES GP-WATER

S/N: KHX29829-35843

PART OF 364-7493 ENGINE AR-COMPLETE

SMCS-1380 **i05327527**

NOTE	REF NO	GRAPHIC REF	PART NUMBER	QTY	PART NAME 1 2 3 4 5 6 (PRODUCT LEVEL)	SEE PAGE
	1	1	**227-5942**	1	HOUSING-WATER REGULATOR	
	2	1	**126-5466**	1	GASKET	
	3	1	**115-4223**	2	REGULATOR-WATER TEMPERATURE (97-DEG C) (COOLANT)	
	4	1	**222-5915**	1	GASKET (TEMPERATURE REGULATOR HOUSING)	
	5	1	**160-5131**	1	PIPE (OUTLET)	
	6	1	**7E-0759**	1	HOSE	
	7	1	*351-0274*	1	ADAPTER AS	
		1	**6V-3250**	1	SEAL-O-RING	
		1	**5P-9617**	1	ADAPTER	
	8	1	*377-9603*	1	VALVE AS-FLUID SAMPLING (ENGINE COOLANT)	
		1	**6V-9027**	1	SEAL-O-RING	
		1	**154-9023**	1	VALVE-SAMPLING	
	9	1	**9M-1974**	6	WASHER-HARD (8.8X16X2-MM THK)	
M	10	1	**6V-3940**	6	BOLT (M8X1.25X25-MM)	
M	11	1	**5P-8347**	2	BOLT (M8X1.25X70-MM)	
M	12	1	**6V-5223**	1	BOLT (M8X1.25X100-MM)	
	13	1	*396-0405*	4	PLUG AS	
					(EACH INCLUDES)	
		1	**6V-6609**	1	SEAL-O-RING	
		1	**360-3680**	1	PLUG	
	14	1	**157-0670**	1	CAP-DUST	
	15	1	*398-5598*	1	PLUG AS	
		1	**6V-9027**	1	SEAL-O-RING	
		1	**360-3677**	1	PLUG (7/16-20-THD)	
	16	1	**347-3148**	2	CLAMP-BAND	

M - METRIC PART

206-4228 **LINES GP-WATER (**contd.**)** **i05327527**

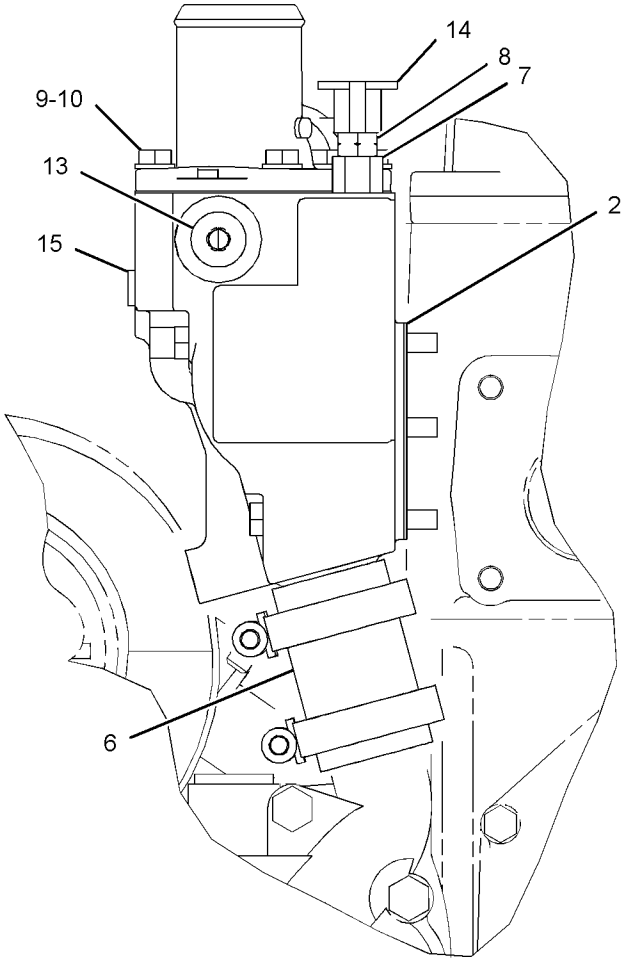

FRONT VIEW OF ENGINE

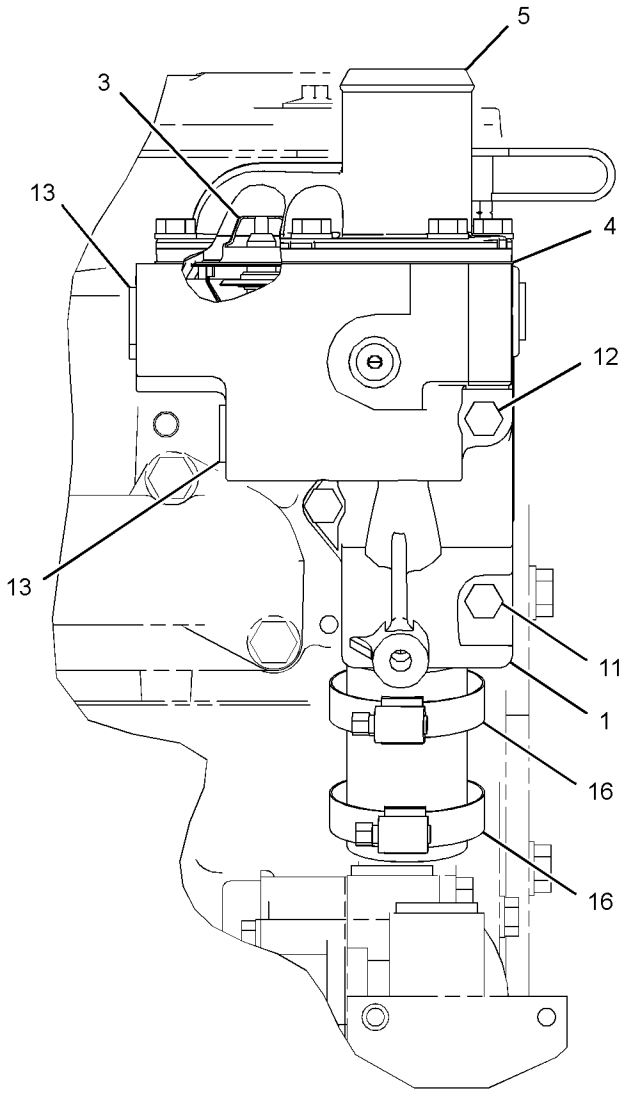

RIGHT SIDE VIEW OF ENGINE

GRAPHIC #1 <END> g03377849

325-7448 LINES GP-WATER

S/N: SZS1-UP

PART OF 368-3025 GENERAL AR, 425-5590 INSTALLATION AR

SMCS-1380 **i06259746**

NOTE	REF NO	GRAPHIC REF	PART NUMBER	QTY	PART NAME 1 2 3 4 5 6 (PRODUCT LEVEL)	SEE PAGE
	1	1	**4S-5719**	1	SPACER (10.31X25X12.7-MM THK)	
	2	1	**5D-1026**	1	CLAMP-BAND	
	3	1	**5I-4376**	1	FITTING	
	4	1	**5P-4961**	4	CLAMP-HOSE	
	5	1	**157-0670**	1	CAP-DUST	
	6	1	*164-5562*	1	CONNECTOR AS	
		1	**5P-1046**	1	CONNECTOR	
		1	**3J-1907**	1	SEAL-O-RING	
C	7	1	*165-2273*	1	VALVE GP-SHUTOFF (COOLANT)	
		1	**6V-7238**	1	VALVE-SHUTOFF	
		1	**3K-0360**	1	SEAL-O-RING	
	8	1	*215-7067*	3	ELBOW AS	
					(EACH INCLUDES)	
		1	**215-7066**	1	ELBOW	
		1	**3J-1907**	1	SEAL-O-RING	
	9	1	**263-6914**	1	HOSE	
	10	1	**265-5007**	1	HOSE	
	11	1	**266-7650**	1	ELBOW	
	12	1	**266-7651**	1	HOSE	
	13	1	**311-3026**	1	TUBE AS	
	14	1	**325-7447**	1	TUBE AS	
C	15	1	**366-7553**	1	BRACKET	
	16	1	**154-9025**	1	VALVE-SAMPLING (ENGINE COOLANT)	
	17	1	*184-2420*	1	ADAPTER AS	
		1	**3E-7401**	1	ADAPTER	
		1	**6V-8397**	1	SEAL-O-RING	
C	19	1	**347-4165**	4	CLAMP-BAND	
C	20	1	**335-9214**	4	CLAMP-BAND	
C	21	1	**6V-9168**	1	NUT (11/16-16-THD)	
	23	1	**6V-1889**	1	CLIP	
	24	1	**297-1546**	2	CLIP	
	25	1	**6V-2235**	1	CLIP	
M	26	1	**6V-8367**	1	LOCKWASHER (17.88X29.62X1.17-MM THK)	
	27	1	**7J-8611**	1	ELBOW-PIPE	
	28	1	**8M-2773**	1	CLIP	
	29	1	**8T-4121**	7	WASHER-HARD (11X21X2.5-MM THK)	
M	30	1	**8T-4133**	1	NUT (M10X1.5-THD)	
M	31	1	**8T-4137**	4	BOLT (M10X1.5X20-MM)	
M	32	1	**8T-4196**	1	BOLT (M10X1.5X35-MM)	
E	33	1	**5P-0767**		HOSE (16-CM)	
E	34	1	**6V-8523**		HOSE (37-CM)	
E	34A	1	**6V-8523**		HOSE (139-CM)	
M	35	1	**8T-4195**	1	BOLT (M10X1.5X30-MM)	
	36	1	**6V-1582**	1	CLIP (TAB)	
	37	1	**6V-1581**	1	CLIP (SLOT)	

C - CHANGE FROM PREVIOUS TYPE
E - ORDER BY THE CENTIMETER
M - METRIC PART

325-7448 **LINES GP-WATER (**contd.**)** **i06259746**

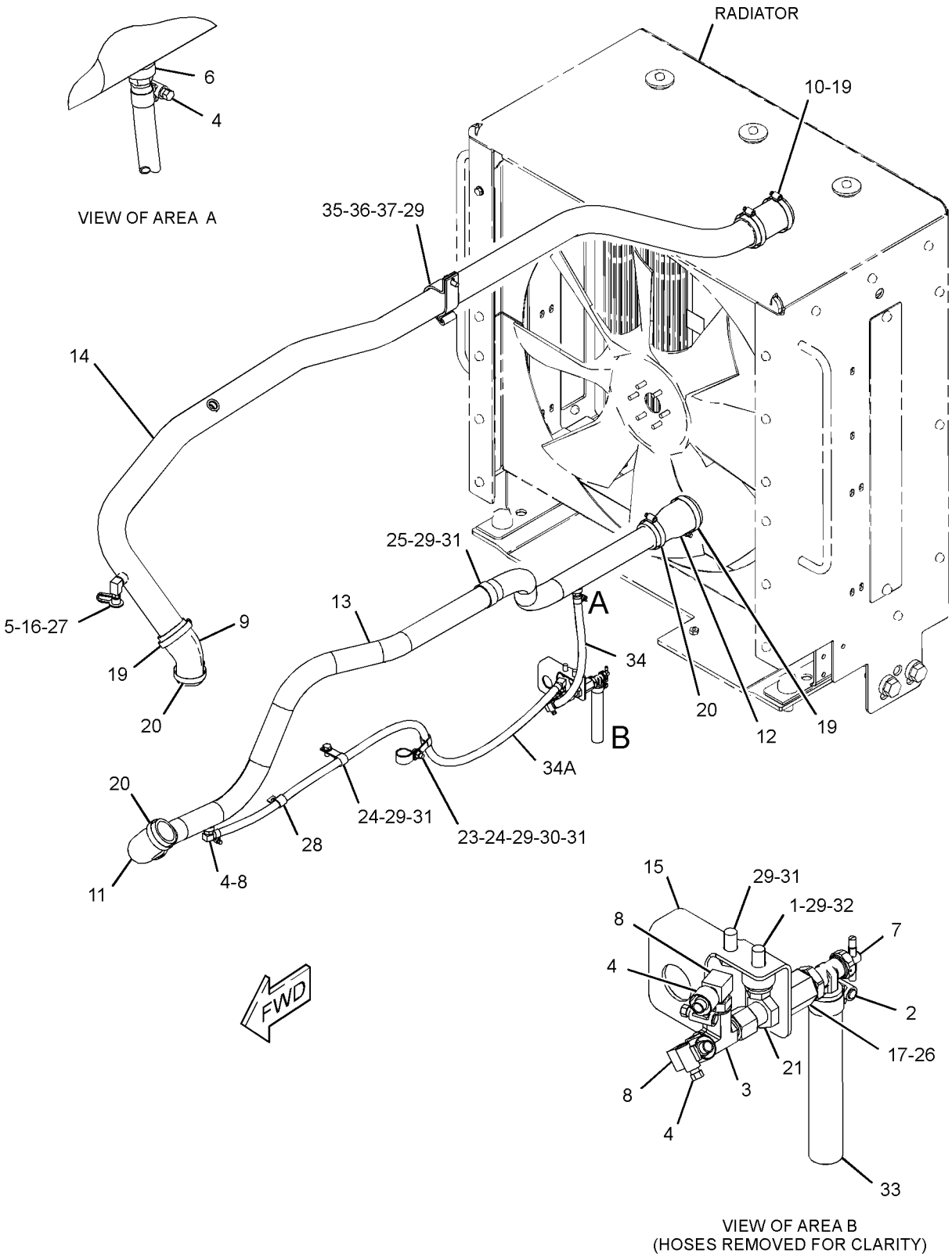

GRAPHIC #1 <END> g06059500

370-5761 LINES GP-WATER

S/N: TX71-UP; KHX1-UP

PART OF 364-7493, 395-0487 ENGINE AR-COMPLETE

SMCS-1380 **i05323883**

NOTE	REF NO	GRAPHIC REF	PART NUMBER	QTY	PART NAME 1 2 3 4 5 6 (PRODUCT LEVEL)	SEE PAGE
	1	1	**227-5942**	1	HOUSING-WATER REGULATOR	
	2	1	**126-5466**	1	GASKET	
	3	1	**115-4223**	2	REGULATOR-WATER TEMPERATURE (97-DEG C) (COOLANT)	
	4	1	**222-5915**	1	GASKET (WATER REGULATOR HOUSING)	
	5	1	**160-5131**	1	PIPE (OUTLET)	
	6	1	**7E-0759**	1	HOSE	
	7	1	*351-0274*	1	ADAPTER AS	
		1	**5P-9617**	1	ADAPTER	
		1	**6V-3250**	1	SEAL-O-RING	
	8	1	*377-9603*	1	VALVE AS-FLUID SAMPLING (ENGINE COOLANT)	
		1	**6V-9207**	1	CLIP (SLOT)	
		1	**154-9023**	1	VALVE-SAMPLING (ENGINE COOLANT)	
	9	1	**9M-1974**	6	WASHER-HARD (8.8X16X2-MM THK)	
M	10	1	**6V-3940**	6	BOLT (M8X1.25X25-MM)	
M	11	1	**5P-8347**	2	BOLT (M8X1.25X70-MM)	
M	12	1	**6V-5223**	1	BOLT (M8X1.25X100-MM)	
	13	1	*398-5598*	1	PLUG AS	
		1	**6V-9027**	1	SEAL-O-RING	
		1	**360-3677**	1	PLUG (7/16-20-THD)	
	14	1	**157-0670**	1	CAP-DUST	
	15	1	**347-3148**	2	CLAMP-BAND	
	16	1	*396-0405*	3	PLUG AS	
					(EACH INCLUDES)	
		1	**6V-6609**	1	SEAL-O-RING	
		1	**360-3680**	1	PLUG	

M - METRIC PART

370-5761 **LINES GP-WATER (**contd.**)** **i05323883**

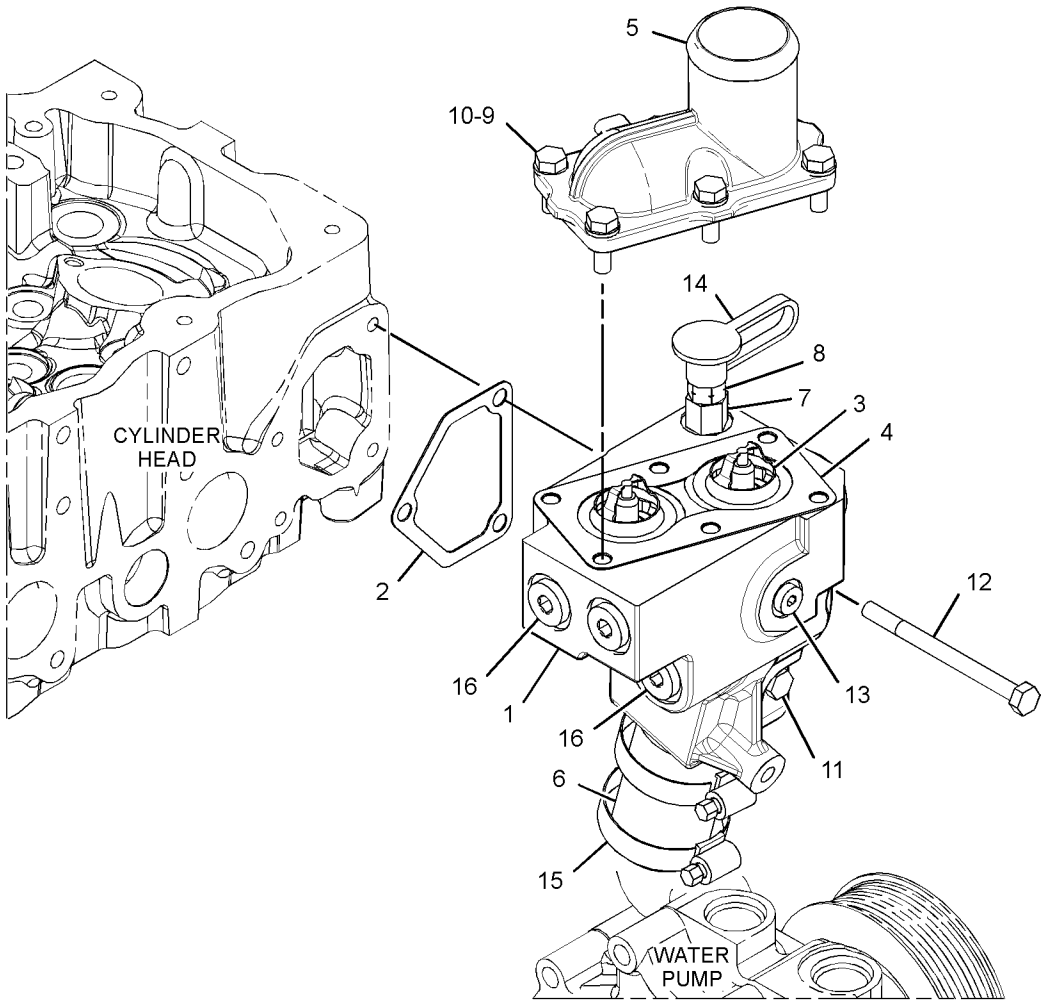

GRAPHIC #1 <END> g03378020

352-2138 PUMP AS-WATER*R

S/N: TX71-UP; KHX1-UP

PART OF 352-2139 PUMP GP-WATER

SMCS-1361 **i05040092**

NOTE	REF NO	GRAPHIC REF	PART NUMBER	QTY	PART NAME 1 2 3 4 5 6 (PRODUCT LEVEL)	SEE PAGE
	1	1	**119-3025**	1	PLUG-FELT (WATER)	

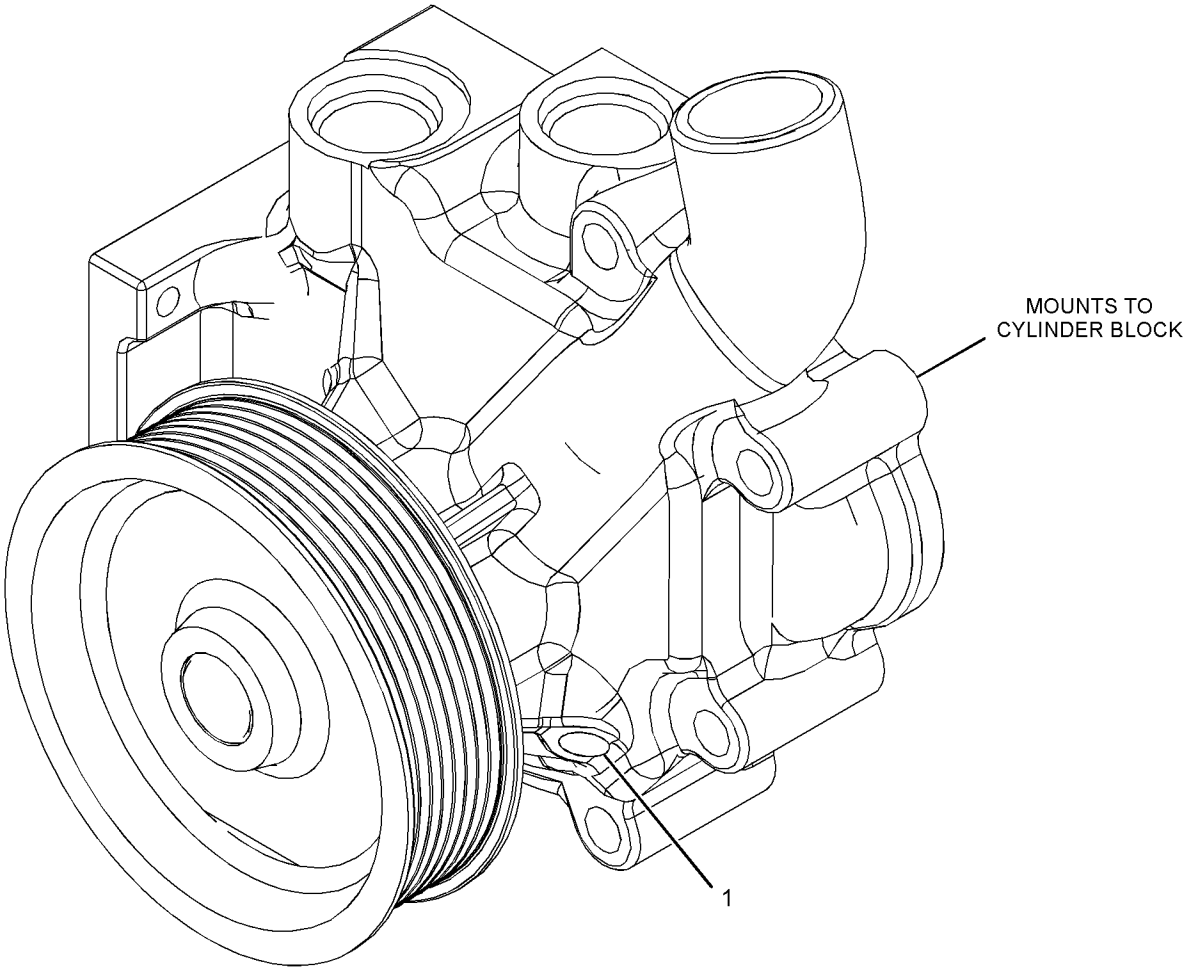

GRAPHIC #1 <END> g02720683

129-1173 PUMP GP-WATER–COOLANT

S/N: TX71-UP; KHX1-UP

FOR USE WITH CUSTOMER SUPPLIED 8-GROOVE POLY-RIB BELT, SHORT FRONT END ACCESSORY DRIVE

PART OF 364-7493 ENGINE AR-COMPLETE, 387-8505 ENGINE AR-CORE

SMCS-1361 **i05330391**

NOTE	REF NO	GRAPHIC REF	PART NUMBER	QTY	PART NAME 1 2 3 4 5 6 (PRODUCT LEVEL)	SEE PAGE
YR	1	1	**352-2139**	1	PUMP GP-WATER (COOLANT)	129
M	2	1	**8T-0644**	4	BOLT (M10X1.5X90-MM)	
	3	1	**147-0182**	1	SEAL-O-RING	
	4	1	**4J-0524**	1	SEAL-O-RING (47.22MM ID)	
	5	1	**6V-5063**	1	SEAL-O-RING (23.47MM ID)	
	6	1	**069-4269**	1	ADAPTER	
	7	1	*396-0404*	1	PLUG AS	
	7A	1	**6V-3251**	1	SEAL-O-RING	
	7B	1	**360-3681**	1	PLUG (7/8-14-THD)	
	8	1	*396-0405*	2	PLUG AS	
					(EACH INCLUDES)	
	8A	1	**6V-6609**	1	SEAL-O-RING	
	8B	1	**360-3680**	1	PLUG	
	9	1	*426-4162*	1	PLUG AS	
	9A	1	**291-8144**	1	SEAL-O-RING	
	9B	1	**360-3678**	1	PLUG-O-RING	

M - METRIC PART
R - REMANUFACTURED PART MAY BE AVAILABLE
Y - SEPARATE ILLUSTRATION

129-1173 **PUMP GP-WATER (**contd.**)** **i05330391**

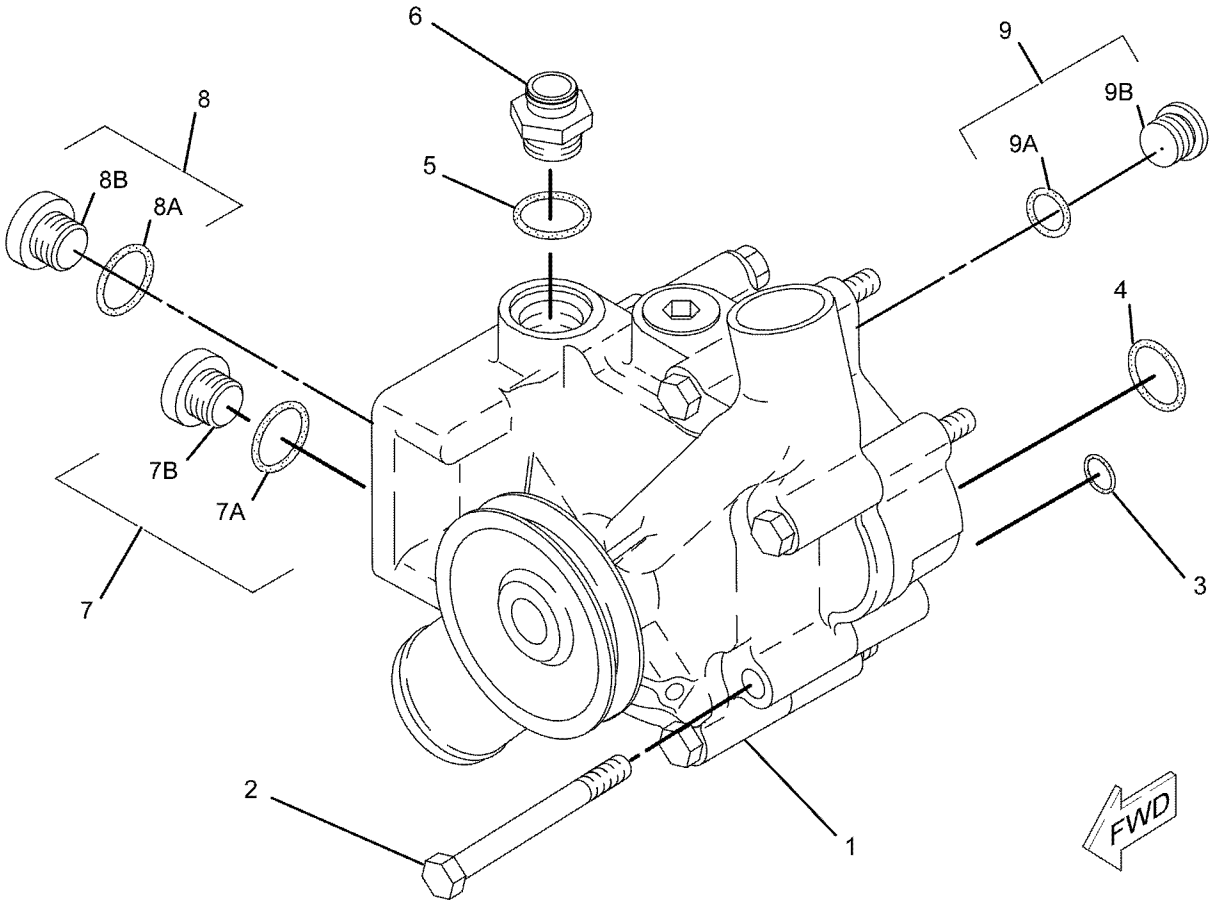

GRAPHIC #1 <END> g01078143

352-2139 PUMP GP-WATER*R

S/N: TX71-UP; KHX1-UP

PART OF 129-1173 PUMP GP-WATER

SMCS-1361 **i05033457**

NOTE	REF NO	GRAPHIC REF	PART NUMBER	QTY	PART NAME 1 2 3 4 5 6 (PRODUCT LEVEL)	SEE PAGE
	1	1	**4W-0253**	1	COVER	
	2	1	**4W-7592**	1	GASKET	
YR	3	1	**352-2138**	1	PUMP AS-WATER	126
M	4	1	**6V-3918**	4	BOLT (M8X1.25X50-MM)	
	5	1	**9M-1974**	4	WASHER-HARD (8.8X16X2-MM THK)	

M - METRIC PART
R - REMANUFACTURED PART MAY BE AVAILABLE
Y - SEPARATE ILLUSTRATION

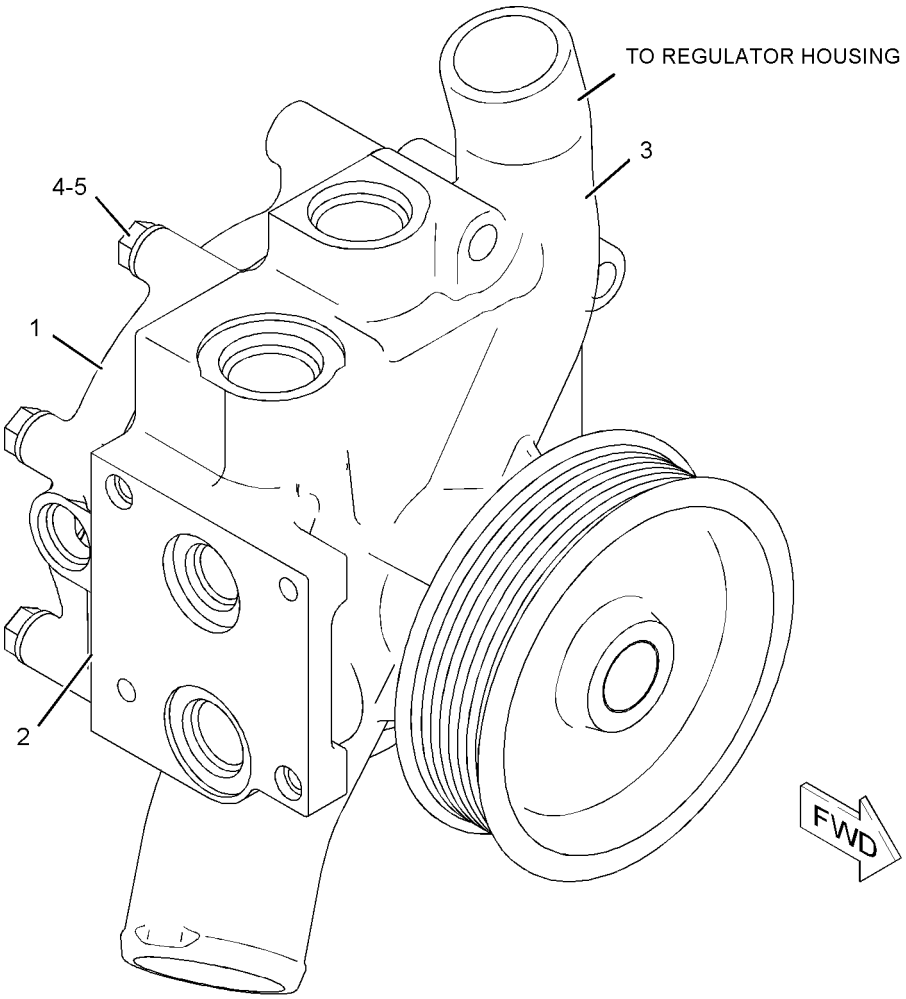

GRAPHIC #1 <END> g01040531

335-2118 RADIATOR & HYD OIL COOLER GP

S/N: SZS1-485
PART OF 368-3025 GENERAL AR, 462-7246 OPTION AR
ALSO AN ATTACHMENT

SMCS-1351, 1353, 1374

i03853482

NOTE	REF NO	GRAPHIC REF	PART NUMBER	QTY	PART NAME 1 2 3 4 5 6 (PRODUCT LEVEL)	SEE PAGE
Y	1	1	*335-1415*	1	SUPPORT GP-RADIATOR	730
Y	2	1	*335-1416*	1	AFTERCOOLER GP-AIR	140
Y	3	1	*335-1418*	1	COOLER GP-TRANSMISSION OIL	610
Y	4	1	**352-7774**	1	RADIATOR GP	133

Y - SEPARATE ILLUSTRATION

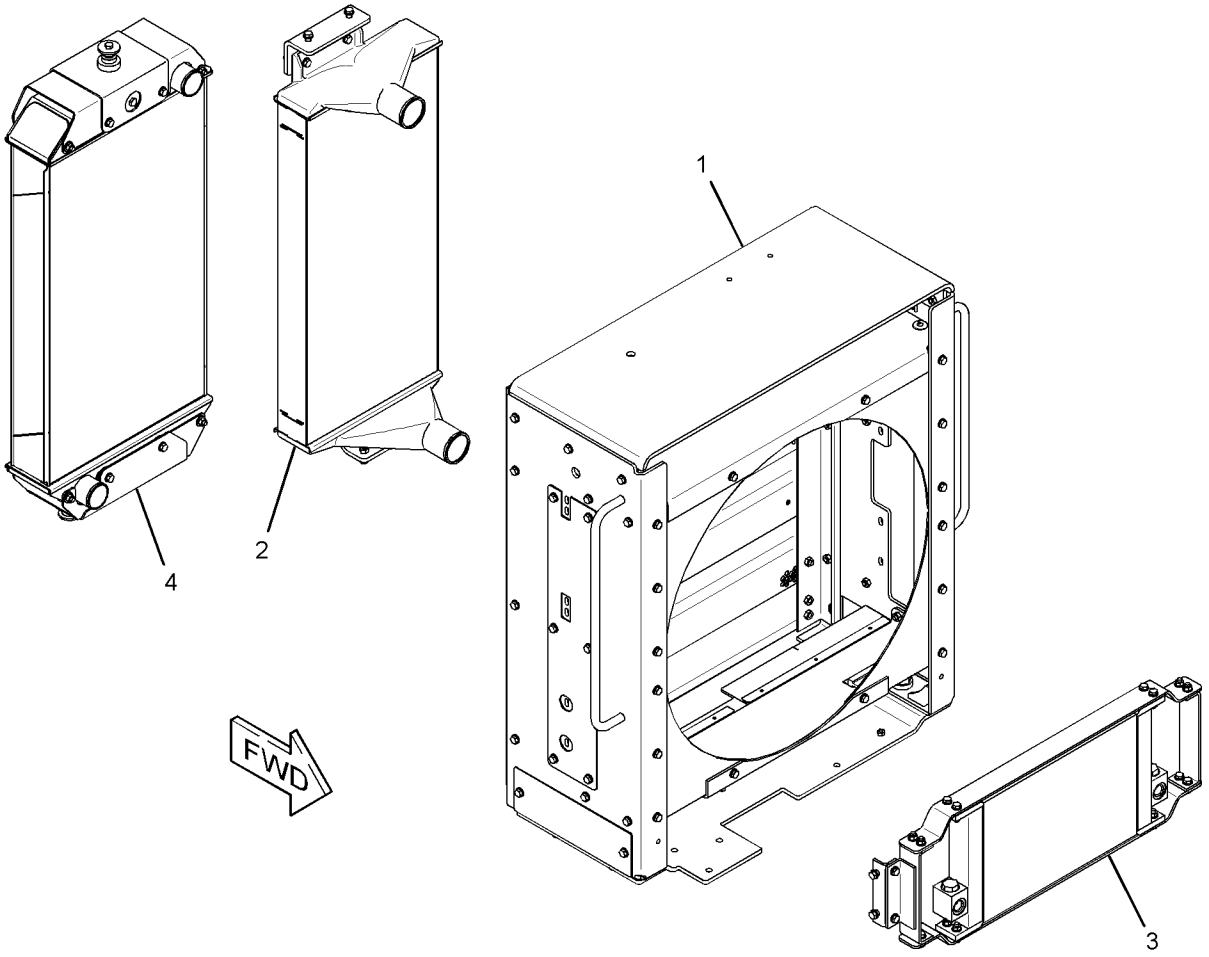

GRAPHIC #1 <END> g02114753

335-2118 RADIATOR & HYD OIL COOLER GP

S/N: SZS486-UP

PART OF 435-1521 COMMON AR, 368-3025 GENERAL AR, 462-7246 OPTION AR

ALSO AN ATTACHMENT

SMCS-1351, 1353, 1374

i04896445

NOTE	REF NO	GRAPHIC REF	PART NUMBER	QTY	PART NAME 1 2 3 4 5 6 (PRODUCT LEVEL)	SEE PAGE
CY	1	1	*376-6728*	1	SUPPORT GP-RADIATOR	732
Y	2	1	*335-1416*	1	AFTERCOOLER GP-AIR	140
CY	3	1	*376-6727*	1	COOLER GP-TRANSMISSION OIL	611
Y	4	1	**352-7774**	1	RADIATOR GP	133

C - CHANGE FROM PREVIOUS TYPE
Y - SEPARATE ILLUSTRATION

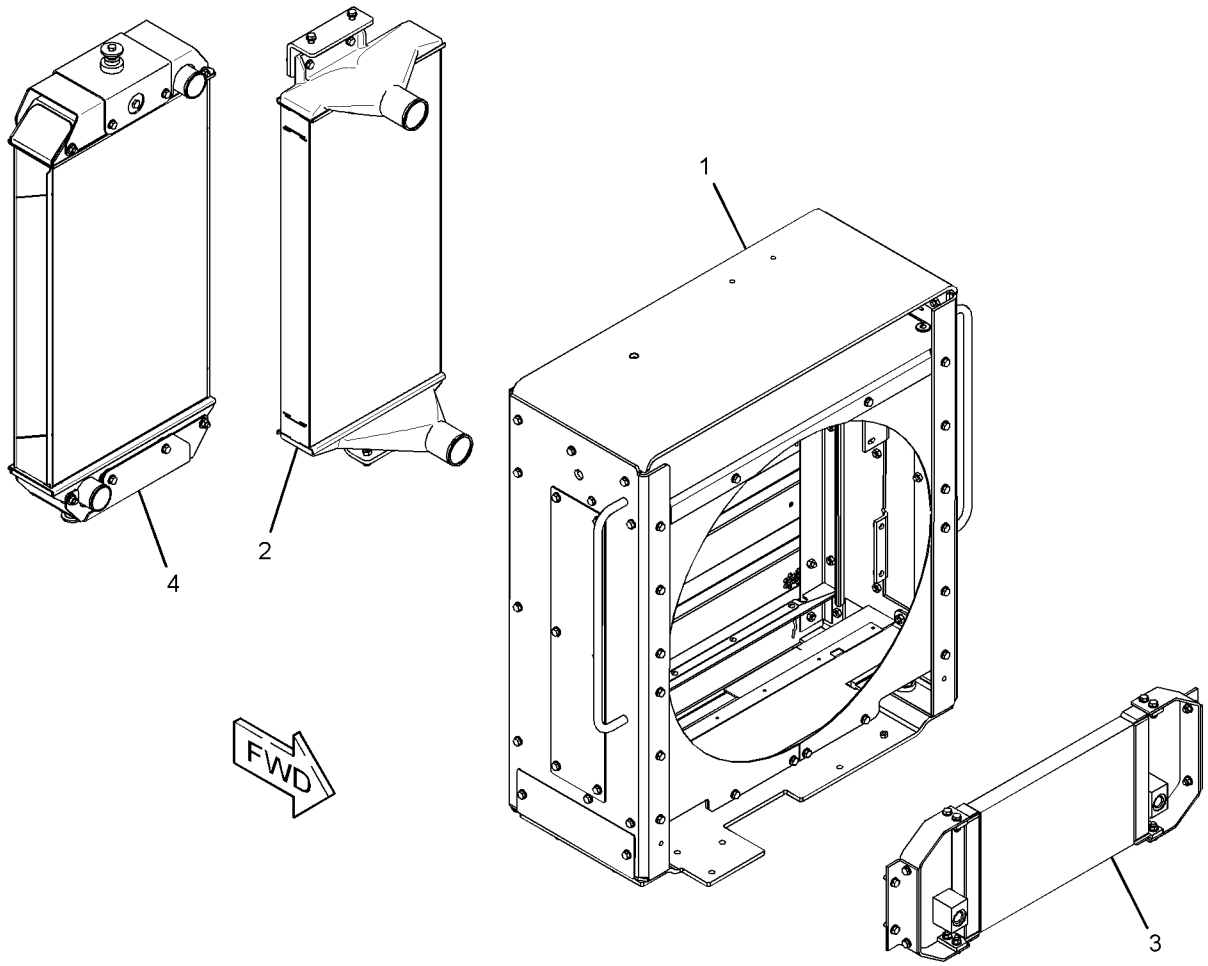

GRAPHIC #1 <END> g03164956

310-5882 RADIATOR GP

S/N: SZS1-UP
PART OF 352-7774 RADIATOR GP
ALSO AN ATTACHMENT

SMCS-1353 **i03751421**

NOTE	REF NO	GRAPHIC REF	PART NUMBER	QTY	PART NAME 1 2 3 4 5 6 (PRODUCT LEVEL)	SEE PAGE
	1	1	**6S-6251**	2	MOUNT	
	2	1	**121-3307**	1	MOUNT AS-RESILIENT	
	3	1	**174-4181**	1	WASHER-HARD (8.5X40X3-MM THK)	
	4	1	**256-5308**	1	CORE AS-RADIATOR	
	5	1	**310-5883**	1	BRACKET AS	
	6	1	**310-5884**	1	BRACKET AS	
	7	1	**3J-5390**	1	PLUG	
M	8	1	**7X-2546**	4	BOLT (M10X1.5X180-MM)	
	9	1	**7X-7729**	8	WASHER (11X25X3-MM THK)	
M	10	1	**8T-4133**	4	NUT (M10X1.5-THD)	
M	11	1	**8T-4194**	2	BOLT (M12X1.75X50-MM)	
	12	1	**8T-4895**	2	WASHER (13.5X50X5-MM THK)	
M	13	1	**8T-6912**	1	BOLT (M8X1.25X50-MM)	
E	14	1	**123-3827**		SEAL (88.2-CM EACH)	

E - ORDER BY THE CENTIMETER
M - METRIC PART

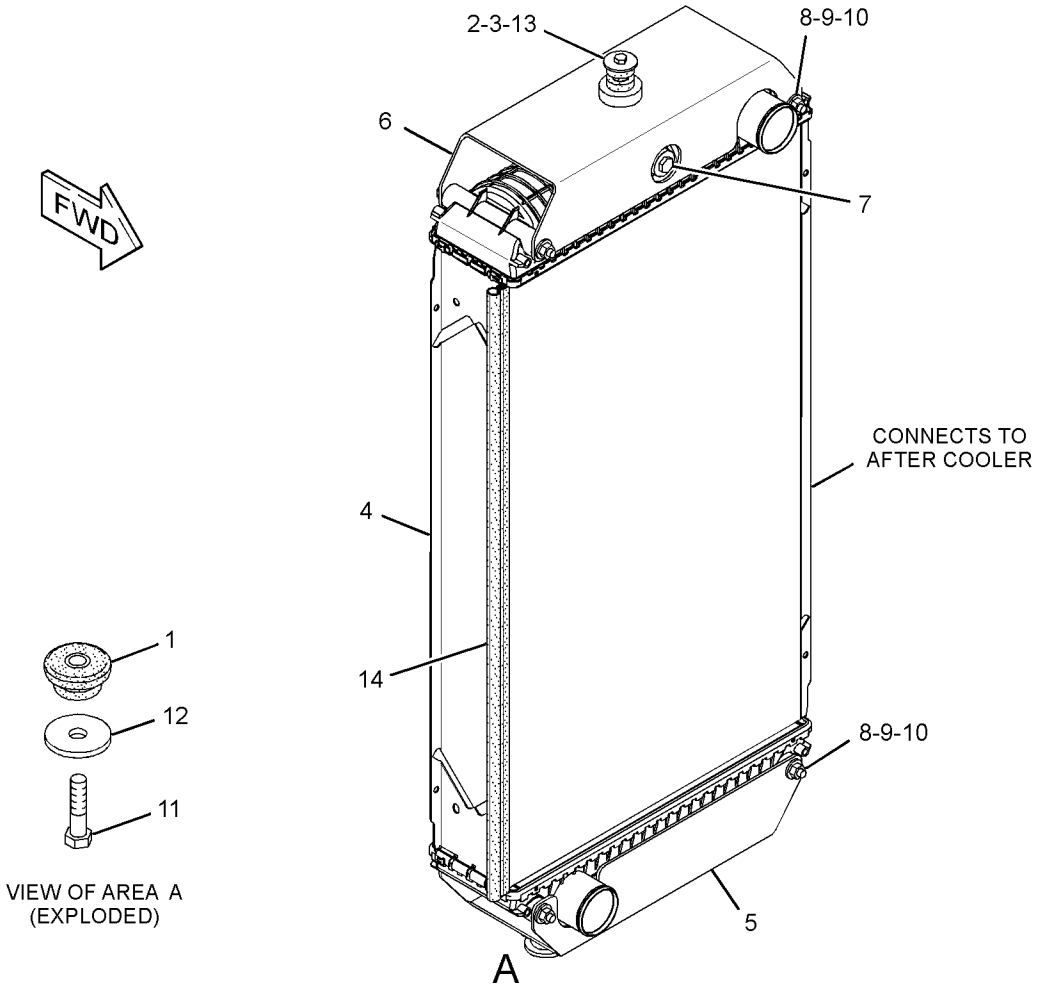

GRAPHIC #1 <END> g01661236

352-7774 RADIATOR GP

S/N: SZS1-UP

PART OF 335-2118 RADIATOR & HYD OIL COOLER GP

ALSO AN ATTACHMENT

SMCS-1353 **i05188795**

NOTE	PART NUMBER	QTY	PART NAME 1 2 3 4 5 6 (PRODUCT LEVEL)	SEE PAGE
Y	*310-5882*	1	RADIATOR GP	132
			—OR—	
Y	*376-6722*	1	RADIATOR GP	134

Y - SEPARATE ILLUSTRATION

<END>

376-6722 RADIATOR GP

S/N: SZS1-UP
PART OF 352-7774 RADIATOR GP
ALSO AN ATTACHMENT

SMCS-1353 **i05079777**

NOTE	REF NO	GRAPHIC REF	PART NUMBER	QTY	PART NAME 1 2 3 4 5 6 (PRODUCT LEVEL)	SEE PAGE
	1	1	**6S-6251**	2	MOUNT	
	2	1	**121-3307**	1	MOUNT AS-RESILIENT (RUBBER)	
	3	1	**335-1450**	1	BRACKET AS	
	4	1	**335-1451**	1	BRACKET AS	
	5	1	**376-6723**	1	CORE AS-RADIATOR	
M	6	1	**7X-2547**	4	BOLT (M10X1.5X200-MM)	
	7	1	**8T-4121**	8	WASHER-HARD (11X21X2.5-MM THK)	
M	8	1	**8T-4133**	4	NUT (M10X1.5-THD)	
M	9	1	**8T-4184**	2	BOLT (M12X1.75X45-MM)	
	10	1	**8T-4895**	3	WASHER (13.5X50X5-MM THK)	
M	11	1	**8T-6466**	1	BOLT (M10X1.5X60-MM)	
E	12	1	**123-3827**		SEAL (90-CM EACH)	

E - ORDER BY THE CENTIMETER
M - METRIC PART

376-6722 **RADIATOR GP (**contd.**)** **i05079777**

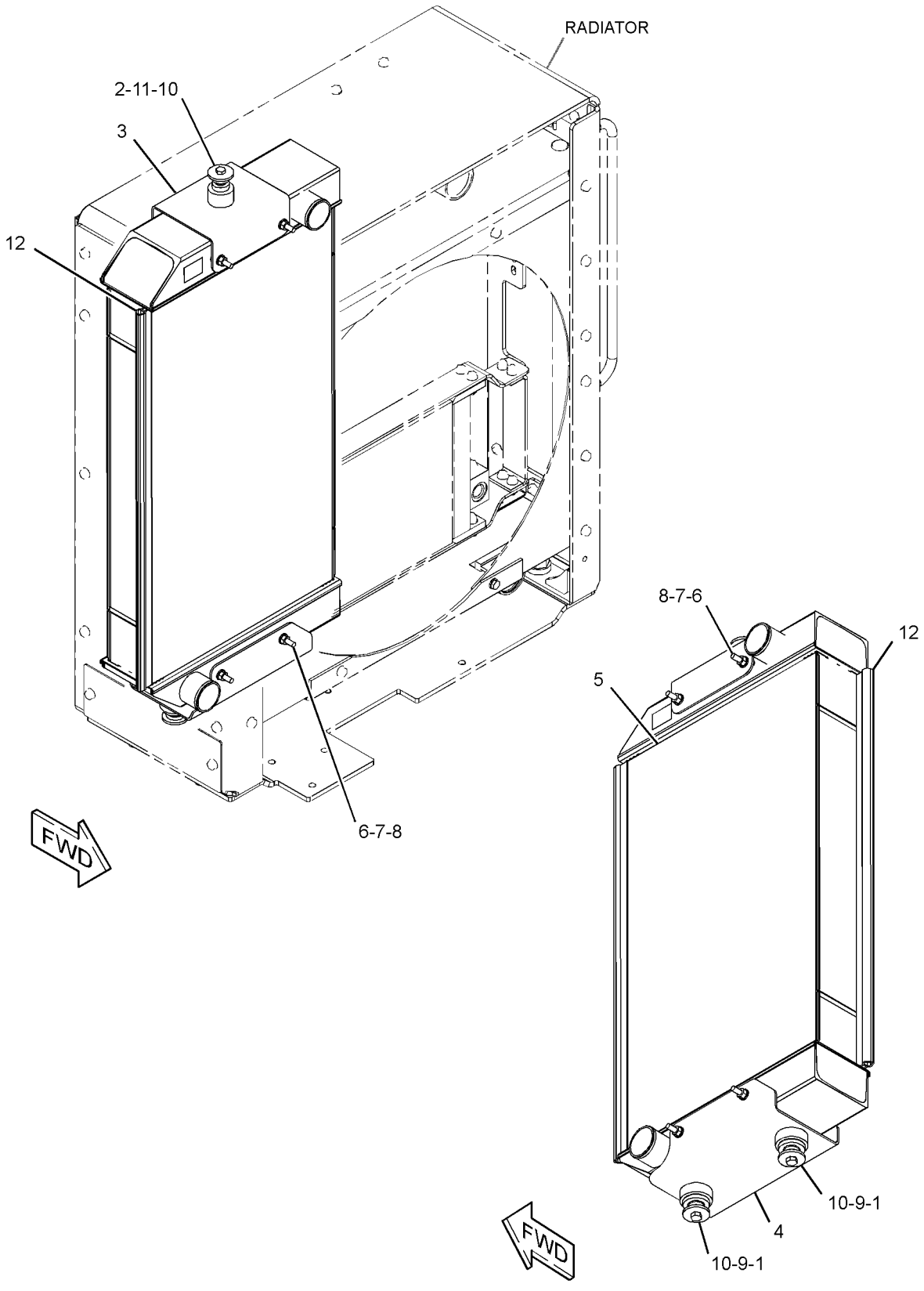

GRAPHIC #1 <END> g03269357

325-7427 TANK GP-COOLANT

S/N: SZS1-UP
PART OF 368-3025 GENERAL AR
TYPE 1

SMCS-1354, 1377

i03853572

NOTE	REF NO	GRAPHIC REF	PART NUMBER	QTY	PART NAME 1 2 3 4 5 6 (PRODUCT LEVEL)	SEE PAGE
	1	1	**8T-1117**	2	CLAMP-HOSE	
	2	1	*150-3026*	1	ELBOW AS	
		1	**6V-4292**	1	ELBOW	
		1	**3K-0360**	1	SEAL-O-RING	
	3	1	**277-4837**	1	TANK GP-COOLANT	
		1	**251-3227**	1	CAP AS-COOLANT TANK	
	4	1	**316-6689**	1	PLATE AS	
	5	1	**317-1529**	1	PLATE	
	6	1	**345-0635**	1	BRACKET AS	
	7	1	**033-8248**	2	CLIP	
	8	1	**198-4776**	4	WASHER-HARD (8.8X20X8-MM THK)	
	9	1	**198-4777**	3	WASHER-HARD (11X25X10-MM THK)	
	10	1	**1S-0994**	2	CLIP	
	11	1	**4D-7388**	2	CLIP	
	12	1	**5D-1026**	2	CLAMP-BAND	
	13	1	**8T-4121**	10	WASHER-HARD (11X21X2.5-MM THK)	
M	14	1	**8T-4133**	2	NUT (M10X1.5-THD)	
M	15	1	**8T-4136**	1	BOLT (M10X1.5X25-MM)	
M	16	1	**8T-4137**	8	BOLT (M10X1.5X20-MM)	
M	17	1	**8T-4195**	2	BOLT (M10X1.5X30-MM)	
M	18	1	**8T-4908**	4	BOLT (M8X1.25X25-MM)	
E	19	1	**9X-2133**		HOSE (78-CM)	
E	20	1	**5P-1251**		HOSE (81-CM)	
E	21	1	**8C-3681**		HOSE (209-CM)	

E - ORDER BY THE CENTIMETER
M - METRIC PART

325-7427 **TANK GP-COOLANT (**contd.**)** **i03853572**

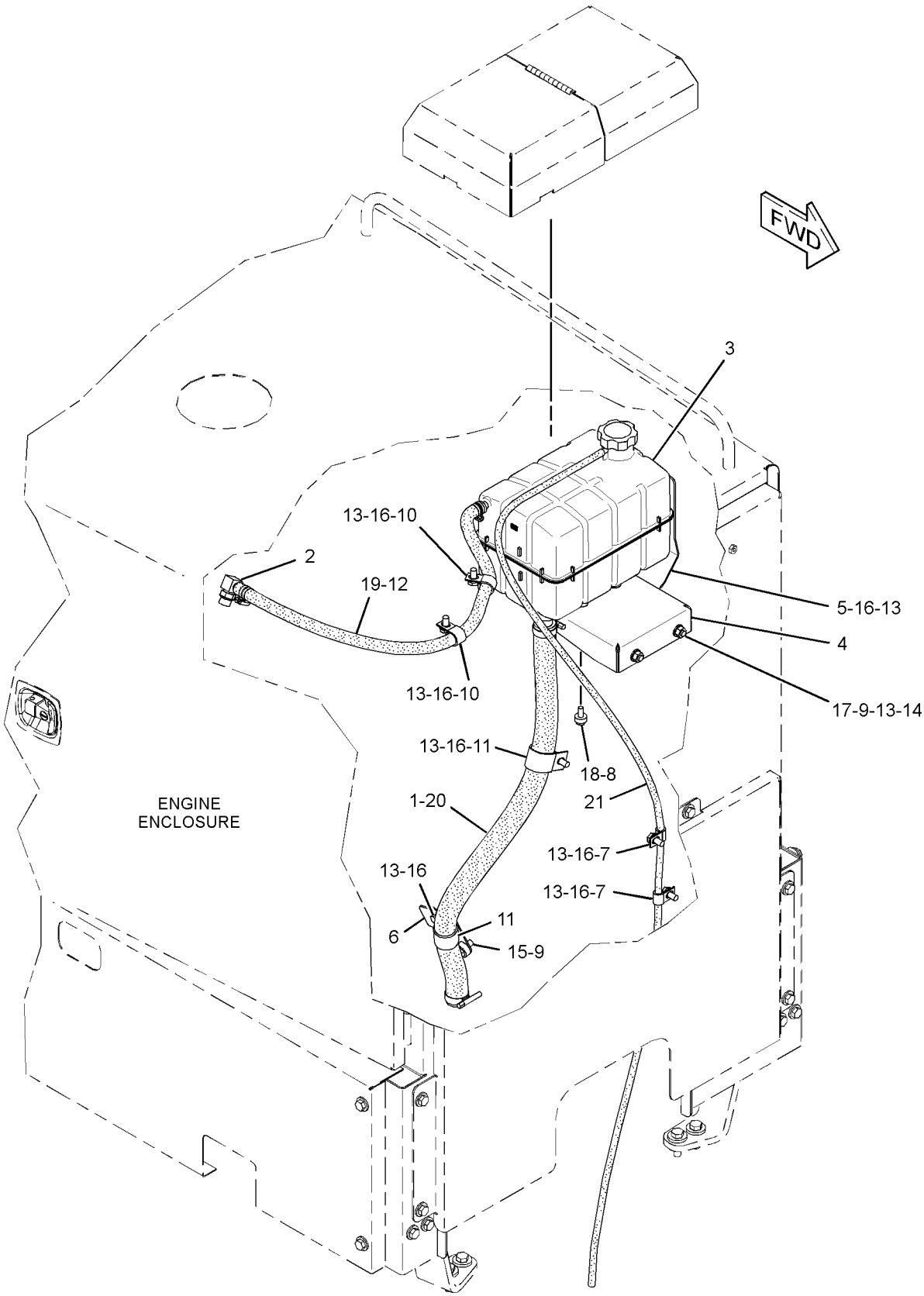

GRAPHIC #1 <END> g02115354

325-7427 TANK GP-COOLANT

S/N: SZS1-UP

PART OF 368-3025 GENERAL AR, 425-5590 INSTALLATION AR

TYPE 2

SMCS-1354, 1377 **i06259918**

NOTE	REF NO	GRAPHIC REF	PART NUMBER	QTY	PART NAME 1 2 3 4 5 6 (PRODUCT LEVEL)	SEE PAGE
	1	1	**8T-1117**	2	CLAMP-HOSE	
	2	1	*150-3026*	1	ELBOW AS	
		1	**6V-4292**	1	ELBOW	
		1	**3K-0360**	1	SEAL-O-RING	
	3	1	**277-4837**	1	TANK GP-COOLANT	
		1	**251-3227**	1	CAP AS-COOLANT TANK	
C	4	1	**441-0962**	1	PLATE AS	
M		1	**8T-3490**	2	NUT-WELD (M10X1.5-THD)	
C	5	1	**441-0963**	1	PLATE	
	6	1	**345-0635**	1	BRACKET AS	
	7	1	**033-8248**	2	CLIP	
	8	1	**198-4776**	4	WASHER-HARD (8.8X20X8-MM THK)	
	9	1	**198-4777**	3	WASHER-HARD (11X25X10-MM THK)	
	10	1	**1S-0994**	2	CLIP	
	11	1	**4D-7388**	2	CLIP	
	12	1	**5D-1026**	2	CLAMP-BAND	
	13	1	**8T-4121**	10	WASHER-HARD (11X21X2.5-MM THK)	
M	14	1	**8T-4133**	2	NUT (M10X1.5-THD)	
CM	15	1	**8T-4136**	2	BOLT (M10X1.5X25-MM)	
CM	16	1	**8T-4137**	7	BOLT (M10X1.5X20-MM)	
M	17	1	**8T-4196**	2	BOLT (M10X1.5X35-MM)	
CM	18	1	**8T-4908**	4	BOLT (M8X1.25X25-MM)	
E	19	1	**9X-2133**		HOSE (79-CM)	
E	20	1	**371-8094**		HOSE (80-CM)	
E	21	1	**8C-3681**		HOSE (209-CM)	

C - CHANGE FROM PREVIOUS TYPE
E - ORDER BY THE CENTIMETER
M - METRIC PART

325-7427 **TANK GP-COOLANT (**contd.**)** **i06259918**

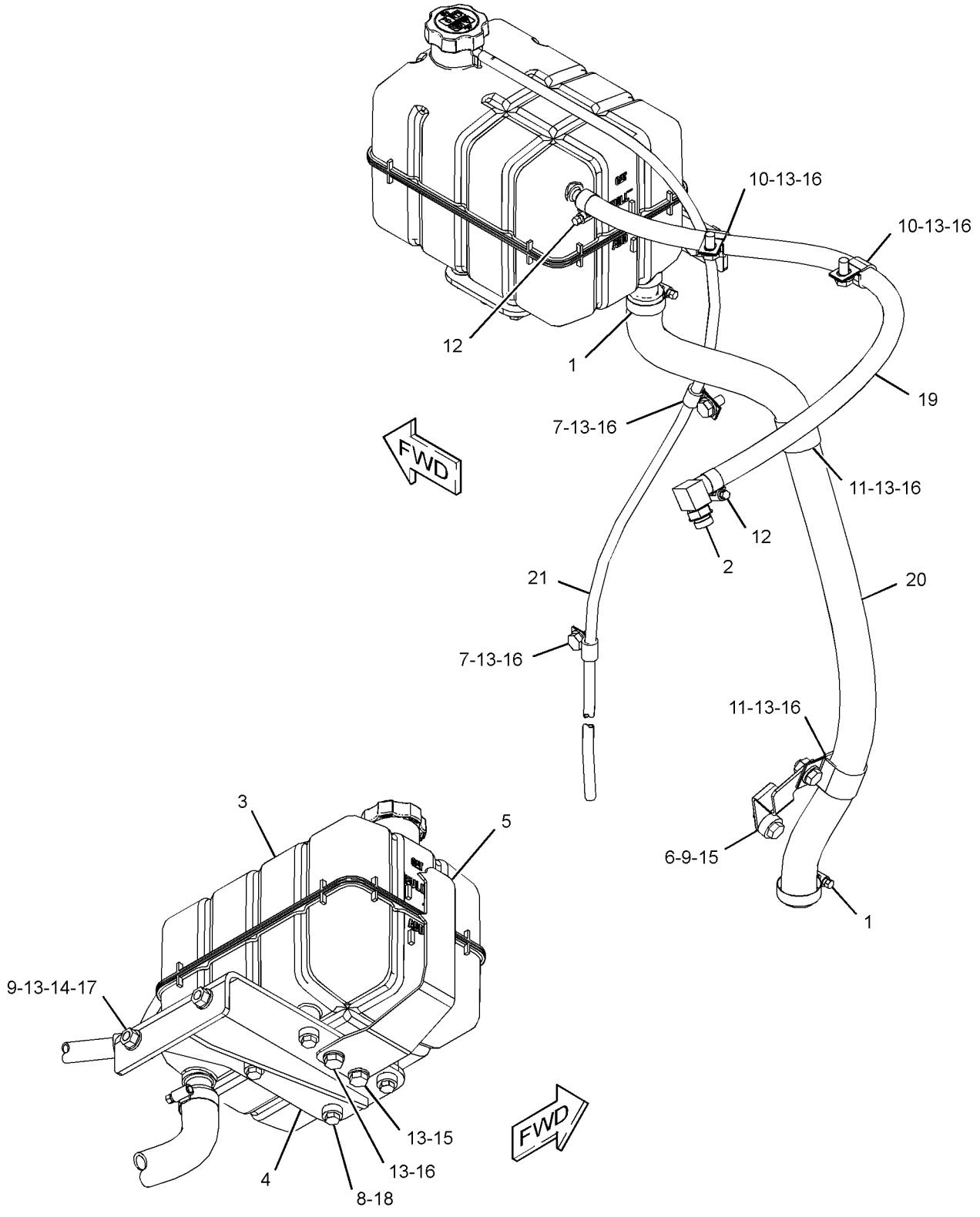

GRAPHIC #1 <END> g03895239

335-1416 AFTERCOOLER GP-AIR

S/N: SZS1-UP

PART OF 335-2118 RADIATOR & HYD OIL COOLER GP

ALSO AN ATTACHMENT

SMCS-1063, 1064, 1079 **i03902668**

NOTE	REF NO	GRAPHIC REF	PART NUMBER	QTY	PART NAME 1 2 3 4 5 6 (PRODUCT LEVEL)	SEE PAGE
	1	1	**121-3307**	4	MOUNT AS-RESILIENT	
	2	1	**335-1446**	1	AFTERCOOLER AS-AIR	
	3	1	**335-1447**	1	BRACKET AS	
M		1	**8T-3490**	2	NUT-WELD (M10X1.5-THD)	
	4	1	**335-1448**	1	BRACKET AS	
M		1	**8T-3490**	4	NUT-WELD (M10X1.5-THD)	
	5	1	**8T-4121**	6	WASHER-HARD (11X21X2.5-MM THK)	
M	6	1	**8T-4133**	2	NUT (M10X1.5-THD)	
M	7	1	**8T-4196**	4	BOLT (M10X1.5X35-MM)	
	8	1	**8T-4226**	6	WASHER-PLATED (10.5X45X3-MM THK)	
M	9	1	**8T-6466**	4	BOLT (M10X1.5X60-MM)	

M - METRIC PART

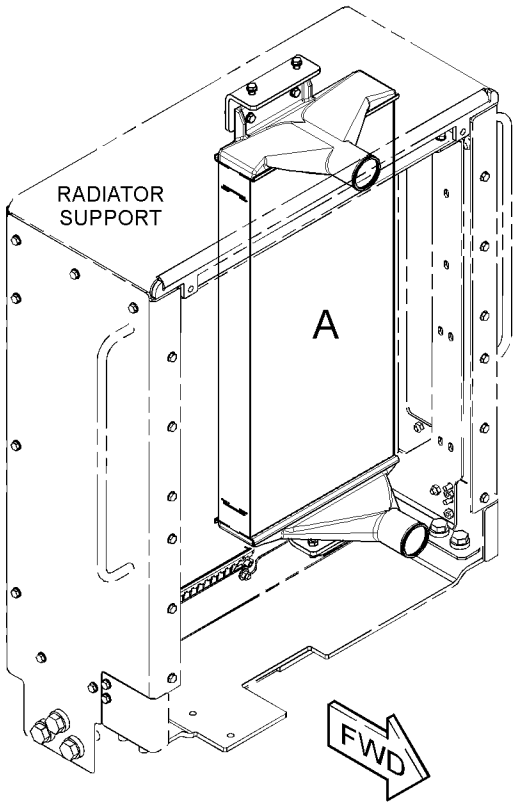

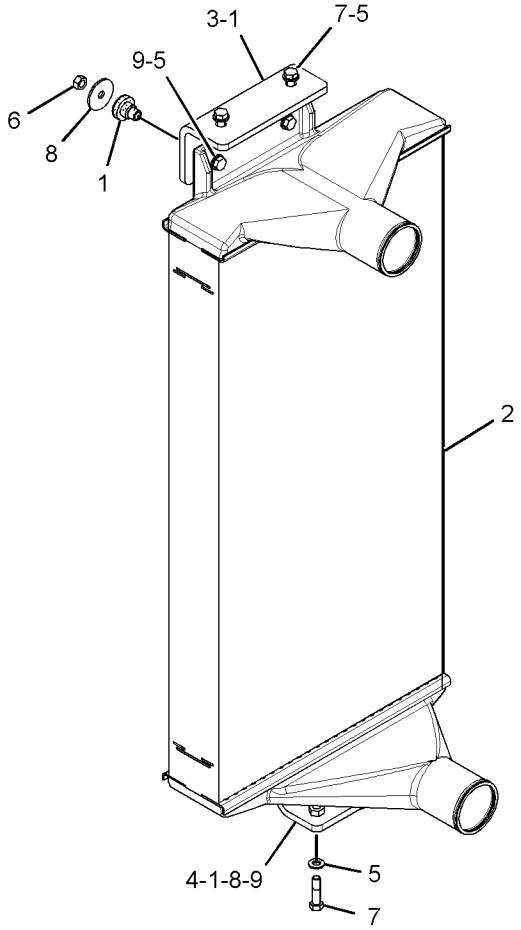

VIEW OF AREA A

GRAPHIC #1 <END> g02121902

264-3762 AIR CLEANER GP

S/N: SZS1-UP

PART OF 310-6459 AIR CLEANER GP

SMCS-1051, 1054

i06151921

NOTE	REF NO	GRAPHIC REF	PART NUMBER	QTY	PART NAME 1 2 3 4 5 6 (PRODUCT LEVEL)	SEE PAGE
	1	1	**212-5081**	1	COVER AS	
	2	1	**245-6375**	1	FILTER ELEMENT-AIR (PRIMARY)	
	3	1	**245-6376**	1	FILTER ELEMENT AS-AIR (SECONDARY)	
	4	1	**246-4615**	2	BRACKET AS	
	5	1	**247-9730**	1	VALVE AS-CHECK	

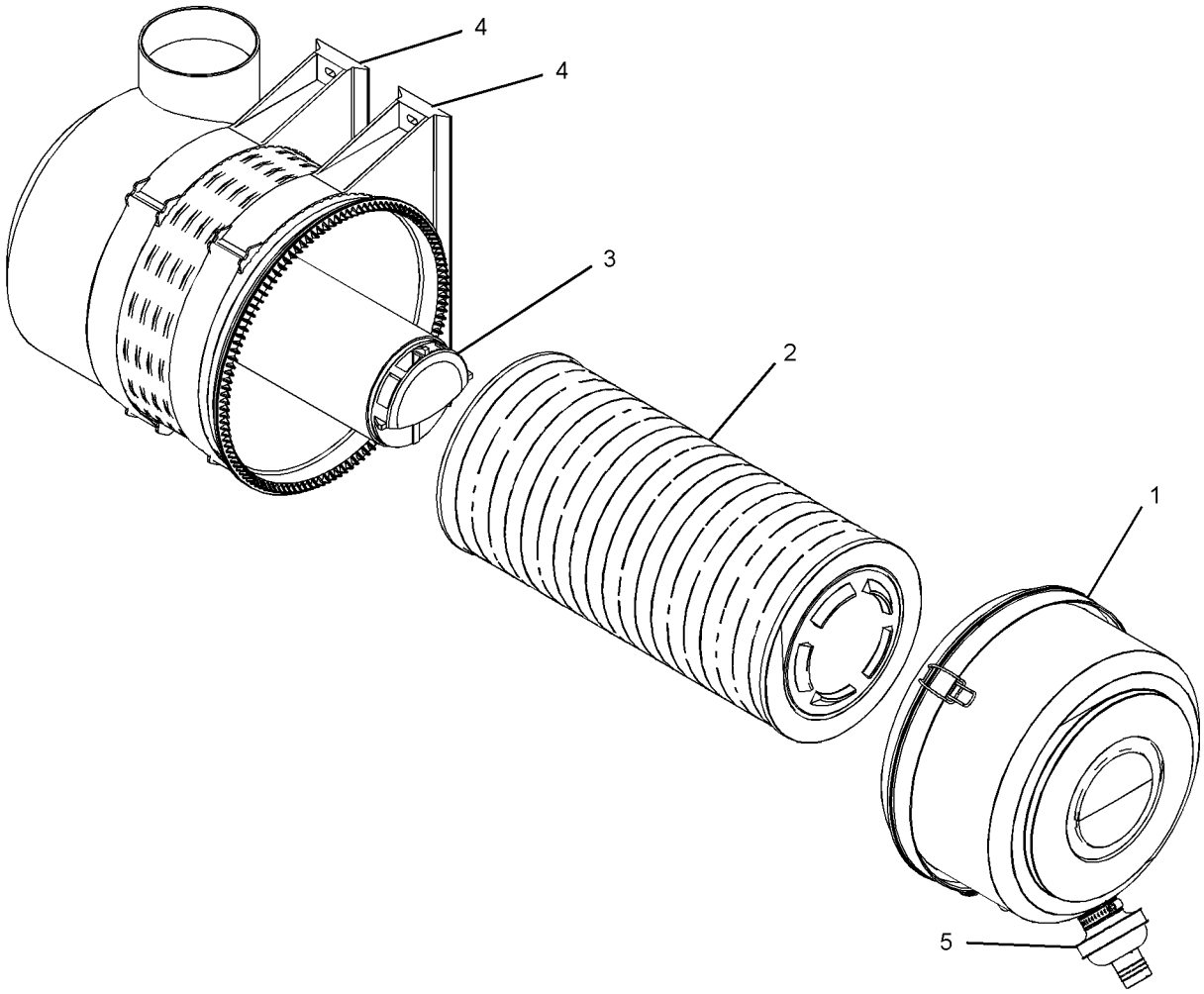

GRAPHIC #1 <END> g01691874

310-6459 AIR CLEANER GP

S/N: SZS1-UP

PART OF 368-3025 GENERAL AR, 425-5590 INSTALLATION AR

SMCS-1051, 1054

i06678231

NOTE	REF NO	GRAPHIC REF	PART NUMBER	QTY	PART NAME 1 2 3 4 5 6 (PRODUCT LEVEL)	SEE PAGE
	1	1	**5P-2230**	2	CLAMP-HOSE	
	2	1	**145-4212**	1	INDICATOR-AIR FILTER CHANGE	
	3	1	**119-6723**	1	FITTING	
	4	1	*150-3058*	1	TEE AS	
		1	**8C-8431**	1	TEE	
		1	**3J-1907**	1	SEAL-O-RING	
	5	1	**246-4611**	1	CAP AS-AIR CLEANER	
	6	1	**250-2984**	1	PIPE-EXTENSION	
Y	7	1	**264-3762**	1	AIR CLEANER GP	141
	8	1	**284-7774**	1	BRACKET	
	9	1	**311-4907**	1	HOSE AS	
I	10	1	**311-4908**	1	HOSE AS	
	11	1	**313-6096**	1	PLATE	
	12	1	**313-9542**	1	HOSE	
M	13	1	**099-3649**	4	BOLT (M8X1.25X40-MM)	
	14	1	*169-5862*	1	ELBOW AS	
		1	**8C-6712**	1	ELBOW	
		1	**3J-1907**	1	SEAL-O-RING	
	16	1	**219-0314**	1	CLAMP	
	17	1	**346-4792**	2	CLAMP-BAND	
	19	1	**3J-7354**	1	SEAL-O-RING	
	20	1	**4D-7794**	1	CLIP	
M	21	1	**5C-2890**	2	NUT (M6X1-THD)	
	22	1	**7L-6326**	1	CLIP	
	23	1	**8T-4121**	6	WASHER-HARD (11X21X2.5-MM THK)	
M	24	1	**8T-4133**	1	NUT (M10X1.5-THD)	
M	25	1	**8T-4136**	1	BOLT (M10X1.5X25-MM)	
M	26	1	**8T-4137**	3	BOLT (M10X1.5X20-MM)	
M	27	1	**8T-4138**	2	BOLT (M6X1X20-MM)	
M	28	1	**8T-4191**	1	BOLT (M10X1.5X16-MM)	
	29	1	**5P-4116**	4	WASHER-HARD (8.8X20.5X2-MM THK)	
	30	1	**9X-8256**	4	WASHER (6.6X12X2-MM THK)	
	31	1	**360-3736**	1	ADAPTER AS	
		1	**7J-0204**	1	SEAL-O-RING	

I - REFER TO HYDRAULIC INFORMATION SYSTEM
M - METRIC PART
Y - SEPARATE ILLUSTRATION

310-6459 **AIR CLEANER GP (**contd.**)** **i06678231**

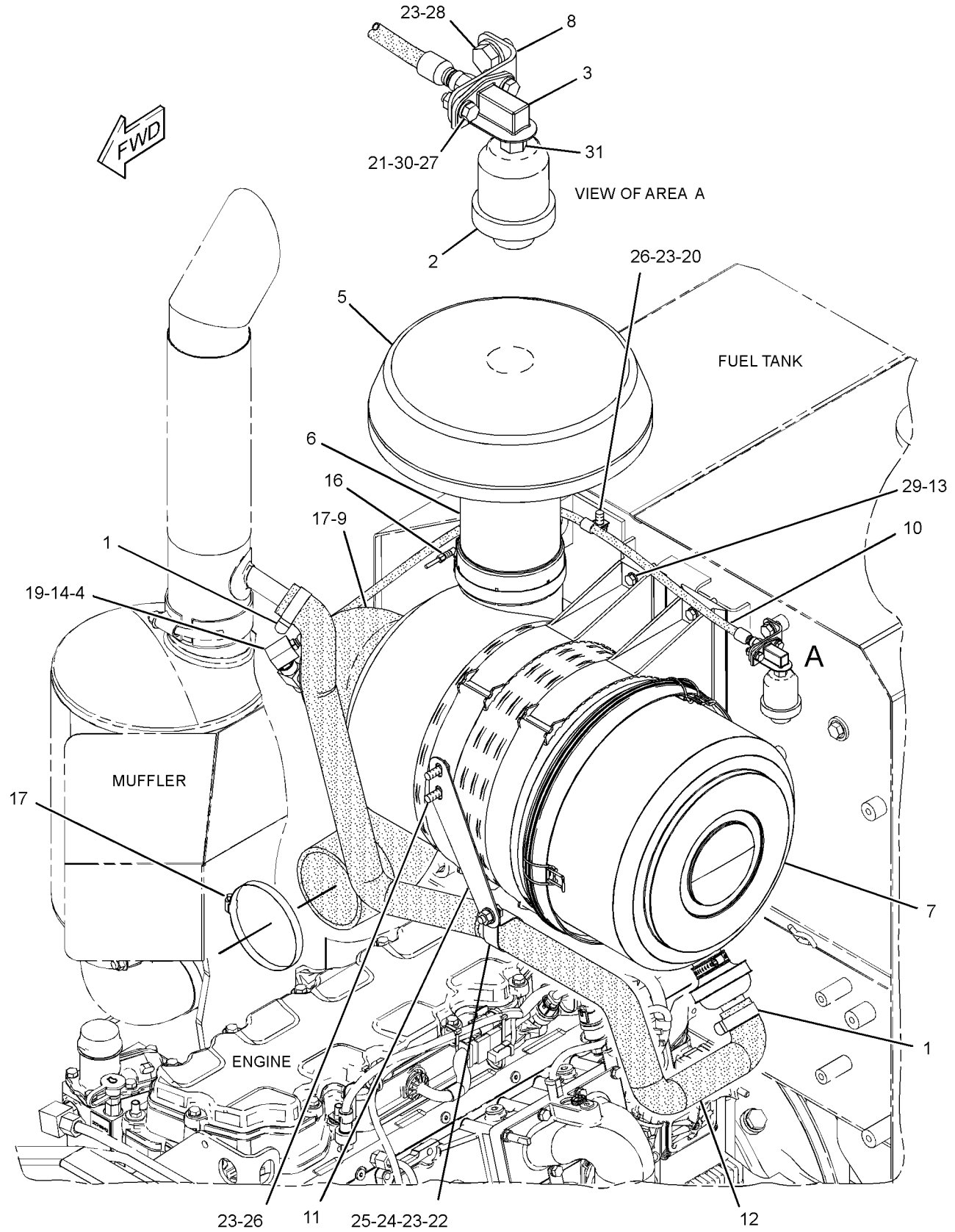

GRAPHIC #1 <END> g02404724

261-9367 CARTRIDGE GP-TURBOCHARGER*R

S/N: TX71-UP; KHX29829-UP

PART OF 250-7696 TURBOCHARGER GP

SMCS-1053 **i06867863**

NOTE	REF NO	GRAPHIC REF	PART NUMBER	QTY	PART NAME 1 2 3 4 5 6 (PRODUCT LEVEL)	SEE PAGE
	1	1	**119-3818**	1	SEAL-PISTON RING	
	2	1	**116-9550**	1	NUT	
	3	1	**7C-6658**	1	RING-RETAINING	
	4	1	**510-3672**	1	INSERT	
	5	1	**6V-8676**	1	SEAL-O-RING	
	6	1	**119-3813**	2	SEAL-PISTON RING	
	7	1	**510-3682**	1	SLEEVE-FLINGER	
	8	1	**510-3687**	1	COLLAR-THRUST	
	9	1	**158-6077**	1	BEARING-THRUST	
	10	1	**510-3708**	2	BEARING-JOURNAL	

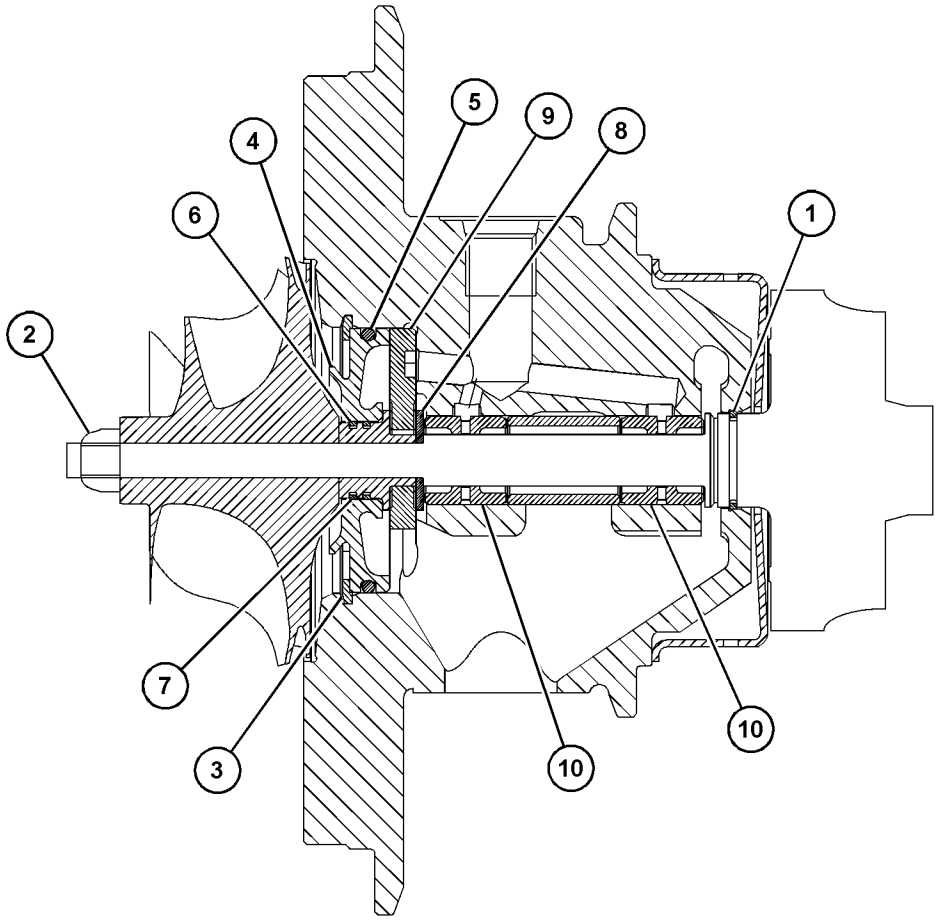

GRAPHIC #1 <END> g06145801

153-1794 COVER GP-AIR INLET

S/N: KHX1-UP

PART OF 364-7493, 395-0487 ENGINE AR-COMPLETE

SMCS-1087 **i05348121**

NOTE	REF NO	GRAPHIC REF	PART NUMBER	QTY	PART NAME 1 2 3 4 5 6 (PRODUCT LEVEL)	SEE PAGE
	1	1	**203-3769**	1	COVER	
	2	1	*398-5596*	2	PLUG AS	
					(EACH INCLUDES)	
		1	**238-5080**	1	SEAL-O-RING	
		1	**360-3680**	1	PLUG	
BF			**1U-8846**		SEALANT-GASKET	

B - USE AS REQUIRED
F - NOT SHOWN

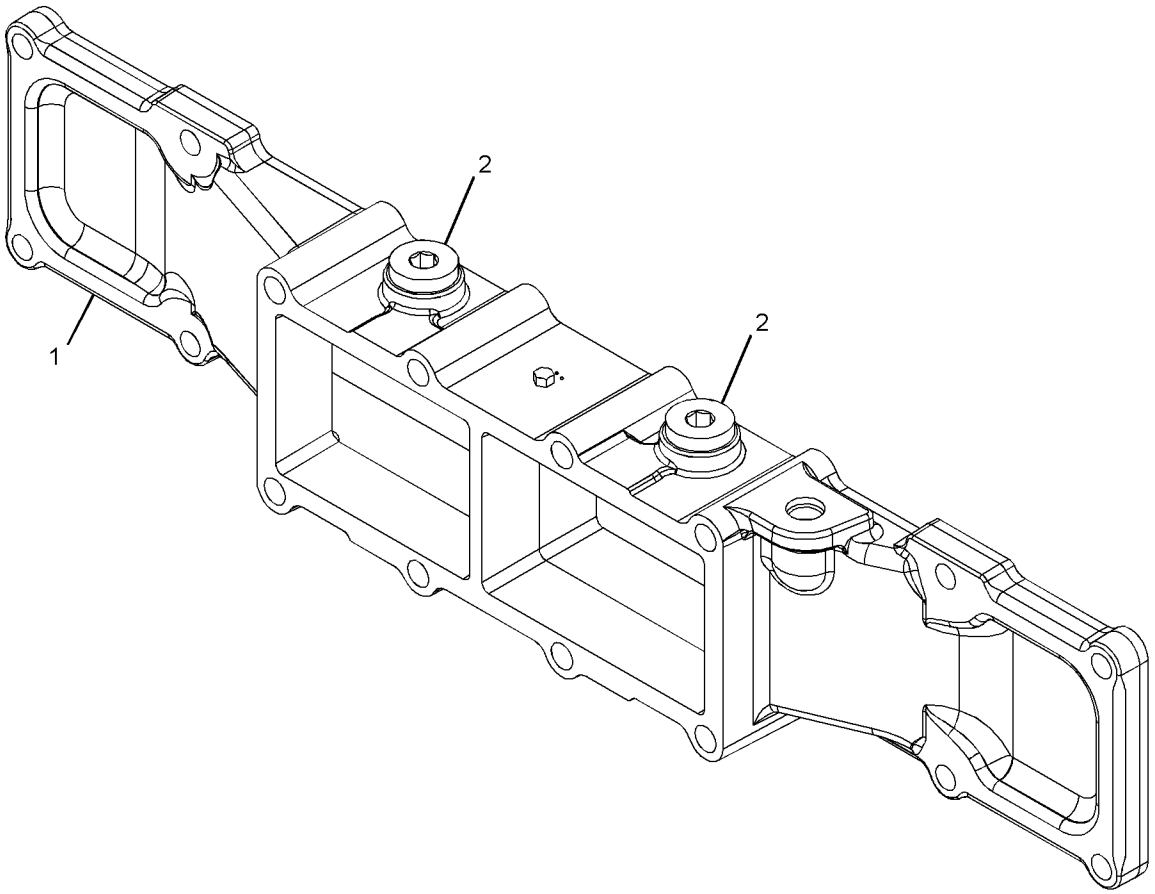

GRAPHIC #1 <END> g03390023

440-1605 COVER GP-AIR INLET

S/N: TX71-UP; KHX54224-99999

PART OF 395-0487 ENGINE AR-COMPLETE

SMCS-1087 **i05763287**

NOTE	REF NO	GRAPHIC REF	PART NUMBER	QTY	PART NAME 1 2 3 4 5 6 (PRODUCT LEVEL)	SEE PAGE
	1	1	**203-3769**	1	COVER	
	2	1	*398-5596*	2	PLUG AS	
					(EACH INCLUDES)	
		1	**238-5080**	1	SEAL-O-RING	
		1	**360-3680**	1	PLUG	
B	3	1	**8C-8422**	9	SEALANT	

B - USE AS REQUIRED

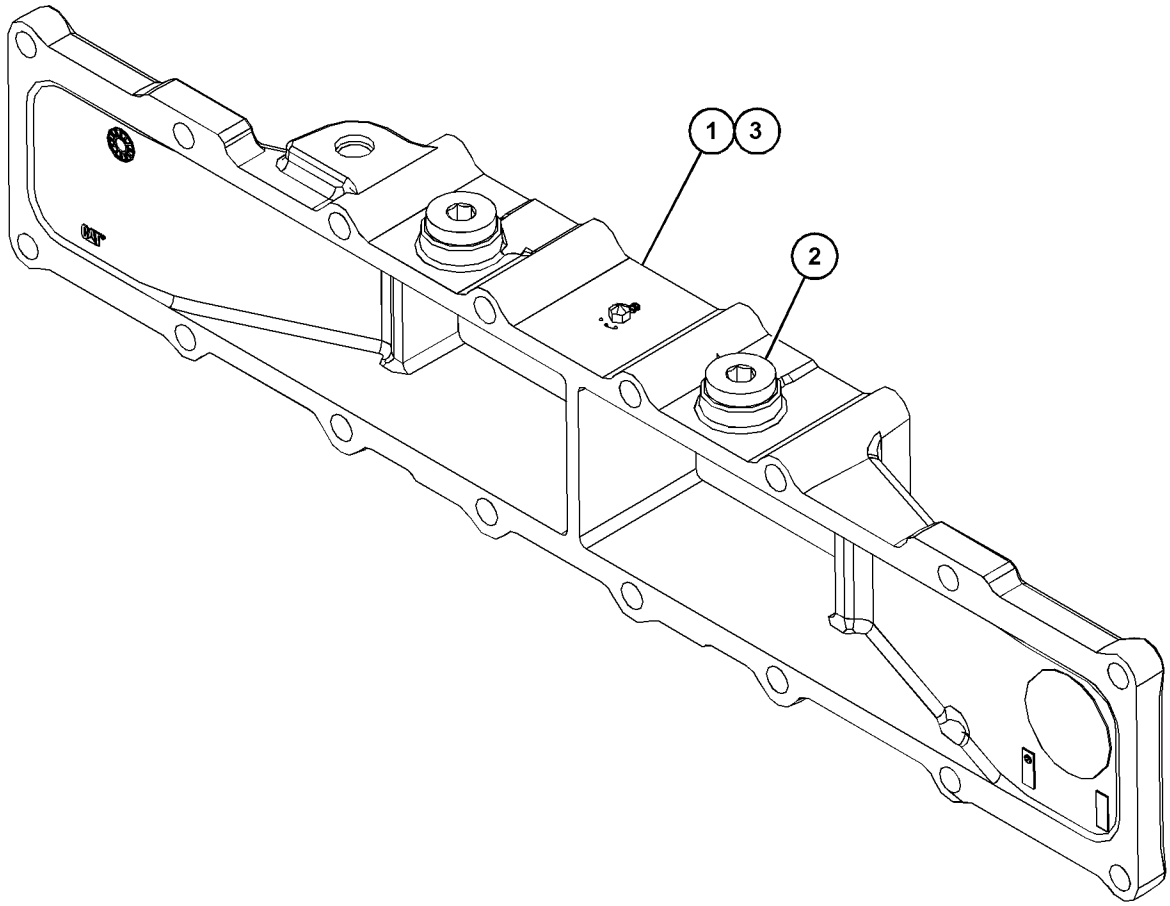

GRAPHIC #1 <END> g03656477

246-2931 ELBOW GP-AIR INLET

S/N: TX71-UP; KHX54224-99999

PART OF 395-0487 ENGINE AR-COMPLETE

SMCS-1087 **i05784170**

NOTE	REF NO	GRAPHIC REF	PART NUMBER	QTY	PART NAME 1 2 3 4 5 6 (PRODUCT LEVEL)	SEE PAGE
	1	1	**4P-5918**	1	CLIP	
	2	1	**7S-6369**	1	WASHER (0.344X0.75X0.188-IN THK)	
M	3	1	**123-4511**	4	STUD (M8X1.25-THD)	
	4	1	**197-0416**	1	ELBOW	
	5	1	*389-3708*	1	PLUG AS	
		1	**214-7568**	1	SEAL-O-RING	
		1	**360-3679**	1	PLUG-CONNECTOR (9/16-18-THD)	
M	6	1	**8T-0292**	4	BOLT (M8X1.25X90-MM)	
	7	1	**9M-1974**	7	WASHER-HARD (8.8X16X2-MM THK)	
BF			**1U-8846**		SEALANT-GASKET	

B - USE AS REQUIRED
F - NOT SHOWN
M - METRIC PART

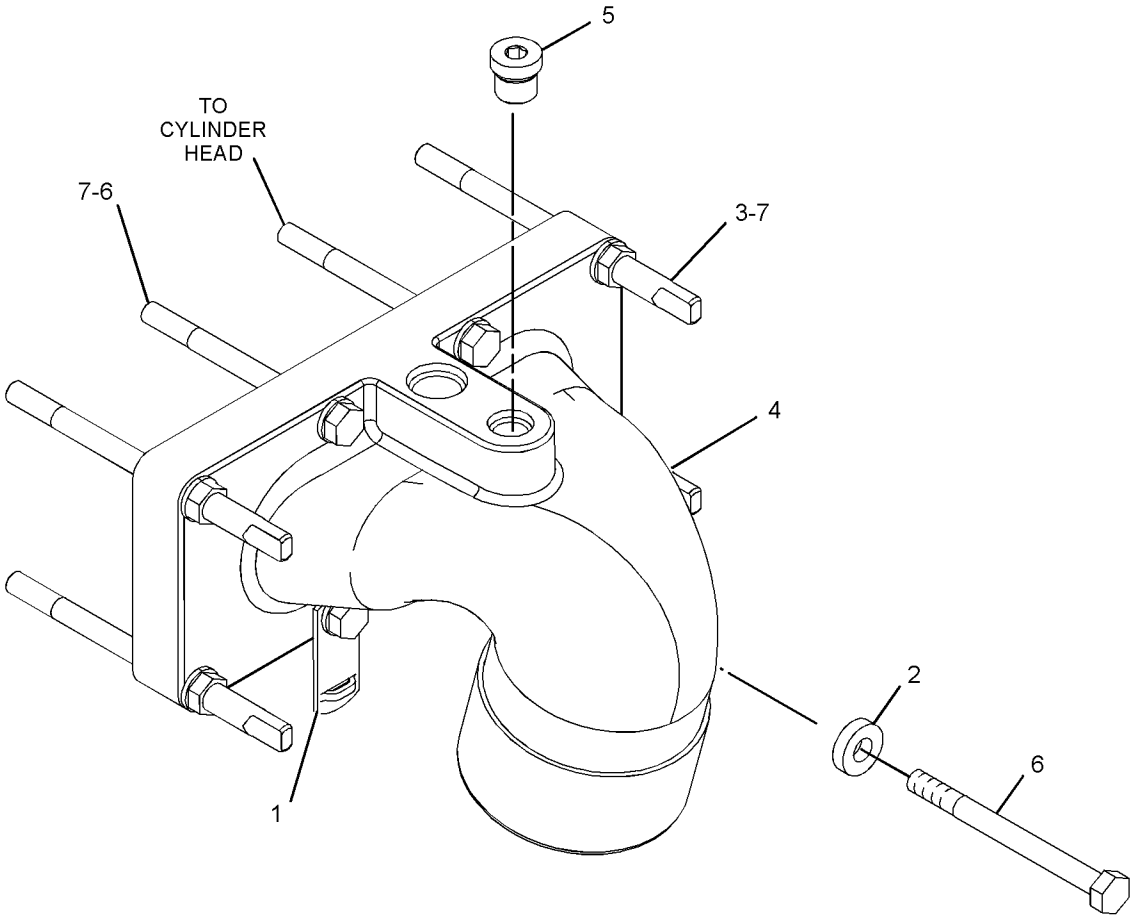

GRAPHIC #1 <END> g03393671

322-0245 ELBOW GP-AIR INLET

S/N: KHX1-UP

PART OF 364-7493, 395-0487 ENGINE AR-COMPLETE

SMCS-1087 **i06952923**

NOTE	REF NO	GRAPHIC REF	PART NUMBER	QTY	PART NAME 1 2 3 4 5 6 (PRODUCT LEVEL)	SEE PAGE
	1	1	**4P-5918**	1	CLIP	
	2	1	**7S-6369**	1	WASHER (0.344X0.75X0.188-IN THK)	
M	3	1	**123-4511**	4	STUD (M8X1.25-THD)	
	4	1	**197-0416**	1	ELBOW	
	5	1	*162-0177*	1	PLUG AS	
	5A	1	**3J-1907**	1	SEAL-O-RING	
	5B	1	**9S-8004**	1	PLUG (9/16-18-THD)	
M	6	1	**8T-0292**	4	BOLT (M8X1.25X90-MM)	
	7	1	**9M-1974**	7	WASHER-HARD (8.8X16X2-MM THK)	
B	8	1	**1U-8846**		SEALANT-GASKET	

B - USE AS REQUIRED
M - METRIC PART

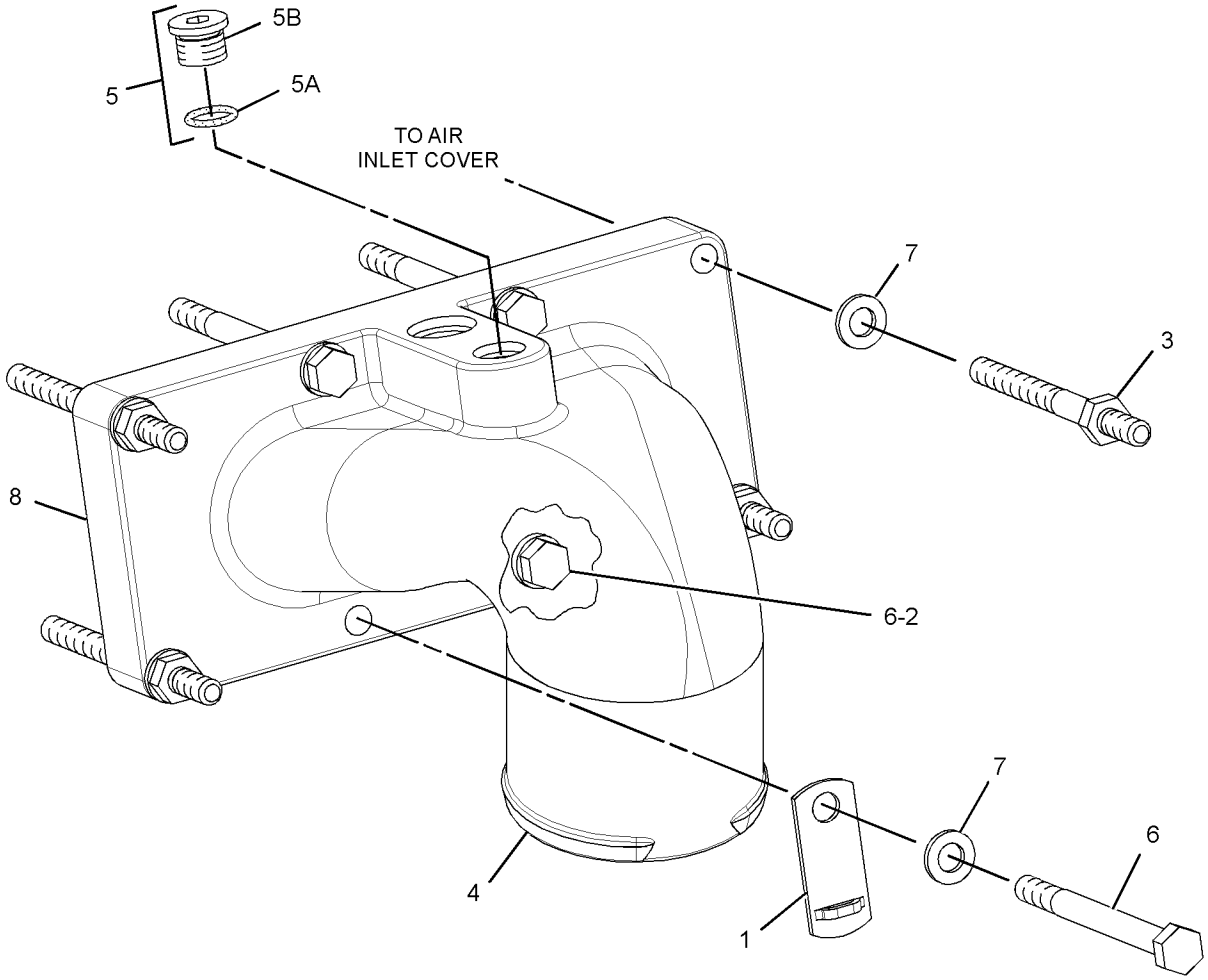

GRAPHIC #1 <END> g01721986

450-6177 KIT-TURBOCHARGER GASKET

S/N: SZS10100-UP

KIT CONTAINS GASKETS AND SEALS TO REINSTALL THE TURBOS AND ATTACHING LINES.. KIT CONTAINS THE TURBO MOUNTING HARDWARE.

FIELD INSTALLATION

SMCS-7555 **i05972901**

NOTE	PART NUMBER	QTY	PART NAME 1 2 3 4 5 6 (PRODUCT LEVEL)	SEE PAGE
	7C-7431	1	GASKET (TURBOCHARGER)	
	197-8419	1	GASKET (TURBOCHARGER)	
M	**3E-8017**	4	LOCKNUT (M10X1.5-THD)	
	214-7568	2	SEAL-O-RING	
	228-7089	2	SEAL-O-RING	
M	**418-6781**	4	STUD-TAPERLOCK (M10X1.5X40-MM)	
			FOR A LIST OF RELATED PARTS THAT MAY BE REQUIRED FOR THE ENGINE REBUILD TO THE KIT CONSIST, PLEASE VISIT	
			HTTP://DEALER.CAT.COM/RELATED	

M - METRIC PART

<END>

311-0864 LINES GP-AFTERCOOLER AIR

S/N: SZS1-UP

PART OF 368-3025 GENERAL AR, 425-5590 INSTALLATION AR

SMCS-1063, 1071

i06259917

NOTE	REF NO	GRAPHIC REF	PART NUMBER	QTY	PART NAME 1 2 3 4 5 6 (PRODUCT LEVEL)	SEE PAGE
	1	1	**177-0581**	2	HOSE	
	2	1	**209-4578**	8	CLAMP-T BOLT	
	3	1	**247-8602**	1	HOSE-ELBOW	
	4	1	**436-3333**	1	HOSE-ELBOW	
	5	1	**311-4959**	1	TUBE	
	6	1	**312-8434**	1	TUBE AS	
	7	1	**313-6098**	1	PLATE AS	
G	8	1	**423-1984**		HOSE (25.6-IN)	
	9	1	**090-0744**	1	ELBOW	
	10	1	**032-3631**	1	ELBOW	
M	12	1	**7X-2552**	3	BOLT (M16X2X30-MM)	
	13	1	**8T-4121**	2	WASHER-HARD (11X21X2.5-MM THK)	
M	15	1	**8T-4195**	1	BOLT (M10X1.5X30-MM)	
	16	1	**9X-8257**	3	WASHER (17.5X30X3.5-MM THK)	
	17	1	**3D-2824**	1	SEAL-O-RING	
	18	1	**5D-1026**	2	CLAMP-BAND	
E	19	1	**7I-1024**		GUARD-HOSE (60-CM)	
	20	1	**9X-2647**	1	CLIP (TAB)	
	21	1	**9X-2646**	1	CLIP (SLOT)	
M	22	1	**8T-4137**	1	BOLT (M10X1.5X20-MM)	
	23	1	**325-1242**	1	CLIP	

E - ORDER BY THE CENTIMETER
G - ORDER BY THE INCH
M - METRIC PART

311-0864 **LINES GP-AFTERCOOLER AIR (**contd.**)** **i06259917**

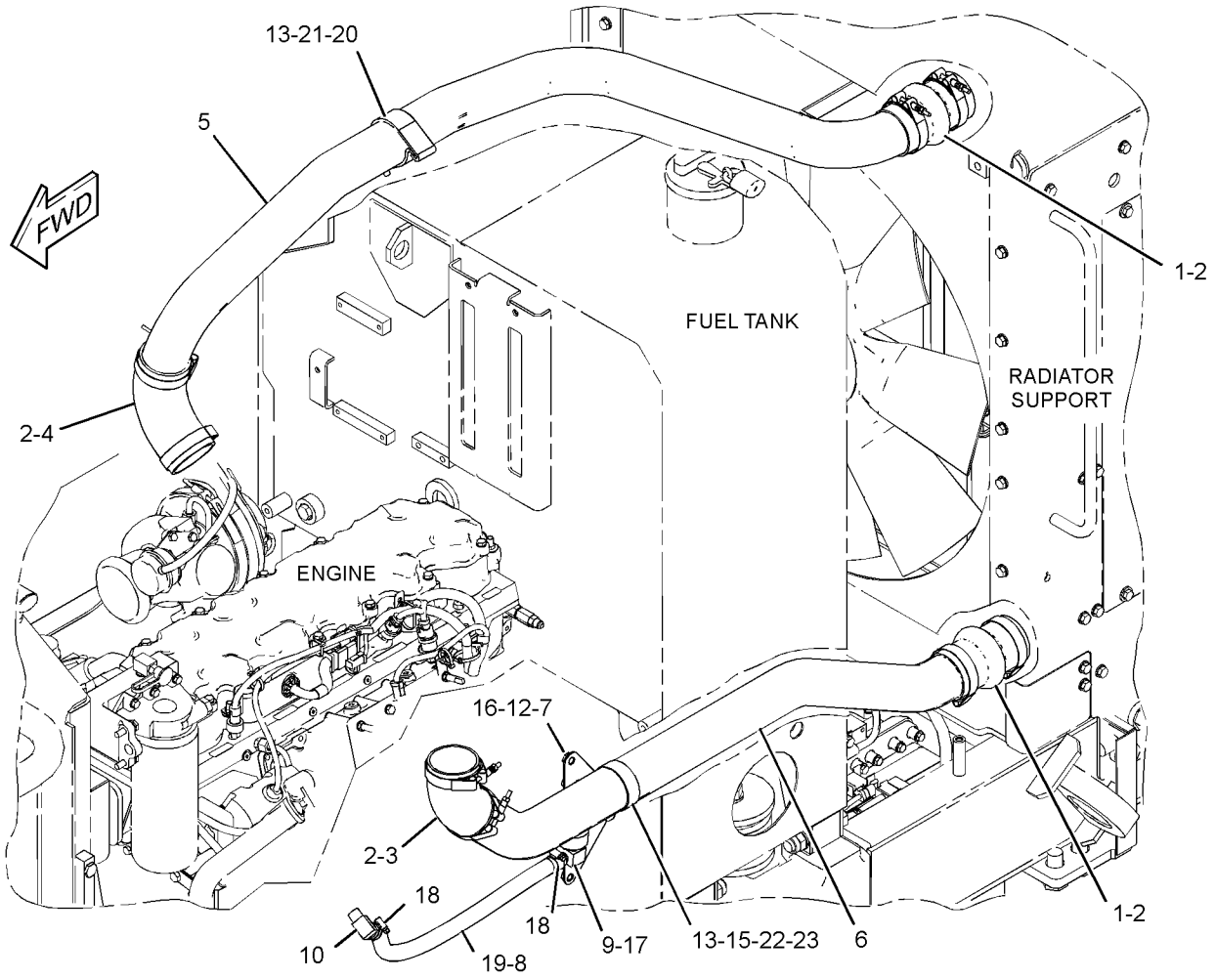

GRAPHIC #1 <END> g03888483

183-6845 MANIFOLD GP-EXHAUST

S/N: TX71-UP; KHX1-UP

PART OF 364-7493, 395-0487 ENGINE AR-COMPLETE

SMCS-1059 **i06040706**

NOTE	REF NO	GRAPHIC REF	PART NUMBER	QTY	PART NAME 1 2 3 4 5 6 (PRODUCT LEVEL)	SEE PAGE
M	1	1	**8T-7044**	4	STUD-TAPERLOCK (M10X1.5X40-MM)	
	2	1	**272-1956**	6	GASKET	
M	3	1	**172-6298**	8	BOLT-FLANGE HEAD (M10X1.5-THD)	
	4	1	**183-6854**	1	MANIFOLD-EXHAUST (CENTER)	
	5	1	**183-6856**	2	MANIFOLD-EXHAUST (END)	
	6	1	**189-8772**	8	SPACER (11X16X35-MM THK)	
	7	1	**203-3768**	4	SPACER (11X16X60-MM THK)	
	8	1	**210-7722**	4	BOLT-FLANGE HEAD (M10X1.5-THD)	

M - METRIC PART

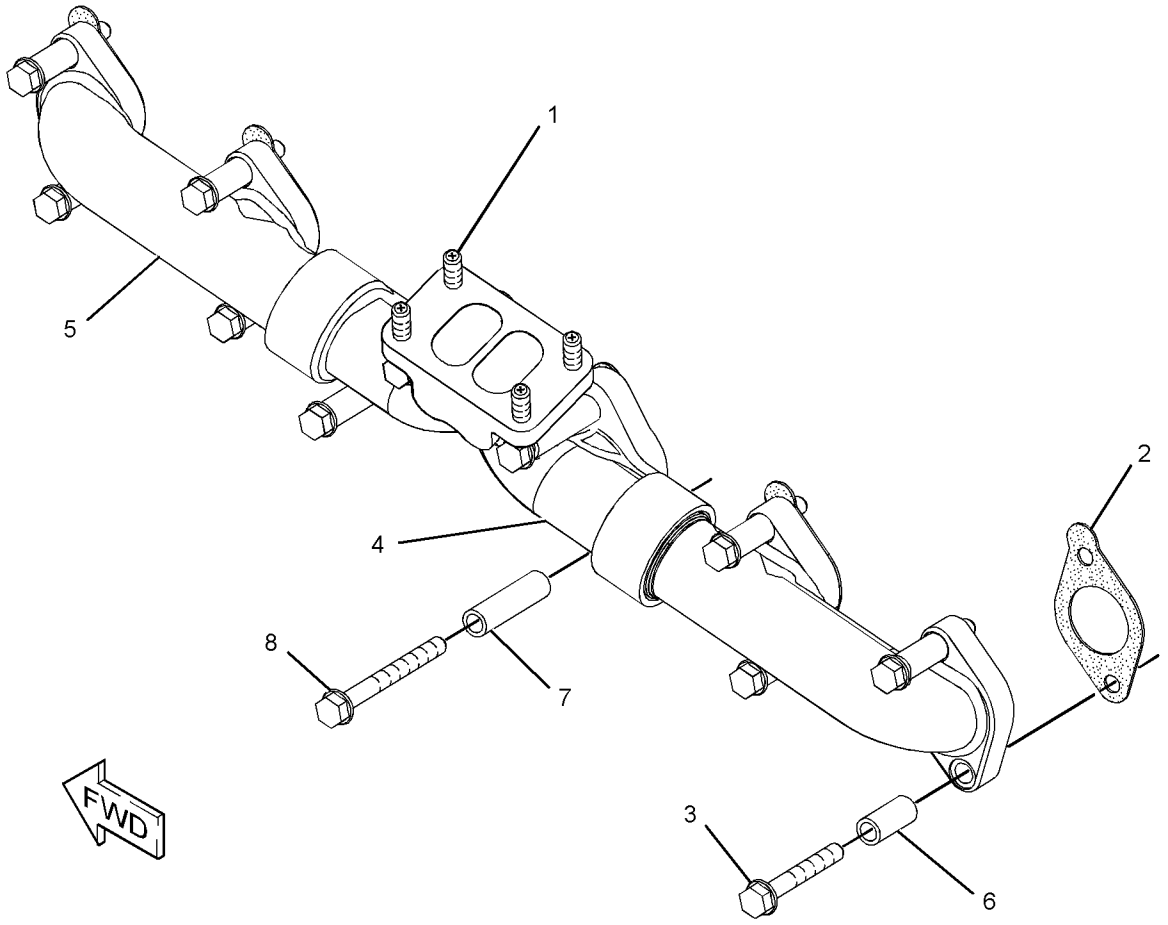

GRAPHIC #1 <END> g01211596

310-6472 MUFFLER GP

S/N: SZS1-1024

PART OF 368-3025 GENERAL AR, 425-5590 INSTALLATION AR

SMCS-1062 **i05339881**

NOTE	REF NO	GRAPHIC REF	PART NUMBER	QTY	PART NAME 1 2 3 4 5 6 (PRODUCT LEVEL)	SEE PAGE
	1	1	**1W-2431**	1	CLAMP-BAND	
	2	1	**312-3542**	1	TUBE AS	
C	3	1	**352-0148**	1	EJECTOR-EXHAUST	
C	4	1	**372-4991**	1	MUFFLER	
	5	1	**388-3769**	1	BRACKET AS	
	6	1	**388-3780**	1	BRACKET AS	
	7	1	**198-4777**	6	WASHER-HARD (11X25X10-MM THK)	
C	8	1	**388-7012**	1	CLAMP-BENT BOLT	
	9	1	**7X-7729**	4	WASHER (11X25X3-MM THK)	
M	10	1	**8T-4133**	2	NUT (M10X1.5-THD)	
M	11	1	**8T-4195**	6	BOLT (M10X1.5X30-MM)	
M	12	1	**8T-4196**	2	BOLT (M10X1.5X35-MM)	
C	13	1	**388-7010**	1	CLAMP-BENT BOLT	

C - CHANGE FROM PREVIOUS TYPE
M - METRIC PART

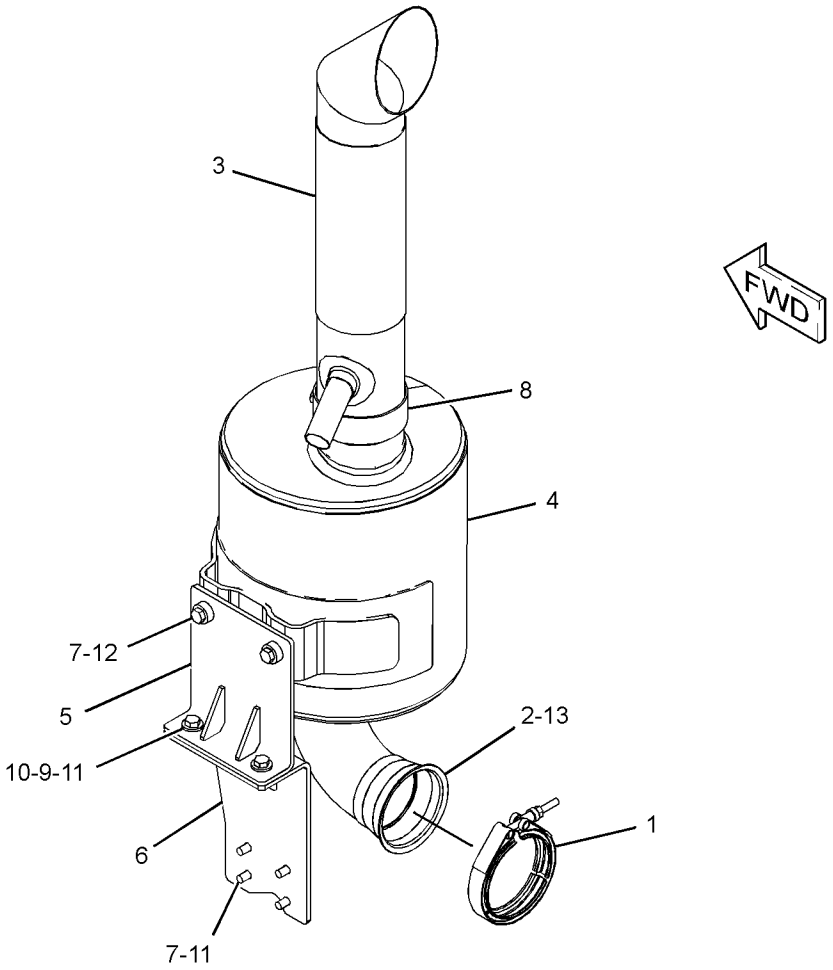

GRAPHIC #1 <END> g02980557

310-6472 MUFFLER GP

S/N: SZS1025-UP

PART OF 425-5590 INSTALLATION AR

SMCS-1062 **i06860891**

NOTE	REF NO	GRAPHIC REF	PART NUMBER	QTY	PART NAME 1 2 3 4 5 6 (PRODUCT LEVEL)	SEE PAGE
	1	1	**1W-2431**	1	CLAMP-BAND	
	2	1	**312-3542**	1	TUBE AS	
	3	1	**352-0148**	1	EJECTOR-EXHAUST	
C	4	1	**486-5257**	1	BRACKET AS	
C	5	1	**491-7840**	1	MUFFLER	
C	6	1	**198-4777**	8	WASHER-HARD (11X25X10-MM THK)	
	7	1	**388-7010**	1	CLAMP-BENT BOLT	
	8	1	**388-7012**	1	CLAMP-BENT BOLT	
CM	9	1	**8T-4186**	4	BOLT (M10X1.5X40-MM)	
CM	10	1	**8T-4196**	4	BOLT (M10X1.5X35-MM)	

C - CHANGE FROM PREVIOUS TYPE
M - METRIC PART

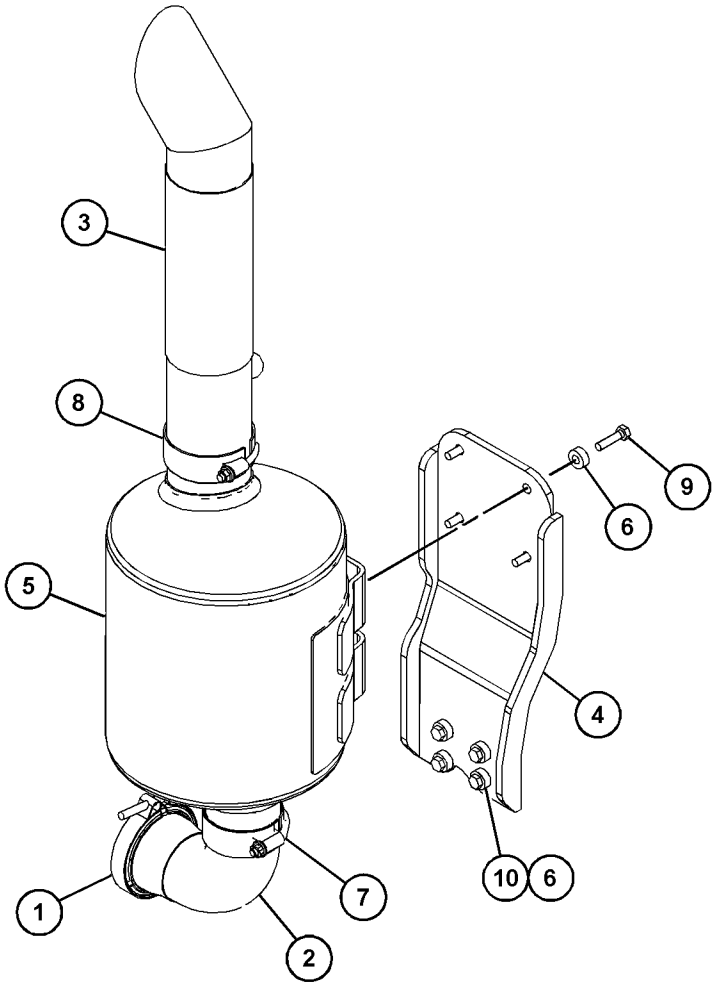

GRAPHIC #1 <END> g06146851

233-3387 PRECLEANER GP

S/N: SZS1-UP

FIELD INSTALLATION

SMCS-1055 **i06757622**

NOTE	REF NO	GRAPHIC REF	PART NUMBER	QTY	PART NAME 1 2 3 4 5 6 (PRODUCT LEVEL)	SEE PAGE
	1	1	**070-0107**	1	PRECLEANER AS (TURBINE)	
	2	1	**251-5743**	1	DAMPER	

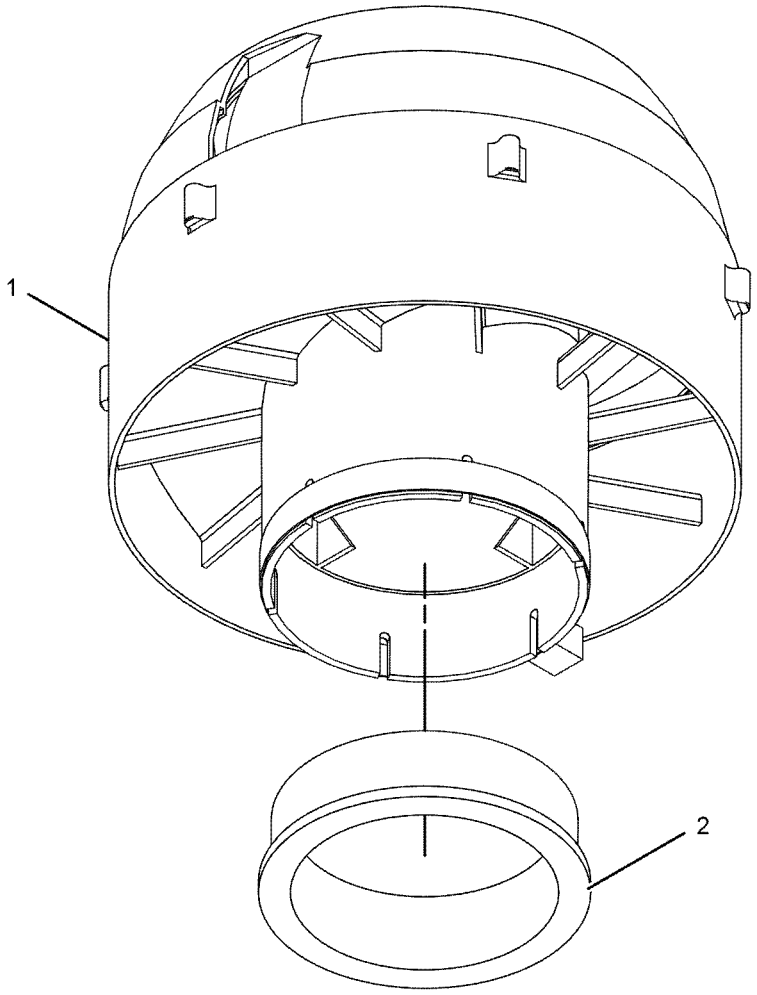

GRAPHIC #1 <END> g01132481

250-7696 TURBOCHARGER GP*R

S/N: TX71-UP; KHX29829-UP

PART OF 372-3738 TURBOCHARGER GP

SMCS-1052, 1053

i06869108

NOTE	REF NO	GRAPHIC REF	PART NUMBER	QTY	PART NAME 1 2 3 4 5 6 (PRODUCT LEVEL)	SEE PAGE
	1	1	**137-1602**	1	CLAMP AS (TURBINE)	
	2	1	**158-6072**	1	CLAMP AS (COMPRESSOR)	
	3	1	**161-6963**	2	CLAMP	
YR	4	1	**261-9367**	1	CARTRIDGE GP-TURBOCHARGER	144
	5	1	**5P-4536**	1	ELBOW	
E	6	1	**242-3360**		HOSE (47-CM)	

E - ORDER BY THE CENTIMETER
R - REMANUFACTURED PART MAY BE AVAILABLE
Y - SEPARATE ILLUSTRATION

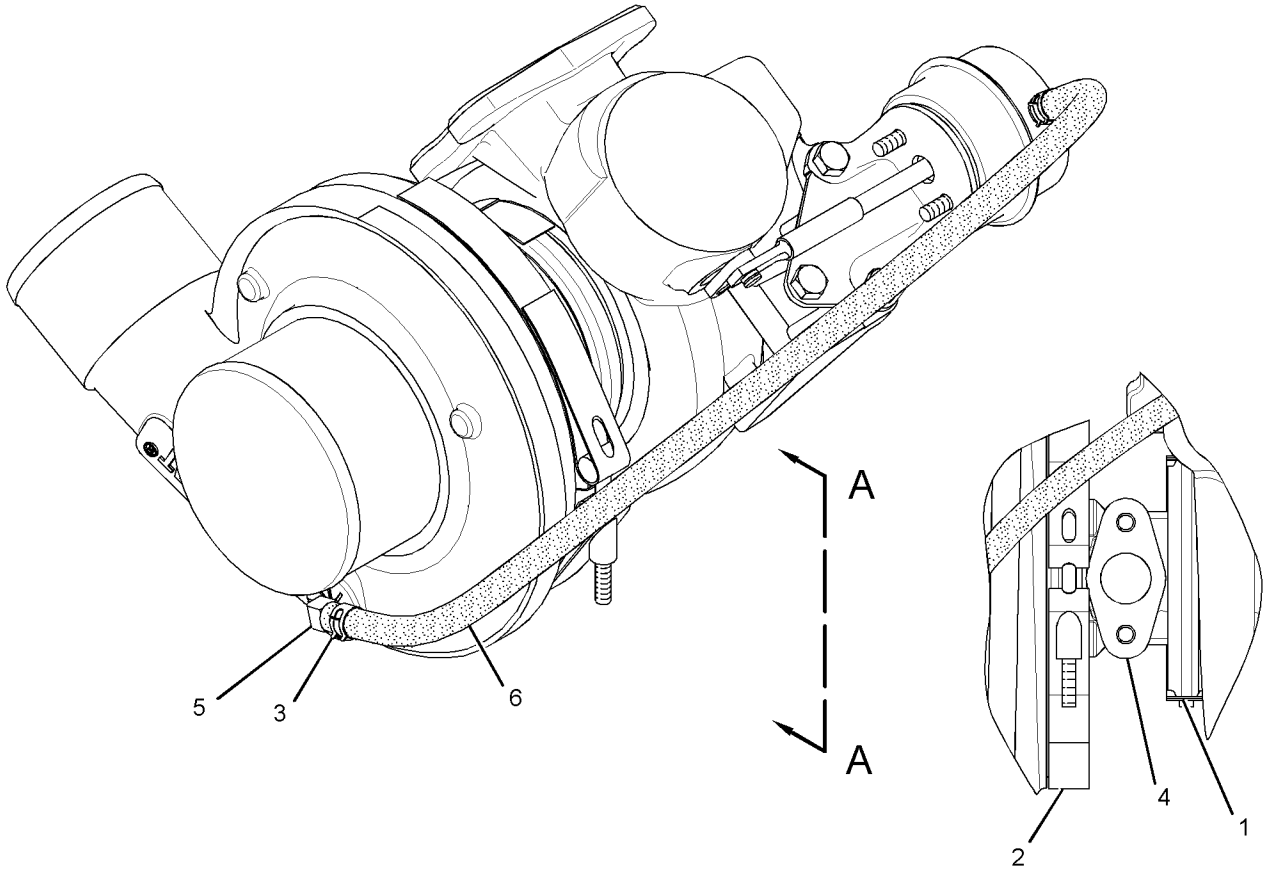

VIEW A-A

GRAPHIC #1

<END>

g01336968

372-3738 TURBOCHARGER GP

S/N: TX71-UP; KHX1-UP

PART OF 395-0487 ENGINE AR-COMPLETE, 365-3500 ENGINE AR-CORE

SMCS-1052, 1053

i04322002

NOTE	REF NO	GRAPHIC REF	PART NUMBER	QTY	PART NAME 1 2 3 4 5 6 (PRODUCT LEVEL)	SEE PAGE
	1	1	**7C-7431**	1	GASKET	
YR	2	1	**250-7696**	1	TURBOCHARGER GP	156
M	3	1	**3E-8017**	4	LOCKNUT (M10X1.5-THD)	
E	4	1	**258-4524**		SLEEVE (38-CM)	
					PARTS SHOWN IN GRAPHIC(S) WITHOUT A REFERENCE NUMBER ARE NOT SERVICED SEPARATELY	

E - ORDER BY THE CENTIMETER
M - METRIC PART
R - REMANUFACTURED PART MAY BE AVAILABLE
Y - SEPARATE ILLUSTRATION

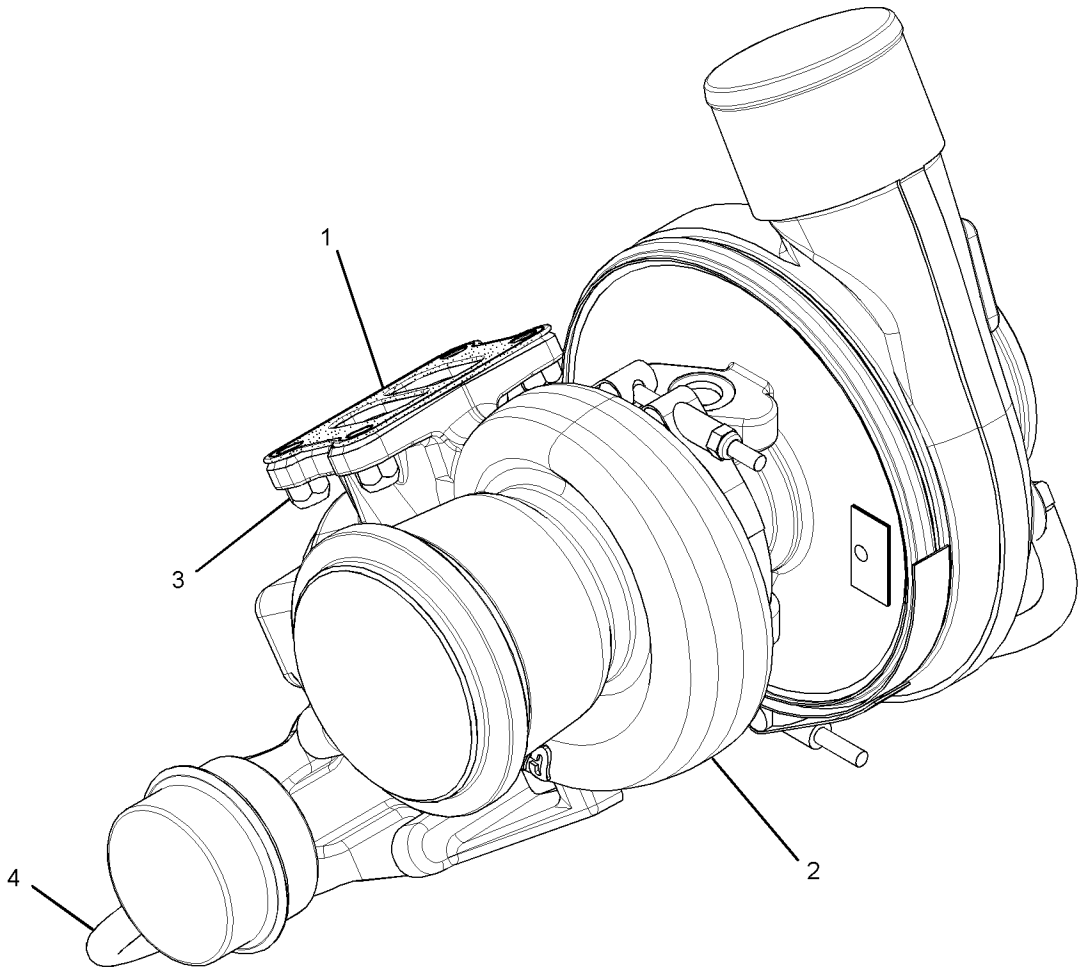

GRAPHIC #1 <END> g02453070

8X-2650 VALVE GP-AIR CONTROL

S/N: SZS1-UP

PART OF 297-8948 CONTROL GP-SERVICE BRAKE

SMCS-108A, 1462, 5506 **i03626748**

NOTE	REF NO	GRAPHIC REF	PART NUMBER	QTY	PART NAME 1 2 3 4 5 6 (PRODUCT LEVEL)	SEE PAGE
	1	1	**8X-2646**	1	LEVER AS	
	1A	1	**9D-8121**	1	ROLLER	
	1B	1	**3B-4607**	1	PIN-COTTER	
	1C	1	**7B-9323**	1	PIN	
	2	1	**2R-0724**	1	BUTTON-STOP	
	3	1	**2R-0694**	1	PLATE-BRAKE VALVE	
	4	1	**125-5321**	3	BOLT	
	5	1	**3B-4610**	1	PIN-COTTER	
J	6	1	**8W-5651**	1	VALVE GP-CONTROL (AIR)	
		1	**5D-0768**	1	SPRING	
	7	1	**2R-0719**	1	PLUNGER	
	8	1	**5D-3636**	1	BOOT	
	9	1	**2D-6006**	1	PIN	
					AVAILABLE REPAIR KIT(S):	
J			**2G-6285**	1	KIT-AIR CONTROL VALVE	
					(INCLUDES SPRINGS, DIAPHRAGMS & WASHER, O-RINGS, INLET & EXHAUST VALVES, SCREW, BOOT, LOCKNUT, & FILTER)	

J - KIT MARKED J SERVICES PART(S) MARKED J

8X-2650 **VALVE GP-AIR CONTROL (**contd.**)** **i03626748**

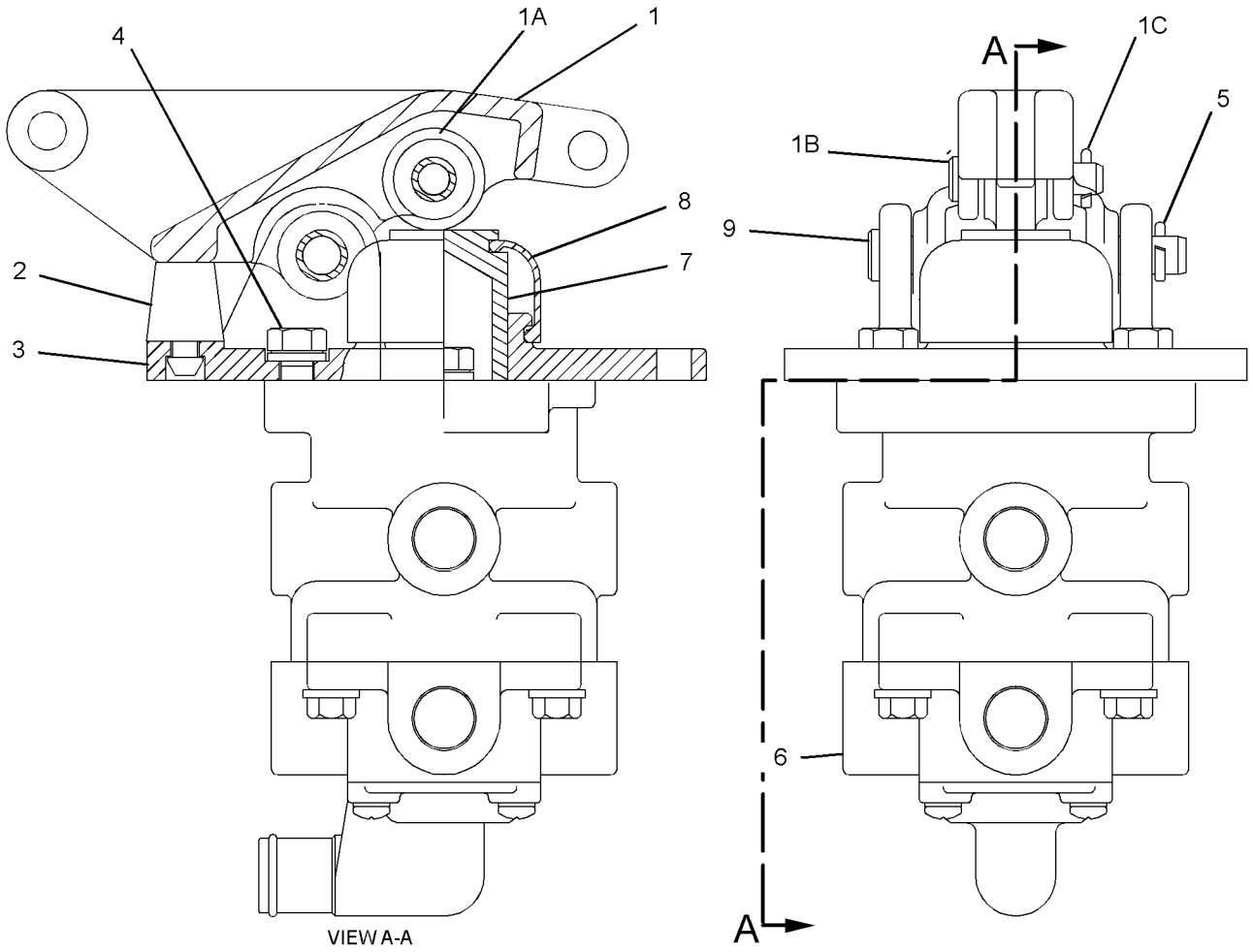

GRAPHIC #1 <END> g01945496

282-2472 CONTROL GP-GOVERNOR

S/N: SZS1-10099

PART OF 437-0626 CAB AR, 368-3025 GENERAL AR

SMCS-1265, 1276 **i06592304**

NOTE	REF NO	GRAPHIC REF	PART NUMBER	QTY	PART NAME 1 2 3 4 5 6 (PRODUCT LEVEL)	SEE PAGE
	1	1	**6V-8183**	1	NUT-FULL (3/8-24-THD)	
B	2	1	**2N-9421**	5	SPRING-DISC	
	3	1	**4D-4064**	1	ROD END (3/8-24-THD)	
	4	1	**5P-9209**	2	BEARING AS-NEEDLE	
	5	1	**7F-0192**	1	BOLT (3/8-16X2-IN)	
	6	1	**7V-0446**	1	CLIP	
	7	1	**8X-3261**	1	LEVER	
	8	1	**116-5710**	1	GROMMET	
	9	1	**130-5300**	1	CLIP	
	10	1	**141-6343**	1	SPRING	
	11	1	**161-7062**	1	HOUSING	
	12	1	**162-8218**	1	GASKET	
	13	1	**162-8219**	1	COVER	
	14	1	**168-8683**	1	SHAFT	
	15	1	**169-0921**	1	ROD END (3/8-24 LH-THD)	
	16	1	**362-2789**	1	ROD	
	17	1	**172-0165**	1	SHAFT	
	18	1	**172-4211**	1	SPACER (10.5X22X50.8-MM THK)	
	19	1	**206-3599**	1	LEVER	
	20	1	**206-3600**	1	LEVER	
	21	1	**207-4927**	1	PEDAL-GOVERNOR CONTROL	
Y	22	1	**266-1467**	1	SENSOR GP-POSITION (ROTARY)	339
	23	1	**009-0008**	1	SETSCREW-SOCKET (3/8-16X0.5-IN)	
	24	1	**129-3173**	1	BOLT-12 POINT HEAD (3/8-16X1.25-IN)	
M	25	1	**142-0485**	1	NUT (M10X1.5-THD)	
	26	1	**1B-0676**	1	PIN	
	27	1	**1B-8704**	3	KEY-WOODRUFF	
M	28	1	**272-3089**	1	BOLT (M10X1.5X90-MM)	
	29	1	**5P-1075**	2	WASHER-HARD (10.2X22.5X3-MM THK)	
	30	1	**5P-1076**	1	WASHER-HARD (13.5X30X4-MM THK)	
M	31	1	**6V-2313**	2	BOLT (M5X0.8X30-MM)	
	32	1	**6V-8801**	2	NUT (3/8-16-THD)	
	33	1	**8T-0328**	2	WASHER-HARD (5.5X10X1-MM THK)	
	34	1	**8T-4121**	3	WASHER-HARD (11X21X2.5-MM THK)	
M	35	1	**8T-4133**	2	NUT (M10X1.5-THD)	
M	36	1	**8T-4136**	3	BOLT (M10X1.5X25-MM)	
M	37	1	**8T-4182**	2	BOLT (M10X1.5X45-MM)	
M	38	1	**8T-4196**	2	BOLT (M10X1.5X35-MM)	
	39	1	**8T-4226**	1	WASHER-PLATED (10.5X45X3-MM THK)	

B - USE AS REQUIRED
M - METRIC PART
Y - SEPARATE ILLUSTRATION

282-2472 **CONTROL GP-GOVERNOR (**contd.**)** **i06592304**

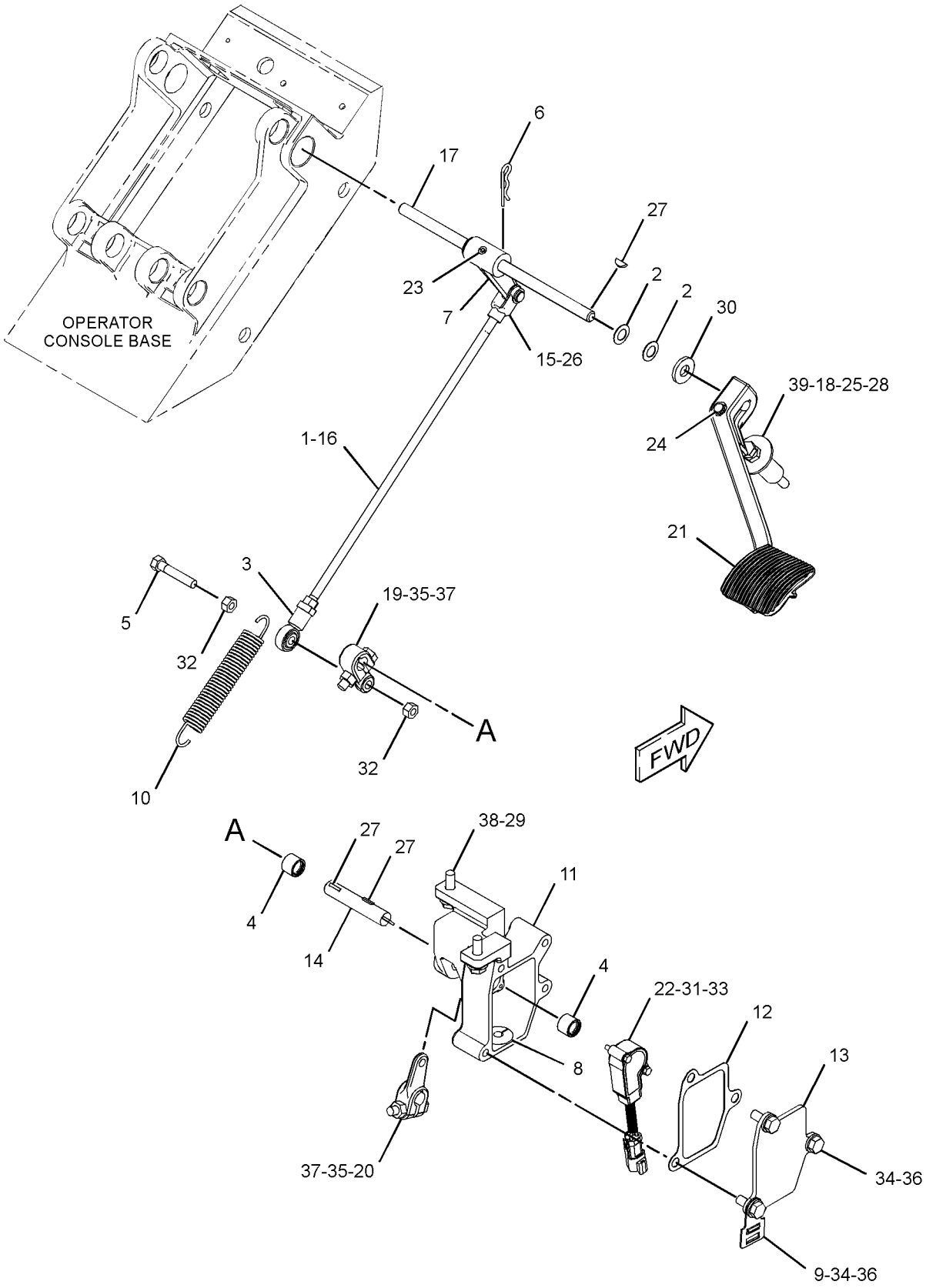

GRAPHIC #1 <END> g03885674

512-5911 CONTROL GP-GOVERNOR

S/N: SZS10100-UP

PART OF 516-7917 CAB AR

SMCS-1265, 1276 **i06902846**

NOTE	REF NO	GRAPHIC REF	PART NUMBER	QTY	PART NAME 1 2 3 4 5 6 (PRODUCT LEVEL)	SEE PAGE
	1	1	**7V-0446**	1	CLIP	
	2	1	**8X-3261**	1	LEVER	
	3	1	**116-5710**	1	GROMMET	
	4	1	**161-7062**	1	HOUSING	
	5	1	**162-8218**	1	GASKET	
	6	1	**162-8219**	1	COVER	
	7	1	**168-8683**	1	SHAFT	
	8	1	**172-0165**	1	SHAFT	
	9	1	**206-3599**	1	LEVER	
	10	1	**206-3600**	1	LEVER	
Y	11	1	**266-1467**	1	SENSOR GP-POSITION (ROTARY) (THROTTLE)	339
	12	1	**362-2789**	1	ROD	
	13	1	**512-5912**	1	PEDAL-GOVERNOR CONTROL	
	14	1	**009-0008**	1	SETSCREW-SOCKET (3/8-16X0.5-IN)	
	15	1	**129-3173**	1	BOLT-12 POINT HEAD (3/8-16X1.25-IN)	
	16	1	**130-5300**	1	CLIP	
	17	1	**141-6343**	1	SPRING	
M	18	1	**142-0485**	1	NUT (M10X1.5-THD)	
	19	1	**169-0921**	1	ROD END (3/8-24 LH-THD)	
	20	1	**172-4211**	1	SPACER (10.5X22X50.8-MM THK)	
	21	1	**1B-0676**	1	PIN	
	22	1	**1B-8704**	3	KEY-WOODRUFF	
M	23	1	**272-3089**	1	BOLT (M10X1.5X90-MM)	
B	24	1	**2N-9421**	5	SPRING-DISC	
	25	1	**4D-4064**	1	ROD END (3/8-24-THD)	
	26	1	**5P-1075**	2	WASHER-HARD (10.2X22.5X3-MM THK)	
	27	1	**5P-1076**	1	WASHER-HARD (13.5X30X4-MM THK)	
	28	1	**5P-9209**	2	BEARING AS-NEEDLE	
M	29	1	**6V-2313**	2	BOLT (M5X0.8X30-MM)	
	30	1	**6V-8183**	1	NUT-FULL (3/8-24-THD)	
	31	1	**6V-8801**	2	NUT (3/8-16-THD)	
	32	1	**7F-0192**	1	BOLT (3/8-16X2-IN)	
	33	1	**8T-0328**	2	WASHER-HARD (5.5X10X1-MM THK)	
	34	1	**8T-4121**	3	WASHER-HARD (11X21X2.5-MM THK)	
M	35	1	**8T-4133**	2	NUT (M10X1.5-THD)	
M	36	1	**8T-4136**	3	BOLT (M10X1.5X25-MM)	
M	37	1	**8T-4182**	2	BOLT (M10X1.5X45-MM)	
M	38	1	**8T-4196**	2	BOLT (M10X1.5X35-MM)	
	39	1	**8T-4226**	1	WASHER-PLATED (10.5X45X3-MM THK)	

B - USE AS REQUIRED
M - METRIC PART
Y - SEPARATE ILLUSTRATION

512-5911 **CONTROL GP-GOVERNOR (**contd.**)** **i06902846**

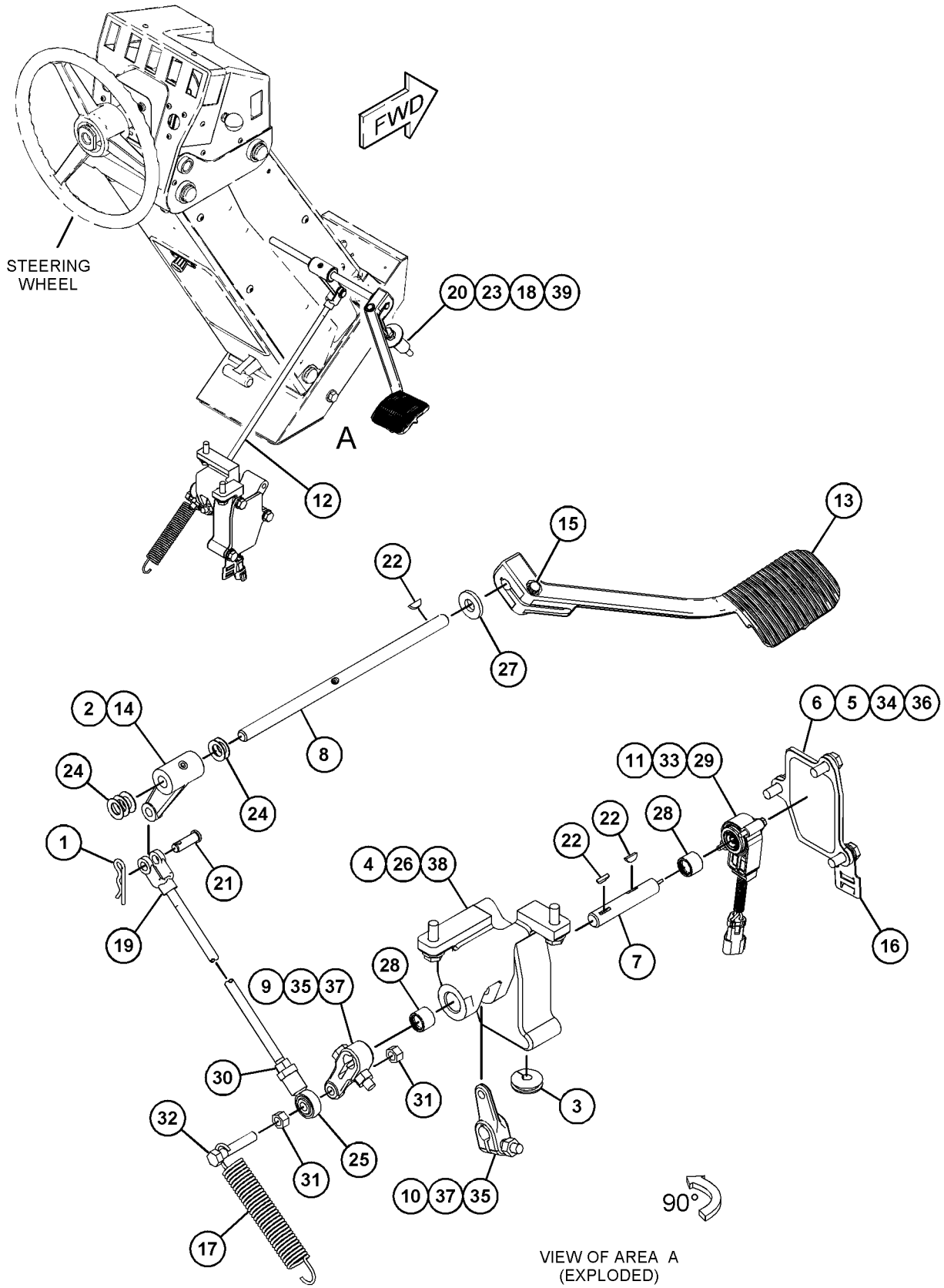

VIEW OF AREA A
(EXPLODED)

GRAPHIC #1 <END> g06169640

174-9570 FILTER GP-WATER SEP & FUEL

S/N: SZS1-UP

PART OF 190-8977 PUMP GP-FUEL PRM & WATER SEP

SMCS-1261, 1263

i06692128

NOTE	REF NO	GRAPHIC REF	PART NUMBER	QTY	PART NAME 1 2 3 4 5 6 (PRODUCT LEVEL)	SEE PAGE
	1	1	**326-1644**	1	FILTER AS-WATER SEP & FUEL (PRIMARY)	
	1A	1	**220-8678**	1	SEAL-RING (FUEL, WATER SEPARATOR)	
	2	1	**343-5527**	1	BOWL AS	
	2A	1	**5F-9144**	1	SEAL-O-RING	
	2B	1	**8F-7219**	1	SEAL-O-RING	

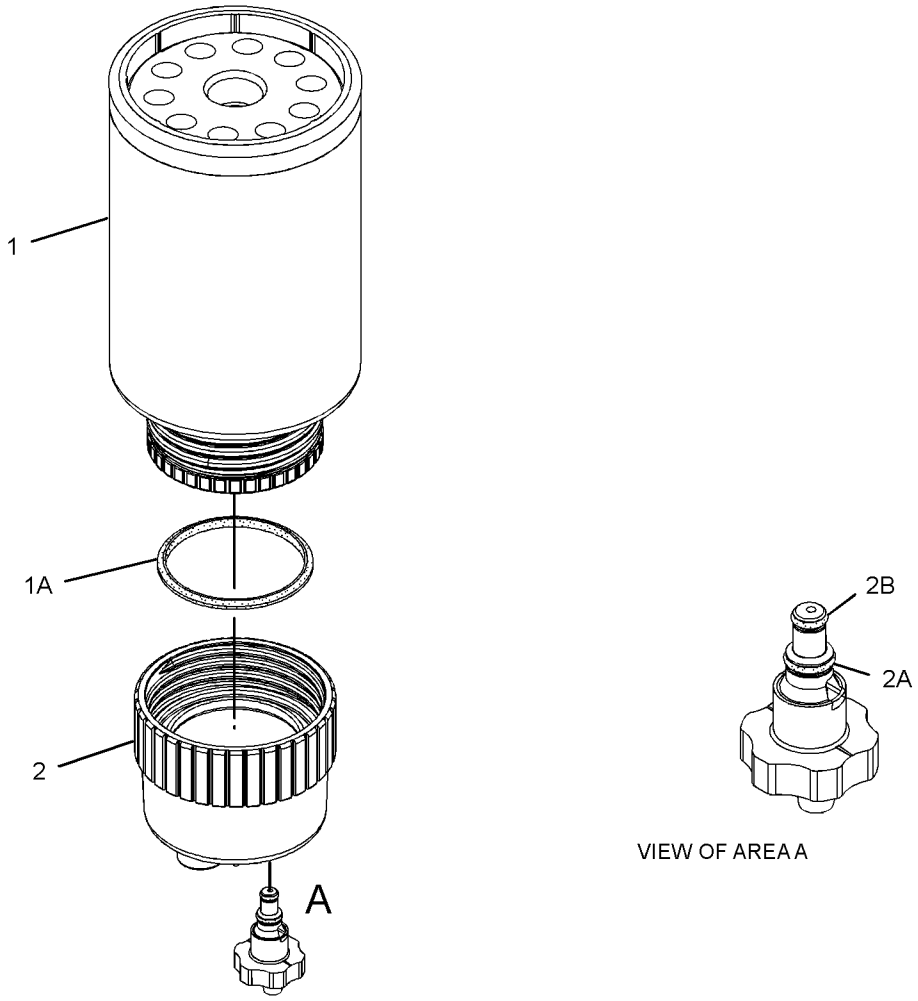

GRAPHIC #1

<END>

g06078297

328-2585 INJECTOR GP-FUEL*R

S/N: KHX29829-UP

PART OF 268-1839 PUMP GP-FUEL INJECTION

SMCS-1251, 1254, 1290, 1713

i03533880

NOTE	REF NO	GRAPHIC REF	PART NUMBER	QTY	PART NAME 1 2 3 4 5 6 (PRODUCT LEVEL)	SEE PAGE
	1	1	**149-5240**	1	RING-BACKUP	
	2	1	*263-8218*	1	INJECTOR GP-FUEL	
	3	1	**293-0730**	1	RING-BACKUP	
	4	1	**109-3207**	1	SEAL-O-RING	
	5	1	**148-2903**	2	SEAL-O-RING	

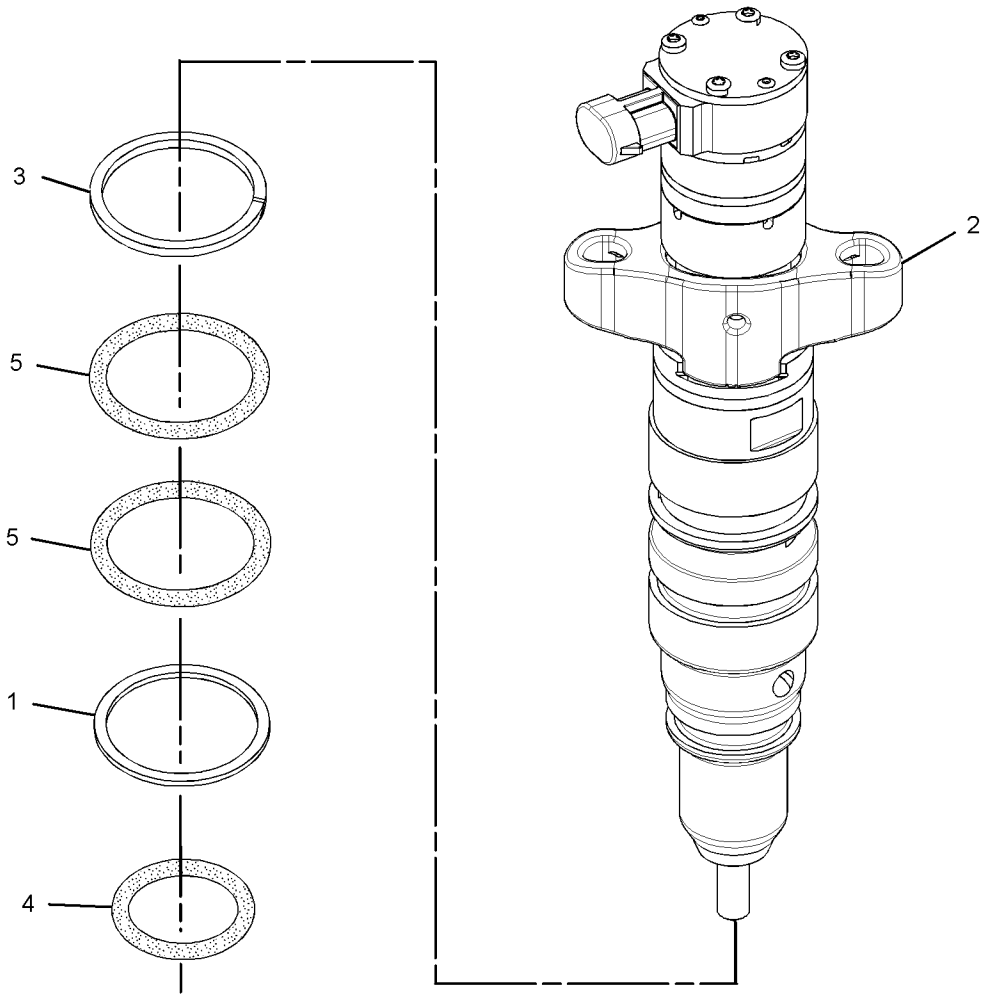

GRAPHIC #1

<END>

g01684557

387-9427 INJECTOR GP-FUEL*R

S/N: TX71-UP; KHX29829-UP

PART OF 268-1839 PUMP GP-FUEL INJECTION

SMCS-1251, 1254, 1290, 1713

i05236952

NOTE	REF NO	GRAPHIC REF	PART NUMBER	QTY	PART NAME 1 2 3 4 5 6 (PRODUCT LEVEL)	SEE PAGE
	1	1	**148-2903**	2	SEAL-O-RING	
	2	1	**109-3207**	1	SEAL-O-RING	
	3	1	**149-5240**	1	RING-BACKUP	
	4	1	**293-0730**	1	RING-BACKUP	

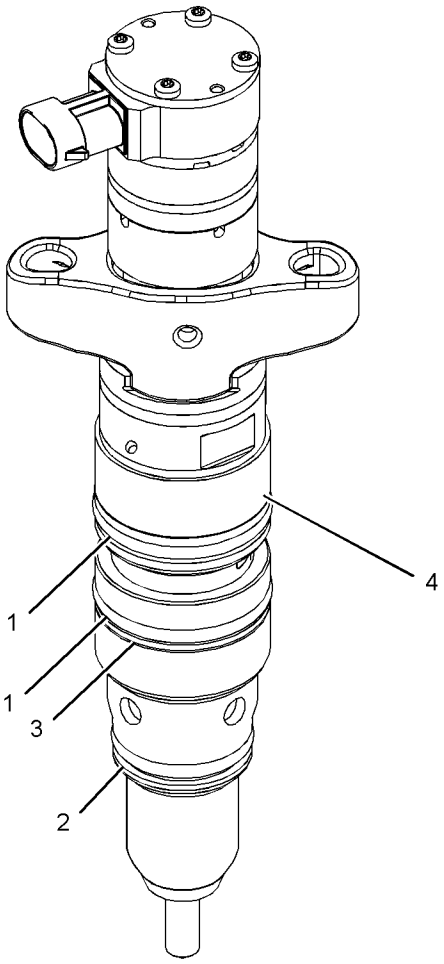

GRAPHIC #1

<END>

g03341832

396-3298 KIT-FUEL PUMP—FUEL TRANSFER PUMP

S/N: TX71-UP; KHX1-UP
FOR USE WITH REHS3830
PART OF 384-0607 PUMP GP-UNIT INJECTOR HYD

SMCS-1251 **i05659691**

NOTE	PART NUMBER	QTY	PART NAME 1 2 3 4 5 6 (PRODUCT LEVEL)	SEE PAGE
M	**3E-8006**	1	BOLT (M8X1.25X130-MM)	
	390-8589	1	COVER AS-PUMP	
	7S-5005	1	DOWEL	
M	**313-4620**	4	SCREW-PAN HEAD (M5X0.8X25-MM)	
	239-2402	3	SEAL-O-RING	
B	**227-5904**	1	SEAL-O-RING	
			—OR—	
BJ	**185-3241**	1	SEAL-O-RING	

B - USE AS REQUIRED
J - USE ONLY ON UNIT INJECTOR HYDRAULIC PUMPS WITH A RADIAL SEAL ON THE MOUNTING FLANGE
M - METRIC PART

<END>

313-3967 LINES GP-FUEL

S/N: TX71-UP; KHX1-UP

PART OF 364-7493, 395-0487 ENGINE AR-COMPLETE

SMCS-1274 **i05323863**

NOTE	REF NO	GRAPHIC REF	PART NUMBER	QTY	PART NAME 1 2 3 4 5 6 (PRODUCT LEVEL)	SEE PAGE
	1	1	*313-9614*	2	ADAPTER AS	
					(EACH INCLUDES)	
		1	**2R-6806**	1	ADAPTER	
		1	**214-7568**	1	SEAL-O-RING	
Y	2	1	*232-0343*	1	REGULATOR GP-FUEL PRESSURE	189
	3	1	*389-3708*	1	PLUG AS	
		1	**214-7568**	1	SEAL-O-RING	
		1	**360-3679**	1	PLUG-CONNECTOR (9/16-18-THD)	

Y - SEPARATE ILLUSTRATION

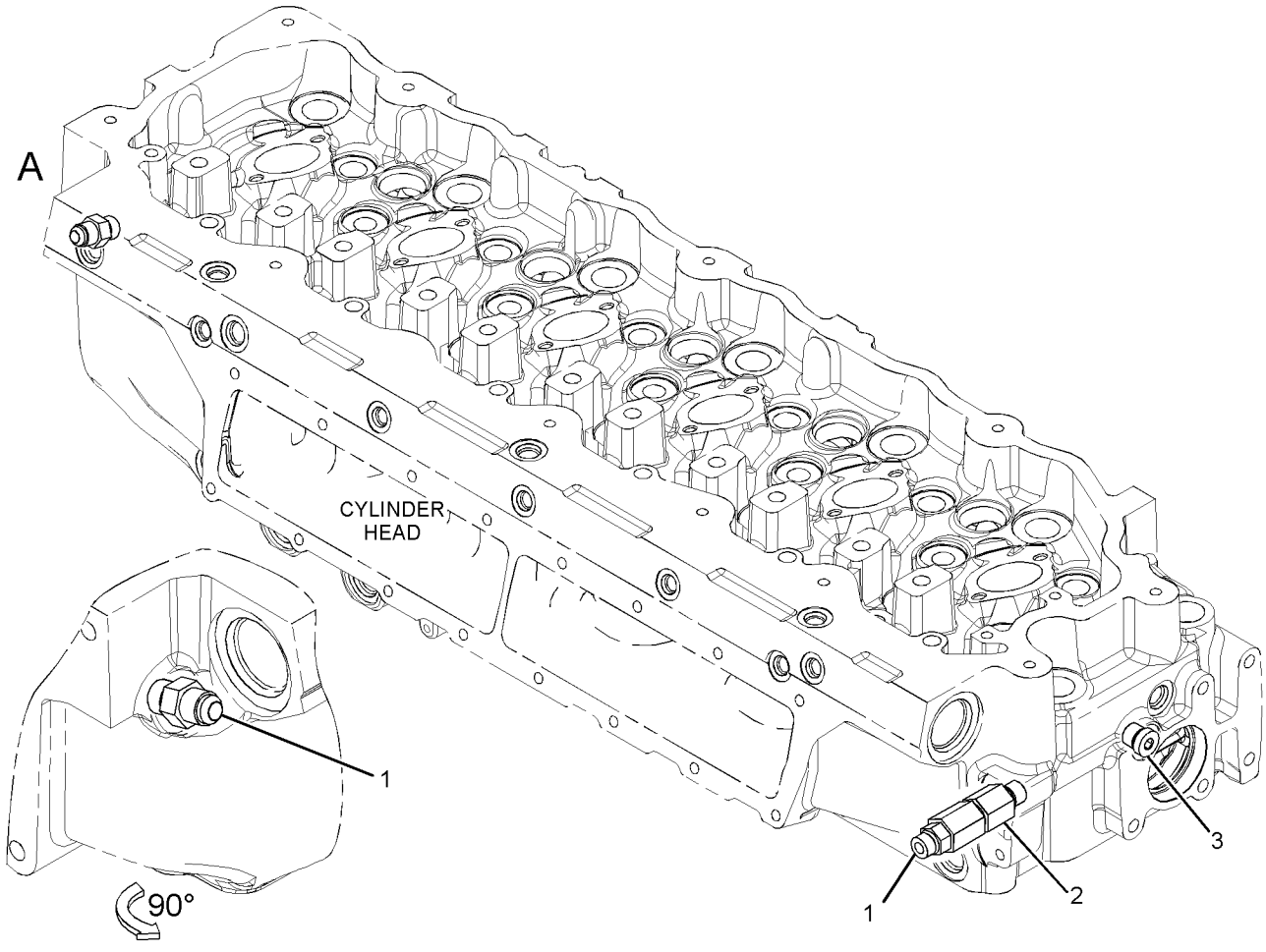

GRAPHIC #1 <END> g03378037

325-7130 LINES GP-FUEL

S/N: SZS1-UP
PART OF 368-3025 GENERAL AR
TYPE 1

SMCS-1274 **i03853592**

NOTE	REF NO	GRAPHIC REF	PART NUMBER	QTY	PART NAME 1 2 3 4 5 6 (PRODUCT LEVEL)	SEE PAGE
	1	1	**3S-2093**	1	STRAP-CABLE	
	2	1	**8T-9655**	6	MOUNT-ISOLATION	
	3	1	*161-9916*	1	ADAPTER AS	
		1	**6V-7420**	1	ADAPTER	
		1	**2M-9780**	1	SEAL-O-RING	
	4	1	*171-6729*	1	VALVE GP-SHUTOFF (MANUAL)	
		1	**3K-0360**	1	SEAL-O-RING	
		1	**8T-0081**	1	VALVE-BALL	
	5	1	*173-7223*	1	ADAPTER AS	
		1	**3J-1907**	1	SEAL-O-RING	
		1	**3J-7354**	1	SEAL-O-RING	
		1	**9X-0261**	1	ADAPTER	
Y	6	1	**190-8977**	1	PUMP GP-FUEL PRM & WATER SEP	184
	7	1	**191-1782**	1	SPACER (8.5X12.7X38.2-MM THK)	
	8	1	**191-1783**	2	SPACER (8.5X12.7X87.3-MM THK)	
	9	1	*194-2903*	1	ELBOW AS	
		1	**3K-0360**	1	SEAL-O-RING	
		1	**8T-0119**	1	ELBOW	
	10	1	**213-0064**	1	BASE AS (FUEL)	
Y	11	1	*234-5013*	1	SENSOR GP-TEMPERATURE (FUEL)	351
	12	1	**274-6719**	1	SENSOR GP-PRESSURE (OIL) (FUEL FILTER)	
		1	**3J-7354**	1	SEAL-O-RING	
		1	**237-0227**	1	PLUG AS-CONNECTOR (3-PIN)	
		1	**264-7030**	1	SEAL-CONNECTOR	
Y	13	1	**275-1253**	1	SWITCH GP-PRESSURE (DIFFERENTIAL)	365
I	14	1	**311-8756**	1	HOSE AS	
	15	1	**317-1533**	1	TUBE AS	
	16	1	**325-7129**	1	PLATE AS	
I	17	1	**328-2786**	1	HOSE AS	
I	18	1	**328-2787**	1	HOSE AS	
I	19	1	**328-2788**	1	HOSE AS	
	20	1	**030-7962**	1	ELBOW	
	21	1	**033-8248**	1	CLIP	
	22	1	*148-8307*	1	ADAPTER AS	
		1	**3J-1907**	1	SEAL-O-RING	
		1	**5P-8874**	1	ADAPTER	
	23	1	*148-8336*	1	CONNECTOR AS	
		1	**3J-1907**	1	SEAL-O-RING	
		1	**6V-8397**	1	SEAL-O-RING	
		1	**6V-8636**	1	CONNECTOR	
	24	1	*148-8364*	2	ELBOW AS	
					(EACH INCLUDES)	
		1	**3K-0360**	1	SEAL-O-RING	
		1	**6V-8398**	1	SEAL-O-RING	
		1	**6V-8625**	1	ELBOW	
	25	1	*153-6258*	1	CONNECTOR AS	
		1	**8T-5050**	1	CONNECTOR	

325-7130 **LINES GP-FUEL (**contd.**)** **i03853592**

NOTE	REF NO	GRAPHIC REF	PART NUMBER	QTY	PART NAME 1 2 3 4 5 6 (PRODUCT LEVEL)	SEE PAGE
		1	**3J-1907**	1	SEAL-O-RING	
		1	**6V-8398**	1	SEAL-O-RING	
	26	1	*164-5557*	1	CONNECTOR AS	
		1	**5I-4370**	1	CONNECTOR	
		1	**2M-9780**	1	SEAL-O-RING	
		1	**6V-8398**	1	SEAL-O-RING	
	27	1	*164-5570*	1	UNION AS	
		1	**6V-8397**	2	SEAL-O-RING	
		1	**6V-8730**	1	UNION (FACE SEAL)	
	28	1	*164-5619*	2	PLUG AS	
					(EACH INCLUDES)	
		1	**2M-9780**	1	SEAL-O-RING	
		1	**9S-8006**	1	PLUG (7/8-14-THD)	
	29	1	*183-3406*	2	PLUG AS	
					(EACH INCLUDES)	
		1	**214-7568**	1	SEAL-O-RING	
		1	**9S-4191**	1	PLUG (9/16-18-THD)	
	30	1	**198-4777**	3	WASHER-HARD (11X25X10-MM THK)	
	31	1	**1F-7567**	1	CLIP	
	32	1	**1R-0762**	1	FILTER-FUEL (ADVANCED EFFICIENCY)	
	33	1	**239-5030**	1	ADAPTER AS	
		1	**9X-2493**	1	ADAPTER	
		1	**3K-0360**	1	SEAL-O-RING	
	34	1	*260-9171*	1	CONNECTOR AS	
		1	**3J-1907**	1	SEAL-O-RING	
		1	**6V-8397**	1	SEAL-O-RING	
		1	**8T-9041**	1	CONNECTOR	
	35	1	**3J-1907**	1	SEAL-O-RING	
	36	1	**5P-4116**	1	WASHER-HARD (8.8X20.5X2-MM THK)	
	37	1	**5P-7462**	3	CLIP (SLOT)	
	38	1	**5P-7463**	3	CLIP (TAB)	
	39	1	**6V-0683**	3	GROMMET	
	40	1	**6V-8397**	1	SEAL-O-RING	
	41	1	**6V-8724**	1	ELBOW	
	42	1	**7X-0579**	6	WASHER-HARD (8.8X25.5X2-MM THK)	
M	43	1	**7X-2539**	2	BOLT (M8X1.25X110-MM)	
	44	1	**8T-4121**	7	WASHER-HARD (11X21X2.5-MM THK)	
M	45	1	**8T-4136**	6	BOLT (M10X1.5X25-MM)	
M	46	1	**8T-4137**	1	BOLT (M10X1.5X20-MM)	
M	47	1	**8T-4195**	1	BOLT (M10X1.5X30-MM)	
M	48	1	**8T-4196**	3	BOLT (M10X1.5X35-MM)	
M	49	1	**8T-4200**	1	BOLT (M8X1.25X16-MM)	
	50	1	**8T-4223**	1	WASHER-HARD (13.5X25.5X3-MM THK)	
M	51	1	**8T-6869**	1	BOLT (M8X1.25X60-MM)	
E	52	1	**8C-6959**		HOSE (132-CM)	

E - ORDER BY THE CENTIMETER
I - REFER TO HYDRAULIC INFORMATION SYSTEM
M - METRIC PART
Y - SEPARATE ILLUSTRATION

325-7130 **LINES GP-FUEL (**contd.**)** **i03853592**

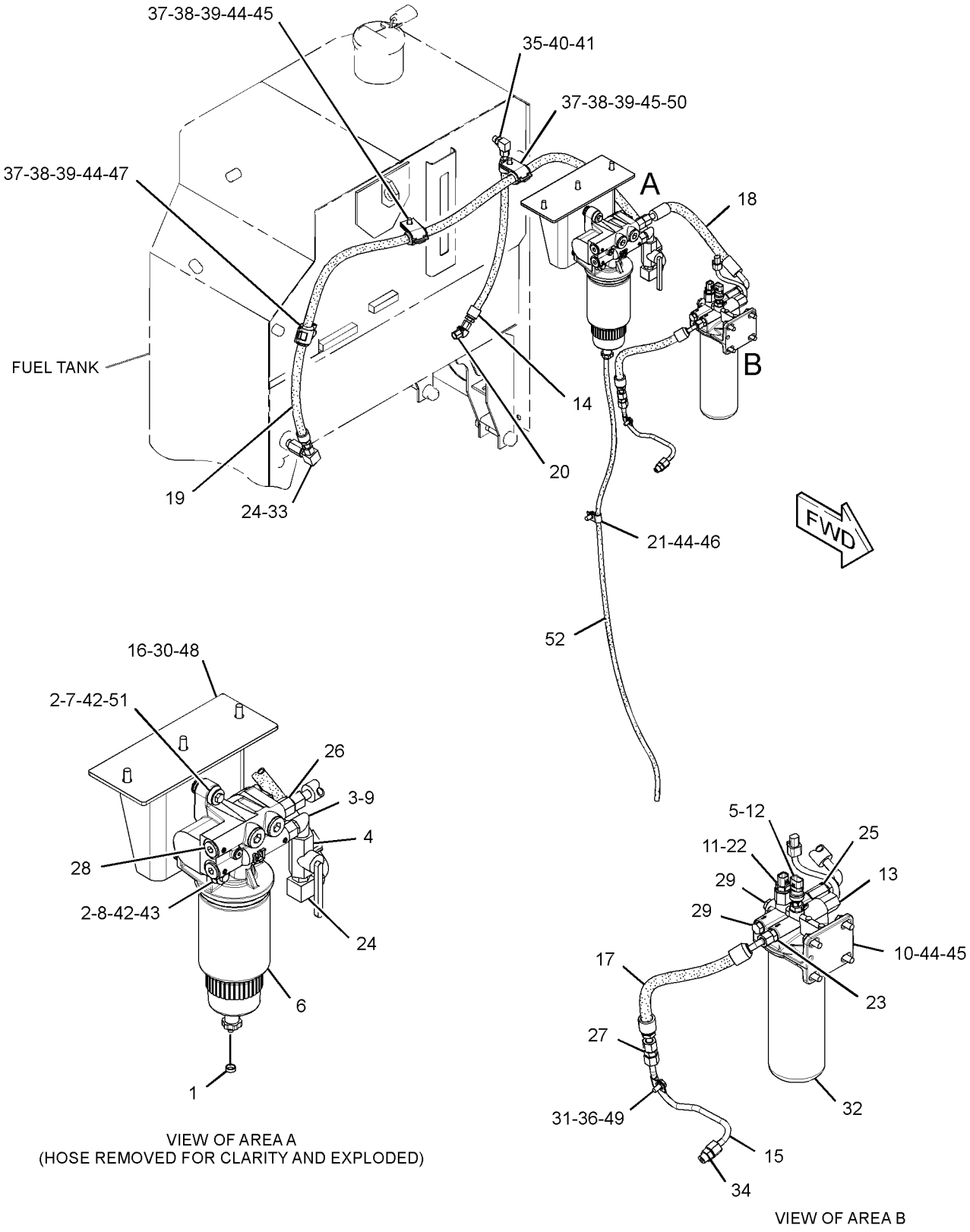

VIEW OF AREA A
(HOSE REMOVED FOR CLARITY AND EXPLODED)

VIEW OF AREA B

GRAPHIC #1 <END> g01929136

325-7130 LINES GP-FUEL

S/N: SZS1-UP

PART OF 368-3025 GENERAL AR, 425-5590 INSTALLATION AR

TYPE 2

SMCS-1274 **i05884688**

NOTE	REF NO	GRAPHIC REF	PART NUMBER	QTY	PART NAME 1 2 3 4 5 6 (PRODUCT LEVEL)	SEE PAGE
	1	1	**3S-2093**	1	STRAP-CABLE	
	2	1	*161-9916*	1	ADAPTER AS	
		1	**6V-7420**	1	ADAPTER	
		1	**2M-9780**	1	SEAL-O-RING	
	3	1	*171-6729*	1	VALVE GP-SHUTOFF (MANUAL)	
		1	**3K-0360**	1	SEAL-O-RING	
		1	**8T-0081**	1	VALVE-BALL	
	4	1	*173-7223*	1	ADAPTER AS	
		1	**3J-1907**	1	SEAL-O-RING	
		1	**3J-7354**	1	SEAL-O-RING	
		1	**9X-0261**	1	ADAPTER	
Y	5	1	**190-8977**	1	PUMP GP-FUEL PRM & WATER SEP	184
	6	1	**191-1782**	1	SPACER (8.5X12.7X38.2-MM THK)	
	7	1	**191-1783**	2	SPACER (8.5X12.7X87.3-MM THK)	
Y	8	1	*234-5013*	1	SENSOR GP-TEMPERATURE (FUEL)	351
	9	1	**274-6719**	1	SENSOR GP-PRESSURE (OIL) (FUEL FILTER)	
Y	10	1	**275-1253**	1	SWITCH GP-PRESSURE (DIFFERENTIAL)	365
I	11	1	**311-8756**	1	HOSE AS	
	12	1	**317-1533**	1	TUBE AS	
C	13	1	**389-1072**	1	BASE AS-FUEL FILTER	
		1	**9S-4167**	2	STUD-HOLLOW (1-14X1.47-IN)	
CI	14	1	**423-2284**	1	HOSE AS	
CI	15	1	**423-2285**	1	HOSE AS	
CI	16	1	**441-0958**	1	HOSE AS	
C	17	1	**441-0961**	1	PLATE AS	
	18	1	**030-7962**	1	ELBOW	
	19	1	**033-8248**	1	CLIP	
C	20	1	**132-7551**	4	SPACER (11X19X6-MM THK)	
C	21	1	*148-8311*	1	ADAPTER AS	
		1	**3K-0360**	1	SEAL-O-RING	
		1	**8T-1715**	1	ADAPTER	
	22	1	*148-8364*	2	ELBOW AS	
					(EACH INCLUDES)	
		1	**3K-0360**	1	SEAL-O-RING	
		1	**6V-8398**	1	SEAL-O-RING	
		1	**6V-8625**	1	ELBOW	
C	23	1	*148-8372*	1	ELBOW AS	
		1	**2M-9780**	1	SEAL-O-RING	
		1	**6V-8398**	1	SEAL-O-RING	
		1	**6V-8721**	1	ELBOW	
C	24	1	*148-8374*	1	ELBOW AS	
		1	**3K-0360**	1	SEAL-O-RING	
		1	**6V-8397**	1	SEAL-O-RING	
		1	**6V-8723**	1	ELBOW	
C	25	1	*148-8378*	1	ELBOW AS	
		1	**3J-1907**	1	SEAL-O-RING	
		1	**6V-8397**	1	SEAL-O-RING	

325-7130 **LINES GP-FUEL (**contd.**)** **i05884688**

NOTE	REF NO	GRAPHIC REF	PART NUMBER	QTY	PART NAME 1 2 3 4 5 6 (PRODUCT LEVEL)	SEE PAGE
		1	**6V-8724**	1	ELBOW	
C	26	1	*148-8410*	1	PLUG AS	
		1	**2M-9780**	1	SEAL-O-RING	
		1	**9S-4190**	1	PLUG-O-RING (7/8-14-THD)	
C	27	1	*148-8411*	2	PLUG AS	
					(EACH INCLUDES)	
		1	**3K-0360**	1	SEAL-O-RING	
		1	**9S-4185**	1	PLUG (3/4-16-THD)	
	28	1	*164-5557*	1	CONNECTOR AS	
		1	**5I-4370**	1	CONNECTOR	
		1	**2M-9780**	1	SEAL-O-RING	
		1	**6V-8398**	1	SEAL-O-RING	
	29	1	*164-5570*	1	UNION AS	
		1	**6V-8397**	2	SEAL-O-RING	
		1	**6V-8730**	1	UNION (FACE SEAL)	
	30	1	*164-5619*	2	PLUG AS	
					(EACH INCLUDES)	
		1	**2M-9780**	1	SEAL-O-RING	
		1	**9S-8006**	1	PLUG (7/8-14-THD)	
C	31	1	*169-5861*	2	PLUG AS	
					(EACH INCLUDES)	
		1	**3K-8460**	1	PLUG (1/2-20-THD)	
		1	**5P-7814**	1	SEAL-O-RING	
	32	1	*194-2903*	1	ELBOW AS	
		1	**3K-0360**	1	SEAL-O-RING	
		1	**8T-0119**	1	ELBOW	
	33	1	**198-4777**	3	WASHER-HARD (11X25X10-MM THK)	
	34	1	**1F-7567**	1	CLIP	
C	35	1	**1R-0749**	2	FILTER-FUEL (ADVANCED EFFICIENCY)	
	36	1	*239-5030*	1	ADAPTER AS	
		1	**9X-2493**	1	ADAPTER	
		1	**3K-0360**	1	SEAL-O-RING	
	37	1	*260-9171*	1	CONNECTOR AS	
		1	**3J-1907**	1	SEAL-O-RING	
		1	**6V-8397**	1	SEAL-O-RING	
		1	**8T-9041**	1	CONNECTOR	
	38	1	**5P-4116**	1	WASHER-HARD (8.8X20.5X2-MM THK)	
C	39	1	**5P-7462**	4	CLIP (SLOT)	
C	40	1	**5P-7463**	4	CLIP (TAB)	
C	41	1	**6V-0683**	4	GROMMET	
C	42	1	**7X-0613**	6	WASHER-HARD (8.8X25.5X5-MM THK)	
M	43	1	**7X-2539**	2	BOLT (M8X1.25X110-MM)	
C	44	1	**8T-4121**	3	WASHER-HARD (11X21X2.5-MM THK)	
CM	45	1	**8T-4136**	3	BOLT (M10X1.5X25-MM)	
CM	46	1	**8T-4186**	4	BOLT (M10X1.5X40-MM)	
M	47	1	**8T-4195**	1	BOLT (M10X1.5X30-MM)	
CM	48	1	**8T-4196**	4	BOLT (M10X1.5X35-MM)	
M	49	1	**8T-6869**	1	BOLT (M8X1.25X60-MM)	
CM	50	1	**8T-7547**	1	BOLT (M8X1.25X30-MM)	
	51	1	**8T-9655**	6	MOUNT-ISOLATION	
CE	52	1	**8C-6959**		HOSE (127-CM)	

325-7130 **LINES GP-FUEL (**contd.**)** **i05884688**

NOTE	REF NO	GRAPHIC REF	PART NUMBER	QTY	PART NAME 1 2 3 4 5 6 (PRODUCT LEVEL)	SEE PAGE

C - CHANGE FROM PREVIOUS TYPE
E - ORDER BY THE CENTIMETER
I - REFER TO HYDRAULIC INFORMATION SYSTEM
M - METRIC PART
Y - SEPARATE ILLUSTRATION

325-7130 **LINES GP-FUEL (**contd.**)** **i05884688**

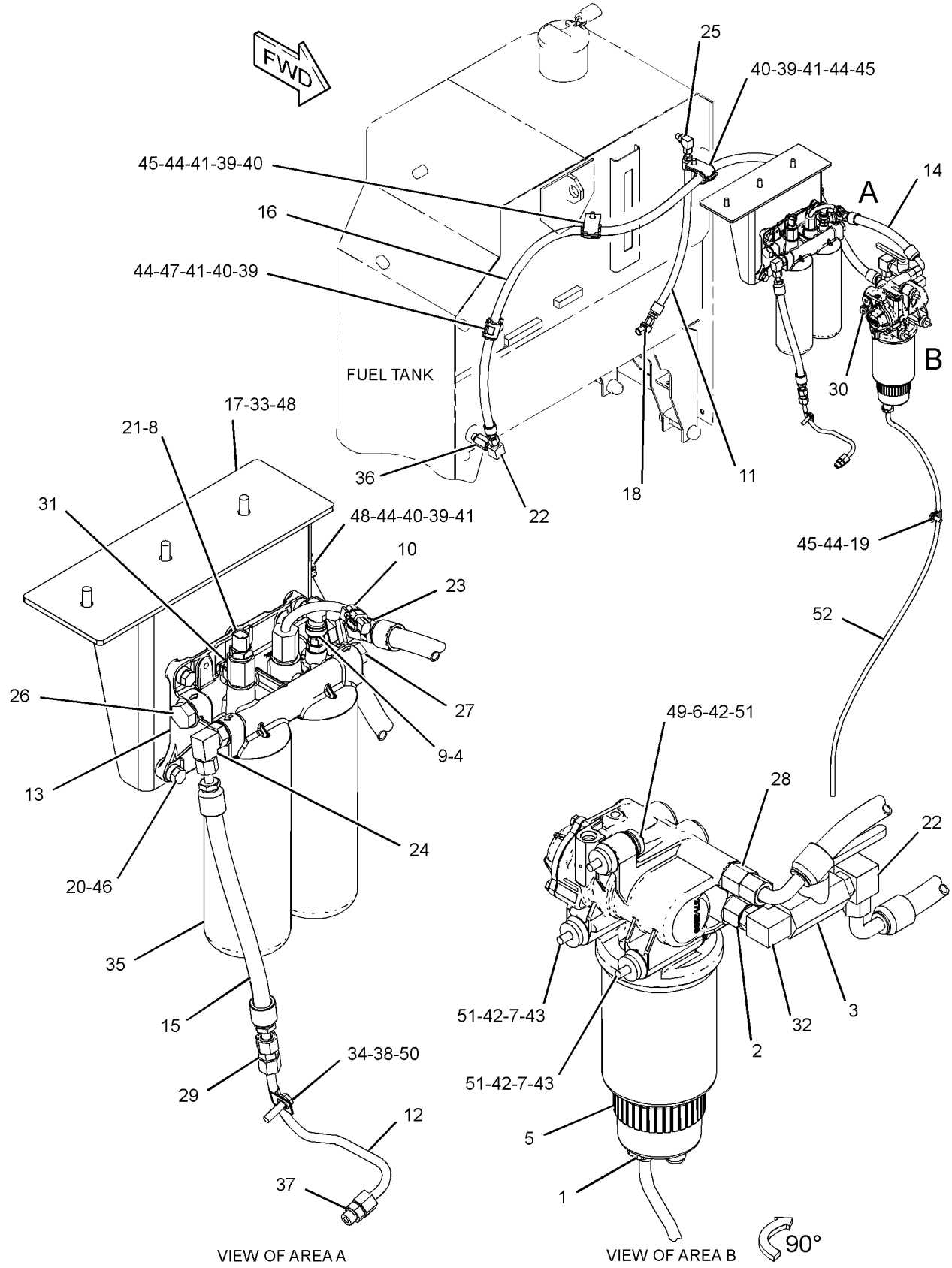

GRAPHIC #1 <END> g03713003

191-0461 LINES GP-INJECTOR HYD PUMP

S/N: KHX29829-UP

PART OF 365-3500 ENGINE AR-CORE

SMCS-1714 **i03530970**

NOTE	REF NO	GRAPHIC REF	PART NUMBER	QTY	PART NAME 1 2 3 4 5 6 (PRODUCT LEVEL)	SEE PAGE
	1	1	*183-3399*	2	CONNECTOR AS	
					(EACH INCLUDES)	
		1	**6V-8636**	1	CONNECTOR	
		1	**214-7568**	1	SEAL-O-RING	
		1	**221-3494**	1	SEAL-O-RING	
Y	2	1	*191-0523*	1	ADAPTER GP-OIL LINE	96
	3	1	**205-1280**	1	HOSE AS	
	4	1	**212-3706**	1	TUBE AS	
	5	1	**3V-2431**	2	WASHER (10.2X16X2-MM THK)	
	6	1	**4F-9653**	1	SEAL-O-RING	
M	7	1	**8T-1159**	2	BOLT-SOCKET HEAD (M10X1.5X25-MM)	

M - METRIC PART
Y - SEPARATE ILLUSTRATION

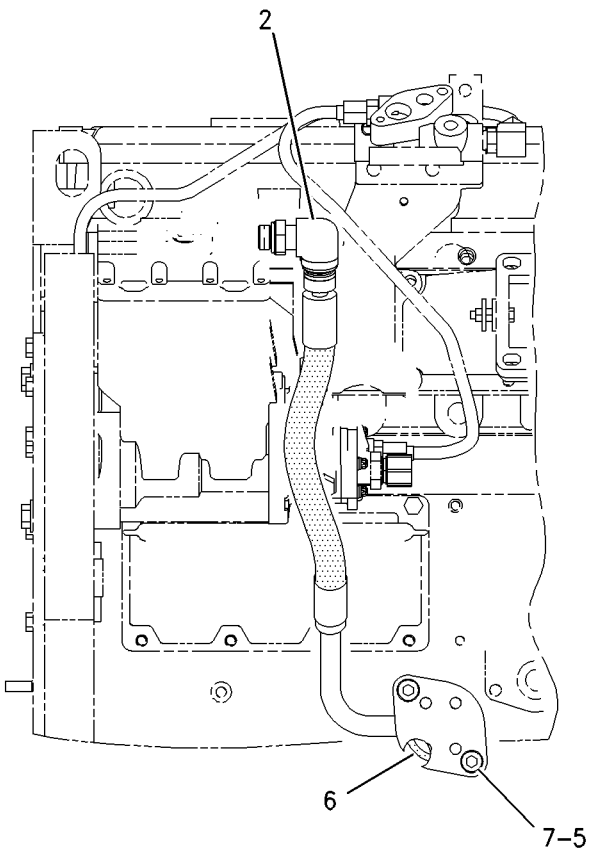

LEFT SIDE VIEW

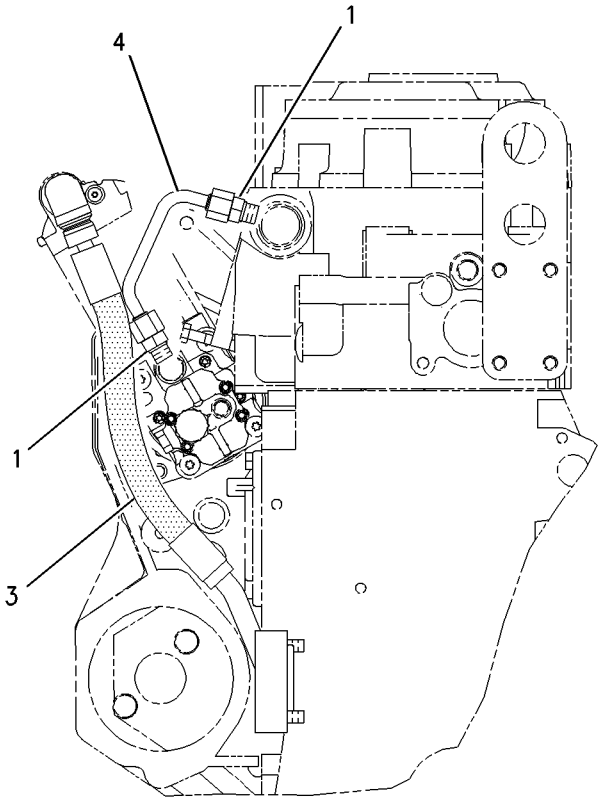

REAR VIEW

GRAPHIC #1 <END> g00881566

381-8868 LINES GP-INJECTOR HYD PUMP

S/N: KHX29829-UP

PART OF 365-3500 ENGINE AR-CORE

SMCS-1714 **i04528647**

NOTE	REF NO	GRAPHIC REF	PART NUMBER	QTY	PART NAME 1 2 3 4 5 6 (PRODUCT LEVEL)	SEE PAGE
	1	1	**6V-9873**	2	CONNECTOR	
		1	**214-7568**	2	SEAL-O-RING	
		1	**228-7090**	2	SEAL-O-RING	
Y	2	1	*191-0523*	1	ADAPTER GP-OIL LINE	96
	3	1	**205-1280**	1	HOSE AS	
	4	1	**378-4616**	1	TUBE AS	
	5	1	**3V-2431**	2	WASHER (10.2X16X2-MM THK)	
	6	1	**4F-9653**	1	SEAL-O-RING	
M	7	1	**8T-1159**	2	BOLT-SOCKET HEAD (M10X1.5X25-MM)	

M - METRIC PART
Y - SEPARATE ILLUSTRATION

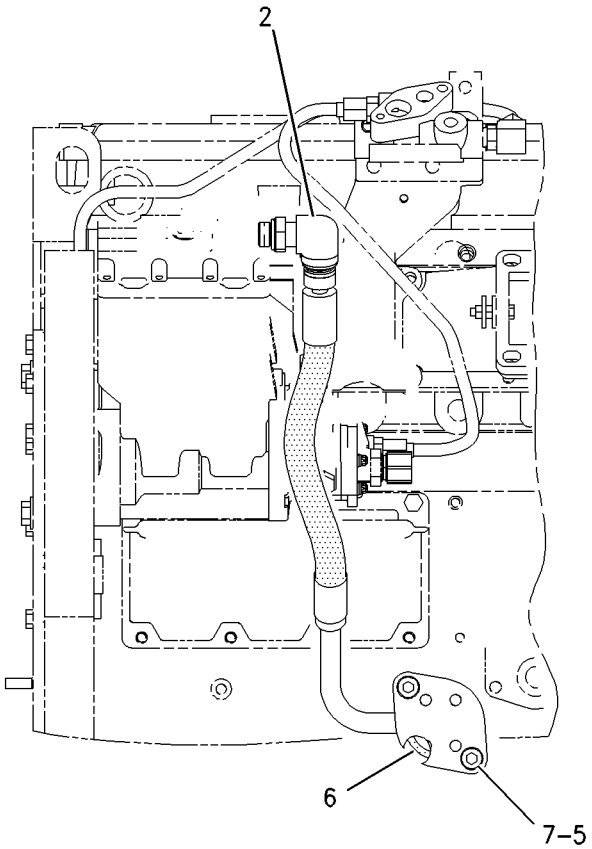

LEFT SIDE VIEW

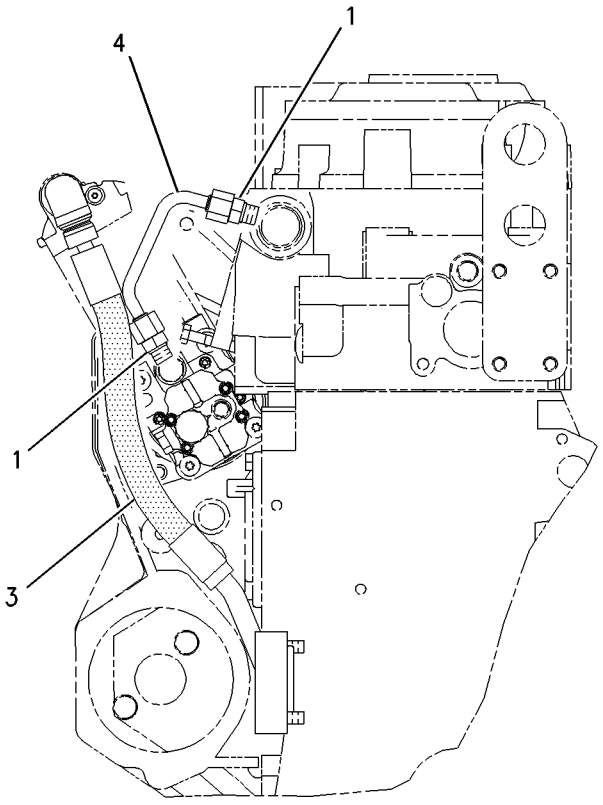

REAR VIEW

GRAPHIC #1 <END> g00881566

396-8415 LINES GP-INJECTOR HYD PUMP

S/N: TX71-UP; KHX1-UP

PART OF 387-8505 ENGINE AR-CORE

SMCS-1714 **i06759814**

NOTE	REF NO	GRAPHIC REF	PART NUMBER	QTY	PART NAME 1 2 3 4 5 6 (PRODUCT LEVEL)	SEE PAGE
Y	1	1	*191-0523*	1	ADAPTER GP-OIL LINE	96
	2	1	**205-1280**	1	HOSE AS	
	3	1	**505-5361**	1	TUBE AS-OIL	
	4	1	*183-3399*	2	CONNECTOR AS	
					(EACH INCLUDES)	
		1	**6V-8636**	1	CONNECTOR	
		1	**214-7568**	1	SEAL-O-RING	
		1	**228-7089**	1	SEAL-O-RING	
	5	1	**3V-2431**	2	WASHER (10.2X16X2-MM THK)	
	6	1	**4F-9653**	1	SEAL-O-RING	
M	7	1	**8T-1159**	2	BOLT-SOCKET HEAD (M10X1.5X25-MM)	

M - METRIC PART
Y - SEPARATE ILLUSTRATION

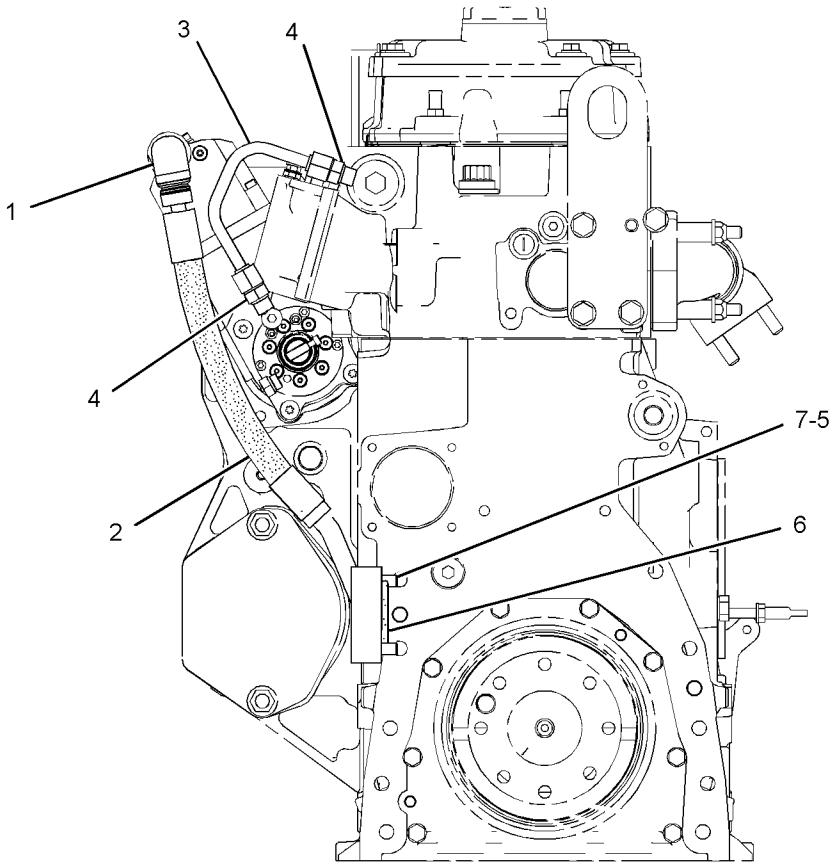

REAR VIEW OF ENGINE

GRAPHIC #1 <END> g03076817

254-0095 PUMP & MTG GP-UNIT INJ HYD

S/N: KHX29829-UP

PART OF 365-3500 ENGINE AR-CORE

SMCS-1714 **i05848447**

NOTE	REF NO	GRAPHIC REF	PART NUMBER	QTY	PART NAME 1 2 3 4 5 6 (PRODUCT LEVEL)	SEE PAGE
	1	1	*389-3708*	2	PLUG AS	
					(EACH INCLUDES)	
		1	**214-7568**	1	SEAL-O-RING	
		1	**360-3679**	1	PLUG-CONNECTOR (9/16-18-THD)	
	2	1	**227-5904**	1	SEAL-O-RING (UNIT INJECTION HYD PUMP)	
CR	3	1	**319-0607**	1	PUMP GP-UNIT INJECTOR HYD	
					(BEFORE ORDERING THIS PUMP, SEE SERVICE LETTER SEPD1743)	
	4	1	**3E-9412**	1	DOWEL	
	5	1	**6V-5839**	2	WASHER (11X21X2.5-MM THK)	
M	6	1	**6V-7981**	2	BOLT (M10X1.5X70-MM)	

C - CHANGE FROM PREVIOUS TYPE
M - METRIC PART
R - REMANUFACTURED PART MAY BE AVAILABLE

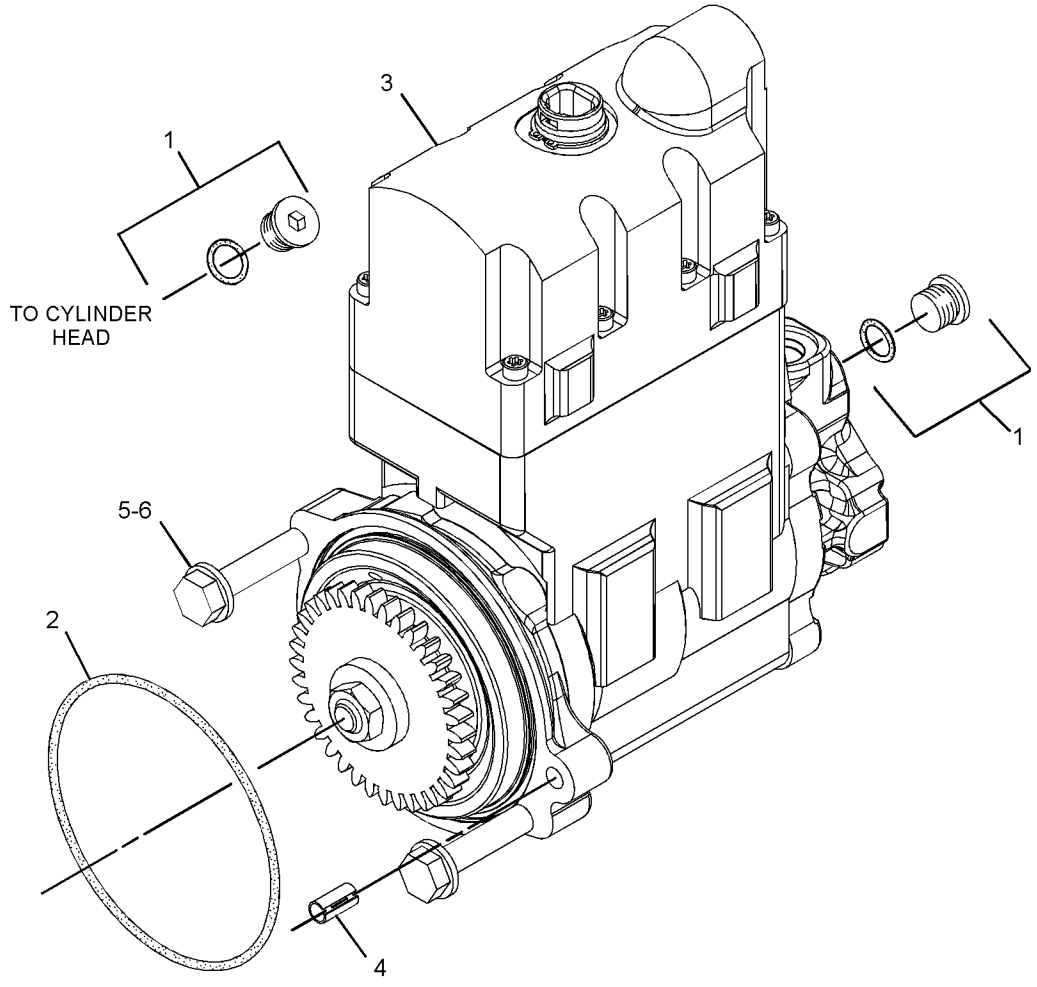

GRAPHIC #1 <END> g01789173

389-1183 PUMP & MTG GP-UNIT INJ HYD

S/N: TX71-1942; KHX1-UP

PART OF 387-8505 ENGINE AR-CORE

SMCS-1714 **i04939514**

NOTE	REF NO	GRAPHIC REF	PART NUMBER	QTY	PART NAME 1 2 3 4 5 6 (PRODUCT LEVEL)	SEE PAGE
	1	1	*321-8638*	2	PLUG AS	
					(EACH INCLUDES)	
		1	**214-7568**	1	SEAL-O-RING	
		1	**321-8635**	1	PLUG	
YR	2	1	**384-0607**	1	PUMP GP-UNIT INJECTOR HYD	185
	3	1	**227-5904**	1	SEAL-O-RING	
	4	1	**6V-5839**	2	WASHER (11X21X2.5-MM THK)	
M	5	1	**6V-7981**	2	BOLT (M10X1.5X70-MM)	

M - METRIC PART
R - REMANUFACTURED PART MAY BE AVAILABLE
Y - SEPARATE ILLUSTRATION

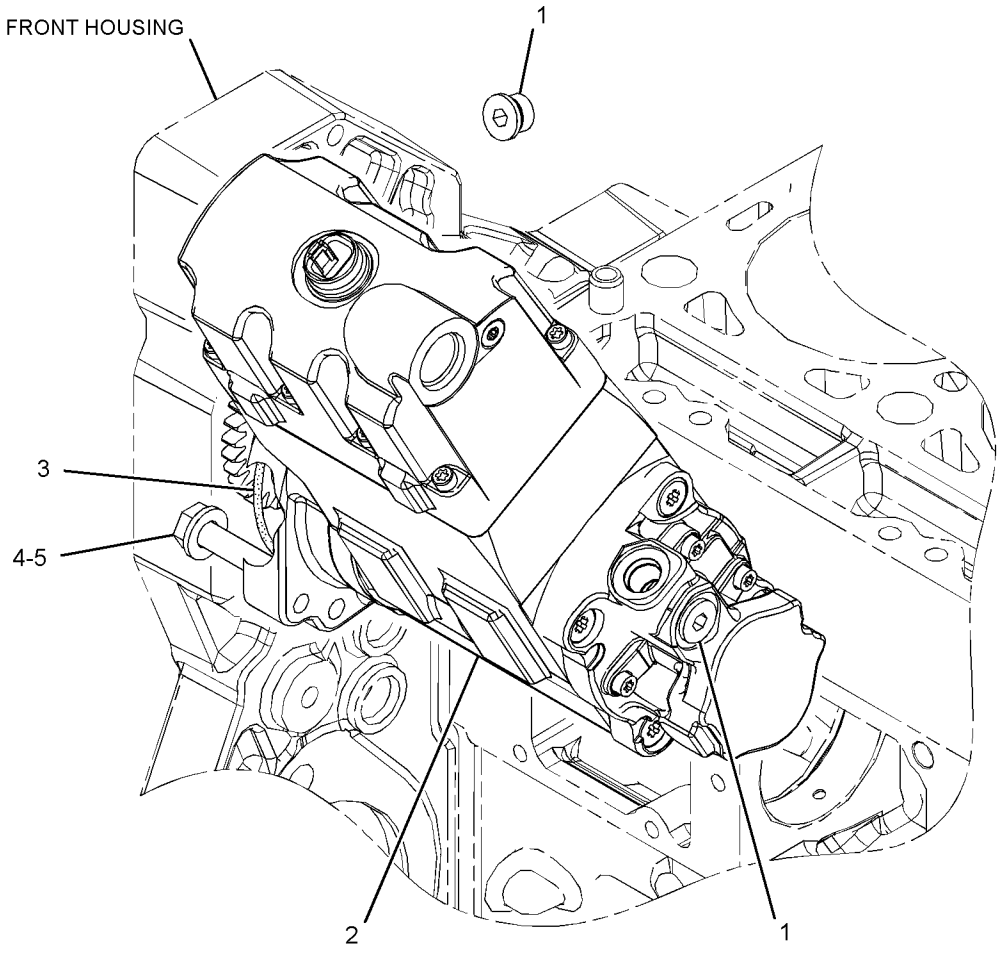

GRAPHIC #1 <END> g03185988

389-1183 PUMP & MTG GP-UNIT INJ HYD

S/N: TX71943-UP

PART OF 387-8505 ENGINE AR-CORE

SMCS-1714 **i06888868**

NOTE	REF NO	GRAPHIC REF	PART NUMBER	QTY	PART NAME 1 2 3 4 5 6 (PRODUCT LEVEL)	SEE PAGE
	1	1	*321-8638*	2	PLUG AS	
					(EACH INCLUDES)	
		1	**214-7568**	1	SEAL-O-RING	
		1	**321-8635**	1	PLUG	
CYR	2	1	**476-8768**	1	PUMP GP-UNIT INJECTOR HYD	187
	3	1	**227-5904**	1	SEAL-O-RING	
	4	1	**6V-5839**	2	WASHER (11X21X2.5-MM THK)	
M	5	1	**6V-7981**	2	BOLT (M10X1.5X70-MM)	

C - CHANGE FROM PREVIOUS TYPE
M - METRIC PART
R - REMANUFACTURED PART MAY BE AVAILABLE
Y - SEPARATE ILLUSTRATION

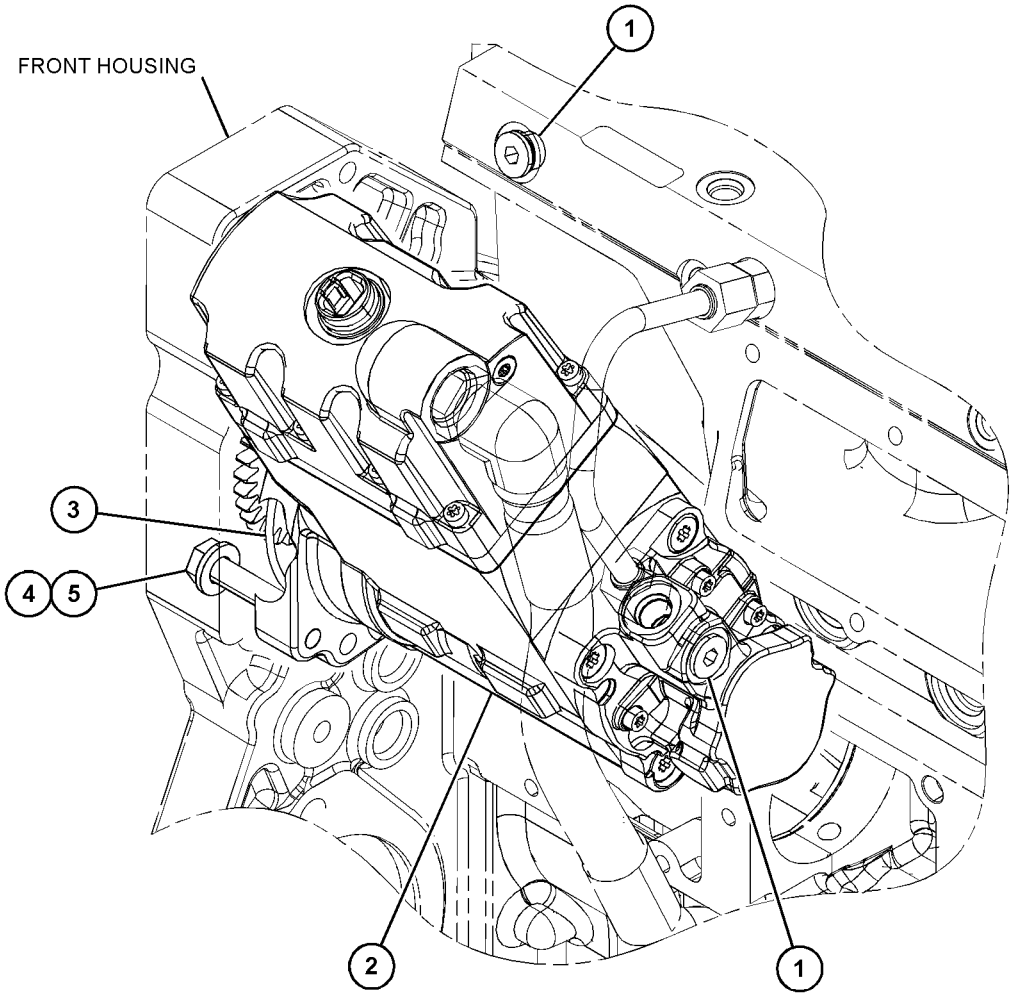

GRAPHIC #1 <END> g06086565

268-1839 PUMP GP-FUEL INJECTION

S/N: KHX29829-UP

PART OF 365-3500 ENGINE AR-CORE

SMCS-1251, 1290 **i03533561**

NOTE	REF NO	GRAPHIC REF	PART NUMBER	QTY	PART NAME 1 2 3 4 5 6 (PRODUCT LEVEL)	SEE PAGE
	1	1	**235-9651**	2	BOLT-SOCKET HEAD (M8X1.25X65-MM)	
YR	2	1	**328-2585**	1	INJECTOR GP-FUEL	165

R - REMANUFACTURED PART MAY BE AVAILABLE
Y - SEPARATE ILLUSTRATION

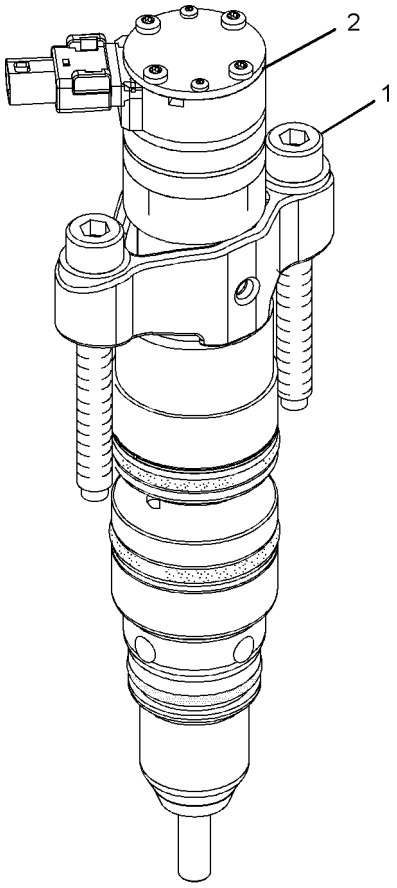

ISOMETRIC VIEW

GRAPHIC #1 <END> g01038652

268-1839 PUMP GP-FUEL INJECTION

S/N: TX71-UP; KHX1-UP

PART OF 365-3500, 387-8505 ENGINE AR-CORE

SMCS-1251, 1290

i05236770

NOTE	REF NO	GRAPHIC REF	PART NUMBER	QTY	PART NAME 1 2 3 4 5 6 (PRODUCT LEVEL)	SEE PAGE
	1	1	**235-9651**	2	BOLT-SOCKET HEAD (M8X1.25X65-MM)	
CYR	2	1	**387-9427**	1	INJECTOR GP-FUEL	166

C - CHANGE FROM PREVIOUS TYPE
R - REMANUFACTURED PART MAY BE AVAILABLE
Y - SEPARATE ILLUSTRATION

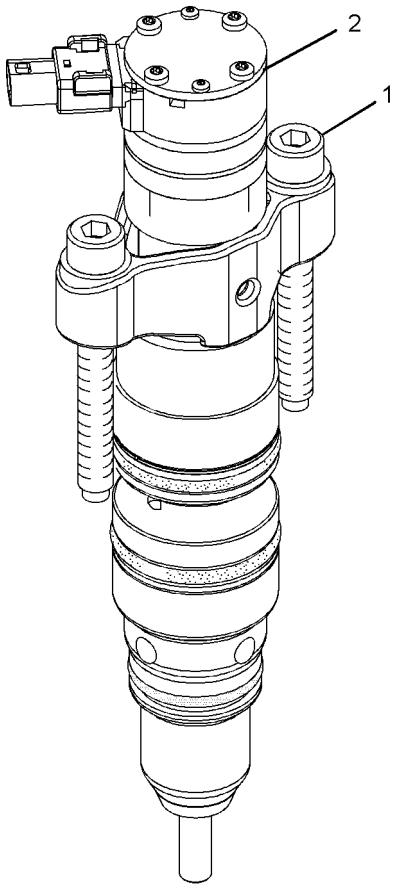

ISOMETRIC VIEW

GRAPHIC #1

<END>

g01038652

190-8977 PUMP GP-FUEL PRM & WATER SEP

S/N: SZS1-UP

PART OF 325-7130 LINES GP-FUEL

SMCS-1258, 1261, 1263 **i04014530**

NOTE	REF NO	GRAPHIC REF	PART NUMBER	QTY	PART NAME 1 2 3 4 5 6 (PRODUCT LEVEL)	SEE PAGE
Y	1	1	*174-9570*	1	FILTER GP-WATER SEP & FUEL (PRIMARY)	164
	2	1	**190-8970**	1	PUMP GP-FUEL PRIMING	

Y - SEPARATE ILLUSTRATION

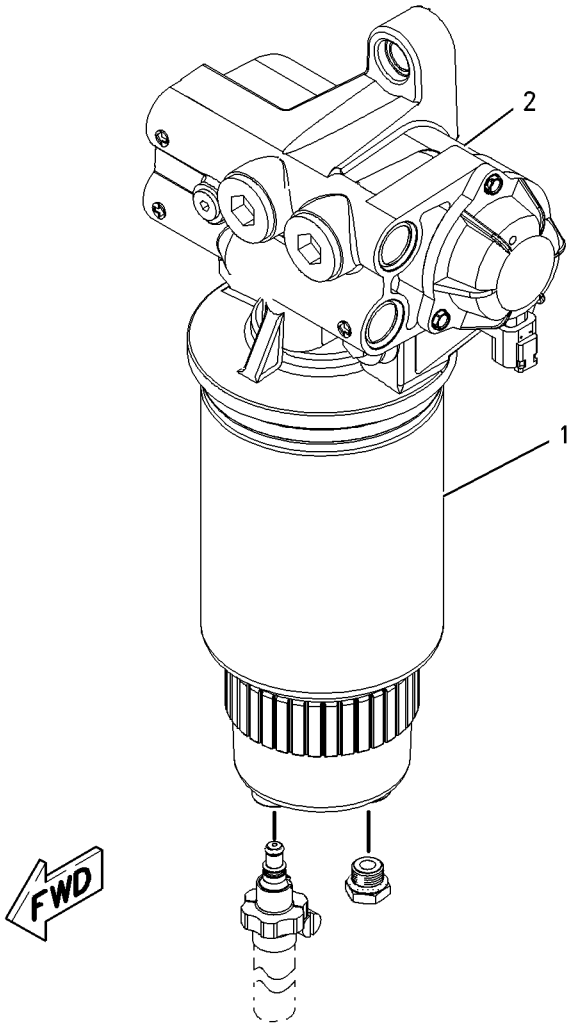

GRAPHIC #1 <END> g00904493

384-0607 PUMP GP-UNIT INJECTOR HYD*R

S/N: TX71-1942; KHX1-UP

PART OF 389-1183 PUMP & MTG GP-UNIT INJ HYD

SMCS-1714 **i05785720**

NOTE	REF NO	GRAPHIC REF	PART NUMBER	QTY	PART NAME 1 2 3 4 5 6 (PRODUCT LEVEL)	SEE PAGE
	1	1	**153-7036**	1	SPOOL	
M	2	1	**313-4620**	3	SCREW-PAN HEAD (M5X0.8X25-MM)	
	3	1	**179-8128**	1	SEAL-O-RING (FUEL SYSTEM)	
M	4	1	**218-8655**	8	BOLT-SOCKET HEAD (M5X0.8X42-MM)	
M	5	1	**228-5897**	4	BOLT-TORX (M8X1.25X136.7-MM)	
	6	1	**239-2402**	4	SEAL-O-RING	
	7	1	*318-8144*	1	CONNECTOR AS	
E		1	**5P-8106**		WIRE-ELECTRICAL (26-CM)	
		1	**179-7400**	2	SEAL	
	8	1	**260-5716**	1	SPOOL	
J	9	1	**390-8589**	1	COVER AS-PUMP	
		1	**7S-5005**	1	DOWEL	
	10	1	**8C-6711**	1	NUT-RETAINER (1/2-20-THD)	
	11	1	**262-0284**	1	RING-RETAINING	
M	12	1	**5C-2890**	1	NUT (M6X1-THD)	
	13	1	**9X-8267**	1	WASHER (6.6X12X2-MM THK)	
	14	1	**1N-8062**	1	BEARING AS-NEEDLE	
					AVAILABLE REPAIR KIT(S):	
AJY			**396-3298**	1	KIT-FUEL PUMP (FUEL TRANSFER PUMP COVER)	167

A - NOT PART OF THIS GROUP
E - ORDER BY THE CENTIMETER
J - KIT MARKED J AVAILABLE AS A OPT SERVICE REPLT FOR PART MARKED J (REFER TO REHS3830)
M - METRIC PART
Y - SEPARATE ILLUSTRATION

384-0607 **PUMP GP-UNIT INJECTOR HYD (**contd.**)** **i05785720**

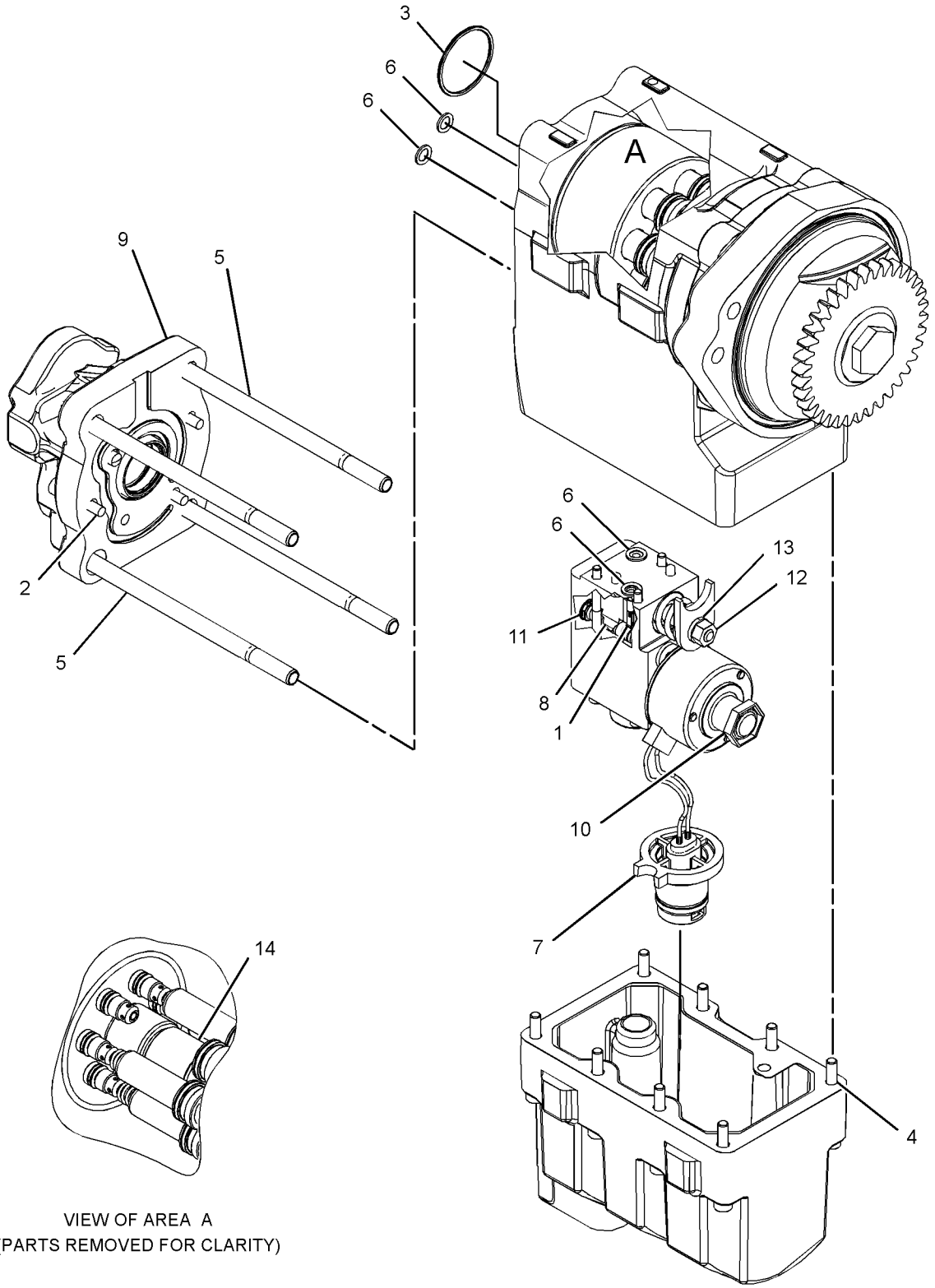

VIEW OF AREA A
(PARTS REMOVED FOR CLARITY)

GRAPHIC #1 <END> g03348462

476-8768 PUMP GP-UNIT INJECTOR HYD*R

S/N: TX71943-UP

PART OF 389-1183 PUMP & MTG GP-UNIT INJ HYD

SMCS-1714 **i06888877**

NOTE	REF NO	GRAPHIC REF	PART NUMBER	QTY	PART NAME 1 2 3 4 5 6 (PRODUCT LEVEL)	SEE PAGE
	1	1	**1N-8062**	1	BEARING AS-NEEDLE	
M	2	1	**5C-2890**	1	NUT (M6X1-THD)	
	3	1	**6V-5048**	3	SEAL-O-RING	
	4	1	**8C-6711**	1	NUT-RETAINER (1/2-20-THD)	
	5	1	**9X-8267**	1	WASHER (6.6X12X2-MM THK)	
	6	1	**153-7036**	1	SPOOL	
	7	1	**179-8128**	1	SEAL-O-RING	
	8	1	**193-1736**	1	SEAL-O-RING	
M	9	1	**218-8655**	8	BOLT-SOCKET HEAD (M5X0.8X42-MM)	
M	10	1	**228-5897**	4	BOLT-TORX (M8X1.25X136.7-MM)	
	11	1	**239-2402**	4	SEAL-O-RING	
	12	1	**260-5716**	1	SPOOL	
	13	1	**262-0284**	1	RING-RETAINING	
M	14	1	**313-4620**	3	SCREW-PAN HEAD (M5X0.8X25-MM)	
	15	1	**390-8589**	1	COVER AS-PUMP	
		1	**7S-5005**	1	DOWEL	
AF		1	**227-5904**	1	SEAL-O-RING	

A - NOT PART OF THIS GROUP
F - NOT SHOWN
M - METRIC PART

476-8768 **PUMP GP-UNIT INJECTOR HYD (**contd.**)** **i06888877**

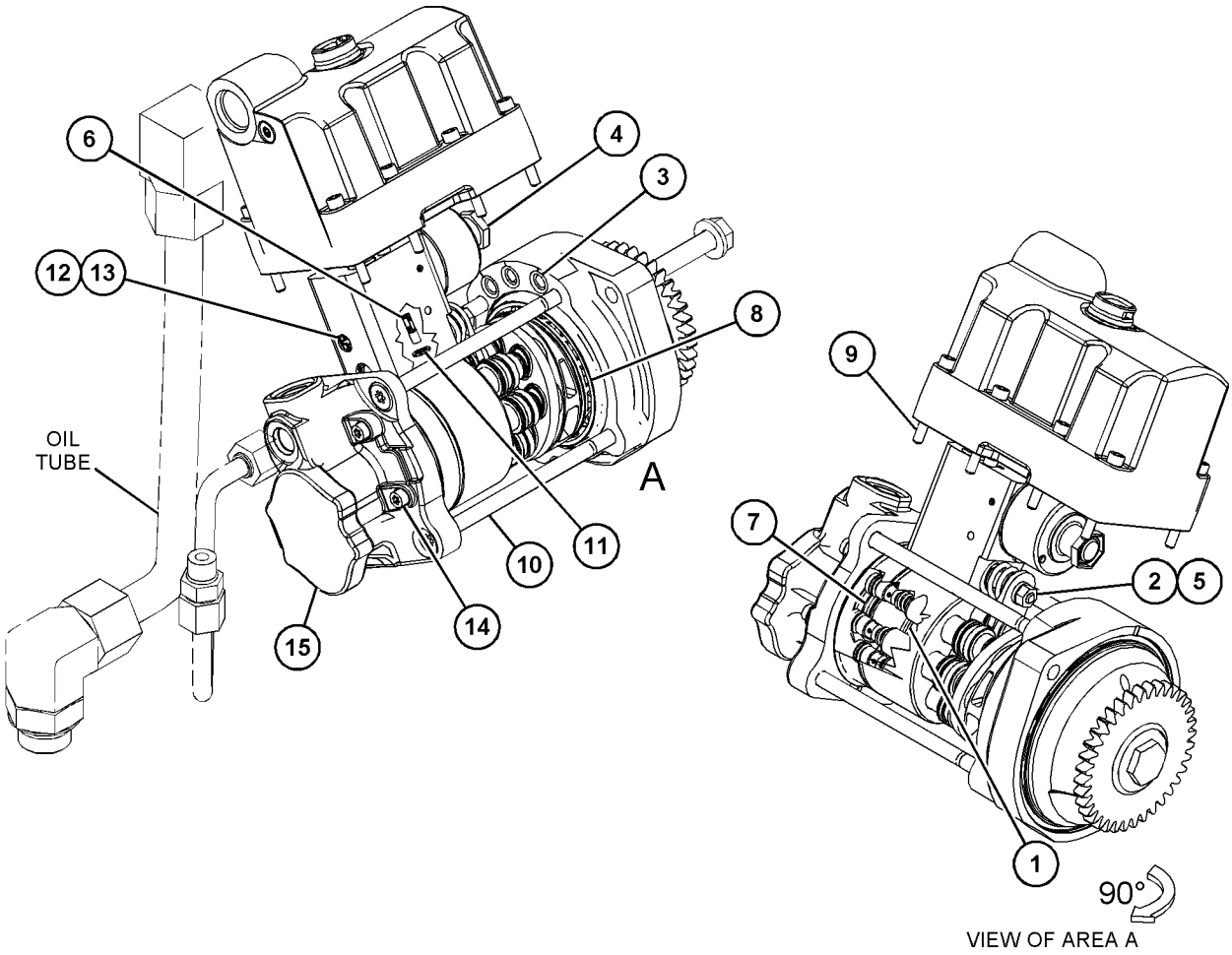

GRAPHIC #1 <END> g06106930

232-0343 REGULATOR GP-FUEL PRESSURE

S/N: TX71-UP; KHX1-UP

PART OF 313-3967 LINES GP-FUEL

SMCS-1715 **i04482874**

NOTE	REF NO	GRAPHIC REF	PART NUMBER	QTY	PART NAME 1 2 3 4 5 6 (PRODUCT LEVEL)	SEE PAGE
	1	1	**214-7568**	1	SEAL-O-RING	
	2	1	**369-6662**	1	REGULATOR AS (FUEL PRESSURE)	

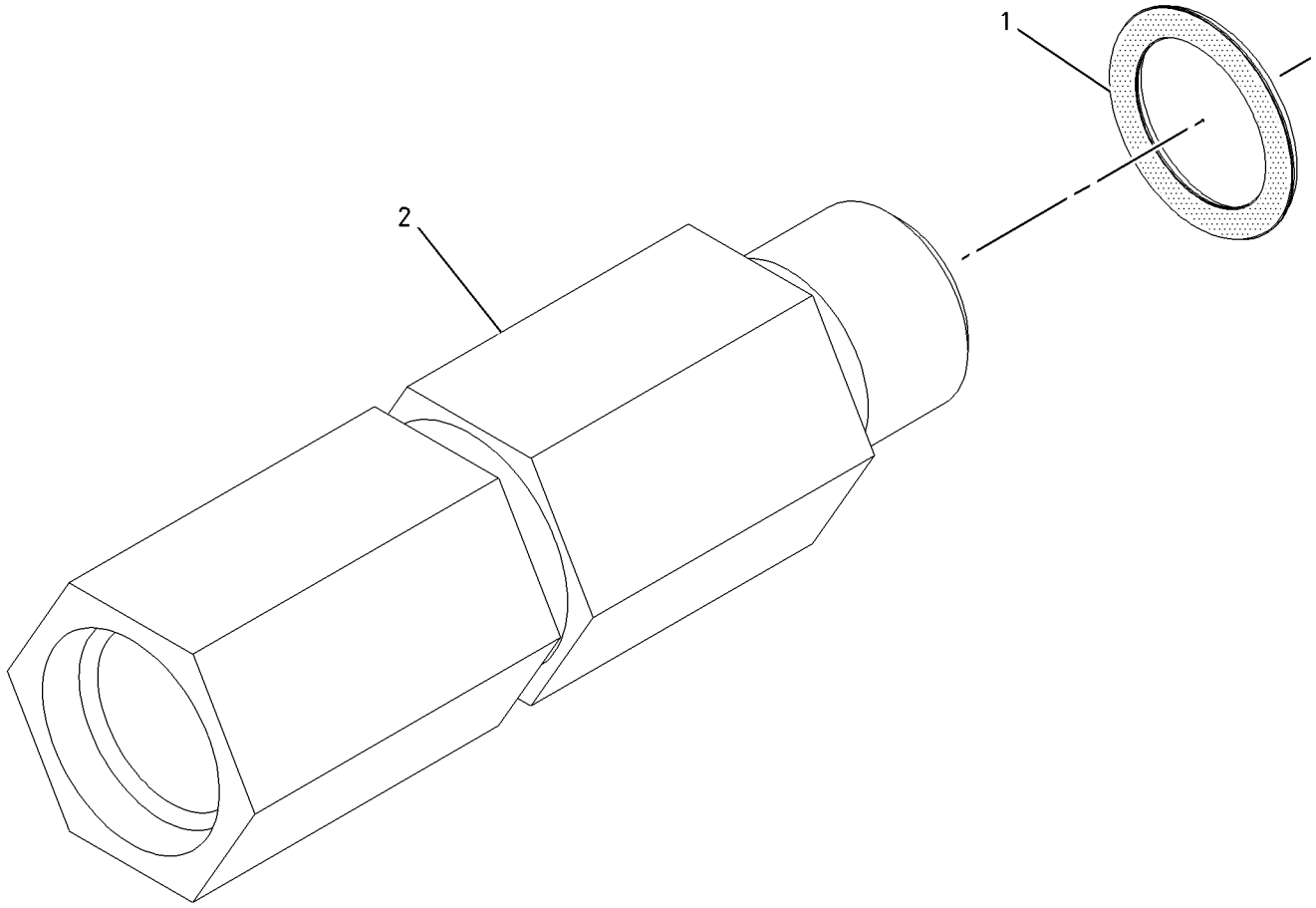

GRAPHIC #1 <END> g01004480

293-4832 TANK GP-FUEL

S/N: SZS1-UP
305-L (80.6-GAL)
PART OF 436-7761 CHASSIS AR, 368-3025 GENERAL AR

SMCS-1273 **i06292473**

NOTE	REF NO	GRAPHIC REF	PART NUMBER	QTY	PART NAME 1 2 3 4 5 6 (PRODUCT LEVEL)	SEE PAGE
	1	1	**246-2641**	1	PADLOCK GP	
		1	**5P-8500**	1	KEY	
	2	1	**349-7059**	1	CAP AS-FUEL (LOCKABLE, VENTED)	
		1	**350-7735**	1	KIT-CAP FILTER (FUEL TANK)	
					(INCLUDES BREATHER, SCREWS, GASKET & WASHERS)	
		1	**7D-7111**	1	SEAL-O-RING	
	3	1	**9P-7121**	1	STRAINER-FUEL (FUEL TANK)	
	4	1	**5P-7175**	1	FITTING-STRAIGHT	
	5	1	**465-1093**	1	TANK AS-FUEL	
	6	1	**1H-8306**	1	SCREW-PURGE (1/2-20X1.625-IN)	
	7	1	**5D-1026**	1	CLAMP-BAND	
M	8	1	**6V-7688**	4	LOCKNUT (M20X2.5-THD)	
M	9	1	**7X-2566**	4	BOLT (M20X2.5X110-MM)	
	10	1	**8T-4123**	8	WASHER (3.62X5.75X0.375-MM THK)	
E	11	1	**371-1253**		HOSE (60-CM)	

E - ORDER BY THE CENTIMETER
M - METRIC PART

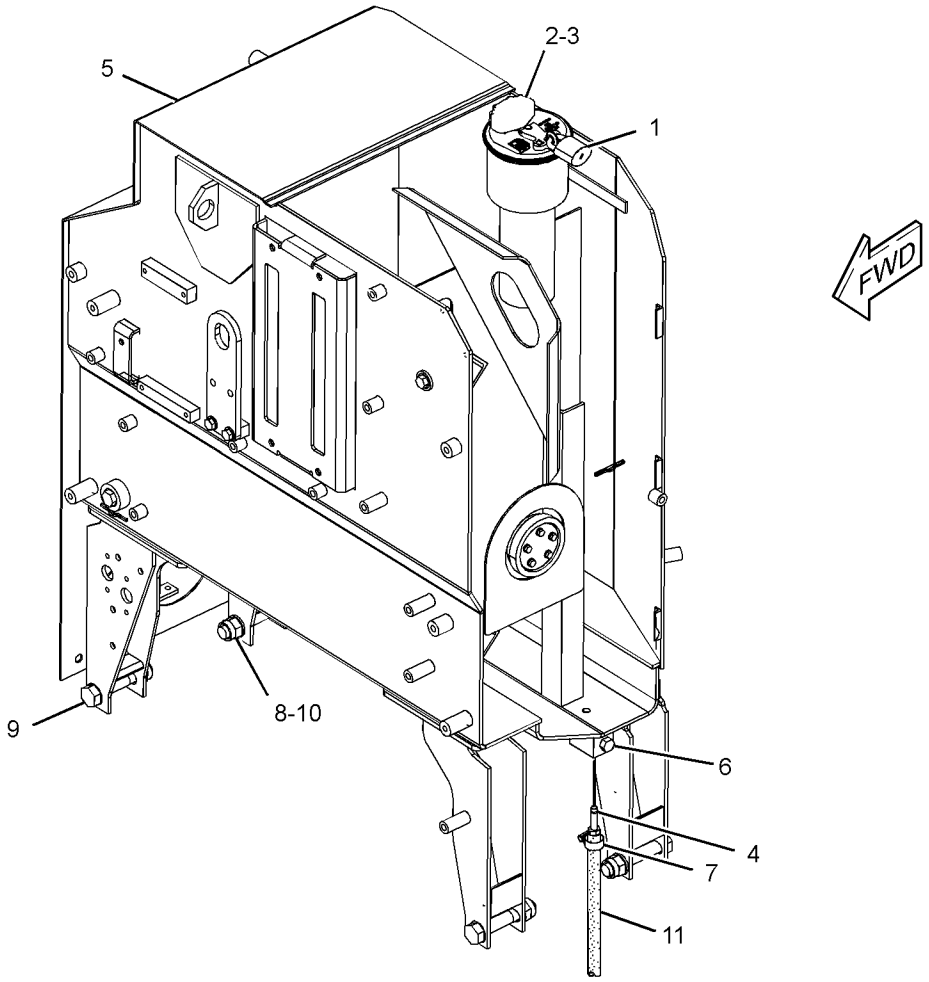

GRAPHIC #1 <END> g02980556

3E-6328 ALARM GP

S/N: SZS1-UP
24-VOLT
PART OF 284-5346, 386-5925, 438-1307 WIRING GP-CONSOLE

SMCS-7400, 7402, 7407 **i06056758**

NOTE	REF NO	GRAPHIC REF	PART NUMBER	QTY	PART NAME 1 2 3 4 5 6 (PRODUCT LEVEL)	SEE PAGE
	1	1	**102-8802**	1	KIT-RECEPTACLE (2-PIN)	
					(INCLUDES RECEPTACLE AS & WEDGE)	
	2	1	**8T-8729**	2	PIN-CONNECTOR (16-GA TO 18-GA)	

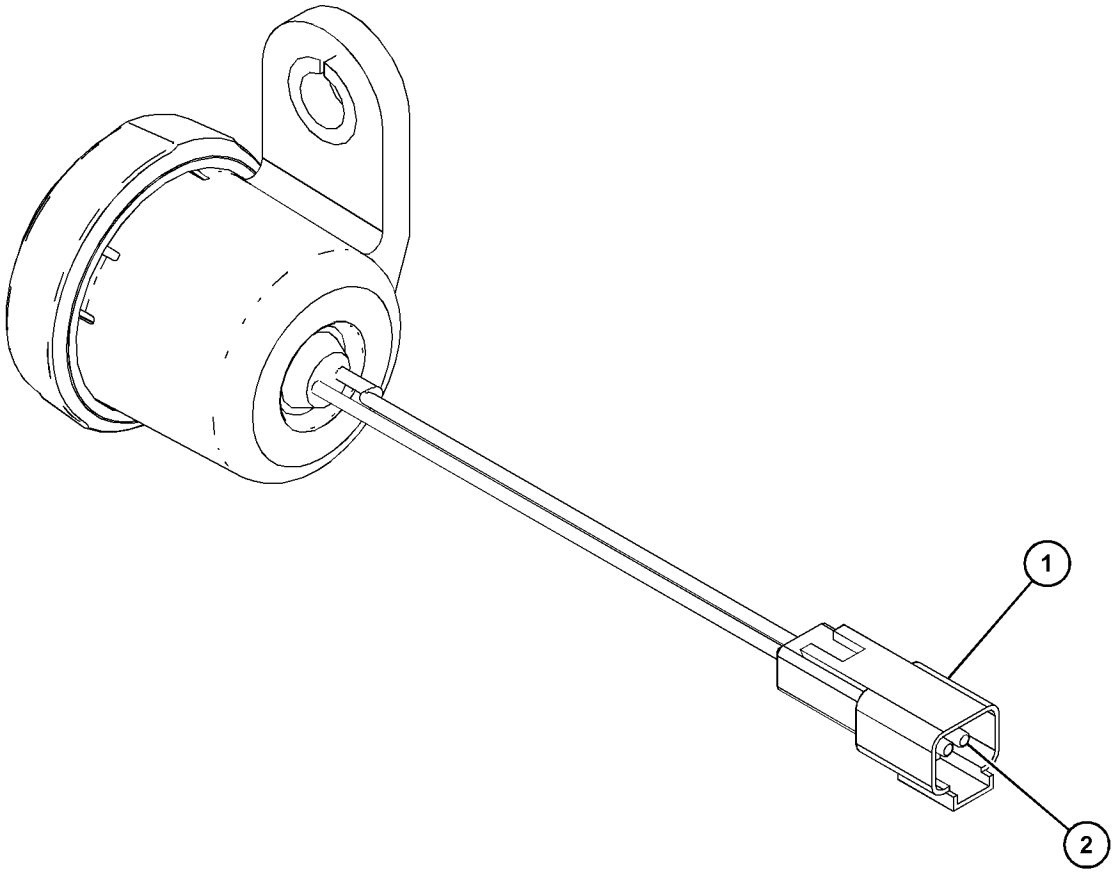

GRAPHIC #1 <END> g03798741

197-8820 ALTERNATOR GP-CHARGING*R

S/N: SZS1-488
24-VOLT, 95-AMPERE
PART OF 345-7649 ALTERNATOR GP-CHARGING

SMCS-1405 **i04001834**

NOTE	REF NO	GRAPHIC REF	PART NUMBER	QTY	PART NAME 1 2 3 4 5 6 (PRODUCT LEVEL)	SEE PAGE
	1	1	**185-2653**	1	FRAME	
	2	1	**5S-7349**	1	BOLT (1/4-20X0.5-IN)	
	3	1	**185-2639**	1	FAN AS	
	4	1	**1H-3244**	1	LOCKWASHER	
	5	1	**185-2645**	1	FRAME	
	6	1	**2K-4821**	1	LOCKNUT (5/8-18-THD)	
	7	1	**5P-8247**	1	WASHER-HARD (17X32X3.5-MM THK)	
	8	1	**185-2651**	1	COVER	
	9	1	**8T-4205**	1	WASHER-HARD (7.2X14.5X2-MM THK)	
	10	1	**185-2647**	1	GROMMET	
	11	1	**9L-6770**	1	CAP-DUST	
	12	1	**205-0626**	1	STATOR AS-ALTERNATOR	
	13	1	**185-2638**	2	COLLAR	
	14	1	**185-2654**	1	PLATE	
	15	1	**185-2650**	1	ROTOR AS (ALTERNATOR)	
	16	1	**185-2644**	1	COIL AS	
	17	1	**185-2648**	1	REGULATOR AS-VOLTAGE (24-VOLT) (ALTERNATOR)	
	18	1	**6V-8189**	1	NUT (5/16-18-THD)	
	19	1	**8T-4224**	1	WASHER-HARD (8.8X16X2-MM THK)	
	20	1	**3F-9556**	1	LOCKWASHER	
					AVAILABLE REPAIR KIT(S):	
			185-2655	1	KIT-BEARING (ALTERNATOR)	
					(INCLUDES BEARINGS)	
			199-8436	1	KIT-TERMINAL (ALTERNATOR AIR)	
					(INCLUDES HOLDER AS, PLATE, INSULATOR, PIN, BOLTS, GROMMET & NUT)	
			199-7891	1	KIT-TERMINAL (ALTERNATOR AIR)	
					(INCLUDES INSULATORS, WASHERS & NUTS)	
			185-2658	1	KIT-HARDWARE (ALTERNATOR AIR)	
					(INCLUDES BOLTS)	

197-8820 **ALTERNATOR GP-CHARGING** (contd.) **i04001834**

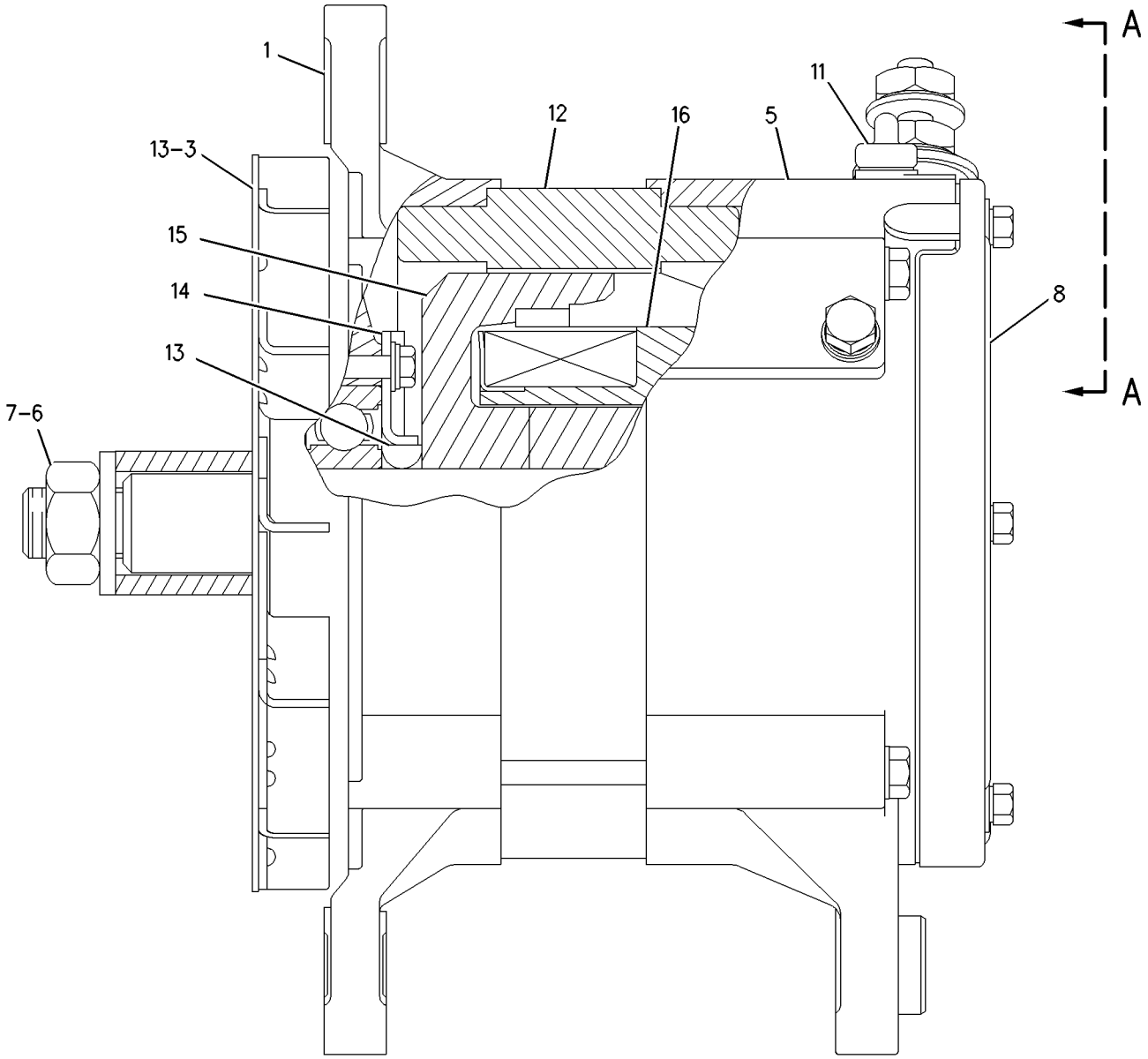

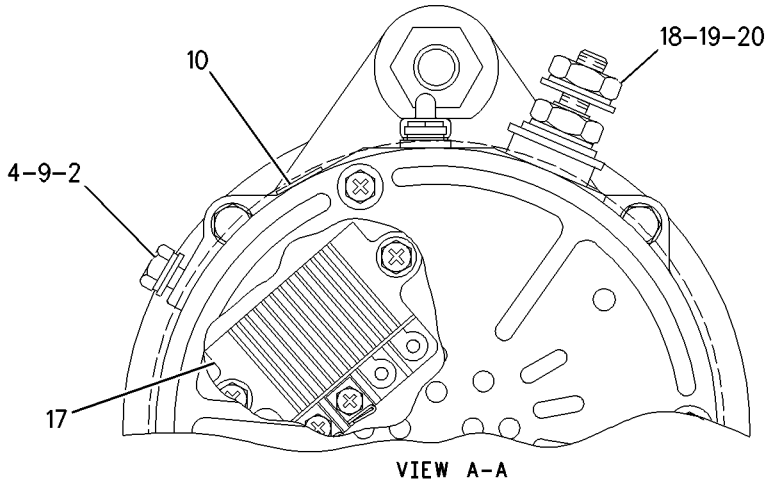

VIEW A-A

GRAPHIC #1 <END> g00873198

345-7649 ALTERNATOR GP-CHARGING

S/N: SZS1-488
24-VOLT, 95-AMPERE
PART OF 368-3025 GENERAL AR

SMCS-1405 **i03565636**

NOTE	REF NO	GRAPHIC REF	PART NUMBER	QTY	PART NAME 1 2 3 4 5 6 (PRODUCT LEVEL)	SEE PAGE
	1	1	**8S-5383**	1	BLOCK	
	2	1	**8X-1805**	1	PULLEY	
	3	1	**9S-1240**	1	BRACKET AS	
YR	4	1	**197-8820**	1	ALTERNATOR GP-CHARGING (24-VOLT, 95-AMPERE)	192
	5	1	**4S-5780**	1	ROD	
	6	1	**5P-1076**	1	WASHER-HARD (13.5X30X4-MM THK)	
	7	1	**6V-8188**	1	NUT (1/2-13-THD)	
	8	1	**7X-0325**	1	BOLT (1/2-13X2.5-IN)	
	9	1	**7X-0339**	1	BOLT (1/2-13X6.25-IN)	
	10	1	**7X-0346**	1	BOLT (5/8-11X2-IN)	
	11	1	**7X-0448**	2	NUT (5/8-11-THD)	
	12	1	**8T-4122**	1	WASHER-HARD (17X32X3.5-MM THK)	
	13	1	**8T-4223**	2	WASHER-HARD (13.5X25.5X3-MM THK)	

R - REMANUFACTURED PART MAY BE AVAILABLE
Y - SEPARATE ILLUSTRATION

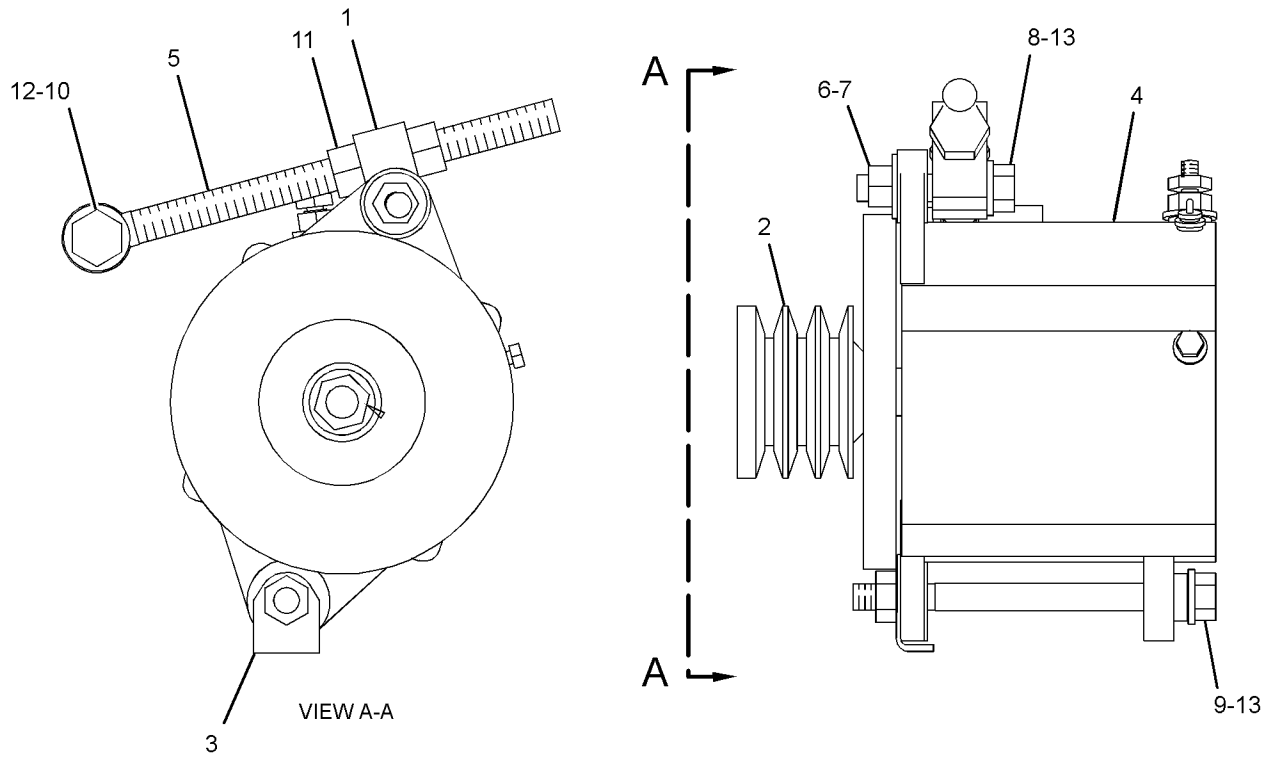

GRAPHIC #1 <END> g01931274

421-4022 ALTERNATOR GP-CHARGING

S/N: SZS489-UP

PART OF 368-3025 GENERAL AR, 425-5590 INSTALLATION AR

SMCS-1405 **i06718652**

NOTE	REF NO	GRAPHIC REF	PART NUMBER	QTY	PART NAME 1 2 3 4 5 6 (PRODUCT LEVEL)	SEE PAGE
	1	1	**8S-5383**	1	BLOCK	
	2	1	**8X-1805**	1	PULLEY	
	3	1	**9S-1240**	1	BRACKET AS	
R	4	1	**366-2756**	1	ALTERNATOR GP-CHARGING	
	5	1	**4S-5780**	1	ROD	
	6	1	**5P-1076**	1	WASHER-HARD (13.5X30X4-MM THK)	
	7	1	**6V-8188**	1	NUT (1/2-13-THD)	
	8	1	**7X-0325**	1	BOLT (1/2-13X2.5-IN)	
	9	1	**7X-0340**	1	BOLT (1/2-13X6.5-IN)	
	10	1	**7X-0346**	1	BOLT (5/8-11X2-IN)	
	11	1	**7X-0448**	2	NUT (5/8-11-THD)	
	12	1	**8T-4122**	1	WASHER-HARD (17X32X3.5-MM THK)	
	13	1	**8T-4223**	2	WASHER-HARD (13.5X25.5X3-MM THK)	

R - REMANUFACTURED PART MAY BE AVAILABLE

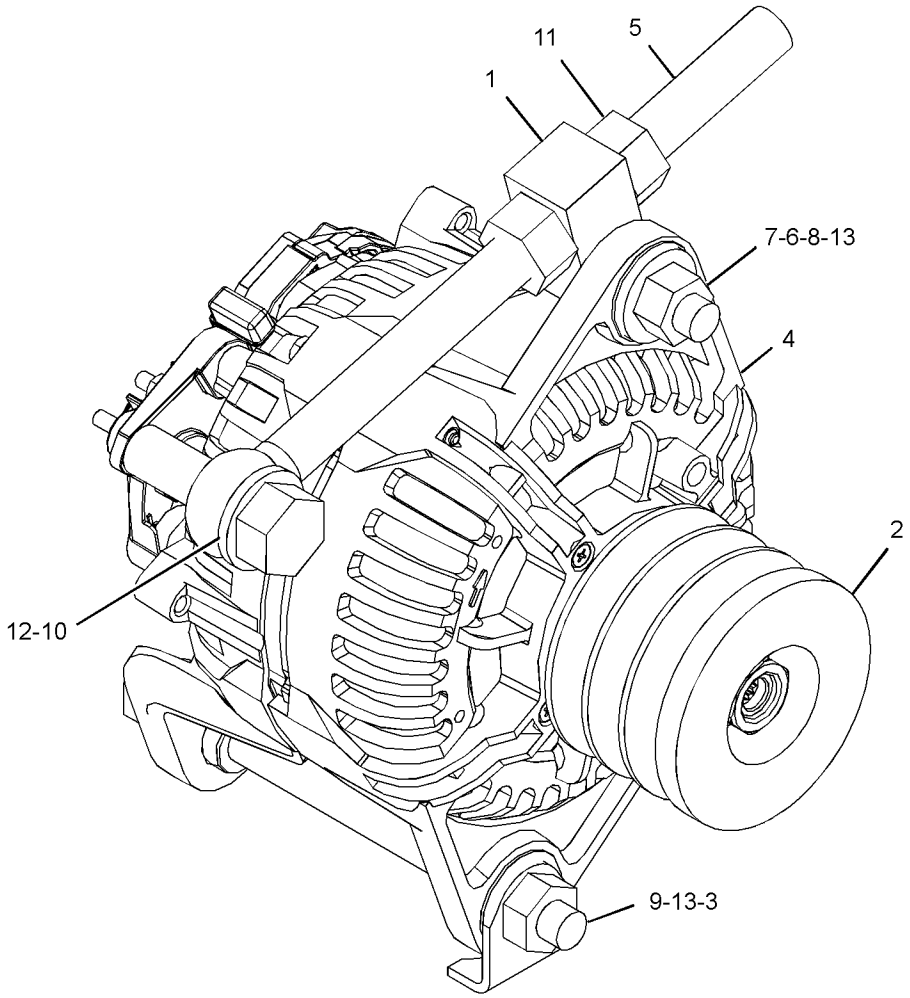

GRAPHIC #1 <END> g03355858

260-7647 APPLICATION GP-POWER TRAIN

S/N: SZS1-UP

PART OF 294-3542, 336-9255, 382-5902, 382-5903, 434-8050, 434-8052 WIRING GP-GRADE CONTROL AN ATTACHMENT

SMCS-7610 **i03537566**

NOTE	PART NUMBER	QTY	PART NAME 1 2 3 4 5 6 (PRODUCT LEVEL)	SEE PAGE
R	**304-5687**	1	CONTROL GP-UNPROGRAMMED (POWER TRAIN)	

R - REMANUFACTURED PART MAY BE AVAILABLE

<END>

434-4117 BATTERY & BOX GP-HEAVY-DUTY

S/N: SZS1-UP
PART OF 435-1535 OPTION AR-COLD WEATHER
AN ATTACHMENT

SMCS-1401, 1402, 7257 **i06054145**

NOTE	REF NO	GRAPHIC REF	PART NUMBER	QTY	PART NAME 1 2 3 4 5 6 (PRODUCT LEVEL)	SEE PAGE
	1	1	**7K-1181**	6	STRAP-CABLE	
	2	2	**9G-2758**	1	LOCKOUT-SWITCH	
	3	1,2	**153-5710**	2	BATTERY GP (12-VOLT, MAINTENANCE FREE, WET)	
					(EACH INCLUDES)	
		1,2	**123-1373**	6	CAP AS-FILLER (7/8-9-THD)	
M		1,2	**461-5232**	6	CAP AS-FILLER (M18X2-MM)	
	4	2	**297-8049**	1	GROMMET	
Y	5	2	*298-3519*	1	BOX GP-BATTERY	682
Y	6	1	*298-3520*	1	SUPPORT GP-BATTERY	729
	7	1,2	**301-6664**	2	BRACKET	
	8	1	**369-3938**	1	HARDWARE GP-MOUNTING (BATTERY BOX)	
		1	**308-3456**	2	LUG	
	9	1,2	**308-9112**	2	HOLD-DOWN AS	
	10	1	**308-9113**	1	CABLE AS	
		1	**9G-0003**	1	COVER AS-TERMINAL (BLACK)	
		1	**9G-0004**	1	COVER AS-TERMINAL (RED)	
					(EACH COVER-TERMINAL INCLUDES)	
		1	**8L-8413**	1	STRAP-CABLE (WHITE)	
		1	**8C-5917**	1	TERMINAL AS-BATTERY (POSITIVE)	
		1	**8T-9757**	1	TERMINAL AS-BATTERY (NEGATIVE)	
					(EACH TERMINAL AS-BATTERY INCLUDES)	
		1	**1M-6119**	1	BOLT (5/16-18X1.375-IN)	
		1	**1M-6120**	1	NUT (5/16-18-THD)	
E		1	**159-8049**		CABLE (00-GA, RED) (253-CM)	
B		1	**1P-0810**		TAPE-ELECTRICAL	
	11	2	*310-7252*	1	CABLE AS	
B		2	**1P-0810**		TAPE-ELECTRICAL	
		2	**1S-7251**	1	TERMINAL-CABLE (00-GA, 1/2-IN SCREW)	
		2	**1S-7252**	1	TERMINAL-CABLE (00-GA, 3/8-IN SCREW)	
D		2	**6V-2722**		TUBE-HEAT SHRINK (25.4-MM DIA) (0.045-M EACH)	
E		2	**159-8050**		CABLE (00-GA, BLACK) (53-CM)	
	12	2	**311-1513**	1	CABLE AS	
D		2	**6V-2722**		TUBE-HEAT SHRINK (25.4-MM DIA) (0.1-M)	
		2	**194-4046**	1	COVER-TERMINAL (00-GA, POSITIVE, RED)	
		2	**8N-1725**	1	COVER AS-TERMINAL (RED)	
					(EACH COVER-TERMINAL INCLUDES)	
		2	**8L-8413**	1	STRAP-CABLE (WHITE)	
		2	**3S-6049**	1	TERMINAL AS-BATTERY (POSITIVE)	
		2	**1M-6119**	1	BOLT (5/16-18X1.375-IN)	
		2	**1M-6120**	1	NUT (5/16-18-THD)	
		2	**208-4617**	1	TERMINAL-RING (00-GA, 1/2-IN SCREW)	
E		2	**159-8049**		CABLE (00-GA, RED) (99-CM)	
B		2	**1P-0810**		TAPE-ELECTRICAL	
	13	2	**311-6573**	1	BRACKET AS	
	14	1	*318-2064*	1	CABLE AS	
B		1	**1P-0810**		TAPE-ELECTRICAL	

434-4117 **BATTERY & BOX GP-HEAVY-DUTY (**contd.**)** **i06054145**

NOTE	REF NO	GRAPHIC REF	PART NUMBER	QTY	PART NAME 1 2 3 4 5 6 (PRODUCT LEVEL)	SEE PAGE
		1	**1S-7252**	2	TERMINAL-CABLE (00-GA, 3/8-IN SCREW)	
D		1	**6V-2722**		TUBE-HEAT SHRINK (25.4-MM DIA) (0.045-M EACH)	
E		1	**159-8050**		CABLE (00-GA, BLACK) (60-CM)	
	15	1	**326-3121**	1	BRACKET AS	
	16	2	**345-0635**	1	BRACKET AS	
	17	1	**349-0739**	1	CABLE AS	
D		1	**6V-2722**		TUBE-HEAT SHRINK (25.4-MM DIA) (0.1-M)	
		1	**194-4046**	1	COVER-TERMINAL (00-GA, POSITIVE, RED)	
		1	**8N-1725**	1	COVER AS-TERMINAL (RED)	
					(EACH COVER-TERMINAL INCLUDES)	
		1	**8L-8413**	1	STRAP-CABLE (WHITE)	
		1	**3S-6049**	1	TERMINAL AS-BATTERY (POSITIVE)	
		1	**1M-6119**	1	BOLT (5/16-18X1.375-IN)	
		1	**1M-6120**	1	NUT (5/16-18-THD)	
		1	**208-4617**	1	TERMINAL-RING (00-GA, 1/2-IN SCREW)	
E		1	**159-8049**		CABLE (00-GA, RED) (99-CM)	
B		1	**1P-0810**		TAPE-ELECTRICAL	
	18	2	**349-0740**	1	BRACKET AS	
	19	1	**373-6949**	1	BRACKET AS	
M		1	**8T-3490**	2	NUT-WELD (M10X1.5-THD)	
	20	1	**380-6215**	1	CABLE AS	
E		1	**8C-0596**		CABLE (2-GA) (56-CM)	
		1	*261-0747*	1	TERMINAL AS	
		1	*311-6185*	1	TERMINAL AS	
					(EACH TERMINAL AS INCLUDES)	
E		1	**125-7876**		TUBE-HEAT SHRINK (17.78-MM DIA) (4-CM)	
M	21	1,2	**108-2949**	4	STUD (M10X1.5X270-MM)	
	22	2	**1P-7009**	1	CLIP	
	23	2	**2G-8767**	2	WASHER (10.5X60X3-MM THK)	
	24	1,2	**2V-1771**	18	GROMMET	
	25	1	**325-1242**	1	CLIP	
	26	1,2	**353-7957**	5	GROMMET	
	27	1	**3S-8664**	2	CLIP	
	28	2	**4S-5719**	1	SPACER (10.31X25X12.7-MM THK)	
	29	1,2	**5P-4295**	3	CLIP	
	30	1,2	**6D-4246**	16	CLIP	
	31	2	**6G-2256**	1	CLAMP	
	32	2	**6G-2263**	1	SPACER (10.5X19X28.5-MM THK)	
	33	2	**6W-6672**	3	SPACER (10.5X20X38-MM THK)	
Y	34	1,2	**7N-0718**	1	SWITCH GP-DISCONNECT (BATTERY)	359
	35	1	**8S-0948**	2	CLIP	
M	36	1,2	**8T-0389**	4	LOCKNUT (M10X1.5-THD)	
	37	1,2	**8T-4121**	36	WASHER-HARD (11X21X2.5-MM THK)	
M	38	1,2	**344-5675**	7	NUT (M10X1.5-THD)	
M	39	1	**8T-4136**	2	BOLT (M10X1.5X25-MM)	
M	40	1,2	**8T-4137**	16	BOLT (M10X1.5X20-MM)	
M	42	1	**8T-4186**	1	BOLT (M10X1.5X40-MM)	
M	43	1,2	**8T-4195**	2	BOLT (M10X1.5X30-MM)	
M	44	2	**8T-4196**	1	BOLT (M10X1.5X35-MM)	
M	45	2	**8T-4198**	1	BOLT (M10X1.5X100-MM)	
M	47	2	**8T-6466**	2	BOLT (M10X1.5X60-MM)	

434-4117 **BATTERY & BOX GP-HEAVY-DUTY (**contd.**)** **i06054145**

NOTE	REF NO	GRAPHIC REF	PART NUMBER	QTY	PART NAME 1 2 3 4 5 6 (PRODUCT LEVEL)	SEE PAGE
	48	2	**8T-7934**	2	WASHER-HARD (11X21X5-MM THK)	
	50	1	**9C-5344**	1	SPACER (10.5X20X18-MM THK)	
M	51	2	**9X-8271**	2	BOLT-12 POINT HEAD (M10X1.5X45-MM)	

B - USE AS REQUIRED
D - ORDER BY THE METER
E - ORDER BY THE CENTIMETER
M - METRIC PART
Y - SEPARATE ILLUSTRATION

434-4117 **BATTERY & BOX GP-HEAVY-DUTY (**contd.**)** **i06054145**

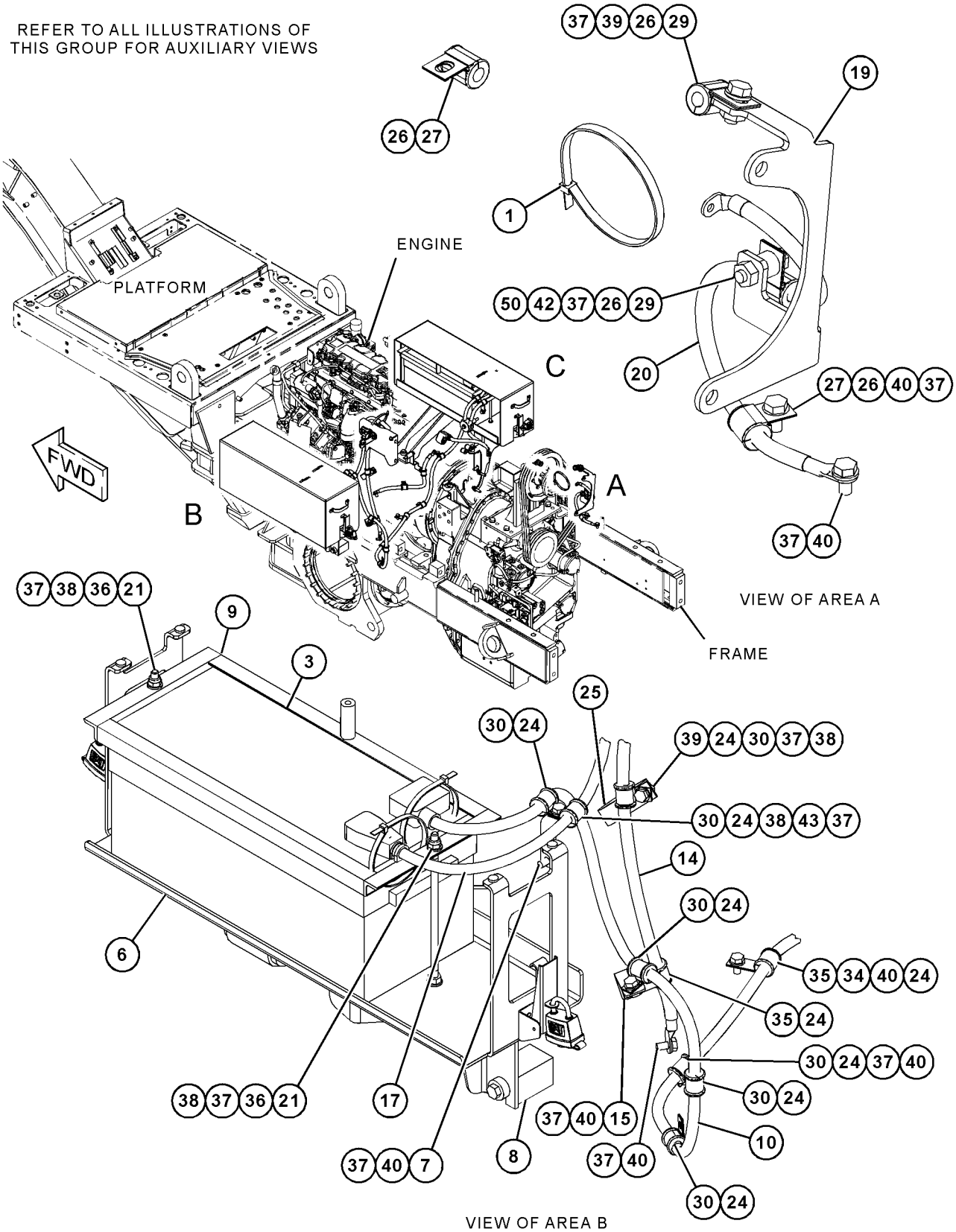

GRAPHIC #1 g03713502

434-4117 **BATTERY & BOX GP-HEAVY-DUTY (**contd.**)** **i06054145**

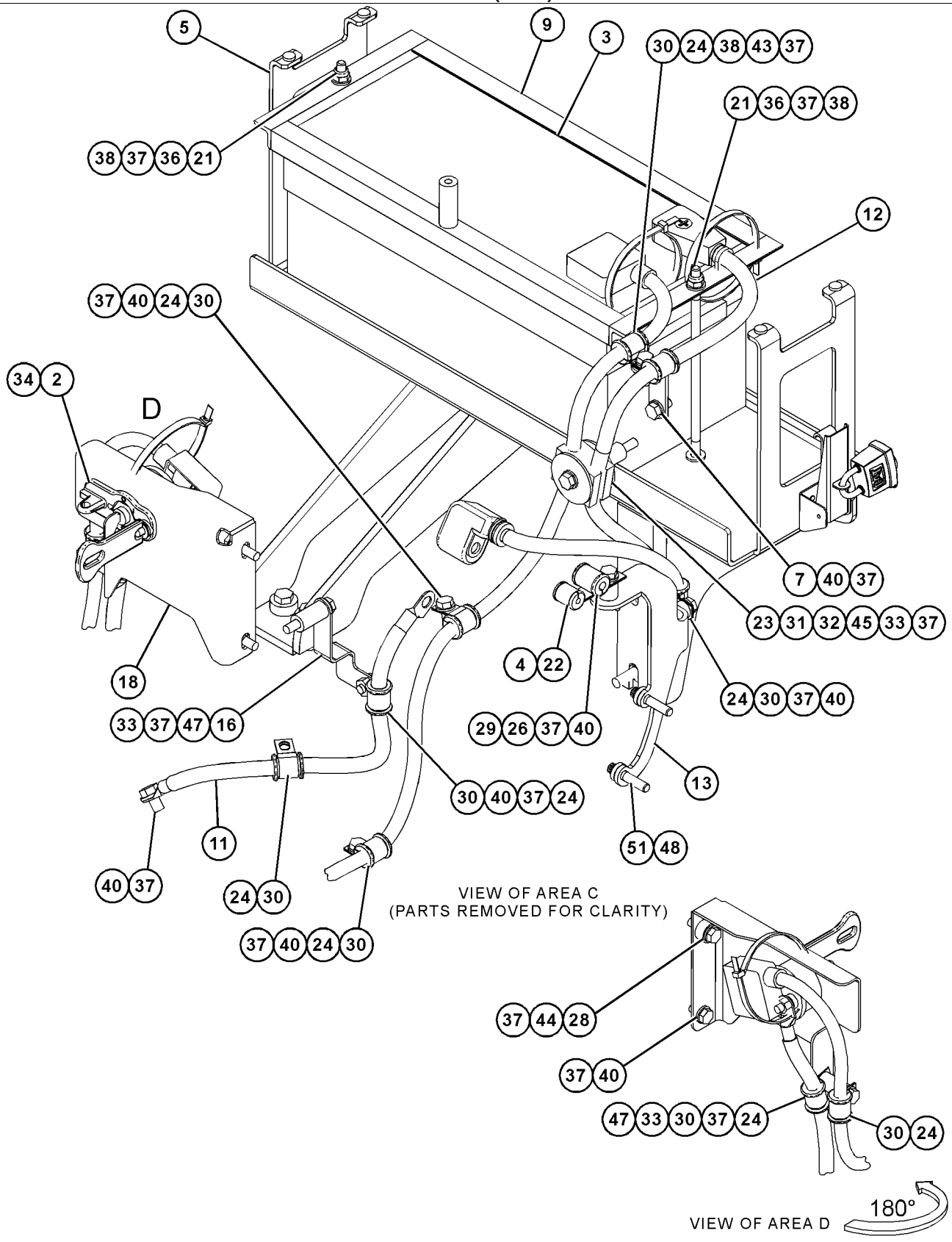

GRAPHIC #2 <END> g03798513

298-5591 BATTERY & WIRING GP

S/N: SZS1-488

PART OF 368-3025 GENERAL AR

SMCS-1401, 1402, 1408 **i06949055**

NOTE	REF NO	GRAPHIC REF	PART NUMBER	QTY	PART NAME 1 2 3 4 5 6 (PRODUCT LEVEL)	SEE PAGE
	1	1,2	**2G-8767**	2	WASHER (10.5X60X3-MM THK)	
	2	1	**3S-2093**	4	STRAP-CABLE	
	3	2	**6G-2256**	1	CLAMP	
	4	2	**6G-2263**	1	SPACER (10.5X19X28.5-MM THK)	
	5	1,2	**6W-6672**	2	SPACER (10.5X20X38-MM THK)	
	6	2	**091-0081**	1	SPACER (10.5X20X10-MM THK)	
M	7	1	**108-2949**	2	STUD (M10X1.5X270-MM)	
	8	2	**177-2215**	1	STRAP-DUAL CLAMP	
	9	1	**295-1139**	1	HOLD-DOWN AS	
	10	1	**300-6152**	1	CABLE AS	
		1	**9G-0003**	1	COVER AS-TERMINAL (BLACK)	
		1	**9G-0004**	1	COVER AS-TERMINAL (RED)	
					(EACH COVER-TERMINAL INCLUDES)	
		1	**8L-8413**	1	STRAP-CABLE (WHITE)	
		1	**8C-5917**	1	TERMINAL AS-BATTERY (POSITIVE)	
		1	**8T-9757**	1	TERMINAL AS-BATTERY (NEGATIVE)	
					(EACH TERMINAL AS INCLUDES)	
		1	**1M-6119**	1	BOLT (5/16-18X1.375-IN)	
		1	**1M-6120**	1	NUT (5/16-18-THD)	
E		1	**159-8049**		CABLE (00-GA, RED) (9-CM)	
	11	2	**301-6664**	1	BRACKET	
	12	1	**310-7252**	1	CABLE AS	
		1	**1S-7251**	1	TERMINAL-CABLE (00-GA, 1/2-IN SCREW)	
		1	**1S-7252**	1	TERMINAL-CABLE (00-GA, 3/8-IN SCREW)	
D		1	**6V-2722**		TUBE-HEAT SHRINK (25.4-MM DIA) (0.045-M EACH)	
E		1	**159-8050**		CABLE (00-GA, BLACK) (53-CM)	
	13	1	**310-7253**	1	CABLE AS	
		1	**1S-7252**	1	TERMINAL-CABLE (00-GA, 3/8-IN SCREW)	
D		1	**6V-2722**		TUBE-HEAT SHRINK (25.4-MM DIA) (0.045-M EACH)	
		1	**7N-5274**	1	COVER AS-TERMINAL (BLACK)	
		1	**8L-8413**	1	STRAP-CABLE (WHITE)	
		1	**9G-8909**	1	COVER-TERMINAL (BLACK)	
		1	**3S-6050**	1	TERMINAL AS-BATTERY (NEGATIVE)	
		1	**1M-6119**	1	BOLT (5/16-18X1.375-IN)	
		1	**1M-6120**	1	NUT (5/16-18-THD)	
E		1	**159-8050**		CABLE (00-GA, BLACK) (283-CM)	
	14	1	**310-7256**	1	CABLE AS	
D		1	**6V-2722**		TUBE-HEAT SHRINK (25.4-MM DIA) (0.045-M)	
		1	**8N-1725**	1	COVER AS-TERMINAL (RED)	
		1	**194-4046**	1	COVER-TERMINAL (00-GA, POSITIVE, RED)	
					(EACH COVER-TERMINAL INCLUDES)	
		1	**8L-8413**	1	STRAP-CABLE (WHITE)	
		1	**3S-6049**	1	TERMINAL AS-BATTERY (POSITIVE)	
		1	**1M-6119**	1	BOLT (5/16-18X1.375-IN)	
		1	**1M-6120**	1	NUT (5/16-18-THD)	
E		1	**159-8049**		CABLE (00-GA, RED) (88-CM)	
		1	**208-4617**	1	TERMINAL-RING (00-GA, 1/2-IN SCREW)	

298-5591 **BATTERY & WIRING GP (**contd.**)** **i06949055**

NOTE	REF NO	GRAPHIC REF	PART NUMBER	QTY	PART NAME 1 2 3 4 5 6 (PRODUCT LEVEL)	SEE PAGE
	15	2	**312-0377**	1	CABLE AS	
		2	**9G-4343**	1	TERMINAL-RING (4-GA, 1/4-IN SCREW)	
		2	**9G-4336**	1	TERMINAL-RING (4-GA, 3/8-IN SCREW)	
					(EACH TERMINAL INCLUDES)	
E		2	**125-7876**		TUBE-HEAT SHRINK (17.78-MM DIA) (4-CM)	
	16	1	**312-0378**	1	CABLE AS	
		1	**8T-8827**	1	BOOT (RED)	
		1	**135-2543**	1	BOOT (RED)	
		1	**9G-4343**	1	TERMINAL-RING (4-GA, 1/4-IN SCREW)	
		1	**5P-3454**	1	TERMINAL-RING (4-GA, 5/16-IN SCREW)	
					(EACH TERMINAL INCLUDES)	
E		1	**125-7876**		TUBE-HEAT SHRINK (17.78-MM DIA) (4-CM)	
	17	2	**312-0379**	1	BRACKET AS	
	18	2	**318-2064**	1	CABLE AS	
		2	**1S-7252**	2	TERMINAL-CABLE (00-GA, 3/8-IN SCREW)	
D		2	**6V-2722**		TUBE-HEAT SHRINK (25.4-MM DIA) (0.045-M)	
E		2	**159-8050**		CABLE (00-GA, BLACK) (60-CM)	
C	19	2	**311-6573**	1	BRACKET AS	
	20	1	**345-0635**	1	BRACKET AS	
	21	2	**345-0637**	1	CABLE AS	
		2	**135-2543**	1	BOOT (RED)	
		2	**9G-4343**	1	TERMINAL-RING (4-GA, 1/4-IN SCREW)	
		2	**9G-4344**	1	TERMINAL-RING (4-GA, 1/2-IN SCREW)	
					(EACH TERMINAL INCLUDES)	
E		2	**125-7876**		TUBE-HEAT SHRINK (17.78-MM DIA) (4-CM)	
	22	1,2	**2V-1771**	17	GROMMET	
	23	2	**325-1242**	1	CLIP	
C	24	2	**3S-8664**	2	CLIP	
	25	1	**3T-5760**	2	BATTERY GP (12-VOLT, 750-CCA)	
C	26	2	**5P-4295**	4	CLIP	
	27	1,2	**6D-4246**	15	CLIP	
	28	2	**6V-8188**	1	NUT (1/2-13-THD)	
	29	2	**7X-7729**	1	WASHER (11X25X3-MM THK)	
C	30	1,2	**8S-0948**	3	CLIP	
M	31	1	**8T-0389**	2	LOCKNUT (M10X1.5-THD)	
C	32	1,2	**8T-4121**	28	WASHER-HARD (11X21X2.5-MM THK)	
M	33	1,2	**8T-4133**	4	NUT (M10X1.5-THD)	
M	34	2	**8T-4136**	1	BOLT (M10X1.5X25-MM)	
CM	35	1,2	**8T-4137**	17	BOLT (M10X1.5X20-MM)	
M	36	1	**8T-4179**	1	BOLT (M12X1.75X20-MM)	
M	37	2	**8T-4195**	2	BOLT (M10X1.5X30-MM)	
M	38	2	**8T-4196**	1	BOLT (M10X1.5X35-MM)	
M	39	2	**8T-4198**	1	BOLT (M10X1.5X100-MM)	
	40	1,2	**8T-4223**	2	WASHER-HARD (13.5X25.5X3-MM THK)	
M	41	1	**8T-6466**	1	BOLT (M10X1.5X60-MM)	
C	42	2	**8W-8909**	7	SLEEVE	
	43	2	**8T-7934**	2	WASHER-HARD (11X21X5-MM THK)	
M	44	2	**9X-8271**	2	BOLT-12 POINT HEAD (M10X1.5X45-MM)	
C	45	2	**1P-7009**	1	CLIP	
C	46	2	**6K-8178**	1	CLIP	
C	47	2	**297-8049**	2	GROMMET	
C	48	2	**317-3164**	1	CABLE AS	

298-5591 **BATTERY & WIRING GP (**contd.**)** **i06949055**

NOTE	REF NO	GRAPHIC REF	PART NUMBER	QTY	PART NAME 1 2 3 4 5 6 (PRODUCT LEVEL)	SEE PAGE
D		2	**5P-5689**		WIRE (8-GA, BLACK) (0.6-M)	
B		2	**1P-0810**		TAPE-ELECTRICAL	

B - USE AS REQUIRED
C - CHANGE FROM PREVIOUS TYPE
D - ORDER BY THE METER
E - ORDER BY THE CENTIMETER
M - METRIC PART

298-5591 **BATTERY & WIRING GP (**contd.**)** **i06949055**

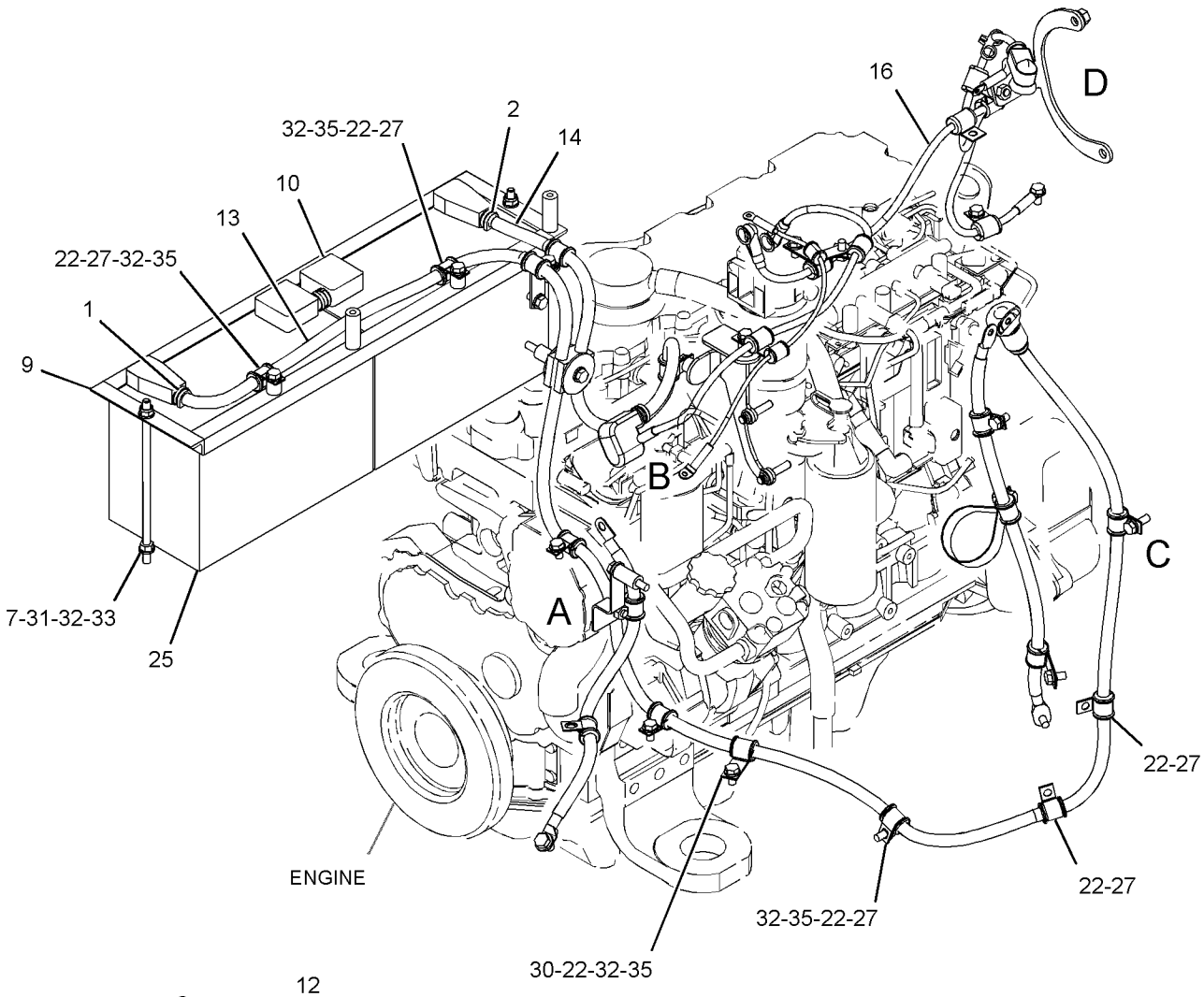

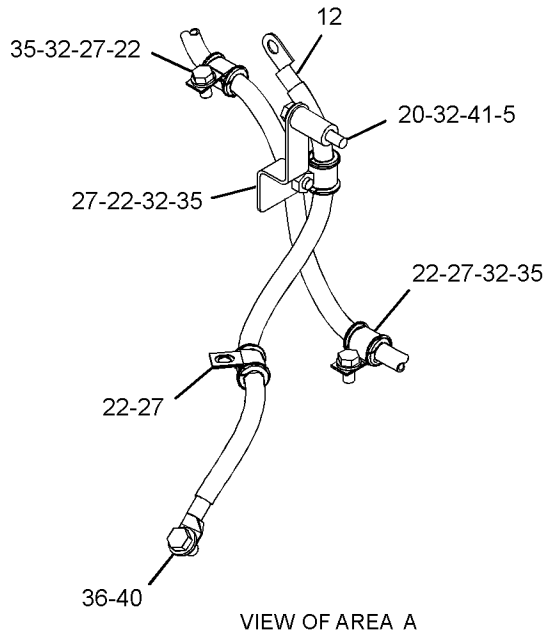

VIEW OF AREA A



REFER TO ALL ILLUSTRATIONS OF THIS GROUP FOR AUXILIARY VIEWS

GRAPHIC #1

g02407501

298-5591 **BATTERY & WIRING GP (**contd.**)** **i06949055**

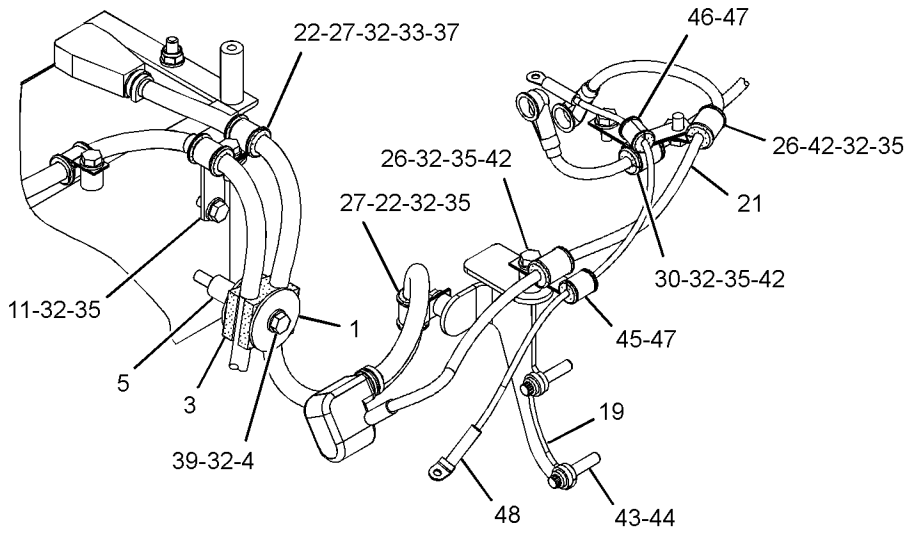

VIEW OF AREA B

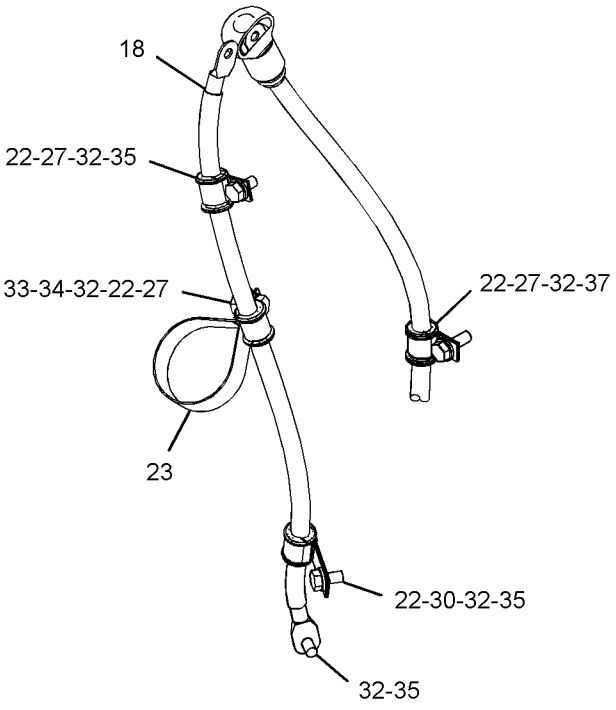

VIEW OF AREA C

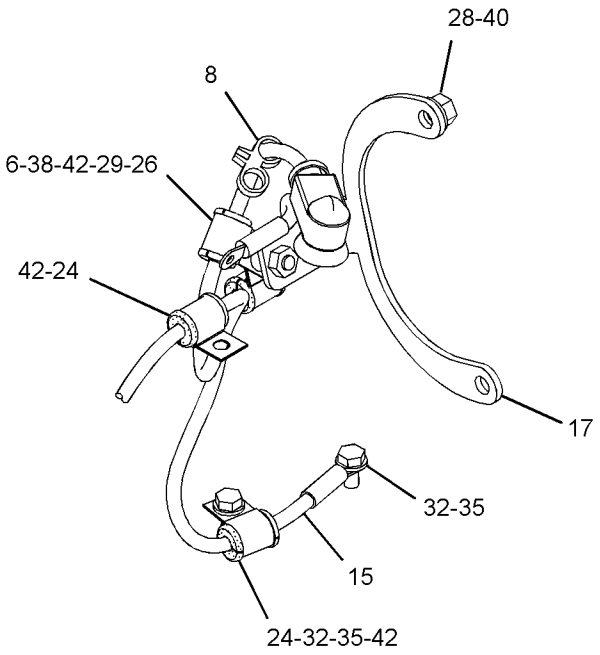

VIEW OF AREA D

GRAPHIC #2 <END> g02407500

298-5592 BATTERY & WIRING GP—EXTREME-DUTY

S/N: SZS1-UP

PART OF 304-9957 BATTERY & WIRING GP

AN ATTACHMENT

SMCS-1401, 1402, 1408

i06949075

NOTE	REF NO	GRAPHIC REF	PART NUMBER	QTY	PART NAME 1 2 3 4 5 6 (PRODUCT LEVEL)	SEE PAGE
	1	1	**7K-1181**	5	STRAP-CABLE	
M	2	1	**108-2949**	2	STUD (M10X1.5X270-MM)	
	3	1	**153-5710**	2	BATTERY GP (12-VOLT, MAINTENANCE FREE, WET)	
	4	1	**301-6664**	1	BRACKET	
	5	1	**308-9112**	2	HOLD-DOWN AS	
	6	1	**308-9113**	1	CABLE AS	
		1	**9G-0003**	1	COVER AS-TERMINAL (BLACK)	
		1	**9G-0004**	1	COVER AS-TERMINAL (RED)	
					(EACH COVER-TERMINAL INCLUDES)	
		1	**8L-8413**	1	STRAP-CABLE (WHITE)	
		1	**8C-5917**	1	TERMINAL AS-BATTERY (POSITIVE)	
		1	**8T-9757**	1	TERMINAL AS-BATTERY (NEGATIVE)	
					(EACH TERMINAL AS-BATTERY INCLUDES)	
		1	**1M-6119**	1	BOLT (5/16-18X1.375-IN)	
		1	**1M-6120**	1	NUT (5/16-18-THD)	
E		1	**159-8049**		CABLE (00-GA, RED) (253-CM)	
B		1	**1P-0810**		TAPE-ELECTRICAL	
	7	1	**311-1513**	1	CABLE AS	
D		1	**6V-2722**		TUBE-HEAT SHRINK (25.4-MM DIA) (0.1-M)	
		1	**194-4046**	1	COVER-TERMINAL (00-GA, POSITIVE, RED)	
		1	**8N-1725**	1	COVER AS-TERMINAL (RED)	
					(EACH COVER-TERMINAL INCLUDES)	
		1	**8L-8413**	1	STRAP-CABLE (WHITE)	
		1	**3S-6049**	1	TERMINAL AS-BATTERY (POSITIVE)	
		1	**1M-6119**	1	BOLT (5/16-18X1.375-IN)	
		1	**1M-6120**	1	NUT (5/16-18-THD)	
		1	**208-4617**	1	TERMINAL-RING (00-GA, 1/2-IN SCREW)	
E		1	**159-8049**		CABLE (00-GA, RED) (99-CM)	
B		1	**1P-0810**		TAPE-ELECTRICAL	
	8	1	**326-3121**	1	BRACKET AS	
M		1	**8T-3490**	1	NUT-WELD (M10X1.5-THD)	
	9	1	**349-0739**	1	CABLE AS	
		1	**4D-1248**	1	TERMINAL (00-GA, 3/8-IN SCREW)	
D		1	**6V-2722**		TUBE-HEAT SHRINK (25.4-MM DIA) (0.1-M)	
		1	**7N-5274**	1	COVER AS-TERMINAL (BLACK)	
		1	**9G-0003**	1	COVER AS-TERMINAL (BLACK)	
		1	**3S-6050**	1	TERMINAL AS-BATTERY (NEGATIVE)	
		1	**1M-6119**	1	BOLT (5/16-18X1.375-IN)	
		1	**1M-6120**	1	NUT (5/16-18-THD)	
E		1	**159-8050**		CABLE (00-GA, BLACK) (84-CM)	
B		1	**1P-0810**		TAPE-ELECTRICAL	
	10	1	**349-0740**	1	BRACKET AS	
M		1	**8T-3490**	1	NUT-WELD (M10X1.5-THD)	
	11	1	**2V-1771**	4	GROMMET	
	12	1	**6D-4246**	4	CLIP	
	13	1	**6W-6672**	1	SPACER (10.5X20X38-MM THK)	
M	14	1	**8T-0389**	2	LOCKNUT (M10X1.5-THD)	

298-5592 **BATTERY & WIRING GP (**contd.**)** **i06949075**

NOTE	REF NO	GRAPHIC REF	PART NUMBER	QTY	PART NAME 1 2 3 4 5 6 (PRODUCT LEVEL)	SEE PAGE
	15	1	**8T-4121**	9	WASHER-HARD (11X21X2.5-MM THK)	
M	16	1	**8T-4133**	3	NUT (M10X1.5-THD)	
M	17	1	**8T-4137**	2	BOLT (M10X1.5X20-MM)	
M	18	1	**8T-4195**	1	BOLT (M10X1.5X30-MM)	
M	19	1	**8T-6466**	1	BOLT (M10X1.5X60-MM)	

B - USE AS REQUIRED
D - ORDER BY THE METER
E - ORDER BY THE CENTIMETER
M - METRIC PART

298-5592 **BATTERY & WIRING GP (**contd.**)** **i06949075**

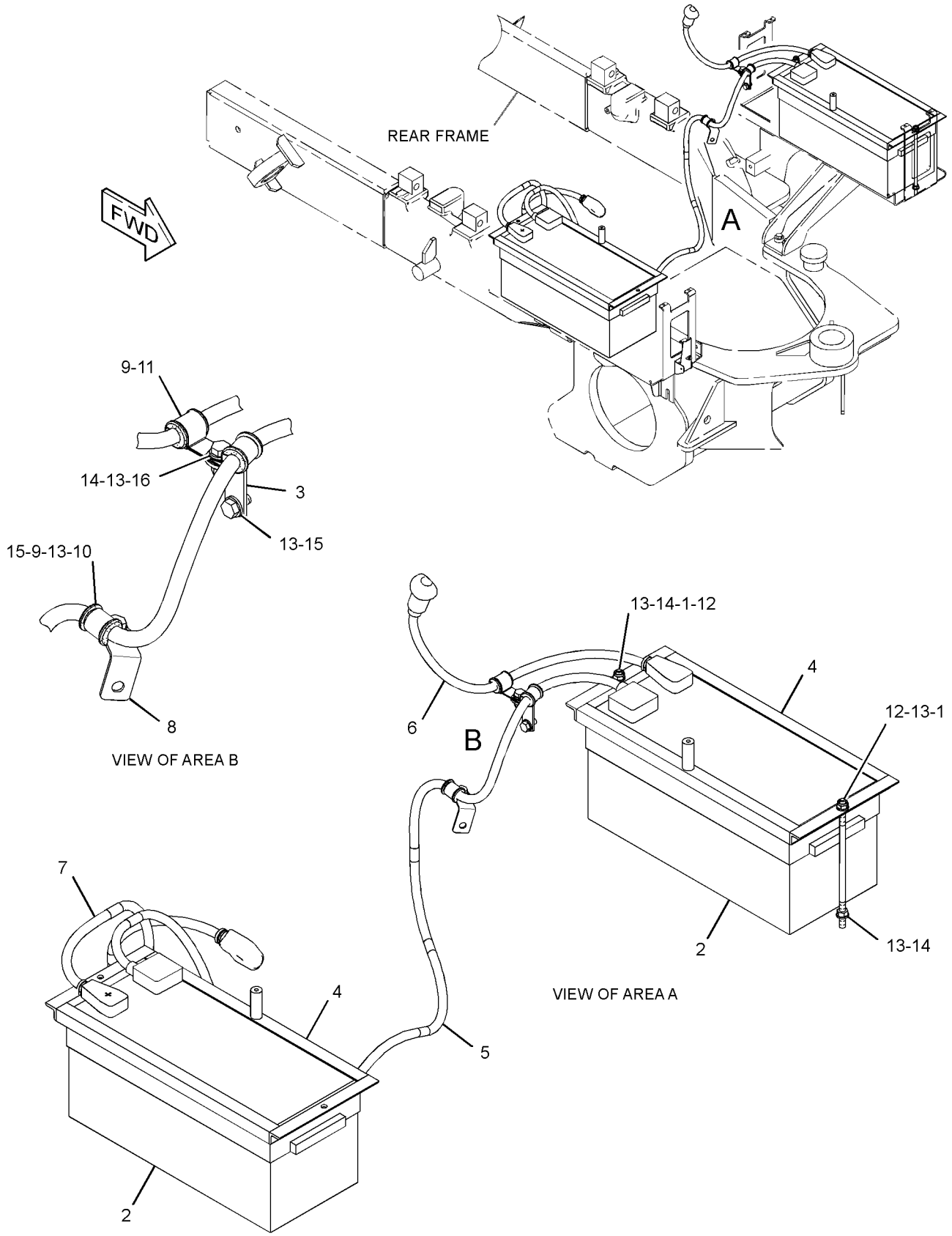

GRAPHIC #1 <END> g01757458

304-9957 BATTERY & WIRING GP–EXTREME-DUTY

S/N: SZS1-UP

PART OF 348-6943 OPTION AR-COLD WEATHER

AN ATTACHMENT

SMCS-1401, 1402, 1408 **i04930799**

NOTE	REF NO	GRAPHIC REF	PART NUMBER	QTY	PART NAME 1 2 3 4 5 6 (PRODUCT LEVEL)	SEE PAGE
	1	1	**225-0312**	2	FILM-WARNING (JUMP START, READ OMM, INTL)	
	2	1	**230-4477**	1	FILM-WARNING (NO STEP)	
Y	3	1	*298-3520*	1	SUPPORT GP-BATTERY	729
Y	4	1	*298-5592*	1	BATTERY & WIRING GP (HEAVY-DUTY)	207
	5	1	*369-3938*	1	HARDWARE GP-MOUNTING (BATTERY BOX)	
		1	**308-3456**	2	LUG	

Y - SEPARATE ILLUSTRATION

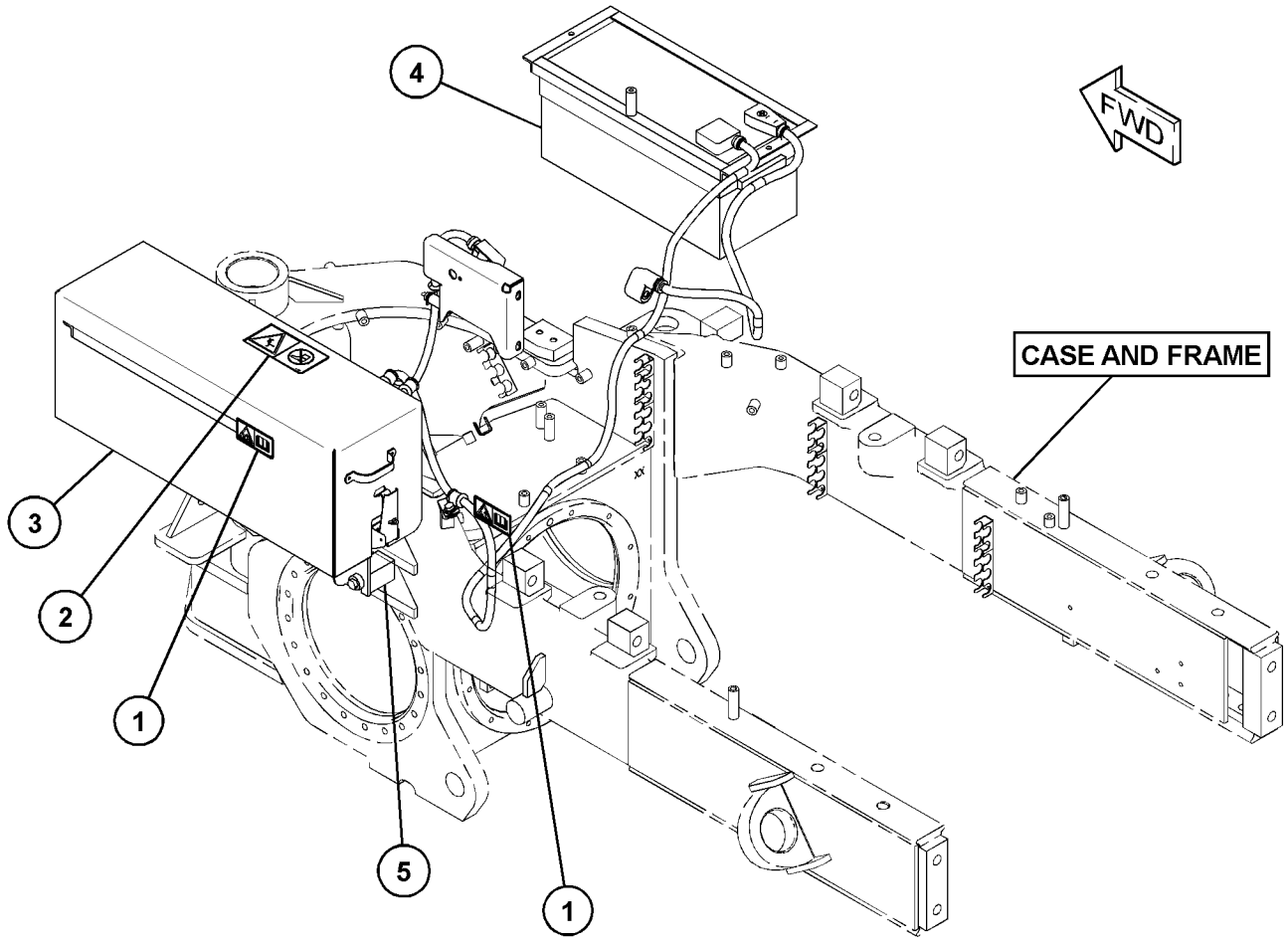

GRAPHIC #1 <END> g03115303

421-1527 BATTERY & WIRING GP

S/N: SZS489-623

PART OF 368-3025 GENERAL AR

SMCS-1401, 1402, 1408 **i05346720**

NOTE	REF NO	GRAPHIC REF	PART NUMBER	QTY	PART NAME 1 2 3 4 5 6 (PRODUCT LEVEL)	SEE PAGE
	1	1	**2G-8767**	2	WASHER (10.5X60X3-MM THK)	
	2	1	**3S-2093**	4	STRAP-CABLE	
	3	1	**6G-2256**	1	CLAMP	
	4	1	**6G-2263**	1	SPACER (10.5X19X28.5-MM THK)	
	5	1	**6W-6672**	2	SPACER (10.5X20X38-MM THK)	
	6	1	**295-1139**	1	HOLD-DOWN AS	
M		1	**9R-2672**	2	BOSS-THREADED (M10X1.5X120-MM)	
	7	1	**297-8049**	2	GROMMET	
	8	1	**300-6152**	1	CABLE AS	
		1	**9G-0003**	1	COVER AS-TERMINAL (BLACK)	
		1	**9G-0004**	1	COVER AS-TERMINAL (RED)	
					(EACH COVER-TERMINAL INCLUDES)	
		1	**3S-2093**	1	STRAP-CABLE	
		1	**8C-5917**	1	TERMINAL AS-BATTERY (POSITIVE)	
		1	**8T-9757**	1	TERMINAL AS-BATTERY (NEGATIVE)	
					(EACH TERMINAL AS INCLUDES)	
		1	**1M-6119**	1	BOLT (5/16-18X1.375-IN)	
		1	**1M-6120**	1	NUT (5/16-18-THD)	
E		1	**159-8049**		CABLE (00-GA, RED) (9-CM)	
	9	1	**301-6664**	1	BRACKET	
	10	1	**310-7252**	1	CABLE AS	
B		1	**1P-0810**		TAPE-ELECTRICAL	
		1	**1S-7251**	1	TERMINAL-CABLE (00-GA, 1/2-IN SCREW)	
		1	**1S-7252**	1	TERMINAL-CABLE (00-GA, 3/8-IN SCREW)	
D		1	**6V-2722**		TUBE-HEAT SHRINK (25.4-MM DIA) (0.045-M EACH)	
E		1	**159-8050**		CABLE (00-GA, BLACK) (53-CM)	
	11	1	**310-7253**	1	CABLE AS	
B		1	**1P-0810**		TAPE-ELECTRICAL	
		1	**1S-7252**	1	TERMINAL-CABLE (00-GA, 3/8-IN SCREW)	
D		1	**6V-2722**		TUBE-HEAT SHRINK (25.4-MM DIA) (0.045-M EACH)	
		1	**7N-5274**	1	COVER AS-TERMINAL (BLACK)	
		1	**8L-8413**	1	STRAP-CABLE (WHITE)	
		1	**9G-8909**	1	COVER-TERMINAL (BLACK)	
		1	**3S-6050**	1	TERMINAL AS-BATTERY (NEGATIVE)	
		1	**1M-6119**	1	BOLT (5/16-18X1.375-IN)	
		1	**1M-6120**	1	NUT (5/16-18-THD)	
E		1	**159-8050**		CABLE (00-GA, BLACK) (283-CM)	
	12	1	**310-7256**	1	CABLE AS	
B		1	**1P-0810**		TAPE-ELECTRICAL	
D		1	**6V-2722**		TUBE-HEAT SHRINK (25.4-MM DIA) (0.045-M EACH)	
		1	**8N-1725**	1	COVER AS-TERMINAL (RED)	
		1	**194-4046**	1	COVER-TERMINAL (00-GA, POSITIVE, RED)	
					(EACH COVER-TERMINAL INCLUDES)	
		1	**8L-8413**	1	STRAP-CABLE (WHITE)	
		1	**3S-6049**	1	TERMINAL AS-BATTERY (POSITIVE)	
		1	**1M-6119**	1	BOLT (5/16-18X1.375-IN)	

421-1527 **BATTERY & WIRING GP (**contd.**)** **i05346720**

NOTE	REF NO	GRAPHIC REF	PART NUMBER	QTY	PART NAME 1 2 3 4 5 6 (PRODUCT LEVEL)	SEE PAGE
		1	**1M-6120**	1	NUT (5/16-18-THD)	
E		1	**159-8049**		CABLE (00-GA, RED) (88-CM)	
		1	**208-4617**	1	TERMINAL-RING (00-GA, 1/2-IN SCREW)	
	13	1	**311-6573**	1	BRACKET AS	
	14	1	**317-3164**	1	CABLE AS	
D		1	**5P-5689**		WIRE (8-GA, BLACK) (0.6-M)	
E		1	**119-3662**		TUBE-HEAT SHRINK (10.85-MM DIA) (4-CM)	
B		1	**1P-0810**		TAPE-ELECTRICAL	
		1	**2L-8050**	1	TERMINAL-RING (6-GA, 1/4-IN SCREW)	
					—OR—	
		1	**2L-8058**	1	TERMINAL-RING (8-GA, 1/4-IN SCREW)	
	15	1	**318-2064**	1	CABLE AS	
B		1	**1P-0810**		TAPE-ELECTRICAL	
		1	**1S-7252**	2	TERMINAL-CABLE (00-GA, 3/8-IN SCREW)	
D		1	**6V-2722**		TUBE-HEAT SHRINK (25.4-MM DIA) (0.045-M EACH)	
E		1	**159-8050**		CABLE (00-GA, BLACK) (60-CM)	
	16	1	**345-0635**	1	BRACKET AS	
	17	1	**345-0637**	1	CABLE AS	
B		1	**1P-0810**		TAPE-ELECTRICAL	
D		1	**6V-2369**		CABLE (4-GA, BLACK) (0.8-M)	
		1	**135-2543**	1	BOOT (RED)	
		1	**9G-4343**	1	TERMINAL-RING (4-GA, 1/4-IN SCREW)	
		1	**9G-4344**	1	TERMINAL-RING (4-GA, 1/2-IN SCREW)	
	18	1	**373-6949**	1	BRACKET AS	
M		1	**8T-3490**	2	NUT-WELD (M10X1.5-THD)	
	19	1	**380-6214**	1	CABLE AS	
		1	**8T-8827**	1	BOOT (RED)	
		1	**135-2543**	1	BOOT (RED)	
E		1	**8C-3056**		CABLE (2-GA, RED) (96-CM)	
		1	**6T-5598**	1	TERMINAL-RING (1-GA TO 2-GA, 5/16-IN SCREW)	
		1	**030-1712**	1	TERMINAL-RING (2-GA, 1/4-IN SCREW)	
	20	1	**380-6215**	1	CABLE AS	
E		1	**8C-0596**		CABLE (2-GA) (56-CM)	
		1	**261-0746**	1	TERMINAL-RING	
E		1	**125-7876**		TUBE-HEAT SHRINK (17.78-MM DIA) (4-CM)	
		1	**311-6184**	1	TERMINAL-RING (2-GA, 3/8-IN SCREW)	
M	21	1	**108-2949**	2	STUD (M10X1.5X270-MM)	
	22	1	**1P-7009**	1	CLIP	
	23	1	**2V-1771**	17	GROMMET	
	24	1	**325-1242**	1	CLIP	
	25	1	**353-7957**	5	GROMMET	
	26	1	**3S-8664**	2	CLIP	
	27	1	**3T-5760**	2	BATTERY GP (12-VOLT, 750-CCA) (MAINTENANCE FREE)	
					(EACH INCLUDES)	
		1	**123-1373**	6	CAP AS-FILLER (7/8-9-THD)	
	28	1	**5P-4295**	4	CLIP	
	29	1	**6D-4246**	15	CLIP	
	30	1	**6K-8178**	1	CLIP	
	32	1	**8S-0948**	3	CLIP	
M	33	1	**8T-0389**	2	LOCKNUT (M10X1.5-THD)	

421-1527 **BATTERY & WIRING GP (**contd.**)** **i05346720**

NOTE	REF NO	GRAPHIC REF	PART NUMBER	QTY	PART NAME 1 2 3 4 5 6 (PRODUCT LEVEL)	SEE PAGE
	34	1	**8T-4121**	30	WASHER-HARD (11X21X2.5-MM THK)	
M	35	1	**8T-4133**	4	NUT (M10X1.5-THD)	
M	36	1	**8T-4136**	2	BOLT (M10X1.5X25-MM)	
M	37	1	**8T-4137**	17	BOLT (M10X1.5X20-MM)	
M	38	1	**8T-4179**	1	BOLT (M12X1.75X20-MM)	
M	39	1	**8T-4186**	1	BOLT (M10X1.5X40-MM)	
M	40	1	**8T-4195**	2	BOLT (M10X1.5X30-MM)	
M	41	1	**8T-4198**	1	BOLT (M10X1.5X100-MM)	
	42	1	**8T-4223**	1	WASHER-HARD (13.5X25.5X3-MM THK)	
M	43	1	**8T-6466**	1	BOLT (M10X1.5X60-MM)	
	44	1	**8T-7934**	2	WASHER-HARD (11X21X5-MM THK)	
	45	1	**8W-8909**	2	SLEEVE	
	46	1	**9C-5344**	1	SPACER (10.5X20X18-MM THK)	
M	47	1	**9X-8271**	2	BOLT-12 POINT HEAD (M10X1.5X45-MM)	

B - USE AS REQUIRED
D - ORDER BY THE METER
E - ORDER BY THE CENTIMETER
M - METRIC PART

421-1527 **BATTERY & WIRING GP** (contd.) **i05346720**

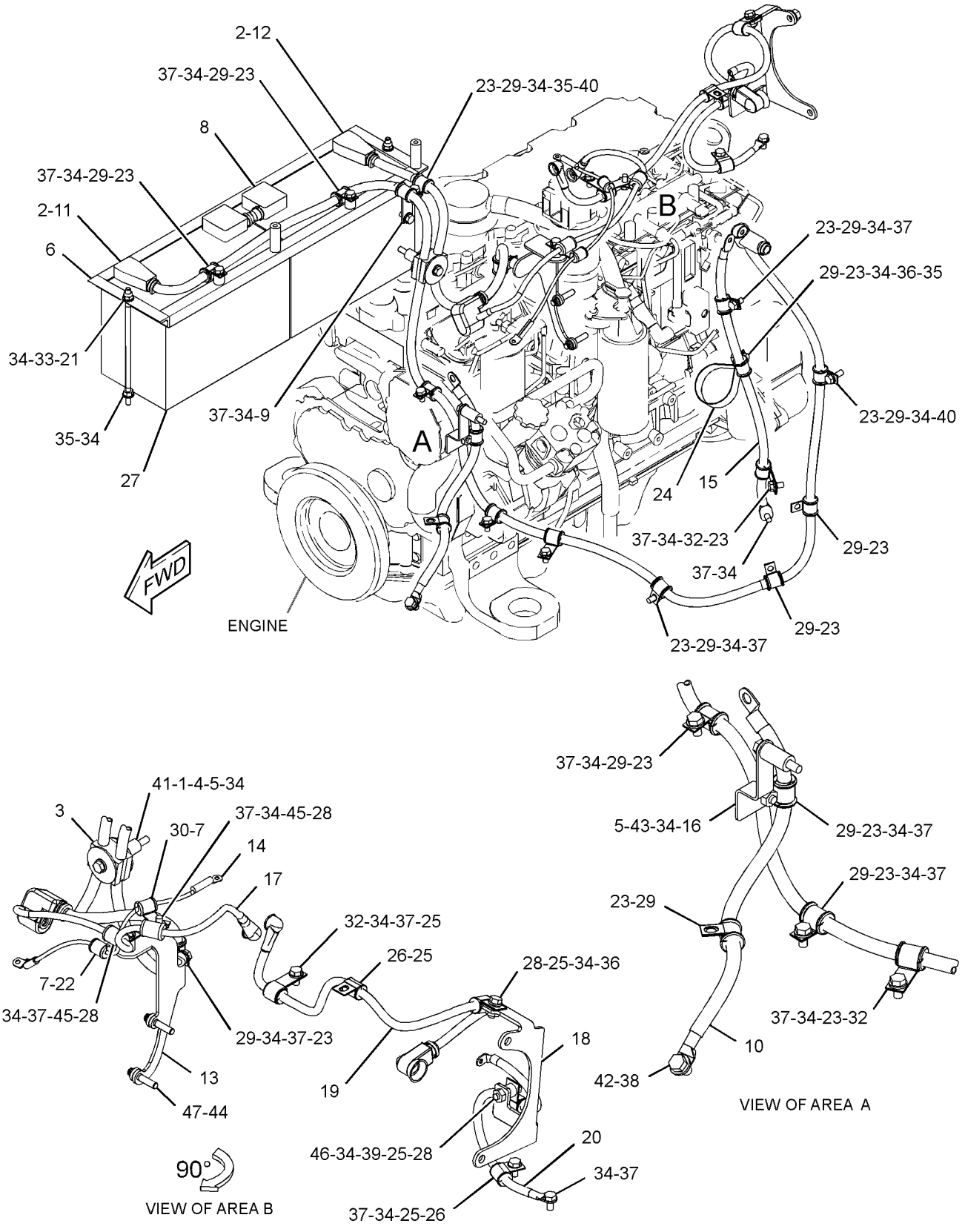

GRAPHIC #1 <END> g03391915

434-4115 BATTERY GP

S/N: SZS1-UP
PART OF 465-8777 DISTRIBUTION AR
AN ATTACHMENT

SMCS-1401 **i05884790**

NOTE	REF NO	GRAPHIC REF	PART NUMBER	QTY	PART NAME 1 2 3 4 5 6 (PRODUCT LEVEL)	SEE PAGE
	1	2	**4S-5719**	1	SPACER (10.31X25X12.7-MM THK)	
	2	1	**7K-1181**	4	STRAP-CABLE	
	3	2	**9G-2758**	1	LOCKOUT-SWITCH	
	4	2	**295-1139**	1	HOLD-DOWN AS	
	5	2	**297-8049**	1	GROMMET	
Y	6	2	*298-3519*	1	BOX GP-BATTERY	682
	7	2	**300-6152**	1	CABLE AS	
		2	**9G-0003**	1	COVER AS-TERMINAL (BLACK)	
		2	**9G-0004**	1	COVER AS-TERMINAL (RED)	
					(EACH COVER-TERMINAL INCLUDES)	
		2	**3S-2093**	1	STRAP-CABLE	
		2	**8C-5917**	1	TERMINAL AS-BATTERY (POSITIVE)	
		2	**8T-9757**	1	TERMINAL AS-BATTERY (NEGATIVE)	
					(EACH TERMINAL AS INCLUDES)	
		2	**1M-6119**	1	BOLT (5/16-18X1.375-IN)	
		2	**1M-6120**	1	NUT (5/16-18-THD)	
E		2	**159-8049**		CABLE (00-GA, RED) (9-CM)	
	8	2	**301-6664**	1	BRACKET	
	9	2	*310-7252*	1	CABLE AS	
B		2	**1P-0810**		TAPE-ELECTRICAL	
		2	**1S-7251**	1	TERMINAL-CABLE (00-GA, 1/2-IN SCREW)	
		2	**1S-7252**	1	TERMINAL-CABLE (00-GA, 3/8-IN SCREW)	
D		2	**6V-2722**		TUBE-HEAT SHRINK (25.4-MM DIA) (0.045-M EACH)	
E		2	**159-8050**		CABLE (00-GA, BLACK) (53-CM)	
	10	2	**310-7253**	1	CABLE AS	
B		2	**1P-0810**		TAPE-ELECTRICAL	
		2	**1S-7252**	1	TERMINAL-CABLE (00-GA, 3/8-IN SCREW)	
D		2	**6V-2722**		TUBE-HEAT SHRINK (25.4-MM DIA) (0.045-M EACH)	
		2	**7N-5274**	1	COVER AS-TERMINAL (BLACK)	
		2	**8L-8413**	1	STRAP-CABLE (WHITE)	
		2	**9G-8909**	1	COVER-TERMINAL (BLACK)	
		2	**3S-6050**	1	TERMINAL AS-BATTERY (NEGATIVE)	
		2	**1M-6119**	1	BOLT (5/16-18X1.375-IN)	
		2	**1M-6120**	1	NUT (5/16-18-THD)	
E		2	**159-8050**		CABLE (00-GA, BLACK) (283-CM)	
	11	2	**310-7256**	1	CABLE AS	
B		2	**1P-0810**		TAPE-ELECTRICAL	
D		2	**6V-2722**		TUBE-HEAT SHRINK (25.4-MM DIA) (0.045-M EACH)	
		2	**8N-1725**	1	COVER AS-TERMINAL (RED)	
		2	**194-4046**	1	COVER-TERMINAL (00-GA, POSITIVE, RED)	
					(EACH COVER-TERMINAL INCLUDES)	
		2	**8L-8413**	1	STRAP-CABLE (WHITE)	
		2	**3S-6049**	1	TERMINAL AS-BATTERY (POSITIVE)	
		2	**1M-6119**	1	BOLT (5/16-18X1.375-IN)	
		2	**1M-6120**	1	NUT (5/16-18-THD)	

434-4115 **BATTERY GP** (contd.) **i05884790**

NOTE	REF NO	GRAPHIC REF	PART NUMBER	QTY	PART NAME 1 2 3 4 5 6 (PRODUCT LEVEL)	SEE PAGE
E		2	**159-8049**		CABLE (00-GA, RED) (88-CM)	
		2	**208-4617**	1	TERMINAL-RING (00-GA, 1/2-IN SCREW)	
	12	2	**311-6573**	1	BRACKET AS	
	13	2	*318-2064*	1	CABLE AS	
B		2	**1P-0810**		TAPE-ELECTRICAL	
		2	**1S-7252**	2	TERMINAL-CABLE (00-GA, 3/8-IN SCREW)	
D		2	**6V-2722**		TUBE-HEAT SHRINK (25.4-MM DIA) (0.045-M EACH)	
E		2	**159-8050**		CABLE (00-GA, BLACK) (60-CM)	
	14	2	**335-0806**	1	BRACKET AS	
	15	2	**345-0635**	1	BRACKET AS	
	16	1	**373-6949**	1	BRACKET AS	
M		1	**8T-3490**	2	NUT-WELD (M10X1.5-THD)	
	17	1	**380-6215**	1	CABLE AS	
E		1	**8C-0596**		CABLE (2-GA) (56-CM)	
		1	*261-0747*	1	TERMINAL AS	
		1	*311-6185*	1	TERMINAL AS	
					(EACH TERMINAL AS INCLUDES)	
E		1	**125-7876**		TUBE-HEAT SHRINK (17.78-MM DIA) (4-CM)	
M	18	2	**108-2949**	2	STUD (M10X1.5X270-MM)	
	19	2	**1P-7009**	1	CLIP	
	20	2	**2G-8767**	2	WASHER (10.5X60X3-MM THK)	
	21	2	**2V-1771**	17	GROMMET	
	22	2	**325-1242**	1	CLIP	
	23	1,2	**353-7957**	5	GROMMET	
	24	1	**3S-8664**	2	CLIP	
	25	2	**3T-5760**	2	BATTERY GP (12-VOLT, 750-CCA) (MAINTENANCE FREE)	
					(EACH INCLUDES)	
		2	**123-1373**	6	CAP AS-FILLER (7/8-9-THD)	
	26	1,2	**5P-4295**	3	CLIP	
	27	2	**6D-4246**	15	CLIP	
	28	2	**6G-2256**	1	CLAMP	
	29	2	**6G-2263**	1	SPACER (10.5X19X28.5-MM THK)	
	30	2	**6W-6672**	2	SPACER (10.5X20X38-MM THK)	
Y	31	2	**7N-0718**	1	SWITCH GP-DISCONNECT (BATTERY)	359
	32	2	**8S-0948**	2	CLIP	
M	33	2	**8T-0389**	2	LOCKNUT (M10X1.5-THD)	
	34	1,2	**8T-4121**	31	WASHER-HARD (11X21X2.5-MM THK)	
M	35	2	**8T-4133**	4	NUT (M10X1.5-THD)	
M	36	1,2	**8T-4136**	2	BOLT (M10X1.5X25-MM)	
M	37	1,2	**8T-4137**	17	BOLT (M10X1.5X20-MM)	
M	38	1	**8T-4186**	1	BOLT (M10X1.5X40-MM)	
M	39	2	**8T-4195**	2	BOLT (M10X1.5X30-MM)	
M	40	2	**8T-4196**	1	BOLT (M10X1.5X35-MM)	
M	41	2	**8T-4198**	1	BOLT (M10X1.5X100-MM)	
M	42	2	**8T-6466**	1	BOLT (M10X1.5X60-MM)	
	43	2	**8T-7934**	2	WASHER-HARD (11X21X5-MM THK)	
	44	1	**9C-5344**	1	SPACER (10.5X20X18-MM THK)	
M	45	2	**9X-8271**	2	BOLT-12 POINT HEAD (M10X1.5X45-MM)	

434-4115 **BATTERY GP** (contd.) **i05884790**

NOTE	REF NO	GRAPHIC REF	PART NUMBER	QTY	PART NAME 1 2 3 4 5 6 (PRODUCT LEVEL)	SEE PAGE

B - USE AS REQUIRED
D - ORDER BY THE METER
E - ORDER BY THE CENTIMETER
M - METRIC PART
Y - SEPARATE ILLUSTRATION

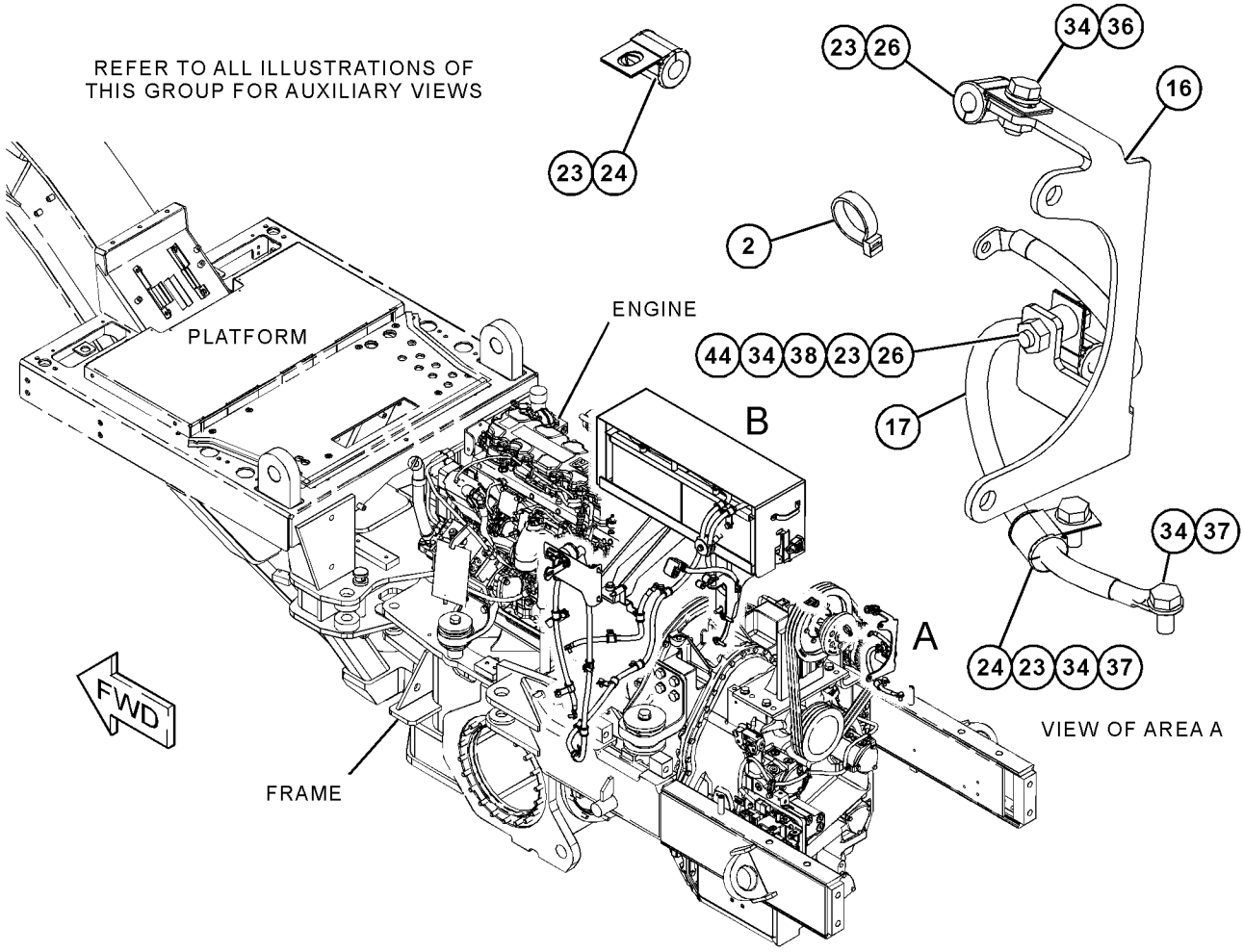

GRAPHIC #1 g03713421

434-4115 **BATTERY GP** (contd.) **i05884790**

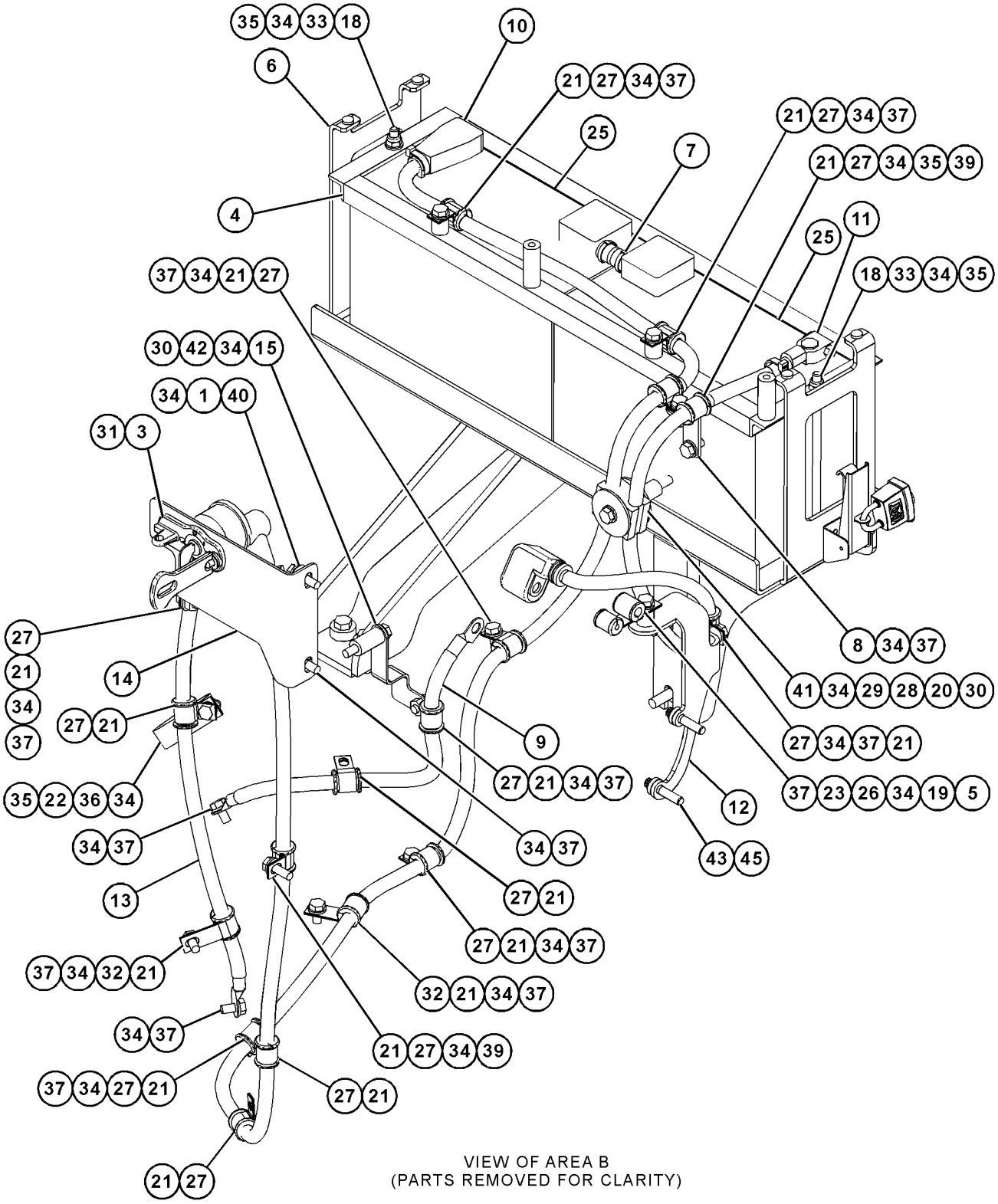

VIEW OF AREA B
(PARTS REMOVED FOR CLARITY)

GRAPHIC #2 <END> g03713422

246-9345 CONTROL & MTG GP-ENGINE ELEK

S/N: TX71-UP; KHX1-UP

PART OF 364-7493, 395-0487 ENGINE AR-COMPLETE

SMCS-1901 **i05908412**

NOTE	REF NO	GRAPHIC REF	PART NUMBER	QTY	PART NAME 1 2 3 4 5 6 (PRODUCT LEVEL)	SEE PAGE
	1	1	**8T-9655**	8	MOUNT-ISOLATION	
	2	1	**101-3128**	4	SPACER-SPECIAL (12.7X26X28.7-MM THK)	
M	3	1	**143-9392**	4	STUD (M8X1.25-THD)	
Y	4	1	*226-7473*	1	CONTROL GP-ENGINE ELECTRONIC	220
	5	1	**206-6875**	4	CAP-TUBE	
	6	1	**244-3168**	1	BRACKET AS (HARNESS)	
M		1	**232-1693**	1	BOLT-FLANGE HEAD (M6X1X35-MM)	
	7	1	**233-0891**	1	BRACKET AS (HARNESS)	
M		1	**232-1693**	1	BOLT-FLANGE HEAD (M6X1X35-MM)	
	8	1	**9M-1974**	4	WASHER-HARD (8.8X16X2-MM THK)	
	9	1	**9N-0869**	4	WASHER-HARD (8.8X25.5X2-MM THK)	

M - METRIC PART
Y - SEPARATE ILLUSTRATION

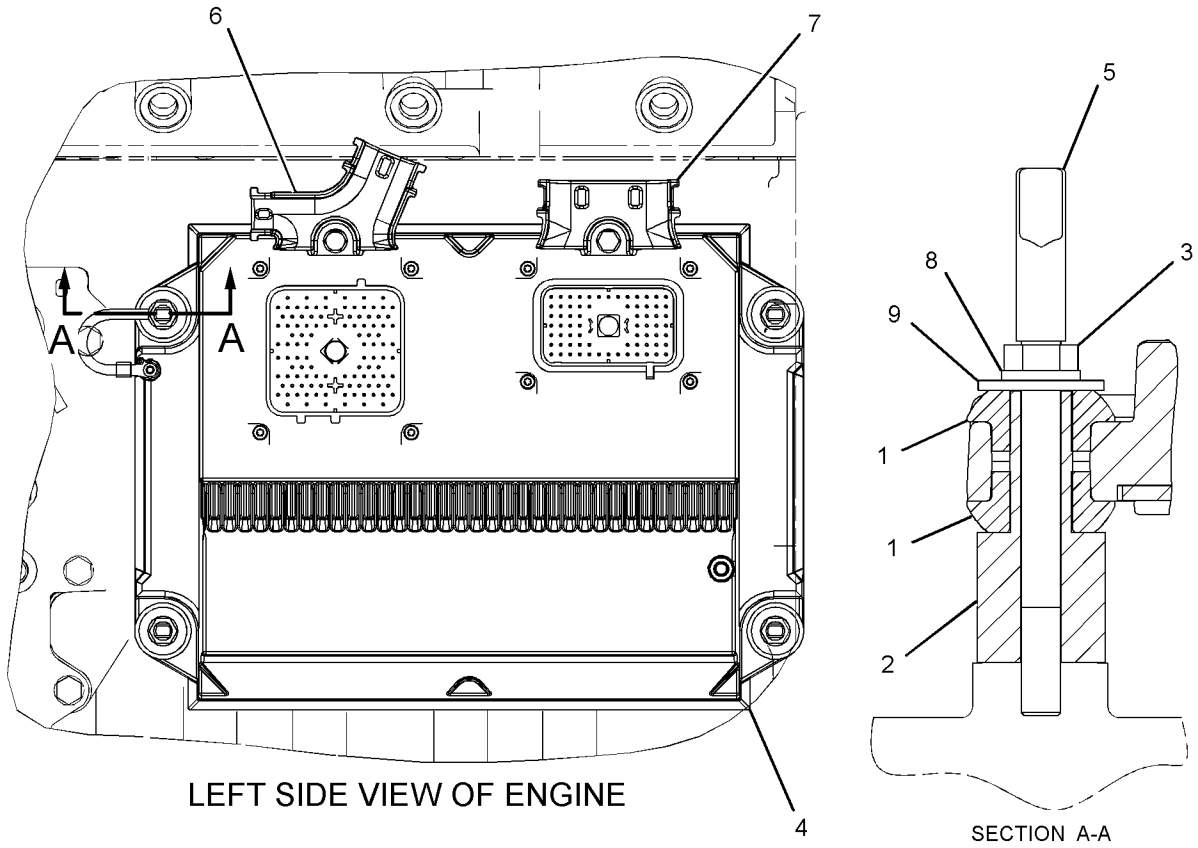

GRAPHIC #1 <END> g03378238

226-7473 CONTROL GP-ENGINE ELECTRONIC

S/N: TX71-UP; KHX1-UP

PART OF 246-9345 CONTROL & MTG GP-ENGINE ELEK

SMCS-1901 **i06752531**

NOTE	REF NO	GRAPHIC REF	PART NUMBER	QTY	PART NAME 1 2 3 4 5 6 (PRODUCT LEVEL)	SEE PAGE
R	1	1	**478-7932**	1	CONTROL GP-ELECTRONIC (ENGINE)	

R - REMANUFACTURED PART MAY BE AVAILABLE

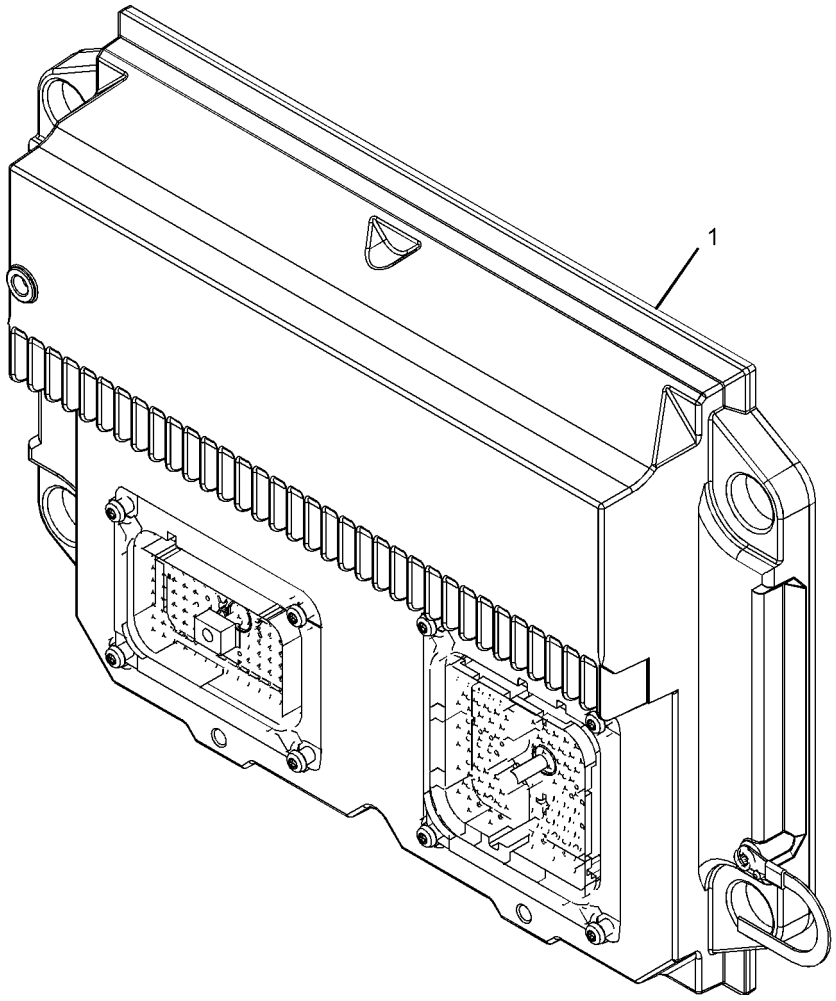

GRAPHIC #1 <END> g01101798

177-4493 CONTROL GP-POWER TRAIN

S/N: SZS1-488

PART OF 284-5343, 334-3341 WIRING GP-FRONT

ALSO AN ATTACHMENT

SMCS-4808, 7610

i03523241

NOTE	REF NO	GRAPHIC REF	PART NUMBER	QTY	PART NAME 1 2 3 4 5 6 (PRODUCT LEVEL)	SEE PAGE
YR	1	1	**172-9389**	1	CONTROL GP-UNPROGRAMMED (POWER TRAIN)	222

R - REMANUFACTURED PART MAY BE AVAILABLE
Y - SEPARATE ILLUSTRATION

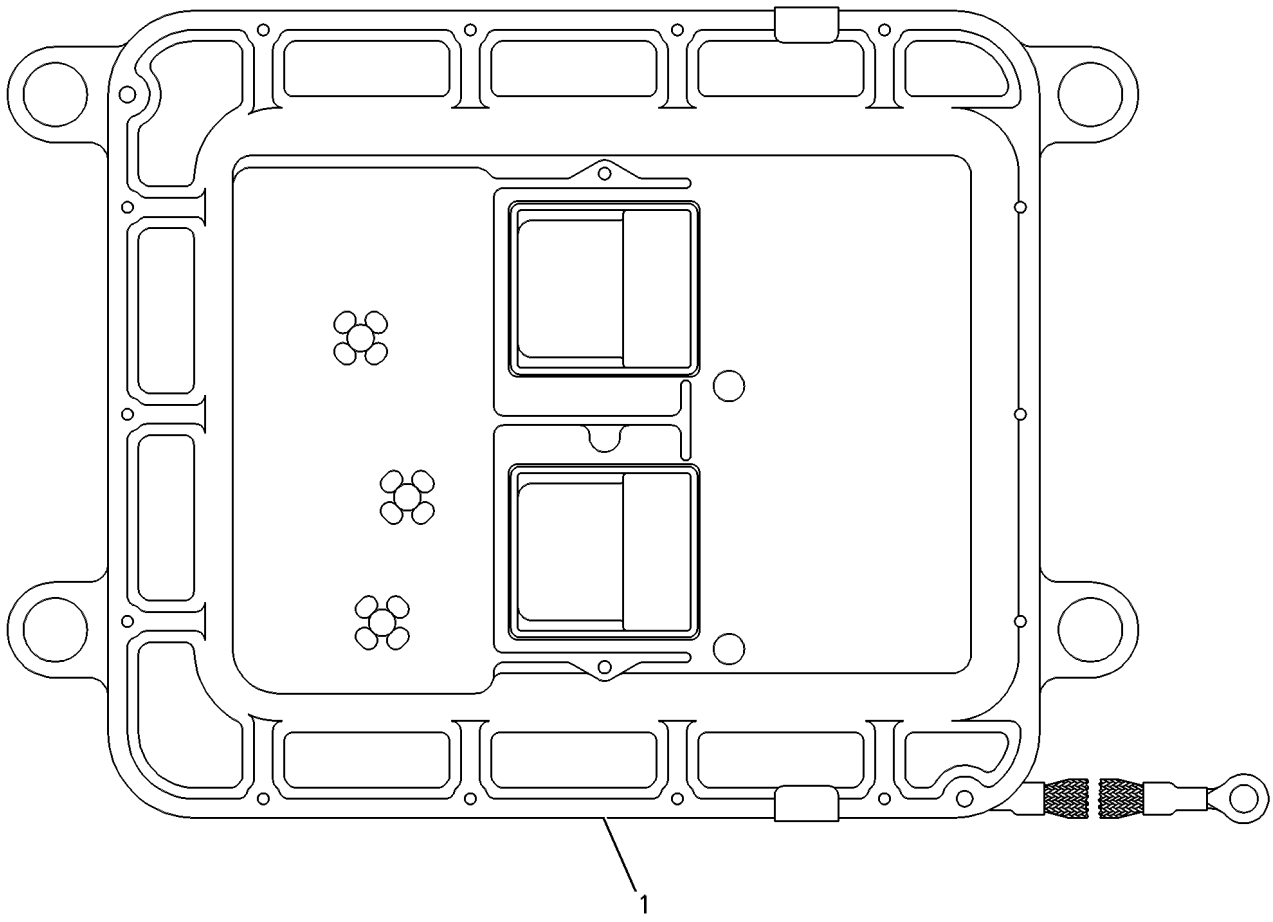

GRAPHIC #1 <END> g00415185

172-9389 CONTROL GP-UNPROGRAMMED–HIGH PROFILE*R

S/N: SZS1-488
DRIVE TRAIN
PART OF 177-4493 CONTROL GP-POWER TRAIN
ALSO AN ATTACHMENT

SMCS-7610 **i03523240**

NOTE	REF NO	GRAPHIC REF	PART NUMBER	QTY	PART NAME 1 2 3 4 5 6 (PRODUCT LEVEL)	SEE PAGE
	1	1	**7X-6315**	1	STRAP AS-GROUND	
	2	1	**101-0852**	1	SCREW-PAN HEAD (8-32X0.375-IN)	
M	3	1	**6V-6703**	2	KIT-RETAINING BOLT	
					(EACH INCLUDES BOLT, RING & SEALS)	
	4	1	**134-4126**	1	WASHER (4.52X8.28X0.76-MM THK)	

M - METRIC PART

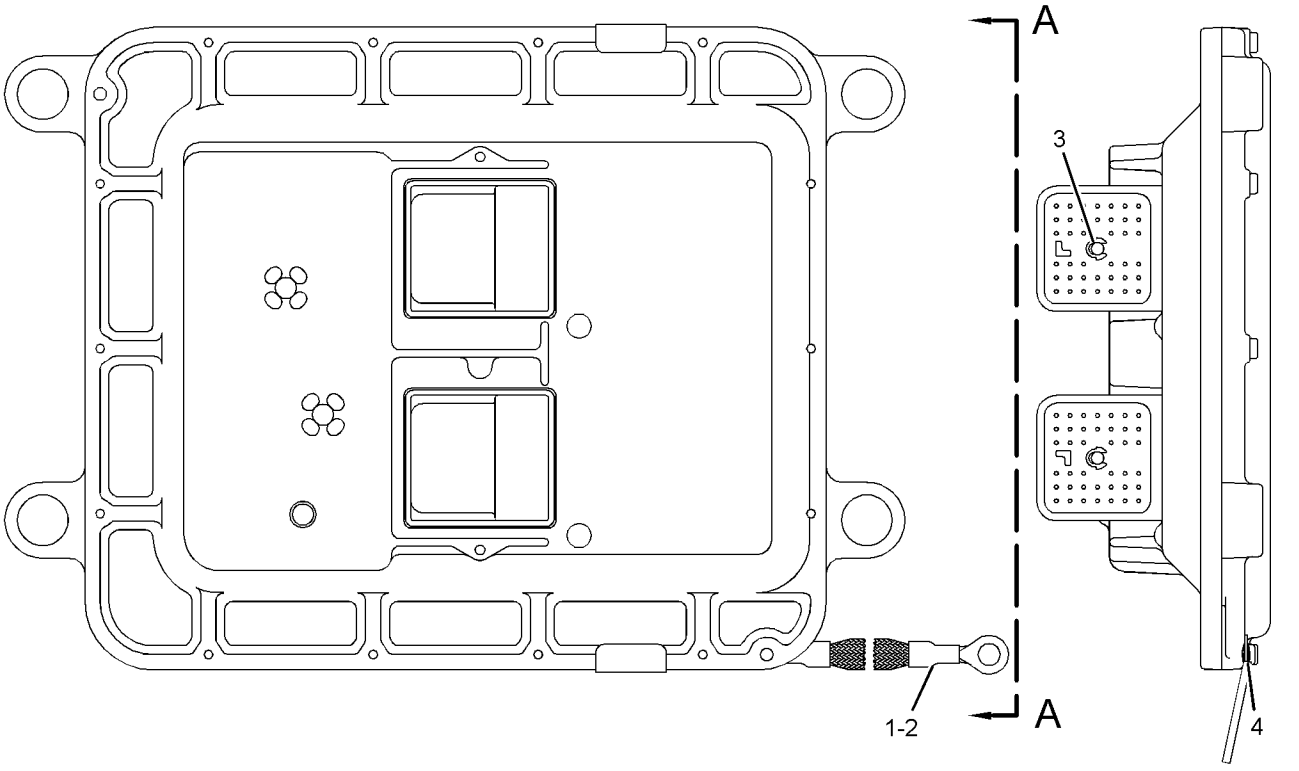

VIEW A-A

GRAPHIC #1 <END> g01859353

351-8490 CONTROL GP-UNPROGRAMMED–PRODUCT LINK 522

S/N: SZS1-UP
WITH SIM CARD
PART OF 368-6713, 368-6714 INSTALLATION AR-COMMUNICATION
AN ATTACHMENT

SMCS-7610 **i06218759**

NOTE	REF NO	GRAPHIC REF	PART NUMBER	QTY	PART NAME 1 2 3 4 5 6 (PRODUCT LEVEL)	SEE PAGE
	1	1	**346-7763**	1	COVER AS	
	2	1	**351-8488**	1	CARD-MEMORY (SUBSCRIBER IDENTITY MODULE)	
	3	1	**7X-6315**	1	STRAP AS-GROUND	
D		1	**5P-6006**		TUBE-HEAT SHRINK (9.52-MM DIA) (0.1-M)	
		1	**2L-8078**	1	TERMINAL-RING (14-GA TO 16-GA, 5/16-IN SCREW)	
		1	**139-6911**	1	RING-TERMINAL	
M	4	1	**342-9022**	4	SCREW-PAN HEAD (M2.5X0.45X8-MM)	
M	5	1	**342-9290**	1	SCREW-PAN HEAD (M4X0.7X10-MM)	
	6	1	**134-4126**	1	WASHER (4.52X8.28X0.76-MM THK)	
F			**476-9318**	1	SOFTWARE GP-MONITOR	

D - ORDER BY THE METER
F - NOT SHOWN
M - METRIC PART

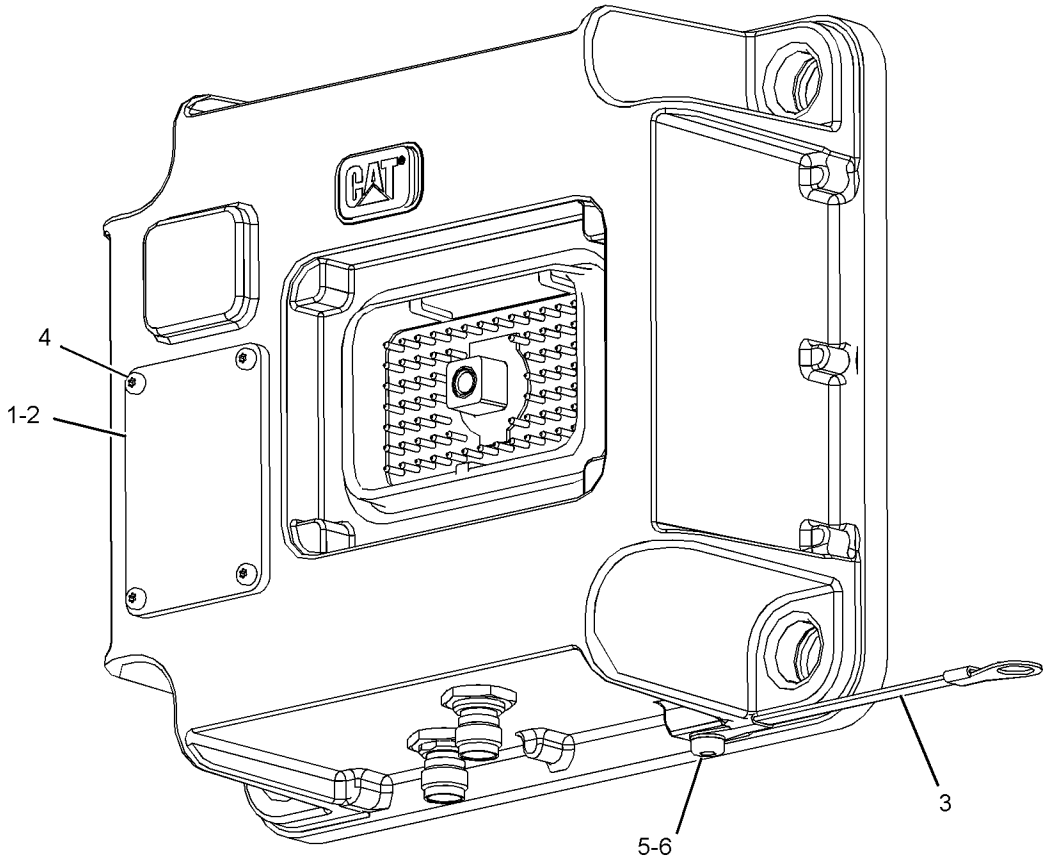

GRAPHIC #1 <END> g02330133

372-4531 CONTROL GP-UNPROGRAMMED–PRODUCT LINK 522, CHINA

S/N: SZS1-UP
WITH SIM CARD
PART OF 368-6729, 368-6730 INSTALLATION AR-COMMUNICATION
AN ATTACHMENT

SMCS-7610 **i06144079**

NOTE	REF NO	GRAPHIC REF	PART NUMBER	QTY	PART NAME 1 2 3 4 5 6 (PRODUCT LEVEL)	SEE PAGE
	1	1	**346-7763**	1	COVER AS	
	2	1	**372-4532**	1	CARD-MEMORY (SUBSCRIBER IDENTITY MODULE)	
	3	1	**7X-6315**	1	STRAP AS-GROUND	
M	4	1	**342-9022**	4	SCREW-PAN HEAD (M2.5X0.45X8-MM)	
M	5	1	**342-9290**	1	SCREW-PAN HEAD (M4X0.7X10-MM)	
	6	1	**134-4126**	1	WASHER (4.52X8.28X0.76-MM THK)	
	7	1	**276-4053**	1	FILM-IDENTIFICATION (CAT)	
F			**476-9318**	1	SOFTWARE GP-MONITOR	

F - NOT SHOWN
M - METRIC PART

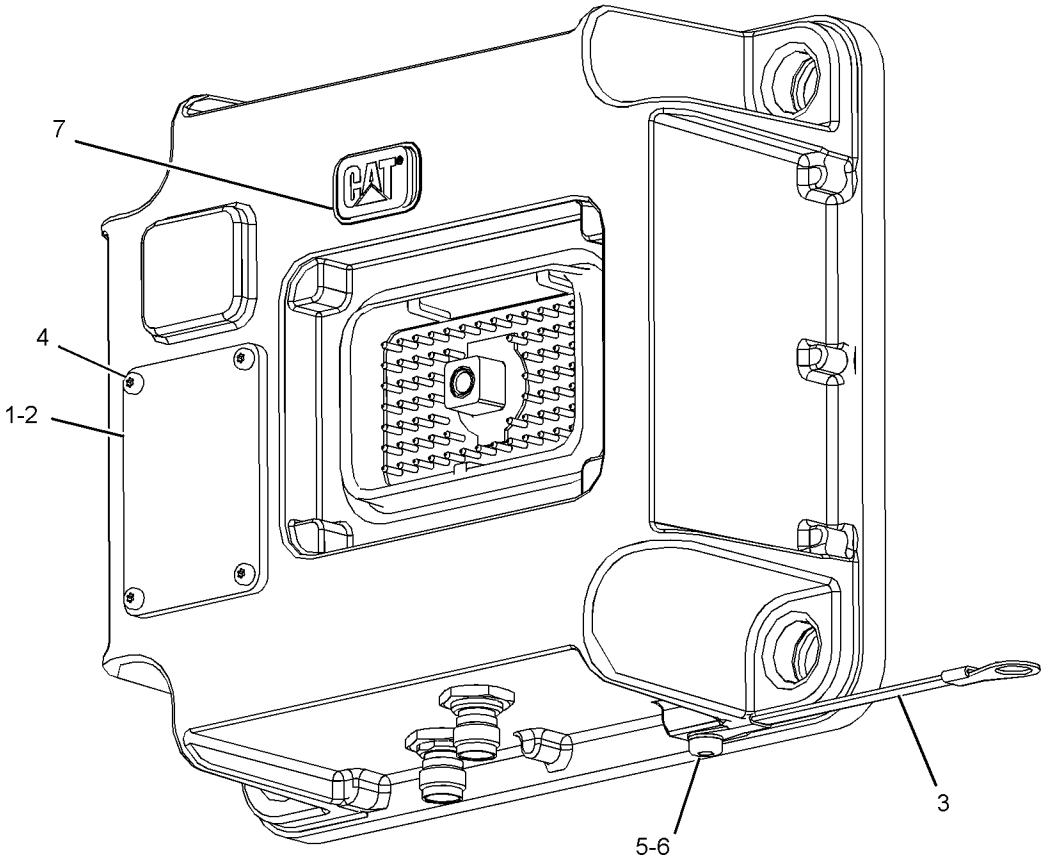

GRAPHIC #1 <END> g03009457

440-2105 CONTROL GP-UNPROGRAMMED–PL641E CELLULAR*R

S/N: SZS1-UP
FIELD REPLACEMENT FOR 464-8368–PAGE: 226
PART OF 464-8368 CONTROL GP-UNPROGRAMMED
AN ATTACHMENT

SMCS-7610 **i06827331**

NOTE	REF NO	GRAPHIC REF	PART NUMBER	QTY	PART NAME 1 2 3 4 5 6 (PRODUCT LEVEL)	SEE PAGE
					(NO SERVICED PARTS)	

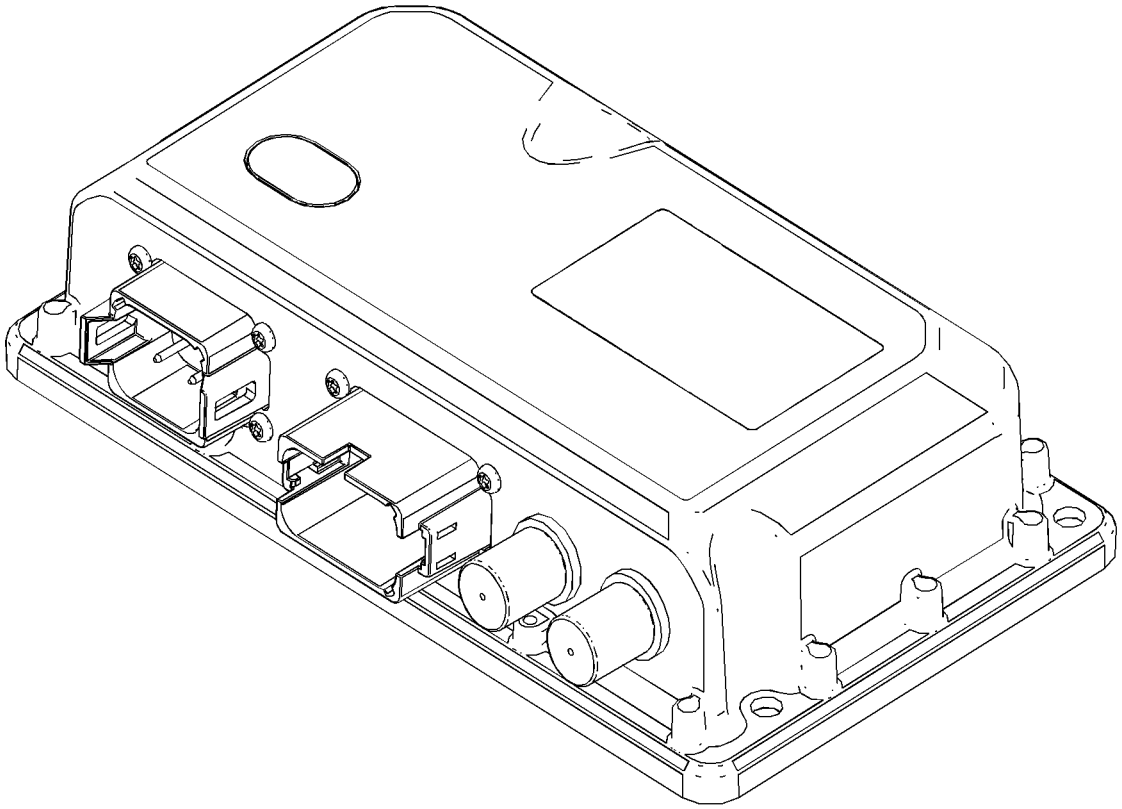

GRAPHIC #1 <END> g06131293

464-8368 CONTROL GP-UNPROGRAMMED—PL641E CELLULAR

S/N: SZS1-UP
FIELD REPLACEMENT ORDER 440-2105—PAGE: 225
PART OF 466-2111 INSTALLATION AR-COMMUNICATION
AN ATTACHMENT

SMCS-7610 **i06537081**

NOTE	PART NUMBER	QTY	PART NAME 1 2 3 4 5 6 (PRODUCT LEVEL)	SEE PAGE
YR	**440-2105**	1	CONTROL GP-UNPROGRAMMED (PL641E CELLULAR)	225

R - REMANUFACTURED PART MAY BE AVAILABLE
Y - SEPARATE ILLUSTRATION

<END>

286-4328 CONVERTER AR-ELECTRICAL—HIGH PROFILE

S/N: SZS1-UP
12-VOLT, POWER PORT
PART OF 340-1191 OPTION AR-CAB
AN ATTACHMENT

SMCS-1421 **i05253384**

NOTE	PART NUMBER	QTY	PART NAME 1 2 3 4 5 6 (PRODUCT LEVEL)	SEE PAGE
Y	*171-7186*	1	ACCESSORY GP-CAB (12-VOLT POWER PORT) (HIGH PROFILE)	1067
Y	*180-4643*	1	CONVERTER GP-ELECTRICAL (12-VOLT)	228
			—OR—	
Y	*423-4955*	1	CONVERTER GP-ELECTRICAL (12-VOLT POWER PORT)	230
Y	*293-6529*	1	INSTALLATION GP-RADIO	1215

Y - SEPARATE ILLUSTRATION

<END>

434-8346 CONVERTER AR-ELECTRICAL—HIGH PROFILE

S/N: SZS1-10099
12-VOLT POWER PORT
FOR USE WITH 437-0677—PAGE: 1106
CANNOT BE USED WITH 437-0650—PAGE: 1105, 437-0660—PAGE: 1106
PART OF 461-0562 OPTION AR-CAB
AN ATTACHMENT

SMCS-1421 **i05865301**

NOTE	PART NUMBER	QTY	PART NAME 1 2 3 4 5 6 (PRODUCT LEVEL)	SEE PAGE
Y	*434-8056*	1	ACCESSORY GP-CAB	1068
Y	*434-8058*	1	CONVERTER GP-ELECTRICAL	231
Y	*434-8048*	1	INSTALLATION GP-RADIO	1216

Y - SEPARATE ILLUSTRATION

<END>

520-3154 CONVERTER AR-ELECTRICAL

S/N: SZS10100-UP
12-VOLT
PART OF 461-0562 OPTION AR-CAB
AN ATTACHMENT

SMCS-1421 **i06907386**

NOTE	PART NUMBER	QTY	PART NAME 1 2 3 4 5 6 (PRODUCT LEVEL)	SEE PAGE
Y	*518-6854*	1	ACCESSORY GP-CAB	1070
Y	*434-8058*	1	CONVERTER GP-ELECTRICAL	231
Y	*518-6855*	1	INSTALLATION GP-RADIO	1217

Y - SEPARATE ILLUSTRATION

<END>

180-4643 CONVERTER GP-ELECTRICAL

S/N: SZS1-UP
12-VOLT, POWER PORT
PART OF 286-4328 CONVERTER AR-ELECTRICAL
AN ATTACHMENT

SMCS-1421 **i03909898**

NOTE	REF NO	GRAPHIC REF	PART NUMBER	QTY	PART NAME 1 2 3 4 5 6 (PRODUCT LEVEL)	SEE PAGE
	1	1	**8X-1853**	2	SPACER (13.1X15.9X30.4-MM THK)	
	2	1	**8T-4896**	2	WASHER-HARD (10.2X18.5X2.5-MM THK)	
	3	1	**208-7782**	1	PLATE AS	
C	4	1	**340-7160**	1	CONVERTER-POWER (24-VOLT TO 12-VOLT)	
	5	1	**096-6166**	2	WASHER-HARD (4.5X9X1-MM THK)	
	6	1	**8T-2501**	2	BOLT (3/8-16X2-IN)	
CM	7	1	**8T-4647**	2	SCREW-MACHINE (M4X0.7X20-MM)	
F			**9W-1442**	1	FUSE (10-AMPERE) (POWER CONVERTER)	
					(IN STEERING CONSOLE FUSE BLOCKS)	

C - CHANGE FROM PREVIOUS TYPE
F - NOT SHOWN
M - METRIC PART

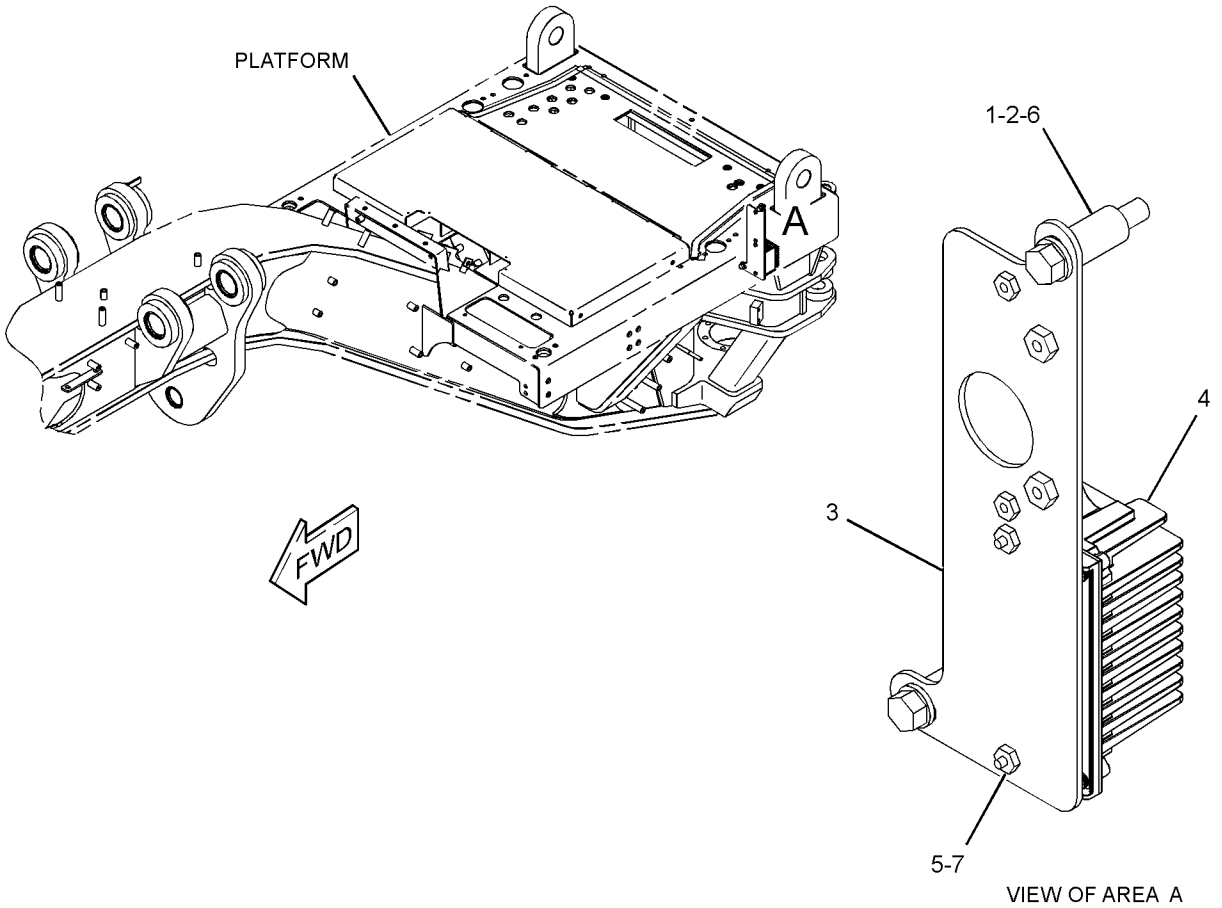

GRAPHIC #1 <END> g02150572

286-4330 CONVERTER GP-ELECTRICAL–RADIO

S/N: SZS1-UP
PART OF 295-7991 INSTALLATION AR-RADIO
AN ATTACHMENT

SMCS-1421 **i03909813**

NOTE	REF NO	GRAPHIC REF	PART NUMBER	QTY	PART NAME 1 2 3 4 5 6 (PRODUCT LEVEL)	SEE PAGE
	1	1	**8X-1853**	2	SPACER (13.1X15.9X30.4-MM THK)	
	2	1	**8T-4896**	2	WASHER-HARD (10.2X18.5X2.5-MM THK)	
	3	1	**208-7782**	1	PLATE AS	
C	4	1	**340-7160**	1	CONVERTER-POWER (24-VOLT TO 12-VOLT)	
	5	1	**096-6166**	2	WASHER-HARD (4.5X9X1-MM THK)	
	6	1	**8T-2501**	2	BOLT (3/8-16X2-IN)	
CM	7	1	**8T-4647**	2	SCREW-MACHINE (M4X0.7X20-MM)	
F			**9W-1442**	1	FUSE (10-AMPERE)	
					(IN STEERING CONSOLE FUSE BLOCKS)	

C - CHANGE FROM PREVIOUS TYPE
F - NOT SHOWN
M - METRIC PART

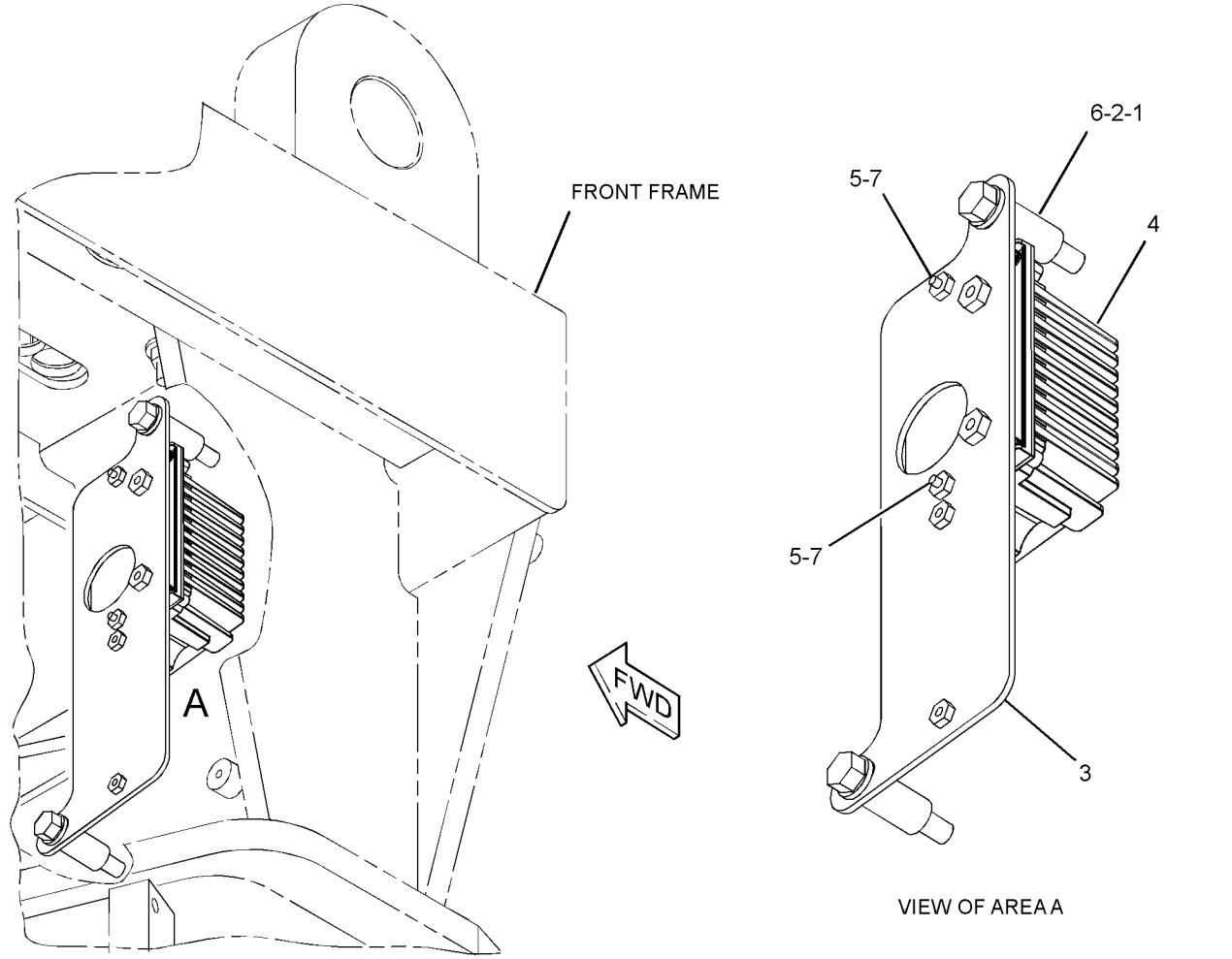

GRAPHIC #1 <END> g02150591

423-4955 CONVERTER GP-ELECTRICAL

S/N: SZS1-UP
12-VOLT POWER PORT
PART OF 286-4328 CONVERTER AR-ELECTRICAL
AN ATTACHMENT

SMCS-1421 **i05173831**

NOTE	REF NO	GRAPHIC REF	PART NUMBER	QTY	PART NAME 1 2 3 4 5 6 (PRODUCT LEVEL)	SEE PAGE
	1	1	**8X-1853**	2	SPACER (13.1X15.9X30.4-MM THK)	
	2	1	**9W-1442**	2	FUSE (10-AMPERE)	
	3	1	**208-7782**	1	PLATE AS	
	4	1	**340-7160**	2	CONVERTER-POWER (24-VOLT TO 12-VOLT)	
	5	1	**096-6166**	4	WASHER-HARD (4.5X9X1-MM THK)	
	6	1	**8T-2501**	2	BOLT (3/8-16X2-IN)	
M	7	1	**8T-4647**	4	SCREW-MACHINE (M4X0.7X20-MM)	
	8	1	**8T-4896**	2	WASHER-HARD (10.2X18.5X2.5-MM THK)	

M - METRIC PART

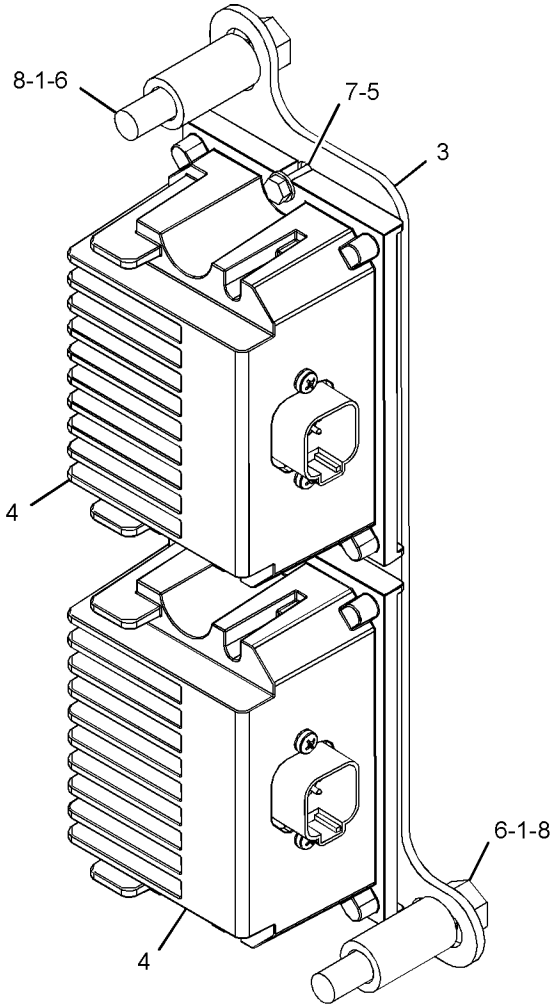

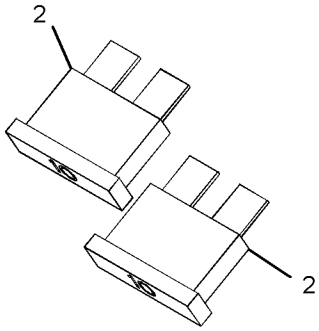

LOCATED IN FUSE BOX
(NOT TO SCALE)

GRAPHIC #1 <END> g03323514

434-8058 CONVERTER GP-ELECTRICAL

S/N: SZS1-UP
12-VOLT
PART OF 434-8346, 520-3154 CONVERTER AR-ELECTRICAL
AN ATTACHMENT

SMCS-1421 **i05865309**

NOTE	REF NO	GRAPHIC REF	PART NUMBER	QTY	PART NAME 1 2 3 4 5 6 (PRODUCT LEVEL)	SEE PAGE
	1	1	**8X-1853**	2	SPACER (13.1X15.9X30.4-MM THK)	
	2	1	**9W-1442**	2	FUSE (10-AMPERE)	
	3	1	**208-7782**	1	PLATE AS	
	4	1	**340-7160**	2	CONVERTER-POWER (24-VOLT TO 12-VOLT)	
	5	1	**096-6166**	4	WASHER-HARD (4.5X9X1-MM THK)	
	6	1	**8T-2501**	2	BOLT (3/8-16X2-IN)	
M	7	1	**8T-4647**	4	SCREW-MACHINE (M4X0.7X20-MM)	
	8	1	**8T-4896**	2	WASHER-HARD (10.2X18.5X2.5-MM THK)	

M - METRIC PART

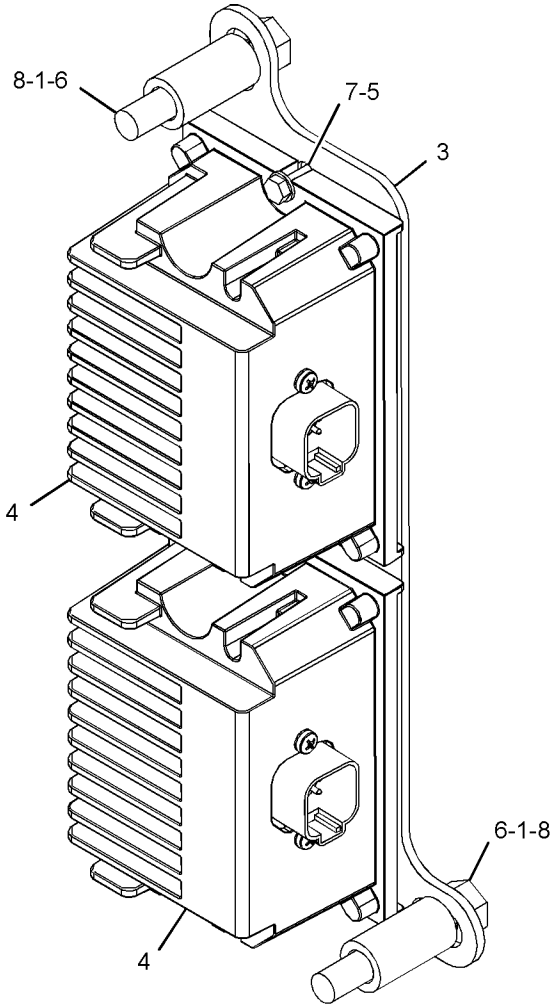

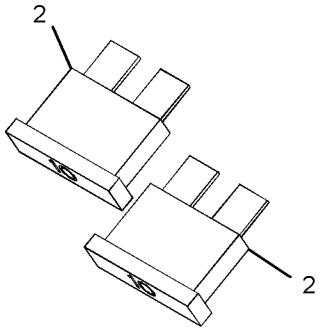

LOCATED IN FUSE BOX
(NOT TO SCALE)

GRAPHIC #1 <END> g03323514

436-7621 ELECTRICAL AR

S/N: SZS624-UP

PART OF 435-1521 COMMON AR

SMCS-1400, 1401, 1408, 1429, 1453, 1454, 1465, 7402, 7406 **i06113317**

NOTE	PART NUMBER	QTY	PART NAME 1 2 3 4 5 6 (PRODUCT LEVEL)	SEE PAGE
Y	*295-4371*	1	HORN GP-ELECTRIC	1207
Y	*284-5394*	1	LIGHTING GP-BACKUP	306
Y	*284-5362*	1	LIGHTING GP-FLOOD (RIPPER)	308
Y	*284-5376*	1	LIGHTING GP-FLOOD (FRONT)	309
Y	*438-1307*	1	WIRING GP-CONSOLE	410
Y	*434-4113*	1	WIRING GP-REAR (FUEL TANK)	531
Y	*452-0647*	1	WIRING GP-REAR	535
Y	*284-5348*	1	WIRING GP-REAR LIGHTING	541

Y - SEPARATE ILLUSTRATION

<END>

262-1421 ELECTRONICS GP-COMMUNICATION—PRODUCT LINK 300

S/N: SZS1-UP

PART OF 302-5429 INSTALLATION AR-COMMUNICATION

AN ATTACHMENT

SMCS-7606, 7610, 7620 **i06554549**

NOTE	PART NUMBER	QTY	PART NAME 1 2 3 4 5 6 (PRODUCT LEVEL)	SEE PAGE
	285-1133		CONTROL GP-UNPROGRAMMED (PRODUCT LINK 300)	
	7X-6315	1	STRAP AS-GROUND	
	101-0852	1	SCREW-PAN HEAD (8-32X0.375-IN)	
	134-4126	1	WASHER (4.52X8.28X0.76-MM THK)	
	476-1913	1	SOFTWARE GP-COMMUNICATION	

<END>

346-5641 ELECTRONICS GP-IMPLEMENT—ACCUGRADE

S/N: SZS1-UP

PART OF 336-4249, 337-3100, 394-0862, 435-1526, 435-1548 GRADE CONTROL AR

AN ATTACHMENT

SMCS-5701, 7610, 7620 **i05745658**

NOTE	PART NUMBER	QTY	PART NAME 1 2 3 4 5 6 (PRODUCT LEVEL)	SEE PAGE
	454-9695	1	SOFTWARE GP-IMPLEMENT	

<END>

381-8026 ELECTRONICS GP-MONITOR—PRODUCT LINK 522

S/N: SZS1-UP

PART OF 368-6713, 368-6714 INSTALLATION AR-COMMUNICATION

AN ATTACHMENT

SMCS-7490, 7610, 7620 **i05957554**

NOTE	PART NUMBER	QTY	PART NAME 1 2 3 4 5 6 (PRODUCT LEVEL)	SEE PAGE
	449-8593	1	SOFTWARE GP-COMMUNICATION (PL522)	

<END>

388-2563 ELECTRONICS GP-MONITOR—PRODUCT LINK 522

S/N: SZS1-UP
PART OF 368-6729, 368-6730 INSTALLATION AR-COMMUNICATION
AN ATTACHMENT

SMCS-7490, 7610, 7620 **i05736147**

NOTE	PART NUMBER	QTY	PART NAME 1 2 3 4 5 6 (PRODUCT LEVEL)	SEE PAGE
	437-2759	1	SOFTWARE GP-COMMUNICATION (PRODUCT LINK 522, CHINA)	

<END>

482-7035 ELECTRONICS GP-MONITOR

S/N: SZS1-UP
PART OF 466-2111 INSTALLATION AR-COMMUNICATION
AN ATTACHMENT

SMCS-7490, 7610, 7620 **i06747373**

NOTE	PART NUMBER	QTY	PART NAME 1 2 3 4 5 6 (PRODUCT LEVEL)	SEE PAGE
	505-1260	1	SOFTWARE GP-COMMUNICATION (PL641 CELLULAR)	
	513-6266	1	SOFTWARE GP-MONITOR (TELEMATICS)	

<END>

291-5475 ELECTRONICS GP-POWER TRAIN

S/N: SZS1-488
PART OF 284-5343 WIRING GP-FRONT

SMCS-4800, 4808, 7610, 7620 **i05792187**

NOTE	PART NUMBER	QTY	PART NAME 1 2 3 4 5 6 (PRODUCT LEVEL)	SEE PAGE
	450-1553	1	SOFTWARE GP-POWER TRAIN	

<END>

360-2133 ELECTRONICS GP-POWER TRAIN

S/N: SZS489-UP
TRANSMISSION CONTROL
PART OF 373-6940, 434-4108, 434-4109 WIRING GP-FRONT
ALSO AN ATTACHMENT

SMCS-4800, 4808, 7610, 7620 **i06678922**

NOTE	PART NUMBER	QTY	PART NAME 1 2 3 4 5 6 (PRODUCT LEVEL)	SEE PAGE
	508-4117	1	SOFTWARE GP-POWER TRAIN	

<END>

336-4249 GRADE CONTROL AR–ACCUGRADE

S/N: SZS1-UP
PART OF 349-2486 OPTION AR-REGIONAL
AN ATTACHMENT
TYPE 1

SMCS-7220 **i06949052**

NOTE	REF NO	GRAPHIC REF	PART NUMBER	QTY	PART NAME 1 2 3 4 5 6 (PRODUCT LEVEL)	SEE PAGE
	1	1	**3S-2093**	6	STRAP-CABLE	
	2	1	**152-6824**	1	KNOB AS (RH) (BLADE LIFT)	
		1	**8T-8737**	1	PLUG-SEAL	
		1	**102-8804**	1	KIT-RECEPTACLE (4-PIN)	
					(INCLUDES RECEPTACLE AS & WEDGE)	
		1	**186-3735**	3	PIN-CONNECTOR (16-GA TO 18-GA)	
	3	1	**152-6825**	1	KNOB AS (LH) (BLADE LIFT)	
		1	**8T-8737**	1	PLUG-SEAL	
		1	**102-8804**	1	KIT-RECEPTACLE (4-PIN)	
					(INCLUDES RECEPTACLE AS & WEDGE)	
		1	**186-3735**	3	PIN-CONNECTOR (16-GA TO 18-GA)	
	4	1	**246-6561**	1	KNOB AS (RH) (ARTICULATION)	
		1	**102-8804**	1	KIT-RECEPTACLE (4-PIN)	
					(INCLUDES RECEPTACLE AS & WEDGE)	
		1	**186-3735**	4	PIN-CONNECTOR (16-GA TO 18-GA)	
	5	1	**246-6562**	1	KNOB AS (LH) (ARTICULATION)	
		1	**102-8804**	1	KIT-RECEPTACLE (4-PIN)	
					(INCLUDES RECEPTACLE AS & WEDGE)	
		1	**186-3735**	4	PIN-CONNECTOR (16-GA TO 18-GA)	
	6	1	**130-5300**	4	CLIP	
	7	1	**1V-7368**	2	SPACER (0.364X0.54X1.06-IN THK)	
	8	1	**8T-4896**	2	WASHER-HARD (10.2X18.5X2.5-MM THK)	
M	9	1	**9X-2480**	2	BOLT (M6X1X45-MM)	
	10	1	*352-6310*	1	BRACKET GP-MOUNTING	
		1	**5P-4115**	2	WASHER-HARD (7.2X19X2-MM THK)	
M		1	**6V-7357**	2	BOLT (M6X1X25-MM)	
M		1	**225-3109**	4	SCREW-TRUSS HEAD (M4X0.7X14-MM)	
		1	**352-6311**	1	BRACKET AS	
M		1	**9R-2672**	1	BOSS-THREADED (M10X1.5X120-MM)	
M		1	**9X-2032**	4	NUT-WELD (M4X0.7-THD)	
FY			*336-9245*	1	BOSS GP-FRAME (ACCUGRADE)	680
FY			*336-5530*	1	COVER GP-ACCESS (PLATFORM)	687
FY			*346-5641*	1	ELECTRONICS GP-IMPLEMENT (ACCUGRADE) (GRADE CONTROL)	232
FY			*247-6450*	1	BOSS GP-DRAWBAR (ACCUGRADE)	1039
FY			*349-8405*	1	MOUNTING GP-GRADE CONTROL (CIRCLE)	329
FY			*252-5709*	1	WIRING GP-GRADE CONTROL (CAB, INDICATOR LAMP)	473
FY			*336-9255*	1	WIRING GP-GRADE CONTROL (ACCUGRADE)	477

F - NOT SHOWN
M - METRIC PART
Y - SEPARATE ILLUSTRATION

336-4249 **GRADE CONTROL AR (**contd.**)** **i06949052**

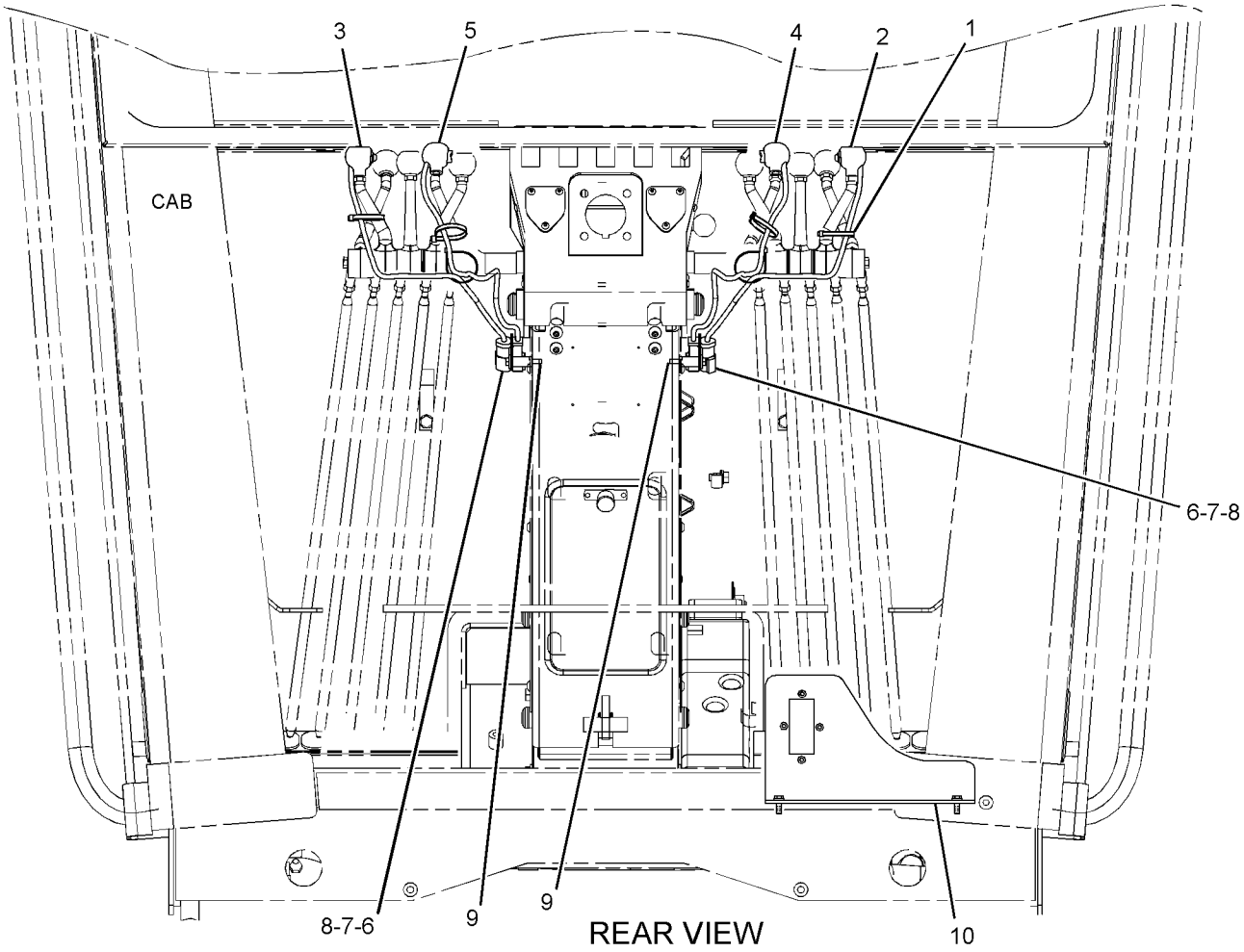

GRAPHIC #1 <END> g02406276

336-4249 GRADE CONTROL AR–ACCUGRADE

S/N: SZS1-UP
PART OF 349-2486 OPTION AR-REGIONAL
AN ATTACHMENT
TYPE 2

SMCS-7220 **i05358834**

NOTE	REF NO	GRAPHIC REF	PART NUMBER	QTY	PART NAME 1 2 3 4 5 6 (PRODUCT LEVEL)	SEE PAGE
	1	1	**3S-2093**	6	STRAP-CABLE	
	2	1	**152-6824**	1	KNOB AS (RH) (BLADE LIFT)	
		1	**8T-8737**	1	PLUG-SEAL	
		1	**102-8804**	1	KIT-RECEPTACLE (4-PIN)	
					(INCLUDES RECEPTACLE AS & WEDGE)	
		1	**186-3735**	3	PIN-CONNECTOR (16-GA TO 18-GA)	
	3	1	**152-6825**	1	KNOB AS (LH) (BLADE LIFT)	
		1	**8T-8737**	1	PLUG-SEAL	
		1	**102-8804**	1	KIT-RECEPTACLE (4-PIN)	
					(INCLUDES RECEPTACLE AS & WEDGE)	
		1	**186-3735**	3	PIN-CONNECTOR (16-GA TO 18-GA)	
	4	1	**246-6561**	1	KNOB AS (RH) (ARTICULATION)	
		1	**102-8804**	1	KIT-RECEPTACLE (4-PIN)	
					(INCLUDES RECEPTACLE AS & WEDGE)	
		1	**186-3735**	4	PIN-CONNECTOR (16-GA TO 18-GA)	
	5	1	**246-6562**	1	KNOB AS (LH) (ARTICULATION)	
		1	**102-8804**	1	KIT-RECEPTACLE (4-PIN)	
					(INCLUDES RECEPTACLE AS & WEDGE)	
		1	**186-3735**	4	PIN-CONNECTOR (16-GA TO 18-GA)	
	6	1	**130-5300**	4	CLIP	
	7	1	**1V-7368**	2	SPACER (0.364X0.54X1.06-IN THK)	
	8	1	**8T-4896**	2	WASHER-HARD (10.2X18.5X2.5-MM THK)	
M	9	1	**9X-2480**	2	BOLT (M6X1X45-MM)	
	10	1	*352-6310*	1	BRACKET GP-MOUNTING	
		1	**5P-4115**	2	WASHER-HARD (7.2X19X2-MM THK)	
M		1	**6V-7357**	2	BOLT (M6X1X25-MM)	
M		1	**225-3109**	4	SCREW-TRUSS HEAD (M4X0.7X14-MM)	
		1	**352-6311**	1	BRACKET AS	
M		1	**9R-2672**	1	BOSS-THREADED (M10X1.5X120-MM)	
M		1	**9X-2032**	4	NUT-WELD (M4X0.7-THD)	
BC	11	1	**7I-1024**		GUARD-HOSE (180-CM)	
FY			*336-9245*	1	BOSS GP-FRAME (ACCUGRADE)	680
FY			*336-5530*	1	COVER GP-ACCESS (PLATFORM)	687
FY			*346-5641*	1	ELECTRONICS GP-IMPLEMENT (ACCUGRADE) (GRADE CONTROL)	232
CFY			*382-1612*	1	BOSS GP-DRAWBAR (ACCUGRADE)	1040
FY			*349-8405*	1	MOUNTING GP-GRADE CONTROL (CIRCLE)	329
FY			*252-5709*	1	WIRING GP-GRADE CONTROL (CAB, INDICATOR LAMP)	473
CFY			*382-5903*	1	WIRING GP-GRADE CONTROL (ACCUGRADE)	489

B - USE AS REQUIRED
C - CHANGE FROM PREVIOUS TYPE
F - NOT SHOWN
M - METRIC PART
Y - SEPARATE ILLUSTRATION

336-4249 **GRADE CONTROL AR (**contd.**)** **i05358834**

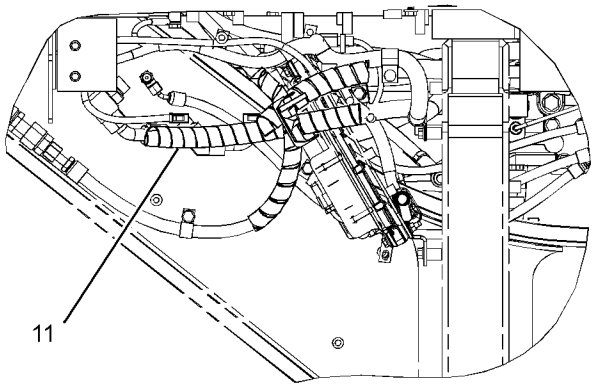

VIEW A-A

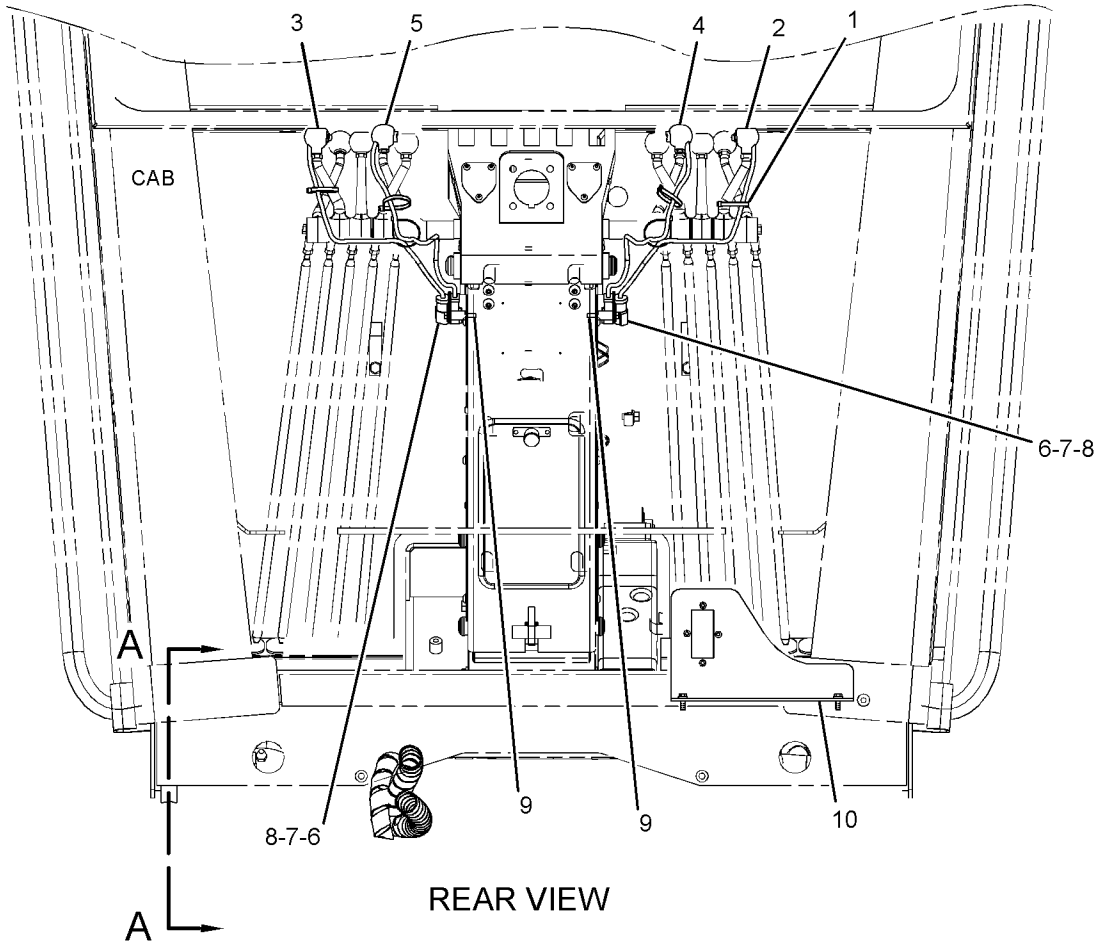

GRAPHIC #1 <END> g03141636

336-4249 GRADE CONTROL AR–ACCUGRADE

S/N: SZS1-UP
PART OF 349-2486 OPTION AR-REGIONAL
AN ATTACHMENT
TYPE 3

SMCS-7220 **i05358835**

NOTE	REF NO	GRAPHIC REF	PART NUMBER	QTY	PART NAME 1 2 3 4 5 6 (PRODUCT LEVEL)	SEE PAGE
	1	1	**3S-2093**	6	STRAP-CABLE	
	2	1	**152-6824**	1	KNOB AS (RH) (BLADE LIFT)	
		1	**8T-8737**	1	PLUG-SEAL	
		1	**102-8804**	1	KIT-RECEPTACLE (4-PIN)	
					(INCLUDES RECEPTACLE AS & WEDGE)	
		1	**186-3735**	3	PIN-CONNECTOR (16-GA TO 18-GA)	
	3	1	**152-6825**	1	KNOB AS (LH) (BLADE LIFT)	
		1	**8T-8737**	1	PLUG-SEAL	
		1	**102-8804**	1	KIT-RECEPTACLE (4-PIN)	
					(INCLUDES RECEPTACLE AS & WEDGE)	
		1	**186-3735**	3	PIN-CONNECTOR (16-GA TO 18-GA)	
	4	1	**246-6561**	1	KNOB AS (RH) (ARTICULATION)	
		1	**102-8804**	1	KIT-RECEPTACLE (4-PIN)	
					(INCLUDES RECEPTACLE AS & WEDGE)	
		1	**186-3735**	4	PIN-CONNECTOR (16-GA TO 18-GA)	
	5	1	**246-6562**	1	KNOB AS (LH) (ARTICULATION)	
		1	**102-8804**	1	KIT-RECEPTACLE (4-PIN)	
					(INCLUDES RECEPTACLE AS & WEDGE)	
		1	**186-3735**	4	PIN-CONNECTOR (16-GA TO 18-GA)	
	6	1	**130-5300**	4	CLIP	
	7	1	**1V-7368**	2	SPACER (0.364X0.54X1.06-IN THK)	
	8	1	**8T-4896**	2	WASHER-HARD (10.2X18.5X2.5-MM THK)	
M	9	1	**9X-2480**	2	BOLT (M6X1X45-MM)	
	10	1	*352-6310*	1	BRACKET GP-MOUNTING	
		1	**5P-4115**	2	WASHER-HARD (7.2X19X2-MM THK)	
M		1	**6V-7357**	2	BOLT (M6X1X25-MM)	
M		1	**225-3109**	4	SCREW-TRUSS HEAD (M4X0.7X14-MM)	
		1	**352-6311**	1	BRACKET AS	
M		1	**9R-2672**	1	BOSS-THREADED (M10X1.5X120-MM)	
M		1	**9X-2032**	4	NUT-WELD (M4X0.7-THD)	
B	11	1	**7I-1024**		GUARD-HOSE (180-CM)	
FY			*336-9245*	1	BOSS GP-FRAME (ACCUGRADE)	680
FY			*336-5530*	1	COVER GP-ACCESS (PLATFORM)	687
FY			*346-5641*	1	ELECTRONICS GP-IMPLEMENT (ACCUGRADE) (GRADE CONTROL)	232
FY			*382-1612*	1	BOSS GP-DRAWBAR (ACCUGRADE)	1040
CFY			*254-5960*	1	MOUNTING GP-GRADE CONTROL (CIRCLE)	327
FY			*252-5709*	1	WIRING GP-GRADE CONTROL (CAB, INDICATOR LAMP)	473
FY			*382-5903*	1	WIRING GP-GRADE CONTROL (ACCUGRADE)	489

B - USE AS REQUIRED
C - CHANGE FROM PREVIOUS TYPE
F - NOT SHOWN
M - METRIC PART
Y - SEPARATE ILLUSTRATION

336-4249 **GRADE CONTROL AR (**contd.**)** **i05358835**

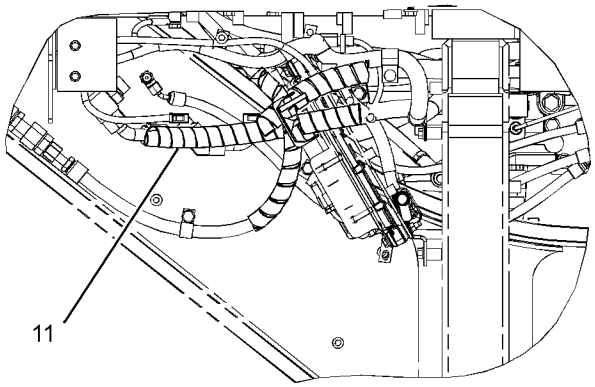

VIEW A-A

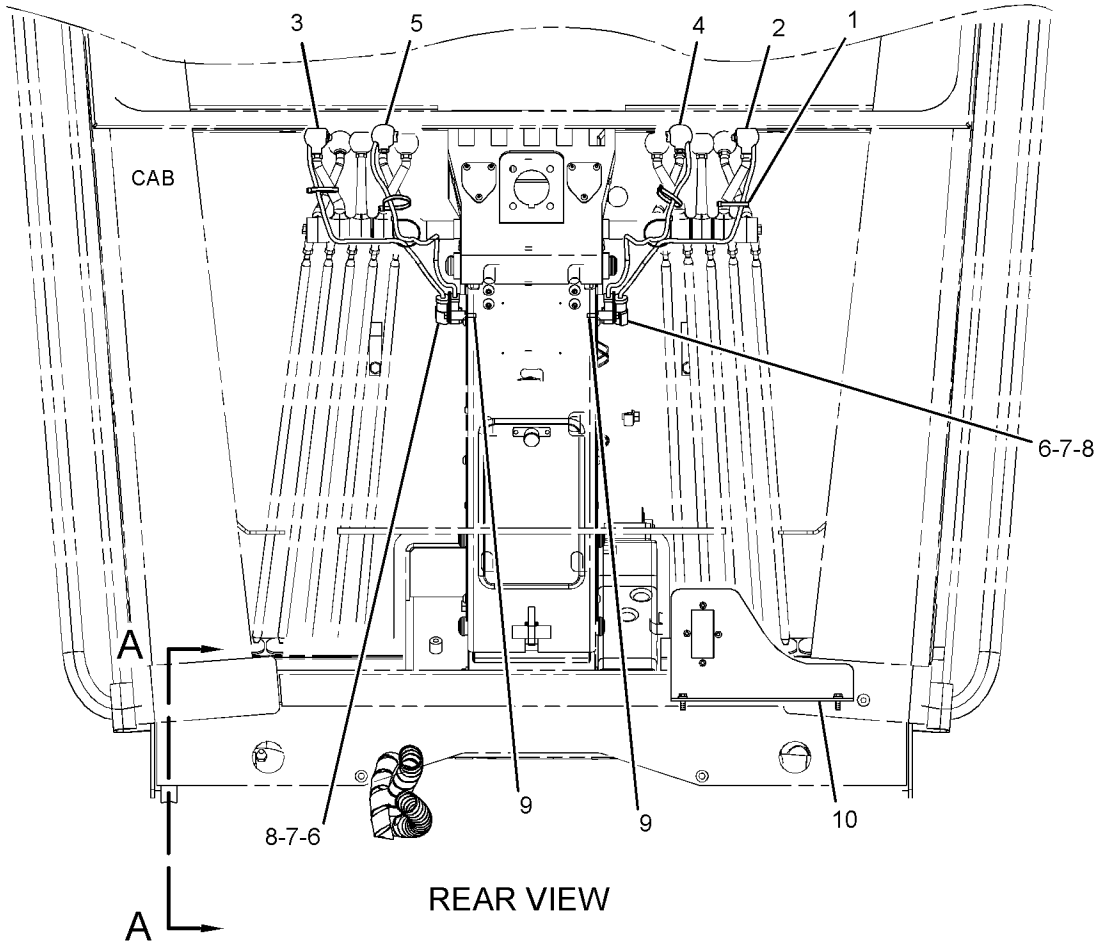

GRAPHIC #1 <END> g03141636

337-3100 GRADE CONTROL AR–ACCUGRADE

S/N: SZS1-UP
PART OF 349-2487 OPTION AR-REGIONAL
AN ATTACHMENT
TYPE 1

SMCS-7220 **i05095412**

NOTE	REF NO	GRAPHIC REF	PART NUMBER	QTY	PART NAME 1 2 3 4 5 6 (PRODUCT LEVEL)	SEE PAGE
	1	1	**3S-2093**	6	STRAP-CABLE	
Y	2	1	*336-5530*	1	COVER GP-ACCESS (PLATFORM)	687
	3	1	**152-6824**	1	KNOB AS (RH) (BLADE LIFT)	
		1	**8T-8737**	1	PLUG-SEAL	
		1	**102-8804**	1	KIT-RECEPTACLE (4-PIN)	
					(INCLUDES RECEPTACLE AS & WEDGE)	
		1	**8T-8729**	3	PIN-CONNECTOR (16-GA TO 18-GA)	
	4	1	**152-6825**	1	KNOB AS (LH) (BLADE LIFT)	
		1	**8T-8737**	1	PLUG-SEAL	
		1	**102-8804**	1	KIT-RECEPTACLE (4-PIN)	
					(INCLUDES RECEPTACLE AS & WEDGE)	
		1	**8T-8729**	3	PIN-CONNECTOR (16-GA TO 18-GA)	
	5	1	**246-6561**	1	KNOB AS (RH) (ARTICULATION)	
		1	**102-8804**	1	KIT-RECEPTACLE (4-PIN)	
					(INCLUDES RECEPTACLE AS & WEDGE)	
		1	**8T-8737**	4	PLUG-SEAL	
	6	1	**246-6562**	1	KNOB AS (LH) (BLADE LIFT, LOWER)	
		1	**102-8804**	1	KIT-RECEPTACLE (4-PIN)	
					(INCLUDES RECEPTACLE AS & WEDGE)	
		1	**8T-8729**	4	PIN-CONNECTOR (16-GA TO 18-GA)	
Y	7	1	*247-6449*	1	MOUNTING GP-GRADE CONTROL (DRAWBAR)	326
Y	8	1	*252-5709*	1	WIRING GP-GRADE CONTROL (CAB, INDICATOR LAMP)	473
Y	9	1	*254-5960*	1	MOUNTING GP-GRADE CONTROL (CIRCLE)	327
Y	10	1	*294-3542*	1	WIRING GP-GRADE CONTROL (ACCUGRADE)	474
Y	11	1	*297-8449*	1	BOSS GP-FRAME (ACCUGRADE)	678
	12	1	**130-5300**	4	CLIP	
	13	1	**1V-7368**	2	SPACER (0.364X0.54X1.06-IN THK)	
	15	1	**8T-4896**	2	WASHER-HARD (10.2X18.5X2.5-MM THK)	
M	16	1	**9X-2480**	2	BOLT (M6X1X45-MM)	
C	17	1	*352-6310*	1	BRACKET GP-MOUNTING	
		1	**5P-4115**	2	WASHER-HARD (7.2X19X2-MM THK)	
M		1	**6V-7357**	2	BOLT (M6X1X25-MM)	
M		1	**225-3109**	4	SCREW-TRUSS HEAD (M4X0.7X14-MM)	
		1	**352-6311**	1	BRACKET AS	
M		1	**9R-2672**	1	BOSS-THREADED (M10X1.5X120-MM)	
M		1	**9X-2032**	4	NUT-WELD (M4X0.7-THD)	
B	18	1	**7I-1024**		GUARD-HOSE	
CFY			*346-5641*	1	ELECTRONICS GP-IMPLEMENT (ACCUGRADE) (GRADE CONTROL)	232

B - USE AS REQUIRED
C - CHANGE FROM PREVIOUS TYPE
F - NOT SHOWN
M - METRIC PART
Y - SEPARATE ILLUSTRATION

337-3100 **GRADE CONTROL AR (**contd.**)** **i05095412**

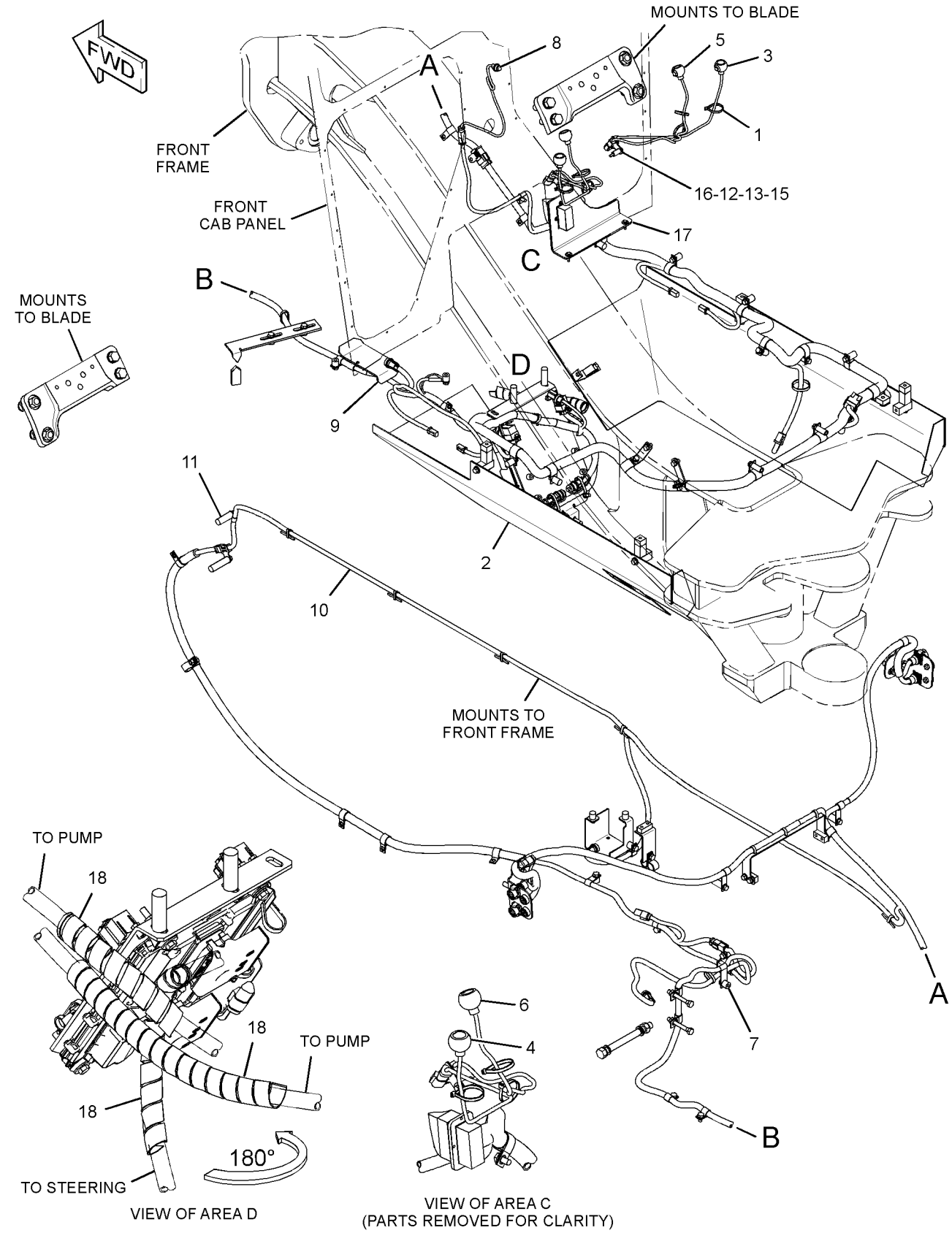

GRAPHIC #1

<END>

g03143837

337-3100 GRADE CONTROL AR–ACCUGRADE

S/N: SZS1-UP
PART OF 349-2487 OPTION AR-REGIONAL
AN ATTACHMENT
TYPE 2

SMCS-7220 **i05358842**

NOTE	REF NO	GRAPHIC REF	PART NUMBER	QTY	PART NAME 1 2 3 4 5 6 (PRODUCT LEVEL)	SEE PAGE
	1	1	**3S-2093**	6	STRAP-CABLE	
Y	2	1	*336-5530*	1	COVER GP-ACCESS (PLATFORM)	687
	3	1	**152-6824**	1	KNOB AS (RH) (BLADE LIFT)	
		1	**8T-8737**	1	PLUG-SEAL	
		1	**102-8804**	1	KIT-RECEPTACLE (4-PIN)	
					(INCLUDES RECEPTACLE AS & WEDGE)	
		1	**8T-8729**	3	PIN-CONNECTOR (16-GA TO 18-GA)	
	4	1	**152-6825**	1	KNOB AS (LH) (BLADE LIFT)	
		1	**8T-8737**	1	PLUG-SEAL	
		1	**102-8804**	1	KIT-RECEPTACLE (4-PIN)	
					(INCLUDES RECEPTACLE AS & WEDGE)	
		1	**8T-8729**	3	PIN-CONNECTOR (16-GA TO 18-GA)	
	5	1	**246-6561**	1	KNOB AS (RH) (ARTICULATION)	
		1	**102-8804**	1	KIT-RECEPTACLE (4-PIN)	
					(INCLUDES RECEPTACLE AS & WEDGE)	
		1	**8T-8737**	4	PLUG-SEAL	
	6	1	**246-6562**	1	KNOB AS (LH) (BLADE LIFT, LOWER)	
		1	**102-8804**	1	KIT-RECEPTACLE (4-PIN)	
					(INCLUDES RECEPTACLE AS & WEDGE)	
		1	**8T-8729**	4	PIN-CONNECTOR (16-GA TO 18-GA)	
CY	7	1	*382-1611*	1	MOUNTING GP-GRADE CONTROL (DRAWBAR)	330
Y	8	1	*252-5709*	1	WIRING GP-GRADE CONTROL (CAB, INDICATOR LAMP)	473
CY	9	1	*255-2361*	1	MOUNTING GP-GRADE CONTROL (CIRCLE)	328
CY	10	1	*382-5902*	1	WIRING GP-GRADE CONTROL (ACCUGRADE)	483
Y	11	1	*297-8449*	1	BOSS GP-FRAME (ACCUGRADE)	678
	12	1	**130-5300**	4	CLIP	
	13	1	**1V-7368**	2	SPACER (0.364X0.54X1.06-IN THK)	
	15	1	**8T-4896**	2	WASHER-HARD (10.2X18.5X2.5-MM THK)	
M	16	1	**9X-2480**	2	BOLT (M6X1X45-MM)	
	17	1	*352-6310*	1	BRACKET GP-MOUNTING	
		1	**5P-4115**	2	WASHER-HARD (7.2X19X2-MM THK)	
M		1	**6V-7357**	2	BOLT (M6X1X25-MM)	
M		1	**225-3109**	4	SCREW-TRUSS HEAD (M4X0.7X14-MM)	
		1	**352-6311**	1	BRACKET AS	
M		1	**9R-2672**	1	BOSS-THREADED (M10X1.5X120-MM)	
M		1	**9X-2032**	4	NUT-WELD (M4X0.7-THD)	
B	18	1	**7I-1024**		GUARD-HOSE	
FY			*346-5641*	1	ELECTRONICS GP-IMPLEMENT (ACCUGRADE) (GRADE CONTROL)	232

B - USE AS REQUIRED
C - CHANGE FROM PREVIOUS TYPE
F - NOT SHOWN
M - METRIC PART
Y - SEPARATE ILLUSTRATION

337-3100 **GRADE CONTROL AR (**contd.**)** **i05358842**

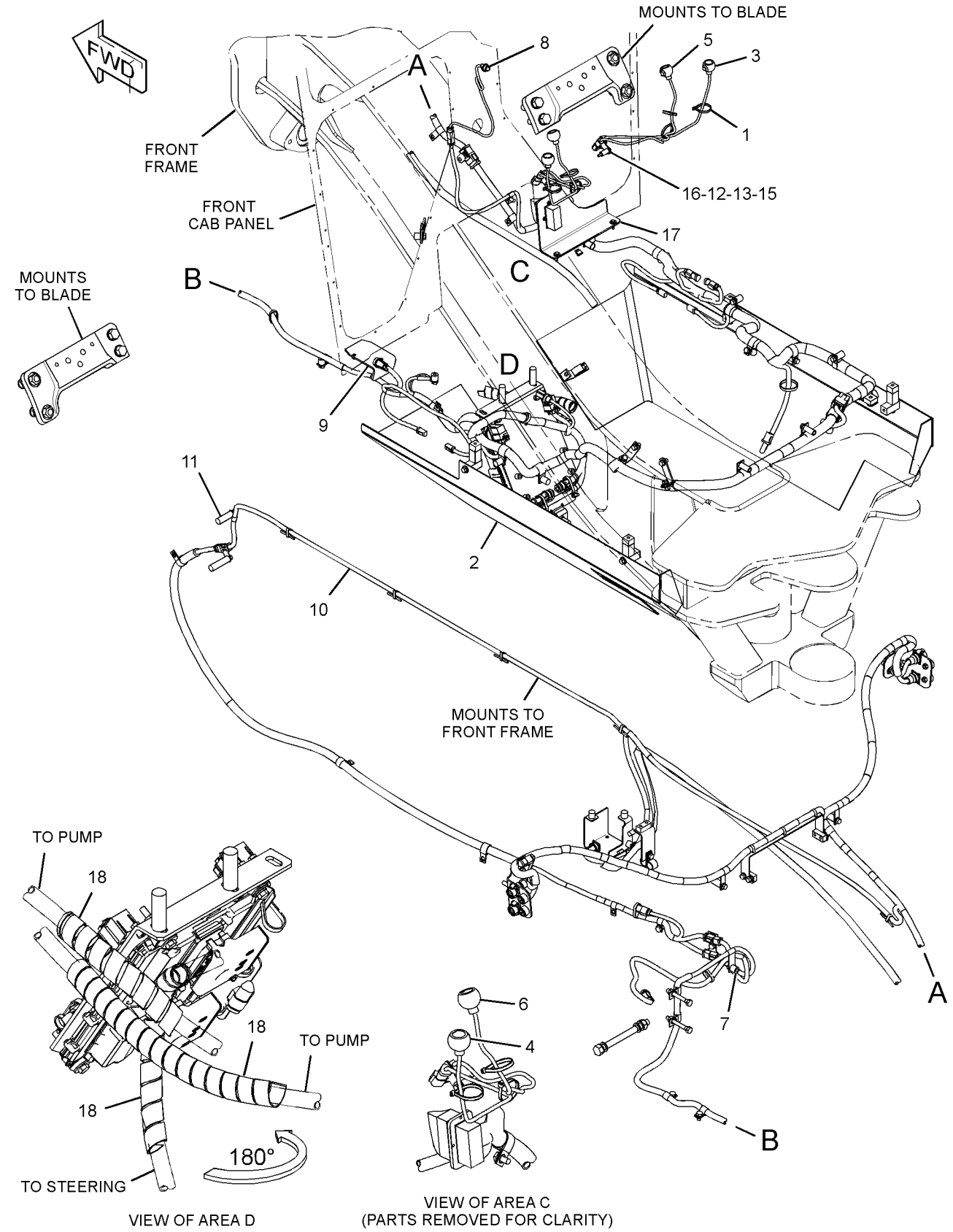

GRAPHIC #1

<END>

g03143859

394-0862 GRADE CONTROL AR–ACCUGRADE

S/N: SZS1-UP
PART OF 394-4973 OPTION AR-GRADE CONTROL
AN ATTACHMENT
TYPE 1

SMCS-7220 **i05052171**

NOTE	REF NO	GRAPHIC REF	PART NUMBER	QTY	PART NAME 1 2 3 4 5 6 (PRODUCT LEVEL)	SEE PAGE
	1	1	**3S-2093**	6	STRAP-CABLE	
	2	1	**152-6824**	1	KNOB AS (RH) (BLADE LIFT)	
		1	**8T-8737**	1	PLUG-SEAL	
		1	**102-8804**	1	KIT-RECEPTACLE (4-PIN)	
					(INCLUDES RECEPTACLE AS & WEDGE)	
		1	**8T-8729**	3	PIN-CONNECTOR (16-GA TO 18-GA)	
	3	1	**152-6825**	1	KNOB AS (LH) (BLADE LIFT)	
		1	**8T-8737**	1	PLUG-SEAL	
		1	**102-8804**	1	KIT-RECEPTACLE (4-PIN)	
					(INCLUDES RECEPTACLE AS & WEDGE)	
		1	**8T-8729**	3	PIN-CONNECTOR (16-GA TO 18-GA)	
	4	1	**246-6561**	1	KNOB AS (RH) (BLADE LIFT, LOWER)	
		1	**102-8804**	1	KIT-RECEPTACLE (4-PIN)	
					(INCLUDES RECEPTACLE AS & WEDGE)	
		1	**8T-8729**	4	PIN-CONNECTOR (16-GA TO 18-GA)	
	5	1	**246-6562**	1	KNOB AS (LH) (BLADE LIFT, LOWER)	
		1	**102-8804**	1	KIT-RECEPTACLE (4-PIN)	
					(INCLUDES RECEPTACLE AS & WEDGE)	
		1	**8T-8729**	4	PIN-CONNECTOR (16-GA TO 18-GA)	
Y	6	1	*247-6450*	1	BOSS GP-DRAWBAR (ACCUGRADE)	1039
Y	7	1	*252-5709*	1	WIRING GP-GRADE CONTROL (CAB, INDICATOR LAMP)	473
Y	8	1	*336-5530*	1	COVER GP-ACCESS (PLATFORM)	687
Y	9	1	*336-9245*	1	BOSS GP-FRAME (ACCUGRADE)	680
Y	10	1	*336-9255*	1	WIRING GP-GRADE CONTROL (ACCUGRADE)	477
Y	11	1	*346-5641*	1	ELECTRONICS GP-IMPLEMENT (ACCUGRADE)	232
Y	12	1	*349-8405*	1	MOUNTING GP-GRADE CONTROL (CIRCLE)	329
	13	1	*352-6310*	1	BRACKET GP-MOUNTING	
		1	**5P-4115**	2	WASHER-HARD (7.2X19X2-MM THK)	
M		1	**6V-7357**	2	BOLT (M6X1X25-MM)	
M		1	**225-3109**	4	SCREW-TRUSS HEAD (M4X0.7X14-MM)	
		1	**352-6311**	1	BRACKET AS	
M		1	**9R-2672**	1	BOSS-THREADED (M10X1.5X120-MM)	
M		1	**9X-2032**	4	NUT-WELD (M4X0.7-THD)	
	14	1	**130-5300**	4	CLIP	
	15	1	**1V-7368**	2	SPACER (0.364X0.54X1.06-IN THK)	
	16	1	**8T-4896**	2	WASHER-HARD (10.2X18.5X2.5-MM THK)	
M	17	1	**9X-2480**	2	BOLT (M6X1X45-MM)	
BE	18	1	**7I-1024**		GUARD-HOSE (180-CM)	
					PARTS SHOWN IN GRAPHIC(S) WITHOUT A REFERENCE NUMBER ARE NOT SERVICED SEPARATELY	

B - USE AS REQUIRED
E - ORDER BY THE CENTIMETER
M - METRIC PART
Y - SEPARATE ILLUSTRATION

394-0862 **GRADE CONTROL AR (**contd.**)** **i05052171**

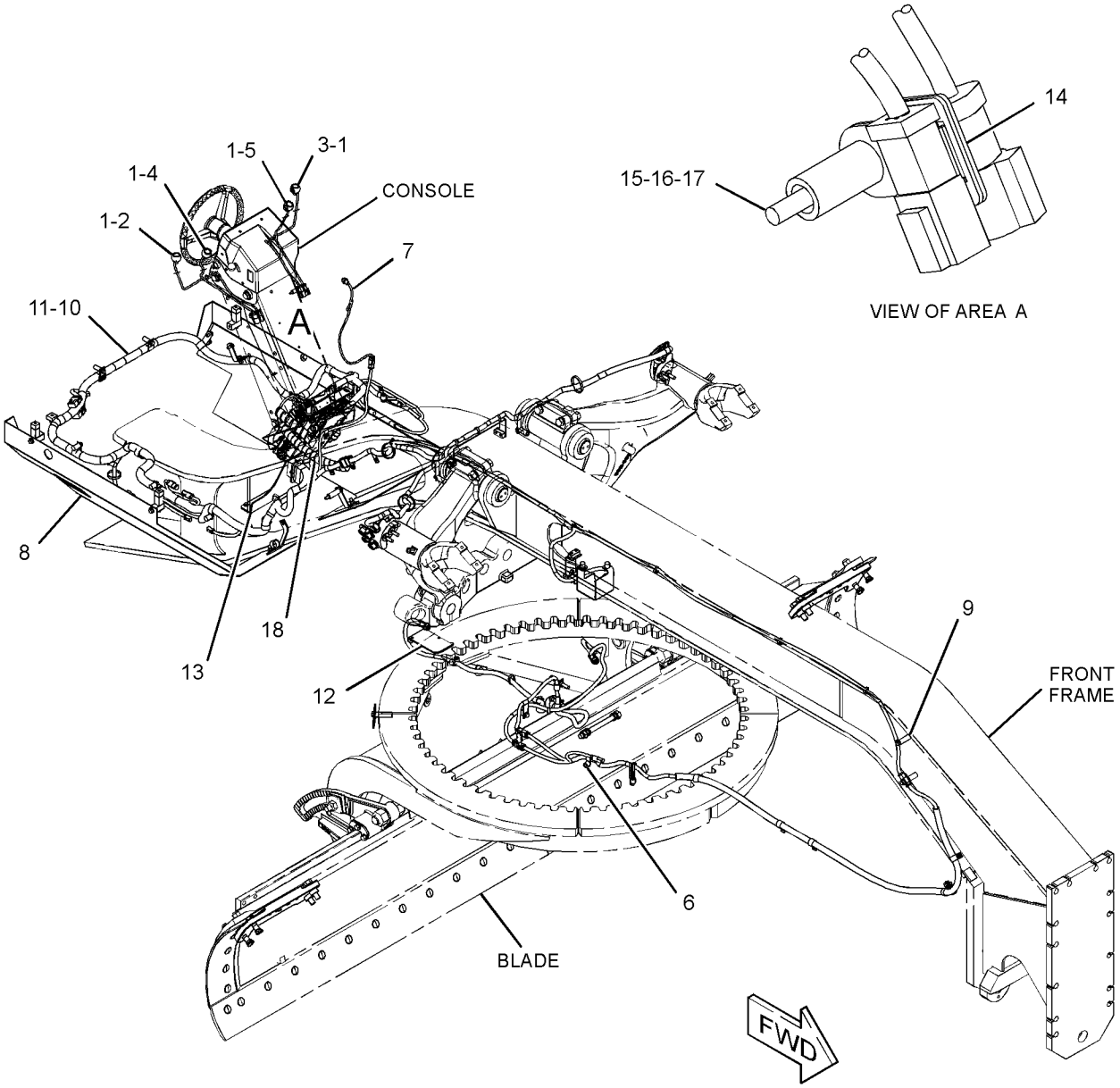

GRAPHIC #1 <END> g03138022

394-0862 GRADE CONTROL AR–ACCUGRADE

S/N: SZS1-UP
PART OF 394-4973 OPTION AR-GRADE CONTROL
AN ATTACHMENT
TYPE 2

SMCS-7220 **i05287672**

NOTE	REF NO	GRAPHIC REF	PART NUMBER	QTY	PART NAME 1 2 3 4 5 6 (PRODUCT LEVEL)	SEE PAGE
	1	1	**3S-2093**	6	STRAP-CABLE	
	2	1	**152-6824**	1	KNOB AS (RH) (BLADE LIFT)	
		1	**8T-8737**	1	PLUG-SEAL	
		1	**102-8804**	1	KIT-RECEPTACLE (4-PIN)	
					(INCLUDES RECEPTACLE AS & WEDGE)	
		1	**8T-8729**	3	PIN-CONNECTOR (16-GA TO 18-GA)	
	3	1	**152-6825**	1	KNOB AS (LH) (BLADE LIFT)	
		1	**8T-8737**	1	PLUG-SEAL	
		1	**102-8804**	1	KIT-RECEPTACLE (4-PIN)	
					(INCLUDES RECEPTACLE AS & WEDGE)	
		1	**8T-8729**	3	PIN-CONNECTOR (16-GA TO 18-GA)	
	4	1	**246-6561**	1	KNOB AS (RH) (BLADE LIFT, LOWER)	
		1	**102-8804**	1	KIT-RECEPTACLE (4-PIN)	
					(INCLUDES RECEPTACLE AS & WEDGE)	
		1	**8T-8729**	4	PIN-CONNECTOR (16-GA TO 18-GA)	
	5	1	**246-6562**	1	KNOB AS (LH) (BLADE LIFT, LOWER)	
		1	**102-8804**	1	KIT-RECEPTACLE (4-PIN)	
					(INCLUDES RECEPTACLE AS & WEDGE)	
		1	**8T-8729**	4	PIN-CONNECTOR (16-GA TO 18-GA)	
Y	6	1	*247-6450*	1	BOSS GP-DRAWBAR (ACCUGRADE)	1039
Y	7	1	*252-5709*	1	WIRING GP-GRADE CONTROL (CAB, INDICATOR LAMP)	473
Y	8	1	*336-5530*	1	COVER GP-ACCESS (PLATFORM)	687
Y	9	1	*336-9245*	1	BOSS GP-FRAME (ACCUGRADE)	680
Y	10	1	*336-9255*	1	WIRING GP-GRADE CONTROL (ACCUGRADE)	477
Y	11	1	*346-5641*	1	ELECTRONICS GP-IMPLEMENT (ACCUGRADE)	232
CY	12	1	*254-5960*	1	MOUNTING GP-GRADE CONTROL (CIRCLE)	327
	13	1	*352-6310*	1	BRACKET GP-MOUNTING	
		1	**5P-4115**	2	WASHER-HARD (7.2X19X2-MM THK)	
M		1	**6V-7357**	2	BOLT (M6X1X25-MM)	
M		1	**225-3109**	4	SCREW-TRUSS HEAD (M4X0.7X14-MM)	
		1	**352-6311**	1	BRACKET AS	
M		1	**9R-2672**	1	BOSS-THREADED (M10X1.5X120-MM)	
M		1	**9X-2032**	4	NUT-WELD (M4X0.7-THD)	
	14	1	**130-5300**	4	CLIP	
	15	1	**1V-7368**	2	SPACER (0.364X0.54X1.06-IN THK)	
	16	1	**8T-4896**	2	WASHER-HARD (10.2X18.5X2.5-MM THK)	
M	17	1	**9X-2480**	2	BOLT (M6X1X45-MM)	
BE	18	1	**7I-1024**		GUARD-HOSE (180-CM)	

PARTS SHOWN IN GRAPHIC(S) WITHOUT A REFERENCE NUMBER ARE NOT SERVICED SEPARATELY

B - USE AS REQUIRED
C - CHANGE FROM PREVIOUS TYPE
E - ORDER BY THE CENTIMETER
M - METRIC PART
Y - SEPARATE ILLUSTRATION

394-0862 **GRADE CONTROL AR (**contd.**)** **i05287672**

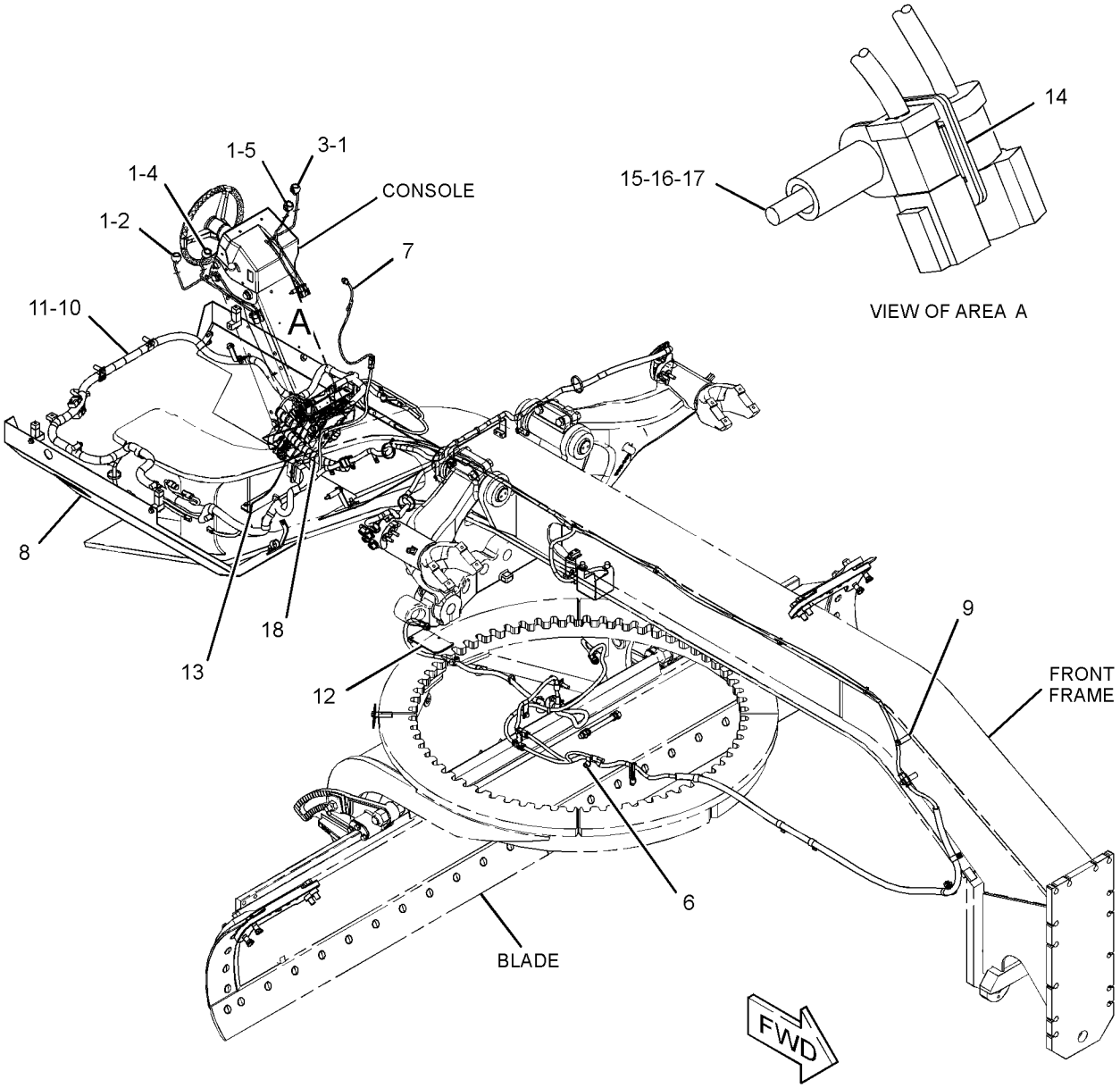

GRAPHIC #1 <END> g03138022

435-1526 GRADE CONTROL AR–ACCUGRADE

S/N: SZS1-UP
FOR USE WITH 437-0650–PAGE: 1105, 437-0677–PAGE: 1106, 435-1515–PAGE: 1433, 435-1551–PAGE: 1051, 435-8241–PAGE: 889, 434-6591–PAGE: 958
CANNOT BE USED WITH 437-0660–PAGE: 1106
PART OF 461-2792 OPTION AR-GRADE CONTROL
AN ATTACHMENT

SMCS-7220 **i05865107**

NOTE	PART NUMBER	QTY	PART NAME 1 2 3 4 5 6 (PRODUCT LEVEL)	SEE PAGE
Y	*247-6450*	1	BOSS GP-DRAWBAR (ACCUGRADE)	1039
Y	*336-9245*	1	BOSS GP-FRAME	680
Y	*336-5530*	1	COVER GP-ACCESS (PLATFORM)	687
Y	*346-5641*	1	ELECTRONICS GP-IMPLEMENT (ACCUGRADE)	232
Y	*434-8341*	1	WIRING GP-CAB	391
Y	*434-8050*	1	WIRING GP-GRADE CONTROL	494

Y - SEPARATE ILLUSTRATION

<END>

435-1548 GRADE CONTROL AR–ACCUGRADE

S/N: SZS1-UP
FOR USE WITH 437-0650–PAGE: 1105, 437-0677–PAGE: 1106, 435-1511–PAGE: 1063, 435-1551–PAGE: 1051, 435-8241–PAGE: 889, 434-6591–PAGE: 958
CANNOT BE USED WITH 437-0660–PAGE: 1106
PART OF 461-2769 OPTION AR-GRADE CONTROL
AN ATTACHMENT

SMCS-7220 **i05865034**

NOTE	PART NUMBER	QTY	PART NAME 1 2 3 4 5 6 (PRODUCT LEVEL)	SEE PAGE
Y	*382-1612*	1	BOSS GP-DRAWBAR (ACCUGRADE)	1040
Y	*336-9245*	1	BOSS GP-FRAME	680
Y	*336-5530*	1	COVER GP-ACCESS (PLATFORM)	687
Y	*346-5641*	1	ELECTRONICS GP-IMPLEMENT (ACCUGRADE)	232
Y	*434-8341*	1	WIRING GP-CAB	391
Y	*434-8052*	1	WIRING GP-GRADE CONTROL	502

Y - SEPARATE ILLUSTRATION

<END>

323-5592 HARNESS AS-CHASSIS–RH

S/N: SZS1-UP

PART OF 294-3542, 434-8050, 434-8052 WIRING GP-GRADE CONTROL

AN ATTACHMENT

SMCS-1408 **i04947260**

NOTE	PART NUMBER	QTY	PART NAME 1 2 3 4 5 6 (PRODUCT LEVEL)	SEE PAGE
E	**5P-1424**		HOSE (194-CM)	
	9X-3401	4	PIN-CONNECTOR (16-GA TO 18-GA)	
	155-2271	2	KIT-CONNECTING PLUG (4-PIN)	
	174-0503	1	KIT-CONNECTING PLUG (3-PIN)	
			(EACH PLUG KIT INCLUDES PLUG AS, WEDGE & INTERFACE SEAL)	
	8T-8737	1	PLUG-SEAL	
	102-8804	1	KIT-RECEPTACLE (4-PIN)	
			(INCLUDES RECEPTACLE AS & WEDGE)	
	134-2540	1	RESISTOR AS-CONNECTION (3-PIN)	
	9X-3402	10	SOCKET-CONNECTOR (16-GA TO 18-GA)	
E	**125-7875**		TUBE-HEAT SHRINK (7.44-MM DIA) (30-CM)	

E - ORDER BY THE CENTIMETER

<END>

339-5505 HARNESS AS-CHASSIS—FRONT FRAME, REAR

S/N: SZS1-UP

PART OF 294-3542, 434-8050, 434-8052 WIRING GP-GRADE CONTROL

AN ATTACHMENT

SMCS-1408 **i04947261**

NOTE	PART NUMBER	QTY	PART NAME 1 2 3 4 5 6 (PRODUCT LEVEL)	SEE PAGE
	6I-4348	1	BOOT (40-PIN)	
	104-6871	2	CAP-DUST	
	126-1774	2	COVER-CONNECTOR	
	111-4875	2	HOUSING	
	8N-1540	1	PIN-CONNECTOR (12-GA TO 14-GA)	
	8T-8729	26	PIN-CONNECTOR (16-GA TO 18-GA)	
	9W-0852	5	PIN-CONNECTOR (14-GA TO 16-GA)	
	147-1445	1	PLUG AS-CONNECTOR (70-PIN)	
	147-1446	1	PLUG AS-CONNECTOR (70-PIN)	
			(EACH PLUG AS INCLUDES)	
	159-9322	1	SEAL-O-RING	
	3R-9965	1	PLUG AS-CONNECTOR (8-PIN)	
	6D-5257	1	PLUG AS-CONNECTOR (8-PIN)	
	155-2255	1	KIT-CONNECTING PLUG (12-PIN)	
	155-2256	2	KIT-CONNECTING PLUG (12-PIN)	
	155-2260	2	KIT-CONNECTING PLUG (3-PIN)	
	155-2270	4	KIT-CONNECTING PLUG (2-PIN)	
	155-2274	1	KIT-CONNECTING PLUG (6-PIN)	
	174-0503	1	KIT-CONNECTING PLUG (3-PIN)	
			(EACH PLUG KIT INCLUDES PLUG AS, WEDGE & INTERFACE SEAL)	
	290-4752	1	PLUG AS-CONNECTOR	
	8T-8737	40	PLUG-SEAL	
	9X-0141	1	PLUG AS-CONNECTOR (40-PIN)	
	3E-4367	1	RING-RETAINING	
M	**3E-8557**	1	BOLT (M5X0.8X39.37-MM)	
	9X-3490	2	SEAL-CONNECTOR (40-PIN)	
	8T-8737	158	PLUG-SEAL	
	102-8802	1	KIT-RECEPTACLE (2-PIN)	
	102-8803	1	KIT-RECEPTACLE (3-PIN)	
	190-7614	2	KIT-RECEPTACLE (12-PIN)	
			(EACH RECEPTACLE KIT INCLUDES RECEPTACLE AS & WEDGE)	
	9X-1343	1	RECEPTACLE AS-CONNECTOR (40-PIN)	
	129-7164	1	RECEPTACLE AS-CONNECTOR (1-PIN)	
	134-2540	2	RESISTOR AS-CONNECTION (3-PIN)	
	8T-8730	9	SOCKET-CONNECTOR (16-GA TO 18-GA)	
	9W-0844	4	SOCKET-CONNECTOR (14-GA TO 16-GA)	
	9X-3402	58	SOCKET-CONNECTOR (16-GA TO 18-GA)	
	126-1768	8	SOCKET-CONNECTOR (14-GA TO 16-GA)	
	3S-2093	2	STRAP-CABLE	
	7K-1181	4	STRAP-CABLE	
B	**1P-0810**		TAPE-ELECTRICAL	
	131-1490	1	TERMINAL AS (6-GA TO 8-GA)	
	6H-3587	1	TERMINAL-RING (6-GA TO 8-GA, 3/8-IN SCREW)	
E	**119-3662**		TUBE-HEAT SHRINK (10.85-MM DIA) (4-CM)	
	2L-8079	1	TERMINAL-RING (14-GA TO 16-GA, 3/8-IN SCREW)	
	7Y-3951	8	TERMINAL-BLADE (14-GA)	

339-5505 **HARNESS AS-CHASSIS (**contd.**)** **i04947261**

NOTE	PART NUMBER	QTY	PART NAME 1 2 3 4 5 6 (PRODUCT LEVEL)	SEE PAGE
E	**119-3662**		TUBE-HEAT SHRINK (10.85-MM DIA) (65-CM)	
E	**125-7874**		TUBE-HEAT SHRINK (5.72-MM DIA) (20-CM)	
E	**125-7875**		TUBE-HEAT SHRINK (7.44-MM DIA) (80-CM)	

B - USE AS REQUIRED
E - ORDER BY THE CENTIMETER
M - METRIC PART

<END>

339-5506 HARNESS AS-CHASSIS—FRONT FRAME, LH

S/N: SZS1-UP

PART OF 294-3542, 434-8050, 434-8052 WIRING GP-GRADE CONTROL AN ATTACHMENT

SMCS-1408 **i04947306**

NOTE	PART NUMBER	QTY	PART NAME 1 2 3 4 5 6 (PRODUCT LEVEL)	SEE PAGE
	243-5362	1	CAP-DUST	
	7R-3029	4	CAP-DUST	
	228-3323	4	CLIP-SPRING	
	9W-0852	4	PIN-CONNECTOR (14-GA TO 16-GA)	
	9X-3401	10	PIN-CONNECTOR (16-GA TO 18-GA)	
	9X-4385	1	PLUG AS-CONNECTOR (6-PIN)	
	174-0503	1	KIT-CONNECTING PLUG (3-PIN)	
			(INCLUDES PLUG AS, WEDGE & INTERFACE SEAL)	
	8T-8737	3	PLUG-SEAL	
	102-8804	1	KIT-RECEPTACLE (4-PIN)	
	102-8801	1	KIT-RECEPTACLE (12-PIN)	
			(EACH RECEPTACLE KIT INCLUDES RECEPTACLE AS & WEDGE)	
	134-2540	1	RESISTOR AS-CONNECTION (3-PIN)	
	230-2566	4	PLUG AS	
	9X-3402	2	SOCKET-CONNECTOR (16-GA TO 18-GA)	
E	**119-3662**		TUBE-HEAT SHRINK (10.85-MM DIA) (33-CM)	
E	**125-7875**		TUBE-HEAT SHRINK (7.44-MM DIA) (120-CM)	

E - ORDER BY THE CENTIMETER

<END>

461-4541 HARNESS AS-CHASSIS

S/N: SZS1-UP
INDIA ROADING
PART OF 384-7616, 518-6849 WIRING GP-STEERING CONSOLE
AN ATTACHMENT

SMCS-1408 **i06218624**

NOTE	PART NUMBER	QTY	PART NAME 1 2 3 4 5 6 (PRODUCT LEVEL)	SEE PAGE
	102-8801	2	KIT-RECEPTACLE (12-PIN)	
			(INCLUDES RECEPTACLE AS & WEDGE)	
	6V-0491	16	TERMINAL-BLADE (14-GA TO 18-GA)	
	7G-7918	1	PLUG-SEAL	
	7T-6365	4	HOUSING-RECEPTACLE	
	8N-1541	1	SOCKET-CONNECTOR (12-GA TO 14-GA)	
	8N-1546	2	PIN-CONNECTOR (6-GA)	
	8N-1547	1	SOCKET-CONNECTOR (6-GA)	
	8T-8729	17	PIN-CONNECTOR (16-GA TO 18-GA)	
	8T-8730	22	SOCKET-CONNECTOR (16-GA TO 18-GA)	
	8T-8737	10	PLUG-SEAL	
	9G-9314	3	TERMINAL-BLADE (14-GA TO 16-GA)	
	9R-9806	11	TERMINAL-BLADE (18-GA TO 20-GA)	
	9W-0844	4	SOCKET-CONNECTOR (14-GA TO 16-GA)	
	9W-0852	3	PIN-CONNECTOR (14-GA TO 16-GA)	
	9W-2032	1	TERMINAL-BLADE (10-GA TO 12-GA)	
	9W-2033	15	TERMINAL-BLADE (14-GA TO 16-GA)	
E	**119-3662**		TUBE-HEAT SHRINK (10.85-MM DIA) (20-CM)	
E	**125-7874**		TUBE-HEAT SHRINK (5.72-MM DIA) (20-CM)	
E	**125-7875**		TUBE-HEAT SHRINK (7.44-MM DIA) (30-CM)	
	127-5483	1	PLUG AS-CONNECTOR (1-PIN)	
	127-5484	2	RECEPTACLE AS-CONNECTOR (1-PIN)	
	129-7163	1	PLUG AS-CONNECTOR (1-PIN)	
	129-7164	1	RECEPTACLE AS-CONNECTOR (1-PIN)	
	5P-4571	5	TERMINAL-BLADE (14-GA TO 16-GA)	
	5P-1475	5	TERMINAL-FORK (14-GA TO 16-GA, NO. 8 SCREW)	
	2L-8050	3	TERMINAL-RING (6-GA, 1/4-IN SCREW)	
			—OR—	
	2L-8058	3	TERMINAL-RING (8-GA, 1/4-IN SCREW)	
	155-2270	1	KIT-CONNECTING PLUG (2-PIN)	
	155-2274	1	KIT-CONNECTING PLUG (6-PIN)	
	155-2255	2	KIT-CONNECTING PLUG (12-PIN)	
			(EACH PLUG KIT INCLUDES PLUG AS, WEDGE & INTERFACE SEAL)	
	174-7566	2	BLOCK AS-FUSE	
			(EACH INCLUDES)	
	151-1398	2	KIT-TERMINAL (LOCK)	
	200-8787	1	SEAL	
	199-6582	1	BLOCK AS-FUSE	
	8T-4205	1	WASHER-HARD (7.2X14.5X2-MM THK)	
	1H-3244	1	LOCKWASHER	
	6V-8185	1	NUT (1/4-20-THD)	
	185-1860	21	SEAL-WIRE	
	185-1861	4	SEAL-WIRE	
	202-5397	5	PLUG	
	204-1297	21	TERMINAL AS-BLADE (18-GA TO 20-GA)	
			(EACH INCLUDES)	

461-4541 **HARNESS AS-CHASSIS (**contd.**)** **i06218624**

NOTE	PART NUMBER	QTY	PART NAME 1 2 3 4 5 6 (PRODUCT LEVEL)	SEE PAGE
	235-4123	1	TERMINAL (18-GA TO 20-GA)	
	245-7434	3	KIT-CONNECTING PLUG (10-PIN)	
			(EACH PLUG KIT INCLUDES PLUG CONNECTOR, WIRE ASSEMBLIES & PLUGS)	
E - ORDER BY THE CENTIMETER				

<END>

466-2118 HARNESS AS-CONSOLE—SHIFT

S/N: SZS624-UP

PART OF 438-1307 WIRING GP-CONSOLE

SMCS-1408, 7451 **i06574555**

NOTE	PART NUMBER	QTY	PART NAME 1 2 3 4 5 6 (PRODUCT LEVEL)	SEE PAGE
	3T-3278	1	BOOT	
	274-3774	1	CAP-CONNECTOR	
	374-7466	1	CAP-SEAL	
	6D-4161	1	CONTACT	
	424-4322	1	COVER-CONNECTOR	
	155-2255	1	KIT-CONNECTING PLUG (12-PIN)	
	155-2270	2	KIT-CONNECTING PLUG (2-PIN)	
	155-2271	1	KIT-CONNECTING PLUG (4-PIN)	
	155-2274	2	KIT-CONNECTING PLUG (6-PIN)	
			(EACH KIT INCLUDES PLUG AS, WEDGE & INTERFACE SEAL)	
	245-7434	3	KIT-CONNECTING PLUG (10-PIN)	
			(EACH KIT INCLUDES PLUG-CONNECTOR, WIRE ASSEMBLIES & PLUGS)	
	102-8801	1	KIT-RECEPTACLE (12-PIN)	
			(INCLUDES RECEPTACLE AS & WEDGE)	
	270-2679	1	LOCKWASHER	
	203-9007	1	NUT (1-1/2-18-THD)	
	8T-8729	13	PIN-CONNECTOR (16-GA TO 18-GA)	
	9X-3401	8	PIN-CONNECTOR (16-GA TO 18-GA)	
	202-5397	18	PLUG	
	3E-5519	1	PLUG AS-CONNECTOR (5-PIN)	
	8T-8737	7	PLUG-SEAL	
	451-8019	1	RECEPTACLE AS-CONNECTOR (14-PIN)	
	185-1860	11	SEAL-WIRE	
	185-1861	1	SEAL-WIRE	
	8T-8730	17	SOCKET-CONNECTOR (16-GA TO 18-GA)	
	9W-0844	5	SOCKET-CONNECTOR (14-GA TO 16-GA)	
	9X-3402	8	SOCKET-CONNECTOR (16-GA TO 18-GA)	
	3T-3158	1	SOCKET-LAMP	
	3T-3159	1	SPRING	
	204-1297	11	TERMINAL AS-BLADE (18-GA TO 20-GA)	
			(EACH INCLUDES)	
	235-4123	1	TERMINAL (18-GA TO 20-GA)	
	3T-3157	1	TERMINAL-BLADE (16-GA TO 20-GA)	
	9X-1056	3	TERMINAL-RECEPTACLE (14-GA TO 16-GA)	
	100-5041	1	TERMINAL-RECEPTACLE (18-GA TO 20-GA)	
E	**119-3662**		TUBE-HEAT SHRINK (10.85-MM DIA) (13-CM)	
E	**125-7874**		TUBE-HEAT SHRINK (5.72-MM DIA) (10-CM)	

E - ORDER BY THE CENTIMETER

<END>

466-2119 HARNESS AS-CONSOLE—TRANSMISSION

S/N: SZS624-UP

PART OF 438-1307 WIRING GP-CONSOLE

SMCS-1408, 7451 **i06113596**

NOTE	PART NUMBER	QTY	PART NAME 1 2 3 4 5 6 (PRODUCT LEVEL)	SEE PAGE
	155-2255	1	KIT-CONNECTING PLUG (12-PIN)	
	155-2274	1	KIT-CONNECTING PLUG (6-PIN)	
			(EACH KIT INCLUDES PLUG AS, WEDGE & INTERFACE SEAL)	
	245-7434	2	KIT-CONNECTING PLUG (10-PIN)	
			(EACH KIT INCLUDES PLUG-CONNECTOR, WIRE ASSEMBLIES & PLUGS)	
	102-8805	1	KIT-RECEPTACLE (6-PIN)	
	102-8801	1	KIT-RECEPTACLE (12-PIN)	
	190-7615	1	KIT-RECEPTACLE (12-PIN)	
			(EACH KIT INCLUDES RECEPTACLE AS & WEDGE)	
	8T-8729	9	PIN-CONNECTOR (16-GA TO 18-GA)	
	9X-3401	14	PIN-CONNECTOR (16-GA TO 18-GA)	
	202-5397	1	PLUG	
	7X-6222	1	PLUG AS-CONNECTOR (24-PIN)	
	3E-4367	1	RING-RETAINING	
M	**3E-8558**	1	BOLT (M5X0.8X39.37-MM)	
	9X-3265	2	SEAL-CONNECTOR (24-PIN)	
	8T-8737	22	PLUG-SEAL	
	185-1860	19	SEAL-WIRE	
	8T-8730	27	SOCKET-CONNECTOR (16-GA TO 18-GA)	
	204-1297	19	TERMINAL AS-BLADE (18-GA TO 20-GA)	
			(EACH INCLUDES)	
	235-4123	1	TERMINAL (18-GA TO 20-GA)	
E	**119-3662**		TUBE-HEAT SHRINK (10.85-MM DIA) (20-CM)	

E - ORDER BY THE CENTIMETER
M - METRIC PART

<END>

222-5917 HARNESS AS-ENGINE

S/N: TX71-UP; KHX1-UP

PART OF 330-6022 WIRING GP-ENGINE

SMCS-1408 **i05952453**

NOTE	PART NUMBER	QTY	PART NAME 1 2 3 4 5 6 (PRODUCT LEVEL)	SEE PAGE
	135-5975	1	GROMMET-WIRING	
	316-8226	1	BOLT-SPECIAL	
	155-2255	1	KIT-CONNECTING PLUG (12-PIN)	
			(INCLUDES PLUG AS & WEDGE)	
	6N-7523	1	WASHER (6.48X11.9X1.57-MM THK)	
	155-2258	1	WEDGE-PLUG LOCK (12-PIN)	
	194-5226	12	WIRE AS (16-GA)	
			—OR—	
	194-5227	12	WIRE AS (14-GA)	

<END>

417-6161 HARNESS AS-HEATER & AIR COND

S/N: SZS1-UP

PART OF 417-6027, 518-3685 AIR CONDITIONER GP, 420-0496 HEATER GP-CAB

AN ATTACHMENT

SMCS-1408 **i06714683**

NOTE	PART NUMBER	QTY	PART NAME 1 2 3 4 5 6 (PRODUCT LEVEL)	SEE PAGE
	3T-3278	1	BOOT	
	6D-4161	1	CONTACT	
	6T-6505	5	HOUSING-RECEPTACLE (BLADE, POSITIVE LOCK)	
	155-2270	1	KIT-CONNECTING PLUG (2-PIN)	
			(INCLUDES PLUG AS, WEDGE, & INTERFACE SEAL)	
	102-8805	1	KIT-RECEPTACLE (6-PIN)	
			(INCLUDES RECEPTACLE AS & WEDGE)	
	8T-8729	2	PIN-CONNECTOR (16-GA TO 18-GA)	
	9W-0852	3	PIN-CONNECTOR (14-GA TO 16-GA)	
	8T-8737	1	PLUG-SEAL	
	9W-0844	2	SOCKET-CONNECTOR (14-GA TO 16-GA)	
	3T-3158	1	SOCKET-LAMP	
	3T-3159	1	SPRING	
	3T-3157	1	TERMINAL-BLADE (16-GA TO 20-GA)	
	6T-6506	4	TERMINAL-BLADE (14-GA TO 18-GA)	
	8T-9850	1	TERMINAL-BLADE	
	5P-1475	5	TERMINAL-FORK (14-GA TO 16-GA, NO. 8 SCREW)	
E	**119-3662**		TUBE-HEAT SHRINK (10.85-MM DIA) (7-CM)	

E - ORDER BY THE CENTIMETER

<END>

421-1522 HARNESS AS-PANEL

S/N: SZS10100-UP
PART OF 518-6848 PANEL GP-INSTRUMENT
AN ATTACHMENT

SMCS-1408, 7451

i06909758

NOTE	PART NUMBER	QTY	PART NAME 1 2 3 4 5 6 (PRODUCT LEVEL)	SEE PAGE
	3T-3278	2	BOOT	
	6D-4161	2	CONTACT	
	8T-8729	13	PIN-CONNECTOR (16-GA TO 18-GA)	
	155-2255	1	KIT-CONNECTING PLUG (12-PIN)	
	155-2260	1	KIT-CONNECTING PLUG (3-PIN)	
	155-2274	2	KIT-CONNECTING PLUG (6-PIN)	
			(EACH PLUG KIT INCLUDES PLUG AS, WEDGE(S) & INTERFACE SEAL)	
	8T-8737	16	PLUG-SEAL	
	102-8805	1	KIT-RECEPTACLE (6-PIN)	
	102-8806	1	KIT-RECEPTACLE (8-PIN)	
	102-8801	1	KIT-RECEPTACLE (12-PIN)	
			(EACH RECEPTACLE KIT INCLUDES RECEPTACLE AS & WEDGE)	
	8T-8730	11	SOCKET-CONNECTOR (16-GA TO 18-GA)	
	9X-3402	13	SOCKET-CONNECTOR (16-GA TO 18-GA)	
	3T-3158	2	SOCKET-LAMP	
	107-1984	14	SOCKET-LAMP	
	3T-3159	2	SPRING	
	3T-3157	2	TERMINAL-BLADE (16-GA TO 20-GA)	
	107-1985	28	TERMINAL	
E	**119-3662**		TUBE-HEAT SHRINK (10.85-MM DIA) (13-CM)	
E	**125-7874**		TUBE-HEAT SHRINK (5.72-MM DIA) (25-CM)	
E	**125-7875**		TUBE-HEAT SHRINK (7.44-MM DIA) (5-CM)	
	155-2258	1	WEDGE-PLUG LOCK (12-PIN)	
	3E-3389	1	WEDGE-RECEPTACLE LOCK (8-PIN)	

E - ORDER BY THE CENTIMETER

<END>

466-2107 HARNESS AS-PLATFORM—PLATFORM

S/N: SZS740-UP

PART OF 434-4110, 434-4111 WIRING GP-FRONT

AN ATTACHMENT

SMCS-1408 **i06914909**

NOTE	PART NUMBER	QTY	PART NAME 1 2 3 4 5 6 (PRODUCT LEVEL)	SEE PAGE
	102-8803	1	KIT-RECEPTACLE (3-PIN)	
	102-8805	1	KIT-RECEPTACLE (6-PIN)	
	102-8801	8	KIT-RECEPTACLE (12-PIN)	
			(EACH RECEPTACLE KIT INCLUDES RECEPTACLE AS & WEDGE)	
	5P-4571	6	TERMINAL-BLADE (14-GA TO 16-GA)	
	7G-7920	1	PLUG-SEAL	
	9X-0196	3	TERMINAL AS (16-GA)	
	8N-1546	3	PIN-CONNECTOR (6-GA)	
	8N-1547	3	SOCKET-CONNECTOR (6-GA)	
	8T-8729	76	PIN-CONNECTOR (16-GA TO 18-GA)	
	8T-8730	93	SOCKET-CONNECTOR (16-GA TO 18-GA)	
	8T-8737	72	PLUG-SEAL	
	9W-0844	10	SOCKET-CONNECTOR (14-GA TO 16-GA)	
	9W-0852	10	PIN-CONNECTOR (14-GA TO 16-GA)	
	9X-1343	1	RECEPTACLE AS-CONNECTOR (40-PIN)	
	9X-3401	29	PIN-CONNECTOR (16-GA TO 18-GA)	
	9X-3402	20	SOCKET-CONNECTOR (16-GA TO 18-GA)	
E	**119-3662**		TUBE-HEAT SHRINK (10.85-MM DIA) (26-CM)	
E	**125-7874**		TUBE-HEAT SHRINK (5.72-MM DIA) (60-CM)	
E	**125-7875**		TUBE-HEAT SHRINK (7.44-MM DIA) (60-CM)	
	127-5483	3	PLUG AS-CONNECTOR (1-PIN)	
	127-5484	4	RECEPTACLE AS-CONNECTOR (1-PIN)	
	2L-8052	3	TERMINAL-RING (6-GA, 3/8-IN SCREW)	
			—OR—	
	2L-8060	3	TERMINAL-RING (8-GA, 3/8-IN SCREW)	
	2L-8069	1	TERMINAL-RING (2-GA TO 10-GA, 3/8-IN SCREW)	
	2L-8079	2	TERMINAL-RING (14-GA TO 16-GA, 3/8-IN SCREW)	
	155-2255	7	KIT-CONNECTING PLUG (12-PIN)	
	155-2256	1	KIT-CONNECTING PLUG (12-PIN)	
	155-2265	1	KIT-CONNECTING PLUG (8-PIN)	
	155-2260	3	KIT-CONNECTING PLUG (3-PIN)	
	155-2270	9	KIT-CONNECTING PLUG (2-PIN)	
	155-2271	1	KIT-CONNECTING PLUG (4-PIN)	
	155-2274	5	KIT-CONNECTING PLUG (6-PIN)	
			(EACH PLUG KIT INCLUDES PLUG AS, WEDGE(S) & INTERFACE SEAL)	
	374-7463	3	CAP-SEAL	
	374-7466	3	CAP-SEAL	
	374-7468	2	CAP-SEAL	
	374-7465	1	CAP-SEAL	

E - ORDER BY THE CENTIMETER

<END>

466-2108 HARNESS AS-PLATFORM

S/N: SZS1-UP

PART OF 434-4108, 434-4109 WIRING GP-FRONT

AN ATTACHMENT

SMCS-1408 **i06902741**

NOTE	PART NUMBER	QTY	PART NAME 1 2 3 4 5 6 (PRODUCT LEVEL)	SEE PAGE
	102-8803	1	KIT-RECEPTACLE (3-PIN)	
	102-8805	1	KIT-RECEPTACLE (6-PIN)	
	102-8801	9	KIT-RECEPTACLE (12-PIN)	
			(EACH RECEPTACLE KIT INCLUDES RECEPTACLE AS & WEDGE)	
	5P-4571	6	TERMINAL-BLADE (14-GA TO 16-GA)	
	7G-7920	1	PLUG-SEAL	
	9X-0196	3	TERMINAL AS (16-GA)	
	8N-1546	3	PIN-CONNECTOR (6-GA)	
	8N-1547	3	SOCKET-CONNECTOR (6-GA)	
	8T-8729	88	PIN-CONNECTOR (16-GA TO 18-GA)	
	8T-8730	99	SOCKET-CONNECTOR (16-GA TO 18-GA)	
	8T-8737	87	PLUG-SEAL	
	9W-0844	10	SOCKET-CONNECTOR (14-GA TO 16-GA)	
	9W-0852	10	PIN-CONNECTOR (14-GA TO 16-GA)	
	9X-1343	1	RECEPTACLE AS-CONNECTOR (40-PIN)	
	9X-3401	21	PIN-CONNECTOR (16-GA TO 18-GA)	
	9X-3402	13	SOCKET-CONNECTOR (16-GA TO 18-GA)	
E	**119-3662**		TUBE-HEAT SHRINK (10.85-MM DIA) (26-CM)	
E	**125-7874**		TUBE-HEAT SHRINK (5.72-MM DIA) (60-CM)	
E	**125-7875**		TUBE-HEAT SHRINK (7.44-MM DIA) (65-CM)	
	127-5483	3	PLUG AS-CONNECTOR (1-PIN)	
	127-5484	4	RECEPTACLE AS-CONNECTOR (1-PIN)	
	2L-8052	3	TERMINAL-RING (6-GA, 3/8-IN SCREW)	
			—OR—	
	2L-8060	3	TERMINAL-RING (8-GA, 3/8-IN SCREW)	
	2L-8069	1	TERMINAL-RING (2-GA TO 10-GA, 3/8-IN SCREW)	
	2L-8079	2	TERMINAL-RING (14-GA TO 16-GA, 3/8-IN SCREW)	
	155-2255	8	KIT-CONNECTING PLUG (12-PIN)	
	155-2256	1	KIT-CONNECTING PLUG (12-PIN)	
	155-2265	1	KIT-CONNECTING PLUG (8-PIN)	
	155-2260	3	KIT-CONNECTING PLUG (3-PIN)	
	155-2270	9	KIT-CONNECTING PLUG (2-PIN)	
	155-2271	1	KIT-CONNECTING PLUG (4-PIN)	
	155-2274	4	KIT-CONNECTING PLUG (6-PIN)	
			(EACH PLUG KIT INCLUDES PLUG AS, WEDGE(S) & INTERFACE SEAL)	
	374-7463	3	CAP-SEAL	
	374-7466	3	CAP-SEAL	
	374-7468	2	CAP-SEAL	
	374-7465	1	CAP-SEAL	

E - ORDER BY THE CENTIMETER

<END>

388-2519 HARNESS AS-REAR CHASSIS

S/N: SZS489-UP

FRAME RELAY

PART OF 388-2517, 452-0647 WIRING GP-REAR

SMCS-1408 **i05885999**

NOTE	PART NUMBER	QTY	PART NAME 1 2 3 4 5 6 (PRODUCT LEVEL)	SEE PAGE
	102-8802	1	KIT-RECEPTACLE (2-PIN)	
	102-8805	1	KIT-RECEPTACLE (6-PIN)	
	102-8801	1	KIT-RECEPTACLE (12-PIN)	
			(EACH RECEPTACLE KIT INCLUDES RECEPTACLE AS & WEDGE)	
	3E-3383	1	WEDGE-RECEPTACLE LOCK (6-PIN)	
	8N-1547	2	SOCKET-CONNECTOR (6-GA)	
	8T-8729	10	PIN-CONNECTOR (16-GA TO 18-GA)	
	8T-8730	9	SOCKET-CONNECTOR (16-GA TO 18-GA)	
	8T-8737	17	PLUG-SEAL	
	9W-1795	1	BOOT	
	9X-3401	2	PIN-CONNECTOR (16-GA TO 18-GA)	
	9X-3402	4	SOCKET-CONNECTOR (16-GA TO 18-GA)	
	127-5483	2	PLUG AS-CONNECTOR (1-PIN)	
	2L-8051	2	TERMINAL-RING (6-GA, 5/16-IN SCREW)	
			—OR—	
	5P-3455	2	TERMINAL-RING (8-GA, 5/16-IN SCREW)	
	2L-8079	2	TERMINAL-RING (14-GA TO 16-GA, 3/8-IN SCREW)	
	7N-9017	1	TERMINAL-RING (18-GA TO 22-GA, NO. 10 SCREW)	
	155-2255	1	KIT-CONNECTING PLUG (12-PIN)	
	155-2270	2	KIT-CONNECTING PLUG (2-PIN)	
	155-2274	1	KIT-CONNECTING PLUG (6-PIN)	
			(EACH PLUG KIT INCLUDES PLUG AS, WEDGE & INTERFACE SEAL)	
	155-2258	1	WEDGE-PLUG LOCK (12-PIN)	
E	**235-2765**		CONDUIT-FLEXIBLE (27.6-MM ID) (84-CM)	
E	**311-4859**		TUBE-HEAT SHRINK (48-MM DIA) (30-CM)	

E - ORDER BY THE CENTIMETER

<END>

236-2356 HARNESS AS-SENSOR—ANGLE

S/N: SZS1-UP
BLADE INCLINATION
PART OF 294-3542, 434-8050, 434-8052 WIRING GP-GRADE CONTROL
AN ATTACHMENT

SMCS-1408 **i06177856**

NOTE	PART NUMBER	QTY	PART NAME 1 2 3 4 5 6 (PRODUCT LEVEL)	SEE PAGE
	243-5362	1	CAP-DUST	
G	**9X-2383**		HOSE (50-IN)	
	102-8804	1	KIT-RECEPTACLE (4-PIN)	
			(INCLUDES RECEPTACLE AS & WEDGE)	
	8T-8729	2	PIN-CONNECTOR (16-GA TO 18-GA)	
	9X-3401	2	PIN-CONNECTOR (16-GA TO 18-GA)	
	9X-4385	1	PLUG AS-CONNECTOR (6-PIN)	
B	**368-2369**		TAPE	
B	**368-2370**		TAPE	
E	**8T-5346**		TUBE-HEAT SHRINK (19.1-MM DIA) (16-CM)	
E	**125-7875**		TUBE-HEAT SHRINK (7.44-MM DIA) (5-CM)	

B - USE AS REQUIRED
E - ORDER BY THE CENTIMETER
G - ORDER BY THE INCH

<END>

243-3250 HARNESS AS-SENSOR—ROTATION

S/N: SZS1-UP
ACCUGRADE
PART OF 294-3542, 434-8050, 434-8052 WIRING GP-GRADE CONTROL
AN ATTACHMENT

SMCS-1408 **i06600796**

NOTE	PART NUMBER	QTY	PART NAME 1 2 3 4 5 6 (PRODUCT LEVEL)	SEE PAGE
	243-5362	1	CAP-DUST	
	9X-4385	1	PLUG AS-CONNECTOR (6-PIN)	
	155-2271	1	KIT-CONNECTING PLUG (4-PIN)	
			(INCLUDES PLUG AS, WEDGE & INTERFACE SEAL)	
	8T-8730	4	SOCKET-CONNECTOR (16-GA TO 18-GA)	
E	**125-7875**		TUBE-HEAT SHRINK (7.44-MM DIA) (5-CM)	

E - ORDER BY THE CENTIMETER

<END>

423-8806 HARNESS AS-SENSOR

S/N: SZS489-UP

PART OF 388-2517, 434-4113 WIRING GP-REAR

SMCS-1408 **i05885953**

NOTE	PART NUMBER	QTY	PART NAME 1 2 3 4 5 6 (PRODUCT LEVEL)	SEE PAGE
	155-2270	1	KIT-CONNECTING PLUG (2-PIN)	
			(INCLUDES PLUG AS, WEDGE & INTERFACE SEAL)	
	102-8801	1	KIT-RECEPTACLE (12-PIN)	
			(INCLUDES RECEPTACLE AS & WEDGE)	
	8T-8729	8	PIN-CONNECTOR (16-GA TO 18-GA)	
	9W-0852	2	PIN-CONNECTOR (14-GA TO 16-GA)	
	9X-3401	3	PIN-CONNECTOR (16-GA TO 18-GA)	
	9X-1054	1	PLUG AS-CONNECTOR (4-PIN)	
	230-4011	1	PLUG AS-CONNECTOR (2-PIN)	
	455-0704	1	SEAL-CONNECTOR	
	237-0227	1	PLUG AS-CONNECTOR (3-PIN)	
	455-0705	1	SEAL-CONNECTOR	
	8T-8737	1	PLUG-SEAL	
	230-4012	1	RECEPTACLE AS-CONNECTOR (2-PIN)	
	8T-8730	2	SOCKET-CONNECTOR (16-GA TO 18-GA)	
	9W-0844	2	SOCKET-CONNECTOR (14-GA TO 16-GA)	
	9X-3402	3	SOCKET-CONNECTOR (16-GA TO 18-GA)	
	9X-1056	4	TERMINAL-RECEPTACLE (14-GA TO 16-GA)	

<END>

455-7844 HARNESS AS-STEERING

S/N: SZS1-UP

PART OF 434-4114, 518-6846 WIRING GP-STEERING CONSOLE

AN ATTACHMENT

SMCS-1408 **i06540060**

NOTE	PART NUMBER	QTY	PART NAME 1 2 3 4 5 6 (PRODUCT LEVEL)	SEE PAGE
	102-8801	2	KIT-RECEPTACLE (12-PIN)	
			(EACH INCLUDES RECEPTACLE AS & WEDGE)	
	6V-0491	16	TERMINAL-BLADE (14-GA TO 18-GA)	
	7G-7918	1	PLUG-SEAL	
	7T-6365	4	HOUSING-RECEPTACLE	
	8N-1541	1	SOCKET-CONNECTOR (12-GA TO 14-GA)	
	8N-1546	2	PIN-CONNECTOR (6-GA)	
	8N-1547	1	SOCKET-CONNECTOR (6-GA)	
	8T-8729	16	PIN-CONNECTOR (16-GA TO 18-GA)	
	8T-8730	17	SOCKET-CONNECTOR (16-GA TO 18-GA)	
	8T-8737	10	PLUG-SEAL	
	9G-9314	5	TERMINAL-BLADE (14-GA TO 16-GA)	
	9R-9806	11	TERMINAL-BLADE (18-GA TO 20-GA)	
	9W-0844	4	SOCKET-CONNECTOR (14-GA TO 16-GA)	
	9W-0852	3	PIN-CONNECTOR (14-GA TO 16-GA)	
	9W-2032	1	TERMINAL-BLADE (10-GA TO 12-GA)	
	9W-2033	16	TERMINAL-BLADE (14-GA TO 16-GA)	
E	**119-3662**		TUBE-HEAT SHRINK (10.85-MM DIA) (33-CM)	
E	**125-7874**		TUBE-HEAT SHRINK (5.72-MM DIA) (10-CM)	
E	**125-7875**		TUBE-HEAT SHRINK (7.44-MM DIA) (30-CM)	
	127-5483	1	PLUG AS-CONNECTOR (1-PIN)	
	127-5484	2	RECEPTACLE AS-CONNECTOR (1-PIN)	
	129-7163	1	PLUG AS-CONNECTOR (1-PIN)	
	129-7164	1	RECEPTACLE AS-CONNECTOR (1-PIN)	
	5P-4571	5	TERMINAL-BLADE (14-GA TO 16-GA)	
	5P-1475	5	TERMINAL-FORK (14-GA TO 16-GA, NO. 8 SCREW)	
	2L-8050	3	TERMINAL-RING (6-GA, 1/4-IN SCREW)	
			—OR—	
	2L-8058	3	TERMINAL-RING (8-GA, 1/4-IN SCREW)	
	155-2255	2	KIT-CONNECTING PLUG (12-PIN)	
	155-2270	1	KIT-CONNECTING PLUG (2-PIN)	
			(EACH PLUG KIT INCLUDES PLUG AS, WEDGE & INTERFACE SEAL)	
	174-7566	2	BLOCK AS-FUSE	
			(EACH INCLUDES)	
	1H-3244	1	LOCKWASHER	
	6V-8185	1	NUT (1/4-20-THD)	
	8T-4205	1	WASHER-HARD (7.2X14.5X2-MM THK)	
	151-1398	2	KIT-TERMINAL (LOCK)	
	185-1860	27	SEAL-WIRE	
	185-1861	6	SEAL-WIRE	
	202-5397	17	PLUG	
	204-1297	27	TERMINAL AS-BLADE (18-GA TO 20-GA)	
			(EACH INCLUDES)	
	235-4123	1	TERMINAL (18-GA TO 20-GA)	
	245-7434	5	KIT-CONNECTING PLUG (10-PIN)	
			(EACH INCLUDES CONNECTOR PLUG, WIRE ASSEMBLIES & PLUGS)	

455-7844 **HARNESS AS-STEERING (**contd.**)** **i06540060**

NOTE	PART NUMBER	QTY	PART NAME 1 2 3 4 5 6 (PRODUCT LEVEL)	SEE PAGE
E - ORDER BY THE CENTIMETER				

<END>

379-4984 HARNESS AS-TRANSMISSION

S/N: CK41-UP; JSE1-UP

PART OF 365-5537 CONTROL GP-TRANSMISSION HYD

SMCS-1408, 3030 **i06682677**

NOTE	PART NUMBER	QTY	PART NAME 1 2 3 4 5 6 (PRODUCT LEVEL)	SEE PAGE
	102-8801	1	KIT-RECEPTACLE (12-PIN)	
			(INCLUDES RECEPTACLE AS & WEDGE)	
	8T-8737	16	PLUG-SEAL	
E	**114-8843**		SLEEVE-PLASTIC (260-CM)	
E	**119-3662**		TUBE-HEAT SHRINK (10.85-MM DIA) (13-CM)	
	9X-3402	36	SOCKET-CONNECTOR (16-GA TO 18-GA)	
			—OR—	
	126-1768	36	SOCKET-CONNECTOR (14-GA TO 16-GA)	
	9X-3401	10	PIN-CONNECTOR (16-GA TO 18-GA)	
			—OR—	
	126-1767	10	PIN-CONNECTOR (14-GA TO 16-GA)	
	155-2255	2	KIT-CONNECTING PLUG (12-PIN)	
	155-2270	13	KIT-CONNECTING PLUG (2-PIN)	
			(EACH PLUG KIT INCLUDES PLUG AS, WEDGE, & INTERFACE SEAL)	
	155-2258	2	WEDGE-PLUG LOCK (12-PIN)	
B	**1P-0810**		TAPE-ELECTRICAL	
B	**329-3734**		TAPE-ELECTRICAL	
	374-7463	1	CAP-SEAL	
	374-7468	1	CAP-SEAL	
B - USE AS REQUIRED E - ORDER BY THE CENTIMETER				

<END>

388-2518 HARNESS AS-TRANSMISSION

S/N: SZS489-UP

PART OF 388-2517, 452-0647 WIRING GP-REAR

SMCS-1408, 3030

i05885998

NOTE	PART NUMBER	QTY	PART NAME 1 2 3 4 5 6 (PRODUCT LEVEL)	SEE PAGE
E	**231-9897**		CONDUIT-FLEXIBLE (36-MM ID) (80-CM)	
	126-1774	3	COVER-CONNECTOR	
	155-2257	1	KIT-CONNECTING PLUG (12-PIN)	
	155-2260	2	KIT-CONNECTING PLUG (3-PIN)	
	155-2270	2	KIT-CONNECTING PLUG (2-PIN)	
			(EACH PLUG KIT INCLUDES PLUG AS, WEDGE & INTERFACE SEAL)	
	102-8806	1	KIT-RECEPTACLE (8-PIN)	
	102-8801	2	KIT-RECEPTACLE (12-PIN)	
			(EACH RECEPTACLE KIT INCLUDES RECEPTACLE AS & WEDGE)	
	8T-8729	25	PIN-CONNECTOR (16-GA TO 18-GA)	
	9X-3401	4	PIN-CONNECTOR (16-GA TO 18-GA)	
	9X-0141	1	PLUG AS-CONNECTOR (40-PIN)	
	3E-4367	1	RING-RETAINING	
M	**3E-8557**	1	BOLT (M5X0.8X39.37-MM)	
	9X-3490	2	SEAL-CONNECTOR (40-PIN)	
	160-7689	1	PLUG AS-CONNECTOR (70-PIN)	
	147-1445	1	PLUG AS-CONNECTOR (70-PIN)	
	147-1446	1	PLUG AS-CONNECTOR (70-PIN)	
			(EACH PLUG AS INCLUDES)	
	159-9322	1	SEAL-O-RING	
	8T-8737	119	PLUG-SEAL	
	8T-8730	107	SOCKET-CONNECTOR (16-GA TO 18-GA)	
	9W-0844	15	SOCKET-CONNECTOR (14-GA TO 16-GA)	
	9X-3402	82	SOCKET-CONNECTOR (16-GA TO 18-GA)	
	7K-1181	6	STRAP-CABLE	
	2L-8069	2	TERMINAL-RING (2-GA TO 10-GA, 3/8-IN SCREW)	
	2L-8076	1	TERMINAL-RING (14-GA TO 16-GA, NO. 10 SCREW)	
	2L-8079	1	TERMINAL-RING (14-GA TO 16-GA, 3/8-IN SCREW)	
E	**119-3662**		TUBE-HEAT SHRINK (10.85-MM DIA) (13-CM)	
E	**125-7874**		TUBE-HEAT SHRINK (5.72-MM DIA) (30-CM)	
E	**125-7875**		TUBE-HEAT SHRINK (7.44-MM DIA) (30-CM)	
E	**311-4859**		TUBE-HEAT SHRINK (48-MM DIA) (30-CM)	
	155-2258	5	WEDGE-PLUG LOCK (12-PIN)	
	3E-3389	1	WEDGE-RECEPTACLE LOCK (8-PIN)	

E - ORDER BY THE CENTIMETER
M - METRIC PART

<END>

381-2499 HARNESS AS-WIRING

S/N: TX71-UP; KHX1-UP

PART OF 330-6022 WIRING GP-ENGINE

SMCS-1408 **i06949077**

NOTE	PART NUMBER	QTY	PART NAME 1 2 3 4 5 6 (PRODUCT LEVEL)	SEE PAGE
	211-6807	1	COVER-CONNECTOR	
	155-2270	6	KIT-CONNECTING PLUG (2-PIN)	
	155-2265	1	KIT-CONNECTING PLUG (8-PIN)	
			(EACH KIT INCLUDES PLUS AS, WEDGE, & INTERFACE SEAL)	
	102-8801	1	KIT-RECEPTACLE (12-PIN)	
			(INCLUDES RECEPTACLE AS & WEDGE)	
	9X-3401	12	PIN-CONNECTOR (16-GA TO 18-GA)	
			—OR—	
	126-1767	12	PIN-CONNECTOR (14-GA TO 16-GA)	
	160-8124	1	PLUG AS (2-PIN)	
	8T-8737	2	PLUG-SEAL	
	100-3320	1	PLUG AS-CONNECTOR (2-PIN)	
	126-5011	1	SEAL-CONNECTOR	
	111-2416	1	PLUG AS-CONNECTOR (2-PIN)	
	126-5011	1	SEAL-CONNECTOR	
	230-4011	2	PLUG AS-CONNECTOR (2-PIN)	
			(EACH INCLUDES)	
	264-7029	1	SEAL-CONNECTOR	
	230-4013	1	PLUG AS-CONNECTOR (3-PIN)	
	264-7030	1	SEAL-CONNECTOR	
	237-0227	3	PLUG AS-CONNECTOR (3-PIN)	
			(EACH INCLUDES)	
	264-7030	1	SEAL-CONNECTOR	
	264-5732	1	PLUG AS-CONNECTOR (120-PIN)	
	288-7324	1	SEAL-CONNECTOR	
	8T-8737	85	PLUG-SEAL	
E	**289-5150**		SLEEVE (31-CM)	
	9X-3402	65	SOCKET-CONNECTOR (16-GA TO 18-GA)	
			—OR—	
	126-1768	65	SOCKET-CONNECTOR (14-GA TO 16-GA)	
	7K-1181	3	STRAP-CABLE	
B	**329-3734**		TAPE-ELECTRICAL	
B	**1P-0810**		TAPE-ELECTRICAL	
	305-5362	4	TERMINAL AS (18-GA)	
E	**125-7874**		TUBE-HEAT SHRINK (5.72-MM DIA) (30-CM)	

B - USE AS REQUIRED
E - ORDER BY THE CENTIMETER

<END>

447-7469 HARNESS AS-WIRING

S/N: SZS1-UP
SPEED, TACHOMETER
PART OF 434-8047 MODULE GP-SPEEDOMETER & TACH
AN ATTACHMENT

SMCS-1408 **i05848660**

NOTE	PART NUMBER	QTY	PART NAME 1 2 3 4 5 6 (PRODUCT LEVEL)	SEE PAGE
	155-2260	1	KIT-CONNECTING PLUG (3-PIN)	
	155-2274	2	KIT-CONNECTING PLUG (6-PIN)	
			(EACH PLUG KIT INCLUDES PLUG AS, WEDGE & INTERFACE SEAL)	
	102-8805	1	KIT-RECEPTACLE (6-PIN)	
			(INCLUDES RECEPTACLE AS & WEDGE)	
	8T-8729	2	PIN-CONNECTOR (16-GA TO 18-GA)	
	9X-3401	2	PIN-CONNECTOR (16-GA TO 18-GA)	
	8T-8737	5	PLUG-SEAL	
	134-2540	1	RESISTOR AS-CONNECTION (3-PIN)	
	8T-8730	6	SOCKET-CONNECTOR (16-GA TO 18-GA)	
	9X-3402	6	SOCKET-CONNECTOR (16-GA TO 18-GA)	
	3S-2093	1	STRAP-CABLE	
E	**125-7874**		TUBE-HEAT SHRINK (5.72-MM DIA) (15-CM)	
E	**125-7875**		TUBE-HEAT SHRINK (7.44-MM DIA) (15-CM)	
	3E-3383	1	WEDGE-RECEPTACLE LOCK (6-PIN)	

E - ORDER BY THE CENTIMETER

<END>

452-0491 HARNESS AS-WIRING—EXTENSION

S/N: SZS1-UP
PART OF 466-2111 INSTALLATION AR-COMMUNICATION
AN ATTACHMENT

SMCS-1408 **i06657351**

NOTE	PART NUMBER	QTY	PART NAME 1 2 3 4 5 6 (PRODUCT LEVEL)	SEE PAGE
	133-0969	1	CONNECTOR-SOCKET (16-GA TO 18-GA)	
	155-2256	1	KIT-CONNECTING PLUG (12-PIN)	
			(INCLUDES PLUG AS, WEDGE, & INTERFACE SEAL)	
	190-7614	1	KIT-RECEPTACLE (12-PIN)	
			(INCLUDES RECEPTACLE AS & WEDGE)	
	9X-3401	10	PIN-CONNECTOR (16-GA TO 18-GA)	
	133-0967	1	PIN-CONNECTOR (16-GA TO 18-GA)	
	8T-8737	2	PLUG-SEAL	
	9X-3402	10	SOCKET-CONNECTOR (16-GA TO 18-GA)	
E	**125-7876**		TUBE-HEAT SHRINK (17.78-MM DIA) (10-CM)	

E - ORDER BY THE CENTIMETER

<END>

302-5429 INSTALLATION AR-COMMUNICATION

S/N: SZS1-UP
FOR USE WITH 320-0341—PAGE: 1103, 320-0342—PAGE: 1325
CANNOT BE USED WITH 368-6713—PAGE: 270, 368-6730—PAGE: 279
PART OF 465-8777 DISTRIBUTION AR
AN ATTACHMENT

SMCS-7606 **i06690286**

NOTE	REF NO	GRAPHIC REF	PART NUMBER	QTY	PART NAME 1 2 3 4 5 6 (PRODUCT LEVEL)	SEE PAGE
	1	1	**256-6803**	1	HARNESS AS-RADIO (ARO FIT)	
		1	**102-8802**	1	KIT-RECEPTACLE (2-PIN)	
		1	**102-8801**	1	KIT-RECEPTACLE (12-PIN)	
					(EACH KIT INCLUDES RECEPTACLE AS & WEDGE)	
		1	**186-3735**	9	PIN-CONNECTOR (16-GA TO 18-GA)	
		1	**186-3736**	9	SOCKET-CONNECTOR (16-GA TO 18-GA)	
		1	**8T-8737**	10	PLUG-SEAL	
		1	**155-2255**	1	KIT-CONNECTING PLUG (12-PIN)	
		1	**155-2270**	1	KIT-CONNECTING PLUG (2-PIN)	
					(EACH KIT INCLUDES PLUG AS, WEDGE, & INTERFACE SEAL)	
	2	1	**256-6804**	1	HARNESS AS-CONTROL (PRODUCT LINK)	
		1	**102-8801**	1	KIT-RECEPTACLE (12-PIN)	
					(INCLUDES RECEPTACLE AS & WEDGE)	
		1	**186-3735**	11	PIN-CONNECTOR (16-GA TO 18-GA)	
		1	**186-3736**	25	SOCKET-CONNECTOR (16-GA TO 18-GA)	
		1	**8T-8737**	60	PLUG-SEAL	
		1	**9X-6772**	2	STRAP-CABLE	
E		1	**125-7874**		TUBE-HEAT SHRINK (5.72-MM DIA) (20-CM)	
		1	**126-1774**	1	COVER-CONNECTOR	
		1	**155-2255**	1	KIT-CONNECTING PLUG (12-PIN)	
		1	**155-2270**	1	KIT-CONNECTING PLUG (2-PIN)	
					(EACH KIT INCLUDES PLUG AS, WEDGE, & INTERFACE SEAL)	
		1	**160-7690**	1	PLUG AS-CONNECTOR (70-PIN)	
	3	1	**257-9363**	1	HARNESS AS-POWER (PRODUCT LINK)	
		1	**102-8805**	1	KIT-RECEPTACLE (6-PIN)	
					(INCLUDES RECEPTACLE AS & WEDGE)	
		1	**186-3735**	9	PIN-CONNECTOR (16-GA TO 18-GA)	
		1	**186-3736**	9	SOCKET-CONNECTOR (16-GA TO 18-GA)	
		1	**8T-8737**	3	PLUG-SEAL	
		1	**9X-4813**	1	RECEPTACLE AS-CONNECTOR (3-PIN)	
		1	**100-5805**	1	CAP-RECEPTACLE (3-PIN)	
		1	**155-2255**	1	KIT-CONNECTING PLUG (12-PIN)	
					(INCLUDES PLUG AS, WEDGE, & INTERFACE SEAL)	
Y	4	1	**262-1421**	1	ELECTRONICS GP-COMMUNICATION (PRODUCT LINK 300)	232
C	5	1	**284-8533**	1	ANTENNA AS	
		1	**301-0589**	1	ANTENNA (FLEXIBLE)	
		1	**355-0598**	1	NUT-SPECIAL	
CY	6	1	**336-3545**	1	RADIO GP-COMMUNICATION (PRODUCT LINK 121SR)	333
Y	7	1	*302-5428*	1	INSTALLATION GP-COMMUNICATION (PRODUCT LINK)	283

C - CHANGE FROM PREVIOUS TYPE
E - ORDER BY THE CENTIMETER
Y - SEPARATE ILLUSTRATION

302-5429 **INSTALLATION AR-COMMUNICATION (**contd.**)** **i06690286**

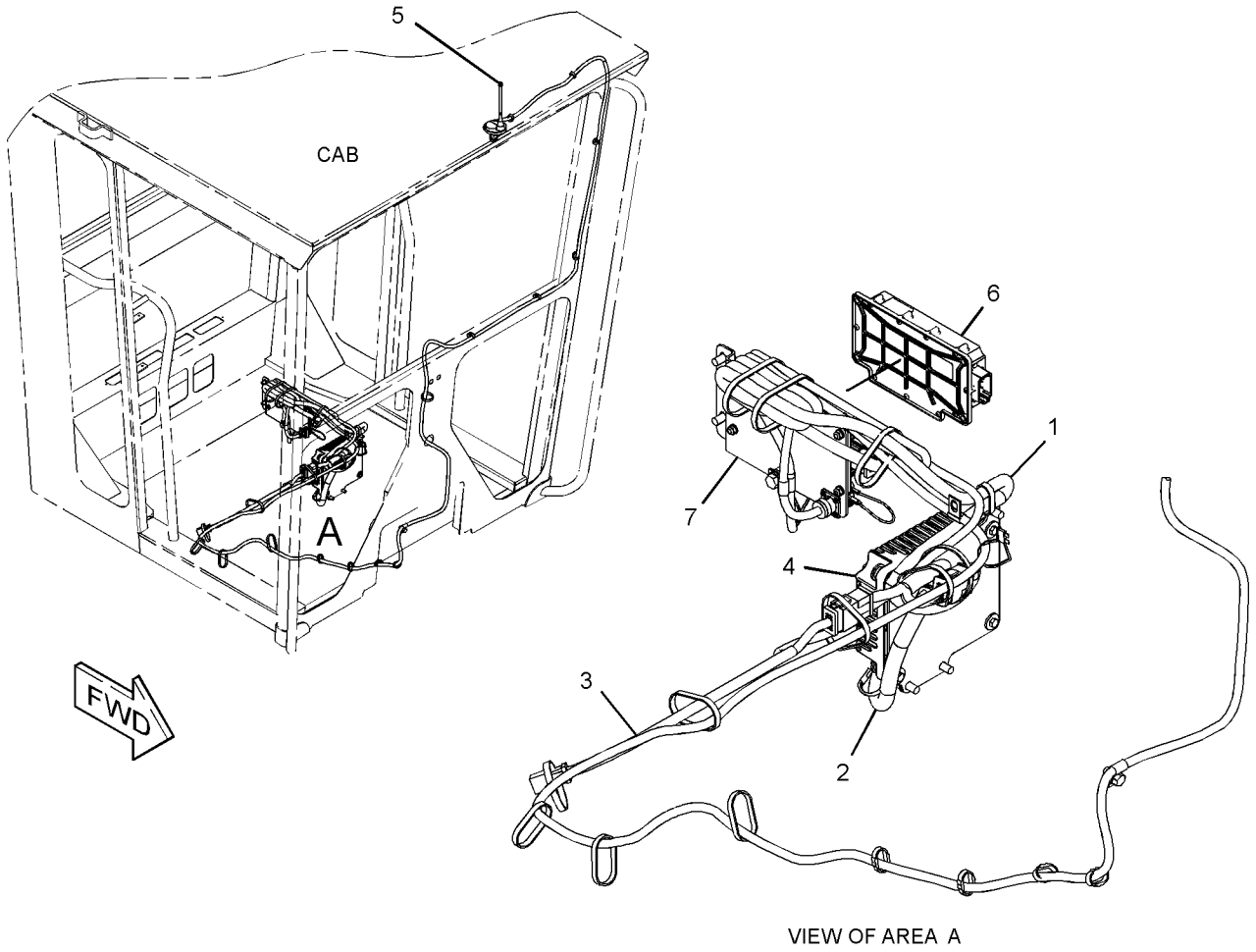

VIEW OF AREA A

GRAPHIC #1 <END> g03083641

368-6713 INSTALLATION AR-COMMUNICATION

S/N: SZS1-UP
FOR USE WITH 320-0341—PAGE: 1103, 320-0342—PAGE: 1325
CANNOT BE USED WITH 302-5429—PAGE: 268, 368-6730—PAGE: 279
AN ATTACHMENT

SMCS-7606 **i06690452**

NOTE	REF NO	GRAPHIC REF	PART NUMBER	QTY	PART NAME 1 2 3 4 5 6 (PRODUCT LEVEL)	SEE PAGE
	1	1	**256-6804**	1	HARNESS AS-CONTROL (PRODUCT LINK)	
		1	**126-1774**	1	COVER-CONNECTOR	
		1	**8T-8729**	11	PIN-CONNECTOR (16-GA TO 18-GA)	
		1	**155-2255**	1	KIT-CONNECTING PLUG (12-PIN)	
		1	**155-2270**	1	KIT-CONNECTING PLUG (2-PIN)	
					(EACH PLUG KIT INCLUDES PLUG AS, WEDGE, & INTERFACE SEAL)	
		1	**160-7690**	1	PLUG AS-CONNECTOR (70-PIN)	
		1	**159-9322**	1	SEAL-O-RING	
		1	**8T-8737**	60	PLUG-SEAL	
		1	**102-8801**	1	KIT-RECEPTACLE (12-PIN)	
					(INCLUDES RECEPTACLE AS & WEDGE)	
		1	**8T-8730**	25	SOCKET-CONNECTOR (16-GA TO 18-GA)	
		1	**7K-1181**	2	STRAP-CABLE	
E		1	**125-7874**		TUBE-HEAT SHRINK (5.72-MM DIA) (20-CM)	
	2	1	**257-9363**	1	HARNESS AS-POWER (PRODUCT LINK)	
		1	**100-5805**	1	CAP-RECEPTACLE (3-PIN)	
		1	**8T-8729**	9	PIN-CONNECTOR (16-GA TO 18-GA)	
		1	**155-2255**	1	KIT-CONNECTING PLUG (12-PIN)	
					(INCLUDES PLUG AS, WEDGE & INTERFACE SEAL)	
		1	**8T-8737**	3	PLUG-SEAL	
		1	**102-8805**	1	KIT-RECEPTACLE (6-PIN)	
					(INCLUDES RECEPTACLE AS & WEDGE)	
		1	**9X-4813**	1	RECEPTACLE AS-CONNECTOR (3-PIN)	
		1	**8T-8730**	9	SOCKET-CONNECTOR (16-GA TO 18-GA)	
	3	1	**346-9376**	1	ANTENNA AS	
		1	**355-1213**	1	PLUG	
		1	**361-1045**	1	NUT-SPECIAL (5/8-18-THD)	
Y	4	1	**351-8490**	1	CONTROL GP-UNPROGRAMMED (PRODUCT LINK 522)	223
	5	1	**353-8773**	1	CABLE AS-COMMUNICATION (ANTENNA)	
Y	6	1	*368-6728*	1	INSTALLATION GP-COMMUNICATION	287
Y	7	1	*381-8026*	1	ELECTRONICS GP-MONITOR (PRODUCT LINK 522)	232

E - ORDER BY THE CENTIMETER
Y - SEPARATE ILLUSTRATION

368-6713 **INSTALLATION AR-COMMUNICATION (**contd.**)** **i06690452**

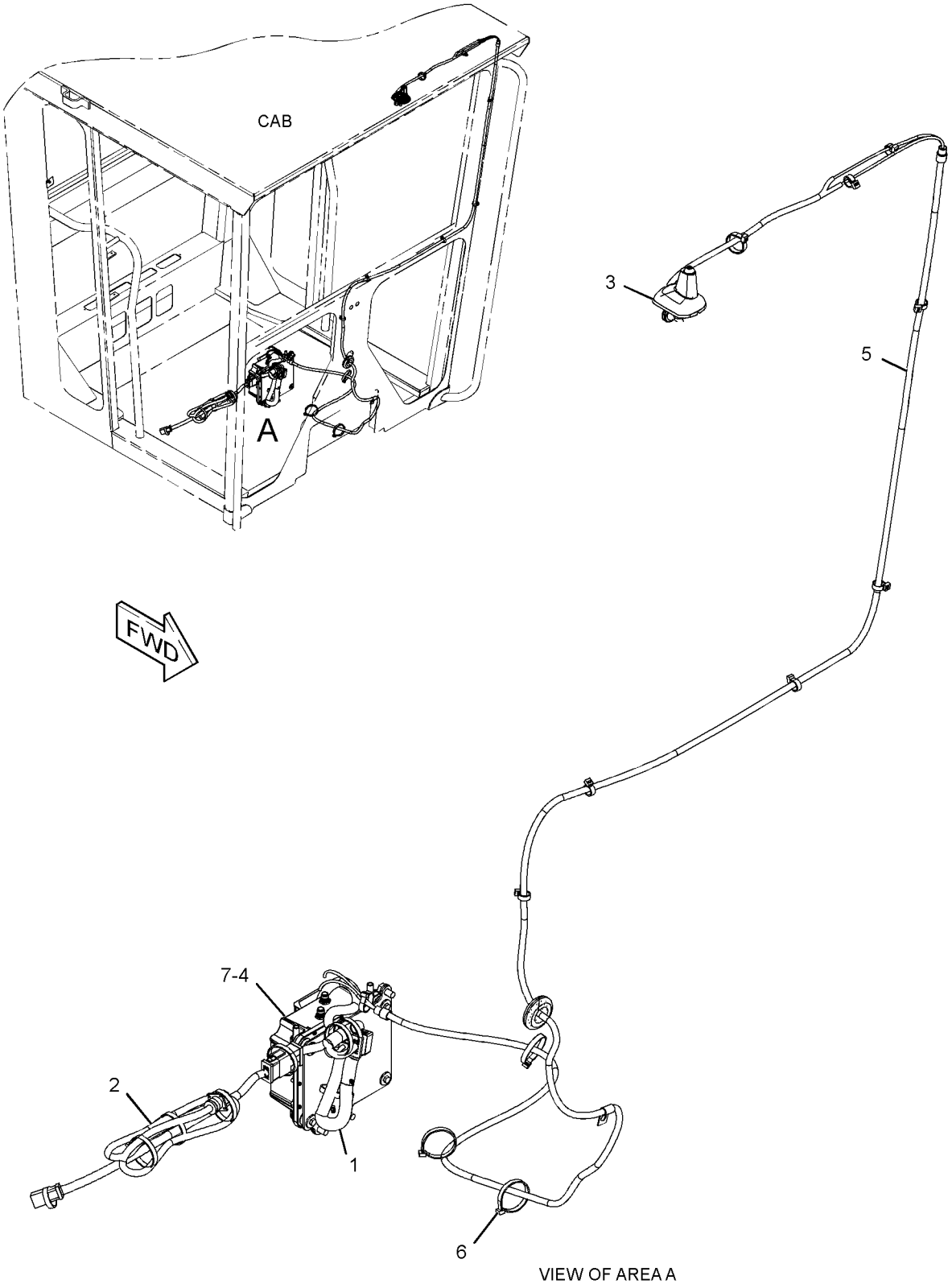

VIEW OF AREA A

GRAPHIC #1 <END> g03114241

368-6714 INSTALLATION AR-COMMUNICATION

S/N: SZS1-UP

FOR USE WITH 284-5400—PAGE: 1324

CANNOT BE USED WITH 368-6726—PAGE: 274, 368-6729—PAGE: 277

AN ATTACHMENT

SMCS-7606 **i06690272**

NOTE	REF NO	GRAPHIC REF	PART NUMBER	QTY	PART NAME 1 2 3 4 5 6 (PRODUCT LEVEL)	SEE PAGE
	1	1	**256-6804**	1	HARNESS AS-CONTROL (PRODUCT LINK)	
		1	**126-1774**	1	COVER-CONNECTOR	
		1	**8T-8729**	11	PIN-CONNECTOR (16-GA TO 18-GA)	
		1	**155-2255**	1	KIT-CONNECTING PLUG (12-PIN)	
		1	**155-2270**	1	KIT-CONNECTING PLUG (2-PIN)	
					(EACH PLUG KIT INCLUDES PLUG AS, WEDGE, & INTERFACE SEAL)	
		1	**160-7690**	1	PLUG AS-CONNECTOR (70-PIN)	
		1	**159-9322**	1	SEAL-O-RING	
		1	**8T-8737**	60	PLUG-SEAL	
		1	**102-8801**	1	KIT-RECEPTACLE (12-PIN)	
					(INCLUDES RECEPTACLE AS & WEDGE)	
		1	**8T-8730**	25	SOCKET-CONNECTOR (16-GA TO 18-GA)	
		1	**7K-1181**	2	STRAP-CABLE	
E		1	**125-7874**		TUBE-HEAT SHRINK (5.72-MM DIA) (20-CM)	
	2	1	**257-9363**	1	HARNESS AS-POWER (PRODUCT LINK)	
		1	**100-5805**	1	CAP-RECEPTACLE (3-PIN)	
		1	**8T-8729**	9	PIN-CONNECTOR (16-GA TO 18-GA)	
		1	**155-2255**	1	KIT-CONNECTING PLUG (12-PIN)	
					(INCLUDES PLUG AS, WEDGE & INTERFACE SEAL)	
		1	**8T-8737**	3	PLUG-SEAL	
		1	**102-8805**	1	KIT-RECEPTACLE (6-PIN)	
					(INCLUDES RECEPTACLE AS & WEDGE)	
		1	**9X-4813**	1	RECEPTACLE AS-CONNECTOR (3-PIN)	
		1	**8T-8730**	9	SOCKET-CONNECTOR (16-GA TO 18-GA)	
	3	1	**346-9376**	1	ANTENNA AS	
		1	**355-1213**	1	PLUG	
		1	**361-1045**	1	NUT-SPECIAL (5/8-18-THD)	
Y	4	1	**351-8490**	1	CONTROL GP-UNPROGRAMMED (PRODUCT LINK 522)	223
	5	1	**353-8773**	1	CABLE AS-COMMUNICATION (ANTENNA)	
Y	6	1	*368-6727*	1	INSTALLATION GP-COMMUNICATION	285
Y	7	1	*381-8026*	1	ELECTRONICS GP-MONITOR (PRODUCT LINK 522)	232

E - ORDER BY THE CENTIMETER
Y - SEPARATE ILLUSTRATION

368-6714 **INSTALLATION AR-COMMUNICATION (**contd.**)** **i06690272**

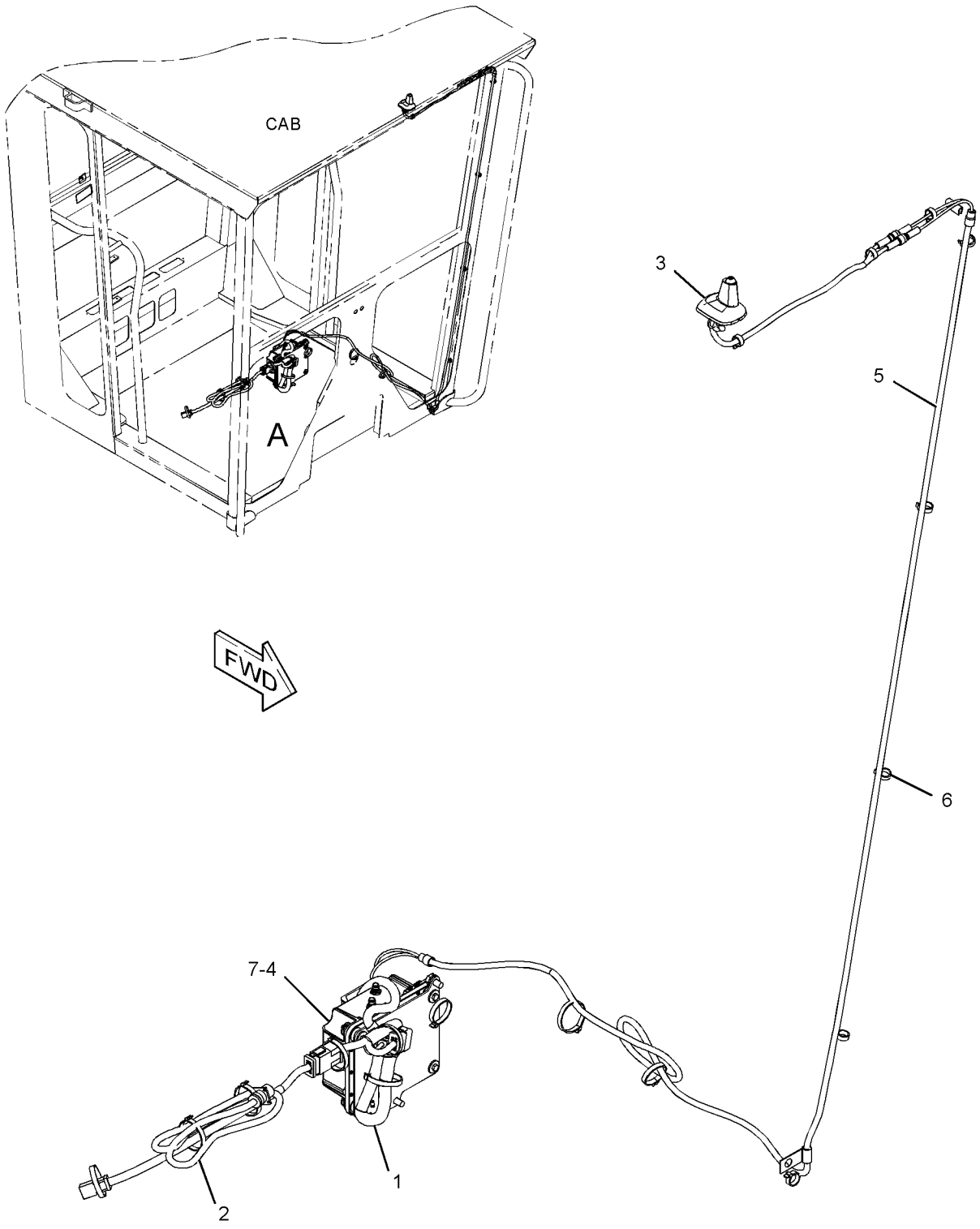

VIEW OF AREA A

GRAPHIC #1 <END> g03114246

368-6726 INSTALLATION AR-COMMUNICATION

S/N: SZS1-UP

FOR USE WITH 284-5400—PAGE: 1324

CANNOT BE USED WITH 368-6714—PAGE: 272, 368-6729—PAGE: 277

AN ATTACHMENT

SMCS-7606 **i06690195**

NOTE	REF NO	GRAPHIC REF	PART NUMBER	QTY	PART NAME 1 2 3 4 5 6 (PRODUCT LEVEL)	SEE PAGE
	1	1	**8C-5608**	4	SPACER (6.5X9.5X25.4-MM THK)	
	2	1	**230-1341**	1	FILM-WARNING (PRODUCT LINK RADIO, INTL)	
	3	1	**256-6803**	1	HARNESS AS-RADIO (ARO FIT)	
		1	**8T-8729**	9	PIN-CONNECTOR (16-GA TO 18-GA)	
		1	**155-2255**	1	KIT-CONNECTING PLUG (12-PIN)	
		1	**155-2270**	1	KIT-CONNECTING PLUG (2-PIN)	
					(EACH PLUG KIT INCLUDES PLUG AS, WEDGE & INTERFACE SEAL)	
		1	**8T-8737**	10	PLUG-SEAL	
		1	**102-8802**	1	KIT-RECEPTACLE (2-PIN)	
		1	**102-8801**	1	KIT-RECEPTACLE (12-PIN)	
					(EACH RECEPTACLE KIT INCLUDES RECEPTACLE AS & WEDGE)	
		1	**8T-8730**	9	SOCKET-CONNECTOR (16-GA TO 18-GA)	
	4	1	**256-6804**	1	HARNESS AS-CONTROL (PRODUCT LINK)	
		1	**126-1774**	1	COVER-CONNECTOR	
		1	**8T-8729**	11	PIN-CONNECTOR (16-GA TO 18-GA)	
		1	**155-2255**	1	KIT-CONNECTING PLUG (12-PIN)	
		1	**155-2270**	1	KIT-CONNECTING PLUG (2-PIN)	
					(EACH PLUG KIT INCLUDES PLUG AS, WEDGE, & INTERFACE SEAL)	
		1	**159-9322**	1	SEAL-O-RING	
		1	**8T-8737**	60	PLUG-SEAL	
		1	**102-8801**	1	KIT-RECEPTACLE (12-PIN)	
					(INCLUDES RECEPTACLE AS & WEDGE)	
		1	**8T-8730**	25	SOCKET-CONNECTOR (16-GA TO 18-GA)	
		1	**7K-1181**	2	STRAP-CABLE	
E		1	**125-7874**		TUBE-HEAT SHRINK (5.72-MM DIA) (20-CM)	
	5	1	**257-9363**	1	HARNESS AS-POWER (PRODUCT LINK)	
		1	**100-5805**	1	CAP-RECEPTACLE (3-PIN)	
		1	**8T-8729**	9	PIN-CONNECTOR (16-GA TO 18-GA)	
		1	**155-2255**	1	KIT-CONNECTING PLUG (12-PIN)	
					(INCLUDES PLUG AS, WEDGE & INTERFACE SEAL)	
		1	**8T-8737**	3	PLUG-SEAL	
		1	**102-8805**	1	KIT-RECEPTACLE (6-PIN)	
					(INCLUDES RECEPTACLE AS & WEDGE)	
		1	**9X-4813**	1	RECEPTACLE AS-CONNECTOR (3-PIN)	
		1	**8T-8730**	9	SOCKET-CONNECTOR (16-GA TO 18-GA)	
	6	1	**386-3993**	1	SERVICE GP-COMMUNICATION (PRODUCT LINK 300)	
		1	**285-1133**	1	CONTROL GP-UNPROGRAMMED (PRODUCT LINK 300)	
		1	**7X-6315**	1	STRAP AS-GROUND	
		1	**101-0852**	1	SCREW-PAN HEAD (8-32X0.375-IN)	
		1	**134-4126**	1	WASHER (4.52X8.28X0.76-MM THK)	
		1	**244-3164**	1	FILM-IDENTIFICATION (CATERPILLAR)	
		1	**384-6463**	1	SOFTWARE GP-COMMUNICATION (PRODUCT LINK 300)	
	7	1	**277-5368**	1	CAP AS	
		1	**5P-7958**	1	SLEEVE-CABLE SPLICE	

368-6726 **INSTALLATION AR-COMMUNICATION (**contd.**)** **i06690195**

NOTE	REF NO	GRAPHIC REF	PART NUMBER	QTY	PART NAME 1 2 3 4 5 6 (PRODUCT LEVEL)	SEE PAGE
		1	**100-5805**	1	CAP-RECEPTACLE (3-PIN)	
		1	**179-9392**	1	LANYARD	
	8	1	**284-8533**	1	ANTENNA AS	
		1	**301-0589**	1	ANTENNA (FLEXIBLE)	
		1	**355-0598**	1	NUT-SPECIAL	
	9	1	**302-5210**	1	PLATE	
	10	1	**307-0047**	1	FILM-INFORMATION (PRODUCT LINK, READ OMM)	
	11	1	**322-5824**	1	PLATE AS	
Y	12	1	**336-3545**	1	RADIO GP-COMMUNICATION (PRODUCT LINK 121SR)	333
M	13	1	**129-3178**	8	LOCKNUT (M6X1-THD)	
	14	1	**5P-9085**	3	CLIP	
	15	1	**5S-4246**	4	LOCKWASHER	
M	16	1	**169-9016**	4	NUT (M2.5X0.45-THD)	
M	17	1	**6V-9326**	4	SCREW-MACHINE (M2.5X0.45X10-MM)	
	18	1	**7K-1181**	19	STRAP-CABLE	
	19	1	**8J-1256**	1	CLIP	
	20	1	**8M-2770**	1	CLIP	
	21	1	**8T-4121**	7	WASHER-HARD (11X21X2.5-MM THK)	
M	22	1	**8T-4137**	7	BOLT (M10X1.5X20-MM)	
M	23	1	**8T-4138**	4	BOLT (M6X1X20-MM)	
M	24	1	**9X-2480**	4	BOLT (M6X1X45-MM)	
	25	1	**9X-6165**	12	WASHER (6.5X22X2.5-MM THK)	
	26	1	**9X-8256**	8	WASHER (6.6X12X2-MM THK)	
	27	1	**9X-9896**	8	MOUNT (ISOLATION)	
D	28	1	**8T-3426**		CHANNEL-TRIM (0.1-M)	
	29	1	**9W-1442**	1	FUSE (10-AMPERE)	

D - ORDER BY THE METER
E - ORDER BY THE CENTIMETER
M - METRIC PART
Y - SEPARATE ILLUSTRATION

368-6726 **INSTALLATION AR-COMMUNICATION (**contd.**)** **i06690195**

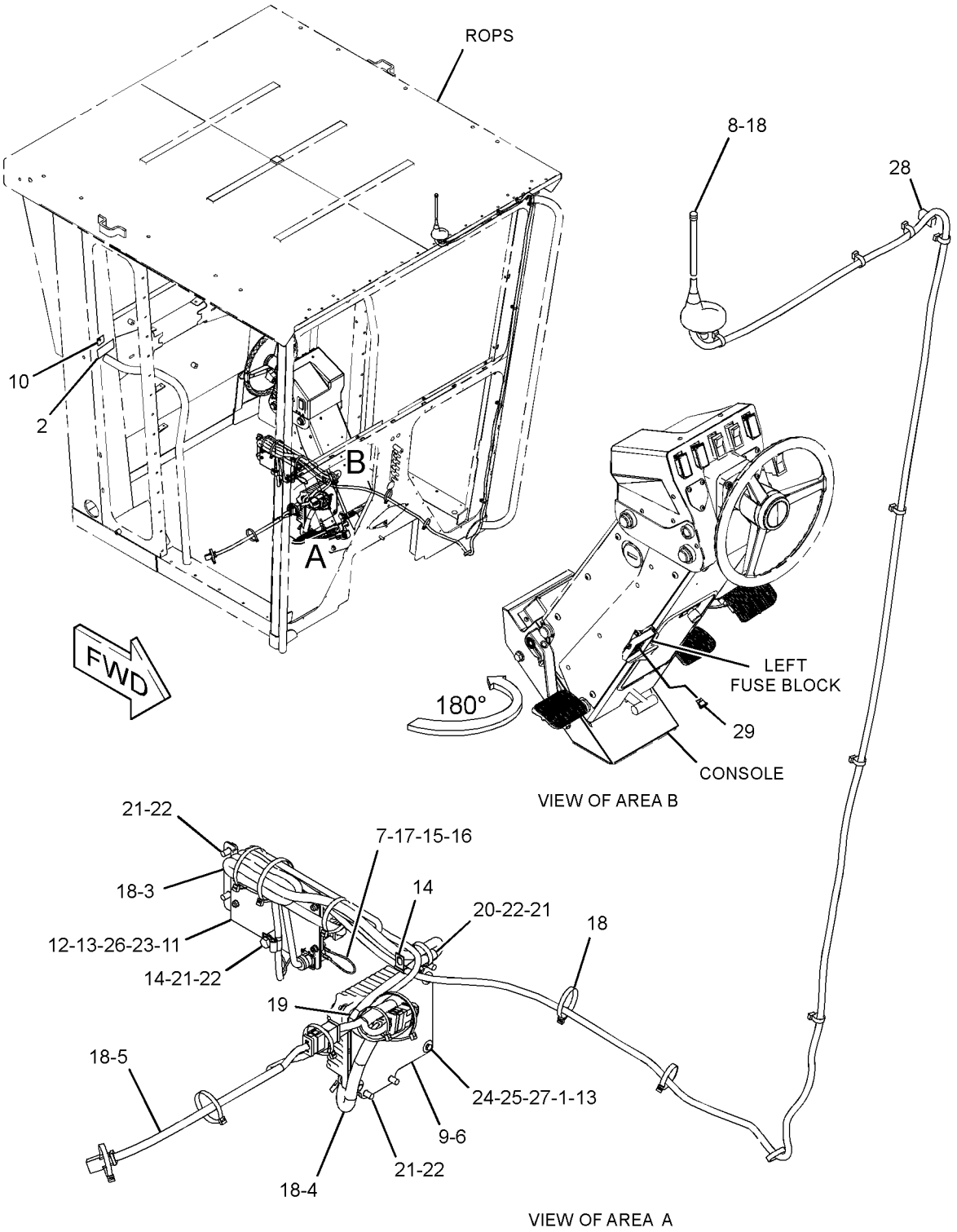

GRAPHIC #1 <END> g03367185

368-6729 INSTALLATION AR-COMMUNICATION

S/N: SZS1-UP

FOR USE WITH 284-5400—PAGE: 1324

CANNOT BE USED WITH 368-6714—PAGE: 272, 368-6726—PAGE: 274

AN ATTACHMENT

SMCS-7606 **i06690184**

NOTE	REF NO	GRAPHIC REF	PART NUMBER	QTY	PART NAME 1 2 3 4 5 6 (PRODUCT LEVEL)	SEE PAGE
	1	1	**256-6804**	1	HARNESS AS-CONTROL (PRODUCT LINK)	
		1	**126-1774**	1	COVER-CONNECTOR	
		1	**8T-8729**	11	PIN-CONNECTOR (16-GA TO 18-GA)	
		1	**155-2255**	1	KIT-CONNECTING PLUG (12-PIN)	
		1	**155-2270**	1	KIT-CONNECTING PLUG (2-PIN)	
					(EACH PLUG KIT INCLUDES PLUG AS, WEDGE, & INTERFACE SEAL)	
		1	**160-7690**	1	PLUG AS-CONNECTOR (70-PIN)	
		1	**159-9322**	1	SEAL-O-RING	
		1	**8T-8737**	60	PLUG-SEAL	
		1	**102-8801**	1	KIT-RECEPTACLE (12-PIN)	
					(INCLUDES RECEPTACLE AS & WEDGE)	
		1	**8T-8730**	25	SOCKET-CONNECTOR (16-GA TO 18-GA)	
		1	**7K-1181**	2	STRAP-CABLE	
E		1	**125-7874**		TUBE-HEAT SHRINK (5.72-MM DIA) (20-CM)	
	2	1	**257-9363**	1	HARNESS AS-POWER (PRODUCT LINK)	
		1	**100-5805**	1	CAP-RECEPTACLE (3-PIN)	
		1	**8T-8729**	9	PIN-CONNECTOR (16-GA TO 18-GA)	
		1	**155-2255**	1	KIT-CONNECTING PLUG (12-PIN)	
					(INCLUDES PLUG AS, WEDGE & INTERFACE SEAL)	
		1	**8T-8737**	3	PLUG-SEAL	
		1	**102-8805**	1	KIT-RECEPTACLE (6-PIN)	
					(INCLUDES RECEPTACLE AS & WEDGE)	
		1	**9X-4813**	1	RECEPTACLE AS-CONNECTOR (3-PIN)	
		1	**8T-8730**	9	SOCKET-CONNECTOR (16-GA TO 18-GA)	
	3	1	**346-9376**	1	ANTENNA AS	
		1	**355-1213**	1	PLUG	
		1	**361-1045**	1	NUT-SPECIAL (5/8-18-THD)	
	4	1	**353-8773**	1	CABLE AS-COMMUNICATION (ANTENNA)	
Y	5	1	*368-6727*	1	INSTALLATION GP-COMMUNICATION	285
Y	6	1	**372-4531**	1	CONTROL GP-UNPROGRAMMED (PRODUCT LINK 522, CHINA)	224
Y	7	1	*388-2563*	1	ELECTRONICS GP-MONITOR (PRODUCT LINK 522)	233

E - ORDER BY THE CENTIMETER
Y - SEPARATE ILLUSTRATION

368-6729 **INSTALLATION AR-COMMUNICATION (**contd.**)** **i06690184**

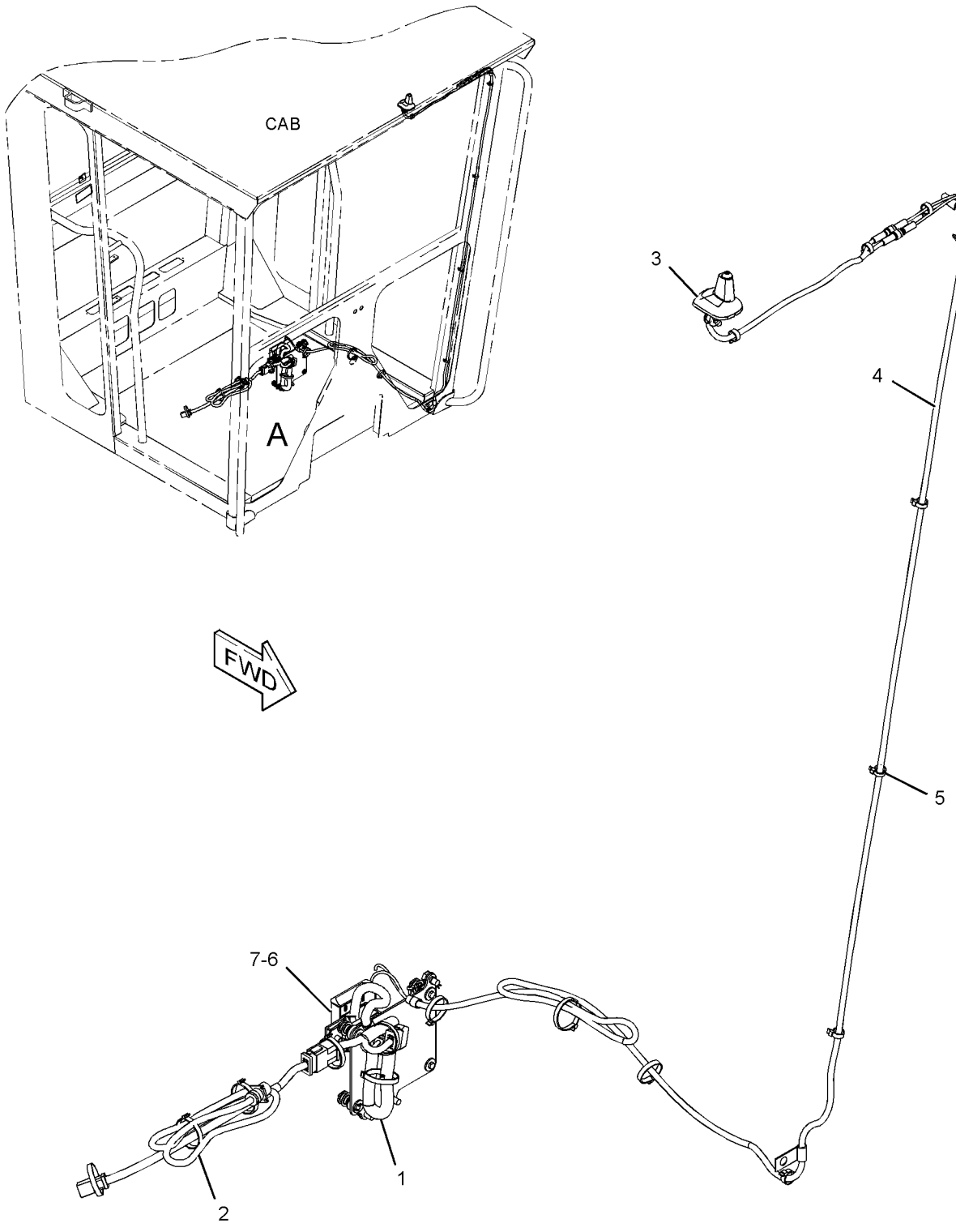

VIEW OF AREA A

GRAPHIC #1 <END> g03117958

368-6730 INSTALLATION AR-COMMUNICATION

S/N: SZS1-UP

FOR USE WITH 320-0341—PAGE: 1103, 320-0342—PAGE: 1325

CANNOT BE USED WITH 368-6713—PAGE: 270, 302-5429—PAGE: 268

AN ATTACHMENT

SMCS-7606 **i06690309**

NOTE	REF NO	GRAPHIC REF	PART NUMBER	QTY	PART NAME 1 2 3 4 5 6 (PRODUCT LEVEL)	SEE PAGE
	1	1	**256-6804**	1	HARNESS AS-CONTROL (PRODUCT LINK)	
		1	**126-1774**	1	COVER-CONNECTOR	
		1	**8T-8729**	11	PIN-CONNECTOR (16-GA TO 18-GA)	
		1	**155-2255**	1	KIT-CONNECTING PLUG (12-PIN)	
		1	**155-2270**	1	KIT-CONNECTING PLUG (2-PIN)	
					(EACH PLUG KIT INCLUDES PLUG AS, WEDGE, & INTERFACE SEAL)	
		1	**160-7690**	1	PLUG AS-CONNECTOR (70-PIN)	
		1	**159-9322**	1	SEAL-O-RING	
		1	**8T-8737**	60	PLUG-SEAL	
		1	**102-8801**	1	KIT-RECEPTACLE (12-PIN)	
					(INCLUDES RECEPTACLE AS & WEDGE)	
		1	**8T-8730**	25	SOCKET-CONNECTOR (16-GA TO 18-GA)	
		1	**7K-1181**	2	STRAP-CABLE	
E		1	**125-7874**		TUBE-HEAT SHRINK (5.72-MM DIA) (20-CM)	
	2	1	**257-9363**	1	HARNESS AS-POWER (PRODUCT LINK)	
		1	**100-5805**	1	CAP-RECEPTACLE (3-PIN)	
		1	**8T-8729**	9	PIN-CONNECTOR (16-GA TO 18-GA)	
		1	**155-2255**	1	KIT-CONNECTING PLUG (12-PIN)	
					(INCLUDES PLUG AS, WEDGE & INTERFACE SEAL)	
		1	**8T-8737**	3	PLUG-SEAL	
		1	**102-8805**	1	KIT-RECEPTACLE (6-PIN)	
					(INCLUDES RECEPTACLE AS & WEDGE)	
		1	**9X-4813**	1	RECEPTACLE AS-CONNECTOR (3-PIN)	
		1	**8T-8730**	9	SOCKET-CONNECTOR (16-GA TO 18-GA)	
	3	1	**346-9376**	1	ANTENNA AS	
		1	**355-1213**	1	PLUG	
		1	**361-1045**	1	NUT-SPECIAL (5/8-18-THD)	
	4	1	**353-8773**	1	CABLE AS-COMMUNICATION (ANTENNA)	
Y	5	1	*368-6728*	1	INSTALLATION GP-COMMUNICATION	287
Y	6	1	**372-4531**	1	CONTROL GP-UNPROGRAMMED (PRODUCT LINK 522, CHINA)	224
Y	7	1	*388-2563*	1	ELECTRONICS GP-MONITOR (PRODUCT LINK 522)	233

E - ORDER BY THE CENTIMETER
Y - SEPARATE ILLUSTRATION

368-6730 **INSTALLATION AR-COMMUNICATION (**contd.**)** **i06690309**

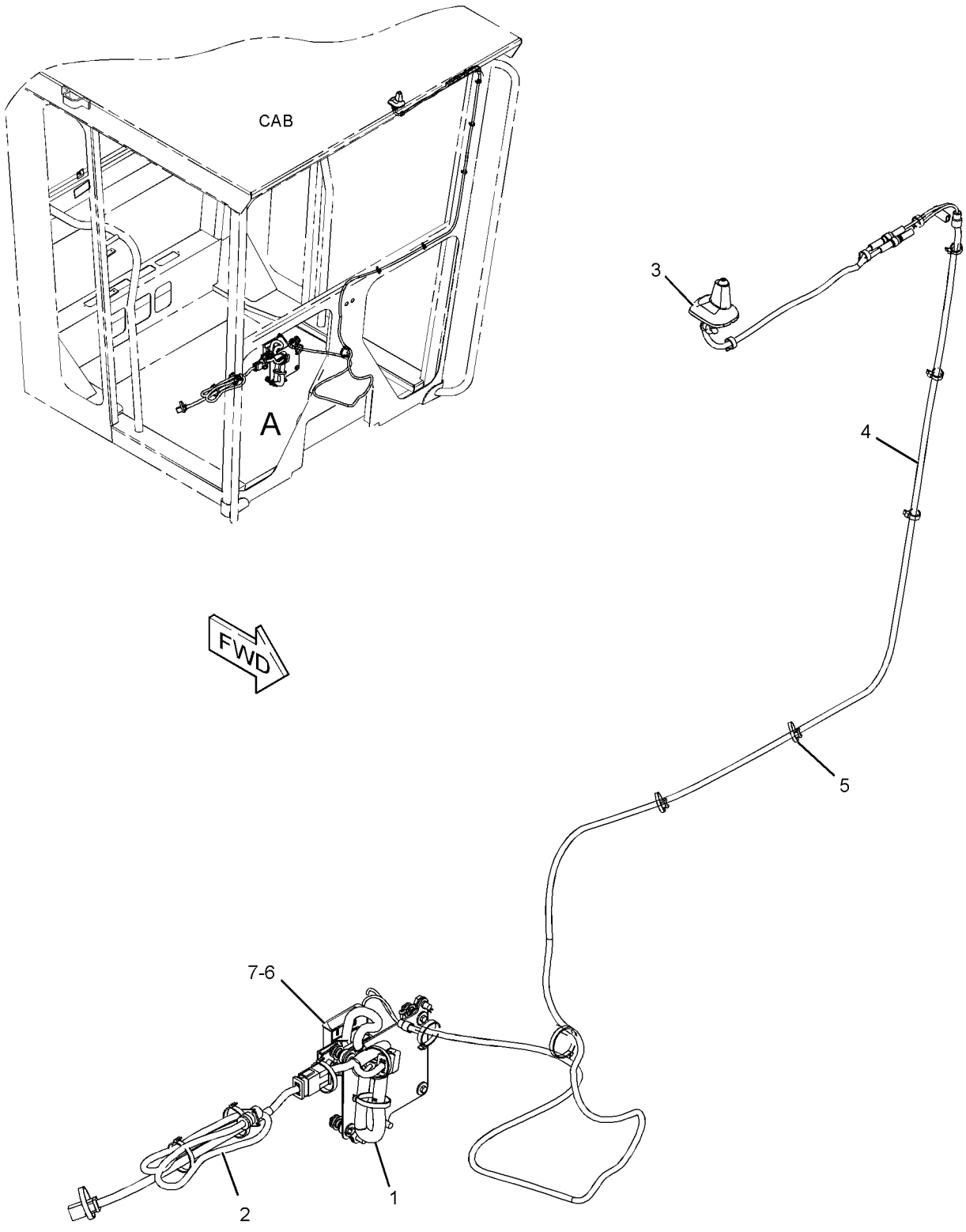

VIEW OF AREA A

GRAPHIC #1 <END> g03117992

466-2111 INSTALLATION AR-COMMUNICATION—PRODUCT LINK

S/N: SZS1-UP

AN ATTACHMENT

SMCS-7606 **i06579501**

NOTE	REF NO	GRAPHIC REF	PART NUMBER	QTY	PART NAME 1 2 3 4 5 6 (PRODUCT LEVEL)	SEE PAGE
	1	1	**7K-1181**	16	STRAP-CABLE	
	2	1	**8T-8737**	8	PLUG-SEAL	
	4	1	**230-1341**	1	FILM-WARNING (PRODUCT LINK RADIO, INTL)	
	5	1	**307-0047**	1	FILM-INFORMATION (PRODUCT LINK, READ OMM)	
	6	1	**353-8773**	1	CABLE AS-COMMUNICATION (ANTENNA)	
	7	1	**443-8462**	1	ANTENNA AS (CELLULAR)	
		1	**361-1045**	1	NUT-SPECIAL (5/8-18-THD)	
		1	**385-8201**	1	CAP AS-CONNECTOR	
Y	8	1	**452-0491**	1	HARNESS AS-WIRING (EXTENSION)	267
Y	9	1	*464-8368*	1	CONTROL GP-UNPROGRAMMED (PL641E CELLULAR)	226
	10	1	**473-1587**	1	BRACKET AS	
Y	11	1	*482-7035*	1	ELECTRONICS GP-MONITOR	233
M	12	1	**129-3178**	4	LOCKNUT (M6X1-THD)	
	13	1	**155-2265**	1	KIT-CONNECTING PLUG (8-PIN)	
					(INCLUDES PLUG AS, WEDGE, & INTERFACE SEAL)	
	14	1	**4P-7581**	1	CLIP	
M	15	1	**6V-7357**	4	BOLT (M6X1X25-MM)	
	16	1	**7N-3718**	1	CLIP	
	17	1	**8T-4121**	4	WASHER-HARD (11X21X2.5-MM THK)	
M	18	1	**8T-4137**	4	BOLT (M10X1.5X20-MM)	
	19	1	**9G-1307**	1	GROMMET	
	20	1	**9X-8256**	8	WASHER (6.6X12X2-MM THK)	
D	21	1	**8T-3426**	1	CHANNEL-TRIM (0.03-M)	

D - ORDER BY THE METER
M - METRIC PART
Y - SEPARATE ILLUSTRATION

466-2111 **INSTALLATION AR-COMMUNICATION (**contd.**)** **i06579501**

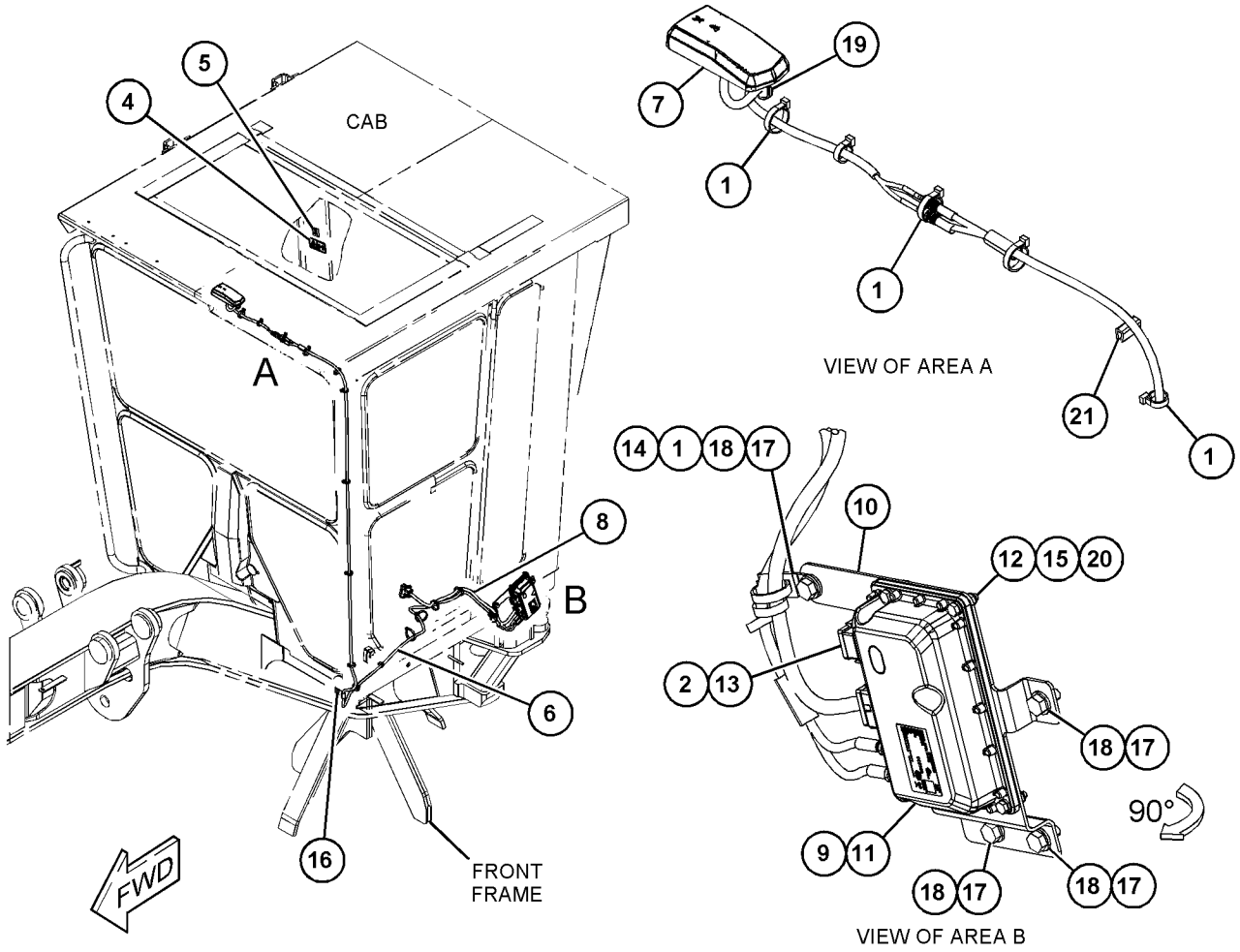

GRAPHIC #1 <END> g06108340

302-5428 INSTALLATION GP-COMMUNICATION—PRODUCT LINK

S/N: SZS1-UP

PART OF 302-5429 INSTALLATION AR-COMMUNICATION

AN ATTACHMENT

SMCS-7606 **i04904971**

NOTE	REF NO	GRAPHIC REF	PART NUMBER	QTY	PART NAME 1 2 3 4 5 6 (PRODUCT LEVEL)	SEE PAGE
	1	1	**8C-5608**	4	SPACER (6.5X9.5X25.4-MM THK)	
C	2	1	**9W-1442**	1	FUSE (10-AMPERE)	
C	3	1	**277-5368**	1	CAP AS	
		1	**5P-7958**	1	SLEEVE-CABLE SPLICE	
		1	**100-5805**	1	CAP-RECEPTACLE (3-PIN)	
		1	**179-9392**	1	LANYARD	
	4	1	**302-5210**	1	PLATE	
C	5	1	**322-5824**	1	PLATE AS	
M	6	1	**129-3178**	8	LOCKNUT (M6X1-THD)	
C	8	1	**5P-9085**	4	CLIP	
	9	1	**5S-4246**	4	LOCKWASHER	
M	10	1	**169-9016**	4	NUT (M2.5X0.45-THD)	
M	11	1	**6V-9326**	4	SCREW-MACHINE (M2.5X0.45X10-MM)	
C	12	1	**7K-1181**	24	STRAP-CABLE	
	13	1	**8J-1256**	1	CLIP	
	14	1	**8M-2770**	1	CLIP	
C	15	1	**8T-4121**	7	WASHER-HARD (11X21X2.5-MM THK)	
CM	16	1	**8T-4137**	7	BOLT (M10X1.5X20-MM)	
M	17	1	**8T-4138**	4	BOLT (M6X1X20-MM)	
C	18	1	**9G-1307**	1	GROMMET	
M	19	1	**9X-2480**	4	BOLT (M6X1X45-MM)	
	20	1	**9X-6165**	12	WASHER (6.5X22X2.5-MM THK)	
	21	1	**9X-8256**	8	WASHER (6.6X12X2-MM THK)	
	22	1	**9X-9896**	8	MOUNT (ISOLATION)	
	23	1	**8T-4896**	1	WASHER-HARD (10.2X18.5X2.5-MM THK)	
	24	1	**5M-3062**	1	BOLT (3/8-16X0.75-IN)	

C - CHANGE FROM PREVIOUS TYPE
M - METRIC PART

302-5428 **INSTALLATION GP-COMMUNICATION (**contd.**)** **i04904971**

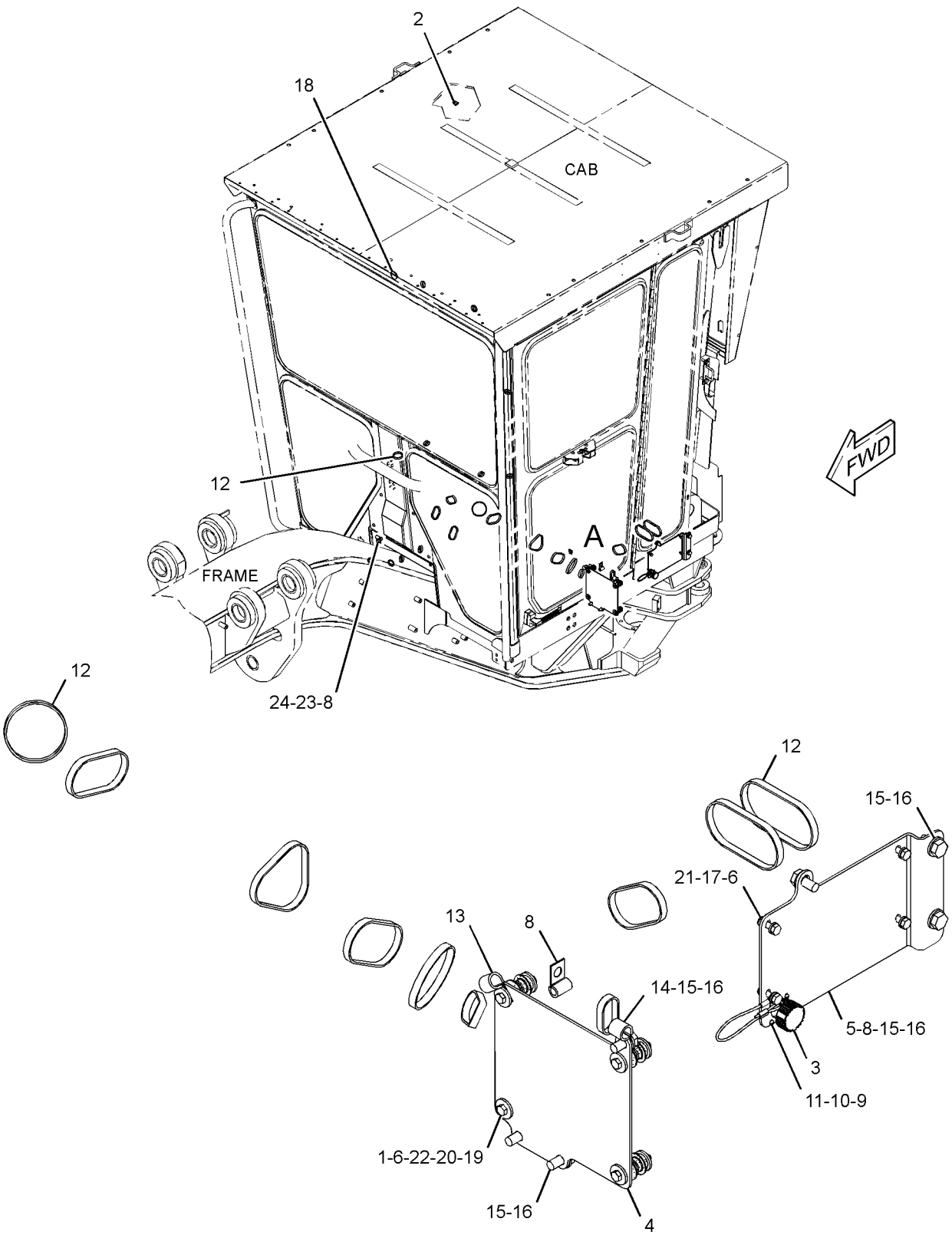

VIEW OF AREA A

GRAPHIC #1 <END> g03144816

368-6727 INSTALLATION GP-COMMUNICATION—PRODUCT LINK

S/N: SZS1-UP

PART OF 368-6714, 368-6729 INSTALLATION AR-COMMUNICATION

AN ATTACHMENT

SMCS-7606 **i05303436**

NOTE	REF NO	GRAPHIC REF	PART NUMBER	QTY	PART NAME 1 2 3 4 5 6 (PRODUCT LEVEL)	SEE PAGE
D	1	1	**8T-3426**		CHANNEL-TRIM (0.1-M)	
	2	1	**7K-1181**	17	STRAP-CABLE	
	3	1	**9W-1442**	1	FUSE (10-AMPERE)	
	4	1	**230-1341**	1	FILM-WARNING (PRODUCT LINK RADIO, INTL)	
	5	1	**274-3774**	1	CAP-CONNECTOR	
	6	1	**274-3779**	1	CAP-SEAL	
	7	1	**307-0047**	1	FILM-INFORMATION (PRODUCT LINK, READ OMM)	
M	8	1	**129-3178**	4	LOCKNUT (M6X1-THD)	
	9	1	**302-5210**	1	PLATE	
	10	1	**7N-3718**	1	CLIP	
	11	1	**8C-5608**	4	SPACER (6.5X9.5X25.4-MM THK)	
M	12	1	**8C-8585**	3	SCREW-BUTTON HEAD (M10X1.5X20-MM)	
	13	1	**9G-1307**	1	GROMMET	
	14	1	**9X-2027**	3	WASHER (11X18X2-MM THK)	
M	15	1	**9X-2480**	4	BOLT (M6X1X45-MM)	
	16	1	**9X-6165**	12	WASHER (6.5X22X2.5-MM THK)	
	17	1	**9X-9896**	8	MOUNT (ISOLATION)	

D - ORDER BY THE METER
M - METRIC PART

368-6727 **INSTALLATION GP-COMMUNICATION (**contd.**)** **i05303436**

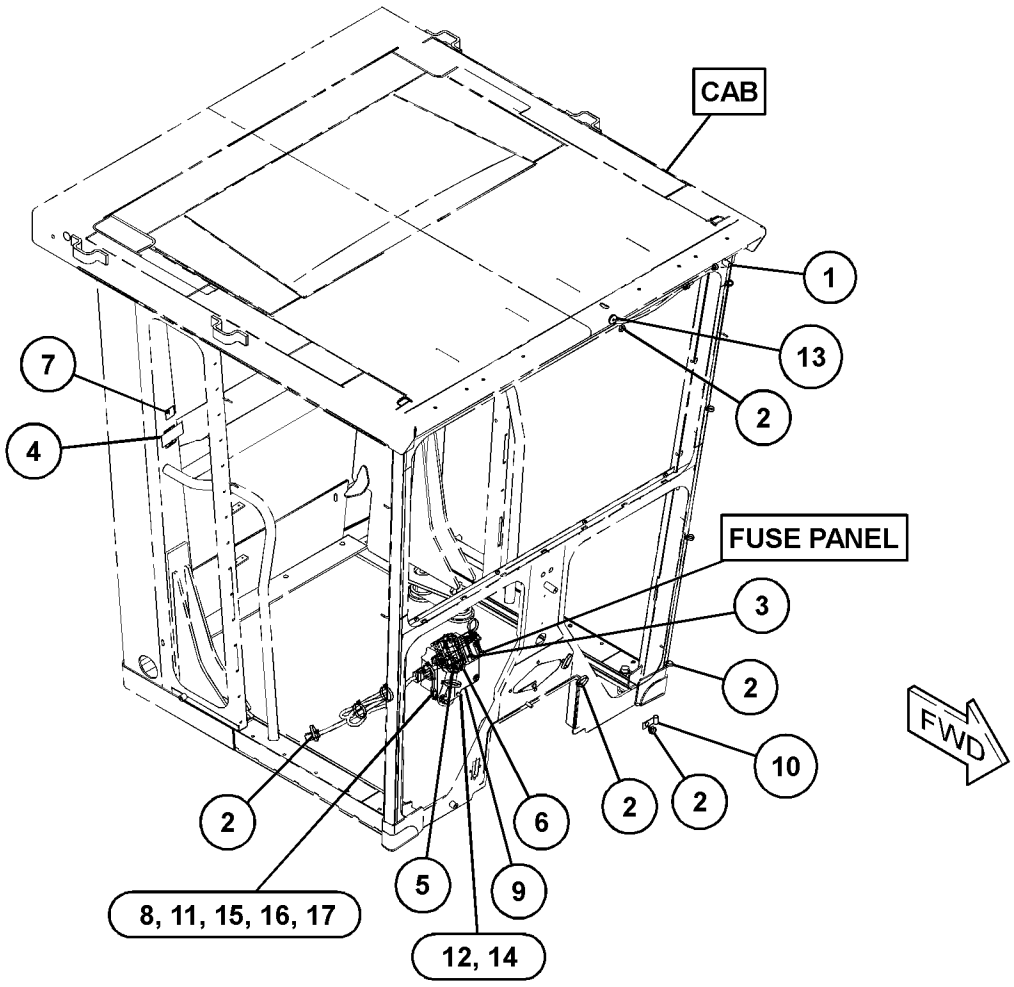

GRAPHIC #1 <END> g03367393

368-6728 INSTALLATION GP-COMMUNICATION

S/N: SZS1-UP

PART OF 368-6713, 368-6730 INSTALLATION AR-COMMUNICATION AN ATTACHMENT

SMCS-7606 **i05303439**

NOTE	REF NO	GRAPHIC REF	PART NUMBER	QTY	PART NAME 1 2 3 4 5 6 (PRODUCT LEVEL)	SEE PAGE
	1	1	**7K-1181**	20	STRAP-CABLE	
	2	1	**8C-5608**	4	SPACER (6.5X9.5X25.4-MM THK)	
	3	1	**9W-1442**	1	FUSE (10-AMPERE)	
	4	1	**230-1341**	1	FILM-WARNING (PRODUCT LINK RADIO, INTL)	
	5	1	**274-3774**	1	CAP-CONNECTOR	
	6	1	**274-3779**	1	CAP-SEAL	
	7	1	**307-0047**	1	FILM-INFORMATION (PRODUCT LINK, READ OMM)	
M	8	1	**129-3178**	4	LOCKNUT (M6X1-THD)	
	9	1	**302-5210**	1	PLATE	
	10	1	**5P-9085**	1	CLIP	
M	11	1	**8C-8585**	3	SCREW-BUTTON HEAD (M10X1.5X20-MM)	
	12	1	**9G-1307**	1	GROMMET	
	13	1	**9X-2027**	3	WASHER (11X18X2-MM THK)	
M	14	1	**9X-2480**	4	BOLT (M6X1X45-MM)	
	15	1	**9X-6165**	12	WASHER (6.5X22X2.5-MM THK)	
	16	1	**9X-9896**	8	MOUNT (ISOLATION)	

M - METRIC PART

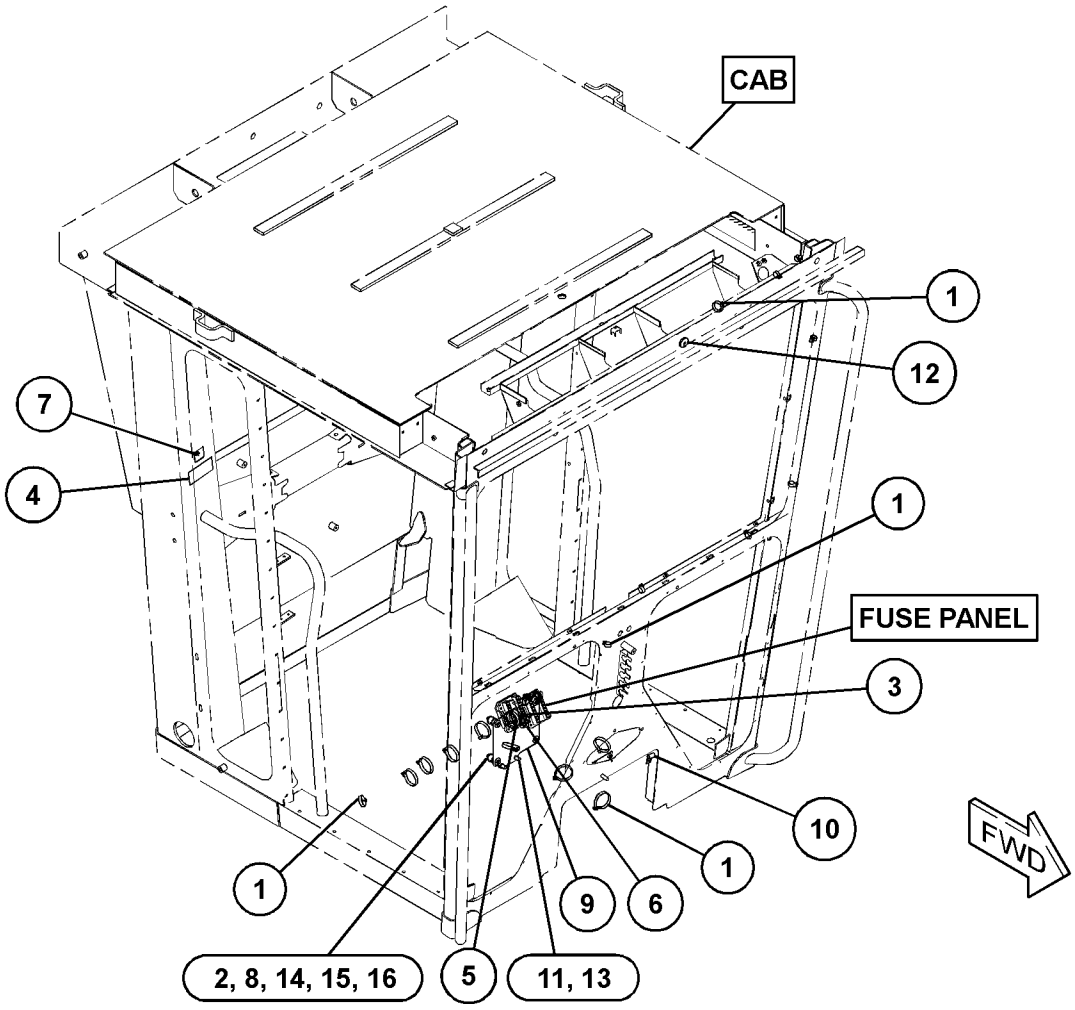

GRAPHIC #1 <END> g03367534

261-1502 LAMP GP

S/N: SZS1-UP
24-VOLT, COMPARTMENT
PART OF 284-5394 LIGHTING GP-BACKUP

SMCS-1429 **i05710877**

NOTE	REF NO	GRAPHIC REF	PART NUMBER	QTY	PART NAME 1 2 3 4 5 6 (PRODUCT LEVEL)	SEE PAGE
	1	1	**264-5346**	1	LENS	
	2	1	**8U-2622**	1	LAMP (24-VOLT, 21-WATT)	
	3	1	**8T-8729**	2	PIN-CONNECTOR (16-GA TO 18-GA)	
	4	1	**102-8802**	1	KIT-RECEPTACLE (2-PIN)	
					(INCLUDES RECEPTACLE AS & WEDGE)	
FM		1	**5C-2890**	3	NUT (M6X1-THD)	
F		1	**8T-4205**	3	WASHER-HARD (7.2X14.5X2-MM THK)	

F - NOT SHOWN
M - METRIC PART

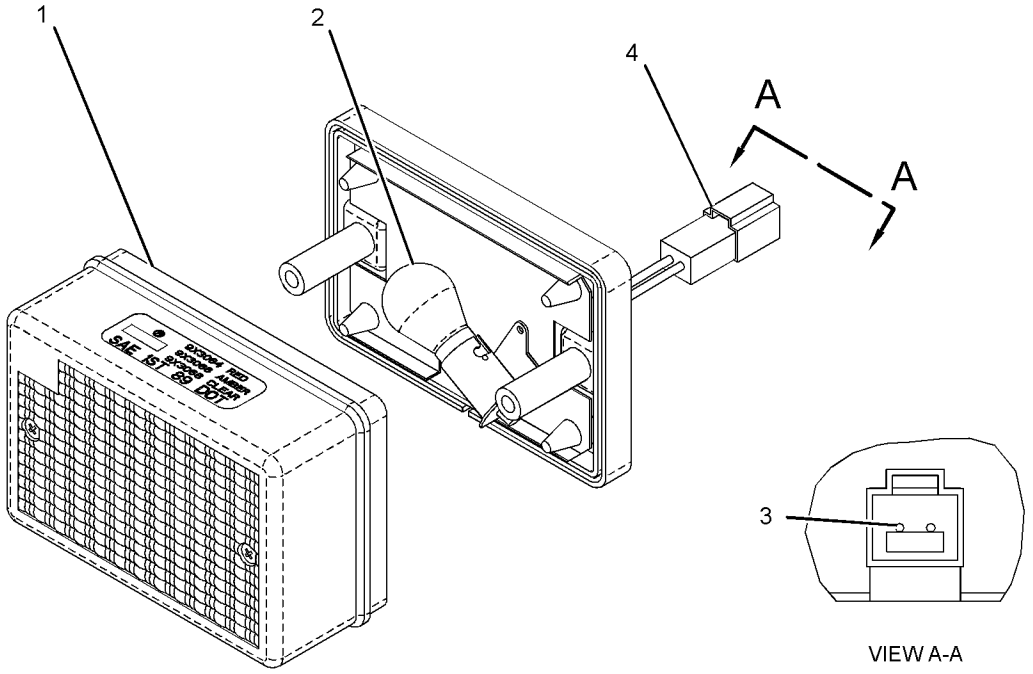

VIEW A-A

GRAPHIC #1 <END> g01279825

3E-6389 LAMP GP-DOME

S/N: SZS1-UP
24-VOLT, WITH SWITCH
PART OF 285-3361, 434-4112 WIRING GP-CAB
AN ATTACHMENT

SMCS-1433 **i04953727**

NOTE	REF NO	GRAPHIC REF	PART NUMBER	QTY	PART NAME 1 2 3 4 5 6 (PRODUCT LEVEL)	SEE PAGE
	1	1	**7N-9943**	1	LAMP (24-VOLT) (DOME LIGHT)	
	2	1	**102-8803**	1	KIT-RECEPTACLE (3-PIN)	
					(INCLUDES RECEPTACLE AS & WEDGE)	
	3	1	**8T-8729**	3	PIN-CONNECTOR (16-GA TO 18-GA)	
	4	1	**7T-0020**	1	LENS-DOME LAMP	

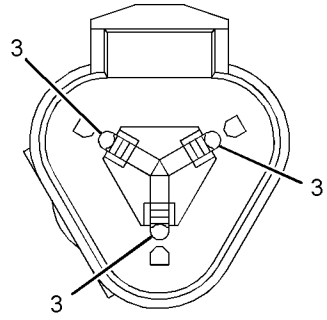

VIEW A-A

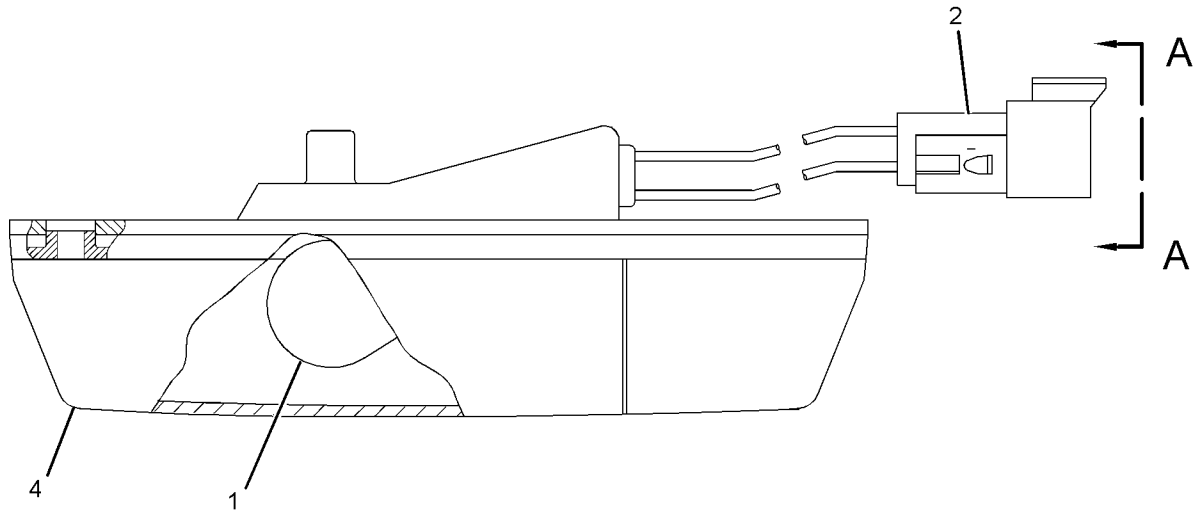

GRAPHIC #1 <END> g02646562

219-6485 LAMP GP-FLOOD

S/N: SZS1-UP
24-VOLT
PART OF 434-8040 LIGHTING GP-ROADING
AN ATTACHMENT

SMCS-1434 **i04303034**

NOTE	REF NO	GRAPHIC REF	PART NUMBER	QTY	PART NAME 1 2 3 4 5 6 (PRODUCT LEVEL)	SEE PAGE
	1	1	**351-9918**	1	LAMP-HALOGEN (24-VOLT, 70-WATT)	
M	2	1	**9X-4244**	2	SCREW-SPECIAL (M4X1.79X25-MM)	
	3	1	**175-4291**	1	BRACKET AS	
	4	1	**202-6614**	1	LENS AS (FLOODLIGHT)	
	5	1	**175-4292**	1	BODY AS	
	6	1	**164-7556**	1	BRACKET (LAMP RETAINING)	
	7	1	**247-4285**	1	BOLT (M8X1.25X50-MM)	
M	8	1	**6V-9189**	1	LOCKNUT (M8X1.25-THD)	
	9	1	**8T-4224**	2	WASHER-HARD (8.8X16X2-MM THK)	

M - METRIC PART

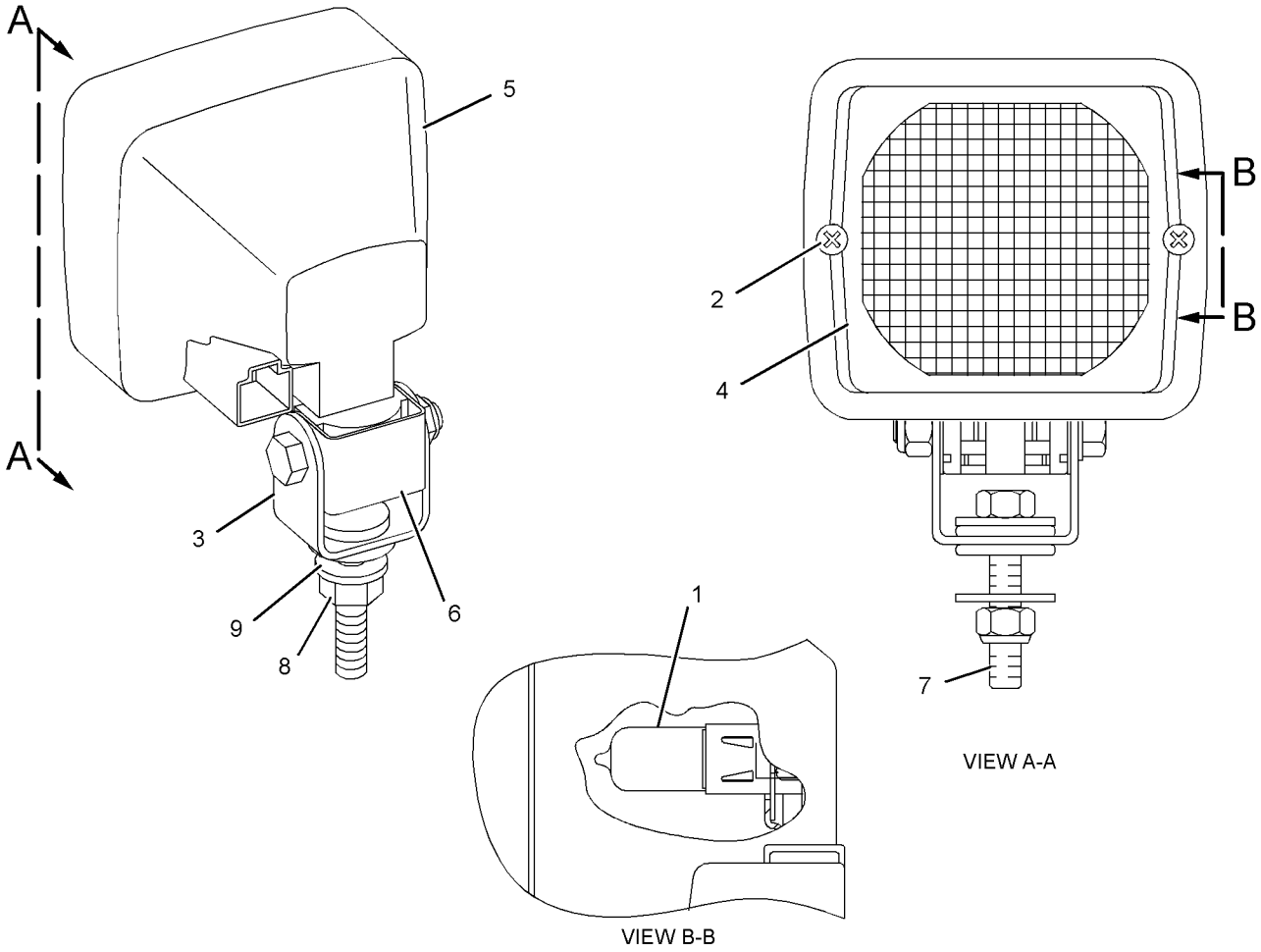

GRAPHIC #1 <END> g02075738

234-4323 LAMP GP-FLOOD

S/N: SZS1-UP
24-VOLT
PART OF 284-5376 LIGHTING GP-FLOOD, 284-5353 LIGHTING GP-ROADING
ALSO AN ATTACHMENT

SMCS-1434 **i04405461**

NOTE	REF NO	GRAPHIC REF	PART NUMBER	QTY	PART NAME 1 2 3 4 5 6 (PRODUCT LEVEL)	SEE PAGE
	1	1	**351-9918**	1	LAMP-HALOGEN (24-VOLT, 70-WATT)	
M	2	1	**9X-4244**	2	SCREW-SPECIAL (M4X1.79X25-MM)	
	3	1	**202-6614**	1	LENS AS	
	4	1	**234-7730**	1	BODY AS	
	5	1	**164-7556**	1	BRACKET (LAMP RETAINING)	
M	6	1	**8T-0389**	1	LOCKNUT (M10X1.5-THD)	
	7	1	**234-7731**	1	BRACKET AS	
	8	1	**8T-4121**	1	WASHER-HARD (11X21X2.5-MM THK)	

M - METRIC PART

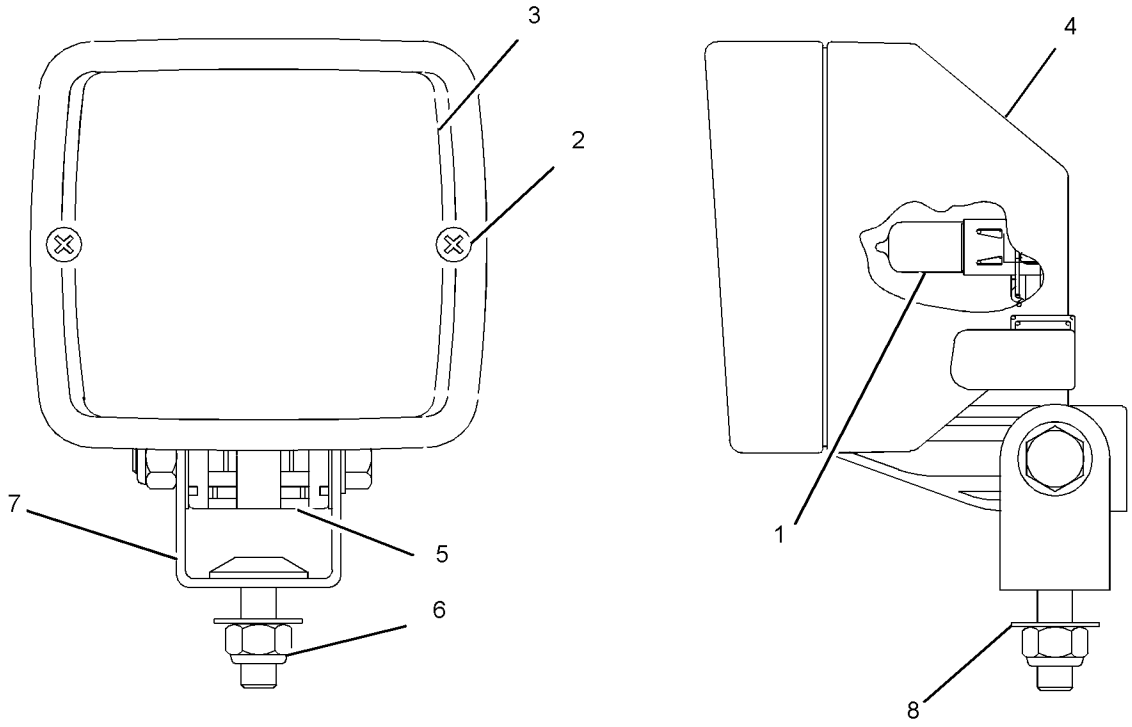

GRAPHIC #1 <END> g01329130

234-4324 LAMP GP-FLOOD

S/N: SZS1-UP
24-VOLT
PART OF 284-5353, 434-8040 LIGHTING GP-ROADING
AN ATTACHMENT

SMCS-1434 **i04543332**

NOTE	REF NO	GRAPHIC REF	PART NUMBER	QTY	PART NAME 1 2 3 4 5 6 (PRODUCT LEVEL)	SEE PAGE
	1	1	**351-9918**	1	LAMP-HALOGEN (24-VOLT, 70-WATT)	
M	2	1	**9X-4244**	2	SCREW-SPECIAL (M4X1.79X25-MM)	
	3	1	**202-6611**	1	LENS AS	
	4	1	**234-7730**	1	BODY AS	
	5	1	**164-7556**	1	BRACKET (LAMP RETAINING)	
M	6	1	**8T-0389**	1	LOCKNUT (M10X1.5-THD)	
	7	1	**234-7731**	1	BRACKET AS	
	8	1	**8T-4121**	1	WASHER-HARD (11X21X2.5-MM THK)	

M - METRIC PART

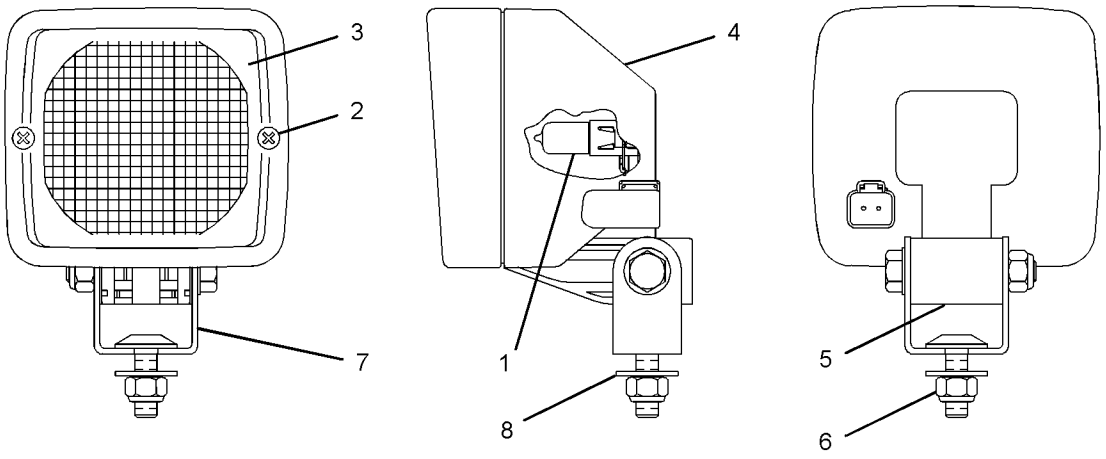

GRAPHIC #1 <END> g01276050

234-4325 LAMP GP-FLOOD

S/N: SZS1-UP
24-VOLT
PART OF 284-5376 LIGHTING GP-FLOOD

SMCS-1434 **i04886929**

NOTE	REF NO	GRAPHIC REF	PART NUMBER	QTY	PART NAME 1 2 3 4 5 6 (PRODUCT LEVEL)	SEE PAGE
	1	1	**351-9918**	1	LAMP-HALOGEN (24-VOLT, 70-WATT)	
M	2	1	**8T-0389**	1	LOCKNUT (M10X1.5-THD)	
M	3	1	**9X-4244**	2	SCREW-SPECIAL (M4X1.79X25-MM)	
	4	1	**202-6614**	1	LENS AS (FLOODLIGHT)	
	5	1	**234-7730**	1	BODY AS	
	6	1	**164-7556**	1	BRACKET (LAMP RETAINING)	
	7	1	**234-7731**	1	BRACKET AS	
	8	1	**8T-4121**	1	WASHER-HARD (11X21X2.5-MM THK)	

M - METRIC PART

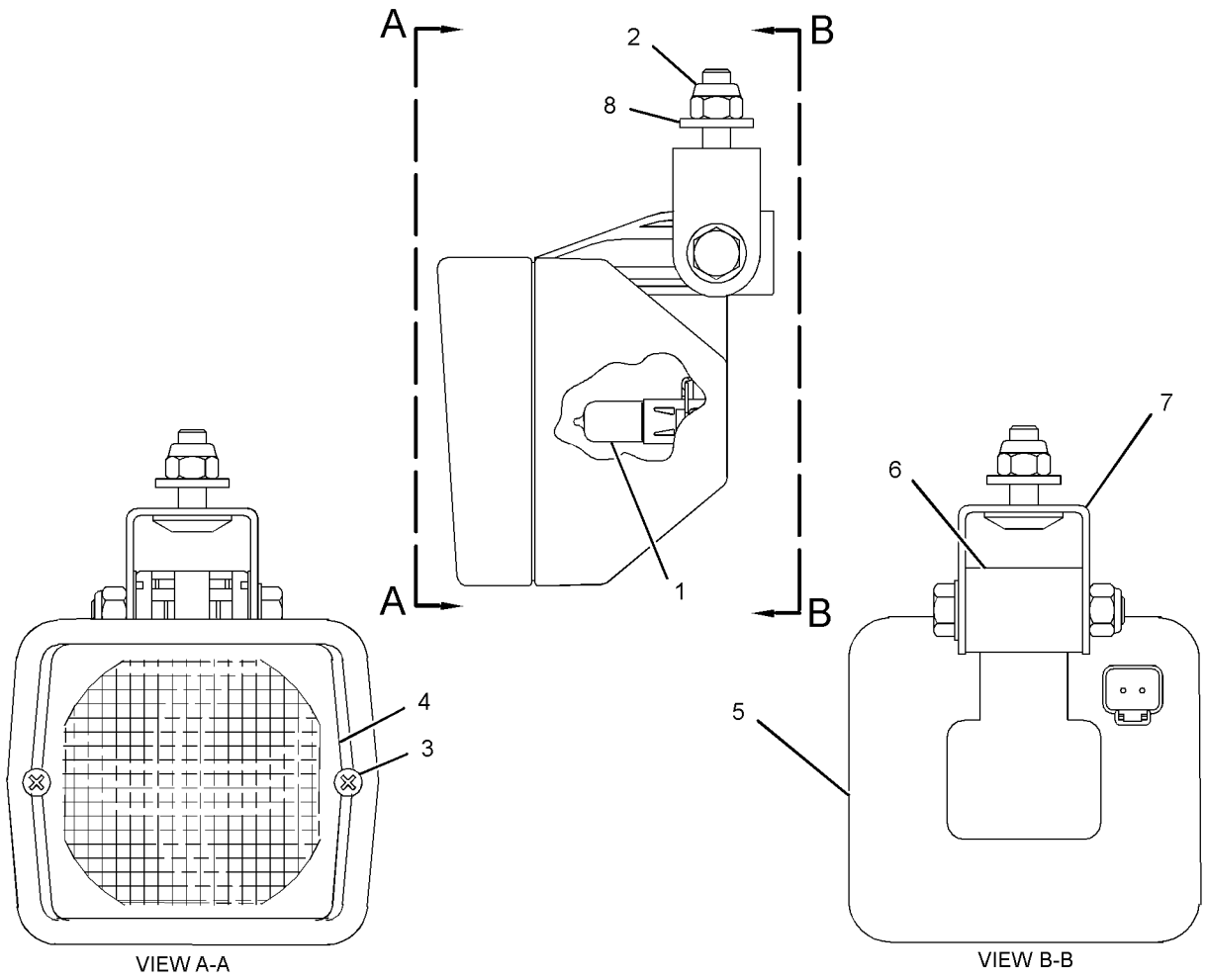

GRAPHIC #1 <END> g01246703

272-6641 LAMP GP-FLOOD

S/N: SZS1-UP
24-VOLT
PART OF 284-5362 LIGHTING GP-FLOOD

SMCS-1434 **i04886817**

NOTE	REF NO	GRAPHIC REF	PART NUMBER	QTY	PART NAME 1 2 3 4 5 6 (PRODUCT LEVEL)	SEE PAGE
	1	1	**351-9918**	1	LAMP-HALOGEN (24-VOLT, 70-WATT)	
M	2	1	**9X-4244**	2	SCREW-SPECIAL (M4X1.79X25-MM)	
	3	1	**202-6614**	1	LENS AS	
	4	1	**175-4292**	1	BODY AS	
	5	1	**164-7556**	1	BRACKET (LAMP RETAINING)	
M	6	1	**8T-7547**	1	BOLT (M8X1.25X30-MM)	
M	7	1	**5C-7261**	1	NUT (M8X1.25-THD)	
	8	1	**8T-4224**	2	WASHER-HARD (8.8X16X2-MM THK)	
	9	1	**175-4291**	1	BRACKET AS	

M - METRIC PART

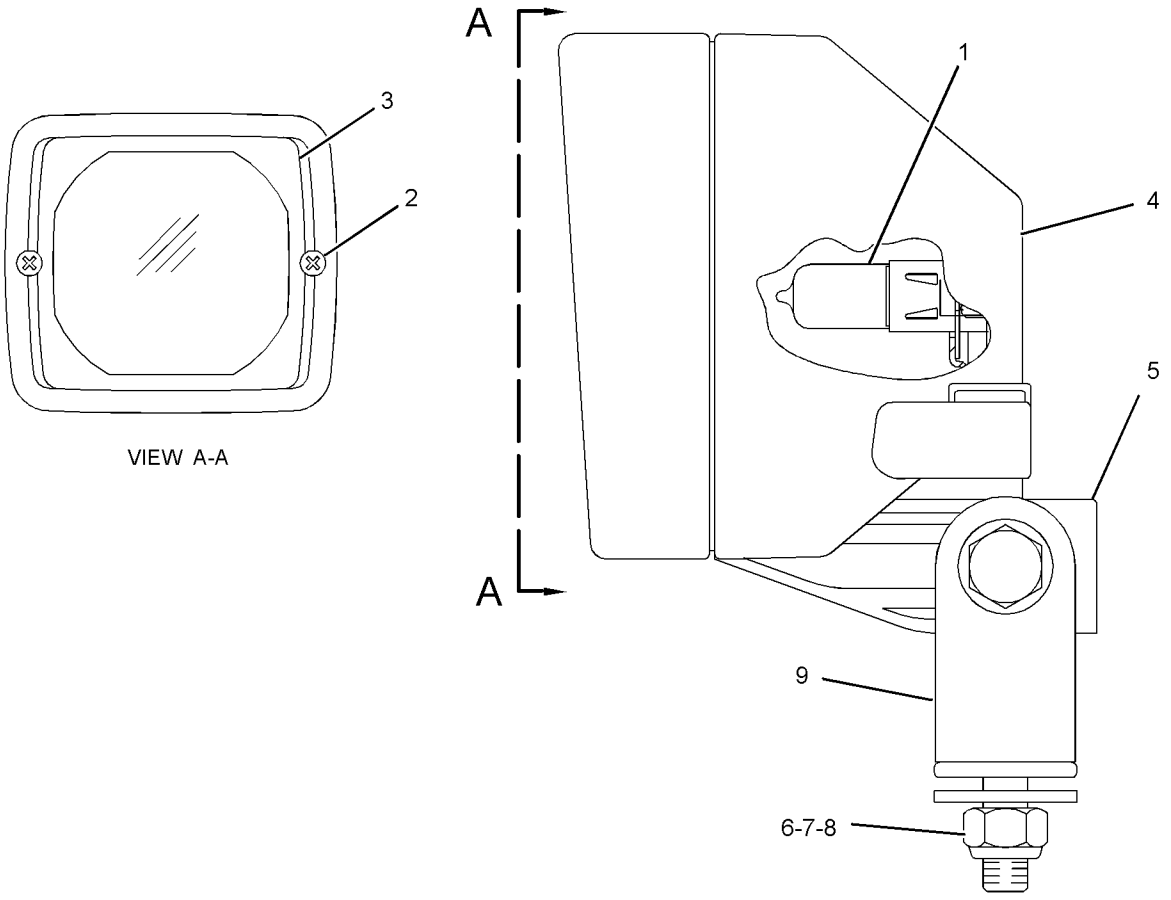

VIEW A-A

GRAPHIC #1 <END> g01305640

344-3457 LAMP GP-HEAD & SIGNAL

S/N: SZS1-UP
24-VOLT
PART OF 334-3341, 384-7614, 434-4110, 434-4111 WIRING GP-FRONT
AN ATTACHMENT

SMCS-1429, 1430 **i06828417**

NOTE	REF NO	GRAPHIC REF	PART NUMBER	QTY	PART NAME 1 2 3 4 5 6 (PRODUCT LEVEL)	SEE PAGE
	1	1	**8T-8737**	1	PLUG-SEAL	
	2	1	**228-6054**	1	BEZEL	
C	3	1	**444-6524**	1	LENS AS (HEADLIGHT)	
	4	1	**228-6052**	1	LENS AS (TURN SIGNAL)	
	5	1	**228-6056**	6	SCREW (4-32X1.26-IN)	
	6	1	**9X-3465**	1	LAMP (24-VOLT, 75/70-WATT)	
	7	1	**130-3515**	1	LAMP (24-VOLT, 5-WATT)	
	8	1	**242-0588**	1	LAMP-TURN SIGNAL (24-VOLT, 21-WATT)	
M	9	1	**8T-0389**	1	LOCKNUT (M10X1.5-THD)	
	10	1	**100-3253**	1	SPACER (SPHERICAL)	
	11	1	**100-3254**	1	SPACER (SPHERICAL)	
	12	1	**100-3255**	2	WASHER (SPHERICAL)	
	13	1	**102-8805**	1	KIT-RECEPTACLE (6-PIN)	
					(INCLUDES RECEPTACLE AS & WEDGE)	
	14	1	**8T-8729**	5	PIN-CONNECTOR (16-GA TO 18-GA)	

C - CHANGE FROM PREVIOUS TYPE
M - METRIC PART

344-3457 **LAMP GP-HEAD & SIGNAL (**contd.**)** **i06828417**

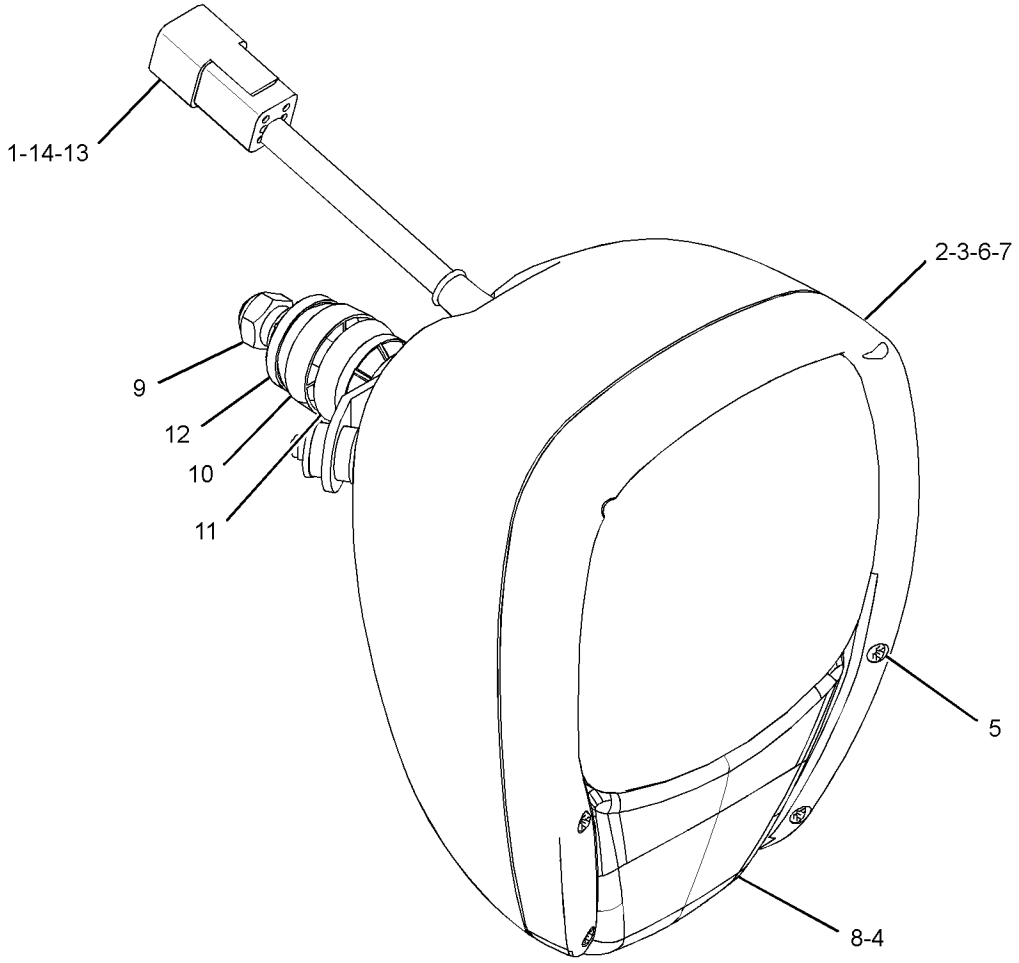

GRAPHIC #1 <END> g03485637

344-3458 LAMP GP-HEAD & SIGNAL

S/N: SZS1-UP
24-VOLT
PART OF 334-3341, 384-7614, 434-4110, 434-4111 WIRING GP-FRONT
AN ATTACHMENT

SMCS-1429, 1430 **i05966511**

NOTE	REF NO	GRAPHIC REF	PART NUMBER	QTY	PART NAME 1 2 3 4 5 6 (PRODUCT LEVEL)	SEE PAGE
	1	1	**8T-8737**	1	PLUG-SEAL	
	2	1	**228-6054**	1	BEZEL	
	3	1	**444-6524**	1	LENS AS (HEADLIGHT)	
	4	1	**228-6052**	1	LENS AS (TURN SIGNAL)	
	5	1	**228-6056**	6	SCREW (4-32X1.26-IN)	
	6	1	**9X-3465**	1	LAMP (24-VOLT, 75/70-WATT)	
	7	1	**130-3515**	1	LAMP (24-VOLT, 5-WATT)	
	8	1	**242-0588**	1	LAMP-TURN SIGNAL (24-VOLT, 21-WATT)	
M	9	1	**8T-0389**	1	LOCKNUT (M10X1.5-THD)	
	10	1	**100-3253**	1	SPACER (SPHERICAL)	
	11	1	**100-3254**	1	SPACER (SPHERICAL)	
	12	1	**100-3255**	2	WASHER (SPHERICAL)	
	13	1	**102-8805**	1	KIT-RECEPTACLE (6-PIN)	
					(INCLUDES RECEPTACLE AS & WEDGE)	
	14	1	**8T-8729**	5	PIN-CONNECTOR (16-GA TO 18-GA)	

M - METRIC PART

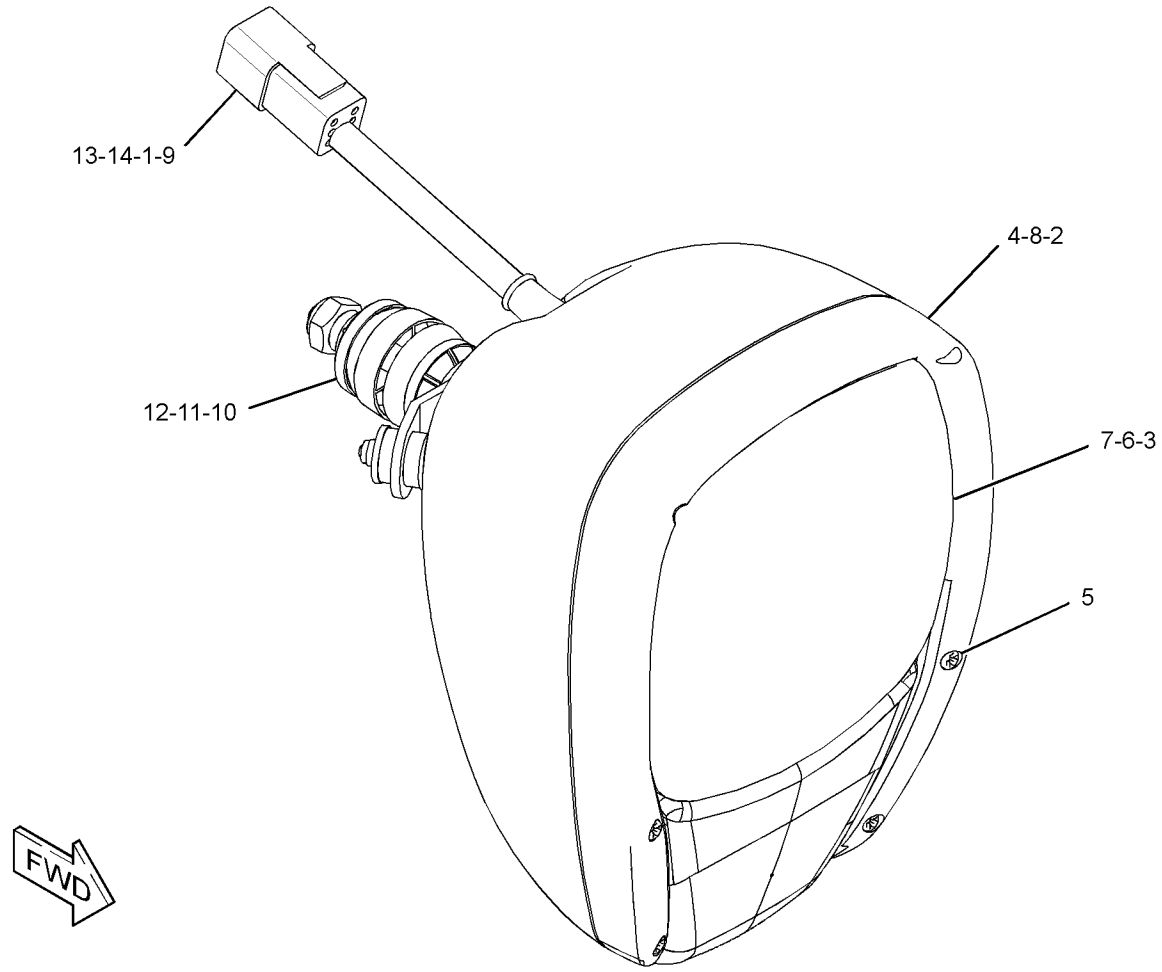

GRAPHIC #1 <END> g03743620

486-4542 LAMP GP-HEAD & SIGNAL

S/N: SZS740-UP
24 VOLT
PART OF 434-4111 WIRING GP-FRONT
AN ATTACHMENT

SMCS-1429, 1430 **i06936394**

NOTE	REF NO	GRAPHIC REF	PART NUMBER	QTY	PART NAME 1 2 3 4 5 6 (PRODUCT LEVEL)	SEE PAGE
	1	1	**8T-8729**	5	PIN-CONNECTOR (16-GA TO 18-GA)	
	2	1	**8T-8737**	1	PLUG-SEAL	
	3	1	**100-3245**	1	LAMP (24-VOLT, 0.17-AMPERE)	
	4	1	**9X-3465**	1	LAMP (24-VOLT, 75/70-WATT)	
	5	1	**102-8805**	1	KIT-RECEPTACLE (6-PIN)	
					(INCLUDES RECEPTACLE AS & WEDGE)	
	6	1	**8U-2622**	1	LAMP (24-VOLT, 21-WATT)	

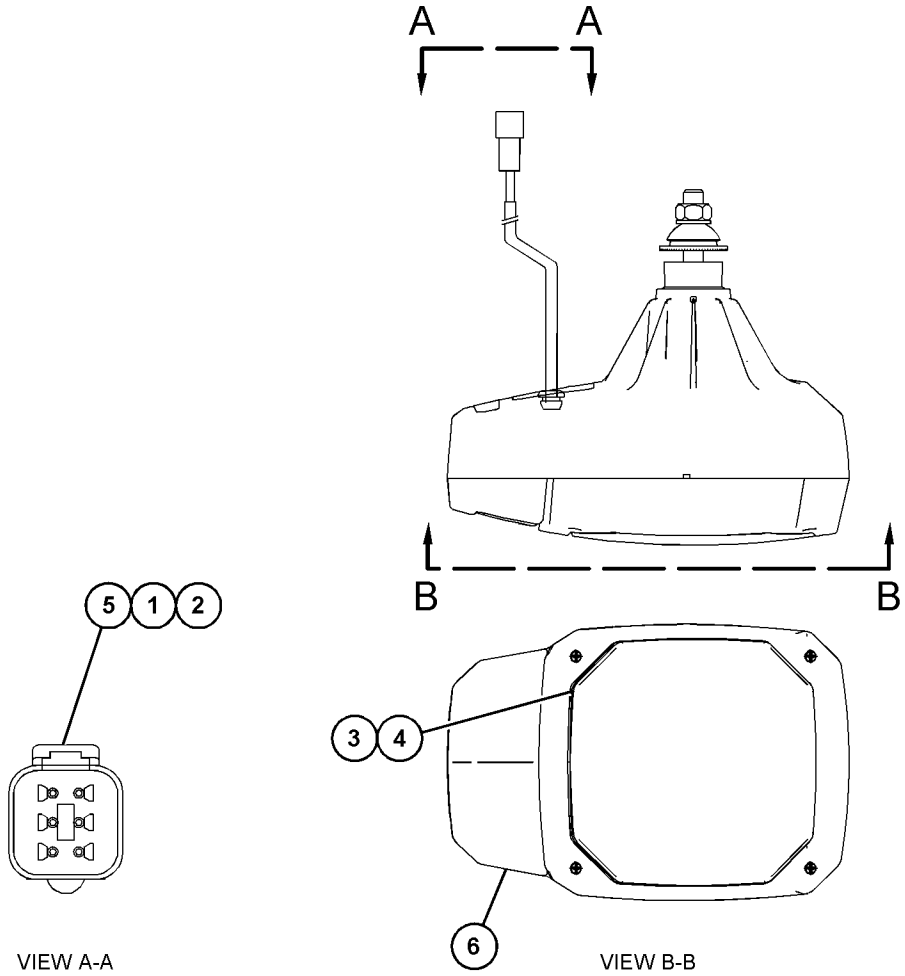

VIEW A-A VIEW B-B

GRAPHIC #1 <END> g06175264

491-0637 LAMP GP-HEAD & SIGNAL

S/N: SZS740-UP
24-VOLT
PART OF 434-4111 WIRING GP-FRONT
AN ATTACHMENT

SMCS-1429, 1430 **i06936389**

NOTE	REF NO	GRAPHIC REF	PART NUMBER	QTY	PART NAME 1 2 3 4 5 6 (PRODUCT LEVEL)	SEE PAGE
	1	1	**8T-8729**	5	PIN-CONNECTOR (16-GA TO 18-GA)	
	2	1	**8T-8737**	1	PLUG-SEAL	
	3	1	**100-3245**	1	LAMP (24-VOLT, 0.17-AMPERE)	
	4	1	**9X-3465**	1	LAMP (24-VOLT, 75/70-WATT)	
	5	1	**102-8805**	1	KIT-RECEPTACLE (6-PIN)	
					(INCLUDES RECEPTACLE AS & WEDGE)	
	6	1	**8U-2622**	1	LAMP (24-VOLT, 21-WATT)	

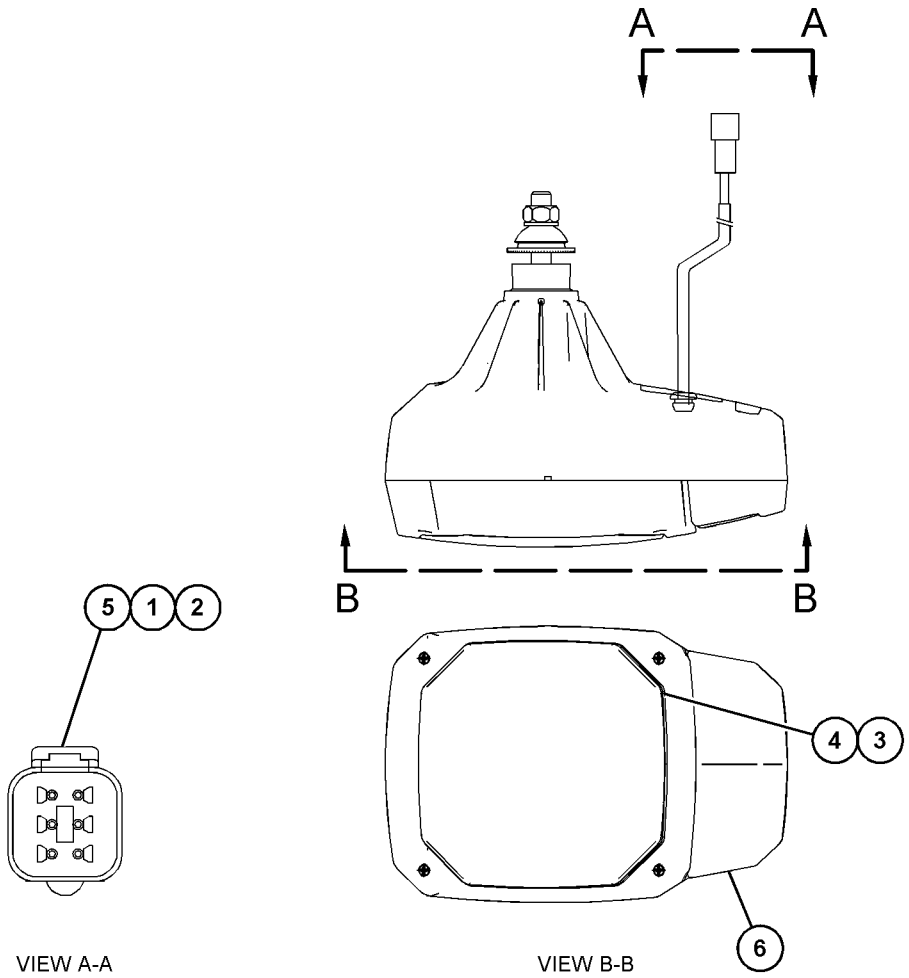

VIEW A-A VIEW B-B

GRAPHIC #1 <END> g06175291

259-0134 LAMP GP-REGISTRATION PLATE–EUROPEAN MARKET

S/N: SZS1-UP
24-VOLT
PART OF 334-3348, 434-8039 LIGHTING GP-REGISTRATION PLATE
AN ATTACHMENT

SMCS-1429 **i05883622**

NOTE	REF NO	GRAPHIC REF	PART NUMBER	QTY	PART NAME 1 2 3 4 5 6 (PRODUCT LEVEL)	SEE PAGE
	1	1	**5C-9583**	1	LAMP (24-VOLT, 5-WATT) (REGISTRATION PLATE)	
	2	1	**102-8802**	1	KIT-RECEPTACLE (2-PIN)	
					(INCLUDES RECEPTACLE AS & WEDGE)	
	3	1	**8T-8729**	2	PIN-CONNECTOR (16-GA TO 18-GA)	

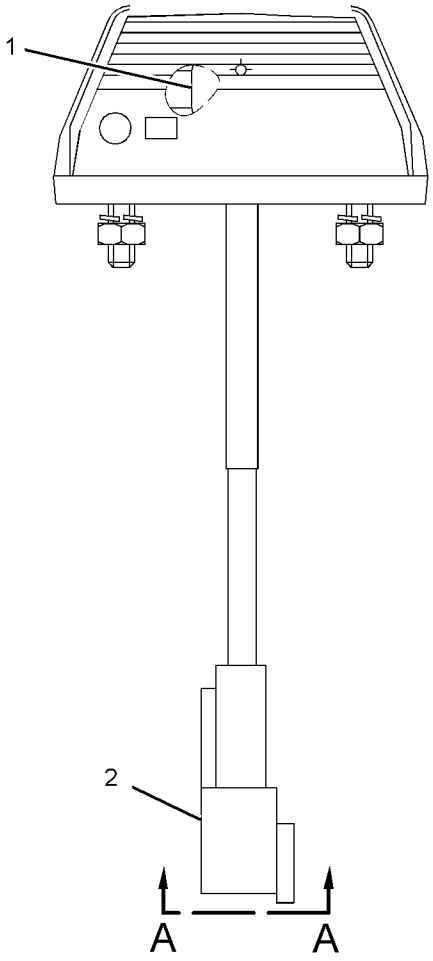

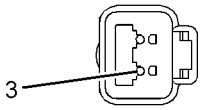

VIEW A-A

GRAPHIC #1 <END> g01201568

135-0426 LAMP GP-SIGNAL–STOP, TAIL

S/N: SZS1-UP
12-VOLT/24-VOLT, LED
PART OF 284-5348 WIRING GP-REAR LIGHTING

SMCS-1430, 1432

i05160969

NOTE	REF NO	GRAPHIC REF	PART NUMBER	QTY	PART NAME 1 2 3 4 5 6 (PRODUCT LEVEL)	SEE PAGE
	1	1	**102-8803**	1	KIT-RECEPTACLE (3-PIN)	
					(INCLUDES RECEPTACLE AS & WEDGE)	
	2	1	**8T-8729**	3	PIN-CONNECTOR (16-GA TO 18-GA)	

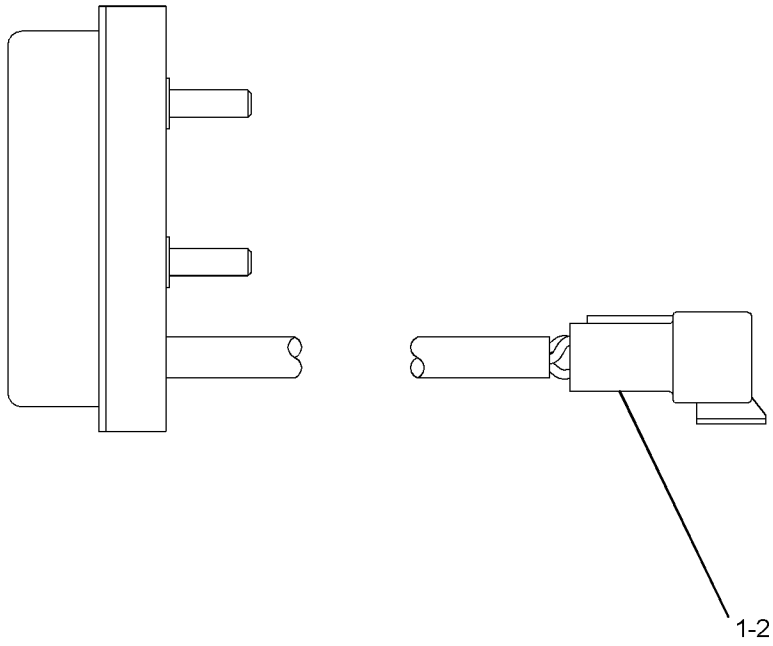

GRAPHIC #1

<END>

g01213248

162-2073 LAMP GP-SIGNAL–REAR TURN

S/N: SZS1-UP
24-VOLT, EUROPEAN MARKET
PART OF 359-1046, 436-7624 LIGHTING GP-SIGNAL
AN ATTACHMENT

SMCS-1430, 1432 **i06714223**

NOTE	REF NO	GRAPHIC REF	PART NUMBER	QTY	PART NAME 1 2 3 4 5 6 (PRODUCT LEVEL)	SEE PAGE
	1	1	**102-8802**	1	KIT-RECEPTACLE (2-PIN)	
					(INCLUDES RECEPTACLE AS & WEDGE)	
	2	1	**8T-8729**	2	PIN-CONNECTOR (16-GA TO 18-GA)	
	3	1	**9X-3066**	1	LENS-AMBER	
	4	1	**8U-2622**	1	LAMP (24-VOLT, 21-WATT)	

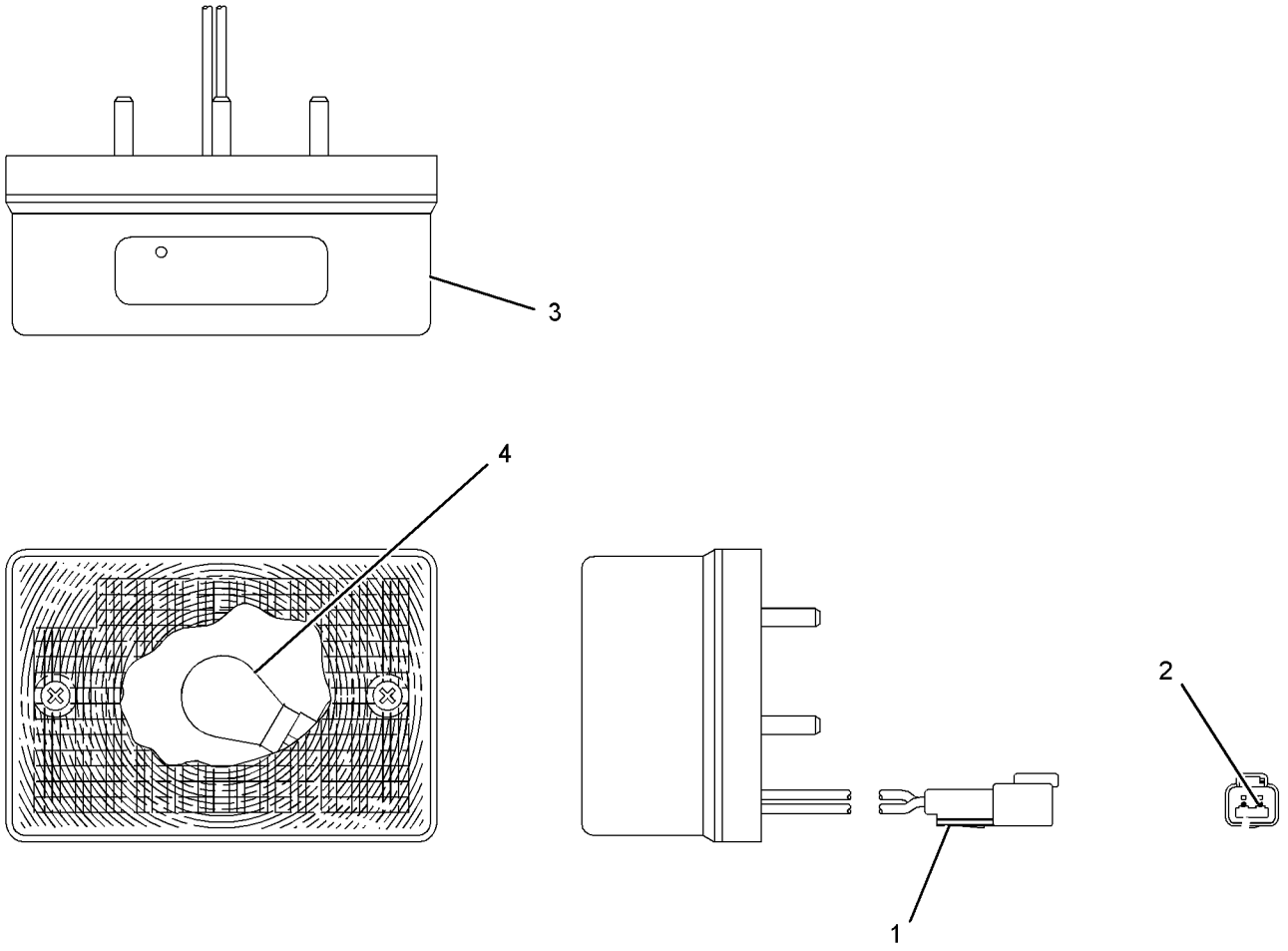

GRAPHIC #1 <END> g06087594

334-5409 LAMP GP-SIGNAL–PARK, TURN

S/N: SZS1-UP
12 VOLT TO 24 VOLT, LED
PART OF 284-5353, 434-8040 LIGHTING GP-ROADING
AN ATTACHMENT

SMCS-1430, 1432

i04906919

NOTE	REF NO	GRAPHIC REF	PART NUMBER	QTY	PART NAME 1 2 3 4 5 6 (PRODUCT LEVEL)	SEE PAGE
	1	1	**102-8803**	1	KIT-RECEPTACLE (3-PIN)	
					(INCLUDES RECEPTACLE AS & WEDGE)	
	2	1	**8T-8729**	3	PIN-CONNECTOR (16-GA TO 18-GA)	

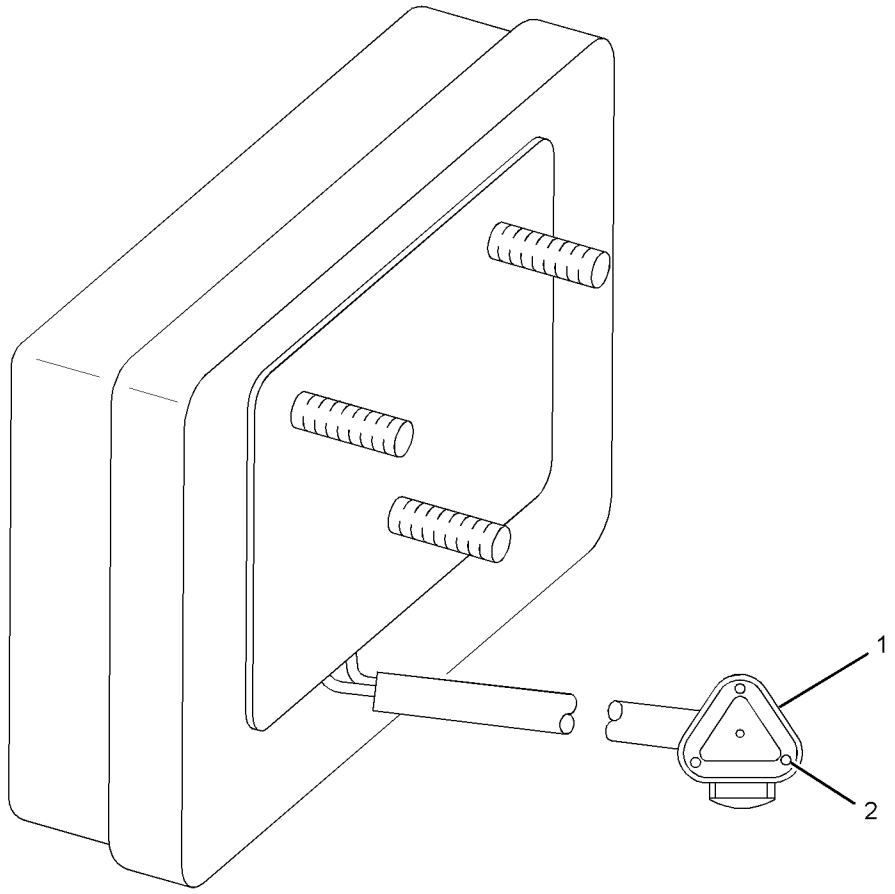

GRAPHIC #1

<END>

g01753359

334-5410 LAMP GP-SIGNAL–TURN

S/N: SZS1-UP
12-VOLT, 24-VOLT, LED
PART OF 284-5363, 434-8042 LIGHTING GP-SIGNAL
AN ATTACHMENT

SMCS-1430, 1432 **i05269580**

NOTE	REF NO	GRAPHIC REF	PART NUMBER	QTY	PART NAME 1 2 3 4 5 6 (PRODUCT LEVEL)	SEE PAGE
	1	1	**102-8802**	1	KIT-RECEPTACLE (2-PIN)	
					(INCLUDES RECEPTACLE AS & WEDGE)	
	2	1	**8T-8729**	2	PIN-CONNECTOR (16-GA TO 18-GA)	

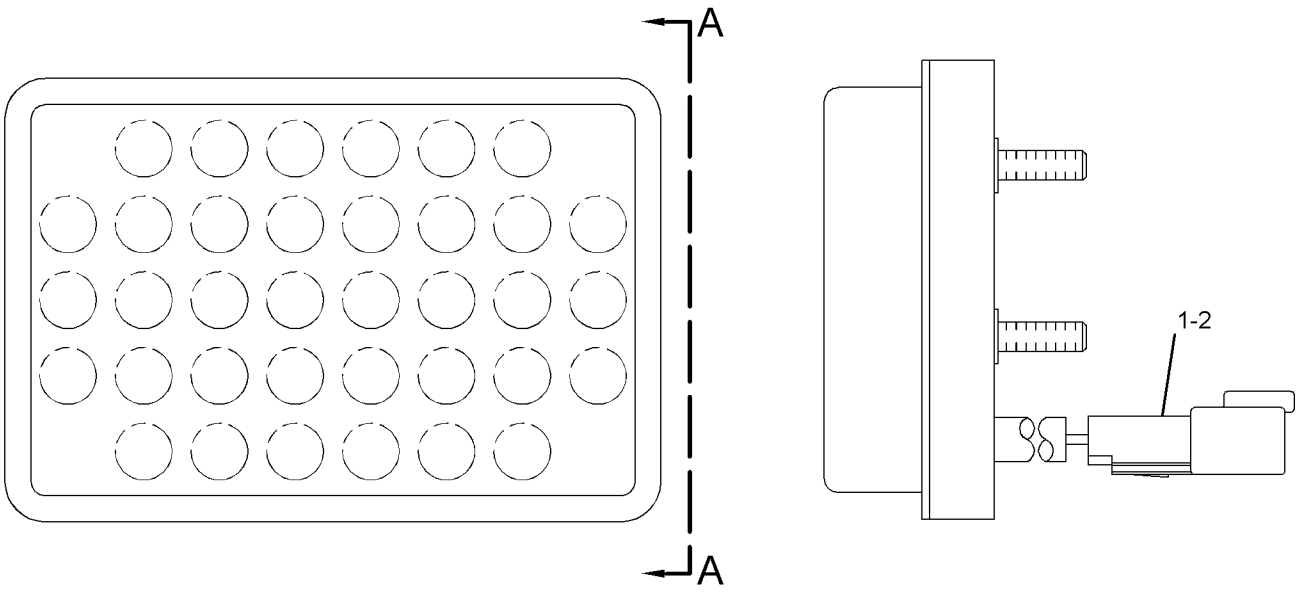

GRAPHIC #1 <END> g01756193

294-8546 LIGHTING AR-ROADING—TURN SIGNAL

S/N: SZS1-UP

AN ATTACHMENT

SMCS-1408, 1429 **i03886612**

NOTE	PART NUMBER	QTY	PART NAME 1 2 3 4 5 6 (PRODUCT LEVEL)	SEE PAGE
Y	*284-5353*	1	LIGHTING GP-ROADING	313
Y	*284-5363*	1	LIGHTING GP-SIGNAL (TURN) (REAR)	319

Y - SEPARATE ILLUSTRATION

<END>

434-8339 LIGHTING AR-ROADING

S/N: SZS1-UP

PART OF 435-1537 OPTION AR-LIGHTING, 458-5990 ROADING AR

AN ATTACHMENT

SMCS-1408, 1429 **i05883632**

NOTE	PART NUMBER	QTY	PART NAME 1 2 3 4 5 6 (PRODUCT LEVEL)	SEE PAGE
Y	*434-8040*	1	LIGHTING GP-ROADING	316
Y	*434-8042*	1	LIGHTING GP-SIGNAL	321

Y - SEPARATE ILLUSTRATION

<END>

284-5394 LIGHTING GP-BACKUP

S/N: SZS1-UP

PART OF 436-7621 ELECTRICAL AR, 368-3025 GENERAL AR

SMCS-1408 **i06949082**

NOTE	REF NO	GRAPHIC REF	PART NUMBER	QTY	PART NAME 1 2 3 4 5 6 (PRODUCT LEVEL)	SEE PAGE
	1	1	**3E-5239**	1	RELAY AS (24-VOLT) (BACKUP LIGHT)	
	2	1	**7K-1181**	1	STRAP-CABLE	
	3	1	**213-9100**	1	ALARM AS (BACKUP)	
		1	**102-8802**	1	KIT-RECEPTACLE (2-PIN)	
					(INCLUDES RECEPTACLE AS & WEDGE)	
D		1	**5P-5623**		WIRE-ELECTRICAL (16-GA, BLACK) (0.4-M EACH)	
		1	**8T-8729**		PIN-CONNECTOR (16-GA TO 18-GA)	
E		1	**9X-1813**		SLEEVE (29-CM)	
	4	1	**304-5794**	1	BRACKET AS	
	5	1	**344-6167**	1	COVER	
	6	1	**130-5300**	3	CLIP	
Y	7	1	**261-1502**	2	LAMP GP (24-VOLT) (BACKUP LIGHT)	288
M	8	1	**5C-2890**	6	NUT (M6X1-THD)	
	9	1	**7X-7729**	2	WASHER (11X25X3-MM THK)	
	10	1	**8T-4121**	4	WASHER-HARD (11X21X2.5-MM THK)	
M	11	1	**8T-4133**	2	NUT (M10X1.5-THD)	
M	12	1	**8T-4137**	4	BOLT (M10X1.5X20-MM)	
	13	1	**8T-4224**	6	WASHER-HARD (8.8X16X2-MM THK)	
M	14	1	**8T-4970**	1	BOLT (M6X1X14-MM)	
	15	1	**9X-8256**	1	WASHER (6.6X12X2-MM THK)	

D - ORDER BY THE METER
E - ORDER BY THE CENTIMETER
M - METRIC PART
Y - SEPARATE ILLUSTRATION

284-5394 **LIGHTING GP-BACKUP (**contd.**)** **i06949082**

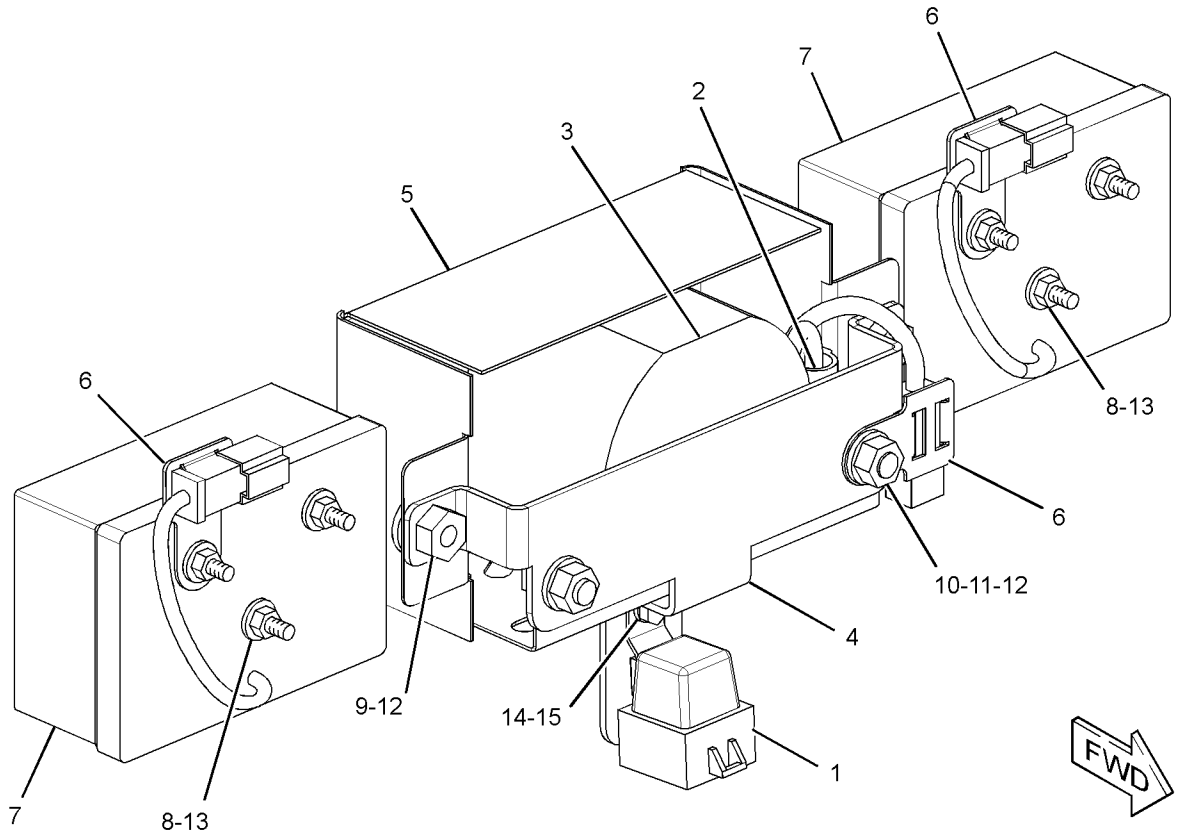

GRAPHIC #1 <END> g01916174

284-5362 LIGHTING GP-FLOOD

S/N: SZS1-UP
RIPPER
PART OF 436-7621 ELECTRICAL AR, 368-3025 GENERAL AR

SMCS-1434 **i03875021**

NOTE	REF NO	GRAPHIC REF	PART NUMBER	QTY	PART NAME 1 2 3 4 5 6 (PRODUCT LEVEL)	SEE PAGE
	1	1	**7K-1181**	9	STRAP-CABLE	
	2	1	**9X-9365**	2	BRACKET	
CY	3	1	**272-6641**	2	LAMP GP-FLOOD (24-VOLT)	294
	4	1	**304-5880**	1	HARNESS AS-REAR LIGHTING	
		1	**102-8802**	2	KIT-RECEPTACLE (2-PIN)	
					(EACH KIT INCLUDES RECEPTACLE AS & WEDGE)	
		1	**9W-0844**	4	SOCKET-CONNECTOR (14-GA TO 16-GA)	
		1	**9W-0852**	2	PIN-CONNECTOR (14-GA TO 16-GA)	
E		1	**119-3662**		TUBE-HEAT SHRINK (10.85-MM DIA) (13-CM)	
		1	**155-2270**	4	KIT-CONNECTING PLUG (2-PIN)	
					(EACH KIT INCLUDES PLUG AS, WEDGE & INTERFACE SEAL)	
	5	1	**6V-3265**	2	CLIP	
	6	1	**7G-7053**	2	GROMMET	

C - CHANGE FROM PREVIOUS TYPE
E - ORDER BY THE CENTIMETER
Y - SEPARATE ILLUSTRATION

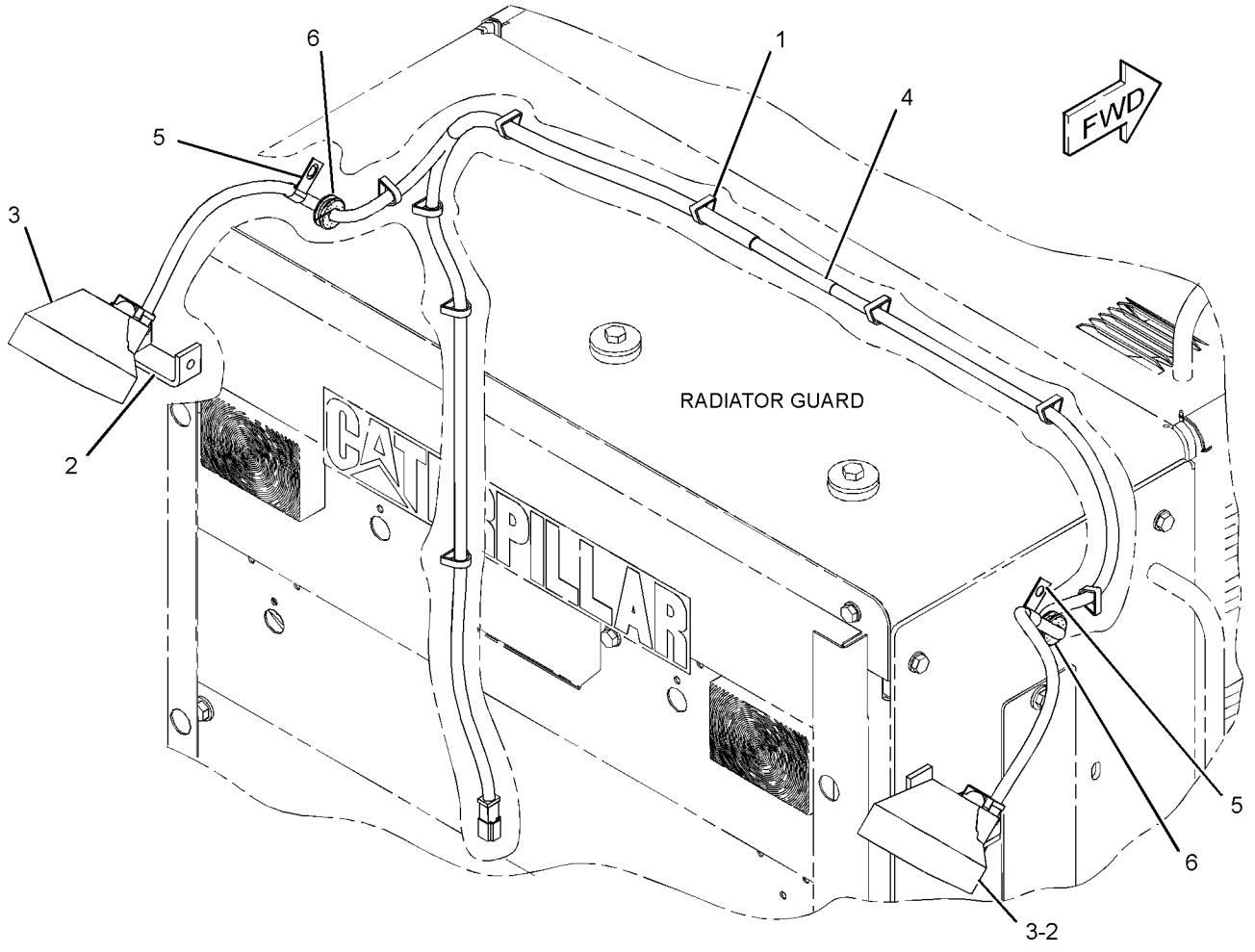

GRAPHIC #1 <END> g02149609

284-5376 LIGHTING GP-FLOOD—FRONT

S/N: SZS1-UP
24-VOLT
PART OF 436-7621 ELECTRICAL AR, 368-3025 GENERAL AR

SMCS-1434 **i04886875**

NOTE	REF NO	GRAPHIC REF	PART NUMBER	QTY	PART NAME 1 2 3 4 5 6 (PRODUCT LEVEL)	SEE PAGE
	1	1	**7K-1181**	2	STRAP-CABLE	
	2	1	**9L-1566**	2	SUPPORT	
Y	3	1	**234-4325**	2	LAMP GP-FLOOD (24-VOLT)	293
	4	1	**335-8402**	1	HARNESS AS-SOLENOID	
		1	**102-8802**	4	KIT-RECEPTACLE (2-PIN)	
		1	**102-8803**	1	KIT-RECEPTACLE (3-PIN)	
					(EACH RECEPTACLE KIT INCLUDES RECEPTACLE AS & WEDGE)	
		1	**8T-8729**	1	PIN-CONNECTOR (16-GA TO 18-GA)	
		1	**8T-8730**	4	SOCKET-CONNECTOR (16-GA TO 18-GA)	
		1	**8T-8737**	8	PLUG-SEAL	
		1	**9W-0844**	4	SOCKET-CONNECTOR (14-GA TO 16-GA)	
		1	**9W-0852**	2	PIN-CONNECTOR (14-GA TO 16-GA)	
E		1	**125-7874**		TUBE-HEAT SHRINK (5.72-MM DIA) (5-CM)	
E		1	**125-7875**		TUBE-HEAT SHRINK (7.44-MM DIA) (10-CM)	
		1	**155-2270**	4	KIT-CONNECTING PLUG (2-PIN)	
					(EACH INCLUDES PLUG AS, WEDGE, & INTERFACE SEAL)	
	5	1	**4D-8123**	1	CLIP	
Y	6	1	**234-4323**	2	LAMP GP-FLOOD (24-VOLT)	291
	7	1	**5P-9085**	6	CLIP	

E - ORDER BY THE CENTIMETER
Y - SEPARATE ILLUSTRATION

284-5376 **LIGHTING GP-FLOOD (**contd.**)** **i04886875**

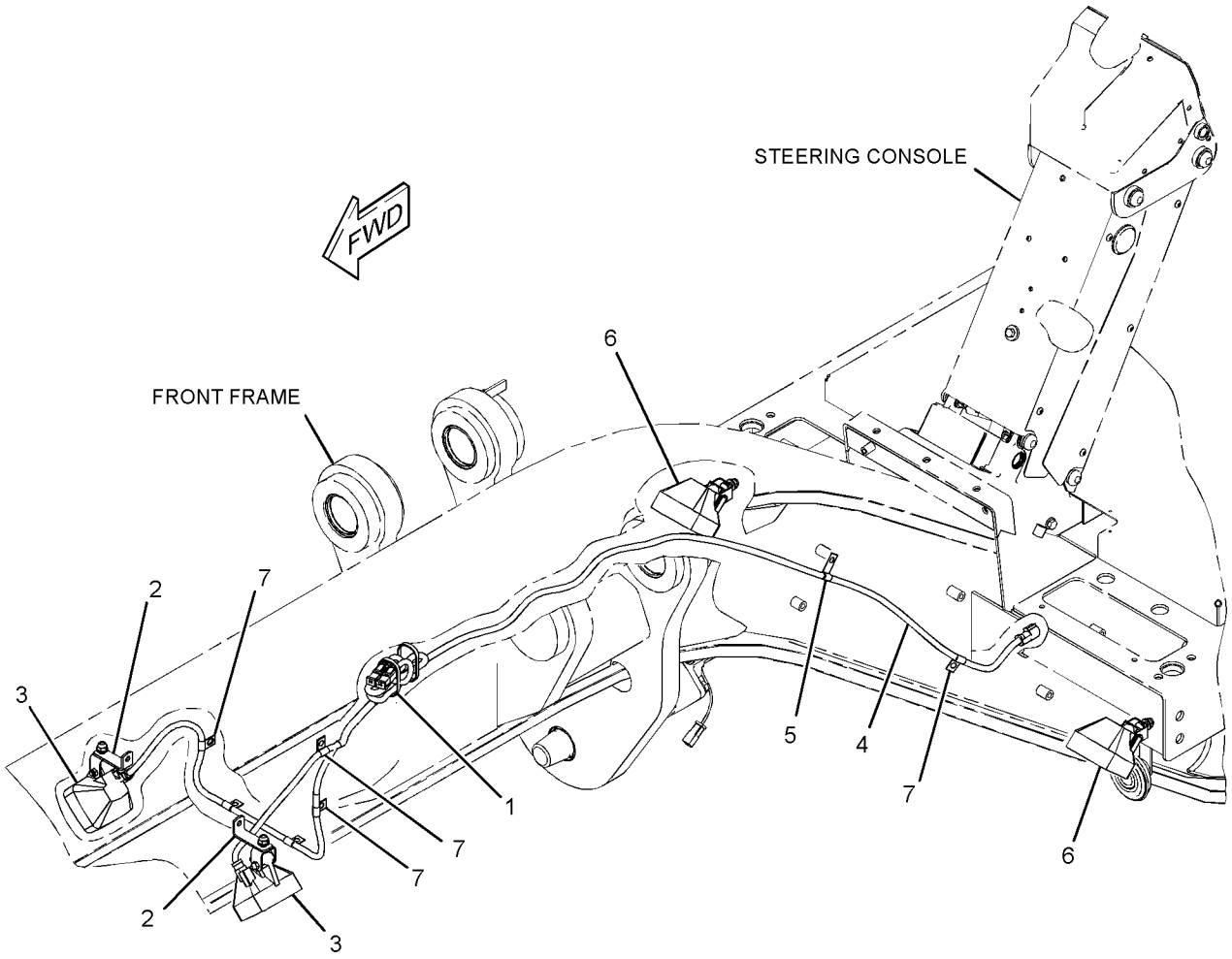

GRAPHIC #1 <END> g03014718

334-3348 LIGHTING GP-REGISTRATION PLATE

S/N: SZS1-UP
24-VOLT, INDIA ROADING
PART OF 358-9496, 359-1519, 359-1520 ROADING AR
AN ATTACHMENT

SMCS-1429 **i04269531**

NOTE	REF NO	GRAPHIC REF	PART NUMBER	QTY	PART NAME 1 2 3 4 5 6 (PRODUCT LEVEL)	SEE PAGE
	1	1	**7K-1181**	1	STRAP-CABLE	
Y	2	1	**259-0134**	1	LAMP GP-REGISTRATION PLATE (24-VOLT) (EUROPEAN MARKET)	300
	3	1	**338-8415**	1	PLATE	
M	4	1	**131-3540**	4	LOCKNUT (M8X1.25-THD)	
	5	1	**5P-4116**	8	WASHER-HARD (8.8X20.5X2-MM THK)	
M	6	1	**8T-4189**	4	BOLT (M8X1.25X20-MM)	
	7	1	**9X-7345**	1	GROMMET	

M - METRIC PART
Y - SEPARATE ILLUSTRATION

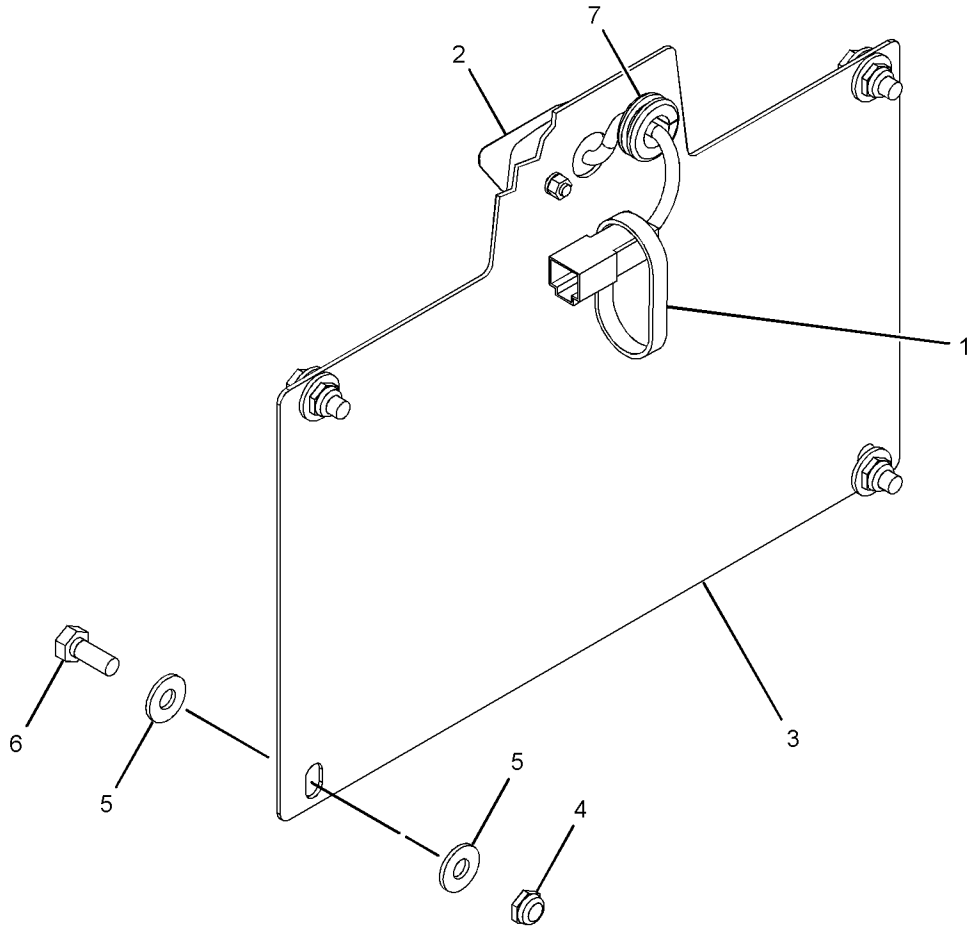

GRAPHIC #1 <END> g02079417

434-8039 LIGHTING GP-REGISTRATION PLATE

S/N: SZS1-UP

PART OF 458-5990, 460-6436, 462-7252 ROADING AR

AN ATTACHMENT

SMCS-1429 **i05883626**

NOTE	REF NO	GRAPHIC REF	PART NUMBER	QTY	PART NAME 1 2 3 4 5 6 (PRODUCT LEVEL)	SEE PAGE
	1	1	**7K-1181**	1	STRAP-CABLE	
Y	2	1	**259-0134**	1	LAMP GP-REGISTRATION PLATE (24-VOLT)	300
	3	1	**338-8415**	1	PLATE	
M	4	1	**131-3540**	4	LOCKNUT (M8X1.25-THD)	
	5	1	**5P-4116**	8	WASHER-HARD (8.8X20.5X2-MM THK)	
M	6	1	**8T-4189**	4	BOLT (M8X1.25X20-MM)	
	7	1	**9X-7345**	1	GROMMET	

M - METRIC PART
Y - SEPARATE ILLUSTRATION

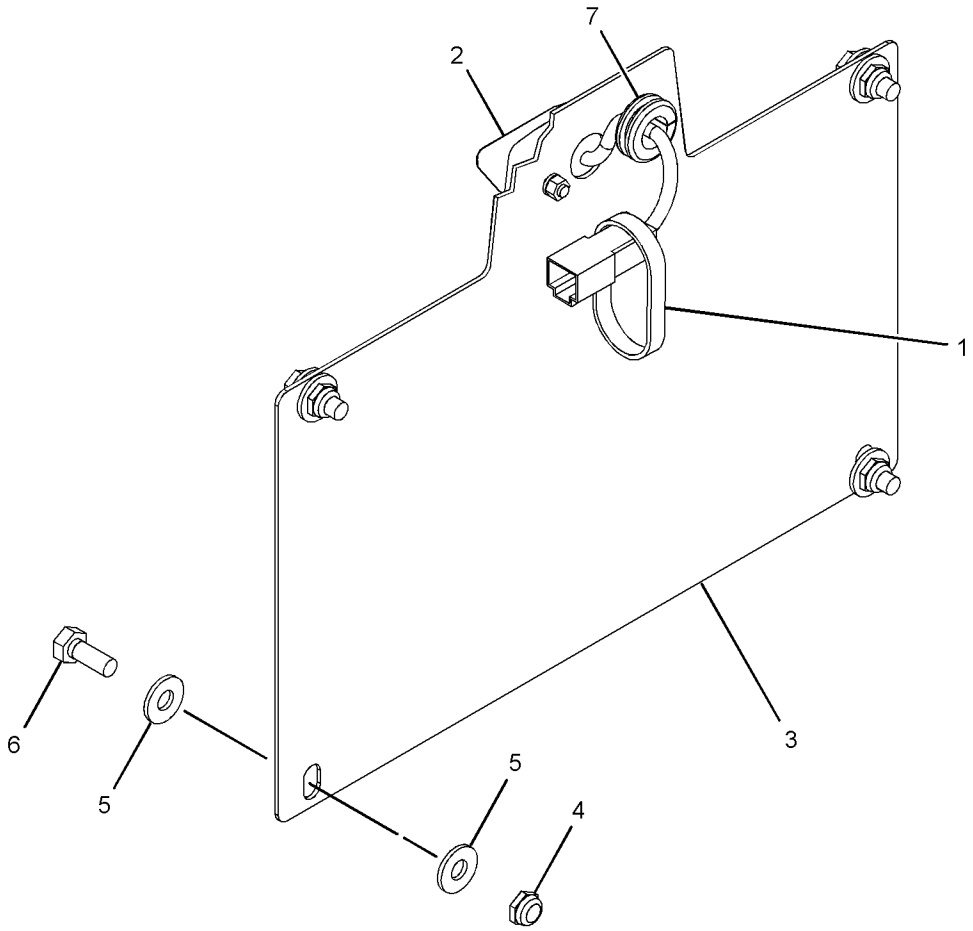

GRAPHIC #1 <END> g02079417

284-5353 LIGHTING GP-ROADING

S/N: SZS1-UP
LOW BAR
PART OF 294-8546 LIGHTING AR-ROADING
AN ATTACHMENT

SMCS-1429 **i05707771**

NOTE	REF NO	GRAPHIC REF	PART NUMBER	QTY	PART NAME 1 2 3 4 5 6 (PRODUCT LEVEL)	SEE PAGE
	1	1	**2G-0617**	4	CLAMP	
	2	1	**2G-0659**	2	BRACKET	
	3	1	**2G-0988**	2	CAP	
	4	1	**3K-9520**	3	GROMMET	
	5	1	**5T-9313**	1	TUBE	
	6	1	**8X-5153**	1	FILM-FACE (TURN SIGNAL, HAZARD)	
	7	1	**8X-5154**	1	FILM-FACE (HEADLIGHTS HIGH, LOW BEAM)	
	8	1	**9W-1441**	1	FUSE (15-AMPERE)	
	9	1	**9W-1442**	1	FUSE (10-AMPERE)	
	10	1	**103-1592**	2	PLATE	
	11	1	**108-0358**	1	FLASHER AS (24-VOLT)	
Y	12	1	**334-5409**	2	LAMP GP-SIGNAL (24-VOLT, PARK, TURN)	303
	13	1	**137-9410**	4	CLAMP	
	14	1	**173-3064**	1	SWITCH GP-ROTARY (TURN SIGNAL, HAZARD)	
		1	**5L-7200**	1	SCREW (8-32X0.375-IN)	
		1	**9B-7233**	1	LOCKWASHER	
	15	1	**179-1550**	2	CLAMP	
Y	16	1	**234-4323**	2	LAMP GP-FLOOD (24-VOLT) (LOW BEAM)	291
Y	17	1	**234-4324**	2	LAMP GP-FLOOD (24-VOLT) (HIGH BEAM)	292
	18	1	**336-0959**	1	HARNESS AS-LIGHTING (WORK LIGHTS, FRONT)	
		1	**102-8801**	1	KIT-RECEPTACLE (12-PIN)	
					(INCLUDES RECEPTACLE AS & WEDGE)	
		1	**8T-8729**	5	PIN-CONNECTOR (16-GA TO 18-GA)	
		1	**8T-8730**	5	SOCKET-CONNECTOR (16-GA TO 18-GA)	
		1	**8T-8737**	2	PLUG-SEAL	
		1	**9W-0844**	6	SOCKET-CONNECTOR (14-GA TO 16-GA)	
		1	**9W-0852**	6	PIN-CONNECTOR (14-GA TO 16-GA)	
		1	**155-2255**	1	KIT-CONNECTING PLUG (12-PIN)	
					(INCLUDES PLUG AS, WEDGE, & INTERFACE SEAL)	
	19	1	**336-0961**	1	HARNESS AS-LIGHTING (BAR)	
		1	**102-8801**	1	KIT-RECEPTACLE (12-PIN)	
					(INCLUDES RECEPTACLE AS & WEDGE)	
		1	**8T-8729**	2	PIN-CONNECTOR (16-GA TO 18-GA)	
		1	**8T-8730**	4	SOCKET-CONNECTOR (16-GA TO 18-GA)	
		1	**8T-8737**	7	PLUG-SEAL	
		1	**9W-0844**	8	SOCKET-CONNECTOR (14-GA TO 16-GA)	
		1	**9W-0852**	5	PIN-CONNECTOR (14-GA TO 16-GA)	
E		1	**119-3662**		TUBE-HEAT SHRINK (10.85-MM DIA) (7-CM)	
		1	**155-2260**	2	KIT-CONNECTING PLUG (3-PIN)	
		1	**155-2270**	4	KIT-CONNECTING PLUG (2-PIN)	
					(EACH PLUG KIT INCLUDES PLUG AS, WEDGE, & INTERFACE SEAL)	
	20	1	**103-5678**	1	SWITCH AS-ROTARY (HIGH, LOW BEAM)	
		1	**5L-7200**	1	SCREW (8-32X0.375-IN)	
		1	**9B-7233**	1	LOCKWASHER	
	21	1	**130-5300**	2	CLIP	

284-5353 **LIGHTING GP-ROADING (**contd.**)** **i05707771**

NOTE	REF NO	GRAPHIC REF	PART NUMBER	QTY	PART NAME 1 2 3 4 5 6 (PRODUCT LEVEL)	SEE PAGE
	22	1	**249-5486**	1	SWITCH AS-ROCKER (24-VOLT) (HEADLIGHTS, TAIL LIGHTS)	
	23	1	**5P-9085**	4	CLIP	
	24	1	**4K-8864**	2	CLIP	
	25	1	**4L-6454**	4	BOLT (3/8-16X1-IN)	
M	26	1	**5C-2890**	8	NUT (M6X1-THD)	
	27	1	**5M-3062**	1	BOLT (3/8-16X0.75-IN)	
	28	1	**6V-8801**	4	NUT (3/8-16-THD)	
	29	1	**7K-1181**	4	STRAP-CABLE	
	30	1	**8T-4205**	8	WASHER-HARD (7.2X14.5X2-MM THK)	
	31	1	**8T-4223**	4	WASHER-HARD (13.5X25.5X3-MM THK)	
M	32	1	**8T-4244**	4	NUT (M12X1.75-THD)	
	33	1	**8T-4896**	5	WASHER-HARD (10.2X18.5X2.5-MM THK)	
M	34	1	**8T-5412**	4	BOLT (M12X1.75X140-MM)	
	35	1	**8X-6296**	2	LEVER	
M	36	1	**9X-2043**	2	SCREW-TRUSS HEAD (M6X1X14-MM)	

E - ORDER BY THE CENTIMETER
M - METRIC PART
Y - SEPARATE ILLUSTRATION

284-5353 **LIGHTING GP-ROADING (**contd.**)** **i05707771**

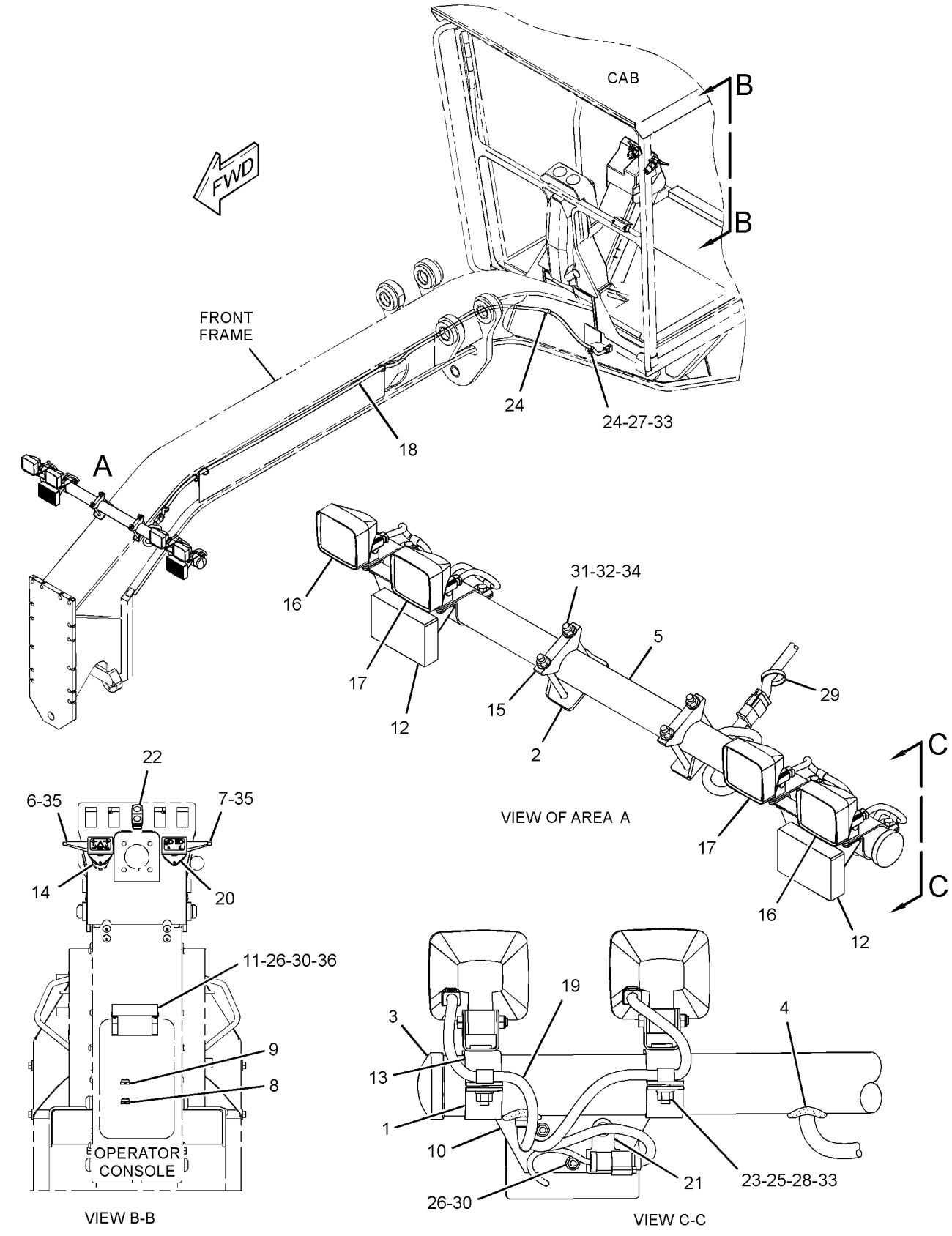

GRAPHIC #1

<END>

g03146618

434-8040 LIGHTING GP-ROADING

S/N: SZS1-UP
LOW BAR
PART OF 434-8339 LIGHTING AR-ROADING
AN ATTACHMENT

SMCS-1429 **i06056261**

NOTE	REF NO	GRAPHIC REF	PART NUMBER	QTY	PART NAME 1 2 3 4 5 6 (PRODUCT LEVEL)	SEE PAGE
	1	1	**2G-0617**	4	CLAMP	
	2	1	**2G-0659**	2	BRACKET	
	3	1	**2G-0988**	2	CAP	
	4	1	**3K-9520**	3	GROMMET	
	5	1	**5T-9313**	1	TUBE	
	6	1	**8X-5153**	1	FILM-FACE (TURN SIGNAL, HAZARD)	
	7	1	**8X-5154**	1	FILM-FACE (HEADLIGHTS HIGH, LOW BEAM)	
	8	1	**9W-1441**	1	FUSE (15-AMPERE)	
	9	1	**9W-1442**	1	FUSE (10-AMPERE)	
	10	1	**103-1592**	2	PLATE	
	11	1	**108-0358**	1	FLASHER AS (24-VOLT)	
Y	12	1	**334-5409**	2	LAMP GP-SIGNAL (24-VOLT, PARK, TURN) (FRONT)	303
	13	1	**137-9410**	4	CLAMP	
	14	1	**173-3064**	1	SWITCH GP-ROTARY (TURN SIGNAL, HAZARD)	
		1	**5L-7200**	1	SCREW (8-32X0.375-IN)	
		1	**9B-7233**	1	LOCKWASHER	
	15	1	**179-1550**	2	CLAMP	
Y	16	1	**219-6485**	2	LAMP GP-FLOOD (24-VOLT) (LOW BEAM)	290
Y	17	1	**234-4324**	2	LAMP GP-FLOOD (24-VOLT) (HIGH BEAM)	292
	18	1	**336-0959**	1	HARNESS AS-LIGHTING (WORK LIGHTS, FRONT)	
		1	**102-8801**	1	KIT-RECEPTACLE (12-PIN)	
					(INCLUDES RECEPTACLE AS & WEDGE)	
		1	**8T-8729**	5	PIN-CONNECTOR (16-GA TO 18-GA)	
		1	**8T-8730**	5	SOCKET-CONNECTOR (16-GA TO 18-GA)	
		1	**8T-8737**	2	PLUG-SEAL	
		1	**9W-0844**	6	SOCKET-CONNECTOR (14-GA TO 16-GA)	
		1	**9W-0852**	6	PIN-CONNECTOR (14-GA TO 16-GA)	
		1	**155-2255**	1	KIT-CONNECTING PLUG (12-PIN)	
					(INCLUDES PLUG AS, WEDGE, & INTERFACE SEAL)	
	19	1	**336-0961**	1	HARNESS AS-LIGHTING (BAR)	
		1	**102-8801**	1	KIT-RECEPTACLE (12-PIN)	
					(INCLUDES RECEPTACLE AS & WEDGE)	
		1	**8T-8729**	2	PIN-CONNECTOR (16-GA TO 18-GA)	
		1	**8T-8730**	4	SOCKET-CONNECTOR (16-GA TO 18-GA)	
		1	**8T-8737**	7	PLUG-SEAL	
		1	**9W-0844**	8	SOCKET-CONNECTOR (14-GA TO 16-GA)	
		1	**9W-0852**	5	PIN-CONNECTOR (14-GA TO 16-GA)	
E		1	**119-3662**		TUBE-HEAT SHRINK (10.85-MM DIA) (7-CM)	
		1	**155-2260**	2	KIT-CONNECTING PLUG (3-PIN)	
		1	**155-2270**	4	KIT-CONNECTING PLUG (2-PIN)	
					(EACH PLUG KIT INCLUDES PLUG AS, WEDGE, & INTERFACE SEAL)	
	20	1	**103-5678**	1	SWITCH AS-ROTARY (HIGH, LOW BEAM)	
		1	**5L-7200**	1	SCREW (8-32X0.375-IN)	
		1	**9B-7233**	1	LOCKWASHER	
	21	1	**130-5300**	2	CLIP	

434-8040 **LIGHTING GP-ROADING (**contd.**)** **i06056261**

NOTE	REF NO	GRAPHIC REF	PART NUMBER	QTY	PART NAME 1 2 3 4 5 6 (PRODUCT LEVEL)	SEE PAGE
	22	1	**249-5486**	1	SWITCH AS-ROCKER (24-VOLT) (HEADLIGHTS, TAIL LIGHTS)	
	23	1	**5P-9085**	4	CLIP	
	24	1	**4K-8864**	2	CLIP	
	25	1	**4L-6454**	4	BOLT (3/8-16X1-IN)	
M	26	1	**5C-2890**	8	NUT (M6X1-THD)	
	28	1	**6V-8801**	4	NUT (3/8-16-THD)	
	29	1	**7K-1181**	4	STRAP-CABLE	
	30	1	**8T-4205**	8	WASHER-HARD (7.2X14.5X2-MM THK)	
	31	1	**8T-4223**	4	WASHER-HARD (13.5X25.5X3-MM THK)	
M	32	1	**8T-4244**	4	NUT (M12X1.75-THD)	
	33	1	**8T-4896**	4	WASHER-HARD (10.2X18.5X2.5-MM THK)	
M	34	1	**8T-5412**	4	BOLT (M12X1.75X140-MM)	
	35	1	**8X-6296**	2	LEVER	
M	36	1	**9X-2043**	2	SCREW-TRUSS HEAD (M6X1X14-MM)	

E - ORDER BY THE CENTIMETER
M - METRIC PART
Y - SEPARATE ILLUSTRATION

434-8040 **LIGHTING GP-ROADING (**contd.**)** **i06056261**

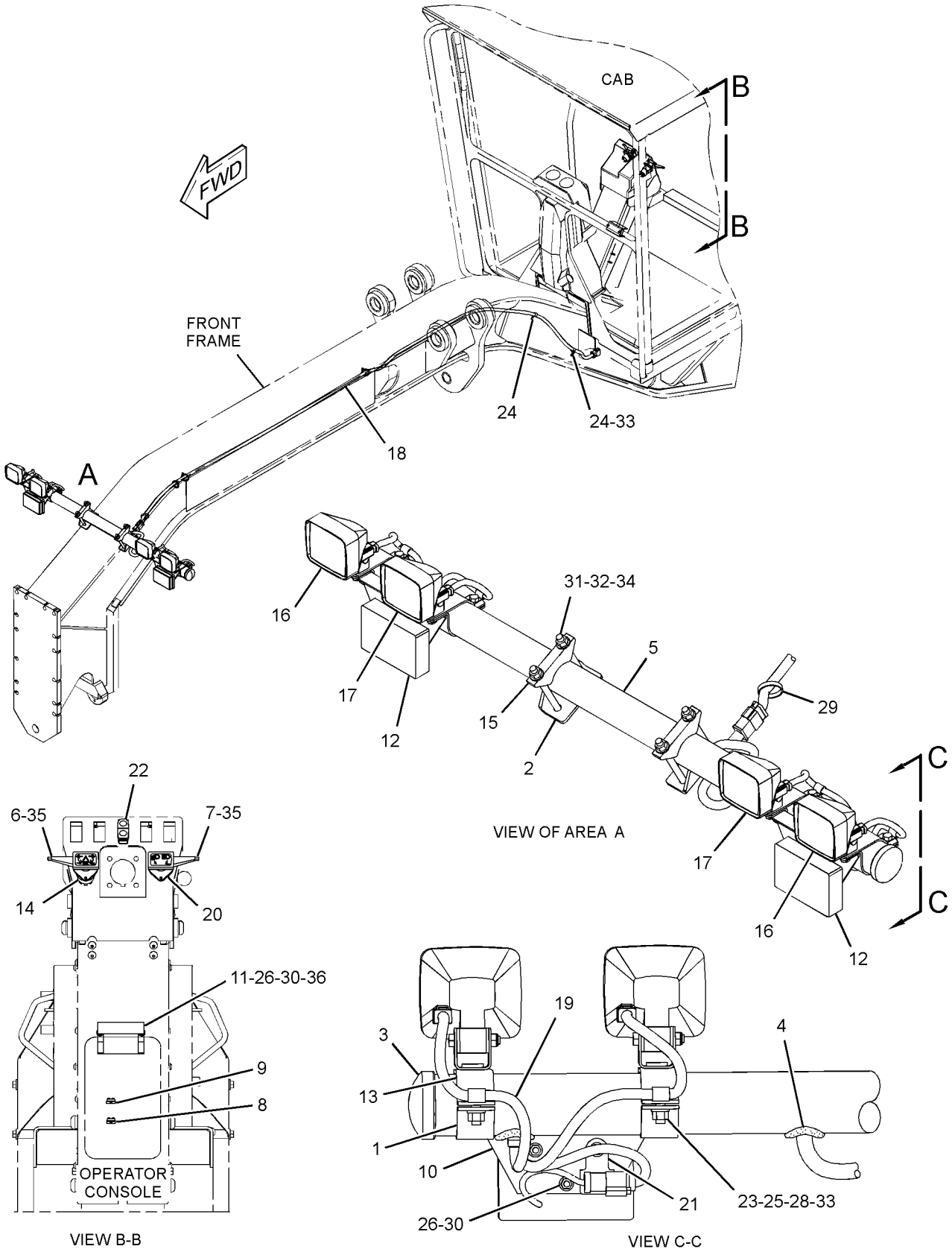

GRAPHIC #1 <END> g03803097

284-5363 LIGHTING GP-SIGNAL–TURN

S/N: SZS1-UP
PART OF 294-8546 LIGHTING AR-ROADING
AN ATTACHMENT

SMCS-1430 **i03742932**

NOTE	REF NO	GRAPHIC REF	PART NUMBER	QTY	PART NAME 1 2 3 4 5 6 (PRODUCT LEVEL)	SEE PAGE
	1	1	**130-5300**	2	CLIP	
Y	2	1	**334-5410**	1	LAMP GP-SIGNAL (12-VOLT, 24-VOLT, TURN) (LH)	304
Y	2A	1	**334-5410**	1	LAMP GP-SIGNAL (12-VOLT, 24-VOLT, TURN) (RH)	304
M	3	1	**5C-2890**	6	NUT (M6X1-THD)	
	4	1	**8T-4224**	6	WASHER-HARD (8.8X16X2-MM THK)	
F		1	**9W-1441**	1	FUSE (15-AMPERE)	
					(ASSEMBLE 15-AMP FUSE IN UNSWITCHED BLOCK SLOT 6)	

F - NOT SHOWN
M - METRIC PART
Y - SEPARATE ILLUSTRATION

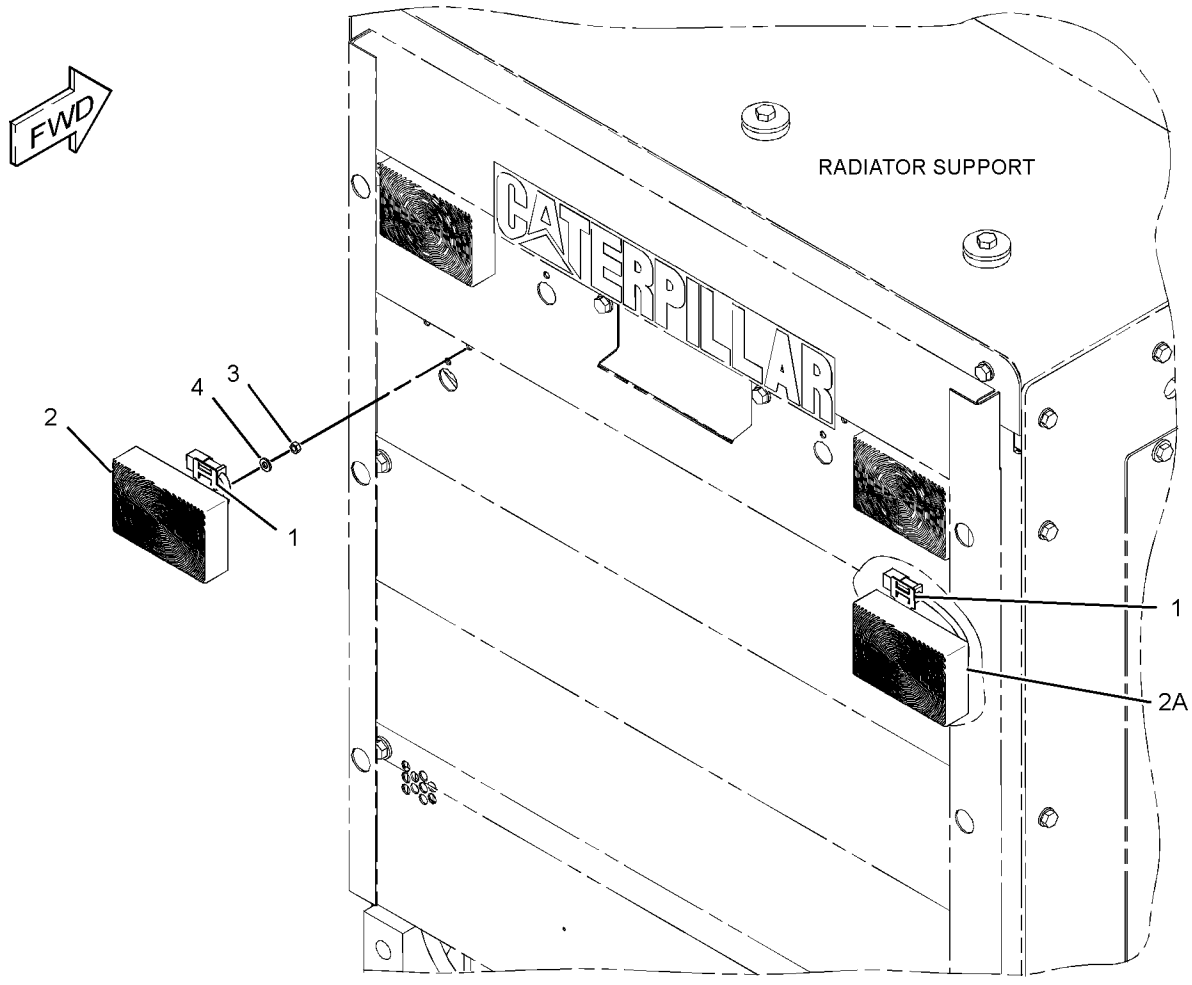

GRAPHIC #1 <END> g01705434

359-1046 LIGHTING GP-SIGNAL–TURN

S/N: SZS1-UP

PART OF 358-9496, 359-1519, 359-1520 ROADING AR AN ATTACHMENT

SMCS-1430 **i03892155**

NOTE	REF NO	GRAPHIC REF	PART NUMBER	QTY	PART NAME 1 2 3 4 5 6 (PRODUCT LEVEL)	SEE PAGE
	1	1	**130-5300**	2	CLIP	
Y	2	1	**162-2073**	1	LAMP GP-SIGNAL (24-VOLT, REAR TURN) (LH)	302
Y	2A	1	**162-2073**	1	LAMP GP-SIGNAL (24-VOLT, REAR TURN) (RH)	302
M	3	1	**5C-2890**	6	NUT (M6X1-THD)	
	4	1	**8T-4224**	6	WASHER-HARD (8.8X16X2-MM THK)	
F		1	**9W-1441**	1	FUSE (15-AMPERE)	
					(ASSEMBLE 15-AMP FUSE IN UNSWITCHED BLOCK SLOT 6)	

F - NOT SHOWN
M - METRIC PART
Y - SEPARATE ILLUSTRATION

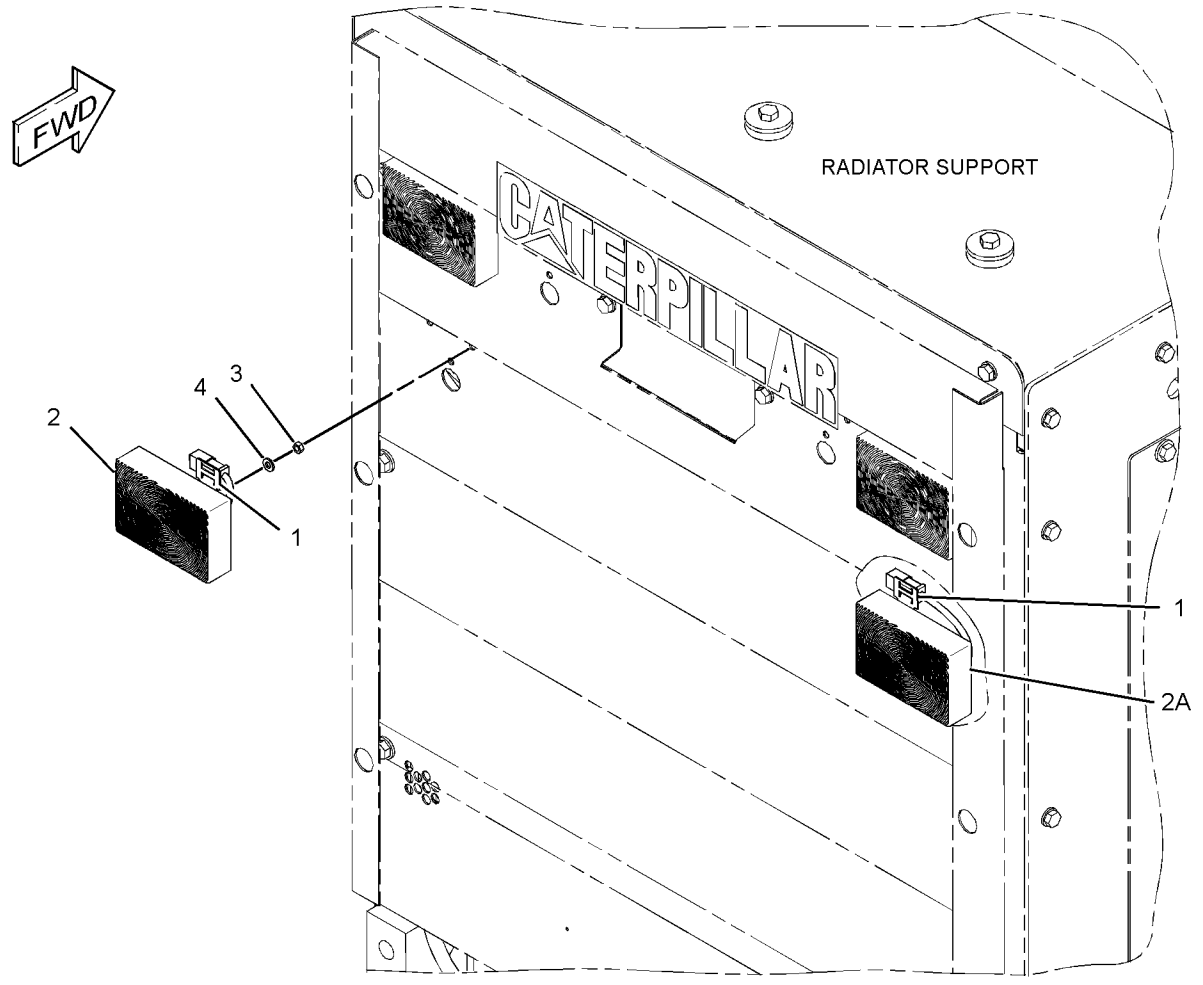

GRAPHIC #1 <END> g01705434

434-8042 LIGHTING GP-SIGNAL—TURN SIGNAL

S/N: SZS1-UP
PART OF 434-8339 LIGHTING AR-ROADING
AN ATTACHMENT

SMCS-1430 **i06056269**

NOTE	REF NO	GRAPHIC REF	PART NUMBER	QTY	PART NAME 1 2 3 4 5 6 (PRODUCT LEVEL)	SEE PAGE
	1	1	**130-5300**	2	CLIP	
Y	2	1	**334-5410**	1	LAMP GP-SIGNAL (12-VOLT, 24-VOLT, TURN) (LH)	304
Y	2A	1	**334-5410**	1	LAMP GP-SIGNAL (12-VOLT, 24-VOLT, TURN) (RH)	304
M	3	1	**5C-2890**	6	NUT (M6X1-THD)	
	4	1	**8T-4224**	6	WASHER-HARD (8.8X16X2-MM THK)	

M - METRIC PART
Y - SEPARATE ILLUSTRATION

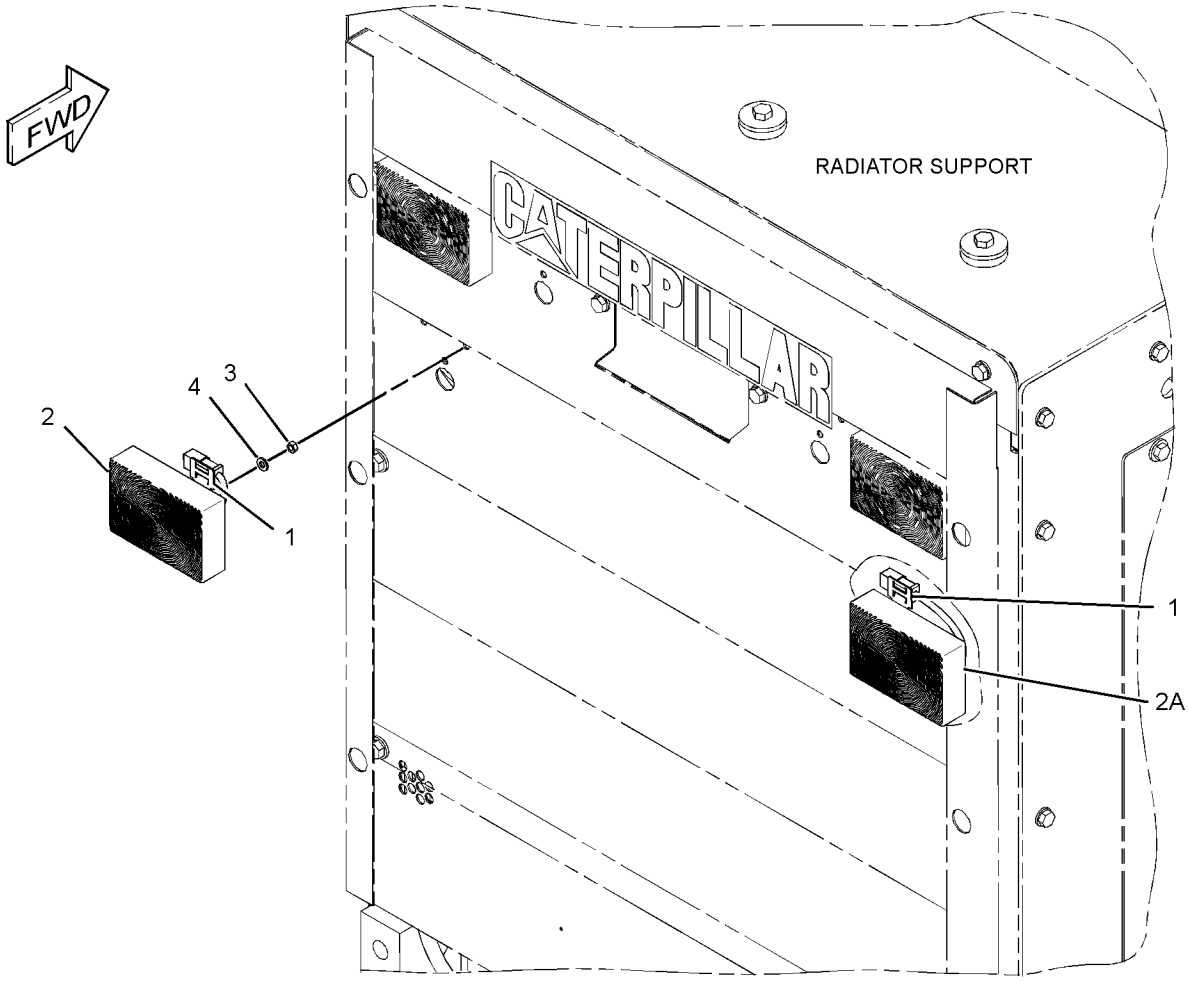

GRAPHIC #1 <END> g01705434

436-7624 LIGHTING GP-SIGNAL—TURN SIGNAL

S/N: SZS1-UP
PART OF 460-6436, 462-7252 ROADING AR
AN ATTACHMENT

SMCS-1430 **i05944236**

NOTE	REF NO	GRAPHIC REF	PART NUMBER	QTY	PART NAME 1 2 3 4 5 6 (PRODUCT LEVEL)	SEE PAGE
	1	1	**9W-1441**	1	FUSE (15-AMPERE)	
Y	2	1	**162-2073**	2	LAMP GP-SIGNAL (24-VOLT, REAR TURN)	302
	3	1	**130-5300**	2	CLIP	
M	4	1	**5C-2890**	6	NUT (M6X1-THD)	
	5	1	**8T-4224**	6	WASHER-HARD (8.8X16X2-MM THK)	

M - METRIC PART
Y - SEPARATE ILLUSTRATION

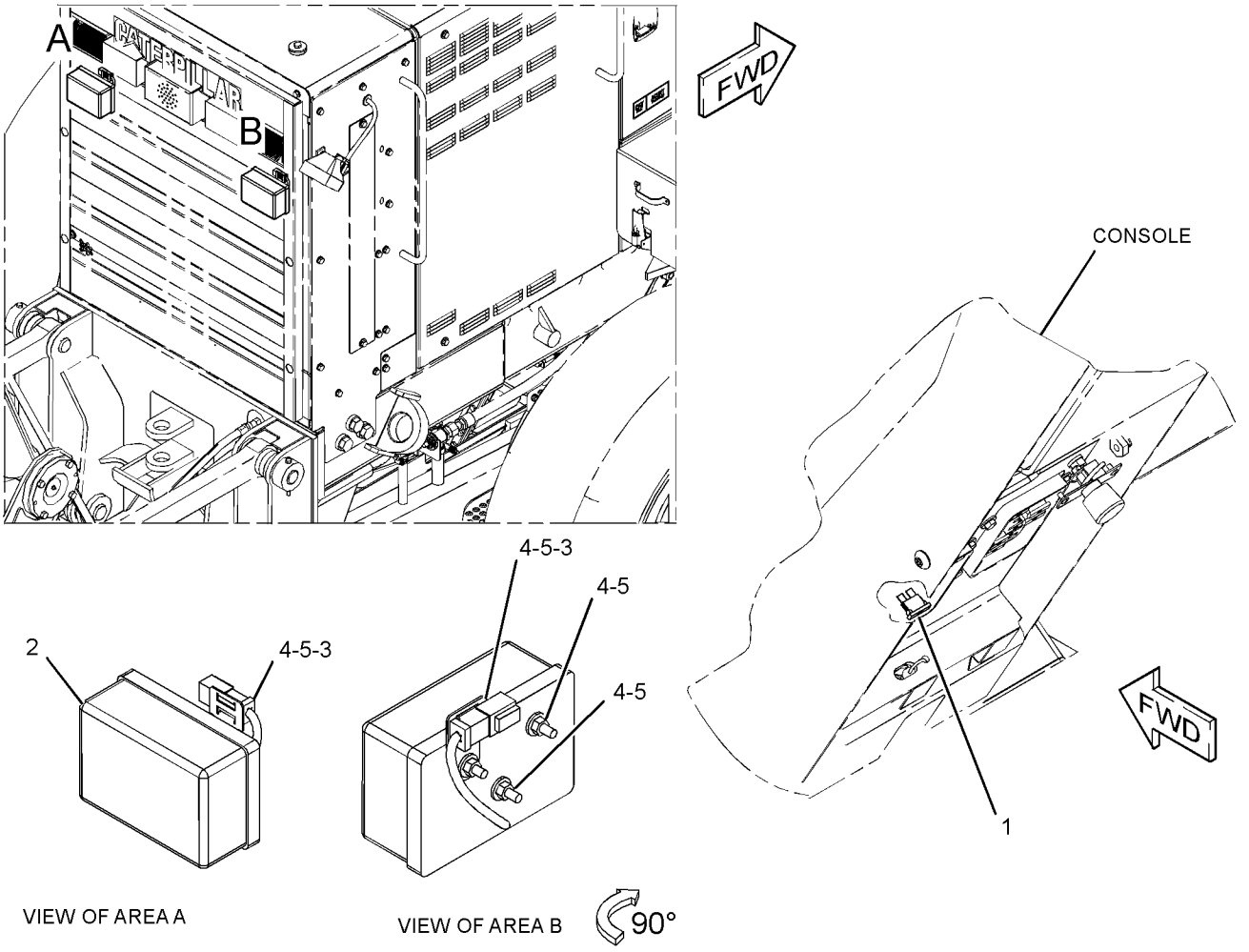

GRAPHIC #1 <END> g03734671

170-5335 MOTOR GP-ELECTRIC—CIRCULATING FAN

S/N: SZS1-UP
27-VOLT, COUNTER CLOCKWISE LEAD END
PART OF 170-4820, 170-5334 FAN GP-CIRCULATING
AN ATTACHMENT

SMCS-5927 **i04191675**

NOTE	REF NO	GRAPHIC REF	PART NUMBER	QTY	PART NAME 1 2 3 4 5 6 (PRODUCT LEVEL)	SEE PAGE
	1	1	**102-8802**	1	KIT-RECEPTACLE (2-PIN)	
					(INCLUDES RECEPTACLE AS & WEDGE)	
	2	1	**9W-0852**	2	PIN-CONNECTOR (14-GA TO 16-GA)	

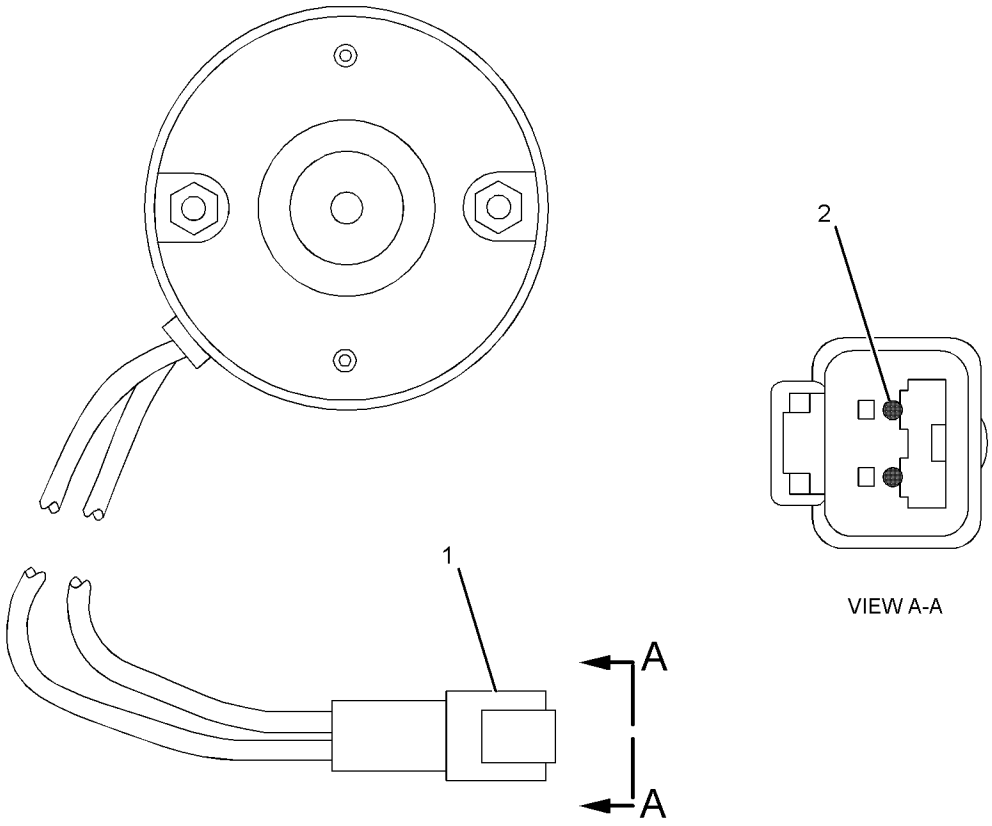

GRAPHIC #1 <END> g01224350

386-9663 MOTOR GP-ELECTRIC—CIRCULATING FAN

S/N: SZS1-UP
27-VOLT, COUNTER CLOCKWISE LEAD END
PART OF 170-4820, 170-5334 FAN GP-CIRCULATING
AN ATTACHMENT

SMCS-5927 **i04912244**

NOTE	REF NO	GRAPHIC REF	PART NUMBER	QTY	PART NAME 1 2 3 4 5 6 (PRODUCT LEVEL)	SEE PAGE
	1	1	**102-8802**	1	KIT-RECEPTACLE (2-PIN)	
					(INCLUDES RECEPTACLE AS & WEDGE)	
	2	1	**9W-0852**	2	PIN-CONNECTOR (14-GA TO 16-GA)	

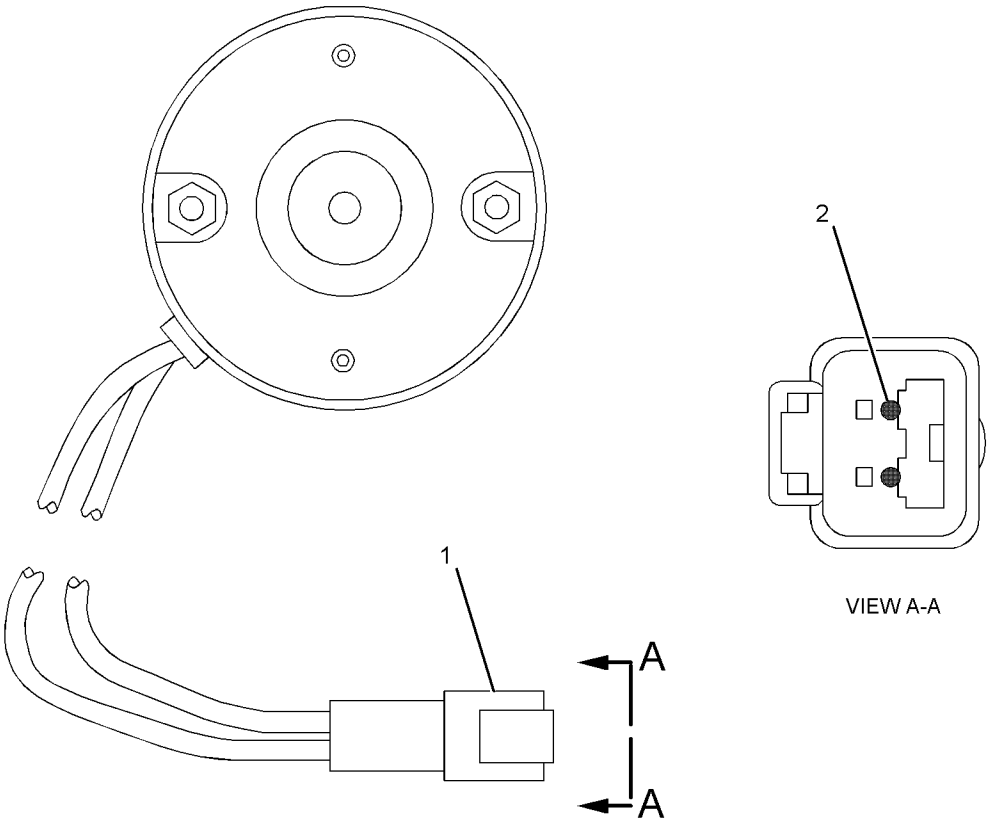

GRAPHIC #1 <END> g01224350

436-9180 MOTOR GP-ELECTRIC—CIRCULATING FAN

S/N: SZS1-UP
27-VOLT, COUNTER CLOCKWISE LEAD END
PART OF 170-5334 FAN GP-CIRCULATING
AN ATTACHMENT

SMCS-5927 **i05711069**

NOTE	REF NO	GRAPHIC REF	PART NUMBER	QTY	PART NAME 1 2 3 4 5 6 (PRODUCT LEVEL)	SEE PAGE
	1	1	**102-8802**	1	KIT-RECEPTACLE (2-PIN)	
					(INCLUDES RECEPTACLE AS & WEDGE)	
	2	1	**9W-0852**	2	PIN-CONNECTOR (14-GA TO 16-GA)	

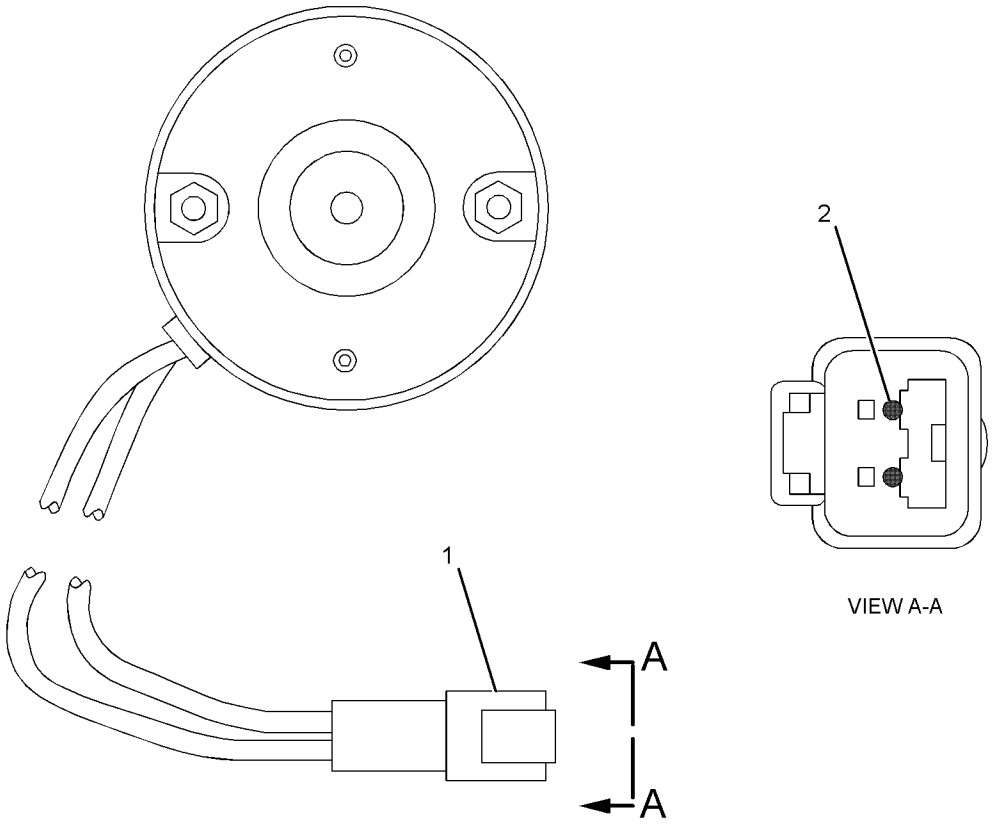

GRAPHIC #1 <END> g01224350

247-6449 MOUNTING GP-GRADE CONTROL–DRAWBAR

S/N: SZS1-UP
PART OF 337-3100 GRADE CONTROL AR
AN ATTACHMENT

SMCS-7220 **i04923062**

NOTE	REF NO	GRAPHIC REF	PART NUMBER	QTY	PART NAME 1 2 3 4 5 6 (PRODUCT LEVEL)	SEE PAGE
M	1	1	**9C-8895**	3	BOSS-TAPPED (M10X1.5-THD)	

M - METRIC PART

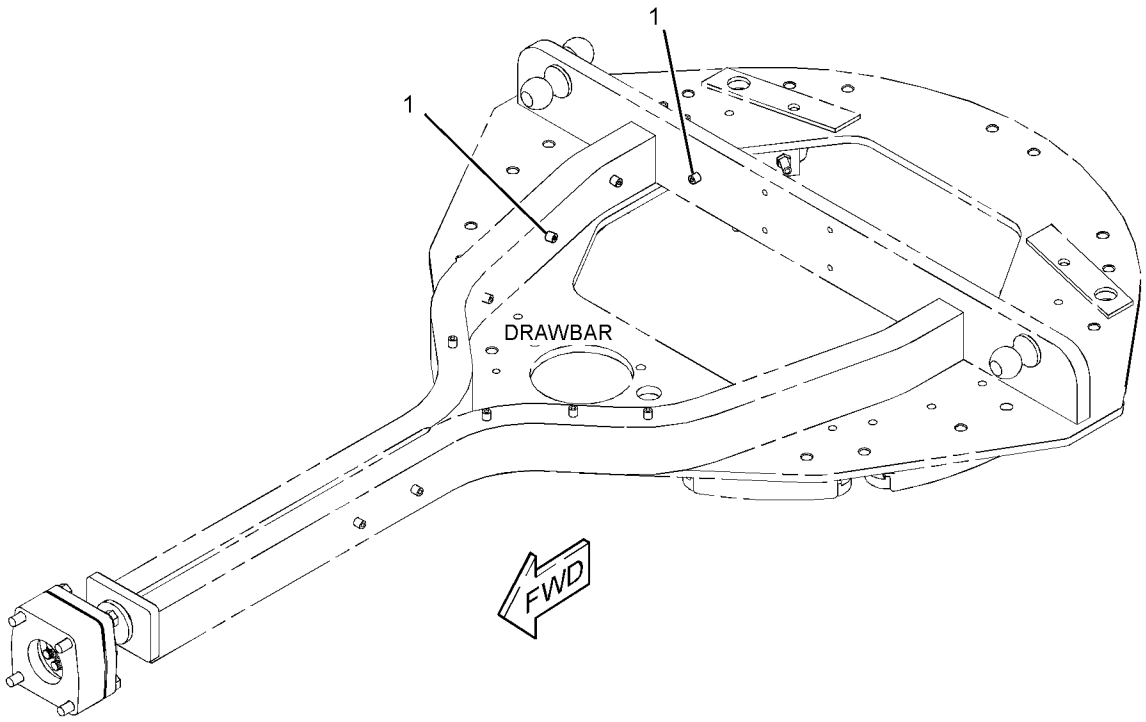

GRAPHIC #1 <END> g03142079

254-5960 MOUNTING GP-GRADE CONTROL–CIRCLE

S/N: SZS1-UP

PART OF 450-6412 CIRCLE GP, 336-4249, 337-3100, 394-0862 GRADE CONTROL AR AN ATTACHMENT

SMCS-7220 **i04923171**

NOTE	REF NO	GRAPHIC REF	PART NUMBER	QTY	PART NAME 1 2 3 4 5 6 (PRODUCT LEVEL)	SEE PAGE
M	1	1	**9C-8895**	1	BOSS-TAPPED (M10X1.5-THD)	
	2	1	**236-1927**	1	BRACKET AS	
M	3	1	**9R-2672**	1	BOSS-THREADED (M10X1.5X120-MM)	

M - METRIC PART

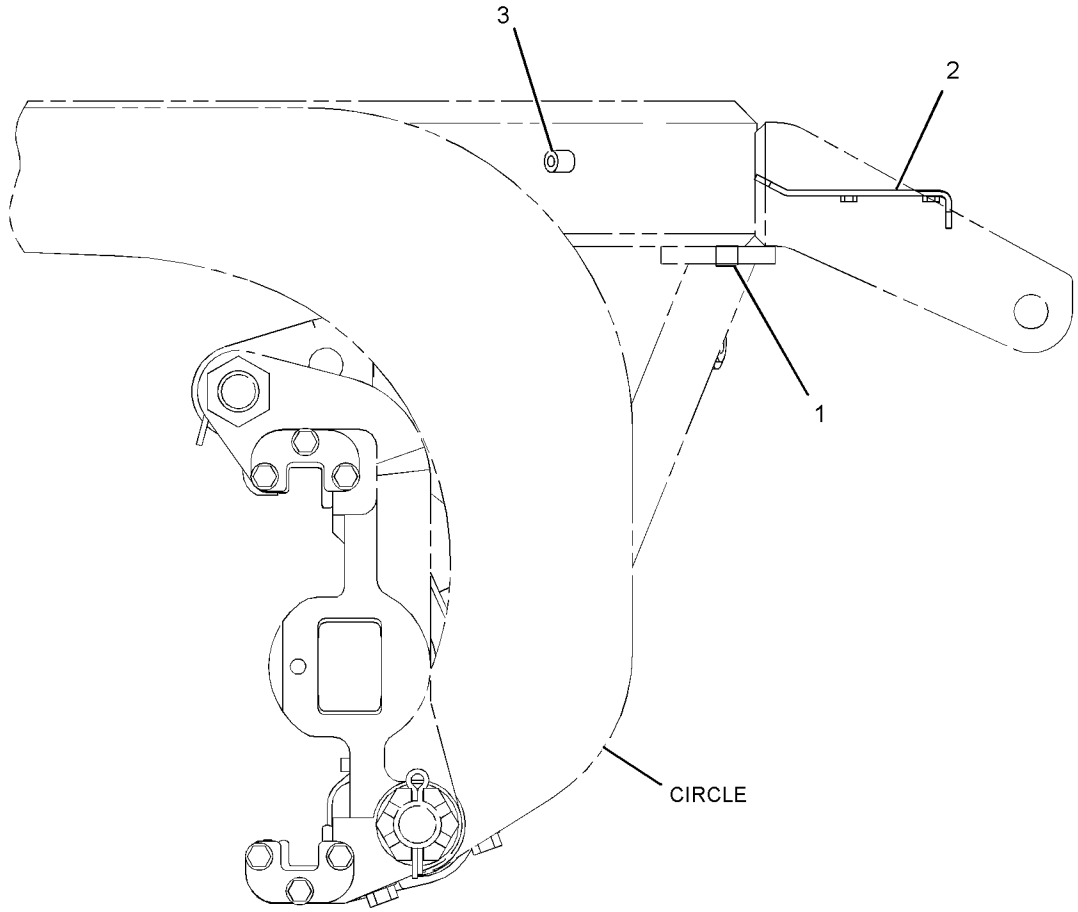

LEFT SIDE VIEW

GRAPHIC #1 <END> g03143601

255-2361 MOUNTING GP-GRADE CONTROL–CIRCLE

S/N: SZS1-UP
PART OF 337-3100 GRADE CONTROL AR
AN ATTACHMENT

SMCS-7220 **i04899148**

NOTE	REF NO	GRAPHIC REF	PART NUMBER	QTY	PART NAME 1 2 3 4 5 6 (PRODUCT LEVEL)	SEE PAGE
M	1	1	**9C-8895**	1	BOSS-TAPPED (M10X1.5-THD)	
	2	1	**255-3431**	1	BRACKET	
M		1	**159-9539**	2	NUT-WELD (M6X1-THD)	
M	3	1	**9R-2672**	1	BOSS-THREADED (M10X1.5X120-MM)	

M - METRIC PART

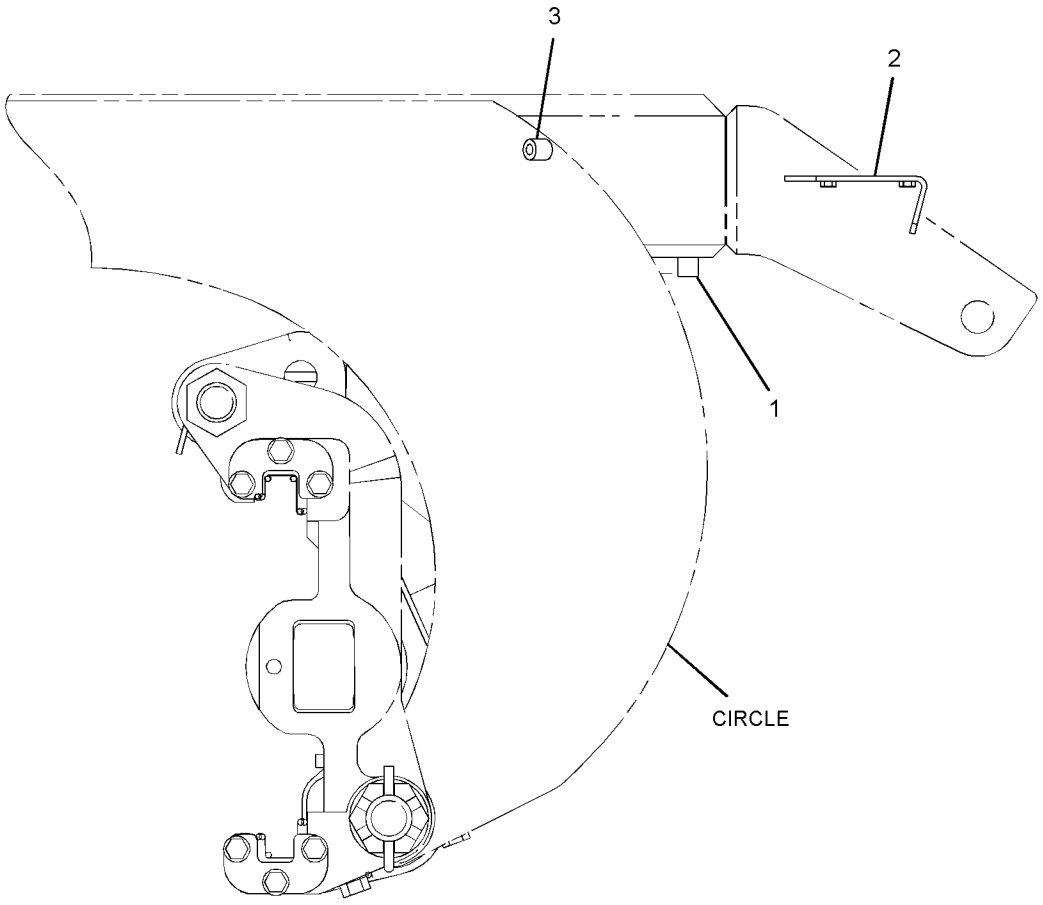

LEFT SIDE VIEW

GRAPHIC #1 <END> g03061256

349-8405 MOUNTING GP-GRADE CONTROL–CIRCLE

S/N: SZS1-UP

PART OF 336-4249, 394-0862 GRADE CONTROL AR

AN ATTACHMENT

SMCS-7220 **i04936098**

NOTE	REF NO	GRAPHIC REF	PART NUMBER	QTY	PART NAME 1 2 3 4 5 6 (PRODUCT LEVEL)	SEE PAGE
M	1	1	**9C-8895**	1	BOSS-TAPPED (M10X1.5-THD)	
	2	1	**236-1927**	1	BRACKET AS	

M - METRIC PART

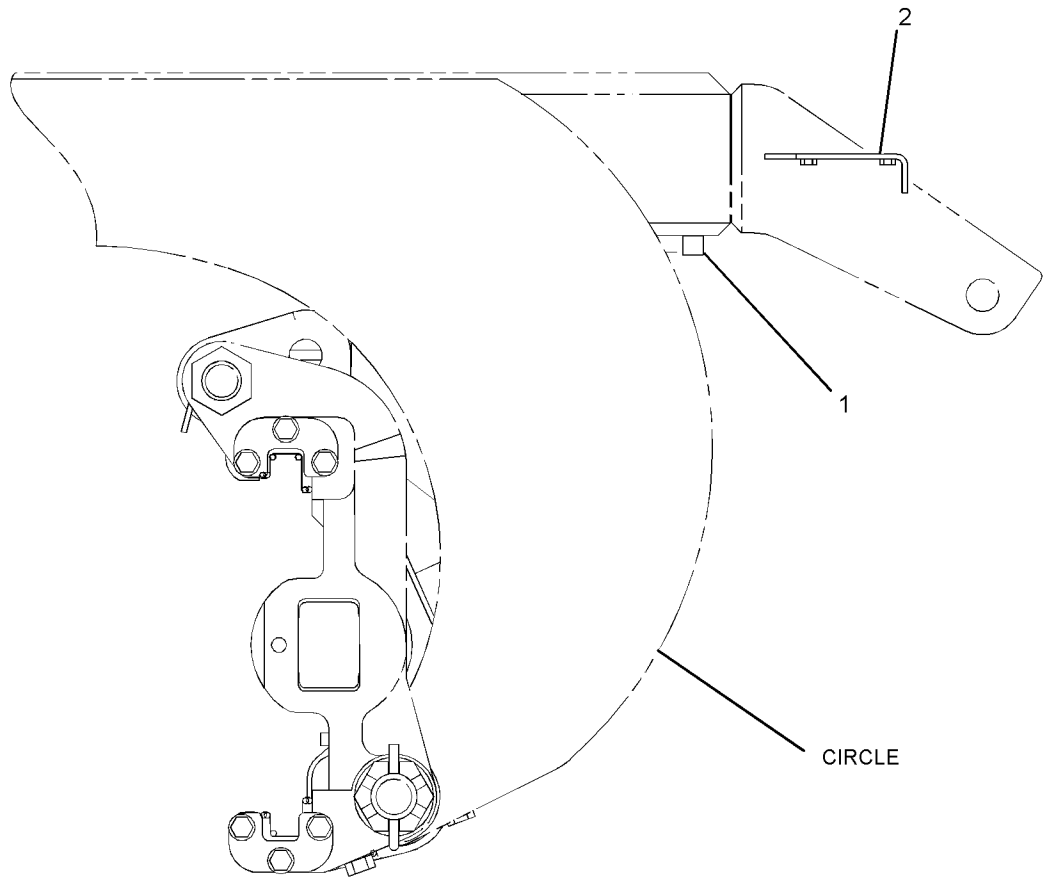

LEFT SIDE VIEW

GRAPHIC #1 <END> g03138338

382-1611 MOUNTING GP-GRADE CONTROL–DRAWBAR

S/N: SZS1-UP
PART OF 337-3100 GRADE CONTROL AR
AN ATTACHMENT

SMCS-7220 **i04922926**

NOTE	REF NO	GRAPHIC REF	PART NUMBER	QTY	PART NAME 1 2 3 4 5 6 (PRODUCT LEVEL)	SEE PAGE
M	1	1	**9R-2613**	1	BOSS-WELD (M10X1.5X25-MM)	
M	2	1	**9R-2672**	2	BOSS-THREADED (M10X1.5X120-MM)	

M - METRIC PART

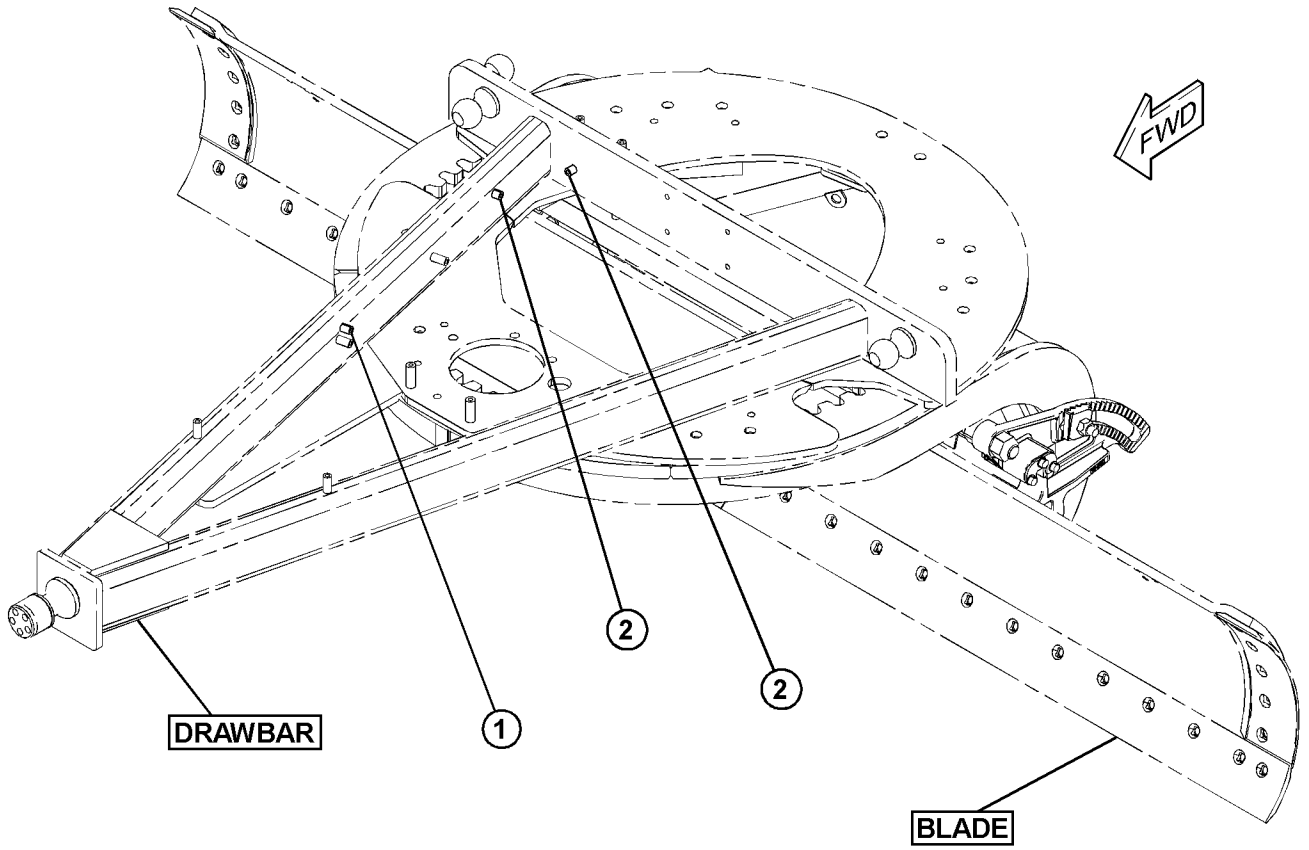

GRAPHIC #1 <END> g03149440

235-8200 PLUG GP-CONNECTOR—ENGINE HARNESS, PROTECTIVE COVER

S/N: TX71-UP; KHX1-UP

PART OF 364-7493, 395-0487 ENGINE AR-COMPLETE

SMCS-1403, 1408

i03585481

NOTE	REF NO	GRAPHIC REF	PART NUMBER	QTY	PART NAME 1 2 3 4 5 6 (PRODUCT LEVEL)	SEE PAGE
	1	1	**246-9353**	1	PLUG AS	
	1A	1	**8T-8737**	8	PLUG-SEAL	
	1B	1	**102-8806**	1	KIT-RECEPTACLE (8-PIN)	
					(INCLUDES RECEPTACLE AS & WEDGE)	
	2	1	**3S-2093**	1	STRAP-CABLE	

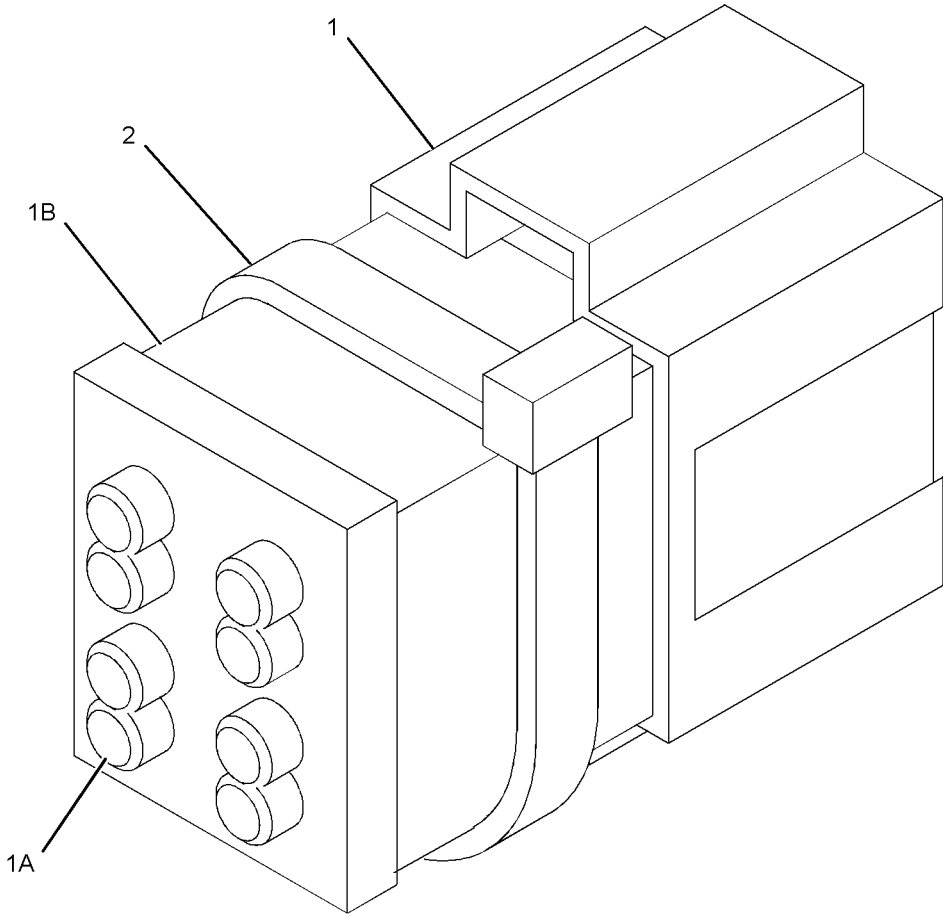

GRAPHIC #1

<END>

g01105455

393-3590 PROTECTION GP-WIRING

S/N: TX74586-UP
HEATER SWITCH
PART OF 395-0487 ENGINE AR-COMPLETE

SMCS-1408, 7553

i05908354

NOTE	REF NO	GRAPHIC REF	PART NUMBER	QTY	PART NAME 1 2 3 4 5 6 (PRODUCT LEVEL)	SEE PAGE
	1	1	**3S-2093**	1	STRAP-CABLE	
	2	1	**160-8124**	1	PLUG AS (2-PIN)	
		1	**102-8802**	1	KIT-RECEPTACLE (2-PIN)	
					(INCLUDES RECEPTACLE AS & WEDGE)	
		1	**8T-8737**	2	PLUG-SEAL	

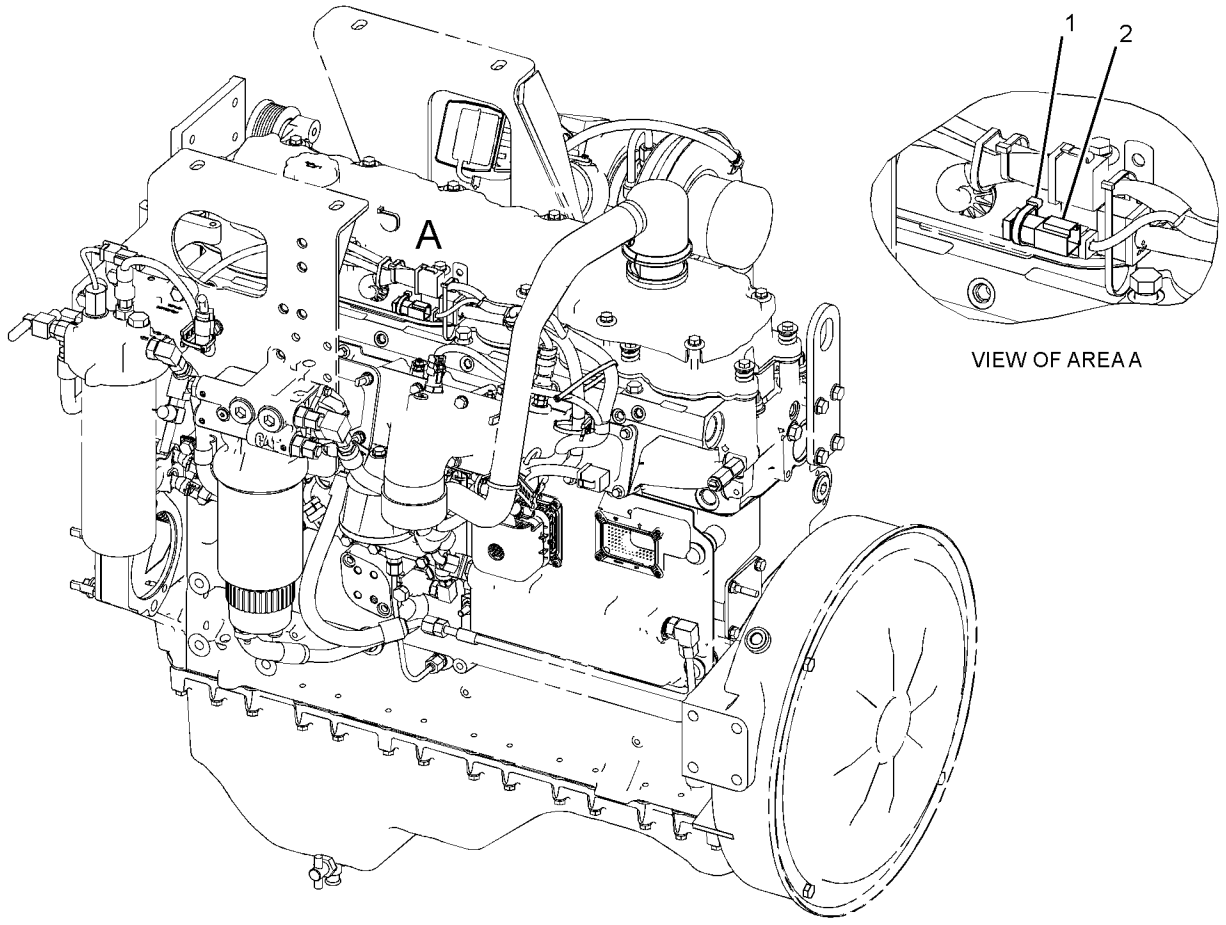

GRAPHIC #1 <END> g03060716

336-3545 RADIO GP-COMMUNICATION–PRODUCT LINK 121SR

S/N: SZS1-UP

PART OF 302-5429, 368-6726 INSTALLATION AR-COMMUNICATION

AN ATTACHMENT

SMCS-733T **i05949996**

NOTE	PART NUMBER	QTY	PART NAME 1 2 3 4 5 6 (PRODUCT LEVEL)	SEE PAGE
	434-1356	1	SOFTWARE GP-COMMUNICATION (PRODUCT LINK 121SR)	

<END>

330-6038 SENSOR GP-ENGINE

S/N: KHX29829-UP

PART OF 364-7493 ENGINE AR-COMPLETE

SMCS-1052, 1087, 1439, 1906, 1912, 1917, 1923, 1924, 1925

i06949094

NOTE	REF NO	GRAPHIC REF	PART NUMBER	QTY	PART NAME 1 2 3 4 5 6 (PRODUCT LEVEL)	SEE PAGE
	1	1	*392-0773*	1	ELBOW AS	
		1	**9X-8403**	1	ELBOW	
		1	**214-7566**	1	SEAL-O-RING	
		1	**214-7568**	1	SEAL-O-RING	
Y	2	1	*234-5012*	1	SENSOR GP-TEMPERATURE (COOLANT TEMPERATURE)	350
Y	3	1	*234-5013*	1	SENSOR GP-TEMPERATURE (INLET AIR)	351
Y	4	1	*236-6221*	1	SENSOR GP-SPEED (ENGINE TIMING)	347
	5	1	**276-6793**	1	SENSOR GP-PRESSURE (BOOST)	
Y	6	1	**267-1402**	1	SENSOR GP-PRESSURE (RAIL)	343
	7	1	*274-6719*	1	SENSOR GP-PRESSURE (OIL) (ENGINE)	
Y	8	1	*303-3357*	1	SENSOR GP-PRESSURE (ATMOSPHERIC)	344
	9	1	*371-7186*	1	PLUG AS	
		1	**214-7567**	1	SEAL-O-RING	
		1	**360-3678**	1	PLUG-O-RING	
	10	1	*389-3708*	1	PLUG AS	
		1	**214-7568**	1	SEAL-O-RING	
		1	**360-3679**	1	PLUG-CONNECTOR (9/16-18-THD)	
	11	1	*396-0393*	1	PLUG AS	
		1	**214-7566**	1	SEAL-O-RING	
		1	**360-3677**	1	PLUG (7/16-20-THD)	
	13	1	**3E-4352**	1	WASHER-HARD (8.8X20.5X2.5-MM THK)	
M	14	1	**6V-3940**	1	BOLT (M8X1.25X25-MM)	
	16	1	*329-5518*	1	ADAPTER AS	
		1	**8T-2353**	1	ADAPTER	
		1	**214-7566**	1	SEAL-O-RING	
	17	1	*353-5112*	1	ADAPTER AS	
		1	**9X-0262**	1	ADAPTER	
		1	**214-7566**	2	SEAL-O-RING	

M - METRIC PART
Y - SEPARATE ILLUSTRATION

330-6038 **SENSOR GP-ENGINE (**contd.**)** **i06949094**

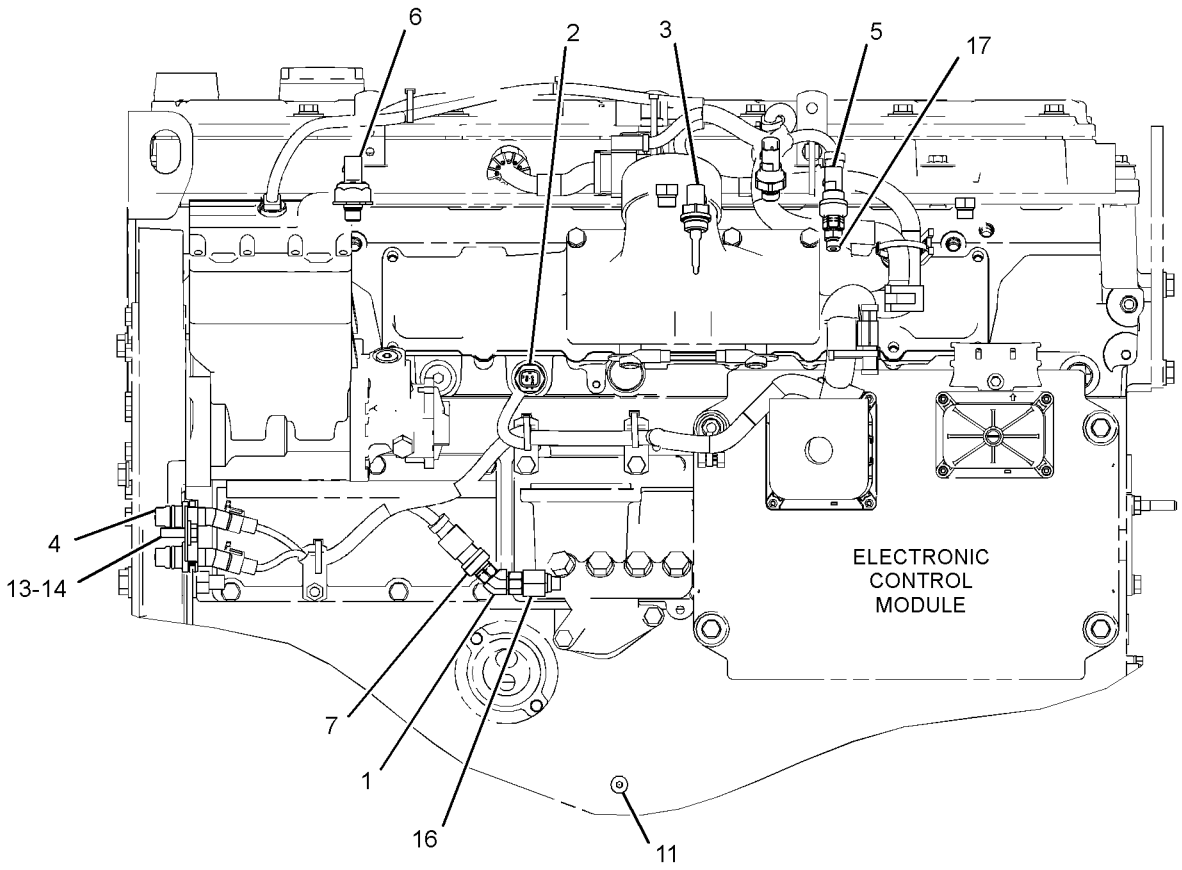

LEFT SIDE VIEW OF ENGINE

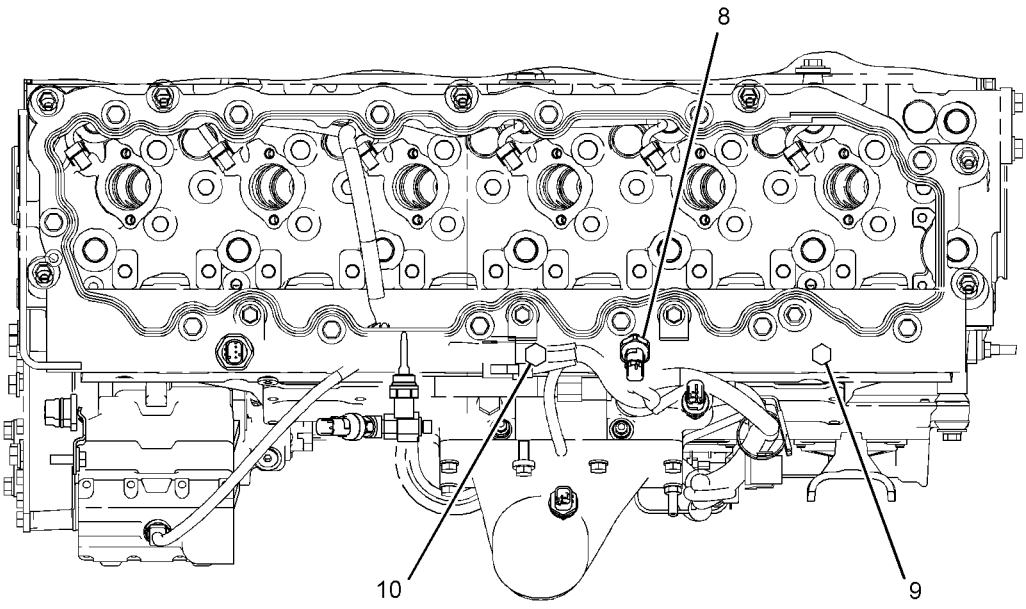

TOP VIEW OF ENGINE

GRAPHIC #1 <END> g06029380

424-7124 SENSOR GP-ENGINE

S/N: TX71-UP; KHX1-UP

PART OF 387-8505 ENGINE AR-CORE

SMCS-1052, 1087, 1439, 1906, 1912, 1917, 1923, 1924, 1925

i06949097

NOTE	REF NO	GRAPHIC REF	PART NUMBER	QTY	PART NAME 1 2 3 4 5 6 (PRODUCT LEVEL)	SEE PAGE
	1	1	**7W-9943**	1	SENDER-TEMPERATURE	
		1	**4B-4274**	1	WASHER (5.5X13X1.2-MM THK)	
		1	**6V-8378**	1	NUT (10-32-THD)	
		1	**8F-1434**	1	LOCKWASHER	
Y	2	1	*234-5012*	1	SENSOR GP-TEMPERATURE (COOLANT TEMPERATURE)	350
Y	3	1	*234-5013*	1	SENSOR GP-TEMPERATURE (AIR INLET)	351
Y	4	1	*236-6221*	1	SENSOR GP-SPEED (ENGINE TIMING)	347
	5	1	*244-3712*	1	PLUG AS	
		1	**9S-4191**	1	PLUG (9/16-18-THD)	
		1	**214-7568**	1	SEAL-O-RING	
Y	6	1	*266-8650*	1	SENSOR GP-PRESSURE (BOOST)	342
Y	7	1	*267-1402*	1	SENSOR GP-PRESSURE (RAIL)	343
	8	1	**274-6719**	1	SENSOR GP-PRESSURE (OIL)	
Y	9	1	*303-3357*	1	SENSOR GP-PRESSURE (ATMOSPHERIC)	344
	10	1	*392-0773*	1	ELBOW AS	
		1	**9X-8403**	1	ELBOW	
		1	**214-7566**	1	SEAL-O-RING	
		1	**214-7568**	1	SEAL-O-RING	
	11	1	*169-5861*	1	PLUG AS	
		1	**3K-8460**	1	PLUG (1/2-20-THD)	
		1	**5P-7814**	1	SEAL-O-RING	
	12	1	*183-7263*	1	PLUG AS	
		1	**3J-7354**	1	SEAL-O-RING	
		1	**9S-8002**	1	PLUG (7/16-20-THD)	
	13	1	**3E-4352**	1	WASHER-HARD (8.8X20.5X2.5-MM THK)	
M	14	1	**6V-3940**	1	BOLT (M8X1.25X25-MM)	
	15	1	**6V-5048**	2	SEAL-O-RING	
	16	1	**6V-6609**	1	SEAL-O-RING	
	17	1	**8T-2353**	1	ADAPTER	
	18	1	**9X-0262**	1	ADAPTER	

M - METRIC PART
Y - SEPARATE ILLUSTRATION

424-7124 **SENSOR GP-ENGINE (**contd.**)** **i06949097**

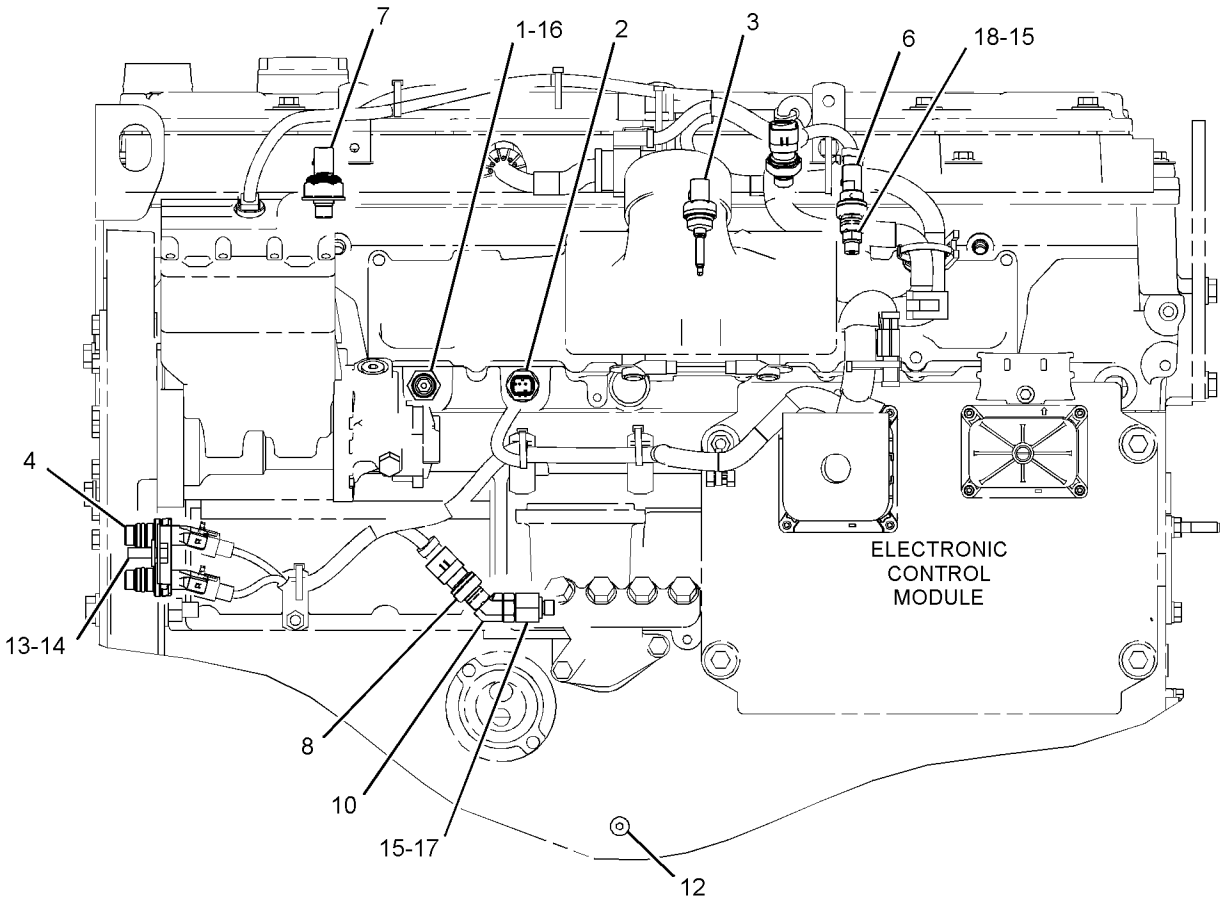

LEFT SIDE VIEW OF ENGINE

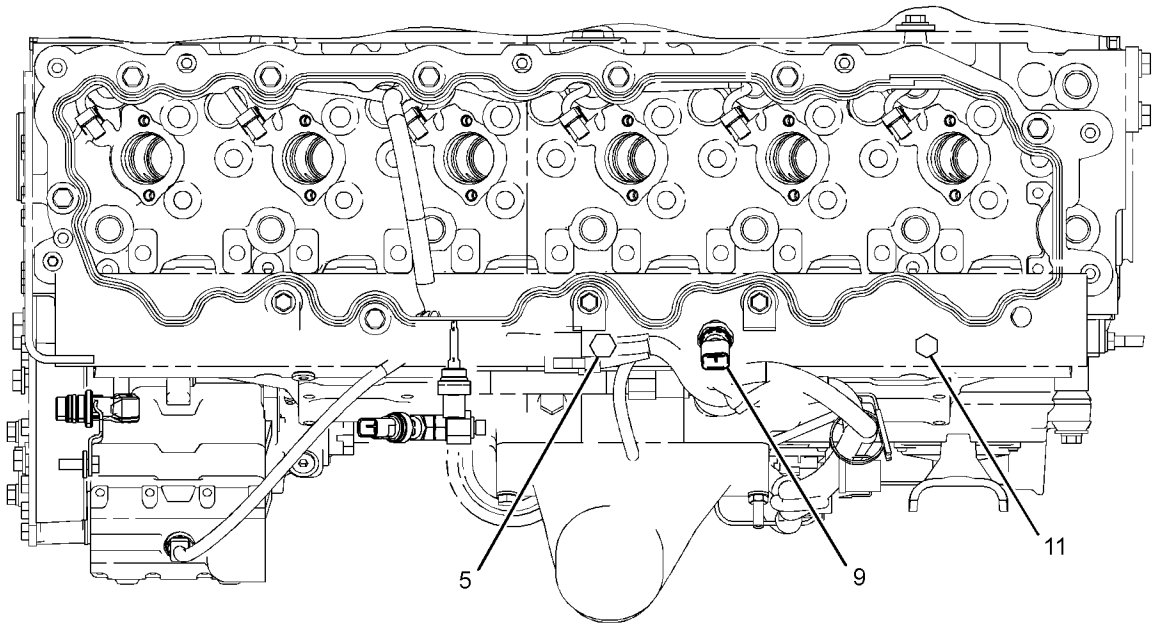

TOP VIEW OF ENGINE

GRAPHIC #1 <END> g03355160

214-4863 SENSOR GP-POSITION

S/N: SZS1-UP
ROTARY
FIELD REPLACEMENT ORDER 266-1478—PAGE: 340
PART OF 282-2473 CONTROL GP-CLUTCH

SMCS-1408, 3168, 3175, 4269, 430S, 4809 **i03522161**

NOTE	REF NO	GRAPHIC REF	PART NUMBER	QTY	PART NAME 1 2 3 4 5 6 (PRODUCT LEVEL)	SEE PAGE
	1	1	**102-8803**	1	KIT-RECEPTACLE (3-PIN)	
					(INCLUDES RECEPTACLE AS & WEDGE)	
	2	1	**186-3735**	1	PIN-CONNECTOR (16-GA TO 18-GA)	
	3	1	**3E-3371**	1	WEDGE-RECEPTACLE LOCK (3-PIN)	

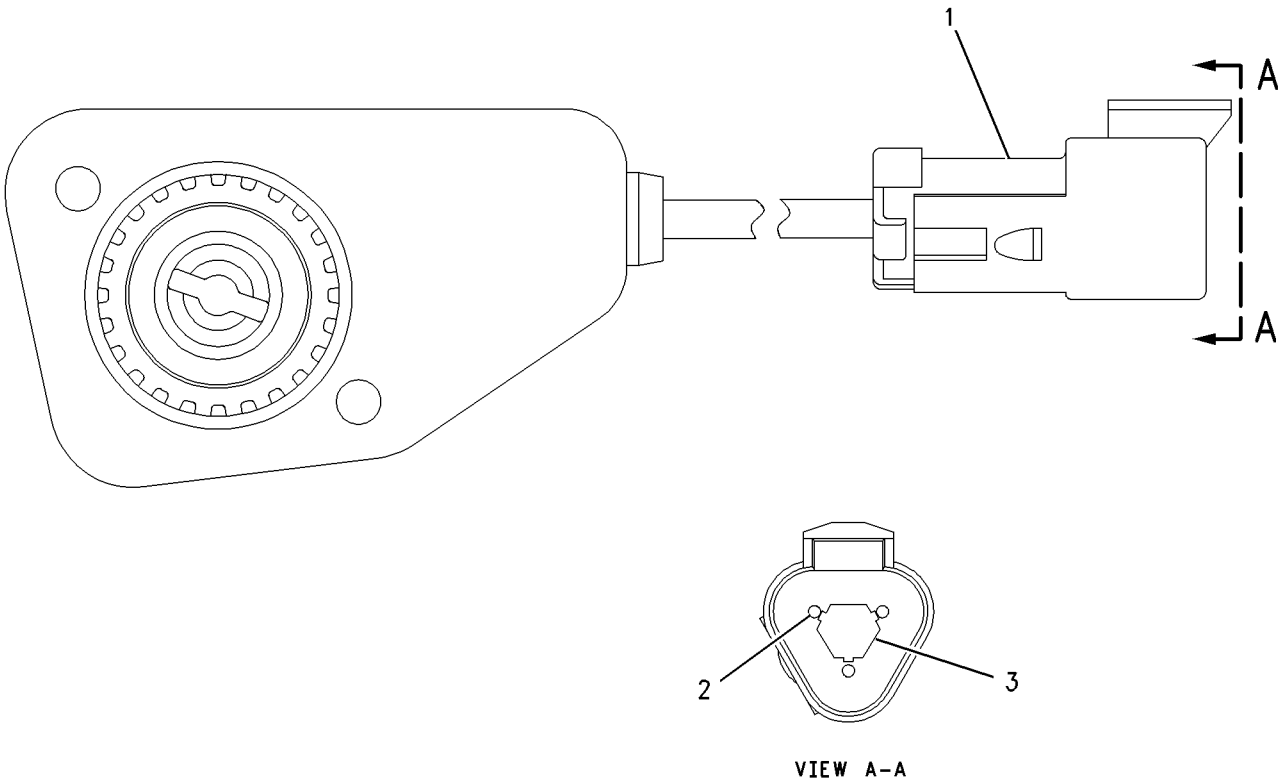

VIEW A-A

GRAPHIC #1 <END> g00925281

266-1467 SENSOR GP-POSITION

S/N: SZS1-UP

ROTARY

PART OF 282-2473, 512-5908 CONTROL GP-CLUTCH, 282-2472, 512-5911 CONTROL GP-GOVERNOR

SMCS-1408, 3168, 3175, 4269, 430S, 4809 **i06801062**

NOTE	REF NO	GRAPHIC REF	PART NUMBER	QTY	PART NAME 1 2 3 4 5 6 (PRODUCT LEVEL)	SEE PAGE
	1	1	**9X-3401**	3	PIN-CONNECTOR (16-GA TO 18-GA)	
					—OR—	
		1	**126-1767**	3	PIN-CONNECTOR (14-GA TO 16-GA)	
	2	1	**102-8803**	1	KIT-RECEPTACLE (3-PIN)	
					(INCLUDES RECEPTACLE AS & WEDGE)	
E	3	1	**3E-9375**		CONDUIT (13-CM)	

E - ORDER BY THE CENTIMETER

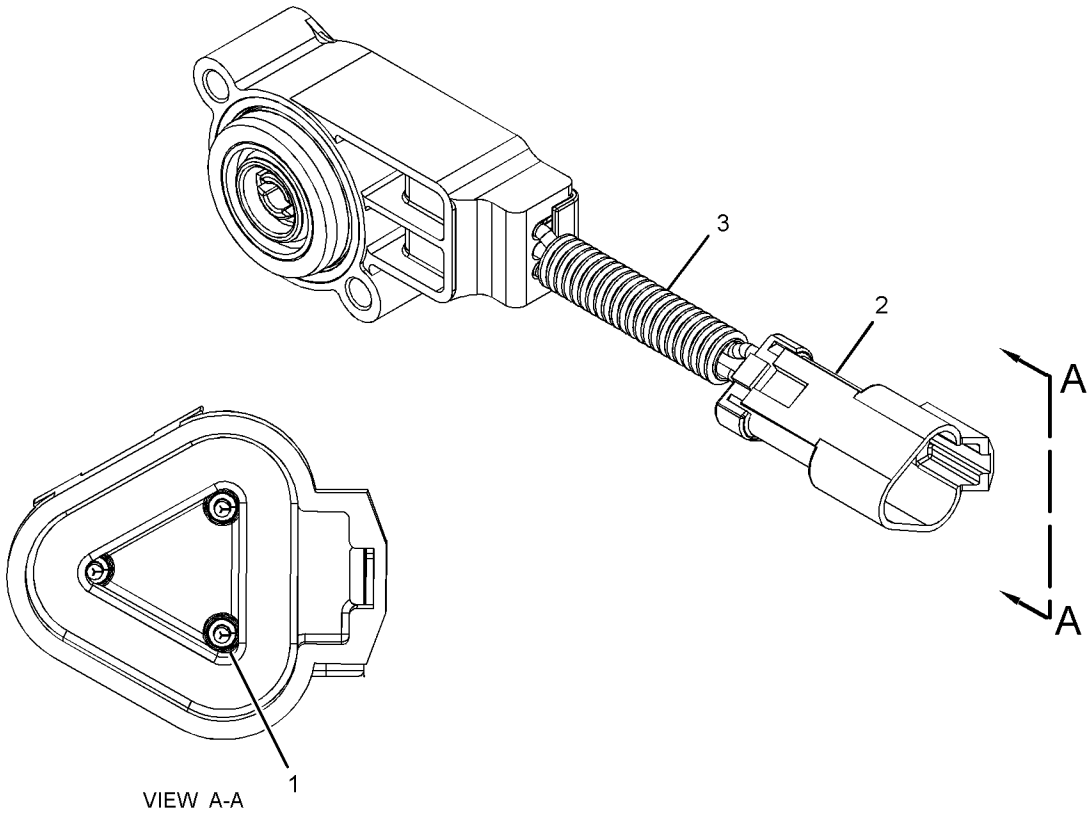

VIEW A-A

GRAPHIC #1 <END> g03547699

266-1478 SENSOR GP-POSITION

S/N: SZS1-488
ROTARY
FIELD REPLACEMENT FOR 214-4863—PAGE: 338
PART OF 282-2473 CONTROL GP-CLUTCH

SMCS-1408, 3168, 3175, 4269, 430S, 4809 **i04930002**

NOTE	REF NO	GRAPHIC REF	PART NUMBER	QTY	PART NAME 1 2 3 4 5 6 (PRODUCT LEVEL)	SEE PAGE
	1	1	**9X-3401**	3	PIN-CONNECTOR (16-GA TO 18-GA)	
					—OR—	
		1	**126-1767**	3	PIN-CONNECTOR (14-GA TO 16-GA)	
	2	1	**102-8803**	1	KIT-RECEPTACLE (3-PIN)	
					(INCLUDES RECEPTACLE AS & WEDGE)	

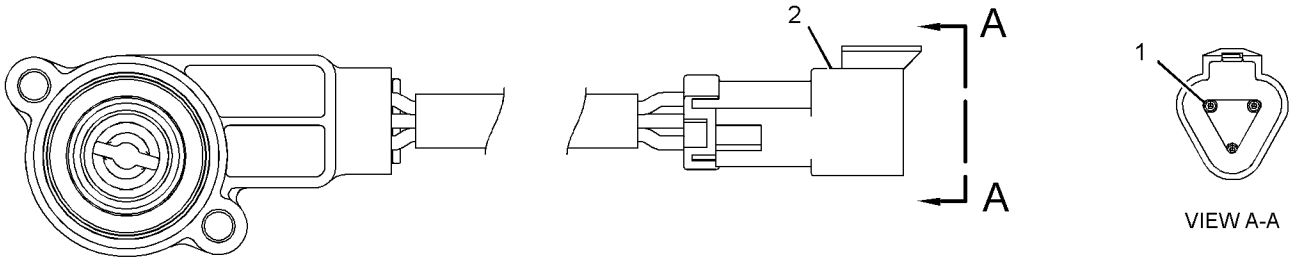

GRAPHIC #1 <END> g02604920

194-6722 SENSOR GP-PRESSURE

S/N: SZS1-UP

OPTIONAL FIELD REPLACEMENT ORDER 274-6717 SENSOR-PRESSURE

PART OF 311-0802 WIRING GP-REAR

SMCS-1052, 1058, 1408, 1718, 1907, 1912, 1916, 1917, 1923, 1924, 1925, 3175, 4351, 4352, 7400, 7494

i05962888

NOTE	REF NO	GRAPHIC REF	PART NUMBER	QTY	PART NAME 1 2 3 4 5 6 (PRODUCT LEVEL)	SEE PAGE
E	1	1	**9X-1813**		SLEEVE (34-CM)	
	2	1	**155-2260**	1	KIT-CONNECTING PLUG (3-PIN)	
					(INCLUDES PLUG AS, WEDGE & INTERFACE SEAL)	
	3	1	**194-5226**	3	WIRE AS (16-GA)	
					–OR–	
		1	**194-5227**	3	WIRE AS (14-GA)	

E - ORDER BY THE CENTIMETER

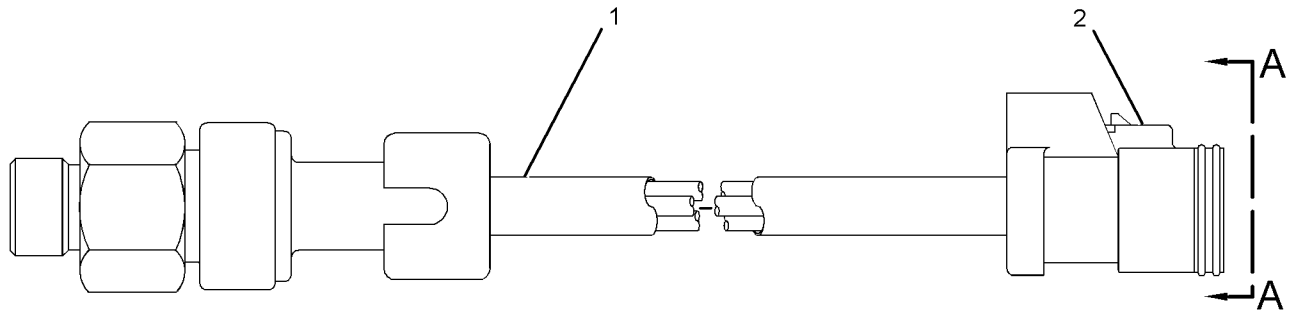

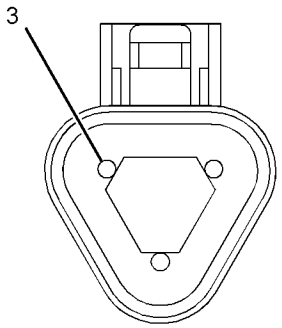

VIEW A-A

GRAPHIC #1 <END> g01991395

266-8650 SENSOR GP-PRESSURE

S/N: TX71-UP; KHX1-UP

PART OF 424-7124 SENSOR GP-ENGINE

SMCS-1052, 1058, 1408, 1718, 1907, 1912, 1916, 1917, 1923, 1924, 1925, 3175, 4351, 4352, 7400, 7494

i03784314

NOTE	REF NO	GRAPHIC REF	PART NUMBER	QTY	PART NAME 1 2 3 4 5 6 (PRODUCT LEVEL)	SEE PAGE
	1	1	**276-6793**	1	SENSOR GP-PRESSURE	
	2	1	**214-7566**	1	SEAL-O-RING	

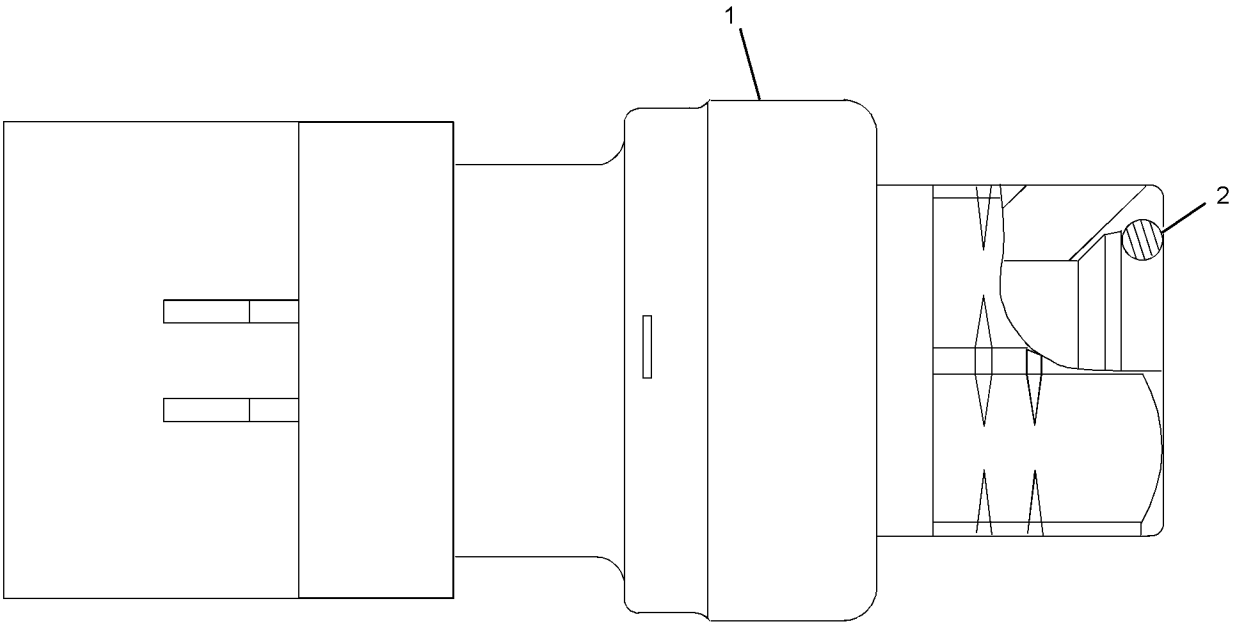

GRAPHIC #1 <END> g01164254

267-1402 SENSOR GP-PRESSURE

S/N: TX71-UP; KHX1-UP

PART OF 330-6038, 424-7124 SENSOR GP-ENGINE

SMCS-1052, 1058, 1408, 1718, 1907, 1912, 1916, 1917, 1923, 1924, 1925, 3175, 4351, 4352, 7400, 7494

i03654802

NOTE	REF NO	GRAPHIC REF	PART NUMBER	QTY	PART NAME 1 2 3 4 5 6 (PRODUCT LEVEL)	SEE PAGE
	1	1	**214-7567**	1	SEAL-O-RING	
	2	1	**248-2169**	1	SENSOR GP-PRESSURE	

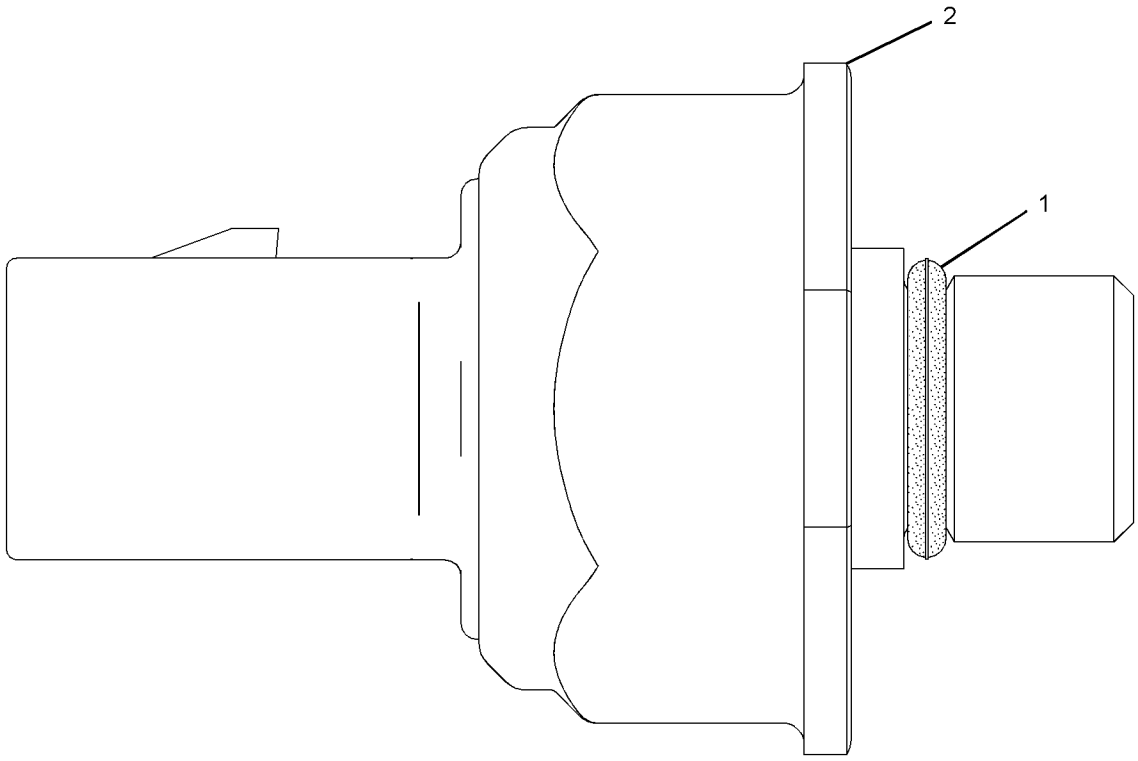

GRAPHIC #1

<END>

g01164283

303-3357 SENSOR GP-PRESSURE

S/N: TX71-UP; KHX1-UP

PART OF 330-6038, 424-7124 SENSOR GP-ENGINE

SMCS-1052, 1058, 1408, 1718, 1907, 1912, 1916, 1917, 1923, 1924, 1925, 3175, 4351, 4352, 7400, 7494

i05020733

NOTE	REF NO	GRAPHIC REF	PART NUMBER	QTY	PART NAME 1 2 3 4 5 6 (PRODUCT LEVEL)	SEE PAGE
	1	1	**296-8060**	1	SENSOR GP-PRESSURE	
	2	1	**214-7568**	1	SEAL-O-RING	

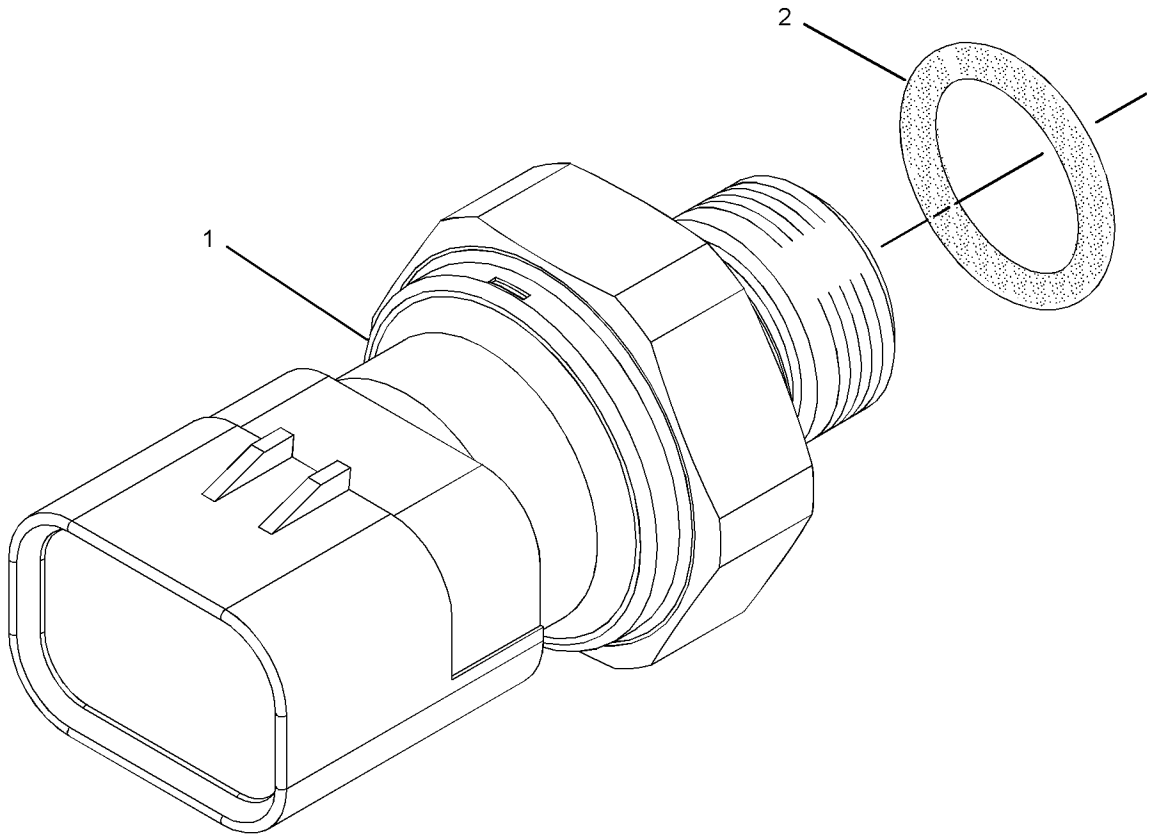

GRAPHIC #1 <END> g01331369

191-8303 SENSOR GP-SPEED

S/N: CK41-UP; JSE1-UP
LOW OUT
PART OF 365-5536 CASE & PARTS GP-PLANETARY

SMCS-1907, 1912, 3141, 3175, 4803, 7493 **i05266779**

NOTE	REF NO	GRAPHIC REF	PART NUMBER	QTY	PART NAME 1 2 3 4 5 6 (PRODUCT LEVEL)	SEE PAGE
	1		**137-6645**	1	PAD-CONNECTOR	
	2		**133-0260**	1	BRACKET	
					AVAILABLE REPAIR KIT(S):	
			155-2270	1	KIT-CONNECTING PLUG (2-PIN)	
					(INCLUDES PLUG AS & WEDGE)	

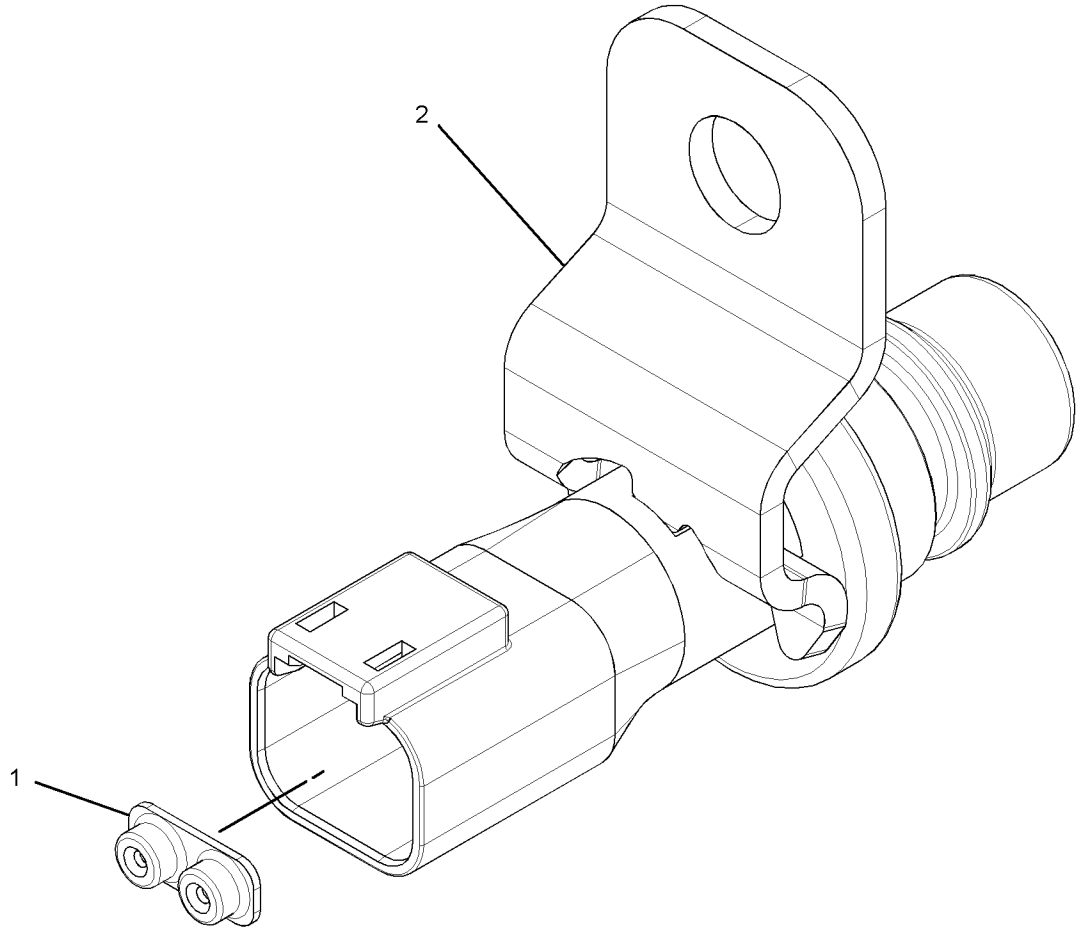

GRAPHIC #1 <END> g01699415

193-2550 SENSOR GP-SPEED

S/N: SZS1-488
MAGNETIC, HIGH OUTPUT
FIELD REPLACEMENT ORDER 318-1178—PAGE: 349
PART OF 293-4828 WIRING GP-REAR

SMCS-1907, 1912, 3141, 3175, 4803, 7493 **i03511280**

NOTE	REF NO	GRAPHIC REF	PART NUMBER	QTY	PART NAME 1 2 3 4 5 6 (PRODUCT LEVEL)	SEE PAGE
	1	1	**171-5349**	1	STRAP-MARKER	
	2	1	**102-8802**	1	KIT-RECEPTACLE (2-PIN)	
					(INCLUDES RECEPTACLE AS & WEDGE)	
	3	1	**9X-3401**	2	PIN-CONNECTOR (16-GA TO 18-GA)	
E	4	1	**9X-1813**		SLEEVE (14-CM)	

E - ORDER BY THE CENTIMETER

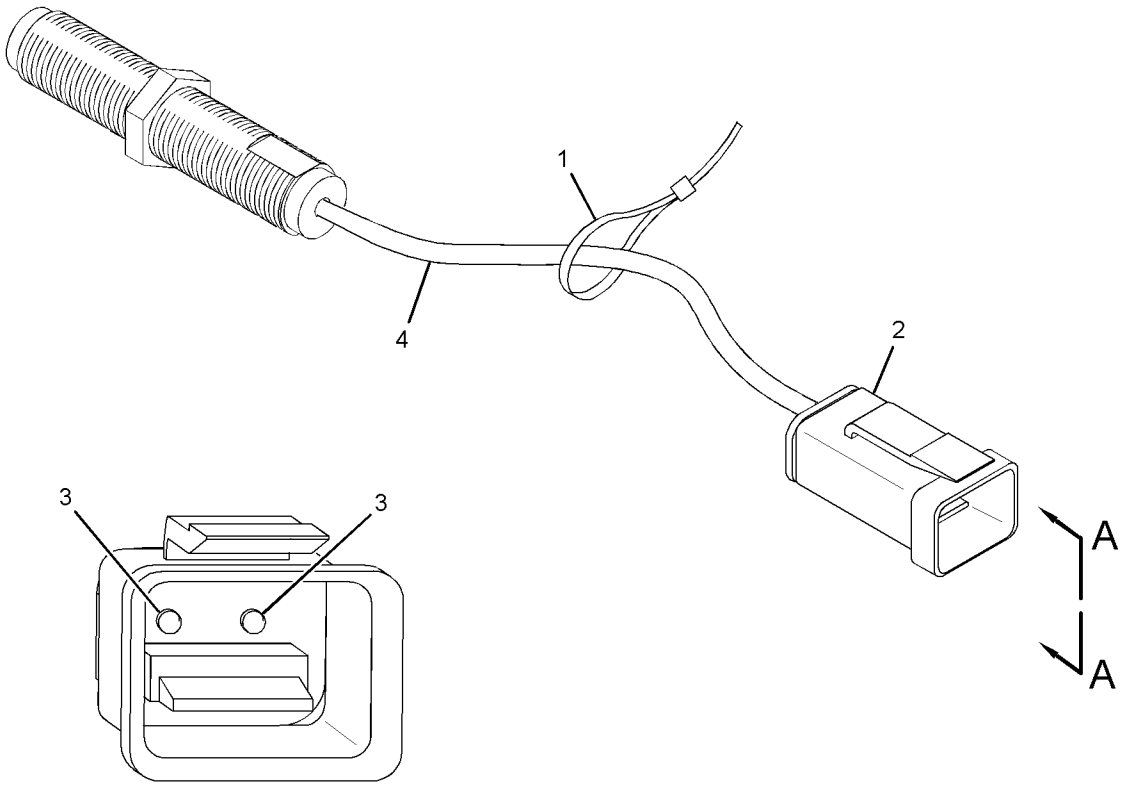

VIEW A-A

GRAPHIC #1 <END> g01454055

236-6221 SENSOR GP-SPEED—ENGINE TIMING

S/N: TX71-UP; KHX1-UP

PART OF 330-6038, 424-7124 SENSOR GP-ENGINE

SMCS-1907, 1912, 3141, 3175, 4803, 7493 **i04565638**

NOTE	REF NO	GRAPHIC REF	PART NUMBER	QTY	PART NAME 1 2 3 4 5 6 (PRODUCT LEVEL)	SEE PAGE
	1	1	**228-4947**	2	SEAL-O-RING	
	2	1	**245-4630**	1	SENSOR GP-SPEED	

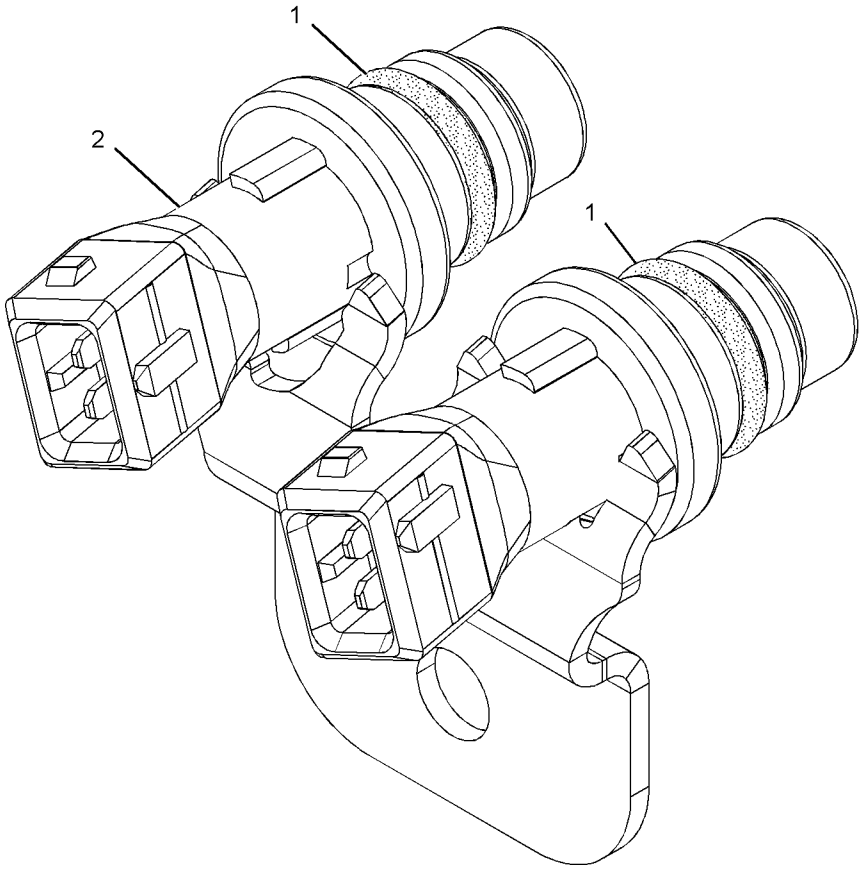

GRAPHIC #1 <END> g01013894

290-5792 SENSOR GP-SPEED

S/N: DMJ1-UP
MAGNETIC, HIGH OUTPUT
PART OF 277-6433 CASE & PARTS GP-PLANETARY

SMCS-1907, 1912, 3141, 3175, 4803, 7493

i03533240

NOTE	REF NO	GRAPHIC REF	PART NUMBER	QTY	PART NAME 1 2 3 4 5 6 (PRODUCT LEVEL)	SEE PAGE
	1	1	**171-5349**	1	STRAP-MARKER	
	2	1	**102-8802**	1	KIT-RECEPTACLE (2-PIN)	
					(INCLUDES RECEPTACLE AS & WEDGE)	
	3	1	**186-3735**	2	PIN-CONNECTOR (16-GA TO 18-GA)	
E	4	1	**9X-1813**		SLEEVE (14-CM)	

E - ORDER BY THE CENTIMETER

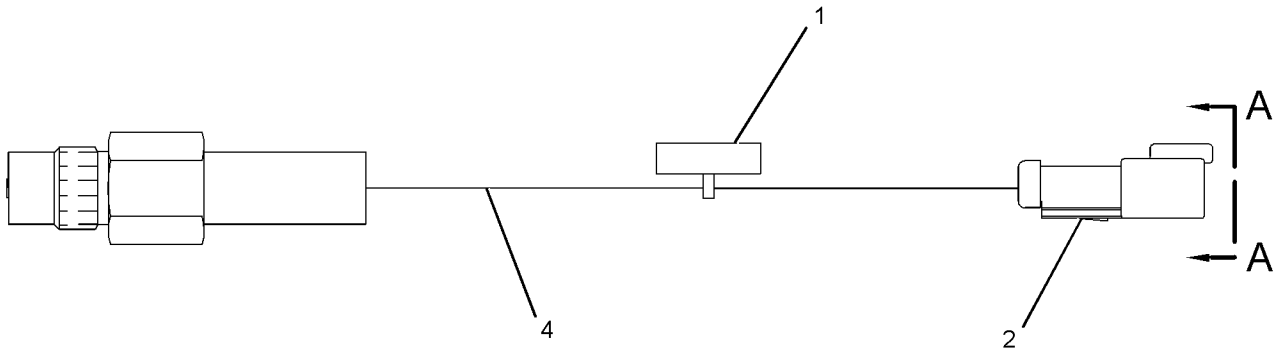

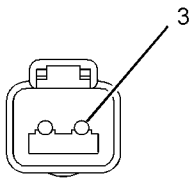

VIEW A-A

GRAPHIC #1 <END> g01409880

318-1178 SENSOR GP-SPEED

S/N: SZS1-UP
MAGNETIC, HIGH OUTPUT
FIELD REPLACEMENT FOR 193-2550—PAGE: 346
PART OF 388-2517, 452-0647 WIRING GP-REAR

SMCS-1907, 1912, 3141, 3175, 4803, 7493 **i04758394**

NOTE	REF NO	GRAPHIC REF	PART NUMBER	QTY	PART NAME 1 2 3 4 5 6 (PRODUCT LEVEL)	SEE PAGE
	1	1	**171-5349**	1	STRAP-MARKER	
	2	1	**102-8802**	1	KIT-RECEPTACLE (2-PIN)	
					(INCLUDES RECEPTACLE AS & WEDGE)	
	3	1	**9X-3401**	2	PIN-CONNECTOR (16-GA TO 18-GA)	
E	4	1	**9X-1813**		SLEEVE (14-CM)	

E - ORDER BY THE CENTIMETER

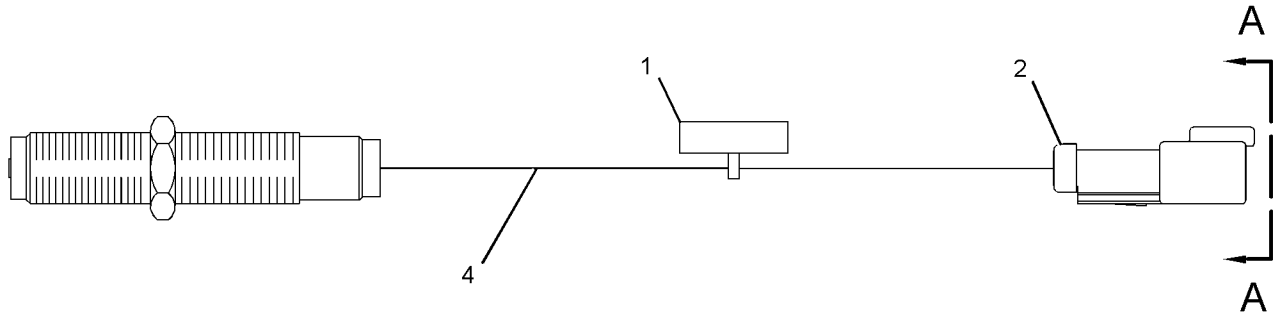

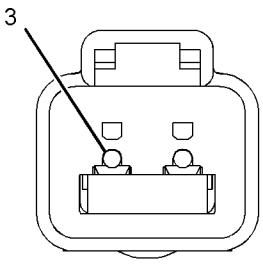

VIEW A-A

GRAPHIC #1 <END> g01490456

234-5012 SENSOR GP-TEMPERATURE

S/N: TX71-UP; KHX1-UP

PART OF 330-6038, 424-7124 SENSOR GP-ENGINE

SMCS-1087, 1439, 1906, 1919, 1921, 1922, 1928, 1929, 192T, 1932, 301T, 3194, 3290, 429T, 509T, 7344

i03654708

NOTE	REF NO	GRAPHIC REF	PART NUMBER	QTY	PART NAME 1 2 3 4 5 6 (PRODUCT LEVEL)	SEE PAGE
	1	1	**256-6453**	1	SENSOR-TEMPERATURE	
	2	1	**6V-6609**	1	SEAL-O-RING	

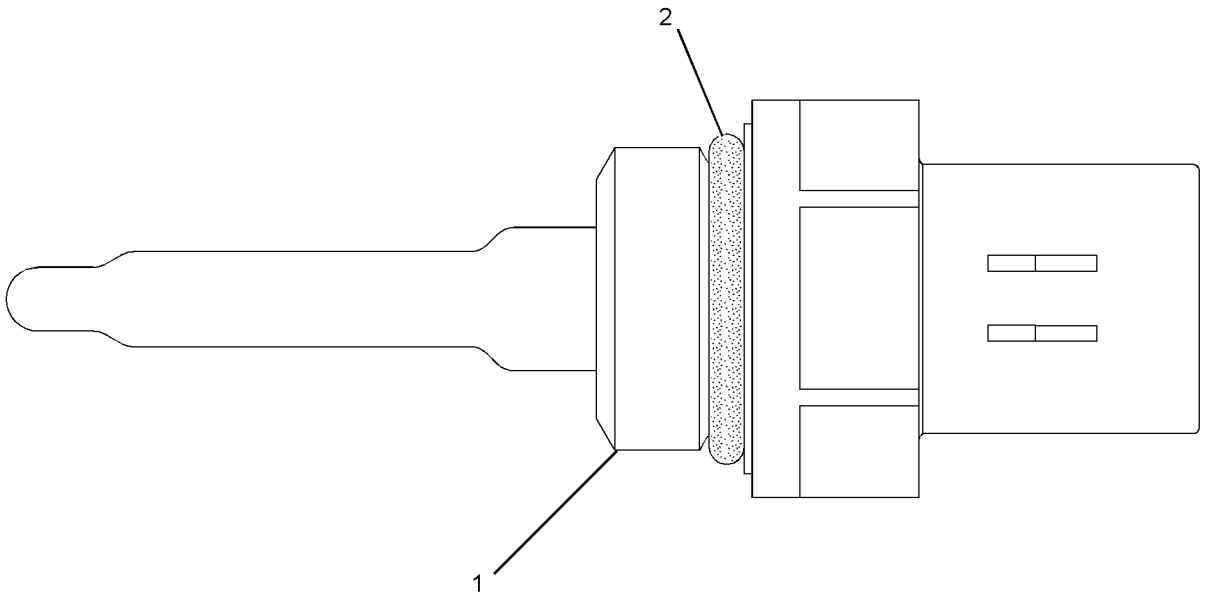

GRAPHIC #1

<END>

g01164284

234-5013 SENSOR GP-TEMPERATURE

S/N: TX71-UP; SZS1-UP; KHX1-UP

PART OF 325-7130 LINES GP-FUEL, 330-6038, 424-7124 SENSOR GP-ENGINE

SMCS-1087, 1439, 1906, 1919, 1921, 1922, 1928, 1929, 192T, 1932, 301T, 3194, 3290, 429T, 509T, 7344

i03671802

NOTE	REF NO	GRAPHIC REF	PART NUMBER	QTY	PART NAME 1 2 3 4 5 6 (PRODUCT LEVEL)	SEE PAGE
	1	1	**256-6453**	1	SENSOR-TEMPERATURE	
	2	1	**238-5080**	1	SEAL-O-RING	

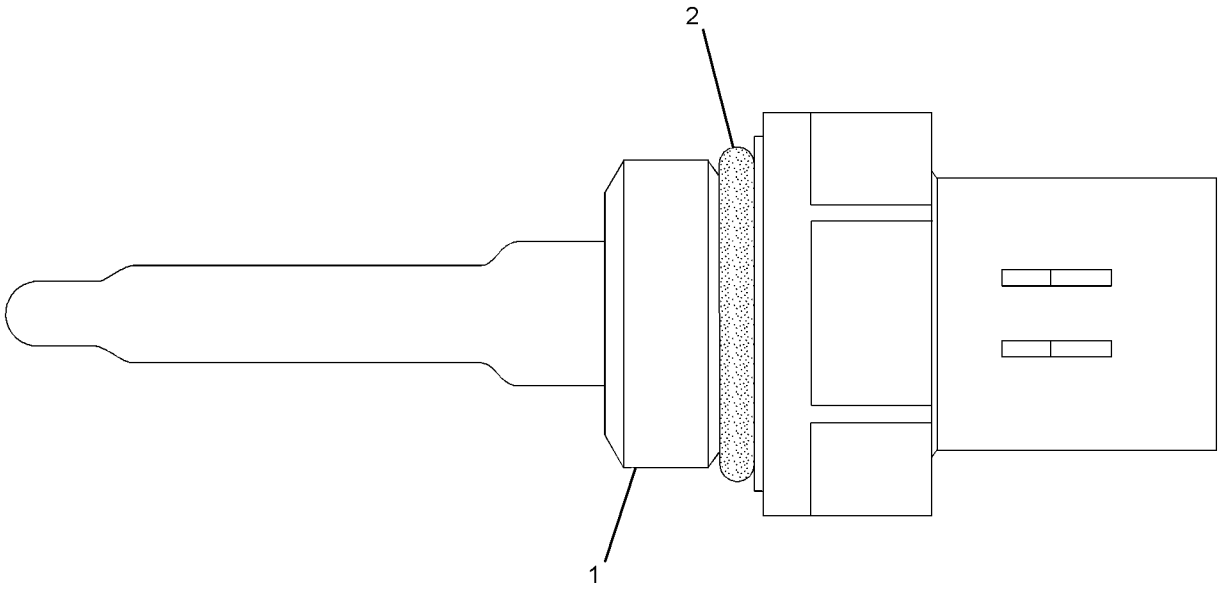

GRAPHIC #1

<END>

g01164268

3E-8700 SENSOR GP-TEMPERATURE

S/N: DMJ1-UP
24-VOLT
PART OF 277-6433 CASE & PARTS GP-PLANETARY

SMCS-1087, 1439, 1906, 1919, 1921, 1922, 1928, 1929, 192T, 1932, 301T, 3194, 3290, 429T, 509T, 7344

i04411669

NOTE	REF NO	GRAPHIC REF	PART NUMBER	QTY	PART NAME 1 2 3 4 5 6 (PRODUCT LEVEL)	SEE PAGE
	1	1	**8T-8730**	3	SOCKET-CONNECTOR (16-GA TO 18-GA)	
	2	1	**155-2260**	1	KIT-CONNECTING PLUG (3-PIN)	
					(INCLUDES PLUG AS, INTERFACE SEAL & WEDGE)	
E	3	1	**9X-1813**		SLEEVE (34-CM)	

E - ORDER BY THE CENTIMETER

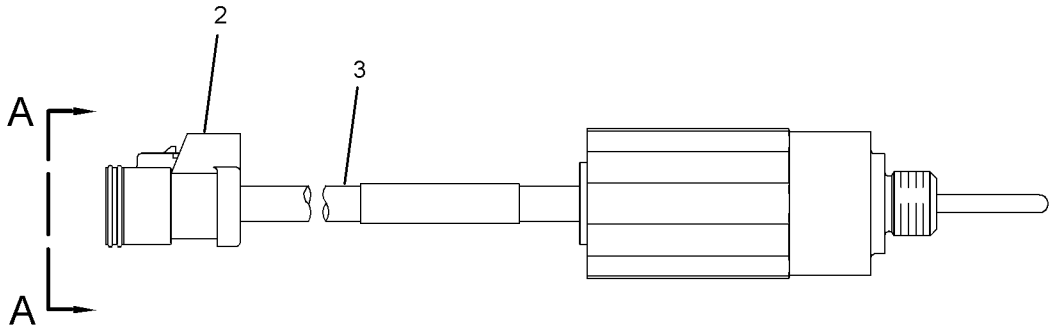

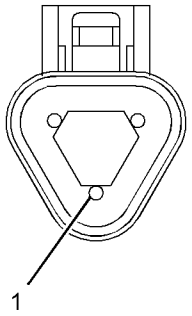

VIEW A-A

GRAPHIC #1 <END> g01871960

311-2771 STARTING AID GP-ETHER

S/N: SZS1-UP

PART OF 348-6943, 435-1535 OPTION AR-COLD WEATHER

AN ATTACHMENT

SMCS-1456 **i05319537**

NOTE	REF NO	GRAPHIC REF	PART NUMBER	QTY	PART NAME 1 2 3 4 5 6 (PRODUCT LEVEL)	SEE PAGE
	1	1	**7N-2059**	1	CLAMP AS	
Y	2	1	**239-1134**	1	VALVE GP-ETHER STARTING (24-VOLT)	370
	3	1	**241-4194**	1	FITTING AS (CONTROL)	
	4	1	**258-0733**	1	ATOMIZER AS	
		1	**236-4545**	1	NUT-SLEEVE (5/16-24-THD)	
	5	1	**124-2528**	2	SPACER (11X20X10-MM THK)	
	6	1	**3J-1907**	1	SEAL-O-RING	
	7	1	**3Y-2888**	1	CONNECTOR	
	8	1	**5P-4116**	1	WASHER-HARD (8.8X20.5X2-MM THK)	
	9	1	**6V-2686**	3	CLIP	
M	10	1	**8T-4136**	2	BOLT (M10X1.5X25-MM)	
M	11	1	**8T-4200**	4	BOLT (M8X1.25X16-MM)	
	12	1	**8T-4224**	4	WASHER-HARD (8.8X16X2-MM THK)	
J	13	1	**5P-5630**		TUBE (9-DM)	
M	14	1	**8T-7547**	1	BOLT (M8X1.25X30-MM)	
A			**275-3634**	1	CYLINDER AS-ETHER (U.S.)	
					(MUST BE PROCURED LOCALLY FROM YOUR CATERPILLAR DEALER)	

A - NOT PART OF THIS GROUP
J - ORDER BY THE DECIMETER
M - METRIC PART
Y - SEPARATE ILLUSTRATION

311-2771 **STARTING AID GP-ETHER (**contd.**)** **i05319537**

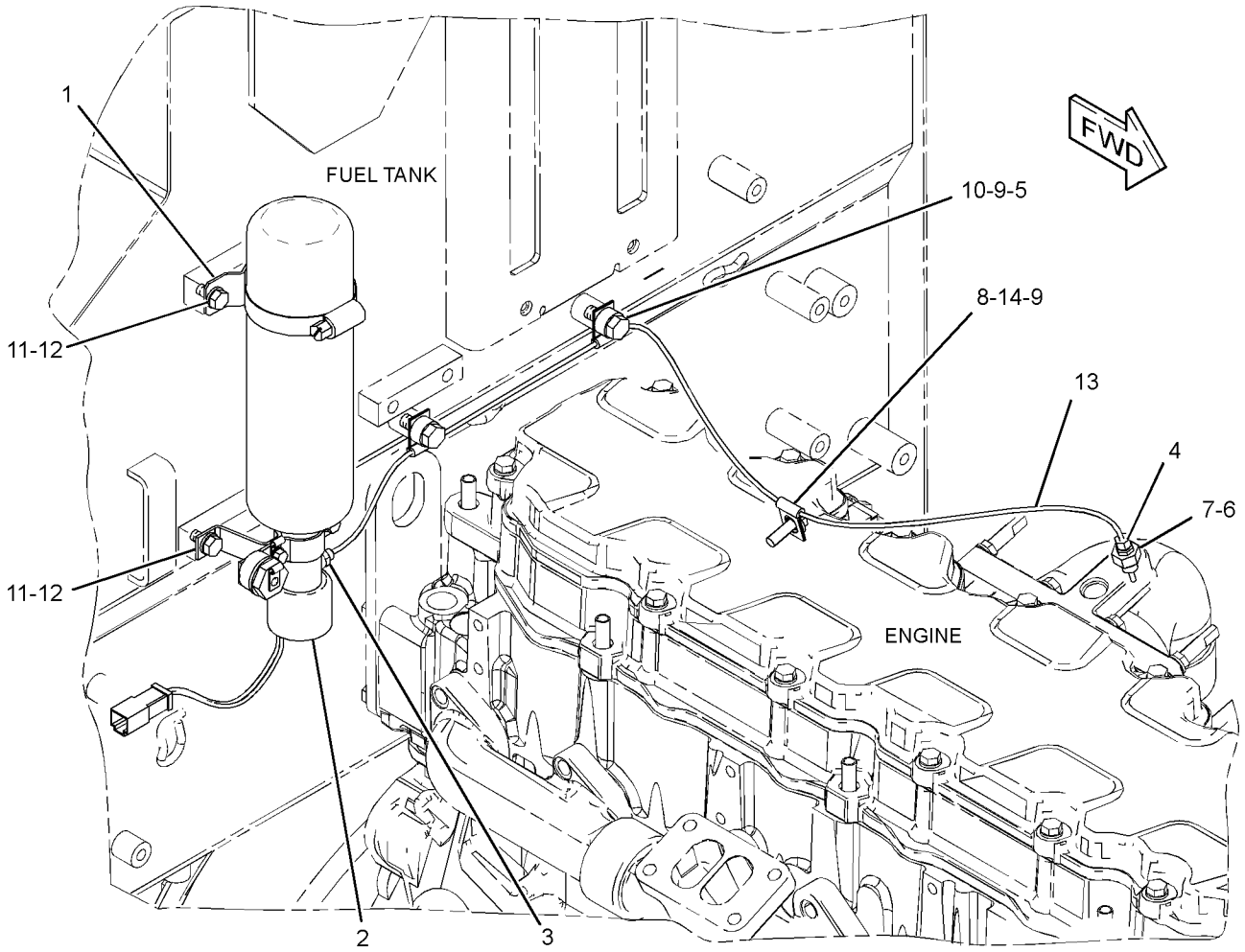

GRAPHIC #1 <END> g03377297

111-4275 STARTING MOTOR GP-ELECTRIC

S/N: TX71-UP; KHX1-UP

PART OF 364-7493, 395-0487 ENGINE AR-COMPLETE

SMCS-1453 **i03503420**

NOTE	REF NO	GRAPHIC REF	PART NUMBER	QTY	PART NAME 1 2 3 4 5 6 (PRODUCT LEVEL)	SEE PAGE
M	1	1	**118-9573**	3	BOLT-12 POINT HEAD (M10X1.5X35-MM)	
CYR	2	1	**207-1517**	1	STARTING MOTOR GP-ELECTRIC	356
	3	1	**3K-3257**	1	GASKET	
M	4	1	**8T-4191**	1	BOLT (M10X1.5X16-MM)	
	5	1	**8Y-9603**	1	CABLE AS-STARTING MOTOR	
		1	**1S-7251**	1	TERMINAL-CABLE (00-GA, 1/2-IN SCREW)	
		1	**1S-7252**	1	TERMINAL-CABLE (00-GA, 3/8-IN SCREW)	
E		1	**5P-0747**		CABLE (00-GA, BLACK) (28-CM)	
	6	1	**8T-4121**	4	WASHER-HARD (11X21X2.5-MM THK)	

C - CHANGE FROM PREVIOUS TYPE
E - ORDER BY THE CENTIMETER
M - METRIC PART
R - REMANUFACTURED PART MAY BE AVAILABLE
Y - SEPARATE ILLUSTRATION

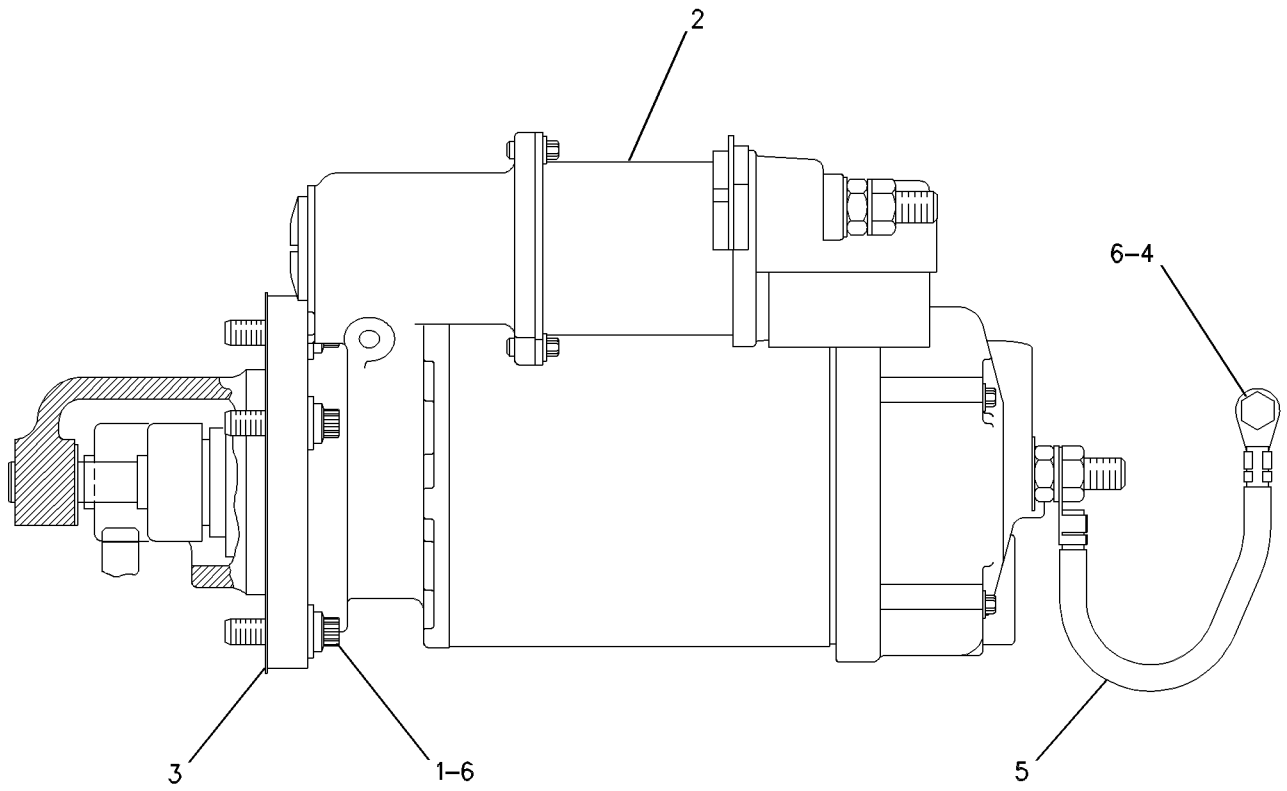

GRAPHIC #1 <END> g00613782

207-1517 STARTING MOTOR GP-ELECTRIC*R

S/N: TX71-UP; KHX29829-UP

PART OF 111-4275 STARTING MOTOR GP-ELECTRIC

SMCS-1453 **i05857374**

NOTE	REF NO	GRAPHIC REF	PART NUMBER	QTY	PART NAME 1 2 3 4 5 6 (PRODUCT LEVEL)	SEE PAGE
	1	1	**8T-9884**	1	KIT-INSULATOR (STARTING MOTOR)	
					(INCLUDES INSULATORS & BUSHING)	
	2	1	**106-7149**	1	HOUSING AS	
	3	1	**102-9863**	1	TERMINAL AS	
	4	1	**6V-8188**	4	NUT (1/2-13-THD)	
	5	1	**7X-0562**	4	WASHER-HARD (13.5X19X0.8-MM THK)	
	6	1	**3E-7853**	1	TERMINAL	
	7	1	**9X-4821**	1	PLATE AS	
	8	1	**3E-7852**	1	COIL-STARTING MOTOR	
	9	1	**7T-3454**	1	INSULATOR	
	10	1	**9X-4271**	1	CONNECTOR	
	11	1	**7T-3451**	1	KIT-INSULATOR (STARTING MOTOR)	
					(INCLUDES INSULATORS & GROMMET)	
	12	1	**8T-8569**	1	INSULATOR-TERMINAL	
	13	1	**5S-7349**	4	BOLT (1/4-20X0.5-IN)	
	14	1	**8T-4205**	4	WASHER-HARD (7.2X14.5X2-MM THK)	
	15	1	**7X-1950**	4	SHOE-POLE	
	16	1	**3E-7861**	1	KIT-LEVER (STARTING MOTOR)	
					(INCLUDES LEVER AS, SHAFT AS, GASKET, O-RINGS, RING & NUT)	
	17	1	**3R-8797**	8	SCREW & WASHER AS (3/8-24X0.72-IN)	
	18	1	**3E-7855**	1	ARMATURE AS-STARTER (24-VOLT)	
	19	1	**7X-1952**	1	HOUSING AS-LEVER	
	20	1	**4M-1831**	1	PLUG-LEVER HOUSING	
	21	1	**7L-2894**	1	GASKET	
	22	1	**0S-1597**	5	BOLT (1/4-28X1-IN)	
	23	1	**3E-7857**	1	DRIVE AS-STARTING MOTOR	
	24	1	**3E-7858**	1	HOUSING AS	
	25	1	**7X-3373**	6	BOLT (5/16-18X0.88-IN)	
	26	1	**206-8784**	1	KIT-SOLENOID (24-VOLT)	
					(INCLUDES SOLENOID AS, BOLT, CONNECTORS & NUTS)	
	27	1	**6V-8378**	2	NUT (10-32-THD)	
	28	1	**8F-1434**	1	LOCKWASHER	
	29	1	**8T-0328**	2	WASHER-HARD (5.5X10X1-MM THK)	
	30	1	**9X-4824**	1	COVER-STARTING MOTOR	
	31	1	**9X-4825**	1	KIT-BRUSH (24-VOLT)	
					(INCLUDES O-RING, SCREWS, BRUSHES & SPRINGS)	
					AVAILABLE REPAIR KIT(S):	
			3E-7860	1	KIT-BUSHING (STARTING MOTOR)	
					(INCLUDES BUSHINGS, PLUGS, CUPS, SEAL, NUT, O-RINGS, GASKET, SPACER, WASHERS & SCREW ASSEMBLIES)	

207-1517 **STARTING MOTOR GP-ELECTRIC (**contd.**)** **i05857374**

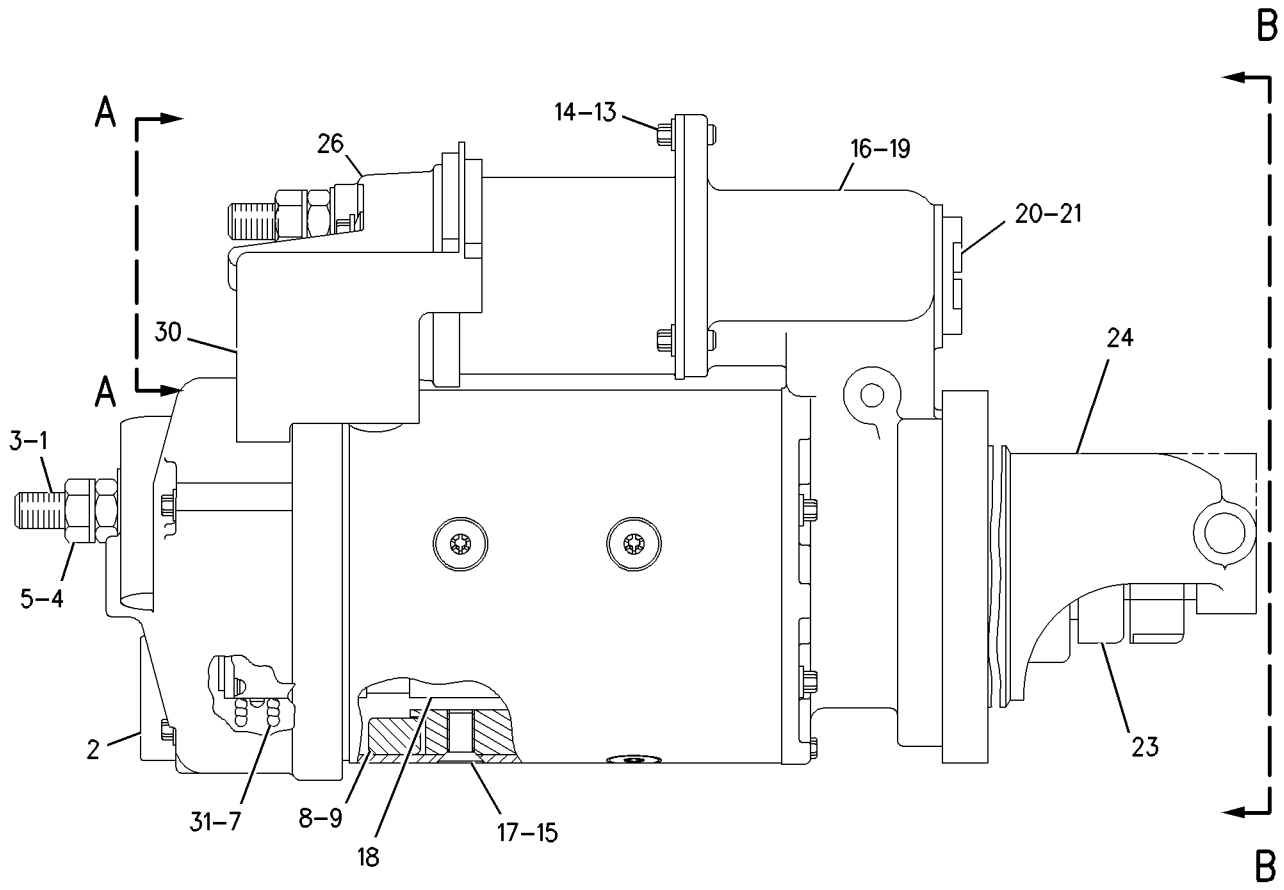

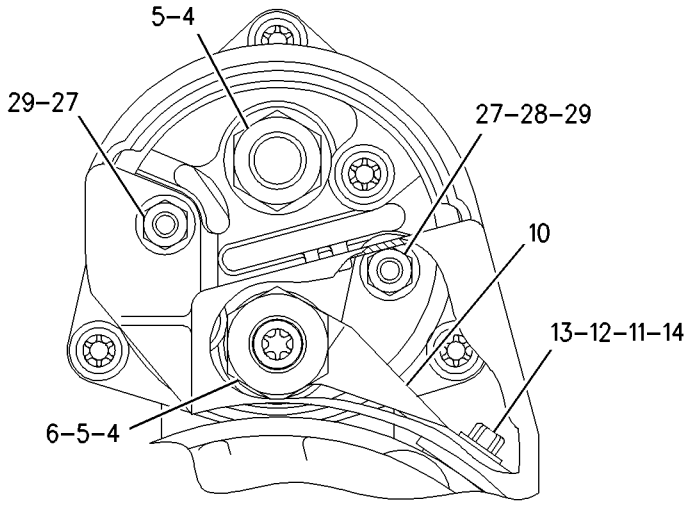

VIEW A-A

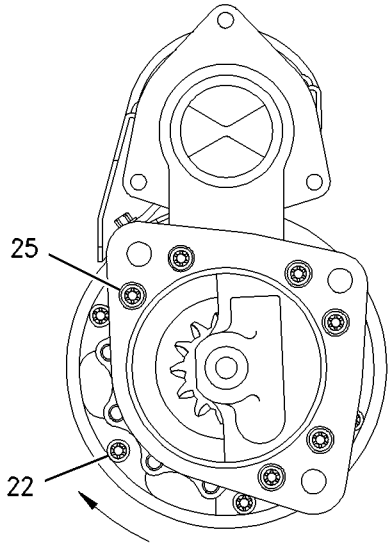

VIEW B-B

GRAPHIC #1 <END> g00839695

164-7577 SWITCH GP-BYPASS

S/N: SZS1-UP

FILTER

PART OF 333-9308 BASE GP-OIL FILTER

SMCS-1408, 1435

i04278169

NOTE	REF NO	GRAPHIC REF	PART NUMBER	QTY	PART NAME 1 2 3 4 5 6 (PRODUCT LEVEL)	SEE PAGE
E	1	1	**9X-1813**		SLEEVE (19-CM)	
	2	1	**102-8802**	1	KIT-RECEPTACLE (2-PIN)	
					(INCLUDES RECEPTACLE AS & WEDGE)	
	3	1	**8T-8729**	2	PIN-CONNECTOR (16-GA TO 18-GA)	
	4	1	**3D-2824**	1	SEAL-O-RING	

E - ORDER BY THE CENTIMETER

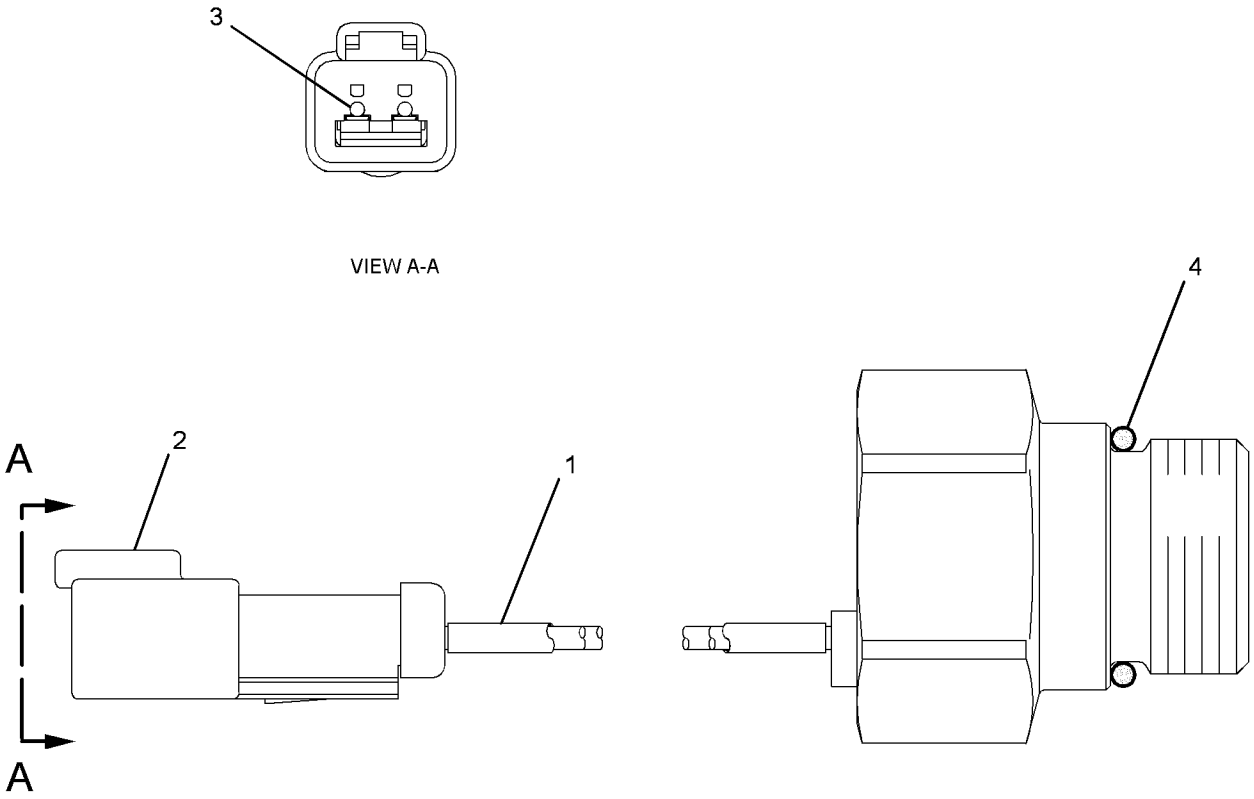

GRAPHIC #1 <END> g02446856

7N-0718 SWITCH GP-DISCONNECT–BATTERY

S/N: SZS1-UP

PART OF 434-4117 BATTERY & BOX GP-HEAVY-DUTY, 434-4115 BATTERY GP, 311-0802, 373-6945 WIRING GP-REAR

ALSO AN ATTACHMENT

SMCS-1411 **i03523081**

NOTE	REF NO	GRAPHIC REF	PART NUMBER	QTY	PART NAME 1 2 3 4 5 6 (PRODUCT LEVEL)	SEE PAGE
	1	1	**8H-5306**	1	KEY (BATTERY DISCONNECT)	
	2	1	**8H-5303**	1	NUT (3/4-16-THD)	
	3	1	**2H-3922**	2	LOCKWASHER	
	4	1	**9F-5644**	2	LOCKWASHER	
	5	1	**6F-7045**	2	NUT-FULL (3/8-24-THD)	

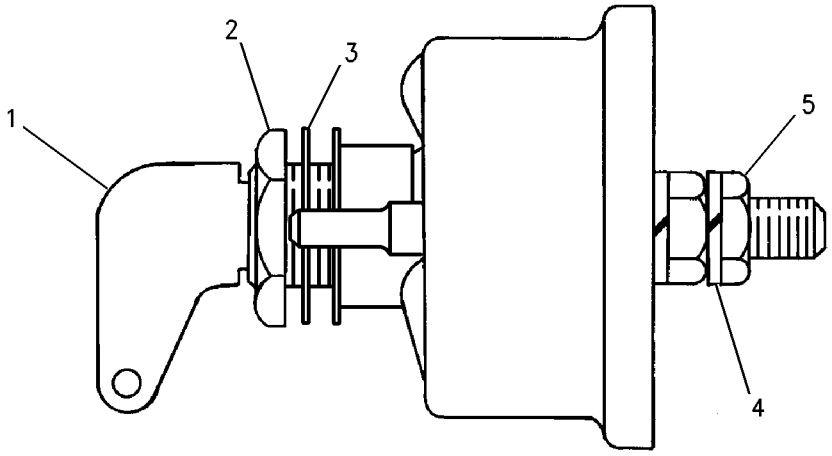

GRAPHIC #1 <END> g00715584

435-1492 SWITCH GP-LIGHT–TAIL LIGHTS

S/N: SZS1-UP

AN ATTACHMENT

SMCS-1429, 1430, 7332 **i06535067**

NOTE	REF NO	GRAPHIC REF	PART NUMBER	QTY	PART NAME 1 2 3 4 5 6 (PRODUCT LEVEL)	SEE PAGE
	1	1	**8D-7960**	2	PLATE	
	2	1	**368-4542**	1	SWITCH AS-ROCKER (TAIL LIGHTS)	

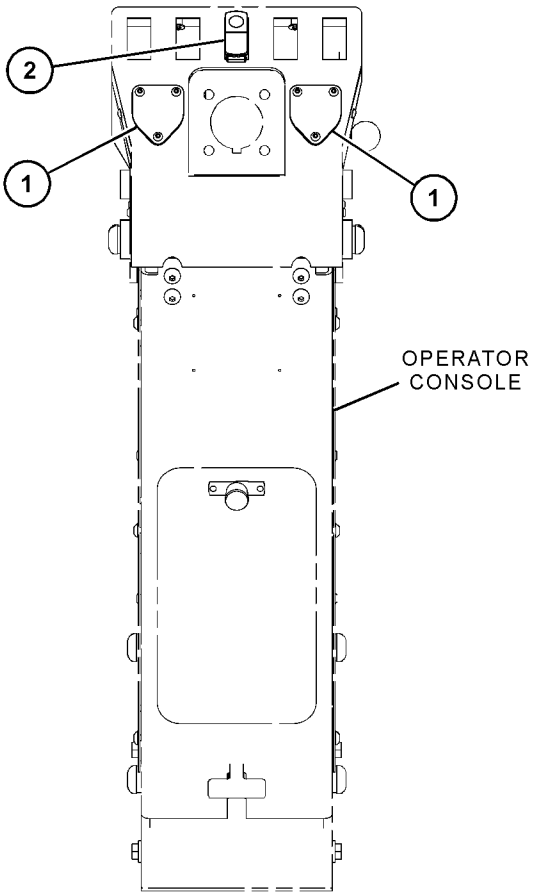

REAR VIEW

GRAPHIC #1 <END> g06014593

118-3534 SWITCH GP-MAGNETIC

S/N: SZS1-UP
24-VOLT. STARTING MOTOR
PART OF 311-0802, 373-6945, 434-4113 WIRING GP-REAR

SMCS-7499 **i06705048**

NOTE	PART NUMBER	QTY	PART NAME 1 2 3 4 5 6 (PRODUCT LEVEL)	SEE PAGE
Y	**175-2308**	1	SWITCH GP-MAGNETIC (24-VOLT) (START RELAY)	362
			—OR—	
Y	*175-2309*	1	SWITCH GP-MAGNETIC (24-VOLT) (START RELAY)	363

Y - SEPARATE ILLUSTRATION

<END>

175-2308 SWITCH GP-MAGNETIC

S/N: SZS1-UP
24-VOLT. STARTING MOTOR
PART OF 118-3534 SWITCH GP-MAGNETIC

SMCS-7499 **i03537284**

NOTE	REF NO	GRAPHIC REF	PART NUMBER	QTY	PART NAME 1 2 3 4 5 6 (PRODUCT LEVEL)	SEE PAGE
	1	1	**102-8802**	1	KIT-RECEPTACLE (2-PIN)	
					(INCLUDES RECEPTACLE AS & WEDGE)	
	2	1	**186-3735**	2	PIN-CONNECTOR (16-GA TO 18-GA)	
	3	1	**1H-3338**	2	LOCKWASHER (EXTERNAL TOOTH)	
	4	1	**012-0380**	2	LOCKWASHER (6.5X12.5X1.6-MM THK)	
M	5	1	**5C-2890**	2	NUT (M6X1-THD)	
E	6	1	**9X-1813**		SLEEVE (16-CM)	

E - ORDER BY THE CENTIMETER
M - METRIC PART

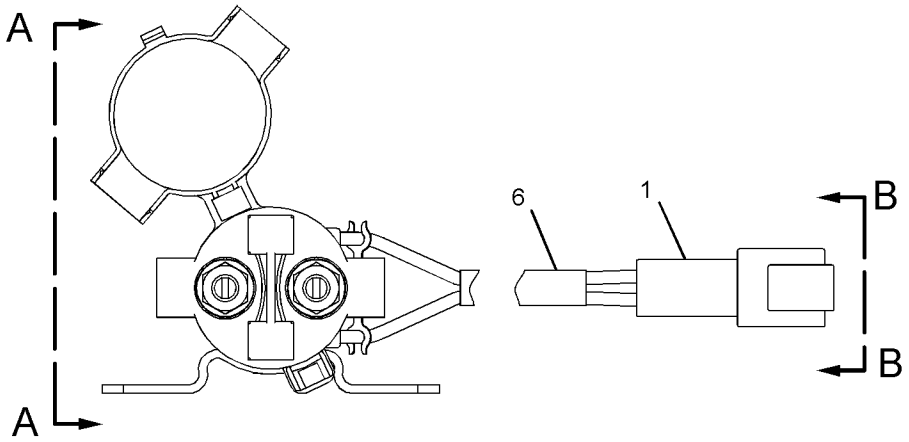

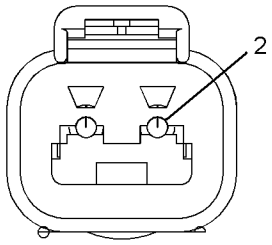

VIEW B-B

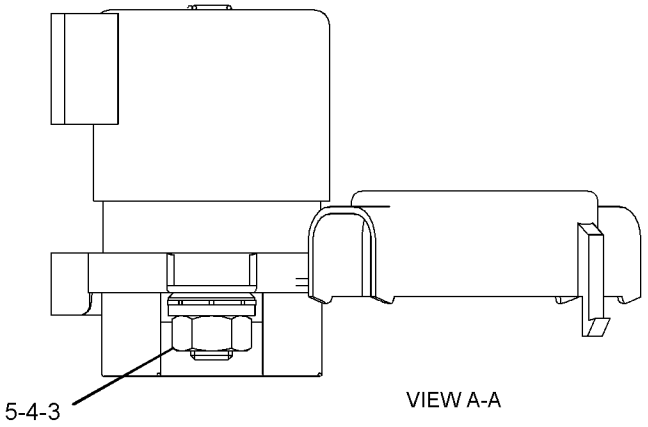

VIEW A-A

GRAPHIC #1 <END> g01266266

175-2309 SWITCH GP-MAGNETIC

S/N: SZS1-UP
24-VOLT. STARTING MOTOR
PART OF 118-3534 SWITCH GP-MAGNETIC

SMCS-7499 **i03537285**

NOTE	REF NO	GRAPHIC REF	PART NUMBER	QTY	PART NAME 1 2 3 4 5 6 (PRODUCT LEVEL)	SEE PAGE
	1	1	**117-9081**	1	SWITCH AS-MAGNETIC (24-VOLT) (START RELAY)	
	1A	1	**1H-3338**	2	LOCKWASHER (EXTERNAL TOOTH)	
M	1B	1	**5C-2890**	2	NUT (M6X1-THD)	
	1C	1	**012-0380**	2	LOCKWASHER (6.5X12.5X1.6-MM THK)	
	2	1	**102-8802**	1	KIT-RECEPTACLE (2-PIN)	
					(INCLUDES RECEPTACLE AS & WEDGE)	
	3	1	**186-3735**	2	PIN-CONNECTOR (16-GA TO 18-GA)	
E	4	1	**9X-1813**		SLEEVE (16-CM)	

E - ORDER BY THE CENTIMETER
M - METRIC PART

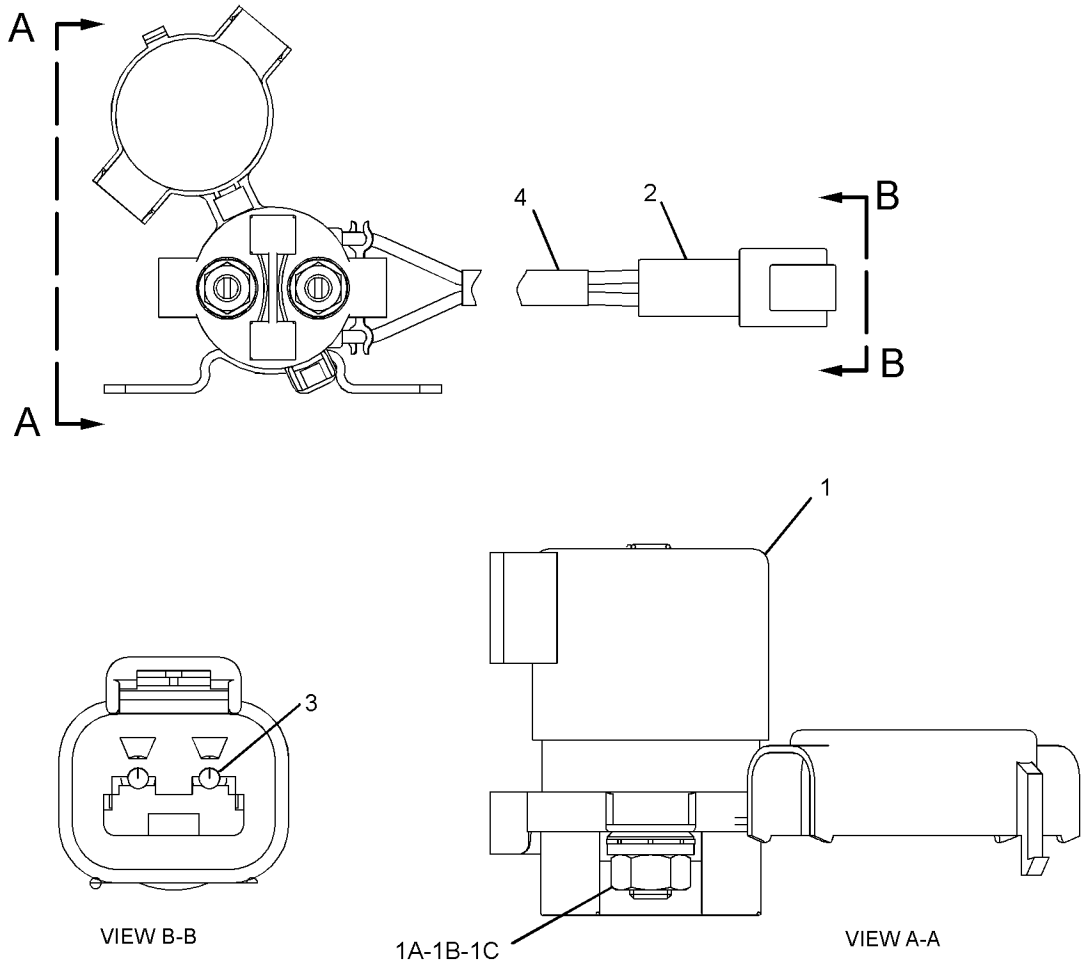

GRAPHIC #1 <END> g01266277

241-8368 SWITCH GP-MAGNETIC

S/N: SZS1-UP

24-VOLT

PART OF 311-0802, 373-6945, 434-4113 WIRING GP-REAR

SMCS-7499 **i06826498**

NOTE	REF NO	GRAPHIC REF	PART NUMBER	QTY	PART NAME 1 2 3 4 5 6 (PRODUCT LEVEL)	SEE PAGE
	1	1	**155-2270**	1	KIT-CONNECTING PLUG (2-PIN)	
					(INCLUDES PLUG AS, WEDGE & INTERFACE SEAL)	
	2	1	**4F-2294**	2	NUT-JAM (5/16-24-THD)	
	3	1	**8T-8730**	2	SOCKET-CONNECTOR (16-GA TO 18-GA)	

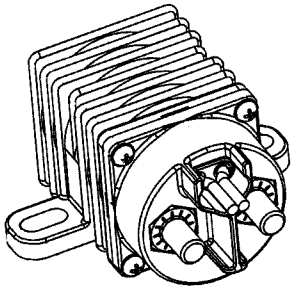

ISOMETRIC VIEW

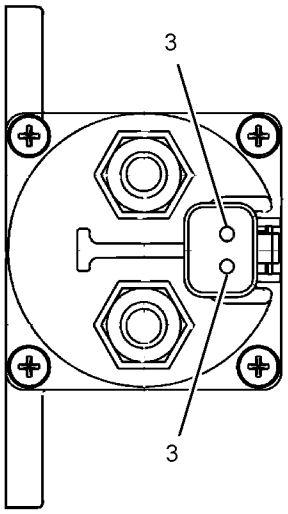

VIEW A-A

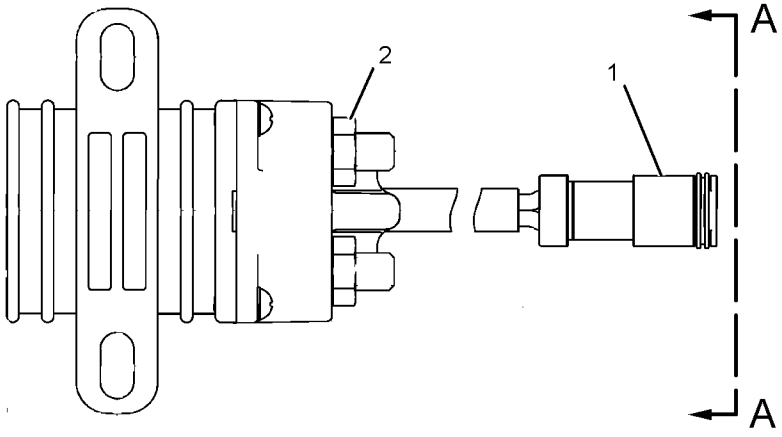

GRAPHIC #1 <END> g01077362

275-1253 SWITCH GP-PRESSURE–FUEL FILTER

S/N: SZS1-UP
DIFFERENTIAL
PART OF 325-7130 LINES GP-FUEL

SMCS-1435 **i06616047**

NOTE	REF NO	GRAPHIC REF	PART NUMBER	QTY	PART NAME 1 2 3 4 5 6 (PRODUCT LEVEL)	SEE PAGE
	1	1	**230-4011**	1	PLUG AS-CONNECTOR (2-PIN)	
		1	**264-7029**	1	SEAL-CONNECTOR	
E	2	1	**9X-1813**		SLEEVE (14-CM)	
	3	1	**6V-4589**	1	SEAL-O-RING	
	4	1	**9X-7737**	1	SEAL-O-RING	
	5	1	**9X-3401**	2	PIN-CONNECTOR (16-GA TO 18-GA)	

E - ORDER BY THE CENTIMETER

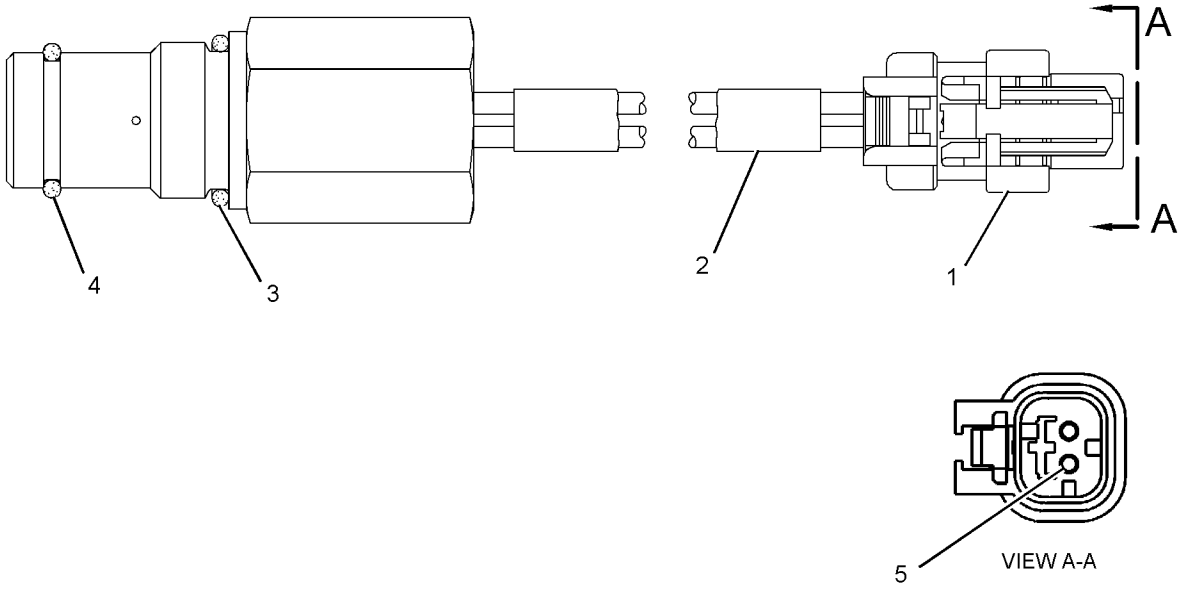

GRAPHIC #1 <END> g01238534

440-0257 SWITCH GP-PRESSURE

S/N: SZS624-UP
DIFFERENTIAL
PART OF 332-8833 FILTER GP-OIL

SMCS-1435 **i06799446**

NOTE	REF NO	GRAPHIC REF	PART NUMBER	QTY	PART NAME 1 2 3 4 5 6 (PRODUCT LEVEL)	SEE PAGE
	1	1	**102-8802**	1	KIT-RECEPTACLE (2-PIN)	
					(INCLUDES RECEPTACLE AS & WEDGE)	
	2	1	**033-6033**	1	SEAL-O-RING	
	3	1	**8T-8729**	2	PIN-CONNECTOR (16-GA TO 18-GA)	
E	4	1	**9X-1813**		SLEEVE (28-CM)	
	5	1	**206-9295**	1	SEAL-O-RING	

E - ORDER BY THE CENTIMETER

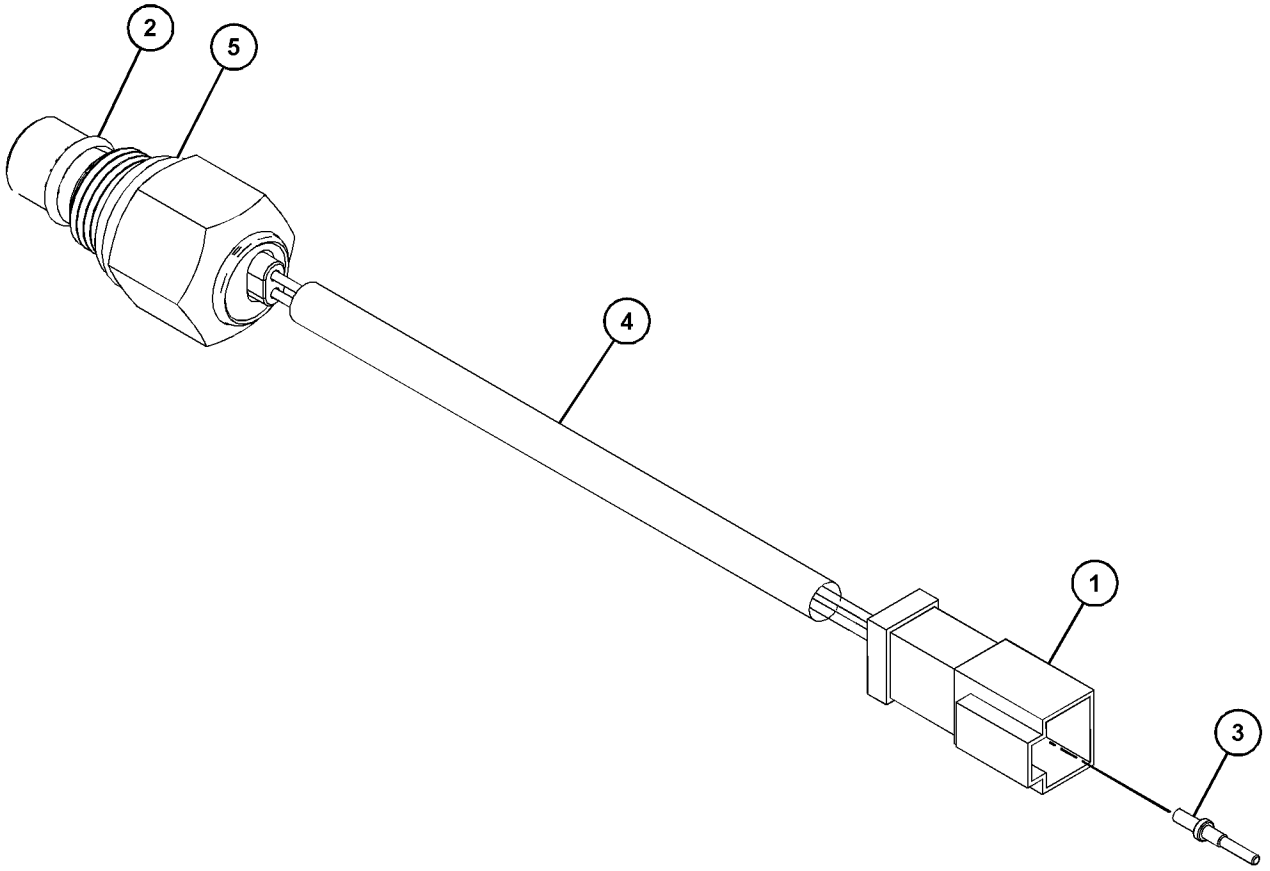

GRAPHIC #1 <END> g03688962

520-8568 SWITCH GP-ROCKER

S/N: SZS10100-UP
PART OF 521-1027 LOCK AR-CENTERSHIFT
AN ATTACHMENT

SMCS-7332 **i06916233**

NOTE	REF NO	GRAPHIC REF	PART NUMBER	QTY	PART NAME 1 2 3 4 5 6 (PRODUCT LEVEL)	SEE PAGE
	1	1	**3E-3636**	1	SWITCH AS-BALL	
		1	**3E-3377**	1	WEDGE-RECEPTACLE LOCK (4-PIN)	
		1	**8T-8729**	4	PIN-CONNECTOR (16-GA TO 18-GA)	
		1	**102-8804**	1	KIT-RECEPTACLE (4-PIN)	
					(INCLUDES RECEPTACLE AS & WEDGE)	
	2	1	**280-4244**	1	SWITCH AS-ROCKER (24-VOLT)	
	3	1	**130-5300**	1	CLIP	
	4	1	**3J-1907**	1	SEAL-O-RING	
	5	1	**4D-7794**	1	CLIP	
B	6	1	**8F-1974**	10	SHIM (0.13-MM THK)	
	7	1	**8T-4121**	2	WASHER-HARD (11X21X2.5-MM THK)	
M	8	1	**8T-4137**	2	BOLT (M10X1.5X20-MM)	

B - USE AS REQUIRED
M - METRIC PART

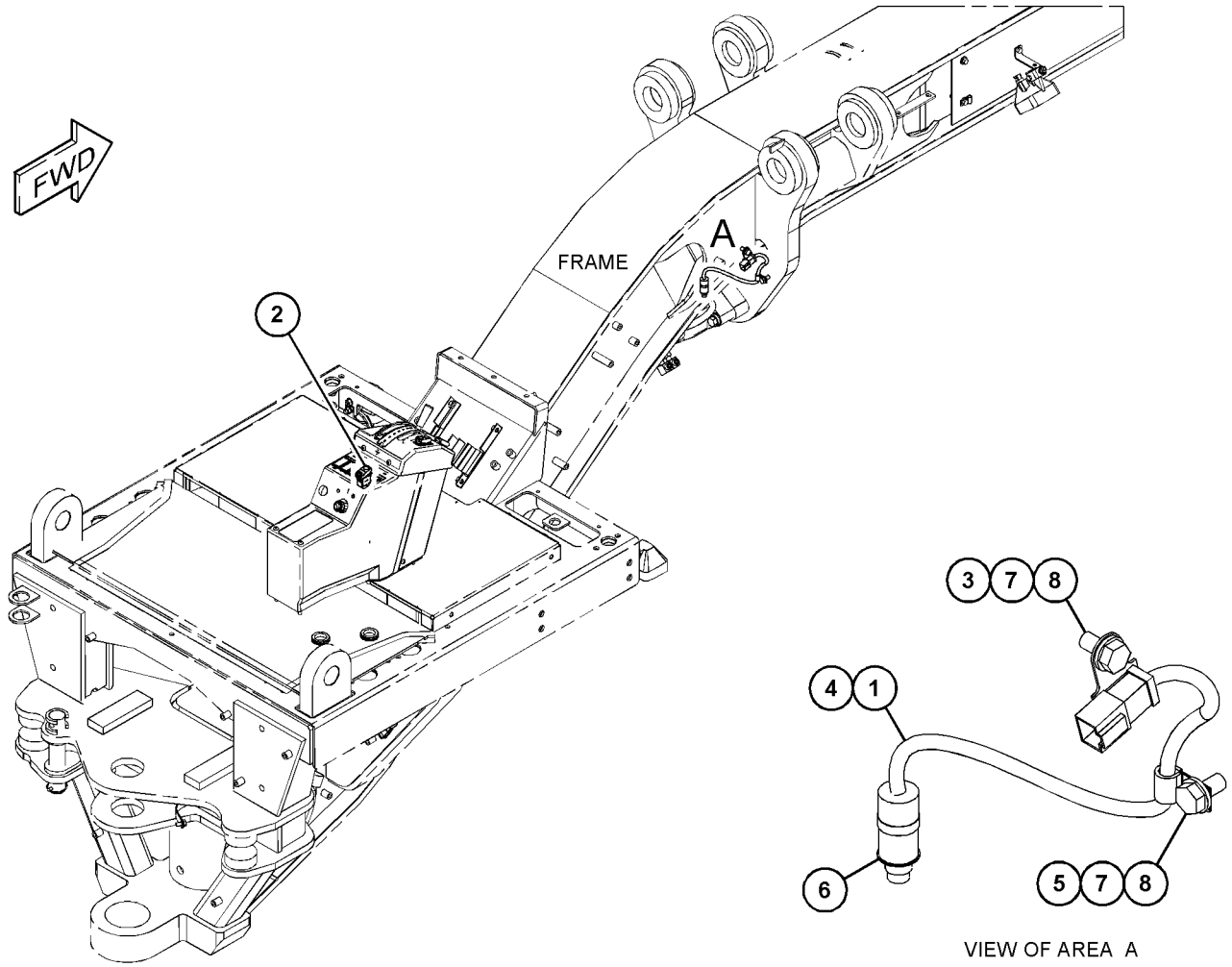

VIEW OF AREA A

GRAPHIC #1 <END> g06165524

112-6174 SWITCH GP-ROTARY

S/N: SZS1-UP

PART OF 437-0650, 437-0677, 516-7920, 516-7931 CAB AR

AN ATTACHMENT

SMCS-7332 **i05864931**

NOTE	REF NO	GRAPHIC REF	PART NUMBER	QTY	PART NAME 1 2 3 4 5 6 (PRODUCT LEVEL)	SEE PAGE
	1	1	**6V-8369**	1	NUT (7/16-28-THD)	
	2	1	**2H-3920**	1	LOCKWASHER	
	3	1	**102-8806**	1	KIT-RECEPTACLE (8-PIN)	
					(INCLUDES RECEPTACLE AS & WEDGE)	
	4	1	**8T-8737**	2	PLUG-SEAL	
	5	1	**8T-8729**	6	PIN-CONNECTOR (16-GA TO 18-GA)	

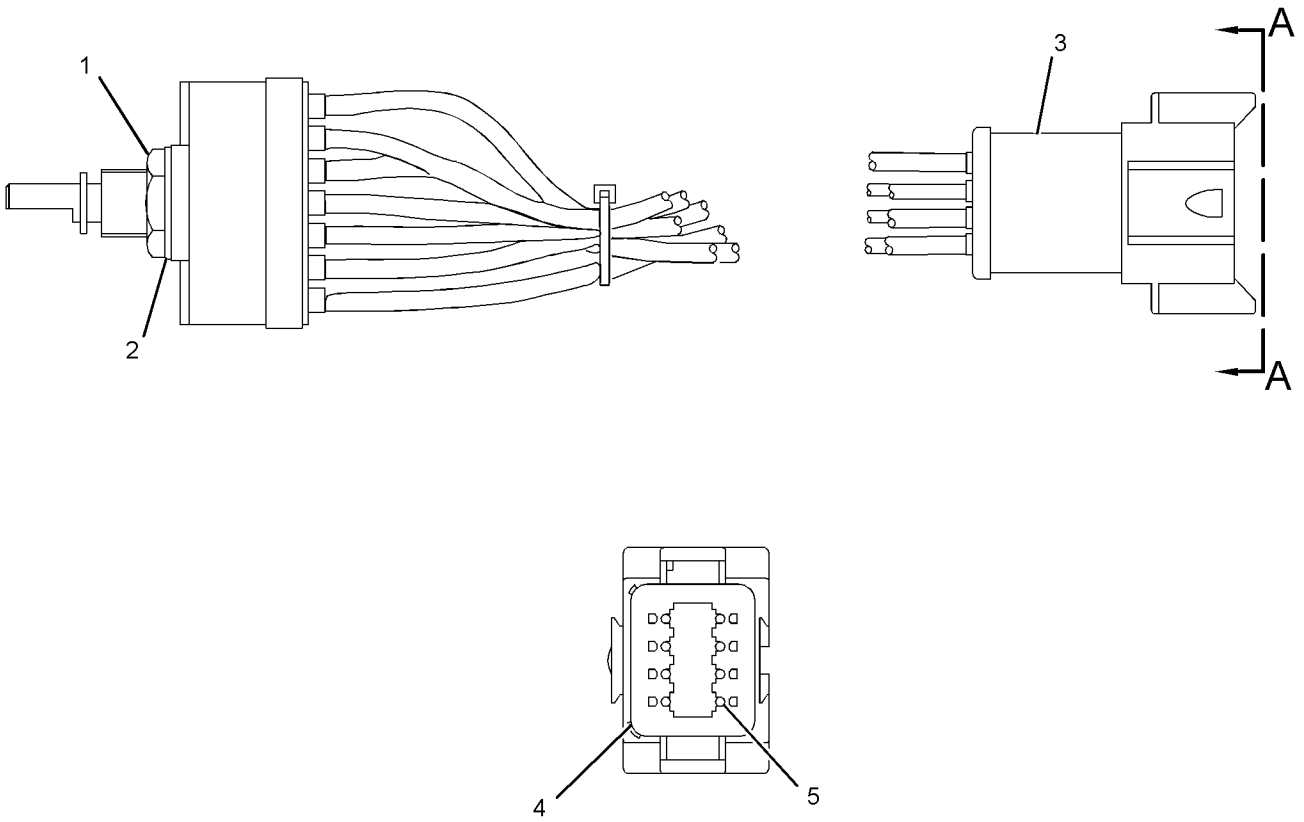

VIEW A-A

GRAPHIC #1 <END> g03197518

275-7741 SWITCH GP-WIPER–INTERMITTENT

S/N: SZS1-UP
24-VOLT
PART OF 286-4823, 434-8049 WIPER GP-WINDOW
AN ATTACHMENT

SMCS-7305, 7332

i03531264

NOTE	REF NO	GRAPHIC REF	PART NUMBER	QTY	PART NAME 1 2 3 4 5 6 (PRODUCT LEVEL)	SEE PAGE
	1	1	**6V-8369**	1	NUT (7/16-28-THD)	
	2	1	**2H-3920**	1	LOCKWASHER	
	3	1	**8T-8737**	2	PLUG-SEAL	
	4	1	**186-3735**	6	PIN-CONNECTOR (16-GA TO 18-GA)	
	5	1	**102-8806**	1	KIT-RECEPTACLE (8-PIN)	
					(INCLUDES RECEPTACLE AS & WEDGE)	

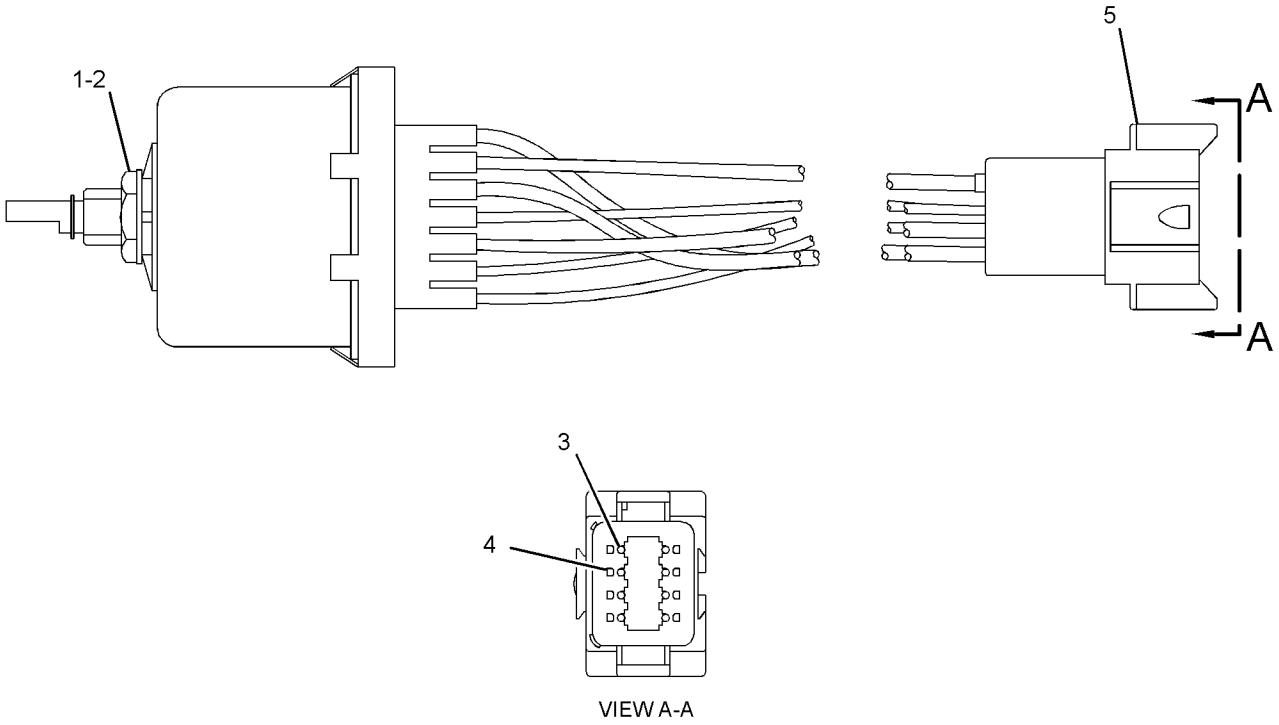

VIEW A-A

GRAPHIC #1

<END>

g01445891

239-1134 VALVE GP-ETHER STARTING

S/N: SZS1-UP
24-VOLT, CONTINUOUS
PART OF 311-2771 STARTING AID GP-ETHER
AN ATTACHMENT

SMCS-1456 **i03907813**

NOTE	REF NO	GRAPHIC REF	PART NUMBER	QTY	PART NAME 1 2 3 4 5 6 (PRODUCT LEVEL)	SEE PAGE
	1	1	**7N-9801**	1	GASKET	
	2	1	**102-8802**	1	KIT-RECEPTACLE (2-PIN)	
					(INCLUDES RECEPTACLE AS & WEDGE)	
	3	1	**8T-8729**	2	PIN-CONNECTOR (16-GA TO 18-GA)	
	4	1	**358-4889**	1	FILTER (ETHER START)	

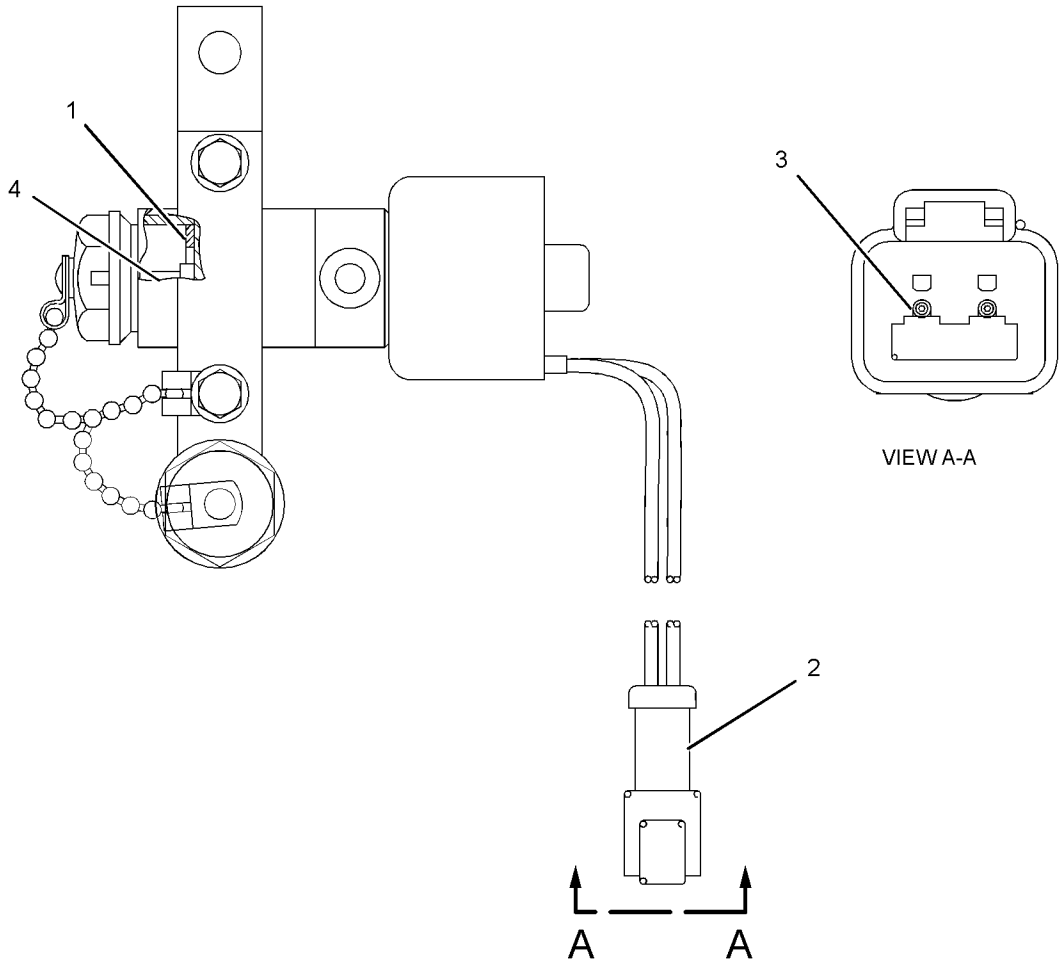

GRAPHIC #1 <END> g02138138

315-2614 WIRING GP-AIR CONDITIONER

S/N: SZS1-UP
PART OF 300-9979 AIR CONDITIONER AR
AN ATTACHMENT

SMCS-1408 **i03860731**

NOTE	REF NO	GRAPHIC REF	PART NUMBER	QTY	PART NAME 1 2 3 4 5 6 (PRODUCT LEVEL)	SEE PAGE
	1	1	**7K-1181**	4	STRAP-CABLE	
	2	1	**338-1942**	1	TIMER AS-ON DELAY (24-VOLT) (REFRIGERANT COMPRESSOR)	
		1	**144-1636**	4	PIN-CONNECTOR (14-GA TO 18-GA)	
		1	**243-4507**	1	RECEPTACLE AS-CONNECTOR (4-PIN)	
	3	1	**352-0373**	1	HARNESS AS-HEATER & AIR COND	
		1	**8T-8730**	14	SOCKET-CONNECTOR (16-GA TO 18-GA)	
		1	**155-2270**	6	KIT-CONNECTING PLUG (2-PIN)	
		1	**155-2271**	2	KIT-CONNECTING PLUG (4-PIN)	
					EACH KIT INCLUDES PLUG AS, WEDGE & INTERFACE SEAL)	
		1	**230-5008**	1	PLUG AS-CONNECTOR (4-PIN)	
		1	**264-7031**	1	SEAL-CONNECTOR	
	4	1	**317-8382**	1	BRACKET AS	
	5	1	**130-5300**	4	CLIP	
	6	1	**4P-7581**	1	CLIP	
	7	1	**7D-1553**	1	CLIP	
	8	1	**8M-2770**	4	CLIP	
	9	1	**8T-4121**	6	WASHER-HARD (11X21X2.5-MM THK)	
M	10	1	**8T-4133**	1	NUT (M10X1.5-THD)	
M	11	1	**8T-4137**	5	BOLT (M10X1.5X20-MM)	

M - METRIC PART

315-2614 **WIRING GP-AIR CONDITIONER (**contd.**)** **i03860731**

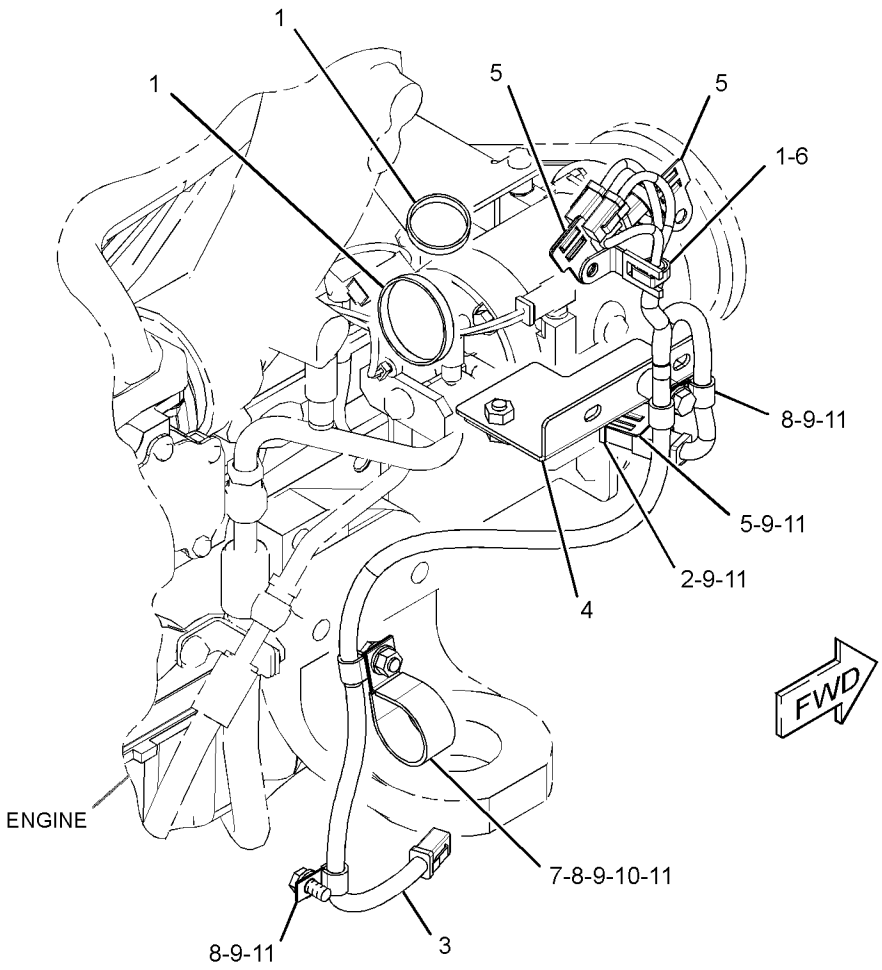

GRAPHIC #1 <END> g01923296

373-6947 WIRING GP-AIR CONDITIONER

S/N: SZS1-UP

PART OF 300-9979, 437-0682, 516-7930 AIR CONDITIONER AR

AN ATTACHMENT

SMCS-1408 **i05266631**

NOTE	REF NO	GRAPHIC REF	PART NUMBER	QTY	PART NAME 1 2 3 4 5 6 (PRODUCT LEVEL)	SEE PAGE
	1	1	**7K-1181**	5	STRAP-CABLE	
	2	1	**373-6948**	1	HARNESS AS-HEATER & AIR COND	
		1	**8T-8730**	13	SOCKET-CONNECTOR (16-GA TO 18-GA)	
		1	**8T-8737**	1	PLUG-SEAL	
		1	**9X-3402**	2	SOCKET-CONNECTOR (16-GA TO 18-GA)	
E		1	**125-7874**		TUBE-HEAT SHRINK (5.72-MM DIA) (10-CM)	
E		1	**125-7875**		TUBE-HEAT SHRINK (7.44-MM DIA) (5-CM)	
		1	**155-2270**	5	KIT-CONNECTING PLUG (2-PIN)	
		1	**155-2274**	1	KIT-CONNECTING PLUG (6-PIN)	
					(EACH PLUG KIT INCLUDES PLUG AS, WEDGE & INTERFACE SEAL)	
		1	**189-3158**	1	SUPPRESSOR-ARC	
		1	**238-9397**	1	RESISTOR AS	
		1	**102-8802**	1	KIT-RECEPTACLE (2-PIN)	
					(INCLUDES RECEPTACLE AS & WEDGE)	
		1	**8T-8729**	2	PIN-CONNECTOR (16-GA TO 18-GA)	
	3	1	**130-5300**	3	CLIP	
	4	1	**4P-7581**	2	CLIP	
	5	1	**7D-1553**	1	CLIP	
	6	1	**8M-2770**	2	CLIP	
	7	1	**8T-4121**	2	WASHER-HARD (11X21X2.5-MM THK)	
M	8	1	**8T-4133**	1	NUT (M10X1.5-THD)	
M	9	1	**8T-4137**	1	BOLT (M10X1.5X20-MM)	

E - ORDER BY THE CENTIMETER
M - METRIC PART

373-6947 **WIRING GP-AIR CONDITIONER (**contd.**)** **i05266631**

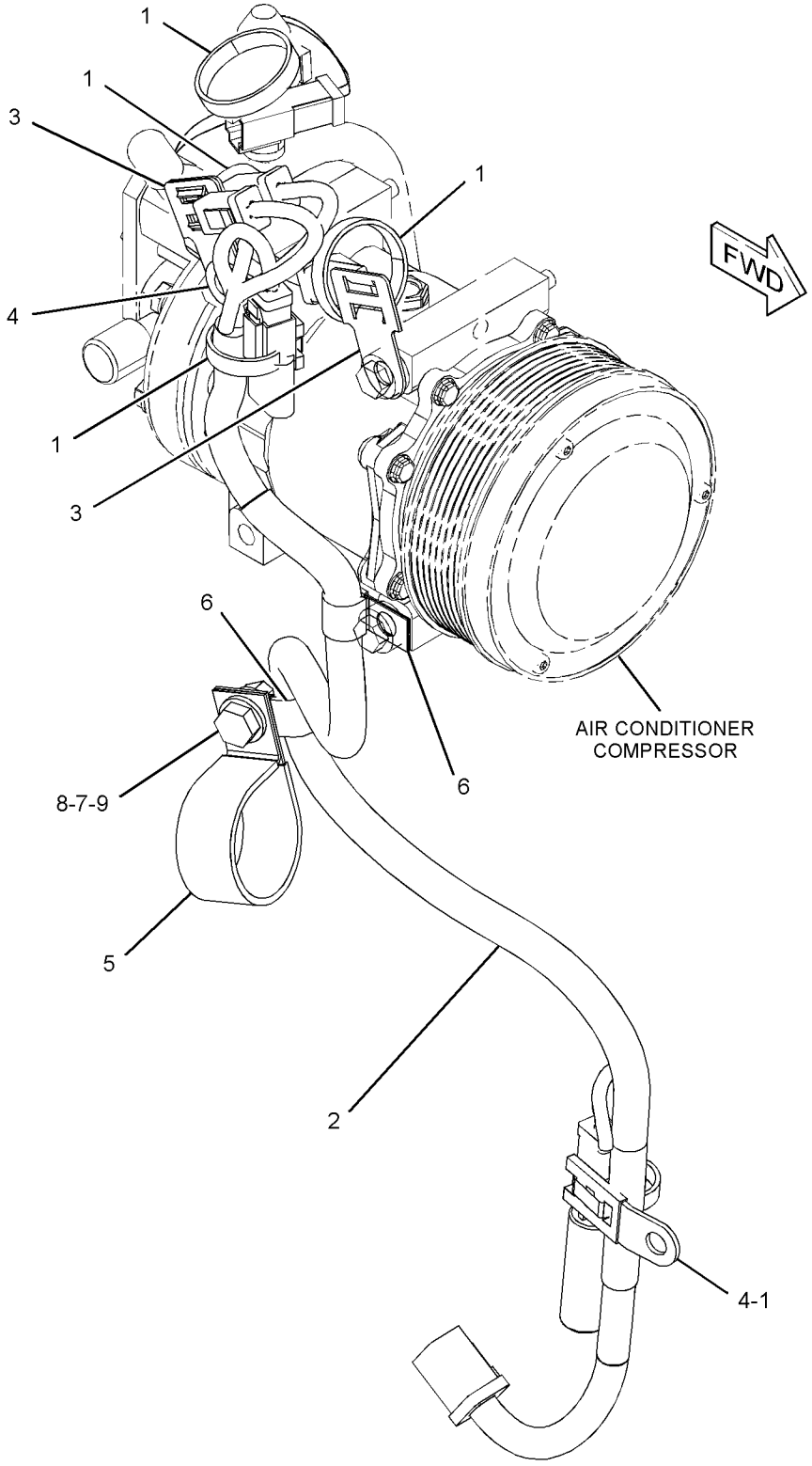

GRAPHIC #1 <END> g03355967

285-3361 WIRING GP-CAB

S/N: SZS1-UP
PART OF 320-0341 CAB AR, 320-0342 ROPS AR
AN ATTACHMENT
TYPE 1

SMCS-1408 **i03522321**

NOTE	REF NO	GRAPHIC REF	PART NUMBER	QTY	PART NAME 1 2 3 4 5 6 (PRODUCT LEVEL)	SEE PAGE
	1	2	**3E-0109**	3	PLUG (ROCKER SWITCH)	
Y	2	2	**3E-6389**	1	LAMP GP-DOME (24-VOLT)	289
	3	1,2	**3S-2093**	23	STRAP-CABLE	
	4	2	**6V-6578**	2	RIVET-BLIND	
	5	2	**7T-9302**	2	KNOB AS-WIPER SWITCH (WIPER, WASHER)	
		2	**014-0816**	1	SETSCREW (8-32X0.5-IN)	
	6	2	**9W-1441**	1	FUSE (15-AMPERE)	
	7	2	**112-6174**	2	SWITCH GP-ROTARY (WIPER, WASHER) (FRONT)	
					(EACH INCLUDES)	
		2	**2H-3920**	1	LOCKWASHER	
		2	**3E-3389**	1	WEDGE-RECEPTACLE LOCK (8-PIN)	
		2	**6V-8369**	1	NUT (7/16-28-THD)	
		2	**186-3735**	6	PIN-CONNECTOR (16-GA TO 18-GA)	
		2	**8T-8737**	2	PLUG-SEAL	
		2	**102-8806**	1	KIT-RECEPTACLE (8-PIN)	
					(INCLUDES RECEPTACLE AS & WEDGE)	
	8	2	**131-5171**	1	CLIP	
	9	2	**160-6382**	1	GROMMET	
	10	1	**167-7504**	1	HARNESS AS-CAB (SWITCH PANEL)	
	11	1	**167-7505**	1	HARNESS AS-CAB (REAR)	
	12	1	**168-8248**	1	HARNESS AS-CAB (FRONT)	
	13	2	**169-8938**	1	PLATE AS	
	14	2	**172-6555**	1	PANEL	
	15	2	**172-8641**	1	PLATE	
	16	2	**172-9316**	1	FILM-FUSE (PANEL ACTION LAMPS)	
	17	2	**096-6166**	3	WASHER-HARD (4.5X9X1-MM THK)	
M	18	2	**5C-8312**	3	NUT (M4X0.7-THD)	
	19	2	**6V-5645**	4	SCREW-MACHINE (10-32X0.87-IN)	
	20	2	**6V-8801**	1	NUT (3/8-16-THD)	
	21	2	**8T-4896**	1	WASHER-HARD (10.2X18.5X2.5-MM THK)	
M	22	2	**9X-1046**	3	SCREW (M4X0.7X18-MM)	
M	23	2	**9X-2042**	4	SCREW-TRUSS HEAD (M6X1X12-MM)	
E	24	2	**7X-7877**		STRIP-EDGE (10-CM)	

E - ORDER BY THE CENTIMETER
M - METRIC PART
Y - SEPARATE ILLUSTRATION

285-3361 **WIRING GP-CAB (**contd.**)** **i03522321**

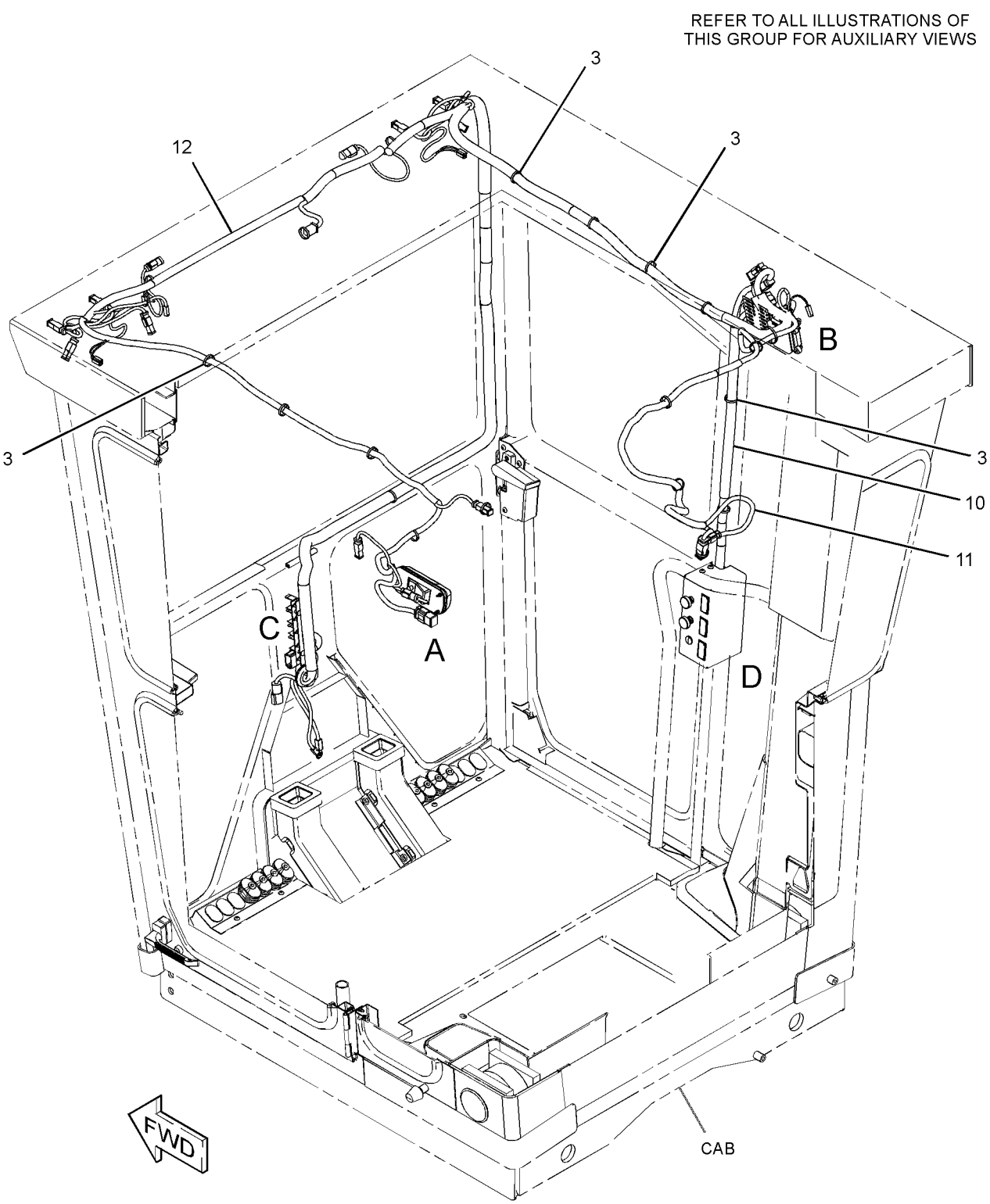

GRAPHIC #1 g01708016

285-3361 **WIRING GP-CAB (**contd.**)** **i03522321**

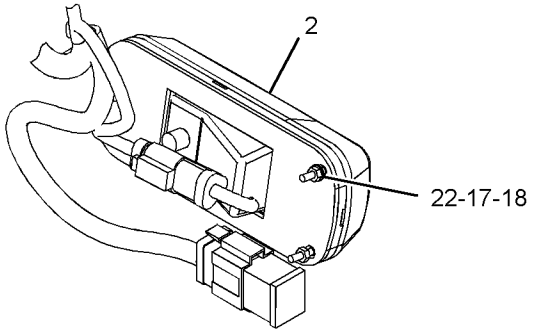

VIEW OF AREA A

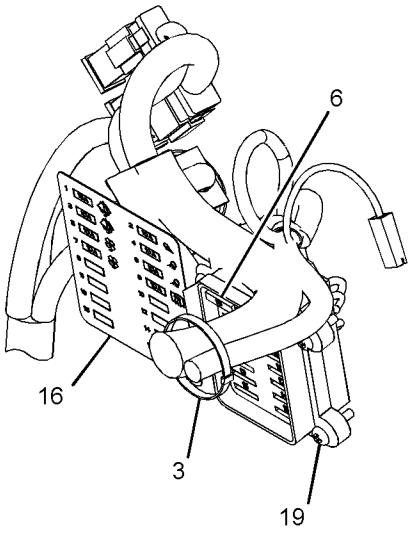

VIEW OF AREA B
(FUSE PANEL COVER REMOVED FOR CLARITY)

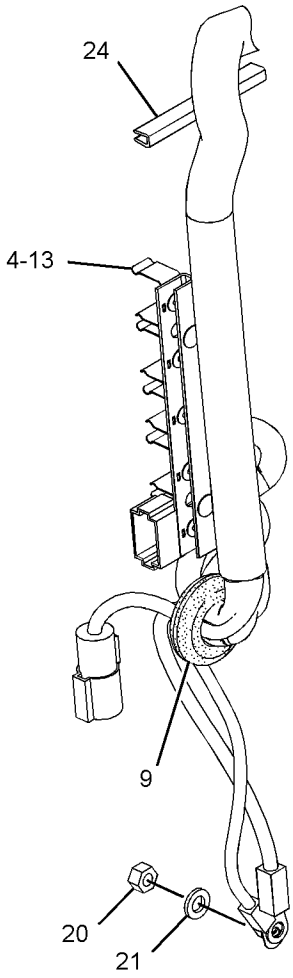

VIEW OF AREA C

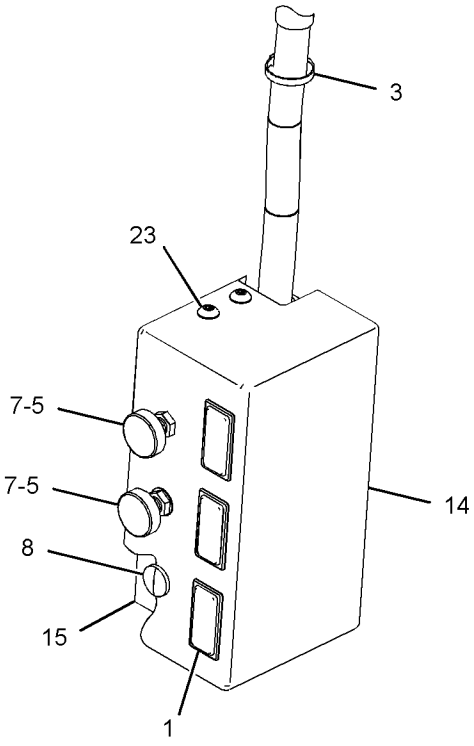

VIEW OF AREA D

GRAPHIC #2 <END> g01708015

285-3361 WIRING GP-CAB

S/N: SZS1-UP
PART OF 320-0341 CAB AR, 320-0342 ROPS AR
AN ATTACHMENT
TYPE 2

SMCS-1408 **i06949216**

NOTE	REF NO	GRAPHIC REF	PART NUMBER	QTY	PART NAME 1 2 3 4 5 6 (PRODUCT LEVEL)	SEE PAGE
	1	2	**3E-0109**	3	PLUG (ROCKER SWITCH)	
Y	2	2	**3E-6389**	1	LAMP GP-DOME (24-VOLT)	289
	3	1,2	**3S-2093**	23	STRAP-CABLE	
	4	2	**6V-6578**	2	RIVET-BLIND	
	6	2	**9W-1441**	1	FUSE (15-AMPERE)	
	8	2	**131-5171**	1	CLIP	
C	9	2	**4D-3100**	1	GROMMET	
	10	1	**167-7504**	1	HARNESS AS-CAB (SWITCH PANEL)	
		1	**8T-8729**	8	PIN-CONNECTOR (16-GA TO 18-GA)	
		1	**9W-0852**	1	PIN-CONNECTOR (14-GA TO 16-GA)	
		1	**155-2255**	1	KIT-CONNECTING PLUG (12-PIN)	
		1	**155-2265**	4	KIT-CONNECTING PLUG (8-PIN)	
					(EACH PLUG KIT INCLUDES PLUG AS, WEDGE & INTERFACE SEAL)	
		1	**3E-7996**	3	PLUG-CONNECTOR (6-PIN)	
		1	**8T-8737**	16	PLUG-SEAL	
		1	**102-8806**	1	KIT-RECEPTACLE (8-PIN)	
		1	**102-8801**	1	KIT-RECEPTACLE (12-PIN)	
					(EACH RECEPTACLE KIT INCLUDES RECEPTACLE AS & WEDGE)	
		1	**8T-8730**	39	SOCKET-CONNECTOR (16-GA TO 18-GA)	
		1	**3E-7790**	6	TERMINAL-BLADE (18-GA TO 20-GA)	
		1	**065-5071**	12	TERMINAL-BLADE (14-GA TO 16-GA)	
E		1	**119-3662**		TUBE-HEAT SHRINK (10.85-MM DIA) (20-CM)	
E		1	**125-7875**		TUBE-HEAT SHRINK (7.44-MM DIA) (10-CM)	
	11	1	**167-7505**	1	HARNESS AS-CAB (REAR)	
		1	**6T-6505**	2	HOUSING-RECEPTACLE (BLADE, POSITIVE LOCK)	
		1	**8T-8729**	8	PIN-CONNECTOR (16-GA TO 18-GA)	
		1	**155-2270**	2	KIT-CONNECTING PLUG (2-PIN)	
		1	**155-2274**	1	KIT-CONNECTING PLUG (6-PIN)	
					(EACH PLUG KIT INCLUDES PLUG AS, WEDGE & INTERFACE SEAL)	
		1	**9G-3695**	11	PLUG-SEAL	
		1	**102-8802**	2	KIT-RECEPTACLE (2-PIN)	
		1	**102-8805**	1	KIT-RECEPTACLE (6-PIN)	
		1	**102-8806**	1	KIT-RECEPTACLE (8-PIN)	
					(EACH RECEPTACLE KIT INCLUDES RECEPTACLE AS & WEDGE)	
		1	**8T-8730**	9	SOCKET-CONNECTOR (16-GA TO 18-GA)	
		1	**3S-2093**	1	STRAP-CABLE	
		1	**8T-9850**	1	TERMINAL-BLADE	
		1	**6T-6506**	1	TERMINAL-BLADE (14-GA TO 18-GA)	
E		1	**119-3662**		TUBE-HEAT SHRINK (10.85-MM DIA) (7-CM)	
	12	1	**168-8248**	1	HARNESS AS-CAB (FRONT)	
		1	**6T-6505**	4	HOUSING-RECEPTACLE (BLADE, POSITIVE LOCK)	
		1	**6T-8047**	2	HOUSING-RECEPTACLE	
		1	**8N-1546**	1	PIN-CONNECTOR (6-GA)	

285-3361 **WIRING GP-CAB (**contd.**)** **i06949216**

NOTE	REF NO	GRAPHIC REF	PART NUMBER	QTY	PART NAME 1 2 3 4 5 6 (PRODUCT LEVEL)	SEE PAGE
		1	**8T-8729**	21	PIN-CONNECTOR (16-GA TO 18-GA)	
		1	**9W-0852**	2	PIN-CONNECTOR (14-GA TO 16-GA)	
		1	**155-2255**	2	KIT-CONNECTING PLUG (12-PIN)	
		1	**155-2265**	1	KIT-CONNECTING PLUG (8-PIN)	
		1	**155-2260**	3	KIT-CONNECTING PLUG (3-PIN)	
		1	**155-2270**	9	KIT-CONNECTING PLUG (2-PIN)	
		1	**155-2271**	1	KIT-CONNECTING PLUG (4-PIN)	
		1	**155-2274**	1	KIT-CONNECTING PLUG (6-PIN)	
					(EACH PLUG KIT INCLUDES PLUG AS, WEDGE & INTERFACE SEAL)	
		1	**8T-8737**	42	PLUG-SEAL	
		1	**102-8802**	9	KIT-RECEPTACLE (2-PIN)	
		1	**102-8803**	2	KIT-RECEPTACLE (3-PIN)	
		1	**102-8804**	1	KIT-RECEPTACLE (4-PIN)	
		1	**102-8806**	1	KIT-RECEPTACLE (8-PIN)	
		1	**102-8801**	2	KIT-RECEPTACLE (12-PIN)	
					(EACH RECEPTACLE KIT INCLUDES RECEPTACLE AS & WEDGE)	
		1	**127-5484**	1	RECEPTACLE AS-CONNECTOR (1-PIN)	
		1	**8T-8730**	47	SOCKET-CONNECTOR (16-GA TO 18-GA)	
		1	**9W-0844**	17	SOCKET-CONNECTOR (14-GA TO 16-GA)	
		1	*7H-1179*	1	TERMINAL AS	
		1	**6H-3586**	1	TERMINAL-RING (6-GA TO 8-GA, 1/4-IN SCREW)	
E		1	**119-3662**		TUBE-HEAT SHRINK (10.85-MM DIA) (4-CM)	
		1	*7H-1181*	1	TERMINAL AS	
		1	**6H-3587**	1	TERMINAL-RING (6-GA TO 8-GA, 3/8-IN SCREW)	
E		1	**119-3662**		TUBE-HEAT SHRINK (10.85-MM DIA) (4-CM)	
		1	**2L-8069**	1	TERMINAL-RING (2-GA TO 10-GA, 3/8-IN SCREW)	
		1	**8T-9850**	1	TERMINAL-BLADE	
		1	**9W-2033**	8	TERMINAL-BLADE (14-GA TO 16-GA)	
		1	**6T-6506**	3	TERMINAL-BLADE (14-GA TO 18-GA)	
		1	**6T-8048**	2	TERMINAL-RECEPTACLE	
E		1	**119-3662**		TUBE-HEAT SHRINK (10.85-MM DIA) (33-CM)	
E		1	**125-7875**		TUBE-HEAT SHRINK (7.44-MM DIA) (20-CM)	
	13	2	**169-8938**	1	PLATE AS	
	14	2	**172-6555**	1	PANEL	
	15	2	**172-8641**	1	PLATE	
	16	2	**172-9316**	1	FILM-FUSE (PANEL ACTION LAMPS)	
	17	2	**096-6166**	3	WASHER-HARD (4.5X9X1-MM THK)	
M	18	2	**5C-8312**	3	NUT (M4X0.7-THD)	
	19	2	**6V-5645**	4	SCREW-MACHINE (10-32X0.87-IN)	
	20	2	**6V-8801**	1	NUT (3/8-16-THD)	
	21	2	**8T-4896**	1	WASHER-HARD (10.2X18.5X2.5-MM THK)	
M	22	2	**9X-1046**	3	SCREW (M4X0.7X18-MM)	
M	23	2	**9X-2042**	4	SCREW-TRUSS HEAD (M6X1X12-MM)	
CE	24	1	**7X-7877**		STRIP-EDGE (12-CM EACH)	
CE	24A	1,2	**7X-7877**		STRIP-EDGE (10-CM EACH)	
CE	24B	2	**7X-7877**		STRIP-EDGE (3.5-CM EACH)	
CE	24C	2	**7X-7877**		STRIP-EDGE (20-CM)	
CE	24D	2	**7X-7877**		STRIP-EDGE (25-CM)	
BC	25	1	**1P-0810**		TAPE-ELECTRICAL	

285-3361 **WIRING GP-CAB (**contd.**)** **i06949216**

NOTE	REF NO	GRAPHIC REF	PART NUMBER	QTY	PART NAME 1 2 3 4 5 6 (PRODUCT LEVEL)	SEE PAGE

B - USE AS REQUIRED
C - CHANGE FROM PREVIOUS TYPE
E - ORDER BY THE CENTIMETER
M - METRIC PART
Y - SEPARATE ILLUSTRATION

285-3361 **WIRING GP-CAB (**contd.**)** **i06949216**

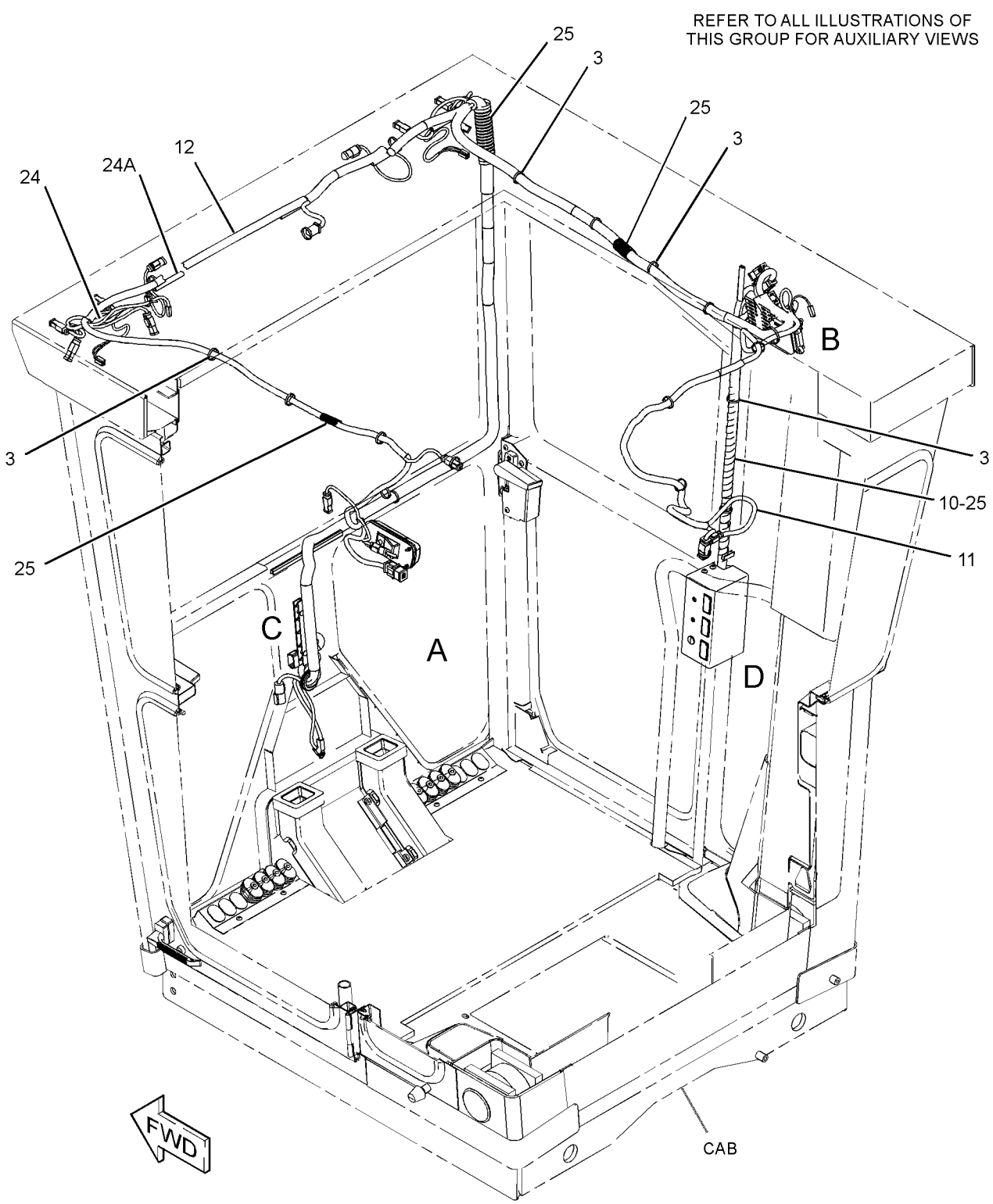

GRAPHIC #1 g02971417

285-3361 **WIRING GP-CAB (**contd.**)** **i06949216**

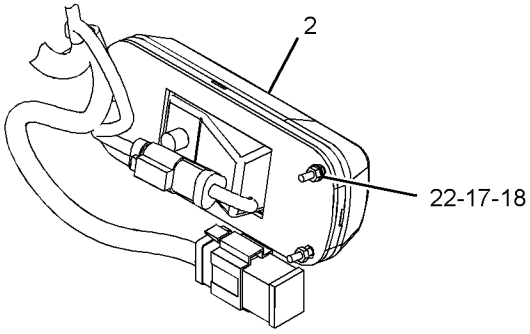

VIEW OF AREA A

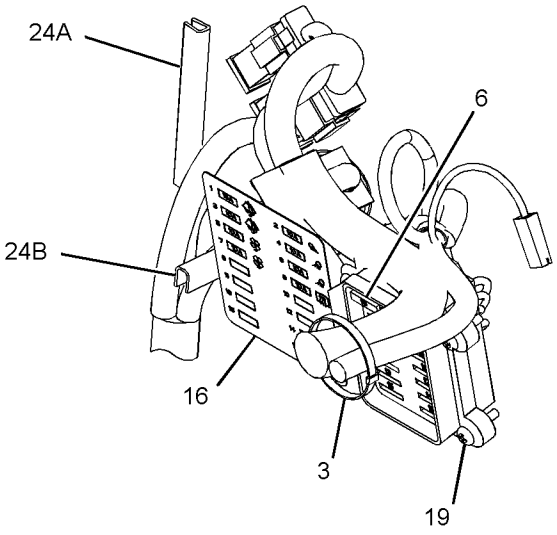

VIEW OF AREA B
(FUSE PANEL COVER REMOVED FOR CLARITY)

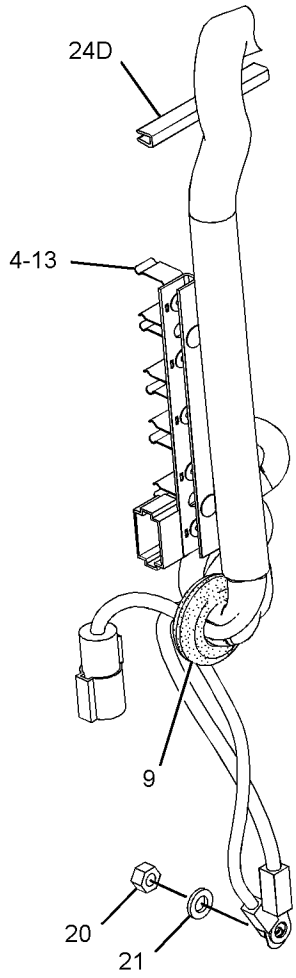

VIEW OF AREA C

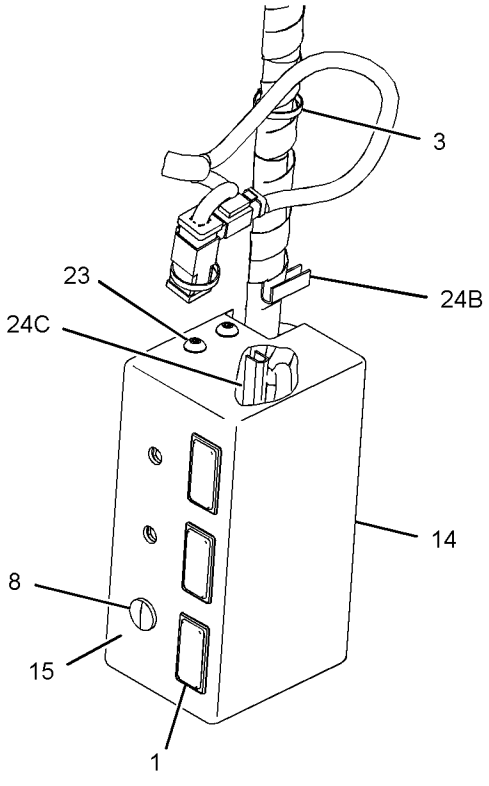

VIEW OF AREA D

GRAPHIC #2 <END> g02971418

285-3361 WIRING GP-CAB

S/N: SZS1-UP
PART OF 320-0341 CAB AR, 320-0342 ROPS AR
AN ATTACHMENT
TYPE 3

SMCS-1408 **i05239475**

NOTE	REF NO	GRAPHIC REF	PART NUMBER	QTY	PART NAME 1 2 3 4 5 6 (PRODUCT LEVEL)	SEE PAGE
C	1	2	**228-6089**	3	PLUG (ROCKER SWITCH)	
Y	2	2	**3E-6389**	1	LAMP GP-DOME (24-VOLT)	289
	3	1,2	**3S-2093**	23	STRAP-CABLE	
	4	2	**6V-6578**	2	RIVET-BLIND	
	6	2	**9W-1441**	1	FUSE (15-AMPERE)	
	8	2	**131-5171**	1	CLIP	
	9	2	**4D-3100**	1	GROMMET	
C	10	1	**382-5906**	1	HARNESS AS-CAB (SWITCH PANEL)	
		1	**245-7434**	2	KIT-CONNECTING PLUG (10-PIN)	
					(EACH INCLUDES WIRE AS, PLUG & PLUG CONNECTOR	
		1	**102-8806**	1	KIT-RECEPTACLE (8-PIN)	
		1	**102-8801**	1	KIT-RECEPTACLE (12-PIN)	
					(EACH RECEPTACLE KIT INCLUDES RECEPTACLE AS & WEDGE)	
		1	**8T-8729**	7	PIN-CONNECTOR (16-GA TO 18-GA)	
		1	**9W-0852**	1	PIN-CONNECTOR (14-GA TO 16-GA)	
		1	**8T-8737**	18	PLUG-SEAL	
		1	**185-1860**	4	SEAL-WIRE	
		1	**185-1861**	10	SEAL-WIRE	
		1	**8T-8730**	38	SOCKET-CONNECTOR (16-GA TO 18-GA)	
		1	**204-1297**	4	TERMINAL AS-BLADE (18-GA TO 20-GA)	
E		1	**119-3662**		TUBE-HEAT SHRINK (10.85-MM DIA) (13-CM)	
E		1	**125-7874**		TUBE-HEAT SHRINK (5.72-MM DIA) (13-CM)	
		1	**155-2255**	1	KIT-CONNECTING PLUG (12-PIN)	
		1	**155-2265**		KIT-CONNECTING PLUG (8-PIN)	
					(EACH PLUG KIT INCLUDES PLUG AS, WEDGE & INTERFACE SEAL)	
	11	1	**167-7505**	1	HARNESS AS-CAB (REAR)	
		1	**6T-6505**	2	HOUSING-RECEPTACLE (BLADE, POSITIVE LOCK)	
		1	**8T-8729**	8	PIN-CONNECTOR (16-GA TO 18-GA)	
		1	**155-2270**	2	KIT-CONNECTING PLUG (2-PIN)	
		1	**155-2274**	1	KIT-CONNECTING PLUG (6-PIN)	
					(EACH PLUG KIT INCLUDES PLUG AS, WEDGE & INTERFACE SEAL)	
		1	**9G-3695**	11	PLUG-SEAL	
		1	**102-8802**	2	KIT-RECEPTACLE (2-PIN)	
		1	**102-8805**	1	KIT-RECEPTACLE (6-PIN)	
		1	**102-8806**	1	KIT-RECEPTACLE (8-PIN)	
					(EACH RECEPTACLE KIT INCLUDES RECEPTACLE AS & WEDGE)	
		1	**8T-8730**	9	SOCKET-CONNECTOR (16-GA TO 18-GA)	
		1	**3S-2093**	1	STRAP-CABLE	
		1	**8T-9850**	1	TERMINAL-BLADE	
		1	**6T-6506**	1	TERMINAL-BLADE (14-GA TO 18-GA)	
E		1	**119-3662**		TUBE-HEAT SHRINK (10.85-MM DIA) (7-CM)	
	12	1	**168-8248**	1	HARNESS AS-CAB (FRONT)	
		1	**2L-8052**	1	TERMINAL-RING (6-GA, 3/8-IN SCREW)	
					—OR—	

285-3361 **WIRING GP-CAB (**contd.**)** **i05239475**

NOTE	REF NO	GRAPHIC REF	PART NUMBER	QTY	PART NAME 1 2 3 4 5 6 (PRODUCT LEVEL)	SEE PAGE
		1	**2L-8060**	1	TERMINAL-RING (8-GA, 3/8-IN SCREW)	
		1	**2L-8050**	1	TERMINAL-RING (6-GA, 1/4-IN SCREW)	
					—OR—	
		1	**2L-8058**	1	TERMINAL-RING (8-GA, 1/4-IN SCREW)	
		1	**174-7566**	1	BLOCK AS-FUSE	
		1	**6T-6505**	4	HOUSING-RECEPTACLE (BLADE, POSITIVE LOCK)	
		1	**6T-8047**	2	HOUSING-RECEPTACLE	
		1	**8N-1546**	1	PIN-CONNECTOR (6-GA)	
		1	**8T-8729**	21	PIN-CONNECTOR (16-GA TO 18-GA)	
		1	**9W-0852**	2	PIN-CONNECTOR (14-GA TO 16-GA)	
		1	**155-2255**	2	KIT-CONNECTING PLUG (12-PIN)	
		1	**155-2265**	1	KIT-CONNECTING PLUG (8-PIN)	
		1	**155-2270**	9	KIT-CONNECTING PLUG (2-PIN)	
		1	**155-2271**	1	KIT-CONNECTING PLUG (4-PIN)	
		1	**155-2274**	1	KIT-CONNECTING PLUG (6-PIN)	
					(EACH PLUG KIT INCLUDES PLUG AS, WEDGE & INTERFACE SEAL)	
		1	**155-2260**	3	KIT-CONNECTING PLUG (3-PIN)	
					(EACH INCLUDES PLUG AS, WEDGES & INTERFACE SEAL)	
		1	**8T-8737**	42	PLUG-SEAL	
		1	**102-8802**	9	KIT-RECEPTACLE (2-PIN)	
		1	**102-8803**	2	KIT-RECEPTACLE (3-PIN)	
		1	**102-8804**	1	KIT-RECEPTACLE (4-PIN)	
		1	**102-8806**	1	KIT-RECEPTACLE (8-PIN)	
		1	**102-8801**	2	KIT-RECEPTACLE (12-PIN)	
					(EACH RECEPTACLE KIT INCLUDES RECEPTACLE AS & WEDGE)	
		1	**127-5484**	1	RECEPTACLE AS-CONNECTOR (1-PIN)	
		1	**8T-8730**	47	SOCKET-CONNECTOR (16-GA TO 18-GA)	
		1	**9W-0844**	17	SOCKET-CONNECTOR (14-GA TO 16-GA)	
		1	**2L-8069**	1	TERMINAL-RING (2-GA TO 10-GA, 3/8-IN SCREW)	
		1	**8T-9850**	1	TERMINAL-BLADE	
		1	**9W-2033**	8	TERMINAL-BLADE (14-GA TO 16-GA)	
		1	**6T-6506**	3	TERMINAL-BLADE (14-GA TO 18-GA)	
		1	**6T-8048**	2	TERMINAL-RECEPTACLE	
E		1	**119-3662**		TUBE-HEAT SHRINK (10.85-MM DIA) (33-CM)	
E		1	**125-7875**		TUBE-HEAT SHRINK (7.44-MM DIA) (20-CM)	
	13	2	**169-8938**	1	PLATE AS	
	14	2	**172-6555**	1	PANEL	
	15	2	**172-8641**	1	PLATE	
	16	2	**172-9316**	1	FILM-FUSE (PANEL ACTION LAMPS)	
	17	2	**096-6166**	3	WASHER-HARD (4.5X9X1-MM THK)	
M	18	2	**5C-8312**	3	NUT (M4X0.7-THD)	
	19	2	**6V-5645**	4	SCREW-MACHINE (10-32X0.87-IN)	
	20	2	**6V-8801**	1	NUT (3/8-16-THD)	
	21	2	**8T-4896**	1	WASHER-HARD (10.2X18.5X2.5-MM THK)	
M	22	2	**9X-1046**	3	SCREW (M4X0.7X18-MM)	
M	23	2	**9X-2042**	4	SCREW-TRUSS HEAD (M6X1X12-MM)	
E	24	1	**7X-7877**		STRIP-EDGE (12-CM EACH)	
E	24A	1,2	**7X-7877**		STRIP-EDGE (10-CM EACH)	
E	24B	2	**7X-7877**		STRIP-EDGE (3.5-CM EACH)	

285-3361 **WIRING GP-CAB (**contd.**)** **i05239475**

NOTE	REF NO	GRAPHIC REF	PART NUMBER	QTY	PART NAME 1 2 3 4 5 6 (PRODUCT LEVEL)	SEE PAGE
E	24C	2	**7X-7877**		STRIP-EDGE (20-CM)	
E	24D	2	**7X-7877**		STRIP-EDGE (25-CM)	
B	25	1	**1P-0810**		TAPE-ELECTRICAL	
C	26	2	**236-4631**	3	BEZEL	

B - USE AS REQUIRED
C - CHANGE FROM PREVIOUS TYPE
E - ORDER BY THE CENTIMETER
M - METRIC PART
Y - SEPARATE ILLUSTRATION

285-3361 **WIRING GP-CAB (**contd.**)** **i05239475**

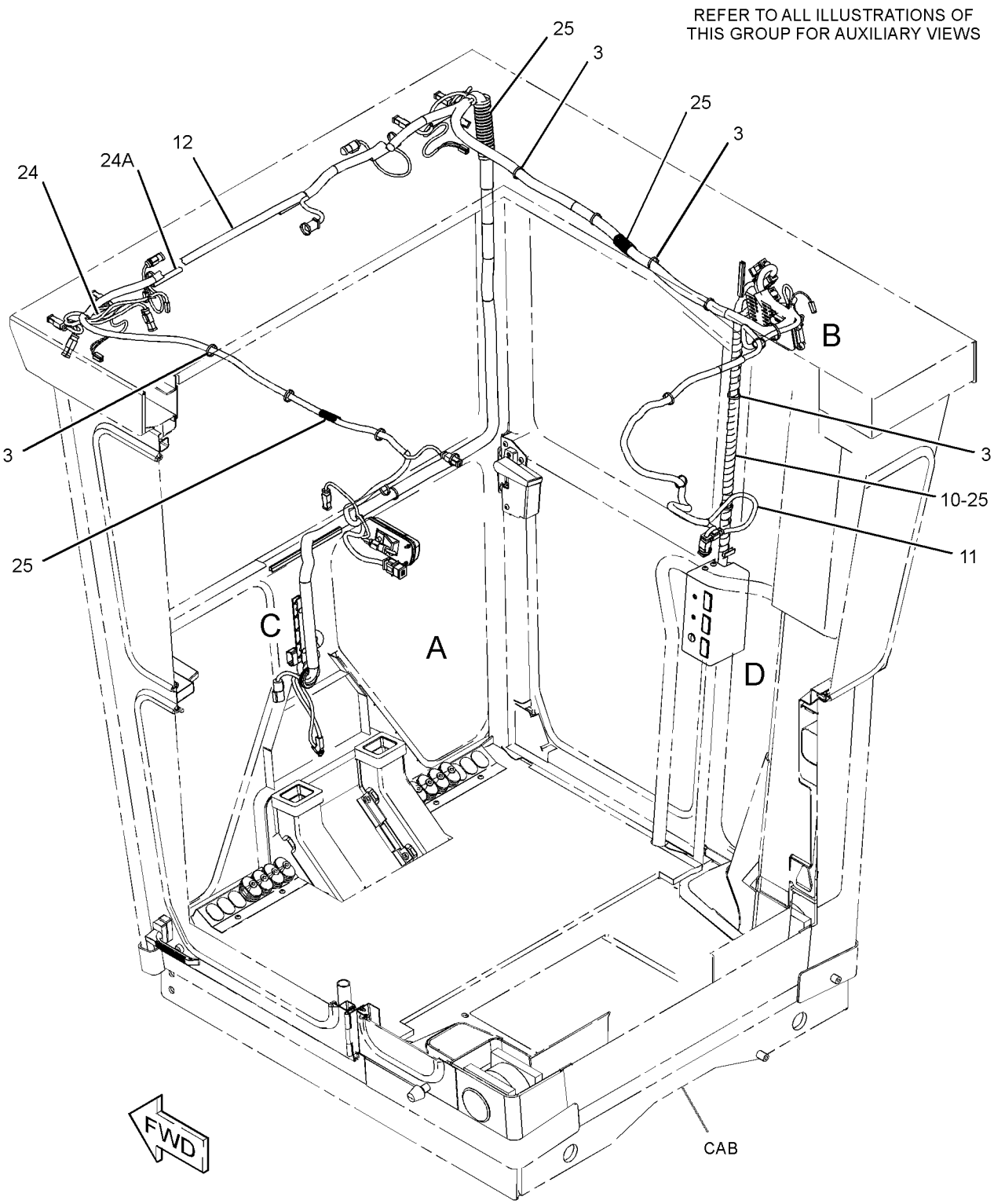

GRAPHIC #1 g03343339

285-3361 **WIRING GP-CAB (**contd.**)** **i05239475**

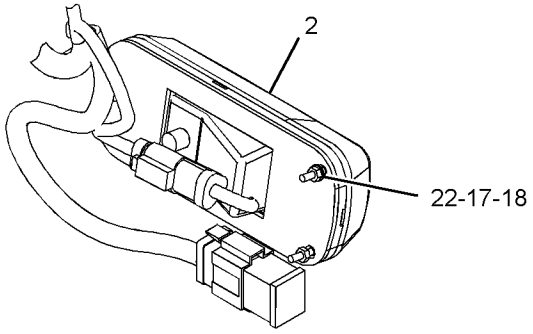

VIEW OF AREA A

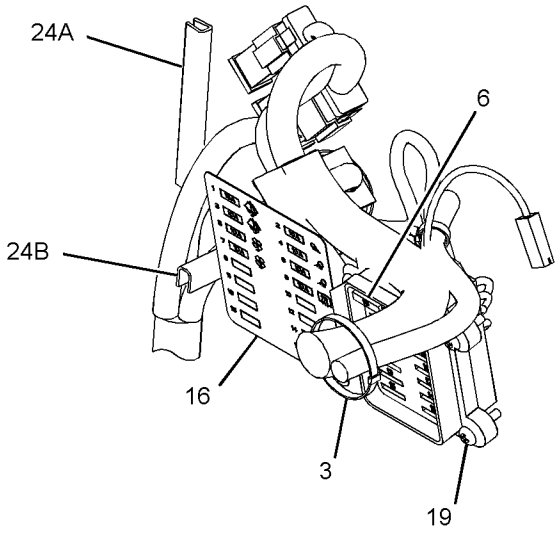

VIEW OF AREA B
(FUSE PANEL COVER REMOVED FOR CLARITY)

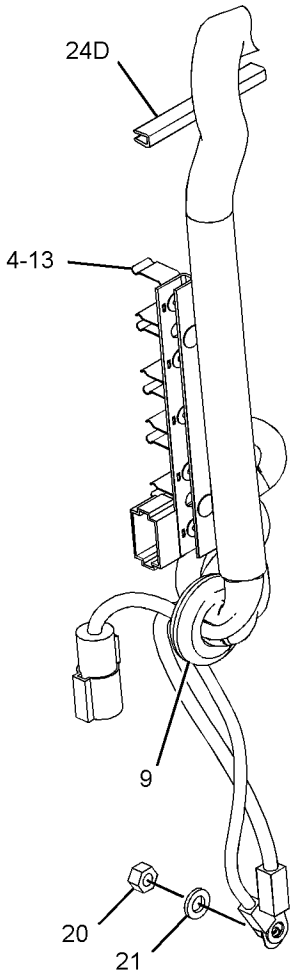

VIEW OF AREA C

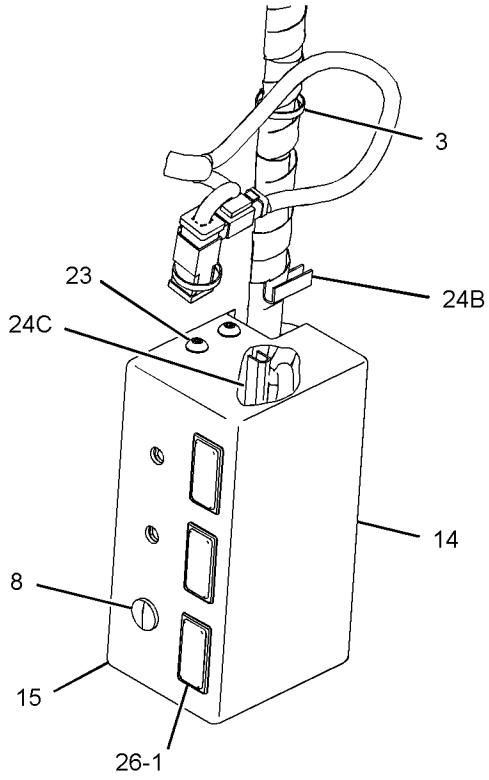

VIEW OF AREA D

GRAPHIC #2 <END> g03343340

434-4112 WIRING GP-CAB

S/N: SZS1-UP

PART OF 437-0650, 437-0677, 516-7920, 516-7931 CAB AR

AN ATTACHMENT

SMCS-1408 **i06218562**

NOTE	REF NO	GRAPHIC REF	PART NUMBER	QTY	PART NAME 1 2 3 4 5 6 (PRODUCT LEVEL)	SEE PAGE
Y	1	1	*3E-6389*	1	LAMP GP-DOME (24-VOLT)	289
	2	1	**3S-2093**	23	STRAP-CABLE	
	3	1	**9W-1441**	1	FUSE (15-AMPERE)	
	4	1	**167-7505**	1	HARNESS AS-CAB (REAR)	
		1	**155-2270**	2	KIT-CONNECTING PLUG (2-PIN)	
		1	**155-2274**	1	KIT-CONNECTING PLUG (6-PIN)	
					(EACH PLUG KIT INCLUDES PLUG AS, WEDGE & INTERFACE SEAL)	
		1	**102-8802**	2	KIT-RECEPTACLE (2-PIN)	
		1	**102-8805**	1	KIT-RECEPTACLE (6-PIN)	
		1	**102-8806**	1	KIT-RECEPTACLE (8-PIN)	
					(EACH RECEPTACLE KIT INCLUDES RECEPTACLE AS & WEDGE)	
		1	**6T-6505**	2	HOUSING-RECEPTACLE (BLADE, POSITIVE LOCK)	
		1	**8T-8729**	8	PIN-CONNECTOR (16-GA TO 18-GA)	
		1	**9G-3695**	11	PLUG-SEAL	
		1	**8T-8730**	9	SOCKET-CONNECTOR (16-GA TO 18-GA)	
		1	**3S-2093**	1	STRAP-CABLE	
		1	**8T-9850**	1	TERMINAL-BLADE	
		1	**6T-6506**	1	TERMINAL-BLADE (14-GA TO 18-GA)	
E		1	**119-3662**		TUBE-HEAT SHRINK (10.85-MM DIA) (7-CM)	
	5	1	**168-8248**	1	HARNESS AS-CAB (FRONT)	
		1	**155-2255**	2	KIT-CONNECTING PLUG (12-PIN)	
		1	**155-2265**	1	KIT-CONNECTING PLUG (8-PIN)	
		1	**155-2270**	9	KIT-CONNECTING PLUG (2-PIN)	
		1	**155-2271**	1	KIT-CONNECTING PLUG (4-PIN)	
		1	**155-2274**	1	KIT-CONNECTING PLUG (6-PIN)	
		1	**155-2260**	3	KIT-CONNECTING PLUG (3-PIN)	
					(EACH PLUG KIT INCLUDES PLUG AS, WEDGE(S) & INTERFACE SEAL)	
		1	**102-8802**	9	KIT-RECEPTACLE (2-PIN)	
		1	**102-8801**	2	KIT-RECEPTACLE (12-PIN)	
		1	**102-8803**	2	KIT-RECEPTACLE (3-PIN)	
		1	**102-8804**	1	KIT-RECEPTACLE (4-PIN)	
		1	**102-8806**	1	KIT-RECEPTACLE (8-PIN)	
					(EACH RECEPTACLE KIT INCLUDES RECEPTACLE AS & WEDGE)	
		1	**2L-8050**	1	TERMINAL-RING (6-GA, 1/4-IN SCREW)	
					—OR—	
		1	**2L-8058**	1	TERMINAL-RING (8-GA, 1/4-IN SCREW)	
		1	**2L-8052**	1	TERMINAL-RING (6-GA, 3/8-IN SCREW)	
					—OR—	
		1	**2L-8060**	1	TERMINAL-RING (8-GA, 3/8-IN SCREW)	
		1	**2L-8069**	1	TERMINAL-RING (2-GA TO 10-GA, 3/8-IN SCREW)	
		1	**174-7566**	1	BLOCK AS-FUSE	
		1	**151-1398**	1	KIT-TERMINAL (LOCK)	
		1	**199-6582**	1	BLOCK AS-FUSE	
		1	**8T-4205**	1	WASHER-HARD (7.2X14.5X2-MM THK)	
		1	**1H-3244**	1	LOCKWASHER	

434-4112 **WIRING GP-CAB (**contd.**)** **i06218562**

NOTE	REF NO	GRAPHIC REF	PART NUMBER	QTY	PART NAME 1 2 3 4 5 6 (PRODUCT LEVEL)	SEE PAGE
		1	**6V-8185**	1	NUT (1/4-20-THD)	
		1	**200-8787**	1	SEAL	
		1	**6T-6505**	4	HOUSING-RECEPTACLE (BLADE, POSITIVE LOCK)	
		1	**6T-8047**	2	HOUSING-RECEPTACLE	
		1	**8N-1546**	1	PIN-CONNECTOR (6-GA)	
		1	**8T-8729**	21	PIN-CONNECTOR (16-GA TO 18-GA)	
		1	**9W-0852**	2	PIN-CONNECTOR (14-GA TO 16-GA)	
		1	**8T-8737**	42	PLUG-SEAL	
		1	**127-5484**	1	RECEPTACLE AS-CONNECTOR (1-PIN)	
		1	**8T-8730**	47	SOCKET-CONNECTOR (16-GA TO 18-GA)	
		1	**9W-0844**	17	SOCKET-CONNECTOR (14-GA TO 16-GA)	
		1	**8T-9850**	1	TERMINAL-BLADE	
		1	**6T-6506**	3	TERMINAL-BLADE (14-GA TO 18-GA)	
		1	**9W-2033**	8	TERMINAL-BLADE (14-GA TO 16-GA)	
		1	**6T-8048**	2	TERMINAL-RECEPTACLE	
E		1	**119-3662**		TUBE-HEAT SHRINK (10.85-MM DIA) (33-CM)	
E		1	**125-7875**		TUBE-HEAT SHRINK (7.44-MM DIA) (20-CM)	
	6	1	**169-8938**	1	PLATE AS	
	7	1	**172-9316**	1	FILM-FUSE	
	8	1	**096-6166**	3	WASHER-HARD (4.5X9X1-MM THK)	
	9	1	**4D-3100**	1	GROMMET	
M	10	1	**5C-8312**	3	NUT (M4X0.7-THD)	
	11	1	**6V-5645**	4	SCREW-MACHINE (10-32X0.87-IN)	
	12	1	**9M-5733**	2	RIVET-POP	
	13	1	**6V-8801**	1	NUT (3/8-16-THD)	
	14	1	**8T-4896**	1	WASHER-HARD (10.2X18.5X2.5-MM THK)	
M	15	1	**9X-1046**	3	SCREW (M4X0.7X18-MM)	
E	16	1	**7X-7877**		STRIP-EDGE (12-CM EACH)	
E	16A	1	**7X-7877**		STRIP-EDGE (10-CM EACH)	
E	16B	1	**7X-7877**		STRIP-EDGE (25-CM)	
E	16C	1	**7X-7877**		STRIP-EDGE (11-CM EACH)	
B	17	1	**1P-0810**		TAPE-ELECTRICAL	

B - USE AS REQUIRED
E - ORDER BY THE CENTIMETER
M - METRIC PART
Y - SEPARATE ILLUSTRATION

434-4112 **WIRING GP-CAB (**contd.**)** **i06218562**

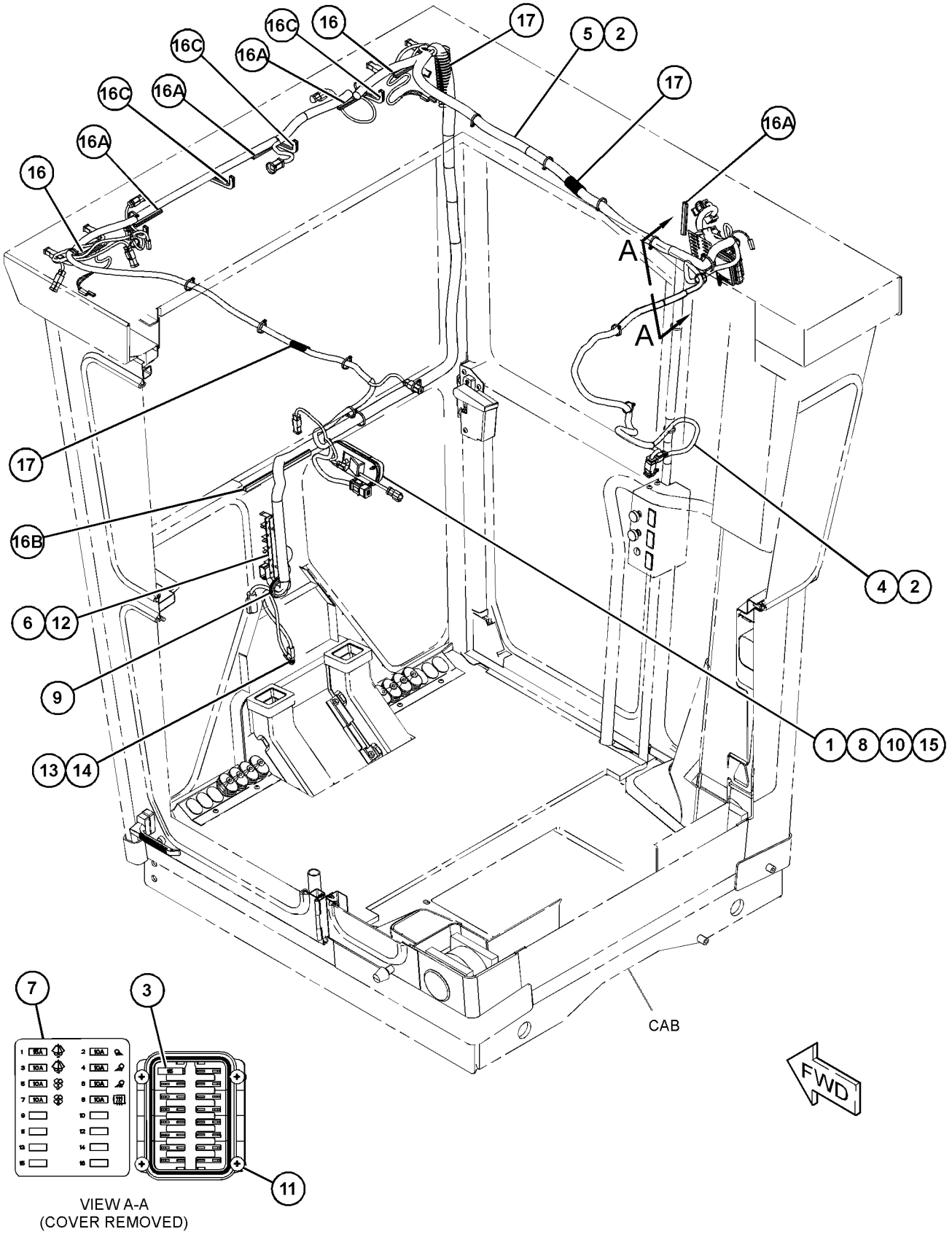

GRAPHIC #1 <END> g03862080

434-8341 WIRING GP-CAB–ACCUGRADE

S/N: SZS1-UP

PART OF 435-1526, 435-1548 GRADE CONTROL AR

AN ATTACHMENT

SMCS-1408 **i06230736**

NOTE	REF NO	GRAPHIC REF	PART NUMBER	QTY	PART NAME 1 2 3 4 5 6 (PRODUCT LEVEL)	SEE PAGE
	1	1	**3S-2093**	7	STRAP-CABLE	
	2	1	**152-6824**	1	KNOB AS (RH) (BLADE LIFT)	
		1	**8T-8737**	1	PLUG-SEAL	
		1	**102-8804**	1	KIT-RECEPTACLE (4-PIN)	
					(INCLUDES RECEPTACLE AS & WEDGE)	
		1	**8T-8729**	3	PIN-CONNECTOR (16-GA TO 18-GA)	
	3	1	**152-6825**	1	KNOB AS (LH) (BLADE LIFT)	
		1	**8T-8737**	1	PLUG-SEAL	
		1	**102-8804**	1	KIT-RECEPTACLE (4-PIN)	
					(INCLUDES RECEPTACLE AS & WEDGE)	
		1	**8T-8729**	3	PIN-CONNECTOR (16-GA TO 18-GA)	
	4	1	**246-6561**	1	KNOB AS (RH) (BLADE LIFT, LOWER)	
		1	**102-8804**	1	KIT-RECEPTACLE (4-PIN)	
					(INCLUDES RECEPTACLE AS & WEDGE)	
		1	**8T-8729**	4	PIN-CONNECTOR (16-GA TO 18-GA)	
	5	1	**246-6562**	1	KNOB AS (LH) (BLADE LIFT, LOWER)	
		1	**102-8804**	1	KIT-RECEPTACLE (4-PIN)	
					(INCLUDES RECEPTACLE AS & WEDGE)	
		1	**8T-8729**	4	PIN-CONNECTOR (16-GA TO 18-GA)	
Y	6	1	*252-5709*	1	WIRING GP-GRADE CONTROL (CAB, INDICATOR LAMP)	473
	7	1	**130-5300**	4	CLIP	
	8	1	**1V-7368**	2	SPACER (0.364X0.54X1.06-IN THK)	
	9	1	**5P-4115**	2	WASHER-HARD (7.2X19X2-MM THK)	
M	10	1	**9X-2480**	2	BOLT (M6X1X45-MM)	
BE	11	1	**7I-1024**		GUARD-HOSE (60-CM EACH)	

B - USE AS REQUIRED
E - ORDER BY THE CENTIMETER
M - METRIC PART
Y - SEPARATE ILLUSTRATION

434-8341 **WIRING GP-CAB (**contd.**)** **i06230736**

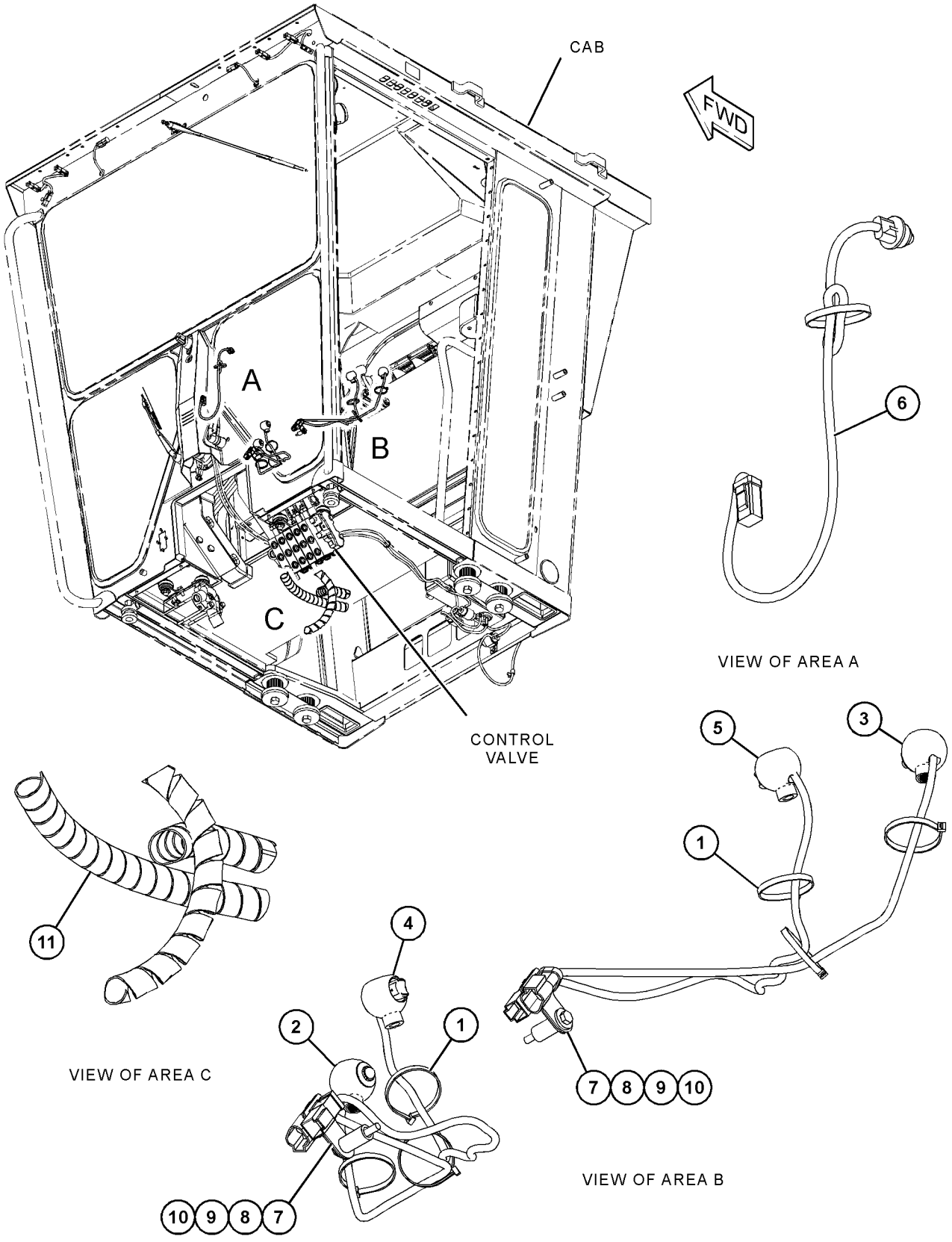

GRAPHIC #1 <END> g03704746

453-2783 WIRING GP-CAB—SWITCH PANEL

S/N: SZS1-10099
PART OF 437-0650, 437-0677 CAB AR
AN ATTACHMENT

SMCS-1408 **i06260217**

NOTE	REF NO	GRAPHIC REF	PART NUMBER	QTY	PART NAME 1 2 3 4 5 6 (PRODUCT LEVEL)	SEE PAGE
	1	1	**3S-2093**	2	STRAP-CABLE	
	2	1	**139-1118**	1	PLATE	
	3	1	**172-6555**	1	PANEL	
	4	1	**172-8641**	1	PLATE	
	5	1	**228-6089**	3	PLUG (ROCKER SWITCH)	
	6	1	**236-4631**	3	BEZEL	
	7	1	**382-5906**	1	HARNESS AS-CAB	
		1	**155-2255**	1	KIT-CONNECTING PLUG (12-PIN)	
		1	**155-2265**	4	KIT-CONNECTING PLUG (8-PIN)	
					(EACH PLUG KIT INCLUDES PLUG AS, WEDGE & INTERFACE SEAL)	
		1	**102-8806**	1	KIT-RECEPTACLE (8-PIN)	
		1	**102-8801**	1	KIT-RECEPTACLE (12-PIN)	
					(EACH RECEPTACLE KIT INCLUDES RECEPTACLE AS & WEDGE)	
		1	**245-7434**	2	KIT-CONNECTING PLUG (10-PIN)	
					(EACH INCLUDES CONNECTOR PLUG, WIRE ASSEMBLIES & PLUGS)	
		1	**8T-8729**	7	PIN-CONNECTOR (16-GA TO 18-GA)	
		1	**9W-0852**	1	PIN-CONNECTOR (14-GA TO 16-GA)	
		1	**8T-8737**	18	PLUG-SEAL	
		1	**185-1860**	4	SEAL-WIRE	
		1	**185-1861**	10	SEAL-WIRE	
		1	**8T-8730**	38	SOCKET-CONNECTOR (16-GA TO 18-GA)	
		1	**204-1297**	4	TERMINAL AS-BLADE (18-GA TO 20-GA)	
					(EACH INCLUDES)	
		1	**235-4123**	1	TERMINAL (18-GA TO 20-GA)	
E		1	**119-3662**		TUBE-HEAT SHRINK (10.85-MM DIA) (13-CM)	
E		1	**125-7874**		TUBE-HEAT SHRINK (5.72-MM DIA) (15-CM)	
	8	1	**131-5171**	1	CLIP	
M	9	1	**9X-2042**	4	SCREW-TRUSS HEAD (M6X1X12-MM)	
E	10	1	**7X-7877**		STRIP-EDGE (20-CM)	
E	10A	1	**7X-7877**		STRIP-EDGE (3.5-CM EACH)	
B	11	1	**1P-0810**		TAPE-ELECTRICAL	

B - USE AS REQUIRED
E - ORDER BY THE CENTIMETER
M - METRIC PART

453-2783 **WIRING GP-CAB (**contd.**)** **i06260217**

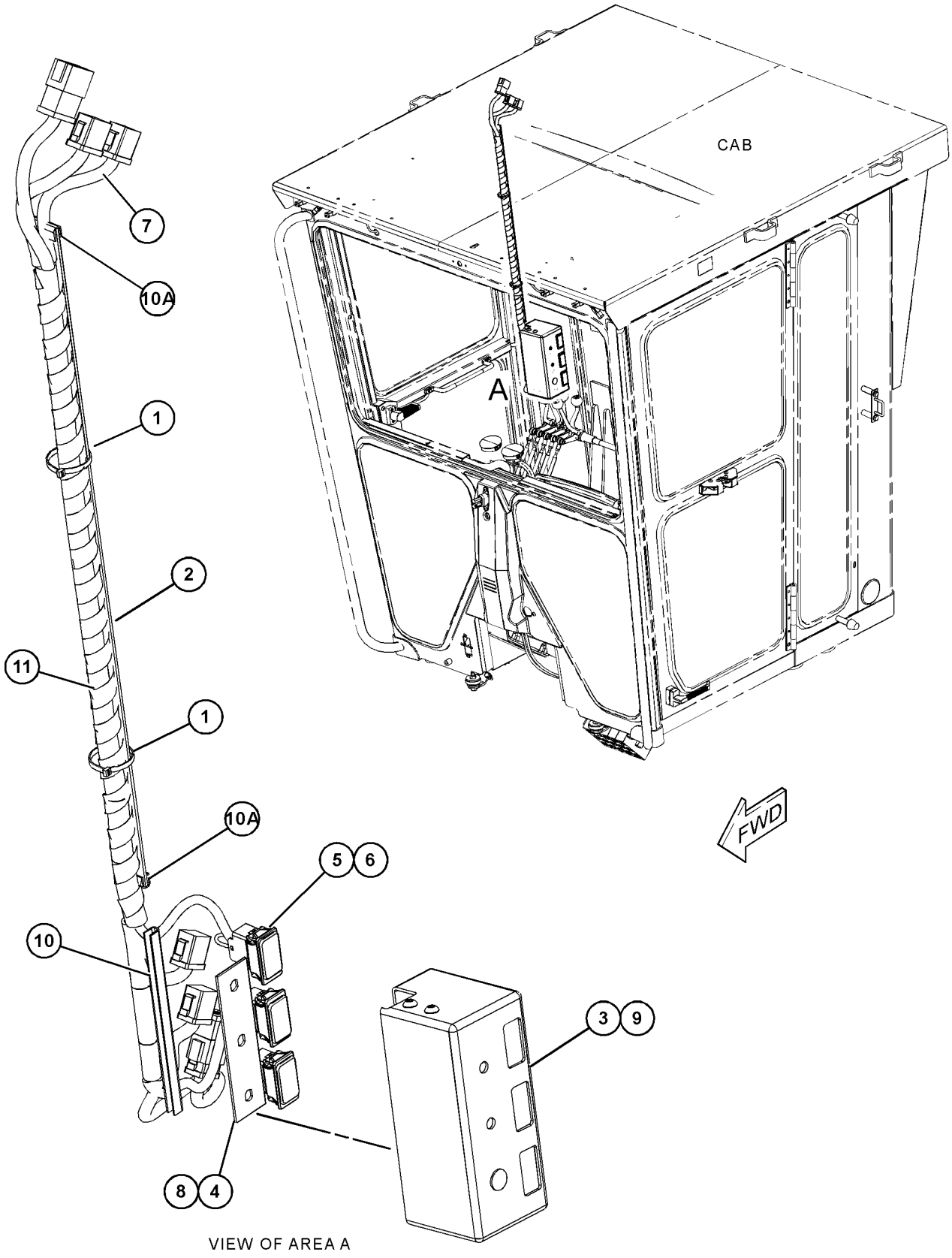

VIEW OF AREA A

GRAPHIC #1 <END> g03879308

518-6852 WIRING GP-CAB—SWITCH PANEL

S/N: SZS10100-UP
PART OF 516-7920, 516-7931 CAB AR
AN ATTACHMENT

SMCS-1408 **i06904537**

NOTE	REF NO	GRAPHIC REF	PART NUMBER	QTY	PART NAME 1 2 3 4 5 6 (PRODUCT LEVEL)	SEE PAGE
	1	1	**3S-2093**	2	STRAP-CABLE	
	2	1	**172-8641**	1	PLATE	
	3	1	**228-6089**	3	PLUG (ROCKER SWITCH)	
	4	1	**236-4631**	3	BEZEL	
	5	1	**382-5906**	1	HARNESS AS-CAB	
		1	**102-8806**	1	KIT-RECEPTACLE (8-PIN)	
		1	**102-8801**	1	KIT-RECEPTACLE (12-PIN)	
					(EACH RECEPTACLE KIT INCLUDES RECEPTACLE AS & WEDGE)	
		1	**8T-8729**	7	PIN-CONNECTOR (16-GA TO 18-GA)	
		1	**8T-8730**	38	SOCKET-CONNECTOR (16-GA TO 18-GA)	
		1	**8T-8737**	18	PLUG-SEAL	
		1	**9W-0852**	1	PIN-CONNECTOR (14-GA TO 16-GA)	
E		1	**119-3662**		TUBE-HEAT SHRINK (10.85-MM DIA) (13-CM)	
E		1	**125-7874**		TUBE-HEAT SHRINK (5.72-MM DIA) (15-CM)	
		1	**155-2255**	1	KIT-CONNECTING PLUG (12-PIN)	
					(INCLUDES PLUG AS, WEDGE, & INTERFACE SEAL)	
		1	**155-2258**	1	WEDGE-PLUG LOCK (12-PIN)	
		1	**155-2259**	4	WEDGE-PLUG LOCK (8-PIN)	
		1	**155-2265**	4	KIT-CONNECTING PLUG (8-PIN)	
					(EACH INCLUDES PLUG AS, WEDGE, & INTERFACE SEAL)	
		1	**185-1860**	4	SEAL-WIRE	
		1	**185-1861**	10	SEAL-WIRE	
		1	**202-5397**	6	PLUG	
		1	**204-1297**	4	TERMINAL AS-BLADE (18-GA TO 20-GA)	
					(EACH INCLUDES)	
		1	**235-4123**	1	TERMINAL (18-GA TO 20-GA)	
		1	**245-7434**	2	KIT-CONNECTING PLUG (10-PIN)	
					(EACH INCLUDES PLUG CONNECTOR, WIRE AS & PLUG)	
	6	1	**512-5976**	1	PANEL	
	7	1	**516-7926**	1	PLATE	
	8	1	**131-5171**	1	CLIP	
M	9	1	**9X-2042**	4	SCREW-TRUSS HEAD (M6X1X12-MM)	
E	10	1	**7X-7877**		STRIP-EDGE (3.5-CM EACH)	
E	10A	1	**7X-7877**		STRIP-EDGE (20-CM)	
B	11	1	**1P-0810**		TAPE-ELECTRICAL	

B - USE AS REQUIRED
E - ORDER BY THE CENTIMETER
M - METRIC PART

518-6852 **WIRING GP-CAB (**contd.**)** **i06904537**

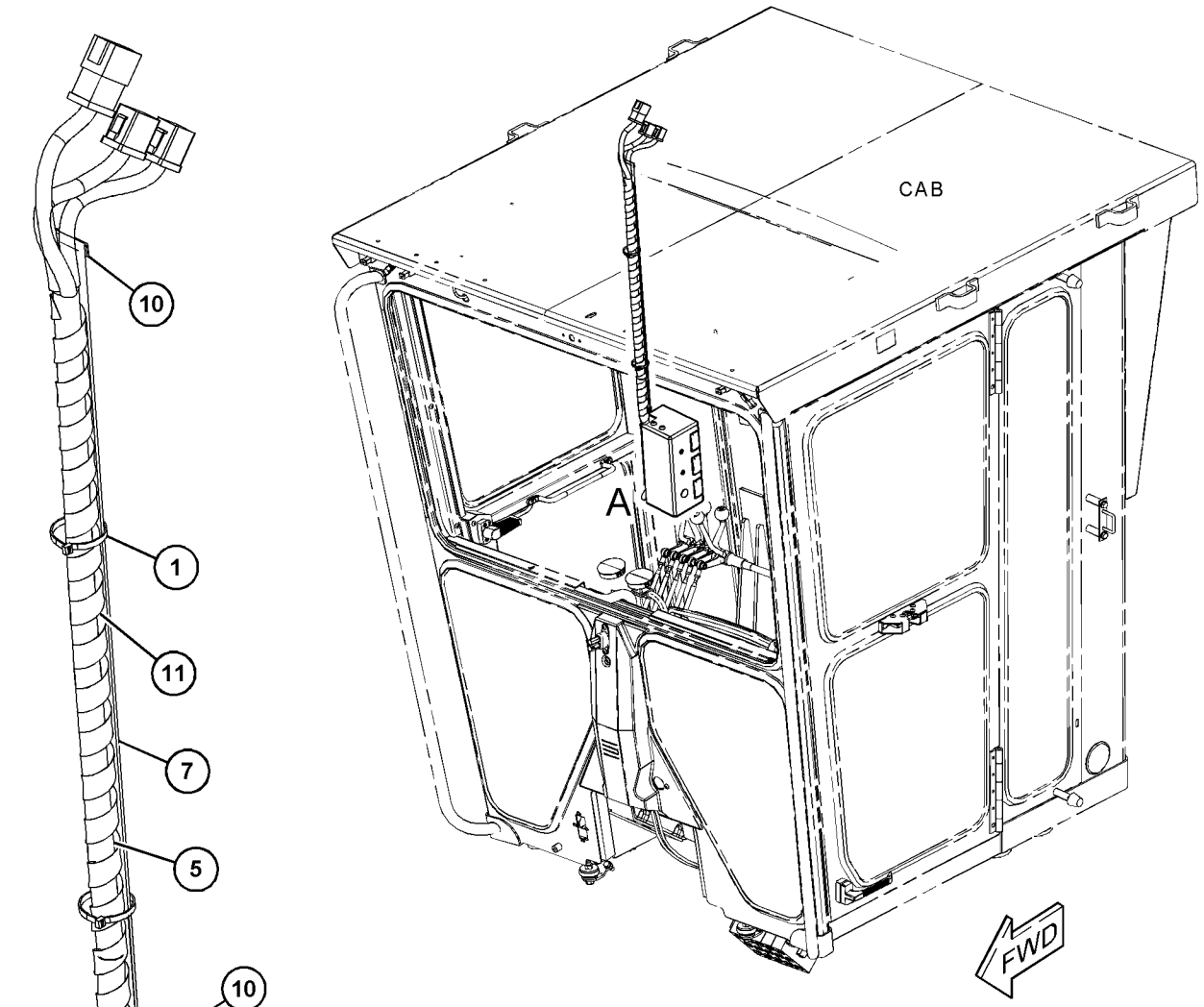

VIEW OF AREA A
(EXPLODED)

GRAPHIC #1 <END> g06165668

284-5346 WIRING GP-CONSOLE

S/N: SZS1-UP
SHIFT CONSOLE
PART OF 368-3025 GENERAL AR

SMCS-1408 **i03895544**

NOTE	REF NO	GRAPHIC REF	PART NUMBER	QTY	PART NAME 1 2 3 4 5 6 (PRODUCT LEVEL)	SEE PAGE
	1	1	**3E-0109**	4	PLUG (ROCKER SWITCH)	
Y	2	1	**3E-6328**	1	ALARM GP (24-VOLT) (ACTION)	191
	3	1	**3S-2093**	4	STRAP-CABLE	
	4	1	**5M-3724**	1	BRACKET	
	5	1	**7N-5876**	1	LAMP (24-VOLT, 0.2-AMPERE)	
	6	1	**8C-6354**	1	CAP-RECEPTACLE (ET CONNECTOR)	
	7	1	**110-7887**	1	SWITCH AS-START (KEY)	
		1	**7T-6799**	1	NUT-MOUNTING (1-32-THD)	
		1	**102-8804**	1	KIT-RECEPTACLE (4-PIN)	
					(INCLUDES RECEPTACLE AS & WEDGE)	
		1	**186-3735**	4	PIN-CONNECTOR (16-GA TO 18-GA)	
	9	1	**169-5414**	3	CLIP	
	10	1	*183-2151*	1	SWITCH AS-ROCKER (24-VOLT)	
		1	**3E-8825**	2	LAMP (24-VOLT)	
		1	**183-2136**	1	ACTUATOR	
		1	**196-7268**	1	SWITCH AS (THROTTLE HOLD MODE)	
	11	1	**185-2197**	1	SWITCH AS-ROCKER (THROTTLE LOCK SET, RESET)	
	12	1	**335-1894**	1	HARNESS AS-CONSOLE	
		1	**102-8805**	2	KIT-RECEPTACLE (6-PIN)	
		1	**102-8801**	1	KIT-RECEPTACLE (12-PIN)	
					(EACH KIT INCLUDES RECEPTACLE AS & WEDGE)	
		1	**3E-7790**	10	TERMINAL-BLADE (18-GA TO 20-GA)	
		1	**3E-7996**	2	PLUG-CONNECTOR (6-PIN)	
		1	**7X-6222**	1	PLUG AS-CONNECTOR (24-PIN)	
		1	**3E-4367**	1	RING-RETAINING	
M		1	**3E-8558**	1	BOLT (M5X0.8X39.37-MM)	
		1	**9X-3265**	2	SEAL-CONNECTOR (24-PIN)	
		1	**8T-8729**	5	PIN-CONNECTOR (16-GA TO 18-GA)	
		1	**8T-8737**	19	PLUG-SEAL	
		1	**9W-1951**	1	RECEPTACLE-CONNECTOR (9-PIN)	
		1	**9X-3401**	24	PIN-CONNECTOR (16-GA TO 18-GA)	
		1	**9X-3402**	27	SOCKET-CONNECTOR (16-GA TO 18-GA)	
		1	**065-5071**	9	TERMINAL-BLADE (14-GA TO 16-GA)	
E		1	**125-7874**		TUBE-HEAT SHRINK (5.72-MM DIA) (10-CM)	
		1	**155-2255**	1	KIT-CONNECTING PLUG (12-PIN)	
		1	**155-2274**	1	KIT-CONNECTING PLUG (6-PIN)	
					(EACH KIT INCLUDES PLUG AS, WEDGE & INTERFACE SEAL)	
	13	1	**335-1895**	1	HARNESS AS-CONSOLE (KEY SWITCH)	
		1	**102-8802**	1	KIT-RECEPTACLE (2-PIN)	
		1	**102-8804**	1	KIT-RECEPTACLE (4-PIN)	
		1	**102-8805**	1	KIT-RECEPTACLE (6-PIN)	
		1	**102-8801**	1	KIT-RECEPTACLE (12-PIN)	
					(EACH KIT INCLUDES RECEPTACLE AS & WEDGE)	
		1	**3E-5519**	1	PLUG AS-CONNECTOR (5-PIN)	
		1	**3E-7790**	10	TERMINAL-BLADE (18-GA TO 20-GA)	
		1	**3E-7996**	3	PLUG-CONNECTOR (6-PIN)	

284-5346 **WIRING GP-CONSOLE (**contd.**)** **i03895544**

NOTE	REF NO	GRAPHIC REF	PART NUMBER	QTY	PART NAME 1 2 3 4 5 6 (PRODUCT LEVEL)	SEE PAGE
		1	**3T-3157**	1	TERMINAL-BLADE (16-GA TO 20-GA)	
		1	**3T-3158**	1	SOCKET-LAMP	
		1	**3T-3159**	1	SPRING	
		1	**3T-3278**	1	BOOT	
		1	**6D-4161**	1	CONTACT	
		1	**8T-8729**	6	PIN-CONNECTOR (16-GA TO 18-GA)	
		1	**8T-8730**	19	SOCKET-CONNECTOR (16-GA TO 18-GA)	
		1	**8T-8737**	25	PLUG-SEAL	
		1	**9W-0844**	5	SOCKET-CONNECTOR (14-GA TO 16-GA)	
		1	**9X-0844**	5	CAGE	
		1	**9X-1056**	2	TERMINAL-RECEPTACLE (14-GA TO 16-GA)	
		1	**9X-3401**	2	PIN-CONNECTOR (16-GA TO 18-GA)	
		1	**9X-3402**	3	SOCKET-CONNECTOR (16-GA TO 18-GA)	
		1	**065-5071**	2	TERMINAL-BLADE (14-GA TO 16-GA)	
		1	**100-5041**	2	TERMINAL-RECEPTACLE (18-GA TO 20-GA)	
E		1	**119-3662**		TUBE-HEAT SHRINK (10.85-MM DIA) (7-CM)	
E		1	**125-7874**		TUBE-HEAT SHRINK (5.72-MM DIA) (10-CM)	
E		1	**125-7875**		TUBE-HEAT SHRINK (7.44-MM DIA) (10-CM)	
		1	**155-2255**	1	KIT-CONNECTING PLUG (12-PIN)	
		1	**155-2270**	2	KIT-CONNECTING PLUG (2-PIN)	
		1	**155-2271**	2	KIT-CONNECTING PLUG (4-PIN)	
		1	**155-2274**	2	KIT-CONNECTING PLUG (6-PIN)	
					(EACH KIT INCLUDES PLUG AS, WEDGE & INTERFACE SEAL)	
	14	1	**130-5300**	1	CLIP	
	16	1	**3E-5239**	1	RELAY AS (24-VOLT) (KEY SWITCH)	
	17	1	**4D-7794**	1	CLIP	
	18	1	**4L-6454**	1	BOLT (3/8-16X1-IN)	
	19	1	**4P-7581**	1	CLIP	
M	20	1	**5C-2890**	1	NUT (M6X1-THD)	
M	21	1	**5C-9553**	1	BOLT (M6X1X16-MM)	
	22	1	**5M-3062**	2	BOLT (3/8-16X0.75-IN)	
	23	1	**5S-4246**	4	LOCKWASHER	
	24	1	**6B-4540**	4	NUT (4-40-THD)	
	25	1	**6V-2480**	4	SCREW (4-40X0.5-IN)	
	26	1	**6V-8801**	1	NUT (3/8-16-THD)	
	27	1	**7C-4354**	1	CLIP	
	28	1	**7G-7053**	1	GROMMET	
	29	1	**7X-4743**	3	GROMMET	
	30	1	**8T-4121**	1	WASHER-HARD (11X21X2.5-MM THK)	
M	31	1	**8T-4137**	2	BOLT (M10X1.5X20-MM)	
	32	1	**8T-4896**	5	WASHER-HARD (10.2X18.5X2.5-MM THK)	
	33	1	**9X-8256**	2	WASHER (6.6X12X2-MM THK)	
	34	1	*9X-9634*	1	SWITCH AS-ROCKER	
		1	**3E-8817**	1	ACTUATOR	
		1	**3E-8825**	1	LAMP (24-VOLT)	
		1	**3E-9327**	1	SWITCH AS (CENTERSHIFT PIN)	
	35	1	**9R-2620**	1	PLUG	

E - ORDER BY THE CENTIMETER
M - METRIC PART
Y - SEPARATE ILLUSTRATION

284-5346 **WIRING GP-CONSOLE (**contd.**)** **i03895544**

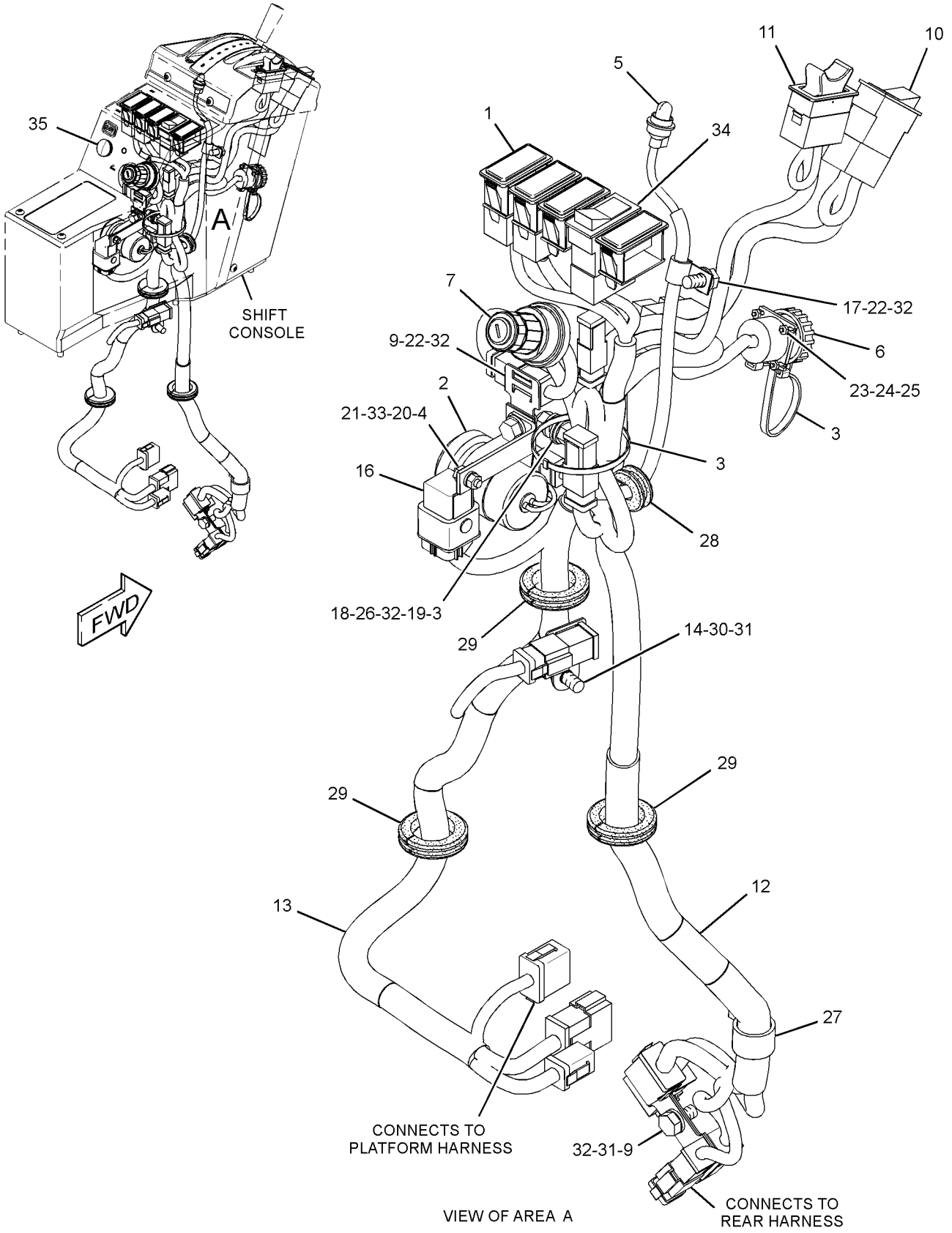

VIEW OF AREA A

GRAPHIC #1

<END>

g02149420

284-5346 WIRING GP-CONSOLE

S/N: SZS1-488
SHIFT CONSOLE
PART OF 368-3025 GENERAL AR

SMCS-1408 **i05110710**

NOTE	REF NO	GRAPHIC REF	PART NUMBER	QTY	PART NAME 1 2 3 4 5 6 (PRODUCT LEVEL)	SEE PAGE
C	1	1	**228-6089**	4	PLUG (ROCKER SWITCH)	
Y	2	1	**3E-6328**	1	ALARM GP (24-VOLT) (ACTION)	191
	3	1	**3S-2093**	4	STRAP-CABLE	
	4	1	**5M-3724**	1	BRACKET	
	5	1	**7N-5876**	1	LAMP (24-VOLT, 0.2-AMPERE)	
	6	1	**8C-6354**	1	CAP-RECEPTACLE (ET CONNECTOR)	
	7	1	**110-7887**	1	SWITCH AS-START (KEY)	
		1	**7T-6799**	1	NUT-MOUNTING (1-32-THD)	
		1	**102-8804**	1	KIT-RECEPTACLE (4-PIN)	
					(INCLUDES RECEPTACLE AS & WEDGE)	
		1	**186-3735**	4	PIN-CONNECTOR (16-GA TO 18-GA)	
	9	1	**169-5414**	3	CLIP	
C	10	1	**249-5493**	1	SWITCH AS-ROCKER (24-VOLT) (SPEED CONTROL REGULATOR)	
C	11	1	**249-5481**	1	SWITCH AS-ROCKER (24-VOLT) (THROTTLE)	
C	12	1	**382-5904**	1	HARNESS AS-CONSOLE	
		1	**102-8805**	2	KIT-RECEPTACLE (6-PIN)	
		1	**102-8801**	1	KIT-RECEPTACLE (12-PIN)	
					(EACH RECEPTACLE KIT INCLUDES RECEPTACLE AS & WEDGE)	
		1	**7X-6222**	1	PLUG AS-CONNECTOR (24-PIN)	
		1	**3E-4367**	1	RING-RETAINING	
M		1	**3E-8558**	1	BOLT (M5X0.8X39.37-MM)	
		1	**9X-3265**	2	SEAL-CONNECTOR (24-PIN)	
		1	**8T-8729**	5	PIN-CONNECTOR (16-GA TO 18-GA)	
		1	**8T-8737**	19	PLUG-SEAL	
		1	**9W-1951**	1	RECEPTACLE-CONNECTOR (9-PIN)	
		1	**9X-3401**	24	PIN-CONNECTOR (16-GA TO 18-GA)	
		1	**9X-3402**	27	SOCKET-CONNECTOR (16-GA TO 18-GA)	
E		1	**119-3662**		TUBE-HEAT SHRINK (10.85-MM DIA) (20-CM)	
E		1	**125-7874**		TUBE-HEAT SHRINK (5.72-MM DIA) (10-CM)	
		1	**155-2255**	1	KIT-CONNECTING PLUG (12-PIN)	
		1	**155-2274**	1	KIT-CONNECTING PLUG (6-PIN)	
					(EACH KIT INCLUDES PLUG AS, WEDGE & INTERFACE SEAL)	
		1	**185-1860**	19	SEAL-WIRE	
		1	**202-5397**	1	PLUG	
		1	**204-1297**	19	TERMINAL AS-BLADE (18-GA TO 20-GA)	
		1	**245-7434**	2	KIT-CONNECTING PLUG (10-PIN)	
					(EACH PLUG KIT INCLUDES CONNECTOR, WIRE ASSEMBLIES, & PLUGS)	
C	13	1	**382-5905**	1	HARNESS AS-CONSOLE	
		1	**102-8805**	1	KIT-RECEPTACLE (6-PIN)	
		1	**102-8801**	1	KIT-RECEPTACLE (12-PIN)	
					(EACH KIT INCLUDES RECEPTACLE AS & WEDGE)	
		1	**3T-3157**	1	TERMINAL-BLADE (16-GA TO 20-GA)	
		1	**3T-3158**	1	SOCKET-LAMP	
		1	**3T-3159**	1	SPRING	
		1	**3T-3278**	1	BOOT	

284-5346 **WIRING GP-CONSOLE (**contd.**)** **i05110710**

NOTE	REF NO	GRAPHIC REF	PART NUMBER	QTY	PART NAME 1 2 3 4 5 6 (PRODUCT LEVEL)	SEE PAGE
		1	**6D-4161**	1	CONTACT	
		1	**8T-8729**	4	PIN-CONNECTOR (16-GA TO 18-GA)	
		1	**8T-8730**	12	SOCKET-CONNECTOR (16-GA TO 18-GA)	
		1	**8T-8737**	21	PLUG-SEAL	
		1	**9W-0844**	5	SOCKET-CONNECTOR (14-GA TO 16-GA)	
		1	**9X-1054**	1	PLUG AS-CONNECTOR (4-PIN)	
		1	**9X-1056**	2	TERMINAL-RECEPTACLE (14-GA TO 16-GA)	
		1	**9X-3401**	2	PIN-CONNECTOR (16-GA TO 18-GA)	
		1	**9X-3402**	4	SOCKET-CONNECTOR (16-GA TO 18-GA)	
		1	**100-5041**	2	TERMINAL-RECEPTACLE (18-GA TO 20-GA)	
E		1	**125-7874**		TUBE-HEAT SHRINK (5.72-MM DIA) (10-CM)	
E		1	**125-7875**		TUBE-HEAT SHRINK (7.44-MM DIA) (10-CM)	
		1	**155-2255**	1	KIT-CONNECTING PLUG (12-PIN)	
		1	**155-2270**	1	KIT-CONNECTING PLUG (2-PIN)	
		1	**155-2271**	1	KIT-CONNECTING PLUG (4-PIN)	
		1	**155-2274**	2	KIT-CONNECTING PLUG (6-PIN)	
					(EACH KIT INCLUDES PLUG AS, WEDGE & INTERFACE SEAL)	
		1	**185-1860**	11	SEAL-WIRE	
		1	**185-1861**	1	SEAL-WIRE	
		1	**202-5397**	18	PLUG	
		1	**204-1297**	11	TERMINAL AS-BLADE (18-GA TO 20-GA)	
		1	**245-7434**	3	KIT-CONNECTING PLUG (10-PIN)	
					(EACH PLUG KIT INCLUDES CONNECTORS, WIRE ASSEMBLIES, & PLUGS)	
	14	1	**130-5300**	1	CLIP	
	16	1	**3E-5239**	1	RELAY AS (24-VOLT) (KEY SWITCH)	
	17	1	**4D-7794**	1	CLIP	
	18	1	**4L-6454**	1	BOLT (3/8-16X1-IN)	
	19	1	**4P-7581**	1	CLIP	
M	20	1	**5C-2890**	1	NUT (M6X1-THD)	
M	21	1	**5C-9553**	1	BOLT (M6X1X16-MM)	
	22	1	**5M-3062**	2	BOLT (3/8-16X0.75-IN)	
	23	1	**5S-4246**	4	LOCKWASHER	
	24	1	**6B-4540**	4	NUT (4-40-THD)	
	25	1	**6V-2480**	4	SCREW (4-40X0.5-IN)	
	26	1	**6V-8801**	1	NUT (3/8-16-THD)	
	27	1	**7C-4354**	1	CLIP	
	28	1	**7G-7053**	1	GROMMET	
	29	1	**7X-4743**	3	GROMMET	
	30	1	**8T-4121**	1	WASHER-HARD (11X21X2.5-MM THK)	
M	31	1	**8T-4137**	2	BOLT (M10X1.5X20-MM)	
	32	1	**8T-4896**	5	WASHER-HARD (10.2X18.5X2.5-MM THK)	
	33	1	**9X-8256**	2	WASHER (6.6X12X2-MM THK)	
C	34	1	**280-4244**	1	SWITCH AS-ROCKER (24-VOLT) (CENTERSHIFT PIN)	
	35	1	**9R-2620**	1	PLUG	
C	36	1	**236-4631**	7	BEZEL	

C - CHANGE FROM PREVIOUS TYPE
E - ORDER BY THE CENTIMETER
M - METRIC PART
Y - SEPARATE ILLUSTRATION

284-5346 **WIRING GP-CONSOLE (**contd.**)** **i05110710**

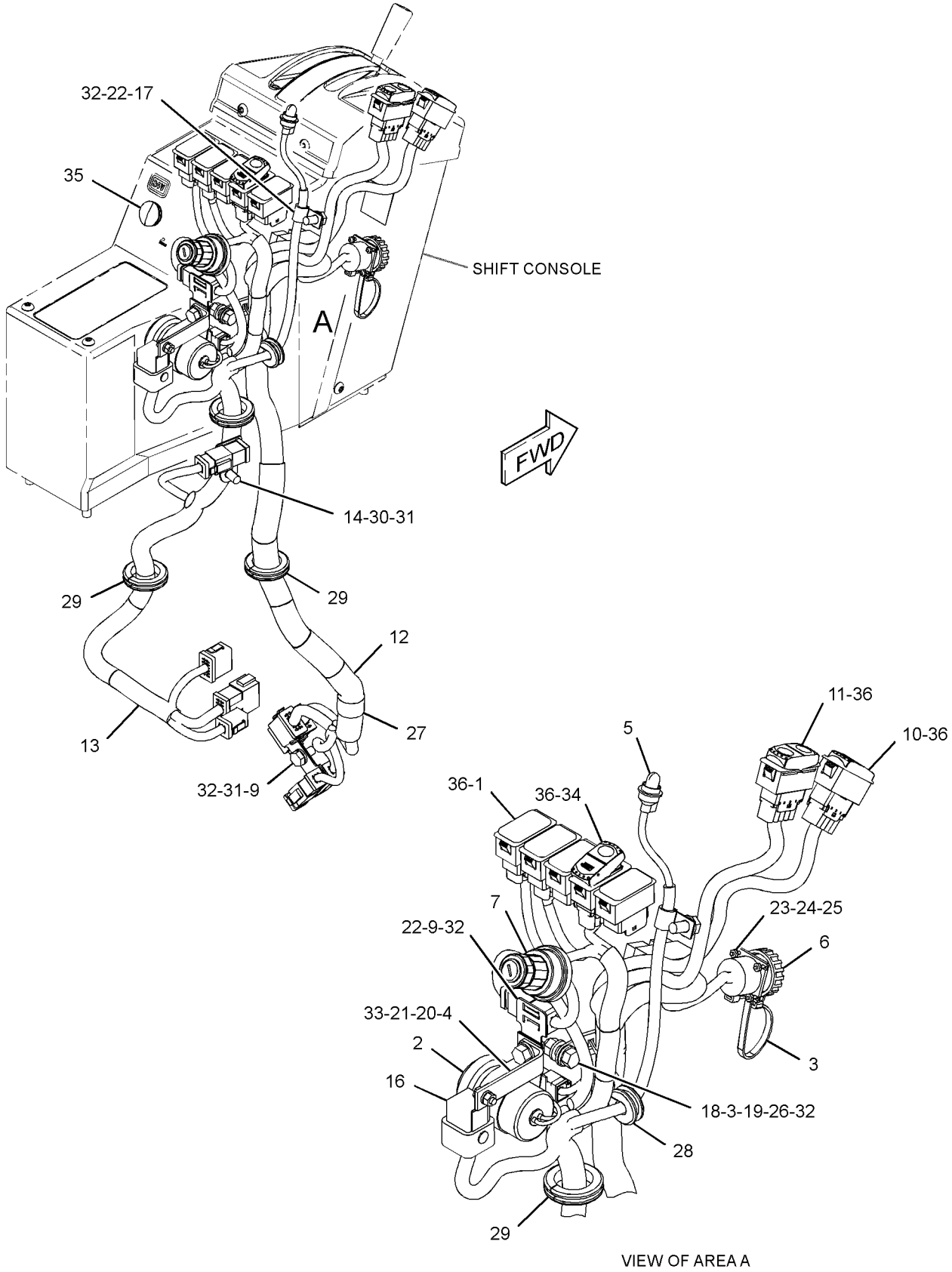

VIEW OF AREA A

GRAPHIC #1 <END> g03326260

386-5925 WIRING GP-CONSOLE

S/N: SZS489-UP
SHIFT CONSOLE
PART OF 368-3025 GENERAL AR

SMCS-1408 **i05358847**

NOTE	REF NO	GRAPHIC REF	PART NUMBER	QTY	PART NAME 1 2 3 4 5 6 (PRODUCT LEVEL)	SEE PAGE
	1	1	**3E-0109**	4	PLUG (ROCKER SWITCH)	
	2	1	**3E-5239**	1	RELAY AS (24-VOLT)	
Y	3	1	**3E-6328**	1	ALARM GP (24-VOLT) (ACTION)	191
	4	1	**3S-2093**	4	STRAP-CABLE	
	5	1	**5M-3724**	1	BRACKET	
	6	1	**7N-5876**	1	LAMP (24-VOLT, 0.2-AMPERE)	
	7	1	**8C-6354**	1	CAP-RECEPTACLE (ET CONNECTOR)	
	8	1	**110-7887**	1	SWITCH AS-START (KEY)	
		1	**7T-6799**	1	NUT-MOUNTING (1-32-THD)	
		1	**8T-8729**	4	PIN-CONNECTOR (16-GA TO 18-GA)	
		1	**102-8804**	1	KIT-RECEPTACLE (4-PIN)	
					(INCLUDES RECEPTACLE AS & WEDGE)	
	10	1	**169-5414**	3	CLIP	
	11	1	*183-2151*	1	SWITCH AS-ROCKER (24-VOLT)	
		1	**3E-8825**	2	LAMP (24-VOLT)	
		1	**183-2136**	1	ACTUATOR	
		1	**196-7268**	1	SWITCH AS	
	12	1	**185-2197**	1	SWITCH AS-ROCKER	
	13	1	**335-1895**	1	HARNESS AS-CONSOLE (KEY SWITCH)	
		1	**102-8802**	1	KIT-RECEPTACLE (2-PIN)	
		1	**102-8804**	1	KIT-RECEPTACLE (4-PIN)	
		1	**102-8805**	1	KIT-RECEPTACLE (6-PIN)	
		1	**102-8801**	1	KIT-RECEPTACLE (12-PIN)	
					(EACH KIT INCLUDES RECEPTACLE AS & WEDGE)	
		1	**3E-5519**	1	PLUG AS-CONNECTOR (5-PIN)	
		1	**3E-7790**	10	TERMINAL-BLADE (18-GA TO 20-GA)	
		1	**3E-7996**	3	PLUG-CONNECTOR (6-PIN)	
		1	**3T-3157**	1	TERMINAL-BLADE (16-GA TO 20-GA)	
		1	**3T-3158**	1	SOCKET-LAMP	
		1	**3T-3159**	1	SPRING	
		1	**3T-3278**	1	BOOT	
		1	**6D-4161**	1	CONTACT	
		1	**8T-8729**	6	PIN-CONNECTOR (16-GA TO 18-GA)	
		1	**8T-8730**	19	SOCKET-CONNECTOR (16-GA TO 18-GA)	
		1	**8T-8737**	25	PLUG-SEAL	
		1	**9W-0844**	5	SOCKET-CONNECTOR (14-GA TO 16-GA)	
		1	**9X-1056**	2	TERMINAL-RECEPTACLE (14-GA TO 16-GA)	
		1	**9X-3401**	2	PIN-CONNECTOR (16-GA TO 18-GA)	
		1	**9X-3402**	3	SOCKET-CONNECTOR (16-GA TO 18-GA)	
		1	**065-5071**	2	TERMINAL-BLADE (14-GA TO 16-GA)	
		1	**100-5041**	2	TERMINAL-RECEPTACLE (18-GA TO 20-GA)	
E		1	**119-3662**		TUBE-HEAT SHRINK (10.85-MM DIA) (7-CM)	
E		1	**125-7874**		TUBE-HEAT SHRINK (5.72-MM DIA) (10-CM)	
E		1	**125-7875**		TUBE-HEAT SHRINK (7.44-MM DIA) (10-CM)	
		1	**155-2258**	1	WEDGE-PLUG LOCK (12-PIN)	
		1	**155-2255**	1	KIT-CONNECTING PLUG (12-PIN)	
		1	**155-2270**	2	KIT-CONNECTING PLUG (2-PIN)	

386-5925 **WIRING GP-CONSOLE (**contd.**)** **i05358847**

NOTE	REF NO	GRAPHIC REF	PART NUMBER	QTY	PART NAME 1 2 3 4 5 6 (PRODUCT LEVEL)	SEE PAGE
		1	**155-2271**	2	KIT-CONNECTING PLUG (4-PIN)	
		1	**155-2274**	2	KIT-CONNECTING PLUG (6-PIN)	
					(EACH KIT INCLUDES PLUG AS, WEDGE & INTERFACE SEAL)	
	14	1	**386-5926**	1	HARNESS AS-CONSOLE	
		1	**3E-3389**	1	WEDGE-RECEPTACLE LOCK (8-PIN)	
		1	**3E-3383**	1	WEDGE-RECEPTACLE LOCK (6-PIN)	
		1	**102-8805**	1	KIT-RECEPTACLE (6-PIN)	
		1	**102-8806**	1	KIT-RECEPTACLE (8-PIN)	
		1	**102-8801**	1	KIT-RECEPTACLE (12-PIN)	
					(EACH KIT INCLUDES RECEPTACLE AS & WEDGE)	
		1	**3E-7790**	10	TERMINAL-BLADE (18-GA TO 20-GA)	
		1	**3E-7996**	2	PLUG-CONNECTOR (6-PIN)	
		1	**7X-6222**	1	PLUG AS-CONNECTOR (24-PIN)	
		1	**3E-4367**	1	RING-RETAINING	
M		1	**3E-8558**	1	BOLT (M5X0.8X39.37-MM)	
		1	**9X-3265**	2	SEAL-CONNECTOR (24-PIN)	
		1	**8T-8729**	2	PIN-CONNECTOR (16-GA TO 18-GA)	
		1	**8T-8737**	20	PLUG-SEAL	
		1	**9W-1951**	1	RECEPTACLE-CONNECTOR (9-PIN)	
		1	**9X-3401**	29	PIN-CONNECTOR (16-GA TO 18-GA)	
		1	**9X-3402**	27	SOCKET-CONNECTOR (16-GA TO 18-GA)	
		1	**065-5071**	9	TERMINAL-BLADE (14-GA TO 16-GA)	
E		1	**125-7874**		TUBE-HEAT SHRINK (5.72-MM DIA) (20-CM)	
		1	**155-2258**	1	WEDGE-PLUG LOCK (12-PIN)	
		1	**155-2255**	1	KIT-CONNECTING PLUG (12-PIN)	
		1	**155-2274**	1	KIT-CONNECTING PLUG (6-PIN)	
					(EACH KIT INCLUDES PLUG AS, WEDGE & INTERFACE SEAL)	
	15	1	**130-5300**	1	CLIP	
	16	1	**4D-7794**	1	CLIP	
	17	1	**4L-6454**	1	BOLT (3/8-16X1-IN)	
	18	1	**4P-7581**	1	CLIP	
M	19	1	**5C-2890**	1	NUT (M6X1-THD)	
M	20	1	**5C-9553**	1	BOLT (M6X1X16-MM)	
	21	1	**5M-3062**	2	BOLT (3/8-16X0.75-IN)	
	22	1	**5S-4246**	4	LOCKWASHER	
	23	1	**6B-4540**	4	NUT (4-40-THD)	
	24	1	**6V-2480**	4	SCREW (4-40X0.5-IN)	
	25	1	**6V-8801**	1	NUT (3/8-16-THD)	
	26	1	**7C-4354**	1	CLIP	
	27	1	**7G-7053**	1	GROMMET	
	28	1	**7X-4743**	3	GROMMET	
	29	1	**8T-4121**	1	WASHER-HARD (11X21X2.5-MM THK)	
M	30	1	**8T-4137**	2	BOLT (M10X1.5X20-MM)	
	31	1	**8T-4896**	5	WASHER-HARD (10.2X18.5X2.5-MM THK)	
	32	1	**9R-2620**	1	PLUG	
	33	1	**9X-8256**	2	WASHER (6.6X12X2-MM THK)	
	34	1	*9X-9634*	1	SWITCH AS-ROCKER	
		1	**3E-8817**	1	ACTUATOR	
		1	**3E-8825**	1	LAMP (24-VOLT)	
		1	**3E-9327**	1	SWITCH AS	

386-5925 **WIRING GP-CONSOLE (**contd.**)** **i05358847**

NOTE	REF NO	GRAPHIC REF	PART NUMBER	QTY	PART NAME 1 2 3 4 5 6 (PRODUCT LEVEL)	SEE PAGE

E - ORDER BY THE CENTIMETER
M - METRIC PART
Y - SEPARATE ILLUSTRATION

386-5925 **WIRING GP-CONSOLE (**contd.**)** **i05358847**

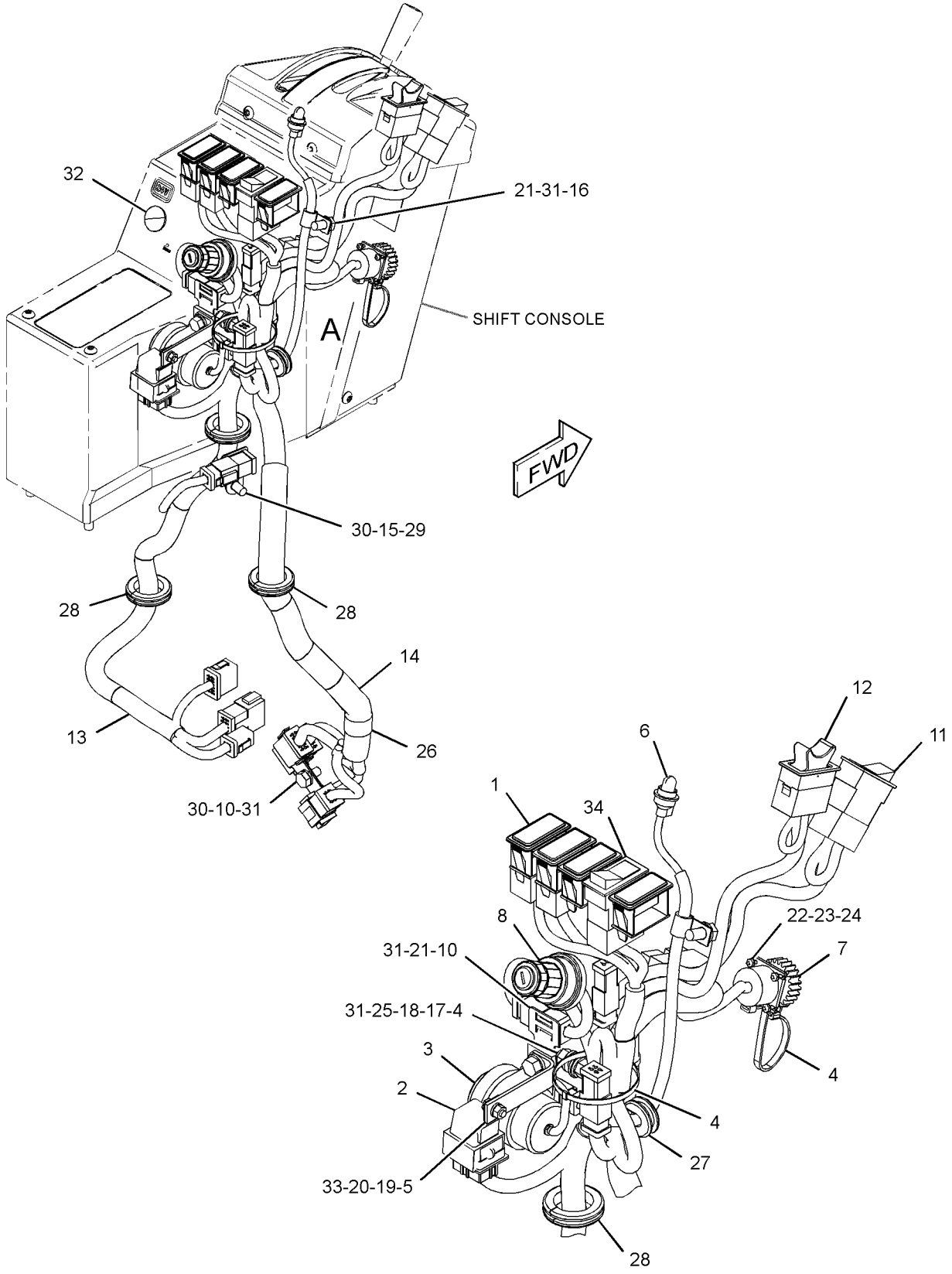

VIEW OF AREA A

GRAPHIC #1 <END> g03326855

386-5925 WIRING GP-CONSOLE

S/N: SZS489-623
SHIFT CONSOLE
PART OF 368-3025 GENERAL AR

SMCS-1408 **i05707716**

NOTE	REF NO	GRAPHIC REF	PART NUMBER	QTY	PART NAME 1 2 3 4 5 6 (PRODUCT LEVEL)	SEE PAGE
C	1	1	**228-6089**	4	PLUG (ROCKER SWITCH)	
	2	1	**3E-5239**	1	RELAY AS (24-VOLT)	
Y	3	1	**3E-6328**	1	ALARM GP (24-VOLT)	191
	4	1	**3S-2093**	4	STRAP-CABLE	
	5	1	**5M-3724**	1	BRACKET	
	6	1	**100-3245**	1	LAMP (24-VOLT, 0.17-AMPERE)	
	7	1	**8C-6354**	1	CAP-RECEPTACLE (ET CONNECTOR)	
	8	1	**110-7887**	1	SWITCH AS-START (KEY)	
		1	**7T-6799**	1	NUT-MOUNTING (1-32-THD)	
		1	**8T-8729**	4	PIN-CONNECTOR (16-GA TO 18-GA)	
		1	**102-8804**	1	KIT-RECEPTACLE (4-PIN)	
					(INCLUDES RECEPTACLE AS & WEDGE)	
	10	1	**169-5414**	3	CLIP	
C	11	1	**249-5493**	1	SWITCH AS-ROCKER (24-VOLT)	
C	12	1	**249-5481**	1	SWITCH AS-ROCKER (24-VOLT)	
C	13	1	**382-5905**	1	HARNESS AS-CONSOLE (KEY SWITCH)	
		1	**102-8805**	1	KIT-RECEPTACLE (6-PIN)	
		1	**102-8801**	1	KIT-RECEPTACLE (12-PIN)	
					(EACH RECEPTACLE KIT INCLUDES RECEPTACLE AS & WEDGE)	
		1	**9X-1054**	1	PLUG AS-CONNECTOR (4-PIN)	
		1	**185-1860**	11	SEAL-WIRE	
		1	**185-1861**	1	SEAL-WIRE	
		1	**3T-3157**	1	TERMINAL-BLADE (16-GA TO 20-GA)	
		1	**3T-3158**	1	SOCKET-LAMP	
		1	**3T-3159**	1	SPRING	
		1	**3T-3278**	1	BOOT	
		1	**6D-4161**	1	CONTACT	
		1	**8T-8729**	4	PIN-CONNECTOR (16-GA TO 18-GA)	
		1	**8T-8730**	12	SOCKET-CONNECTOR (16-GA TO 18-GA)	
		1	**8T-8737**	21	PLUG-SEAL	
		1	**9W-0844**	5	SOCKET-CONNECTOR (14-GA TO 16-GA)	
		1	**9X-1056**	2	TERMINAL-RECEPTACLE (14-GA TO 16-GA)	
		1	**9X-3401**	2	PIN-CONNECTOR (16-GA TO 18-GA)	
		1	**9X-3402**	4	SOCKET-CONNECTOR (16-GA TO 18-GA)	
		1	**100-5041**	2	TERMINAL-RECEPTACLE (18-GA TO 20-GA)	
		1	**204-1297**	11	TERMINAL AS-BLADE (18-GA TO 20-GA)	
E		1	**125-7874**		TUBE-HEAT SHRINK (5.72-MM DIA) (10-CM)	
E		1	**125-7875**		TUBE-HEAT SHRINK (7.44-MM DIA) (10-CM)	
		1	**245-7434**	3	KIT-CONNECTING PLUG (10-PIN)	
					(EACH INCLUDES PLUG AS & WEDGE)	
		1	**155-2255**	1	KIT-CONNECTING PLUG (12-PIN)	
		1	**155-2270**	1	KIT-CONNECTING PLUG (2-PIN)	
		1	**155-2271**	1	KIT-CONNECTING PLUG (4-PIN)	
		1	**155-2274**	2	KIT-CONNECTING PLUG (6-PIN)	
					(EACH PLUG KIT INCLUDES PLUG AS, WEDGE, & INTERFACE SEAL)	
	14	1	**386-5926**	1	HARNESS AS-CONSOLE	

386-5925 **WIRING GP-CONSOLE (**contd.**)** **i05707716**

NOTE	REF NO	GRAPHIC REF	PART NUMBER	QTY	PART NAME 1 2 3 4 5 6 (PRODUCT LEVEL)	SEE PAGE
		1	**102-8805**	1	KIT-RECEPTACLE (6-PIN)	
		1	**102-8801**	1	KIT-RECEPTACLE (12-PIN)	
		1	**190-7615**	1	KIT-RECEPTACLE (12-PIN)	
					(EACH RECEPTACLE KIT INCLUDES RECEPTACLE AS & WEDGE)	
		1	**3E-7790**	10	TERMINAL-BLADE (18-GA TO 20-GA)	
		1	**8T-8730**	27	SOCKET-CONNECTOR (16-GA TO 18-GA)	
		1	**7X-6222**	1	PLUG AS-CONNECTOR (24-PIN)	
		1	**3E-4367**	1	RING-RETAINING	
M		1	**3E-8558**	1	BOLT (M5X0.8X39.37-MM)	
		1	**9X-3265**	2	SEAL-CONNECTOR (24-PIN)	
		1	**8T-8729**	13	PIN-CONNECTOR (16-GA TO 18-GA)	
		1	**8T-8737**	24	PLUG-SEAL	
		1	**9W-1951**	1	RECEPTACLE-CONNECTOR (9-PIN)	
		1	**9X-3401**	18	PIN-CONNECTOR (16-GA TO 18-GA)	
E		1	**119-3662**		TUBE-HEAT SHRINK (10.85-MM DIA) (20-CM)	
		1	**065-5071**	9	TERMINAL-BLADE (14-GA TO 16-GA)	
E		1	**125-7874**		TUBE-HEAT SHRINK (5.72-MM DIA) (20-CM)	
		1	**185-1860**	19	SEAL-WIRE	
		1	**245-7434**	2	KIT-CONNECTING PLUG (10-PIN)	
					(EACH INCLUDES PLUG AS & WEDGE)	
		1	**155-2255**	1	KIT-CONNECTING PLUG (12-PIN)	
		1	**155-2274**	1	KIT-CONNECTING PLUG (6-PIN)	
					(EACH PLUG KIT INCLUDES PLUG AS, WEDGE & INTERFACE SEAL)	
	15	1	**130-5300**	1	CLIP	
	16	1	**4D-7794**	1	CLIP	
	17	1	**4L-6454**	1	BOLT (3/8-16X1-IN)	
	18	1	**4P-7581**	1	CLIP	
M	19	1	**5C-2890**	1	NUT (M6X1-THD)	
M	20	1	**5C-9553**	1	BOLT (M6X1X16-MM)	
	21	1	**5M-3062**	2	BOLT (3/8-16X0.75-IN)	
	22	1	**5S-4246**	4	LOCKWASHER	
	23	1	**6B-4540**	4	NUT (4-40-THD)	
	24	1	**6V-2480**	4	SCREW (4-40X0.5-IN)	
	25	1	**6V-8801**	1	NUT (3/8-16-THD)	
	26	1	**7C-4354**	1	CLIP	
	27	1	**7G-7053**	1	GROMMET	
	28	1	**7X-4743**	3	GROMMET	
	29	1	**8T-4121**	2	WASHER-HARD (11X21X2.5-MM THK)	
M	30	1	**8T-4137**	2	BOLT (M10X1.5X20-MM)	
	31	1	**8T-4896**	4	WASHER-HARD (10.2X18.5X2.5-MM THK)	
	32	1	**9R-2620**	1	PLUG	
	33	1	**9X-8256**	2	WASHER (6.6X12X2-MM THK)	
C	34	1	**280-4244**	1	SWITCH AS-ROCKER (24-VOLT)	
C	35	1	**236-4631**	7	BEZEL	

C - CHANGE FROM PREVIOUS TYPE
E - ORDER BY THE CENTIMETER
M - METRIC PART
Y - SEPARATE ILLUSTRATION

386-5925 **WIRING GP-CONSOLE (**contd.**)** **i05707716**

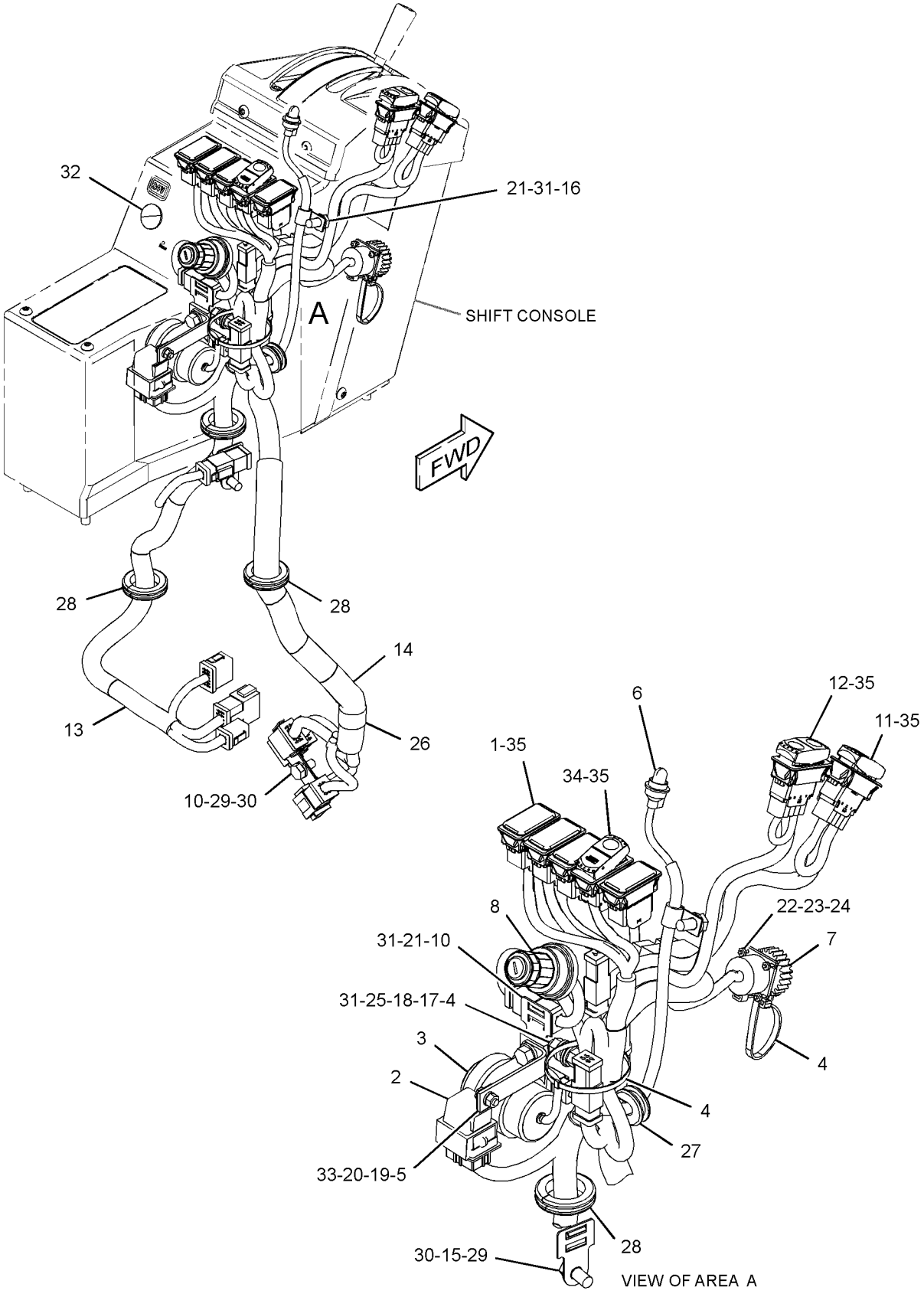

GRAPHIC #1 <END> g03626904

438-1307 WIRING GP-CONSOLE

S/N: SZS624-UP
SHIFT CONSOLE
PART OF 436-7621 ELECTRICAL AR

SMCS-1408 **i06782423**

NOTE	REF NO	GRAPHIC REF	PART NUMBER	QTY	PART NAME 1 2 3 4 5 6 (PRODUCT LEVEL)	SEE PAGE
	1	1	**3E-5239**	1	RELAY AS (24-VOLT) (ALARM)	
Y	2	1	**3E-6328**	1	ALARM GP (24-VOLT) (ACTION)	191
	3	1	**3S-2093**	2	STRAP-CABLE	
	4	1	**5M-3724**	1	BRACKET	
	5	1	**5P-7958**	1	SLEEVE-CABLE SPLICE	
	6	1	**100-3245**	1	LAMP (24-VOLT, 0.17-AMPERE)	
	7	1	**467-8535**	1	SWITCH AS-START (KEY)	
		1	**7T-6799**	1	NUT-MOUNTING (1-32-THD)	
		1	**8T-8729**	4	PIN-CONNECTOR (16-GA TO 18-GA)	
		1	**102-8804**	1	KIT-RECEPTACLE (4-PIN)	
					(INCLUDES RECEPTACLE AS & WEDGE)	
	8	1	**169-5414**	3	CLIP	
	9	1	**179-9392**	1	LANYARD	
	10	1	**228-6089**	4	PLUG (ROCKER SWITCH)	
	11	1	**236-4631**	7	BEZEL	
	12	1	**249-5481**	1	SWITCH AS-ROCKER (24-VOLT) (THROTTLE)	
	13	1	**249-5493**	1	SWITCH AS-ROCKER (24-VOLT) (SPEED CONTROL REGULATOR)	
	14	1	**280-4244**	1	SWITCH AS-ROCKER (24-VOLT) (CENTERSHIFT LOCK)	
Y	15	1	**466-2118**	1	HARNESS AS-CONSOLE (SHIFT)	254
Y	16	1	**466-2119**	1	HARNESS AS-CONSOLE (TRANSMISSION)	255
	17	1	**130-5300**	1	CLIP	
	18	1	**4D-7794**	1	CLIP	
	19	1	**4L-6454**	2	BOLT (3/8-16X1-IN)	
	20	1	**4P-7581**	1	CLIP	
M	21	1	**5C-2890**	1	NUT (M6X1-THD)	
M	22	1	**5C-9553**	1	BOLT (M6X1X16-MM)	
	23	1	**5M-3062**	1	BOLT (3/8-16X0.75-IN)	
	24	1	**6V-8801**	1	NUT (3/8-16-THD)	
	25	1	**7G-7053**	1	GROMMET	
	26	1	**7X-4743**	3	GROMMET	
	27	1	**8T-4121**	7	WASHER-HARD (11X21X2.5-MM THK)	
M	28	1	**8T-4137**	2	BOLT (M10X1.5X20-MM)	
	29	1	**9D-3769**	1	GROMMET	
	30	1	**9R-2620**	1	PLUG	
	31	1	**9X-8250**	1	CLIP	
	32	1	**9X-8256**	2	WASHER (6.6X12X2-MM THK)	
M	33	1	**8T-4185**	1	BOLT (M10X1.5X50-MM)	
	34	1	**302-3908**	1	SPACER (11X20X30-MM THK)	

M - METRIC PART
Y - SEPARATE ILLUSTRATION

438-1307 **WIRING GP-CONSOLE (**contd.**)** **i06782423**

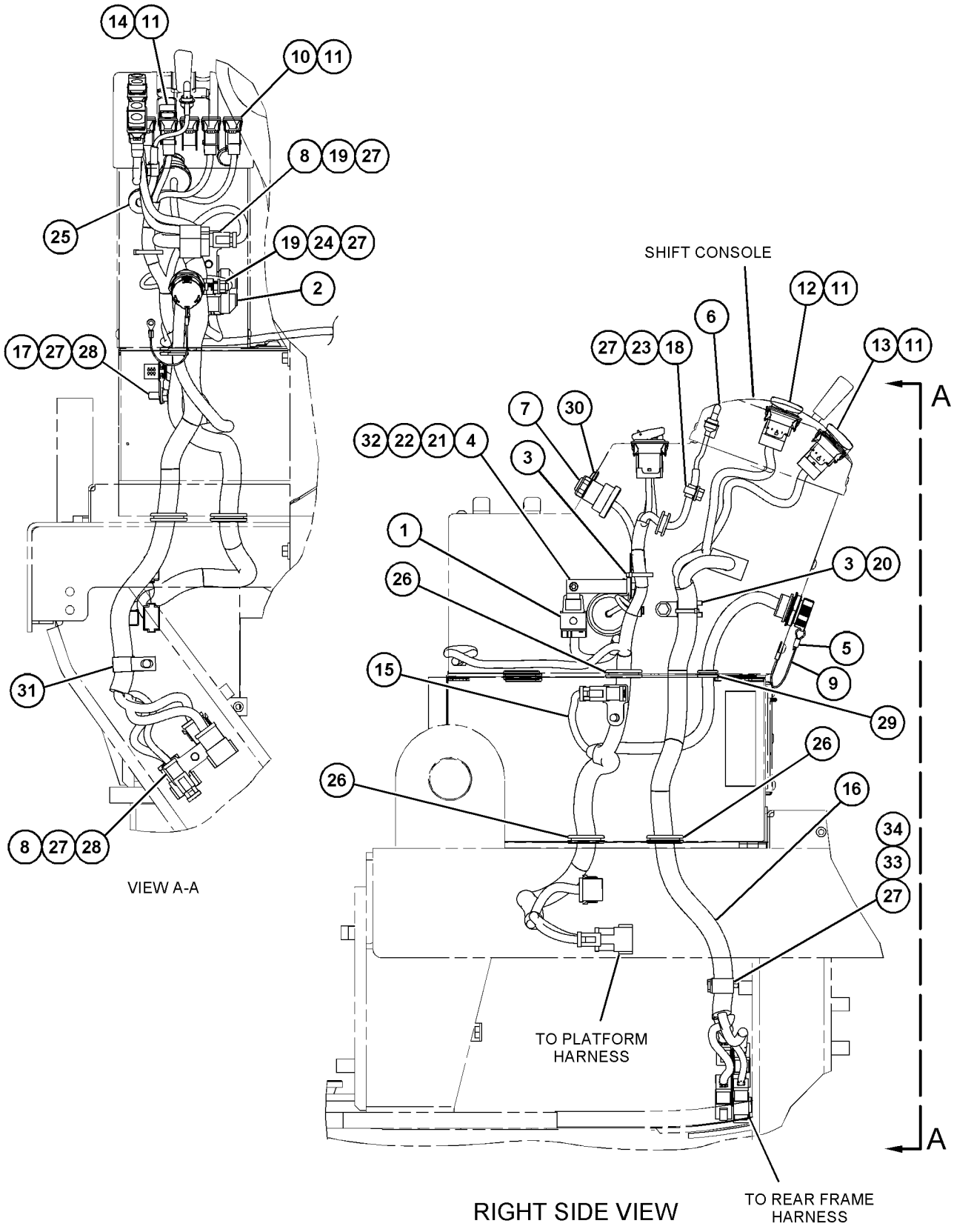

GRAPHIC #1 <END> g06113090

330-6022 WIRING GP-ENGINE

S/N: TX71-UP; KHX1-UP

PART OF 364-7493, 395-0487 ENGINE AR-COMPLETE

SMCS-1408 **i05892122**

NOTE	REF NO	GRAPHIC REF	PART NUMBER	QTY	PART NAME 1 2 3 4 5 6 (PRODUCT LEVEL)	SEE PAGE
	1	1	**3S-2093**	14	STRAP-CABLE	
	2	1	**4P-5918**	1	CLIP	
	3	1	**206-1345**	7	STRAP-CABLE	
Y	4	1	**222-5917**	1	HARNESS AS-ENGINE (FUEL INJECTION)	255
Y	5	1	**381-2499**	1	HARNESS AS-WIRING (SENSOR)	266
	6	1	**352-3966**	1	CLIP (LADDER)	
	7	1	**4P-8134**	1	CLIP (LADDER)	
M	8	1	**5P-7970**	1	NUT (M8X1.25-THD)	
	9	1	**6K-0806**	2	STRAP-CABLE	
M	10	1	**6V-2317**	1	BOLT (M8X1.25X30-MM)	
	11	1	**9M-1974**	1	WASHER-HARD (8.8X16X2-MM THK)	
J	12	1	**5P-4116**	1	WASHER-HARD (8.8X20.5X2-MM THK)	
JM	13	1	**6V-5217**	1	BOLT (M8X1.25X20-MM)	
J	14	1	**7X-7729**	1	WASHER (11X25X3-MM THK)	
JM	15	1	**8T-4191**	1	BOLT (M10X1.5X16-MM)	
J	16	1	**113-8690**	1	WASHER (11.1X37.9X3.3-MM THK)	
J	17	1	**156-9890**	1	WASHER (9X30X4-MM THK)	

J - SHIPPING & STORAGE
M - METRIC PART
Y - SEPARATE ILLUSTRATION

330-6022 **WIRING GP-ENGINE (**contd.**)** **i05892122**

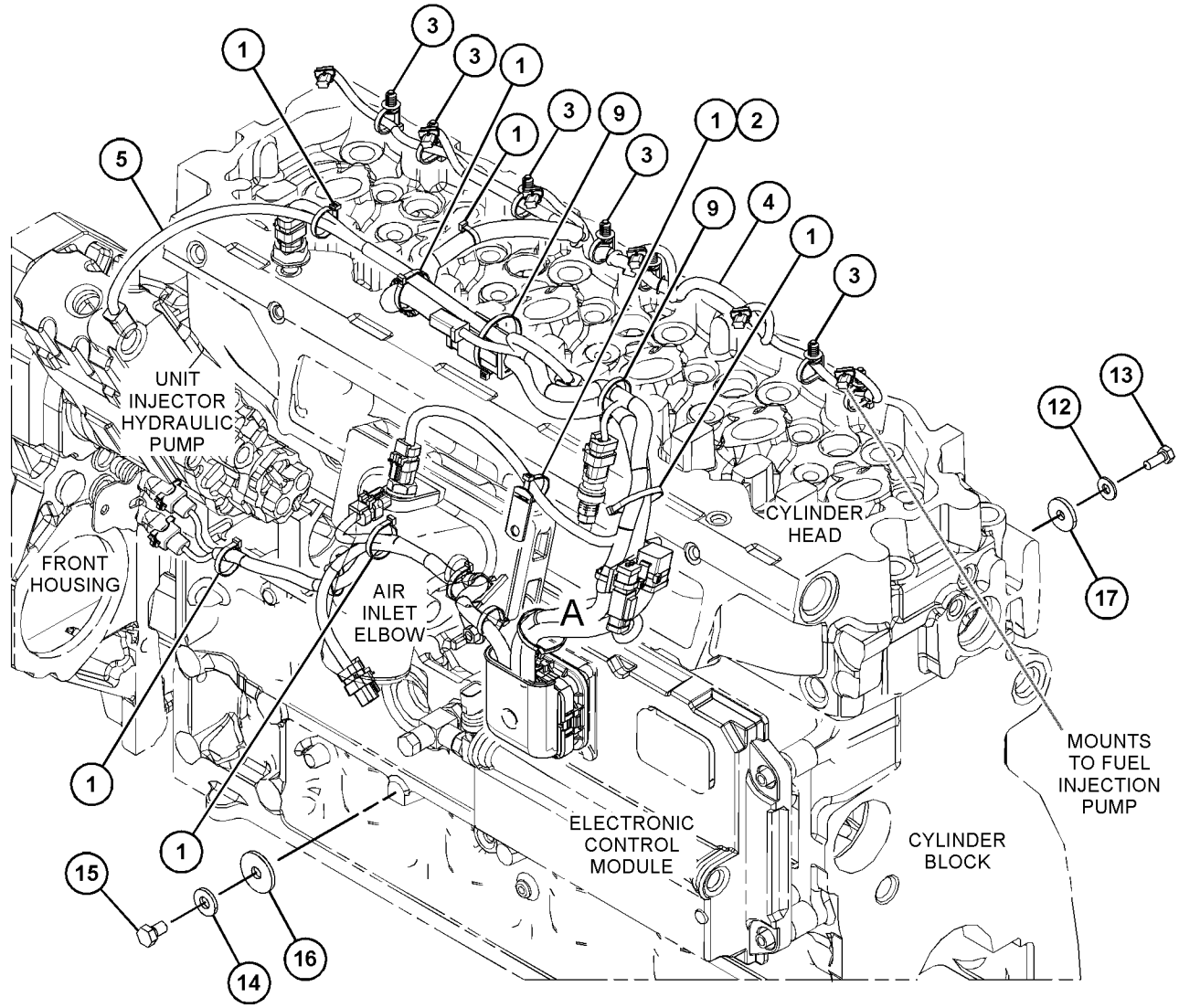

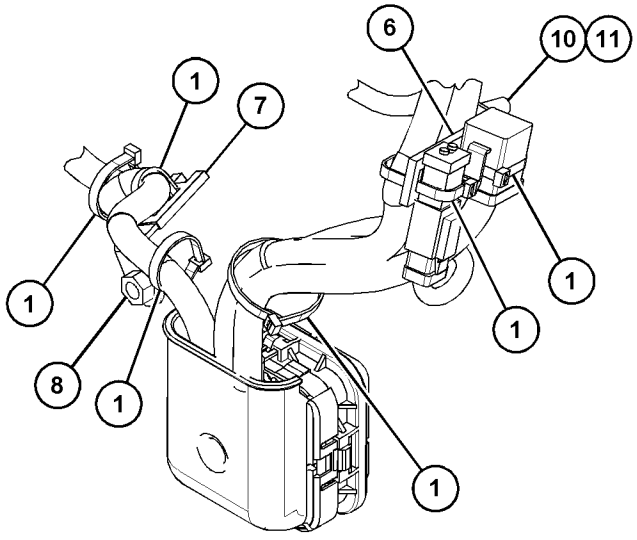

VIEW OF AREA A

GRAPHIC #1

<END>

g03716294

311-0801 WIRING GP-ETHER STARTING AID

S/N: SZS1-UP
PART OF 348-6943 OPTION AR-COLD WEATHER
AN ATTACHMENT

SMCS-1408 **i03542873**

NOTE	REF NO	GRAPHIC REF	PART NUMBER	QTY	PART NAME 1 2 3 4 5 6 (PRODUCT LEVEL)	SEE PAGE
	1	1	**334-6872**	1	HARNESS AS-STARTING AID	
	2	1	**132-5789**	1	CLIP	
	3	1	**3E-5239**	1	RELAY AS (24-VOLT) (ETHER STARTING AID)	
M	4	1	**5C-9553**	1	BOLT (M6X1X16-MM)	
	5	1	**7K-1181**	1	STRAP-CABLE	
	6	1	**9X-8256**	1	WASHER (6.6X12X2-MM THK)	

M - METRIC PART

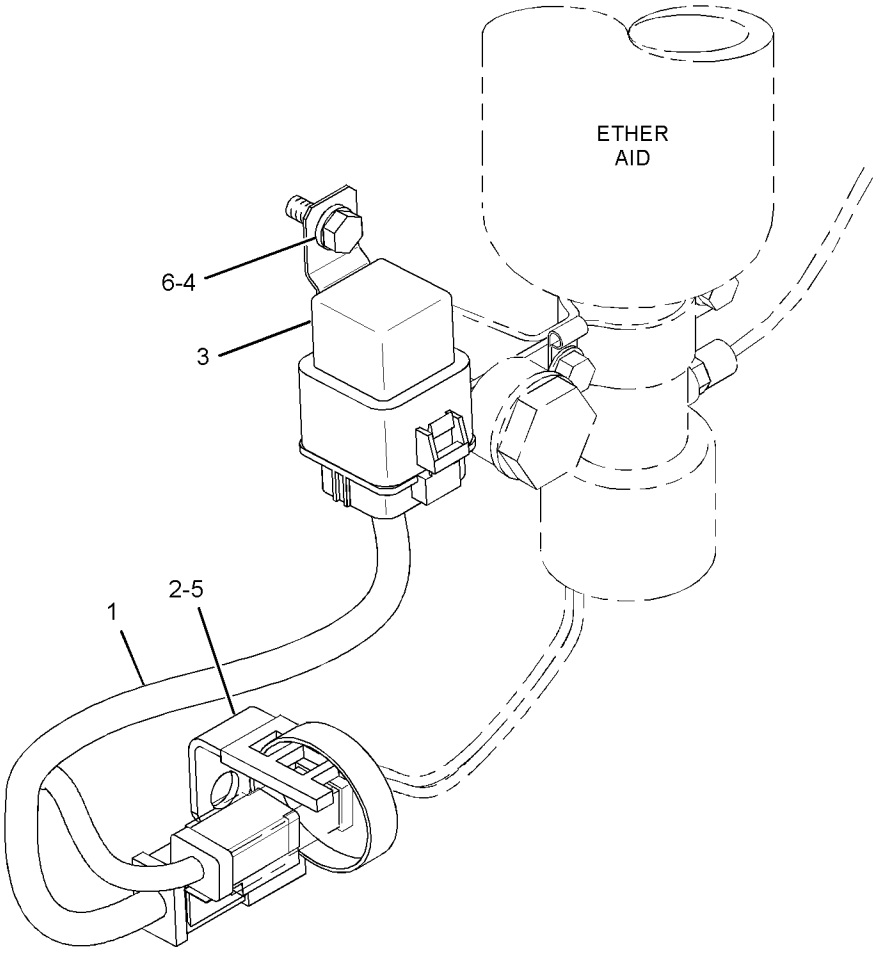

GRAPHIC #1 <END> g01703353

434-8054 WIRING GP-ETHER STARTING AID

S/N: SZS1-UP
PART OF 435-1535 OPTION AR-COLD WEATHER
AN ATTACHMENT

SMCS-1408 **i05879656**

NOTE	REF NO	GRAPHIC REF	PART NUMBER	QTY	PART NAME 1 2 3 4 5 6 (PRODUCT LEVEL)	SEE PAGE
	1	1	**334-6872**	1	HARNESS AS-STARTING AID (ETHER)	
		1	**8T-8729**	4	PIN-CONNECTOR (16-GA TO 18-GA)	
		1	**9X-1054**	1	PLUG AS-CONNECTOR (4-PIN)	
		1	**155-2270**	1	KIT-CONNECTING PLUG (2-PIN)	
					(INCLUDES PLUG AS, WEDGE & INTERFACE SEAL)	
		1	**102-8804**	1	KIT-RECEPTACLE (4-PIN)	
					(INCLUDES RECEPTACLE AS & WEDGE)	
		1	**8T-8730**	2	SOCKET-CONNECTOR (16-GA TO 18-GA)	
		1	**9X-1056**	2	TERMINAL-RECEPTACLE (14-GA TO 16-GA)	
		1	**100-5041**	2	TERMINAL-RECEPTACLE (18-GA TO 20-GA)	
	2	1	**132-5789**	1	CLIP	
	3	1	**3E-5239**	1	RELAY AS (24-VOLT) (ETHER STARTING AID)	
M	4	1	**5C-9553**	1	BOLT (M6X1X16-MM)	
	5	1	**7K-1181**	1	STRAP-CABLE	
	6	1	**9X-8256**	1	WASHER (6.6X12X2-MM THK)	

M - METRIC PART

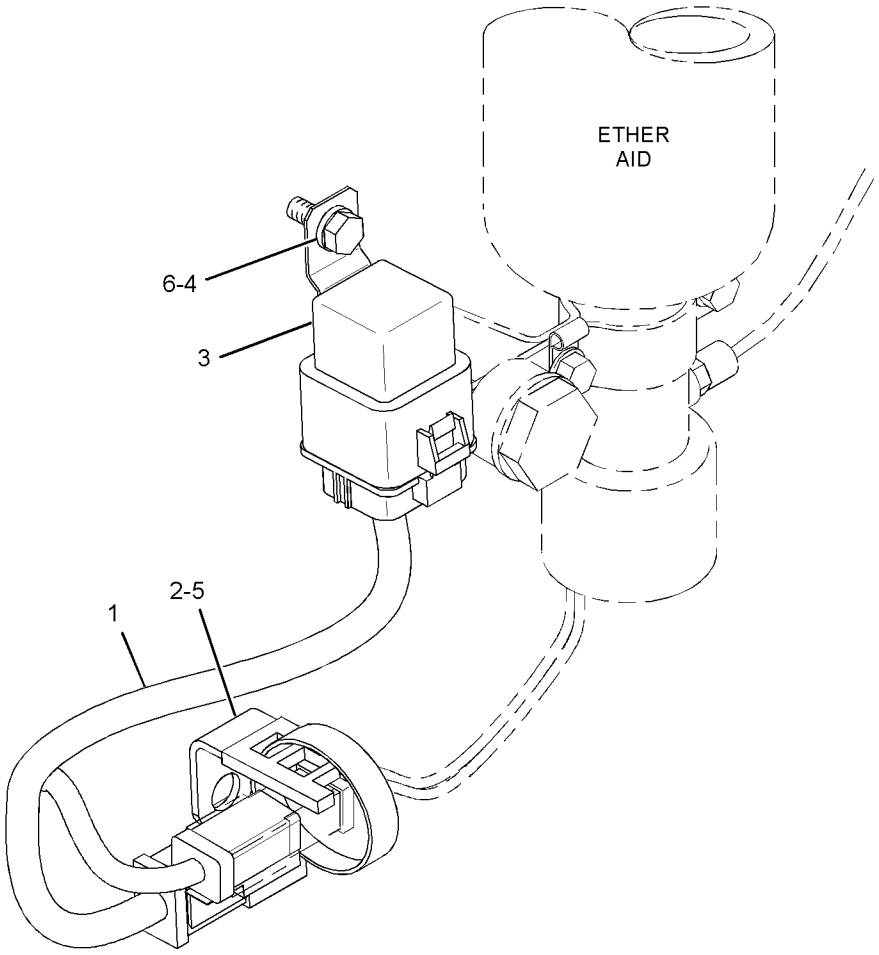

GRAPHIC #1 <END> g01703353

284-5343 WIRING GP-FRONT

S/N: SZS1-488

PART OF 368-3025 GENERAL AR

SMCS-1408 **i06949229**

NOTE	REF NO	GRAPHIC REF	PART NUMBER	QTY	PART NAME 1 2 3 4 5 6 (PRODUCT LEVEL)	SEE PAGE
	1	1	**1S-2342**	1	STRAP AS-GROUND	
	2	2	**3E-2026**	1	SWITCH AS-PRESSURE (STOP LIGHT)	
		2	**102-8802**	1	KIT-RECEPTACLE (2-PIN)	
					(INCLUDES RECEPTACLE AS & WEDGE)	
		2	**8T-8729**	2	PIN-CONNECTOR (16-GA TO 18-GA)	
	3	2	**3E-3636**	1	SWITCH AS-BALL (CENTERSHIFT INDICATOR)	
		2	**8T-8729**	4	PIN-CONNECTOR (16-GA TO 18-GA)	
		2	**102-8804**	1	KIT-RECEPTACLE (4-PIN)	
					(INCLUDES RECEPTACLE AS & WEDGE)	
	4	2	**6I-1418**	4	SPACER (8.2X12.7X28.7-MM THK)	
	5	2	**8T-9655**	8	MOUNT-ISOLATION	
	6	2	**9L-1566**	2	SUPPORT	
	7	1	**9L-6331**	1	BRACKET	
	8	2	**114-9281**	2	SWITCH AS-PRESSURE (AIR BRAKE)	
					(EACH INCLUDES)	
		2	**102-8802**	1	KIT-RECEPTACLE (2-PIN)	
					(INCLUDES RECEPTACLE AS & WEDGE)	
		2	**8T-8729**	2	PIN-CONNECTOR (16-GA TO 18-GA)	
	9	1,2	**169-5414**	5	CLIP	
Y	10	2	**177-4493**	1	CONTROL GP-POWER TRAIN	221
	11	2	**297-1140**	1	SWITCH AS-PRESSURE (PARKING BRAKE)	
		2	**102-8802**	1	KIT-RECEPTACLE (2-PIN)	
					(INCLUDES RECEPTACLE AS & WEDGE)	
		2	**8T-8729**	2	PIN-CONNECTOR (16-GA TO 18-GA)	
	12	2	**320-8203**	1	PLATE AS	
	13	1	**334-9745**	1	HARNESS AS-PLATFORM	
		1	**102-8802**	2	KIT-RECEPTACLE (2-PIN)	
		1	**102-8803**	1	KIT-RECEPTACLE (3-PIN)	
		1	**102-8805**	5	KIT-RECEPTACLE (6-PIN)	
		1	**102-8801**	9	KIT-RECEPTACLE (12-PIN)	
					(EACH KIT INCLUDES RECEPTACLE AS & WEDGE)	
		1	**7G-7920**	1	PLUG-SEAL	
		1	**9X-0196**	3	TERMINAL AS (16-GA)	
		1	**8N-1546**	3	PIN-CONNECTOR (6-GA)	
		1	**8N-1547**	3	SOCKET-CONNECTOR (6-GA)	
		1	**8T-8729**	72	PIN-CONNECTOR (16-GA TO 18-GA)	
		1	**8T-8730**	80	SOCKET-CONNECTOR (16-GA TO 18-GA)	
		1	**8T-8737**	115	PLUG-SEAL	
		1	**9W-0844**	7	SOCKET-CONNECTOR (14-GA TO 16-GA)	
		1	**9W-0852**	8	PIN-CONNECTOR (14-GA TO 16-GA)	
		1	**9X-1343**	1	RECEPTACLE AS-CONNECTOR (40-PIN)	
		1	**9X-3401**	30	PIN-CONNECTOR (16-GA TO 18-GA)	
		1	**9X-3402**	26	SOCKET-CONNECTOR (16-GA TO 18-GA)	
E		1	**119-3662**		TUBE-HEAT SHRINK (10.85-MM DIA) (20-CM)	
E		1	**125-7874**		TUBE-HEAT SHRINK (5.72-MM DIA) (40-CM)	
E		1	**125-7875**		TUBE-HEAT SHRINK (7.44-MM DIA) (70-CM)	
		1	**127-5483**	3	PLUG AS-CONNECTOR (1-PIN)	
		1	**127-5484**	4	RECEPTACLE AS-CONNECTOR (1-PIN)	

284-5343 **WIRING GP-FRONT (**contd.**)** **i06949229**

NOTE	REF NO	GRAPHIC REF	PART NUMBER	QTY	PART NAME 1 2 3 4 5 6 (PRODUCT LEVEL)	SEE PAGE
		1	**131-1490**	3	TERMINAL AS (6-GA TO 8-GA)	
		1	**2L-8069**	2	TERMINAL-RING (2-GA TO 10-GA, 3/8-IN SCREW)	
		1	**2L-8079**	1	TERMINAL-RING (14-GA TO 16-GA, 3/8-IN SCREW)	
		1	**155-2255**	7	KIT-CONNECTING PLUG (12-PIN)	
		1	**155-2265**	1	KIT-CONNECTING PLUG (8-PIN)	
		1	**155-2260**	3	KIT-CONNECTING PLUG (3-PIN)	
		1	**155-2270**	9	KIT-CONNECTING PLUG (2-PIN)	
		1	**155-2271**	1	KIT-CONNECTING PLUG (4-PIN)	
		1	**155-2274**	5	KIT-CONNECTING PLUG (6-PIN)	
					(EACH KIT INCLUDES PLUG AS, WEDGE & INTERFACE SEAL)	
B		1	**1P-0810**		TAPE-ELECTRICAL	
	14	2	**096-6166**	4	WASHER-HARD (4.5X9X1-MM THK)	
	15	1,2	**130-5300**	6	CLIP	
	16	2	**174-5907**	2	CLIP	
	17	2	**3J-1907**	1	SEAL-O-RING	
	18	1,2	**4D-7388**	3	CLIP	
	19	1,2	**4D-7794**	6	CLIP	
	20	1	**4K-8864**	1	CLIP	
	21	1	**4L-6454**	1	BOLT (3/8-16X1-IN)	
	22	1,2	**4P-8134**	2	CLIP	
	23	1,2	**5M-3062**	4	BOLT (3/8-16X0.75-IN)	
	24	1	**6D-4246**	1	CLIP	
	25	2	**7D-7233**	1	CLIP	
	26	1	**6V-1889**	1	CLIP	
	27	1,2	**6V-3265**	6	CLIP	
	28	2	**7X-0613**	4	WASHER-HARD (8.8X25.5X5-MM THK)	
	29	1	**6V-8801**	1	NUT (3/8-16-THD)	
	30	1	**7C-4354**	1	CLIP	
	31	1,2	**7K-1181**	19	STRAP-CABLE	
	32	2	**7N-3718**	1	CLIP	
M	33	2	**7X-0818**	4	BOLT (M8X1.25X45-MM)	
B	34	2	**8F-1974**	10	SHIM (0.13-MM THK)	
	35	2	**8M-2770**	1	CLIP	
	36	1	**8M-2773**	1	CLIP	
	37	1,2	**8T-4121**	33	WASHER-HARD (11X21X2.5-MM THK)	
M	38	1,2	**8T-4133**	4	NUT (M10X1.5-THD)	
M	39	1,2	**8T-4136**	3	BOLT (M10X1.5X25-MM)	
M	40	1,2	**8T-4137**	23	BOLT (M10X1.5X20-MM)	
M	41	1,2	**8T-4195**	3	BOLT (M10X1.5X30-MM)	
M	42	2	**8T-4647**	4	SCREW-MACHINE (M4X0.7X20-MM)	
	43	1,2	**8T-4896**	6	WASHER-HARD (10.2X18.5X2.5-MM THK)	
	44	2	**7D-1553**	1	CLIP	
Y	45	2	*291-5475*	1	ELECTRONICS GP-POWER TRAIN	233
	46	2	**8T-4224**	2	WASHER-HARD (8.8X16X2-MM THK)	
	47	2	**5P-9085**	2	CLIP	

B - USE AS REQUIRED
E - ORDER BY THE CENTIMETER
M - METRIC PART
Y - SEPARATE ILLUSTRATION

284-5343 **WIRING GP-FRONT (**contd.**)** **i06949229**

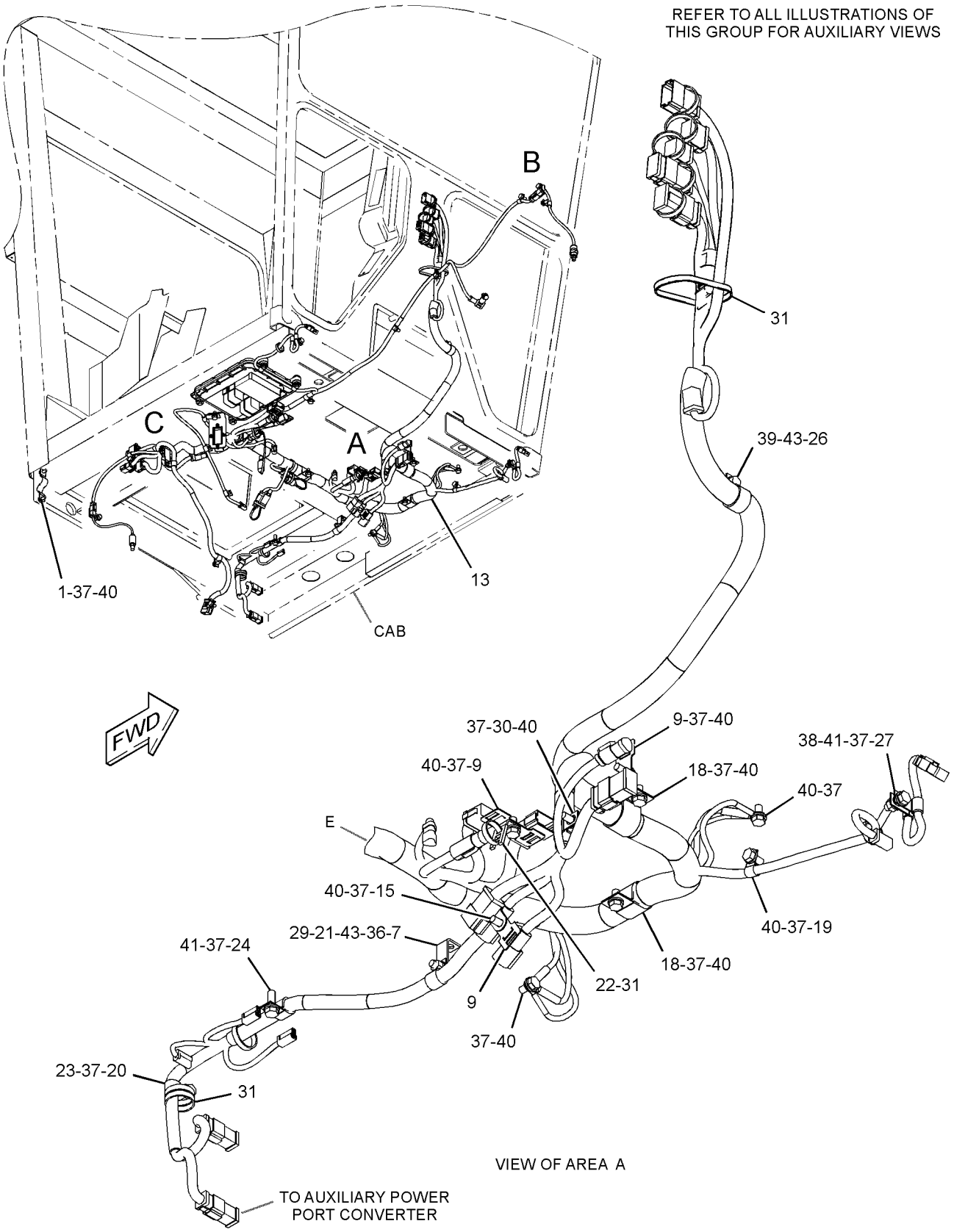

GRAPHIC #1 g03325484

284-5343 **WIRING GP-FRONT (**contd.**)** **i06949229**

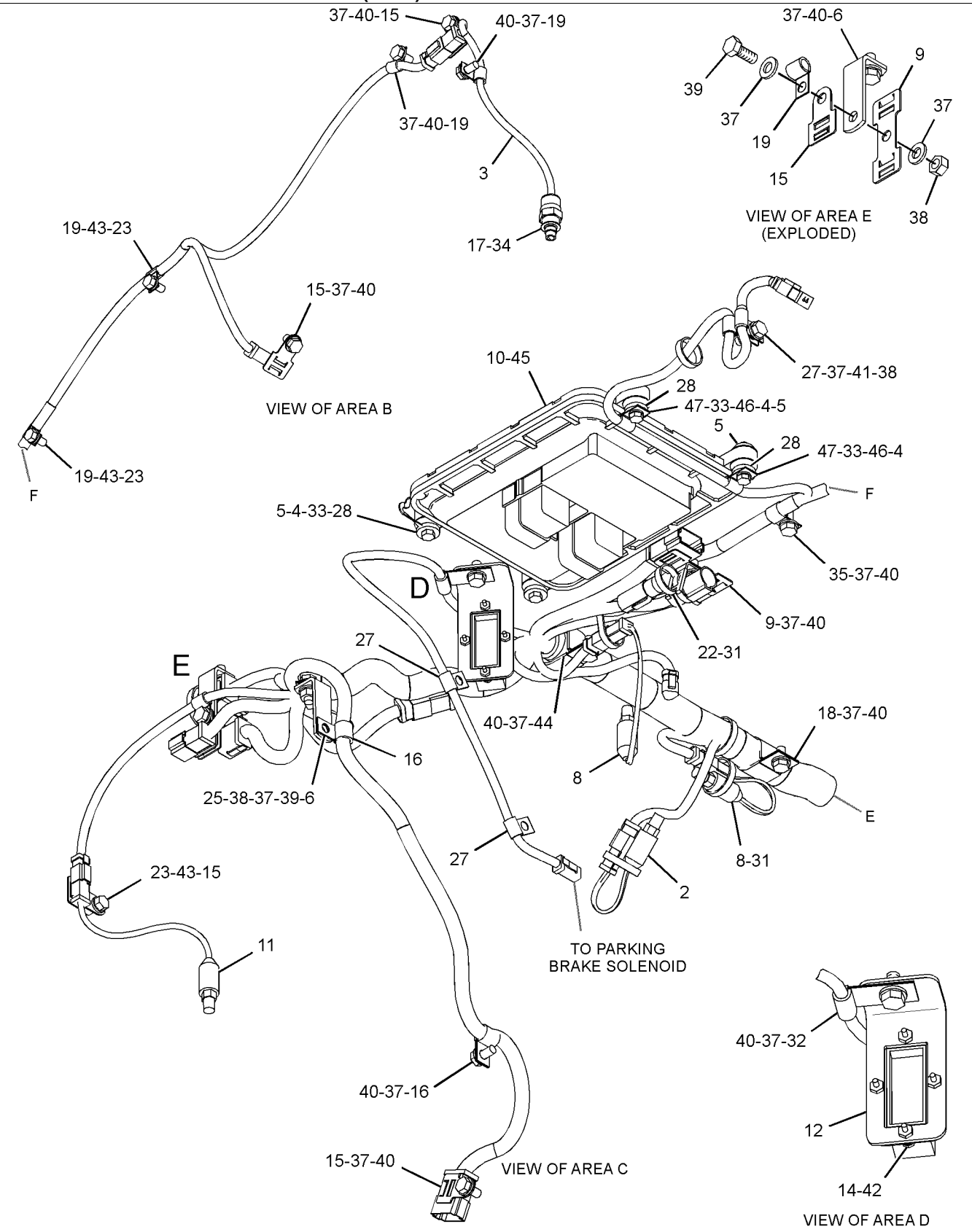

GRAPHIC #2 <END> g03325485

334-3341 WIRING GP-FRONT

S/N: SZS1-UP
INDIA ROADING
PART OF 358-9496, 359-1519, 359-1520 ROADING AR
AN ATTACHMENT

SMCS-1408 **i06953453**

NOTE	REF NO	GRAPHIC REF	PART NUMBER	QTY	PART NAME 1 2 3 4 5 6 (PRODUCT LEVEL)	SEE PAGE
	1	2	**1S-2342**	1	STRAP AS-GROUND	
	2	1	**2G-0617**	2	CLAMP	
	3	1	**2G-0659**	2	BRACKET	
	4	1	**2G-0988**	2	CAP	
	5	2	**3E-2026**	1	SWITCH AS-PRESSURE (STOP LIGHT)	
		2	**102-8802**	1	KIT-RECEPTACLE (2-PIN)	
					(INCLUDES RECEPTACLE AS & WEDGE)	
		2	**8T-8729**	2	PIN-CONNECTOR (16-GA TO 18-GA)	
	6	2	**3E-3636**	1	SWITCH AS-BALL (CENTERSHIFT INDICATOR)	
		2	**8T-8729**	4	PIN-CONNECTOR (16-GA TO 18-GA)	
		2	**102-8804**	1	KIT-RECEPTACLE (4-PIN)	
					(INCLUDES RECEPTACLE AS & WEDGE)	
	7	1	**3K-9520**	3	GROMMET	
	8	1	**5T-9313**	1	TUBE	
	9	2	**6I-1418**	4	SPACER (8.2X12.7X28.7-MM THK)	
	10	2	**8T-9655**	8	MOUNT-ISOLATION	
	11	2	**9L-1566**	2	SUPPORT	
	12	2	**9L-6331**	1	BRACKET	
	13	2	**114-9281**	2	SWITCH AS-PRESSURE (AIR BRAKE)	
					(EACH INCLUDES)	
		2	**102-8802**	1	KIT-RECEPTACLE (2-PIN)	
					(INCLUDES RECEPTACLE AS & WEDGE)	
		2	**8T-8729**	2	PIN-CONNECTOR (16-GA TO 18-GA)	
	14	1	**137-9410**	2	CLAMP	
	15	2	**169-5414**	5	CLIP	
Y	16	2	**177-4493**	1	CONTROL GP-POWER TRAIN	221
	17	1	**179-1550**	2	CLAMP	
	18	2	**297-1140**	1	SWITCH AS-PRESSURE (PARKING BRAKE)	
		2	**102-8802**	1	KIT-RECEPTACLE (2-PIN)	
					(INCLUDES RECEPTACLE AS & WEDGE)	
		2	**8T-8729**	2	PIN-CONNECTOR (16-GA TO 18-GA)	
CY	19	1	**344-3457**	1	LAMP GP-HEAD & SIGNAL (24-VOLT) (RH)	295
	20	2	**320-8203**	1	PLATE AS	
	21	2	**334-3342**	1	HARNESS AS-PLATFORM	
		2	**102-8802**	2	KIT-RECEPTACLE (2-PIN)	
		2	**102-8803**	1	KIT-RECEPTACLE (3-PIN)	
		2	**102-8805**	5	KIT-RECEPTACLE (6-PIN)	
		2	**102-8801**	8	KIT-RECEPTACLE (12-PIN)	
					(EACH KIT INCLUDES RECEPTACLE AS & WEDGE)	
		2	**5P-4571**	6	TERMINAL-BLADE (14-GA TO 16-GA)	
		2	**7G-7920**	1	PLUG-SEAL	
		2	**8N-1546**	3	PIN-CONNECTOR (6-GA)	
		2	**8N-1547**	3	SOCKET-CONNECTOR (6-GA)	
		2	**8T-8729**	68	PIN-CONNECTOR (16-GA TO 18-GA)	
		2	**8T-8730**	80	SOCKET-CONNECTOR (16-GA TO 18-GA)	
		2	**8T-8737**	100	PLUG-SEAL	

334-3341 **WIRING GP-FRONT (**contd.**)** **i06953453**

NOTE	REF NO	GRAPHIC REF	PART NUMBER	QTY	PART NAME 1 2 3 4 5 6 (PRODUCT LEVEL)	SEE PAGE
		2	**9W-0844**	7	SOCKET-CONNECTOR (14-GA TO 16-GA)	
		2	**9W-0852**	8	PIN-CONNECTOR (14-GA TO 16-GA)	
		2	**9W-0852**	8	PIN-CONNECTOR (14-GA TO 16-GA)	
		2	**9X-1343**	1	RECEPTACLE AS-CONNECTOR (40-PIN)	
		2	**9X-3401**	30	PIN-CONNECTOR (16-GA TO 18-GA)	
		2	**9X-3402**	27	SOCKET-CONNECTOR (16-GA TO 18-GA)	
E		2	**119-3662**		TUBE-HEAT SHRINK (10.85-MM DIA) (20-CM)	
E		2	**125-7874**		TUBE-HEAT SHRINK (5.72-MM DIA) (45-CM)	
E		2	**125-7875**		TUBE-HEAT SHRINK (7.44-MM DIA) (60-CM)	
		2	**127-5483**	3	PLUG AS-CONNECTOR (1-PIN)	
		2	**127-5484**	4	RECEPTACLE AS-CONNECTOR (1-PIN)	
		2	**131-1490**	3	TERMINAL AS (6-GA TO 8-GA)	
		2	**2L-8069**	2	TERMINAL-RING (2-GA TO 10-GA, 3/8-IN SCREW)	
		2	**2L-8079**	1	TERMINAL-RING (14-GA TO 16-GA, 3/8-IN SCREW)	
		2	**155-2255**	6	KIT-CONNECTING PLUG (12-PIN)	
		2	**155-2265**	1	KIT-CONNECTING PLUG (8-PIN)	
		2	**155-2260**	3	KIT-CONNECTING PLUG (3-PIN)	
		2	**155-2270**	9	KIT-CONNECTING PLUG (2-PIN)	
		2	**155-2271**	1	KIT-CONNECTING PLUG (4-PIN)	
		2	**155-2274**	6	KIT-CONNECTING PLUG (6-PIN)	
					(EACH KIT INCLUDES PLUG AS, WEDGE & INTERFACE SEAL)	
B		2	**1P-0810**		TAPE-ELECTRICAL	
	22	1	**334-3343**	1	HARNESS AS-PANEL	
		1	**102-8805**	1	KIT-RECEPTACLE (6-PIN)	
					(INCLUDES RECEPTACLE AS & WEDGE)	
		1	**8T-8729**	5	PIN-CONNECTOR (16-GA TO 18-GA)	
		1	**8T-8730**	8	SOCKET-CONNECTOR (16-GA TO 18-GA)	
		1	**8T-8737**	2	PLUG-SEAL	
		1	**9W-0844**	2	SOCKET-CONNECTOR (14-GA TO 16-GA)	
		1	**9W-0852**	1	PIN-CONNECTOR (14-GA TO 16-GA)	
E		1	**125-7874**		TUBE-HEAT SHRINK (5.72-MM DIA) (5-CM)	
E		1	**125-7875**		TUBE-HEAT SHRINK (7.44-MM DIA) (15-CM)	
		1	**155-2274**	2	KIT-CONNECTING PLUG (6-PIN)	
					(EACH KIT INCLUDES PLUG AS, WEDGE & INTERFACE SEAL)	
	23	2	**096-6166**	4	WASHER-HARD (4.5X9X1-MM THK)	
	24	1,2	**130-5300**	8	CLIP	
	25	2	**174-5907**	2	CLIP	
CY	26	1	**344-3458**	1	LAMP GP-HEAD & SIGNAL (24-VOLT) (LH)	297
	27	2	**3J-1907**	1	SEAL-O-RING	
	28	2	**4D-7388**	4	CLIP	
	29	2	**4D-7794**	8	CLIP	
	30	2	**4K-8864**	3	CLIP	
	31	2	**4L-6454**	1	BOLT (3/8-16X1-IN)	
	32	2	**4P-8134**	2	CLIP	
	33	2	**5M-3062**	5	BOLT (3/8-16X0.75-IN)	
	34	2	**6D-4246**	1	CLIP	
	35	2	**6D-4636**	1	CLIP	
	36	2	**6V-1889**	1	CLIP	
	37	2	**6V-3265**	6	CLIP	
	38	2	**6V-3964**	4	WASHER-HARD (8.8X25.5X5-MM THK)	

334-3341 **WIRING GP-FRONT (**contd.**)** **i06953453**

NOTE	REF NO	GRAPHIC REF	PART NUMBER	QTY	PART NAME 1 2 3 4 5 6 (PRODUCT LEVEL)	SEE PAGE
	39	2	**6V-8801**	1	NUT (3/8-16-THD)	
	40	2	**7C-4354**	1	CLIP	
	41	1,2	**7K-1181**	23	STRAP-CABLE	
	42	2	**7N-3718**	1	CLIP	
M	43	2	**7X-0818**	4	BOLT (M8X1.25X45-MM)	
B	44	2	**8F-1974**	10	SHIM (0.13-MM THK)	
	45	2	**8M-2770**	1	CLIP	
	46	2	**8M-2773**	1	CLIP	
	47	1,2	**8T-4121**	35	WASHER-HARD (11X21X2.5-MM THK)	
M	48	1,2	**8T-4133**	6	NUT (M10X1.5-THD)	
M	49	1,2	**8T-4136**	4	BOLT (M10X1.5X25-MM)	
M	50	2	**8T-4137**	24	BOLT (M10X1.5X20-MM)	
M	51	2	**8T-4195**	3	BOLT (M10X1.5X30-MM)	
	52	1	**8T-4223**	4	WASHER-HARD (13.5X25.5X3-MM THK)	
M	53	1	**8T-4244**	4	NUT (M12X1.75-THD)	
M	54	2	**8T-4647**	4	SCREW-MACHINE (M4X0.7X20-MM)	
	55	2	**8T-4896**	7	WASHER-HARD (10.2X18.5X2.5-MM THK)	
M	56	1	**8T-5412**	4	BOLT (M12X1.75X140-MM)	

B - USE AS REQUIRED
C - CHANGE FROM PREVIOUS TYPE
E - ORDER BY THE CENTIMETER
M - METRIC PART
Y - SEPARATE ILLUSTRATION

REFER TO ALL ILLUSTRATIONS OF THIS GROUP FOR AUXILIARY VIEWS

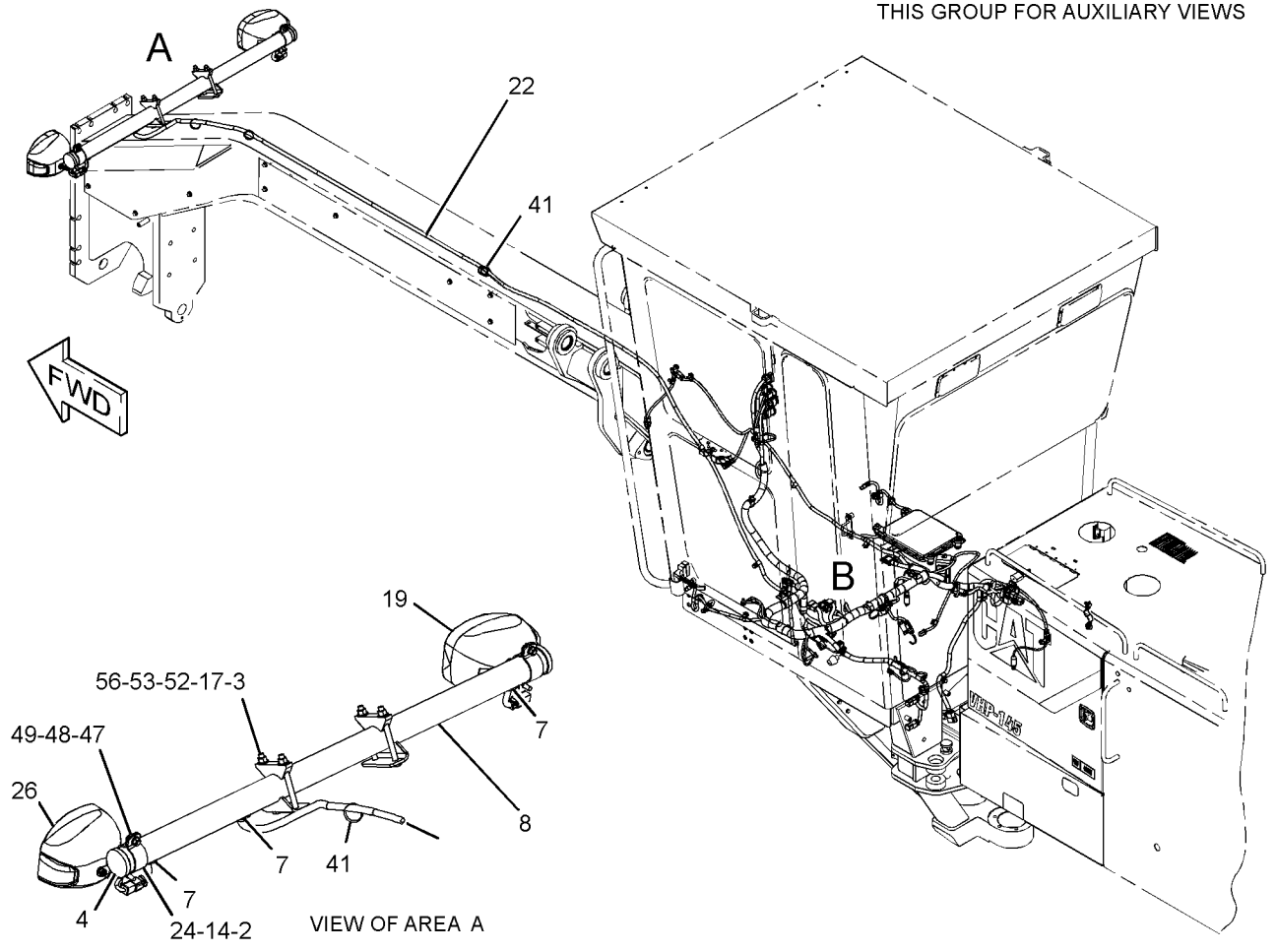

GRAPHIC #1 g01925056

334-3341 **WIRING GP-FRONT (**contd.**)** **i06953453**

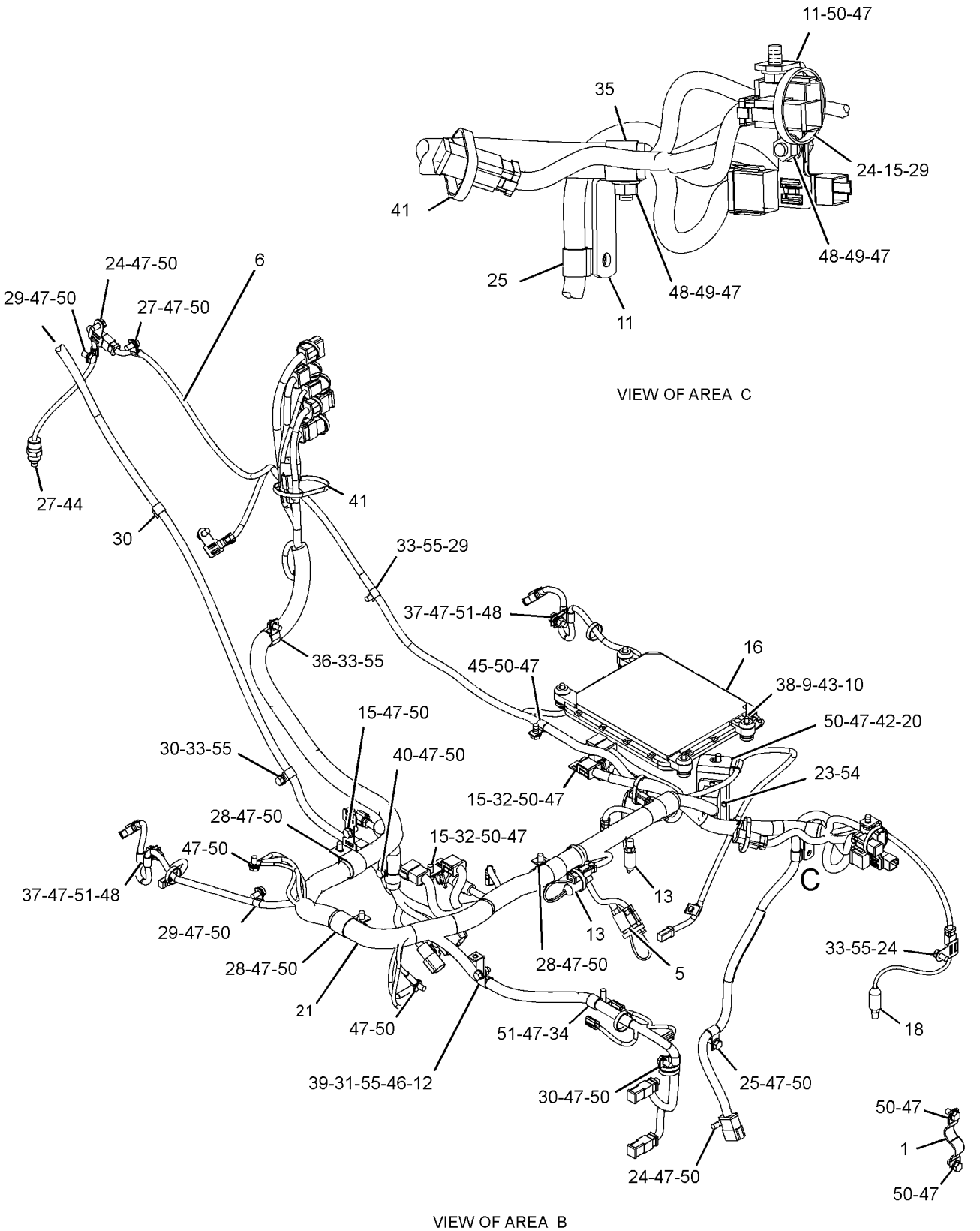

GRAPHIC #2 <END> g01925057

373-6940 WIRING GP-FRONT

S/N: SZS489-623

PART OF 368-3025 GENERAL AR

SMCS-1408 **i05819611**

NOTE	REF NO	GRAPHIC REF	PART NUMBER	QTY	PART NAME 1 2 3 4 5 6 (PRODUCT LEVEL)	SEE PAGE
	1	2	**1S-2342**	1	STRAP AS-GROUND	
	2	1	**3E-2026**	1	SWITCH AS-PRESSURE (STOP LIGHT)	
		1	**102-8802**	1	KIT-RECEPTACLE (2-PIN)	
					(INCLUDES RECEPTACLE AS & WEDGE)	
		1	**8T-8729**	2	PIN-CONNECTOR (16-GA TO 18-GA)	
	3	2	**3E-3636**	1	SWITCH AS-BALL (CENTERSHIFT INDICATOR)	
		2	**8T-8729**	4	PIN-CONNECTOR (16-GA TO 18-GA)	
		2	**102-8804**	1	KIT-RECEPTACLE (4-PIN)	
					(INCLUDES RECEPTACLE AS & WEDGE)	
	4	2	**6I-1418**	4	SPACER (8.2X12.7X28.7-MM THK)	
	5	1,2	**7K-1181**	21	STRAP-CABLE	
	6	2	**8T-9655**	8	MOUNT-ISOLATION	
	7	2	**9L-1566**	2	SUPPORT	
	8	1	**9L-6331**	1	BRACKET	
	9	1,2	**114-9281**	2	SWITCH AS-PRESSURE (AIR BRAKE)	
					(EACH INCLUDES)	
		1,2	**102-8802**	1	KIT-RECEPTACLE (2-PIN)	
					(INCLUDES RECEPTACLE AS & WEDGE)	
		1,2	**8T-8729**	2	PIN-CONNECTOR (16-GA TO 18-GA)	
	10	1,2	**169-5414**	4	CLIP	
	11	2	**455-9255**	1	SWITCH AS-PRESSURE (PARKING BRAKE)	
		2	**102-8802**	1	KIT-RECEPTACLE (2-PIN)	
					(INCLUDES RECEPTACLE AS & WEDGE)	
		2	**8T-8729**	2	PIN-CONNECTOR (16-GA TO 18-GA)	
R	12	1	**304-5691**	1	CONTROL GP-UNPROGRAMMED (POWER TRAIN)	
Y	13	1	*360-2133*	1	ELECTRONICS GP-POWER TRAIN	233
	14	2	**320-8203**	1	PLATE AS	
	15	1	**373-6941**	1	HARNESS AS-PLATFORM	
		1	**102-8803**	1	KIT-RECEPTACLE (3-PIN)	
		1	**102-8805**	5	KIT-RECEPTACLE (6-PIN)	
		1	**102-8801**	9	KIT-RECEPTACLE (12-PIN)	
					(EACH RECEPTACLE KIT INCLUDES RECEPTACLE AS & WEDGE)	
		1	**5P-4571**	6	TERMINAL-BLADE (14-GA TO 16-GA)	
		1	**7G-7920**	1	PLUG-SEAL	
		1	**9X-0196**	3	TERMINAL AS (16-GA)	
		1	**8N-1546**	3	PIN-CONNECTOR (6-GA)	
		1	**8N-1547**	3	SOCKET-CONNECTOR (6-GA)	
		1	**8T-8729**	78	PIN-CONNECTOR (16-GA TO 18-GA)	
		1	**8T-8730**	85	SOCKET-CONNECTOR (16-GA TO 18-GA)	
		1	**8T-8737**	109	PLUG-SEAL	
		1	**9W-0844**	7	SOCKET-CONNECTOR (14-GA TO 16-GA)	
		1	**9W-0852**	10	PIN-CONNECTOR (14-GA TO 16-GA)	
		1	**9X-1343**	1	RECEPTACLE AS-CONNECTOR (40-PIN)	
		1	**9X-3401**	25	PIN-CONNECTOR (16-GA TO 18-GA)	
		1	**9X-3402**	20	SOCKET-CONNECTOR (16-GA TO 18-GA)	
E		1	**119-3662**		TUBE-HEAT SHRINK (10.85-MM DIA) (20-CM)	
E		1	**125-7874**		TUBE-HEAT SHRINK (5.72-MM DIA) (35-CM)	
E		1	**125-7875**		TUBE-HEAT SHRINK (7.44-MM DIA) (70-CM)	

373-6940 **WIRING GP-FRONT (**contd.**)** **i05819611**

NOTE	REF NO	GRAPHIC REF	PART NUMBER	QTY	PART NAME 1 2 3 4 5 6 (PRODUCT LEVEL)	SEE PAGE
		1	**127-5483**	3	PLUG AS-CONNECTOR (1-PIN)	
		1	**127-5484**	4	RECEPTACLE AS-CONNECTOR (1-PIN)	
		1	**2L-8052**	3	TERMINAL-RING (6-GA, 3/8-IN SCREW)	
					—OR—	
		1	**2L-8060**	3	TERMINAL-RING (8-GA, 3/8-IN SCREW)	
		1	**2L-8069**	2	TERMINAL-RING (2-GA TO 10-GA, 3/8-IN SCREW)	
		1	**2L-8079**	1	TERMINAL-RING (14-GA TO 16-GA, 3/8-IN SCREW)	
		1	**155-2255**	7	KIT-CONNECTING PLUG (12-PIN)	
		1	**155-2265**	1	KIT-CONNECTING PLUG (8-PIN)	
					(EACH KIT INCLUDES RECEPTACLE AS & WEDGE)	
		1	**155-2270**	9	KIT-CONNECTING PLUG (2-PIN)	
		1	**155-2271**	1	KIT-CONNECTING PLUG (4-PIN)	
		1	**155-2274**	5	KIT-CONNECTING PLUG (6-PIN)	
		1	**155-2260**	3	KIT-CONNECTING PLUG (3-PIN)	
					(EACH PLUG KIT INCLUDES PLUG AS, WEDGE, & INTERFACE SEAL)	
		1	**274-3774**	2	CAP-CONNECTOR	
	16	2	**096-6166**	4	WASHER-HARD (4.5X9X1-MM THK)	
	17	1,2	**130-5300**	8	CLIP	
	18	2	**174-5907**	2	CLIP	
	19	2	**3J-1907**	1	SEAL-O-RING	
	20	1	**4D-7388**	2	CLIP	
	21	1,2	**4D-7794**	5	CLIP	
	22	1	**4K-8864**	1	CLIP	
	23	1	**4L-6454**	1	BOLT (3/8-16X1-IN)	
	24	1,2	**4P-8134**	2	CLIP	
	25	1,2	**5M-3062**	4	BOLT (3/8-16X0.75-IN)	
	26	2	**5P-9085**	3	CLIP	
	27	1	**6D-4246**	1	CLIP	
	29	1,2	**6V-3265**	6	CLIP	
	30	1	**6V-8801**	1	NUT (3/8-16-THD)	
	31	1	**7C-4354**	2	CLIP	
	33	1,2	**7D-7233**	2	CLIP	
	34	2	**7N-3718**	1	CLIP	
	35	2	**7X-0613**	4	WASHER-HARD (8.8X25.5X5-MM THK)	
M	36	2	**7X-0818**	4	BOLT (M8X1.25X45-MM)	
B	37	2	**8F-1974**	10	SHIM (0.13-MM THK)	
	38	2	**8M-2770**	1	CLIP	
	39	1	**8M-2773**	1	CLIP	
	40	1,2	**8T-4121**	28	WASHER-HARD (11X21X2.5-MM THK)	
M	41	2	**344-5675**	2	NUT (M10X1.5-THD)	
M	42	1,2	**8T-4136**	4	BOLT (M10X1.5X25-MM)	
M	43	1,2	**8T-4137**	22	BOLT (M10X1.5X20-MM)	
	45	2	**8T-4224**	2	WASHER-HARD (8.8X16X2-MM THK)	
M	46	2	**8T-4647**	4	SCREW-MACHINE (M4X0.7X20-MM)	
	47	1,2	**8T-4896**	6	WASHER-HARD (10.2X18.5X2.5-MM THK)	
E	48	2	**332-3657**		SLEEVE-ABRASION (15-CM)	

B - USE AS REQUIRED
E - ORDER BY THE CENTIMETER
M - METRIC PART
R - REMANUFACTURED PART MAY BE AVAILABLE
Y - SEPARATE ILLUSTRATION

373-6940 **WIRING GP-FRONT (**contd.**)** **i05819611**

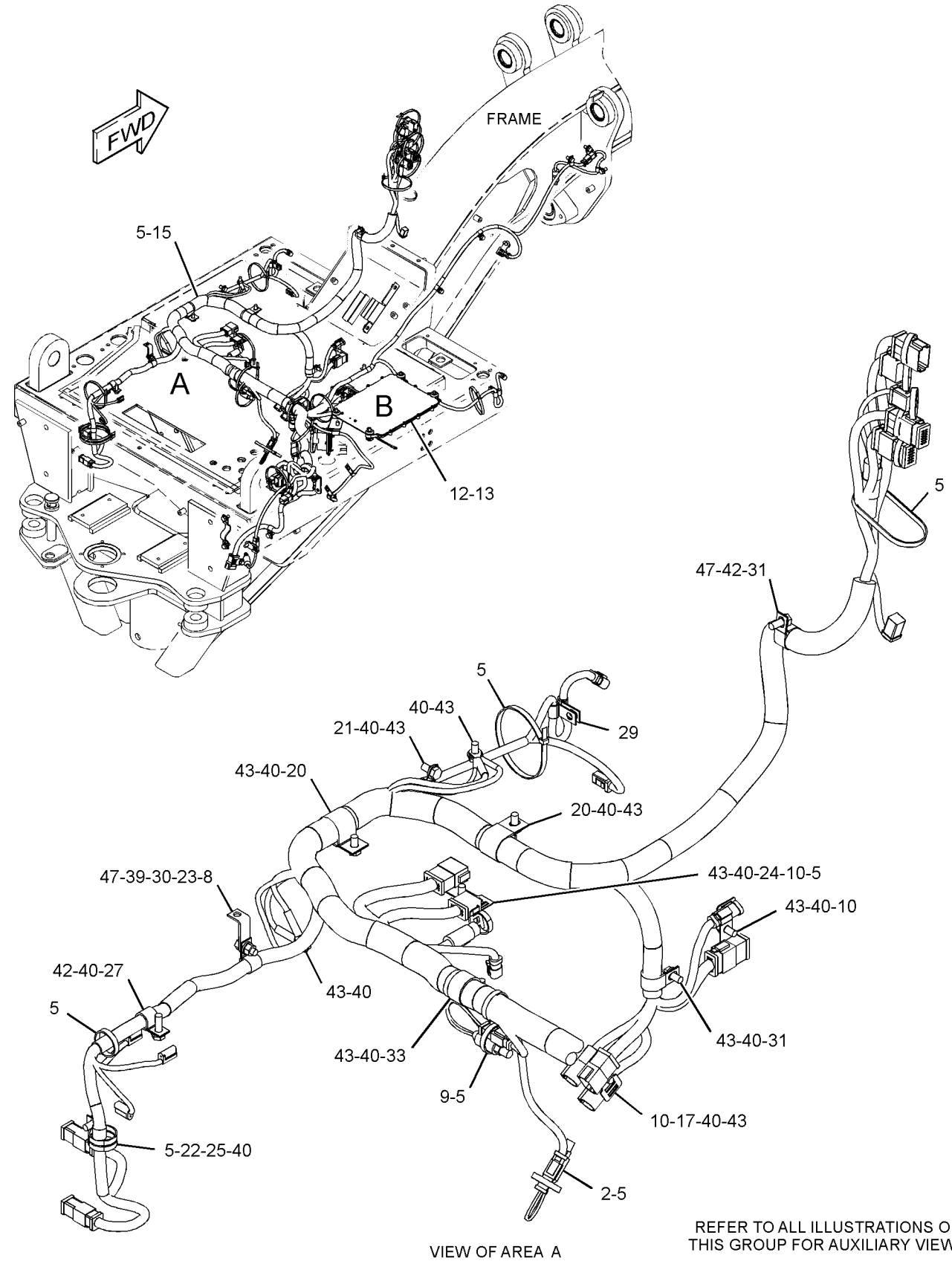

VIEW OF AREA A

REFER TO ALL ILLUSTRATIONS OF THIS GROUP FOR AUXILIARY VIEWS

GRAPHIC #1

g03686816

373-6940 **WIRING GP-FRONT (**contd.**)** **i05819611**

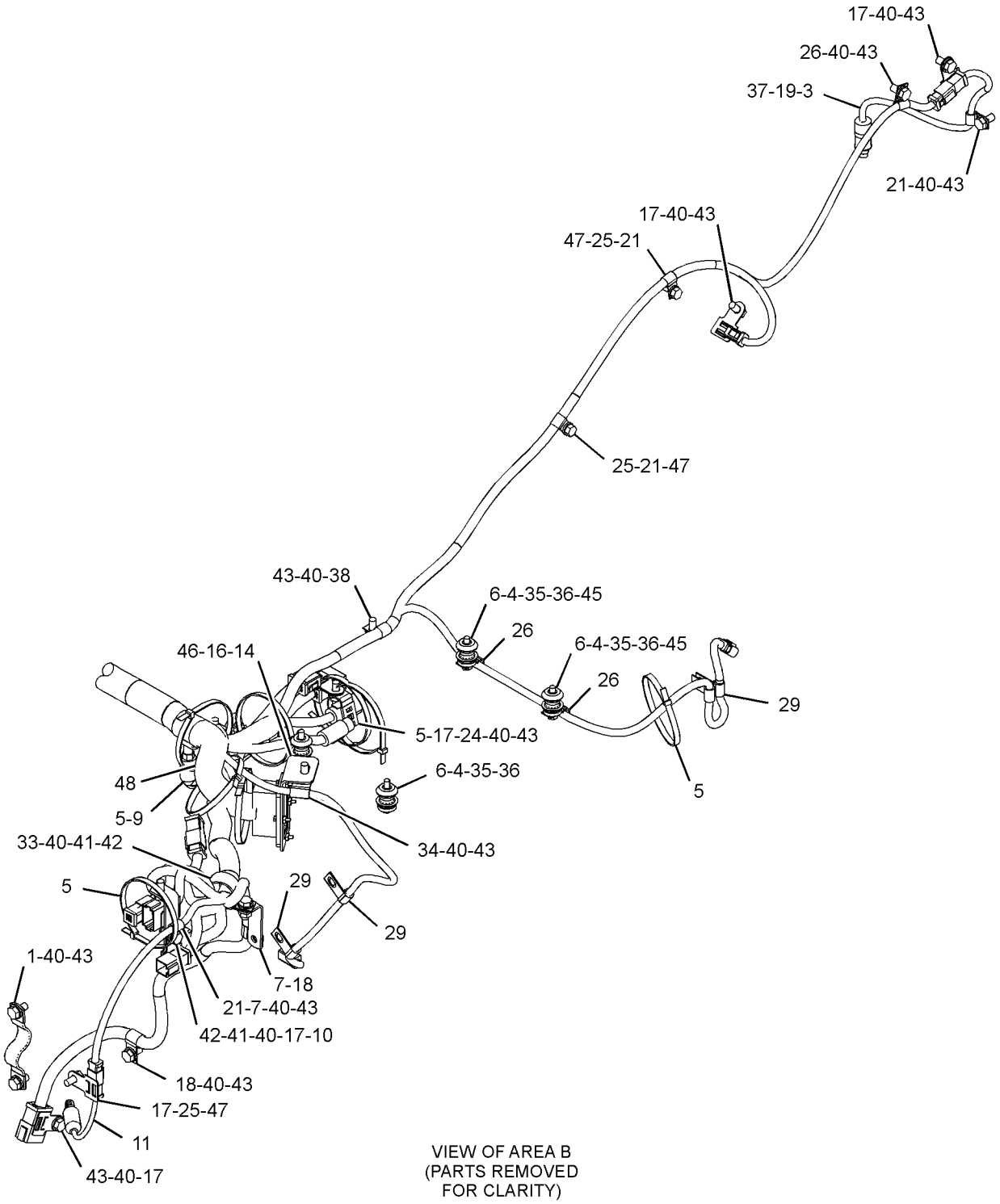

VIEW OF AREA B
(PARTS REMOVED
FOR CLARITY)

GRAPHIC #2 <END> g03686817

384-7614 WIRING GP-FRONT

S/N: SZS548-UP
PART OF 358-9496, 359-1520 ROADING AR
AN ATTACHMENT

SMCS-1408 **i05944985**

NOTE	REF NO	GRAPHIC REF	PART NUMBER	QTY	PART NAME 1 2 3 4 5 6 (PRODUCT LEVEL)	SEE PAGE
	1	1	**1S-2342**	1	STRAP AS-GROUND	
	2	1	**2G-0659**	2	BRACKET	
	3	1	**2G-0988**	2	CAP	
	4	2	**3E-2026**	1	SWITCH AS-PRESSURE (STOP LIGHT)	
		2	**102-8802**	1	KIT-RECEPTACLE (2-PIN)	
					(INCLUDES RECEPTACLE AS & WEDGE)	
		2	**8T-8729**	2	PIN-CONNECTOR (16-GA TO 18-GA)	
	5	2	**3E-3636**	1	SWITCH AS-BALL (CENTERSHIFT INDICATOR)	
		2	**8T-8729**	4	PIN-CONNECTOR (16-GA TO 18-GA)	
		2	**102-8804**	1	KIT-RECEPTACLE (4-PIN)	
					(INCLUDES RECEPTACLE AS & WEDGE)	
	6	1	**5T-9313**	1	TUBE	
	7	1,2	**7K-1181**	25	STRAP-CABLE	
	8	2	**8T-9655**	8	MOUNT-ISOLATION	
	9	2	**9L-1566**	2	SUPPORT	
	10	2	**9L-6331**	1	BRACKET	
	11	2	**114-9281**	2	SWITCH AS-PRESSURE (AIR BRAKE)	
					(EACH INCLUDES)	
		2	**102-8802**	1	KIT-RECEPTACLE (2-PIN)	
					(INCLUDES RECEPTACLE AS & WEDGE)	
		2	**8T-8729**	2	PIN-CONNECTOR (16-GA TO 18-GA)	
	12	1	**137-9410**	2	CLAMP	
	13	2	**169-5414**	4	CLIP	
	14	1	**179-1550**	2	CLAMP	
	15	2	**320-8203**	1	PLATE AS	
	16	1	**334-3343**	1	HARNESS AS-PANEL (LIGHT BAR)	
		1	**102-8805**	1	KIT-RECEPTACLE (6-PIN)	
					(INCLUDES RECEPTACLE AS & WEDGE)	
		1	**3E-3383**	1	WEDGE-RECEPTACLE LOCK (6-PIN)	
		1	**8T-8729**	5	PIN-CONNECTOR (16-GA TO 18-GA)	
		1	**8T-8730**	8	SOCKET-CONNECTOR (16-GA TO 18-GA)	
		1	**8T-8737**	2	PLUG-SEAL	
		1	**9W-0844**	2	SOCKET-CONNECTOR (14-GA TO 16-GA)	
		1	**9W-0852**	1	PIN-CONNECTOR (14-GA TO 16-GA)	
E		1	**125-7874**		TUBE-HEAT SHRINK (5.72-MM DIA) (5-CM)	
E		1	**125-7875**		TUBE-HEAT SHRINK (7.44-MM DIA) (15-CM)	
		1	**155-2274**	2	KIT-CONNECTING PLUG (6-PIN)	
					(EACH KIT INCLUDES PLUG AS, WEDGE & INTERFACE SEAL)	
Y	17	1	**344-3457**	1	LAMP GP-HEAD & SIGNAL (24-VOLT) (RH)	295
Y	18	1	**344-3458**	1	LAMP GP-HEAD & SIGNAL (24-VOLT) (LH)	297
R	20	2	**304-5691**	1	CONTROL GP-UNPROGRAMMED	
	21	2	**384-7615**	1	HARNESS AS-CHASSIS (PLATFORM)	
		2	**102-8803**	1	KIT-RECEPTACLE (3-PIN)	
		2	**102-8805**	5	KIT-RECEPTACLE (6-PIN)	
		2	**102-8801**	8	KIT-RECEPTACLE (12-PIN)	
					(EACH KIT INCLUDES RECEPTACLE AS & WEDGE)	
		2	**3E-3383**	1	WEDGE-RECEPTACLE LOCK (6-PIN)	

384-7614 **WIRING GP-FRONT (**contd.**)** **i05944985**

NOTE	REF NO	GRAPHIC REF	PART NUMBER	QTY	PART NAME 1 2 3 4 5 6 (PRODUCT LEVEL)	SEE PAGE
		2	**5P-4571**	6	TERMINAL-BLADE (14-GA TO 16-GA)	
		2	**7G-7920**	1	PLUG-SEAL	
		2	**9X-0196**	3	TERMINAL AS (16-GA)	
		2	**8N-1546**	3	PIN-CONNECTOR (6-GA)	
		2	**8N-1547**	3	SOCKET-CONNECTOR (6-GA)	
		2	**8T-8729**	75	PIN-CONNECTOR (16-GA TO 18-GA)	
		2	**8T-8730**	93	SOCKET-CONNECTOR (16-GA TO 18-GA)	
		2	**8T-8737**	94	PLUG-SEAL	
		2	**9W-0844**	7	SOCKET-CONNECTOR (14-GA TO 16-GA)	
		2	**9W-0852**	10	PIN-CONNECTOR (14-GA TO 16-GA)	
		2	**9X-1343**	1	RECEPTACLE AS-CONNECTOR (40-PIN)	
		2	**9X-3401**	24	PIN-CONNECTOR (16-GA TO 18-GA)	
		2	**9X-3402**	13	SOCKET-CONNECTOR (16-GA TO 18-GA)	
E		2	**119-3662**		TUBE-HEAT SHRINK (10.85-MM DIA) (20-CM)	
E		2	**125-7874**		TUBE-HEAT SHRINK (5.72-MM DIA) (35-CM)	
E		2	**125-7875**		TUBE-HEAT SHRINK (7.44-MM DIA) (65-CM)	
		2	**127-5483**	3	PLUG AS-CONNECTOR (1-PIN)	
		2	**127-5484**	4	RECEPTACLE AS-CONNECTOR (1-PIN)	
		2	**2L-8052**	3	TERMINAL-RING (6-GA, 3/8-IN SCREW)	
					—OR—	
		2	**2L-8060**	3	TERMINAL-RING (8-GA, 3/8-IN SCREW)	
		2	**2L-8069**	2	TERMINAL-RING (2-GA TO 10-GA, 3/8-IN SCREW)	
		2	**2L-8079**	1	TERMINAL-RING (14-GA TO 16-GA, 3/8-IN SCREW)	
		2	**155-2255**	6	KIT-CONNECTING PLUG (12-PIN)	
		2	**155-2258**	5	WEDGE-PLUG LOCK (12-PIN)	
		2	**155-2259**	1	WEDGE-PLUG LOCK (8-PIN)	
		2	**155-2265**	1	KIT-CONNECTING PLUG (8-PIN)	
		2	**155-2260**	3	KIT-CONNECTING PLUG (3-PIN)	
		2	**155-2270**	9	KIT-CONNECTING PLUG (2-PIN)	
		2	**155-2271**	1	KIT-CONNECTING PLUG (4-PIN)	
		2	**155-2274**	6	KIT-CONNECTING PLUG (6-PIN)	
					(EACH KIT INCLUDES PLUG AS, WEDGE & INTERFACE SEAL)	
		2	**274-3774**	2	CAP-CONNECTOR	
	22	2	**455-9255**	1	SWITCH AS-PRESSURE (PARKING BRAKE)	
		2	**102-8802**	1	KIT-RECEPTACLE (2-PIN)	
					(INCLUDES RECEPTACLE AS & WEDGE)	
		2	**8T-8729**	2	PIN-CONNECTOR (16-GA TO 18-GA)	
	23	2	**096-6166**	4	WASHER-HARD (4.5X9X1-MM THK)	
	24	1,2	**130-5300**	10	CLIP	
	25	2	**174-5907**	2	CLIP	
	26	1	**2G-0617**	2	CLAMP	
M	27	1,2	**344-5675**	4	NUT (M10X1.5-THD)	
	28	2	**3J-1907**	1	SEAL-O-RING	
	29	1	**3K-9520**	3	GROMMET	
	30	2	**4D-7388**	3	CLIP	
	31	2	**4D-7794**	5	CLIP	
	32	1,2	**4K-8864**	3	CLIP	
	33	2	**4L-6454**	1	BOLT (3/8-16X1-IN)	
	34	2	**4P-8134**	2	CLIP	
	35	1,2	**5M-3062**	4	BOLT (3/8-16X0.75-IN)	
	36	2	**5P-9085**	3	CLIP	

384-7614 **WIRING GP-FRONT (**contd.**)** **i05944985**

NOTE	REF NO	GRAPHIC REF	PART NUMBER	QTY	PART NAME 1 2 3 4 5 6 (PRODUCT LEVEL)	SEE PAGE
	37	2	**6D-4246**	1	CLIP	
	38	2	**6D-4636**	1	CLIP	
	39	2	**6I-1418**	4	SPACER (8.2X12.7X28.7-MM THK)	
	40	2	**6V-3265**	6	CLIP	
	41	2	**6V-3964**	4	WASHER-HARD (8.8X25.5X5-MM THK)	
	42	2	**6V-8801**	1	NUT (3/8-16-THD)	
	43	2	**7C-4354**	2	CLIP	
	44	2	**7N-3718**	1	CLIP	
M	45	2	**7X-0818**	4	BOLT (M8X1.25X45-MM)	
B	46	2	**8F-1974**	10	SHIM (0.13-MM THK)	
	47	2	**8M-2770**	1	CLIP	
	48	2	**8M-2773**	1	CLIP	
	49	1,2	**8T-4121**	32	WASHER-HARD (11X21X2.5-MM THK)	
M	50	1,2	**8T-4136**	6	BOLT (M10X1.5X25-MM)	
M	51	1,2	**8T-4137**	23	BOLT (M10X1.5X20-MM)	
	52	1	**8T-4223**	8	WASHER-HARD (13.5X25.5X3-MM THK)	
	53	2	**8T-4224**	2	WASHER-HARD (8.8X16X2-MM THK)	
M	54	1	**8T-4244**	4	NUT (M12X1.75-THD)	
M	55	2	**8T-4647**	4	SCREW-MACHINE (M4X0.7X20-MM)	
	56	1,2	**8T-4896**	7	WASHER-HARD (10.2X18.5X2.5-MM THK)	
M	57	1	**8T-5412**	4	BOLT (M12X1.75X140-MM)	
E	58	2	**332-3657**		SLEEVE-ABRASION (15-CM)	

B - USE AS REQUIRED
E - ORDER BY THE CENTIMETER
M - METRIC PART
R - REMANUFACTURED PART MAY BE AVAILABLE
Y - SEPARATE ILLUSTRATION

384-7614 **WIRING GP-FRONT (**contd.**)** **i05944985**

REFER TO ALL ILLUSTRATIONS OF
THIS GROUP FOR AUXILIARY VIEWS

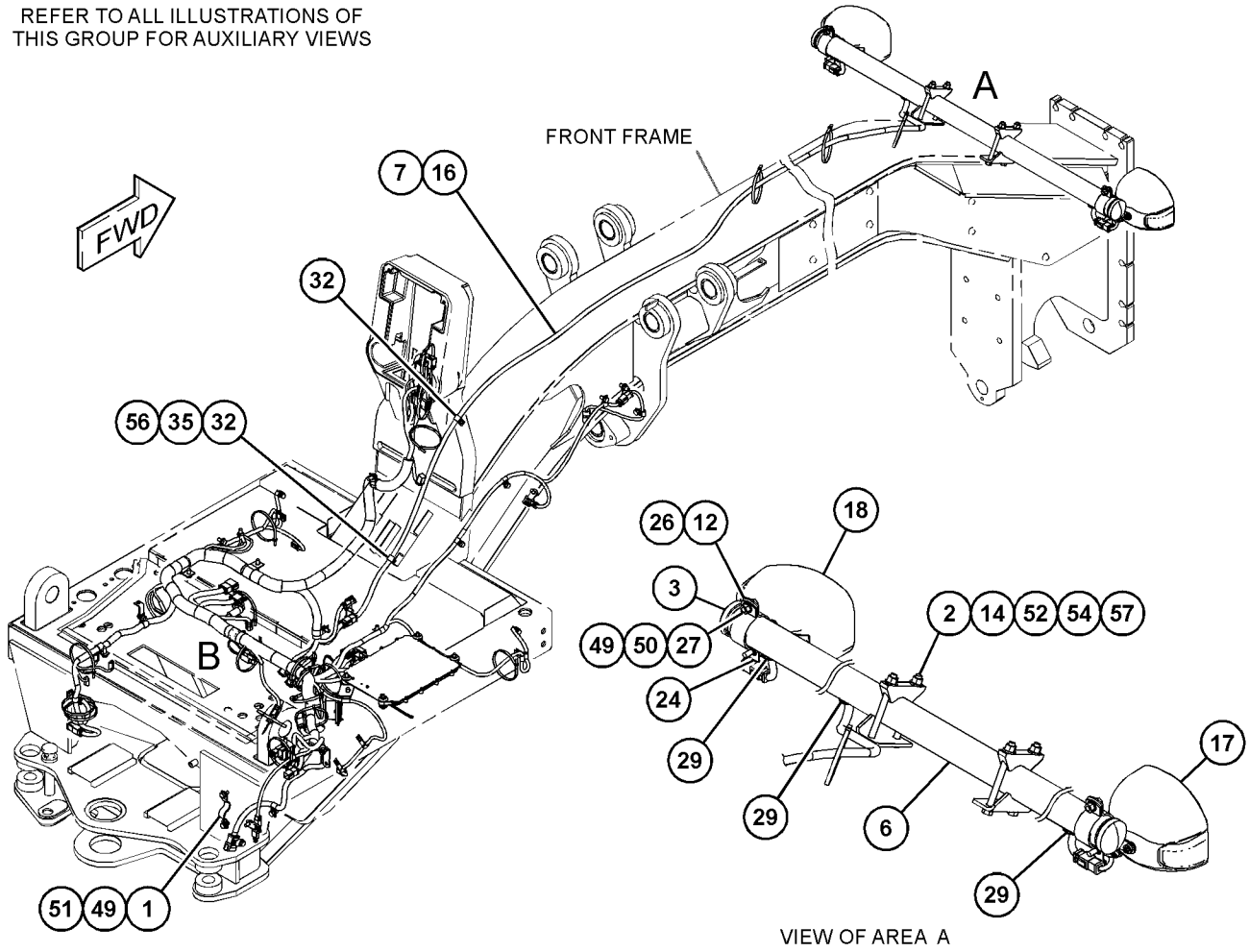

GRAPHIC #1 g03733532

384-7614 **WIRING GP-FRONT (**contd.**)** **i05944985**

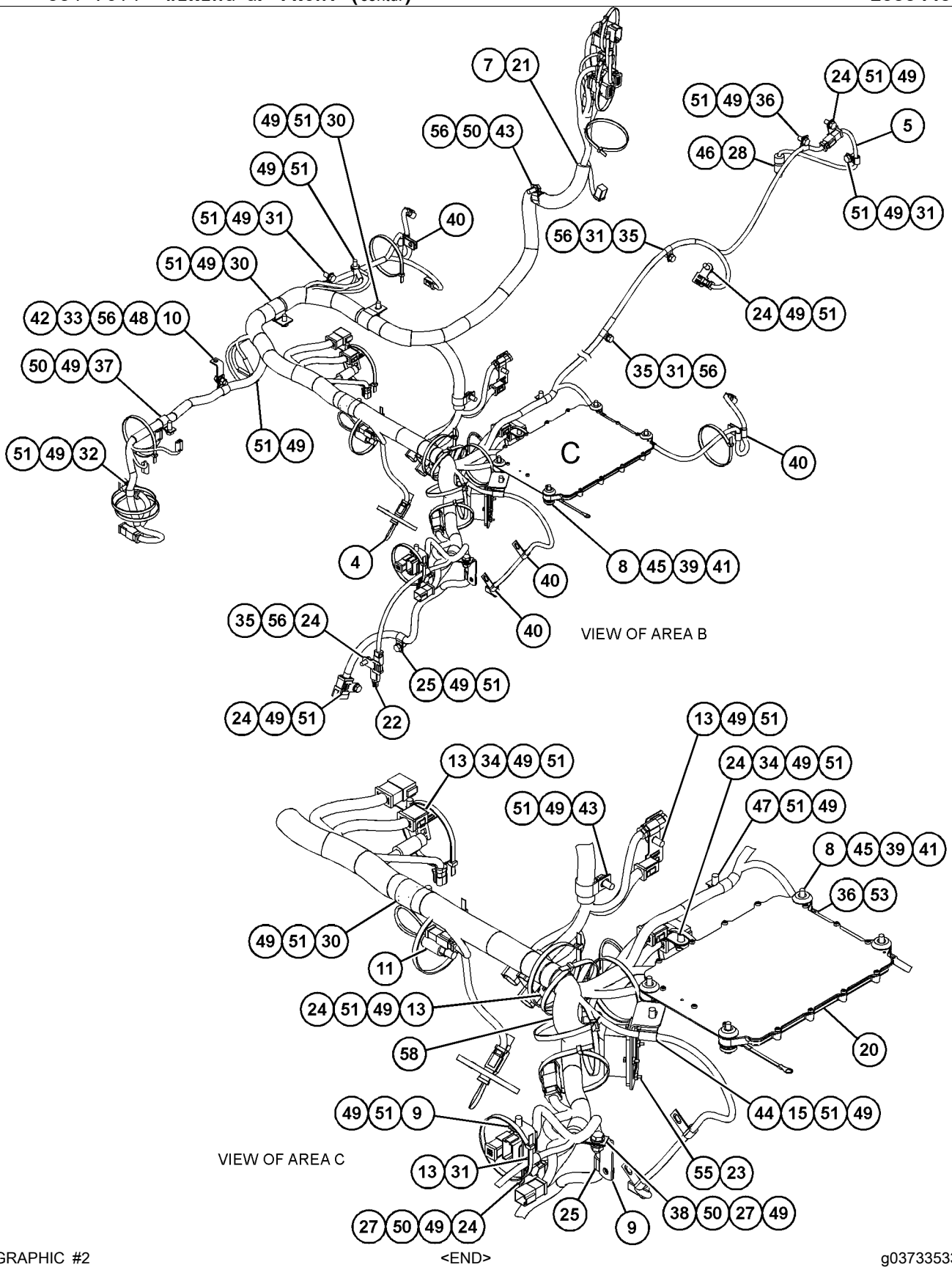

GRAPHIC #2 <END> g03733533

434-4108 WIRING GP-FRONT—WITH CAB

S/N: SZS1-UP
PART OF 447-6840 OPTION AR-REGIONAL
AN ATTACHMENT
TYPE 1

SMCS-1408 **i05865704**

NOTE	REF NO	GRAPHIC REF	PART NUMBER	QTY	PART NAME 1 2 3 4 5 6 (PRODUCT LEVEL)	SEE PAGE
	1	2	**1S-2342**	1	STRAP AS-GROUND	
	2	1	**3E-2026**	1	SWITCH AS-PRESSURE (STOP LIGHT)	
		1	**102-8802**	1	KIT-RECEPTACLE (2-PIN)	
					(INCLUDES RECEPTACLE AS & WEDGE)	
		1	**8T-8729**	2	PIN-CONNECTOR (16-GA TO 18-GA)	
	3	2	**3E-3636**	1	SWITCH AS-BALL (CENTERSHIFT INDICATOR)	
		2	**8T-8729**	4	PIN-CONNECTOR (16-GA TO 18-GA)	
		2	**102-8804**	1	KIT-RECEPTACLE (4-PIN)	
					(INCLUDES RECEPTACLE AS & WEDGE)	
	4	2	**6I-1418**	4	SPACER (8.2X12.7X28.7-MM THK)	
	5	1,2	**7K-1181**	22	STRAP-CABLE	
	6	2	**8T-9655**	8	MOUNT-ISOLATION	
	7	2	**9L-1566**	2	SUPPORT	
	8	1	**9L-6331**	1	BRACKET	
	9	1,2	**114-9281**	2	SWITCH AS-PRESSURE (AIR BRAKE)	
					(EACH INCLUDES)	
		1,2	**102-8802**	1	KIT-RECEPTACLE (2-PIN)	
					(INCLUDES RECEPTACLE AS & WEDGE)	
		1,2	**8T-8729**	2	PIN-CONNECTOR (16-GA TO 18-GA)	
	10	1,2	**169-5414**	4	CLIP	
	11	2	**455-9255**	1	SWITCH AS-PRESSURE (PARKING BRAKE)	
		2	**102-8802**	1	KIT-RECEPTACLE (2-PIN)	
					(INCLUDES RECEPTACLE AS & WEDGE)	
		2	**8T-8729**	2	PIN-CONNECTOR (16-GA TO 18-GA)	
R	12	1	**304-5691**	1	CONTROL GP-UNPROGRAMMED (POWER TRAIN)	
Y	13	1	*360-2133*	1	ELECTRONICS GP-POWER TRAIN	233
	14	2	**320-8203**	1	PLATE AS	
	15	1	**373-6941**	1	HARNESS AS-PLATFORM	
		1	**102-8803**	1	KIT-RECEPTACLE (3-PIN)	
		1	**102-8805**	5	KIT-RECEPTACLE (6-PIN)	
		1	**102-8801**	9	KIT-RECEPTACLE (12-PIN)	
					(EACH RECEPTACLE KIT INCLUDES RECEPTACLE AS & WEDGE)	
		1	**5P-4571**	6	TERMINAL-BLADE (14-GA TO 16-GA)	
		1	**7G-7920**	1	PLUG-SEAL	
		1	**9X-0196**	3	TERMINAL AS (16-GA)	
		1	**8N-1546**	3	PIN-CONNECTOR (6-GA)	
		1	**8N-1547**	3	SOCKET-CONNECTOR (6-GA)	
		1	**8T-8729**	78	PIN-CONNECTOR (16-GA TO 18-GA)	
		1	**8T-8730**	85	SOCKET-CONNECTOR (16-GA TO 18-GA)	
		1	**8T-8737**	109	PLUG-SEAL	
		1	**9W-0844**	7	SOCKET-CONNECTOR (14-GA TO 16-GA)	
		1	**9W-0852**	10	PIN-CONNECTOR (14-GA TO 16-GA)	
		1	**9X-1343**	1	RECEPTACLE AS-CONNECTOR (40-PIN)	
		1	**9X-3401**	25	PIN-CONNECTOR (16-GA TO 18-GA)	
		1	**9X-3402**	20	SOCKET-CONNECTOR (16-GA TO 18-GA)	
E		1	**119-3662**		TUBE-HEAT SHRINK (10.85-MM DIA) (20-CM)	

434-4108 **WIRING GP-FRONT (**contd.**)** **i05865704**

NOTE	REF NO	GRAPHIC REF	PART NUMBER	QTY	PART NAME 1 2 3 4 5 6 (PRODUCT LEVEL)	SEE PAGE
E		1	**125-7874**		TUBE-HEAT SHRINK (5.72-MM DIA) (35-CM)	
E		1	**125-7875**		TUBE-HEAT SHRINK (7.44-MM DIA) (70-CM)	
		1	**127-5483**	3	PLUG AS-CONNECTOR (1-PIN)	
		1	**127-5484**	4	RECEPTACLE AS-CONNECTOR (1-PIN)	
		1	**2L-8052**	3	TERMINAL-RING (6-GA, 3/8-IN SCREW)	
					—OR—	
		1	**2L-8060**	3	TERMINAL-RING (8-GA, 3/8-IN SCREW)	
		1	**2L-8069**	2	TERMINAL-RING (2-GA TO 10-GA, 3/8-IN SCREW)	
		1	**2L-8079**	1	TERMINAL-RING (14-GA TO 16-GA, 3/8-IN SCREW)	
		1	**155-2255**	7	KIT-CONNECTING PLUG (12-PIN)	
		1	**155-2265**	1	KIT-CONNECTING PLUG (8-PIN)	
					(EACH KIT INCLUDES RECEPTACLE AS & WEDGE)	
		1	**155-2270**	9	KIT-CONNECTING PLUG (2-PIN)	
		1	**155-2271**	1	KIT-CONNECTING PLUG (4-PIN)	
		1	**155-2274**	5	KIT-CONNECTING PLUG (6-PIN)	
		1	**155-2260**	3	KIT-CONNECTING PLUG (3-PIN)	
					(EACH PLUG KIT INCLUDES PLUG AS, WEDGE, & INTERFACE SEAL)	
		1	**274-3774**	2	CAP-CONNECTOR	
	16	2	**096-6166**	4	WASHER-HARD (4.5X9X1-MM THK)	
	17	1,2	**130-5300**	8	CLIP	
	18	2	**174-5907**	2	CLIP	
	19	2	**3J-1907**	1	SEAL-O-RING	
	20	1	**4D-7388**	2	CLIP	
	21	1,2	**4D-7794**	5	CLIP	
	22	1	**4K-8864**	1	CLIP	
	23	1	**4L-6454**	1	BOLT (3/8-16X1-IN)	
	24	1,2	**4P-8134**	2	CLIP	
	25	1,2	**5M-3062**	4	BOLT (3/8-16X0.75-IN)	
	26	2	**5P-9085**	3	CLIP	
	27	1	**6D-4246**	1	CLIP	
	29	1,2	**6V-3265**	6	CLIP	
	30	1	**6V-8801**	1	NUT (3/8-16-THD)	
	31	1	**7C-4354**	2	CLIP	
	33	1,2	**7D-7233**	2	CLIP	
	34	2	**7N-3718**	1	CLIP	
	35	2	**7X-0613**	4	WASHER-HARD (8.8X25.5X5-MM THK)	
M	36	2	**7X-0818**	4	BOLT (M8X1.25X45-MM)	
B	37	2	**8F-1974**	10	SHIM (0.13-MM THK)	
	38	2	**8M-2770**	1	CLIP	
	39	1	**8M-2773**	1	CLIP	
	40	1,2	**8T-4121**	28	WASHER-HARD (11X21X2.5-MM THK)	
M	41	2	**344-5675**	2	NUT (M10X1.5-THD)	
M	42	1,2	**8T-4136**	4	BOLT (M10X1.5X25-MM)	
M	43	1,2	**8T-4137**	22	BOLT (M10X1.5X20-MM)	
	45	2	**8T-4224**	2	WASHER-HARD (8.8X16X2-MM THK)	
M	46	2	**8T-4647**	4	SCREW-MACHINE (M4X0.7X20-MM)	
	47	1,2	**8T-4896**	6	WASHER-HARD (10.2X18.5X2.5-MM THK)	
E	48	2	**332-3657**		SLEEVE-ABRASION (15-CM)	

434-4108 **WIRING GP-FRONT (**contd.**)** **i05865704**

NOTE	REF NO	GRAPHIC REF	PART NUMBER	QTY	PART NAME 1 2 3 4 5 6 (PRODUCT LEVEL)	SEE PAGE

B - USE AS REQUIRED
E - ORDER BY THE CENTIMETER
M - METRIC PART
R - REMANUFACTURED PART MAY BE AVAILABLE
Y - SEPARATE ILLUSTRATION

434-4108 **WIRING GP-FRONT (**contd.**)** **i05865704**

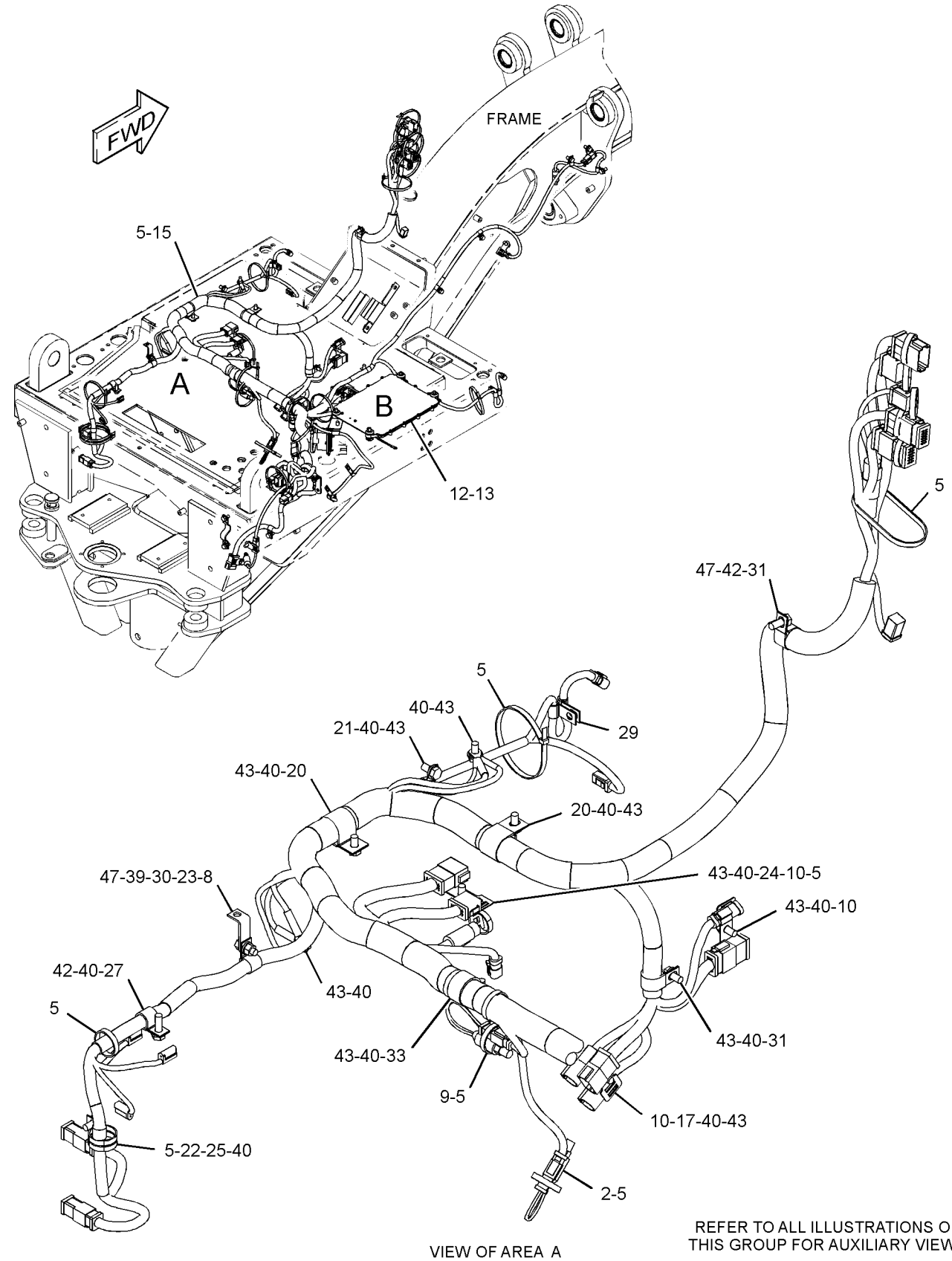

VIEW OF AREA A

REFER TO ALL ILLUSTRATIONS OF THIS GROUP FOR AUXILIARY VIEWS

GRAPHIC #1

g03686816

434-4108 **WIRING GP-FRONT (**contd.**)** **i05865704**

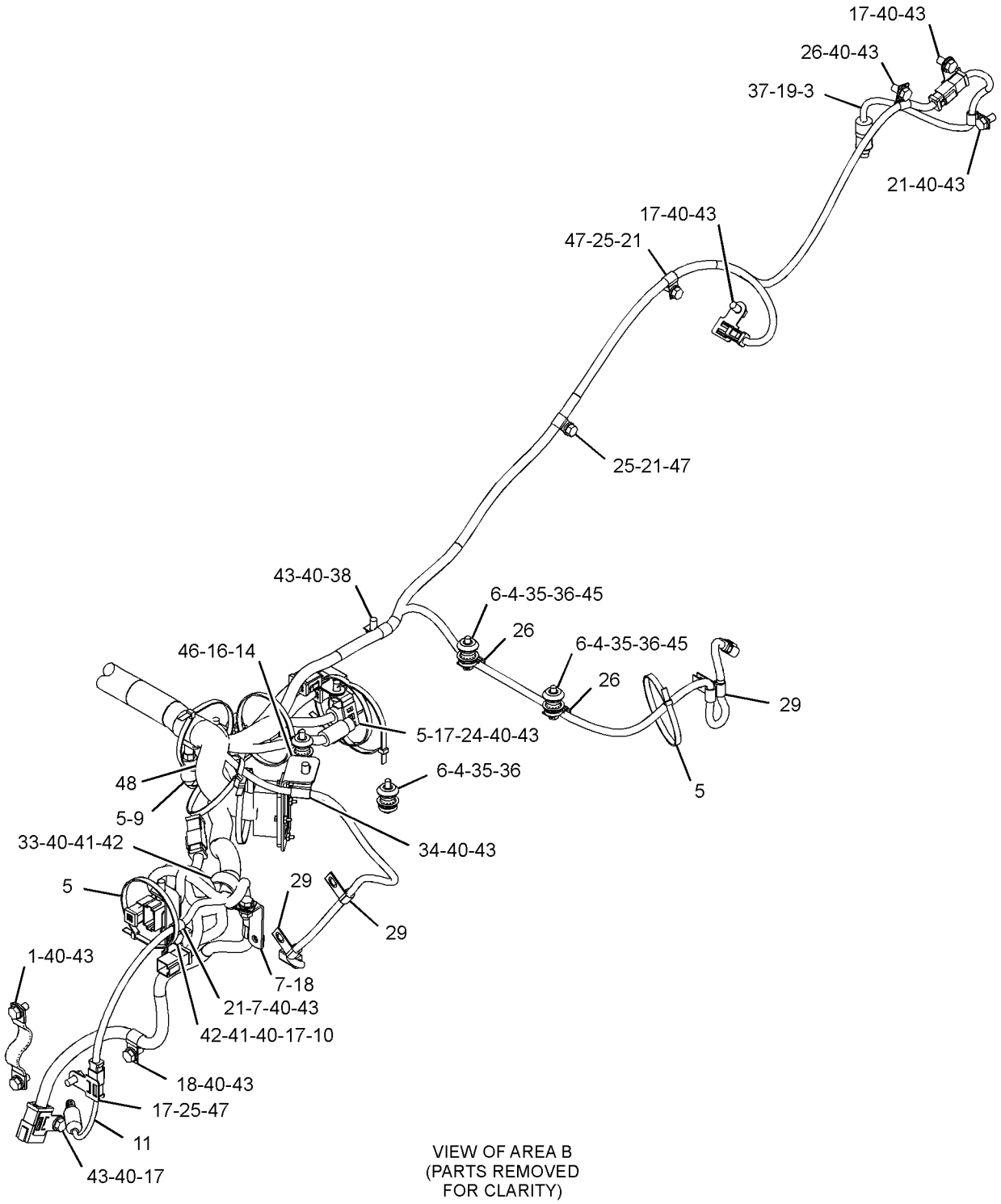

VIEW OF AREA B
(PARTS REMOVED
FOR CLARITY)

GRAPHIC #2 <END> g03686817

434-4108 WIRING GP-FRONT—WITH CAB

S/N: SZS1-UP
PART OF 447-6840 OPTION AR-REGIONAL
AN ATTACHMENT
TYPE 2

SMCS-1408 **i06539946**

NOTE	REF NO	GRAPHIC REF	PART NUMBER	QTY	PART NAME 1 2 3 4 5 6 (PRODUCT LEVEL)	SEE PAGE
	1	2	**1S-2342**	1	STRAP AS-GROUND	
	2	1	**3E-2026**	1	SWITCH AS-PRESSURE (STOP LIGHT)	
		1	**102-8802**	1	KIT-RECEPTACLE (2-PIN)	
					(INCLUDES RECEPTACLE AS & WEDGE)	
		1	**8T-8729**	2	PIN-CONNECTOR (16-GA TO 18-GA)	
	3	2	**3E-3636**	1	SWITCH AS-BALL (CENTERSHIFT INDICATOR)	
		2	**8T-8729**	4	PIN-CONNECTOR (16-GA TO 18-GA)	
		2	**102-8804**	1	KIT-RECEPTACLE (4-PIN)	
					(INCLUDES RECEPTACLE AS & WEDGE)	
	4	2	**6I-1418**	4	SPACER (8.2X12.7X28.7-MM THK)	
	5	1,2	**7K-1181**	22	STRAP-CABLE	
	6	2	**8T-9655**	8	MOUNT-ISOLATION	
	7	2	**9L-1566**	2	SUPPORT	
	8	1	**9L-6331**	1	BRACKET	
	9	1,2	**114-9281**	2	SWITCH AS-PRESSURE (AIR BRAKE)	
					(EACH INCLUDES)	
		1,2	**102-8802**	1	KIT-RECEPTACLE (2-PIN)	
					(INCLUDES RECEPTACLE AS & WEDGE)	
		1,2	**8T-8729**	2	PIN-CONNECTOR (16-GA TO 18-GA)	
	10	1,2	**169-5414**	4	CLIP	
	11	2	**455-9255**	1	SWITCH AS-PRESSURE (PARKING BRAKE)	
		2	**102-8802**	1	KIT-RECEPTACLE (2-PIN)	
					(INCLUDES RECEPTACLE AS & WEDGE)	
		2	**8T-8729**	2	PIN-CONNECTOR (16-GA TO 18-GA)	
R	12	1	**304-5691**	1	CONTROL GP-UNPROGRAMMED (POWER TRAIN)	
Y	13	1	*360-2133*	1	ELECTRONICS GP-POWER TRAIN	233
	14	2	**320-8203**	1	PLATE AS	
CY	15	1	**466-2108**	1	HARNESS AS-PLATFORM	259
	16	2	**096-6166**	4	WASHER-HARD (4.5X9X1-MM THK)	
	17	1,2	**130-5300**	8	CLIP	
	18	2	**174-5907**	2	CLIP	
	19	2	**3J-1907**	1	SEAL-O-RING	
	20	1	**4D-7388**	2	CLIP	
	21	1,2	**4D-7794**	5	CLIP	
	22	1	**4K-8864**	1	CLIP	
	23	1	**4L-6454**	1	BOLT (3/8-16X1-IN)	
	24	1,2	**4P-8134**	2	CLIP	
	25	1,2	**5M-3062**	4	BOLT (3/8-16X0.75-IN)	
	26	2	**5P-9085**	3	CLIP	
	27	1	**6D-4246**	1	CLIP	
	29	1,2	**6V-3265**	6	CLIP	
	30	1	**6V-8801**	1	NUT (3/8-16-THD)	
	31	1	**7C-4354**	2	CLIP	
	33	1,2	**7D-7233**	2	CLIP	
	34	2	**7N-3718**	1	CLIP	
	35	2	**7X-0613**	4	WASHER-HARD (8.8X25.5X5-MM THK)	
M	36	2	**7X-0818**	4	BOLT (M8X1.25X45-MM)	

434-4108 **WIRING GP-FRONT (**contd.**)** **i06539946**

NOTE	REF NO	GRAPHIC REF	PART NUMBER	QTY	PART NAME 1 2 3 4 5 6 (PRODUCT LEVEL)	SEE PAGE
B	37	2	**8F-1974**	10	SHIM (0.13-MM THK)	
	38	2	**8M-2770**	1	CLIP	
	39	1	**8M-2773**	1	CLIP	
	40	1,2	**8T-4121**	28	WASHER-HARD (11X21X2.5-MM THK)	
M	41	2	**344-5675**	2	NUT (M10X1.5-THD)	
M	42	1,2	**8T-4136**	4	BOLT (M10X1.5X25-MM)	
M	43	1,2	**8T-4137**	22	BOLT (M10X1.5X20-MM)	
	45	2	**8T-4224**	2	WASHER-HARD (8.8X16X2-MM THK)	
M	46	2	**8T-4647**	4	SCREW-MACHINE (M4X0.7X20-MM)	
	47	1,2	**8T-4896**	6	WASHER-HARD (10.2X18.5X2.5-MM THK)	
E	48	2	**332-3657**		SLEEVE-ABRASION (15-CM)	
C	49	2	**3S-2093**	1	STRAP-CABLE	

B - USE AS REQUIRED
C - CHANGE FROM PREVIOUS TYPE
E - ORDER BY THE CENTIMETER
M - METRIC PART
R - REMANUFACTURED PART MAY BE AVAILABLE
Y - SEPARATE ILLUSTRATION

434-4108 **WIRING GP-FRONT (**contd.**)** **i06539946**

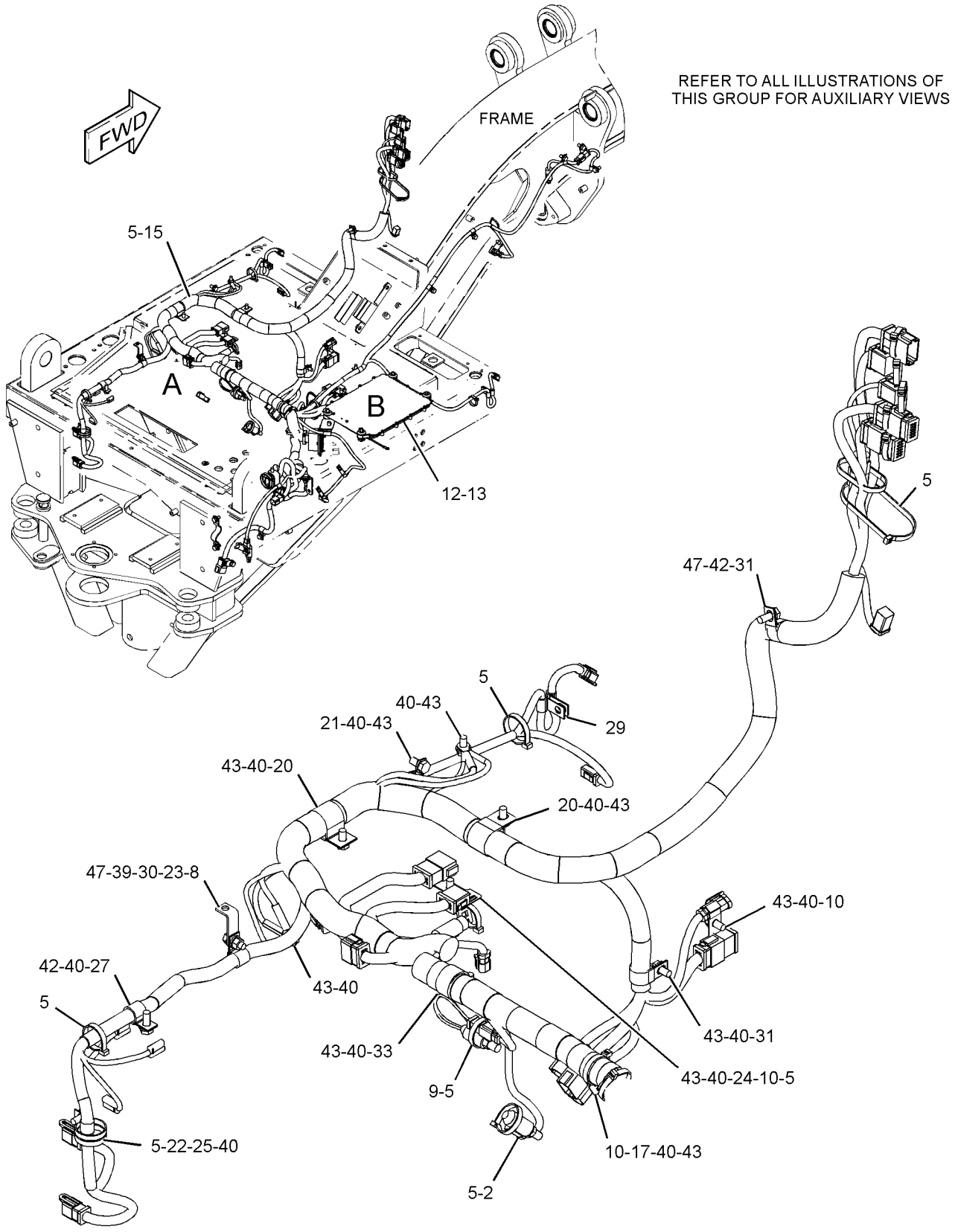

VIEW OF AREA A

GRAPHIC #1 g06015541

434-4108 **WIRING GP-FRONT (**contd.**)** **i06539946**

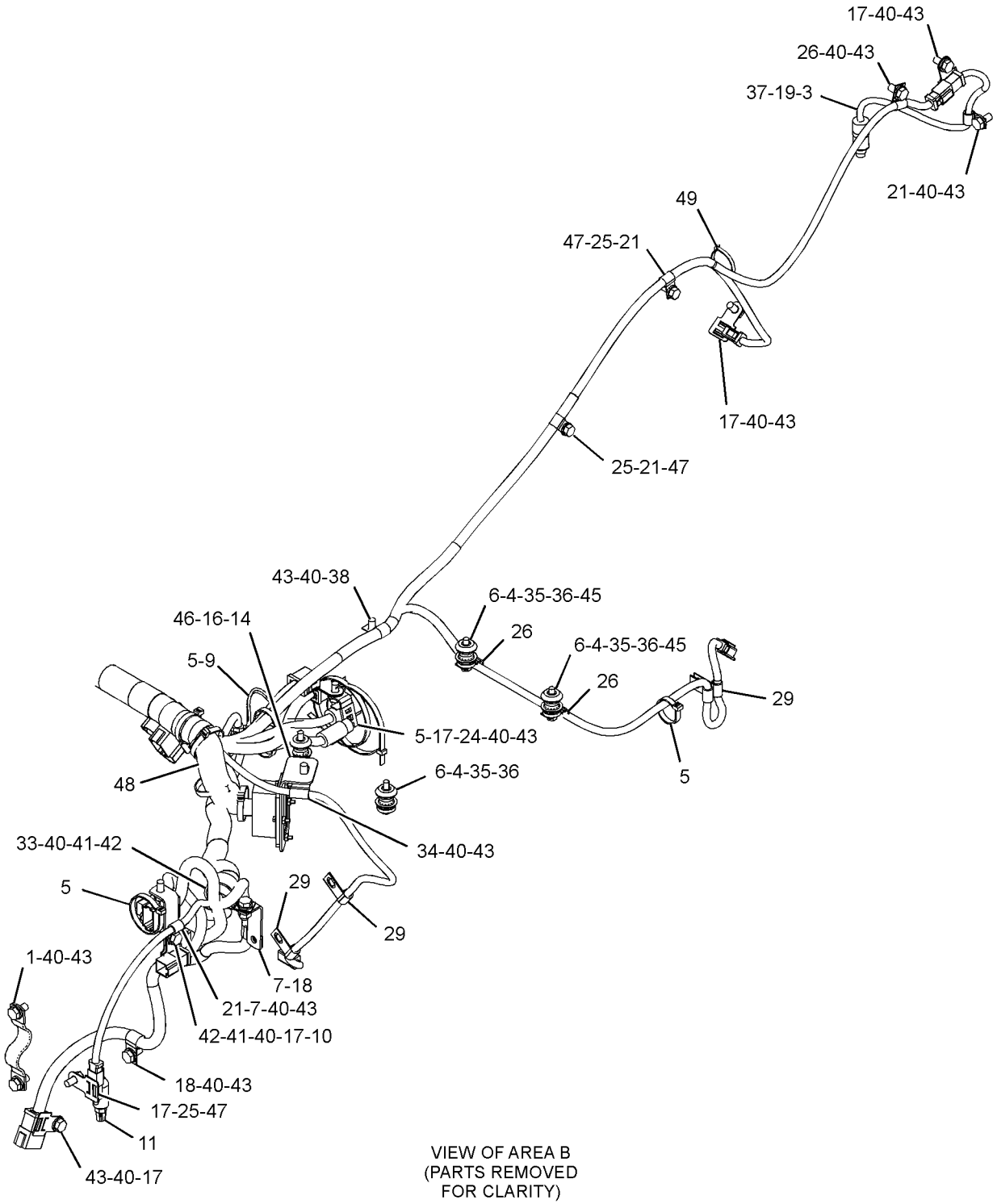

GRAPHIC #2 <END> g06015542

434-4109 WIRING GP-FRONT—CANOPY

S/N: SZS1-UP
PART OF 447-6839 OPTION AR-REGIONAL
AN ATTACHMENT
TYPE 1

SMCS-1408 **i05865684**

NOTE	REF NO	GRAPHIC REF	PART NUMBER	QTY	PART NAME 1 2 3 4 5 6 (PRODUCT LEVEL)	SEE PAGE
	1	2	**1S-2342**	1	STRAP AS-GROUND	
	2	1	**3E-2026**	1	SWITCH AS-PRESSURE (STOP LIGHT)	
		1	**102-8802**	1	KIT-RECEPTACLE (2-PIN)	
					(INCLUDES RECEPTACLE AS & WEDGE)	
		1	**8T-8729**	2	PIN-CONNECTOR (16-GA TO 18-GA)	
	3	2	**3E-3636**	1	SWITCH AS-BALL (CENTERSHIFT INDICATOR)	
		2	**8T-8729**	4	PIN-CONNECTOR (16-GA TO 18-GA)	
		2	**102-8804**	1	KIT-RECEPTACLE (4-PIN)	
					(INCLUDES RECEPTACLE AS & WEDGE)	
	4	2	**6I-1418**	4	SPACER (8.2X12.7X28.7-MM THK)	
	5	1,2	**7K-1181**	22	STRAP-CABLE	
	6	2	**8T-9655**	8	MOUNT-ISOLATION	
	7	2	**9L-1566**	2	SUPPORT	
	8	1	**9L-6331**	1	BRACKET	
	9	1,2	**114-9281**	2	SWITCH AS-PRESSURE (AIR BRAKE)	
					(EACH INCLUDES)	
		1,2	**102-8802**	1	KIT-RECEPTACLE (2-PIN)	
					(INCLUDES RECEPTACLE AS & WEDGE)	
		1,2	**8T-8729**	2	PIN-CONNECTOR (16-GA TO 18-GA)	
	10	1,2	**169-5414**	4	CLIP	
	11	2	**455-9255**	1	SWITCH AS-PRESSURE (PARKING BRAKE)	
		2	**102-8802**	1	KIT-RECEPTACLE (2-PIN)	
					(INCLUDES RECEPTACLE AS & WEDGE)	
		2	**8T-8729**	2	PIN-CONNECTOR (16-GA TO 18-GA)	
R	12	1	**304-5691**	1	CONTROL GP-UNPROGRAMMED (POWER TRAIN)	
Y	13	1	*360-2133*	1	ELECTRONICS GP-POWER TRAIN	233
	14	2	**320-8203**	1	PLATE AS	
	15	1	**373-6941**	1	HARNESS AS-PLATFORM	
		1	**102-8803**	1	KIT-RECEPTACLE (3-PIN)	
		1	**102-8805**	5	KIT-RECEPTACLE (6-PIN)	
		1	**102-8801**	9	KIT-RECEPTACLE (12-PIN)	
					(EACH RECEPTACLE KIT INCLUDES RECEPTACLE AS & WEDGE)	
		1	**5P-4571**	6	TERMINAL-BLADE (14-GA TO 16-GA)	
		1	**7G-7920**	1	PLUG-SEAL	
		1	**9X-0196**	3	TERMINAL AS (16-GA)	
		1	**8N-1546**	3	PIN-CONNECTOR (6-GA)	
		1	**8N-1547**	3	SOCKET-CONNECTOR (6-GA)	
		1	**8T-8729**	78	PIN-CONNECTOR (16-GA TO 18-GA)	
		1	**8T-8730**	85	SOCKET-CONNECTOR (16-GA TO 18-GA)	
		1	**8T-8737**	109	PLUG-SEAL	
		1	**9W-0844**	7	SOCKET-CONNECTOR (14-GA TO 16-GA)	
		1	**9W-0852**	10	PIN-CONNECTOR (14-GA TO 16-GA)	
		1	**9X-1343**	1	RECEPTACLE AS-CONNECTOR (40-PIN)	
		1	**9X-3401**	25	PIN-CONNECTOR (16-GA TO 18-GA)	
		1	**9X-3402**	20	SOCKET-CONNECTOR (16-GA TO 18-GA)	
E		1	**119-3662**		TUBE-HEAT SHRINK (10.85-MM DIA) (20-CM)	

434-4109 **WIRING GP-FRONT (**contd.**)** **i05865684**

NOTE	REF NO	GRAPHIC REF	PART NUMBER	QTY	PART NAME 1 2 3 4 5 6 (PRODUCT LEVEL)	SEE PAGE
E		1	**125-7874**		TUBE-HEAT SHRINK (5.72-MM DIA) (35-CM)	
E		1	**125-7875**		TUBE-HEAT SHRINK (7.44-MM DIA) (70-CM)	
		1	**127-5483**	3	PLUG AS-CONNECTOR (1-PIN)	
		1	**127-5484**	4	RECEPTACLE AS-CONNECTOR (1-PIN)	
		1	**2L-8052**	3	TERMINAL-RING (6-GA, 3/8-IN SCREW)	
					—OR—	
		1	**2L-8060**	3	TERMINAL-RING (8-GA, 3/8-IN SCREW)	
		1	**2L-8069**	2	TERMINAL-RING (2-GA TO 10-GA, 3/8-IN SCREW)	
		1	**2L-8079**	1	TERMINAL-RING (14-GA TO 16-GA, 3/8-IN SCREW)	
		1	**155-2255**	7	KIT-CONNECTING PLUG (12-PIN)	
		1	**155-2265**	1	KIT-CONNECTING PLUG (8-PIN)	
					(EACH KIT INCLUDES RECEPTACLE AS & WEDGE)	
		1	**155-2270**	9	KIT-CONNECTING PLUG (2-PIN)	
		1	**155-2271**	1	KIT-CONNECTING PLUG (4-PIN)	
		1	**155-2274**	5	KIT-CONNECTING PLUG (6-PIN)	
		1	**155-2260**	3	KIT-CONNECTING PLUG (3-PIN)	
					(EACH PLUG KIT INCLUDES PLUG AS, WEDGE, & INTERFACE SEAL)	
		1	**274-3774**	2	CAP-CONNECTOR	
	16	2	**096-6166**	4	WASHER-HARD (4.5X9X1-MM THK)	
	17	1,2	**130-5300**	8	CLIP	
	18	2	**174-5907**	2	CLIP	
	19	2	**3J-1907**	1	SEAL-O-RING	
	20	1	**4D-7388**	2	CLIP	
	21	1,2	**4D-7794**	5	CLIP	
	22	1	**4K-8864**	1	CLIP	
	23	1	**4L-6454**	1	BOLT (3/8-16X1-IN)	
	24	1,2	**4P-8134**	2	CLIP	
	25	1,2	**5M-3062**	4	BOLT (3/8-16X0.75-IN)	
	26	2	**5P-9085**	3	CLIP	
	27	1	**6D-4246**	1	CLIP	
	29	1,2	**6V-3265**	6	CLIP	
	30	1	**6V-8801**	1	NUT (3/8-16-THD)	
	31	1	**7C-4354**	3	CLIP	
	33	1,2	**7D-7233**	2	CLIP	
	34	2	**7N-3718**	1	CLIP	
	35	2	**7X-0613**	4	WASHER-HARD (8.8X25.5X5-MM THK)	
M	36	2	**7X-0818**	4	BOLT (M8X1.25X45-MM)	
B	37	2	**8F-1974**	10	SHIM (0.13-MM THK)	
	38	2	**8M-2770**	1	CLIP	
	39	1	**8M-2773**	1	CLIP	
	40	1,2	**8T-4121**	29	WASHER-HARD (11X21X2.5-MM THK)	
M	41	2	**344-5675**	2	NUT (M10X1.5-THD)	
M	42	1,2	**8T-4136**	4	BOLT (M10X1.5X25-MM)	
M	43	1,2	**8T-4137**	23	BOLT (M10X1.5X20-MM)	
	45	2	**8T-4224**	2	WASHER-HARD (8.8X16X2-MM THK)	
M	46	2	**8T-4647**	4	SCREW-MACHINE (M4X0.7X20-MM)	
	47	1,2	**8T-4896**	6	WASHER-HARD (10.2X18.5X2.5-MM THK)	
E	48	2	**332-3657**		SLEEVE-ABRASION (15-CM)	

434-4109 **WIRING GP-FRONT (**contd.**)** **i05865684**

NOTE	REF NO	GRAPHIC REF	PART NUMBER	QTY	PART NAME 1 2 3 4 5 6 (PRODUCT LEVEL)	SEE PAGE

B - USE AS REQUIRED
E - ORDER BY THE CENTIMETER
M - METRIC PART
R - REMANUFACTURED PART MAY BE AVAILABLE
Y - SEPARATE ILLUSTRATION

434-4109 **WIRING GP-FRONT (**contd.**)** **i05865684**

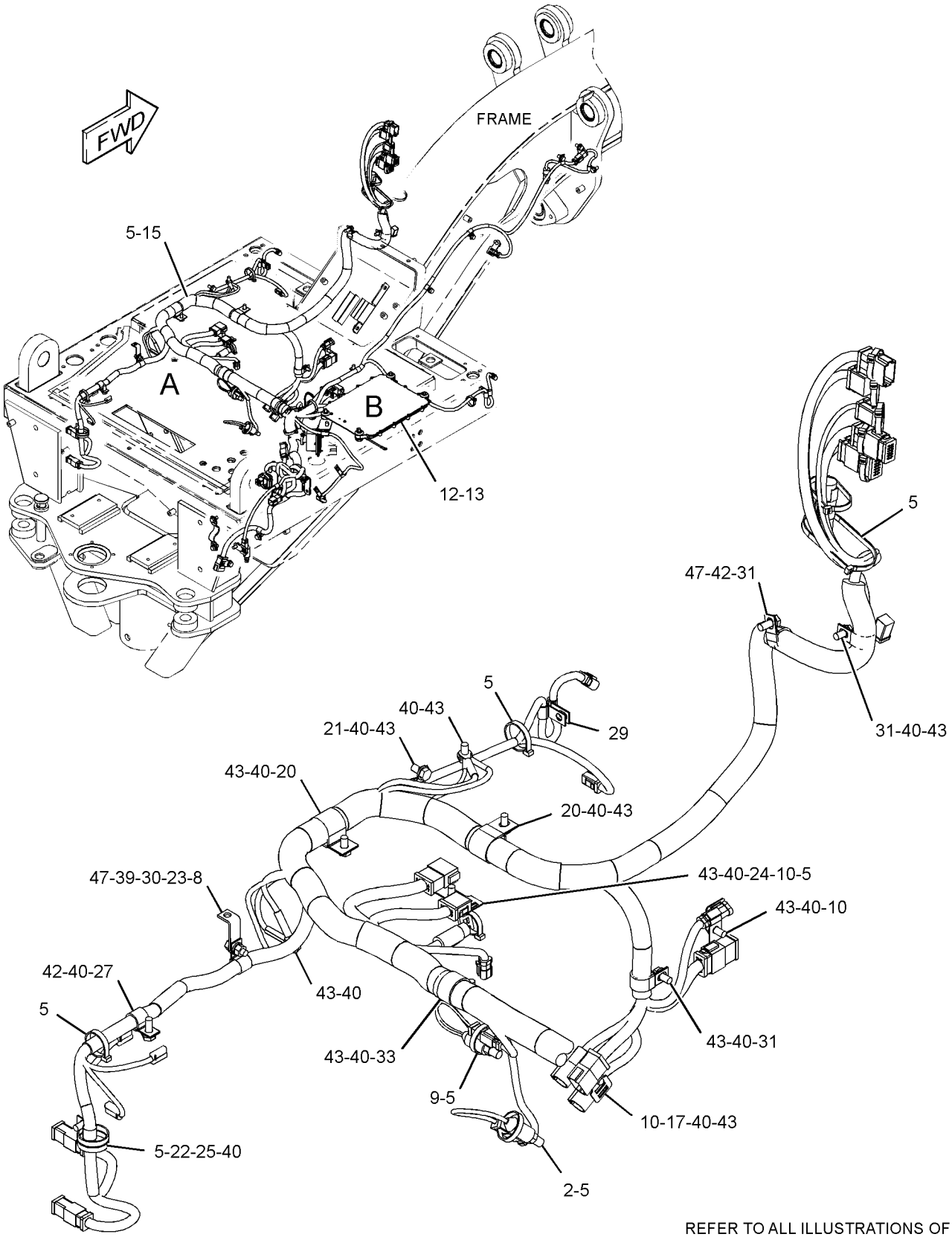

VIEW OF AREA A

REFER TO ALL ILLUSTRATIONS OF THIS GROUP FOR AUXILIARY VIEWS

GRAPHIC #1

g03708051

434-4109 **WIRING GP-FRONT (**contd.**)** **i05865684**

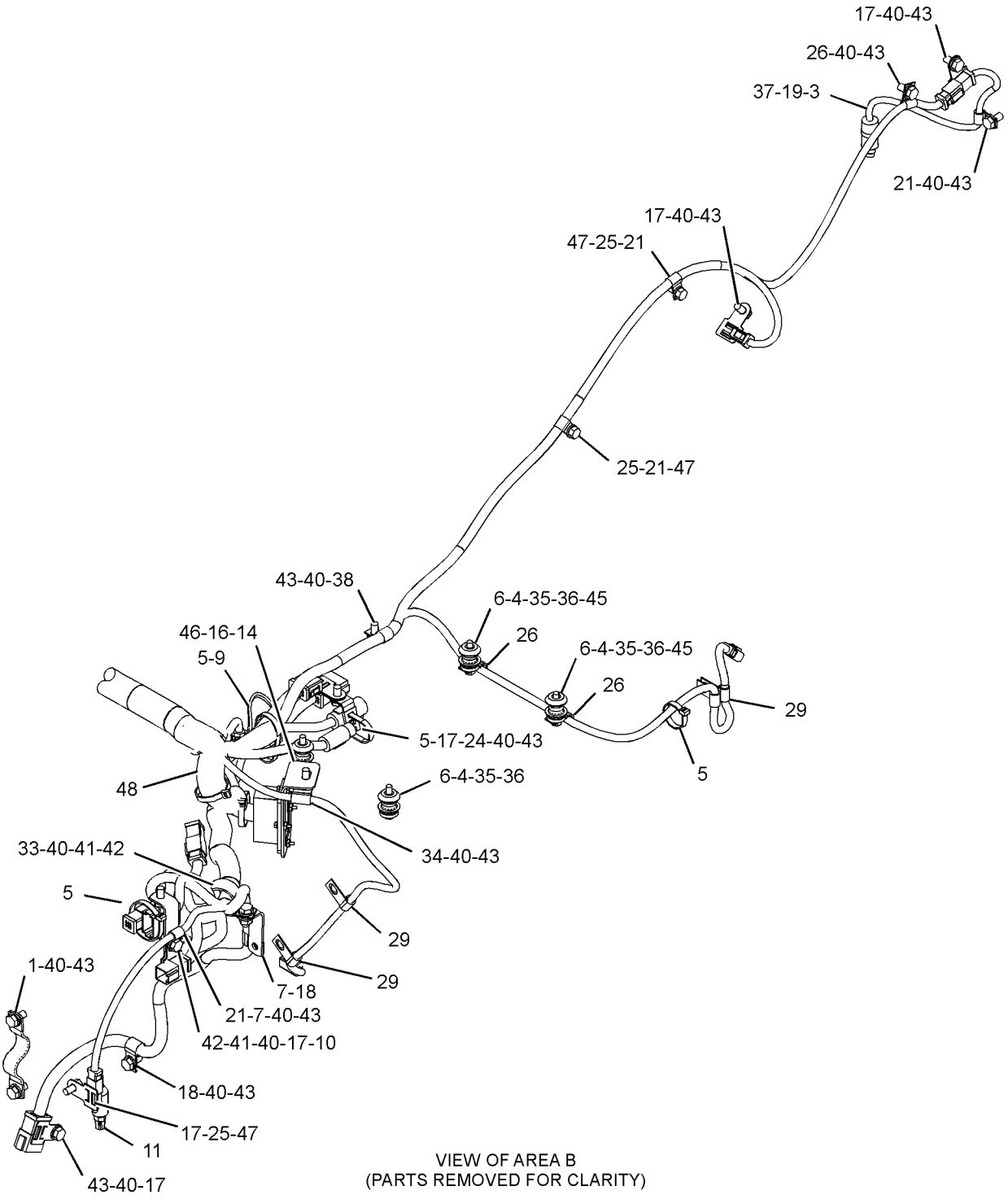

VIEW OF AREA B
(PARTS REMOVED FOR CLARITY)

GRAPHIC #2 <END> g03708052

434-4109 WIRING GP-FRONT—CANOPY

S/N: SZS1-UP
PART OF 447-6839 OPTION AR-REGIONAL
AN ATTACHMENT
TYPE 2

SMCS-1408 **i06539728**

NOTE	REF NO	GRAPHIC REF	PART NUMBER	QTY	PART NAME 1 2 3 4 5 6 (PRODUCT LEVEL)	SEE PAGE
	1	2	**1S-2342**	1	STRAP AS-GROUND	
	2	1	**3E-2026**	1	SWITCH AS-PRESSURE (STOP LIGHT)	
		1	**102-8802**	1	KIT-RECEPTACLE (2-PIN)	
					(INCLUDES RECEPTACLE AS & WEDGE)	
		1	**8T-8729**	2	PIN-CONNECTOR (16-GA TO 18-GA)	
	3	2	**3E-3636**	1	SWITCH AS-BALL (CENTERSHIFT INDICATOR)	
		2	**8T-8729**	4	PIN-CONNECTOR (16-GA TO 18-GA)	
		2	**102-8804**	1	KIT-RECEPTACLE (4-PIN)	
					(INCLUDES RECEPTACLE AS & WEDGE)	
C	4	1	**3S-2093**	1	STRAP-CABLE	
	5	1,2	**7K-1181**	22	STRAP-CABLE	
	6	2	**8T-9655**	8	MOUNT-ISOLATION	
	7	2	**9L-1566**	2	SUPPORT	
	8	1	**9L-6331**	1	BRACKET	
	9	1,2	**114-9281**	2	SWITCH AS-PRESSURE (AIR BRAKE)	
					(EACH INCLUDES)	
		1,2	**102-8802**	1	KIT-RECEPTACLE (2-PIN)	
					(INCLUDES RECEPTACLE AS & WEDGE)	
		1,2	**8T-8729**	2	PIN-CONNECTOR (16-GA TO 18-GA)	
	10	1,2	**169-5414**	4	CLIP	
	11	2	**320-8203**	1	PLATE AS	
Y	12	1	*360-2133*	1	ELECTRONICS GP-POWER TRAIN	233
R	13	1	**304-5691**	1	CONTROL GP-UNPROGRAMMED (POWER TRAIN)	
	14	2	**455-9255**	1	SWITCH AS-PRESSURE (PARKING BRAKE)	
		2	**102-8802**	1	KIT-RECEPTACLE (2-PIN)	
					(INCLUDES RECEPTACLE AS & WEDGE)	
		2	**8T-8729**	2	PIN-CONNECTOR (16-GA TO 18-GA)	
CY	15	1	**466-2108**	1	HARNESS AS-PLATFORM	259
	16	2	**096-6166**	4	WASHER-HARD (4.5X9X1-MM THK)	
	17	1,2	**130-5300**	8	CLIP	
	18	2	**174-5907**	2	CLIP	
M	19	2	**344-5675**	2	NUT (M10X1.5-THD)	
	20	2	**3J-1907**	1	SEAL-O-RING	
	21	1	**4D-7388**	2	CLIP	
	22	1,2	**4D-7794**	5	CLIP	
	23	1	**4K-8864**	1	CLIP	
	24	1	**4L-6454**	1	BOLT (3/8-16X1-IN)	
	25	1,2	**4P-8134**	2	CLIP	
	26	1,2	**5M-3062**	4	BOLT (3/8-16X0.75-IN)	
	27	2	**5P-9085**	3	CLIP	
	28	1	**6D-4246**	1	CLIP	
	29	2	**6I-1418**	4	SPACER (8.2X12.7X28.7-MM THK)	
	30	1,2	**6V-3265**	6	CLIP	
	31	1	**6V-8801**	1	NUT (3/8-16-THD)	
	32	1	**7C-4354**	3	CLIP	
	33	1,2	**7D-7233**	2	CLIP	

434-4109 **WIRING GP-FRONT (**contd.**)** **i06539728**

NOTE	REF NO	GRAPHIC REF	PART NUMBER	QTY	PART NAME 1 2 3 4 5 6 (PRODUCT LEVEL)	SEE PAGE
	34	2	**7N-3718**	1	CLIP	
	35	2	**7X-0613**	4	WASHER-HARD (8.8X25.5X5-MM THK)	
M	36	2	**7X-0818**	4	BOLT (M8X1.25X45-MM)	
B	37	2	**8F-1974**	10	SHIM (0.13-MM THK)	
	38	2	**8M-2770**	1	CLIP	
	39	1	**8M-2773**	1	CLIP	
	40	1,2	**8T-4121**	29	WASHER-HARD (11X21X2.5-MM THK)	
M	41	1,2	**8T-4136**	4	BOLT (M10X1.5X25-MM)	
M	42	1,2	**8T-4137**	23	BOLT (M10X1.5X20-MM)	
	43	2	**8T-4224**	2	WASHER-HARD (8.8X16X2-MM THK)	
M	44	2	**8T-4647**	4	SCREW-MACHINE (M4X0.7X20-MM)	
	45	1,2	**8T-4896**	6	WASHER-HARD (10.2X18.5X2.5-MM THK)	
E	46	2	**332-3657**		SLEEVE-ABRASION (15-CM)	

B - USE AS REQUIRED
C - CHANGE FROM PREVIOUS TYPE
E - ORDER BY THE CENTIMETER
M - METRIC PART
R - REMANUFACTURED PART MAY BE AVAILABLE
Y - SEPARATE ILLUSTRATION

434-4109 **WIRING GP-FRONT (**contd.**)** **i06539728**

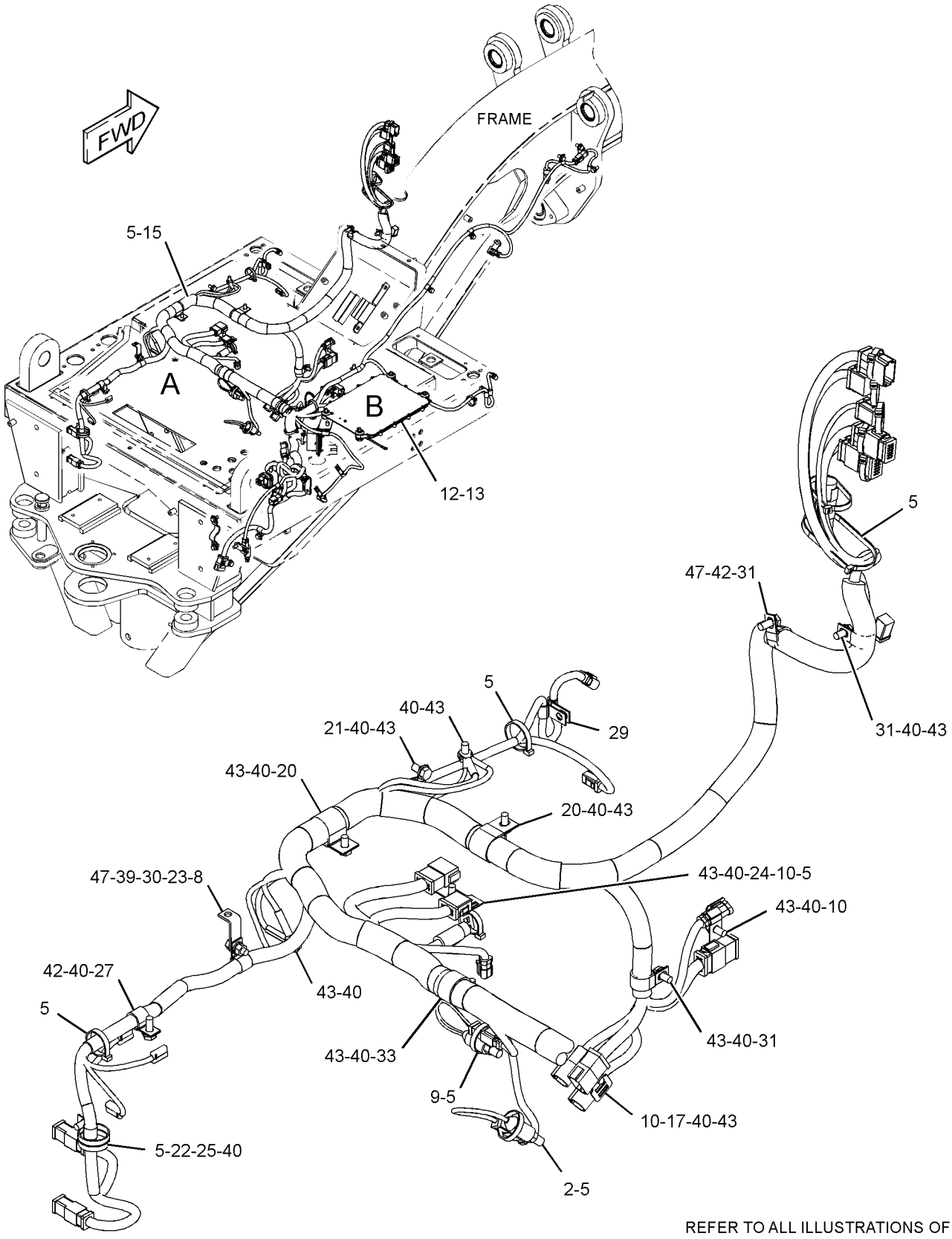

VIEW OF AREA A

REFER TO ALL ILLUSTRATIONS OF THIS GROUP FOR AUXILIARY VIEWS

GRAPHIC #1

g03708051

434-4109 **WIRING GP-FRONT (**contd.**)** **i06539728**

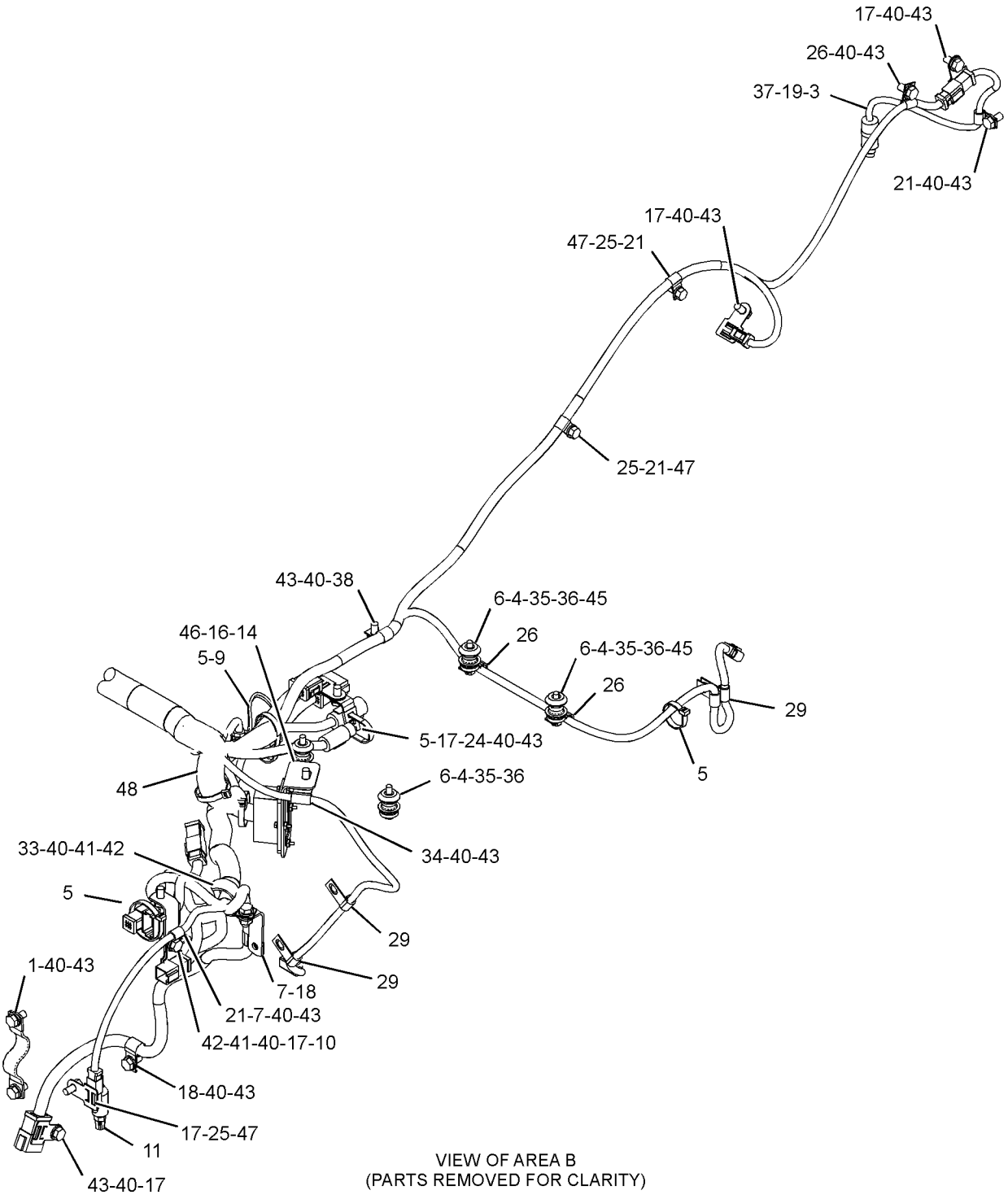

VIEW OF AREA B
(PARTS REMOVED FOR CLARITY)

GRAPHIC #2 <END> g03708052

434-4110 WIRING GP-FRONT

S/N: SZS1-739
ROADING
PART OF 461-2964 CANOPY AR
AN ATTACHMENT

SMCS-1408 **i06678291**

NOTE	REF NO	GRAPHIC REF	PART NUMBER	QTY	PART NAME 1 2 3 4 5 6 (PRODUCT LEVEL)	SEE PAGE
	1	1	**1S-2342**	1	STRAP AS-GROUND	
	2	1	**2G-0659**	2	BRACKET	
	3	1	**2G-0988**	2	CAP	
	4	2	**3E-2026**	1	SWITCH AS-PRESSURE (STOP LIGHT)	
		2	**102-8802**	1	KIT-RECEPTACLE (2-PIN)	
					(INCLUDES RECEPTACLE AS & WEDGE)	
		2	**8T-8729**	2	PIN-CONNECTOR (16-GA TO 18-GA)	
	5	2	**3E-3636**	1	SWITCH AS-BALL (CENTERSHIFT INDICATOR)	
		2	**8T-8729**	4	PIN-CONNECTOR (16-GA TO 18-GA)	
		2	**102-8804**	1	KIT-RECEPTACLE (4-PIN)	
					(INCLUDES RECEPTACLE AS & WEDGE)	
	6	1	**5T-9313**	1	TUBE	
	7	1,2	**7K-1181**	25	STRAP-CABLE	
	8	2	**8T-9655**	8	MOUNT-ISOLATION	
	9	2	**9L-1566**	2	SUPPORT	
	10	2	**9L-6331**	1	BRACKET	
	11	2	**114-9281**	2	SWITCH AS-PRESSURE (AIR BRAKE)	
					(EACH INCLUDES)	
		2	**102-8802**	1	KIT-RECEPTACLE (2-PIN)	
					(INCLUDES RECEPTACLE AS & WEDGE)	
		2	**8T-8729**	2	PIN-CONNECTOR (16-GA TO 18-GA)	
	12	1	**137-9410**	2	CLAMP	
	13	2	**169-5414**	4	CLIP	
	14	1	**179-1550**	2	CLAMP	
	15	2	**320-8203**	1	PLATE AS	
	16	1	**334-3343**	1	HARNESS AS-PANEL (LIGHT BAR)	
		1	**102-8805**	1	KIT-RECEPTACLE (6-PIN)	
					(INCLUDES RECEPTACLE AS & WEDGE)	
		1	**3E-3383**	1	WEDGE-RECEPTACLE LOCK (6-PIN)	
		1	**8T-8729**	5	PIN-CONNECTOR (16-GA TO 18-GA)	
		1	**8T-8730**	8	SOCKET-CONNECTOR (16-GA TO 18-GA)	
		1	**8T-8737**	2	PLUG-SEAL	
		1	**9W-0844**	2	SOCKET-CONNECTOR (14-GA TO 16-GA)	
		1	**9W-0852**	1	PIN-CONNECTOR (14-GA TO 16-GA)	
E		1	**125-7874**		TUBE-HEAT SHRINK (5.72-MM DIA) (5-CM)	
E		1	**125-7875**		TUBE-HEAT SHRINK (7.44-MM DIA) (15-CM)	
		1	**155-2274**	2	KIT-CONNECTING PLUG (6-PIN)	
					(EACH KIT INCLUDES PLUG AS, WEDGE & INTERFACE SEAL)	
Y	17	1	**344-3457**	1	LAMP GP-HEAD & SIGNAL (24-VOLT) (RH)	295
Y	18	1	**344-3458**	1	LAMP GP-HEAD & SIGNAL (24-VOLT) (LH)	297
R	20	2	**304-5691**	1	CONTROL GP-UNPROGRAMMED	
	21	2	**384-7615**	1	HARNESS AS-CHASSIS (PLATFORM)	
		2	**102-8803**	1	KIT-RECEPTACLE (3-PIN)	
		2	**102-8805**	5	KIT-RECEPTACLE (6-PIN)	
		2	**102-8801**	8	KIT-RECEPTACLE (12-PIN)	
					(EACH KIT INCLUDES RECEPTACLE AS & WEDGE)	

434-4110 **WIRING GP-FRONT (**contd.**)** **i06678291**

NOTE	REF NO	GRAPHIC REF	PART NUMBER	QTY	PART NAME 1 2 3 4 5 6 (PRODUCT LEVEL)	SEE PAGE
		2	**3E-3383**	1	WEDGE-RECEPTACLE LOCK (6-PIN)	
		2	**5P-4571**	6	TERMINAL-BLADE (14-GA TO 16-GA)	
		2	**7G-7920**	1	PLUG-SEAL	
		2	**9X-0196**	3	TERMINAL AS (16-GA)	
		2	**8N-1546**	3	PIN-CONNECTOR (6-GA)	
		2	**8N-1547**	3	SOCKET-CONNECTOR (6-GA)	
		2	**8T-8729**	75	PIN-CONNECTOR (16-GA TO 18-GA)	
		2	**8T-8730**	93	SOCKET-CONNECTOR (16-GA TO 18-GA)	
		2	**8T-8737**	94	PLUG-SEAL	
		2	**9W-0844**	7	SOCKET-CONNECTOR (14-GA TO 16-GA)	
		2	**9W-0852**	10	PIN-CONNECTOR (14-GA TO 16-GA)	
		2	**9X-1343**	1	RECEPTACLE AS-CONNECTOR (40-PIN)	
		2	**9X-3401**	24	PIN-CONNECTOR (16-GA TO 18-GA)	
		2	**9X-3402**	13	SOCKET-CONNECTOR (16-GA TO 18-GA)	
E		2	**119-3662**		TUBE-HEAT SHRINK (10.85-MM DIA) (20-CM)	
E		2	**125-7874**		TUBE-HEAT SHRINK (5.72-MM DIA) (35-CM)	
E		2	**125-7875**		TUBE-HEAT SHRINK (7.44-MM DIA) (65-CM)	
		2	**127-5483**	3	PLUG AS-CONNECTOR (1-PIN)	
		2	**127-5484**	4	RECEPTACLE AS-CONNECTOR (1-PIN)	
		2	**2L-8052**	3	TERMINAL-RING (6-GA, 3/8-IN SCREW)	
					—OR—	
		2	**2L-8060**	3	TERMINAL-RING (8-GA, 3/8-IN SCREW)	
		2	**2L-8069**	2	TERMINAL-RING (2-GA TO 10-GA, 3/8-IN SCREW)	
		2	**2L-8079**	1	TERMINAL-RING (14-GA TO 16-GA, 3/8-IN SCREW)	
		2	**155-2255**	6	KIT-CONNECTING PLUG (12-PIN)	
		2	**155-2258**	5	WEDGE-PLUG LOCK (12-PIN)	
		2	**155-2259**	1	WEDGE-PLUG LOCK (8-PIN)	
		2	**155-2265**	1	KIT-CONNECTING PLUG (8-PIN)	
		2	**155-2260**	3	KIT-CONNECTING PLUG (3-PIN)	
		2	**155-2270**	9	KIT-CONNECTING PLUG (2-PIN)	
		2	**155-2271**	1	KIT-CONNECTING PLUG (4-PIN)	
		2	**155-2274**	6	KIT-CONNECTING PLUG (6-PIN)	
					(EACH KIT INCLUDES PLUG AS, WEDGE & INTERFACE SEAL)	
		2	**274-3774**	2	CAP-CONNECTOR	
	22	2	**455-9255**	1	SWITCH AS-PRESSURE (PARKING BRAKE)	
		2	**102-8802**	1	KIT-RECEPTACLE (2-PIN)	
					(INCLUDES RECEPTACLE AS & WEDGE)	
		2	**8T-8729**	2	PIN-CONNECTOR (16-GA TO 18-GA)	
	23	2	**096-6166**	4	WASHER-HARD (4.5X9X1-MM THK)	
	24	1,2	**130-5300**	10	CLIP	
	25	2	**174-5907**	2	CLIP	
	26	1	**2G-0617**	2	CLAMP	
M	27	1,2	**344-5675**	4	NUT (M10X1.5-THD)	
	28	2	**3J-1907**	1	SEAL-O-RING	
	29	1	**3K-9520**	3	GROMMET	
	30	2	**4D-7388**	3	CLIP	
	31	2	**4D-7794**	5	CLIP	
	32	1,2	**4K-8864**	3	CLIP	
	33	2	**4L-6454**	1	BOLT (3/8-16X1-IN)	
	34	2	**4P-8134**	2	CLIP	
	35	1,2	**5M-3062**	4	BOLT (3/8-16X0.75-IN)	

434-4110 **WIRING GP-FRONT (**contd.**)** **i06678291**

NOTE	REF NO	GRAPHIC REF	PART NUMBER	QTY	PART NAME 1 2 3 4 5 6 (PRODUCT LEVEL)	SEE PAGE
	36	2	**5P-9085**	3	CLIP	
	37	2	**6D-4246**	1	CLIP	
	38	2	**6D-4636**	1	CLIP	
	39	2	**6I-1418**	4	SPACER (8.2X12.7X28.7-MM THK)	
	40	2	**6V-3265**	6	CLIP	
	41	2	**6V-3964**	4	WASHER-HARD (8.8X25.5X5-MM THK)	
	42	2	**6V-8801**	1	NUT (3/8-16-THD)	
	43	2	**7C-4354**	2	CLIP	
	44	2	**7N-3718**	1	CLIP	
M	45	2	**7X-0818**	4	BOLT (M8X1.25X45-MM)	
B	46	2	**8F-1974**	10	SHIM (0.13-MM THK)	
	47	2	**8M-2770**	1	CLIP	
	48	2	**8M-2773**	1	CLIP	
	49	1,2	**8T-4121**	32	WASHER-HARD (11X21X2.5-MM THK)	
M	50	1,2	**8T-4136**	6	BOLT (M10X1.5X25-MM)	
M	51	1,2	**8T-4137**	23	BOLT (M10X1.5X20-MM)	
	52	1	**8T-4223**	8	WASHER-HARD (13.5X25.5X3-MM THK)	
	53	2	**8T-4224**	2	WASHER-HARD (8.8X16X2-MM THK)	
M	54	1	**8T-4244**	4	NUT (M12X1.75-THD)	
M	55	2	**8T-4647**	4	SCREW-MACHINE (M4X0.7X20-MM)	
	56	1,2	**8T-4896**	7	WASHER-HARD (10.2X18.5X2.5-MM THK)	
M	57	1	**8T-5412**	4	BOLT (M12X1.75X140-MM)	
E	58	2	**332-3657**		SLEEVE-ABRASION (15-CM)	

B - USE AS REQUIRED
E - ORDER BY THE CENTIMETER
M - METRIC PART
R - REMANUFACTURED PART MAY BE AVAILABLE
Y - SEPARATE ILLUSTRATION

434-4110 **WIRING GP-FRONT (**contd.**)** **i06678291**

REFER TO ALL ILLUSTRATIONS OF
THIS GROUP FOR AUXILIARY VIEWS

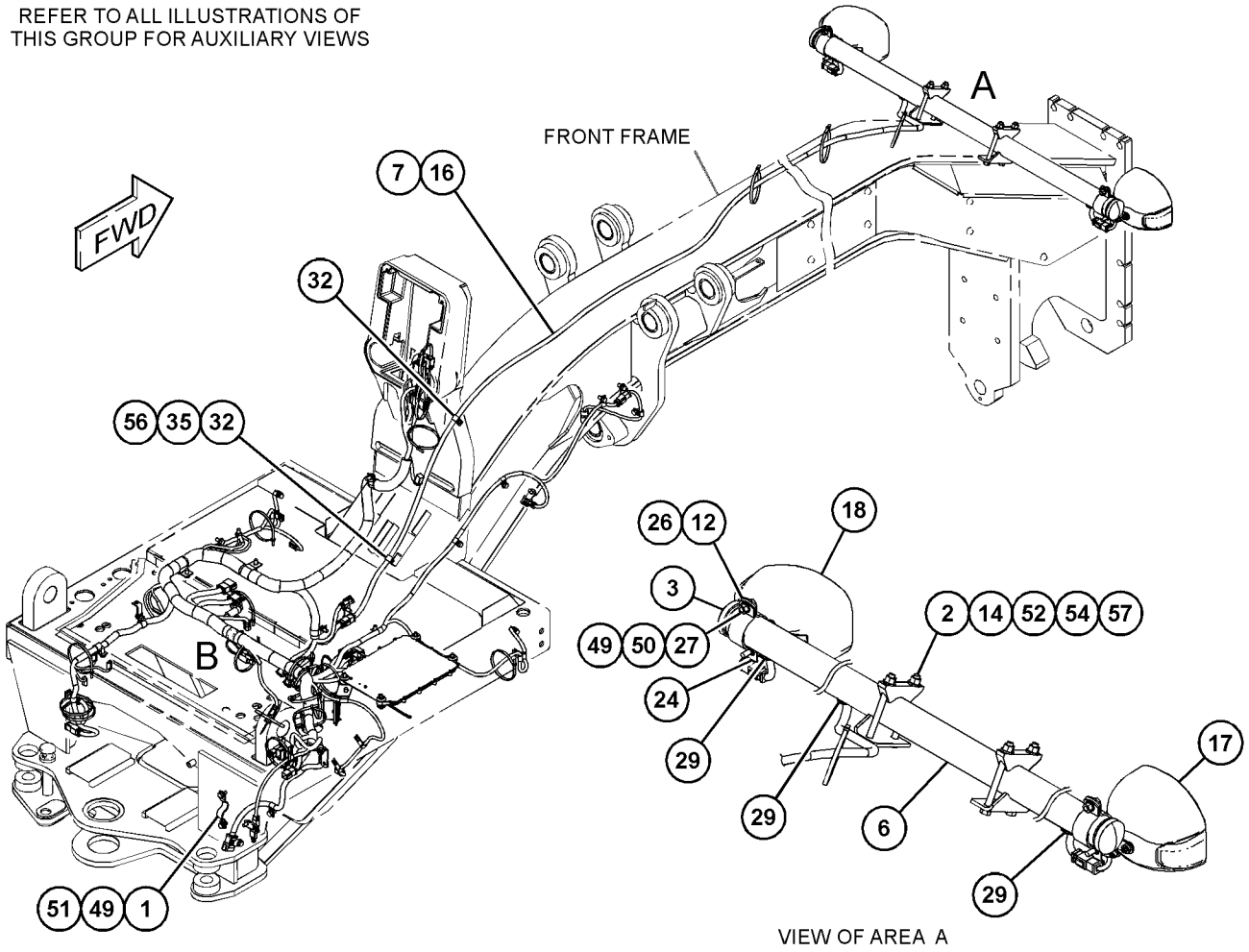

GRAPHIC #1 g03733532

434-4110 **WIRING GP-FRONT (**contd.**)** **i06678291**

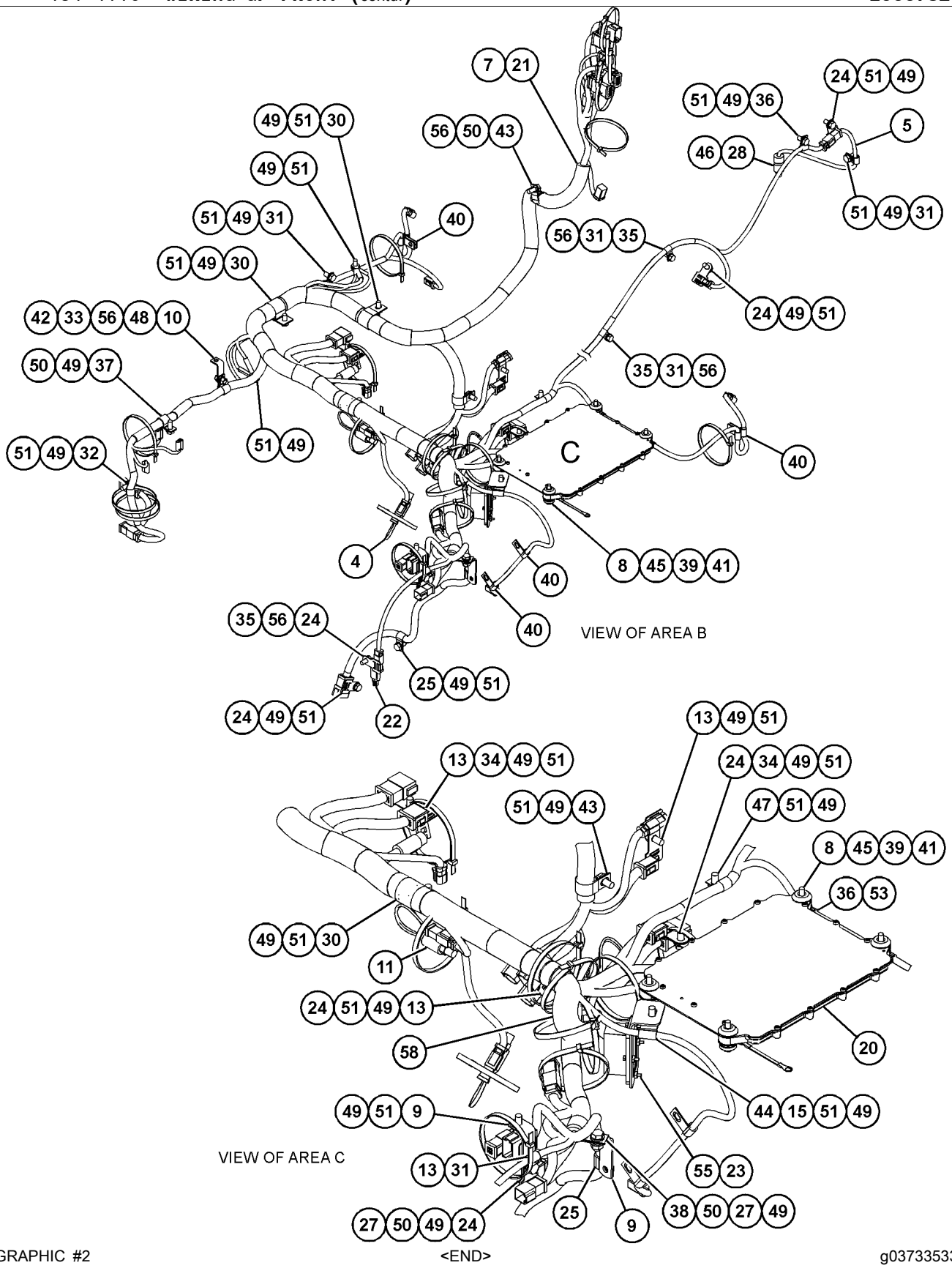

GRAPHIC #2 <END> g03733533

434-4110 WIRING GP-FRONT

S/N: SZS740-UP
ROADING
PART OF 461-2964 CANOPY AR
AN ATTACHMENT

SMCS-1408 **i06264775**

NOTE	REF NO	GRAPHIC REF	PART NUMBER	QTY	PART NAME 1 2 3 4 5 6 (PRODUCT LEVEL)	SEE PAGE
	1	1	**1S-2342**	1	STRAP AS-GROUND	
	2	1	**2G-0659**	2	BRACKET	
	3	1	**2G-0988**	2	CAP	
	4	2	**3E-2026**	1	SWITCH AS-PRESSURE (STOP LIGHT)	
		2	**102-8802**	1	KIT-RECEPTACLE (2-PIN)	
					(INCLUDES RECEPTACLE AS & WEDGE)	
		2	**8T-8729**	2	PIN-CONNECTOR (16-GA TO 18-GA)	
	5	2	**3E-3636**	1	SWITCH AS-BALL (CENTERSHIFT INDICATOR)	
		2	**8T-8729**	4	PIN-CONNECTOR (16-GA TO 18-GA)	
		2	**102-8804**	1	KIT-RECEPTACLE (4-PIN)	
					(INCLUDES RECEPTACLE AS & WEDGE)	
	6	1	**5T-9313**	1	TUBE	
C	7	1,2	**7K-1181**	26	STRAP-CABLE	
	8	2	**8T-9655**	8	MOUNT-ISOLATION	
	9	2	**9L-1566**	2	SUPPORT	
	10	2	**9L-6331**	1	BRACKET	
	11	2	**114-9281**	2	SWITCH AS-PRESSURE (AIR BRAKE)	
					(EACH INCLUDES)	
		2	**102-8802**	1	KIT-RECEPTACLE (2-PIN)	
					(INCLUDES RECEPTACLE AS & WEDGE)	
		2	**8T-8729**	2	PIN-CONNECTOR (16-GA TO 18-GA)	
C	12	1	**2G-0615**	2	CLAMP	
	13	2	**169-5414**	4	CLIP	
	14	1	**179-1550**	2	CLAMP	
	15	2	**320-8203**	1	PLATE AS	
	16	1	**334-3343**	1	HARNESS AS-PANEL (LIGHT BAR)	
		1	**102-8805**	1	KIT-RECEPTACLE (6-PIN)	
					(INCLUDES RECEPTACLE AS & WEDGE)	
		1	**3E-3383**	1	WEDGE-RECEPTACLE LOCK (6-PIN)	
		1	**8T-8729**	5	PIN-CONNECTOR (16-GA TO 18-GA)	
		1	**8T-8730**	8	SOCKET-CONNECTOR (16-GA TO 18-GA)	
		1	**8T-8737**	2	PLUG-SEAL	
		1	**9W-0844**	2	SOCKET-CONNECTOR (14-GA TO 16-GA)	
		1	**9W-0852**	1	PIN-CONNECTOR (14-GA TO 16-GA)	
E		1	**125-7874**		TUBE-HEAT SHRINK (5.72-MM DIA) (5-CM)	
E		1	**125-7875**		TUBE-HEAT SHRINK (7.44-MM DIA) (15-CM)	
		1	**155-2274**	2	KIT-CONNECTING PLUG (6-PIN)	
					(EACH KIT INCLUDES PLUG AS, WEDGE & INTERFACE SEAL)	
C	18	1	**345-0188**	2	LAMP GP-HEAD & SIGNAL (24-VOLT)	
R	20	2	**304-5691**	1	CONTROL GP-UNPROGRAMMED	
CY	21	2	**466-2107**	1	HARNESS AS-PLATFORM (PLATFORM)	258
	22	2	**455-9255**	1	SWITCH AS-PRESSURE (PARKING BRAKE)	
		2	**102-8802**	1	KIT-RECEPTACLE (2-PIN)	
					(INCLUDES RECEPTACLE AS & WEDGE)	
		2	**8T-8729**	2	PIN-CONNECTOR (16-GA TO 18-GA)	
	23	2	**096-6166**	4	WASHER-HARD (4.5X9X1-MM THK)	

434-4110 **WIRING GP-FRONT (**contd.**)** **i06264775**

NOTE	REF NO	GRAPHIC REF	PART NUMBER	QTY	PART NAME 1 2 3 4 5 6 (PRODUCT LEVEL)	SEE PAGE
	24	1,2	**130-5300**	10	CLIP	
	25	2	**174-5907**	2	CLIP	
	26	1	**2G-0617**	2	CLAMP	
M	27	1,2	**344-5675**	4	NUT (M10X1.5-THD)	
	28	2	**3J-1907**	1	SEAL-O-RING	
	29	1	**3K-9520**	3	GROMMET	
	30	2	**4D-7388**	3	CLIP	
	31	2	**4D-7794**	5	CLIP	
	32	1,2	**4K-8864**	3	CLIP	
	33	2	**4L-6454**	1	BOLT (3/8-16X1-IN)	
	34	2	**4P-8134**	2	CLIP	
	35	1,2	**5M-3062**	4	BOLT (3/8-16X0.75-IN)	
	36	2	**5P-9085**	3	CLIP	
	37	2	**6D-4246**	1	CLIP	
	38	2	**7D-7233**	1	CLIP	
	39	2	**6I-1418**	4	SPACER (8.2X12.7X28.7-MM THK)	
	40	2	**6V-3265**	6	CLIP	
	41	2	**6V-3964**	4	WASHER-HARD (8.8X25.5X5-MM THK)	
	42	2	**6V-8801**	1	NUT (3/8-16-THD)	
	43	2	**7C-4354**	2	CLIP	
	44	2	**7N-3718**	1	CLIP	
M	45	2	**7X-0818**	4	BOLT (M8X1.25X45-MM)	
B	46	2	**8F-1974**	10	SHIM (0.13-MM THK)	
	47	2	**8M-2770**	1	CLIP	
	48	2	**8M-2773**	1	CLIP	
	49	1,2	**8T-4121**	32	WASHER-HARD (11X21X2.5-MM THK)	
M	50	1,2	**8T-4136**	6	BOLT (M10X1.5X25-MM)	
M	51	1,2	**8T-4137**	23	BOLT (M10X1.5X20-MM)	
C	52	1	**8T-4223**	10	WASHER-HARD (13.5X25.5X3-MM THK)	
	53	2	**8T-4224**	2	WASHER-HARD (8.8X16X2-MM THK)	
M	54	1	**8T-4244**	4	NUT (M12X1.75-THD)	
M	55	2	**8T-4647**	4	SCREW-MACHINE (M4X0.7X20-MM)	
	56	1,2	**8T-4896**	7	WASHER-HARD (10.2X18.5X2.5-MM THK)	
M	57	1	**8T-5412**	4	BOLT (M12X1.75X140-MM)	
E	58	2	**332-3657**		SLEEVE-ABRASION (15-CM)	
C	59	1	**4P-7429**	2	CLIP	
C	60	1,2	**3S-2093**	3	STRAP-CABLE	

B - USE AS REQUIRED
C - CHANGE FROM PREVIOUS TYPE
E - ORDER BY THE CENTIMETER
M - METRIC PART
R - REMANUFACTURED PART MAY BE AVAILABLE
Y - SEPARATE ILLUSTRATION

434-4110 **WIRING GP-FRONT (**contd.**)** **i06264775**

REFER TO ALL ILLUSTRATIONS OF
THIS GROUP FOR AUXILIARY VIEWS

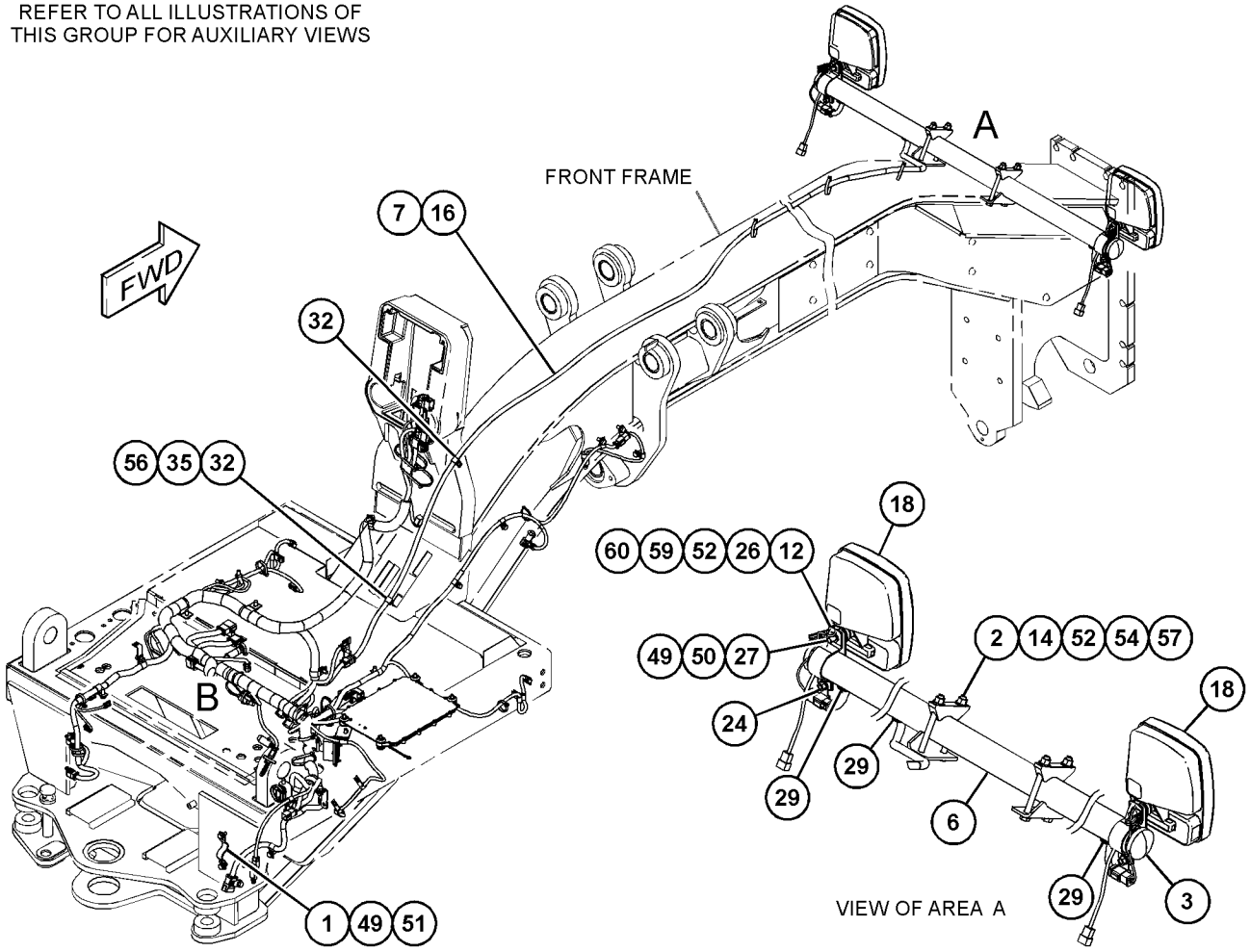

GRAPHIC #1 g03882731

434-4110 **WIRING GP-FRONT (**contd.**)** **i06264775**

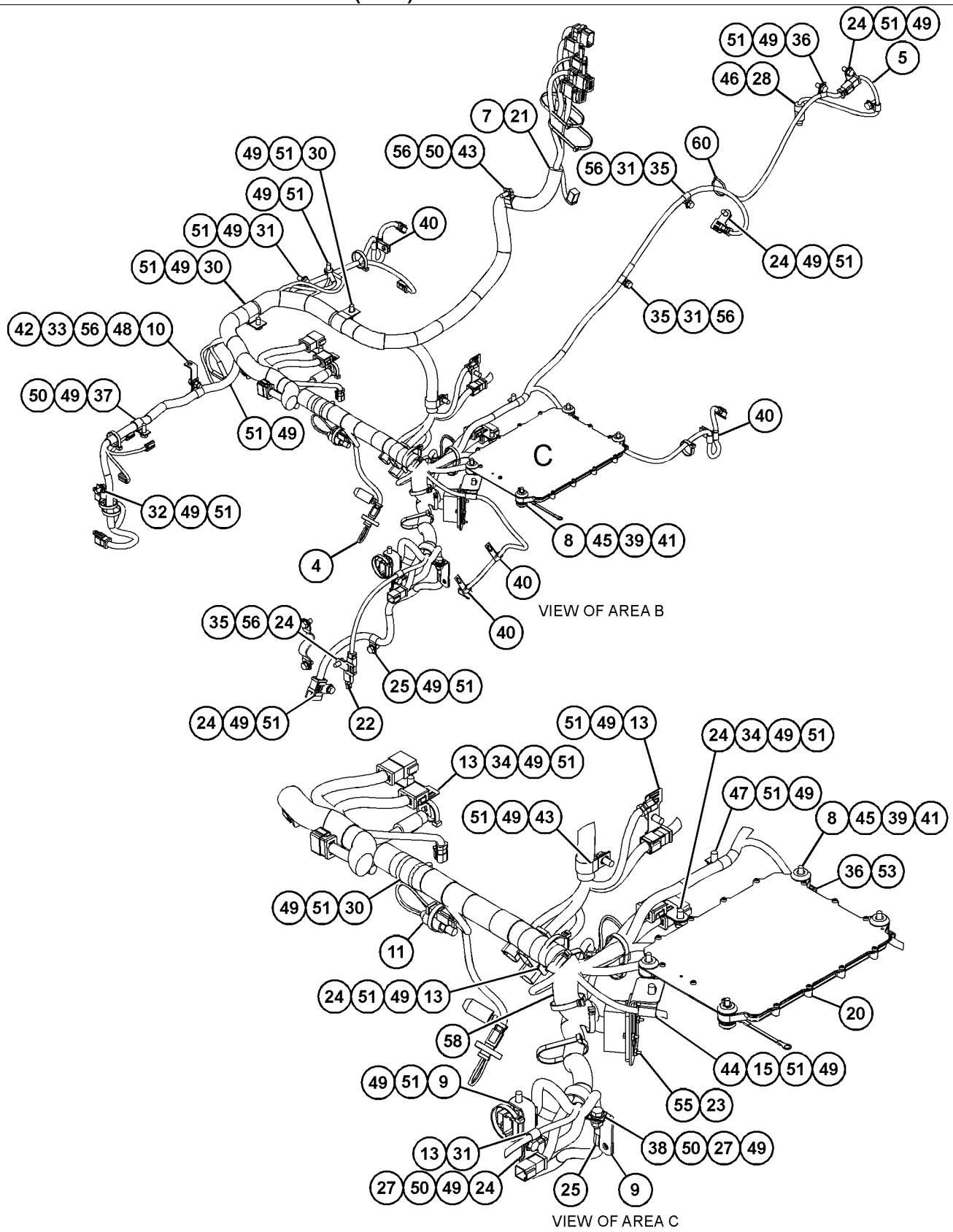

GRAPHIC #2 <END> g03882732

434-4111 WIRING GP-FRONT–CANOPY

S/N: SZS1-739
ROADING
PART OF 461-2961 CANOPY AR
AN ATTACHMENT

SMCS-1408 **i06678283**

NOTE	REF NO	GRAPHIC REF	PART NUMBER	QTY	PART NAME 1 2 3 4 5 6 (PRODUCT LEVEL)	SEE PAGE
	1	1	**1S-2342**	1	STRAP AS-GROUND	
	2	1	**2G-0659**	2	BRACKET	
	3	1	**2G-0988**	2	CAP	
	4	2	**3E-2026**	1	SWITCH AS-PRESSURE (STOP LIGHT)	
		2	**102-8802**	1	KIT-RECEPTACLE (2-PIN)	
					(INCLUDES RECEPTACLE AS & WEDGE)	
		2	**8T-8729**	2	PIN-CONNECTOR (16-GA TO 18-GA)	
	5	2	**3E-3636**	1	SWITCH AS-BALL (CENTERSHIFT INDICATOR)	
		2	**8T-8729**	4	PIN-CONNECTOR (16-GA TO 18-GA)	
		2	**102-8804**	1	KIT-RECEPTACLE (4-PIN)	
					(INCLUDES RECEPTACLE AS & WEDGE)	
	6	1	**5T-9313**	1	TUBE	
	7	1,2	**7K-1181**	27	STRAP-CABLE	
	8	2	**8T-9655**	8	MOUNT-ISOLATION	
	9	2	**9L-1566**	2	SUPPORT	
	10	2	**9L-6331**	1	BRACKET	
	11	2	**114-9281**	2	SWITCH AS-PRESSURE (AIR BRAKE)	
					(EACH INCLUDES)	
		2	**102-8802**	1	KIT-RECEPTACLE (2-PIN)	
					(INCLUDES RECEPTACLE AS & WEDGE)	
		2	**8T-8729**	2	PIN-CONNECTOR (16-GA TO 18-GA)	
	12	1	**137-9410**	2	CLAMP	
	13	2	**169-5414**	4	CLIP	
	14	1	**179-1550**	2	CLAMP	
	15	2	**320-8203**	1	PLATE AS	
	16	1	**334-3343**	1	HARNESS AS-PANEL (LIGHT BAR)	
		1	**102-8805**	1	KIT-RECEPTACLE (6-PIN)	
					(INCLUDES RECEPTACLE AS & WEDGE)	
		1	**3E-3383**	1	WEDGE-RECEPTACLE LOCK (6-PIN)	
		1	**8T-8729**	5	PIN-CONNECTOR (16-GA TO 18-GA)	
		1	**8T-8730**	8	SOCKET-CONNECTOR (16-GA TO 18-GA)	
		1	**8T-8737**	2	PLUG-SEAL	
		1	**9W-0844**	2	SOCKET-CONNECTOR (14-GA TO 16-GA)	
		1	**9W-0852**	1	PIN-CONNECTOR (14-GA TO 16-GA)	
E		1	**125-7874**		TUBE-HEAT SHRINK (5.72-MM DIA) (5-CM)	
E		1	**125-7875**		TUBE-HEAT SHRINK (7.44-MM DIA) (15-CM)	
		1	**155-2274**	2	KIT-CONNECTING PLUG (6-PIN)	
					(EACH KIT INCLUDES PLUG AS, WEDGE & INTERFACE SEAL)	
Y	17	1	**344-3457**	1	LAMP GP-HEAD & SIGNAL (24-VOLT) (RH)	295
Y	18	1	**344-3458**	1	LAMP GP-HEAD & SIGNAL (24-VOLT) (LH)	297
R	20	2	**304-5691**	1	CONTROL GP-UNPROGRAMMED	
	21	2	**384-7615**	1	HARNESS AS-CHASSIS (PLATFORM)	
		2	**102-8803**	1	KIT-RECEPTACLE (3-PIN)	
		2	**102-8805**	5	KIT-RECEPTACLE (6-PIN)	
		2	**102-8801**	8	KIT-RECEPTACLE (12-PIN)	
					(EACH KIT INCLUDES RECEPTACLE AS & WEDGE)	

434-4111 **WIRING GP-FRONT (**contd.**)** **i06678283**

NOTE	REF NO	GRAPHIC REF	PART NUMBER	QTY	PART NAME 1 2 3 4 5 6 (PRODUCT LEVEL)	SEE PAGE
		2	**3E-3383**	1	WEDGE-RECEPTACLE LOCK (6-PIN)	
		2	**5P-4571**	6	TERMINAL-BLADE (14-GA TO 16-GA)	
		2	**7G-7920**	1	PLUG-SEAL	
		2	**9X-0196**	3	TERMINAL AS (16-GA)	
		2	**8N-1546**	3	PIN-CONNECTOR (6-GA)	
		2	**8N-1547**	3	SOCKET-CONNECTOR (6-GA)	
		2	**8T-8729**	75	PIN-CONNECTOR (16-GA TO 18-GA)	
		2	**8T-8730**	93	SOCKET-CONNECTOR (16-GA TO 18-GA)	
		2	**8T-8737**	94	PLUG-SEAL	
		2	**9W-0844**	7	SOCKET-CONNECTOR (14-GA TO 16-GA)	
		2	**9W-0852**	10	PIN-CONNECTOR (14-GA TO 16-GA)	
		2	**9X-1343**	1	RECEPTACLE AS-CONNECTOR (40-PIN)	
		2	**9X-3401**	24	PIN-CONNECTOR (16-GA TO 18-GA)	
		2	**9X-3402**	13	SOCKET-CONNECTOR (16-GA TO 18-GA)	
E		2	**119-3662**		TUBE-HEAT SHRINK (10.85-MM DIA) (20-CM)	
E		2	**125-7874**		TUBE-HEAT SHRINK (5.72-MM DIA) (35-CM)	
E		2	**125-7875**		TUBE-HEAT SHRINK (7.44-MM DIA) (65-CM)	
		2	**127-5483**	3	PLUG AS-CONNECTOR (1-PIN)	
		2	**127-5484**	4	RECEPTACLE AS-CONNECTOR (1-PIN)	
		2	**2L-8052**	3	TERMINAL-RING (6-GA, 3/8-IN SCREW)	
					—OR—	
		2	**2L-8060**	3	TERMINAL-RING (8-GA, 3/8-IN SCREW)	
		2	**2L-8069**	2	TERMINAL-RING (2-GA TO 10-GA, 3/8-IN SCREW)	
		2	**2L-8079**	1	TERMINAL-RING (14-GA TO 16-GA, 3/8-IN SCREW)	
		2	**155-2255**	6	KIT-CONNECTING PLUG (12-PIN)	
		2	**155-2258**	5	WEDGE-PLUG LOCK (12-PIN)	
		2	**155-2259**	1	WEDGE-PLUG LOCK (8-PIN)	
		2	**155-2265**	1	KIT-CONNECTING PLUG (8-PIN)	
		2	**155-2260**	3	KIT-CONNECTING PLUG (3-PIN)	
		2	**155-2270**	9	KIT-CONNECTING PLUG (2-PIN)	
		2	**155-2271**	1	KIT-CONNECTING PLUG (4-PIN)	
		2	**155-2274**	6	KIT-CONNECTING PLUG (6-PIN)	
					(EACH KIT INCLUDES PLUG AS, WEDGE & INTERFACE SEAL)	
		2	**274-3774**	2	CAP-CONNECTOR	
	22	2	**455-9255**	1	SWITCH AS-PRESSURE (PARKING BRAKE)	
		2	**102-8802**	1	KIT-RECEPTACLE (2-PIN)	
					(INCLUDES RECEPTACLE AS & WEDGE)	
		2	**8T-8729**	2	PIN-CONNECTOR (16-GA TO 18-GA)	
	23	2	**096-6166**	4	WASHER-HARD (4.5X9X1-MM THK)	
	24	1,2	**130-5300**	10	CLIP	
	25	2	**174-5907**	2	CLIP	
	26	1	**2G-0617**	2	CLAMP	
M	27	1,2	**344-5675**	4	NUT (M10X1.5-THD)	
	28	2	**3J-1907**	1	SEAL-O-RING	
	29	1	**3K-9520**	3	GROMMET	
	30	2	**4D-7388**	3	CLIP	
	31	2	**4D-7794**	5	CLIP	
	32	1,2	**4K-8864**	3	CLIP	
	33	2	**4L-6454**	1	BOLT (3/8-16X1-IN)	
	34	2	**4P-8134**	2	CLIP	
	35	1,2	**5M-3062**	4	BOLT (3/8-16X0.75-IN)	

434-4111 **WIRING GP-FRONT (**contd.**)** **i06678283**

NOTE	REF NO	GRAPHIC REF	PART NUMBER	QTY	PART NAME 1 2 3 4 5 6 (PRODUCT LEVEL)	SEE PAGE
	36	2	**5P-9085**	3	CLIP	
	37	2	**6D-4246**	1	CLIP	
	38	2	**6D-4636**	1	CLIP	
	39	2	**6I-1418**	4	SPACER (8.2X12.7X28.7-MM THK)	
	40	2	**6V-3265**	6	CLIP	
	41	2	**6V-3964**	4	WASHER-HARD (8.8X25.5X5-MM THK)	
	42	2	**6V-8801**	1	NUT (3/8-16-THD)	
	43	2	**7C-4354**	3	CLIP	
	44	2	**7N-3718**	1	CLIP	
M	45	2	**7X-0818**	4	BOLT (M8X1.25X45-MM)	
B	46	2	**8F-1974**	10	SHIM (0.13-MM THK)	
	47	2	**8M-2770**	1	CLIP	
	48	2	**8M-2773**	1	CLIP	
	49	1,2	**8T-4121**	33	WASHER-HARD (11X21X2.5-MM THK)	
M	50	1,2	**8T-4136**	6	BOLT (M10X1.5X25-MM)	
M	51	1,2	**8T-4137**	24	BOLT (M10X1.5X20-MM)	
	52	1	**8T-4223**	8	WASHER-HARD (13.5X25.5X3-MM THK)	
	53	2	**8T-4224**	2	WASHER-HARD (8.8X16X2-MM THK)	
M	54	1	**8T-4244**	4	NUT (M12X1.75-THD)	
M	55	2	**8T-4647**	4	SCREW-MACHINE (M4X0.7X20-MM)	
	56	1,2	**8T-4896**	7	WASHER-HARD (10.2X18.5X2.5-MM THK)	
M	57	1	**8T-5412**	4	BOLT (M12X1.75X140-MM)	
E	58	2	**332-3657**		SLEEVE-ABRASION (15-CM)	

B - USE AS REQUIRED
E - ORDER BY THE CENTIMETER
M - METRIC PART
R - REMANUFACTURED PART MAY BE AVAILABLE
Y - SEPARATE ILLUSTRATION

434-4111 **WIRING GP-FRONT (**contd.**)** **i06678283**

REFER TO ALL ILLUSTRATIONS OF
THIS GROUP FOR AUXILIARY VIEWS

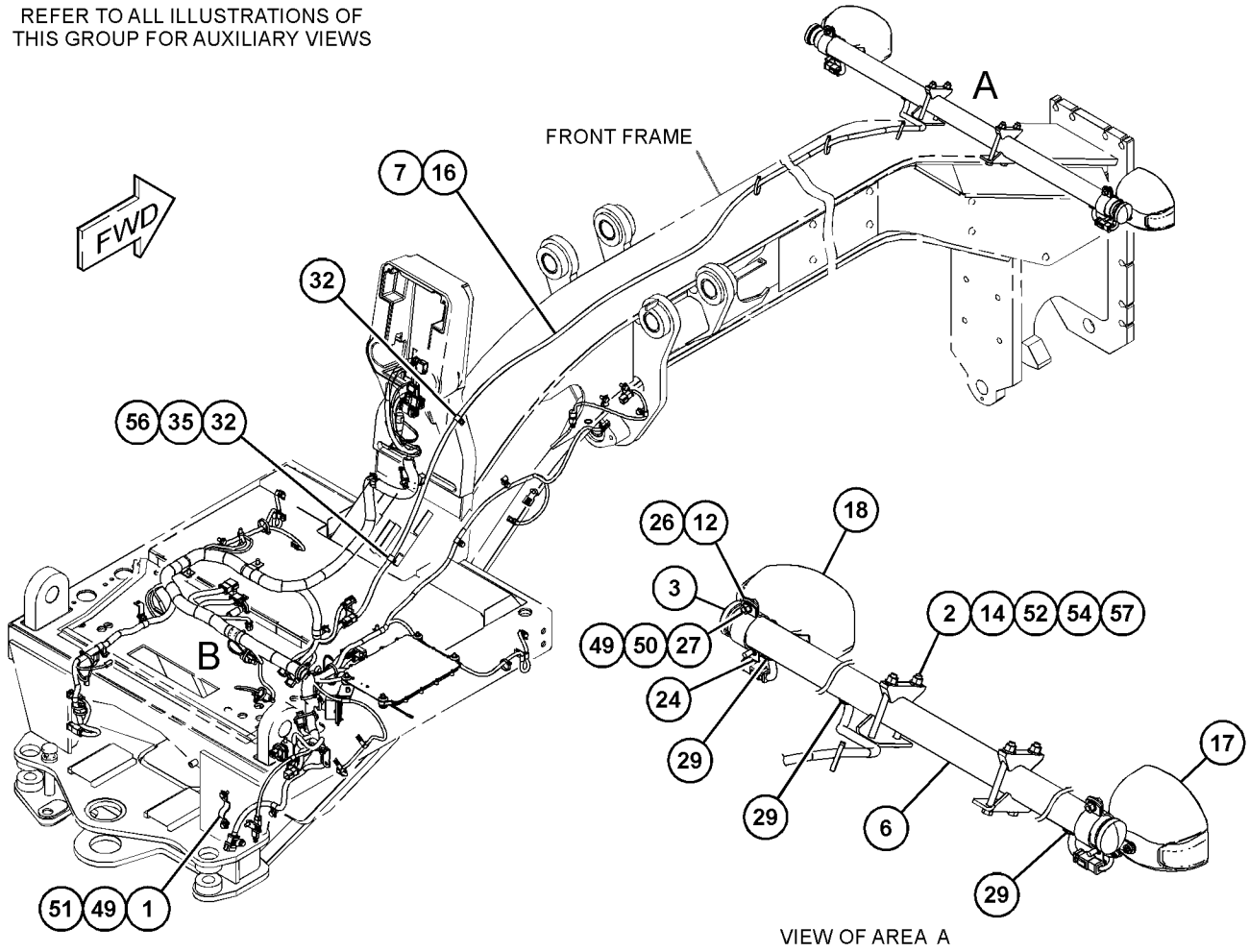

GRAPHIC #1 g03733621

434-4111 **WIRING GP-FRONT (**contd.**)** **i06678283**

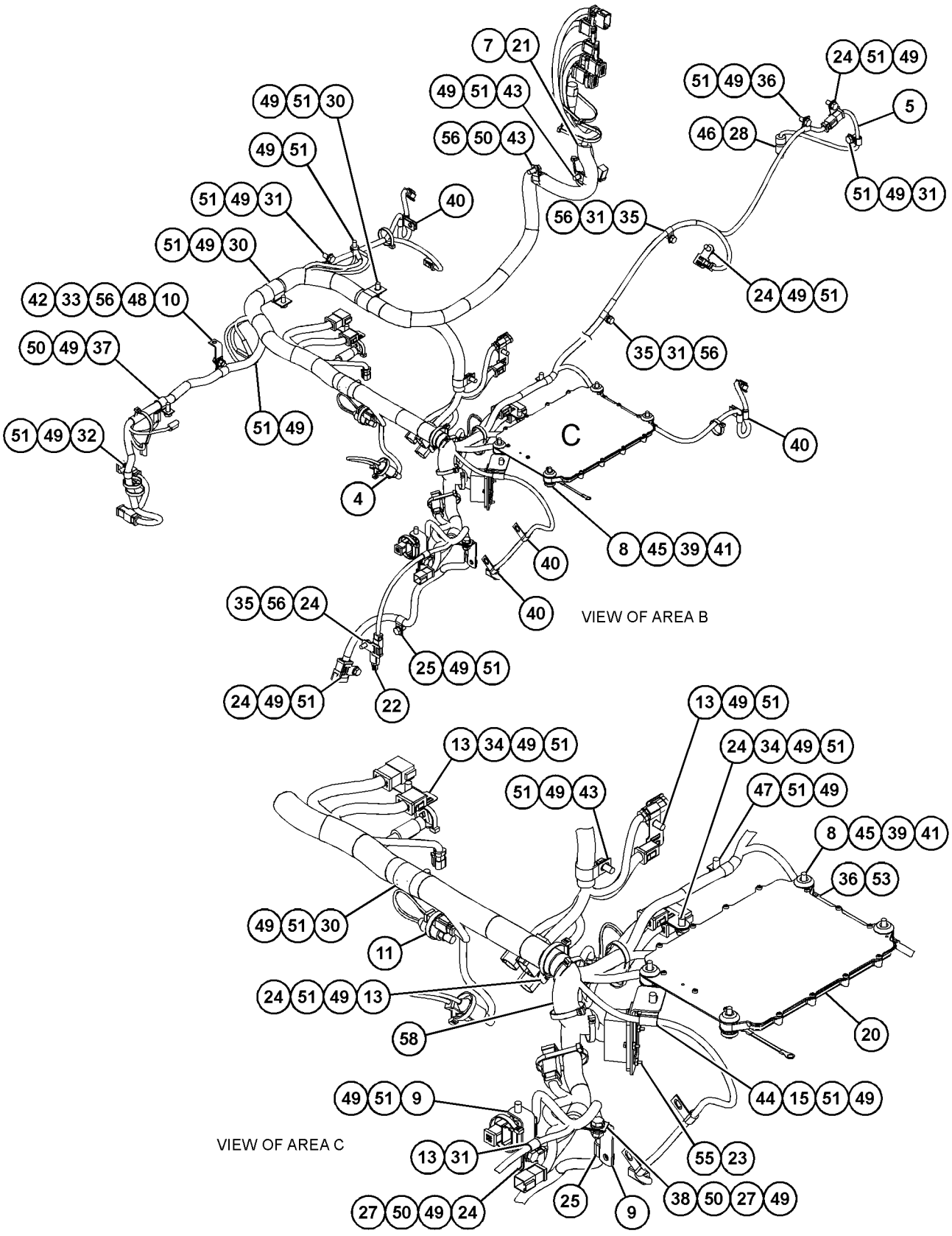

GRAPHIC #2 <END> g03733622

434-4111 WIRING GP-FRONT–CANOPY

S/N: SZS740-UP
ROADING
PART OF 461-2961 CANOPY AR
AN ATTACHMENT
TYPE 1

SMCS-1408 **i06264776**

NOTE	REF NO	GRAPHIC REF	PART NUMBER	QTY	PART NAME 1 2 3 4 5 6 (PRODUCT LEVEL)	SEE PAGE
	1	1	**1S-2342**	1	STRAP AS-GROUND	
	2	1	**2G-0659**	2	BRACKET	
	3	1	**2G-0988**	2	CAP	
	4	2	**3E-2026**	1	SWITCH AS-PRESSURE (STOP LIGHT)	
		2	**102-8802**	1	KIT-RECEPTACLE (2-PIN)	
					(INCLUDES RECEPTACLE AS & WEDGE)	
		2	**8T-8729**	2	PIN-CONNECTOR (16-GA TO 18-GA)	
	5	2	**3E-3636**	1	SWITCH AS-BALL (CENTERSHIFT INDICATOR)	
		2	**8T-8729**	4	PIN-CONNECTOR (16-GA TO 18-GA)	
		2	**102-8804**	1	KIT-RECEPTACLE (4-PIN)	
					(INCLUDES RECEPTACLE AS & WEDGE)	
	6	1	**5T-9313**	1	TUBE	
	7	1,2	**7K-1181**	27	STRAP-CABLE	
	8	2	**8T-9655**	8	MOUNT-ISOLATION	
	9	2	**9L-1566**	2	SUPPORT	
	10	2	**9L-6331**	1	BRACKET	
	11	2	**114-9281**	2	SWITCH AS-PRESSURE (AIR BRAKE)	
					(EACH INCLUDES)	
		2	**102-8802**	1	KIT-RECEPTACLE (2-PIN)	
					(INCLUDES RECEPTACLE AS & WEDGE)	
		2	**8T-8729**	2	PIN-CONNECTOR (16-GA TO 18-GA)	
C	12	1	**2G-0615**	2	CLAMP	
	13	2	**169-5414**	4	CLIP	
	14	1	**179-1550**	2	CLAMP	
	15	2	**320-8203**	1	PLATE AS	
	16	1	**334-3343**	1	HARNESS AS-PANEL (LIGHT BAR)	
		1	**102-8805**	1	KIT-RECEPTACLE (6-PIN)	
					(INCLUDES RECEPTACLE AS & WEDGE)	
		1	**3E-3383**	1	WEDGE-RECEPTACLE LOCK (6-PIN)	
		1	**8T-8729**	5	PIN-CONNECTOR (16-GA TO 18-GA)	
		1	**8T-8730**	8	SOCKET-CONNECTOR (16-GA TO 18-GA)	
		1	**8T-8737**	2	PLUG-SEAL	
		1	**9W-0844**	2	SOCKET-CONNECTOR (14-GA TO 16-GA)	
		1	**9W-0852**	1	PIN-CONNECTOR (14-GA TO 16-GA)	
E		1	**125-7874**		TUBE-HEAT SHRINK (5.72-MM DIA) (5-CM)	
E		1	**125-7875**		TUBE-HEAT SHRINK (7.44-MM DIA) (15-CM)	
		1	**155-2274**	2	KIT-CONNECTING PLUG (6-PIN)	
					(EACH KIT INCLUDES PLUG AS, WEDGE & INTERFACE SEAL)	
C	18	1	**345-0188**	2	LAMP GP-HEAD & SIGNAL (24-VOLT)	
R	20	2	**304-5691**	1	CONTROL GP-UNPROGRAMMED	
CY	21	2	**466-2107**	1	HARNESS AS-PLATFORM (PLATFORM)	258
	22	2	**455-9255**	1	SWITCH AS-PRESSURE (PARKING BRAKE)	
		2	**102-8802**	1	KIT-RECEPTACLE (2-PIN)	
					(INCLUDES RECEPTACLE AS & WEDGE)	
		2	**8T-8729**	2	PIN-CONNECTOR (16-GA TO 18-GA)	

434-4111 **WIRING GP-FRONT (**contd.**)** **i06264776**

NOTE	REF NO	GRAPHIC REF	PART NUMBER	QTY	PART NAME 1 2 3 4 5 6 (PRODUCT LEVEL)	SEE PAGE
	23	2	**096-6166**	4	WASHER-HARD (4.5X9X1-MM THK)	
	24	1,2	**130-5300**	10	CLIP	
	25	2	**174-5907**	2	CLIP	
	26	1	**2G-0617**	2	CLAMP	
M	27	1,2	**344-5675**	4	NUT (M10X1.5-THD)	
	28	2	**3J-1907**	1	SEAL-O-RING	
	29	1	**3K-9520**	3	GROMMET	
	30	2	**4D-7388**	3	CLIP	
	31	2	**4D-7794**	5	CLIP	
	32	1,2	**4K-8864**	3	CLIP	
	33	2	**4L-6454**	1	BOLT (3/8-16X1-IN)	
	34	2	**4P-8134**	2	CLIP	
	35	1,2	**5M-3062**	4	BOLT (3/8-16X0.75-IN)	
	36	2	**5P-9085**	3	CLIP	
	37	2	**6D-4246**	1	CLIP	
	38	2	**7D-7233**	1	CLIP	
	39	2	**6I-1418**	4	SPACER (8.2X12.7X28.7-MM THK)	
	40	2	**6V-3265**	6	CLIP	
	41	2	**6V-3964**	4	WASHER-HARD (8.8X25.5X5-MM THK)	
	42	2	**6V-8801**	1	NUT (3/8-16-THD)	
	43	2	**7C-4354**	3	CLIP	
	44	2	**7N-3718**	1	CLIP	
M	45	2	**7X-0818**	4	BOLT (M8X1.25X45-MM)	
B	46	2	**8F-1974**	10	SHIM (0.13-MM THK)	
	47	2	**8M-2770**	1	CLIP	
	48	2	**8M-2773**	1	CLIP	
	49	1,2	**8T-4121**	33	WASHER-HARD (11X21X2.5-MM THK)	
M	50	1,2	**8T-4136**	6	BOLT (M10X1.5X25-MM)	
M	51	1,2	**8T-4137**	24	BOLT (M10X1.5X20-MM)	
C	52	1	**8T-4223**	10	WASHER-HARD (13.5X25.5X3-MM THK)	
	53	2	**8T-4224**	2	WASHER-HARD (8.8X16X2-MM THK)	
M	54	1	**8T-4244**	4	NUT (M12X1.75-THD)	
M	55	2	**8T-4647**	4	SCREW-MACHINE (M4X0.7X20-MM)	
	56	1,2	**8T-4896**	7	WASHER-HARD (10.2X18.5X2.5-MM THK)	
M	57	1	**8T-5412**	4	BOLT (M12X1.75X140-MM)	
E	58	2	**332-3657**		SLEEVE-ABRASION (15-CM)	
C	59	1	**4P-7429**	2	CLIP	
C	60	2	**3S-2093**	3	STRAP-CABLE	

B - USE AS REQUIRED
C - CHANGE FROM PREVIOUS TYPE
E - ORDER BY THE CENTIMETER
M - METRIC PART
R - REMANUFACTURED PART MAY BE AVAILABLE
Y - SEPARATE ILLUSTRATION

434-4111 **WIRING GP-FRONT (**contd.**)** **i06264776**

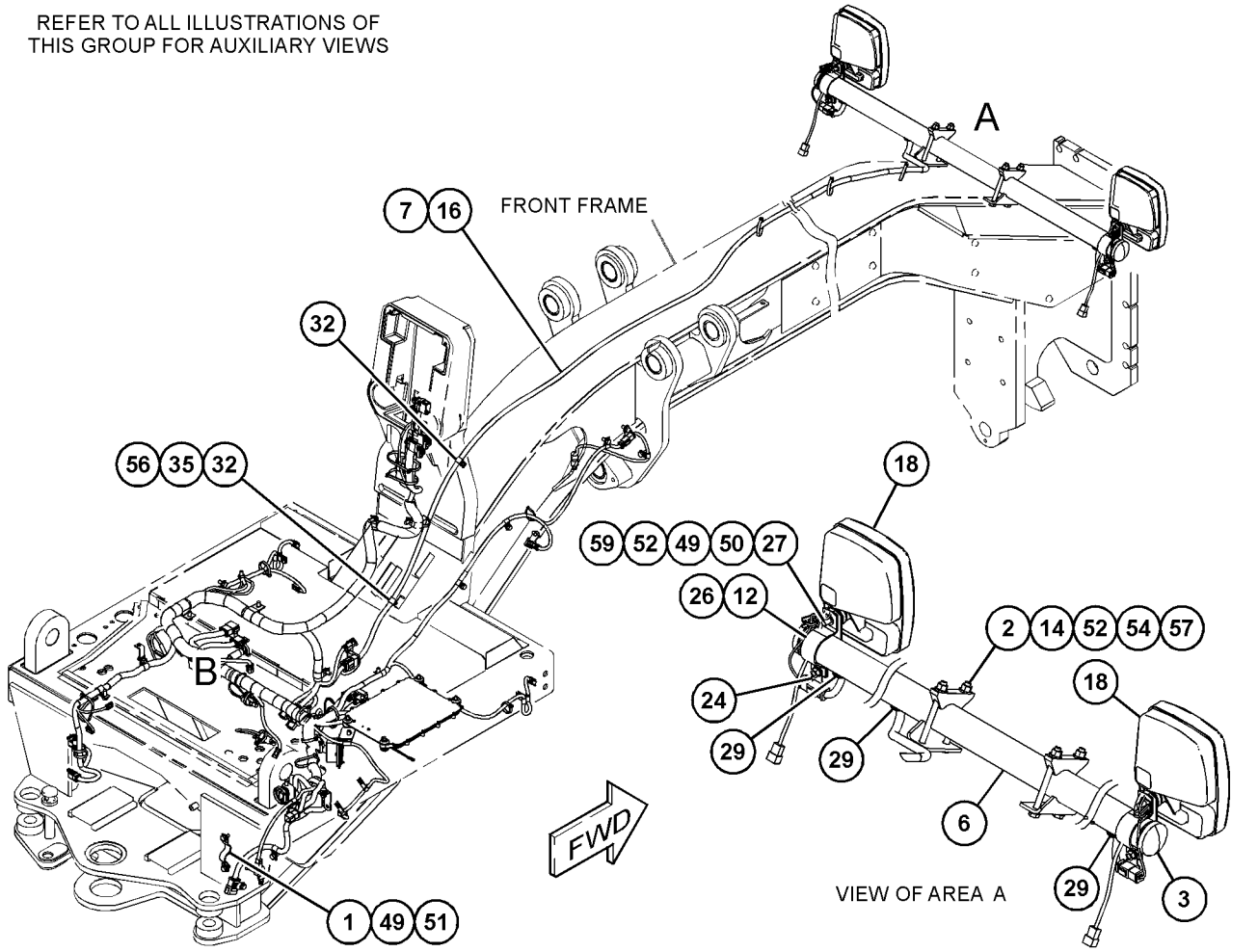

GRAPHIC #1 g03882589

434-4111 **WIRING GP-FRONT (**contd.**)** **i06264776**

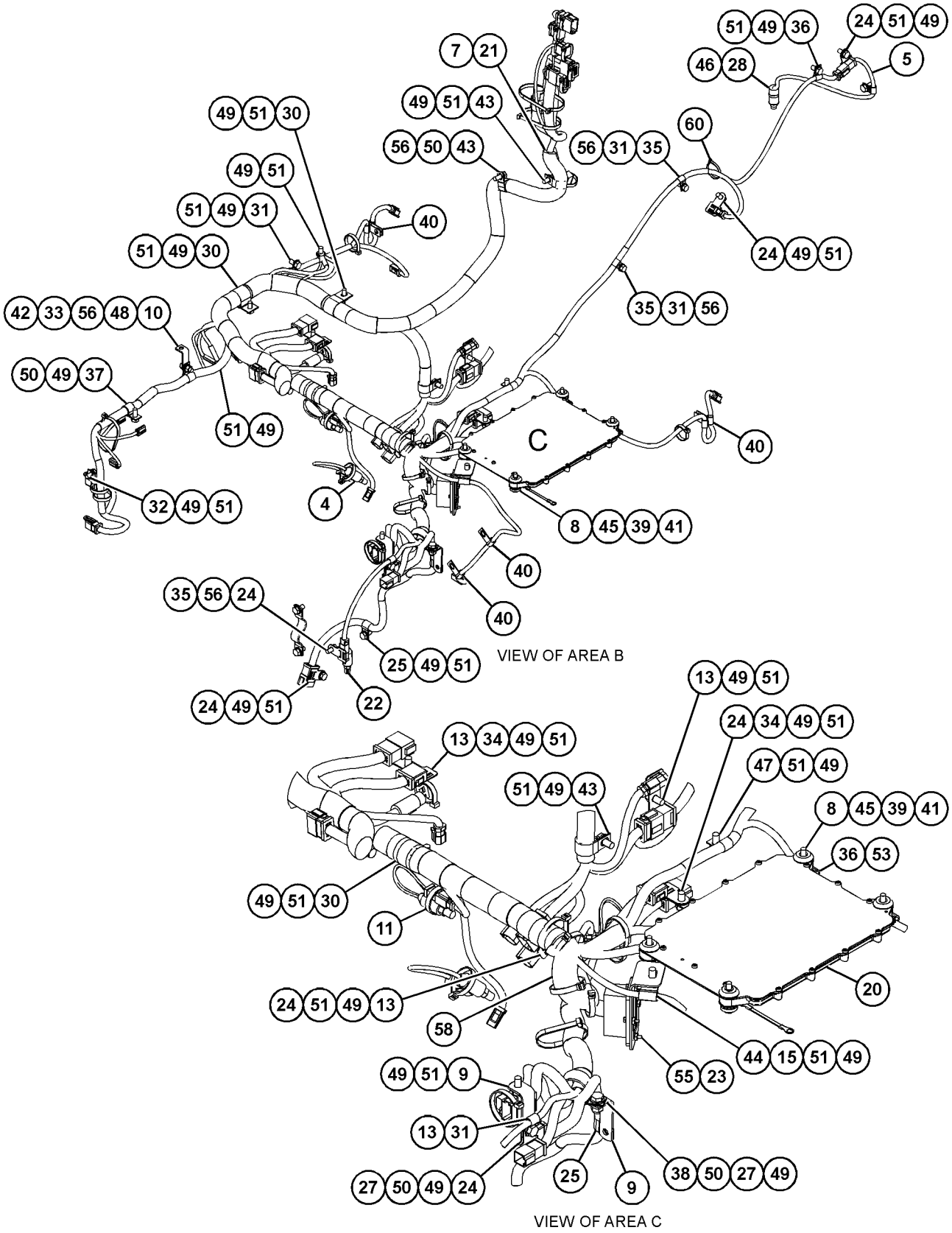

GRAPHIC #2 <END> g03882590

434-4111 WIRING GP-FRONT–CANOPY

S/N: SZS740-UP
ROADING
PART OF 461-2961 CANOPY AR
AN ATTACHMENT
TYPE 2

SMCS-1408 **i06922273**

NOTE	REF NO	GRAPHIC REF	PART NUMBER	QTY	PART NAME 1 2 3 4 5 6 (PRODUCT LEVEL)	SEE PAGE
	1	1	**1S-2342**	1	STRAP AS-GROUND	
	2	1	**2G-0659**	2	BRACKET	
	3	1	**2G-0988**	2	CAP	
	4	2	**3E-2026**	1	SWITCH AS-PRESSURE (STOP LIGHT)	
		2	**102-8802**	1	KIT-RECEPTACLE (2-PIN)	
					(INCLUDES RECEPTACLE AS & WEDGE)	
		2	**8T-8729**	2	PIN-CONNECTOR (16-GA TO 18-GA)	
	6	1	**5T-9313**	1	TUBE	
C	7	1,2	**7K-1181**	29	STRAP-CABLE	
	8	2	**8T-9655**	8	MOUNT-ISOLATION	
	9	2	**9L-1566**	2	SUPPORT	
	10	2	**9L-6331**	1	BRACKET	
	11	2	**114-9281**	2	SWITCH AS-PRESSURE (AIR BRAKE)	
					(EACH INCLUDES)	
		2	**102-8802**	1	KIT-RECEPTACLE (2-PIN)	
					(INCLUDES RECEPTACLE AS & WEDGE)	
		2	**8T-8729**	2	PIN-CONNECTOR (16-GA TO 18-GA)	
	12	1	**2G-0615**	2	CLAMP	
	13	2	**169-5414**	4	CLIP	
	14	1	**179-1550**	2	CLAMP	
	15	2	**320-8203**	1	PLATE AS	
	16	1	**334-3343**	1	HARNESS AS-PANEL (LIGHT BAR)	
		1	**102-8805**	1	KIT-RECEPTACLE (6-PIN)	
					(INCLUDES RECEPTACLE AS & WEDGE)	
		1	**3E-3383**	1	WEDGE-RECEPTACLE LOCK (6-PIN)	
		1	**8T-8729**	5	PIN-CONNECTOR (16-GA TO 18-GA)	
		1	**8T-8730**	8	SOCKET-CONNECTOR (16-GA TO 18-GA)	
		1	**8T-8737**	2	PLUG-SEAL	
		1	**9W-0844**	2	SOCKET-CONNECTOR (14-GA TO 16-GA)	
		1	**9W-0852**	1	PIN-CONNECTOR (14-GA TO 16-GA)	
E		1	**125-7874**		TUBE-HEAT SHRINK (5.72-MM DIA) (5-CM)	
E		1	**125-7875**		TUBE-HEAT SHRINK (7.44-MM DIA) (15-CM)	
		1	**155-2274**	2	KIT-CONNECTING PLUG (6-PIN)	
					(EACH KIT INCLUDES PLUG AS, WEDGE & INTERFACE SEAL)	
CY	18	1	**486-4542**	1	LAMP GP-HEAD & SIGNAL	298
R	20	2	**304-5691**	1	CONTROL GP-UNPROGRAMMED	
Y	21	2	**466-2107**	1	HARNESS AS-PLATFORM (PLATFORM)	258
	22	2	**455-9255**	1	SWITCH AS-PRESSURE (PARKING BRAKE)	
		2	**102-8802**	1	KIT-RECEPTACLE (2-PIN)	
					(INCLUDES RECEPTACLE AS & WEDGE)	
		2	**8T-8729**	2	PIN-CONNECTOR (16-GA TO 18-GA)	
	23	2	**096-6166**	4	WASHER-HARD (4.5X9X1-MM THK)	
C	24	1,2	**130-5300**	9	CLIP	
	25	2	**174-5907**	2	CLIP	
	26	1	**2G-0617**	2	CLAMP	

434-4111 **WIRING GP-FRONT (**contd.**)** **i06922273**

NOTE	REF NO	GRAPHIC REF	PART NUMBER	QTY	PART NAME 1 2 3 4 5 6 (PRODUCT LEVEL)	SEE PAGE
M	27	1,2	**344-5675**	4	NUT (M10X1.5-THD)	
	29	1	**3K-9520**	3	GROMMET	
	30	2	**4D-7388**	3	CLIP	
C	31	2	**4D-7794**	4	CLIP	
	32	1,2	**4K-8864**	3	CLIP	
	33	2	**4L-6454**	1	BOLT (3/8-16X1-IN)	
	34	2	**4P-8134**	2	CLIP	
	35	1,2	**5M-3062**	4	BOLT (3/8-16X0.75-IN)	
	36	2	**5P-9085**	3	CLIP	
	37	2	**6D-4246**	1	CLIP	
	38	2	**7D-7233**	1	CLIP	
	39	2	**6I-1418**	4	SPACER (8.2X12.7X28.7-MM THK)	
	40	2	**6V-3265**	6	CLIP	
	41	2	**6V-3964**	4	WASHER-HARD (8.8X25.5X5-MM THK)	
	42	2	**6V-8801**	1	NUT (3/8-16-THD)	
	43	2	**7C-4354**	3	CLIP	
	44	2	**7N-3718**	1	CLIP	
M	45	2	**7X-0818**	4	BOLT (M8X1.25X45-MM)	
	47	2	**8M-2770**	1	CLIP	
	48	2	**8M-2773**	1	CLIP	
C	49	1,2	**8T-4121**	31	WASHER-HARD (11X21X2.5-MM THK)	
M	50	1,2	**8T-4136**	6	BOLT (M10X1.5X25-MM)	
CM	51	1,2	**8T-4137**	22	BOLT (M10X1.5X20-MM)	
	52	1	**8T-4223**	10	WASHER-HARD (13.5X25.5X3-MM THK)	
	53	2	**8T-4224**	2	WASHER-HARD (8.8X16X2-MM THK)	
M	54	1	**8T-4244**	4	NUT (M12X1.75-THD)	
M	55	2	**8T-4647**	4	SCREW-MACHINE (M4X0.7X20-MM)	
	56	1,2	**8T-4896**	7	WASHER-HARD (10.2X18.5X2.5-MM THK)	
M	57	1	**8T-5412**	4	BOLT (M12X1.75X140-MM)	
E	58	2	**332-3657**		SLEEVE-ABRASION (15-CM)	
C	59	1	**352-3965**	2	CLIP	
C	60	2	**3S-2093**	1	STRAP-CABLE	
CY	61	1	**491-0637**	1	LAMP GP-HEAD & SIGNAL	299

C - CHANGE FROM PREVIOUS TYPE
E - ORDER BY THE CENTIMETER
M - METRIC PART
R - REMANUFACTURED PART MAY BE AVAILABLE
Y - SEPARATE ILLUSTRATION

434-4111 **WIRING GP-FRONT (**contd.**)** **i06922273**

REFER TO ALL ILLUSTRATIONS OF
THIS GROUP FOR AUXILIARY VIEWS

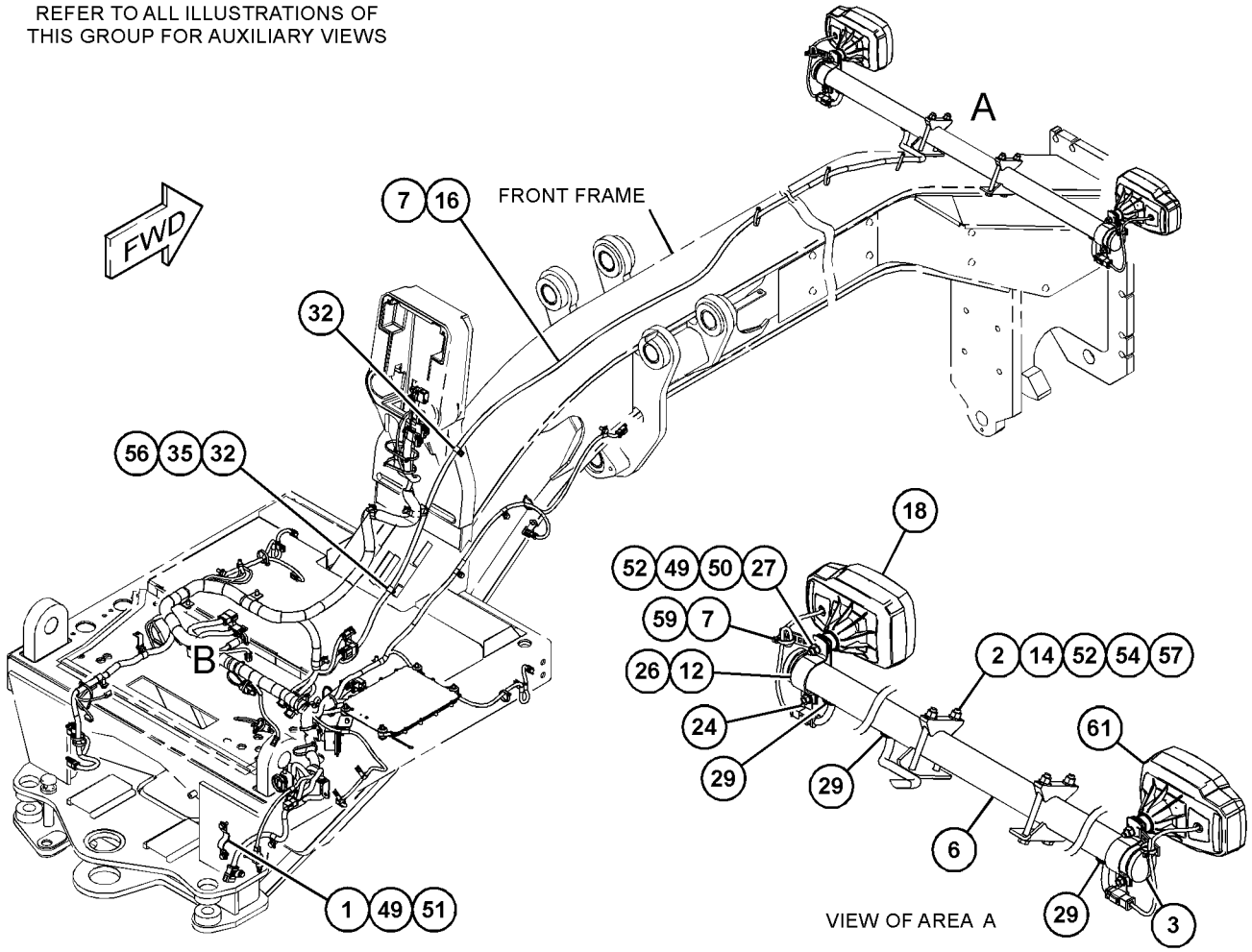

GRAPHIC #1 g06174834

434-4111 **WIRING GP-FRONT (**contd.**)** **i06922273**

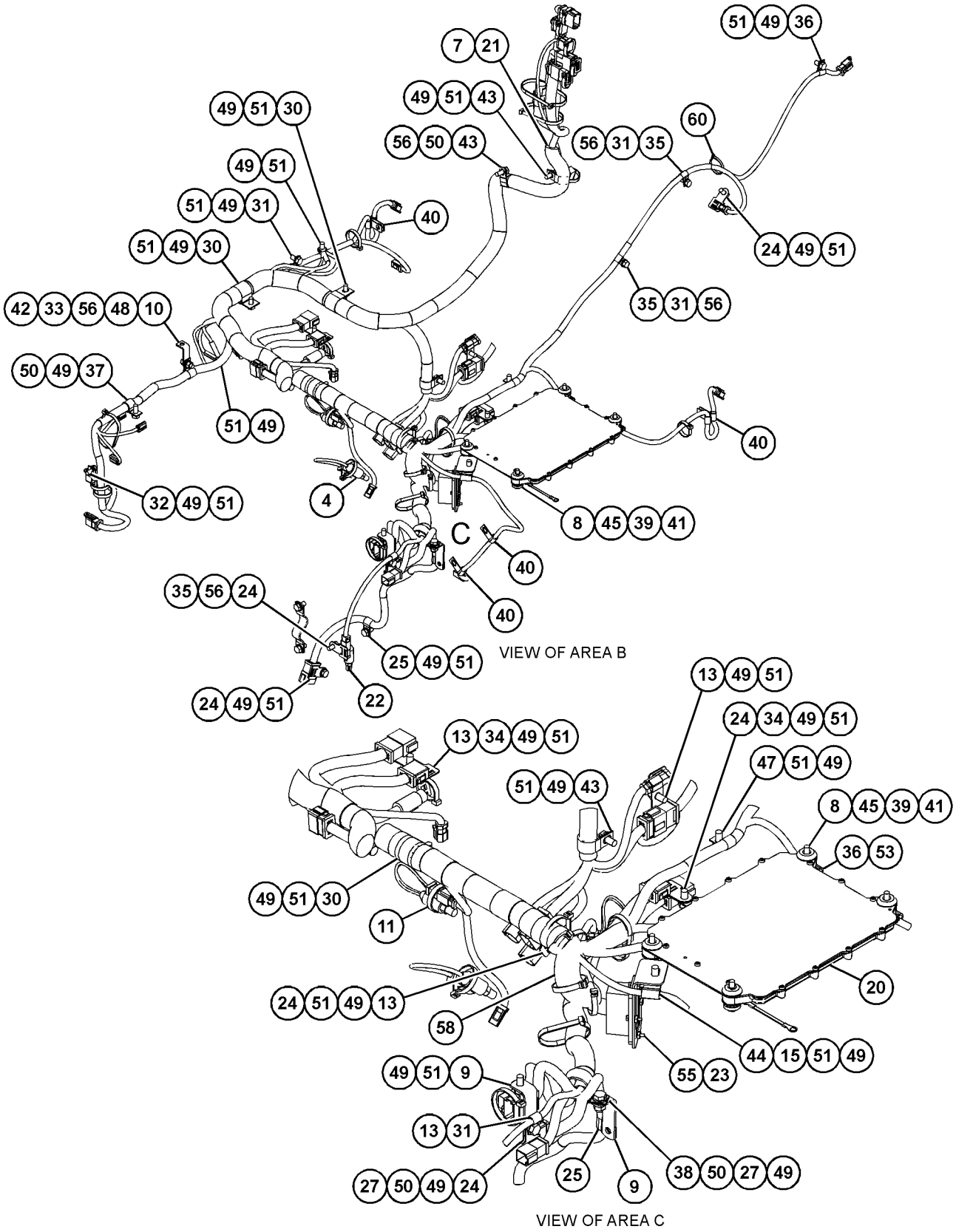

GRAPHIC #2 <END> g06174835

252-5709 WIRING GP-GRADE CONTROL–CAB, INDICATOR LAMP

S/N: SZS1-UP

HIGH, LOW PROFILE. CAT TRIMBLE CONTROL TECH, ACCUGRADE

PART OF 336-4249, 337-3100, 394-0862 GRADE CONTROL AR, 434-8341 WIRING GP-CAB AN ATTACHMENT

SMCS-1408 **i03537550**

NOTE	REF NO	GRAPHIC REF	PART NUMBER	QTY	PART NAME 1 2 3 4 5 6 (PRODUCT LEVEL)	SEE PAGE
	1	1	**115-1748**	1	LAMP (24-VOLT, 3-WATT)	
	2	1	**247-6457**	1	WIRING AS	

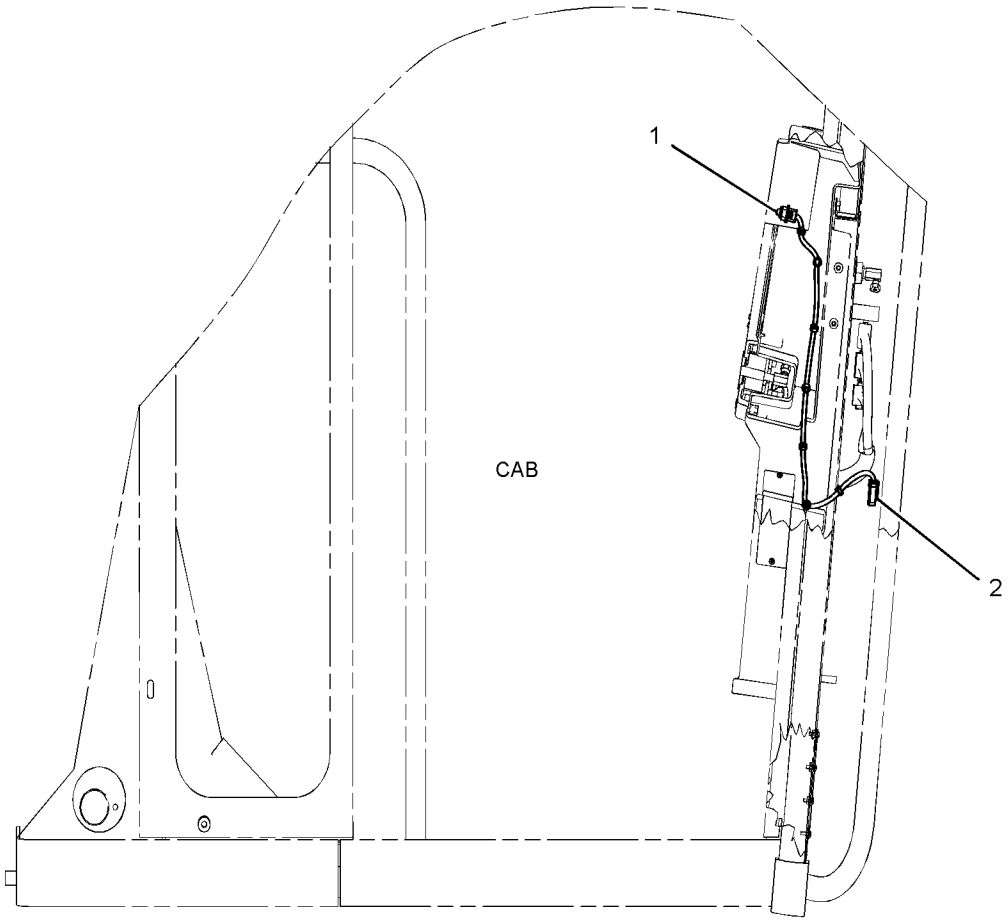

RIGHT SIDE VIEW

GRAPHIC #1 <END> g01239581

294-3542 WIRING GP-GRADE CONTROL–ACCUGRADE

S/N: SZS1-UP
PART OF 337-3100 GRADE CONTROL AR
AN ATTACHMENT

SMCS-1408 **i05039110**

NOTE	REF NO	GRAPHIC REF	PART NUMBER	QTY	PART NAME 1 2 3 4 5 6 (PRODUCT LEVEL)	SEE PAGE
	1	1	**6D-3033**	16	SCREW-SOCKET HEAD (4-40X0.5-IN)	
	2	1	**7K-1181**	19	STRAP-CABLE	
	3	1	**8T-9655**	8	MOUNT-ISOLATION	
	4	1	**8T-9658**	4	SPACER (8.2X12.7X25.4-MM THK)	
	5	1	**9L-1566**	2	SUPPORT	
	6	1	**9W-1446**	1	FUSE (20-AMPERE)	
	7	1	**132-8487**	4	NUT-RING	
	8	1	**169-5414**	1	CLIP	
Y	9	1	**236-2356**	1	HARNESS AS-SENSOR (ANGLE)	261
	10	1	**236-8826**	4	BOSS (1-1/8-18X0.708-IN)	
Y	11	1	**243-3250**	1	HARNESS AS-SENSOR (ROTATION)	261
	12	1	**244-5880**	1	BRACKET	
	13	1	**255-3482**	1	BRACKET	
Y	14	1	*260-7647*	1	APPLICATION GP-POWER TRAIN	196
	15	1	**288-5508**	1	BRACKET AS (LH)	
	16	1	**288-5509**	1	BRACKET AS (RH)	
	17	1	**313-4670**	1	BRACKET AS	
Y	18	1	**323-5592**	1	HARNESS AS-CHASSIS (RH)	249
	19	1	**324-3364**	1	PLATE	
	20	1	**324-3366**	1	PLATE AS	
	21	1	**327-0560**	1	BRACKET (RH)	
	22	1	**327-0561**	1	BRACKET (LH)	
	23	1	**331-1102**	1	BRACKET AS	
Y	24	1	**339-5505**	1	HARNESS AS-CHASSIS (FRONT FRAME, REAR)	250
Y	25	1	**339-5506**	1	HARNESS AS-CHASSIS (FRONT FRAME, LH)	251
	26	1	**033-8248**	1	CLIP	
	27	1	**111-4871**	2	RELAY (24-VOLT)	
	28	1	**130-5300**	4	CLIP	
M	29	1	**131-3539**	4	SCREW-FLAT HEAD (M8X1.25X30-MM)	
	30	1	**147-0385**	1	CLIP	
	31	1	**174-5907**	1	CLIP	
	32	1	**174-9692**	4	SPACER (20.5X35X16-MM THK)	
	33	1	**1J-6762**	4	BOLT-PLOW (3/4-10X3-IN)	
	34	1	**1K-6870**	1	LOCKNUT (3/4-10-THD)	
	35	1	**1P-7009**	2	CLIP	
	36	1	**2Y-3812**	1	CLIP	
	37	1	**352-3970**	1	CLIP	
	38	1	**3P-2404**	1	CLIP	
	39	1	**4D-7794**	1	CLIP	
	40	1	**4K-8302**	2	CLIP	
	41	1	**4K-8864**	1	CLIP	
	42	1	**4S-1962**	6	CLIP	
M	43	1	**5C-7261**	2	NUT (M8X1.25-THD)	
M	44	1	**5C-9553**	2	BOLT (M6X1X16-MM)	
	45	1	**5M-3062**	27	BOLT (3/8-16X0.75-IN)	
	46	1	**5P-4135**	1	BOLT (3/4-10X8-IN)	

294-3542 **WIRING GP-GRADE CONTROL (**contd.**)** **i05039110**

NOTE	REF NO	GRAPHIC REF	PART NUMBER	QTY	PART NAME 1 2 3 4 5 6 (PRODUCT LEVEL)	SEE PAGE
	47	1	**5P-9085**	1	CLIP	
	48	1	**5S-7379**	2	BOLT (3/8-16X0.875-IN)	
	49	1	**6D-4244**	8	CLIP	
	50	1	**6K-8178**	1	CLIP	
	51	1	**6V-1889**	7	CLIP	
	52	1	**6V-8182**	4	NUT (3/4-10-THD)	
	53	1	**6V-8801**	2	NUT (3/8-16-THD)	
	54	1	**7X-0550**	8	WASHER-HARD (13.5X32X5-MM THK)	
	55	1	**7X-0579**	8	WASHER-HARD (8.8X25.5X2-MM THK)	
	56	1	**7X-0619**	4	WASHER-HARD (20X30X2.5-MM THK)	
	57	1	**7X-7729**	1	WASHER (11X25X3-MM THK)	
M	58	1	**7Y-0589**	2	BOLT (M12X1.75X90-MM)	
	59	1	**8C-6857**	4	BOLT (3/4-10X2.75-IN)	
	60	1	**8M-2773**	4	CLIP	
	61	1	**8T-4121**	16	WASHER-HARD (11X21X2.5-MM THK)	
	62	1	**8T-4123**	4	WASHER (3.62X5.75X0.375-MM THK)	
M	63	1	**8T-4133**	1	NUT (M10X1.5-THD)	
M	64	1	**8T-4137**	14	BOLT (M10X1.5X20-MM)	
M	65	1	**8T-4191**	2	BOLT (M10X1.5X16-MM)	
M	66	1	**8T-4194**	4	BOLT (M12X1.75X50-MM)	
	67	1	**8T-4223**	2	WASHER-HARD (13.5X25.5X3-MM THK)	
	68	1	**8T-4224**	4	WASHER-HARD (8.8X16X2-MM THK)	
M	69	1	**8T-4244**	2	NUT (M12X1.75-THD)	
	70	1	**8T-4896**	31	WASHER-HARD (10.2X18.5X2.5-MM THK)	
M	71	1	**8T-6869**	4	BOLT (M8X1.25X60-MM)	
	72	1	**9M-8406**	4	CLIP	
	73	1	**9X-8256**	2	WASHER (6.6X12X2-MM THK)	

M - METRIC PART
Y - SEPARATE ILLUSTRATION

294-3542 **WIRING GP-GRADE CONTROL** (contd.) **i05039110**

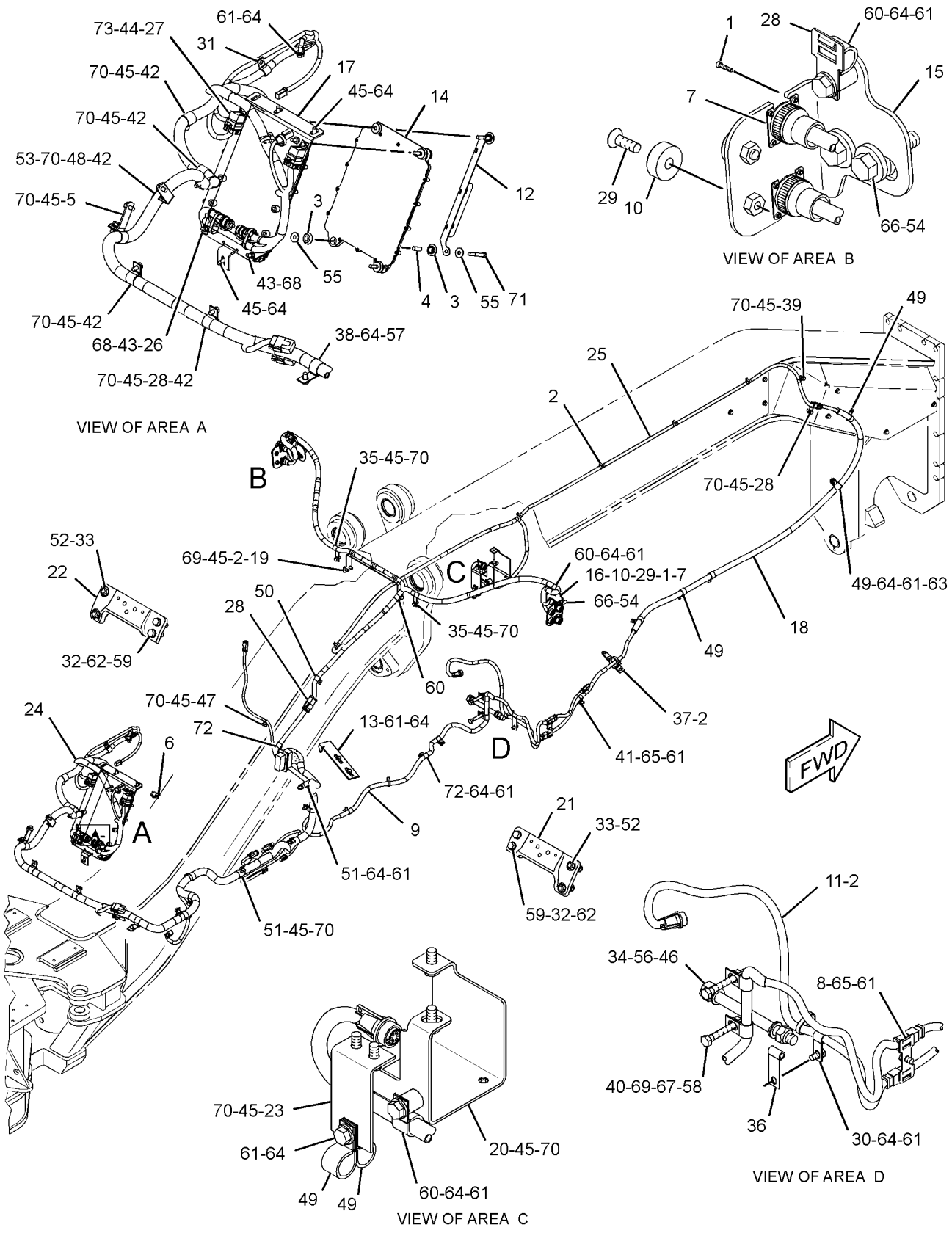

GRAPHIC #1 <END> g03132877

336-9255 WIRING GP-GRADE CONTROL–ACCUGRADE

S/N: SZS1-UP
PART OF 336-4249, 394-0862 GRADE CONTROL AR
AN ATTACHMENT

SMCS-1408 **i05358876**

NOTE	REF NO	GRAPHIC REF	PART NUMBER	QTY	PART NAME 1 2 3 4 5 6 (PRODUCT LEVEL)	SEE PAGE
	1	2	**6D-3033**	16	SCREW-SOCKET HEAD (4-40X0.5-IN)	
	2	1	**7K-1181**	22	STRAP-CABLE	
	3	1	**8T-9655**	8	MOUNT-ISOLATION	
	4	1	**9L-1566**	2	SUPPORT	
	5	1	**9W-1446**	1	FUSE (20-AMPERE)	
	6	2	**132-8487**	4	NUT-RING	
	7	2	**169-5414**	1	CLIP	
	8	1	**236-2356**	1	HARNESS AS-SENSOR (ANGLE)	
		1	**102-8804**	1	KIT-RECEPTACLE (4-PIN)	
					(INCLUDES RECEPTACLE AS & WEDGE)	
E		1	**9X-2383**		HOSE (127-CM)	
		1	**9X-3401**	4	PIN-CONNECTOR (16-GA TO 18-GA)	
		1	**9X-4385**	1	PLUG AS-CONNECTOR (6-PIN)	
E		1	**114-8843**		SLEEVE-PLASTIC (20-CM)	
E		1	**125-7875**		TUBE-HEAT SHRINK (7.44-MM DIA) (5-CM)	
		1	**243-5362**	1	CAP-DUST	
	9	2	**236-8826**	4	BOSS (1-1/8-18X0.708-IN)	
	10	1	**243-3250**	1	HARNESS AS-SENSOR (ROTATION)	
		1	**9X-3402**	4	SOCKET-CONNECTOR (16-GA TO 18-GA)	
		1	**9X-4385**	1	PLUG AS-CONNECTOR (6-PIN)	
E		1	**125-7875**		TUBE-HEAT SHRINK (7.44-MM DIA) (5-CM)	
		1	**155-2271**	2	KIT-CONNECTING PLUG (4-PIN)	
					(EACH KIT INCLUDES PLUG AS, WEDGE & INTERFACE SEAL)	
		1	**243-5362**	1	CAP-DUST	
	11	1	**244-5880**	1	BRACKET	
	12	1	**255-3482**	1	BRACKET	
Y	13	1	*260-7647*	1	APPLICATION GP-POWER TRAIN	196
	14	2	**288-5508**	1	BRACKET AS (LH)	
	15	2	**288-5509**	1	BRACKET AS (RH)	
	16	1	**313-4670**	1	BRACKET AS	
	17	1	**323-5592**	1	HARNESS AS-CHASSIS (RH)	
		1	**102-8804**	1	KIT-RECEPTACLE (4-PIN)	
					(INCLUDES RECEPTACLE AS & WEDGE)	
E		1	**5P-1424**		HOSE (194-CM)	
		1	**8T-8737**	1	PLUG-SEAL	
		1	**9X-3401**	4	PIN-CONNECTOR (16-GA TO 18-GA)	
		1	**9X-3402**	10	SOCKET-CONNECTOR (16-GA TO 18-GA)	
E		1	**125-7875**		TUBE-HEAT SHRINK (7.44-MM DIA) (30-CM)	
		1	**134-2540**	1	RESISTOR AS-CONNECTION (3-PIN)	
		1	**155-2271**	4	KIT-CONNECTING PLUG (4-PIN)	
		1	**174-0503**	2	KIT-CONNECTING PLUG (3-PIN)	
					(EACH KIT INCLUDES PLUG AS, WEDGE & INTERFACE SEAL)	
	18	2	**324-3366**	1	PLATE AS	
	19	1	**327-0560**	1	BRACKET (RH)	
	20	1	**327-0561**	1	BRACKET (LH)	
	21	2	**331-1102**	1	BRACKET AS	

336-9255 **WIRING GP-GRADE CONTROL (**contd.**)** **i05358876**

NOTE	REF NO	GRAPHIC REF	PART NUMBER	QTY	PART NAME 1 2 3 4 5 6 (PRODUCT LEVEL)	SEE PAGE
	22	1	**339-5505**	1	HARNESS AS-CHASSIS (FRONT FRAME, REAR)	
		1	**102-8802**	2	KIT-RECEPTACLE (2-PIN)	
		1	**102-8803**	1	KIT-RECEPTACLE (3-PIN)	
		1	**190-7614**	2	KIT-RECEPTACLE (12-PIN)	
					(EACH KIT INCLUDES RECEPTACLE AS & WEDGE)	
		1	**3R-9965**	1	PLUG AS-CONNECTOR (8-PIN)	
		1	**3S-2093**	2	STRAP-CABLE	
		1	**6D-5257**	1	PLUG AS-CONNECTOR (8-PIN)	
		1	**6I-4348**	1	BOOT (40-PIN)	
		1	**7K-1181**	4	STRAP-CABLE	
		1	**8N-1540**	1	PIN-CONNECTOR (12-GA TO 14-GA)	
		1	**186-3735**	26	PIN-CONNECTOR (16-GA TO 18-GA)	
		1	**186-3736**	9	SOCKET-CONNECTOR (16-GA TO 18-GA)	
		1	**8T-8737**	158	PLUG-SEAL	
		1	**9W-0844**	4	SOCKET-CONNECTOR (14-GA TO 16-GA)	
		1	**9W-0852**	5	PIN-CONNECTOR (14-GA TO 16-GA)	
		1	**9X-1343**	1	RECEPTACLE AS-CONNECTOR (40-PIN)	
		1	**9X-3402**	58	SOCKET-CONNECTOR (16-GA TO 18-GA)	
		1	**104-6871**	2	CAP-DUST	
		1	**111-4875**	2	HOUSING	
E		1	**119-3662**		TUBE-HEAT SHRINK (10.85-MM DIA) (65-CM)	
E		1	**125-7874**		TUBE-HEAT SHRINK (5.72-MM DIA) (20-CM)	
E		1	**125-7875**		TUBE-HEAT SHRINK (7.44-MM DIA) (80-CM)	
		1	**126-1768**	8	SOCKET-CONNECTOR (14-GA TO 16-GA)	
		1	**126-1774**	2	COVER-CONNECTOR	
		1	**129-7164**	1	RECEPTACLE AS-CONNECTOR (1-PIN)	
		1	**134-2540**	2	RESISTOR AS-CONNECTION (3-PIN)	
		1	**147-1445**	1	PLUG AS-CONNECTOR (70-PIN)	
		1	**159-9322**	1	SEAL-O-RING	
		1	**147-1446**	1	PLUG AS-CONNECTOR (70-PIN)	
		1	**159-9322**	1	SEAL-O-RING	
		1	**155-2255**	1	KIT-CONNECTING PLUG (12-PIN)	
		1	**155-2256**	2	KIT-CONNECTING PLUG (12-PIN)	
		1	**155-2270**	8	KIT-CONNECTING PLUG (2-PIN)	
		1	**174-0503**	3	KIT-CONNECTING PLUG (3-PIN)	
		1	**155-2260**	3	KIT-CONNECTING PLUG (3-PIN)	
		1	**155-2274**	1	KIT-CONNECTING PLUG (6-PIN)	
					(EACH KIT INCLUDES PLUG AS, WEDGE & INTERFACE SEAL)	
		1	**290-4752**	1	PLUG AS-CONNECTOR	
	23	1	**339-5506**	1	HARNESS AS-CHASSIS (FRONT FRAME, LH)	
		1	**102-8804**	1	KIT-RECEPTACLE (4-PIN)	
		1	**102-8801**	2	KIT-RECEPTACLE (12-PIN)	
					(EACH KIT INCLUDES RECEPTACLE AS & WEDGE)	
		1	**7R-3029**	4	CAP-DUST	
		1	**8T-8737**	3	PLUG-SEAL	
		1	**9W-0852**	4	PIN-CONNECTOR (14-GA TO 16-GA)	
		1	**9X-3401**	10	PIN-CONNECTOR (16-GA TO 18-GA)	
		1	**9X-3402**	2	SOCKET-CONNECTOR (16-GA TO 18-GA)	
		1	**9X-4385**	1	PLUG AS-CONNECTOR (6-PIN)	
E		1	**119-3662**		TUBE-HEAT SHRINK (10.85-MM DIA) (33-CM)	

336-9255 **WIRING GP-GRADE CONTROL (**contd.**)** **i05358876**

NOTE	REF NO	GRAPHIC REF	PART NUMBER	QTY	PART NAME 1 2 3 4 5 6 (PRODUCT LEVEL)	SEE PAGE
E		1	**125-7875**		TUBE-HEAT SHRINK (7.44-MM DIA) (120-CM)	
		1	**134-2540**	1	RESISTOR AS-CONNECTION (3-PIN)	
		1	**174-0503**	2	KIT-CONNECTING PLUG (3-PIN)	
					(EACH KIT INCLUDES PLUG AS, WEDGE & INTERFACE SEAL)	
		1	**228-3323**	4	CLIP-SPRING	
		1	**243-5362**	1	CAP-DUST	
	24	2	**358-7348**	1	PLATE	
	25	1	**033-8248**	1	CLIP	
	26	1	**111-4871**	1	RELAY (24-VOLT) (IMPLEMENT ENABLE)	
	26A	1	**111-4871**	1	RELAY (24-VOLT) (POWER MODULE)	
	27	1,2	**130-5300**	4	CLIP	
M	28	2	**131-3539**	4	SCREW-FLAT HEAD (M8X1.25X30-MM)	
	29	2	**147-0385**	1	CLIP	
	30	1	**174-5907**	1	CLIP	
	31	1	**174-9692**	4	SPACER (20.5X35X16-MM THK)	
	32	1	**1J-6762**	4	BOLT-PLOW (3/4-10X3-IN)	
	33	2	**1K-6870**	1	LOCKNUT (3/4-10-THD)	
	34	2	**1P-7009**	2	CLIP	
	35	2	**2Y-3812**	1	CLIP	
	36	1	**352-3970**	1	CLIP	
	37	1	**3P-2404**	1	CLIP	
	38	1	**4D-7794**	1	CLIP	
	39	2	**4K-8302**	2	CLIP	
	40	1	**4K-8864**	1	CLIP	
	41	1	**4S-1962**	6	CLIP	
M	42	1	**5C-7261**	2	NUT (M8X1.25-THD)	
M	43	1	**5C-9553**	2	BOLT (M6X1X16-MM)	
	44	1,2	**5M-3062**	27	BOLT (3/8-16X0.75-IN)	
	45	2	**5P-4135**	1	BOLT (3/4-10X8-IN)	
	46	2	**5P-9085**	1	CLIP	
	47	1	**5S-7379**	2	BOLT (3/8-16X0.875-IN)	
	48	1,2	**6D-4244**	8	CLIP	
	49	2	**6K-8178**	1	CLIP	
	50	1,2	**6V-1889**	7	CLIP	
	51	1	**6V-8182**	4	NUT (3/4-10-THD)	
	52	1	**6V-8801**	2	NUT (3/8-16-THD)	
	53	2	**7X-0550**	8	WASHER-HARD (13.5X32X5-MM THK)	
	54	1	**7X-0579**	8	WASHER-HARD (8.8X25.5X2-MM THK)	
	55	2	**7X-0619**	4	WASHER-HARD (20X30X2.5-MM THK)	
	56	1	**7X-7729**	1	WASHER (11X25X3-MM THK)	
M	57	2	**7Y-0589**	2	BOLT (M12X1.75X90-MM)	
	58	1	**8C-6857**	4	BOLT (3/4-10X2.75-IN)	
	59	2	**8M-2773**	4	CLIP	
	60	1,2	**8T-4121**	16	WASHER-HARD (11X21X2.5-MM THK)	
	61	1	**8T-4123**	4	WASHER (3.62X5.75X0.375-MM THK)	
M	62	1	**8T-4133**	1	NUT (M10X1.5-THD)	
M	63	1,2	**8T-4137**	14	BOLT (M10X1.5X20-MM)	
M	64	1,2	**8T-4191**	2	BOLT (M10X1.5X16-MM)	
M	65	2	**8T-4194**	4	BOLT (M12X1.75X50-MM)	
	66	2	**8T-4223**	2	WASHER-HARD (13.5X25.5X3-MM THK)	

336-9255 **WIRING GP-GRADE CONTROL (**contd.**)** **i05358876**

NOTE	REF NO	GRAPHIC REF	PART NUMBER	QTY	PART NAME 1 2 3 4 5 6 (PRODUCT LEVEL)	SEE PAGE
	67	1	**8T-4224**	4	WASHER-HARD (8.8X16X2-MM THK)	
M	68	2	**8T-4244**	2	NUT (M12X1.75-THD)	
	69	1,2	**8T-4896**	31	WASHER-HARD (10.2X18.5X2.5-MM THK)	
M	70	1	**8T-6869**	4	BOLT (M8X1.25X60-MM)	
	71	1	**8T-9658**	4	SPACER (8.2X12.7X25.4-MM THK)	
	72	1,2	**9M-8406**	4	CLIP	
	73	1	**9X-8256**	2	WASHER (6.6X12X2-MM THK)	

E - ORDER BY THE CENTIMETER
M - METRIC PART
Y - SEPARATE ILLUSTRATION

336-9255 **WIRING GP-GRADE CONTROL (**contd.**)** **i05358876**

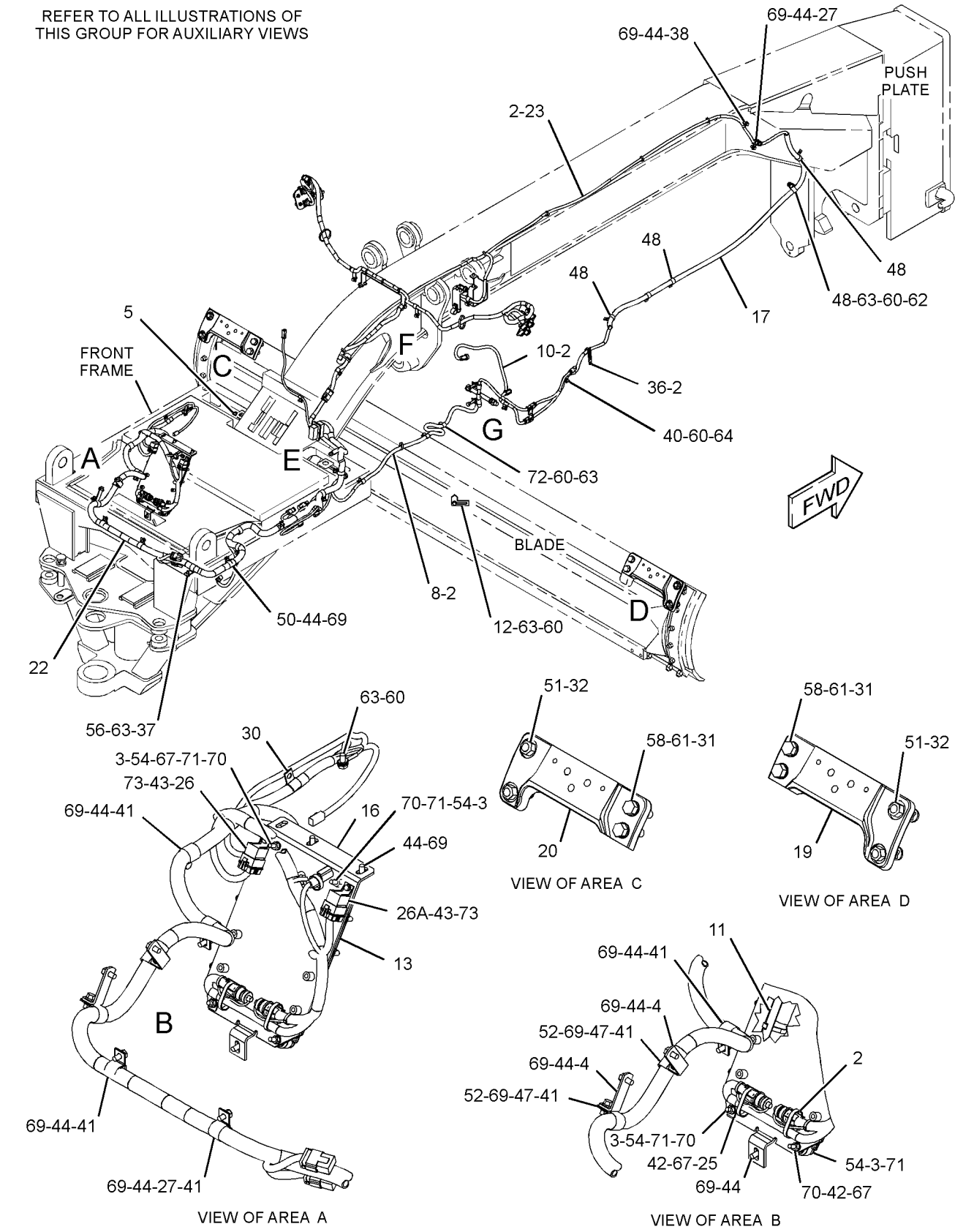

GRAPHIC #1 g03229097

336-9255 **WIRING GP-GRADE CONTROL (**contd.**)** **i05358876**

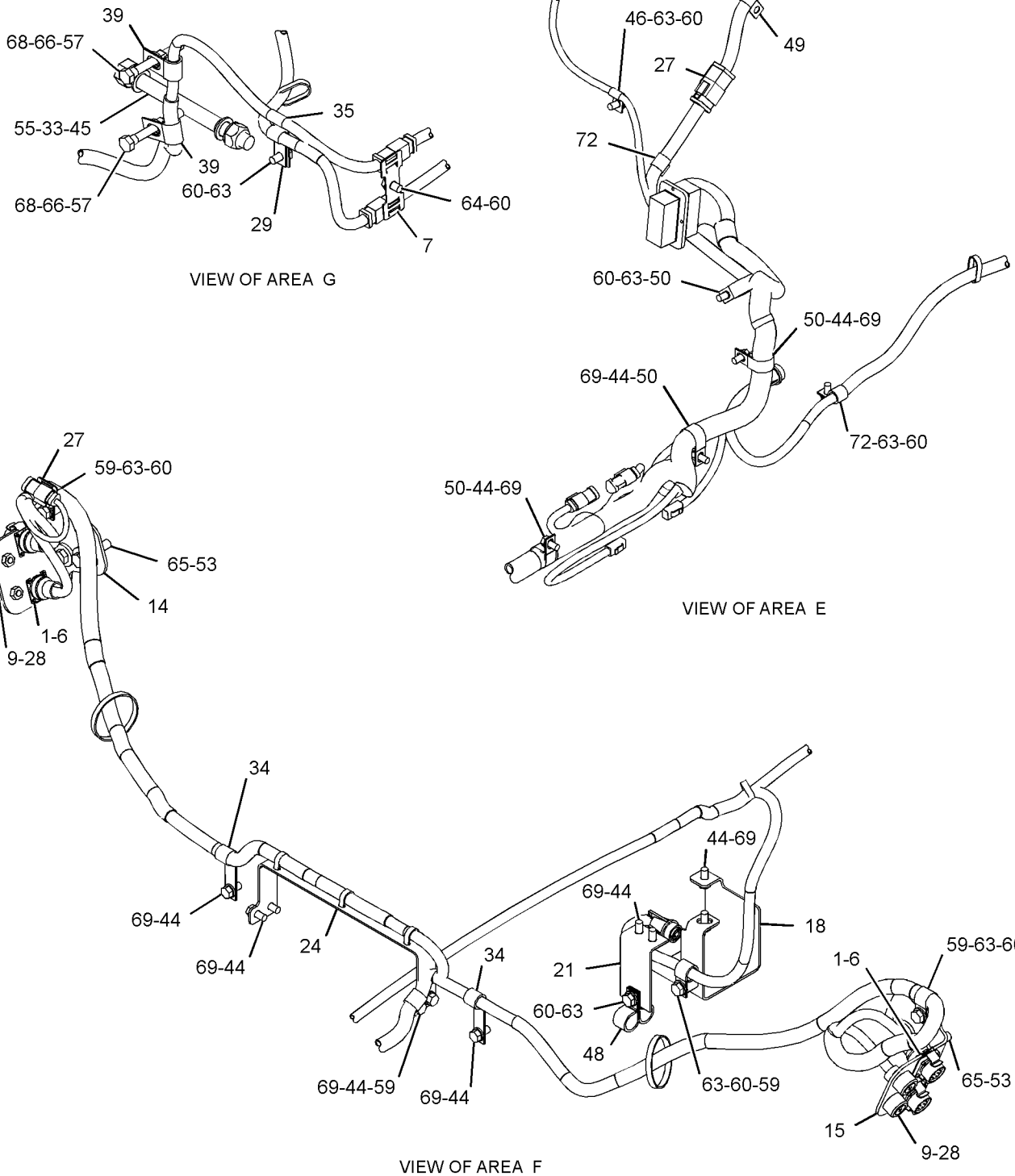

GRAPHIC #2 <END> g03229099

382-5902 WIRING GP-GRADE CONTROL–ACCUGRADE

S/N: SZS1-UP
PART OF 337-3100 GRADE CONTROL AR
AN ATTACHMENT

SMCS-1408 **i04922835**

NOTE	REF NO	GRAPHIC REF	PART NUMBER	QTY	PART NAME 1 2 3 4 5 6 (PRODUCT LEVEL)	SEE PAGE
	1	1,2	**6D-3033**	16	SCREW-SOCKET HEAD (4-40X0.5-IN)	
	2	1,2	**7K-1181**	19	STRAP-CABLE	
	3	2	**8T-9655**	8	MOUNT-ISOLATION	
	4	2	**8T-9658**	4	SPACER (8.2X12.7X25.4-MM THK)	
	5	2	**9L-1566**	2	SUPPORT	
	6	2	**9W-1446**	1	FUSE (20-AMPERE)	
	7	1,2	**132-8487**	4	NUT-RING	
	8	1	**169-5414**	1	CLIP	
	9	1	**236-2356**	1	HARNESS AS-SENSOR (ANGLE)	
		1	**102-8804**	1	KIT-RECEPTACLE (4-PIN)	
					(INCLUDES RECEPTACLE AS & WEDGE)	
E		1	**9X-2388**		HOSE (127-CM)	
E		1	**8T-5346**		TUBE-HEAT SHRINK (19.1-MM DIA) (10-CM)	
		1	**9X-3401**	4	PIN-CONNECTOR (16-GA TO 18-GA)	
		1	**9X-4385**	1	PLUG AS-CONNECTOR (6-PIN)	
E		1	**114-8843**		SLEEVE-PLASTIC (20-CM)	
E		1	**114-8844**		SLEEVE-PLASTIC (20-CM)	
E		1	**125-7875**		TUBE-HEAT SHRINK (7.44-MM DIA) (5-CM)	
		1	**243-5362**	1	CAP-DUST	
	10	1,2	**236-8826**	4	BOSS (1-1/8-18X0.708-IN)	
	11	1	**243-3250**	1	HARNESS AS-SENSOR (ROTATION)	
		1	**9X-3402**	4	SOCKET-CONNECTOR (16-GA TO 18-GA)	
		1	**9X-4385**	1	PLUG AS-CONNECTOR (6-PIN)	
E		1	**114-8844**		SLEEVE-PLASTIC (40-CM)	
E		1	**125-7875**		TUBE-HEAT SHRINK (7.44-MM DIA) (5-CM)	
		1	**155-2271**	1	KIT-CONNECTING PLUG (4-PIN)	
					(INCLUDES PLUG AS, WEDGE, & INTERFACE SEAL)	
		1	**243-5362**	1	CAP-DUST	
	12	2	**244-5880**	1	BRACKET	
	13	1	**255-3482**	1	BRACKET	
Y	14	2	*260-7647*	1	APPLICATION GP-POWER TRAIN	196
	15	2	**288-5508**	1	BRACKET AS (LH)	
	16	1	**288-5509**	1	BRACKET AS (RH)	
	17	2	**313-4670**	1	BRACKET AS	
	18	1	**323-5592**	1	HARNESS AS-CHASSIS (RH)	
		1	**102-8804**	1	KIT-RECEPTACLE (4-PIN)	
					(INCLUDES RECEPTACLE AS & WEDGE)	
E		1	**5P-1424**		HOSE (194-CM)	
		1	**8T-8737**	1	PLUG-SEAL	
		1	**9X-3401**	4	PIN-CONNECTOR (16-GA TO 18-GA)	
		1	**9X-3402**	10	SOCKET-CONNECTOR (16-GA TO 18-GA)	
E		1	**125-7875**		TUBE-HEAT SHRINK (7.44-MM DIA) (30-CM)	
		1	**134-2540**	1	RESISTOR AS-CONNECTION (3-PIN)	
		1	**155-2271**	2	KIT-CONNECTING PLUG (4-PIN)	
		1	**174-0503**	1	KIT-CONNECTING PLUG (3-PIN)	
					(EACH PLUG KIT INCLUDES PLUG AS, WEDGE, & INTERFACE SEAL)	

382-5902 **WIRING GP-GRADE CONTROL (**contd.**)** **i04922835**

NOTE	REF NO	GRAPHIC REF	PART NUMBER	QTY	PART NAME 1 2 3 4 5 6 (PRODUCT LEVEL)	SEE PAGE
	19	2	**324-3364**	1	PLATE	
	20	1	**324-3366**	1	PLATE AS	
	21	1	**327-0560**	1	BRACKET (RH)	
	22	1	**327-0561**	1	BRACKET (LH)	
	23	1	**331-1102**	1	BRACKET AS	
	24	1	**339-5505**	1	HARNESS AS-CHASSIS (FRONT FRAME, REAR)	
		1	**102-8802**	2	KIT-RECEPTACLE (2-PIN)	
		1	**102-8803**	1	KIT-RECEPTACLE (3-PIN)	
		1	**190-7614**	2	KIT-RECEPTACLE (12-PIN)	
					(EACH RECEPTACLE KIT INCLUDES RECEPTACLE AS & WEDGE)	
		1	**3R-9965**	1	PLUG AS-CONNECTOR (8-PIN)	
		1	**3S-2093**	2	STRAP-CABLE	
		1	**6D-5257**	1	PLUG AS-CONNECTOR (8-PIN)	
		1	**6I-4348**	1	BOOT (40-PIN)	
		1	**7K-1181**	4	STRAP-CABLE	
		1	**7Y-3951**	8	TERMINAL-BLADE (14-GA)	
		1	**8N-1540**	1	PIN-CONNECTOR (12-GA TO 14-GA)	
		1	**8T-8729**	26	PIN-CONNECTOR (16-GA TO 18-GA)	
		1	**8T-8730**	9	SOCKET-CONNECTOR (16-GA TO 18-GA)	
		1	**8T-8737**	158	PLUG-SEAL	
		1	**9W-0844**	4	SOCKET-CONNECTOR (14-GA TO 16-GA)	
		1	**9W-0852**	5	PIN-CONNECTOR (14-GA TO 16-GA)	
		1	**9X-1343**	1	RECEPTACLE AS-CONNECTOR (40-PIN)	
		1	**9X-3402**	58	SOCKET-CONNECTOR (16-GA TO 18-GA)	
		1	**104-6871**	2	CAP-DUST	
		1	**111-4875**	2	HOUSING	
E		1	**119-3662**		TUBE-HEAT SHRINK (10.85-MM DIA) (65-CM)	
E		1	**125-7874**		TUBE-HEAT SHRINK (5.72-MM DIA) (20-CM)	
E		1	**125-7875**		TUBE-HEAT SHRINK (7.44-MM DIA) (80-CM)	
		1	**126-1768**	8	SOCKET-CONNECTOR (14-GA TO 16-GA)	
		1	**126-1774**	2	COVER-CONNECTOR	
		1	**129-7164**	1	RECEPTACLE AS-CONNECTOR (1-PIN)	
		1	**2L-8052**	1	TERMINAL-RING (6-GA, 3/8-IN SCREW)	
					—OR—	
		1	**2L-8060**	1	TERMINAL-RING (8-GA, 3/8-IN SCREW)	
		1	**2L-8079**	1	TERMINAL-RING (14-GA TO 16-GA, 3/8-IN SCREW)	
		1	**134-2540**	2	RESISTOR AS-CONNECTION (3-PIN)	
		1	**147-1445**	1	PLUG AS-CONNECTOR (70-PIN)	
		1	**159-9322**	1	SEAL-O-RING	
		1	**147-1446**	1	PLUG AS-CONNECTOR (70-PIN)	
		1	**159-9322**	1	SEAL-O-RING	
		1	**155-2255**	1	KIT-CONNECTING PLUG (12-PIN)	
		1	**155-2256**	2	KIT-CONNECTING PLUG (12-PIN)	
		1	**155-2270**	4	KIT-CONNECTING PLUG (2-PIN)	
		1	**174-0503**	1	KIT-CONNECTING PLUG (3-PIN)	
		1	**155-2260**	2	KIT-CONNECTING PLUG (3-PIN)	
		1	**155-2274**	1	KIT-CONNECTING PLUG (6-PIN)	
					(EACH PLUG KIT INCLUDES PLUG AS, WEDGE, & INTERFACE SEAL)	
B		1	**1P-0810**		TAPE-ELECTRICAL	
		1	**174-0503**	1	KIT-CONNECTING PLUG (3-PIN)	

382-5902 **WIRING GP-GRADE CONTROL (**contd.**)** **i04922835**

NOTE	REF NO	GRAPHIC REF	PART NUMBER	QTY	PART NAME 1 2 3 4 5 6 (PRODUCT LEVEL)	SEE PAGE
					(INCLUDES PLUG AS & WEDGE)	
		1	**290-4752**	1	PLUG AS-CONNECTOR	
	25	1	**339-5506**	1	HARNESS AS-CHASSIS (FRONT FRAME, LH)	
		1	**102-8804**	1	KIT-RECEPTACLE (4-PIN)	
		1	**102-8801**	1	KIT-RECEPTACLE (12-PIN)	
					(EACH RECEPTACLE KIT INCLUDES RECEPTACLE AS & WEDGE)	
		1	**7R-3029**	4	CAP-DUST	
		1	**8T-8737**	3	PLUG-SEAL	
		1	**9W-0852**	4	PIN-CONNECTOR (14-GA TO 16-GA)	
		1	**9X-3401**	10	PIN-CONNECTOR (16-GA TO 18-GA)	
		1	**9X-3402**	2	SOCKET-CONNECTOR (16-GA TO 18-GA)	
		1	**9X-4385**	1	PLUG AS-CONNECTOR (6-PIN)	
E		1	**119-3662**		TUBE-HEAT SHRINK (10.85-MM DIA) (33-CM)	
E		1	**125-7875**		TUBE-HEAT SHRINK (7.44-MM DIA) (120-CM)	
		1	**134-2540**	1	RESISTOR AS-CONNECTION (3-PIN)	
		1	**174-0503**	2	KIT-CONNECTING PLUG (3-PIN)	
					(EACH INCLUDES PLUG AS, WEDGE, & INTERFACE SEAL)	
		1	**228-3323**	4	CLIP-SPRING	
		1	**243-5362**	1	CAP-DUST	
	26	2	**033-8248**	1	CLIP	
	27	2	**111-4871**	2	RELAY (24-VOLT)	
	28	1,2	**130-5300**	4	CLIP	
M	29	1,2	**131-3539**	4	SCREW-FLAT HEAD (M8X1.25X30-MM)	
	30	1	**147-0385**	1	CLIP	
	31	2	**174-5907**	1	CLIP	
	32	1	**174-9692**	4	SPACER (20.5X35X16-MM THK)	
	33	1	**1J-6762**	4	BOLT-PLOW (3/4-10X3-IN)	
	34	1	**1K-6870**	1	LOCKNUT (3/4-10-THD)	
	35	2	**1P-7009**	2	CLIP	
	36	1	**2Y-3812**	1	CLIP	
	37	2	**3P-2404**	1	CLIP	
	38	1	**4D-7794**	1	CLIP	
	39	1	**4K-8302**	2	CLIP	
	40	1	**4K-8864**	2	CLIP	
	41	2	**4S-1962**	6	CLIP	
M	42	2	**5C-7261**	2	NUT (M8X1.25-THD)	
M	43	2	**5C-9553**	2	BOLT (M6X1X16-MM)	
	44	1,2	**5M-3062**	27	BOLT (3/8-16X0.75-IN)	
	45	1	**5P-4135**	1	BOLT (3/4-10X8-IN)	
	46	2	**5P-9085**	1	CLIP	
	47	2	**5S-7379**	2	BOLT (3/8-16X0.875-IN)	
	48	1	**6D-4244**	4	CLIP	
	49	2	**6K-8178**	1	CLIP	
	50	2	**6V-1889**	7	CLIP	
	51	1	**6V-8182**	4	NUT (3/4-10-THD)	
	52	2	**6V-8801**	2	NUT (3/8-16-THD)	
	53	1,2	**7X-0550**	8	WASHER-HARD (13.5X32X5-MM THK)	
	54	2	**7X-0579**	8	WASHER-HARD (8.8X25.5X2-MM THK)	
	55	1	**7X-0619**	4	WASHER-HARD (20X30X2.5-MM THK)	
	56	2	**7X-7729**	1	WASHER (11X25X3-MM THK)	

382-5902 **WIRING GP-GRADE CONTROL (**contd.**)** **i04922835**

NOTE	REF NO	GRAPHIC REF	PART NUMBER	QTY	PART NAME 1 2 3 4 5 6 (PRODUCT LEVEL)	SEE PAGE
M	57	1	**7Y-0589**	2	BOLT (M12X1.75X90-MM)	
	58	1	**8C-6857**	4	BOLT (3/4-10X2.75-IN)	
	59	1,2	**8M-2773**	4	CLIP	
	60	1,2	**8T-4121**	14	WASHER-HARD (11X21X2.5-MM THK)	
	61	1	**8T-4123**	4	WASHER (3.62X5.75X0.375-MM THK)	
M	62	1,2	**8T-4137**	13	BOLT (M10X1.5X20-MM)	
M	63	1	**8T-4191**	2	BOLT (M10X1.5X16-MM)	
M	64	1,2	**8T-4194**	4	BOLT (M12X1.75X50-MM)	
	65	1	**8T-4223**	2	WASHER-HARD (13.5X25.5X3-MM THK)	
	66	2	**8T-4224**	4	WASHER-HARD (8.8X16X2-MM THK)	
M	67	1	**8T-4244**	2	NUT (M12X1.75-THD)	
	68	1,2	**8T-4896**	31	WASHER-HARD (10.2X18.5X2.5-MM THK)	
M	69	2	**8T-6869**	4	BOLT (M8X1.25X60-MM)	
	70	1,2	**9M-8406**	4	CLIP	
	71	1	**9X-8250**	1	CLIP	
	72	2	**9X-8256**	2	WASHER (6.6X12X2-MM THK)	

B - USE AS REQUIRED
E - ORDER BY THE CENTIMETER
M - METRIC PART
Y - SEPARATE ILLUSTRATION

382-5902 **WIRING GP-GRADE CONTROL (**contd.**)** **i04922835**

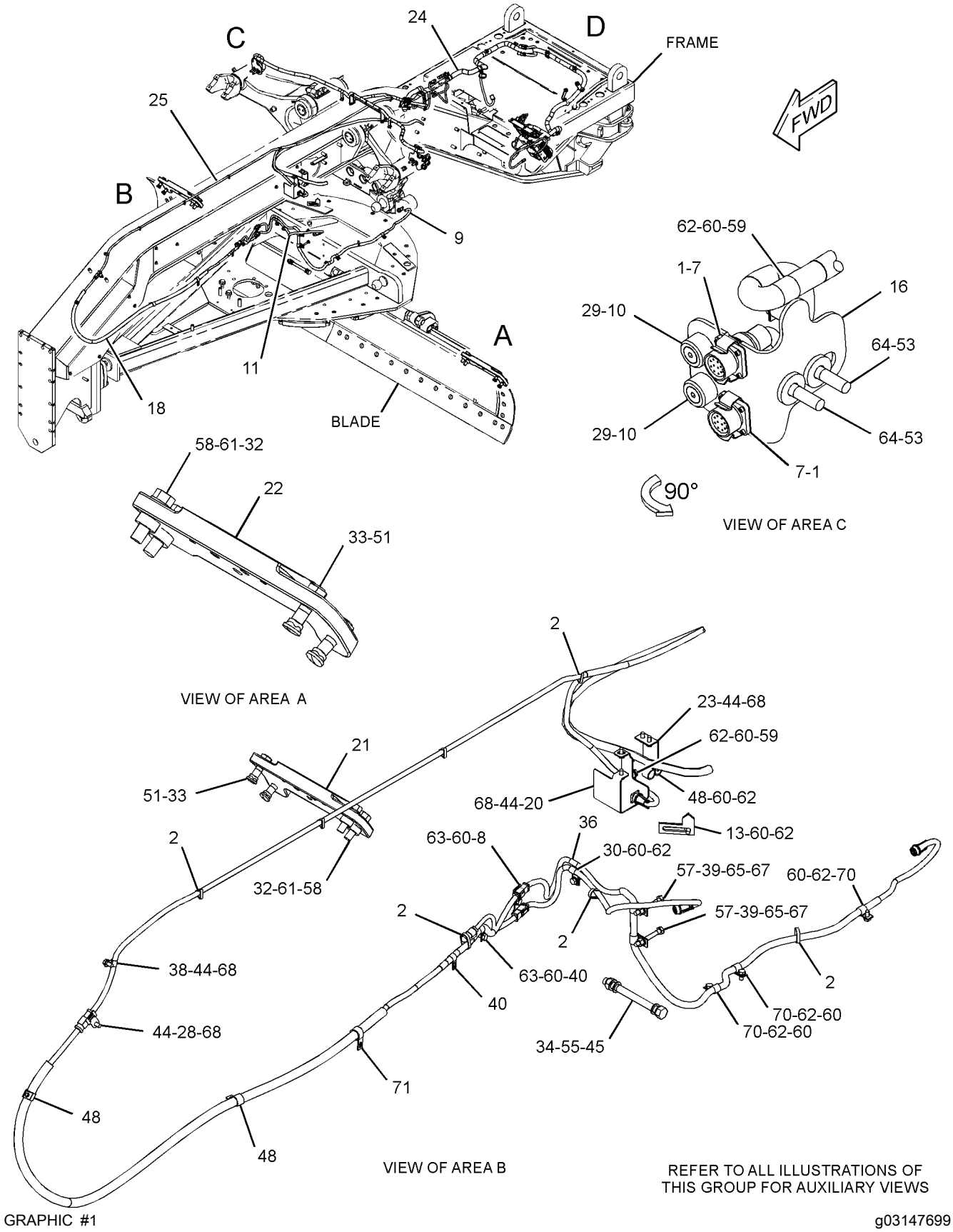

382-5902 **WIRING GP-GRADE CONTROL (**contd.**)** **i04922835**

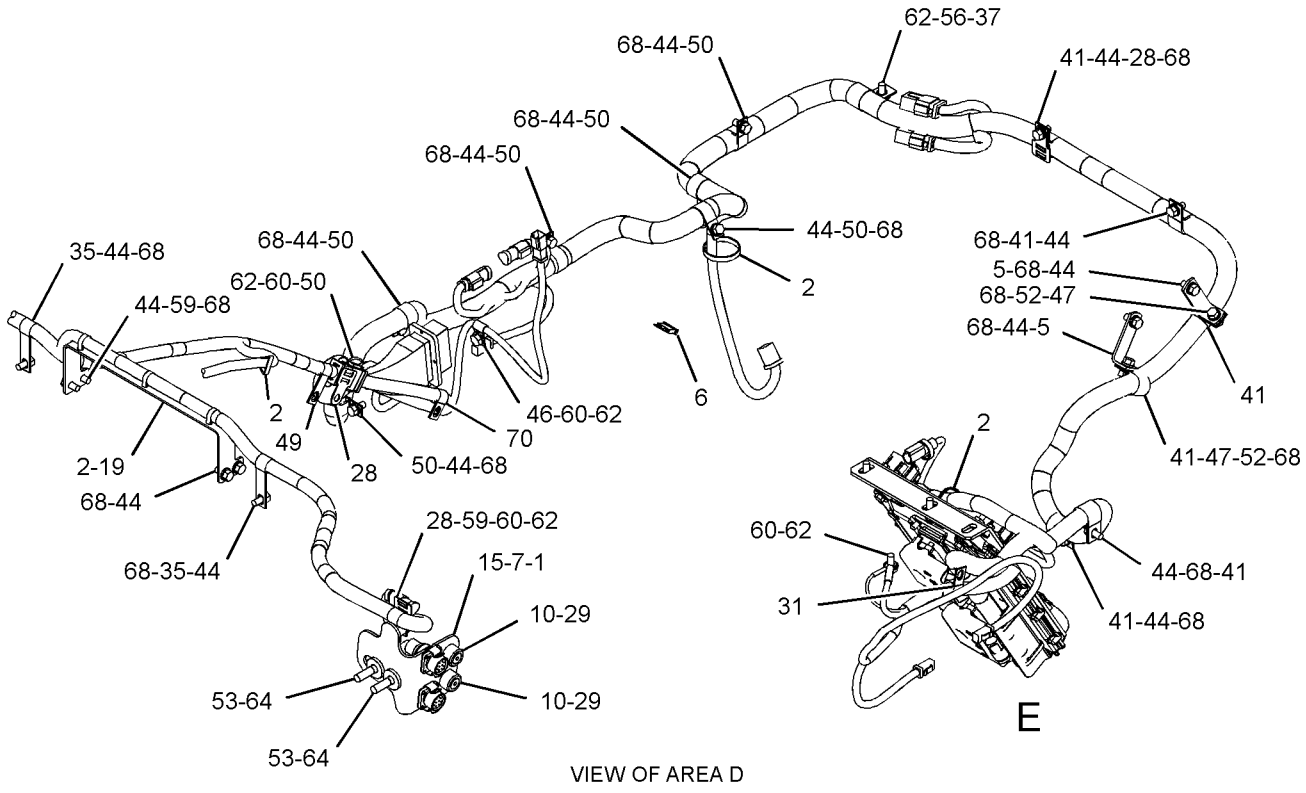

VIEW OF AREA D

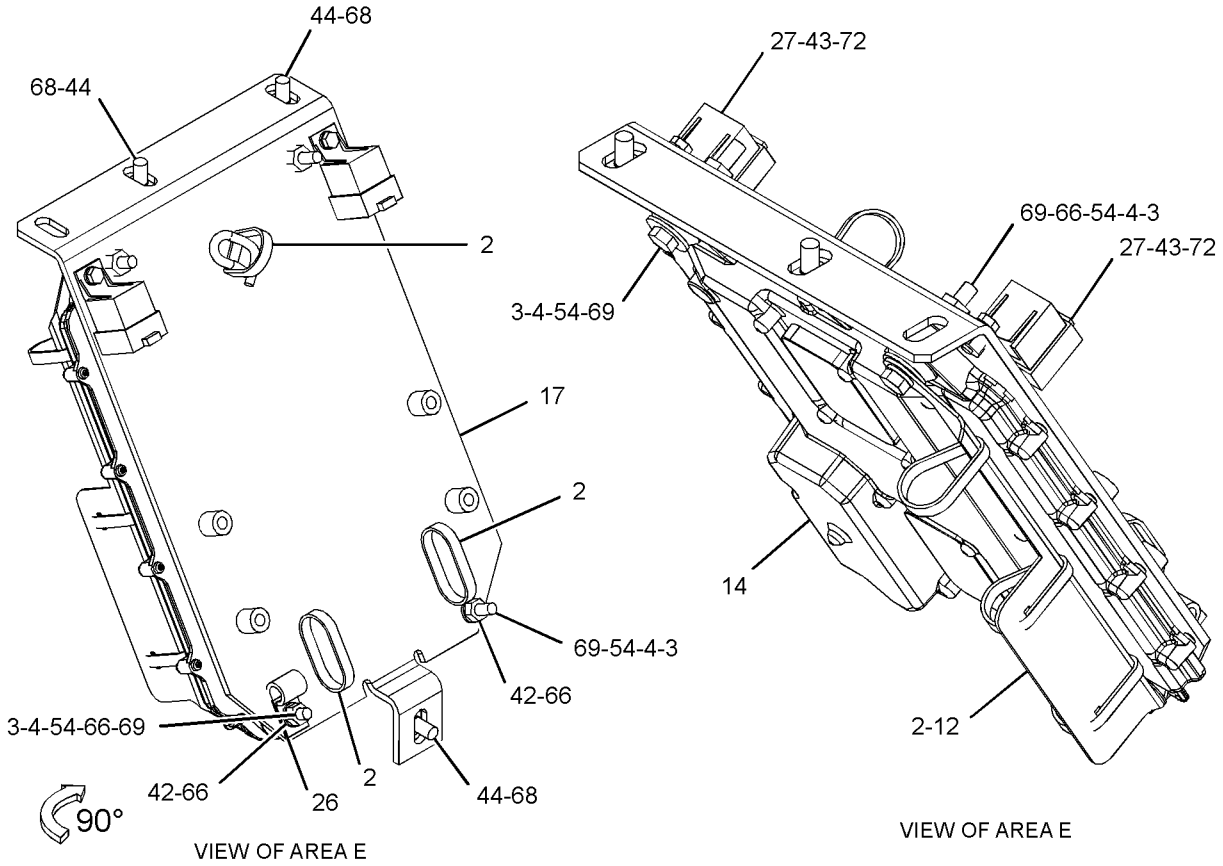

VIEW OF AREA E

VIEW OF AREA E

GRAPHIC #2 <END> g03147700

382-5903 WIRING GP-GRADE CONTROL–ACCUGRADE

S/N: SZS1-UP
PART OF 336-4249 GRADE CONTROL AR
AN ATTACHMENT

SMCS-1408 **i05063610**

NOTE	REF NO	GRAPHIC REF	PART NUMBER	QTY	PART NAME 1 2 3 4 5 6 (PRODUCT LEVEL)	SEE PAGE
	1	1	**6D-3033**	16	SCREW-SOCKET HEAD (4-40X0.5-IN)	
	2	1	**7K-1181**	22	STRAP-CABLE	
	3	1	**8T-9655**	8	MOUNT-ISOLATION	
	4	1	**8T-9658**	4	SPACER (8.2X12.7X25.4-MM THK)	
	5	1	**9L-1566**	2	SUPPORT	
	6	1	**9W-1446**	1	FUSE (20-AMPERE)	
	7	1	**132-8487**	4	NUT-RING	
	8	1	**169-5414**	1	CLIP	
	9	1	**236-2356**	1	HARNESS AS-SENSOR (ANGLE)	
		1	**102-8804**	1	KIT-RECEPTACLE (4-PIN)	
					(INCLUDES RECEPTACLE AS & WEDGE)	
G		1	**9X-2383**		HOSE (50-IN)	
E		1	**8T-5346**		TUBE-HEAT SHRINK (19.1-MM DIA) (10-CM)	
		1	**9X-3401**	4	PIN-CONNECTOR (16-GA TO 18-GA)	
		1	**9X-4385**	1	PLUG AS-CONNECTOR (6-PIN)	
E		1	**114-8843**		SLEEVE-PLASTIC (20-CM)	
E		1	**125-7875**		TUBE-HEAT SHRINK (7.44-MM DIA) (5-CM)	
		1	**243-5362**	1	CAP-DUST	
	10	1	**236-8826**	4	BOSS (1-1/8-18X0.708-IN)	
	11	1	**243-3250**	1	HARNESS AS-SENSOR (ROTATION)	
		1	**9X-3402**	4	SOCKET-CONNECTOR (16-GA TO 18-GA)	
		1	**9X-4385**	1	PLUG AS-CONNECTOR (6-PIN)	
E		1	**125-7875**		TUBE-HEAT SHRINK (7.44-MM DIA) (5-CM)	
		1	**155-2271**		KIT-CONNECTING PLUG (4-PIN)	
					(INCLUDES PLUG AS, WEDGE, & INTERFACE SEAL)	
		1	**243-5362**		CAP-DUST	
	12	1	**244-5880**	1	BRACKET	
	13	1	**255-3482**	1	BRACKET	
Y	14	1	*260-7647*	1	APPLICATION GP-POWER TRAIN	196
	15	1	**288-5508**	1	BRACKET AS (LH)	
	16	1	**288-5509**	1	BRACKET AS (RH)	
	17	1	**313-4670**	1	BRACKET AS	
	18	1	**323-5592**	1	HARNESS AS-CHASSIS (RH)	
		1	**102-8804**	1	KIT-RECEPTACLE (4-PIN)	
					(INCLUDES RECEPTACLE AS & WEDGE)	
E		1	**5P-1424**		HOSE (194-CM)	
		1	**8T-8737**	1	PLUG-SEAL	
		1	**9X-3401**	4	PIN-CONNECTOR (16-GA TO 18-GA)	
		1	**9X-3402**	10	SOCKET-CONNECTOR (16-GA TO 18-GA)	
E		1	**125-7875**		TUBE-HEAT SHRINK (7.44-MM DIA) (30-CM)	
		1	**134-2540**	1	RESISTOR AS-CONNECTION (3-PIN)	
		1	**155-2271**	2	KIT-CONNECTING PLUG (4-PIN)	
		1	**174-0503**	1	KIT-CONNECTING PLUG (3-PIN)	
					(EACH PLUG KIT INCLUDES PLUG AS, WEDGE, & INTERFACE SEAL)	
	19	1	**358-7348**	1	PLATE	
	20	1	**324-3366**	1	PLATE AS	

382-5903 **WIRING GP-GRADE CONTROL (**contd.**)** **i05063610**

NOTE	REF NO	GRAPHIC REF	PART NUMBER	QTY	PART NAME 1 2 3 4 5 6 (PRODUCT LEVEL)	SEE PAGE
	21	1	**327-0560**	1	BRACKET (RH)	
	22	1	**327-0561**	1	BRACKET (LH)	
	23	1	**331-1102**	1	BRACKET AS	
	24	1	**339-5505**	1	HARNESS AS-CHASSIS (FRONT FRAME, REAR)	
		1	**102-8802**	1	KIT-RECEPTACLE (2-PIN)	
		1	**102-8803**	1	KIT-RECEPTACLE (3-PIN)	
		1	**190-7614**	2	KIT-RECEPTACLE (12-PIN)	
					(EACH RECEPTACLE KIT INCLUDES RECEPTACLE AS & WEDGE)	
		1	**3R-9965**	1	PLUG AS-CONNECTOR (8-PIN)	
		1	**3S-2093**	2	STRAP-CABLE	
		1	**6D-5257**	1	PLUG AS-CONNECTOR (8-PIN)	
		1	**6I-4348**	1	BOOT (40-PIN)	
		1	**7K-1181**	4	STRAP-CABLE	
		1	**7Y-3951**	8	TERMINAL-BLADE (14-GA)	
		1	**8N-1540**	1	PIN-CONNECTOR (12-GA TO 14-GA)	
		1	**8T-8729**	26	PIN-CONNECTOR (16-GA TO 18-GA)	
		1	**8T-8730**	9	SOCKET-CONNECTOR (16-GA TO 18-GA)	
		1	**8T-8737**	158	PLUG-SEAL	
		1	**9W-0844**	4	SOCKET-CONNECTOR (14-GA TO 16-GA)	
		1	**9W-0852**	5	PIN-CONNECTOR (14-GA TO 16-GA)	
		1	**9X-1343**	1	RECEPTACLE AS-CONNECTOR (40-PIN)	
		1	**9X-3402**	58	SOCKET-CONNECTOR (16-GA TO 18-GA)	
		1	**104-6871**	2	CAP-DUST	
		1	**111-4875**	2	HOUSING	
E		1	**119-3662**		TUBE-HEAT SHRINK (10.85-MM DIA) (65-CM)	
E		1	**125-7874**		TUBE-HEAT SHRINK (5.72-MM DIA) (20-CM)	
E		1	**125-7875**		TUBE-HEAT SHRINK (7.44-MM DIA) (80-CM)	
		1	**126-1768**	8	SOCKET-CONNECTOR (14-GA TO 16-GA)	
		1	**126-1774**	2	COVER-CONNECTOR	
		1	**129-7164**	1	RECEPTACLE AS-CONNECTOR (1-PIN)	
		1	**2L-8052**	1	TERMINAL-RING (6-GA, 3/8-IN SCREW)	
					—OR—	
		1	**2L-8060**	1	TERMINAL-RING (8-GA, 3/8-IN SCREW)	
		1	**2L-8079**	1	TERMINAL-RING (14-GA TO 16-GA, 3/8-IN SCREW)	
		1	**134-2540**	2	RESISTOR AS-CONNECTION (3-PIN)	
		1	**147-1445**	1	PLUG AS-CONNECTOR (70-PIN)	
		1	**147-1446**	1	PLUG AS-CONNECTOR (70-PIN)	
		1	**155-2255**	1	KIT-CONNECTING PLUG (12-PIN)	
		1	**155-2256**	2	KIT-CONNECTING PLUG (12-PIN)	
		1	**155-2260**	2	KIT-CONNECTING PLUG (3-PIN)	
		1	**155-2270**	4	KIT-CONNECTING PLUG (2-PIN)	
		1	**155-2274**	1	KIT-CONNECTING PLUG (6-PIN)	
		1	**174-0503**		KIT-CONNECTING PLUG (3-PIN)	
					(EACH PLUG KIT INCLUDES PLUG AS, WEDGE, & INTERFACE SEAL)	
B		1	**1P-0810**		TAPE-ELECTRICAL	
		1	**290-4752**	1	PLUG AS-CONNECTOR	
		1	**8T-8737**	40	PLUG-SEAL	
		1	**9X-0141**	1	PLUG AS-CONNECTOR (40-PIN)	
		1	**3E-4367**	1	RING-RETAINING	
M		1	**3E-8557**	1	BOLT (M5X0.8X39.37-MM)	

382-5903 **WIRING GP-GRADE CONTROL (**contd.**)** **i05063610**

NOTE	REF NO	GRAPHIC REF	PART NUMBER	QTY	PART NAME 1 2 3 4 5 6 (PRODUCT LEVEL)	SEE PAGE
		1	**9X-3490**	2	SEAL-CONNECTOR (40-PIN)	
	25	1	**339-5506**	1	HARNESS AS-CHASSIS (FRONT FRAME, LH)	
		1	**102-8804**	1	KIT-RECEPTACLE (4-PIN)	
		1	**102-8801**	1	KIT-RECEPTACLE (12-PIN)	
					(EACH RECEPTACLE KIT INCLUDES RECEPTACLE AS & WEDGE)	
		1	**7R-3029**	4	CAP-DUST	
		1	**8T-8737**	3	PLUG-SEAL	
		1	**9W-0852**	4	PIN-CONNECTOR (14-GA TO 16-GA)	
		1	**9X-3401**	10	PIN-CONNECTOR (16-GA TO 18-GA)	
		1	**9X-3402**	2	SOCKET-CONNECTOR (16-GA TO 18-GA)	
		1	**9X-4385**	1	PLUG AS-CONNECTOR (6-PIN)	
E		1	**119-3662**		TUBE-HEAT SHRINK (10.85-MM DIA) (33-CM)	
E		1	**125-7875**		TUBE-HEAT SHRINK (7.44-MM DIA) (120-CM)	
		1	**134-2540**	1	RESISTOR AS-CONNECTION (3-PIN)	
		1	**174-0503**	1	KIT-CONNECTING PLUG (3-PIN)	
					(INCLUDES PLUG AS, WEDGE, & INTERFACE SEAL)	
		1	**228-3323**	4	CLIP-SPRING	
		1	**243-5362**	1	CAP-DUST	
	26	1	**033-8248**	1	CLIP	
	27	1	**111-4871**	1	RELAY (24-VOLT) (IMPLEMENT)	
	27A	1	**111-4871**	1	RELAY (24-VOLT) (POWER MODULE)	
	28	1	**130-5300**	4	CLIP	
M	29	1	**131-3539**	4	SCREW-FLAT HEAD (M8X1.25X30-MM)	
	30	1	**147-0385**	1	CLIP	
	31	1	**174-5907**	1	CLIP	
	32	1	**174-9692**	4	SPACER (20.5X35X16-MM THK)	
	33	1	**1J-6762**	4	BOLT-PLOW (3/4-10X3-IN)	
	34	1	**1K-6870**	1	LOCKNUT (3/4-10-THD)	
	35	1	**1P-7009**	2	CLIP	
	36	1	**2Y-3812**	1	CLIP	
	38	1	**3P-2404**	1	CLIP	
	39	1	**4D-7794**	1	CLIP	
	40	1	**4K-8302**	2	CLIP	
	41	1	**4K-8864**	2	CLIP	
	42	1	**4S-1962**	6	CLIP	
M	43	1	**5C-7261**	2	NUT (M8X1.25-THD)	
M	44	1	**5C-9553**	2	BOLT (M6X1X16-MM)	
	45	1	**5M-3062**	27	BOLT (3/8-16X0.75-IN)	
	46	1	**5P-4135**	1	BOLT (3/4-10X8-IN)	
	47	1	**5P-9085**	1	CLIP	
	48	1	**5S-7379**	2	BOLT (3/8-16X0.875-IN)	
	49	1	**6D-4244**	4	CLIP	
	50	1	**6K-8178**	1	CLIP	
	51	1	**6V-1889**	7	CLIP	
	52	1	**6V-8182**	4	NUT (3/4-10-THD)	
	53	1	**6V-8801**	2	NUT (3/8-16-THD)	
	54	1	**7X-0550**	8	WASHER-HARD (13.5X32X5-MM THK)	
	55	1	**7X-0579**	8	WASHER-HARD (8.8X25.5X2-MM THK)	
	56	1	**7X-0619**	4	WASHER-HARD (20X30X2.5-MM THK)	
	57	1	**7X-7729**	1	WASHER (11X25X3-MM THK)	
M	58	1	**7Y-0589**	2	BOLT (M12X1.75X90-MM)	

382-5903 **WIRING GP-GRADE CONTROL (**contd.**)** **i05063610**

NOTE	REF NO	GRAPHIC REF	PART NUMBER	QTY	PART NAME 1 2 3 4 5 6 (PRODUCT LEVEL)	SEE PAGE
	59	1	**8C-6857**	4	BOLT (3/4-10X2.75-IN)	
	60	1	**8M-2773**	4	CLIP	
	61	1	**8T-4121**	14	WASHER-HARD (11X21X2.5-MM THK)	
	62	1	**8T-4123**	4	WASHER (3.62X5.75X0.375-MM THK)	
M	64	1	**8T-4137**	13	BOLT (M10X1.5X20-MM)	
M	65	1	**8T-4191**	2	BOLT (M10X1.5X16-MM)	
M	66	1	**8T-4194**	4	BOLT (M12X1.75X50-MM)	
	67	1	**8T-4223**	2	WASHER-HARD (13.5X25.5X3-MM THK)	
	68	1	**8T-4224**	4	WASHER-HARD (8.8X16X2-MM THK)	
M	69	1	**8T-4244**	2	NUT (M12X1.75-THD)	
	70	1	**8T-4896**	31	WASHER-HARD (10.2X18.5X2.5-MM THK)	
M	71	1	**8T-6869**	4	BOLT (M8X1.25X60-MM)	
	72	1	**9M-8406**	4	CLIP	
	73	1	**9X-8256**	2	WASHER (6.6X12X2-MM THK)	
	74	1	**9X-8250**	1	CLIP	

B - USE AS REQUIRED
E - ORDER BY THE CENTIMETER
G - ORDER BY THE INCH
M - METRIC PART
Y - SEPARATE ILLUSTRATION

382-5903 **WIRING GP-GRADE CONTROL** (contd.) **i05063610**

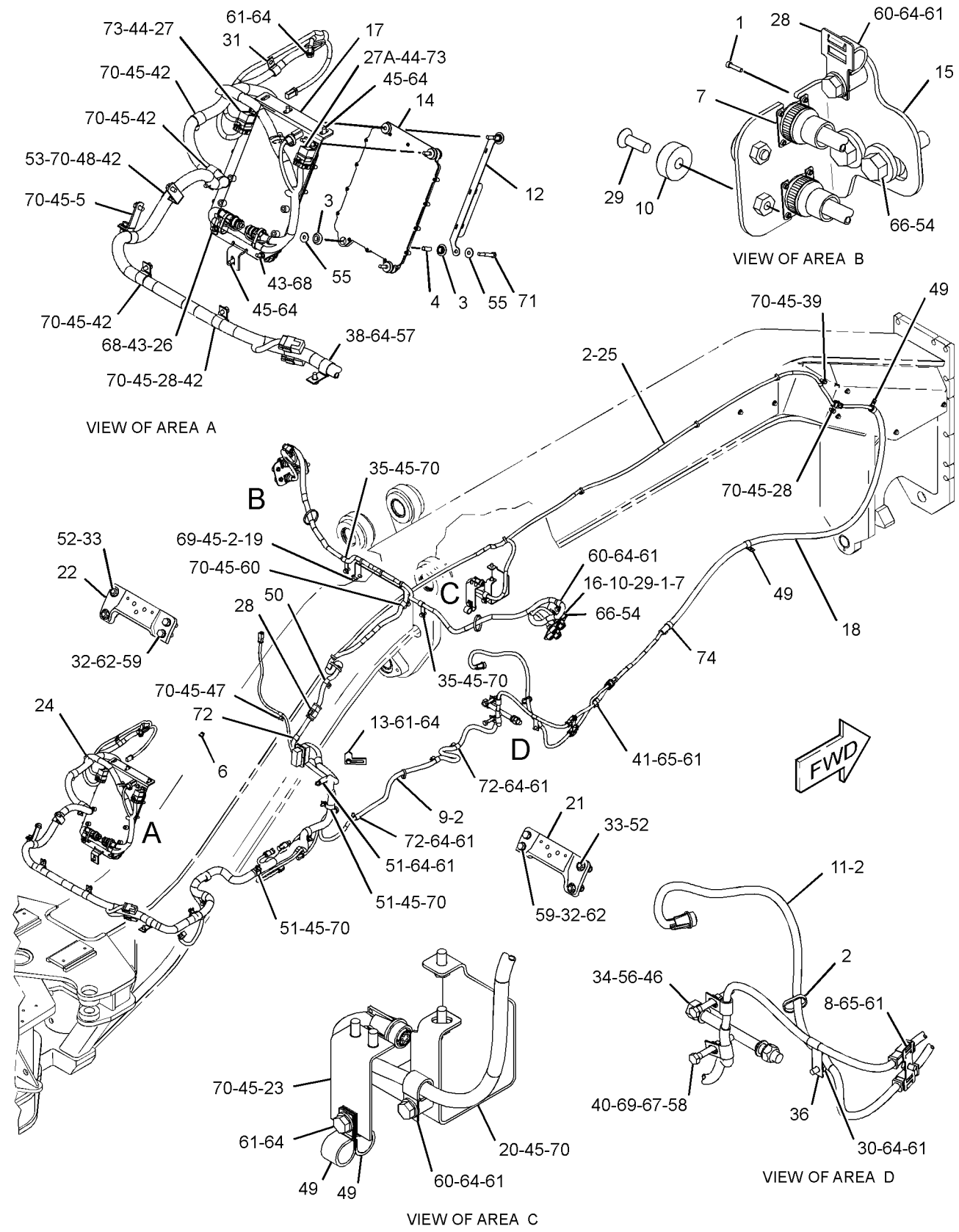

GRAPHIC #1

<END>

g03141637

434-8050 WIRING GP-GRADE CONTROL–ACCUGRADE

S/N: SZS1-UP
CHASSIS
PART OF 435-1526 GRADE CONTROL AR
AN ATTACHMENT
TYPE 1

SMCS-1408 **i06280903**

NOTE	REF NO	GRAPHIC REF	PART NUMBER	QTY	PART NAME 1 2 3 4 5 6 (PRODUCT LEVEL)	SEE PAGE
	1	2	**6D-3033**	16	SCREW-SOCKET HEAD (4-40X0.5-IN)	
	2	1,2	**7K-1181**	23	STRAP-CABLE	
	3	1	**8T-9655**	8	MOUNT-ISOLATION	
	4	1	**9L-1566**	2	SUPPORT	
	5	1	**9W-1446**	1	FUSE (20-AMPERE)	
	6	2	**132-8487**	4	NUT-RING	
	7	2	**169-5414**	1	CLIP	
Y	8	1	**236-2356**	1	HARNESS AS-SENSOR (ANGLE)	261
	9	2	**236-8826**	4	BOSS (1-1/8-18X0.708-IN)	
Y	10	1	**243-3250**	1	HARNESS AS-SENSOR (ROTATION)	261
	11	1	**244-5880**	1	BRACKET	
	12	1	**255-3482**	1	BRACKET	
Y	13	1	*260-7647*	1	APPLICATION GP-POWER TRAIN	196
	14	2	**288-5508**	1	BRACKET AS (LH)	
	15	2	**288-5509**	1	BRACKET AS (RH)	
	16	1	**313-4670**	1	BRACKET AS	
Y	17	1	**323-5592**	1	HARNESS AS-CHASSIS (RH)	249
	18	2	**324-3366**	1	PLATE AS	
	19	1	**327-0560**	1	BRACKET (RH)	
	20	1	**327-0561**	1	BRACKET (LH)	
	21	2	**331-1102**	1	BRACKET AS	
Y	22	1	**339-5505**	1	HARNESS AS-CHASSIS (FRONT FRAME, REAR)	250
Y	23	1	**339-5506**	1	HARNESS AS-CHASSIS (FRONT FRAME, LH)	251
	24	2	**358-7348**	1	PLATE	
	25	1	**033-8248**	1	CLIP	
	26	1	**111-4871**	1	RELAY (24-VOLT) (IMPLEMENT ENABLE)	
	26A	1	**111-4871**	1	RELAY (24-VOLT) (POWER MODULE)	
	27	1,2	**130-5300**	4	CLIP	
M	28	2	**188-9644**	4	SCREW-FLAT HEAD (M8X1.25X25-MM)	
	29	2	**147-0385**	1	CLIP	
	30	1	**174-5907**	1	CLIP	
	31	1	**174-9692**	4	SPACER (20.5X35X16-MM THK)	
	32	1	**1J-6762**	4	BOLT-PLOW (3/4-10X3-IN)	
	33	2	**1K-6870**	1	LOCKNUT (3/4-10-THD)	
	34	2	**1P-7009**	2	CLIP	
	35	2	**2Y-3812**	1	CLIP	
	36	1	**352-3970**	1	CLIP	
	37	1	**3P-2404**	1	CLIP	
	38	1	**4D-7794**	1	CLIP	
	39	2	**4K-8302**	2	CLIP	
	40	1	**4K-8864**	1	CLIP	
	41	1	**4S-1962**	6	CLIP	
M	42	1	**5C-7261**	2	NUT (M8X1.25-THD)	
M	43	1	**5C-9553**	2	BOLT (M6X1X16-MM)	
	44	1,2	**5M-3062**	27	BOLT (3/8-16X0.75-IN)	

434-8050 **WIRING GP-GRADE CONTROL (**contd.**)** **i06280903**

NOTE	REF NO	GRAPHIC REF	PART NUMBER	QTY	PART NAME 1 2 3 4 5 6 (PRODUCT LEVEL)	SEE PAGE
	45	2	**5P-4135**	1	BOLT (3/4-10X8-IN)	
	46	2	**5P-9085**	1	CLIP	
	47	1	**5S-7379**	2	BOLT (3/8-16X0.875-IN)	
	48	1,2	**6D-4244**	8	CLIP	
	49	2	**6K-8178**	1	CLIP	
	50	1,2	**6V-1889**	7	CLIP	
	51	1	**6V-8182**	4	NUT (3/4-10-THD)	
	52	1	**6V-8801**	2	NUT (3/8-16-THD)	
	53	2	**7X-0550**	8	WASHER-HARD (13.5X32X5-MM THK)	
	54	1	**7X-0579**	8	WASHER-HARD (8.8X25.5X2-MM THK)	
	55	2	**7X-0619**	4	WASHER-HARD (20X30X2.5-MM THK)	
	56	1	**7X-7729**	1	WASHER (11X25X3-MM THK)	
M	57	2	**7Y-0589**	2	BOLT (M12X1.75X90-MM)	
	58	1	**8C-6857**	4	BOLT (3/4-10X2.75-IN)	
	59	2	**8M-2773**	4	CLIP	
	60	1,2	**8T-4121**	16	WASHER-HARD (11X21X2.5-MM THK)	
	61	1	**8T-4123**	4	WASHER (3.62X5.75X0.375-MM THK)	
M	62	1	**8T-4133**	1	NUT (M10X1.5-THD)	
M	63	1,2	**8T-4137**	14	BOLT (M10X1.5X20-MM)	
M	64	1,2	**8T-4191**	2	BOLT (M10X1.5X16-MM)	
M	65	2	**8T-4194**	4	BOLT (M12X1.75X50-MM)	
	66	2	**8T-4223**	2	WASHER-HARD (13.5X25.5X3-MM THK)	
	67	1	**8T-4224**	4	WASHER-HARD (8.8X16X2-MM THK)	
M	68	2	**8T-4244**	2	NUT (M12X1.75-THD)	
	69	1,2	**8T-4896**	31	WASHER-HARD (10.2X18.5X2.5-MM THK)	
M	70	1	**8T-6869**	4	BOLT (M8X1.25X60-MM)	
	71	1	**6I-1418**	4	SPACER (8.2X12.7X28.7-MM THK)	
	72	1,2	**9M-8406**	3	CLIP	
	73	1	**9X-8256**	2	WASHER (6.6X12X2-MM THK)	

M - METRIC PART
Y - SEPARATE ILLUSTRATION

434-8050 **WIRING GP-GRADE CONTROL (**contd.**)** **i06280903**

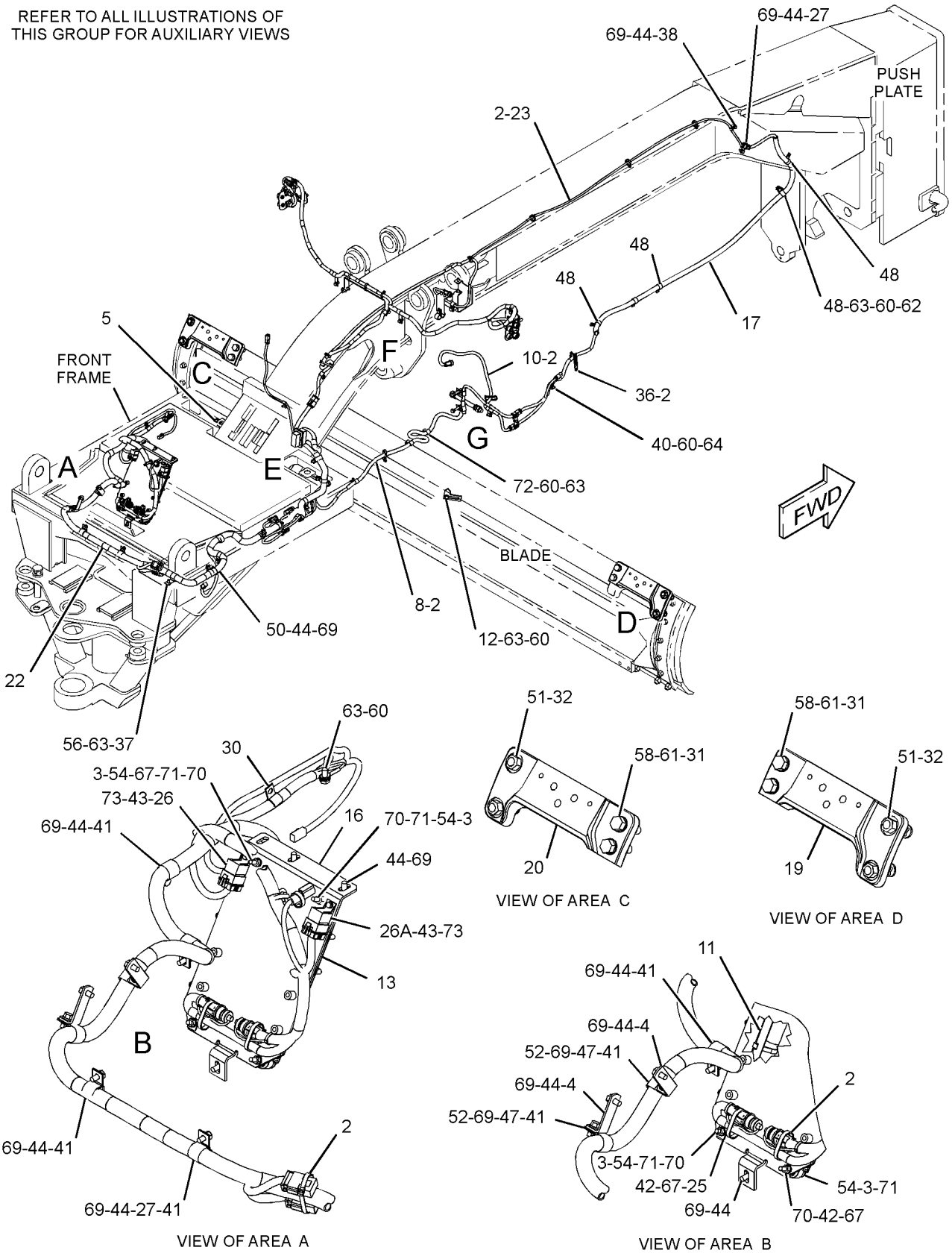

GRAPHIC #1 g03708259

434-8050 **WIRING GP-GRADE CONTROL (**contd.**)** **i06280903**

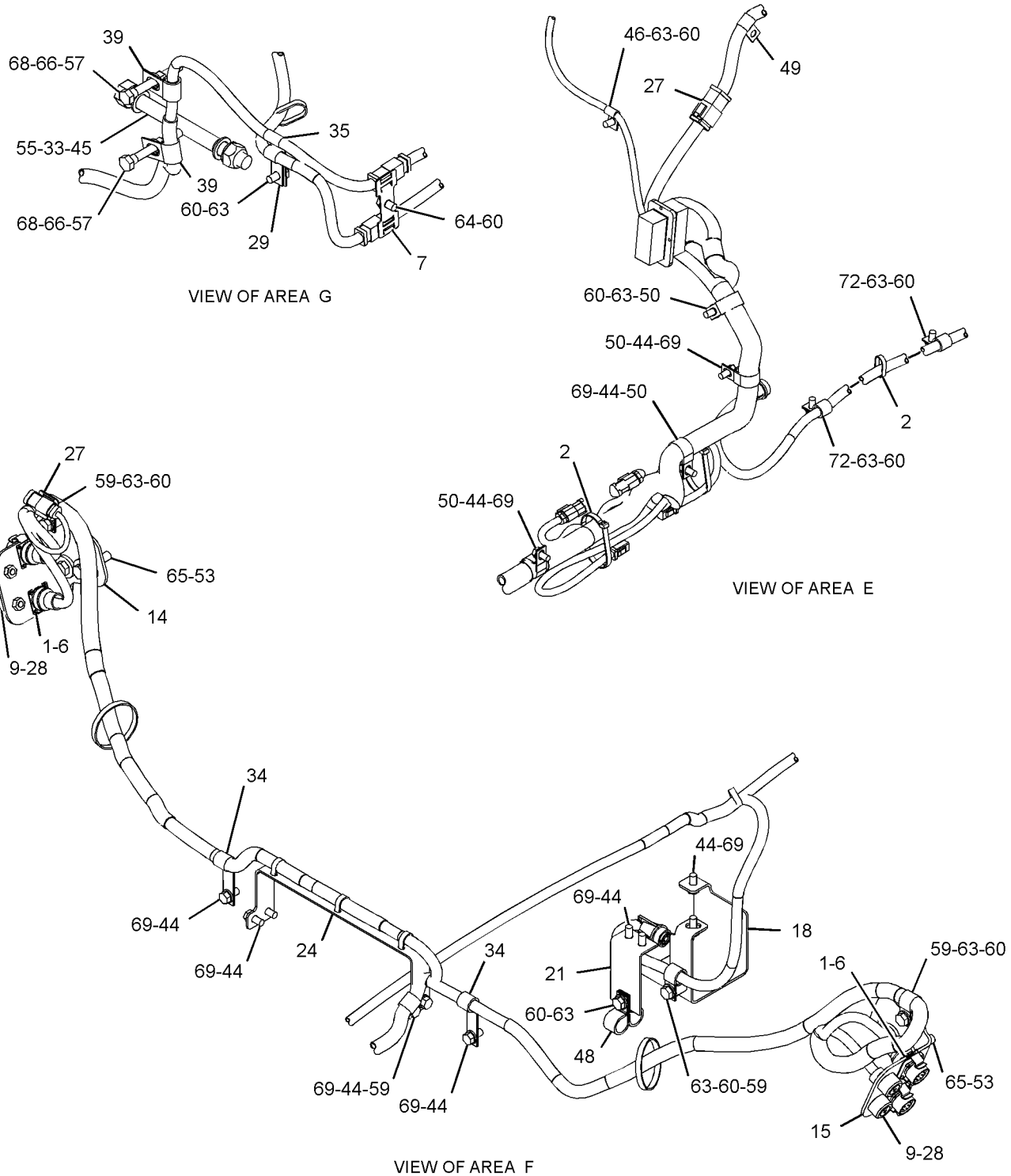

GRAPHIC #2 <END> g03708340

434-8050 WIRING GP-GRADE CONTROL–ACCUGRADE

S/N: SZS1-UP
CHASSIS
PART OF 435-1526 GRADE CONTROL AR
AN ATTACHMENT
TYPE 2

SMCS-1408 **i06927903**

NOTE	REF NO	GRAPHIC REF	PART NUMBER	QTY	PART NAME 1 2 3 4 5 6 (PRODUCT LEVEL)	SEE PAGE
CM	1	2	**107-1716**	16	SCREW (4-40X15.88-MM)	
C	2	1,2	**7K-1181**	24	STRAP-CABLE	
	3	1	**8T-9655**	8	MOUNT-ISOLATION	
	4	1	**9L-1566**	2	SUPPORT	
	5	1	**9W-1446**	1	FUSE (20-AMPERE)	
	6	2	**132-8487**	4	NUT-RING	
	7	2	**169-5414**	1	CLIP	
Y	8	1	**236-2356**	1	HARNESS AS-SENSOR (ANGLE)	261
	9	2	**236-8826**	4	BOSS (1-1/8-18X0.708-IN)	
Y	10	1	**243-3250**	1	HARNESS AS-SENSOR (ROTATION)	261
	11	1	**244-5880**	1	BRACKET	
	12	1	**255-3482**	1	BRACKET	
Y	13	1	*260-7647*	1	APPLICATION GP-POWER TRAIN	196
C	14	2	**516-2801**	1	BRACKET AS	
M		2	**8T-3612**	2	NUT-WELD (M8X1.25-THD)	
M		2	**9R-2672**	1	BOSS-THREADED (M10X1.5X120-MM)	
C	15	2	**516-2802**	1	BRACKET AS	
M		2	**8T-3612**	2	NUT-WELD (M8X1.25-THD)	
M		2	**9R-2672**	1	BOSS-THREADED (M10X1.5X120-MM)	
	16	1	**313-4670**	1	BRACKET AS	
Y	17	1	**323-5592**	1	HARNESS AS-CHASSIS (RH)	249
	18	2	**324-3366**	1	PLATE AS	
	19	1	**327-0560**	1	BRACKET (RH)	
	20	1	**327-0561**	1	BRACKET (LH)	
	21	2	**331-1102**	1	BRACKET AS	
Y	22	1	**339-5505**	1	HARNESS AS-CHASSIS (FRONT FRAME, REAR)	250
Y	23	1	**339-5506**	1	HARNESS AS-CHASSIS (FRONT FRAME, LH)	251
	24	2	**358-7348**	1	PLATE	
	25	1	**033-8248**	1	CLIP	
	26	1	**111-4871**	1	RELAY (24-VOLT) (IMPLEMENT ENABLE)	
	26A	1	**111-4871**	1	RELAY (24-VOLT) (POWER MODULE)	
	27	1,2	**130-5300**	4	CLIP	
M	28	2	**188-9644**	4	SCREW-FLAT HEAD (M8X1.25X25-MM)	
	29	2	**147-0385**	1	CLIP	
	30	1	**174-5907**	1	CLIP	
	31	1	**174-9692**	4	SPACER (20.5X35X16-MM THK)	
	32	1	**1J-6762**	4	BOLT-PLOW (3/4-10X3-IN)	
	33	2	**1K-6870**	1	LOCKNUT (3/4-10-THD)	
	34	2	**1P-7009**	2	CLIP	
	35	2	**2Y-3812**	1	CLIP	
	36	1	**352-3970**	1	CLIP	
C	37	1	**352-3964**	1	CLIP	
	38	1	**4D-7794**	1	CLIP	
	39	2	**4K-8302**	2	CLIP	
	40	1	**4K-8864**	1	CLIP	

434-8050 **WIRING GP-GRADE CONTROL (**contd.**)** **i06927903**

NOTE	REF NO	GRAPHIC REF	PART NUMBER	QTY	PART NAME 1 2 3 4 5 6 (PRODUCT LEVEL)	SEE PAGE
	41	1	**4S-1962**	6	CLIP	
M	42	1	**5C-7261**	2	NUT (M8X1.25-THD)	
M	43	1	**5C-9553**	2	BOLT (M6X1X16-MM)	
	44	1,2	**5M-3062**	27	BOLT (3/8-16X0.75-IN)	
	45	2	**5P-4135**	1	BOLT (3/4-10X8-IN)	
	46	2	**5P-9085**	1	CLIP	
	47	1	**5S-7379**	2	BOLT (3/8-16X0.875-IN)	
	48	1,2	**6D-4244**	8	CLIP	
	49	2	**6K-8178**	1	CLIP	
	50	1,2	**6V-1889**	7	CLIP	
	51	1	**6V-8182**	4	NUT (3/4-10-THD)	
	52	1	**6V-8801**	2	NUT (3/8-16-THD)	
	53	2	**7X-0550**	8	WASHER-HARD (13.5X32X5-MM THK)	
	54	1	**7X-0579**	8	WASHER-HARD (8.8X25.5X2-MM THK)	
	55	2	**7X-0619**	4	WASHER-HARD (20X30X2.5-MM THK)	
	56	1	**7X-7729**	1	WASHER (11X25X3-MM THK)	
M	57	2	**7Y-0589**	2	BOLT (M12X1.75X90-MM)	
	58	1	**8C-6857**	4	BOLT (3/4-10X2.75-IN)	
	59	2	**8M-2773**	4	CLIP	
	60	1,2	**8T-4121**	16	WASHER-HARD (11X21X2.5-MM THK)	
	61	1	**8T-4123**	4	WASHER (3.62X5.75X0.375-MM THK)	
M	62	1	**8T-4133**	1	NUT (M10X1.5-THD)	
M	63	1,2	**8T-4137**	14	BOLT (M10X1.5X20-MM)	
M	64	1,2	**8T-4191**	2	BOLT (M10X1.5X16-MM)	
M	65	2	**8T-4194**	4	BOLT (M12X1.75X50-MM)	
	66	2	**8T-4223**	2	WASHER-HARD (13.5X25.5X3-MM THK)	
	67	1	**8T-4224**	4	WASHER-HARD (8.8X16X2-MM THK)	
M	68	2	**8T-4244**	2	NUT (M12X1.75-THD)	
	69	1,2	**8T-4896**	31	WASHER-HARD (10.2X18.5X2.5-MM THK)	
M	70	1	**8T-6869**	4	BOLT (M8X1.25X60-MM)	
	71	1	**6I-1418**	4	SPACER (8.2X12.7X28.7-MM THK)	
	72	1,2	**9M-8406**	3	CLIP	
	73	1	**9X-8256**	2	WASHER (6.6X12X2-MM THK)	

C - CHANGE FROM PREVIOUS TYPE
M - METRIC PART
Y - SEPARATE ILLUSTRATION

434-8050 **WIRING GP-GRADE CONTROL (**contd.**)** **i06927903**

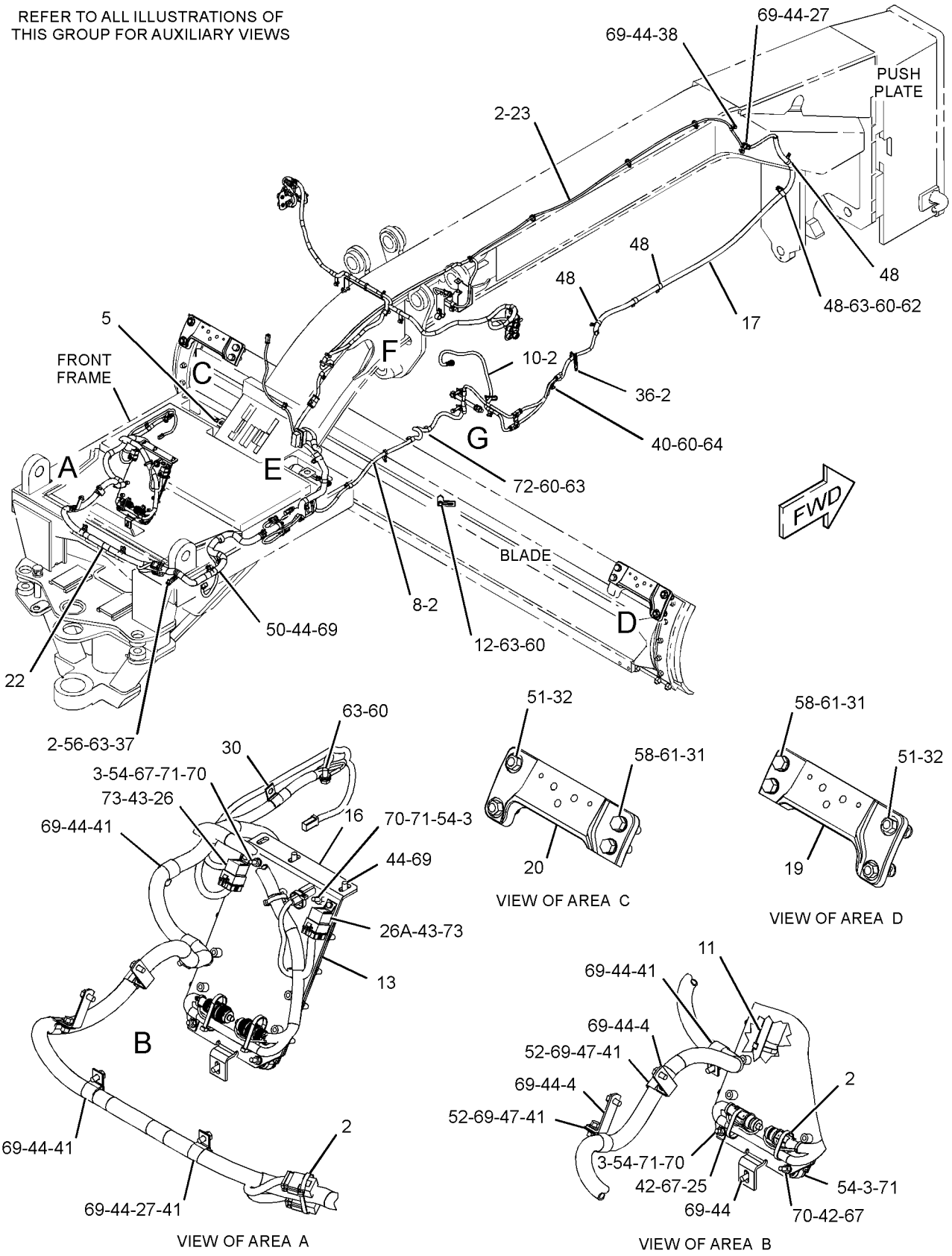

GRAPHIC #1 g06173143

434-8050 **WIRING GP-GRADE CONTROL (**contd.**)** **i06927903**

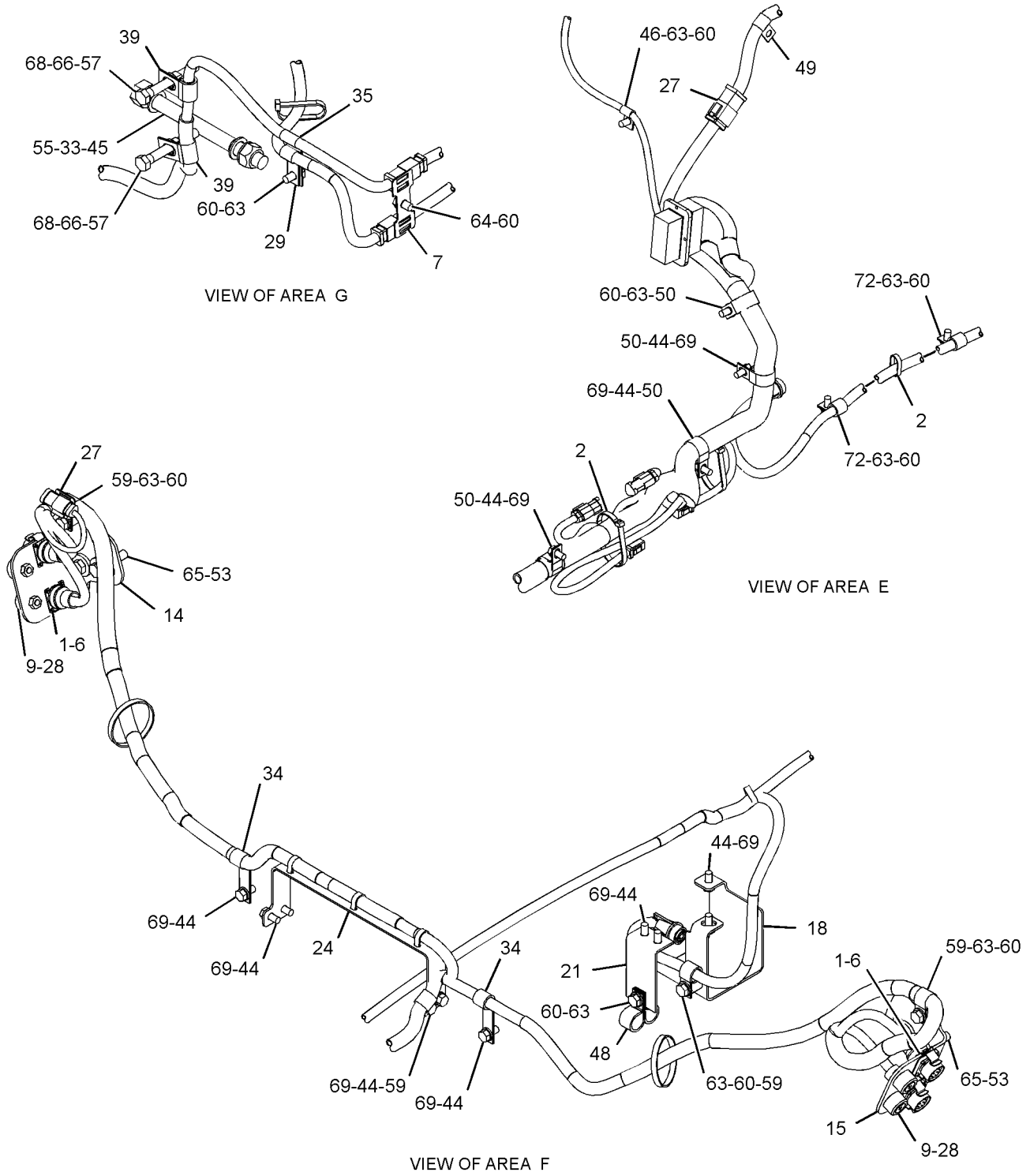

GRAPHIC #2 <END> g06173144

434-8052 WIRING GP-GRADE CONTROL–ACCUGRADE

S/N: SZS1-UP
CHASSIS
PART OF 435-1548 GRADE CONTROL AR
AN ATTACHMENT
TYPE 1

SMCS-1408 **i06197829**

NOTE	REF NO	GRAPHIC REF	PART NUMBER	QTY	PART NAME 1 2 3 4 5 6 (PRODUCT LEVEL)	SEE PAGE
	1	1	**6D-3033**	16	SCREW-SOCKET HEAD (4-40X0.5-IN)	
	2	1	**7K-1181**	23	STRAP-CABLE	
	3	1	**8T-9655**	8	MOUNT-ISOLATION	
	4	1	**6I-1418**	4	SPACER (8.2X12.7X28.7-MM THK)	
	5	1	**9L-1566**	2	SUPPORT	
	6	1	**9W-1446**	1	FUSE (20-AMPERE)	
	7	1	**132-8487**	4	NUT-RING	
	8	1	**169-5414**	1	CLIP	
Y	9	1	**236-2356**	1	HARNESS AS-SENSOR (ANGLE)	261
	10	1	**236-8826**	4	BOSS (1-1/8-18X0.708-IN)	
Y	11	1	**243-3250**	1	HARNESS AS-SENSOR (ROTATION)	261
	12	1	**244-5880**	1	BRACKET	
	13	1	**255-3482**	1	BRACKET	
Y	14	1	*260-7647*	1	APPLICATION GP-POWER TRAIN	196
	15	1	**288-5508**	1	BRACKET AS (LH)	
	16	1	**288-5509**	1	BRACKET AS (RH)	
	17	1	**313-4670**	1	BRACKET AS	
Y	18	1	**323-5592**	1	HARNESS AS-CHASSIS (RH)	249
	19	1	**358-7348**	1	PLATE	
	20	1	**324-3366**	1	PLATE AS	
	21	1	**327-0560**	1	BRACKET (RH)	
	22	1	**327-0561**	1	BRACKET (LH)	
	23	1	**331-1102**	1	BRACKET AS	
Y	24	1	**339-5505**	1	HARNESS AS-CHASSIS (FRONT FRAME, REAR)	250
Y	25	1	**339-5506**	1	HARNESS AS-CHASSIS (FRONT FRAME, LH)	251
	26	1	**033-8248**	1	CLIP	
	27	1	**111-4871**	1	RELAY (24-VOLT) (IMPLEMENT)	
	27A	1	**111-4871**	1	RELAY (24-VOLT) (POWER MODULE)	
	28	1	**130-5300**	4	CLIP	
M	29	1	**188-9644**	4	SCREW-FLAT HEAD (M8X1.25X25-MM)	
	30	1	**147-0385**	1	CLIP	
	31	1	**174-5907**	1	CLIP	
	32	1	**174-9692**	4	SPACER (20.5X35X16-MM THK)	
	33	1	**1J-6762**	4	BOLT-PLOW (3/4-10X3-IN)	
	34	1	**1K-6870**	1	LOCKNUT (3/4-10-THD)	
	35	1	**1P-7009**	2	CLIP	
	36	1	**2Y-3812**	1	CLIP	
	38	1	**3P-2404**	1	CLIP	
	39	1	**4D-7794**	1	CLIP	
	40	1	**4K-8302**	2	CLIP	
	41	1	**4K-8864**	2	CLIP	
	42	1	**4S-1962**	6	CLIP	
M	43	1	**5C-7261**	2	NUT (M8X1.25-THD)	
M	44	1	**5C-9553**	2	BOLT (M6X1X16-MM)	
	45	1	**5M-3062**	27	BOLT (3/8-16X0.75-IN)	

434-8052 **WIRING GP-GRADE CONTROL (**contd.**)** **i06197829**

NOTE	REF NO	GRAPHIC REF	PART NUMBER	QTY	PART NAME 1 2 3 4 5 6 (PRODUCT LEVEL)	SEE PAGE
	46	1	**5P-4135**	1	BOLT (3/4-10X8-IN)	
	47	1	**5P-9085**	1	CLIP	
	48	1	**5S-7379**	2	BOLT (3/8-16X0.875-IN)	
	49	1	**6D-4244**	4	CLIP	
	50	1	**6K-8178**	1	CLIP	
	51	1	**6V-1889**	7	CLIP	
	52	1	**6V-8182**	4	NUT (3/4-10-THD)	
	53	1	**6V-8801**	2	NUT (3/8-16-THD)	
	54	1	**7X-0550**	8	WASHER-HARD (13.5X32X5-MM THK)	
	55	1	**7X-0579**	8	WASHER-HARD (8.8X25.5X2-MM THK)	
	56	1	**7X-0619**	4	WASHER-HARD (20X30X2.5-MM THK)	
	57	1	**7X-7729**	1	WASHER (11X25X3-MM THK)	
M	58	1	**7Y-0589**	2	BOLT (M12X1.75X90-MM)	
	59	1	**8C-6857**	4	BOLT (3/4-10X2.75-IN)	
	60	1	**8M-2773**	4	CLIP	
	61	1	**8T-4121**	14	WASHER-HARD (11X21X2.5-MM THK)	
	62	1	**8T-4123**	4	WASHER (3.62X5.75X0.375-MM THK)	
M	64	1	**8T-4137**	13	BOLT (M10X1.5X20-MM)	
M	65	1	**8T-4191**	2	BOLT (M10X1.5X16-MM)	
M	66	1	**8T-4194**	4	BOLT (M12X1.75X50-MM)	
	67	1	**8T-4223**	2	WASHER-HARD (13.5X25.5X3-MM THK)	
	68	1	**8T-4224**	4	WASHER-HARD (8.8X16X2-MM THK)	
M	69	1	**8T-4244**	2	NUT (M12X1.75-THD)	
	70	1	**8T-4896**	31	WASHER-HARD (10.2X18.5X2.5-MM THK)	
M	71	1	**8T-6869**	4	BOLT (M8X1.25X60-MM)	
	72	1	**9M-8406**	3	CLIP	
	73	1	**9X-8256**	2	WASHER (6.6X12X2-MM THK)	
	74	1	**9X-8250**	1	CLIP	

M - METRIC PART
Y - SEPARATE ILLUSTRATION

434-8052 **WIRING GP-GRADE CONTROL (**contd.**)** **i06197829**

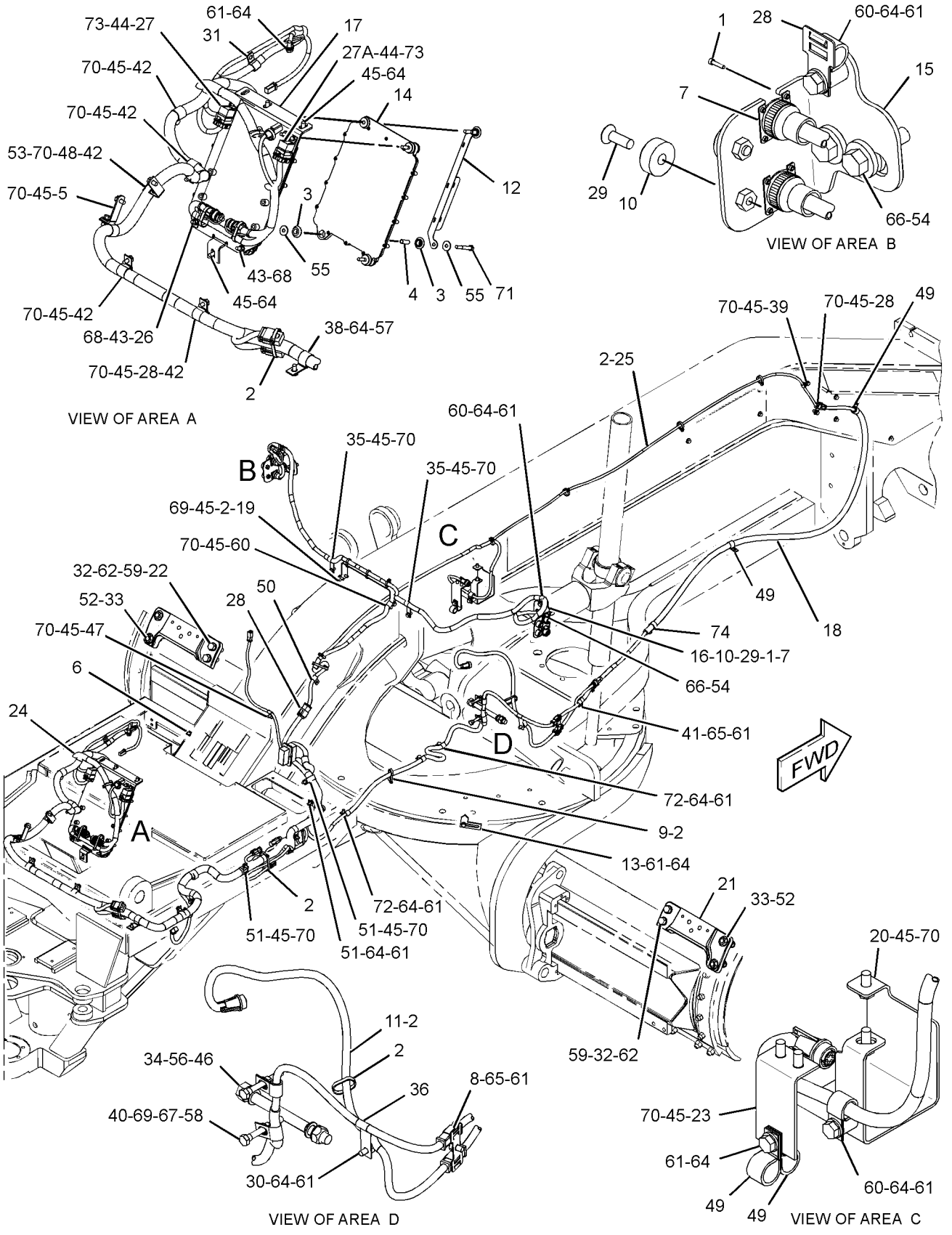

GRAPHIC #1 <END> g03707711

434-8052 WIRING GP-GRADE CONTROL–ACCUGRADE

S/N: SZS1-UP
CHASSIS
PART OF 435-1548 GRADE CONTROL AR
AN ATTACHMENT
TYPE 2

SMCS-1408 **i06925934**

NOTE	REF NO	GRAPHIC REF	PART NUMBER	QTY	PART NAME 1 2 3 4 5 6 (PRODUCT LEVEL)	SEE PAGE
CM	1	1	**107-1716**	16	SCREW (4-40X15.88-MM)	
C	2	1	**7K-1181**	24	STRAP-CABLE	
	3	1	**8T-9655**	8	MOUNT-ISOLATION	
	4	1	**6I-1418**	4	SPACER (8.2X12.7X28.7-MM THK)	
	5	1	**9L-1566**	2	SUPPORT	
	6	1	**9W-1446**	1	FUSE (20-AMPERE)	
	7	1	**132-8487**	4	NUT-RING	
	8	1	**169-5414**	1	CLIP	
Y	9	1	**236-2356**	1	HARNESS AS-SENSOR (ANGLE)	261
	10	1	**236-8826**	4	BOSS (1-1/8-18X0.708-IN)	
Y	11	1	**243-3250**	1	HARNESS AS-SENSOR (ROTATION)	261
	12	1	**244-5880**	1	BRACKET	
	13	1	**255-3482**	1	BRACKET	
Y	14	1	*260-7647*	1	APPLICATION GP-POWER TRAIN	196
C	15	1	**516-2801**	1	BRACKET AS (LH)	
C	16	1	**516-2802**	1	BRACKET AS (RH)	
	17	1	**313-4670**	1	BRACKET AS	
Y	18	1	**323-5592**	1	HARNESS AS-CHASSIS (RH)	249
	19	1	**358-7348**	1	PLATE	
	20	1	**324-3366**	1	PLATE AS	
	21	1	**327-0560**	1	BRACKET (RH)	
	22	1	**327-0561**	1	BRACKET (LH)	
	23	1	**331-1102**	1	BRACKET AS	
Y	24	1	**339-5505**	1	HARNESS AS-CHASSIS (FRONT FRAME, REAR)	250
Y	25	1	**339-5506**	1	HARNESS AS-CHASSIS (FRONT FRAME, LH)	251
	26	1	**033-8248**	1	CLIP	
	27	1	**111-4871**	1	RELAY (24-VOLT) (IMPLEMENT)	
	27A	1	**111-4871**	1	RELAY (24-VOLT) (POWER MODULE)	
	28	1	**130-5300**	4	CLIP	
M	29	1	**188-9644**	4	SCREW-FLAT HEAD (M8X1.25X25-MM)	
	30	1	**147-0385**	1	CLIP	
	31	1	**174-5907**	1	CLIP	
	32	1	**174-9692**	4	SPACER (20.5X35X16-MM THK)	
	33	1	**1J-6762**	4	BOLT-PLOW (3/4-10X3-IN)	
	34	1	**1K-6870**	1	LOCKNUT (3/4-10-THD)	
	35	1	**1P-7009**	2	CLIP	
	36	1	**2Y-3812**	1	CLIP	
C	38	1	**352-3964**	1	CLIP	
	39	1	**4D-7794**	1	CLIP	
	40	1	**4K-8302**	2	CLIP	
	41	1	**4K-8864**	2	CLIP	
	42	1	**4S-1962**	6	CLIP	
M	43	1	**5C-7261**	2	NUT (M8X1.25-THD)	
M	44	1	**5C-9553**	2	BOLT (M6X1X16-MM)	
	45	1	**5M-3062**	27	BOLT (3/8-16X0.75-IN)	

434-8052 **WIRING GP-GRADE CONTROL (**contd.**)** **i06925934**

NOTE	REF NO	GRAPHIC REF	PART NUMBER	QTY	PART NAME 1 2 3 4 5 6 (PRODUCT LEVEL)	SEE PAGE
	46	1	**5P-4135**	1	BOLT (3/4-10X8-IN)	
	47	1	**5P-9085**	1	CLIP	
	48	1	**5S-7379**	2	BOLT (3/8-16X0.875-IN)	
	49	1	**6D-4244**	4	CLIP	
	50	1	**6K-8178**	1	CLIP	
	51	1	**6V-1889**	7	CLIP	
	52	1	**6V-8182**	4	NUT (3/4-10-THD)	
	53	1	**6V-8801**	2	NUT (3/8-16-THD)	
	54	1	**7X-0550**	8	WASHER-HARD (13.5X32X5-MM THK)	
	55	1	**7X-0579**	8	WASHER-HARD (8.8X25.5X2-MM THK)	
	56	1	**7X-0619**	4	WASHER-HARD (20X30X2.5-MM THK)	
	57	1	**7X-7729**	1	WASHER (11X25X3-MM THK)	
M	58	1	**7Y-0589**	2	BOLT (M12X1.75X90-MM)	
	59	1	**8C-6857**	4	BOLT (3/4-10X2.75-IN)	
	60	1	**8M-2773**	4	CLIP	
	61	1	**8T-4121**	14	WASHER-HARD (11X21X2.5-MM THK)	
	62	1	**8T-4123**	4	WASHER (3.62X5.75X0.375-MM THK)	
M	64	1	**8T-4137**	13	BOLT (M10X1.5X20-MM)	
M	65	1	**8T-4191**	2	BOLT (M10X1.5X16-MM)	
M	66	1	**8T-4194**	4	BOLT (M12X1.75X50-MM)	
	67	1	**8T-4223**	2	WASHER-HARD (13.5X25.5X3-MM THK)	
	68	1	**8T-4224**	4	WASHER-HARD (8.8X16X2-MM THK)	
M	69	1	**8T-4244**	2	NUT (M12X1.75-THD)	
	70	1	**8T-4896**	31	WASHER-HARD (10.2X18.5X2.5-MM THK)	
M	71	1	**8T-6869**	4	BOLT (M8X1.25X60-MM)	
	72	1	**9M-8406**	3	CLIP	
	73	1	**9X-8256**	2	WASHER (6.6X12X2-MM THK)	
	74	1	**9X-8250**	1	CLIP	

C - CHANGE FROM PREVIOUS TYPE
M - METRIC PART
Y - SEPARATE ILLUSTRATION

434-8052 **WIRING GP-GRADE CONTROL** (contd.) **i06925934**

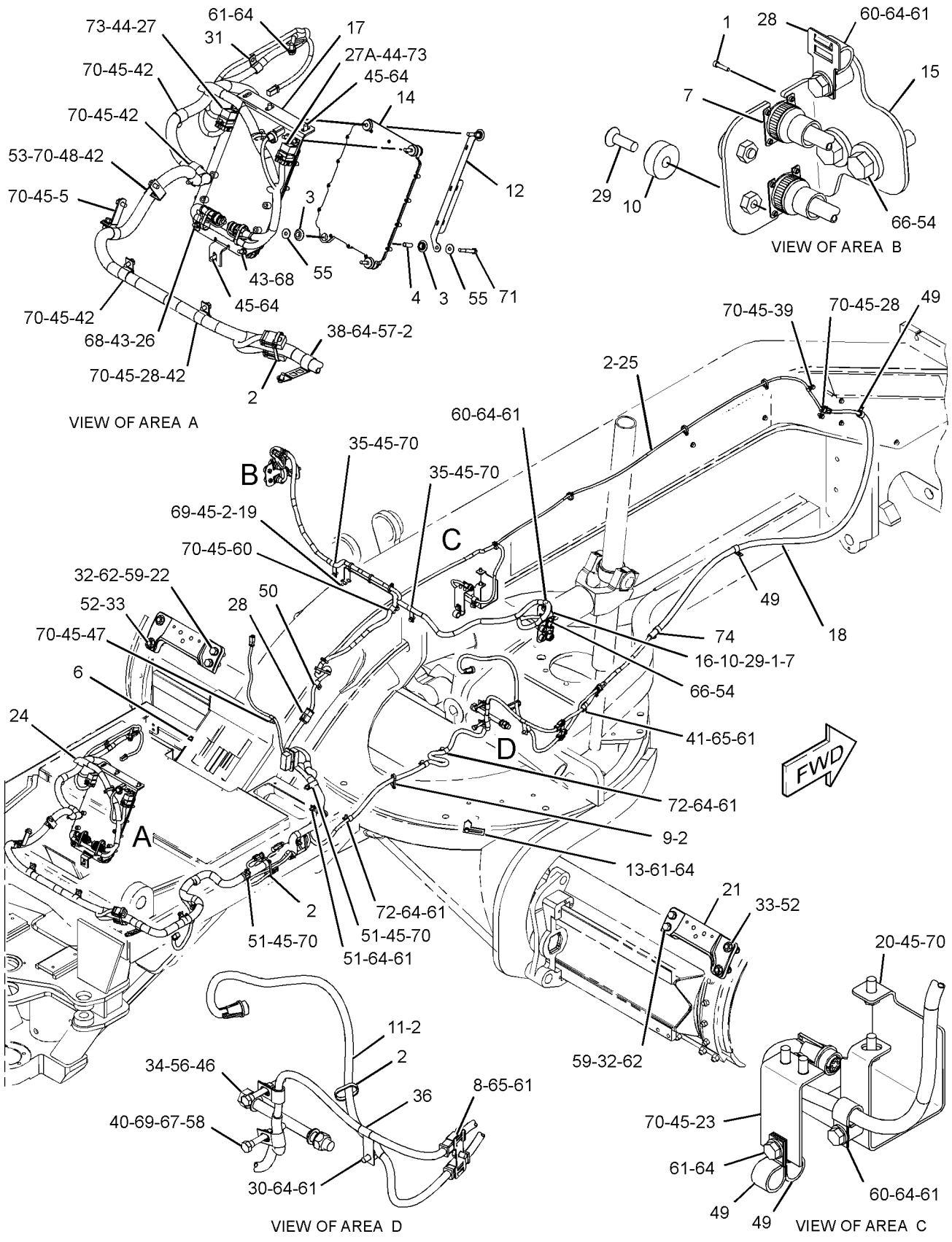

GRAPHIC #1 <END> g06170487

293-4828 WIRING GP-REAR

S/N: SZS1-488

PART OF 368-3025 GENERAL AR

SMCS-1408 **i06949130**

NOTE	REF NO	GRAPHIC REF	PART NUMBER	QTY	PART NAME 1 2 3 4 5 6 (PRODUCT LEVEL)	SEE PAGE
	1	3	**3E-5239**	1	RELAY AS (24-VOLT) (FUEL PRIMING)	
	2	1	**7G-1060**	1	STRAP AS-GROUND	
	3	2,3	**7K-1181**	24	STRAP-CABLE	
	4	1	**7W-9943**	1	SENDER-TEMPERATURE (HYDRAULIC OIL)	
	5	1	**8W-8527**	1	SLEEVE	
	6	2	**091-0081**	1	SPACER (10.5X20X10-MM THK)	
	7	2	**123-3688**	1	PLATE AS	
		2	**7L-0811**	1	DOWEL	
	8	2	**123-3689**	1	PLATE AS	
	9	2	**123-3692**	1	ARM	
	10	2	**123-3695**	1	PLATE	
M	11	3	**130-2792**	1	SCREW (M6X1X16-MM)	
	12	2	**139-2116**	1	SWITCH GP-TOGGLE (GROUND LEVEL SHUTDOWN)	
		2	**102-8803**	1	KIT-RECEPTACLE (3-PIN)	
					(INCLUDES RECEPTACLE AS & WEDGE)	
		2	**6T-3631**	2	NUT-HEX (15/32-32-THD)	
		2	**6T-3632**	1	LOCKWASHER	
		2	**6T-3633**	1	RING-LOCKING	
		2	**186-3735**	3	PIN-CONNECTOR (16-GA TO 18-GA)	
	13	3	**177-2215**	3	STRAP-DUAL CLAMP	
	14	2	**187-1008**	1	SENDER AS-POSITION (ARTICULATION)	
		2	**102-8802**	1	KIT-RECEPTACLE (2-PIN)	
					(INCLUDES RECEPTACLE AS & WEDGE)	
		2	**186-3735**	2	PIN-CONNECTOR (16-GA TO 18-GA)	
E		2	**9X-1813**		SLEEVE (15-CM)	
	15	2	**308-0291**	1	HARNESS AS-SENSOR (TRANSMISSION SPEED)	
		2	**102-8802**	1	KIT-RECEPTACLE (2-PIN)	
					(INCLUDES RECEPTACLE AS & WEDGE)	
		2	**126-1766**	2	SOCKET-CONNECTOR (14-GA TO 18-GA)	
		2	**155-2270**	1	KIT-CONNECTING PLUG (2-PIN)	
					(INCLUDES PLUG AS, WEDGE & INTERFACE SEAL)	
	16	2	**308-6403**	1	BRACKET AS	
	17	2	**322-7341**	1	BRACKET AS	
	18	1	**326-3117**	1	HARNESS AS-TRANSMISSION	
E		1	**231-9897**		CONDUIT-FLEXIBLE (36-MM ID) (80-CM)	
E		1	**125-7874**		TUBE-HEAT SHRINK (5.72-MM DIA) (45-CM)	
E		1	**125-7875**		TUBE-HEAT SHRINK (7.44-MM DIA) (20-CM)	
E		1	**119-3662**		TUBE-HEAT SHRINK (10.85-MM DIA) (20-CM)	
		1	**126-1766**	32	SOCKET-CONNECTOR (14-GA TO 18-GA)	
		1	**126-1768**	8	SOCKET-CONNECTOR (14-GA TO 16-GA)	
		1	**126-1774**	1	COVER-CONNECTOR	
		1	**2L-8069**	2	TERMINAL-RING (2-GA TO 10-GA, 3/8-IN SCREW)	
		1	**2L-8076**	1	TERMINAL-RING (14-GA TO 16-GA, NO. 10 SCREW)	
		1	**131-1506**	1	TERMINAL AS	
		1	**2L-8079**		TERMINAL-RING (14-GA TO 16-GA, 3/8-IN SCREW)	
E		1	**125-7874**		TUBE-HEAT SHRINK (5.72-MM DIA) (3-CM)	
		1	**155-2255**	4	KIT-CONNECTING PLUG (12-PIN)	

293-4828 **WIRING GP-REAR (**contd.**)** **i06949130**

NOTE	REF NO	GRAPHIC REF	PART NUMBER	QTY	PART NAME 1 2 3 4 5 6 (PRODUCT LEVEL)	SEE PAGE
		1	**155-2260**	2	KIT-CONNECTING PLUG (3-PIN)	
		1	**155-2270**	2	KIT-CONNECTING PLUG (2-PIN)	
		1	**155-2274**	1	KIT-CONNECTING PLUG (6-PIN)	
					(EACH KIT INCLUDES PLUG AS, WEDGE, & INTERFACE SEAL)	
		1	**160-7689**	1	PLUG AS-CONNECTOR (70-PIN)	
		1	**159-9322**	1	SEAL-O-RING	
E		1	**1P-0810**		TAPE-ELECTRICAL (13-CM)	
		1	**186-3735**	7	PIN-CONNECTOR (16-GA TO 18-GA)	
		1	**186-3736**	67	SOCKET-CONNECTOR (16-GA TO 18-GA)	
		1	**8T-8737**	69	PLUG-SEAL	
		1	**9W-0844**	4	SOCKET-CONNECTOR (14-GA TO 16-GA)	
		1	**9X-0141**	1	PLUG AS-CONNECTOR (40-PIN)	
		1	**3E-4367**		RING-RETAINING	
M		1	**3E-8557**	1	BOLT (M5X0.8X39.37-MM)	
		1	**9X-3490**	2	SEAL-CONNECTOR (40-PIN)	
		1	**9X-3401**	25	PIN-CONNECTOR (16-GA TO 18-GA)	
		1	**9X-3402**	77	SOCKET-CONNECTOR (16-GA TO 18-GA)	
		1	**9X-6772**	2	STRAP-CABLE	
		1	**110-6848**	1	PLUG AS-CONNECTOR (40-PIN)	
		1	**110-6844**	1	SEAL	
		1	**102-8803**	1	KIT-RECEPTACLE (3-PIN)	
		1	**102-8806**	1	KIT-RECEPTACLE (8-PIN)	
		1	**102-8801**	2	KIT-RECEPTACLE (12-PIN)	
					(EACH KIT INCLUDES RECEPTACLE AS & WEDGE)	
		1	**110-6846**	1	PLUG AS-CONNECTOR (40-PIN)	
		1	**110-6844**	1	SEAL	
	19	1	**326-3118**	1	HARNESS AS-REAR CHASSIS (RH)	
		1	**102-8802**	1	KIT-RECEPTACLE (2-PIN)	
		1	**102-8804**	2	KIT-RECEPTACLE (4-PIN)	
		1	**8N-1547**	2	SOCKET-CONNECTOR (6-GA)	
		1	**186-3735**	7	PIN-CONNECTOR (16-GA TO 18-GA)	
		1	**186-3736**	8	SOCKET-CONNECTOR (16-GA TO 18-GA)	
		1	**8T-8737**	10	PLUG-SEAL	
		1	**9X-3402**	5	SOCKET-CONNECTOR (16-GA TO 18-GA)	
		1	**110-8769**		WIRE AS (16-GA)	
		1	**127-5483**	2	PLUG AS-CONNECTOR (1-PIN)	
		1	**131-1489**	2	TERMINAL AS-RING (6-GA TO 8-GA)	
					(EACH INCLUDES)	
		1	**6H-3592**	1	TERMINAL-RING (6-GA TO 8-GA, 5/16-IN SCREW)	
E		1	**119-3662**		TUBE-HEAT SHRINK (10.85-MM DIA) (4-CM)	
		1	**131-1506**	3	TERMINAL AS	
					(EACH INCLUDES)	
		1	**2L-8079**	1	TERMINAL-RING (14-GA TO 16-GA, 3/8-IN SCREW)	
E		1	**125-7874**		TUBE-HEAT SHRINK (5.72-MM DIA) (3-CM)	
		1	**155-2255**	1	KIT-CONNECTING PLUG (12-PIN)	
		1	**155-2270**	2	KIT-CONNECTING PLUG (2-PIN)	
		1	**155-2271**	1	KIT-CONNECTING PLUG (4-PIN) (13-CM)	
					(EACH KIT INCLUDES PLUG AS, WEDGE & INTERFACE SEAL)	
E		1	**1P-0810**		TAPE-ELECTRICAL	

293-4828 **WIRING GP-REAR (**contd.**)** **i06949130**

NOTE	REF NO	GRAPHIC REF	PART NUMBER	QTY	PART NAME 1 2 3 4 5 6 (PRODUCT LEVEL)	SEE PAGE
E		1	**235-2765**		CONDUIT-FLEXIBLE (27.6-MM ID) (83-CM)	
	20	2	**326-3120**	1	BRACKET AS	
	21	2	**336-9085**	1	HARNESS AS-REAR CHASSIS (LH)	
		2	**102-8802**	3	KIT-RECEPTACLE (2-PIN)	
					(EACH INCLUDES RECEPTACLE AS & WEDGE)	
		2	**186-3736**	24	SOCKET-CONNECTOR (16-GA TO 18-GA)	
		2	**8T-8737**	11	PLUG-SEAL	
		2	**9W-0844**	1	SOCKET-CONNECTOR (14-GA TO 16-GA)	
E		2	**125-7874**		TUBE-HEAT SHRINK (5.72-MM DIA) (5-CM)	
E		2	**125-7875**		TUBE-HEAT SHRINK (7.44-MM DIA) (5-CM)	
		2	**2L-8071**	1	TERMINAL-RING (10-GA TO 12-GA, 1/2-IN SCREW)	
		2	**155-2255**	2	KIT-CONNECTING PLUG (12-PIN)	
		2	**155-2270**	3	KIT-CONNECTING PLUG (2-PIN)	
					(EACH KIT INCLUDES PLUG AS, WEDGE & INTERFACE SEAL)	
B		2	**1P-0810**		TAPE-ELECTRICAL	
E		2	**235-2765**		CONDUIT-FLEXIBLE (27.6-MM ID) (78-CM)	
	22	1	**337-6814**	1	HARNESS AS-SENSOR (FUEL SYSTEM)	
		1	**102-8801**	1	KIT-RECEPTACLE (12-PIN)	
					(INCLUDES RECEPTACLE AS & WEDGE)	
		1	**186-3735**	9	PIN-CONNECTOR (16-GA TO 18-GA)	
		1	**8T-8737**	1	PLUG-SEAL	
		1	**9W-0844**	2	SOCKET-CONNECTOR (14-GA TO 16-GA)	
		1	**9W-0852**	2	PIN-CONNECTOR (14-GA TO 16-GA)	
		1	**9X-1054**	1	PLUG AS-CONNECTOR (4-PIN)	
		1	**9X-1056**	4	TERMINAL-RECEPTACLE (14-GA TO 16-GA)	
		1	**9X-3401**	2	PIN-CONNECTOR (16-GA TO 18-GA)	
		1	**9X-3402**	5	SOCKET-CONNECTOR (16-GA TO 18-GA)	
		1	**155-2270**		KIT-CONNECTING PLUG (2-PIN)	
					(INCLUDES RECEPTACLE AS & WEDGE)	
B		1	**1P-0810**		TAPE-ELECTRICAL	
		1	**230-4011**	1	PLUG AS-CONNECTOR (2-PIN)	
		1	**264-7029**	1	SEAL-CONNECTOR	
		1	**230-4012**	1	RECEPTACLE AS-CONNECTOR (2-PIN)	
		1	**237-0227**	1	PLUG AS-CONNECTOR (3-PIN)	
		1	**264-7030**	1	SEAL-CONNECTOR	
	23	3	**344-0050**	1	BRACKET AS	
M		3	**8T-3490**	1	NUT-WELD (M10X1.5-THD)	
	24	2	**109-0361**	1	FILM-INSTRUCTION (ENGINE SHUTDOWN)	
	25	2,3	**130-5300**	8	CLIP	
	26	2	**132-5789**	2	CLIP	
	27	3	**132-7551**	1	SPACER (11X19X6-MM THK)	
	28	3	**133-3260**	1	SPACER (11X19X10-MM THK)	
	29	3	**134-2540**	1	RESISTOR AS-CONNECTION (3-PIN)	
	30	3	**147-0385**	1	CLIP	
Y	31	2	**193-2550**	1	SENSOR GP-SPEED (MAGNETIC, HIGH OUTPUT) (TRANSMISSION)	346
	32	3	**277-1873**	1	CLIP	
	33	2	**2A-1162**	1	GASKET	
	34	2	**3E-5169**	1	GUARD-SWITCH	
	35	2	**3S-8665**	1	CLIP	
	36	2	**4D-7794**	7	CLIP	

293-4828 **WIRING GP-REAR (**contd.**)** **i06949130**

NOTE	REF NO	GRAPHIC REF	PART NUMBER	QTY	PART NAME 1 2 3 4 5 6 (PRODUCT LEVEL)	SEE PAGE
	37	2,3	**4D-8123**	4	CLIP	
	38	2,3	**4K-8864**	4	CLIP	
	39	3	**4P-8134**	1	CLIP	
	40	3	**4S-1936**	1	CLIP	
	41	3	**4S-1962**	2	CLIP	
	42	1,2,3	**4S-4455**	9	CLIP	
	43	2	**5P-8167**	3	BOLT (3/8-16X0.625-IN)	
	44	2	**5P-9085**	2	CLIP	
	45	3	**5P-9297**	3	CLIP	
	46	3	**6D-3479**	5	CLIP	
	47	1,2,3	**6D-4244**	6	CLIP	
	48	1,2,3	**6D-4246**	5	CLIP	
	51	2	**6V-3265**	1	CLIP	
	52	2	**6V-6893**	3	BOLT (6-32X0.375-IN)	
	53	2	**6V-8801**	1	NUT (3/8-16-THD)	
	54	1	**6W-6672**	1	SPACER (10.5X20X38-MM THK)	
	55	3	**7C-4354**	2	CLIP	
	56	3	**7D-7233**	1	CLIP	
	57	2	**7N-3718**	1	CLIP	
	58	3	**8D-9671**	1	CLIP	
	59	3	**8M-2773**	1	CLIP	
	60	1,2,3	**8T-4121**	61	WASHER-HARD (11X21X2.5-MM THK)	
M	61	2,3	**8T-4133**	5	NUT (M10X1.5-THD)	
M	62	3	**8T-4136**	1	BOLT (M10X1.5X25-MM)	
M	63	1,2,3	**8T-4137**	50	BOLT (M10X1.5X20-MM)	
M	64	2,3	**8T-4195**	3	BOLT (M10X1.5X30-MM)	
M	65	3	**8T-4196**	1	BOLT (M10X1.5X35-MM)	
	66	2	**8T-4205**	2	WASHER-HARD (7.2X14.5X2-MM THK)	
	67	2	**8T-4226**	1	WASHER-PLATED (10.5X45X3-MM THK)	
	68	2	**8T-4896**	2	WASHER-HARD (10.2X18.5X2.5-MM THK)	
M	69	1	**8T-6466**	1	BOLT (M10X1.5X60-MM)	
	70	2	**8T-9364**	2	BOLT (1/4-20X0.625-IN)	
	71	3	**8W-8909**	1	SLEEVE	
	72	2,3	**8X-5489**	3	SLEEVE	
	73	3	**9X-8256**	1	WASHER (6.6X12X2-MM THK)	
	74	3	**189-3158**	1	SUPPRESSOR-ARC	
	75	3	**4P-7581**	1	CLIP	
	76	1	**3K-0360**	1	SEAL-O-RING	
	77	3	**9C-5344**	1	SPACER (10.5X20X18-MM THK)	

B - USE AS REQUIRED
E - ORDER BY THE CENTIMETER
M - METRIC PART
Y - SEPARATE ILLUSTRATION

293-4828 **WIRING GP-REAR (**contd.**)** **i06949130**

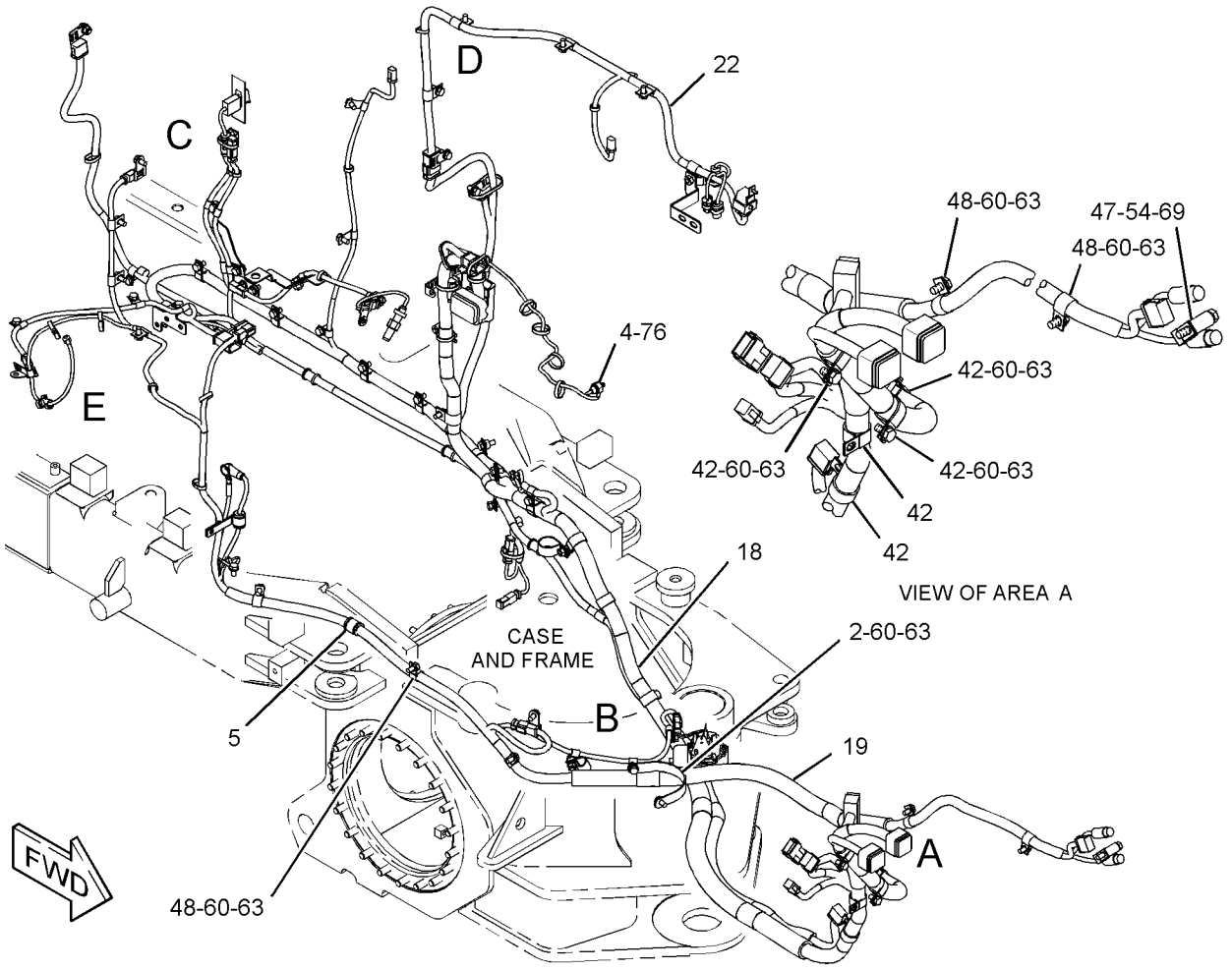

GRAPHIC #1 g02141754

293-4828 **WIRING GP-REAR (**contd.**)** **i06949130**

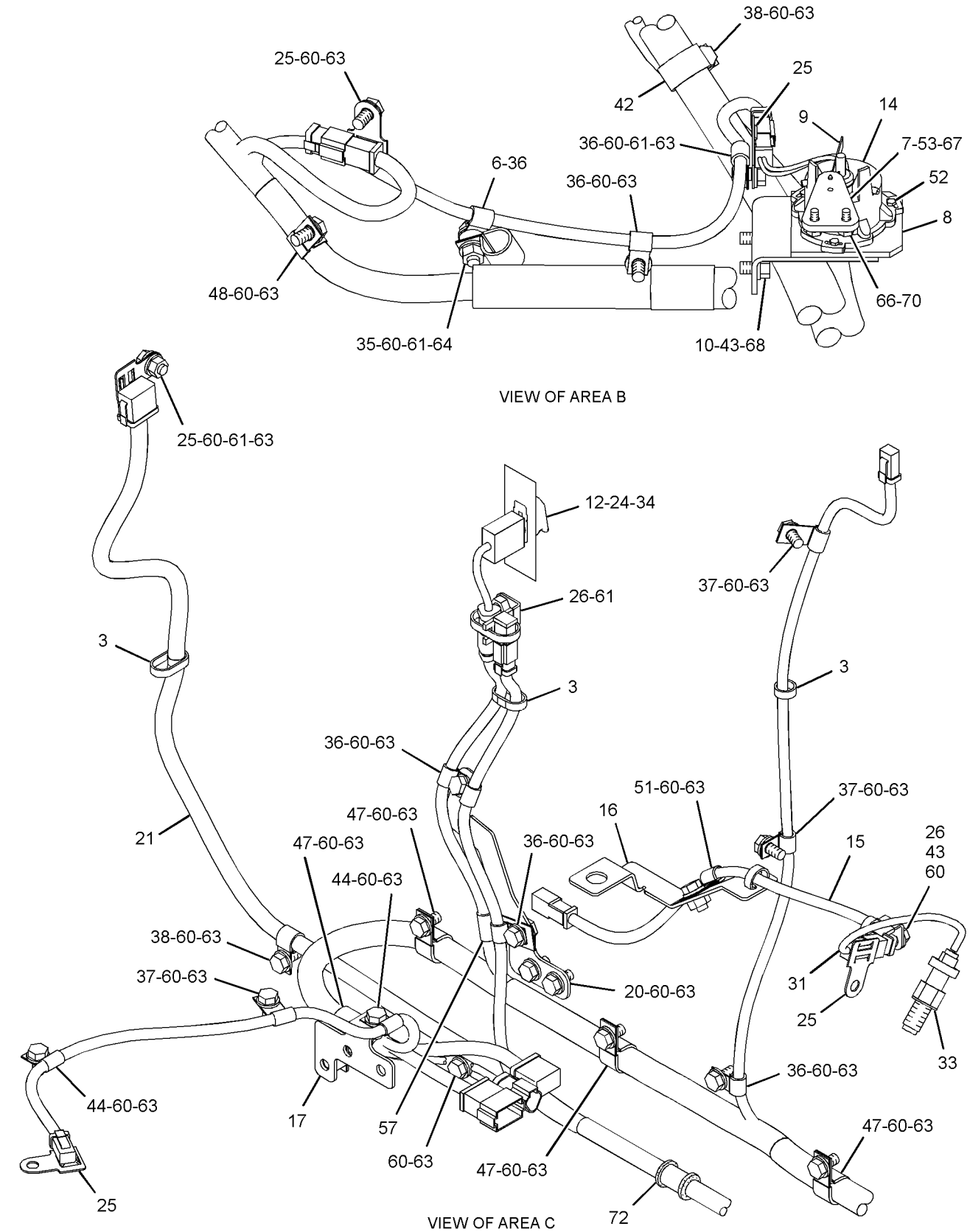

GRAPHIC #2 g02141755

293-4828 **WIRING GP-REAR (**contd.**)** **i06949130**

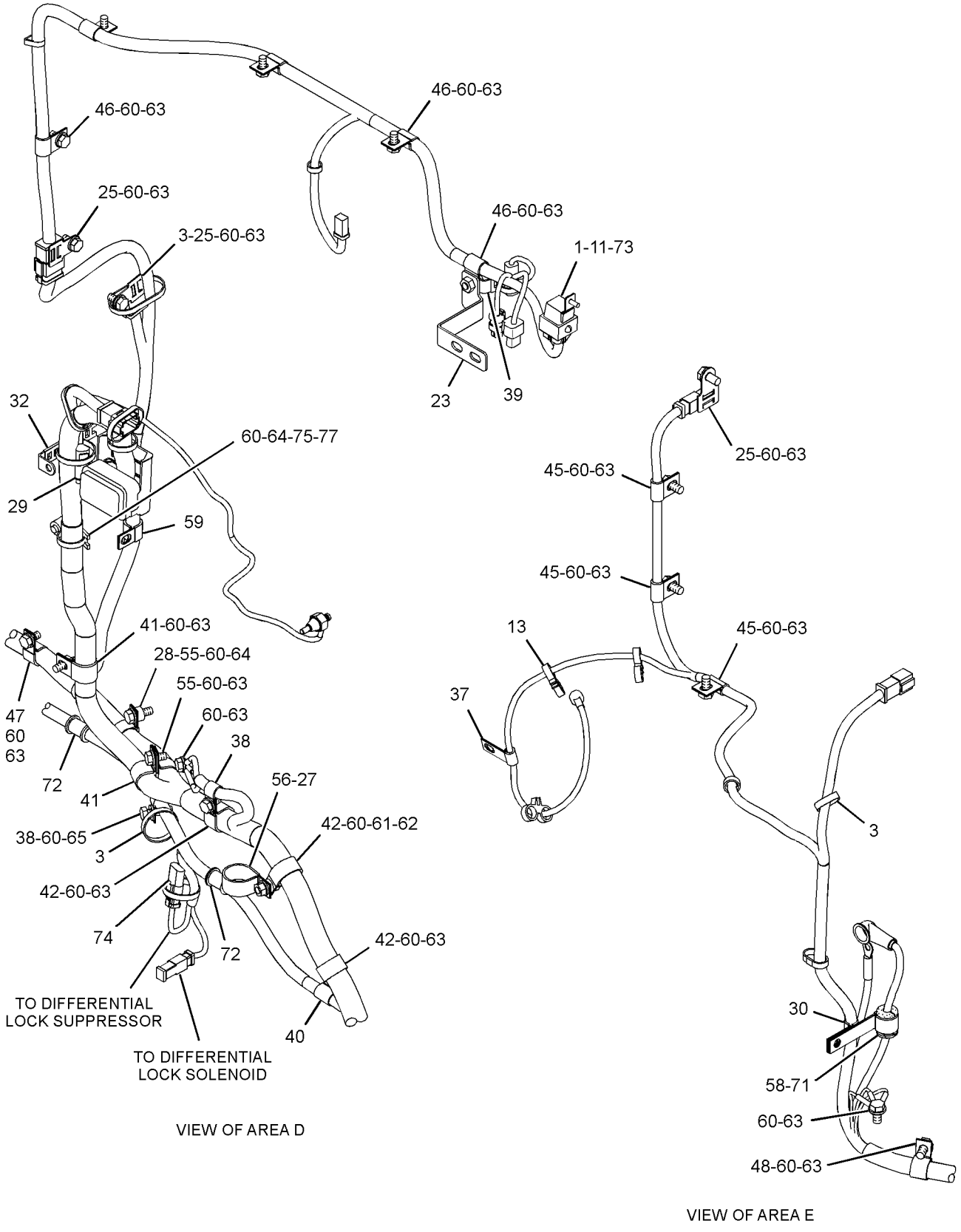

GRAPHIC #3 <END> g02141756

311-0802 WIRING GP-REAR–FUEL TANK

S/N: SZS1-488

PART OF 368-3025 GENERAL AR

SMCS-1408 **i06949176**

NOTE	REF NO	GRAPHIC REF	PART NUMBER	QTY	PART NAME 1 2 3 4 5 6 (PRODUCT LEVEL)	SEE PAGE
CY	1	1	**118-3534**	1	SWITCH GP-MAGNETIC (24-VOLT) (START RELAY)	361
	2	1	**4S-5719**	1	SPACER (10.31X25X12.7-MM THK)	
	3	1	**6V-4283**	1	PLATE-IDENTIFICATION (ALTERNATOR RESET)	
	4	1	**6V-7555**	1	STRAP-CABLE	
	5	1	**7K-1181**	11	STRAP-CABLE	
Y	6	1	**7N-0718**	1	SWITCH GP-DISCONNECT (BATTERY)	359
	7	1	**9C-5344**	1	SPACER (10.5X20X18-MM THK)	
	8	1	**9G-2758**	1	LOCKOUT-SWITCH	
	9	1	**135-2543**	2	BOOT (RED)	
	10	1	**171-2212**	1	CIRCUIT BREAKER AS (105-AMPERE) (MAIN)	
	10A	1	**171-2212**	1	CIRCUIT BREAKER AS (105-AMPERE) (ALTERNATOR)	
					(EACH INCLUDES)	
		1	**6V-8187**	2	NUT (1/4-28-THD)	
		1	**8T-4205**	2	WASHER-HARD (7.2X14.5X2-MM THK)	
		1	**253-2111**	2	LOCKWASHER	
	11	1	**186-3223**	1	PLATE AS	
	12	1	**189-0108**	1	PLATE	
Y	13	1	**194-6722**	1	SENSOR GP-PRESSURE (ATMOSPHERIC AIR)	341
	14	1	**204-8000**	1	MOUNTING-CABLE TIE	
Y	15	1	**241-8368**	1	SWITCH GP-MAGNETIC (24-VOLT) (MAIN RELAY)	364
	16	1	**289-9354**	1	CABLE AS	
D		1	**6V-2369**		CABLE (4-GA, BLACK) (0.3-M)	
		1	**131-1478**	1	TERMINAL AS	
		1	**9G-4343**	1	TERMINAL-RING (4-GA, 1/4-IN SCREW)	
E		1	**125-7876**		TUBE-HEAT SHRINK (17.78-MM DIA) (4-CM)	
		1	**5P-3454**	1	TERMINAL-RING (4-GA, 5/16-IN SCREW)	
		1	**135-2543**	2	BOOT (RED)	
	17	1	**311-9296**	1	HARNESS AS-FUEL TANK	
		1	**102-8802**	1	KIT-RECEPTACLE (2-PIN)	
		1	**102-8803**	1	KIT-RECEPTACLE (3-PIN)	
		1	**102-8804**	1	KIT-RECEPTACLE (4-PIN)	
		1	**102-8801**	1	KIT-RECEPTACLE (12-PIN)	
					(EACH KIT INCLUDES RECEPTACLE AS & WEDGE)	
		1	**8T-8729**	12	PIN-CONNECTOR (16-GA TO 18-GA)	
		1	**8T-8730**	9	SOCKET-CONNECTOR (16-GA TO 18-GA)	
		1	**8T-8737**	10	PLUG-SEAL	
E		1	**125-7875**		TUBE-HEAT SHRINK (7.44-MM DIA) (5-CM)	
		1	**155-2270**	1	KIT-CONNECTING PLUG (2-PIN)	
		1	**155-2271**	2	KIT-CONNECTING PLUG (4-PIN)	
					(EACH KIT INCLUDES PLUG AS, WEDGE, & INTERFACE SEAL)	
B		1	**1P-0810**		TAPE-ELECTRICAL	
	18	1	**335-0806**	1	BRACKET AS	
C	19	1	**289-9355**	1	CABLE AS	
D		1	**5P-5689**		WIRE (8-GA, BLACK) (0.4-M)	
	20	1	**124-9633**	1	CLIP (SLOT)	
	21	1	**130-5300**	5	CLIP	
	22	1	**132-5789**	1	CLIP	

311-0802 **WIRING GP-REAR (**contd.**)** **i06949176**

NOTE	REF NO	GRAPHIC REF	PART NUMBER	QTY	PART NAME 1 2 3 4 5 6 (PRODUCT LEVEL)	SEE PAGE
	23	1	**332-7657**	1	SENDER AS-FUEL LEVEL	
		1	**102-8802**	1	KIT-RECEPTACLE (2-PIN)	
					(INCLUDES RECEPTACLE AS & WEDGE)	
		1	**186-3735**	2	PIN-CONNECTOR (16-GA TO 18-GA)	
	24	1	**3J-1907**	1	SEAL-O-RING	
	25	1	**4D-7794**	1	CLIP	
M	26	1	**5C-9553**	5	BOLT (M6X1X16-MM)	
	27	1	**5L-4507**	4	SCREW-MACHINE (10-32X0.875-IN)	
M	28	1	**6V-7357**	1	BOLT (M6X1X25-MM)	
	29	1	**6V-7699**	4	WASHER-HARD (5.5X13X1.6-MM THK)	
	30	1	**8T-4121**	8	WASHER-HARD (11X21X2.5-MM THK)	
M	31	1	**8T-4133**	1	NUT (M10X1.5-THD)	
M	32	1	**8T-4136**	2	BOLT (M10X1.5X25-MM)	
M	33	1	**8T-4137**	3	BOLT (M10X1.5X20-MM)	
CM	34	1	**8T-4138**	3	BOLT (M6X1X20-MM)	
M	35	1	**8T-4196**	2	BOLT (M10X1.5X35-MM)	
	36	1	**8T-4205**	5	WASHER-HARD (7.2X14.5X2-MM THK)	
C	37	1	**9X-8256**	4	WASHER (6.6X12X2-MM THK)	
B	38	1	**8C-8422**		SEALANT	

B - USE AS REQUIRED
C - CHANGE FROM PREVIOUS TYPE
D - ORDER BY THE METER
E - ORDER BY THE CENTIMETER
M - METRIC PART
Y - SEPARATE ILLUSTRATION

311-0802 **WIRING GP-REAR (**contd.**)** **i06949176**

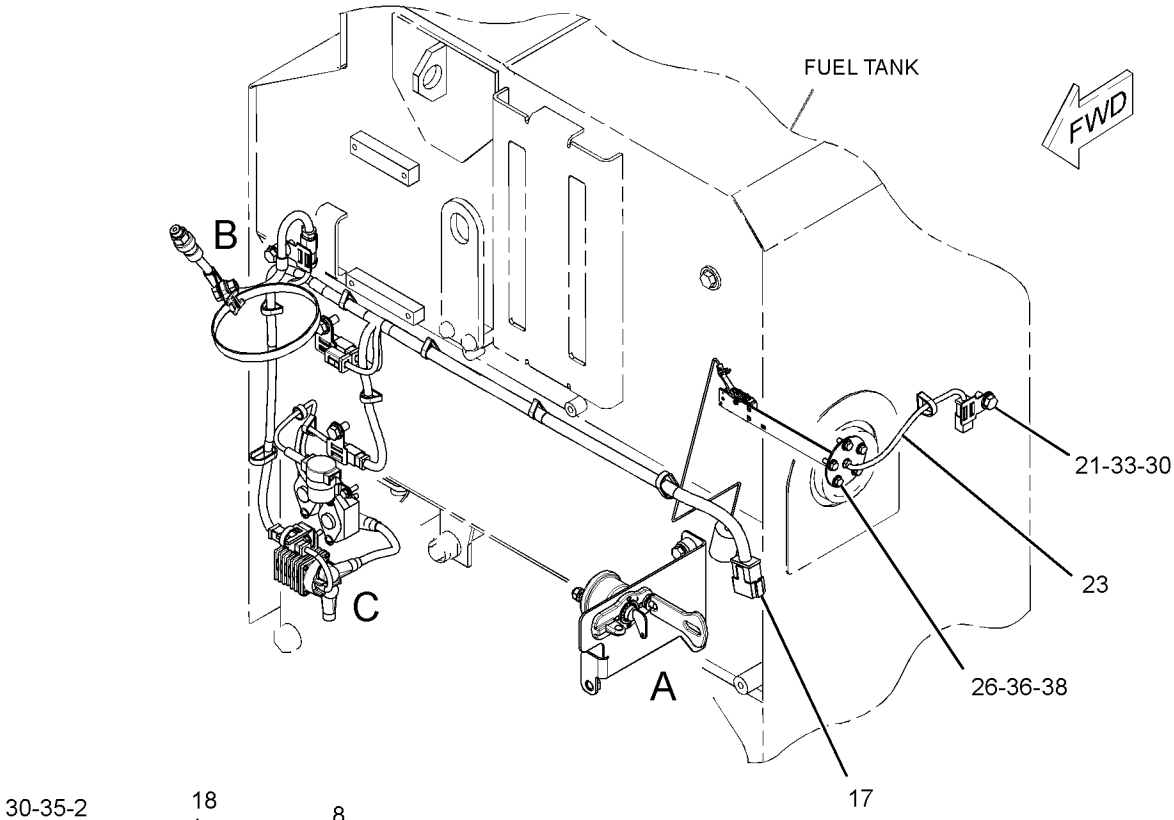

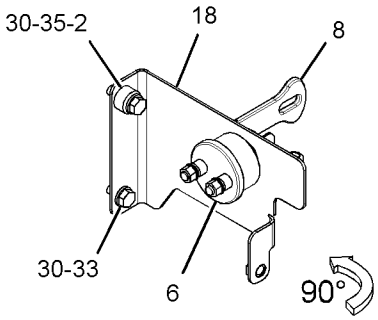

VIEW OF AREA A

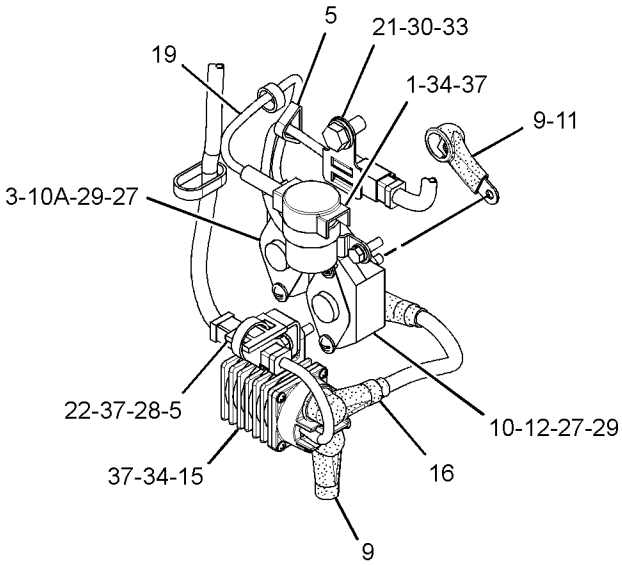

VIEW OF AREA C

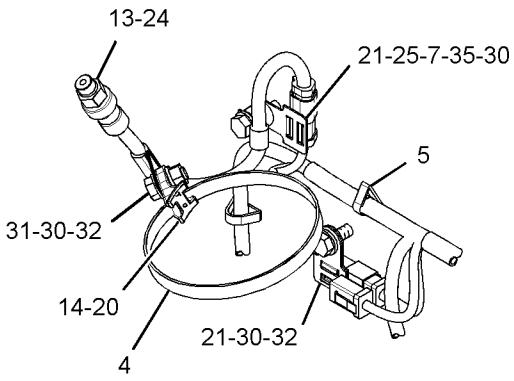

VIEW OF AREA B

GRAPHIC #1 <END> g02423438

373-6945 WIRING GP-REAR—FUEL TANK

S/N: SZS489-623

PART OF 368-3025 GENERAL AR

SMCS-1408 **i06561236**

NOTE	REF NO	GRAPHIC REF	PART NUMBER	QTY	PART NAME 1 2 3 4 5 6 (PRODUCT LEVEL)	SEE PAGE
	1	1	**4S-5719**	1	SPACER (10.31X25X12.7-MM THK)	
	2	1	**6V-4283**	1	PLATE-IDENTIFICATION (ALTERNATOR RESET)	
	3	1	**6V-7555**	1	STRAP-CABLE	
	4	1	**7K-1181**	11	STRAP-CABLE	
Y	5	1	**7N-0718**	1	SWITCH GP-DISCONNECT (BATTERY)	359
	6	1	**9G-2758**	1	LOCKOUT-SWITCH	
	7	1	**135-2543**	2	BOOT (RED)	
	8	1	**171-2212**	1	CIRCUIT BREAKER AS (105-AMPERE)	
	9	1	**171-2213**	1	CIRCUIT BREAKER AS (135-AMPERE)	
					(EACH CIRCUIT BREAKER AS INCLUDES)	
		1	**4E-5724**	2	WASHER (7X12X1-MM THK)	
		1	**8T-0122**	2	NUT-FULL (1/4-28-THD)	
		1	**253-2111**	2	LOCKWASHER	
	10	1	**186-3223**	1	PLATE AS	
	11	1	**189-0108**	1	PLATE	
	12	1	**204-8000**	1	MOUNTING-CABLE TIE	
Y	13	1	**241-8368**	1	SWITCH GP-MAGNETIC (24-VOLT) (MAIN POWER RELAY)	364
	14	1	**274-6717**	1	SENSOR-PRESSURE	
	15	1	**289-9354**	1	CABLE AS	
D		1	**6V-2369**		CABLE (4-GA, BLACK) (0.3-M)	
		1	**9G-4343**	1	TERMINAL-RING (4-GA, 1/4-IN SCREW)	
		1	**5P-3454**	1	TERMINAL-RING (4-GA, 5/16-IN SCREW)	
		1	**135-2543**	2	BOOT (RED)	
	16	1	**289-9355**	1	CABLE AS	
D		1	**5P-5689**		WIRE (8-GA, BLACK) (0.4-M)	
		1	**2L-8050**	2	TERMINAL-RING (6-GA, 1/4-IN SCREW)	
					—OR—	
		1	**2L-8058**	2	TERMINAL-RING (8-GA, 1/4-IN SCREW)	
	17	1	**335-0806**	1	BRACKET AS	
	18	1	**373-6946**	1	HARNESS AS-FUEL TANK	
		1	**102-8802**	1	KIT-RECEPTACLE (2-PIN)	
		1	**102-8804**	1	KIT-RECEPTACLE (4-PIN)	
		1	**102-8801**	1	KIT-RECEPTACLE (12-PIN)	
					(EACH RECEPTACLE KIT INCLUDES RECEPTACLE AS & WEDGE)	
		1	**8T-8729**	9	PIN-CONNECTOR (16-GA TO 18-GA)	
		1	**8T-8730**	12	SOCKET-CONNECTOR (16-GA TO 18-GA)	
		1	**8T-8737**	10	PLUG-SEAL	
		1	**9X-3401**	4	PIN-CONNECTOR (16-GA TO 18-GA)	
		1	**9X-3402**	4	SOCKET-CONNECTOR (16-GA TO 18-GA)	
E		1	**125-7875**		TUBE-HEAT SHRINK (7.44-MM DIA) (5-CM)	
		1	**155-2255**	1	KIT-CONNECTING PLUG (12-PIN)	
		1	**155-2270**	1	KIT-CONNECTING PLUG (2-PIN)	
		1	**155-2271**	1	KIT-CONNECTING PLUG (4-PIN)	
					(EACH PLUG KIT INCLUDES PLUG AS, WEDGE & INTERFACE SEAL)	
		1	**230-4013**	1	PLUG AS-CONNECTOR (3-PIN)	
		1	**264-7030**	1	SEAL-CONNECTOR	
Y	19	1	**118-3534**	1	SWITCH GP-MAGNETIC (24-VOLT) (STARTING MOTOR)	361

373-6945 **WIRING GP-REAR (**contd.**)** **i06561236**

NOTE	REF NO	GRAPHIC REF	PART NUMBER	QTY	PART NAME 1 2 3 4 5 6 (PRODUCT LEVEL)	SEE PAGE
	20	1	**5P-9297**	1	CLIP	
	21	1	**130-5300**	4	CLIP	
	22	1	**132-5789**	1	CLIP	
	23	1	**332-7657**	1	SENDER AS-FUEL LEVEL	
		1	**102-8802**	1	KIT-RECEPTACLE (2-PIN)	
					(INCLUDES RECEPTACLE AS & WEDGE)	
		1	**8T-8729**	2	PIN-CONNECTOR (16-GA TO 18-GA)	
	24	1	**3J-1907**	1	SEAL-O-RING	
	25	1	**4D-7794**	1	CLIP	
M	26	1	**5C-9553**	5	BOLT (M6X1X16-MM)	
	27	1	**5L-4507**	4	SCREW-MACHINE (10-32X0.875-IN)	
M	28	1	**6V-7357**	1	BOLT (M6X1X25-MM)	
	29	1	**6V-7699**	4	WASHER-HARD (5.5X13X1.6-MM THK)	
	30	1	**8T-4121**	8	WASHER-HARD (11X21X2.5-MM THK)	
M	31	1	**8T-4133**	1	NUT (M10X1.5-THD)	
M	32	1	**8T-4136**	2	BOLT (M10X1.5X25-MM)	
M	33	1	**8T-4137**	4	BOLT (M10X1.5X20-MM)	
M	34	1	**8T-4138**	3	BOLT (M6X1X20-MM)	
M	35	1	**8T-4196**	1	BOLT (M10X1.5X35-MM)	
	36	1	**8T-4205**	5	WASHER-HARD (7.2X14.5X2-MM THK)	
	37	1	**9X-8256**	4	WASHER (6.6X12X2-MM THK)	
BF			**1U-8846**		SEALANT-GASKET	

B - USE AS REQUIRED
D - ORDER BY THE METER
E - ORDER BY THE CENTIMETER
F - NOT SHOWN
M - METRIC PART
Y - SEPARATE ILLUSTRATION

373-6945 **WIRING GP-REAR (**contd.**)** **i06561236**

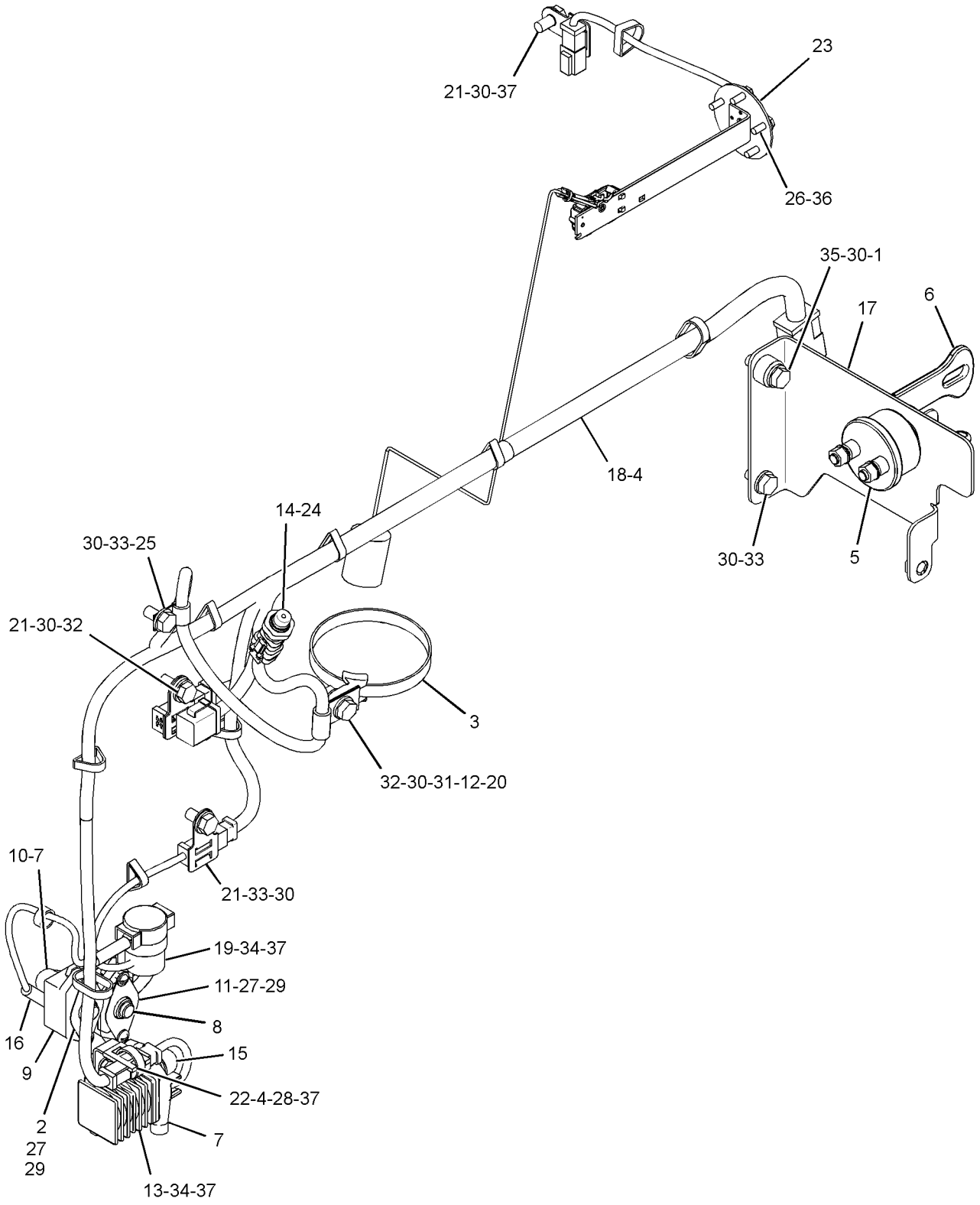

GRAPHIC #1 <END> g03344688

388-2517 WIRING GP-REAR

S/N: SZS489-UP

PART OF 368-3025 GENERAL AR

SMCS-1408 **i05890396**

NOTE	REF NO	GRAPHIC REF	PART NUMBER	QTY	PART NAME 1 2 3 4 5 6 (PRODUCT LEVEL)	SEE PAGE
	1	2	**3E-5169**	1	GUARD-SWITCH	
	2	2	**3E-5239**	1	RELAY AS (24-VOLT) (FUEL PRIMING)	
	3	1	**7G-1060**	1	STRAP AS-GROUND	
	4	1,2	**7K-1181**	25	STRAP-CABLE	
	5	2	**8W-8527**	1	SLEEVE	
	6	2	**9X-8256**	1	WASHER (6.6X12X2-MM THK)	
	7	2	**109-0361**	1	FILM-INSTRUCTION (ENGINE SHUTDOWN)	
	8	1	**123-3688**	1	PLATE AS	
		1	**7L-0811**	1	DOWEL	
	9	1	**123-3689**	1	PLATE AS	
	10	1	**123-3692**	1	ARM	
	11	1	**123-3695**	1	PLATE	
M	12	2	**130-2792**	1	SCREW (M6X1X16-MM)	
	13	2	**133-3260**	1	SPACER (11X19X10-MM THK)	
	14	2	**177-2215**	2	STRAP-DUAL CLAMP	
	15	1	**187-1008**	1	SENDER AS-POSITION (ARTICULATION)	
		1	**3E-3365**	1	WEDGE-RECEPTACLE LOCK (2-PIN)	
		1	**102-8802**	1	KIT-RECEPTACLE (2-PIN)	
					(INCLUDES RECEPTACLE AS & WEDGE)	
		1	**8T-8729**	2	PIN-CONNECTOR (16-GA TO 18-GA)	
	16	2	**189-3158**	1	SUPPRESSOR-ARC	
	17	2	**308-0291**	1	HARNESS AS-SENSOR (TRANSMISSION SPEED)	
		2	**102-8802**	1	KIT-RECEPTACLE (2-PIN)	
					(INCLUDES RECEPTACLE AS & WEDGE)	
		2	**8T-8729**	2	PIN-CONNECTOR (16-GA TO 18-GA)	
		2	**9X-3402**	2	SOCKET-CONNECTOR (16-GA TO 18-GA)	
					—OR—	
		2	**126-1768**	2	SOCKET-CONNECTOR (14-GA TO 16-GA)	
		2	**155-2270**	1	KIT-CONNECTING PLUG (2-PIN)	
					(INCLUDES PLUG AS, WEDGE & INTERFACE SEAL)	
	18	2	**308-6403**	1	BRACKET AS	
Y	19	2	**318-1178**	1	SENSOR GP-SPEED (MAGNETIC, HIGH OUTPUT) (TRANSMISSION)	349
	20	2	**326-3120**	1	BRACKET AS	
	21	2	**336-9085**	1	HARNESS AS-REAR CHASSIS (LH)	
		2	**102-8802**	3	KIT-RECEPTACLE (2-PIN)	
					(EACH RECEPTACLE KIT INCLUDES RECEPTACLE AS & WEDGE)	
		2	**8T-8730**	24	SOCKET-CONNECTOR (16-GA TO 18-GA)	
		2	**8T-8737**	11	PLUG-SEAL	
		2	**9W-0844**	1	SOCKET-CONNECTOR (14-GA TO 16-GA)	
E		2	**125-7874**		TUBE-HEAT SHRINK (5.72-MM DIA) (5-CM)	
E		2	**125-7875**		TUBE-HEAT SHRINK (7.44-MM DIA) (5-CM)	
		2	**2L-8071**	1	TERMINAL-RING (10-GA TO 12-GA, 1/2-IN SCREW)	
		2	**155-2255**	2	KIT-CONNECTING PLUG (12-PIN)	
		2	**155-2270**	3	KIT-CONNECTING PLUG (2-PIN)	
					(EACH PLUG KIT INCLUDES PLUG AS, WEDGE & INTERFACE SEAL)	
		2	**155-2258**	2	WEDGE-PLUG LOCK (12-PIN)	

388-2517 **WIRING GP-REAR (**contd.**)** **i05890396**

NOTE	REF NO	GRAPHIC REF	PART NUMBER	QTY	PART NAME 1 2 3 4 5 6 (PRODUCT LEVEL)	SEE PAGE
B		2	**1P-0810**		TAPE-ELECTRICAL	
E		2	**235-2765**		CONDUIT-FLEXIBLE (27.6-MM ID) (78-CM)	
E		2	**311-4859**		TUBE-HEAT SHRINK (48-MM DIA) (30-CM)	
	22	2	**337-6814**	1	HARNESS AS-SENSOR (FUEL SYSTEM)	
		2	**102-8801**	1	KIT-RECEPTACLE (12-PIN)	
					(INCLUDES RECEPTACLE AS & WEDGE)	
		2	**8T-8729**	9	PIN-CONNECTOR (16-GA TO 18-GA)	
		2	**8T-8737**	1	PLUG-SEAL	
		2	**9W-0844**	2	SOCKET-CONNECTOR (14-GA TO 16-GA)	
		2	**9W-0852**	2	PIN-CONNECTOR (14-GA TO 16-GA)	
		2	**9X-1054**	1	PLUG AS-CONNECTOR (4-PIN)	
		2	**9X-1056**	4	TERMINAL-RECEPTACLE (14-GA TO 16-GA)	
		2	**9X-3401**	2	PIN-CONNECTOR (16-GA TO 18-GA)	
		2	**9X-3402**	5	SOCKET-CONNECTOR (16-GA TO 18-GA)	
		2	**155-2270**	1	KIT-CONNECTING PLUG (2-PIN)	
					(INCLUDES PLUG AS, WEDGE & INTERFACE SEAL)	
B		2	**1P-0810**		TAPE-ELECTRICAL	
		2	**230-4011**	1	PLUG AS-CONNECTOR (2-PIN)	
		2	**264-7029**	1	SEAL-CONNECTOR	
		2	**230-4012**	1	RECEPTACLE AS-CONNECTOR (2-PIN)	
		2	**237-0227**	1	PLUG AS-CONNECTOR (3-PIN)	
		2	**264-7030**	1	SEAL-CONNECTOR	
	23	2	**344-0050**	1	BRACKET AS	
	24	2	**353-4515**	1	SWITCH AS-TOGGLE (ENGINE SHUTDOWN)	
		2	**102-8803**	1	KIT-RECEPTACLE (3-PIN)	
					(INCLUDES RECEPTACLE AS & WEDGE)	
		2	**3E-3371**	1	WEDGE-RECEPTACLE LOCK (3-PIN)	
		2	**3E-3390**	3	PIN-CONNECTOR	
Y	25	1	**388-2518**	1	HARNESS AS-TRANSMISSION	265
Y	26	2	**388-2519**	1	HARNESS AS-REAR CHASSIS	260
	27	1,2	**130-5300**	8	CLIP	
	28	1,2	**132-5789**	3	CLIP	
	29	2	**132-7551**	1	SPACER (11X19X6-MM THK)	
	30	2	**134-2540**	1	RESISTOR AS-CONNECTION (3-PIN)	
	31	2	**198-4777**	1	WASHER-HARD (11X25X10-MM THK)	
	32	2	**277-1873**	1	CLIP	
	33	2	**2A-1162**	1	GASKET	
	34	1,2	**4D-7794**	7	CLIP	
	35	2	**4D-8123**	4	CLIP	
	36	1,2	**4K-8864**	4	CLIP	
	37	2	**4P-8134**	1	CLIP	
	38	2	**4S-1936**	1	CLIP	
	39	2	**4S-1962**	2	CLIP	
	40	1,2	**4S-4455**	9	CLIP	
	41	1	**5P-8167**	2	BOLT (3/8-16X0.625-IN)	
	42	2	**5P-9085**	2	CLIP	
	43	2	**5P-9297**	3	CLIP	
	44	2	**6D-3479**	6	CLIP	
	45	1,2	**6D-4244**	6	CLIP	
	46	1,2	**6D-4246**	5	CLIP	
	47	2	**6V-3265**	1	CLIP	

388-2517 **WIRING GP-REAR (**contd.**)** **i05890396**

NOTE	REF NO	GRAPHIC REF	PART NUMBER	QTY	PART NAME 1 2 3 4 5 6 (PRODUCT LEVEL)	SEE PAGE
	48	1	**6V-6893**	3	BOLT (6-32X0.375-IN)	
	49	1	**6V-8801**	1	NUT (3/8-16-THD)	
	50	1	**6W-6672**	1	SPACER (10.5X20X38-MM THK)	
	51	2	**7C-4354**	2	CLIP	
	52	2	**7D-7233**	1	CLIP	
	53	2	**7N-3718**	1	CLIP	
	54	2	**8D-9671**	1	CLIP	
	55	2	**8M-2773**	1	CLIP	
	56	1,2	**8T-4121**	59	WASHER-HARD (11X21X2.5-MM THK)	
M	57	1,2	**8T-4133**	4	NUT (M10X1.5-THD)	
M	58	1,2	**8T-4136**	2	BOLT (M10X1.5X25-MM)	
M	59	1,2	**8T-4137**	50	BOLT (M10X1.5X20-MM)	
M	60	2	**8T-4195**	2	BOLT (M10X1.5X30-MM)	
M	61	2	**8T-4196**	1	BOLT (M10X1.5X35-MM)	
	62	1	**8T-4205**	2	WASHER-HARD (7.2X14.5X2-MM THK)	
	63	1	**8T-4226**	1	WASHER-PLATED (10.5X45X3-MM THK)	
	64	1	**8T-4896**	3	WASHER-HARD (10.2X18.5X2.5-MM THK)	
M	65	1	**8T-6466**	1	BOLT (M10X1.5X60-MM)	
	66	1	**8T-9364**	2	BOLT (1/4-20X0.625-IN)	
	67	2	**8W-8909**	1	SLEEVE	
	68	2	**8X-5489**	3	SLEEVE	
	69	1	**5M-3062**	1	BOLT (3/8-16X0.75-IN)	

B - USE AS REQUIRED
E - ORDER BY THE CENTIMETER
M - METRIC PART
Y - SEPARATE ILLUSTRATION

388-2517 **WIRING GP-REAR (**contd.**)** **i05890396**

REFER TO ALL ILLUSTRATIONS OF
THIS GROUP FOR AUXILIARY VIEWS

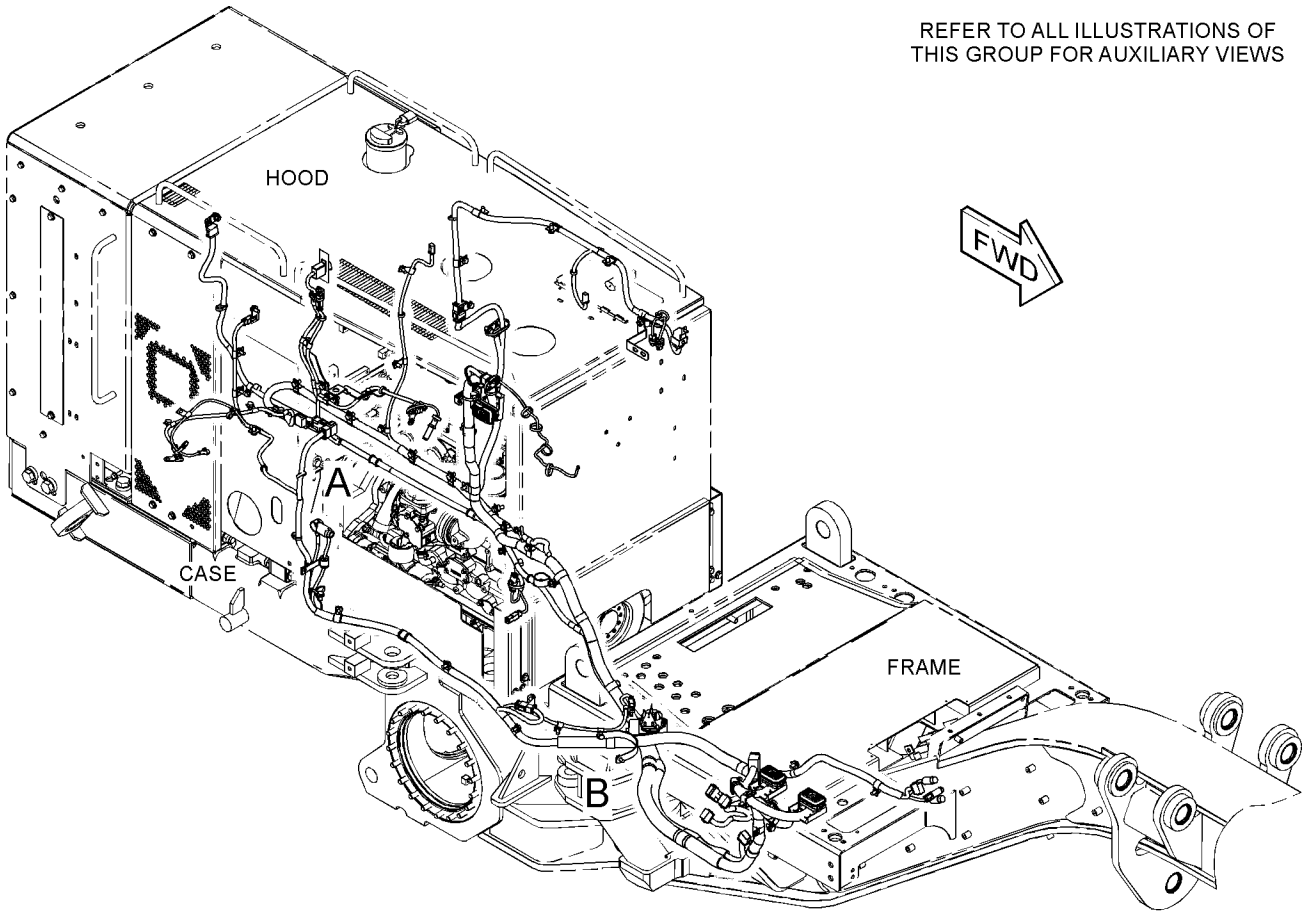

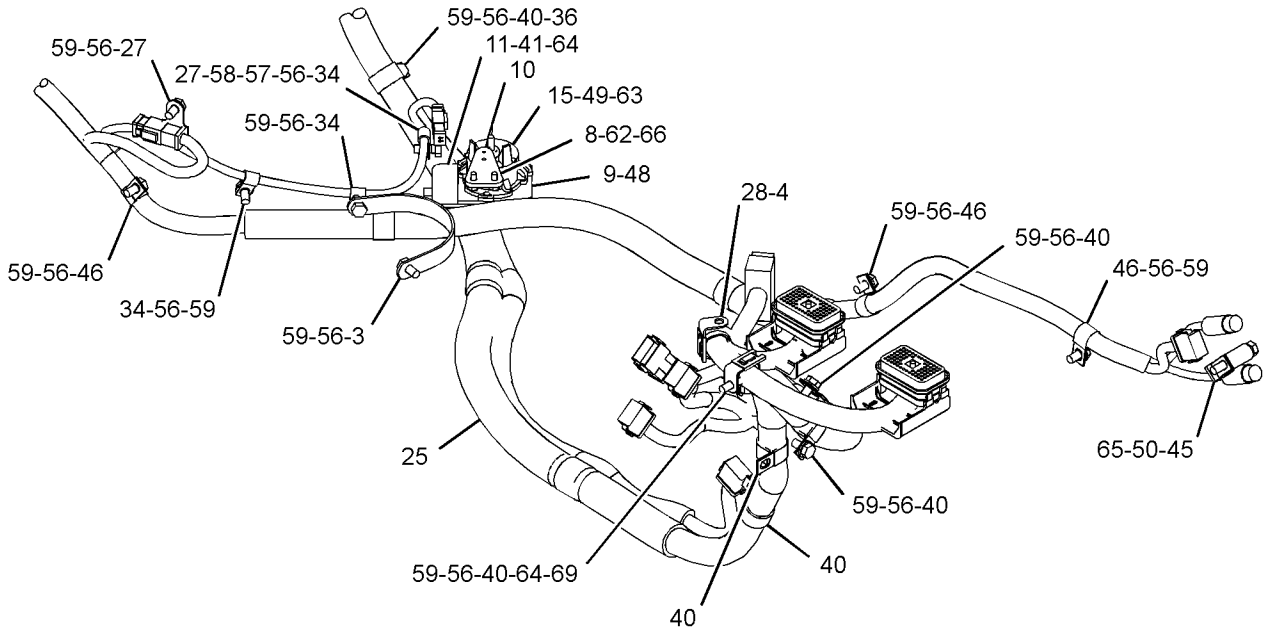

VIEW OF AREA B

GRAPHIC #1 g03391834

388-2517 **WIRING GP-REAR (**contd.**)** **i05890396**

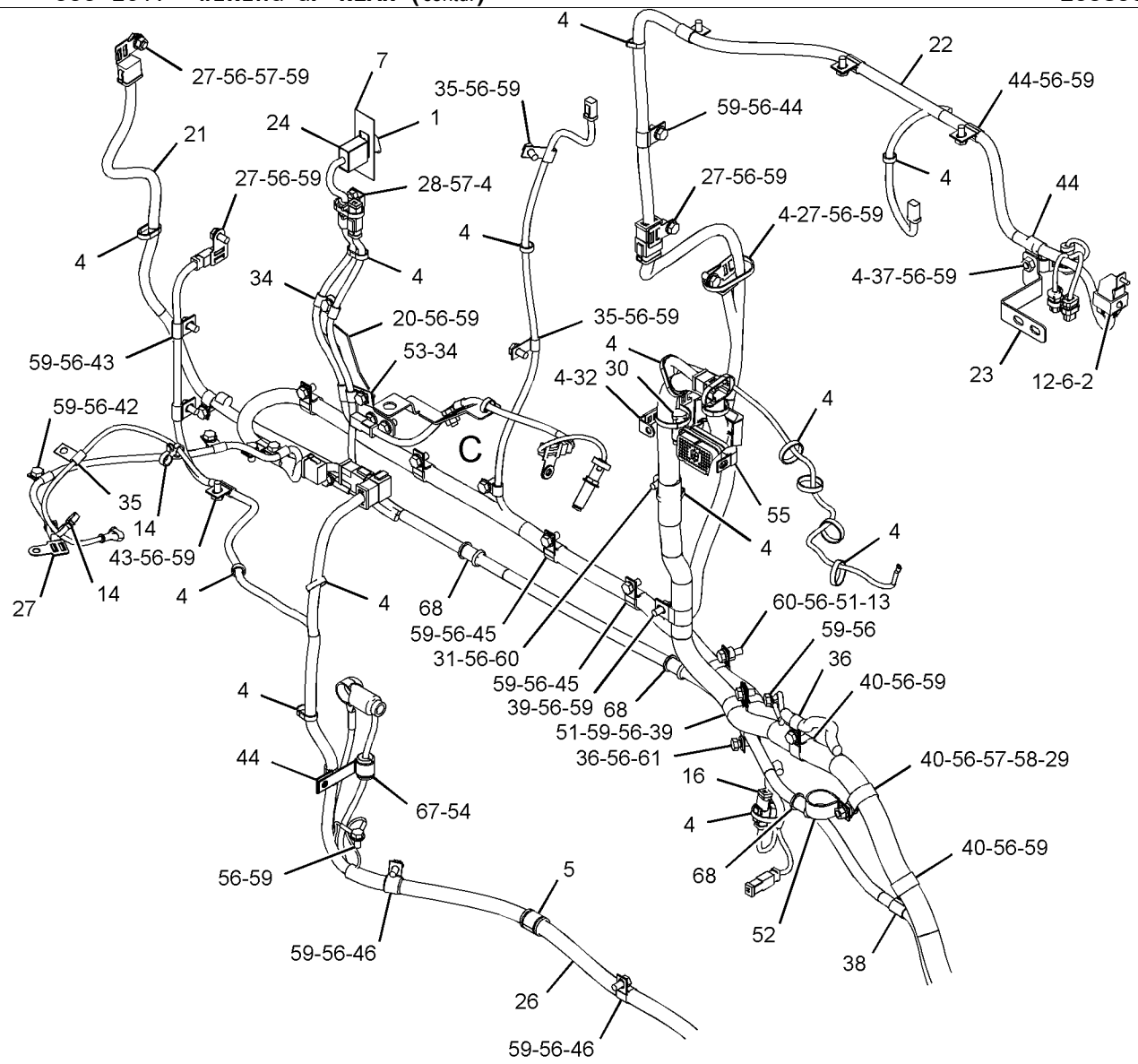

VIEW OF AREA A

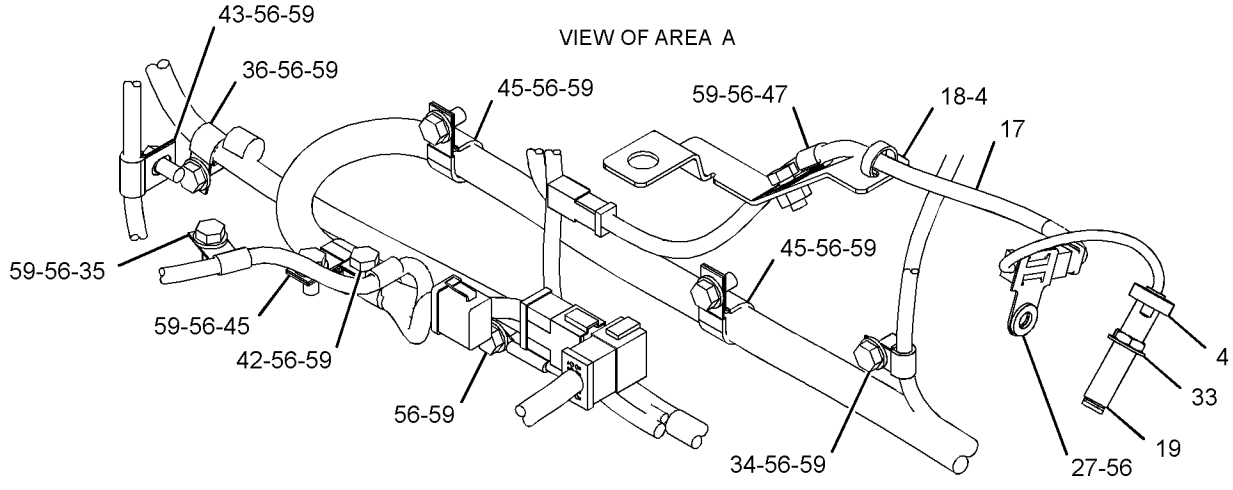

VIEW OF AREA C

GRAPHIC #2

<END>

g03391847

388-2517 WIRING GP-REAR

S/N: SZS489-623

PART OF 368-3025 GENERAL AR

SMCS-1408 **i05884695**

NOTE	REF NO	GRAPHIC REF	PART NUMBER	QTY	PART NAME 1 2 3 4 5 6 (PRODUCT LEVEL)	SEE PAGE
	1	2	**3E-5169**	1	GUARD-SWITCH	
	2	2	**3E-5239**	1	RELAY AS (24-VOLT) (FUEL PRIMING)	
	3	1	**7G-1060**	1	STRAP AS-GROUND	
	4	2	**7K-1181**	25	STRAP-CABLE	
	5	2	**8W-8527**	1	SLEEVE	
	7	2	**109-0361**	1	FILM-INSTRUCTION (ENGINE SHUTDOWN)	
	8	1	**123-3688**	1	PLATE AS	
		1	**7L-0811**	1	DOWEL	
	9	1	**123-3689**	1	PLATE AS	
	10	1	**123-3692**	1	ARM	
	11	1	**123-3695**	1	PLATE	
M	12	2	**130-2792**	1	SCREW (M6X1X16-MM)	
C	13	2	**091-0081**	1	SPACER (10.5X20X10-MM THK)	
	14	2	**177-2215**	2	STRAP-DUAL CLAMP	
	15	1	**187-1008**	1	SENDER AS-POSITION (ARTICULATION)	
		1	**3E-3365**	1	WEDGE-RECEPTACLE LOCK (2-PIN)	
		1	**102-8802**	1	KIT-RECEPTACLE (2-PIN)	
					(INCLUDES RECEPTACLE AS & WEDGE)	
		1	**8T-8729**	2	PIN-CONNECTOR (16-GA TO 18-GA)	
	16	2	**189-3158**	1	SUPPRESSOR-ARC	
	17	2	**308-0291**	1	HARNESS AS-SENSOR (TRANSMISSION SPEED)	
		2	**102-8802**	1	KIT-RECEPTACLE (2-PIN)	
					(INCLUDES RECEPTACLE AS & WEDGE)	
		2	**8T-8729**	2	PIN-CONNECTOR (16-GA TO 18-GA)	
		2	**9X-3402**	2	SOCKET-CONNECTOR (16-GA TO 18-GA)	
					—OR—	
		2	**126-1768**	2	SOCKET-CONNECTOR (14-GA TO 16-GA)	
		2	**155-2270**	1	KIT-CONNECTING PLUG (2-PIN)	
					(INCLUDES PLUG AS, WEDGE & INTERFACE SEAL)	
	18	2	**308-6403**	1	BRACKET AS	
Y	19	2	**318-1178**	1	SENSOR GP-SPEED (MAGNETIC, HIGH OUTPUT) (TRANSMISSION)	349
	20	2	**326-3120**	1	BRACKET AS	
	21	2	**336-9085**	1	HARNESS AS-REAR CHASSIS (LH)	
		2	**102-8802**	3	KIT-RECEPTACLE (2-PIN)	
					(EACH RECEPTACLE KIT INCLUDES RECEPTACLE AS & WEDGE)	
		2	**8T-8730**	24	SOCKET-CONNECTOR (16-GA TO 18-GA)	
		2	**8T-8737**	11	PLUG-SEAL	
		2	**9W-0844**	1	SOCKET-CONNECTOR (14-GA TO 16-GA)	
E		2	**125-7874**		TUBE-HEAT SHRINK (5.72-MM DIA) (5-CM)	
E		2	**125-7875**		TUBE-HEAT SHRINK (7.44-MM DIA) (5-CM)	
		2	**2L-8071**	1	TERMINAL-RING (10-GA TO 12-GA, 1/2-IN SCREW)	
		2	**155-2255**	2	KIT-CONNECTING PLUG (12-PIN)	
		2	**155-2270**	3	KIT-CONNECTING PLUG (2-PIN)	
					(EACH PLUG KIT INCLUDES PLUG AS, WEDGE & INTERFACE SEAL)	
		2	**155-2258**	2	WEDGE-PLUG LOCK (12-PIN)	
B		2	**1P-0810**		TAPE-ELECTRICAL	

388-2517 **WIRING GP-REAR (**contd.**)** **i05884695**

NOTE	REF NO	GRAPHIC REF	PART NUMBER	QTY	PART NAME 1 2 3 4 5 6 (PRODUCT LEVEL)	SEE PAGE
E		2	**235-2765**		CONDUIT-FLEXIBLE (27.6-MM ID) (78-CM)	
E		2	**311-4859**		TUBE-HEAT SHRINK (48-MM DIA) (30-CM)	
CY	22	2	**423-8806**	1	HARNESS AS-SENSOR	262
C	23	2	**226-3492**	1	BRACKET AS	
	24	2	**353-4515**	1	SWITCH AS-TOGGLE (ENGINE SHUTDOWN)	
		2	**102-8803**	1	KIT-RECEPTACLE (3-PIN)	
					(INCLUDES RECEPTACLE AS & WEDGE)	
		2	**3E-3371**	1	WEDGE-RECEPTACLE LOCK (3-PIN)	
		2	**3E-3390**	3	PIN-CONNECTOR	
Y	25	1	**388-2518**	1	HARNESS AS-TRANSMISSION	265
Y	26	2	**388-2519**	1	HARNESS AS-REAR CHASSIS (RELAY)	260
	27	1,2	**130-5300**	8	CLIP	
C	28	2	**132-5789**	2	CLIP	
	29	2	**132-7551**	1	SPACER (11X19X6-MM THK)	
	30	2	**134-2540**	1	RESISTOR AS-CONNECTION (3-PIN)	
	31	2	**198-4777**	1	WASHER-HARD (11X25X10-MM THK)	
	32	2	**277-1873**	1	CLIP	
	33	2	**2A-1162**	1	GASKET	
	34	1,2	**4D-7794**	7	CLIP	
	35	2	**4D-8123**	4	CLIP	
	36	1,2	**4K-8864**	4	CLIP	
	37	2	**4P-8134**	1	CLIP	
	38	2	**4S-1936**	1	CLIP	
	40	1,2	**4S-4455**	9	CLIP	
	41	1	**5P-8167**	2	BOLT (3/8-16X0.625-IN)	
	42	2	**5P-9085**	2	CLIP	
	43	2	**5P-9297**	3	CLIP	
C	44	2	**6D-3479**	5	CLIP	
	45	1,2	**6D-4244**	6	CLIP	
	46	1,2	**6D-4246**	5	CLIP	
	47	2	**6V-3265**	1	CLIP	
	48	1	**6V-6893**	3	BOLT (6-32X0.375-IN)	
	49	1	**6V-8801**	1	NUT (3/8-16-THD)	
	50	1	**6W-6672**	1	SPACER (10.5X20X38-MM THK)	
C	51	2	**7C-4354**	4	CLIP	
	52	2	**7D-7233**	1	CLIP	
	53	2	**7N-3718**	1	CLIP	
	54	2	**8D-9671**	1	CLIP	
	55	2	**8M-2773**	1	CLIP	
C	56	1,2	**8T-4121**	60	WASHER-HARD (11X21X2.5-MM THK)	
CM	57	1,2	**344-5675**	4	NUT (M10X1.5-THD)	
M	58	1	**8T-4136**	2	BOLT (M10X1.5X25-MM)	
M	59	1,2	**8T-4137**	50	BOLT (M10X1.5X20-MM)	
CM	60	2	**8T-4195**	3	BOLT (M10X1.5X30-MM)	
	62	1	**8T-4205**	2	WASHER-HARD (7.2X14.5X2-MM THK)	
	63	1	**8T-4226**	1	WASHER-PLATED (10.5X45X3-MM THK)	
C	64	1	**8T-4896**	2	WASHER-HARD (10.2X18.5X2.5-MM THK)	
M	65	1	**8T-6466**	1	BOLT (M10X1.5X60-MM)	
	66	1	**8T-9364**	2	BOLT (1/4-20X0.625-IN)	
	67	2	**8W-8909**	1	SLEEVE	
	68	2	**8X-5489**	3	SLEEVE	

388-2517 **WIRING GP-REAR (**contd.**)** **i05884695**

NOTE	REF NO	GRAPHIC REF	PART NUMBER	QTY	PART NAME 1 2 3 4 5 6 (PRODUCT LEVEL)	SEE PAGE
	69	1	**5M-3062**	1	BOLT (3/8-16X0.75-IN)	
C	70	2	**4P-7581**	1	CLIP	
C	71	1	**4B-4274**	6	WASHER (5.5X13X1.2-MM THK)	

B - USE AS REQUIRED
C - CHANGE FROM PREVIOUS TYPE
E - ORDER BY THE CENTIMETER
M - METRIC PART
Y - SEPARATE ILLUSTRATION

388-2517 **WIRING GP-REAR (**contd.**)** **i05884695**

REFER TO ALL ILLUSTRATIONS OF
THIS GROUP FOR AUXILIARY VIEWS

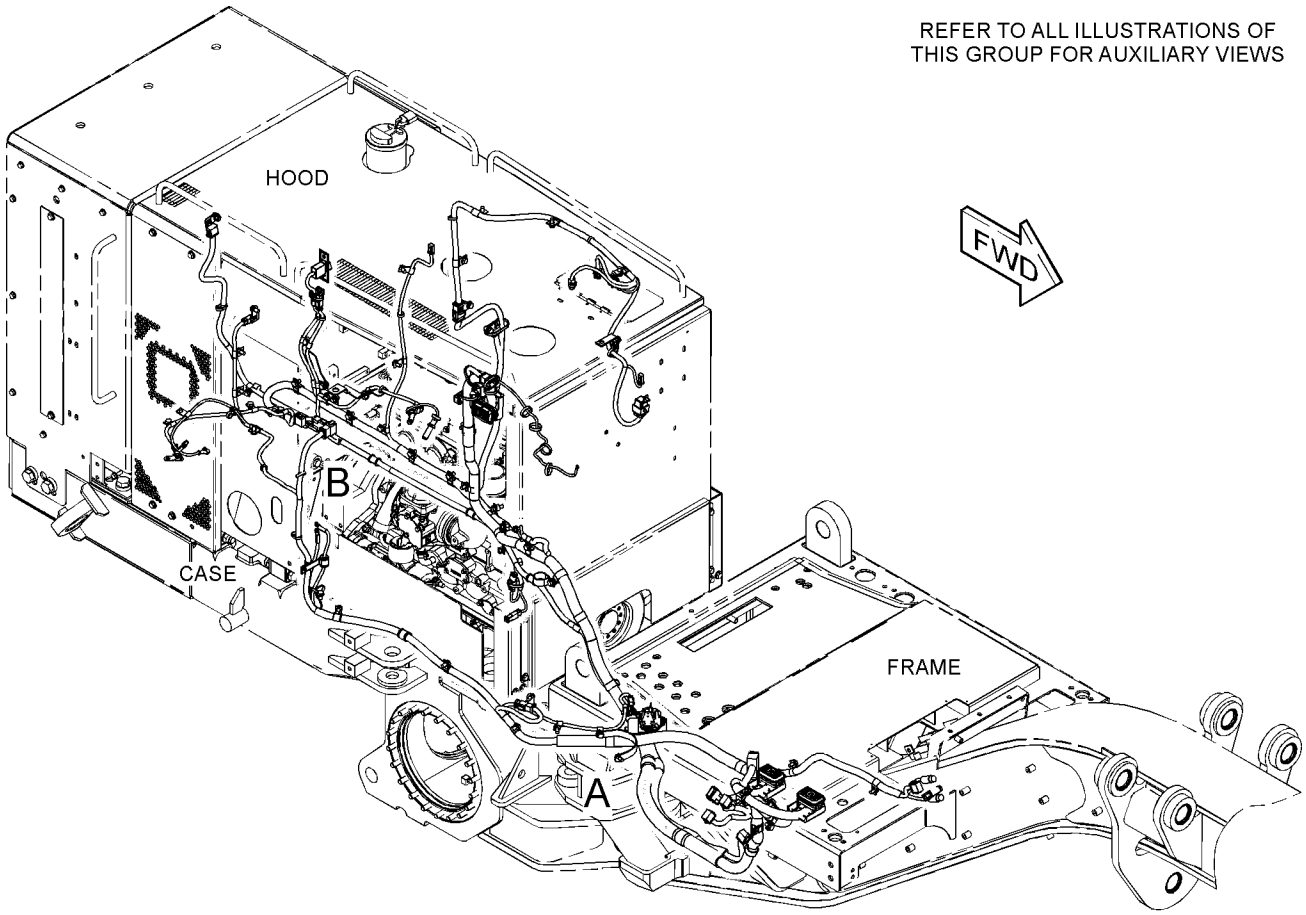

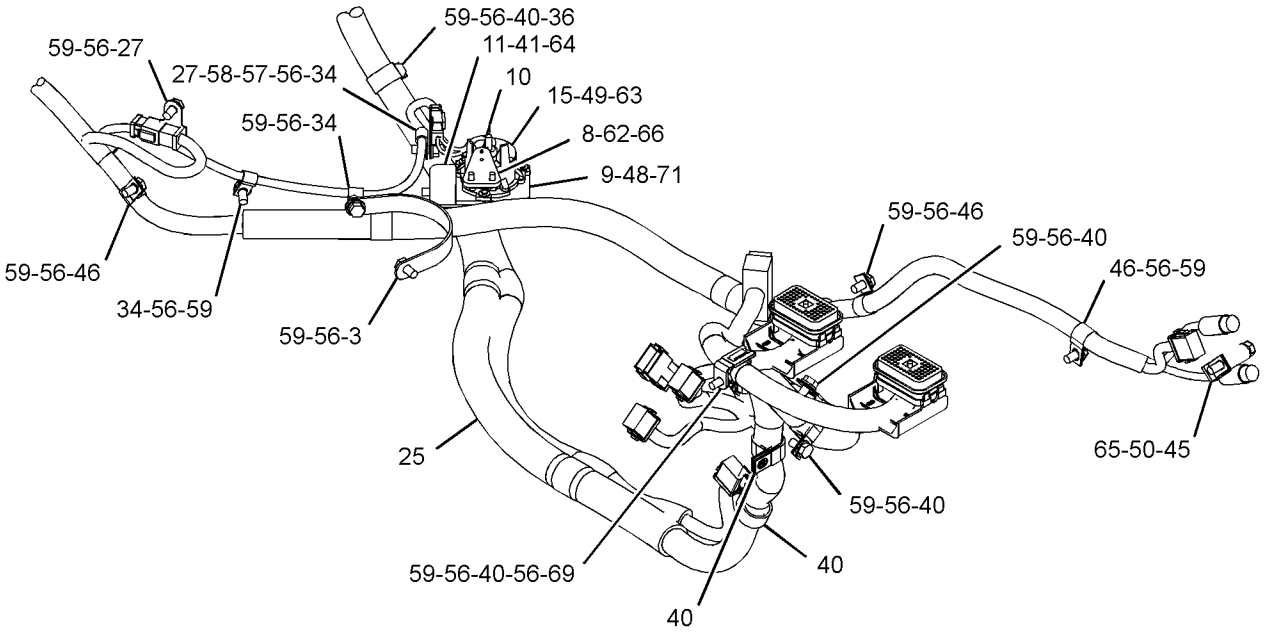

VIEW OF AREA A

GRAPHIC #1 g03712091

388-2517 **WIRING GP-REAR (**contd.**)** **i05884695**

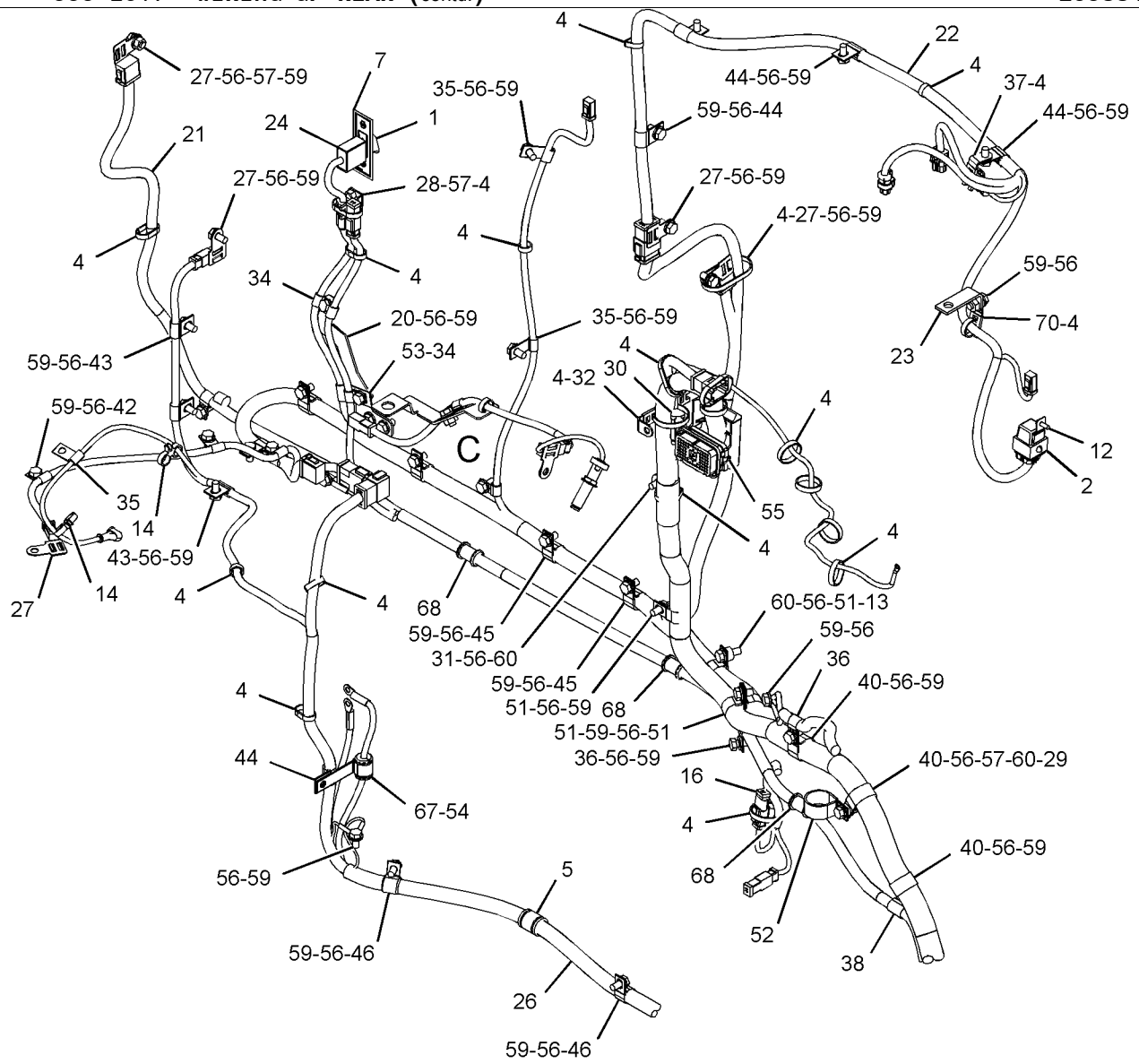

VIEW OF AREA B

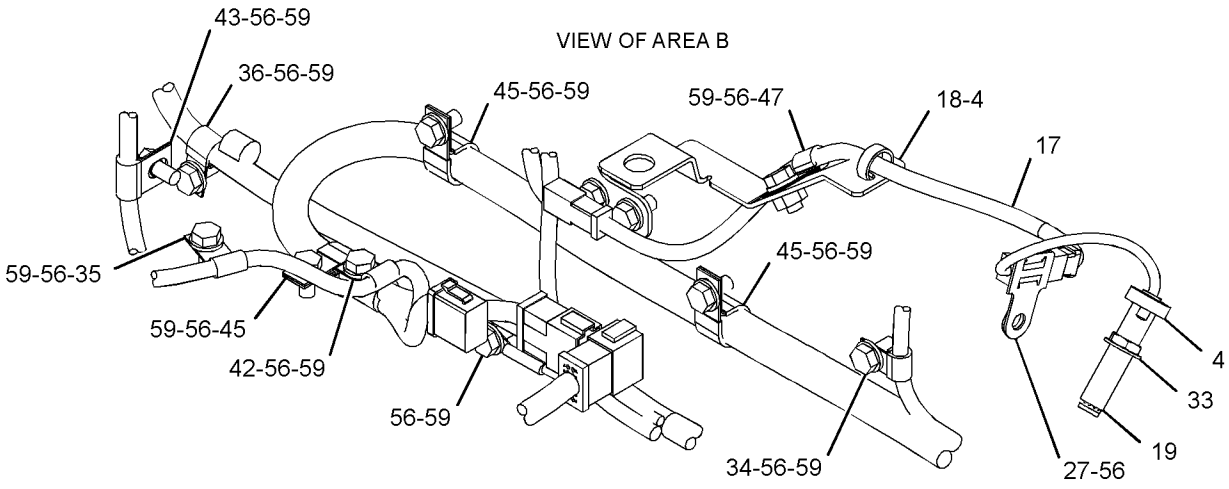

VIEW OF AREA C

GRAPHIC #2 <END> g03712092

434-4113 WIRING GP-REAR—FUEL TANK

S/N: SZS624-UP

PART OF 436-7621 ELECTRICAL AR

SMCS-1408 **i06842843**

NOTE	REF NO	GRAPHIC REF	PART NUMBER	QTY	PART NAME 1 2 3 4 5 6 (PRODUCT LEVEL)	SEE PAGE
	1	2	**6V-4283**	1	PLATE-IDENTIFICATION (ALTERNATOR RESET)	
	2	1,2	**7K-1181**	12	STRAP-CABLE	
	3	2	**135-2543**	2	BOOT (RED)	
	4	2	**171-2212**	1	CIRCUIT BREAKER AS (105-AMPERE) (MAIN POWER)	
	5	2	**171-2213**	1	CIRCUIT BREAKER AS (135-AMPERE) (ALTERNATOR)	
					(EACH CIRCUIT BREAKER AS INCLUDES)	
		2	**1H-3244**	2	LOCKWASHER	
		2	**4E-5724**	2	WASHER (7X12X1-MM THK)	
		2	**8T-0122**	2	NUT-FULL (1/4-28-THD)	
	6	2	**186-3223**	1	PLATE AS	
	7	2	**189-0108**	1	PLATE	
Y	8	2	**241-8368**	1	SWITCH GP-MAGNETIC (24-VOLT) (MAIN POWER RELAY)	364
	9	1	**274-6717**	1	SENSOR-PRESSURE (TURBOCHARGER INLET)	
	10	1	**289-9354**	1	CABLE AS	
		1	**9G-4343**	1	TERMINAL-RING (4-GA, 1/4-IN SCREW)	
D		1	**6V-2369**		CABLE (4-GA, BLACK) (0.3-M)	
		1	**5P-3454**	1	TERMINAL-RING (4-GA, 5/16-IN SCREW)	
		1	**135-2543**	2	BOOT (RED)	
	11	1	**289-9355**	1	CABLE AS	
D		1	**5P-5689**		WIRE (8-GA, BLACK) (0.4-M)	
		1	**2L-8050**	2	TERMINAL-RING (6-GA, 1/4-IN SCREW)	
					—OR—	
		1	**2L-8058**	2	TERMINAL-RING (8-GA, 1/4-IN SCREW)	
	12	1	**297-8049**	1	GROMMET	
	13	1	**317-3164**	1	CABLE AS	
E		1	**119-3662**		TUBE-HEAT SHRINK (10.85-MM DIA) (4-CM)	
D		1	**5P-5689**		WIRE (8-GA, BLACK) (0.6-M)	
		1	**2L-8050**	1	TERMINAL-RING (6-GA, 1/4-IN SCREW)	
					—OR—	
		1	**2L-8058**	1	TERMINAL-RING (8-GA, 1/4-IN SCREW)	
B		1	**1P-0810**		TAPE-ELECTRICAL	
	14	1	**345-0637**	1	CABLE AS	
D		1	**6V-2369**		CABLE (4-GA, BLACK) (0.8-M)	
		1	**9G-4343**	1	TERMINAL-RING (4-GA, 1/4-IN SCREW)	
		1	**9G-4344**	1	TERMINAL-RING (4-GA, 1/2-IN SCREW)	
		1	**135-2543**	1	BOOT (RED)	
B		1	**1P-0810**		TAPE-ELECTRICAL	
	15	1	**373-6946**	1	HARNESS AS-FUEL TANK	
		1	**155-2255**	1	KIT-CONNECTING PLUG (12-PIN)	
		1	**155-2270**	1	KIT-CONNECTING PLUG (2-PIN)	
		1	**155-2271**	1	KIT-CONNECTING PLUG (4-PIN)	
					(EACH PLUG KIT INCLUDES PLUG AS, WEDGE & INTERFACE SEAL)	
		1	**230-4013**	1	PLUG AS-CONNECTOR (3-PIN)	
		1	**455-0705**	1	SEAL-CONNECTOR	
		1	**8T-8737**	10	PLUG-SEAL	
		1	**9X-3401**	4	PIN-CONNECTOR (16-GA TO 18-GA)	
		1	**9X-3402**	4	SOCKET-CONNECTOR (16-GA TO 18-GA)	

434-4113 **WIRING GP-REAR (**contd.**)** **i06842843**

NOTE	REF NO	GRAPHIC REF	PART NUMBER	QTY	PART NAME 1 2 3 4 5 6 (PRODUCT LEVEL)	SEE PAGE
E		1	**125-7875**		TUBE-HEAT SHRINK (7.44-MM DIA) (5-CM)	
		1	**102-8802**	1	KIT-RECEPTACLE (2-PIN)	
		1	**102-8804**	1	KIT-RECEPTACLE (4-PIN)	
		1	**102-8801**	1	KIT-RECEPTACLE (12-PIN)	
					(EACH RECEPTACLE KIT INCLUDES RECEPTACLE AS & WEDGE)	
		1	**8T-8729**	9	PIN-CONNECTOR (16-GA TO 18-GA)	
		1	**8T-8730**	12	SOCKET-CONNECTOR (16-GA TO 18-GA)	
	16	1	**380-6214**	1	CABLE AS	
		1	**6T-5598**	1	TERMINAL-RING (1-GA TO 2-GA, 5/16-IN SCREW)	
E		1	**8C-3056**		CABLE (2-GA, RED) (96-CM)	
		1	**8T-8827**	1	BOOT (RED)	
		1	**030-1712**	1	TERMINAL-RING (2-GA, 1/4-IN SCREW)	
		1	**135-2543**	1	BOOT (RED)	
Y	17	1	**423-8806**	1	HARNESS AS-SENSOR (FUEL)	262
Y	18	2	**118-3534**	1	SWITCH GP-MAGNETIC (24-VOLT) (STARTING MOTOR)	361
	19	1,2	**130-5300**	5	CLIP	
	20	2	**132-5789**	1	CLIP	
	21	1	**204-8000**	1	MOUNTING-CABLE TIE	
	22	1	**332-7657**	1	SENDER AS-FUEL LEVEL	
		1	**9X-3401**	2	PIN-CONNECTOR (16-GA TO 18-GA)	
		1	**102-8802**	1	KIT-RECEPTACLE (2-PIN)	
					(INCLUDES RECEPTACLE AS & WEDGE)	
M	23	1	**344-5675**	1	NUT (M10X1.5-THD)	
	24	1	**353-7957**	2	GROMMET	
	25	1	**3J-1907**	1	SEAL-O-RING	
	26	1	**4D-7794**	1	CLIP	
M	27	1	**5C-9553**	5	BOLT (M6X1X16-MM)	
	28	2	**5L-4507**	4	SCREW-MACHINE (10-32X0.875-IN)	
	29	1	**5P-4295**	1	CLIP	
	30	1	**5P-9297**	1	CLIP	
	31	1	**6D-3479**	1	CLIP	
	32	1	**6K-8178**	1	CLIP	
M	33	2	**6V-7357**	1	BOLT (M6X1X25-MM)	
	34	1	**6V-7555**	1	STRAP-CABLE	
	35	2	**6V-7699**	4	WASHER-HARD (5.5X13X1.6-MM THK)	
	36	1	**8S-0948**	1	CLIP	
	37	1,2	**8T-4121**	10	WASHER-HARD (11X21X2.5-MM THK)	
M	38	1	**8T-4136**	1	BOLT (M10X1.5X25-MM)	
M	39	1,2	**8T-4137**	8	BOLT (M10X1.5X20-MM)	
M	40	2	**8T-4138**	3	BOLT (M6X1X20-MM)	
	41	1	**8T-4205**	5	WASHER-HARD (7.2X14.5X2-MM THK)	
	42	2	**9X-8256**	4	WASHER (6.6X12X2-MM THK)	
	43	2	**4B-4277**	2	WASHER (8.8X17.5X1.6-MM THK)	

B - USE AS REQUIRED
D - ORDER BY THE METER
E - ORDER BY THE CENTIMETER
M - METRIC PART
Y - SEPARATE ILLUSTRATION

434-4113 **WIRING GP-REAR (**contd.**)** **i06842843**

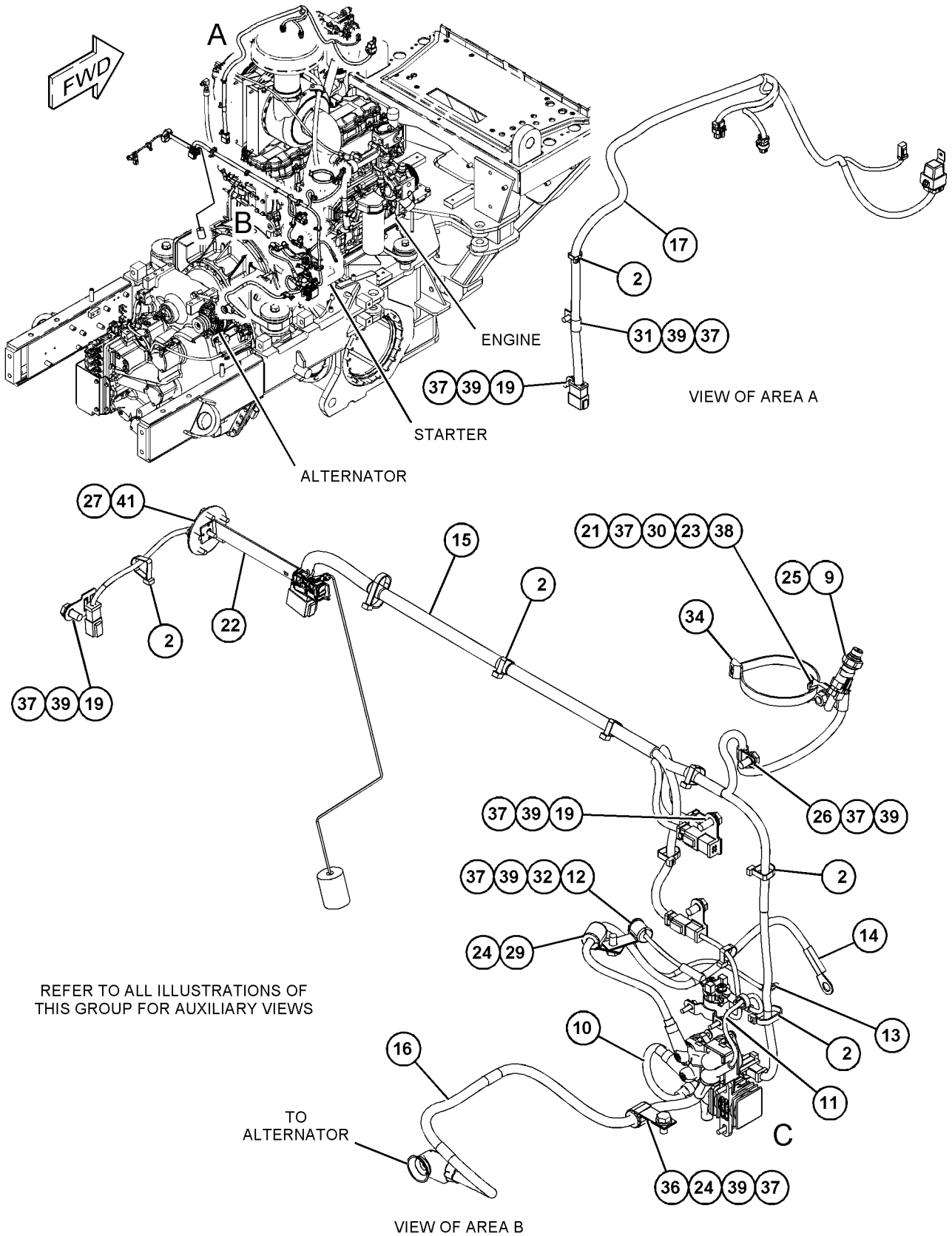

GRAPHIC #1 g06136118

434-4113 **WIRING GP-REAR (**contd.**)** **i06842843**

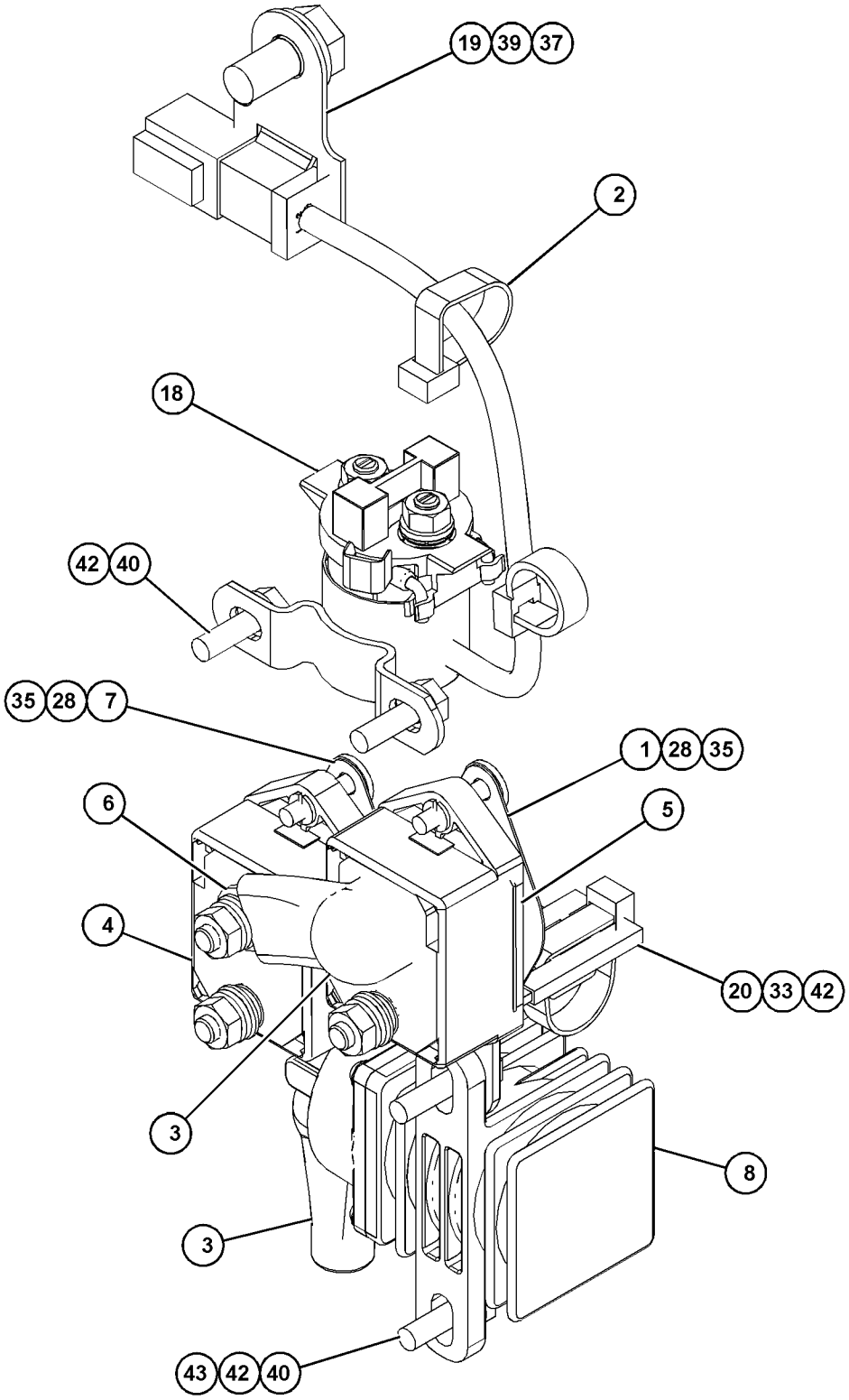

VIEW OF AREA C
(PARTS REMOVED FOR CLARITY)

GRAPHIC #2 <END> g06136120

452-0647 WIRING GP-REAR

S/N: SZS624-UP

PART OF 436-7621 ELECTRICAL AR

SMCS-1408 **i06835702**

NOTE	REF NO	GRAPHIC REF	PART NUMBER	QTY	PART NAME 1 2 3 4 5 6 (PRODUCT LEVEL)	SEE PAGE
	1	1	**3E-5169**	1	GUARD-SWITCH (TOGGLE)	
	2	2	**3E-5239**	1	RELAY AS (24-VOLT) (FUEL PRIMING PUMP)	
	3	3	**7G-1060**	1	STRAP AS-GROUND	
	4	1,2	**7K-1181**	23	STRAP-CABLE	
	5	2	**8W-8527**	1	SLEEVE	
	6	1	**109-0361**	1	FILM-INSTRUCTION (ENGINE SHUTDOWN)	
	7	3	**123-3688**	1	PLATE AS	
		3	**7L-0811**	1	DOWEL	
	8	3	**123-3689**	1	PLATE AS	
	9	3	**123-3692**	1	ARM	
	10	3	**123-3695**	1	PLATE	
M	11	2	**130-2792**	1	SCREW (M6X1X16-MM)	
	12	1	**177-2215**	2	STRAP-DUAL CLAMP	
	13	3	**187-1008**	1	SENDER AS-POSITION (ARTICULATION)	
		3	**8T-8729**	2	PIN-CONNECTOR (16-GA TO 18-GA)	
		3	**102-8802**	1	KIT-RECEPTACLE (2-PIN)	
					(INCLUDES RECEPTACLE AS & WEDGE)	
	14	2	**189-3158**	1	SUPPRESSOR-ARC	
	15	2	**226-3492**	1	BRACKET AS	
	16	1	**308-0291**	1	HARNESS AS-SENSOR (TRANSMISSION SPEED)	
		1	**8T-8729**	2	PIN-CONNECTOR (16-GA TO 18-GA)	
		1	**9X-3402**	2	SOCKET-CONNECTOR (16-GA TO 18-GA)	
					—OR—	
		1	**126-1768**	2	SOCKET-CONNECTOR (14-GA TO 16-GA)	
		1	**102-8802**	1	KIT-RECEPTACLE (2-PIN)	
					(INCLUDES RECEPTACLE AS & WEDGE)	
		1	**155-2270**	1	KIT-CONNECTING PLUG (2-PIN)	
					(INCLUDES PLUG AS, WEDGE & INTERFACE SEAL)	
	17	1	**308-6403**	1	BRACKET AS	
Y	18	1	**318-1178**	1	SENSOR GP-SPEED (MAGNETIC, HIGH OUTPUT)	349
	19	1	**326-3120**	1	BRACKET AS	
	20	1	**336-9085**	1	HARNESS AS-REAR CHASSIS (LH)	
E		1	**311-4859**		TUBE-HEAT SHRINK (48-MM DIA) (30-CM)	
E		1	**235-2765**		CONDUIT-FLEXIBLE (27.6-MM ID) (78-CM)	
		1	**9W-0844**	1	SOCKET-CONNECTOR (14-GA TO 16-GA)	
E		1	**125-7874**		TUBE-HEAT SHRINK (5.72-MM DIA) (5-CM)	
E		1	**125-7875**		TUBE-HEAT SHRINK (7.44-MM DIA) (5-CM)	
		1	**2L-8071**	1	TERMINAL-RING (10-GA TO 12-GA, 1/2-IN SCREW)	
B		1	**163-4519**		TAPE	
		1	**8T-8730**	24	SOCKET-CONNECTOR (16-GA TO 18-GA)	
		1	**8T-8737**	11	PLUG-SEAL	
		1	**102-8802**	3	KIT-RECEPTACLE (2-PIN)	
					(EACH RECEPTACLE KIT INCLUDES RECEPTACLE AS & WEDGE)	
		1	**155-2255**	2	KIT-CONNECTING PLUG (12-PIN)	
		1	**155-2270**	3	KIT-CONNECTING PLUG (2-PIN)	
					(EACH PLUG KIT INCLUDES PLUG AS, WEDGE & INTERFACE SEAL)	
	21	1	**353-4515**	1	SWITCH AS-TOGGLE (ENGINE SHUTDOWN)	

452-0647 **WIRING GP-REAR (**contd.**)** **i06835702**

NOTE	REF NO	GRAPHIC REF	PART NUMBER	QTY	PART NAME 1 2 3 4 5 6 (PRODUCT LEVEL)	SEE PAGE
E		1	**112-4550**		SLEEVE (19-CM)	
		1	**8T-8729**	3	PIN-CONNECTOR (16-GA TO 18-GA)	
		1	**102-8803**	1	KIT-RECEPTACLE (3-PIN)	
					(INCLUDES RECEPTACLE AS & WEDGE)	
Y	22	2	**388-2518**	1	HARNESS AS-TRANSMISSION	265
Y	23	3	**388-2519**	1	HARNESS AS-REAR CHASSIS (RH)	260
	24	2	**091-0081**	1	SPACER (10.5X20X10-MM THK)	
	25	1,2,3	**130-5300**	7	CLIP	
	26	1,3	**132-5789**	2	CLIP	
	27	2	**132-7551**	1	SPACER (11X19X6-MM THK)	
	28	2	**134-2540**	1	RESISTOR AS-CONNECTION (3-PIN)	
	29	2	**198-4777**	1	WASHER-HARD (11X25X10-MM THK)	
	30	2	**277-1873**	1	CLIP	
	31	1	**2A-1162**	1	GASKET	
M	32	1,2,3	**344-5675**	4	NUT (M10X1.5-THD)	
	33	3	**4B-4274**	6	WASHER (5.5X13X1.2-MM THK)	
	34	1,3	**4D-7794**	6	CLIP	
	35	1	**4D-8123**	3	CLIP	
	36	1,2,3	**4K-8864**	4	CLIP	
	37	2	**4P-7581**	1	CLIP	
	38	2	**4P-8134**	1	CLIP	
	39	2	**4S-1936**	1	CLIP	
	40	2,3	**4S-4455**	4	CLIP	
	41	3	**5M-3062**	1	BOLT (3/8-16X0.75-IN)	
	42	3	**5P-8167**	2	BOLT (3/8-16X0.625-IN)	
	43	1	**5P-9085**	1	CLIP	
	44	1	**5P-9297**	3	CLIP	
	45	2	**6D-3479**	4	CLIP	
	46	1,3	**6D-4244**	6	CLIP	
	47	2,3	**6D-4246**	5	CLIP	
	48	1	**6V-3265**	3	CLIP	
	49	3	**6V-6893**	3	BOLT (6-32X0.375-IN)	
	50	3	**6V-8801**	1	NUT (3/8-16-THD)	
	51	3	**6W-6672**	1	SPACER (10.5X20X38-MM THK)	
	52	2	**7C-4354**	4	CLIP	
	53	2	**7D-7233**	1	CLIP	
	54	1	**7N-3718**	1	CLIP	
	55	2	**8D-9671**	1	CLIP	
	56	2	**8M-2773**	1	CLIP	
	57	1,2,3	**8T-4121**	57	WASHER-HARD (11X21X2.5-MM THK)	
M	58	2,3	**8T-4136**	3	BOLT (M10X1.5X25-MM)	
M	59	1,2,3	**8T-4137**	45	BOLT (M10X1.5X20-MM)	
M	60	2	**8T-4195**	3	BOLT (M10X1.5X30-MM)	
	61	3	**8T-4205**	2	WASHER-HARD (7.2X14.5X2-MM THK)	
	62	3	**8T-4226**	1	WASHER-PLATED (10.5X45X3-MM THK)	
	63	3	**8T-4896**	2	WASHER-HARD (10.2X18.5X2.5-MM THK)	
M	64	3	**8T-6466**	1	BOLT (M10X1.5X60-MM)	
	65	3	**8T-9364**	2	BOLT (1/4-20X0.625-IN)	
	66	2	**8W-8909**	1	SLEEVE	
	67	1,2	**8X-5489**	3	SLEEVE	

452-0647 **WIRING GP-REAR (**contd.**)** **i06835702**

NOTE	REF NO	GRAPHIC REF	PART NUMBER	QTY	PART NAME 1 2 3 4 5 6 (PRODUCT LEVEL)	SEE PAGE
M	68	1	**8T-4196**	1	BOLT (M10X1.5X35-MM)	
	69	1	**4D-7388**	5	CLIP	

B - USE AS REQUIRED
E - ORDER BY THE CENTIMETER
M - METRIC PART
Y - SEPARATE ILLUSTRATION

452-0647 **WIRING GP-REAR (**contd.**)** **i06835702**

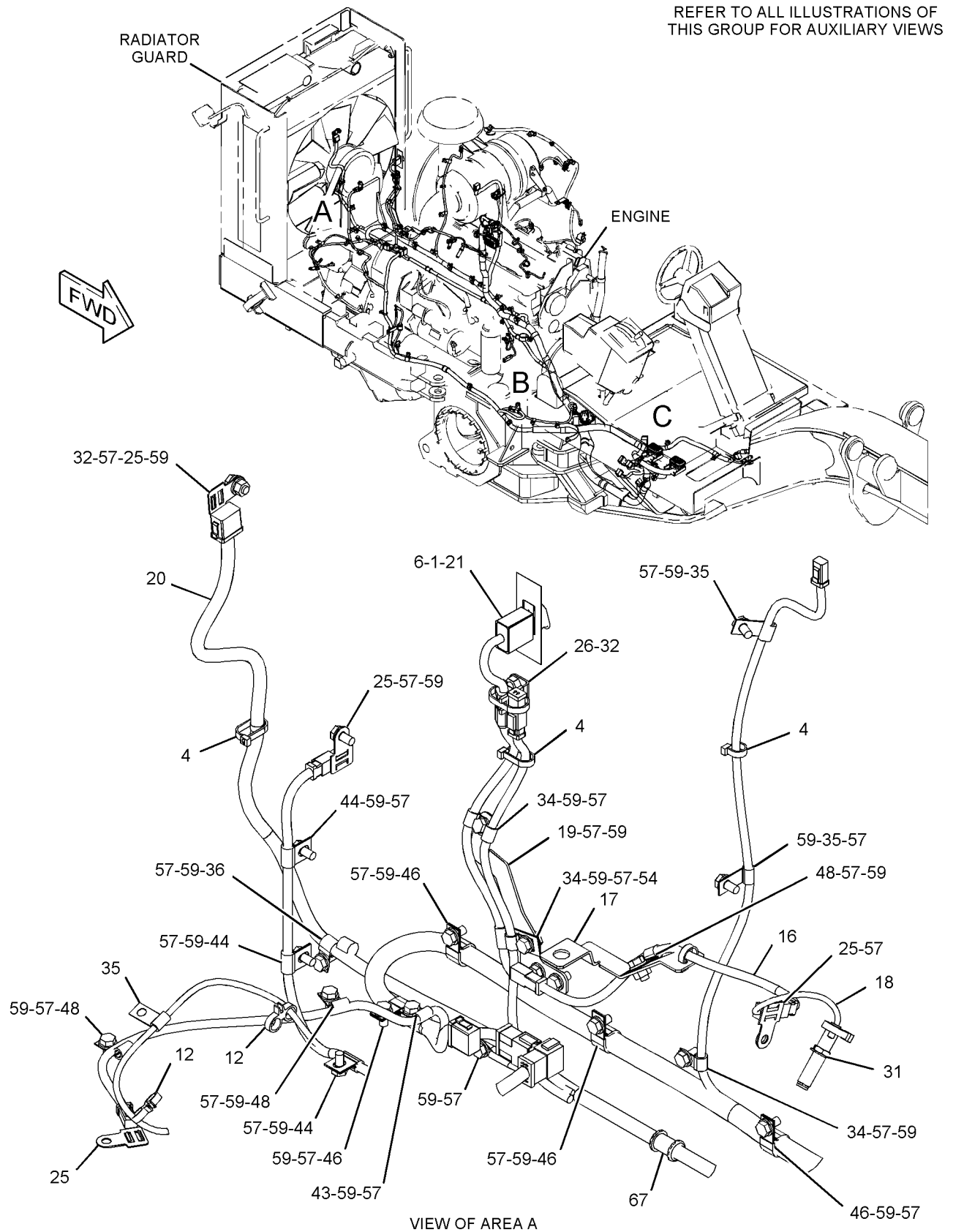

GRAPHIC #1 g03884895

452-0647 **WIRING GP-REAR (**contd.**)** **i06835702**

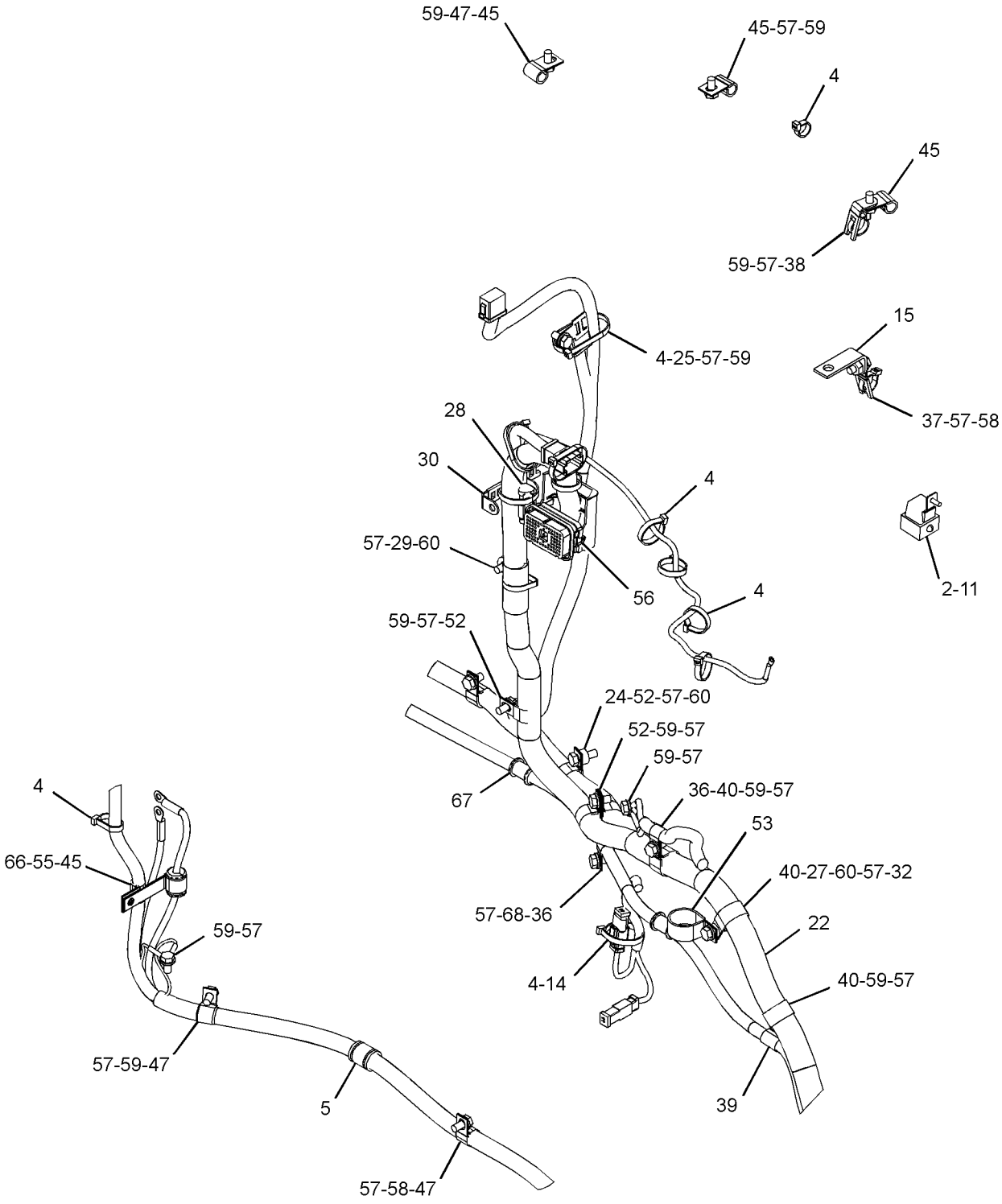

VIEW OF AREA B

GRAPHIC #2 g06136032

452-0647 **WIRING GP-REAR (**contd.**)** **i06835702**

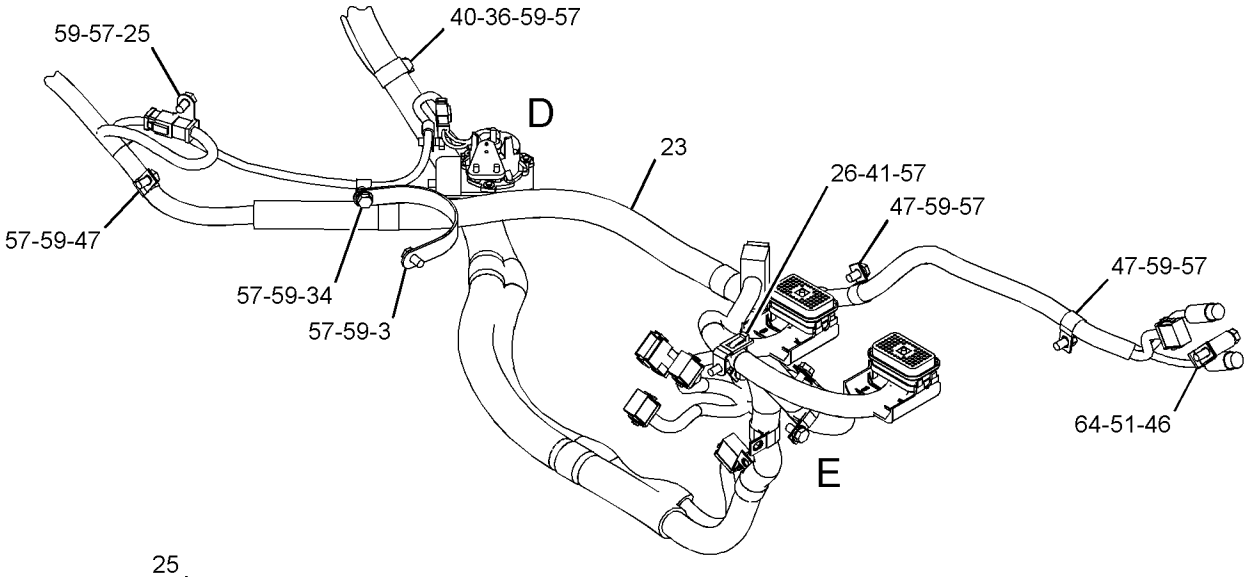

VIEW OF AREA C

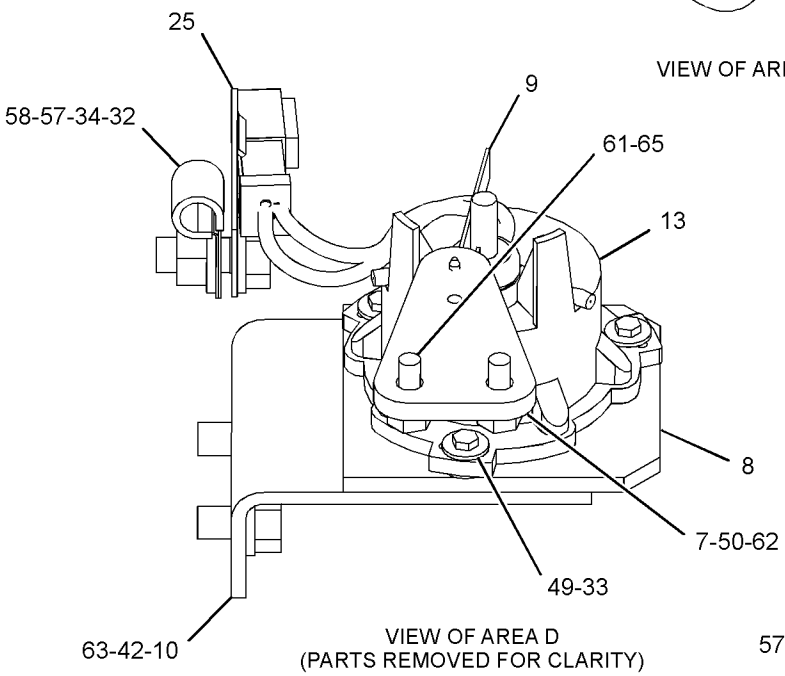

VIEW OF AREA D
(PARTS REMOVED FOR CLARITY)

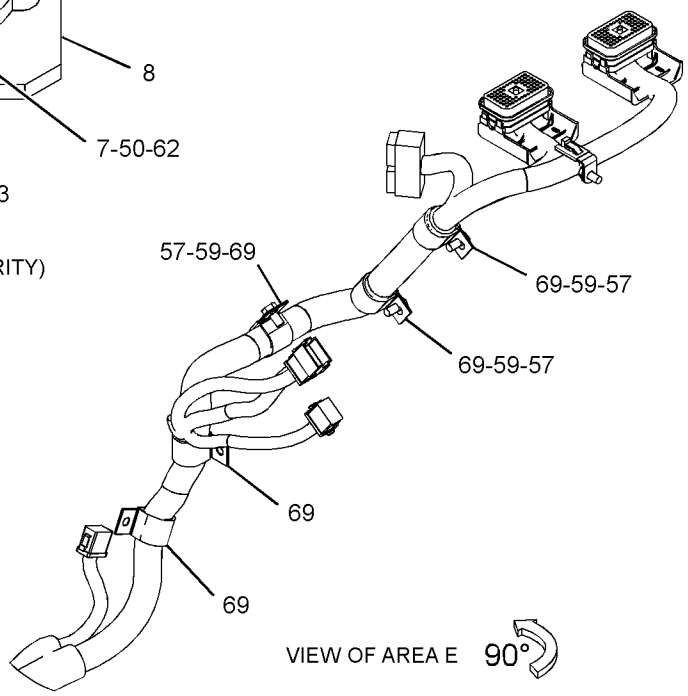

VIEW OF AREA E 90°

GRAPHIC #3 <END> g06136038

284-5348 WIRING GP-REAR LIGHTING–RADIATOR

S/N: SZS1-UP

PART OF 436-7621 ELECTRICAL AR, 368-3025 GENERAL AR

SMCS-1408, 1429

i03523380

NOTE	REF NO	GRAPHIC REF	PART NUMBER	QTY	PART NAME 1 2 3 4 5 6 (PRODUCT LEVEL)	SEE PAGE
	1	1	**334-7633**	1	HARNESS AS-REAR LIGHTING	
	2	1	**130-5300**	2	CLIP	
Y	3	1	**135-0426**	2	LAMP GP-SIGNAL (24-VOLT, STOP, TAIL)	301
M	4	1	**5C-2890**	6	NUT (M6X1-THD)	
	5	1	**7K-1181**	9	STRAP-CABLE	
	6	1	**8T-4224**	6	WASHER-HARD (8.8X16X2-MM THK)	

M - METRIC PART
Y - SEPARATE ILLUSTRATION

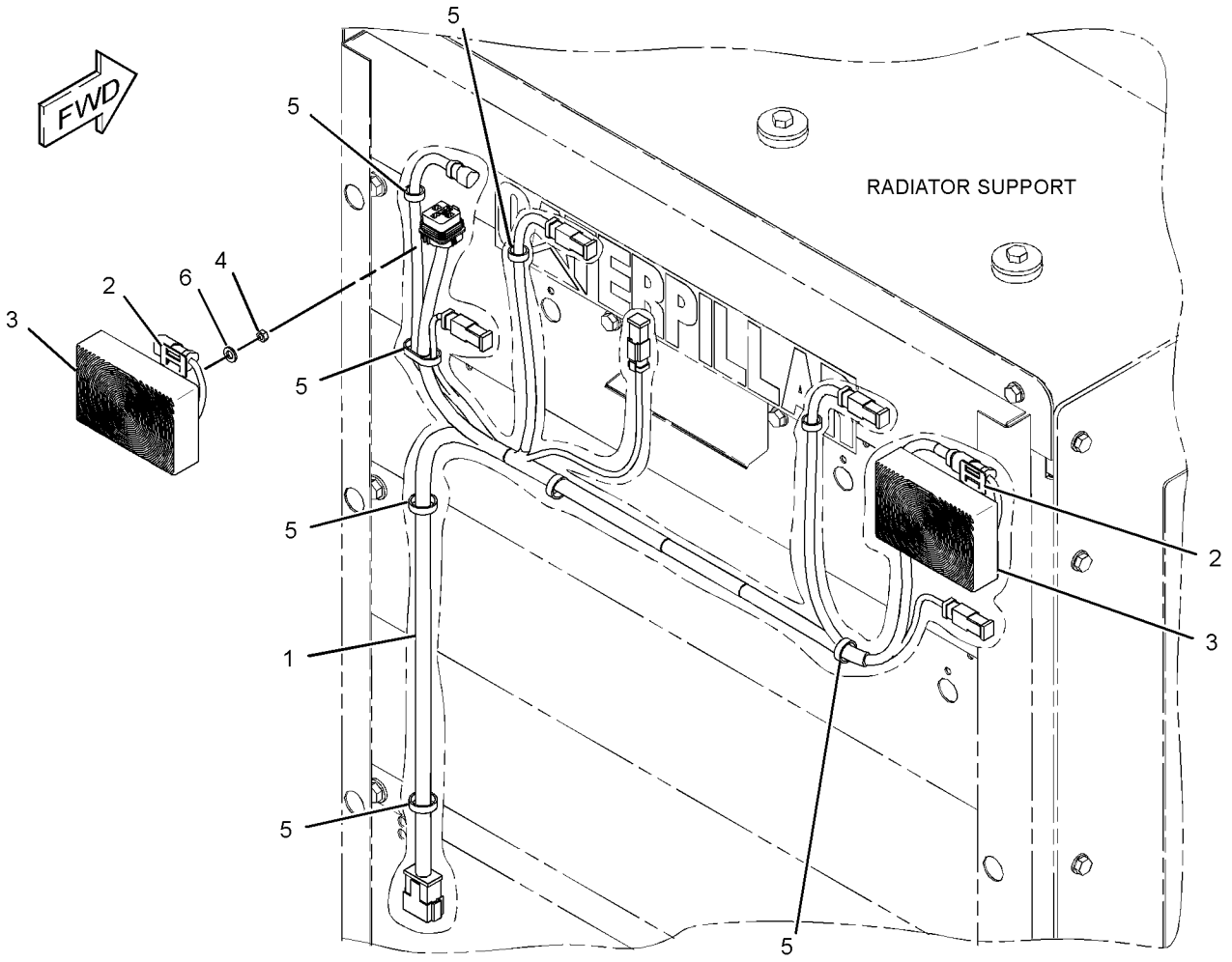

GRAPHIC #1 <END> g01708342

284-5347 WIRING GP-STEERING CONSOLE

S/N: SZS1-UP

PART OF 368-3025 GENERAL AR

SMCS-4334 **i04886110**

NOTE	REF NO	GRAPHIC REF	PART NUMBER	QTY	PART NAME 1 2 3 4 5 6 (PRODUCT LEVEL)	SEE PAGE
	1	1	**3E-0109**	4	PLUG (ROCKER SWITCH)	
	2	1	**3E-6477**	4	RELAY AS (24-VOLT)	
	3	1	**3S-2093**	7	STRAP-CABLE	
	4	1	**9W-1441**	3	FUSE (15-AMPERE)	
	5	1	**9W-1442**	10	FUSE (10-AMPERE)	
	6	1	*112-6175*	2	SWITCH AS-LIMIT (BRAKE PEDAL)	
					(EACH INCLUDES)	
		1	**6V-8376**	3	SCREW-MACHINE (8-32XO.25-IN)	
		1	**9B-7233**	3	LOCKWASHER	
	7	1	**362-0288**	1	KIT-SERVICE METER	
		1	**114-2505**	1	FILM-IDENTIFICATION (SERVICE METER)	
		1	**304-5303**		NUT-SPECIAL (SERVICE METER)	
	8	1	**180-4028**	2	BRACKET	
	9	1	**180-7033**	1	COVER	
	10	1	**228-5009**	4	CLIP	
	11	1	**385-5215**	1	HARNESS AS-CONSOLE	
		1	**102-8801**	2	KIT-RECEPTACLE (12-PIN)	
					(EACH INCLUDES RECEPTACLE AS & WEDGE)	
		1	**3E-7790**	15	TERMINAL-BLADE (18-GA TO 20-GA)	
		1	**3E-7996**	4	PLUG-CONNECTOR (6-PIN)	
		1	**3E-7999**	1	TERMINAL-BLADE (10-GA)	
		1	**6V-0491**	16	TERMINAL-BLADE (14-GA TO 18-GA)	
		1	**7G-7918**	1	PLUG-SEAL	
		1	**7T-6365**	4	HOUSING-RECEPTACLE	
		1	**8N-1541**	1	SOCKET-CONNECTOR (12-GA TO 14-GA)	
		1	**8N-1546**	2	PIN-CONNECTOR (6-GA)	
		1	**8N-1547**	1	SOCKET-CONNECTOR (6-GA)	
		1	**8T-8729**	11	PIN-CONNECTOR (16-GA TO 18-GA)	
		1	**8T-8730**	15	SOCKET-CONNECTOR (16-GA TO 18-GA)	
		1	**8T-8737**	12	PLUG-SEAL	
		1	**9G-9314**	5	TERMINAL-BLADE (14-GA TO 16-GA)	
		1	**9R-9806**	11	TERMINAL-BLADE (18-GA TO 20-GA)	
		1	**9W-0844**	3	SOCKET-CONNECTOR (14-GA TO 16-GA)	
		1	**9W-0852**	2	PIN-CONNECTOR (14-GA TO 16-GA)	
		1	**9W-2032**	1	TERMINAL-BLADE (10-GA TO 12-GA)	
		1	**9W-2033**	14	TERMINAL-BLADE (14-GA TO 16-GA)	
		1	**9X-3401**	5	PIN-CONNECTOR (16-GA TO 18-GA)	
		1	**9X-3402**	2	SOCKET-CONNECTOR (16-GA TO 18-GA)	
		1	**065-5071**	13	TERMINAL-BLADE (14-GA TO 16-GA)	
E		1	**125-7874**		TUBE-HEAT SHRINK (5.72-MM DIA) (20-CM)	
E		1	**125-7875**		TUBE-HEAT SHRINK (7.44-MM DIA) (30-CM)	
		1	**127-5483**	1	PLUG AS-CONNECTOR (1-PIN)	
		1	**127-5484**	2	RECEPTACLE AS-CONNECTOR (1-PIN)	
		1	**129-7163**	1	PLUG AS-CONNECTOR (1-PIN)	
		1	**129-7164**	1	RECEPTACLE AS-CONNECTOR (1-PIN)	
		1	**5P-4571**	5	TERMINAL-BLADE (14-GA TO 16-GA)	
		1	**5P-1475**	5	TERMINAL-FORK (14-GA TO 16-GA, NO. 8 SCREW)	
		1	**2L-8050**	3	TERMINAL-RING (6-GA, 1/4-IN SCREW)	

284-5347 **WIRING GP-STEERING CONSOLE (**contd.**)** **i04886110**

NOTE	REF NO	GRAPHIC REF	PART NUMBER	QTY	PART NAME 1 2 3 4 5 6 (PRODUCT LEVEL)	SEE PAGE
					—OR—	
		1	**2L-8058**	3	TERMINAL-RING (8-GA, 1/4-IN SCREW)	
		1	**155-2255**	2	KIT-CONNECTING PLUG (12-PIN)	
		1	**155-2270**	1	KIT-CONNECTING PLUG (2-PIN)	
					(EACH PLUG KIT INCLUDES PLUG AS, WEDGE, & INTERFACE SEAL)	
B		1	**1P-0810**		TAPE-ELECTRICAL	
		1	**174-7566**	2	BLOCK AS-FUSE	
					(EACH INCLUDES)	
		1	**1H-3244**	1	LOCKWASHER	
		1	**6V-8185**	1	NUT (1/4-20-THD)	
		1	**8T-4205**	1	WASHER-HARD (7.2X14.5X2-MM THK)	
		1	**151-1398**	2	KIT-TERMINAL (LOCK)	
		1	**199-6582**	1	BLOCK AS-FUSE	
		1	**1H-3244**	1	LOCKWASHER	
		1	**6V-8185**	1	NUT (1/4-20-THD)	
		1	**8T-4205**	1	WASHER-HARD (7.2X14.5X2-MM THK)	
		1	**151-1397**	1	COVER-FUSE BLOCK	
	12	1	**295-1834**	1	FILM-IDENTIFICATION (FUSE BOX) (RH)	
	13	1	**295-1835**	1	FILM-IDENTIFICATION (FUSE BOX) (LH)	
	14	1	**130-5300**	1	CLIP	
M	15	1	**151-4957**	4	BOLT-SOCKET HEAD (M3X0.5X25-MM)	
M	16	1	**174-8131**	2	SCREW-TRUSS HEAD (M4X0.7X12-MM)	
	17	1	**1H-3244**	2	LOCKWASHER	
M	18	1	**3C-6969**	4	NUT (M3X0.5-THD)	
	19	1	*3E-9319*	1	SWITCH AS-ROCKER (24-VOLT)	
		1	**3E-8763**	1	SWITCH AS (24-VOLT) (TAIL LIGHTS)	
		1	**3E-8825**	1	LAMP (24-VOLT)	
		1	**3E-9323**	1	ACTUATOR	
	20	1	**3L-8187**	4	LOCKWASHER	
	21	1	**4B-1281**	3	SCREW-MACHINE (1/4-20X0.625-IN)	
	22	1	**4B-4274**	16	WASHER (5.5X13X1.2-MM THK)	
	23	1	**4D-1212**	1	GROMMET	
M	24	1	**5C-2890**	3	NUT (M6X1-THD)	
M	25	1	**5C-8312**	2	NUT (M4X0.7-THD)	
M	26	1	**5C-9553**	2	BOLT (M6X1X16-MM)	
	27	1	**5P-4115**	1	WASHER-HARD (7.2X19X2-MM THK)	
	28	1	**6D-4244**	2	CLIP	
	29	1	**6V-8185**	3	NUT (1/4-20-THD)	
	30	1	**8C-7508**	2	LOCKWASHER	
	31	1	**8L-6521**	8	BOLT (10-32X0.5-IN)	
M	32	1	**8T-4971**	1	BOLT (M6X1X30-MM)	
	33	1	**9P-2553**	1	SPACER (6.83X10.28X11-MM THK)	
M	34	1	**9X-1046**	6	SCREW (M4X0.7X18-MM)	
M	35	1	**9X-2042**	1	SCREW-TRUSS HEAD (M6X1X12-MM)	
	36	1	**9X-8256**	6	WASHER (6.6X12X2-MM THK)	
	37	1	**102-9383**	1	PLATE	
	38	1	*9X-9632*	1	SWITCH AS-ROCKER (24-VOLT) (FLOODLIGHTS)	
		1	**3E-8772**	1	SWITCH-ROCKER (24-VOLT) (FLOODLIGHTS)	
		1	**3E-8815**	1	ACTUATOR	
		1	**3E-8825**	2	LAMP (24-VOLT)	
	39	1	**8T-4205**	2	WASHER-HARD (7.2X14.5X2-MM THK)	

284-5347 **WIRING GP-STEERING CONSOLE** (contd.) **i04886110**

NOTE	REF NO	GRAPHIC REF	PART NUMBER	QTY	PART NAME 1 2 3 4 5 6 (PRODUCT LEVEL)	SEE PAGE

B - USE AS REQUIRED
E - ORDER BY THE CENTIMETER
M - METRIC PART

284-5347 **WIRING GP-STEERING CONSOLE (**contd.**)** **i04886110**

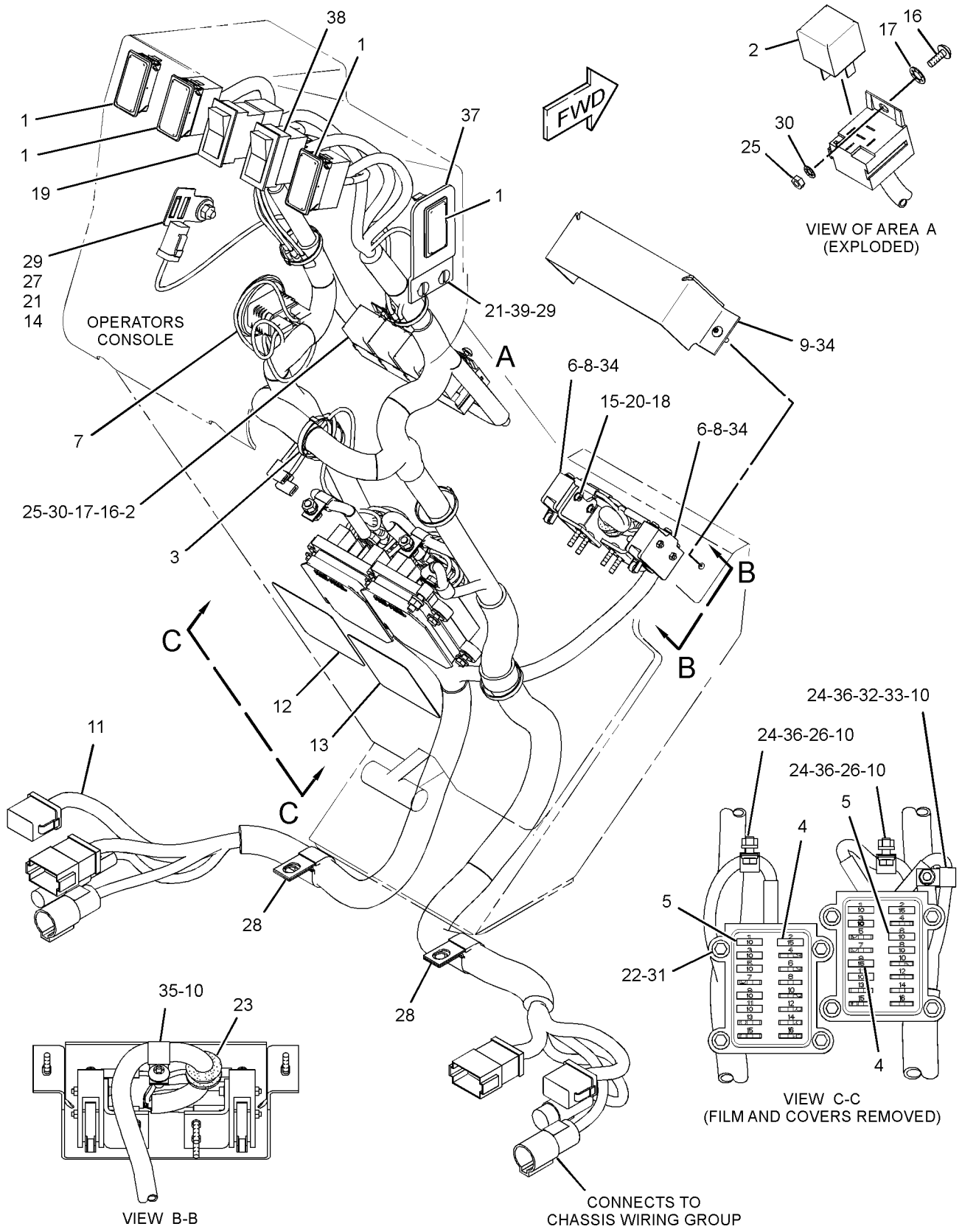

GRAPHIC #1 <END> g03014717

284-5347 WIRING GP-STEERING CONSOLE

S/N: SZS1-488

PART OF 368-3025 GENERAL AR

SMCS-4334 **i05098190**

NOTE	REF NO	GRAPHIC REF	PART NUMBER	QTY	PART NAME 1 2 3 4 5 6 (PRODUCT LEVEL)	SEE PAGE
C	1	1	**228-6089**	3	PLUG (ROCKER SWITCH)	
	2	1	**3E-6477**	4	RELAY AS (24-VOLT)	
	3	1	**3S-2093**	7	STRAP-CABLE	
	4	1	**9W-1441**	3	FUSE (15-AMPERE)	
	5	1	**9W-1442**	10	FUSE (10-AMPERE)	
	6	1	**112-6175**	2	SWITCH AS-LIMIT (BRAKE PEDAL)	
					(EACH INCLUDES)	
		1	**6V-8376**	3	SCREW-MACHINE (8-32X0.25-IN)	
		1	**9B-7233**	3	LOCKWASHER	
	7	1	*361-7150*	1	METER GP-SERVICE	
		1	**304-5303**	1	NUT-SPECIAL (SERVICE METER)	
		1	**362-0288**	1	KIT-SERVICE METER	
					(INCLUDES FILM & NUT)	
	8	1	**180-4028**	2	BRACKET	
	9	1	**180-7033**	1	COVER	
	10	1	**228-5009**	4	CLIP	
C	11	1	**382-5907**	1	HARNESS AS-CONSOLE	
		1	**102-8801**	2	KIT-RECEPTACLE (12-PIN)	
					(EACH KIT INCLUDES RECEPTACLE AS & WEDGE)	
		1	**6V-0491**	16	TERMINAL-BLADE (14-GA TO 18-GA)	
		1	**7G-7918**	1	PLUG-SEAL	
		1	**7T-6365**	4	HOUSING-RECEPTACLE	
		1	**8N-1541**	1	SOCKET-CONNECTOR (12-GA TO 14-GA)	
		1	**8N-1546**	2	PIN-CONNECTOR (6-GA)	
		1	**8N-1547**	1	SOCKET-CONNECTOR (6-GA)	
		1	**8T-8729**	10	PIN-CONNECTOR (16-GA TO 18-GA)	
		1	**8T-8730**	14	SOCKET-CONNECTOR (16-GA TO 18-GA)	
		1	**8T-8737**	15	PLUG-SEAL	
		1	**9G-9314**	5	TERMINAL-BLADE (14-GA TO 16-GA)	
		1	**9R-9806**	10	TERMINAL-BLADE (18-GA TO 20-GA)	
		1	**9W-0844**	3	SOCKET-CONNECTOR (14-GA TO 16-GA)	
		1	**9W-0852**	1	PIN-CONNECTOR (14-GA TO 16-GA)	
		1	**9W-2032**	1	TERMINAL-BLADE (10-GA TO 12-GA)	
		1	**9W-2033**	12	TERMINAL-BLADE (14-GA TO 16-GA)	
		1	**9X-3401**	5	PIN-CONNECTOR (16-GA TO 18-GA)	
		1	**9X-3402**	2	SOCKET-CONNECTOR (16-GA TO 18-GA)	
E		1	**119-3662**		TUBE-HEAT SHRINK (10.85-MM DIA) (39-CM)	
E		1	**125-7874**		TUBE-HEAT SHRINK (5.72-MM DIA) (10-CM)	
E		1	**125-7875**		TUBE-HEAT SHRINK (7.44-MM DIA) (25-CM)	
		1	**127-5483**	1	PLUG AS-CONNECTOR (1-PIN)	
		1	**127-5484**	2	RECEPTACLE AS-CONNECTOR (1-PIN)	
		1	**129-7163**	1	PLUG AS-CONNECTOR (1-PIN)	
		1	**129-7164**	1	RECEPTACLE AS-CONNECTOR (1-PIN)	
		1	**5P-4571**	5	TERMINAL-BLADE (14-GA TO 16-GA)	
		1	**5P-1475**	5	TERMINAL-FORK (14-GA TO 16-GA, NO. 8 SCREW)	
		1	**2L-8050**	3	TERMINAL-RING (6-GA, 1/4-IN SCREW)	
					—OR—	
		1	**2L-8058**	3	TERMINAL-RING (8-GA, 1/4-IN SCREW)	

284-5347 **WIRING GP-STEERING CONSOLE (**contd.**)** **i05098190**

NOTE	REF NO	GRAPHIC REF	PART NUMBER	QTY	PART NAME 1 2 3 4 5 6 (PRODUCT LEVEL)	SEE PAGE
		1	**155-2255**	2	KIT-CONNECTING PLUG (12-PIN)	
		1	**155-2270**	1	KIT-CONNECTING PLUG (2-PIN)	
					(EACH PLUG KIT INCLUDES PLUG AS, WEDGE, & INTERFACE SEAL)	
B		1	**1P-0810**		TAPE-ELECTRICAL	
		1	**174-7566**	2	BLOCK AS-FUSE	
					(EACH INCLUDES)	
		1	**151-1398**	2	KIT-TERMINAL (LOCK)	
		1	**199-6582**	1	BLOCK AS-FUSE	
		1	**1H-3244**	1	LOCKWASHER	
		1	**6V-8185**	1	NUT (1/4-20-THD)	
		1	**8T-4205**	1	WASHER-HARD (7.2X14.5X2-MM THK)	
		1	**151-1397**	1	COVER-FUSE BLOCK	
		1	**185-1860**	27	SEAL-WIRE	
		1	**185-1861**	6	SEAL-WIRE	
		1	**202-5397**	17	PLUG	
		1	**204-1297**	27	TERMINAL AS-BLADE (18-GA TO 20-GA)	
		1	**245-7434**	5	KIT-CONNECTING PLUG (10-PIN)	
					(EACH KIT INCLUDES PLUG CONNECTOR, WIRE ASSEMBLIES, & PLUGS)	
	12	1	**295-1834**	1	FILM-IDENTIFICATION (FUSE BOX) (RH)	
	13	1	**295-1835**	1	FILM-IDENTIFICATION (FUSE BOX) (LH)	
	14	1	**130-5300**	1	CLIP	
M	15	1	**151-4957**	4	BOLT-SOCKET HEAD (M3X0.5X25-MM)	
M	16	1	**174-8131**	2	SCREW-TRUSS HEAD (M4X0.7X12-MM)	
	17	1	**1H-3244**	2	LOCKWASHER	
M	18	1	**3C-6969**	4	NUT (M3X0.5-THD)	
C	19	1	**368-4541**	1	SWITCH AS-ROCKER (DIFFERENTIAL LOCK)	
	20	1	**3L-8187**	4	LOCKWASHER	
	21	1	**4B-1281**	3	SCREW-MACHINE (1/4-20X0.625-IN)	
	22	1	**4B-4274**	16	WASHER (5.5X13X1.2-MM THK)	
	23	1	**4D-1212**	1	GROMMET	
M	24	1	**5C-2890**	3	NUT (M6X1-THD)	
M	25	1	**5C-8312**	2	NUT (M4X0.7-THD)	
M	26	1	**5C-9553**	2	BOLT (M6X1X16-MM)	
	27	1	**5P-4115**	1	WASHER-HARD (7.2X19X2-MM THK)	
	28	1	**6D-4244**	2	CLIP	
	29	1	**6V-8185**	3	NUT (1/4-20-THD)	
	30	1	**8C-7508**	2	LOCKWASHER	
	31	1	**8L-6521**	8	BOLT (10-32X0.5-IN)	
M	32	1	**8T-4971**	1	BOLT (M6X1X30-MM)	
	33	1	**9P-2553**	1	SPACER (6.83X10.28X11-MM THK)	
M	34	1	**9X-1046**	6	SCREW (M4X0.7X18-MM)	
M	35	1	**9X-2042**	1	SCREW-TRUSS HEAD (M6X1X12-MM)	
	36	1	**9X-8256**	6	WASHER (6.6X12X2-MM THK)	
	37	1	**102-9383**	1	PLATE	
C	38	1	**249-5488**	1	SWITCH AS-ROCKER (FLOODLIGHT)	
	39	1	**8T-4205**	2	WASHER-HARD (7.2X14.5X2-MM THK)	
C	40	1	**236-4631**	6	BEZEL	
C	41	1	**368-4542**	1	SWITCH AS-ROCKER (PANEL LIGHT, TAIL LIGHT)	
	42	1	**5J-0605**	1	RING-BACKUP	

284-5347 **WIRING GP-STEERING CONSOLE (**contd.**)** **i05098190**

NOTE	REF NO	GRAPHIC REF	PART NUMBER	QTY	PART NAME 1 2 3 4 5 6 (PRODUCT LEVEL)	SEE PAGE

B - USE AS REQUIRED
C - CHANGE FROM PREVIOUS TYPE
E - ORDER BY THE CENTIMETER
M - METRIC PART

284-5347 **WIRING GP-STEERING CONSOLE (**contd.**)** **i05098190**

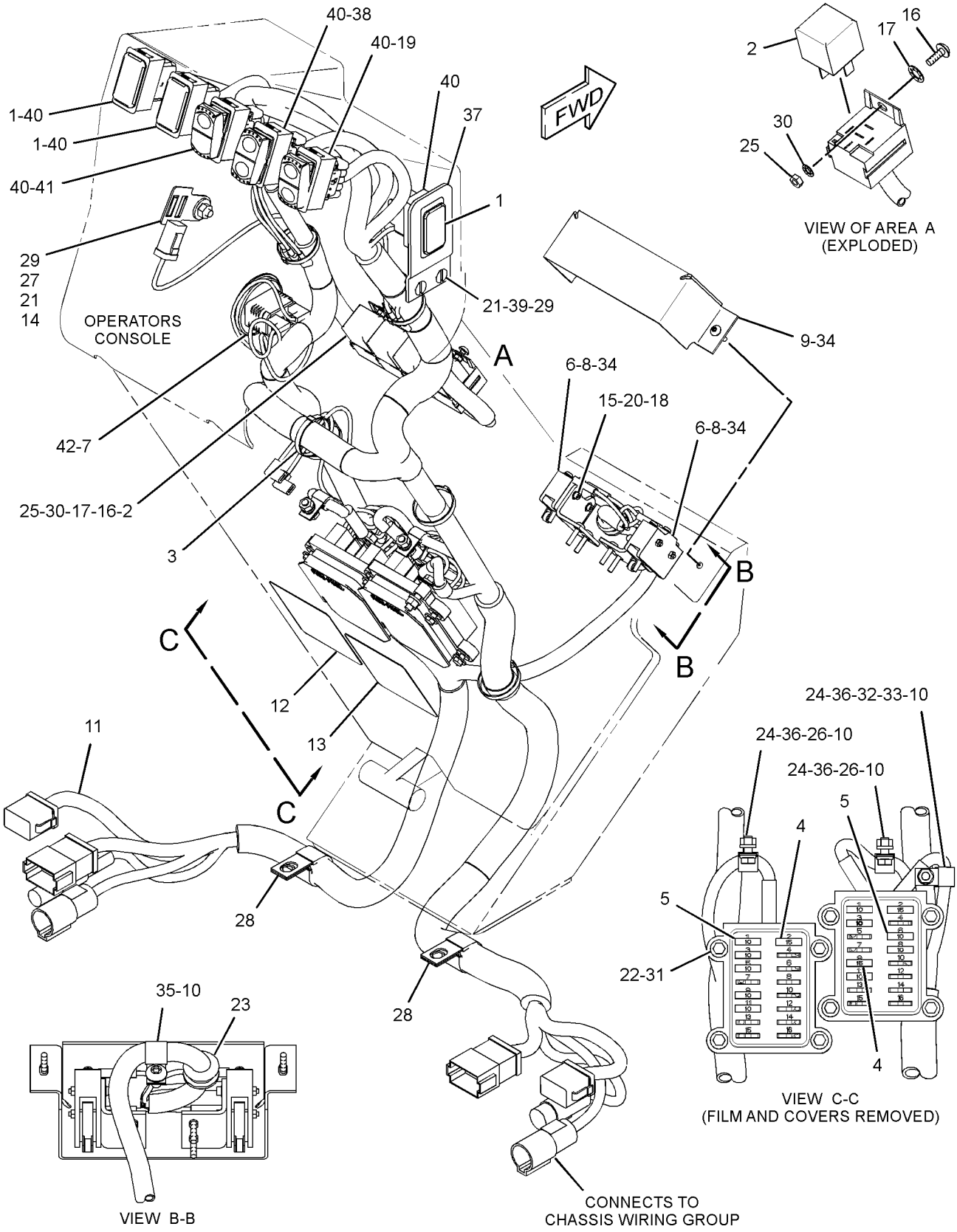

GRAPHIC #1 <END> g03326082

334-3344 WIRING GP-STEERING CONSOLE

S/N: SZS1-UP
INDIA ROADING
PART OF 358-9496, 359-1519, 359-1520 ROADING AR
AN ATTACHMENT
TYPE 1

SMCS-4334 **i04904698**

NOTE	REF NO	GRAPHIC REF	PART NUMBER	QTY	PART NAME 1 2 3 4 5 6 (PRODUCT LEVEL)	SEE PAGE
	1	1	**3E-0109**	4	PLUG (ROCKER SWITCH)	
	2	1	**3E-6477**	2	RELAY AS (24-VOLT) (TAIL, PANEL LAMPS, RH)	
	2A	1	**3E-6477**	2	RELAY AS (24-VOLT) (TAIL, PANEL LAMPS, LH)	
	3	1	**3S-2093**	5	STRAP-CABLE	
	4	1	**8X-5153**	1	FILM-FACE (TURN SIGNAL, HAZARD)	
	5	1	**8X-5154**	1	FILM-FACE (HEADLIGHTS HIGH, LOW BEAM)	
	6	1	**9W-1441**	4	FUSE (15-AMPERE)	
	7	1	**9W-1442**	11	FUSE (10-AMPERE)	
	8	1	**112-6175**	2	SWITCH AS-LIMIT (TRANSMISSION NEUTRALIZER)	
					(EACH INCLUDES)	
		1	**6V-8376**	3	SCREW-MACHINE (8-32X0.25-IN)	
		1	**9B-7233**	3	LOCKWASHER	
J	9	1	*361-7150*	1	METER GP-SERVICE	
		1	**304-5303**	1	NUT-SPECIAL (SERVICE METER)	
	10	1	**173-3064**	1	SWITCH GP-ROTARY (TURN SIGNAL, HAZARD)	
		1	**5L-7200**	1	SCREW (8-32X0.375-IN)	
		1	**9B-7233**	1	LOCKWASHER	
	11	1	**217-8166**	1	FLASHER AS (24-VOLT)	
	12	1	**180-4028**	2	BRACKET	
	13	1	**180-7033**	1	COVER	
	14	1	**295-1834**	1	FILM-IDENTIFICATION (FUSE BOX) (RH)	
	15	1	**295-1835**	1	FILM-IDENTIFICATION (FUSE BOX) (LH)	
	16	1	**385-5216**	1	HARNESS AS-CONSOLE	
		1	**102-8801**	2	KIT-RECEPTACLE (12-PIN)	
					(EACH INCLUDES RECEPTACLE AS & WEDGE)	
		1	**3E-7790**	14	TERMINAL-BLADE (18-GA TO 20-GA)	
		1	**3E-7996**	3	PLUG-CONNECTOR (6-PIN)	
		1	**3E-7999**	1	TERMINAL-BLADE (10-GA)	
		1	**6V-0491**	16	TERMINAL-BLADE (14-GA TO 18-GA)	
		1	**7G-7918**	1	PLUG-SEAL	
		1	**7T-6365**	4	HOUSING-RECEPTACLE	
		1	**8N-1541**	1	SOCKET-CONNECTOR (12-GA TO 14-GA)	
		1	**8N-1546**	2	PIN-CONNECTOR (6-GA)	
		1	**8N-1547**	1	SOCKET-CONNECTOR (6-GA)	
		1	**8T-8729**	12	PIN-CONNECTOR (16-GA TO 18-GA)	
		1	**8T-8730**	20	SOCKET-CONNECTOR (16-GA TO 18-GA)	
		1	**8T-8737**	12	PLUG-SEAL	
		1	**9G-9314**	3	TERMINAL-BLADE (14-GA TO 16-GA)	
		1	**9R-9806**	11	TERMINAL-BLADE (18-GA TO 20-GA)	
		1	**9W-0844**	3	SOCKET-CONNECTOR (14-GA TO 16-GA)	
		1	**9W-0852**	2	PIN-CONNECTOR (14-GA TO 16-GA)	
		1	**9W-2032**	1	TERMINAL-BLADE (10-GA TO 12-GA)	
		1	**9W-2033**	14	TERMINAL-BLADE (14-GA TO 16-GA)	
		1	**9X-3401**	5	PIN-CONNECTOR (16-GA TO 18-GA)	
		1	**9X-3402**	2	SOCKET-CONNECTOR (16-GA TO 18-GA)	

334-3344 **WIRING GP-STEERING CONSOLE (**contd.**)** **i04904698**

NOTE	REF NO	GRAPHIC REF	PART NUMBER	QTY	PART NAME 1 2 3 4 5 6 (PRODUCT LEVEL)	SEE PAGE
		1	**065-5071**	10	TERMINAL-BLADE (14-GA TO 16-GA)	
E		1	**125-7874**		TUBE-HEAT SHRINK (5.72-MM DIA) (25-CM)	
E		1	**125-7875**		TUBE-HEAT SHRINK (7.44-MM DIA) (30-CM)	
		1	**127-5483**	1	PLUG AS-CONNECTOR (1-PIN)	
		1	**127-5484**	2	RECEPTACLE AS-CONNECTOR (1-PIN)	
		1	**129-7163**	1	PLUG AS-CONNECTOR (1-PIN)	
		1	**129-7164**	1	RECEPTACLE AS-CONNECTOR (1-PIN)	
		1	**5P-4571**	5	TERMINAL-BLADE (14-GA TO 16-GA)	
		1	**5P-1475**	5	TERMINAL-FORK (14-GA TO 16-GA, NO. 8 SCREW)	
		1	**2L-8050**	3	TERMINAL-RING (6-GA, 1/4-IN SCREW)	
					—OR—	
		1	**2L-8058**	3	TERMINAL-RING (8-GA, 1/4-IN SCREW)	
		1	**155-2255**	2	KIT-CONNECTING PLUG (12-PIN)	
		1	**155-2270**	1	KIT-CONNECTING PLUG (2-PIN)	
		1	**155-2274**	1	KIT-CONNECTING PLUG (6-PIN)	
					(EACH PLUG KIT INCLUDES PLUG AS, WEDGE, & INTERFACE SEAL)	
B		1	**1P-0810**		TAPE-ELECTRICAL	
		1	**174-7566**	2	BLOCK AS-FUSE	
					(EACH INCLUDES)	
		1	**1H-3244**	1	LOCKWASHER	
		1	**6V-8185**	1	NUT (1/4-20-THD)	
		1	**8T-4205**	1	WASHER-HARD (7.2X14.5X2-MM THK)	
		1	**151-1398**	2	KIT-TERMINAL (LOCK)	
		1	**199-6582**	1	BLOCK AS-FUSE	
		1	**1H-3244**	1	LOCKWASHER	
		1	**6V-8185**	1	NUT (1/4-20-THD)	
		1	**8T-4205**	1	WASHER-HARD (7.2X14.5X2-MM THK)	
		1	**151-1397**	1	COVER-FUSE BLOCK	
	17	1	**089-7960**	2	WASHER (5.3X25X1.6-MM THK)	
	18	1	**103-5678**	1	SWITCH AS-ROTARY (HEADLIGHT DIMMER)	
		1	**5L-7200**	1	SCREW (8-32X0.375-IN)	
		1	**9B-7233**	1	LOCKWASHER	
	19	1	**130-5300**	1	CLIP	
M	20	1	**151-4957**	4	BOLT-SOCKET HEAD (M3X0.5X25-MM)	
M	21	1	**174-8131**	2	SCREW-TRUSS HEAD (M4X0.7X12-MM)	
	22	1	**1H-3244**	2	LOCKWASHER	
	23	1	**228-5009**	4	CLIP	
M	24	1	**3C-6969**	4	NUT (M3X0.5-THD)	
	25	1	*3E-9317*	1	SWITCH AS-ROCKER (24-VOLT) (HEADLIGHTS)	
		1	**3E-8772**	1	SWITCH-ROCKER (24-VOLT) (HEADLIGHTS)	
		1	**3E-8825**	2	LAMP (24-VOLT)	
		1	**3E-9326**	1	ACTUATOR	
	26	1	**3L-8187**	4	LOCKWASHER	
	27	1	**4B-1281**	3	SCREW-MACHINE (1/4-20X0.625-IN)	
	28	1	**4B-2047**	2	NUT (10-24-THD)	
	29	1	**4B-4274**	18	WASHER (5.5X13X1.2-MM THK)	
	30	1	**4D-1212**	1	GROMMET	
M	31	1	**5C-2890**	3	NUT (M6X1-THD)	
M	32	1	**5C-8312**	2	NUT (M4X0.7-THD)	
M	33	1	**5C-9553**	2	BOLT (M6X1X16-MM)	
	34	1	**5M-6755**	2	SCREW-MACHINE (10-24X0.562-IN)	

334-3344 **WIRING GP-STEERING CONSOLE (**contd.**)** **i04904698**

NOTE	REF NO	GRAPHIC REF	PART NUMBER	QTY	PART NAME 1 2 3 4 5 6 (PRODUCT LEVEL)	SEE PAGE
	35	1	**5P-4115**	1	WASHER-HARD (7.2X19X2-MM THK)	
	36	1	**6D-4244**	2	CLIP	
	37	1	**6V-8185**	3	NUT (1/4-20-THD)	
	38	1	**8C-7508**	2	LOCKWASHER	
	39	1	**8L-6521**	8	BOLT (10-32X0.5-IN)	
M	40	1	**8T-4971**	1	BOLT (M6X1X30-MM)	
	41	1	**8X-6296**	2	LEVER	
	42	1	**9P-2553**	1	SPACER (6.83X10.28X11-MM THK)	
M	43	1	**9X-1046**	6	SCREW (M4X0.7X18-MM)	
M	44	1	**9X-2042**	1	SCREW-TRUSS HEAD (M6X1X12-MM)	
	45	1	**9X-8256**	6	WASHER (6.6X12X2-MM THK)	
	46	1	**102-9383**	1	PLATE	
	47	1	**8T-4205**	2	WASHER-HARD (7.2X14.5X2-MM THK)	
	48	1	*9X-9632*	1	SWITCH AS-ROCKER (24-VOLT) (FLOODLIGHTS)	
		1	**3E-8772**	1	SWITCH-ROCKER (24-VOLT) (FLOODLIGHTS)	
		1	**3E-8815**	1	ACTUATOR	
		1	**3E-8825**	2	LAMP (24-VOLT)	
					AVAILABLE REPAIR KIT(S):	
J			**362-0288**	1	KIT-SERVICE METER	
					(INCLUDES METER & FILM)	

B - USE AS REQUIRED
E - ORDER BY THE CENTIMETER
J - KIT MARKED J SERVICES PART(S) MARKED J
M - METRIC PART

334-3344 **WIRING GP-STEERING CONSOLE (**contd.**)** **i04904698**

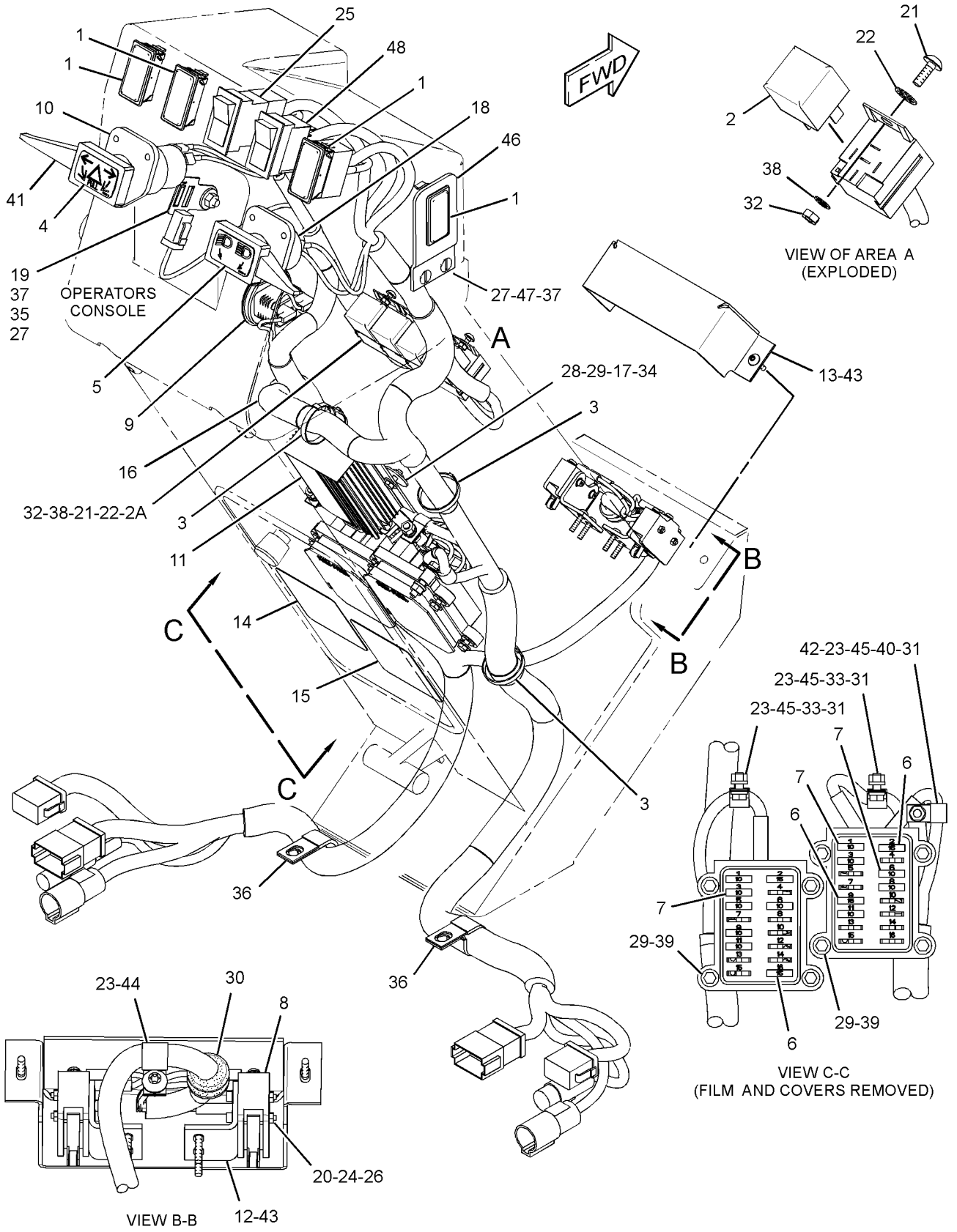

GRAPHIC #1 <END> g03067122

334-3344 WIRING GP-STEERING CONSOLE

S/N: SZS1-UP
INDIA ROADING
PART OF 358-9496, 359-1519, 359-1520 ROADING AR
AN ATTACHMENT
TYPE 2

SMCS-4334 **i06280926**

NOTE	REF NO	GRAPHIC REF	PART NUMBER	QTY	PART NAME 1 2 3 4 5 6 (PRODUCT LEVEL)	SEE PAGE
C	1	1	**228-6089**	3	PLUG (ROCKER SWITCH)	
	2	1	**3E-6477**	2	RELAY AS (24-VOLT) (TAIL, PANEL LAMPS, RH)	
	2A	1	**3E-6477**	2	RELAY AS (24-VOLT) (TAIL, PANEL LAMPS, LH)	
	3	1	**3S-2093**	5	STRAP-CABLE	
	4	1	**8X-5153**	1	FILM-FACE (TURN SIGNAL, HAZARD)	
	5	1	**8X-5154**	1	FILM-FACE (HEADLIGHTS HIGH, LOW BEAM)	
	6	1	**9W-1441**	4	FUSE (15-AMPERE)	
	7	1	**9W-1442**	11	FUSE (10-AMPERE)	
	8	1	**112-6175**	2	SWITCH AS-LIMIT (TRANSMISSION NEUTRALIZER)	
					(EACH INCLUDES)	
		1	**6V-8376**	3	SCREW-MACHINE (8-32X0.25-IN)	
		1	**9B-7233**	3	LOCKWASHER	
J	9	1	*361-7150*	1	METER GP-SERVICE	
		1	**304-5303**	1	NUT-SPECIAL (SERVICE METER)	
	10	1	**173-3064**	1	SWITCH GP-ROTARY (TURN SIGNAL, HAZARD)	
		1	**5L-7200**	1	SCREW (8-32X0.375-IN)	
		1	**9B-7233**	1	LOCKWASHER	
	11	1	**217-8166**	1	FLASHER AS (24-VOLT)	
	12	1	**180-4028**	2	BRACKET	
	13	1	**180-7033**	1	COVER	
	14	1	**295-1834**	1	FILM-IDENTIFICATION (FUSE BOX) (RH)	
	15	1	**295-1835**	1	FILM-IDENTIFICATION (FUSE BOX) (LH)	
C	16	1	**391-8796**	1	HARNESS AS-CONSOLE	
		1	**9G-9314**	3	TERMINAL-BLADE (14-GA TO 16-GA)	
		1	**5P-4571**	5	TERMINAL-BLADE (14-GA TO 16-GA)	
		1	**5P-1475**	5	TERMINAL-FORK (14-GA TO 16-GA, NO. 8 SCREW)	
		1	**2L-8050**	3	TERMINAL-RING (6-GA, 1/4-IN SCREW)	
					—OR—	
		1	**2L-8058**	3	TERMINAL-RING (8-GA, 1/4-IN SCREW)	
		1	**155-2255**	2	KIT-CONNECTING PLUG (12-PIN)	
		1	**155-2270**	1	KIT-CONNECTING PLUG (2-PIN)	
					(EACH PLUG KIT INCLUDES PLUG AS, WEDGE & INTERFACE SEAL)	
		1	**245-7434**	3	KIT-CONNECTING PLUG (10-PIN)	
					(EACH INCLUDE WIRE AS, PLUG CONNECTOR & PLUG)	
		1	**102-8801**	2	KIT-RECEPTACLE (12-PIN)	
					(EACH RECEPTACLE KIT INCLUDES RECEPTACLE AS & WEDGE)	
B		1	**1P-0810**		TAPE-ELECTRICAL	
		1	**9W-2032**	1	TERMINAL-BLADE (10-GA TO 12-GA)	
		1	**9W-2033**	11	TERMINAL-BLADE (14-GA TO 16-GA)	
		1	**204-1297**	21	TERMINAL AS-BLADE (18-GA TO 20-GA)	
E		1	**119-3662**		TUBE-HEAT SHRINK (10.85-MM DIA) (33-CM)	
E		1	**125-7874**		TUBE-HEAT SHRINK (5.72-MM DIA) (20-CM)	
E		1	**125-7875**		TUBE-HEAT SHRINK (7.44-MM DIA) (20-CM)	

334-3344 **WIRING GP-STEERING CONSOLE (**contd.**)** **i06280926**

NOTE	REF NO	GRAPHIC REF	PART NUMBER	QTY	PART NAME 1 2 3 4 5 6 (PRODUCT LEVEL)	SEE PAGE
		1	**9R-9806**	10	TERMINAL-BLADE (18-GA TO 20-GA)	
		1	**185-1861**	4	SEAL-WIRE	
		1	**8N-1541**	1	SOCKET-CONNECTOR (12-GA TO 14-GA)	
		1	**8N-1547**	1	SOCKET-CONNECTOR (6-GA)	
		1	**8T-8730**	19	SOCKET-CONNECTOR (16-GA TO 18-GA)	
		1	**9W-0844**	3	SOCKET-CONNECTOR (14-GA TO 16-GA)	
		1	**9X-3402**	2	SOCKET-CONNECTOR (16-GA TO 18-GA)	
		1	**6V-0491**	16	TERMINAL-BLADE (14-GA TO 18-GA)	
		1	**129-7164**	1	RECEPTACLE AS-CONNECTOR (1-PIN)	
		1	**185-1860**	21	SEAL-WIRE	
		1	**7T-6365**	4	HOUSING-RECEPTACLE	
		1	**8N-1546**	2	PIN-CONNECTOR (6-GA)	
		1	**8T-8729**	11	PIN-CONNECTOR (16-GA TO 18-GA)	
		1	**9W-0852**	1	PIN-CONNECTOR (14-GA TO 16-GA)	
		1	**9X-3401**	5	PIN-CONNECTOR (16-GA TO 18-GA)	
		1	**127-5483**	1	PLUG AS-CONNECTOR (1-PIN)	
		1	**129-7163**	1	PLUG AS-CONNECTOR (1-PIN)	
		1	**8T-8737**	15	PLUG-SEAL	
		1	**7G-7918**	1	PLUG-SEAL	
		1	**127-5484**	2	RECEPTACLE AS-CONNECTOR (1-PIN)	
		1	**174-7566**	2	BLOCK AS-FUSE	
					(EACH INCLUDES)	
		1	**1H-3244**	1	LOCKWASHER	
		1	**6V-8185**	1	NUT (1/4-20-THD)	
		1	**8T-4205**	1	WASHER-HARD (7.2X14.5X2-MM THK)	
		1	**151-1398**	2	KIT-TERMINAL (LOCK)	
		1	**199-6582**	1	BLOCK AS-FUSE	
		1	**1H-3244**	1	LOCKWASHER	
		1	**6V-8185**	1	NUT (1/4-20-THD)	
		1	**8T-4205**	1	WASHER-HARD (7.2X14.5X2-MM THK)	
		1	**151-1397**	1	COVER-FUSE BLOCK	
	17	1	**089-7960**	2	WASHER (5.3X25X1.6-MM THK)	
	18	1	**103-5678**	1	SWITCH AS-ROTARY (HEADLIGHT DIMMER)	
		1	**5L-7200**	1	SCREW (8-32X0.375-IN)	
		1	**9B-7233**	1	LOCKWASHER	
	19	1	**130-5300**	1	CLIP	
M	20	1	**151-4957**	4	BOLT-SOCKET HEAD (M3X0.5X25-MM)	
M	21	1	**174-8131**	2	SCREW-TRUSS HEAD (M4X0.7X12-MM)	
	22	1	**1H-3244**	2	LOCKWASHER	
	23	1	**228-5009**	4	CLIP	
M	24	1	**3C-6969**	4	NUT (M3X0.5-THD)	
C	25	1	**368-4542**	1	SWITCH AS-ROCKER (HEADLIGHTS)	
	26	1	**3L-8187**	4	LOCKWASHER	
	27	1	**4B-1281**	3	SCREW-MACHINE (1/4-20X0.625-IN)	
	28	1	**4B-2047**	2	NUT (10-24-THD)	
	29	1	**4B-4274**	18	WASHER (5.5X13X1.2-MM THK)	
	30	1	**4D-1212**	1	GROMMET	
M	31	1	**5C-2890**	3	NUT (M6X1-THD)	
M	32	1	**5C-8312**	2	NUT (M4X0.7-THD)	
M	33	1	**5C-9553**	2	BOLT (M6X1X16-MM)	
	34	1	**5M-6755**	2	SCREW-MACHINE (10-24X0.562-IN)	

334-3344 **WIRING GP-STEERING CONSOLE (**contd.**)** **i06280926**

NOTE	REF NO	GRAPHIC REF	PART NUMBER	QTY	PART NAME 1 2 3 4 5 6 (PRODUCT LEVEL)	SEE PAGE
	35	1	**5P-4115**	1	WASHER-HARD (7.2X19X2-MM THK)	
	36	1	**6D-4244**	2	CLIP	
	37	1	**6V-8185**	3	NUT (1/4-20-THD)	
	38	1	**8C-7508**	2	LOCKWASHER	
	39	1	**8L-6521**	8	BOLT (10-32X0.5-IN)	
M	40	1	**8T-4971**	1	BOLT (M6X1X30-MM)	
	41	1	**8X-6296**	2	LEVER	
	42	1	**9P-2553**	1	SPACER (6.83X10.28X11-MM THK)	
M	43	1	**9X-1046**	6	SCREW (M4X0.7X18-MM)	
M	44	1	**9X-2042**	1	SCREW-TRUSS HEAD (M6X1X12-MM)	
	45	1	**9X-8256**	6	WASHER (6.6X12X2-MM THK)	
	46	1	**102-9383**	1	PLATE	
	47	1	**8T-4205**	2	WASHER-HARD (7.2X14.5X2-MM THK)	
C	48	1	**249-5488**	1	SWITCH AS-ROCKER (FLOODLIGHT)	
	49	1	**5J-0605**	1	RING-BACKUP	
C	50	1	**236-4631**	6	BEZEL	
C	51	1	**368-4541**	1	SWITCH AS-ROCKER (DIFFERENTIAL LOCK)	
					AVAILABLE REPAIR KIT(S):	
J			**362-0288**	1	KIT-SERVICE METER	
					(INCLUDES METER & FILM)	

B - USE AS REQUIRED
C - CHANGE FROM PREVIOUS TYPE
E - ORDER BY THE CENTIMETER
J - KIT MARKED J SERVICES PART(S) MARKED J
M - METRIC PART

334-3344 **WIRING GP-STEERING CONSOLE (**contd.**)** **i06280926**

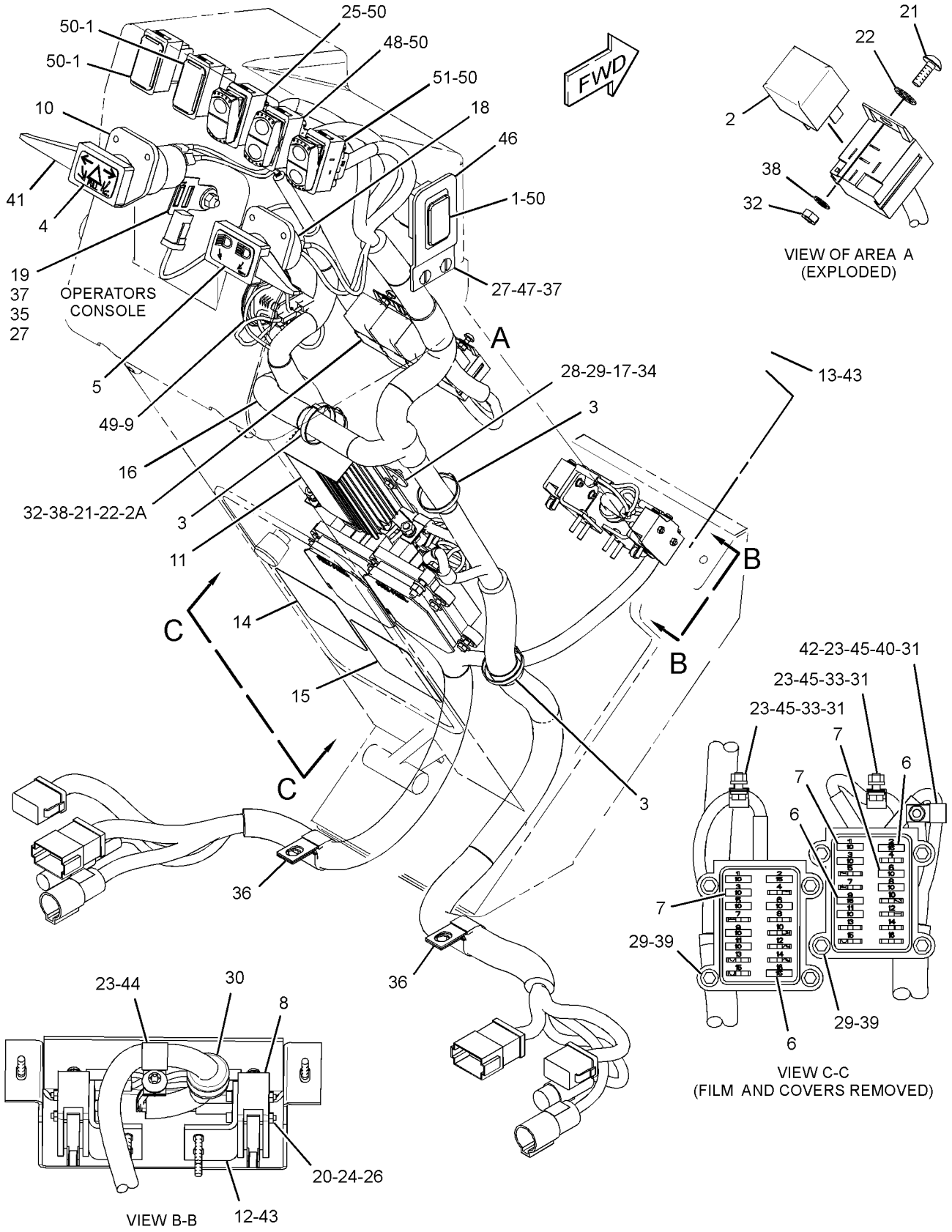

GRAPHIC #1 <END> g03343356

373-6938 WIRING GP-STEERING CONSOLE

S/N: SZS489-623

PART OF 368-3025 GENERAL AR

SMCS-4334 **i05301272**

NOTE	REF NO	GRAPHIC REF	PART NUMBER	QTY	PART NAME 1 2 3 4 5 6 (PRODUCT LEVEL)	SEE PAGE
	1	1	**228-6089**	3	PLUG (ROCKER SWITCH)	
	2	1	**3E-6477**	4	RELAY AS (24-VOLT)	
	3	1	**3S-2093**	7	STRAP-CABLE	
	4	1	**9W-1441**	4	FUSE (15-AMPERE)	
	5	1	**9W-1442**	10	FUSE (10-AMPERE)	
	6	1	**112-6175**	2	SWITCH AS-LIMIT (BRAKE PEDAL)	
					(EACH INCLUDES)	
		1	**6V-8376**	3	SCREW-MACHINE (8-32X0.25-IN)	
		1	**9B-7233**	3	LOCKWASHER	
	7	1	**366-4622**	1	KIT-SERVICE METER (32-VOLT DC)	
					(KIT INCLUDES SERVICE METER & FILM)	
	8	1	**180-4028**	2	BRACKET	
	9	1	**180-7033**	1	COVER	
	10	1	**228-5009**	4	CLIP	
	11	1	**373-6939**	1	HARNESS AS-CONSOLE	
		1	**102-8801**	2	KIT-RECEPTACLE (12-PIN)	
					(EACH INCLUDES RECEPTACLE AS & WEDGE)	
		1	**6V-0491**	16	TERMINAL-BLADE (14-GA TO 18-GA)	
		1	**7G-7918**	1	PLUG-SEAL	
		1	**7T-6365**	4	HOUSING-RECEPTACLE	
		1	**8N-1541**	1	SOCKET-CONNECTOR (12-GA TO 14-GA)	
		1	**8N-1546**	2	PIN-CONNECTOR (6-GA)	
		1	**8N-1547**	1	SOCKET-CONNECTOR (6-GA)	
		1	**8T-8729**	11	PIN-CONNECTOR (16-GA TO 18-GA)	
		1	**8T-8730**	16	SOCKET-CONNECTOR (16-GA TO 18-GA)	
		1	**8T-8737**	11	PLUG-SEAL	
		1	**9G-9314**	5	TERMINAL-BLADE (14-GA TO 16-GA)	
		1	**9R-9806**	11	TERMINAL-BLADE (18-GA TO 20-GA)	
		1	**9W-0844**	4	SOCKET-CONNECTOR (14-GA TO 16-GA)	
		1	**9W-0852**	2	PIN-CONNECTOR (14-GA TO 16-GA)	
		1	**9W-2032**	1	TERMINAL-BLADE (10-GA TO 12-GA)	
		1	**9W-2033**	15	TERMINAL-BLADE (14-GA TO 16-GA)	
		1	**9X-3401**	5	PIN-CONNECTOR (16-GA TO 18-GA)	
		1	**9X-3402**	1	SOCKET-CONNECTOR (16-GA TO 18-GA)	
E		1	**119-3662**		TUBE-HEAT SHRINK (10.85-MM DIA) (33-CM)	
E		1	**125-7874**		TUBE-HEAT SHRINK (5.72-MM DIA) (10-CM)	
E		1	**125-7875**		TUBE-HEAT SHRINK (7.44-MM DIA) (30-CM)	
		1	**127-5483**	1	PLUG AS-CONNECTOR (1-PIN)	
		1	**127-5484**	2	RECEPTACLE AS-CONNECTOR (1-PIN)	
		1	**129-7163**	1	PLUG AS-CONNECTOR (1-PIN)	
		1	**129-7164**	1	RECEPTACLE AS-CONNECTOR (1-PIN)	
		1	**5P-4571**	5	TERMINAL-BLADE (14-GA TO 16-GA)	
		1	**5P-1475**	5	TERMINAL-FORK (14-GA TO 16-GA, NO. 8 SCREW)	
		1	**2L-8050**	3	TERMINAL-RING (6-GA, 1/4-IN SCREW)	
					—OR—	
		1	**2L-8058**	3	TERMINAL-RING (8-GA, 1/4-IN SCREW)	
		1	**155-2255**	2	KIT-CONNECTING PLUG (12-PIN)	
		1	**155-2270**	1	KIT-CONNECTING PLUG (2-PIN)	

373-6938 **WIRING GP-STEERING CONSOLE (**contd.**)** **i05301272**

NOTE	REF NO	GRAPHIC REF	PART NUMBER	QTY	PART NAME 1 2 3 4 5 6 (PRODUCT LEVEL)	SEE PAGE
					(EACH PLUG KIT INCLUDES PLUG AS, WEDGE, & INTERFACE SEAL)	
		1	**174-7566**	2	BLOCK AS-FUSE	
					(EACH INCLUDES)	
		1	**151-1398**	2	KIT-TERMINAL (LOCK)	
		1	**199-6582**	1	BLOCK AS-FUSE	
		1	**1H-3244**	1	LOCKWASHER	
		1	**6V-8185**	1	NUT (1/4-20-THD)	
		1	**8T-4205**	1	WASHER-HARD (7.2X14.5X2-MM THK)	
		1	**151-1397**	1	COVER-FUSE BLOCK	
		1	**185-1860**	27	SEAL-WIRE	
		1	**185-1861**	6	SEAL-WIRE	
		1	**202-5397**	17	PLUG	
		1	**204-1297**	27	TERMINAL AS-BLADE (18-GA TO 20-GA)	
		1	**245-7434**	5	KIT-CONNECTING PLUG (10-PIN)	
					(EACH KIT INCLUDES PLUG CONNECTOR, WIRE ASSEMBLIES, & PLUGS)	
	12	1	**398-5361**	1	FILM-IDENTIFICATION (FUSE PANEL) (RH)	
	13	1	**295-1834**	1	FILM-IDENTIFICATION (FUSE BOX) (LH)	
	14	1	**130-5300**	1	CLIP	
M	15	1	**151-4957**	4	BOLT-SOCKET HEAD (M3X0.5X25-MM)	
M	16	1	**174-8131**	2	SCREW-TRUSS HEAD (M4X0.7X12-MM)	
	17	1	**1H-3244**	2	LOCKWASHER	
M	18	1	**3C-6969**	4	NUT (M3X0.5-THD)	
	19	1	**368-4541**	1	SWITCH AS-ROCKER (DIFFERENTIAL LOCK)	
	20	1	**3L-8187**	4	LOCKWASHER	
	21	1	**4B-1281**	3	SCREW-MACHINE (1/4-20X0.625-IN)	
	22	1	**4B-4274**	16	WASHER (5.5X13X1.2-MM THK)	
	23	1	**4D-1212**	1	GROMMET	
M	24	1	**5C-2890**	3	NUT (M6X1-THD)	
M	25	1	**5C-8312**	2	NUT (M4X0.7-THD)	
M	26	1	**5C-9553**	2	BOLT (M6X1X16-MM)	
	27	1	**5P-4115**	1	WASHER-HARD (7.2X19X2-MM THK)	
	28	1	**6D-4244**	2	CLIP	
	29	1	**6V-8185**	3	NUT (1/4-20-THD)	
	30	1	**8C-7508**	2	LOCKWASHER	
	31	1	**8L-6521**	8	BOLT (10-32X0.5-IN)	
M	32	1	**8T-4971**	1	BOLT (M6X1X30-MM)	
	33	1	**9P-2553**	1	SPACER (6.83X10.28X11-MM THK)	
M	34	1	**9X-1046**	6	SCREW (M4X0.7X18-MM)	
M	35	1	**9X-2042**	1	SCREW-TRUSS HEAD (M6X1X12-MM)	
	36	1	**9X-8256**	6	WASHER (6.6X12X2-MM THK)	
	37	1	**102-9383**	1	PLATE	
	38	1	**249-5488**	1	SWITCH AS-ROCKER (FLOODLIGHT)	
	39	1	**8T-4205**	2	WASHER-HARD (7.2X14.5X2-MM THK)	
	40	1	**236-4631**	6	BEZEL	
	41	1	**368-4542**	1	SWITCH AS-ROCKER (PANEL LIGHT, TAIL LIGHT)	
	42	1	**5J-0605**	1	RING-BACKUP	

E - ORDER BY THE CENTIMETER
M - METRIC PART

373-6938 **WIRING GP-STEERING CONSOLE (**contd.**)** **i05301272**

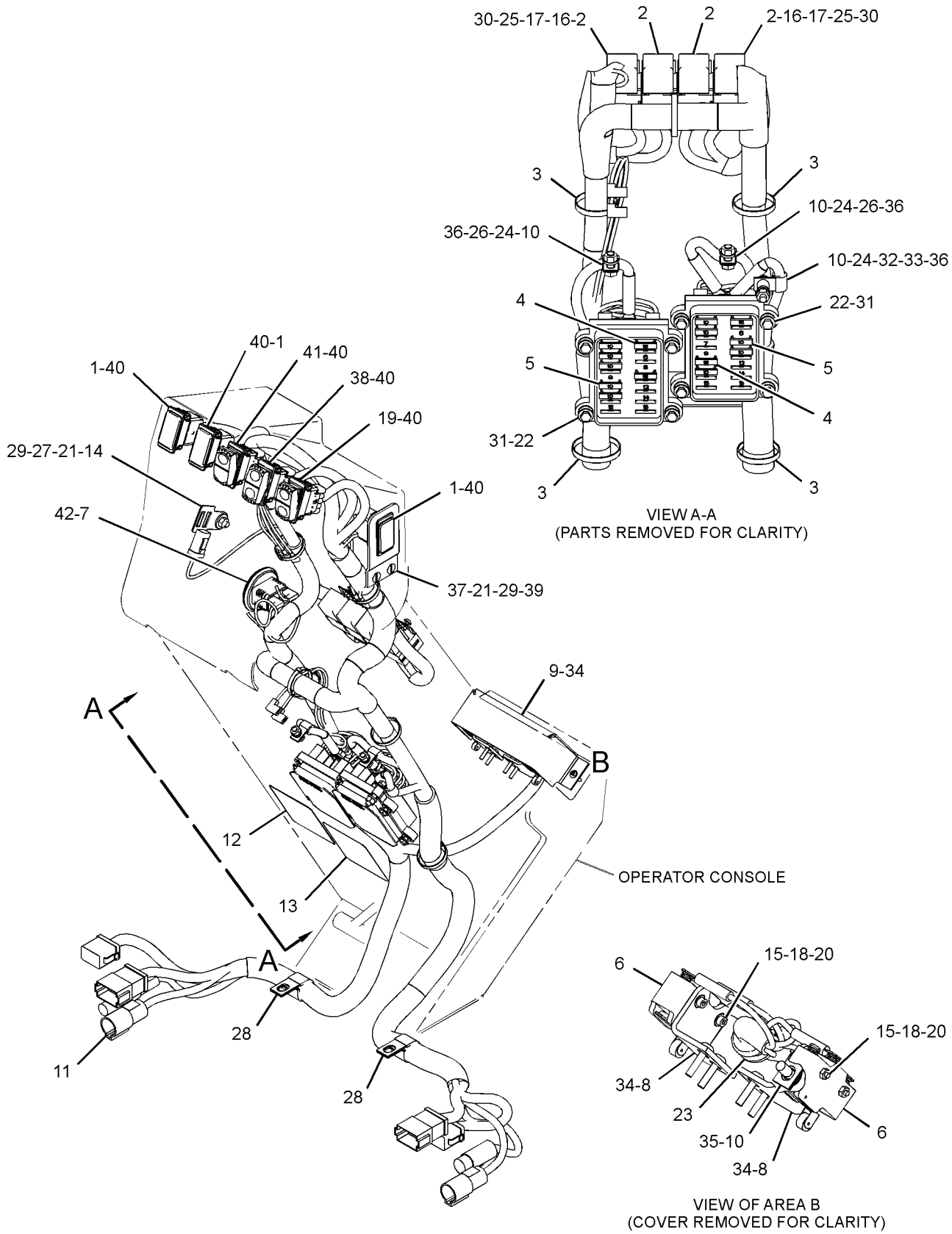

GRAPHIC #1 <END> g03356202

384-7616 WIRING GP-STEERING CONSOLE

S/N: SZS1-UP
INDIA ROADING
PART OF 461-2961, 461-2964 CANOPY AR, 358-9496, 359-1520 ROADING AR
AN ATTACHMENT

SMCS-4334 **i06737501**

NOTE	REF NO	GRAPHIC REF	PART NUMBER	QTY	PART NAME 1 2 3 4 5 6 (PRODUCT LEVEL)	SEE PAGE
	1	1	**3E-6477**	2	RELAY AS (24-VOLT) (TAIL, PANEL LAMPS, RH)	
	1A	1	**3E-6477**	2	RELAY AS (24-VOLT) (TAIL, PANEL LAMPS, LH)	
	2	1	**3S-2093**	5	STRAP-CABLE	
	3	1	**8X-5153**	1	FILM-FACE (TURN SIGNAL, HAZARD)	
	4	1	**8X-5154**	1	FILM-FACE (HEADLIGHTS HIGH, LOW BEAM)	
	5	1	**9W-1441**	5	FUSE (15-AMPERE)	
	6	1	**9W-1442**	12	FUSE (10-AMPERE)	
	7	1	**102-9383**	1	PLATE	
	8	1	**112-6175**	2	SWITCH AS-LIMIT (BRAKE PEDAL)	
					(EACH INCLUDES)	
		1	**6V-8376**	3	SCREW-MACHINE (8-32X0.25-IN)	
		1	**9B-7233**	3	LOCKWASHER	
	9	1	**173-3064**	1	SWITCH GP-ROTARY (TURN SIGNAL, HAZARD)	
		1	**5L-7200**	1	SCREW (8-32X0.375-IN)	
		1	**9B-7233**	1	LOCKWASHER	
	10	1	**180-4028**	2	BRACKET	
	11	1	**180-7033**	1	COVER	
	12	1	**217-8166**	1	FLASHER AS (24-VOLT)	
	13	1	**228-6089**	3	PLUG (ROCKER SWITCH)	
	14	1	**236-4631**	6	BEZEL	
	15	1	**249-5486**	1	SWITCH AS-ROCKER (24-VOLT) (HEADLIGHTS, TAIL LIGHTS)	
	16	1	**249-5488**	1	SWITCH AS-ROCKER (FLOODLIGHT)	
	17	1	**366-4622**	1	KIT-SERVICE METER (32-VOLT DC)	
					(INCLUDES FILM & METER GP)	
	18	1	**368-4541**	1	SWITCH AS-ROCKER (DIFFERENTIAL LOCK)	
Y	19	1	**461-4541**	1	HARNESS AS-CHASSIS	252
	20	1	**462-5407**	1	FILM-INFORMATION (FUSE BOX)	
	21	1	**473-5448**	1	FILM-IDENTIFICATION (FUSE PANEL)	
	22	1	**089-7960**	2	WASHER (5.3X25X1.6-MM THK)	
	23	1	**103-5678**	1	SWITCH AS-ROTARY (HIGH, LOW BEAM)	
		1	**5L-7200**	1	SCREW (8-32X0.375-IN)	
		1	**9B-7233**	1	LOCKWASHER	
	24	1	**130-5300**	1	CLIP	
M	25	1	**151-4957**	4	BOLT-SOCKET HEAD (M3X0.5X25-MM)	
M	26	1	**174-8131**	2	SCREW-TRUSS HEAD (M4X0.7X12-MM)	
	27	1	**1H-3244**	2	LOCKWASHER	
	28	1	**228-5009**	4	CLIP	
M	29	1	**3C-6969**	4	NUT (M3X0.5-THD)	
	30	1	**3L-8187**	4	LOCKWASHER	
	31	1	**4B-1281**	3	SCREW-MACHINE (1/4-20X0.625-IN)	
	32	1	**4B-2047**	2	NUT (10-24-THD)	
	33	1	**4B-4274**	18	WASHER (5.5X13X1.2-MM THK)	
	34	1	**4D-1212**	1	GROMMET	
M	35	1	**5C-2890**	3	NUT (M6X1-THD)	
M	36	1	**5C-8312**	2	NUT (M4X0.7-THD)	
M	37	1	**5C-9553**	2	BOLT (M6X1X16-MM)	

384-7616 **WIRING GP-STEERING CONSOLE (**contd.**)** **i06737501**

NOTE	REF NO	GRAPHIC REF	PART NUMBER	QTY	PART NAME 1 2 3 4 5 6 (PRODUCT LEVEL)	SEE PAGE
	38	1	**5J-0605**	1	RING-BACKUP	
	39	1	**5M-6755**	2	SCREW-MACHINE (10-24X0.562-IN)	
	40	1	**5P-4115**	1	WASHER-HARD (7.2X19X2-MM THK)	
	41	1	**6D-4244**	2	CLIP	
	42	1	**6V-8185**	3	NUT (1/4-20-THD)	
	43	1	**8C-7508**	2	LOCKWASHER	
	44	1	**8L-6521**	8	BOLT (10-32X0.5-IN)	
	45	1	**8T-4205**	2	WASHER-HARD (7.2X14.5X2-MM THK)	
M	46	1	**8T-4971**	1	BOLT (M6X1X30-MM)	
	47	1	**8X-6296**	2	LEVER	
	48	1	**9P-2553**	1	SPACER (6.83X10.28X11-MM THK)	
M	49	1	**9X-1046**	6	SCREW (M4X0.7X18-MM)	
M	50	1	**9X-2042**	1	SCREW-TRUSS HEAD (M6X1X12-MM)	
	51	1	**9X-8256**	6	WASHER (6.6X12X2-MM THK)	

M - METRIC PART
Y - SEPARATE ILLUSTRATION

384-7616 **WIRING GP-STEERING CONSOLE (**contd.**)** **i06737501**

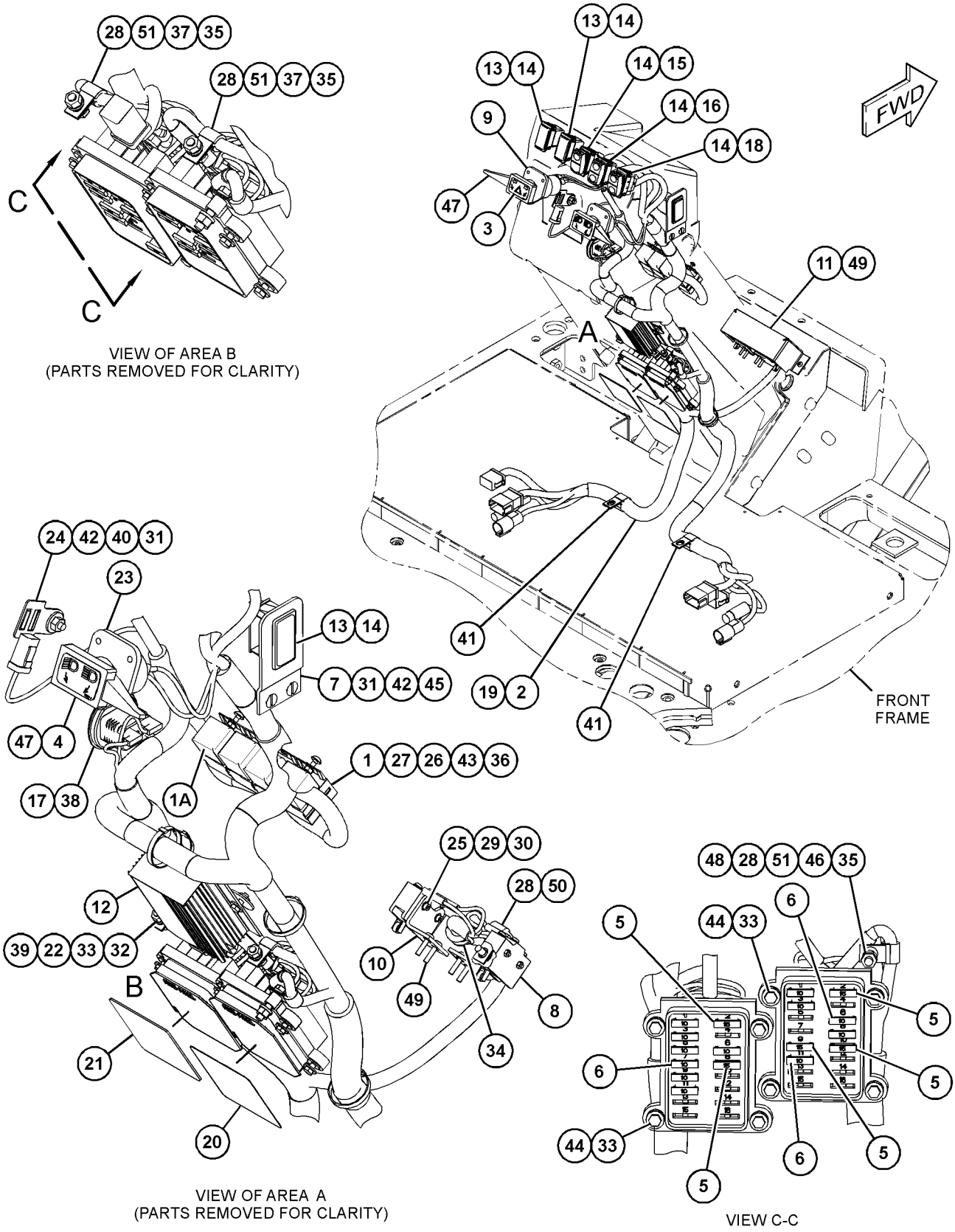

GRAPHIC #1 <END> g06054730

434-4114 WIRING GP-STEERING CONSOLE

S/N: SZS1-UP

PART OF 447-6839, 447-6840 OPTION AR-REGIONAL

AN ATTACHMENT

SMCS-4334 **i05865696**

NOTE	REF NO	GRAPHIC REF	PART NUMBER	QTY	PART NAME 1 2 3 4 5 6 (PRODUCT LEVEL)	SEE PAGE
	1	1	**3E-6477**	4	RELAY AS (24-VOLT)	
	2	1	**3S-2093**	7	STRAP-CABLE	
	3	1	**9W-1441**	4	FUSE (15-AMPERE)	
	4	1	**9W-1442**	10	FUSE (10-AMPERE)	
	5	1	**102-9383**	1	PLATE	
	6	1	**112-6175**	2	SWITCH AS-LIMIT (BRAKE PEDAL)	
					(EACH INCLUDES)	
		1	**6V-8376**	3	SCREW-MACHINE (8-32X0.25-IN)	
		1	**9B-7233**	3	LOCKWASHER	
	7	1	**180-4028**	2	BRACKET	
	8	1	**180-7033**	1	COVER	
	9	1	**228-6089**	3	PLUG (ROCKER SWITCH)	
	10	1	**236-4631**	6	BEZEL	
	11	1	**249-5488**	1	SWITCH AS-ROCKER (FLOODLIGHT)	
	12	1	**295-1835**	1	FILM-IDENTIFICATION (FUSE BOX)	
	13	1	*366-0367*	1	METER GP-SERVICE	
		1	**304-5303**	1	NUT-SPECIAL (SERVICE METER)	
		1	**366-4622**	1	KIT-SERVICE METER (32-VOLT DC)	
					(INCLUDES FILM & METER)	
	14	1	**368-4541**	1	SWITCH AS-ROCKER (DIFFERENTIAL LOCK)	
	15	1	**368-4542**	1	SWITCH AS-ROCKER (PANEL LIGHT, TAIL LIGHT)	
	16	1	**373-6939**	1	HARNESS AS-CONSOLE	
		1	**155-2255**	2	KIT-CONNECTING PLUG (12-PIN)	
		1	**155-2270**	1	KIT-CONNECTING PLUG (2-PIN)	
		1	**245-7434**	1	KIT-CONNECTING PLUG (10-PIN)	
					(EACH PLUG KIT INCLUDES PLUG AS, WEDGE & INTERFACE SEAL)	
		1	**102-8801**	2	KIT-RECEPTACLE (12-PIN)	
					(EACH KIT INCLUDES RECEPTACLE AS & WEDGE)	
		1	**9G-9314**	5	TERMINAL-BLADE (14-GA TO 16-GA)	
		1	**5P-4571**	1	TERMINAL-BLADE (14-GA TO 16-GA)	
		1	**5P-1475**	1	TERMINAL-FORK (14-GA TO 16-GA, NO. 8 SCREW)	
		1	**2L-8050**	1	TERMINAL-RING (6-GA, 1/4-IN SCREW)	
					—OR—	
		1	**2L-8058**	1	TERMINAL-RING (8-GA, 1/4-IN SCREW)	
E		1	**125-7874**		TUBE-HEAT SHRINK (5.72-MM DIA) (10-CM)	
E		1	**125-7875**		TUBE-HEAT SHRINK (7.44-MM DIA) (30-CM)	
		1	**8N-1547**	1	SOCKET-CONNECTOR (6-GA)	
		1	**8T-8730**	16	SOCKET-CONNECTOR (16-GA TO 18-GA)	
		1	**9W-0844**	4	SOCKET-CONNECTOR (14-GA TO 16-GA)	
		1	**9X-3402**	1	SOCKET-CONNECTOR (16-GA TO 18-GA)	
		1	**6V-0491**	16	TERMINAL-BLADE (14-GA TO 18-GA)	
		1	**9R-9806**	11	TERMINAL-BLADE (18-GA TO 20-GA)	
		1	**9W-2032**	1	TERMINAL-BLADE (10-GA TO 12-GA)	
		1	**9W-2033**	15	TERMINAL-BLADE (14-GA TO 16-GA)	
		1	**204-1297**	27	TERMINAL AS-BLADE (18-GA TO 20-GA)	
					(EACH INCLUDES)	
		1	**235-4123**	1	TERMINAL (18-GA TO 20-GA)	

434-4114 **WIRING GP-STEERING CONSOLE (**contd.**)** **i05865696**

NOTE	REF NO	GRAPHIC REF	PART NUMBER	QTY	PART NAME 1 2 3 4 5 6 (PRODUCT LEVEL)	SEE PAGE
E		1	**119-3662**		TUBE-HEAT SHRINK (10.85-MM DIA) (33-CM)	
		1	**9X-3401**	5	PIN-CONNECTOR (16-GA TO 18-GA)	
		1	**127-5483**	1	PLUG AS-CONNECTOR (1-PIN)	
		1	**129-7163**	1	PLUG AS-CONNECTOR (1-PIN)	
		1	**8T-8737**	11	PLUG-SEAL	
		1	**7G-7918**	1	PLUG-SEAL	
		1	**127-5484**	2	RECEPTACLE AS-CONNECTOR (1-PIN)	
		1	**129-7164**	1	RECEPTACLE AS-CONNECTOR (1-PIN)	
		1	**185-1860**	27	SEAL-WIRE	
		1	**185-1861**	6	SEAL-WIRE	
		1	**8N-1541**	1	SOCKET-CONNECTOR (12-GA TO 14-GA)	
	17	1	**398-5361**	1	FILM-IDENTIFICATION (FUSE PANEL)	
	18	1	**130-5300**	1	CLIP	
M	19	1	**151-4957**	4	BOLT-SOCKET HEAD (M3X0.5X25-MM)	
M	20	1	**174-8131**	2	SCREW-TRUSS HEAD (M4X0.7X12-MM)	
	21	1	**1H-3244**	2	LOCKWASHER	
	22	1	**228-5009**	4	CLIP	
M	23	1	**3C-6969**	4	NUT (M3X0.5-THD)	
	24	1	**3L-8187**	4	LOCKWASHER	
	25	1	**4B-1281**	3	SCREW-MACHINE (1/4-20X0.625-IN)	
	26	1	**4B-4274**	16	WASHER (5.5X13X1.2-MM THK)	
	27	1	**4D-1212**	1	GROMMET	
M	28	1	**5C-2890**	3	NUT (M6X1-THD)	
M	29	1	**5C-8312**	2	NUT (M4X0.7-THD)	
M	30	1	**5C-9553**	2	BOLT (M6X1X16-MM)	
	31	1	**5J-0605**	1	RING-BACKUP	
	32	1	**5P-4115**	1	WASHER-HARD (7.2X19X2-MM THK)	
	33	1	**6D-4244**	2	CLIP	
	34	1	**6V-8185**	3	NUT (1/4-20-THD)	
	35	1	**8L-6521**	8	BOLT (10-32X0.5-IN)	
	36	1	**8T-4205**	2	WASHER-HARD (7.2X14.5X2-MM THK)	
M	37	1	**8T-4971**	1	BOLT (M6X1X30-MM)	
	38	1	**9B-7233**	2	LOCKWASHER	
	39	1	**9P-2553**	1	SPACER (6.83X10.28X11-MM THK)	
M	40	1	**9X-1046**	6	SCREW (M4X0.7X18-MM)	
M	41	1	**9X-2042**	1	SCREW-TRUSS HEAD (M6X1X12-MM)	
	42	1	**9X-8256**	6	WASHER (6.6X12X2-MM THK)	

E - ORDER BY THE CENTIMETER
M - METRIC PART

434-4114 **WIRING GP-STEERING CONSOLE (**contd.**)** **i05865696**

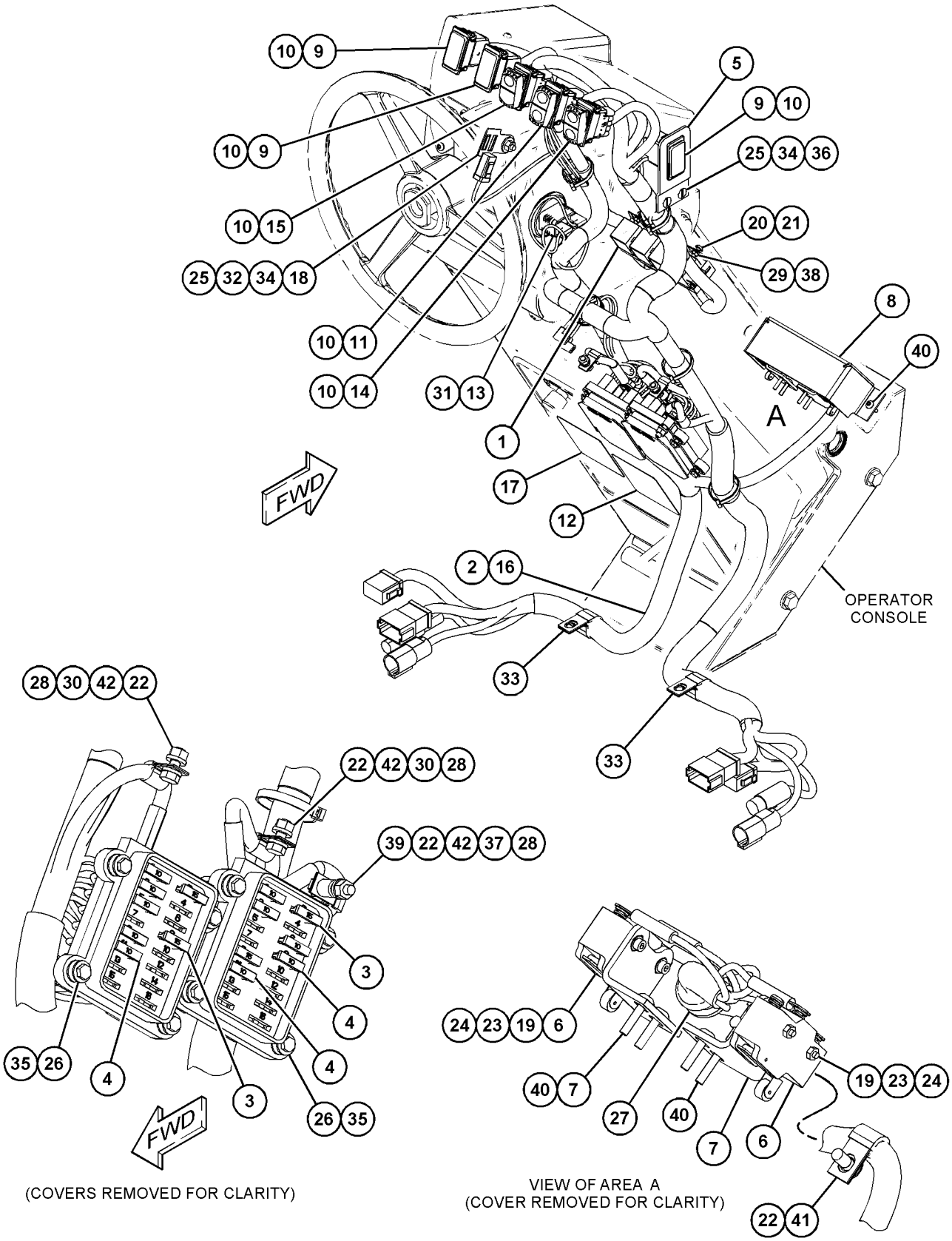

GRAPHIC #1 <END> g03714260

434-4114 WIRING GP-STEERING CONSOLE

S/N: SZS1-10099
PART OF 447-6839, 447-6840 OPTION AR-REGIONAL
AN ATTACHMENT

SMCS-4334 **i06782573**

NOTE	REF NO	GRAPHIC REF	PART NUMBER	QTY	PART NAME 1 2 3 4 5 6 (PRODUCT LEVEL)	SEE PAGE
	1	1	**3E-6477**	4	RELAY AS (24-VOLT)	
	2	1	**3S-2093**	7	STRAP-CABLE	
	3	1	**9W-1441**	5	FUSE (15-AMPERE)	
C	4	1	**9W-1442**	12	FUSE (10-AMPERE)	
	5	1	**102-9383**	1	PLATE	
	6	1	**112-6175**	2	SWITCH AS-LIMIT (BRAKE PEDAL)	
					(EACH INCLUDES)	
		1	**6V-8376**	3	SCREW-MACHINE (8-32X0.25-IN)	
		1	**9B-7233**	3	LOCKWASHER	
	7	1	**180-4028**	2	BRACKET	
	8	1	**180-7033**	1	COVER	
	9	1	**228-6089**	3	PLUG (ROCKER SWITCH)	
	10	1	**236-4631**	6	BEZEL	
	11	1	**249-5488**	1	SWITCH AS-ROCKER (FLOODLIGHT)	
C	12	1	**462-5407**	1	FILM-INFORMATION (FUSE BOX)	
	13	1	*366-0367*	1	METER GP-SERVICE	
		1	**304-5303**	1	NUT-SPECIAL (SERVICE METER)	
		1	**366-4622**	1	KIT-SERVICE METER (32-VOLT DC)	
					(INCLUDES FILM & METER)	
	14	1	**368-4541**	1	SWITCH AS-ROCKER (DIFFERENTIAL LOCK)	
CY	16	1	**455-7844**	1	HARNESS AS-STEERING	263
C	17	1	**473-5448**	1	FILM-IDENTIFICATION (FUSE PANEL)	
	18	1	**130-5300**	1	CLIP	
M	19	1	**151-4957**	4	BOLT-SOCKET HEAD (M3X0.5X25-MM)	
M	20	1	**174-8131**	2	SCREW-TRUSS HEAD (M4X0.7X12-MM)	
	21	1	**1H-3244**	2	LOCKWASHER	
	22	1	**228-5009**	4	CLIP	
M	23	1	**3C-6969**	4	NUT (M3X0.5-THD)	
	24	1	**3L-8187**	4	LOCKWASHER	
	25	1	**4B-1281**	3	SCREW-MACHINE (1/4-20X0.625-IN)	
	26	1	**4B-4274**	16	WASHER (5.5X13X1.2-MM THK)	
	27	1	**4D-1212**	1	GROMMET	
M	28	1	**5C-2890**	3	NUT (M6X1-THD)	
M	29	1	**5C-8312**	2	NUT (M4X0.7-THD)	
M	30	1	**5C-9553**	2	BOLT (M6X1X16-MM)	
	31	1	**5J-0605**	1	RING-BACKUP	
	32	1	**5P-4115**	1	WASHER-HARD (7.2X19X2-MM THK)	
	33	1	**6D-4244**	2	CLIP	
	34	1	**6V-8185**	3	NUT (1/4-20-THD)	
	35	1	**8L-6521**	8	BOLT (10-32X0.5-IN)	
	36	1	**8T-4205**	2	WASHER-HARD (7.2X14.5X2-MM THK)	
M	37	1	**8T-4971**	1	BOLT (M6X1X30-MM)	
	38	1	**9B-7233**	2	LOCKWASHER	
	39	1	**9P-2553**	1	SPACER (6.83X10.28X11-MM THK)	
M	40	1	**9X-1046**	6	SCREW (M4X0.7X18-MM)	
M	41	1	**9X-2042**	1	SCREW-TRUSS HEAD (M6X1X12-MM)	
	42	1	**9X-8256**	6	WASHER (6.6X12X2-MM THK)	

434-4114 **WIRING GP-STEERING CONSOLE** (contd.) **i06782573**

NOTE	REF NO	GRAPHIC REF	PART NUMBER	QTY	PART NAME 1 2 3 4 5 6 (PRODUCT LEVEL)	SEE PAGE

C - CHANGE FROM PREVIOUS TYPE
M - METRIC PART
Y - SEPARATE ILLUSTRATION

434-4114 **WIRING GP-STEERING CONSOLE (**contd.**)** **i06782573**

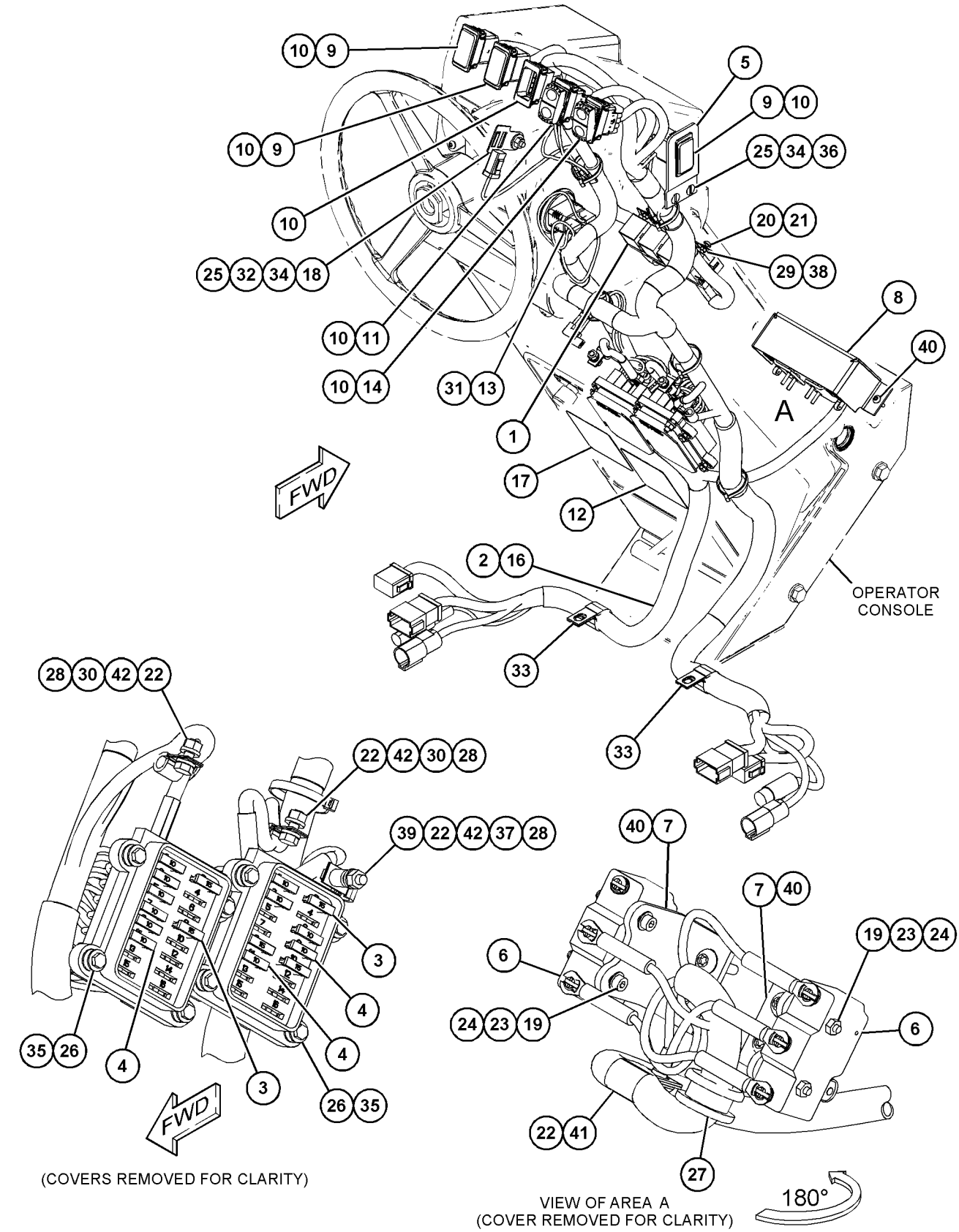

GRAPHIC #1 <END> g06015672

518-6846 WIRING GP-STEERING CONSOLE

S/N: SZS10100-UP

PART OF 447-6839, 447-6840 OPTION AR-REGIONAL

AN ATTACHMENT

SMCS-4334 **i06907608**

NOTE	REF NO	GRAPHIC REF	PART NUMBER	QTY	PART NAME 1 2 3 4 5 6 (PRODUCT LEVEL)	SEE PAGE
	1	2	**3E-6477**	4	RELAY AS (24-VOLT)	
	2	2	**3S-2093**	7	STRAP-CABLE	
	3	1	**9W-1441**	5	FUSE (15-AMPERE)	
	4	1	**9W-1442**	12	FUSE (10-AMPERE)	
	5	2	**102-9383**	1	PLATE	
	6	2	**112-6175**	2	SWITCH AS-LIMIT (BRAKE PEDAL)	
					(EACH INCLUDES)	
		2	**6V-8376**	3	SCREW-MACHINE (8-32X0.25-IN)	
		2	**9B-7233**	3	LOCKWASHER	
	7	2	**180-4028**	2	BRACKET	
	8	1,2	**228-6089**	3	PLUG (ROCKER SWITCH)	
	9	1,2	**236-4631**	6	BEZEL	
	10	1	**249-5488**	1	SWITCH AS-ROCKER (FLOODLIGHT)	
	11	1	**366-4622**	1	KIT-SERVICE METER (32-VOLT DC)	
		1	**114-2505**	1	FILM-IDENTIFICATION (SERVICE METER)	
	12	1	**368-4541**	1	SWITCH AS-ROCKER (DIFFERENTIAL LOCK)	
Y	13	1	**455-7844**	1	HARNESS AS-STEERING	263
	14	1	**462-5407**	1	FILM-INFORMATION (FUSE BOX)	
	15	1	**473-5448**	1	FILM-IDENTIFICATION (FUSE PANEL)	
	16	1	**512-9020**	1	COVER	
	17	2	**130-5300**	1	CLIP	
M	18	2	**151-4957**	4	BOLT-SOCKET HEAD (M3X0.5X25-MM)	
M	19	2	**174-8131**	2	SCREW-TRUSS HEAD (M4X0.7X12-MM)	
	20	2	**1H-3244**	2	LOCKWASHER	
	21	1,2	**228-5009**	4	CLIP	
M	22	2	**3C-6969**	4	NUT (M3X0.5-THD)	
	23	2	**3L-8187**	4	LOCKWASHER	
	24	2	**033-0695**	3	SCREW-FLAT HEAD	
	25	1	**4B-4274**	16	WASHER (5.5X13X1.2-MM THK)	
	26	2	**4D-1212**	1	GROMMET	
M	27	1	**5C-2890**	3	NUT (M6X1-THD)	
M	28	2	**5C-8312**	2	NUT (M4X0.7-THD)	
M	29	1	**5C-9553**	2	BOLT (M6X1X16-MM)	
	30	1	**5J-0605**	1	RING-BACKUP	
	31	2	**5P-4115**	1	WASHER-HARD (7.2X19X2-MM THK)	
	32	1	**6D-4244**	2	CLIP	
	33	2	**6V-8185**	3	NUT (1/4-20-THD)	
	34	1	**8L-6521**	8	BOLT (10-32X0.5-IN)	
	35	2	**8T-4205**	2	WASHER-HARD (7.2X14.5X2-MM THK)	
M	36	1	**8T-4971**	1	BOLT (M6X1X30-MM)	
	37	2	**9B-7233**	2	LOCKWASHER	
	38	1	**9P-2553**	1	SPACER (6.83X10.28X11-MM THK)	
M	39	1,2	**9X-1046**	6	SCREW (M4X0.7X18-MM)	
M	40	2	**9X-2042**	1	SCREW-TRUSS HEAD (M6X1X12-MM)	
	41	1	**9X-8256**	6	WASHER (6.6X12X2-MM THK)	

M - METRIC PART
Y - SEPARATE ILLUSTRATION

518-6846 **WIRING GP-STEERING CONSOLE (**contd.**)** **i06907608**

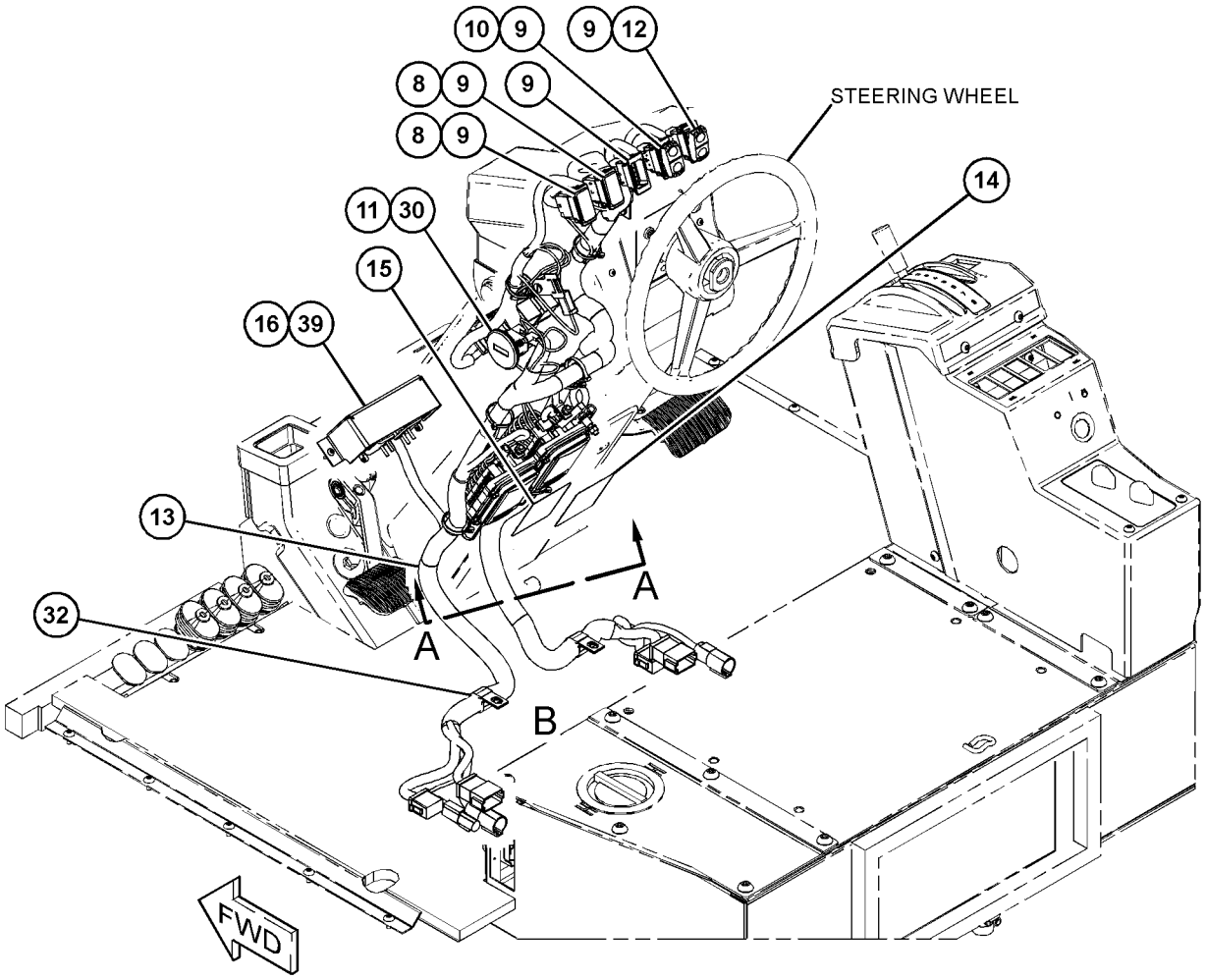

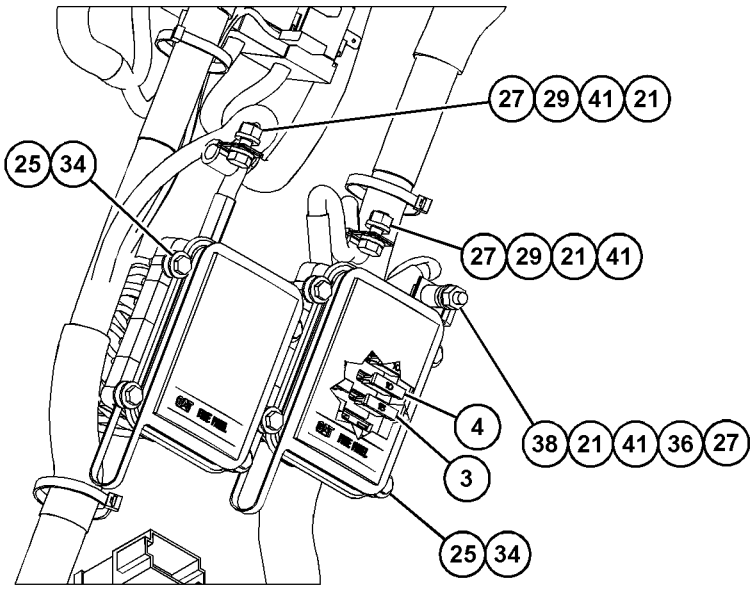

VIEW A-A

REFER TO ALL ILLUSTRATIONS OF THIS GROUP FOR AUXILIARY VIEWS

GRAPHIC #1

g06168846

518-6846 **WIRING GP-STEERING CONSOLE (**contd.**)** **i06907608**

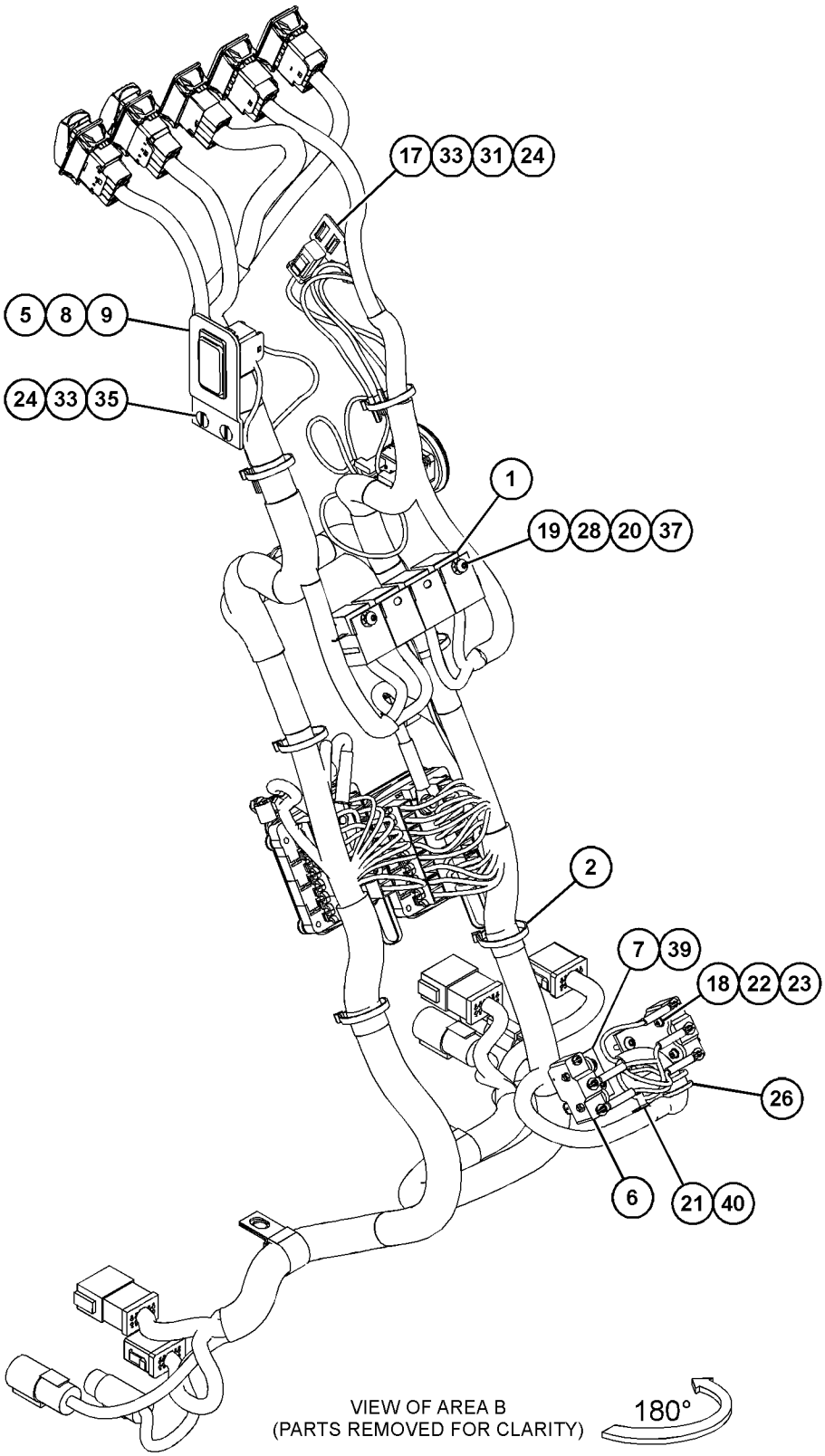

GRAPHIC #2 <END> g06168847

518-6849 WIRING GP-STEERING CONSOLE

S/N: SZS10100-UP
INDIA ROADING
PART OF 461-2961, 461-2964 CANOPY AR
AN ATTACHMENT

SMCS-4334 **i06907282**

NOTE	REF NO	GRAPHIC REF	PART NUMBER	QTY	PART NAME 1 2 3 4 5 6 (PRODUCT LEVEL)	SEE PAGE
	1	1	**3E-6477**	2	RELAY AS (24-VOLT) (TAIL, PANEL LAMPS, RH)	
	1A	1	**3E-6477**	2	RELAY AS (24-VOLT) (TAIL, PANEL LAMPS, LH)	
	2	1	**3S-2093**	5	STRAP-CABLE	
	3	2	**8X-5153**	1	FILM-FACE (TURN SIGNAL, HAZARD)	
	4	2	**8X-5154**	1	FILM-FACE (HEADLIGHTS HIGH, LOW BEAM)	
	5	2	**9W-1441**	5	FUSE (15-AMPERE)	
	6	2	**9W-1442**	12	FUSE (10-AMPERE)	
	7	2	**102-9383**	1	PLATE	
	8	1	**103-5678**	1	SWITCH AS-ROTARY (HIGH, LOW BEAM)	
		1	**6D-3031**	1	SCREW-SOCKET HEAD (8-32X0.375-IN)	
		1	**9B-7233**	1	LOCKWASHER	
	9	2	**112-6175**	2	SWITCH AS-LIMIT (BRAKE PEDAL)	
					(EACH INCLUDES)	
		2	**6V-8376**	3	SCREW-MACHINE (8-32X0.25-IN)	
		2	**9B-7233**	3	LOCKWASHER	
	10	1	**173-3064**	1	SWITCH GP-ROTARY (TURN SIGNAL, HAZARD)	
		1	**6D-3031**	1	SCREW-SOCKET HEAD (8-32X0.375-IN)	
		1	**9B-7233**	1	LOCKWASHER	
	11	2	**180-4028**	2	BRACKET	
	12	1	**217-8166**	1	FLASHER AS (24-VOLT)	
	13	1,2	**228-6089**	3	PLUG (ROCKER SWITCH)	
	14	1,2	**236-4631**	6	BEZEL	
	15	1	**249-5486**	1	SWITCH AS-ROCKER (24-VOLT) (HEADLIGHTS, TAIL LIGHTS)	
	16	1	**249-5488**	1	SWITCH AS-ROCKER (FLOODLIGHT)	
	17	1	**366-4622**	1	KIT-SERVICE METER (32-VOLT DC)	
					(INCLUDES FILM & METER SERVICE GP)	
	18	1	**368-4541**	1	SWITCH AS-ROCKER (DIFFERENTIAL LOCK ON, OFF)	
Y	19	1	**461-4541**	1	HARNESS AS-CHASSIS	252
	20	1	**462-5407**	1	FILM-INFORMATION (FUSE BOX)	
	21	1	**473-5448**	1	FILM-IDENTIFICATION (FUSE PANEL)	
	22	1	**512-9020**	1	COVER	
	23	1	**089-7960**	2	WASHER (5.3X25X1.6-MM THK)	
	24	1	**130-5300**	1	CLIP	
M	25	2	**151-4957**	4	BOLT-SOCKET HEAD (M3X0.5X25-MM)	
M	26	1	**174-8131**	2	SCREW-TRUSS HEAD (M4X0.7X12-MM)	
	27	1	**1H-3244**	2	LOCKWASHER	
	28	2	**228-5009**	4	CLIP	
M	29	2	**3C-6969**	4	NUT (M3X0.5-THD)	
	30	2	**3L-8187**	4	LOCKWASHER	
	31	1,2	**033-0695**	3	SCREW-FLAT HEAD	
	32	1	**4B-2047**	2	NUT (10-24-THD)	
	33	1,2	**4B-4274**	18	WASHER (5.5X13X1.2-MM THK)	
	34	2	**4D-1212**	1	GROMMET	
M	35	2	**5C-2890**	3	NUT (M6X1-THD)	
M	36	1	**5C-8312**	2	NUT (M4X0.7-THD)	
M	37	2	**5C-9553**	2	BOLT (M6X1X16-MM)	

518-6849 **WIRING GP-STEERING CONSOLE (**contd.**)** **i06907282**

NOTE	REF NO	GRAPHIC REF	PART NUMBER	QTY	PART NAME 1 2 3 4 5 6 (PRODUCT LEVEL)	SEE PAGE
	38	1	**5J-0605**	1	RING-BACKUP	
	39	1	**5M-6755**	2	SCREW-MACHINE (10-24X0.562-IN)	
	40	1	**5P-4115**	1	WASHER-HARD (7.2X19X2-MM THK)	
	41	2	**6D-4244**	2	CLIP	
	42	1,2	**6V-8185**	3	NUT (1/4-20-THD)	
	43	2	**8L-6521**	8	BOLT (10-32X0.5-IN)	
	44	2	**8T-4205**	2	WASHER-HARD (7.2X14.5X2-MM THK)	
M	45	2	**8T-4971**	1	BOLT (M6X1X30-MM)	
	46	1	**8X-6296**	2	LEVER	
	47	1	**9B-7233**	2	LOCKWASHER	
	48	2	**9P-2553**	1	SPACER (6.83X10.28X11-MM THK)	
M	49	2	**9X-1046**	6	SCREW (M4X0.7X18-MM)	
M	50	2	**9X-2042**	1	SCREW-TRUSS HEAD (M6X1X12-MM)	
	51	2	**9X-8256**	6	WASHER (6.6X12X2-MM THK)	

M - METRIC PART
Y - SEPARATE ILLUSTRATION

518-6849 **WIRING GP-STEERING CONSOLE (**contd.**)** **i06907282**

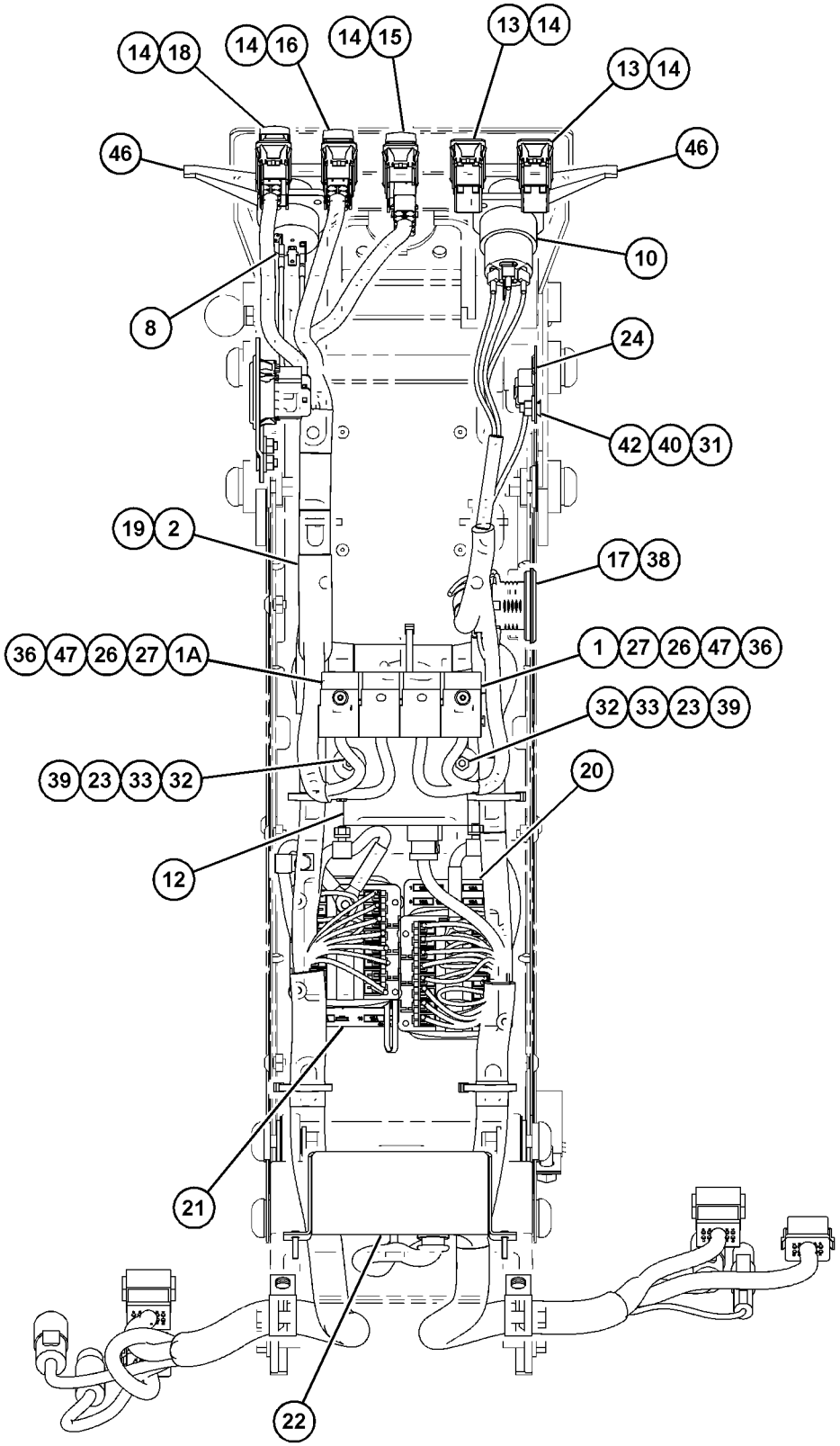

REAR VIEW

GRAPHIC #1 g06169530

518-6849 **WIRING GP-STEERING CONSOLE (**contd.**)** **i06907282**

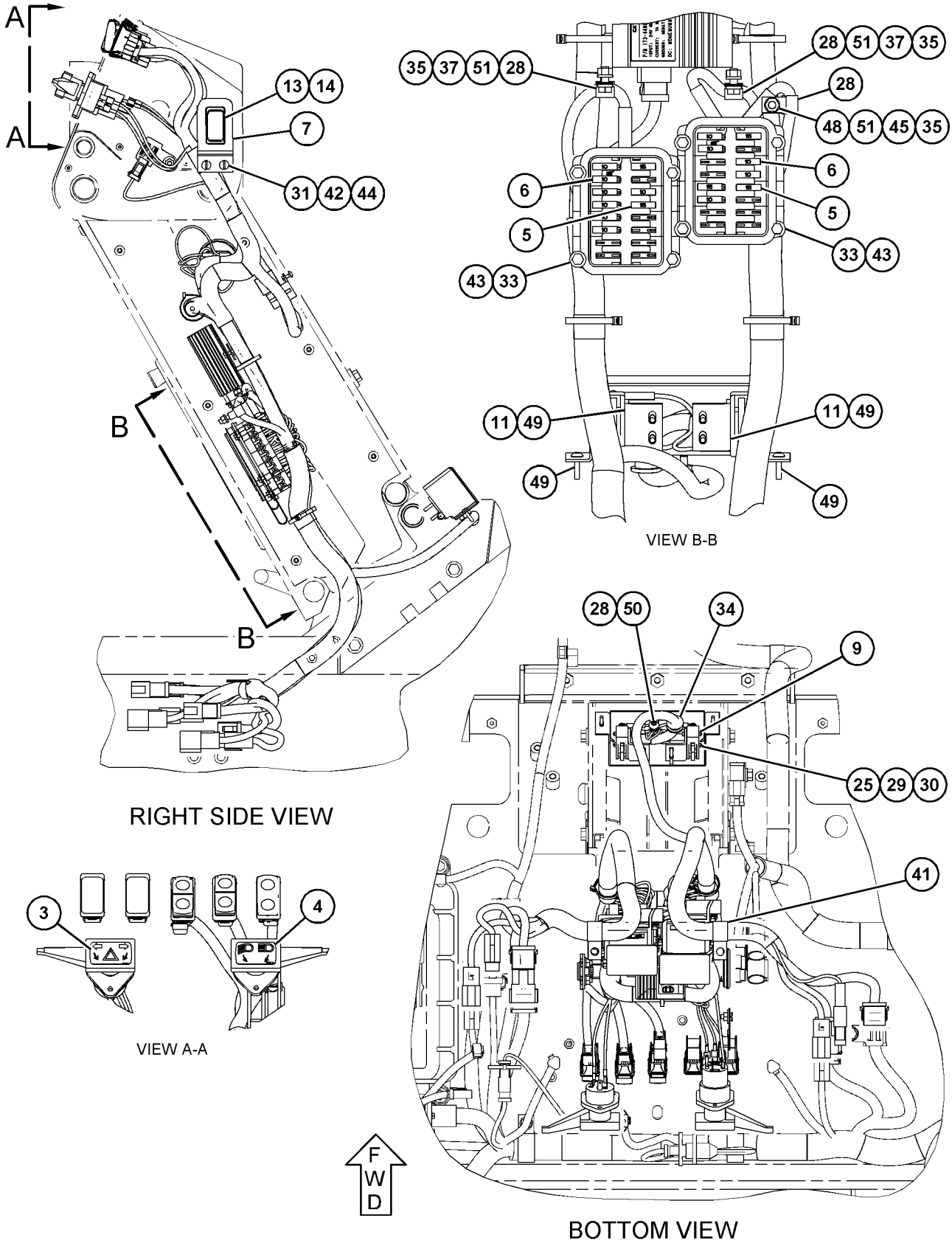

GRAPHIC #2 <END> g06169534

134-1080 AXLE GP-FRONT

S/N: SZS1-UP

PART OF 368-3025 GENERAL AR, 436-8767 POWER TRAIN AR

SMCS-3020, 3282, 4303, 4305, 5225

i05558475

NOTE	REF NO	GRAPHIC REF	PART NUMBER	QTY	PART NAME 1 2 3 4 5 6 (PRODUCT LEVEL)	SEE PAGE
R	1	2	**5K-5288**	2	SEAL GP-DUO-CONE	
					(EACH INCLUDES)	
		2	**5K-5129**	2	RING-SEALING	
	2	2	**2G-8626**	2	WASHER-THRUST (2.02X3.63X0.16-IN THK)	
	3	1,2	**3B-8489**	11	FITTING-GREASE (1/8-27 PTF)	
	4	2	**4D-3704**	2	WASHER-HARD (17X30X5-MM THK)	
	5	2	**2G-8615**	4	WASHER-THRUST (2.015X3.625X0.11-IN THK)	
	6	2	**2G-8742**	2	WASHER-HARD (20X65X5-MM THK)	
	7	2	**2H-3740**	4	BOLT (3/4-16X1.25-IN)	
	8	2	**2G-8741**	4	RING-METAL SEAL	
	9	2	**2G-8777**	4	SEAL	
	10	2	**9M-2092**	4	SEAL-O-RING	
	11	2	**8W-5293**	4	PIN	
	12	1	**8W-4652**	1	HOUSING-SPINDLE	
	13	1	**8W-4653**	1	HOUSING-SPINDLE	
	14	1	**8D-2811**	2	WASHER (1.25X1.94X0.032-IN THK)	
	15	2	**2G-8633**	2	PIN	
	16	1	**1D-4627**	2	BOLT (7/8-9X3-IN)	
	17	1	**2J-3505**	2	NUT-FULL (7/8-9-THD)	
	18	1	**7X-7731**	2	PLUG-PIPE (3/4-14-THD)	
	19	2	**433-7105**	8	SEAL-PIN	
	20	2	**9D-3523**	1	WASHER (2.062X4X0.188-IN)	
	21	2	**5P-1075**	4	WASHER-HARD (10.2X22.5X3-MM THK)	
	22	2	**5S-7379**	4	BOLT (3/8-16X0.875-IN)	
	23	2	**2G-8768**	4	WASHER (10.5X53.8X3-MM THK)	
	24	1	**103-9125**	1	BAR AS	
	24A	2	**2G-8624**	2	BUSHING	
	25	2	**5P-8890**	2	SEAL-LIP TYPE	
	26	2	**030-0060**	2	CUP-BEARING	
	27	2	**030-0061**	2	CONE-BEARING	
	28	2	**7D-8637**	2	CUP-BEARING	
	29	2	**7D-8636**	2	CONE-BEARING	
	30	1	**3B-4618**	2	PIN-COTTER	
	31	2	**7D-8643**	2	RETAINER	
B	32	2	**2G-3865**	6	SHIM (0.127-MM THK)	
	33	2	**0V-0375**	6	BOLT (1/2-13X3.25-IN)	
	34	1	**9D-9797**	2	LOCK	
	35	2	**5T-0906**	2	COVER	
	36	2	**2J-8163**	2	SEAL-O-RING	
	37	2	**5D-0353**	4	BOLT-LOCKING (3/8-16X1-IN)	
	38	2	**5P-2566**	1	BOLT (1/2-13X1.5-IN)	
	39	2	**5P-1076**	1	WASHER-HARD (13.5X30X4-MM THK)	
	40	2	**5P-8843**	2	SEAL-LIP TYPE	
B	41	2	**2G-5673**	2	WASHER (2.031X4X0.06-IN THK)	
	42	2	**9G-5211**	1	SPACER (12.95X19.05X9-MM THK)	
	43	2	**130-3595**	1	PIN AS	
	44	2	**147-3400**	2	SPINDLE	

134-1080 **AXLE GP-FRONT (**contd.**)** **i05558475**

NOTE	REF NO	GRAPHIC REF	PART NUMBER	QTY	PART NAME 1 2 3 4 5 6 (PRODUCT LEVEL)	SEE PAGE
	45	2	**0S-1592**	2	BOLT (5/8-11X1.25-IN)	
	46	2	**2G-5667**	2	RETAINER	
Y	47	1	*131-3740*	1	LINK GP-STEERING	717
	48	1	**134-1081**	1	AXLE AS-FRONT	
	49	2	**2G-8631**	4	BUSHING	
	50	2	**131-4428**	2	BUSHING	
	51	1	**8X-3434**	1	ARM AS-LEANING (LH)	
	52	2	**146-1842**	1	BUSHING	
	53	2	**146-1843**	1	BUSHING	
	54	2	**8W-6476**	1	PIN	
	56	1	**8X-3435**	1	ARM AS-LEANING (RH)	
	57	1	**146-1842**	1	BUSHING	
	58	1	**146-1843**	1	BUSHING	
	59	2	**8W-6497**	1	PIN	

B - USE AS REQUIRED
R - REMANUFACTURED PART MAY BE AVAILABLE
Y - SEPARATE ILLUSTRATION

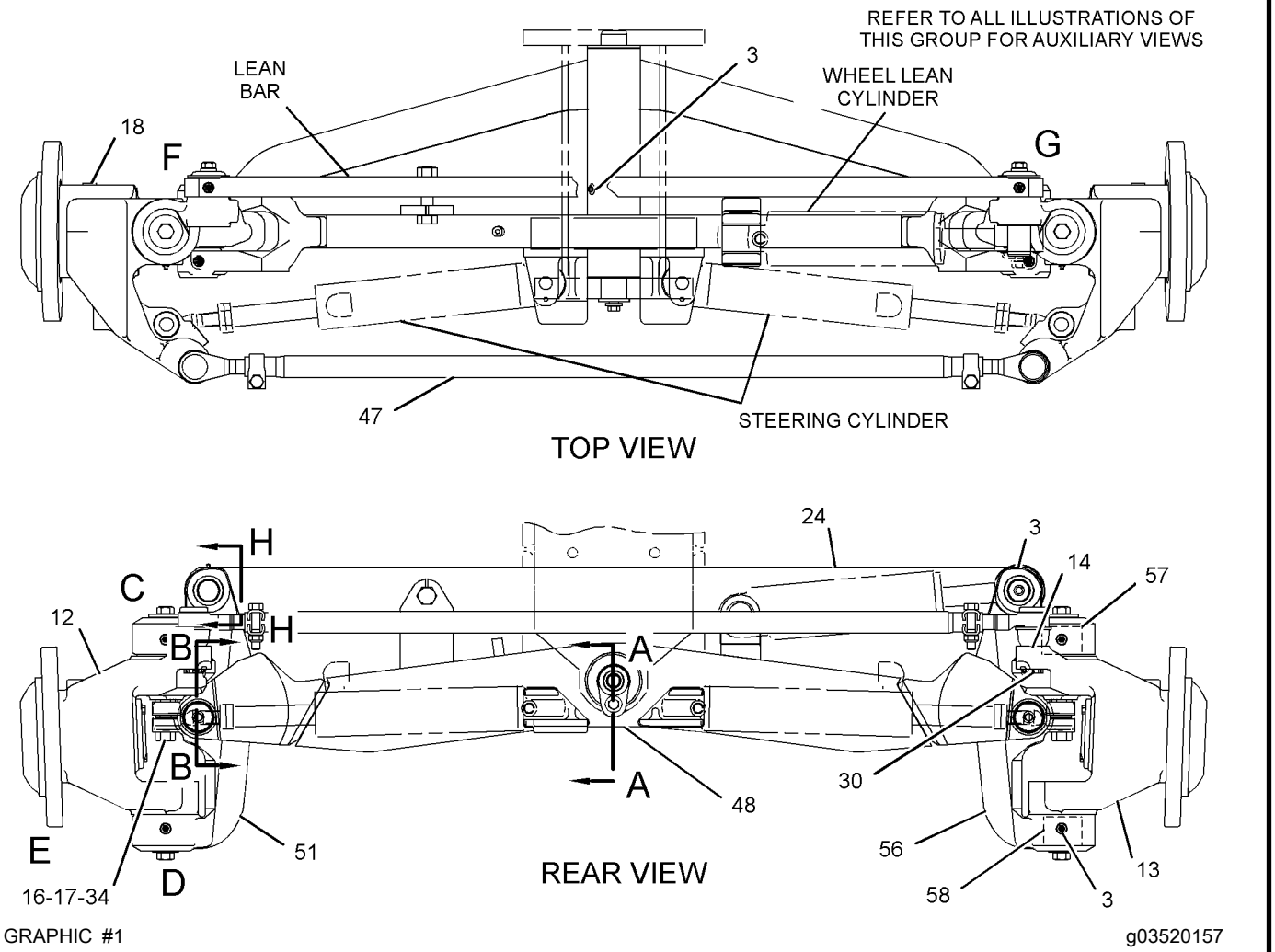

GRAPHIC #1 g03520157

134-1080 **AXLE GP-FRONT (**contd.**)** **i05558475**

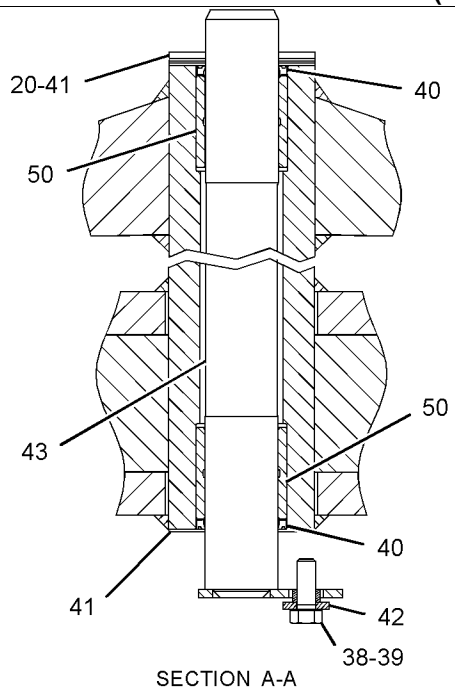

SECTION A-A

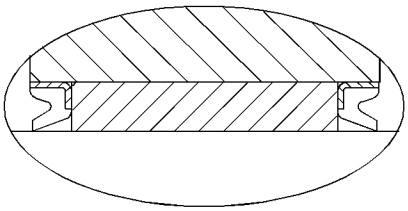

TYPICAL SEAL INSTALLATION

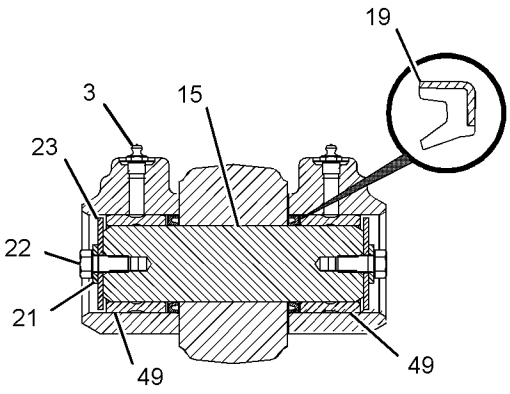

SECTION B-B

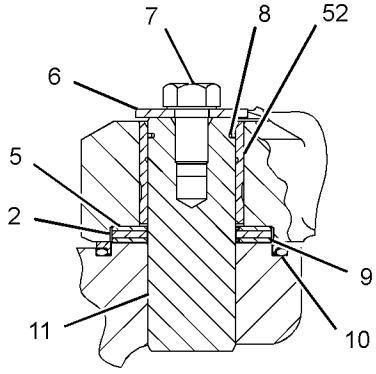

SECTION OF AREA C

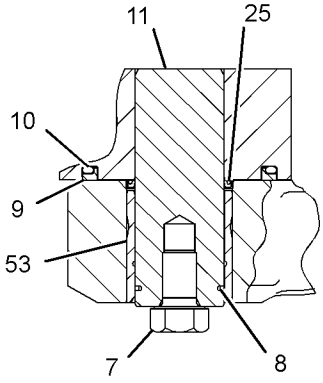

SECTION OF AREA D

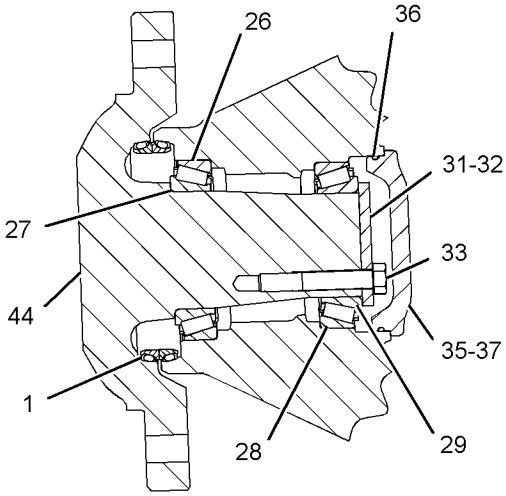

SECTION OF AREA E

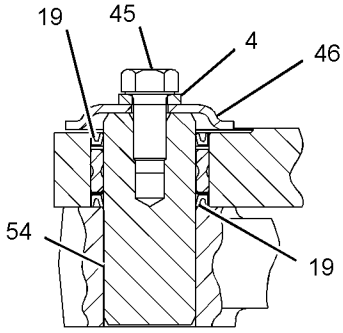

SECTION OF AREA F

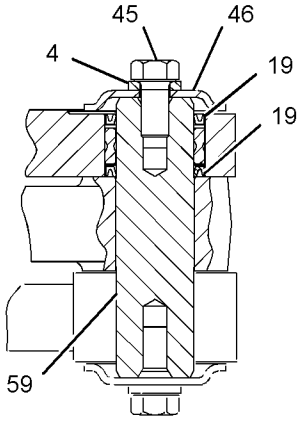

SECTION OF AREA G

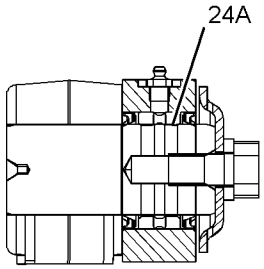

SECTION H-H

GRAPHIC #2

<END>

g03401557

333-9308 BASE GP-OIL FILTER–TRANSMISSION

S/N: SZS1-UP
INTERNAL BYPASS
PART OF 333-6436 FILTER GP-OIL

SMCS-3004, 3067 **i04176383**

NOTE	REF NO	GRAPHIC REF	PART NUMBER	QTY	PART NAME 1 2 3 4 5 6 (PRODUCT LEVEL)	SEE PAGE
	1	1	**3T-9549**	1	ADAPTER	
	2	1	**7G-4998**	1	SPOOL-BYPASS	
Y	3	1	**164-7577**	1	SWITCH GP-BYPASS (POWER TRAIN OIL FILTER)	358
	4	1	**334-2679**	1	SPRING	
	5	1	**334-2680**	1	SPRING	
	6	1	**5P-7815**	1	SEAL-O-RING	
	7	1	**6V-5050**	1	SEAL-O-RING	
	8	1	**9S-8008**	1	PLUG (1-1/16-12-THD)	
					PARTS SHOWN IN GRAPHIC(S) WITHOUT A REFERENCE NUMBER ARE NOT SERVICED SEPARATELY	

Y - SEPARATE ILLUSTRATION

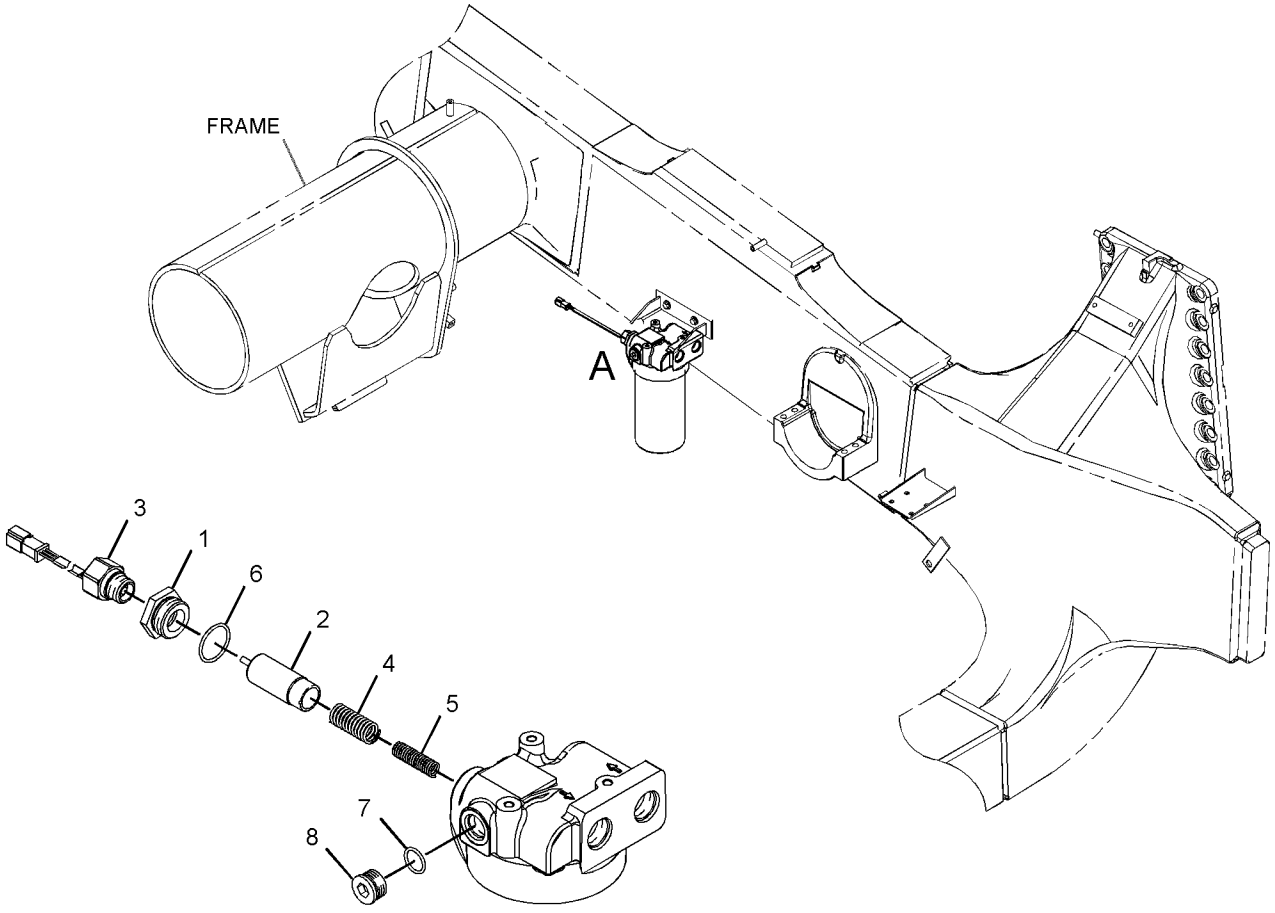

VIEW OF AREA A
(EXPLODED)

GRAPHIC #1 <END> g01719003

277-6433 CASE & PARTS GP-PLANETARY

S/N: DMJ1-UP

PART OF 275-6535 TRANSMISSION AR

SMCS-3030, 3064, 3160 **i04788301**

NOTE	REF NO	GRAPHIC REF	PART NUMBER	QTY	PART NAME 1 2 3 4 5 6 (PRODUCT LEVEL)	SEE PAGE
	1	1	**277-6430**	1	CASE AS-TRANSMISSION	
		1	**7T-6496**	7	PLUG	
		1	**8M-6521**	2	DOWEL	
	2	1	**277-6432**	1	COVER AS-TRANSMISSION	
		1	**7T-6496**	1	PLUG	
M	3	1	**6V-1820**	37	BOLT (M10X1.5X30-MM)	
M	4	1	**8T-5436**	2	BOLT (M10X1.5X130-MM)	
	5	1,2	*148-8395*	4	PLUG AS	
					(EACH INCLUDES)	
		1,2	**9S-8005**	1	PLUG (3/4-16-THD)	
		1,2	**3K-0360**	1	SEAL-O-RING	
	6	2	**3K-0360**	2	SEAL-O-RING	
	7	1	**2J-0157**	1	SEAL-O-RING	
B	8	2	**1U-8846**		SEALANT-GASKET	
	9	1	**8T-6765**	1	PLUG-PIPE (1/4-18-THD)	
	10	1	**5M-6200**	1	SEAL-O-RING	
	11	1	**8E-1133**	1	TUBE AS	
	12	1	**6L-1650**	1	SEAL-O-RING	
M	13	1,2,3	**6V-5217**	15	BOLT (M8X1.25X20-MM)	
	14	1,2,3	**5P-3863**	5	SEAL-O-RING	
	15	1,2,3	**9W-1454**	5	COVER	
	16	1	**8S-9129**	1	FILTER-MAGNETIC (TRANSMISSION)	
	17	1	**8S-9130**	1	SCREEN-SUCTION (TRANSMISSION)	
	18	3	**4M-6108**	2	RACE-BEARING OUTER	
	19	1	**148-1925**	2	VALVE-RELIEF	
	20	1	**9X-4609**	2	SEAL-O-RING	
	21	3	**9W-7038**	1	RING-SNAP	
M	22	3	**6V-3940**	4	BOLT (M8X1.25X25-MM)	
	23	3	**6Y-9763**	1	GEAR AS	
		3	**6Y-1007**	1	GEAR (38-TEETH)	
		3	**4K-8603**	1	PLUG-CUP	
	24	3	**2S-3029**	1	BALL BEARING	
	25	3	**9W-6465**	1	RETAINER-BEARING	
	26	2	*164-5619*	6	PLUG AS	
					(EACH INCLUDES)	
		2	**9S-8006**	1	PLUG (7/8-14-THD)	
		2	**2M-9780**	1	SEAL-O-RING	
	28	2	*162-0177*	1	PLUG AS	
		2	**9S-8004**	1	PLUG (9/16-18-THD)	
		2	**3J-1907**	1	SEAL-O-RING	
	29	1	**3J-1907**	1	SEAL-O-RING	
	30	1,2	**8T-4121**	10	WASHER-HARD (11X21X2.5-MM THK)	
	31	2	**190-1684**	1	PLATE AS	
M	32	2	**6V-8212**	1	BOLT (M10X1.5X16-MM)	
	33	2	*197-4977*	1	PLUG AS	
		2	**5P-4483**	1	PLUG	
		2	**7M-8485**	1	SEAL-O-RING	
M	35	2	**6V-7981**	5	BOLT (M10X1.5X70-MM)	

277-6433 **CASE & PARTS GP-PLANETARY (**contd.**)** **i04788301**

NOTE	REF NO	GRAPHIC REF	PART NUMBER	QTY	PART NAME 1 2 3 4 5 6 (PRODUCT LEVEL)	SEE PAGE
M	36	2	**6V-4248**	7	BOLT (M10X1.5X25-MM)	
	39	2,3	**6I-8642**	4	RACE-BEARING OUTER	
	40	3	**5P-3924**	2	RACE-BEARING OUTER	
	41	3	**9M-2042**	1	RACE-BEARING OUTER	
	42	3	**2H-6489**	1	RACE-BEARING OUTER	
	43	2	**226-6621**	1	HARNESS AS-SENSOR (SPEED)	
	44	2	**191-9256**	2	CLIP	
M	45	1,2	**8T-4137**	4	BOLT (M10X1.5X20-MM)	
	46	2	**6V-1720**	1	PLATE-SERIAL NUMBER (TRANSMISSION)	
Y	47	2	**290-5792**	2	SENSOR GP-SPEED (TRANSMISSION OUTPUT)	348
	48	2	**201-0387**	1	CLIP AS	
M	49	2	**8T-4133**	1	NUT (M10X1.5-THD)	
	50	2	**143-5373**	1	GUARD AS	
	51	1	**5P-9299**	1	CLIP	
Y	52	1	**3E-8700**	1	SENSOR GP-TEMPERATURE (TRANSMISSION OIL)	352
	53	1	**4P-7581**	1	CLIP	
	54	1	*148-8406*	3	PLUG AS	
					(EACH INCLUDES)	
		1	**7M-8485**	1	SEAL-O-RING	
		1	**9S-9334**	1	PLUG-O-RING	
	55	1	**1B-5174**	1	PLUG-PIPE	
	56	2	**113-7745**	1	PLATE AS	
	57	1	**3S-2093**	1	STRAP-CABLE	
	58	2	**145-8039**	3	LOCK	
	59	1	**130-5300**	1	CLIP	
	60	3	**278-0642**	1	SEAL-LIP TYPE	

B - USE AS REQUIRED
M - METRIC PART
Y - SEPARATE ILLUSTRATION

277-6433 **CASE & PARTS GP-PLANETARY** (contd.) **i04788301**

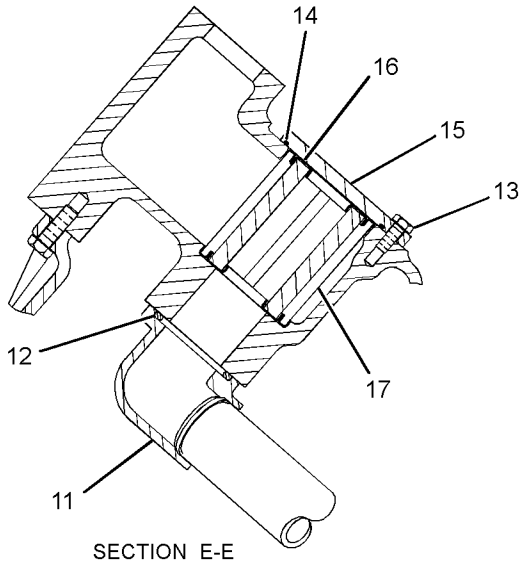

SECTION E-E

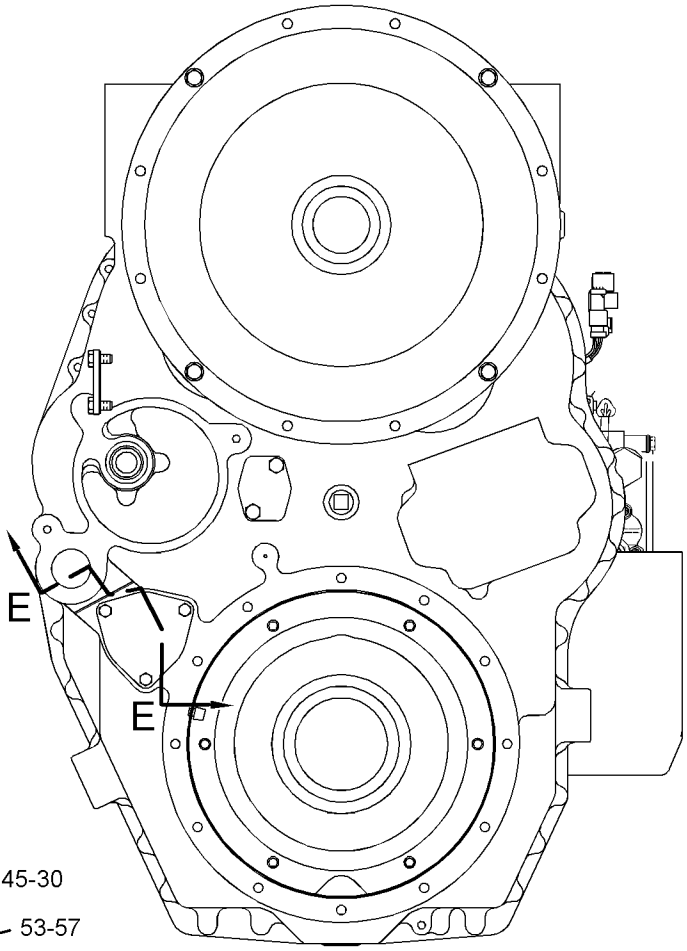

FRONT VIEW

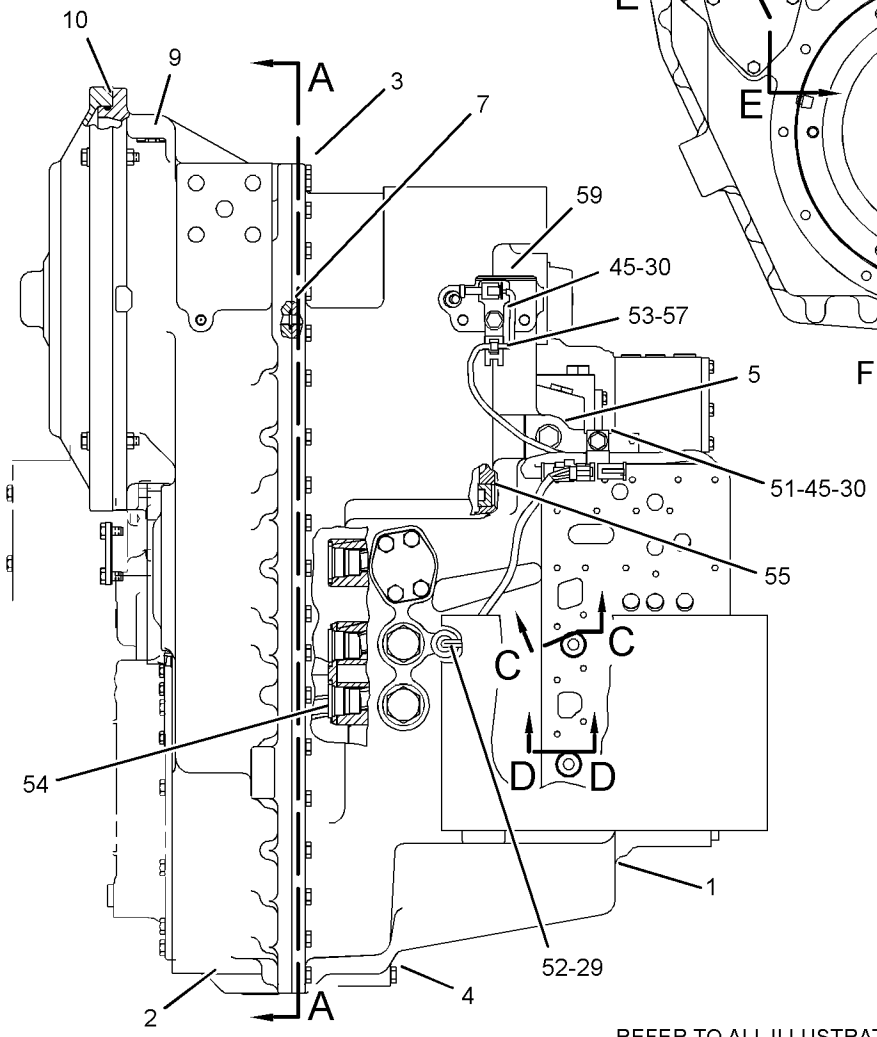

LEFT SIDE VIEW

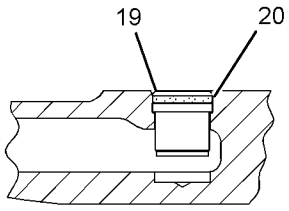

SECTION C-C

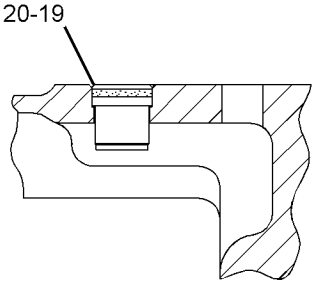

SECTION D-D

REFER TO ALL ILLUSTRATIONS OF THIS GROUP FOR AUXILIARY VIEWS

GRAPHIC #1

g02994216

277-6433 **CASE & PARTS GP-PLANETARY (**contd.**)** **i04788301**

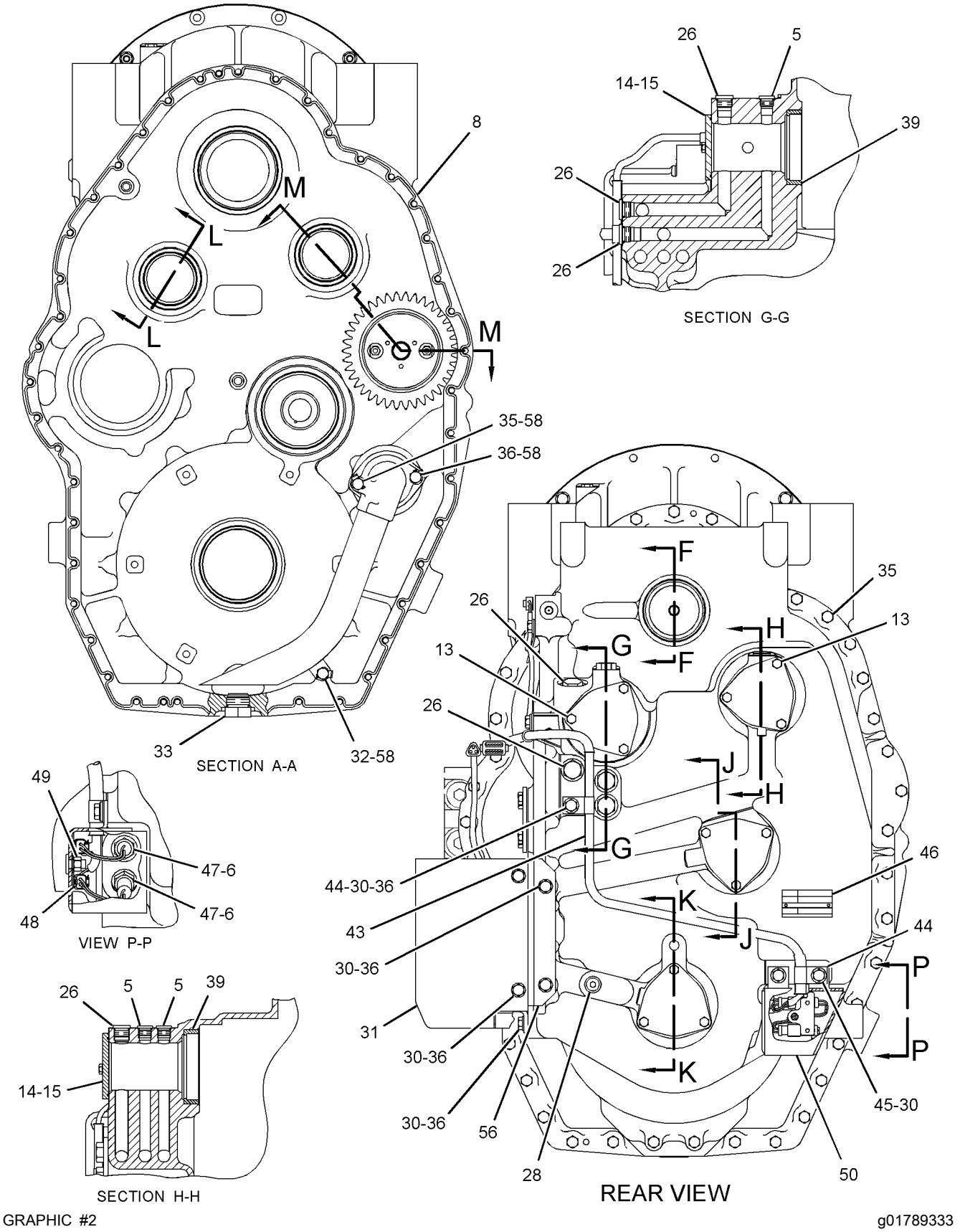

GRAPHIC #2

g01789333

277-6433 **CASE & PARTS GP-PLANETARY (**contd.**)** **i04788301**

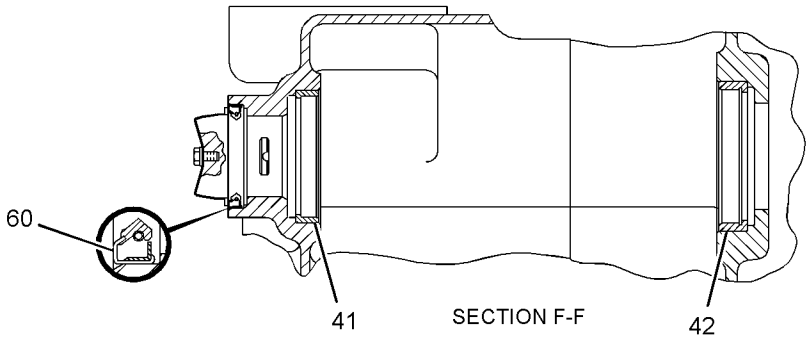

SECTION F-F

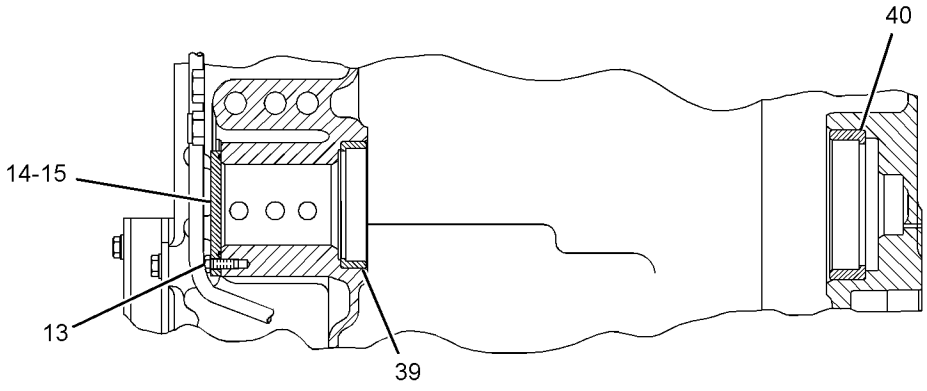

SECTION J-J

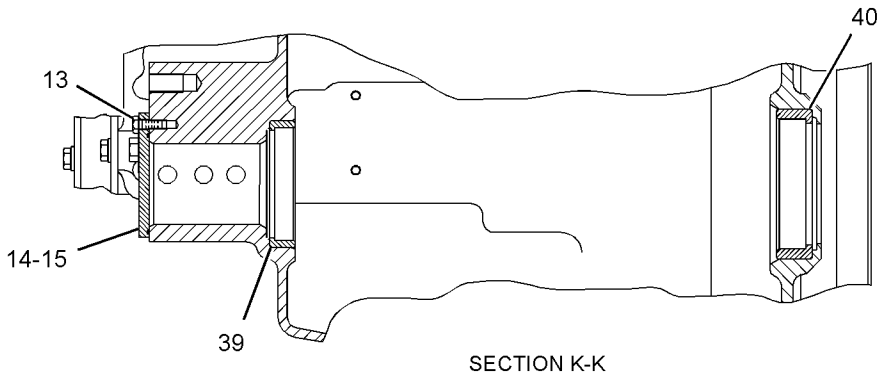

SECTION K-K

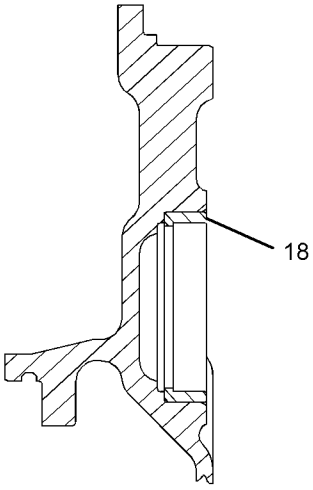

SECTION L-L

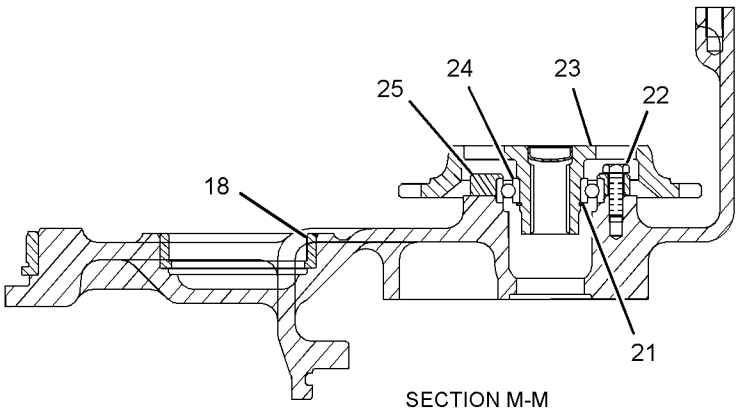

SECTION M-M

GRAPHIC #3 <END> g01772115

365-5536 CASE & PARTS GP-PLANETARY

S/N: CK41-UP; JSE1-UP

PART OF 365-6500 TRANSMISSION AR

SMCS-3030, 3064, 3160 **i05792214**

NOTE	REF NO	GRAPHIC REF	PART NUMBER	QTY	PART NAME 1 2 3 4 5 6 (PRODUCT LEVEL)	SEE PAGE
	1	1	**6V-1720**	1	PLATE-SERIAL NUMBER (TRANSMISSION)	
	2	2	**6Y-9763**	1	GEAR AS	
		2	**4K-8603**	1	PLUG-CUP	
		2	**6Y-1007**	1	GEAR (38-TEETH)	
	3	2	**8E-1133**	1	TUBE AS	
	4	2	**8S-9129**	1	FILTER-MAGNETIC (TRANSMISSION)	
	5	2	**8S-9130**	1	SCREEN-SUCTION (TRANSMISSION)	
	6	1,2	**9W-1454**	5	COVER	
	7	2	**9W-6465**	1	RETAINER-BEARING	
	8	2	**145-8039**	3	LOCK	
	9	1	**148-1925**	2	VALVE-RELIEF (TRANSMISSION LUBRICATION)	
Y	10	1	**191-8303**	1	SENSOR GP-SPEED (TRANSMISSION OUTPUT,LOW)	345
	11	1	**191-8304**	2	SENSOR GP-SPEED (TRANSMISSION OUTPUT, HIGH)	
					(EACH INCLUDES)	
		1	**137-6645**	1	PAD-CONNECTOR	
	12	2	*197-4977*	1	PLUG AS	
		2	**5P-4483**	1	PLUG	
		2	**7M-8485**	1	SEAL-O-RING	
	13	1	**253-5322**	1	GUARD	
	14	2	**277-6432**	1	COVER AS-TRANSMISSION	
		2	**7T-6496**	1	PLUG	
	15	1	**290-4134**	2	VALVE-RELIEF (TRANSMISSION)	
	16	1	**365-5529**	1	CASE AS-TRANSMISSION	
		1	**7T-6496**	7	PLUG	
		1	**8M-6521**	2	DOWEL	
	17	1	**397-2124**	1	PLATE	
	18	1	**398-3707**	1	PLATE AS	
M		1	**8T-3490**	2	NUT-WELD (M10X1.5-THD)	
	19	1	**398-3708**	1	PLATE AS	
M		1	**8T-3490**	1	NUT-WELD (M10X1.5-THD)	
	20	1	**117-1385**	3	SEAL-O-RING	
	21	1	**130-5300**	1	CLIP	
	22	1	**132-5789**	4	CLIP	
	23	1	*148-8395*	4	PLUG AS	
					(EACH INCLUDES)	
		1	**3K-0360**	1	SEAL-O-RING	
		1	**9S-8005**	1	PLUG (3/4-16-THD)	
	24	1	*148-8406*	3	PLUG AS	
					(EACH INCLUDES)	
		1	**7M-8485**	1	SEAL-O-RING	
		1	**9S-9334**	1	PLUG-O-RING	
	25	1	*162-0177*	1	PLUG AS	
		1	**3J-1907**	1	SEAL-O-RING	
		1	**9S-8004**	1	PLUG (9/16-18-THD)	
	26	1	*164-5619*	6	PLUG AS	
					(EACH INCLUDES)	
		1	**2M-9780**	1	SEAL-O-RING	
		1	**9S-8006**	1	PLUG (7/8-14-THD)	

365-5536 **CASE & PARTS GP-PLANETARY (**contd.**)** **i05792214**

NOTE	REF NO	GRAPHIC REF	PART NUMBER	QTY	PART NAME 1 2 3 4 5 6 (PRODUCT LEVEL)	SEE PAGE
	27	1	**1B-5174**	1	PLUG-PIPE	
	28	1	**278-0642**	1	SEAL-LIP TYPE	
	29	2	**2H-6489**	1	RACE-BEARING OUTER	
	30	2	**2J-0157**	1	SEAL-O-RING	
	31	2	**2S-3029**	1	BALL BEARING	
	32	1	**303-4649**	1	CLIP	
	33	1	**3S-2093**	7	STRAP-CABLE	
	34	2	**4M-6108**	2	RACE-BEARING OUTER	
	35	1	**6I-8642**	4	RACE-BEARING OUTER	
	36	1	**4P-7581**	2	CLIP	
	37	2	**5M-6200**	1	SEAL-O-RING	
	38	1,2	**5P-3863**	5	SEAL-O-RING	
	39	2	**5P-3924**	2	RACE-BEARING OUTER	
	40	1	**6F-6672**	2	SEAL-O-RING	
	41	2	**6L-1650**	1	SEAL-O-RING	
M	42	2	**6V-3940**	4	BOLT (M8X1.25X25-MM)	
M	43	1,2	**6V-4248**	9	BOLT (M10X1.5X25-MM)	
M	44	2	**6V-8212**	1	BOLT (M10X1.5X16-MM)	
	45	1	**8T-4121**	9	WASHER-HARD (11X21X2.5-MM THK)	
M	46	1	**8T-4137**	3	BOLT (M10X1.5X20-MM)	
M	47	1,2	**8T-4189**	16	BOLT (M8X1.25X20-MM)	
M	48	1	**8T-4195**	37	BOLT (M10X1.5X30-MM)	
M	49	1	**8T-4200**	2	BOLT (M8X1.25X16-MM)	
	50	1	**8T-4224**	2	WASHER-HARD (8.8X16X2-MM THK)	
M	51	1,2	**8T-5005**	5	BOLT (M10X1.5X70-MM)	
M	52	1	**8T-5436**	2	BOLT (M10X1.5X130-MM)	
	53	2	**8T-6765**	1	PLUG-PIPE (1/4-18-THD)	
	54	1	**9M-2042**	1	RACE-BEARING OUTER	
	55	2	**9W-7038**	1	RING-SNAP	
	56	1	**9X-4609**	2	SEAL-O-RING	
E	57	1	**9X-2092**		TRIM-EDGE (17-CM)	

E - ORDER BY THE CENTIMETER
M - METRIC PART
Y - SEPARATE ILLUSTRATION

365-5536 **CASE & PARTS GP-PLANETARY (**contd.**)** **i05792214**

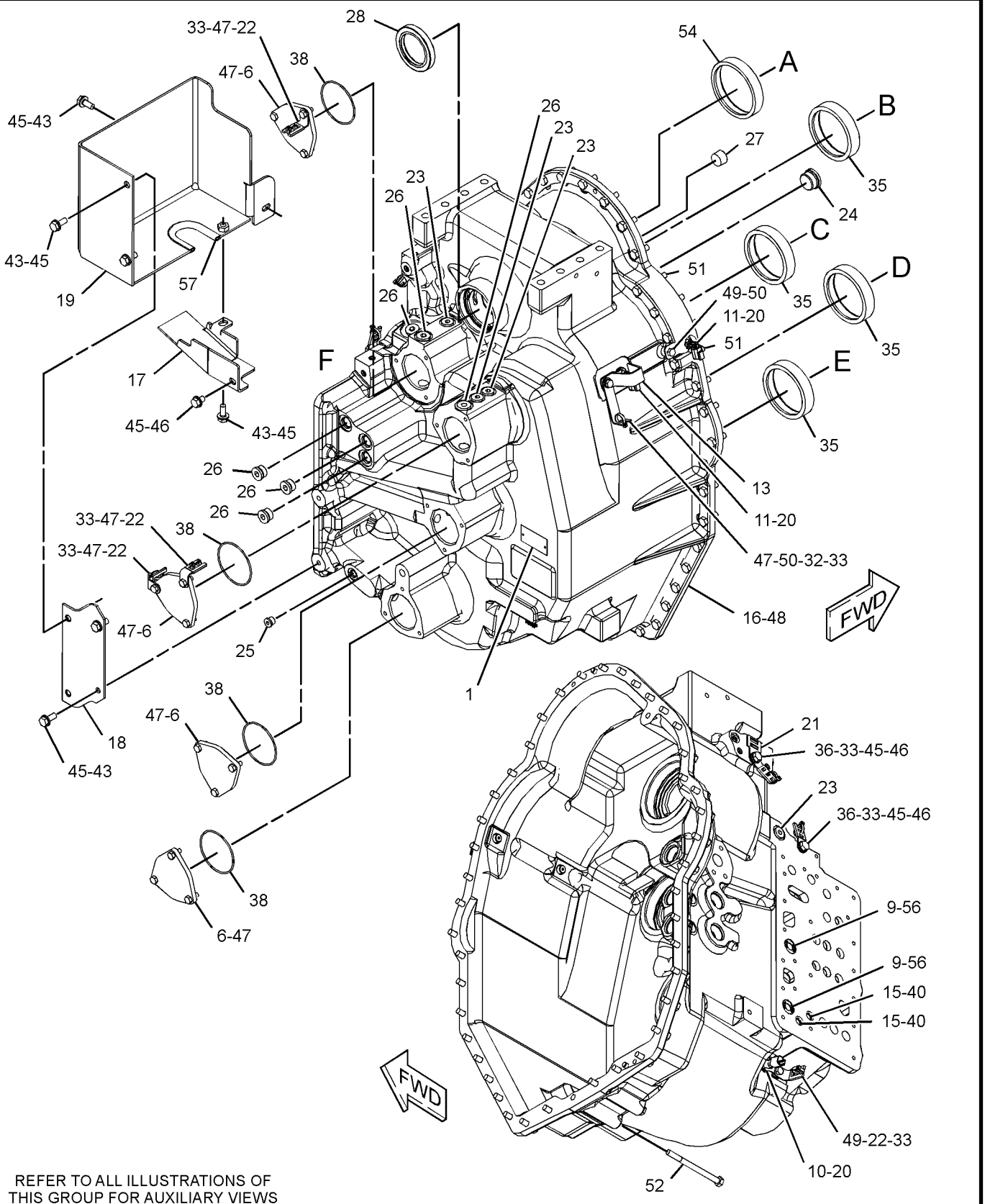

REFER TO ALL ILLUSTRATIONS OF THIS GROUP FOR AUXILIARY VIEWS

VIEW OF AREA F

GRAPHIC #1

g03671325

365-5536 **CASE & PARTS GP-PLANETARY (**contd.**)** **i05792214**

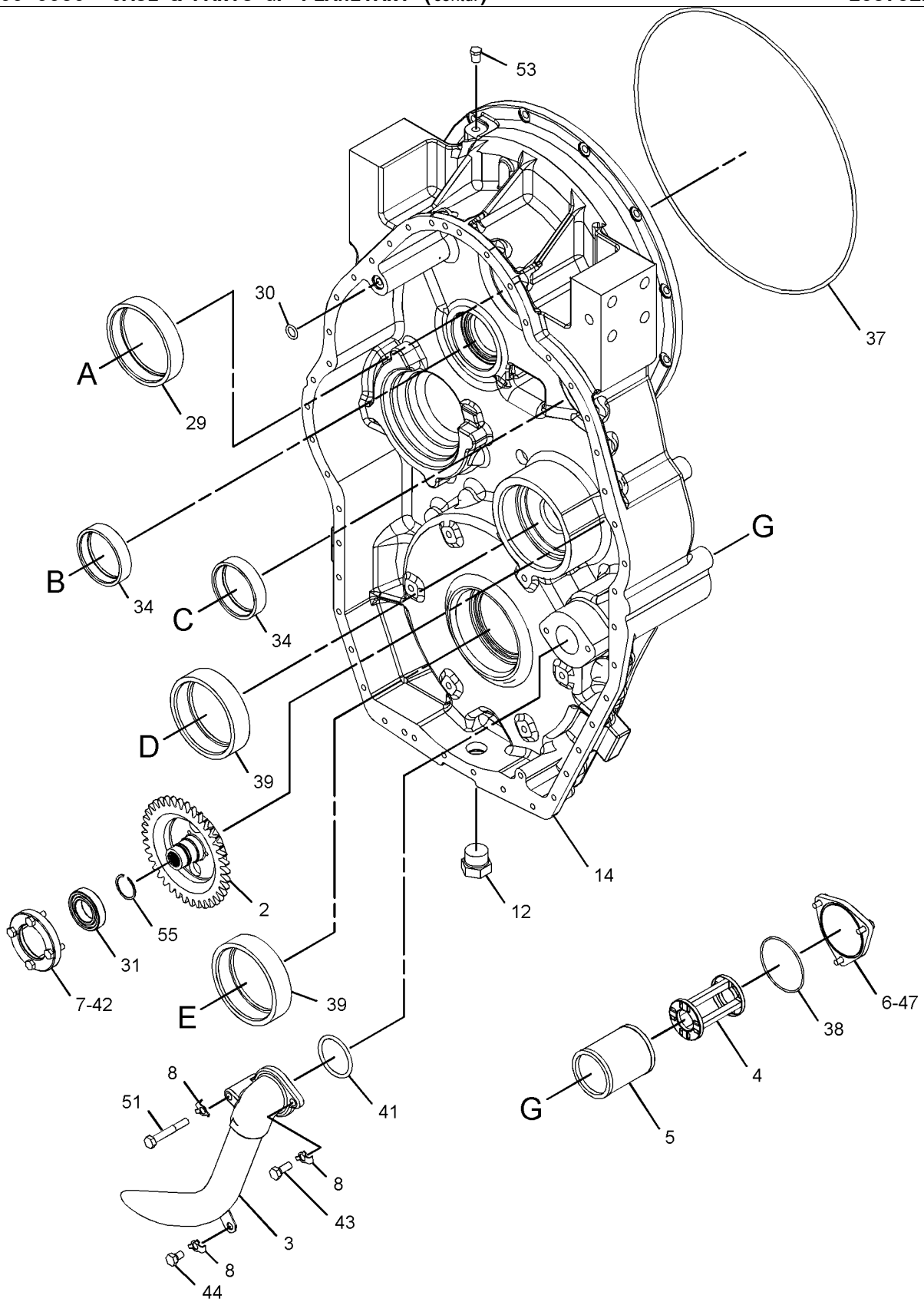

GRAPHIC #2 <END> g03358119

332-6415 CHAIN GP-DRIVE–TANDEM

S/N: SZS1-525

PART OF 368-3025 GENERAL AR

SMCS-3261, 4063

i04229232

NOTE	REF NO	GRAPHIC REF	PART NUMBER	QTY	PART NAME 1 2 3 4 5 6 (PRODUCT LEVEL)	SEE PAGE
	1	1	*366-3033*	4	CHAIN GP-DRIVE	
					(EACH INCLUDES)	
		1	**5T-0731**	1	LINK-CONNECTING	

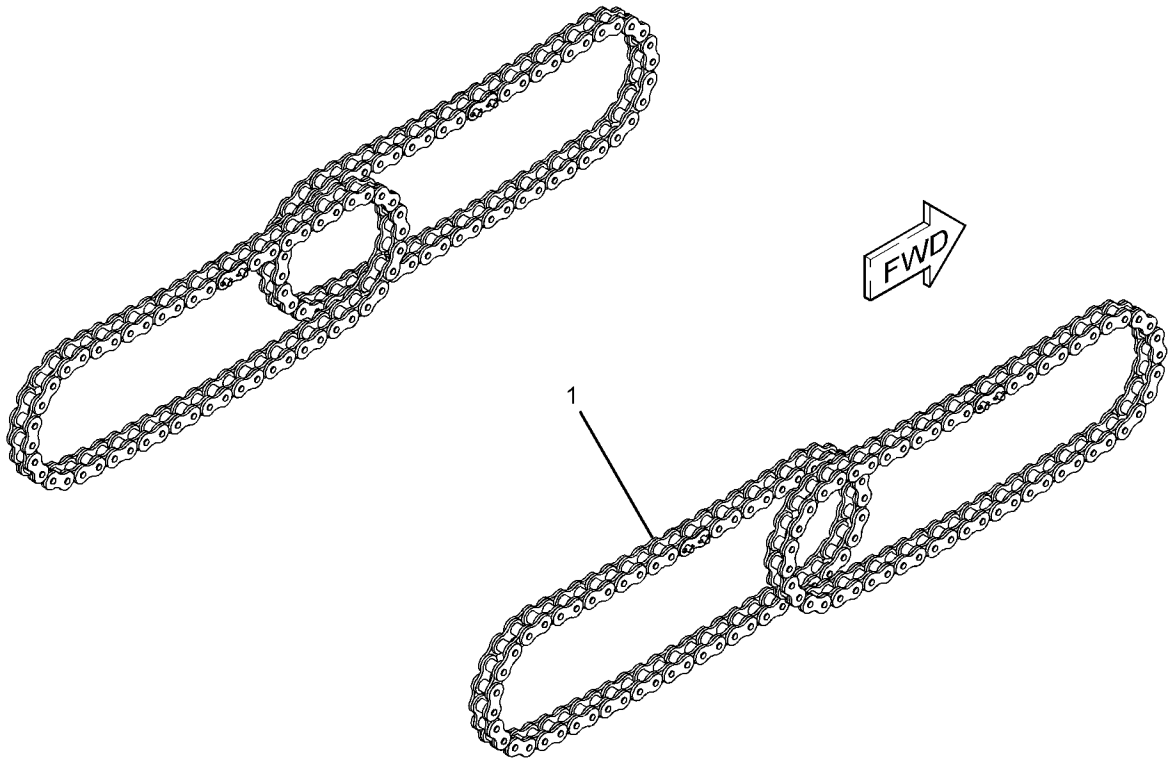

GRAPHIC #1

<END>

g02408796

453-0259 CHAIN GP-DRIVE

S/N: SZS526-UP

PART OF 368-3025 GENERAL AR, 436-8767 POWER TRAIN AR

SMCS-3261, 4063 **i06554764**

NOTE	REF NO	GRAPHIC REF	PART NUMBER	QTY	PART NAME 1 2 3 4 5 6 (PRODUCT LEVEL)	SEE PAGE
	1	1	**450-0595**	4	CHAIN GP-DRIVE	
					(EACH INCLUDES)	
		1	**453-0260**	1	LINK-CONNECTING	
		1	**3B-4627**	2	PIN-COTTER	

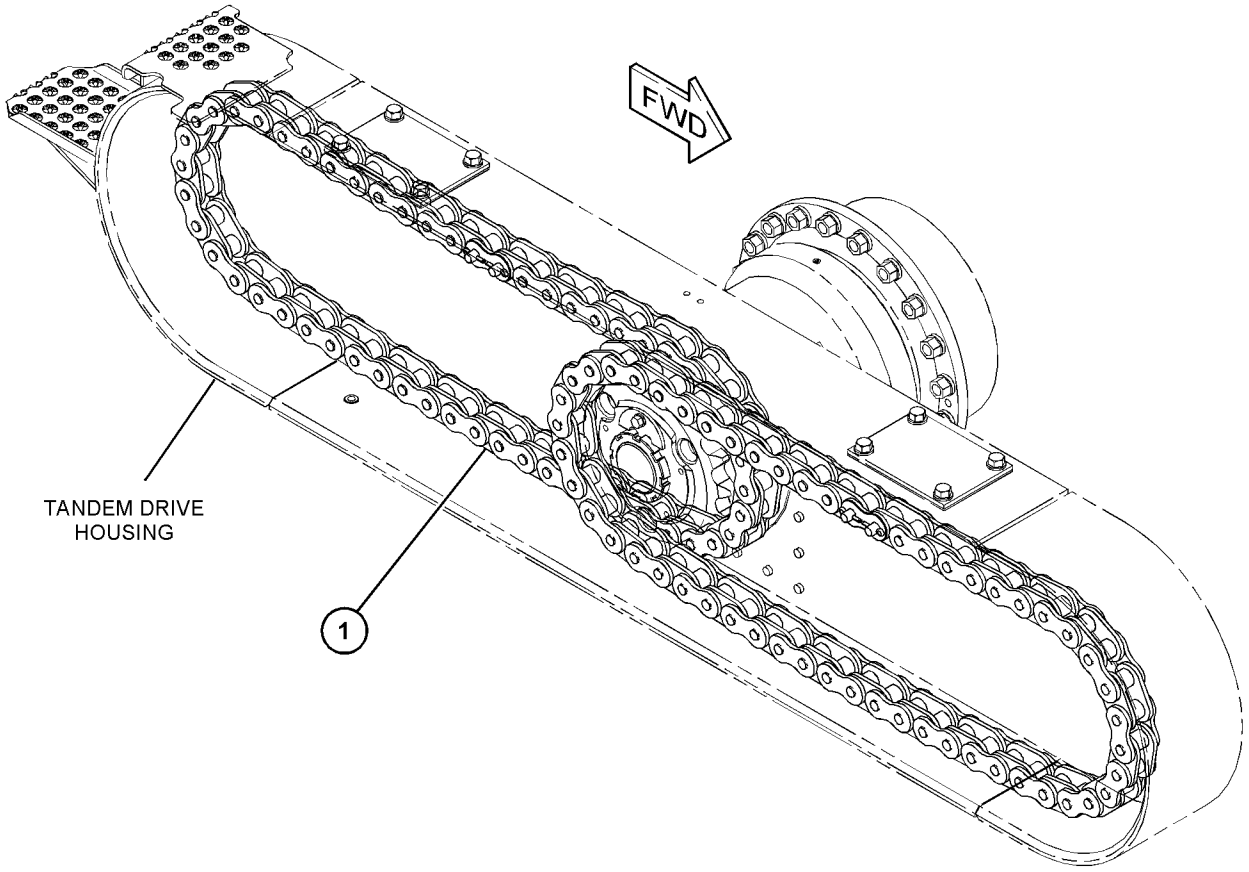

GRAPHIC #1 <END> g03779793

235-2412 CLUTCH GP-TRANSMISSION–FORWARD

S/N: CK41-UP; JSE1-UP; DMJ1-UP

PART OF 275-6535, 365-6500 TRANSMISSION AR

SMCS-3063, 3155, 3170

i06860452

NOTE	REF NO	GRAPHIC REF	PART NUMBER	QTY	PART NAME 1 2 3 4 5 6 (PRODUCT LEVEL)	SEE PAGE
	1	1	**6I-8911**	5	DISC-FRICTION	
	2	1	**6I-8912**	6	DISC-FRICTION	
	3	1	**6I-9502**	6	PLATE-CLUTCH	
	4	1	**6Y-1115**	4	RING-HALF	
	5	1	**6Y-1116**	1	GEAR AS (43-TEETH)	
	6	1	**6Y-1119**	1	CARRIER-SEAL	
	7	1	**7G-4822**	3	RING-SEAL	
	8	1	**7T-4897**	2	DISC-THRUST	
	9	1	**8E-5742**	2	RING-SEAL (INTERNAL)	
	10	1	**8E-8319**	4	DISC-THRUST	
	11	1	**8F-3469**	4	SEAL-O-RING	
	12	1	**9U-8815**	2	SPRING	
	13	1	**9U-9995**	6	PLATE-CLUTCH	
	14	1	**9W-2029**	1	RACE-THRUST BEARING	
	15	1	**9W-9371**	2	RING-SEAL	
	16	1	**9W-9905**	4	RING-LOCK	
	17	1	**108-5751**	2	DISC-FRICTION	
	18	1	**132-9625**	1	GEAR AS (50-TEETH)	
	19	1	**509-4136**	2	PISTON	
	20	1	**159-0927**	1	DISC-FRICTION	
	21	1	**161-6713**	2	PLATE-LOCK	
	22	1	**171-7091**	1	SHAFT AS	
		1	**1P-0604**	1	PLUG-CUP	
	23	1	**247-8629**	2	VALVE AS	
	24	1	**247-9711**	2	HUB AS	
	25	1	**131-3919**	1	BEARING-ROLLER	
	26	1	**4M-6107**	1	BEARING-INNER	
M	27	1	**5C-7423**	4	SCREW (M6X1X16-MM)	
	28	1	**5H-8985**	1	PIN-SPRING	
M	29	1	**6V-1819**	2	BOLT (M10X1.5X100-MM)	
	30	1	**8E-1263**	2	BEARING-ROLLER	

M - METRIC PART

235-2412 **CLUTCH GP-TRANSMISSION (**contd.**)** **i06860452**

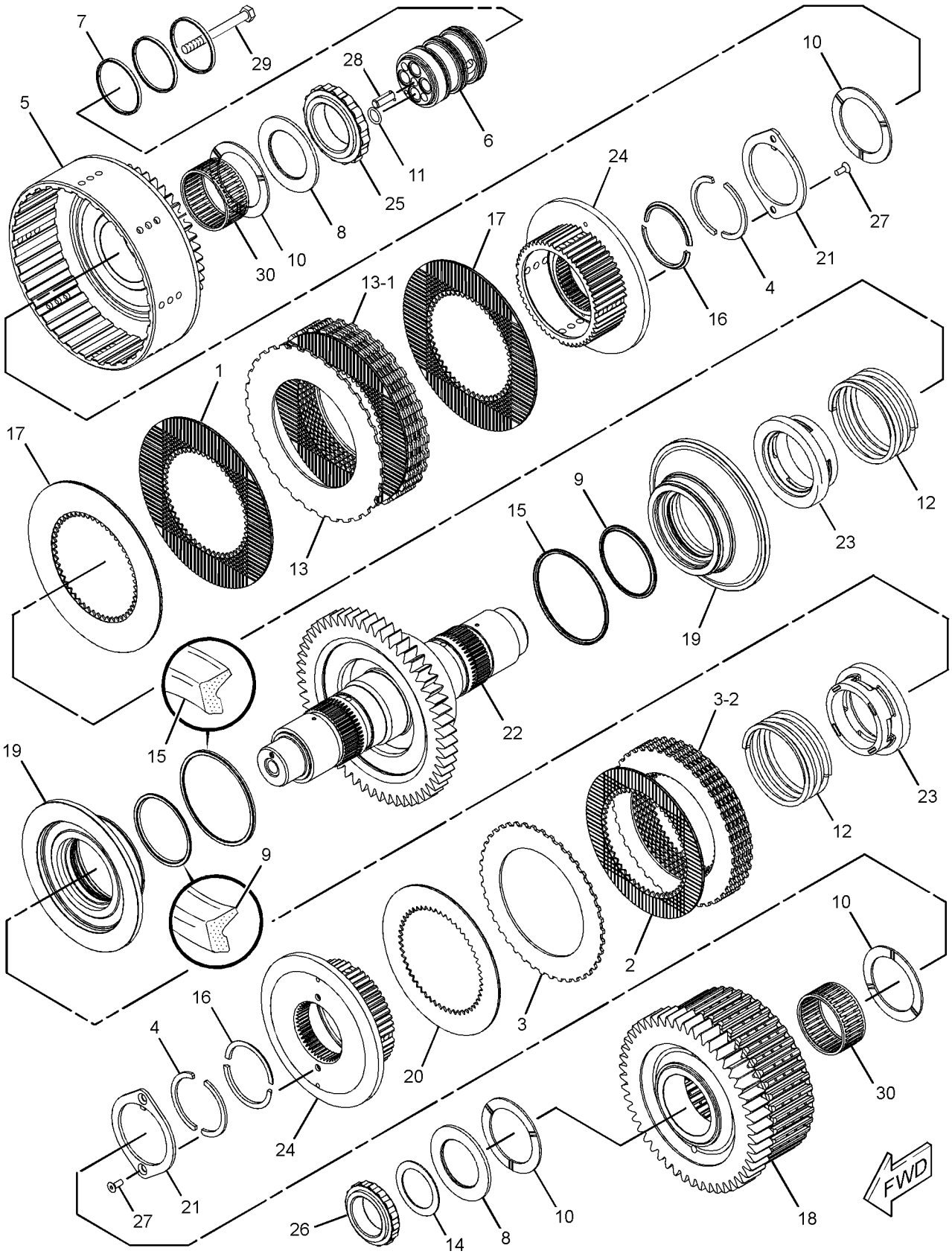

GRAPHIC #1 <END> g03541144

235-2413 CLUTCH GP-TRANSMISSION—REVERSE, 2ND

S/N: CK41-UP; JSE1-UP; DMJ1-UP

PART OF 275-6535, 365-6500 TRANSMISSION AR

SMCS-3063, 3155, 3170 **i06860497**

NOTE	REF NO	GRAPHIC REF	PART NUMBER	QTY	PART NAME 1 2 3 4 5 6 (PRODUCT LEVEL)	SEE PAGE
	1	1	**131-3919**	1	BEARING-ROLLER	
	2	1	**4M-6107**	1	BEARING-INNER	
	3	1	**8E-1263**	1	BEARING-ROLLER	
	4	1	**6I-8912**	10	DISC-FRICTION	
	5	1	**6I-9502**	9	PLATE-CLUTCH	
	6	1	**6Y-0976**	1	GEAR (29-TEETH)	
	7	1	**6Y-1114**	1	LOCKWASHER	
	8	1	**6Y-1115**	4	RING-HALF	
	9	1	**6Y-1119**	1	CARRIER-SEAL	
	10	1	**509-4135**	1	PISTON	
	11	1	**6Y-1888**	1	SPACER	
	12	1	**6Y-1891**	1	HUB AS	
	13	1	**6Y-2307**	1	SPACER (61X82.55X43.88-MM THK)	
	14	1	**7G-4822**	3	RING-SEAL	
	15	1	**7T-4897**	1	DISC-THRUST	
	16	1	**8E-5734**	1	RING-SEAL EXTENSION	
	17	1	**8E-5742**	2	RING-SEAL (INTERNAL)	
	18	1	**8E-8319**	4	DISC-THRUST	
	19	1	**8F-3469**	4	SEAL-O-RING	
	20	1	**9U-8815**	1	SPRING	
	21	1	**9W-2029**	1	RACE-THRUST BEARING	
	22	1	**9W-9371**	1	RING-SEAL	
	23	1	**9W-9905**	4	RING-LOCK	
	24	1	**102-5881**	1	SPRING-WAVE	
	25	1	**132-9628**	1	GEAR AS (44-TEETH)	
		1	**6Y-1895**	1	BUSHING	
	26	1	**509-4136**	1	PISTON	
	27	1	**159-0927**	1	DISC-FRICTION	
	28	1	**161-6713**	1	PLATE-LOCK	
	29	1	**171-7095**	1	SHAFT AS	
		1	**1P-0604**	1	PLUG-CUP	
	30	1	**247-8629**	1	VALVE AS	
	31	1	**247-9711**	1	HUB AS	
	32	1	**248-2886**	1	GEAR AS (46-TEETH)	
M	33	1	**5C-7423**	2	SCREW (M6X1X16-MM)	
	34	1	**5H-8985**	1	PIN-SPRING	
M	35	1	**6V-1819**	2	BOLT (M10X1.5X100-MM)	

M - METRIC PART

235-2413 **CLUTCH GP-TRANSMISSION (**contd.**)** **i06860497**

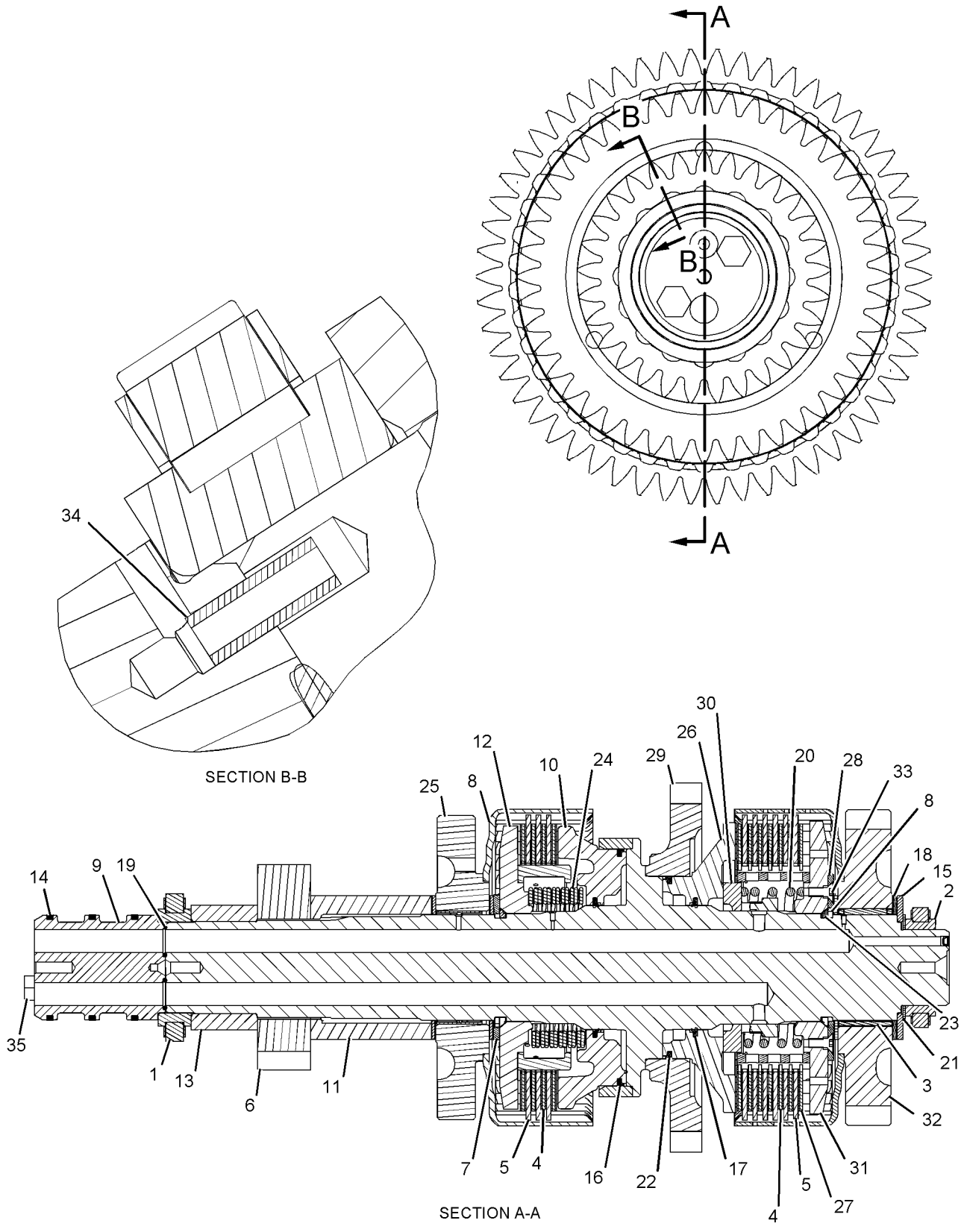

GRAPHIC #1 <END> g01132487

6Y-2303 CLUTCH GP-TRANSMISSION—FIRST, THIRD

S/N: CK41-UP; JSE1-UP; DMJ1-UP

PART OF 275-6535, 365-6500 TRANSMISSION AR

SMCS-3063, 3155, 3170

i06843484

NOTE	REF NO	GRAPHIC REF	PART NUMBER	QTY	PART NAME 1 2 3 4 5 6 (PRODUCT LEVEL)	SEE PAGE
	1	1	**6Y-1878**	1	SHAFT AS (64-TEETH)	
	2	1	**6Y-1000**	1	GEAR (69-TEETH)	
	3	1	**132-9630**	1	GEAR AS (54-TEETH)	
	4	1	**6Y-1895**	1	BUSHING	
	5	1	**3B-8921**	1	BEARING-INNER	
	6	1	**265-5287**	1	RING-SEAL	
	7	1	**7T-4897**	2	DISC-THRUST	
	8	1	**6Y-1891**	1	HUB AS	
	9	1	**8E-5734**	2	RING-SEAL EXTENSION	
	10	1	**509-4135**	2	PISTON	
	11	1	**5H-8985**	1	PIN-SPRING	
	12	1	**6I-8912**	10	DISC-FRICTION	
	13	1	**6I-9502**	8	PLATE-CLUTCH	
	14	1	**6Y-2312**	1	HUB AS	
	15	1	**132-9633**	1	GEAR AS (79-TEETH)	
	16	1	**6Y-2419**	1	BUSHING	
	17	1	**6I-8641**	1	RACE & BEARING	
	18	1	**7G-4822**	3	RING-SEAL	
M	19	1	**6V-1819**	2	BOLT (M10X1.5X100-MM)	
	20	1	**6Y-2425**	1	CARRIER-SEAL	
	21	1	**8F-3469**	3	SEAL-O-RING	
	22	1	**8E-8319**	4	DISC-THRUST	
	23	1	**6Y-1115**	4	RING-HALF	
	24	1	**6Y-1114**	2	LOCKWASHER	
	25	1	**9W-9905**	4	RING-LOCK	
	26	1	**102-5881**	2	SPRING-WAVE	
	27	1	**8E-5742**	2	RING-SEAL (INTERNAL)	
	28	1	**6Y-0982**	1	GEAR (30-TEETH)	

M - METRIC PART

6Y-2303 **CLUTCH GP-TRANSMISSION** (contd.) **i06843484**

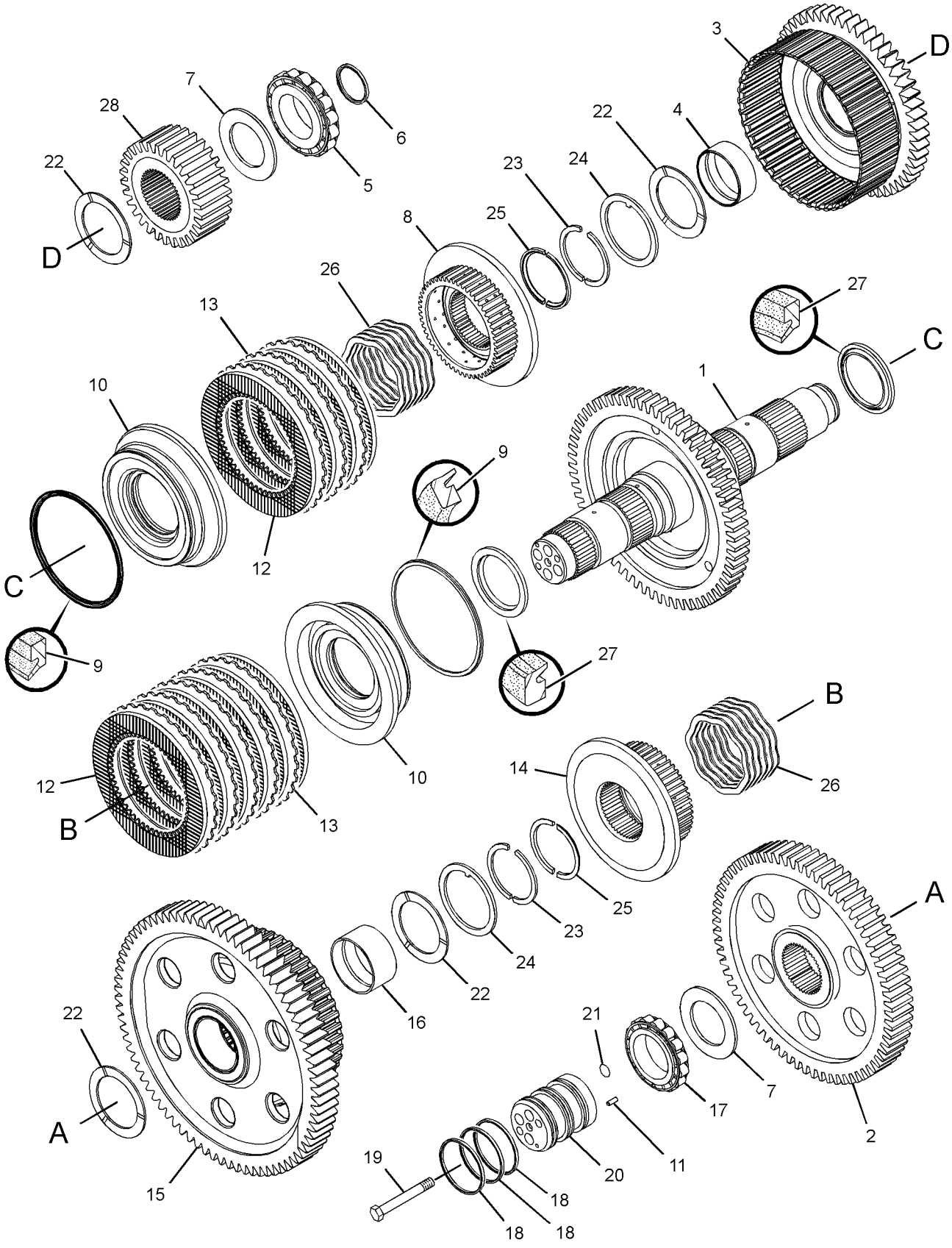

GRAPHIC #1 <END> g01945135

8E-9316 CLUTCH GP-TRANSMISSION—HIGH, LOW

S/N: CK41-UP; JSE1-UP; DMJ1-UP

PART OF 275-6535, 365-6500 TRANSMISSION AR

SMCS-3063, 3155, 3170 **i06843534**

NOTE	REF NO	GRAPHIC REF	PART NUMBER	QTY	PART NAME 1 2 3 4 5 6 (PRODUCT LEVEL)	SEE PAGE
	1	1	**307-6260**	1	SHAFT AS	
	2	1	**8M-4295**	15	SPRING	
	3	1	**509-4138**	1	PISTON	
	4	1	**6Y-1890**	1	RING-RETAINING	
	5	1	**9W-9905**	4	RING-LOCK	
	6	1	**6Y-1114**	2	LOCKWASHER	
	7	1	**6Y-1115**	4	RING-HALF	
	8	1	**8E-8319**	4	DISC-THRUST	
	9	1	**7T-4897**	1	DISC-THRUST	
	10	1	**3B-8921**	1	BEARING-INNER	
	11	1	**8E-1913**	1	GEAR AS (84-TEETH)	
	12	1	**9W-6467**	2	BUSHING	
	13	1	**6Y-7981**	7	DISC-FRICTION	
	14	1	**3P-0337**	8	PLATE-CLUTCH	
	15	1	**8E-5736**	2	RING-SEAL EXTENSION	
	16	1	**509-4139**	1	PISTON-BALANCE	
	17	1	**102-5881**	1	SPRING-WAVE	
	18	1	**8E-5742**	2	RING-SEAL (INTERNAL)	
	19	1	**8E-5734**	1	RING-SEAL EXTENSION	
	20	1	**6I-9502**	5	PLATE-CLUTCH	
	21	1	**6I-8912**	6	DISC-FRICTION	
	22	1	**132-9635**	1	GEAR AS (45-TEETH)	
	23	1	**9W-6467**	2	BUSHING	
	24	1	**131-3919**	1	BEARING-ROLLER	
	25	1	**6Y-2425**	1	CARRIER-SEAL	
M	26	1	**6V-1819**	2	BOLT (M10X1.5X100-MM)	
	27	1	**7G-4822**	3	RING-SEAL	
	28	1	**8F-3469**	3	SEAL-O-RING	
	29	1	**6Y-2312**	1	HUB AS	
	30	1	**5H-8985**	1	PIN-SPRING	
	31	1	**509-4135**	1	PISTON	
	32	1	**218-3339**	1	HUB AS	
	33	1	**8E-1161**	1	ROTOR	

M - METRIC PART

8E-9316 **CLUTCH GP-TRANSMISSION (**contd.**)** **i06843534**

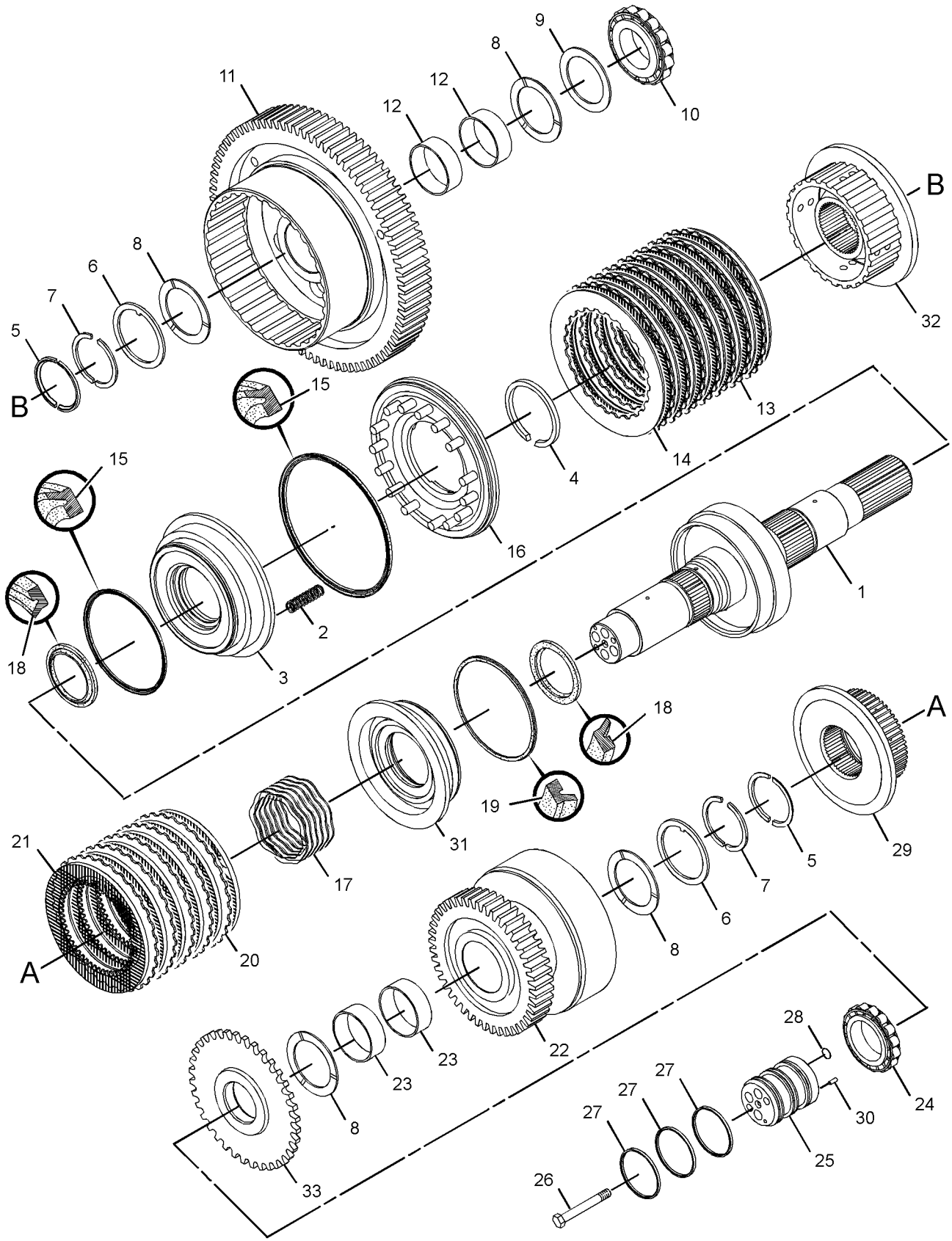

GRAPHIC #1 <END> g01525201

303-3011 CONTROL GP-DIFFERENTIAL LOCK

S/N: SZS1-1013

PART OF 368-3025 GENERAL AR, 435-8193 HYDRAULIC AR

SMCS-3264 **i04932098**

NOTE	REF NO	GRAPHIC REF	PART NUMBER	QTY	PART NAME 1 2 3 4 5 6 (PRODUCT LEVEL)	SEE PAGE
	1	1	**6V-0852**	1	CAP-DUST	
	2	1	**8X-5492**	1	TUBE	
	3	1	**130-5300**	1	CLIP	
	4	1	*156-4281*	1	TEE AS	
		1	**7X-0838**	1	TEE-O-RING	
		1	**3J-7354**	1	SEAL-O-RING	
		1	**6V-8397**	2	SEAL-O-RING	
	5	1	**165-9928**	1	PLATE	
Y	6	1	**174-3705**	1	VALVE & MTG GP-DIFF LOCK	648
	7	1	*180-9933*	1	ADAPTER AS	
		1	**135-9941**	1	ADAPTER	
		1	**3J-7354**	1	SEAL-O-RING	
	8	1	**189-3158**	1	SUPPRESSOR-ARC	
I	9	1	**328-1673**	1	HOSE AS	
	10	1	*148-8316*	1	CONNECTOR AS	
		1	**6V-8647**	1	CONNECTOR	
		1	**3J-7354**	1	SEAL-O-RING	
		1	**4J-5477**	1	SEAL-O-RING	
	11	1	*148-8369*	1	ELBOW AS	
		1	**6V-8628**	1	ELBOW	
		1	**3J-7354**	1	SEAL-O-RING	
		1	**4J-5477**	1	SEAL-O-RING	
	12	1	*164-5567*	1	COUPLER AS-QUICK DISCONNECT (MALE)	
		1	**6V-3965**	1	FITTING (QUICK DISCONNECT)	
		1	**214-7568**	1	SEAL-O-RING	
	14	1	**4J-2506**	2	SEAL-O-RING	
	15	1	**202-2762**	1	CLIP	
	16	1	**4P-8134**	1	CLIP	
	17	1	**4K-8864**	3	CLIP	
I	18	1	**7T-1159**	1	HOSE AS	
	19	1	**8M-4438**	2	SEAL-O-RING	
	20	1	**8T-2501**	2	BOLT (3/8-16X2-IN)	
	21	1	**8T-4121**	6	WASHER-HARD (11X21X2.5-MM THK)	
M	22	1	**8T-4133**	2	NUT (M10X1.5-THD)	
M	23	1	**8T-4136**	2	BOLT (M10X1.5X25-MM)	
	24	1	**8T-4896**	2	WASHER-HARD (10.2X18.5X2.5-MM THK)	
	25	1	**9X-6772**	1	STRAP-CABLE	
	26	1	*148-8367*	1	ELBOW AS	
		1	**6V-9850**	1	ELBOW	
		1	**6V-8397**	1	SEAL-O-RING	
	27	1	*148-8368*	1	ELBOW AS	
		1	**6V-8627**	1	ELBOW	
		1	**3J-1907**	1	SEAL-O-RING	
		1	**4J-5477**		SEAL-O-RING	
	28	1	**4S-1962**	1	CLIP	
M	29	1	**8T-4195**	1	BOLT (M10X1.5X30-MM)	

I - REFER TO HYDRAULIC INFORMATION SYSTEM
M - METRIC PART
Y - SEPARATE ILLUSTRATION

303-3011 **CONTROL GP-DIFFERENTIAL LOCK (**contd.**)** **i04932098**

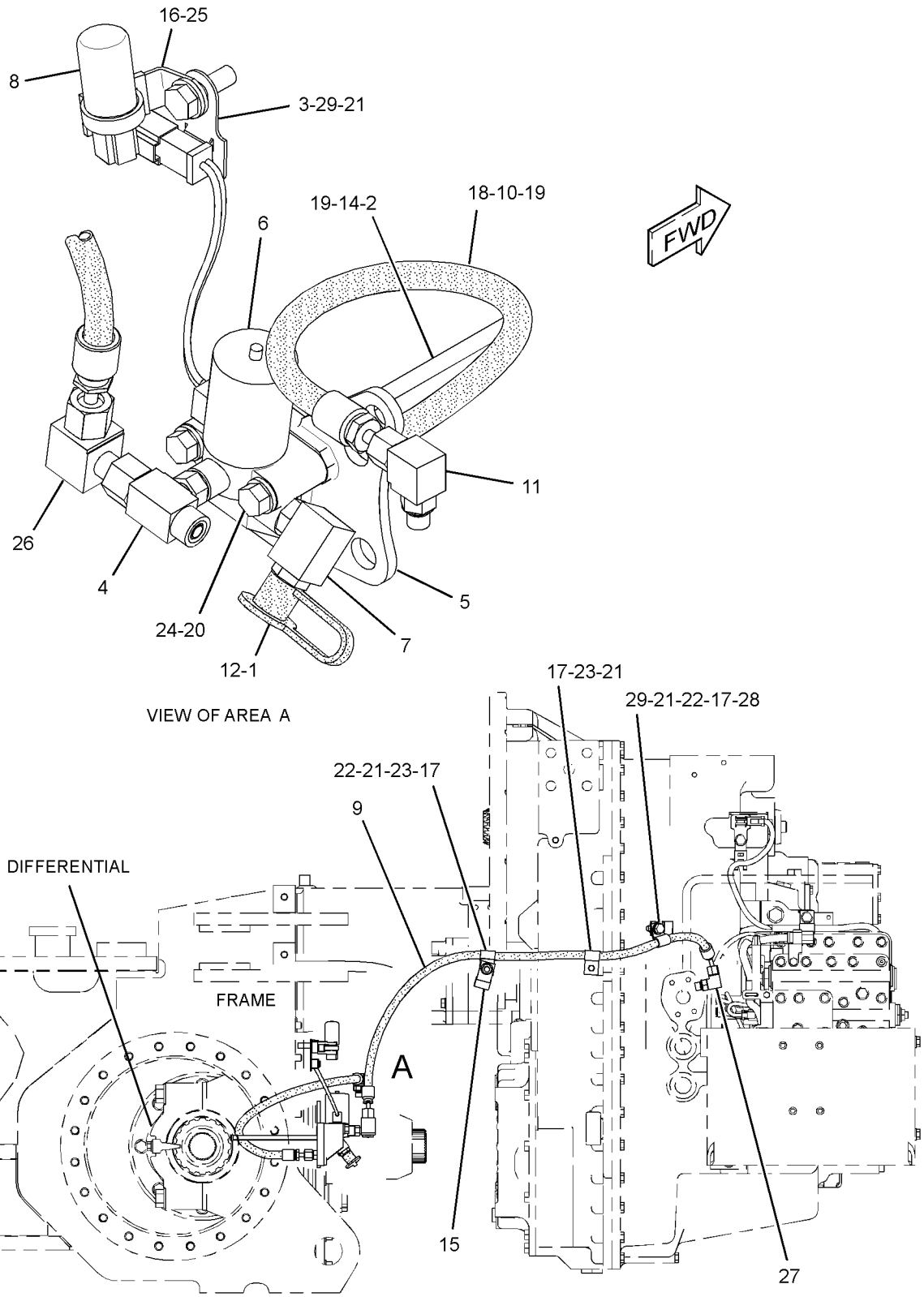

LEFT SIDE VIEW

GRAPHIC #1 <END> g02153668

303-3011 CONTROL GP-DIFFERENTIAL LOCK

S/N: SZS1014-UP

PART OF 435-8193 HYDRAULIC AR

SMCS-3264 **i06948242**

NOTE	REF NO	GRAPHIC REF	PART NUMBER	QTY	PART NAME 1 2 3 4 5 6 (PRODUCT LEVEL)	SEE PAGE
	1	1	**6V-0852**	1	CAP-DUST	
	2	1	**8X-5492**	1	TUBE	
	3	1	**130-5300**	1	CLIP	
	4	1	*156-4281*	1	TEE AS	
		1	**7X-0838**	1	TEE-O-RING	
		1	**3J-7354**	1	SEAL-O-RING	
		1	**6V-8397**	2	SEAL-O-RING	
	5	1	**165-9928**	1	PLATE	
CY	6	1	**482-4544**	1	VALVE & MTG GP-SOLENOID	649
	7	1	*180-9933*	1	ADAPTER AS	
		1	**135-9941**	1	ADAPTER	
		1	**3J-7354**	1	SEAL-O-RING	
I	9	1	**328-1673**	1	HOSE AS	
	10	1	*148-8316*	1	CONNECTOR AS	
		1	**6V-8647**	1	CONNECTOR	
		1	**3J-7354**	1	SEAL-O-RING	
		1	**4J-5477**	1	SEAL-O-RING	
	11	1	*148-8369*	1	ELBOW AS	
		1	**6V-8628**	1	ELBOW	
		1	**3J-7354**	1	SEAL-O-RING	
		1	**4J-5477**	1	SEAL-O-RING	
	12	1	*164-5567*	1	COUPLER AS-QUICK DISCONNECT (MALE)	
		1	**6V-3965**	1	FITTING (QUICK DISCONNECT)	
		1	**214-7568**	1	SEAL-O-RING	
	14	1	**4J-2506**	2	SEAL-O-RING	
	15	1	**202-2762**	1	CLIP	
	16	1	**4P-8134**	1	CLIP	
	17	1	**4K-8864**	3	CLIP	
I	18	1	**7T-1159**	1	HOSE AS	
	19	1	**8M-4438**	2	SEAL-O-RING	
	20	1	**8T-2501**	2	BOLT (3/8-16X2-IN)	
	21	1	**8T-4121**	6	WASHER-HARD (11X21X2.5-MM THK)	
CM	22	1	**344-5675**	2	NUT (M10X1.5-THD)	
CM	23	1	**8T-4136**	4	BOLT (M10X1.5X25-MM)	
	24	1	**8T-4896**	2	WASHER-HARD (10.2X18.5X2.5-MM THK)	
	26	1	*148-8367*	1	ELBOW AS	
		1	**6V-9850**	1	ELBOW	
		1	**6V-8397**	1	SEAL-O-RING	
	27	1	*148-8368*	1	ELBOW AS	
		1	**6V-8627**	1	ELBOW	
		1	**3J-1907**	1	SEAL-O-RING	
		1	**4J-5477**		SEAL-O-RING	
	28	1	**4S-1962**	1	CLIP	

C - CHANGE FROM PREVIOUS TYPE
I - REFER TO HYDRAULIC INFORMATION SYSTEM
M - METRIC PART
Y - SEPARATE ILLUSTRATION

303-3011 **CONTROL GP-DIFFERENTIAL LOCK (**contd.**)** **i06948242**

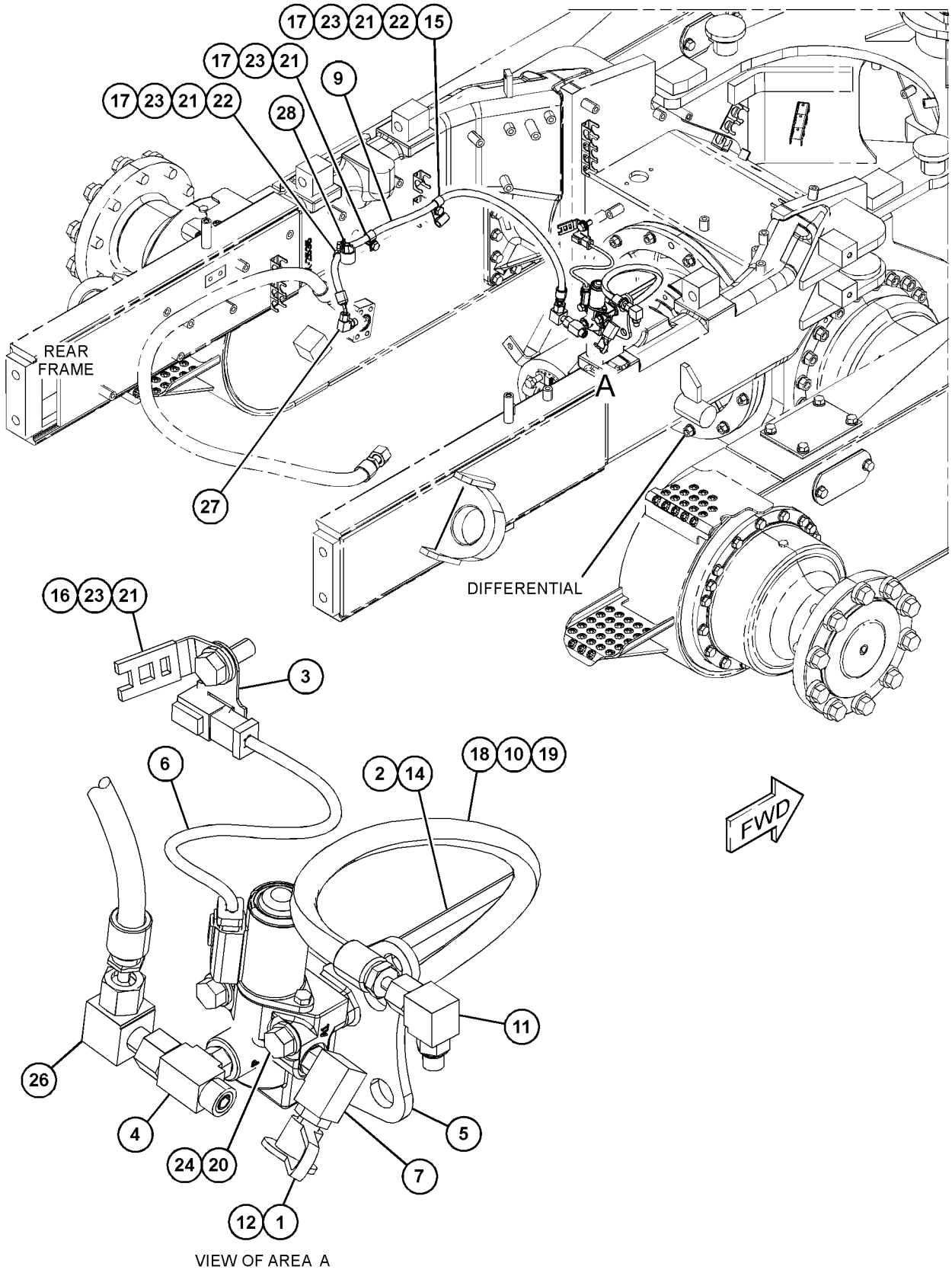

GRAPHIC #1 <END> g06181500

281-3165 CONTROL GP-TRANSMISSION HYD

S/N: DMJ1-UP

PART OF 275-6535 TRANSMISSION AR

SMCS-3073, 3167 **i04883490**

NOTE	REF NO	GRAPHIC REF	PART NUMBER	QTY	PART NAME 1 2 3 4 5 6 (PRODUCT LEVEL)	SEE PAGE
Y	1	1	**281-3163**	1	VALVE GP-TRANSMISSION CONTROL	660
M	2	1	**6V-3918**	5	BOLT (M8X1.25X50-MM)	
	3	1	**9P-9150**	66	WASHER (8.25X18X0.84-MM THK)	
	4	1	**1T-0738**	31	WASHER (8.4X19X1.83-MM THK)	
M	5	1	**8C-4984**	14	BOLT (M8X1.25X150-MM)	
M	6	1	**3E-8005**	14	BOLT (M8X1.25X160-MM)	
	7	1	**4S-5879**	1	SEAL-O-RING	
	8	1	*180-9324*	1	WIRING GP-TRANSMISSION	
		1	**3S-2093**	7	STRAP-CABLE	
M		1	**8T-0639**	1	BOLT (M6X1X12-MM)	
		1	**205-8839**	1	CLIP AS	
		1	**205-8847**	1	PLATE AS	
		1	**207-6034**	1	PLATE AS	
		1	**213-9842**	1	HARNESS AS-TRANSMISSION	
		1	**102-8801**	1	KIT-RECEPTACLE (12-PIN)	
					(INCLUDES RECEPTACLE AS & WEDGE)	
		1	**155-2270**	8	KIT-CONNECTING PLUG (2-PIN)	
					(EACH INCLUDES PLUG AS, WEDGE & INTERFACE SEAL)	
		1	**8T-8729**	10	PIN-CONNECTOR (16-GA TO 18-GA)	
		1	**8T-8737**	2	PLUG-SEAL	
		1	**8T-8730**	16	SOCKET-CONNECTOR (16-GA TO 18-GA)	
M	9	1	**8T-0639**	2	BOLT (M6X1X12-MM)	
M	10	1	**6V-5217**	3	BOLT (M8X1.25X20-MM)	
	11	1	**347-0066**	1	PLATE AS	
M		1	**8T-3490**	1	NUT-WELD (M10X1.5-THD)	

M - METRIC PART
Y - SEPARATE ILLUSTRATION

281-3165 **CONTROL GP-TRANSMISSION HYD (**contd.**)** **i04883490**

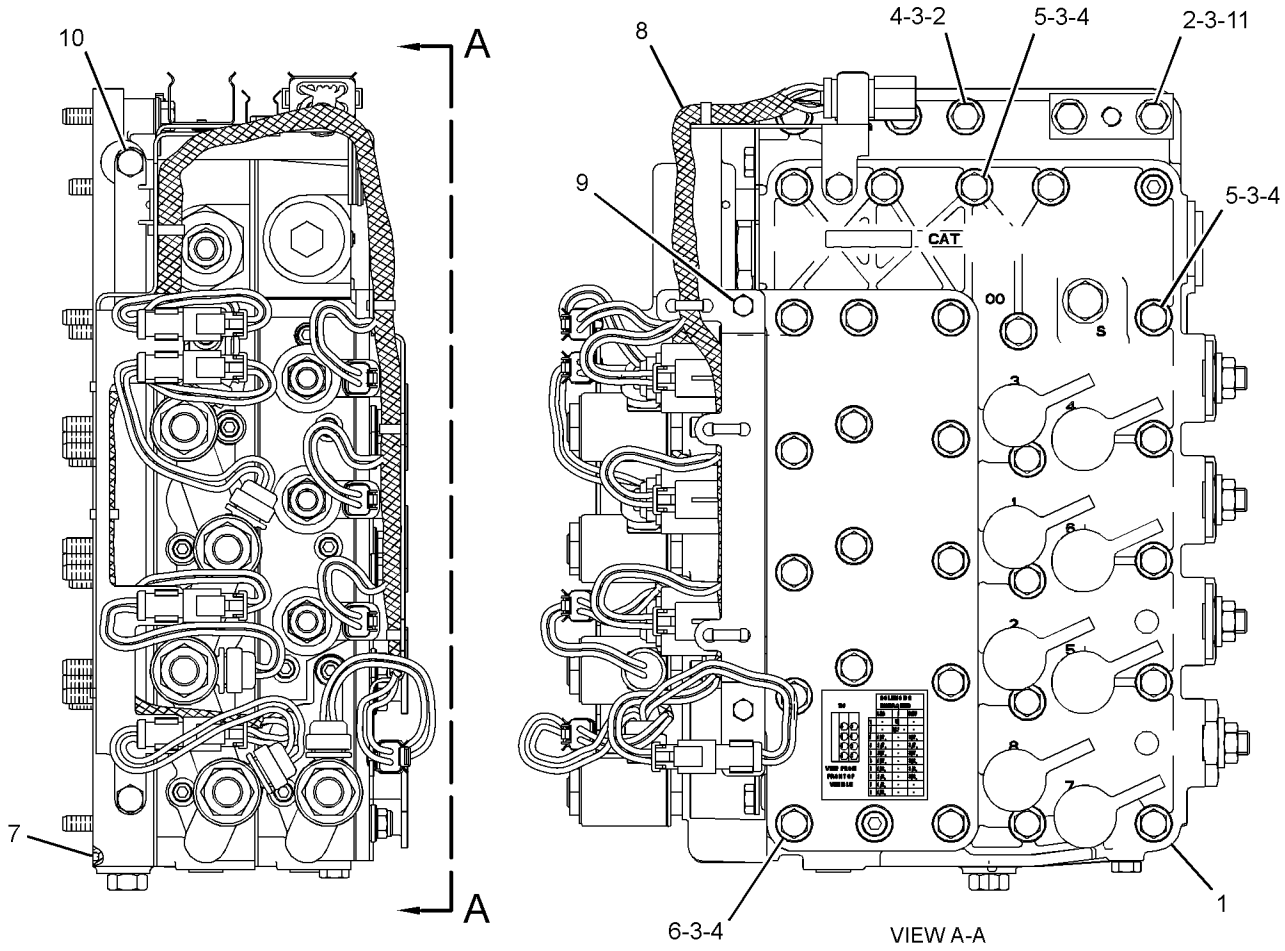

GRAPHIC #1 <END> g01223665

365-5537 CONTROL GP-TRANSMISSION HYD

S/N: CK41-UP; JSE1-UP

PART OF 365-6500 TRANSMISSION AR

SMCS-3073, 3167 **i06678060**

NOTE	REF NO	GRAPHIC REF	PART NUMBER	QTY	PART NAME 1 2 3 4 5 6 (PRODUCT LEVEL)	SEE PAGE
	1	2	**6D-0692**	1	SEAL-O-RING	
	2	1,2	**9P-9150**	38	WASHER (8.25X18X0.84-MM THK)	
	3	1	**264-4297**	1	SENSOR AS-TEMPERATURE (TRANSMISSION OIL)	
		1	**137-6645**	1	PAD-CONNECTOR	
H	4	2	**423-6535**	8	VALVE GP-SOLENOID (TRANSMISSION CONTROL)	
Y	5	1	**365-5531**	1	VALVE GP-RELIEF (TRANSMISSION)	650
	6	2	**365-5532**	1	MANIFOLD	
Y	7	2	**379-4984**	1	HARNESS AS-TRANSMISSION	264
	8	2	**379-5175**	1	BRACKET AS	
M		2	**8T-3490**	2	NUT-WELD (M10X1.5-THD)	
M	9	2	**096-5866**	2	BOLT (M8X1.25X75-MM)	
M	10	2	**8T-7329**	12	BOLT (M8X1.25X55-MM)	
M	11	1,2	**107-0269**	5	BOLT-HEAD (M8X1.25X50-MM)	
	12	1	**130-5300**	2	CLIP	
	13	1,2	**132-5789**	3	CLIP	
	14	1	*150-3065*	3	ELBOW AS	
					(EACH INCLUDES)	
		1	**6V-0484**	1	ELBOW	
		1	**3J-1907**	1	SEAL-O-RING	
M	15	2	**162-2165**	16	BOLT-SOCKET HEAD (M4X0.7X16-MM)	
	16	1	*164-5567*	8	COUPLER AS-QUICK DISCONNECT (MALE)	
					(EACH INCLUDES)	
		1	**6V-3965**	1	FITTING (QUICK DISCONNECT)	
		1	**214-7568**	1	SEAL-O-RING	
	17	1	**1T-0738**	3	WASHER (8.4X19X1.83-MM THK)	
	18	1	**238-5080**	1	SEAL-O-RING	
M	19	2	**285-9066**	4	BOLT (M8X1.25X65-MM)	
	20	1	**2P-1692**	1	SEAL-O-RING	
	21	1,2	*307-2673*	3	PLUG AS	
					(EACH INCLUDES)	
		1,2	**9S-8005**	1	PLUG (3/4-16-THD)	
		1,2	**238-5080**	1	SEAL-O-RING	
	22	2	*321-8641*	8	PLUG AS	
					(EACH INCLUDES)	
		2	**9S-8001**	1	PLUG	
		2	**238-5078**	1	SEAL-O-RING	
	23	1,2	**352-3970**	4	CLIP	
	24	1,2	**3S-2093**	8	STRAP-CABLE	
	25	2	**4P-7581**	1	CLIP	
	26	1	**6V-0852**	8	CAP-DUST	
M	27	1,2	**8T-4200**	7	BOLT (M8X1.25X16-MM)	
	28	1,2	**8T-4224**	13	WASHER-HARD (8.8X16X2-MM THK)	
M	29	1,2	**8T-4776**	3	BOLT-SOCKET HEAD (M8X1.25X100-MM)	
M	30	1	**8T-6869**	2	BOLT (M8X1.25X60-MM)	
	31	2	**503-6251**	12	SPACER (9X20X15-MM THK)	
					AVAILABLE REPAIR KIT(S):	
H			**387-2867**	1	KIT-SEAL	
					(INCLUDES O-RINGS)	

365-5537 **CONTROL GP-TRANSMISSION HYD (**contd.**)** **i06678060**

NOTE	REF NO	GRAPHIC REF	PART NUMBER	QTY	PART NAME 1 2 3 4 5 6 (PRODUCT LEVEL)	SEE PAGE

H - KIT MARKED H SERVICES PART(S) MARKED H
M - METRIC PART
Y - SEPARATE ILLUSTRATION

365-5537 **CONTROL GP-TRANSMISSION HYD (**contd.**)** **i06678060**

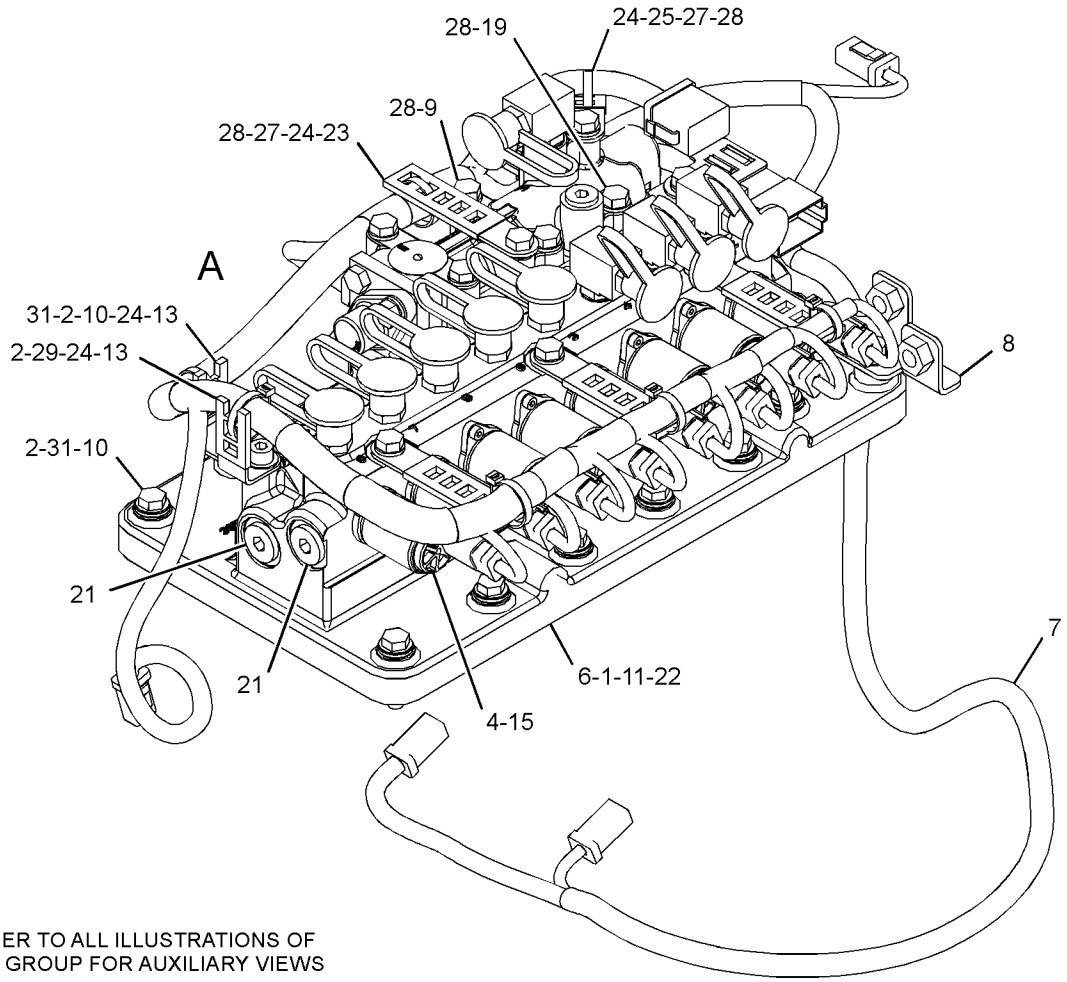

REFER TO ALL ILLUSTRATIONS OF
THIS GROUP FOR AUXILIARY VIEWS

GRAPHIC #1 g06074410

365-5537 **CONTROL GP-TRANSMISSION HYD (**contd.**)** **i06678060**

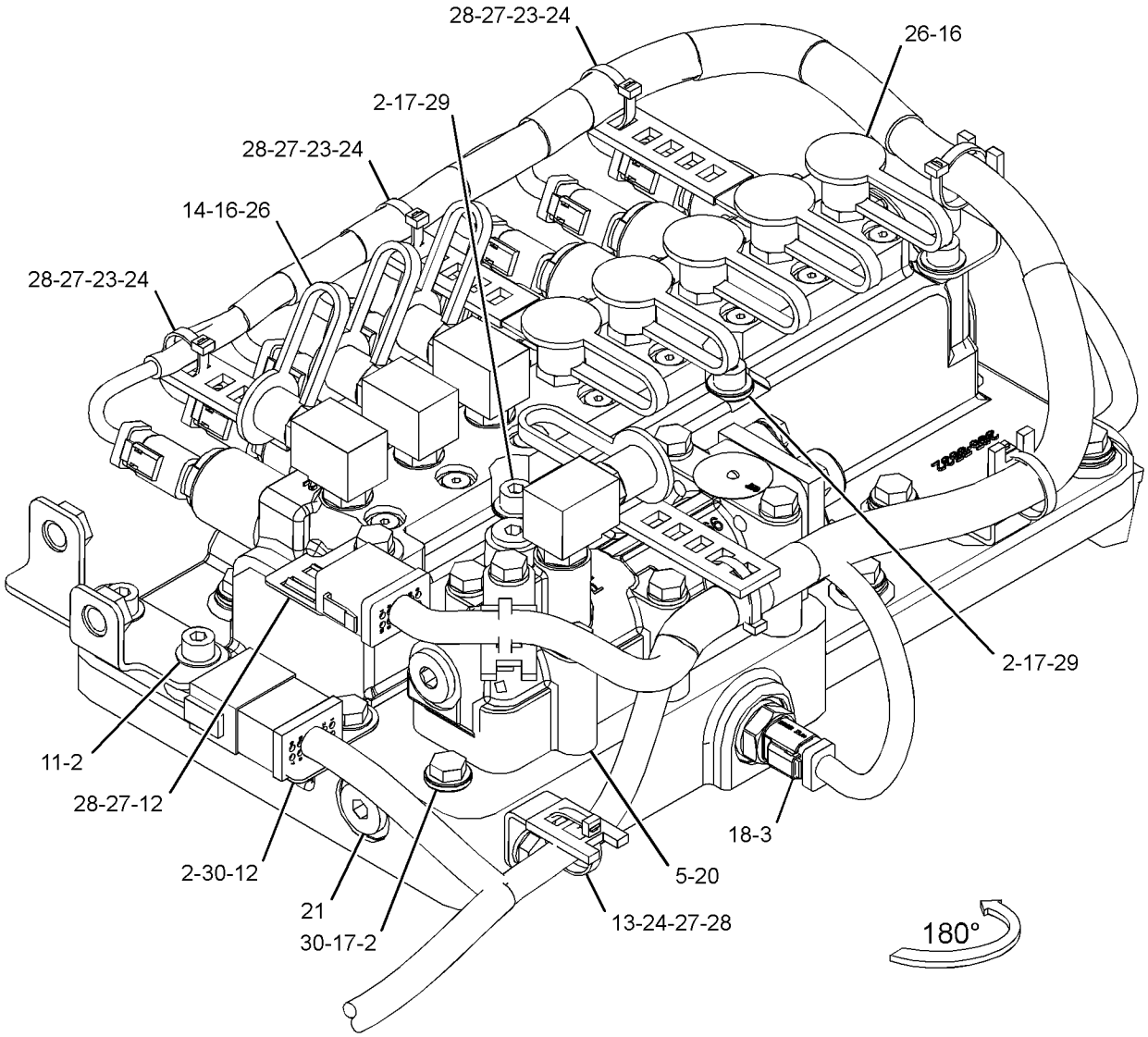

VIEW OF AREA A

GRAPHIC #2 <END> g03326341

335-1418 COOLER GP-TRANSMISSION OIL

S/N: SZS1-485

PART OF 335-2118 RADIATOR & HYD OIL COOLER GP

ALSO AN ATTACHMENT

SMCS-1375 **i05070275**

NOTE	REF NO	GRAPHIC REF	PART NUMBER	QTY	PART NAME 1 2 3 4 5 6 (PRODUCT LEVEL)	SEE PAGE
	1	1	**375-2987**	1	CORE AS-OIL COOLER (TRANSMISSION OIL)	
	2	1	**335-1453**	2	BRACKET	
	3	1	**335-1454**	2	BRACKET AS	
	4	1	**335-2115**	2	BRACKET AS	
M	5	1	**8T-4195**	12	BOLT (M10X1.5X30-MM)	
	6	1	**8T-4121**	40	WASHER-HARD (11X21X2.5-MM THK)	
M	7	1	**8T-4133**	16	NUT (M10X1.5-THD)	
M	8	1	**8T-4136**	4	BOLT (M10X1.5X25-MM)	
M	9	1	**8T-4186**	8	BOLT (M10X1.5X40-MM)	

M - METRIC PART

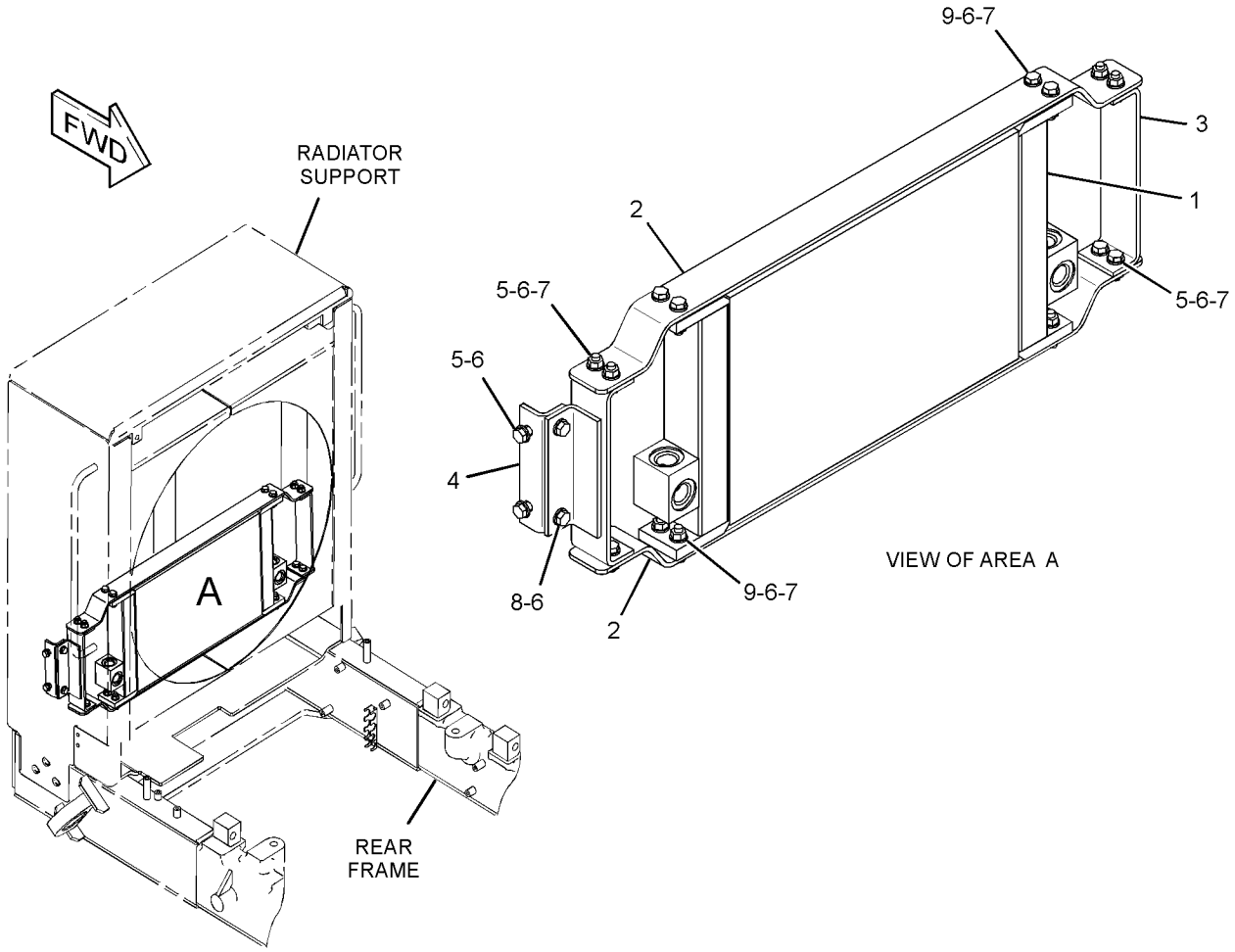

GRAPHIC #1 <END> g03316789

376-6727 COOLER GP-TRANSMISSION OIL

S/N: SZS486-UP

PART OF 335-2118 RADIATOR & HYD OIL COOLER GP

ALSO AN ATTACHMENT

SMCS-1375 **i04896466**

NOTE	REF NO	GRAPHIC REF	PART NUMBER	QTY	PART NAME 1 2 3 4 5 6 (PRODUCT LEVEL)	SEE PAGE
	1	1	**375-2987**	1	CORE AS-OIL COOLER (TRANSMISSION OIL)	
	2	1	**376-6725**	2	BRACKET	
	3	1	**376-6726**	2	BRACKET	
	4	1	**8T-4121**	28	WASHER-HARD (11X21X2.5-MM THK)	
M	5	1	**8T-4133**	12	NUT (M10X1.5-THD)	
M	6	1	**8T-4195**	8	BOLT (M10X1.5X30-MM)	
M	7	1	**8T-4196**	8	BOLT (M10X1.5X35-MM)	

M - METRIC PART

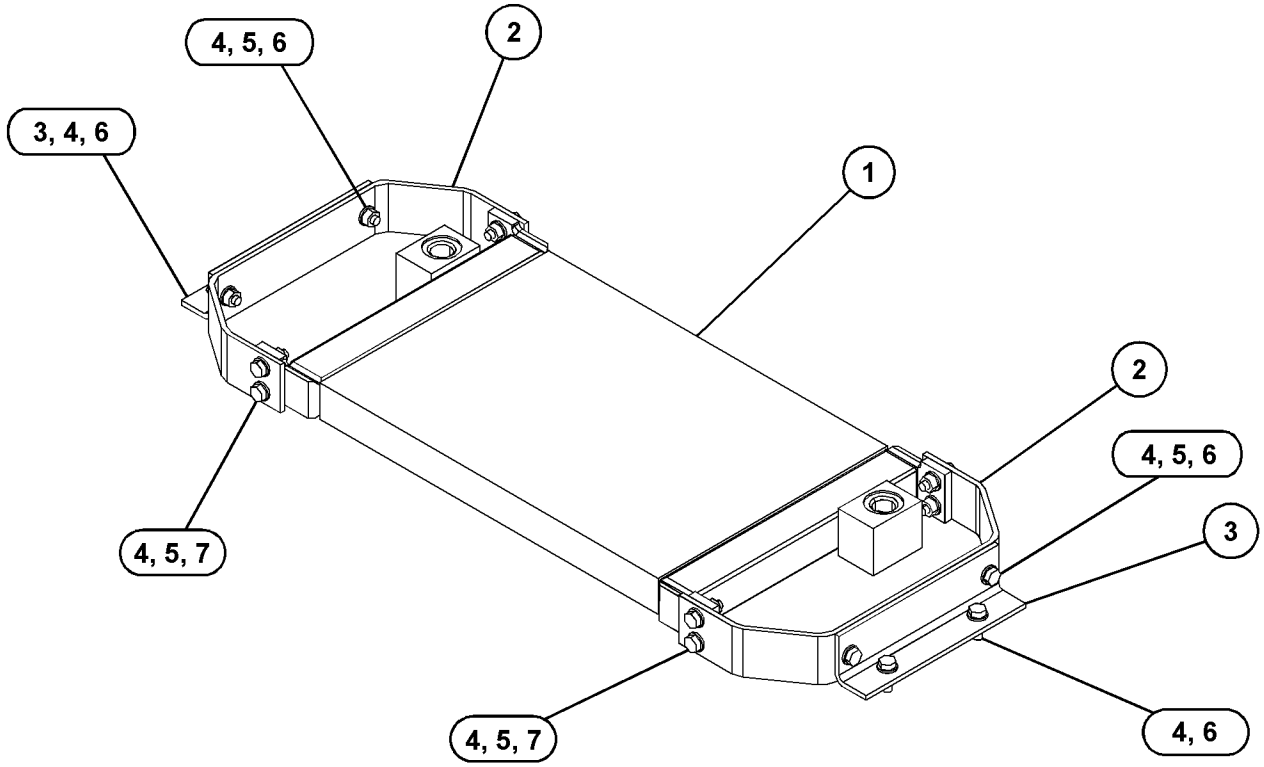

GRAPHIC #1 <END> g03141477

337-3357 COUPLING GP-TORSIONAL

S/N: SZS1-UP

PART OF 368-3025 GENERAL AR, 425-5590 INSTALLATION AR

SMCS-3252, 3279 **i05801438**

NOTE	REF NO	GRAPHIC REF	PART NUMBER	QTY	PART NAME 1 2 3 4 5 6 (PRODUCT LEVEL)	SEE PAGE
	1	1	**422-2480**	1	COUPLING AS	
M	2	1	**266-4360**	12	BOLT (M10X1.5X30-MM)	
	3	1	**6V-5839**	12	WASHER (11X21X2.5-MM THK)	

M - METRIC PART

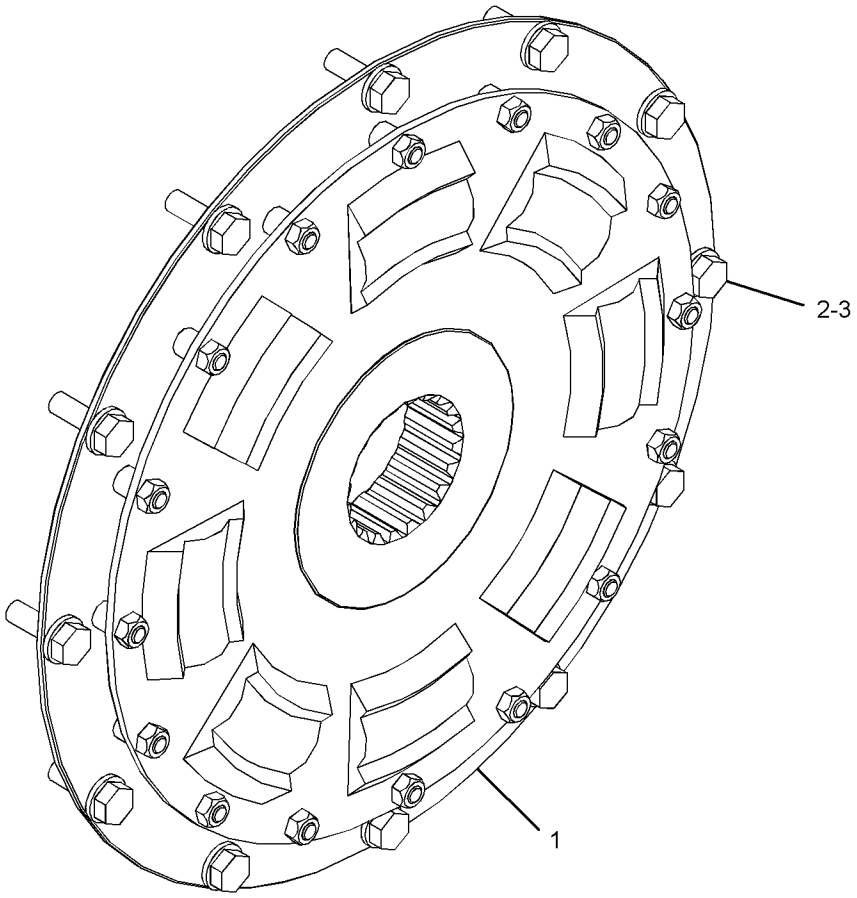

GRAPHIC #1 <END> g03324731

348-4955 DIFFERENTIAL & BEVEL GEAR GP

S/N: SZS1-UP

PART OF 368-3025 GENERAL AR, 436-8767 POWER TRAIN AR

SMCS-3256, 3258 **i03853256**

NOTE	REF NO	GRAPHIC REF	PART NUMBER	QTY	PART NAME 1 2 3 4 5 6 (PRODUCT LEVEL)	SEE PAGE
	1	1	**5D-9844**	1	BOLT-LOCKING (3/8-16X2-IN)	
	2	1	**5P-8245**	8	WASHER-HARD (13.5X25.5X3-MM THK)	
	3	1	**034-3557**	5	BOLT-LOCKING (3/8-16X1.125-IN)	
	4	1	**5M-2894**	8	WASHER-HARD (10.2X18.5X2.5-MM THK)	
	5	1	**2K-5109**	1	GASKET	
	6	1	**8W-5279**	1	RETAINER	
	7	1	**123-4003**	1	SEAL-LIP TYPE	
	8	1	**7S-4571**	1	SEAL-O-RING	
	9	1	**5P-5813**	1	LOCKNUT-BEARING (2.75X18-THD)	
	10	1	**9B-0143**	1	LOCKWASHER	
	11	1	**7D-8347**	1	WASHER-TAB	
	12	1	**8X-2316**	1	HOUSING	
	13	1	**5L-2031**	1	CUP-BEARING	
	14	1	**5L-2030**	1	CONE-BEARING	
	15	1	**0S-1587**	8	BOLT (1/2-13X1.75-IN)	
B	16	1	**8V-3273**	1	SHIM PACK (INCLUDES 10-SHIMS)	
	17	1	**299-3330**	12	NUT (1/2-13-THD)	
	18	1	**9F-1399**	1	SEAL-O-RING	
	19	1	**1S-3184**	1	CONE-BEARING	
	20	1	**2D-9454**	1	CUP-BEARING	
	21	1	**9D-3306**	1	CAGE	
	22	1	**6G-4702**	1	NUT (4-1/4-12-THD)	
	23	1	**126-2728**	1	CONE	
	24	1	**2N-2138**	1	CUP-BEARING	
	25	1	**6F-0698**	1	DOWEL	
	26	1	**8D-9784**	2	LOCK	
	27	1	**030-8535**	2	BOLT-LOCKING (3/8-16X0.875-IN)	
	28	1	**8X-2305**	1	CARRIER AS	
	28A	1	**0S-1756**	4	BOLT (3/4-10X4.25-IN)	
	28B	1	**5P-8248**	4	WASHER-HARD (20X36.5X3.5-MM THK)	
	31	1	**4D-5292**	1	RING-RETAINING	
	32	1	**1P-2662**	1	CONE-BEARING	
	33	1	**1P-2636**	1	CUP-BEARING	
	34	1	**6G-4701**	1	NUT-BEARING (4-1/4-12-THD)	
	35	1	**8X-2308**	1	CAGE AS	
		1	**2D-6642**	1	BALL	
	36	1	**2H-5001**	1	SEAL-O-RING	
	37	1	**8W-5111**	1	SLEEVE	
	38	1	**8X-1206**	1	SHAFT-PINION	
Y	39	1	**8W-5587**	1	DIFFERENTIAL GP	615
	40	1	**9G-2991**	2	RING-SEAL	
	41	1	**279-6632**	12	WASHER (13.5X25.5X3-MM THK)	

B - USE AS REQUIRED
Y - SEPARATE ILLUSTRATION

348-4955 **DIFFERENTIAL & BEVEL GEAR GP** (contd.) **i03853256**

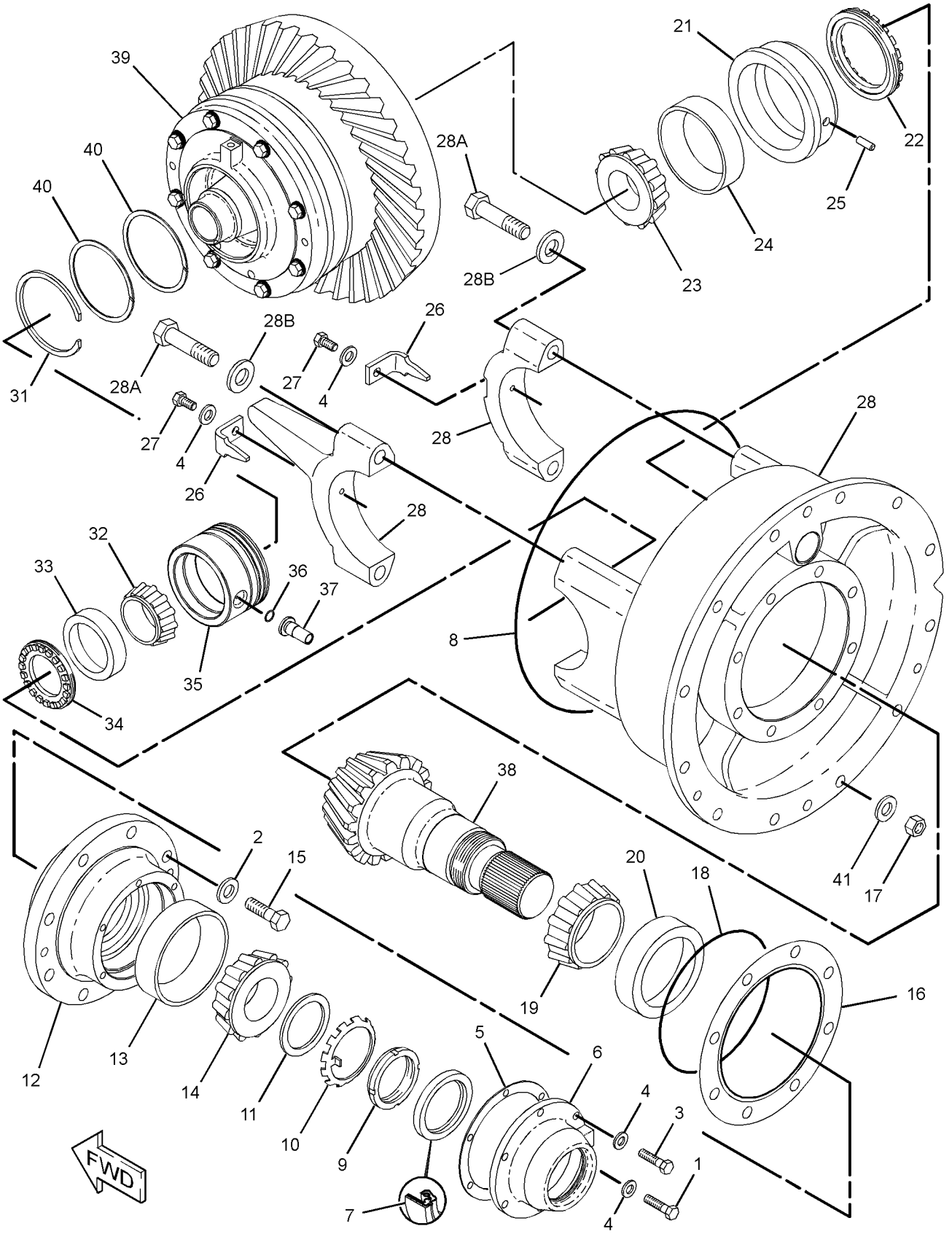

GRAPHIC #1 <END> g01961826

8W-5587 DIFFERENTIAL GP

S/N: SZS1-UP

PART OF 348-4955 DIFFERENTIAL & BEVEL GEAR GP

SMCS-3258 **i05792271**

NOTE	REF NO	GRAPHIC REF	PART NUMBER	QTY	PART NAME 1 2 3 4 5 6 (PRODUCT LEVEL)	SEE PAGE
	1	1	**8W-5578**	1	PISTON	
	2	1	**8D-9738**	1	SEAL-RING	
	3	1	**6T-0840**	1	RING-SEAL (INTERNAL)	
	4	1	**6Y-7955**	7	DISC-FRICTION	
	5	1	**8X-1205**	1	GEAR-BEVEL (50 TEETH)	
	6	1	**8X-2310**	1	HOUSING AS	
	7	1	**2D-6642**	1	BALL	
	8	1	**3D-6509**	2	DOWEL	
	9	1	**5P-8247**	18	WASHER-HARD (17X32X3.5-MM THK)	
	10	1	**8D-9756**	2	WASHER-THRUST	
	11	1	**5B-0841**	18	BOLT (5/8-18X1.75-IN)	
	12	1	**8X-4865**	1	HOUSING AS	
	13	1	**3D-6509**	2	DOWEL	
Z	14	1		1	HOUSING-DIFFERENTIAL	
	15	1	**1B-2886**	9	BOLT (1/2-13X3.75-IN)	
	16	1	**5P-8245**	9	WASHER-HARD (13.5X25.5X3-MM THK)	
	17	1	**2B-0947**	8	BOLT (1/2-13X2.25-IN)	
	18	1	**5P-8245**	8	WASHER-HARD (13.5X25.5X3-MM THK)	
	19	1	**8W-5586**	1	SPIDER	
	20	1	**8X-4869**	3	SPACER	
	21	1	**8W-5589**	3	PINION AS (11 TEETH)	
					(EACH INCLUDES)	
	22	1	**174-6818**	1	BUSHING	
	23	1	**109-4580**	1	GEAR-DIFFERENTIAL BEVEL (18 TEETH)	
	24	1	**109-4581**	1	GEAR-DIFFERENTIAL BEVEL (18 TEETH)	
	25	1	**2G-1084**	1	DISC	
	26	1	**8D-9718**	8	DISC	

Z - NOT SERVICED SEPARATELY

8W-5587 **DIFFERENTIAL GP (**contd.**)** **i05792271**

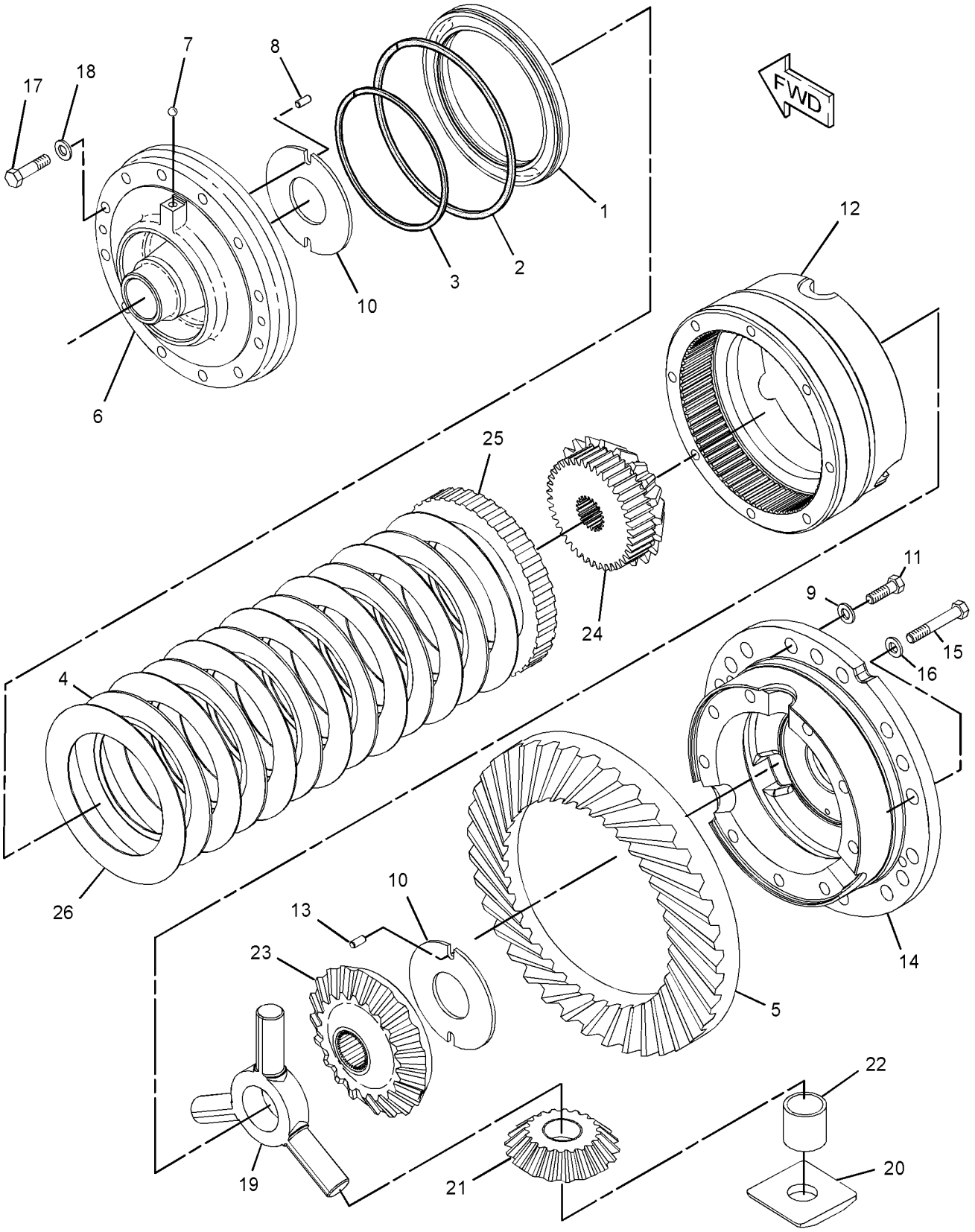

GRAPHIC #1 <END> g02211873

8W-4980 DRIVE GP-FINAL

S/N: SZS1-UP

PART OF 368-3025 GENERAL AR, 436-8767 POWER TRAIN AR

SMCS-4050 **i06782697**

NOTE	REF NO	GRAPHIC REF	PART NUMBER	QTY	PART NAME 1 2 3 4 5 6 (PRODUCT LEVEL)	SEE PAGE
	1	1	**195-8553**	2	GEAR-SUN (17-TEETH)	
	2	1	**6G-7213**	2	CARRIER-PLANETARY (52-TEETH)	
	3	1	**265-9125**	8	RETAINER	
	4	1	**8W-2307**	8	SHAFT	
	5	1	**2M-5685**	16	BEARING	
	6	1	**8D-8634**	8	GEAR-PLANETARY (24-TEETH)	
	7	1	**8D-8639**	2	GEAR-RING (67-TEETH)	
	8	1	**5J-1086**	2	SEAL-O-RING	
	9	1	**5D-0353**	16	BOLT-LOCKING (3/8-16X1-IN)	
	10	1	**5M-2894**	18	WASHER-HARD (10.2X18.5X2.5-MM THK)	
	11	1	**340-4515**	40	NUT (5/8-11-THD)	
	12	1	**340-4518**	40	WASHER-HARD (17X30X5-MM THK)	
	13	1	**329-0412**	2	SEAL-LIP TYPE	
	14	1	**9F-2247**	2	PLUG-PIPE	
	15	1	**8X-3276**	4	WASHER-THRUST (247X281.28X6.97-MM THK)	
	16	1	**219-2434**	4	RING-WEAR	
	17	1	**030-0061**	2	CONE-BEARING	
	18	1	**030-0060**	2	CUP-BEARING (TAPERED ROLLER)	
	19	1	**8X-3395**	2	HOUSING	
	21	1	**8S-9092**	32	BOLT (5/8-11X2.25-IN)	
	22	1	**2G-6377**	4	SPROCKET (20-TEETH)	
	23	1	**5P-2545**	2	SEAL-O-RING	
	24	1	**030-8535**	2	BOLT-LOCKING (3/8-16X0.875-IN)	
	25	1	**8W-4981**	2	LOCK	
	26	1	**8W-4979**	2	SHAFT-DRIVE	
	27	1	**6K-8329**	2	CONE-BEARING	
	28	1	**6F-2956**	2	CUP-BEARING	
	29	1	**2G-6396**	2	NUT (2-7/8-12-THD)	
	30	1	**219-2437**	2	RETAINER	
	31	1	**0S-1585**	48	BOLT (1/2-13X1.5-IN)	
B	32	1	**8X-3364**	2	SHIM PACK (INCLUDES 10-SHIMS)	
	33	1	**8D-8628**	2	WASHER (49.3X91.29X6.35-MM THK)	
	34	1	**8D-8621**	2	RING-RETAINING	
	35	1	**277-8996**	2	SEAL-LIP TYPE	
	36	1	**8X-2968**	2	HOUSING-AXLE	
	37	1	**8X-8376**	16	WASHER (44.78X79.25X2.92-MM THK)	
	38	1	**5P-6851**	48	BOLT-LOCKING (1/2-13X1.5-IN)	
	39	1	**5P-8247**	32	WASHER-HARD (17X32X3.5-MM THK)	

B - USE AS REQUIRED

8W-4980 **DRIVE GP-FINAL (**contd.**)** **i06782697**

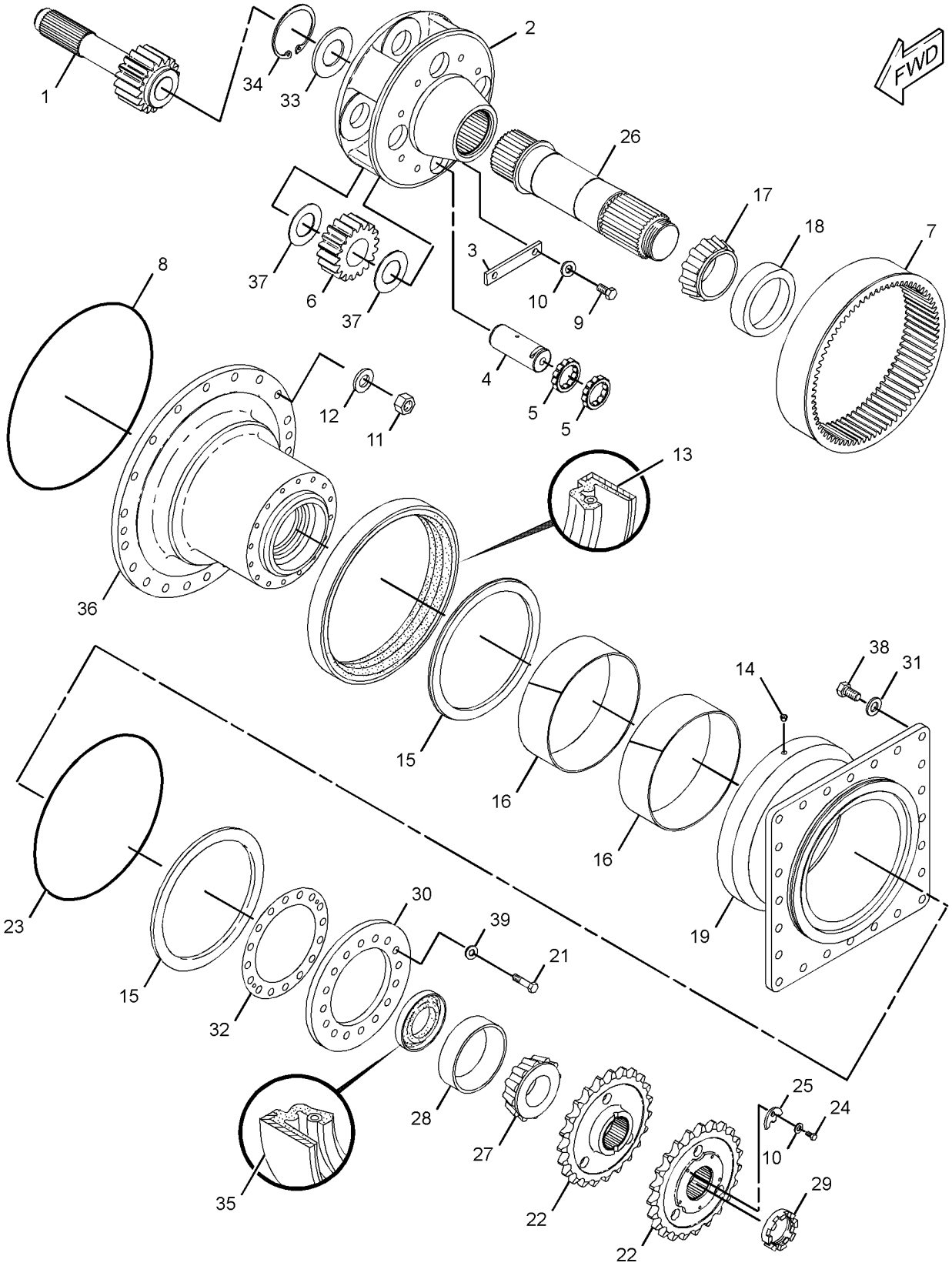

GRAPHIC #1 <END> g03034316

315-4118 FILLER GP-POWER TRAIN OIL

S/N: SZS1-UP

PART OF 368-3025 GENERAL AR, 425-5590 INSTALLATION AR

SMCS-3005, 3081, 7513 **i06691230**

NOTE	REF NO	GRAPHIC REF	PART NUMBER	QTY	PART NAME 1 2 3 4 5 6 (PRODUCT LEVEL)	SEE PAGE
	1	1	**7J-8611**	1	ELBOW-PIPE	
	2	1	**183-3873**	1	BREATHER (POWER TRAIN OIL FILLER)	
	3	1	**8T-4896**	2	WASHER-HARD (10.2X18.5X2.5-MM THK)	
	4	1	**315-6148**	1	GAUGE AS-OIL LEVEL (DIPSTICK) (POWER TRAIN OIL)	
	5	1	**5D-0353**	2	BOLT-LOCKING (3/8-16X1-IN)	
	6	1	**8B-1615**	1	GASKET	
	7	1	**315-4117**	1	TUBE AS	
					PARTS SHOWN IN GRAPHIC(S) WITHOUT A REFERENCE NUMBER ARE NOT SERVICED SEPARATELY	

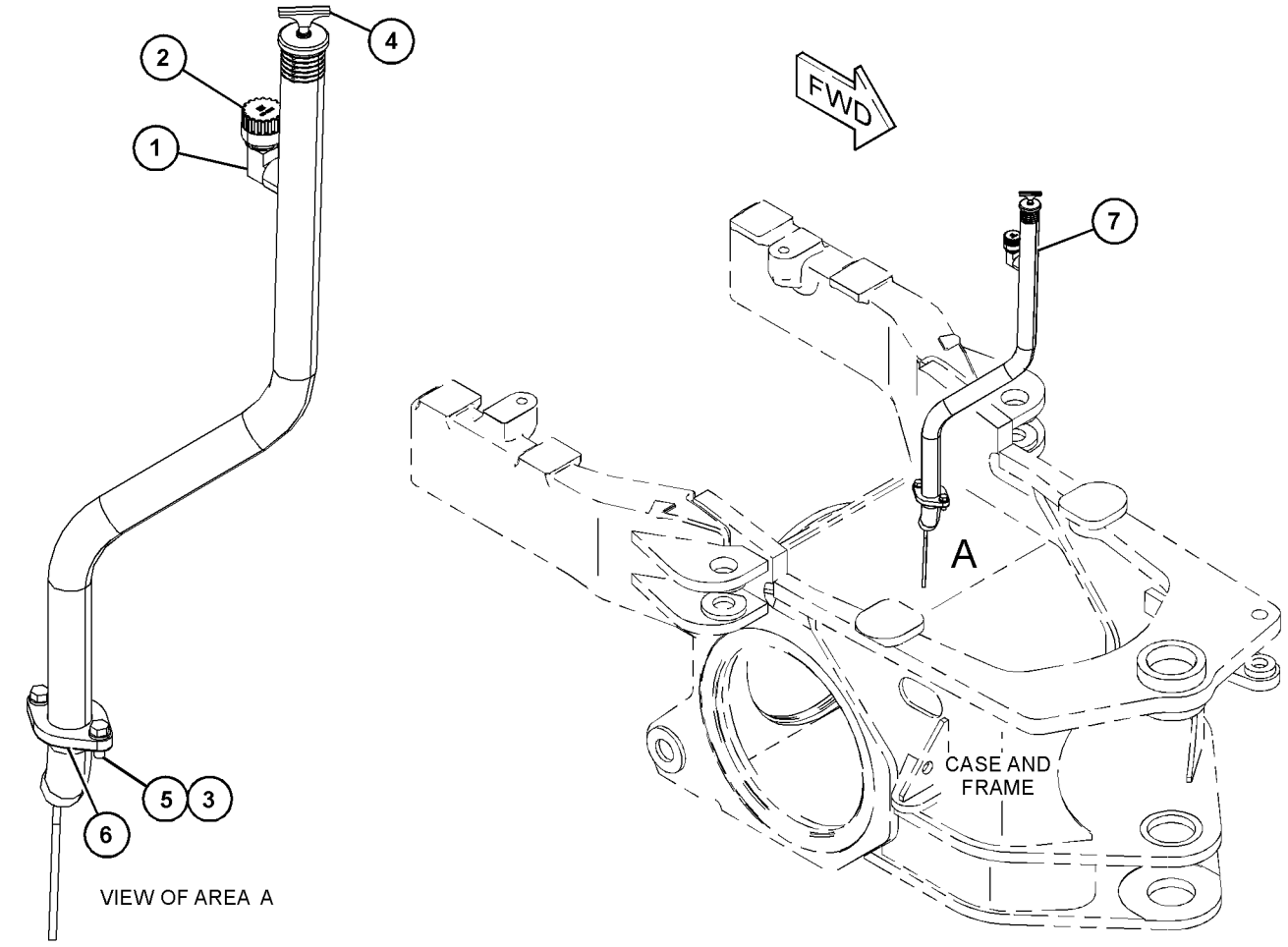

GRAPHIC #1 <END> g06090174

332-8833 FILTER GP-OIL—MEDIUM PRESSURE

S/N: SZS624-UP

PART OF 348-8157 LINES GP-TRANSMISSION OIL

SMCS-3004, 3067 **i06842912**

NOTE	REF NO	GRAPHIC REF	PART NUMBER	QTY	PART NAME 1 2 3 4 5 6 (PRODUCT LEVEL)	SEE PAGE
	1	1	**332-8832**	1	BASE AS-OIL FILTER	
		1	**5P-7701**	1	SEAL-O-RING	
		1	**9S-4181**	1	PLUG (1-5/16-12-THD)	
		1	**114-0561**	1	PLUG	
		1	**206-9292**	1	SEAL-O-RING	
Y	2	1	**440-0257**	1	SWITCH GP-PRESSURE (POWER TRAIN OIL)	366
Y	3	1	**353-4688**	1	FILTER GP-OIL (POWER TRAIN)	623

Y - SEPARATE ILLUSTRATION

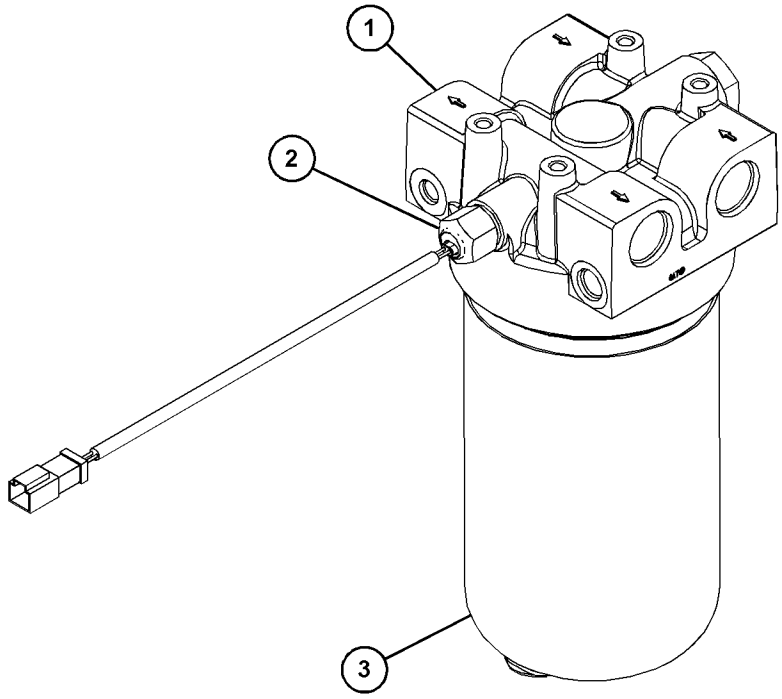

GRAPHIC #1 <END> g03687729

333-6436 FILTER GP-OIL—TRANSMISSION

S/N: SZS1-UP
WITH HOUSING, INTERNAL BYPASS
PART OF 348-8157 LINES GP-TRANSMISSION OIL

SMCS-3004, 3067 **i03886333**

NOTE	REF NO	GRAPHIC REF	PART NUMBER	QTY	PART NAME 1 2 3 4 5 6 (PRODUCT LEVEL)	SEE PAGE
	1	1	*244-3712*	1	PLUG AS	
		1	**9S-4191**	1	PLUG (9/16-18-THD)	
		1	**214-7568**	1	SEAL-O-RING	
	2	1	**321-5967**	1	HOUSING GP-FILTER	
		1	**9S-8004**	1	PLUG (9/16-18-THD)	
		1	**214-7568**	1	SEAL-O-RING	
	3	1	**328-3655**	1	FILTER ELEMENT AS-OIL (ADVANCED EFFICIENCY, WITH SEAL) (TRANSMISSION)	
Y	4	1	**333-9308**	1	BASE GP-OIL FILTER (TRANSMISSION)	580
	5	1	**3P-1932**	1	ADAPTER	
	6	1	**6V-5048**	1	SEAL-O-RING	
	7	1	**8L-2786**	1	SEAL-O-RING	
	8	1	**9S-4182**	1	PLUG (7/16-20-THD)	
	9	1	**130-0229**	1	SEAL-O-RING	
F			**9S-4191**	1	PLUG (9/16-18-THD)	
F			**214-7568**	1	SEAL-O-RING	

F - NOT SHOWN
Y - SEPARATE ILLUSTRATION

333-6436 **FILTER GP-OIL (**contd.**)** **i03886333**

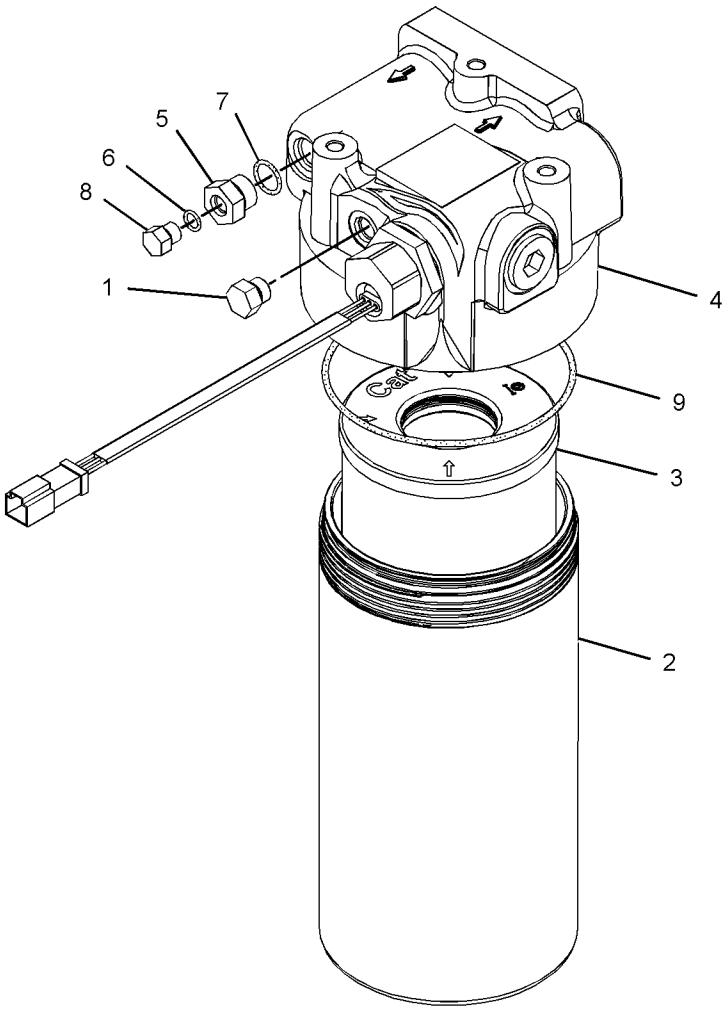

GRAPHIC #1 <END> g02126725

353-4688 FILTER GP-OIL

S/N: SZS624-UP
TRANSMISSION
PART OF 332-8833 FILTER GP-OIL

SMCS-3004, 3067

i06799445

NOTE	REF NO	GRAPHIC REF	PART NUMBER	QTY	PART NAME 1 2 3 4 5 6 (PRODUCT LEVEL)	SEE PAGE
	1	1	**9S-8005**	1	PLUG (3/4-16-THD)	
	2	1	**337-5270**	1	FILTER ELEMENT AS-OIL (TRANSMISSION)	
	2A	1	**095-1678**	1	SEAL-O-RING	
	3	1	**347-7407**	1	TUBE-CENTER	
	4	1	**8L-2786**	1	SEAL-O-RING	
					PARTS SHOWN IN GRAPHIC(S) WITHOUT A REFERENCE NUMBER ARE NOT SERVICED SEPARATELY	

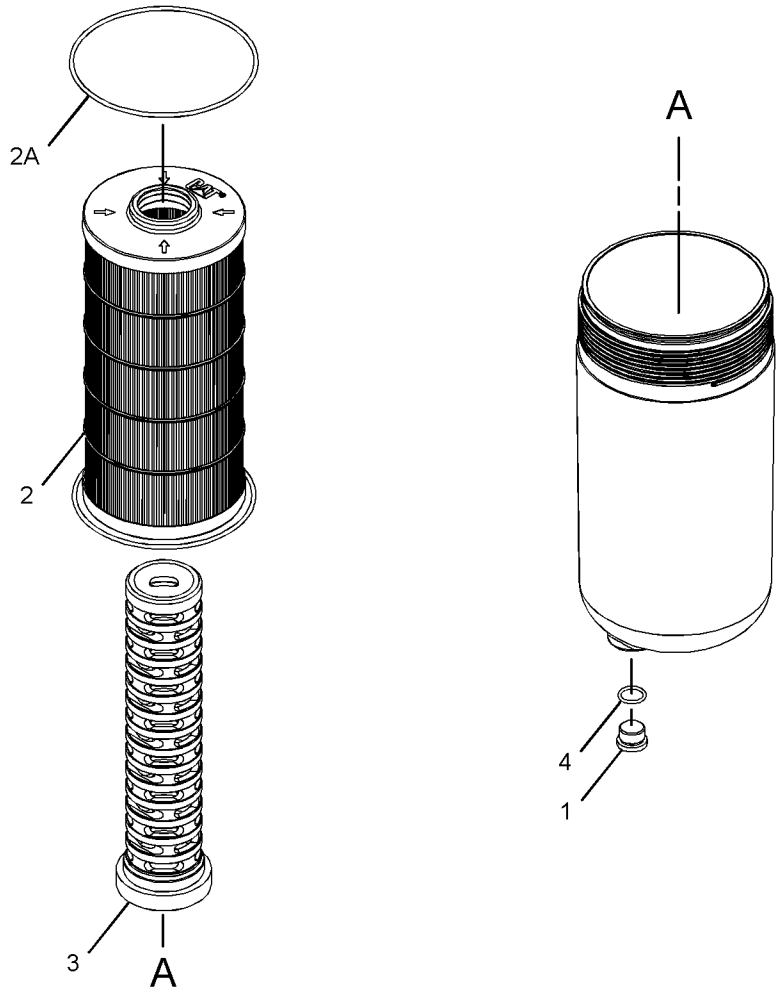

GRAPHIC #1

<END>

g02308153

527-3176 KIT-TRANSMISSION BEARING

S/N: SZS10100-UP

FIELD INSTALLATION

SMCS-3030, 3064, 7551

i06915954

NOTE	PART NUMBER	QTY	PART NAME 1 2 3 4 5 6 (PRODUCT LEVEL)	SEE PAGE
	1M-4095	1	BEARING-INNER	
	2H-6490	1	BEARING-INNER	
	3B-8921	2	BEARING-INNER	
	4M-6107	2	BEARING-INNER	
	8E-1263	3	BEARING-ROLLER	
	131-3919	4	BEARING-ROLLER	
	1M-3780	2	BUSHING	
	6Y-1895	2	BUSHING	
	6Y-2419	1	BUSHING	
	9W-6467	4	BUSHING	
	6Y-1119	2	CARRIER-SEAL	
	7T-4897	6	DISC-THRUST	
	8E-8319	16	DISC-THRUST	
	5H-8985	4	PIN-SPRING	
	9W-2029	2	RACE-THRUST BEARING	
	9W-9905	8	RING-LOCK	
	7G-4822	3	RING-SEAL	
	8E-5742	2	RING-SEAL (INTERNAL)	
	265-5287	1	RING-SEAL	
	8E-5734	2	RING-SEAL EXTENSION	
	3T-4377	2	SEAL-RING	

<END>

527-3175 KIT-TRANSMISSION GASKET

S/N: SZS10100-UP

FIELD INSTALLATION

SMCS-7555 **i06915952**

NOTE	PART NUMBER	QTY	PART NAME 1 2 3 4 5 6 (PRODUCT LEVEL)	SEE PAGE
	6Y-2425	2	CARRIER-SEAL	
	7G-4822	9	RING-SEAL	
	8E-5742	6	RING-SEAL (INTERNAL)	
	9W-9371	3	RING-SEAL	
	8E-5734	2	RING-SEAL EXTENSION	
	8E-5736	2	RING-SEAL EXTENSION	
	203-5957	1	SEAL	
	203-5958	1	SEAL	
	9X-7743	1	SEAL-LIP TYPE	
	2D-8009	3	SEAL-O-RING	
	2J-6274	1	SEAL-O-RING	
	2M-9780	2	SEAL-O-RING	
	3J-1907	1	SEAL-O-RING	
	3J-7354	1	SEAL-O-RING	
	3K-0360	1	SEAL-O-RING	
	4F-7390	1	SEAL-O-RING	
	4H-9105	1	SEAL-O-RING	
	5J-1086	1	SEAL-O-RING	
	5P-8211	1	SEAL-O-RING	
	7M-8485	1	SEAL-O-RING	
	8C-3089	1	SEAL-O-RING	
	8F-3469	14	SEAL-O-RING	
	214-7568	2	SEAL-O-RING	

<END>

7I-4610 LINES GP-LUBRICATION

S/N: SZS1-UP

PART OF 368-3025 GENERAL AR, 435-8193 HYDRAULIC AR

SMCS-5057, 7517 **i03523344**

NOTE	REF NO	GRAPHIC REF	PART NUMBER	QTY	PART NAME 1 2 3 4 5 6 (PRODUCT LEVEL)	SEE PAGE
	1	1	**3B-7733**	1	FITTING	
	2	1	**3B-6769**	2	ELBOW	
	3	1	**3B-8489**	2	FITTING-GREASE (1/8-27 PTF) (ARTICULATION HITCH)	
	4	1	**4D-7794**	1	CLIP	
	5	1	**5H-7826**	1	NIPPLE-PIPE	
I	6	1	**3G-6659**	2	HOSE AS	

I - REFER TO HYDRAULIC INFORMATION SYSTEM

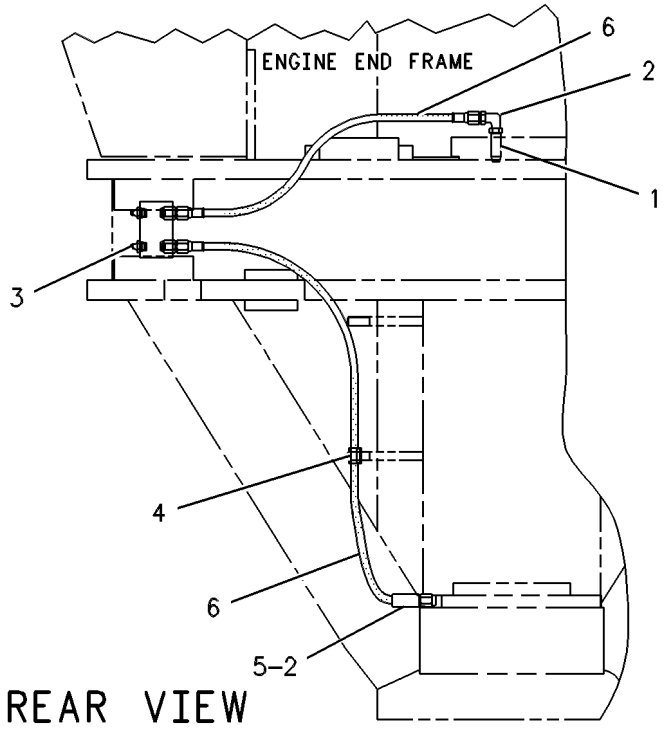

GRAPHIC #1 <END> g00109092

348-8157 LINES GP-TRANSMISSION OIL

S/N: SZS1-UP

PART OF 368-3025 GENERAL AR, 425-5590 INSTALLATION AR

SMCS-3154 **i06229244**

NOTE	REF NO	GRAPHIC REF	PART NUMBER	QTY	PART NAME 1 2 3 4 5 6 (PRODUCT LEVEL)	SEE PAGE
	1	2	**5D-1026**	2	CLAMP-BAND	
	2	2	**8T-4983**	2	CLAMP-HOSE	
	3	2	**8X-5121**	1	TUBE	
	4	2	**8X-7317**	1	HOSE	
	5	2	**8X-8916**	1	PLATE	
	6	2	**9C-5344**	1	SPACER (10.5X20X18-MM THK)	
	7	2	**005-7898**	2	CONNECTOR-HOSE	
	8	2	**113-9048**	1	BAFFLE	
	9	2	**118-0424**	1	ADAPTER	
	10	2	*164-5567*	1	COUPLER AS-QUICK DISCONNECT (MALE)	
		2	**6V-3965**	1	FITTING (QUICK DISCONNECT)	
		2	**214-7568**	1	SEAL-O-RING	
	11	2	**178-3695**	1	ADAPTER	
	12	2	*244-3712*	1	PLUG AS	
		2	**9S-4191**	1	PLUG (9/16-18-THD)	
		2	**214-7568**	1	SEAL-O-RING	
I	13	1	**443-8144**	1	HOSE AS	
	14	2	**285-6570**	1	TUBE AS	
I	15	1	**293-4285**	1	HOSE AS	
	16	2	**299-8264**	1	TUBE AS	
I	17	2	**299-8270**	1	HOSE AS	
I	18	2	**303-6032**	1	HOSE AS	
I	19	2	**316-6688**	1	HOSE AS	
	20	1	**328-3655**	1	FILTER ELEMENT AS-OIL (ADVANCED EFFICIENCY, WITH SEAL)	
Y	21	1	*333-6436*	1	FILTER GP-OIL (WITH HOUSING)	621
	22	2	**000-7246**	1	ELBOW	
	23	2	*148-8335*	2	CONNECTOR AS	
					(EACH INCLUDES)	
		2	**6V-8635**	1	CONNECTOR	
		2	**5K-9090**	1	SEAL-O-RING	
		2	**7M-8485**	1	SEAL-O-RING	
	24	1	*148-8339*	1	CONNECTOR AS	
		1	**6V-8716**	1	CONNECTOR (STRAIGHT)	
		1	**6V-9746**	1	SEAL-O-RING	
		1	**7M-8485**	1	SEAL-O-RING	
	25	1	*148-8357*	1	ELBOW AS	
		1	**6V-9008**	1	ELBOW	
		1	**5K-9090**	1	SEAL-O-RING	
		1	**7M-8485**	1	SEAL-O-RING	
	26	2	*148-8344*	2	CONNECTOR AS	
					(EACH INCLUDES)	
		2	**6V-9162**	1	CONNECTOR	
		2	**3D-2824**	1	SEAL-O-RING	
		2	**6V-9746**	1	SEAL-O-RING	
	27	2	**189-8772**	1	SPACER (11X16X35-MM THK)	
	28	2	**1L-0509**	2	BOLT (3/8-16X0.74-IN)	
	29	2	**1P-4577**	6	FLANGE-HALF	

348-8157 **LINES GP-TRANSMISSION OIL (**contd.**)** **i06229244**

NOTE	REF NO	GRAPHIC REF	PART NUMBER	QTY	PART NAME 1 2 3 4 5 6 (PRODUCT LEVEL)	SEE PAGE
	30	2	**1P-4578**	2	FLANGE-HALF	
	31	1	**242-6099**	2	CLIP	
	32	2	**4F-7389**	2	SEAL-O-RING	
	33	2	**4J-0520**	5	SEAL-O-RING	
	34	2	**4J-0522**	1	SEAL-O-RING	
	36	2	**5P-1075**	1	WASHER-HARD (10.2X22.5X3-MM THK)	
	37	2	**5P-9938**	4	BOLT-HEAD LOCKING (3/8-16X1.375-IN)	
	38	2	**6V-1889**	4	CLIP	
	39	2	**6V-9746**	2	SEAL-O-RING	
	40	2	**7X-0342**	1	BOLT (5/8-11X0.75-IN)	
M	41	2	**7X-2552**	2	BOLT (M16X2X30-MM)	
	42	2	**8C-3447**	1	CAP-DUST	
	43	2	**8M-2769**	2	CLIP	
	44	1,2	**8T-4121**	22	WASHER-HARD (11X21X2.5-MM THK)	
M	45	2	**8T-4195**	3	BOLT (M10X1.5X30-MM)	
M	46	1,2	**8T-4196**	5	BOLT (M10X1.5X35-MM)	
M	47	2	**8T-4908**	3	BOLT (M8X1.25X25-MM)	
	48	2	**8T-4224**	3	WASHER-HARD (8.8X16X2-MM THK)	
	49	2	**8T-4896**	2	WASHER-HARD (10.2X18.5X2.5-MM THK)	
M	50	2	**8T-6466**	9	BOLT (M10X1.5X60-MM)	
	51	2	**9C-9467**	1	CLIP	
	52	2	**9X-8257**	2	WASHER (17.5X30X3.5-MM THK)	
BE	53	2	**5P-0765**		HOSE (50-CM)	
M	54	1	**344-5675**	1	NUT (M10X1.5-THD)	
	55	1	**135-2145**	1	BRACKET	
M	56	1	**8T-4136**	1	BOLT (M10X1.5X25-MM)	

B - USE AS REQUIRED
E - ORDER BY THE CENTIMETER
I - REFER TO HYDRAULIC INFORMATION SYSTEM
M - METRIC PART
Y - SEPARATE ILLUSTRATION

348-8157 **LINES GP-TRANSMISSION OIL (**contd.**)** **i06229244**

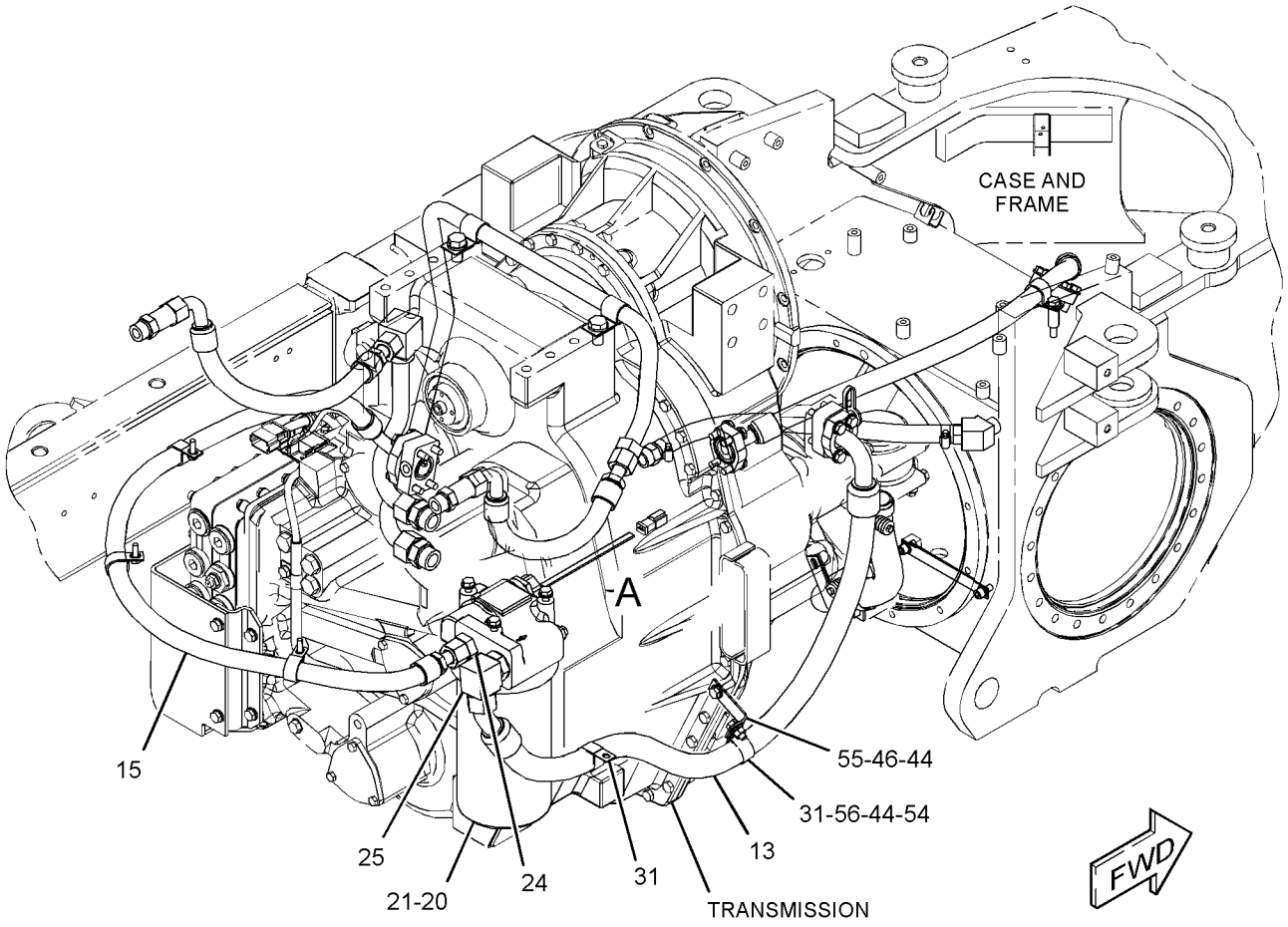

GRAPHIC #1 g03515383

348-8157 **LINES GP-TRANSMISSION OIL (**contd.**)** **i06229244**

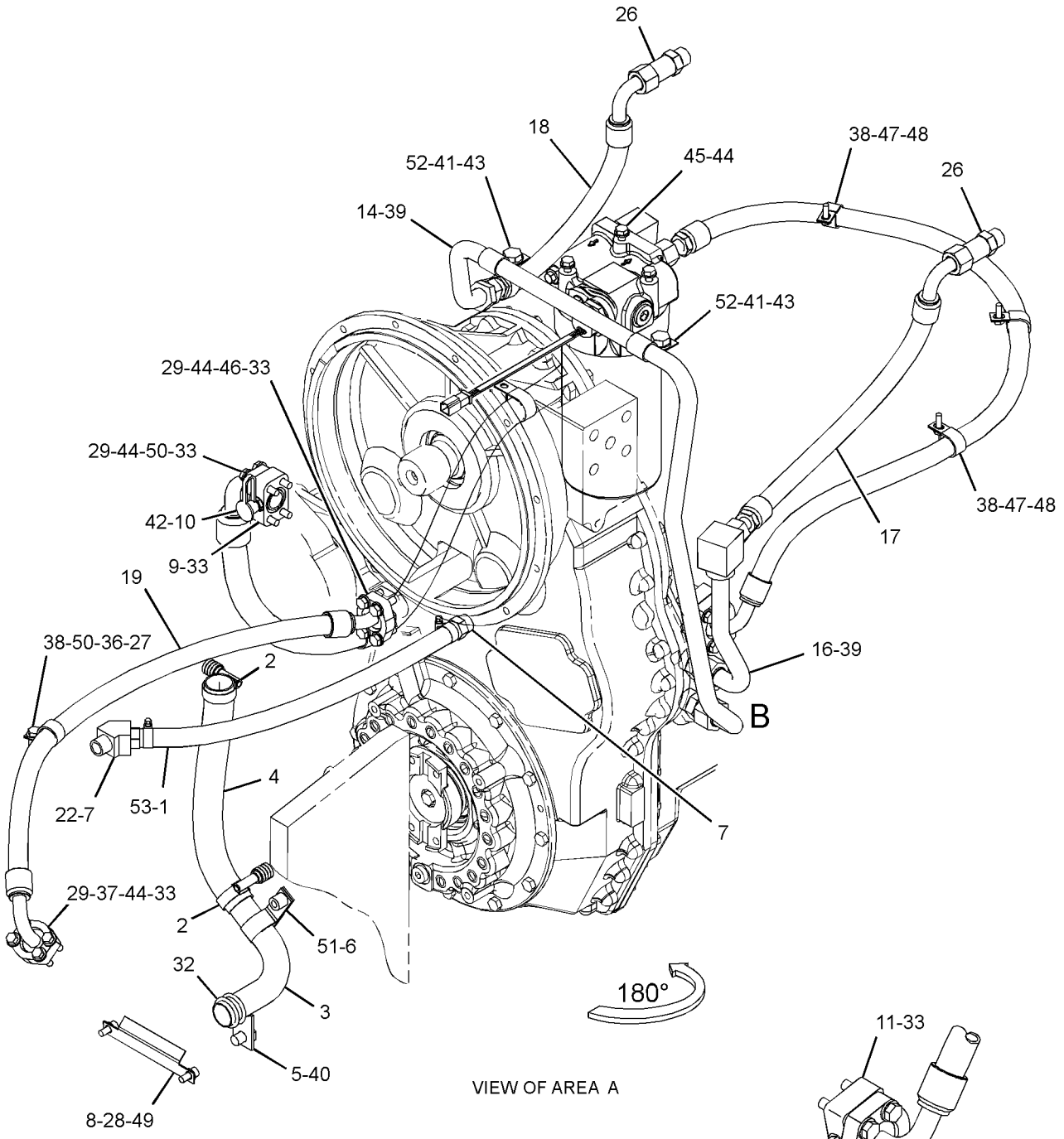

GRAPHIC #2 <END> g03863317

348-8157 LINES GP-TRANSMISSION OIL

S/N: SZS624-UP

PART OF 425-5590 INSTALLATION AR

SMCS-3154 **i06932556**

NOTE	REF NO	GRAPHIC REF	PART NUMBER	QTY	PART NAME 1 2 3 4 5 6 (PRODUCT LEVEL)	SEE PAGE
	1	2	**5D-1026**	2	CLAMP-BAND	
	2	2	**8T-4983**	2	CLAMP-HOSE	
	3	2	**8X-5121**	1	TUBE	
	4	2	**8X-7317**	1	HOSE	
	5	2	**8X-8916**	1	PLATE	
	6	2	**9C-5344**	1	SPACER (10.5X20X18-MM THK)	
	7	2	**005-7898**	2	CONNECTOR-HOSE	
	8	2	**113-9048**	1	BAFFLE	
	9	2	**118-0424**	1	ADAPTER	
	10	2	*164-5567*	1	COUPLER AS-QUICK DISCONNECT (MALE)	
		2	**6V-3965**	1	FITTING (QUICK DISCONNECT)	
		2	**214-7568**	1	SEAL-O-RING	
	11	2	**178-3695**	1	ADAPTER	
C	12	2	*244-3712*	3	PLUG AS	
					(EACH INCLUDES)	
		2	**9S-4191**	1	PLUG (9/16-18-THD)	
		2	**214-7568**	1	SEAL-O-RING	
I	13	1	**443-8144**	1	HOSE AS	
	14	2	**285-6570**	1	TUBE AS	
I	15	1	**293-4285**	1	HOSE AS	
	16	2	**299-8264**	1	TUBE AS	
I	17	2	**299-8270**	1	HOSE AS	
I	18	2	**303-6032**	1	HOSE AS	
I	19	2	**316-6688**	1	HOSE AS	
CY	21	1	*332-8833*	1	FILTER GP-OIL (MEDIUM PRESSURE) (TRANSMISSION)	620
	22	2	**000-7246**	1	ELBOW	
	23	2	*148-8335*	2	CONNECTOR AS	
					(EACH INCLUDES)	
		2	**6V-8635**	1	CONNECTOR	
		2	**5K-9090**	1	SEAL-O-RING	
		2	**7M-8485**	1	SEAL-O-RING	
	24	1	*148-8339*	1	CONNECTOR AS	
		1	**6V-8716**	1	CONNECTOR (STRAIGHT)	
		1	**6V-9746**	1	SEAL-O-RING	
		1	**7M-8485**	1	SEAL-O-RING	
	25	1	*148-8357*	1	ELBOW AS	
		1	**6V-9008**	1	ELBOW	
		1	**5K-9090**	1	SEAL-O-RING	
		1	**7M-8485**	1	SEAL-O-RING	
	26	2	*148-8344*	2	CONNECTOR AS	
					(EACH INCLUDES)	
		2	**6V-9162**	1	CONNECTOR	
		2	**3D-2824**	1	SEAL-O-RING	
		2	**6V-9746**	1	SEAL-O-RING	
	27	2	**189-8772**	1	SPACER (11X16X35-MM THK)	
	28	2	**1L-0509**	2	BOLT (3/8-16X0.74-IN)	
	29	2	**1P-4577**	6	FLANGE-HALF	
	30	2	**1P-4578**	2	FLANGE-HALF	

348-8157 **LINES GP-TRANSMISSION OIL (**contd.**)** **i06932556**

NOTE	REF NO	GRAPHIC REF	PART NUMBER	QTY	PART NAME 1 2 3 4 5 6 (PRODUCT LEVEL)	SEE PAGE
	31	1	**242-6099**	2	CLIP	
	32	2	**4F-7389**	2	SEAL-O-RING	
	33	2	**4J-0520**	5	SEAL-O-RING	
	34	2	**4J-0522**	1	SEAL-O-RING	
	36	2	**5P-1075**	1	WASHER-HARD (10.2X22.5X3-MM THK)	
	37	2	**5P-9938**	4	BOLT-HEAD LOCKING (3/8-16X1.375-IN)	
	38	2	**6V-1889**	4	CLIP	
	39	2	**6V-9746**	2	SEAL-O-RING	
	40	2	**7X-0342**	1	BOLT (5/8-11X0.75-IN)	
M	41	2	**7X-2552**	2	BOLT (M16X2X30-MM)	
	42	2	**8C-3447**	1	CAP-DUST	
	43	2	**8M-2769**	2	CLIP	
C	44	1,2	**8T-4121**	23	WASHER-HARD (11X21X2.5-MM THK)	
CM	45	2	**8T-4195**	4	BOLT (M10X1.5X30-MM)	
M	46	1,2	**8T-4196**	5	BOLT (M10X1.5X35-MM)	
M	47	2	**8T-4908**	3	BOLT (M8X1.25X25-MM)	
	48	2	**8T-4224**	3	WASHER-HARD (8.8X16X2-MM THK)	
	49	2	**8T-4896**	2	WASHER-HARD (10.2X18.5X2.5-MM THK)	
M	50	2	**8T-6466**	9	BOLT (M10X1.5X60-MM)	
	51	2	**9C-9467**	1	CLIP	
	52	2	**9X-8257**	2	WASHER (17.5X30X3.5-MM THK)	
BE	53	2	**5P-0765**		HOSE (50-CM)	
M	54	1	**344-5675**	1	NUT (M10X1.5-THD)	
	55	1	**135-2145**	1	BRACKET	
M	56	1	**8T-4136**	1	BOLT (M10X1.5X25-MM)	
C	57	2	**5P-7701**	2	SEAL-O-RING	
C	58	1	**6V-6609**	2	SEAL-O-RING	
C	59	2	**9S-4181**	2	PLUG (1-5/16-12-THD)	
C	60	1	**9S-4185**	2	PLUG (3/4-16-THD)	

B - USE AS REQUIRED
C - CHANGE FROM PREVIOUS TYPE
E - ORDER BY THE CENTIMETER
I - REFER TO HYDRAULIC INFORMATION SYSTEM
M - METRIC PART
Y - SEPARATE ILLUSTRATION

348-8157 **LINES GP-TRANSMISSION OIL (**contd.**)** **i06932556**

REFER TO ALL ILLUSTRATIONS OF
THIS GROUP FOR AUXILIARY VIEWS

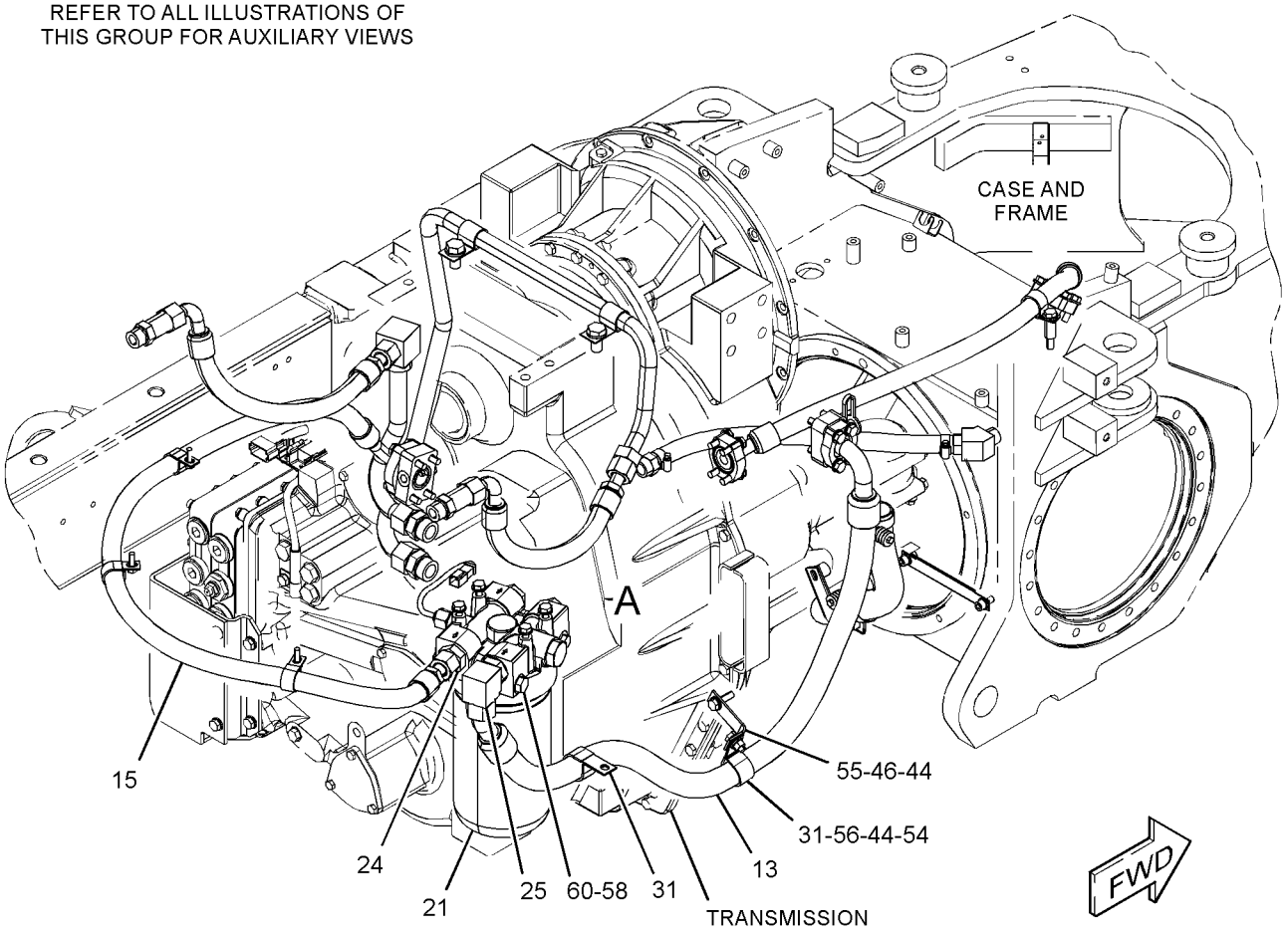

GRAPHIC #1 g06169995

348-8157 **LINES GP-TRANSMISSION OIL (**contd.**)** **i06932556**

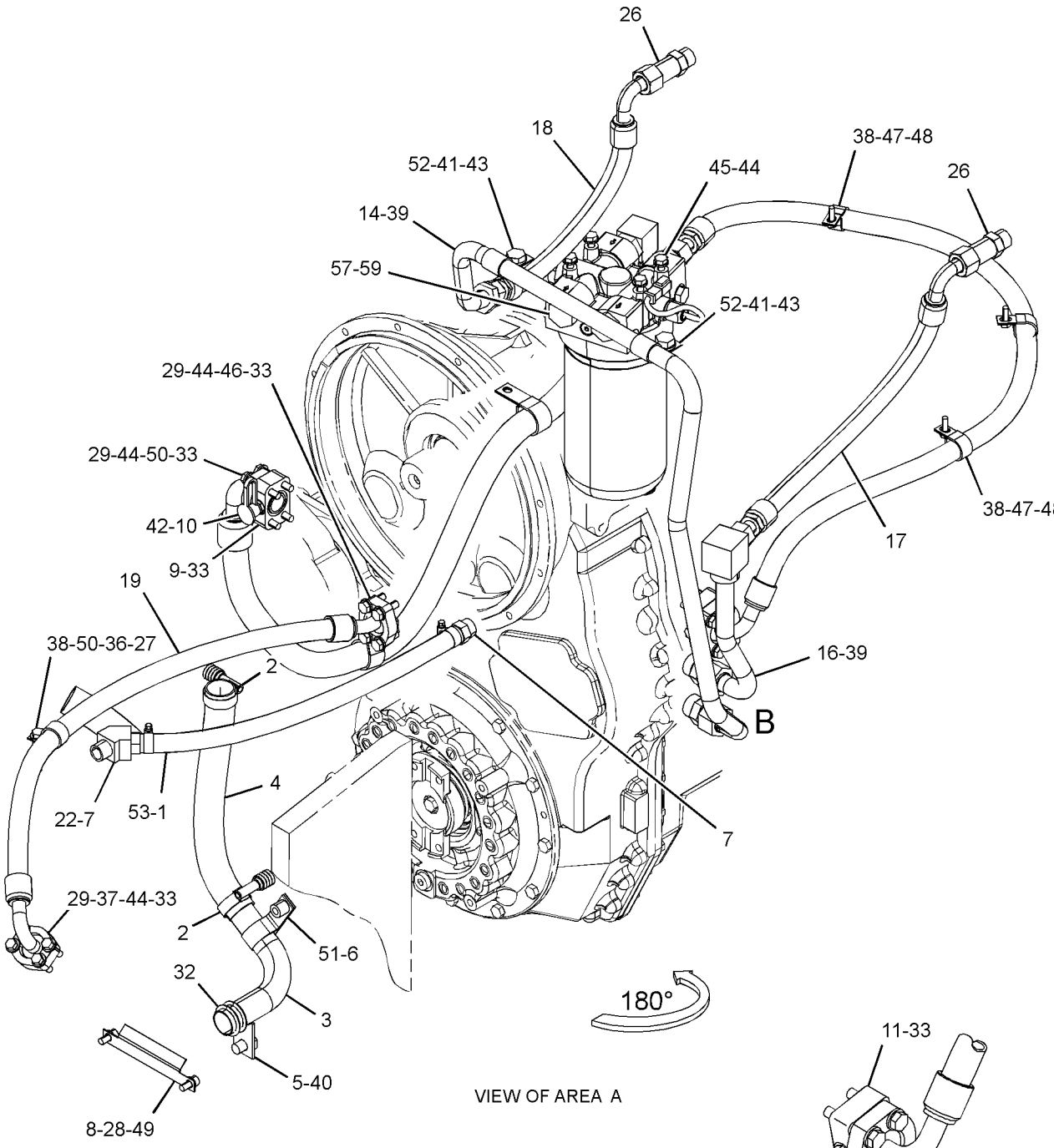

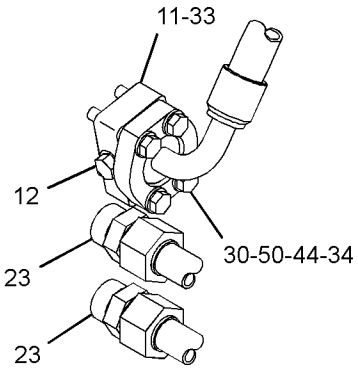

VIEW OF AREA B
(PARTS REMOVED FOR CLARITY)

GRAPHIC #2 <END> g06169997

337-0732 MOUNTING GP-WHEEL

S/N: SZS1-UP

PART OF 368-3025 GENERAL AR, 436-8767 POWER TRAIN AR

SMCS-4201 **i03624639**

NOTE	REF NO	GRAPHIC REF	PART NUMBER	QTY	PART NAME 1 2 3 4 5 6 (PRODUCT LEVEL)	SEE PAGE
	1	1	**267-3507**	60	WASHER-HARD (26X47X12-MM THK)	
	2	1	**338-8484**	60	BOLT (7/8-9X2.5-IN)	

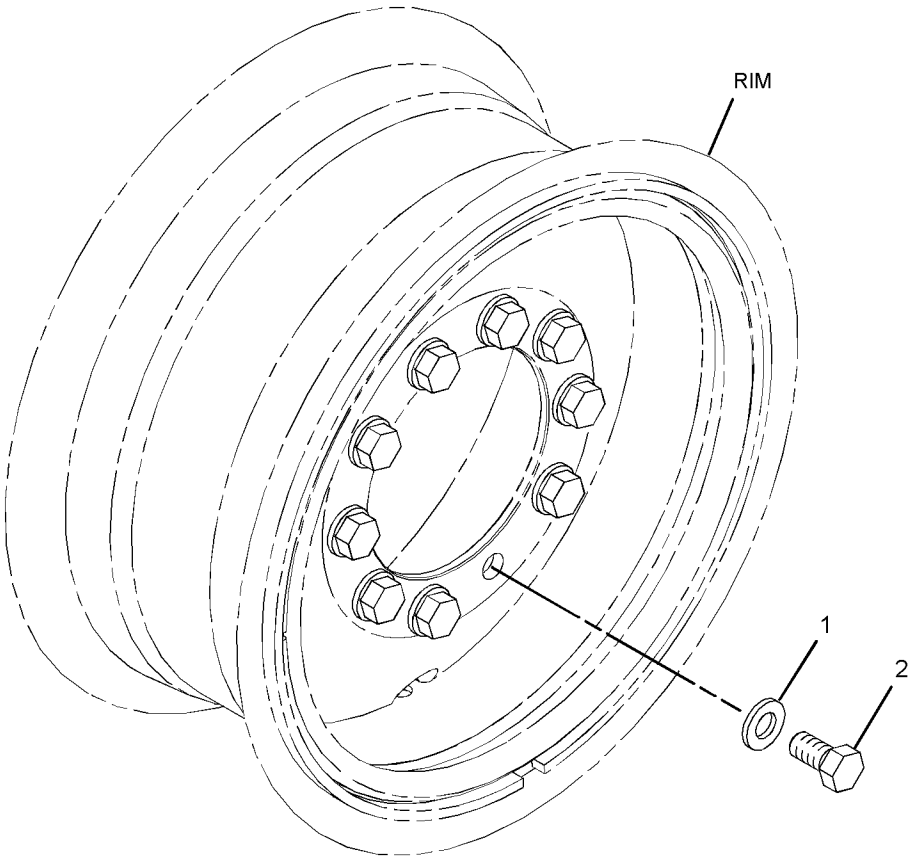

GRAPHIC #1 <END> g01841155

436-8767 POWER TRAIN AR

S/N: SZS624-UP

PART OF 435-1521 COMMON AR

SMCS-3000, 4000

i06196590

NOTE	PART NUMBER	QTY	PART NAME 1 2 3 4 5 6 (PRODUCT LEVEL)	SEE PAGE
Y	*134-1080*	1	AXLE GP-FRONT	577
Y	*351-0580*	1	BRAKE GP-SERVICE	748
Y	*453-0259*	1	CHAIN GP-DRIVE	591
Y	*348-4955*	1	DIFFERENTIAL & BEVEL GEAR GP	613
Y	*8W-4980*	1	DRIVE GP-FINAL	617
Y	*337-0732*	1	MOUNTING GP-WHEEL	635
Y	*8W-5621*	1	SHAFT GP-DRIVE	641
Y	*293-8638*	1	SHAFT GP-PUMP DRIVE	900
Y	*193-1721*	1	TANDEM & COVER GP	643

Y - SEPARATE ILLUSTRATION

<END>

6Y-8764 PUMP GP-GEAR*R

S/N: CK41-UP; JSE1-UP; DMJ1-UP
2-SECTION
PART OF 6Y-8765 PUMP GP-GEAR

SMCS-3066, 3115, 3203, 5073 **i03533141**

NOTE	REF NO	GRAPHIC REF	PART NUMBER	QTY	PART NAME 1 2 3 4 5 6 (PRODUCT LEVEL)	SEE PAGE
	1	1	**9N-4163**	1	COVER AS-PUMP	
	1A	1	**1M-3780**	2	BUSHING	
	2	1	**9N-4161**	1	GEAR AS-OIL PUMP (12-TEETH)	
	3	1	**9N-4162**	1	GEAR AS-OIL PUMP (12-TEETH)	
	4	1	**9N-4159**	1	BODY AS-OIL PUMP	
	4A	1	**1M-3780**	2	BUSHING	
	5	1	**9N-4156**	1	MANIFOLD AS-PUMP	
		1	**9N-4155**	1	ADAPTER	
		1	**8M-8489**	2	DOWEL	
	6	1	**5S-4385**	1	BODY AS-OIL PUMP	
		1	**8M-8489**	4	DOWEL	
	7	1	**9N-4158**	2	GEAR (8-TEETH)	
	8	1	**2B-9373**	1	KEY-WOODRUFF	
	9	1	**2D-8009**	3	SEAL-O-RING	
	10	1	**3S-0004**	6	WASHER (0.406X0.728X0.09-IN THK)	
M	11	1	**8T-5030**	2	BOLT (M10X1.5X120-MM)	
	12	1	**6Y-5010**	8	WASHER (10.16X19X0.84-MM THK)	
M	13	1	**8C-2926**	4	BOLT (M10X1.5X140-MM)	
F			**7B-3028**		SCREW-DRIVE (NO 4X 3/16-IN)	
					PARTS SHOWN IN GRAPHIC(S) WITHOUT A REFERENCE NUMBER ARE NOT SERVICED SEPARATELY	

F - NOT SHOWN
M - METRIC PART

6Y-8764 **PUMP GP-GEAR** (contd.) **i03533141**

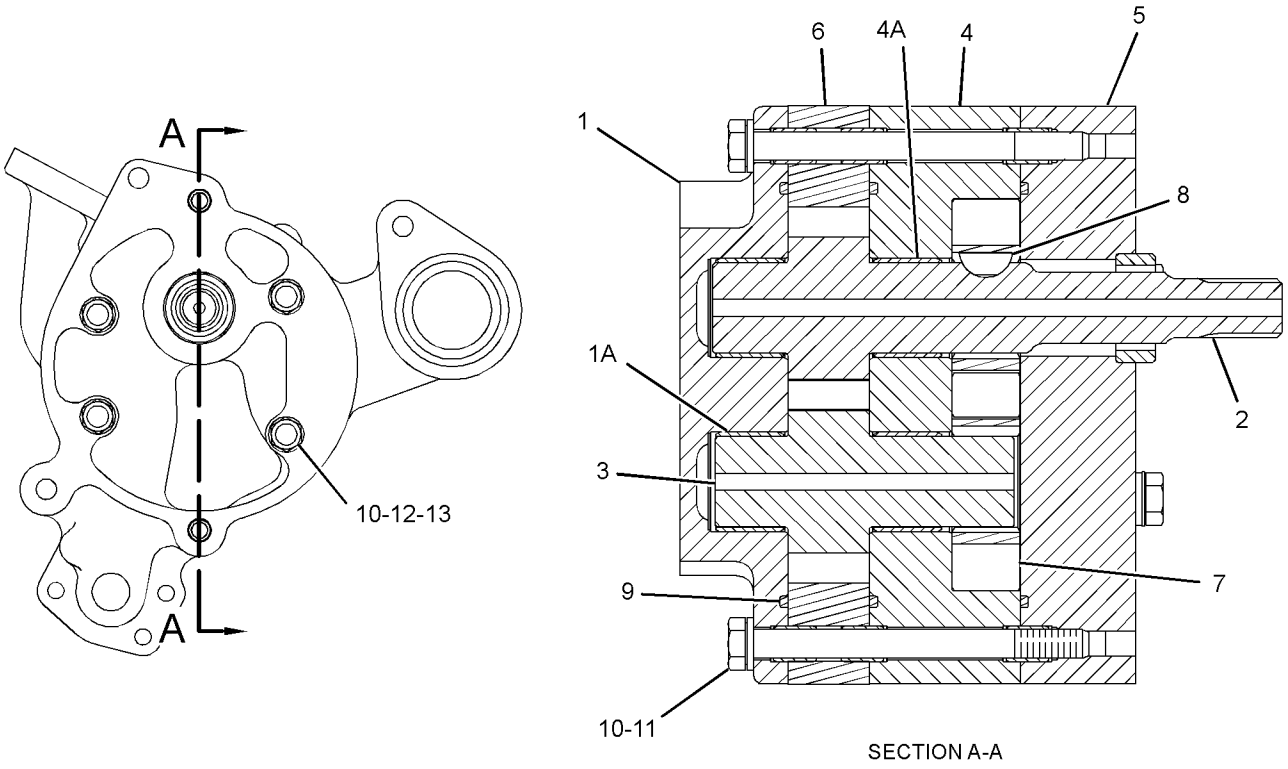

SECTION A-A

GRAPHIC #1 <END> g01943707

6Y-8765 PUMP GP-GEAR–TRANSMISSION

S/N: CK41-UP; JSE1-UP; DMJ1-UP
2-SECTION
PART OF 275-6535, 365-6500 TRANSMISSION AR

SMCS-3066, 3115, 3203, 5073 **i05077259**

NOTE	REF NO	GRAPHIC REF	PART NUMBER	QTY	PART NAME 1 2 3 4 5 6 (PRODUCT LEVEL)	SEE PAGE
YR	1	1	**6Y-8764**	1	PUMP GP-GEAR (TRANSMISSION)	637
	2	1	**4F-7952**	1	SEAL-O-RING	
	3	1	**7F-8268**	1	SEAL-O-RING	
M	4	1	**6V-1820**	3	BOLT (M10X1.5X30-MM)	

M - METRIC PART
R - REMANUFACTURED PART MAY BE AVAILABLE
Y - SEPARATE ILLUSTRATION

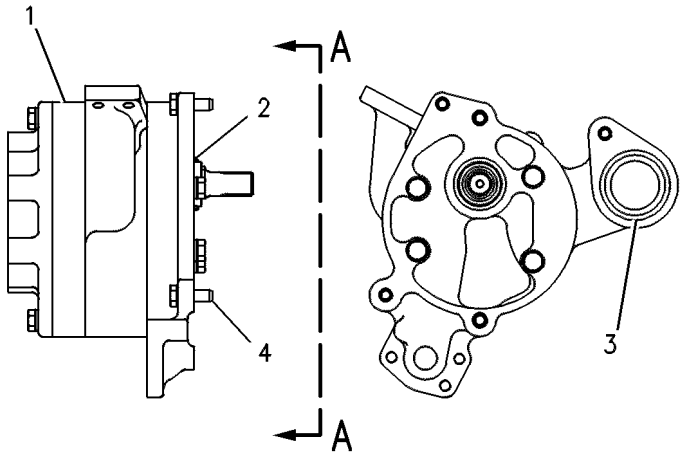

VIEW A–A

GRAPHIC #1 <END> g00108547

9W-5134 SCREEN GP-MAGNETIC—TRANSMISSION

S/N: CK41-UP; JSE1-UP; DMJ1-UP

PART OF 275-6535, 365-6500 TRANSMISSION AR

SMCS-3067 **i03532640**

NOTE	REF NO	GRAPHIC REF	PART NUMBER	QTY	PART NAME 1 2 3 4 5 6 (PRODUCT LEVEL)	SEE PAGE
	1	1	**325-9697**	1	COVER AS	
	2	1	**6Y-3860**	1	HOUSING-FILTER	
	3	1	**8S-9130**	1	SCREEN-SUCTION (TRANSMISSION)	
	4	1	**8S-9129**	1	FILTER-MAGNETIC (TRANSMISSION)	
	5	1	**8C-3089**	1	SEAL-O-RING	
M	6	1	**6V-2317**	3	BOLT (M8X1.25X30-MM)	
	7	1	**5P-8211**	1	SEAL-O-RING	
M	8	1	**8T-0355**	3	BOLT (M10X1.5X110-MM)	

M - METRIC PART

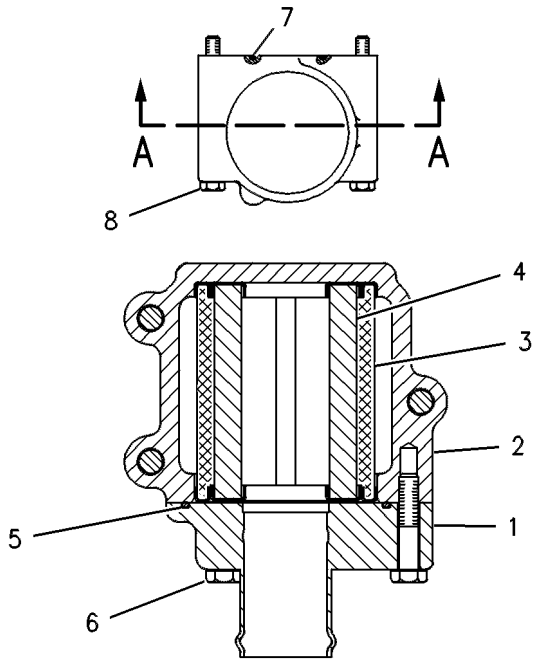

VIEW A–A

GRAPHIC #1 <END> g00108551

8W-5621 SHAFT GP-DRIVE–TRANSMISSION

S/N: SZS1-UP

PART OF 368-3025 GENERAL AR, 436-8767 POWER TRAIN AR

SMCS-3253 **i05064969**

NOTE	REF NO	GRAPHIC REF	PART NUMBER	QTY	PART NAME 1 2 3 4 5 6 (PRODUCT LEVEL)	SEE PAGE
	1	1	**3K-0196**	1	GUARD	
	2	1	**8W-1592**	1	YOKE AS	
		1	**3K-0986**	1	PLUG	
Y	3	1	**8X-5006**	1	UNIVERSAL JOINT GP (MAIN DRIVE SHAFT)	647
	4	1	**0S-1604**	4	BOLT (1/2-20X2.5-IN)	
	5	1	**5P-7213**	4	WASHER-HARD (13.5X20.5X2-MM THK)	
	6	1	**6B-6684**	4	NUT-FULL (1/2-20-THD)	
	7	1	**6V-1911**	4	BOLT-LOCKING (1/2-20X2-IN)	

Y - SEPARATE ILLUSTRATION

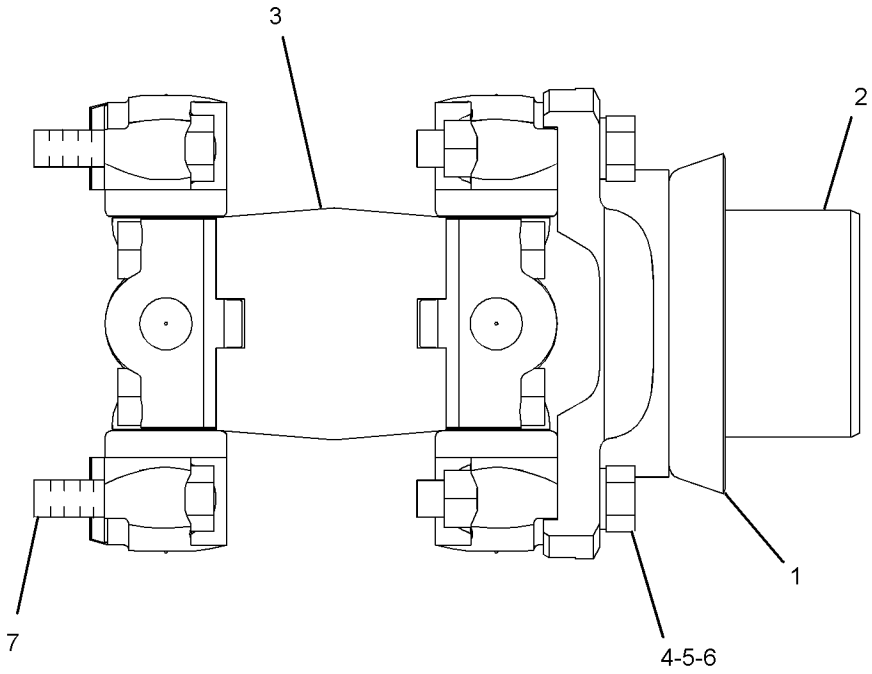

GRAPHIC #1 <END> g01923053

6Y-2300 SHAFT GP-INPUT

S/N: CK41-UP; JSE1-UP; DMJ1-UP

PART OF 275-6535, 365-6500 TRANSMISSION AR

SMCS-3063 **i03532982**

NOTE	REF NO	GRAPHIC REF	PART NUMBER	QTY	PART NAME 1 2 3 4 5 6 (PRODUCT LEVEL)	SEE PAGE
	1	1	**6Y-1870**	1	SHAFT AS-INPUT	
	2	1	**0L-1026**	1	PLUG-CUP	
	3	1	**6Y-0591**	1	GEAR (45-TEETH)	
	4	1	**6Y-0590**	1	GEAR (38-TEETH)	
	5	1	**2H-6490**	1	BEARING-INNER	
	6	1	**1M-4095**	1	BEARING-INNER	
	7	1	**3T-4377**	2	SEAL-RING	

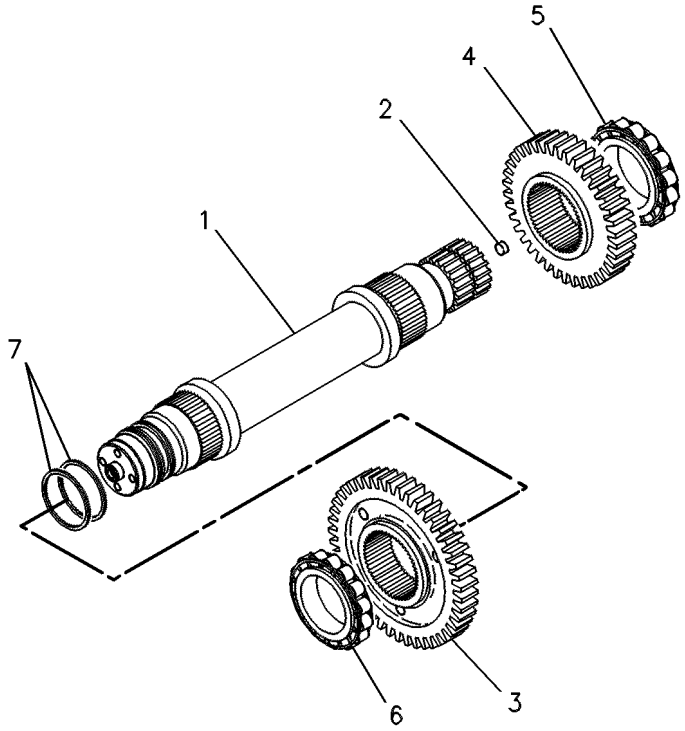

GRAPHIC #1 <END> g00108544

193-1721 TANDEM & COVER GP

S/N: SZS1-UP

PART OF 368-3025 GENERAL AR, 436-8767 POWER TRAIN AR

SMCS-4062, 4064 **i06917211**

NOTE	REF NO	GRAPHIC REF	PART NUMBER	QTY	PART NAME 1 2 3 4 5 6 (PRODUCT LEVEL)	SEE PAGE
	1	1	**2A-6938**	2	COVER	
	2	1	**2B-3147**	8	GASKET	
C	3	1	**2B-3148**	6	COVER	
	4	1	**2G-9789**	4	GASKET	
	5	1	**0S-1621**	48	BOLT (1/2-13X1-IN)	
	6	1	**392-0184**	1	HOUSING AS-TANDEM DRIVE (RH)	
	7	1	**392-0185**	1	HOUSING AS-TANDEM DRIVE (LH)	
C	8	1	**248-1377**	2	COVER AS	
					(EACH INCLUDES)	
		1	**6B-5072**	1	BUSHING-REDUCER	
		1	**002-6453**	1	ELBOW	
		1	**4H-6112**	1	BREATHER (TANDEM HOUSING)	
	9	1	**2G-9791**	2	GASKET	
	10	1	**2M-9780**	2	SEAL-O-RING	
	12	1	**3K-0360**	2	SEAL-O-RING	
	13	1	**5P-8245**	32	WASHER-HARD (13.5X25.5X3-MM THK)	
	14	1	**304-8032**	2	PLUG-MAGNETIC	
	15	1	**252-0964**	4	PLATE	
	16	1	**9S-4190**	2	PLUG-O-RING (7/8-14-THD)	

C - CHANGE FROM PREVIOUS TYPE

193-1721 **TANDEM & COVER GP** (contd.) **i06917211**

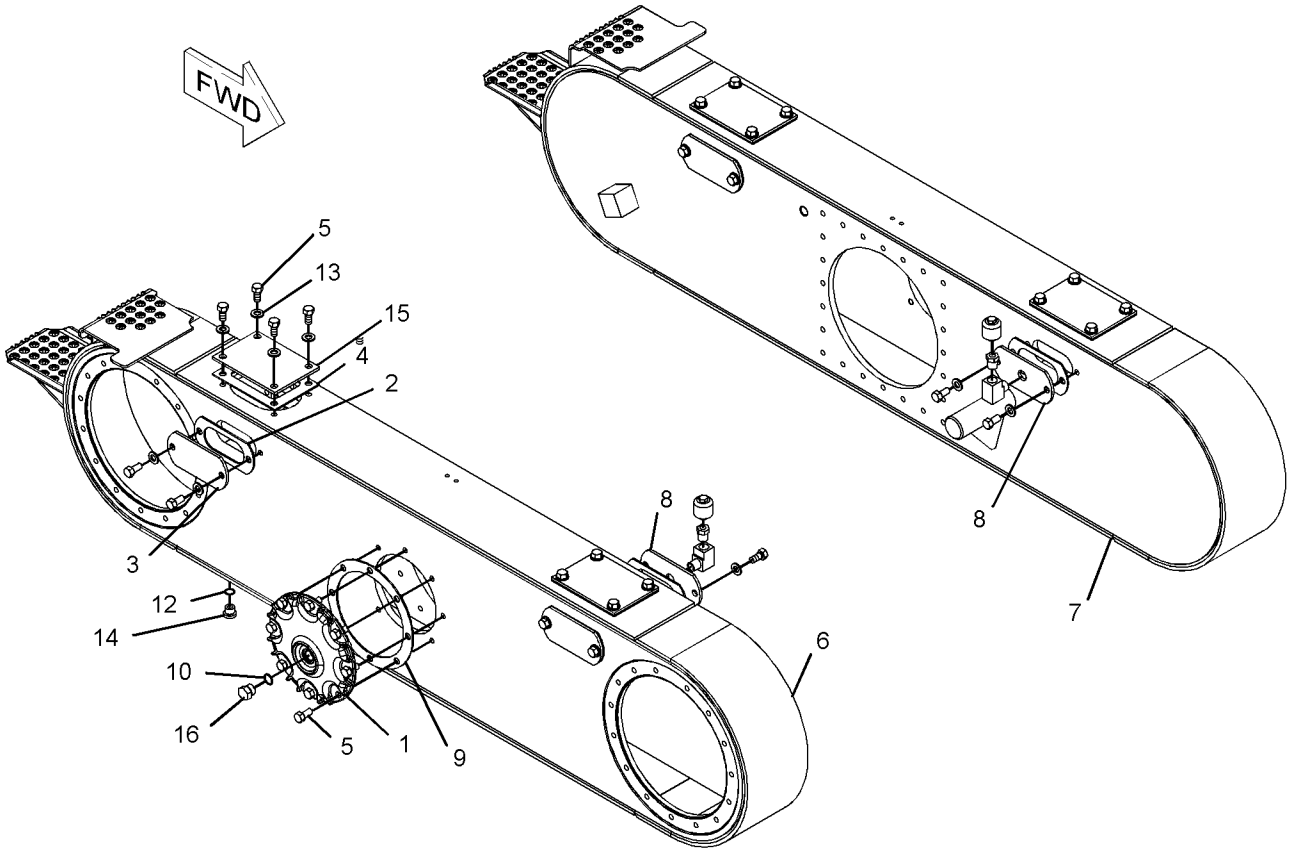

GRAPHIC #1 <END> g02976998

275-6535 TRANSMISSION AR

S/N: DMJ1-UP

PART OF 368-3025 GENERAL AR

SMCS-3030 **i04269578**

NOTE	REF NO	GRAPHIC REF	PART NUMBER	QTY	PART NAME 1 2 3 4 5 6 (PRODUCT LEVEL)	SEE PAGE
Y	1	1	*6Y-2300*	1	SHAFT GP-INPUT	642
Y	2	1	*235-2412*	1	CLUTCH GP-TRANSMISSION (FORWARD)	592
Y	3	1	*235-2413*	1	CLUTCH GP-TRANSMISSION (REVERSE, 2ND)	594
Y	4	1	*6Y-2303*	1	CLUTCH GP-TRANSMISSION (FIRST, THIRD)	596
Y	5	1	*8E-9316*	1	CLUTCH GP-TRANSMISSION (HIGH, LOW)	598
Y	6	1	*277-6433*	1	CASE & PARTS GP-PLANETARY	581
Y	7	1	*9W-5132*	1	BRAKE GP-PARKING	746
Y	8	1	*9W-5134*	1	SCREEN GP-MAGNETIC (TRANSMISSION)	640
Y	9	1	*6Y-8765*	1	PUMP GP-GEAR (TRANSMISSION)	639
Y	10	1	*281-3165*	1	CONTROL GP-TRANSMISSION HYD	604

Y - SEPARATE ILLUSTRATION

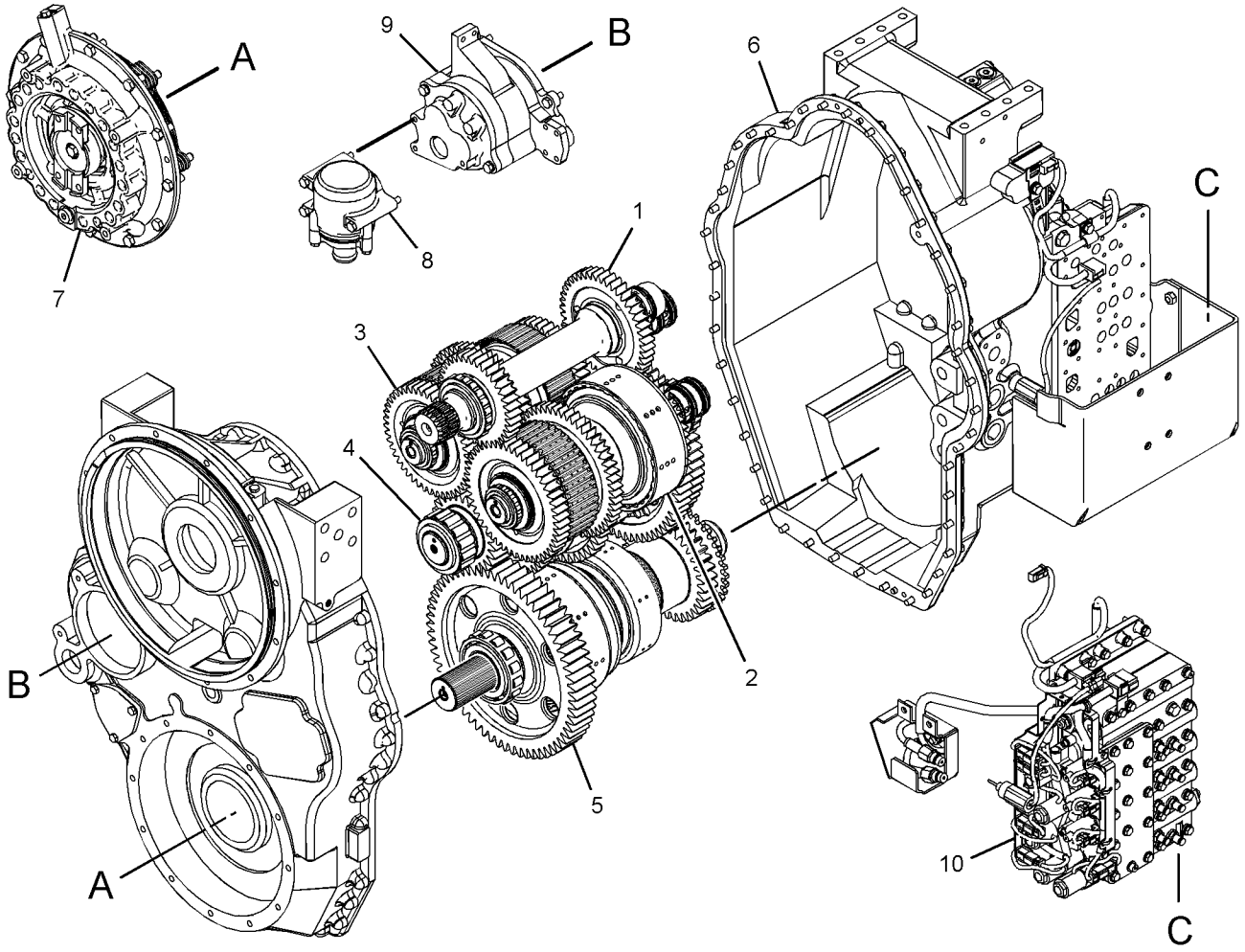

GRAPHIC #1 <END> g01770733

365-6500 TRANSMISSION AR

S/N: CK41-UP; JSE1-UP

PART OF 435-1521 COMMON AR, 368-3025 GENERAL AR

SMCS-3030 **i05313950**

NOTE	PART NUMBER	QTY	PART NAME 1 2 3 4 5 6 (PRODUCT LEVEL)	SEE PAGE
Y	*9W-5132*	1	BRAKE GP-PARKING	746
Y	*365-5536*	1	CASE & PARTS GP-PLANETARY	586
Y	*6Y-2303*	1	CLUTCH GP-TRANSMISSION (FIRST, THIRD)	596
Y	*8E-9316*	1	CLUTCH GP-TRANSMISSION (HIGH, LOW)	598
Y	*235-2412*	1	CLUTCH GP-TRANSMISSION (FORWARD)	592
Y	*235-2413*	1	CLUTCH GP-TRANSMISSION (REVERSE, 2ND)	594
Y	*365-5537*	1	CONTROL GP-TRANSMISSION HYD	606
Y	*6Y-8765*	1	PUMP GP-GEAR	639
Y	*9W-5134*	1	SCREEN GP-MAGNETIC (TRANSMISSION)	640
Y	*6Y-2300*	1	SHAFT GP-INPUT	642

Y - SEPARATE ILLUSTRATION

<END>

8X-5006 UNIVERSAL JOINT GP

S/N: SZS1-UP

PART OF 8W-5621 SHAFT GP-DRIVE

SMCS-3251, 3253

i03854569

NOTE	REF NO	GRAPHIC REF	PART NUMBER	QTY	PART NAME 1 2 3 4 5 6 (PRODUCT LEVEL)	SEE PAGE
	1	1	**8X-5044**	1	PLATE-COUPLING	
	2	1	**9P-0356**	2	SPIDER & BEARING AS	
	3	1	**0S-1579**	8	BOLT (1/2-20X2-IN)	

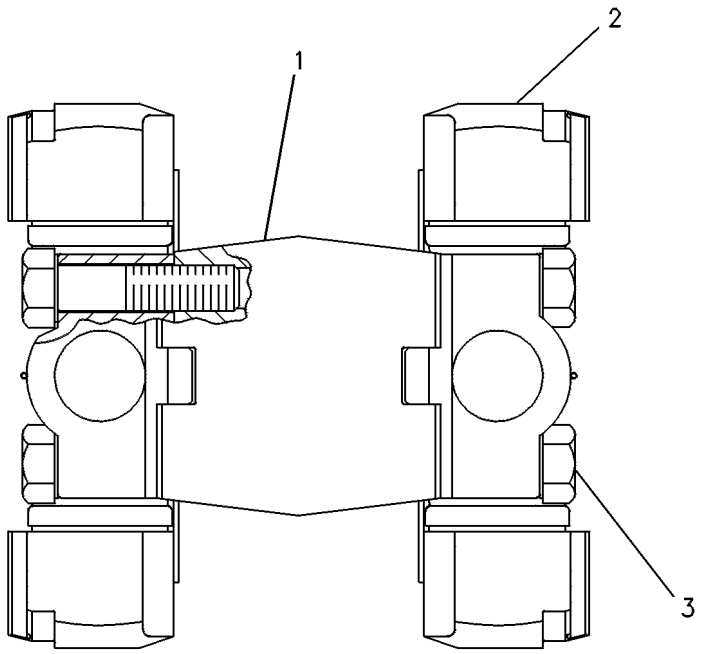

GRAPHIC #1

<END>

g00108712

174-3705 VALVE & MTG GP-DIFF LOCK

S/N: SZS1-1013

24-VOLT

PART OF 303-3011 CONTROL GP-DIFFERENTIAL LOCK

SMCS-3272 **i03568420**

NOTE	REF NO	GRAPHIC REF	PART NUMBER	QTY	PART NAME 1 2 3 4 5 6 (PRODUCT LEVEL)	SEE PAGE
	1	1	**6G-5979**	1	KIT-SEAL (DIFFERENTIAL LOCK)	
					(INCLUDES O-RINGS)	
Y	2	1	**154-3064**	1	VALVE GP-SOLENOID (DIFFERENTIAL LOCK)	658
	3	1	**148-2516**	1	MANIFOLD	

Y - SEPARATE ILLUSTRATION

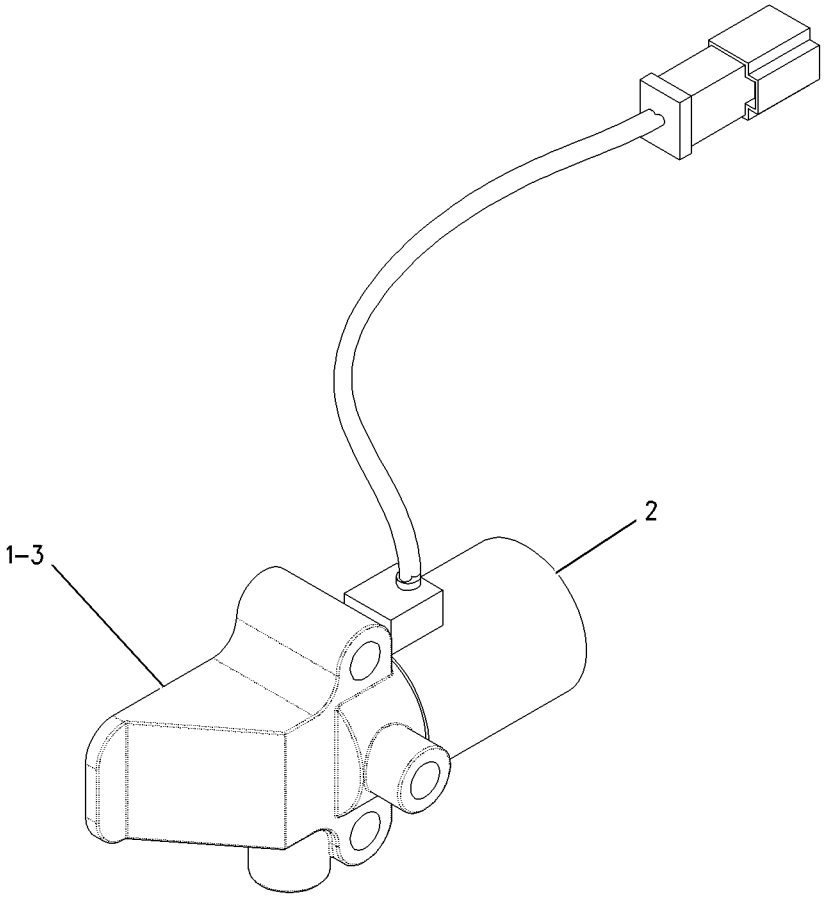

GRAPHIC #1 <END> g00806911

482-4544 VALVE & MTG GP-SOLENOID

S/N: SZS1014-UP

PART OF 303-3011 CONTROL GP-DIFFERENTIAL LOCK

SMCS-5479 **i06843107**

NOTE	REF NO	GRAPHIC REF	PART NUMBER	QTY	PART NAME 1 2 3 4 5 6 (PRODUCT LEVEL)	SEE PAGE
	1	1	**481-6936**	1	VALVE AS-SOLENOID (DIFFERENTIAL LOCK)	
		1	**3E-6780**	1	SEAL-O-RING	
		1	**6V-5758**	1	SEAL-O-RING	
		1	**033-6043**	1	SEAL-O-RING	
		1	**206-9296**	1	SEAL-O-RING	
	2	1	**472-0205**	1	HARNESS AS-WIRING	
		1	**1S-9593**	1	STRAP-CABLE	
		1	**102-8802**	1	KIT-RECEPTACLE (2-PIN)	
					(INCLUDES RECEPTACLE AS & WEDGE)	
		1	**8T-8729**	2	PIN-CONNECTOR (16-GA TO 18-GA)	
		1	**8T-8730**	2	SOCKET-CONNECTOR (16-GA TO 18-GA)	
		1	**155-2270**	1	KIT-CONNECTING PLUG (2-PIN)	
					(INCLUDES PLUG AS, WEDGE, & INTERFACE SEAL)	
M	3	1	**7I-2272**	2	BOLT (M5X0.8X12-MM)	

M - METRIC PART

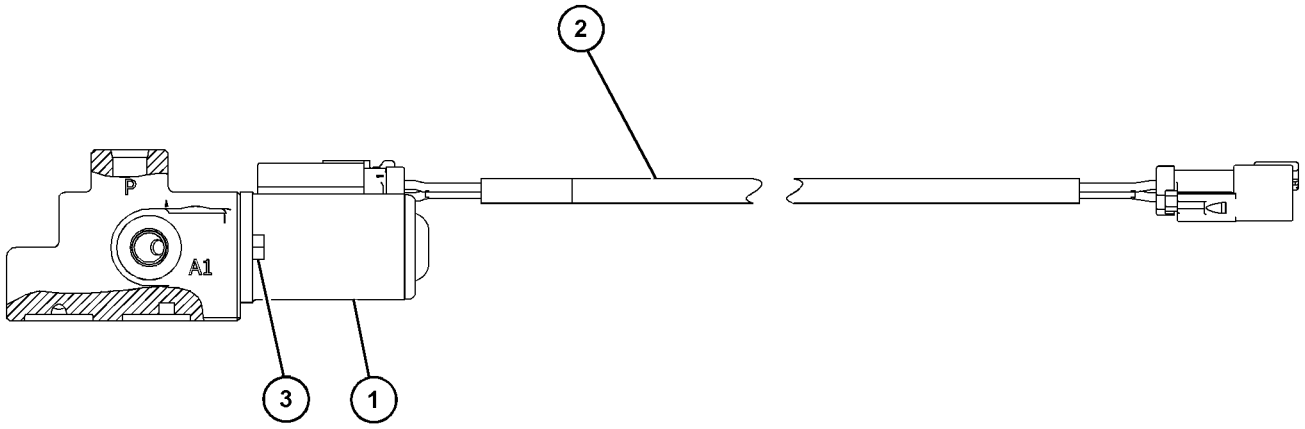

GRAPHIC #1 <END> g06174808

365-5531 VALVE GP-RELIEF

S/N: CK41-UP; JSE1-UP

PART OF 365-5537 CONTROL GP-TRANSMISSION HYD

SMCS-3133 **i05077593**

NOTE	REF NO	GRAPHIC REF	PART NUMBER	QTY	PART NAME 1 2 3 4 5 6 (PRODUCT LEVEL)	SEE PAGE
	1	1	**2S-5835**	1	PISTON-LOAD	
	2	1	**6V-0852**	1	CAP-DUST	
	4	1	**8E-1143**	1	SLUG	
	5	1	**9M-2110**	1	COVER-ADJUSTMENT	
	6	1	**115-4550**	1	COVER	
	7	1	**172-7966**	1	BODY	
	8	1	**172-7968**	1	SPOOL AS	
		1	**3D-8317**	1	RING-RETAINING	
		1	**4B-9880**	1	BALL	
		1	**4M-2381**	1	SPRING	
		1	**9U-8669**	1	RETAINER	
	9	1	**174-7449**	1	SPRING	
	10	1	*241-6218*	1	PLUG AS	
		1	**3K-0360**	1	SEAL-O-RING	
		1	**241-6205**	1	PLUG	
	12	1	*162-0177*	1	PLUG AS	
		1	**3J-1907**	1	SEAL-O-RING	
		1	**9S-8004**	1	PLUG (9/16-18-THD)	
	13	1	*164-5567*	1	COUPLER AS-QUICK DISCONNECT (MALE)	
		1	**6V-3965**	1	FITTING (QUICK DISCONNECT)	
		1	**214-7568**	1	SEAL-O-RING	
	14	1	**2S-4663**	1	SEAL-O-RING	
	15	1	*315-9835*	1	ELBOW AS	
		1	**6V-0484**	1	ELBOW	
		1	**214-7568**	1	SEAL-O-RING	
	16	1	**4M-5905**	1	SCREW-ADJUSTMENT (5/16-18X1-IN)	
M	17	1	**6V-3940**	2	BOLT (M8X1.25X25-MM)	
M	18	1	**6V-5218**	2	BOLT (M8X1.25X35-MM)	
	19	1	**8M-5253**	1	SEAL-O-RING	
	20	1	**9M-1974**	2	WASHER-HARD (8.8X16X2-MM THK)	

M - METRIC PART

365-5531 **VALVE GP-RELIEF (**contd.**)** **i05077593**

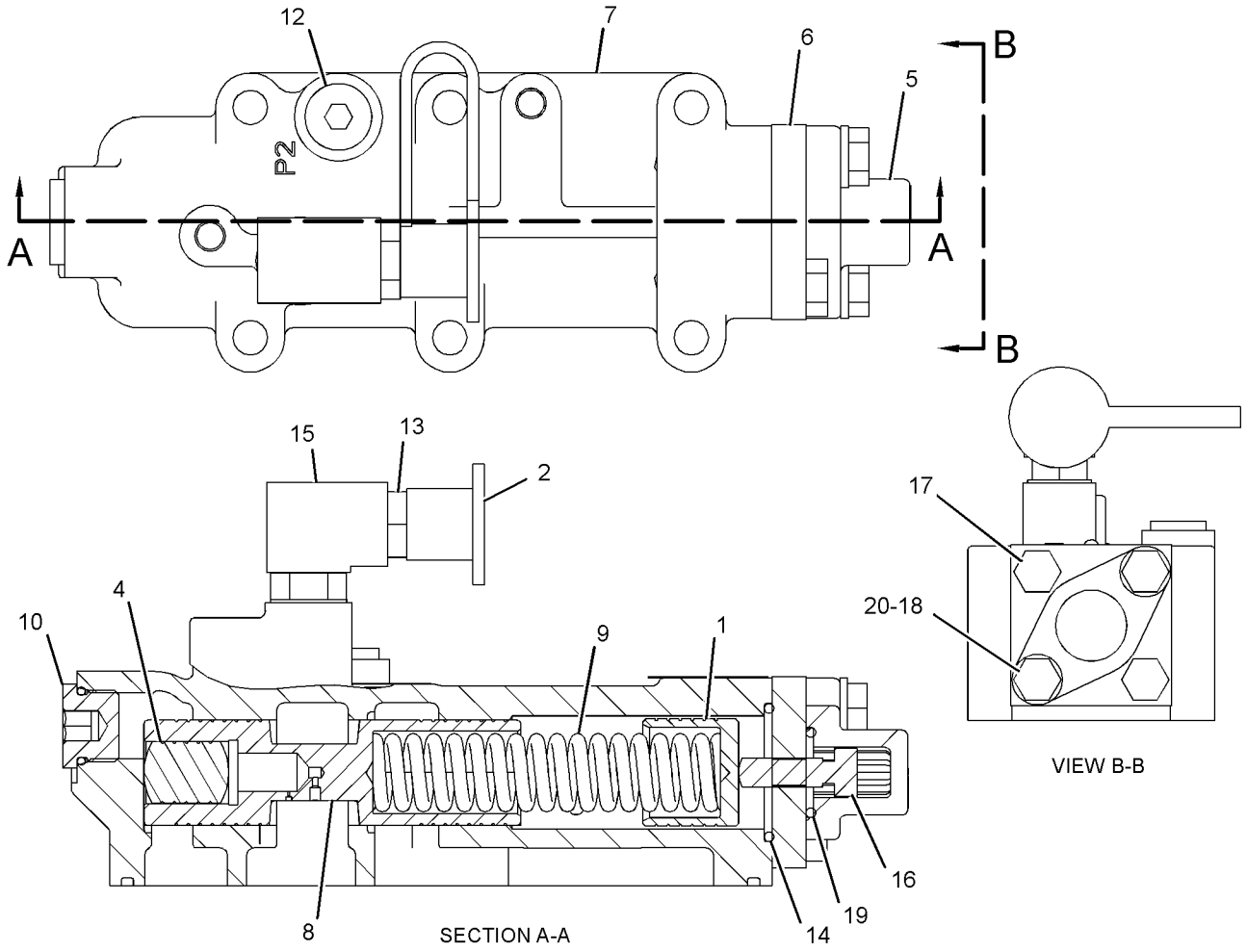

GRAPHIC #1 <END> g03323507

184-1130 VALVE GP-SELECTOR & PRESS CONT

S/N: DMJ1-UP

PART OF 281-3163 VALVE GP-TRANSMISSION CONTROL

SMCS-3083 **i04269589**

NOTE	REF NO	GRAPHIC REF	PART NUMBER	QTY	PART NAME 1 2 3 4 5 6 (PRODUCT LEVEL)	SEE PAGE
	1	1	**154-6309**	1	BODY	
M	2	1	**6V-5683**	5	BOLT (M6X1X16-MM)	
	4	1	**3D-4245**	1	SEAL-O-RING	
	6	1	**8E-9894**	1	SPOOL	
	7	1	**9U-8068**	1	SLUG	
	8	1	**9U-9282**	1	SPRING	
	9	1	**9U-9316**	1	SPRING	
	10	1	**108-6523**	1	ADJUSTER AS	
		1	**4K-2039**	1	SEAL-O-RING	
		1	**7M-8485**	1	SEAL-O-RING	
		1	**8T-4223**	1	WASHER-HARD (13.5X25.5X3-MM THK)	
		1	**9U-8069**	1	PLUG	
M		1	**095-1207**	1	NUT (M12X1.75-THD)	
		1	**101-9754**	1	SCREW-ADJUSTMENT (M12X1.75X18-MM)	
	11	1	*309-1877*	1	ORIFICE AS	
		1	**5F-9144**	1	SEAL-O-RING	
		1	**9U-8620**	1	ORIFICE	
	12	1	**9U-8067**	1	RETAINER	
	13	1	**8E-9895**	1	PISTON-LOAD	
	14	1	**9W-7412**	1	SPRING	
	15	1	**4J-2506**	1	SEAL-O-RING	
	16	1	**6F-4855**	1	SEAL-O-RING	
B	17	1	**5J-1036**	4	SHIM (0.8-MM THK)	
	18	1	**8E-9896**	1	PISTON-SELECTOR	
	19	1	**179-1298**	3	SPACER	
	20	1	**7T-0570**	1	SPRING	
B	21	1	**4M-1751**	2	SPACER (15.09X0.4-MM THK)	
Y	23	1	**186-1526**	1	VALVE GP-SOLENOID (24-VOLT)	659
	25	1	*309-2995*	1	PLUG AS	
		1	**4J-7533**	1	SEAL-O-RING	
		1	**9G-7132**	1	PLUG-ORIFICE	
	26	1	*162-0177*	1	PLUG AS	
		1	**3J-1907**	1	SEAL-O-RING	
		1	**9S-8004**	1	PLUG (9/16-18-THD)	
	28	1	**180-9327**	1	MANIFOLD	
	30	1	**3K-6116**	1	WASHER (0.266X0.47X0.031-IN THK)	
M	31	1	**8T-8442**	1	BOLT-SOCKET HEAD (M6X1X30-MM)	
	32	1	**5P-0537**	6	WASHER-HARD (7.2X14.5X2-MM THK)	
	33	1	**9X-7384**	3	SEAL-O-RING	
	34	1	**175-3893**	1	VALVE GP-SOLENOID (PROPN SOL FOR CL PACK 1)	
	34A	1	**175-3893**	1	VALVE GP-SOLENOID (PROPN SOL FOR CL PACK 2)	
	34B	1	**175-3893**	1	VALVE GP-SOLENOID (PROPN SOL FOR CL PACK 3)	
					(EACH VALVE GP INCLUDES)	
		1	**226-9622**	1	COIL AS-SOLENOID (24-VOLT)	
		1	**164-2108**	1	WASHER (13.03X25.4X2.38-MM THK)	
		1	**167-9524**	1	NUT-SELF LOCKING (1/2-28-THD)	
	35	1	**183-6774**	1	PLATE	
M	36	1	**8C-6965**	1	BOLT-SOCKET HEAD (M6X1X45-MM)	

184-1130 **VALVE GP-SELECTOR & PRESS CONT (**contd.**)** **i04269589**

NOTE	REF NO	GRAPHIC REF	PART NUMBER	QTY	PART NAME 1 2 3 4 5 6 (PRODUCT LEVEL)	SEE PAGE
	37	1	**154-7172**	1	SPOOL	
	38	1	*309-2996*	5	PLUG AS	
					(EACH INCLUDES)	
		1	**6Y-4638**	1	PLUG-HEX SOCKET (1-5/16-12-THD)	
		1	**7M-8485**	1	SEAL-O-RING	
	39	1	**183-6775**	3	SPOOL AS	
					(EACH INCLUDES)	
		1	**167-0566**	1	CARTRIDGE	
	40	1	**154-7175**	3	SLUG	
	41	1	**154-7176**	3	SPRING	
	42	1	**154-7177**	3	SPRING	

B - USE AS REQUIRED
M - METRIC PART
Y - SEPARATE ILLUSTRATION

184-1130 **VALVE GP-SELECTOR & PRESS CONT** (contd.) **i04269589**

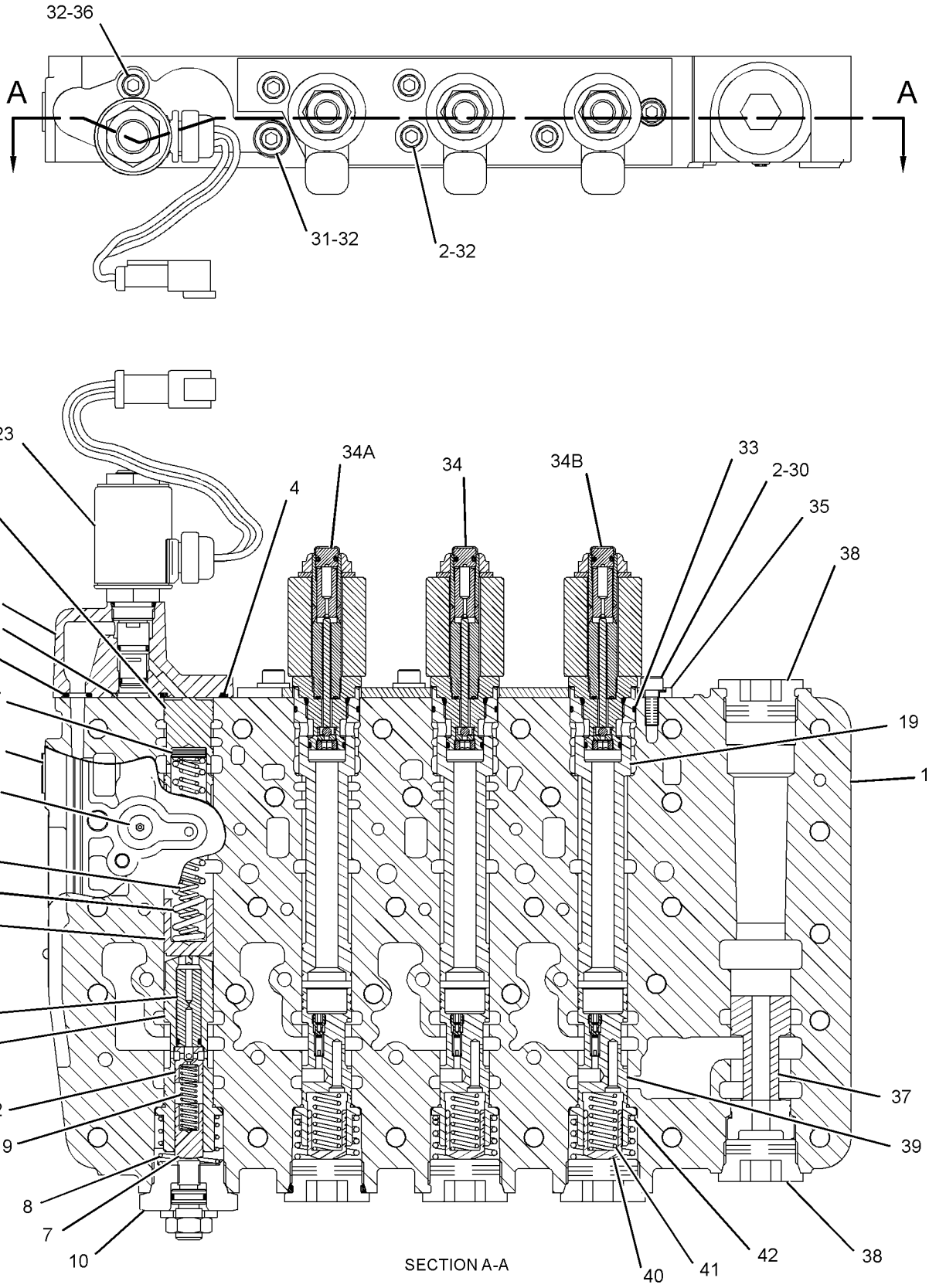

SECTION A-A

GRAPHIC #1 <END> g01415135

281-3160 VALVE GP-SELECTOR & PRESS CONT

S/N: DMJ1-UP

PART OF 281-3163 VALVE GP-TRANSMISSION CONTROL

SMCS-3083 **i03537522**

NOTE	REF NO	GRAPHIC REF	PART NUMBER	QTY	PART NAME 1 2 3 4 5 6 (PRODUCT LEVEL)	SEE PAGE
	1	1	**161-7055**	1	BODY	
	2	1	*309-1876*	2	ORIFICE AS	
					(EACH INCLUDES)	
		1	**5F-9144**	1	SEAL-O-RING	
		1	**8E-7714**	1	ORIFICE	
	4	1	**8E-9894**	4	SPOOL	
	5	1	**9U-8068**	4	SLUG	
	6	1	**9U-9316**	4	SPRING	
	7	1	**9U-9282**	4	SPRING	
	9	1	**9U-8067**	4	RETAINER	
	10	1	**8E-9895**	4	PISTON-LOAD	
	11	1	**4J-2506**	1	SEAL-O-RING	
	12	1	**6F-4855**	4	SEAL-O-RING	
	13	1	**8E-9896**	4	PISTON-SELECTOR	
B	14	1	**4M-1751**	4	SPACER (15.09X0.4-MM THK)	
B	15	1	**5J-1036**	15	SHIM (0.8-MM THK)	
	16	1	**3D-4245**	4	SEAL-O-RING	
	17	1	**9W-7410**	1	SPRING	
	18	1	**7T-0570**	3	SPRING	
	19	1	**8E-1143**	1	SLUG	
	20	1	**9U-8668**	1	SPOOL AS	
		1	**3D-8317**	1	RING-RETAINING	
		1	**4B-9880**	1	BALL	
		1	**4M-2381**	1	SPRING	
		1	**8E-9893**	1	SPOOL-RELIEF	
		1	**9U-8669**	1	RETAINER	
	21	1	**9U-9595**	1	SPRING	
	22	1	**9N-4500**	1	SPRING	
	23	1	**9N-4498**	1	SPRING	
	24	1	**8E-9897**	1	SPOOL	
	25	1	**9W-0898**	1	SLUG	
	27	1	**8E-6570**	1	MANIFOLD	
Y	28	1	**186-1526**	4	VALVE GP-SOLENOID (24-VOLT) (SPEED, RANGE, TRANSMISSION)	659
M	31	1	**8C-6965**	4	BOLT-SOCKET HEAD (M6X1X45-MM)	
	32	1	**5P-0537**	5	WASHER-HARD (7.2X14.5X2-MM THK)	
M	33	1	**8T-8442**	1	BOLT-SOCKET HEAD (M6X1X30-MM)	
	34	1	*309-1877*	1	ORIFICE AS	
		1	**5F-9144**	1	SEAL-O-RING	
		1	**9U-8620**	1	ORIFICE	
	35	1	*309-2995*	4	PLUG AS	
					(EACH INCLUDES)	
		1	**4J-7533**	1	SEAL-O-RING	
		1	**9G-7132**	1	PLUG-ORIFICE	
	37	1	*183-7263*	1	PLUG AS	
		1	**3J-7354**	1	SEAL-O-RING	
		1	**9S-8002**	1	PLUG (7/16-20-THD)	
	38	1	*162-0177*	1	PLUG AS	

281-3160 **VALVE GP-SELECTOR & PRESS CONT (**contd.**)** **i03537522**

NOTE	REF NO	GRAPHIC REF	PART NUMBER	QTY	PART NAME 1 2 3 4 5 6 (PRODUCT LEVEL)	SEE PAGE
		1	**3J-1907**	1	SEAL-O-RING	
		1	**9S-8004**	1	PLUG (9/16-18-THD)	
	40	1	**108-6523**	5	ADJUSTER AS	
					(EACH INCLUDES)	
		1	**4K-2039**	1	SEAL-O-RING	
		1	**7M-8485**	1	SEAL-O-RING	
		1	**8T-4223**	1	WASHER-HARD (13.5X25.5X3-MM THK)	
		1	**9U-8069**	1	PLUG	
M		1	**095-1207**	1	NUT (M12X1.75-THD)	
		1	**101-9754**	1	SCREW-ADJUSTMENT (M12X1.75X18-MM)	
	41	1	*309-2996*	1	PLUG AS	
		1	**6Y-4638**	1	PLUG-HEX SOCKET (1-5/16-12-THD)	
		1	**7M-8485**	1	SEAL-O-RING	
	42	1	*309-1878*	1	ORIFICE AS	
		1	**5F-9144**	1	SEAL-O-RING	
		1	**8E-7713**	1	ORIFICE	
	43	1	**9W-7412**	3	SPRING	
	44	1	**7G-5453**	1	SPRING	
	45	1	**108-3129**	1	STOP	

B - USE AS REQUIRED
M - METRIC PART
Y - SEPARATE ILLUSTRATION

281-3160 **VALVE GP-SELECTOR & PRESS CONT** (contd.) **i03537522**

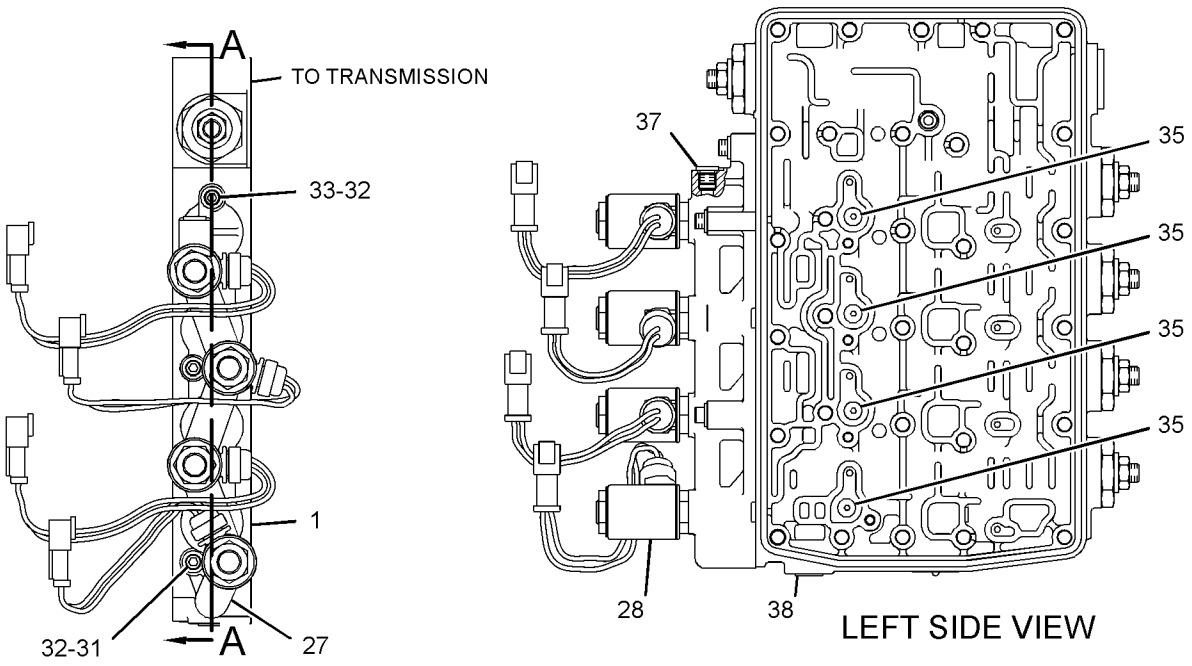

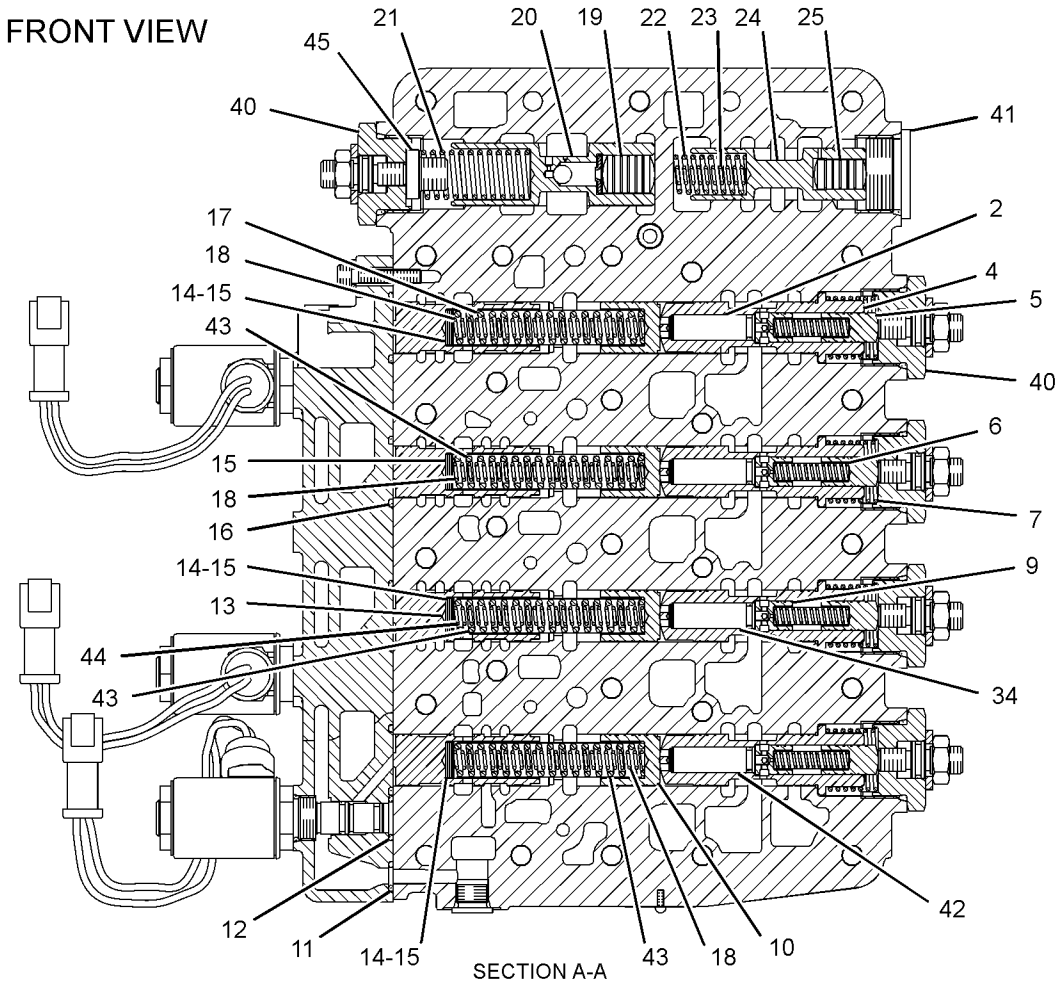

GRAPHIC #1 <END> g01419350

154-3064 VALVE GP-SOLENOID

S/N: SZS1-1013
24-VOLT
PART OF 174-3705 VALVE & MTG GP-DIFF LOCK

SMCS-5479 **i03568428**

NOTE	REF NO	GRAPHIC REF	PART NUMBER	QTY	PART NAME 1 2 3 4 5 6 (PRODUCT LEVEL)	SEE PAGE
	1	1	**8C-9987**	1	WASHER (8.3X28X2.5-MM THK)	
	2	1	**111-0343**	1	LOCKNUT (5/16-18-THD)	
	3	1	**142-0350**	1	CARTRIDGE AS	
		1	**8C-9987**	1	WASHER (8.3X28X2.5-MM THK)	
		1	**111-0343**	1	LOCKNUT (5/16-18-THD)	
	4	1	**218-9894**	1	COIL AS (24-VOLT)	
		1	**1S-9593**	2	STRAP-CABLE	
		1	**102-8802**	1	KIT-RECEPTACLE (2-PIN)	
					(INCLUDES RECEPTACLE AS & WEDGE)	
		1	**186-3735**	2	PIN-CONNECTOR (16-GA TO 18-GA)	
					AVAILABLE REPAIR KIT(S):	
			6G-5979	1	KIT-SEAL (DIFFERENTIAL LOCK VALVE)	

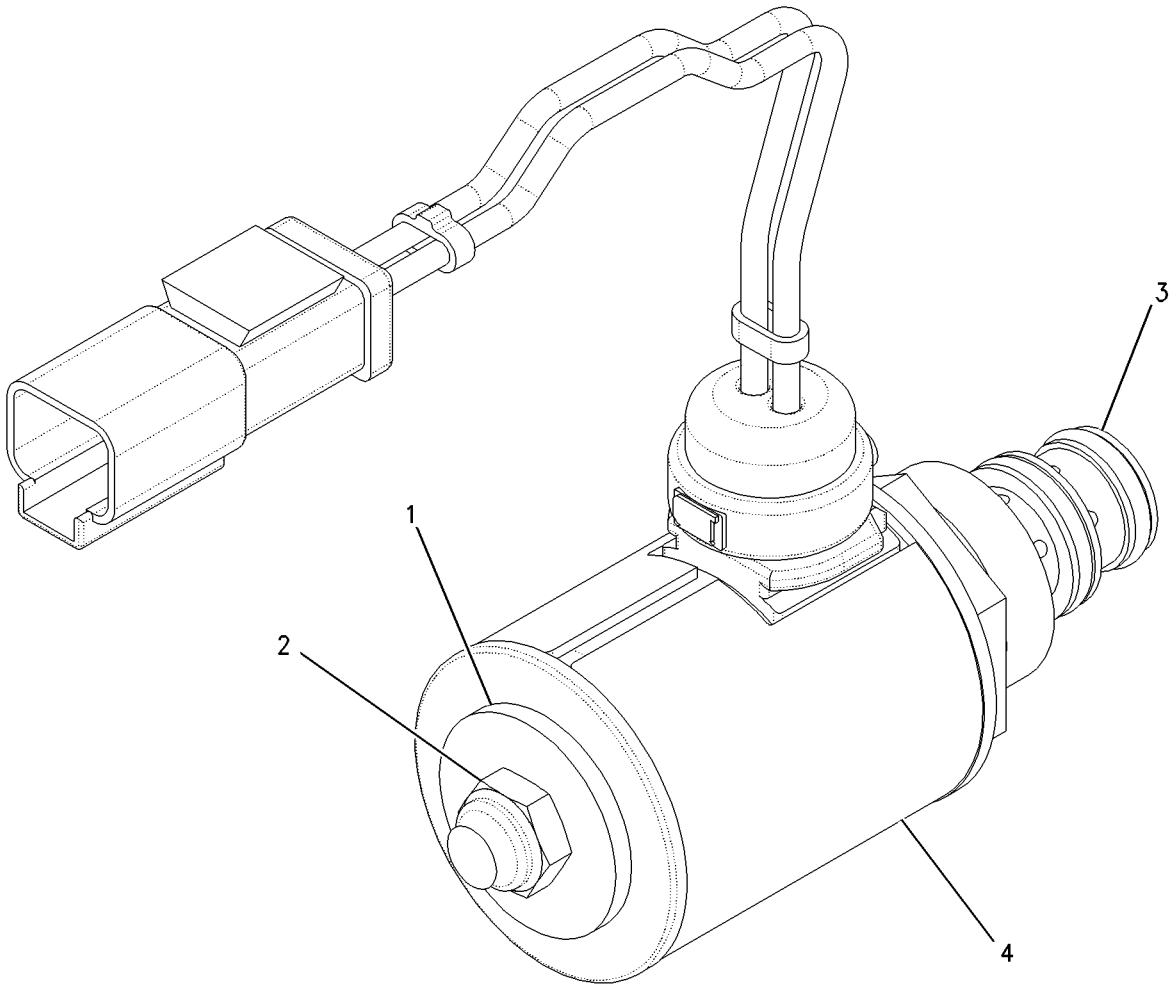

GRAPHIC #1 <END> g00877963

186-1526 VALVE GP-SOLENOID

S/N: DMJ1-UP
24-VOLT
PART OF 184-1130, 281-3160 VALVE GP-SELECTOR & PRESS CONT

SMCS-5479 **i06191913**

NOTE	REF NO	GRAPHIC REF	PART NUMBER	QTY	PART NAME 1 2 3 4 5 6 (PRODUCT LEVEL)	SEE PAGE
	1	1	**104-3947**	1	LOCKNUT (5/8-11-THD)	
J	2	1	**234-6666**	1	CARTRIDGE AS-VALVE	
	3	1	**301-3118**	1	COIL AS	
	3A	1	**1S-9593**	2	STRAP-CABLE	
	3B	1	**102-8802**	1	KIT-RECEPTACLE (2-PIN)	
					(INCLUDES RECEPTACLE AS & WEDGE)	
	3C	1	**186-3735**	2	PIN-CONNECTOR (16-GA TO 18-GA)	
					AVAILABLE REPAIR KIT(S):	
J			**7T-4515**	1	KIT-SEAL	
					(INCLUDES SEAL-O-RINGS)	

J - KIT MARKED J SERVICES PART(S) MARKED J

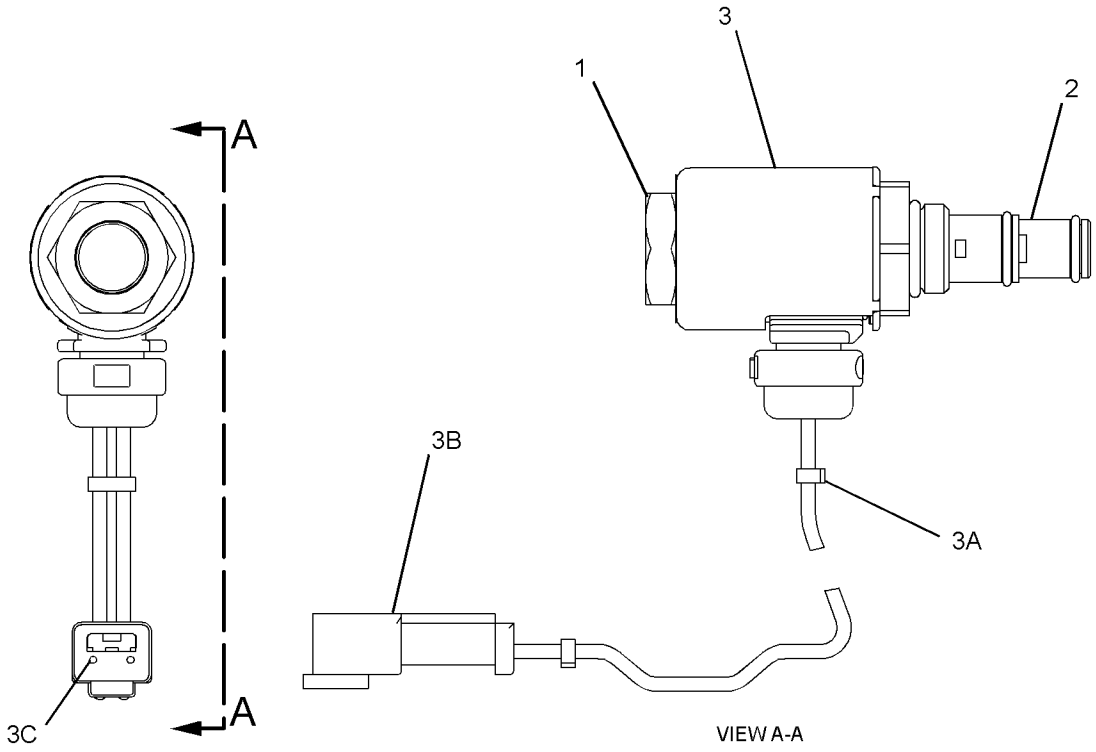

GRAPHIC #1 <END> g01945407

281-3163 VALVE GP-TRANSMISSION CONTROL

S/N: DMJ1-UP

PART OF 281-3165 CONTROL GP-TRANSMISSION HYD

SMCS-3073 **i03536387**

NOTE	REF NO	GRAPHIC REF	PART NUMBER	QTY	PART NAME 1 2 3 4 5 6 (PRODUCT LEVEL)	SEE PAGE
Y	1	1	**184-1130**	1	VALVE GP-SELECTOR & PRESS CONT (DIRECTION, RANGE, TRANSMISSION)	652
	2	1	**154-6306**	1	PLATE	
Y	3	1	**281-3160**	1	VALVE GP-SELECTOR & PRESS CONT (SPEED, RANGE, TRANSMISSION)	655
	4	1	**110-5161**	1	MANIFOLD	
	5	1	**154-6307**	1	PLATE	
	6	1	**8E-9474**	1	COVER	
	7	1	*164-5567*	8	COUPLER AS-QUICK DISCONNECT (MALE)	
					(EACH INCLUDES)	
		1	**214-7568**	1	SEAL-O-RING	
		1	**6V-3965**	1	FITTING (QUICK DISCONNECT)	
	8	1	*148-8407*	2	PLUG AS	
					(EACH INCLUDES)	
		1	**3J-1907**	1	SEAL-O-RING	
		1	**9S-4191**	1	PLUG (9/16-18-THD)	
	9	1	**6V-0852**	8	CAP-DUST	
	11	1	**1T-0738**	2	WASHER (8.4X19X1.83-MM THK)	
	12	1	**9P-9150**	4	WASHER (8.25X18X0.84-MM THK)	
M	13	1	**3E-8006**	2	BOLT (M8X1.25X130-MM)	
	15	1	**9L-9068**	6	DOWEL	
	16	1	**8F-6230**	1	SEAL-O-RING	
	17	1	**4D-6695**	4	SEAL-O-RING	
	18	1	**142-1767**	1	POPPET	
	19	1	**4D-1322**	1	RING-RETAINING	
	20	1	**6Y-2584**	1	RETAINER	
	21	1	**3J-6956**	1	SPRING	
	22	1	**6I-9395**	1	SCREEN	
M	23	1	**6V-5217**	1	BOLT (M8X1.25X20-MM)	

M - METRIC PART
Y - SEPARATE ILLUSTRATION

281-3163 **VALVE GP-TRANSMISSION CONTROL** (contd.) **i03536387**

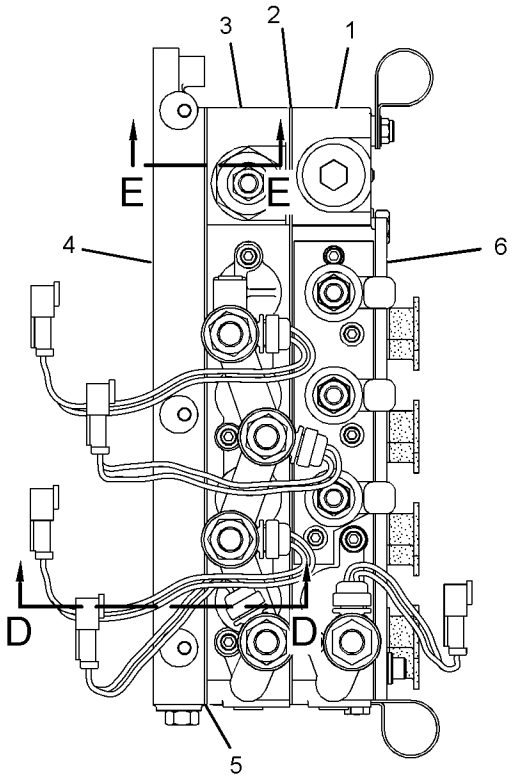

FRONT VIEW

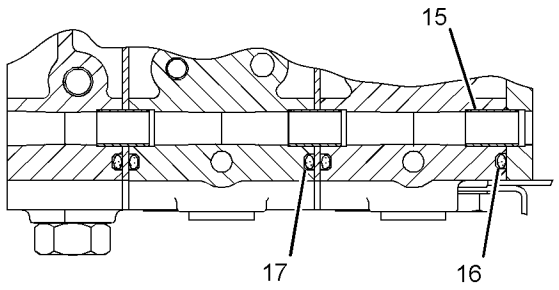

SECTION A-A

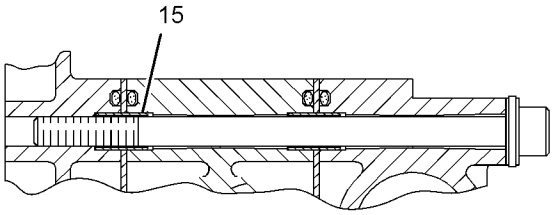

SECTION C-C

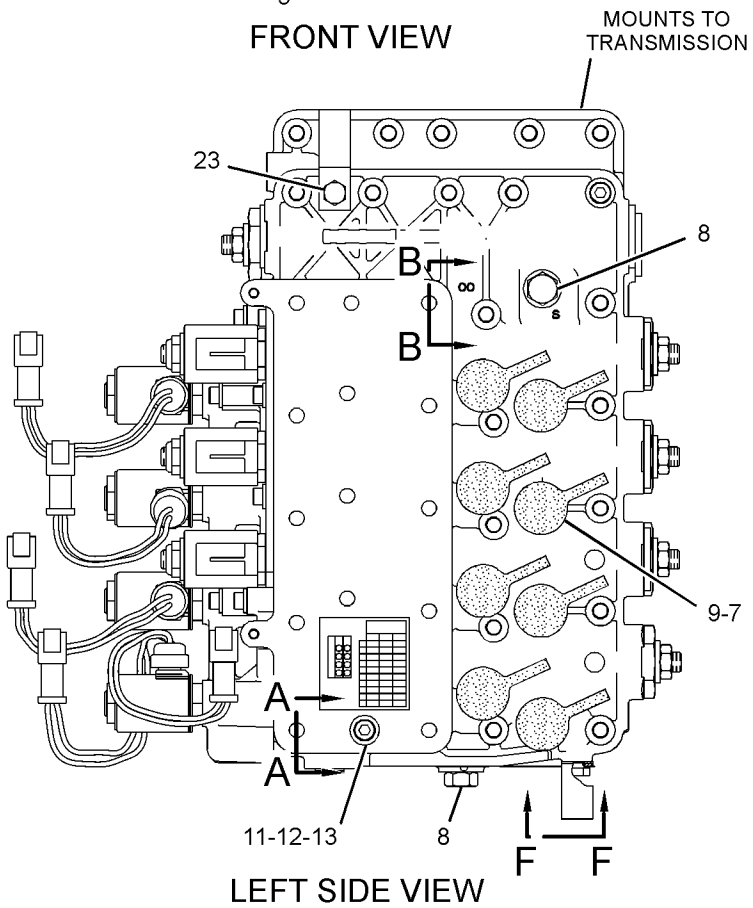

LEFT SIDE VIEW

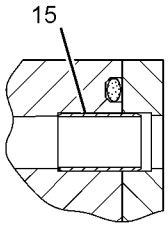

SECTION B-B

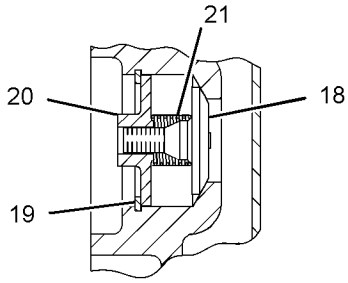

SECTION D-D

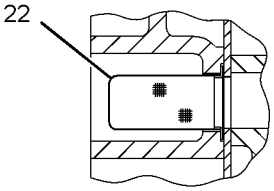

SECTION E-E

GRAPHIC #1 <END> g01419381

252-0679 WHEEL & TIRE AR

S/N: SZS1-UP

AN ATTACHMENT

SMCS-4200 **i03521122**

NOTE	PART NUMBER	QTY	PART NAME 1 2 3 4 5 6 (PRODUCT LEVEL)	SEE PAGE
Y	*252-0678*	6	WHEEL & TIRE GP	668

Y - SEPARATE ILLUSTRATION

<END>

252-0720 WHEEL & TIRE AR

S/N: SZS1-UP

CANNOT BE USED WITH ANY OTHER WHEEL & TIRE AR

AN ATTACHMENT

SMCS-4200 **i04897627**

NOTE	PART NUMBER	QTY	PART NAME 1 2 3 4 5 6 (PRODUCT LEVEL)	SEE PAGE
Y	*252-0719*	6	WHEEL & TIRE GP	668

Y - SEPARATE ILLUSTRATION

<END>

252-0731 WHEEL & TIRE AR

S/N: SZS1-UP

AN ATTACHMENT

SMCS-4200 **i03521123**

NOTE	PART NUMBER	QTY	PART NAME 1 2 3 4 5 6 (PRODUCT LEVEL)	SEE PAGE
Y	*252-0730*	6	WHEEL & TIRE GP	668

Y - SEPARATE ILLUSTRATION

<END>

252-0774 WHEEL & TIRE AR

S/N: SZS1-UP

CANNOT BE USED WITH ANY OTHER WHEEL & TIRE AR

PART OF 252-0775 WHEEL & TIRE AR

AN ATTACHMENT

SMCS-4200 **i04897675**

NOTE	PART NUMBER	QTY	PART NAME 1 2 3 4 5 6 (PRODUCT LEVEL)	SEE PAGE
Y	*252-0112*	1	WHEEL GP	677
	105-3249	1	TIRE (17.5-R25)	

Y - SEPARATE ILLUSTRATION

<END>

252-0775 WHEEL & TIRE AR

S/N: SZS1-UP
CANNOT BE USED WITH ANY OTHER WHEEL & TIRE AR
AN ATTACHMENT

SMCS-4200 **i04897687**

NOTE	PART NUMBER	QTY	PART NAME 1 2 3 4 5 6 (PRODUCT LEVEL)	SEE PAGE
Y	*252-0774*	6	WHEEL & TIRE AR	662

Y - SEPARATE ILLUSTRATION

<END>

254-7964 WHEEL & TIRE AR

S/N: SZS1-UP
AN ATTACHMENT

SMCS-4200 **i03521141**

NOTE	PART NUMBER	QTY	PART NAME 1 2 3 4 5 6 (PRODUCT LEVEL)	SEE PAGE
Y	*254-7948*	6	WHEEL & TIRE GP	668

Y - SEPARATE ILLUSTRATION

<END>

254-8061 WHEEL & TIRE AR

S/N: SZS1-UP
AN ATTACHMENT

SMCS-4200 **i03856149**

NOTE	PART NUMBER	QTY	PART NAME 1 2 3 4 5 6 (PRODUCT LEVEL)	SEE PAGE
Y	*254-8053*	6	WHEEL & TIRE GP	669

Y - SEPARATE ILLUSTRATION

<END>

340-2602 WHEEL & TIRE AR

S/N: SZS1-UP
CANNOT BE USED WITH ANY OTHER TIRES
AN ATTACHMENT

SMCS-4200 **i03629989**

NOTE	PART NUMBER	QTY	PART NAME 1 2 3 4 5 6 (PRODUCT LEVEL)	SEE PAGE
Y	*340-2614*	6	WHEEL & TIRE GP	669

Y - SEPARATE ILLUSTRATION

<END>

340-2603 WHEEL & TIRE AR

S/N: SZS1-UP
CANNOT BE USED WITH ANY OTHER TIRE
AN ATTACHMENT

SMCS-4200 **i03629987**

NOTE	PART NUMBER	QTY	PART NAME 1 2 3 4 5 6 (PRODUCT LEVEL)	SEE PAGE
Y	*340-2615*	6	WHEEL & TIRE GP	669

Y - SEPARATE ILLUSTRATION

<END>

340-2640 WHEEL & TIRE AR

S/N: SZS1-UP

AN ATTACHMENT

SMCS-4200 **i03524521**

NOTE	PART NUMBER	QTY	PART NAME 1 2 3 4 5 6 (PRODUCT LEVEL)	SEE PAGE
Y	*340-2632*	6	WHEEL & TIRE GP	669

Y - SEPARATE ILLUSTRATION

<END>

340-2641 WHEEL & TIRE AR

S/N: SZS1-UP

AN ATTACHMENT

SMCS-4200 **i03524520**

NOTE	PART NUMBER	QTY	PART NAME 1 2 3 4 5 6 (PRODUCT LEVEL)	SEE PAGE
Y	*340-2633*	6	WHEEL & TIRE GP	670

Y - SEPARATE ILLUSTRATION

<END>

353-5223 WHEEL & TIRE AR

S/N: SZS1-UP

AN ATTACHMENT

SMCS-4200 **i03741689**

NOTE	PART NUMBER	QTY	PART NAME 1 2 3 4 5 6 (PRODUCT LEVEL)	SEE PAGE
Y	*353-2308*	6	WHEEL & TIRE GP	670

Y - SEPARATE ILLUSTRATION

<END>

353-5224 WHEEL & TIRE AR

S/N: SZS1-UP

AN ATTACHMENT

SMCS-4200 **i03741720**

NOTE	PART NUMBER	QTY	PART NAME 1 2 3 4 5 6 (PRODUCT LEVEL)	SEE PAGE
Y	*353-2309*	6	WHEEL & TIRE GP	670

Y - SEPARATE ILLUSTRATION

<END>

353-5225 WHEEL & TIRE AR

S/N: SZS1-UP

AN ATTACHMENT

SMCS-4200 **i03741641**

NOTE	PART NUMBER	QTY	PART NAME 1 2 3 4 5 6 (PRODUCT LEVEL)	SEE PAGE
Y	*353-2310*	6	WHEEL & TIRE GP	671

Y - SEPARATE ILLUSTRATION

<END>

353-5226 WHEEL & TIRE AR

S/N: SZS1-UP
AN ATTACHMENT

SMCS-4200 **i03741625**

NOTE	PART NUMBER	QTY	PART NAME 1 2 3 4 5 6 (PRODUCT LEVEL)	SEE PAGE
Y	*353-2311*	6	WHEEL & TIRE GP	671

Y - SEPARATE ILLUSTRATION

<END>

353-5228 WHEEL & TIRE AR

S/N: SZS1-UP
AN ATTACHMENT

SMCS-4200 **i03884549**

NOTE	PART NUMBER	QTY	PART NAME 1 2 3 4 5 6 (PRODUCT LEVEL)	SEE PAGE
Y	*352-4719*	6	WHEEL & TIRE GP	670

Y - SEPARATE ILLUSTRATION

<END>

356-0790 WHEEL & TIRE AR

S/N: SZS1-UP
PART OF 356-0791 WHEEL & TIRE AR
AN ATTACHMENT

SMCS-4200 **i03886381**

NOTE	PART NUMBER	QTY	PART NAME 1 2 3 4 5 6 (PRODUCT LEVEL)	SEE PAGE
Y	*252-0106*	1	WHEEL GP	676
	353-5729	1	TIRE (13-24)	

Y - SEPARATE ILLUSTRATION

<END>

356-0791 WHEEL & TIRE AR

S/N: SZS1-UP
AN ATTACHMENT

SMCS-4200 **i03881263**

NOTE	PART NUMBER	QTY	PART NAME 1 2 3 4 5 6 (PRODUCT LEVEL)	SEE PAGE
Y	*356-0790*	6	WHEEL & TIRE AR	665

Y - SEPARATE ILLUSTRATION

<END>

368-9750 WHEEL & TIRE AR

S/N: SZS1-UP
PART OF 368-9751 WHEEL & TIRE AR
AN ATTACHMENT

SMCS-4200 **i04936103**

NOTE	PART NUMBER	QTY	PART NAME 1 2 3 4 5 6 (PRODUCT LEVEL)	SEE PAGE
Y	*252-0108*	1	WHEEL GP	676
	317-6017	1	TIRE (14-24)	

Y - SEPARATE ILLUSTRATION

<END>

368-9751 WHEEL & TIRE AR

S/N: SZS1-UP
AN ATTACHMENT

SMCS-4200 **i04147590**

NOTE	PART NUMBER	QTY	PART NAME 1 2 3 4 5 6 (PRODUCT LEVEL)	SEE PAGE
Y	*368-9750*	6	WHEEL & TIRE AR	666

Y - SEPARATE ILLUSTRATION

<END>

372-6419 WHEEL & TIRE AR

S/N: SZS1-UP
AN ATTACHMENT

SMCS-4200 **i04926250**

NOTE	PART NUMBER	QTY	PART NAME 1 2 3 4 5 6 (PRODUCT LEVEL)	SEE PAGE
Y	*372-6418*	6	WHEEL & TIRE GP	671

Y - SEPARATE ILLUSTRATION

<END>

372-6425 WHEEL & TIRE AR

S/N: SZS1-UP
AN ATTACHMENT

SMCS-4200 **i04926269**

NOTE	PART NUMBER	QTY	PART NAME 1 2 3 4 5 6 (PRODUCT LEVEL)	SEE PAGE
Y	*372-6424*	6	WHEEL & TIRE GP	671

Y - SEPARATE ILLUSTRATION

<END>

376-1345 WHEEL & TIRE AR

S/N: SZS1-UP
AN ATTACHMENT

SMCS-4200 **i04926273**

NOTE	PART NUMBER	QTY	PART NAME 1 2 3 4 5 6 (PRODUCT LEVEL)	SEE PAGE
Y	*376-1344*	6	WHEEL & TIRE GP	672

Y - SEPARATE ILLUSTRATION

<END>

382-1741 WHEEL & TIRE AR

S/N: SZS1-UP

AN ATTACHMENT

SMCS-4200 **i04931746**

NOTE	PART NUMBER	QTY	PART NAME 1 2 3 4 5 6 (PRODUCT LEVEL)	SEE PAGE
Y	*382-1740*	6	WHEEL & TIRE GP	672

Y - SEPARATE ILLUSTRATION

<END>

440-3433 WHEEL & TIRE AR

S/N: SZS1-UP

CANNOT BE USED WITH ANY OTHER WHEEL & TIRE AR

AN ATTACHMENT

SMCS-4200 **i06233938**

NOTE	PART NUMBER	QTY	PART NAME 1 2 3 4 5 6 (PRODUCT LEVEL)	SEE PAGE
Y	*440-3431*	6	WHEEL & TIRE GP	672
	4K-4879	6	SEAL-O-RING	
	2G-6595	6	VALVE GP-TIRE	
	6F-3930	1	CORE-VALVE	
	7D-5252	1	SPUD AS	
	2D-2507	1	SPUD	
	2D-2508	1	GROMMET	
	2D-2509	1	LOCKNUT (11/16-16-THD)	
	9K-7951	1	CAP-VALVE (STEM)	

Y - SEPARATE ILLUSTRATION

<END>

448-5577 WHEEL & TIRE AR

S/N: SZS1-UP

CANNOT BE USED WITH ANY OTHER WHEEL & TIRE AR

AN ATTACHMENT

SMCS-4200 **i06233943**

NOTE	PART NUMBER	QTY	PART NAME 1 2 3 4 5 6 (PRODUCT LEVEL)	SEE PAGE
Y	*448-0412*	6	WHEEL & TIRE GP	673
	2D-2565	6	SEAL-O-RING	
	110-4213	6	VALVE GP-TIRE (TIRE INFLATION)	
			(EACH INCLUDES)	
	110-4214	1	STEM AS	
	6F-3930	1	CORE-VALVE	
	9K-7951	1	CAP-VALVE (STEM)	
	7D-5252	1	SPUD AS	
	2D-2507	1	SPUD	
	2D-2508	1	GROMMET	
	2D-2509	1	LOCKNUT (11/16-16-THD)	

Y - SEPARATE ILLUSTRATION

<END>

252-0678 WHEEL & TIRE GP

S/N: SZS1-UP
PART OF 252-0679 WHEEL & TIRE AR
AN ATTACHMENT

SMCS-4200 **i03522483**

NOTE	PART NUMBER	QTY	PART NAME 1 2 3 4 5 6 (PRODUCT LEVEL)	SEE PAGE
Y	*252-0108*	1	WHEEL GP	676
	112-9813	1	TIRE (14-R24)	

Y - SEPARATE ILLUSTRATION

<END>

252-0719 WHEEL & TIRE GP

S/N: SZS1-UP
PART OF 252-0720 WHEEL & TIRE AR
AN ATTACHMENT

SMCS-4200 **i04897628**

NOTE	PART NUMBER	QTY	PART NAME 1 2 3 4 5 6 (PRODUCT LEVEL)	SEE PAGE
Y	*252-0108*	1	WHEEL GP	676
	173-7830	1	TIRE (14-R24)	

Y - SEPARATE ILLUSTRATION

<END>

252-0730 WHEEL & TIRE GP

S/N: SZS1-UP
PART OF 252-0731 WHEEL & TIRE AR
AN ATTACHMENT

SMCS-4200 **i03524591**

NOTE	PART NUMBER	QTY	PART NAME 1 2 3 4 5 6 (PRODUCT LEVEL)	SEE PAGE
Y	*252-0112*	1	WHEEL GP	677
	142-6183	1	TIRE (17.5-25)	

Y - SEPARATE ILLUSTRATION

<END>

254-7948 WHEEL & TIRE GP

S/N: SZS1-UP
PART OF 254-7964 WHEEL & TIRE AR
AN ATTACHMENT

SMCS-4200 **i03526946**

NOTE	PART NUMBER	QTY	PART NAME 1 2 3 4 5 6 (PRODUCT LEVEL)	SEE PAGE
Y	*252-0111*	1	WHEEL GP	677
	142-6183	1	TIRE (17.5-25)	

Y - SEPARATE ILLUSTRATION

<END>

254-8053 WHEEL & TIRE GP

S/N: SZS1-UP
PART OF 254-8061 WHEEL & TIRE AR
AN ATTACHMENT

SMCS-4200 **i03856152**

NOTE	PART NUMBER	QTY	PART NAME 1 2 3 4 5 6 (PRODUCT LEVEL)	SEE PAGE
Y	*252-0108*	1	WHEEL GP	676
	142-6168	1	TIRE (13-24)	
Y - SEPARATE ILLUSTRATION				

<END>

340-2614 WHEEL & TIRE GP

S/N: SZS1-UP
PART OF 340-2602 WHEEL & TIRE AR
AN ATTACHMENT

SMCS-4200 **i03629990**

NOTE	PART NUMBER	QTY	PART NAME 1 2 3 4 5 6 (PRODUCT LEVEL)	SEE PAGE
Y	*252-0106*	1	WHEEL GP	676
	142-6167	1	TIRE (13-24)	
Y - SEPARATE ILLUSTRATION				

<END>

340-2615 WHEEL & TIRE GP

S/N: SZS1-UP
PART OF 340-2603 WHEEL & TIRE AR
AN ATTACHMENT

SMCS-4200 **i03629992**

NOTE	PART NUMBER	QTY	PART NAME 1 2 3 4 5 6 (PRODUCT LEVEL)	SEE PAGE
Y	*252-0108*	1	WHEEL GP	676
	142-6167	1	TIRE (13-24)	
Y - SEPARATE ILLUSTRATION				

<END>

340-2632 WHEEL & TIRE GP

S/N: SZS1-UP
PART OF 340-2640 WHEEL & TIRE AR
AN ATTACHMENT

SMCS-4200 **i03596600**

NOTE	PART NUMBER	QTY	PART NAME 1 2 3 4 5 6 (PRODUCT LEVEL)	SEE PAGE
Y	*252-0106*	1	WHEEL GP	676
	317-6017	1	TIRE (14-24)	
Y - SEPARATE ILLUSTRATION				

<END>

340-2633 WHEEL & TIRE GP

S/N: SZS1-UP
PART OF 340-2641 WHEEL & TIRE AR
AN ATTACHMENT

SMCS-4200 **i03571610**

NOTE	PART NUMBER	QTY	PART NAME 1 2 3 4 5 6 (PRODUCT LEVEL)	SEE PAGE
Y	*252-0111*	1	WHEEL GP	677
	317-6018	1	TIRE (17.5-25)	

Y - SEPARATE ILLUSTRATION

<END>

352-4719 WHEEL & TIRE GP

S/N: SZS1-UP
PART OF 353-5228 WHEEL & TIRE AR
AN ATTACHMENT

SMCS-4200 **i03886350**

NOTE	PART NUMBER	QTY	PART NAME 1 2 3 4 5 6 (PRODUCT LEVEL)	SEE PAGE
Y	*252-0108*	1	WHEEL GP	676
	353-5729	1	TIRE (13-24)	

Y - SEPARATE ILLUSTRATION

<END>

353-2308 WHEEL & TIRE GP

S/N: SZS1-UP
PART OF 353-5223 WHEEL & TIRE AR
AN ATTACHMENT

SMCS-4200 **i03742550**

NOTE	PART NUMBER	QTY	PART NAME 1 2 3 4 5 6 (PRODUCT LEVEL)	SEE PAGE
Y	*252-0108*	1	WHEEL GP	676
	347-6521	1	TIRE (14-24)	

Y - SEPARATE ILLUSTRATION

<END>

353-2309 WHEEL & TIRE GP

S/N: SZS1-UP
PART OF 353-5224 WHEEL & TIRE AR
AN ATTACHMENT

SMCS-4200 **i03742549**

NOTE	PART NUMBER	QTY	PART NAME 1 2 3 4 5 6 (PRODUCT LEVEL)	SEE PAGE
Y	*252-0106*	1	WHEEL GP	676
	347-6521	1	TIRE (14-24)	

Y - SEPARATE ILLUSTRATION

<END>

353-2310 WHEEL & TIRE GP

S/N: SZS1-UP
PART OF 353-5225 WHEEL & TIRE AR
AN ATTACHMENT

SMCS-4200 **i03742548**

NOTE	PART NUMBER	QTY	PART NAME 1 2 3 4 5 6 (PRODUCT LEVEL)	SEE PAGE
Y	*252-0112*	1	WHEEL GP	677
	347-6522	1	TIRE (17.5-25)	
Y - SEPARATE ILLUSTRATION				

<END>

353-2311 WHEEL & TIRE GP

S/N: SZS1-UP
PART OF 353-5226 WHEEL & TIRE AR
AN ATTACHMENT

SMCS-4200 **i03742546**

NOTE	PART NUMBER	QTY	PART NAME 1 2 3 4 5 6 (PRODUCT LEVEL)	SEE PAGE
Y	*252-0111*	1	WHEEL GP	677
	347-6522	1	TIRE (17.5-25)	
Y - SEPARATE ILLUSTRATION				

<END>

372-6418 WHEEL & TIRE GP

S/N: SZS1-UP
PART OF 372-6419 WHEEL & TIRE AR
AN ATTACHMENT

SMCS-4200 **i04926265**

NOTE	PART NUMBER	QTY	PART NAME 1 2 3 4 5 6 (PRODUCT LEVEL)	SEE PAGE
Y	*252-0106*	1	WHEEL GP	676
	190-7401	1	TIRE (13-R24)	
Y - SEPARATE ILLUSTRATION				

<END>

372-6424 WHEEL & TIRE GP

S/N: SZS1-UP
PART OF 372-6425 WHEEL & TIRE AR
AN ATTACHMENT

SMCS-4200 **i04926271**

NOTE	PART NUMBER	QTY	PART NAME 1 2 3 4 5 6 (PRODUCT LEVEL)	SEE PAGE
Y	*252-0106*	1	WHEEL GP	676
	173-7830	1	TIRE (14-R24)	
Y - SEPARATE ILLUSTRATION				

<END>

376-1344 WHEEL & TIRE GP

S/N: SZS1-UP
PART OF 376-1345 WHEEL & TIRE AR
AN ATTACHMENT

SMCS-4200 **i04926276**

NOTE	PART NUMBER	QTY	PART NAME 1 2 3 4 5 6 (PRODUCT LEVEL)	SEE PAGE
Y	*252-0108*	1	WHEEL GP	676
	190-7401	1	TIRE (13-R24)	

Y - SEPARATE ILLUSTRATION

<END>

382-1740 WHEEL & TIRE GP

S/N: SZS1-UP
PART OF 382-1741 WHEEL & TIRE AR
AN ATTACHMENT

SMCS-4200 **i04926388**

NOTE	PART NUMBER	QTY	PART NAME 1 2 3 4 5 6 (PRODUCT LEVEL)	SEE PAGE
Y	*252-0104*	1	WHEEL GP	675
	381-8233	1	TIRE (17.5-R25)	

Y - SEPARATE ILLUSTRATION

<END>

440-3431 WHEEL & TIRE GP

S/N: SZS1-UP
PART OF 440-3433 WHEEL & TIRE AR
AN ATTACHMENT

SMCS-4200 **i06954408**

NOTE	PART NUMBER	QTY	PART NAME 1 2 3 4 5 6 (PRODUCT LEVEL)	SEE PAGE
Y	*252-0112*	1	WHEEL GP	677
			—OR—	
Y	*252-0104*	1	WHEEL GP	675
	396-9056	1	TIRE (17.5)	

Y - SEPARATE ILLUSTRATION

<END>

448-0412 WHEEL & TIRE GP

S/N: SZS1-UP
PART OF 448-5577 WHEEL & TIRE AR
AN ATTACHMENT

SMCS-4200 **i06279514**

NOTE	PART NUMBER	QTY	PART NAME 1 2 3 4 5 6 (PRODUCT LEVEL)	SEE PAGE
Y	*252-0108*	1	WHEEL GP	676
			—OR—	
Y	*252-0102*	1	WHEEL GP	674
	447-3143	1	TIRE (14-R24)	

Y - SEPARATE ILLUSTRATION

<END>

252-0114 WHEEL AR

S/N: SZS1-UP
AN ATTACHMENT

SMCS-4208 **i03521120**

NOTE	PART NUMBER	QTY	PART NAME 1 2 3 4 5 6 (PRODUCT LEVEL)	SEE PAGE
Y	*252-0106*	6	WHEEL GP	676

Y - SEPARATE ILLUSTRATION

<END>

252-0118 WHEEL AR

S/N: SZS1-UP
AN ATTACHMENT

SMCS-4208 **i03521143**

NOTE	PART NUMBER	QTY	PART NAME 1 2 3 4 5 6 (PRODUCT LEVEL)	SEE PAGE
Y	*252-0112*	6	WHEEL GP	677

Y - SEPARATE ILLUSTRATION

<END>

252-0102 WHEEL GP

S/N: SZS1-UP
(10X24)
PART OF 448-0412 WHEEL & TIRE GP, 252-0108 WHEEL GP
AN ATTACHMENT

SMCS-4006, 4201, 4208 **i06752735**

NOTE	REF NO	GRAPHIC REF	PART NUMBER	QTY	PART NAME 1 2 3 4 5 6 (PRODUCT LEVEL)	SEE PAGE
	1	1	**2D-2654**	1	RING-LOCK	
	2	1	**8W-9566**	1	FLANGE AS	
	3	1	**290-1505**	1	RIM AS	

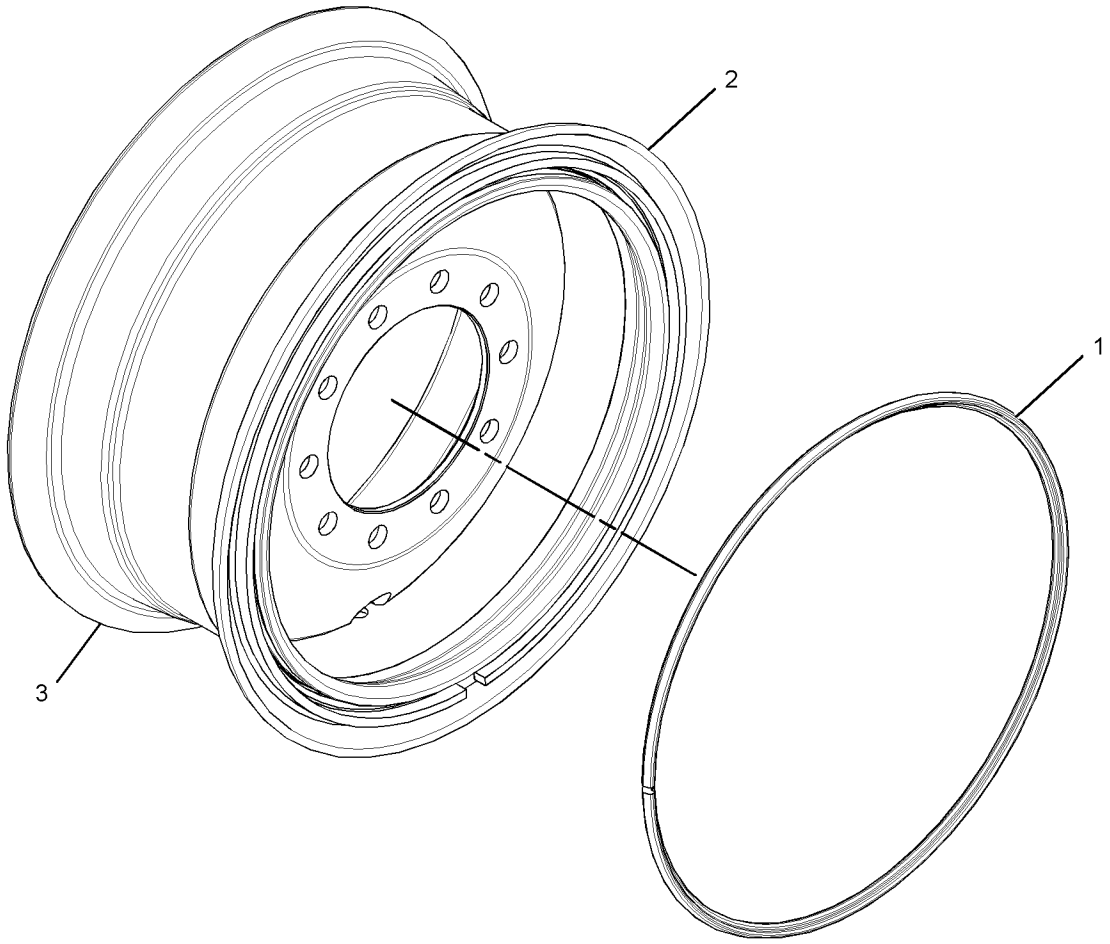

GRAPHIC #1 <END> g01393131

252-0104 WHEEL GP

S/N: SZS1-UP
(14X25)
PART OF 382-1740, 440-3431 WHEEL & TIRE GP, 252-0112 WHEEL GP
AN ATTACHMENT

SMCS-4006, 4201, 4208

i06752791

NOTE	REF NO	GRAPHIC REF	PART NUMBER	QTY	PART NAME 1 2 3 4 5 6 (PRODUCT LEVEL)	SEE PAGE
	1	1	**4K-4881**	1	RING-LOCK	
	2	1	**8W-9594**	1	FLANGE AS	
	3	1	**289-9726**	1	RIM AS	

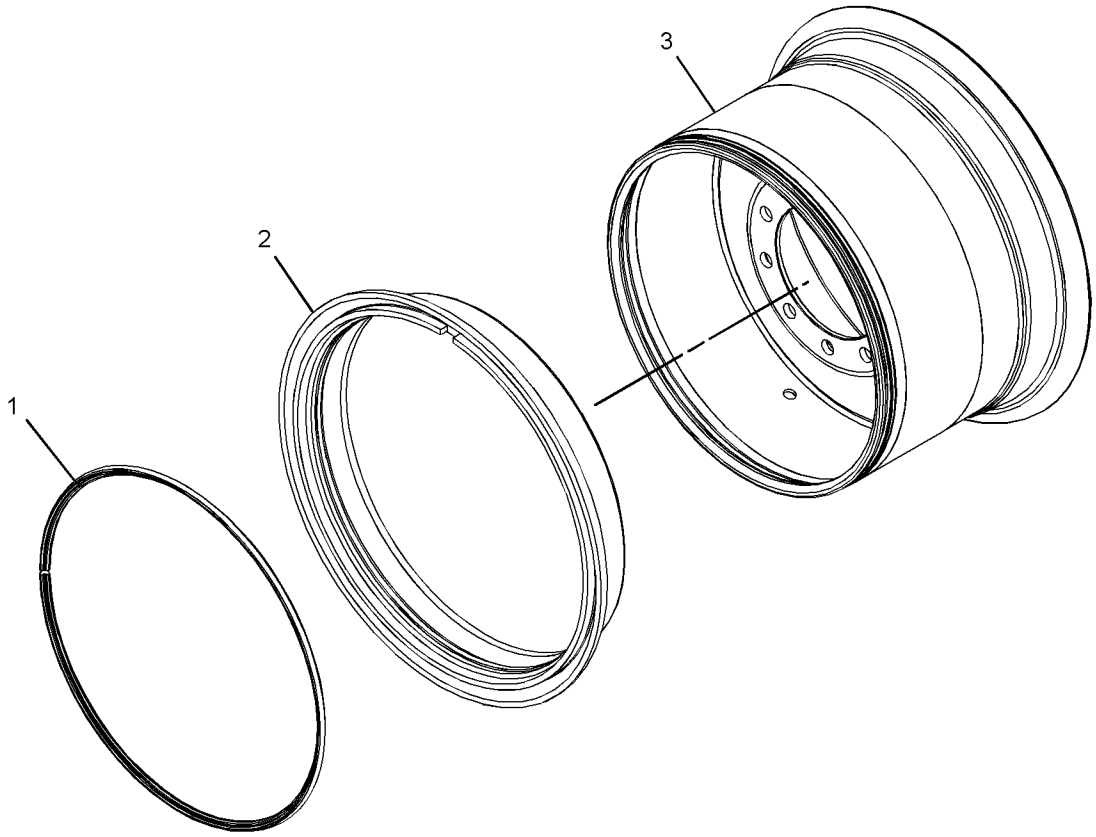

GRAPHIC #1

<END>

g01392485

252-0106 WHEEL GP

S/N: SZS1-UP
(9X24)
PART OF 356-0790 WHEEL & TIRE AR, 340-2614, 340-2632, 353-2309, 372-6418, 372-6424 WHEEL & TIRE GP, 252-0114 WHEEL AR
AN ATTACHMENT

SMCS-4006, 4201, 4208 **i03522293**

NOTE	PART NUMBER	QTY	PART NAME 1 2 3 4 5 6 (PRODUCT LEVEL)	SEE PAGE
	252-0098	1	RIM AS	
	2D-2511	1	VALVE GP-TIRE (BASIC)	
	3D-2239	1	VALVE AS-TIRE (TIRE INFLATION)	
	6F-3930	1	CORE-VALVE	
	9K-7951	1	CAP-VALVE (STEM)	
	7D-5252	1	SPUD AS	
	2D-2507	1	SPUD	
	2D-2508	1	GROMMET	
	2D-2509	1	LOCKNUT (11/16-16-THD)	

<END>

252-0108 WHEEL GP

S/N: SZS1-UP
PART OF 368-9750 WHEEL & TIRE AR, 252-0678, 252-0719, 254-8053, 340-2615, 352-4719, 353-2308, 376-1344, 448-0412 WHEEL & TIRE GP
AN ATTACHMENT

SMCS-4006, 4201, 4208 **i03522541**

NOTE	PART NUMBER	QTY	PART NAME 1 2 3 4 5 6 (PRODUCT LEVEL)	SEE PAGE
Y	*252-0102*	1	WHEEL GP	674
	2D-2565	1	SEAL-O-RING	
	110-4213	1	VALVE GP-TIRE (TIRE INFLATION)	
	7D-5252	1	SPUD AS	
	2D-2507	1	SPUD	
	2D-2508	1	GROMMET	
	2D-2509	1	LOCKNUT (11/16-16-THD)	
	110-4214	1	STEM AS	
	6F-3930	1	CORE-VALVE	
	9K-7951	1	CAP-VALVE (STEM)	

Y - SEPARATE ILLUSTRATION

<END>

252-0111 WHEEL GP

S/N: SZS1-UP
(13X25)
PART OF 254-7948, 340-2633, 353-2311 WHEEL & TIRE GP
AN ATTACHMENT

SMCS-4006, 4201, 4208 **i03526980**

NOTE	PART NUMBER	QTY	PART NAME 1 2 3 4 5 6 (PRODUCT LEVEL)	SEE PAGE
	252-0100	1	RIM AS	
	2G-6595	1	VALVE GP-TIRE	
	6F-3930	1	CORE-VALVE	
	9K-7951	1	CAP-VALVE (STEM)	
	7D-5252	1	SPUD AS	
	2D-2507	1	SPUD	
	2D-2508	1	GROMMET	
	2D-2509	1	LOCKNUT (11/16-16-THD)	

<END>

252-0112 WHEEL GP

S/N: SZS1-UP
PART OF 252-0774 WHEEL & TIRE AR, 252-0730, 353-2310, 440-3431 WHEEL & TIRE GP, 252-0118 WHEEL AR
AN ATTACHMENT

SMCS-4006, 4201, 4208 **i03524586**

NOTE	PART NUMBER	QTY	PART NAME 1 2 3 4 5 6 (PRODUCT LEVEL)	SEE PAGE
Y	*252-0104*	1	WHEEL GP	675
	4K-4879	1	SEAL-O-RING	
	2G-6595	1	VALVE GP-TIRE	
	6F-3930	1	CORE-VALVE	
	9K-7951	1	CAP-VALVE (STEM)	
	7D-5252	1	SPUD AS	
	2D-2507	1	SPUD	
	2D-2508	1	GROMMET	
	2D-2509	1	LOCKNUT (11/16-16-THD)	

Y - SEPARATE ILLUSTRATION

<END>

297-8449 BOSS GP-FRAME–ACCUGRADE

S/N: SZS1-UP

PART OF 337-3100 GRADE CONTROL AR

AN ATTACHMENT

SMCS-7051 **i06109971**

NOTE	REF NO	GRAPHIC REF	PART NUMBER	QTY	PART NAME 1 2 3 4 5 6 (PRODUCT LEVEL)	SEE PAGE
	1	1	**5D-9629**	5	ROD	
	2	1	**1F-5339**	4	LUG (3/8-16-THD)	
	3	1	**3G-9190**	3	PLATE	
	4	1	**4D-8128**	2	COUPLING	
M	5	1	**8X-5147**	1	BLOCK (M10X1.5-MM)	
	6	1	**9D-5196**	1	BOSS (3/8-16X3.06-IN)	
	7	1	**9D-5567**	3	BOSS (3/8-16X2.44-IN)	
	8	1	**9D-5659**	5	BOSS (3/8-16X1.19-IN)	
	9	1	**9D-6164**	2	BOSS (3/8-16X1.44-IN)	
	10	1	**8D-3508**	1	BOSS (3/8-16X1-IN)	

M - METRIC PART

297-8449 **BOSS GP-FRAME** (contd.) **i06109971**

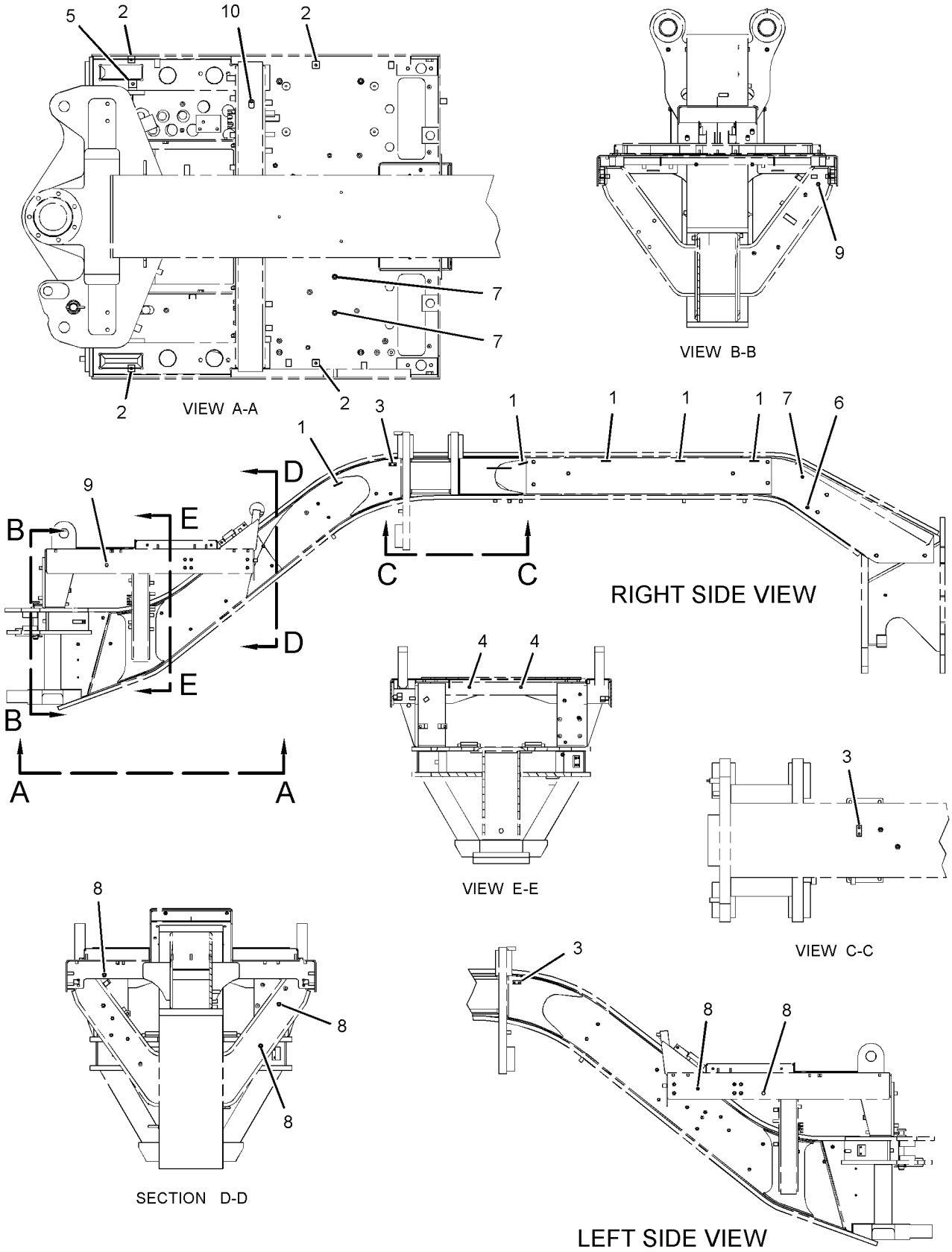

GRAPHIC #1 <END> g03336662

336-9245 BOSS GP-FRAME–ACCUGRADE

S/N: SZS1-UP

PART OF 336-4249, 394-0862, 435-1526, 435-1548 GRADE CONTROL AR

AN ATTACHMENT

SMCS-7051 **i06208874**

NOTE	REF NO	GRAPHIC REF	PART NUMBER	QTY	PART NAME 1 2 3 4 5 6 (PRODUCT LEVEL)	SEE PAGE
	1	1	**5D-9629**	5	ROD	
	2	1	**1F-5339**	4	LUG (3/8-16-THD)	
	3	1	**3G-9190**	3	PLATE	
	4	1	**4D-8128**	2	COUPLING	
	5	1	**8D-3508**	1	BOSS (3/8-16X1-IN)	
M	6	1	**8X-5147**	1	BLOCK (M10X1.5-MM)	
	7	1	**9D-5196**	1	BOSS (3/8-16X3.06-IN)	
	8	1	**9D-5567**	3	BOSS (3/8-16X2.44-IN)	
	9	1	**9D-5659**	5	BOSS (3/8-16X1.19-IN)	
	10	1	**9D-6164**	2	BOSS (3/8-16X1.44-IN)	

M - METRIC PART

336-9245 **BOSS GP-FRAME (**contd.**)** **i06208874**

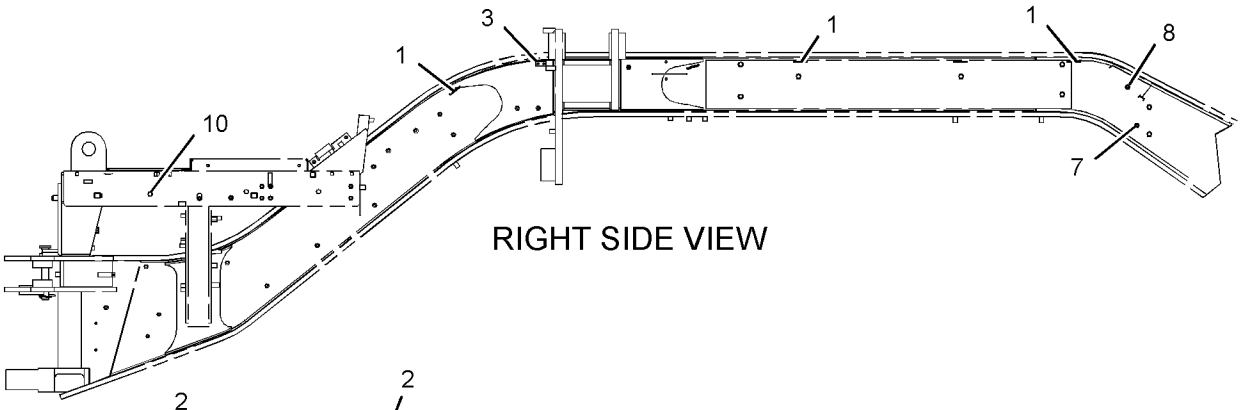

RIGHT SIDE VIEW

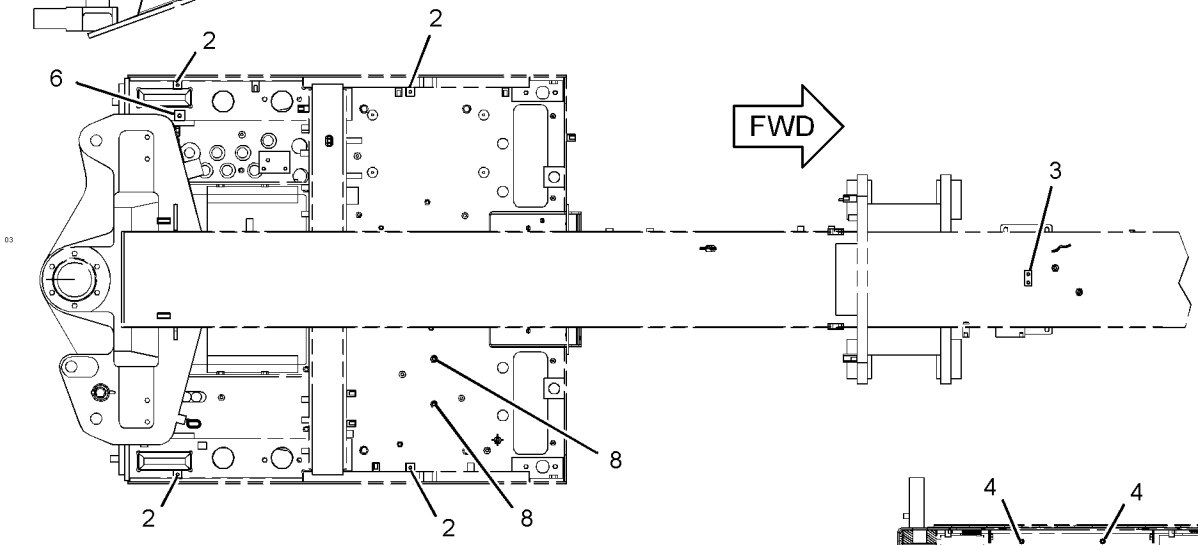

BOTTOM VIEW

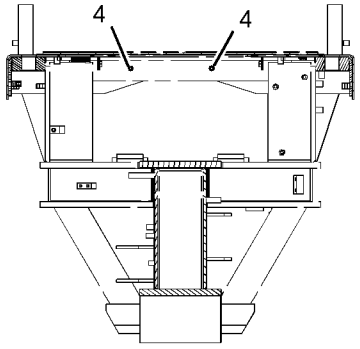

SECTION B-B

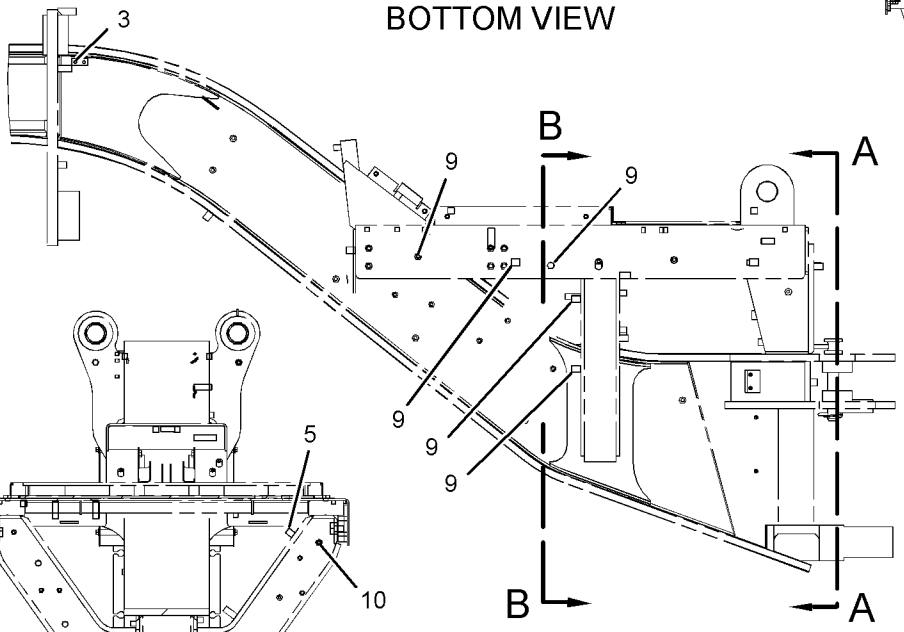

LEFT SIDE VIEW

SECTION A-A

GRAPHIC #1 <END> g03336670

298-3519 BOX GP-BATTERY

S/N: SZS1-623

PART OF 434-4117 BATTERY & BOX GP-HEAVY-DUTY, 434-4115 BATTERY GP, 368-3025 GENERAL

AR

ALSO AN ATTACHMENT

SMCS-7257 **i03854209**

NOTE	REF NO	GRAPHIC REF	PART NUMBER	QTY	PART NAME 1 2 3 4 5 6 (PRODUCT LEVEL)	SEE PAGE
	1	1	**246-2641**	2	PADLOCK GP	
					(EACH INCLUDES)	
		1	**5P-8500**	1	KEY	
	2	1	**143-4792**	4	BUMPER	
	3	1	**298-3522**	1	SUPPORT AS	
	4	1	**298-3523**	1	COVER AS	
		1	**6F-7013**	2	HANDLE	
	5	1	**198-4778**	4	WASHER-HARD (13.5X30X12-MM THK)	
M	6	1	**8T-4184**	4	BOLT (M12X1.75X45-MM)	

M - METRIC PART

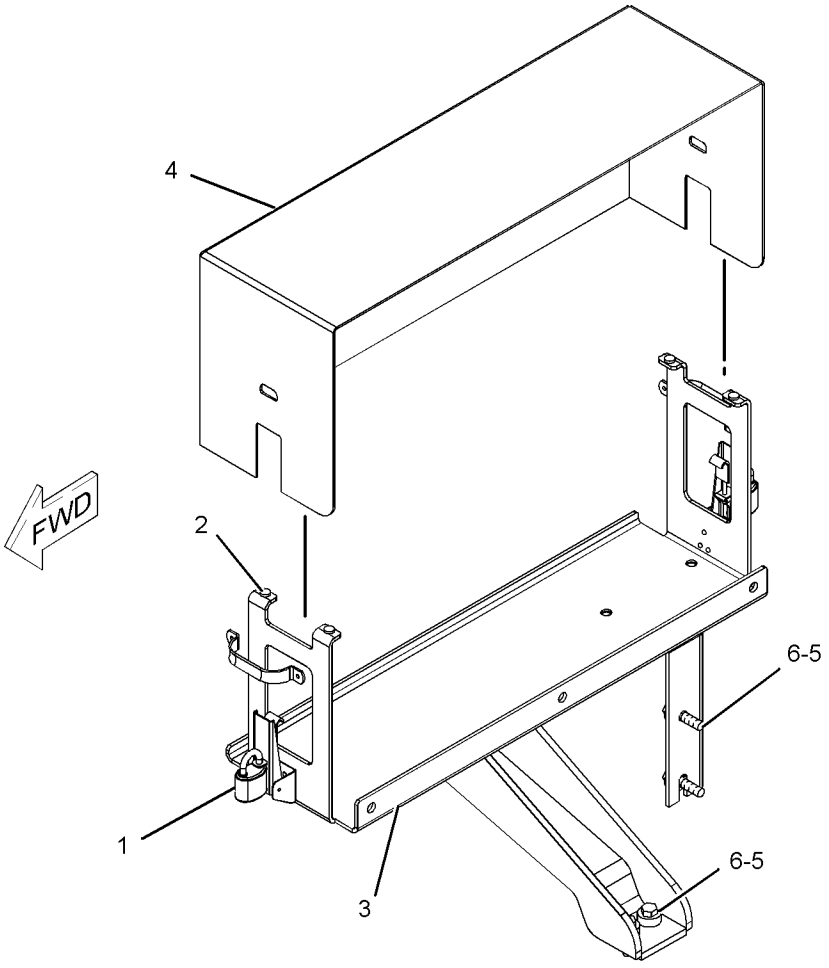

GRAPHIC #1 <END> g02046316

521-3245 BRACKET GP-MOUNTING

S/N: SZS10100-UP

PART OF 521-3250 LUBRICATION AR-CENTRAL

AN ATTACHMENT

SMCS-7220 **i06906620**

NOTE	REF NO	GRAPHIC REF	PART NUMBER	QTY	PART NAME 1 2 3 4 5 6 (PRODUCT LEVEL)	SEE PAGE
	1	1	**447-1655**	1	BRACKET AS	
	2	1	**6V-5839**	3	WASHER (11X21X2.5-MM THK)	
M	3	1	**8T-0722**	3	BOLT-LOCKING (M10X1.5X30-MM)	

M - METRIC PART

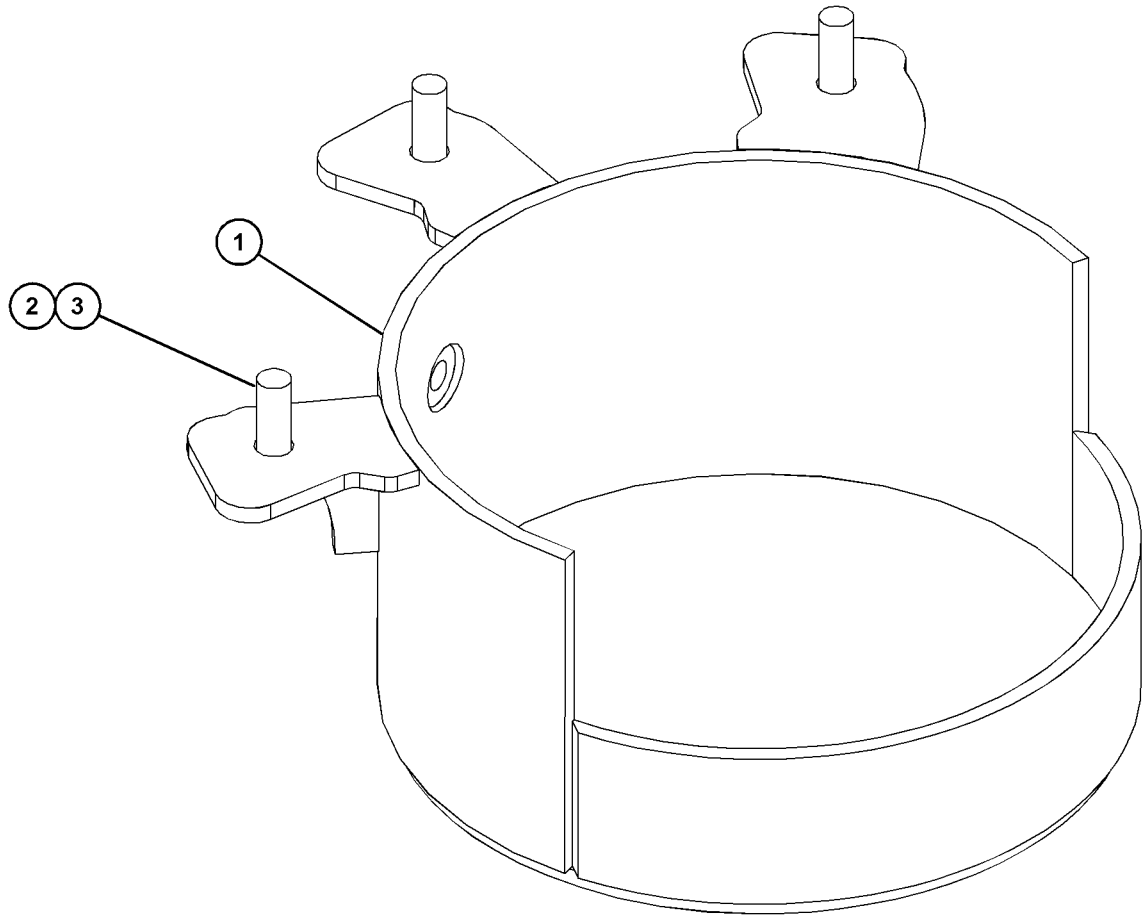

GRAPHIC #1 <END> g06153087

283-7190 BUMPER GP-REAR

S/N: SZS1-UP
HITCH
AN ATTACHMENT

SMCS-7156 **i03856111**

NOTE	REF NO	GRAPHIC REF	PART NUMBER	QTY	PART NAME 1 2 3 4 5 6 (PRODUCT LEVEL)	SEE PAGE
	1	1	**291-6693**	1	BUMPER AS-TOW	
M	2	1	**7X-2575**	8	BOLT (M24X3X60-MM)	
	3	1	**8T-5361**	8	WASHER-HARD (28X49X5-MM THK)	

M - METRIC PART

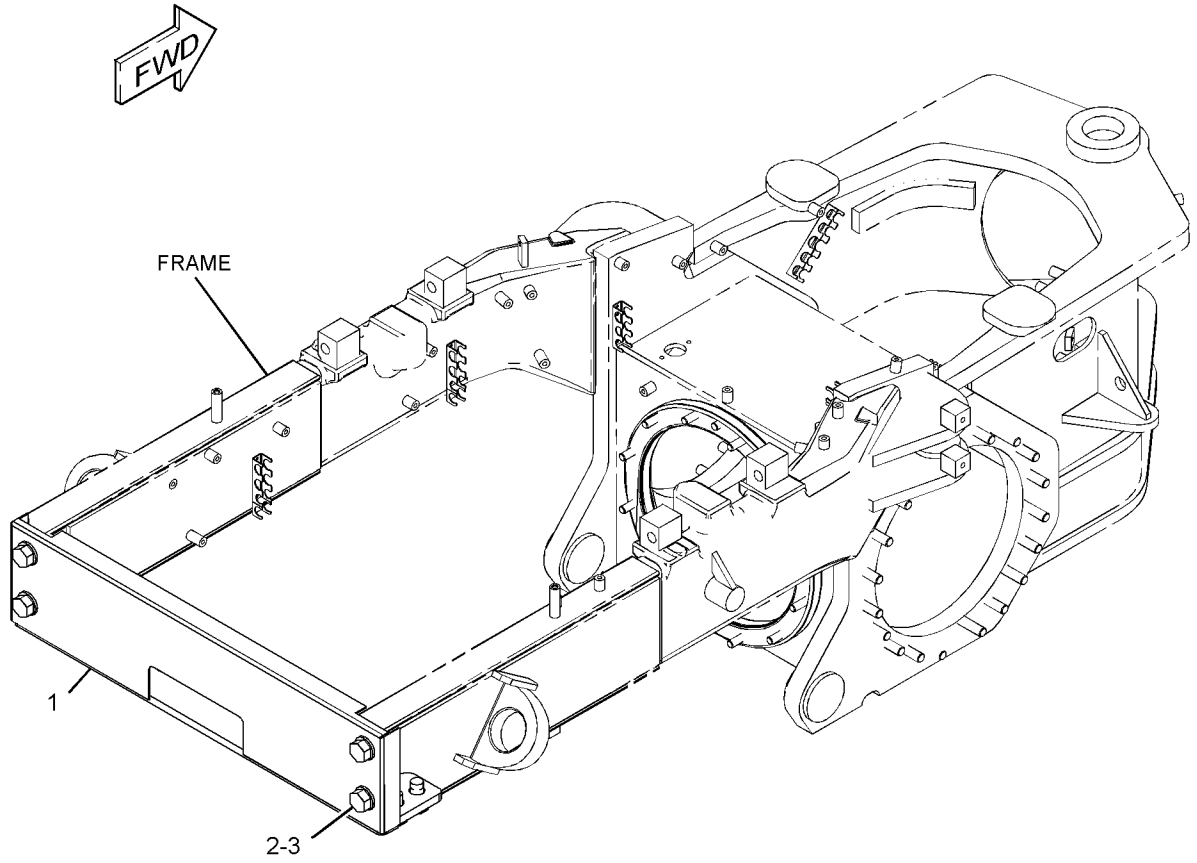

GRAPHIC #1 <END> g01667374

284-5378 BUMPER GP-REAR

S/N: SZS1-623

PART OF 368-3025 GENERAL AR

SMCS-7156 **i03499142**

NOTE	REF NO	GRAPHIC REF	PART NUMBER	QTY	PART NAME 1 2 3 4 5 6 (PRODUCT LEVEL)	SEE PAGE
	1	1	**284-5379**	1	BUMPER AS	
M	2	1	**7X-2575**	6	BOLT (M24X3X60-MM)	
	3	1	**8T-5361**	6	WASHER-HARD (28X49X5-MM THK)	

M - METRIC PART

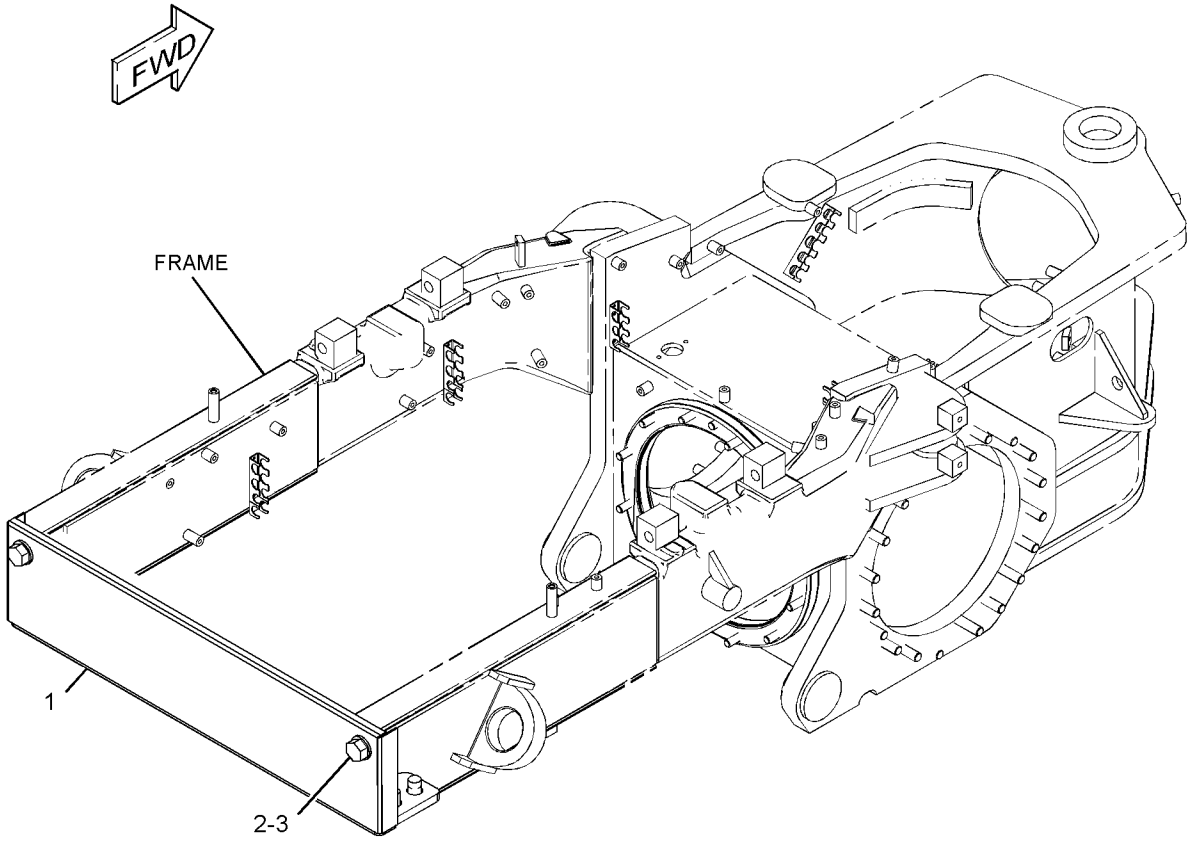

GRAPHIC #1 <END> g01667394

303-2159 CASE & FRAME GP

S/N: SZS1-UP

PART OF 434-3510 FRAME AR, 368-3025 GENERAL AR

SMCS-7051 **i06049051**

NOTE	REF NO	GRAPHIC REF	PART NUMBER	QTY	PART NAME 1 2 3 4 5 6 (PRODUCT LEVEL)	SEE PAGE
	1	1	**2A-3398**	1	GASKET	
	2	1	**8M-3837**	1	PLUG-MAGNETIC (CASE DRAIN) (FINAL DRIVE OIL DRAIN)	
	3	1	**105-6491**	1	BOLT-ADJUSTMENT (5/8-11X3.15-IN)	
	4	1	**293-4835**	1	CASE & FRAME AS	
	5	1	**340-3687**	12	STUD-TAPERLOCK (1/2-13X2.17-IN)	
	6	1	**340-3689**	40	STUD-TAPERLOCK (5/8-11X2.36-IN)	
	7	1	**4D-8148**	1	DOWEL	
	8	1	**4K-0367**	1	NUT-FULL (5/8-11-THD)	

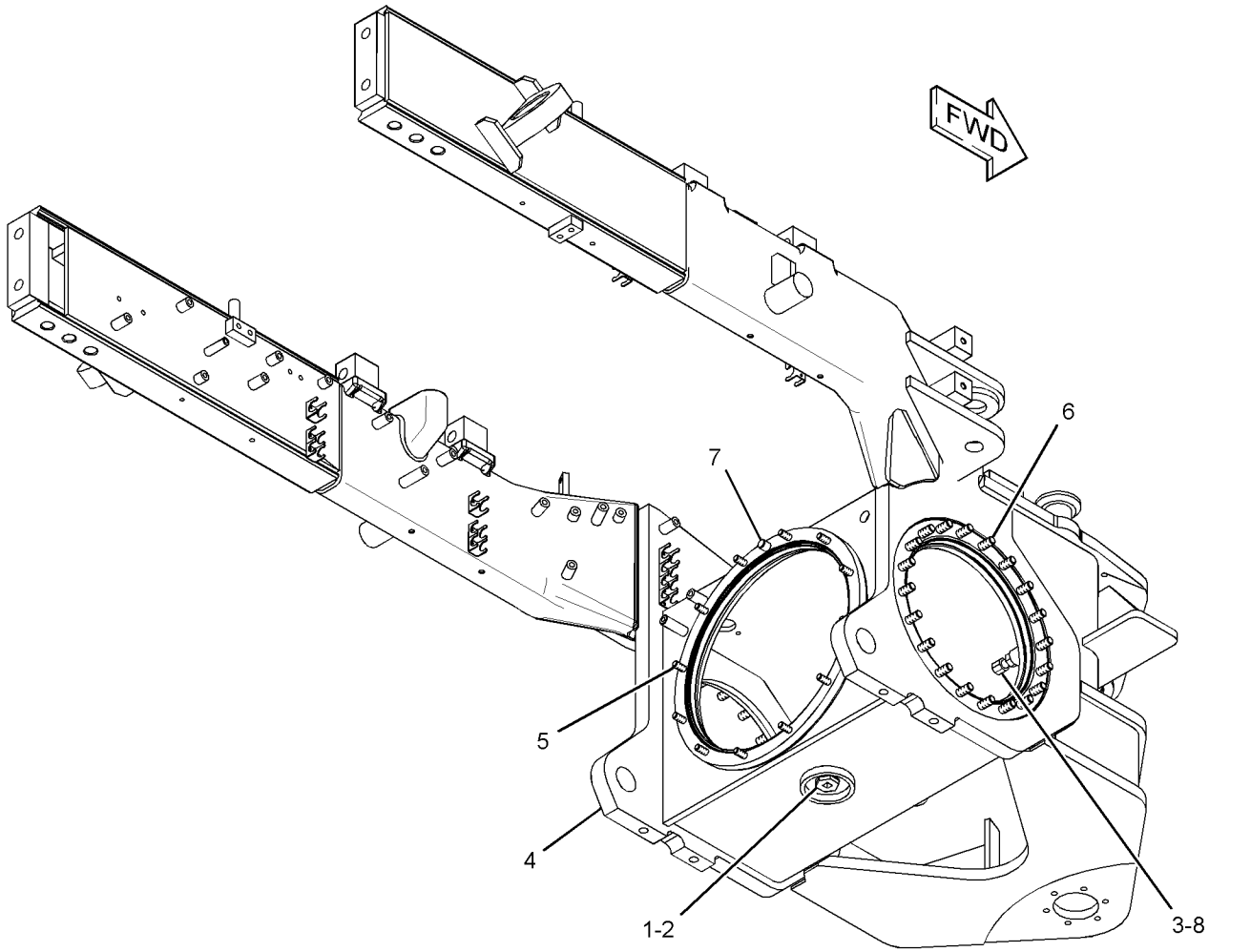

GRAPHIC #1 <END> g01950779

336-5530 COVER GP-ACCESS–PLATFORM

S/N: SZS1-UP

PART OF 336-4249, 337-3100, 394-0862, 435-1526, 435-1548 GRADE CONTROL AR AN ATTACHMENT

SMCS-726A **i06522473**

NOTE	REF NO	GRAPHIC REF	PART NUMBER	QTY	PART NAME 1 2 3 4 5 6 (PRODUCT LEVEL)	SEE PAGE
	1	1	**4T-8050**	1	SPACER (11X19X57-MM THK)	
	2	1	**129-5049**	4	BRACKET AS	
	3	1	**224-5912**	1	BRACKET	
	4	1	**226-1240**	2	FILM-WARNING (CRUSH HAZARD, STAY BACK, INTL)	
	5	1	**231-5251**	1	BRACKET	
	6	1	**245-3930**	1	COVER (RH)	
	7	1	**478-6234**	1	COVER (LH)	
	8	1	**5M-3062**	4	BOLT (3/8-16X0.75-IN)	
	9	1	**5P-1075**	12	WASHER-HARD (10.2X22.5X3-MM THK)	
	10	1	**5S-7382**	2	BOLT (3/8-16X1.375-IN)	
	11	1	**6V-1889**	1	CLIP	
	12	1	**6V-8801**	2	NUT (3/8-16-THD)	
	13	1	**8T-8915**	5	BOLT (3/8-16X3.25-IN)	
	14	1	**8T-4896**	1	WASHER-HARD (10.2X18.5X2.5-MM THK)	

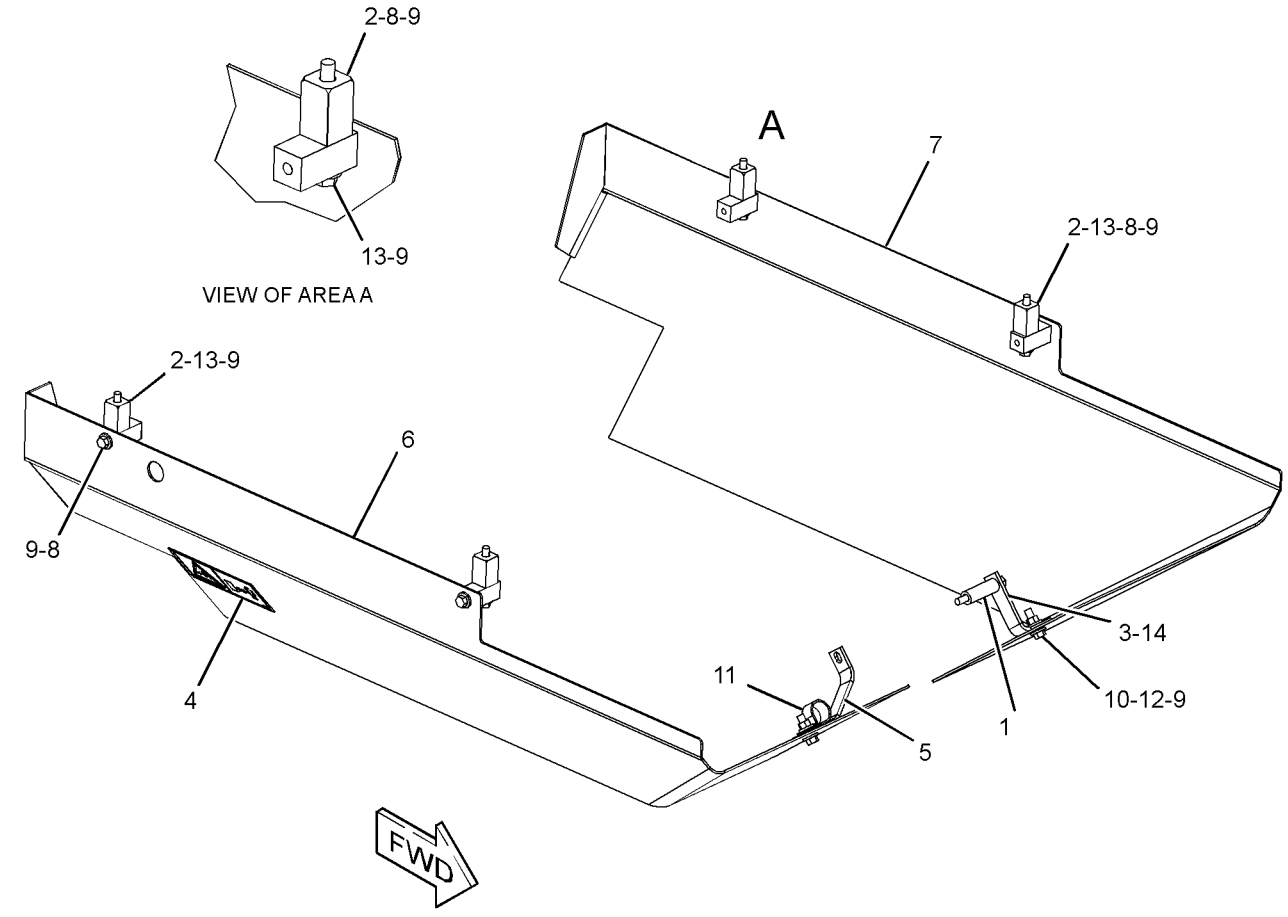

GRAPHIC #1 <END> g06008134

434-6743 COVER GP-ACCESS

S/N: SZS1-10099

PART OF 461-0561 OPTION AR-CAB, 461-0560 OPTION AR-ROADING

AN ATTACHMENT

SMCS-726A **i05865557**

NOTE	REF NO	GRAPHIC REF	PART NUMBER	QTY	PART NAME 1 2 3 4 5 6 (PRODUCT LEVEL)	SEE PAGE
	1	1	**2G-8572**	1	WASHER-SPECIAL	
	2	1	**2G-8573**	1	CAP	
	3	1	**6V-3928**	1	PLUG-BUTTON	
	4	1	**115-9923**	1	COVER (LH)	
	5	1	**122-8795**	2	PLATE	
	6	1	**096-6166**	3	WASHER-HARD (4.5X9X1-MM THK)	
	7	1	**2G-8767**	1	WASHER (10.5X60X3-MM THK)	
M	8	1	**5C-8312**	3	NUT (M4X0.7-THD)	
	9	1	**9R-2620**	1	PLUG	
M	10	1	**9X-1046**	3	SCREW (M4X0.7X18-MM)	

M - METRIC PART

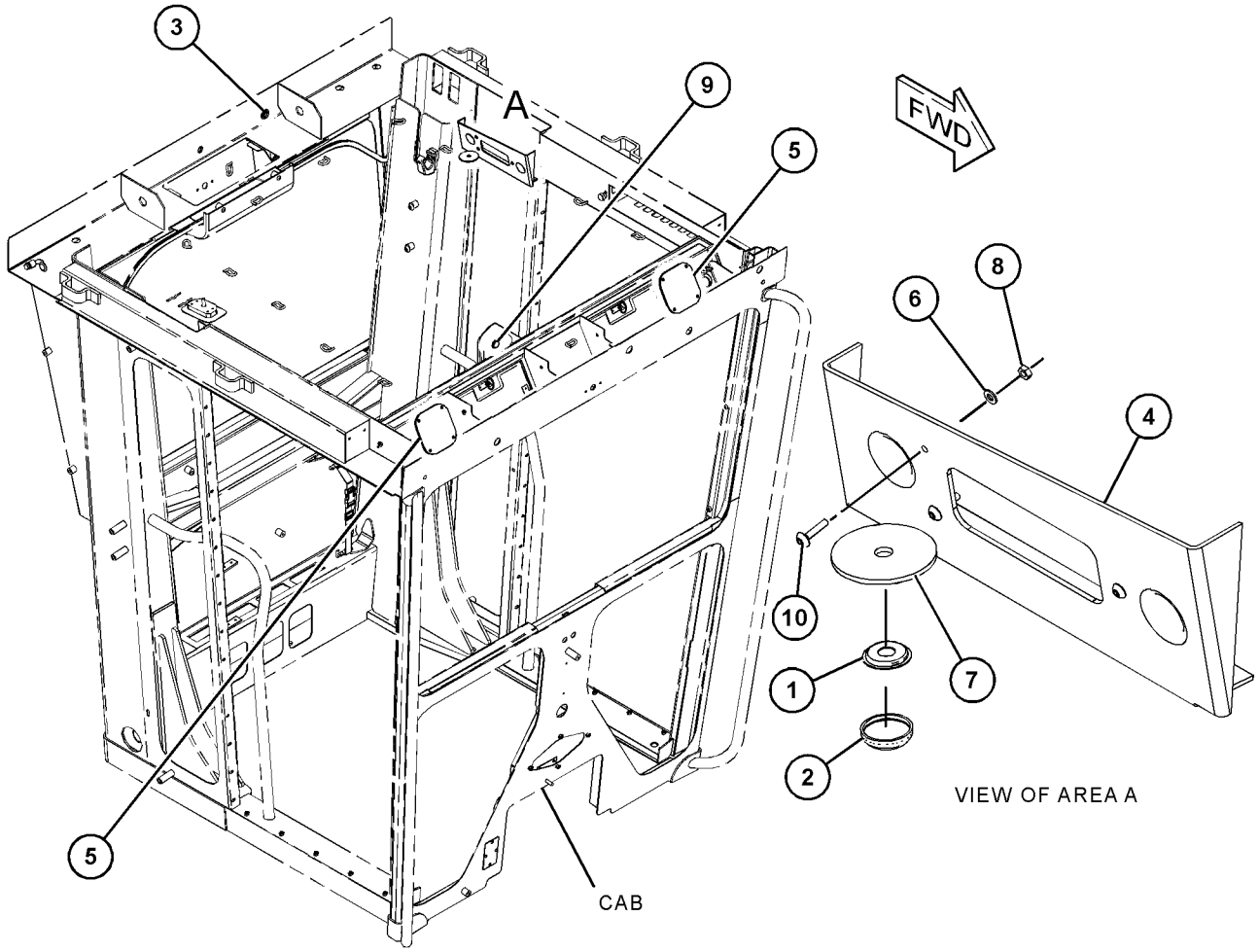

GRAPHIC #1 <END> g03704600

518-3381 COVER GP-ACCESS

S/N: SZS10100-UP

PART OF 461-0561 OPTION AR-CAB, 461-0560 OPTION AR-ROADING AN ATTACHMENT

SMCS-726A **i06908126**

NOTE	REF NO	GRAPHIC REF	PART NUMBER	QTY	PART NAME 1 2 3 4 5 6 (PRODUCT LEVEL)	SEE PAGE
	1	1	**2G-8572**	1	WASHER-SPECIAL	
	2	1	**2G-8573**	1	CAP	
	3	1	**6V-3928**	1	PLUG-BUTTON	
	4	1	**122-8795**	2	PLATE	
	5	1	**512-5975**	1	COVER	
	6	1	**096-6166**	3	WASHER-HARD (4.5X9X1-MM THK)	
	7	1	**2G-8767**	1	WASHER (10.5X60X3-MM THK)	
M	8	1	**5C-8312**	3	NUT (M4X0.7-THD)	
	9	1	**9R-2620**	1	PLUG	
M	10	1	**9X-1046**	3	SCREW (M4X0.7X18-MM)	

M - METRIC PART

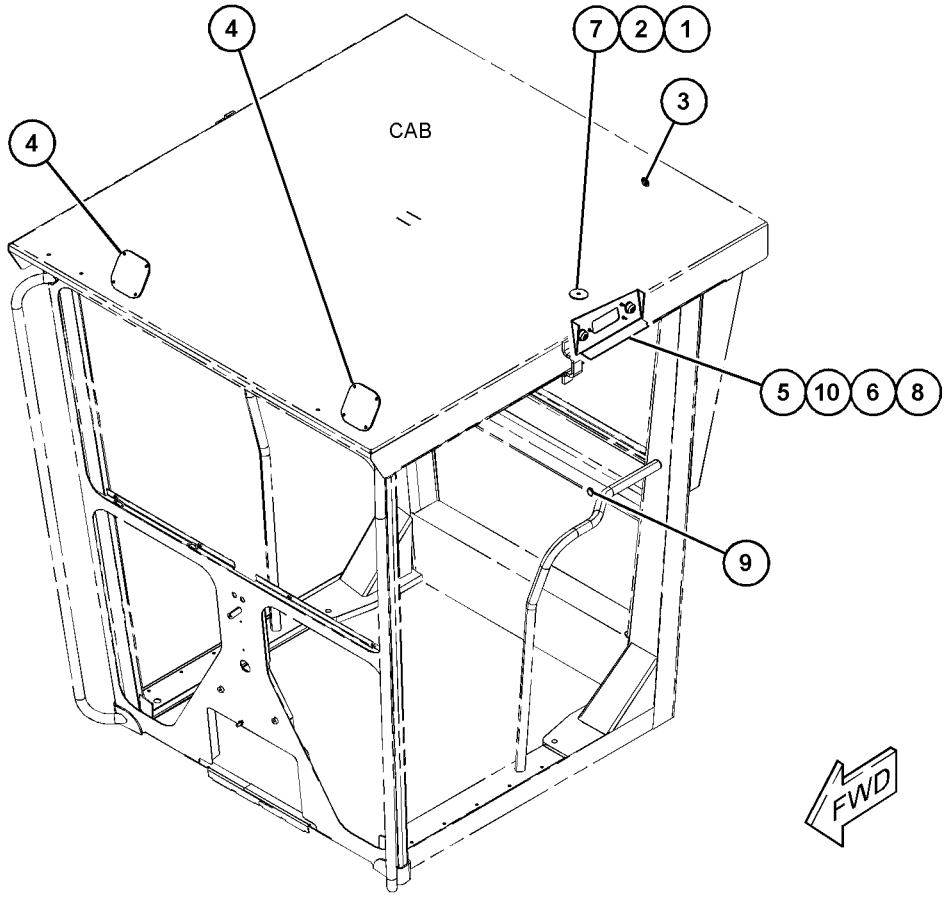

GRAPHIC #1 <END> g06167977

293-4833 ENCLOSURE GP-ENGINE

S/N: SZS1-UP

PART OF 436-7761 CHASSIS AR, 368-3025 GENERAL AR

SMCS-7263 **i06107806**

NOTE	REF NO	GRAPHIC REF	PART NUMBER	QTY	PART NAME 1 2 3 4 5 6 (PRODUCT LEVEL)	SEE PAGE
	1	1	**3T-5763**	2	BUMPER	
	2	1,2	**7I-4959**	4	BRACKET-HINGE	
	3	2	**7I-4960**	2	HINGE AS	
	4	2	**7I-4979**	2	HINGE AS	
	5	1	**7I-4981**	2	HINGE AS	
	6	1	**7I-4982**	2	HINGE AS	
	7	2	**7X-1387**	4	WASHER (10.26X22.22X1.9-MM THK)	
	8	2	**8D-3786**	4	MOUNTING	
	9	2	**123-5980**	2	ROD	
	10	2	**134-0165**	6	WASHER (13.8X45X3-MM THK)	
	11	1	**177-4119**	2	HANDRAIL	
	12	2	**177-4120**	2	HANDHOLD	
	13	1	**194-7015**	2	HANDRAIL	
J	14	1	**275-0572**	1	LATCH AS	
	15	1	**294-4619**	1	PANEL AS (LH)	
	16	1	**294-4621**	1	PANEL AS (RH)	
	17	1	**295-3839**	2	PAWL	
	18	1	**426-2118**	1	HOOD AS	
	19	1	**351-8660**	1	DASH AS	
	20	2	**298-8562**	1	PLATE AS	
	21	1	**298-8563**	1	PLATE AS	
	23	2	**304-7252**	2	BRACKET AS	
	24	1,2	**304-7417**	2	PLATE AS	
	25	1,2	**304-7418**	8	PLATE AS	
	26	1	**304-7419**	2	PLATE AS	
	27	2	**305-7827**	2	PLATE	
	28	1	**310-6534**	1	DOOR AS-ACCESS (RH)	
	29	1	**310-6535**	1	DOOR AS-ACCESS (LH)	
	30	2	**312-8529**	1	BRACKET AS (RH)	
	31	1	**312-8530**	1	BRACKET AS (LH)	
					(EACH BRACKET AS INCLUDES)	
		1	**4K-9097**	1	NUT-WELD (5/16-18-THD)	
	32	2	**313-4374**	2	BRACKET	
	33	1	**316-5743**	1	COVER AS	
		1	**3R-9322**	1	HINGE	
M		1	**6V-9632**	3	NUT-WELD (M6X1-THD)	
	34	1	**317-7250**	1	CAM-LATCH	
J	35	1	**326-0610**	2	LATCH AS	
					(EACH INCLUDES)	
			1H-3244	4	LOCKWASHER	
M			**095-1207**	2	NUT (M12X1.75-THD)	
			326-0612	2	WASHER-TAB	
M			**344-5673**	4	NUT (M6X1-THD)	
	36	1	**336-4754**	1	SUPPORT AS (LH)	
	37	1	**336-4756**	1	SUPPORT AS (RH)	
	38	2	**3B-4615**	4	PIN-COTTER	
	39	1	**3V-0613**	6	BUMPER	
M	40	1	**5C-9553**	3	BOLT (M6X1X16-MM)	

293-4833 **ENCLOSURE GP-ENGINE (**contd.**)** **i06107806**

NOTE	REF NO	GRAPHIC REF	PART NUMBER	QTY	PART NAME 1 2 3 4 5 6 (PRODUCT LEVEL)	SEE PAGE
	41	2	**5P-8439**	2	GROMMET	
	42	1	**6V-8189**	2	NUT (5/16-18-THD)	
	43	2	**7X-0550**	4	WASHER-HARD (13.5X32X5-MM THK)	
	44	2	**7X-0618**	2	WASHER-HARD (13.5X40X5-MM THK)	
	45	1,2	**7X-7729**	71	WASHER (11X25X3-MM THK)	
	46	1	**8T-2561**	4	WASHER-HARD (10.5X28.5X5-MM THK)	
M	47	1	**8T-4133**	2	NUT (M10X1.5-THD)	
M	48	1,2	**8T-4136**	55	BOLT (M10X1.5X25-MM)	
M	49	1	**8T-4137**	10	BOLT (M10X1.5X20-MM)	
M	50	2	**8T-4183**	4	BOLT (M12X1.75X40-MM)	
M	51	2	**8T-4194**	4	BOLT (M12X1.75X50-MM)	
M	52	1,2	**8T-4195**	8	BOLT (M10X1.5X30-MM)	
	53	1	**8T-4224**	2	WASHER-HARD (8.8X16X2-MM THK)	
M	54	2	**8T-4244**	2	NUT (M12X1.75-THD)	
	56	2	**8X-5155**	2	PLATE	
	57	1	**9X-8256**	3	WASHER (6.6X12X2-MM THK)	
	58	2	**349-6212**	1	INSULATION	
M	59	1	**8T-4908**	4	BOLT (M8X1.25X25-MM)	
	60	1	**5P-4116**	4	WASHER-HARD (8.8X20.5X2-MM THK)	

J - REQUIRES CORPORATE KEY
M - METRIC PART

293-4833 **ENCLOSURE GP-ENGINE (**contd.**)** **i06107806**

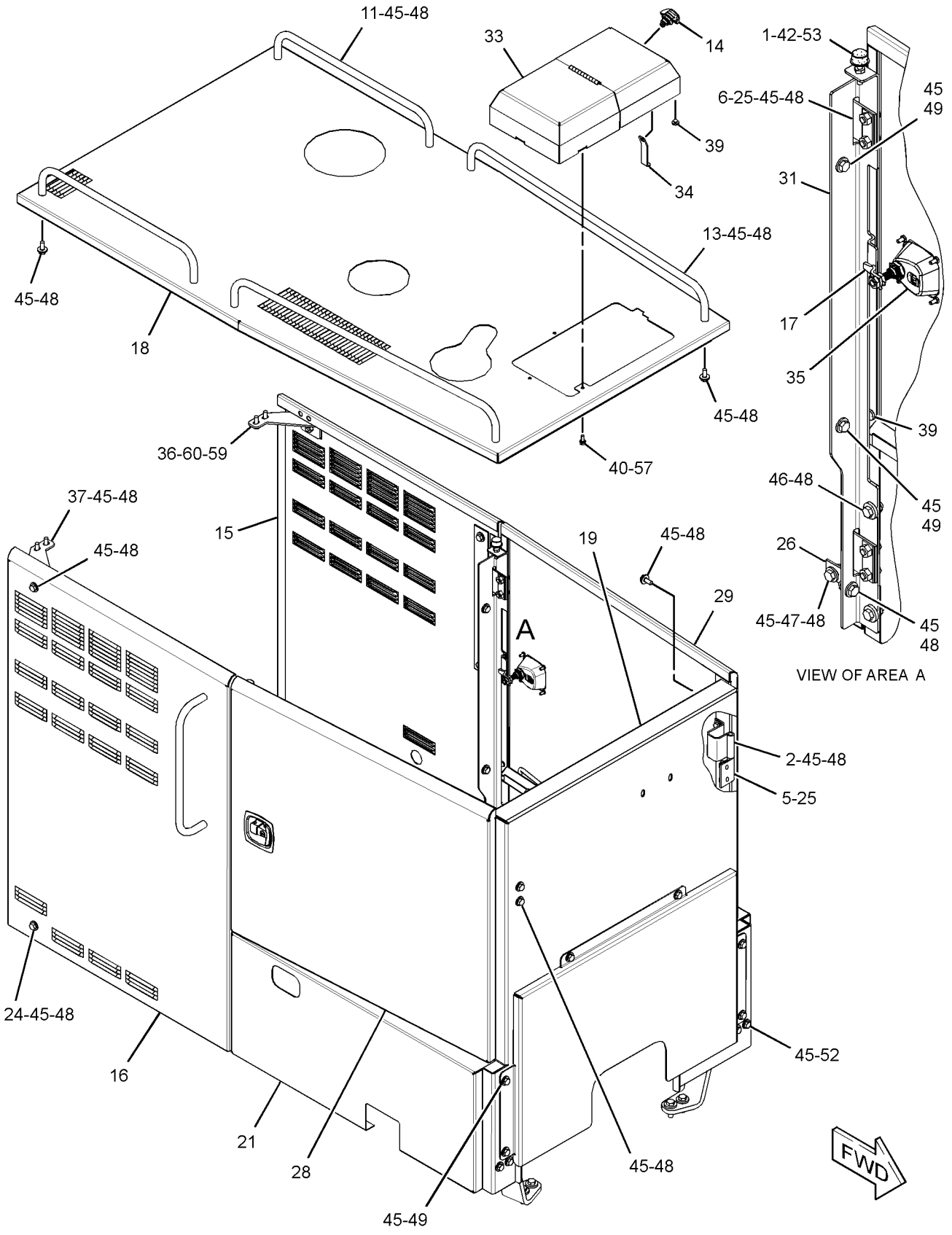

GRAPHIC #1 g01957783

293-4833 **ENCLOSURE GP-ENGINE (**contd.**)** **i06107806**

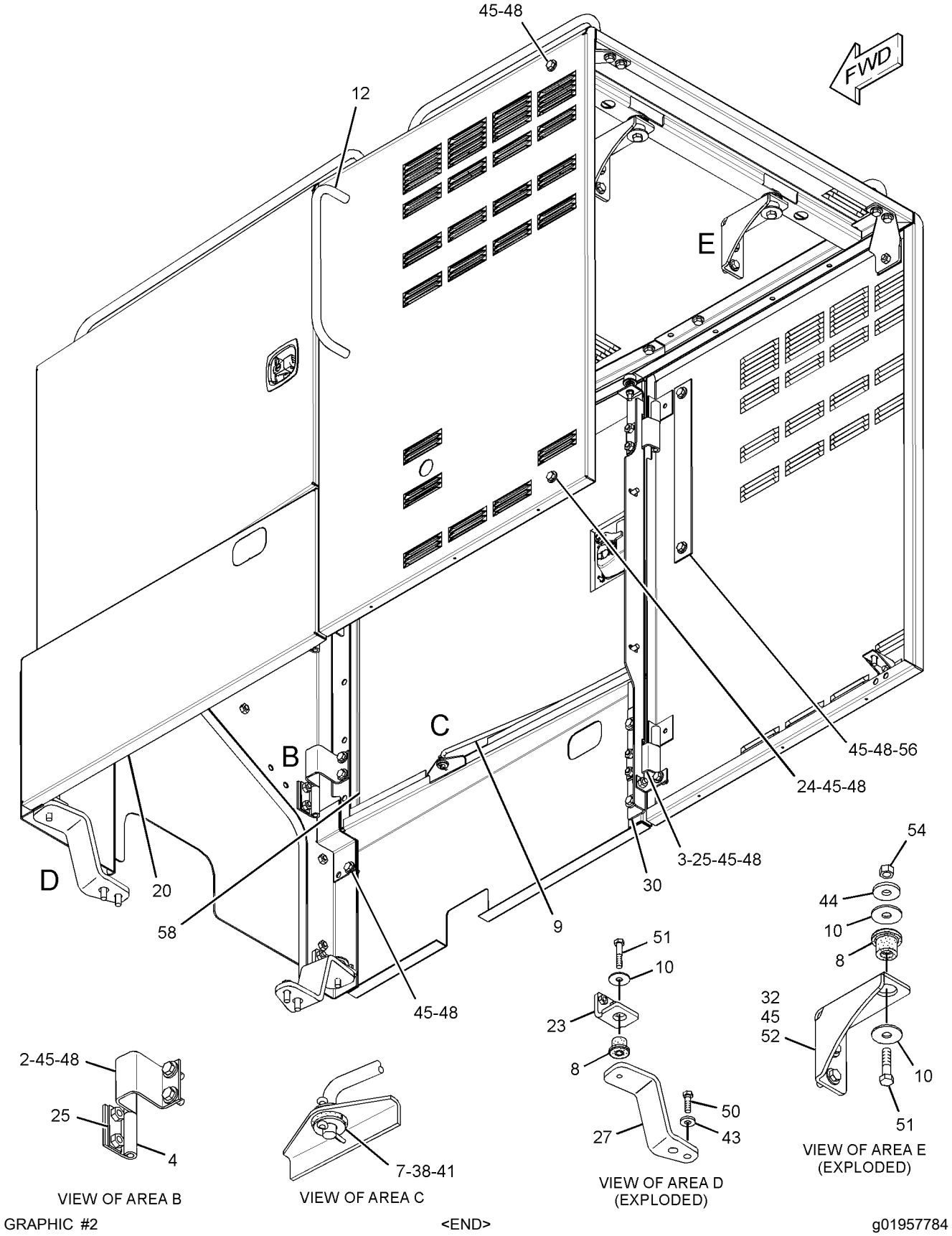

GRAPHIC #2 <END> g01957784

293-4833 ENCLOSURE GP-ENGINE

S/N: SZS624-UP

PART OF 436-7761 CHASSIS AR

SMCS-7263 **i06264442**

NOTE	REF NO	GRAPHIC REF	PART NUMBER	QTY	PART NAME 1 2 3 4 5 6 (PRODUCT LEVEL)	SEE PAGE
	1	1	**3T-5763**	2	BUMPER	
	2	1,2	**7I-4959**	4	BRACKET-HINGE	
	3	2	**7I-4960**	2	HINGE AS	
	4	2	**7I-4979**	2	HINGE AS	
	5	1	**7I-4981**	2	HINGE AS	
	6	1	**7I-4982**	2	HINGE AS	
	7	2	**7X-1387**	4	WASHER (10.26X22.22X1.9-MM THK)	
	8	2	**8D-3786**	4	MOUNTING	
	9	2	**123-5980**	2	ROD	
	10	2	**134-0165**	6	WASHER (13.8X45X3-MM THK)	
	11	1	**177-4119**	2	HANDRAIL	
	12	2	**177-4120**	2	HANDHOLD	
	13	1	**194-7015**	2	HANDRAIL	
J	14	1	**275-0572**	1	LATCH AS	
C	15	1	**465-8551**	1	PANEL AS-ENCLOSURE (LH)	
C	16	1	**465-8553**	1	PANEL AS-ENCLOSURE (RH)	
	17	1	**295-3839**	2	PAWL	
C	18	1	**465-8555**	1	HOOD AS-ENGINE	
	19	1	**351-8660**	1	DASH AS	
	20	2	**298-8562**	1	PLATE AS	
	21	1	**298-8563**	1	PLATE AS	
	23	2	**304-7252**	2	BRACKET AS	
	24	1,2	**304-7417**	2	PLATE AS	
	25	1,2	**304-7418**	8	PLATE AS	
	26	1	**304-7419**	2	PLATE AS	
	27	2	**305-7827**	2	PLATE	
	28	1	**310-6534**	1	DOOR AS-ACCESS (RH)	
	29	1	**310-6535**	1	DOOR AS-ACCESS (LH)	
	30	2	**312-8529**	1	BRACKET AS (RH)	
	31	1	**312-8530**	1	BRACKET AS (LH)	
					(EACH BRACKET AS INCLUDES)	
		1	**4K-9097**	1	NUT-WELD (5/16-18-THD)	
	32	2	**313-4374**	2	BRACKET	
	33	1	**316-5743**	1	COVER AS	
		1	**3R-9322**	1	HINGE	
M		1	**6V-9632**	3	NUT-WELD (M6X1-THD)	
	34	1	**317-7250**	1	CAM-LATCH	
J	35	1	**326-0610**	2	LATCH AS	
					(EACH INCLUDES)	
		1	**1H-3244**	4	LOCKWASHER	
M		1	**095-1207**	2	NUT (M12X1.75-THD)	
		1	**326-0612**	2	WASHER-TAB	
M		1	**344-5673**	4	NUT (M6X1-THD)	
	36	1	**336-4754**	1	SUPPORT AS (LH)	
	37	1	**336-4756**	1	SUPPORT AS (RH)	
	38	2	**3B-4615**	4	PIN-COTTER	
	39	1	**3V-0613**	6	BUMPER	
M	40	1	**5C-9553**	3	BOLT (M6X1X16-MM)	

293-4833 **ENCLOSURE GP-ENGINE (**contd.**)** **i06264442**

NOTE	REF NO	GRAPHIC REF	PART NUMBER	QTY	PART NAME 1 2 3 4 5 6 (PRODUCT LEVEL)	SEE PAGE
	41	2	**5P-8439**	2	GROMMET	
	42	1	**6V-8189**	2	NUT (5/16-18-THD)	
	43	2	**7X-0550**	4	WASHER-HARD (13.5X32X5-MM THK)	
	44	2	**7X-0618**	2	WASHER-HARD (13.5X40X5-MM THK)	
	45	1,2	**7X-7729**	71	WASHER (11X25X3-MM THK)	
	46	1	**8T-2561**	4	WASHER-HARD (10.5X28.5X5-MM THK)	
M	47	1	**8T-4133**	2	NUT (M10X1.5-THD)	
M	48	1,2	**8T-4136**	55	BOLT (M10X1.5X25-MM)	
M	49	1	**8T-4137**	10	BOLT (M10X1.5X20-MM)	
M	50	2	**8T-4183**	4	BOLT (M12X1.75X40-MM)	
M	51	2	**8T-4194**	4	BOLT (M12X1.75X50-MM)	
M	52	1,2	**8T-4195**	8	BOLT (M10X1.5X30-MM)	
	53	1	**8T-4224**	2	WASHER-HARD (8.8X16X2-MM THK)	
M	54	2	**8T-4244**	2	NUT (M12X1.75-THD)	
	56	2	**8X-5155**	2	PLATE	
	57	1	**9X-8256**	3	WASHER (6.6X12X2-MM THK)	
	58	2	**349-6212**	1	INSULATION	
M	59	1	**8T-4908**	4	BOLT (M8X1.25X25-MM)	
	60	1	**5P-4116**	4	WASHER-HARD (8.8X20.5X2-MM THK)	

C - CHANGE FROM PREVIOUS TYPE
J - REQUIRES CORPORATE KEY
M - METRIC PART

293-4833 **ENCLOSURE GP-ENGINE (**contd.**)** **i06264442**

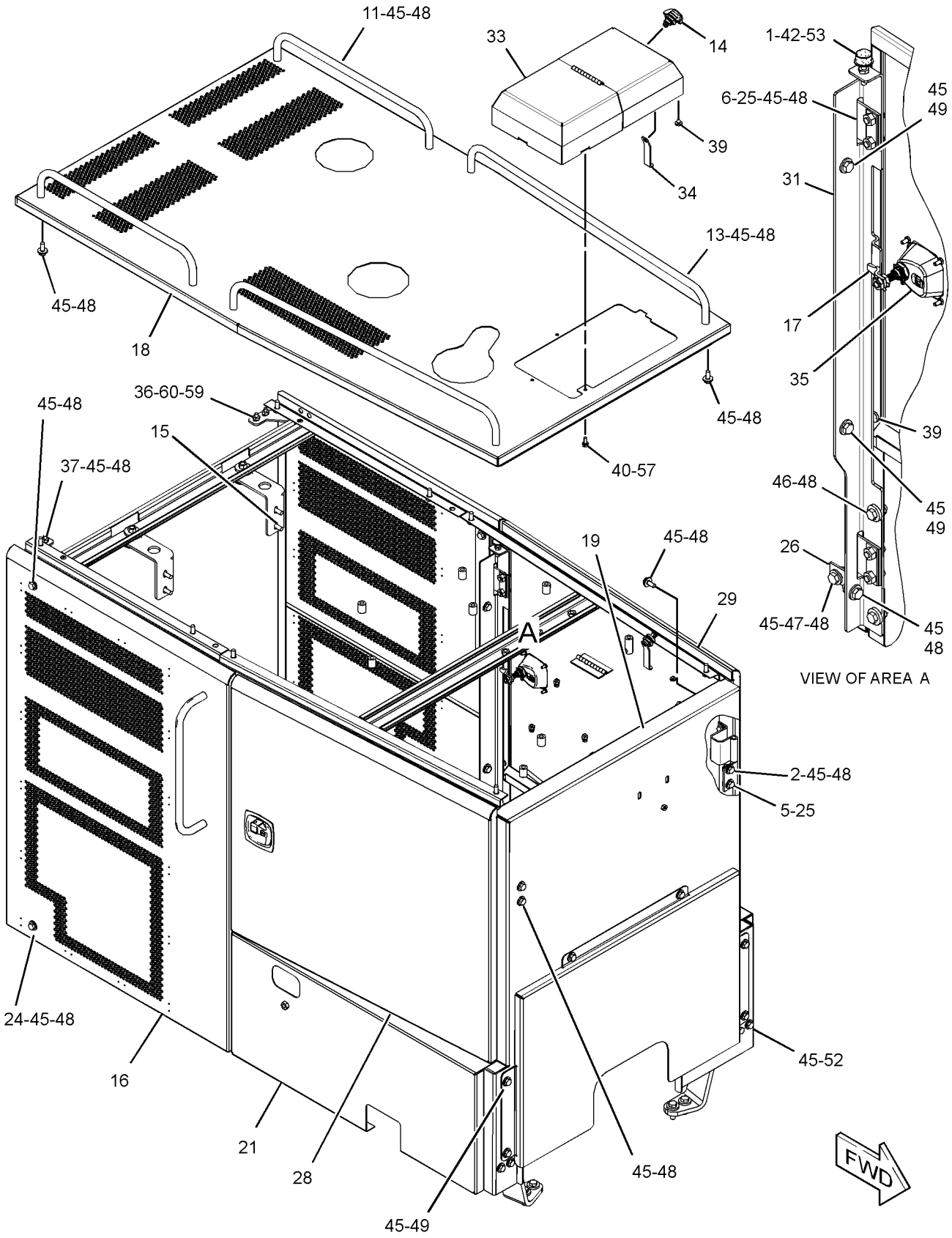

GRAPHIC #1 g03886997

293-4833 **ENCLOSURE GP-ENGINE (**contd.**)** **i06264442**

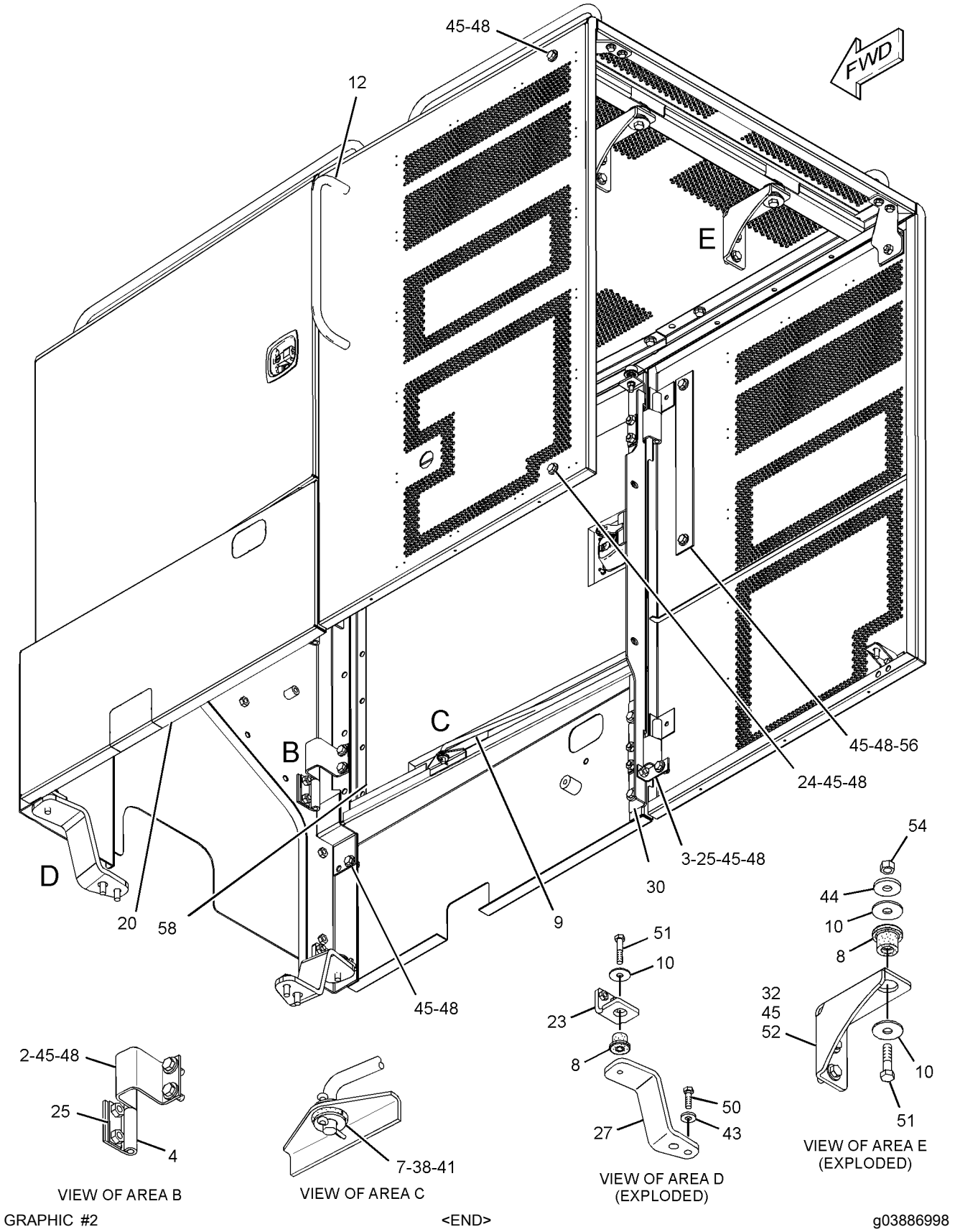

GRAPHIC #2 <END> g03886998

434-3510 FRAME AR

S/N: SZS624-UP

PART OF 435-1521 COMMON AR

SMCS-7050, 7051

i06214394

NOTE	PART NUMBER	QTY	PART NAME 1 2 3 4 5 6 (PRODUCT LEVEL)	SEE PAGE
Y	*303-2159*	1	CASE & FRAME GP	686
Y	*309-4095*	1	FRAME GP-FRONT	699
Y	*338-9747*	1	HITCH GP-ARTICULATING	712

Y - SEPARATE ILLUSTRATION

<END>

309-4095 FRAME GP-FRONT

S/N: SZS1-UP

PART OF 434-3510 FRAME AR, 368-3025 GENERAL AR

SMCS-7050, 7051

i05532019

NOTE	REF NO	GRAPHIC REF	PART NUMBER	QTY	PART NAME 1 2 3 4 5 6 (PRODUCT LEVEL)	SEE PAGE
	1	1	**8D-3791**	1	PIN	
	2	1	**9D-6584**	9	SEAL-LIP TYPE	
	3	1	**9D-9257**	1	PIN	
	4	1	**142-1814**	2	COVER	
	5	1	**144-2161**	1	PLATE	
	6	1	**144-2162**	1	INSULATION	
	7	1	**145-5966**	1	COVER	
	8	1	**145-5967**	1	COVER	
	9	1	**283-0644**	1	PLATE AS	
	10	1	**309-4096**	1	FRAME AS	
	11	1	**5M-3062**	20	BOLT (3/8-16X0.75-IN)	
	12	1	**5P-1075**	20	WASHER-HARD (10.2X22.5X3-MM THK)	
	13	1	**7X-7729**	7	WASHER (11X25X3-MM THK)	
M	14	1	**8T-4136**	7	BOLT (M10X1.5X25-MM)	
	16	1	**9D-0178**	4	BEARING	
	17	1	**9D-3311**	1	BUSHING	
E	18	1	**144-7620**		TAPE (50-CM EACH)	
E	18A	1	**144-7620**		TAPE (87-CM)	
E	18B	1	**144-7620**		TAPE (26.5-CM EACH)	
D	19	1	**5P-5969**		SEAL (0.1-M)	
D	19A	1	**5P-5969**		SEAL (0.05-M)	

D - ORDER BY THE METER
E - ORDER BY THE CENTIMETER
M - METRIC PART

309-4095 **FRAME GP-FRONT (**contd.**)** **i05532019**

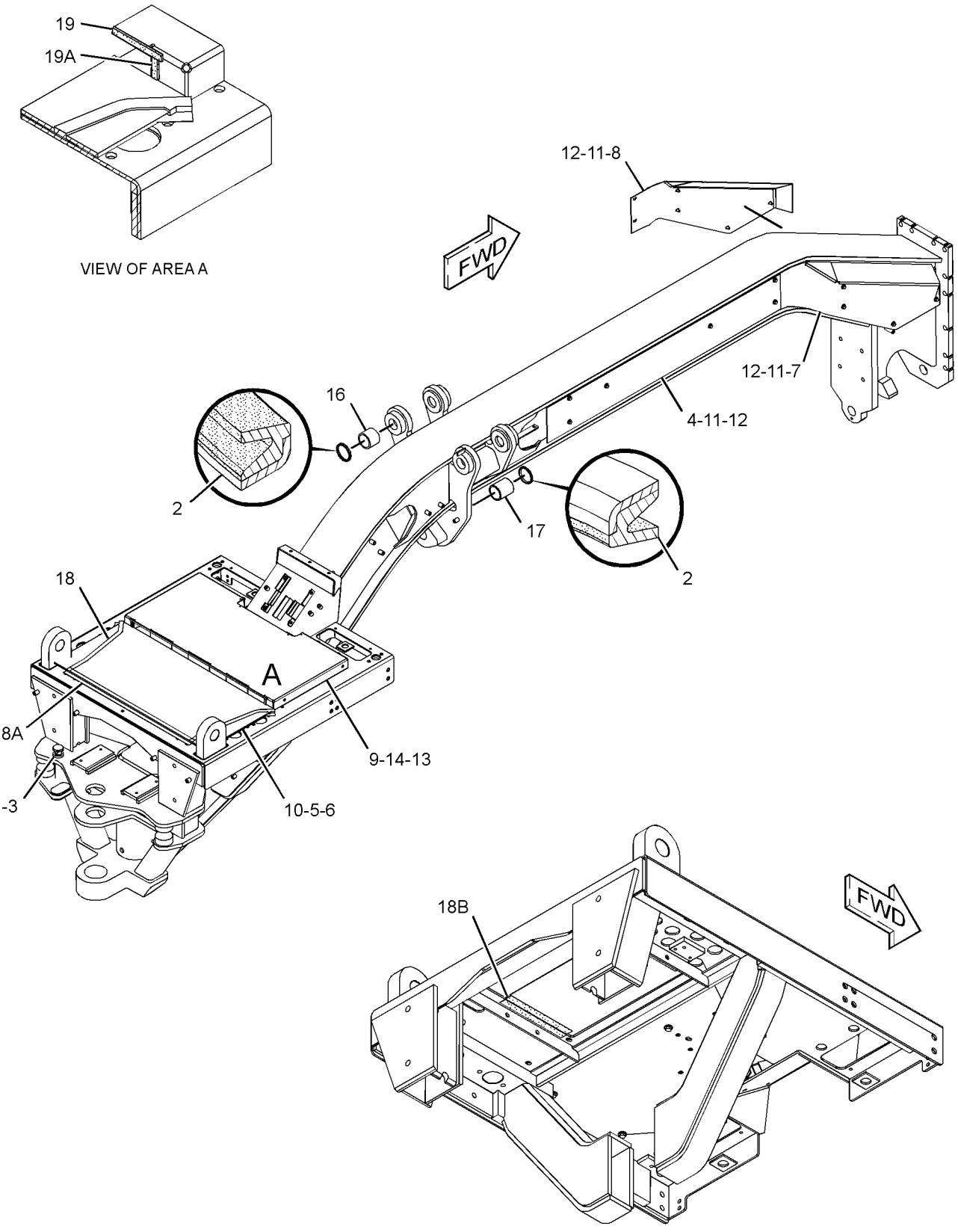

GRAPHIC #1 <END> g03507370

334-5760 GUARD GP-BOTTOM—TRANSMISSION

S/N: SZS1-UP

PART OF 348-6937 OPTION AR-GUARD, 348-6936 OPTION AR-WORK TOOL AN ATTACHMENT

SMCS-7153 **i03752791**

NOTE	REF NO	GRAPHIC REF	PART NUMBER	QTY	PART NAME 1 2 3 4 5 6 (PRODUCT LEVEL)	SEE PAGE
	1	1	**7D-7496**	2	PIN AS	
	2	1	**8W-6626**	2	CAP	
	3	1	**352-1511**	1	SUPPORT AS	
	4	1	**350-6658**	1	GUARD AS-BOTTOM	
	5	1	**3B-7740**	2	NIPPLE-PIPE	
	6	1	**8K-0530**	2	PIN-CABLE SOCKET	
M	7	1	**8T-4183**	8	BOLT (M12X1.75X40-MM)	
	8	1	**8T-4223**	8	WASHER-HARD (13.5X25.5X3-MM THK)	
	9	1	**8T-5439**	4	WASHER-HARD (21.5X45X6-MM THK)	
M	10	1	**8T-6430**	4	BOLT (M20X2.5X50-MM)	

M - METRIC PART

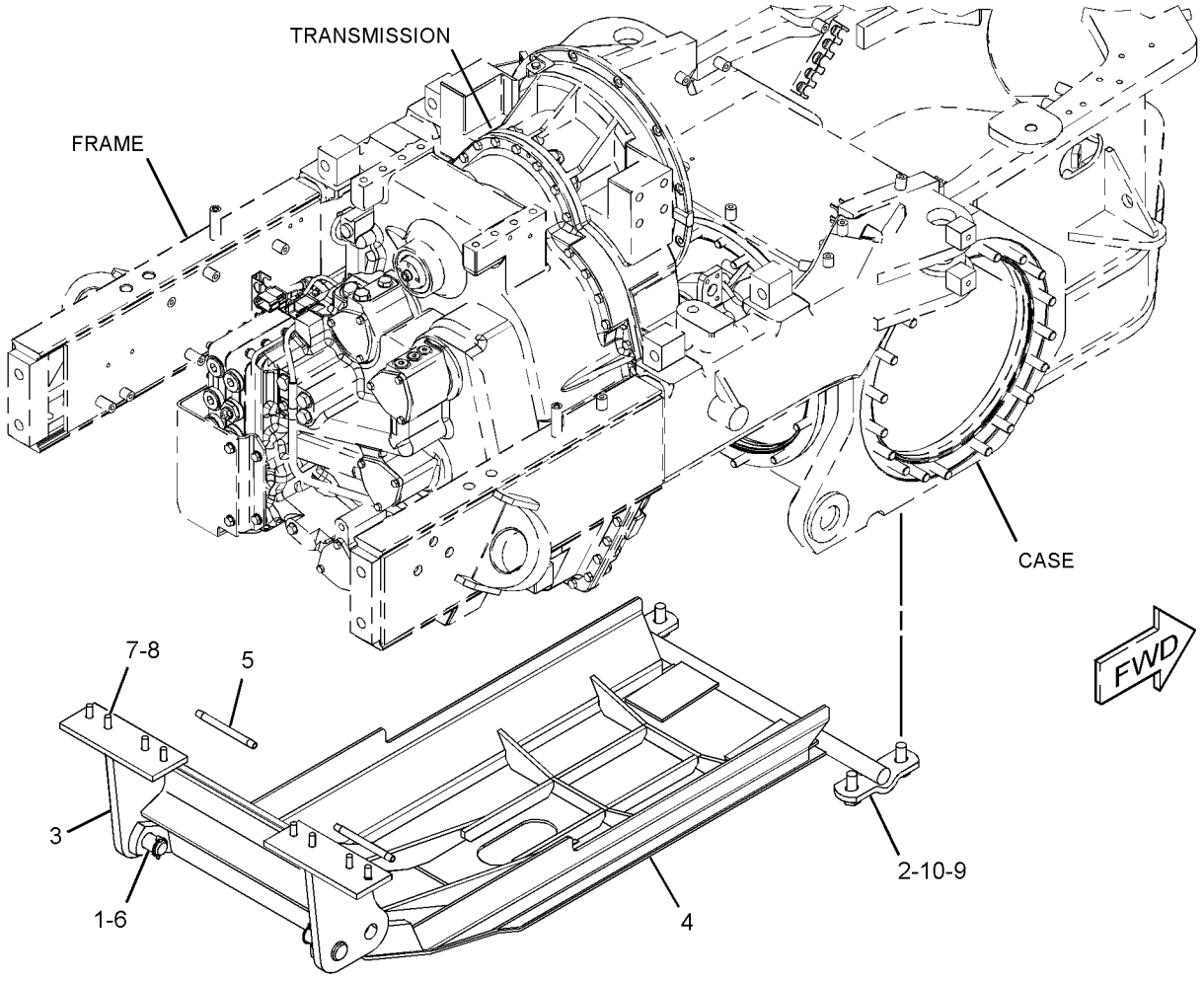

GRAPHIC #1 <END> g02100733

439-5724 GUARD GP-BOTTOM

S/N: SZS1-UP
PART OF 465-8777 DISTRIBUTION AR
AN ATTACHMENT

SMCS-7153 **i05944125**

NOTE	REF NO	GRAPHIC REF	PART NUMBER	QTY	PART NAME 1 2 3 4 5 6 (PRODUCT LEVEL)	SEE PAGE
	1	1	**8W-6626**	2	CAP	
	2	1	**350-6658**	1	GUARD AS-BOTTOM	
	3	1	**352-1511**	1	SUPPORT AS	
M	4	1	**287-5701**	4	BOLT (M20X2.5X50-MM)	
	5	1	**7D-7496**	2	PIN AS	
	6	1	**8K-0530**	2	PIN-CABLE SOCKET	
M	7	1	**8T-4183**	8	BOLT (M12X1.75X40-MM)	
	8	1	**8T-4223**	8	WASHER-HARD (13.5X25.5X3-MM THK)	
	9	1	**8T-5439**	4	WASHER-HARD (21.5X45X6-MM THK)	

M - METRIC PART

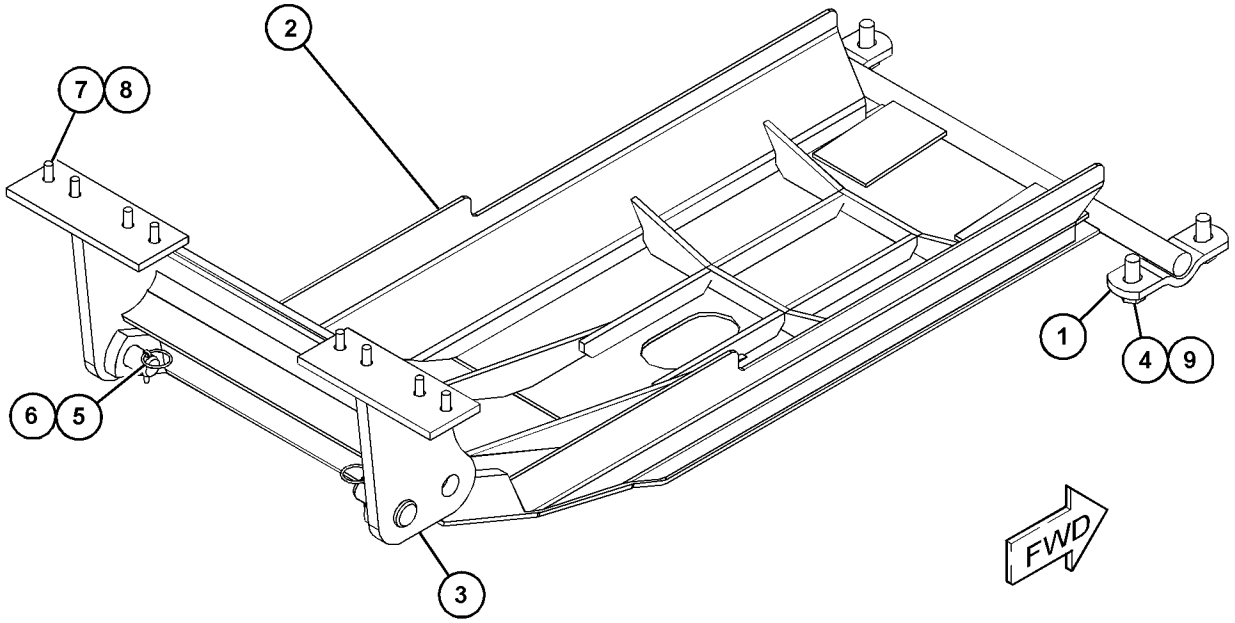

GRAPHIC #1 <END> g03734177

8W-5870 GUARD GP-DRIVE SHAFT

S/N: SZS1-UP

PART OF 368-3025 GENERAL AR, 435-8193 HYDRAULIC AR

SMCS-7153 **i03854613**

NOTE	REF NO	GRAPHIC REF	PART NUMBER	QTY	PART NAME 1 2 3 4 5 6 (PRODUCT LEVEL)	SEE PAGE
	1	1	**5P-1075**	2	WASHER-HARD (10.2X22.5X3-MM THK)	
	2	1	**8T-7971**	4	WASHER-HARD (13.5X25.5X5-MM THK)	
	3	1	**5S-7379**	2	BOLT (3/8-16X0.875-IN)	
	4	1	**5C-6565**	4	BOLT (1/2-13X1.125-IN)	
	5	1	**103-5419**	1	GUARD AS	
		1	**9F-2978**	2	NUT-WELD (3/8-16-THD)	
	6	1	**103-5417**	1	GUARD	

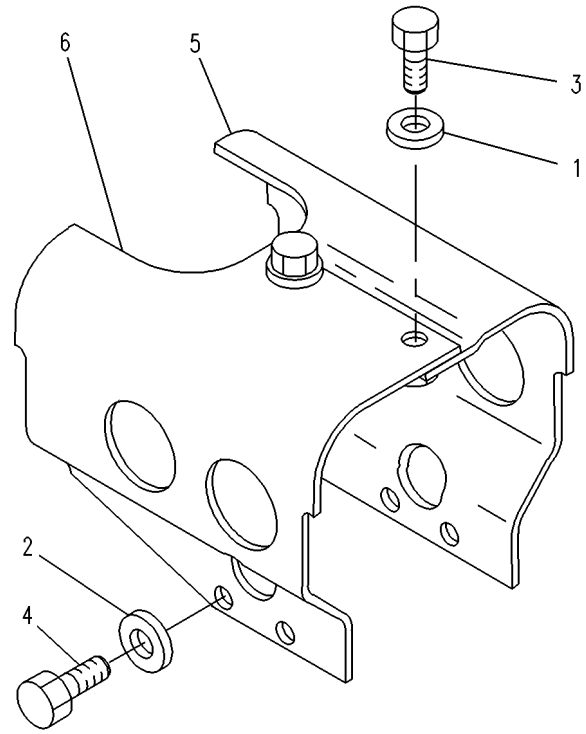

GRAPHIC #1 <END> g00108482

282-2469 GUARD GP-PLATFORM

S/N: SZS1-623

PART OF 368-3025 GENERAL AR

SMCS-7150, 7253 **i03499162**

NOTE	REF NO	GRAPHIC REF	PART NUMBER	QTY	PART NAME 1 2 3 4 5 6 (PRODUCT LEVEL)	SEE PAGE
	1	1	**8W-3902**	1	SUPPORT AS	
	2	1	**8X-2913**	2	COVER AS	
					(EACH INCLUDES)	
M		1	**6V-9632**	2	NUT-WELD (M6X1-THD)	
	3	1	**8X-6419**	1	FLOOR MAT	
	4	1	**8X-6475**	2	PLATE	
	5	1	**8X-8505**	2	PLATE	
	6	1	**8X-9464**	2	STEP AS	
	7	1	**135-3894**	1	PIPE AS	
	8	1	**160-6382**	1	GROMMET	
	9	1	**169-5414**	1	CLIP	
	10	1	**198-8588**	1	PANEL	
	11	1	**200-3967**	1	PANEL AS	
	12	1	**115-3072**	1	CLIP AS-CONNECTING (8-PIN)	
	13	1	**3P-3839**	1	GROMMET	
	14	1	**5P-1075**	7	WASHER-HARD (10.2X22.5X3-MM THK)	
	15	1	**5P-4115**	4	WASHER-HARD (7.2X19X2-MM THK)	
	16	1	**5P-9085**	2	CLIP	
	17	1	**6V-2687**	4	SCREW-PAN HEAD (10-24X1-IN)	
	18	1	**8T-4121**	2	WASHER-HARD (11X21X2.5-MM THK)	
M	19	1	**8T-4137**	2	BOLT (M10X1.5X20-MM)	
M	20	1	**8T-4138**	4	BOLT (M6X1X20-MM)	
M	21	1	**8T-4176**	4	BOLT (M12X1.75X90-MM)	
M	22	1	**8T-4183**	8	BOLT (M12X1.75X40-MM)	
	23	1	**8T-4223**	16	WASHER-HARD (13.5X25.5X3-MM THK)	
M	24	1	**8T-4244**	4	NUT (M12X1.75-THD)	
M	25	1	**9X-2043**	12	SCREW-TRUSS HEAD (M6X1X14-MM)	
M	26	1	**9X-2125**	7	BOLT-LOCKING (M10X1.5X25-MM)	

M - METRIC PART

282-2469 **GUARD GP-PLATFORM (**contd.**)** **i03499162**

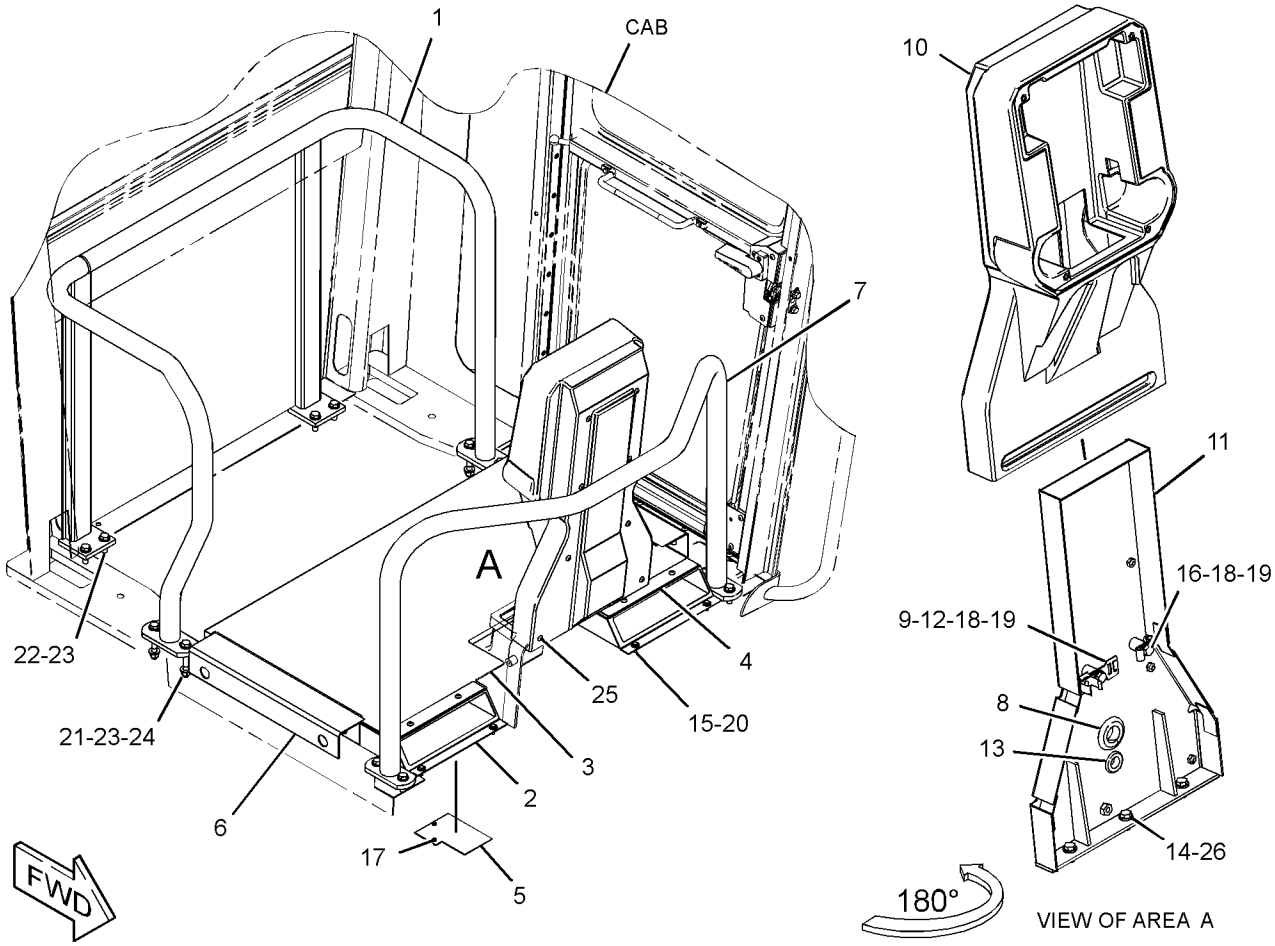

GRAPHIC #1 <END> g01700178

290-1148 GUARD GP-PLATFORM

S/N: SZS1-UP
PART OF 284-5400 ROPS AR
AN ATTACHMENT

SMCS-7150, 7253

i06231057

NOTE	REF NO	GRAPHIC REF	PART NUMBER	QTY	PART NAME 1 2 3 4 5 6 (PRODUCT LEVEL)	SEE PAGE
	1	1	**8X-2226**	2	PLATE	
	2	1	**8X-2913**	2	COVER AS	
					(EACH INCLUDES)	
M		1	**6V-9632**	2	NUT-WELD (M6X1-THD)	
	3	1	**8X-6475**	2	PLATE	
	4	1	**8X-8505**	2	PLATE	
	5	1	**124-8949**	1	FLOOR MAT	
	6	1	**160-6382**	1	GROMMET	
	7	1	**169-5414**	1	CLIP	
	8	1	**198-8588**	1	PANEL	
	9	1	**200-3967**	1	PANEL AS	
	10	1	**115-3072**	1	CLIP AS-CONNECTING (8-PIN)	
	11	1	**3P-3839**	1	GROMMET	
	12	1	**5P-1075**	3	WASHER-HARD (10.2X22.5X3-MM THK)	
	13	1	**5P-4115**	4	WASHER-HARD (7.2X19X2-MM THK)	
	14	1	**5P-9085**	2	CLIP	
	15	1	**6V-2687**	4	SCREW-PAN HEAD (10-24X1-IN)	
M	16	1	**6V-7732**	3	BOLT (M10X1.5X25-MM)	
M	17	1	**6V-8214**	4	BOLT (M6X1X20-MM)	
	18	1	**8T-4121**	2	WASHER-HARD (11X21X2.5-MM THK)	
M	19	1	**8T-4137**	2	BOLT (M10X1.5X20-MM)	
M	20	1	**9X-2043**	22	SCREW-TRUSS HEAD (M6X1X14-MM)	

M - METRIC PART

290-1148 **GUARD GP-PLATFORM (**contd.**)** **i06231057**

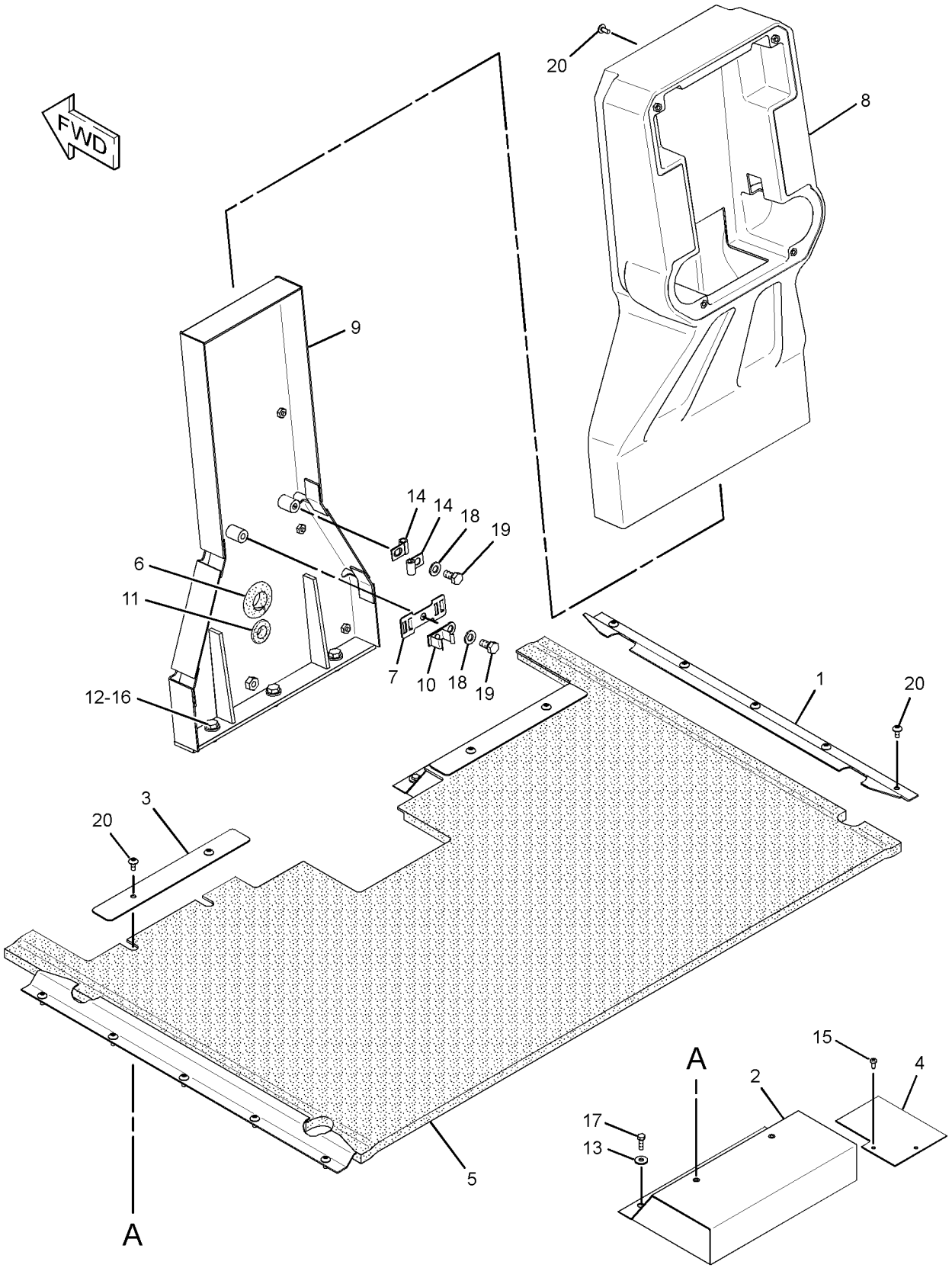

GRAPHIC #1 <END> g01671593

437-0689 GUARD GP-PLATFORM

S/N: SZS1-10099
PART OF 437-0660 CAB AR
AN ATTACHMENT

SMCS-7150, 7253

i06179066

NOTE	REF NO	GRAPHIC REF	PART NUMBER	QTY	PART NAME 1 2 3 4 5 6 (PRODUCT LEVEL)	SEE PAGE
	1	1	**8X-2226**	2	PLATE	
	2	1	**8X-2913**	2	COVER AS	
					(EACH INCLUDES)	
M		1	**6V-9632**	2	NUT-WELD (M6X1-THD)	
	4	1	**8X-8505**	2	PLATE	
	5	1	**124-8949**	1	FLOOR MAT	
	6	1	**160-6382**	1	GROMMET	
	7	1	**169-5414**	1	CLIP	
	8	1	**198-8588**	1	PANEL	
	9	1	**200-3967**	1	PANEL AS	
	10	1	**115-3072**	1	CLIP AS-CONNECTING (8-PIN)	
	11	1	**3P-3839**	1	GROMMET	
	12	1	**5P-1075**	3	WASHER-HARD (10.2X22.5X3-MM THK)	
	13	1	**5P-4115**	4	WASHER-HARD (7.2X19X2-MM THK)	
	14	1	**5P-9085**	2	CLIP	
	15	1	**6V-2687**	4	SCREW-PAN HEAD (10-24X1-IN)	
M	16	1	**6V-7732**	3	BOLT (M10X1.5X25-MM)	
M	17	1	**6V-8214**	4	BOLT (M6X1X20-MM)	
	18	1	**8T-4121**	2	WASHER-HARD (11X21X2.5-MM THK)	
M	19	1	**8T-4137**	2	BOLT (M10X1.5X20-MM)	
M	20	1	**9X-2043**	18	SCREW-TRUSS HEAD (M6X1X14-MM)	

M - METRIC PART

437-0689 **GUARD GP-PLATFORM (**contd.**)** **i06179066**

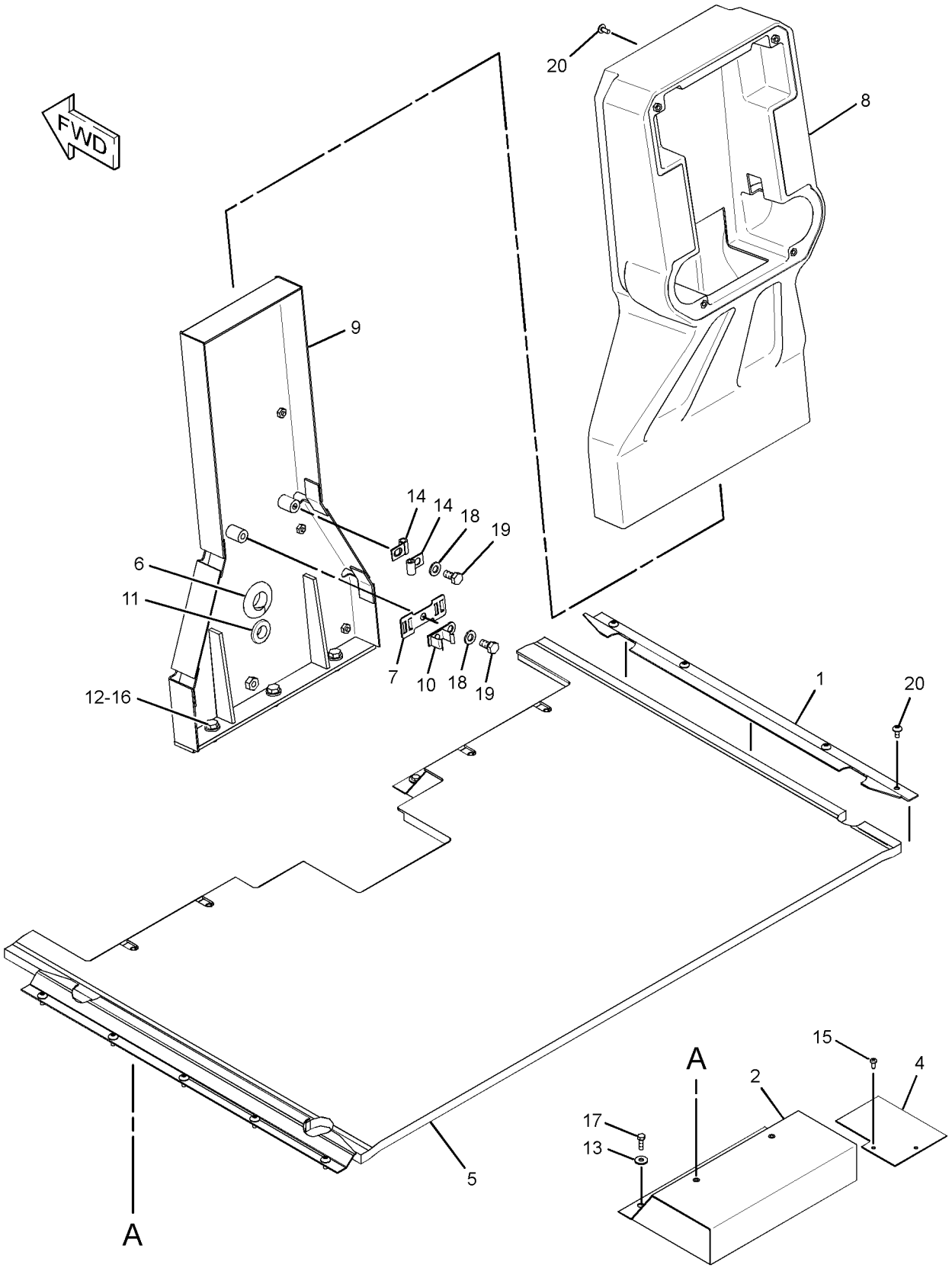

GRAPHIC #1 <END> g03707500

516-7923 GUARD GP-PLATFORM

S/N: SZS10100-UP
PART OF 516-7921 CAB AR
AN ATTACHMENT

SMCS-7150, 7253

i06903767

NOTE	REF NO	GRAPHIC REF	PART NUMBER	QTY	PART NAME 1 2 3 4 5 6 (PRODUCT LEVEL)	SEE PAGE
	1	1	**8X-8505**	2	PLATE	
	2	1	**160-6382**	1	GROMMET	
	3	1	**169-5414**	1	CLIP	
	4	1	**200-3967**	1	PANEL AS	
	5	1	**512-5952**	1	PANEL AS	
	6	1	**512-5988**	1	FLOOR MAT	
	7	1	**516-7914**	2	COVER AS	
					(EACH INCLUDES)	
M		1	**6V-9632**	2	NUT-WELD (M6X1-THD)	
	8	1	**516-7915**	2	PLATE	
	9	1	**115-3072**	1	CLIP AS-CONNECTING (8-PIN)	
	10	1	**3P-3839**	1	GROMMET	
	11	1	**5P-1075**	3	WASHER-HARD (10.2X22.5X3-MM THK)	
	12	1	**5P-4115**	4	WASHER-HARD (7.2X19X2-MM THK)	
	13	1	**5P-9085**	2	CLIP	
	14	1	**6V-2687**	4	SCREW-PAN HEAD (10-24X1-IN)	
M	15	1	**6V-7732**	3	BOLT (M10X1.5X25-MM)	
M	16	1	**6V-8214**	4	BOLT (M6X1X20-MM)	
	17	1	**8T-4121**	2	WASHER-HARD (11X21X2.5-MM THK)	
M	18	1	**8T-4137**	2	BOLT (M10X1.5X20-MM)	
M	19	1	**9X-2043**	18	SCREW-TRUSS HEAD (M6X1X14-MM)	

M - METRIC PART

516-7923 **GUARD GP-PLATFORM (**contd.**)** **i06903767**

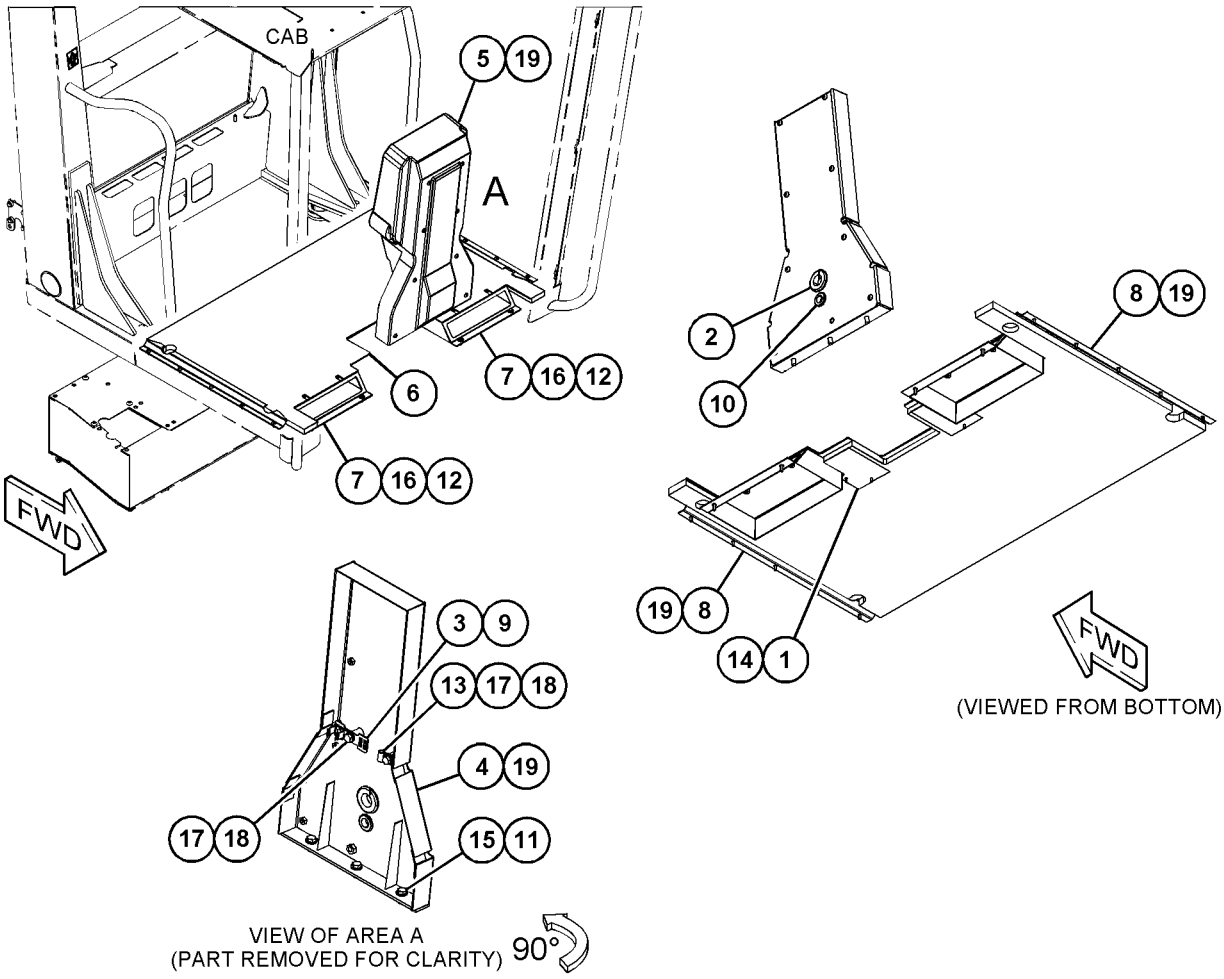

GRAPHIC #1 <END> g06166010

338-9747 HITCH GP-ARTICULATING

S/N: SZS1-UP

PART OF 434-3510 FRAME AR, 368-3025 GENERAL AR

SMCS-7057, 7100

i06259928

NOTE	REF NO	GRAPHIC REF	PART NUMBER	QTY	PART NAME 1 2 3 4 5 6 (PRODUCT LEVEL)	SEE PAGE
	1	1	**2G-4011**	1	COLLAR	
	2	1	**2G-6157**	1	PIN	
	3	1	**6G-0417**	1	COVER	
	4	1	**6K-4185**	1	SPACER-SPECIAL	
	5	1	**6K-4186**	2	SEAL-LIP TYPE	
B	6	1	**6K-4187**	1	SHIM PACK (INCLUDES 19-SHIMS)	
	7	1	**6K-4190**	1	CAP-LOWER	
	8	1	**6K-4191**	1	CAP-UPPER	
	9	1	**6K-4193**	1	PLATE-LOCK	
	10	1	**8D-9688**	1	SPACER	
B	11	1	**8D-9689**	1	SHIM PACK (INCLUDES 24-SHIMS)	
	12	1	**8D-9909**	1	BEARING AS-ROLLER	
	13	1	**124-3240**	1	PIN	
	14	1	**4K-7463**	2	SEAL-LIP TYPE	
	15	1	**4K-8659**	1	BUSHING	
	16	1	**5K-0984**	1	BUSHING	
	17	1	**7X-0333**	6	BOLT (1/2-13X4.75-IN)	
	18	1	**8C-4436**	10	BOLT (1/2-13X1.375-IN)	
	19	1	**8T-4223**	22	WASHER-HARD (13.5X25.5X3-MM THK)	
	20	1	**8T-4835**	4	BOLT (1/2-13X2-IN)	
	21	1	**8T-8919**	2	BOLT (1/2-13X1.75-IN)	

B - USE AS REQUIRED

338-9747 **HITCH GP-ARTICULATING** (contd.) **i06259928**

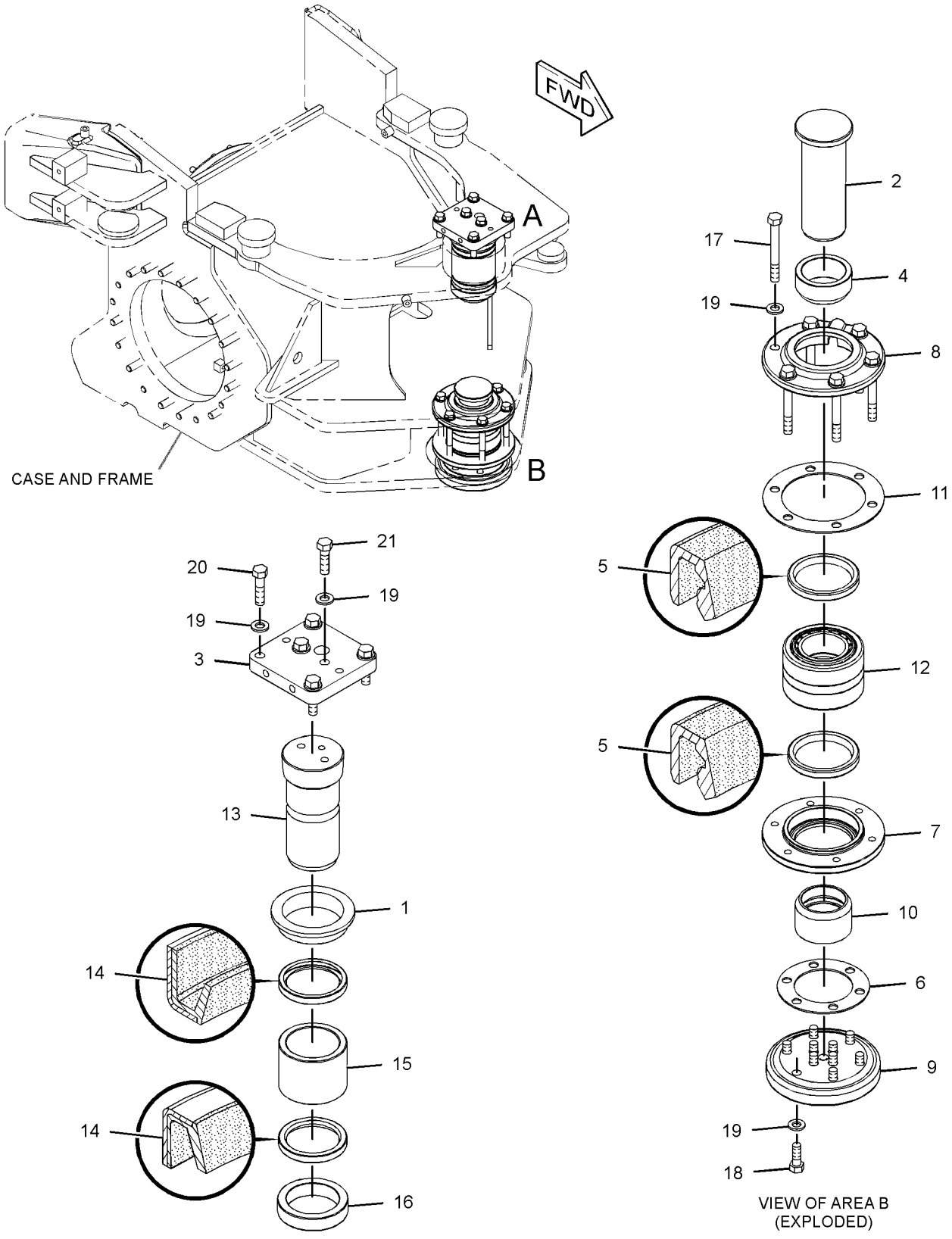

GRAPHIC #1 <END> g01929235

442-1756 HITCH GP-TOWING

S/N: SZS1-UP

CANNOT BE USED WITH 284-5378—PAGE: 685, 439-9104—PAGE: 1430 AN ATTACHMENT

SMCS-7100 **i05883569**

NOTE	REF NO	GRAPHIC REF	PART NUMBER	QTY	PART NAME 1 2 3 4 5 6 (PRODUCT LEVEL)	SEE PAGE
	1	1	**291-6693**	1	BUMPER AS-TOW	
M	2	1	**7X-2575**	8	BOLT (M24X3X60-MM)	
	3	1	**8T-5361**	8	WASHER-HARD (28X49X5-MM THK)	

M - METRIC PART

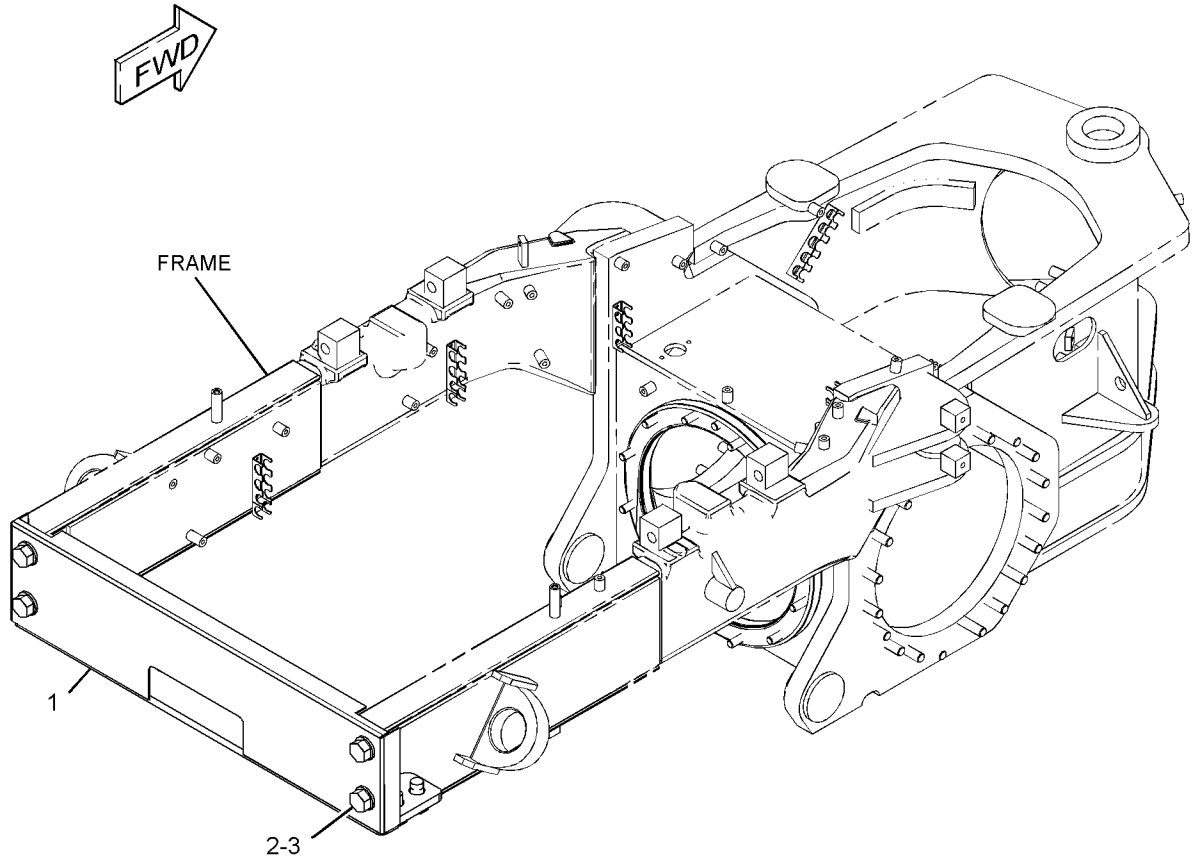

GRAPHIC #1 <END> g01667374

516-2826 LINES GP-LUBRICATION

S/N: SZS10100-UP

PART OF 521-3250 LUBRICATION AR-CENTRAL

AN ATTACHMENT

SMCS-7510 **i06931846**

NOTE	REF NO	GRAPHIC REF	PART NUMBER	QTY	PART NAME 1 2 3 4 5 6 (PRODUCT LEVEL)	SEE PAGE
C	1	1	**3B-8489**	1	FITTING-GREASE (1/8-27 PTF)	
C	2	1	**5P-9085**	1	CLIP	
	3	1	**4P-7048**	1	BRACKET	
I	4	1	**437-1151**	1	HOSE AS	
M	5	1	**344-5675**	1	NUT (M10X1.5-THD)	
	6	1	**8T-4121**	3	WASHER-HARD (11X21X2.5-MM THK)	
M	7	1	**8T-4137**	2	BOLT (M10X1.5X20-MM)	

C - CHANGE FROM PREVIOUS TYPE
I - REFER TO HYDRAULIC INFORMATION SYSTEM
M - METRIC PART

516-2826 **LINES GP-LUBRICATION (**contd.**)** **i06931846**

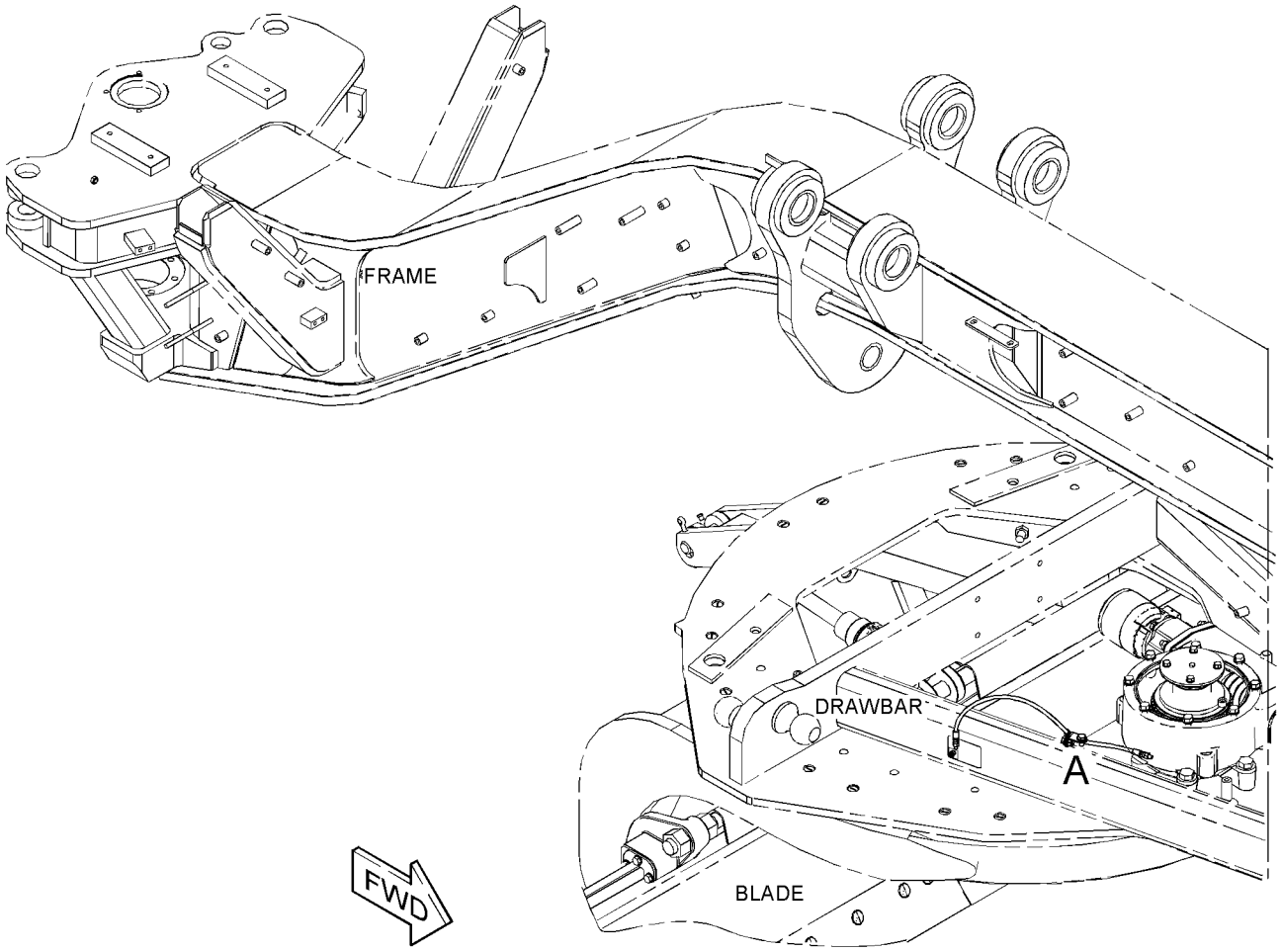

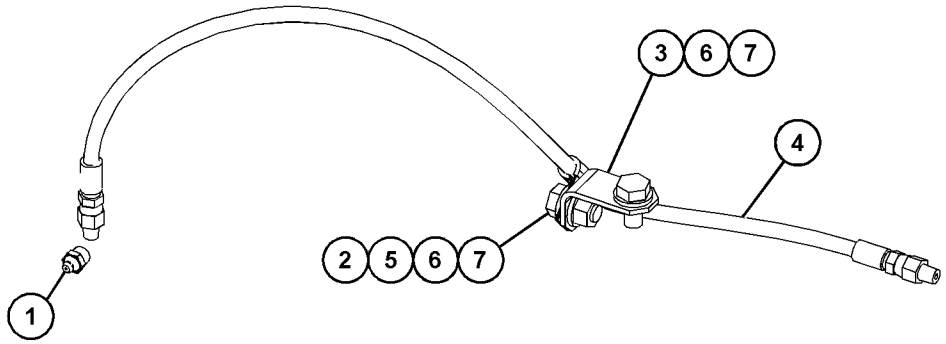

VIEW OF AREA A

GRAPHIC #1 <END> g06168559

131-3740 LINK GP-STEERING

S/N: SZS1-UP

PART OF 134-1080 AXLE GP-FRONT

SMCS-4305 **i03624652**

NOTE	REF NO	GRAPHIC REF	PART NUMBER	QTY	PART NAME 1 2 3 4 5 6 (PRODUCT LEVEL)	SEE PAGE
	1	1	**131-3739**	1	TIE ROD	
	2	1	**131-3738**	1	TIE ROD GP (LH THREAD, RH)	
		1	**2F-8057**	1	NUT-SLOTTED	
		1	**132-1143**	1	SEAL-BOOT	
	3	1	**131-3737**	1	TIE ROD GP (RH THREAD, LH)	
		1	**2F-8057**	1	NUT-SLOTTED	
		1	**132-1143**	1	SEAL-BOOT	
	4	1	**132-1144**	2	CLAMP	
	5	1	**1B-4367**	2	BOLT (5/8-11X3-IN)	
	6	1	**3K-2889**	2	LOCKNUT (5/8-11-THD)	

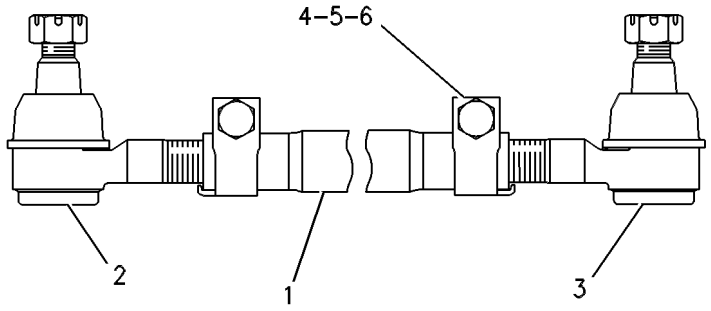

GRAPHIC #1 <END> g00109239

521-3250 LUBRICATION AR-CENTRAL

S/N: SZS10100-UP

AN ATTACHMENT

SMCS-7510, 7540

i06906617

NOTE	PART NUMBER	QTY	PART NAME 1 2 3 4 5 6 (PRODUCT LEVEL)	SEE PAGE
Y	*521-3245*	1	BRACKET GP-MOUNTING	683
Y	*516-2826*	1	LINES GP-LUBRICATION	715

Y - SEPARATE ILLUSTRATION

<END>

435-1538 MOUNTING GP

S/N: SZS1-UP
PART OF 424-8613, 461-2764 OPTION AR-WORK TOOL
AN ATTACHMENT

SMCS-1801, 7263 **i05865003**

NOTE	REF NO	GRAPHIC REF	PART NUMBER	QTY	PART NAME 1 2 3 4 5 6 (PRODUCT LEVEL)	SEE PAGE
	1	1	**251-7350**	1	PLATE	
M	2	1	**259-2627**	4	BOLT (M12X1.75X40-MM)	
	3	1	**3B-4628**	2	PIN-COTTER	
	4	1	**8D-9092**	1	PIN	
M	5	1	**9X-2042**	2	SCREW-TRUSS HEAD (M6X1X12-MM)	

M - METRIC PART

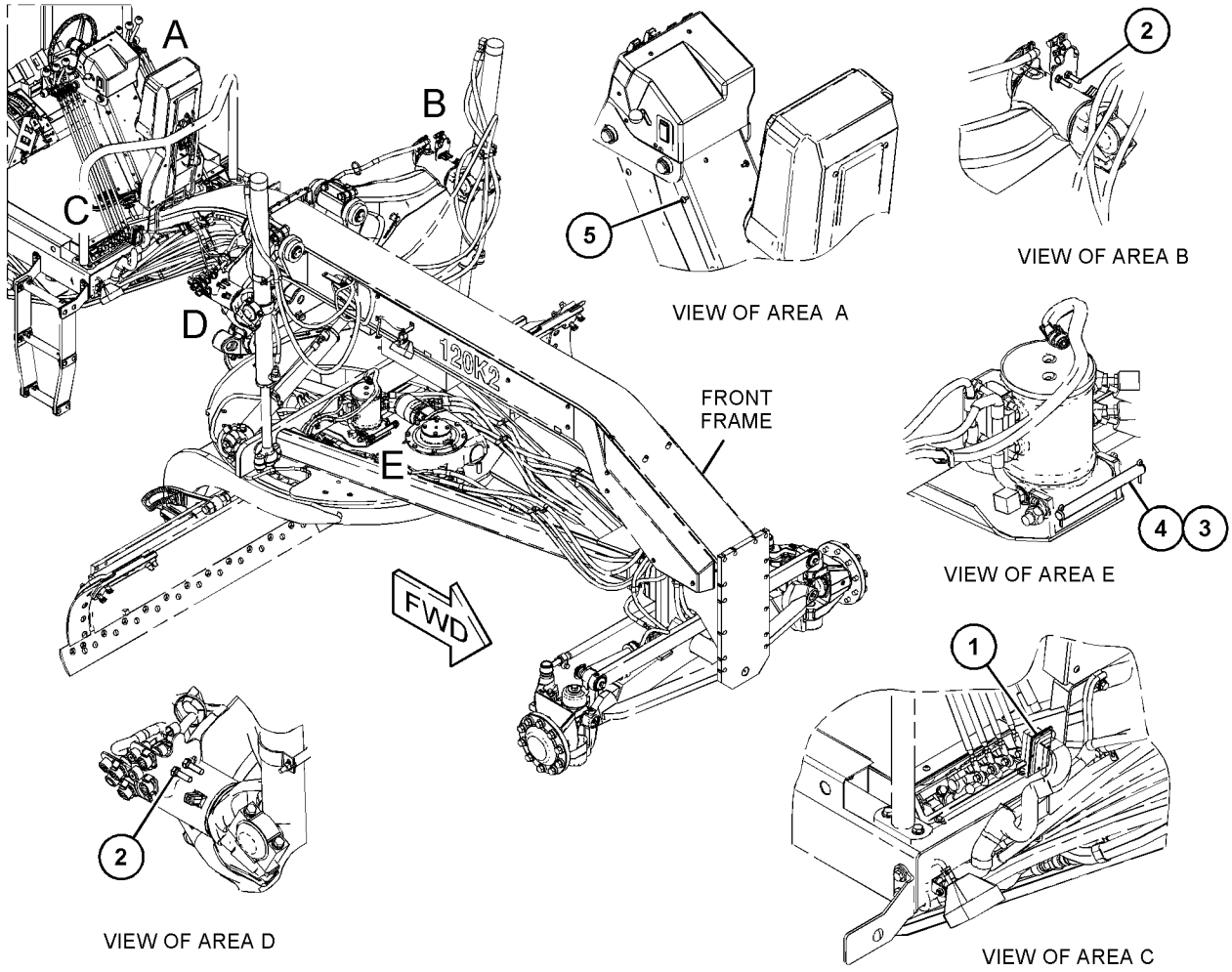

GRAPHIC #1 <END> g03704577

336-1559 PLATE GP-PUSH

S/N: SZS1-UP
PART OF 348-6936, 458-5955 OPTION AR-WORK TOOL
AN ATTACHMENT
TYPE 1

SMCS-6077 **i06246655**

NOTE	REF NO	GRAPHIC REF	PART NUMBER	QTY	PART NAME 1 2 3 4 5 6 (PRODUCT LEVEL)	SEE PAGE
	1	1	**112-5853**	1	PLATE	
M	2	1	**166-1880**	8	BOLT (M20X2.5X75-MM)	
	3	1	**388-7390**	1	PLATE AS-PUSH	
		1	**5J-7333**	2	HOOK	
	4	1	**336-1963**	1	PLATE AS	
M		1	**8T-3490**	4	NUT-WELD (M10X1.5-THD)	
	5	1	**336-1964**	1	BRACKET AS	
	6	1	**283-1578**	8	WASHER-HARD (22X45X10-MM THK)	
	7	1	**7X-7729**	8	WASHER (11X25X3-MM THK)	
M	8	1	**8T-4136**	2	BOLT (M10X1.5X25-MM)	
M	9	1	**8T-4137**	6	BOLT (M10X1.5X20-MM)	
M	10	1	**8T-4139**	2	BOLT (M12X1.75X30-MM)	
	11	1	**8T-4223**	2	WASHER-HARD (13.5X25.5X3-MM THK)	
D	12	1	**5P-5923**		SEAL (0.4-M)	

D - ORDER BY THE METER
M - METRIC PART

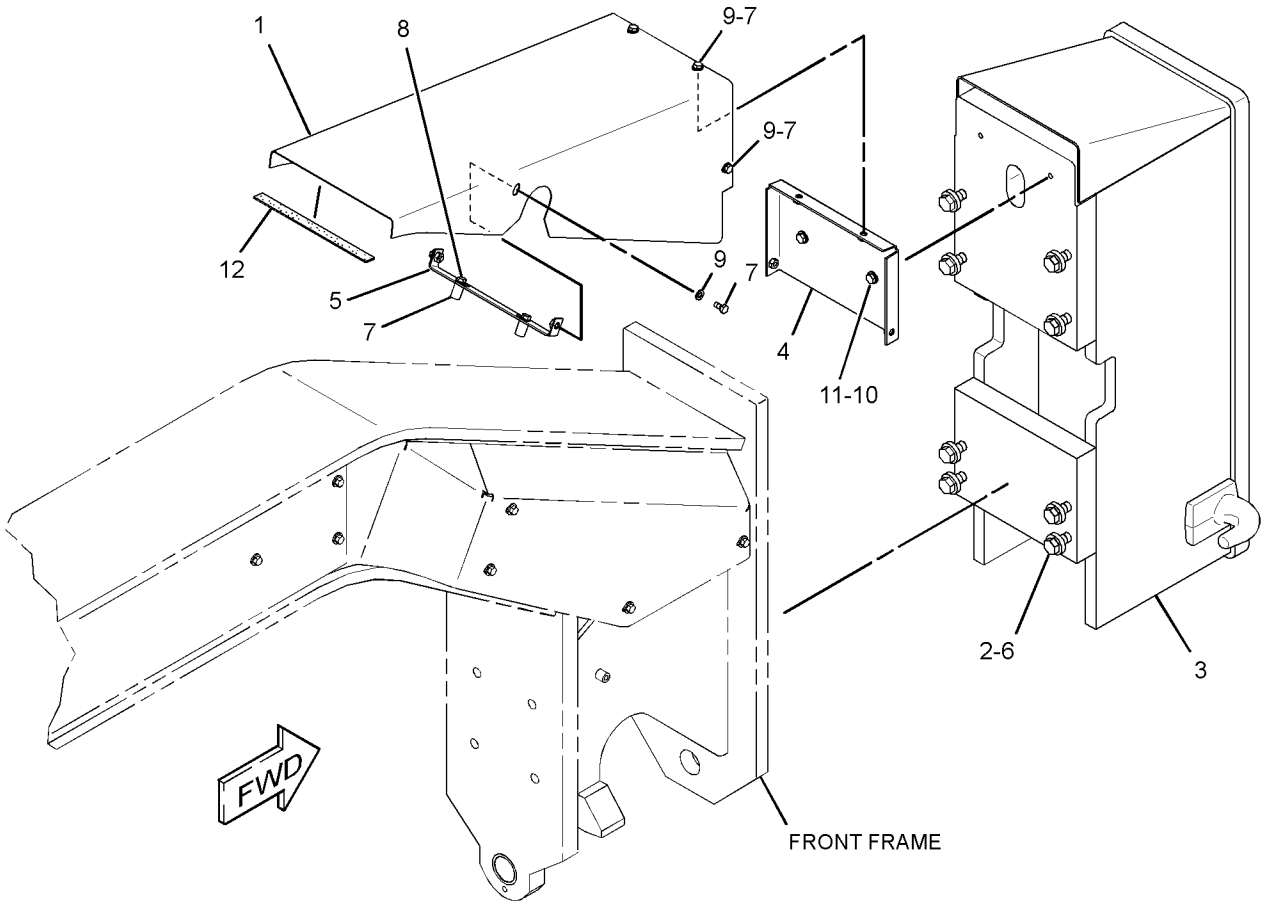

GRAPHIC #1 <END> g03871164

336-1559 PLATE GP-PUSH

S/N: SZS1-UP
PART OF 348-6936, 458-5955 OPTION AR-WORK TOOL
AN ATTACHMENT
TYPE 2

SMCS-6077 **i06245329**

NOTE	REF NO	GRAPHIC REF	PART NUMBER	QTY	PART NAME 1 2 3 4 5 6 (PRODUCT LEVEL)	SEE PAGE
M	1	1	**166-1880**	8	BOLT (M20X2.5X75-MM)	
C	2	1	**388-7390**	1	PLATE AS-PUSH	
		1	**5J-7333**	2	HOOK	
	3	1	**283-1578**	8	WASHER-HARD (22X45X10-MM THK)	

C - CHANGE FROM PREVIOUS TYPE
M - METRIC PART

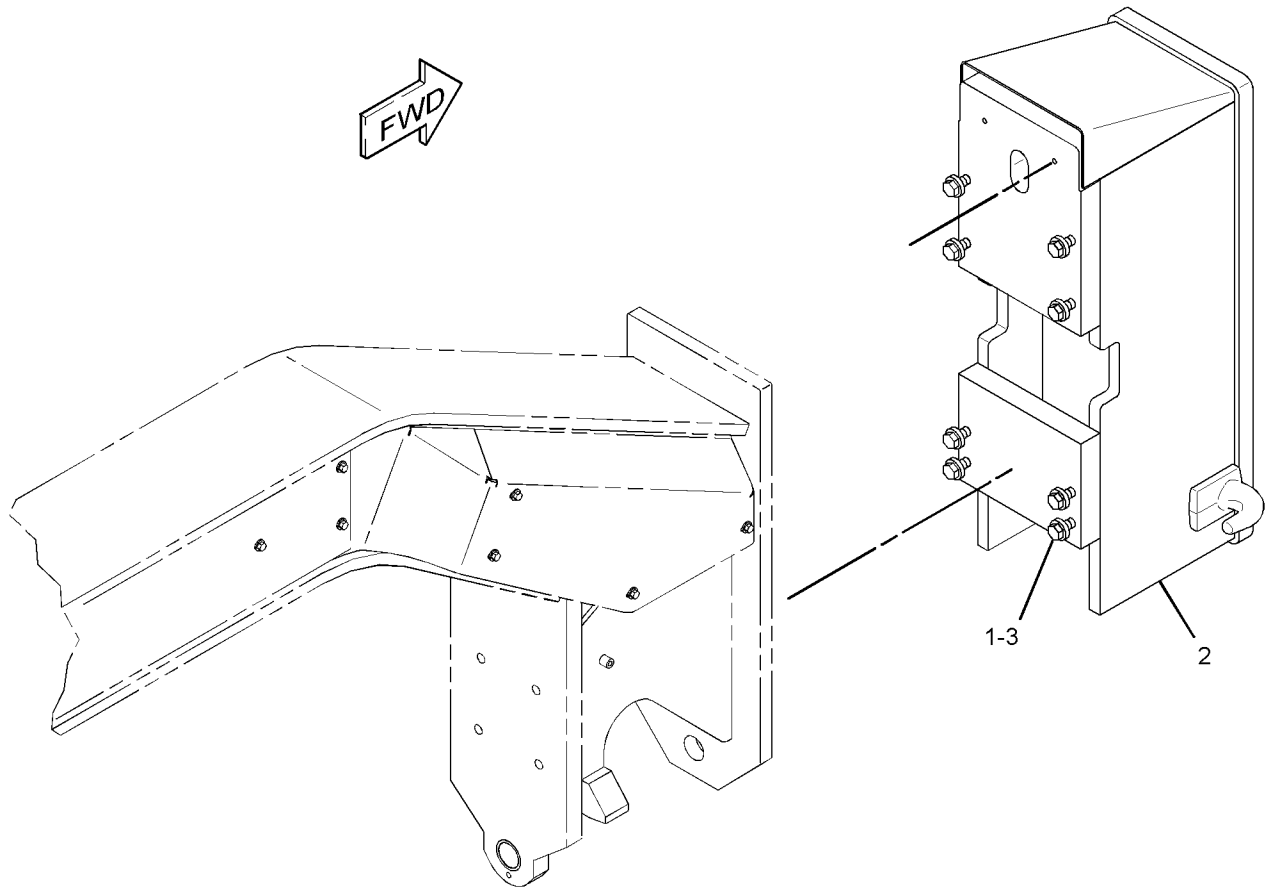

GRAPHIC #1 <END> g03870580

332-1618 REFLECTOR GP

S/N: SZS1-UP

PART OF 358-9496, 359-1519, 359-1520, 460-6436, 462-7252 ROADING AR AN ATTACHMENT

SMCS-7430 **i06953471**

NOTE	REF NO	GRAPHIC REF	PART NUMBER	QTY	PART NAME 1 2 3 4 5 6 (PRODUCT LEVEL)	SEE PAGE
	1	1	**238-4523**	2	REFLECTOR-RED	
	2	1	**238-4524**	8	REFLECTOR-AMBER	
	3	1	**238-4525**	2	REFLECTOR-WHITE	
	4	1	**332-1550**	2	PLATE	
B	5	1	**238-4527**		TAPE-REFLECTIVE (RED)	
B	6	1	**238-4528**		TAPE-REFLECTIVE (WHITE)	

B - USE AS REQUIRED

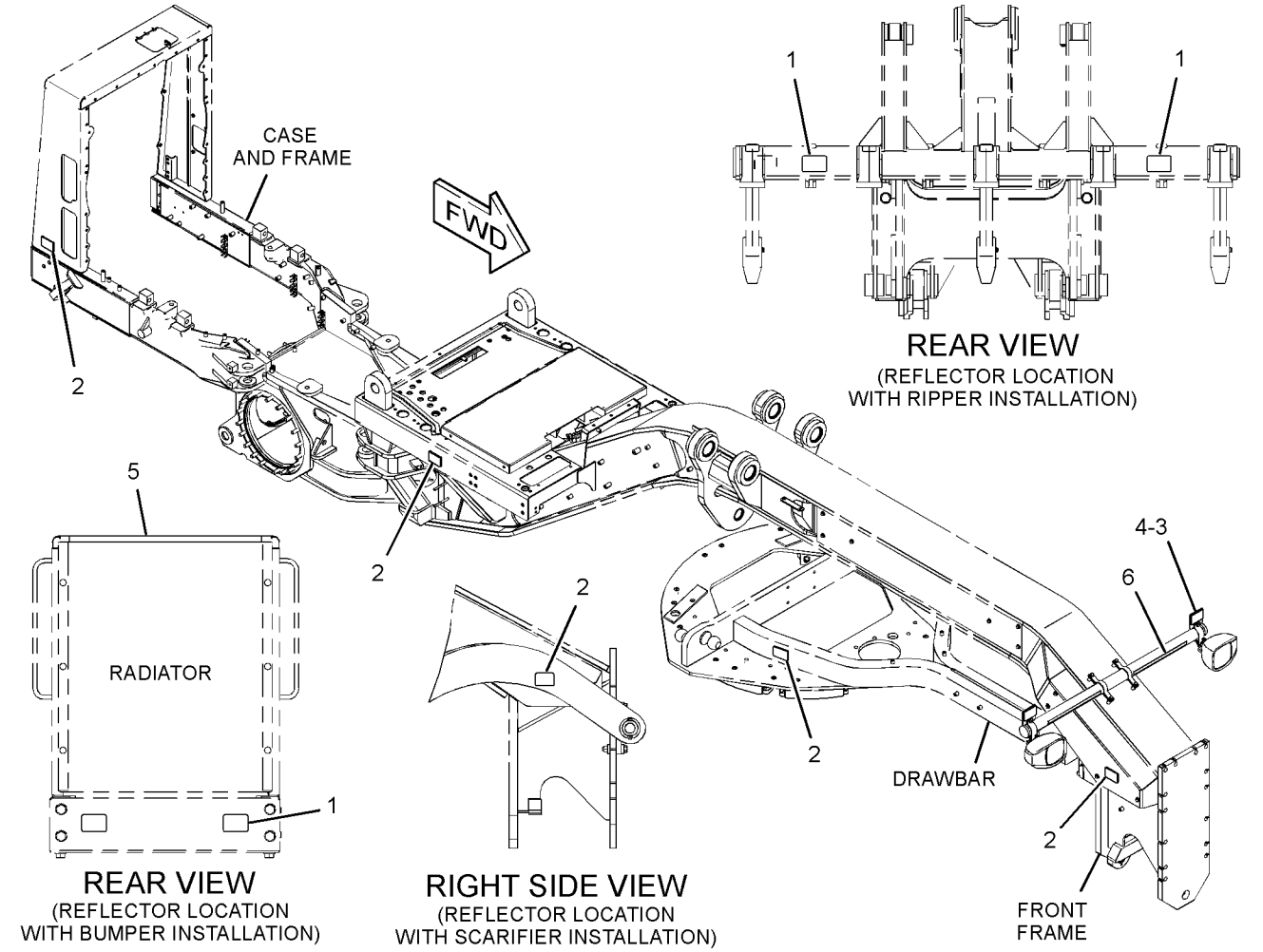

GRAPHIC #1

<END>

g02141779

295-2933 STEP GP

S/N: SZS1-10099

PART OF 436-7761 CHASSIS AR, 368-3025 GENERAL AR

SMCS-7254 **i05592371**

NOTE	REF NO	GRAPHIC REF	PART NUMBER	QTY	PART NAME 1 2 3 4 5 6 (PRODUCT LEVEL)	SEE PAGE
Y	1	1	*389-0240*	1	STEP GP	724
Y	2	1	*389-0241*	1	STEP GP	725
	3	1	**5P-1076**	8	WASHER-HARD (13.5X30X4-MM THK)	
M	4	1	**8T-4183**	8	BOLT (M12X1.75X40-MM)	

M - METRIC PART
Y - SEPARATE ILLUSTRATION

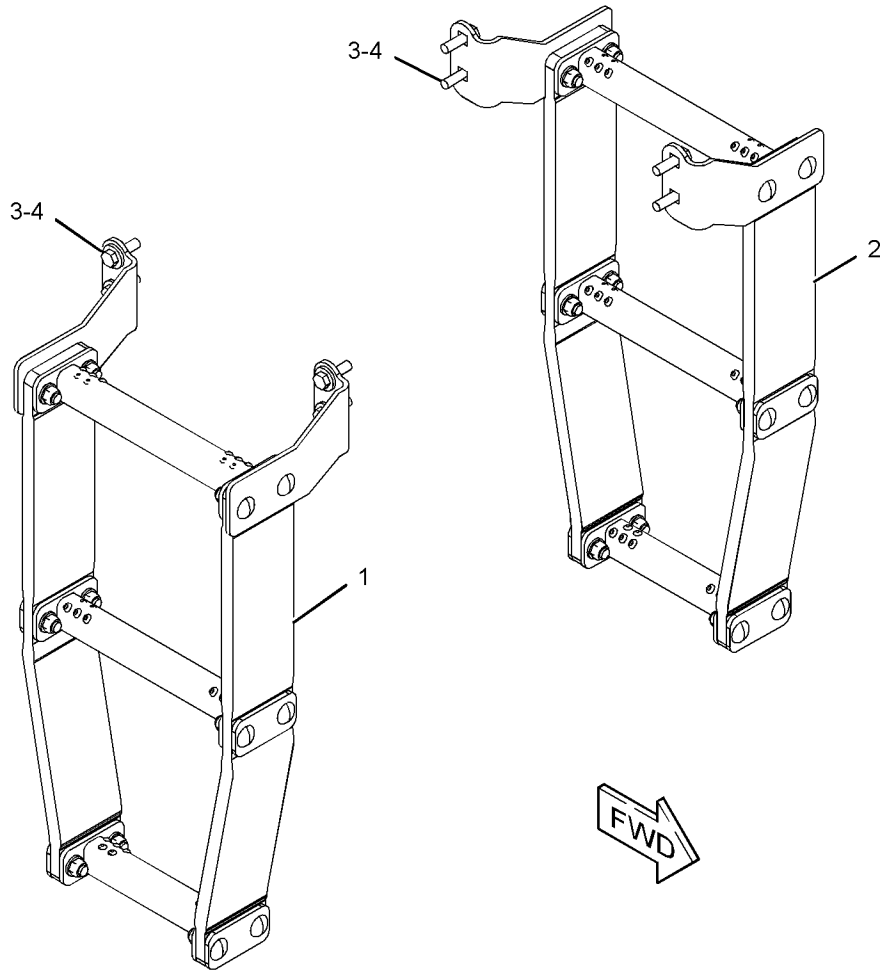

GRAPHIC #1 <END> g03561018

389-0240 STEP GP

S/N: SZS1-10099

PART OF 295-2933 STEP GP

SMCS-7254 **i05660217**

NOTE	REF NO	GRAPHIC REF	PART NUMBER	QTY	PART NAME 1 2 3 4 5 6 (PRODUCT LEVEL)	SEE PAGE
	1	1	**4V-9804**	4	PLATE	
	2	1	**4V-9809**	1	STEP AS	
		1	**4V-9803**	2	PLATE	
	3	1	**8X-1032**	2	SUPPORT-STEP (RUBBER)	
	4	1	**123-3698**	2	PLATE	
	5	1	**1K-6872**	12	LOCKNUT (1/2-13-THD)	
	6	1	**8T-4223**	12	WASHER-HARD (13.5X25.5X3-MM THK)	
	7	1	**198-7380**	2	STEP AS	
	8	1	**223-8372**	12	BOLT-CARRIAGE (1/2-13X1.75-IN)	

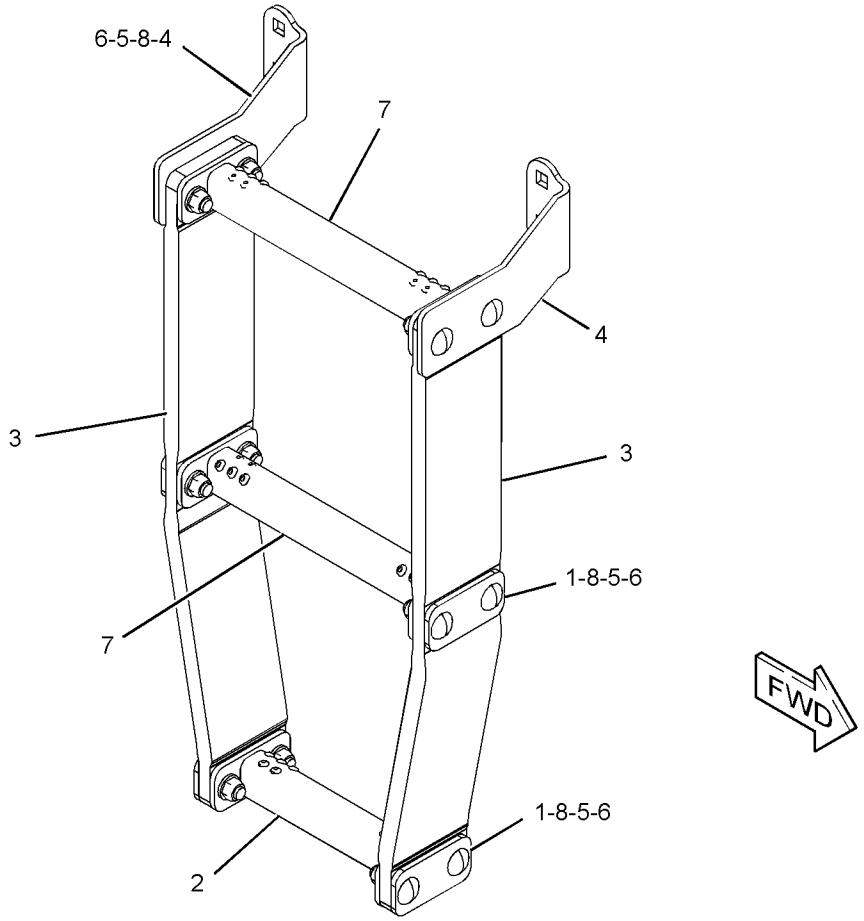

GRAPHIC #1 <END> g03590261

389-0241 STEP GP

S/N: SZS1-10099

PART OF 295-2933 STEP GP

SMCS-7254 **i05660220**

NOTE	REF NO	GRAPHIC REF	PART NUMBER	QTY	PART NAME 1 2 3 4 5 6 (PRODUCT LEVEL)	SEE PAGE
	1	1	**4V-9804**	4	PLATE	
	2	1	**4V-9809**	1	STEP AS	
	3	1	**8X-1032**	2	SUPPORT-STEP (RUBBER)	
	4	1	**123-3699**	2	PLATE	
	5	1	**198-7380**	2	STEP AS	
	6	1	**223-8372**	12	BOLT-CARRIAGE (1/2-13X1.75-IN)	
	7	1	**1K-6872**	12	LOCKNUT (1/2-13-THD)	
	8	1	**8T-4223**	12	WASHER-HARD (13.5X25.5X3-MM THK)	

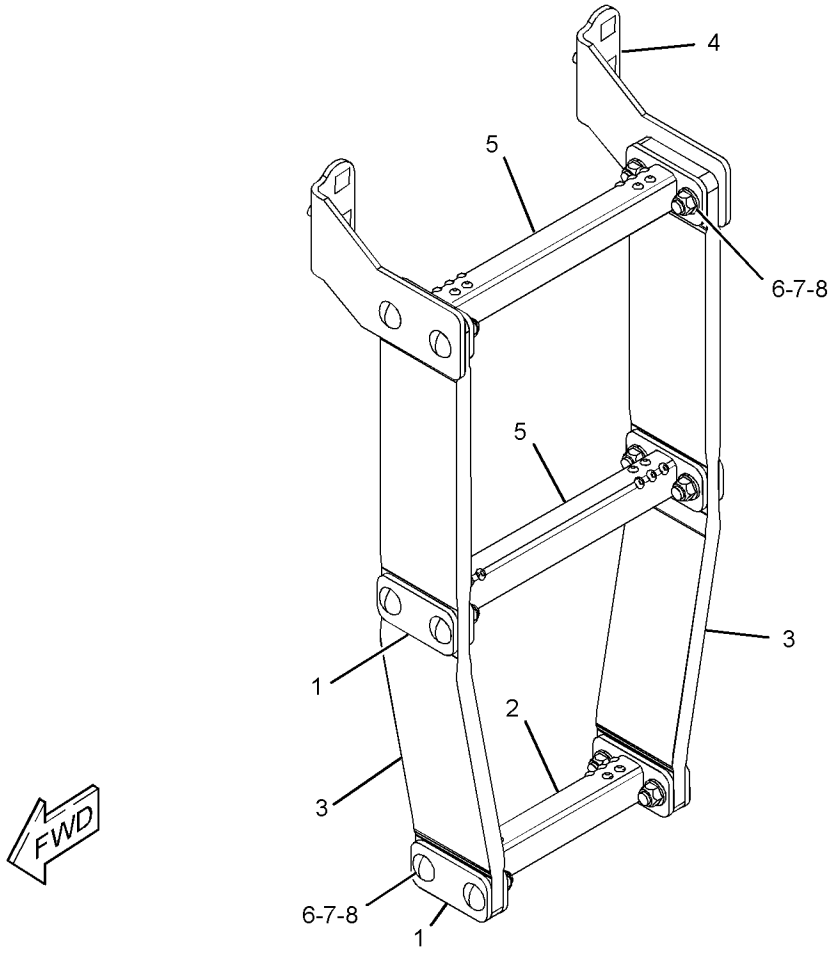

GRAPHIC #1 <END> g03589680

512-9036 STEP GP

S/N: SZS10100-UP

PART OF 516-7917 CAB AR

SMCS-7254 **i06902942**

NOTE	REF NO	GRAPHIC REF	PART NUMBER	QTY	PART NAME 1 2 3 4 5 6 (PRODUCT LEVEL)	SEE PAGE
Y	1	1	*512-9037*	1	STEP GP	727
Y	2	1	*512-9046*	1	STEP GP	728
	3	1	**5P-1076**	8	WASHER-HARD (13.5X30X4-MM THK)	
M	4	1	**8T-4183**	8	BOLT (M12X1.75X40-MM)	

M - METRIC PART
Y - SEPARATE ILLUSTRATION

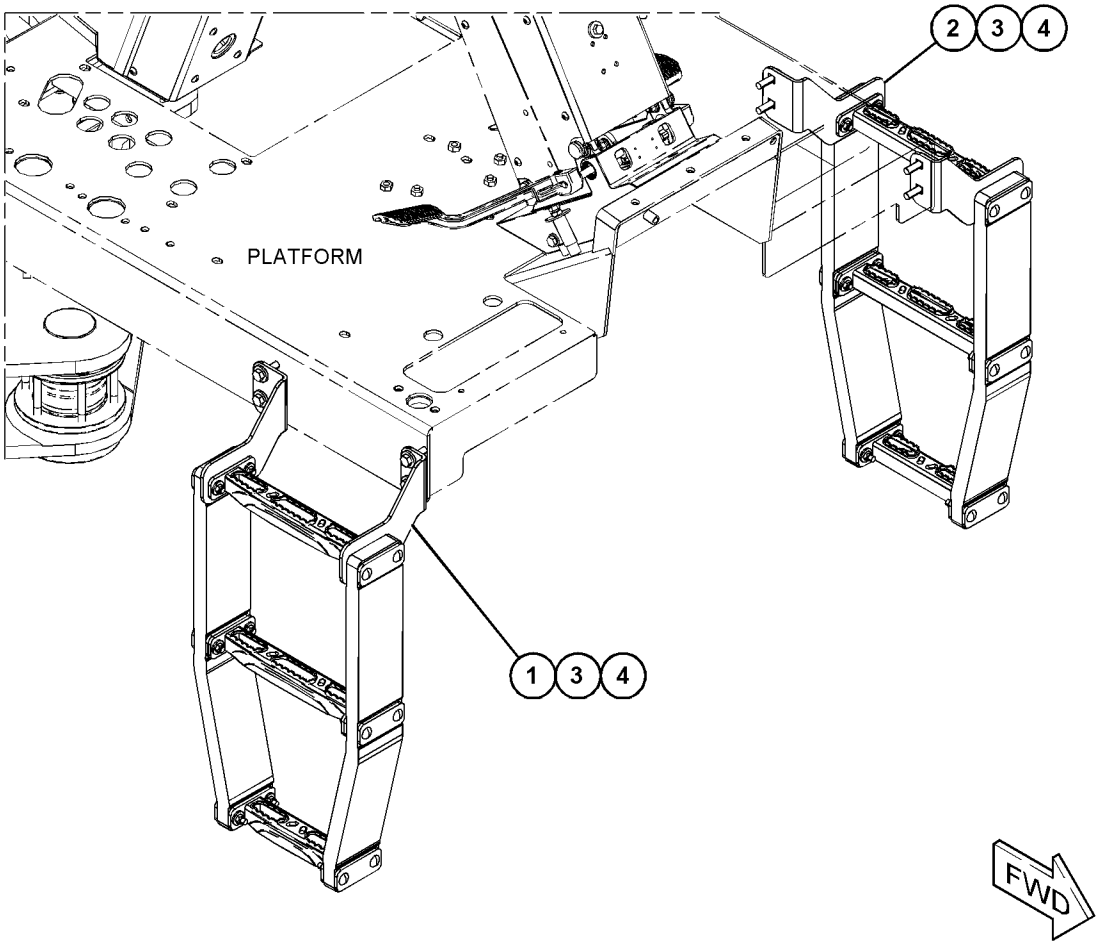

GRAPHIC #1 <END> g06164423

512-9037 STEP GP

S/N: SZS10100-UP

PART OF 512-9036 STEP GP

SMCS-7254 **i06903179**

NOTE	REF NO	GRAPHIC REF	PART NUMBER	QTY	PART NAME 1 2 3 4 5 6 (PRODUCT LEVEL)	SEE PAGE
	1	1	**512-9040**	2	BELT	
	2	1	**454-7803**	2	STEP AS	
	3	1	**512-9038**	1	BRACKET	
	4	1	**512-9039**	1	BRACKET	
	5	1	**512-9041**	8	PLATE	
	6	1	**512-9043**	1	STEP AS	
	7	1	**1D-4680**	12	BOLT-CARRIAGE (3/8-16X2.25-IN)	
	8	1	**2K-4973**	12	LOCKNUT (3/8-16-THD)	
	9	1	**7X-7729**	12	WASHER (11X25X3-MM THK)	

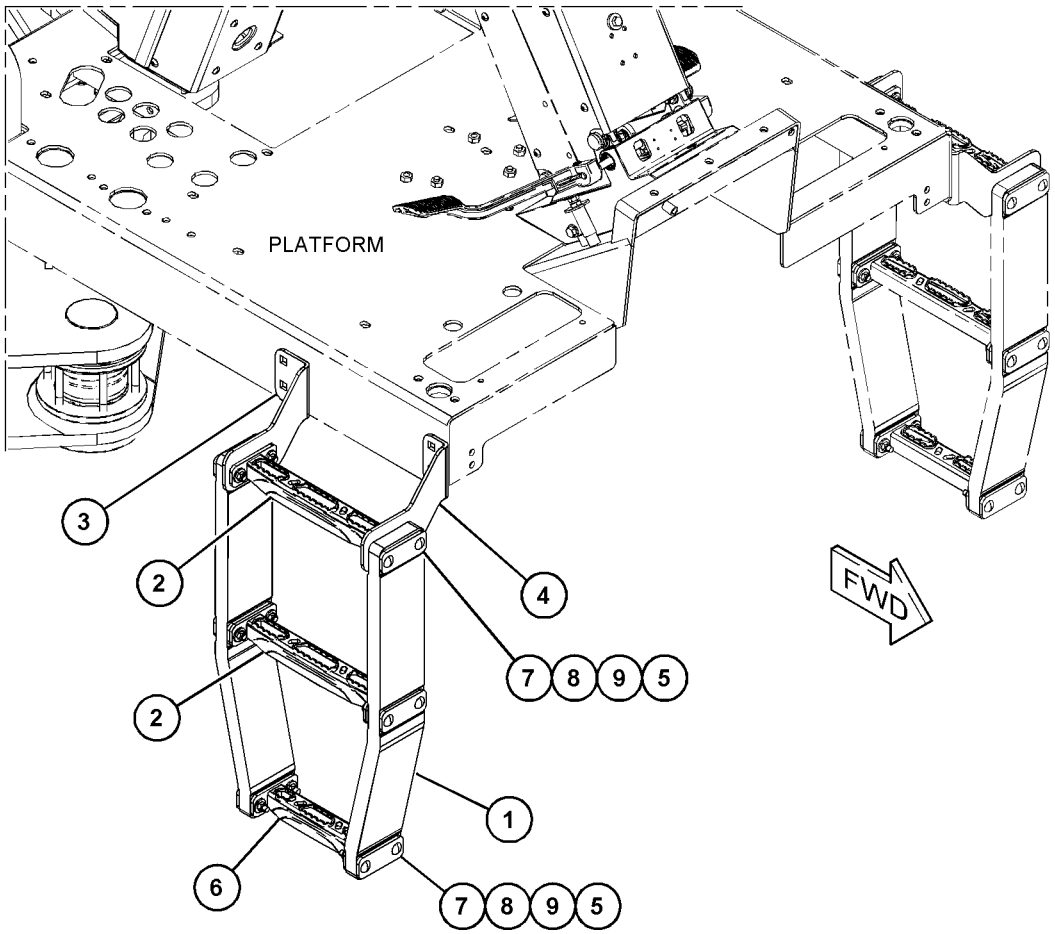

GRAPHIC #1 <END> g06164424

512-9046 STEP GP

S/N: SZS10100-UP

PART OF 512-9036 STEP GP

SMCS-7254 **i06903180**

NOTE	REF NO	GRAPHIC REF	PART NUMBER	QTY	PART NAME 1 2 3 4 5 6 (PRODUCT LEVEL)	SEE PAGE
	1	1	**512-9040**	2	BELT	
	2	1	**454-7803**	2	STEP AS	
	3	1	**512-9041**	8	PLATE	
	4	1	**512-9043**	1	STEP AS	
	5	1	**512-9044**	1	BRACKET	
	6	1	**512-9045**	1	BRACKET	
	7	1	**1D-4680**	12	BOLT-CARRIAGE (3/8-16X2.25-IN)	
	8	1	**2K-4973**	12	LOCKNUT (3/8-16-THD)	
	9	1	**7X-7729**	12	WASHER (11X25X3-MM THK)	

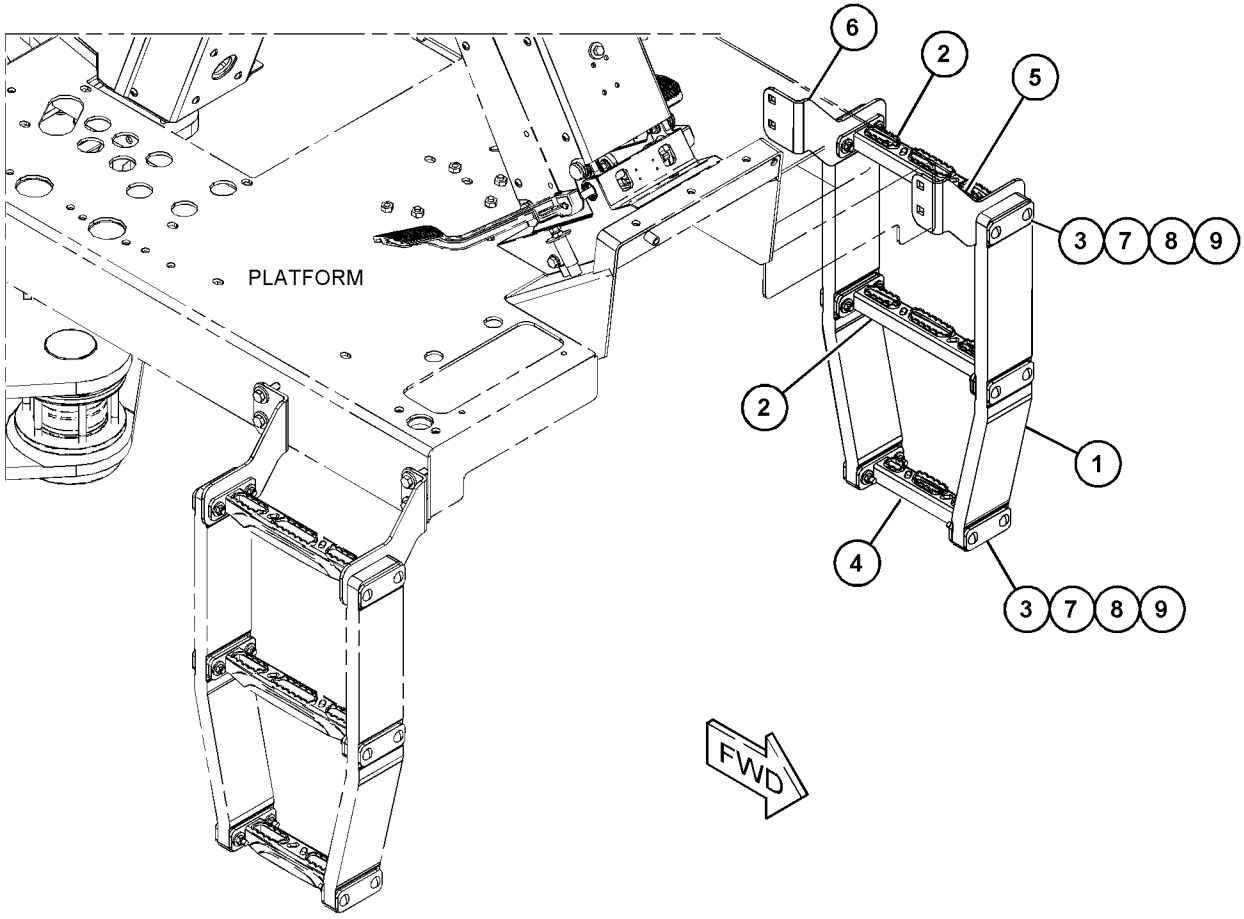

GRAPHIC #1 <END> g06164426

298-3520 SUPPORT GP-BATTERY–HEAVY-DUTY

S/N: SZS1-UP

PART OF 434-4117 BATTERY & BOX GP-HEAVY-DUTY, 304-9957 BATTERY & WIRING GP

AN ATTACHMENT

SMCS-7257 **i06218774**

NOTE	REF NO	GRAPHIC REF	PART NUMBER	QTY	PART NAME 1 2 3 4 5 6 (PRODUCT LEVEL)	SEE PAGE
	1	1	**246-2641**	2	PADLOCK GP	
					(EACH INCLUDES)	
		1	**5P-8500**	1	KEY	
	2	1	**143-4792**	4	BUMPER	
	3	1	**298-3523**	1	COVER AS	
		1	**6F-7013**	2	HANDLE	
	4	1	**298-3529**	1	SUPPORT AS	
M		1	**8T-3490**	4	NUT-WELD (M10X1.5-THD)	
		1	**034-7044**	6	RIVET	
		1	**161-4423**	2	LATCH AS	
	5	1	**198-4778**	4	WASHER-HARD (13.5X30X12-MM THK)	
M	6	1	**8T-4184**	4	BOLT (M12X1.75X45-MM)	

M - METRIC PART

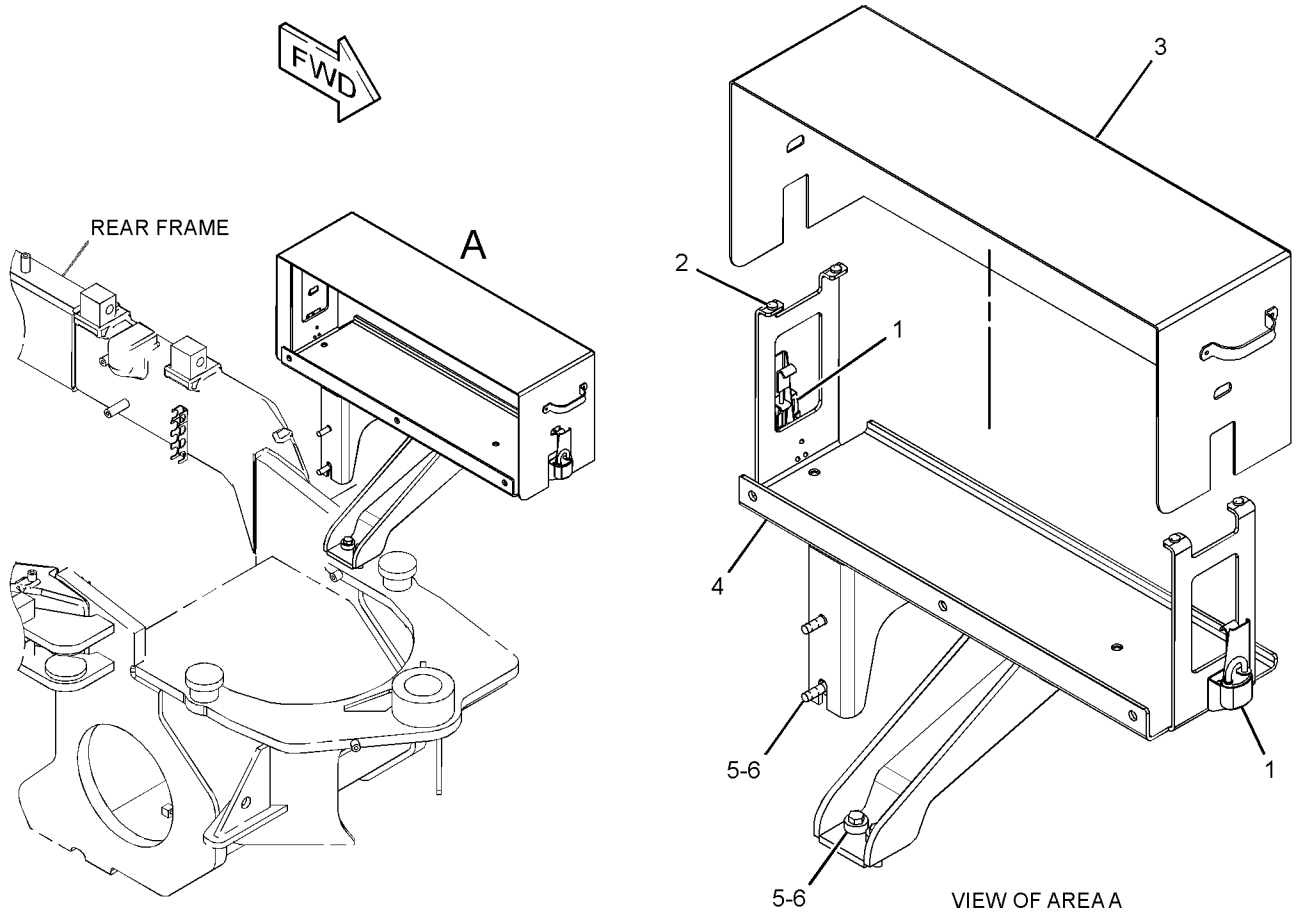

GRAPHIC #1 <END> g03862133

335-1415 SUPPORT GP-RADIATOR

S/N: SZS1-485

PART OF 335-2118 RADIATOR & HYD OIL COOLER GP

ALSO AN ATTACHMENT

SMCS-1353 **i04204980**

NOTE	REF NO	GRAPHIC REF	PART NUMBER	QTY	PART NAME 1 2 3 4 5 6 (PRODUCT LEVEL)	SEE PAGE
	1	1	**274-1704**	2	HANDHOLD	
	2	1	**299-8306**	1	BRACKET AS	
	3	1	**303-5999**	1	SUPPORT AS	
	4	1	**317-1537**	2	PLATE	
	5	1	**320-0924**	1	PLATE	
	6	1	**335-1420**	1	PLATE AS	
	7	1	**335-1422**	1	PLATE AS	
	8	1	**335-1424**	1	DOOR (RH)	
	9	1	**335-1425**	1	DOOR (LH)	
	10	1	**335-1426**	1	PLATE AS	
	11	1	**360-9277**	1	PLATE AS	
M		1	**8T-3490**	3	NUT-WELD (M10X1.5-THD)	
	12	1	**335-1428**	1	PLATE AS	
	13	1	**360-9279**	1	PLATE AS	
M		1	**8T-3490**	3	NUT-WELD (M10X1.5-THD)	
	14	1	**335-1430**	1	BRACKET AS	
	15	1	**335-1431**	1	BRACKET AS	
	16	1	**335-1432**	1	BRACKET AS	
	17	1	**335-1433**	1	PLATE AS	
	18	1	**360-9276**	1	SHROUD AS	
	19	1	**335-2120**	1	SHROUD AS	
	20	1	**336-4598**	1	PLATE AS	
	21	1	**198-4782**	4	WASHER-HARD (26X47X12-MM THK)	
	22	1	**7G-7053**	1	GROMMET	
M	23	1	**7X-2575**	4	BOLT (M24X3X60-MM)	
	24	1	**7X-7729**	4	WASHER (11X25X3-MM THK)	
	25	1	**8T-4121**	73	WASHER-HARD (11X21X2.5-MM THK)	
M	26	1	**8T-4136**	46	BOLT (M10X1.5X25-MM)	
M	27	1	**8T-4137**	14	BOLT (M10X1.5X20-MM)	
M	28	1	**8T-4195**	10	BOLT (M10X1.5X30-MM)	
M	29	1	**8T-4196**	7	BOLT (M10X1.5X35-MM)	
	30	1	**9D-3767**	1	PLUG-BUTTON	
E	31	1	**123-3827**		SEAL (100-CM EACH)	

E - ORDER BY THE CENTIMETER
M - METRIC PART

335-1415 **SUPPORT GP-RADIATOR (**contd.**)** **i04204980**

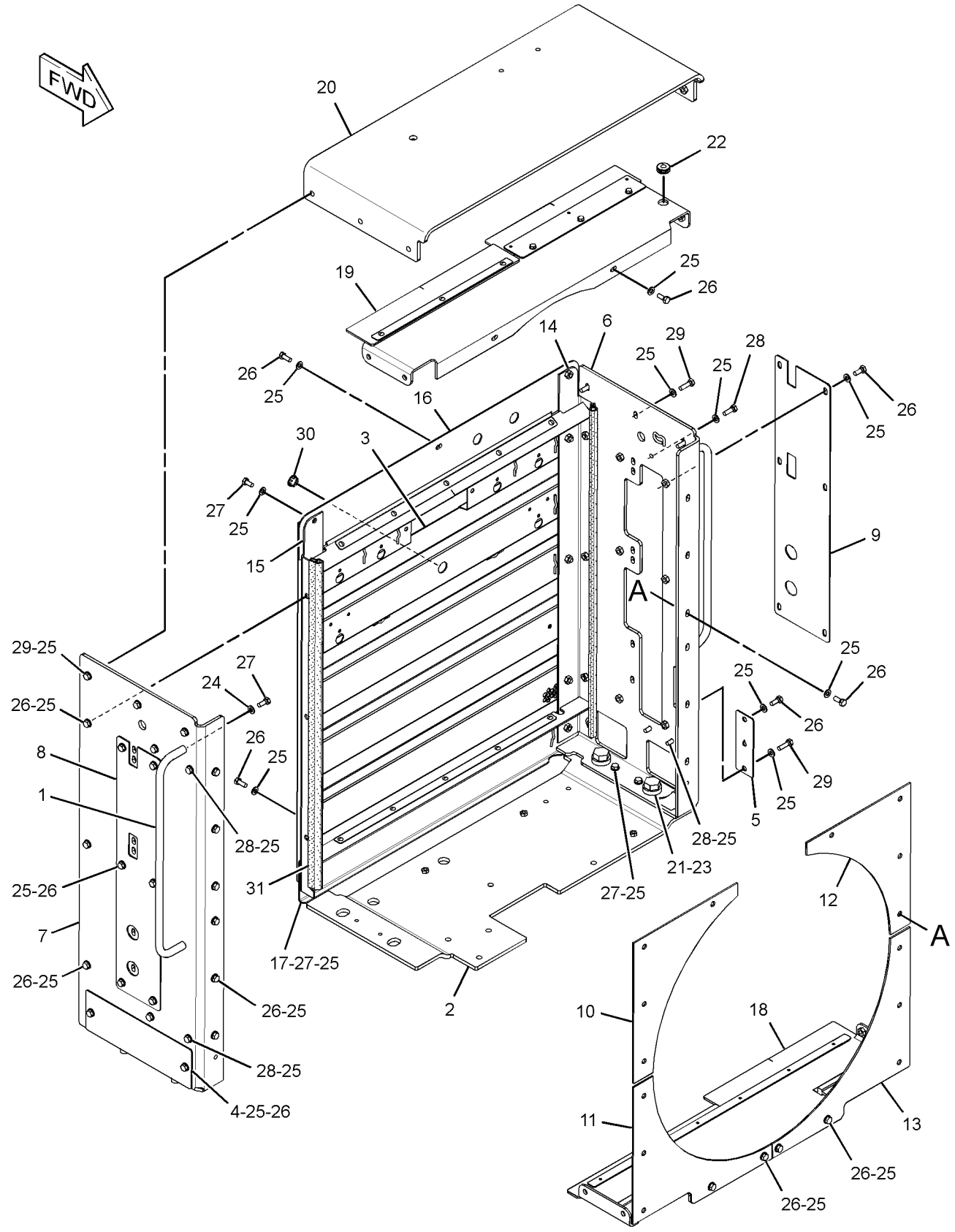

GRAPHIC #1 <END> g02408596

376-6728 SUPPORT GP-RADIATOR

S/N: SZS486-UP

PART OF 335-2118 RADIATOR & HYD OIL COOLER GP

ALSO AN ATTACHMENT

SMCS-1353 **i06835636**

NOTE	REF NO	GRAPHIC REF	PART NUMBER	QTY	PART NAME 1 2 3 4 5 6 (PRODUCT LEVEL)	SEE PAGE
	1	1	**274-1704**	2	HANDHOLD	
	2	1	**514-4274**	1	BRACKET AS	
M		1	**8T-3490**	2	NUT-WELD (M10X1.5-THD)	
M		1	**8T-3612**	3	NUT-WELD (M8X1.25-THD)	
	3	1	**303-5999**	1	SUPPORT AS	
	4	1	**317-1537**	2	PLATE	
	5	1	**320-0924**	1	PLATE	
	6	1	**376-6712**	1	PLATE AS	
		1	**5D-9629**	4	ROD	
M		1	**8T-3490**	12	NUT-WELD (M10X1.5-THD)	
	7	1	**376-6714**	1	PLATE AS	
		1	**5D-9629**	1	ROD	
M		1	**8T-3490**	10	NUT-WELD (M10X1.5-THD)	
	8	1	**376-6718**	1	DOOR (LH)	
	8A	1	**376-6718**	1	DOOR (RH)	
	10	1	**335-1426**	1	PLATE AS	
	11	1	**360-9277**	1	PLATE AS	
M		1	**8T-3490**	3	NUT-WELD (M10X1.5-THD)	
	12	1	**335-1428**	1	PLATE AS	
	13	1	**360-9279**	1	PLATE AS	
M		1	**8T-3490**	3	NUT-WELD (M10X1.5-THD)	
	14	1	**376-6719**	1	BRACKET AS	
M		1	**8T-3490**	9	NUT-WELD (M10X1.5-THD)	
	15	1	**376-6720**	1	BRACKET AS	
M		1	**8T-3490**	9	NUT-WELD (M10X1.5-THD)	
	16	1	**335-1432**	1	BRACKET AS	
	17	1	**335-1433**	1	PLATE AS	
	18	1	**360-9276**	1	SHROUD AS	
		1	**6V-4604**	6	RIVET-POP	
		1	**122-9764**	6	RIVET-POP	
		1	**303-6037**	2	BRUSH AS	
	19	1	**376-6716**	1	SHROUD AS	
		1	**6V-4604**	6	RIVET-POP	
	20	1	**336-4598**	1	PLATE AS	
	21	1	**267-3507**	4	WASHER-HARD (26X47X12-MM THK)	
	22	1	**7G-7053**	1	GROMMET	
M	23	1	**7X-2575**	4	BOLT (M24X3X60-MM)	
	24	1	**7X-7729**	77	WASHER (11X25X3-MM THK)	
M	26	1	**8T-4136**	46	BOLT (M10X1.5X25-MM)	
M	27	1	**8T-4137**	14	BOLT (M10X1.5X20-MM)	
M	28	1	**8T-4195**	10	BOLT (M10X1.5X30-MM)	
M	29	1	**8T-4196**	7	BOLT (M10X1.5X35-MM)	
E	31	1	**123-3827**		SEAL (94-CM EACH)	

E - ORDER BY THE CENTIMETER
M - METRIC PART

376-6728 **SUPPORT GP-RADIATOR (**contd.**)** **i06835636**

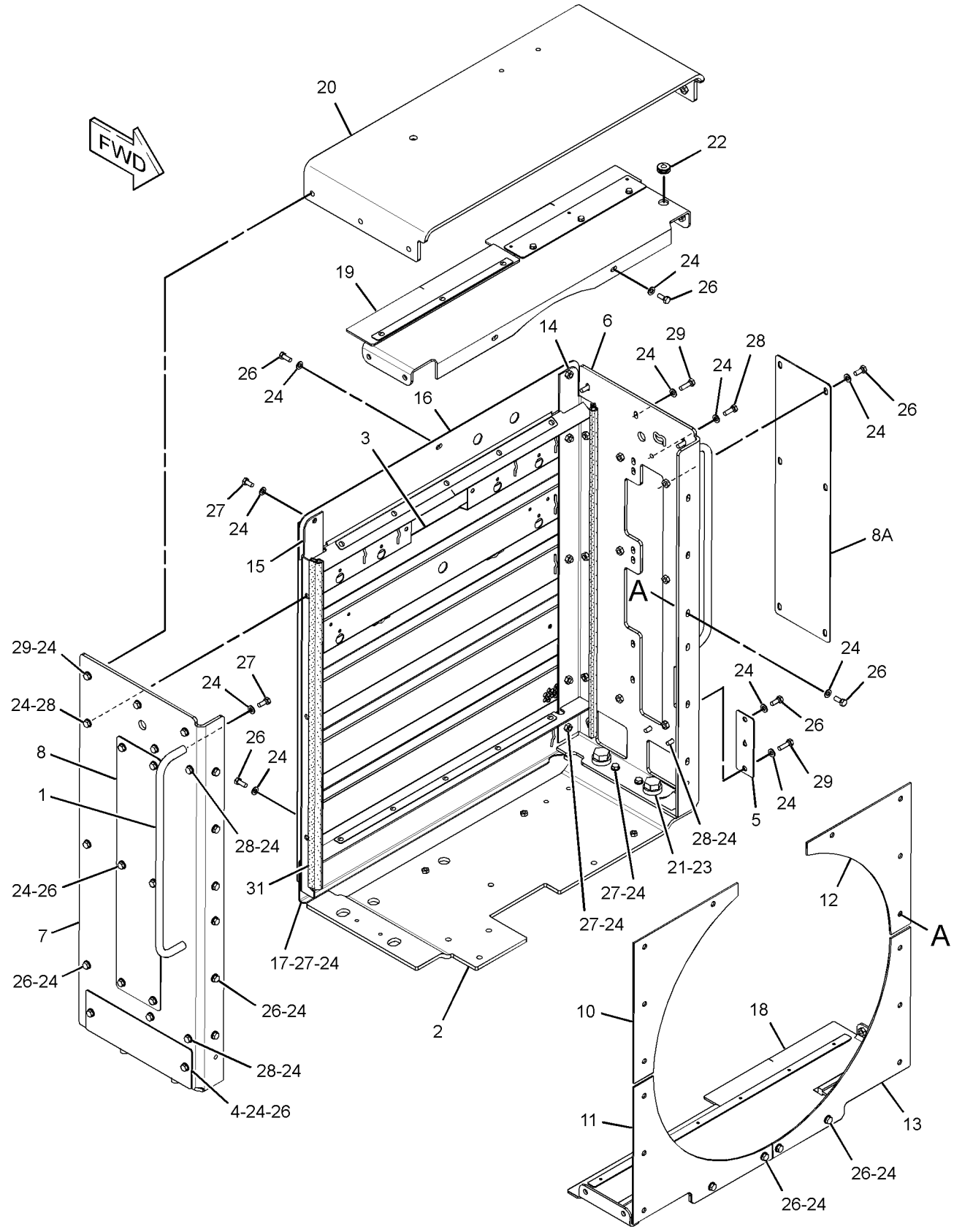

GRAPHIC #1 <END> g06123272

215-3005 AIR DRYER GP

S/N: SZS489-UP
PART OF 303-2035 AIR DRYER GP
ALSO AN ATTACHMENT

SMCS-4285 **i06275986**

NOTE	REF NO	GRAPHIC REF	PART NUMBER	QTY	PART NAME 1 2 3 4 5 6 (PRODUCT LEVEL)	SEE PAGE
	1	1	**203-2390**	1	KIT-VALVE (AIR DRYER, CUTOFF)	
	2	1	**203-2391**	1	KIT-CHECK VALVE	
	3	1	**203-2423**	1	KIT-HEATING ELEMENT (AIR DRYER)	
	4	1	**203-2389**	1	KIT-CARTRIDGE (DESICCANT) (AIR DRYER)	
	5	1	**218-2971**	1	KIT-VALVE (AIR DRYER, PURGE)	

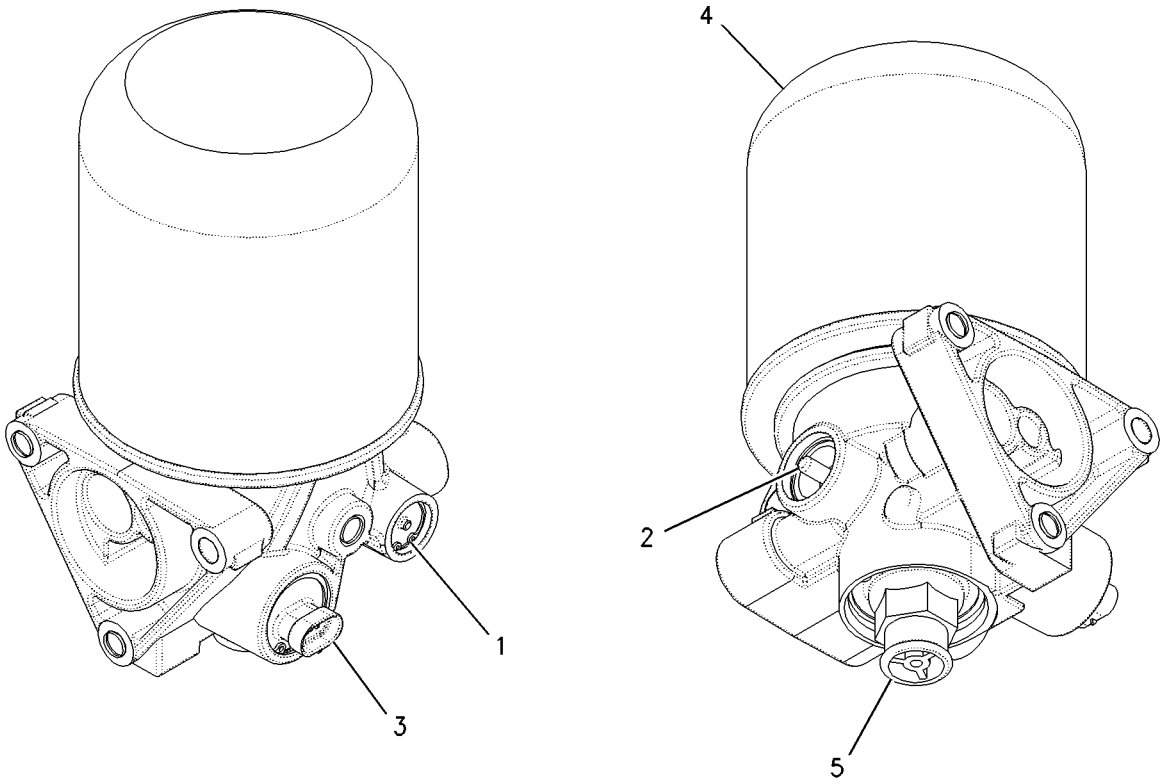

GRAPHIC #1 <END> g00945969

303-2033 AIR DRYER GP

S/N: SZS489-623
PART OF 368-3025 GENERAL AR
ALSO AN ATTACHMENT

SMCS-4285 **i03856089**

NOTE	REF NO	GRAPHIC REF	PART NUMBER	QTY	PART NAME 1 2 3 4 5 6 (PRODUCT LEVEL)	SEE PAGE
	1	1	**9W-1442**	1	FUSE (10-AMPERE)	
	2	1	**300-1377**	1	HARNESS AS-WIRING	
		1	**102-8802**	1	KIT-RECEPTACLE (2-PIN)	
					(INCLUDES RECETACLE AS & WEDGE)	
		1	**186-3735**	2	PIN-CONNECTOR (16-GA TO 18-GA)	
		1	**196-2412**	2	TERMINAL AS (16-GA)	
					(EACH INCLUDES)	
		1	**101-8105**	1	SOCKET-CONNECTOR (16-GA TO 18-GA)	
		1	**7R-2750**	1	SEAL-CONNECTOR	
		1	**101-8106**	1	LOCK-CONNECTOR	
		1	**101-8108**	1	PLUG-CONNECTOR	
E		1	**114-8843**		SLEEVE-PLASTIC (40-CM)	
Y	3	1	*303-2034*	1	AIR DRYER GP	736

E - ORDER BY THE CENTIMETER
Y - SEPARATE ILLUSTRATION

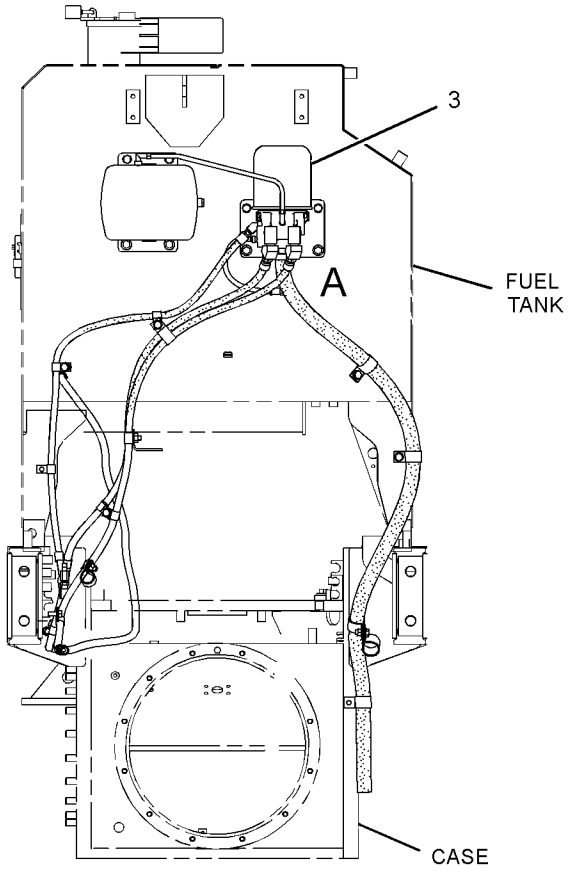

REAR VIEW

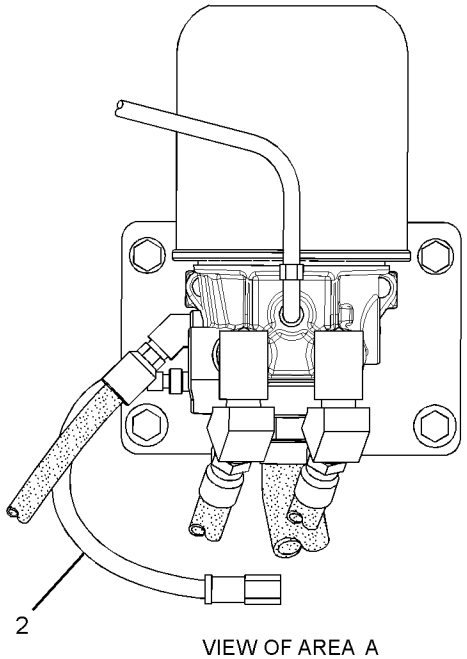

VIEW OF AREA A

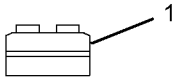

LOCATED IN STEERING CONSOLE GROUP

GRAPHIC #1 <END> g01929253

303-2034 AIR DRYER GP

S/N: SZS489-513
PART OF 303-2033 AIR DRYER GP
ALSO AN ATTACHMENT

SMCS-4285 **i05592411**

NOTE	REF NO	GRAPHIC REF	PART NUMBER	QTY	PART NAME 1 2 3 4 5 6 (PRODUCT LEVEL)	SEE PAGE
Y	1	1	*303-2035*	1	AIR DRYER GP	738
I	2	1	**342-1630**	1	HOSE AS	
	3	1	**174-5907**	10	CLIP	
	4	1	**205-7299**	1	CLIP	
	5	1	**4K-8864**	1	CLIP	
	6	1	**8T-4121**	9	WASHER-HARD (11X21X2.5-MM THK)	
M	7	1	**8T-4133**	4	NUT (M10X1.5-THD)	
M	8	1	**8T-4136**	5	BOLT (M10X1.5X25-MM)	
	9	1	**217-4369**	1	BRACKET AS	
	10	1	**124-1479**	1	CLIP	
	11	1	**8W-8528**	1	SLEEVE	
	12	1	**7D-4903**	1	ADAPTER	
	13	1	**2H-3940**	1	ELBOW	

I - REFER TO HYDRAULIC INFORMATION SYSTEM
M - METRIC PART
Y - SEPARATE ILLUSTRATION

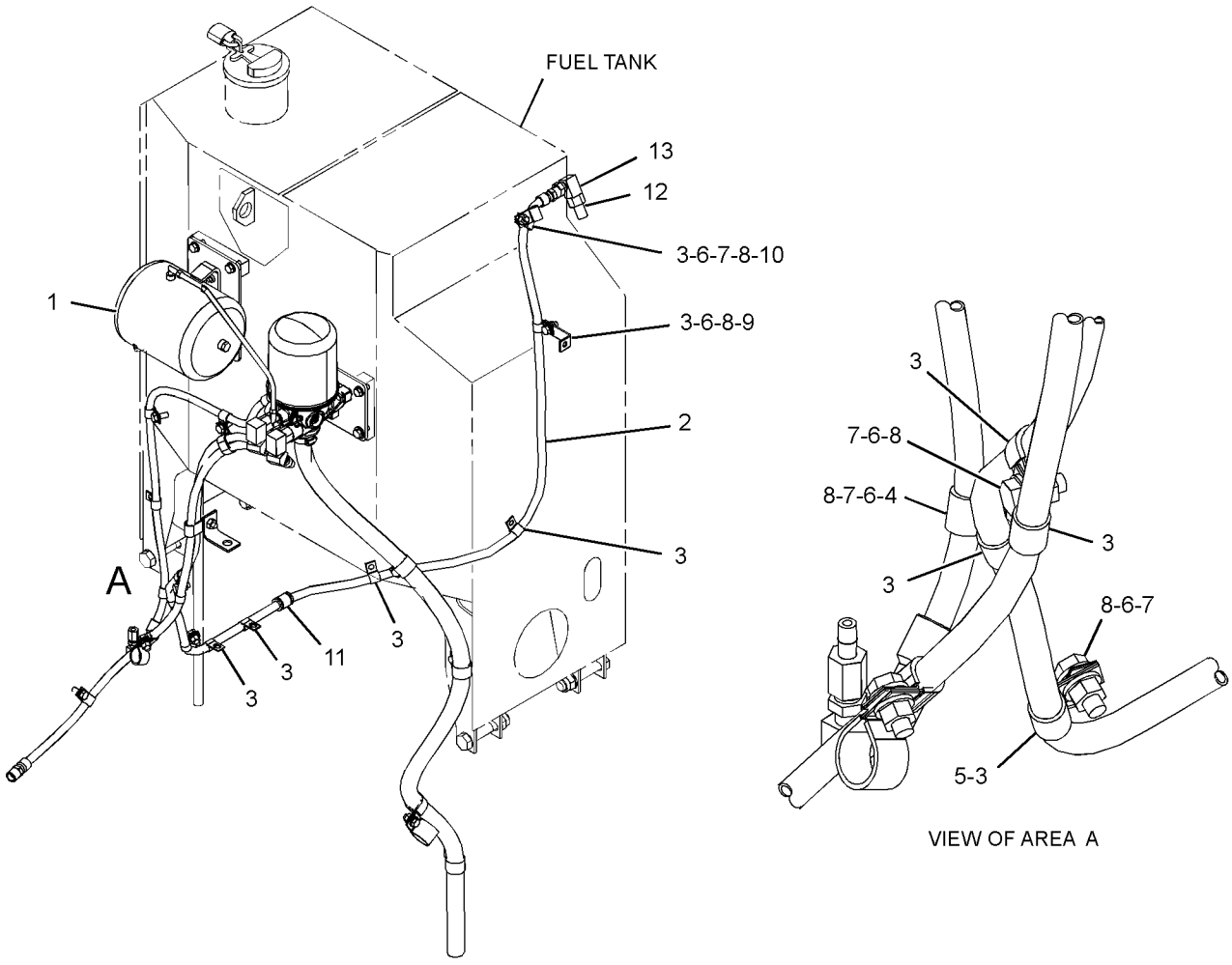

GRAPHIC #1 <END> g03557516

303-2034 AIR DRYER GP

S/N: SZS514-UP

PART OF 303-2033 AIR DRYER GP

SMCS-4285 **i05884708**

NOTE	REF NO	GRAPHIC REF	PART NUMBER	QTY	PART NAME 1 2 3 4 5 6 (PRODUCT LEVEL)	SEE PAGE
	1	1	**8W-8528**	1	SLEEVE	
	2	1	**217-4369**	1	BRACKET AS	
Y	3	1	*303-2035*	1	AIR DRYER GP	738
CI	4	1	**457-4050**	1	HOSE AS	
C	5	1	**174-5907**	8	CLIP	
	6	1	**4K-8864**	1	CLIP	
C	7	1	**8T-4121**	5	WASHER-HARD (11X21X2.5-MM THK)	
CM	8	1	**8T-4133**	2	NUT (M10X1.5-THD)	
CM	9	1	**8T-4136**	3	BOLT (M10X1.5X25-MM)	

C - CHANGE FROM PREVIOUS TYPE
I - REFER TO HYDRAULIC INFORMATION SYSTEM
M - METRIC PART
Y - SEPARATE ILLUSTRATION

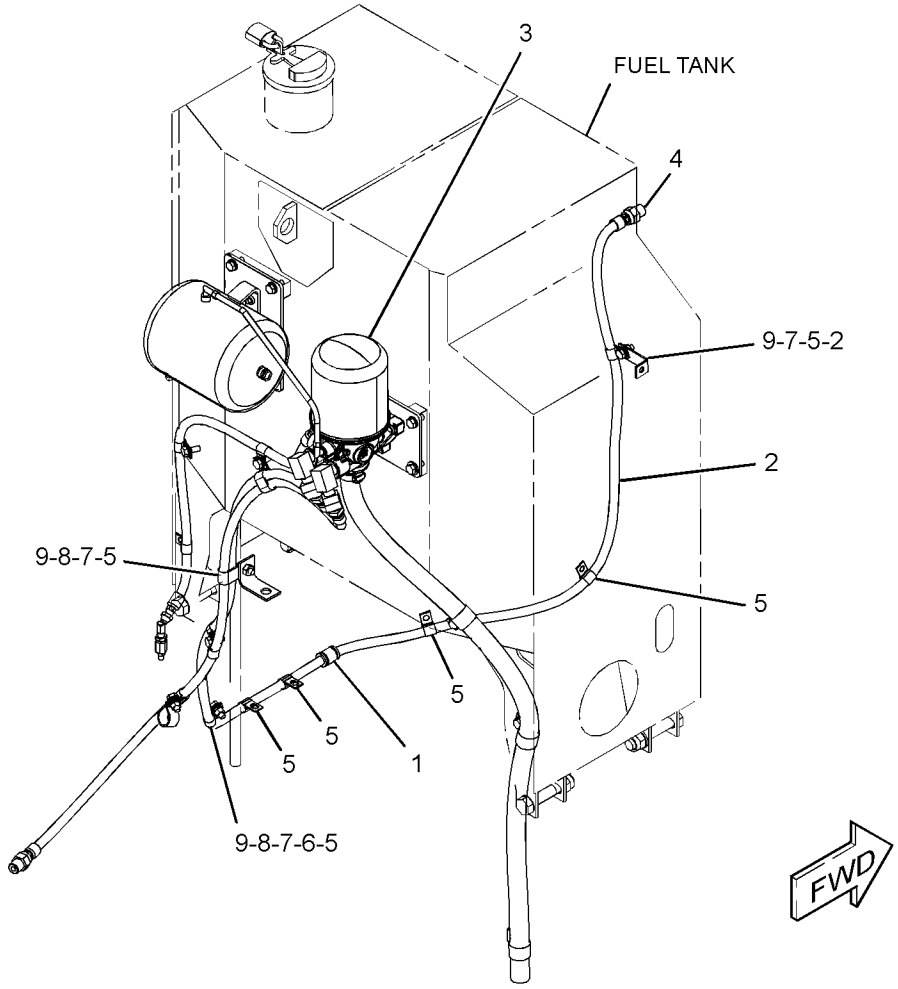

GRAPHIC #1 <END> g03711995

303-2035 AIR DRYER GP

S/N: SZS489-UP
FOR USE WITH 303-2033—PAGE: 735
PART OF 303-2034 AIR DRYER GP
ALSO AN ATTACHMENT

SMCS-4285 **i05301160**

NOTE	REF NO	GRAPHIC REF	PART NUMBER	QTY	PART NAME 1 2 3 4 5 6 (PRODUCT LEVEL)	SEE PAGE
	1	1	**2S-3440**	1	CLAMP-HOSE	
	2	1	**5P-4424**	2	ELBOW-AIR BRAKE	
	3	1	**6V-2610**	1	FITTING	
	4	1	**327-0726**	1	PLATE	
	5	1	**191-3645**	1	RESERVOIR	
Y	6	1	**215-3005**	1	AIR DRYER GP	734
	7	1	**327-0727**	1	PLATE	
I	8	1	**327-0731**	1	HOSE AS	
	9	1	**327-0730**	1	HOSE AS	
	10	1	**303-2348**	1	TUBE	
	11	1	**327-0728**	1	PLATE AS	
	12	1	**004-7617**	1	ELBOW-PIPE	
	13	1	**174-5907**	1	CLIP	
	14	1	**8T-8917**	3	BOLT (1/2-13X1.25-IN)	
	15	1	**5K-8451**	2	CLIP	
	16	1	**5P-7854**	4	CLIP	
	17	1	**7D-4903**	2	ADAPTER	
	18	1	**7D-0215**	1	CONNECTOR-PIPE	
	19	1	**8T-4121**	14	WASHER-HARD (11X21X2.5-MM THK)	
M	20	1	**8T-4133**	2	NUT (M10X1.5-THD)	
M	21	1	**8T-4136**	16	BOLT (M10X1.5X25-MM)	
	22	1	**205-7299**	3	CLIP	
	23	1	**6V-7535**	2	ELBOW-PIPE	
	24	1	**8T-4223**	3	WASHER-HARD (13.5X25.5X3-MM THK)	
	25	1	**8T-4224**	2	WASHER-HARD (8.8X16X2-MM THK)	
M	26	1	**8T-4908**	2	BOLT (M8X1.25X25-MM)	
	27	1	**9L-3560**	2	ELBOW	
	28	1	**9M-8406**	1	CLIP	
	29	1	**3J-5390**	1	PLUG	
	30	1	**4D-7388**	1	CLIP	
	31	1	**5B-1585**	2	ELBOW	
	32	1	**6V-1889**	1	CLIP	
	33	1	**7X-7729**	4	WASHER (11X25X3-MM THK)	
E	34	1	**8I-1362**		HOSE (148-CM)	

E - ORDER BY THE CENTIMETER
I - REFER TO HYDRAULIC INFORMATION SYSTEM
M - METRIC PART
Y - SEPARATE ILLUSTRATION

303-2035 **AIR DRYER GP (**contd.**)** **i05301160**

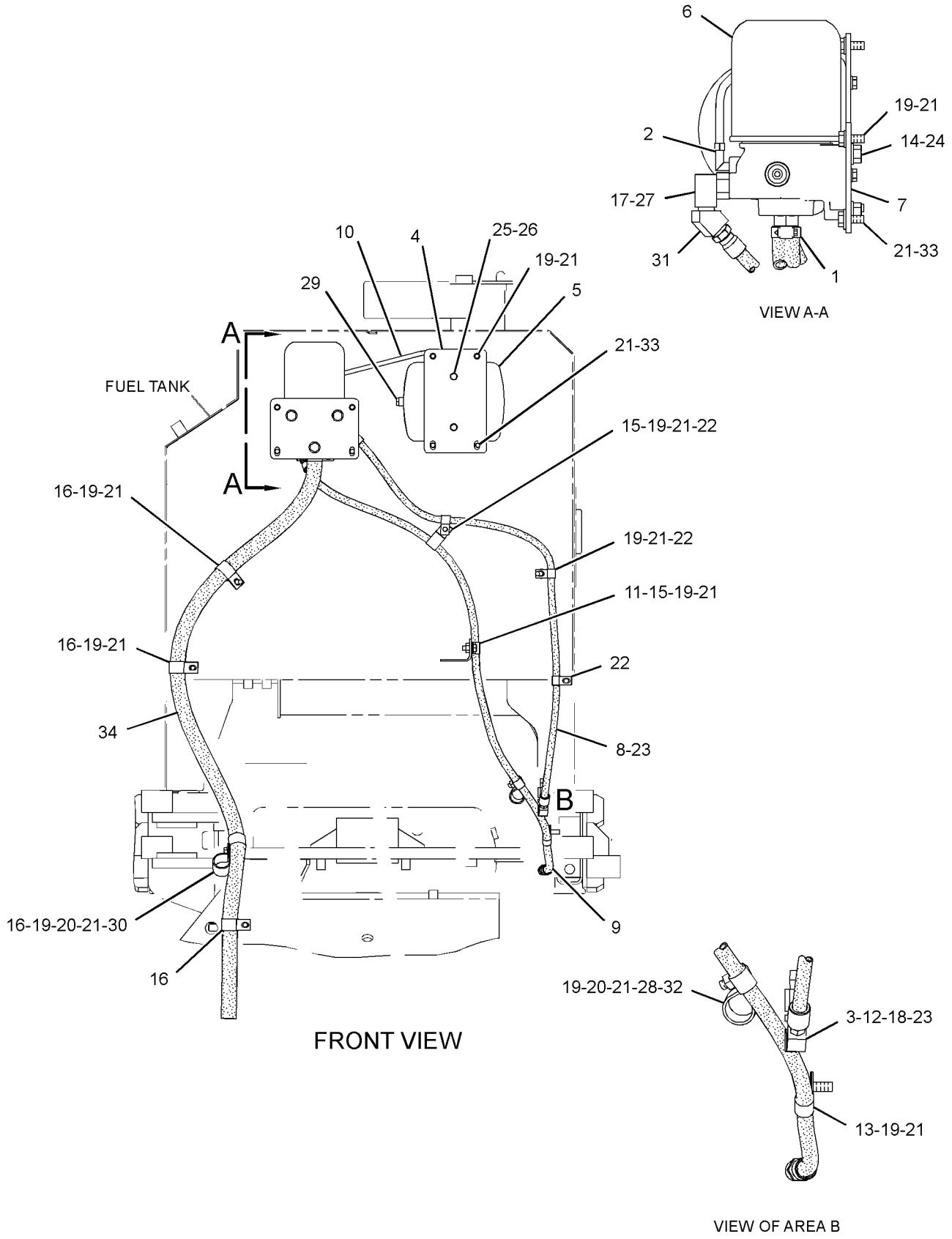

GRAPHIC #1 <END> g01927572

303-2035 AIR DRYER GP

S/N: SZS1-513
FOR USE WITH 303-2033—PAGE: 735
PART OF 303-2034 AIR DRYER GP
ALSO AN ATTACHMENT

SMCS-4285 **i05725156**

NOTE	REF NO	GRAPHIC REF	PART NUMBER	QTY	PART NAME 1 2 3 4 5 6 (PRODUCT LEVEL)	SEE PAGE
	1	1	**2S-3440**	1	CLAMP-HOSE	
	2	1	**5P-4424**	2	ELBOW-AIR BRAKE	
	3	1	**6V-2610**	1	FITTING	
	4	1	**327-0726**	1	PLATE	
	5	1	**191-3645**	1	RESERVOIR	
CY	6	1	**450-3729**	1	AIR DRYER GP	744
	7	1	**327-0727**	1	PLATE	
I	8	1	**327-0731**	1	HOSE AS	
	9	1	**327-0730**	1	HOSE AS	
	10	1	**303-2348**	1	TUBE	
	11	1	**327-0728**	1	PLATE AS	
	12	1	**004-7617**	1	ELBOW-PIPE	
	13	1	**174-5907**	1	CLIP	
	14	1	**8T-8917**	3	BOLT (1/2-13X1.25-IN)	
	15	1	**5K-8451**	2	CLIP	
	16	1	**5P-7854**	4	CLIP	
	17	1	**7D-4903**	2	ADAPTER	
	18	1	**7D-0215**	1	CONNECTOR-PIPE	
	19	1	**8T-4121**	14	WASHER-HARD (11X21X2.5-MM THK)	
M	20	1	**8T-4133**	2	NUT (M10X1.5-THD)	
M	21	1	**8T-4136**	16	BOLT (M10X1.5X25-MM)	
	22	1	**205-7299**	3	CLIP	
	23	1	**6V-7535**	2	ELBOW-PIPE	
	24	1	**8T-4223**	3	WASHER-HARD (13.5X25.5X3-MM THK)	
	25	1	**8T-4224**	2	WASHER-HARD (8.8X16X2-MM THK)	
M	26	1	**8T-4908**	2	BOLT (M8X1.25X25-MM)	
	27	1	**9L-3560**	2	ELBOW	
	28	1	**9M-8406**	1	CLIP	
	29	1	**3J-5390**	1	PLUG	
	30	1	**4D-7388**	1	CLIP	
	31	1	**5B-1585**	2	ELBOW	
	32	1	**6V-1889**	1	CLIP	
	33	1	**7X-7729**	4	WASHER (11X25X3-MM THK)	
E	34	1	**8I-1362**		HOSE (148-CM)	

C - CHANGE FROM PREVIOUS TYPE
E - ORDER BY THE CENTIMETER
I - REFER TO HYDRAULIC INFORMATION SYSTEM
M - METRIC PART
Y - SEPARATE ILLUSTRATION

303-2035 **AIR DRYER GP (**contd.**)** **i05725156**

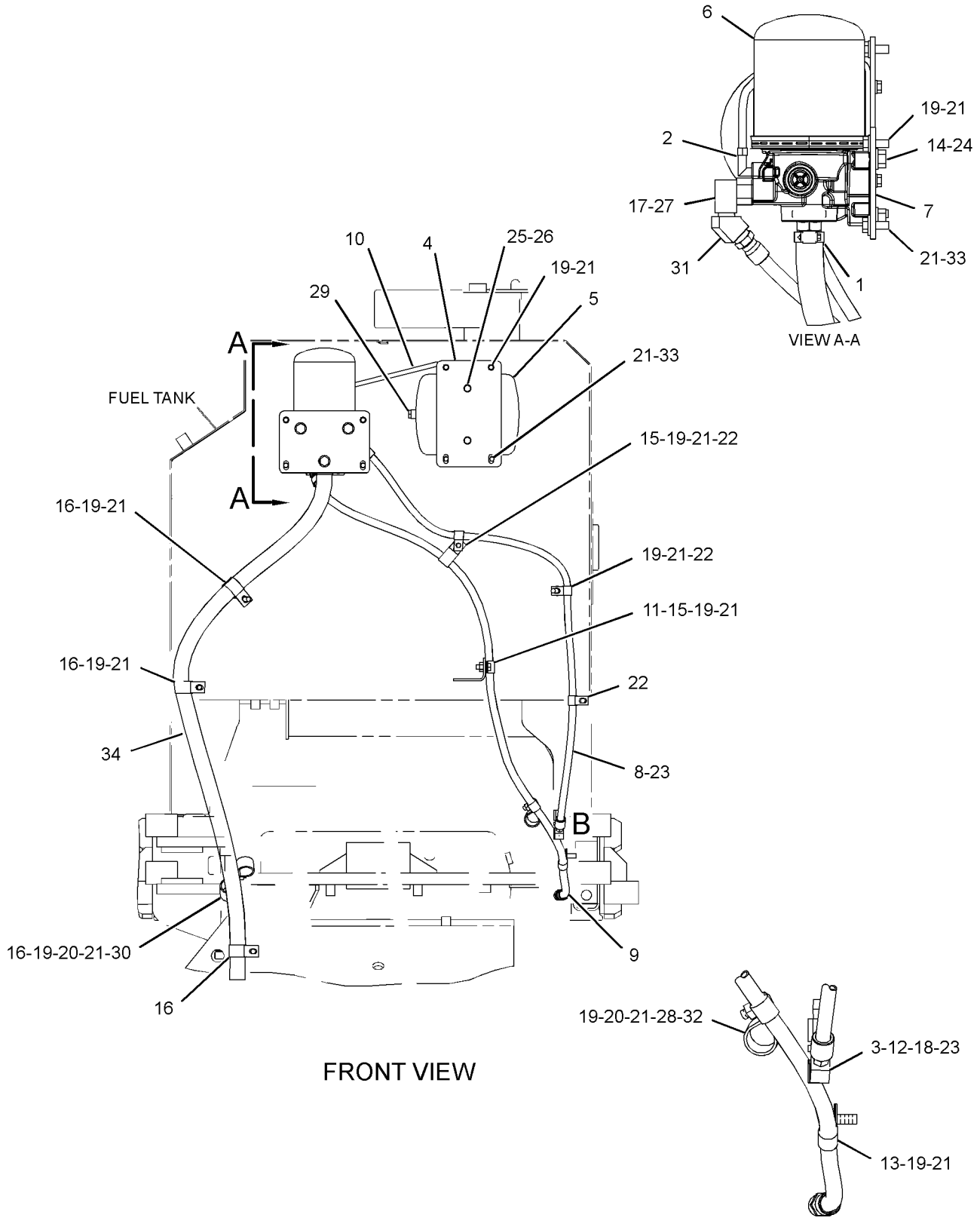

FRONT VIEW

GRAPHIC #1 <END> g03645504

303-2035 AIR DRYER GP

S/N: SZS514-UP
FOR USE WITH 303-2033—PAGE: 735
PART OF 303-2034 AIR DRYER GP

SMCS-4285 **i06013256**

NOTE	REF NO	GRAPHIC REF	PART NUMBER	QTY	PART NAME 1 2 3 4 5 6 (PRODUCT LEVEL)	SEE PAGE
	1	1	**2S-3440**	1	CLAMP-HOSE	
	2	1	**5P-4424**	2	ELBOW-AIR BRAKE	
C	3	1	**0A-2926**	1	FITTING	
	4	1	**327-0726**	1	PLATE	
	5	1	**191-3645**	1	RESERVOIR	
Y	6	1	**450-3729**	1	AIR DRYER GP	744
	7	1	**327-0727**	1	PLATE	
CI	8	1	**457-4049**	1	HOSE AS	
CI	9	1	**457-4051**	1	HOSE AS	
	10	1	**303-2348**	1	TUBE	
	11	1	**327-0728**	1	PLATE AS	
	14	1	**8T-8917**	3	BOLT (1/2-13X1.25-IN)	
	15	1	**5K-8451**	2	CLIP	
C	16	1	**5P-7854**	3	CLIP	
	18	1	**7D-0215**	1	CONNECTOR-PIPE	
C	19	1	**8T-4121**	11	WASHER-HARD (11X21X2.5-MM THK)	
CM	20	1	**8T-4133**	1	NUT (M10X1.5-THD)	
CM	21	1	**8T-4136**	14	BOLT (M10X1.5X25-MM)	
	22	1	**205-7299**	3	CLIP	
	24	1	**8T-4223**	3	WASHER-HARD (13.5X25.5X3-MM THK)	
	25	1	**8T-4224**	2	WASHER-HARD (8.8X16X2-MM THK)	
M	26	1	**8T-4908**	2	BOLT (M8X1.25X25-MM)	
	27	1	**9L-3560**	2	ELBOW	
	28	1	**9M-8406**	1	CLIP	
	29	1	**3J-5390**	1	PLUG	
	31	1	**5B-1585**	2	ELBOW	
	32	1	**6V-1889**	1	CLIP	
	33	1	**7X-7729**	4	WASHER (11X25X3-MM THK)	
CE	34	1	**8I-1362**		HOSE (130-CM)	
C	35	1	**3D-7587**	2	ELBOW	

C - CHANGE FROM PREVIOUS TYPE
E - ORDER BY THE CENTIMETER
I - REFER TO HYDRAULIC INFORMATION SYSTEM
M - METRIC PART
Y - SEPARATE ILLUSTRATION

303-2035 **AIR DRYER GP (**contd.**)** **i06013256**

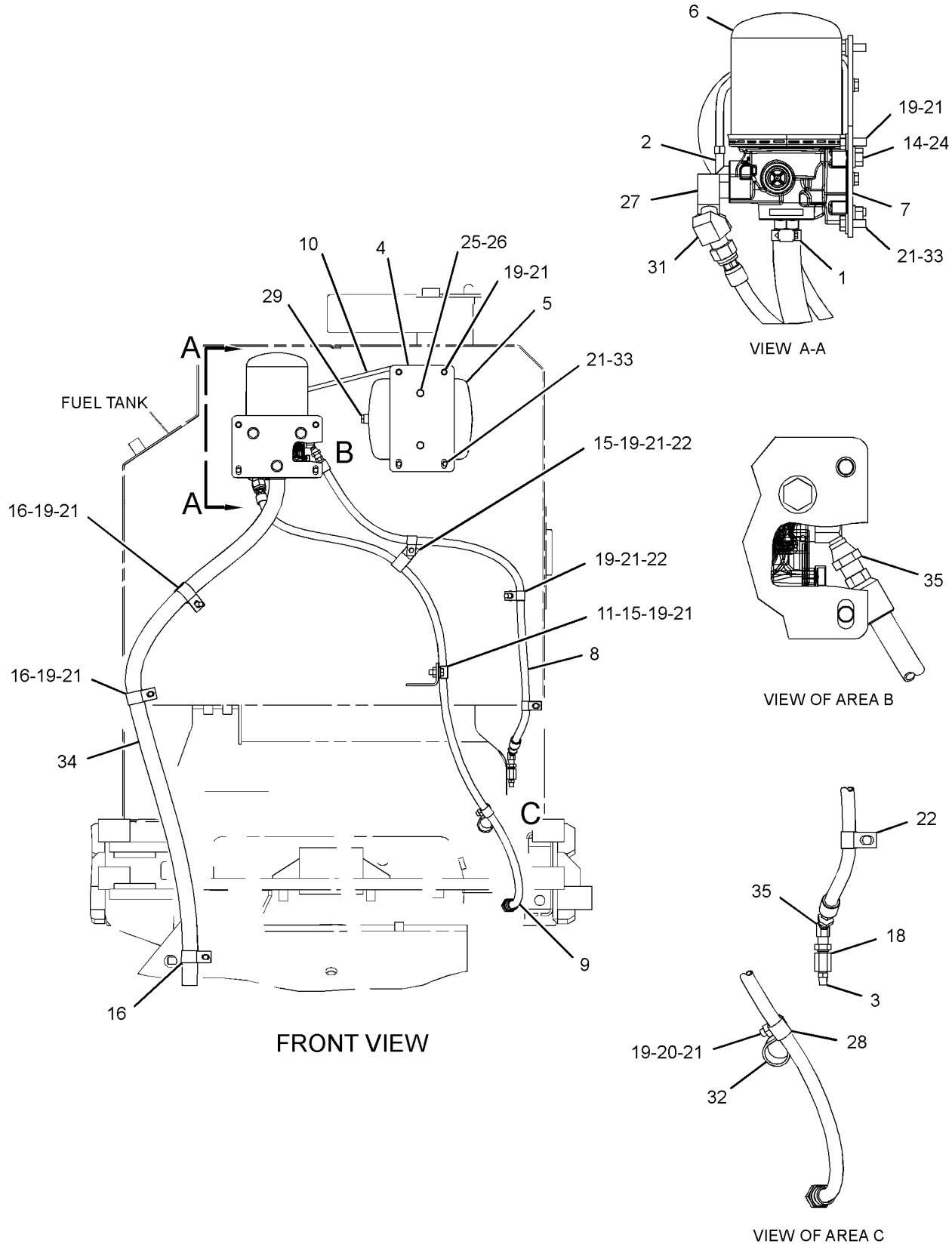

GRAPHIC #1 <END> g03711994

450-3729 AIR DRYER GP

S/N: SZS1-UP

PART OF 303-2035 AIR DRYER GP, 455-0162 DRYER & LINES GP-AIR

ALSO AN ATTACHMENT

SMCS-4285 **i06276004**

NOTE	REF NO	GRAPHIC REF	PART NUMBER	QTY	PART NAME 1 2 3 4 5 6 (PRODUCT LEVEL)	SEE PAGE
	1	1	**203-2390**	1	KIT-VALVE (AIR DRYER, CUTOFF)	
	2	1	**203-2391**	1	KIT-CHECK VALVE	
	3	1	**203-2423**	1	KIT-HEATING ELEMENT (AIR DRYER)	
	4	1	**203-2389**	1	KIT-CARTRIDGE (DESICCANT) (AIR DRYER)	
	5	1	**218-2971**	1	KIT-VALVE (AIR DRYER, PURGE)	

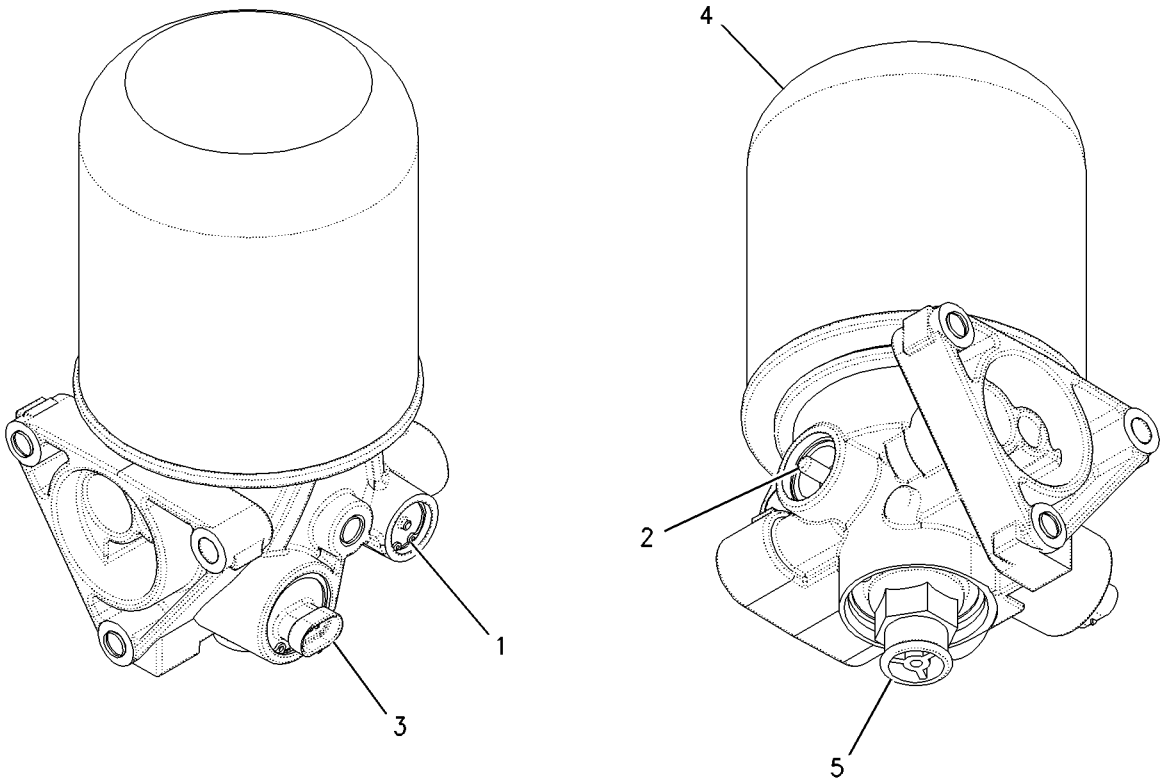

GRAPHIC #1 <END> g00945969

455-0158 AIR DRYER GP

S/N: SZS624-UP

PART OF 435-8193 HYDRAULIC AR

SMCS-4285 **i06054151**

NOTE	REF NO	GRAPHIC REF	PART NUMBER	QTY	PART NAME 1 2 3 4 5 6 (PRODUCT LEVEL)	SEE PAGE
	1	1	**9W-1442**	1	FUSE (10-AMPERE)	
	2	1	**300-1377**	1	HARNESS AS-WIRING	
		1	**102-8802**	1	KIT-RECEPTACLE (2-PIN)	
					(INCLUDES RECEPTACLE AS & WEDGE)	
		1	**8T-8729**	2	PIN-CONNECTOR (16-GA TO 18-GA)	
		1	**196-2412**	2	TERMINAL AS (16-GA)	
					(EACH INCLUDES)	
		1	**7R-2750**	1	SEAL-CONNECTOR	
		1	**101-8106**	1	LOCK-CONNECTOR	
		1	**101-8108**	1	PLUG-CONNECTOR	
E		1	**114-8843**		SLEEVE-PLASTIC (40-CM)	
Y	3	1	*455-0162*	1	DRYER & LINES GP-AIR	762

E - ORDER BY THE CENTIMETER
Y - SEPARATE ILLUSTRATION

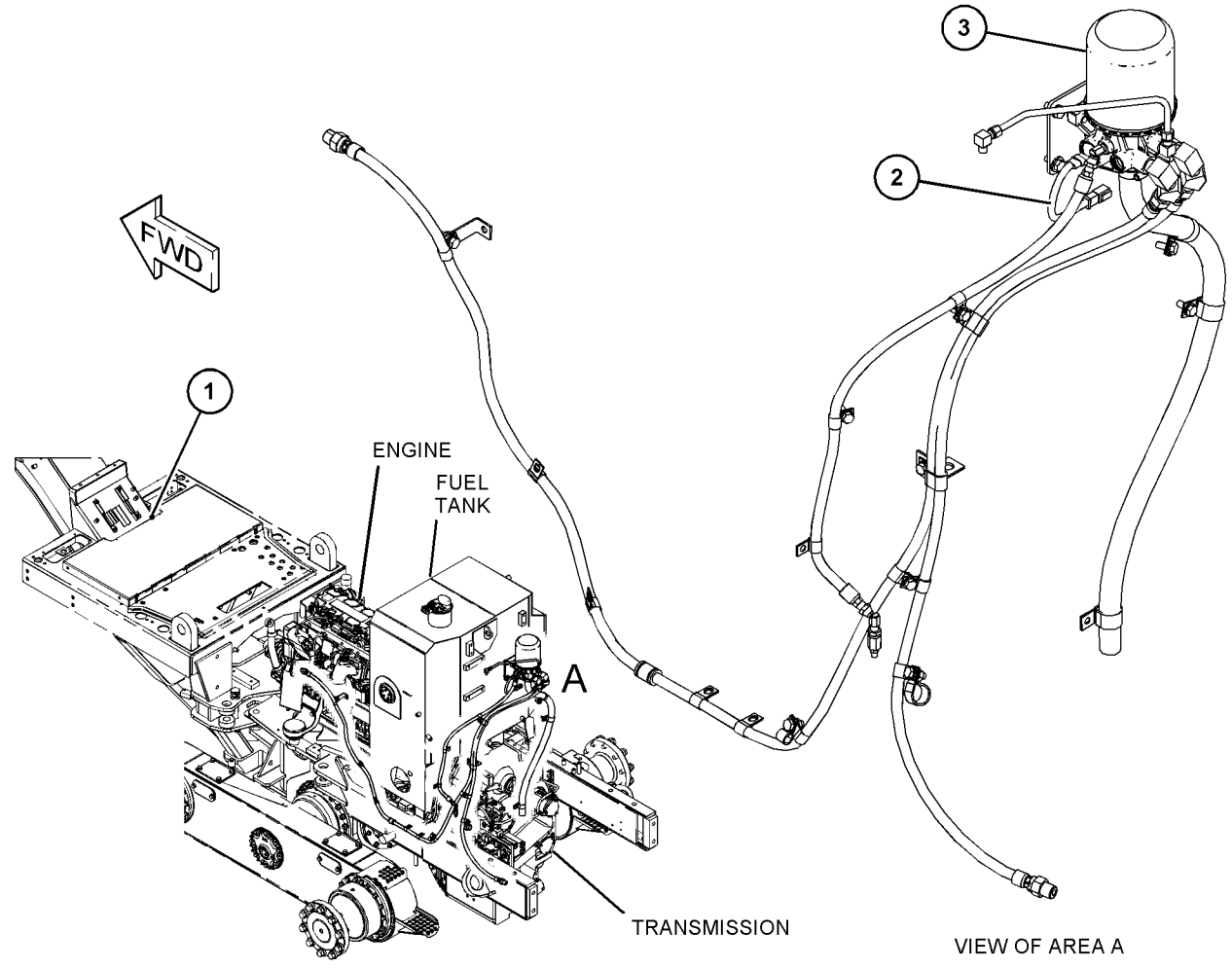

GRAPHIC #1 <END> g03793716

9W-5132 BRAKE GP-PARKING

S/N: CK41-UP; JSE1-UP; DMJ1-UP

PART OF 275-6535, 365-6500 TRANSMISSION AR

SMCS-3077, 4267

i03912193

NOTE	REF NO	GRAPHIC REF	PART NUMBER	QTY	PART NAME 1 2 3 4 5 6 (PRODUCT LEVEL)	SEE PAGE
M	1	1	**6V-5842**	6	BOLT (M10X1.5X40-MM)	
	2	1	**6V-5839**	6	WASHER (11X21X2.5-MM THK)	
	3	1	**6Y-3849**	1	HUB-CLUTCH	
	4	1	**9M-4335**	6	DOWEL-REACTION	
	5	1	**5J-1086**	1	SEAL-O-RING	
	6	1	**6Y-3850**	1	HOUSING-BRAKE	
	7	1	**4S-5838**	1	RETAINER	
M	8	1	**8T-0372**	1	BOLT (M12X1.75X90-MM)	
	9	1	**4F-7390**	1	SEAL-O-RING	
	10	1	**1P-7521**	1	YOKE	
	11	1	**203-5957**	1	SEAL	
	12	1	**9W-4431**	20	SPRING	
	13	1	**9W-4430**	20	SPRING	
M	14	1	**6V-3668**	12	BOLT (M12X1.75X30-MM)	
R	15	1	**7G-0437**	6	PLATE-CLUTCH	
	16	1	**6Y-5352**	5	DISC-FRICTION	
	17	1	**2J-6274**	1	SEAL-O-RING	
	18	1	*183-7263*	1	PLUG AS	
		1	**9S-8002**	1	PLUG (7/16-20-THD)	
		1	**3J-7354**	1	SEAL-O-RING	
	20	1	**203-5958**	1	SEAL	
	21	1	**325-5978**	1	PISTON	
	22	1	**9W-4453**	1	PISTON	
	23	1	**4H-9105**	1	SEAL-O-RING	
	24	1	**6Y-3852**	1	PLUG	
	25	1	*164-5619*	1	PLUG AS	
		1	**9S-8006**	1	PLUG (7/8-14-THD)	
		1	**2M-9780**	1	SEAL-O-RING	
	27	1	**9X-7743**	1	SEAL-LIP TYPE	

M - METRIC PART
R - REMANUFACTURED PART MAY BE AVAILABLE

9W-5132 **BRAKE GP-PARKING (**contd.**)** **i03912193**

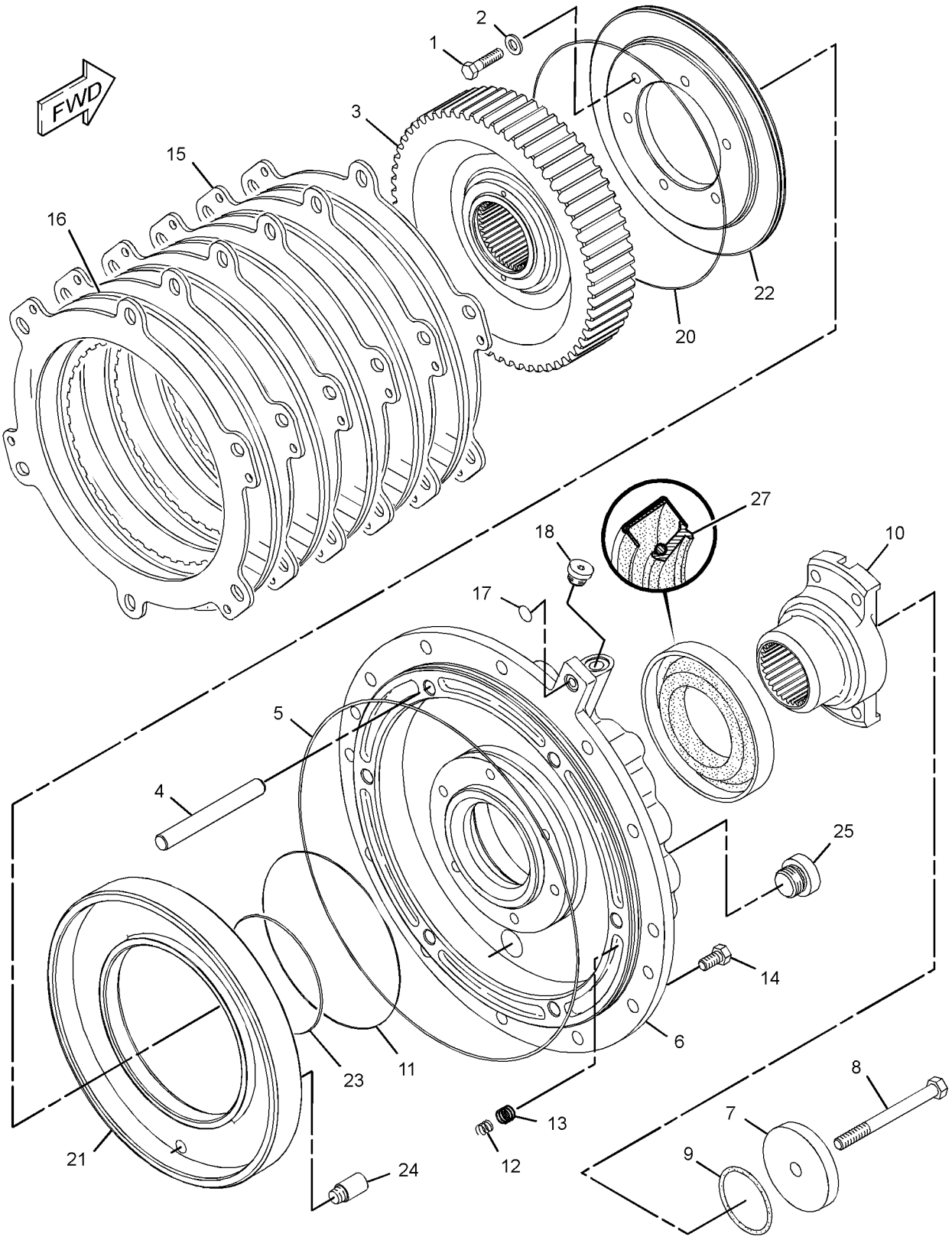

GRAPHIC #1 <END> g01454288

351-0580 BRAKE GP-SERVICE

S/N: SZS1-UP

PART OF 368-3025 GENERAL AR, 436-8767 POWER TRAIN AR

SMCS-4251 **i03853233**

NOTE	REF NO	GRAPHIC REF	PART NUMBER	QTY	PART NAME 1 2 3 4 5 6 (PRODUCT LEVEL)	SEE PAGE
	1	1	**2G-6336**	4	HUB-BRAKE	
	2	1	**2N-2138**	4	CUP-BEARING	
	3	1	**2N-2139**	4	CONE-BEARING	
	4	1	**3S-0303**	4	SEAL GP-DUO-CONE	
					(EACH INCLUDES)	
	4A	1	**3S-0302**	2	RING-SEALING	
	5	1	**5P-4143**	52	BOLT-LOCKING (1/2-13X2-IN)	
	6	1	**6G-0905**	24	BOLT (7/16-14X4.37-IN)	
	7	1	**6Y-7915**	40	DISC-FRICTION	
B	8	1	**8D-8791**	24	SHIM (.007 IN THK)	
B	9	1	**8D-8792**	24	SHIM (.005 IN THK)	
	10	1	**8D-8794**	44	DISC	
	11	1	**8D-8805**	4	COVER	
	12	1	**8T-2861**	8	BOLT (1/2-13X2.5 IN)	
	13	1	**8W-0789**	4	RETAINER	
	14	1	**8D-8787**	4	SPROCKET	
	15	1	**9D-3241**	4	CUP-BEARING	
	16	1	**9D-3242**	4	CONE-BEARING	
	17	1	**9D-4029**	4	SPACER (3.014X3.75XO.75-IN THK)	
B	18	1	**9D-7085**	8	SHIM (.02 IN THK)	
	19	1	**9J-5498**	24	SPRING	
	20	1	**147-3309**	4	SPINDLE-WHEEL	
	21	1	**218-2309**	4	PISTON	
	22	1	**234-0225**	4	HOUSING	
	23	1	**0S-1595**	12	BOLT (1/2-13X1.25-IN)	
	24	1	**3J-5390**	4	PLUG	
	25	1	**5P-2545**	8	SEAL-O-RING	
	26	1	**5P-8244**	24	WASHER-HARD (12X22.5X2.5-MM THK)	
	27	1	**5P-8245**	72	WASHER-HARD (13.5X25.5X3-MM THK)	
	28	1	**6V-0314**	12	BOLT-LOCKING (1/2-13X2-IN)	
	29	1	**8D-8795**	4	SEAL-D-RING	
	30	1	**9D-7972**	4	SEAL-D-RING	
					PARTS SHOWN IN GRAPHIC(S) WITHOUT A REFERENCE NUMBER ARE NOT SERVICED SEPARATELY	

B - USE AS REQUIRED

351-0580 **BRAKE GP-SERVICE (**contd.**)** **i03853233**

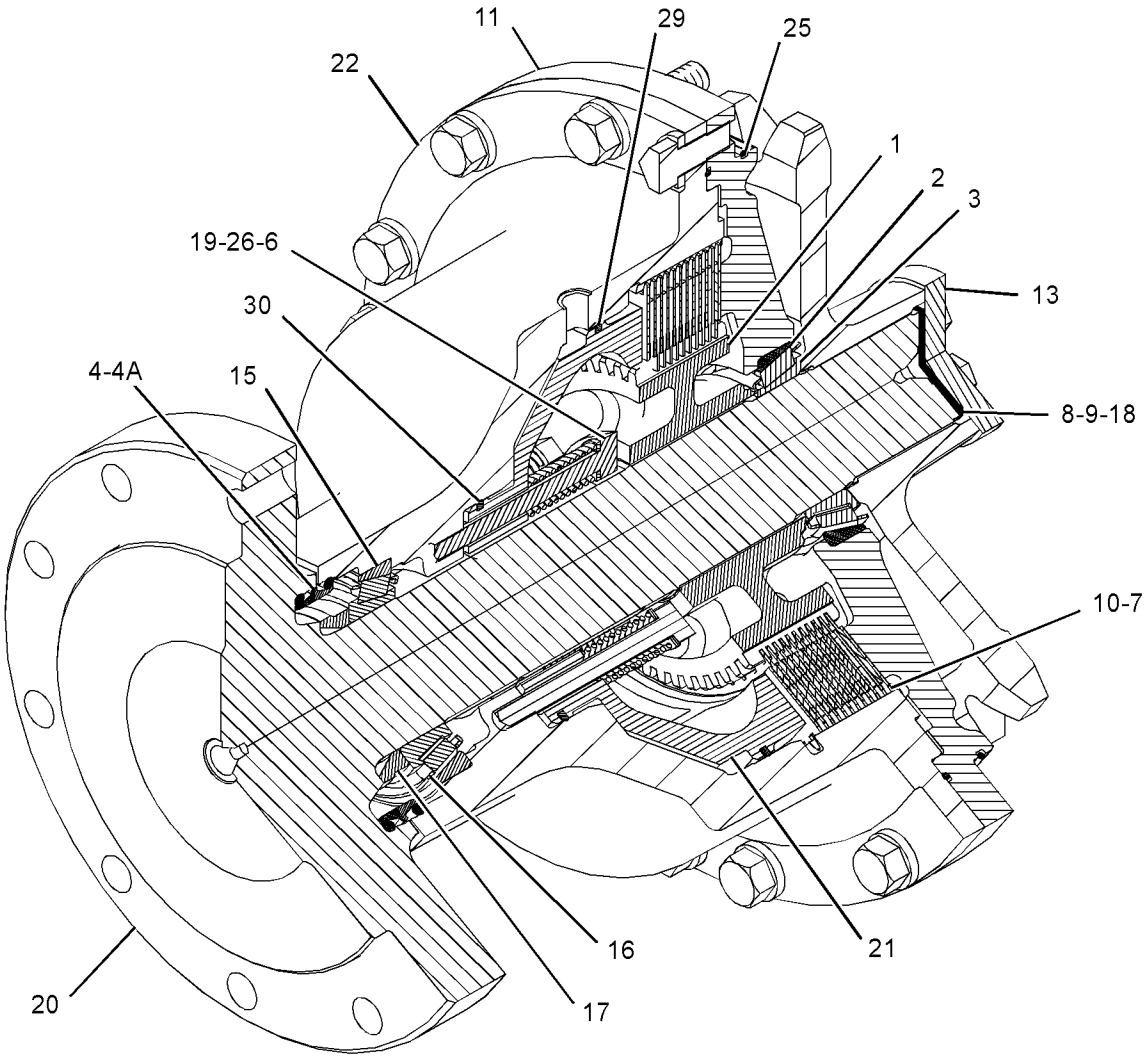

SECTION A-A

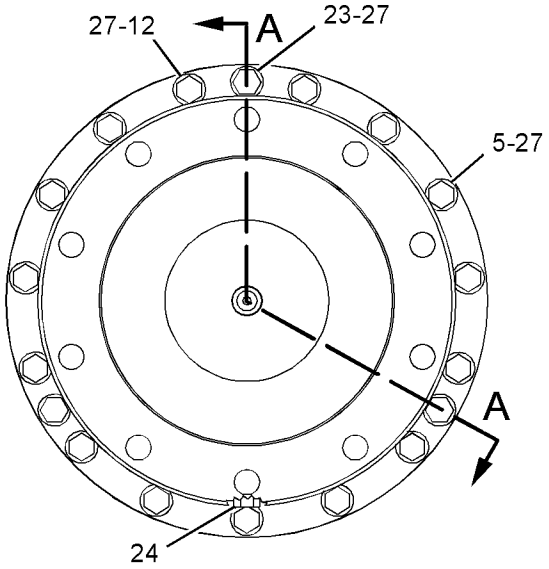

VIEW B-B

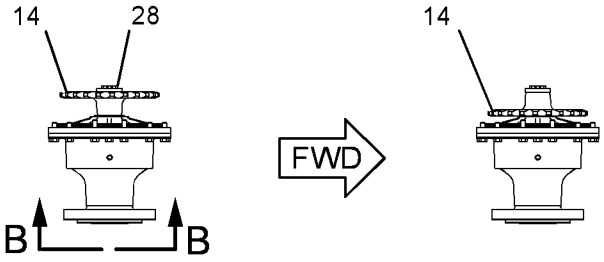

TOP VIEW
(RIGHT SIDE)

GRAPHIC #1 <END> g02108959

306-5499 CONTROL GP-PARKING BRAKE

S/N: SZS1-UP

PART OF 368-3025 GENERAL AR, 435-8193 HYDRAULIC AR

SMCS-4282, 4284

i03854076

NOTE	REF NO	GRAPHIC REF	PART NUMBER	QTY	PART NAME 1 2 3 4 5 6 (PRODUCT LEVEL)	SEE PAGE
	1	1	**3B-8822**	1	ELBOW	
	2	1	**4S-7606**	2	ELBOW	
	3	1	**5K-2408**	2	FITTING	
	4	1	**5T-8285**	1	JUNCTION BLOCK	
	5	1	**6D-1432**	1	VALVE-CHECK (PARKING BRAKE)	
	6	1	**7X-4736**	1	GROMMET	
	7	1	**8W-8528**	3	SLEEVE	
	8	1	**8X-5160**	1	GROMMET	
I	9	1	**112-4834**	2	HOSE AS	
Y	10	1	**185-0008**	1	VALVE GP-SOLENOID (24-VOLT) (PARKING BRAKE)	768
	11	1	**253-4347**	1	VALVE AS-AIR (PARKING BRAKE)	
		1	**1H-1023**	1	SEAL-O-RING	
		1	**6H-9691**	1	SEAL-O-RING	
	12	1	**205-7299**	2	CLIP	
I	13	1	**306-5505**	1	HOSE AS	
	14	1	**3D-8884**	1	ELBOW	
	15	1	**4D-6585**	1	ELBOW-PIPE	
	16	1	**4H-6147**	1	CONNECTOR	
	17	1	**5H-4778**	2	ELBOW	
M	18	1	**5K-1094**	1	LOCKWASHER (21X33.4X1.3-MM THK)	
	19	1	**5M-6213**	2	PLUG-PIPE	
	20	1	**7J-8611**	1	ELBOW-PIPE	
	22	1	**8T-2502**	2	BOLT (3/8-16X1.125-IN)	
	23	1	**8T-4121**	2	WASHER-HARD (11X21X2.5-MM THK)	
M	24	1	**8T-4133**	1	NUT (M10X1.5-THD)	
M	25	1	**8T-4195**	1	BOLT (M10X1.5X30-MM)	
	26	1	**8T-4896**	2	WASHER-HARD (10.2X18.5X2.5-MM THK)	
	27	1	**4S-1962**	1	CLIP	

I - REFER TO HYDRAULIC INFORMATION SYSTEM
M - METRIC PART
Y - SEPARATE ILLUSTRATION

306-5499 **CONTROL GP-PARKING BRAKE (**contd.**)** **i03854076**

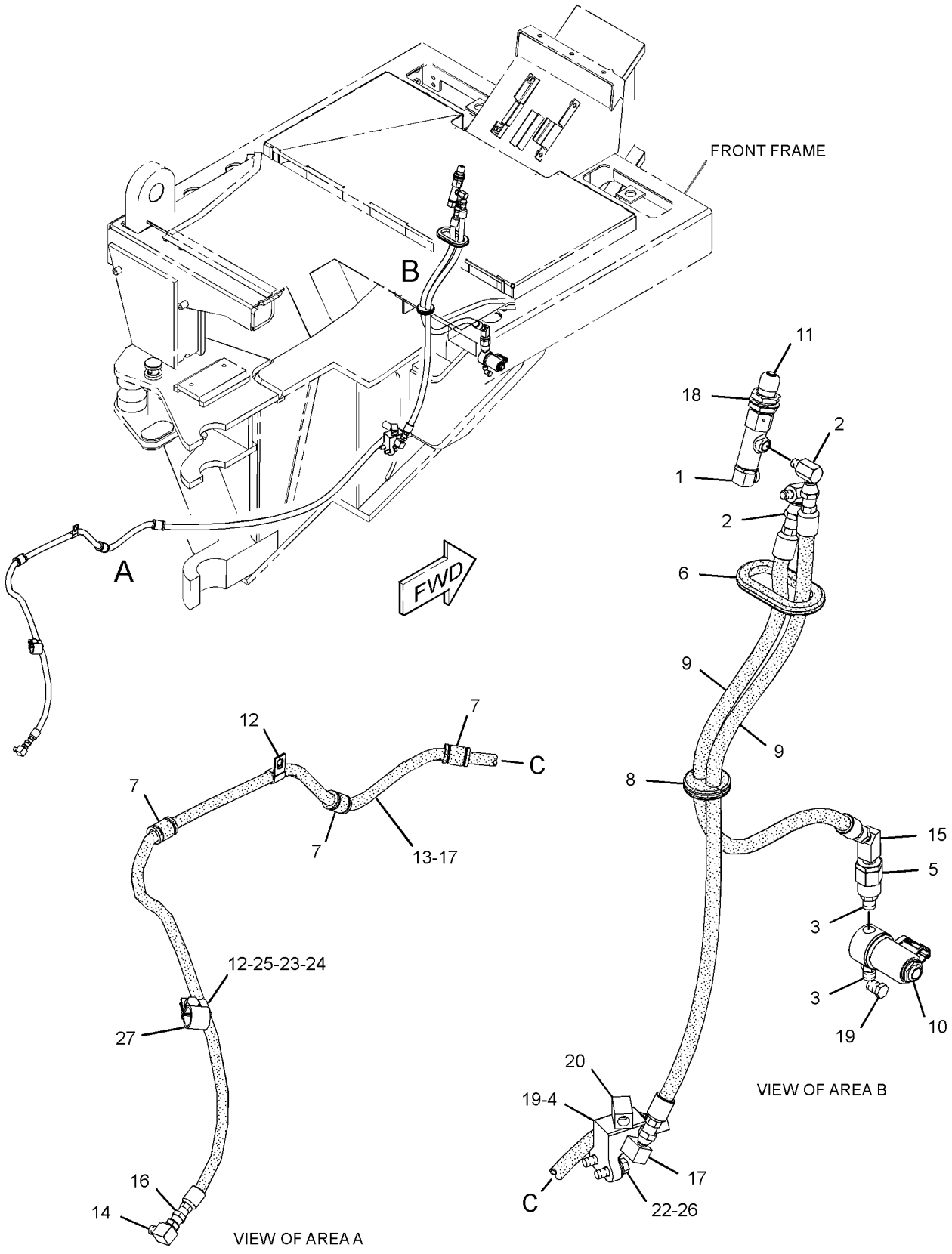

GRAPHIC #1 <END> g02018533

297-8948 CONTROL GP-SERVICE BRAKE

S/N: SZS1-10099

PART OF 368-3025 GENERAL AR, 435-8193 HYDRAULIC AR

SMCS-4251, 4265, 4269 **i06835629**

NOTE	REF NO	GRAPHIC REF	PART NUMBER	QTY	PART NAME 1 2 3 4 5 6 (PRODUCT LEVEL)	SEE PAGE
	1	1	**1F-4622**	2	BEARING AS-NEEDLE	
	2	1	**2D-7325**	1	TEE-PIPE	
	3	1,2	**2L-3331**	4	CONNECTOR-PIPE	
	4	1	**3S-2713**	1	NUT-FULL (3/8-24-THD)	
	5	2	**3T-0050**	2	CLIP	
	6	2	**5K-9238**	4	CONNECTOR	
	7	1	**5T-8285**	1	JUNCTION BLOCK	
	8	1	**6K-6826**	4	ELBOW (45-DEG)	
	9	1	**6W-5817**	1	SPRING	
	10	1	**7V-0446**	2	CLIP	
	11	1	**8D-8826**	4	GUARD	
	12	1	**8L-6005**	3	TEE-PIPE	
	13	1,2	**8W-8527**	15	SLEEVE	
	14	1	**8W-8903**	2	CLIP	
Y	15	1	*8X-2650*	1	VALVE GP-AIR CONTROL (SERVICE BRAKE)	158
	16	1	**8X-2680**	1	BRACKET AS	
	17	1	**9J-8783**	1	SHIM (0.508-MM THK)	
	18	1	**9S-7706**	2	ELBOW-FLARED	
	19	1	**9X-8606**	8	CLIP	
	20	2	**110-3326**	1	PLATE AS	
		2	**3S-0391**	1	BOSS (3/8-16-THD)	
		2	**8X-8450**	1	PLATE	
	21	1	**169-0921**	1	ROD END (3/8-24 LH-THD)	
	22	1	**172-4211**	1	SPACER (10.5X22X50.8-MM THK)	
	23	1,2	**176-2945**	2	FITTING-BULKHEAD	
	24	1	**177-1713**	1	ROD	
	25	1	**180-4027**	1	CAM	
	26	1	**180-7147**	1	LEVER	
	27	1	**185-1122**	1	BRACKET	
	28	2	**198-5438**	2	BLOCK	
	29	1	**204-8736**	1	TUBE AS	
	30	1	**204-8737**	1	TUBE AS	
	31	1	**204-8738**	1	TUBE AS	
	32	1	**204-8739**	1	TUBE AS	
	33	1	**204-8740**	1	TUBE AS	
	34	1	**204-8741**	1	TUBE AS	
I	35	1	**207-4773**	2	HOSE AS	
	36	1	**207-4924**	1	PEDAL-BRAKE	
	37	1	**242-9245**	2	HOSE AS	
I	38	1	**306-4107**	2	HOSE AS	
	39	2	**307-6241**	2	BLOCK-CLAMP	
	40	2	**307-6242**	2	BLOCK-CLAMP	
	41	2	**307-6243**	4	BLOCK-CLAMP	
	42	2	**307-6568**	1	BRACKET AS	
	43	2	**307-7500**	2	BLOCK-CLAMP	
	44	2	**307-7501**	1	PLATE AS	
	45	2	**307-7502**	1	PLATE	
M	46	2	**8T-0389**	4	LOCKNUT (M10X1.5-THD)	

297-8948 **CONTROL GP-SERVICE BRAKE (**contd.**)** **i06835629**

NOTE	REF NO	GRAPHIC REF	PART NUMBER	QTY	PART NAME 1 2 3 4 5 6 (PRODUCT LEVEL)	SEE PAGE
	47	1	**129-3173**	1	BOLT-12 POINT HEAD (3/8-16X1.25-IN)	
	48	1,2	**190-4375**	2	WASHER (26X40X2-MM THK)	
	49	1	**1B-0676**	1	PIN	
	50	1	**1H-7724**	3	BUSHING-REDUCER	
	51	1	**3B-7721**	1	BUSHING-REDUCER	
	52	1	**3D-8913**	2	ELBOW	
	53	2	**3K-6060**	4	LOCKNUT (3/8-16-THD)	
	54	1	**3K-8280**	1	PIN-CLEVIS	
	55	1	**4B-6060**	1	SETSCREW-SOCKET (1/4-20X0.375-IN)	
	56	1	**4D-0577**	1	ELBOW	
	57	1,2	**4D-0582**	5	ELBOW	
	58	1	**4D-7735**	2	CLIP	
	59	1	**4J-3914**	1	ELBOW	
	60	1	**4J-8922**	1	ROD END (3/8-24-THD)	
	61	1	**4M-6425**	1	BOLT (5/16-18X1-IN)	
	62	1	**4S-4455**	1	CLIP	
M	63	1	**5C-2890**	3	NUT (M6X1-THD)	
	64	1	**5H-4778**	1	ELBOW	
	65	1	**5K-5338**	1	CLIP	
	66	2	**5M-3062**	2	BOLT (3/8-16X0.75-IN)	
	67	1	**5M-6213**	1	PLUG-PIPE	
	68	1	**6D-4244**	2	CLIP	
I	69	1	**6D-9855**	1	HOSE AS	
	70	1	**6V-4245**	1	ELBOW	
M	71	1	**6V-7357**	1	BOLT (M6X1X25-MM)	
	72	1	**6V-8189**	3	NUT (5/16-18-THD)	
	73	2	**6V-8801**	2	NUT (3/8-16-THD)	
	74	1	**6V-8918**	2	BOLT (5/16-18X1.25-IN)	
	75	1,2	**7M-7410**	6	PLUG-PIPE	
	76	1	**7X-7729**	2	WASHER (11X25X3-MM THK)	
	77	1	**8M-2773**	1	CLIP	
	78	1,2	**8T-4121**	19	WASHER-HARD (11X21X2.5-MM THK)	
M	79	1	**8T-4133**	3	NUT (M10X1.5-THD)	
M	80	1	**8T-4136**	5	BOLT (M10X1.5X25-MM)	
M	81	1,2	**8T-4137**	7	BOLT (M10X1.5X20-MM)	
M	82	1	**272-3089**	1	BOLT (M10X1.5X90-MM)	
M	83	1	**8T-4195**	2	BOLT (M10X1.5X30-MM)	
	84	1	**8T-4224**	5	WASHER-HARD (8.8X16X2-MM THK)	
	85	1	**8T-4226**	1	WASHER-PLATED (10.5X45X3-MM THK)	
	86	1,2	**8T-4896**	13	WASHER-HARD (10.2X18.5X2.5-MM THK)	
	87	2	**8T-9056**	4	BOLT (3/8-16X1.25-IN)	
	88	1	**8X-7603**	2	HOSE AS	
	89	2	**8X-8450**	1	PLATE	
	90	1	**9M-4972**	1	CLIP	
	91	1	**9X-8256**	1	WASHER (6.6X12X2-MM THK)	
E	92	1	**5P-0767**		HOSE (74-CM)	
M	93	1	**142-0485**	1	NUT (M10X1.5-THD)	
	94	1	**6V-7535**	3	ELBOW-PIPE	
	95	1	**7J-8611**	1	ELBOW-PIPE	
	96	1	**003-2143**	1	ELBOW	
	97	1	**6D-4246**	1	CLIP	

297-8948 **CONTROL GP-SERVICE BRAKE (**contd.**)** **i06835629**

NOTE	REF NO	GRAPHIC REF	PART NUMBER	QTY	PART NAME 1 2 3 4 5 6 (PRODUCT LEVEL)	SEE PAGE

E - ORDER BY THE CENTIMETER
I - REFER TO HYDRAULIC INFORMATION SYSTEM
M - METRIC PART
Y - SEPARATE ILLUSTRATION

297-8948 **CONTROL GP-SERVICE BRAKE (**contd.**)** **i06835629**

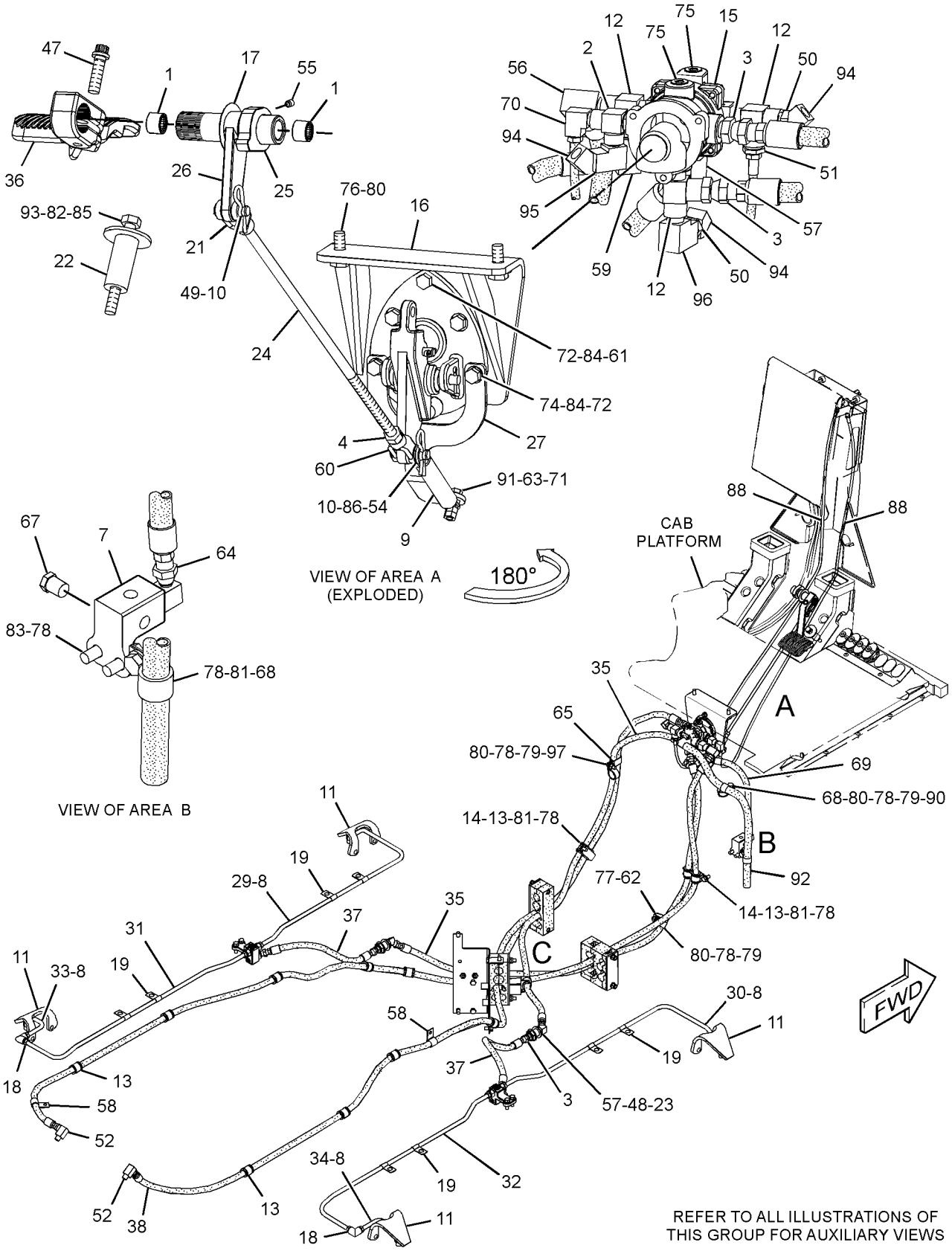

GRAPHIC #1

g06135886

297-8948 **CONTROL GP-SERVICE BRAKE (**contd.**)** **i06835629**

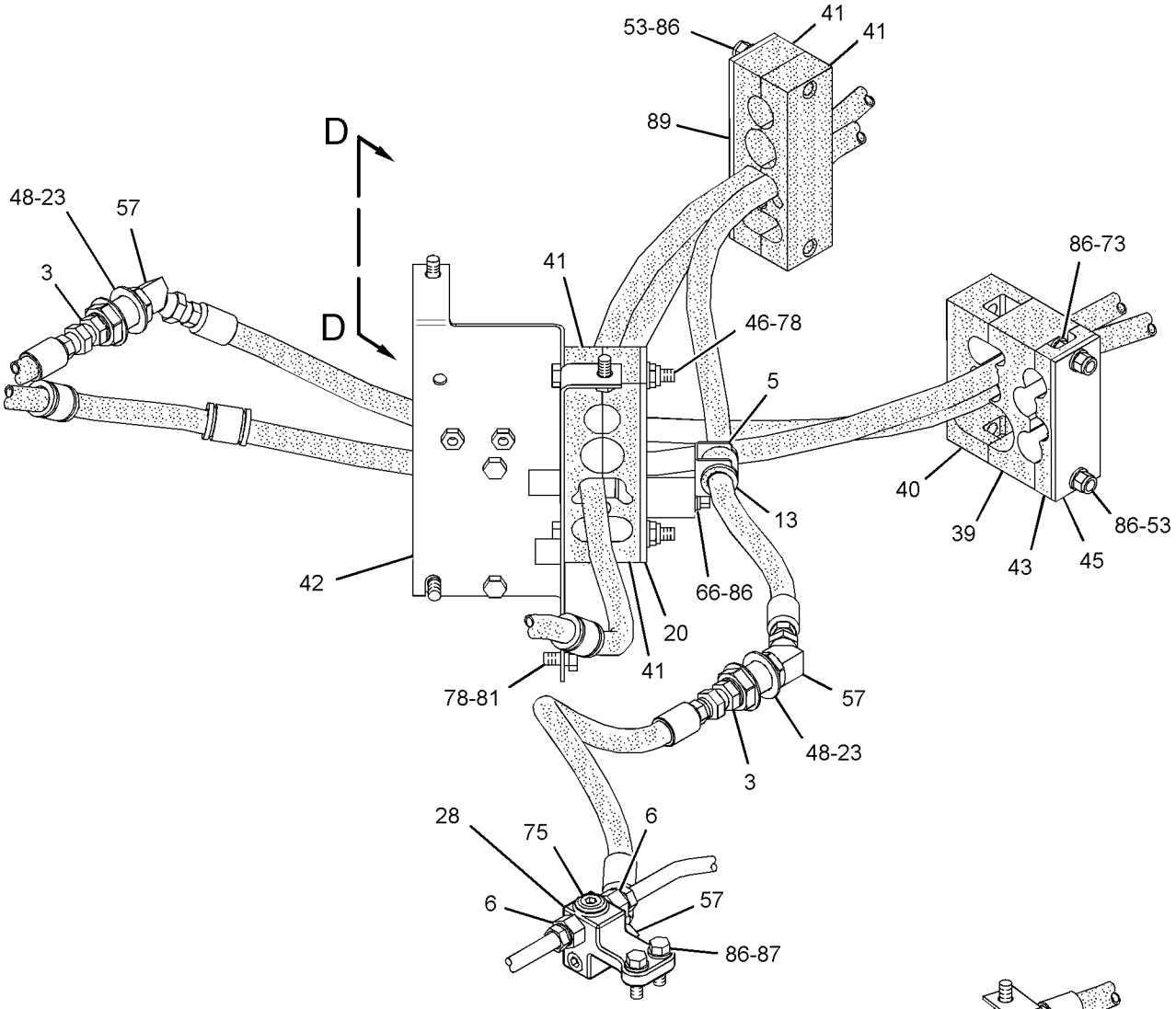

VIEW OF AREA C

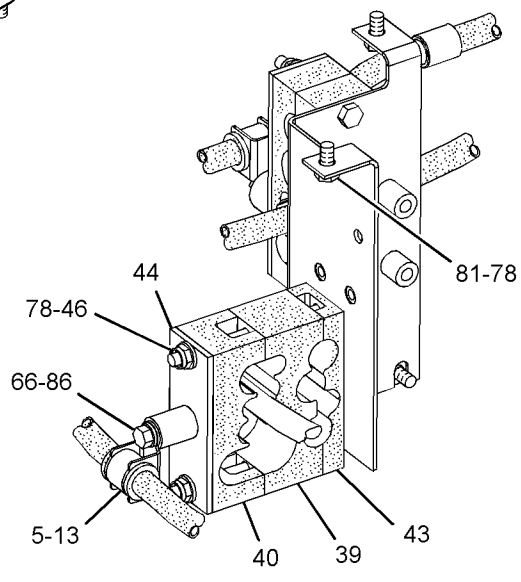

VIEW D-D

GRAPHIC #2 <END> g06135888

297-8948 CONTROL GP-SERVICE BRAKE

S/N: SZS10100-UP

PART OF 435-8193 HYDRAULIC AR

SMCS-4251, 4265, 4269 **i06907385**

NOTE	REF NO	GRAPHIC REF	PART NUMBER	QTY	PART NAME 1 2 3 4 5 6 (PRODUCT LEVEL)	SEE PAGE
	1	1	**1F-4622**	2	BEARING AS-NEEDLE	
	2	1	**2D-7325**	1	TEE-PIPE	
	3	1,2	**2L-3331**	4	CONNECTOR-PIPE	
	4	1	**3S-2713**	1	NUT-FULL (3/8-24-THD)	
	5	2	**3T-0050**	2	CLIP	
	6	2	**5K-9238**	4	CONNECTOR	
	7	1	**5T-8285**	1	JUNCTION BLOCK	
	8	1	**6K-6826**	4	ELBOW (45-DEG)	
	9	1	**6W-5817**	1	SPRING	
	10	1	**7V-0446**	2	CLIP	
	11	1	**8D-8826**	4	GUARD	
	12	1	**8L-6005**	3	TEE-PIPE	
	13	1,2	**8W-8527**	15	SLEEVE	
	14	1	**8W-8903**	2	CLIP	
Y	15	1	*8X-2650*	1	VALVE GP-AIR CONTROL (SERVICE BRAKE)	158
	16	1	**8X-2680**	1	BRACKET AS	
	17	1	**9J-8783**	1	SHIM (0.508-MM THK)	
	18	1	**9S-7706**	2	ELBOW-FLARED	
	19	1	**9X-8606**	8	CLIP	
	20	2	**110-3326**	1	PLATE AS	
		2	**3S-0391**	1	BOSS (3/8-16-THD)	
		2	**8X-8450**	1	PLATE	
	21	1	**169-0921**	1	ROD END (3/8-24 LH-THD)	
	22	1	**172-4211**	1	SPACER (10.5X22X50.8-MM THK)	
	23	1,2	**176-2945**	2	FITTING-BULKHEAD	
	24	1	**177-1713**	1	ROD	
	25	1	**180-4027**	1	CAM	
	26	1	**180-7147**	1	LEVER	
	27	1	**185-1122**	1	BRACKET	
	28	2	**198-5438**	2	BLOCK	
	29	1	**204-8736**	1	TUBE AS	
	30	1	**204-8737**	1	TUBE AS	
	31	1	**204-8738**	1	TUBE AS	
	32	1	**204-8739**	1	TUBE AS	
	33	1	**204-8740**	1	TUBE AS	
	34	1	**204-8741**	1	TUBE AS	
I	35	1	**207-4773**	2	HOSE AS	
C	36	1	**512-5938**	1	PEDAL-CLUTCH	
	37	1	**242-9245**	2	HOSE AS	
I	38	1	**306-4107**	2	HOSE AS	
	39	2	**307-6241**	2	BLOCK-CLAMP	
	40	2	**307-6242**	2	BLOCK-CLAMP	
	41	2	**307-6243**	4	BLOCK-CLAMP	
	42	2	**307-6568**	1	BRACKET AS	
	43	2	**307-7500**	2	BLOCK-CLAMP	
	44	2	**307-7501**	1	PLATE AS	
	45	2	**307-7502**	1	PLATE	
M	46	2	**8T-0389**	4	LOCKNUT (M10X1.5-THD)	

297-8948 **CONTROL GP-SERVICE BRAKE (**contd.**)** **i06907385**

NOTE	REF NO	GRAPHIC REF	PART NUMBER	QTY	PART NAME 1 2 3 4 5 6 (PRODUCT LEVEL)	SEE PAGE
	47	1	**129-3173**	1	BOLT-12 POINT HEAD (3/8-16X1.25-IN)	
	48	1,2	**190-4375**	2	WASHER (26X40X2-MM THK)	
	49	1	**1B-0676**	1	PIN	
	50	1	**1H-7724**	3	BUSHING-REDUCER	
	51	1	**3B-7721**	1	BUSHING-REDUCER	
	52	1	**3D-8913**	2	ELBOW	
	53	2	**3K-6060**	4	LOCKNUT (3/8-16-THD)	
	54	1	**3K-8280**	1	PIN-CLEVIS	
	55	1	**4B-6060**	1	SETSCREW-SOCKET (1/4-20X0.375-IN)	
	56	1	**4D-0577**	1	ELBOW	
	57	1,2	**4D-0582**	5	ELBOW	
	58	1	**4D-7735**	2	CLIP	
	59	1	**4J-3914**	1	ELBOW	
	60	1	**4J-8922**	1	ROD END (3/8-24-THD)	
	61	1	**4M-6425**	1	BOLT (5/16-18X1-IN)	
	62	1	**4S-4455**	1	CLIP	
M	63	1	**5C-2890**	3	NUT (M6X1-THD)	
	64	1	**5H-4778**	1	ELBOW	
	65	1	**5K-5338**	1	CLIP	
	66	2	**5M-3062**	2	BOLT (3/8-16X0.75-IN)	
	67	1	**5M-6213**	1	PLUG-PIPE	
	68	1	**6D-4244**	2	CLIP	
I	69	1	**6D-9855**	1	HOSE AS	
	70	1	**6V-4245**	1	ELBOW	
M	71	1	**6V-7357**	1	BOLT (M6X1X25-MM)	
	72	1	**6V-8189**	3	NUT (5/16-18-THD)	
	73	2	**6V-8801**	2	NUT (3/8-16-THD)	
	74	1	**6V-8918**	2	BOLT (5/16-18X1.25-IN)	
	75	1,2	**7M-7410**	6	PLUG-PIPE	
	76	1	**7X-7729**	2	WASHER (11X25X3-MM THK)	
	77	1	**8M-2773**	1	CLIP	
	78	1,2	**8T-4121**	19	WASHER-HARD (11X21X2.5-MM THK)	
M	79	1	**8T-4133**	3	NUT (M10X1.5-THD)	
M	80	1	**8T-4136**	5	BOLT (M10X1.5X25-MM)	
M	81	1,2	**8T-4137**	7	BOLT (M10X1.5X20-MM)	
M	82	1	**272-3089**	1	BOLT (M10X1.5X90-MM)	
M	83	1	**8T-4195**	2	BOLT (M10X1.5X30-MM)	
	84	1	**8T-4224**	5	WASHER-HARD (8.8X16X2-MM THK)	
	85	1	**8T-4226**	1	WASHER-PLATED (10.5X45X3-MM THK)	
	86	1,2	**8T-4896**	13	WASHER-HARD (10.2X18.5X2.5-MM THK)	
	87	2	**8T-9056**	4	BOLT (3/8-16X1.25-IN)	
	88	1	**8X-7603**	2	HOSE AS	
	89	2	**8X-8450**	1	PLATE	
	90	1	**9M-4972**	1	CLIP	
	91	1	**9X-8256**	1	WASHER (6.6X12X2-MM THK)	
E	92	1	**5P-0767**		HOSE (74-CM)	
M	93	1	**142-0485**	1	NUT (M10X1.5-THD)	
	94	1	**6V-7535**	3	ELBOW-PIPE	
	95	1	**7J-8611**	1	ELBOW-PIPE	
	96	1	**003-2143**	1	ELBOW	
	97	1	**6D-4246**	1	CLIP	

297-8948 **CONTROL GP-SERVICE BRAKE (**contd.**)** **i06907385**

NOTE	REF NO	GRAPHIC REF	PART NUMBER	QTY	PART NAME 1 2 3 4 5 6 (PRODUCT LEVEL)	SEE PAGE

C - CHANGE FROM PREVIOUS TYPE
E - ORDER BY THE CENTIMETER
I - REFER TO HYDRAULIC INFORMATION SYSTEM
M - METRIC PART
Y - SEPARATE ILLUSTRATION

297-8948 **CONTROL GP-SERVICE BRAKE (**contd.**)** **i06907385**

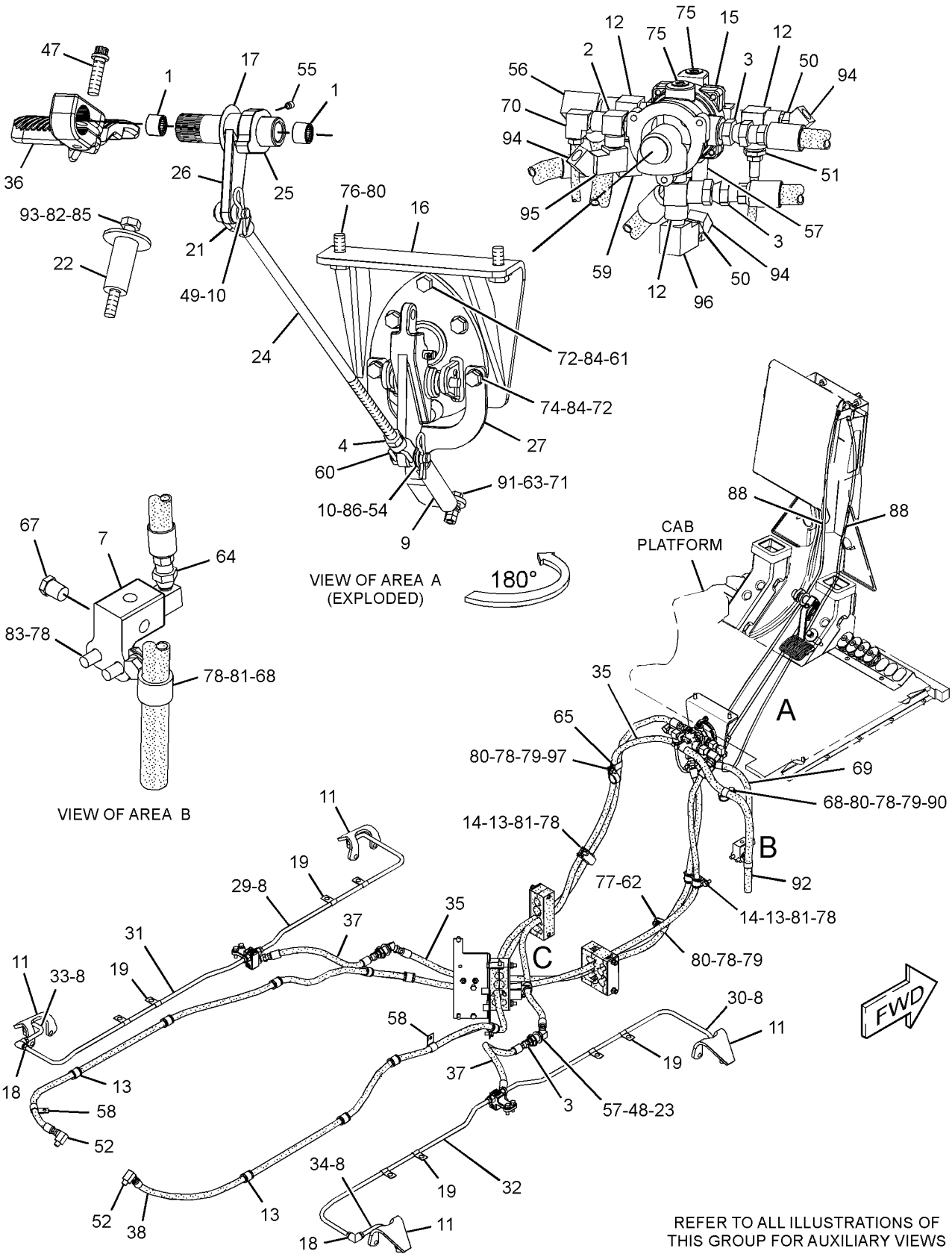

GRAPHIC #1 g06135886

297-8948 **CONTROL GP-SERVICE BRAKE (**contd.**)** **i06907385**

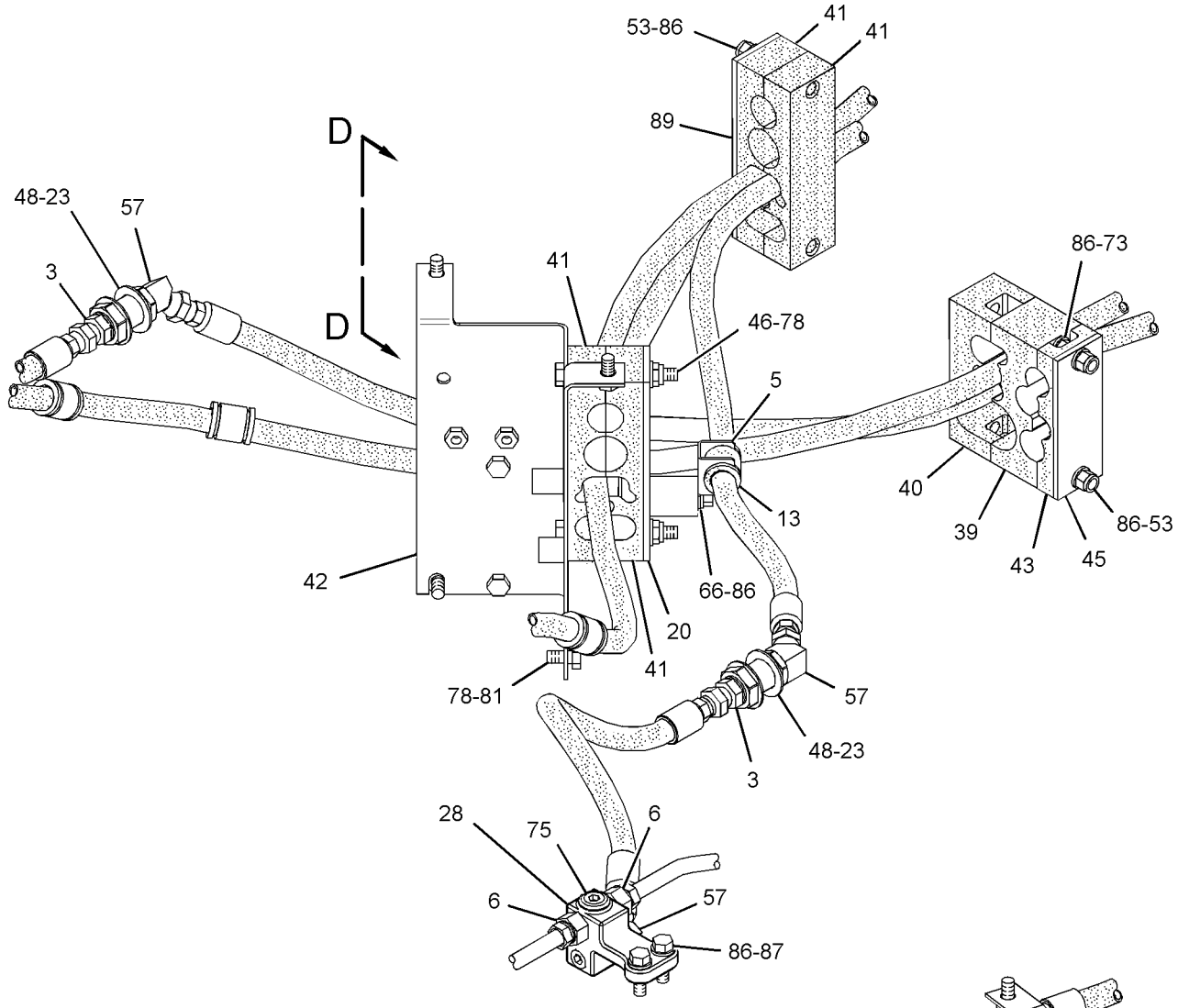

VIEW OF AREA C

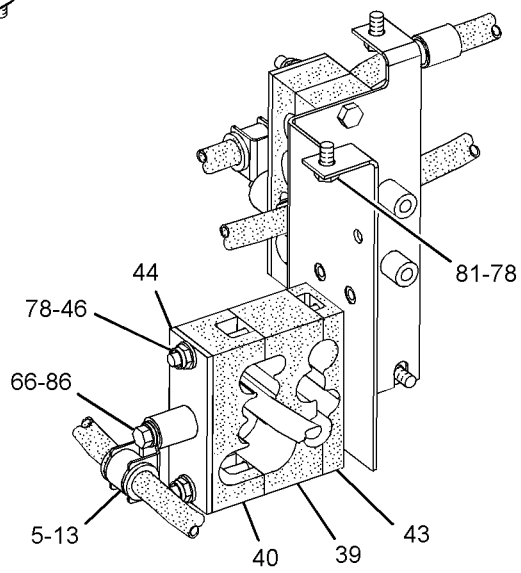

VIEW D-D

GRAPHIC #2 <END> g06135888

455-0162 DRYER & LINES GP-AIR

S/N: SZS624-UP

PART OF 455-0158 AIR DRYER GP

SMCS-4285 **i06782443**

NOTE	REF NO	GRAPHIC REF	PART NUMBER	QTY	PART NAME 1 2 3 4 5 6 (PRODUCT LEVEL)	SEE PAGE
	1	1	**3D-7587**	2	ELBOW	
	2	1	**8W-8528**	1	SLEEVE	
	3	1	**217-4369**	1	BRACKET AS	
M		1	**8T-3490**	1	NUT-WELD (M10X1.5-THD)	
	4	1	**303-2348**	1	TUBE	
	5	1	**327-0727**	1	PLATE	
	6	1	**327-0728**	1	PLATE AS	
M		1	**8T-3490**	1	NUT-WELD (M10X1.5-THD)	
Y	7	1	**450-3729**	1	AIR DRYER GP	744
I	8	1	**515-1615**	1	HOSE AS	
I	9	1	**457-4050**	1	HOSE AS	
I	10	1	**457-4051**	1	HOSE AS	
	11	1	**0A-2926**	1	FITTING	
	12	1	**174-5907**	8	CLIP	
	13	1	**205-7299**	3	CLIP	
	14	1	**2S-3440**	1	CLAMP-HOSE	
M	15	1	**344-5675**	3	NUT (M10X1.5-THD)	
	16	1	**4K-8864**	1	CLIP	
	17	1	**5B-1585**	2	ELBOW	
	18	1	**5K-8451**	2	CLIP	
	19	1	**5P-4424**	2	ELBOW-AIR BRAKE	
	20	1	**5P-7854**	3	CLIP	
	21	1	**6V-1889**	1	CLIP	
	22	1	**7D-0215**	1	CONNECTOR-PIPE	
	23	1	**7X-7729**	2	WASHER (11X25X3-MM THK)	
	24	1	**8T-4121**	14	WASHER-HARD (11X21X2.5-MM THK)	
M	25	1	**8T-4136**	13	BOLT (M10X1.5X25-MM)	
	26	1	**8T-4223**	3	WASHER-HARD (13.5X25.5X3-MM THK)	
	27	1	**8T-8917**	3	BOLT (1/2-13X1.25-IN)	
	28	1	**9L-3560**	2	ELBOW	
	29	1	**9M-8406**	1	CLIP	
BE	30	1	**8I-1362**		HOSE (131-CM)	

B - USE AS REQUIRED
E - ORDER BY THE CENTIMETER
I - REFER TO HYDRAULIC INFORMATION SYSTEM
M - METRIC PART
Y - SEPARATE ILLUSTRATION

455-0162 **DRYER & LINES GP-AIR (**contd.**)** **i06782443**

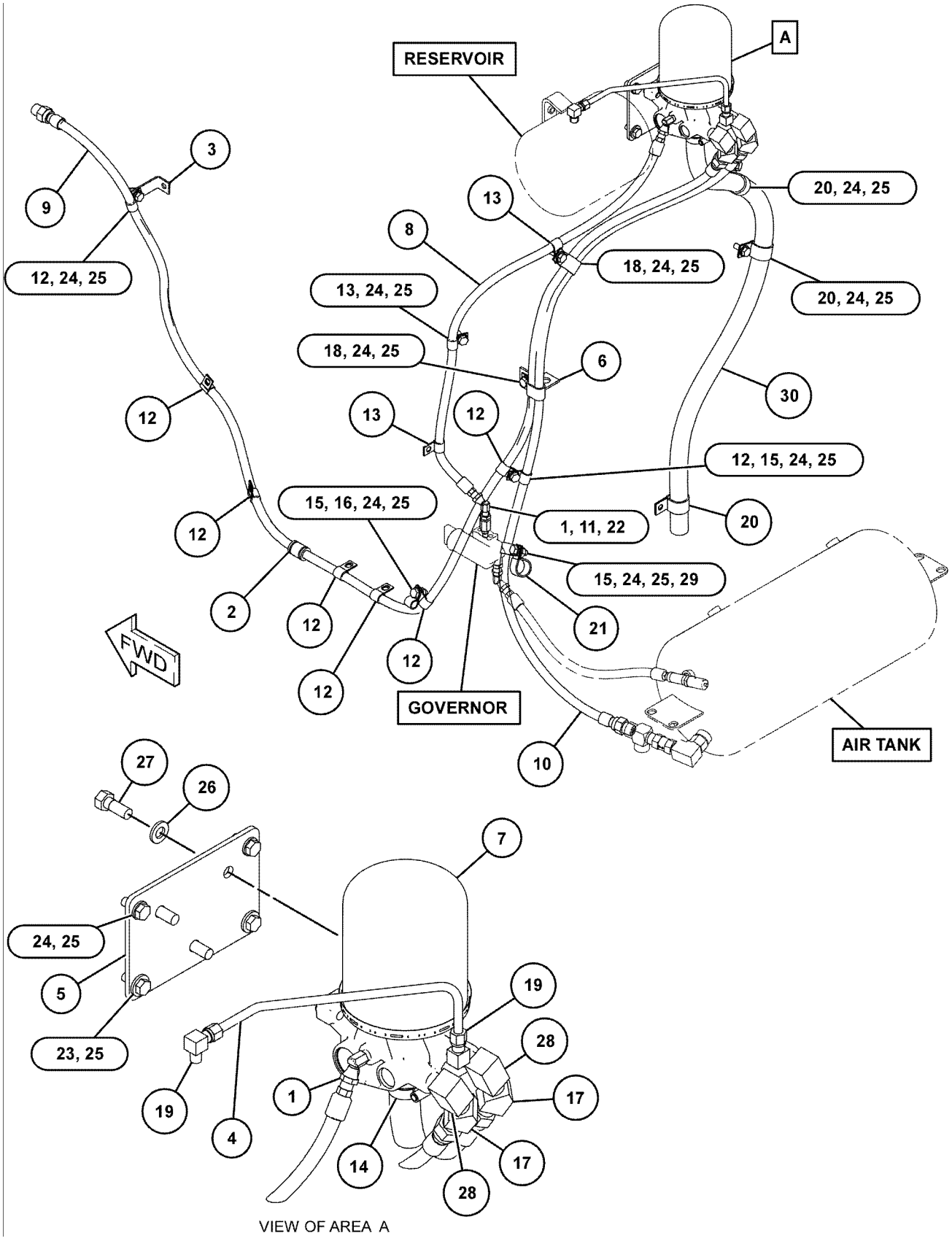

VIEW OF AREA A

GRAPHIC #1 <END> g03823417

434-8083 LINES GP-AIR TANK

S/N: SZS624-UP

PART OF 435-8193 HYDRAULIC AR

SMCS-4272 **i06782504**

NOTE	REF NO	GRAPHIC REF	PART NUMBER	QTY	PART NAME 1 2 3 4 5 6 (PRODUCT LEVEL)	SEE PAGE
	1	1	**3D-7587**	1	ELBOW	
	2	1	**5F-5434**	1	VALVE AS-VENT	
J	3	1	**205-7187**	1	GOVERNOR AS (AIR COMPRESSOR)	
		1	**2S-2923**	1	COVER AS	
		1	**2K-8198**	1	SEAL-O-RING	
	4	1	**292-4772**	1	PLATE-SUPPORT	
I	5	1	**515-1614**	1	HOSE AS	
I	6	1	**515-1618**	1	HOSE AS	
	7	1	**091-9035**	1	SPACER (11X25X20-MM THK)	
	8	1	**202-2762**	4	CLIP	
	9	1	**205-7299**	2	CLIP	
M	10	1	**344-5673**	2	NUT (M6X1-THD)	
M	11	1	**344-5675**	5	NUT (M10X1.5-THD)	
	12	1	**3E-6909**	1	CLIP	
	13	1	**4D-2560**	2	CONNECTOR-PIPE	
	14	1	**4D-7388**	1	CLIP	
	15	1	**4D-7733**	1	CLIP	
	16	1	**4S-7606**	1	ELBOW	
	17	1	**7D-7233**	1	CLIP	
	18	1	**7X-7729**	2	WASHER (11X25X3-MM THK)	
	19	1	**8L-5008**	1	ELBOW-PIPE	
	20	1	**8T-4121**	11	WASHER-HARD (11X21X2.5-MM THK)	
M	21	1	**8T-4136**	5	BOLT (M10X1.5X25-MM)	
M	22	1	**8T-4182**	1	BOLT (M10X1.5X45-MM)	
M	23	1	**8T-4186**	1	BOLT (M10X1.5X40-MM)	
M	24	1	**8T-4195**	1	BOLT (M10X1.5X30-MM)	
	25	1	**8T-6757**	4	PLUG-PIPE	
M	26	1	**8T-6974**	2	BOLT (M6X1X80-MM)	
	27	1	**9M-4594**	1	SPACER (0.406X0.875X0.75-IN THK)	
	28	1	**9X-8256**	4	WASHER (6.6X12X2-MM THK)	
					AVAILABLE REPAIR KIT(S):	
J			**9M-0402**	1	KIT-GOVERNOR OVERHAUL (AIR COMPRESSOR)	
					(INCLUDES GROMMETS, FILTERS, SPRING, VALVE, COVER, RING & GASKET)	

I - REFER TO HYDRAULIC INFORMATION SYSTEM
J - KIT MARKED J SERVICES PART(S) MARKED J
M - METRIC PART

434-8083 **LINES GP-AIR TANK (**contd.**)** **i06782504**

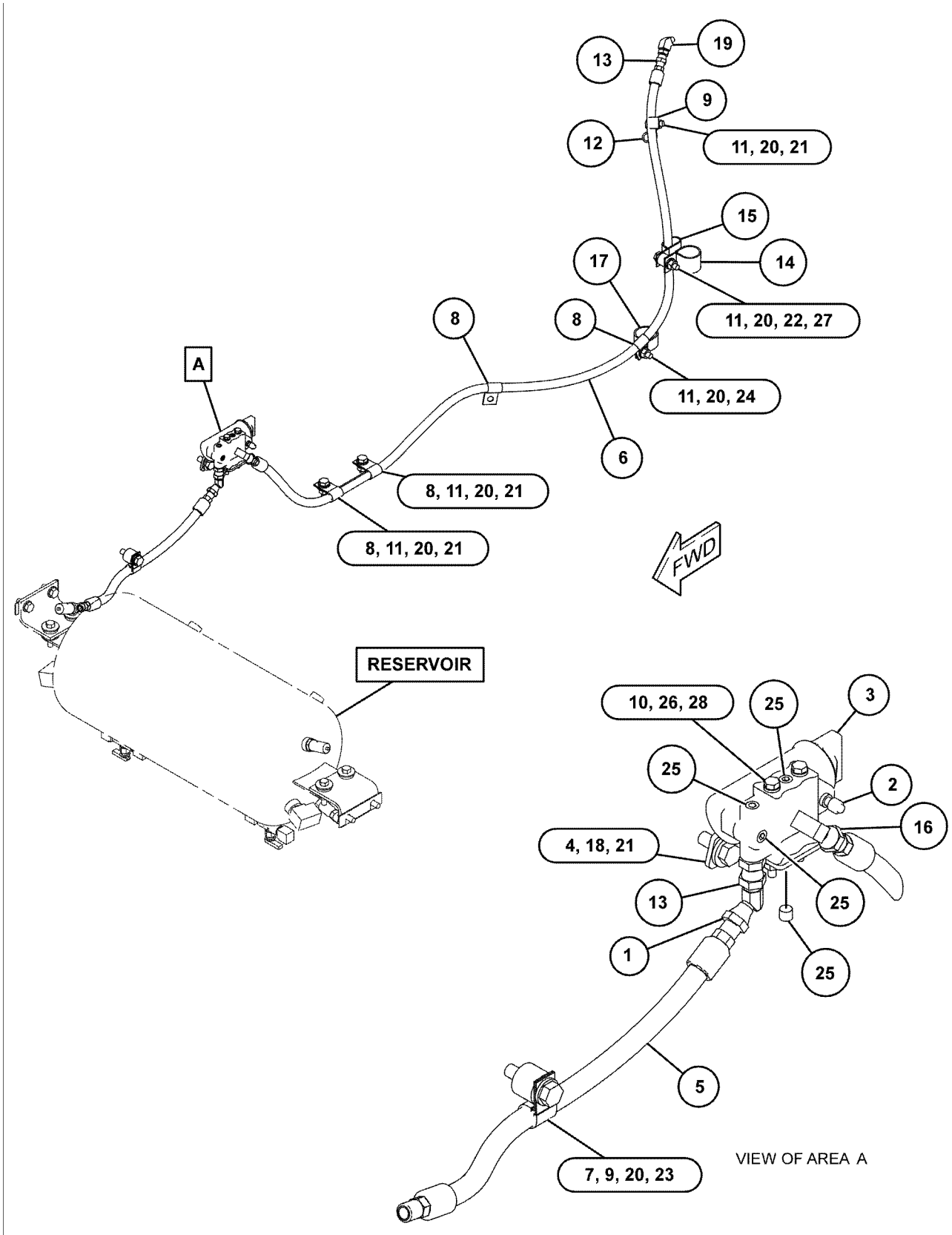

GRAPHIC #1 <END> g03823432

434-8087 TANK GP-AIR

S/N: SZS624-UP
CANNOT BE USED WITH 455-0154—PAGE: 1466
PART OF 465-8777 DISTRIBUTION AR, 435-8193 HYDRAULIC AR
ALSO AN ATTACHMENT

SMCS-4272 **i06737556**

NOTE	REF NO	GRAPHIC REF	PART NUMBER	QTY	PART NAME 1 2 3 4 5 6 (PRODUCT LEVEL)	SEE PAGE
	1	1	**1P-7115**	4	GROMMET AS	
	2	1	**2G-1034**	2	VALVE-AIR RELIEF	
	3	1	**7D-6936**	2	VALVE AS-CHECK	
B	4	1	**8W-7915**	2	SHIM (2-MM THK)	
	5	1	**8W-8496**	2	PLATE	
	6	1	**8W-8575**	1	RESERVOIR	
	7	1	**9D-6663**	2	VALVE-DRAIN	
	8	1	**191-3645**	1	RESERVOIR	
	9	1	**327-0726**	1	PLATE	
I	10	1	**460-1394**	1	HOSE AS	
	11	1	**002-6453**	2	ELBOW	
	12	1	**004-5933**	1	TEE-PIPE	
	13	1	**3B-7740**	2	NIPPLE-PIPE	
	14	1	**3D-8913**	2	ELBOW	
	15	1	**3J-5390**	1	PLUG	
	16	1	**4D-0577**	1	ELBOW	
	17	1	**6A-3591**	1	TEE-PIPE	
	18	1	**5P-1075**	4	WASHER-HARD (10.2X22.5X3-MM THK)	
	19	1	**5S-7383**	4	BOLT (3/8-16X1.75-IN)	
	20	1	**6V-8801**	4	NUT (3/8-16-THD)	
	21	1	**7D-4903**	1	ADAPTER	
	22	1	**7F-9311**	4	FITTING	
	23	1	**7X-0578**	8	WASHER-HARD (10.2X32X2.5-MM THK)	
	24	1	**7X-7729**	2	WASHER (11X25X3-MM THK)	
	25	1	**8T-4121**	6	WASHER-HARD (11X21X2.5-MM THK)	
M	26	1	**8T-4136**	8	BOLT (M10X1.5X25-MM)	
	27	1	**8T-4224**	2	WASHER-HARD (8.8X16X2-MM THK)	
M	28	1	**8T-4908**	2	BOLT (M8X1.25X25-MM)	

B - USE AS REQUIRED
I - REFER TO HYDRAULIC INFORMATION SYSTEM
M - METRIC PART

434-8087 **TANK GP-AIR (**contd.**)** **i06737556**

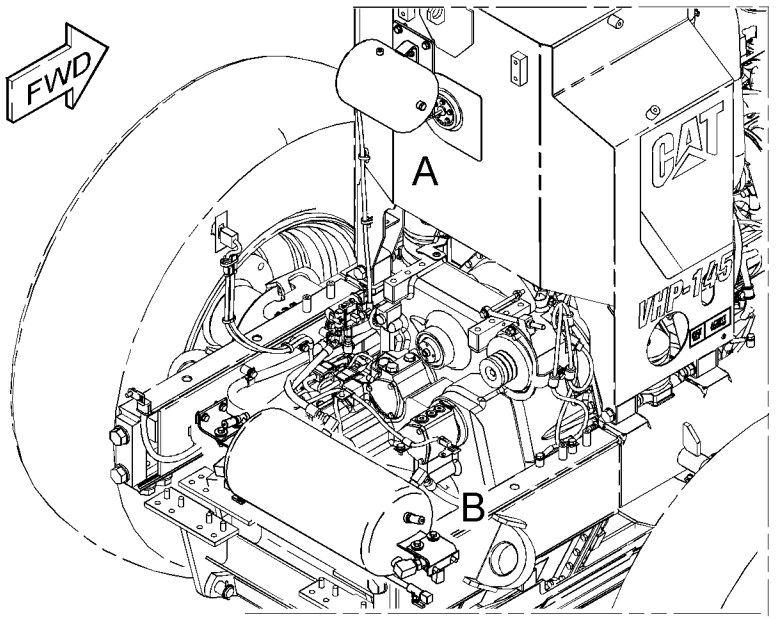

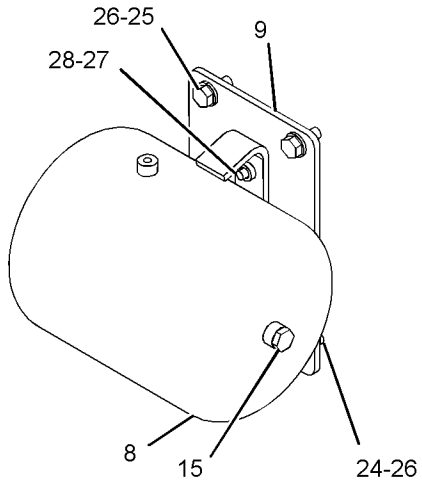

VIEW OF AREA A

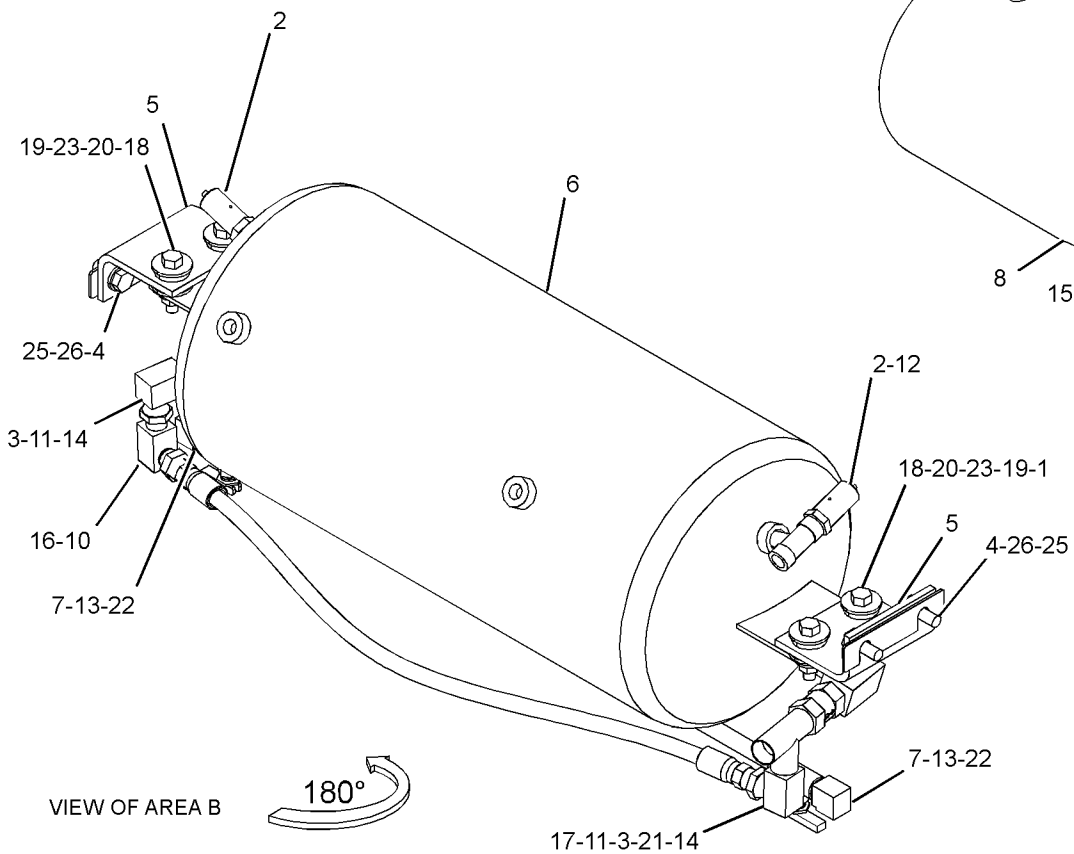

VIEW OF AREA B

GRAPHIC #1

<END>

g03733331

185-0008 VALVE GP-SOLENOID

S/N: SZS1-UP

24-VOLT

PART OF 306-5499 CONTROL GP-PARKING BRAKE

SMCS-5479 **i03513440**

NOTE	REF NO	GRAPHIC REF	PART NUMBER	QTY	PART NAME 1 2 3 4 5 6 (PRODUCT LEVEL)	SEE PAGE
	1	1	**156-5970**	1	NUT (1/2-20-THD)	
	2	1	**164-2108**	1	WASHER (13.03X25.4X2.38-MM THK)	
	3	1	**314-7646**	1	COIL AS	

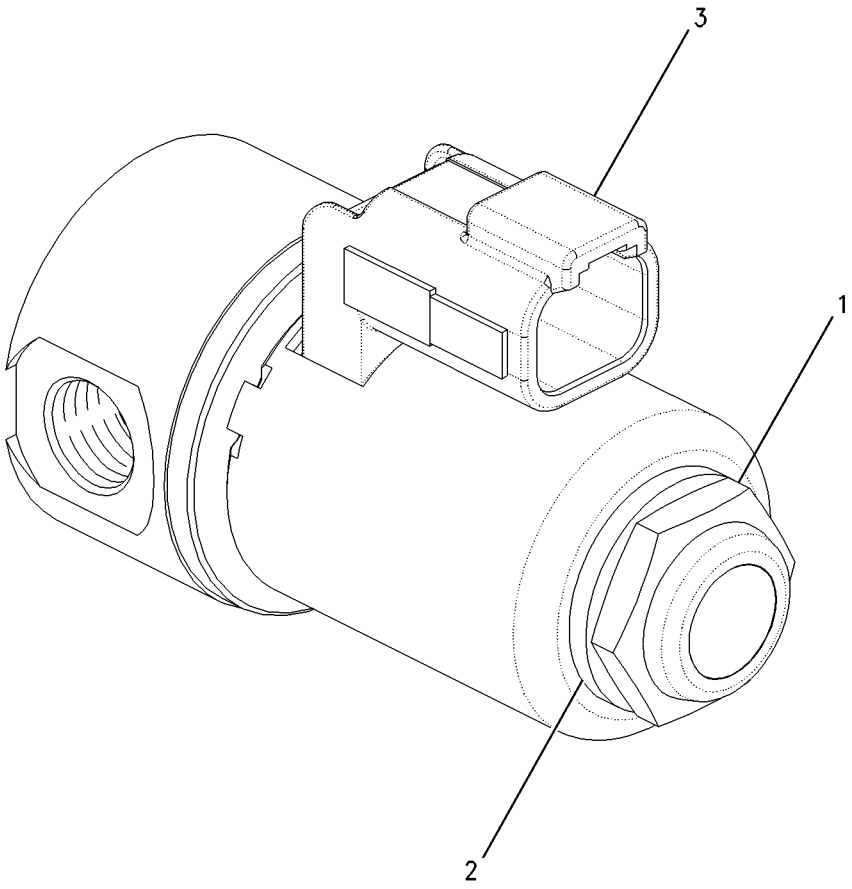

GRAPHIC #1 <END> g00925213

PART NUMBER INDEX

Part	Page
0	
0A-2926	742
	762
0L-0478	900
0L-1026	642
0S-1571	900
0S-1579	647
0S-1585	617
	808
	812
0S-1587	613
0S-1592	578
	782
0S-1595	748
0S-1597	356
0S-1604	641
0S-1621	643
0S-1756	613
0T-0244	1349
0V-0375	577
1	
1A-1415	808
	812
1A-4350	1345
1B-0676	160
	162
	753
	758
	1138
	1140
	1142
	1144
1B-2713	1180
	1182
	1184
	1186
	1188
1B-2886	615
1B-4038	808
	812
1B-4046	808
	812
1B-4367	717
1B-5174	582
	587
	808
	812
1B-8704	160
	162
	1138
	1140
	1142
	1144
1B-8705	38
	44
1B-8737	890
	891
1D-4627	577
1D-4680	727
	728
1D-5119	1054
	1056
	1058
	1060
1D-5120	890
	891
1F-0748	907
	910
	912
	915
	918
	921
	925
	928
	931
	934
	937
	940
	943
	946
	949
	952
	955
	958
	962
	966
	969
	972
	975
	1041
	1043
	1047
	1049
	1052
1F-0750	1100
	1101
	1356
1F-1599	1347
1F-4622	752
	757
	1138
	1140
	1142
	1144
1F-5339	678
	680
1F-7567	170
	173
1F-7958	808
	812
1H-0337	995
	998
1H-1023	750
1H-3244	192
	252
	263
	388
	531
	543
	547
	551
	555
	559
	561
	565
	567
	570
	573
	690
	694
1H-3338	362
	363
	1157
	1159
	1165
	1167
	1169
	1172
1H-3937	892
	901
1H-4393	1273
1H-7339	808
	812
1H-7724	753
	758
1H-8306	190
1H-8720	868
1J-6762	474
	479
	485
	491
	494
	498
	502
	505
	1391
	1393
	1395
1J-9671	995
	998
1K-6870	474
	479
	485
	491
	494
	498
	502
	505
1K-6872	724
	725
	779
1K-6985	1401
1L-0509	627
	631
1L-5072	904
1M-1230	1180
	1182
	1184
	1186
	1188
1M-3780	624
	637
1M-4095	624
	642
1M-6119	197
	198
	202
	207
	211
	215
1M-6120	197
	198
	202
	207
	211
	212
	215
1M-6718	1038
1N-5999	52
	54
	801
	803
1N-8062	185
	187
1P-0604	592
	594
1P-0810	197
	198
	204
	207
	211
	212
	215
	216
	250
	264
	266
	379
	385
	389
	393
	395
	417
	421
	484
	490
	509
	510
	515
	522
	526
	531
	543
	547
	551
	554
1P-2378	1259
	1270
1P-2636	613
1P-2662	613
1P-4577	627
	631
1P-4578	628
	631
1P-6356	1247
	1250
1P-6872	892
1P-7009	198
	203
	212
	216
	474
	479
	485
	491
	494
	498
	502
	505
1P-7115	766
	1461
	1466
1P-7521	746
1R-0749	173
1R-0762	170
1R-0774	904
1R-1807	100
1S-0994	105
	106
	111
	136
	138
	822
	826
	831
	835
	838
	842
	846
	849
	852
	855
	858
	862
	874
1S-2342	416
	420
	424
	428
	433
	438

PART NUMBER INDEX

Part	Page
	442
	447
	451
	456
	460
	465
	469
1S-2563	88
1S-3184	613
1S-6420	868
	872
1S-7251	197
	202
	211
	215
	355
1S-7252	197
	198
	202
	203
	211
	212
	215
	216
	355
1S-9593	649
	658
	659
1T-0738	604
	606
	660
1U-3202	1440
1U-3998	801
	803
1U-8846	40
	71
	72
	145
	147
	148
	519
	581
1V-7368	234
	236
	238
	240
	242
	244
	246
	391
1W-2431	153
	154
1W-2715	57
	59
1W-8407	46
1Y-7927	1208
	1211

2

Part	Page
2A-1162	71
	75
	76
	510
	522
	527
	536
2A-3211	1034
2A-3398	686
2A-4429	57
	59
2A-6684	1215
	1216
	1217
2A-6926	1383
2A-6928	1383
2A-6929	1383
2A-6938	643
2A-6985	1106
	1109
	►1277
	1325
	1326
	1327
	1328
2A-7081	821
	830
	834
	841
	845
	848
	851
	854
2A-7184	1125
	1129
2B-0858	808
	812
2B-0941	821
	825
	830
	834
	837
	841
	846
	849
	852
	854
	858
	862
	864
2B-0947	615
2B-2673	1041
	1043
	1047
	1049
	1052
2B-3147	643
2B-3148	643
2B-8293	812
2B-9373	637
2D-2507	667
	676
	677
2D-2508	667
	676
	677
2D-2509	667
	676
	677
2D-2511	676
2D-2565	667
	676
2D-2654	674
2D-4202	904
2D-6006	158
2D-6235	1180
	1182
	1184
	1186
	1188
	1208
	1211
2D-6642	77
	613
	615
2D-7325	752
	757
2D-8009	625
	637
2D-8154	808
	812
2D-8652	789
2D-9454	613
2F-8057	717
	780
2F-8509	895
2G-0478	808
	812
2G-0615	456
	465
	469
2G-0617	313
	316
	420
	429
	452
	457
	461
	466
	469
2G-0659	313
	316
	420
	428
	451
	456
	460
	465
	469
2G-0988	313
	316
	420
	428
	451
	456
	460
	465
	469
2G-1034	766
	1461
	1466
2G-1084	615
2G-3219	1041
	1043
	1047
	1049
	1052
2G-3221	1041
	1043
	1047
	1049
	1052
2G-3865	577
2G-3967	776
2G-3971	1046
2G-4011	712
2G-4332	1434
	1437
2G-5493	821
	825
	830
	834
	837
	841
	845
	848
	851
	854
	857
	861
2G-5667	578
	782
2G-5673	577
2G-6157	712
2G-6285	158
2G-6336	748
2G-6377	617
2G-6396	617
2G-6595	667
	677
2G-6695	808
	812
2G-6740	925
	929
	931
	934
	937
	946
	949
	973
	975
2G-6747	912
	915
	922
	925
	928
	946
	949
	952
	955
	959
	963
	966
	969
	972
	975
2G-6748	907
	910
	912
	915
	918
	922
	925
	928
	931
	934
	937
	940
	943
	946
	949
	952
	955
	959
	963
	966
	969
	972
	975
2G-6749	907
	910
	912
	915
	918
	922
	925
	928
	931
	934
	937
	940
	943
	946
	949

► PRIMARY REFERENCE

PART NUMBER INDEX

Part	Page
	952
	955
	959
	963
	966
	969
	972
	975
2G-6751	907
	910
	912
	915
	918
	922
	925
	928
	931
	934
	937
	940
	943
	946
	949
	952
	955
	959
	963
	966
	969
	972
	975
2G-6752	907
	910
	912
	915
	918
	922
	925
	928
	931
	934
	937
	940
	943
	946
	949
	952
	955
	959
	963
	966
	969
	972
	975
2G-6753	913
	916
	919
	922
	941
	944
	953
	956
	959
	963
	967
	969
2G-6754	916
	929
	967
	969
	973
	975
2G-6755	907
	910
	912
	915
	918
	922
	925
	928
	931
	934
	937
	940
	943
	946
2G-6756	907
	910
	912
	915
	918
	922
	925
	928
	931
	934
	937
	940
	943
	946
2G-6757	907
	910
	912
	915
	918
	922
	925
	928
	931
	934
	937
	940
	943
	946
2G-6788	1054
2G-6793	1054
	1056
2G-6794	1054
	1056
2G-7097	1275
	1277
2G-7098	1275
	1277
2G-7728	1434
	1437
2G-8233	1415
	1418
	1421
	1424
	1426
2G-8241	1259
	1270
2G-8242	1270
2G-8572	688
	689
	1125
	1129
	1133
	1227
	1232
	1239
	1244
	1270
2G-8573	688
	689
	1125
	1129
	1133
	1227
	1232
	1239
	1244
	1270
2G-8609	782
2G-8615	577
2G-8624	577
2G-8626	577
2G-8631	578
	805
2G-8633	577
2G-8741	577
2G-8742	577
2G-8767	198
	202
	211
	216
	688
	689
	1215
	1216
	1217
	1227
	1232
2G-8768	577
2G-8777	577
2G-9098	774
	775
	777
2G-9103	774
	775
	777
2G-9789	643
2G-9791	643
2H-3740	577
2H-3786	780
2H-3920	7
	8
	9
	10
	368
	369
	375
2H-3922	359
	1280
	1283
	1296
	1299
	1304
	1307
	1315
	1321
2H-3928	902
2H-3931	881
2H-3935	812
2H-3940	736
2H-5001	613
2H-6489	582
	587
2H-6490	624
	642
2H-9247	808
2J-0157	581
	587
2J-3505	577
2J-3506	1393
	1394
	1395
	1396
	1398
2J-6089	1034
2J-6274	625
	746
2J-7761	904
2J-8163	577
2K-0419	1041
	1043
	1047
	1049
	1052
2K-2306	1396
	1398
2K-4821	192
2K-4973	727
	728
	1072
	1075
	1100
	1101
	1261
	1268
	1269
	1356
	1371
	1373
2K-5109	613
2K-5830	1125
	1129
	1133
2K-6061	1100
	1101
	1356
2K-7979	1125
	1129
	1133
2K-8198	764
	1461
2K-8199	1001
	1003
	1005
	1007
	1009
	1011
	1013
	1015
	1017
	1019
	1021
	1023
	1025

► PRIMARY REFERENCE

PART NUMBER INDEX

Part	Page
2L-3331	752
	757
2L-5893	1072
	1323
2L-8050	212
	252
	263
	384
	388
	518
	531
	542
	546
	551
	554
	558
	564
2L-8051	260
2L-8052	258
	259
	383
	388
	425
	429
	434
	443
	452
	461
	484
	490
2L-8058	212
	252
	263
	384
	388
	518
	531
	543
	546
	551
	554
	558
	564
2L-8060	258
	259
	384
	388
	425
	429
	434
	443
	452
	461
	484
	490
2L-8069	258
	259
	265
	379
	384
	388
	417
	421
	425
	429
	434
	443
	452
	461
	508
2L-8071	510
	521
	526
	535
2L-8076	265
	508
2L-8078	223
2L-8079	250
	258
	259
	260
	265
	417
	421
	425
	429
	434
	443
	452
	461
	484
	490
	508
	509
2M-4453	118
2M-5685	617
2M-6471	48
2M-7819	1208
	1211
2M-9780	169
	170
	172
	173
	581
	586
	625
	643
	746
	821
	830
	834
	841
	845
	848
	851
	854
	995
	998
	1253
	1255
2N-1287	31
	33
2N-2138	613
	748
2N-2139	748
2N-9421	160
	162
2P-1293	106
	111
2P-1294	76
2P-1692	606
2P-4339	1076
	1091
	1096
	1199
	1203
2P-4358	29
2R-0694	158
2R-0719	158
2R-0724	158
2R-6806	168
2S-2053	102
2S-2923	764
	1461
2S-3029	581
	587
2S-3440	738
	740
	742
	762
2S-4078	867
	871
	995
	998
2S-4663	650
2S-5100	904
2S-5835	650
2T-1922	31
	33
2V-0099	1076
	1091
	1095
	1199
	1203
2V-1771	198
	203
	207
	212
	216
2V-3726	1102
2V-8259	1224
	1237
	1242
2W-0027	86
2W-6544	40
2W-6546	39
2W-7213	48
2W-7381	60
2W-8147	44
2Y-3812	474
	479
	485
	491
	494
	498
	502
	505
2Y-5829	91
	92
	108

3

Part	Page
3B-4607	158
	1126
	1129
	1133
3B-4610	158
3B-4611	904
3B-4615	690
	694
3B-4618	577
	780
3B-4627	591
3B-4628	719
	822
	831
	835
	842
3B-4632	1440
3B-4647	779
3B-4897	773
3B-5320	1041
	1043
	1047
	1049
	1052
3B-5329	776
3B-6769	626
3B-7721	753
	758
3B-7733	626
3B-7740	701
	766
	1466
3B-8485	774
	775
	777
3B-8489	577
	626
	715
	782
	1054
	1056
	1058
	1060
	1396
	1398
	1434
	1437
3B-8491	1396
	1398
3B-8822	750
3B-8921	596
	598
	624
3C-6969	543
	547
	551
	555
	559
	561
	565
	567
	570
	573
3D-2239	676
3D-2824	118
	150
	358
	627
	631
	833
	866
	867
	868
	870
	871
	872
	895
	996
	999
3D-2975	1208
	1211
3D-4245	652
	655
3D-6509	615
3D-7587	742
	762
	764
	1461
3D-8317	650
	655
3D-8747	1180
	1182
	1184
	1186
	1188
3D-8748	1180
3D-8749	1180
	1182
	1184
	1186
	1188

PART NUMBER INDEX

Part	Page
3D-8752	1180
	1182
	1184
	1186
	1188
3D-8884	750
3D-8913	753
	758
	766
	1461
	1466
3E-0109	375
	378
	397
	403
	542
	550
3E-0400	1076
	1091
	1095
	1199
3E-1552	1450
	1456
3E-2026	416
	420
	424
	428
	433
	438
	442
	447
	451
	456
	460
	465
	469
3E-3213	68
3E-3365	521
	526
3E-3371	338
	522
	527
3E-3377	367
3E-3382	1295
3E-3383	260
	267
	404
	428
	451
	452
	456
	460
	461
	465
	469
3E-3388	1295
3E-3389	257
	265
	375
	404
	1295
	1306
	1309
	1312
	1317
	1321
3E-3390	522
	527
3E-3636	367
	416
	420
	424
	428
	433
	438
	442
	447
	451
	456
	460
	465
	469
3E-3890	1076
	1091
	1095
	1199
	1203
3E-4048	1277
	1330
	1332
	1334
	1340
	1342
3E-4051	1250
3E-4052	1250
3E-4302	892
	895
3E-4304	1077
3E-4352	61
	102
	334
	336
3E-4367	250
	255
	265
	397
	400
	404
	408
	490
	509
3E-5169	510
	521
	526
	535
3E-5239	306
	398
	401
	403
	407
	410
	414
	415
	508
	521
	526
	535
3E-5519	254
	397
	403
3E-6328	▶191
	397
	400
	403
	407
	410
3E-6389	▶289
	375
	378
	383
	388
3E-6477	542
	546
	550
	554
	558
	561
	564
	567
	570
	573
3E-6780	649
3E-6909	764
	1461
3E-7401	122
3E-7417	892
	895
3E-7790	378
	397
	403
	404
	408
	542
	550
3E-7852	356
3E-7853	356
3E-7855	356
3E-7857	356
3E-7858	356
3E-7860	356
3E-7861	356
3E-7996	378
	397
	403
	404
	542
	550
3E-7999	542
	550
3E-8005	604
3E-8006	167
	660
3E-8017	149
	157
	1447
	1448
3E-8020	1281
	1284
	1286
	1288
	1290
	1293
	1296
	1299
	1301
	1304
	1307
	1310
	1313
	1315
	1318
	1321
3E-8557	250
	265
	490
	509
3E-8558	255
	397
	400
	404
	408
3E-8700	▶352
	582
3E-8763	543
3E-8772	543
	551
	552
3E-8815	543
	552
3E-8817	398
	404
3E-8825	397
	398
3E-9317	551
3E-9319	543
3E-9323	543
3E-9326	551
3E-9327	398
	404
3E-9375	339
3E-9412	94
	179
3E-9413	1380
3E-9865	1125
	1129
	1133
3F-1547	904
3F-7514	1125
	1129
	1133
3F-9556	192
	907
	910
	912
	915
	918
	921
	925
	928
	931
	934
	937
	940
	943
	946
	949
	952
	955
	958
	962
	966
	969
	972
	975
	1383
	1385
	1386
	1388
3G-0361	904
3G-0471	1431
3G-0472	1064
3G-1701	1207
3G-3265	1224
	1227
	1232
	1237
	1239
	1242
	1244
3G-3726	1037
3G-6659	626
3G-9190	678
	680
3H-2900	1077
	1092
	1096
	1199
	1203
3H-5552	48
3H-7654	94
3H-8538	1138
	1140

► PRIMARY REFERENCE

PART NUMBER INDEX

Part	Page
	1142
	1144
3J-1907	75
	118
	122
	142
	148
	169
	170
	172
	173
	353
	367
	417
	421
	425
	429
	434
	438
	443
	447
	452
	457
	461
	466
	516
	519
	532
	581
	586
	600
	602
	606
	625
	650
	652
	656
	660
	817
	819
	867
	868
	871
	872
	876
	883
	922
	959
	963
	995
	998
	1001
	1027
	1031
	1032
	1033
	1034
	1037
	1038
	1449
3J-3679	995
	998
3J-5389	31
	33
3J-5390	132
	738
	740
	742
	748
	766
	1466
3J-5696	1072
3J-6956	660
3J-7354	142
	169
	172
	336
	600
	602
	625
	655
	746
	867
	871
	876
	877
	884
	886
	995
	998
	1030
	1035
3J-8500	898
3K-0196	641
3K-0360	105
	106
	111
	118
	122
	136
	138
	169
	170
	172
	173
	511
	581
	586
	625
	643
	650
	771
	821
	822
	825
	826
	829
	830
	831
	834
	835
	837
	838
	841
	842
	845
	846
	848
	849
	851
	852
	854
	855
	857
	858
	861
	862
	864
	867
	874
	876
	892
	902
	921
	958
	959
	962
	995
	998
	1001
	1003
	1005
	1007
	1009
	1011
	1013
	1015
	1017
	1019
	1021
	1023
	1025
	1030
	1035
	1036
	1253
	1255
3K-0986	641
3K-2889	717
3K-3257	75
	76
	355
3K-6060	753
	758
	904
	1125
	1129
	1133
3K-6113	983
	992
3K-6116	652
3K-8280	753
	758
3K-8460	173
	336
3K-9520	313
	316
	420
	429
	452
	457
	461
	466
	470
3L-8187	543
	547
	551
	555
	559
	561
	565
	567
	570
	573
3P-0337	598
3P-1156	74
	104
	116
	118
	1446
3P-1461	774
	775
3P-1932	100
	621
3P-2404	474
	479
	485
	491
	494
	502
3P-3839	704
	706
	708
	710
3P-9498	995
	998
3R-2437	995
	998
3R-8797	356
3R-9322	690
	694
3R-9965	250
	478
	484
	490
3S-0004	637
3S-0302	748
3S-0303	748
3S-0391	752
	757
3S-2093	169
	172
	202
	211
	215
	234
	236
	238
	240
	242
	244
	246
	250
	267
	331
	332
	375
	378
	383
	388
	391
	393
	395
	397
	400
	403
	407
	410
	412
	439
	447
	457
	466
	470
	478
	484
	490
	542
	546
	550
	554
	558
	561
	564
	567
	570
	573
	582
	587
	604
	606
	825
	837
	857
	876
	1076

PART NUMBER INDEX

Part	Page
	1081
	1082
	1089
	1090
	1091
	1095
	1199
	1203
	1215
	1216
	1217
	1375
	1377
3S-2713	752
	757
	1138
	1140
	1142
	1144
3S-6049	197
	198
	202
	207
	211
	215
3S-6050	202
	207
	211
	215
3S-7023	787
	791
	793
	795
3S-8664	198
	203
	212
	216
3S-8665	510
	1253
	1255
3S-9557	1077
	1092
	1096
3T-0050	752
	757
3T-0849	899
	1157
	1159
	1165
	1167
3T-0852	1068
	1070
	1161
	1163
	1225
	1233
	1237
	1239
	1242
	1244
3T-3157	254
	256
	257
	398
	400
	403
	407
	1077
	1200
	1280
	1283
	1286
	1288
	1290
	1292
	1295
	1298
	1301
	1303
	1306
	1309
	1312
	1317
	1320
3T-3158	254
	256
	257
	398
	400
	403
	407
	1077
	1200
	1280
	1283
	1286
	1288
	1290
	1292
	1295
	1298
	1301
	1303
	1306
	1309
	1312
	1317
	1320
3T-3159	254
	256
	257
	398
	400
	403
	407
	1077
	1200
	1280
	1283
	1286
	1288
	1290
	1292
	1295
	1298
	1301
	1303
	1306
	1309
	1312
	1317
	1320
3T-3197	1076
	1091
	1095
3T-3198	1076
	1091
	1095
3T-3278	254
	256
	257
	398
	400
	403
	407
	1077
	1200
	1280
	1283
	1286
	1288
	1290
	1292
	1295
3T-4377	624
	642
3T-5760	203
	212
	216
3T-5763	690
	694
3T-6774	1180
	1182
	1184
	1186
	1188
3T-8236	995
	998
3T-9549	580
3V-0613	690
	694
3V-2431	176
	177
	178
3V-3816	1379
3V-9244	1275
	1277
	1330
	1332
	1334
	1340
	1342
3W-6485	1146
3W-7254	1428
3Y-2806	1125
	1129
	1133
3Y-2888	353
4	
4B-0418	1247
	1250
4B-1281	543
	547
	551
	555
	559
	561
	565
	567
4B-2047	551
	555
	561
	573
4B-2049	1280
	1283
	1286
	1288
	1290
	1292
	1295
	1298
	1301
	1303
	1306
	1309
	1312
	1315
	1317
	1320
4B-2913	904
4B-4158	1329
4B-4274	336
	528
	536
	543
	547
	551
	555
	559
	561
	565
	567
	570
	573
4B-4277	532
4B-4283	1383
	1385
	1386
	1388
4B-4314	1126
	1129
	1133
4B-4863	1272
	1359
	1361
	1364
4B-5059	1208
	1211
4B-5272	1074
4B-6060	753
	758
	1138
	1140
	1142
	1144
4B-9302	1247
	1250
4B-9880	650
	655
4D-0577	753
	758
	766
	1461
	1466
4D-0582	753
	758
4D-1212	543
	547
	551
	555
	559
	561
	565
	567
	570
	573
4D-1248	207
4D-1322	660
4D-2297	1001
	1031
	1032
	1033
	1034
	1037

► PRIMARY REFERENCE

PART NUMBER INDEX

Part	Page
4D-2560	764
	1461
4D-3100	378
	383
	389
4D-3704	577
	782
4D-4064	160
	162
4D-4375	1041
	1045
	1046
4D-5292	613
4D-6086	1434
	1437
4D-6432	1345
4D-6585	750
4D-6695	660
4D-7388	136
	138
	417
	421
	425
	429
	434
	438
	443
	447
	452
	457
	461
	466
	470
	537
	738
	740
	764
	1375
	1377
	1379
	1461
4D-7733	764
	817
	819
	1461
4D-7735	753
	758
	822
	835
	852
	855
4D-7794	142
	367
	398
	401
	404
	408
	410
	417
	421
	425
	429
	434
	438
	443
	447
	452
	457
	461
	466
	470
	474
	479
	485
	491
	494
	498
	502
	505
	510
	516
	519
	522
	527
	532
	536
	626
	1379
4D-8123	309
	511
	522
	527
	536
4D-8128	678
	680
4D-8148	686
4D-9986	1001
	1003
	1005
	1007
	1009
	1011
	1013
	1015
	1017
	1019
	1021
	1023
	1025
4E-2392	876
4E-5724	518
	531
4F-2294	364
4F-4097	895
4F-4879	1358
4F-5695	50
	51
4F-6123	1147
	1148
4F-7389	628
	632
4F-7390	625
	746
4F-7827	1396
	1398
4F-7952	639
4F-9029	110
	1446
4F-9653	176
	177
	178
	808
	1446
4H-1440	895
4H-6112	643
4H-6147	750
4H-6996	808
	812
4H-9105	625
	746
4I-6140	111
4J-0520	628
	632
4J-0521	868
	872
4J-0522	628
	632
4J-0524	118
	119
	127
4J-2506	600
	602
	652
	655
4J-3914	753
	758
4J-5468	821
	825
	830
	834
	837
	841
	845
	848
	851
	854
	857
	861
	864
	876
4J-5477	600
	602
	867
	868
	871
	872
	876
	995
	998
4J-7533	652
	655
	884
	886
	978
	979
	980
	981
	982
	983
	984
	985
	986
	987
	988
	989
	990
	991
	992
	994
	995
	998
	1001
	1003
	1005
	1007
	1009
	1011
	1013
	1015
	1017
	1019
	1021
	1023
	1025
4J-8922	753
	758
	1138
	1140
	1142
	1144
4J-9224	793
	805
	1401
4J-9225	789
	801
	803
4J-9964	902
4K-0367	686
	1275
	1277
	1330
	1332
	1334
	1340
	1342
4K-1388	995
	998
4K-2039	652
	656
4K-4879	667
	677
4K-4881	675
4K-7463	712
4K-8302	474
	479
	485
	491
	494
	498
	502
	505
4K-8603	581
	586
4K-8659	712
4K-8864	314
	317
	417
	421
	425
	429
	434
	438
	443
	447
	452
	457
	461
	466
	470
	474
	479
	485
	491
	494
	498
	502
	505
	511
	522
	527
	536
	600
	602
	736
	737
	762
	868
	872
	1247
	1250
4K-9097	690
	694
4K-9429	1279
4L-5966	1076
	1092
	1095

PART NUMBER INDEX

Part	Page
	1199
	1204
4L-6454	314
	317
	398
	401
	404
	408
	410
	417
	421
	425
	429
	434
	438
	443
	447
	452
	457
	461
	466
	470
	826
	838
	858
	862
	877
	1074
	1100
	1101
	1247
	1250
	1377
4L-6459	915
	928
	966
	969
	972
	975
4M-0061	1184
	1186
	1188
4M-1751	652
	655
4M-1831	356
4M-2381	650
	655
4M-5905	650
4M-6107	592
	594
	624
4M-6108	581
	587
4M-6425	753
	758
	1323
4M-6582	1077
	1092
	1096
	1200
	1204
4M-6921	904
4N-2927	1208
	1211
4P-3966	29
4P-3977	29
4P-5106	31
	33
4P-5918	40
	147
	148
	412
4P-7048	715
4P-7429	457
	466
4P-7581	281
	371
	373
	398
	401
	404
	408
	410
	511
	528
	536
	582
	587
	606
4P-8134	412
	417
	421
	425
	429
	434
	438
	443
	447
	452
	457
	461
	466
	470
	511
	522
	527
	536
	600
	602
4S-1936	511
	522
	527
	536
4S-1962	474
	479
	485
	491
	494
	499
	502
	505
	511
	522
	600
	602
	750
	1247
	1250
4S-4455	511
	522
	527
	536
	753
	758
4S-5719	122
	198
	215
	515
	518
4S-5780	194
	195
4S-5838	746
4S-5879	604
4S-7606	750
	764
	1461
4T-0928	1038
4T-1700	1035
4T-1860	995
	998
	▶1038
4T-3010	1396
	1398
4T-4509	1035
4T-4935	995
	998
	▶1036
4T-4942	1036
4T-5613	787
	791
	793
	795
	805
4T-6780	789
4T-6907	783
	785
	797
	799
	1401
4T-7571	1036
4T-8050	687
4T-8054	793
	805
	881
	1401
4V-7875	1208
4V-7877	1208
4V-7884	1371
	1373
4V-7890	1072
4V-7891	1072
4V-8256	1075
4V-8577	1371
	1373
4V-9803	724
4V-9804	724
	725
4V-9809	724
	725
4W-0253	129
4W-1203	64
4W-1204	64
4W-1413	1450
	1454
	1456
4W-2042	64
4W-3462	25
	26
	▶39
4W-7592	118
	119
	129
4Y-9652	40
	1446
5	
5B-0577	1434
	1437
5B-0841	615
5B-1585	738
	740
	742
	762
5B-1866	95
5B-6172	1072
	1352
5B-8978	1461
5B-9318	807
	1001
	1003
	1005
	1007
	1009
	1011
	1013
	1015
	1017
	1019
	1021
	1023
	1025
5C-2890	142
	185
	187
	288
	306
	314
	317
	319
	320
	321
	322
	362
	363
	398
	401
	404
	408
	410
	541
	543
	547
	551
	555
	559
	561
	565
	567
	570
	573
	753
	758
	1077
	1092
	1096
	1178
	1179
	1200
	1204
	1375
	1377
	1461
5C-6565	703
	1043
	1047
5C-7261	40
	294
	474
	479
	485
	491
	494
	499
	502
	505
	1383
	1385
	1386
	1388
5C-7423	592
	594
	1383
5C-8312	375

▶ PRIMARY REFERENCE

PART NUMBER INDEX

Part	Page
	379
	384
	389
	543
	547
	551
	555
	559
	561
	565
	567
	570
	573
	688
	689
	1078
	1092
	1096
	1126
	1129
	1133
	1272
	1281
	1284
	1286
	1288
	1290
	1292
	1295
	1298
	1301
	1303
	1306
	1309
	1312
	1315
	1317
	1320
5D-0353	577
	617
	619
5D-0768	158
5D-1026	106
	111
	122
	136
	138
	150
	190
	627
	631
	1081
	1082
	1089
	1090
	1253
	1255
5D-1911	904
5D-2645	821
	825
	830
	834
	841
	845
	848
	851
	854
	861
5D-3636	158
5D-4822	1208
	1211
5D-4988	825
	837
	857
	861
5D-5206	1043
	1047
5D-6644	1041
	1049
	1052
5D-8159	1434
	1437
5D-8161	1435
	1437
5D-9629	678
	680
	732
5D-9844	613
5F-0149	1415
	1418
	1421
	1424
	1426
5F-0304	71
5F-5434	764
	1461
5F-8933	1391
	1393
	1395
5F-9144	164
	652
	655
	656
5G-8760	1431
5H-4778	750
	753
	758
5H-4909	808
	812
5H-7826	626
5H-8848	866
	870
	872
5H-8985	592
	594
	596
	598
	624
5I-4370	170
	173
5I-4376	122
5J-0605	547
	556
	559
	562
	565
	567
	570
	574
5J-1036	652
	655
5J-1086	617
	625
	746
5J-1246	902
5J-4773	1393
	1394
	1395
5J-7010	789
5J-7333	720
	721
5K-0984	712
5K-1094	750
5K-1458	1434
	1437
5K-1459	1434
	1437
5K-2408	750
5K-5129	577
	808
	812
5K-5288	577
	808
	812
5K-5338	753
	758
	858
	862
5K-7577	1280
	1283
	1295
	1298
	1303
	1306
	1315
	1320
5K-8451	738
	740
	742
	762
5K-8454	808
	812
5K-9090	627
	631
	867
	871
5K-9107	1441
5K-9238	752
	757
5L-2030	613
5L-2031	613
5L-4507	516
	519
	532
5L-5502	31
	33
	1466
5L-7200	313
	316
	550
	551
	554
	555
	561
5M-2057	995
	998
5M-2894	613
	617
	1074
	1323
	1356
5M-3062	105
	283
	314
	398
	401
	404
	408
	410
	417
	421
	425
	429
	434
	438
	443
	447
	452
	457
	461
	466
	470
	474
	479
	485
	491
	494
	499
	502
	505
	523
	528
	536
	687
	699
	753
	758
	1072
	1081
	1082
	1089
	1090
	1161
	1163
	1174
	1375
	1377
5M-3724	397

PART NUMBER INDEX

Part	Page
	400
	403
	407
	410
5M-6200	581
	587
5M-6213	750
	753
	758
5M-6214	1396
	1398
5M-6755	551
	555
	562
	574
5M-8500	1126
	1129
	1133
5N-4185	97
5P-0537	652
	655
	1180
	1182
	1184
	1186
	1188
	1279
5P-0599	825
	837
	857
	861
5P-0743	106
5P-0747	355
5P-0765	628
	632
5P-0767	122
	753
	758
	1253
	1255
5P-1046	122
5P-1075	160
	162
	577
	628
	632
	687
	699
	703
	704
	706
	708
	710
	766
	822
	826
	831
	835
	838
	842
	846
	849
	852
	855
	858
	862
	877
	907
	910
	912
	915
	918
	922
	925
	928
	931
	934
	937
	940
	943
	946
	949
	952
	955
	959
	963
	966
	969
	972
	975
	1077
	1092
	1096
	1126
	1129
	1133
	1138
	1140
	1142
	1144
	1161
	1163
	1174
	1200
	1204
	1247
	1250
	1270
	1365
	1367
	1369
	1441
	1461
	1466
5P-1076	160
	162
	194
	195
	577
	723
	726
	907
	910
	912
	915
	918
	922
	925
	928
	931
	934
	937
	940
	943
	946
	949
	952
	955
	959
	963
	966
	969
	972
	975
5P-1174	1450
	1456
5P-1175	1450
	1456
5P-1251	136
5P-1295	867
	871
5P-1424	249
	477
	483
	489
5P-1475	252
	256
	263
	542
	546
	551
	554
	558
	564
	1077
	1200
5P-2228	778
5P-2230	142
5P-2424	773
	907
	910
	913
	916
	919
	922
	926
	929
	932
	935
	937
	941
	943
	947
	949
	953
	955
	959
	963
	967
	970
	973
	976
5P-2545	617
	748
5P-2566	577
	773
	902
5P-3454	203
	515
	518
	531
5P-3455	260
5P-3863	581
	587
5P-3924	582
	587
5P-4115	234
	236
	238
	240
	242
	244
	246
	391
	543
	547
	552
	556
	559
	562
	565
	567
	570
	574
	704
	706
	708
	710
	1178
	1179
	1218
	1220
	1222
	1228
	1375
	1377
	1383
	1385
	1386
	1388
5P-4116	142
	170
	173
	311
	312
	353
	412
	691
	695
	1161
	1163
5P-4135	474
	479
	485
	491
	495
	499
	503
	506
5P-4143	748
5P-4295	198
	203
	212
	216
	532
5P-4424	738
	740
	742
	762
5P-4483	581
	586
5P-4536	156
5P-4571	252
	258
	259
	263
	420
	424
	429
	433
	442
	452
	461
	542
	546
	551
	554
	558
	564
	1067
	1068
	1070
5P-4868	867
	871
5P-4906	1253
	1255

► PRIMARY REFERENCE

PART NUMBER INDEX

Part	Page
5P-4961	122
5P-5454	1227
5P-5623	306
5P-5630	353
5P-5637	1078
	1092
	1096
	1126
	1130
	1134
	1200
	1204
5P-5639	1126
	1130
	1134
5P-5689	204
	212
	515
	518
	531
5P-5768	1157
	1159
	1165
	1167
	1169
	1172
	1330
	1380
5P-5813	613
5P-5824	1227
5P-5905	1200
5P-5908	1078
	1092
	1096
	1204
5P-5923	720
5P-5931	822
	826
	831
	835
	838
	842
	846
	849
	852
	855
	858
	862
5P-5969	8
	9
	10
	699
	1105
	1106
	1108
	1109
	1161
	1163
	1174
	1218
	1220
	1222
	1257
5P-6006	223
5P-6851	617
5P-6871	1258
5P-6882	1218
	1220
	1222
5P-7175	190
5P-7213	641
5P-7462	170
	173
	846
	849
	852
	855
	858
	862
5P-7701	620
	632
5P-7803	1076
	1091
	1095
	1151
	1199
	1203
	1224
	1227
	1232
	1330
	1365
5P-7814	173
	336
5P-7815	580
5P-7854	738
	740
	742
	762
	868
	872
5P-7957	1347
	1352
	1359
	1361
	1364
5P-7958	5
	274
	283
	410
5P-7970	98
	412
5P-8106	185
5P-8167	511
	522
	527
	536
	1126
	1133
	1379
5P-8211	625
	640
5P-8244	748
5P-8245	67
	68
	613
	615
	643
	748
	782
	808
	812
	1421
	1426
5P-8247	47
	192
	615
	617
5P-8248	613
5P-8291	1054
	1056
	1058
	1060
5P-8347	120
	124
5P-8439	691
	695
5P-8445	1208
	1211
5P-8500	1
	5
	190
	682
	729
	906
	1346
	1348
	1355
	1360
	1362
	1441
5P-8525	1191
	1193
	1215
	1216
	1217
5P-8843	577
5P-8874	169
5P-8890	577
5P-8998	1461
5P-9085	275
	283
	287
	309
	314
	317
	417
	425
	429
	434
	438
	443
	447
	453
	457
	462
	466
	470
	475
	479
	485
	491
	495
	499
	503
	506
	511
	522
	527
	536
	704
	706
	708
	710
	715
5P-9135	1077
	1092
	1096
	1199
	1203
5P-9209	160
	162
	1138
	1140
	1142
	1144
5P-9297	103
	511
	519
	522
	527
	532
	536
5P-9299	582
5P-9617	120
	124
	876
5P-9938	628
	632
5R-4787	890
	891
5S-4246	275
	283
	398
	401
	404
	408
5S-4385	637
5S-7349	192
	356
5S-7379	475
	479
	485
	491
	495
	499
	503
	506
	577
	703
	780
	808
	812
	822
	826
	831
	835
	838
	842
	846
	849
	852
	855
	858
	862
	877
	1270
5S-7382	687
5S-7383	766
	822
	826
	831
	849
	852
	858
	862
	1100
	1101
	1126
	1129
	1133
	1323
	1356
	1461
	1466
5S-9062	64
5T-0731	590
5T-0906	577

PART NUMBER INDEX

Part	Page
5T-1362	900
5T-2925	1054
	1056
5T-2926	1054
	1056
5T-3889	1045
	1046
5T-3890	1045
	1046
5T-4030	1207
5T-4267	▶1066
5T-5295	779
5T-7486	1157
	1159
	1165
	1167
	1169
	1172
5T-8285	750
	752
	757
5T-8366	1041
	1043
5T-8417	779
5T-9313	313
	316
	420
	428
	451
	456
	460
	465
	469
5T-9903	876
5T-9986	821
	834
	851
	854
5V-0770	1208
	1211
5V-1496	1350
5V-1497	1371
	1373
5V-5262	1074
5V-6454	1396
	1398
5V-6455	1396
	1398

6

Part	Page
6A-3591	766
6B-0933	907
	910
	912
	916
	918
	921
	926
	929
	931
	934
	937
	941
	943
	947
	949
	953
	955
	958
	962
	967
	970
	973
	976
6B-3260	1434
	1438
6B-4540	398
	401
	404
	408
6B-5072	643
6B-5464	1440
6B-6205	33
6B-6682	35
6B-6684	641
6C-3220	1437
6C-9149	1398
	1435
6D-0692	606
6D-1004	29
6D-1432	750
6D-3031	573
6D-3033	474
	477
	483
	489
	494
	502
6D-3479	511
	522
	527
	532
	536
	868
	872
6D-4161	254
	256
	257
	398
	401
	403
	407
	1077
	1200
	1280
	1283
	1286
	1288
	1290
	1292
	1295
	1298
	1301
	1303
	1306
	1309
	1312
	1317
	1320
6D-4244	475
	479
	485
	491
	495
	499
	503
	506
	511
	522
	527
	536
	543
	547
	552
	556
	559
	562
	565
	567
	570
	574
	753
	758
	822
	826
	831
	835
	838
	842
	846
	849
	852
	855
	858
	862
	868
	872
	877
6D-4246	198
	203
	207
	212
	216
	417
	421
	425
	430
	434
	438
	443
	447
	453
	457
	462
	466
	470
	511
	522
	527
	536
	753
	758
	822
	835
	852
	855
	877
6D-4247	864
	874
6D-4636	421
	430
	453
	462
6D-5257	250
	478
	484
	490
6D-6581	1169
	1172
6D-9855	753
	758
6E-1131	787
	791
	795
6E-1436	895
6E-1554	773
	▶783
6E-1555	783
6E-1634	787
6E-1754	777
	▶787
6E-1835	1036
6E-1857	787
6E-1923	995
	998
6E-1924	995
	998
6E-1925	995
	998
6E-1926	867
	871
6E-2447	793
6E-3007	1001
	1003
	1005
	1007
	1009
	1011
	1013
	1015
	1017
	1019
	1021
	1023
	1025
6E-3013	1001
	1003
	1005
	1007
	1011
	1013
	1015
	1017
	1019
	1021
	1023
	1025
6E-3019	1001
	1003
	1005
	1007
	1009
	1011
	1013
	1015
	1017
	1019
	1021
	1023
	1025
6E-3028	980
	983
	986
	989
	994
	▶1011
6E-3029	980
	983
	986
	989
	994
	▶1013
6E-3030	980
	983
	986
	989
	994
	▶1015
6E-3031	983
	986
	994
	▶1017
6E-3032	910

▶ PRIMARY REFERENCE

PART NUMBER INDEX

Part	Page
	937
	943
	949
	955
	▶986
6E-3034	987
	988
	990
	991
	992
	▶1019
6E-3035	978
	979
	981
	982
	984
	985
	987
	988
	990
	991
	992
	▶1021
6E-3036	978
	979
	981
	982
	984
	985
	987
	988
	990
	991
	992
	▶1023
6E-3037	979
	984
	985
	987
	988
	992
	▶1025
6E-3043	1017
	1025
6E-3044	1011
	1013
	1015
	1021
6E-3058	1023
6E-3136	891
	▶892
6E-3137	866
	870
	890
	▶895
6E-4090	783
	785
6E-4224	892
	895
6E-4228	1027
6E-4230	1027
6E-4502	1001
	1003
	1005
	1007
	1009
	1011
	1013
	1015
	1017
	1019
	1021
	1023
	1025
6E-4581	793
6E-4599	1001
	1003
	1009
	1019
6E-4703	995
	▶1037
6E-4724	771
	▶793
6E-4725	793
6E-4940	789
6E-4974	793
	805
6E-5153	1001
	1003
	1005
	1007
	1009
	1011
	1013
	1015
	1017
	1019
	1021
	1023
	1025
6E-5200	1035
6E-6140	1027
6E-6141	1027
6E-6142	1027
6E-6419	1027
6E-6420	1027
6E-6571	892
	▶899
6E-6594	892
6E-6596	892
6E-6597	892
6E-6599	892
6E-6600	892
6E-6601	892
6E-6602	892
6E-6604	899
6E-6605	899
6F-0698	613
6F-2956	617
6F-3930	667
	676
	677
6F-4855	652
	655
6F-6672	587
6F-6992	1434
	1437
6F-7013	682
	729
6F-7045	359
6F-7062	89
6G-0417	712
6G-0905	748
6G-1914	1058
	1060
6G-1915	1058
	1060
6G-2256	198
	202
	211
	216
6G-2263	198
	202
	211
	216
6G-2395	1224
	1227
	1232
	1237
	1239
	1242
	1244
6G-2396	1224
	1227
	1232
	1237
	1239
	1242
	1244
6G-2751	1227
	1232
	1239
	1244
6G-2914	1125
	1129
	1133
	1227
	1232
	1239
	1244
6G-2946	1041
	1046
6G-2947	1041
	1043
6G-2949	1041
	1045
	1046
6G-4701	613
6G-4702	613
6G-4848	1054
	1056
6G-5442	1054
	1056
	1058
	1060
6G-5534	808
	812
6G-5537	808
	812
6G-5538	808
	812
6G-5539	808
	812
6G-5542	808
	812
6G-5548	808
	812
6G-5979	648
	658
6G-5987	1180
	1182
	1184
	1186
	1188
6G-6122	808
	812
6G-7187	778
	782
6G-7213	617
6G-7222	1224
	1227
	1232
	1237
	1239
	1242
	1244
6G-8814	1125
	1129
	1133
6G-8831	1258
	1262
	1263
6H-0211	779
6H-1717	782
	808
	812
6H-3586	379
6H-3587	250
	379
6H-3592	509
6H-9691	750
6I-1418	416
	420
	424
	430
	433
	438
	442
	447
	453
	457
	462
	466
	470
	495
	499
	502
	505
6I-4348	250
	478
	484
	490
6I-8641	596
6I-8642	582
	587
6I-8911	592
6I-8912	592
	594
	596
	598
6I-9395	660
6I-9502	592
	594
	596
	598
6J-0488	1126
	1130
	1134
6J-1972	783
	785
	787
	795
	797
	799
6J-5731	783
	785
	787
	791
	795
	797
	799
6J-5733	783
	785
	787
	791
	795
	797
	799
6J-6439	1036
6K-0545	1435
	1437
6K-0806	412
6K-3273	1224
	1227
	1232
	1237

▶ PRIMARY REFERENCE

PART NUMBER INDEX

Part	Page
	1239
	1242
	1244
	1350
6K-3632	1434
	1437
6K-4185	712
6K-4186	712
6K-4187	712
6K-4190	712
6K-4191	712
6K-4193	712
6K-6826	752
	757
6K-8178	203
	212
	475
	479
	485
	491
	495
	499
	503
	506
	532
	868
	872
	1253
	1255
6K-8329	617
6K-9632	1375
	1379
6L-1650	581
	587
6L-1962	907
	910
	912
	915
	918
	921
	925
	928
	931
	934
	937
	940
	943
	946
	949
	952
	955
	958
	962
	966
	969
	972
	975
	1125
	1129
	1134
6N-7523	255
6P-0205	1067
	1068
	1070
	1224
	1227
	1232
	1237
	1239
	1242
	1244
6P-3236	1076
	1091
	1096
	1199
	1203
6S-6251	132
	134
6T-0840	615
6T-2421	771
6T-3631	508
6T-3632	508
6T-3633	508
6T-5345	1076
	1091
	1095
	1199
	1203
6T-5598	212
	532
6T-6505	256
	378
	383
	384
	388
	389
	1077
	1200
6T-6506	256
	378
	379
	383
	384
	388
	389
	1077
	1200
6T-6708	1076
	1091
	1095
	1199
	1203
6T-7695	1215
	1216
	1217
6T-8047	378
	384
	389
6T-8048	379
	384
	389
6V-0292	1151
	1225
	1227
	1232
6V-0314	748
6V-0484	606
	650
6V-0491	252
	263
	542
	546
	550
	555
	558
	564
6V-0683	170
	173
	846
	849
	852
	855
	858
	862
6V-0852	600
	602
	606
	650
	660
	867
	871
	995
	998
6V-0894	1138
	1140
6V-1581	122
6V-1582	122
6V-1668	1077
	1092
	1096
	1200
	1204
6V-1720	582
	586
6V-1819	592
	594
	596
	598
6V-1820	29
	85
	581
	639
6V-1875	1260
6V-1889	122
	417
	421
	475
	479
	485
	491
	495
	499
	503
	506
	628
	632
	687
	738
	740
	742
	762
	877
6V-1911	641
6V-1970	1
	5
6V-2235	122
6V-2313	160
	162
	1138
	1140
	1142
	1144
6V-2317	40
	66
	98
	100
	412
	640
6V-2369	212
	515
	518
	531
6V-2480	398
	401
	404
	408
6V-2610	738
	740
6V-2686	353
6V-2687	704
	706
	708
	710
	1257
6V-2722	197
	198
	202
	203
	207
	211
	212
	215
	216
6V-2773	1157
	1159
	1165
	1167
	1169
	1172
6V-3250	52
	54
	74
	120
	124
	1447
	1449
6V-3251	52
	54
	74
	127
	1447
	1449
6V-3259	1208
6V-3265	308
	417
	421
	425
	430
	434
	438
	443
	447
	453
	457
	462
	466
	470
	511
	522
	527
	536
6V-3538	39
	46
6V-3668	746
6V-3822	61
6V-3823	1421
	1426
6V-3831	1449
6V-3834	892
6V-3918	72
	129
	604
6V-3928	688
	689
	1151
	1224
	1227
	1232
	1237
	1239
	1242
	1244
	1330
	1332
	1334
	1340

► PRIMARY REFERENCE

PART NUMBER INDEX

Part	Page
	1342
6V-3940	38
	39
	86
	104
	120
	124
	334
	336
	581
	587
	650
6V-3964	421
	430
	453
	457
	462
	466
	470
6V-3965	600
	602
	606
	627
	631
	650
	660
	868
	872
	995
	998
6V-4245	753
	758
6V-4248	31
	33
	78
	104
	108
	582
	587
6V-4283	515
	518
	531
6V-4292	136
	138
6V-4589	365
6V-4604	732
6V-5048	187
	336
	621
	1449
6V-5050	580
6V-5063	89
	118
	127
	1446
6V-5158	1161
	1163
	1174
6V-5163	1224
	1228
	1233
	1237
	1240
	1242
	1245
	1344
6V-5165	1161
	1163
6V-5192	66
	898
6V-5217	72
	412
	581
	604
6V-5218	108
	650
6V-5219	110
6V-5220	61
6V-5223	120
	124
6V-5230	995
	998
6V-5324	1038
6V-5556	1030
	1035
6V-5645	375
	379
	384
	389
6V-5683	652
6V-5686	808
	812
6V-5696	94
6V-5698	40
6V-5758	649
6V-5815	113
	115
6V-5834	1215
6V-5839	29
	56
	60
	61
	78
	98
	104
	108
	113
	115
	179
	180
	181
	612
	683
	746
6V-5842	71
	746
6V-5843	69
6V-5853	1383
	1385
	1386
	1388
6V-6467	1375
6V-6578	375
	378
	383
6V-6609	74
	90
	118
	120
	124
	127
	336
	350
	632
	1446
	1449
6V-6703	222
6V-6888	1383
6V-6889	1383
6V-6893	511
	523
	527
	536
6V-7238	106
	111
	122
6V-7357	234
	236
	238
	240
	242
	244
	246
	281
	516
	519
	532
	753
	758
6V-7420	169
	172
	1253
	1255
6V-7535	738
	740
	753
	758
6V-7555	515
	518
	532
6V-7636	1157
	1159
	1165
	1167
	1169
	1172
6V-7646	1350
6V-7673	892
	895
6V-7688	190
6V-7697	1273
6V-7699	516
	519
	532
6V-7728	1077
	1092
	1096
	1200
	1204
6V-7732	706
	708
	710
6V-7742	1421
	1426
6V-7744	1258
	1262
	1263
6V-7981	60
	98
	179
	180
	181
	581
6V-8004	64
6V-8182	475
	479
	485
	491
	495
	499
	503
	506
	1434
6V-8183	160
	162
	1125
	1130
	1134
6V-8185	252
	263
	389
	543
	547
	551
	552
	555
	556
	559
	562
	565
	567
	570
	574
6V-8186	897
	907
	912
	915
	918
	921
	925
	928
	931
	934
	940
	946
	952
	958
	966
	972
6V-8187	515
6V-8188	194
	195
	203
	356
	907
	910
	913
	916
	919
	922
	926
	929
	932
	935
	937
	941
	943
	947
	949
	953
	955
	959
	963
	967
	969
	973
	975
	1434
	1437
6V-8189	192
	691
	695
	753
	758
6V-8197	1421
6V-8212	581
	587
6V-8214	706
	708
	710
	892
6V-8237	783
	785
	797
	1401

PART NUMBER INDEX

Part	Page
6V-8258	1386
	1388
6V-8259	1383
	1385
6V-8336	67
	895
6V-8337	892
	895
6V-8362	1076
	1091
	1096
	1199
	1203
6V-8367	122
6V-8369	7
	8
	9
	10
	368
	369
	375
6V-8376	542
	546
	550
	554
	558
	561
	564
	567
	570
	573
6V-8378	336
	356
6V-8397	118
	122
	169
	170
	172
	173
	600
	602
	771
	817
	819
	821
	822
	825
	826
	829
	830
	833
	834
	835
	837
	838
	841
	845
	846
	848
	851
	852
	854
	855
	857
	858
	861
	862
	864
	874
	883
	921
	922
	959
	962
	963
6V-8398	106
	111
	169
	170
	172
	173
	821
	822
	825
	830
	831
	834
	835
	837
	841
	845
	846
	848
	849
	851
	852
	854
	855
	857
	861
	867
	868
	876
	877
	921
	922
	958
	959
	962
	963
	995
	998
6V-8523	122
6V-8624	821
	830
	834
	841
	845
	848
	851
	854
6V-8625	31
	33
	106
	111
	169
	172
	822
	825
	830
	835
	837
	841
	845
	848
	851
	854
	857
	861
	867
	876
6V-8627	31
	33
	600
	602
	868
	871
6V-8628	600
	602
6V-8634	821
	825
	829
	830
	834
	837
	841
	845
	848
	851
	854
	857
	861
	864
	921
	958
	962
6V-8635	627
	631
6V-8636	108
	169
	176
	178
	817
	883
6V-8637	867
	871
6V-8639	821
	830
	834
	841
	845
	848
	851
	854
	876
6V-8647	600
	602
	867
	871
	876
	995
	998
6V-8653	1054
	1056
	1058
	1060
6V-8676	144
6V-8716	627
	631
6V-8721	172
6V-8723	172
	822
	826
	835
	838
	852
	855
	858
	862
	864
	874
6V-8724	108
	170
	173
	817
	819
	883
6V-8730	170
	173
6V-8765	890
	891
6V-8801	160
	162
	314
	317
	375
	379
	384
	389
	398
	401
	404
	408
	410
	417
	422
	425
	430
	434
	438
	443
	447
	453
	457
	462
	466
	470
	475
	479
	485
	491
	495
	499
	503
	506
	511
	523
	527
	536
	687
	753
	758
	766
	822
	826
	831
	835
	838
	842
	846
	849
	852
	855
	858
	862
	877
	1077
	1092
	1096
	1200
	1204
	1365
	1367
	1369
	1377
	1461
	1466
6V-8837	895
6V-8918	753
	758
6V-8928	1227
	1232
	1239
	1244
6V-8969	1279
6V-8987	833

► PRIMARY REFERENCE

PART NUMBER INDEX

Part	Page
6V-9001	959
	962
6V-9002	876
6V-9004	868
	872
6V-9007	866
	867
	870
	871
6V-9008	627
	631
6V-9027	120
	124
6V-9162	627
	631
6V-9168	122
	833
	874
6V-9189	290
6V-9207	124
6V-9326	275
	283
6V-9343	833
6V-9493	1272
6V-9632	690
	694
	704
	706
	708
	710
	1124
	1125
	1136
	1157
	1159
	1169
	1178
	1179
	1224
	1237
	1242
	1280
	1283
	1295
	1298
	1303
	1306
	1315
	1320
6V-9667	1421
	1426
6V-9746	106
	111
	627
	628
	631
	632
	866
	867
	868
	870
	871
	872
	877
6V-9748	64
6V-9835	868
	872
6V-9836	826
	838
	858
	862
	922
	959
	963
6V-9837	876
6V-9839	111
6V-9849	876
6V-9850	600
	602
	817
	883
	959
	963
6V-9873	177
6V-9875	867
	871
6V-9876	771
	821
	825
	830
	835
	837
	841
	845
	848
	851
	854
	857
	861
6W-0108	1072
6W-0111	1072
6W-0590	1072
6W-1496	1074
6W-1497	1074
6W-1885	1072
6W-1888	1074
6W-1890	1352
6W-1895	1352
6W-2371	1074
6W-2373	1352
6W-3309	1347
	1352
6W-3628	1074
	1356
6W-5698	1375
	1377
6W-5740	1352
6W-5757	1347
	1352
6W-5817	752
	757
6W-6672	198
	202
	207
	211
	216
	511
	523
	527
	536
6W-9693	1352
6Y-0590	642
6Y-0591	642
6Y-0976	594
6Y-0982	596
6Y-1000	596
6Y-1007	581
	586
6Y-1114	594
	596
	598
6Y-1115	592
	594
	596
	598
6Y-1116	592
6Y-1119	592
	594
	624
6Y-1870	642
6Y-1878	596
6Y-1888	594
6Y-1890	598
6Y-1891	594
	596
6Y-1895	594
	596
	624
6Y-2300	▶642
	645
	646
6Y-2303	▶596
	645
	646
6Y-2307	594
6Y-2312	596
	598
6Y-2419	596
	624
6Y-2425	596
	598
	625
6Y-2584	660
6Y-2805	1391
	1393
	1395
6Y-2935	887
6Y-3849	746
6Y-3850	746
6Y-3852	746
6Y-3860	640
6Y-4280	895
6Y-4638	653
	656
6Y-5010	637
6Y-5230	1434
	1437
6Y-5352	746
6Y-7915	748
6Y-7953	808
	812
6Y-7955	615
6Y-7981	598
6Y-8764	▶637
	639
6Y-8765	▶639
	645
	646
6Y-9763	581
	586
6Y-9960	80
	82
	438
	443
	447
	453
	457
	462
	466
	470
	511
	523
	527
	536
7C-6658	144
7C-6921	102
	1461
7C-6976	86
7C-6977	86
7C-7431	74
	149
	157
	1447
	1448
	1449
7C-7980	44
7C-8365	62
	▶64
7C-8366	64
7C-8369	64
7C-8370	64
7C-8634	64
7D-0215	738
	740
	742
	762
7D-1195	904
7D-1553	371
	373
	417
7D-1576	1403
7D-1577	1393
	1395
7D-2135	1434
	1437
7D-2136	1434
	1437
7D-2196	1434
	1437
7D-4903	736
	738
	740
	766
	1461
	1466
7D-5252	667
	676
	677
7D-6936	766
	1466
7D-7111	190
7D-7233	98
	417
	425
	434
	438
	443
	447
	457
	466
	470
	511
	523
	527
	536
	764

7

Part	Page
7B-3028	637
7B-5037	1041
7B-9323	158
7C-0111	86
7C-1493	100
7C-3179	35
7C-4354	398
	401
	404
	408
	417
	422
	425
	430
	434

PART NUMBER INDEX

Part	Page
	1461
7D-7496	701
	702
7D-8245	1434
	1437
7D-8347	613
7D-8636	577
7D-8637	577
7D-8643	577
7D-8825	1434
	1437
7D-8826	1434
	1437
7D-8875	1415
	1418
	1421
	1424
	1426
7D-8876	1415
	1418
	1421
	1424
	1426
7D-8877	1415
	1418
	1421
	1424
	1426
7D-8878	1415
	1418
	1421
	1424
	1426
7D-8879	1415
	1418
	1421
	1424
	1426
7D-8881	1415
	1418
	1421
	1424
	1426
7D-8882	1415
	1418
	1421
	1424
	1426
7D-8883	1415
	1418
	1421
	1424
	1426
7D-8884	1415
	1418
	1421
	1424
	1426
7D-8889	1415
	1418
	1421
	1424
	1426
7D-8983	808
	812
7D-8984	808
	812
7D-9267	900
7E-0759	120
	124
7E-2968	47
7E-6794	77
7E-7589	93
7E-7590	25
	26
	►93
7E-7779	57
	59
7E-8923	29
7E-8926	29
7E-8928	29
7F-0192	160
	162
7F-1327	1434
	1437
7F-4617	874
7F-8268	74
	639
7F-9311	766
	1461
	1466
7G-0437	746
7G-1060	508
	521
	526
	535
7G-4326	1377
7G-4822	592
	594
	596
	598
	624
	625
7G-4824	1224
	1227
	1232
	1237
	1239
	1242
	1244
	1365
7G-4998	580
7G-5453	656
7G-7053	308
	398
	401
	404
	408
	410
	730
	732
7G-7918	252
	263
	542
	546
	550
	555
	558
	565
7G-7920	258
	259
	416
	420
	424
	429
	433
	442
	452
	461
7G-8839	1396
	1398
7H-1179	379
7H-1181	379
7H-1447	904
7H-2423	801
	803
7H-2444	1415
	1418
	1421
	1424
	1426
7H-3641	897
	907
	912
	915
	918
	921
	925
	928
	931
	934
	940
	946
	952
	958
	966
	972
7I-1024	150
	236
	238
	240
	242
	244
	246
	391
7I-2272	649
7I-4610	4
	►626
	816
7I-4696	1207
7I-4698	1207
7I-4699	1207
7I-4718	3
	1105
	1107
	►1149
7I-4890	1125
	1129
7I-4959	690
	694
7I-4960	690
	694
7I-4979	690
	694
7I-4981	690
	694
7I-4982	690
	694
7I-5015	1083
	1084
	1085
	1086
	►1179
7J-0204	142
	801
	803
7J-8611	122
	619
	750
	753
	758
7J-9108	1253
	1255
7J-9885	793
	805
	1401
7J-9933	1036
7K-1181	197
	207
	215
	250
	265
	266
	270
	272
	274
	275
	277
	279
	281
	283
	285
	287
	306
	308
	309
	311
	312
	314
	317
	371
	373
	414
	415
	417
	422
	424
	428
	433
	438
	442
	447
	451
	456
	460
	465
	469
	474
	477
	478
	483
	484
	489
	490
	494
	498
	502
	505
	508
	515
	518
	521
	526
	531
	535
	541
	1247
	1250
	1272
	1273
	1274
	1281
	1284
	1286
	1288
	1290
	1293
	1295
	1298
	1301
	1303
	1306
	1309
	1312
	1315
	1317

► PRIMARY REFERENCE

PART NUMBER INDEX

Part	Page
	1320
7K-4199	1194
	1195
7K-4201	1176
	1177
7K-6128	773
7K-9201	773
7K-9202	778
	1065
7K-9203	771
	1064
	1415
	1418
	1421
	1424
	1426
7L-0811	508
	521
	526
	535
7L-2894	76
	356
7L-6326	142
7L-8316	1180
	1182
	1184
	1186
	1188
7L-9061	892
	895
7M-0706	1124
	1136
7M-7219	1208
	1211
7M-7410	753
	758
7M-8485	111
	581
	582
	586
	625
	627
	631
	652
	653
	656
7N-0718	198
	216
	►359
	515
	518
7N-2059	353
7N-3718	281
	285
	417
	422
	425
	430
	434
	438
	443
	448
	453
	457
	462
	466
	470
	511
	523
	527
	536
7N-5274	202
	207
	211
	215
7N-5683	46
7N-5876	397
	400
	403
	1281
	1284
	1286
	1288
	1290
	1293
	1295
	1298
7N-9017	260
7N-9801	370
7N-9943	289
7P-1577	1396
	1398
7R-2750	735
	745
7R-3029	251
	478
	485
	491
7S-0530	108
7S-4571	613
7S-5005	167
	185
	187
7S-6369	147
	148
7T-0020	289
7T-0570	652
	655
7T-0582	1180
	1182
	1184
	1186
	1188
	1199
7T-1159	600
	602
7T-1961	1375
	1377
7T-3451	356
7T-3454	356
7T-4003	1190
	1191
	1192
	1193
7T-4515	659
7T-4532	1115
	1118
	1121
7T-4897	592
	594
	596
	598
	624
7T-6365	252
	263
	542
	546
	550
	555
	558
7T-6496	581
	586
7T-6799	397
	400
	403
	407
	410
7T-7358	1194
	1195
7T-8272	892
7T-8273	892
7T-8891	1375
	1377
	1379
7T-9302	7
	8
	9
	10
	375
	1105
	1106
	1108
	1109
7T-9755	895
7T-9793	1077
	1092
	1095
7V-0446	160
	162
	752
	757
	1138
	1140
	1142
	1144
7V-5191	1208
	1211
7W-3872	40
	1116
	1117
	1119
7W-5340	104
	1446
7W-9737	114
7W-9738	114
7W-9740	114
7W-9930	114
7W-9943	336
	508
7X-0288	826
	838
	858
	862
7X-0289	826
	838
	858
	862
	864
	877
7X-0325	194
	195
	906
7X-0328	1435
	1437
7X-0333	712
7X-0334	1041
	1043
	1047
	1049
	1052
7X-0339	194
7X-0340	195
7X-0342	628
	632
7X-0346	194
	195
	881
7X-0350	881
7X-0354	1275
	1277
	1330
	1332
	1334
	1340
	1342
7X-0375	1275
	1277
	1330
	1332
	1334
	1340
	1342
7X-0386	1434
7X-0390	1435
7X-0423	1434
	1437
7X-0443	1434
	1437
7X-0448	194
	195
7X-0450	1434
7X-0452	1041
	1043
	1047
	1049
	1052
7X-0490	1092
	1096
	1204
7X-0510	79
7X-0521	35
7X-0550	475
	479
	485
	491
	495
	499
	503
	506
	691
	695
	1041
	1043
	1047
	1049
	1052
7X-0562	356
7X-0578	766
	1461
	1466
7X-0579	170
	475
	479
	485
	491
	495
	499
	503
	506
	1123
7X-0591	1365
7X-0605	1161
	1163
	1174
7X-0608	1075
7X-0613	173
	417
	425
	434
	438
	443

► PRIMARY REFERENCE

PART NUMBER INDEX

Part	Page
	448
7X-0618	691
	695
7X-0619	475
	479
	485
	491
	495
	499
	503
	506
7X-0818	62
	417
	422
	425
	430
	434
	438
	443
	448
	453
	457
	462
	466
	470
7X-0838	600
	602
7X-0871	876
7X-1387	690
	694
7X-1950	356
7X-1952	356
7X-2537	1116
	1117
	1119
	1123
7X-2538	1116
	1117
	1119
7X-2539	170
	173
7X-2543	1428
7X-2546	132
	978
	979
	980
	981
	982
	983
	984
	985
	986
	987
	988
	989
	990
	991
	992
	994
7X-2547	134
7X-2549	774
	775
	1428
	1431
7X-2552	150
	628
	632
7X-2553	62
	1396
	1398
7X-2556	1418
	1424
7X-2565	1054
	1396
	1398
	1415
	1418
	1424
7X-2566	190
7X-2575	684
	685
	714
	730
	732
	1428
7X-3373	356
7X-3392	1041
	1049
	1052
7X-4733	887
7X-4736	750
7X-4743	398
	401
	404
	408
	410
7X-4776	995
7X-6222	255
	397
	400
	404
	408
7X-6315	222
	223
	224
	232
	274
7X-7729	105
	106
	111
	132
	153
	203
	306
	412
	475
	479
	485
	491
	495
	499
	503
	506
	691
	695
	699
	720
	727
	728
	730
	732
	738
	740
	742
	753
	758
	762
	764
	766
	1461
	1466
7X-7731	577
7X-7739	1352
7X-7877	375
	379
	384
	385
	389
	393
	395
	1067
	1068
	1070
	1347
	1352
7X-7910	1247
	1250
7X-7911	1247
	1250
7X-7961	68
7Y-0589	475
	479
	486
	491
	495
	499
	503
	506
7Y-3951	250
	484
	490
7Y-3952	1067
	1068
	1070
8	
8B-1615	619
8C-0596	198
	212
	216
8C-2926	637
8C-3056	212
	532
8C-3089	625
	640
8C-3290	80
	82
8C-3309	867
	872
8C-3425	79
	890
	891
8C-3442	1125
	1129
	1133
8C-3445	100
8C-3446	100
	877
8C-3447	628
	632
8C-3451	876
8C-3681	136
	138
8C-3756	1076
	1199
	1203
8C-4436	712
8C-4586	1076
	1091
	1095
	1199
	1203
8C-4984	604
8C-5608	274
	283
	285
	287
8C-5897	1450
	1456
8C-5917	197
	202
	207
	211
	215
8C-6354	397
	400
	403
	407
8C-6512	884
	886
8C-6711	185
	187
8C-6712	142
8C-6857	475
	479
	486
	492
	495
	499
	503
	506
8C-6872	31
	33
8C-6913	1435
	1437
8C-6959	170
	173
8C-6965	652
	655
8C-7508	543
	547
	552
	556
	559
	562
8C-8422	146
	516
8C-8431	142
8C-8454	1174
8C-8585	285
	287
8C-8842	1434
8C-9987	658
8D-1268	1434
	1437
8D-1429	1076
	1199
	1203
8D-2414	780
8D-2428	780
8D-2429	780
8D-2638	780
8D-2811	577
	780
8D-3508	678
	680
	1136
8D-3786	690
	694
8D-3791	699
8D-5054	809
	813
8D-5467	1043
	1047
8D-5632	907
	908
	912
	915
	918
	921
	925
	928
	931

► PRIMARY REFERENCE

PART NUMBER INDEX

Part	Page
	934
	940
	946
	952
	958
	966
	972
8D-5633	907
	908
	912
	915
	918
	921
	925
	928
	931
	934
	940
	946
	952
	958
	966
	972
8D-5634	907
	908
	912
	915
	918
	921
	925
	928
	931
	934
	940
	946
	952
	958
	966
	972
8D-5636	907
	910
	912
	915
	918
	921
	925
	928
	931
	934
	937
	940
	943
	946
	949
	952
	955
	958
	962
	966
	969
	972
	975
8D-5637	907
	910
	912
	915
	918
	921
	925
	928
	931
	934
	937
	940
	943
	946
	949
	952
	955
	958
	962
	966
	969
	972
	975
8D-5640	907
	910
	912
	915
	918
	921
	925
	928
	931
	934
	937
	940
8D-5641	907
	910
	912
	915
	918
	921
	925
	928
	931
	934
	937
	940
	943
	946
	949
	952
	955
	958
	962
	966
	969
	972
	975
8D-5949	1041
	1043
	1047
	1049
	1052
8D-6687	776
8D-7086	778
8D-7225	778
8D-7423	808
8D-7424	808
	812
8D-7425	809
	813
8D-7426	808
	812
8D-7678	776
8D-7685	771
8D-7960	360
	1125
8D-7996	774
	775
8D-8168	1415
	1418
	1421
	1424
	1426
8D-8621	617
8D-8628	617
8D-8634	617
8D-8639	617
8D-8787	748
8D-8791	748
8D-8792	748
8D-8794	748
8D-8795	748
8D-8805	748
8D-8826	752
	757
8D-8852	907
	918
	931
	934
	940
8D-9092	719
	822
	831
	835
	842
8D-9296	1065
8D-9671	511
	523
	527
	536
	1253
	1255
8D-9688	712
8D-9689	712
8D-9718	615
8D-9738	615
8D-9756	615
8D-9784	613
8D-9814	773
8D-9815	773
8D-9882	1045
	1046
8D-9886	1045
	1046
8D-9887	1045
	1046
8D-9909	712
8E-1133	581
	586
8E-1143	650
	655
8E-1161	598
8E-1263	592
	594
	624
8E-1913	598
8E-5529	1393
	1394
	1395
8E-5734	594
	596
	598
	624
	625
8E-5736	598
	625
8E-5742	592
	594
	596
	598
	624
	625
8E-6208	1440
8E-6209	1440
8E-6570	655
8E-7713	656
8E-7714	655
8E-7791	1224
	1227
	1232
	1237
	1239
	1242
	1244
	1365
8E-8319	592
	594
	596
	598
	624
8E-9316	►598
	645
	646
8E-9474	660
8E-9893	655
8E-9894	652
	655
8E-9895	652
	655
8E-9896	652
	655
8E-9897	655
8F-0492	1227
	1232
	1239
	1244
8F-1434	336
	356
	1280
	1283
	1286
	1288
	1290
	1292
	1295
	1298
	1301
	1303
	1306
	1309
	1312
	1315
	1317
	1320
8F-1974	367
	417
	422
	425
	430
	434
	439
	443
	448
	453
	457
	462
	466
8F-3469	592
	594

► PRIMARY REFERENCE

PART NUMBER INDEX

Part	Page
	596
	598
	625
8F-4102	776
8F-6230	660
8F-6437	907
	910
	913
	916
	919
	922
	926
	929
	932
	935
	938
	941
	944
	947
	949
	953
	956
	959
	963
	967
	970
	973
	976
8F-7219	164
8F-9836	1054
	1058
8H-1728	1270
8H-2046	74
	97
	1447
	1449
8H-5244	95
8H-5303	359
8H-5306	359
8I-1362	738
	740
	742
	762
8J-0112	789
8J-1256	275
	283
8J-2331	902
8J-5299	1440
8J-5313	1431
	►1440
8J-6384	791
	795
8J-6815	995
	998
8K-0530	701
	702
8L-2786	74
	621
	623
8L-5008	764
	1461
8L-6005	752
	757
8L-6521	543
	547
	552
	556
	559
	562
	565
	567
	570
	574
8L-7905	1125
	1130
	1134
8L-8413	197
	198
	202
	207
	211
	215
	1208
	1211
	1454
8L-8598	897
	907
	912
	915
	918
	921
	925
	928
	931
	934
	940
	946
	952
	958
	966
	972
8M-2769	628
	632
8M-2770	275
	283
	371
	373
	417
	422
	425
	430
	434
	439
	443
	448
	453
	457
	462
	466
	470
8M-2773	122
	417
	422
	425
	430
	434
	439
	443
	448
	453
	457
	462
	466
	470
	475
	479
	486
	492
	495
	499
	503
	506
	511
	523
	527
	536
	753
	758
	817
	819
	1081
	1082
	1089
	1090
	1247
	1250
8M-3175	995
	998
8M-3368	1461
8M-3837	686
8M-4295	598
8M-4437	1001
	1003
	1005
	1007
	1009
	1011
	1013
	1015
	1017
	1019
	1021
	1023
	1025
8M-4438	600
	602
8M-5253	650
8M-5860	50
	51
8M-6176	1271
8M-6521	581
	586
8M-8489	637
8N-1540	250
	478
	484
	490
8N-1541	252
	263
	542
	546
	550
	555
	558
	565
8N-1546	252
	258
	259
	263
	378
	384
	389
	416
	420
	424
	429
	433
	442
	452
	461
	509
	542
	546
	550
	555
	558
8N-1547	252
	258
	259
	260
	263
	416
	420
	424
	429
	433
	442
	452
	461
	542
	546
	550
	555
	558
	1081
	1082
	1089
	1090
	1247
	1250
8M-3175	995
	998
8M-3368	1461
8M-3837	686
8M-4295	598
8M-4437	1001
	1003
	1005
	1007
	1009
	1011
	1013
	1015
	1017
	1019
	1021
	1023
	1025
8M-4438	600
	602
8M-5253	650
8M-5860	50
	51
8M-6176	1271
8M-6521	581
	586
8M-8489	637
8N-1540	250
	478
	484
	490
8N-1541	252
	263
	542
	546
	550
	555
	558
	565
8N-1546	252
	258
	259
	263
	378
	384
	389
	416
	420
	424
	429
	433
	442
	452
	461
	542
	546
	550
	555
	558
8N-1547	252
	258
	259
	260
	263
	416
	420
	424
	429
	433
	442
	452
	461
	542
	546
	550
	555
	558
8N-1725	197
	198
	202
	207
	211
	215
8P-5141	1076
	1091
	1095
	1199
	1203
8R-0126	1265
	1266
8R-1778	1195
8R-2054	1347
	1352
8R-2057	1347
	1352
8R-4519	1074
	1356
8S-0934	1345
8S-0948	198
	203
	212
	216
	532
8S-4790	1074
	1356
8S-5383	194
	195
8S-6109	1247
	1250
8S-6110	1247
	1250
8S-7566	1176
	1177
8S-7803	1208
	1211
8S-9092	617
8S-9129	581
	586
	640
8S-9130	581
	586
	640
8T-0076	821
	825
	829
	830
	834
	837
	841
	845
	849
	852
	855
	857
	861
	864
8T-0081	169
	172

► PRIMARY REFERENCE

PART NUMBER INDEX

Part	Page
8T-0100	65
	94
	98
8T-0119	169
	173
8T-0122	518
	531
8T-0207	1421
	1426
8T-0226	71
8T-0276	100
8T-0292	147
	148
8T-0293	89
8T-0328	160
	162
	356
	1138
	1140
	1142
	1144
	1350
8T-0336	808
	812
8T-0337	1078
	1092
	1096
8T-0355	640
8T-0372	746
	892
	895
8T-0389	198
	203
	207
	212
	216
	291
	292
	293
	295
	297
	752
	757
	1428
	1431
8T-0639	604
8T-0643	61
8T-0644	127
8T-0667	799
8T-0722	683
8T-1117	136
	138
8T-1159	176
	177
	178
8T-1174	1126
	1130
	1134
8T-1482	1428
8T-1683	771
	826
	838
	858
	862
	874
8T-1687	821
	825
	830
	834
	837
	841
	846
	849
	852
	855
	857
	861
	921
	958
	962
8T-1715	172
8T-2275	904
8T-2353	334
	336
8T-2501	228
	229
	230
	231
	600
	602
	822
	831
	849
	852
	1267
8T-2502	750
	822
	831
	849
	852
8T-2530	1253
	1255
8T-2561	691
	695
	1126
	1130
	1134
8T-2861	748
8T-2901	1377
8T-3282	56
	789
	801
	803
	1421
	1426
8T-3426	275
	281
	285
	1228
	1233
	1240
	1245
8T-3490	103
	138
	140
	198
	207
	212
	216
	510
	586
	604
	606
	720
	729
	730
	732
	762
	834
	841
	845
	851
	854
	1076
	1091
	1096
	1157
	1159
	1169
	1199
	1203
	1250
	1365
	1367
8T-3612	498
	732
8T-3653	79
8T-3666	60
8T-4121	31
	33
	62
	80
	82
	103
	105
	106
	111
	117
	122
	134
	136
	138
	140
	142
	150
	160
	162
	170
	173
	198
	203
	208
	213
	216
	275
	281
	283
	291
	292
	293
	306
	355
	367
	371
	373
	398
	401
	404
	408
	410
	417
	422
	425
	430
	434
	439
	443
	448
	453
	457
	462
	466
	470
	475
	479
	486
	492
	495
	499
	503
	506
	511
	516
	519
	523
	527
	532
	536
	581
	587
	600
	602
	610
	611
	628
	632
	704
	706
	708
	710
	715
	730
	736
	737
	738
	740
	742
	750
	753
	758
	762
	764
	766
	817
	819
	822
	835
	838
	842
	846
	849
	852
	855
	858
	862
	868
	872
	874
	904
	907
	910
	912
	916
	918
	922
	926
	929
	932
	935
	938
	941
	943
	947
	949
	953
	955
	959
	963
	967
	970
	973
	976
	1100
	1101
	1116
	1117

PART NUMBER INDEX

Part	Page	Part	Page	Part	Page	Part	Page
	1119		1396		136		952
	1122		1398		138		955
	1138		1415		142		959
	1140		1418		160		963
	1142		1424		162		966
	1144	8T-4133	122		170		969
	1157		132		173		972
	1159		134		198		975
	1161		136		203		1119
	1163		138		213		1122
	1165		140		216		1138
	1167		142		353		1140
	1169		153		417		1142
	1172		160		422		1144
	1174		162		425		1161
	1207		203		430		1163
	1215		208		434		1174
	1216		213		439		1247
	1217		216		443		1251
	1224		306		448		1461
	1228		371		453		1466
	1233		373		457	8T-4137	106
	1237		417		462		111
	1239		422		466		122
	1242		475		470		136
	1244		479		511		138
	1247		495		516		142
	1250		499		519		150
	1253		511		523		170
	1255		516		527		198
	1258		519		532		203
	1261		523		536		208
	1262		582		600		213
	1263		600		602		216
	1265		610		610		275
	1266		611		628		281
	1268		691		632		283
	1269		695		691		306
	1379		736		695		367
	1461		737		699		371
	1466		738		720		373
8T-4122	194		740		730		398
	195		742		732		401
	881		750		736		404
	1275		753		737		408
	1277		758		738		410
	1330		817		740		417
	1332		819		742		422
	1334		822		753		425
	1340		835		758		430
	1342		852		762		434
	1415		855		764		439
	1418		868		766		443
	1421		874		817		448
	1424		1122		819		453
	1426		1126		838		457
8T-4123	80		1130		858		462
	82		1134		868		466
	190		1138		872		470
	475		1140		907		475
	479		1142		910		479
	486		1144		912		486
	492		1161		915		492
	495		1163		918		495
	499		1174		922		499
	503		1207		925		503
	506		1247		928		506
	1058		1250		931		511
	1060		1258		934		516
	1415		1262		937		519
	1418		1263		940		523
	1424		1461		943		527
8T-4131	1058	8T-4136	36		946		532
	1060		80		949		536

► PRIMARY REFERENCE

PART NUMBER INDEX

Part	Page
	582
	587
	691
	695
	704
	706
	708
	710
	715
	720
	730
	732
	753
	758
	817
	819
	858
	862
	868
	872
	874
	1116
	1117
	1119
	1157
	1159
	1165
	1167
	1169
	1172
	1215
	1216
	1217
	1247
	1251
	1253
	1255
	1258
	1262
	1263
8T-4138	142
	275
	283
	516
	519
	532
	704
	1001
	1003
	1005
	1007
	1009
	1011
	1013
	1015
	1017
	1019
	1021
	1023
	1025
	1218
	1220
	1222
	1383
8T-4139	720
	1041
	1049
	1052
	1396
	1398
8T-4167	80
	82
	1058
	1060
8T-4171	1077
	1092
	1096
	1200
	1204
	1383
	1385
	1386
	1388
8T-4172	835
	855
	984
	985
	992
	994
8T-4175	1415
8T-4176	704
8T-4179	203
	213
8T-4181	1157
	1159
	1165
	1167
	1169
	1172
8T-4182	160
	162
	764
	835
	838
	842
	846
	855
	858
	1138
	1140
	1142
	1144
	1228
	1233
	1239
	1244
	1461
8T-4183	691
	695
	701
	702
	704
	723
	726
8T-4184	134
	682
	729
8T-4185	62
	410
	868
	872
	1258
	1261
	1262
	1263
	1265
	1266
	1268
	1269
8T-4186	154
	173
	198
	213
	216
	610
	764
	978
	979
	980
	983
	986
	1258
	1262
	1263
	1461
8T-4189	311
	312
	587
	1001
	1003
	1005
	1007
	1009
	1011
	1013
	1015
	1017
	1019
	1021
	1023
	1025
8T-4191	103
	142
	355
	412
	475
	479
	486
	492
	495
	499
	503
	506
	1379
8T-4194	132
	475
	479
	486
	492
	495
	499
	503
	506
	691
	695
	1260
8T-4195	31
	33
	117
	122
	136
	150
	153
	170
	173
	198
	203
	208
	213
	216
	417
	422
	511
	523
	527
	536
	587
	600
	610
	611
	628
	632
	691
	695
	730
	732
	750
	753
	758
	764
	822
	835
	852
	855
	858
	862
	904
	907
	910
	913
	916
	919
	922
	926
	929
	932
	935
	937
	941
	943
	947
	949
	953
	956
	959
	963
	967
	970
	973
	975
	1122
	1138
	1140
	1142
	1144
	1207
	1228
	1233
	1239
	1244
	1247
	1251
	1253
	1255
	1461
8T-4196	62
	80
	82
	122
	138
	140
	153
	154
	160
	162
	170
	173
	198
	203
	216
	511
	516
	519
	523
	537
	611

► PRIMARY REFERENCE

PART NUMBER INDEX

Part	Page
	628
	632
	730
	732
	846
	849
	852
	855
	868
	872
	1126
	1130
	1134
	1138
	1140
	1142
	1144
	1247
	1251
8T-4198	198
	203
	213
	216
	1431
8T-4200	170
	353
	587
	606
8T-4205	192
	252
	263
	288
	314
	317
	356
	388
	511
	515
	516
	519
	523
	527
	532
	536
	543
	547
	551
	552
	555
	556
	559
	562
	565
	567
	570
	574
	1077
	1092
	1096
	1200
	1204
	1350
8T-4223	31
	33
	170
	194
	195
	203
	213
	314
	317
	422
	430
	453
	457
	462
	466
	470
	475
	479
	486
	492
	495
	499
	503
	506
	652
	656
	701
	702
	704
	712
	720
	724
	725
	738
	740
	742
	762
	773
	774
	775
	778
	822
	831
	835
	842
	846
	849
	852
	855
	868
	872
	881
	906
	1043
	1047
	1260
	1418
	1424
	1435
	1437
8T-4224	41
	62
	108
	192
	290
	294
	306
	319
	320
	321
	322
	353
	417
	425
	430
	434
	439
	443
	448
	453
	457
	462
	466
	470
	475
	480
	486
	492
	495
	499
	503
	506
	541
	587
	606
	628
	632
	691
	695
	738
	740
	742
	753
	758
	766
	1001
	1003
	1005
	1007
	1009
	1011
	1013
	1015
	1017
	1019
	1021
	1023
	1025
	1068
	1070
	1116
	1117
	1119
	1225
	1233
	1237
	1240
	1242
	1244
	1323
	1354
	1466
8T-4226	140
	160
	162
	511
	523
	527
	536
	753
	758
	1138
	1140
	1142
	1144
8T-4244	314
	317
	422
	430
	453
	457
	462
	466
	470
	475
	480
	486
	492
	495
	499
	503
	506
	691
	695
	704
8T-4647	228
	229
	230
	231
	417
	422
	425
	430
	434
	439
	443
	448
	453
	457
	462
	466
	470
	1267
8T-4648	822
	831
	835
	842
	846
	849
	852
	855
8T-4750	892
	895
8T-4776	606
8T-4835	712
8T-4895	132
	134
8T-4896	228
	229
	230
	231
	234
	236
	238
	240
	242
	244
	246
	283
	314
	317
	375
	379
	384
	389
	398
	401
	404
	408
	417
	422
	425
	430
	434
	439
	443
	448
	453
	457
	462
	466
	470
	475
	480

► PRIMARY REFERENCE

PART NUMBER INDEX

Part	Page
	486
	492
	495
	499
	503
	506
	511
	523
	527
	536
	600
	602
	619
	628
	632
	687
	750
	753
	758
	780
	809
	813
	822
	826
	831
	835
	838
	842
	846
	849
	852
	855
	858
	862
	864
	877
	978
	980
	981
	982
	983
	989
	990
	991
	992
	1081
	1082
	1089
	1090
	1138
	1140
	1142
	1144
	1233
	1240
	1244
	1267
	1277
	1330
	1332
	1334
	1340
	1342
	1375
	1377
	1379
8T-4908	36
	62
	80
	136
	138
	628
	632
	691
	695
	738
	740
	742
	766
	1466
8T-4910	1418
	1424
8T-4956	868
	872
8T-4970	306
8T-4971	543
	547
	552
	556
	559
	562
	565
	567
	570
	574
8T-4983	627
	631
8T-4994	822
	831
	835
	842
	846
	849
	852
	855
	890
	891
	1435
	1438
8T-5005	33
	587
	835
	842
	846
	855
	1247
	1251
8T-5030	637
8T-5050	169
8T-5082	877
8T-5346	261
	483
	489
8T-5361	684
	685
	714
	1435
	1438
8T-5401	1152
	1224
	1227
	1232
	1332
	1334
8T-5412	314
	317
	422
	430
	453
	457
	462
	466
	470
8T-5429	868
8T-5436	581
	587
8T-5439	701
	702
8T-5890	874
8T-6381	80
	82
8T-6408	979
	984
	985
	992
	994
8T-6430	80
	82
	701
8T-6466	31
	134
	140
	198
	203
	208
	213
	216
	511
	523
	527
	536
	628
	632
	1247
	1251
8T-6685	1428
8T-6757	29
	764
	1462
8T-6765	581
	587
8T-6868	31
	33
	868
	872
8T-6869	170
	173
	475
	480
	486
	492
	495
	499
	503
	506
	606
	1017
	1025
8T-6912	132
8T-6974	764
	1462
8T-7008	776
	822
	831
	835
	842
	846
	849
	852
	855
8T-7044	152
8T-7087	1260
8T-7329	606
8T-7547	173
	294
	353
8T-7565	1347
	1352
8T-7566	1279
8T-7876	892
	895
8T-7934	199
	203
	213
	216
8T-7950	56
8T-7971	703
8T-8442	94
	652
	655
8T-8569	356
8T-8729	7
	8
	9
	10
	191
	240
	242
	244
	246
	250
	252
	254
	255
	256
	257
	258
	259
	260
	261
	262
	263
	265
	267
	270
	272
	274
	277
	279
	288
	289
	295
	297
	298
	299
	300
	301
	302
	303
	304
	306
	309
	313
	316
	358
	366
	367
	368
	370
	373
	378
	379
	383
	384
	388
	389
	391
	393
	395
	397
	398
	400
	401
	403
	404
	407

PART NUMBER INDEX

Part	Page	Part	Page	Part	Page	Part	Page
	408		270		8		460
	410		272		9		461
	415		274		10		465
	416		277		234		469
	420		279		236		477
	421		309		238		478
	424		313		240		483
	428		316		242		484
	429		352		244		485
	433		364		246		489
	438		371		249		490
	442		373		250		491
	447		378		251		509
	451		379		252		510
	452		383		254		515
	456		384		255		518
	460		388		256		521
	461		389		257		522
	465		393		258		526
	469		395		259		531
	484		398		260		535
	490		401		262		542
	515		403		263		546
	518		407		264		550
	519		408		265		555
	521		415		266		558
	522		416		267		565
	526		420		268		604
	532		421		270		1273
	535		424		272		1280
	536		428		274		1283
	542		429		277		1286
	546		433		279		1288
	550		442		281		1290
	555		451		295		1292
	558		452		297		1295
	604		456		298		1298
	649		460		299		1301
	745		461		309		1303
	1067		465		313		1306
	1068		469		316		1309
	1070		484		331		1312
	1077		490		332		1317
	1200		515		368		1320
	1247		518		369		1383
	1250		521		373		1385
	1280		526		375		1386
	1283		532		378		1388
	1286		535		379	8T-8827	203
	1288		542		383		212
	1290		546		384		532
	1292		550		389	8T-8915	687
	1295		555		391	8T-8917	738
	1298		558		393		740
	1301		564		395		742
	1303		604		397		762
	1306		649		398		881
	1309		1273		400	8T-8919	712
	1312		1280		401	8T-8924	1434
	1317		1283		403		1438
	1320		1286		404	8T-8987	995
8T-8730	250		1288		407		998
	252		1290		408	8T-9006	1125
	254		1292		416		1130
	255		1295		420		1134
	257		1298		421	8T-9041	170
	258		1301		424		173
	259		1303		428		922
	260		1306		429		959
	261		1309		433		963
	262		1312		442	8T-9043	907
	263		1317		451		910
	265		1320		452		912
	267	8T-8737	7		456		915

► PRIMARY REFERENCE

PART NUMBER INDEX

Part	Page
	918
	922
	925
	928
	931
	934
	937
	940
	943
	946
	950
	952
	955
	959
	963
	966
	969
	972
	975
	1352
8T-9056	753
	758
8T-9364	511
	523
	527
	536
8T-9378	822
	826
	831
	835
	838
	842
	846
	849
	852
	855
	858
	862
8T-9381	1074
	1345
	1356
8T-9389	890
	891
8T-9391	779
8T-9655	169
	173
	219
	416
	420
	424
	428
	433
	438
	442
	447
	451
	456
	460
	465
	469
	474
	477
	483
	489
	494
	498
	502
	505
8T-9658	474
	480
	483
	489
8T-9757	197
	202
	207
	211
	215
8T-9850	256
	378
	379
	383
	384
	388
	389
8T-9884	356
8U-2622	288
	298
	299
	302
8V-3208	1347
8V-3273	613
8V-8082	871
8W-0220	826
	838
8W-0225	876
8W-0302	825
	837
	857
	861
8W-0456	915
	928
	966
	969
	972
	975
8W-0663	1434
	1437
8W-0681	1400
8W-0684	1400
8W-0789	748
8W-0934	1375
	1377
8W-0935	1375
	1377
8W-1592	641
8W-1749	1041
	1043
	1047
	1049
	1052
8W-1752	1043
	1047
8W-1753	1043
	1047
8W-2290	3
	▶780
	816
8W-2307	617
8W-2737	3
	▶782
	816
8W-2842	774
	775
8W-2913	▶778
	1432
	1433
8W-3166	867
	871
8W-3653	1041
8W-3656	1041
8W-3902	704
8W-4193	821
	830
	834
	841
	845
	848
	851
	854
8W-4194	821
	830
	834
	841
	845
	848
	851
	854
8W-4652	577
8W-4653	577
8W-4979	617
8W-4980	4
	▶617
	636
8W-4981	617
8W-5111	613
8W-5227	1043
8W-5279	613
8W-5293	577
8W-5578	615
8W-5586	615
8W-5587	613
	▶615
8W-5589	615
8W-5597	1434
	1437
8W-5621	5
	636
	▶641
8W-5651	158
8W-5870	4
	▶703
	816
8W-6061	1220
8W-6476	578
8W-6497	578
8W-6626	701
	702
8W-7915	766
	1461
	1466
8W-8496	766
	1461
	1466
8W-8527	508
	521
	526
	535
	752
	757
	874
	1247
	1250
8W-8528	736
	737
	750
	762
	817
	819
	1247
	1250
8W-8575	766
	1461
8W-8903	752
	757
8W-8909	203
	213
	511
	523
	527
	536
8W-9566	674
8W-9594	675
8X-0674	1275
	1277
	1330
	1332
	1334
	1340
	1342
8X-1032	724
	725
8X-1135	1375
	1377
8X-1205	615
8X-1206	613
8X-1805	194
	195
8X-1853	228
	229
	230
	231
	1267
8X-1904	1125
	1129
	1133
8X-1907	1126
	1130
	1134
8X-1908	1125
	1129
8X-1911	1126
	1129
8X-1913	1125
	1129
	1133
8X-1914	1125
	1129
	1133
8X-1921	1125
	1129
8X-1943	▶776
	1051
	1392
8X-1946	3
	▶777
	816
8X-1948	3
	▶774
	▶775
	816
8X-1968	4
	816
	▶876
8X-2160	1125
	1129
	1133
8X-2161	1125
	1129
8X-2226	706
	708
	1218
	1220
8X-2228	1380
8X-2305	613
8X-2308	613
8X-2310	615
8X-2316	613
8X-2379	4
	889
	▶891
8X-2385	1103
	1104
	1111
	1112
	1113
	1325

▶ PRIMARY REFERENCE

PART NUMBER INDEX

Part	Page
	1326
	1327
	1339
	▶1380
8X-2556	1383
8X-2646	158
8X-2650	▶158
	752
	757
8X-2663	1383
8X-2680	752
	757
8X-2795	13
	19
	1103
	1104
	▶1270
	1325
	1326
	1327
	1328
	1330
	1332
	1334
8X-2881	1415
	1418
	1421
	1424
	1426
8X-2893	1125
	1129
	1133
8X-2913	704
	706
	708
	1218
	1220
	1222
8X-2925	1083
	1084
	1085
	1086
	▶1195
8X-2968	617
8X-3261	160
	162
8X-3276	617
8X-3364	617
8X-3395	617
8X-3434	578
8X-3435	578
8X-3789	1126
	1129
8X-3806	1169
	1172
8X-3938	1157
	1159
	1165
	1167
	1169
	1172
8X-3951	1125
	1129
	1133
8X-3965	1125
	1129
	1133
8X-4243	1157
	1169
8X-4244	1159
	1172
8X-4245	1157
	1159
	1165
	1167
	1169
	1171
	1172
8X-4262	1157
	1169
8X-4263	1159
	1172
8X-4277	907
	912
	915
	918
	921
	925
	928
	931
	934
	940
	946
	952
	958
	966
	972
8X-4317	▶1169
	1174
8X-4318	▶1172
	1174
8X-4413	1110
	▶1174
	1336
	1338
8X-4448	1157
	1159
	1165
	1167
	1169
	1172
8X-4467	890
	891
8X-4644	1415
	1418
	1421
	1424
	1426
8X-4865	615
8X-4869	615
8X-4879	1124
	1136
8X-4884	1415
	1418
	1421
	1424
	1426
8X-5006	641
	▶647
8X-5021	1415
	1418
	1421
	1424
	1426
8X-5028	1415
8X-5044	647
8X-5102	1178
	1179
8X-5121	627
	631
8X-5123	1125
	1129
	1133
8X-5147	678
	680
8X-5153	313
	316
	550
	554
	561
	573
8X-5154	313
	316
	550
	554
	561
	573
8X-5155	691
	695
8X-5160	750
8X-5414	1227
	1232
	1239
	1244
8X-5489	511
	523
	527
	536
8X-5492	600
	602
8X-5498	907
8X-5499	912
	915
	918
	921
	925
	928
	931
	934
	940
	946
	952
	958
	966
	972
8X-5536	1076
	1091
	1199
	1203
	1365
8X-5538	1076
	1091
	1199
	1203
	1365
8X-5540	1076
	1091
	1199
	1203
	1365
8X-6070	▶864
	1432
	1433
8X-6075	1434
8X-6131	1275
	1277
8X-6296	314
	317
	552
	556
	562
	574
8X-6419	704
8X-6475	704
	706
	1155
8X-6999	1227
	1232
	1239
8X-7317	627
	631
8X-7603	753
	758
8X-7820	870
	871
8X-7845	8
	9
	10
	1086
	1368
8X-7956	1054
	1058
8X-7974	867
	871
8X-7975	876
8X-8055	1218
	1220
	1222
8X-8096	1124
	1136
8X-8351	1153
	1218
8X-8376	617
8X-8450	752
	753
	757
	758
8X-8505	704
	706
	708
	710
8X-8813	866
	870
	871
8X-8916	627
	631
8X-9349	1375
	1377
8X-9405	1375
	1377
8X-9464	704
8X-9675	1106
	1109
	1325
	1326
	1327
	1328
	▶1377
8X-9680	▶1379
	1381
	1382
8X-9884	1215
	1216
8Y-1816	31
8Y-3795	1058
	1060
8Y-4005	▶1352
	1356
8Y-4030	1346
8Y-4398	1157
	1159
	1165
	1167
	1169
	1172
8Y-4399	1159
	1167
	1172
8Y-4400	1157
	1165
	1169
8Y-4401	1157
	1159
	1165
	1167
	1169
	1172

▶ PRIMARY REFERENCE

PART NUMBER INDEX

Part	Page
8Y-4408	1375
	1377
	1379
8Y-4409	1377
8Y-4489	1060
8Y-4619	1157
	1159
	1165
	1167
	1169
	1172
8Y-4620	1157
	1159
	1165
	1167
	1169
	1172
8Y-4801	1157
	1159
	1165
	1167
	1169
	1172
8Y-5944	1371
	1373
8Y-6012	1371
	1373
8Y-6024	1371
	1373
8Y-6041	1208
	1211
8Y-6045	1208
	1211
8Y-6046	1208
	1211
8Y-6047	1208
	1211
8Y-6060	1208
	1211
8Y-6062	1208
	1211
8Y-6063	1208
	1211
8Y-6064	1208
	1211
8Y-6066	1208
	1211
8Y-6067	1208
	1211
8Y-6068	1208
	1211
8Y-6069	1208
	1211
8Y-6277	1356
8Y-6852	1348
	1355
	►1356
8Y-6859	1208
	1211
8Y-6860	1208
	1211
8Y-7119	82
8Y-9603	355

9

9B-0143	613
9B-7233	313
	316
	542
	546
	550
	551
	554
	555
	558
	561
	564
	565
	567
	570
	573
	574
	1076
	1091
	1096
	1199
	1203
9B-7237	822
	826
	831
	835
	838
	842
	846
	849
	852
	855
	858
	862
	907
	910
	912
	915
	918
	922
	925
	928
	931
	934
	937
	940
	943
	946
	950
	952
	955
	959
	963
	966
	969
	972
	975
	1247
	1251
9C-1587	1352
9C-2177	1072
9C-2399	868
	871
9C-5344	199
	213
	216
	511
	515
	627
	631
	867
	871
9C-5347	1072
9C-5928	1258
	1262
	1263
9C-8895	326
	327
	328
	329
	1039
9C-9467	628
	632
9D-0178	699
9D-0953	821
	830
	834
	841
	845
	848
	851
	854
	876
9D-1491	808
	812
9D-1530	1415
	1418
	1421
	1424
	1426
9D-1589	1275
	1277
	1330
	1332
	1334
	1340
	1342
9D-2753	1415
	1418
	1421
	1424
	1426
9D-3241	748
9D-3242	748
9D-3306	613
9D-3311	699
9D-3523	577
9D-3767	730
9D-3769	410
9D-4029	748
9D-5196	678
	680
9D-5516	1434
	1437
9D-5567	678
	680
9D-5659	678
	680
9D-6164	678
	680
9D-6584	699
	881
9D-6663	766
	1461
	1466
9D-7085	748
9D-7972	748
9D-8121	158
9D-8285	1041
	1049
	1052
9D-9257	699
9D-9797	577
9F-1399	613
9F-2247	617
9F-2978	703
9F-5644	359
9F-6705	995
	998
9G-0003	197
	202
	207
	211
	215
9G-0004	197
	202
	207
	211
	215
9G-1307	281
	283
	285
	287
9G-1950	1076
	1091
	1095
	1199
	1203
9G-2673	1224
	1237
	1242
9G-2758	197
	215
	515
	518
9G-2991	613
9G-3695	378
	383
	388
	1077
	1200
9G-4336	203
9G-4343	203
	212
	515
	518
	531
9G-4344	203
	212
	531
9G-5211	577
9G-7101	1247
	1250
9G-7132	652
	655
9G-8909	202
	211
	215
9G-9314	252
	263
	542
	546
	550
	554
	558
	564
9H-6454	904
9J-0090	1428
9J-0403	1001
	1003
	1005
	1007
	1009
	1011
	1013
	1015
	1017
	1019
	1023
	1025
9J-0404	1001
	1003
	1005
	1007
	1009
	1011
	1013
	1015

► PRIMARY REFERENCE

PART NUMBER INDEX

Part	Page
	1017
	1019
	1021
	1023
	1025
9J-1979	904
9J-3047	904
9J-3657	1394
9J-4963	887
9J-5498	748
9J-8783	752
	757
	1138
	1140
	1142
	1144
9K-7951	667
	676
	677
9L-1566	309
	416
	420
	424
	428
	433
	438
	442
	447
	451
	456
	460
	465
	469
	474
	477
	483
	489
	494
	498
	502
	505
9L-1630	62
9L-3560	738
	740
	742
	762
9L-6331	416
	420
	424
	428
	433
	438
	442
	447
	451
	456
	460
	465
	469
9L-6770	192
9L-9068	660
9L-9814	1356
9M-0402	764
	1462
9M-1328	1401
9M-1853	907
	910
	912
	915
	918
	921
	925
	928
	931
	934
	937
	940
	943
	946
	949
	952
	955
	958
	962
	966
	969
	972
	975
9M-1974	39
	40
	66
	72
	94
	98
	100
	104
	108
	120
	124
	129
	147
	148
	219
	412
	650
	1180
	1182
	1184
	1186
	1188
9M-2042	582
	587
9M-2092	577
9M-2110	650
9M-2904	102
9M-4335	746
9M-4594	764
	1461
9M-4972	753
	758
9M-5590	1126
	1130
	1134
9M-5732	1359
	1361
	1364
9M-5733	389
9M-7394	904
9M-8406	475
	480
	486
	492
	495
	499
	503
	506
	738
	740
	742
	762
	1077
	1092
	1096
	1200
	1204
9M-8662	1280
	1283
	1295
	1298
	1303
	1307
	1315
	1321
9N-0869	65
	219
9N-1995	1227
	1232
	1239
	1244
9N-4155	637
9N-4156	637
9N-4158	637
9N-4159	637
9N-4161	637
9N-4162	637
9N-4163	637
9N-4498	655
9N-4500	655
9N-6152	100
9P-0356	647
9P-2369	1375
	1377
9P-2553	543
	547
	552
	556
	559
	562
	565
	567
	570
	574
9P-7121	190
9P-9150	604
	606
	660
9R-2613	330
9R-2620	398
	401
	404
	408
	410
	688
	689
	1224
	1228
	1233
	1237
	1242
9R-2672	211
	234
	236
	238
	240
	242
	244
	246
	327
	328
	330
	498
	1040
	1060
9R-8870	825
	837
	857
	861
9R-9806	252
	263
	542
	546
	550
	555
	558
	564
9R-9866	1060
9S-1240	194
	195
9S-2544	1347
	1352
9S-4167	172
9S-4180	978
	979
	980
	981
	982
	983
	984
	985
	986
	987
	988
	989
	990
	991
	992
	994
9S-4181	620
	632
9S-4182	621
9S-4183	895
	996
	999
9S-4185	84
	173
	632
	831
	842
	845
	848
	892
9S-4189	995
	998
9S-4190	173
	643
9S-4191	170
	336
	621
	627
	631
	660
	1027
9S-4968	1281
	1284
	1286
	1288
	1290
	1292
	1296
	1299
	1301
	1304
	1306
	1309
	1312
	1315
	1317
	1320
9S-7706	752
	757
9S-8001	606
	884
	886
	995
	998
9S-8002	52

► PRIMARY REFERENCE

PART NUMBER INDEX

Part	Page
	54
	336
	655
	746
	995
	998
9S-8003	884
	886
	995
	998
9S-8004	52
	54
	148
	581
	586
	621
	650
	652
	656
9S-8005	581
	586
	606
	623
	902
	1001
	1003
	1005
	1007
	1009
	1011
	1013
	1015
	1017
	1019
	1021
	1023
	1025
9S-8006	48
	52
	54
	170
	173
	581
	586
	746
9S-8008	580
9S-8009	995
	998
9S-9334	52
	54
	582
	586
9T-1633	892
9T-1636	892
	895
9T-1652	892
	895
9T-1699	892
	895
9T-1710	892
	895
9T-1857	1027
9T-2186	1027
9T-2197	892
9T-2388	801
	803
9T-2446	785
9T-2457	789
9T-3727	801
	803
9T-4211	797
	799
9T-4215	783
	785
9T-5241	1184
	1186
	1188
9T-5934	995
	998
9T-5935	995
	998
9T-5957	867
	871
	►995
	►998
9T-6001	1367
9T-7750	1027
9T-7754	899
9T-7755	899
9T-7756	899
9T-7757	899
9T-7759	899
9T-7761	899
9T-7765	898
9T-7767	898
9T-7769	898
9T-7771	898
9T-7773	898
9T-7774	898
9T-7775	895
9T-8051	887
9T-8053	887
9T-8054	887
9T-8056	887
9T-8058	887
9T-8059	887
9T-8061	887
9T-8065	887
9T-8067	887
9T-8069	887
9T-8785	773
	►785
9T-9040	805
9T-9071	887
9T-9072	887
9U-8067	652
	655
9U-8068	652
	655
9U-8069	652
	656
9U-8263	1215
	1216
	1217
9U-8620	652
	655
9U-8668	655
9U-8669	650
	655
9U-8815	592
	594
9U-9282	652
	655
9U-9316	652
	655
9U-9595	655
9U-9995	592
9V-3043	1072
9V-7437	1347
	1352
9V-7440	1072
	1347
9V-7446	1356
9V-7447	1356
9V-7453	1356
9V-7454	1356
9V-7458	1356
9V-7943	1072
9V-8788	1347
9V-8789	1347
9W-0844	250
	252
	254
	256
	258
	259
	262
	263
	265
	308
	309
	313
	316
	379
	384
	389
	398
	401
	403
	407
	416
	421
	424
	428
	429
	433
	442
	451
	452
	456
	460
	461
	465
	469
	478
	484
	490
	509
	510
	521
	522
	526
	535
	542
	546
	550
	555
	558
	1077
	1200
9W-0852	250
	251
	252
	256
	258
	259
	262
	263
	308
	309
	313
	316
	323
	324
	325
	378
	379
	383
	384
	389
	393
	395
	416
	421
	424
	428
	429
	433
	442
	451
	452
	456
	460
	461
	465
	469
	478
	484
	490
	509
	510
	521
	522
	526
	535
	542
	546
	550
	554
	558
	561
	564
	567
	570
	573
	1083
	1084
	1085
	1086
	1087
	1196
	1197
9W-0898	655
9W-1441	313
	316
	319
	320
	322
	375
	378
	383
	388
	542
	546
	550
	554
	558
	561
	564
	567
	570
	573
	1083
	1084
	1085
	1086
	1087
	1196
	1197
9W-1442	228
	229
	230
	231
	275
	283
	285
	287
	313
	316
	542
	546
	550
	554
	558

► PRIMARY REFERENCE

PART NUMBER INDEX

Part	Page
	561
	564
	567
	570
	573
	735
	745
	1190
	1191
	1192
	1193
	1267
	1386
	1388
9W-1446	474
	477
	483
	489
	494
	498
	502
	505
9W-1454	581
	586
9W-1795	260
9W-1951	397
	400
	404
	408
9W-2029	592
	594
	624
9W-2032	252
	263
	542
	546
	550
	554
	558
	564
9W-2033	252
	263
	379
	384
	389
	542
	546
	550
	554
	558
	564
9W-2312	▶1414
9W-3072	1215
	1216
	1217
9W-4430	746
9W-4431	746
9W-4453	746
9W-5132	645
	646
	▶746
9W-5134	▶640
	645
	646
9W-6465	581
	586
9W-6467	598
	624
9W-6582	80
	82
9W-6584	80
	82
9W-7038	581
	587
9W-7385	80
	82
9W-7388	80
9W-7410	655
9W-7412	652
	656
9W-9371	592
	594
	625
9W-9905	592
	594
	596
	598
	624
9W-9920	80
	82
9X-0141	250
	265
	490
	509
9X-0196	258
	259
	416
	424
	429
	433
	442
	452
	461
	1067
	1068
	1070
9X-0261	169
	172
9X-0262	334
	336
9X-0844	398
9X-1046	375
	379
	384
	389
	543
	547
	552
	556
	559
	562
	565
	567
	570
	574
	688
	689
	1126
	1130
	1134
	1190
	1191
	1192
	1193
9X-1054	262
	401
	407
	415
	510
	522
9X-1056	254
	262
	398
	401
	403
	407
	415
	510
	522
9X-1343	250
	258
	259
	416
	421
	424
	429
	433
	442
	452
	461
	478
	484
	490
9X-1813	306
	341
	346
	348
	349
	352
	358
	362
	363
	365
	366
	508
9X-2027	85
	285
	287
	1261
	1268
	1269
9X-2032	234
	236
	238
	240
	242
	244
	246
9X-2040	1077
	1092
	1096
	1200
	1204
	1365
9X-2041	1077
	1124
	1136
	1199
	1203
	1224
	1228
	1233
	1237
	1240
	1242
	1244
	1346
	1348
	1355
	1359
	1360
	1361
	1362
	1364
	1365
	1367
	1369
9X-2042	375
	379
	384
	393
	395
	543
	547
	552
	556
	559
	562
	565
	567
	570
	574
	719
	1124
	1126
	1130
	1134
	1136
	1157
	1159
	1165
	1167
	1169
	1172
	1224
	1233
	1237
	1240
	1242
	1244
	1375
9X-2043	314
	317
	704
	706
	708
	710
	1102
	1124
	1136
	1146
	1147
	1148
	1151
	1153
	1154
	1155
	1156
	1176
	1177
	1178
	1179
	1218
	1220
	1222
	1224
	1228
	1232
	1233
	1237
	1239
	1240
	1242
	1244
	1281
	1284
	1296
	1299
	1304
	1307
	1315
	1321
	1332
	1334
	1340
	1342

▶ PRIMARY REFERENCE

PART NUMBER INDEX

Part	Page
9X-2044	1130
9X-2045	1077
	1092
	1096
	1124
	1136
	1157
	1159
	1161
	1163
	1165
	1167
	1169
	1172
	1174
	1178
	1179
	1191
	1193
	1200
	1204
	1224
	1228
	1233
	1237
	1240
	1242
	1245
	1365
	1375
	1377
9X-2046	1228
	1233
	1240
	1245
	1259
	1270
9X-2092	587
9X-2099	108
9X-2125	704
9X-2126	1078
	1092
	1096
	1200
	1204
9X-2133	136
	138
9X-2185	1076
	1091
	1096
	1199
9X-2305	114
9X-2383	261
	477
	489
9X-2388	483
9X-2480	234
	236
	238
	240
	242
	244
	246
	275
	283
	285
	287
	391
9X-2488	1076
	1091
	1096
	1199
	1203
9X-2493	170
	173
9X-2546	1169
	1172
9X-2646	150
9X-2647	150
9X-3066	302
9X-3265	255
	397
	400
	404
	408
9X-3401	249
	251
	254
	255
	258
	259
	260
	261
	262
	264
	265
	266
	267
	339
	340
	346
	349
	365
	397
	398
	400
	401
	403
	404
	407
	408
	416
	421
	424
	429
	433
	442
	452
	461
	477
	478
	483
	485
	489
	491
	509
	510
	518
	521
	522
	526
	531
	535
	542
	546
	550
	555
	558
	564
	1273
	1280
	1283
	1286
	1288
	1290
	1292
	1295
	1298
	1301
	1303
	1306
	1309
	1312
	1317
	1320
9X-3465	295
	297
	298
	299
9X-3490	250
	265
	491
	509
9X-4244	290
	291
	292
	293
	294
9X-4271	356
9X-4284	1271
9X-4385	251
	261
	477
	478
	483
	485
	489
	491
9X-4609	581
	587
9X-4813	268
	270
	272
	274
	277
	279
9X-4821	356
9X-4824	356
9X-4825	356
9X-6165	275
	283
	285
	287
9X-6395	1035
	1036
9X-6772	268
	509
	600
9X-7345	311
	312
9X-7378	1248
	1251
9X-7380	1248
	1251
9X-7381	1078
	1092
	1096
	1248
	1251
9X-7382	1078
	1092
	1096
	1248
	1251
9X-7383	1248
	1251
9X-7384	652
9X-7385	1115
	1118
	1121
	1248
	1251
9X-7680	1027
9X-7737	365
9X-7743	625
	746
9X-8122	1195
9X-8250	410
	486
	492
	503
	506
	1253
	1255
9X-8256	142
	275
	281
	283

► PRIMARY REFERENCE

PART NUMBER INDEX

Part	Page
	306
	398
	401
	404
	408
	410
	414
	415
	475
	480
	486
	492
	495
	499
	503
	506
	511
	516
	519
	521
	532
	543
	547
	552
	556
	559
	562
	565
	567
	570
	574
	691
	695
	753
	758
	764
	1067
	1068
	1070
	1157
	1159
	1161
	1163
	1165
	1167
	1169
	1172
	1174
	1224
	1228
	1233
	1237
	1240
	1242
	1245
	1344
	1462
9X-8257	62
	150
	628
	632
	1396
	1398
9X-8258	1438
9X-8267	185
	187
9X-8271	199
	203
	213
	216
9X-8276	1356
9X-8356	1450
	1456
9X-8399	805
9X-8403	334
	336
9X-8606	752
	757
9X-8916	47
9X-9365	308
9X-9632	543
	552
9X-9634	398
	404
9X-9653	1076
	1091
	1095
9X-9689	1180
	1182
	1184
	1186
	1188
9X-9896	275
	283
	285
	287
0	
000-7246	627
	631
002-1212	895
002-6453	643
	766
	1461
	1466
003-2143	753
	758
004-5933	766
	1461
	1466
004-7617	738
	740
004-9040	892
005-7898	627
	631
005-8639	801
	803
006-8663	892
	895
009-0008	160
	162
009-2069	899
009-4184	1207
009-4185	1207
012-0380	362
	363
014-0816	7
	375
	1105
	1106
	1108
	1109
	1386
	1388
030-0060	577
	617
030-0061	577
	617
030-1712	212
	532
030-7962	169
	172
030-8535	613
	617
	1125
	1129
	1133
	1277
	1330
	1332
	1334
	1340
	1342
031-0214	1323
031-2666	1125
	1129
	1133
031-4155	1184
	1186
	1188
	1354
032-3631	150
033-0695	570
	573
033-4121	1347
033-4843	1352
033-6027	96
	1027
033-6033	366
033-6036	892
	895
	1027
033-6043	649
033-8248	108
	136
	138
	169
	172
	474
	479
	485
	491
	494
	498
	502
	505
034-1994	1125
	1129
	1133
034-3557	613
034-7044	729
037-4838	1076
	1091
	1095
	1199
061-9455	75
	98
061-9456	1449
065-5071	378
	397
	398
	403
	404
	408
	542
	551
067-2551	1247
	1250
067-3045	867
	871
	876
068-4497	98
069-4269	127
070-0107	155
085-8091	1247
	1250
086-0507	904
089-7960	551
	555
	561
	573
089-7968	1356
090-0744	150
091-0081	202
	508
	526
	536
	1253
	1255
091-9035	764
091-9071	1207
092-7385	867
	871
095-0843	1350
095-0878	1208
	1211
095-0888	892
095-1207	652
	656
	690
	694
095-1260	1147
	1148
095-1678	623
096-3218	1146
096-5866	606
096-6166	228
	229
	230
	231
	375
	379
	384
	389
	417
	421
	425
	429
	434
	438
	443
	447
	452
	456
	461
	466
	469
	688
	689
	1035
	1077
	1092
	1096
	1125
	1129
	1133
	1267
	1280
	1283
	1286
	1288
	1290
	1292
	1296
	1299
	1301
	1303
	1307
	1310
	1312
	1315
	1318
	1321

► PRIMARY REFERENCE

PART NUMBER INDEX

Part	Page
098-7467	1207
099-3649	41
	142
1	
100-3224	1209
	1211
100-3245	298
	299
	407
	410
	1091
	1095
	1301
	1303
	1306
	1309
	1312
	1315
	1317
	1320
100-3253	295
	297
100-3254	295
	297
100-3255	295
	297
100-3320	266
100-3401	895
100-3402	895
100-3403	895
100-3404	895
100-3405	895
100-3407	895
100-3408	895
100-3409	895
100-3410	898
100-3411	898
100-3412	895
	►898
100-3413	895
100-3415	895
100-4336	825
	829
	837
	857
	861
100-5041	254
	398
	401
	403
	407
	415
100-5179	1208
	1211
100-5805	268
	270
	272
	274
	275
	277
	279
	283
100-6021	995
	998
	►1030
100-6551	71
100-7000	998
101-0003	1371
	1373
101-0509	978
	979
	980
	981
	982
	983
	984
	985
	986
	987
	988
	989
	990
	991
	992
	994
101-0852	222
	232
	274
101-1148	1001
	1003
	1011
101-1149	1013
101-1154	1015
101-1155	1019
101-1971	1001
	1003
	1005
	1007
	1009
	1011
	1013
	1015
	1017
	1019
	1021
	1023
	1025
101-1973	1001
	1003
	1005
	1007
	1009
	1011
	1013
	1015
	1017
	1019
	1021
	1023
	1025
101-1978	1001
	1003
	1005
	1007
	1009
	1011
	1013
	1015
	1017
	1019
	1021
	1023
	1025
101-1980	1017
	1025
101-1984	1001
	1003
	1005
	1007
	1009
	1011
	1013
	1015
	1017
	1019
	1021
	1023
	1025
101-2457	907
	912
	915
	918
	921
	925
	928
	931
	934
	940
	946
	952
	958
	966
	972
101-2458	912
	915
	921
	925
	928
	946
	952
	958
	966
	972
101-2480	1001
	1003
	1005
	1007
	1009
	1011
	1013
	1015
	1017
	1019
	1021
	1023
	1025
101-2867	1323
101-3055	1227
	1232
	1239
	1244
101-3128	219
101-4194	1371
	1373
101-4195	1371
	1373
101-7402	868
	871
101-8105	735
101-8106	735
	745
101-8108	735
	745
101-9346	978
	979
	980
	981
	982
	984
	985
	986
	987
	988
	989
	990
	991
	994
101-9754	652
	656
102-2384	892
102-2385	892
102-2386	892
102-3645	1375
	1377
102-3659	867
102-4139	1041
	1043
	1047
	1049
	1052
102-4140	1043
102-4574	1009
102-4577	1023
102-5881	594
	596
	598
102-6238	980
	983
	986
	989
	994
102-7412	1001
	1003
	1005
	1007
	1009
	1011
	1013
	1015
	1017
	1019
	1021
	1023
	1025
102-8385	978
	979
	981
	982
	984
	985
	987
	988
	990
	991
	992
102-8801	251
	252
	254
	255
	257
	258
	259
	260
	262
	263
	264
	265
	266
	268
	270
	272
	274
	277
	279
	313
	316
	378
	379
	383
	384
	388
	393
	395
	397

► PRIMARY REFERENCE

PART NUMBER INDEX

Part	Page
	400
	403
	404
	407
	408
	416
	420
	424
	428
	433
	442
	451
	460
	478
	485
	491
	509
	510
	515
	518
	522
	532
	542
	546
	550
	554
	558
	564
	604
	1280
	1283
	1286
	1288
	1290
	1292
	1296
	1298
	1301
	1303
	1306
	1309
	1312
	1317
	1320
102-8802	191
	250
	260
	268
	274
	288
	300
	302
	304
	306
	308
	309
	323
	324
	325
	332
	346
	348
	349
	358
	362
	363
	366
	370
	373
	378
	379
	383
	384
	388
	397
	403
	416
	420
	424
	428
	429
	433
	438
	442
	447
	451
	452
	456
	460
	461
	465
	469
	478
	484
	490
	508
	509
	510
	515
	516
	518
	519
	521
	526
	532
	535
	649
	658
	659
	735
	745
	1067
	1068
	1070
	1077
	1092
	1095
	1115
	1118
	1121
	1204
	1247
	1250
102-8803	250
	258
	259
	289
	301
	303
	309
	338
	339
	340
	379
	384
	388
	416
	420
	424
	428
	433
	442
	451
	460
	478
	484
	490
	508
	509
	515
	522
	527
	536
102-8804	234
	236
	238
	240
	242
	244
	246
	249
	251
	261
	367
	379
	384
	388
	391
	397
	400
	403
	407
	410
	415
	416
	420
	424
	428
	433
	438
	442
	447
	451
	456
	460
	465
	477
	478
	483
	485
	489
	491
	509
	515
	518
	532
102-8805	255
	256
	257
	258
	259
	260
	267
	268
	270
	272
	274
	277
	279
	295
	297
	298
	299
	378
	383
	388
	397
	400
	403
	404
	407
	408
	416
	420
	421
	424
	428
	433
	442
	451
	456
	460
	465
	469
	1077
	1200
	1271
	1280
	1283
	1286
	1288
	1290
	1292
	1298
	1301
	1303
	1306
	1309
	1312
	1317
	1320
	1383
	1385
	1386
	1388
102-8806	7
	8
	9
	10
	257
	265
	331
	368
	369
	375
	378
	379
	383
	384
	388
	393
	395
	404
	509
	1280
	1283
	1286
	1288
	1290
	1292
	1298
	1301
	1303
	1306
	1309
	1312
	1317
	1320
102-9372	1330
	1380
102-9383	543
	547
	552
	556
	559
	561

► PRIMARY REFERENCE

PART NUMBER INDEX

Part	Page
	564
	567
	570
	573
102-9863	356
103-1592	313
	316
103-4771	1277
	1330
	1332
	1334
	1340
	1342
103-4953	1275
	1277
	1330
	1332
	1334
	1340
	1342
103-5417	703
103-5419	703
103-5515	1275
	1277
	1330
	1332
	1334
	1340
	1342
103-5516	1275
	1277
	1330
	1332
	1334
	1340
	1342
103-5678	313
	316
	551
	555
	561
	573
103-9125	577
103-9425	1228
	1233
	1239
	1244
104-2091	1077
	1092
	1096
	1178
	1179
	1280
	1283
	1296
	1299
	1303
	1307
	1315
	1321
104-3122	892
	895
	▶1027
104-3124	892
	895
104-3947	659
104-4286	867
	871
104-4523	1428
104-6871	250
	478
	484
	490
104-7419	907
	910
	912
	915
	918
	921
	925
	928
	931
	934
	937
	940
	943
	946
	949
	952
	955
	958
	962
	966
	969
	972
	975
104-7429	907
	910
	912
	915
	918
	921
	925
	928
	931
	934
	937
	940
	943
	946
	949
	952
	955
	958
	962
	967
	969
	972
	975
104-7740	907
	910
	912
	915
	918
	921
	925
	928
	931
	934
	937
	940
	943
	946
	949
	952
	955
	958
	962
	966
	969
	972
	975
104-8645	949
	976
	▶987
104-8646	955
	970
	▶988
104-8673	907
	▶978
105-2080	1041
	1043
	1047
	1049
	1052
105-3196	808
	812
	▶887
105-3249	662
105-6491	686
105-7167	874
106-3658	1017
106-3659	1001
	1003
	1005
	1007
	1009
	1011
	1013
	1015
	1019
	1021
	1023
106-3660	1017
	1025
106-4496	1178
	1179
106-4684	868
	871
106-4787	▶821
	1392
	1432
106-5074	106
	111
106-6553	1161
	1163
	1174
106-7149	356
107-0269	606
107-0543	981
	984
	988
	990
	992
	▶1001
107-0545	982
	985
	987
	991
	▶1003
107-1716	498
	505
107-1983	1280
	1283
	1286
	1288
	1290
	1292
	1295
	1298
	1301
	1303
	1306
	1309
	1312
	1317
	1320
107-1985	257
	1280
	1283
	1286
	1288
	1290
	1292
	1295
	1298
	1301
	1303
	1306
	1309
	1312
	1317
	1320
107-2344	1060
107-3398	▶1391
	1392
107-4865	1375
	1377
107-5014	1146
	1147
	1148
	1224
	1227
	1232
	1237
	1239
	1242
	1244
107-6813	1161
	1163
	1174
107-7604	48
107-7694	38
107-7708	44
107-8141	825
	837
107-8143	821
	851
107-8144	821
	830
	848
	851
107-8147	825
	837
	857
	861
107-8148	825
	837
	857
	861
107-8149	821
	830
	848
	851
107-8150	821
	825
	830
	834
	837

▶ PRIMARY REFERENCE

PART NUMBER INDEX

Part	Page
	841
	845
	848
	851
	854
	857
	861
107-8374	1434
	1437
107-8375	1434
	1437
107-9579	62
107-9641	1157
	1159
	1165
	1167
	1169
	1172
108-0358	313
	316
108-1610	821
	825
	834
	837
	851
	854
	857
	861
	876
108-2187	1001
	1003
	1005
	1007
	1009
	1011
	1013
	1015
	1017
	1019
	1021
	1023
	1025
108-2949	198
	202
	207
	212
	216
108-3129	656
108-4086	1209
	1211
108-4087	1209
	1211
108-4103	1209
	1212
108-4816	1027
108-4916	▶807
	1017
	1025
108-5157	1035
108-5751	592
108-5949	1159
	1167
	1172
108-5950	1157
	1165
	1169
108-5951	1159
	1167
	1172
108-5952	1157
	1165
	1169
108-6523	652
	656
109-0361	510
	521
	526
	535
109-1144	1029
109-2804	1227
	1232
	1239
109-3001	857
	861
109-3124	▶1404
109-3150	▶1405
109-3204	892
	895
109-3207	73
	165
	166
109-4580	615
109-4581	615
109-6753	791
109-6776	1431
109-9771	867
110-2028	1216
	1217
110-2985	4
	▶825
	1432
	1433
110-3003	825
	837
	857
	861
110-3326	752
	757
110-4213	667
	676
110-4214	667
	676
110-5161	660
110-6241	1125
	1129
	1133
110-6393	1076
	1091
	1095
110-6844	509
110-6846	509
110-6848	509
110-7618	40
110-7885	1386
	1388
110-7887	397
	400
	403
	407
110-8769	509
110-8827	111
111-0343	658
111-1719	1
	3
	▶1441
111-2416	266
111-4275	25
	26
	▶355
111-4871	474
	479
	485
	491
	494
	498
	502
	505
111-4875	250
	478
	484
	490
111-8233	1001
	1003
	1005
	1007
	1009
	1011
	1013
	1015
	1019
	1021
	1023
111-8234	1017
	1025
111-9321	978
	979
	981
	982
	984
	985
112-1813	1394
112-1814	1393
112-3199	864
112-3200	864
112-3540	1448
112-3928	1043
	1047
112-4159	890
	891
112-4550	536
112-4834	750
112-5575	779
	▶799
112-5853	720
112-6032	33
112-6174	7
	8
	9
	10
	▶368
	375
	1105
	1106
	1108
	1109
112-6175	542
	546
	550
	554
	558
	561
	564
	567
	570
	573
112-7462	779
112-7463	3
	▶779
	816
	1392
112-9035	799
112-9164	1218
	1220
	1222
112-9442	883
112-9555	1194
	1195
112-9787	867
	871
112-9813	668
113-0993	1428
113-0994	▶1065
	1431
113-0996	1431
113-0997	▶1064
	1431
113-0998	1064
113-0999	833
113-1009	1431
113-4254	4
	▶1346
113-5801	1208
113-5805	1208
	1211
113-5806	1208
	1211
113-5807	1208
	1211
113-5808	▶1208
	1371
113-6069	69
113-7745	582
113-8218	1258
	1262
	1263
113-8690	412
113-9048	627
	631
114-0025	16
	▶829
	1392
114-0027	829
114-0561	620
114-2505	542
	570
114-2768	1203
114-3350	1161
	1163
114-5333	1247
114-6635	1034
114-8843	264
	477
	483
	489
	735
	745
114-8844	483
114-9190	1157
	1159
	1165
	1167
	1169
	1172
114-9281	416
	420
	424
	428
	433
	438
	442
	447
	451
	456
	460
	465
	469
115-1748	473
115-3072	704
	706
	708
	710
115-4072	69
115-4219	69
115-4223	120
	124
115-4550	650

▶ PRIMARY REFERENCE

PART NUMBER INDEX

Part	Page
115-5726	3
	▶773
	816
115-6806	1380
115-6807	1227
	1232
	1239
115-9923	688
	1227
	1232
116-1965	▶1345
	1348
	1355
	1360
	1362
116-2015	1072
116-2016	1072
116-2327	1072
116-2779	▶1072
	1356
116-4556	25
	26
	▶67
116-4686	1271
116-5710	160
	162
	1138
	1140
	1142
	1144
116-9550	144
117-1385	586
117-2311	1067
	1068
	1070
117-3643	26
	27
	▶116
117-3855	4
	▶830
	1432
117-4492	1075
117-9081	363
117-9966	8
	9
	1368
	1370
117-9978	1450
	1456
118-0424	627
	631
118-2558	1227
	1232
	1239
118-3534	▶361
	515
	518
	532
118-7313	1041
	1049
	1052
118-7880	1434
	1437
118-7881	1434
	1437
118-9573	355
	1149
119-0036	1352
119-3025	126
119-3662	212
	250
	251
	252
	254
	255
	256
	257
	258
	259
	263
	264
	265
	308
	313
	316
	378
	379
	383
	384
	388
	389
	393
	395
	398
	400
	403
	408
	416
	421
	424
	429
	433
	442
	452
	461
	478
	484
	485
	490
	491
	508
	509
	531
	546
	554
	558
	565
	1280
	1283
	1286
	1288
	1290
	1292
	1295
	1298
	1301
	1303
	1306
	1309
	1312
	1317
	1321
119-3813	144
119-3818	144
119-5026	1208
	1211
119-6194	1356
119-6723	142
119-8666	791
	795
119-9631	1076
	1091
	1095
121-3307	132
	134
	140
121-9242	782
	▶805
121-9245	805
122-2228	1174
122-7045	8
	9
	1295
	1298
	1368
	1370
122-8146	1280
	1283
	1295
	1298
	1303
	1306
	1315
	1320
122-8154	1179
122-8155	1179
122-8795	688
	689
	1227
	1232
122-9764	732
123-0872	1081
	1082
	1089
	1090
123-1076	805
123-1201	1125
	1129
123-1373	197
	212
	216
123-3115	1005
	1007
123-3688	508
	521
	526
	535
123-3689	508
	521
	526
	535
123-3692	508
	521
	526
	535
123-3695	508
	521
	526
	535
123-3698	724
123-3699	725
123-3827	132
	134
	730
	732
123-4003	613
123-4354	1383
123-4355	1383
123-4358	7
	8
	9
	10
	▶1258
	1330
	1332
123-4511	147
	148
123-4586	1258
	1261
	1262
	1263
	1265
	1266
	1268
	1269
123-4587	1258
	1262
123-4618	1076
	1091
	1095
	1199
	1203
	1365
	1367
	1369
123-4701	1076
	1091
	1095
	1199
	1203
	1365
123-4994	817
	819
123-5980	690
	694
123-6806	1275
	1277
124-0360	1415
	1418
	1421
	1424
	1426
124-0507	1371
	1373
124-1431	1076
	1091
	1095
	1199
	1203
124-1432	1076
	1091
	1095
	1199
	1203
124-1479	736
124-2528	353
124-2883	978
	981
	982
	990
	991
	▶1005
124-2884	980
	989
	▶1007
124-2885	989
	994
	▶1009
124-3019	1250
124-3137	1076
	1091
	1095
	1199
	1203
124-3138	1076
	1091
	1095
	1199
	1203
124-3240	712
124-3325	907
	912
	918
	925
	931
	934

▶ PRIMARY REFERENCE

PART NUMBER INDEX

Part	Page
	940
	946
	952
	▶980
124-3326	916
	929
	967
	973
	▶989
124-3328	912
	916
	952
	967
	▶990
124-3329	925
	929
	946
	973
	▶991
124-3330	1005
	1007
124-5572	31
	33
124-6258	105
124-6679	1428
124-7792	61
124-8843	1161
	1163
	1174
124-8949	706
	708
	1218
124-9006	1076
	1091
	1095
	1199
	1203
124-9007	1199
124-9633	515
124-9675	817
	819
124-9768	1431
125-0438	1076
	1091
	1095
125-0439	1199
	1203
125-0442	1199
	1203
125-1393	1035
125-4342	1103
	1104
	1105
	1108
	▶1375
125-4344	1103
	1104
	1105
	1108
	▶1275
125-5321	158
125-5520	1224
	1237
125-7003	1383
125-7004	1383
125-7874	251
	252
	254
	257
	258
	259
	263
	265
	266
	267
	268
	270
	272
	274
	277
	279
	309
	373
	383
	393
	395
	397
	398
	400
	401
	403
	404
	407
	408
	416
	421
	424
	428
	429
	434
	443
	451
	452
	456
	460
	461
	465
	490
	469
	478
	484
	490
	508
	509
	510
	521
	526
	535
	542
	546
	551
	554
	558
	564
	1273
	1280
	1283
	1286
	1288
	1290
	1292
	1295
	1298
	1301
	1303
	1306
	1309
	1312
	1317
	1321
125-7875	249
	251
	252
	257
	258
	259
	261
	263
	265
	267
	268
	270
	272
	274
	277
	279
	309
	373
	378
	379
	384
	389
	398
	401
	403
	407
	416
	421
	424
	428
	429
	434
	443
	451
	452
	456
	460
	461
	465
	469
	477
	478
	479
	483
	484
	485
	489
	490
	491
	508
	510
	515
	518
	521
	526
	532
	535
	542
	546
	551
	554
	558
	564
	1280
	1283
	1286
	1288
	1290
	1292
	1295
	1298
	1301
	1303
	1306
	1309
	1312
	1317
	1321
125-7876	198
	203
	212
	216
	267
	515
125-9584	1224
	1237
	1242
125-9853	1074
125-9854	▶1074
	1354
125-9855	▶1347
	1354
125-9856	1346
	▶1354
126-1135	1257
126-1136	1257
126-1757	75
	98
126-1766	508
126-1767	264
	266
	339
	340
	1115
	1118
126-1768	250
	264
	266
	478
	484
	490
	508
	521
	526
	535
126-1774	250
	265
	268
	270
	272
	274
	277
	279
	478
	484
	490
	508
126-2728	613
126-2747	7
	8
	9
	10
	▶1348
126-4966	1161
	1163
	1174
126-5011	266
126-5211	1068
	1070
	1224
	1233
	1237
	1239
	1242
	1244
126-5466	74
	120
	124
	1447
	1449
127-1647	31
	33
127-5483	252
	258
	259
	260
	263
	416
	421
	425
	429
	434
	443

▶ PRIMARY REFERENCE

PART NUMBER INDEX

Part	Page
	452
	461
	509
	542
	546
	551
	555
	558
	565
127-5484	252
	258
	259
	263
	379
	384
	389
	416
	421
	425
	429
	434
	443
	452
	461
	542
	546
	551
	555
	558
	565
127-8157	1065
128-0037	1157
	1159
	1165
	1167
	1169
	1172
128-7759	29
128-7761	29
128-8678	857
	861
128-9654	1054
	1056
	1058
	1060
129-1173	25
	28
	▶127
129-3173	160
	162
	753
	758
	1138
	1140
	1142
	1144
129-3178	275
	281
	283
	285
	287
	1067
	1068
	1070
	1077
	1092
	1096
	1161
	1163
	1174
	1200
	1204
	1224
	1228
	1233
	1237
	1239
	1242
	1244
129-3180	1260
	1428
	1431
129-4935	1076
	1091
	1095
	1199
	1203
129-5049	687
129-7163	252
	263
	542
	546
	551
	555
	558
	565
129-7164	250
	252
	263
	478
	484
	490
	542
	546
	551
	555
	558
	565
129-7249	1441
129-7261	1415
	1418
	1421
	1424
	1426
129-7632	1027
129-7679	1450
	1456
129-7680	1450
	1456
130-0229	621
130-1433	1247
	1250
130-2792	508
	521
	526
	535
130-3515	295
	297
130-3595	577
130-5300	160
	162
	234
	236
	238
	240
	242
	244
	246
	306
	313
	316
	319
	320
	321
	322
	367
	371
	373
	391
	398
	401
	404
	408
	410
	417
	421
	425
	429
	434
	438
	443
	447
	452
	457
	461
	466
	469
	474
	479
	485
	491
	494
	498
	502
	505
	510
	515
	519
	522
	527
	532
	536
	541
	543
	547
	551
	555
	559
	561
	565
	567
	570
	573
	582
	586
	600
	602
	606
	1077
	1092
	1096
	1138
	1140
	1142
	1144
	1199
	1203
130-5770	1029
130-7084	877
130-7754	918
	940
	▶981
130-7755	931
	934
	▶982
130-9041	780
	▶801
130-9042	780
	▶803
130-9044	801
130-9045	803
131-1478	515
131-1489	509
131-1490	250
	417
	421
131-1506	508
	509
131-3539	474
	479
	485
	491
131-3540	311
	312
131-3736	780
131-3737	717
131-3738	717
131-3739	717
131-3740	578
	▶717
131-3919	592
	594
	598
	624
131-4242	1208
	1211
131-4428	578
131-5167	1208
	1211
131-5171	8
	375
	378
	383
	393
	395
	1105
	1108
	1151
131-5492	1194
	1195
131-6009	1224
	1228
	1233
	1237
	1239
	1242
	1244
131-7191	776
	▶789
131-7194	789
131-7195	789
131-8350	995
	998
	▶1029
131-8777	1034
132-0338	1075
132-1072	▶1406
132-1143	717
	780
132-1144	717
132-4926	774
	▶795
132-4927	795
132-5789	414
	415
	510
	515
	519
	522
	527
	536
	586
	606
132-7551	172
	510

▶ PRIMARY REFERENCE

PART NUMBER INDEX

Part	Page
	522
	527
	536
	1247
	1250
132-8487	474
	477
	483
	489
	494
	498
	502
	505
132-9625	592
132-9628	594
132-9630	596
132-9633	596
132-9635	598
133-0260	345
133-0967	267
133-0969	267
133-3260	510
	521
133-4995	56
	74
	1447
	1449
134-0165	690
	694
134-0747	821
	825
	830
	834
	837
	841
	845
	848
	851
	854
	857
	861
134-1080	3
	►577
	636
134-1081	578
134-2540	249
	250
	251
	267
	477
	478
	479
	483
	484
	485
	489
	490
	491
	510
	522
	527
	536
	1280
	1283
	1286
	1288
	1290
	1292
	1296
	1299
134-4126	222
	223
	224
	232
	274
134-4483	57
	59
134-7258	1450
	1456
135-0426	►301
	541
135-0450	825
	837
	857
	861
135-0451	821
	830
	834
	841
	845
	848
	851
	854
135-0452	821
	830
	834
	841
	845
	848
	851
	854
135-0453	825
	837
	857
	861
135-0611	1383
	1385
	1386
	1388
135-1979	1184
	1186
	1188
135-2141	25
	26
	►88
135-2145	628
	632
135-2543	203
	212
	515
	518
	531
	532
135-3894	704
135-5975	255
135-9819	31
	33
	75
135-9941	600
	602
136-0822	98
136-1543	1279
136-1544	1075
136-1711	1396
	1398
136-1953	1078
	1092
	1096
	1200
	1204
136-4183	69
136-6330	876
136-6331	876
136-7226	1253
136-9066	1454
137-1602	156
137-4515	907
	912
	915
	918
	921
	925
	928
	931
	934
	940
	946
	952
	958
	966
	972
137-4516	907
	910
	912
	915
	918
	921
	925
	928
	931
	934
	937
	940
	943
	946
	949
	952
	955
	958
	962
	967
	969
	972
	975
137-6645	345
	586
	606
137-6715	57
	59
137-6717	95
137-6718	57
	59
137-6719	981
	982
	987
	988
	989
	990
	991
137-6720	978
	980
	981
	982
	983
	986
	987
	988
	989
	990
	991
137-6783	1227
137-8065	1227
137-9410	313
	316
	420
	428
	451
	460
138-3252	56
138-4054	1161
	1163
	1174
138-7026	1227
	1232
	1239
138-7198	95
138-8402	95
138-8403	95
138-9868	95
138-9910	1227
139-1118	393
	1224
	1227
	1232
139-1153	1067
	1068
139-2116	508
139-3593	7
	8
	9
	1368
139-3595	1176
139-4081	►77
	94
139-4084	77
139-4605	1344
139-4612	6
	10
	►1344
139-6911	223
139-8472	1003
	1019
	1023
	►1031
140-6188	57
	59
140-9670	57
	59
141-1546	29
141-6343	160
	162
141-9661	904
141-9784	1077
	1200
142-0350	658
142-0485	160
	162
	753
	758
	1138
	1140
	1142
	1144
142-1767	660
142-1814	699
142-4940	1076
	1091
	1095
	1199
	1203
142-6167	669
142-6168	669
142-6183	668
142-7289	56
143-1288	1100
	1101
	1350
143-4654	97
143-4792	682
	729
143-5373	582
143-9290	1124
143-9392	219
144-0195	1375
	1377
	1379

► PRIMARY REFERENCE

PART NUMBER INDEX

Part	Page
144-1636	371
144-2161	699
144-2162	699
144-4107	1227
	1232
	1239
	1244
	1330
	1332
	1334
	1340
	1342
144-6695	1149
144-7620	699
145-0162	44
145-0164	44
145-0168	44
145-0170	44
145-0326	1371
	1373
145-2901	61
145-4212	142
145-5181	1260
145-5966	699
145-5967	699
145-8039	582
	586
146-0705	907
	912
	915
	918
	921
	925
	928
	931
	934
	940
	946
	952
	958
	966
	972
146-1842	578
146-1843	578
146-7453	105
147-0182	118
	119
	127
147-0385	474
	479
	485
	491
	494
	498
	502
	505
	510
147-1445	250
	265
	478
	484
	490
147-1446	250
	265
	478
	484
	490
147-3309	748
147-3400	577
147-5112	1054
	1056
	1058
	1060
147-6603	1038
147-6604	1038
147-6605	1038
147-8211	57
147-8214	57
	59
147-8218	51
147-8220	57
	59
148-1925	581
	586
148-2516	648
148-2592	801
	803
148-2593	787
	791
	795
148-2903	73
	165
	166
148-7027	817
148-7906	1021
148-8305	876
148-8307	169
148-8311	172
148-8316	600
	602
	867
	871
	876
148-8318	821
	825
	829
	830
	834
	837
	841
	845
	848
	851
	854
	857
	861
	864
	921
	958
	962
148-8323	867
	871
148-8327	867
	871
148-8335	627
	631
148-8336	169
	817
	883
148-8339	627
	631
148-8340	821
	830
	834
	841
	845
	848
	851
	854
	857
	861
	864
	874
148-8344	627
	631
148-8347	866
	867
	870
	871
148-8351	876
148-8354	876
148-8357	627
	631
148-8358	821
	830
	834
	841
	845
	848
	851
	854
148-8363	771
	821
	825
	830
	834
	837
	841
	845
	848
	851
	854
	857
	861
148-8364	106
	111
	169
	172
	822
	825
	830
	835
	837
	841
	845
	848
	851
	854
	857
	861
	867
	876
148-8367	600
	602
	817
	883
148-8368	600
	602
	867
	871
148-8369	600
	602
148-8372	172
148-8374	172
	822
	825
	835
	837
	851
	854
	857
	861
	864
	874
148-8378	172
	817
	819
	883
148-8381	868
148-8383	771
	826
	838
	858
	862
	874
148-8395	581
	586
	902
	1001
	1003
	1005
	1007
	1009
	1011
	1013
	1015
	1017
	1019
	1021
	1023
	1025
148-8406	582
	586
148-8407	660
148-8408	995
	998
148-8410	173
148-8411	173
	831
	842
	845
	848
148-8433	826
	838
	858
	862
148-8444	876
148-8449	111
149-2065	1138
	1140
	1142
	1144
149-3409	1380
149-4915	►29
	35
149-5240	73
	165
	166
149-6371	1247
	1250
149-7226	1208
150-1280	799
150-3026	136
	138
150-3028	833
150-3037	1253
	1255
150-3058	142
150-3065	606
150-4868	876
150-5968	868
	871
150-7158	1253
151-1397	543
	547
	551
	555
	559
151-1398	252
	263
	388
	543
	547
	551
	555
	559
151-4957	543
	547
	551

► PRIMARY REFERENCE

PART NUMBER INDEX

Part	Page
	555
	559
	561
	565
	567
	570
	573
152-5430	1146
	1147
	1148
152-5431	1146
	1147
	1148
152-5436	1146
	1147
152-6824	234
	236
	238
	240
	242
	244
	246
	391
152-6825	234
	236
	238
	240
	242
	244
	246
	391
152-7903	▶1146
153-1794	25
	26
	▶145
153-1818	921
153-3580	1047
	1049
	1052
153-5710	197
	207
153-6237	868
	872
153-6258	169
153-7036	185
	187
154-0896	78
154-3064	648
	▶658
154-6306	660
154-6307	660
154-6309	652
154-6579	801
	803
154-7172	653
154-7175	653
154-7176	653
154-7177	653
154-9023	120
	124
154-9025	122
155-2255	250
	252
	254
	255
	257
	258
	259
	260
	263
	264
	268
	270
	272
	274
	277
	279
	313
	316
	378
	379
	383
	384
	388
	393
	395
	397
	398
	400
	401
	403
	404
	407
	408
	417
	421
	425
	429
	434
	443
	452
	461
	478
	484
	490
	508
	509
	510
	518
	521
	526
	531
	535
	543
	547
	551
	554
	558
	564
	1280
	1283
	1286
	1288
	1292
	1295
	1298
	1301
	1303
	1306
	1309
	1312
	1317
	1320
155-2256	250
	258
	259
	267
	478
	484
	490
155-2257	265
155-2258	255
	257
	260
	264
	265
	395
	403
	404
	429
	452
	461
	521
	526
	1295
	1307
	1309
	1312
	1317
	1321
155-2259	395
	429
	452
	461
155-2260	250
	257
	258
	259
	265
	267
	313
	316
	341
	352
	379
	384
	388
	417
	421
	425
	429
	434
	443
	452
	461
	478
	484
	490
	509
	1280
	1283
	1286
	1288
	1290
	1292
	1295
	1298
	1301
	1303
	1306
	1309
	1312
	1317
	1320
155-2265	258
	259
	266
	281
	378
	379
	383
	384
	388
	393
	395
	417
	421
	425
	429
	434
	443
	452
	461
155-2270	250
	252
	254
	256
	258
	259
	260
	262
	263
	264
	265
	266
	268
	270
	272
	274
	277
	279
	308
	309
	313
	316
	345
	364
	371
	373
	378
	379
	383
	384
	388
	398
	401
	403
	407
	415
	417
	421
	425
	429
	434
	443
	452
	461
	478
	484
	490
	508
	509
	510
	515
	518
	521
	522
	526
	531
	535
	543
	547
	551
	554
	558
	564
	604
	649
	1077
	1200
	1290
	1292
	1295
	1298
	1307
	1309

▶ PRIMARY REFERENCE

PART NUMBER INDEX

Part	Page
	1317
	1320
155-2271	249
	254
	258
	259
	261
	371
	379
	384
	388
	398
	401
	404
	407
	417
	421
	425
	429
	434
	443
	452
	461
	477
	483
	489
	509
	515
	518
	531
155-2274	250
	252
	254
	255
	257
	258
	259
	260
	267
	373
	378
	379
	383
	384
	388
	397
	398
	400
	401
	404
	407
	408
	417
	421
	425
	428
	429
	434
	443
	451
	452
	456
	460
	461
	465
	469
	478
	484
	490
	509
	551
	1273
	1280
	1283
	1286
	1288
	1290
	1292
	1295
	1298
	1301
	1303
	1307
	1309
	1312
	1317
	1320
156-4281	600
	602
156-5545	1075
156-5762	1450
	1456
156-5970	768
156-6312	1329
156-9890	412
157-0670	120
	122
	124
157-7130	59
158-6072	156
158-6077	144
159-0303	25
	26
	▶89
159-0927	592
	594
159-3590	1450
	1456
159-8049	197
	198
	202
	207
	211
	212
	215
	216
159-8050	197
	198
	202
	203
	207
	211
	212
	215
	216
159-9322	250
	265
	270
	272
	274
	277
	279
	478
	484
	509
159-9539	328
160-5131	120
	124
160-6382	375
	704
	706
	708
	710
160-7689	265
	509
160-7690	268
	270
	272
	277
	279
160-8124	266
	332
160-8503	1126
	1129
	1133
161-4423	729
161-5967	1208
	1211
161-6713	592
	594
161-6963	156
161-7055	655
161-7062	160
	162
	1138
	1140
	1142
	1144
161-7063	1138
	1140
	1142
	1144
161-9289	1358
161-9916	169
	172
	1253
	1255
162-0177	148
	581
	586
	650
	652
	655
162-2073	▶302
	320
	322
162-2165	606
162-3148	102
162-6448	801
	803
162-8068	25
	▶90
162-8218	160
	162
	1138
	1140
	1142
	1144
162-8219	160
	162
	1138
	1140
	1142
	1144
163-0325	1401
163-0326	1401
163-0327	1401
163-0872	▶1115
	1116
163-1146	1371
	1373
163-1201	1207
163-1387	68
163-2478	57
	59
163-4195	821
	825
	830
	834
	837
	841
	845
	848
	851
	854
	857
	861
163-4519	535
163-4720	1041
163-4721	1041
163-6074	1041
	1047
	1049
	1052
164-0210	97
164-2108	652
	768
164-2465	1275
	1277
	1330
	1332
	1334
	1340
	1342
164-4531	1075
164-4883	1279
164-5557	170
	173
164-5562	122
164-5567	600
	602
	606
	627
	631
	650
	660
164-5569	111
164-5570	170
	173
164-5586	876
164-5590	876
164-5605	821
	825
	829
	830
	834
	837
	841
	845
	848
	852
	855
	857
	861
	864
164-5608	821
	825
	830
	834
	837
	841
	846
	849
	852
	855
	857
	861
	921
	958
	962
164-5619	170
	173
	581
	586
	746
164-7556	290

▶ PRIMARY REFERENCE

PART NUMBER INDEX

Part	Page
	291
	292
	293
	294
164-7572	29
164-7577	▶358
	580
164-8462	4
	816
	▶881
	883
165-2273	106
	111
	122
165-2510	778
	▶797
165-4446	26
	27
	▶72
165-7014	867
	872
165-9928	600
	602
166-1776	98
166-1781	75
	98
166-1880	720
	721
166-1997	1277
	1330
	1332
	1334
	1340
	1342
166-1999	1277
	1330
	1332
	1334
	1340
	1342
166-2830	1380
166-2905	84
	85
	1446
166-6781	1371
	1373
166-9913	1101
166-9914	1100
167-0566	653
167-1801	892
	901
167-1802	892
167-2186	789
	801
	803
167-2190	783
	785
	797
	799
167-2294	789
	801
	803
167-2304	793
167-2307	881
167-7504	375
	378
167-7505	375
	378
	383
	388
167-8121	60
167-9002	3
	1105
	▶1124
167-9524	652
168-7224	86
168-8248	375
	378
	383
	388
168-8683	160
	162
168-9108	797
168-9110	797
169-0921	160
	162
	752
	757
	1138
	1140
	1142
	1144
169-1025	1350
169-2621	1124
169-2876	1102
	1232
	1239
169-3145	1207
169-3264	1067
	1068
	1070
169-3290	895
	▶901
169-3380	1124
169-3677	1125
169-4088	1396
	1398
169-4089	1396
	1398
169-4090	1396
	1398
169-4092	1396
	1398
169-5414	397
	400
	403
	407
	410
	416
	420
	424
	428
	433
	438
	442
	447
	451
	456
	460
	465
	469
	474
	477
	483
	489
	494
	498
	502
	505
	704
	706
	708
	710
169-5861	173
	336
169-5862	142
169-7380	1371
	1373
169-8938	375
	379
	384
	389
169-9016	275
	283
170-0967	1253
	1255
170-1112	1075
170-1114	1075
170-1115	1075
170-4820	▶1180
	▶1182
	1191
	1193
170-5334	▶1184
	▶1186
	▶1188
	1190
	1192
170-5335	▶323
	1180
	1184
170-8590	1323
171-1230	1350
171-2122	1124
171-2212	515
	518
	531
171-2213	518
	531
171-5349	346
	348
	349
171-6165	1218
	1220
171-6467	877
171-6682	1350
171-6729	169
	172
171-7091	592
171-7095	594
171-7186	226
	▶1067
172-0165	160
	162
172-1239	1227
	1232
	1239
172-2416	1350
172-4211	160
	162
	752
	757
	1138
	1140
	1142
	1144
	1247
	1250
172-4880	1250
172-6298	152
172-6555	375
	379
	384
	393
172-6581	1350
172-6831	1106
	1109
	1325
	1326
	1327
	1328
	▶1383
172-6876	801
	803
172-7105	1124
	1136
172-7106	1124
	1136
172-7966	650
172-7968	650
172-8641	375
	379
	384
	393
	395
172-9316	375
	379
	384
	389
172-9367	60
172-9389	221
	▶222
173-0143	86
173-1007	902
173-1009	902
173-1028	▶1075
	1350
173-2052	1359
	1361
	1364
173-3064	313
	316
	550
	554
	561
	573
173-3084	1349
173-3993	995
	998
173-5360	▶1196
	▶1197
	1198
173-5787	1358
173-6756	▶1329
	1336
173-7035	1358
173-7211	1401
173-7223	169
	172
173-7830	668
	671
173-9683	787
	791
	793
	795
	805
173-9779	783
	785
	797
	1401
174-0503	249
	250
	251
	477
	478
	479
	483
	484
	485
	489
	490
	491
	1295
	1312
	1321
174-3016	1272

PART NUMBER INDEX

Part	Page
174-3705	600
	▶648
174-4140	1224
	1227
	1232
	1237
	1239
174-4181	132
174-4492	1076
	1091
	1199
	1203
	1365
174-4546	5
	12
	14
	▶1365
	▶1367
	1368
174-4547	1196
	▶1199
174-4971	1077
	1091
174-5807	1157
	1159
	1165
	1167
174-5907	417
	421
	425
	429
	434
	438
	443
	447
	452
	457
	461
	466
	469
	474
	479
	485
	491
	494
	498
	502
	505
	736
	737
	738
	740
	762
174-6051	1200
	1203
	1365
174-6353	1365
174-6818	615
174-7449	650
174-7566	252
	263
	384
	388
	543
	547
	551
	555
	559
174-8131	543
	547
	551
	555
	559
	561
	565
	567
	570
	573
	80
	82
174-9570	▶164
	184
174-9692	474
	479
	485
	491
	494
	498
	502
	505
175-1504	▶1349
	1358
175-2308	361
	▶362
175-2309	361
	▶363
175-3676	84
	85
175-3893	652
175-4291	290
	294
175-4292	290
	294
175-7895	789
	801
	803
175-7896	783
	785
	787
	791
	795
	797
	799
175-7898	793
	805
	1401
176-2945	752
	757
176-5507	1365
177-0581	150
177-1713	752
	757
177-1862	1323
177-1863	1350
177-2215	202
	508
	521
	526
	535
177-4119	690
	694
177-4120	690
	694
177-4493	▶221
	416
	420
177-4937	1349
177-7448	1125
	1129
177-7858	1077
	1200
177-7891	1083
	1084
	1085
	1086
	▶1176
178-1685	1041
178-1686	1041
	1049
	1052
178-1688	1041
	1049
	1052
178-2991	789
178-3086	1054
	1056
	1058
	1060
178-3695	627
	631
178-4190	1218
	1220
	1222
178-7023	1060
178-7907	1359
	1361
	1364
178-8455	1041
	1049
	1052
178-8603	1198
	▶1257
178-8894	1161
	1163
	1174
179-1298	652
179-1550	313
	316
	420
	428
	451
	456
	460
	465
	469
179-2138	1218
	1220
	1222
179-2139	1218
	1220
	1222
179-2140	1218
	1220
	1222
179-4814	1207
179-7400	185
179-8128	185
	187
179-9392	275
	283
	410
180-3833	1271
180-3834	1271
180-3836	1271
180-4027	752
	757
	1138
	1140
	1142
	1144
180-4028	542
	546
	550
	554
	558
	561
	564
	567
	573
180-4643	226
	▶228
180-4656	1329
180-7033	542
	546
	550
	554
	558
	561
	564
	567
180-7147	752
	757
	1138
	1140
	1142
	1144
180-7303	867
	871
180-7344	79
180-9324	604
180-9327	652
180-9933	600
	602
183-1425	1125
	1129
183-2136	397
	403
183-2151	397
	403
183-3399	108
	176
	178
183-3406	170
183-3407	52
	54
183-3873	619
183-6774	652
183-6775	653
183-6845	25
	26
	▶152
183-6854	152
183-6856	152
183-7263	336
	655
	746
	995
	998
184-1130	▶652
	660
184-2298	1350
184-2299	1350
184-2420	122
184-9843	783
	785
	797
	799
185-0008	750
	▶768
185-1122	752
	757
185-1860	252
	254
	255
	263
	383
	393
	395
	400
	401
	407
	408

▶ PRIMARY REFERENCE

PART NUMBER INDEX

Part	Page
	547
	555
	559
	565
185-1861	252
	254
	263
	383
	393
	395
	401
	407
	547
	555
	559
	565
185-2197	397
	403
185-2638	192
185-2639	192
185-2644	192
185-2645	192
185-2647	192
185-2648	192
185-2650	192
185-2651	192
185-2653	192
185-2654	192
185-2655	192
185-2658	192
185-3241	167
185-5872	1116
	1117
	1119
186-1526	652
	655
	▶659
186-3223	515
	518
	531
186-3735	234
	236
	238
	268
	338
	348
	362
	363
	369
	375
	397
	400
	478
	508
	509
	510
	516
	658
	659
	735
	1271
	1383
	1385
	1386
	1388
186-3736	268
	478
	509
	510
187-0491	1124
187-1008	508
	521
	526
	535
187-6279	25
	26
	▶108
187-6294	108
187-8278	57
187-8279	57
187-8280	57
187-8281	57
188-9644	494
	498
	502
	505
189-0108	515
	518
	531
189-1707	1247
	1250
189-2864	1161
	1163
189-3158	373
	511
	521
	526
	535
	600
	1290
	1292
	1296
	1299
	1306
	1309
	1317
	1320
189-8772	152
	627
	631
189-8777	114
190-1684	581
190-3043	1138
	1140
	1142
	1144
190-4375	753
	758
190-4885	98
190-5386	1431
	1456
190-7401	671
	672
190-7614	250
	267
	478
	484
	490
190-7615	255
	408
190-8970	184
190-8977	169
	172
	▶184
191-0027	1077
	1091
	1095
	1200
	1203
	1365
	1367
	1369
191-0461	27
	▶176
191-0522	96
191-0523	▶96
	176
	177
	178
191-1782	169
	172
191-1783	169
	172
191-3645	738
	740
	742
	766
191-5236	1081
	1082
	1089
	1090
191-8303	▶345
	586
191-8304	586
191-9256	582
192-2981	28
	▶113
192-7357	80
	82
193-1721	5
	636
	▶643
193-1736	187
193-2550	▶346
	510
194-2903	169
	173
194-4046	197
	198
	202
	207
	211
	215
194-5226	255
	341
194-5227	255
	341
194-6722	▶341
	515
194-7015	690
	694
195-0321	86
195-7218	1434
	1437
195-8553	617
196-2412	735
	745
196-4150	1280
	1283
	1295
	1298
	1303
	1306
196-7268	397
	403
196-9519	44
197-0416	147
	148
197-2055	1262
	1263
197-2066	7
	▶1259
	1260
197-4977	581
	586
197-5210	25
	26
	▶71
197-7689	1371
	1373
197-8419	74
	108
	149
	1447
	1448
	1449
197-8611	1224
	1227
	1232
	1237
	1239
197-8624	1224
	1227
	1232
	1237
	1239
197-8629	1224
	1227
	1232
	1237
	1239
197-8630	1224
	1227
	1232
	1237
	1239
197-8820	▶192
	194
197-9353	86
197-9354	86
197-9386	86
198-3611	36
	80
198-4776	36
	80
	136
	138
	1116
	1117
	1119
198-4777	36
	80
	136
	138
	153
	154
	170
	173
	522
	527
	536
	1119
198-4778	682
	729
198-4780	881
198-4781	1058
	1060
198-4782	730
198-5438	752
	757
198-7380	724
	725
198-8588	704
	706
	708
198-9811	1434
	1437
198-9812	1434
	1437
199-2677	1157
	1159
	1165
	1167
	1169
	1172
199-2712	1157

PART NUMBER INDEX

Part	Page
	1159
	1165
	1167
	1169
	1172
199-2739	1169
199-2740	1172
199-6582	252
	388
	543
	547
	551
	555
	559
199-7891	192
199-8436	192
2	
200-2258	118
200-3967	704
	706
	708
	710
200-4495	69
200-4497	113
	▶114
	115
200-8623	1227
	1232
	1239
	1244
200-8787	252
	389
201-0387	582
201-2184	779
201-7354	882
202-1138	1280
	1283
	1295
	1298
	1303
	1306
	1315
	1320
202-2762	31
	33
	600
	602
	764
	817
	819
	1247
	1250
	1461
202-5397	252
	254
	255
	263
	395
	400
	401
	547
	559
202-6611	292
202-6614	290
	291
	293
	294
202-7666	▶1100
	1349
202-7668	▶1101
	1349
203-0780	1259
203-1124	1383
	1385
	1386
	1388
203-2389	734
	744
203-2390	734
	744
203-2391	734
	744
203-2423	734
	744
203-3768	152
203-3769	145
	146
203-5957	625
	746
203-5958	625
	746
203-7703	1358
203-9007	254
204-1297	252
	254
	255
	263
	383
	393
	395
	400
	401
	407
	547
	554
	559
	564
204-4376	1077
	1091
	1095
	1200
	1203
204-6488	1125
	1129
204-8000	515
	518
	532
204-8736	752
	757
204-8737	752
	757
204-8738	752
	757
204-8739	752
	757
204-8740	752
	757
204-8741	752
	757
205-0626	192
205-1280	176
	177
	178
205-1320	69
205-1321	27
	28
	▶69
205-6388	1349
205-7187	764
	1461
205-7299	736
	738
	740
	742
	750
	762
	764
	817
	819
	868
	872
	1461
205-8839	604
205-8847	604
206-1345	412
206-3599	160
	162
	1138
	1140
	1142
	1144
206-3600	160
	162
206-4097	1125
	1129
	1133
206-4228	25
	▶120
206-4669	105
206-5122	922
	959
	963
206-5123	922
	959
	962
206-5823	1383
	1385
	1386
	1388
206-6875	219
206-8784	356
206-9292	620
206-9295	366
206-9296	649
206-9651	1125
	1129
207-1517	355
	▶356
207-4773	752
	757
207-4922	1138
	1140
	1142
207-4924	752
207-4927	160
207-6034	604
208-0423	1253
208-4617	197
	198
	202
	207
	212
	216
208-7782	228
	229
	230
	231
	1267
208-9698	▶771
	1429
	1430
209-4578	150
210-2262	1323
210-2263	1323
210-2266	1323
210-2270	▶1323
	1350
210-3321	40
210-5590	27
	28
	▶44
210-5592	27
	28
	▶86
210-7722	152
210-9246	108
	1446
211-4908	1110
	1111
211-4913	1103
	1104
	1105
	1108
	▶1385
211-6807	266
211-9274	80
211-9275	80
212-2270	27
	28
	▶115
212-3706	176
212-4174	105
212-4288	38
212-4289	27
	28
	▶38
212-4893	44
212-5081	141
212-8255	1272
212-8259	1272
213-0064	169
213-3193	86
213-5007	1054
	1056
	1058
	1060
213-7315	1280
	1283
	1286
	1288
	1290
	1292
	1296
	1299
	1301
	1304
	1307
	1310
	1312
	1315
	1318
	1321
213-9100	306
213-9842	604
214-0647	1262
	1263
214-1982	904
214-1983	5
	816
	▶906
214-1984	▶904
	906
214-4863	▶338
	1138
214-7566	52
	54
	71
	74
	75
	76
	100
	118

PART NUMBER INDEX

Part	Page
	334
	336
	342
	1446
	1447
	1448
	1449
214-7567	74
	334
	343
	1447
	1449
214-7568	31
	33
	52
	54
	74
	75
	84
	85
	98
	108
	110
	147
	149
	168
	170
	176
	177
	178
	179
	180
	181
	189
	334
	336
	344
	600
	602
	606
	621
	625
	627
	631
	650
	660
	1446
	1447
	1448
	1449
215-3005	▶734
	738
215-7066	122
215-7067	122
216-5586	48
217-2661	904
217-4369	736
	737
	762
217-7742	1247
	1250
217-7933	1323
217-8166	550
	554
	561
	573
218-2309	748
218-2971	734
	744
218-3339	598
218-8655	185
	187
218-9894	658
219-0302	1106
	1109
	1325
	1326
	1327
	1328
	1330
	1332
	1334
	1340
	1342
219-0314	142
219-2000	1100
	1101
219-2434	617
219-2437	617
219-3309	94
219-5847	▶52
	▶54
	56
219-5849	27
	28
	▶56
219-6485	▶290
	316
220-1194	25
	26
	▶102
220-1209	61
220-3634	1450
	1456
220-8678	164
221-0777	1272
221-3494	108
	176
221-3676	1017
	1025
221-4482	27
	28
	▶46
221-8045	1450
	1456
222-0345	▶1346
	1349
222-3769	1149
222-3910	75
	76
222-4737	978
	979
	980
	981
	982
	983
	984
	985
	986
	987
	988
	989
	990
	991
	992
	994
222-5893	40
222-5915	74
	120
	124
222-5917	▶255
	412
222-5946	25
	26
	▶97
222-7774	1005
	1007
	1009
	1017
	1025
	▶1032
223-5916	1253
223-8372	724
	725
224-0554	1450
	1456
224-3247	38
224-5912	687
224-6638	86
225-0312	210
	1450
	1456
225-3109	234
	236
	238
	240
	242
	244
	246
	1224
	1228
	1233
	1237
	1239
	1242
	1244
225-4150	1450
	1456
225-4257	1450
	1456
226-0295	1157
	1159
	1165
	1167
	1169
	1172
226-0342	1157
	1159
	1165
	1167
	1169
	1172
226-1240	687
	1450
	1456
226-1274	1450
	1456
226-2870	904
226-2871	904
226-3492	527
	535
226-6621	582
226-7473	219
	▶220
226-8202	789
	801
	803
226-8696	110
226-9622	652
227-1200	50
	51
227-5904	75
	167
	179
	180
	181
	187
227-5926	25
	26
	▶110
227-5942	120
	124
228-3323	251
	479
	485
	491
228-4766	61
228-4947	75
	347
228-5009	542
	546
	551
	555
	558
	561
	565
	567
	570
	573
228-5897	185
	187
228-6052	295
	297
228-6054	295
	297
228-6056	295
	297
228-6089	383
	393
	395
	400
	407
	410
	546
	554
	558
	561
	564
	567
	570
	573
	1151
228-7088	31
	33
228-7089	74
	108
	149
	178
	1447
	1448
	1449
228-7090	31
	33
	74
	177
	1447
	1449
228-8510	102
229-5153	44
229-5154	44
229-5155	44
229-5156	44
229-8841	25
	26
	▶40
229-8844	65
230-1341	274
	281
	285
	287
230-2566	251
230-4011	262
	266
	365
	510
	522

PART NUMBER INDEX

Part	Page
230-4012	262
	510
	522
230-4013	266
	518
	531
230-4477	210
	1450
	1456
230-5008	371
230-6262	84
	85
231-4486	1194
	1195
231-4487	1194
	1195
231-5251	687
231-9897	265
	508
232-0343	168
	▶189
232-1285	50
232-1693	219
232-1732	1194
	1195
232-1754	94
232-3717	27
	28
	▶94
232-6114	1259
233-0891	219
233-3387	▶155
233-7655	116
	118
234-0225	748
234-4323	▶291
	309
	313
234-4324	▶292
	313
	316
234-4325	▶293
	309
234-5012	334
	336
	▶350
234-5013	169
	172
	334
	336
	▶351
234-6666	659
234-7565	1058
	1060
234-7730	291
	292
	293
234-7731	291
	292
	293
235-2412	▶592
	645
	646
235-2413	▶594
	645
	646
235-2765	260
	510
	522
	527
	535
235-4123	253
	254
	255
	263
	393
	395
	564
235-5527	95
235-8200	25
	26
	▶331
235-9651	182
	183
236-0737	1125
	1129
	1133
236-1927	327
	329
236-2356	▶261
	474
	477
	483
	489
	494
	498
	502
	505
236-4545	353
236-4631	385
	393
	395
	401
	408
	410
	547
	556
	559
	561
	564
	567
	570
	573
236-5197	1323
236-6221	334
	336
	▶347
236-8826	474
	477
	483
	489
	494
	498
	502
	505
237-0227	169
	262
	266
	510
	522
237-9822	25
	26
	▶78
238-0415	1077
	1091
	1095
	1200
	1203
238-0417	1077
	1092
	1095
	1200
	1203
238-2698	86
238-4462	787
	795
238-4523	722
238-4524	722
238-4525	722
238-4527	722
238-4528	722
238-5078	606
238-5079	52
	54
	74
	1447
	1449
238-5080	31
	33
	74
	75
	84
	85
	100
	118
	119
	145
	146
	351
	606
	1446
	1447
	1449
238-5081	48
	100
	118
	1446
238-5082	31
	33
	71
	75
	76
	118
	119
238-5084	52
	54
	74
	1447
	1449
238-9397	373
239-0583	39
	75
	76
239-1134	353
	▶370
239-2402	167
	185
	187
239-4991	1450
	1456
239-5030	170
	173
239-6989	1450
	1456
239-9893	▶884
	992
239-9894	▶886
	983
241-4194	353
241-5889	884
	886
241-6205	650
241-6218	650
241-8368	▶364
	515
	518
	531
241-8534	117
242-0588	295
	297
242-3360	156
242-3864	100
242-6099	628
	632
242-9245	752
	757
243-1786	1056
	1060
243-3250	▶261
	474
	477
	483
	489
	494
	498
	502
	505
243-4507	371
243-5289	1450
	1456
243-5362	251
	261
	477
	479
	483
	485
	489
	491
244-2585	921
244-2589	921
	958
	962
244-2592	921
	958
	962
244-2596	921
	958
	962
244-3164	274
244-3168	219
244-3712	336
	621
	627
	631
244-4500	65
244-5880	474
	477
	483
	489
	494
	498
	502
	505
245-3259	72
245-3930	687
245-4630	347
245-6375	141
245-6376	141
245-7339	75
	93
245-7434	253
	254
	255
	263
	383
	393
	395
	400
	401
	407
	408
	547
	554
	559
	564
246-2641	190

▶ PRIMARY REFERENCE

PART NUMBER INDEX

Part	Page
	682
	729
	906
	1346
	1348
	1355
	1360
	1362
	1441
246-2931	26
	▶147
246-4611	142
246-4615	141
246-5916	801
246-6036	108
246-6561	234
	236
	238
	240
	242
	244
	246
	391
246-6562	234
	236
	238
	240
	242
	244
	246
	391
246-9345	25
	26
	▶219
246-9353	331
247-1876	39
	75
	76
247-4285	290
247-4412	1396
	1398
247-6449	240
	▶326
247-6450	234
	244
	246
	248
	▶1039
247-6457	473
247-8602	150
247-8629	592
	594
247-9711	592
	594
247-9730	141
248-1377	643
248-2169	343
248-2886	594
248-5245	1450
	1456
248-6772	1077
	1092
	1096
	1200
	1203
249-3251	884
	886
249-5481	400
	407
	410
249-5486	314
	317
	561
	573
249-5488	547
	556
	559
	561
	564
	567
	570
	573
249-5493	400
	407
	410
249-8575	1450
	1456
250-0544	921
	958
	962
	▶983
250-1424	108
250-2984	142
250-4628	1279
250-7696	▶156
	157
251-0982	1122
251-3227	136
	138
251-4390	867
	871
251-5743	155
251-7350	719
	1224
	1227
	1233
252-0098	676
252-0100	677
252-0102	673
	▶674
	676
252-0104	672
	▶675
	677
252-0106	665
	669
	670
	671
	673
	▶676
252-0108	666
	668
	669
	670
	672
	673
	▶676
252-0111	668
	670
	671
	▶677
252-0112	662
	668
	671
	672
	673
	▶677
252-0114	▶673
252-0118	▶673
252-0678	662
	▶668
252-0679	▶662
252-0719	662
	▶668
252-0720	▶662
252-0730	662
	▶668
252-0731	▶662
252-0774	▶662
	663
252-0775	▶663
252-0964	643
252-5709	234
	236
	238
	240
	242
	244
	246
	391
	▶473
252-7801	57
	59
252-8213	104
253-0861	1443
253-0912	867
	871
253-2111	515
	518
253-2589	25
	26
	▶104
253-4019	1124
	1136
253-4347	750
253-4677	3
	▶808
253-4678	808
	812
253-5322	586
254-0095	27
	▶179
254-5960	238
	240
	246
	▶327
	1051
254-6136	1450
	1456
254-7948	663
	▶668
254-7964	▶663
254-8053	663
	▶669
254-8061	▶663
255-2361	242
	▶328
255-3431	328
255-3482	474
	477
	483
	489
	494
	498
	502
	505
255-6261	1077
	1092
256-3830	94
	▶95
256-3831	▶91
	95
256-3832	91
256-3834	▶92
	95
256-3835	92
256-5308	132
256-6453	350
	351
256-6803	268
	274
256-6804	268
	270
	272
	274
	277
	279
257-3226	1247
	1250
257-8471	1149
257-9363	268
	270
	272
	274
	277
	279
258-0733	353
258-4524	157
258-8723	25
	26
	▶65
259-0134	▶300
	311
	312
259-2627	719
	1415
	1418
259-4758	1265
	1266
260-5716	185
	187
260-6502	821
	830
	834
	841
	845
	848
	851
	854
	▶902
260-7524	91
	92
260-7647	▶196
	474
	477
	483
	489
	494
	498
	502
	505
260-8630	108
260-8631	108
260-9171	170
	173
261-0746	212
261-0747	198
	216
261-1108	867
	871
261-1502	▶288
	306
261-3345	1375
	1377
261-4672	1054
	1056
	1058
	1060
261-4673	1054
	1056
	1058
	1060
261-4674	1054
	1056
	1058
	1060

▶ PRIMARY REFERENCE

PART NUMBER INDEX

Part	Page
261-4675	1054
	1056
	1058
	1060
261-4676	1054
	1056
	1058
	1060
261-5694	1279
261-8541	1415
	1418
	1421
	1424
	1426
261-8543	1415
	1418
	1421
	1424
	1426
261-8553	808
261-9367	▶144
	156
262-0284	185
	187
262-1421	▶232
	268
262-7291	922
	959
	963
	▶992
263-1786	61
263-3774	▶47
	48
263-6914	122
263-8218	165
263-9657	1001
264-2215	▶1407
264-3565	▶118
264-3762	▶141
	142
264-4297	606
264-5346	288
264-5732	266
264-6156	94
264-6157	50
	51
264-7029	266
	365
	510
	522
264-7030	169
	266
	510
	518
	522
264-7031	371
265-1094	1415
265-1095	1415
265-1096	1415
	1418
	1421
	1424
	1426
265-1100	4
	▶1415
265-5007	122
265-5287	596
	624
265-9125	617
266-1467	160
	162
	▶339
	1142
	1144
266-1478	▶340
	1140
266-1598	886
266-1599	884
	886
266-1600	884
266-4360	612
266-6026	1116
	1117
	1119
266-7650	122
266-7651	122
266-8650	336
	▶342
267-1402	334
	336
	▶343
267-3506	1054
	1056
267-3507	635
	732
267-3508	1054
	1056
267-4743	116
267-8575	1078
	1092
	1096
267-8821	882
268-1839	27
	28
	▶182
	▶183
270-2679	254
270-3277	866
271-5658	44
272-0388	43
	74
	1447
	1449
272-1956	74
	152
	1447
	1449
272-3089	160
	162
	753
	758
	1138
	1140
	1142
	1144
272-6641	▶294
	308
274-1704	730
	732
274-3774	254
	285
	287
	425
	429
	434
	443
	452
	461
274-3779	285
	287
274-5909	1247
	1250
274-6717	518
	531
274-6719	169
	172
	334
	336
274-8068	1272
	1273
275-0572	690
	694
275-1253	169
	172
	▶365
275-3634	353
275-6535	5
	▶645
275-7741	▶369
	1386
	1388
275-8387	25
	26
	▶68
275-9638	884
	886
276-4053	224
276-6793	334
	342
276-7462	62
277-1873	510
	522
	527
	536
277-4837	136
	138
277-5368	274
	283
277-6430	581
277-6432	581
	586
277-6433	▶581
	645
277-8996	617
278-0642	582
	587
279-5267	774
	775
	777
279-6632	613
	1415
279-8138	16
	▶833
	1392
280-1480	1443
280-4072	1392
	▶1403
280-4244	367
	401
	408
	410
281-0547	1450
	1456
281-3160	▶655
	660
281-3163	604
	▶660
281-3165	▶604
	645
282-0882	1435
282-2469	4
	▶704
282-2472	3
	▶160
	1105
282-2473	3
	1105
	▶1138
	▶1140
	▶1142
282-2475	3
	▶1125
283-0644	699
283-1578	720
	721
	1054
	1056
	1396
283-7190	▶684
284-0815	884
	886
284-0824	4
	6
	▶117
284-3045	884
	886
284-3502	108
284-5343	5
	▶416
284-5346	5
	▶397
	▶400
284-5347	5
	▶542
	▶546
284-5348	5
	232
	▶541
284-5353	305
	▶313
284-5362	4
	232
	▶308
284-5363	305
	▶319
284-5376	4
	232
	▶309
284-5378	3
	▶685
284-5379	685
284-5394	4
	232
	▶306
284-5397	1324
	▶1330
	▶1332
	▶1334
284-5399	7
	▶1198
284-5400	▶1324
284-7774	142
284-8533	268
	275
285-1133	232
	274
285-3361	▶375
	▶378
	▶383
	1103
	1104
	1325
	1326
	1327
	1328
285-6570	627
	631
285-9066	606
286-0466	1056
286-0742	1054
	1056
286-1089	1450
	1456
286-2631	808
	812
286-4328	7

PART NUMBER INDEX

Part	Page
	▶226
286-4330	▶229
	1214
286-4415	6
	▶1190
286-4416	6
	▶1191
286-4823	1381
	▶1386
287-3259	1272
	1273
287-3260	▶1271
	1280
	1286
	1290
	1295
287-5701	702
287-8562	1286
	1288
	1301
	1303
	1306
	1309
288-0735	1415
288-5508	474
	477
	483
	489
	494
	502
288-5509	474
	477
	483
	489
	494
	502
288-5736	1272
	1273
288-5756	1280
	1283
	1286
	1288
	1290
	1292
	1295
	1298
	1301
	1303
	1306
	1309
	1312
	1315
	1317
	1320
288-5757	1280
	1283
	1286
	1288
	1290
	1292
	1295
	1298
	1301
	1303
	1306
	1309
	1312
	1315
	1317
	1320
288-7324	266
289-0580	1054
	1056
	1058
	1060
289-2935	787
	791
	793
	795
	805
289-2946	787
	795
289-5150	266
289-7545	1083
	1084
	1085
	▶1089
	▶1090
289-9354	515
	518
	531
289-9355	515
	518
	531
289-9726	675
290-0349	1325
	▶1336
290-1127	1103
	1104
	1105
	▶1110
	▶1111
290-1148	▶706
	1324
290-1505	674
290-3783	1454
290-4134	586
290-4752	250
	478
	485
	490
290-5792	▶348
	582
290-8473	1150
291-5475	▶233
	417
291-6693	684
	714
291-8144	127
292-4772	764
	1461
292-6099	1279
293-0730	73
	165
	166
293-2911	1323
293-3824	1450
	1456
293-4153	7
	9
	10
	21
	22
	▶1272
	▶1273
293-4285	627
	631
293-4495	1272
293-4828	5
	▶508
293-4829	4
	816
	▶817
	▶819
293-4830	5
	▶1461
293-4832	1
	5
	▶190
293-4833	1
	4
	▶690
	▶694
293-4835	686
293-6529	226
	1214
	▶1215
293-7533	1215
	1216
	1217
293-8638	5
	636
	▶900
293-9659	1454
294-1136	62
294-1137	62
294-3542	240
	▶474
294-4619	690
294-4621	690
294-5042	1100
	1101
	1350
294-8546	▶305
294-8587	1224
	1237
294-8588	1103
	1104
	▶1224
295-1139	202
	211
	215
295-1834	543
	547
	550
	554
	559
295-1835	543
	547
	550
	554
	564
295-2933	1
	5
	▶723
295-3839	690
	694
295-4371	4
	232
	▶1207
295-7991	▶1214
296-6764	1443
296-6765	1443
296-8060	344
297-1140	416
	420
297-1546	122
297-4841	▶73
297-8049	197
	203
	211
	215
	531
297-8449	240
	242
	▶678
297-8948	3
	▶752
	▶757
	816
298-2426	6
	▶1381
298-3519	3
	197
	215
	▶682
298-3520	197
	210
	▶729
298-3522	682
298-3523	682
	729
298-3529	729
298-5591	3
	▶202
298-5592	▶207
	210
298-8562	690
	694
298-8563	690
	694
299-2277	1279
299-2511	1429
	1430
	▶1431
299-3330	613
299-3427	779
299-3436	774
	775
	777
	1437
299-3439	774
	775
	777
299-3443	1041
	1043
	1047
	1049
	1052
299-8264	627
	631
299-8270	627
	631
299-8306	730
3	
300-1377	735
	745
300-6152	202
	211
	215
300-7933	100
	118
300-9550	52
	▶57
300-9979	10
	▶1083
	1084
	1085
301-0589	268
	275
301-2237	17
	▶866
301-3118	659
301-4173	▶1279
	1350
301-4174	1349
	▶1350
301-6664	197
	202
	207
	211
	215

PART NUMBER INDEX

Part	Page
301-8205	▶1428
	1429
	1430
301-8206	19
	▶1429
301-8207	1428
302-3908	410
	868
	872
302-5210	275
	283
	285
	287
302-5428	268
	▶283
302-5429	2
	▶268
302-6326	1418
	1421
	1424
	1426
302-6328	1418
	1421
	1424
	1426
302-6330	▶1418
	1423
302-7458	1358
	▶1371
	▶1373
302-8814	▶1358
	1359
	1361
303-1978	769
	770
	▶874
303-2033	3
	▶735
303-2034	735
	▶736
	▶737
303-2035	736
	737
	▶738
	▶740
	▶742
303-2159	3
	▶686
	698
303-2348	738
	740
	742
	762
303-3011	3
	▶600
	▶602
	816
303-3357	334
	336
	▶344
303-4649	587
303-5999	730
	732
303-6032	627
	631
303-6037	732
303-6203	1224
	1237
304-0267	1428
304-4924	41
	74
	1447
	1449
304-5303	542
	546
	550
	554
	564
	567
304-5687	196
304-5691	424
	428
	433
	438
	442
	447
	451
	456
	460
	465
	469
304-5794	306
304-5880	308
304-6958	1280
	1283
	1286
	1288
	1290
	1292
	1295
	1298
	1301
	1303
	1306
	1309
	1312
	1315
	1317
	1320
304-7252	690
	694
304-7417	690
	694
304-7418	690
	694
304-7419	690
	694
304-8032	643
304-9957	14
	▶210
305-5362	266
305-7827	690
	694
305-8141	46
	▶48
306-4107	752
	757
306-5499	3
	▶750
	816
306-5505	750
306-8891	900
306-8893	900
307-0047	275
	281
	285
	287
307-0769	1428
307-1735	25
	26
	▶41
307-1958	808
307-1959	808
	812
307-1960	808
	812
307-1961	808
	812
307-1962	808
	812
307-2670	84
307-2671	52
	54
307-2673	606
307-6241	752
	757
307-6242	752
	757
307-6243	752
	757
307-6260	598
307-6568	752
	757
307-7500	752
	757
307-7501	752
	757
307-7502	752
	757
308-0291	508
	521
	526
	535
308-1845	787
	791
	793
	795
	805
308-1880	783
	785
	797
	799
	1401
308-1883	1401
308-1884	1401
308-3456	197
	210
308-5632	1077
	1092
	1095
308-5633	▶1076
	1089
308-6403	508
	521
	526
	535
308-9112	197
	207
308-9113	197
	207
309-1876	655
309-1877	652
	655
309-1878	656
309-1905	874
309-2995	652
	655
309-2996	653
	656
309-4095	4
	698
	▶699
309-4096	699
309-5131	48
310-1640	1281
	1284
	1286
	1288
	1290
	1292
	1296
	1299
	1301
	1304
	1307
	1310
	1313
	1315
	1318
	1321
310-3568	1280
	1283
310-5882	▶132
	133
310-5883	132
310-5884	132
310-6437	4
	▶80
310-6459	3
	6
	▶142
310-6472	4
	6
	▶153
	▶154
310-6534	690
	694
310-6535	690
	694
310-7252	197
	202
	211
	215
310-7253	202
	211
	215
310-7255	50
	51
310-7256	202
	211
	215
310-7257	50
	51
310-9247	41
310-9428	1432
	1433
	▶1434
311-0801	14
	▶414
311-0802	5
	▶515
311-0864	4
	6
	▶150
311-1513	197
	207
311-2771	14
	15
	▶353
311-3026	122
311-3542	25
	26
	▶79
311-4859	260
	265
	522
	527
	535
311-4907	142
311-4908	142
311-4959	150
311-6184	212
311-6185	198
	216
311-6573	197
	203

▶ PRIMARY REFERENCE

PART NUMBER INDEX

Part	Page
	212
	216
311-7210	68
311-8756	169
	172
311-9296	515
312-0377	203
312-0378	203
312-0379	203
312-3542	153
	154
312-8434	150
312-8529	690
	694
312-8530	690
	694
313-3967	25
	26
	▶168
313-4128	1247
313-4131	1247
313-4132	1247
	1250
313-4374	690
	694
313-4384	25
	26
	▶61
313-4620	167
	185
	187
313-4670	474
	477
	483
	489
	494
	498
	502
	505
313-6096	142
313-6098	150
313-6224	1077
	1092
	1095
313-6546	1253
313-6547	1253
313-9542	142
313-9614	168
314-4018	1115
	1118
	1121
314-4184	▶50
	57
314-7609	▶1408
314-7646	768
314-9338	1396
	1398
	▶1401
314-9339	1401
315-2614	▶371
	1083
	1084
315-4117	619
315-4118	4
	6
	▶619
315-6148	619
315-9835	650
315-9843	52
	54
316-5237	1103
	▶1280
	▶1283
	1325
	1326
316-5238	4
	▶1286
	▶1288
316-5743	690
	694
316-6688	627
	631
316-6689	136
316-8226	255
317-1117	1043
	1047
317-1529	136
317-1533	169
	172
317-1537	730
	732
317-3164	203
	212
	531
317-6017	666
	669
317-6018	670
317-7250	690
	694
317-8063	106
317-8382	371
318-1178	▶349
	521
	526
	535
318-2064	197
	203
	212
	216
318-8144	185
319-0607	179
319-2228	1058
	1060
319-3819	50
319-3820	50
319-3821	50
319-3822	50
319-3823	50
319-3824	50
319-6225	31
	33
319-6234	52
	54
319-6698	868
	872
320-0341	8
	▶1103
	▶1104
320-0342	7
	9
	10
	▶1325
	1326
	1327
	1328
320-0924	730
	732
320-2746	1393
	1395
320-2749	1394
320-7431	19
	1392
	▶1393
320-8203	416
	420
	424
	428
	433
	438
	442
	447
	451
	456
	460
	465
	469
320-9924	3
	▶1394
321-4272	▶1390
321-5967	621
321-8635	180
	181
321-8638	180
	181
321-8641	606
321-8649	100
321-8654	100
322-0245	25
	26
	▶148
322-0246	25
	26
	▶66
322-2320	4
	▶867
	889
322-2322	15
	17
	▶870
322-5824	275
	283
322-7341	508
322-8548	▶1359
323-5592	▶249
	474
	477
	483
	489
	494
	498
	502
	505
323-8674	808
	812
323-8675	808
	812
323-8857	1325
	1326
	1327
	1328
	1330
	1332
	1334
323-8936	25
	26
	▶100
324-3364	474
	484
324-3366	474
	477
	484
	489
	494
	498
	502
	505
325-1242	150
	198
	203
	212
	216
325-5730	1224
	1237
325-5978	746
325-7129	169
325-7130	4
	6
	▶169
	▶172
325-7427	5
	6
	▶136
	▶138
325-7447	122
325-7448	4
	6
	▶122
325-8635	1083
	1084
	1085
	1086
	1087
	1198
	▶1253
	▶1255
325-9697	640
326-0610	690
	694
326-0612	690
	694
326-1644	164
326-3117	508
326-3118	509
326-3120	510
	521
	526
	535
326-3121	198
	207
326-9040	60
326-9045	25
	26
	▶60
327-0560	474
	477
	484
	490
	494
	498
	502
	505
327-0561	474
	477
	484
	490
	494
	498
	502
	505
327-0726	738
	740
	742
	766
	1466
327-0727	738
	740
	742
	762
327-0728	738
	740
	742
	762
327-0730	738
	740
327-0731	738
	740

PART NUMBER INDEX

Part	Page
327-3973	1461
328-1673	600
	602
328-1674	874
328-2060	1116
	1117
	1119
328-2062	1083
	1084
	1085
	▶1116
	▶1117
328-2585	▶165
	182
328-2786	169
328-2787	169
328-2788	169
328-3655	621
	627
329-0412	617
329-3710	1437
329-3734	264
	266
329-3826	20
	▶1392
329-5518	334
329-5707	1450
	1456
330-6022	25
	26
	▶412
330-6038	25
	▶334
330-6877	1434
	1437
330-7743	998
	▶1033
330-9763	31
	33
331-1102	474
	477
	484
	490
	494
	498
	502
	505
331-3892	1450
	1456
332-1550	722
332-1618	21
	22
	23
	▶722
332-3657	425
	430
	434
	439
	443
	448
	453
	457
	462
	466
	470
332-6415	3
	▶590
332-6594	1260
332-6597	1260
332-7657	516
	519
	532
332-8657	22
	▶1260
332-8832	620
332-8833	▶620
	631
333-0960	1058
	1060
333-6436	▶621
	627
333-9308	▶580
	621
334-2679	580
334-2680	580
334-3341	21
	22
	▶420
334-3342	420
334-3343	421
	428
	451
	456
	460
	465
	469
334-3344	21
	22
	▶550
	▶554
334-3346	21
	22
	▶1290
	▶1292
334-3347	1290
	1292
	1295
	1298
334-3348	21
	22
	▶311
334-3741	1290
	1293
	1296
	1299
	1307
	1310
	1318
	1321
334-5409	▶303
	313
	316
334-5410	▶304
	319
	321
334-5760	16
	19
	▶701
334-6872	414
	415
334-7633	541
334-9745	416
335-0806	216
	515
	518
335-1415	130
	▶730
335-1416	130
	131
	▶140
335-1418	130
	▶610
335-1419	1083
	▶1122
335-1420	730
335-1422	730
335-1424	730
335-1425	730
335-1426	730
	732
335-1428	730
	732
335-1430	730
335-1431	730
335-1432	730
	732
335-1433	730
	732
335-1446	140
335-1447	140
335-1448	140
335-1450	134
335-1451	134
335-1453	610
335-1454	610
335-1894	397
335-1895	397
	403
335-2115	610
335-2116	1122
335-2117	1122
335-2118	1
	4
	6
	▶130
	▶131
335-2120	730
335-3982	31
	33
335-6210	1116
	1117
	1119
335-6989	22
	▶1295
	▶1298
335-8402	309
335-8961	1273
335-9214	122
335-9387	1280
	1283
	1286
	1288
336-0057	36
	1450
336-0959	313
	316
336-0961	313
	316
336-1559	19
	20
	▶720
	▶721
336-1963	720
336-1964	720
336-3545	268
	275
	▶333
336-4249	17
	▶234
	▶236
	▶238
336-4598	730
	732
336-4754	690
	694
336-4756	690
	694
336-5530	234
	236
	238
	240
	242
	244
	246
	248
	▶687
336-9085	510
	521
	526
	535
336-9245	234
	236
	238
	244
	246
	248
	▶680
336-9255	234
	244
	246
	▶477
337-0732	4
	▶635
	636
337-3100	17
	▶240
	▶242
337-3357	3
	6
	▶612
337-5270	623
337-6814	510
	522
337-7998	▶1227
	▶1232
	1325
	1326
	1327
	1328
338-1942	371
338-3481	1224
	1237
338-3483	1224
	1237
	1242
338-5223	1224
	1237
338-5871	4
	6
	▶62
	63
338-7445	1041
	1049
	1052
338-7446	1041
	1049
	1052
338-7447	1041
	1049
	1052
338-7508	▶1041
	1392
338-8415	311
	312
338-8484	635
338-9747	4
	698
	▶712
339-1882	1041
	1049
	1052
339-1910	1041
	1049
	1052
339-1911	1058
	1060

PART NUMBER INDEX

Part	Page
339-4968	▶6
339-4978	▶19
339-5505	▶250
	474
	478
	484
	490
	494
	498
	502
	505
339-5506	▶251
	474
	478
	485
	491
	494
	498
	502
	505
339-6543	1261
	1268
	1269
339-7734	▶1400
	1432
	1433
340-1166	1
	1442
	1460
340-1191	▶7
340-2602	▶663
340-2603	▶663
340-2614	663
	▶669
340-2615	663
	▶669
340-2632	664
	▶669
340-2633	664
	▶670
340-2640	▶664
340-2641	▶664
340-3687	686
340-3689	686
340-3739	98
340-3745	25
	26
	▶98
340-4515	617
340-4518	617
340-5008	▶1432
340-5470	1007
	1009
	1011
	1013
	1015
	1017
340-5472	1001
	1003
	1005
	1019
	1021
	1023
	1025
340-7076	1261
	1268
	1269
340-7160	228
	229
	230
	231
	1267
341-8347	1043
341-8349	3
	▶1054
341-8350	1054
341-8667	31
	33
341-8841	31
342-0725	1461
342-1630	736
342-4977	40
342-9022	223
	224
342-9290	223
	224
343-5527	164
344-0050	510
	522
344-3457	▶295
	420
	428
	451
	460
344-3458	▶297
	421
	428
	451
	460
344-5673	690
	694
	764
344-5675	198
	425
	429
	434
	439
	443
	447
	452
	457
	461
	466
	470
	527
	532
	536
	602
	628
	632
	715
	762
	764
	846
	849
	852
	855
	858
	862
	868
	872
344-6167	306
345-0188	456
	465
345-0635	136
	138
	198
	203
	212
	216
345-0637	203
	212
	531
345-7649	3
	▶194
346-3285	▶1409
346-3799	1031
	1032
	1033
	▶1034
346-3800	1030
	▶1035
346-4792	142
346-5641	▶232
	234
	236
	238
	240
	242
	244
	246
	248
346-7763	223
	224
346-9376	270
	272
	277
	279
347-0066	604
347-1266	36
	80
	1119
347-2426	103
347-2428	1
	4
	▶103
347-2429	103
347-3148	120
	124
347-4165	122
347-4645	3
	▶1043
347-6521	670
347-6522	671
347-7407	623
347-8846	16
	▶1396
348-2557	▶7
348-2795	1330
	▶1337
348-3301	5
	▶907
	▶910
348-4955	3
	▶613
	636
348-6936	▶19
348-6937	▶16
348-6939	▶20
348-6940	▶8
348-6941	▶9
348-6942	▶10
348-6943	▶14
348-7027	▶912
348-7028	▶915
348-7029	▶769
348-7030	▶918
348-7031	▶921
348-7032	▶769
348-7033	▶769
348-7520	769
	▶925
348-7523	769
	▶928
348-7527	769
	▶931
348-8157	4
	6
	▶627
	▶631
348-8159	1083
	▶1247
348-8224	1247
348-8372	1247
349-0739	198
	207
349-0740	198
	207
349-0883	▶1410
349-2486	▶17
349-2487	▶17
349-6212	691
	695
349-7059	190
349-8405	234
	236
	244
	▶329
350-6658	701
	702
350-7735	190
351-0274	120
	124
351-0580	3
	636
	▶748
351-8488	223
351-8490	▶223
	270
	272
351-8628	783
	785
	797
	799
351-8660	690
	694
351-9918	290
	291
	292
	293
	294
352-0148	153
	154
352-0373	371
352-1511	701
	702
352-2138	▶126
	129
352-2139	127
	▶129
352-3964	498
	505
352-3965	470
352-3966	412
352-3970	474
	479
	494
	498
	606
352-4719	665
	▶670
352-6310	234
	236
	238
	240
	242
	244
	246
352-6311	234
	236
	238
	240
	242
	244
	246

▶ PRIMARY REFERENCE

PART NUMBER INDEX

Part	Page
352-7774	130
	131
	▶133
353-2130	1102
	1232
	1239
353-2308	664
	▶670
353-2309	664
	▶670
353-2310	664
	▶671
353-2311	665
	▶671
353-4515	522
	527
	535
353-4688	620
	▶623
353-5097	31
	33
353-5112	334
353-5124	52
	54
353-5125	52
	54
353-5223	▶664
353-5224	▶664
353-5225	▶664
353-5226	▶665
353-5228	▶665
353-5729	665
	670
353-7957	198
	212
	216
	532
353-8773	270
	272
	277
	279
	281
354-0882	1428
354-9444	1001
	1003
	1005
	1007
	1009
	1011
	1013
	1015
	1017
	1019
	1023
	1025
355-0598	268
	275
355-1213	270
	272
	277
	279
355-3148	1250
356-0790	▶665
356-0791	▶665
356-5748	41
	▶43
356-7636	80
	82
356-7637	80
	82
356-8331	805
358-4889	370
358-7348	479
	489
	494
	498
	502
	505
358-7822	25
	26
	▶84
358-9192	1258
	1261
	1262
	1263
	1265
	1266
	1268
	1269
358-9496	▶21
359-1046	21
	22
	▶320
359-1519	▶22
359-1520	▶22
360-0567	1103
	1104
	▶1218
	1325
	1326
	1327
	1328
360-2133	▶233
	424
	433
	438
	442
	447
360-2196	25
	26
	▶31
	▶33
360-2197	31
360-3677	71
	120
	124
	334
360-3678	127
	334
360-3679	84
	85
	98
	110
	147
	168
	179
	334
360-3680	85
	90
	120
	124
	127
	145
	146
360-3681	127
360-3682	71
	89
360-3736	142
360-9276	730
	732
360-9277	730
	732
360-9279	730
	732
361-1045	270
	272
	277
	279
	281
361-3549	1001
	1003
	1005
	1007
	1009
	1011
	1013
	1015
	1017
	1019
	1021
	1023
	1025
361-7150	546
	550
	554
361-9025	1367
361-9061	1367
361-9062	1367
362-0288	542
	546
	552
	556
362-1559	4
	6
	▶105
	▶106
362-2789	160
	162
	1138
	1140
	1142
	1144
363-6601	1034
363-8142	105
364-0400	1338
	1339
364-7493	4
	▶25
364-9230	1332
	1334
	1340
365-3500	25
	▶27
365-5529	586
365-5531	606
	▶650
365-5532	606
365-5536	▶586
	646
365-5537	▶606
	646
365-6500	1
	5
	▶646
365-7756	24
	27
366-0367	564
	567
366-2756	195
366-3033	590
366-4622	558
	561
	564
	567
	570
	573
366-4972	1030
	1035
366-7553	122
367-0844	1450
	1456
368-2369	261
368-2370	261
368-3025	▶3
368-3034	4
	▶1450
368-3035	▶1443
	1450
	1456
368-3036	1443
368-4541	547
	556
	559
	561
	564
	567
	570
	573
368-4542	360
	547
	555
	559
	564
368-4544	1190
	1191
	1192
	1193
368-6713	▶270
368-6714	▶272
368-6722	▶1261
368-6723	1261
	1268
368-6724	1261
	1268
368-6726	▶274
368-6727	272
	277
	▶285
368-6728	270
	279
	▶287
368-6729	▶277
368-6730	▶279
368-9750	▶666
368-9751	▶666
369-0378	877
369-3938	197
	210
369-6662	189
370-5761	25
	26
	▶124
371-1253	190
371-7186	334
371-8094	138
372-2766	876
372-2767	876
372-3738	26
	27
	▶157
372-3879	▶834
	1392
372-3880	4
	▶837
	1063
372-4531	▶224
	277
	279
372-4532	224
372-4991	153
372-6418	666
	▶671
372-6419	▶666
372-6424	666

▶ PRIMARY REFERENCE

PART NUMBER INDEX

Part	Page
	▶671
372-6425	▶666
373-6938	5
	▶558
373-6939	558
	564
373-6940	5
	▶424
373-6941	424
	433
	442
373-6945	5
	▶518
373-6946	518
	531
373-6947	▶373
	1085
	1086
	1087
373-6948	373
373-6949	198
	212
	216
374-0614	3
	▶1056
374-0615	1056
374-7463	258
	259
	264
374-7464	1307
	1309
	1312
	1317
	1320
374-7465	258
	259
374-7466	254
	258
	259
374-7468	258
	259
	264
375-2467	74
	1449
375-2987	610
	611
375-4824	1106
	1326
	1327
	1328
	▶1338
	▶1339
375-5429	834
	854
375-5430	834
	842
	845
	854
376-1344	666
	▶672
376-1345	▶666
376-6712	732
376-6714	732
376-6716	732
376-6718	732
376-6719	732
376-6720	732
376-6722	133
	▶134
376-6723	134
376-6725	611
376-6726	611
376-6727	131
	▶611
376-6728	131
	▶732
376-6729	1084
	1085
	1086
	1087
	▶1123
376-9011	793
	805
376-9017	783
	785
	797
	799
377-0662	4
	▶841
377-9303	825
	837
377-9304	825
	837
377-9593	100
377-9603	120
	124
378-2695	801
	803
378-4616	177
379-4984	▶264
	606
379-5175	606
380-0563	1255
380-6214	212
	532
380-6215	198
	212
	216
380-6949	881
381-2499	▶266
	412
381-3243	▶1360
381-3244	1157
	1159
	1165
	1167
381-3245	1161
	1163
381-3246	1161
	1163
381-3250	1261
	▶1262
	▶1263
	1268
	1269
381-3256	1157
381-3257	▶1157
	1161
381-3258	▶1159
	1161
381-3259	1159
381-3261	1111
	▶1161
	1339
381-3269	1102
	1232
	1239
381-3280	1332
	1334
	1340
381-3284	1232
	1239
381-3653	1288
	1292
	1298
	1301
	1303
	1306
	1309
	1312
	1315
	1317
	1320
381-8026	▶232
	270
	272
381-8147	1288
	1292
	1298
	1301
	1303
	1306
	1309
	1312
	1315
	1317
	1320
381-8233	672
381-8868	27
	▶177
382-1611	242
	▶330
382-1612	236
	238
	248
	▶1040
382-1740	667
	▶672
382-1741	▶667
382-4604	1418
	1421
	1424
	1426
382-5902	242
	▶483
382-5903	236
	238
	▶489
382-5904	400
382-5905	400
	407
382-5906	383
	393
	395
382-5907	546
383-2251	▶1421
	1423
383-6008	4
	▶1423
383-6302	1
	1460
383-7644	1182
	1184
	1186
	1188
383-8496	1283
	1288
	1292
	1298
	1301
	1303
	1306
	1309
	1312
	1315
	1317
	1320
384-0607	180
	▶185
384-3405	▶1
384-3727	1250
384-3730	1250
384-3892	881
384-3893	881
384-5820	1149
384-6463	274
384-7614	21
	22
	▶428
384-7615	428
	451
	460
384-7616	21
	22
	▶561
	1114
384-7727	881
384-9992	118
385-0244	1077
	1092
	1095
	1199
	1203
385-4545	1250
385-4546	1250
385-5215	542
385-5216	550
385-8201	281
386-3993	274
386-5925	5
	▶403
	▶407
386-5926	404
	407
386-9663	▶324
	1182
	1186
387-2851	2
	7
	8
	9
	10
	▶1264
	1334
387-2867	606
387-8505	24
	▶28
387-9427	▶166
	183
388-2517	5
	▶521
	▶526
388-2518	▶265
	522
	527
	536
388-2519	▶260
	522
	527
	536
388-2563	▶233
	277
	279
388-3769	153
388-3780	153
388-7010	153
	154
388-7012	153
	154
388-7390	720
	721
389-0240	723
	▶724
389-0241	723
	▶725
389-1072	172

PART NUMBER INDEX

Part Page

389-1183 28
▶180
▶181
389-3708 84
85
110
147
168
179
334
389-3709 71
389-3737 31
33
389-8102 834
842
845
854
389-9576 31
33
▶35
390-2799 881
390-8021 821
834
851
854
390-8589 167
185
187
391-4245 1264
▶1265
391-4246 1264
▶1266
391-4247 1265
391-4248 1266
391-8796 554
392-0184 643
392-0185 643
392-0773 334
336
392-5357 100
393-0314 1360
1362
393-2625 1084
1085
1086
1087
▶1250
393-3590 26
▶332
394-0862 15
▶244
▶246
394-4972 . . . . . ▶1432
394-4973 . . . . . ▶15
394-9671 1117
▶1118
395-0487 1
4
▶26
396-0393 71
334
396-0404 127
396-0405 90
120
124
127
396-2352 1176
1177
1257
396-3298 . . . . . ▶167
185
396-8415 28
▶178
396-8955 . . . . . ▶1045

Part Page

1047
396-9056 672
397-1172 . . . . . ▶24
26
397-2124 586
398-0371 1274
398-3644 799
398-3707 586
398-3708 586
398-5361 559
565
398-5596 85
98
145
146
398-5598 120
124
398-5612 89
399-4567 1418
1421
1424
1426

4

415-3517 24
▶1454
416-4678 103
417-6027 1081
1090
▶1091
417-6161 . . . . . ▶256
1092
1095
1203
417-8149 . . . . . ▶1046
1049
1051
417-8152 . . . . . ▶1058
1432
1433
417-8159 1058
417-8161 3
▶1060
1063
417-8162 1060
418-6781 74
149
1447
1448
1449
420-0496 1197
▶1203
421-1520 4
18
▶1301
421-1521 18
1104
▶1303
1327
1328
421-1522 . . . . . ▶257
1301
1303
1312
1315
421-1525 1306
1309
1317
1320
421-1527 3
▶211

Part Page

421-4022 3
6
▶195
421-4023 791
421-5047 3
20
▶1047
421-5048 . . . . . ▶1049
1051
1392
422-2152 1076
1092
1095
1176
1177
1178
1179
1257
422-2480 612
423-1984 111
150
423-2284 172
423-2285 172
423-4955 226
▶230
423-5701 1211
423-6535 606
423-6697 1076
1092
1095
1204
423-8806 . . . . . ▶262
527
532
423-9923 4
23
▶812
424-4322 254
424-7124 28
▶336
424-8612 2
▶16
424-8613 . . . . . ▶20
425-5541 6
▶82
425-5542 11
12
14
▶36
425-5544 11
▶1119
425-5590 1
▶6
426-0979 . . . . . ▶1211
1373
426-2118 690
426-4162 127
428-7471 84
85
431-8801 881
433-7105 577
782
433-9530 . . . . . ▶1442
434-1356 333
434-3510 1
▶698
434-4108 18
▶433
▶438
434-4109 18
▶442
▶447
434-4110 . . . . . ▶451
▶456

Part Page

1114
434-4111 . . . . . ▶460
▶465
▶469
1114
434-4112 . . . . . ▶388
1105
1106
1108
1109
434-4113 232
▶531
434-4114 18
▶564
▶567
434-4115 2
▶215
434-4117 15
▶197
434-6583 770
▶934
▶937
434-6584 . . . . . ▶940
▶943
434-6587 770
▶946
▶949
434-6589 . . . . . ▶952
▶955
434-6591 . . . . . ▶958
▶962
434-6593 . . . . . ▶966
▶969
434-6594 769
▶972
▶975
434-6740 11
12
14
▶1368
434-6741 12
▶1150
434-6742 19
▶1151
434-6743 13
19
▶688
434-6744 17
23
▶1152
434-8039 23
▶312
434-8040 305
▶316
434-8042 305
▶321
434-8045 10
▶1192
434-8046 10
▶1193
434-8047 7
9
10
11
14
21
22
▶1274
434-8048 226
▶1216
434-8049 1382
▶1388
434-8050 248
▶494

PART NUMBER INDEX

Part	Page
	▶498
434-8052	248
	▶502
	▶505
434-8054	15
	▶415
434-8056	226
	▶1068
434-8058	226
	227
	▶231
434-8078	▶871
	889
434-8079	889
	▶890
434-8083	▶764
	816
434-8084	16
	▶845
434-8085	16
	▶848
434-8086	▶1465
434-8087	2
	▶766
	816
434-8088	17
	▶851
434-8089	16
	20
	▶854
434-8339	17
	23
	▶305
434-8341	248
	▶391
434-8346	13
	▶226
435-1492	▶360
435-1511	16
	20
	▶1063
435-1512	▶1432
435-1513	21
	▶1051
435-1515	16
	17
	▶1433
435-1519	20
	▶1392
435-1521	▶1
435-1526	15
	▶248
435-1534	▶10
	13
435-1535	▶15
435-1536	10
	▶1382
435-1537	2
	▶17
435-1538	20
	21
	▶719
435-1544	1
	▶1456
435-1548	15
	▶248
435-1551	15
	▶1051
435-1558	▶769
435-1559	2
	▶770
435-1561	▶770
435-8193	1
	▶816
435-8241	15
	▶889
435-8242	20
	21
	▶889
435-8654	61
436-3333	150
436-3473	2
	▶1395
436-7621	1
	▶232
436-7624	23
	▶322
436-7761	▶1
436-8767	1
	▶636
436-8770	1
	▶23
436-9180	▶325
	1188
437-0626	1
	▶1105
437-0627	1105
	▶1129
437-0650	12
	14
	▶1105
437-0660	12
	14
	▶1106
437-0671	▶1355
437-0672	2
	▶1361
437-0673	13
	▶1267
437-0677	11
	▶1106
437-0678	1105
	▶1237
437-0680	1106
	▶1340
437-0681	1106
	▶1239
437-0682	11
	▶1086
437-0684	▶1362
437-0685	▶1268
	▶1269
437-0688	1105
	1106
	▶1220
437-0689	▶708
	1106
437-0690	2
	▶1153
	▶1154
437-0691	▶1155
	▶1156
437-0701	▶1081
	1086
437-1151	715
437-2759	233
438-1307	232
	▶410
438-8638	104
439-5724	2
	▶702
439-9104	20
	▶1430
439-9111	1392
	▶1398
440-0257	▶366
	620
440-1605	26
	▶146
440-2105	▶225
	226
440-3431	667
	▶672
440-3433	▶667
441-0958	172
441-0961	172
441-0962	138
441-0963	138
441-1236	1274
442-1756	▶714
443-8144	627
	631
443-8462	281
444-5323	23
	▶1423
444-5324	1423
	▶1424
444-5325	1423
	▶1426
444-5326	1432
	▶1437
444-6524	295
	297
446-1524	1047
	1049
	1052
446-1527	1049
	1052
447-1655	683
447-3143	673
447-6839	▶18
447-6840	2
	▶18
447-7469	▶267
	1274
448-0412	667
	▶673
448-5577	▶667
449-8593	232
450-0595	591
450-1553	233
450-3729	740
	742
	▶744
	762
450-6177	▶149
450-6412	▶1051
	1052
450-7134	22
	1114
	▶1306
450-7136	21
	1114
	▶1309
450-7861	1051
	▶1052
451-8019	254
452-0491	▶267
	281
452-0647	232
	▶535
453-0259	3
	▶591
	636
453-0260	591
453-1662	▶75
453-2783	▶393
	1105
	1106
453-2908	▶1147
	▶1148
453-6457	958
	962
454-2957	902
454-3032	902
454-7803	727
	728
454-9640	1465
	1466
454-9642	1465
	1466
454-9695	232
455-0154	▶1466
455-0158	▶745
	816
455-0162	745
	▶762
455-0704	262
455-0705	262
	531
455-1084	1444
455-1106	▶1446
455-1107	▶75
455-1108	▶118
455-1109	▶76
455-1110	▶1447
455-1111	▶1448
455-6164	857
	861
455-6177	857
	861
455-6179	857
	861
455-7844	▶263
	567
	570
455-9255	424
	429
	433
	438
	442
	447
	452
	456
	461
	465
	469
455-9820	▶1392
457-0799	812
457-4049	742
457-4050	737
	762
457-4051	742
	762
457-5258	▶1449
458-3867	812
458-3868	812
458-5941	▶16
458-5943	▶20
458-5955	2
	▶20
458-5959	2
	▶11
458-5977	▶11
458-5980	▶16
458-5984	▶12
458-5988	▶12
458-5990	▶23
460-1394	766
	1461
	1466
460-6436	▶23
460-7649	▶17
461-0560	2
	▶19

▶ PRIMARY REFERENCE

PART NUMBER INDEX

Part	Page
461-0561	▶13
461-0562	▶13
461-0999	▶1460
461-2764	2
	▶21
461-2769	▶15
461-2792	▶15
461-2961	▶1114
461-2964	▶1114
461-3386	▶119
461-3568	1130
461-4541	▶252
	561
	573
461-5232	197
462-3542	1270
462-5407	561
	567
	570
	573
462-7244	▶19
462-7246	2
	▶6
462-7250	▶13
462-7252	▶23
464-8368	▶226
	281
464-8591	▶14
464-8592	▶14
464-9988	1119
	▶1121
465-1093	190
465-6950	▶63
465-8551	694
465-8553	694
465-8555	694
465-8777	▶2
465-9256	▶74
466-1003	1344
466-2107	▶258
	456
	465
	469
466-2108	▶259
	438
	447
466-2111	▶281
466-2118	▶254
	410
466-2119	▶255
	410
466-4376	1133
466-4377	1133
467-5480	1123
467-8535	410
472-0205	649
472-8025	789
472-8026	801
	803
473-1587	281
473-5448	561
	567
	570
	573
476-1913	232
476-8768	181
	▶187
476-9318	223
	224
478-6234	687
478-7932	220
479-5977	▶857
	1063
479-5978	▶861
	1432
	1433
479-5979	857
	861
481-6936	649
482-4544	602
	▶649
482-7035	▶233
	281
485-7242	33
485-7243	33
486-4542	▶298
	469
486-5257	154
487-2807	54
	▶59
487-2810	▶51
	59
490-1097	1133
490-1103	910
	937
	943
	949
	955
	962
	969
	975
490-1104	910
	937
	943
	949
	955
	962
	969
	975
490-1105	910
	937
	943
	949
	955
	962
	969
	975
490-1106	910
	937
	943
	949
	955
	962
	969
	975
490-1107	949
	955
	962
	969
	975
490-1108	937
	943
	949
	955
	962
	969
	975
490-1110	▶897
	910
	937
	943
	949
	955
	962
	969
	975
490-1111	897
491-0637	▶299
	470
491-7840	154
492-1813	77
494-5306	1049
	1052
494-5307	1049
	1052
494-5308	1047
494-7120	▶75
495-8194	791
495-8289	▶1411
499-9252	1113
499-9253	1112
499-9254	1342
5	
501-1161	▶111
501-1168	111
503-6251	606
504-9576	1130
505-1260	233
505-5361	178
507-5209	85
508-4117	233
509-4135	594
	596
	598
509-4136	592
	594
509-4138	598
509-4139	598
510-3672	144
510-3682	144
510-3687	144
510-3708	144
512-5898	1107
	▶1133
512-5899	1133
512-5900	1133
512-5901	1133
512-5903	1133
512-5904	1133
512-5907	1133
512-5908	1107
	▶1144
512-5909	1144
512-5911	▶162
	1107
512-5912	162
512-5914	1148
512-5917	910
	937
	943
512-5919	1133
512-5933	1107
	▶1136
512-5936	1136
512-5937	1136
512-5938	757
512-5945	1133
512-5946	1133
512-5948	1136
512-5949	1136
512-5950	1315
	1321
512-5951	1312
	1315
	1317
	1321
512-5952	710
512-5953	1108
	▶1242
512-5954	1370
512-5955	1087
	▶1178
512-5956	1178
512-5957	1178
512-5958	1109
	▶1244
512-5959	1244
512-5961	1244
512-5962	1244
512-5963	1244
512-5964	1242
	1244
512-5965	1242
	1244
512-5966	1242
	1244
512-5967	1242
	1244
512-5968	1242
	1244
512-5969	▶1102
	1244
512-5970	1102
512-5971	1136
512-5972	1108
	1109
	▶1222
512-5973	1222
512-5974	1222
512-5975	689
512-5976	395
512-5977	910
	937
	943
	949
	955
	962
	969
	975
512-5978	910
512-5982	1087
	▶1177
512-5983	1177
512-5988	710
512-9018	1154
512-9019	1156
512-9020	570
	573
512-9021	1342
512-9022	1369
512-9023	1369
512-9024	1369
512-9025	1242
512-9026	1242
512-9027	1242
512-9028	1242
512-9029	1242
512-9030	1242
512-9031	1087
	1370
512-9032	1194
512-9033	1244
512-9034	1102
512-9035	1217
512-9036	▶726
	1107
512-9037	726
	▶727
512-9038	727
512-9039	727
512-9040	727
	728

PART NUMBER INDEX

Part	Page
512-9041	727
	728
512-9043	727
	728
512-9044	728
512-9045	728
512-9046	726
	▶728
512-9912	881
513-0286	1364
513-0865	910
	▶979
513-0866	943
	▶984
513-0867	937
	▶985
513-0868	970
	976
	▶994
513-2229	1444
513-2495	1106
	1109
	1340
	1342
513-3693	▶1363
	1364
513-6266	233
514-4274	732
514-5810	1
	▶1444
514-6534	26
	▶85
514-7745	1112
	1113
	▶1163
514-7746	1163
	▶1165
514-7747	1163
	▶1167
514-7748	1165
514-7749	1167
514-7750	1165
514-7751	1167
514-7752	1165
514-7753	1167
515-1614	764
515-1615	762
515-1618	764
515-4605	1364
515-4606	1364
516-2801	498
	505
516-2802	498
	505
516-2826	▶715
	718
516-7747	775
	▶791
516-7748	791
516-7914	710
516-7915	710
	1222
516-7916	1070
516-7917	1
	▶1107
516-7920	12
	14
	▶1108
516-7921	12
	14
	▶1109
516-7922	1109
	▶1342
516-7923	▶710
	1109
516-7924	12
	14
	▶1369
	1370
516-7925	1108
	▶1112
516-7926	395
516-7928	11
	12
	14
	▶1370
516-7929	▶1082
	1087
516-7930	11
	▶1087
516-7931	11
	▶1109
516-7932	1109
	▶1113
516-8248	882
516-8251	▶882
517-1128	882
517-1129	882
518-3378	1263
518-3381	13
	19
	▶689
518-3382	▶1364
518-3384	1269
518-3385	1269
518-3685	1082
	▶1095
518-3689	1087
	▶1194
518-3690	1194
518-6846	18
	▶570
518-6847	18
	▶1312
518-6848	18
	▶1315
518-6849	▶573
	1114
518-6850	1114
	▶1317
518-6851	1114
	▶1320
518-6852	▶395
	1108
	1109
518-6854	227
	▶1070
518-6855	227
	▶1217
518-9609	1095
518-9611	1095
518-9612	1095
518-9613	1095
518-9614	1096
518-9616	1096
520-3154	13
	▶227
520-8568	▶367
	880
520-9964	880
	▶883
521-1027	▶880
521-3245	▶683
	718
521-3250	▶718
523-9805	▶1412
523-9806	▶1413
527-3175	▶625
527-3176	▶624

▶ PRIMARY REFERENCE

MEMORANDA



©2017 Caterpillar
All Rights Reserved

CAT, CATERPILLAR, their respective logos, “Caterpillar Yellow”, and the POWER EDGE trade dress as well as corporate and product identity used herein, are trademarks of Caterpillar and may not be used without permission.

SEBP6015-14
VOLUME I
Pages 1-768

120K Motor Grader

SZS1-UP