Parts Catalog

12G CRAWLER LOADER

ALLIS CHALMERS

(S/N 101-UP)
(S/N 43C01001-UP)

JANEIRO 1974

(Includes 11R RIPPER)

RUTHZIL TRATOR COMERCIAL DE PEÇAS LTDA 11 97083-6812 ROLANDO

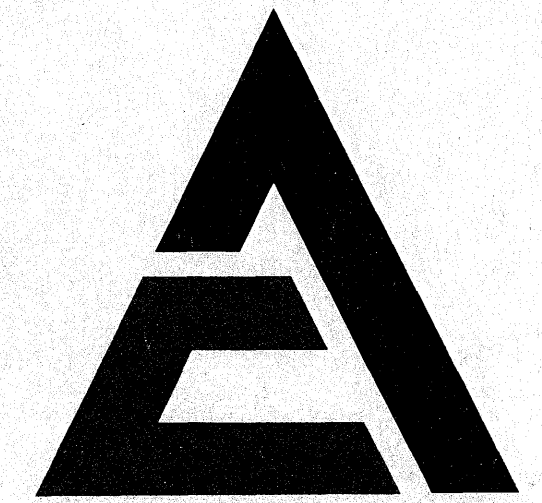

NOTICE

Allis-Chalmers Corporation and FIAT S.p.A. entered into a joint venture agreement to combine their manufacture, sale and service of construction machinery products throughout the world after January 1, 1974.

In view of the new enterprise, wherever in this publication reference is made to Allis-Chalmers or your Allis-Chalmers dealer, such reference is intended to identify FIAT-ALLIS Construction Machinery Inc. or your FIAT-ALLIS dealer.

CONSTRUCTION MACHINERY DIVISION
SPRINGFIELD, ILLINOIS 62708 U.S.A.

FORM 0683934-4
REPLACES 0667913-8

AVOID ACCIDENTS

Most accidents, whether they occur in industry, on the farm, at home or on the highway, are caused by the failure of some individual to follow simple and fundamental safety rules or precautions. For this reason **MOST ACCIDENTS CAN BE PREVENTED** by recognizing the real cause and doing something about it before the accident occurs.

Regardless of the care used in the design and construction of any type of equipment there are many conditions that cannot be completely safeguarded against without interfering with reasonable accessibility and efficient operation.

A careful operator is the best insurance against an accident. The complete observance of one simple rule would prevent many thousand serious injuries each year.
That rule is:

Never attempt to clean, oil or adjust a machine while it is in motion.

NATIONAL SAFETY COUNCIL

WARNING

On machines having hydraulically, mechanically, and/or cable controlled equipment (such as shovels, loaders, dozers, scrapers, etc.) be certain the equipment is lowered to the ground before servicing, adjusting and/or repairing. If it is necessary to have the hydraulically, mechanically, and/or cable controlled equipment partially or fully raised to gain access to certain items, be sure the equipment is suitably supported by means other than the hydraulic lift cylinders, cable and/or mechanical devices used for controlling the equipment.

PUBLICATIONS AVAILABLE
FOR
MODEL 12G CRAWLER LOADER

DESCRIPTION	SERIAL NO.	FORM NO.			
		ENGLISH	ESPAÑOL (Spanish)	PORTUGUÊS (Portuguese)	FRANÇAIS (French)
Parts Catalogs					
Crawler Loader	All	0683934-4			
Injection Pump (Roosa Master)	All	0645323-7			
Operator Manuals					
12G (Loaders prior to s/n 1000)		0656801-8	0665289-5		
12G (Loader s/n 43C01001 and up)		0671726-8			
Service Manuals					
Engine (10000 & 11000)	All	0645121-5	0650410-4	0650411-2	0650412-0
Turbocharger	All	0677064-8	0678570-3	0679482-0	0678727-9
Fuel Injection Pump (Roosa Master)	All	0656820-8			
Fuel Injection Nozzles	All	0682797-6			
Engine Clutch, Torque Converter, Transmission, Bevel Gear and Drive Shaft U-Joint	All	0656803-4			
Steering Clutches and Brakes	All	0659189-5			
Final Drives	All	0659393-3			
Undercarriage	All	0659188-7			
Loader Linkage and Hydraulic System	All	0671114-7			
Electrical System	All	0680006-4			

NOTICE

CONSULT ALLIS-CHALMERS CONSTRUCTION MACHINERY DEALER FOR PUBLICATIONS.

SEE CONSTRUCTION MACHINERY TECHNICAL PUBLICATIONS INDEX (FORM 0658800-8) FOR ALL AVAILABLE PUBLICATIONS.

PUBLICATIONS INDEX (FORM 0658800-8) IS AVAILABLE FREE FROM YOUR DEALER.

IMPORTANT

All parts listed herein, which have no specific usage indicated, are applicable to all models. Those parts which are used only on specific models are so indicated.

Attaching parts such as bolts, nuts, rivets, screws, washers, etc., are indented immediately following the parts which they attach.

Parts indicated with a square (□) are also available in packaged sets. Refer to section titled "PACKAGED PARTS".

The terms "right" and "left" used throughout this parts catalog are determined by facing the direction of forward travel.

INSTRUCTIONS FOR ORDERING PARTS

Order parts from the dealer covering the local territory.

ALWAYS GIVE THE MODEL AND SERIAL NUMBER OF MACHINE. IF PARTS ARE FOR AN ASSEMBLY WHICH HAS A MODEL AND/OR SERIAL NUMBER (SUCH AS ENGINE ASSEMBLY, PUMP ASSEMBLY), ALSO INCLUDE THIS INFORMATION.

To obtain parts promptly, give part name and part number.

Give post office address, town, county and state where parts are to be shipped. Also specify whether material is to be shipped by freight, express or parcel post.

Confirm all telephone or telegraph orders in writing.

Parts for standard motor accessories such as generators and starting motors should be ordered from authorized Service Stations maintained by manufacturers of these units throughout the country.

No credit will be allowed on parts unless they are returned to the dealer from whom they were purchased; from there they will be returned, at the customer's expense, to the factory for inspection.

Unless claims for shortages or errors are made immediately upon receipt of goods, they will not be considered.

When broken goods are received, a full description of the damage should be made by the carrier agent on the freight bill. If this description is insisted upon, full damage can always be collected from the transportation company.

No responsibility is assumed for delay or damage to merchandise while in transit. Our responsibility ceases upon delivery of shipment to the transportation company from whom a receipt is received showing that shipment was in good condition when delivered to them; therefore, claims (if any) should be filed with the transportation company and not with Allis-Chalmers.

The right is reserved to change the construction or material of any parts where it seems desirable to do so without incurring the obligation of installing such changes on units already delivered.

The information contained herein is general in nature and is not intended for specific application purposes. Allis-Chalmers reserves the right to make changes in specifications shown herein or add improvements at any time without notice or obligation.

MODEL IDENTIFICATION

MODEL SYMBOL	ENGINE MODEL	DESCRIPTION
12G	11000	Diesel engine driven crawler loader with power-shift transmission, 42 link track

RECORD YOUR SERIAL NUMBERS BELOW

MODEL SERIAL NUMBER _____ ENGINE SERIAL NUMBER _____

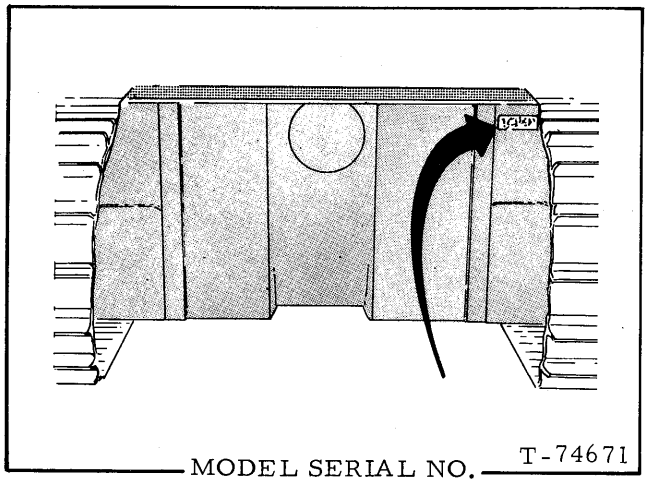

MODEL SERIAL NO. T-74671

Also stamped vertically along rear edge on right side of main housing and on small plate attached to front of filter box.

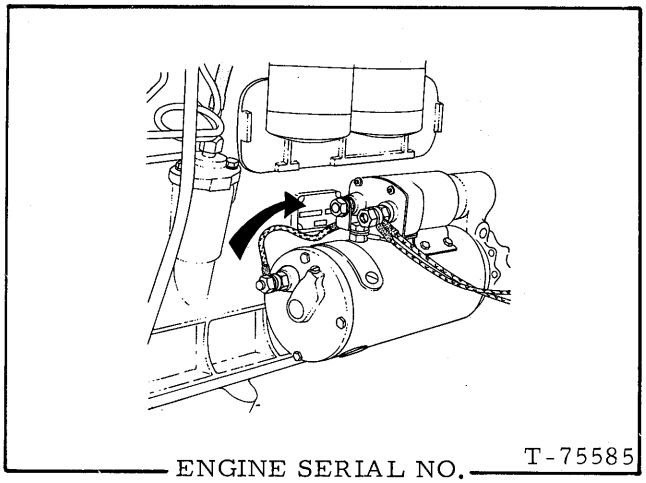

ENGINE SERIAL NO. T-75585

Also stamped on small plate attached to front of filter box.

MODEL SERIAL NUMBER

NOTE: Effective in 1969, the model serial numbering system was changed. Under the prior system, models were numbered consecutively in numerals only. Thereafter, models are identified by an 8-character combination of letters and numerals.

***SERIAL NUMBER,** consisting of all 8 characters must always be submitted for positive identification of your machine. This point cannot be overemphasized.

CRAWLER MODEL	*SERIAL NO.	
	PRODUCT CODE	UNIT NO.
12G	43C	01001

ALPHABETICAL INDEX

Air Cleaner Mounting 58
Air Restriction Indicator 58
Automatic Bucket Controls 283
Batteries and Cables 208
Belt, Drive 82, 218
Bevel Gear and Shaft 137
Boom Piping 289
Brake Control 159
Brake Drum 140
Brakes 157
Bucket 233, 237
Bucket Control Valve 245
Bucket Controls 282, 283
Bucket Hydraulic Pump Lines 241
Bucket Hydraulics 290, 292
Bucket Level Indicator 287
Bucket Linkage 239
Bucket Position Indicator 293
Camshaft 29
Camshaft Bearings 15
Connecting Rod 17
Counterweight 232
Crankcase Guard 163
Crankshaft 22
Cylinder Block 15
Cylinder Head 25
Cylinder Sleeve 15
Cylinders
  Clam 294
  Dump 262, 264, 266, 268
  Lift 276, 278, 280
  Ripper 302
Drawbar 204, 205
Dump Cylinder Piping 254, 257, 261
Elements
  Air Cleaner 57
  Bucket Hydraulic Tank 245
  Coolant Filter 71
  Engine Oil Filter 37, 39
  Fuel Filter 43
  Steering Oil Filter 154
  Steering Oil Strainer 155
  Transmission Breather 109
  Transmission Filter 125
Engine Breather 27
Engine Clutch 102
Engine Clutch Control 91
Engine Hood 201
Engine and Mounting 13
Engine Primer 67
Exhaust Pipe 66, 201
Fan 82
Fan Belt 82
Fan Drive 81
Filter Box 199
Filters
  Coolant 71
  Engine Oil 37, 39
  Fuel 43
  Steering 154
  Transmission 125
Final Drive
  Housing 135
  Intermediate Shaft 142
  Pinion Shaft 140
  Outboard Bearing and Seal 143
  Sprocket, Shaft and Gear 145
Floor 192
Flywheel 20
Flywheel Housing 20
Fuel Lines 40
Fuel Tank 40
Fuel Tank Guard 42
Gauges
  Air Restriction Indicator 58
  Ammeter 210
  Bevel Gear Compartment Oil Level . . 135
  Engine Oil Level 30
  Engine Oil Pressure 214
  Engine Temperature 210
  Fuel Level 40
  Hour Meter 215, 216
  Hydraulic Tank Oil Level 245
  Transmission Oil Level 135
  Transmission Pressure 212
Generator 218
Head Lights 220, 221
Heat Exchangers 84
Hood 201, 203
Hood Side Plates 201, 203
Hose Parts 6
Hour Meter 215, 216
Hydraulic Tank 245
Hydraulic Track Adjuster 187, 190
Injection Fuel Return Lines 49
Injection Nozzles and Lines 47
Injection Pump 44
Instruments 210
Lift Cylinder Piping 271, 273, 274

Lights
- Dash 210
- Head 220,221
- Rear Flood 222,223
- Tail 226

Main Bearings 22
Main Frame 163
Main Housing 135
Main Wiring 127,219
Mainfolds
- Exhaust 61
- Intake 60
- Radiator Inlet and Outlet 75
- Water Outlet 88

Master Switch 208
Numerical Index 303
Oil Cooler 84
Oil Filler Tube 31
Oil Pan 30
Oil Pump 33
Packaged Parts 8
Painting and Marking 206
Piston 17
Primer 69
Pull Hook 239
Pumps
- Buckets 243
- Engine Oil 33
- Fuel Injection 44
- Primer 69
- Steering 153
- Transmission 123
- Water 86

Radiator Mounting 72
Radiator Expansion Tank 76
Radiator Guard 78
Radiator Screen 78
Radiator Piping 75
Raincap 201,203
Rear Fenders 199
Rear Flood Light 222,223
Rear Guard 230,231
Regulator 219
Rigid Beam 164
Ripper Cylinder Piping 300
Ripper Mounting Frame 295
Ripper Valve Controls 298
Seat 193,195
Speed Control Linkage 127
Speed Control Piping 133
Speed Control Valves 129
Starter 217
Steering Clutch & Final Drive Housing . . . 135
Steering Clutches 139
Steering Control 159
Steering Pump and Filter Lines 151
Steering Valve Lines 147
Switch
- Light 210
- Master 208
- Safety 127
- Starter 210

Tail Light 226
Thermostat 88
Throttle Control 51,55
Timing Gear Housing 19
Timing Gears 22,29,44
Tool Bar and Linkage 297
Torque Converter Lines 95
Track 166
Track Carrier Roller 182,184
Track Frame 171
Track Frame Guards 169
Track Idler 177,179,181
Track Release 187,190
Track Rollers 172,175
Transmission
- Assembly 107
- Case and Covers 109
- Clutch Shafts 113
- Input Shaft 112
- Pinion 118

Transmission Guards 163
Transmission Oil Pump & Filter Lines . . . 120
Turbocharger 63
Universal Joint 106
Valve Operating Mechanism 29
Valves
- Bucket Control 245
- Bucket Relief 245
- Clutch Modulating 131
- Decelerator 93
- Engine Clutch Control 91
- Engine Oil Pressure Regulating 15
- Engine Oil Pump Relief 33
- Exhaust 25
- Front-Mounted Equipment Control . . . 289
- Intake 25
- Ripper Control 298
- Speed Control 130
- Steering Control 149
- Transmission Pressure Relief 124

Vandalism Prevention Parts 229
Water Outlet Manifold 88
Water Pump 86

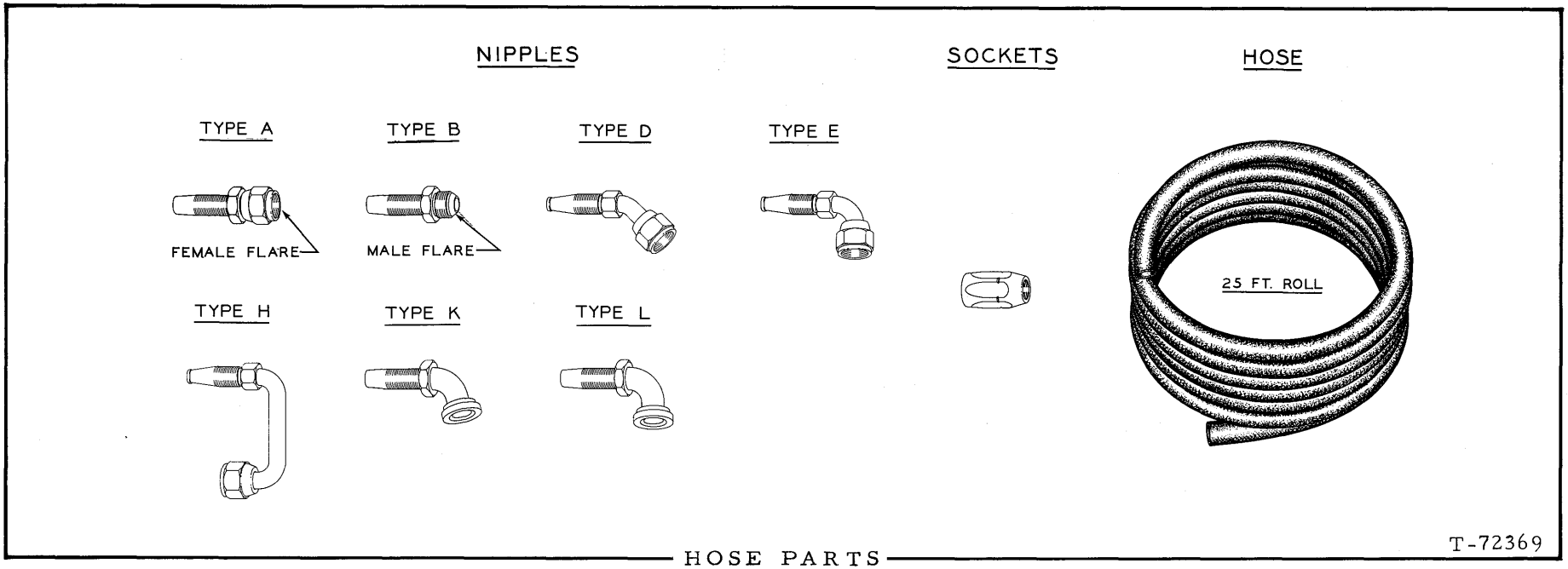

HOSE PARTS

NOTE: Refer to right hand column for identity of interchangeable crimped-type hose (fittings not re-usable). Assembly number shown in left hand column indicates available replacement hose assembly with re-usable components; where no assembly number is listed, hose assembly is not available from factory but may be constructed in the field from data indicated.

HOSE ASSEMBLY NO. (See NOTE)	BULK HOSE (25' roll)	HOSE LENGTH (inches)	NIPPLE (#1 end)			NIPPLE (#2 end)			SOCKET (both ends)	NIPPLE FLANGE		CRIMPED-TYPE HOSE (See NOTE)
			Including SOCKET	NIPPLE only	Type	Including SOCKET	NIPPLE only	Type		Part No.	X Dim	Part No.
4357430-0	0920388-6	12-3/4		0920806-7	A		0920806-7	A				
	0919218-8	6-3/4	0920850-5	0920303-5	A	0920880-2	0919254-3	D	0919076-0			0641125-0
	0919217-0	63-1/4	0920849-7	0920302-7	A	0920864-6	0919082-8	E	0919075-2			0642485-7
	0919196-6	56-3/4	0920847-1	0920301-9	A	0920847-1	0920301-9	A	0919143-8			0646198-2
	0919155-2	52-3/4	0920849-7	0920302-7	A	0920864-6	0919082-8	E	0919075-2			0650862-6
	0920794-5	21-1/4	0921020-4	0922830-5	A	0921020-4	0922830-5	A	0920972-7			0654778-0
	0920794-5	7	0921020-4	0922830-5	A		0923279-4	E	0920972-7			0654779-8
	0919156-0	7	0920858-8	0919080-2	B	0920865-3	0919081-0	E	0919076-0			0655072-7
	0920794-5	28		0923279-4	E		0923279-4	E	0920972-7			0655316-9

	0920794-5	25		0923279-4	E		0923279-4	E	0920972-7			0655317-6
	0919196-6	28	0920855-4	0919144-6	B	0920862-0	0919194-1	E	0919143-8			0655390-3
	0919196-6	27-3/4	0920855-4	0919144-6	B	0920855-4	0919144-6	B	0919143-8			0655395-2
	0919196-6	35	0920855-4	0919144-6	B	0920862-0	0919194-1	E	0919143-8			0655404-2
	0920794-5	41	0920934-7	0922833-9	B		0923279-4	E	0920972-7			0655716-9
	0919156-0	7-3/4	0920850-5	0920303-5	A	0920858-8	0919080-2	B	0919076-0			0655778-9
	0920221-9	7-1/4	0920860-4	0919279-0	B	0920860-4	0919279-0	B	0919281-6			0656237-5
	0919155-2	7-5/16	0920857-0	0919079-4	B	0920864-6	0919082-8	E	0919075-2			0656239-1
	0920222-7	8-1/2	0922808-1	0923011-1	B	0922808-1	0923011-1	B	0919282-4			0656246-6
	0919474-7	6-3/4	0920859-6	0923867-6	B	0920859-6	0923867-6	B	0919469-7			0656283-9
	0919156-0	8-7/8	0920858-8	0919080-2	B	0920858-8	0919080-2	B	0919076-0			0656403-3
	0919155-2	9-1/4	0920857-0	0919079-4	B	0920857-0	0919079-4	B	0919075-2			0656542-8
	0920795-2	45	0920945-3	0922831-3	A	0920945-3	0922831-3	A	0920973-5			0663458-8
	0920794-5	24	0920944-6	0920978-4	A	0920944-6	0920978-4	A	0920972-7			0663459-6

PACKAGED PARTS

PACKAGE NUMBER		DESCRIPTION
---------		CONVERSION KIT, dump and lift cylinders (See pages 263 and 277)
0676107-6		CONVERTER KIT, torque (For updating torque converter on loaders #101 thru #509)
	1	0655619-5 SEAL, oil, fan drive
	2	0656701-0 PLATE, thrust, guide wheel
	3	0656717-6 GASKET, pump adapting plate
	1	0656726-7 GASKET, bearing retainer
	1	0657964-3 EXPANDER, piston outer ring
	1	0657965-0 EXPANDER, piston inner ring
	1	0657973-4 RING, piston, outer (teflon, split)
	1	0657974-2 RING, piston, inner (teflon)
	1	0658953-5 PIN, spacing plate
	1	0663526-2 RING, piston, outer (teflon, not split)
	2	0668279-3 WASHER, carrier retaining
	1	0668281-9 CARRIER, sealing ring
	1	0668282-7 HUB, turbine wheel
	1	0668283-5 RACE, thrust bearing
	1	0669677-7 VALVE ASSY., check
	1	0669678-5 SEAL, oil, transmission pump drive
	4	0669705-6 RING, back-up
	1	0670385-4 HUB ASSY.
	2	0670386-2 WASHER, hub
	1	0670410-0 PLATE, spacing, accessory drive gear
	2	0670411-8 BEARING, roller, idler gear
	1	0672955-2 BEARING, thrust
	2	0675282-8 CAP ASSY.
	1	0681083-2 FLANGE ASSY., driving
	3	0681070-9 RING, sealing
	3	0924140-7 O-RING
	2	0926059-7 O-RING
	2	0926860-8 O-RING
	1	3034958-3 SEAL
	2	3037629-7 RING
	1	--------- PRINT of X-217937-B ("Twin-Disc")
0676108-4		CONVERTER KIT, torque (For updating torque converter on loaders #510 thru #659)
	1	0655619-5 SEAL, oil, fan drive
	2	0656701-0 PLATE, thrust, guide wheel
	1	0656726-7 GASKET, bearing retainer
	1	0657964-3 EXPANDER, piston outer ring
	1	0657965-0 EXPANDER, piston inner ring
	1	0657973-4 RING, piston, outer (teflon, split)
	1	0657974-2 RING, piston, inner (teflon)
	1	0658953-5 PIN, spacing plate
	1	0663526-2 RING, piston, outer (teflon, not split)
	2	0668279-3 WASHER, carrier retaining
	1	0668281-9 CARRIER, sealing ring
	1	0668282-7 HUB, turbine wheel
	1	0668283-5 RACE, thrust bearing
	1	0669677-7 VALVE ASSY., check
	1	0669678-5 SEAL, oil, transmission pump drive
	4	0669705-6 RING, back-up
	1	0670385-4 HUB ASSY.
	2	0670386-2 WASHER, hub
	1	0670410-0 PLATE, spacing, accessory drive gear
	2	0670411-8 BEARING, roller, idler gear
	1	0672955-2 BEARING, thrust
	2	0675282-8 CAP ASSY.

(Continued)

PACKAGE NUMBER		DESCRIPTION
0676108-8		CONVERTER KIT, torque (For updating torque converter on loaders #510 thru #659) (Continued)
	3	0681070-9 RING, sealing
	3	0924140-7 O-RING
	2	0926059-7 O-RING
	2	0926860-8 O-RING
	1	3034958-3 SEAL
	2	3037629-7 RING
	1	--------- PRINT of X-217937-B ("Twin-Disc")
4354291-9		GASKET KIT, cylinder head
	4	0923813-0 O-RING, water manifold tube
	4	4254294-2 O-RING, water by-pass tube (Discard. Not used)
	1	4300145-2 GASKET, water outlet elbow
	2	4336148-4 GASKET, rocker cover
	4	4336182-3 GASKET, water manifold
	1	4336263-1 GASKET, thermostat housing
	1	4336266-4 GASKET, water elbow (Discard. Not used)
	2	4337764-7 GASKET, valve lifter cover
	2	4348133-4 GASKET, breather tube
	1	4354294-1 GASKET ASSY., front cylinder head
	1	4354295-0 GASKET ASSY., rear cylinder head
	6	4359571-9 GASKET, intake and exhaust manifold
	6	4378031-1 GASKET, injection nozzle
4358696-5		GASKET KIT, intermediate, cylinder block
	2	0923376-8 O-RING, flywheel housing dowel
	4	0923574-8 O-RING, heat exchanger tubes
	2	0923813-0 O-RING, heat exchanger elbows
	1	0923816-3 O-RING, flywheel to crankshaft
	1	0923820-5 O-RING, injection pump drive cover
	1	0924139-9 O-RING, injection pump mounting cover
	1	4335056-0 GASKET, water pump volute
	1	4336676-4 GASKET, timing hole cover
	1	4336897-6 RING, sealing, flywheel housing to crankcase
	1	4339118-4 GASKET, oil filter outlet flange
	1	4339123-4 GASKET, filter interconnection
	1	4339128-3 GASKET, filter head
	1	4339150-7 GASKET, filter head to block
	1	4339151-5 GASKET, oil line elbow
	1	4346169-8 GASKET, oil pipe
	1	4346456-9 GASKET, water inlet pipe
	1	4346744-8 GASKET, water pump
	1	4347031-9 GASKET, water by-pass flange
	1	4348136-5 GASKET, timing gear housing
	1	4348184-5 GASKET, filter head to block
	1	4348185-2 GASKET, heat exchanger front cover
	1	4348218-1 GASKET, oil pipe
	1	4354163-0 GASKET, timing gear cover
---------		GASKET KIT, turbocharger mounting (See TURBOCHARGER)
4358753-4		PISTON AND SLEEVE KIT (Used prior to engine #11-18404)
	2	4255465-9 RETAINER, piston pin
	2	4337972-6 O-RING, cylinder sleeve
	1	4354720-7 SLEEVE, cylinder
	1	4354778-5 PIN, piston
	1	4357677-6 RING SET, piston
	1	4358745-0 PISTON

PACKAGE NUMBER	DESCRIPTION
4359603-0	PISTON AND SLEEVE KIT (Engine #11-18404 and up)
	2 4255465-9 RETAINER, piston pin
	2 4337972-6 O-RING, cylinder sleeve (1st and 2nd groove)
	1 4354778-5 PIN, piston
	1 4357677-6 RING SET, piston
	1 4358745-0 PISTON
	1 4359583-6 SLEEVE, cylinder
	1 4359586-7 O-RING, cylinder sleeve (3rd groove)
---------	REPAIR KITS, dump and lift cylinders (See pages 265, 267, 269, 279, 281)
---------	RING KIT, transmission (See page 116)
---------	RING SET, piston (See PISTON AND CONNECTING ROD)
---------	SEAL KITS, final drive (See pages 143 and 145)
---------	SEAL KIT, track roller (See page 173)
---------	SEAL KIT, track idler (See pages 177 and 179)
---------	SEAL KIT, track carrier roller (See page 183)

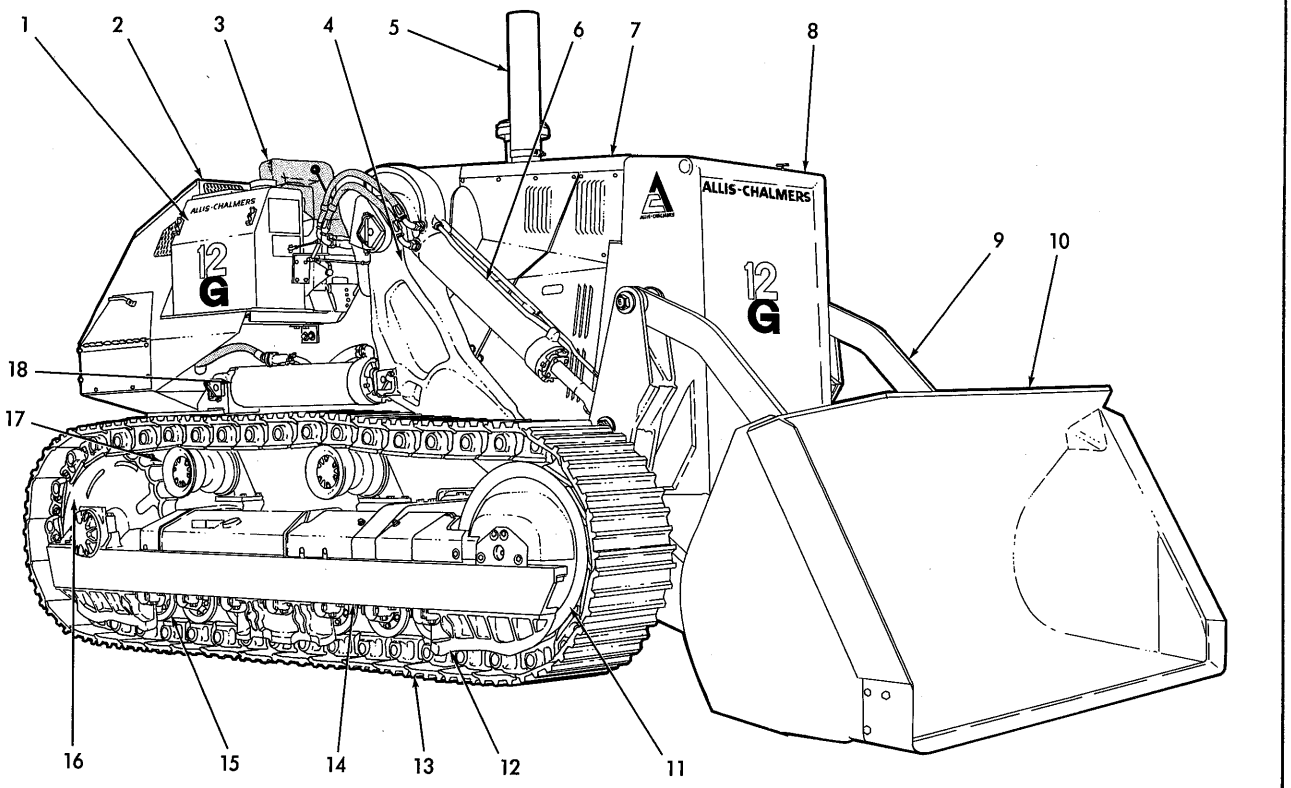

MODEL 12G CRAWLER LOADER — T-73023

1. Hydraulic Tank
2. Radiator Guard
3. Seat
4. Bucket Boom
5. Exhaust Pipe
6. Dump Cylinder
7. Engine Hood
8. Fuel Tank Guard
9. Bucket Linkage
10. Bucket
11. Track Idler
12. Track Roller Guards
13. Track
14. Track Frame
15. Track Rollers
16. Track Sprocket
17. Track Carrier Roller
18. Lift Cylinder

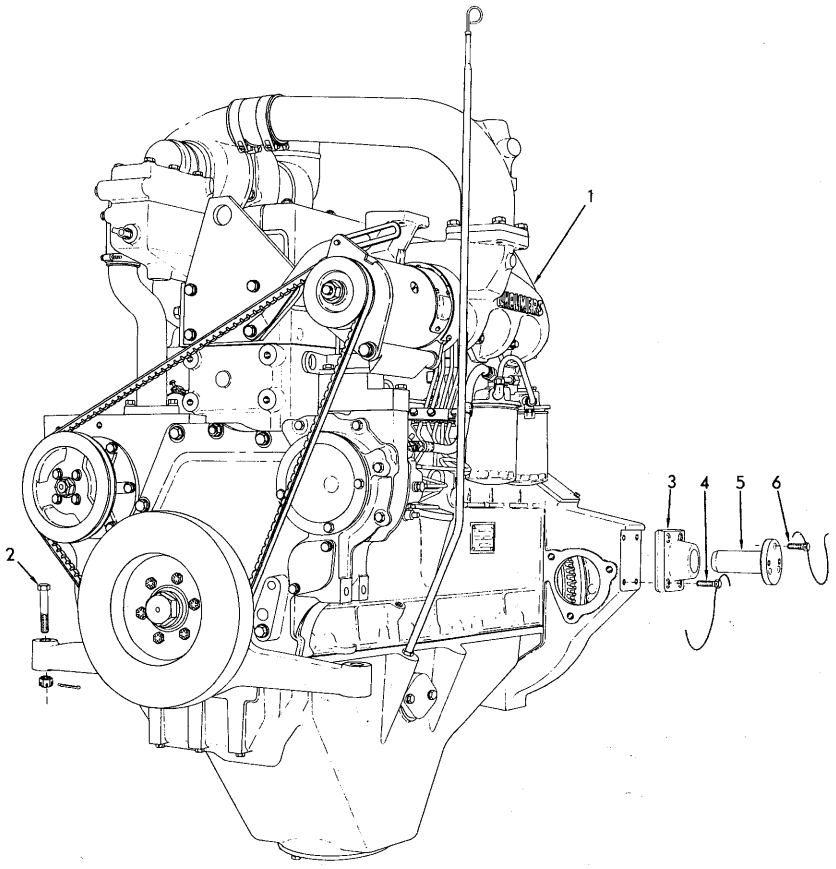

T-74988

ENGINE AND MOUNTING

ITEM	PART NO.	QTY.	DESCRIPTION
1	4354538	1	ENGINE ASSY. (Engines prior to serial No. 11-17330 on loaders prior to #43C01001)
	4359570	1	ENGINE ASSY. (Engines serial No. 11-17330 and up, effective with loader #43C01001)
			NOTE: Engines include generator, oil and fuel filters, turbo-charger, but do not include air cleaner or starter.
2	642563	2	CAPSCREW, front mounting (5/8"NF x 3-1/2")
	913280	2	NUT, high, slotted, 5/8"NF
	900806	2	PIN, cotter, 1/8" x 1"
3	656193	2	TRUNNION, rear mounting
4	927475	8	CAPSCREW, drilled-hd., 1/2"NC x 1-1/2"
	023633	4	WIRE, locking, 1/16" x 12"
5	655552	2	PIN, rear trunnion
6	604963	6	CAPSCREW, drilled-hd., 1/2"NC x 1-3/8"
	023633	2	WIRE, locking, 1/16" x 12"

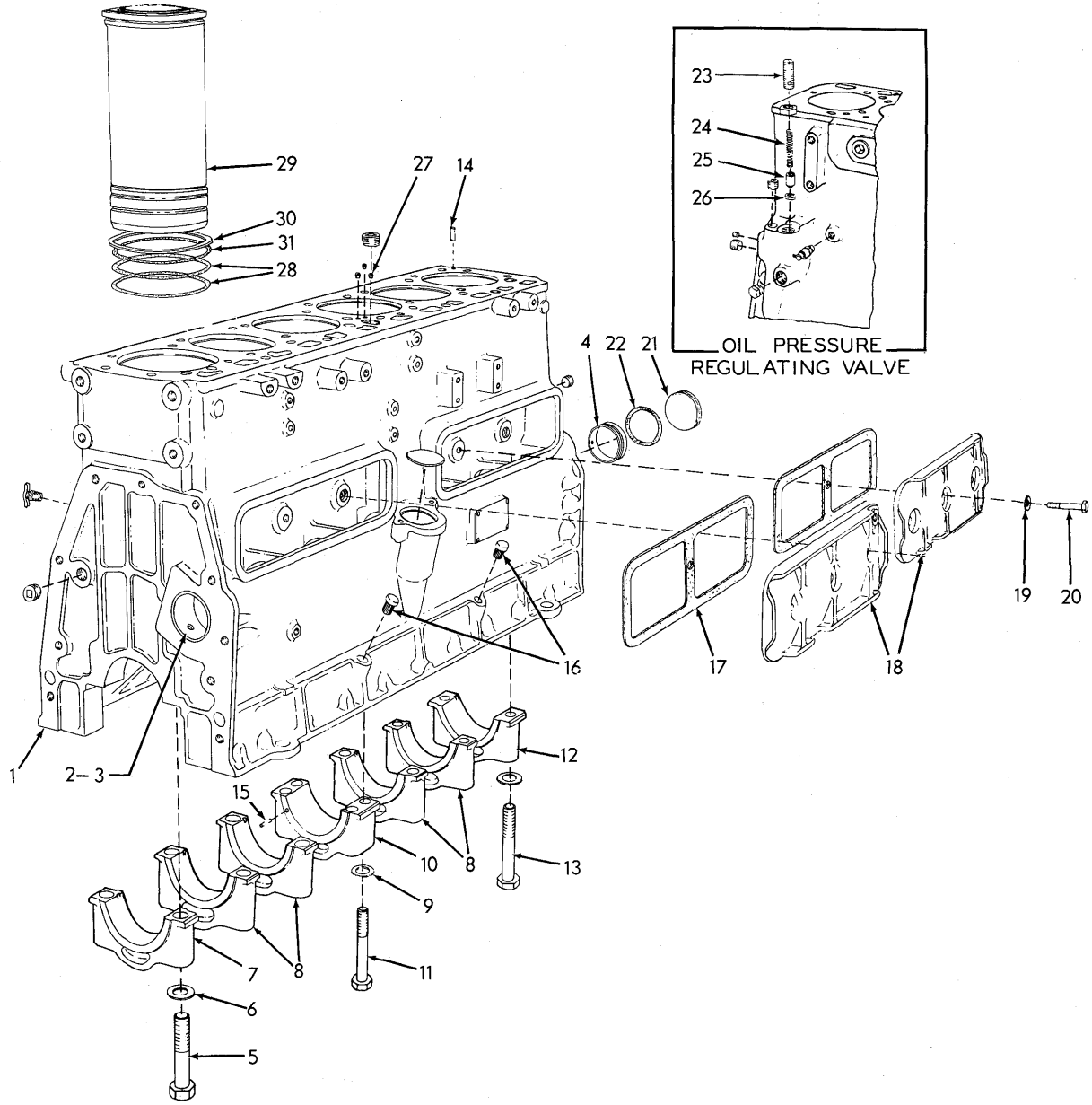

CYLINDER BLOCK

T-41944

CYLINDER BLOCK

ITEM	PART NO.	QTY.	DESCRIPTION
1	4358582	1	BLOCK ASSEMBLY (Includes items 2 thru 13, 26 and 27)
	910017	1	PLUG, expansion, 2-3/8" diam. (Early units)
	919134	4	PLUG, pipe, hex-hd., 1/8"NPT
	920333	1	PLUG, pipe, hex-hd., 3/8"NPT
	918887	1	PLUG, pipe, hex-socket, 3/8"NPT
	917970	2	PLUG, pipe, hex-socket, 1/2"NPT
	920416	1	PLUG, pipe, hex-hd., 1/2"NPT
	918851	1	PLUG, pipe, hex-socket, 3/4"NPT
	918888	1	PLUG, pipe, hex-socket, 1"NPT
	912415	2	COCK, drain, 1/4"NPT
2	4346100	1	BEARING, camshaft, front (standard size)
	4347416	1	BEARING, camshaft, front (.010" undersize)
3	4346099	2	BEARING, camshaft, intermediate (standard size)
	4347419	2	BEARING, camshaft, intermediate (.010" undersize)
4	4346108	1	BEARING, camshaft, rear (standard size)
	4347413	1	BEARING, camshaft, rear (.010" undersize)
5	4339037	2	CAPSCREW, front main bearing cap (3/4"NC x 3-15/16")
6	4354175	12	WASHER, main bearing capscrew
7	4349630	1	*CAP, front main bearing
8	4349632	4	*CAP, intermediate main bearing
9	4391160	4	WASHER, center main bearing capscrew
10	4349629	1	*CAP, center main bearing
11	4339038	4	CAPSCREW, center main bearing cap (5/8"NC x 3-13/16")
12	4349631	1	*CAP, rear main bearing
13	4339036	10	CAPSCREW, rear and intermediate main bearing cap (3/4"NC x 4-5/16")
14	4336432	4	PIN, dowel, cylinder head
15	------	4	PIN, dowel, crankshaft thrust flange (See CRANKSHAFT)
16	4362338	2	PLUG, crankcase
17	4337764	2	□GASKET, valve lifter cover
18	4354635	2	COVER, valve lifter
19	4335456	6	WASHER, valve lifter cover bolt
20	4335455	6	BOLT, valve lifter cover
21	4335534	1	PLUG, camshaft hole
22	923815	1	O-RING, camshaft hole plug
23	4389058	1	SCREW, oil pressure regulating valve
	910847	1	NUT, jam, 3/4"NF

*Replacement bearing caps are semi-finished and must be line-bored after installing

(Continued)

CYLINDER BLOCK (Continued)

ITEM	PART NO.	QTY.	DESCRIPTION	
24	4660358-5	1	SPRING, oil pressure regulating valve	
25	4500230-0	1	PISTON, oil pressure regulating valve	
26	4347465-9	1	INSERT, oil pressure regulating valve seat	
27	4347061-6	1	RESTRICTOR, oil passage	
28	4337972-6	12	☐ O-RING, cylinder sleeve (1 and 2 groove)	
29	---------	6	☐ SLEEVE, cylinder (Used prior to engine #11-16980. Order SLEEVE 4359583-4 and O-RING 4359586-7)	
	4359583-4	6	☐ SLEEVE, cylinder (Effective engine #11-16980 and up)	
30	4348857-6	-	SHIM, cylinder sleeve (.005" thick)	Use as required when re-machining cylinder blocks
	4348856-8	-	SHIM, cylinder sleeve (.008" thick)	
	4348859-2	-	SHIM, cylinder sleeve (.010" thick)	
	4348858-4	-	SHIM, cylinder sleeve (.015" thick)	
	4348900-4	-	SHIM, cylinder sleeve (.020" thick)	
31	4359586-7	6	O-RING, cylinder sleeve (3rd groove)(Effective engine #11-16980 and up)	

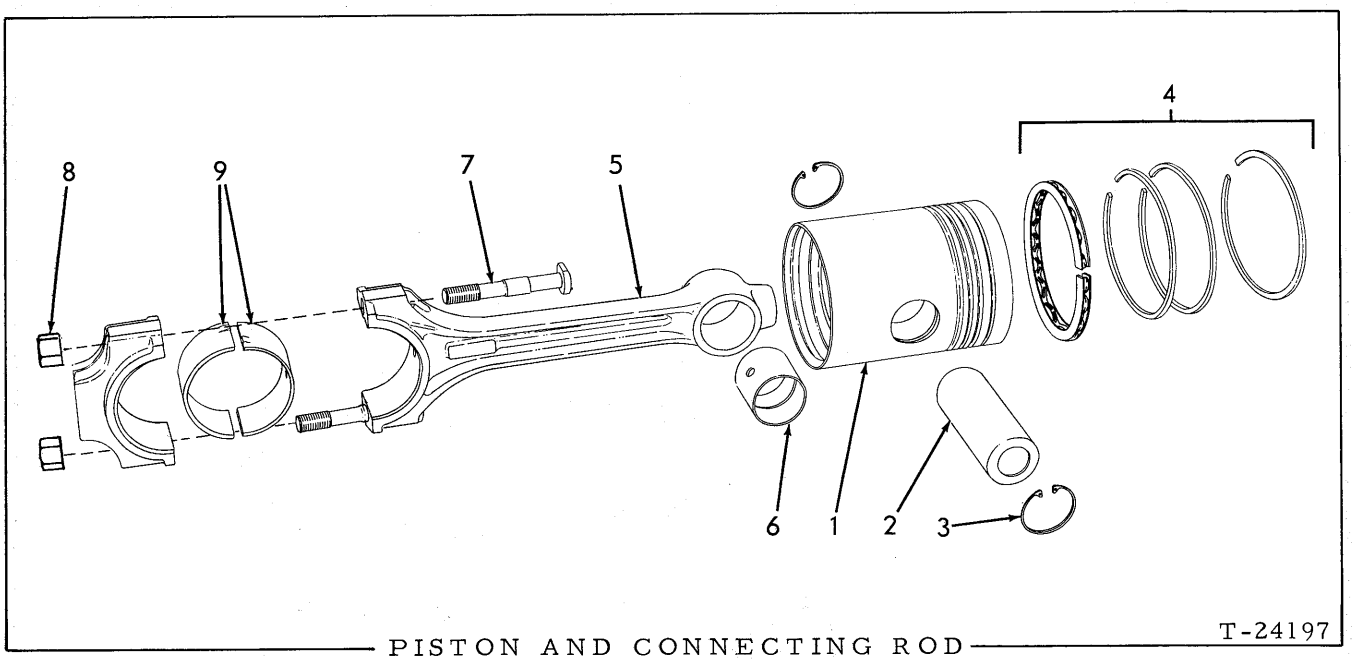

PISTON AND CONNECTING ROD

ITEM	PART NO.	QTY.	DESCRIPTION
1	4358745-0	6	☐PISTON (Engines prior to #11-18404)
	4359360-7	6	☐PISTON (Engine #11-18404 and up)
2	4354778-5	6	☐PIN, piston
3	4255465-9	12	☐RETAINER, piston pin
4	4359758-2	6	☐RING SET (Engines prior to #11-18404)
	4359757-4	6	☐RING SET (Engine #11-18404 and up)
5	4354788-4	6	ROD ASSY., connecting (Includes items 6 thru 8)
6	4339017-8	6	BUSHING, connecting rod
7	4354787-6	12	BOLT, connecting rod
8	4354748-8	12	NUT, connecting rod bolt
9	4337701-9	12	BEARING, connecting rod (standard size)
	4337702-7	12	BEARING, connecting rod (.010" undersize)
	4337703-5	12	BEARING, connecting rod (.020" undersize)
	4337704-3	12	BEARING, connecting rod (.030" undersize)
	4337705-0	12	BEARING, connecting rod (.040" undersize)

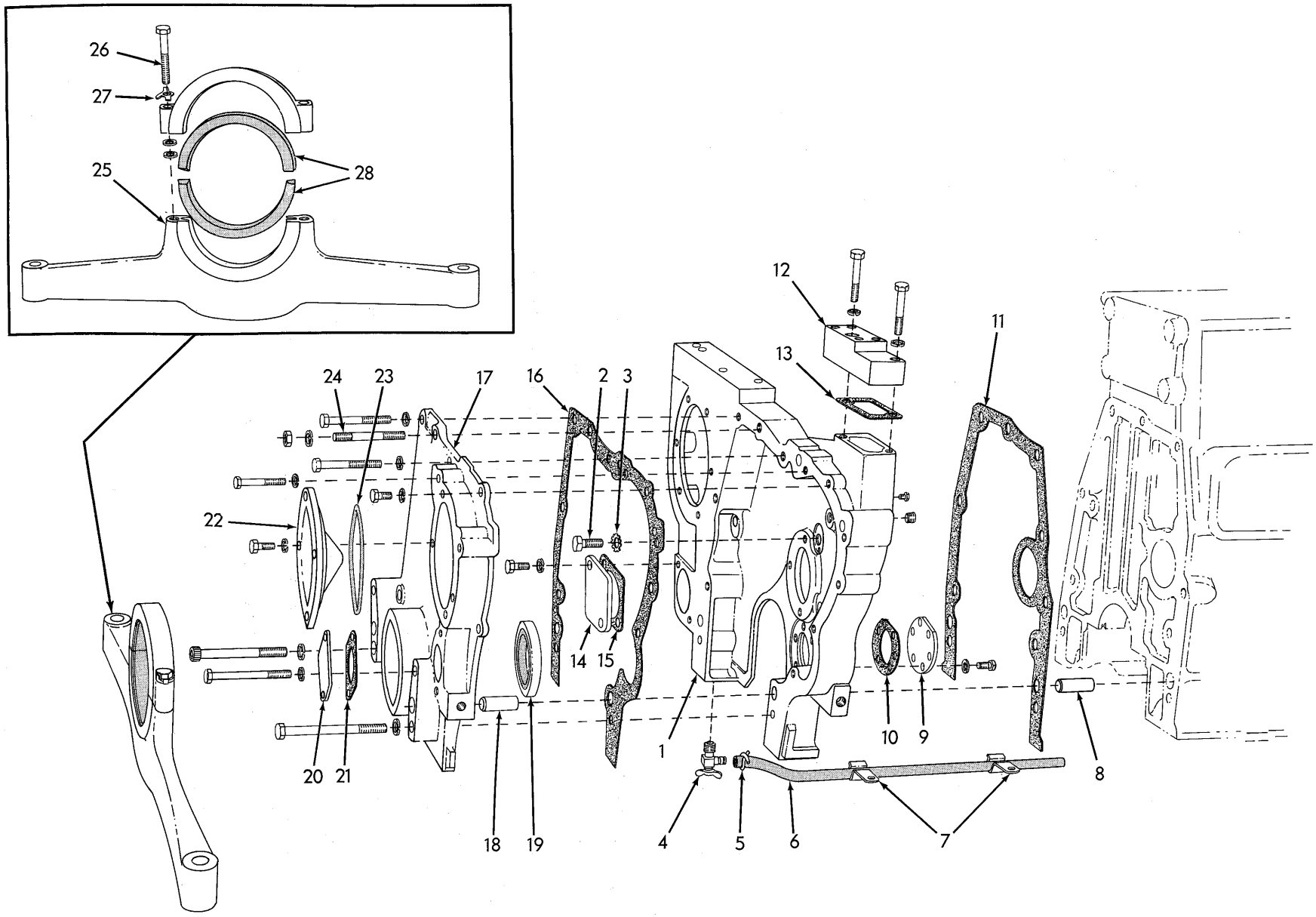

TIMING GEAR HOUSING

TIMING GEAR HOUSING

ITEM	PART NO.	QTY.	DESCRIPTION
1	4357328	1	HOUSING, timing gear
	919134	1	PLUG, pipe, hex-hd., 1/8"NPT
	917970	1	PLUG, pipe, hex-socket, 1/2"NPT
2	4004054	3	CAPSCREW, 1/2"NC x 1-1/16"
3	4253490	3	LOCKWASHER
4	089894	1	COCK, drain
5	089107	1	CLAMP, drain hose
6	092652	1	HOSE, water drain
7	092758	2	CLIP, supporting, water drain hose
8	4346246	2	PIN, dowel, timing gear housing
9	4354414	1	COVER, timing gear housing
	916277	6	CAPSCREW, 5/16"NC x 5/8"
	917330	6	WASHER, copper
10	4354415	1	GASKET, timing gear housing cover
11	4348136	1	□GASKET, timing gear housing
12	4357792	1	BLOCK, generator mounting
	919287	2	CAPSCREW, 3/8"NC x 1-7/8"
	904206	2	LOCKWASHER, 3/8"
13	4354304	1	GASKET, generator mounting block
14	4339954	1	PLATE, cover, gear housing water hole
	916269	2	CAPSCREW, 3/8"NC x 7/8"
	904206	2	LOCKWASHER, 3/8"
15	4346456	1	GASKET, water hole cover plate
16	4354163	1	□GASKET, timing gear housing cover
17	4357409	1	COVER ASSEMBLY, timing gear housing (Includes item 18)
	915969	3	CAPSCREW, 1/2"NC x 3"
	916319	1	CAPSCREW, 1/2"NC x 3-1/2"
	921299	1	CAPSCREW, hex-socket-hd., 1/2"NC x 4"
	919232	1	CAPSCREW, 1/2"NC x 4-3/4"
	916274	2	CAPSCREW, 3/8"NC x 2-1/4"
	919287	2	CAPSCREW, 3/8"NC x 1-7/8"
	904208	6	LOCKWASHER, 1/2"
	904206	6	LOCKWASHER, 3/8"
	916271	2	CAPSCREW, 3/8"NC x 1"
18	4348107	2	PIN, dowel, timing gear cover
19	4027416	1	SEAL, oil, crankshaft
20	4335711	1	PLATE, timing gear cover
21	4335712	1	GASKET, cover plate
22	4354306	1	PLATE, cover, injection pump driving gear
	916271	4	CAPSCREW, 3/8"NC x 1"
	904206	4	LOCKWASHER, 3/8"
23	923820	1	□O-RING, cover plate
24	4335371	1	STUD, timing gear housing
	904208	1	LOCKWASHER, 1/2"
	910195	1	NUT, 1/2"NF
25	4359425	1	BRACKET, engine mounting (Includes cap)
26	4254891	2	CAPSCREW, 1/2"NC x 2-1/2"
	916009	10	WASHER, plain (1/32" thick. Use as required)
27	4335550	2	LOCKWASHER
28	4336491	2	LINER, engine mounting bracket

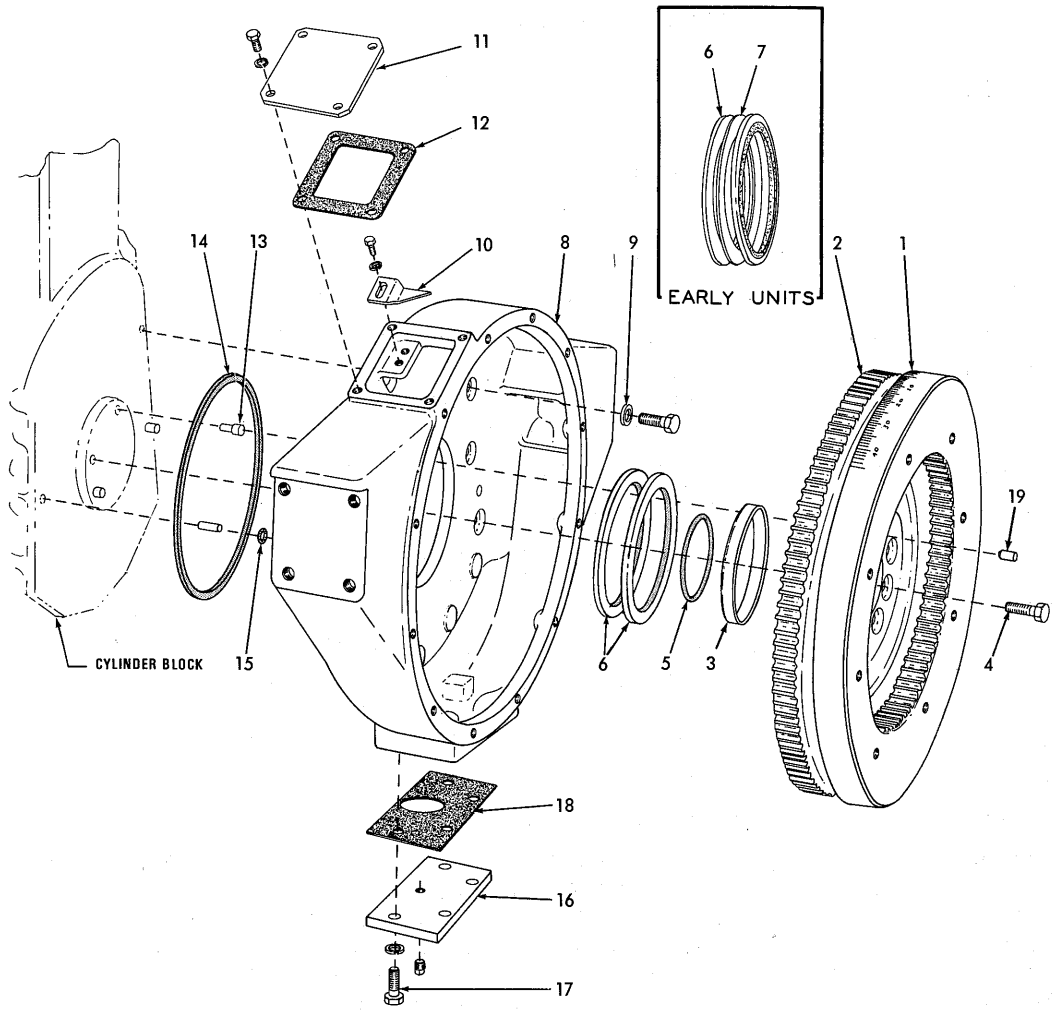

FLYWHEEL AND HOUSING

T-73049

ITEM	PART NO.	QTY.	DESCRIPTION
1	4359097-5	1	FLYWHEEL ASSY. (Includes item 2)
2	4304907-1	1	GEAR, ring
3	---------	1	SLEEVE, wear (Used on engines #11-14388 thru #11-15367 only) (Order SLEEVE 4028261-8 and 2 SEAL 4359650-1)
	4028261-8	1	SLEEVE, wear (Effective with engine #11-18384 and up)
4	4255336-2	6	BOLT, flywheel
5	0923816-3	1	☐ O-RING, flywheel to crankshaft

(Continued)

ITEM	PART NO.	QTY.	DESCRIPTION	
6	---------	1	SEAL, oil, crankshaft rear end (double-lip, 5-3/8"I.D.)(Used prior to engine #11-14388; also engines #11-15368 thru 11-18383)	Order 2 SEAL 4359650-1 and 1 SLEEVE 4028261-8
	---------	2	SEAL, oil,crankshaft rear end (single-lip, 5-1/2"I. D.)(Used on engine #11-14388 thru #11-15367 only)	
	4359650-1	2	SEAL, oil crankshaft rear end (Effective with engine #11-18384 and up)	
7	4027439-1	1	SPACER, oil seal (Used on engine #11-14388 thru #11-15367 only)	
8	4358790-6	1	HOUSING, flywheel	
	0917021-8	2	PIN, dowel, 1/2" x 1"	
	4752075-4	9	BOLT, self-locking, 1/2"NC x 1-3/8"	
9	4376749-0	9	WASHER, sealing (Used prior to engine #11-14324)	
10	4336609-5	1	POINTER, timing	
	0916284-3	2	CAPSCREW, 1/4"NC x 1/2"	
	0904204-5	2	LOCKWASHER, 1/4"	
11	4358840-9	1	COVER, timing hole	
	0916282-7	4	CAPSCREW, 1/4"NC x 7/8"	
	0904204-5	4	LOCKWASHER, 1/4"	
12	4336676-4	1	☐GASKET, timing hole cover	
13	4500300-1	2	DOWEL, flywheel to crankshaft	
14	4336897-6	1	☐RING, sealing, flywheel housing to crankcase	
15	0923376-8	2	☐O-RING, flywheel housing dowel pin hole	
16	0628512-6	1	COVER, bottom, flywheel housing	
	0901652-8	1	PLUG, pipe, 1/4"NPT	
17	0920582-4	4	CAPSCREW, 1/2"NC x 1-1/4"	
	0912441-3	4	LOCKWASHER, 1/2"	
18	0629141-3	1	GASKET, bottom cover	
19	4359168-4	1	SLUG KIT, dowel sealing (Consists of two lead slugs)	

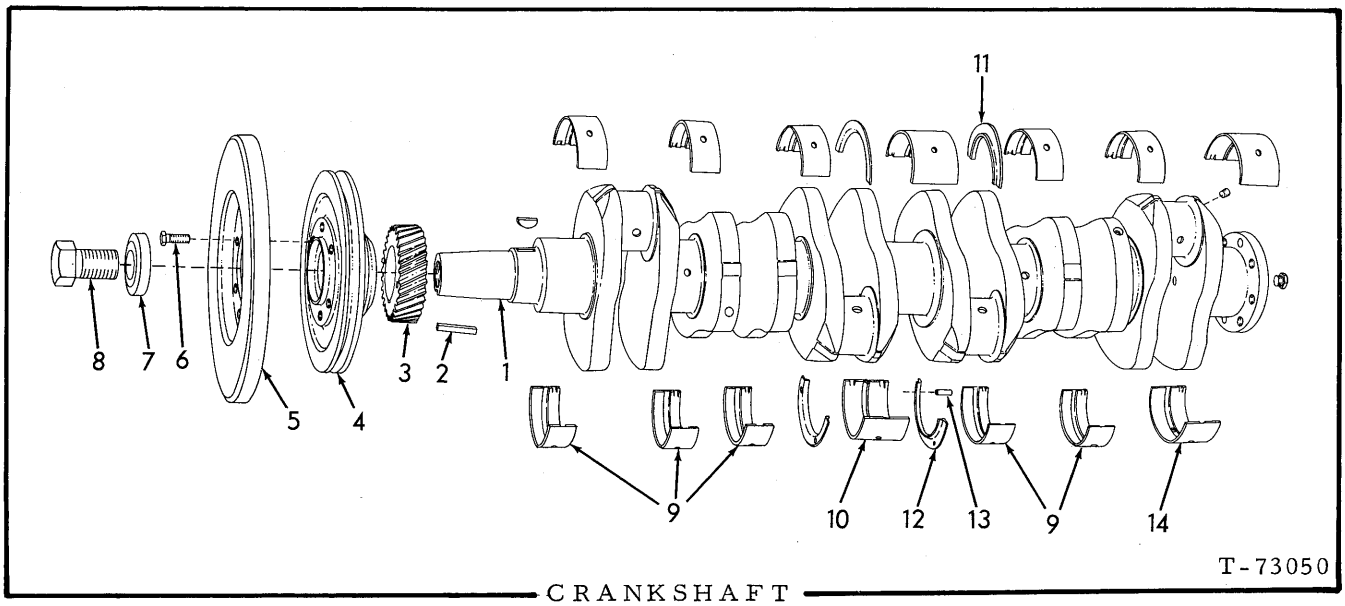

CRANKSHAFT

ITEM	PART NO.	QTY.	DESCRIPTION
1	4357323	1	CRANKSHAFT ASSEMBLY (Includes PLUGS indented below)
	917673	6	PLUG, pipe, hex-socket, 1/8"NPT (Early units only)
	919840	1	PLUG, pipe, hex-head, 1/4"NPT
2	4003490	1	KEY, crankshaft damper
3	4359278	1	GEAR, crankshaft
	905127	1	KEY, "B" woodruff, 5/16" x 1"
4	4354553	1	PULLEY, drive, water pump and generator
5	4354261	1	DAMPER, vibration
6	4255585	6	BOLT, attaching
7	4371503	1	WASHER, crankshaft damper
8	4390838	1	CAPSCREW, crankshaft damper
9	4337710	10	BEARING, front and intermediate main (standard size)
	4337711	10	BEARING, front and intermediate main (.010" undersize)
	4337712	10	BEARING, front and intermediate main (.020" undersize)
	4337713	10	BEARING, front and intermediate main (.030" undersize)
	4337714	10	BEARING, front and intermediate main (.040" undersize)
10	4348991	2	BEARING, center main (standard size)
	4348992	2	BEARING, center main (.010" undersize)
	4348993	2	BEARING, center main (.020" undersize)
	4348994	2	BEARING, center main (.030" undersize)
	4348995	2	BEARING, center main (.040" undersize)

(Continued)

ITEM	PART NO.	QTY.	DESCRIPTION
11	4337683	2	FLANGE, thrust, center main, upper (standard size)
	4337684	2	FLANGE, thrust, center main, upper (.005" oversize)
	4337685	2	FLANGE, thrust, center main, upper (.010" oversize)
	4337686	2	FLANGE, thrust, center main, upper (.015" oversize)
12	4337687	2	FLANGE, thrust, center main, lower (standard size)
	4337688	2	FLANGE, thrust, center main, lower (.005" oversize)
	4337689	2	FLANGE, thrust, center main, lower (.010" oversize)
	4337690	2	FLANGE, thrust, center main, lower (.015" oversize)
13	4250898	4	PIN, dowel, thrust flange
14	4337698	2	BEARING, rear main (standard size)
	4337699	2	BEARING, rear main (.010" undersize)
	4337700	2	BEARING, rear main (.020" undersize)
	4337715	2	BEARING, rear main (.030" undersize)
	4337716	2	BEARING, rear main (.040" undersize)

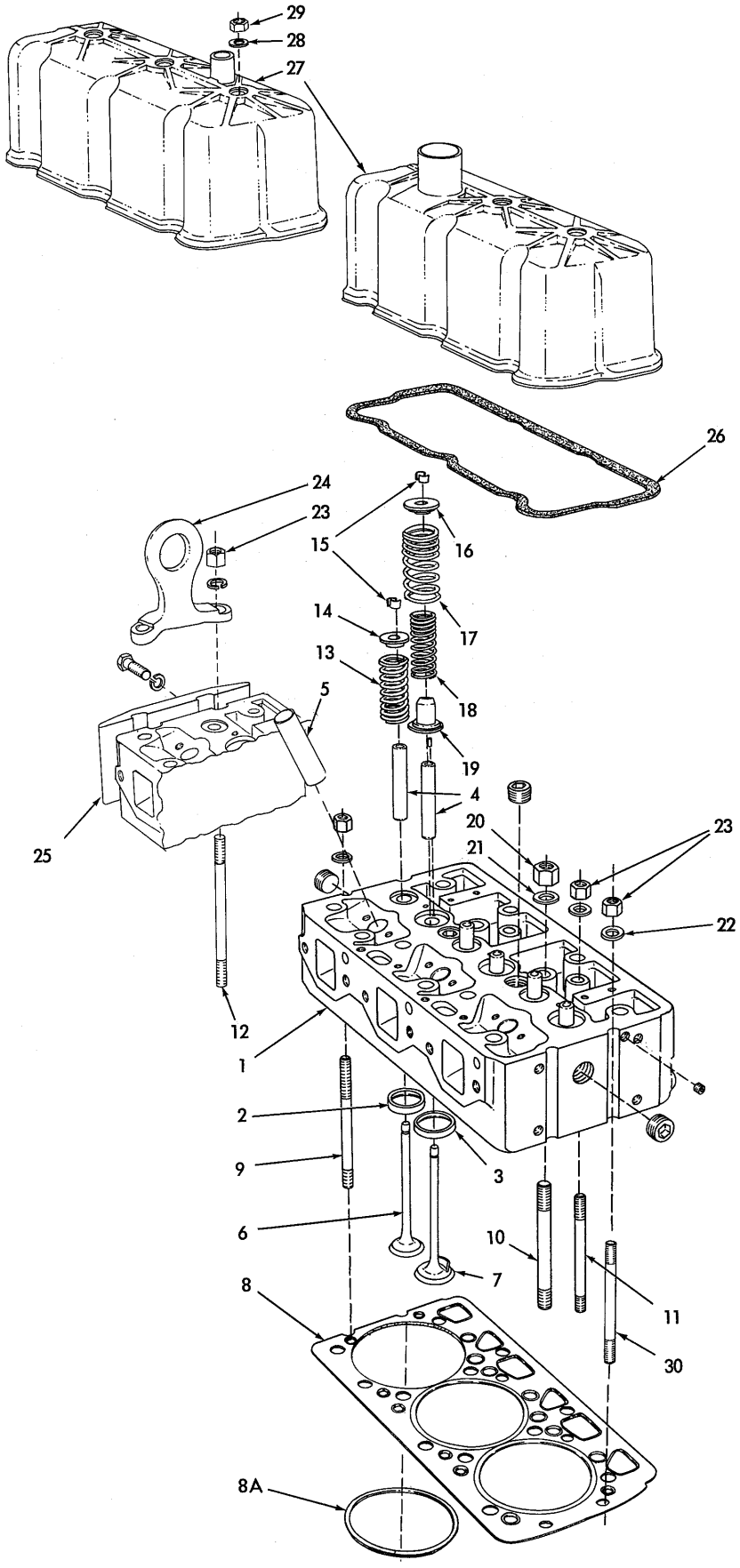

T-24202

CYLINDER HEAD

CYLINDER HEAD

*Engines prior to serial No. 11-13980, excluding Nos. 11-13918 and 11-13919
**Engines serial No. 11-13980 and up, including Nos. 11-13918 and 11-13919

ITEM	PART NO.	QTY. *	QTY. **	DESCRIPTION
1	------	2	-	HEAD ASSY. (Order 4359072, 3 VALVES 4359116 and 3 VALVES 4359117)
	4359072	-	2	HEAD ASSY. (Includes items 2 thru 5 and hardward indented below)
	917673	4	4	PLUG, pipe, hex-socket, 1/8"NPT
	920340	8	8	PLUG, pipe, hex-socket, 3/4"NPT
	917560	6	6	PIN, dowel, 3/16" x 3/8" (intake valve locator)
2	4339547	6	-	INSERT, exhaust valve seat (45° - standard size)
	4359114	-	6	INSERT, exhaust valve seat (30° - standard size)
	4339625	6	-	INSERT, exhaust valve seat (45° - .005" oversize)
	4359115	-	6	INSERT, exhaust valve seat (30° - .005" oversize)
3	4339546	6	-	INSERT, intake valve seat (45° - standard size)
	4359112	-	6	INSERT, intake valve seat (30° - standard size)
	4339624	6	-	INSERT, intake valve seat (45° - .005" oversize)
	4359113	-	6	INSERT, intake valve seat (30° - .005" oversize)
4	4359192	6	6	GUIDE, valve stem, exhaust
	4359193	6	6	GUIDE, valve stem, intake
5	4336157	6	6	SLEEVE, injection nozzle
6	4336128	6	-	VALVE, exhaust (45°)
	4359117	-	6	VALVE, exhaust (30°)
7	4336127	6	-	VALVE, intake (45°)
	4359116	-	6	VALVE, intake (30°)
8	4354294	1	1	GASKET, cylinder head, front (Includes item 8A) — Used prior to engine #11-16431
	4354295	1	1	GASKET, cylinder head, rear (Includes item 8A) — Used prior to engine #11-16431
	4359029	-	1	☐GASKET, cylinder head, front (Includes item 8A) — Effective with engine #11-16431
	4359030	-	1	☐GASKET, cylinder head, rear (Includes item 8A) — Effective with engine #11-16431
8A	4339848	6	6	GASKET, fire ring, cylinder sealing (Used prior to engine #11-6431)
	4358984	-	6	GASKET, fire ring, cylinder sealing (Effective with engine engine #11-16431)

(Continued)

CYLINDER HEAD (Continued)

ITEM	PART NO.	QTY. *	QTY. **	DESCRIPTION
9	4339434	2	2	STUD, cylinder head (1/2" x 8-5/8")
10	4339505	24	24	STUD, cylinder head (5/8" x 6-1/2")
11	4339498	6	6	STUD, cylinder head (1/2" x 6-1/8")
12	4339499	2	2	STUD, cylinder head (1/2" x 7-1/4")
13	4336131	6	6	SPRING, exhaust valve
14	4343799	6	6	RETAINER, exhaust valve spring
15	4376497	24	24	LOCK, valve spring retainer (half only)
16	4336153	6	6	RETAINER, intake valve spring
17	4336129	6	6	SPRING, intake valve, outer
18	4336130	6	6	SPRING, intake valve, inner
19	4336758	6	6	LOCATOR, intake valve
20	4388202	20	20	NUT, cylinder head stud (5/8"NF)
	4354407	4	4	NUT, cylinder head stud (5/8"NF, Nylok)(For end studs only)
21	4354490	24	24	WASHER, cylinder head nut (For 5/8" stud)
22	4372864	12	12	WASHER, cylinder head nut (For 1/2" stud)
23	4388205	12	12	NUT, cylinder head stud (1/2"NF)
24	4347619	1	1	EYE, engine lifting (rear end)
25	4336178	2	2	PLATE, end
	916191	4	4	CAPSCREW, 7/16"NC x 1-1/2" } Rear end only
	904207	4	4	LOCKWASHER, 7/16" }
26	4336148	2	2	□GASKET, rocker cover
27	4336146	2	2	COVER, rocker (Engines prior #11-14271)
	4357732	-	1	COVER, rocker,rear (Effective with engine #11-14271)
	4357732	-	1	COVER, rocker, front (Engines #11-14271 thru #11-17329)
	4359584	-	1	COVER, rocker, front (Effective with engine #11-17330)
28	4376749	6	6	WASHER, sealing, rocker cover nut
29	4375937	6	6	NUT, rocker cover

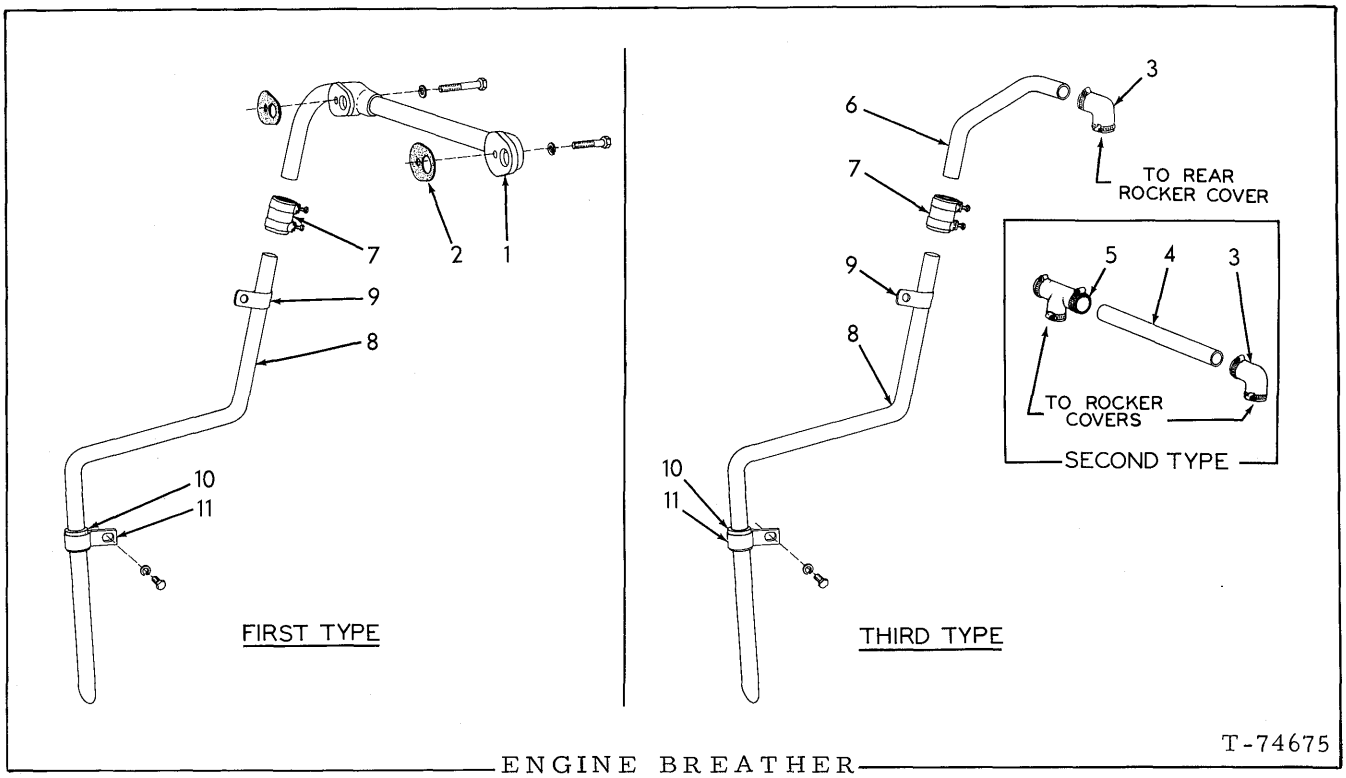

ENGINE BREATHER

* Engines prior to serial No. 11-14271
** Engines serial No. 11-14271 thru 11-17329
△ Effective with engine serial No. 11-17330

ITEM	PART NO.	QUANTITY *	**	△	DESCRIPTION
1	4349305	1	-	-	TUBE, upper
	916273	1	-	-	CAPSCREW, 3/8"NC x 1-3/4"
	912069	1	-	-	CAPSCREW, 3/8"NC x 2-1/2"
	904206	2	-	-	LOCKWASHER, 3/8"
2	4348133	2	-	-	□GASKET, upper tube
3	4357735	-	1	1	ELBOW, (rubber)
	921912	-	2	2	CLAMP, hose, 1-1/16" to 2" diam.
4	4357775	-	1	-	TUBE, upper
5	4357736	-	1	-	TEE (rubber)
	921912	-	3	-	CLAMP, hose, 1-1/16" to 2" diam.
6	4357733	-	1	1	TUBE, intermediate
7	4347924	1	1	1	HOSE, tube connecting
	4253453	2	2	2	CLAMP, hose
8	4338310	1	1	1	TUBE, lower
9	4254173	1	1	1	CLIP, tube supporting, upper
10	4371324	1	1	1	INSULATOR, lower tube (rubber)
11	4371323	1	1	1	CLIP, tube supporting, lower
	915408	1	1	1	CAPSCREW, 3/8"NC x 3/4"
	904206	1	1	1	LOCKWASHER, 3/8"

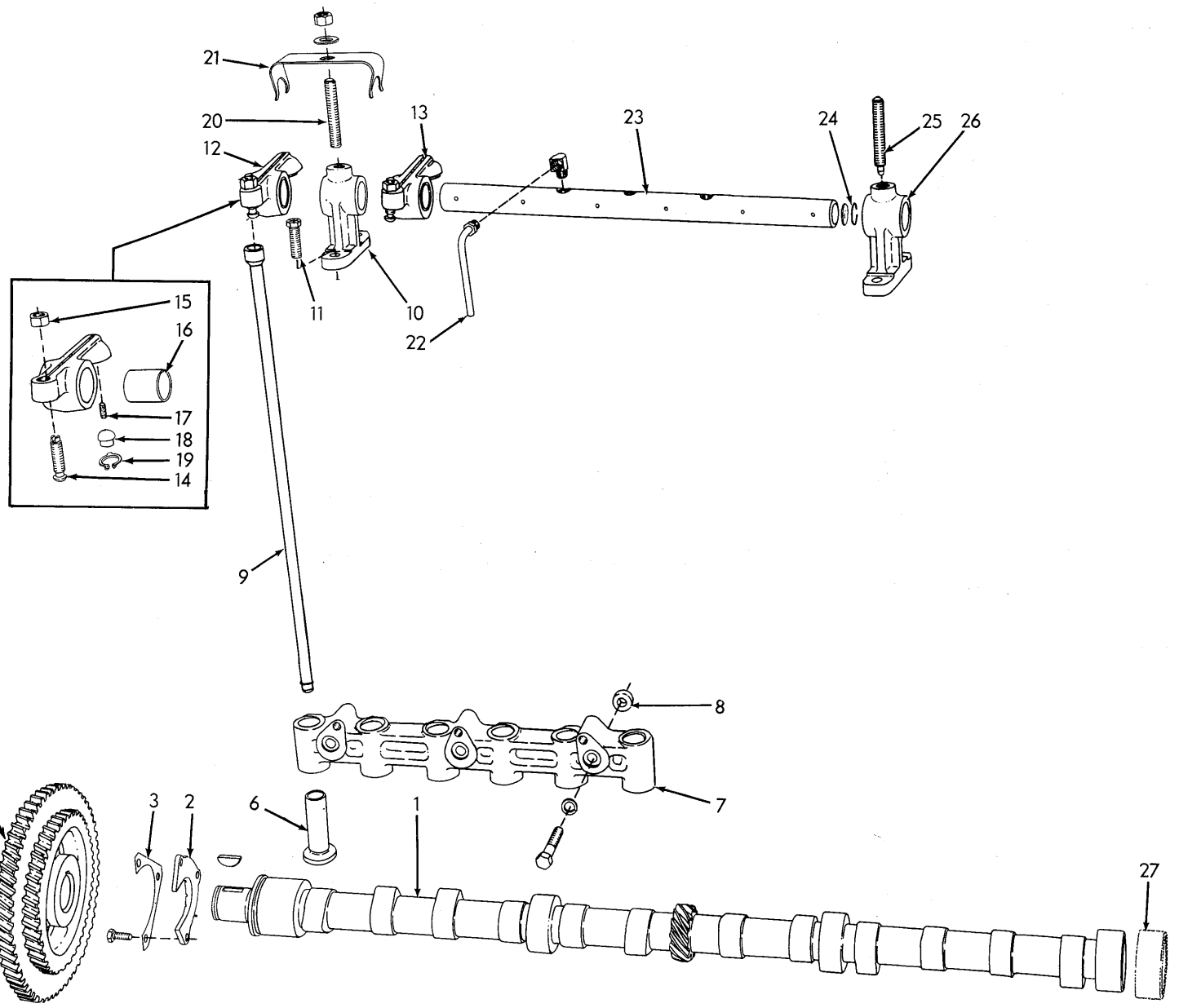

VALVE OPERATING MECHANISM

T-27404

VALVE OPERATING MECHANISM

ITEM	PART NO.	QTY.	DESCRIPTION
1	4337723	1	CAMSHAFT
	905126	1	KEY, #5 woodruff, 1/4" x 1"
2	4349257	1	COLLAR, camshaft thrust
	916277	3	CAPSCREW, 5/16"NC x 5/8"
3	4025391	1	PLATE, capscrew locking
4	4339659	1	GEAR, camshaft
5	4346307	1	RING, snap, gear retaining
6	4338299	12	LIFTER, valve
7	4347511	2	BRACKET, valve lifter
	919287	6	CAPSCREW, 3/8"NC x 1-7/8"
	904206	6	LOCKWASHER, 3/8"
8	4347832	4	DOWEL, hollow, valve lifter bracket
9	4336234	12	ROD, push
10	4336143	4	BRACKET, rocker shaft, end
11	4506946	12	STUD, rocker shaft bracket (Used prior to engine #11-15290)
	904206	12	LOCKWASHER, 3/8"
	4348440	12	NUT, heat-treated, 3/8"NF
	4255723	12	BOLT, rocker shaft bracket (self-locking)(Effective with engine #11-15290)
12	4337478	6	ARM ASSY., rocker, intake valve (Includes items 14 thru 19) (Used prior to engine serial no. 11-13409)
	4339219	6	ARM ASSY., rocker, intake valve (Includes items 14 and 15) (Used on engine serial nos. 11-13409 thru 11-14897)
	4358989	6	ARM ASSY., rocker, intake valve (Includes insert and items 14 and 15)(Effective with engine serial No. 11-14898)
13	4337479	6	ARM ASSY., rocker, exhaust valve (Includes items 14 thru 19) (Used prior to engine serial No. 11-13409)
	4339220	6	ARM ASSY., rocker, exhaust valve (Includes items 14 and 15) (Used on engine serial nos. 11-13409 thru 11-14897)
	4358988	6	ARM ASSY., rocker, exhaust valve (Includes Insert and items 14 and 15)(Effective with engine serial No. 11-14898)
14	4336646	12	SCREW, valve lash adjustment
15	4348440	12	NUT, valve lash adjustment screw
16	4660369	12	BUSHING, rocker arm
17	4364422	12	WICK, oiling, rocker ball
18	4379305	12	BALL, rocker arm
19	4385480	12	RING, snap, rocker arm ball
			Used prior to engine No. 11-13409
20	4348129	4	STUD, rocker cover (2-5/8" long)
21	4338143	6	CLIP, spring, rocker arm retaining
	912298	6	WASHER, plain, SAE std., 7/16"
	910986	6	NUT, 7/16"NF
22	4349157	2	TUBE ASSY., rocker shaft overflow (Includes nut)
	913039	2	ELBOW, inverted flare, 90°, 1/4" tube, 1/8"NPT male
23	4336145	2	SHAFT ASSY., rocker arm (Includes PLUGS indented below and item 24)
	910002	4	PLUG, expansion, 3/4" diam.
24	4254363	4	RING, snap, rocker shaft
25	4348130	2	SCREW, rocker shaft retaining (3" long, dog-pt.)
26	4336142	2	BRACKET, rocker shaft, center
27	-------	-	BEARING, camshaft (See CYLINDER BLOCK)

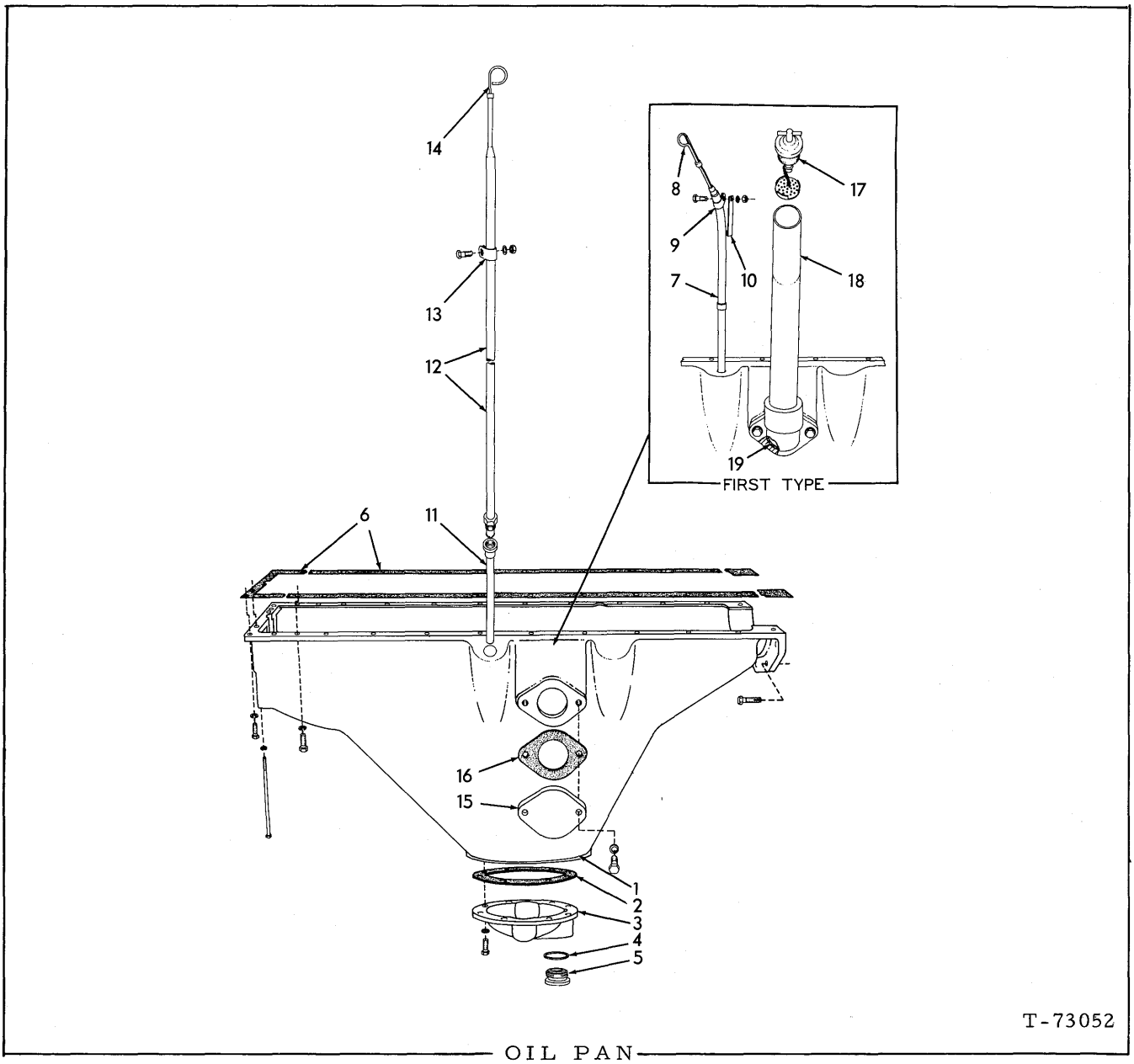

OIL PAN

*Used prior to engine serial No. 11-17330
**Effective with engine serial No. 11-17330

ITEM	PART NO.	QTY. *	QTY. **	DESCRIPTION
1	4354681	1	1	PAN, oil
	919224	24	24	CAPSCREW, 3/8"NC x 1-1/8"
	4255916	5	5	CAPSCREW, nylon strip, 3/8"NC x 1"
	914392	2	2	CAPSCREW, 5/16"NC x 1"
	919787	3	3	CAPSCREW, 5/16"NC x 6-1/2"
	904206	24	24	LOCKWASHER, 3/8"
	904205	5	5	LOCKWASHER, 5/16"
2	4373069	1	1	GASKET, clean-out cover
3	4373770	1	1	COVER, clean-out
	916271	8	8	CAPSCREW, 3/8"NC x 1"
	904206	8	8	LOCKWASHER, 3/8"
4	667252	1	1	GASKET, oil drain plug

(Continued)

OIL PAN (Continued)

ITEM	PART NO.	QTY. *	QTY. **	DESCRIPTION
5	035250	1	1	PLUG, oil drain
6	4347543	1	1	GASKET SET, oil pan (5 pieces)
7	4357837	1	-	ADAPTER, oil level gauge
8	4357805	1	-	GAUGE, oil level
9	4254154	1	-	CLAMP, oil level gauge adapter
	916310	1	-	CAPSCREW, 1/2"NC x 1"
	904208	1	-	LOCKWASHER, 1/2"
	910325	1	-	NUT, 1/2"NC
10	4357855	1	-	BRACE, oil level gauge adapter
11	4359565	-	1	ADAPTER ASSY., oil level gauge
12	4359625	-	1	TUBE ASSY., oil level gauge, upper (Includes NUT)
	915361	-	1	NUT, inverted flared, 1/2" tube, 3/4" straight thread
13	4251849	-	1	CLAMP, oil level gauge tube
	915408	-	1	CAPSCREW, 3/8"NC x 3/4"
	904206	-	1	LOCKWASHER, 3/8"
	910324	-	1	NUT, 3/8"NC
14	4359568	-	1	GAUGE, oil level
15	4339954	-	1	COVER
	916269	-	2	CAPSCREW, 3/8"NC x 7/8"
	904206	-	2	LOCKWASHER, 3/8"
16	4346456	-	1	GASKET, cover
17	4354449	1	-	CLOSURE ASSY., oil filler (Serviced only as a unit)
18	4357810	1	-	TUBE, oil filler
	919224	2	-	CAPSCREW, 3/8"NC x 1-1/8"
	904206	2	-	LOCKWASHER, 3/8"
19	923815	1	-	O-RING, oil filler

For succeeding design, see below

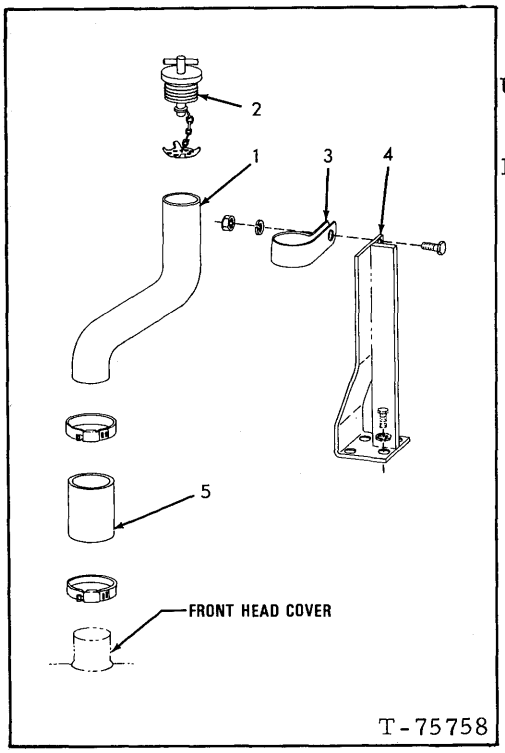

OIL FILLER TUBE (Second Type)

USAGE: Effective with engine serial No. 11-17330 (For prior design, see opposite page)

ITEM	PART NO.	QTY.	DESCRIPTION
1	670458	1	TUBE, oil filler
2	681969	1	CLOSURE
3	927514	1	CLIP, filler tube
	921175	1	CAPSCREW, 1/2"NC x 1"
	912441	1	LOCKWASHER, 1/2"
	911028	1	NUT, 1/2"NC
4	670448	1	BRACKET, support, filler tube
	------	4	CAPSCREW
	------	4	LOCKWASHER
5	670459	1	HOSE, filler tube connecting
	925758	2	CLAMP, hose, 2" to 3" diam.

See page 52

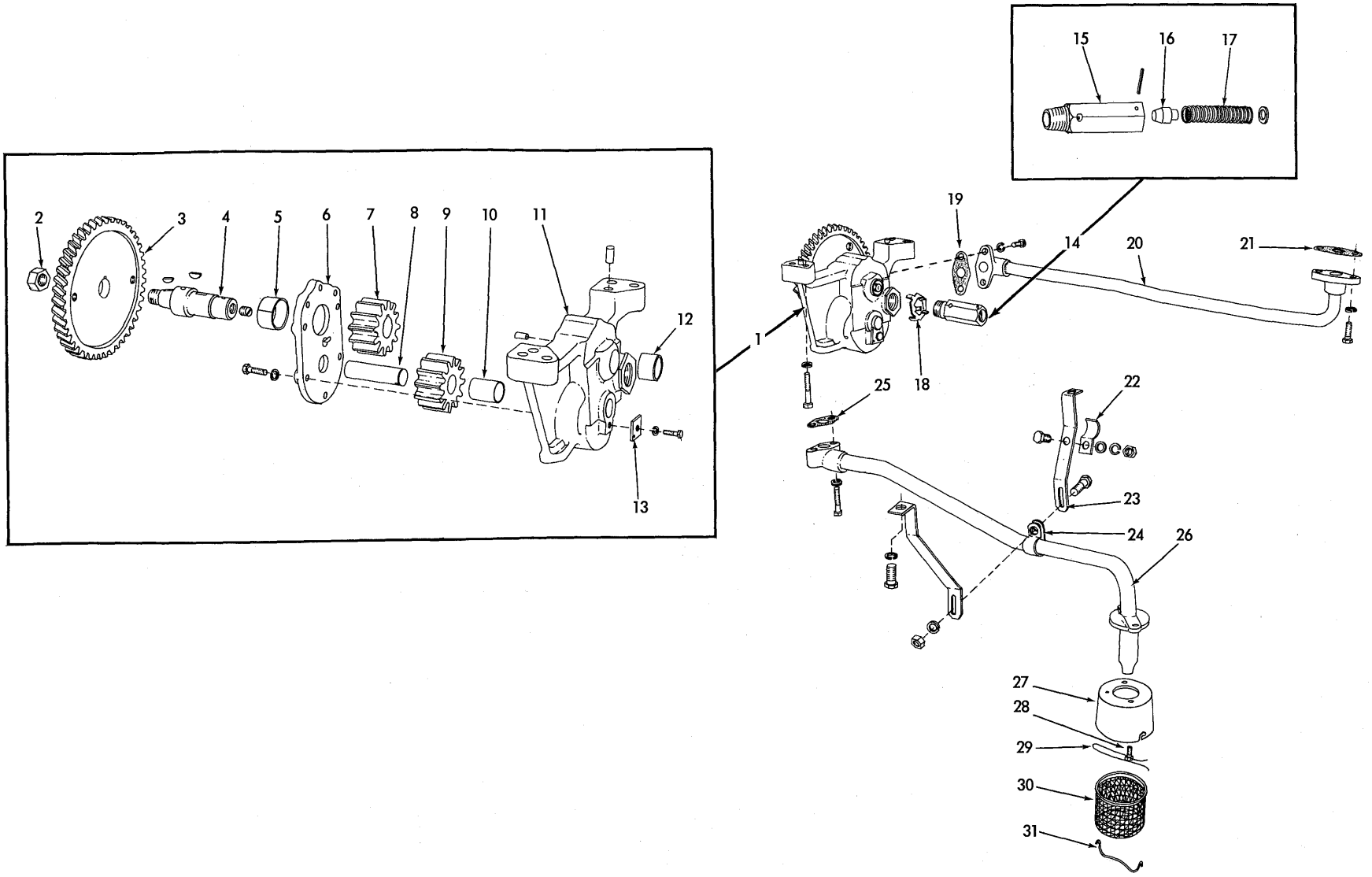

T-73053

OIL PUMP

OIL PUMP

ITEM	PART NO.	QTY.	DESCRIPTION
1	4359056	1	PUMP ASSEMBLY (Consists of items 2 thru 13)
	919226	4	CAPSCREW, 3/8"NC x 1-5/8"
	904206	4	LOCKWASHER, 3/8"
2	4254977	1	NUT, gear retaining
3	4337047	1	GEAR, driving
4	4348894	1	SHAFT, upper
	917673	1	PLUG, pipe, hex-socket, 1/8"NPT
	910224	2	KEY, #6 woodruff, 5/32" x 5/8"
5	4347659	1	BUSHING, pump cover
6	4348044	1	COVER ASSEMBLY (Includes item 5)
	916282	6	CAPSCREW, 1/4"NC x 7/8"
	904204	6	LOCKWASHER, 1/4"
7	4348883	1	GEAR, upper (10 teeth)
8	4348038	1	SHAFT, lower
9	4348891	1	GEAR ASSEMBLY, lower (10 teeth. Includes item 10)
10	4348083	1	BUSHING, lower gear
11	4348885	1	HOUSING ASSEMBLY (Includes item 12 and dowel PINS indented below)
	917554	1	PIN, dowel, 1/4" x 1/2"
	917546	2	PIN, dowel, 3/8" x 5/8"
12	4348303	1	BUSHING, pump housing
13	4348020	1	RETAINER, lower shaft
	916284	1	CAPSCREW, 1/4"NC x 1/2"
	904204	1	LOCKWASHER, 1/4"
14	4354573	1	VALVE ASSEMBLY, oil pressure relief (Consists of items 15 thru 17)
15	------	1	BODY, pressure relief valve (Not serviced separately)
16	------	1	PISTON, pressure relief valve (Not serviced separately)
17	4354568	1	SPRING, pressure relief valve
	4359310	1	WASHER, plain
	916001	1	PIN, spring, 3/16" x 1"
18	4347938	1	LOCK, oil pressure relief valve
19	4348215	1	GASKET, discharge pipe to pump
20	4335382	1	PIPE, pump discharge
	915813	2	CAPSCREW, 5/16"NC x 7/8"
	904205	2	LOCKWASHER, 5/16"
	916272	2	CAPSCREW, 3/8"NC x 1-1/4"
	904206	2	LOCKWASHER, 3/8"

(Continued)

OIL PUMP (Continued)

ITEM	PART NO.	QTY.	DESCRIPTION
21	4346169	1	□GASKET, discharge pipe to crankcase
22	4347572	1	CLAMP, supporting, discharge pipe
	916271	1	CAPSCREW, 3/8"NC x 1"
	912597	1	WASHER, plain
	904206	1	LOCKWASHER, 3/8"
	910324	1	NUT, 3/8"NC
23	4354687	2	BRACKET, pipe supporting
	916310	2	CAPSCREW, 1/2"NC x 1"
	904208	2	LOCKWASHER, 1/2"
24	4354750	1	CLIP, supporting, suction tube
	916311	1	CAPSCREW, 1/2"NC x 1-1/4"
	904208	1	LOCKWASHER, 1/2"
	910325	1	NUT, 1/2"NC
25	4348218	1	□GASKET, suction pipe to pressure pump
26	4354684	1	TUBE ASSEMBLY (Includes item 24)
	919290	2	CAPSCREW, 5/16"NC x 1-5/8"
	904205	2	LOCKWASHER, 5/16"
27	4389732	1	COVER, oil screen
28	4335608	2	CAPSCREW, drilled-hd., 5/16"NC x 3/4"
29	4509035	1	WIRE, locking, #18 x 10"
30	4374127	1	SCREEN, oil
31	4376294	1	RETAINER, oil screen

MEMO

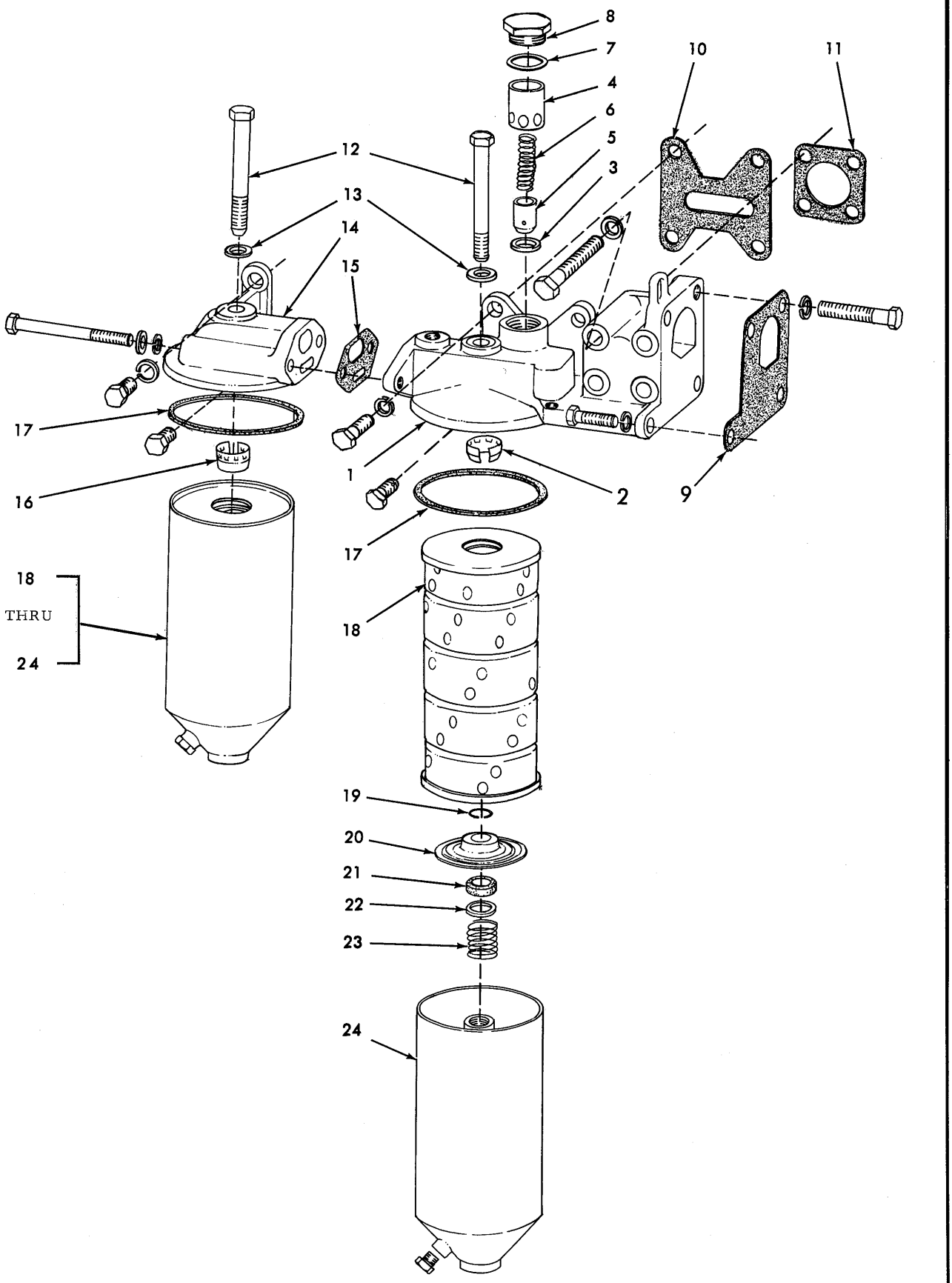

LUBRICATING OIL FILTER (Full-flow)

LUBRICATING OIL FILTER
(Full-flow)

ITEM	PART NO.	QTY.	DESCRIPTION
1	4339198	1	HEAD ASSEMBLY (Includes items 2 thru 8)
	920541	3	CAPSCREW, Nylok, 1/2"NC x 1-1/2"
	920540	1	CAPSCREW, Nylok, 1/2"NC x 1-1/4"
	920574	3	CAPSCREW, 1/2"NC x 1-3/8"
	915969	1	CAPSCREW, 1/2"NC x 3"
	904208	6	LOCKWASHER, 1/2"
	919293	4	CAPSCREW, 3/8"NC x 5"
	904206	4	LOCKWASHER, 3/8"
2	4379263	1	ADAPTOR, cartridge centering, upper
3	4373614	1	SEAT, by-pass valve
4	4373612	1	SLEEVE, by-pass valve piston
5	4373613	1	PISTON, by-pass valve
6	4335666	1	SPRING, by-pass valve
7	4253751	1	GASKET, by-pass valve cap
8	4373610	1	CAP, by-pass valve
9	4339128	1	□GASKET, filter head
10	4339150	1	□GASKET, filter head to block, rear
11	4348184	1	□GASKET, filter head to block, front
12	4339022	2	CAPSCREW, oil filter body
13	4376749	2	WASHER, sealing, filter body capscrew
14	4339454	1	HEAD ASSEMBLY, rear filter (Includes item 16)
	920682	2	CAPSCREW, 3/8"NC x 5-1/2"
	904206	2	LOCKWASHER, 3/8"
	922465	2	WASHER, plain
	916311	1	CAPSCREW, 1/2"NC x 1-1/4"
	904208	1	LOCKWASHER, 1/2"
	921865	1	CAPSCREW, Nylok, 1/2"NC x 1"
15	4339123	1	□GASKET, filter interconnection
16	4379263	1	ADAPTOR, cartridge centering, upper
17	4372325	2	GASKET, oil filter body
18	4371021	2	CARTRIDGE ASSEMBLY, oil filter (Includes item 17)
19	4379269	2	RING, snap, adaptor retaining
20	4055971	2	ADAPTOR, cartridge centering, lower
21	4053409	2	SEAL, cartridge adaptor
22	4053410	2	WASHER, cartridge adaptor seal
23	4379268	2	SPRING, cartridge retaining
24	4339021	2	BODY, oil filter
	918951	2	PLUG, pipe, hex-hd., 3/8"NPT

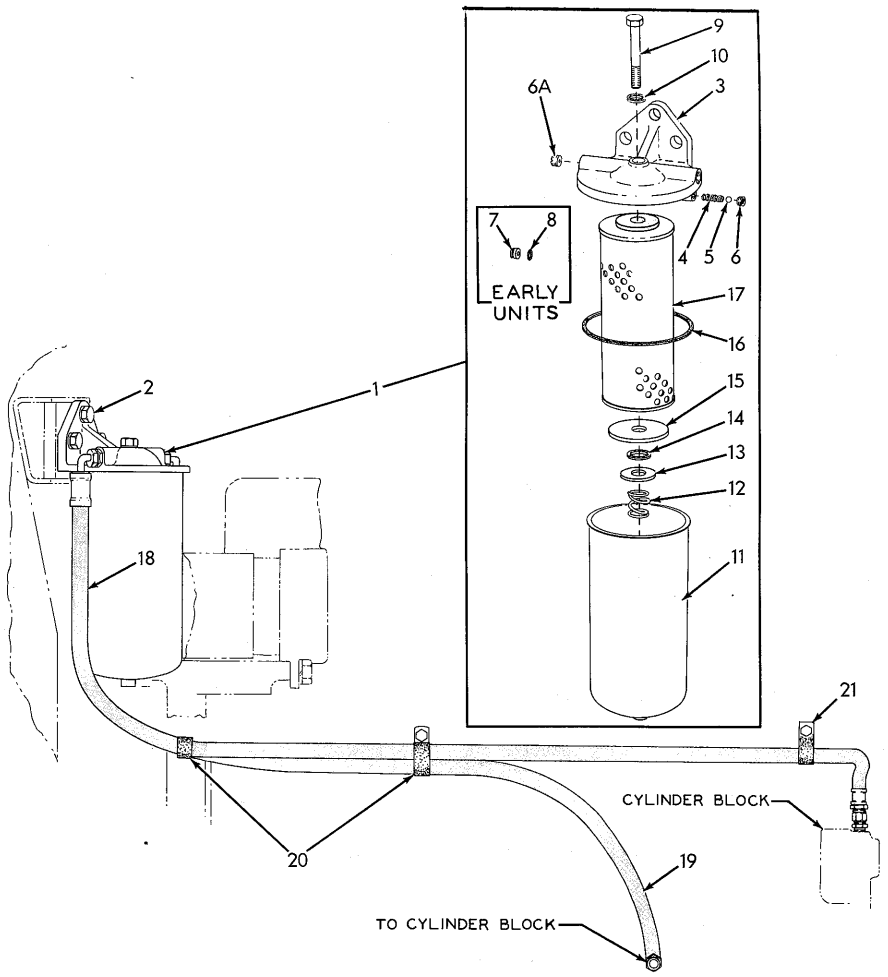

LUBRICATING OIL FILTER (By-pass) T-73046

ITEM	PART NO.	QTY.	DESCRIPTION
1	0655834-0	1	FILTER ASSY. (Consists of items 3 thru 17)
2	0035018-1	3	CAPSCREW, 1/2"NF x 1-1/2"
	0904208-6	3	LOCKWASHER, 1/2"
3	0669210-7	1	HEAD ASSY. (Includes items 4 thru 6A)
4	0656579-0	1	SPRING, oil by-pass
5	0905358-8	1	BALL, oil by-pass (1/4" diam.)
6	0656578-2	1	BUSHING, oil by-pass
6A	0669209-9	1	BUSHING, orifice (threaded)(Late units)
7	0661548-8	1	SLEEVE, orifice } Early units
8	0923663-9	1	O-RING, orifice sleeve } Early units
9	0061631-8	1	CAPSCREW, tank retaining

(Continued)

LUBRICATING OIL FILTER (By-pass)(Continued)

ITEM	PART NO.	QTY.	DESCRIPTION
10	656431	1	WASHER, sealing, tank retaining capscrew
11	656575	1	TANK (Has 3/4" diam. stud)(Early units)
	669215	1	TANK (Has 1" diam. stud)(Late units)
12	656572	1	SPRING, element
13	656573	1	WASHER, spring seating (3/4" hole)(Early units)
	669484	1	WASHER, spring seating (1" hole)(Late units)
14	641029	1	WASHER, sealing (3/4" hole)(Early units)
	669485	1	WASHER, sealing (1" hole)(Late units)
15	656574	1	PLATE, element seating (3/4" hole)(Early units)
	669483	1	PLATE, element seating (1" hole)(Late units)
16	647448	1	GASKET, filter tank
17	667422	1	ELEMENT KIT (Includes items 10 and 16)
18	642485	1	HOSE, filter inlet (See HOSE PARTS)
	919172	2	CONNECTOR, flare type, 3/8" tube, 3/8"NPT male
19	650862	1	HOSE, filter outlet (See HOSE PARTS)
	919172	2	CONNECTOR, flare type, 3/8" tube, 3/8"NPT male
20	643941	2	CLIP, hose supporting (For two 3/4" diam. lines)
	035221	1	CAPSCREW, 1/2"NC x 1"
	904208	1	LOCKWASHER, 1/2"
	910244	1	WASHER, plain, SAE std., 1/2"
21	643932	1	CLIP, hose supporting (13/16" diam.)
	070467	1	CAPSCREW, 1/2"NF x 1"
	904208	1	LOCKWASHER, 1/2"
	911043	1	NUT, 1/2"NF

NOTE: See PAINTING AND MARKING for instruction transfer applied to filter

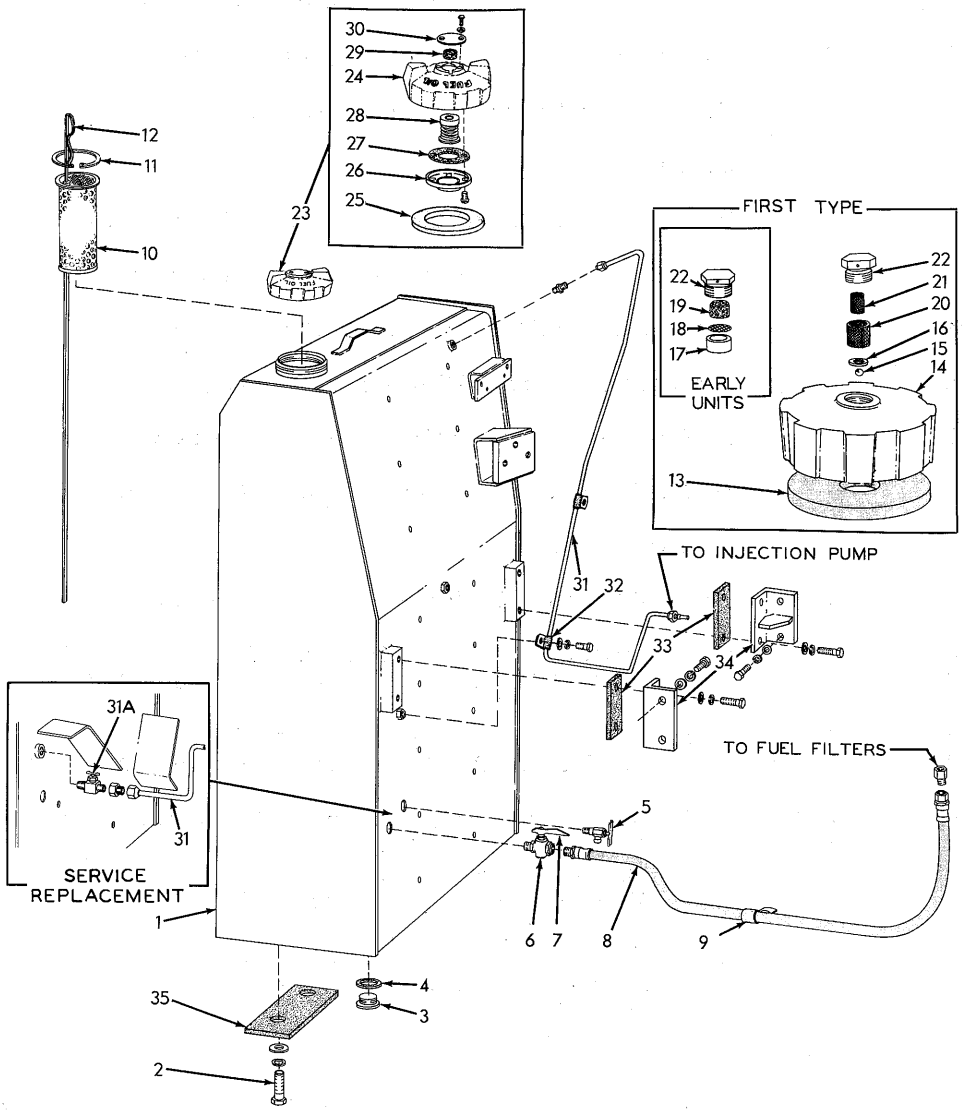

T-72819

FUEL TANK AND LINES

* Loaders prior to serial No. 565
** Loaders serial No. 565 and up

ITEM	PART NO.	QTY. *	QTY. **	DESCRIPTION
1	---------	1	1	TANK, fuel (Original equipment. Order 1 TANK 0671239-2, 1 VALVE ASSY. 0914378-5, 1 CONNECTOR 0924902-0 and 1 TUBE ASSY. 0683209-9)
	0671239-2	1	1	TANK, fuel (Service replacement)
2	0927199-0	8	8	CAPSCREW, 3/4"NC x 2-1/4"
	0914726-5	8	8	LOCKWASHER, 3/4"
	0061689-6	8	8	WASHER, plain

(Continued)

FUEL TANK AND LINES (Continued)

ITEM	PART NO.	QTY. *	QTY. **	DESCRIPTION
3	0035250-0	1	1	PLUG, drain
4	0667252-1	1	1	GASKET, drain plug
5	0089894-0	1	1	COCK, drain (3/8"NPT)
6	0092727-7	1	1	COCK, fuel shut-off (Includes item 7)
7	0082189-2	1	1	HANDLE, fuel shut-off cock
8	0655843-1	1	1	HOSE, fuel supply
	0923979-9	1	1	CONNECTOR, flare type, 3/8" tube, 3/8"NPT female
9	0621304-5	1	1	CLIP, fuel hose
10	0650509-3	1	1	STRAINER, fuel filler
11	0654840-8	1	1	RING, snap, fuel strainer
12	0655842-3	1	1	GAUGE, fuel level
13	0655416-6	1	-	GASKET, tank cap
14	0652567-9	1	-	CAP ASSY., fuel tank (Includes items 15 thru 22)
15	0652586-9	1	-	BALL, check
16	0652587-7	1	-	WASHER, check ball
17	---------	1	-	SPACER, breather } FIRST TYPE FILTER. Used prior to
18	---------	1	-	SCREEN, breather } loader #446. Order items 20 and 21
19	---------	1	-	FILTER, breather }
20	0664867-9	1	-	ELEMENT, breather (lower) } SECOND TYPE FILTER.
21	0664868-7	1	-	ELEMENT, breather (upper) } Effective with loader #446.
22	0652590-1	1	-	BREATHER, fuel tank (Used prior to loader #446)
	0664866-1	1	-	BREATHER, fuel tank (Effective with loader #446)
23	0668252-0	-	1	CAP ASSY., fuel tank (Consists of items 24 thru 30)
24	---------	-	1	CAP only (Not serviced separately)
25	0668263-7	-	1	GASKET, cap
26	0668806-3	-	1	SEAT, relief valve
	0926699-0	-	4	SCREW, fil-hd., brass, #10-24NC x 3/8"
27	0668804-8	-	1	GASKET, valve seat
28	0668805-5	-	1	VALVE ASSY., relief (Serviced only as a unit)
29	0664867-9	-	1	ELEMENT, air filter
30	0668262-9	-	1	COVER, tank cap
	0921181-4	-	2	SCREW ASSY., #10-24NC x 1/2" (Includes lockwasher)
31	0655851-4	1	1	TUBE ASSY., fuel return (Includes metal sleeve)(Original equipment)
	0919140-4	1	1	CONNECTOR, flare type, 1/4" tube, 1/4"NPT male
	0683209-1	1	1	TUBE ASSY., fuel return (Includes metal sleeve)(Not original equipment. Used with service replacement tank only)
	0924902-0	1	1	CONNECTOR, flare type, 1/4" tube, 1/4"NPT female
	0919141-2	1	1	NUT, flare type, 1/4" tube
	0917809-6	1	1	NUT, Imperial, 1/4" tube
	0917806-2	1	1	SLEEVE, Imperial, 1/4" tube (rubber)
31A	0914378-5	1	1	VALVE ASSY., fuel return shut-off (Not original equipment. Use with service replacement tank only)
32	0640677-1	2	2	CLIP, fuel return tube
	0035244-3	2	2	CAPSCREW, 3/8"NC x 3/4"
	0904206-0	2	2	LOCKWASHER, 3/8"
	0911115-4	2	2	WASHER, plain, SAE std., 3/8"
33	0655844-9	2	2	PAD, supporting bracket (fabric)
34	0655845-6	2	2	BRACKET, tank supporting
	0035236-9	8	8	CAPSCREW, 1/2"NC x 1-3/4"
	0904208-6	8	8	LOCKWASHER, 1/2"
	0064531-7	8	8	WASHER, plain
35	0655949-6	4	4	PAD, tank mounting (fabric)

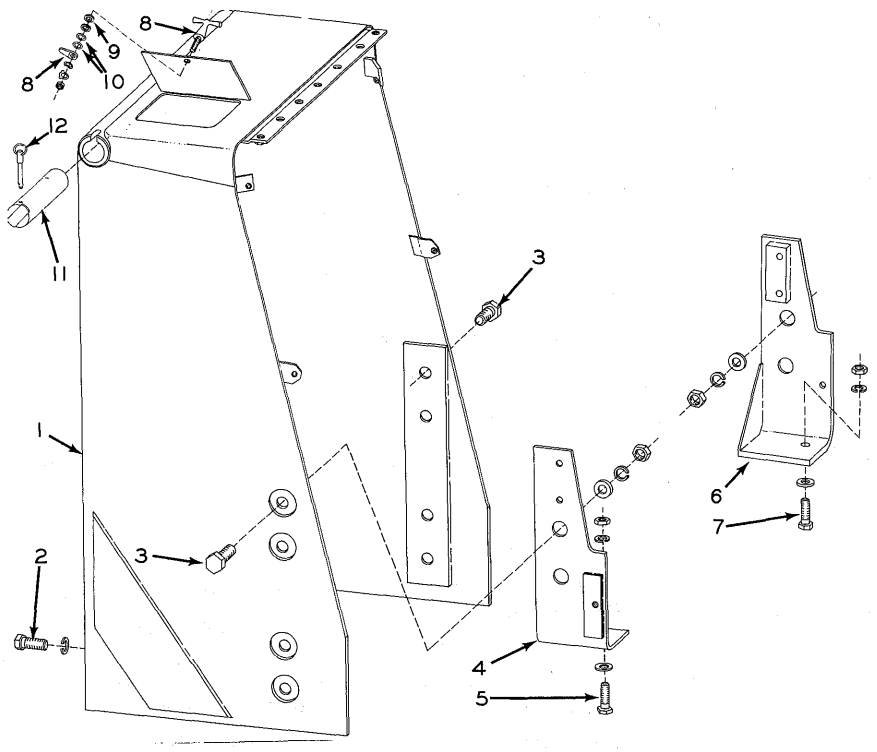

FUEL TANK GUARD

ITEM	PART NO.	QTY.	DESCRIPTION
1	655850	1	GUARD (Loaders prior to #1000)
	669974	1	GUARD (Loader unit #01001 and up)
2	603426	5	CAPSCREW, 1"NC x 2-1/2"
	910916	5	LOCKWASHER, 1"
3	603426	8	CAPSCREW, 1"NC x 2-1/2"
	910916	8	LOCKWASHER, 1"
	911032	8	NUT, 1"NC
	095951	8	WASHER, plain
4	655855	1	BRACKET, guard attaching, left side
5	921068	2	CAPSCREW, 3/4"NC x 2-1/4"
	061689	2	WASHER, plain
	904369	2	LOCKWASHER, 3/4"
	911030	2	NUT, 3/4"NC
6	655856	1	BRACKET, guard attaching, right side
7	921068	2	CAPSCREW, 3/4"NC x 2-1/4"
	061689	2	WASHER, plain
	904369	2	LOCKWASHER, 3/4"
	911030	2	NUT, 3/4"NC
8	653814	1	LOCK ASSEMBLY, tank access lid (Serviced only as a unit)
9	044973	2	WASHER, spacing, lid lock
10	659035	4	SHIM, lid lock (Use as required)
11	655846	2	PIN, boom safety rest
12	655847	2	PIN, retaining, boom safety pin

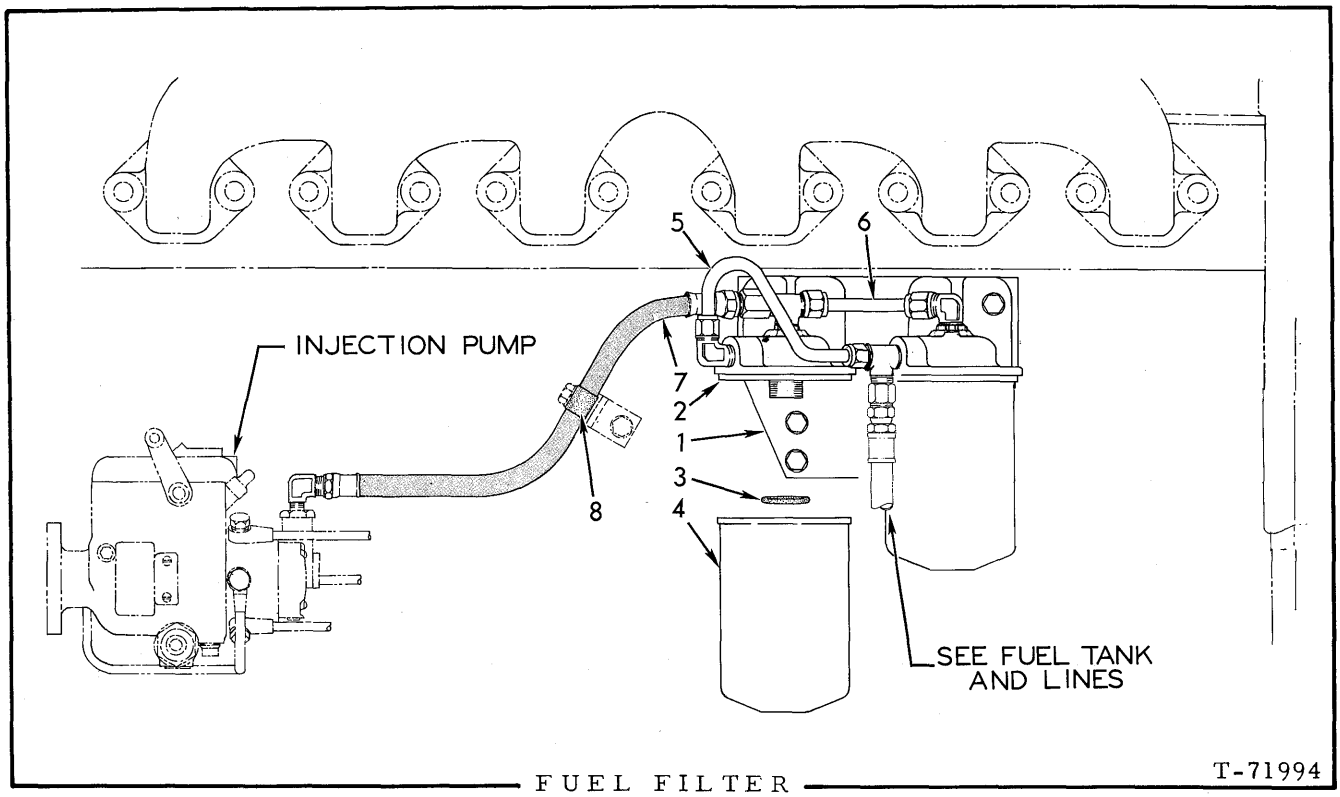

FUEL FILTER

ITEM	PART NO.	QTY.	DESCRIPTION
1	4357429	1	BRACKET, filter mounting
	914392	4	CAPSCREW, 5/16"NC x 1"
	904205	4	LOCKWASHER, 5/16"
2	4025229	2	BASE ASSEMBLY, fuel filter (Includes insert which is not serviced separately)
	919134	2	PLUG, pipe, hex-hd., 1/8"NPT
	916197	4	CAPSCREW, 7/16"NC x 1-1/4"
	904207	4	LOCKWASHER, 7/16"
	912201	4	NUT, 7/16"NC
3	923934	2	O-RING, filter element
4	4025230	2	ELEMENT, fuel filter (Includes item 3)
5	4354393	1	TUBE ASSEMBLY, fuel inlet (Includes NUTS and SLEEVES indented below)
	917810	2	NUT, Imperial, 3/8" tube
	917807	2	SLEEVE, Imperial, 3/8" tube
	919005	1	ELBOW, Imperial, 3/8" tube, 3/8"NPT male
	4354394	1	TEE, Imperial, 3/8" tube, 3/8"NPT male end and side
6	4354391	1	TUBE ASSEMBLY, fuel outlet (Includes NUTS and SLEEVES indented below)
	917810	2	NUT, Imperial, 3/8" tube
	917807	2	SLEEVE, Imperial, 3/8" tube
	919005	1	ELBOW, Imperial, 3/8" tube, 3/8"NPT male
	4354394	1	TEE, Imperial, 3/8" tube, 3/8"NPT male end and side
7	4357430	1	HOSE, filter to pump (See HOSE PARTS)
	923979	1	CONNECTOR, flare type, 3/8" tube, 3/8"NPT female
	919135	1	ELBOW, flare type, 3/8" tube, 1/4"NPT male
8	4255010	1	CLAMP, hose supporting

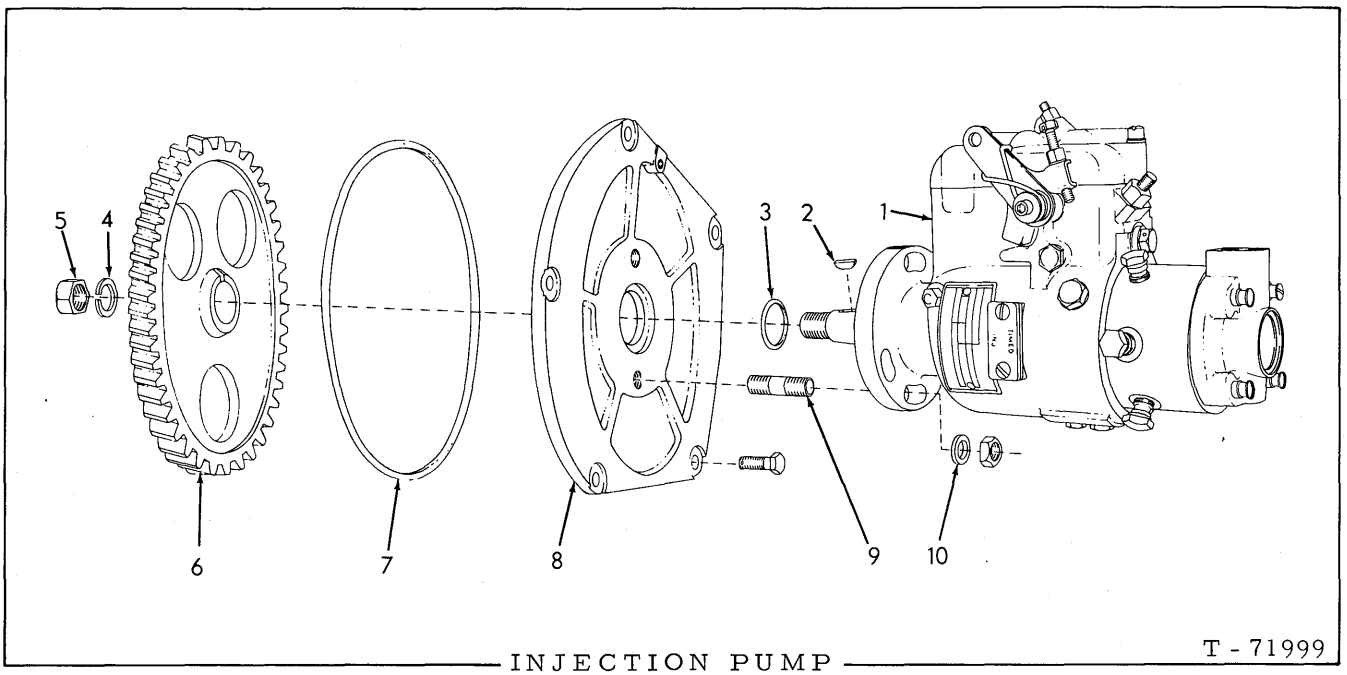

INJECTION PUMP T-71999

ITEM	PART NO.	QTY.	DESCRIPTION
1	4354963	1	PUMP ASSY., injection (Includes items 2 thru 5. See your Allis-Chalmers dealer for pump service)(Used prior to engine #11-17330)
	4359639	1	PUMP ASSY., injection (Includes items 2 thru 5)(See your Allis-Chalmers dealer for pump service)(Effective with engine #11-17330)
2	910224	1	KEY, #6 woodruff, 5/32" x 5/8"
3	4048596	1	SEAL, pump mounting
4	4048598	1	LOCKWASHER, gear retaining
5	4048597	1	NUT, gear retaining
6	4339851	1	GEAR, pump drive
7	924139	1	☐O-RING, pump mounting cover
8	4354954	1	COVER, pump mounting
	920473	5	CAPSCREW, Nylok, 3/8"NC x 3/4"
9	4344938	2	STUD, pump attaching
	910123	2	NUT, 3/8"NF
10	4371718	2	WASHER, serrated

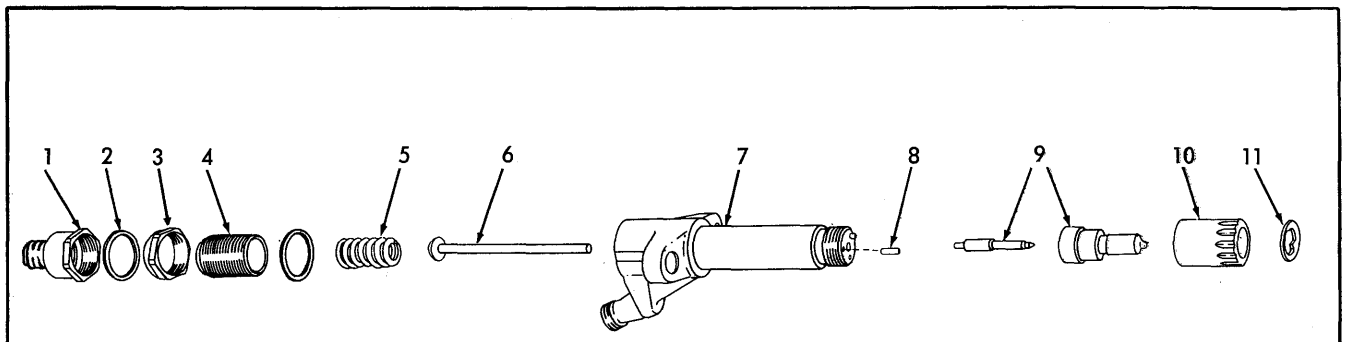

INJECTION NOZZLE HOLDER ASSEMBLY 4359059 T-33500

USAGE: See page 47

ITEM	PART NO.	QTY.	DESCRIPTION
			NOTE: Quantities indicated are for one (1) Holder Assembly only
1	4021227	1	CAP
2	4511243	2	GASKET, cap nut
3	4511213	1	NUT, locking
4	4378033	1	SCREW, adjusting
5	4380652	1	SPRING
6	4380656	1	SPINDLE
7	------	1	BODY (Not serviced separately)
8	922943	2	PIN, nozzle locating
9	4338803	1	NOZZLE ASSEMBLY (Includes item 11)
10	4380662	1	NUT, nozzle retaining
11	4378031	1	□GASKET, nozzle holder

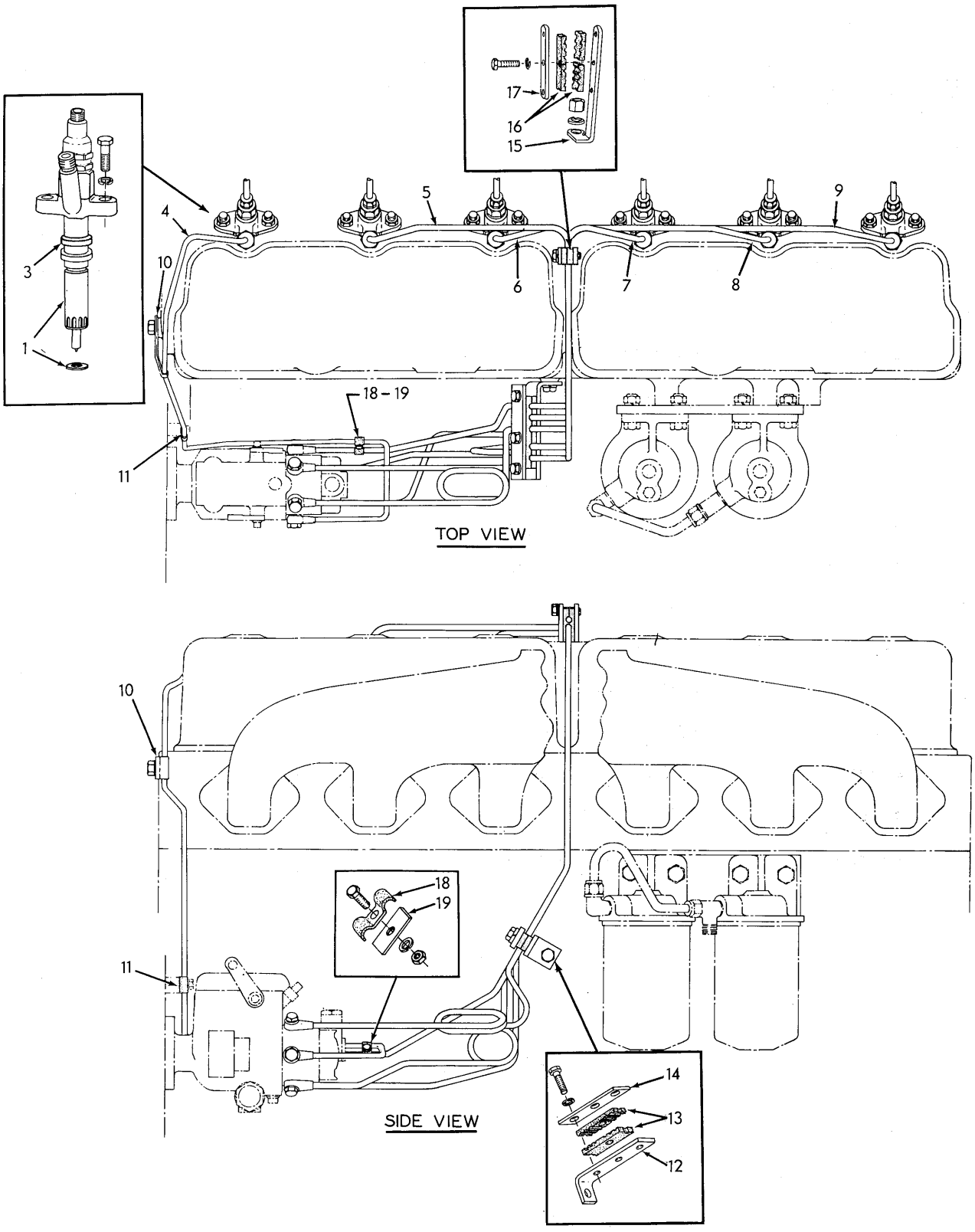

INJECTION NOZZLES AND LINES

T-71998

INJECTION NOZZLES AND LINES

ITEM	PART NO.	QTY.	DESCRIPTION
1	4359059	6	HOLDER ASSEMBLY, injection nozzle (See page 45 for parts)
	903632	12	CAPSCREW, 3/8"NC x 1-1/2"
	904206	12	LOCKWASHER, 3/8"
3	4025385	12	SHIELD, dirt
4	4357434	1	TUBE, fuel injection (#1 cylinder)(Used prior to engine #11-17330)
	4359567	1	TUBE, fuel injection (#1 cylinder)(Effective with engine #11-17330)
5	4339559	1	TUBE, fuel injection (#2 cylinder)
6	4339560	1	TUBE, fuel injection (#3 cylinder)
7	4339561	1	TUBE, fuel injection (#4 cylinder)
8	4339562	1	TUBE, fuel injection (#5 cylinder)
9	4339563	1	TUBE, fuel injection (#6 cylinder)
10	4255757	1	CLIP, injection tube, upper (#1 cylinder)
	919228	1	CAPSCREW, 7/16"NC x 1-1/8"
	904207	1	LOCKWASHER, 7/16"
	912201	1	NUT, 7/16"NC
11	4354831	1	CLIP, injection tube, lower (#1 cylinder)
	916284	1	CAPSCREW, 1/4"NC x 1/2"
	904204	1	LOCKWASHER, 1/4"
12	4339712	1	BRACKET, tube supporting, lower
	915809	1	CAPSCREW, 5/16"NC x 3/4"
	904205	1	LOCKWASHER, 5/16"
13	4336532	2	SPACER, injection tubes, lower
14	4336531	1	PLATE, clamping, injection tubes, lower
	914670	3	CAPSCREW, 5/16"NC x 1-1/8"
	904205	3	LOCKWASHER, 5/16"
15	4336249	1	BRACKET, tube supporting, upper
	910195	1	NUT, 1/2"NF
	904208	1	LOCKWASHER, 1/2"
16	4507359	4	SPACER, injection tubes, upper
17	4336250	1	CLAMP, injection tubes, upper
	914670	3	CAPSCREW, 5/16"NC x 1-1/8"
	904205	3	LOCKWASHER, 5/16"
18	4513552	1	CLAMP, injection tubes
	916278	1	CAPSCREW, 5/16"NC x 1/2"
	904205	1	LOCKWASHER, 5/16"
	910323	1	NUT, 5/16"NC
19	4359106	1	PLATE, injection tube clamp

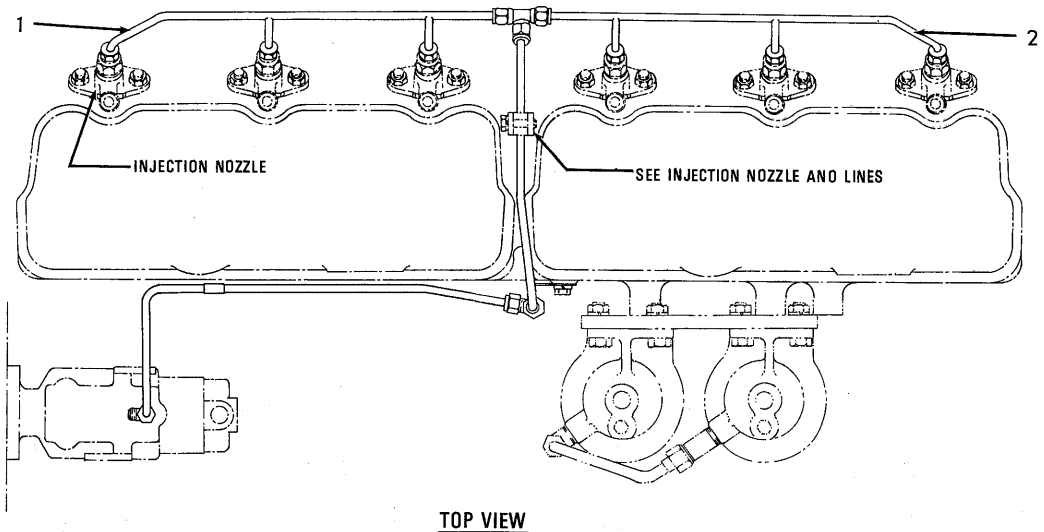

TOP VIEW

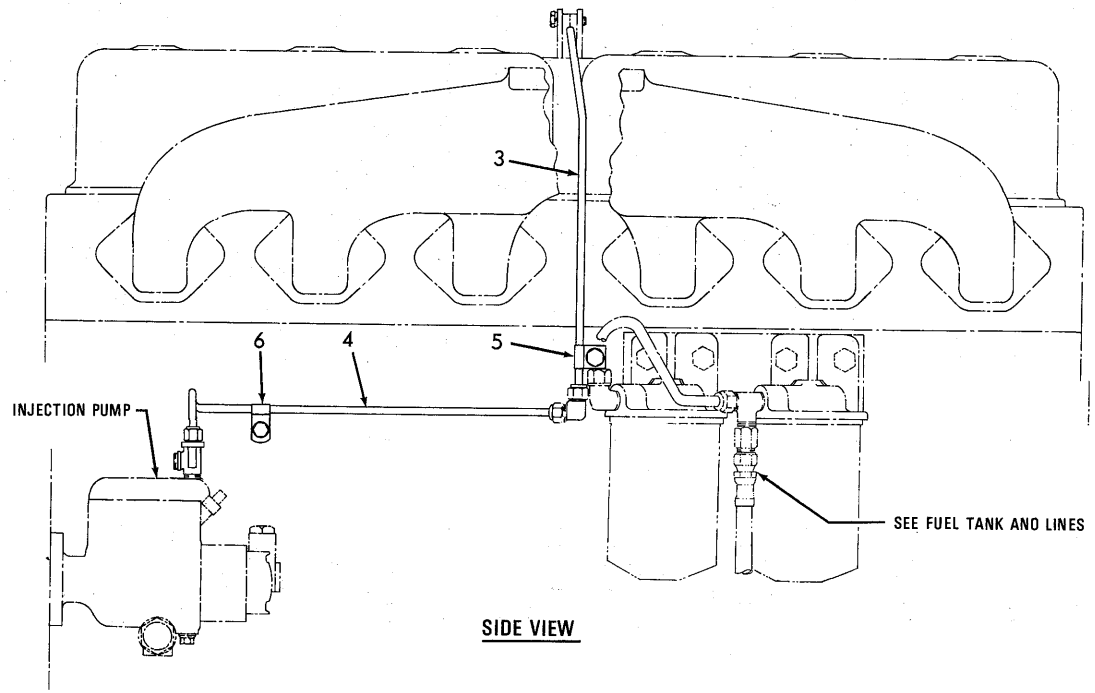

SIDE VIEW

INJECTION FUEL RETURN LINES

T-71997

INJECTION FUEL RETURN LINES

ITEM	PART NO.	QTY.	DESCRIPTION
1	4336546-9	1	MANIFOLD ASSY., front (Includes NUTS and SLEEVES indented below)
	0917809-6	4	NUT, Imperial, 1/4" tube
	0917806-2	4	SLEEVE, Imperial, 1/4" tube
2	4336681-4	1	MANIFOLD, rear
	0917809-6	4	NUT, Imperial, 1/4" tube
	0917806-2	4	SLEEVE, Imperial, 1/4" tube
3	4339691-0	1	TUBE ASSY., manifold return (Includes NUTS and SLEEVES indented below)
	0917809-6	2	NUT, Imperial, 1/4" tube
	0917806-2	2	SLEEVE, Imperial, 1/4" tube
	0919797-1	1	TEE, union, Imperial, 1/4" tube
	0924189-4	1	ELBOW, Imperial, 1/4" tube
4	4358724-5	1	TUBE, pump return
	0917809-6	2	NUT, Imperial, 1/4" tube
	0917806-2	2	SLEEVE, Imperial, 1/4" tube
	0920411-6	1	TEE, service, Imperial, 1/4" tube, 1/8"NPT male
5	4339949-2	1	CLAMP, manifold return tube
	0916277-7	1	CAPSCREW, 5/16"NC x 5/8"
	0904205-2	1	LOCKWASHER, 5/16"
6	4253435-4	1	CLIP, pump return tube
	0916277-7	1	CAPSCREW, 5/16"NC x 5/8"
	0904205-2	1	LOCKWASHER, 5/16"

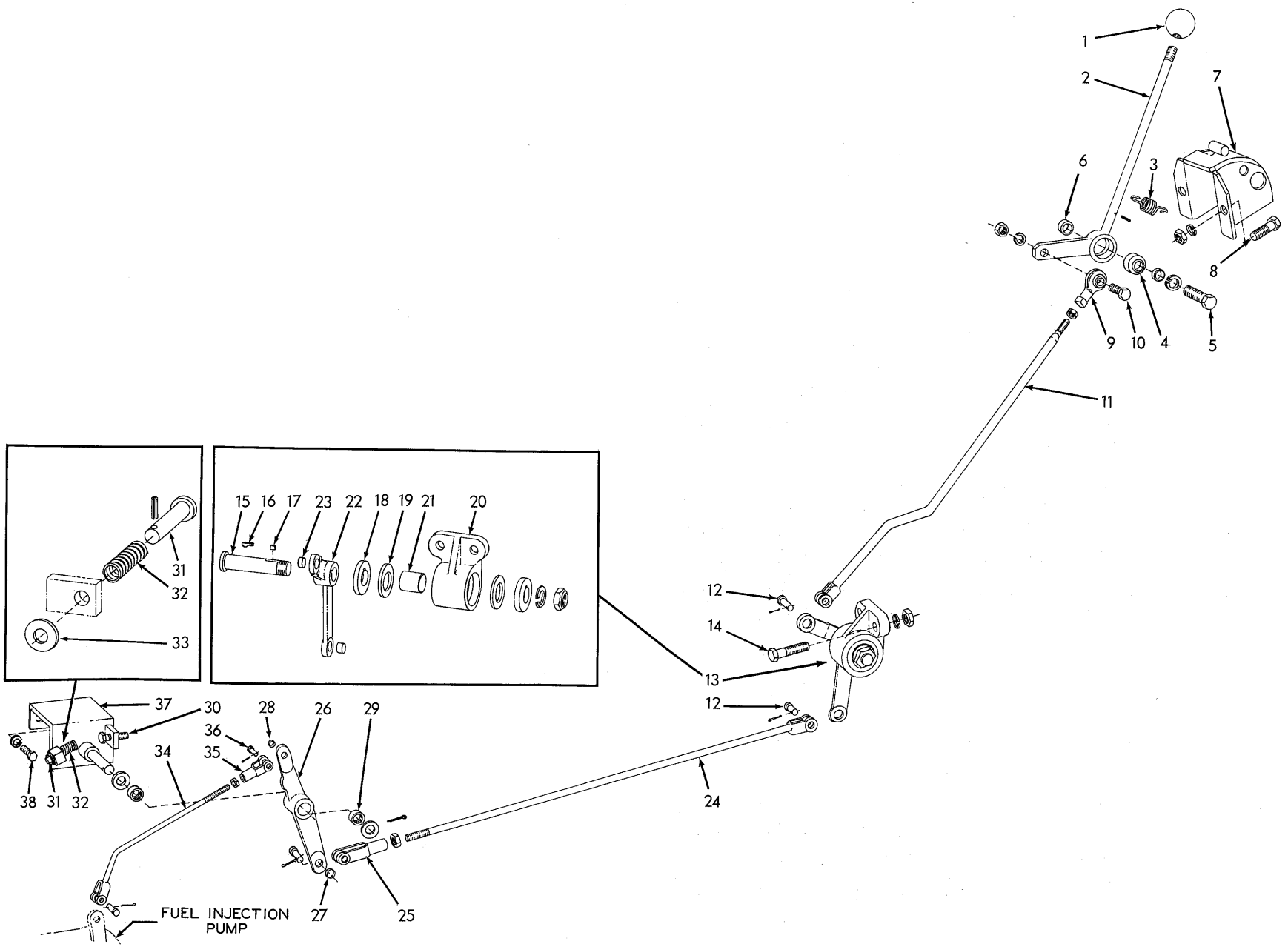

THROTTLE CONTROL

T-72913

THROTTLE CONTROL

USAGE: Loaders prior to serial No. 1000

ITEM	PART NO.	QTY.	DESCRIPTION
1	659076	1	KNOB, operating lever
2	655540	1	LEVER, operating
	918111	1	PIN, spring, 1/8" x 1"
3	641008	1	SPRING, operating lever
4	655546	1	BEARING, swivel, operating lever
5	035236	1	CAPSCREW, 1/2"NC x 1-3/4"
	904208	1	LOCKWASHER, 1/2"
6	657559	2	SPACER, bearing
7	655545	1	BRACKET, guide, operating lever
8	035190	2	CAPSCREW, 1/2"NC x 1-1/2"
	904208	2	LOCKWASHER, 1/2"
	911028	2	NUT, 1/2"NC
9	617932	1	END, rod
10	040382	1	CAPSCREW, 3/8"NC x 1-3/8"
	904206	1	LOCKWASHER, 3/8"
	911026	1	NUT, 3/8"NC
11	659366	1	ROD, rear
	911048	1	NUT, 3/8"NF
12	078810	3	PIN, control rod yoke
	900942	3	PIN, cotter, 3/32" x 5/8"
13	655536	1	FRICTION ASSEMBLY (Consists of items 15 thru 23)
14	035236	2	CAPSCREW, 1/2"NC x 1-3/4"
	904208	2	LOCKWASHER, 1/2"
	911028	2	NUT, 1/2"NC
15	655535	1	SHAFT, friction
	904369	1	LOCKWASHER, 3/4"
	914452	1	NUT, elastic stop, 3/4"NF
16	923280	1	KEY, friction shaft lever
17	632716	1	KEY, friction washer
18	632710	2	WASHER, friction
19	632747	2	DISC, friction
20	632766	1	HOUSING ASSEMBLY, friction (Includes item 21)
21	632752	1	BUSHING, friction housing
22	655534	1	LEVER ASSEMBLY, friction shaft (Includes item 23)
23	624584	2	BUSHING, friction shaft lever
24	655532	1	ROD, intermediate
	911048	1	NUT, 3/8"NF
25	628736	1	YOKE, intermediate rod
26	650740	1	LEVER ASSEMBLY, front rod (Includes items 27 and 28)
27	624584	1	BUSHING, lower rod lever (large)

(Continued)

THROTTLE CONTROL (Continued)

ITEM	PART NO.	QTY.	DESCRIPTION
28	624585	1	BUSHING, lower rod lever (small)
29	655215	2	BEARING, needle, lower rod lever
30	634650	1	CAPSCREW, lever stop (3/8"NC x 1-1/2")
	911034	1	NUT, jam, 3/8"NC
31	651001	1	PIN, lever stop
	916202	1	PIN, spring, 1/8" x 7/8"
32	650999	1	SPRING, lever stop pin
33	630753	1	WASHER, lever stop pin
34	650686	1	ROD, lower
	910267	1	NUT, jam, 1/4"NF
35	628737	1	YOKE, lower rod
36	628738	2	PIN, lower rod
	900970	2	PIN, cotter, 1/16" x 1/2"
37	651005	1	BRACKET, supporting, control linkage
38	035439	2	CAPSCREW, 3/8"NC x 1"
	904206	2	LOCKWASHER, 3/8"
	910244	2	WASHER, plain, SAE std., 1/2"
	900806	1	PIN, cotter, 1/8" x 1"

MEMO

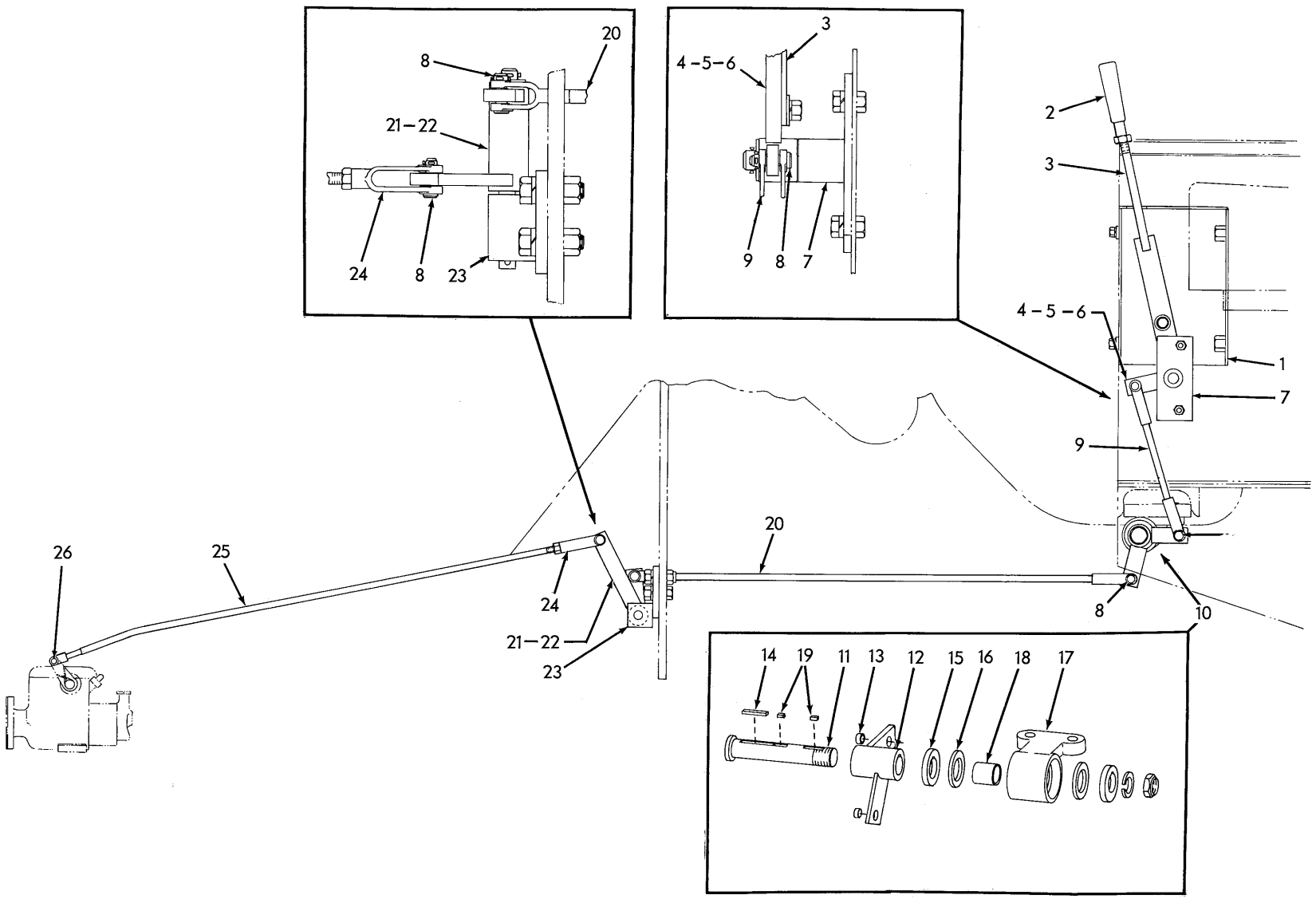

THROTTLE CONTROL (Second type)

T-75593

THROTTLE CONTROL (Second type)

USAGE: Loader Serial No. 43C01001 and up

ITEM	PART NO.	QTY.	DESCRIPTION
1	668733	1	GUIDE, operating lever
	921076	4	CAPSCREW, 3/8"NC x 1-1/4"
	910287	4	LOCKWASHER, 3/8"
	044973	4	WASHER, plain
2	078620	1	GRIP, operating lever
3	668735	1	LEVER, operating
	922262	2	CAPSCREW, 3/8"NC x 7/8"
	910287	2	LOCKWASHER, 3/8"
	900817	2	WASHER, plain U.S. std., 3/8"
4	670132	1	LEVER ASSY., rear (Includes items 5 and 6)
5	097273	1	BUSHING, rear lever (large)
6	624584	1	BUSHING, rear lever (small)
7	668745	1	BRACKET, rear lever supporting
	922763	2	CAPSCREW, 3/8"NC x 1"
	910287	2	LOCKWASHER, 3/8"
	911026	2	NUT, 3/8"NC
	911100	1	WASHER, plain, SAE std., 5/8"
	900806	1	PIN, cotter, 1/8" x 1"
8	078810	5	PIN, control rod yoke
	900942	5	PIN, cotter, 3/32" x 5/8"
9	668752	1	ROD, rear
10	670138	1	FRICTION ASSY. (Consists of items 11 thru 19)
	920583	2	CAPSCREW, 1/2"NC x 1-1/2"
	912441	2	LOCKWASHER, 1/2"
11	670450	1	SHAFT, friction
	904369	1	LOCKWASHER, 3/4"
	914452	1	NUT, elastic stop, 3/4"NF
12	670133	1	LEVER ASSY., friction shaft (Includes item 13)
13	624584	2	BUSHING, friction shaft lever
14	915569	1	KEY, friction shaft lever
15	632710	2	WASHER, friction
16	632747	2	DISC, friction
17	632766	1	HOUSING, friction (Includes item 18)
18	632752	1	BUSHING, friction housing
19	632716	2	KEY, friction washer
20	670463	1	ROD, intermediate
21	670134	1	LEVER ASSY., front (Includes item 22)
22	063222	2	BUSHING, front lever

(Continued)

THROTTLE CONTROL (Second type)(Continued)

ITEM	PART NO.	QTY.	DESCRIPTION
23	676806	1	BRACKET, front lever supporting
	920583	2	CAPSCREW, 1/2"NC x 1-1/2"
	912441	2	LOCKWASHER, 1/2"
	911028	2	NUT, 1/2"NC
	910244	1	WASHER, plain, SAE std., 1/2"
	900806	1	PIN, cotter, 1/8" x 1"
24	628736	1	YOKE, front rod
25	676808	1	ROD, front
	911048	1	NUT, jam, 3/8"NF
26	628738	1	PIN, front rod
	900970	1	PIN, cotter, 1/16" x 1/2"

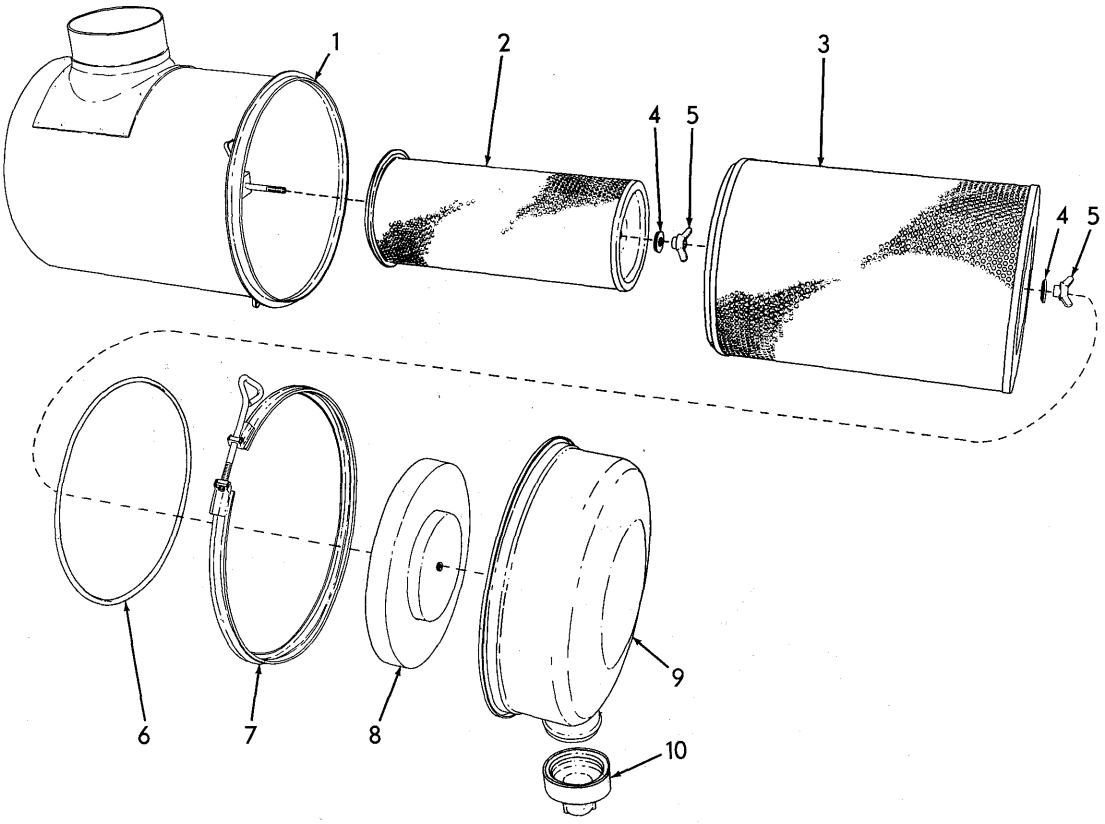

AIR CLEANER ASSEMBLY 662618 T-73590

USAGE: See page 58

ITEM	PART NO.	QTY.	DESCRIPTION	
1	------	1	BODY (Not serviced separately)	
2	662477	1	ELEMENT ASSEMBLY, safety (inner)	Each includes item 4
3	659533	1	ELEMENT ASSEMBLY, filtering (outer)	
4	------	2	GASKET, element retaining nut	
5	239517	2	NUT ASSEMBLY, element retaining (Includes item 4)	
6	620721	1	O-RING, cup sealing	
7	621530	1	CLAMP ASSEMBLY (Includes tightening screw)	
8	661162	1	BAFFLE ASSEMBLY (Includes wing nut)	
9	661163	1	CUP, sediment	
10	3042943	1	VALVE, unloading	

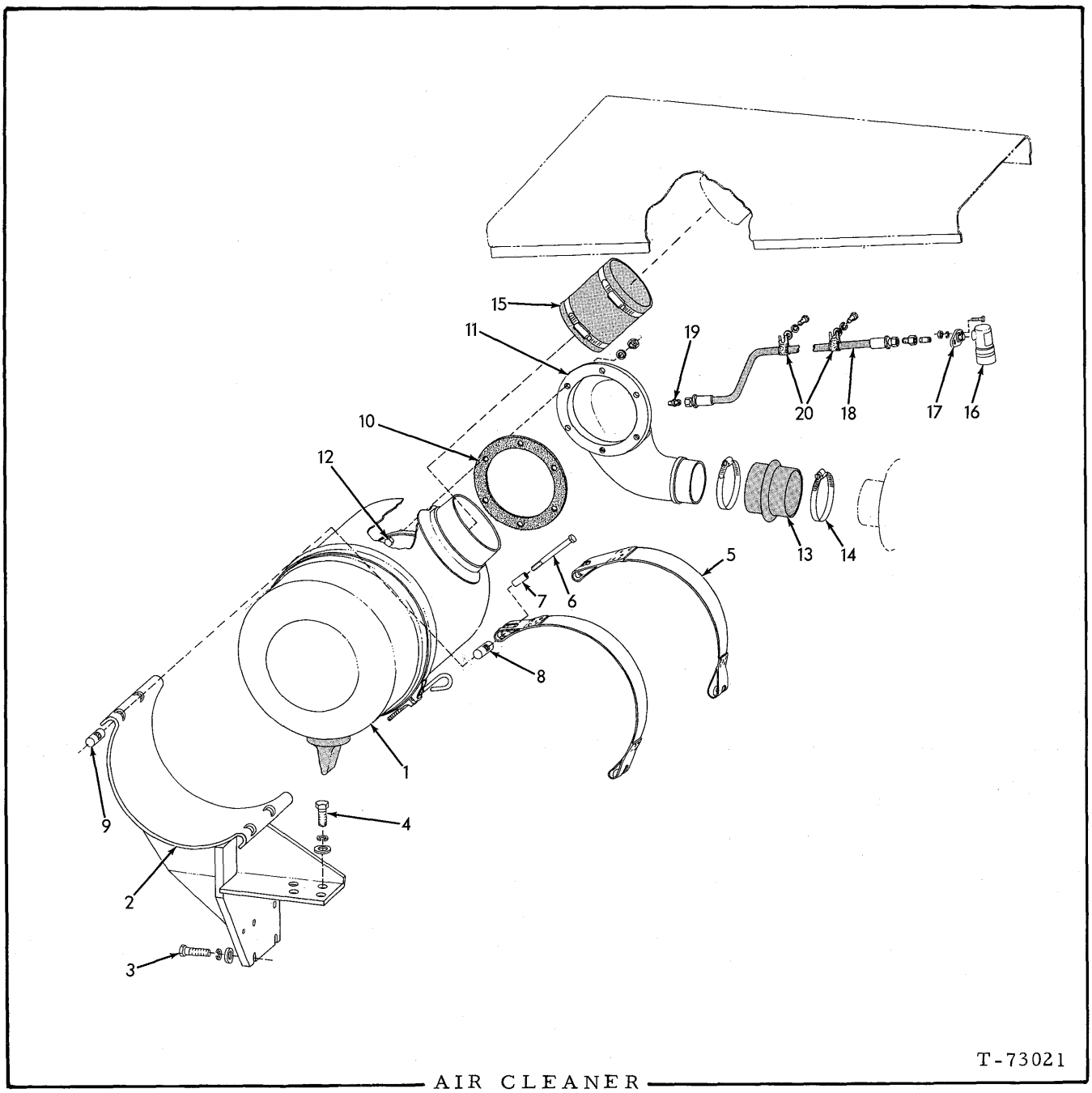

AIR CLEANER

ITEM	PART NO.	QTY.	DESCRIPTION
1	662618	1	CLEANER ASSEMBLY, air (See page 57 for parts)
2	664339	1	BRACKET, mounting, air cleaner
3	047558	4	CAPSCREW, 7/16"NC x 2-1/4"
	904207	4	LOCKWASHER, 7/16"
	074790	3	WASHER, plain
4	035190	4	CAPSCREW, 1/2"NC x 1-1/2"
	904208	4	LOCKWASHER, 1/2"
5	658774	2	BAND, mounting
6	082937	4	CAPSCREW, mounting band

(Continued)

AIR CLEANER (Continued)

ITEM	PART NO.	QTY.	DESCRIPTION
7	0053667-2	4	SPACER, mounting band capscrew
8	0056099-5	4	PIN, mounting band, upper
9	0056100-1	4	PIN, mounting band, lower
10	0658759-6	1	GASKET, air intake elbow
11	0657243-2	1	ELBOW, air intake
12	0044249-1	6	CAPSCREW, 3/8"NC x 1-1/8"
	0904206-0	6	LOCKWASHER, 3/8"
	0911026-3	4	NUT, 3/8"NC
13	0659034-3	1	HOSE, air intake elbow
14	0658781-0	2	CLAMP, air intake elbow hose
15	0658841-2	1	HOSE, air cleaner to hood
	0921919-7	2	CLAMP, hose, 4-5/8" to 7-1/4" diam.
16	---------	1	INDICATOR, air restriction (Serviced only as a unit)(Used prior to loader #566. Order INDICATOR 4388648-0 and item #17)
	4388648-0	1	INDICATOR, air restriction (Serviced only as a unit)(Effective on loader #566 and up)
17	3045531-5	1	FLANGE, mounting, air restriction indicator
	0924957-4	2	CAPSCREW, cd-pltd., 1/4"NF x 7/8"
	0904204-5	2	LOCKWASHER, 1/4"
	0911040-4	2	NUT, 1/4"NF
18	0646198-2	1	HOSE, restriction indicator (See HOSE PARTS)
	0919174-3	1	CONNECTOR, flare type, 1/4" tube, 1/8"NPT female
	0904273-0	1	NIPPLE, pipe, 1/8"NPT x 1"
19	0631769-7	1	FITTING, safety, restriction indicator line
20	0620035-6	2	CLIP, supporting, indicator hose
	0035439-9	2	CAPSCREW, 3/8"NC x 1"
	0904206-0	2	LOCKWASHER 3/8"
	0911115-4	2	WASHER, plain, SAE std., 3/8"

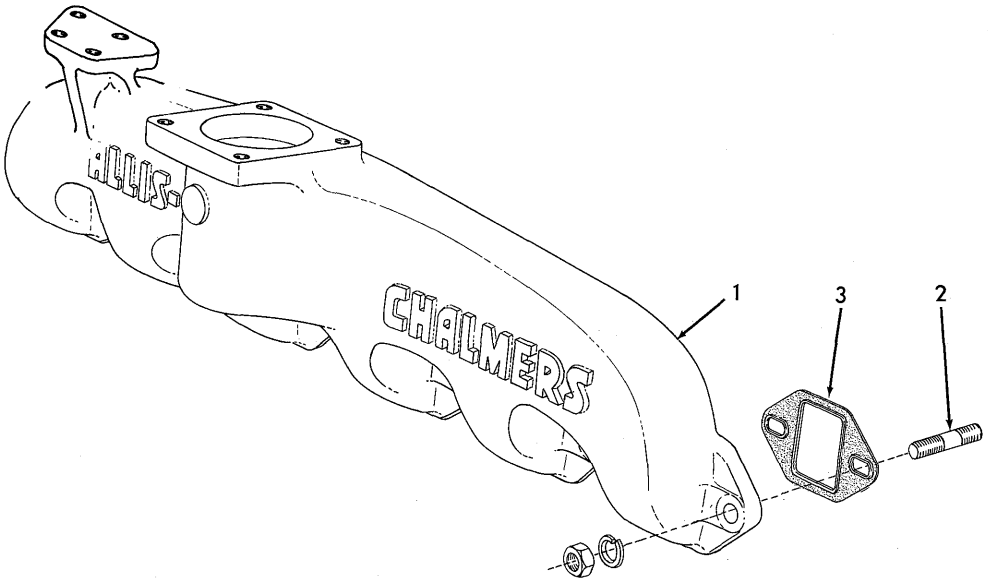

INTAKE MANIFOLD T-13157

ITEM	PART NO.	QTY.	DESCRIPTION
1	4338684	1	MANIFOLD, intake
2	4339378	2	STUD, intake manifold (2-1/2" long)
	4346208	10	STUD, intake manifold (2-1/8" long)
	904208	12	LOCKWASHER, 1/2"
	910325	12	NUT, 1/2"NC
3	4359741	6	□GASKET, intake manifold

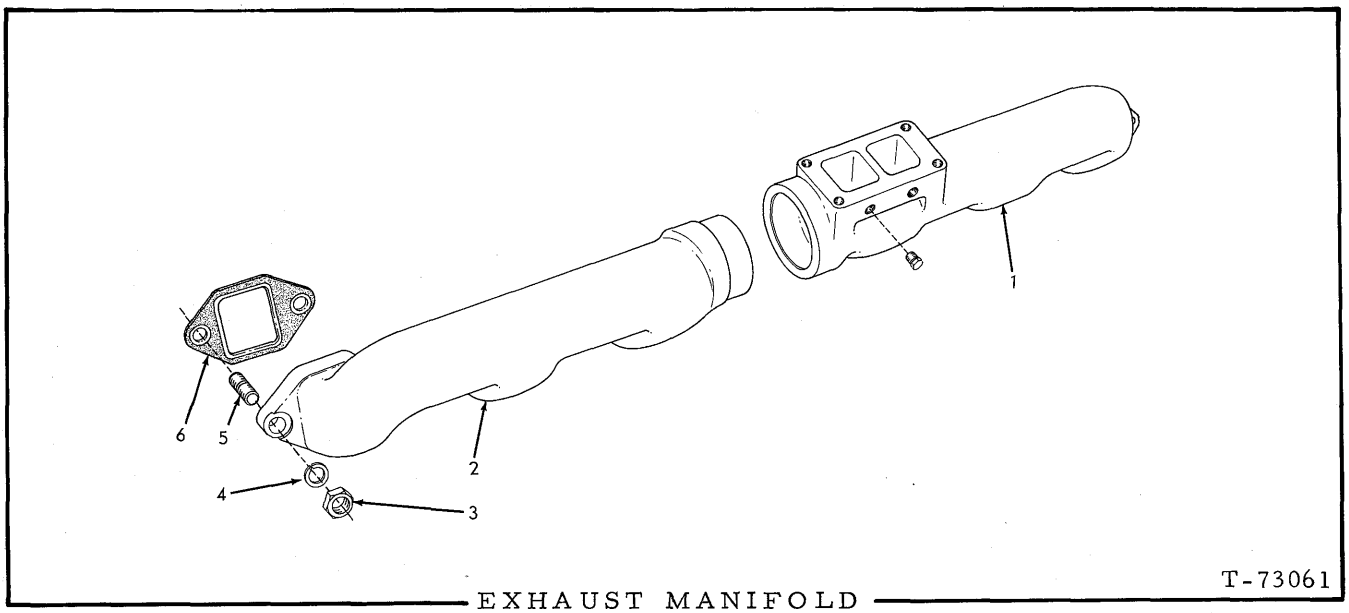

EXHAUST MANIFOLD

ITEM	PART NO.	QTY.	DESCRIPTION
1	4357644	1	MANIFOLD, front
	919840	2	PLUG, pipe, hex-hd., 1/4"NPT
2	4357643	1	MANIFOLD, rear
3	4253270	12	NUT, manifold stud
4	904208	12	LOCKWASHER,
5	4346208	12	STUD, exhaust manifold
6	4359741	6	□GASKET, exhaust manifold

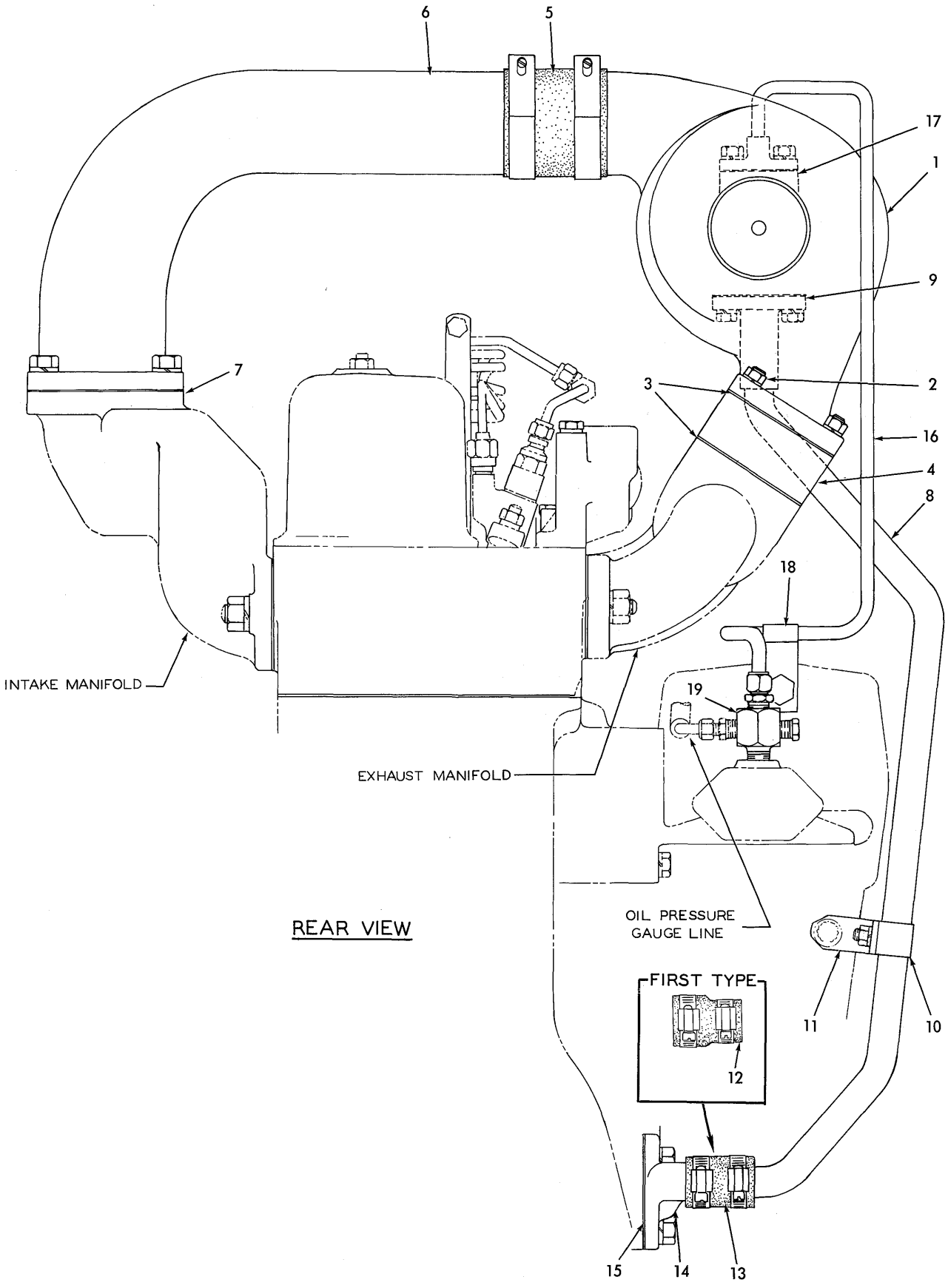

TURBOCHARGER

TURBOCHARGER

ITEM	PART NO.	QTY.	DESCRIPTION
1	4357655	1	TURBOCHARGER ASSEMBLY (See page 65 for parts)
2	4337455	4	STUD, turbocharger mounting
	4255977	4	NUT, stainless, 3/8"NC
	913544	4	WASHER, plain
3	4336558	2	□GASKET, turbocharger mounting
4	4357645	1	ADAPTER, turbocharger mounting
5	4388349	1	HOSE, air discharge elbow
	4255644	2	CLAMP, hose
6	4357647	1	ELBOW, air discharge
	919840	1	PLUG, pipe, hex-hd., 1/4"NPT (Not used when engine primer is installed)
	919230	2	CAPSCREW, 1/2"NC x 1-3/8"(two additional used prior to engine #11-17330)
	916313	2	CAPSCREW, 1/2"NC x 1-3/4" } Effective with
	912476	2	WASHER, plain, 1/2" } engine #11-17330)
	904208	4	LOCKWASHER, 1/2"
7	4349193	1	□GASKET, air discharge elbow
8	4358934	1	TUBE, oil drain (When required for engines prior to #11-13697 also order item 13)
	916269	2	CAPSCREW, 3/8"NC x 7/8"
	904206	2	LOCKWASHER, 3/8"
9	4339532	1	□GASKET, oil drain line
10	4255606	1	CLAMP, supporting, oil drain line
	915809	1	CAPSCREW, 5/16"NC x 3/4"
	904205	1	LOCKWASHER, 5/16"
	910323	1	NUT, 5/16"NC
11	4358911	1	BRACKET, supporting, oil drain line
12	4379723	1	ADAPTOR, oil drain line (rubber)(Used prior to engine #11-13697)
	921912	1	CLAMP, hose, 1-1/16" to 2" diam.
13	4358728	1	HOSE, oil drain line (Effective with engine #11-13697)
	921912	2	CLAMP, hose, 1-1/16" to 2" diam.
14	4339496	1	FLANGE, oil drain line
	916311	2	CAPSCREW, 1/2"NC x 1-1/4"
	904208	2	LOCKWASHER, 1/2"
15	4336436	1	GASKET, oil drain line flange
16	4357656	1	TUBE ASSEMBLY, oil feed (Includes SLEEVE and NUT indented below)
	917807	1	SLEEVE, Imperial, 3/8" tube
	917810	1	NUT, Imperial, 3/8" tube
	920700	1	CONNECTOR, Imperial, 3/8" tube, 3/8"NPT male
	916269	2	CAPSCREW, 3/8"NC x 7/8"
	904206	2	LOCKWASHER, 3/8"
17	4339533	1	□GASKET, oil feed tube
18	4375953	1	CLAMP, supporting, oil feed tube
19	4339606	1	ADAPTER, oil line
	919840	1	PLUG, pipe, hex-hd., 1/4"NPT (Not used if Hour Meter is installed)
20	4339827	-	GASKET KIT (Consists of items 3, 7, 9 and 17)(Not illustrated)

□Indicates components of item 20

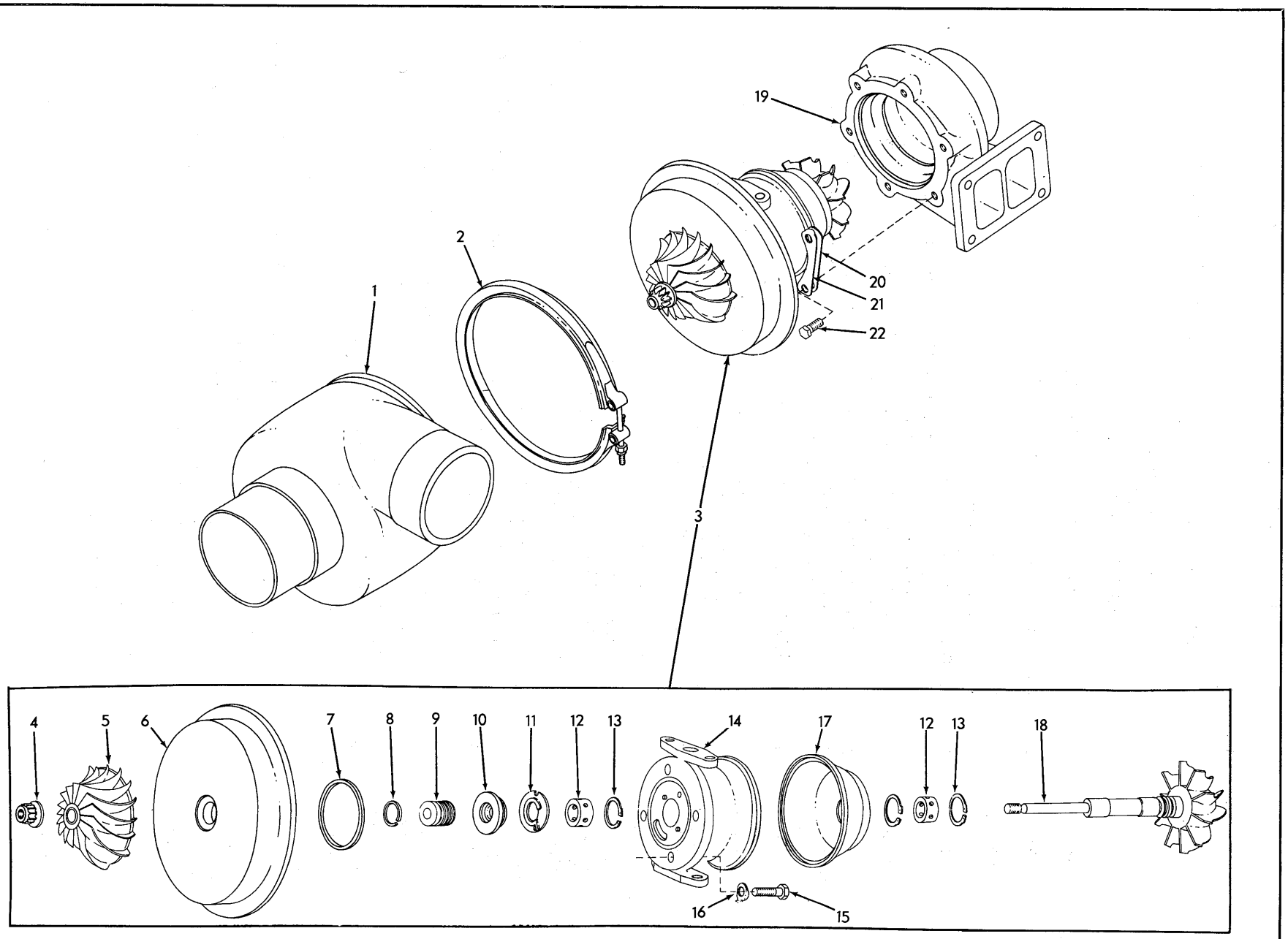

TURBOCHARGER ASSEMBLY 4357655

T-70408

TURBOCHARGER ASSEMBLY 4357655

USAGE: See page 63

ITEM	PART NO.	QTY.	DESCRIPTION
1	4056303	1	HOUSING ASSEMBLY, compressor (Includes impeller shroud and locating pin)
2	4056302	1	COUPLING, compressor housing
3	4059050	1	HOUSING ASSEMBLY, center (Consists of items 4 thru 19)
4	4056291	1	LOCKNUT, impeller retaining
5	4056290	1	IMPELLER, compressor
6	4059030	1	BACKPLATE ASSEMBLY (Includes thrust washer and orifice pin)
7	4056300	1	RING, end plate sealing
8	4055195	1	RING, sealing, turbine wheel shaft, compressor end
9	4056289	1	SPACER, thrust
10	4059029	1	COLLAR, thrust
11	4056294	1	BEARING, thrust
12	4056295	2	BEARING, turbine wheel
13	4056296	3	RING, snap, bearing retaining
14	4059024	1	HOUSING ASSEMBLY, center (Includes dowels)
15	4181061	4	BOLT, backplate attaching
16	4056298	4	LOCKPLATE, back plate attaching bolt
17	4056293	1	SHROUD, heat, turbine end
18	4059049	1	WHEEL, turbine
19	4059051	1	HOUSING, turbine
20	4056306	3	PLATE, clamp, center housing
21	4056305	3	LOCKPLATE, clamp plate bolt
22	4056314	3	BOLT, clamp plate (3/8"NC x 5/8")

EXHAUST PIPE

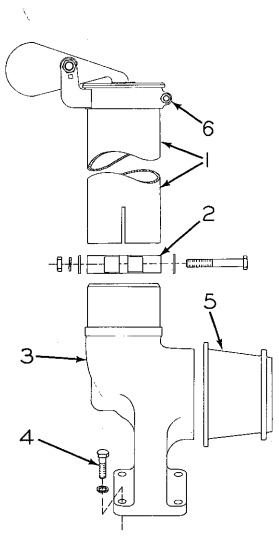

T-73065

ITEM	PART NO.	QTY.	DESCRIPTION
1	655326	1	PIPE, exhaust (18" long)(Loaders prior to #527)
	666679	1	PIPE, exhaust (44-1/2" long)(Loaders #527 and up)
2	634091	1	CLAMP, exhaust
	922848	1	CAPSCREW, 3/8"NC x 3-1/4"
	677006	2	WASHER, plain
	911026	1	NUT, 3/8"NC
3	4357646	1	ELBOW, exhaust
4	4255003	4	CAPSCREW, stainless, 3/8"NC x 1-1/4"
	904206	4	LOCKWASHER, 3/8"
5	4354714	1	DIFFUSER, exhaust
6	068623	1	CAP, weather (Loaders #527 and up)

NOTE: See HOOD for exhaust extension pipe and weather cap

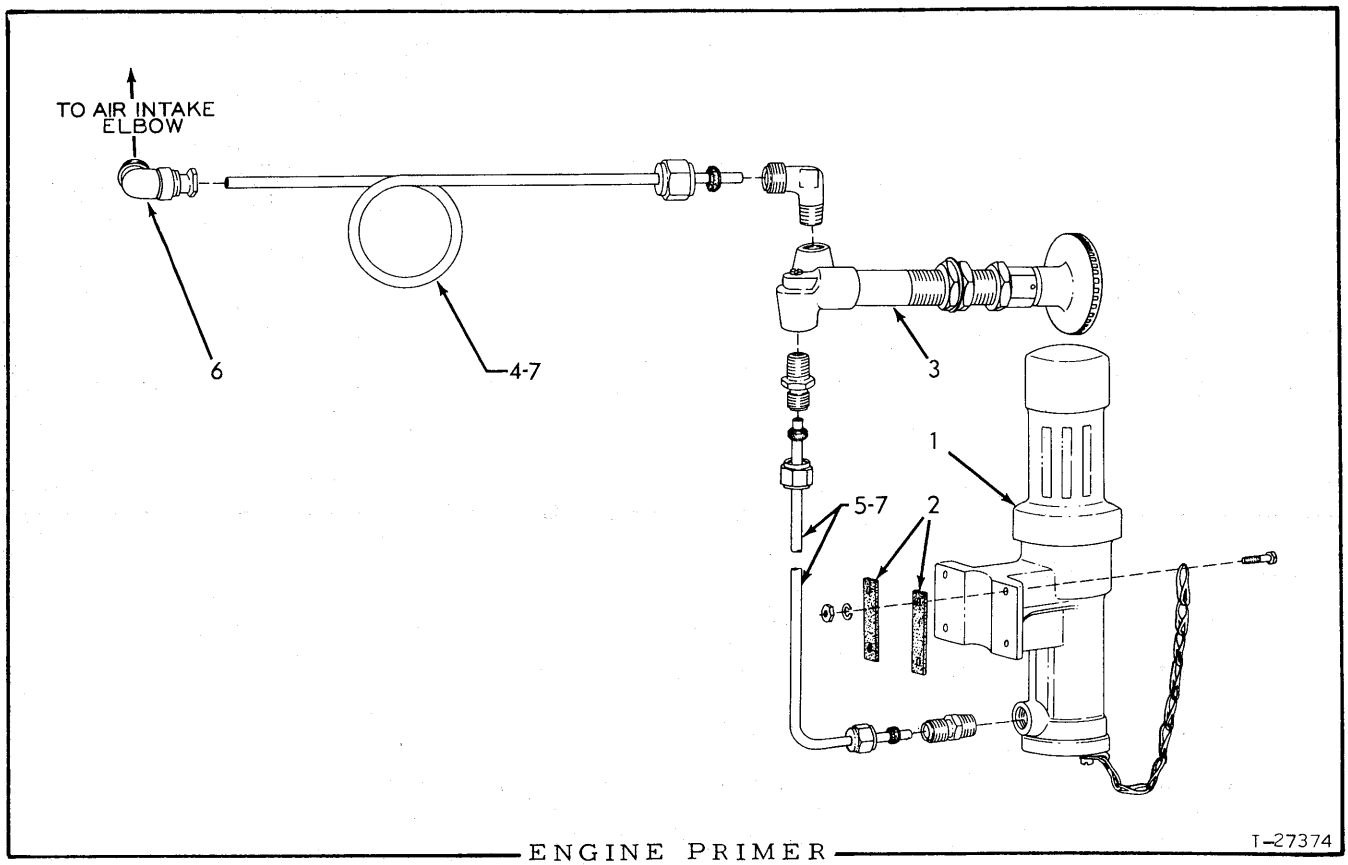

ENGINE PRIMER

USAGE: Special equipment. For all units except those equipped with Air Heater.

ITEM	PART NO.	QTY.	DESCRIPTION
1	075771	1	DISPENSER ASSEMBLY, priming fuel (See page 68 for parts)
	913706	4	CAPSCREW, #10-24NC x 1"
	904203	4	LOCKWASHER, #10
	901310	4	NUT, #10-24NC
2	066261	6	GASKET, dispenser mounting
3	092160	1	PUMP ASSEMBLY (See page 69 for parts)
4	------	1	TUBE (Order item 7)
	915488	1	NUT, Sealastic, 1/8" tube
	915486	1	RING, Sealastic, 1/8" tube (Includes ferrule)
	915557	1	ELBOW, Sealastic, 1/8" tube, 1/8"NPT male
5	------	1	TUBE (Order item 7)
	915488	2	NUT, Sealastic, 1/8" tube
	915486	2	RING, Sealastic, 1/8" tube (Includes ferrule)
	915556	2	CONNECTOR, Sealastic, 1/8" tube, 1/8"NPT male
6	066517	1	ELBOW ASSEMBLY, fuel spray (Includes nozzle, nut and sleeve. Serviced only as a unit)
7	066253	-	TUBING, copper, 1/8"O.D., 10 ft. roll (Use as required)

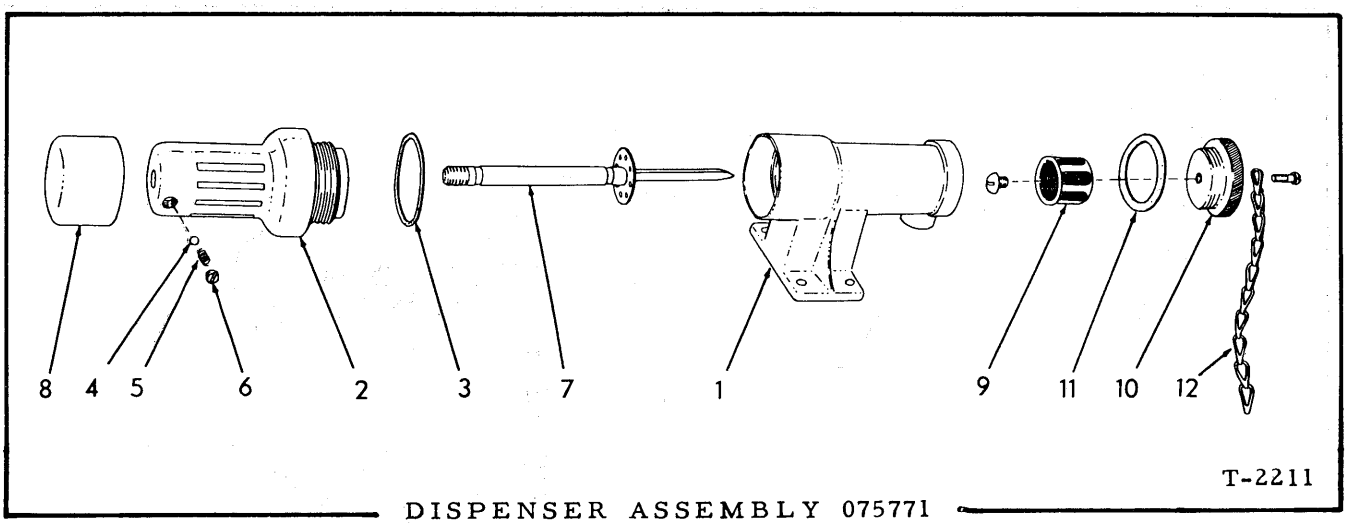

DISPENSER ASSEMBLY 075771

USAGE: See page 67

ITEM	PART NO.	QTY.	DESCRIPTION
1	068878	1	BODY, fuel dispenser
2	068879	1	CHAMBER, fuel dispenser
3	069164	1	GASKET, fuel dispenser chamber
4	905357	1	BALL, steel, 3/16" diam.
5	066251	1	SPRING, plunger locking ball
6	066252	1	PLUG, retaining, locking ball spring
7	066255	1	PLUNGER, fuel dispenser
8	068881	1	KNOB, fuel dispenser plunger
9	068875	1	STRAINER, fuel dispenser
	915432	1	SCREW, machine, 1/4"NC x 5/16"
10	075770	1	PLUG, fuel dispenser strainer
11	068876	1	GASKET, fuel dispenser strainer plug
12	075769	1	CHAIN, strainer plug retaining
	901781	1	SCREW, machine, fil-hd., #10-32NF x 1/2"

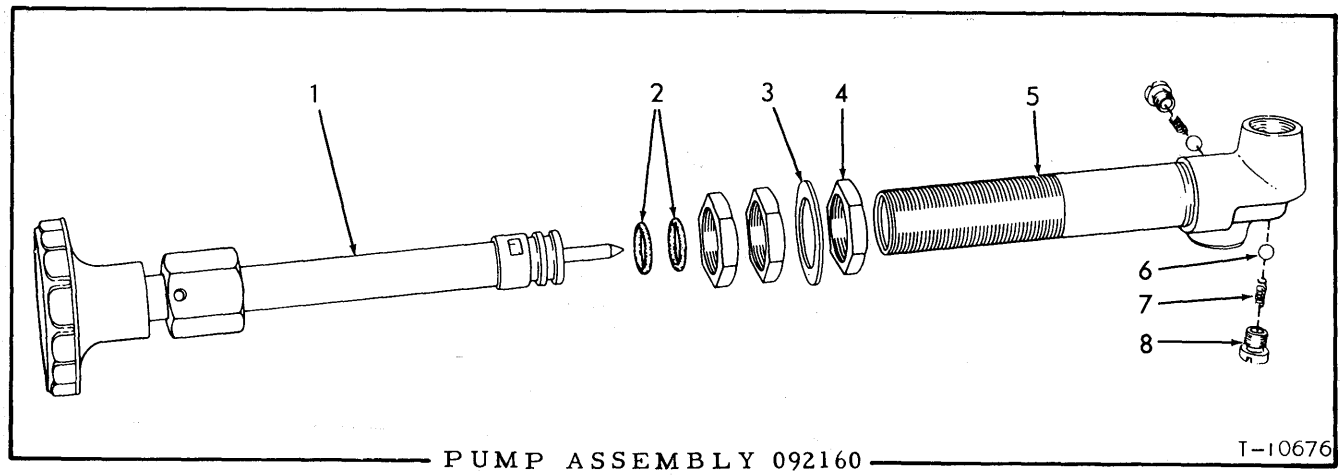

PUMP ASSEMBLY 092160

USAGE: See Page 67

ITEM	PART NO.	QTY.	DESCRIPTION
1	------	1	PISTON ASSEMBLY (Not serviced separately)
2	923560	2	RING, plunger packing (rubber)
3	066873	1	WASHER, mounting
4	066872	3	NUT, mounting
5	------	1	BARREL ASSEMBLY (Not serviced separately)
6	066876	2	BALL, check valve (5/32" diam.)
7	066875	2	SPRING, check valve
8	066874	2	RETAINER, check valve

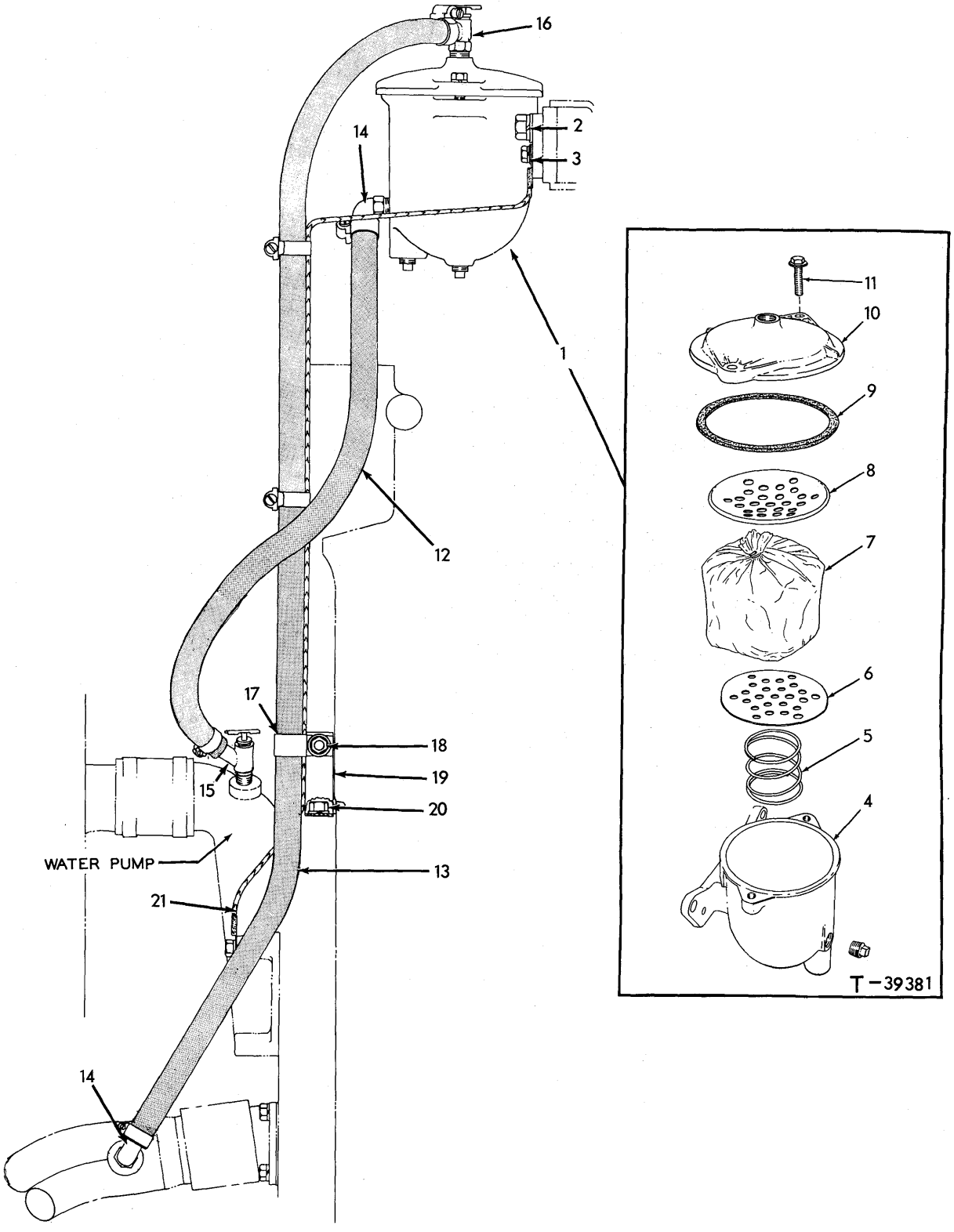

COOLANT FILTER

T-73074

COOLANT FILTER

ITEM	PART NO.	QTY.	DESCRIPTION
1	4359248	1	FILTER ASSY., water (Consists of items 4 thru 11. Has all-purpose element)
2	920582	2	CAPSCREW, 1/2"NC x 1-1/4"
	910244	2	WASHER, plain, SAE std., 1/2"
	912441	2	LOCKWASHER, 1/2"
3	922843	2	CAPSCREW, 5/16"NC x 1-1/4"
	910335	2	WASHER, plain, SAE std., 5/16"
	910286	2	LOCKWASHER, 5/16"
4	4055031	1	BODY, filter
	920131	2	PLUG, pipe, 3/8"NPT
5	4054569	1	SPRING, filter element
6	4054568	1	PLATE, filter element, lower
	4059380	1	ELEMENT KIT, filter (Includes items 6, 8 and 9)(Chromate type, for use with "Dowtherm" 209)
7	4059979	1	ELEMENT KIT, filter (Includes items 6, 8 and 9)(Original equipment, All-purpose, recommended for use with plain water as well as most type of permanent and non-permanent anti-freeze except "Dowtherm" 209)
8	4055034	1	PLATE, filter element, upper
9	4054566	1	GASKET, filter cover
10	4055032	1	COVER, filter
11	4055033	2	BOLT ASSY., filter cover (Includes washer)
12	-------	1	HOSE, water pump to filter (28" long. Order item 22)
	921911	2	CLAMP, hose 11/16" to 1-1/4" diam.
13	------	1	HOSE, filter to water pump (48" long. Order item 22)
	921911	2	CLAMP, hose, 11/16" to 1-1/4" diam.
14	4255286	2	ELBOW, water hose (90°, 5/8" nipple, 3/8"NPT)
15	4255287	1	VALVE, water shut-off (45°, 5/8" nipple, 3/8"NPT)
16	089894	1	VALVE, water shut-off (90°, 5/8" nipple, 3/8"NPT)
17	4254951	1	CLAMP, hose supporting
18	922262	1	CAPSCREW, 3/8"NC x 7/8"
	911115	1	WASHER, plain, SAE std., 3/8"
	910287	1	LOCKWASHER, 3/8"
	911026	1	NUT, 3/8"NC
19	667312	1	ANGLE, hose supporting
20	927219	1	CAPSCREW, 1/2"NC x 3/4"
	912441	1	LOCKWASHER, 1/2"
21	661101	1	CABLE, ground
	921911	2	CLAMP, hose, 11/16" to 1-1/4" diam.
22	920722	-	HOSE, rubber, 5/8"I.D., 25 ft. roll (Use as required)

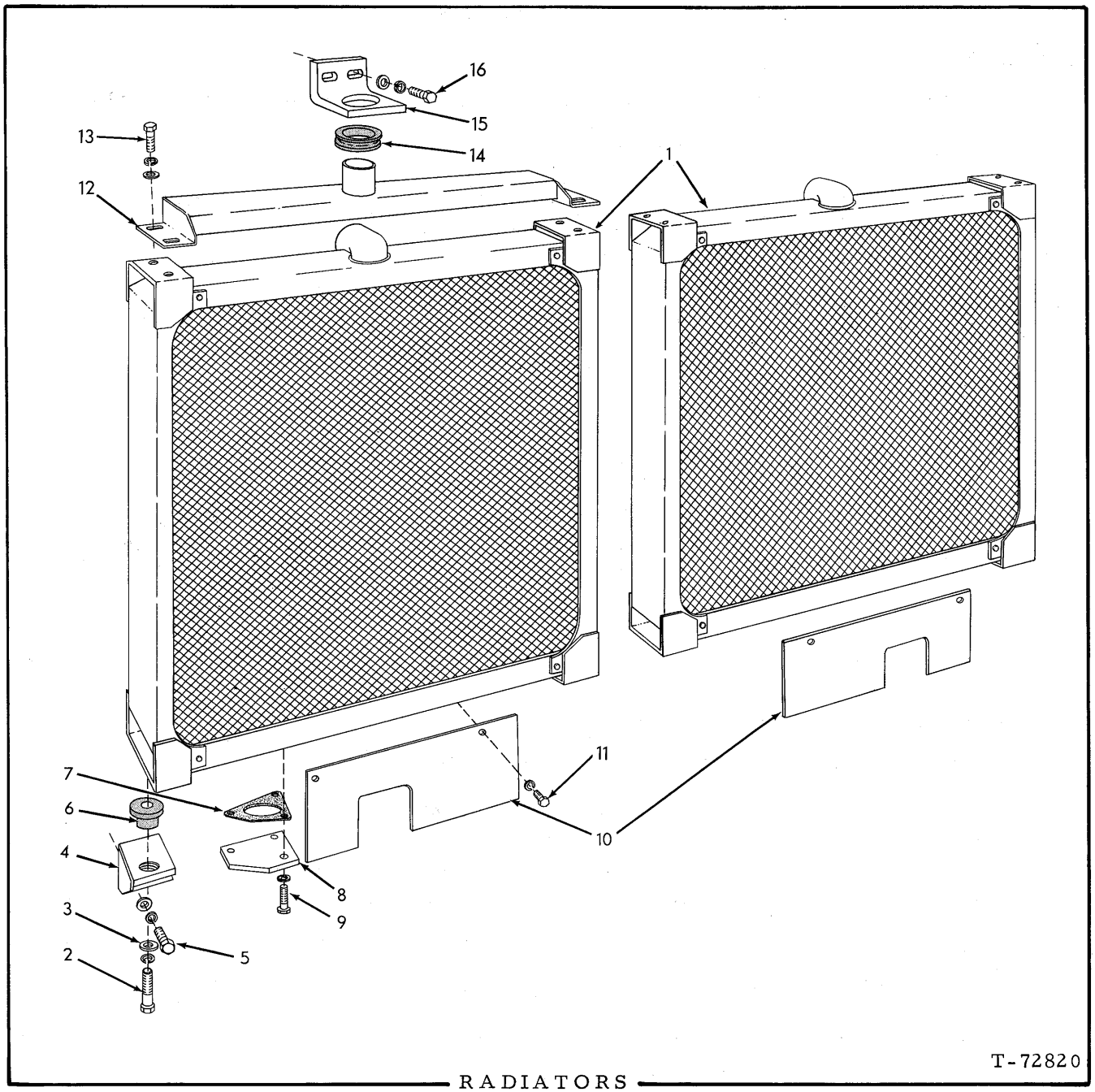

RADIATORS

ITEM	PART NO.	QTY.	DESCRIPTION
1	654587	2	RADIATOR
2	915779	4	CAPSCREW, 1/2"NF x 2"
	912441	4	LOCKWASHER, 1/2"
3	092163	4	WASHER, plain
4	654657	1	ANGLE, supporting, left radiator
	654658	1	ANGLE, supporting, right radiator
5	920584	4	CAPSCREW, 1/2"NC x 1-5/8"
	677008	4	WASHER, plain

(Continued)

RADIATORS (Continued)

ITEM	PART NO.	QTY.	DESCRIPTION
6	642441	4	SNUBBER, radiator mounting
7	654566	2	GASKET, cover plate
8	654563	2	PLATE, cover
9	013058	8	CAPSCREW, 3/8"NC x 1-1/4"
	904206	8	LOCKWASHER, 3/8"
10	679918	2	PLATE, air baffle
11	922763	4	CAPSCREW, 3/8"NC x 1"
	910287	4	LOCKWASHER, 3/8"
12	654581	2	ANGLE, radiator supporting
13	036034	8	CAPSCREW, 3/8"NF x 1"
	904206	8	LOCKWASHER, 3/8"
	044973	8	WASHER, plain
14	654564	2	RING, radiator snubbing
15	654923	2	ANGLE, radiator snubbing
16	920584	4	CAPSCREW, 1/2"NC x 1-5/8"
	677008	4	WASHER, plain

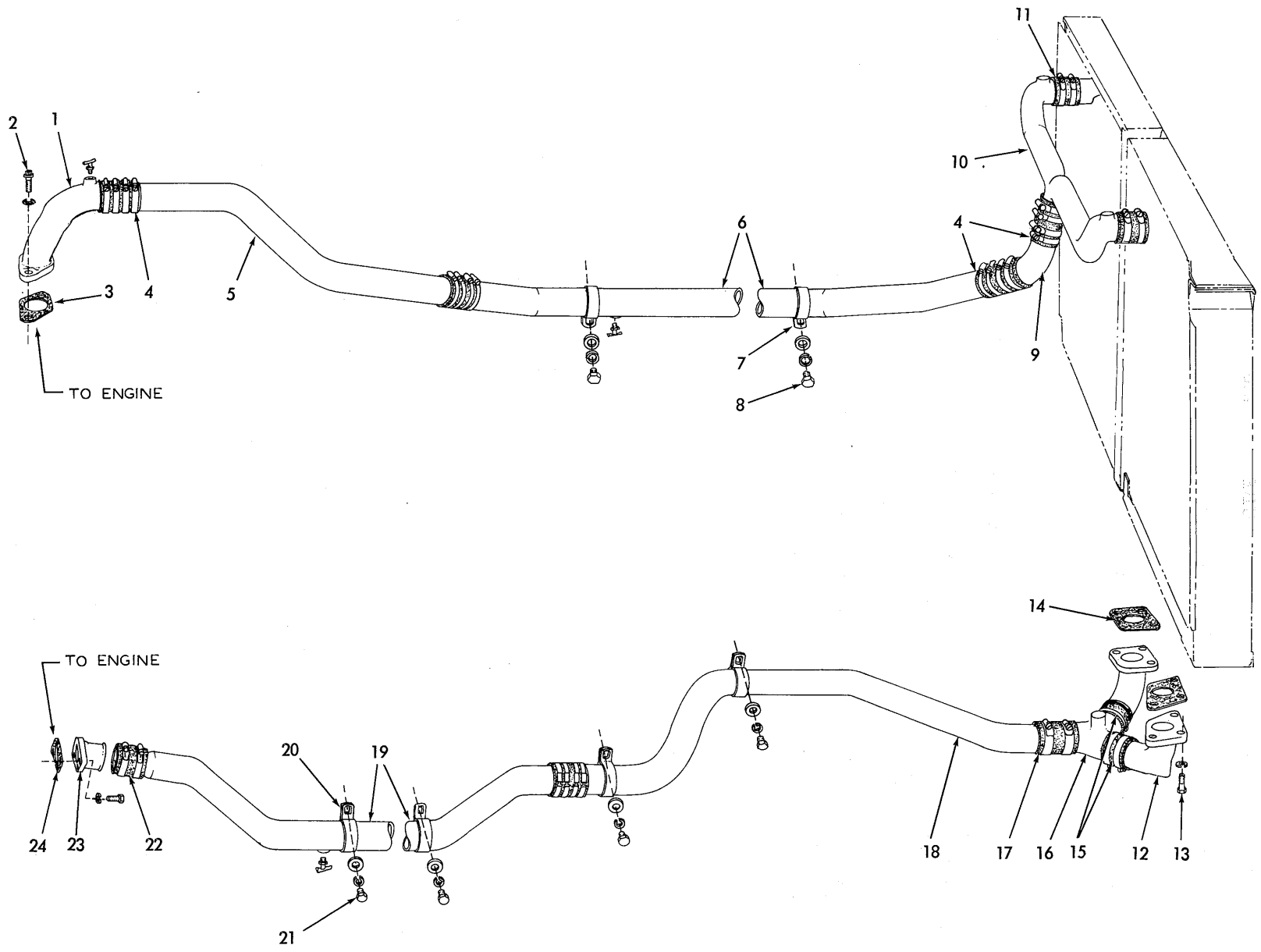

RADIATOR PIPING

T-72821

RADIATOR PIPING

ITEM	PART NO.	QTY.	DESCRIPTION
1	657335	1	ELBOW, engine outlet
	912415	1	COCK, T-handle, 1/4"NPT (air vent)
2	923016	2	SCREW, 12-point hd., 7/16"NC x 1-1/4"
	914678	2	LOCKWASHER, 7/16"
3	4300145	1	□GASKET, outlet elbow
4	654565	4	HOSE, water inlet tubes
	921914	16	CLAMP, hose, 2-1/4" to 3-1/4" diam.
5	654633	1	TUBE, water inlet, front section
6	654575	1	TUBE, water inlet, intermediate section
	912415	1	COCK, drain, 1/4"NPT
7	638826	2	CLIP, intermediate tube
8	921175	2	CAPSCREW, 1/2"NC x 1"
	912441	2	LOCKWASHER, 1/2"
	910244	2	WASHER, plain, SAE std., 1/2"
9	654569	1	TUBE, water inlet, rear section
10	654585	1	MANIFOLD, radiator inlet
11	669864	2	HOSE, radiator inlet
	921914	4	CLAMP, hose, 2-1/4" to 3-1/4" diam.
12	654567	2	ELBOW, radiator outlet
13	013058	4	CAPSCREW, 3/8"NC x 1-1/4"
	904206	4	LOCKWASHER, 3/8"
14	654566	2	GASKET, outlet elbow
15	670084	2	HOSE, radiator outlet
	921914	4	CLAMP, hose, 2-1/4" to 3-1/4" diam.
16	654579	1	MANIFOLD, radiator outlet
17	067884	2	HOSE, water outlet tubes
	921915	8	CLAMP, hose, 2-13/16" to 3-3/4" diam.
18	654582	1	TUBE, water outlet, rear section
19	654568	1	TUBE, water outlet, front section
	912415	1	COCK, drain, 1/4"NPT
20	654578	4	CLIP, water outlet tubes
21	921175	4	CAPSCREW, 1/2"NC x 1"
	912441	4	LOCKWASHER, 1/2"
	910244	4	WASHER, plain, SAE std., 1/2"
22	670084	1	HOSE, engine water inlet pipe
	921214	2	CLAMP, hose, 2-1/4" to 3-1/4" diam.
23	4347872	1	PIPE, engine water inlet
	922763	2	CAPSCREW, 3/8"NC x 1"
	910287	2	LOCKWASHER, 3/8"
24	4346456	1	□GASKET, water inlet pipe

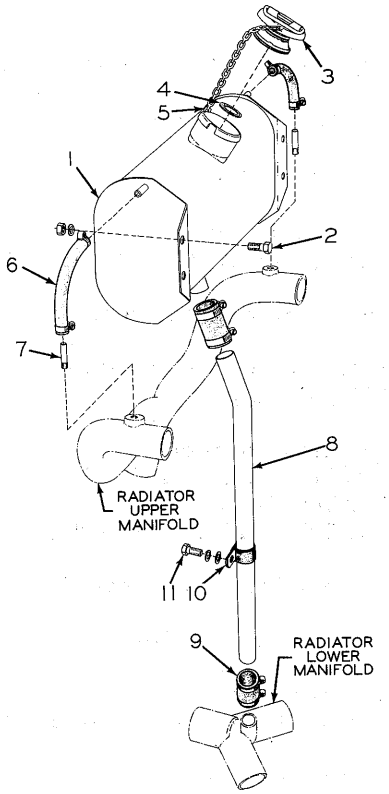

RADIATOR EXPANSION TANK T-72822

ITEM	PART NO.	QTY.	DESCRIPTION
1	0654588-3	1	TANK ASSY. (Includes items 3 and 5)
2	0070467-6	4	CAPSCREW, 1/2"NF x 1"
	0904208-6	4	LOCKWASHER, 1/2"
	0911043-8	4	NUT, 1/2"NF
3	0654096-7	1	CAP ASSY., filler (Includes item 4)
4	0682843-8	1	GASKET, filler cap
5	0654098-3	1	CHAIN, filler cap
6	0654560-2	2	HOSE, tank to upper manifold
	0921911-4	4	CLAMP, hose, 11/16" to 1-1/4" diam.
7	0915882-5	2	NIPPLE, upper hose
8	0654571-9	1	TUBE, tank to lower manifold
9	0654558-6	2	HOSE, tube connecting
	0921912-2	4	CLAMP, hose, 1-1/16" to 2" diam.
10	0095869-4	1	CLIP, tube supporting
11	0035221-1	1	CAPSCREW, 1/2"NC x 1"
	0904208-6	1	LOCKWASHER, 1/2"
	0910244-3	1	WASHER, plain, SAE std., 1/2"

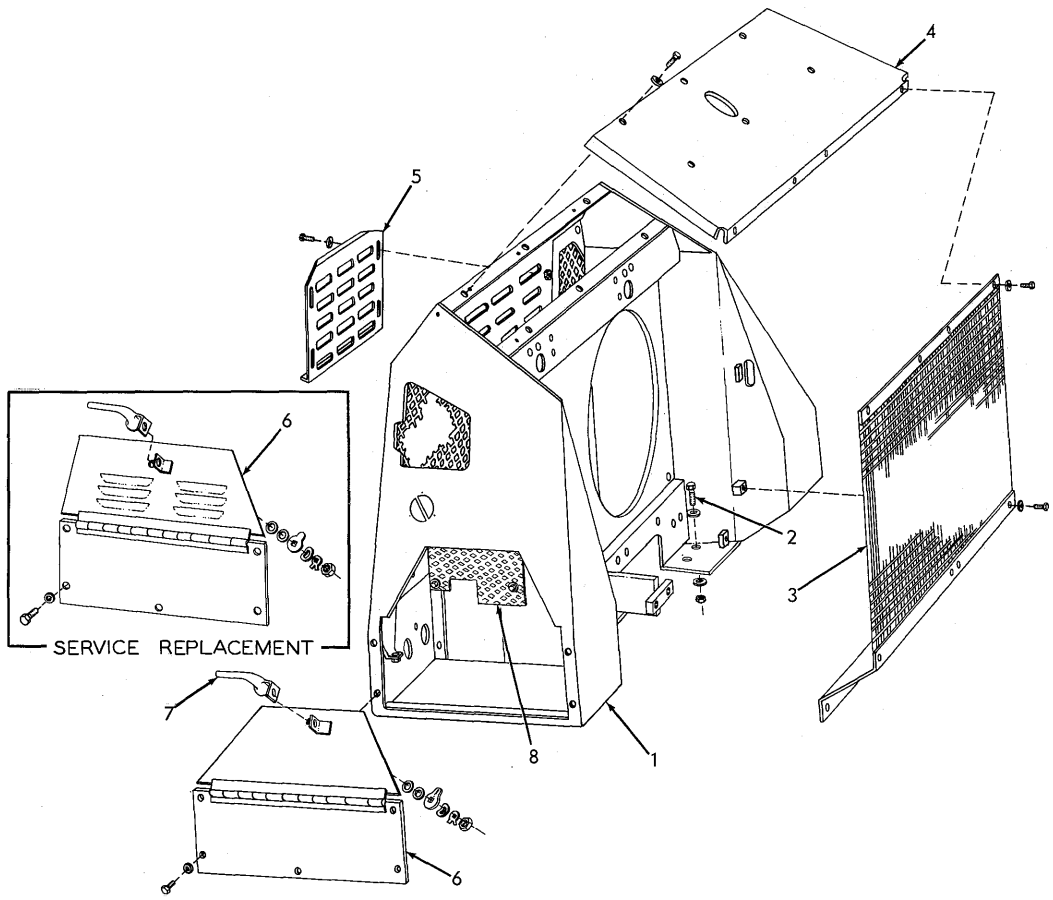

RADIATOR GUARD T-72825

ITEM	PART NO.	QTY.	DESCRIPTION
	---------	1	GUARD, radiator (Loaders prior to #493) } Original equip. Order
	---------	1	GUARD, radiator (Loaders #493 and up) } GUARD 0672569-1
1	0672569-1	1	GUARD, radiator (If for first replacement also order 1 COVER, left side 0677855-9 and 1 COVER, right side 0679707-0)(If for units prior to #493 also order 2 HOLD-DOWN 0664334-0, 4 ROD 0664289-6, 4 PIN 0632260-6, 4 PIN, cotter 0900806-1, 4 NUT 0911028-9 and 4 WASHER 0677008-5)
2	0922526-9	12	CAPSCREW, 1/2"NC x 2-1/2"
	0677008-5	24	WASHER, plain
	0911028-9	12	NUT, 1/2"NC

(Continued)

RADIATOR GUARD (Continued)

ITEM	PART NO.	QTY.	DESCRIPTION
3	0656123-7	1	GRILL, radiator
	0921076-6	10	CAPSCREW, 3/8"NC x 1-1/4"
	0677006-9	10	WASHER, plain
4	0656131-0	1	COVER, top
	0921076-6	6	CAPSCREW, 3/8"NC x 1-1/4"
	0677006-9	6	WASHER, plain
5	0656134-4	1	BAFFLE, air flow control
	0922763-8	4	CAPSCREW, 3/8"NC x 1"
	0677006-9	4	WASHER, plain
6	0656129-4	2	COVER, side (original equipment)
	0677855-9	1	COVER, left side } Service replacement
	0679707-0	1	COVER, right side } Service replacement
	0921076-6	10	CAPSCREW, 3/8"NC x 1-1/4"
	0677006-9	10	WASHER, plain
7	0650901-2	2	LOCK ASSY., side cover (Serviced only as a unit)
	0911115-4	4	WASHER, plain, SAE std., 3/8"
8	0664185-6	1	SCREEN, fan guarding, left side
	0664186-4	1	SCREEN, fan guarding, right side
	0922763-8	8	CAPSCREW, 3/8"NC x 1"
	0677006-9	8	WASHER, plain

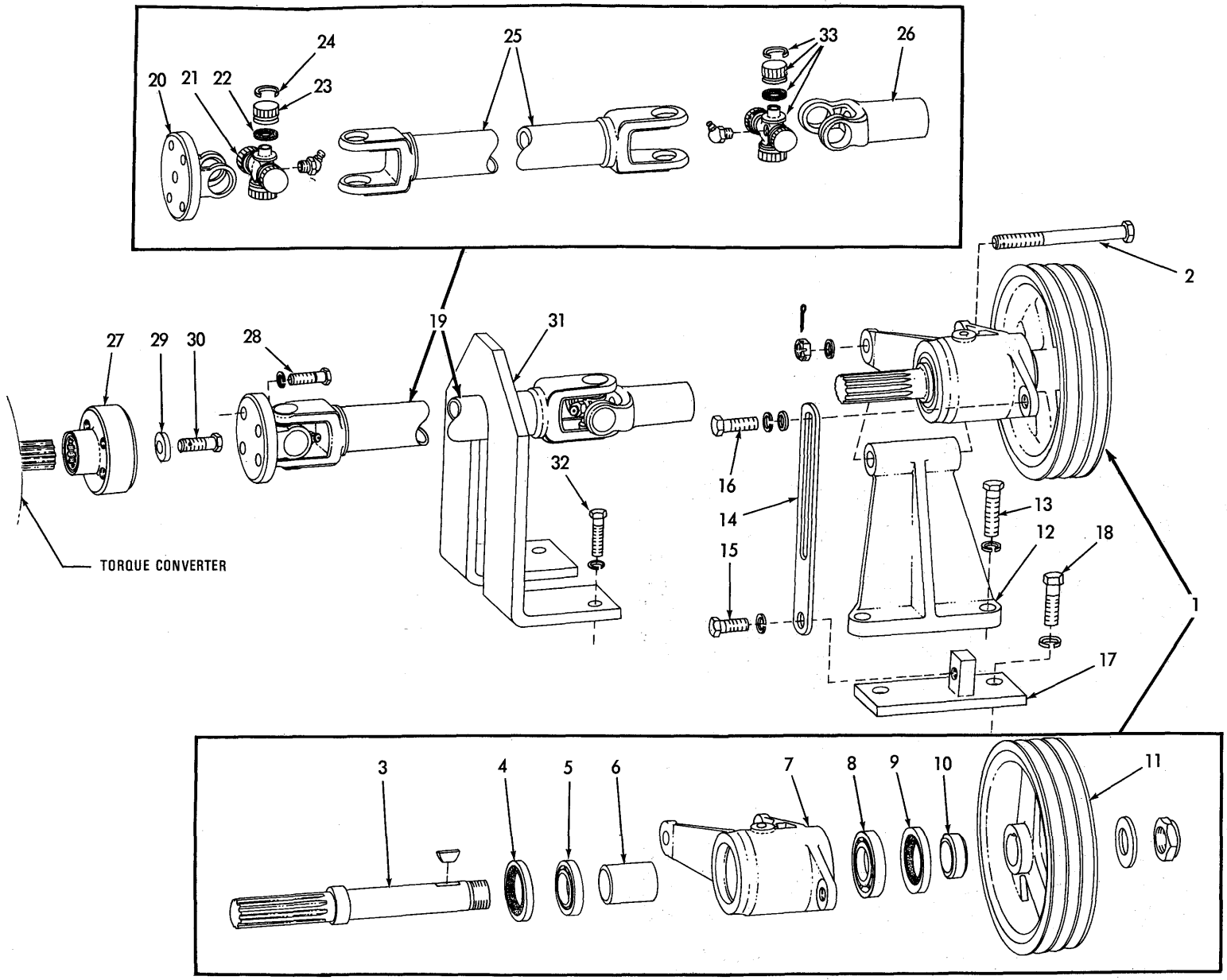
20
21
22
23
24
25
26
33
2
27
29
30
28
19
31
32
TORQUE CONVERTER
16
14
15
13
12
18
17
1
3
4
5
6
7
8
9
10
11
T-72823

FAN DRIVE

FAN DRIVE

ITEM	PART NO.	QTY.	DESCRIPTION
1	654584	1	DRIVE ASSY. (Consists of items 3 thru 11)
2	654562	1	CAPSCREW
	910244	1	WASHER, plain, SAE std., 1/2"
	910867	1	NUT, slotted, 1/2"NF
	900802	1	PIN, cotter, 3/32" x 1"
3	654678	1	SHAFT
	905125	1	KEY, #13 woodruff, 3/16" x 1"
	919108	1	NUT, self-locking, 7/8"NF
	911116	1	WASHER, plain, SAE std., 7/8"
4	654680	1	SEAL, oil, front end
5	4253862	1	BEARING, ball, front end
6	654681	1	SPACER, bearing
7	654679	1	HOUSING
8	067916	1	BEARING, ball, rear end
9	654682	1	SEAL, oil, rear end
10	654684	1	SPACER, pulley
11	654683	1	PULLEY
12	654580	1	BRACKET, drive mounting
13	927522	4	CAPSCREW, 1/2"NF x 1-3/4"
	912441	4	LOCKWASHER, 1/2"
14	654559	1	STRAP, adjustment
15	921175	1	CAPSCREW, 1/2"NC x 1" (lower)
	912441	1	LOCKWASHER, 1/2"
16	927172	1	CAPSCREW, 1/2"NC x 1-1/4" (upper)
	677008	1	WASHER, plain
17	654570	1	PLATE, adjustment strap
18	927574	2	CAPSCREW, 1/2"NF x 1-3/8"
	912441	2	LOCKWASHER, 1/2"
19	666824	1	SHAFT ASSY., fan drive (Consists of items 20 thru 26)
20	653812	1	YOKE, drive shaft, front end
21	------	2	□SPIDER, drive shaft
	915275	2	FITTING, lubricating, 65°, 1/8"NPT (Loaders prior to #565)
	918186	2	□FITTING, lubricating, 45°, 1/4"NF tapered thd. (Loaders #565 and up)
22	662053	8	WASHER, sealing, drive shaft spider (cork)(Loaders prior to #565)
	666877	8	□SEAL, drive shaft spider (rubber)(Loaders #565 and up)
23	------	8	□BEARING, needle, drive shaft spider
24	662054	8	RING, snap, drive shaft (.080" width)(Loaders prior to #565)
	666876	8	□RING, snap, drive shaft (.055" width)(Loaders #525 and up)
25	------	1	TUBE, drive shaft (Not serviced separately)
26	653808	1	YOKE, drive shaft, rear end (splined)
27	653809	1	FLANGE, coupling, drive shaft
28	012992	4	CAPSCREW, 3/8"NF x 1-1/4"
	904206	4	LOCKWASHER, 3/8"
29	653741	1	WASHER, flange retaining
30	922211	1	CAPSCREW, flange retaining (3/8"NC x 1-1/4", Nylok)
31	------	1	ANGLE, restricting
32	035018	2	CAPSCREW, 1/2"NF x 1-1/2" } Used prior to Loader unit #01016
	904208	2	LOCKWASHER, 1/2"
33	666878	2	SPIDER KIT, drive shaft (Consists of items 21 thru 24)

□ Indicates components of item 33

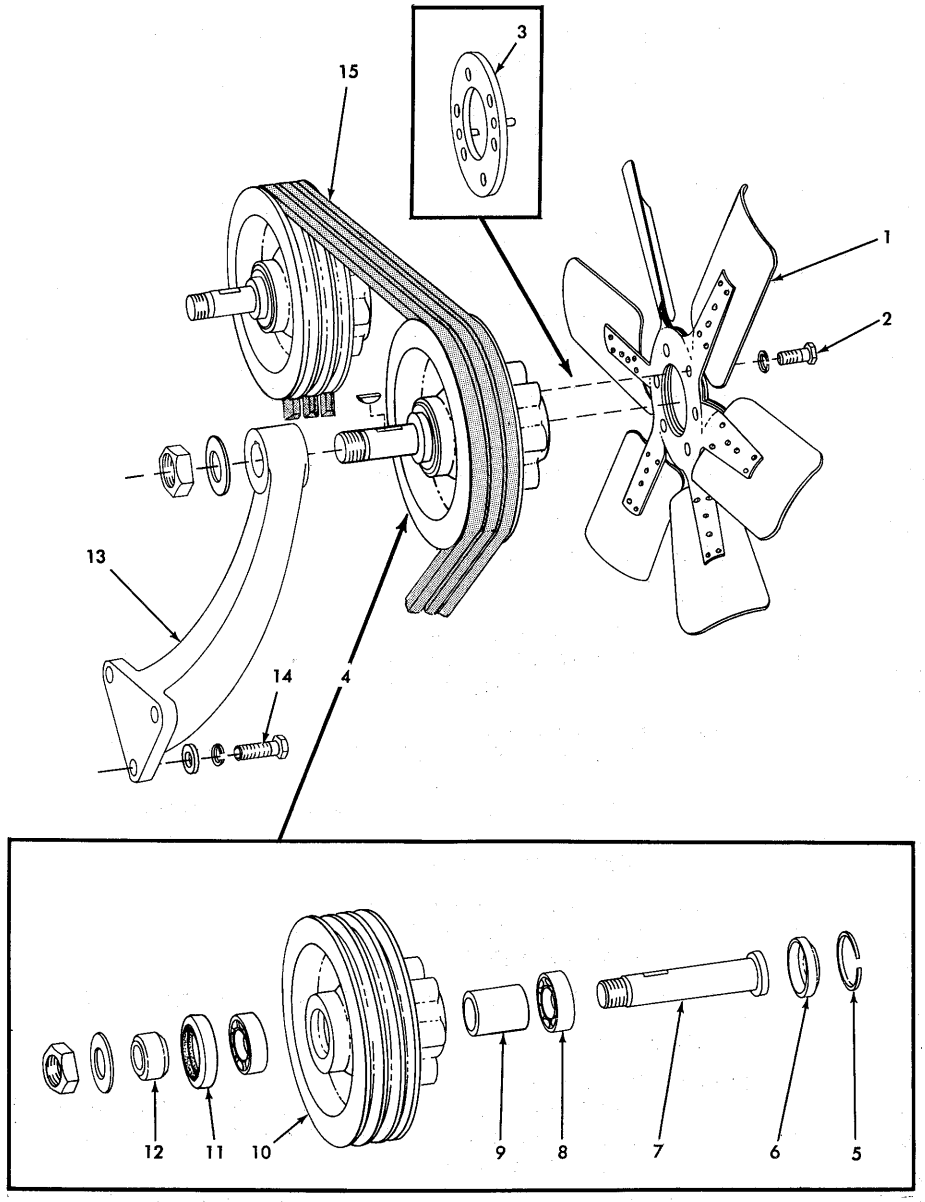

T-72824

FANS

ITEM	PART NO.	QTY.	DESCRIPTION
1	0654586-7	2	FAN (Standard)
	0659473-3	2	FAN ASSY., reversible (Special equipment)(Early units)
	0666519-4	2	FAN ASSY., reversible (Special equipment)(Late units)(See page 83 for parts)
2	0922763-8	12	CAPSCREW, 3/8"NC x 1" (For FAN 0654586-7 and 0666519-4)
	0040382-4	12	CAPSCREW, 3/8"NC x 1-3/8" (For FAN 0659473-3)
	0910287-2	12	LOCKWASHER, 3/8"
3	0649983-4	2	SPACER ASSY., fan (Includes dowels)(For FAN 0659473-3 only)
4	0658609-3	2	PULLEY ASSY. (Consists of items 5 thru 12)
	0905125-1	2	KEY, #13 woodruff, 3/16" x 1"

(Continued)

ITEM	PART NO.	QTY.	DESCRIPTION
5	4042081-2	2	RING, snap, cap retaining
6	0088561-6	2	CAP, pulley
7	0654692-3	2	SHAFT
	0919108-1	2	NUT, self-locking, 7/8"NF
	0911116-2	2	WASHER, plain, SAE std., 7/8"
8	4253862-9	4	BEARING, ball
9	0654681-6	2	SPACER, bearing
10	0654693-1	2	PULLEY
11	0654682-4	2	SEAL, oil
12	0654684-0	2	SPACER, mounting
13	0665392-7	2	BRACKET, mounting
14	0920583-2	4	CAPSCREW, 1/2"NC x 1-1/2"
	0920585-7	2	CAPSCREW, 1/2"NC x 1-3/4"
	0064531-7	2	WASHER, plain
	0912441-3	6	LOCKWASHER, 1/2"
15	0675161-4	1	BELT SET, fan drive (Consists of 3 matched belts)

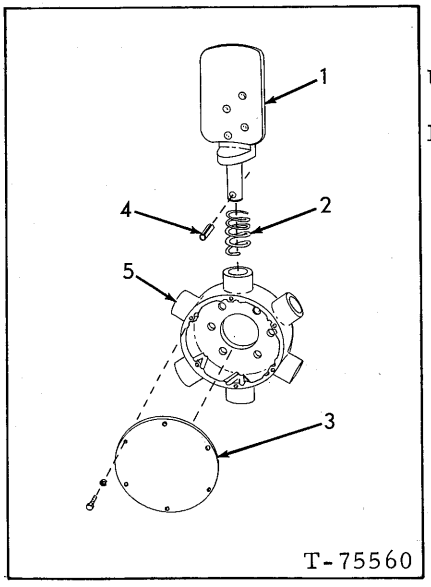

REVERSIBLE FAN PARTS
(Huber)

USAGE: See page 82

ITEM	PART NO.	QTY.	DESCRIPTION
1	---------	6	BLADE (See NOTE below)
2	0668596-0	6	SPRING
3	0668591-1	1	COVER, dust
	0926339-3	6	CAPSCREW, #10-24 x 5/16" (Includes lockwasher)
4	0921839-7	6	PIN, blade retaining
5	---------	1	HUB (See NOTE below)

NOTE: Blade and Hub replacements require precision balancing. Return complete fan to HUBER REVERSIBLE FAN CO., 2103 Hershey Rd., Erie, Pa. 16509

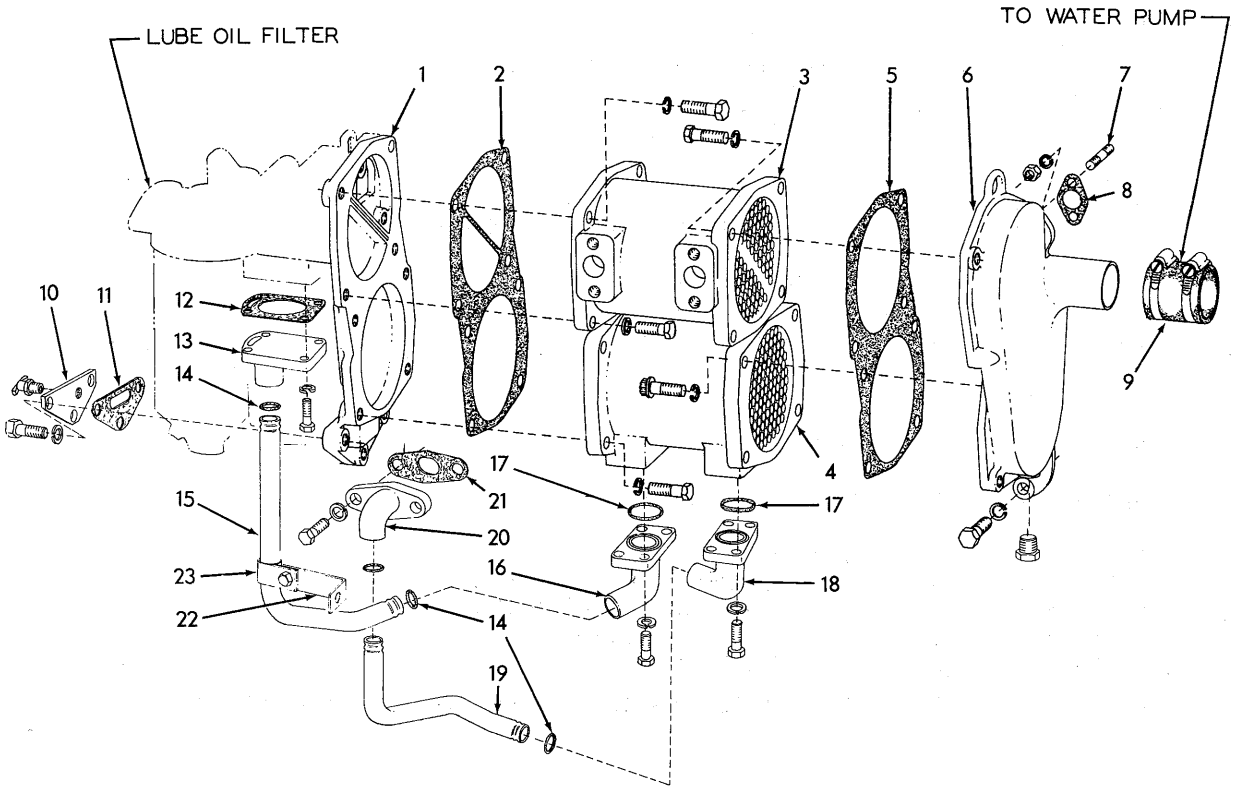

HEAT EXCHANGERS

ITEM	PART NO.	QTY.	DESCRIPTION
1	4339116-8	1	COVER, rear
2	4339697-7	1	GASKET, rear cover
3	4357554-7	1	COOLER, heat, transmission oil
	0916313-0	4	CAPSCREW, 1/2" NC x 1-3/4"
	0904208-6	4	LOCKWASHER, 1/2"
	0916255-3	1	CAPSCREW, 7/16" NC x 1-3/4"
	0904207-8	1	LOCKWASHER, 7/16"
	0922066-6	2	SCREW, 12-point, 1/2" NC x 1-3/4"
4	4339119-2	1	EXCHANGER, heat, engine oil
	0916313-0	6	CAPSCREW, 1/2" NC x 1-3/4"
	0904208-6	6	LOCKWASHER, 1/2"
	0922066-6	2	SCREW, 12-point, 1/2" NC x 1-3/4"
5	4339698-5	1	GASKET, front cover
6	4358587-6	1	COVER, front
	0920333-2	1	PLUG, pipe, hex-hd., 3/8" NPT
	0921556-7	1	CAPSCREW, 1/2" NC x 2"
	0904208-6	1	LOCKWASHER, 1/2"

(Continued)

HEAT EXCHANGERS (Continued)

ITEM	PART NO.	QTY.		DESCRIPTION
7	4514091-0	2		STUD, attaching, front cover
	4115287-7	2		NUT
	0904206-0	2		LOCKWASHER, 3/8"
8	4348185-2	1	□	GASKET, front cover to block
9	4506737-8	1		HOSE, water pump to cooler
	0925758-5	2		CLAMP, hose
10	4357701-4	1		COVER, flange
	0912415-7	1		COCK, drain, 1/4" NPT
	0916311-4	3		CAPSCREW, 1/2" NC x 1-1/4"
	0904208-6	3		LOCKWASHER, 1/2"
11	4339127-5	1		GASKET, flange cover
12	4339118-4	1	□	GASKET, filter outlet flange
13	4357689-1	1		FLANGE, filter outlet
	0916272-8	4		CAPSCREW, 3/8" NC x 1-1/4"
	0904206-0	4		LOCKWASHER, 3/8"
14	0923574-8	4	□	O-RING, oil tubes
15	4357706-3	1		TUBE, oil filter to heat exchanger
16	4357691-7	1		ELBOW, oil inlet
	0916197-7	4		CAPSCREW, 7/16" NC x 1-1/4"
	0904207-8	4		LOCKWASHER, 7/16"
17	0923813-0	2	□	O-RING, heat exchanger elbows
18	4357692-5	1		ELBOW, oil outlet
	0916197-7	4		CAPSCREW, 7/16" NC x 1-1/4"
	0904207-8	4		LOCKWASHER, 7/16"
19	4357705-5	1		TUBE, heat exchanger to cylinder block
20	4357690-9	1		ELBOW, cylinder block
	0921076-6	2		CAPSCREW, 3/8" NC x 1-1/4"
	0904206-0	2		LOCKWASHER, 3/8"
21	4339151-5	1	□	GASKET, cylinder block elbow
22	4358763-3	1		BRACKET, tube supporting
23	4253771-2	1		CLAMP, tube attaching
	0916268-6	1		CAPSCREW, 3/8" NC x 5/8"
	0904206-0	1		LOCKWASHER, 3/8"
	0910324-3	1		NUT, 3/8" NC

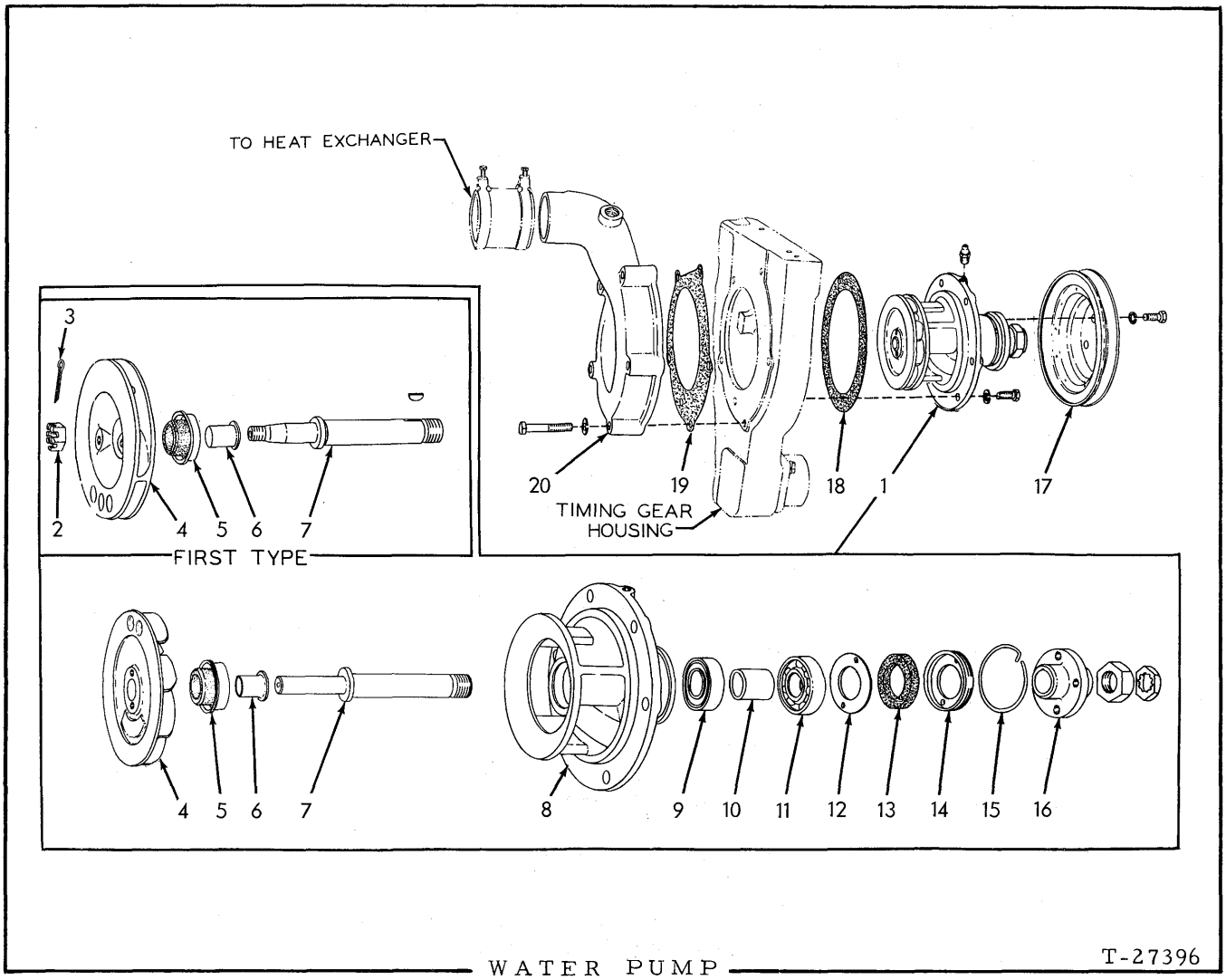

WATER PUMP

* Engines prior to serial No. 11-14220
** Engines serial No. 11-14220 and up

ITEM	PART NO.	QTY. *	QTY. **	DESCRIPTION
				NOTE: See GENERATOR for listing of driving belt
1	-------	1	-	PUMP ASSEMBLY (Consists of items 2 thru 16)(Order PUMP ASSY. 4359281)
	4359281	-	1	PUMP ASSEMBLY (Consists of items 4 thru 16)
	916271	6	6	CAPSCREW, 3/8"NC x 1"
	904206	6	6	LOCKWASHER, 3/8"
	914465	1	1	FITTING, lubricating, straight, 1/8"NPT
2	4375686	1	-	NUT, impeller retaining
3	4041097	1	-	PIN, cotter, impeller nut
4	4339103	1	-	IMPELLER ASSEMBLY (Includes ceramic insert)
	4358786	-	1	IMPELLER ASSEMBLY (Includes ceramic insert)
5	4507091	1	1	SEAL ASSEMBLY (Serviced only as a unit)

(Continued)

WATER PUMP (Continued)

ITEM	PART NO.	QTY. *	QTY. **	DESCRIPTION
6	4507084	1	1	FLINGER, water
7	4348757	1	-	SHAFT ASSEMBLY (Includes item 6)
	905121	1	-	KEY, #5 woodruff, 1/8" x 5/8"
	4358787	-	1	SHAFT ASSEMBLY (Includes item 6)
8	4338663	1	1	BODY, water pump
9	4044212	1	1	BEARING, ball, rear
10	4044211	1	1	SPACER, bearing
11	4044210	1	1	BEARING, ball, front
12	4044209	1	1	WASHER, retaining
13	4348825	1	1	WASHER, sealing
14	4335320	1	1	RETAINER, sealing washer
15	4053968	1	1	RING, snap sealing washer retainer
16	4335808	1	-	FLANGE, driving pulley
	4359280	-	1	FLANGE, driving pulley
	910847	1	1	NUT, 3/4"NF
	917680	1	1	NUT, Pal locking,3/4"
17	4339503	1	1	PULLEY
	916206	4	-	CAPSCREW, 5/16"NF x 7/8" (Early units)
	911169	4	4	CAPSCREW, 5/16"NF x 5/8" (Late units)
	904205	4	4	LOCKWASHER, 5/16"
18	4346744	1	1	□GASKET, water pump
19	4335056	1	1	□GASKET, water pump volute
20	4349953	1	1	VOLUTE
	916274	5	5	CAPSCREW, 3/8"NC x 2-1/4"
	904206	5	5	LOCKWASHER, 3/8"

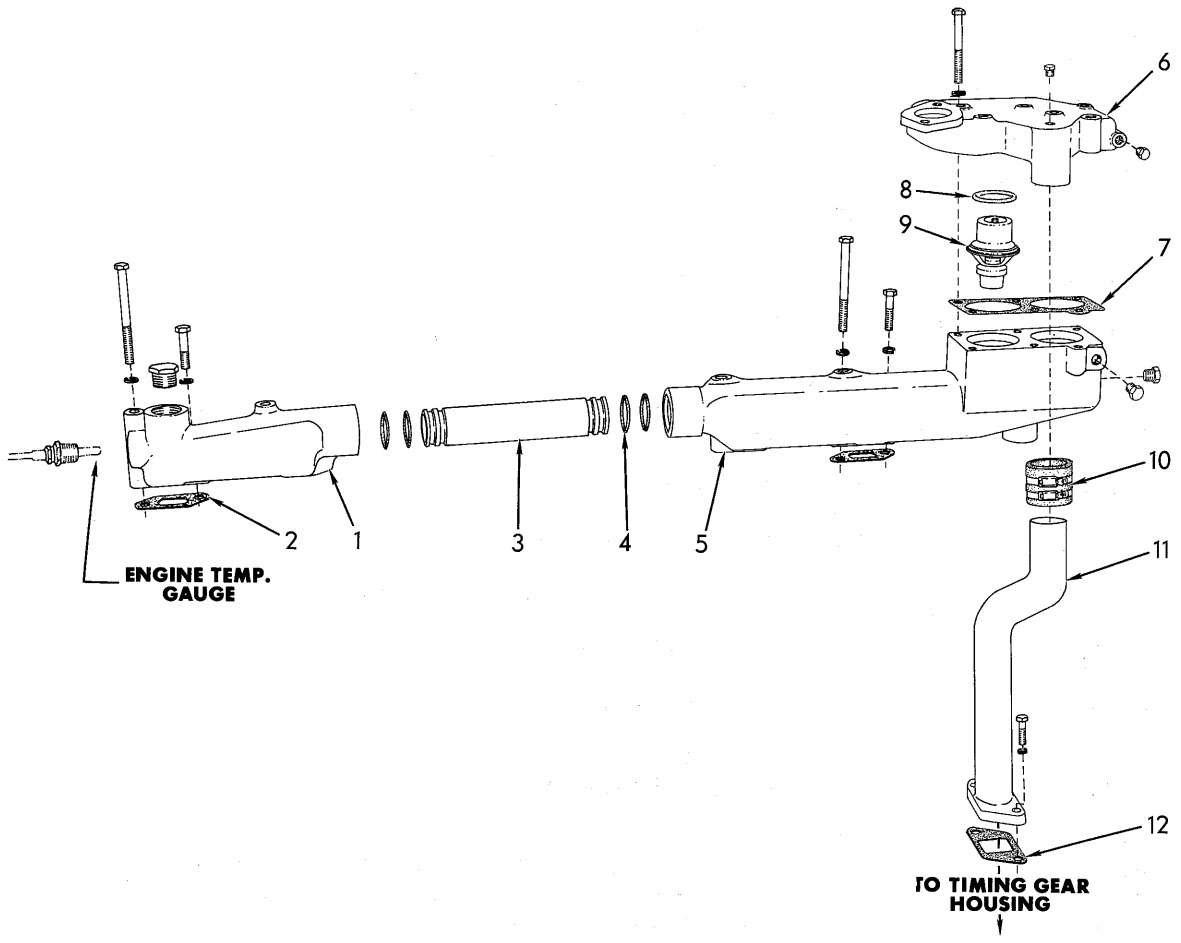

WATER OUTLET MANIFOLD T-38101

ITEM	PART NO.	QTY.	DESCRIPTION
1	4336506	1	MANIFOLD, water outlet, rear
	920525	1	PLUG, pipe, hex-hd., 3/4"NPT (Not original equipment)
	914847	2	CAPSCREW, 3/8"NC x 1-1/2"
	916275	2	CAPSCREW, 3/8"NC x 3-3/4"
	904206	4	LOCKWASHER, 3/8"
2	4336182	4	□GASKET, water manifold
3	4336156	1	TUBE, water manifold connecting
4	923813	4	□O-RING, water manifold connecting tube
5	4338243	1	MANIFOLD water outlet, front
	919840	1	PLUG, pipe, hex-hd., 1/4"NPT
	914847	2	CAPSCREW, 3/8"NC x 1-1/2"
	916275	2	CAPSCREW, 3/8"NC x 3-3/4"
	904206	4	LOCKWASHER, 3/8"
	916873	1	COCK, T-handle, 3/8"NPT
	920333	1	PLUG, pipe, hex-hd., 3/8"NPT

(Continued)

WATER OUTLET MANIFOLD (Continued)

ITEM	PART NO.	QTY.	DESCRIPTION
6	4358754	1	HOUSING ASSEMBLY, thermostat (Includes item 8)
	919840	2	PLUG, pipe, hex-hd., 1/4"NPT (air vent and drain)
	919227	6	CAPSCREW, 3/8"NC x 3-1/4"
	904206	6	LOCKWASHER, 3/8"
7	4336263	1	□GASKET, thermostat housing
8	4317554	2	SEAL, thermostat
9	4354537	2	THERMOSTAT
10	4337602	1	HOSE, water by-pass pipe
	922918	2	CLAMP, hose
11	4338242	1	PIPE, water by-pass
	916272	2	CAPSCREW, 3/8"NC 1-1/4"
	904206	2	LOCKWASHER, 3/8"
12	4347031	1	□GASKET, water by-pass pipe

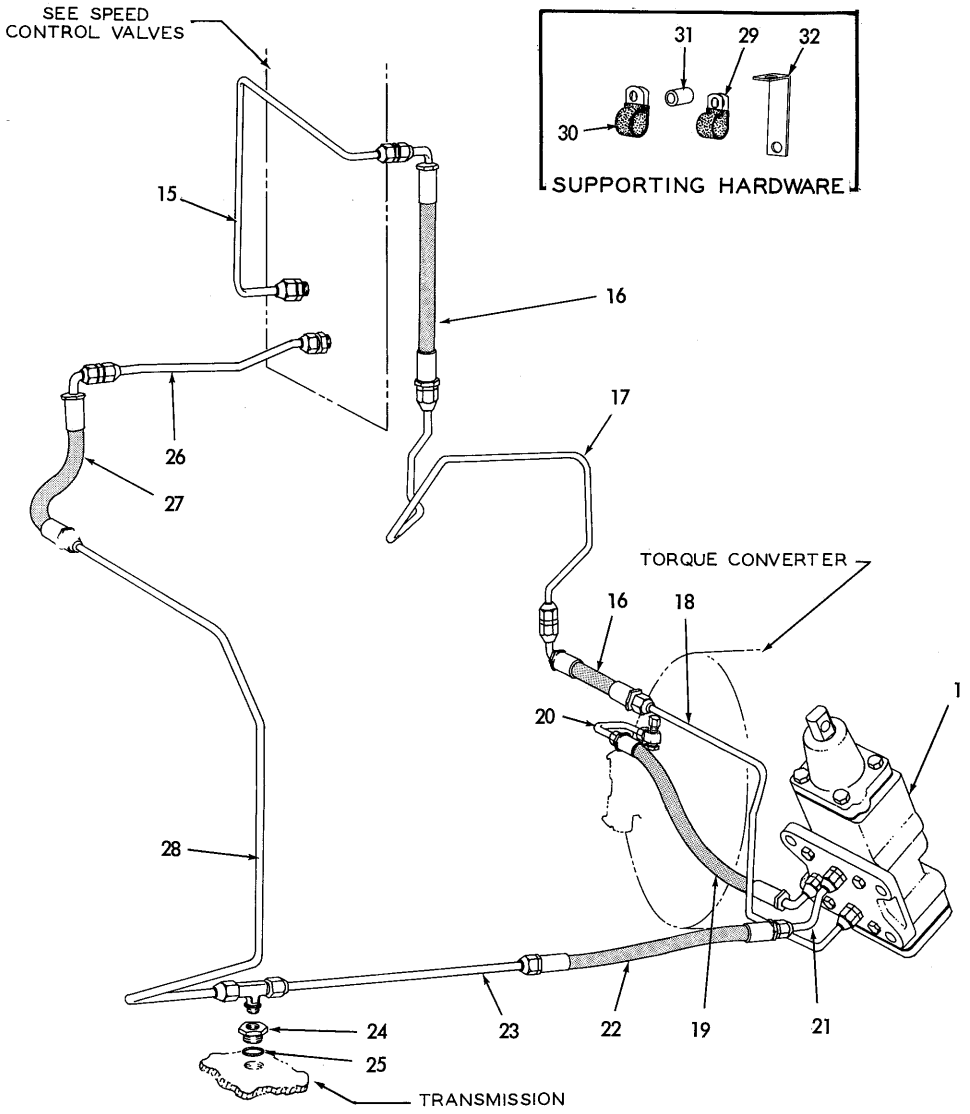

CONTROL PIPING

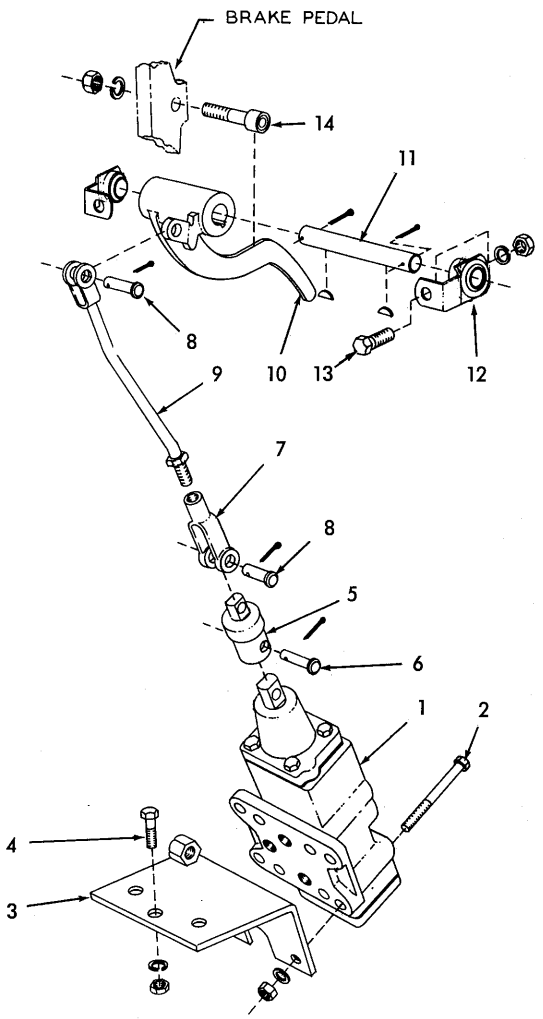

CONTROL LINKAGE

T-73063

ENGINE CLUTCH CONTROL

ITEM	PART NO.	QTY.	DESCRIPTION
1	656245	1	VALVE ASSEMBLY (See page 93 for parts)
2	070960	4	CAPSCREW, 3/8"NC x 1-1/2"
	904206	4	LOCKWASHER, 3/8"
	911026	4	NUT, 3/8"NC
3	656563	1	BRACKET, valve mounting
4	035061	3	CAPSCREW, 1/2"NC x 1-1/4"
	904208	3	LOCKWASHER, 1/2"
	911028	3	NUT, 1/2"NC
5	648143	1	OVERTRAVEL ASSEMBLY (Serviced only as a unit)
6	085038	1	PIN, overtravel
	900801	1	PIN, cotter, 3/32" x 3/4"
7	917663	1	YOKE, control rod
8	627451	2	PIN, control rod yoke
	900801	2	PIN, cotter, 3/32" x 3/4"
9	656251	1	ROD, control
	910980	1	NUT, jam, 5/16"NF
10	656243	1	LEVER, valve operating
11	656249	1	SHAFT, valve operating lever
	905119	2	KEY, #3 woodruff, 1/8" x 1/2"
	900801	2	PIN, cotter, 3/32" x 3/4"
12	654402	2	BEARING ASSEMBLY (Serviced only as a unit)
13	035220	2	CAPSCREW, 1/2"NC x 1-1/8"
	904208	2	LOCKWASHER, 1/2"
	911028	2	NUT, 1/2"NC
14	656546	1	ROLLER ASSEMBLY, brake pedal (Serviced only as a unit)
	911041	1	NUT, 3/8"NF
	904206	1	LOCKWASHER, 3/8"
15	656256	1	TUBE ASSEMBLY, pressure line rear section (Includes nuts)
	921409	1	CONNECTOR, flare type, 1/2" tube, 3/4"NF male end (Includes O-RING 921349)
16	655072	2	HOSE, pressure line (See HOSE PARTS)
	919066	2	UNION, flare type, 1/2" tube
17	656250	1	TUBE ASSEMBLY, pressure line, intermediate section (Includes nuts)
18	656539	1	TUBE ASSEMBLY, pressure line, front section (Includes nuts)
	921409	1	CONNECTOR, flare type, 1/2" tube, 3/4"NF male end (Includes O-RING 921349)
19	655072	1	HOSE, pressure line, valve to torque converter (See HOSE PARTS)
	921409	1	CONNECTOR, flare type, 1/2" tube, 3/4"NF male end (Includes O-RING 921349)
20	656541	1	TUBE ASSEMBLY, pressure line, valve to torque converter (Includes nuts)
	922792	1	TEE, adjustable, flare type, 1/2" tube, 3/4"NF male end (Includes nut, washer and O-RING 921349)
	923737	1	CAP, flare fitting, 1/2" tube

(Continued)

ENGINE CLUTCH CONTROL (Continued)

ITEM	PART NO.	QTY.	DESCRIPTION
21	656538	1	TUBE ASSEMBLY, return line, valve to transmission, front section (Includes nuts)
	922522	1	CONNECTOR, flare type, 3/8" tube, 9/16"NF male end (Includes O-RING 921885)
22	656542	1	HOSE, return line, valve to transmission (See HOSE PARTS)
23	656540	1	TUBE ASSEMBLY, return line, valve to transmission, rear section (Includes nuts)
	923894	1	TEE, flare type, adjustable, 3/8" tube, 9/16"NF male end (Includes O-RING 921885)
24	659077	1	ADAPTER, return line (Includes item 25)
25	921214	1	O-RING, return line adapter
26	659115	1	TUBE ASSEMBLY, return line, modulating valve to transmission, upper section
	922457	1	CONNECTOR, flare type, 3/8" tube, 3/4"NF male end (Includes O-RING 921349)
27	656239	1	HOSE, return line, modulating valve to transmission (See HOSE PARTS)
	919065	1	UNION, flare type, 3/8" tube
28	656255	1	TUBE ASSEMBLY, return line, modulating valve to transmission, lower section
29	640675	3	CLIP, return line tubes (3/8" diam., 17/32" bolt-hole)
	035979	1	CAPSCREW, 3/8"NC x 5/8"
	013058	1	CAPSCREW, 3/8"NC x 1-1/4"
	904206	2	LOCKWASHER, 3/8"
	911115	2	WASHER, plain, SAE std., 3/8"
	035221	1	CAPSCREW, 1/2"NC x 1"
	910244	1	WASHER, plain, SAE std., 1/2"
	904208	1	LOCKWASHER, 1/2"
	911028	1	NUT, 3/8"NC
30	620063	5	CLIP, pressure line tubes (1/2" diam., 17/32" bolt-hole)
	903775	1	CAPSCREW, 3/8"NC x 7/8"
	904206	1	LOCKWASHER, 3/8"
	911115	1	WASHER, plain, SAE std., 3/8"
	035220	2	CAPSCREW, 1/2"NC x 1-1/8"
	035712	1	CAPSCREW, 1/2"NC x 2-1/4"
	904208	3	LOCKWASHER, 1/2"
	910244	3	WASHER, plain, SAE std., 1/2"
31	065785	1	BLOCK, clip spacing
32	642533	1	ANGLE, tube supporting

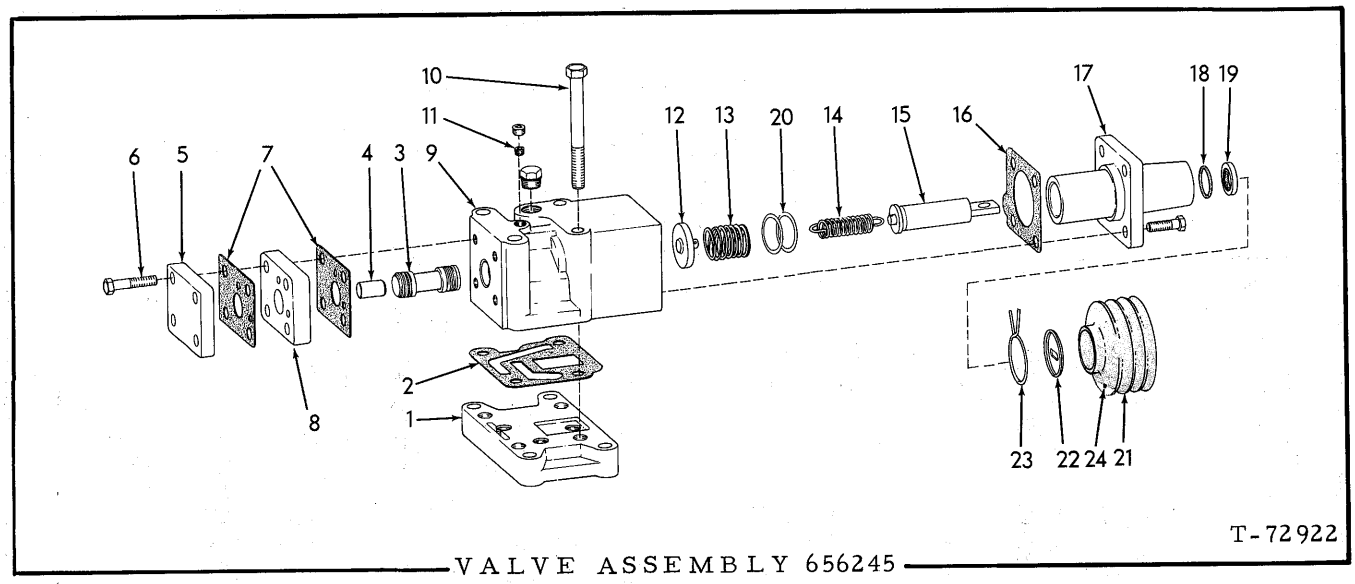

VALVE ASSEMBLY 656245

USAGE: See page 91

ITEM	PART NO.	QTY.	DESCRIPTION
1	656733	1	PLATE, adapting
2	658008	1	GASKET, adapting plate
3	658013	1	SPOOL, valve (large)
4	659137	1	SPOOL, valve (small)
5	659129	1	CAP, lower
6	046321	4	CAPSCREW, 5/16"NC x 1-1/2"
7	658010	2	GASKET, plate
8	659130	1	PLATE
9	658004	1	BODY, valve
	921573	1	PLUG, hex-hd., 3/4"NF (Includes O-RING 921349)
	910231	1	PLUG, pipe, socket-hd., 1/8"NPT
10	086238	4	CAPSCREW, 3/8"NC x 3-3/4"
11	188168	1	PLUG, orifice, valve body
12	659136	1	SEAT, spool spring
13	659135	1	SPRING, valve spool
14	656735	1	SPRING, connecting
15	659132	1	STEM, valve operating
16	659133	1	GASKET, upper cover
17	659131	1	COVER, upper
	045295	4	CAPSCREW, 5/16"NC x 1"
18	923719	1	O-RING, stem sealing
19	186392	1	SEAL, wiper
20	661236	2	WASHER, valve spool spring
21	668353	1	BOOT, valve stem
22	668352	1	WASHER, valve stem boot
23	668351	1	CLAMP, valve stem boot

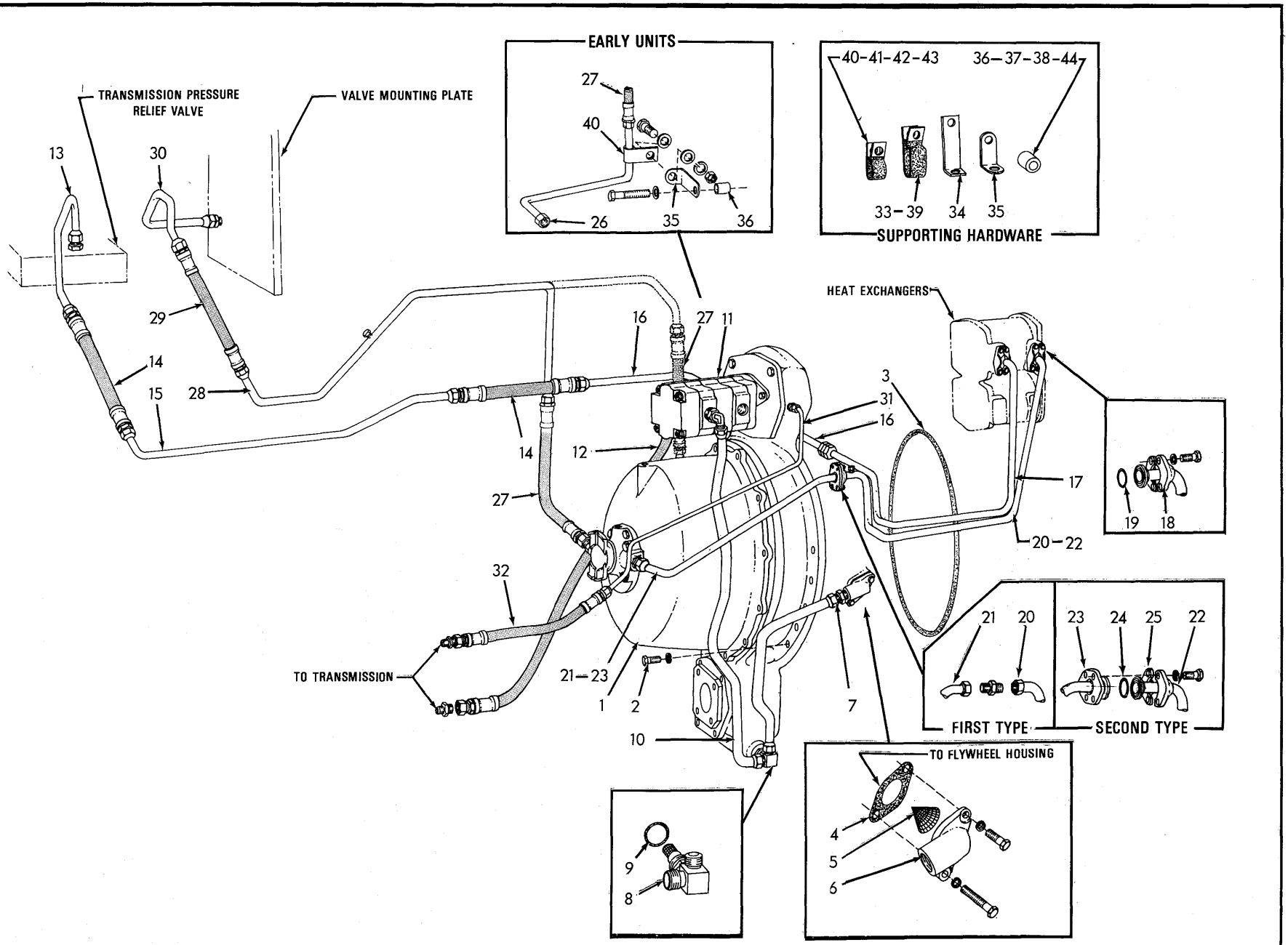

TORQUE CONVERTER AND LINES

TORQUE CONVERTER AND LINES

ITEM	PART NO.	QTY.	DESCRIPTION
1	656241	1	CONVERTER ASSEMBLY, torque (See page 99 for parts)
2	044249	14	CAPSCREW, 3/8"NC x 1-1/8"
	904206	14	LOCKWASHER, 3/8"
3	926059	1	O-RING, torque converter to flywheel housing
4	630030	1	GASKET, scavenging line elbow
5	656819	1	SCREEN, scavenging line elbow
6	653967	1	ELBOW, scavenging line
	058793	1	CAPSCREW, 3/8"NC x 2-1/4"
	035439	1	CAPSCREW, 3/8"NC x 1"
	904206	2	LOCKWASHER, 3/8"
7	654011	1	TUBE ASSEMBLY, scavenging line, flywheel housing to torque converter (Includes nuts)
	921228	1	CONNECTOR, flare type, 1" tube, 1-5/16" straight thd. male end (Includes O-RING 921214
8	656545	1	TEE, scavenging line (Includes nut, washer and item 9)
9	921214	1	O-RING, scavenging line tee
10	654005	1	TUBE ASSEMBLY, scavenging line, torque converter to pump (Includes nuts)(Used prior to loader #285)(Order TUBE ASSY.664267)
	------	1	HOSE, scavenging line, torque converter to pump (Loaders #285 thru #343 only. Order TUBE ASSEMB LY 664267)
	664267	1	TUBE ASSEMBLY, scavenging line, torque converter to pump (Includes nuts)(Effective with loader #344)
	921227	1	ELBOW, adjustable, 90°, flare type, 1" tube, 1-5/16" straight thd. male end (Includes washer, nut and O-RING 921214)
11	------	1	PUMP, scavenging (See TRANSMISSION OIL PUMP AND FILTER)
12	662986	1	HOSE, scavenging pump to transmission (Loaders prior to #538 excluding Nos. 515, 516, 517, 528, 535 but including 555, 557)
	669708	1	HOSE, scavenging pump to transmission (Loaders #538 and up, excluding Nos. 555, 557 but including 515, 516, 517, 528, 535)
	923174	1	CONNECTOR, flare type, 1" tube, 1-1/16"NF male end (Incl. O-RING 921206)(Loader units #01001 and up)
	921728	1	ELBOW, flare type, adjustable, 45°, 3/4" tube, 1-1/16" straight-thd., male end (Incl. nut, washer and O-Ring 921206)
13	656254	1	TUBE ASSY., regulator valve to oil cooler, rear section (incl nuts)
	921228	1	CONNECTOR, flare type, 1" tube, 1-5/16" straight thd. male end (Includes O-RING 921214)
14	656246	2	HOSE, regulator valve to oil cooler line (See HOSE PARTS)
15	656252	1	TUBE ASSY., regulator valve to oil cooler, intermediate rear section (Includes nuts)
16	656242	1	TUBE ASSY., regulator valve to oil cooler, intermediate front section (Includes nuts)
17	656235	1	TUBE ASSY., regulator valve to oil cooler, front section (Includes nuts)
	919268	1	UNION, flare type, 1" tube

(Continued)

TORQUE CONVERTER AND LINES (Continued)

ITEM	PART NO.	QTY.	DESCRIPTION
18	921117	4	FLANGE, tube attaching (half only)
	041250	8	CAPSCREW, 7/16"NC x 1-1/4"
	904207	8	LOCKWASHER, 7/16"
19	923664	2	O-RING, tube to oil cooler
20	------	1	TUBE ASSEMBLY, oil cooler to converter, front section (Includes nut)(Loaders prior to #391) (Order items 22 thru 25)
	919268	1	UNION, flare type, 1" tube
21	653915	1	TUBE ASSEMBLY, oil cooler to converter, rear section (Includes nuts)(Loaders prior to #391)
	921228	1	CONNECTOR, flare type, 1" tube, 1-5/16" straight thd. male end (Includes O-RING 921214)
22	660918	1	TUBE, oil cooler to converter, front section
	921467	1	CAP, flare fitting, 1/4" tube
23	660919	1	TUBE ASSEMBLY, oil cooler to converter, rear section (Includes nut)
	921228	1	CONNECTOR, flare type, 1" tube, 1-5/16" straight thd. male end (Includes O-RING 921214)
24	923664	1	O-RING, oil tube connection
25	921117	2	FLANGE, tube attaching (half only)
	041250	4	CAPSCREW, 7/16"NC x 1-1/4"
	904207	4	LOCKWASHER, 7/16"

Loaders #391 and up

26	------	1	TUBE ASSEMBLY, converter to control valve, front section (Includes nuts)(Loaders prior to #426. Order TUBE ASSY. 665231, TUBE ASSY. 665232 and HOSE 665233)
	921217	1	CONNECTOR, flare type, 3/4" tube, 1-1/16" straight thd. male end (Includes O-RING 921206)
27	656237	1	HOSE, converter to control valve line, front (10-3/4" long. See HOSE PARTS)(Loaders prior to #426)
	665233	1	HOSE, converter to control valve line, front (22" long)(Effective with loader #426)
	921217	1	CONNECTOR, flare type, 3/4" tube, 1-1/16" straight thd. male end (Includes O-RING 921206)
28	------	1	TUBE ASSEMBLY, converter to control valve, intermediate section (Includes nuts)(Loaders prior to #426. Order TUBE ASSY. 665231, TUBE ASSY. 665232 and HOSE 665233)
	665231	1	TUBE ASSEMBLY, converter to control valve, intermediate section (Includes nuts)(Effective with loader #426)
	921467	1	CAP, flare fitting, 1/4" tube
29	656237	1	HOSE, converter to control valve line, rear (See HOSE PARTS)
30	656253	1	TUBE ASSEMBLY, converter to control valve, rear section (Includes nuts)
	921217	1	CONNECTOR, flare type, 3/4" tube, 1-1/16"straight thd. male end(Includes O-RING 921206)
31	656238	1	TUBE ASSEMBLY, breather line (Includes nuts)
	919063	1	CONNECTOR, flare type, 1/2" tube, 3/8"NPT male
32	655778	1	HOSE, breather line (See HOSE PARTS)
	919205	1	CONNECTOR, flare type, 1/2" tube, 1/4"NPT male

(Continued)

ITEM	PART NO.	QTY.	DESCRIPTION	
33	641555	1	CLIP, breather line (For two 1/2" diam. lines, 13/32" bolt-hole)	
	915408	1	CAPSCREW, 3/8"NC x 3/4"	
	911115	2	WASHER, plain, SAE std., 3/8"	
	904206	1	LOCKWASHER, 3/8"	
	911026	1	NUT, 3/8"NC	
34	642535	2	ANGLE, oil line supporting	Loaders prior to #426
	041917	2	CAPSCREW, 1/2"NC x 3-1/4"	
	904208	2	LOCKWASHER, 1/2"	
35	628821	1	SUPPORT, oil tubes	
	058793	1	CAPSCREW, 3/8"NC x 2-1/4"	
	904206	1	LOCKWASHER, 3/8"	
36	085452	1	BLOCK, spacing, oil tube support (13/16" long)	
37	610563	2	SPACER, tube supporting angle (1" long)	
38	614516	1	BLOCK, clip spacing (1-3/16" long)	
39	642536	2	CLIP, tube supporting (For two 1" diam. lines, 17/32" bolt-hole)	
	035220	1	CAPSCREW, 1/2"NC x 1-1/8"	
	922055	1	CAPSCREW, Nylok, 1/2"NC x 2-1/4"	
	904208	2	LOCKWASHER, 1/2"	
	910244	2	WASHER, plain, SAE std., 1/2"	
40	621304	1	CLIP, tube supporting (3/4" diam., 17/32" bolt-hole)	
41	638780	1	CLIP, tube supporting, (1" diam., 17/32" bolt-hole)	
	911115	1	WASHER, plain, SAE std., 3/8"	
	035018	1	CAPSCREW, 1/2"NF x 1-1/2"	
	904208	1	LOCKWASHER, 1/2"	
	910244	1	WASHER, plain, SAE std., 1/2"	
42	095869	2	CLIP, hose supporting, (1-1/4" diam., 17/32 bolt-hole)	
	916311	1	CAPSCREW, 1/2"NC x 1-1/4"	
	910244	2	WASHER, plain, SAE std., 1/2"	
	904208	1	LOCKWASHER, 1/2"	
	911028	1	NUT, 1/2"NC	
43	632547	1	CLIP, hose supporting, scavenging line (1-1/2" diam., 17/32" bolt-hole)	
44	068017	1	BLOCK, spacing	

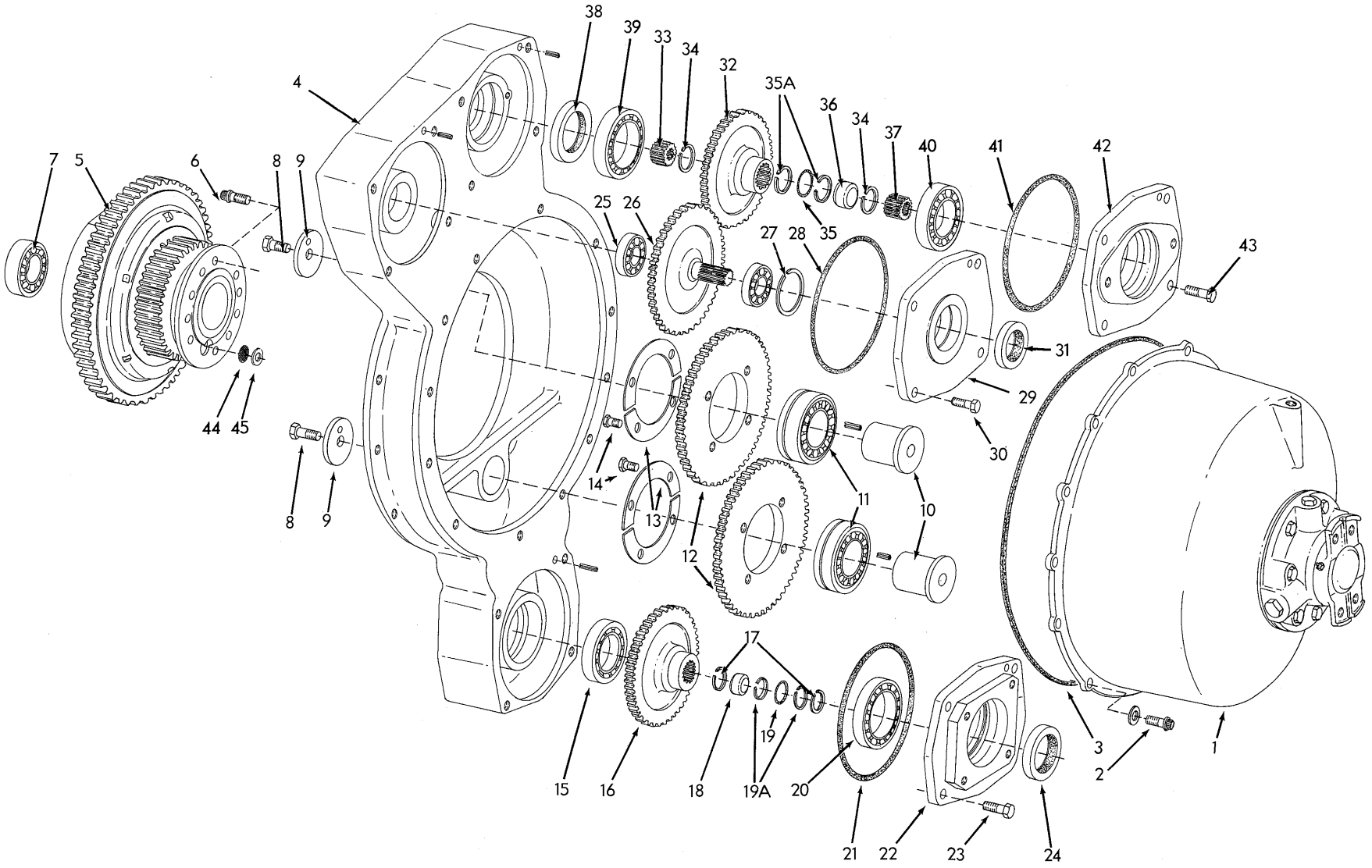

TORQUE CONVERTER ASSEMBLY 656241

T-73071

TORQUE CONVERTER ASSEMBLY 656241

USAGE: See page 95

ITEM	PART NO.	QTY.	DESCRIPTION
1	------	1	TORQUE CONVERTER SUB-ASSEMBLY (See page 104 for parts)
2	3039124	12	CAPSCREW, 12-point, 3/8"NC x 1-1/4"
	3035025	12	WASHER, copper
3	926059	1	O-RING, converter housing
4	656709	1	HOUSING, gear train
	921292	3	PIN, spring, 1/4" x 1/2"
5	------	1	ENGINE CLUTCH SUB-ASSEMBLY (See page 102 for parts)
6	666441	10	SCREW, 12-point, 1/2"NC x 1-3/8"
7	058974	1	BEARING, ball, clutch pilot
8	035073	2	CAPSCREW, retaining, idler gear shaft
9	656720	2	WASHER, retaining, idler gear shaft
10	656721	2	SHAFT, intermediate gear
	915513	2	PIN, spring, 1/4" x 3/4"
11	670411	2	BEARING, roller, idler gear
12	656715	2	GEAR, idler
13	638610	4	WASHER, retaining, idler gear bearing (half only)
14	639534	8	CAPSCREW, self-locking, 3/8"NF x 5/8"
15	054073	1	BEARING, ball, loader pump drive, front
16	656714	1	GEAR, loader pump drive
17	3037989	2	RING, snap, loader pump drive gear
18	656706	1	PLUG, loader pump drive gear
19	926860	1	O-RING, loader pump drive gear
19A	669705	2	RING, back-up, drive gear O-ring
20	073647	1	BEARING, ball, loader pump drive, rear
21	656717	1	GASKET, loader pump adapting plate (Converters prior to #228078)
	924140	1	O-RING, loader pump adapting plate (Converters #228078 and up)
22	656718	1	PLATE, adapting, loader pump (Converters prior to #228078)
	669704	1	PLATE, adapting, loader pump (Converters #228078 and up)
23	035439	4	CAPSCREW, 3/8"NC x 1"
24	669678	1	SEAL, oil, loader pump drive
25	656774	2	BEARING, ball, fan drive gear
26	656716	1	GEAR, fan drive
27	056362	1	RING, snap, fan drive gear

(Continued)

TORQUE CONVERTER ASSEMBLY 656241 (Continued)

ITEM	PART NO.	QTY.	DESCRIPTION
28	656717	1	GASKET, bearing carrier (Converters prior to #228078)
	924140	1	O-RING, bearing carrier (Converters #228078 and up)
29	656712	1	CARRIER, fan drive gear bearing (Converters prior to #228078)
	665837	1	CARRIER, fan drive gear bearing (Converters #228078 and up)
30	035439	4	CAPSCREW, 3/8"NC x 1"
31	655619	1	SEAL, oil, fan drive
32	656714	1	GEAR, transmission pump drive
33	656711	1	ADAPTER, splined, steering pump
34	3037989	2	RING, snap, transmission pump drive gear
35	926860	1	O-RING, transmission pump drive gear
35A	669705	2	RING, back-up, drive gear O-ring
36	656706	1	PLUG, transmission pump drive gear
37	656710	1	ADAPTER, splined, transmission pump
38	669678	1	SEAL, oil, transmission pump drive
39	073647	1	BEARING, ball, transmission pump drive, front
40	054073	1	BEARING, ball, transmission pump drive, rear
41	656717	1	GASKET, pump adapting plate (Converters prior to #228078)
	924140	1	O-RING, pump adapting plate (Converters #228078 and up)
42	656719	1	PLATE, adapting, transmission pump (Converters prior to #228078)
	665835	1	PLATE, adapting, transmission pump (Converters #228078 and up)
43	035439	4	CAPSCREW, 3/8"NC x 1"
44	188182	1	SCREEN, oil filtering } Converters prior to #234223
45	662994	1	WASHER, screen retaining } Converters prior to #234223

MEMO

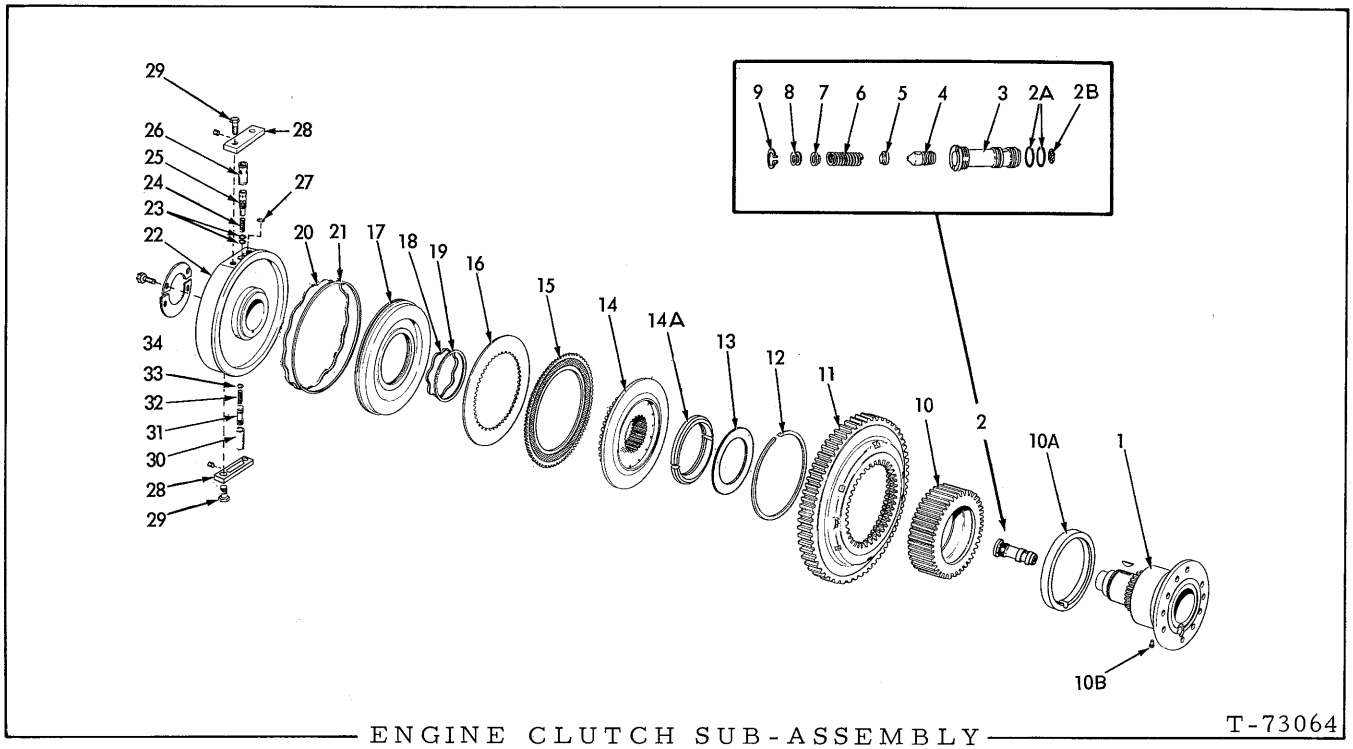

ENGINE CLUTCH SUB-ASSEMBLY T-73064

USAGE: See page 99

ITEM	PART NO.	QTY.	DESCRIPTION
1	0670416-7	1	FLANGE, driving (If for Converters prior to #255500 also order PLATE 0670410-0, WASHER 0670386-2; if for Converter prior to #234223 also order VALVE 0669677-7)
	0911201-2	1	KEY, woodruff, #E, 3/8" x 1-1/4"
2	0662883-8	1	VALVE ASSY., check (Items 3 thru 9)(Converters prior to #234223)
	0669677-7	1	VALVE ASSY., check (Includes items 2A thru 9)(Converters #234223 and up)
2A	0669183-6	2	RING, sealing, check valve sleeve (teflon)(Converters #234223 thru #234295)
	0186451-1	2	O-RING, check valve sleeve (Converters #234296 and up)
2B	0639939-8	1	SCREEN, check valve (Converters #234223 and up)
3	---------	1	SLEEVE, check valve
4	0662916-6	1	PISTON, check valve
5	0662917-4	1	SEAT, check valve
6	0662884-6	1	SPRING, check valve
7	0662918-2	1	GUIDE, check valve spring
8	0656704-4	-	WASHER, check valve (.020" thick) — Use as required
	0662920-8	-	WASHER, check valve (.010" thick) — Use as required
	0925966-4	-	WASHER, check valve (.049" thick) — Use as required
9	0662919-0	1	RING, snap, check valve

(Continued)

ENGINE CLUTCH SUB-ASSEMBLY (Continued)

ITEM	PART NO.	QTY.	DESCRIPTION
10	0656697-0	1	GEAR ASSY., accessory drive (Includes bushing, not serviced separately)
10A	0670410-0	1	PLATE, spacing, accessory drive gear } Effective with Torque Converter #235500
10B	0658953-5	1	PIN, spacing plate } Effective with Torque Converter #235500
11	0656700-2	1	SPIDER
12	0656692-1	1	RING, snap, gear retaining
13	0656703-6	1	PLATE, oil baffle
14	0670385-4	1	HUB ASSY. (Includes item 13)(If for first replacement on Converters prior to #235500 also order 2 WASHER 0670386-2)
14A	0670386-2	2	WASHER, hub (Effective with Torque Converter #235500)
15	0657969-2	3	PLATE, outer
16	0657968-4	3	PLATE, inner
17	0656699-6	1	PISTON
18	0657965-0	1	EXPANDER, piston inner ring
19	0657974-2	1	RING, piston, inner (teflon)
20	0657964-3	1	EXPANDER, piston outer ring
21	0657973-4	1	RING, piston, outer (teflon, split)
	0663526-2	1	RING, piston, outer (teflon, not split)
22	0665850-4	1	CARRIER ASSY., clutch piston (Includes items 23 thru 33)
23	0656704-4	-	WASHER, shimming, relief valve spring (.020" thick) } Use as required
	0925466-5	-	WASHER, shimming, relief valve spring (.049" thick) } Use as required
24	0665851-2	1	SPRING, pressure relief valve
25	0667055-8	1	PISTON, pressure relief valve
26	0657959-3	1	SLEEVE, pressure relief valve (Used prior to Converter #229430)
27	0639939-8	1	FILTER, pressure relief valve
28	0675282-8	2	CAP ASSY., relief and overspeed valve (Includes PLUG)
	0927473-9	2	PLUG, hex-socket, 1/16"NPT
29	0035439-9	4	CAPSCREW, 3/8"NC x 1"
30	0661584-3	1	SLEEVE, overspeed valve
31	0661583-5	1	PISTON, overspeed valve
32	0665852-0	1	SPRING, overspeed valve
33	0656704-4	1	WASHER, overspeed valve
34	0668279-3	2	WASHER, carrier retaining (half only)
	0662973-7	4	BOLT, self-locking, 5/16"NC x 3/4"

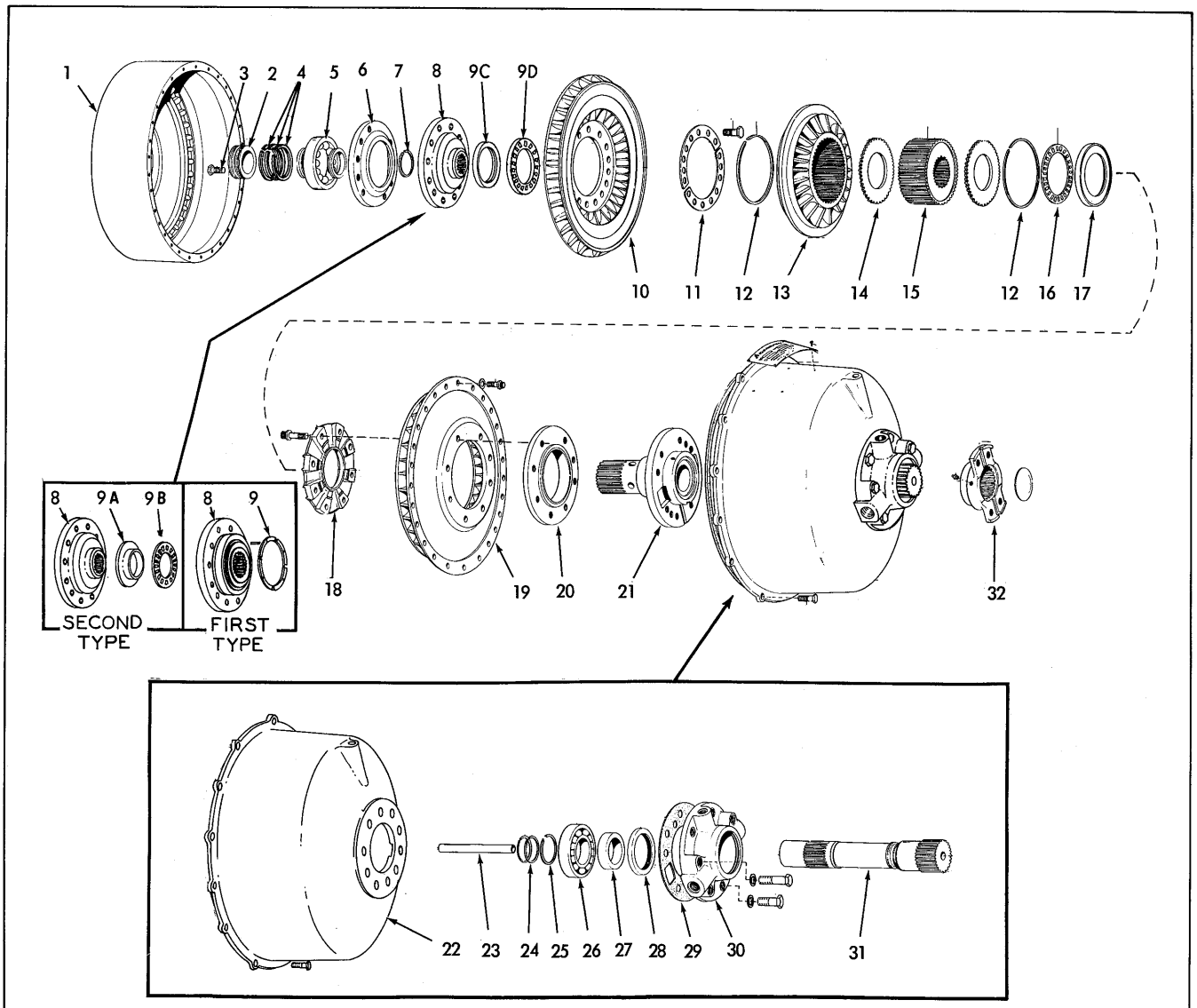

TORQUE CONVERTER SUB-ASSEMBLY T-73072

USAGE: See page 99

ITEM	PART NO.	QTY.	DESCRIPTION
1	0656687-1	1	HOUSING, rotating
2	---------	1	CARRIER, sealing ring (Converters prior to #237510)(Order item 33)
	0668281-9	1	CARRIER, sealing ring (Effective with Converter #237510)
3	0045295-3	4	CAPSCREW, 5/16"NC x 1"
4	0681070-9	3	RING, sealing (1 less used prior to Converter #237510)
5	0186563-3	1	BEARING, ball, drive shaft, front
6	0656695-4	1	CARRIER, front bearing
7	0186531-0	1	RING, snap

(Continued)

TORQUE CONVERTER SUB-ASSEMBLY (Continued)

ITEM	PART NO.	QTY.	DESCRIPTION
8	---------	1	HUB, turbine wheel (Converters prior to #231331)
	---------	1	HUB, turbine wheel (Converters #231331 thru #237509) — Order item 33
	0668282-7	1	HUB, turbine wheel (Effective with Converter#237510)
9	---------	1	WASHER, thrust (Converters prior to #231331)(Order item #33)
	0921717-5	4	PIN, spring, 3/32" x 7/16"
9A	---------	1	RACE, thrust bearing — Converters #231331 thru #237509 Order item 33
9B	---------	1	BEARING, thrust — Converters #231331 thru #237509 Order item 33
9C	0668283-5	1	RACE, thrust bearing — Effective with Converter #237510
9D	0672955-2	1	BEARING, thrust — Effective with Converter #237510
10	0656684-8	1	WHEEL, turbine
	0916310-6	16	CAPSCREW, 1/2"NC x 1"
11	0656693-9	2	WASHER, locking
12	0639572-7	2	RING, snap, guide wheel
13	0656683-0	1	WHEEL, guide
14	---------	2	PLATE, thrust, guide wheel (Converters prior to #237510) (Order item 33)
	0656701-0	2	PLATE, thrust, guide wheel (Effective with Converter #237510)
15	0656685-5	1	ADAPTER, guide wheel
16	0656776-2	1	BEARING, thrust
17	0656691-3	1	RACE, thrust bearing
18	0656689-7	1	HUB, impeller wheel
	0922065-8	8	SCREW, 12-point, 1/2"NC x 1-1/4"
19	0656682-2	1	WHEEL, impeller
	0914670-5	24	CAPSCREW, 5/16"NC x 1-1/4"
	3046938-1	24	WASHER, locking
20	0656686-3	1	CARRIER ASSY., impeller wheel (Includes bushing which is not serviced separately)
21	0656713-5	1	CARRIER, impeller and guide wheels
22	0656725-9	1	HOUSING, stationary
23	0657999-9	1	TUBE, oil
24	3037629-7	2	RING, sealing, drive shaft
25	0628519-1	1	RING, snap, drive shaft
26	0067566-0	1	BEARING, ball, drive shaft, rear
27	0656723-4	1	SPACER, drive shaft bearing
28	3034958-3	1	SEAL, oil
29	0656726-7	1	GASKET, bearing retainer
30	0656727-5	1	RETAINER, rear bearing
	0916315-5	4	CAPSCREW, 1/2"NC x 2-1/4"
	0041917-6	4	CAPSCREW, 1/2"NC x 3-1/4"
	3037944-0	8	WASHER, copper
31	0656724-2	1	SHAFT, drive
32	0629439-1	1	YOKE ASSY., drive shaft (Includes PLUG and FITTING indented below)
	0910011-6	1	PLUG, expansion, 2-1/2" diam.
	0914465-0	1	FITTING, lubricating, straight, 1/8"NPT
33	0676107-6	1	UPDATE KIT, converter (Loaders #101 thru #509) — See PACKAGED PARTS for components.
	0676108-4	1	UPDATE KIT, converter (Loaders #510 thru #659) — See PACKAGED PARTS for components.

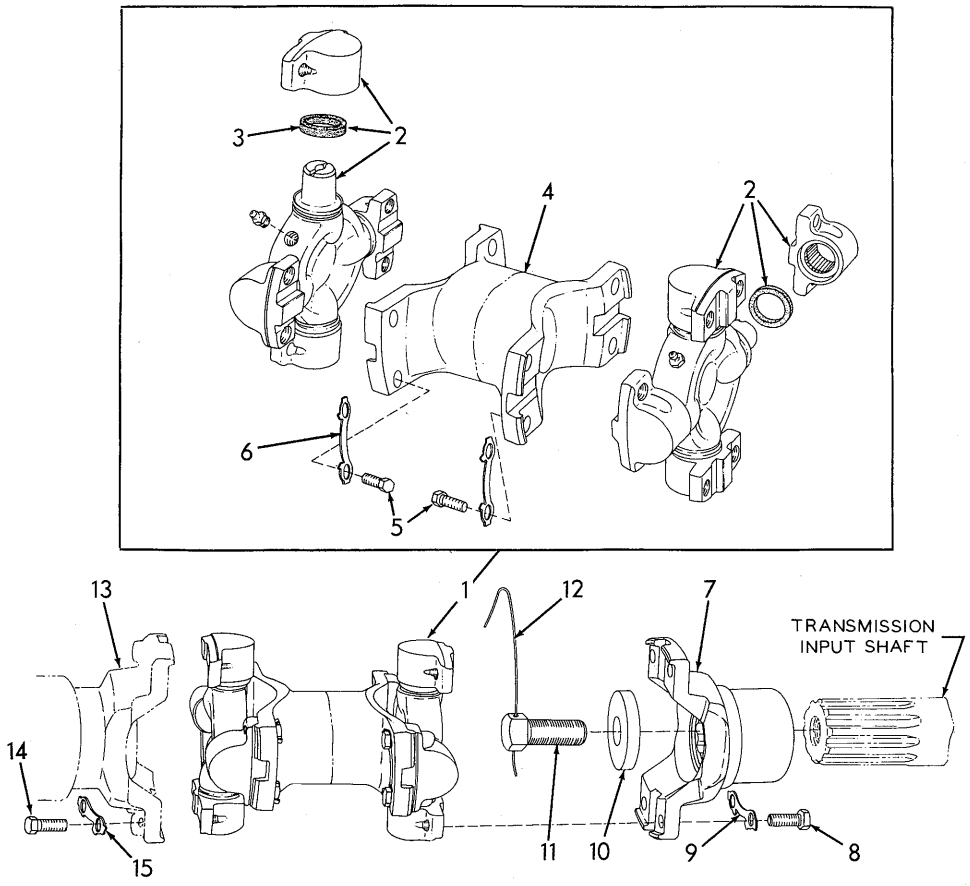

UNIVERSAL JOINT

T-72912

ITEM	PART NO.	QTY.	DESCRIPTION
1	0656063-5	1	JOINT ASSY., universal (Consists of items 2 thru 6)
2	0085918-1	2	SPIDER ASSY., front (Includes four bearing, item 3, and FITTING indented below. Serviced only as a unit)
	0914687-9	2	FITTING, lubricating, straight, 1/4"NF
3	0076461-3	8	WASHER, sealing, spider bearing
4	0656062-7	1	YOKE, center
5	0035167-6	8	CAPSCREW, 3/8"NF x 7/8"
6	0059876-3	4	LOCK, capscrew
7	0623958-6	1	YOKE, rear
8	0035167-6	4	CAPSCREW, 3/8"NF x 7/8"
9	0059876-3	2	LOCK, capscrew
10	0078314-2	1	WASHER, rear yoke retaining
11	0075950-6	1	CAPSCREW, rear yoke retaining
12	0023633-1	1	WIRE, locking, 1/16" x 12"
13	---------	1	YOKE, front (See TORQUE CONVERTER)
14	0035167-6	4	CAPSCREW, 3/8"NF x 7/8"
15	0059876-3	2	LOCK, capscrew

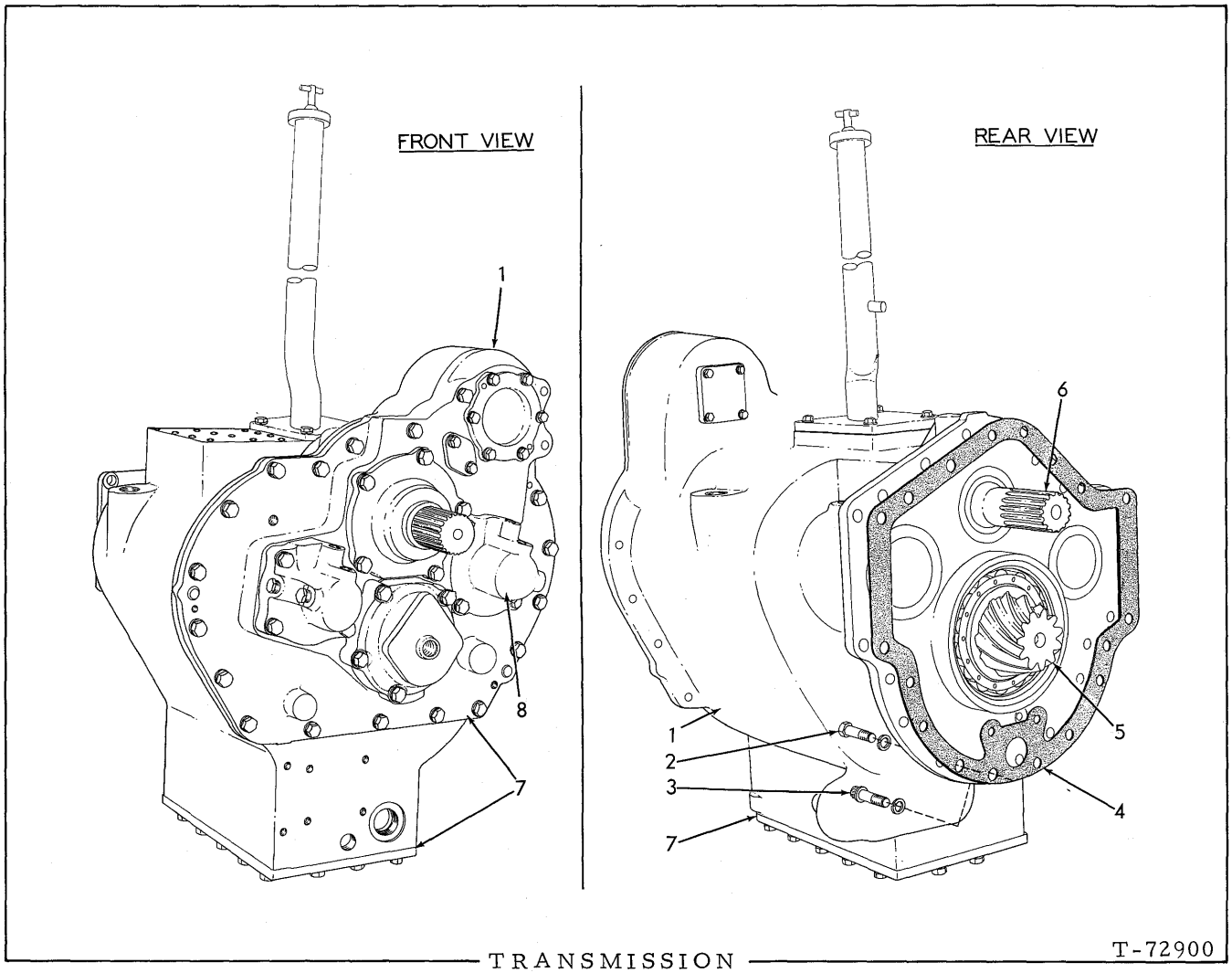

TRANSMISSION

ITEM	PART NO.	QTY.	DESCRIPTION
1	0656429-8	1	TRANSMISSION ASSY. (Includes items 5 thru 8)
2	0922726-5	16	CAPSCREW, hex-hd., 1/2"NF x 1-1/2"
3	0647563-6	2	CAPSCREW, 12-point hd., 1/2"NF x 1-1/2"
	0904208-6	18	LOCKWASHER, 1/2"
4	0654294-8	1	GASKET, case to steering clutch housing
5	---------	-	See TRANSMISSION BEVEL PINION SHAFT
6	---------	-	See TRANSMISSION INPUT SHAFT
7	---------	-	See TRANSMISSION CASE AND COVERS
8	---------	-	See TRANSMISSION CLUTCH SHAFTS

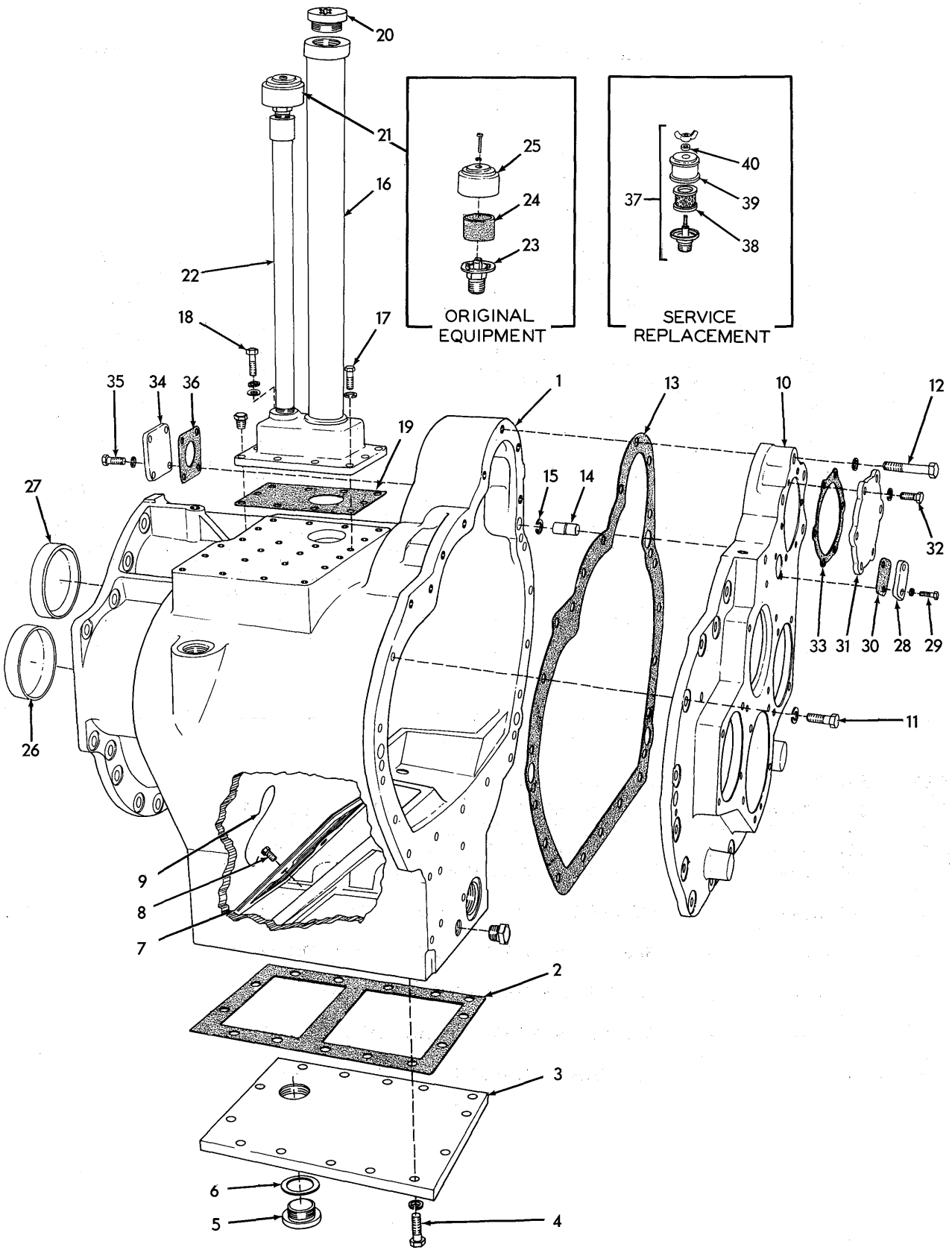
20
21
16
22
18
17
35
34
36
19
27
26
25
24
23
ORIGINAL EQUIPMENT
40
37
39
38
SERVICE REPLACEMENT
1
13
10
12
15
14
32
33
31
30
28
29
11
9
8
7
2
3
6
5
4
T-72911

TRANSMISSION CASE AND COVERS

ITEM	PART NO.	QTY.	DESCRIPTION
1	0654310-2	1	CASE, transmission (Loaders prior to #492)
	0662964-6	1	CASE, transmission (Loaders #492 and up)
	0920525-3	1	PLUG, pipe, hex-hd., 3/4"NPT
	0919840-9	1	PLUG, pipe, hex-hd., 1/4"NPT
2	0642788-4	1	GASKET, bottom cover
3	0642787-6	1	COVER, bottom
4	0915987-2	14	CAPSCREW, 1/2"NC x 1-1/2"
	0904208-6	14	LOCKWASHER, 1/2"
5	0035250-0	1	PLUG, drain
6	0667252-1	1	GASKET, drain plug
7	0632067-5	1	SCREEN, oil
8	0606858-9	2	CAPSCREW, drilled-hd., 3/8"NC x 3/4"
9	0023633-1	1	WIRE, locking, 1/16" x 12"
10	0643799-0	1	COVER, front (Loaders prior to #492)
	0663191-5	1	COVER, front (Loaders #492 and up)
11	0915987-2	14	CAPSCREW, 1/2"NC x 1-1/2" (2 additional used on early units)
12	0915969-0	5	CAPSCREW, 1/2"NC x 3"
	0904208-6	19	LOCKWASHER, 1/2" (2 additional used on early units)
13	0654798-8	1	GASKET, front cover
14	0624695-3	3	PIN, dowel, front cover
15	0623804-2	3	RING, snap, dowel pin
16	0656466-0	1	FILLER, oil
17	0044249-1	9	CAPSCREW, 3/8"NC x 1-1/8"
18	0013058-9	1	CAPSCREW, 3/8"NC x 1-1/4" } Also attaches tube clip
	0911115-4	1	WASHER, plain, SAE std., 3/8" } Also attaches tube clip
	0904206-0	10	LOCKWASHER, 3/8"
19	0627346-0	1	GASKET, oil filler
20	0035250-0	1	PLUG, oil filler
21	---------	1	BREATHER ASSY. (Consists of items 23 thru 25)(Original equipment. Order item #37)
	0901767-4	1	COUPLING, pipe, 3/4"NPT
22	0656506-3	1	PIPE, breather extension
23	3002767-6	1	BASE, breather
24	3002769-2	1	ELEMENT, breather
25	3002768-4	1	CAP, breather
	0914172-2	1	SCREW, machine, #10-24NF x 1-1/4"
	0904203-7	1	LOCKWASHER, #10

(Continued)

TRANSMISSION CASE AND COVERS (Continued)

ITEM	PART NO.	QTY.	DESCRIPTION
26	0632793-6	1	PLUG, cup (4" diam.)(Loaders prior to #492)
	0632794-4	1	PLUG, cup (4-3/4" diam.)(Loaders #492 and up)
27	0632794-4	1	PLUG, cup (4-3/4" diam.)
28	0631885-1	1	COVER, hole (front, small)
29	0035439-9	2	CAPSCREW, 3/8"NC x 1"
	0904206-0	2	LOCKWASHER, 3/8"
30	0643810-5	1	GASKET, cover, small hole
31	0643081-3	1	COVER, hole (front, large)
32	0035439-9	6	CAPSCREW, 3/8"NC x 1"
	0904206-0	6	LOCKWASHER, 3/8"
33	0643080-5	1	GASKET, cover, large hole
34	0630584-1	1	COVER, hole (rear)
35	0914392-6	4	CAPSCREW, 5/16"NC x 1"
	0904205-2	4	LOCKWASHER, 5/16"
36	0624706-8	1	GASKET, rear cover
37	0679375-6	1	BREATHER ASSY. (Includes item 38 thru 40)(Service replacement)
	0901767-4	1	COUPLING, pipe, 3/4"NPT
38	0679115-6	1	ELEMENT
39	0679118-0	1	COVER
	0918470-6	1	NUT, wing
40	0678591-9	1	GASKET

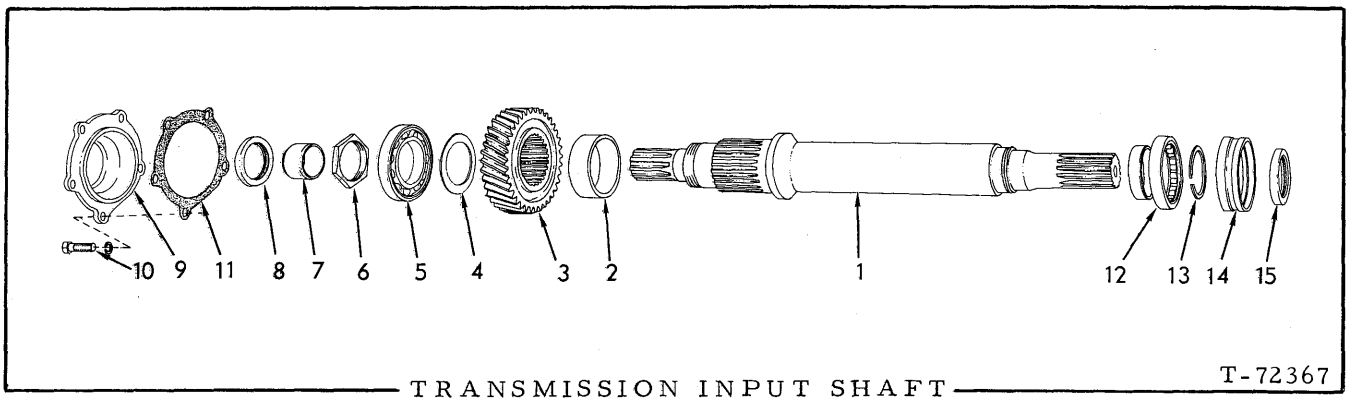

T-72367

TRANSMISSION INPUT SHAFT

* Loaders prior to serial No. 492
** Loaders serial No. 492 and up

ITEM	PART NO.	QTY. *	QTY. **	DESCRIPTION
1	623975	1	1	SHAFT
2	623976	1	1	SPACER, drive gear (wide)
3	623977	1	1	GEAR, drive (36 teeth)
4	623978	1	-	SPACER, drive gear (1/2" thick)
	662881	-	1	SPACER, drive gear (1/8" thick)
5	623979	1	-	BEARING, ball (3-1/2"O. D.)
	662954	-	1	BEARING, ball (3-15/16"O. D.)
6	641633	1	1	NUT, bearing retaining
7	623984	1	1	SLEEVE, wear, oil seal
8	628941	1	1	SEAL, oil, front end
9	623981	1	-	RETAINER, front oil seal
	662938	-	1	RETAINER, front oil seal
10	915987	5	5	CAPSCREW, 1/2"NC x 1-1/2"
	904208	5	5	LOCKWASHER, 1/2"
11	629287	1	-	GASKET, oil seal retainer
	662882	-	1	GASKET, oil seal retainer
12	623974	1	1	BEARING, roller
13	624783	1	1	RING, snap, shaft
14	638334	1	1	RETAINER, rear oil seal
15	638336	1	1	SEAL, oil, rear end

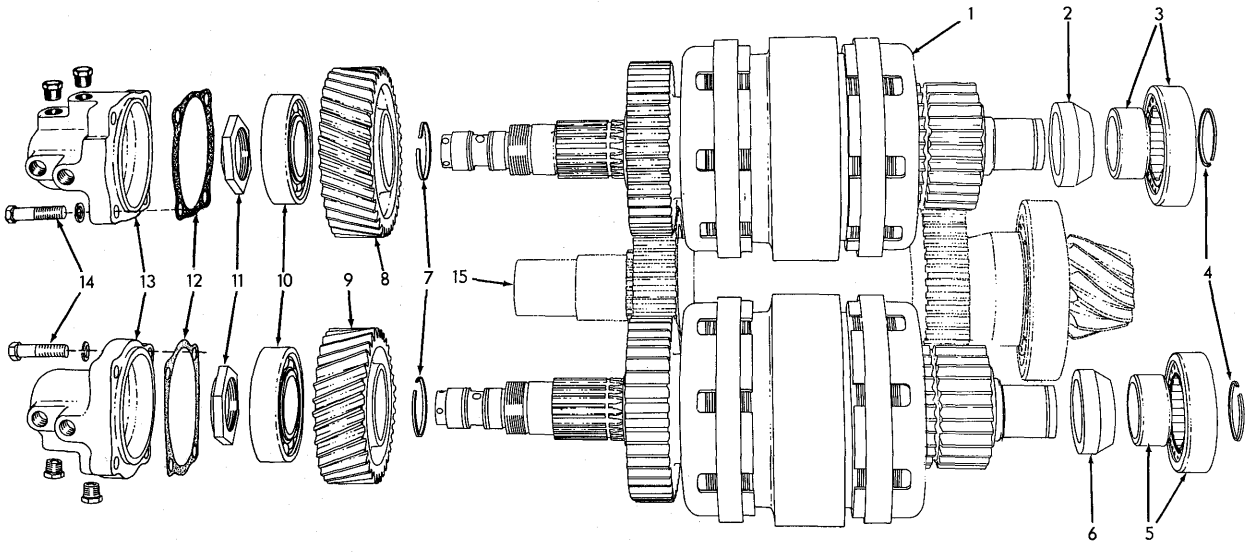

TRANSMISSION CLUTCH SHAFTS T-72361

ITEM	PART NO.	QTY.	DESCRIPTION
1	------	2	CLUTCH AND SHAFT ASSEMBLY (See page 115 for parts)
2	656432	1	SPACER, rear bearing, right clutch (1-1/8" long)(Loaders prior to # 492)
	656433	1	SPACER, rear bearing, right clutch (13/16" long)(Loaders # 492 and up)
3	091375	1	BEARING, roller, right clutch, rear (3-15/16"O. D.)(Loaders prior to # 492)
	623963	1	BEARING, roller, right clutch, rear (4-3/4"O. D.)(Loaders # 492 and up)
4	050292	2	RING, snap, clutch bearings, rear
5	623963	1	BEARING, roller, left clutch, rear
6	656433	1	SPACER, rear bearing, left clutch
7	623969	2	RING, snap, clutch shaft
8	623992	1	GEAR, driving, right clutch (38 teeth)
9	623965	1	GEAR, driving, left clutch(33 teeth)
10	647972	2	BEARING, ball, front end
11	639761	2	NUT, clutch shaft
12	629223	2	GASKET, oil collector
13	623967	2	COLLECTOR, oil
	920333	4	PLUG, pipe, hex-hd., 3/8"NPT
14	916313	8	CAPSCREW, 1/2"NC x 1-3/4"
	904208	8	LOCKWASHER, 1/2"
15	------	-	See TRANSMISSION BEVEL PINION SHAFT

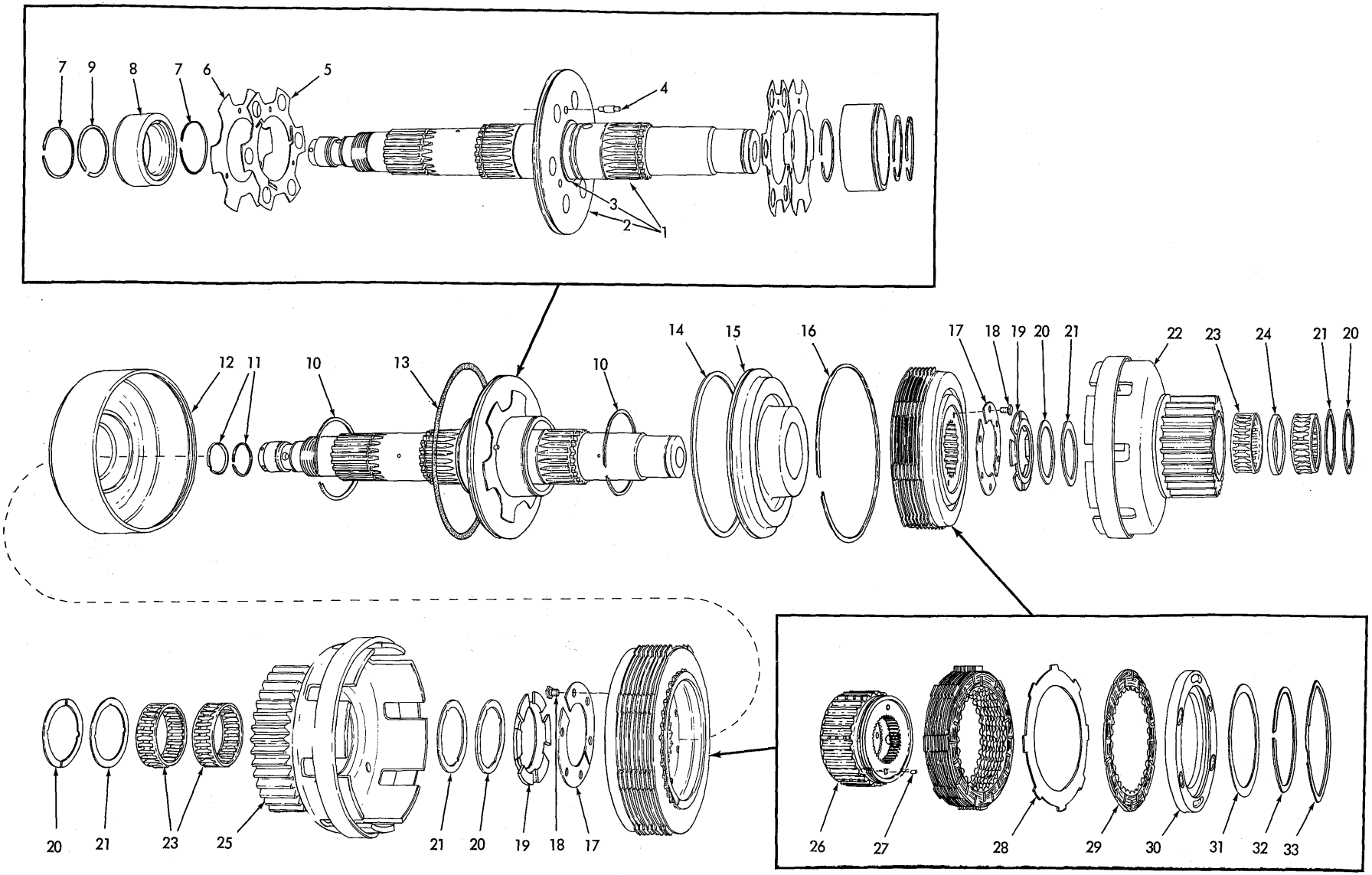

CLUTCH AND SHAFT ASSEMBLY

T-72362

CLUTCH AND SHAFT ASSEMBLY

USAGE: See page 113

ITEM	PART NO.	QTY.	DESCRIPTION
			NOTE: All quantities indicated are for one (1) assembly only
-	0675511-0	2	CLUTCH AND SHAFT ASSY. (Includes items 1 thru 33)(Loaders prior to unit #1050)
-	0675678-7	2	CLUTCH AND SHAFT ASSY. (Includes items 1 thru 33)(Loaders unit #1050 and up)
1	0651648-8	1	SHAFT ASSY. (Includes items 2 and 3)
2	0651644-7	1	PLATE
3	0629860-8	2	RING, snap, plate retaining
4	0651639-7	3	PIN, valve actuating (step type)
5	0651642-1	2	DISC, backing
6	0629853-3	2	DISC, valve
7	0647998-4	4	☐RING, shaft sealing
8	0629859-0	2	PISTON, accelerating
9	0629860-8	2	RING, snap, piston retaining
10	0629861-6	2	☐RING, sealing, accelerating piston
11	0643958-2	2	RING, sealing, shaft (small)
12	0629858-2	1	HOUSING, piston
13	0629856-6	1	☐O-RING, shaft separator plate
14	0629855-8	1	☐RING, sealing, actuating piston
15	0629852-5	1	PISTON, clutch actuating
16	0629854-1	1	RING. snap, actuating piston housing
17	0644797-3	4	RETAINER, clutch hub
18	0624251-5	4	BOLT (8 additional used on early units)
19	0669152-1	2	SPACER, clutch hub
20	0629873-1	4	WASHER, thrust
21	0629872-3	4	SPACER, thrust washer
22	0656464-5	1	GEAR AND DRUM ASSY., low speed (25 teeth)
23	3037615-6	4	BEARING, roller, clutch gear
24	0658627-5	1	SPACER, bearing
25	0656462-9	1	GEAR AND DRUM ASSY., high speed (37 teeth)

(Continued)

CLUTCH AND SHAFT ASSEMBLY (Continued)

ITEM	PART NO.	QTY.	DESCRIPTION
26	0629862-4	2	HUB ASSY., clutch (Serviced only as a unit)(Loaders prior to #507, excluding 460, 493, 496, 502. Order 0669576-1)
	0669576-1	2	HUB ASSY., clutch (Includes items 27, 30 thru 33)(Loaders #507 thru unit #1049, including 460, 493, 496, 502)
	0675674-6	2	HUB, clutch (Loader unit #1050 and up)
27	0624249-9	6	PIN, locking, back plate
28	0629864-0	16	PLATE, friction (steel)
29	0675510-2	18	PLATE, friction (bronze)
30	0629865-7	2	PLATE, back, clutch hub (Loaders prior to #507, excluding 460, 493, 496, 502. Order item 26)
	---------	2	PLATE, back, clutch hub (Loaders #507 thru unit #1049, including 460, 493, 496, 502. Order item 26)
	0675675-3	2	PLATE, back, clutch hub (Loader unit #1050 and up)
31	0669614-0	2	RETAINER, locking pin (Loaders prior to unit #1050)
32	0629867-3	2	RING, snap, clutch hub (Loaders prior to unit #1050)
	0927509-0	2	RING, snap, clutch hub (Loaders unit #1050 and up)
33	0629868-1	2	RING, snap, back plate (Loaders prior to unit #1050)
	0927508-2	2	RING, snap, back plate (Loaders unit #1050 and up)
34	0648027-1	-	RING KIT (Includes full set for one (1) shaft; items 7, 10, 13 and 14)

☐ Components of item 34

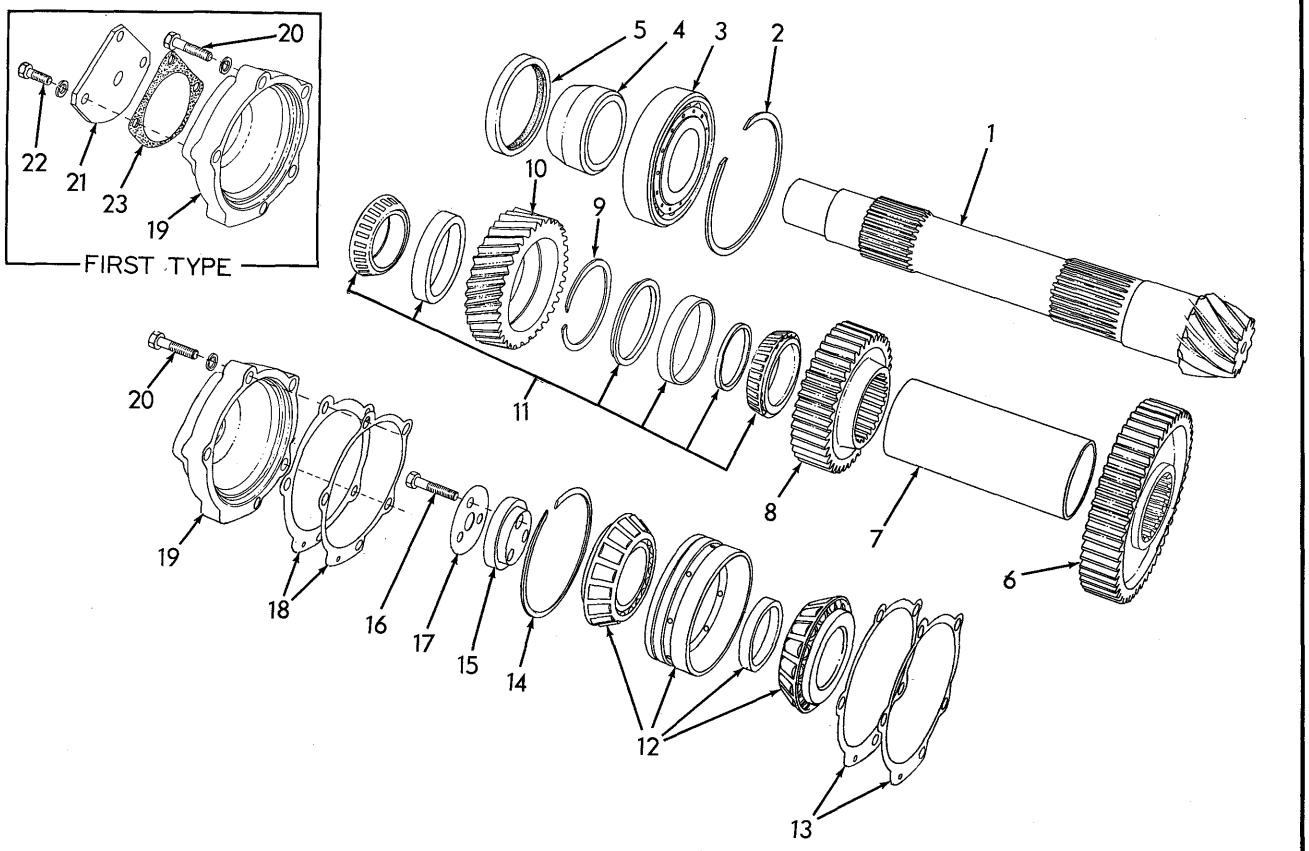

TRANSMISSION BEVEL PINION SHAFT

ITEM	PART NO.	QTY.	DESCRIPTION
1	659391	1	PINION, bevel (9 teeth)
2	638335	1	RING, snap, bearing retaining
3	623991	1	BEARING, roller, rear end
4	623947	1	SLEEVE, spacing, low speed gear
5	623971	1	SEAL, oil
6	656436	1	GEAR, low speed (55 teeth)
7	623945	1	SLEEVE, gear spacing
8	656434	1	GEAR, high speed (43 teeth)
9	634670	1	RING, snap, idling gear
10	623968	1	GEAR, idling (36 teeth)
11	650724	1	BEARING ASSEMBLY, roller, idling gear (Consists of 2 roller assemblies, 2 cups and 2 spacers. Serviced only as a unit)

(Continued)

TRANSMISSION BEVEL PINION SHAFT (Continued)

ITEM	PART NO.	QTY.	DESCRIPTION	
12	082343	1	BEARING, roller, front end (Consists of 2 roller assemblies, 1 cup and 1 spacer. Serviced only as a unit)	
13	623953	3	SHIM, pinion adjustment (.005" thick)	Use as required
	623954	7	SHIM, pinion adjustment (.007" thick)	
	623955	10	SHIM, pinion adjustment (.010" thick)	
14	048705	1	RING, snap, front bearing	
15	643028	1	WASHER, end	
16	035073	3	CAPSCREW, 1/2"NF x 1-3/4"	
17	632166	1	PLATE, capscrew locking	
18	623956	4	SHIM, bearing retainer (.005" thick	Use as req'd
	623957	3	SHIM, bearing retainer (.007" thick)	
19	623959	1	RETAINER, front bearing (Loaders prior to #1001)	
	623959	1	RETAINER, front bearing (Loaders prior to #1001)	
	667386	1	RETAINER, front bearing (Loader units #01001 and up)	
20	035712	5	CAPSCREW, 1/2"NC x 2-1/4"	
	904208	5	LOCKWASHER, 1/2"	
21	660767	1	COVER, front bearing retainer	Loaders prior to #1001)
22	035439	3	CAPSCREW, 3/8"NC x 1"	
	904206	3	LOCKWASHER, 3/8"	
23	632065	1	GASKET, cover	

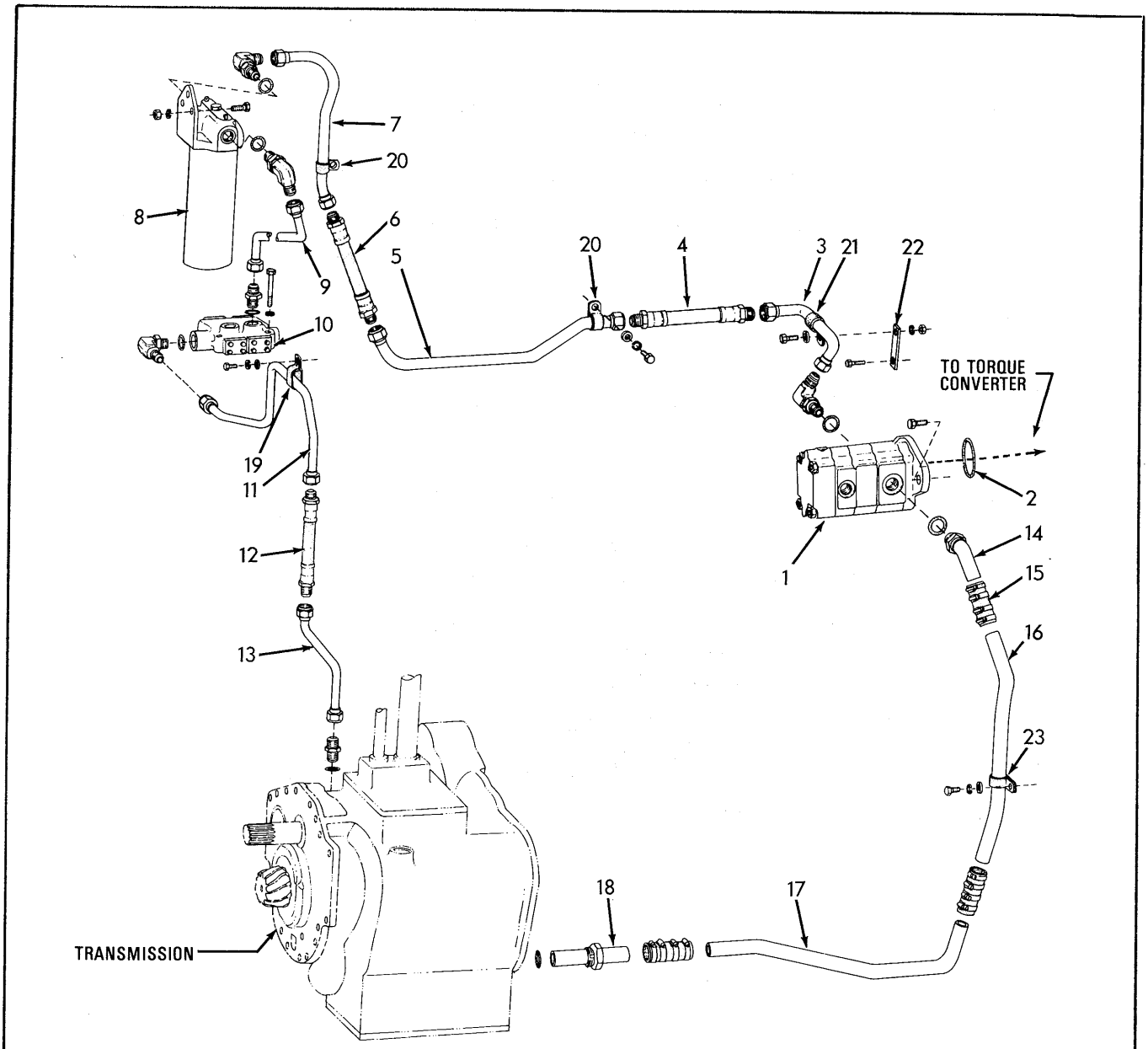

TRANSMISSION OIL PUMP AND FILTER

ITEM	PART NO.	QTY.	DESCRIPTION
1	------	1	PUMP ASSEMBLY, oil (See page 123 for parts)
	920582	2	CAPSCREW, 1/2"NC x 1-1/4"
2	923587	1	O-RING, pump mounting
3	656473	1	TUBE ASSEMBLY, pump to filter, front (Includes nuts)
	923713	1	ELBOW, adjustable, 90°, flare type, 1" tube, 1-5/8" straight thd. (Includes washer, nut and O-RING 923879)
4	662982	1	HOSE, pump to filter line, front
5	656472	1	TUBE ASSEMBLY, pump to filter, center (Includes nuts)
6	656246	1	HOSE, pump to filter line, rear (See HOSE PARTS)

(Continued)

ITEM	PART NO.	QTY.	DESCRIPTION
7	0656470-2	1	TUBE ASSY., pump to filter, rear (Includes nuts)
	0921227-5	1	ELBOW, adjustable, 90°, flare type, 1" tube, 1-5/16"NF (Includes washer, nut and O-RING 0921214-3)
8	0650397-3	1	FILTER ASSY., oil (See page 125 for parts)(Used prior to loader #305. Order FILTER ASSY. 0659519-3)
	0659519-3	1	FILTER ASSY., oil (See page 125 for parts)(Effective with loader #305)
	0035061-1	3	CAPSCREW, 1/2"NC x 1-1/4"
	0904208-6	3	LOCKWASHER, 1/2"
	0911028-9	3	NUT, 1/2"NC
9	0656469-4	1	TUBE ASSY., filter to valve (Includes nuts)
	0921227-5	1	ELBOW, adjustable, 90°, flare type, 1" tube, 1-5/16"NF (Includes washer, nut and O-RING 0921214-3)
	0921228-3	1	CONNECTOR, flare type, 1" tube, 1-5/16"NF (Includes O-RING 0921214-3)
10	---------	1	VALVE ASSY., pressure relief (See page 124 for parts)
	---------	1	VALVE ASSY., pressure relief (See page 124 for parts)
	0922848-7	3	CAPSCREW, 3/8"NC x 3-1/4"
	0910287-2	3	LOCKWASHER, 3/8"
11	0656471-0	1	TUBE ASSY., valve to transmission, upper (Includes nuts)
	0921203-6	1	ELBOW, adjustable, 90°, flare type, 3/4" tube, 1-1/16"NF (Includes washer, nut and O-RING 0921206-9)
12	0656237-5	1	HOSE, valve to transmission line (See HOSE PARTS)
13	0656475-1	1	TUBE ASSY., valve to transmission, lower (Includes nuts)
	0922997-2	1	CONNECTOR, flare type, 3/4" tube, 1-5/16"NF (Includes O-RING 0921214-3)
14	0662983-6	1	ELBOW, suction line, upper (Includes O-RING 0921887-6)
	0921887-6	1	O-RING, elbow sealing
15	0631788-7	3	HOSE, suction line
	0921912-2	12	CLAMP, hose, 1-1/16" to 2" diam.
16	0654307-8	1	TUBE, suction line, upper
17	0654306-0	1	TUBE, suction line, lower
18	0641849-5	1	ADAPTER, suction line, lower (Includes O-RING 0921887-6)
	0921887-6	1	O-RING, adapter sealing
19	0643941-8	1	CLIP, tube supporting (For two 3/4" diam. tubes)
	0922262-1	1	CAPSCREW, 3/8"NC x 7/8"
	0910287-2	1	LOCKWASHER, 3/8"
	0911115-4	1	WASHER, plain, SAE std., 3/8"
20	0638780-7	2	CLIP, tube supporting (1" diam.)
	0922262-1	1	CAPSCREW, 3/8"NC x 7/8"
	0910287-2	1	LOCKWASHER, 3/8"
	0911115-4	1	WASHER, plain, SAE std., 3/8"

(Continued)

TRANSMISSION OIL PUMP AND FILTER (Continued)

ITEM	PART NO.	QTY.	DESCRIPTION
21	0095869-4	1	CLIP, tube supporting (1-1/4" diam.)
	0035221-1	1	CAPSCREW, 1/2"NC x 1"
	0910244-3	1	WASHER, plain, SAE std., 1/2"
	0904208-6	1	LOCKWASHER, 1/2"
	0911028-9	1	NUT, 1/2"NC
22	0662995-0	1	STRAP, tube supporting
	0070960-0	1	CAPSCREW, 3/8"NC x 1-1/2"
	0904206-0	1	LOCKWASHER, 3/8"
	0044973-6	1	WASHER, plain
23	0645638-8	1	CLIP, tube supporting (1-9/16" diam.)
	0921175-6	1	CAPSCREW, 1/2"NC x 1"
	0912441-3	1	LOCKWASHER, 1/2"
	0910244-3	1	WASHER, plain, SAE std., 1/2"

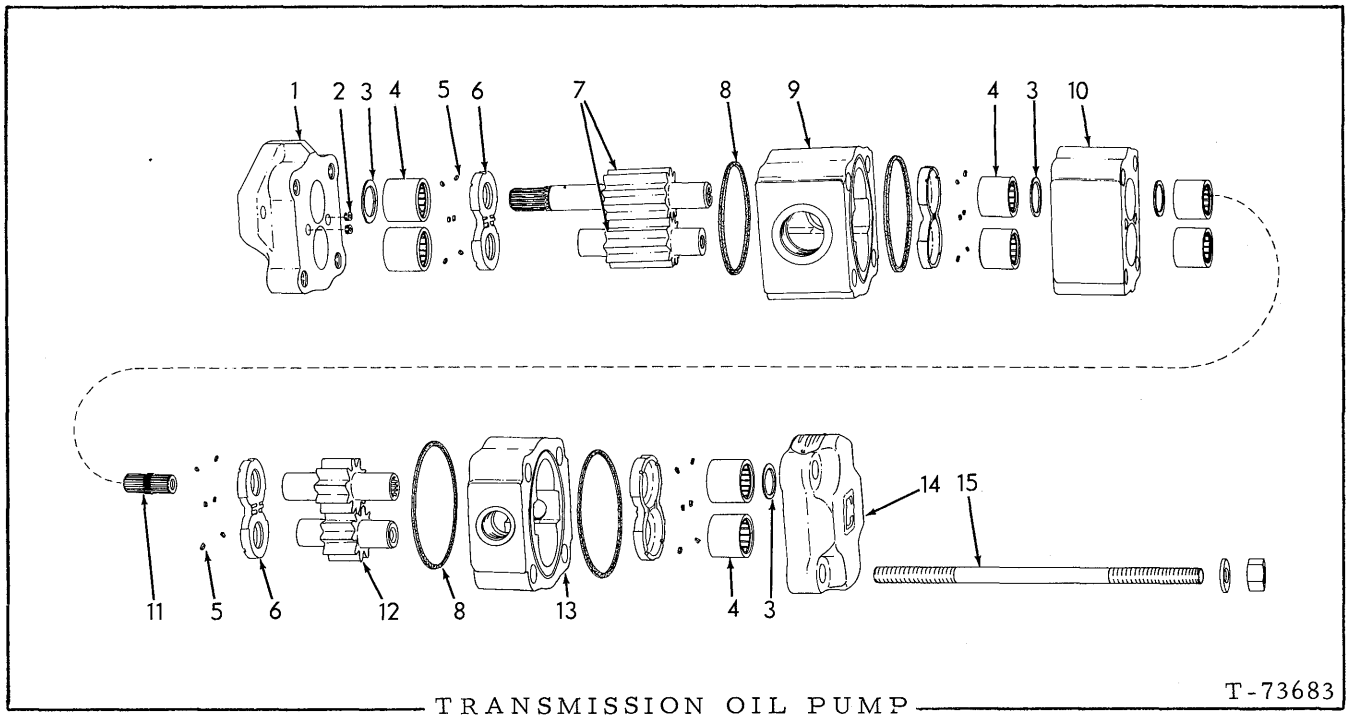

TRANSMISSION OIL PUMP

USAGE: See page 120

ITEM	PART NO.	QTY.	DESCRIPTION
-	0662814-3	1	PUMP ASSY. (Includes items 1 thru 15)
1	0664027-0	1	COVER, drive end
2	0194324-0	2	SETSCREW, end cover
3	3053766-6	1	KIT, seal (Consists of 4 seal)
4	3045977-0	8	BEARING, roller
5	3046521-5	24	SEAL, thrust plate
6	3045963-0	4	PLATE, thrust
7	0664025-4	1	GEAR SET, front pump (Consists of 2 matched gears. Includes shafts)
8	0926813-7	4	SEAL, gear housing
9	0664026-2	1	HOUSING, front pump
10	0664024-7	1	CARRIER, center bearings
11	0664020-5	1	SHAFT, coupling
12	0664021-3	1	GEAR SET, rear pump (Consists of 2 matched gears. Includes shafts)
13	0664023-9	1	HOUSING, rear pump
14	0194321-6	1	COVER, rear end
15	0664019-7	4	STUD
	0668231-4	4	NUT, 5/8"NC
	0659494-9	4	WASHER, plain

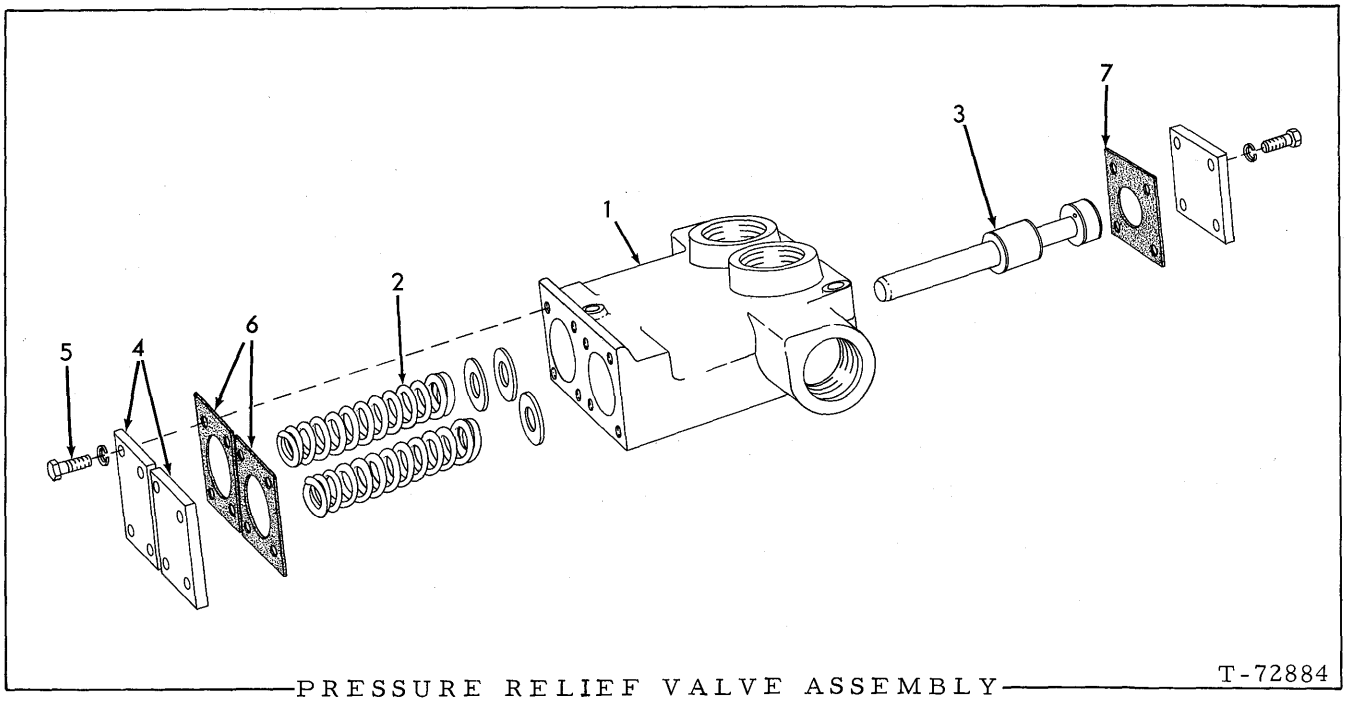

PRESSURE RELIEF VALVE ASSEMBLY T-72884

USAGE: See page 120

ITEM	PART NO.	QTY.	DESCRIPTION
–	0656468-6	1	VALVE ASSY. (Includes items 1 thru 7)(Loaders prior to unit #1001)
–	0676215-7	1	VALVE ASSY. (Includes items 1 thru 7)(Loaders unit #1001 and up)
1	0656467-8	1	HOUSING, valve (Loaders prior to unit #1001)
1	0676214-0	1	HOUSING, valve (Loader unit #1001 and up)
2	0656808-3	2	SPRING, spool
	0910819-2	8	WASHER, plain (Use as required)
3	0647000-9	2	SPOOL, valve
4	0629408-6	4	COVER, valve
5	0045312-6	16	CAPSCREW, 5/16"NC x 3/4"
	0904205-2	16	LOCKWASHER, 5/16"
6	0629409-4	2	GASKET, spring cover
7	0629414-4	2	GASKET, spool cover

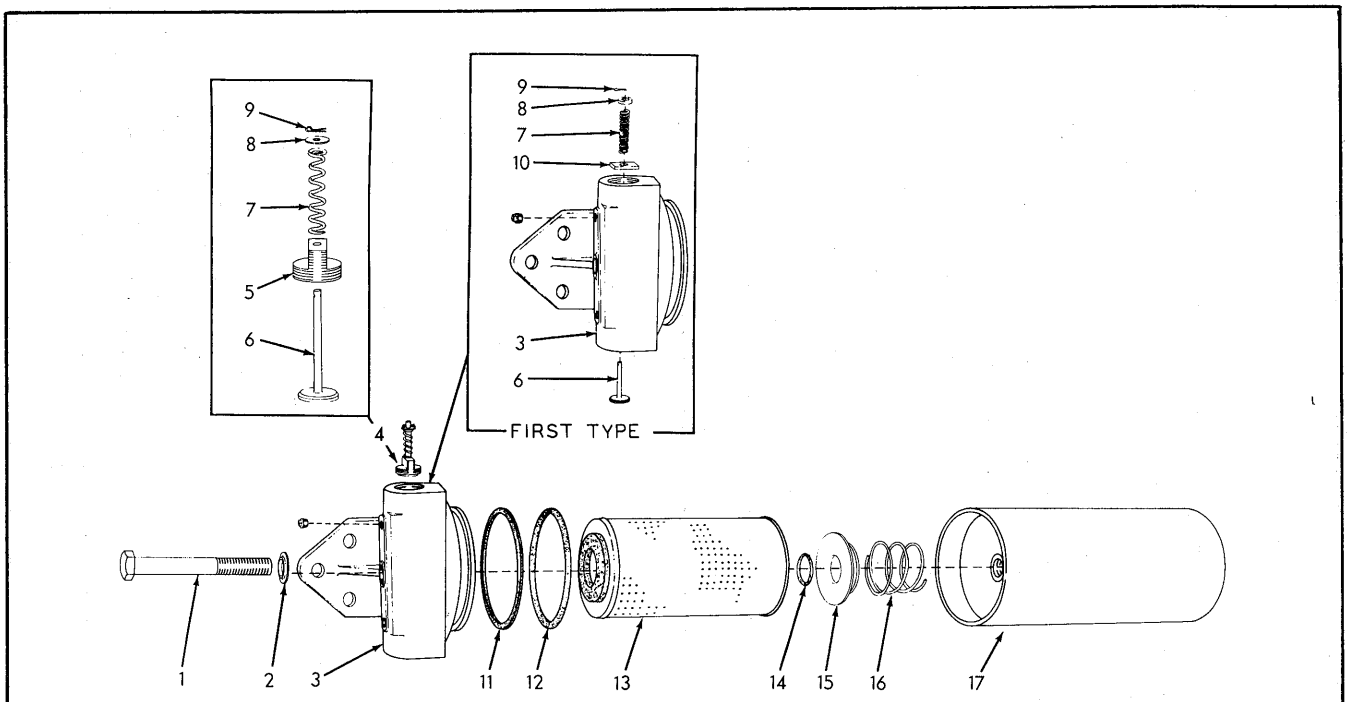

TRANSMISSION OIL FILTER PARTS

* 650397 FILTER ASSY. (First type)
** 659519 FILTER ASSY. (Second type)

See page 120

ITEM	PART NO.	QTY. *	QTY. **	DESCRIPTION
1	923438	1	1	CAPSCREW, tank retaining (3/4" NF x 5-1/2")
2	641029	1	1	WASHER, tank retaining capscrew
3	650427	1	-	HEAD ASSEMBLY (Includes items 6 thru 10 and PLUGS indented below)(Order HEAD ASSY. 659514 and item 4)
	659514	-	1	HEAD
	901652	2	2	PLUG, pipe, 1/4" NPT
4	661534	-	1	VALVE ASSEMBLY, by-pass (Consists of items 5 thru 9)
5	------	-	1	HOUSING, by-pass valve (Not serviced separately)
6	650853	1	-	VALVE, by-pass
	------	-	1	VALVE, by-pass (Not serviced separately)
7	650430	1	-	SPRING, by-pass valve
	661268	-	1	SPRING, by-pass valve
8	632060	1	1	WASHER, by-pass valve spring
9	900970	1	1	PIN, cotter, 1/16" x 1/2"
10	650431	1	-	SPANNER, by-pass valve spring
11	646532	1	1	RING, back-up
12	923836	1	1	O-RING, filter head
13	640780	1	1	ELEMENT KIT (Includes items 2, 11 and 12)
14	923649	1	1	O-RING, element seating plate
15	641031	1	1	PLATE, element seating
16	641027	1	1	SPRING, element seating plate
17	650428	1	1	TANK

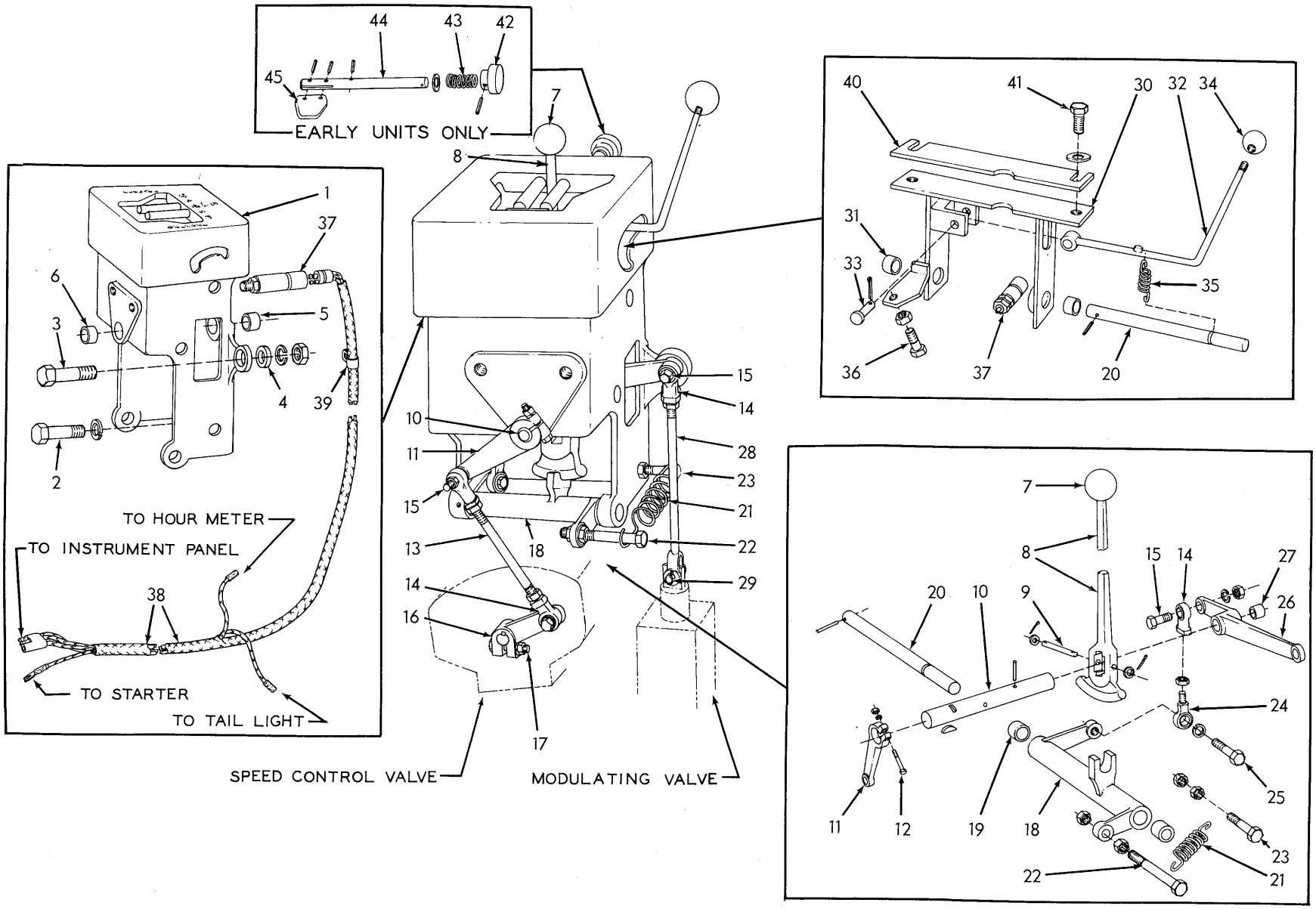

SPEED CONTROL LINKAGE

T-72883

SPEED CONTROL LINKAGE

ITEM	PART NO.	QTY.	DESCRIPTION
1	0655777-1	1	GUIDE ASSY., control (Includes items 5 and 6)
2	0035061-1	2	CAPSCREW, 1/2"NC x 1-1/4"
3	0035068-6	1	CAPSCREW, 1/2"NF x 2-1/4"
4	0064531-7	1	WASHER, plain
	0904208-6	3	LOCKWASHER, 1/2"
	0911043-8	1	NUT, 1/2"NF
5	0639785-5	1	BUSHING, control guide, front
6	0628157-0	1	BUSHING, control guide, rear
7	0629709-7	1	KNOB, speed shift lever
8	0639766-5	1	LEVER, speed shift
9	0656155-9	1	PIN, lever pivot
	0911115-4	2	WASHER, plain, SAE std., 3/8"
	0900806-1	2	PIN, cotter, 1/8" x 1"
10	0656159-1	1	SHAFT, speed shift lever
	0915989-8	1	PIN, spring, 3/16" x 1-3/8"
11	0639775-6	1	LEVER, control valve, upper
	0905123-6	1	KEY, #9 woodruff, 3/16" x 3/4"
12	0046419-8	1	CAPSCREW, 3/8"NF x 2"
	0904206-0	1	LOCKWASHER, 3/8"
	0911041-2	1	NUT, 3/8"NF
13	0639778-0	1	ROD, control valve
	0911048-7	2	NUT, 3/8"NF
14	0617932-9	4	END, rod (female)
15	0036039-6	4	CAPSCREW, 3/8"NF x 1-3/8"
	0904206-0	4	LOCKWASHER, 3/8"
	0911041-2	4	NUT, 3/8"NF
16	0639753-3	1	LEVER, control valve, lower
17	0203188-8	1	CAPSCREW, 3/8"NF x 1-1/2"
	0904206-0	1	LOCKWASHER, 3/8"
	0911041-2	1	NUT, 3/8"NF
18	0644064-8	1	BELLCRANK ASSY., speed shift lever (Includes item 19)
19	0637286-6	2	BUSHING, bellcrank
20	0639790-5	2	SHAFT, pivot
	0919761-7	2	PIN, spring, 1/8" x 1-1/4"
21	0640637-5	1	SPRING, bellcrank
22	0099575-3	1	CAPSCREW, bellcrank spring (3/8"NF x 2-1/4")
	0911048-7	2	NUT, jam, 3/8"NF
23	0012992-4	1	CAPSCREW, bellcrank spring (3/8"NF x 1-1/4")
	0911048-7	2	NUT, jam, 3/8"NF
24	0639916-6	1	END, rod (male)
	0911048-7	1	NUT, jam, 3/8"NF
25	0012992-4	1	CAPSCREW, 3/8"NF x 1-1/4"
	0904206-0	1	LOCKWASHER, 3/8"

(Continued)

SPEED CONTROL LINKAGE (Continued)

ITEM	PART NO.	QTY.	DESCRIPTION	
26	639784	1	BELLCRANK ASSEMBLY, modulating valve rod (Includes item 27)	
27	628157	1	BUSHING, bellcrank	
28	655662	1	ROD, modulating valve	
	911048	1	NUT, jam, 3/8"NF	
29	078810	1	PIN, yoke, 3/8" diam.	
	900801	1	PIN, cotter, 3/32" x 3/4"	
30	644065	1	BRACKET ASSEMBLY, neutral lock (Includes item 31)	
31	637286	2	BUSHING, neutral lock bracket	
32	639839	1	LEVER, neutral lock	
33	078810	1	PIN, yoke, 3/8" diam.	
	900801	1	PIN, cotter, 3/32" x 3/4"	
34	632038	1	KNOB, neutral lock lever	
35	641008	1	SPRING, neutral lock lever	
36	036034	1	CAPSCREW, neutral lock bracket (3/8"NF x 1")	
	911048	1	NUT, jam, 3/8"NF	
37	631844	1	SWITCH, safety (Includes mounting nuts)	
38	656508	1	HARNESS, wiring, safety switch	
39	640676	3	CLIP, safety switch wiring harness (5/16" diam., 13/32" bolt-hole)	
	035244	1	CAPSCREW, 3/8"NC x 3/4"	
	904206	1	LOCKWASHER, 3/8"	
	911115	1	WASHER, plain, SAE std., 3/8"	
40	641979	1	BAR, adjustment, neutral lock bracket	
41	036032	2	CAPSCREW, 3/8"NF x 3/4"	
	911115	2	WASHER, plain, SAE std., 3/8"	
42	655666	1	KNOB, PTO lockout rod	Used prior to loader #367 only
	918111	1	PIN, spring, 1/8" x 1"	
43	653701	1	SPRING, PTO lockout rod	
44	655779	1	ROD, PTO lockout	
	916168	1	PIN, spring, 1/8" x 3/4"	
	910244	1	WASHER, plain, SAE std., 1/2"	
45	655663	1	PLATE, PTO lockout	
	918547	2	PIN, spring, 1/8" x 1/2"	

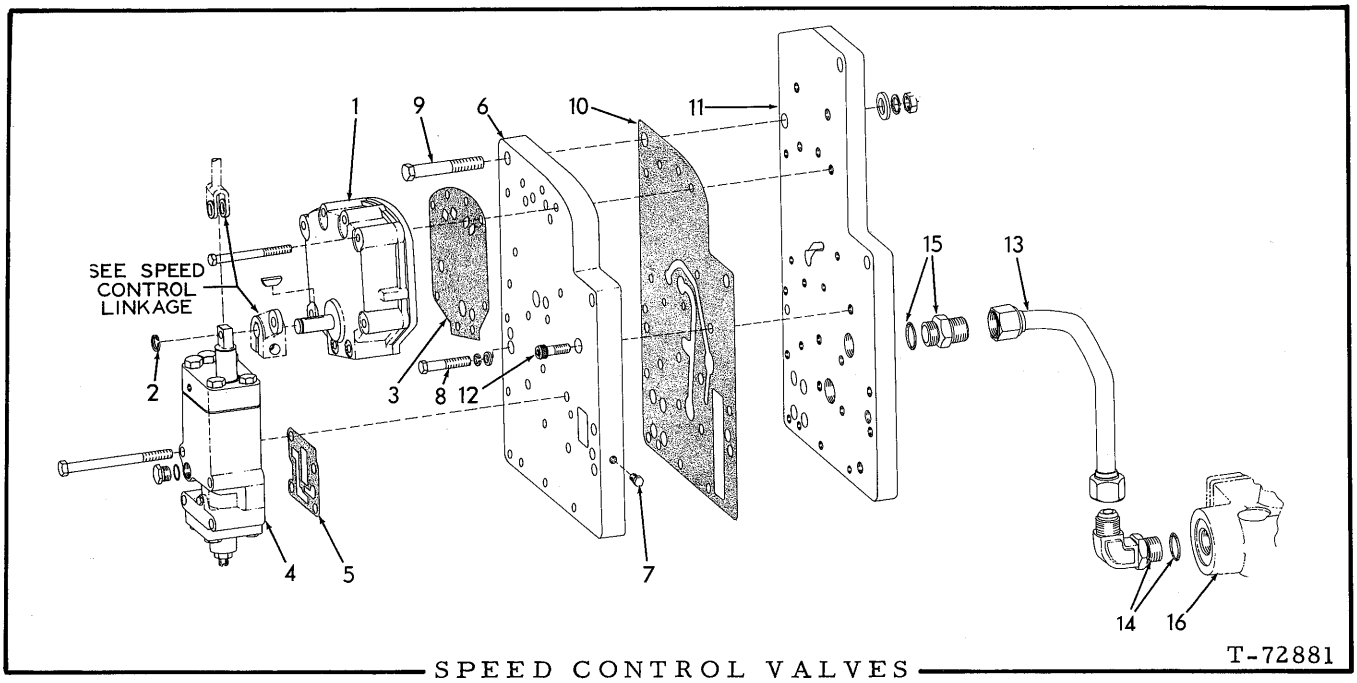

SPEED CONTROL VALVES

ITEM	PART NO.	QTY.	DESCRIPTION
1	------	1	VALVE ASSEMBLY, speed control (See page 130 for parts)
	905123	1	KEY, #9 woodruff, 3/16" x 3/4"
	917605	8	CAPSCREW, 5/16"NC x 3-1/4"
2	639946	1	RING, snap, speed control valve
3	639882	1	GASKET, speed control valve
4	658000	1	VALVE ASSEMBLY, clutch modulating (See page 131 for parts)
	921573	1	PLUG, 3/4" straight thread (Includes O-RING 921349)
	918778	4	CAPSCREW, 3/8"NC x 4-3/4"
5	658008	1	GASKET, modulating valve
6	656427	1	PLATE, manifold
7	651036	1	PLUG, pipe, hex-hd., 1/4"NPT
8	053616	9	CAPSCREW, 3/8"NC x 1-3/4"
	911115	9	WASHER, plain, SAE std., 3/8"
9	035278	3	CAPSCREW, 1/2"NF x 2-3/4"
	064531	3	WASHER, plain
	904208	3	LOCKWASHER, 1/2"
	911043	3	NUT, 1/2"NF
10	656422	1	GASKET, manifold plate
11	656428	1	PLATE, mounting
12	653706	1	CAPSCREW, hex-socket-hd., 3/8"NC x 1-1/8"
13	655672	1	TUBE ASSEMBLY, oil supply (Includes nuts)
14	921203	1	ELBOW, adjustable, 90°, flare type, 3/4" tube, 1-1/16" straight male thread (Includes washer, nut and O-RING 921206)
15	921217	1	CONNECTOR, flare type, 3/4" tube, 1-1/16" straight male thread (Includes O-RING 921206)
16	------	-	TRANSMISSION PRESSURE RELIEF VALVE

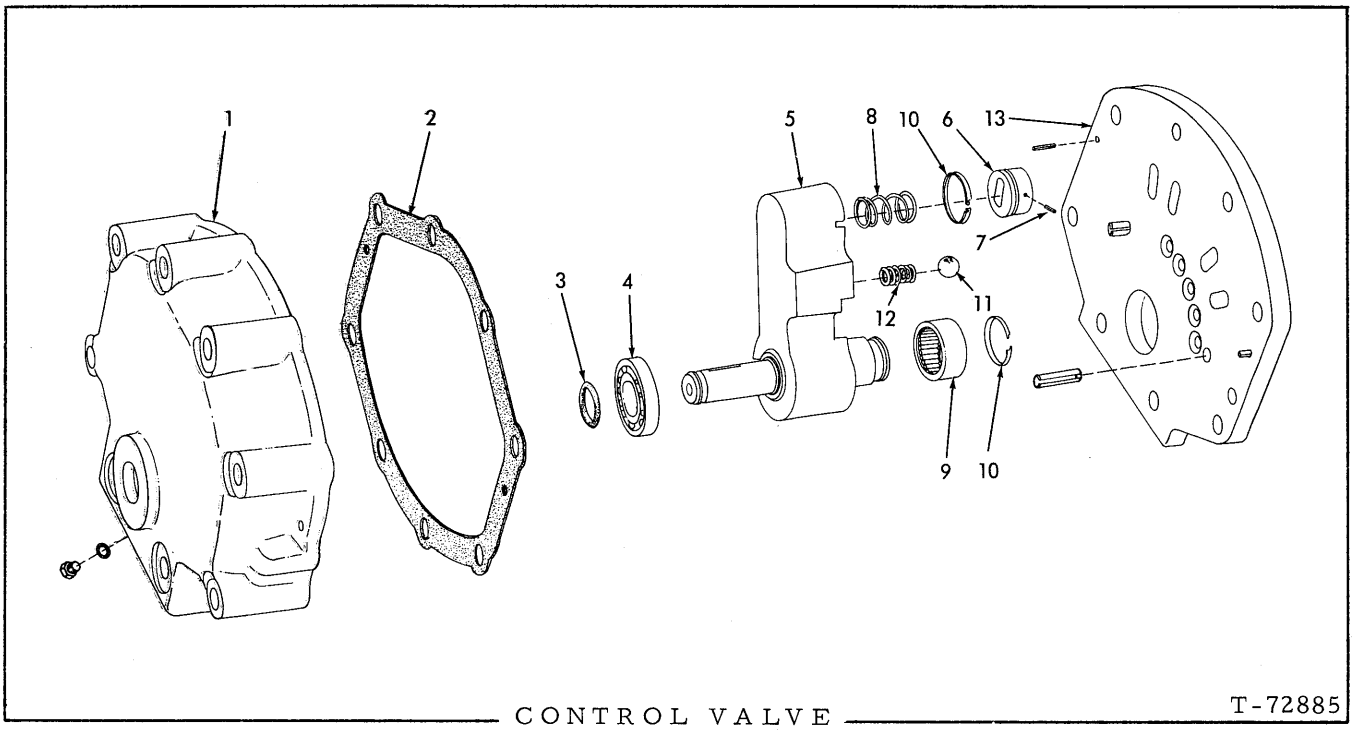

CONTROL VALVE T-72885

USAGE: See page 129

ITEM	PART NO.	QTY.	DESCRIPTION
-	0656420-7	1	VALVE ASSY. (Includes items 1 thru 13)
1	0656702-8	1	COVER
	0923166-3	1	PLUG, hex-hd., 7/16"NF (Includes O-RING)
	0921883-5	1	O-RING, plug
2	0644276-8	1	GASKET, cover
3	0186266-3	1	O-RING, valve shaft
4	0186668-0	1	BEARING, ball, valve cover
5	0639846-5	1	SHAFT ASSY. (Includes arm and pin)
6	0639919-0	1	WIPER
7	0639976-0	1	PIN, spring, wiper (1/16" x 1/4")
8	0639969-5	1	SPRING, wiper
9	0050442-3	1	BEARING, roller, adapter
10	0637623-0	2	RING, sealing, valve shaft and wiper
11	0915905-4	1	BALL, steel (3/8" diam.)
12	0642849-4	1	SPRING, detent ball
13	0656367-0	1	ADAPTER
	0918547-1	2	PIN, spring, 1/8" x 1/2" (dowel)
	0919347-5	2	PIN, spring, 1/4" x 5/8" (stop)

MODULATING VALVE ASSEMBLY 658000

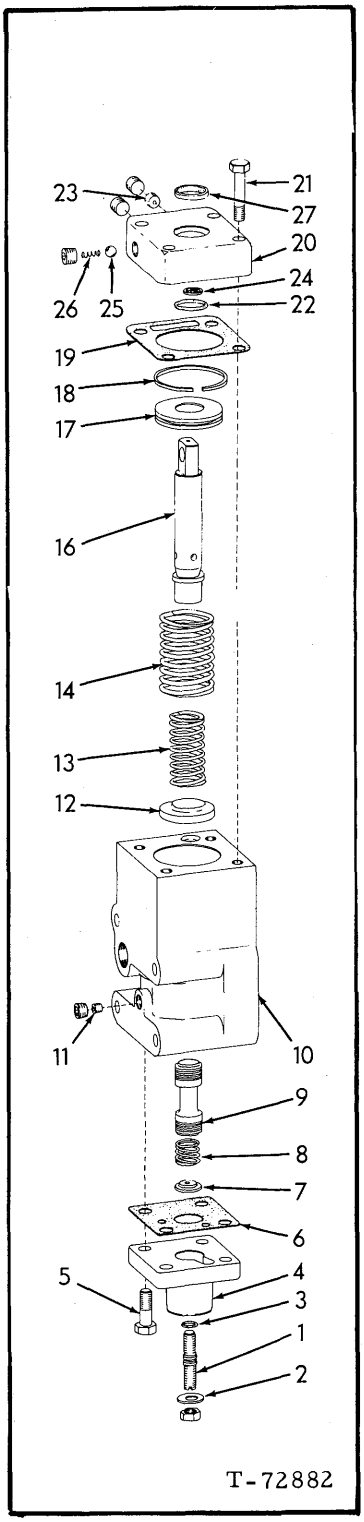

USAGE: See page 129

ITEM	PART NO.	QTY.	DESCRIPTION
1	658012	1	SCREW, valve adjusting
	914321	1	NUT, jam, 5/16"NC
2	3046938	1	WASHER
3	3037741	1	O-RING, adjusting screw sealing
4	658006	1	COVER, lower
5	045295	4	CAPSCREW, 5/16"NC x 1"
6	658010	1	GASKET, lower cover
7	658014	1	SEAT, spool spring
8	658016	1	SPRING, valve spool
9	682371	1	SPOOL, valve
10	658004	1	BODY
	910231	1	PLUG, hex-socket, 1/8"NPT
11	188168	1	PLUG, orifice body
12	658019	1	SEAT, spring
13	659135	1	SPRING, inner
14	658017	1	SPRING, outer
16	658015	1	STEM, valve operating
17	658011	1	PISTON
18	3034905	1	RING, piston
19	658009	1	GASKET, upper cover
20	658007	1	COVER, upper
	910231	3	PLUG, pipe, hex-socket, 1/8"NPT
21	046321	4	CAPSCREW, 5/16"NC x 1-1/2"
22	923719	1	O-RING, stem sealing
23	661237	1	PLUG, orifice, upper cover
24	639939	1	FILTER, oil
25	915904	1	BALL
26	658005	1	SPRING
27	186392	1	SEAL, wiper

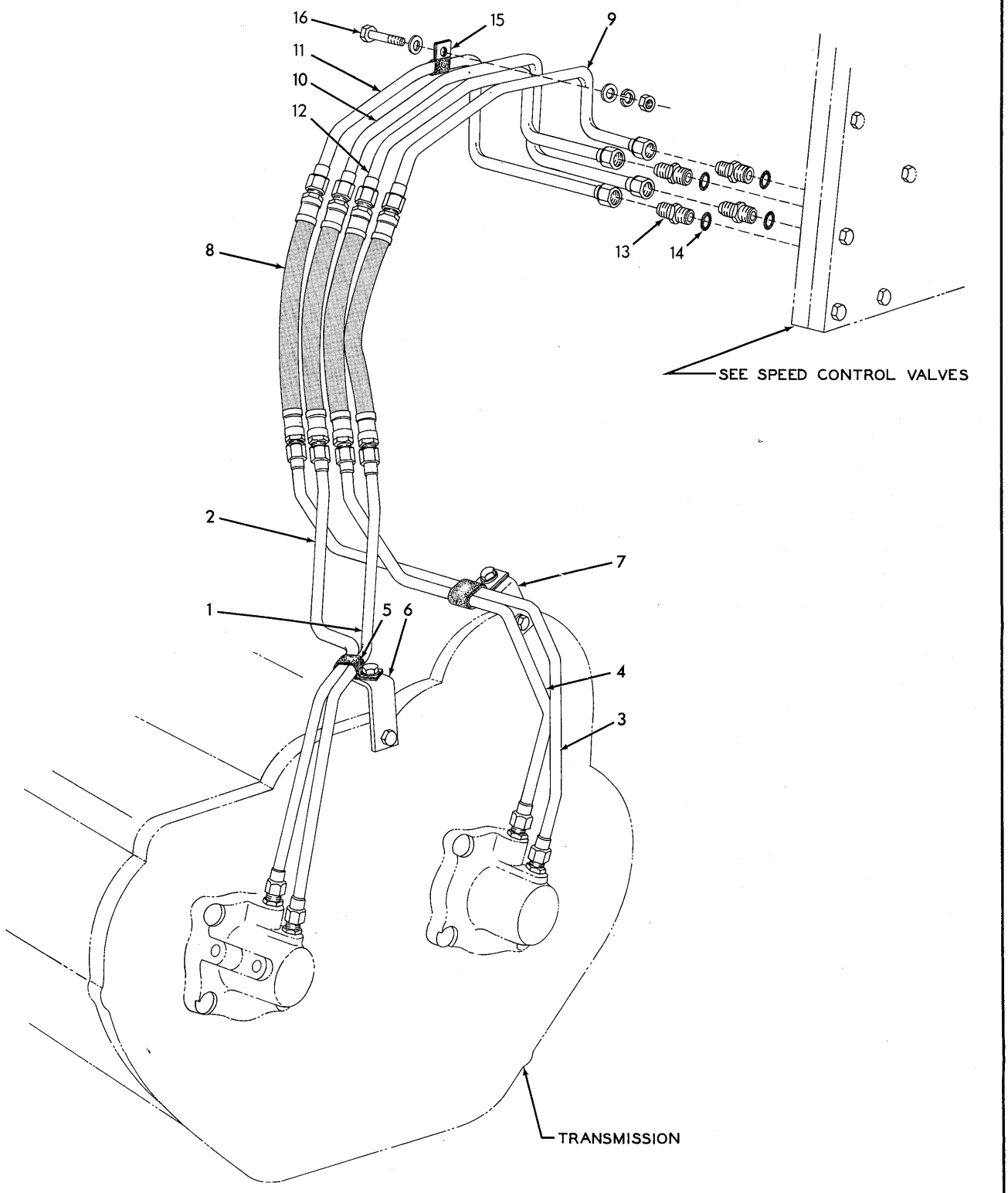

T-72886

SPEED CONTROL PIPING

SPEED CONTROL PIPING

ITEM	PART NO.	QTY.	DESCRIPTION
1	0655675-7	1	TUBE ASSY., 1st forward, lower (Includes nuts)
	0919063-8	1	CONNECTOR, flare type, 1/2" tube, 3/8" NPT male
2	0655670-8	1	TUBE ASSY., 2nd forward, lower (Includes nuts)
	0919063-8	1	CONNECTOR, flare type, 1/2" tube, 3/8" NPT male
3	0655671-6	1	TUBE ASSY., 1st reverse, lower (Includes nuts)
	0919063-8	1	CONNECTOR, flare type, 1/2" tube, 3/8" NPT male
4	0655673-2	1	TUBE ASSY., 2nd reverse, lower (Includes nuts)
	0919063-8	1	CONNECTOR, flare type, 1/2" tube, 3/8" NPT male
5	0641555-8	2	CLIP, lower tubes (For two 1/2" diam., lines)
	0916268-6	2	CAPSCREW, 3/8" NC x 5/8"
	0911115-4	2	WASHER, plain, SAE std., 3/8"
	0904206-0	2	LOCKWASHER, 3/8"
	0911026-3	2	NUT, 3/8" NC
6	0657548-4	1	ANGLE, tube supporting
7	0657549-2	1	ANGLE, tube supporting
8	0656403-3	4	HOSE, speed control (See HOSE PARTS)
9	0655667-4	1	TUBE ASSY., 1st forward, upper (Includes nuts)
10	0655668-2	1	TUBE ASSY., 2nd forward, upper (Includes nuts)
11	0655669-0	1	TUBE ASSY., 1st reverse, upper (Includes nuts)
12	0655674-0	1	TUBE ASSY., 2nd reverse, upper (Includes nuts)
13	0921409-9	4	CONNECTOR, upper tubes (Includes item 14)
14	0921349-7	4	O-RING, upper tube connector
15	0094527-9	4	CLIP, upper tubes (1/2" diam., 13/32" bolt-hole)
16	0053616-9	2	CAPSCREW, 3/8" NC x 1-3/4"
	0911115-4	4	WASHER, plain, SAE std., 3/8"
	0904206-0	2	LOCKWASHER, 3/8"
	0911026-3	2	NUT, 3/8" NC

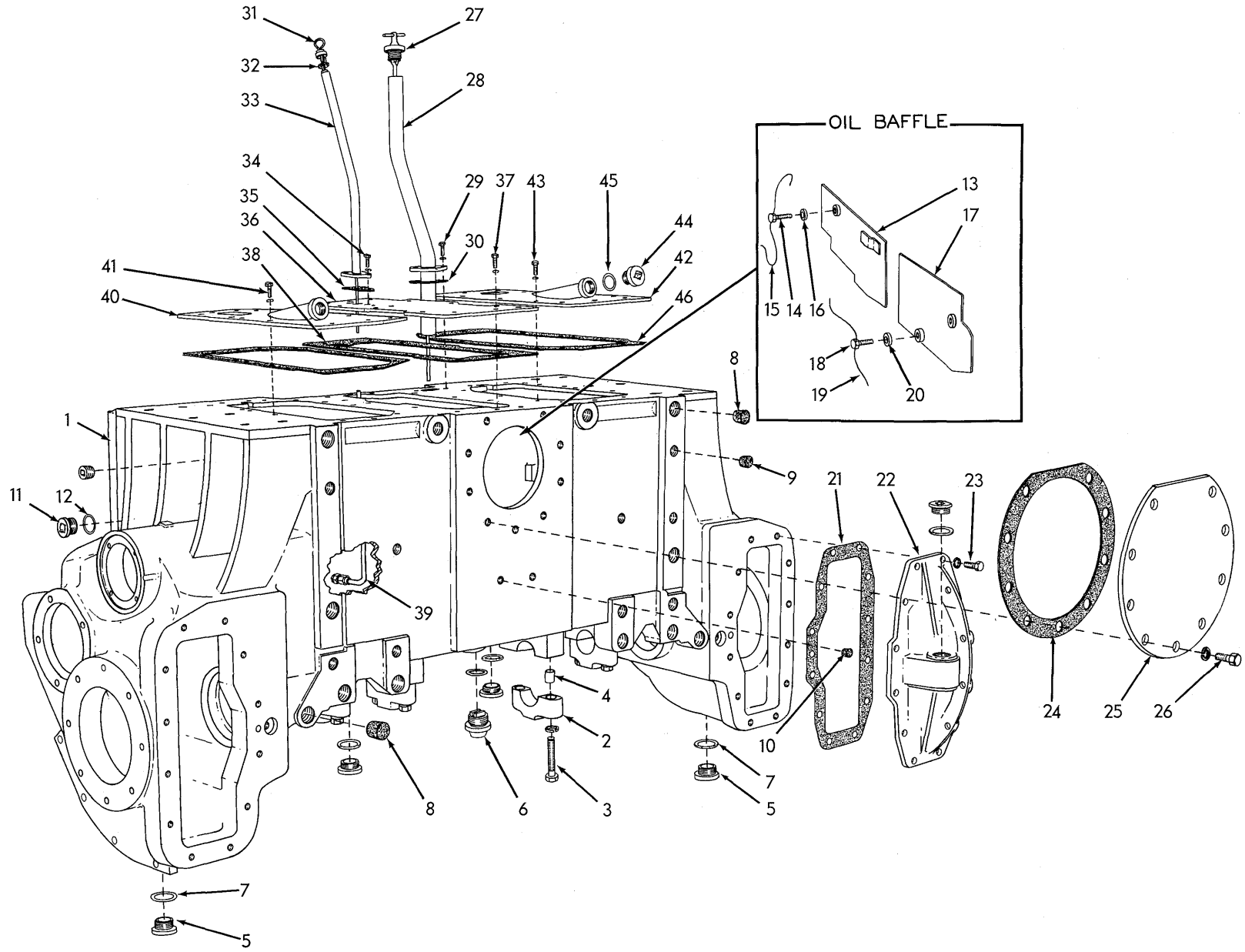

MAIN HOUSING

T-72887

MAIN HOUSING

ITEM	PART NO.	QTY.	DESCRIPTION
1	---------	1	HOUSING ASSY. (Includes items 2 thru 4)(Original equipment. Order HOUSING ASSY. 0670216-1, 1 TUBE 0670281-5, 1 TUBE 0670282-3, 4 CLIP 0640677-1, 4 CAPSCREW 0922300-9, 4 LOCKWASHER 0910287-2, 8 WASHER 0911115-4, and 2 CONNECTOR 0919171-0)
	0670216-1	1	HOUSING ASSY. (Includes item #2)(Service replacement)
	0901667-0	2	PLUG, pipe, ctsk-hd., 1-1/4"NPT (Early units)
2	0060552-7	4	CAP, track frame connecting shaft
3	0926380-7	8	CAPSCREW, 3/4"NF x 3-1/2"
	0914726-5	8	LOCKWASHER, 3/4"
4	0075053-9	8	DOWEL, hollow, connecting shaft (Used prior to unit #1047)
5	0035250-0	6	PLUG, final drive compartment
6	0638256-8	1	PLUG, drain, bevel gear compartment (magnetic)
7	0667252-1	7	GASKET, plug
8	0664852-1	10	CORK, thread protecting (1-1/4" diam.)
9	0664850-5	4	CORK, thread protecting (1" diam.)
10	0664851-3	2	CORK, thread protecting (5/8" diam.)
11	0050594-1	2	PLUG, brake pin access hole
12	0050595-8	2	GASKET, access hole plug
13	0642048-3	1	PLATE, oil baffle, front section
14	0021527-7	1	CAPSCREW, drilled-hd., 3/8"NC x 1-5/8"
15	0023633-1	1	WIRE, locking, 1/16" x 12"
16	0044973-6	1	WASHER, plain
17	0642435-2	1	PLATE, oil baffle, rear section
18	0099963-1	2	CAPSCREW, drilled-hd., 3/8"NC x 2"
19	0037000-7	1	WIRE, locking, 1/16" x 16"
20	0044973-6	2	WASHER, plain
21	0064377-5	2	GASKET, final drive compartment cover
22	0656989-1	1	COVER, left final drive compartment
	0656990-9	1	COVER, right final drive compartment
23	0035018-1	26	CAPSCREW, 1/2"NF x 1-1/2"
	0904208-6	26	LOCKWASHER, 1/2"
24	0052976-8	1	GASKET, bevel gear compartment rear cover
25	0052977-6	1	COVER, bevel gear compartment, rear (Removed when Power Take-off is installed)
26	0921731-6	9	CAPSCREW, Nylok, 5/8"NC x 1-1/4"
	0904209-4	9	LOCKWASHER, 5/8"
27	0655883-7	1	GAUGE, oil level, bevel gear compartment

(Continued)

MAIN HOUSING (Continued)

ITEM	PART NO.	QTY.	DESCRIPTION
28	0655878-7	1	TUBE, oil filler, bevel gear compartment
29	0044249-1	2	CAPSCREW, 3/8"NC x 1-1/8"
	0904206-0	2	LOCKWASHER, 3/8"
30	0655875-3	1	GASKET, oil filler tube
31	0655880-3	1	GAUGE ASSY., transmission oil level (Includes item 32)
32	4506607-3	1	SEAL, transmission oil level gauge
33	0655882-9	1	GUIDE, transmission oil level gauge (Loaders prior to #1001)
	0670378-9	1	GUIDE, transmission oil level gauge (Loader units #1001 and up)
34	0044249-1	2	CAPSCREW, 3/8"NC x 1-1/8"
	0904206-0	2	LOCKWASHER, 3/8"
35	0628951-6	1	GASKET, oil level gauge guide
36	0655967-8	1	COVER, bevel gear compartment, top
37	0035525-5	10	CAPSCREW, 1/2"NF x 1-1/8" } 1 less used on loaders
	0904208-6	10	LOCKWASHER, 1/2" } prior to unit #1016
38	0655964-5	1	GASKET, bevel gear compartment top cover
39	0655963-7	1	TUBE ASSY., transmission oil level gauge (Includes nut)
	0919063-8	1	CONNECTOR, flare type, 1/2" tube, 3/8"NPT male
40	0650061-5	1	PLATE, cover, left steering clutch compartment
41	0070467-6	8	CAPSCREW, 1/2"NF x 1"
	0904208-6	8	LOCKWASHER, 1/2"
42	0650062-3	1	PLATE, cover, right steering clutch compartment
43	0070467-6	11	CAPSCREW, 1/2"NF x 1"
	0904208-6	11	LOCKWASHER, 1/2"
44	0651978-9	2	PLUG, brake adjustment access hole
45	0623144-3	2	GASKET, access hole plug
46	0650264-5	2	GASKET, steering clutch compartment cover

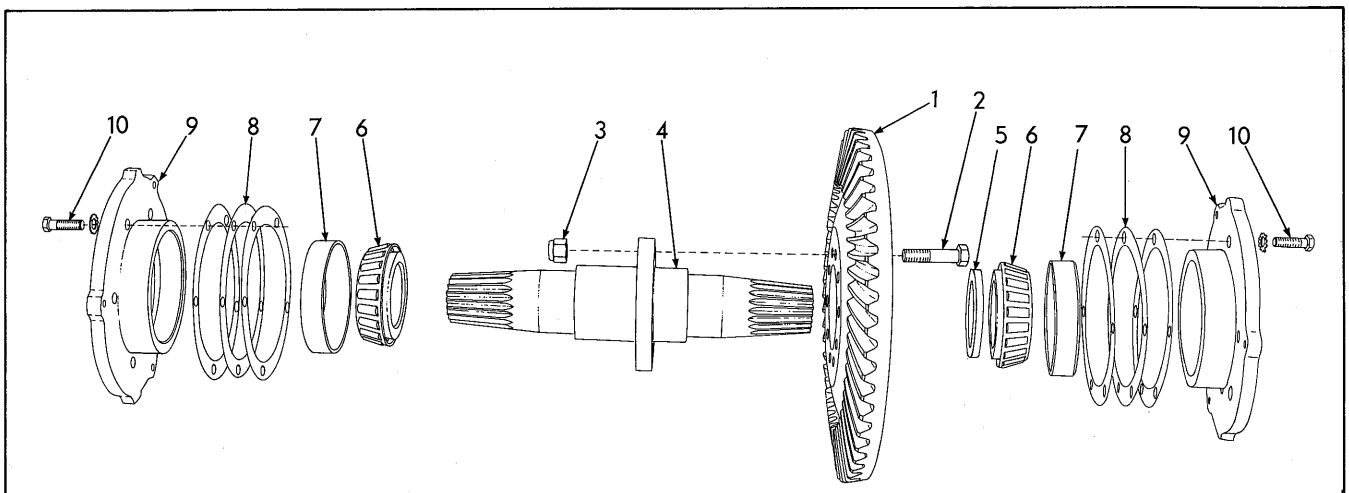

BEVEL GEAR AND SHAFT

ITEM	PART NO.	QTY.	DESCRIPTION
1	0659392-5	1	GEAR, bevel (41 teeth)
2	0067680-9	10	BOLT, 5/8"NF x 2-3/4"
3	0645320-3	10	NUT, elastic stop, 5/8"NF
4	0659446-9	1	SHAFT, bevel gear (Loaders prior to #643)
	0666494-0	1	SHAFT, bevel gear (Loaders #643 thru #1000)
	0672828-1	1	SHAFT, bevel gear (Loaders unit #1001 and up)
5	0627279-3	1	RING, bolt locking
6	0631588-1	2	CONE ASSY., shaft bearing
7	0631587-3	2	CUP, shaft bearing
8	0634134-1	12	SHIM, bearing adjustment (.005" thick)
	0634135-8	12	SHIM, bearing adjustment (.007" thick)
	0634136-6	12	SHIM, bearing adjustment (.010" thick
9	0659493-1	2	CAGE, bearing
10	0916028-4	10	CAPSCREW, 1/2"NC x 1-3/4"
	0910210-4	10	LOCKWASHER, external teeth, 1/2"

Use as required

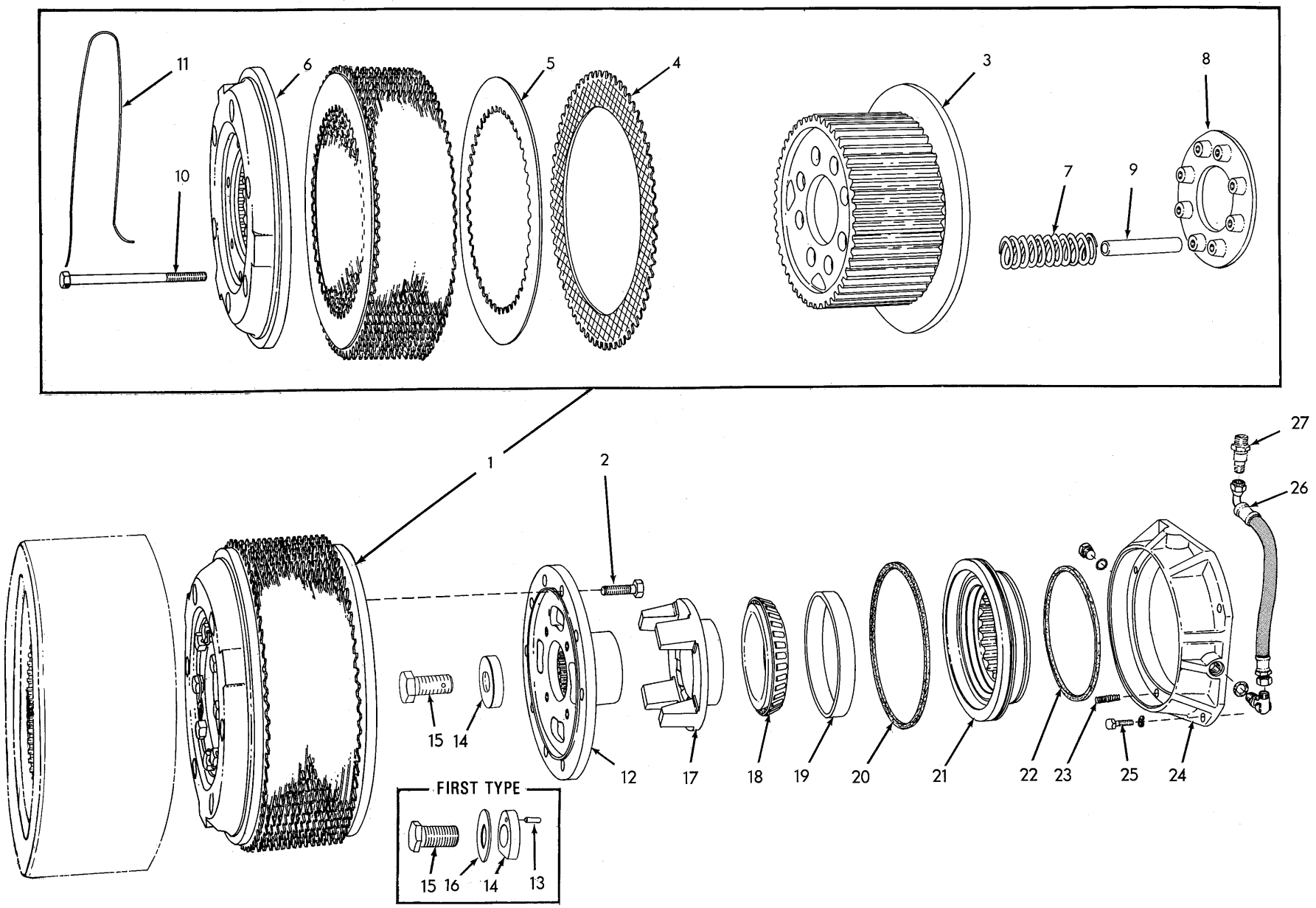
11
6
5
4
3
8
10
7
9
1
2
27
26
15
14
12
17
18
19
20
21
22
23
25
24
FIRST TYPE
15
16
14
13

T-41894

STEERING CLUTCHES

ITEM	PART NO.	QTY.	DESCRIPTION
1	661595	2	CLUTCH ASSEMBLY (Consists of items 3 thru 11)
2	650828	20	BOLT, self-locking, 1/2"NC x 1-3/8"
3	650657	2	HUB, steering clutch
4	624561	32	DISC, friction (bi-metallic)
5	624562	32	DISC, friction (steel)(Use as required)
6	056793	2	PLATE, pressure
7	661594	16	SPRING, pressure
8	050214	2	PLATE, throwout
9	631305	16	SPACER, throwout plate
10	631300	16	CAPSCREW, plate (drilled-hd., 1/2"NC x 5-3/4")
11	023756	4	WIRE, locking, 1/16" x 26"
12	659686	2	HUB, driving
13	035793	2	PIN, hub retaining washer (Early units only)
14	637932	2	WASHER ASSY., hub retaining (Includes item 13)(Used prior to loader #462)
	664337	2	WASHER ASSY., hub retaining (Includes item 13)(Effective with loader #462 thru #528)
	666366	2	WASHER, hub retaining (Loader #529 and up)
15	630045	2	CAPSCREW, hub retaining (Used prior to loader #462)
	663117	2	CAPSCREW, hub retaining (self-locking)(Effective with loader #462)
16	651745	2	WASHER, capscrew locking (Used prior to loader #462)
17	659687	2	SLEEVE, throwout
18	624642	2	CONE ASSEMBLY, clutch throwout bearing
19	624641	2	CUP, clutch throwout bearing
20	624673	2	RING, sealing, actuating piston, outer
21	631510	2	PISTON, actuating
22	624674	2	RING, sealing, actuating piston, inner
23	040475	6	SPRING, throwout bearing ring
24	631575	2	RING, collector
	921573	2	PLUG, hex-hd., 3/4"NF (Includes O-RING 921349)
25	916272	6	CAPSCREW, 3/8"NC x 1-1/4"
	904206	6	LOCKWASHER, 3/8"
26	641125	2	HOSE, oil pressure (See HOSE PARTS)
	921402	2	ELBOW, adjustable, 90°, flare type, 1/2" tube, 3/4"NF (Includes washer, nut and O-RING 921349)
27	------	2	UNION (See STEERING VALVE AND LINES)

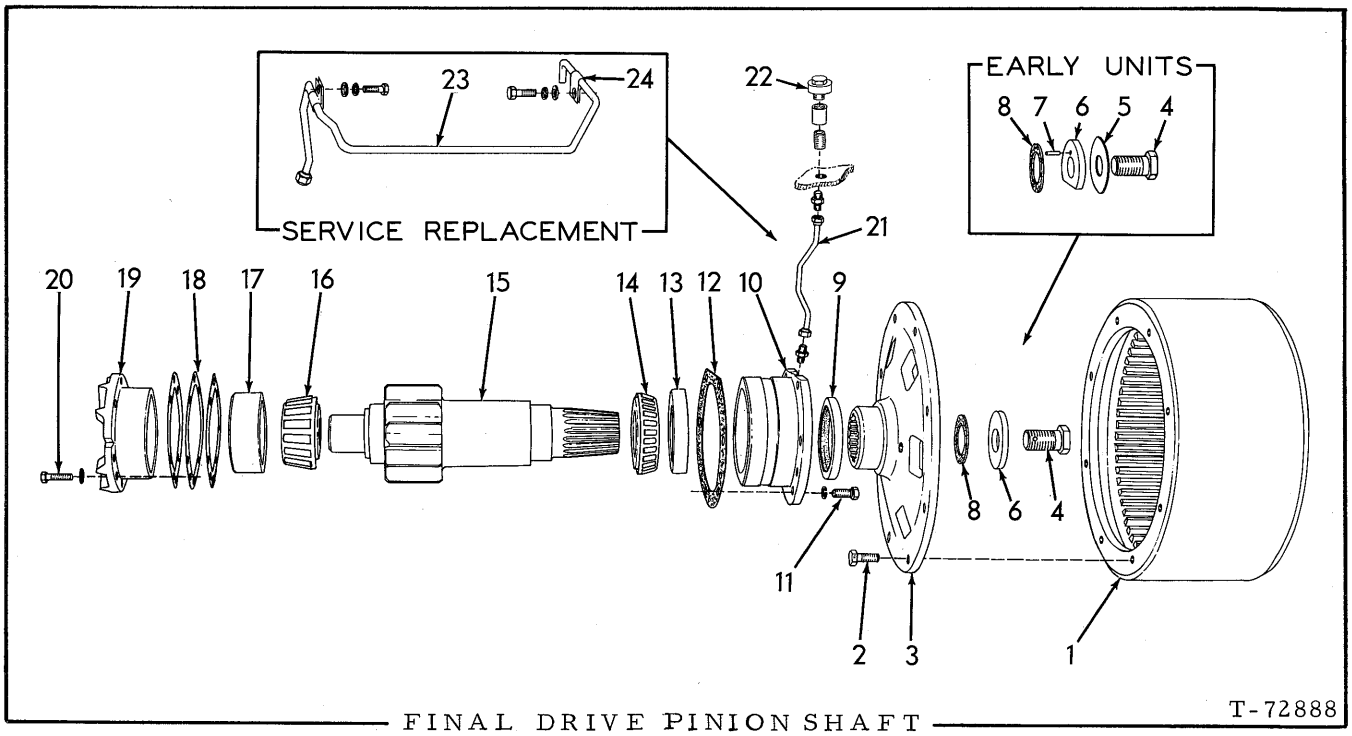

FINAL DRIVE PINION SHAFT

ITEM	PART NO.	QTY.	DESCRIPTION
1	631316	2	DRUM, brake
2	650835	16	BOLT, self-locking, 1/2"NC x 1"
3	624559	2	HUB, brake drum
4	630045	2	CAPSCREW, hub retaining (Used prior to loader #462)
	663117	2	CAPSCREW, hub retaining (self-locking)(Effective with loader #462)
5	630052	2	LOCK, hub retaining capscrew (Used prior to loader #462)
6	631584	2	WASHER ASSY., hub retaining (Includes item 7)(Used prior to loader #462)
	664330	2	WASHER ASSY., hub retaining (Includes item 7)(Used on loaders #462 thru #572)
	666324	2	WASHER, hub retaining (Loaders #573 and up)
7	035793	2	PIN, hub retaining washer (Early units only)
8	056513	2	WASHER, sealing, brake drum hub
9	628320	2	SEAL, oil
10	631577	2	CAGE, inner bearing
11	070469	12	CAPSCREW, 1/2"NF x 1-1/4"
	904208	12	LOCKWASHER, 1/2"
12	633904	2	GASKET, inner bearing cage
13	057005	2	CUP, inner bearing
14	057006	2	CONE ASSEMBLY, inner bearing

(Continued)

FINAL DRIVE PINION SHAFT (Continued)

ITEM	PART NO.	QTY.	DESCRIPTION	
15	0655628-6	2	PINION (12 teeth)	
16	0057004-4	2	CONE ASSY., outer bearing	
17	0057003-6	2	CUP, outer bearing	
18	0084905-9	4	SHIM, bearing adjustment (.005" thick)	Use as required
	0084904-2	4	SHIM, bearing adjustment (.007" thick)	
	0084903-4	14	SHIM, bearing adjustment (.010" thick)	
19	0084319-3	2	CAGE, outer bearing	
20	0012992-4	8	CAPSCREW, 3/8"NF x 1-1/4"	
	0904206-0	8	LOCKWASHER, 3/8"	
21	0650128-2	2	TUBE ASSY., vent (Includes nuts)	Original equipment
	0919171-9	4	CONNECTOR, flare type, 1/4" tube, 1/8"NPT male	
22	0050748-3	2	BREATHER	
	0901489-5	2	NIPPLE, pipe, 3/8"NPT x 1"	
	0901765-8	2	COUPLING, pipe, 3/8"NPT	
23	0670281-5	1	TUBE ASSY., final drive breather, left (Includes nuts)	For use with service replacement HOUSING
	0670282-3	1	TUBE ASSY., final drive breather, right (Includes nuts)	
	0919171-9	2	CONNECTOR, flare type, 1/2" tube (1/8"NPT male)	
24	0640677-1	4	CLIP, tube supporting	
	0922300-9	4	CAPSCREW, 3/8"NC x 3/4"	
	0910287-2	4	LOCKWASHER, 3/8"	
	0911115-4	8	WASHER, plain, SAE std., 3/8"	

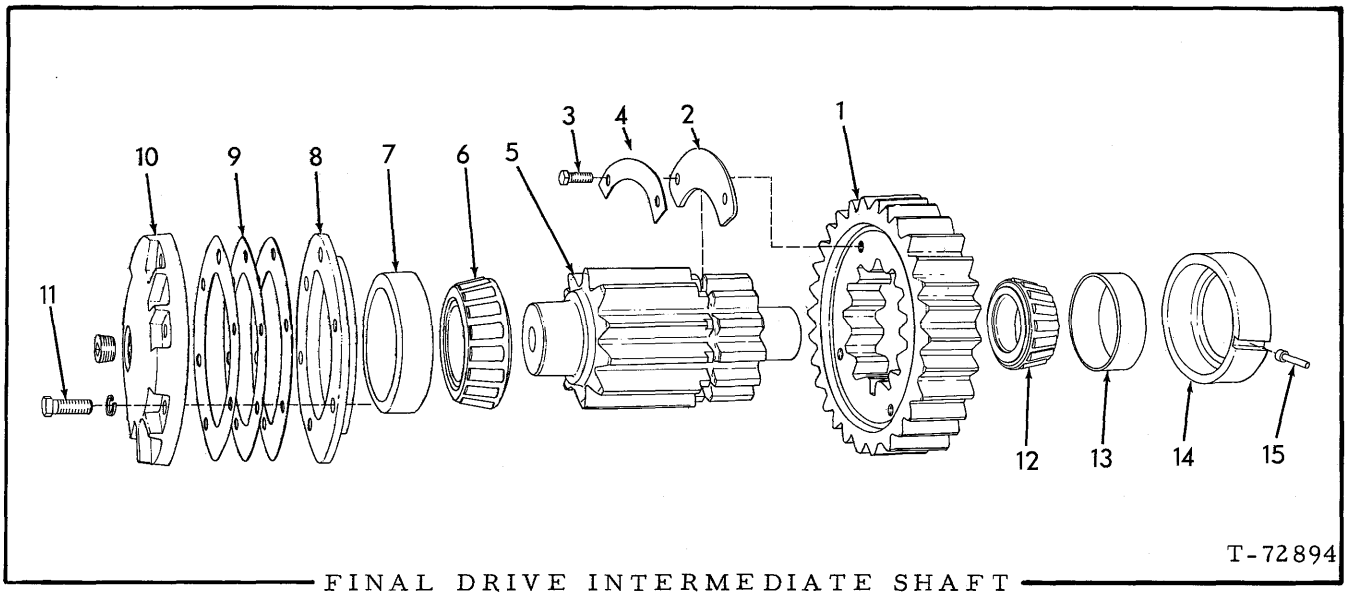

FINAL DRIVE INTERMEDIATE SHAFT

ITEM	PART NO.	QTY.	DESCRIPTION	
1	671413	2	GEAR (30 teeth)	
2	655631	4	LOCK, gear retaining	
3	035439	8	CAPSCREW, 3/8"NC x 1"	
4	655632	4	LOCK, capscrew	
5	655630	2	PINION (12 teeth)	
6	069441	2	CONE ASSEMBLY, outer bearing	
7	069328	2	CUP, outer bearing	
8	658834	2	CAGE, outer bearing cup	
9	658838	4	SHIM, bearing adjustment (.005" thick)	Use as required
	658839	4	SHIM, bearing adjustment (.007" thick)	
	658840	14	SHIM, bearing adjustment (.010" thick)	
10	658837	2	RETAINER, outer bearing	
	901666	2	PLUG, pipe, ctsk-hd., 1"NPT	
11	023465	12	CAPSCREW, 5/8"NF x 1-3/4"	
	904209	12	LOCKWASHER, 5/8"	
12	211582	2	CONE ASSEMBLY, inner bearing	
13	211581	2	CUP, inner bearing	
14	084297	2	CAGE, inner bearing cup	
15	089320	2	PIN, locking, inner bearing cage	

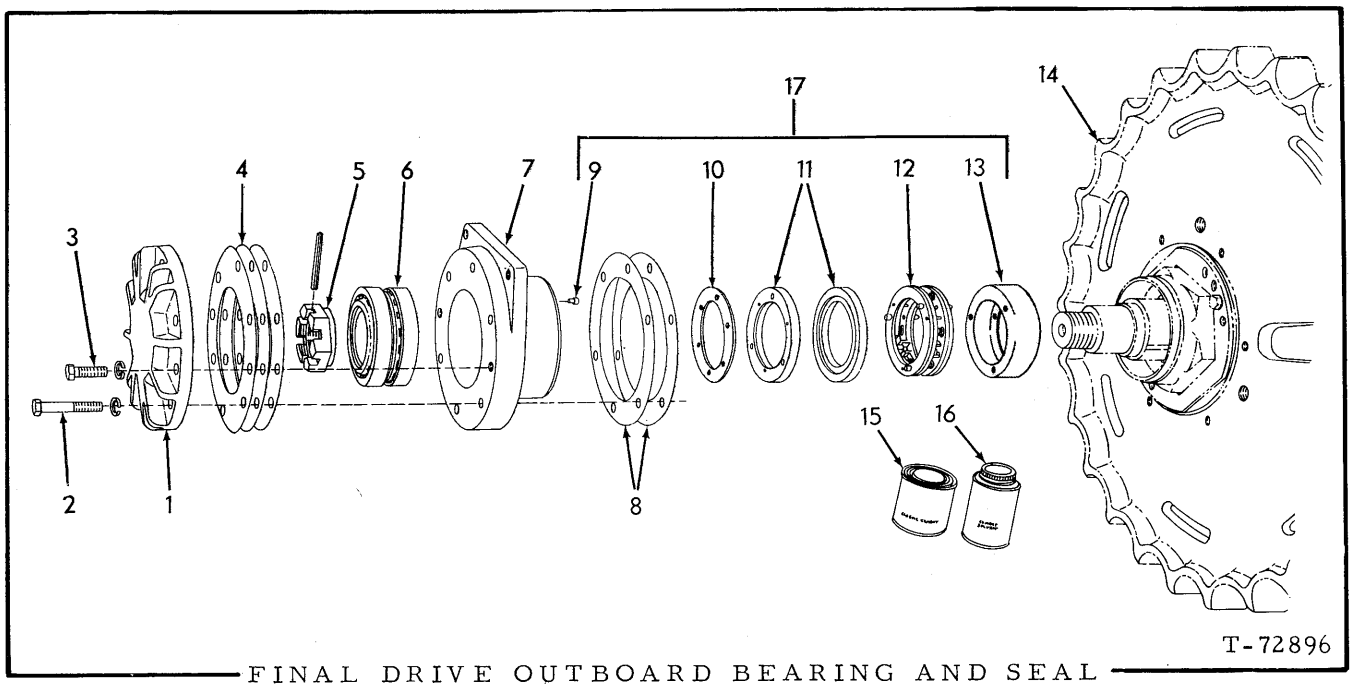

FINAL DRIVE OUTBOARD BEARING AND SEAL

ITEM	PART NO.	QTY.	DESCRIPTION	
1	084303	2	COVER, outboard bearing	
2	070403	12	CAPSCREW, 1/2"NF x 3" (Loaders prior to #505)	
	915969	12	CAPSCREW, 1/2"NC x 3" (Loaders # 505 and up)	
	904208	16	LOCKWASHER, 1/2"	
3	035018	4	CAPSCREW, 1/2"NF x 1-1/2"	
4	084313	4	SHIM, outer bearing cap (.005" thick)	Use as req'd
	084312	4	SHIM, outer bearing cap (.007" thick)	
	084311	14	SHIM, outer bearing cap (.010" thick)	
5	058925	2	NUT, retaining, outer bearing	
	917904	2	PIN, spring, 5/16" x 3"	
6	058702	2	BEARING, roller, outboard (Each consists of 1 roller assembly and 2 cups. Serviced only as a unit)	
7	084271	2	CAGE, outboard bearing	
8	069080	12	SHIM, outboard bearing cage (.015" thick. Use as req'd)	
9	084432	6	□PIN, outer seal ring	
10	069106	2	□GASKET, seal ring	
11	081787	4	□RING, outer seal	
12	084337	2	□FOLLOWER ASSEMBLY, outer seal (Serviced only as a unit)	
13	058814	2	□BOOT, outer seal	
14	------	-	SPROCKET (See page 145)	
15	033288	-	CEMENT, neoprene, 1/2 pint can	For cementing boots and gaskets
16	054890	-	SOLVENT, neoprene cement, 1/2 pint can	
17	091972	2	SEAL KIT (Items 9 thru 13; includes parts for one (1) side only)	

□Components of item 17

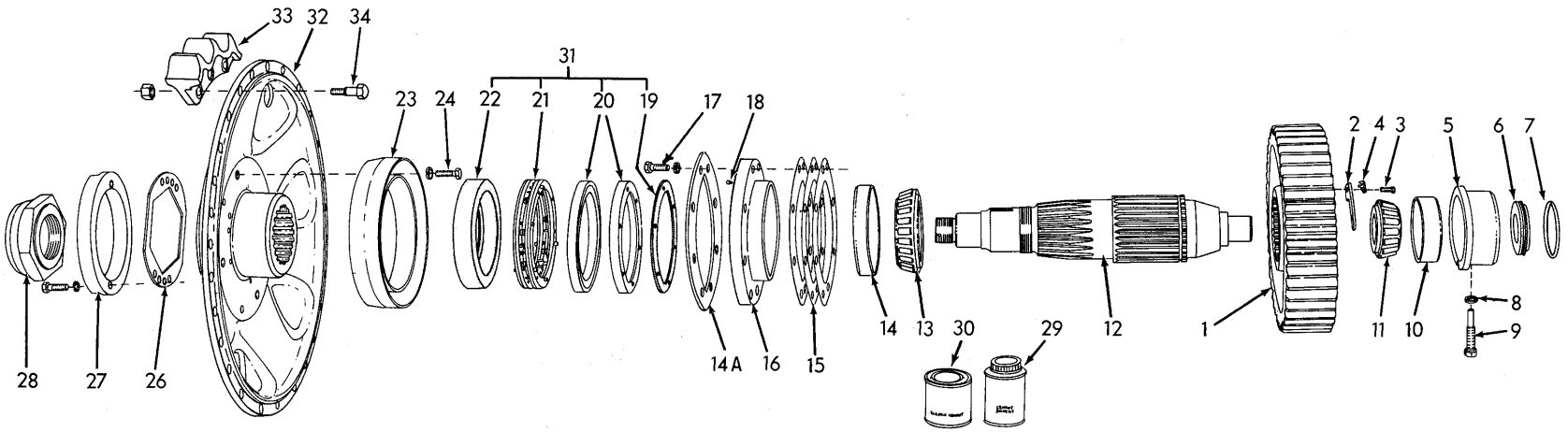

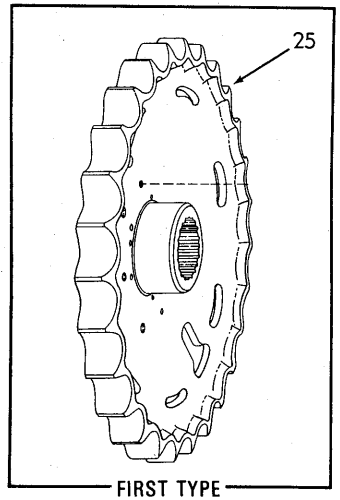

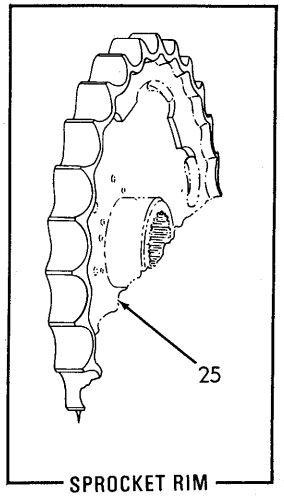

FINAL DRIVE SPROCKET, SHAFT AND GEAR

T-72895

FINAL DRIVE SPROCKET, SHAFT AND GEAR

ITEM	PART NO.	QTY.	DESCRIPTION
1	655633	2	GEAR, driving
2	058826	4	LOCK, gear retaining
3	035439	8	CAPSCREW, 3/8"NC x 1"
4	052444	8	LOCK, capscrew
5	084289	2	CAGE, inner bearing cup
6	091571	2	COVER, inner bearing
7	923817	2	O-RING, inner bearing cover
8	049918	2	WASHER, bearing cage setscrew (copper)
9	084278	2	SETSCREW, bearing cage
10	052070	2	CUP, inner bearing
11	084277	2	CONE ASSY., inner bearing
12	622135	2	SHAFT, sprocket
13	069615	2	CONE ASSY., intermediate bearing
14	069614	2	CUP, intermediate bearing
14A	668549	2	GUARD, seal
15	056971	8	SHIM, bearing adjustment (.005" thick) } Use as required
	056970	6	SHIM, bearing adjustment (.007" thick)
	056969	24	SHIM, bearing adjustment (.010" thick)
16	666814	2	CAGE ASSY., intermediate bearing (Includes item 18)
17	916421	16	CAPSCREW, 1/2"NF x 2-1/2"
	904208	16	LOCKWASHER, 1/2"
18	084432	6	PIN, locating, seal ring
19	058807	2	☐ GASKET, seal ring
20	651996	4	☐ RING, inner seal
21	058796	2	☐ FOLLOWER ASSY., inner seal (Serviced only as a unit)
22	058806	2	☐ BOOT, inner seal
23	668553	2	GUARD, seal
24	035061	8	CAPSCREW, 1/2"NC x 1-1/4"
	904208	8	LOCKWASHER, 1/2"
25	666799	2	SPROCKET, track } Loaders prior to #1000
	633487	2	SPROCKET, rim (Requires welding to install)
26	084299	2	LOCK, sprocket retaining nut
	035221	4	CAPSCREW, 1/2"NC x 1" } Loaders prior to #504
	904208	4	LOCKWASHER 1/2"
27	666820	2	RING, screw protecting (Effective with loader #504)
	035190	4	CAPSCREW, 1/2"NC x 1-1/2"
	904208	4	LOCKWASHER, 1/2"
28	084236	2	NUT, sprocket retaining
29	054890	-	SOLVENT, neoprene cement, 1/2 pint can } For cementing boots and gaskets
30	033288	-	CEMENT, neoprene, 1/2 pint can
31	656664	2	SEAL KIT (Includes parts for one (1) side only; items 19 thru 22)
32	669567	2	HUB, sprocket segment } Loader unit No. 1001 and up
33	669330	18	SEGMENT, sprocket
34	097324	54	BOLT, sprocket segment
	012767	54	NUT, high, 3/4"NF

☐ Components of item 31

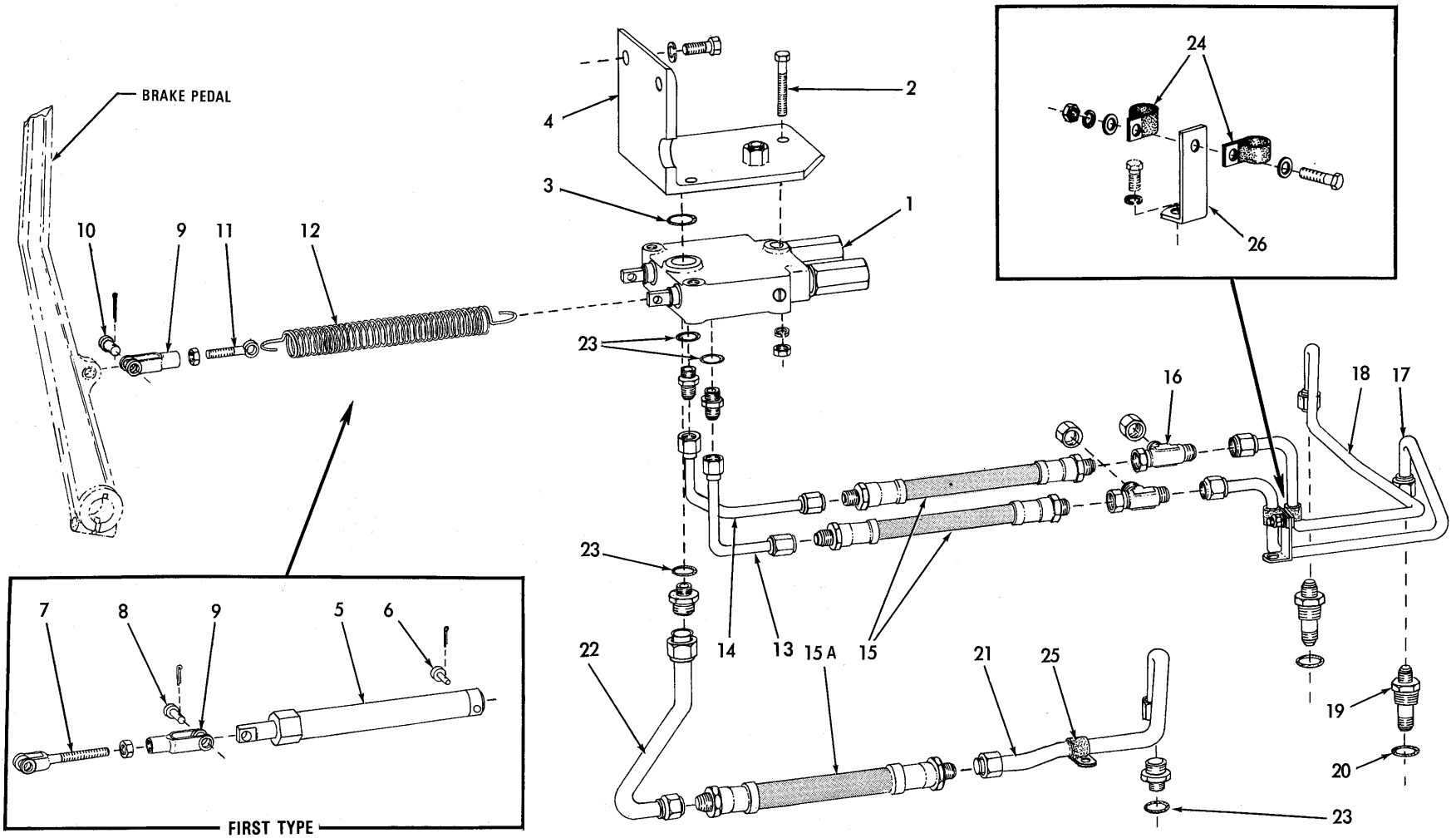

STEERING VALVE AND LINES

T-74995

STEERING VALVE AND LINES

* Loaders prior to serial No. 577 excluding 548, 554, 564, 565, 567 thru 575
** Loaders serial No. 577 thru 1000; also 43C01001 and up including 548, 554, 564, 565, 567 thru 575

ITEM	PART NO.	QTY. *	QTY. **	DESCRIPTION	
1	651739	1	1	VALVE ASSY. (See page 149 for parts)	
2	620253	3	3	CAPSCREW, 3/8"NF x 2-3/4"	
	904206	3	3	LOCKWASHER, 3/8"	
	911041	3	3	NUT, 3/8"NF	
3	923947	1	1	O-RING, valve to mounting bracket	
4	657708	1	1	ANGLE, valve mounting	
	035220	2	2	CAPSCREW, 1/2"NC x 1-1/8"	
	904208	2	2	LOCKWASHER, 1/2"	
5	656262	2	-	OVER-TRAVEL ASSY.	Loaders prior to #510
6	630833	2	-	PIN, over-travel connecting	
	900801	2	-	PIN, cotter, 3/32" x 3/4"	
7	659575	2	-	ROD, control	
	911048	2	-	NUT, jam, 3/8"NF	
8	078810	2	-	PIN, control rod	
	900801	2	-	PIN, cotter, 3/32" x 3/4"	
9	628736	2	2	YOKE, control rod	
10	078810	2	2	PIN, control rod yoke	
	900801	2	2	PIN, cotter, 3/32" x 3/4"	
11	666926	-	2	EYE-BOLT, pull spring	Loaders #510 and up
	911048	-	2	NUT, jam, 3/8"NF	
12	668869	-	2	SPRING, pull	
13	654777	1	1	TUBE ASSY., valve to left clutch, front section (Includes nuts)	
	921409	1	1	CONNECTOR, flare type, 1/2" tube, 3/4"NF male end (Includes item 23)	
14	654789	1	1	TUBE ASSY., valve to right clutch, front section (Includes nuts)	
	921409	1	1	CONNECTOR, flare type, 1/2" tube, 3/4"NF male end (Includes item 23)	
15	656403	2	2	HOSE (See HOSE PARTS)	
15A	656403	1	-	HOSE, oil return (See HOSE PARTS)	
	671377	-	1	HOSE, oil return (See HOSE PARTS)	
16	921298	2	2	TEE, pressure check	
	923737	2	2	CAP, flare fitting, 1/2" tube	
17	656275	1	1	TUBE ASSY., valve to left clutch rear section (Includes nuts)	
18	656276	1	1	TUBE ASSY., valve to right clutch, rear section (Includes nuts)	
19	651893	2	2	UNION, bulkhead	
20	921206	2	2	O-RING, bulkhead union	

(Continued)

ITEM	PART NO.	QTY. *	QTY. **	DESCRIPTION
21	656272	1	-	TUBE ASSY., oil return, rear section (Includes nuts)
	921409	1	-	CONNECTOR, flare type, 1/2" tube, 3/4"NF male end (Includes item 23)
	671378	-	1	TUBE ASSY., oil return, rear section (Includes nuts)
	671428	-	1	CONNECTOR, flare type, 3/4" tube, 3/4"NF male end (Includes item 23)
22	654748	1	-	TUBE ASSY., oil return, front section (Includes nuts)
	921409	1	-	CONNECTOR, flare type, 1/2" tube, 3/4"NF male end (Includes item 23)
	671376	-	1	TUBE ASSY., oil return, front section (Includes nuts)
	671428	-	1	CONNECTOR, flare type, 3/4"tube, 3/4"NF male end (Includes item 23)
23	921349	4	4	O-RING, connector (3/4"O.D.)
24	094527	2	2	CLIP, tube supporting
	035439	1	1	CAPSCREW, 3/8"NC x 1"
	911115	2	2	WASHER, plain, SAE std., 3/8"
	904206	1	1	LOCKWASHER, 3/8"
	911026	1	1	NUT, 3/8"NC
25	094527	1	-	CLIP, tube supporting (1/2" diam.)
	094467	-	1	CLIP, tube supporting (3/4" diam.)
26	628821	1	1	SUPPORT, oil tubes

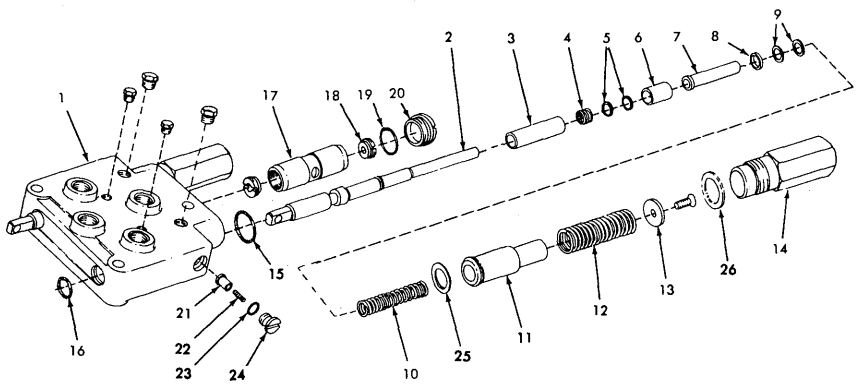

T-72413

CONTROL VALVE ASSEMBLY 651739

USAGE: See page 147

ITEM	PART NO.	QTY.	DESCRIPTION	
1	------	1	BODY (Not serviced separately)	
	919134	2	PLUG, pipe, hex-head, 1/8"NPT	
	919840	2	PLUG, pipe, hex-head, 1/4"NPT	
2	------	2	PLUNGER (Not serviced separately)	
3	651564	2	PISTON, pressure regulating	
4	671178	2	SPRING, pressure regulating (short)	
5	651576	-	SHIM, pressure adjustment (.015" thick)	Use as required
	651577	-	SHIM, pressure adjustment (.005" thick)	
6	651571	2	SLEEVE, valve plunger (outer)	
7	651572	2	SLEEVE, valve plunger (inner)	
8	651573	2	WASHER, valve plunger	
9	651574	-	SHIM, pressure adjustment (.015" thick)	Use as required
	651575	-	SHIM, pressure adjustment (.005" thick)	
10	661676	2	SPRING, pressure regulating (long)	
11	651565	2	SLEEVE, plunger return spring	
12	651570	2	SPRING, plunger return	
13	651567	2	WASHER, end, valve plunger	
	924989	2	SCREW, machine, flat-hd., 1/4"NF x 7/8"	
14	651566	2	CAP, valve plunger	
15	924416	2	O-RING, valve body (large)	
16	923645	2	O-RING, valve body (small)	
17	------	1	PLUNGER, flow divider (Not serviced separately)	
18	660057	2	PLUG, orifice, flow divider plunger	
19	923988	1	O-RING, flow divider plug	
20	654523	1	PLUG ASSEMBLY, flow divider (Includes item 19)	
21	656190	2	PLUNGER, relief valve	
22	656192	2	SPRING, relief valve	
23	923663	2	O-RING, relief valve plug	
24	656191	2	PLUG ASSEMBLY, relief valve (Includes item 23)	
25	663123	2	SHIM, plunger clearance (Late units)	Use as required
26	663124	2	SHIM, plunger clearance (Early units)	

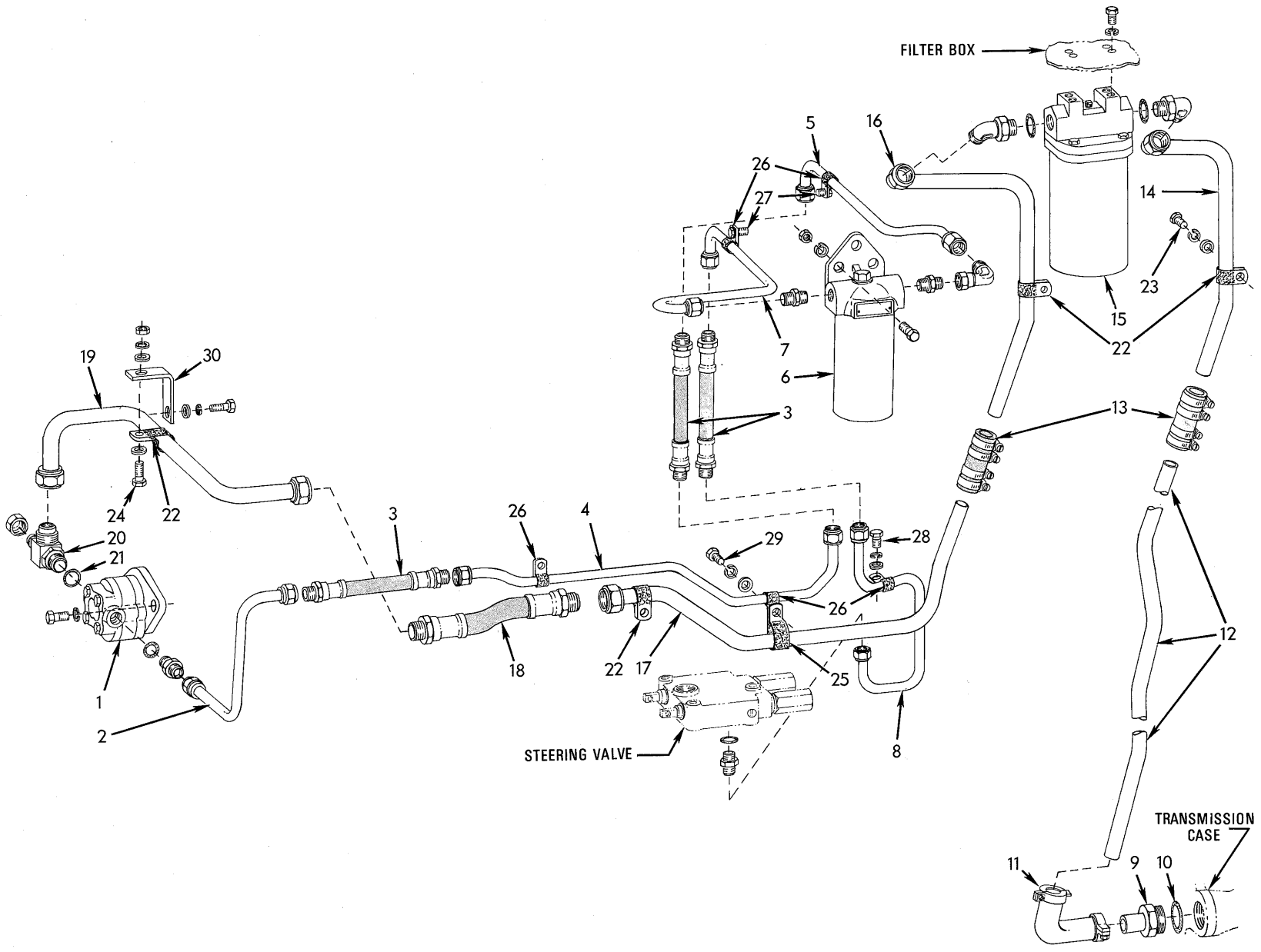

STEERING PUMP AND FILTERS

STEERING PUMP AND FILTERS

ITEM	PART NO.	QTY.	DESCRIPTION
1	659036	1	PUMP ASSEMBLY, oil (See page 153 for parts)
	013058	2	CAPSCREW, 3/8"NC x 1-1/4"
	904206	2	LOCKWASHER, 3/8"
2	659051	1	TUBE ASSEMBLY, pump to filter, front section (Includes nuts)
	923080	1	CONNECTOR, flare type, 5/8" tube, 3/4"NF male end (Includes O-RING 921349)
3	656283	3	HOSE, pressure line (See HOSE PARTS)
4	656274	1	TUBE ASSEMBLY, pump to filter, intermediate section (Includes nuts)
5	656273	1	TUBE ASSEMBLY, pump to filter, rear section (Includes nuts)
	921325	1	ELBOW, swivel, 90°, flare type, 5/8" tube
	921030	1	CONNECTOR, flare type, 5/8" tube, 3/4"NPT male
6	------	1	FILTER ASSEMBLY, oil (See page 154 for parts)
	070469	3	CAPSCREW, 1/2"NF x 1-1/4"
	904208	3	LOCKWASHER, 1/2"
	911043	3	NUT, 1/2"NF
7	656279	1	TUBE ASSEMBLY, filter to valve, upper section (Includes nuts)
	921030	1	CONNECTOR, flare type, 5/8" tube, 3/4"NPT male
8	654810	1	TUBE ASSEMBLY, filter to valve, lower section (Includes nuts)
	923080	1	CONNECTOR, flare type, 5/8" tube, 3/4"NF male end (Includes O-RING 921349)
9	656284	1	ADAPTER ASSEMBLY, suction line (Includes item 10)
10	921887	1	O-RING, suction line adapter
11	656259	1	ELBOW ASSEMBLY, suction line (Includes nuts, washers and rubber sleeves)
12	656271	1	TUBE, suction line, lower section
13	656261	2	HOSE, suction line
	921912	8	CLAMP, hose, 1-1/16" to 2" diam.
14	656278	1	TUBE ASSEMBLY, suction line, upper section (Includes nut)
	921227	1	ELBOW, adjustable, 90°, flare type, 1" tube, 1-5/16" straight thread (Includes washer, nut and O-RING 921214)
15	660800	1	STRAINER ASSEMBLY, oil (See page 155 for parts)
	035718	4	CAPSCREW, 1/2"NC x 3/4"
	904208	4	LOCKWASHER, 1/2"
16	656277	1	TUBE ASSEMBLY, strainer to pump, rear section (Includes nut)
	921227	1	ELBOW, adjustable, 90°, flare type, 1" tube, 1-5/16" straight thread (Includes washer, nut and O-RING 921214)
17	656270	1	TUBE ASSEMBLY, strainer to pump intermediate section (Includes nut)
18	656246	1	HOSE, strainer to pump line (See HOSE PARTS)
19	665232	1	TUBE ASSEMBLY, strainer to pump, front section (Includes nuts)
20	659042	1	TEE, pump suction line (Includes nut, washer and item 21)
	919552	1	CAP, flare fitting, 3/8" tube

(Continued)

STEERING PUMP AND FILTERS (Continued)

ITEM	PART NO.	QTY.	DESCRIPTION
21	921205	1	O-RING, pump tee
22	638780	4	CLIP, suction tubes (1" diam., 17/32" bolt-hole)
23	903775	1	CAPSCREW, 3/8"NC x 7/8"
	904206	1	LOCKWASHER, 3/8"
	911115	1	WASHER, plain, SAE std., 3/8"
24	916311	1	CAPSCREW, 1/2"NC x 1-1/4"
	910244	1	WASHER, plain, SAE std., 1/2"
	064531	1	WASHER, plain (heavy)
	904208	1	LOCKWASHER, 1/2"
	911028	1	NUT, 1/2"NC
25	656281	1	CLIP, intermediate suction tube (For one 1" diam. line and one 5/8" diam. line, 9/16" bolt-hole)
26	637741	5	CLIP, pressure line tubes
27	903775	2	CAPSCREW, 3/8"NC x 7/8"
	904206	2	LOCKWASHER, 3/8"
	911115	2	WASHER, plain, SAE std., 3/8"
28	035718	1	CAPSCREW, 1/2"NC x 3/4"
29	035061	1	CAPSCREW, 1/2"NC x 1-1/4"
	904208	2	LOCKWASHER, 1/2"
	910244	2	WASHER, plain, SAE std., 1/2"
30	665335	1	ANGLE, tube supporting
	919225	1	CAPSCREW, 3/8"NC x 1-3/8"
	904206	1	LOCKWASHER, 3/8"
	044973	1	WASHER, plain

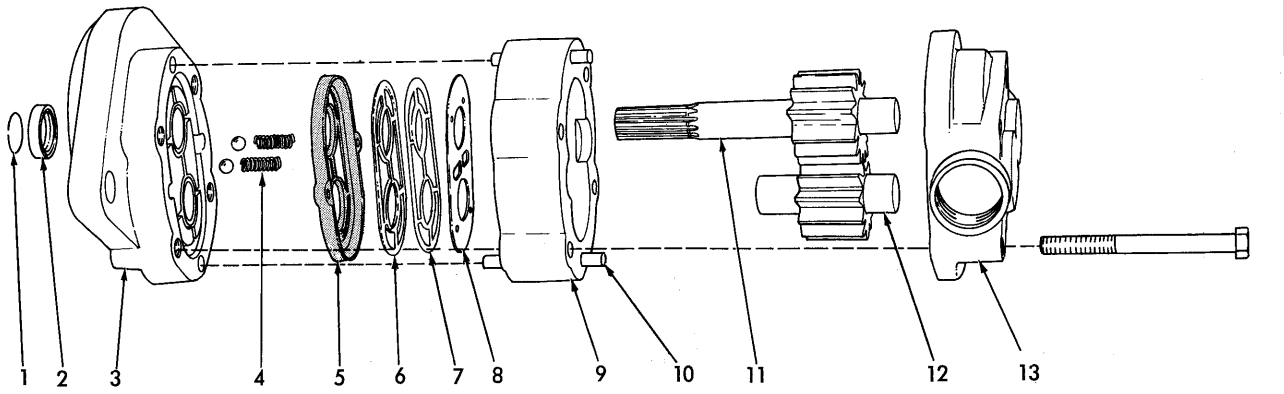

STEERING PUMP ASSEMBLY 0659036-8 T-73015

USAGE: See page 151

ITEM	PART NO.	QTY.	DESCRIPTION
1	0656775-4	1	RING, snap, drive gear
2	1131019-0	1	SEAL, oil
3	0655442-2	1	PLATE ASSY., front (Includes bushings)
4	0650679-4	2	SPRING, check valve
	0915903-9	2	BALL, steel, 7/32" diam.
5	0661605-6	1	SEAL, diaphragm (Early units)
	0677066-3	1	SEAL, diaphragm (Late units)
6	0661604-9	1	GASKET, diaphragm (Early units)
	0677067-1	1	GASKET, diaphragm (Late units)
7	0677068-9	1	GASKET, diaphragm (Late units)
8	0661603-1	1	DIAPHRAGM, sealing
9	0650245-4	1	BODY, center
10	0650180-3	2	PIN, dowel
11	0650181-1	1	GEAR ASSY., drive (Includes shaft)
12	0237769-5	1	GEAR ASSY., idler (Includes shaft)
13	0650179-5	1	PLATE ASSY., back (Includes bushings)
	0033751-9	4	CAPSCREW, 5/16"NC x 2-1/2"

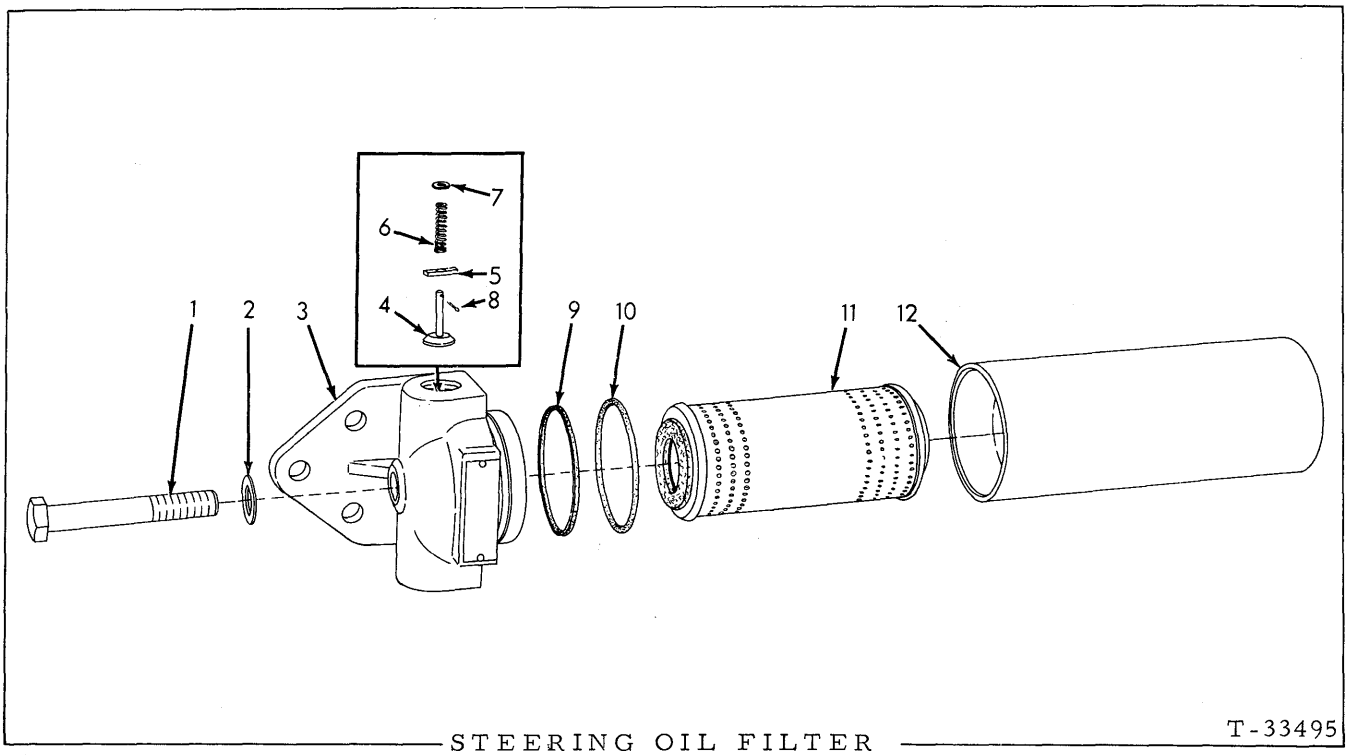

T-33495

STEERING OIL FILTER

USAGE: See page 151

ITEM	PART NO.	QTY.	DESCRIPTION
-	0631542-8	1	FILTER ASSY., oil (Includes items 1 thru 12)
1	0070299-3	1	CAPSCREW, head retaining (5/8"NF x 4")
2	0631869-5	1	WASHER, head retaining capscrew
3	0631846-3	1	HEAD
4	0646302-0	1	VALVE, by-pass
5	0631868-7	1	SPANNER, by-pass valve
6	0631870-3	1	SPRING, by-pass valve
7	0632060-0	1	WASHER, by-pass valve spring
8	0900970-5	1	PIN, cotter, 1/16" x 1/2"
9	0632062-6	1	RING, sealing, filter head
10	0632063-4	1	O-RING, filter head
11	0631828-1	1	ELEMENT KIT (Includes items 2, 9 and 10)
12	0631872-9	1	TANK

OIL STRAINER ASSEMBLY 660800

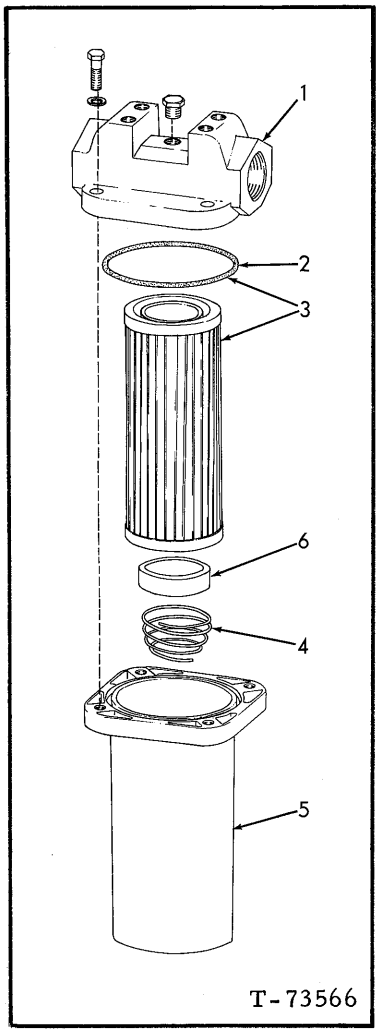

USAGE: See page 151

ITEM	PART NO.	QTY.	DESCRIPTION
1	661526	1	HEAD ASSEMBLY (Includes PLUG indented below)
	919134	1	PLUG, pipe, hex-hd., 1/8"NPT
	905662	4	CAPSCREW, 5/16"NC x 1-1/8"
	906959	4	LOCKWASHER, internal-teeth, 5/16"
2	923589	1	O-RING, body
3	661529	1	ELEMENT KIT (Includes item 2)
4	661528	1	SPRING, element
5	661527	1	BODY, oil strainer
6	662037	1	MAGNET

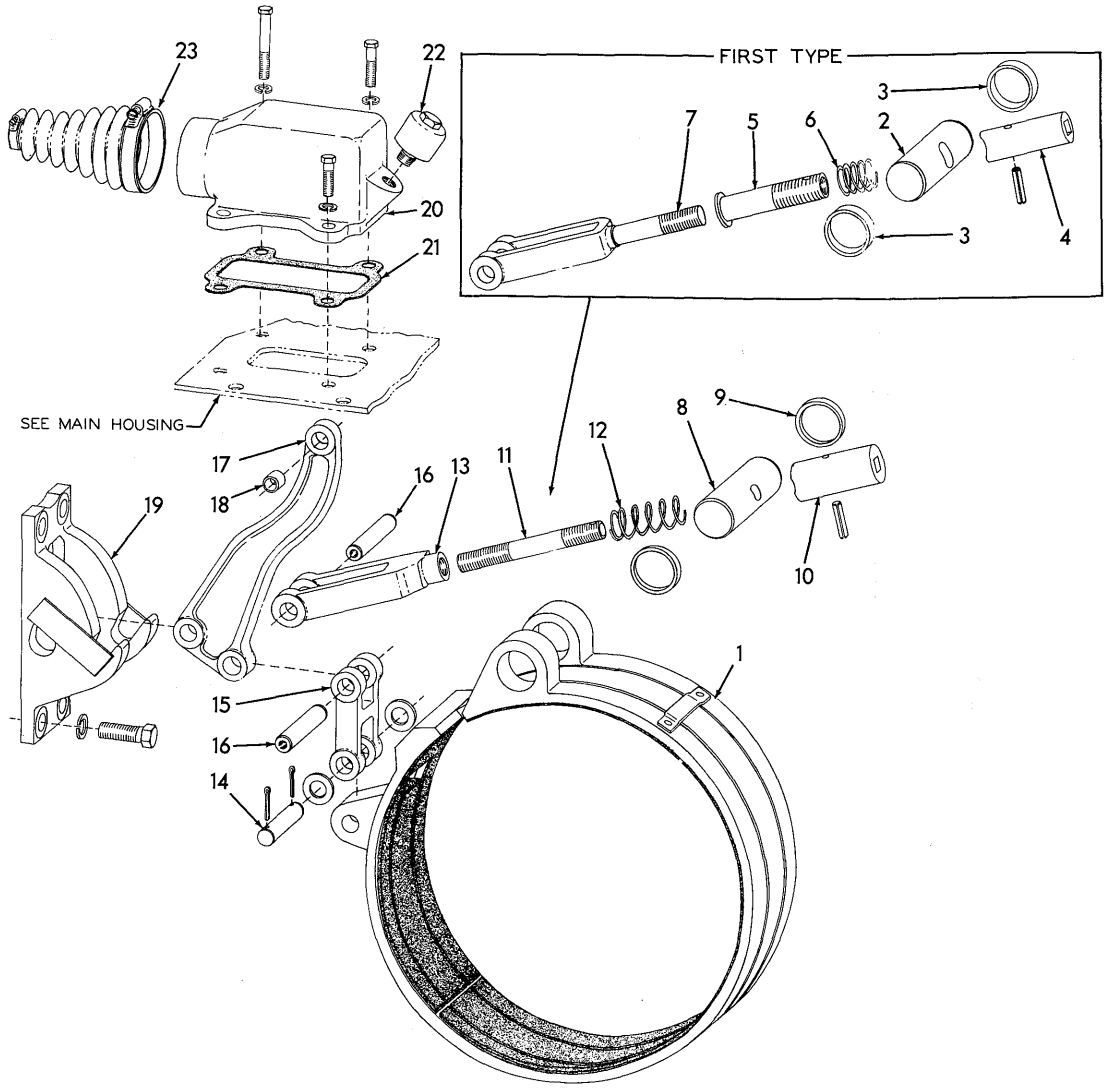
FIRST TYPE
SEE MAIN HOUSING
1
2
3
4
5
6
7
8
9
10
11
12
13
14
15
16
17
18
19
20
21
22
23

T-74886

BRAKES

* Loaders prior to serial No. 583
** Loaders serial No. 583 thru 1000; also serial No. 43C01001 and up

ITEM	PART NO.	QTY. *	QTY. **	DESCRIPTION
1	650328	2	2	BAND, brake
2	------	2	-	PIN, brake band (Order items 8 thru 13)
3	650253	4	-	SPACER, brake band pin
4	646994	2	-	BLOCK, band adjusting
	915797	2	-	PIN, spring, 3/16" x 1-1/4"
5	646912	2	-	SCREW, band adjusting
6	077309	2	-	SPRING, band adjusting
7	------	2	-	FORK, brake band (Order items 8 thru 13)
8	668292	-	2	PIN, brake band
9	668291	-	4	SPACER, brake band pin
10	668293	-	2	BLOCK, band adjusting
	915751	-	2	PIN, spring, 3/16" x 1-1/2"
11	668290	-	2	ROD, band adjusting
12	651245	-	2	SPRING, band adjusting
13	668295	-	2	FORK, brake band
14	650254	2	2	PIN, brake band yoke
	900806	4	4	PIN, cotter, 1/8" x 1"
	911100	4	4	WASHER, plain, SAE std., 5/8"
15	650269	2	2	YOKE, brake band
16	648138	4	-	PIN, brake lever
	668329	-	4	PIN, brake lever
17	650282	2	2	LEVER ASSY., brake band (Includes item 18)
18	049988	2	2	BUSHING, brake band lever
19	650280	2	2	BRACKET, brake band lever
	631795	8	8	CAPSCREW, Nylok, 5/8"NF x 1-3/4"
	904209	8	8	LOCKWASHER, 5/8"
20	648795	2	2	COVER, band linkage
	040382	6	6	CAPSCREW, 3/8"NC x 1-3/8"
	914847	1	1	CAPSCREW, 3/8"NC x 1-1/2" } Left Cover only
	056721	1	1	CAPSCREW, 3/8"NC x 2-1/2" } Left Cover only
	904206	8	8	LOCKWASHER, 3/8"
21	649205	2	2	GASKET, band linkage cover
22	050748	1	1	BREATHER, brake compartment (left side)
	907856	1	1	PLUG, pipe, hex-socket, 3/8"NPT (right side)
23	648167	2	2	BOOT, brake rod
	921914	2	2	CLAMP, hose, 2-5/16" to 3-1/4" diam.
	921911	2	2	CLAMP, hose, 11/16" to 1-1/4"

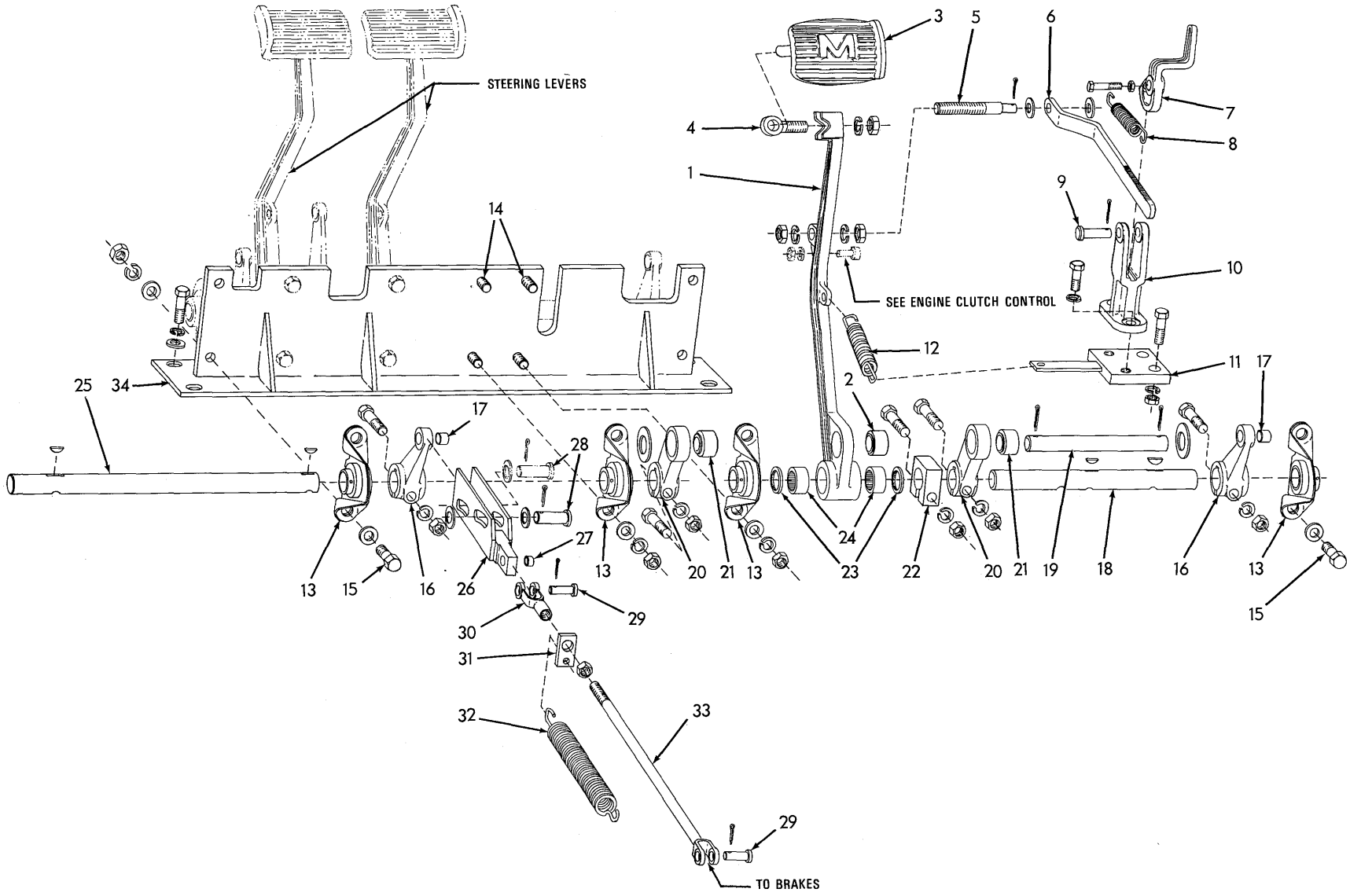

BRAKE CONTROL (Master)

T-74994

ITEM	PART NO.	QTY.	DESCRIPTION
1	654818	1	LEVER ASSEMBLY, pedal, master control (Includes item 2)
2	654453	1	BUSHING, brake master control pedal lever (spherical)
3	659487	1	PAD, brake master control pedal lever
4	050433	3	BOLT, eye, pedal pad
	904209	3	LOCKWASHER, 5/8"
	911044	3	NUT, 5/8"NF
5	656359	1	ROD, parking brake lock
	904209	2	LOCKWASHER, 5/8"
	911044	2	NUT, 5/8"NF
	910244	2	WASHER, plain, SAE std., 1/2"
	900805	1	PIN, cotter, 1/8" x 3/4"
6	656361	1	BAR, parking brake
7	656363	1	LOCK, parking brake
	903774	1	CAPSCREW, 5/16"NC x 2"
	906652	1	NUT, jam, 5/16"NC
8	049108	1	SPRING, parking brake lock
9	033074	1	PIN, parking brake lock
	910967	1	PIN, cotter, 1/8" x 7/8"
10	057196	1	BRACKET, parking brake lock
	614478	2	CAPSCREW, 1/2"NF x 1-3/8"
	904208	2	LOCKWASHER, 1/2"

(Continued)

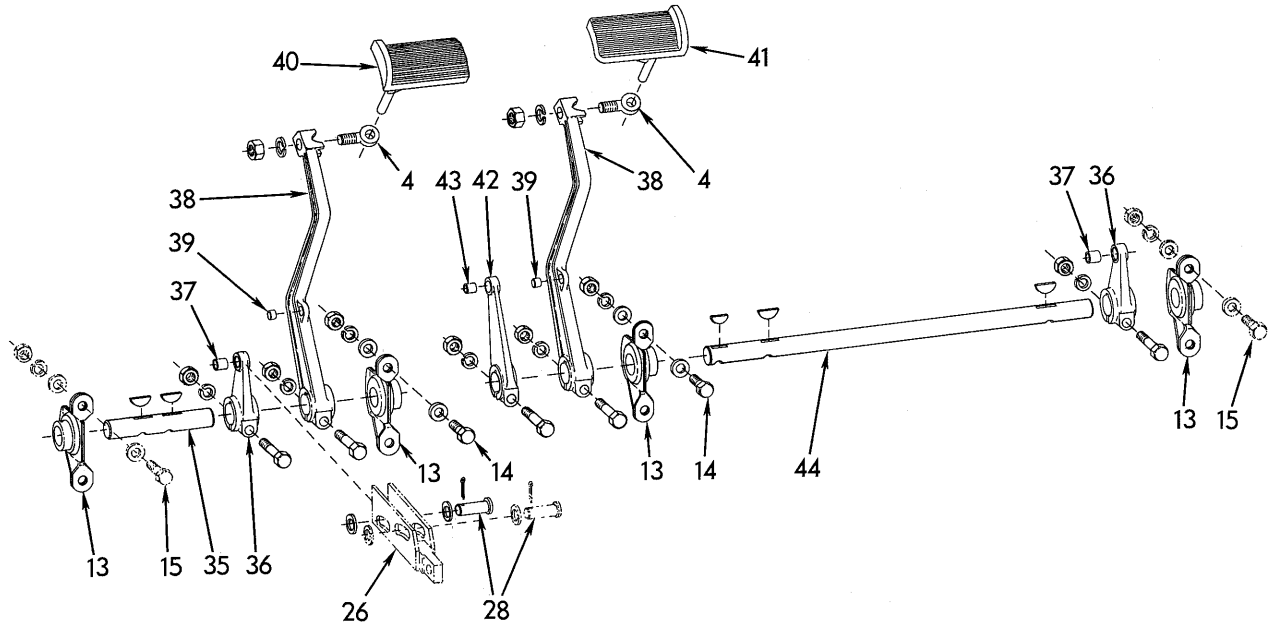

STEERING CONTROLS

ITEM	PART NO.	QTY.	DESCRIPTION
11	656366	1	PLATE, mounting, parking brake bracket
	916313	2	CAPSCREW, 1/2"NC x 1-3/4"
	904208	2	LOCKWASHER, 1/2"
	911028	2	NUT, 1/2"NC
12	043881	1	SPRING, retracting, brake master control pedal lever
13	650026	8	BEARING, ball, pedal shaft
14	035073	8	CAPSCREW, 1/2"NF x 1-3/4"
15	035068	4	CAPSCREW, 1/2"NF x 2-1/4"
	064531	16	WASHER, plain
	904208	12	LOCKWASHER, 1/2"
	911043	12	NUT, 1/2"NF
16	654782	2	LEVER ASSEMBLY, brake master control shafts, outer (Includes item 17)
	035278	2	CAPSCREW, 1/2"NF x 2-3/4"
	904208	2	LOCKWASHER, 1/2"
	911043	2	NUT, 1/2"NF
17	052669	2	BUSHING, brake master control lever
18	654716	1	SHAFT, brake master control pedal lever
	631883	1	KEY, woodruff, #21, 1/4"" x 1-1/4" (hardened)
	905126	1	KEY, woodruff, #15, 1/4" x 1"
19	655527	1	SHAFT, connecting, brake master control pedal lever
	911159	2	WASHER, plain, SAE std., 1"
	900807	2	PIN, cotter, 1/4" x 1-1/4"
20	656357	2	LEVER ASSEMBLY, brake master control shafts, inner (Includes item 21)
	035278	2	CAPSCREW, 1/2"NF x 2-3/4"
	904208	2	LOCKWASHER, 1/2"
	911043	2	NUT, 1/2"NF
21	654453	2	BUSHING, brake master control shaft lever (spherical)
22	052639	1	COLLAR, pedal lever retaining
	035278	1	CAPSCREW, 1/2"NF x 2-3/4"
	904208	1	LOCKWASHER, 1/2"
	911043	1	NUT, 1/2"NF
23	053243	2	SEAL, dust, brake master control pedal lever
24	052642	2	BEARING, needle, brake master control pedal lever
25	654715	1	SHAFT, brake master control, left side
	631883	1	KEY, woodruff #21, 1/4" x 1-1/4" (hardened)
	905126	1	KEY, woodruff #15, 1/4" x 1"
26	659725	2	YOKE ASSEMBLY, slip (Includes item 27)
27	049988	2	BUSHING, slip yoke
28	656807	4	PIN, slip yoke
	911100	8	WASHER, plain, SAE std., 5/8"
	900806	4	PIN, cotter, 1/8" x 1"
29	049993	4	PIN, brake rod yoke
	900806	4	PIN, cotter, 1/8" x 1"
30	068389	2	YOKE, control rod

(Continued)

ITEM	PART NO.	QTY.	DESCRIPTION
31	650039	2	PLATE, control rod spring
32	035942	2	SPRING, control rod retraction
33	656362	2	ROD, brake control
	913830	2	NUT, jam, 1/2"NF
34	654687	1	PLATE, mounting
	035236	4	CAPSCREW, 1/2"NC x 1-3/4"
	904208	4	LOCKWASHER, 1/2"
	064531	4	WASHER, plain
35	654592	1	SHAFT, left brake pedal lever
	631883	2	KEY, woodruff #21, 1/4" x 1-1/4"(hardened)
36	654767	2	LEVER ASSEMBLY, pedal front shaft (Includes item 37)
	035278	2	CAPSCREW, 1/2"NF x 2-3/4"
	904208	2	LOCKWASHER, 1/2"
	911043	2	NUT, 1/2"NF
37	052669	2	BUSHING, pedal shaft lever
38	654454	2	LEVER ASSEMBLY, brake pedal (Includes item 39)
	035278	2	CAPSCREW, 1/2"NF x 2-3/4"
	904208	2	LOCKWASHER, 1/2"
	911043	2	NUT, 1/2"NF
39	624584	2	BUSHING, pedal lever
40	623151	1	PAD, left brake pedal lever
41	641820	1	PAD, right brake pedal lever
42	650497	1	LEVER ASSEMBLY, steering valve actuating (Includes item 43)
	035278	1	CAPSCREW, 1/2"NF x 2-3/4"
	904208	1	LOCKWASHER, 1/2"
	911043	1	NUT, 1/2"NF
43	624584	1	BUSHING, steering valve lever
44	654722	1	SHAFT, right brake pedal lever
	631883	2	KEY, woodruff #21, 1/4" x 1-1/4" (hardened)
	905126	1	KEY, woodruff #15, 1/4" x 1"

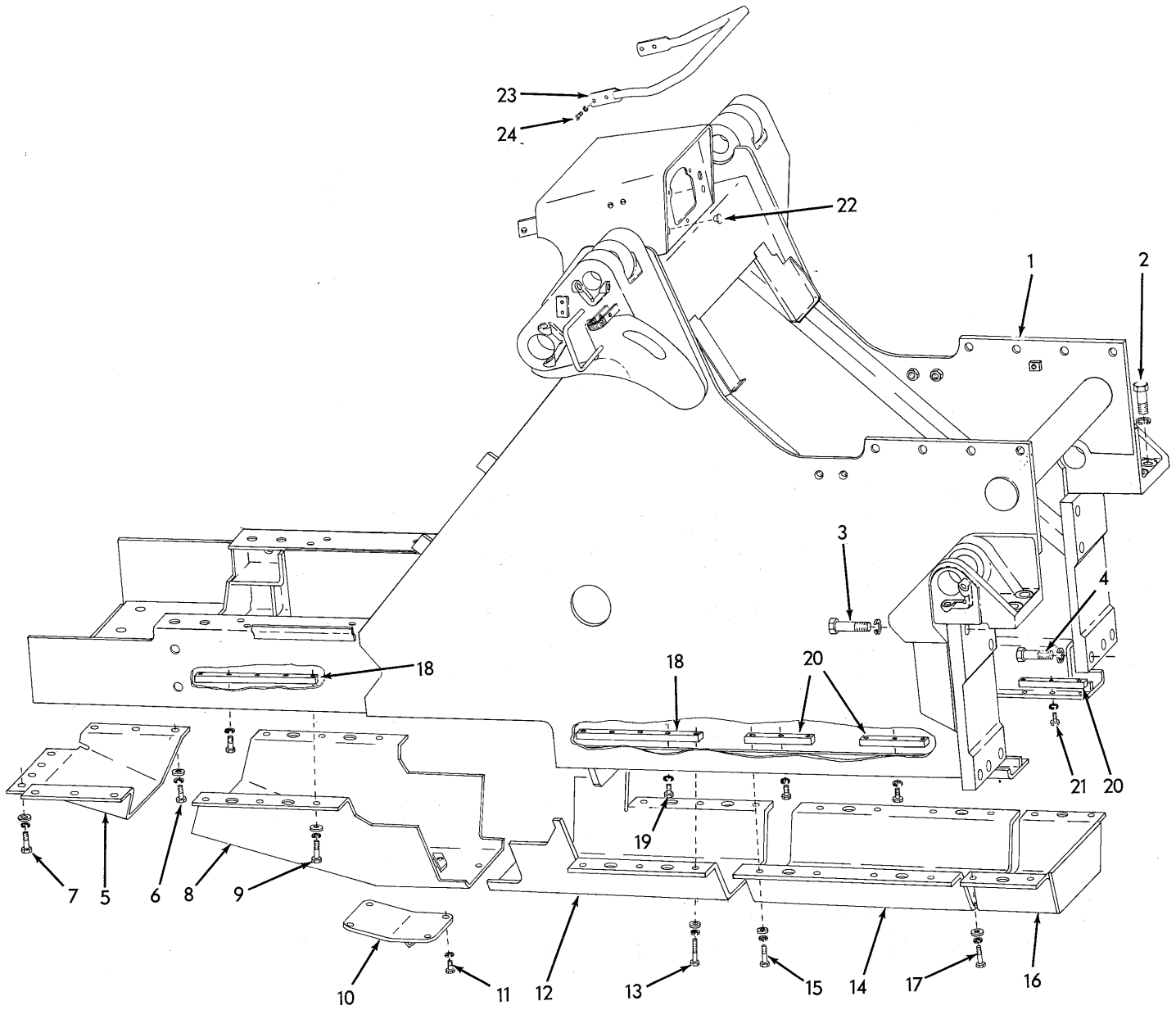

MAIN FRAME

MAIN FRAME

ITEM	PART NO.	QTY.	DESCRIPTION
1	0655937-1	1	FRAME, main (Loaders prior to #1001)
	0666942-8	1	FRAME, main (Loader units #1001 and up)
2	0655948-8	4	CAPSCREW, 1"NF x 2-3/4"
3	0927637-9	4	CAPSCREW, 1"NF x 4-3/4"
4	0928235-1	10	CAPSCREW, Nylok, 1"NF x 3-3/4"
	0914728-1	18	LOCKWASHER, 1"
5	0655938-9	1	SUPPORT, fuel tank (Loaders prior to #1001)
	0666923-8	1	SUPPORT, fuel tank (Loader units #1001 and up)
6	0922726-5	6	CAPSCREW, 1/2"NF x 1-1/2"
7	0921556-7	4	CAPSCREW, 1/2"NC x 2"
	0912441-3	10	LOCKWASHER, 1/2"
	0064531-7	10	WASHER, plain
8	0655940-5	1	GUARD ASSY., crankcase (Includes items 10 and 11)
9	0927236-0	6	CAPSCREW, 1/2"NF x 2"
	0912441-3	6	LOCKWASHER, 1/2"
	0064531-7	6	WASHER, plain
10	0656337-3	1	COVER, oil drain hole
11	0070467-6	4	CAPSCREW, 1/2"NF x 1"
	0904208-6	4	LOCKWASHER, 1/2"
12	0655942-1	1	GUARD, torque converter (Loaders prior to #1001)
	0666920-4	1	GUARD, torque converter (Loader units #1001 and up)
13	0916420-3	6	CAPSCREW, 1/2"NF x 2-1/4"
	0912441-3	6	LOCKWASHER, 1/2"
	0064531-7	6	WASHER, plain
14	0655943-9	1	GUARD, transmission, front section
15	0916420-3	8	CAPSCREW, 1/2"NF x 2-1/4"
	0912441-3	8	LOCKWASHER, 1/2"
	0064531-7	8	WASHER, plain
16	0655947-0	1	GUARD, transmission, rear section (Loaders prior to #1001)
	0666922-0	1	GUARD, transmission, rear section (Loader units #1001 and up)
17	0916420-3	4	CAPSCREW, 1/2"NF x 2-1/4"
	0912441-3	4	LOCKWASHER, 1/2"
	0064531-7	4	WASHER, plain
18	0655941-3	4	BAR, tapped, guard attachment (long)
19	0927574-4	8	CAPSCREW, 1/2"NF x 1-3/8"
	0912441-3	8	LOCKWASHER, 1/2"
20	0655944-7	6	BAR, tapped, guard attachment (short)
21	0927574-4	6	CAPSCREW, 1/2"NF x 1-3/8"
	0912441-3	6	LOCKWASHER, 1/2"
22	0658770-3	1	PLUG, plastic (Removed when Primer is installed)
23	0660603-2	1	BAR, grab
24	0921565-8	4	CAPSCREW, 3/8"NC x 1-1/2"
	0910287-2	4	LOCKWASHER, 3/8"

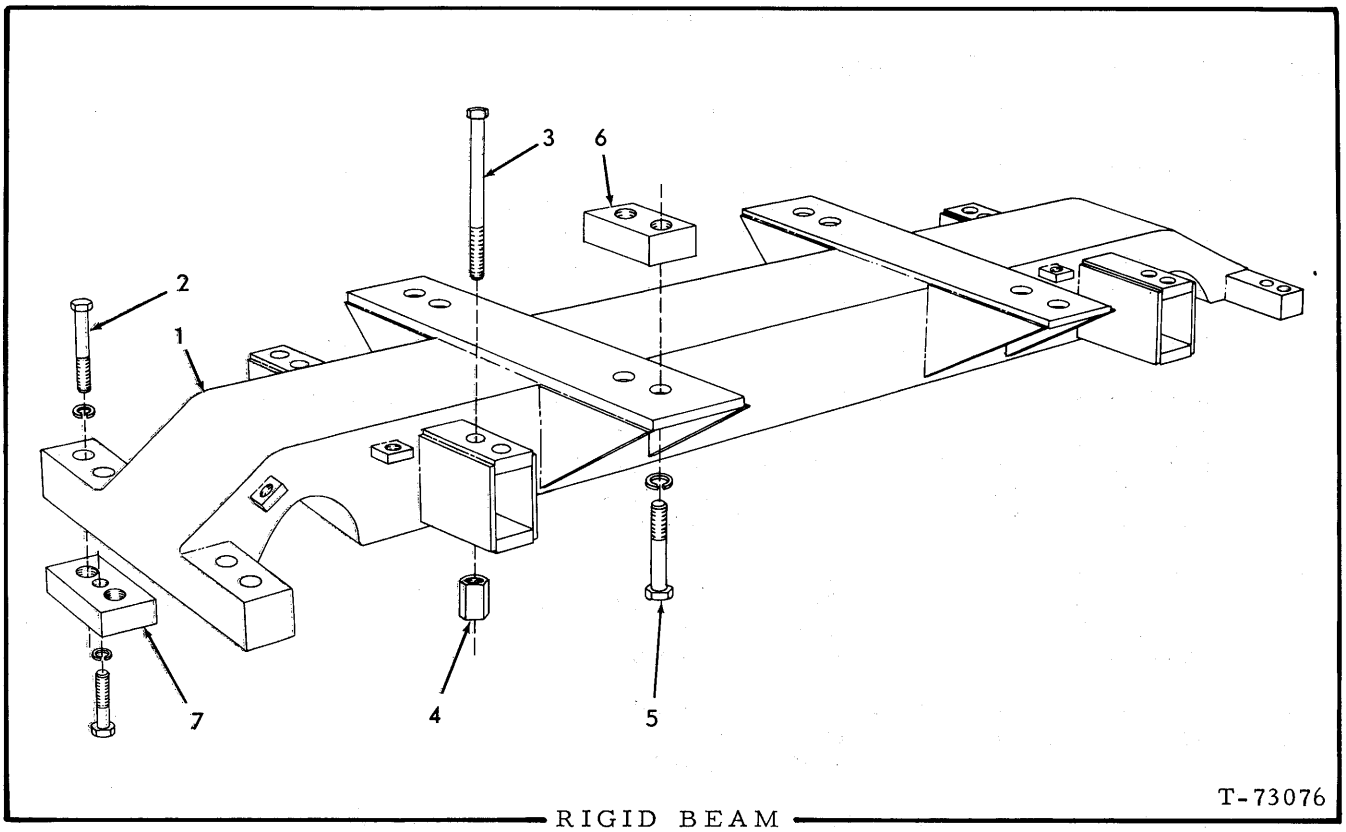

RIGID BEAM

ITEM	PART NO.	QTY.	DESCRIPTION
1	669249	1	BEAM, rigid
2	926283	8	CAPSCREW, beam to track frame (1"NF x 5-3/4")
	910916	8	LOCKWASHER, 1"
3	654556	8	CAPSCREW, beam to track frame (1"NF x 11-1/4")
4	600236	8	NUT, high, 1"NF
5	052077	8	CAPSCREW, beam to main frame (1-1/4"NF x 6")
	904210	8	LOCKWASHER, 1-1/4"
6	654557	4	BLOCK, tapped (main frame)
7	655756	2	BLOCK, tapped (track frame)
	915659	2	CAPSCREW, 1/2"NF x 2-1/4" (Early units)
	916315	2	CAPSCREW, 1/2"NC x 2-1/4" (Late units)
	904208	2	LOCKWASHER, 1/2"

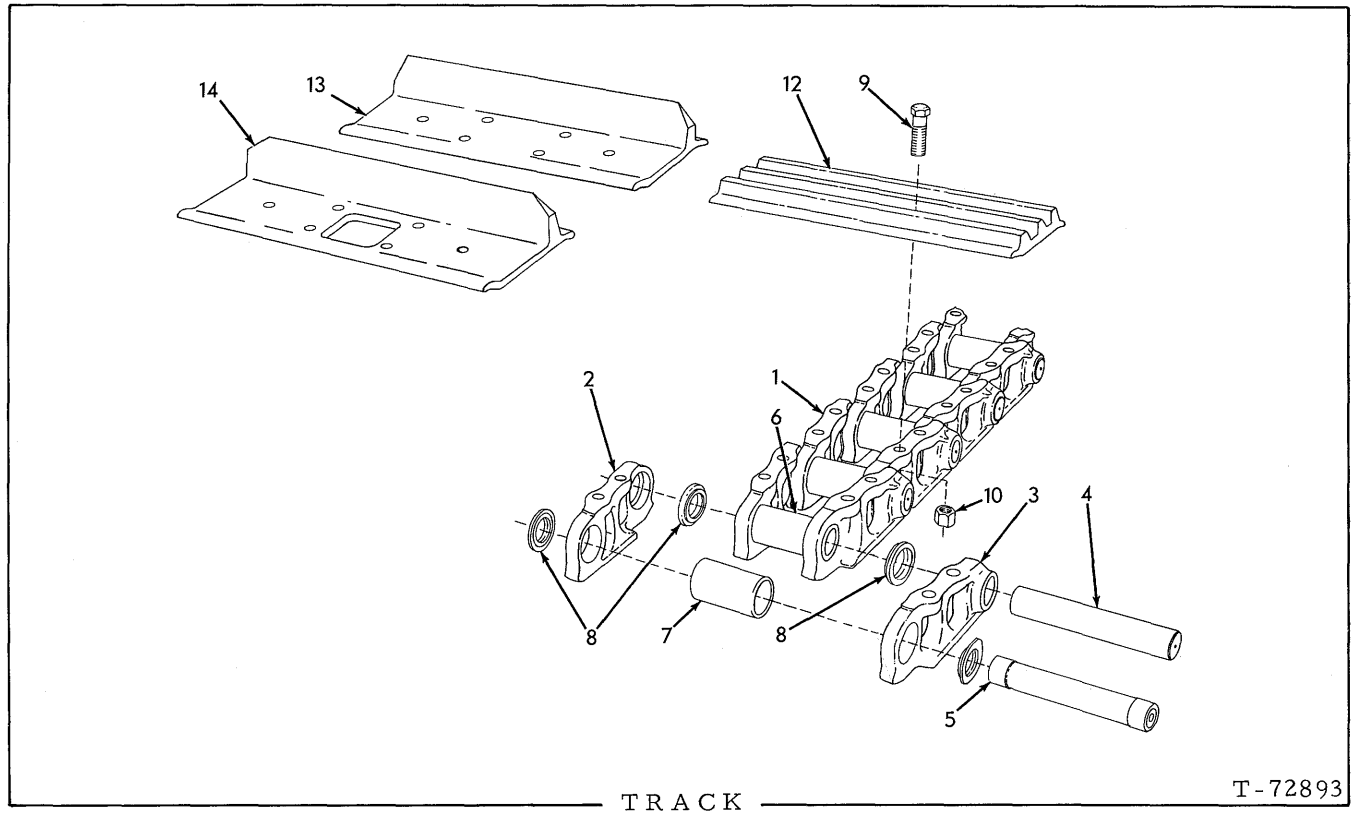

TRACK

* Standard equipment (Sealed type)
** Special equipment (Unsealed type)(Loaders prior to unit #43C01044)
*** Special equipment (Unsealed type)(Loaders unit #43C01044 and up)

ITEM	PART NO.	QUANTITY *	**	***	DESCRIPTION
1	0668950-9	2	-	-	CHAIN ASSY. (42 links)(Consists of items 2 thru 8)
	0668994-7	-	2	-	CHAIN ASSY. (42 links)(Consists of items 2 thru 8)
	0677623-1	-	-	2	CHAIN ASSY. (42 links)(Consists of items 2 thru 8)
2	0632975-9	82	84	—	LINK, left
	0676871-7	-	-	82	LINK, left
	0664957-8	2	-	2	LINK, master, left
3	0664956-0	82	84	—	LINK, right
	0676872-5	-	-	82	LINK, right
	0645934-1	2	-	2	LINK, master, right
4	0633365-2	82	82	82	PIN
5	0665383-6	2	2	2	PIN, master
6	0645920-0	82	-	-	BUSHING (6-15/16" long)
	0633364-5	-	82	82	BUSHING (7-3/4" long)
7	0645947-3	2	2	2	BUSHING, master (6-3/4" long)

(Continued)

ITEM	PART NO.	QUANTITY *	**	***	DESCRIPTION
8	0645784-0	168	–	–	SEAL
	0633266-2	-	4	-	SPACER, master bushing (1/2" thick)
	0679734-4	-	-	4	SPACER, master bushing (3/8" thick)
9	0097324-8	336	336	336	BOLT, track shoe (3/4"NF x 2-1/2")
10	0083617-1	336	336	336	NUT, high, 3/4"NF
11	0644381-6	1	1	1	GAUGE, track wear (Not illustrated)

					TRACK SHOES	COMPLETE TRACK ASSEMBLIES WITH SHOES (2 Required) * (42 links)	** (42 links)	*** (42 links)
12	0663970-2	84	84	84	SHOE, semi-grouser, open-center, 18". . .	0668952-5	---------	0666772-9
13	0633380-1	84	–	–	SHOE, grouser 18". . . .	0677577-9	---------	---------
14	0633337-1	84	–	–	SHOE, grouser, open-center, 18" . . .	0668959-0	---------	---------

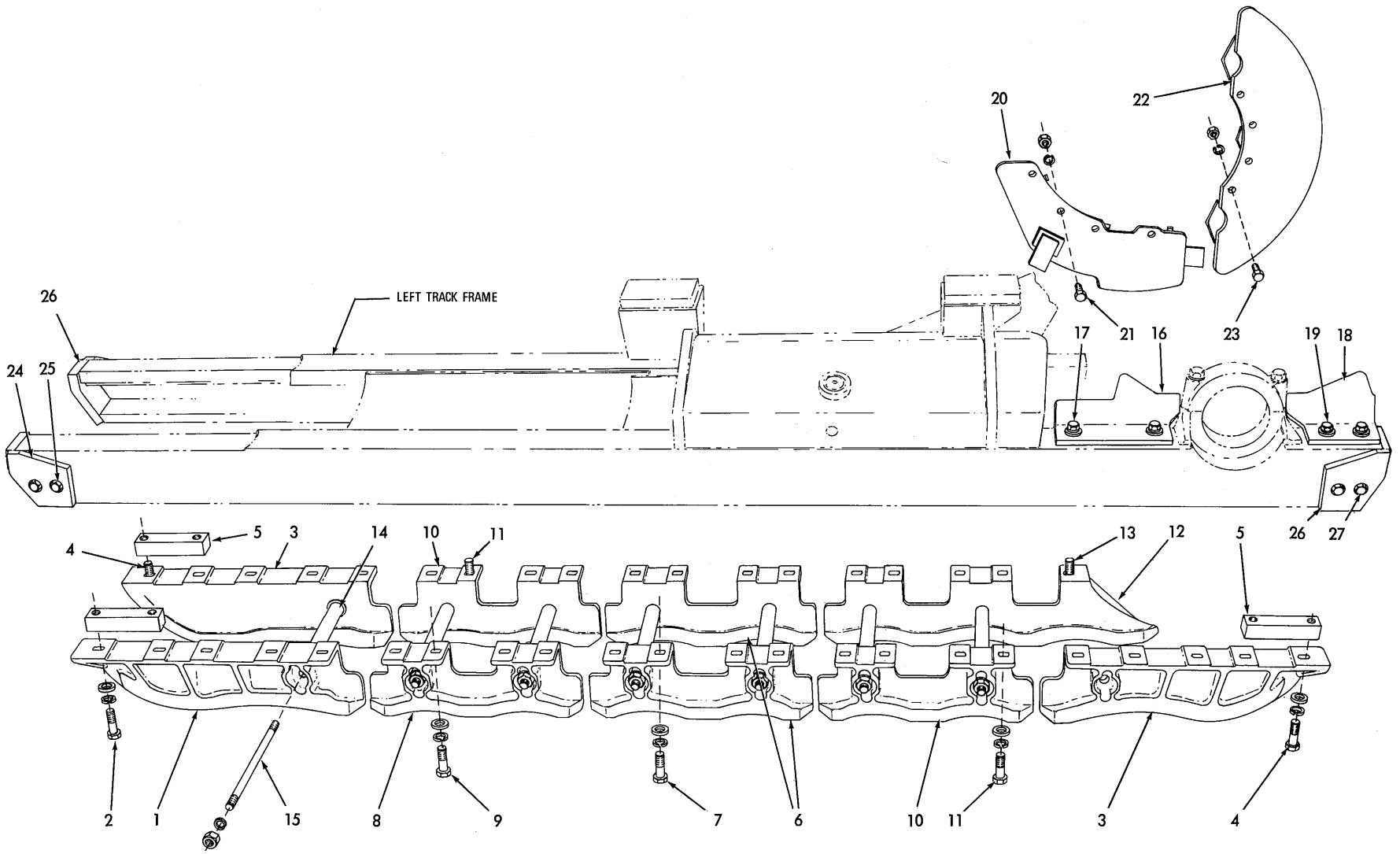

TRACK FRAME GUARDS

TRACK FRAME GUARDS

* Partial guarding. Standard equipment
** Full guarding. Special equipment

ITEM	PART NO.	QTY. *	QTY. **	DESCRIPTION
1	655749	3	3	GUARD, end section, left hand
2	928146	15	15	CAPSCREW, 3/4"NF x 3-1/4"
	904369	15	15	LOCKWASHER, 3/4"
	677012	15	15	WASHER, plain
3	655750	3	3	GUARD, end section, right hand
4	928146	15	15	CAPSCREW, 3/4"NF x 3-1/4"
	904369	15	15	LOCKWASHER, 3/4"
	677012	15	15	WASHER, plain
5	632323	12	12	BLOCK, tapped, guard attachment
6	655766	-	4	GUARD, center section
7	916335	-	16	CAPSCREW, 3/4"NF x 3-1/4"
	904369	-	16	LOCKWASHER, 3/4"
	061689	-	16	WASHER, plain
8	656405	-	3	GUARD, intermediate section, left hand
9	916335	-	12	CAPSCREW, 3/4"NF x 3-1/4"
	904369	-	12	LOCKWASHER, 3/4"
	061689	-	12	WASHER, plain
10	656406	-	3	GUARD, intermediate section, right hand
11	916335	-	12	CAPSCREW, 3/4"NF x 3-1/4"
	904369	-	12	LOCKWASHER, 3/4"
	061689	-	12	WASHER, plain
12	655747	-	1	GUARD, rear inner section, left side
	655748	-	1	GUARD, rear inner section, right side
13	916335	-	10	CAPSCREW, 3/4"NF x 3-1/4"
	904369	-	10	LOCKWASHER, 3/4"
	061689	-	10	WASHER, plain
14	082915	2	14	SPACER, guard bracing
	911116	4	4	WASHER, plain, SAE std., 7/8"
15	655193	2	14	ROD, guard bracing
	914727	4	28	LOCKWASHER, 7/8"
	911046	4	28	NUT, 7/8"NF
16	655739	1	1	PLATE, front closure, left side — Loaders prior to #1001
	655740	1	1	PLATE, front closure, right side — Loaders prior to #1001
	669595	1	1	PLATE, front closure, left side — Loader units #01001 and up
	669596	1	1	PLATE, front closure, right side — Loader units #01001 and up
17	035073	4	4	CAPSCREW, 1/2"NF x 1-3/4" (Early units)
	920585	4	4	CAPSCREW, 1/2"NC x 1-3/4" (Late units)
	912441	4	4	LOCKWASHER, 1/2"
	677008	4	4	WASHER, plain
18	655741	1	1	PLATE, rear closure, left side — Loaders prior to #1001
	655742	1	1	PLATE, rear closure, right side — Loaders prior to #1001
	669593	1	1	PLATE, rear closure, left side — Loader units #01001 and up
	669594	1	1	PLATE, rear closure, right side — Loader units #01001 and up
19	035073	4	4	CAPSCREW, 1/2"NF x 1-3/4" (Early units)
	920585	4	4	CAPSCREW, 1/2"NC x 1-3/4" (Late units)
	912441	4	4	LOCKWASHER, 1/2"
	677008	4	4	WASHER, plain

(Continued)

ITEM	PART NO.	*	**	DESCRIPTION	
20	656391	-	1	GUARD, track sprocket, lower left	Loaders prior to #1000
	656392	-	1	GUARD, track sprocket, lower right	
	669937	-	1	GUARD, track sprocket, lower left	Loader units #01001 and up
	669938	-	1	GUARD, track sprocket, lower right	
21	916314	-	8	CAPSCREW, 1/2"NC x 1-3/4"	
	904208	-	8	LOCKWASHER, 1/2"	
	911028	-	8	NUT, 1/2"NC	
22	656393	-	2	GUARD, track sprocket, upper (Loaders prior to #1000)	
	669924	-	2	GUARD, track sprocket, upper (Loader units #01001 and up)	
23	916314	-	8	CAPSCREW, 1/2"NC x 1-3/4"	
	904208	-	8	LOCKWASHER, 1/2"	
	911028	-	8	NUT, 1/2"NC	
24	656749	-	3	GUARD, end, left hand	
25	023465	-	6	CAPSCREW, 5/8"NF x 1-3/4"	
	904209	-	6	LOCKWASHER, 5/8"	
	911044	-	6	NUT, 5/8"NF	
26	656750	-	3	GUARD, end, right hand	
27	023465	-	6	CAPSCREW, 5/8"NF x 1-3/4"	
	904209	-	6	LOCKWASHER, 5/8"	
	911044	-	6	NUT, 5/8"NF	

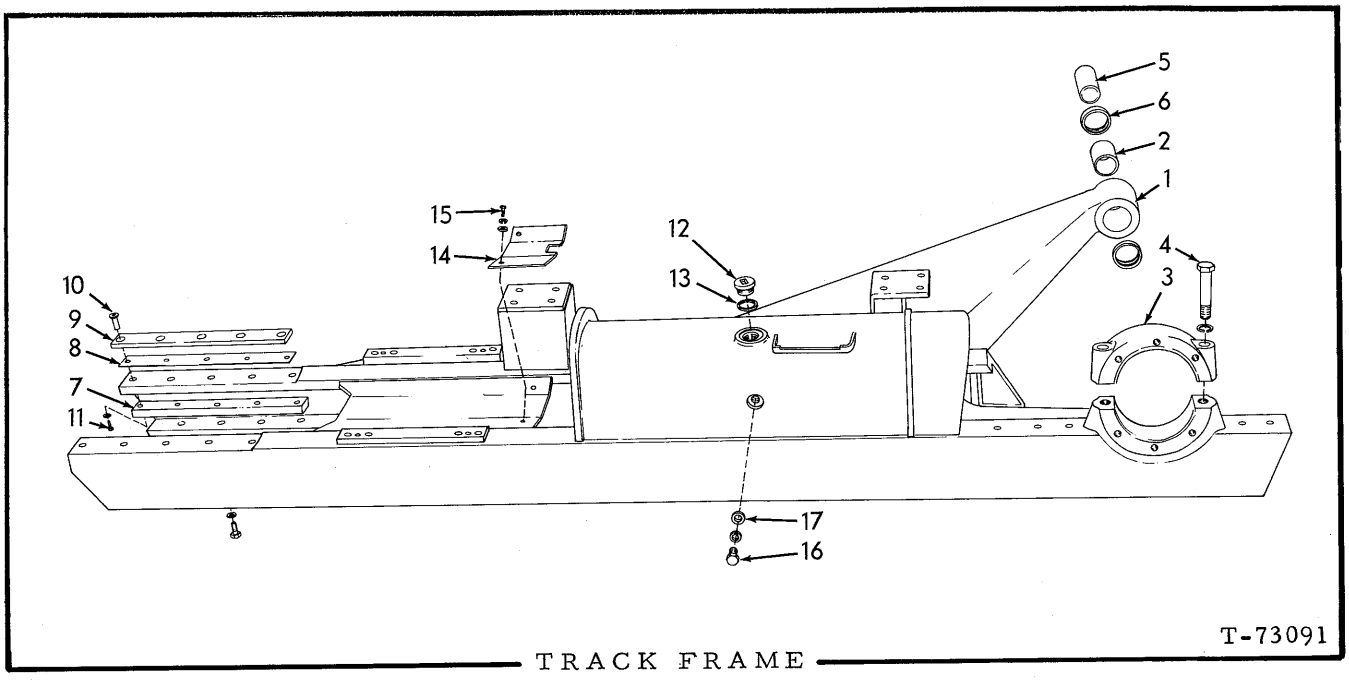

TRACK FRAME

ITEM	PART NO.	QTY.	DESCRIPTION
1	-------	1	FRAME ASSY., left (Includes items 2 thru 4)(Original equipment. Order FRAME ASSY. 0678385-6 and SERVICE KIT 0680081-7. See page 190)
	0678385-6	1	FRAME ASSY., left (Includes item 2 thru 4)(Service replacement)
	-------	1	FRAME ASSY., right (Includes items 2 thru 4)(Original equipment. Order FRAME ASSY. 0678386-4 and SERVICE KIT 0680082-5. See page 190)
	0678386-4	1	FRAME ASSY., right (Includes items 2 thru 4)(Service replacement)
2	0056261-1	2	BUSHING, connecting shaft
3	0056895-6	2	CAP, sprocket shaft bearing
4	0925954-0	4	CAPSCREW, 3/4"NF x 4-1/2"
	0914726-5	4	LOCKWASHER, 3/4"
5	0655765-6	2	SHAFT, connecting
6	0629733-7	4	SEAL, connecting shaft
7	0631031-2	4	BAR, slide, track idler, lower
8	0637701-4	4	SHIM, slide bar (.014" thick. Use as required)
	0632580-7	8	SHIM, slide bar (.028" thick. Use as required)
9	0639021-5	4	BAR, slide, track idler, upper
10	0631034-6	20	DOWEL, tapped, track idler slide bar
11	0646045-5	20	CAPSCREW, Nylok, 3/8"NF x 1"
	0647080-1	20	WASHER, plain
12	0035250-0	2	PLUG, oil filler, release spring compartment
13	0667252-1	2	GASKET, oil filler plug
14	0655752-4	2	PLATE, dirt closure (Original equipment)
	0678848-3	2	PLATE, dirt closure (Use with service replacement Frame)
15	0923193-7	4	CAPSCREW, 3/8"NF x 1-1/4"
	0677006-9	4	WASHER, plain
16	0916270-2	2	CAPSCREW, oil level check (3/8"NC x 1/2")
	0922464-3	2	WASHER, plain
17	0663967-8	2	WASHER, sealing, oil level capscrew

Effective with loader #415

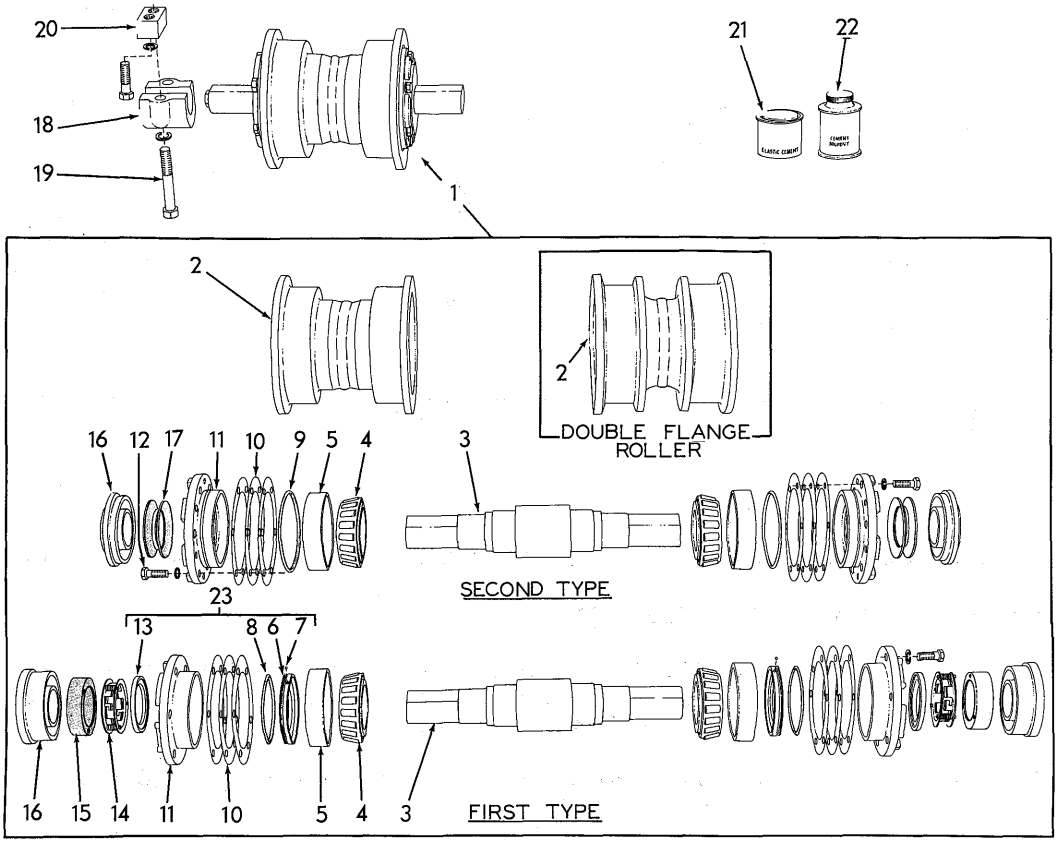

TRACK ROLLER

USAGE: Standard equipment.

* Loader prior to serial No. 1000; also on Loader unit No. 43C01001 thru 43C01033.
** Loader unit No. 43C01034 and up.

ITEM	PART NO.	QTY. *	QTY. **	DESCRIPTION
1	0632983-3	1	-	ROLLER ASSY., single flange (Consists of items 2 thru 8 and 10 thru 16)
	0669682-7	1	-	ROLLER ASSY., double flange (Consists of items 2 thru 8 and 10 thru16)
	0675323-0	-	1	ROLLER ASSY., single flange (Consists of items 2 thru 5, 9 thru 12, 16 and 17)
	0675327-1	-	1	ROLLER ASSY., double flange (Consists of items 2 thru 5, 9 thru 12, 16 and 17)
2	0632982-5	1	-	ROLLER, single flange
	0669683-5	1	-	ROLLER, double flange
	0675322-2	-	1	ROLLER, single flange
	0675326-3	-	1	ROLLER, double flange
3	0622002-4	1	1	SHAFT

(Continued)

ITEM	PART NO.	QTY. *	QTY. **	DESCRIPTION
4	0087027-9	2	-	CONE ASSY., bearing
	0673415-6	-	2	CONE ASSY., bearing
5	0680631-9	2	2	CUP, bearing
6	0645976-2	2	-	□RING, seal, inner
7	0905357-0	2	-	□BALL, steel, 3/16" diam.
8	0923588-8	2	-	□O-RING, seal packing
9	0924772-7	-	2	O-RING, retainer (Used on unit #1034 thru #1047)
	0923820-5	-	2	O-RING, retainer (Unit #1048 and up)
10	0655464-6	4	4	SHIM, bearing adjustment (.003" thick) } Use as req'd.
	0077287-1	4	4	SHIM, bearing adjustment (.007" thick)
	0077286-3	4	4	SHIM, bearing adjustment (.010" thick)
	0077285-5	2	2	SHIM, bearing adjustment (.032" thick)
11	0665815-7	2	-	RETAINER, bearing
	0670074-4	-	2	RETAINER, bearing (used on unit # 1034 thru # 1047)
	0679613-0	-	2	RETAINER, bearing (Unit #1048 and up)
12	0922155-7	12	12	CAPSCREW, 1/2" NF x 1-1/4"
	0912441-3	12	12	LOCKWASHER, 1/2"
13	0051124-6	2	-	□RING, seal, outer
14	0051121-2	2	-	SPRING ASSEMBLY, seal (Serviced only as a unit)
15	0051112-1	2	-	BOOT, seal spring
16	0074487-0	2	-	RETAINER, seal
	0670073-6	-	2	RETAINER, seal
17	0670071-0	-	2	SEAL ASSY., (Consists of 2 seals. Serviced only as a unit)
18	0066692-5	2	2	BRACKET, attaching
19	0925947-4	4	4	CAPSCREW, 3/4"NF x 4-1/4"
	0914726-5	4	4	LOCKWASHER, 3/4"
20	0631290-4	4	4	BLOCK, attaching capscrews
	0921171-5	4	4	CAPSCREW, 3/4"NF x 2-3/4" } Not used when Track Frame
	0914726-5	4	4	LOCKWASHER, 3/4" } Guards are installed
21	0033288-2	-	-	CEMENT, neoprene, 1/2 pint can } For cementing seal boots
22	0054890-9	-	-	SOLVENT, neoprene cement, 1/2pint can } For cementing seal boots
23	0083212-1	1	-	SEAL KIT (Includes items 6, 7, 8 and 13)

NOTE: All quantities indicated above are for one (1) roller only. The number of rollers used is 14, 6 single flange and 8 double flange.

□Components of item 23

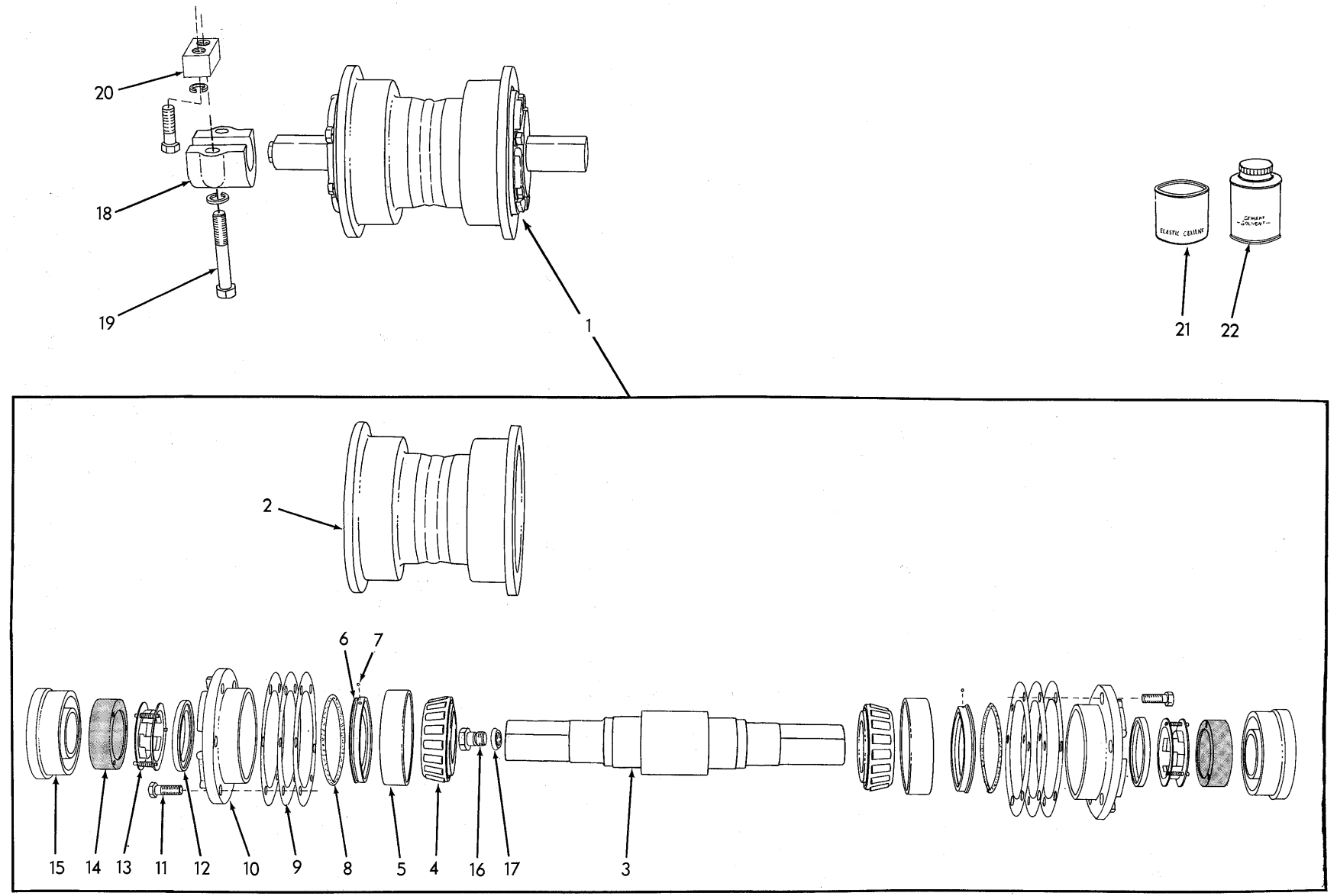

TRACK ROLLERS (Special)

T-5149

TRACK ROLLERS

USAGE: Special. Units for Steel Mill slag removal

ITEM	PART NO.	QTY.	DESCRIPTION	
1	0666593-9	1	ROLLER ASSEMBLY, single flange (Consists of items 2 thru 17)	
2	0632982-5	1	ROLLER, single flange	
3	0666591-3	1	SHAFT	
4	0087027-9	2	CONE ASSEMBLY, bearing	
5	0087026-1	2	CUP, bearing	
6	0645976-2	2	RING, seal, inner	
7	0905357-0	2	BALL, steel, 3/16" diam.	
8	0926078-7	2	O-RING, seal packing	
9	0655464-6	4	SHIM, bearing adjustment (.003" thick)	Use as req'd
	0077287-1	4	SHIM, bearing adjustment (.007" thick)	
	0077286-3	4	SHIM, bearing adjustment (.010" thick)	
	0077285-5	2	SHIM, bearing adjustment (.032" thick)	
10	0666615-0	2	RETAINER, bearing	
11	0922155-7	12	CAPSCREW, 1/2"NF x 1-1/4"	
12	0051124-6	2	RING, seal, outer	
13	0051121-2	2	SPRING ASSEMBLY, seal (Serviced only as a unit)	
14	0666592-1	2	BOOT, seal spring	
15	0074487-0	2	RETAINER, seal	
16	0034042-2	1	PLUG, shaft lubricating hole	
17	0034043-0	1	GASKET, lubricating hole plug	
18	0066692-5	2	BRACKET, attaching	
19	0035423-3	4	CAPSCREW, 3/4"NF x 4-1/4"	
	0904369-6	4	LOCKWASHER, 3/4"	
20	0631290-4	4	BLOCK, attaching capscrews	
	0917157-0	4	CAPSCREW, 3/4"NF x 2-3/4"	Not used when Track Frame Guards are installed
	0904369-6	4	LOCKWASHER, 3/4"	
21	0033288-2	-	CEMENT, neoprene, 1/2" pint can	For cementing seal boots
22	0054890-9	-	SOLVENT, neoprene cement, 1/2 pint can	

NOTE: All quantities indicated above are for one (1) roller only. The number of rollers used is 14.

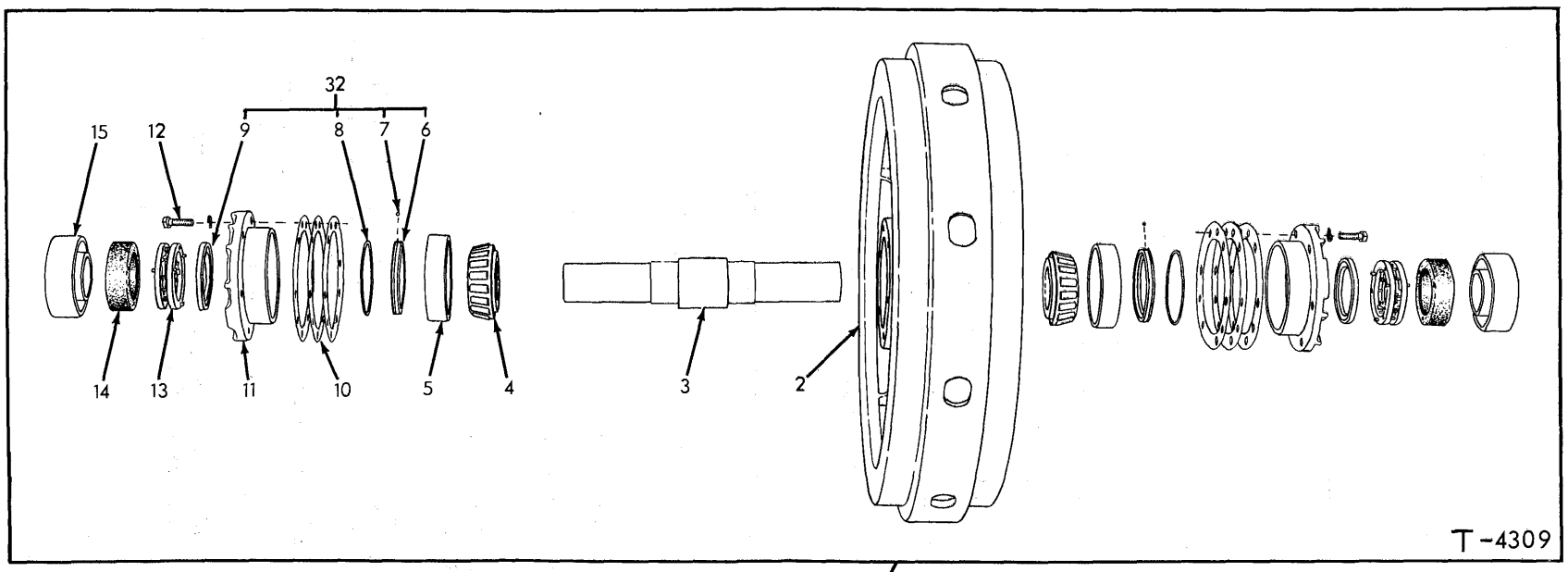

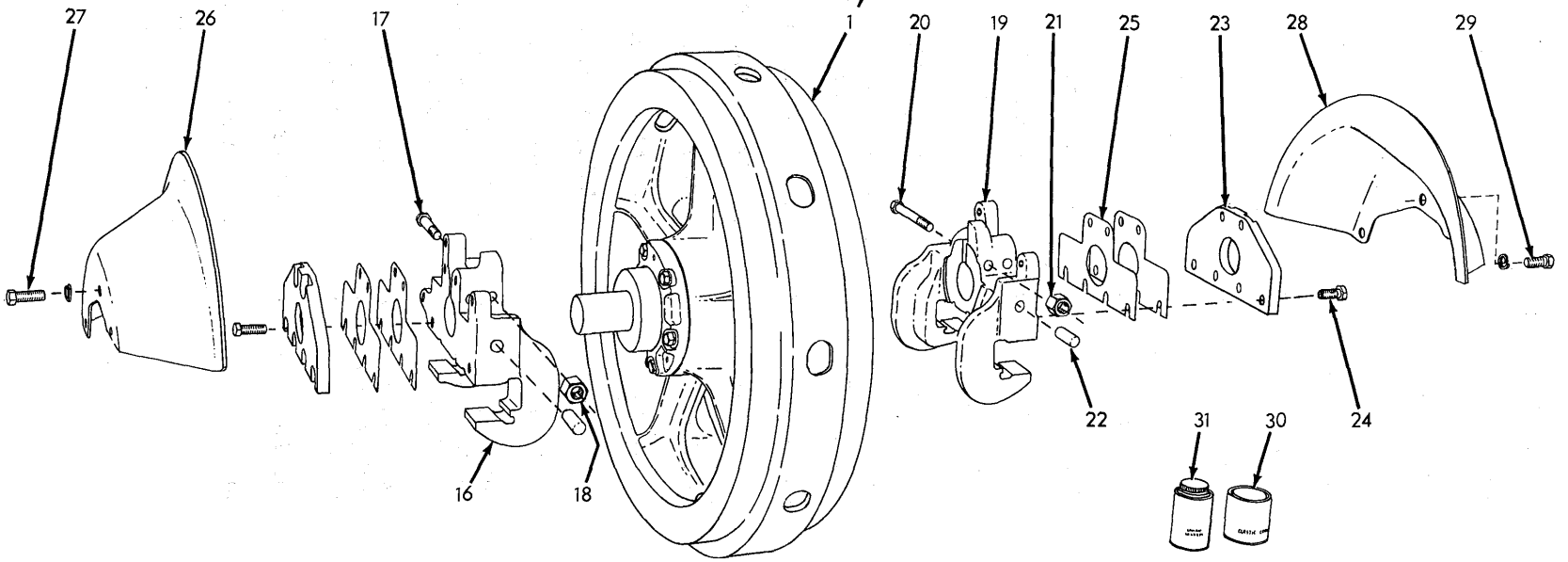

TRACK IDLER (First type)

TRACK IDLER

USAGE: Standard equipment. Loaders prior to #1000

ITEM	PART NO.	QTY.	DESCRIPTION	
1	655988	2	IDLER ASSEMBLY, track (Consists of items 2 thru 15)	
2	655987	2	IDLER	
3	622001	2	SHAFT	
4	042873	4	CONE ASSEMBLY, bearing	
5	042898	4	CUP, bearing	
6	670623	4	□RING, seal, inner	
7	905357	4	□BALL, steel, 3/16" diam.	
8	067137	4	□O-RING, seal ring	
9	051623	4	□RING, seal, outer	
10	655528	8	SHIM, bearing adjustment (.003" thick)	Use as req'd
	059387	8	SHIM, bearing adjustment (.007" thick)	
	059386	12	SHIM, bearing adjustment (.010" thick)	
	059385	4	SHIM, bearing adjustment (.032" thick)	
11	067141	4	RETAINER, bearing	
12	035018	24	CAPSCREW, 1/2"NF x 1-1/2"	
	904208	24	LOCKWASHER, 1/2"	
13	051959	4	SPRING ASSEMBLY, seal (serviced only as a unit)	
14	051629	4	BOOT, seal	
15	099506	4	RETAINER, seal	
16	655993	2	BRACKET ASSEMBLY, left (Includes item 22)	
17	638796	4	CAPSCREW, 5/8"NF x 5"	
18	072366	4	NUT, high, 5/8"NF	
19	655994	2	BRACKET ASSEMBLY, right (Includes item 22)	
20	638796	4	CAPSCREW, 5/8"NF x 5"	
21	072366	4	NUT, high, 5/8"NF	
22	056585	4	PIN, dowel, idler bracket to release yoke	
23	655995	4	PLATE, guide	
24	035014	24	CAPSCREW, 5/8"NF x 1-1/2"	
25	655990	8	SHIM, guide plate (1/32" thick. Use as req'd)	
	655989	4	SHIM, guide plate (1/16" thick. Use as req'd)	
26	081405	2	GUARD, left	
27	035014	6	CAPSCREW, 5/8"NF x 1-1/2"	
	904209	6	LOCKWASHER, 5/8"	
28	081406	2	GUARD, right	
29	035014	6	CAPSCREW, 5/8"NF x 1-1/2"	
	904209	6	LOCKWASHER, 5/8"	
30	033288	-	CEMENT, neoprene, 1/2 pint can	For cementing seal boots
31	054890	-	SOLVENT, neoprene cement, 1/2 pint can	
32	083209	2	SEAL KIT (Includes parts for one (1) idler only;items 6 thru 9)	

□Components of item 32

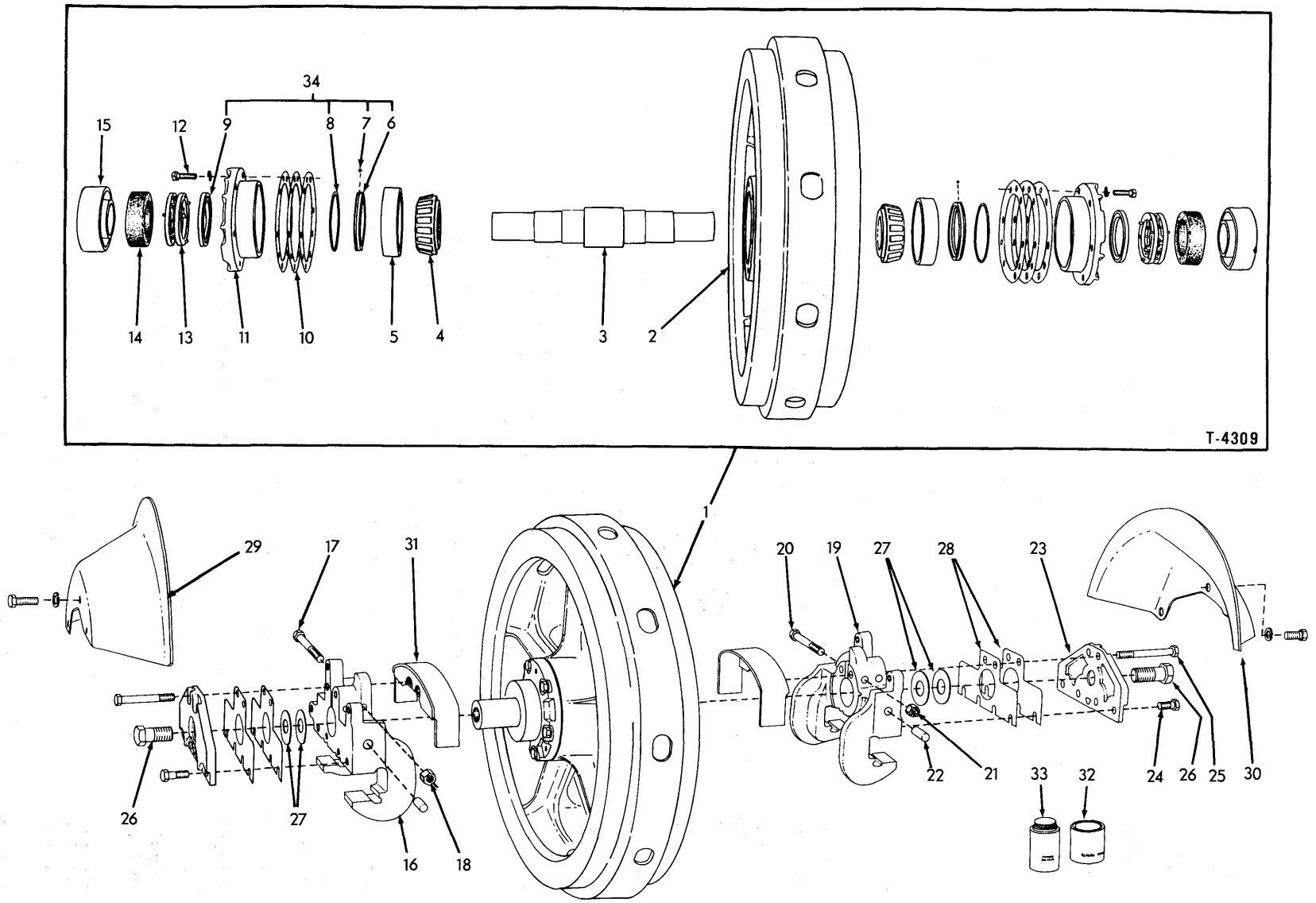

TRACK IDLER (Second type)

T-75594

TRACK IDLER (Second-type)

USAGE: Standard equipment. Loaders sedial No. 43C01001 and up

ITEM	PART NO.	QTY.	DESCRIPTION	
1	0676405-4	2	IDLER ASSY., track (Spoke-type. Standard)	Consists of items 2 thru 15
	0677995-3	2	IDLER ASSY., track (Solid-type. Special)	
2	0655987-6	2	IDLER (Spoke-type. Standard)	
	0669703-1	2	IDLER (Solid-type, Special)	
3	0676364-3	2	SHAFT	
4	0669786-6	4	CONE ASSY., bearing	
5	0069328-3	4	CUP, bearing	
6	0670623-8	4	□ RING, seal, inner	
7	0905357-0	4	□ BALL, steel, 3/16" diam.	
8	0067137-0	4	□ O-RING, seal ring	
9	0051623-7	4	□ RING, seal, outer	
10	0655528-8	8	SHIM, bearing adjustment (.003" thick)	Use as required
	0059387-1	8	SHIM, bearing adjustment (.007" thick)	
	0059386-3	12	SHIM, bearing adjustment (.010" thick)	
	0059385-5	4	SHIM, bearing adjustment (.032" thick)	
11	0067141-2	4	RETAINER, bearing	
12	0913105-3	24	CAPSCREW, 1/2"NF x 1-1/2"	
	0904208-6	24	LOCKWASHER, 1/2"	
13	0051959-5	4	SPRING ASSY., seal (Serviced only as a unit)	
14	0051629-4	4	BOOT, seal	
15	0099506-8	4	RETAINER, seal	
16	0657777-9	2	BRACKET ASSY., left (Includes item 22)	
17	0922319-9	4	CAPSCREW, 5/8"NF x 5"	
18	0072366-8	4	NUT, high, 5/8"NF	
19	0657778-7	2	BRACKET ASSY., right (Includes item 22)	
20	0922319-9	4	CAPSCREW, 5/8"NF x 5"	
21	0072366-8	4	NUT, high, 5/8"NF	
22	0056585-3	4	PIN, dowel, idler bracket to release yoke	
23	0669298-2	4	PLATE, guide	
24	0923884-1	16	CAPSCREW, 5/8"NF x 1-1/2"	
25	0921404-0	8	CAPSCREW, 5/8"NC x 4"	
	0910308-6	8	NUT, 5/8"NC (Not used with special idler guard)	
26	0926566-1	4	CAPSCREW, idler adjustment (1"NF x 2")	
27	0669302-2	12	SHIM, idler adjustment (1/16" thick)	Use as required
	0669303-0	12	SHIM, idler adjustment (1/32" thick)	
28	0655990-0	8	SHIM, guide plate (1/32" thick)	
	0655989-2	4	SHIM, guide plate (1/16" thick)	
29	0081405-3	2	GUARD, left	
	0923884-1	6	CAPSCREW, 5/8"NF x 1-1/2"	
	0912942-0	6	LOCKWASHER, 5/8"	
30	0081406-1	2	GUARD, right	
	0923884-1	6	CAPSCREW, 5/8"NF x 1-1/2"	
	0912942-0	6	LOCKWASHER, 5/8"	
31	0669791-6	4	GUARD (Special. For use with sold-type idler only)	
32	0033288-2	-	CEMENT, neoprene, 1/2 pint can	For cementing seal boots
33	0054890-9	-	SOLVENT, neoprene cement, 1/2 pint can	
34	0083209-7	2	SEAL KIT (Includes parts for one (1) idler only; items 6 thru 9)	

□ Components of item 34

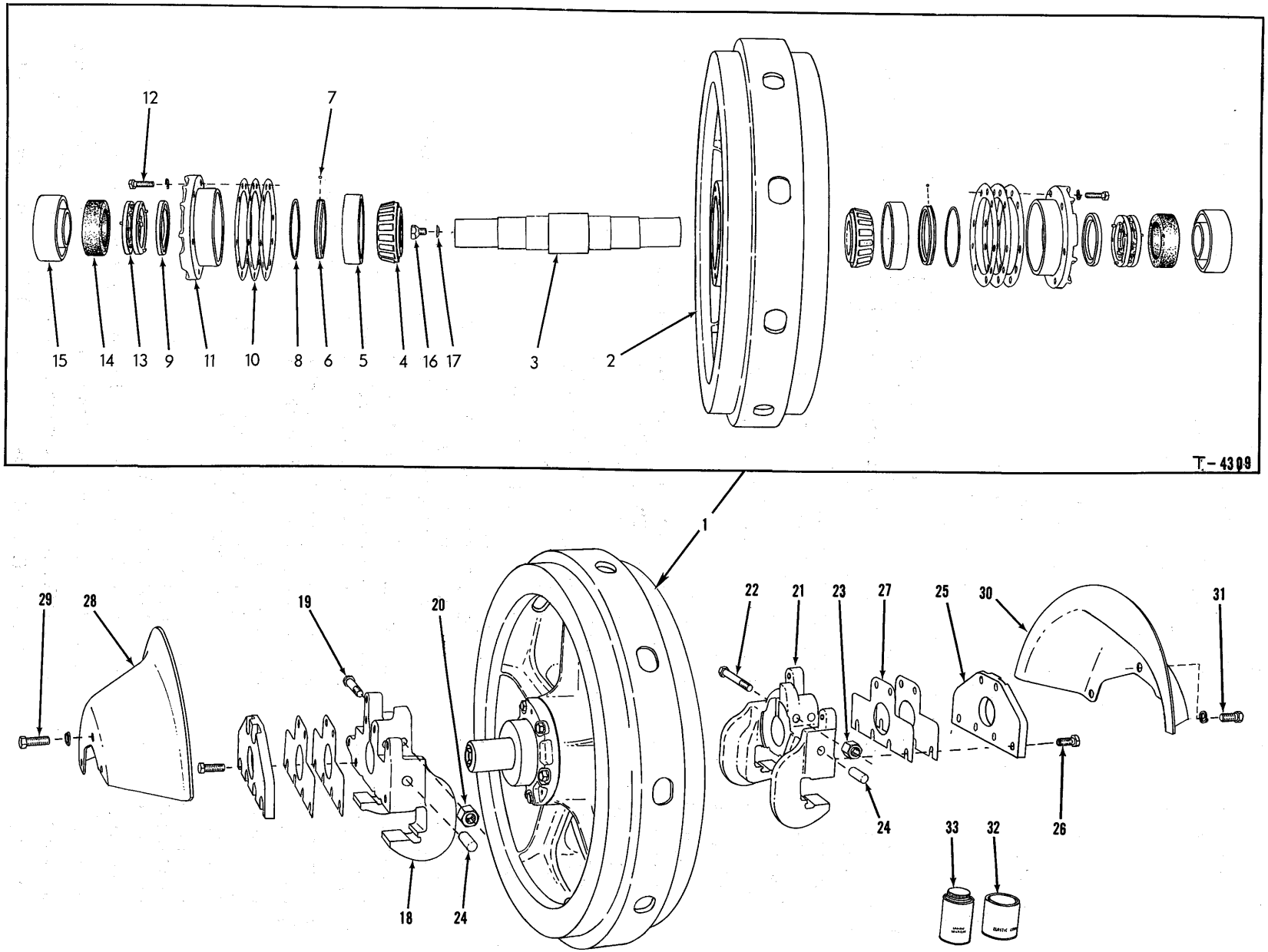

TRACK IDLER (Special)

TRACK IDLER

USAGE: Special. Units for Steel Mill slag removal

ITEM	PART NO.	QTY.	DESCRIPTION	
1	0666585-5	2	IDLER ASSEMBLY, track (Consists of items 2 thru 17)	
2	0655987-6	2	IDLER	
3	0666586-3	2	SHAFT	
4	0042873-0	4	CONE ASSEMBLY, bearing	
5	0042898-7	4	CUP, bearing	
6	0670623-8	4	RING, seal, inner	
7	0905357-0	4	BALL, steel, 3/16" diam	
8	0926079-5	4	O-RING, seal ring	
9	0051623-7	4	RING, seal, outer	
10	0655528-8	8	SHIM, bearing adjustment (.003" thick)	Use as req'd
	0059387-1	8	SHIM, bearing adjustment (.007" thick)	
	0059386-3	12	SHIM, bearing adjustment (.010" thick)	
	0059385-5	4	SHIM, bearing adjustment (.032" thick)	
11	0067141-2	4	RETAINER, bearing	
12	0922726-5	24	CAPSCREW, 1/2"NF x 1-1/2"	
	0912441-3	24	LOCKWASHER, 1/2"	
13	0051959-5	4	SPRING ASSEMBLY, seal (serviced only as a unit)	
14	0666587-1	4	BOOT, seal	
15	0099506-8	4	RETAINER, seal	
16	0034042-2	2	PLUG, shaft lubricating hole	
17	0034043-0	2	GASKET, lubricating hole plug	
18	0655993-3	2	BRACKET ASSEMBLY, left (Includes item 24)	
19	0638796-3	4	CAPSCREW, 5/8"NF x 5"	
20	0072366-8	4	NUT, high, 5/8"NF	
21	0655994-2	2	BRACKET ASSEMBLY, right (Includes item 24)	
22	0638796-3	4	CAPSCREW, 5/8"NF x 5"	
23	0072366-8	4	NUT, high, 5/8"NF	
24	0056585-3	4	PIN, dowel, idler bracket to release yoke	
25	0655995-9	4	PLATE, guide	
26	0035014-0	24	CAPSCREW, 5/8"NF x 1-1/2"	
27	0655990-0	8	SHIM, guide plate (1/32" thick. Use as req'd)	
	0655989-2	4	SHIM, guide plate (1/16" thick. Use as req'd)	
28	0081405-3	2	GUARD, left	
29	0035014-0	6	CAPSCREW, 5/8"NF x 1-1/2"	
	0904209-4	6	LOCKWASHER, 5/8"	
30	0081406-1	2	GUARD, right	
31	0035014-0	6	CAPSCREW, 5/8"NF x 1-1/2"	
	0904209-4	6	LOCKWASHER, 5/8"	
32	0033288-2	-	CEMENT, neoprene, 1/2 pint can	For cementing seal boots
33	0054890-9	-	SOLVENT, neoprene cement, 1/2 pint can	

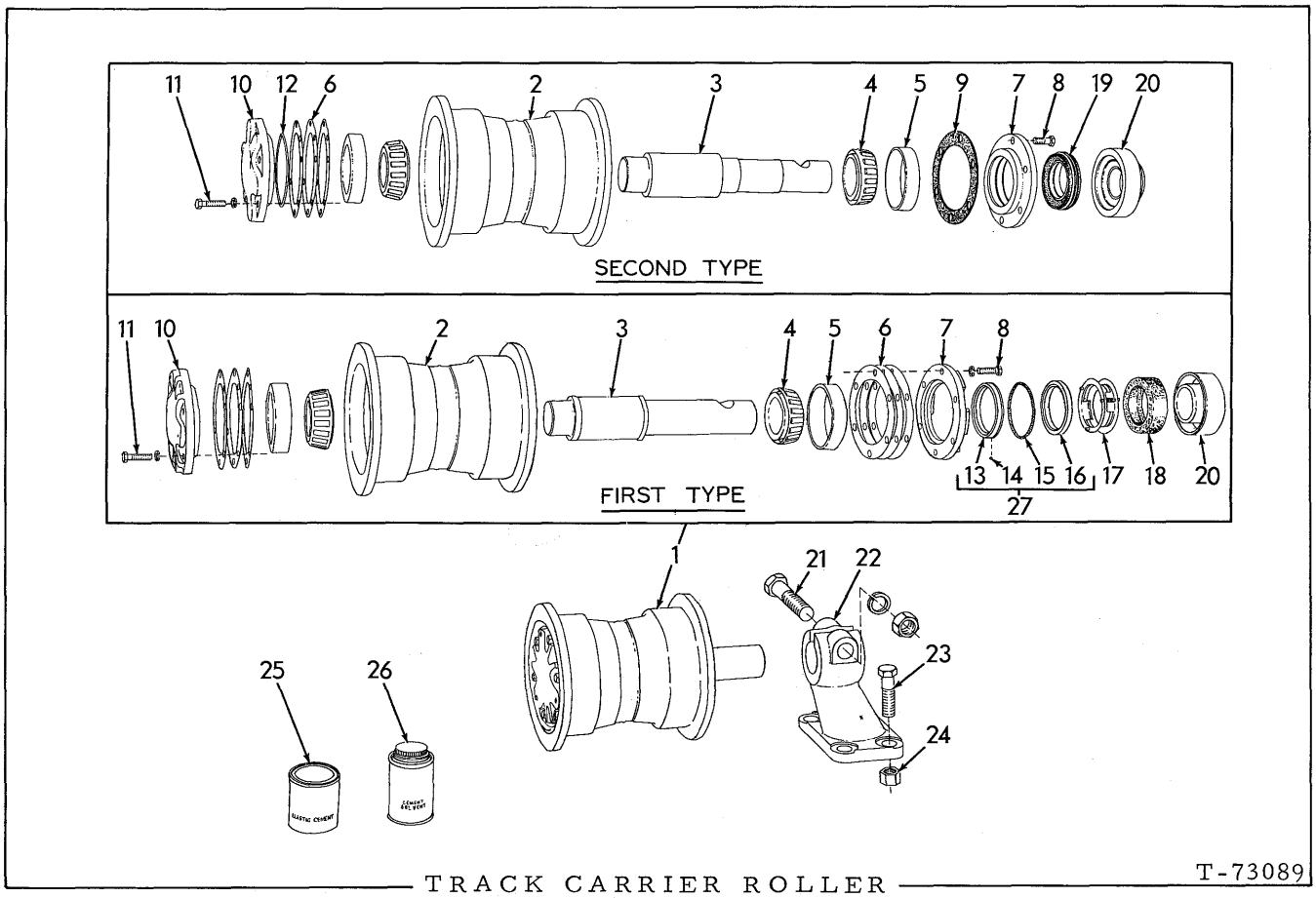

TRACK CARRIER ROLLER T-73089

USAGE: Standard equipment

* Loaders prior to Serial No. 1000; also on Loaders unit #43C01001 thru 43C01015

** Loader units #43C01016 and up

ITEM	PART NO.	QTY. *	QTY. **	DESCRIPTION
1	0633269-6	4	-	ROLLER ASSY. (Consists of items 2 thru 8, 10, 11, 13 thru 18 and 20)
	0671163-4	-	4	ROLLER ASSY. (Consists of items 2 thru 12 and 18 thru 20)
2	0633268-8	4	4	ROLLER
3	0640070-9	4	-	SHAFT
	0671162-6	-	4	SHAFT
4	0043491-0	8	8	CONE ASSY., bearing
5	0074740-2	8	8	CUP, bearing
6	0655497-6	16	8	SHIM, bearing adjustment (.003" thick) — Use as required
	0059618-9	24	12	SHIM, bearing adjustment (.007" thick) — Use as required
	0059619-7	20	12	SHIM, bearing adjustment (.010" thick) — Use as required
	0059617-1	8	4	SHIM, bearing adjustment (.032" thick) — Use as required

(Continued)

TRACK CARRIER ROLLER (Continued)

ITEM	PART NO.	QTY. *	QTY. **	DESCRIPTION
7	0622753-2	4	-	RETAINER, inner bearing
	0671161-8	-	4	RETAINER, inner bearing
8	0923193-7	24	24	CAPSCREW, 3/8"NF x 1-1/4"
	0904206-0	24	-	LOCKWASHER, 3/8"
9	0671157-6	-	1	GASKET, retainer, inner bearing
10	0622195-6	4	-	RETAINER, outer bearing
	0677276-8	-	4	RETAINER, outer bearing (Prior to unit #1032)
	0678716-2	-	4	RETAINER, outer bearing (Unit #1032 and up)
11	0923193-7	24	24	CAPSCREW, 3/8"NF x 1-1/4"
	0904206-0	24	24	LOCKWASHER, 3/8"
12	0923586-2	-	4	O-RING, retainer, outer bearing (Prior to unit #1032)
	0923931-0	-	4	O-RING, retainer, outer bearing (Unit #1032 and up)
13	0067253-5	4	-	◻RING, seal, inner
14	0905357-0	4	-	◻BALL, steel, 3/16" diam.
15	0923585-4	4	-	◻O-RING, seal ring
16	0067251-9	4	-	◻RING, seal, outer
17	0048681-1	4	-	SPRING ASSY., seal (Serviced only as a unit)
18	0048679-5	4	-	BOOT, seal spring
19	0671158-4	-	4	SEAL ASSY. (Consists of 2 seals. Serviced only as a unit)
20	0622751-6	4	-	RETAINER, seal
	0671160-0	-	4	RETAINER, seal
21	0012561-7	4	4	CAPSCREW, bracket clamping (1"NF x 5-1/4")
	0910916-6	4	4	LOCKWASHER, 1"
	0911047-9	4	4	NUT, 1"NF
22	0656323-3	4	4	BRACKET
23	0070285-2	16	16	CAPSCREW, 3/4"NF x 3"
24	0012767-0	16	16	NUT, high, 3/4"NF
25	0033288-2	-	-	CEMENT, neoprene, 1/2 pint can } For cementing boots
26	0054890-9	-	-	SOLVENT, neoprene cement, 1/2 pint can } For cementing boots
27	0073169-5	4	-	SEAL KIT (Includes parts for one (1) roller assembly only; items 13 thru 16)

◻Components of item 27

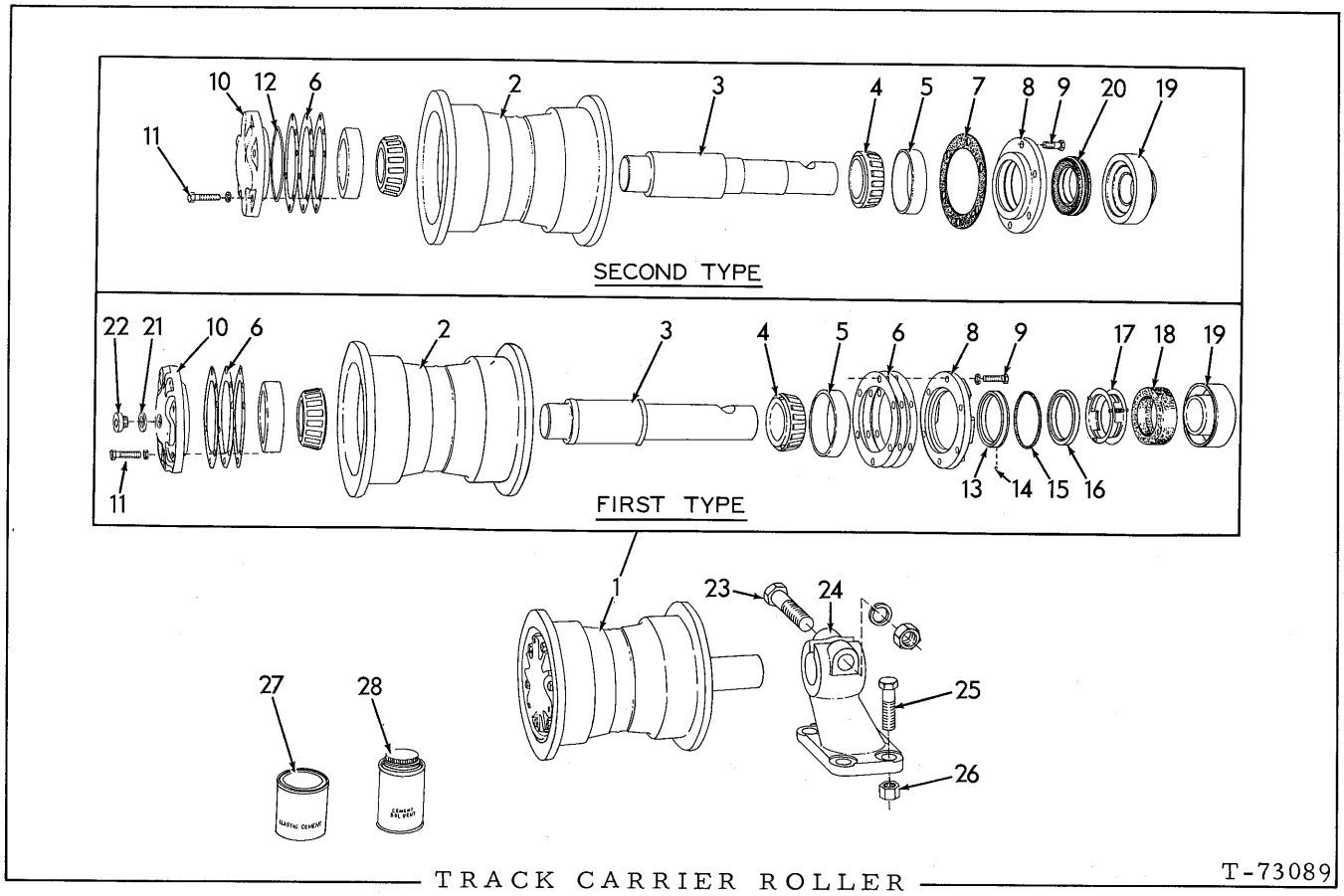

TRACK CARRIER ROLLER

USAGE: Special units for Steel Mill slag removal

* First type
** Second type

ITEM	PART NO.	QTY. *	QTY. **	DESCRIPTION	
1	0666604-4	4	4	ROLLER ASSY. (Consists of items 2 thru 22)	
2	0633268-8	4	4	ROLLER	
3	0666734-9	4	-	SHAFT	
	0671162-6	-	4	SHAFT	
4	0043491-0	8	8	CONE ASSY., bearing	
5	0074740-2	8	8	CUP, bearing	
6	0655497-6	16	8	SHIM, bearing adjustment (.003" thick)	Use as required
	0059618-9	24	12	SHIM, bearing adjustment (.007" thick)	
	0059619-7	20	12	SHIM, bearing adjustment (.010" thick)	
	0059617-1	8	4	SHIM, bearing adjustment (.032" thick)	
7	0671157-6	-	1	GASKET, retainer	
8	0666616-8	4	-	RETAINER, inner bearing	
	0671161-8	-	4	RETAINER, inner bearing	
9	0923193-7	24	24	CAPSCREW, 3/8"NF x 1-1/4"	
	0904206-0	24	-	LOCKWASHER, 3/8"	

(Continued)

TRACK CARRIER ROLLER (Continued)

ITEM	PART NO.	QTY. *	QTY. **	DESCRIPTION
10	0666724-0	4	-	RETAINER, outer bearing
	0677276-8	-	4	RETAINER, outer bearing
11	0923193-7	24	24	CAPSCREW, 3/8"NF x 1-1/4"
	0904206-0	24	-	LOCKWASHER, 3/8" (First type)
12	0927972-0	-	4	O-RING, retainer
13	0067253-5	4	-	RING, seal, inner
14	0905357-0	4	-	BALL, steel, 3/16" diam.
15	0926077-9	4	-	O-RING, seal ring
16	0067251-9	4	-	RING, seal, outer
17	0048681-1	4	-	SPRING ASSY., seal (Serviced only as a unit)
18	0666645-7	4	-	BOOT, seal spring
19	0622751-6	4	-	RETAINER, seal
	0671160-0	-	4	RETAINER, seal
20	0675536-7	-	4	SEAL ASSY. (Each consists of 2 seals. Serviced only as a unit)
21	0667252-1	4	-	GASKET, lubricating hole plug
22	0035250-0	4	-	PLUG, lubricating hole
23	0012561-7	4	4	CAPSCREW, bracket clamping (1"NF x 5-1/4")
	0910916-6	4	4	LOCKWASHER, 1"
	0911047-9	4	4	NUT, 1"NF
24	0656323-3	4	4	BRACKET
25	0070285-2	16	16	CAPSCREW, 3/4"NF x 3"
26	0012767-0	16	16	NUT, high, 3/4"NF
27	0033288-2	-	-	CEMENT, neoprene, 1/2" pint can } For cementing seal boots
28	0054890-9	-	-	SOLVENT, neoprene, 1/2 pint can } For cementing seal boots

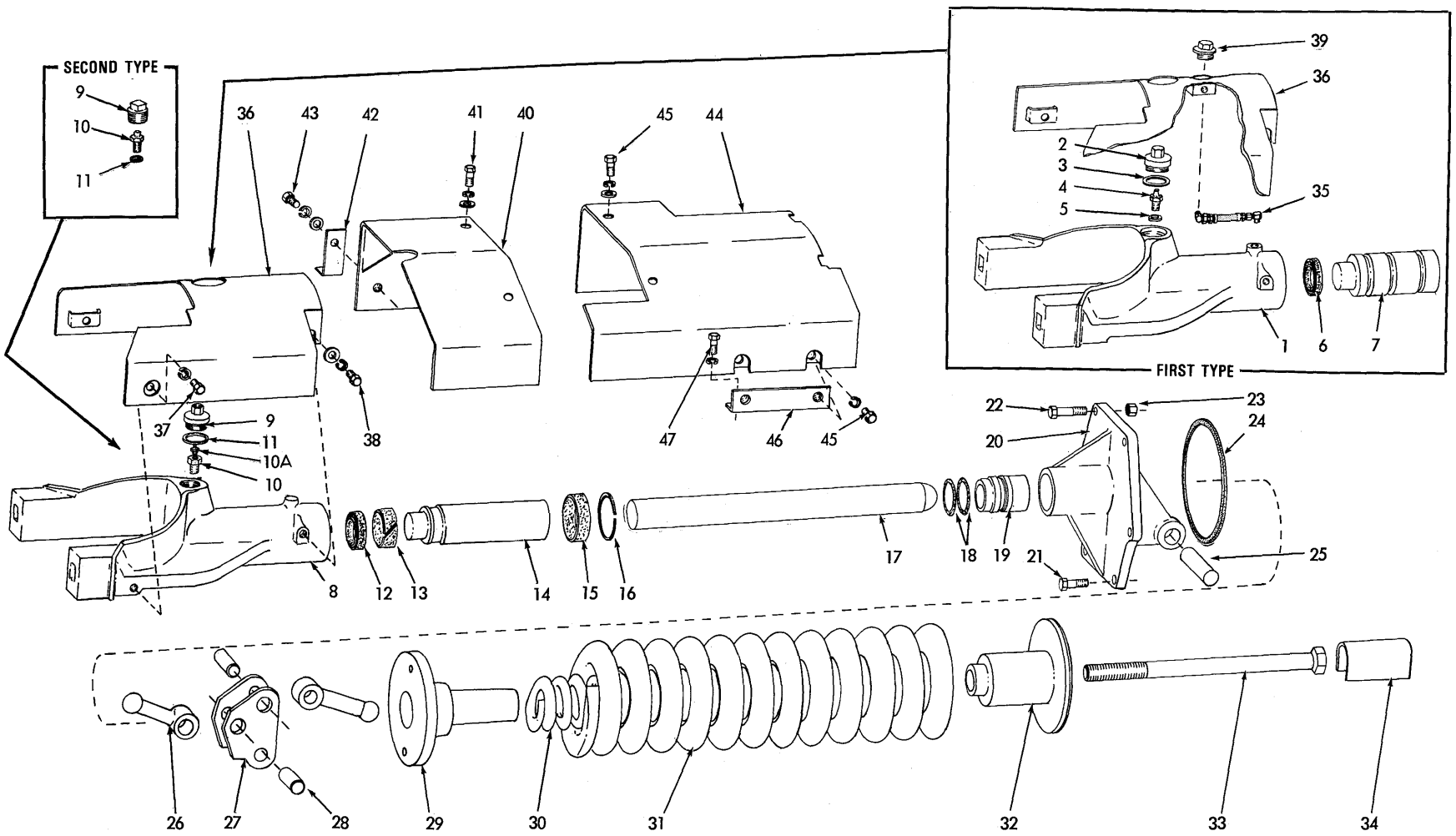

TRACK RELEASE (Original Equipment)

T-74990

TRACK RELEASE

USAGE: Original equipment

* Loaders prior to serial No. 345
** Loaders serial No. 345 thru No. 489
*** Loaders serial No. 490 and up

ITEM	PART NO.	QUANTITY *	**	***	DESCRIPTION
1	---------	2	2	-	YOKE ASSY. (Includes items 2 thru 7)(Order 1 each YOKE ASSY. 0675246-3 and BAR 0667081-4)
2	0644255-2	2	2	-	PLUG, yoke
3	0623144-3	2	2	-	GASKET, yoke plug
4	0644330-3	2	2	-	VALVE ASSY., pressurizing
5	0908191-0	2	2	-	WASHER, pressurizing valve
6	0628937-5	2	2	-	SEAL, piston
7	0656556-8	2	2	-	PISTON, adjusting
8	0664173-2	-	-	2	YOKE ASSY. (Includes items 9 thru 16)(Loaders prior to #1000)
	0670649-3	-	-	2	YOKE ASSY. (Includes items 9 thru 16)(Loaders unit #01001 thru #01015)
	0675246-3	-	-	2	YOKE ASSY. (Includes items 9 thru 16)(Loaders unit #01016 and up)
9	0665040-2	-	-	2	PLUG, yoke (For YOKE ASSEMBLIES 0664173-2 and 0670649-3)
	0644255-2	-	-	2	PLUG, yoke (For YOKE ASSY. 0675246-3)
10	0644330-3	-	-	2	VALVE ASSY., pressurizing (For YOKE ASSEMBLIES 0664173-2 and 0670649-3)
	0676455-9	-	-	2	CHECK BALL ASSY., pressurizing (Includes ball)(For YOKE ASSY. 0675246-3)
10A	0676456-7	-	-	2	FITTING, check ball assy. (For Yoke Assy. 0675246-3)
11	0908191-0	-	-	2	WASHER, pressurizing valve (For YOKE ASSEMBLIES 0664173-2 and 0670649-3)
	0623144-3	-	-	2	GASKET, yoke plug (For YOKE ASSY. 0675246-3)
12	0670648-5	-	-	2	SEAL, piston
13	0664171-6	-	-	2	RING, wear, adjusting piston
14	0664169-0	-	-	2	PISTON, adjusting (8-3/4" bore depth)(Loaders prior to #1000)
	0667104-4	-	-	2	PISTON, adjusting (4" bore depth)(Loader units #01001 and up)
15	0664170-8	-	-	2	RING, wear, release yoke
16	0065513-4	-	-	2	RING, snap
17	0665069-1	2	2	2	BAR, push (25-1/2" long)(Loaders prior to #1000)
	0667081-4	-	-	2	BAR, push (20-3/4" long)(Loader units #01001 and up)
18	0923827-0	4	4	4	O-RING, crosshead
19	0621299-7	2	2	2	CROSSHEAD
20	---------	2	-	-	GUIDE, crosshead (Order 1 each GUIDE 0664875-2, BELLCRANK 0664847-1, LOCK 0664843-0, SEAT 0664813-0 and INSTRUCTION SHEET S-5198)
	0664875-2	-	2	2	GUIDE, crosshead
21	0631795-2	8	8	8	CAPSCREW, Nylok, 5/8"NF x 1-3/4"
22	0023618-2	4	4	4	CAPSCREW, 5/8"NF x 2-1/2"
23	0072366-8	4	4	4	NUT, high, 5/8"NF
24	0059742-7	2	2	2	GASKET, crosshead guide
25	0656208-6	2	2	2	PIN, bellcrank pivot

(Continued)

ITEM	PART NO.	QUANTITY *	**	***	DESCRIPTION
26	656206	4	-	-	ROD, push
	664844	-	4	4	ROD, push
27	------	2	-	-	BELLCRANK (Order 1 each BELLCRANK 664847, GUIDE 664875, LOCK 664843, SEAT 664813 and INSTRUCTION SHEET S-5198)
	664847	-	2	2	BELLCRANK
28	051798	4	4	4	PIN, push rod
29	059740	2	-	-	PLUNGER, spring
	664815	-	2	2	PLUNGER, spring
30	664877	-	2	2	SPRING, inner
31	664879	2	2	2	SPRING, outer
32	059741	2	-	-	SEAT, spring
	664813	-	2	2	SEAT, spring
33	059739	2	2	2	CAPSCREW, spring adjustment
34	059738	2	-	-	LOCK, spring adjustment capscrew (4-5/8" long)
	664843	-	2	2	LOCK, spring adjustment capscrew (5-1/8" long)
35	656201	2	2	-	TUBE ASSEMBLY, yoke lubricating (Serviced only as a unit)
36	656216	2	2	-	GUARD front section
	664174	-	-	2	GUARD, front section
	914465	2	2	-	FITTING, lubricating, straight, 1/8"NPT
37	035061	4	4	4	CAPSCREW, 1/2"NC x 1-1/4"
38	035190	4	4	4	CAPSCREW, 1/2"NC x 1-1/2"
	904208	8	8	8	LOCKWASHER, 1/2"
	064531	4	4	4	WASHER, plain
39	656202	2	2	-	PLUG, front guard
40	656669	1	1	1	GUARD, intermediate section, left side
	656670	1	1	1	GUARD, intermediate section, right side
41	035061	4	4	4	CAPSCREW, 1/2"NC x 1-1/4"
	904208	4	4	4	LOCKWASHER, 1/2"
	064531	4	4	4	WASHER, plain
42	656834	2	2	2	ANGLE, guard attachment
43	916311	4	4	4	CAPSCREW, 1/2"NC x 1-1/4"
	904208	4	4	4	LOCKWASHER, 1/2"
	064531	4	4	4	WASHER, plain

(Continued)

TRACK RELEASE (Continued)

ITEM	PART NO.	QUANTITY *	**	***	DESCRIPTION
44	656213	1	1	1	GUARD, rear section, left side
	656214	1	1	1	GUARD, rear section, right side
45	035061	8	8	8	CAPSCREW, 1/2"NC x 1-1/4"
	904208	8	8	8	LOCKWASHER, 1/2"
	064531	4	4	4	WASHER, plain
46	656203	2	2	2	BRACKET, rear guard
47	035018	4	4	4	CAPSCREW, 1/2"NF x 1-1/2" (Early units)
	915987	-	-	4	CAPSCREW, 1/2"NC x 1-1/2" (Late units)
	904208	4	4	4	LOCKWASHER, 1/2"

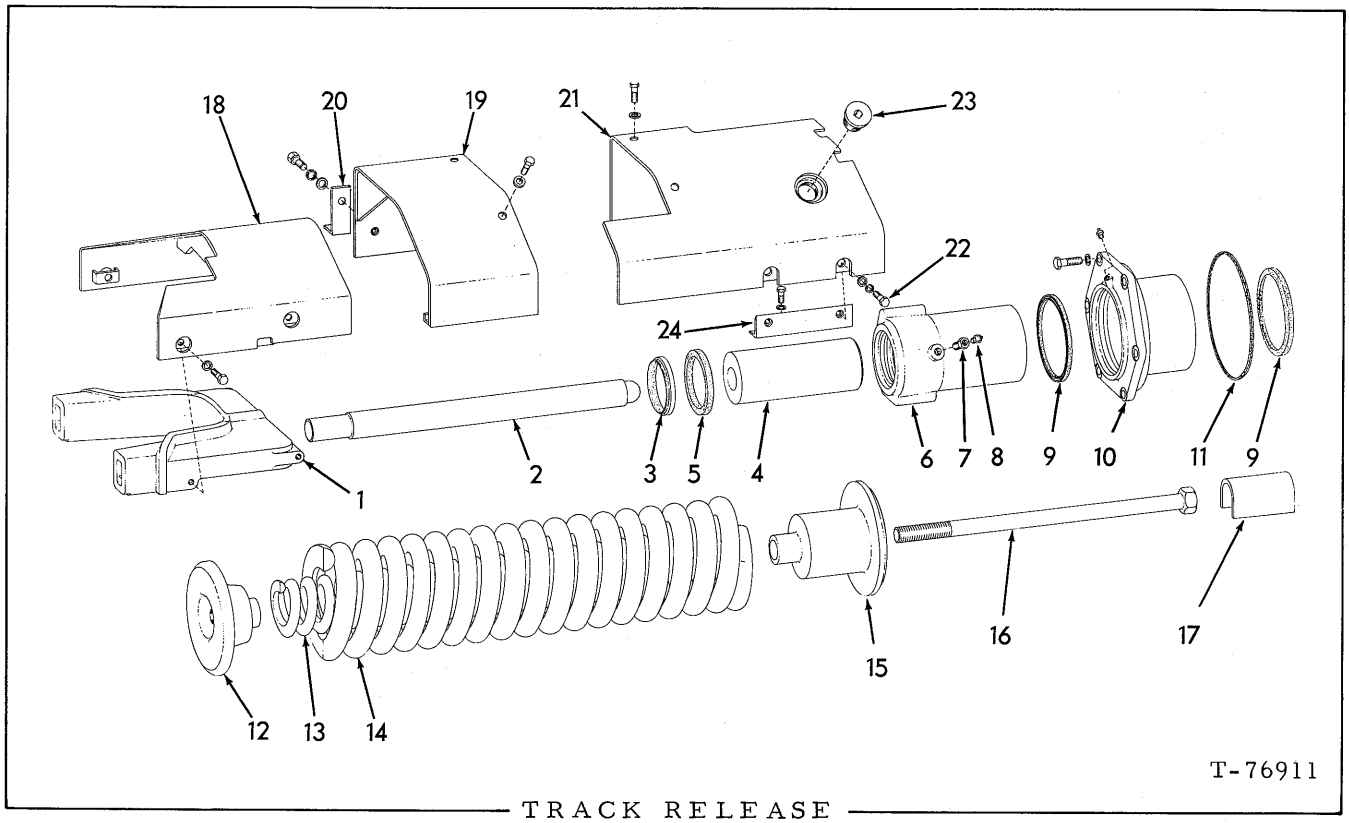

TRACK RELEASE

USAGE: Service replacement; use with service replacement Track Frame only.

ITEM	PART NO.	QTY.	DESCRIPTION
1	0678420-1	2	YOKE
2	0678434-2	2	BAR, push
3	0678438-3	2	SEAL, piston, small
4	0678436-7	2	PISTON, adjusting
5	0096803-2	2	SEAL, piston, large
6	0677810-4	2	CYLINDER
7	0676455-9	2	CHECK BALL ASSY., pressurizing (Includes ball)
8	0676456-7	2	FITTING, check ball assy.
9	0678437-5	4	SEAL, cylinder
10	0678374-0	2	HOUSING, cylinder
	0914465-0	2	FITTING, lubricating, 1/8"NPT
	0928130-4	12	CAPSCREW, 5/8"NF x 1-7/8"
	0912942-0	12	LOCKWASHER, 5/8"
11	0670962-0	2	GASKET, cylinder housing
12	0678846-7	2	PLUNGER, spring
13	0679637-9	2	SPRING, inner
14	0673350-5	2	SPRING, outer

(Continued)

ITEM	PART NO.	QTY.	DESCRIPTION
15	0664813-3	2	SEAT, spring
16	0678428-4	2	CAPSCREW, spring adjustment
17	0664843-0	2	LOCK, spring adjustment capscrew
18	0678835-0	1	GUARD, front section, left side
	0678836-8	1	GUARD, front section, right side
	0920582-4	8	CAPSCREW, 1/2"NC x 1-1/4"
	0912441-3	8	LOCKWASHER, 1/2"
19	0678839-2	1	GUARD, intermediate section, left side
	0678840-0	1	GUARD, intermediate section, right side
	0920582-4	4	CAPSCREW, 1/2"NC x 1-1/4"
	0677008-5	4	WASHER, plain
20	0656834-9	2	ANGLE, guard attachment
	0920582-4	4	CAPSCREW, 1/2"NC x 1-1/4"
	0677008-5	4	WASHER, plain
21	0678843-4	1	GUARD, rear section, left side
	0678844-2	1	GUARD, rear section, right side
22	0920582-4	8	CAPSCREW, 1/2"NC x 1-1/4"
	0677008-5	4	WASHER, plain
	0912441-3	4	LOCKWASHER, 1/2"
23	0656203-7	2	BRACKET, guard mounting
	0920583-2	4	CAPSCREW, 1/2"NC x 1-1/2"
	0912441-3	4	LOCKWASHER, 1/2"
24	0035250-0	2	PLUG, check ball assy., access
—	0680081-7	1	SERVICE KIT, left (Includes items 1 thru 23)
	0680082-5	1	SERVICE KIT, right (Includes items 1 thru 23)

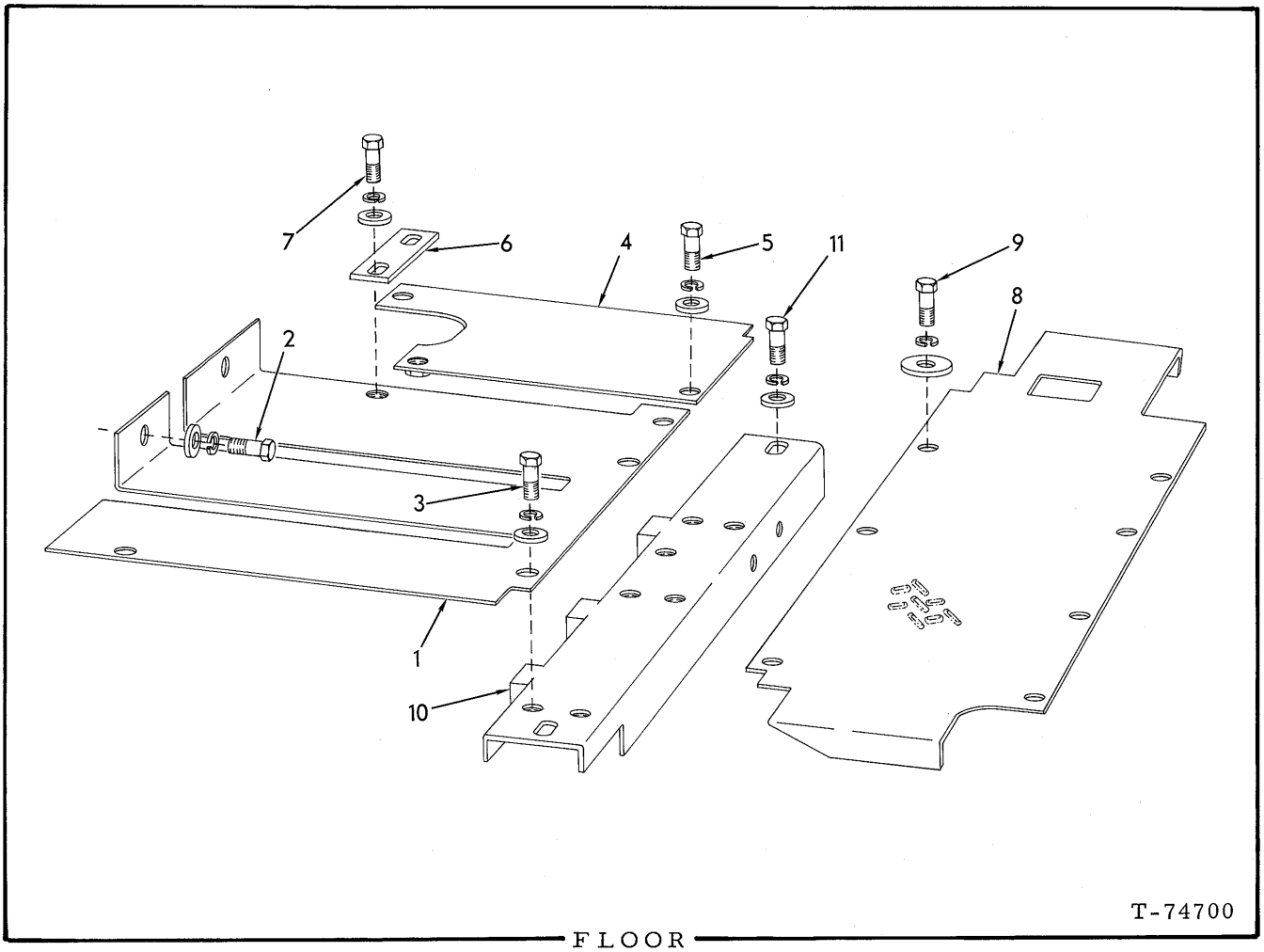

FLOOR

ITEM	PART NO.	QTY.	DESCRIPTION
1	655804	1	PLATE, left front
2	035439	2	CAPSCREW, 3/8"NC x 1"
	904206	2	LOCKWASHER, 3/8"
	044973	2	WASHER, plain
3	035733	4	CAPSCREW, 1/2"NC x 1-3/8"
	904208	4	LOCKWASHER, 1/2"
	064531	4	WASHER, plain
4	655806	1	PLATE, right front
5	035733	2	CAPSCREW, 1/2"NC x 1-3/8"
	904208	2	LOCKWASHER, 1/2"
	064531	2	WASHER, plain
6	655807	1	BLOCK, tie, front plates
7	035733	2	CAPSCREW, 1/2"NC x 1-3/8"
	904208	2	LOCKWASHER, 1/2"
	064531	2	WASHER, plain
8	655808	1	PLATE, rear
9	035733	7	CAPSCREW, 1/2"NC x 1-3/8"
	904208	7	LOCKWASHER, 1/2"
	092163	7	WASHER, plain
10	655802	1	CHANNEL, supporting
11	035733	2	CAPSCREW, 1/2"NC x 1-3/8"
	904208	2	LOCKWASHER, 1/2"
	064531	2	WASHER, plain

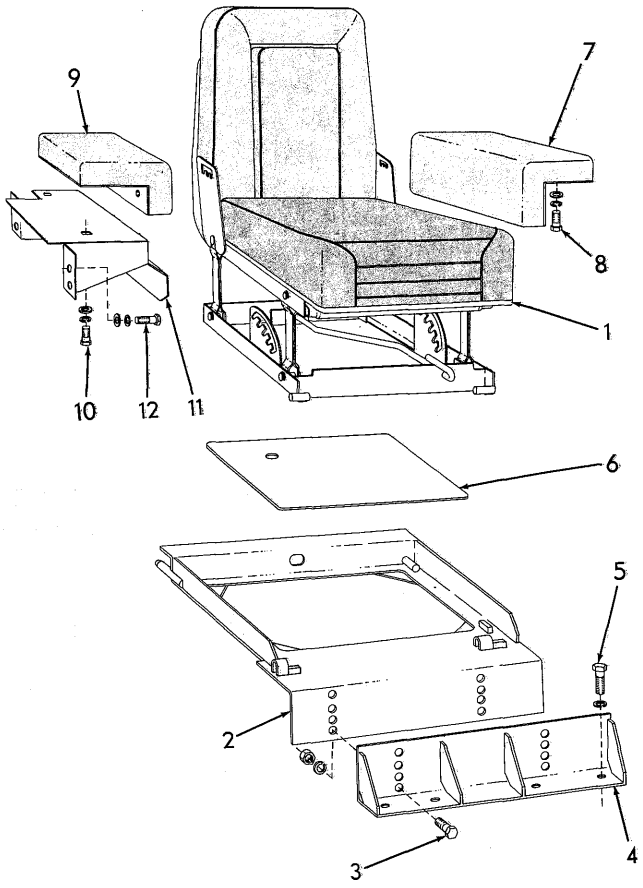

T-73090

SEAT

USAGE: Loaders prior to Serial No. 1000

ITEM	PART NO.	QTY.	DESCRIPTION
1	---------	1	SEAT ASSEMBLY (See page 197 for parts)
2	0654637-8	1	SUPPORT, seat
3	0916310-6	4	CAPSCREW, 1/2"NC x 1"
	0904208-6	4	LOCKWASHER, 1/2"
	0911028-9	4	NUT, 1/2"NC
4	0654542-0	1	ANGLE, seat support
5	0919230-3	4	CAPSCREW, 1/2"NC x 1-3/8"
	0904208-6	4	LOCKWASHER, 1/2"
6	0654654-3	1	PLATE, closure
7	0666880-0	1	CUSHION, arm rest, left (Special, fire resistant)
	0632179-8	1	CUSHION, arm rest, left (std.)
8	0919331-9	4	CAPSCREW, cd-pltd., 3/8"NF x 1"
	0916965-7	4	LOCKWASHER, cd-pltd., 3/8"
	0920743-2	4	WASHER, plain
9	0666879-2	1	CUSHION, arm rest, right (Special,fire resistant)
	0633798-4	1	CUSHION, arm rest, right (std.)
10	0919331-9	4	CAPSCREW, cd-pltd., 3/8"NF x 1"
	0916965-7	4	LOCKWASHER, cd-pltd., 3/8"
	0920743-2	4	WASHER, plain
11	0654646-9	1	SUPPORT, right arm rest cushion
12	0916272-8	3	CAPSCREW, 3/8"NC x 1-1/4"
	0904206-0	3	LOCKWASHER, 3/8"
	0044973-6	3	WASHER, plain
13	0657564-1	1	BELT, safety (Special equipment)(Not illustrated)

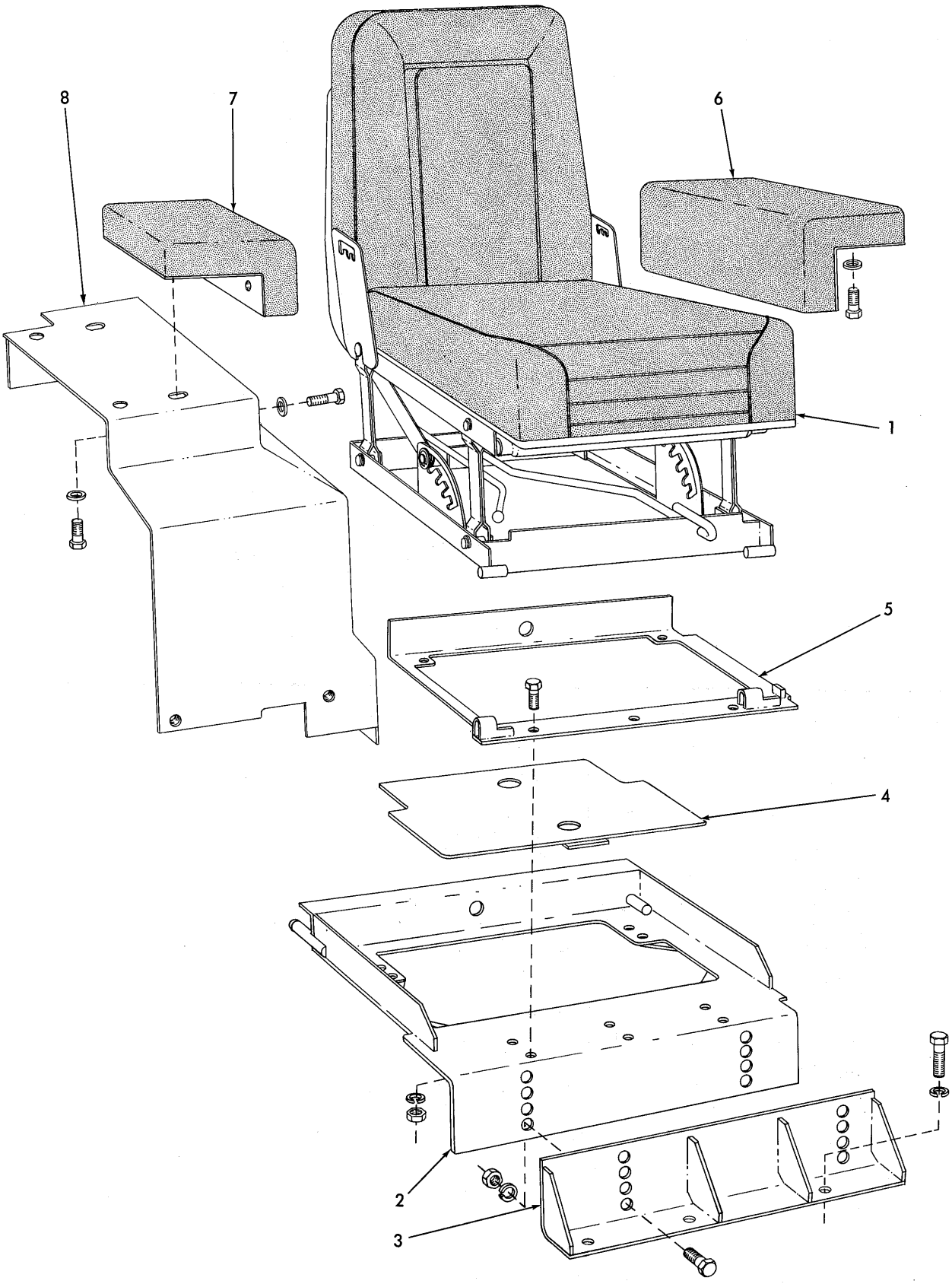

SEAT (Second type)

SEAT

USAGE: Loader Serial No. 43C01001 and up

ITEM	PART NO.	QTY.	DESCRIPTION
1	---------	1	SEAT ASSY., (See page 197 for parts)
2	0669912-8	1	SUPPORT, seat
	0916310-6	4	CAPSCREW, 1/2"NC x 1"
	0904208-6	4	LOCKWASHER, 1/2"
	0911028-9	4	NUT, 1/2"NC
3	0677781-7	1	ANGLE, seat supporting
	0920574-1	4	CAPSCREW, 1/2"NC x 1-3/8"
	0912441-3	4	LOCKWASHER, 1/2"
4	0675564-9	1	PLATE, closure
5	0669942-5	1	ANGLE, seat support
	0916269-4	5	CAPSCREW, 3/8"NC x 7/8"
	0904206-0	5	LOCKWASHER, 3/8"
	0911026-3	5	NUT, 3/8"NC
6	0632179-8	1	CUSHION, arm rest, left (Standard)
	0666880-0	1	CUSHION, arm rest, left (Special. Fire resistant)
	0919331-9	4	CAPSCREW, cd-pltd., 3/8"NF x 1"
	0916965-7	4	LOCKWASHER, cd-pltd., 3/8"
	0920743-2	4	WASHER, plain
7	0633798-4	1	CUSHION, arm, right (Standard)
	0666879-2	1	CUSHION, arm, right (Special. Fire resistant)
	0919331-9	4	CAPSCREW, cd-pltd., 3/8"NF x 1"
	0916965-7	4	LOCKWASHER, cd-pltd., 3/8"
	0920743-2	4	WASHER, plain
8	0654646-9	1	SUPPORT, right arm rest cushion
	0916272-8	3	CAPSCREW, 3/8"NC x 1-1/4"
	0904206-0	3	LOCKWASHER, 3/8"
	0044973-6	3	WASHER, plain
9	0657564-1	1	BELT, safety (Special equipment)(Not illustrated)

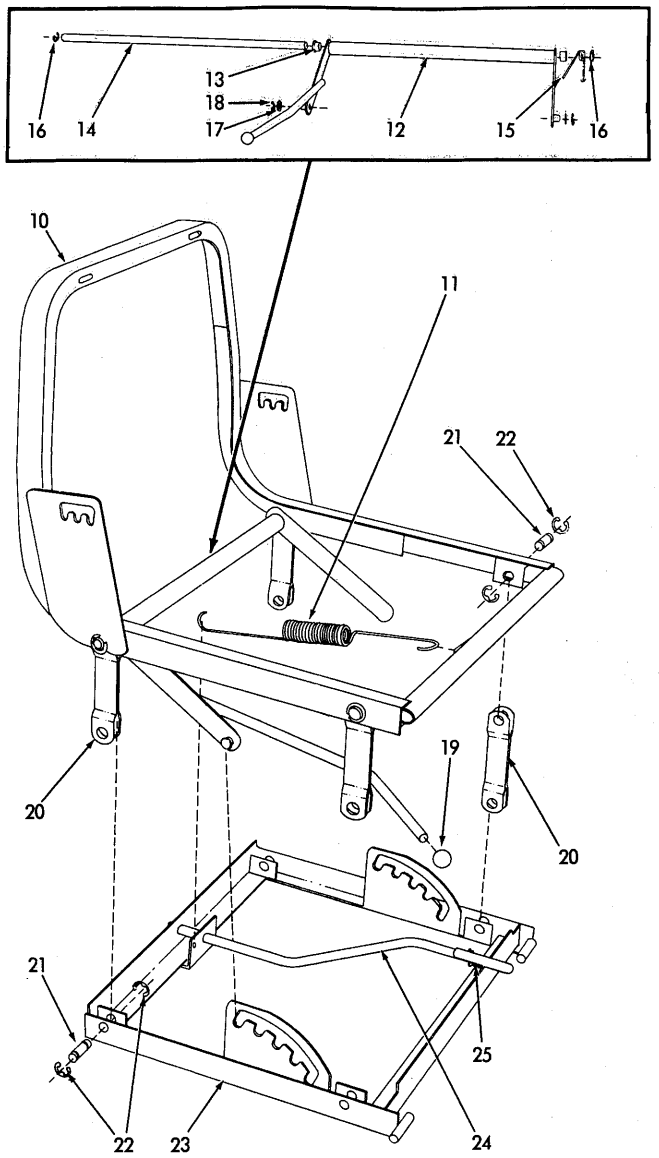

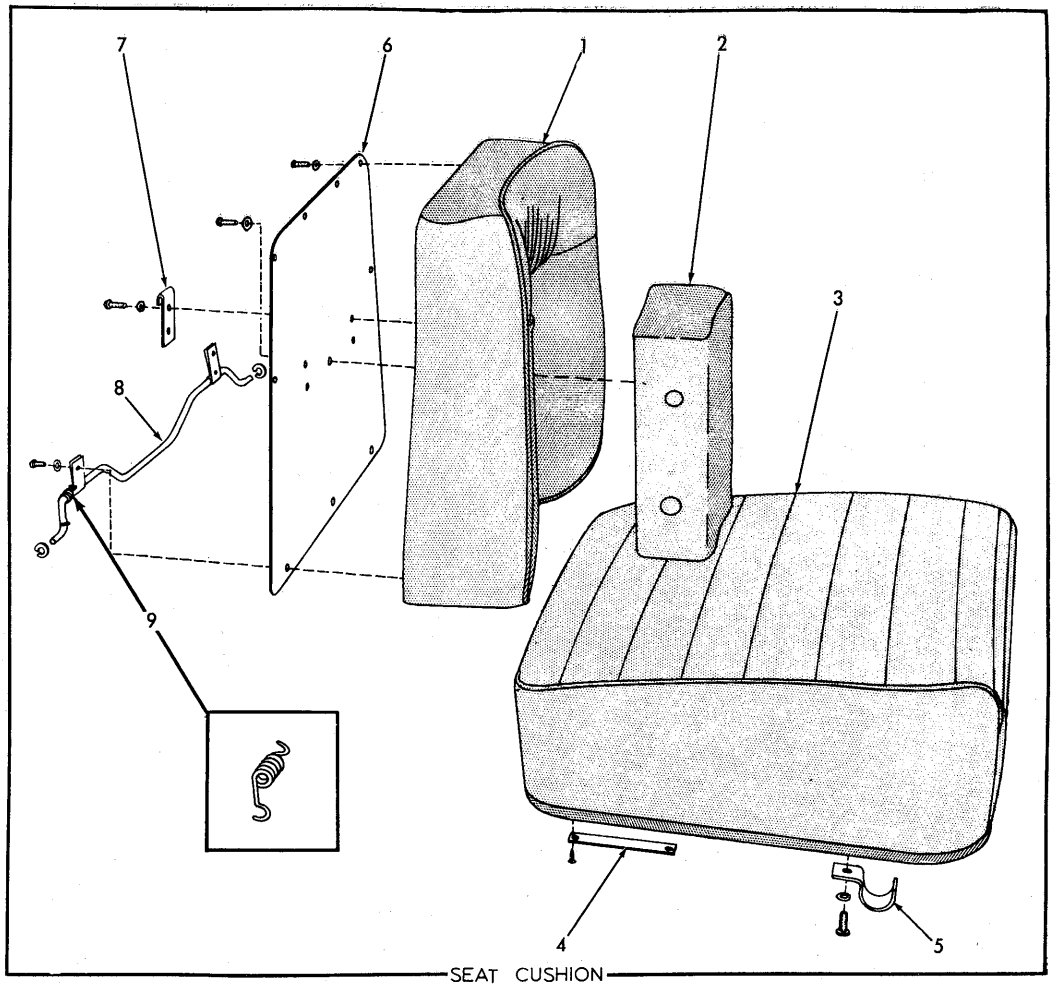

SEAT ASSEMBLY

T-71877

SEAT ASSEMBLY

USAGE: See pages 193 and 195

ITEM	PART NO.	QTY.	DESCRIPTION
-	0659093-9	1	SEAT ASSY. (Std.) } Each includes items 1 thru 25
-	0650199-3	1	SEAT ASSY. (Special. Fire resistant) } Each includes items 1 thru 25
1	0638422-6	1	CUSHION, back (outside section) (Std.)
1	0641249-8	1	CUSHION, back (outside section) (Special. Fire resistant)
1	0642499-8	1	COVER, slip, back cushion (Includes fastenings)(Not original equipment)
2	0638421-8	1	CUSHION, back (center section) (Std.)
2	0641250-6	1	CUSHION, back (center section) (Special. Fire resistant)
2	0916532-5	2	SCREW, machine, rd-hd., 1/4" NC x 3/4"
2	0914105-2	2	LOCKWASHER, ext-tooth, 1/4"
2	0642498-0	1	COVER, slip, back cushion (Includes fastening)(Not original equipment)
3	0659102-8	1	CUSHION ASSY., seat (Includes item 4) (Std.)
3	0641248-0	1	CUSHION ASSY., seat (Includes item 4) (Special. Fire resistant)
3	0642500-3	1	COVER, slip, seat cushion (Includes fastenings)(Not original equipment)
4	0638431-7	2	PLATE, bearing, seat cushion
	-------	4	SCREW, wood, fl-hd., #8 x 1/2" (Procure locally)
5	0638432-5	2	BRACKET, pivot, seat cushion
	0916532-5	2	SCREW, machine, rd-hd., 1/4" NC x 3/4"
	0914105-2	2	LOCKWASHER, ext-tooth, 1/4"
6	0650143-1	1	PLATE, reinforcing, back cushion
	0916532-5	8	SCREW, machine, rd-hd., 1/4" NC x 3/4"
	0914105-2	8	LOCKWASHER, ext-tooth, 1/4"
7	0650132-4	2	BRACKET, retaining, back cushion
	0916532-5	4	SCREW, machine, rd-hd., 1/4" NC x 3/4"
	0914105-2	4	LOCKWASHER, ext-tooth, 1/4"
8	0650141-5	1	ROD ASSY., back cushion adjustment (Includes mounting clips)
	0916532-5	2	SCREW, machine, rd-hd., 1/4" NC x 3/4"
	0914105-2	2	LOCKWASHER, ext-tooth, 1/4"
	0928197-3	2	RING, retaining
9	0650137-3	1	SPRING, back cushion adjustment rod
10	0650144-9	1	FRAME, seat
11	0650138-1	1	SPRING, retracting, seat frame
12	0650142-3	1	LATCH, seat adjustment
13	0650146-4	2	BEARING, seat adjustment latch
14	0650136-5	1	SHAFT, seat adjustment latch
15	0650135-7	1	SPRING, seat adjustment latch
16	0638351-7	2	RING, snap, seat adjustment latch shaft
17	0188436-0	2	WASHER, seat adjustment latch
18	0650147-2	2	RING, snap, seat adjustment latch
19	0650133-2	1	KNOB, seat adjustment latch
20	0650139-9	4	LINK, suspension, seat frame
21	0650131-6	6	PIN, seat frame suspension link
22	0638351-7	12	RING, snap, suspension link pin
23	0650145-6	1	FRAME ASSY., base (Includes items 24 and 25)
24	0650140-7	1	ROD, seat release
	0188436-0	1	WASHER, plain
	0924169-6	2	PIN, groove, 1/8" x 1"
25	0650134-0	1	SPRING, seat release rod

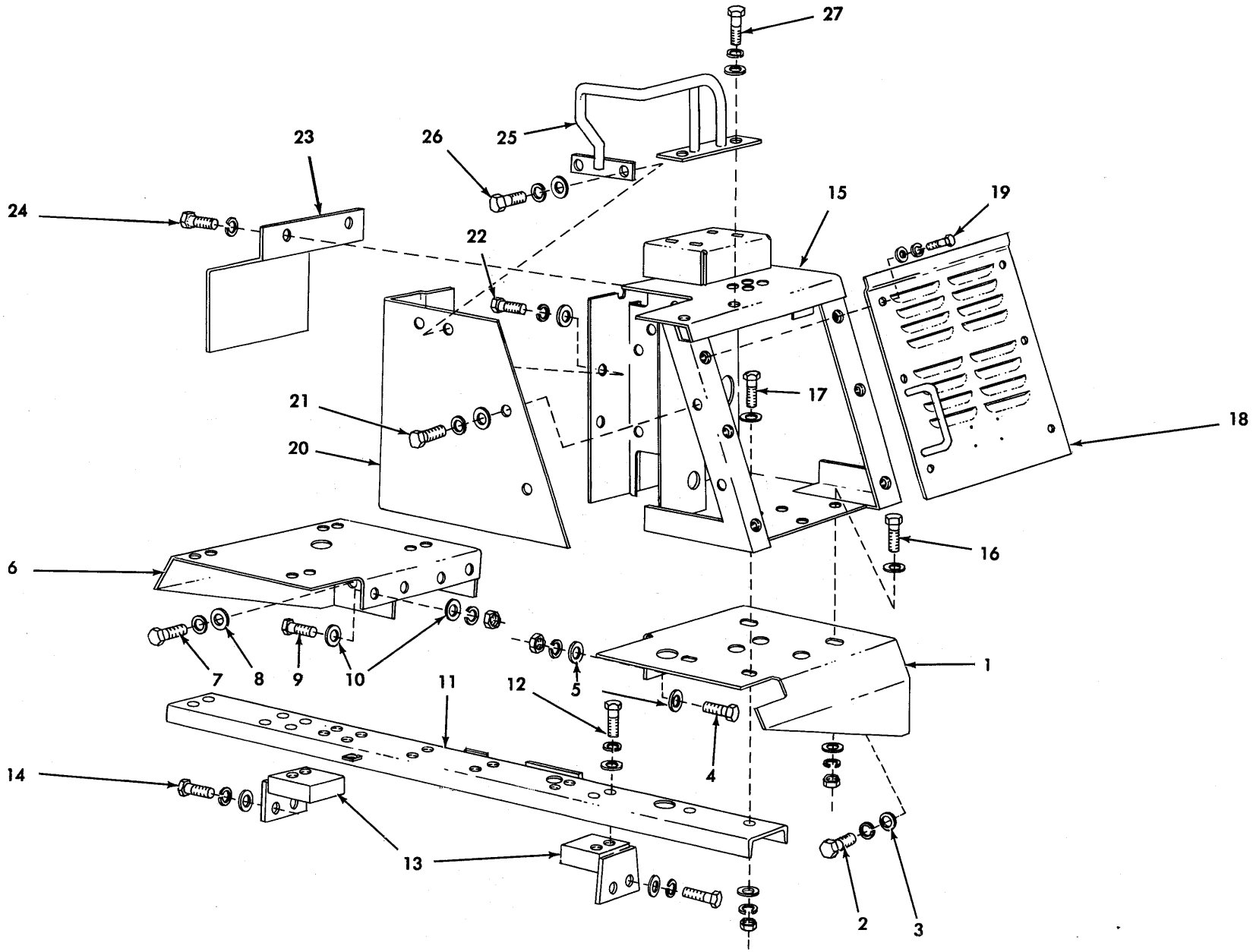

T-73092

REAR FENDERS AND FILTER BOX

REAR FENDERS AND FILTER BOX

ITEM	PART NO.	QTY.	DESCRIPTION
1	0654551-1	1	FENDER, left side (Standard)(Original equipment. Order FENDER 0676389-0 and COVER 0676387-4)
	0676389-0	1	FENDER, left side (Standard)(Service replacement)
	0660147-0	1	FENDER, left side (Units with special REAR GUARD)
2	0920574-1	4	CAPSCREW, 1/2"NC x 1-3/8"
3	0677008-5	4	WASHER, plain
4	0921068-3	4	CAPSCREW, 3/4"NC x 2-1/4"
5	0677012-7	8	WASHER, plain
	0911030-5	4	NUT, 3/4"NC
6	0673159-0	1	FENDER, right side (Standard units)
	0660148-8	1	FENDER, right side (Units with special REAR GUARD)
7	0920574-1	4	CAPSCREW, 1/2"NC x 1-3/8"
8	0677008-5	4	WASHER, plain
9	0921068-3	4	CAPSCREW, 3/4"NC x 2-1/4"
10	0677012-7	8	WASHER, plain
	0911030-5	4	NUT, 3/4"NC
11	0666882-6	1	CHANNEL, fender supporting (Standard units)
	0660998-6	1	CHANNEL, fender supporting (Units with special REAR GUARD)
12	0921556-7	2	CAPSCREW, 1/2"NC x 2"
	0677008-5	2	WASHER, plain
13	0656342-3	2	ANGLE, channel attachment
14	0915963-3	4	CAPSCREW, 5/8"NC x 2-1/4"
	0904209-4	4	LOCKWASHER, 5/8"
	0064810-5	4	WASHER, plain
15	0654594-1	1	BOX, transmission filters and control valve (Loaders prior to #1000)
	0670091-8	1	BOX, transmission filters and control valve (Loader units #01001 and up)
16	0916313-0	2	CAPSCREW, 1/2"NC x 1-3/4"
17	0921556-7	2	CAPSCREW, 1/2"NC x 2"
	0677008-5	8	WASHER, plain
	0904208-6	4	LOCKWASHER, 1/2"
	0911028-9	4	NUT, 1/2"NC
18	0676387-4	1	COVER, filter box, side
19	0922763-8	6	CAPSCREW, 3/8"NC x 1"
	0677006-9	6	WASHER, plain
20	0654537-0	1	COVER, filter box, front (Loaders prior to #1000)
	0670093-4	1	COVER, filter box, front (Loader units #01001 and up)
21	0919224-6	2	CAPSCREW, 3/8"NC x 1-1/8"
22	0916271-0	3	CAPSCREW, 3/8"NC x 1" } 1 less used prior to unit #1001
	0904206-0	5	LOCKWASHER, 3/8" } 1 less used prior to unit #1001
	0044973-6	3	WASHER, plain (1 additional used prior to unit #1001)
23	0656060-1	1	GUARD, piping
24	0922262-1	2	CAPSCREW, 3/8"NC x 7/8"
	0677006-9	2	WASHER, plain
25	0639870-5	1	GUARD, speed shift lever
26	0921076-6	2	CAPSCREW, 3/8"NC x 1-1/4"
	0922262-1	2	CAPSCREW, 3/8"NC x 7/8"
	0904206-0	4	LOCKWASHER, 3/8"
	0677006-9	4	WASHER, plain

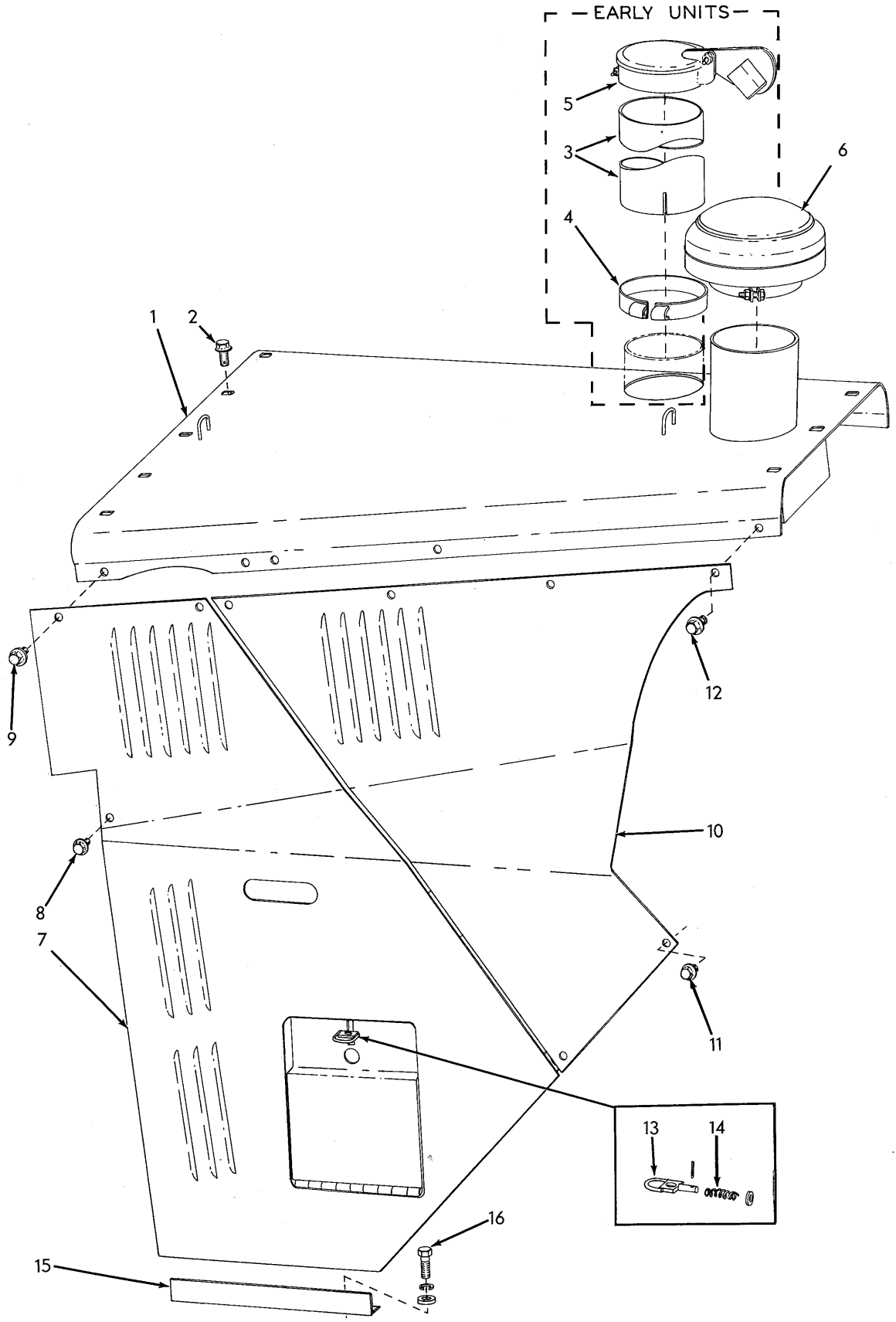

ENGINE HOOD (First type)

T-74991

ENGINE HOOD

USAGE: Loaders prior to Serial No. 1000

ITEM	PART NO.	QTY.	DESCRIPTION	
1	659063	1	HOOD, engine (Loaders prior to #527)	
	666996	1	HOOD, engine (Loaders #527 and up)	
2	648294	8	CAPSCREW, Nylok, 1/2"NC x 1"	
3	659613	1	PIPE, exhaust	Loaders prior to #527
4	659006	1	CLAMP, exhaust pipe	
	916389	1	CAPSCREW, 3/8"NF x 3-1/4"	
	044973	2	WASHER, plain	
	904206	1	LOCKWASHER, 3/8"	
	911041	1	NUT, 3/8"NF	
5	665498	1	CAP, weather (Serviced only as a unit)	
6	645028	1	RAINCAP, air stack (Includes mounting clamp)	
7	659887	1	PLATE, left side, front section	
	659888	1	PLATE, right side, front section	
8	648238	4	CAPSCREW, Nylok, 1/2"NC x 3/4"	
9	648294	2	CAPSCREW, Nylok, 1/2"NC x 1"	
10	659883	1	PLATE, left side, rear section	
	659884	1	PLATE, right side, rear section	
11	648238	10	CAPSCREW, Nylok, 1/2"NC x 3/4"	
12	648294	2	CAPSCREW, Nylok, 1/2"NC x 1"	
13	659876	1	LOCK, oil filler door	
	911114	1	WASHER, plain, SAE std., 1/4"	
	916018	1	PIN, spring, 3/32" x 5/8"	
14	659005	1	SPRING, door lock	
15	659759	1	ANGLE, side plate retention, left side	
	659760	1	ANGLE, side plate retention, right side	
16	035190	4	CAPSCREW, 1/2"NC x 1-1/2"	
	904208	4	LOCKWASHER, 1/2"	
	064531	4	WASHER, plain	

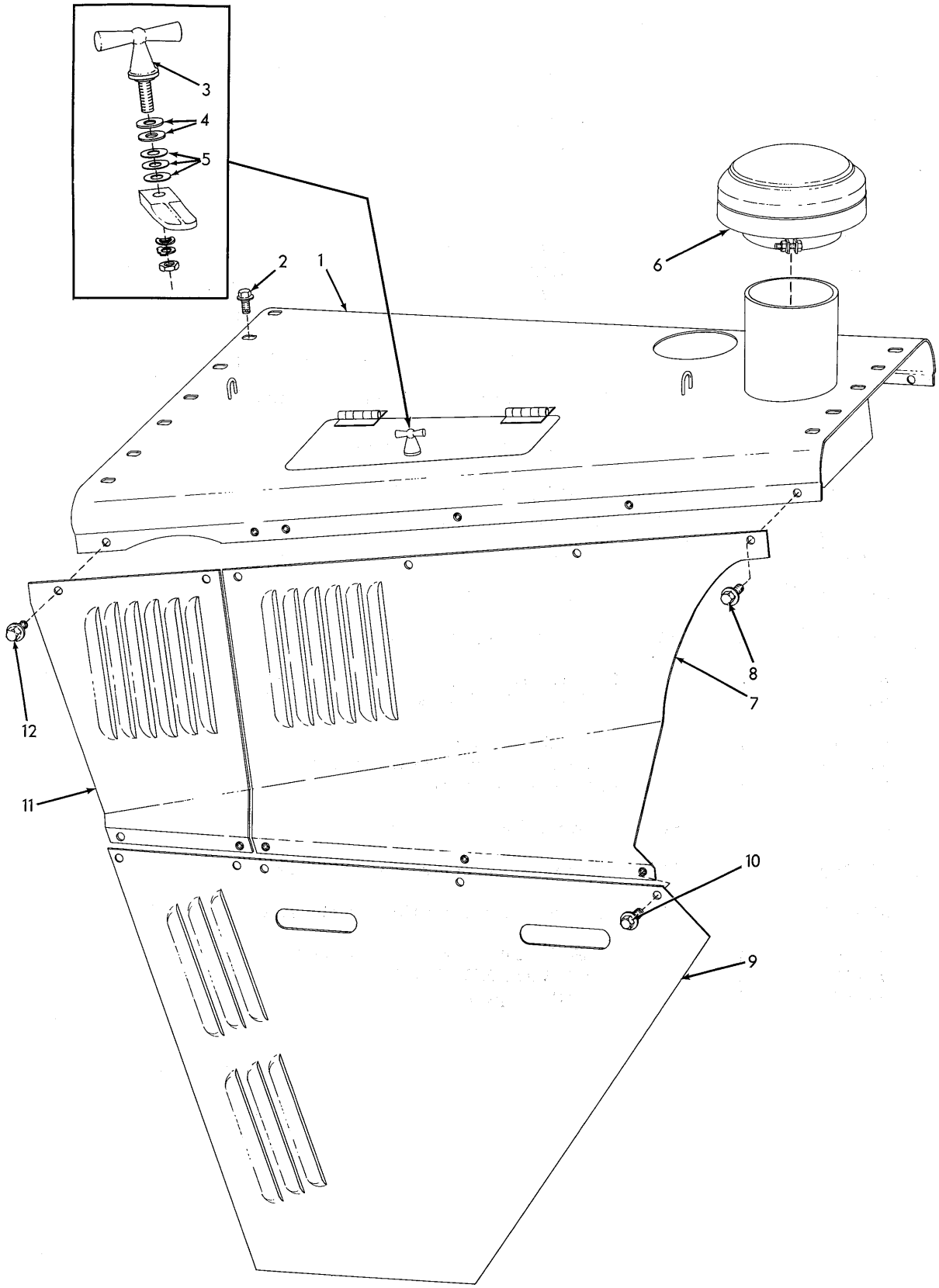

T-75592

ENGINE HOOD (Second type)

ENGINE HOOD

USAGE: Loaders Serial No. 43C01001 and up

ITEM	PART NO.	QTY.	DESCRIPTION
1	669852	1	HOOD, engine
2	648294	12	CAPSCREW, Nylok, 1/2"NC x 1"
3	653814	1	LOCK ASSY., access lid (Serviced only as a unit)
4	913274	2	WASHER, spacing, lid lock
5	659035	3	SHIM, lid lock (Use as required)
6	645028	1	RAINCAP, air stack (Includes mounting clamp)
7	669875	1	PLATE, left side, rear section
	669876	1	PLATE, right side, rear section
8	648294	8	CAPSCREW, Nylok, 1/2"NC x 1"
9	669873	1	PLATE, left side, lower section
	669874	1	PLATE, right side, lower section
10	648294	10	CAPSCREW, Nylok, 1/2"NC x 1"
11	669871	1	PLATE, left side, front section
	669872	1	PLATE, right side, front section
12	648294	4	CAPSCREW, Nylok, 1/2"NC x 1"

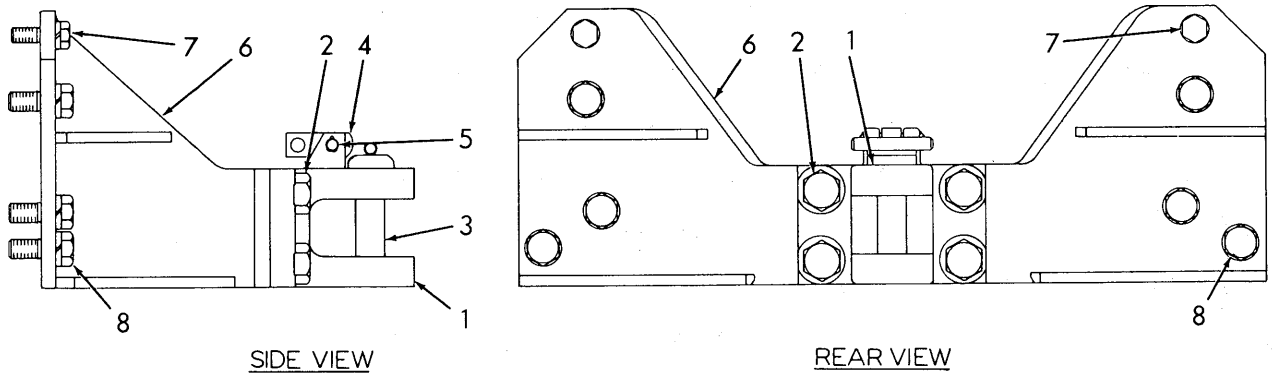

T-41926

DRAWBAR
(Heavy-duty)

USAGE: Standard on Loaders prior to serial No. 344. Optional on late units

ITEM	PART NO.	QTY.	DESCRIPTION
1	633729	1	BRACKET, coupling
2	633733	4	CAPSCREW, 1-1/2"NF x 5-1/2"
	913077	4	LOCKWASHER, 1-1/2"
	916555	4	NUT, 1-1/2"NF
3	633730	1	PIN, drawbar
4	629697	1	BLOCK, retaining, drawbar pin
5	629698	1	PIN, retaining block
	900806	2	PIN, cotter, 1/8" x 1"
6	633863	1	BRACKET, supporting
7	070272	2	CAPSCREW, 1"NF x 3"
	910916	2	LOCKWASHER, 1"
8	066794	6	CAPSCREW, 1-1/4"NF x 3-1/4"
	904210	6	LOCKWASHER, 1-1/4"

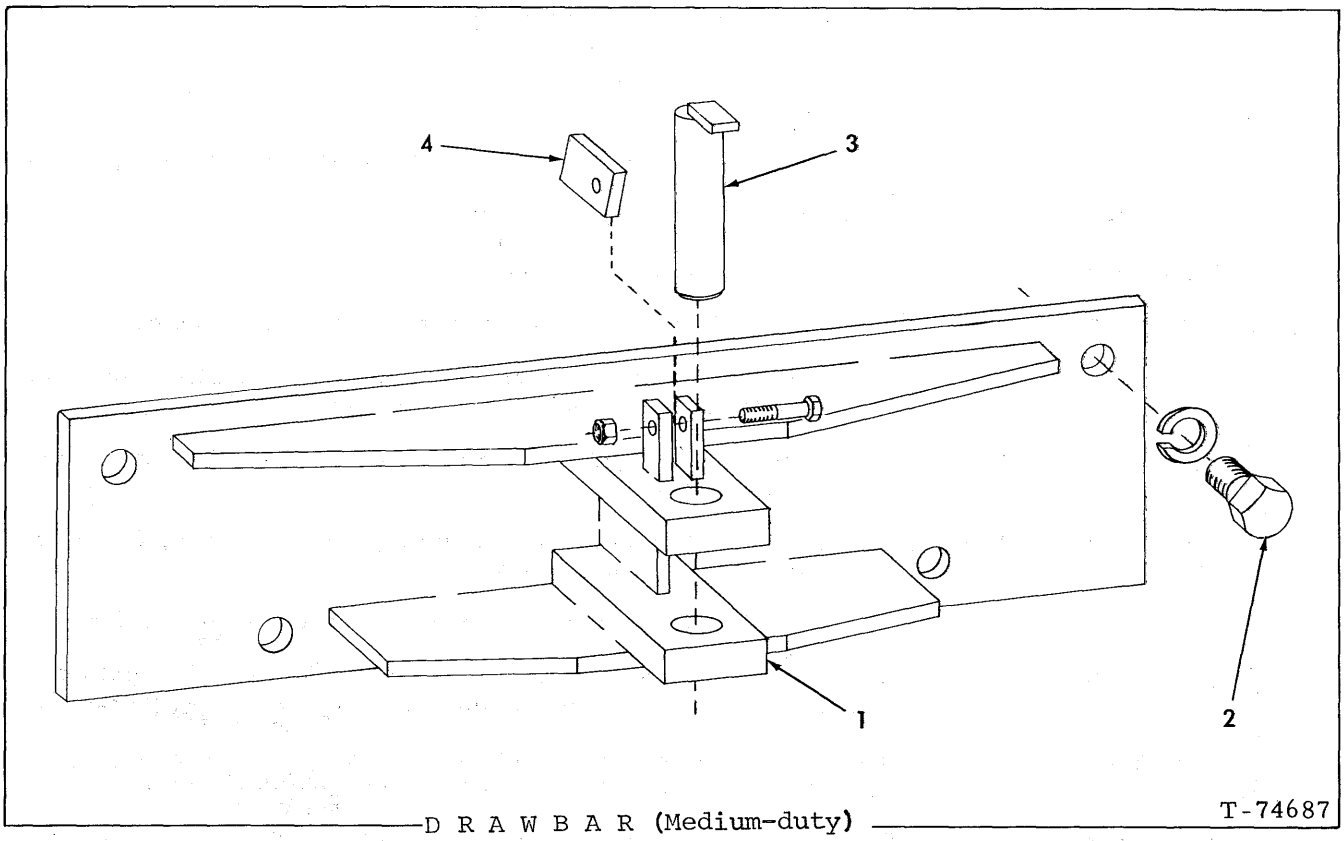

D R A W B A R (Medium-duty)

USAGE: Standard equipment. Loader serial No. 344 thru 1000; also Loader serial No. 43C1001 and up

ITEM	PART NO.	QTY.	DESCRIPTION
1	0663991-8	1	DRAWBAR
2	0927608-0	4	CAPSCREW, 1-1/4"NF x 3-1/4"
	0914730-7	4	LOCKWASHER, 1-1/4"
3	0664015-5	1	PIN, coupling
4	0664052-8	1	PLATE, pin retaining
	0922526-9	1	CAPSCREW, 1/2"NC x 2-1/2"
	0915972-4	1	NUT, elastic stop, 1/2"NC

PAINTING AND MARKING
(Not illustrated)

ITEM	PART NO.	QTY.	DESCRIPTION
			NOTE: Approximately 6 gallons paint required for spraying one coat
1	0925109-1	-	ENAMEL, A-C yellow, quart can
2	0925110-9	-	ENAMEL, A-C yellow, gallon can
3	0925108-3	-	ENAMEL, A-C yellow, 12 oz. pressurized spray-type can
			NOTE: All plates and transfers listed below are English language printings unless otherwise indicated.
4	0657300-0	1	PLATE, lubrication and service guide (8-3/4" x 12". Attached to front of filter box)
	0657301-8	1	PLATE, lubrication and service guide (multi-language, 8-3/4" x 12". Attached to front of filter box)
	0034076-0	6	SCREW, thread-cutting, cross-recessed-hd,#8 x 1/2"
5	0621357-3	1	TRANSFER, lubrication certification(3-7/8" x 6-3/4")(Applied to hydraulic tank)(Not used on units for steel mill slag removal)
	0666588-9	1	TRANSFER, undercarriage lubrication guide (3-1/4" x 6-1/2") (Applied to front of filter box on steel mill units only)
6	0924552-3	1	TRANSFER,"ALLIS-CHALMERS" (2-1/2" x 39")(Applied to rear of radiator guard)
7	0924549-9	1	TRANSFER, "ALLIS-CHALMERS" (1-5/8" x 27")(Applied to front of loader)
8	0668230-6	3	TRANSFER, "12G"(5"x15 - 1/8")(Applied to sides and front of loader)
9	0666821-4	2	TRANSFER, "SANITATION SPECIAL" (4" x 12")(Applied to sides hydraulic tank and filter box on Land Fill units only)
10	0924306-4	2	TRANSFER, trademark (7-3/4", black and orange) } Applied to sides of fuel tank guard
	0924463-3	2	TRANSFER, trademark (7-3/4", white)(Optional) } Applied to sides of fuel tank guard
11	0621343-3	2	TRANSFER, instruction, oil filter (2-5/16" x 3-1/4") } Applied to engine full-flow oil filters
	0633627-5	2	TRANSFER, instruction, oil filter (multi-language, 4" x 4-3/4") } Applied to engine full-flow oil filters
12	0661556-1	1	TRANSFER, instruction, oil filter (1-1/2" x 3-1/4") } Applied to engine by-pass oil filter
	0661557-9	1	TRANSFER, instruction, oil filter (multi-language, 1-1/2" x 3-1/4") } Applied to engine by-pass oil filter
13	0661558-7	1	TRANSFER, instruction, oil filter (1-3/4" x 2-1/4")(Applied to FILTER ASSEMBLY 631542)
14	0658069-0	1	TRANSFER, instruction, hydraulic oil filter (6-1/2" x 7-1/2") (Applied to hydraulic tank)
15	0659534-2	1	TRANSFER, instruction, air cleaner (2-1/2" x 5"))Applied to hydraulic tank)

(Continued)

ITEM	PART NO.	QTY.	DESCRIPTION
16	0651894-8	1	TRANSFER, instruction, air cleaner cartridge replacement (1-5/16" x 2-7/16")(Applied to air restriction indicator on early units only)
17	0621342-5	1	TRANSFER, instruction, engine primer (1-3/4" x 6")(Applied to dash)
18	0669933-4	1	TRANSFER, instruction, coolant filter (2-3/8" x 3-1/2")(Applied to filter)
19	0660345-0	1	TRANSFER, "COOLANT ONLY" (1/2" x 7-3/8")(Applied to radiator guard)
20	0650587-9	1	TRANSFER, turbocharger, altitude warning (1-3/4" x 3-1/2") (Applied to dash)
21	0666497-3	1	TRANSFER, instruction, engine operation (2-1/4" x 4-1/2") (Applied to dash)
22	3029538-0	1	STICKER, caution, phosphate-ester hydraulic fluid (2-1/8" x 3") (Applied to top of hydraulic tank equipped to use phosphate-ester fire-resistant hydraulic fluid)

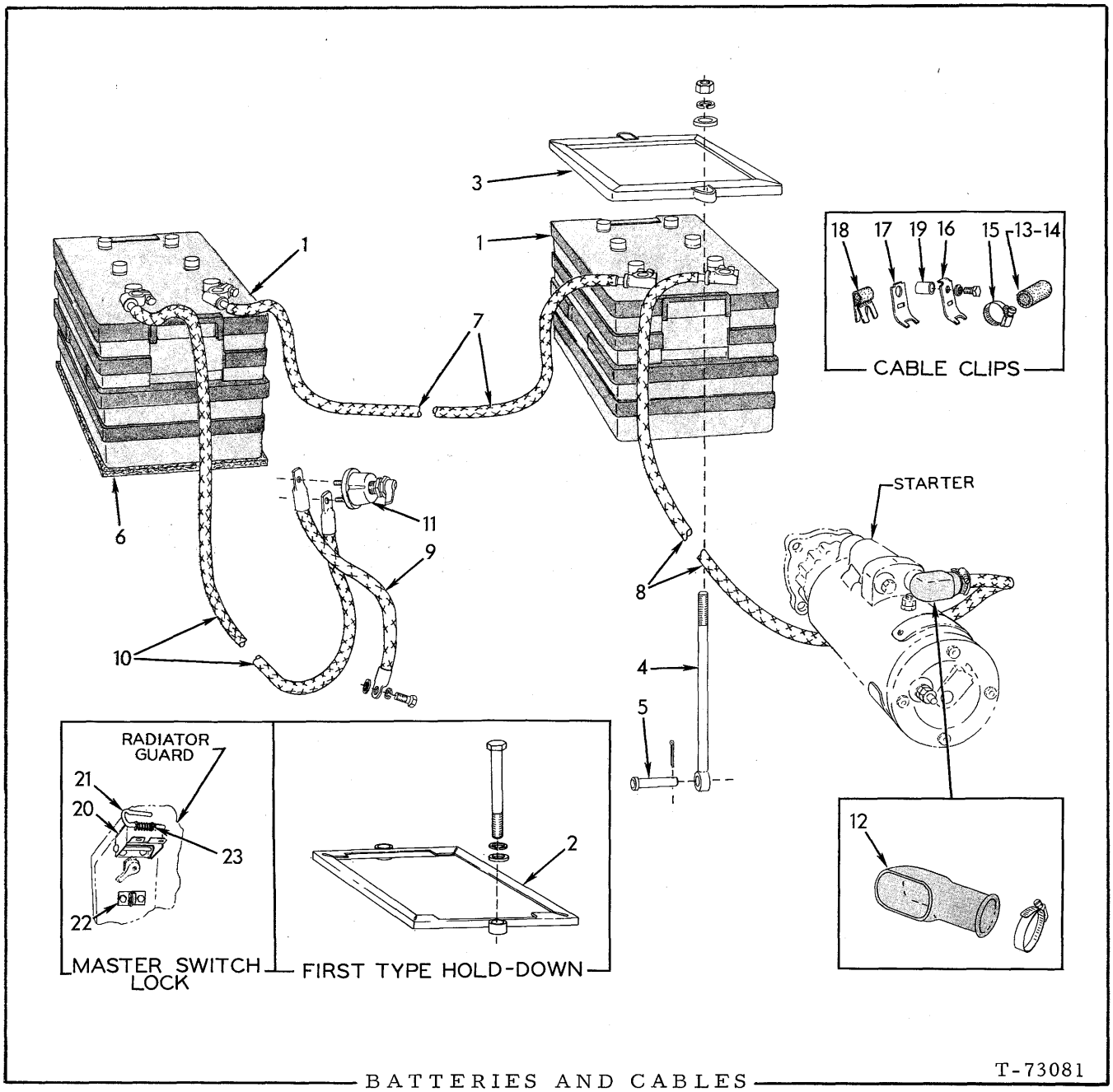

BATTERIES AND CABLES T-73081

ITEM	PART NO.	QTY.	DESCRIPTION
1	------	2	BATTERY, storage, 12 volts, 21 plates ("Prestolite" #6DA-172. Order from local dealer)(Loaders prior to # 493)
	248922	2	BATTERY, storage, 12 volts, dry-charged (Each requires 14 qts. electrolyte)(Loaders # 493 and up)
1A	243526	1	ELECTROLYTE ("Z" pack - 6.1 quarts) } Not illustrated
	243527	1	ELECTROLYTE ("F" pack - 5 gallons) } Not illustrated

(Continued)

ITEM	PART NO.	QTY.	DESCRIPTION
1B	243528	1	HOSE, electrolyte dispensing (For use with 5 gal. pack) (Not illustrated)
2	656078	2	HOLD-DOWN, battery (Loaders prior to # 493)
	052191	4	CAPSCREW, 1/2"NC x 5-1/2"
	904208	4	LOCKWASHER, 1/2"
	064531	4	WASHER, plain
3	664334	2	HOLD-DOWN, battery
4	664289	4	ROD, battery hold-down
	911028	4	NUT, 1/2"NC
	904208	4	LOCKWASHER, 1/2"
	064531	4	WASHER, plain
5	632260	4	PIN, hold-down rod
	900806	4	PIN, cotter, 1/8" x 1"
6	085680	2	PAD, battery bottom
7	656521	1	CABLE, battery connecting (94" long)
8	656518	1	CABLE, battery to starter (134" long)
9	066604	1	CABLE, master switch to ground (22" long)
	035244	1	CAPSCREW, 3/8"NC x 3/4"
	904206	1	LOCKWASHER, regular, 3/8"
	906960	1	LOCKWASHER, int-tooth, 3/8"
10	656519	1	CABLE, battery to master switch (56" long)
11	643726	1	SWITCH ASSEMBLY, master (Serviced only as a unit)
12	076572	1	BOOT, protecting, starter terminal
13	097611	6	BOOT, cable protecting (5/8" I. D.)
14	076469	5	BOOT, cable protecting (3/4" I. D.)
15	921912	12	CLAMP, cable boot
16	633653	9	CLIP, cable supporting
	035244	6	CAPSCREW, 3/8"NC x 3/4"
	916225	2	CAPSCREW, 3/8"NF x 1"
	904206	8	LOCKWASHER, 3/8"
17	084895	2	CLIP, cable supporting
18	644666	3	CLIP, cable supporting (9/16" diam., 17/32" bolt-slot)
	035244	3	CAPSCREW, 3/8"NC x 3/4"
	904206	3	LOCKWASHER, 3/8"
	911115	3	WASHER, plain, SAE std., 3/8"
19	043024	1	BLOCK, clip spacing
			NOTE: Items listed below are special equipment
20	620474	1	COVER, master switch
	914330	2	CAPSCREW, 1/4"NF x 5/8"
	904204	2	LOCKWASHER, 1/4"
	911040	2	NUT, 1/4"NF
21	621201	1	ROD, latching, master switch cover
	916146	1	PIN, spring, 3/32" x 1/2"
22	620472	1	PLATE, latching, master switch cover
	914330	2	CAPSCREW, 1/4"NF x 5/8"
	904204	2	LOCKWASHER, 1/4"
	911040	2	NUT, 1/4"NF
23	035916	1	SPRING, master switch cover

Loaders # 493 and up

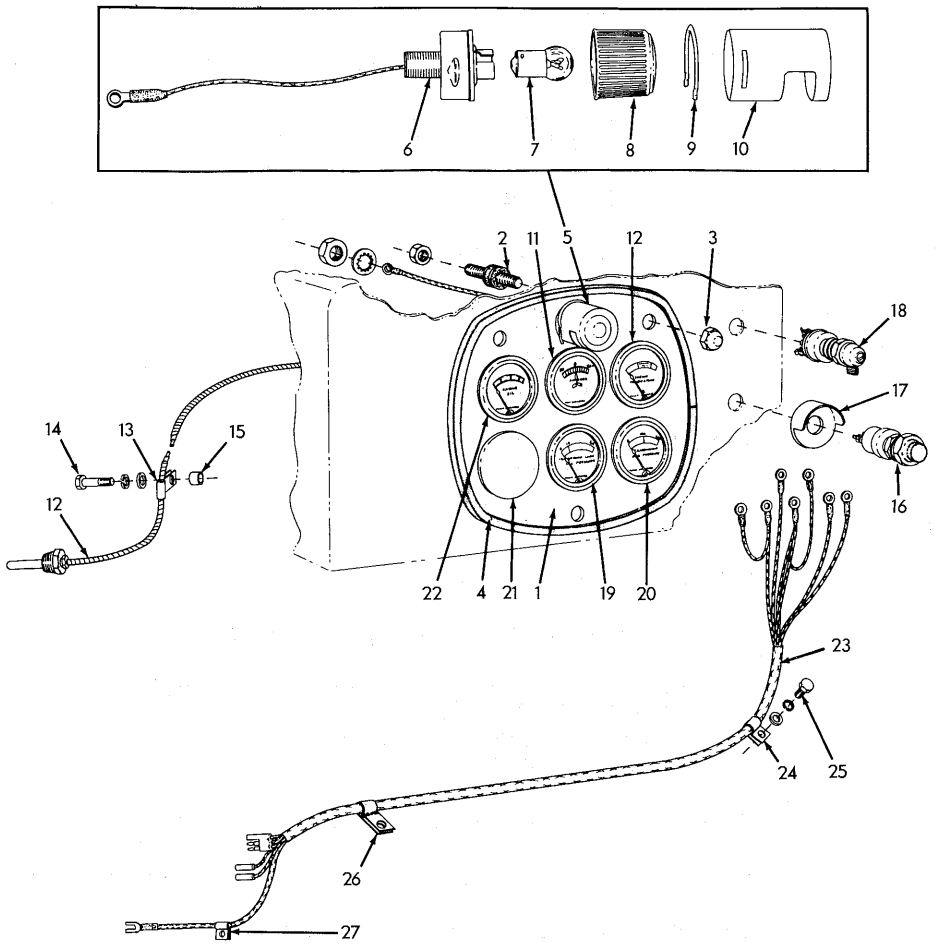

T-73079

INSTRUMENTS

ITEM	PART NO.	QTY.	DESCRIPTION
1	656905	1	PLATE, instrument mounting
2	642746	3	CUSHION, instrument mounting plate
	911048	3	NUT, jam, 3/8"NF
3	924950	3	NUT, instrument mounting plate
4	656923	1	SEAL, weather, instrument mounting plate
5	659003	1	LIGHT ASSEMBLY, instrument panel (Consists of items 6 thru 10)
	911049	1	NUT, jam, 5/8"NF
	910334	1	LOCKWASHER, int-tooth, 5/8"
6	------	1	BASE ASSEMBLY (Not serviced separately)
7	074452	1	BULB, instrument light (single contact, 6 C. P., 24 volts)
8	095267	1	LENS, instrument light
9	095265	1	SPRING, retaining, instrument light cover
10	659002	1	COVER, instrument light

(Continued)

ITEM	PART NO.	QTY.	DESCRIPTION
11	658348	1	AMMETER (Includes mounting clamp)
12	658397	1	GAUGE, engine temperature (Includes mounting clamp)
13	639313	3	CLIP, temperature gauge tube
14	053616	1	CAPSCREW, 3/8"NC x 1-3/4"
	904206	1	LOCKWASHER, 3/8"
	911115	1	WASHER, plain, SAE std., 3/8"
15	085452	1	BLOCK, clip spacing
16	240962	1	SWITCH ASSEMBLY, starter (Includes mounting nut)
17	634677	1	GUARD, starter switch
18	661345	1	SWITCH ASSEMBLY, lights (Includes mounting nut)
19	------	1	GAUGE, transmission lubricating oil pressure (See page 212)
20	------	1	GAUGE, transmission hydraulic pressure (See page 212)
21	921193	1	PLUG, button, cd-pltd., 2-3/32" diam.
22	------	1	GAUGE, engine oil pressure (See page 214)
23	659197	1	HARNESS, instrument panel wiring
24	620063	1	CLIP, wiring harness (short)
25	035244	1	CAPSCREW, 3/8"NC x 3/4"
	911115	1	WASHER, plain, SAE std., 3/8"
	904206	1	LOCKWASHER, 3/8"
26	641504	1	CLIP, wiring harness (long)
27	644758	1	CLIP, harness supporting (3/16" diam., 9/32" bolt-hole)

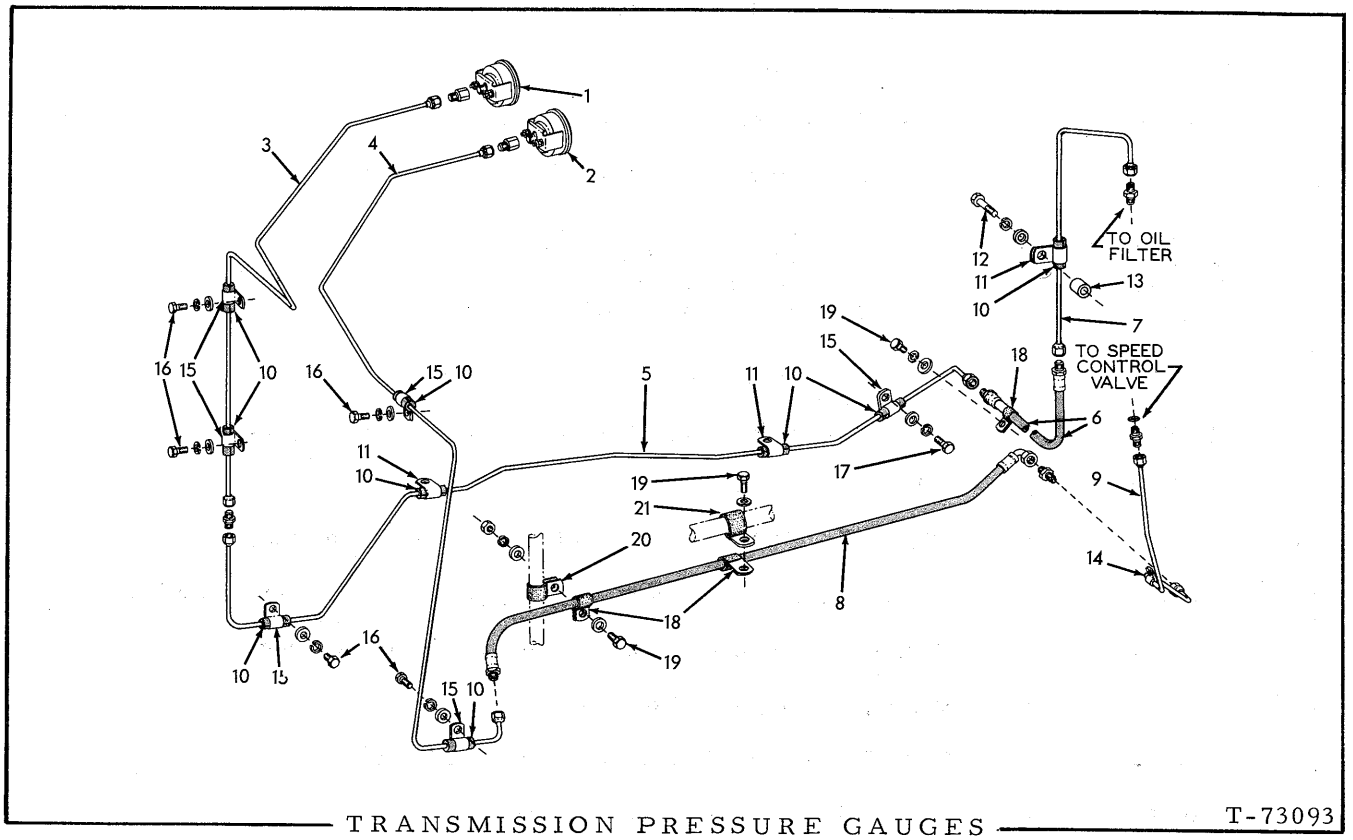

TRANSMISSION PRESSURE GAUGES T-73093

ITEM	PART NO.	QTY.	DESCRIPTION
1	666185	1	GAUGE, hydraulic pressure (Includes mounting clamp)
2	658313	1	GAUGE, lubricating oil pressure (Includes mounting clamp)
3	655398	1	TUBE ASSEMBLY, hydraulic pressure gauge, front section (Includes nuts)
	919174	1	CONNECTOR, flare type, 1/4" tube, 1/8"NPT female
4	655399	1	TUBE ASSEMBLY, lube oil pressure gauge, front section (Includes nuts)
	919174	1	CONNECTOR, flare type, 1/4" tube, 1/8"NPT female
5	655393	1	TUBE ASSEMBLY, hydraulic pressure gauge, intermediate section (Includes nuts)
	919214	1	UNION, flare type, 1/4" tube
6	655395	1	HOSE, hydraulic pressure gauge (See HOSE PARTS)
7	655397	1	TUBE ASSEMBLY, hydraulic pressure gauge, rear section (Includes nuts)
	919140	1	CONNECTOR, flare type, 1/4" tube, 1/4"NPT male
8	655404	1	HOSE, lube oil pressure gauge (See HOSE PARTS)
	919214	1	UNION, flare type, 1/4" tube
9	656626	1	TUBE ASSEMBLY, lube oil pressure gauge, rear section (Includes nuts)
	923163	1	CONNECTOR, flare type, 1/4" tube, 7/16"NF straight male thread (Includes O-RING 921883)
10	093972	9	BOOT, tube protecting (rubber)

(Continued)

ITEM	PART NO.	QTY.	DESCRIPTION
11	051311	3	CLIP, tube supporting (5/8" diam., 17/32" bolt-hole)
12	058793	1	CAPSCREW, 3/8"NC x 2-1/4"
	904206	1	LOCKWASHER, 3/8"
	911115	1	WASHER, plain, SAE std., 3/8"
13	675569	1	BLOCK, clip spacing
14	640677	1	CLIP, tube supporting (1/4" diam., 13/32" bolt-hole)
15	047381	6	CLIP, tube supporting (5/8" diam., 13/32" bolt-hole)
16	035244	5	CAPSCREW, 3/8"NC x 3/4"
17	013058	1	CAPSCREW, 3/8"NC x 1-1/4"
	904206	6	LOCKWASHER, 3/8"
	911115	6	WASHER, plain, SAE std., 3/8"
18	644006	4	CLIP, hose supporting (9/16" diam., 17/32" bolt-hole)
19	035244	4	CAPSCREW, 3/8"NC x 3/4"
	904206	4	LOCKWASHER, 3/8"
	911115	6	WASHER, plain, SAE std., 3/8"
	911026	2	NUT, 3/8"NC
20	094467	1	CLIP, hose supporting (3/4" diam., 13/32" bolt-hole)
21	632547	1	CLIP, hose supporting (1-1/2" diam., 17/32" bolt-hole)

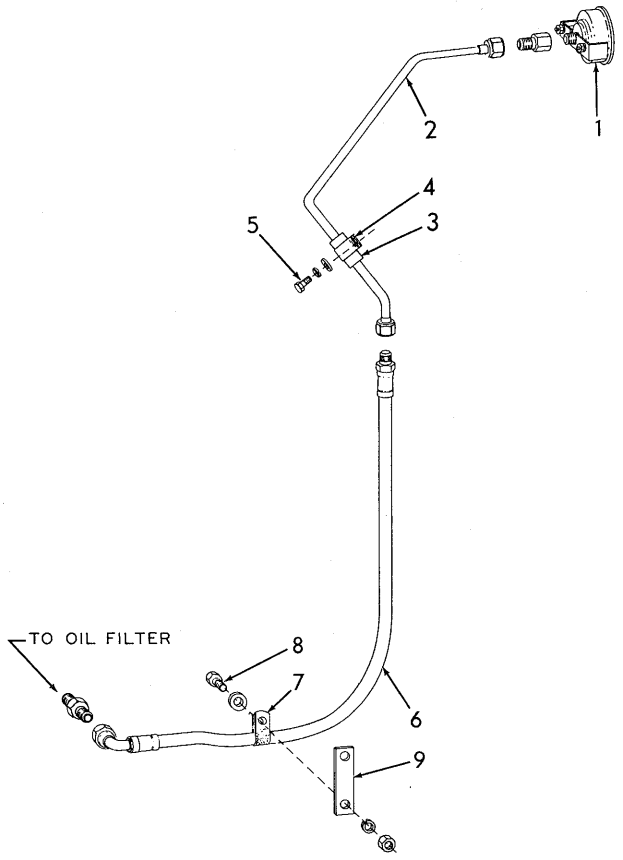

ENGINE OIL PRESSURE GAUGE T-73564

ITEM	PART NO.	QTY.	DESCRIPTION
1	0658293-6	1	GAUGE, oil pressure (Includes mounting clamp)
2	0655400-0	1	TUBE ASSY., oil pressure gauge (Includes nuts)
	0919174-3	1	CONNECTOR, flare type, 1/4" tube, 1/8"NPT female
3	0093972-8	1	BOOT, tube protecting (rubber)
4	0047381-9	1	CLIP, tube supporting (5/8" diam., 13/32" bolt-hole)
5	0922763-8	1	CAPSCREW, 3/8"NC x 3/4"
	0044973-6	1	WASHER, plain, SAE std., 3/8"
6	0655390-3	1	HOSE, oil pressure line (See HOSE PARTS)
	0919140-4	1	CONNECTOR, flare type, 1/4" tube, 1/4"NPT male
7	0094527-9	2	CLIP, hose supporting (1/2" diam., 13/32" bolt-hole)
8	0035244-3	1	CAPSCREW, 3/8"NC x 3/4"
	0911115-4	1	WASHER, plain, SAE std., 3/8"
	0904206-0	1	LOCKWASHER, 3/8"
	0911026-3	1	NUT, 3/8"NC
9	0644162-0	1	STRAP, hose supporting

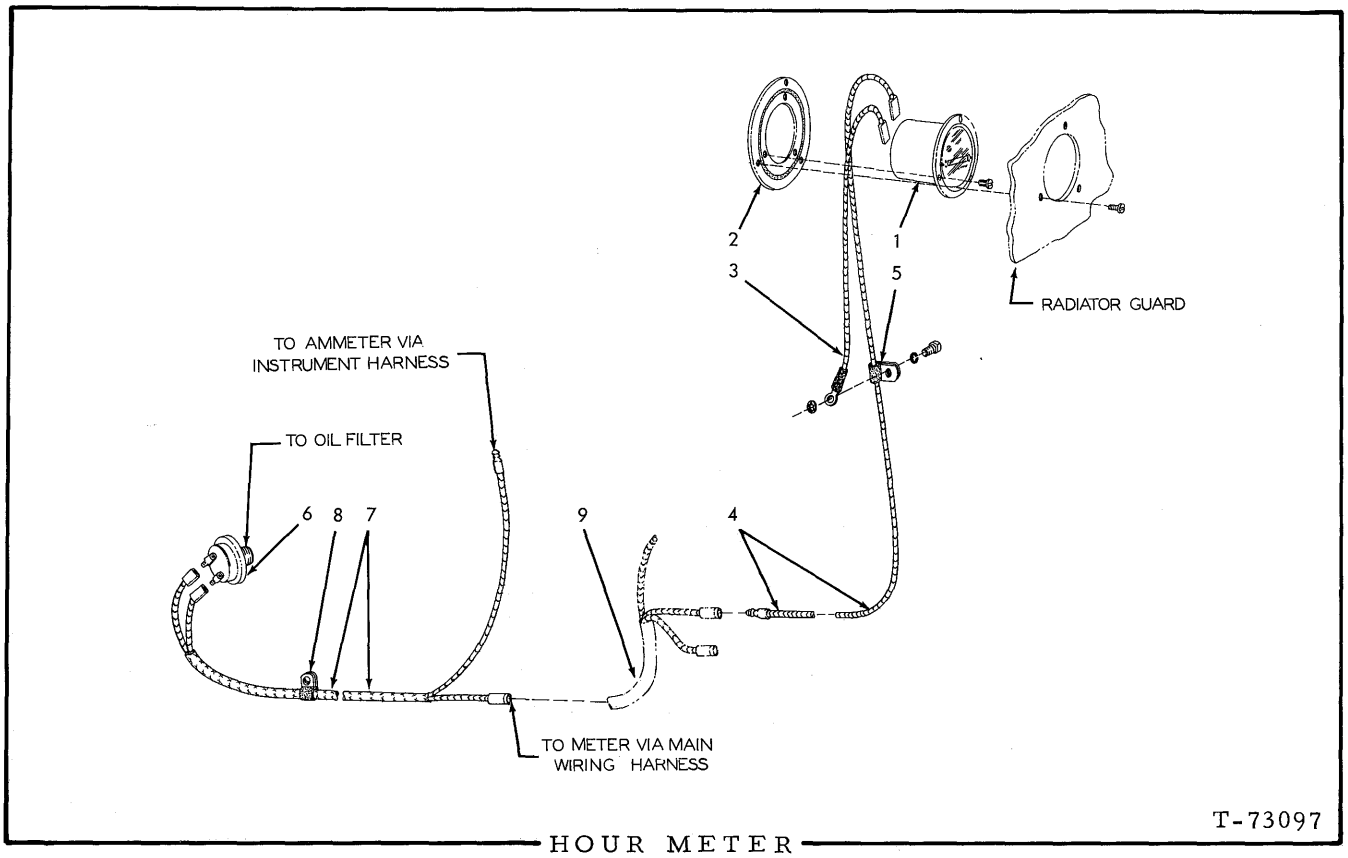

HOUR METER

USAGE: **Special equipment**, supplements Mechanical Hour Meter

ITEM	PART NO.	QTY.	DESCRIPTION
1	650299	1	METER, hour (24 volt)
	918210	3	SCREW ASSEMBLY, #6 x 1/2" (Includes lockwasher)
			NOTE: Meter carries manufacturer's warranty and in case of failure should not be returned to Allis-Chalmers. Return "Hobbs" meter to nearest "Stewart-Warner" agency. Return "Hamilton" meter to Hamilton Watch Company, Industrial Products Division, Lancaster, Pa.
2	066467	1	DAMPER, vibration
	918210	3	SCREW ASSEMBLY, #6 x 1/2" (Includes lockwasher)
3	630917	1	CABLE, meter to ground (8" long)
	909367	1	LOCKWASHER, int-tooth, 1/4"
4	655862	1	CABLE, meter to wiring harness (25" long)
5	640707	1	CLIP, hour meter cable (1/8" diam., 9/32" bolt-hole)
	905656	1	CAPSCREW, 1/4"NC x 5/8"
	904204	1	LOCKWASHER, 1/4"
6	640727	1	SWITCH, pressure
7	659198	1	HARNESS, wiring, pressure switch
8	639314	1	CLIP, wiring harness
9	------	1	HARNESS, safety switch (See SPEED CONTROL LINKAGE)

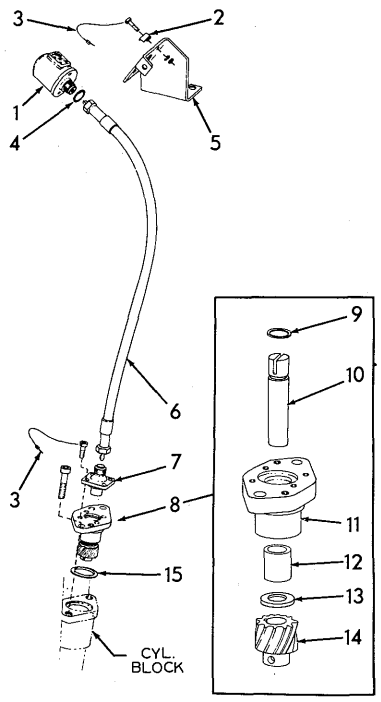

T-75759

HOUR METER (Mechanical)

USAGE: Effective with engine serial No. 11-17330

ITEM	PART NO.	QTY.	DESCRIPTION
1	4359569-3	1	METER, hour (Serviced only as a unit)
2	4359293-0	2	CLAMP, meter retaining
	4027687-5	2	SCREW, hex-socket hd., 1/4" NF x 7/8"
	0904204-5	2	LOCKWASHER, 1/4"
	0910337-5	2	NUT, 1/4" NF
3	4355843-6	3	SEAL, anti-tampering
4	0923934-4	1	O-RING, meter mounting
5	4359564-4	1	BRACKET, meter mounting
6	4359588-3	1	SHAFT ASSY., meter driving
7	4027565-3	1	DRIVE ASSY., hour meter (Serviced only as a unit)
	4027595-0	4	SCREW, hex-socket hd., #10 x 5/8"
8	4359237-7	1	ADAPTER ASSY. (Consists of items 9 thru 14)
	4359231-0	2	SCREW, hex-socket hd., 3/8" NC x 2-1/4"
9	4255961-7	1	RING, shaft retaining
10	4359271-6	1	SHAFT, drive
11	-------	1	HOUSING, adapter (Not serviced separately, order item 8)
12	4255962-5	1	BUSHING, adapter housing
13	4359308-6	1	BEARING, thrust (washer)
14	4660408-8	1	GEAR, drive shaft
15	4253773-8	1	GASKET, adapter

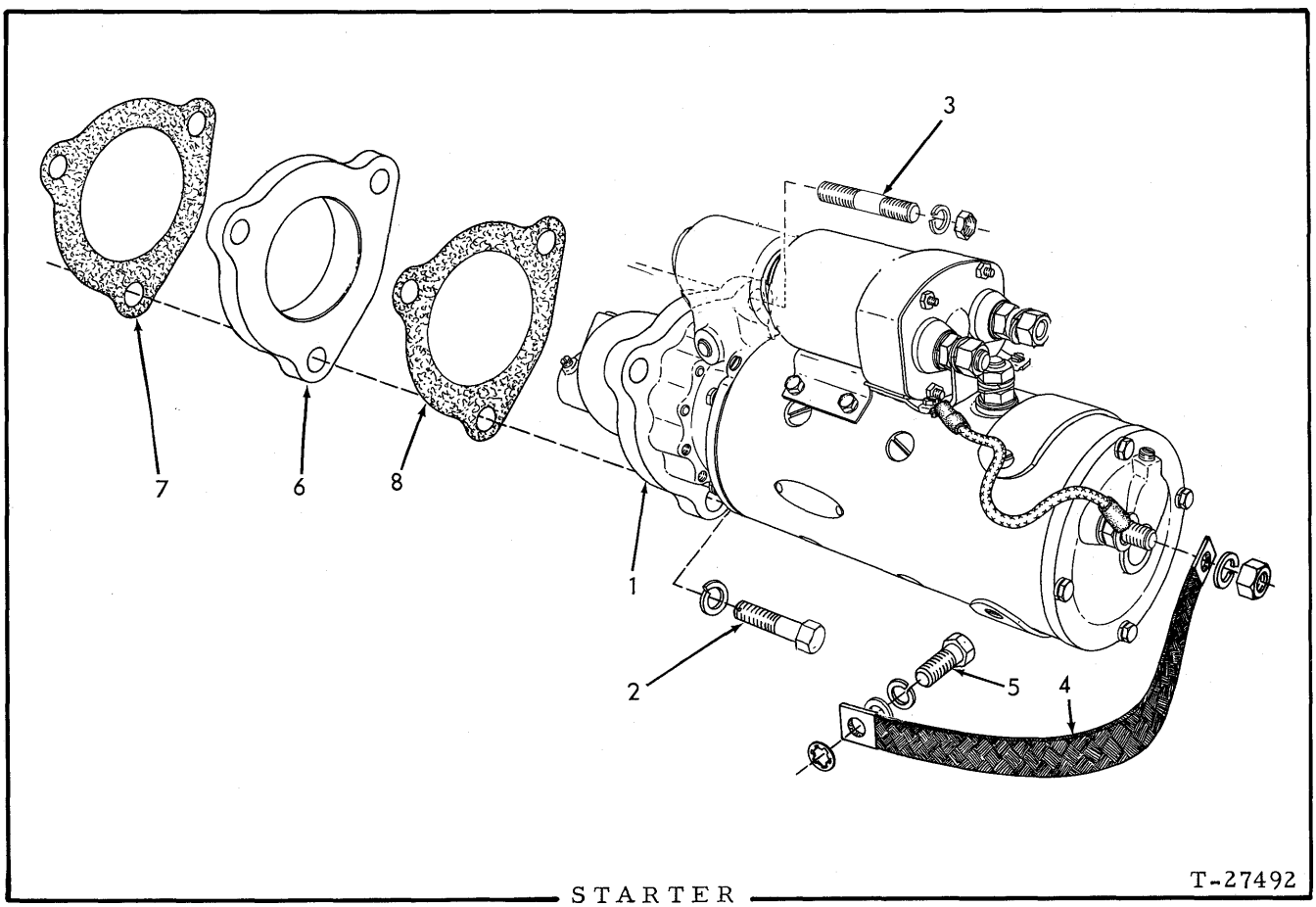

STARTER

ITEM	PART NO.	QTY.	DESCRIPTION
1	------	1	MOTOR, starting ("Delco-Remy" No. 1113900)(Original equipment. Order MOTOR 4387529)
	4387529	1	MOTOR, starting ("Delco-Remy" No. 1113898)(Service replacement)
2	621456	2	CAPSCREW, Nylok, 5/8"NC x 2-1/2"
3	648262	1	STUD, Nylok, 5/8"NF x 3-1/8"
	911044	1	NUT, 5/8"NF
	904209	3	LOCKWASHER, 5/8"
			NOTE: Order starting motor parts from local United Motors Service agency
4	623545	1	STRAP, grounding
5	035236	1	CAPSCREW, 1/2"NC x 1-3/4"
	904208	1	LOCKWASHER, regular, 1/2"
	910244	1	WASHER, plain, SAE std., 1/2"
	906961	1	LOCKWASHER, int-tooth, 1/2"
6	621278	1	ADAPTER, starting motor
7	620420	1	GASKET, starting motor adapter
8	620366	1	GASKET, starting motor

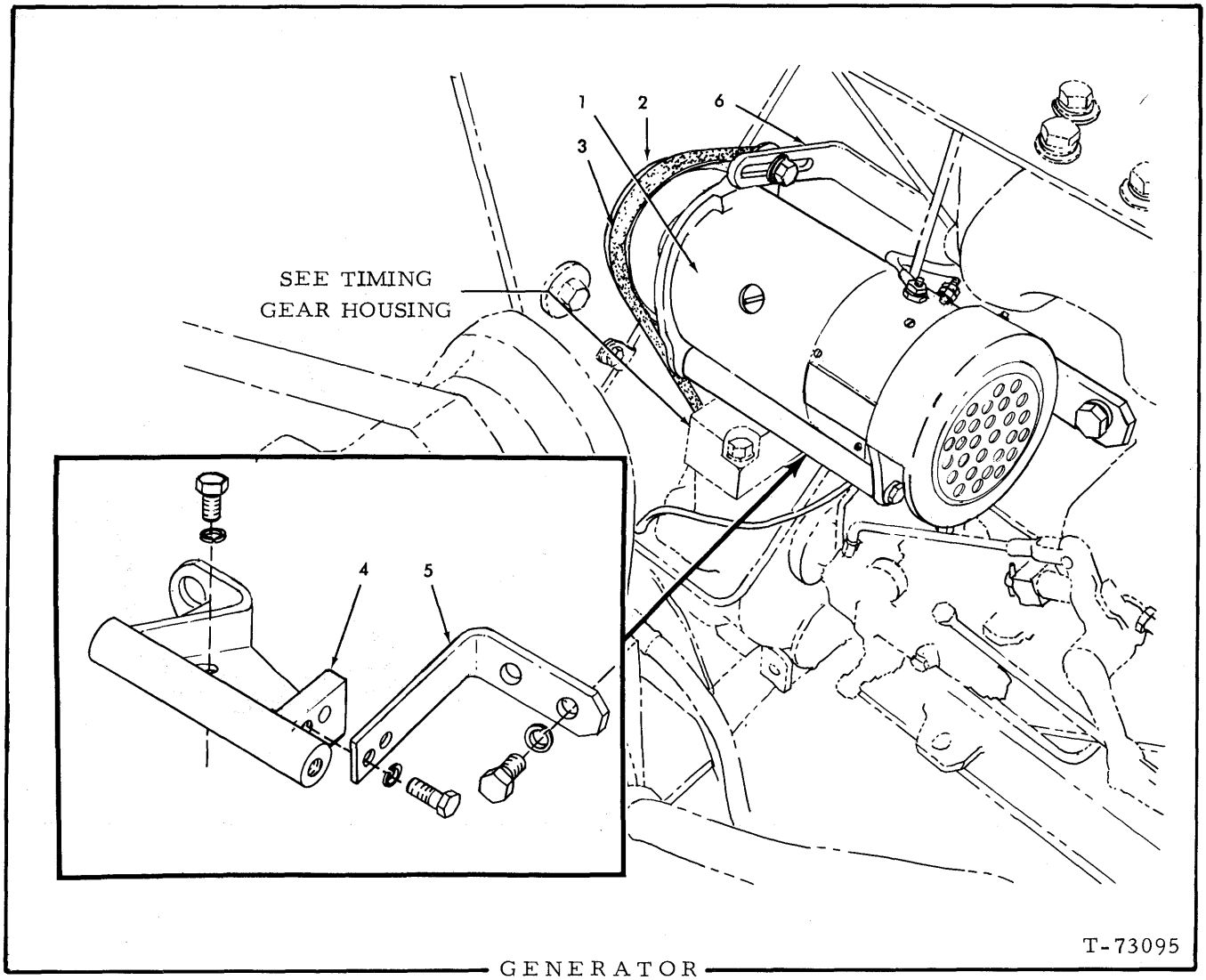

GENERATOR

ITEM	PART NO.	QTY.	DESCRIPTION
1	4357744	1	GENERATOR ASSEMBLY (Includes key, nut and washer for pulley) ("Delco-Remy" #1105237. Order parts from United Motors Service agency)
	915987	2	CAPSCREW, 1/2"NC x 1-1/2"
	904208	2	LOCKWASHER, 1/2"
2	4357745	1	PULLEY
3	4359587	1	BELT, generator and water pump
4	4357696	1	BRACKET, mounting
	916269	2	CAPSCREW, 3/8"NC x 7/8"
	904206	2	LOCKWASHER, 3/8"
5	------	1	SUPPORT, mounting bracket(Used on early units only. Deemed unnecessary)
	916272	2	CAPSCREW, 3/8"NC x 1-1/4"
	904206	2	LOCKWASHER, 3/8"
	918683	2	CAPSCREW, 1/2"NC x 1-1/8"
	904208	2	LOCKWASHER, 1/2"
6	4357828	1	BRACE, belt adjustment
	916271	1	CAPSCREW, 3/8"NC x 1"
	904206	1	LOCKWASHER, 3/8"
	911993	1	WASHER, plain, 3/8"

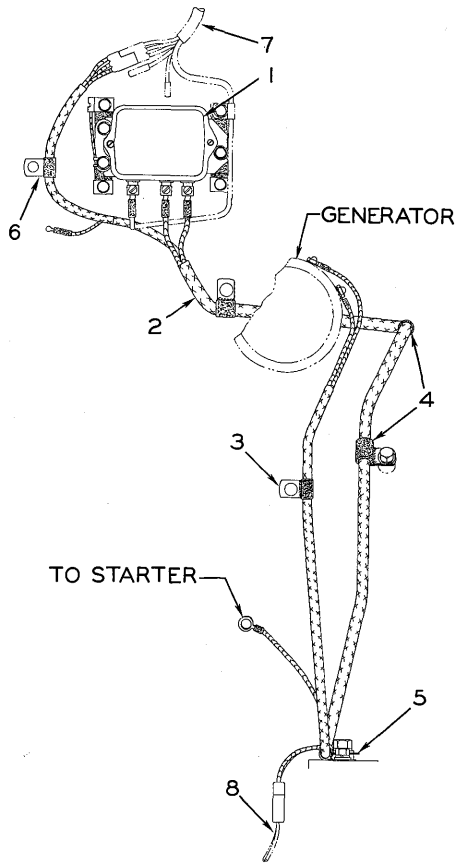

GENERATOR REGULATOR T-73096

ITEM	PART NO.	QTY.	DESCRIPTION
1	649520	1	REGULATOR, voltage and current (Order parts from local United Motors Service Agency)
	912182	4	CAPSCREW, 1/4"NC x 1-3/4"
	904204	4	LOCKWASHER, regular, 1/4"
	909367	1	LOCKWASHER, int-tooth, 1/4" (ground cable)
	911114	2	WASHER, plain, SAE std., 1/4"
2	659196	1	HARNESS, wiring, generator to regulator
3	640677	2	CLIP, harness supporting, (1/4" diam., 13/32" bolt-hole)
	044249	1	CAPSCREW, 3/8"NC x 1-1/8"
	904206	1	LOCKWASHER, 3/8"
	911115	1	WASHER, plain, SAE std., 3/8"
4	094527	3	CLIP, harness supporting (1/2" diam., 13/32" bolt-hole)
	035244	2	CAPSCREW, 3/8"NC x 3/4"
	904206	2	LOCKWASHER, 3/8"
	911115	2	WASHER, plain, SAE std., 3/8"
5	641563	1	CLIP, harness supporting (5/16" diam., 9/16" bolt-slot)
6	639314	1	CLIP, harness supporting (3/8" diam., 13/32" bolt-hole)
7	------	1	HARNESS, instrument panel wiring (See INSTRUMENTS)
8	------	1	HARNESS, safety switch wiring (See SPEED CONTROL LINKAGE)

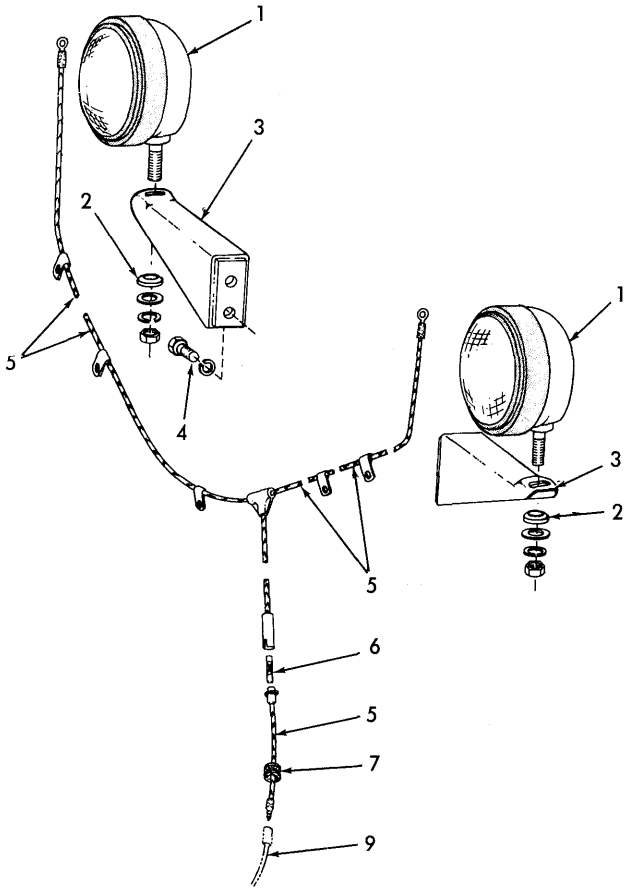

HEAD LIGHTS T-73077

USAGE: Special equipment. Loaders prior to Serial No. 1000

ITEM	PART NO.	QTY.	DESCRIPTION
1	638283	2	LIGHT ASSEMBLY (See page 224 for parts)(Early units)
	621429	2	LIGHT ASSEMBLY (See page 225 for parts)(Late units)
	900818	2	WASHER, plain, U.S. std., 1/2"
	904208	2	LOCKWASHER, 1/2"
	911043	2	NUT, 1/2"NF
2	075535	2	WASHER, light mounting
3	655786	2	BRACKET, light mounting
4	916311	4	CAPSCREW, 1/2"NC x 1-1/4"
	904208	4	LOCKWASHER, 1/2"
5	655784	1	CABLE ASSEMBLY (Includes item 6)
6	208960	1	FUSE, cartridge type, 1/4" x 1-1/4", 20 amperes
7	040981	1	GROMMET, rubber
8	654365	5	CLIP, cable supporting
9	------	1	HARNESS (See INSTRUMENTS)

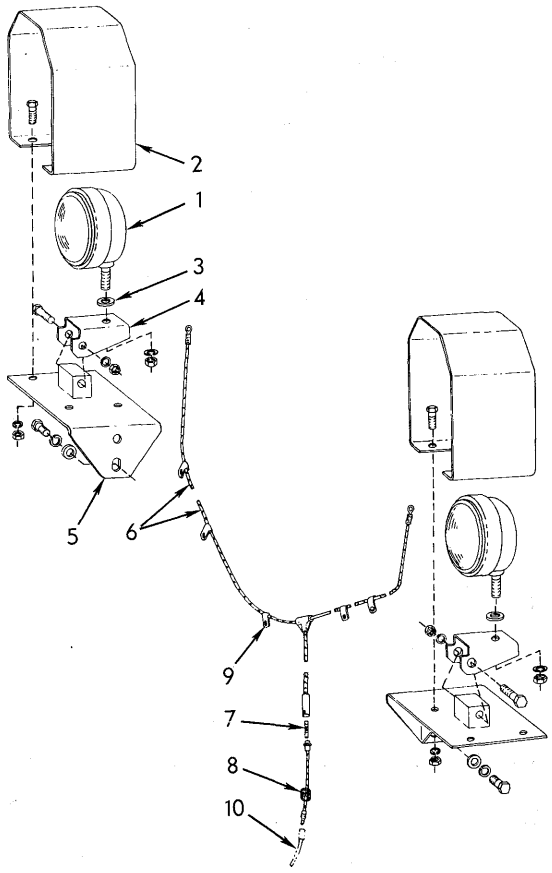

T-75559

HEADLIGHTS

USAGE: Special equipment. Loader serial No. 43C01001 and up

ITEM	PART NO.	QTY.	DESCRIPTION
1	---------	2	LIGHT ASSY. (See page 225)
	0904208-6	2	LOCKWASHER, 1/2"
	0911043-8	2	NUT, jam, 1/2"NF
2	0670774-9	2	GUARD, light protecting
	0916311-4	8	CAPSCREW, 1/2"NC x 1-1/4"
	0904208-6	8	LOCKWASHER, 1/2"
	0911028-9	8	NUT, 1/2"NC
3	0061528-6	2	BOSS, light spacing
4	0076140-3	2	BRACKET, light mounting
	0916903-8	2	CAPSCREW, 5/8"NC x 3-1/2"
	0904209-4	2	LOCKWASHER, 5/8"
	0911029-7	2	NUT, 5/8"NC
5	0670762-4	2	BRACKET, mounting
	0915987-2	4	CAPSCREW, 1/2"NC x 1-1/4"
	0904208-6	4	LOCKWASHER, 1/2"
	0064531-7	4	WASHER, plain
6	0655784-7	1	CABLE ASSY. (Includes item 7)
7	0208960-5	1	FUSE, cartridge type, 1/4" x 1-1/4", 20 amperes
8	0040981-3	1	GROMMET, rubber
9	0654365-6	5	CLIP, cable supporting
10	---------	1	HARNESS (See INSTRUMENTS)

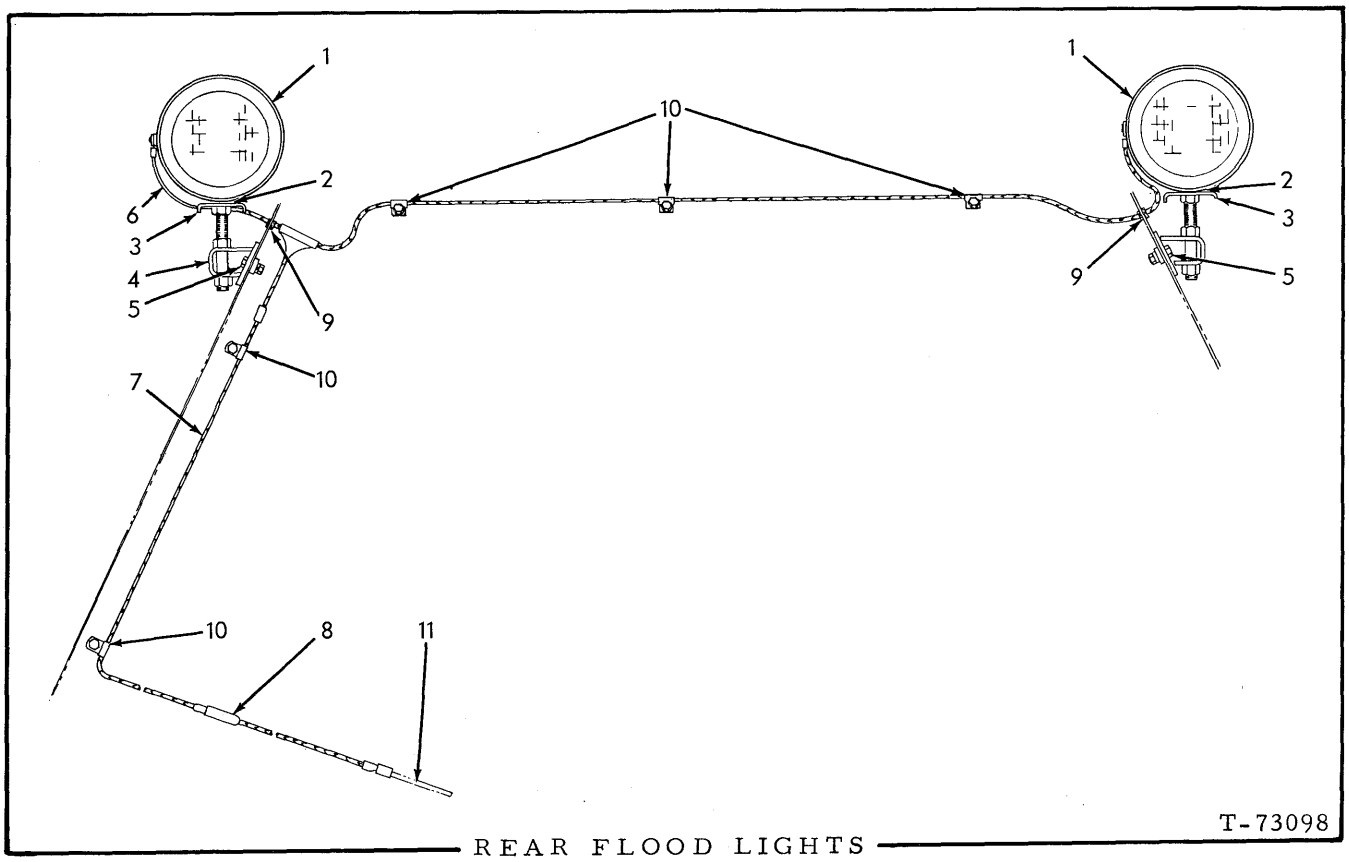

REAR FLOOD LIGHTS

USAGE: Special equipment, Loaders prior to Serial No. 1000

ITEM	PART NO.	QTY.	DESCRIPTION
1	638283	2	LIGHT ASSEMBLY (See page 224 for parts)(Early units)
	------	2	LIGHT ASSEMBLY (See page 225 for parts)(Late units)
	900818	2	WASHER, plain, U.S. std., 1/2"
	904208	2	LOCKWASHER, 1/2"
	911043	2	NUT, 1/2"NF
2	075535	2	WASHER, light mounting
3	094630	2	BRACKET, light mounting
	911044	2	NUT, 5/8"NF
4	655791	2	BRACKET, mounting
5	919224	4	CAPSCREW, 3/8"NC x 1-1/8"
	044973	4	WASHER, plain
	904206	4	LOCKWASHER, 3/8"
	911026	4	NUT, 3/8"NC
6	655959	1	CABLE, rear section
7	655785	1	CABLE ASSEMBLY, front section (38" long. Includes item 8)
8	208960	1	FUSE, cartridge type, 1/4" x 1-1/4", 20 amperes
9	083987	2	GROMMET, rubber
10	640707	5	CLIP, cable supporting
	905655	5	CAPSCREW, 1/4"NC x 1/2"
	904204	5	LOCKWASHER, 1/4"
	911114	5	WASHER, plain, SAE std., 1/4"
11	------	1	HARNESS (See INSTRUMENTS)

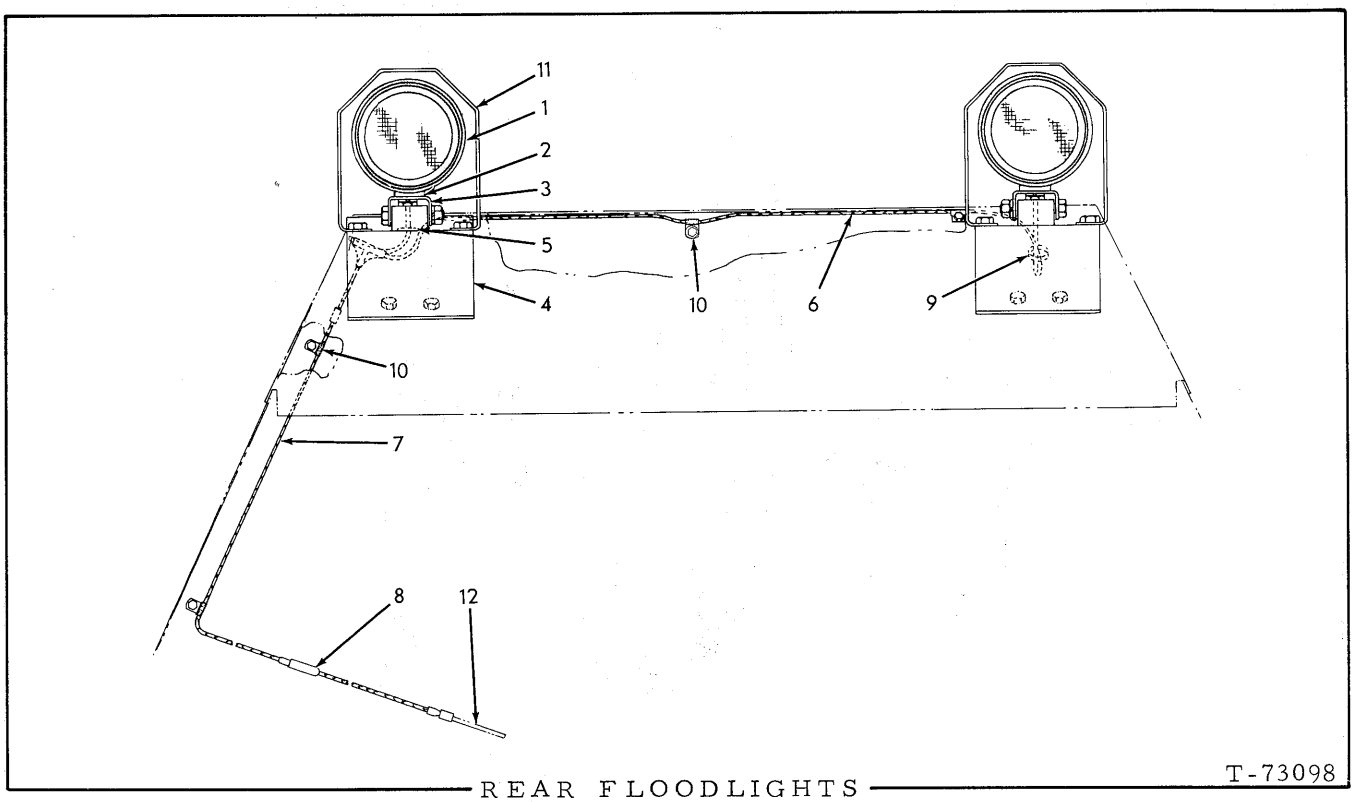

REAR FLOODLIGHTS

USAGE: Special equipment. Loader serial No. 43C01001 and up

ITEM	PART NO.	QTY.	DESCRIPTION
1	---------	2	LIGHT ASSY. (See page 225)
	0904208-6	2	LOCKWASHER, 1/2"
	0911043-8	2	NUT, 1/2"NF
2	0061528-6	2	BOSS, light spacing
3	0076140-3	2	BRACKET, light mounting
	0916903-8	2	CAPSCREW, 5/8"NC x 3-1/2"
	0904209-4	2	LOCKWASHER, 5/8"
	0911029-7	2	NUT, 5/8"NC
4	0675568-0	2	BRACKET, mounting
5	0023176-1	2	GROMMET, rubber
6	0671205-3	1	CABLE, rear section
7	0655785-4	1	CABLE ASSY., front section (38" long. Includes item 8)
8	0208960-5	1	FUSE, cartridge type, 1/4" x 1-1/4", 20 amperes
9	0083987-8	2	GROMMET, rubber
10	0640707-6	5	CLIP, cable supporting
	0905655-7	5	CAPSCREW, 1/4"NC x 1/2"
	0904204-5	5	LOCKWASHER, 1/4"
	0911114-7	5	WASHER, plain, SAE std., 1/4"
11	0670774-9	2	GUARD, light protecting
	0916311-4	8	CAPSCREW, 1/2"NC x 1-1/4"
	0904208-6	8	LOCKWASHER, 1/2"
	0911028-9	8	NUT, 1/2"NC
12	---------	1	HARNESS (See INSTRUMENTS)

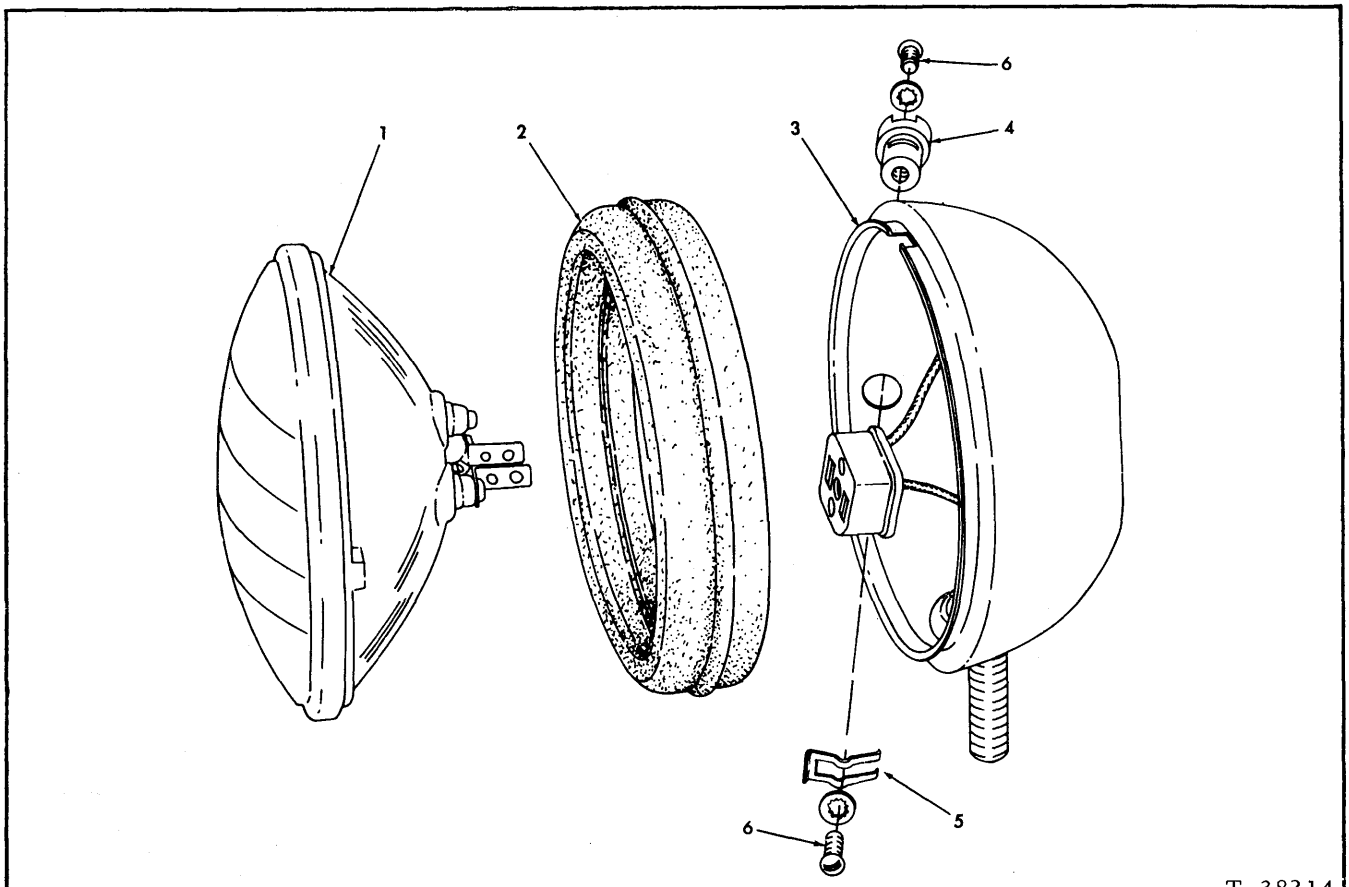

LIGHT ASSEMBLY 638283

USAGE: See pages 220 and 222

ITEM	PART NO.	QTY.	DESCRIPTION
			NOTE: Quantities indicated below are for one (1) light only
1	182763	1	SEALED BEAM (24 volt)
2	638282	1	RING, retaining (rubber)
3	------	1	BODY ASSEMBLY (Includes wiring. Not serviced separately)
4	055589	1	TERMINAL KIT (Includes items 5 and 6)
5	048922	1	SPRING, retaining, terminal bushing
6	912731	2	SCREW, terminal(#8-32NC x 5/16")
	912739	2	LOCKWASHER, internal teeth, #8

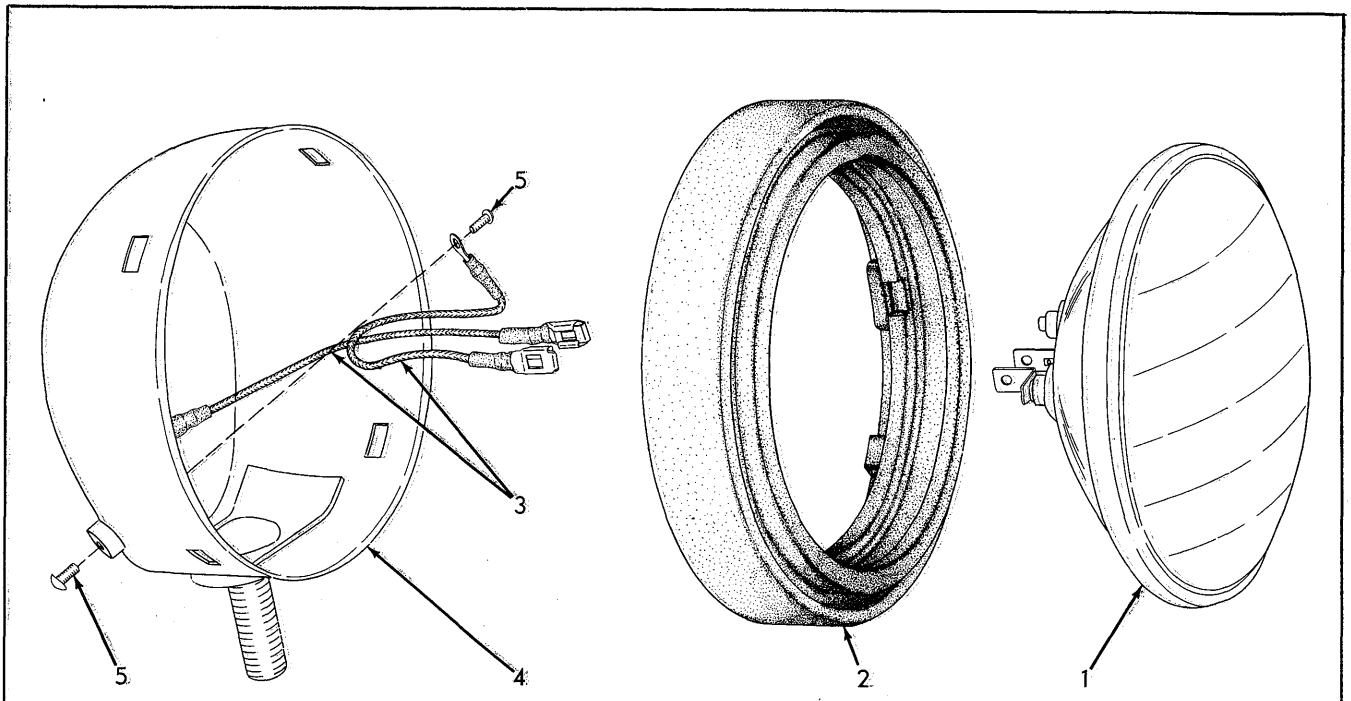

LIGHT ASSEMBLY T-27390

USAGE: See pages 220 and 222

ITEM	PART NO.	QTY.	DESCRIPTION
-	0621429-0	4	LIGHT ASSY. (Includes items 1 thru 5)
			NOTE: Quantities indicated are for one (1) light only
1	0182763-3	1	SEALED BEAM (24 volt)
2	0621428-2	1	RETAINER (rubber)
3	0621724-4	2	CABLE, sealed beam (Includes terminals)
4	---------	1	BODY ASSY. (Not serviced separately)
5	0912731-7	2	SCREW, terminal (#8-32NC x 5/16")

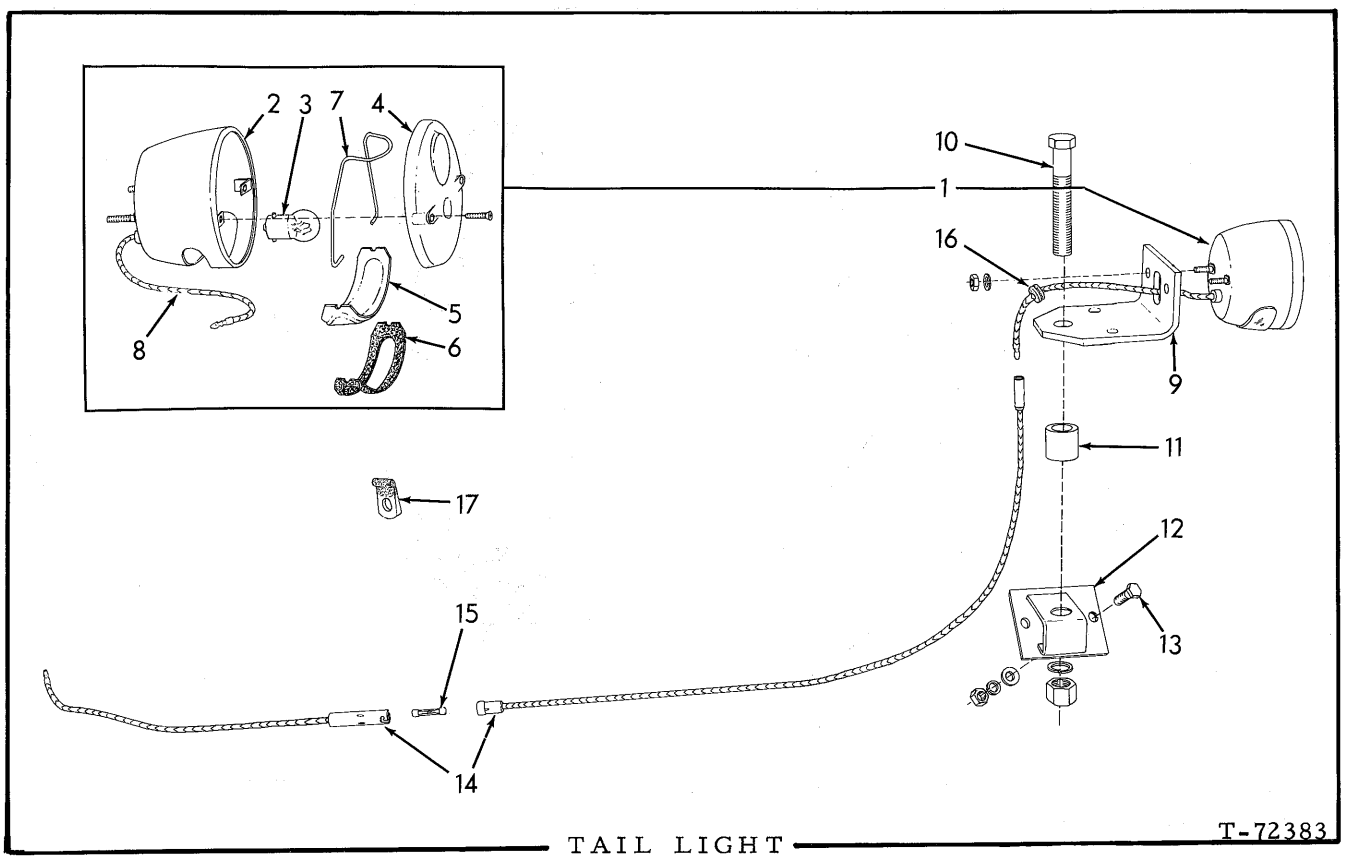

TAIL LIGHT

USAGE: Special equipment

ITEM	PART NO.	QTY.	DESCRIPTION
1	654652	1	LIGHT ASSEMBLY, tail (Consists of items 2 thru 8)
	904204	2	LOCKWASHER, 1/4"
	911024	2	NUT, 1/4"NC
2	------	1	BODY ASSEMBLY (Not serviced separately)
3	074452	1	BULB, single contact, 6 c.p., 24 volt
4	654991	1	LENS (red)
	654990	2	SCREW, retaining
5	654988	1	LENS-SEGMENT (clear)
6	654989	1	GASKET, lens-segment
7	654987	1	CLIP, lens-segment retaining
8	654986	1	WIRE ASSEMBLY (Includes insulating bushing)
9	067110	1	BRACKET, mounting
10	034440	1	CAPSCREW, 5/8"NF x 3-1/2"
	904209	1	LOCKWASHER, 5/8"
	911044	1	NUT, 5/8"NF
11	067112	1	BLOCK, spacing, mounting bracket
12	655791	1	BRACKET, mounting
13	044249	2	CAPSCREW, 3/8"NF x 1-1/8"
	044973	2	WASHER, plain
	904206	2	LOCKWASHER, 3/8"
	911026	2	NUT, 3/8"NC

(Continued)

ITEM	PART NO.	QTY.	DESCRIPTION
14	655785	1	CABLE ASSEMBLY (Includes item 15)
15	208960	1	FUSE, cartridge type, 1/4" x 1-1/4", 20 amperes
16	083987	1	GROMMET, rubber
17	640707	2	CLIP, cable supporting
	905655	2	CAPSCREW, 1/4"NC x 1/2"
	904204	2	LOCKWASHER, 1/4"
	911114	2	WASHER, plain, SAE std., 1/4"

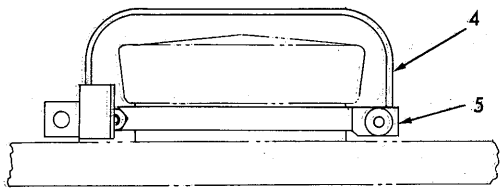

HYDRAULIC TANK

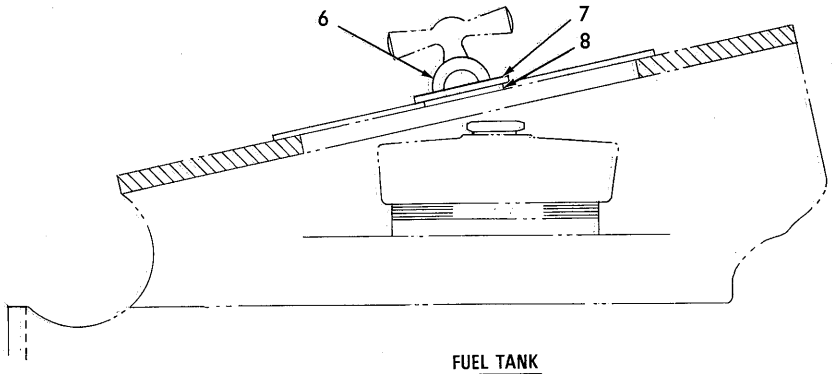

FUEL TANK

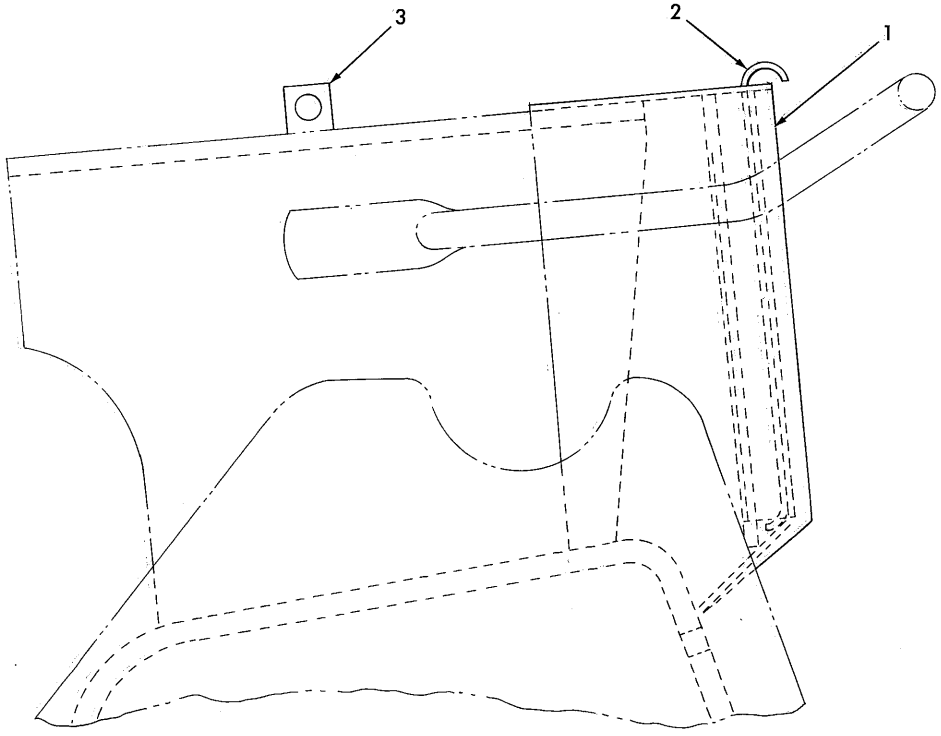

INSTRUMENT PANEL

VANDALISM PREVENTION PARTS

ITEM	PART NO.	QTY.	DESCRIPTION	
			NOTE: Items 1 thru 5 are not required on units equipped with a cab. Padlocks are required to complete the various installations.	
1	0659680-3	1	GUARD, instrument panel (Requires welding to cowl)	
2	0659681-1	1	COVER, instrument panel guard	
3	0625018-7	1	BLOCK, cover retaining (Requires welding to cowl)	
4	0657553-4	1	COVER, hydraulic tank cap	
	0924838-6	1	RIVET, 5/16" x 1-3/16"	
5	0657556-7	1	CLAMP, hydraulic tank filler neck	
	0916285-0	1	CAPSCREW, 1/4"NC x 1"	
	0904204-5	1	LOCKWASHER, 1/4"	
	0911024-8	1	NUT, 1/4"NC	
6	0657523-7	1	ROD, locking, fuel tank	Requires welding to fuel tank guard
7	0657522-9	1	PLATE, locking, fuel tank	
8	0657521-1	1	LUG, locking, fuel tank	

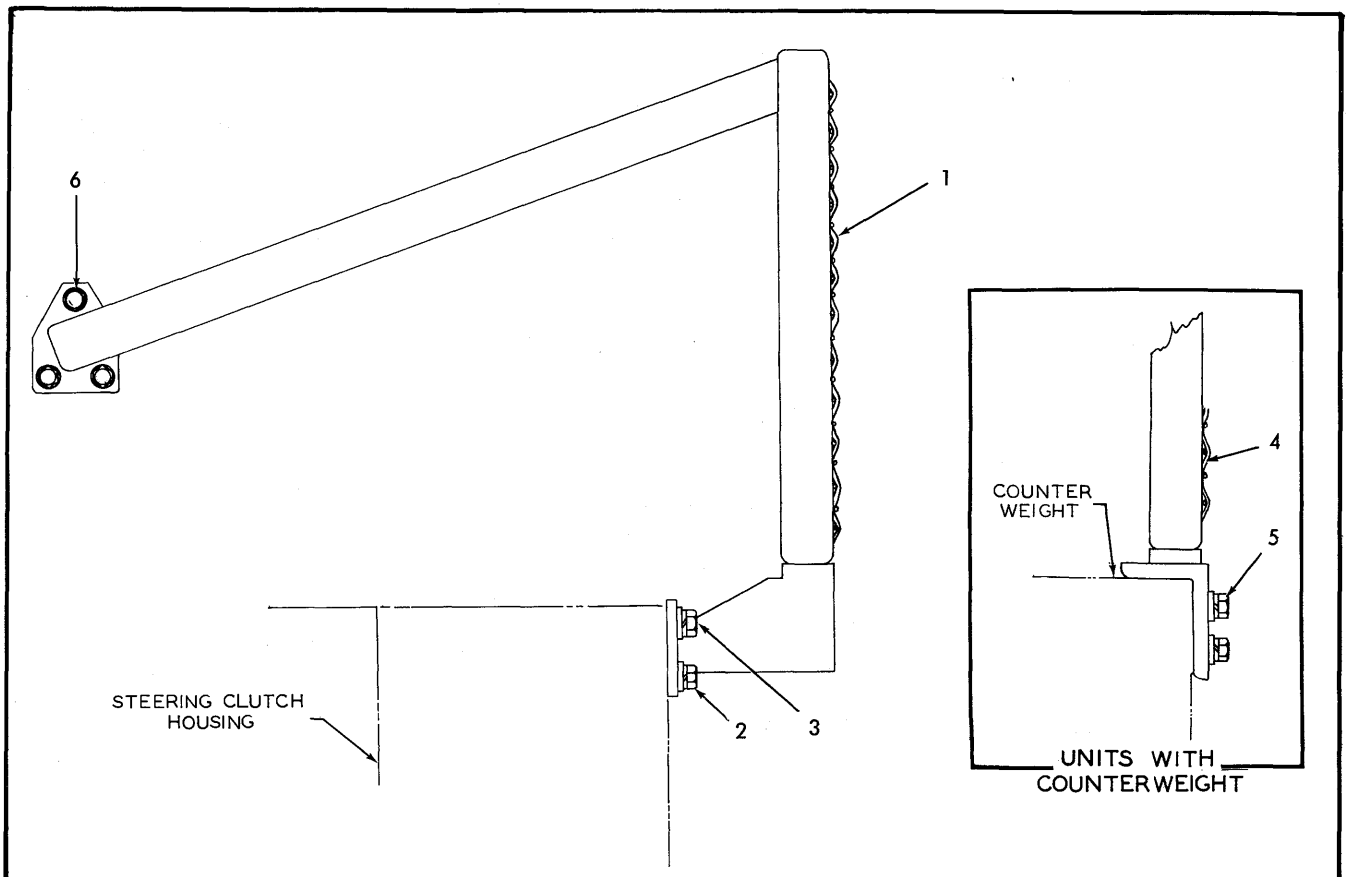

REAR GUARD

USAGE: Special equipment. Used prior to July 15, 1967

ITEM	PART NO.	QTY.	DESCRIPTION
1	------	1	GUARD, rear (For standard units)(Order 1 each GUARD 660417, GUARD 660422, BRACKET 662445, BRACKET 662446; 4 each CAPSCREW 921068, LOCKWASHER 904369, WASHER 061689; 5 each CAPSCREW 915963, LOCKWASHER 904209, WASHER 064810)
2	035420	2	CAPSCREW, 1"NF x 3-1/4"
	910916	2	LOCKWASHER, 1"
	095951	2	WASHER, plain
3	066794	4	CAPSCREW, 1-1/4"NF x 3-1/4"
	904210	4	LOCKWASHER, 1-1/4"
	061702	4	WASHER, plain
4	------	1	GUARD, rear (For units with special counterweight)(Order 1 each GUARD 660417, GUARD 660422; 5 each CAPSCREW 915963, LOCKWASHER 904209, WASHER 064810)
5	916302	4	CAPSCREW, 1"NC x 3-1/2"
	910916	4	LOCKWASHER, 1"
	095951	4	WASHER, plain
6	013238	6	CAPSCREW, 3/4"NC x 2"
	904369	6	LOCKWASHER, 3/4"

NOTE: See REAR FENDERS for other special items used with this installation

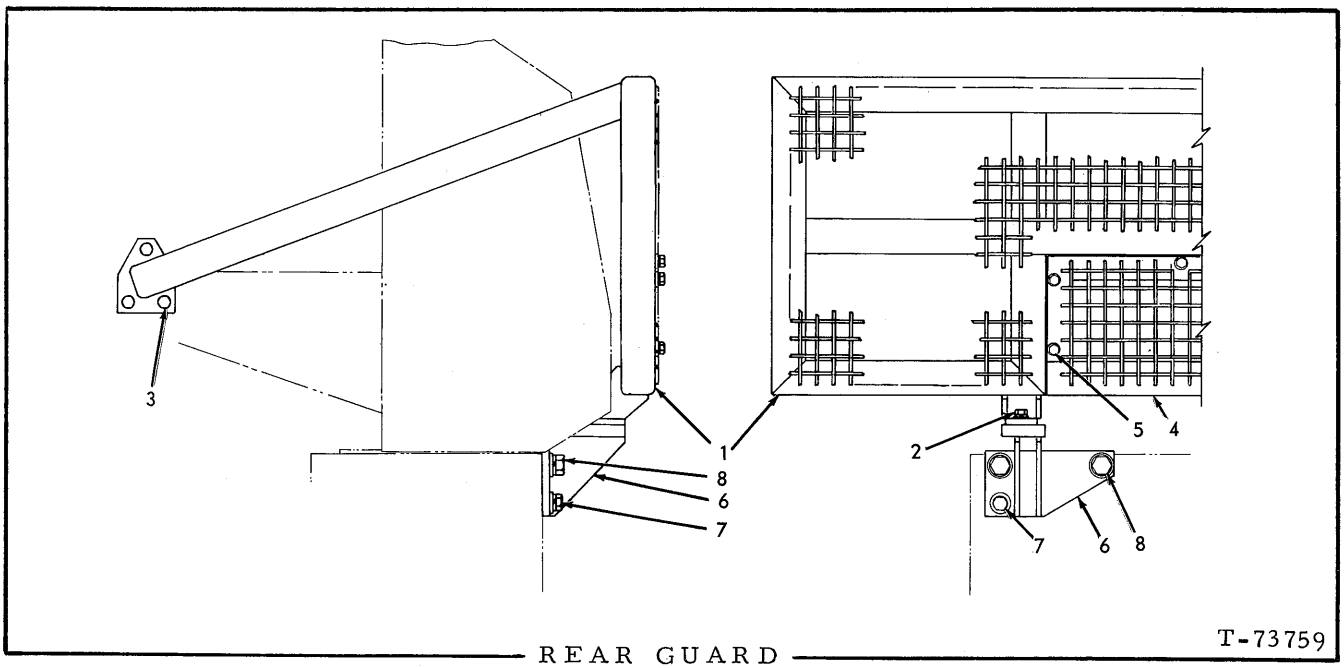

REAR GUARD

USAGE: Special equipment. Effective July 15, 1967

* Standard units
** Units with special counterweight or winch

ITEM	PART NO.	QTY. *	QTY. **	DESCRIPTION
1	660417	1	1	GUARD, main
2	921068	4	4	CAPSCREW, 3/4" NC x 2-1/4"
	904369	4	4	LOCKWASHER, 3/4"
	061689	4	4	WASHER, plain
3	013238	6	6	CAPSCREW, 3/4" NC x 2"
	904369	6	6	LOCKWASHER, 3/4"
4	660422	1	1	GUARD, rear insert
5	915963	5	5	CAPSCREW, 5/8" NC x 2-1/4"
	904209	5	5	LOCKWASHER, 5/8"
	064810	5	5	WASHER, plain
6	662445	1	-	BRACKET, guard supporting, left
	662446	1	-	BRACKET, guard supporting, right
7	035420	2	-	CAPSCREW, 1" NF x 3-1/4"
	910916	2	-	LOCKWASHER, 1"
	095951	2	-	WASHER, plain
8	066794	4	-	CAPSCREW, 1-1/4" NF x 3-1/4"
	904210	4	-	LOCKWASHER, 1-1/4"
	061702	4	-	WASHER, plain

NOTE: See REAR FENDERS for other special items used with this installation

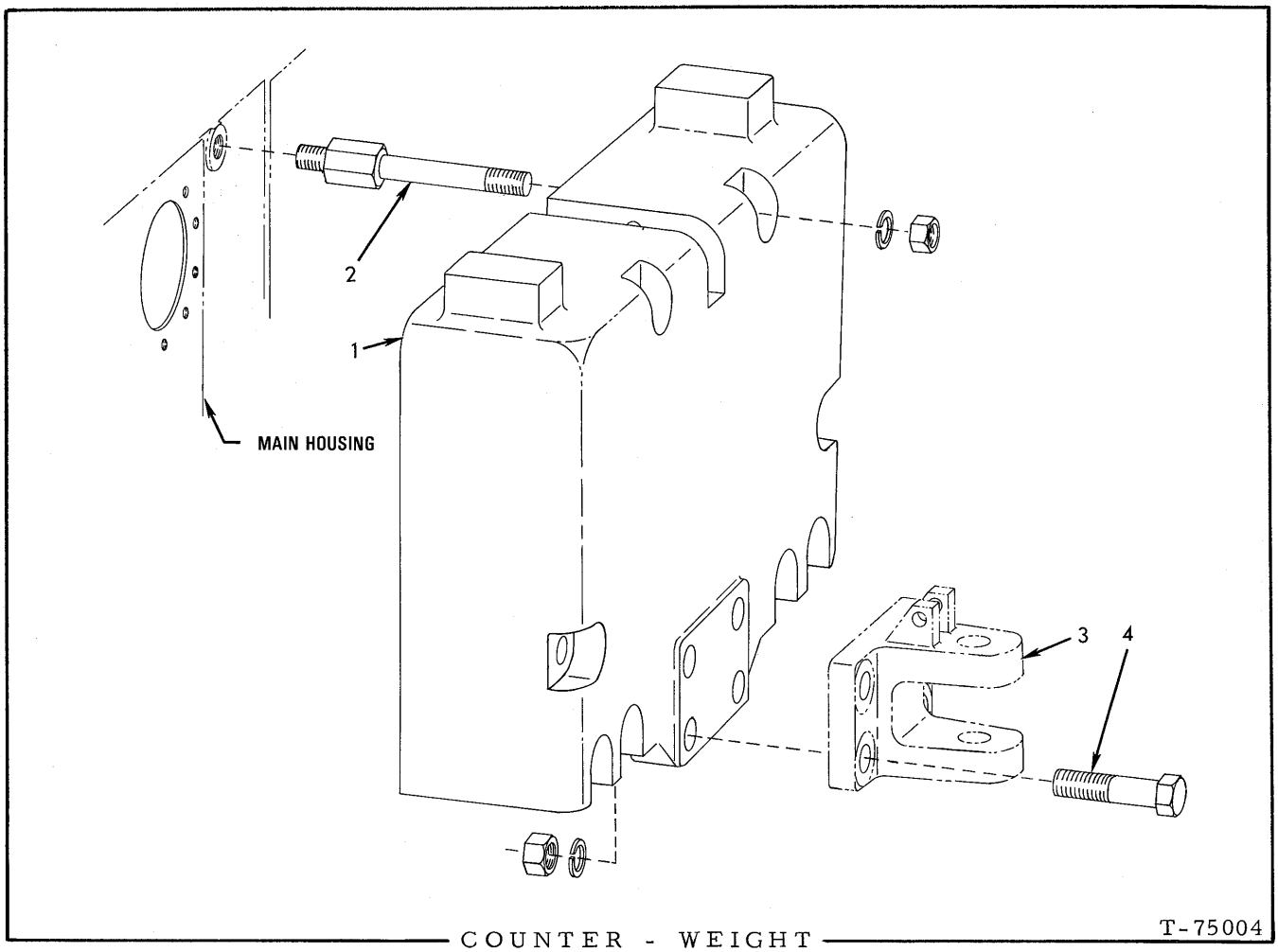

COUNTER - WEIGHT

USAGE: Special equipment

ITEM	PART NO.	QTY.	DESCRIPTION
1	659373	1	COUNTER-WEIGHT
2	654982	8	STUD
	904210	8	LOCKWASHER, 1-1/4"
	913097	8	NUT, 1-1/4"NF
3	------	-	BRACKET, coupling (See DRAWBAR)
4	648331	4	CAPSCREW, 1-1/2"NF x 6-1/4"
	913077	4	LOCKWASHER, 1-1/2"
	916555	4	NUT, 1-1/2"NF

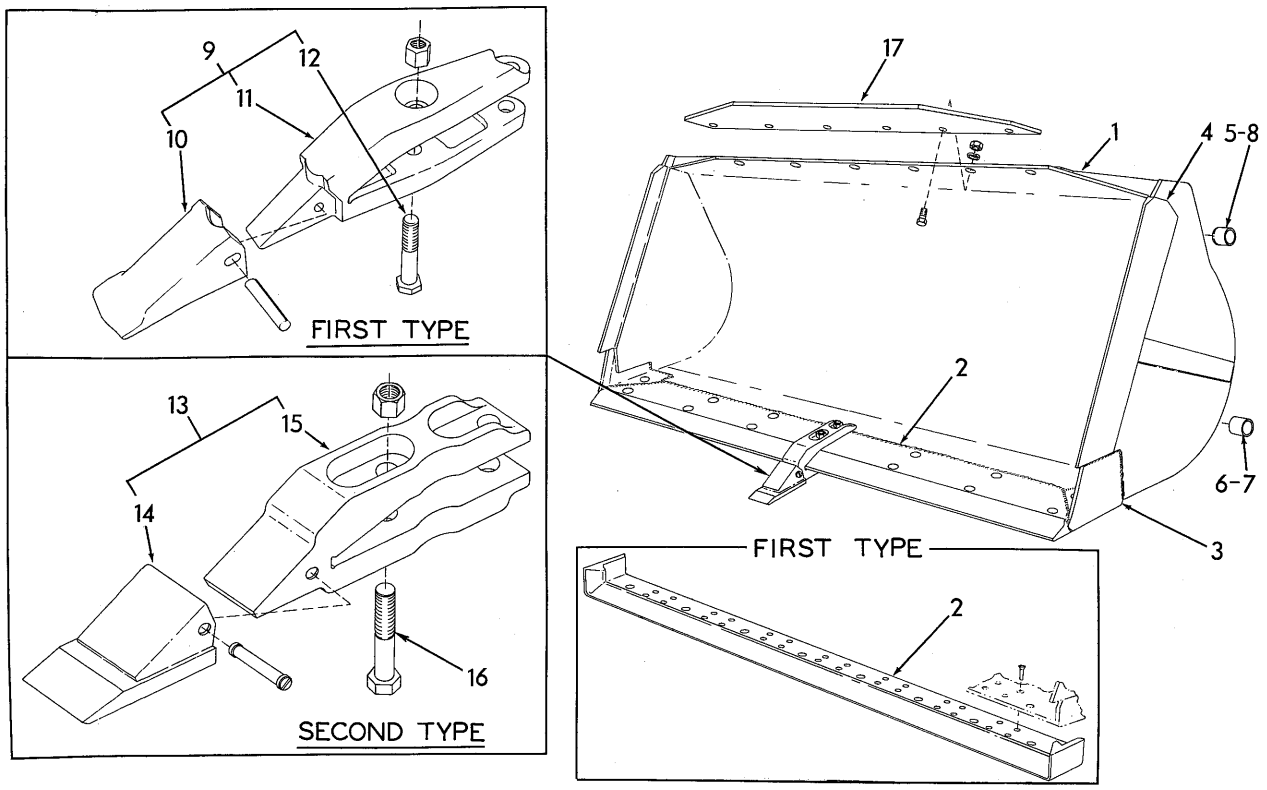

BUCKET T-73100

* Loaders prior to serial No. 567
** Loaders serial No. 567 thru 1000; also loader serial No. 43C01001 and up
*** Service replacement only

ITEM	PART NO.	QUANTITY *	**	***	DESCRIPTION	
	0660107-4	1	-	-	BUCKET (2-1/2 yd. Includes item 2)	Order BUCKET 0676365-0
	0666313-2	-	1	-	BUCKET (2-1/2 yd. Includes items 2 thru 4)	
	0660045-6	1	-	-	BUCKET (2-3/4 yd. Includes item 2)	
	0665376-0	-	1	-	BUCKET (2-3/4 yd. Includes items 2 thru 4)	
	0676365-0	-	-	1	BUCKET (2-3/4 yd. Includes items 2 thru 4)	
1	0660118-1	1	-	-	BUCKET (3 yd. Includes item 2)	Order BUCKET 0676366-8
	0663062-8	-	1	-	BUCKET (3 yd. Includes items 2 thru 4)	
	0676366-8	-	-	1	BUCKET (3 yd. Includes items 2 thru 4)	
	0663080-0	-	1	-	BUCKET (3-1/2 yd. Includes items 2 thru 4)(Order BUCKET 0676367-6)	
	0676367-6	-	-	1	BUCKET (3-1/2 yd. Includes items 2 thru 4)	
	0663071-9	-	1	-	BUCKET (4 yd. Includes items 2 thru 4)(Order BUCKET 0676368-4)	
	0676368-4	-	-	1	BUCKET (4 yd. Includes items 2 thru 4)	

NOTE: 2-3/4 yard bucket is standard equipment

(Continued)

ITEM	PART NO.	QUANTITY *	**	***	DESCRIPTION	
2	0660066-2	1	-	-	△EDGE, cutting	
	0913811-6	28	-	-	RIVET, ctsk-hd., 1/2" x 2-3/8"	
	0665384-4	-	1	-	△EDGE, cutting	
		-	-	1		
	0676352-8	-	-	1	△EDGE, cutting	
3	0665347-1	-	1	-	△BIT, left end	
	0676355-1	-	-	1	△BIT, left end	
	0665348-9	-	1	-	△BIT, right end	
	0676356-9	-	-	1	△BIT, right end	
4	0666321-5	-	1	-	△EDGE, cutting, left side	For 2-1/2 yd. bucket
	0666322-3	-	1	-	△EDGE, cutting, right side	For 2-1/2 yd. bucket
	0665373-7	-	1	-	△EDGE, cutting, left side	For 2-3/4 yd. bucket
	0676915-2	-	-	1	△EDGE, cutting, left side	For 2-3/4 yd. bucket
	0665374-5	-	1	-	△EDGE, cutting, right side	For 2-3/4 yd. bucket
	0676916-0	-	-	1	△EDGE, cutting, right side	For 2-3/4 yd. bucket
	0663059-4	-	1	-	△EDGE, cutting, left side	For 3 yd. bucket
	0676917-8	-	-	1	△EDGE, cutting, left side	For 3 yd. bucket
	0663060-2	-	1	-	△EDGE, cutting, right side	For 3 yd. bucket
	0676918-6	-	-	1	△EDGE, cutting, right side	For 3 yd. bucket
	0663077-6	-	1	-	△EDGE, cutting, left side	For 3-1/2 yd. bucket
	0676919-4	-	-	1	△EDGE, cutting, left side	For 3-1/2 yd. bucket
	0663078-4	-	1	-	△EDGE, cutting, right side	For 3-1/2 yd. bucket
	0676920-2	-	-	1	△EDGE, cutting, right side	For 3-1/2 yd. bucket
	0663067-7	-	1	-	△EDGE, cutting, left side	For 4 yd. bucket
	0677155-4	-	-	1	△EDGE, cutting, left side	For 4 yd. bucket
	0663068-5	-	1	-	△EDGE, cutting, right side	For 4 yd. bucket
	0677156-2	-	-	1	△EDGE, cutting, right side	For 4 yd. bucket
5	0665265-5	4	-	-	△BUSHING, adapting (1-3/8" long)	Used to adapt late type buckets on older units. Also see item 18.
6	0665266-3	4	-	-	△BUSHING, adapting (2" long)	Used to adapt late type buckets on older units. Also see item 18.
7	0670711-1	4	-	-	△BUSHING, adapting (1-3/4" long)	Used to recondition mounting pin holes on old-type buckets. Also see item 19.
8	0665265-5	4	-	-	△BUSHING, adapting (2" long)	Used to recondition mounting pin holes on old-type buckets. Also see item 19.

NOTE: Items listed below are special equipment.

9	0647823-4	8	-	-	TOOTH ASSY., bucket (Includes items 10 thru 12)
10	3020853-2	8	-	-	POINT, tooth shank
	0626279-4	8	-	-	PIN, spring
11	0647819-2	8	-	-	SHANK, tooth

(Continued)

ITEM	PART NO.	QUANTITY *	**	***	DESCRIPTION
12	0035541-2	16	-	-	CAPSCREW, tooth shank (5/8"NF x 3-3/4")
	0072366-8	16	-	-	NUT, high, 5/8"NF
	0679282-4	7	7	7	TOOTH ASSY., bucket (Severe service)(Includes items 14 and 15)
13	0666982-4	8	-	-	TOOTH ASSY., bucket } Each includes items 14 and 15
	0667643-1	-	7	7	TOOTH ASSY., bucket } Each includes items 14 and 15
14	0666984-0	8	7	7	TOOTH, bucket
	0679206-3	7	7	7	TOOTH, bucket (Severe service)
	0666983-2	8	7	7	PIN, flex
15	---------	8	7	7	SHANK, tooth (Not serviced separately)
	0926298-1	16	-	-	CAPSCREW, tooth shank (7/8"NF x 4-1/4")
	0926260-1	7	7	7	CAPSCREW, tooth shank (7/8"NF x 3-1/4")
16	0925590-2	7	7	7	CAPSCREW, tooth shank (7/8"NF x 4-1/8")
	0070400-7	14	14	14	NUT, high, 7/8"NF (Two additional used with TOOTH ASSY. 0647823-4)
	0655522-1	1	-	-	PLATE, spill
	0071113-5	6	-	-	CAPSCREW, 5/8"NC x 2"
	0904209-4	6	-	-	LOCKWASHER, 5/8"
	0911029-7	6	-	-	NUT, 5/8"NC
17	0666238-1	-	1	1	PLATE, spill
	0070792-7	-	6	6	CAPSCREW, 3/4"NC x 2-1/2"
	0904369-6	-	6	6	LOCKWASHER, 3/4"
	0911030-5	-	6	6	NUT, 3/4"NC
18	0669606-6	1	-	-	BUSHING KIT, bucket (Includes 4 BUSHING 0665265-5 (item 5) and 4 BUSHING 0665266-3 (item 6)
19	0670275-7	1	-	-	BUCKET REPAIR KIT (Includes items 7 and 8; also 2 each PINS 0654970-3 and 0654971-1)

SECOND TYPE. Effective with Loader #424

△ Requires welding to install

NOTE: See page 237 for special multi-purpose bucket

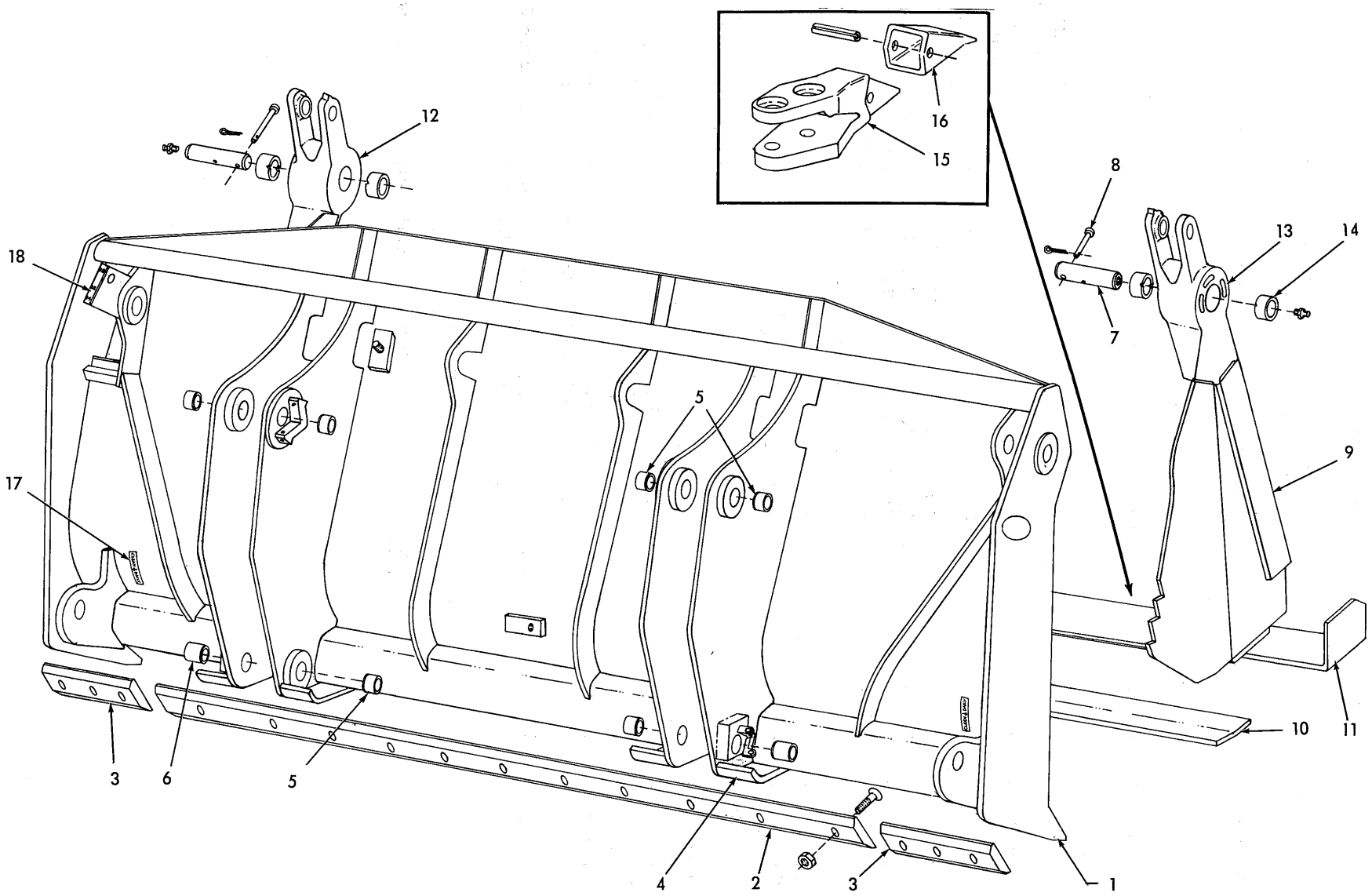

MULTI-PURPOSE BUCKET

MULTI-PURPOSE BUCKET

USAGE: Special equipment

ITEM	PART NO.	QTY.	DESCRIPTION
1	663266	1	MOLDBOARD ASSY. (Includes items 2 thru 4)(Loaders prior to #567)(Order MOLDBOARD ASSY., 669763 and BUSHING KIT 671831)
	669763	1	MOLDBOARD ASSY. (Includes items 2 thru 4)(Loaders #567 and up)
2	663357	1	EDGE, moldboard cutting
	918281	12	BOLT, plow, 3/4"NC x 2-1/2"
	911030	12	NUT, 3/4" NC
3	663353	2	BIT, moldboard end
	918281	6	BOLT, plow, 3/4" NC x 2-1/2"
	911030	6	NUT, 3/4" NC
4	663273	4	*SHOE, moldboard skid
5	665265	6	*BUSHING, adapting (1-3/8" long) } Used to adapt late type moldboards on older units, also see item 19
6	665266	2	*BUSHING, adapting (2" long) } Used to adapt late type moldboards on older units, also see item 19
7	663356	2	PIN ASSY., clam pivot (Includes FITTING indented below)
	914465	2	FITTING, lubricating, straight, 1/8" NPT
8	663455	2	PIN, retaining, clam pivot pin
	900806	2	PIN, cotter, 1/8" x 1"
9	663267	1	CLAM ASSY. (Includes items 10 thru 16)
10	663276	1	*EDGE, clam cutting
11	663277	1	*EDGE, bucket cutting
12	663279	1	*HINGE, clam, left side
13	663280	1	*HINGE, clam, right side
14	663278	4	BUSHING, clam hinge
15	654171	11	*SHANK, bucket tooth
16	654172	11	TIP, bucket tooth
	918245	11	PIN, spring, 1/2" x 2-1/2"
17	654127	2	TRANSFER, "clean daily" (Applied to moldboard)
18	664647	1	TRANSFER, clam opening indication (Applied to rear of moldboard)
19	671831	1	BUSHING KIT, bucket (Includes 6 BUSHING 665265 (item 5) and 2 BUSHING 665266 (item 6)

*Requires welding to install

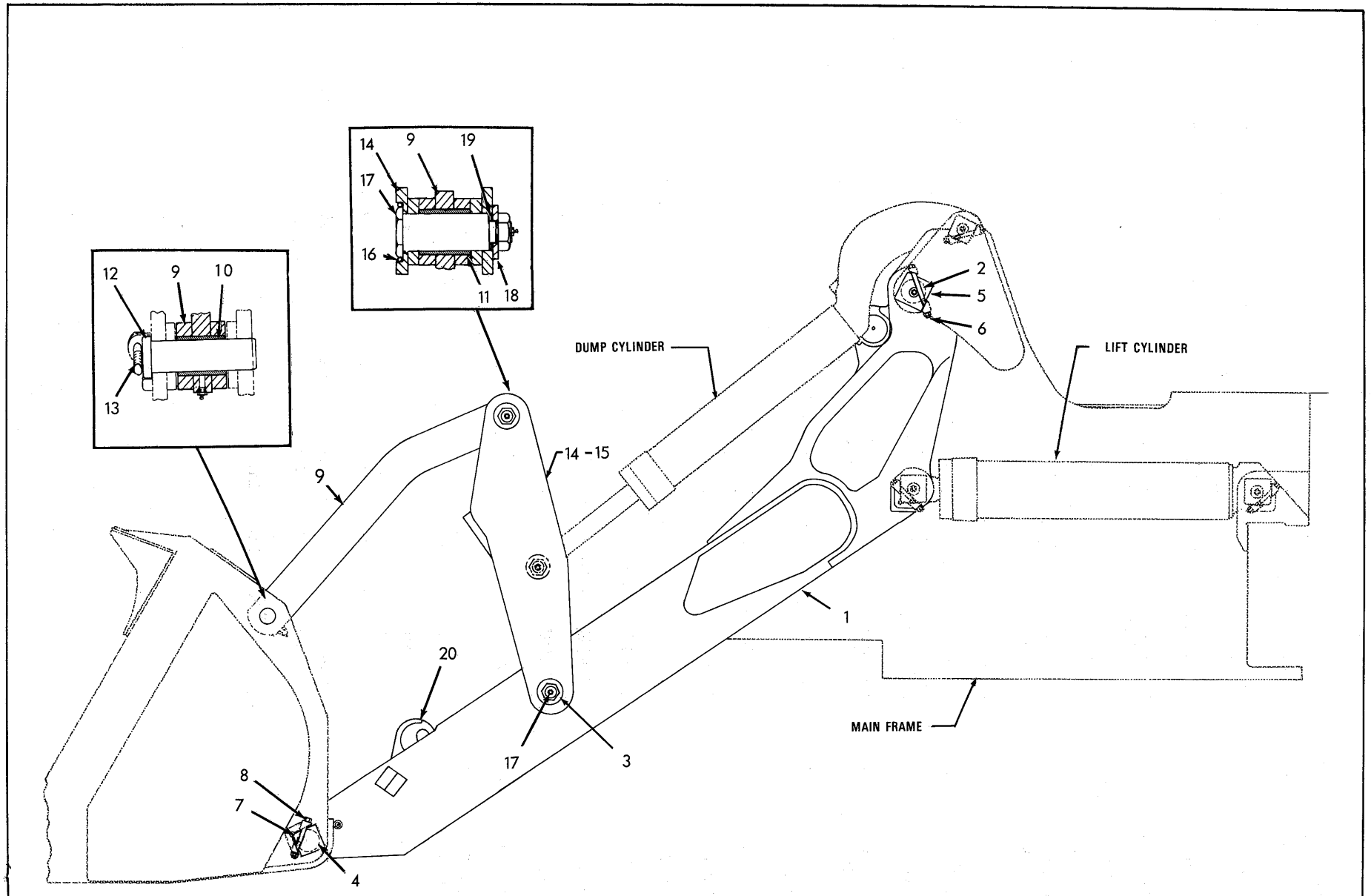

BUCKET LINKAGE

BUCKET LINKAGE

* Loaders prior to serial No. 567
** Loaders serial No. 567 thru 1000; also 43C01001 and up

ITEM	PART NO.	QTY. *	QTY. **	DESCRIPTION	
1	655034	1	-	BOOM ASSY. (Order BOOM ASSY. 664885 and 2 BUSHING 665398)	Includes items 2 thru 4
	664885	-	1	BOOM ASSY.	
	914465	-	2	FITTING, lubricating, 1/8"NPT	
2	655033	2	2	BUSHING, upper	
3	654994	2	2	BUSHING, intermediate	
4	647807	2	-	BUSHING, lower (2-1/8" I. D. x 2-5/8" O. D.)(Original equipment)	
	665398	2	-	BUSHING, lower (2-1/8" I. D. x 3-1/4" O. D.)(Use in place of BUSHING 665400 when adapting BOOM ASSY. 664885 to older units)	
	665400	-	2	BUSHING, lower (2-1/2" I. D.)	
5	667298	2	2	PIN, boom pivot, rear	
	912497	2	2	FITTING, lubricating, 1/4" NPT	
6	925196	2	2	CAPSCREW, retaining, rear boom pivot pin (5/8" NC x 7")	
	914501	2	2	NUT, elastic stop, 5/8" NC	
7	654970	2	-	PIN, boom, front (2-1/8" diam.)	
	912497	2	-	FITTING, lubricating, 1/4" NPT	
	669181	-	2	PIN, boom, front (2-1/2" diam.)	
8	3011625	2	-	PIN, retaining, front boom pin	
	900810	2	-	PIN, cotter, 3/16" x 1-1/4"	
	917599	-	2	CAPSCREW, retaining, front boom pin (1/2" NC x 5-1/4")	
	915972	-	2	NUT, elastic stop, 1/2" NC	
9	654972	2	-	LINK ASSY., dump (Includes items 10 and 11)	
	665415	-	2	LINK ASSY., dump (Includes items 10 and 11)	
	912497	-	2	FITTING, lubricating, 1/4" NPT	
10	654992	2	-	BUSHING, dump link, front (2-1/8" I. D. x 2-5/8" O. D.) (Original equipment)	
	665399	2	-	BUSHING, dump link, front (2-1/8" I. D. x 3-1/4" O. D.)(Use in place of BUSHING 665401 when adapting LINK ASSY. 665415 to older units)	
	665401	-	2	BUSHING, dump link, front (2-1/2" I. D.)	
11	654994	2	2	BUSHING, dump link, rear	
12	654971	2	-	PIN, dump link, front (2-1/8" diam.)	
	912497	2	-	FITTING, lubricating, 1/4" NPT	
	665334	-	2	PIN, dump link, front (2-1/2" diam.)	
13	917599	2	2	CAPSCREW, pin retaining (1/2"NC x 5-1/4")	
	915972	2	2	NUT, elastic stop, 1/2" NC	
14	654973	1	1	LINK, cross, left (Includes item 16)	
15	654974	1	1	LINK, cross, right (Includes item 16)	
16	3014553	6	6	RING, pin locking (Requires welding to install)	
17	657382	4	4	PIN, dump and cross link pivot	
	914465	4	4	FITTING, lubricating, 1/8" NPT	
18	3001559	4	4	WASHER, plain	
	917835	4	4	NUT, elastic stop, 1-1/2" NF	
19	3021340	14	14	WASHER, shimming (. 036" thick)	Use as required
	3018616	6	6	WASHER, shimming (. 060" thick)	
20	050543	1	1	HOOK, front pull (Special equipment. Requires welding to install)	

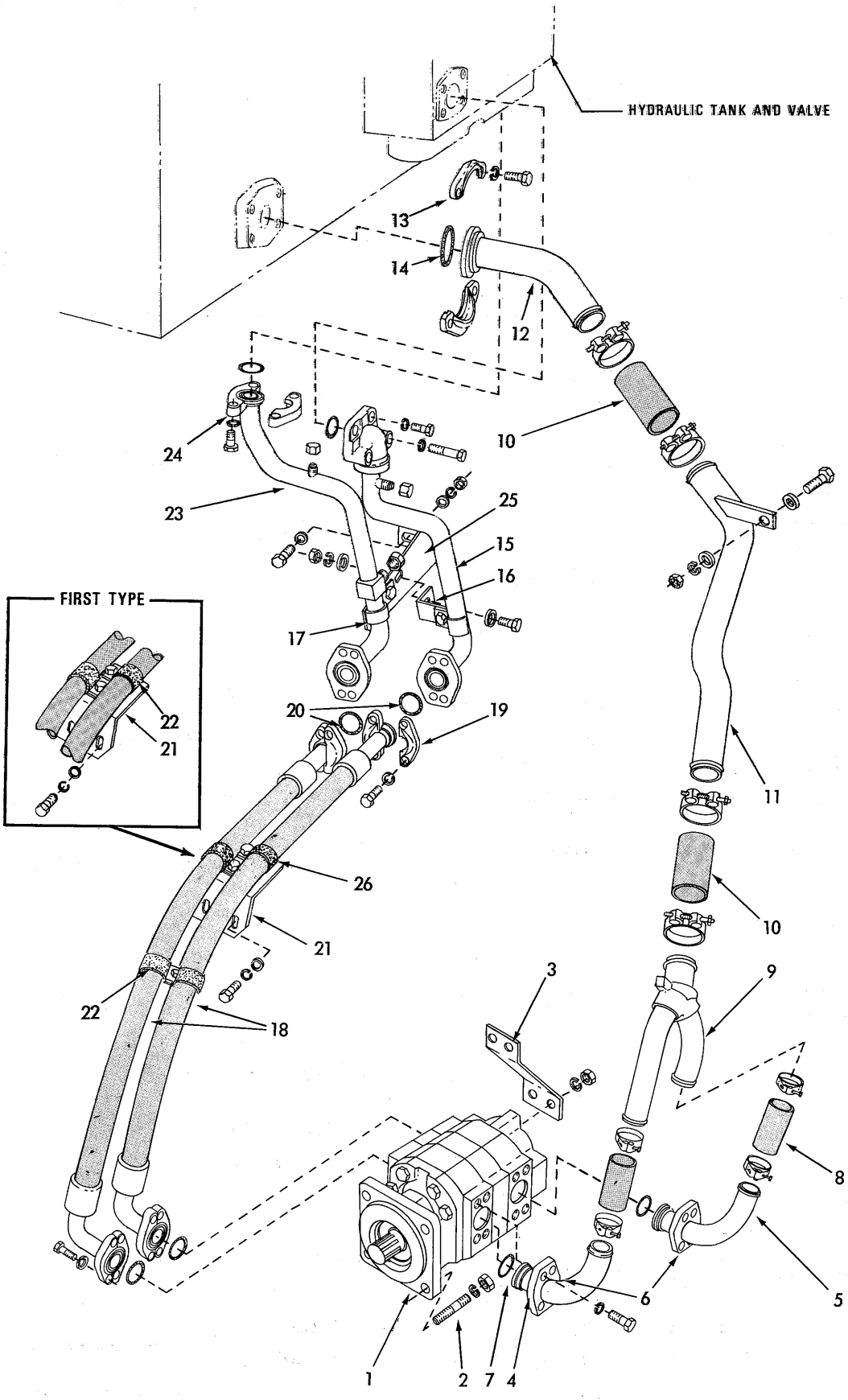

BUCKET HYDRAULIC PUMP AND LINES

T-75550

BUCKET HYDRAULIC PUMP AND LINES

ITEM	PART NO.	QTY.	DESCRIPTION
1	---------	1	PUMP ASSY. (See page 243)
	0904209-4	2	LOCKWASHER, 5/8"
	0912942-0	2	NUT, 5/8"NC
2	0669612-4	4	STUD, attaching
	0912441-3	4	LOCKWASHER, 1/2"
	0911028-9	4	NUT, 1/2"NC
3	0669636-3	1	STRAP, pump supporting
4	0668470-8	1	TUBE, suction line, lower (front)
5	0669642-1	1	TUBE, suction line, lower (rear)
6	0669659-5	2	FLANGE, tube attaching, lower
	0920584-0	8	CAPSCREW, 1/2"NC x 1-5/8"
	0912441-3	8	LOCKWASHER, 1/2"
7	0924193-6	4	O-RING, tube sealing (2-1/8"O. D.)(Standard)
	0925936-7	4	*O-RING, tube sealing (2-1/8" O. D.)(Optional)
8	0668483-1	2	HOSE, suction line, lower (Standard)
	0668484-9	2	*HOSE, suction line, lower (Optional)
	0925280-0	4	CLAMP, hose, 2-1/4" to 2-9/16" diam.
9	0668495-5	1	TUBE, suction line, lower intermediate
10	0665278-8	2	HOSE, suction line, intermediate and upper (Standard)
	0667932-8	2	*HOSE, suction line, intermediate and upper (Optional)
	0925807-0	4	CLAMP, hose, 3" to 3-5/16" diam.
11	0665225-9	1	TUBE, suction line, upper intermediate
	0916313-0	1	CAPSCREW, 1/2"NC x 1-3/4"
	0064531-7	2	WASHER, plain
	0904208-6	1	LOCKWASHER, 1/2"
	0911028-9	1	NUT, 1/2"NC
12	0665226-7	1	TUBE, suction line, upper
13	0921599-7	2	FLANGE, tube attaching, suction line (half only)
	0920584-0	4	CAPSCREW, 1/2"NC x 1-5/8"
	0912441-3	4	LOCKWASHER, 1/2"
14	0924686-9	1	O-RING, tube sealing (3" O. D.)(Standard)
	0926537-2	1	*O-RING, tube sealing (3" O. D.)(Optional)
15	0668515-0	1	TUBE, pressure line, pump to valve side
	0921467-7	1	CAP, flare fitting, 1/4" tube (pressure check)
	0920584-0	2	CAPSCREW, 1/2"NC x 1-5/8"
	0921598-9	2	CAPSCREW, 1/2"NC x 3"
	0912441-3	4	LOCKWASHER, 1/2"
16	0669669-4	1	BRACKET, tube supporting
	0920584-0	1	CAPSCREW, 1/2"NC x 1-5/8"
	0677008-5	2	WASHER, plain
	0911028-9	1	NUT, 1/2"NC
17	0669641-3	2	CLAMP, tube supporting
	0920582-4	2	CAPSCREW, 1/2"NC x 1-1/4"
	0677008-5	2	WASHER, plain
	0911028-9	2	NUT, 1/2"NC

*Optional. Used on units with phosphate – ester hydraulic fluid.

(Continued)

ITEM	PART NO.	QTY.	DESCRIPTION
18	0668511-9	2	HOSE, pressure line (Standard)
	0669702-3	2	HOSE, pressure line (Optional)
19	0921117-8	8	FLANGE, tube attaching, pressure line (half only)
	0925193-5	16	CAPSCREW, 7/16"NC x 1-1/4"
	0914678-8	16	LOCKWASHER, 7/16"
20	0924192-8	4	O-RING, tube sealing (1-3/4" O.D.)(Standard)
	0926534-9	4	*O-RING, tube sealing (1-3/4" O.D.)(Optional)
21	0668513-5	1	ANGLE, hose supporting
	0928342-5	2	CAPSCREW, 1/2"NC x 1-7/8"
	0677008-5	2	WASHER, plain
22	0668512-7	2	CLIP, hose supporting, 1/2"NC x 1-1/4"
	0927172-7	1	CAPSCREW, 1/2"NC x 1-1/4" } 1 additional used
	0677008-5	1	WASHER, plain } prior to 43C01001
	0911026-3	1	NUT, 3/8"NC }
23	0668514-3	1	TUBE, pressure line, pump to valve bottom
	0921467-7	1	CAP, flare fitting, 1/4" tube (pressure check)
	0921244-0	1	CAP, flare fitting, 3/4" tube (flare check)
24	0921118-6	2	FLANGE, tube attaching, pressure line (half only)
	0920584-0	4	CAPSCREW, 1/2"NC x 1-5/8"
	0912441-3	4	LOCKWASHER, 1/2"
25	0669664-5	1	BRACKET, tube supporting
	0928342-5	1	CAPSCREW, 1/2"NC x 1-7/8"
	0677008-5	2	WASHER, plain
	0911028-9	1	NUT, 1/2"NC
26	0927513-2	2	CLIP, hose supporting
	0921076-6	2	CAPSCREW, 3/8"NC x 1-1/4" } Unit #43C01001
	0677008-5	2	WASHER, plain } and up
	0911026-3	2	NUT, 3/8"NC }

*Optional. Used on units with phosphate-ester hydraulic fluid.

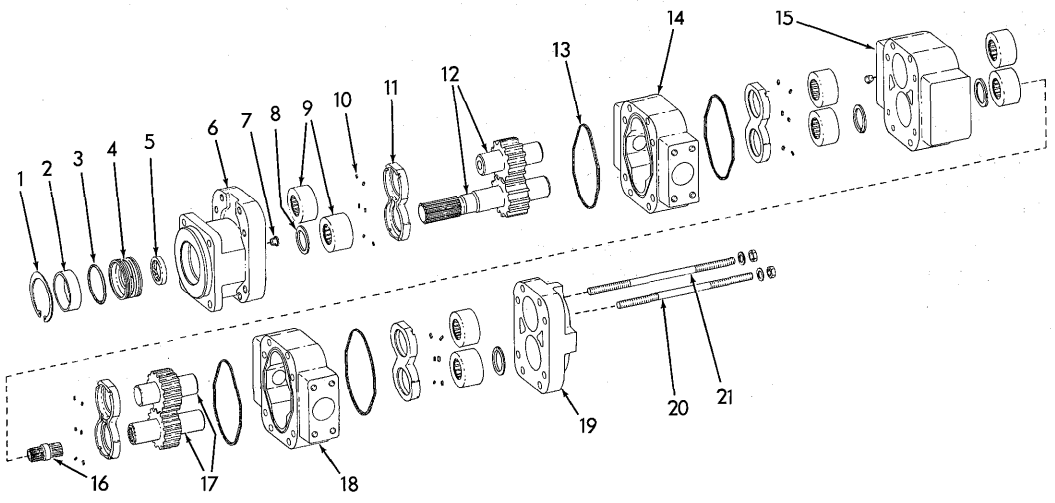

T-75551

HYDRAULIC PUMP ASSEMBLY

HYDRAULIC PUMP ASSEMBLY

USAGE: See page 241

ITEM	PART NO.	QTY.	DESCRIPTION
-	0668413-8	1	PUMP ASSY., (Standard)(Includes items 1 thru 20)
-	0669695-9	1	PUMP ASSY., (Optional)(Includes item 1 thru 20)(Used with phosphate-ester hydraulic fluid)
1	0669625-6	1	RING, snap
2	0668520-0	1	SPACER, retaining
3	0666157-3	1	O-RING, retainer
4	0668521-8	1	RETAINER, seal
5	0669624-9	1	SEAL, oil (Standard)
5	0669692-6	1	SEAL, oil (For optional pump)
6	0668522-6	1	COVER, drive end
7	0669623-1	1	PLUG
8	0669620-7	4	SEAL, drive shaft
9	0669621-5	8	BEARING, roller
10	0669618-1	24	SEAL, thrust plate (Standard)
10	0669693-4	24	SEAL, thrust plate (For optional pump)
11	0669619-9	4	PLATE, thrust
12	0669630-6	1	GEAR KIT, front (Consists of 2 matched gears. Includes shafts)
13	0669617-3	4	SEAL, housing (Standard)
13	0926844-2	4	O-RING, housing (For optional pump)
14	0669631-4	2	HOUSING, pump
15	0668519-2	1	CARRIER, center bearings
	0907859-3	1	PLUG, pipe, hex-socket,1/4"NPT
16	0669616-5	1	SHAFT, coupling
17	0669629-8	1	GEAR KIT, rear (Consists of 2 matched gears. Includes shafts)
18	0669622-3	1	COVER, rear end
19	0664019-7	6	STUD (11" long)
	0659494-9	6	WASHER, plain
	0668231-4	6	NUT, 5/8"NC
20	0668517-6	2	STUD (12-1/4" long)
	0659494-9	2	WASHER, plain
	0668231-4	2	NUT, 5/8"NC

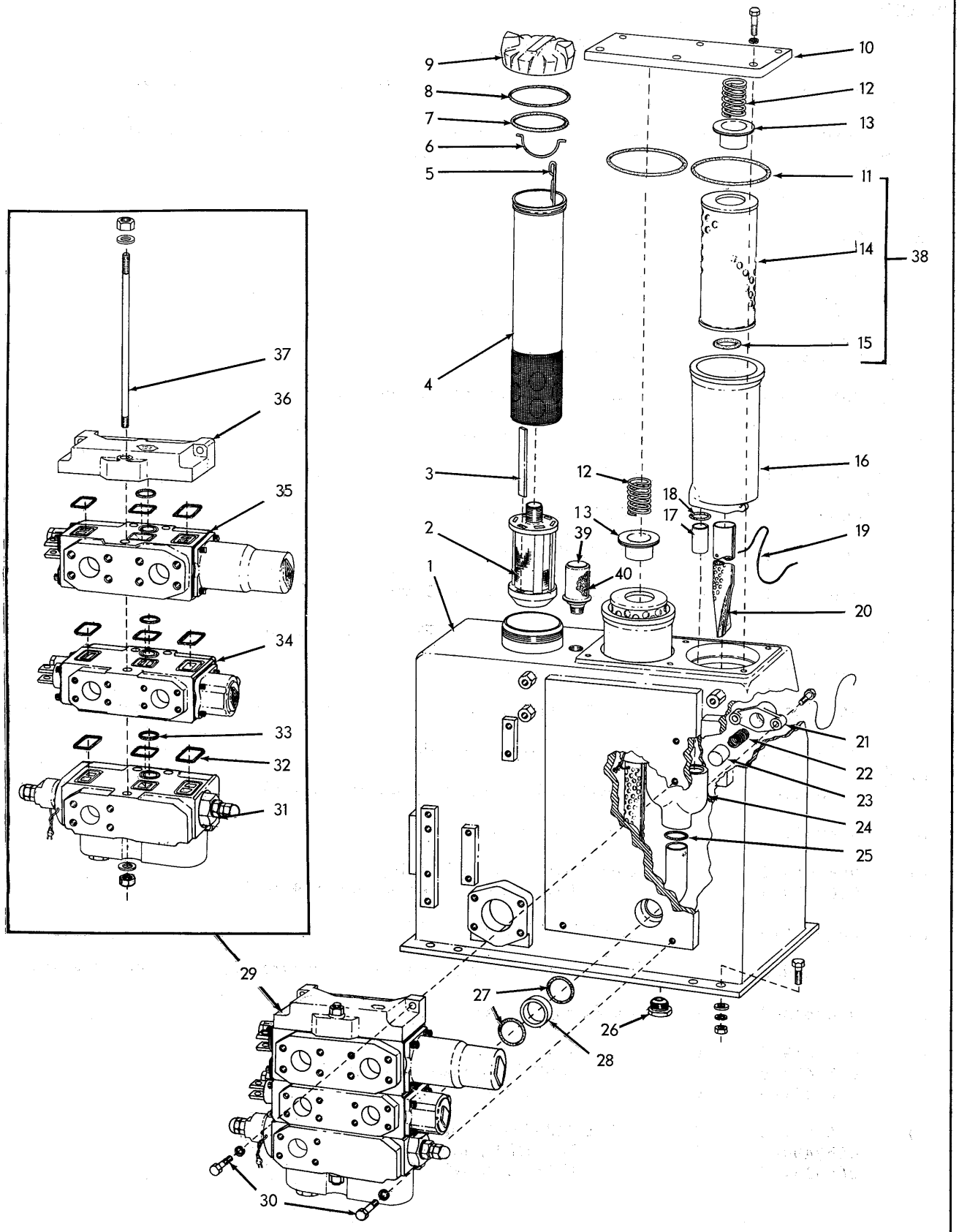

HYDRAULIC TANK AND CONTROL VALVE T-72985

HYDRAULIC TANK AND CONTROL VALVE

* Loaders prior to #538 including 555-557 but excluding 515-516-517-528-535
** Loaders #538 thru 1000; also 43C01001 and up excluding 555-557 but including 515-516-517-528-535
*** Optional. Units with phosphate-ester hydraulic fluid

ITEM	PART NO.	QUANTITY *	**	***	DESCRIPTION
1	0655079-2	1	-	-	TANK, hydraulic
	0667195-2	-	1	1	TANK, hydraulic
	0035236-9	8	8	8	CAPSCREW, 1/2"NC x 1-3/4"
	0064531-7	8	8	8	WASHER, plain
	0904208-5	8	8	8	LOCKWASHER, 1/2"
	0911028-9	8	8	8	NUT, 1/2"NC
2	---------	1	-	-	STRAINER, oil suction line (Order STRAINER ASSY. 0669335-2)
	0669335-2	-	1	1	STRAINER ASSY., oil suction line
3	0655081-8	6	6	6	MAGNET, suction line strainer
4	0660033-2	1	-	-	TUBE, oil filler (Loaders prior to #512)
	0668843-6	1	1	1	TUBE, oil filler (Effective with loader #512)
5	0655083-4	1	-	-	DIPSTICK, oil level (Loaders prior to #512)
	0668846-9	1	1	1	DIPSTICK, oil level (Effective with loader #512)
6	0660030-8	1	1	1	BAIL, oil filler tube
7	0923831-2	1	1	-	O-RING, oil filler tube
	0926289-0	-	-	1	O-RING, oil filler tube
8	0923950-0	1	1	-	O-RING, oil filler cap
	0926290-8	-	-	1	O-RING, oil filler cap
9	0656604-6	1	1	1	CAP, oil filler
10	0655084-2	1	1	1	COVER, filters
	0914847-9	6	6	6	CAPSCREW, 3/8"NC x 1-1/2"
	0904206-0	6	6	6	LOCKWASHER, 3/8"
11	0924691-9	2	2	-	O-RING, oil filter cover
	0925986-2	-	-	2	O-RING, oil filter cover
12	0665886-8	2	2	2	SPRING, filter element } Effective with loader #496
13	0665879-3	2	2	2	CAP ASSY., filter element (Includes gasket) } Effective with loader #496
14	---------	2	2	2	ELEMENT, oil filter (Order item 38)
15	0647130-4	2	-	-	GASKET oil filter element (Loaders prior to #496)
	0923664-7	2	2	-	O-RING, oil filter element (Effective with loader #496)
	0925919-3	-	-	2	O-RING, oil filter element

(Continued)

HYDRAULIC TANK AND CONTROL VALVE (Continued)

ITEM	PART NO.	QUANTITY *	**	***	DESCRIPTION	
16	0660769-1	2	2	2	HOUSING oil filter	
17	0667745-4	2	-	-	TUBE, connecting, adapter to filter (steel)	
	0667725-6	-	2	2	TUBE, connecting, adapter to filter (aluminum)	
18	0923948-4	4	2	-	O-RING, filter housing and return line adapter	
	0926286-6	-	-	2	O-RING, filter housing and return line adapter	
19	0023633-1	2	2	2	WIRE, retaining, oil discharge tube	
20	0665841-3	2	2	2	TUBE, oil discharge	
21	0647122-1	1	1	1	CAP, oil by-pass valve	
	0033182-7	2	2	2	CAPSCREW, drilled-hd., 3/8"NC x 1-1/2"	
	0023633-1	1	1	1	WIRE, locking, 1/16" x 12"	
22	0647108-0	1	1	1	SPRING, oil by-pass valve	
23	0647151-0	1	1	1	VALVE, oil by-pass	
24	0667727-2	1	1	1	ADAPTER ASSY., oil return line (Includes item 17)	
25	0923850-2	1	1	-	O-RING, return line adapter	
	0926287-4	-	-	1	O-RING, return line adapter	
26	0924692-7	1	1	1	PLUG, tank drain	
27	0925271-9	2	2	-	O-RING, tank to valve	
	0926288-2	-	-	2	O-RING, tank to valve	
28	0655088-3	1	1	1	TUBE, o-ring spacing	
29	0668412-0	1	1	-	VALVE ASSY., control (Loaders prior to unit #1000)	Consists of items 31 thru 37
	0671983-5	-	1	-	VALVE ASSY., control (Loaders unit #1001 and up)	
	0669696-7	-	-	1	VALVE ASSY., control	
30	0922526-9	3	3	3	CAPSCREW, 1/2"NC x 2-1/2"	
	0912441-3	3	3	3	LOCKWASHER, 1/2"	

NOTE: Special valves required for operation of front or rear auxiliary equipment are listed elsewhere in this publication.

31	0668414-6	1	1	-	VALVE ASSY., main relief and pump unloading	See page 248 for parts
	0669697-5	-	-	1	VALVE ASSY., main relief and pump unloading	
32	0659497-2	9	9	-	RING, valve sealing (2-1/2"O.D.)	
	0925938-3	-	-	9	RING, valve sealing (2-1/2"O.D.)	

(Continued)

ITEM	PART NO.	QUANTITY *	**	***	DESCRIPTION	
33	0659496-4	3	3	-	RING, valve sealing (1-7/16"O.D.)	
	0925937-5	-	-	3	RING, valve sealing (1-7/16"O.D.)	
34	0660830-1	1	-	-	VALVE ASSY., dump control	See page 250 for parts
	0667085-5	-	1	-	VALVE ASSY., dump control	
	0667358-6	-	-	1	VALVE ASSY., dump control	
35	0658429-6	1	1	-	VALVE ASSY., lift control (Loaders prior to #1000)	See Page 252
	0671984-3	-	1	-	VALVE ASSY., lift control (Loader units #1001 and up)	
	0665694-6	-	-	1	VALVE ASSY., lift control	
36	0666134-2	1	1	1	COVER, valve	
37	0667089-7	3	3	3	STUD, valve	
	0659494-9	6	6	6	WASHER, plain	
	0668231-4	6	6	6	NUT, 5/8"NC	
38	0658068-2	1	-	-	ELEMENT KIT, filter (Loaders prior to #496)	Includes parts for both filters; items 11, 14, 15
	0665859-5	1	1	-	ELEMENT KIT, filter (Effective with loader #496)	
	0667167-1	-	-	1	ELEMENT KIT, filter	
39	0668807-1	1	1	1	VALVE ASSY., pressure relief (Includes item 40 and items indented below)(Effective with loader #512)	
	0196132-5	1	1	1	SEAL, poppet	Not illustrated
	0196131-7	1	1	1	SEAL, sleeve	
	0196130-9	2	2	2	RING, locking	
40	0668921-0	1	1	1	FILTER, relief valve	

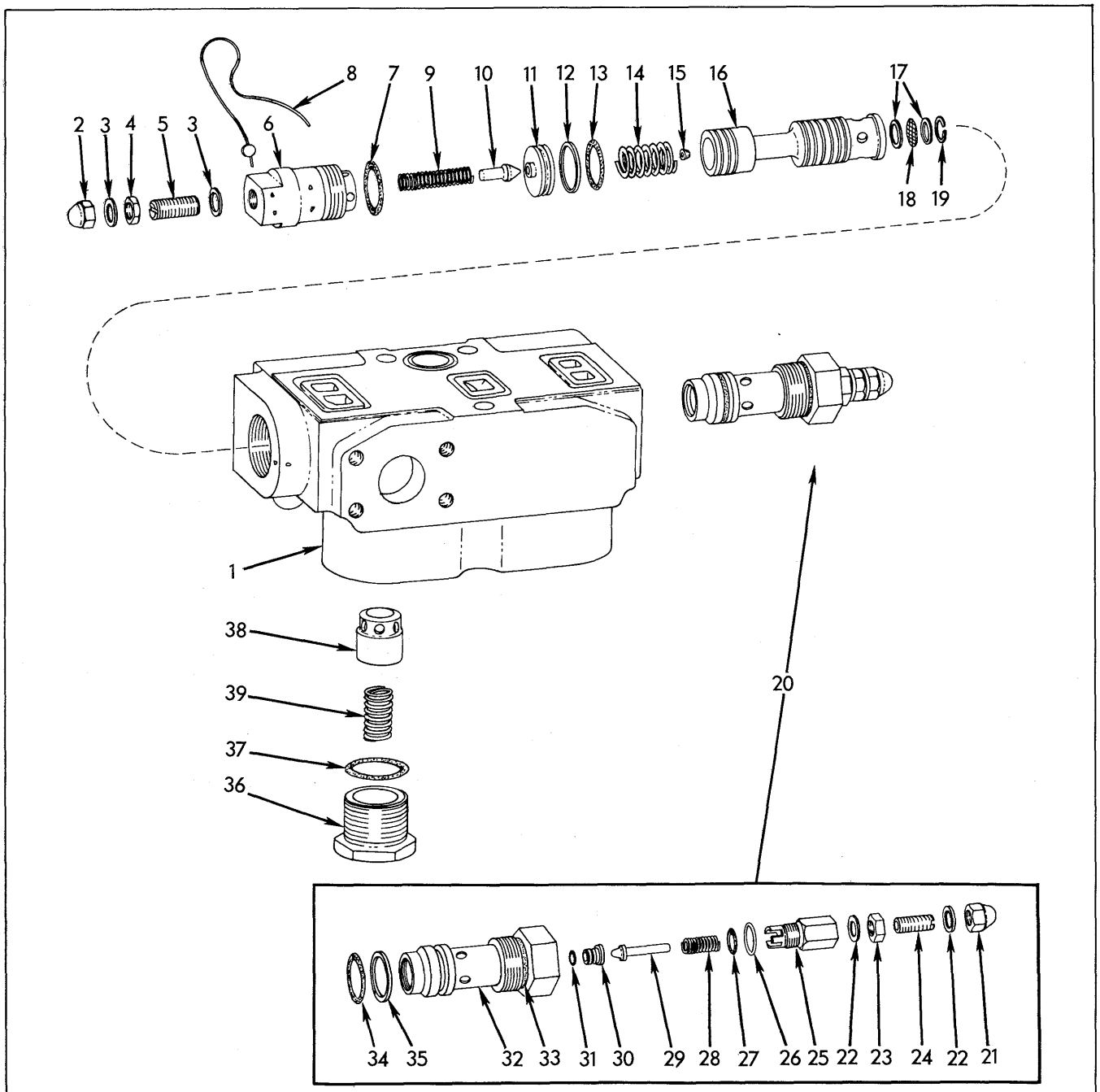

MAIN RELIEF VALVE ASSEMBLY

USAGE: See page 245

* 0668414-6 VALVE ASSEMBLY (Standard)
** 0669697-5 VALVE ASSEMBLY (Optional)

ITEM	PART NO.	QTY. *	QTY. **	DESCRIPTION
1	---------	1	1	HOUSING (Not serviced separately)
2	0913463-6	1	1	NUT, cap, valve adjustment screw
3	0668532-5	2	2	GASKET, adjusting screw nut
4	0913177-2	1	1	NUT, jam, 1/2"NF
5	0926354-2	1	1	SCREW, unloading valve adjustment

(Continued)

MAIN RELIEF VALVE ASSEMBLY (Continued)

ITEM	PART NO.	QTY. *	QTY. **	DESCRIPTION
6	0668533-3	1	1	RETAINER, spring
7	0924270-2	1	-	O-RING, retainer (1-5/8"O.D.)
	0925934-2	-	1	O-RING, retainer (1-5/8"O.D.)
8	0668544-0	1	1	LOCKWIRE, retainer
9	0666177-1	1	1	SPRING, poppet valve
10	0666176-3	1	1	VALVE, poppet
11	0668536-6	1	1	SEAT, spring, spool return
12	0668543-2	1	1	RING, back-up
13	0926693-3	1	-	O RING, spring seat (1-1/2"O.D.)
	0926843-4	-	1	O-RING, spring seat (1-1/2"O.D.)
14	0668534-1	1	1	SPRING, spool return
15	0666180-5	1	1	PLUG, orifice, valve spool
16	---------	1	1	SPOOL, unloading valve (Not serviced separately)
17	0668537-4	2	2	SPACER, valve spool
18	0668539-0	1	1	SCREEN, valve spool (30 mesh)
	0669699-1	-	1	SCREEN, valve spool (100 mesh)
19	0668530-9	1	1	RING, snap, washer
20	0669198-4	1	-	VALVE ASSY., relief (Consists of items 21 thru 35)
	0669701-5	-	1	VALVE ASSY., relief (Consists of items 21 thru 35)
21	0916559-8	1	1	NUT, cap, valve adjustment screw
22	0668552-3	2	2	GASKET, adjustment screw nut
23	0910329-2	1	1	NUT, jam, 3/8"NF
24	0668550-7	1	1	SCREW, relief valve adjustment
25	0668551-5	1	1	RETAINER, spring
26	0668548-1	1	1	GASKET, retainer o-ring
27	0923846-0	1	-	O-RING, retainer
	0926842-6	-	1	O-RING, retainer
28	0668555-6	1	1	SPRING, poppet valve
29	0669188-5	1	1	VALVE, poppet
30	0669189-3	1	1	SEAT, poppet valve
31	0926356-7	1	-	O-RING, valve seat
	0926841-8	-	1	O-RING, valve seat
32	---------	1	1	CARTRIDGE ASSY. (Not serviced separately)
33	0924270-2	1	-	O-RING, cartridge sealing (1-5/8"O.D.)
	0925934-2	-	1	O-RING, cartridge sealing (1-5/8"O.D.)
34	0924696-8	1	-	O-RING, cartridge (1-1/2"O.D.)
	0925933-4	-	1	O-RING, cartridge (1-1/2"O.D.)
35	0658245-6	1	1	RING, back-up, cartridge o-ring
36	0668531-7	1	1	CAP, check valve
37	0924112-6	1	-	O-RING, cap (1-7/8"O.D.)
	0925935-9	-	1	O-RING, cap (1-7/8"O.D.)
38	0668538-2	1	1	VALVE, check
39	0668535-8	1	1	SPRING, check valve

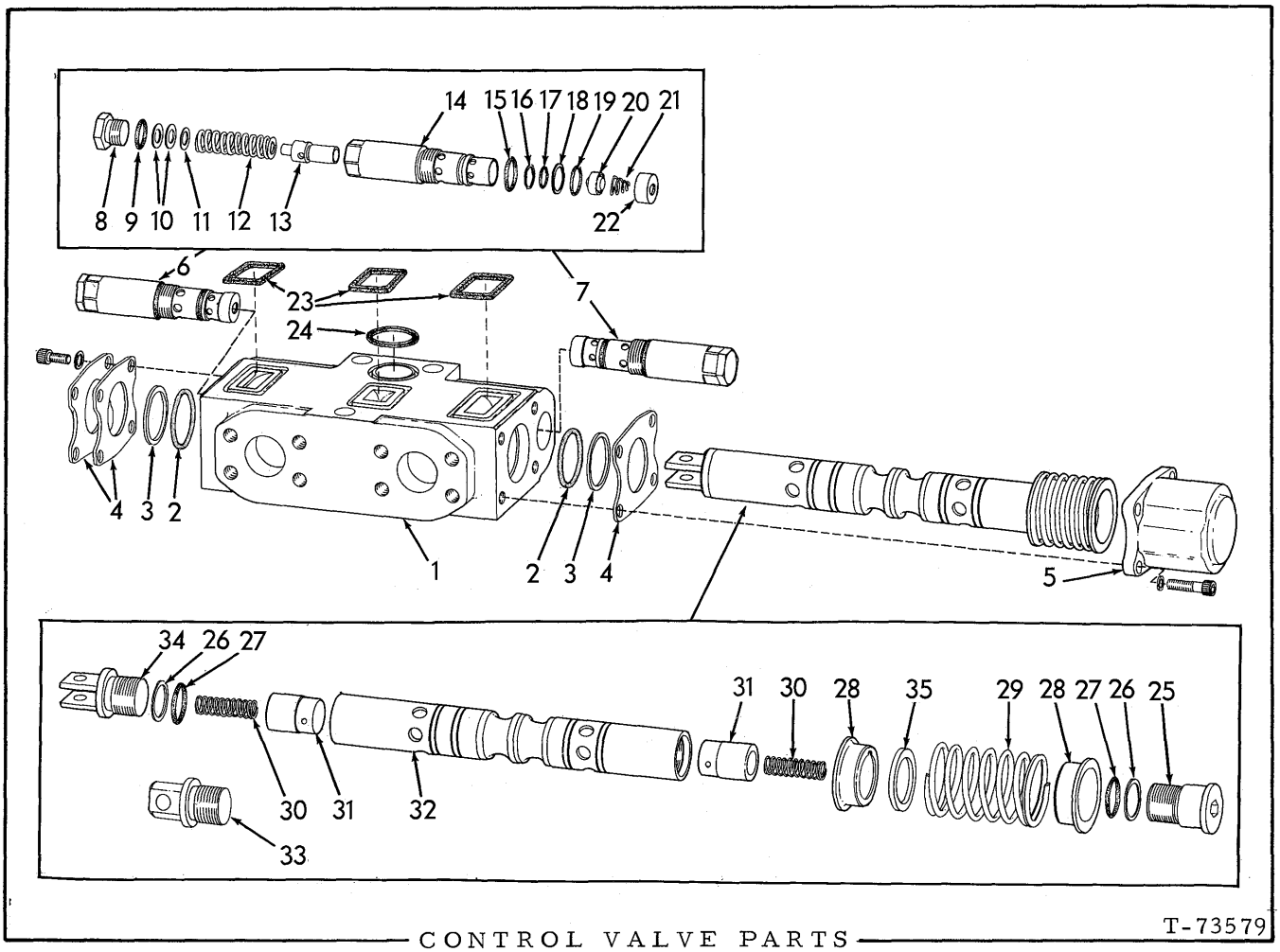

T-73579

CONTROL VALVE PARTS

* 0660830-1 VALVE ASSY., dump control } See page 245
* 0667085-5 VALVE ASSY., dump control }
** 0655713-6 VALVE ASSY., auxiliary control (See page 289)
*** 0655655-9 VALVE ASSY., ripper control (See page 298)
△ 0667358-6 VALVE ASSY., dump control (Optional)(See page 245)

ITEM	PART NO.	QUANTITY *	**	***	△	DESCRIPTION	
1	---------	1	1	1	1	HOUSING (Not serviced separately)	
2	0923576-3	2	2	-	-	O-RING, operating plunger	
	0676692-7	-	-	2	-	O-RING, operating plunger	
	0925935-9	-	-	-	2	O-RING, operating plunger	
3	0658284-5	2	2	2	2	RING, back-up plunger o-ring	
4	0658286-0	3	3	3	3	RETAINER	
	0925192-7	4	4	4	4	CAPSCREW, socket-hd., 5/16"NC x 5/8"	
	0904205-2	4	4	4	4	LOCKWASHER, 5/16"	
5	0658282-9	1	1	1	1	CAP, spring closure	
	0926269-2	4	4	4	4	CAPSCREW, socket-hd., 5/16"NC x 1-1/4"	
	0904205-2	4	4	4	4	LOCKWASHER, 5/16"	
6	0665104-6	1	-	-	-	VALVE ASSY., relief, front end (3000 lb.)	Each consists of items 8 thru 22
	0658466-8	-	1	1	-	VALVE ASSY., relief, front end (2300 lb.)	
	0665714-2	-	-	-	1	VALVE ASSY., relief, front end (3000 lb.)	
7	0658466-8	1	1	1	-	VALVE ASSY., relief, rear end (2300 lb.)	
	0665696-1	-	-	-	1	VALVE ASSY., relief, rear end (2300 lb.)	

(Continued)

CONTROL VALVE PARTS (Continued)

ITEM	PART NO.	QUANTITY *	**	***	△	DESCRIPTION	
8	0658363-7	2	2	2	2	CAP, relief valve	
9	0923379-2	2	2	2	-	O-RING, relief valve cap (1" O.D.)	
	0925929-2	-	-	-	2	O-RING, relief valve cap (1" O.D.)	
10	0658360-3	1	1	1	1	WASHER, spring adjusting (1/64" thick)	Use as required
	0911992-6	1	1	1	1	WASHER, spring adjusting (1/16" thick)	
11	0660792-3	1	1	1	1	SHIM, spring adjusting (.005" thick)	
12	0659555-7	2	2	2	2	SPRING, relief valve	
13	0658364-5	2	2	2	2	SEAT, relief valve spring	
14	---------	2	2	2	2	CARTRIDGE, (Not serviced separately)	
15	0924775-0	2	2	2	-	O-RING, cartridge, outer (1-1/8" O.D.)	
	0925931-8	-	-	-	2	O-RING, cartridge, outer (1-1/8" O.D.)	
16	0660793-1	2	2	2	1	RING, back-up	
17	0925081-2	2	2	2	-	O-RING, cartridge, inner (3/4" O.D.)	
	0925928-4	-	-	-	2	O-RING, cartridge, inner (3/4" O.D.)	
18	0665250-7	2	2	2	2	RING, back-up	
19	0924854-3	2	2	2	-	O-RING, cartridge, outer (1" O.D.)	
	0925930-0	-	-	-	2	O-RING, cartridge, outer (1" O.D.)	
20	0658365-2	2	2	2	2	BALL ASSY., relief valve (Serviced only as a unit)	
21	0658361-1	2	2	2	2	SPRING (conical)	
22	0665174-9	2	2	2	2	CAP, spring retaining	
23	0659497-2	-	3	3	-	RING, valve sealing	
24	0659496-4	-	1	1	-	RING, valve sealing	
25	0658279-5	1	1	1	1	BOLT, plunger return	
26	0660780-8	2	2	2	2	RING, back-up	
27	0925069-7	2	2	2	-	O-RING, clevis and plunger return bolt	
	0925932-6	-	-	-	2	O-RING, clevis and plunger return bolt	
28	0658280-3	2	2	2	2	GUIDE, spring	
29	0659506-0	1	1	1	1	SPRING, plunger return	
30	0659504-5	2	2	2	2	SPRING, check valve	
31	0660829-3	2	-	-	-	VALVE, check (1-9/16" long)(For VALVE ASSY.0660830-1)	
	0658278-7	2	-	-	-	VALVE, check (1-1/8" long)(For VALVE ASSY. 0667085-5)	
	0658278-7	-	2	2	2	VALVE, check	
32	---------	1	1	1	1	PLUNGER, operating (Not serviced separately)	
33	0658281-1	-	-	1	-	CLEVIS, operating plunger	
34	0658347-0	1	1	-	1	CLEVIS, operating plunger	
35	0667086-3	1	-	-	1	SPACER (Not for VALVE ASSY. 0660830-1)	

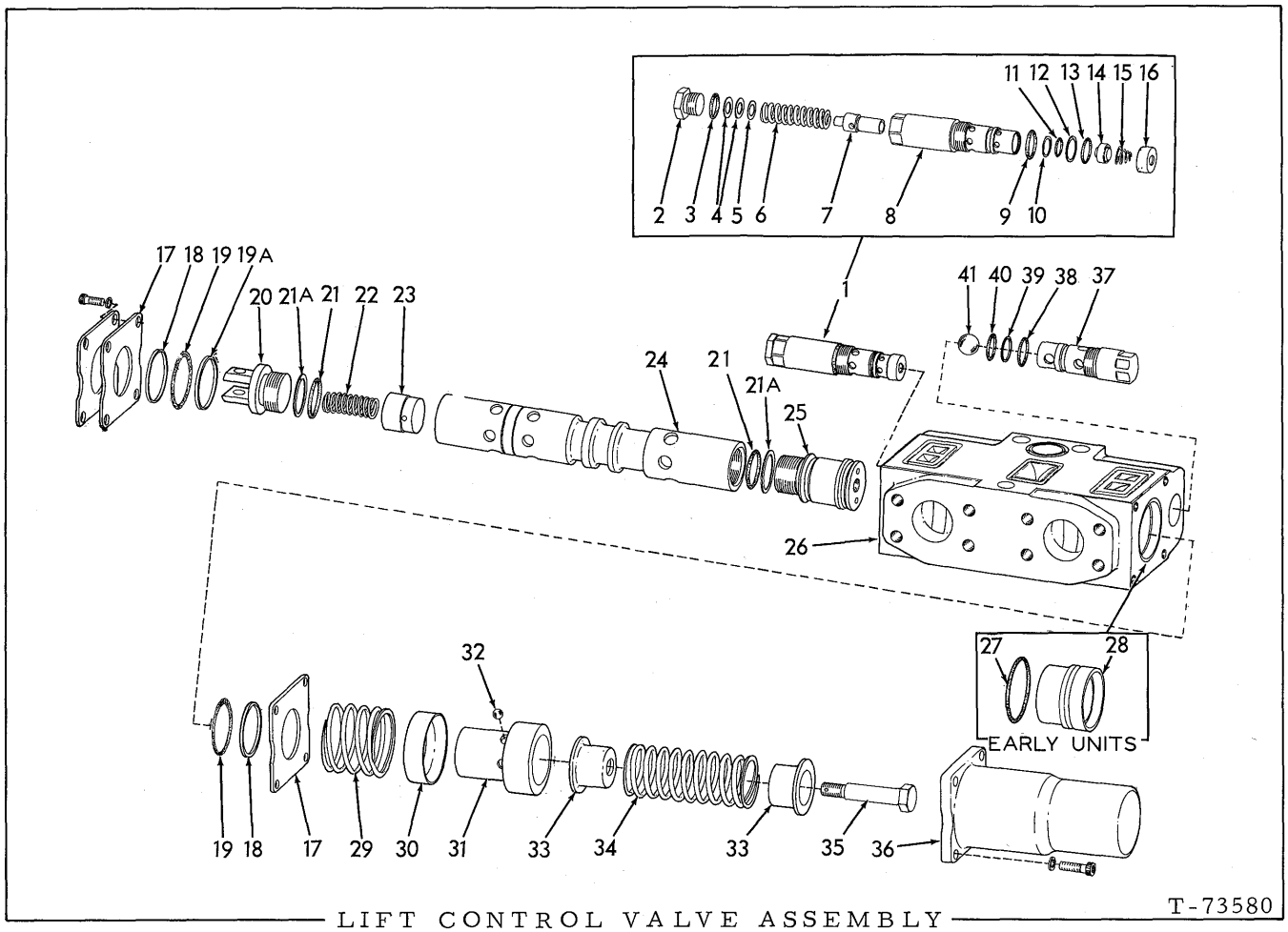

LIFT CONTROL VALVE ASSEMBLY

USAGE: See page 245

* { 0658429-6 VALVE ASSEMBLY (Early units) / 0671984-2 VALVE ASSEMBLY (Late units) } Standard

** 0665694-6 VALVE ASSEMBLY (Optional)

ITEM	PART NO.	QTY. *	QTY. **	DESCRIPTION
1	0658466-8	1	-	VALVE ASSY., relief (2300 lb. for VALVE ASSY. 0658429-6) (Consists of items 2 thru 16)
	0671986-8	1	-	VALVE ASSY., relief (2600 lb. for VALVE ASSY. 0671984-2) (Consists of items 2 thru 16)
	0665696-1	-	1	VALVE ASSY., relief (Consists of items 2 thru 16)
2	0658363-7	1	1	CAP, relief valve
3	0923379-2	1	-	O-RING, relief valve cap (1" O.D.)
	0925929-0	-	1	O-RING, relief valve cap (1" O.D.)
4	0658360-3	1	1	WASHER, pressure adjustment (1/64" thick)
	0911992-6	1	1	WASHER, pressure adjustment (1/16" thick)
5	0660792-3	1	1	SHIM, pressure adjustment (.005" thick)
				} Use as required
6	0659555-7	1	1	SPRING, relief valve
7	0658364-5	1	1	SEAT, relief valve spring
8	---------	1	1	CARTRIDGE (Not serviced. Order item 1)
9	0924775-0	1	-	O-RING, cartridge, outer (1-1/8" O.D.)
	0925931-8	-	1	O-RING, cartridge, outer (1-1/8" O.D.)
10	0660793-1	1	1	RING, back-up

(Continued)

LIFT CONTROL VALVE ASSEMBLY (Continued)

ITEM	PART NO.	QTY. *	QTY. **	DESCRIPTION
11	0925081-2	1	-	O-RING, cartridge, inner (3/4" O. D.)
	0925928-4	-	1	O-RING, cartridge, inner (3/4" O. D.)
12	0665250-7	1	1	RING, back-up
13	0924854-3	1	-	O-RING, cartridge, outer (1" O. D.)
	0925930-0	-	1	O-RING, cartridge, outer (1" O. D.)
14	0658365-2	1	1	BALL ASSY., relief valve (Serviced only as a unit)
15	0658361-1	1	1	SPRING (Conical)
16	0665174-9	1	1	CAP, spring retaining
17	0658434-6	3	3	RETAINER
	0925192-7	4	4	CAPSCREW, hex-socket-hd., 5/16"NC x 5/8"
	0904205-2	4	4	LOCKWASHER, 5/16"
18	0658432-0	2	2	RING, back-up, plunger seal ring (teflon)
19	0923578-9	2	-	O-RING, operating plunger
	0925936-7	-	2	O-RING, operating plunger
19A	0665693-8	1	1	RING, back-up, plunger seal ring (steel)
20	0658433-8	1	1	CLEVIS, operating plunger
21	0924696-8	2	-	O-RING, clevis and detent
	0925933-4	-	2	O-RING, clevis and detent
21A	0658245-6	2	2	RING, back-up, clevis and detent o-ring
22	0659504-5	1	1	SPRING, check valve
23	0658430-4	1	1	VALVE, check
24	---------	1	1	PLUNGER, operating (Not serviced separately)
25	0658437-9	1	1	DETENT
26	---------	1	1	HOUSING (Not serviced separately)
27	0923814-8	1	-	O-RING, plunger sleeve } Early units only
28	---------	1	-	SLEEVE, plunger (Not serviced separately) } Early units only
29	0669713-0	1	1	SPRING, sleeve, detent ball
30	0658435-3	1	1	SLEEVE, detent ball
31	0658436-1	1	1	RETAINER, detent ball
32	0917145-5	6	6	BALL, detent
33	0658317-3	2	2	GUIDE, spring
34	0659498-0	1	1	SPRING, plunger return
35	0658316-5	1	1	BOLT, plunger return
36	0658441-1	1	1	CAP, spring closure
	0926269-2	4	4	CAPSCREW, hex-socket-hd., 5/16"NC x 1-1/4"
	0904205-2	4	4	LOCKWASHER, 5/16"
37	0658315-7	1	-	VALVE ASSY., flow (Includes items 38 thru 41)
	0665695-3	-	1	VALVE ASSY., flow (Includes items 38 thru 41)
38	0924775-0	1	-	O-RING, flow valve shell (1-1/8" O. D.)
	0925931-8	-	1	O-RING, flow valve shell (1-1/8" O. D.)
39	0665250-7	1	1	RING, back-up
40	0924854-3	1	-	O-RING, flow valve shell (1" O. D.)
	0925930-0	-	1	O-RING, flow valve shell (1" O. D.)
41	0917012-7	1	1	BALL, flow valve (3/4" diam.)

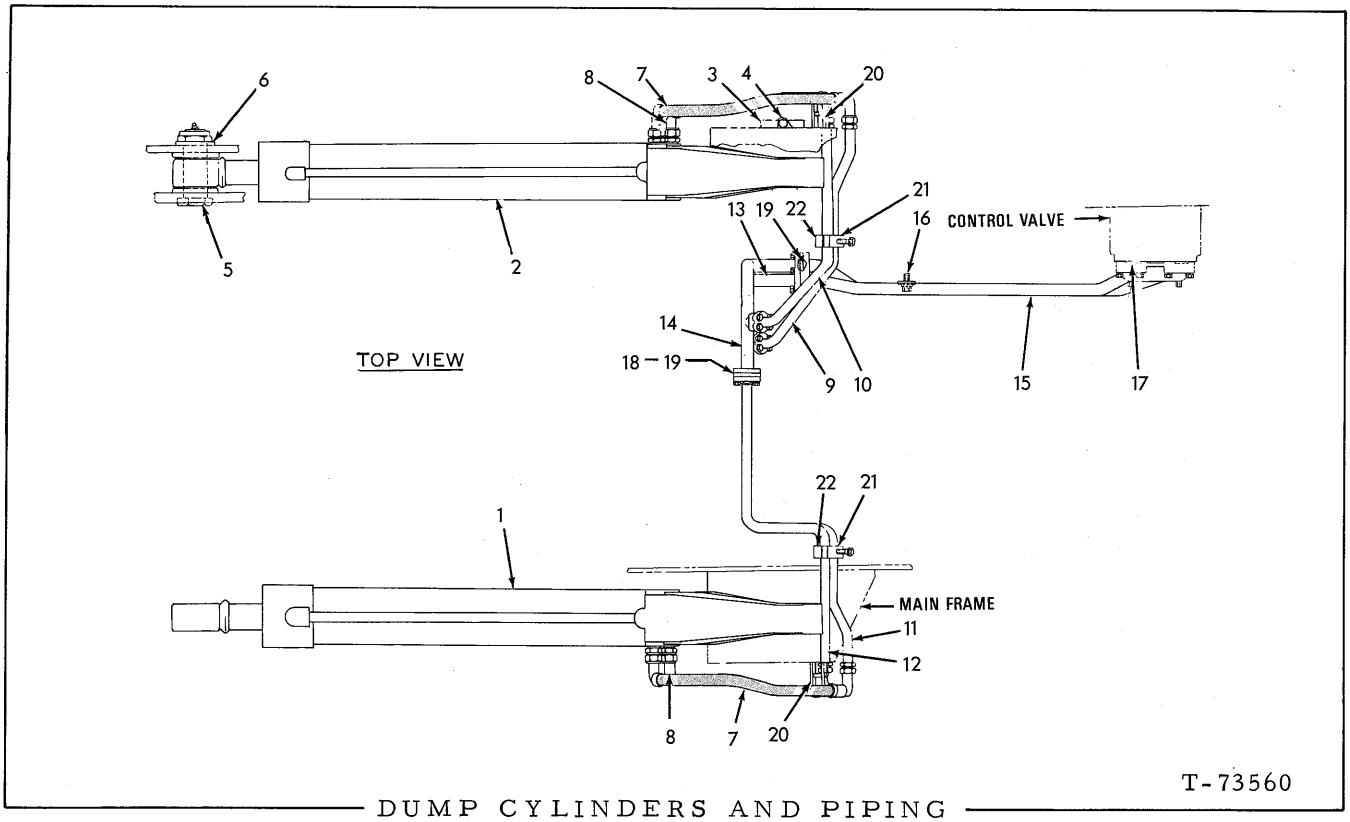

DUMP CYLINDERS AND PIPING

USAGE: Standard equipment. Loaders prior to serial No. 340, excluding No. 157, 259, 328, 329, 330, 336 and 338.

ITEM	PART NO.	QTY.	DESCRIPTION
1	0659015-2	1	CYLINDER ASSEMBLY, left (Order CYLINDER ASSY. 3052767)
2	0659016-0	1	CYLINDER ASSEMBLY, right (Order CYLINDER ASSEMBLY 3052768)
			See page 262 for parts
3	0654975-2	2	PIN, cylinder pivot, upper
	0912497-5	2	FITTING, lubricating, straight, 1/4"NPT
4	0917599-3	2	CAPSCREW, pin retaining (1/2"NC x 5-1/4")
	0915972-4	2	NUT, elastic stop, 1/2"NC
5	0657382-8	2	PIN, cylinder pivot, lower
	0914465-0	2	FITTING, lubricating, straight, 1/8"NPT
6	3001559-8	2	WASHER, plain
	0917835-1	2	NUT, elastic stop, 1-1/2"NF
7	0655316-8	2	HOSE, retract line (See HOSE PARTS)(Order HOSE 669860-9 and ELBOW 0924069-8)
	0921228-3	2	CONNECTOR, flare type, 1"tube, 1-5/16" straight thread (Includes O-RING)
	0921214-3	2	O-RING
	0669860-9	2	HOSE, retract line (See HOSE PARTS)
	0924069-8	2	ELBOW, adjustable, 90°, flare type, 1"tube, 1-5/16"straight thread(Includes O-RING)
	0921214-3	2	O-RING

(Continued)

DUMP CYLINDERS AND PIPING (Continued)

ITEM	PART NO.	QTY.	DESCRIPTION
8	0665317-4	2	HOSE, dump line (See HOSE PARTS)(Order HOSE 0669861-7 and ELBOW 0924069-8)
	0921228-3	2	CONNECTOR, flare type 1"tube, 1-5/16" straight thread (Includes O-RING)
	0921214-3	2	O-RING
	0669861-7	2	HOSE, dump line (See HOSE PARTS)
	0924069-8	2	ELBOW, adjustable 90°, flare type, 1"tube, 1-5/16" straight thread (Includes O-RING)
	0921214-3	2	O-RING
9	---------	1	*TUBE, retract line, right cylinder
10	---------	1	*TUBE, dump line, right cylinder
11	---------	1	*TUBE, retract line, left cylinder
12	---------	1	*TUBE, dump line, left cylinder
13	---------	1	*TUBE, retract line, center section
14	---------	1	*TUBE, dump line, center section
15	---------	1	*TUBE, mainfold, rear
	0921467-7	2	CAP, flare fitting, 1/4" tube
	0914649-9	6	CAPSCREW, 7/16"NC x 2"
	0904207-8	6	LOCKWASHER, 7/16"
16	0035733-5	1	CAPSCREW, 1/2"NC x 1-3/8"
	0904208-6	1	LOCKWASHER, 1/2"
	0064531-7	1	WASHER, plain
17	0924192-8	2	O-RING, rear mainfold tube (1-3/4"O. D.)
18	0921116-0	12	FLANGE, tube connecting (half only)
	0916272-8	24	CAPSCREW, 3/8"NC x 1-1/4"
	0904206-0	24	LOCKWASHER, 3/8"
19	0924200-9	6	O-RING, tube connections (1-9/16"O. D.)
20	0659592-0	4	CLIP, hose supporting
	0916274-4	2	CAPSCREW, 3/8"NC x 2-1/4"
	0904206-0	2	LOCKWASHER, 3/8"
	0910324-3	2	NUT, 3/8"NC
21	0657273-9	2	CLAMP, tube supporting (plain hole)
22	0657274-7	2	CLAMP, tube supporting (threaded hole)
	0916319-7	2	CAPSCREW, 1/2"NC x 3-1/2"
	0904208-6	2	LOCKWASHER, 1/2"

See NOTE below

NOTE: Items indicated with asterisk (*) above are not available. Replace with items 7, 8, 10, 11, 14, 15, 18, 19, 21, and 22 as as shown on pages 257 and 258.

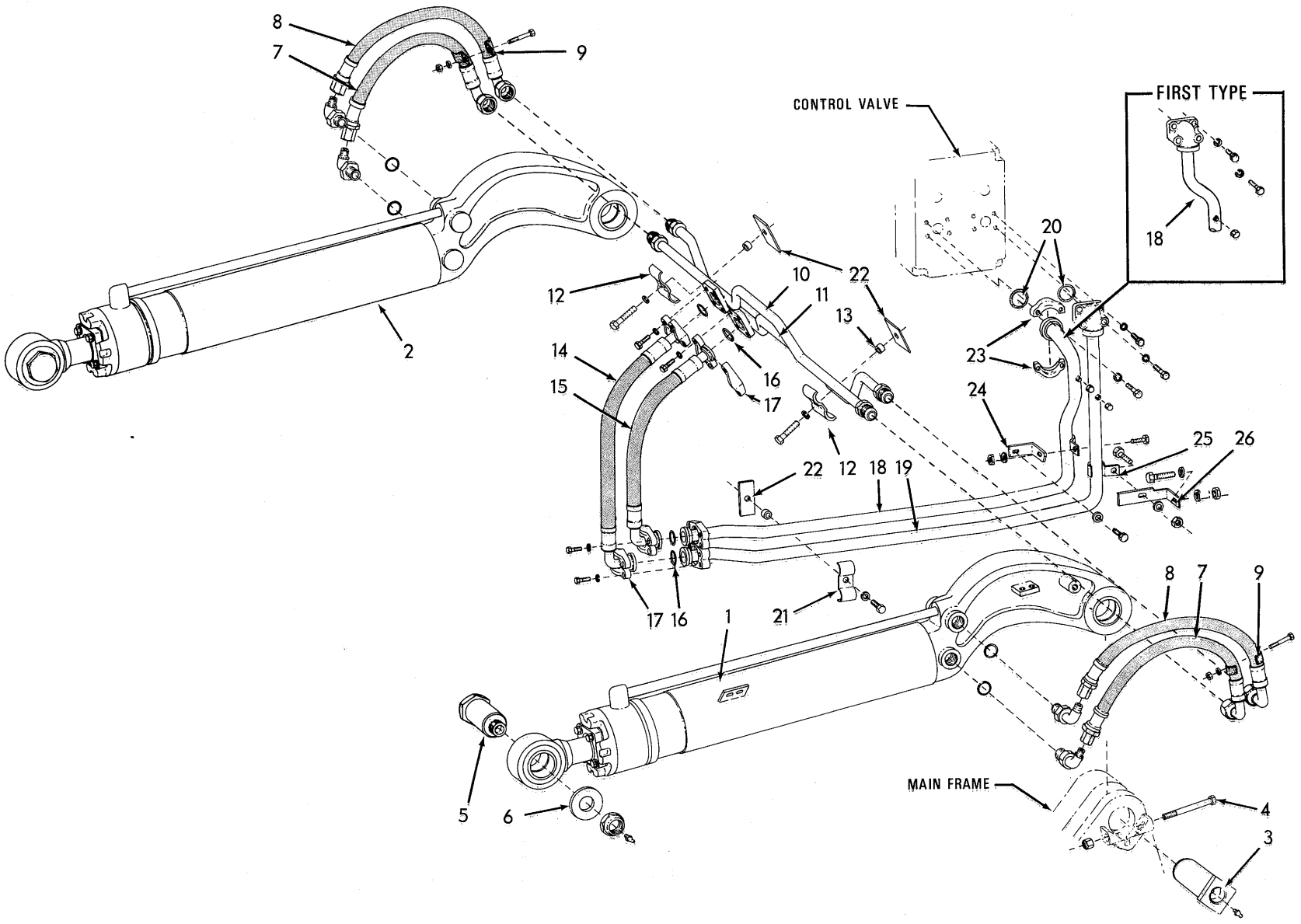

DUMP CYLINDERS AND PIPING (Second type)

T-75005

DUMP CYLINDERS AND PIPING

USAGE: Standard equipment. Effective with loader serial No. 340 thru 1000; also loader serial No. 43C01001 and up; including Nos. 157, 259, 328, 329, 330, 336, and 338.

ITEM	PART NO.	QTY.	DESCRIPTION
1	0659015-2	1	CYLINDER ASSY., left (See page 262 for parts)(Loaders prior to #475)
	3052767-5	1	CYLINDER ASSY., left (See page 264 for parts)(Loaders #475 thru #602)
	3054083-5	1	CYLINDER ASSY., left (See page 264 for parts)(Loaders #603 thru #1000)
	3054973-7	1	CYLINDER ASSY., left (See page 266 for parts)(Loader unit #1001 and up)
2	0659016-8	1	CYLINDER ASSY., right (See page 262 for parts)(Loaders prior to #475. Order CYLINDER ASSY. 3052768-3
	3052768-3	1	CYLINDER ASSY., right (See page 264 for parts)(Loaders #475 thru #602)
	3054084-3	1	CYLINDER ASSY., right (See page 264 for parts)(Loaders #603 thru #1000)
	3054974-5	1	CYLINDER ASSY., right (See page 266 for parts)(Loader unit #1001 and up)
3	0654975-2	2	PIN, cylinder pivot, upper
	0912497-5	2	FITTING, lubricating, straight, 1/4"NPT
4	0927180-0	2	CAPSCREW, pin retaining (1/2"NC x 5-1/4")
	0915972-4	2	NUT, elastic stop, 1/2"NC
5	0657382-8	2	PIN cylinder pivot, lower
	0914465-0	2	FITTING, lubricating, straight, 1/8"NPT
6	3001559-8	2	WASHER, plain
	0917835-1	2	NUT, elastic stop, 1-1/2"NF
7	0669861-7	2	HOSE, dump line, upper (See HOSE PARTS)(If for first replacement on loaders prior to #1000 also order ELBOW 0924069-8)
	0921228-3	2	CONNECTOR, flare type, 1" tube, 1-5/16" straight thread (Includes O-RING 0921214-3)(Loaders prior to #1000)
	0924069-8	2	ELBOW, adjustable, 90°, flare type, 1" tube, 1-5/16" straight thread (Includes washer, nut and O-RING 0921214-3)(Loader units #1001 and up)
8	0669860-9	2	HOSE, retract line, upper (See HOSE PARTS)(If for first replacement on loaders prior to #1000 also order ELBOW 0924069-8)
	0921228-3	2	CONNECTOR, flare type, 1" tube, 1-5/16" straight thread thread (Includes O-RING 0921214-3)(Loaders prior to #1000)
	0924069-8	2	ELBOW, adjustable, 90°, flare type, 1" tube, 1-5/16" straight thread (Includes washer, nut and O-RING 0921214-3)(Loader units #1001 and up)
9	0659592-0	4	CLIP, hose supporting
	0920996-6	2	CAPSCREW, 3/8"NC x 2-1/4"
	0910287-2	2	LOCKWASHER, 3/8"
	0911026-3	2	NUT, 3/8"NC
10	0665214-3	1	TUBE ASSY., cross, dump line (Includes nuts)

(Continued)

DUMP CYLINDER AND PIPING (Continued)

ITEM	PART NO.	QTY.	DESCRIPTION	
11	0665215-0	1	TUBE ASSY., cross, retract line (Includes nuts)	
12	0666917-0	2	CLAMP, tube supporting	
	0916318-9	2	CAPSCREW, 1/2"NC x 3-1/4"	
	0913432-1	2	WASHER, plain	
	0904208-6	2	LOCKWASHER, 1/2"	
	0911028-9	2	NUT, 1/2"NC	
13	0673769-6	3	SPACER, tube supporting clamp	
14	0665274-7	1	HOSE, dump line, lower	
15	0665275-4	1	HOSE, retract line, lower	
16	0924200-9	4	O-RING, lower hoses (1-9/16"O. D.)	
17	0921116-0	8	FLANGE, hose connecting (half only)	
	0921076-6	16	CAPSCREW, 3/8"NC x 1-1/4"	
	0910287-2	16	LOCKWASHER, 3/8"	
18	0665213-5	1	TUBE, retract line, rear (Loaders prior to #538 excluding 515, 516, 517, 528, 535 and including 555 and 557)	
	0668571-3	1	TUBE, retract line, rear (Loaders #538 and up except 555 and 557 but including 515, 516, 517, 528 and 535)	
	0921467-7	1	CAP, flare fitting, 1/4" tube	Loaders prior to #538 excluding 515, 516, 517 528, 535 and including 555 and 557.
	0916191-0	2	CAPSCREW, 7/16"NC x 1-1/2"	
	0916866-7	2	CAPSCREW, 7/16"NC x 2-3/4"	
	0904207-8	4	LOCKWASHER, 7/16"	
19	0665212-7	1	TUBE, dump line,rear	
	0921467-7	1	CAP, flare fitting, 1/4" tube	
	0923192-9	2	CAPSCREW, 7/16"NC x 1-1/2"	
	0916866-7	2	CAPSCREW, 7/16"NC x 2-3/4"	
	0914678-8	4	LOCKWASHER, 7/16"	
20	0924192-8	2	O-RING, rear tubes (1-3/4"O. D.)	
21	0665218-4	1	CLAMP, supporting, rear tubes	
	0921556-7	1	CAPSCREW, 1/2"NC x 2"	
	0912441-3	1	LOCKWASHER, 1/2"	
22	0665219-2	3	PLATE, tube supporting clamp	
23	0921117-8	2	FLANGE, tube attaching, rear retract line(half)	Loaders #538 and up except 555, 557 but including 515, 516, 517, 528, 535.
	0923192-9	4	CAPSCREW, 7/16"NC x 1-1/2"	
	0914678-8	4	LOCKWASHER, 7/16"	
24	0669640-5	1	ANGLE, tube supporting, rear retract line	
	0920582-4	1	CAPSCREW, 1/2"NC x 1-1/4"	
	0677008-5	1	WASHER, plain	
25	0669641-3	2	CLAMP, tube supporting	
	0920583-2	2	CAPSCREW, 1/2"NC x 1-1/2"	
	0677008-5	2	WASHER, plain	
	0911028-9	2	NUT, 1/2"NC	
26	0669639-7	1	ANGLE, tube supporting, rear dump line	
	0924864-2	1	CAPSCREW, 1/2"NC x 2-1/4"	
	0677008-5	2	WASHER, plain	
	0911028-9	1	NUT, 1/2"NC	

MEMO

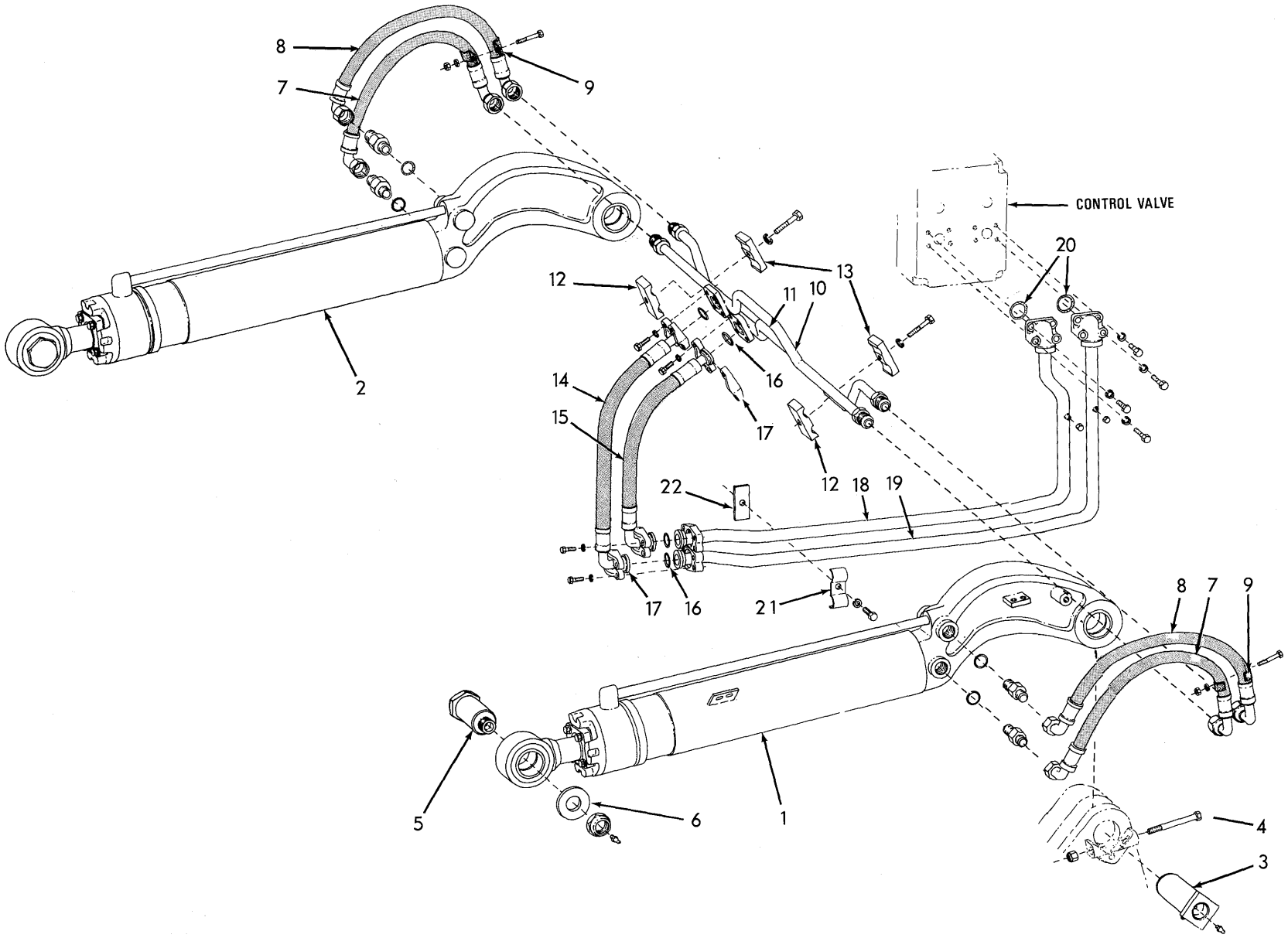

T-75005

DUMP CYLINDERS AND PIPING (Optional)

DUMP CYLINDERS AND PIPING

USAGE: Optional. For units with phosphate-ester hydraulic fluid.

ITEM	PART NO.	QTY.	DESCRIPTION
1	3052625-5	1	CYLINDER ASSEMBLY, left } See page 268 for parts
2	3052626-3	1	CYLINDER ASSEMBLY, right }
3	0654975-2	1	PIN, cylinder pivot, upper
	0912497-5	2	FITTING, lubricating, straight, 1/4"NPT
4	0917599-3	2	CAPSCREW, pin retaining (1/2"NC x 5-1/4")
	0915972-4	2	NUT, elastic stop, 1/2"NC
5	0657382-8	2	PIN, cylinder,pivot, lower
	0914465-0	2	FITTING, lubricating, straight, 1/8"NPT
6	3001559-8	2	WASHER, plain
	0917835-1	2	NUT, elastic stop, 1-1/2"NF
7	0665230-9	2	HOSE, dump line, upper
	0925832-8	2	CONNECTOR, flare type, 1" tube, 1-5/16"straight thread
	0926538-0	2	O-RING, connector
8	0665229-1	2	HOSE, retract line, upper
	0925832-8	2	CONNECTOR, flare type, 1"tube, 1-5/16" straight thread
	0926538-0	2	O-RING, connector
9	0659592-0	4	CLIP, hose supporting
	0916274-4	2	CAPSCREW, 3/8"NC x 2-1/4"
	0904206-0	2	LOCKWASHER, 3/8"
	0910324-3	2	NUT, 3/8"NC
10	0665214-3	1	TUBE ASSEMBLY, cross, dump line (Includes nuts)
11	0665215-0	1	TUBE ASSEMBLY, cross, retract line (Includes nuts)
12	0657274-7	2	CLAMP, tube supporting (threaded hole)
	0916319-7	2	CAPSCREW, 1/2"NC x 31/2"
	0904208-6	2	LOCKWASHER, 1/2"
13	0657273-9	2	CLAMP, tube supporting (plain hole)
14	0665216-8	1	HOSE, dump line, lower
15	0665217-6	1	HOSE, retract line, lower
16	0926533-1	4	O-RING, lower hoses (1-9/16" O. D.)
17	0921116-0	8	FLANGE, hose connecting (half only)
	0916272-8	16	CAPSCREW, 3/8"NC x 1-1/4"
	0904206-0	16	LOCKWASHER, 3/8"
18	0665213-5	1	TUBE, retract line, rear
	0921467-7	1	CAP, flare fitting, 1/4" tube
	0916191-0	2	CAPSCREW, 7/16"NC x 1-1/2"
	0916866-7	2	CAPSCREW, 7/16"NC x 2-3/4"
	0904207-8	4	LOCKWASHER, 7/16"
19	0665212-7	1	TUBE, dump line, rear
	0921467-7	1	CAP, flare fitting, 1/4" tube
	0916191-0	2	CAPSCREW, 7/16"NC x 1-1/2"
	0916866-7	2	CAPSCREW, 7/16"NC x 2-3/4"
	0904207-8	4	LOCKWASHER, 7/16"
20	0926534-9	2	O-RING, rear tubes (1-3/4" O. D.)
21	0665218-4	1	CLAMP, supporting, rear tubes
	0916314-8	1	CAPSCREW, 1/2"NC x 2"
	0904208-6	1	LOCKWASHER, 1/2"
22	0665219-2	1	PLATE, tube supporting clamp

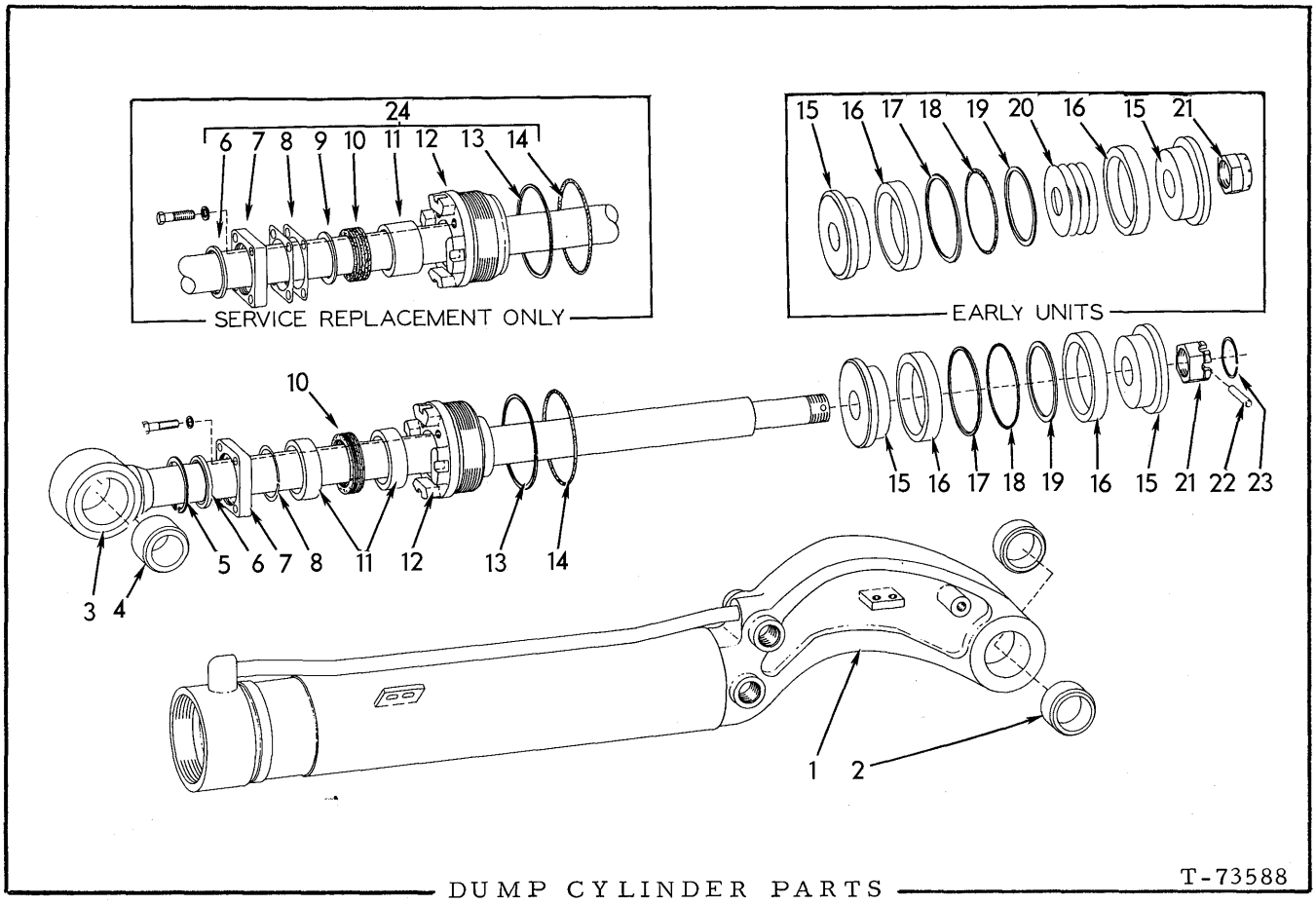

DUMP CYLINDER PARTS

USAGE: See pages 254 and 257

659015 CYLINDER ASSEMBLY, left
659016 CYLINDER ASSEMBLY, right

ITEM	PART NO.	QTY.	DESCRIPTION
			NOTE: Quantities indicated are for one (1) cylinder only
1	659099	1	TUBE ASSEMBLY, left cylinder (Includes item 2)
	659100	1	TUBE ASSEMBLY, right cylinder (Includes item 2)
2	607556	2	BUSHING, cylinder pivot
3	------	1	ROD ASSEMBLY, piston (Includes item 4)(Used prior to loader #300. Order ROD ASSEMBLY 3052529, NUT 659061, PIN 659064 and RING 609705)
	3052529	1	ROD ASSEMBLY, piston (Includes item 4)(Effective with loader #300)
4	3020678	1	BUSHING, piston rod
5	659058	1	RING, seal retaining
6	659056	1	SEAL, piston rod wiping (Original equipment)
	3052879	1	□SEAL, piston rod wiping (Service replacement)

(Continued)

DUMP CYLINDER PARTS (Continued)

ITEM	PART NO.	QTY.	DESCRIPTION
7	659901	1	PLATE, end (Original equipment)
	053616	4	CAPSCREW, 3/8"NC x 1-3/4"
	904206	4	LOCKWASHER, 3/8"
	3051194	1	□PLATE, end (Service replacement)
	914847	4	□CAPSCREW, 3/8"NC x 1-1/2"
	904206	4	□LOCKWASHER, 3/8"
8	664482	7	SHIM, rod packing adjustment (.002" thick) — Original equipment. Use as req'd.
	659018	4	SHIM, rod packing adjustment (.015" thick) — Original equipment. Use as req'd.
	3052553	2	□SHIM, rod packing adjustment (.003" thick) — Service replacement. Use as req'd
	3052640	2	□SHIM, rod packing adjustment (.005" thick) — Service replacement. Use as req'd
9	3052552	1	□WASHER, rod packing (Service replacement only)
10	------	1	PACKING SET, rod (Original equipment. Order item 24)
	3052551	1	□PACKING SET, rod (Service replacement)
11	659106	2	BUSHING, rod packing (7/8" long)(Original equipment)
	3052546	1	□BUSHING, rod packing (1-7/8" long)(Service replacement)
12	659059	1	HEAD, cylinder (Original equipment)
	3053742	1	□HEAD, cylinder (Service replacement)
13	659057	1	□RING, back-up
14	924926	1	□O-RING, cylinder head
15	659098	2	PISTON
16	663630	2	RING, piston
17	645586	1	RING, back-up
18	924153	1	O-RING, piston ring
19	659104	1	SPACER, piston ring
20	659013	4	SHIM, piston packing adjustment (Use as req'd)(Early units only)
21	923689	1	NUT, piston rod (self-locking)(Used prior to loader #300)
	659061	1	NUT, piston rod — Effective with loader #300
22	659064	1	PIN, piston rod nut — Effective with loader #300
23	609705	1	RING, pin retaining — Effective with loader #300
24	3053744	1	CONVERSION KIT (Consists of parts required to convert old cylinders to new design; items 6 thru 14)

□ Components of item 24

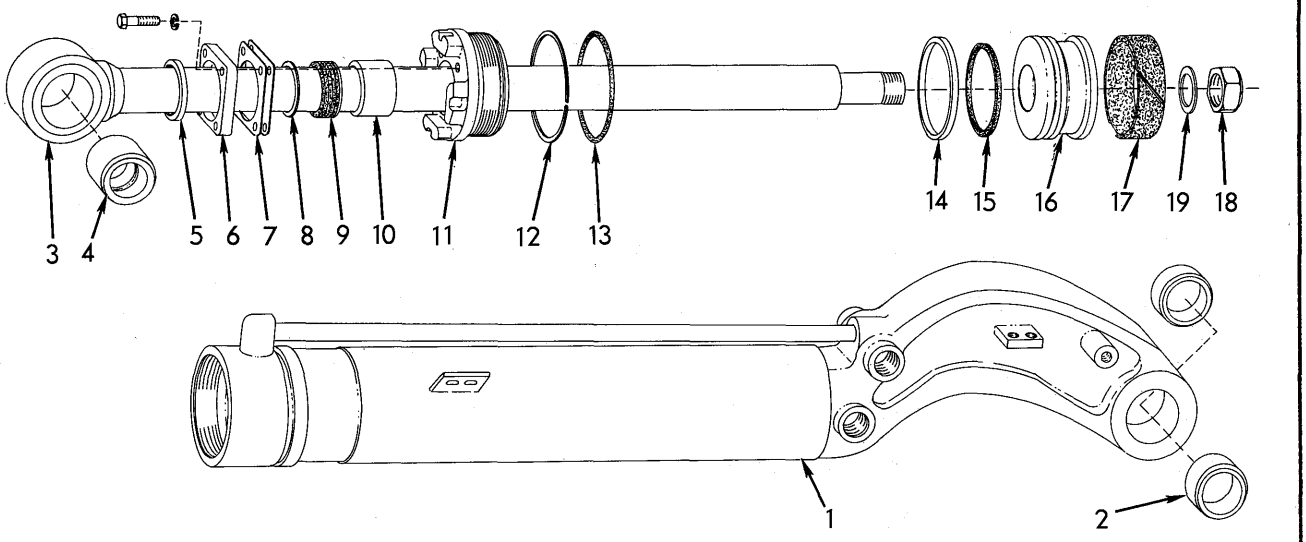

DUMP CYLINDER PARTS

USAGE: See page 257

*3052767 CYLINDER ASSEMBLY, left
*3052768 CYLINDER ASSEMBLY, right
**3054083 CYLINDER ASSEMBLY, left
**3054084 CYLINDER ASSEMBLY, right

ITEM	PART NO.	QTY. *	QTY. **	DESCRIPTION
				NOTE: Quantities indicated are for one (1) cylinder only
1	3052765	1	1	CYLINDER ASSEMBLY, left (Includes item 2)
1	3052766	1	1	CYLINDER ASSEMBLY, right (Includes item 2)
2	607556	2	2	BUSHING, cylinder pivot
3	3052529	1	-	ROD ASSEMBLY, piston } (Each includes item 4)
3	3054118	-	1	ROD ASSEMBLY, piston } (Each includes item 4)
4	3020678	1	1	BUSHING, piston rod
5	3052879	1	1	□SEAL, piston rod wiping
6	3051194	1	1	PLATE, end
	914847	4	4	CAPSCREW, 3/8"NC x 1-1/2"
	904206	4	4	LOCKWASHER, 3/8"
7	3052553	2	-	SHIM, rod packing adjustment (.003" thick) (Early Units) } Use as Required
7	3052640	2	-	SHIM, rod packing adjustment (.005" thick) (Early Units) } Use as Required
7	3054486	4	4	□SHIM, rod packing adjustment (.0299" thick) (Late Units) } Use as Required

(Continued)

DUMP CYLINDER PARTS (Continued)

ITEM	PART NO.	QTY. *	QTY. **	DESCRIPTION
8	3052552	1	-	WASHER, piston rod packing (.078" thick) (Early units)
	3054485	1	1	WASHER, piston rod packing (.190" thick) (Late units)
9	3052551	1	-	PACKING SET, rod (Early units)
	3053886	1	1	PACKING SET, rod (Includes wave spring and washer (Late units)
10	3052546	1	-	BUSHING, piston rod (Early units)
	3054066	1	1	□BUSHING, piston rod (Late units)
11	3052538	1	1	HEAD, cylinder
12	926635	1	1	□RING, back-up
13	924924	1	1	□O-RING, cylinder head
14	3052998	1	1	□RING, piston (teflon)
15	926819	1	1	□RING, piston (rubber)
16	3052995	1	-	PISTON
	3054079	-	1	PISTON
17	3052996	1	1	□RING, wear
18	926391	1	1	NUT, piston rod
19	3053977	-	1	SPACER, piston rod nut
20	3056485	1	1	REPAIR KIT, cylinder (Not illustrated)

□Components of item 20

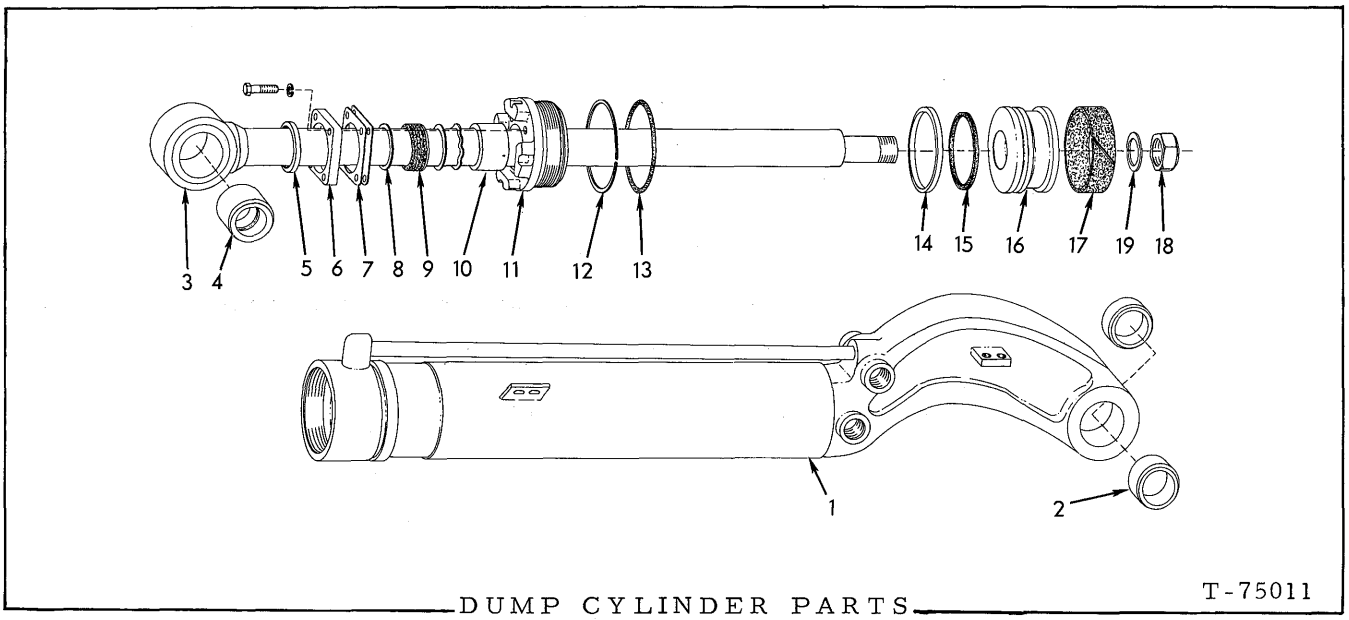

DUMP CYLINDER PARTS T-75011

USAGE: See page 257

3054973 CYLINDER ASSEMBLY, left
3054974 CYLINDER ASSEMBLY, right

ITEM	PART NO.	QTY.	DESCRIPTION
			NOTE: Quantities indicated are for one (1) cylinder only
1	3055023	1	CYLINDER ASSY., left (Includes item 2)
	3055024	1	CYLINDER ASSY., right (Includes item 2)
2	607556	2	BUSHING, cylinder pivot
3	3054118	1	ROD ASSY., piston (Includes item 4)
4	3020678	1	BUSHING, piston rod
5	3052879	1	☐ SEAL, piston rod wiping
6	3051194	1	PLATE, end
	914847	4	CAPSCREW, 3/8"NC x 1-1/2"
	904206	4	LOCKWASHER, 3/8"
7	3054486	4	☐ SHIM, rod packing adjustment (.0299" thick)(Use as required)
8	3054485	1	WASHER, piston rod packing (.190" thick)
9	3053886	1	☐ PACKING SET, rod (Includes wave spring and washer)
10	3054066	1	BUSHING, piston rod
11	3052920	1	HEAD, cylinder
12	926637	1	☐ RING, back-up
13	924691	1	☐ O-RING, cylinder head
14	3053357	1	☐ RING, piston (teflon)

(Continued)

ITEM	PART NO.	QTY.	DESCRIPTION
15	926865	1	☐RING, piston (rubber)
16	3053356	1	PISTON
17	3053359	1	☐RING, wear
18	926391	1	NUT, piston rod
19	3053977	1	SPACER, piston rod nut
20	3056493	1	REPAIR KIT, cylinder (Not illustrated)
			☐Components of item 20

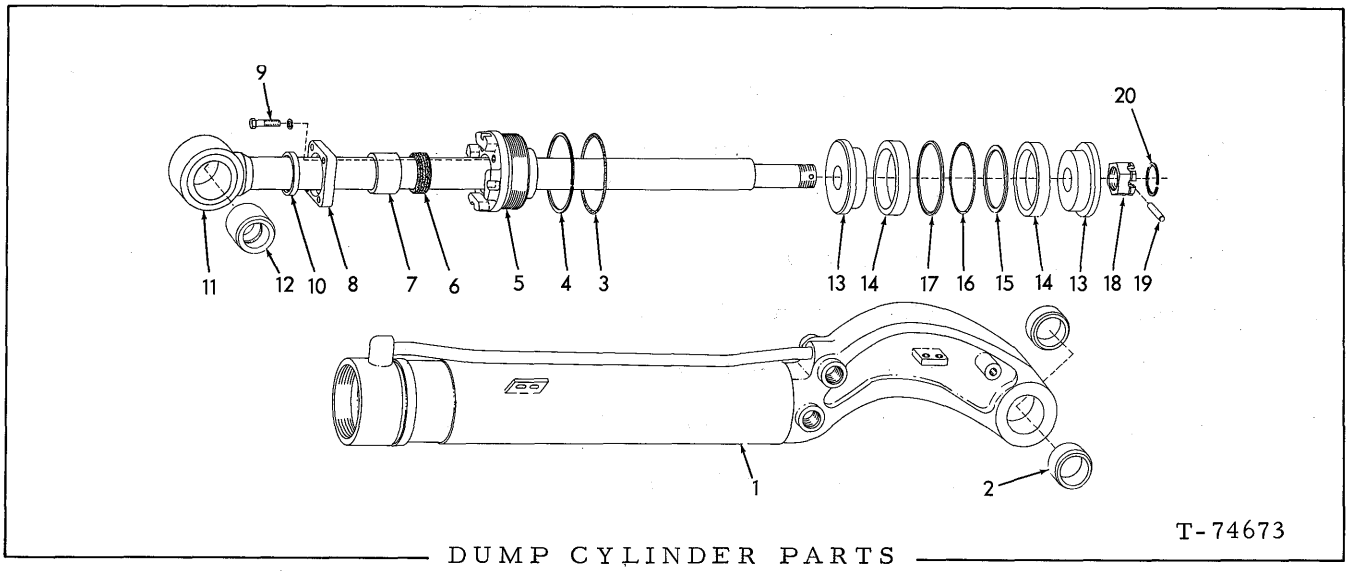

DUMP CYLINDER PARTS

USAGE: See page 261

3052625-5 CYLINDER ASSEMBLY, left
3052626-3 CYLINDER ASSEMBLY, right

ITEM	PART NO.	QTY.	DESCRIPTION
			NOTE: Quantities indicated are for one (1) cylinder only
1	0659099-6	1	TUBE ASSEMBLY, left (Includes item 2)
	0659100-2	1	TUBE ASSEMBLY, right (Includes item 2)
2	0607556-8	2	BUSHING, cylinder pivot
3	0925786-6	1	□O-RING, cylinder head
4	0659057-4	1	□RING, back-up
5	0659059-0	1	HEAD, cylinder
6	3051717-1	1	□PACKING SET, rod
7	3051722-1	1	BUSHING, cylinder head
8	3052622-2	1	PLATE, rod packing
9	0053616-9	4	CAPSCREW, 3/8"NC x 1-3/4"
	0904206-0	4	LOCKWASHER, 3/8"
10	3052627-1	1	□SEAL, piston rod wiping
11	3052529-9	1	ROD ASSEMBLY, piston (Includes item 12)
12	3020678-3	1	BUSHING, piston rod
13	0659098-8	2	PISTON
14	0663630-2	2	□RING, piston
15	0659104-4	1	SPACER, piston ring
16	0925785-8	1	□O-RING, piston ring
17	0645586-9	1	RING, back-up
18	0659061-6	1	NUT, piston rod

(Continued)

DUMP CYLINDER PARTS (Continued)

ITEM	PART NO.	QTY.	DESCRIPTION
19	0659064-0	1	PIN, piston rod nut
20	0609705-9	1	□RING, pin retaining
21	3052714-7	1	REPAIR KIT (Consists of items 3, 4, 6, 10, 14, 16 and 20)
			□Components of item 21

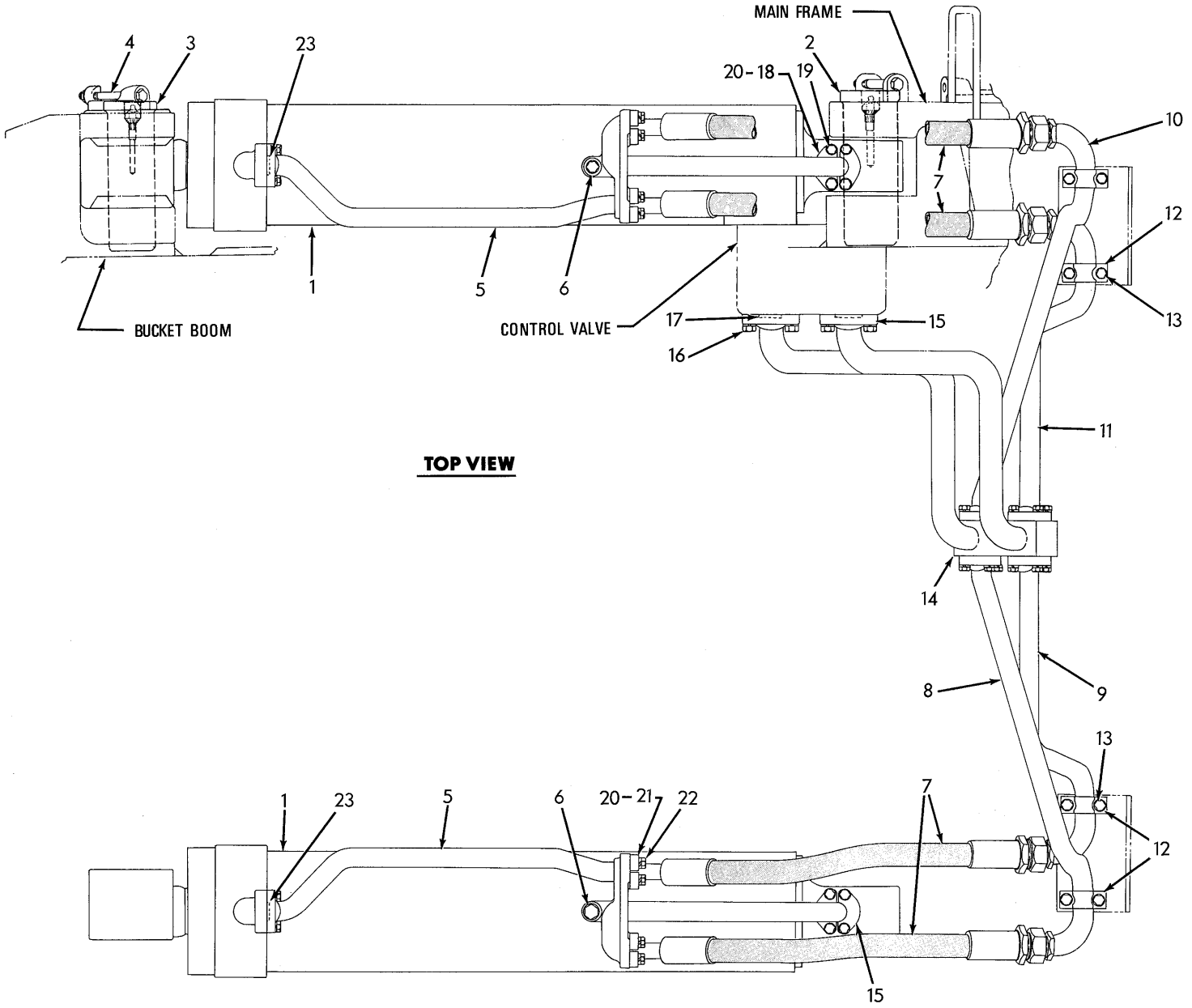

LIFT CYLINDERS AND PIPING (First type)

T-73078

LIFT CYLINDERS AND PIPING

USAGE: Loaders prior to serial No. 340 excluding No. 157, 259, 328, 329, 330, 336-and 338

ITEM	PART NO.	QTY.	DESCRIPTION
1	659010	2	CYLINDER ASSY., lift (See page 276)(Order CYLINDER ASSY. 3052847)
2	654979	2	PIN, cylinder pivot, rear
	912497	2	FITTING, lubricating, straight, 1/4"NPT
3	654978	2	PIN, cylinder pivot, front
	912497	2	FITTING, lubricating, straight, 1/4"NPT
4	917599	4	CAPSCREW, pin retaining (1/2"NC x 5-1/4")
	915972	4	NUT, elastic stop, 1/2"NC
5	655341	1	TUBE, left cylinder
	655342	1	TUBE, right cylinder
6	035190	2	CAPSCREW, 1/2"NC x 1-1/2"
	904208	2	LOCKWASHER, 1/2"
	910244	2	WASHER, plain, SAE std., 1/2"
7	655348	4	HOSE, cylinder piping
8	------	1	*TUBE, extend line, left cylinder
9	------	1	*TUBE, retract line, left cylinder
10	------	1	*TUBE, extend line, right cylinder
11	------	1	*TUBE, retract line, right cylinder
12	657281	4	CLAMP, tube supporting
13	056320	8	CAPSCREW, 3/8"NC x 3"
	904206	8	LOCKWASHER, 3/8"
	044973	8	WASHER, plain
14	------	1	*TUBE, manifold (See NOTE below)
	921467	2	CAP, flare fitting, 1/4" tube
15	921118	4	FLANGE, connecting (half only)
16	035733	8	CAPSCREW, 1/2"NC x 1-3/8"
	904208	8	LOCKWASHER, 1/2"
17	924193	2	O-RING, connecting flange (2-1/8" O. D.)
18	921117	4	FLANGE, connecting (half only)
19	041250	8	CAPSCREW, 7/16"NC x 1-1/4"
	904207	8	LOCKWASHER, 7/16"
20	924192	2	O-RING, connecting flange (1-3/4" O. D.)
21	921116	20	FLANGE, connecting (half only)
22	013058	40	CAPSCREW, 3/8"NC x 1-1/4"
	904206	40	LOCKWASHER, 3/8"
23	924200	10	O-RING, connecting flange (1-9/16" O. D.)

See NOTE below

NOTE: Items indicated with asterisk (*) above are not available. Replace with items 9, 10, 11, 12, 16 and 17 as shown on page 273

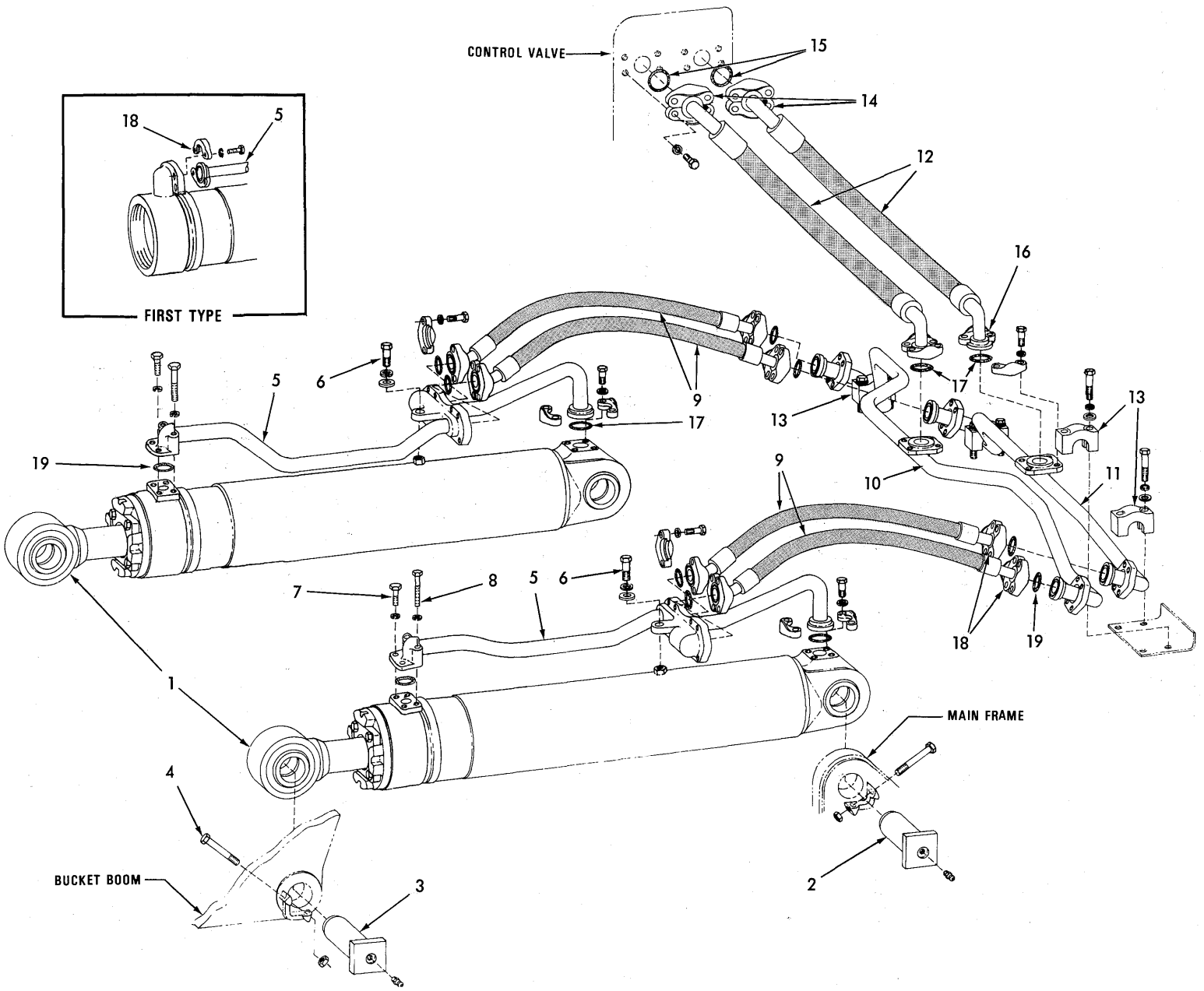

LIFT CYLINDERS AND PIPING (Second type)

T-75025

LIFT CYLINDERS AND PIPING

USAGE: Effective with loader serial No. 340 thru 1000; also #43C01001 and up including Nos. 157, 259, 328, 329, 330, 336 and 338

ITEM	PART NO.	QTY.	DESCRIPTION
1	659010	2	CYLINDER ASSY. (See page 276 for parts)(Loaders prior to #476. Order CYLINDER ASSY. 3052847, 2 CAPSCREWS 916274 and either TUBE 666273 or TUBE 666274)
	3052847	2	CYLINDER ASSY. (See page 278 for parts)(Loaders #476 thru 584)
	3054102	2	CYLINDER ASSY. (See page 278 for parts)(Loaders #585 and up)
2	654979	2	PIN, cylinder pivot, rear
	912497	2	FITTING, lubricating, straight, 1/4"NPT
3	654978	2	PIN, cylinder pivot, front
	912497	2	FITTING, lubricating, straight, 1/4"NPT
4	917599	4	CAPSCREW, pin retaining (1/2"NC x 5-1/4")
	915972	4	NUT, elastic stop, 1/2"NC
5	655341	1	TUBE, left cylinder — Used prior to loader #476
	655342	1	TUBE, right cylinder — Used prior to loader #476
	666273	1	TUBE, left cylinder — Effective with loader #476
	666274	1	TUBE, right cylinder — Effective with loader #476
6	915987	2	CAPSCREW, 1/2"NC x 1-1/2"
	904208	2	LOCKWASHER, 1/2"
	064531	2	WASHER, plain
7	919224	4	CAPSCREW, 3/8"NC x 1-1/8" — Effective with loader #476
8	916274	4	CAPSCREW, 3/8"NC x 2-1/4" — Effective with loader #476
	904206	8	LOCKWASHER, 3/8" — Effective with loader #476
9	665277	4	HOSE, cylinder
10	665223	1	TUBE, extend line
11	665222	1	TUBE, retract line
12	665276	2	HOSE, control valve
	921467	2	CAP, flare fitting, 1/4" tube
13	657281	4	CLAMP, tube supporting
	920275	8	CAPSCREW, 3/8"NC x 3"
	904206	8	LOCKWASHER, 3/8"
	044973	8	WASHER, plain
14	921118	4	FLANGE, connecting (half only)
	920574	8	CAPSCREW, 1/2"NC x 1-3/8"
	912441	8	LOCKWASHER, 1/2"
15	924193	2	O-RING (2-1/8" O. D.)
16	921117	8	FLANGE (half only)
	921569	16	CAPSCREW, 7/16"NC x 1-1/4"
	914678	16	LOCKWASHER, 7/16"
17	924192	4	O-RING, (1-3/4" O. D.)
18	921116	20	FLANGE, connecting (half only)(4 less used effective with loader #476)
	921076	40	CAPSCREW, 3/8"NC s 1-1/4" — 8 less used effective with loader #476
	910278	40	LOCKWASHER, 3/8" — 8 less used effective with loader #476
19	924200	10	O-RING (1-9/16" O. D.)

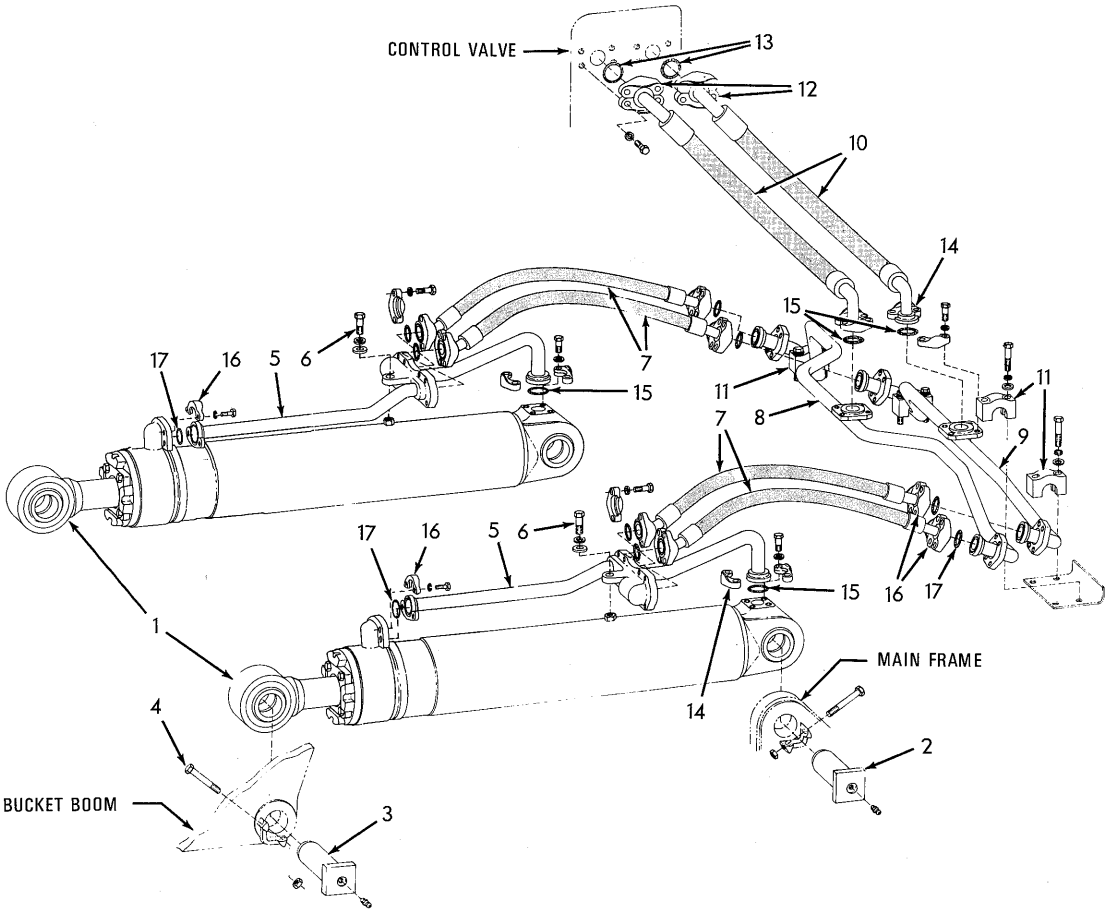

LIFT CYLINDERS AND PIPING

USAGE: Optional. For units with phosphate-ester hydraulic fluid.

ITEM	PART NO.	QTY.	DESCRIPTION
1	---------	2	CYLINDER ASSEMBLY (See page 280 for parts)
2	0654979-4	2	PIN, cylinder pivot, rear
	0912497-5	2	FITTING, lubricating, straight, 1/4"NPT
3	0654978-6	2	PIN, cylinder pivot, front
	0912497-5	2	FITTING, lubricating, straight, 1/4"NPT
4	0917599-3	4	CAPSCREW, pin retaining (1/2"NC x 5-1/4")
	0915972-4	4	NUT, elastic stop, 1/2"NC
5	0655341-6	1	TUBE, left cylinder
	0655342-4	1	TUBE, right cylinder
6	0915987-2	2	CAPSCREW, 1/2"NC x 1-1/2"
	0904208-6	2	LOCKWASHER, 1/2"
	0064531-7	2	WASHER, plain
7	0665224-2	4	HOSE, cylinder
8	0665223-4	1	TUBE, extend line

(Continued)

LIFT CYLINDERS AND PIPING (Continued)

ITEM	PART NO.	QTY.	DESCRIPTION
9	0665222-6	1	TUBE, retract line
10	0665221-8	2	HOSE, control valve
	0921467-7	2	CAP, flare fitting, 1/4"tube
11	0657281-2	4	CLAMP, tube supporting
	0920275-5	8	CAPSCREW, 3/8"NC x 3"
	0904206-0	8	LOCKWASHER, 3/8"
	0044973-6	8	WASHER, plain
12	0921118-6	4	FLANGE, connecting (half only)
	0919230-3	8	CAPSCREW, 1/2"NC x 1-3/8"
	0904208-6	8	LOCKWASHER, 1/2"
13	0925936-8	2	O-RING (2-1/8"O. D.)
14	0921117-8	8	FLANGE (half only)
	0916197-7	16	CAPSCREW, 7/16"NC x 1-1/4"
	0904207-8	16	LOCKWASHER, 7/16"
15	0926534-9	4	O-RING, (1-3/4"O. D.)
16	0921116-0	20	FLANGE, connecting (half only)
	0916272-8	40	CAPSCREW, 3/8"NC x 1-1/4"
	0904206-0	40	LOCKWASHER, 3/8"
17	0926533-1	10	O-RING (1-9/16"O. D.)

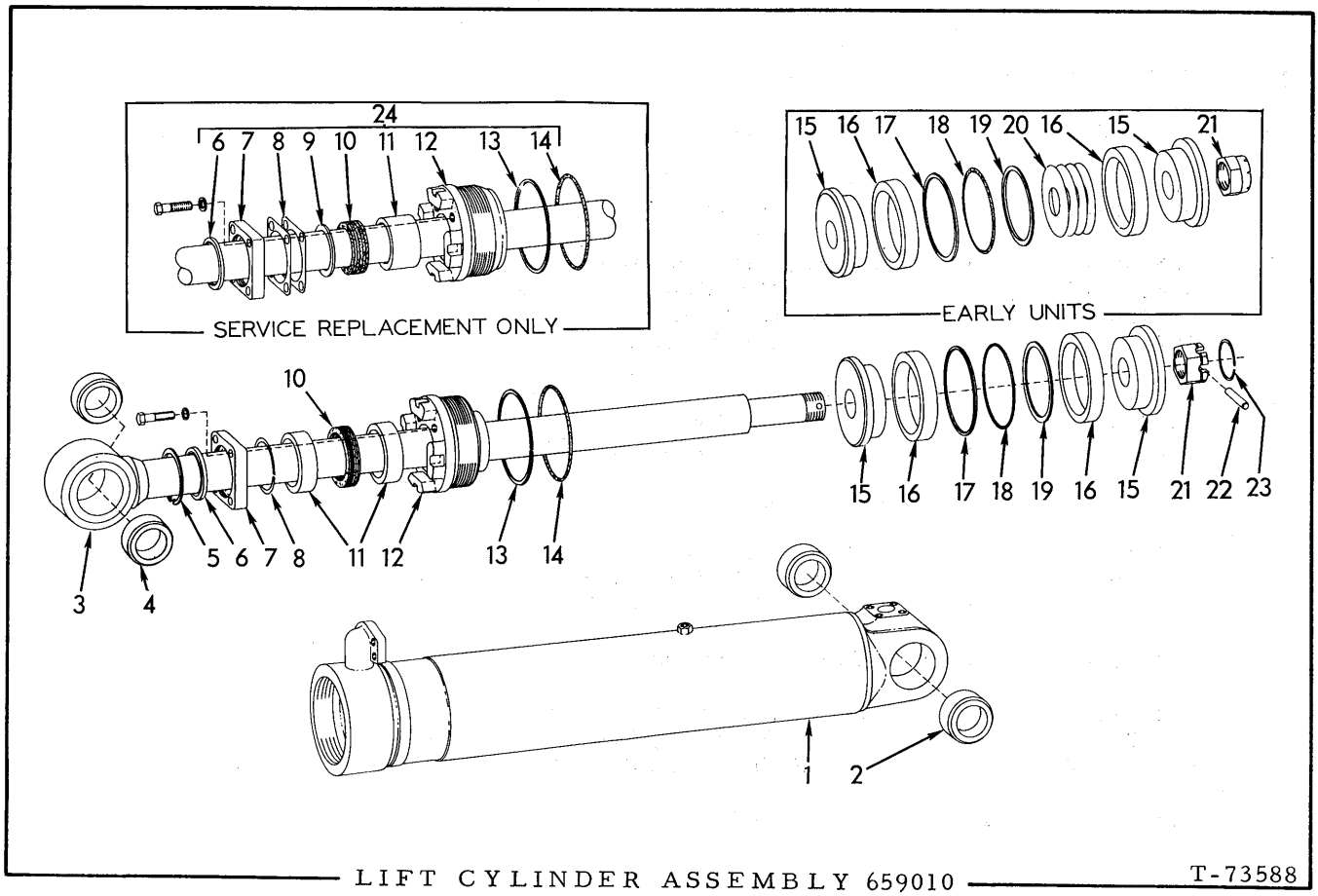

LIFT CYLINDER ASSEMBLY 659010 T-73588

USAGE: See pages 271 and 273

ITEM	PART NO.	QTY.	DESCRIPTION
			NOTE: Quantities indicated are for one (1) cylinder only
1	659030	1	TUBE ASSEMBLY, cylinder (Includes item 2)
2	3008156	2	BUSHING, cylinder pivot
3	------	1	ROD ASSEMBLY, piston (Includes item 4)(Used prior to loader #292. Order ROD ASSEMBLY 663633, NUT, 659086, PIN 659017 and RING 659046)
	663633	1	ROD ASSEMBLY, piston (Includes item 4)(Effective with loader #292)
4	3008156	2	BUSHING, piston rod
5	055457	1	RING, seal retaining
6	659039	1	SEAL, piston rod wiping (Original equipment)
	3052942	1	□SEAL, piston rod wiping (Service replacement)
7	659898	1	PLATE, end (Original equipment)
	921556	4	CAPSCREW, 1/2"NC x 2"
	904208	4	LOCKWASHER, 1/2"
	3052034	1	□PLATE, end (Service replacement)
	915987	4	□CAPSCREW, 1/2"NC x 1-1/2"
	904208	4	□LOCKWASHER, 1/2"

(Continued)

LIFT CYLINDER ASSEMBLY 659010 (Continued)

ITEM	PART NO.	QTY.	DESCRIPTION	
8	664483	7	SHIM, rod packing adjustment (.002" thick)	Original equipment, Use as req'd.
	659031	4	SHIM, rod packing adjustment (.015" thick)	
	3052845	2	□SHIM, rod packing adjustment (.003" thick)	Service replacement, Use as req'd
	3052846	2	□SHIM, rod packing adjustment (.005" thick)	
9	3052844	1	□WASHER, rod packing (Service replacement only)	
10	------	1	PACKING SET, rod (Original equipment. Order item 24)	
	3052642	1	□PACKING SET, rod (Service replacement)	
11	659092	2	BUSHING, rod packing (1-1/8" long)(Original equipment)	
	3052644	1	□BUSHING, rod packing (2-3/16" long)(Service replacement)	
12	659087	1	HEAD, cylinder (Original equipment)	
	3053743	1	□HEAD, cylinder (Service replacement)	
13	659047	1	□RING, back-up	
14	924927	1	□O-RING, cylinder head	
15	659012	2	PISTON	
16	663629	2	RING, piston	
17	659088	1	RING, back-up	
18	924139	1	O-RING, piston ring	
19	659083	1	SPACER, piston ring	
20	659090	2	SHIM, piston packing adjustment (Use as req'd)(Early units only)	
21	3017556	1	NUT, piston rod (self-locking)(Used prior to loader #292)	
	659086	1	NUT, piston rod	Effective with loader #292
22	659017	1	PIN, piston rod nut	
23	659046	1	RING, pin retaining	
24	3053745	1	CONVERSION KIT (Consists of parts required to convert old cylinder to new design; items 6 thru 14)	

□Components of item 24)

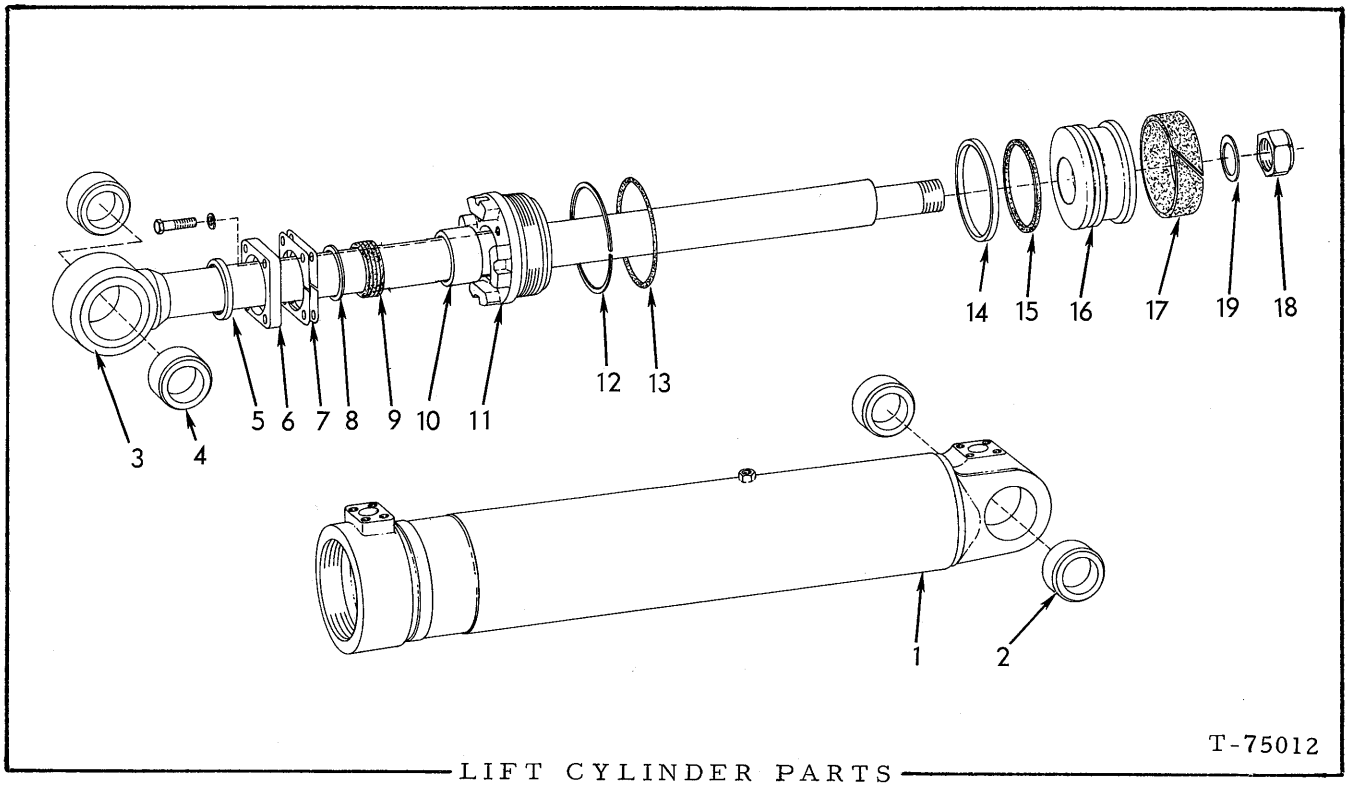

LIFT CYLINDER PARTS

USAGE: See page 273

* 3052847 CYLINDER ASSEMBLY
** 3054102 CYLINDER ASSEMBLY,

ITEM	PART NO.	QTY. *	QTY. **	DESCRIPTION
				NOTE: Quantities indicated are for one (1) cylinder only
1	3052513	1	1	TUBE ASSEMBLY, cylinder (Includes item 2)
2	3008156	2	2	BUSHING, cylinder pivot
3	3052842	1	-	ROD ASSEMBLY, piston (Each includes item 4)
	3054119	-	1	ROD ASSEMBLY, piston (Each includes item 4)
4	3008156	2	2	BUSHING, piston rod
5	3052942	1	1	□SEAL, piston rod wiping
6	3052034	1	1	PLATE, end
	915987	4	4	CAPSCREW, 1/2"NC x 1-1/2"
	904208	4	4	LOCKWASHER, 1/2"
7	3052845	1	-	SHIM, rod packing adjustment (.003" thick)(Early units) (Use as required)
	3052846	1	-	SHIM, rod packing adjustment (.005" thick)(Early units) (Use as required)
	3054488	4	4	□SHIM, rod packing adjustment (.0299" thick) (Use as required)
8	3052844	1	-	WASHER, piston rod packing (.078" thick)(Early units)
	3054487	1	1	WASHER, piston rod packing, outer (.190" thick)(Late units)

(Continued)

LIFT CYLINDER PARTS (Continued)

ITEM	PART NO.	QTY. *	QTY. **	DESCRIPTION
9	3052642	1	-	PACKING SET, rod (Early units)
	3054073	-	1	□PACKING SET, rod (Includes wave spring and washer)(Late units)
10	3052644	1	-	BUSHING, cylinder head (Early units)
	3054072	-	1	BUSHING, cylinder head (Late units)
11	3052838	1	1	HEAD, cylinder
12	926715	1	1	□RING, back-up
13	923596	1	1	□O-RING, cylinder head
14	3052994	1	1	□RING, piston (teflon)
15	926820	1	1	□RING, piston (rubber)
16	3052991	1	-	PISTON
	3054095	-	1	PISTON
17	3052992	1	1	□RING, wear
18	926392	1	1	NUT, piston rod (Nylok)
19	3054108	-	1	SPACER, piston rod nut
20	3056486	1	1	REPAIR KIT (Not illustrated)

□Components of item 20

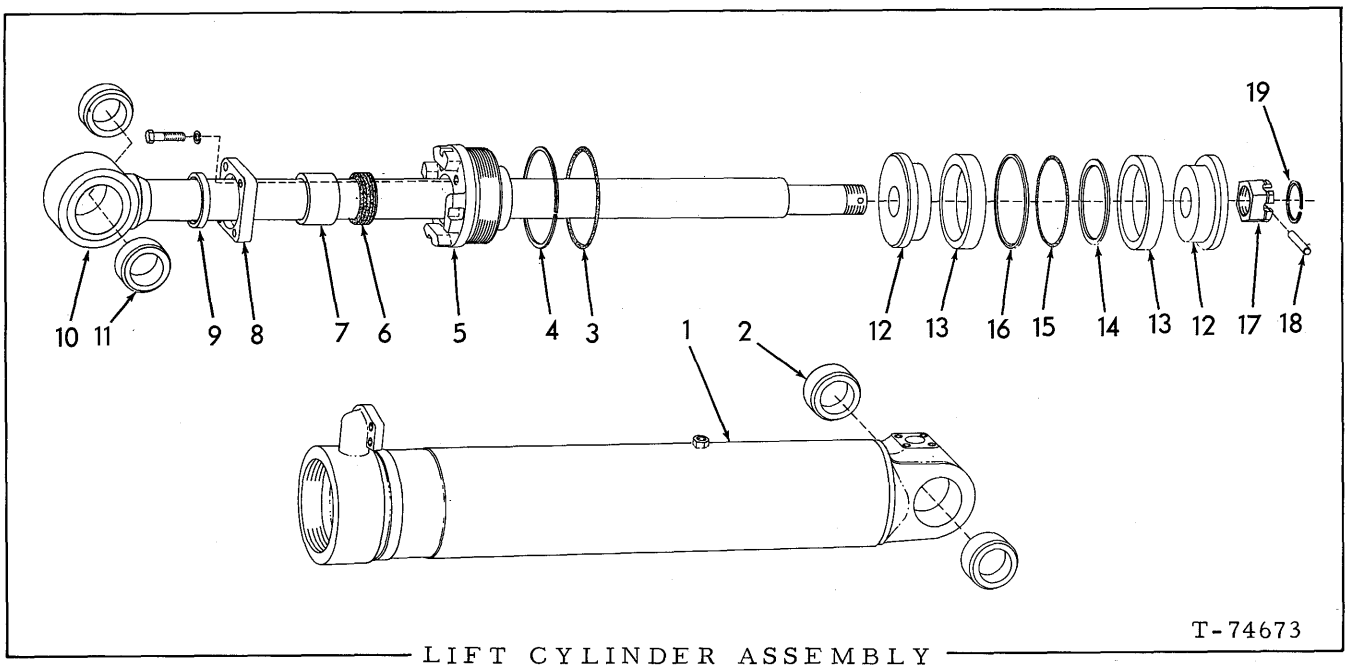

LIFT CYLINDER ASSEMBLY
(Phosphate-ester fluid)

USAGE: See page 275

ITEM	PART NO.	QTY.	DESCRIPTION
			NOTE: Quantities indicated are for one (1) cylinder only
-	3052621-4	1	CYLINDER ASSY. (Includes items 1 thru 20)
1	0659030-1	1	TUBE ASSEMBLY, cylinder (Includes item 2)
2	3008156-6	2	BUSHING, cylinder pivot
3	0925788-2	1	□O-RING, cylinder head
4	0659047-5	1	□RING, back-up
5	0659087-1	1	HEAD, cylinder
6	3051718-9	1	□PACKING SET, rod
7	3051723-9	1	BUSHING, cylinder head
8	3052617-2	1	PLATE, rod packing
	0921556-7	4	CAPSCREW, 1/2"NC x 2"
	0904208-6	4	LOCKWASHER, 1/2"
9	3052620-6	1	□SEAL, piston rod wiping
10	0663633-6	1	ROD ASSEMBLY, piston (Includes item 11)
11	3008156-6	2	BUSHING, piston rod
12	0659012-9	2	PISTON
13	0663629-4	2	□RING, piston
14	0659083-0	1	SPACER, piston ring
15	0925787-4	1	□O-RING, piston ring
16	0659088-9	1	□RING, back-up

(Continued)

LIFT CYLINDER ASSEMBLY (Continued)
(Phosphate-ester fluid)

ITEM	PART NO.	QTY.	DESCRIPTION
17	0659086-3	1	NUT, piston rod
18	0659017-8	1	PIN, piston rod nut
19	0659046-7	1	RING, pin retaining
20	3052711-3	1	REPAIR KIT (Consists of items 3, 4, 6, 9, 13, 15 and 16)

□Components of item 20

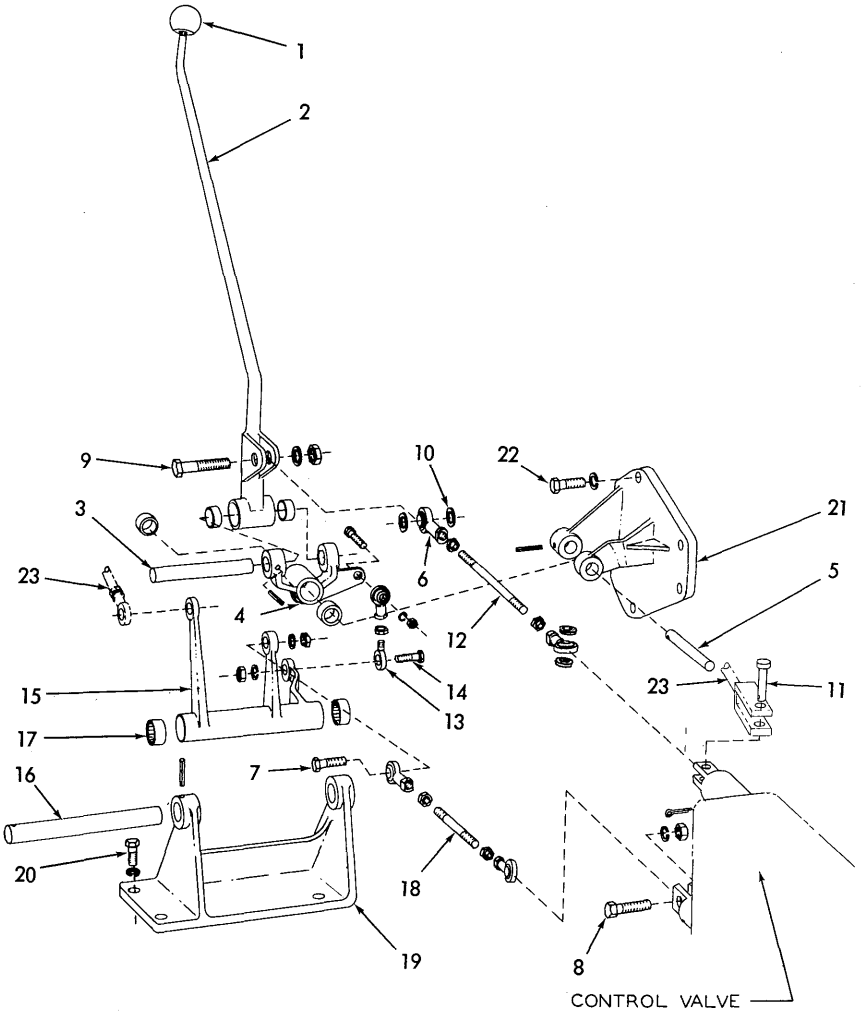

T-73060

BUCKET CONTROLS

ITEM	PART NO.	QTY.	DESCRIPTION
1	090020	1	KNOB, operating lever
2	655423	1	LEVER, operating
3	655418	1	SHAFT, cross, operating lever
	915797	1	PIN, spring, 3/16" x 1-1/4"
4	655428	1	LEVER, pivot
5	656614	1	SHAFT, cross, pivot lever
	915797	1	PIN, spring, 3/16" x 1-1/4"
6	617932	5	END, connecting rod
7	203188	2	CAPSCREW, 3/8"NF x 1-1/2"
8	056590	1	CAPSCREW, 3/8"NF x 1-5/8"
9	035336	1	CAPSCREW, 3/8"NF x 1-3/4"
	904206	4	LOCKWASHER, 3/8"
	911041	4	NUT, 3/8"NF
10	078402	4	WASHER, plain

(Continued)

ITEM	PART NO.	QTY.	DESCRIPTION
11	658570	1	PIN, control rod (For units equipped with automatic bucket control)
	085038	1	PIN, control rod (Not for units equipped with automatic bucket control)
	900942	1	PIN, cotter, 3/32" x 5/8"
12	655420	1	ROD, connecting, raise and drop valve plunger
	911041	2	NUT, 3/8"NF
13	639916	1	END, rod, dump and retracting bellcrank lever (male end)
14	203188	1	CAPSCREW, 3/8"NF x 1-1/2"
	904206	1	LOCKWASHER, 3/8"
	911041	2	NUT, 3/8"NF
15	655426	1	LEVER, bellcrank, dump and retract (For units equipped with automatic bucket control)
	670462	1	LEVER, bellcrank, dump and retract (Not for units equipped with automatic bucket control)
16	655417	1	SHAFT, cross, bellcrank lever
	915797	1	PIN, spring, 3/16" x 1-1/4"
17	655215	6	BEARING, lever
18	642130	1	ROD, connecting, dump and retracting valve plunger
	911041	2	NUT, 3/8"NF
19	655425	1	BRACKET, bellcrank lever
20	035190	4	CAPSCREW, 1/2"NC x 1-1/2"
	904208	4	LOCKWASHER, 1/2"
21	655424	1	BRACKET, pivot lever
22	044249	4	CAPSCREW, 3/8"NC x 1-1/8"
	904206	4	LOCKWASHER, 3/8"
23	------	-	ROD, control (See AUTOMATIC BUCKET CONTROLS)

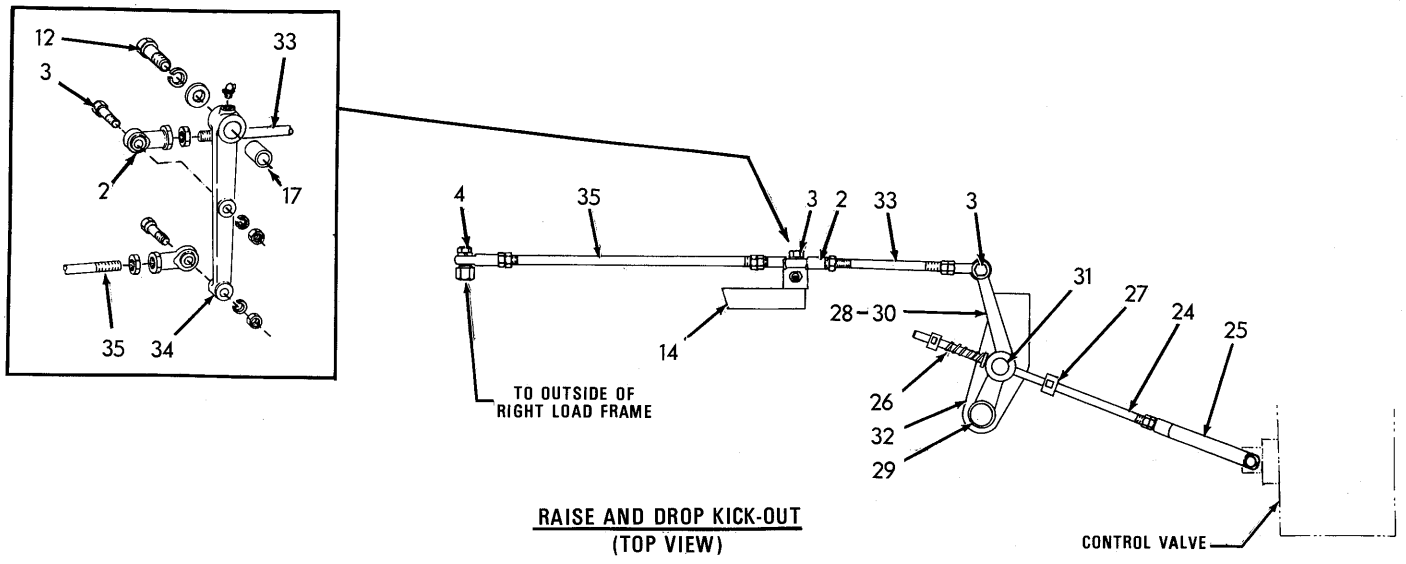

RAISE AND DROP KICK-OUT
(TOP VIEW)

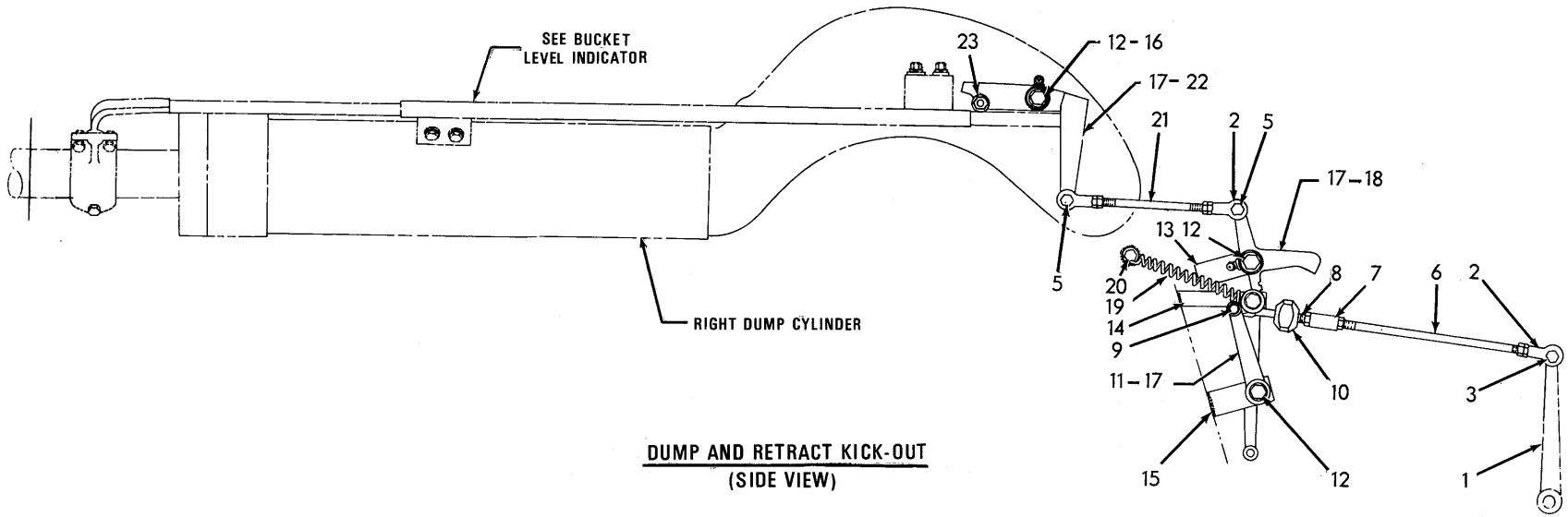

DUMP AND RETRACT KICK-OUT
(SIDE VIEW)

T-73080

AUTOMATIC BUCKET CONTROLS

USAGE: Standard on loaders prior to serial No. 1000; special equipment on loaders serial No. 43C01001 and up.

ITEM	PART NO.	QTY.	DESCRIPTION
1	------	1	LEVER, operating, dump and retract (See BUCKET CONTROLS)
2	617932	7	END, connecting rod
3	921565	4	CAPSCREW, rod end (3/8"NC x 1-1/2")
	910287	4	LOCKWASHER, 3/8"
	911041	4	NUT, 3/8"NC
4	921076	1	CAPSCREW, rod end (3/8"NC x 1-1/4")
	910287	1	LOCKWASHER, 3/8"
5	927157	2	CAPSCREW, rod end (3/8"NC x 1-3/8")
	910287	2	LOCKWASHER, 3/8"
	911026	2	NUT, 3/8"NC
6	655421	1	ROD, control, inside rear
	911041	2	NUT, 3/8"NF
7	082366	1	BLOCK, tapped, rod connecting
8	646054	1	ROD, control, inside rear intermediate
	911041	1	NUT, 3/8"NF
9	078810	1	PIN, yoke, inside rear intermediate control rod
	900942	1	PIN, cotter, 3/32" x 5/8"
10	635156	1	BLOCK, stop, control rod
	900686	1	SETSCREW, sq-hd., cup-pt., 5/16"NC x 7/8"
11	655216	1	LEVER, rear intermediate control rod
	918188	1	FITTING, lubricating, 90°, 1/4" - 28 taper thread
12	924864	4	CAPSCREW, control levers (1/2"NC x 2-1/4")
	677008	4	WASHER, plain, SAE std., 1/2"
13	655936	1	BLOCK, spacing — Require welding to frame — Loader units #1001 and up
14	652792	1	BAR, spacing — Require welding to frame — Loader units #1001 and up
15	655930	1	BLOCK, spacing — Require welding to frame — Loader units #1001 and up
16	654919	1	BLOCK, spacing (Requires welding to dump cylinder) — Loader units #1001 and up
17	635151	4	BUSHING, control levers
18	635159	1	LEVER, front intermediate control rod
	918188	1	FITTING, lubricating, 90°, 1/4" - 28 taper thread
19	049108	1	SPRING, control lever
20	927235	1	CAPSCREW, control lever spring (5/16"NF x 1/2")
	080942	1	BLOCK, spacing (Requires welding) (Loader unit #1001 and up)
21	655212	1	ROD, control, front intermediate
	911041	2	NUT, 3/8"NF

(Continued)

AUTOMATIC BUCKET CONTROLS (Continued)

ITEM	PART NO.	QTY.	DESCRIPTION
22	655214	1	LEVER, front control rod
	918188	1	FITTING, lubricating, 90°, 1/4" - 28 taper thread
23	635191	1	FOLLOWER, cam, level indicator rod
	914678	1	LOCKWASHER, 7/16"
	911042	1	NUT, 7/16"NF
24	658576	1	ROD, control, outside rear (Loaders prior to #492)
	664683	1	ROD, control, outside rear (Effective with loader #492)
	911041	1	NUT, 3/8"NF
25	658569	1	YOKE, outside rear control rod
26	641989	1	SPRING, control rod (Effective with loader #492)
	911115	1	WASHER, plain, SAE std., 3/8"
27	635291	2	BOSS, boom stop
	906835	2	SETSCREW, sq-hd., cup-pt., 5/16"NC x 1/2"
28	655207	1	LEVER, control rod
29	655211	1	PIN, control rod lever
	915797	1	PIN, spring, 3/16" x 1-1/4"
30	655215	2	BUSHING, control rod lever
31	635293	1	ROD, pivot, control lever
32	655208	1	BRACKET, control rod lever
	922763	4	CAPSCREW, 3/8"NC x 1"
	910287	4	LOCKWASHER, 3/8"
33	655212	1	ROD, control, outside intermediate
	911041	2	NUT, 3/8"NF
34	657291	1	LEVER, outside front control rod
	918188	1	FITTING, lubricating, 90°, 1/4" - 28 taper thread
35	657290	1	ROD, control, outside front
	911041	2	NUT, 3/8"NF

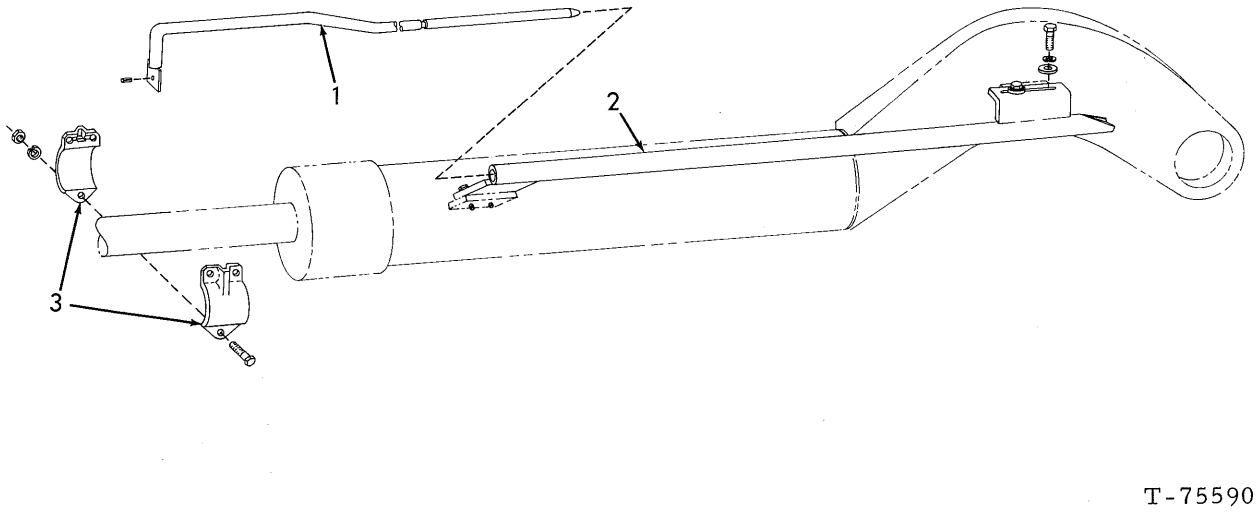

T-75590

BUCKET LEVEL INDICATOR

* Loaders prior to Serial No. 1000
** Loaders Serial No. 43C01001 and up

ITEM	PART NO.	QTY. *	QTY. **	DESCRIPTION
1	656413	1	-	ROD, control front
	670485	-	1	ROD, level indicator
	916227	1	1	PIN, spring, 1/4" x 1"
2	656416	1	-	TUBE, guide, front control rod
	044249	2	-	CAPSCREW, 3/8"NC x 1-1/8" (rear)
	040382	2	-	CAPSCREW, 3/8"NC x 1-3/8" (front)
	044973	6	-	WASHER, plain
	904206	4	-	LOCKWASHER, 3/8"
	911026	2	-	NUT, 3/8"NC
	670492	-	1	TUBE, guide, indicator rod (Standard)
	670655	-	1	TUBE, guide, front control rod (Special)(Used with Automatic Bucket Control
	919224	-	4	CAPSCREW, 3/8"NC x 1-1/8"
	904206	-	4	LOCKWASHER, 3/8"NC
	044973	-	4	WASHER, plain
3	636687	2	2	CLAMP, supporting, guide tube
	036039	3	-	CAPSCREW, 3/8"NF x 1-3/8"
	919225	-	3	CAPSCREW, 3/8"NC x 1-3/8"
	904206	3	3	LOCKWASHER, 3/8"
	911041	3	-	NUT, 3/8"NF
	911026	-	3	NUT, 3/8"NC

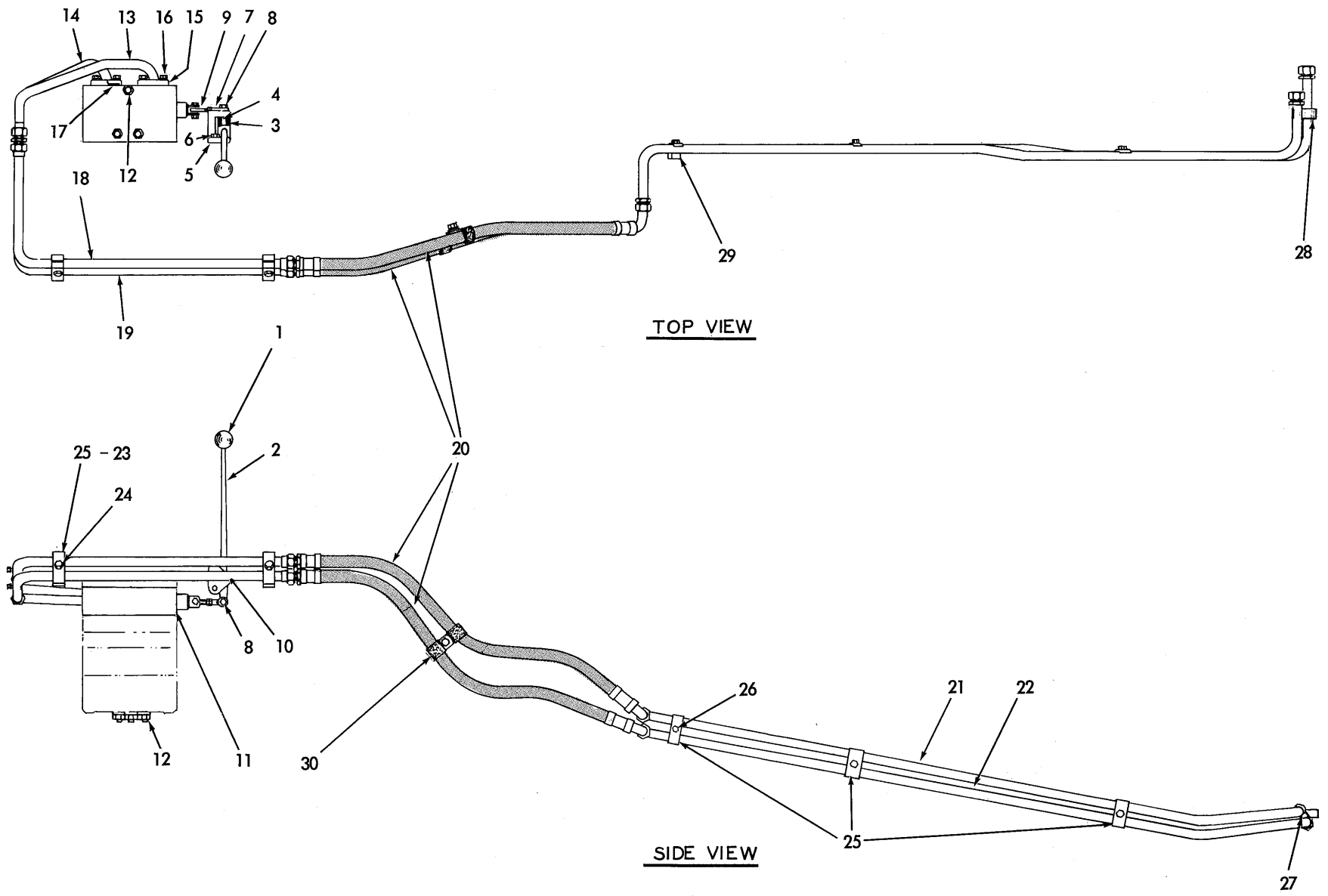
14
13
16
15
9
7
8
4
3
17
6
12
5
18
19
29
28
TOP VIEW
1
2
20
25 - 23
24
8
10
12
11
30
26
21
22
25
27
SIDE VIEW
T-73556

BOOM PIPING

BOOM PIPING

USAGE: Special equipment. For units with multi-purpose bucket or other front mounted auxiliary equipment.

ITEM	PART NO.	QTY.	DESCRIPTION
1	090020	1	KNOB, operating lever
2	655725	1	LEVER, valve operating
3	655215	2	BEARING, needle, lever
4	655712	1	SHAFT, cross, lever
	915989	1	PIN, spring, 3/16" x 1-3/8"
5	655718	1	BRACKET, lever
6	920582	2	CAPSCREW, 1/2"NC x 1-1/4"
	912441	2	LOCKWASHER, 1/2"
7	617932	1	END, rod (female)
8	036039	1	CAPSCREW, 3/8"NF x 1-3/8"
	904206	1	LOCKWASHER, 3/8"
	911041	1	NUT, 3/8"NF
9	639916	1	END, rod (male)
	911041	1	NUT, 3/8"NF
10	056590	1	CAPSCREW, 3/8"NF x 1-5/8"
	904206	1	LOCKWASHER, 3/8"
	911041	1	NUT, 3/8"NF
11	655713	1	VALVE ASSEMBLY (See page 250 for parts)
12	659586	3	STUD (5/8"NC x 15-3/4")
	659494	6	WASHER, plain
	668231	6	NUT, 5/8"NC
13	655006	1	TUBE, upper, rear section
14	655016	1	TUBE, lower, rear section
15	921117	4	FLANGE, tube (half only)
16	921569	8	CAPSCREW, 7/16"NC x 1-1/4"
	914678	8	LOCKWASHER, 7/16"
17	924192	2	O-RING, tube seal (1-3/4" O. D.)
18	655723	1	TUBE, upper, rear intermediate section
	921467	1	CAP, flare type, 1/4" tube
19	655717	1	TUBE, lower, rear intermediate section
	921467	1	CAP, flare type, 1/4" tube
20	655716	2	HOSE (See HOSE PARTS)
21	655721	1	TUBE, upper, front section
	922195	1	CAP, flare type, 1" tube
22	657675	1	TUBE, lower, front section
	922195	1	CAP, flare type, 1" tube
23	625540	2	BLOCK, tube clamping
24	035018	2	CAPSCREW, 1/2"NF x 1-1/2"
	904208	2	LOCKWASHER, 1/2"
25	3016323	4	CLAMP, front tubes
26	922300	4	CAPSCREW, 3/8"NC x 3/4"
	910287	4	LOCKWASHER, 3/8"
27	646631	4	NUT, (Requires welding to install)
28	655714	1	BLOCK, tube spacing } Requires welding to boom
29	655715	1	BLOCK, tube spacing }
30	095869	2	CLIP, hose supporting (1-1/4" diam., 17/32" bolt-hole)
	921175	1	CAPSCREW, 1/2"NC x 1"
	677008	1	WASHER, plain,
	911028	1	NUT, 1/2"NC

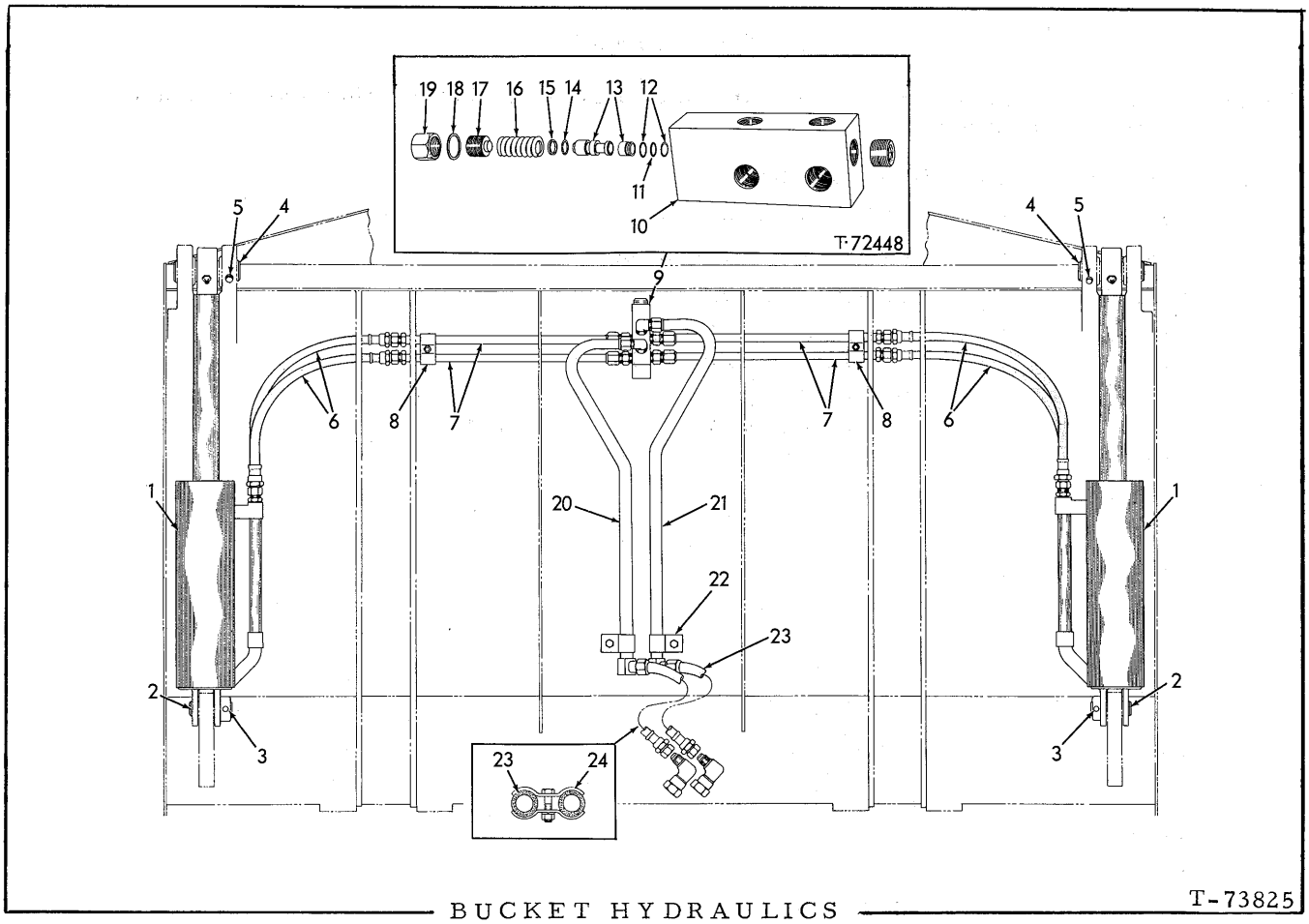

BUCKET HYDRAULICS

USAGE: Special equipment. For units with multi-purpose bucket prior to November 1967.

ITEM	PART NO.	QTY.	DESCRIPTION
1	------	2	CYLINDER ASSEMBLY, clam operating (See page 294 for parts)
2	663354	2	PIN, clam cylinder, lower
3	663455	2	PIN, retaining, cylinder lower pin
	900806	2	PIN, cotter, 1/8" x 1"
4	663355	2	PIN, clam cylinder , upper
5	663456	2	PIN, retaining, cylinder upper pin
	900806	2	PIN, cotter, 1/8" x 1"
6	663459	4	HOSE, clam cylinder (See HOSE PARTS)
	919342	4	CONNECTOR, flare type, 3/4" tube, 3/4"NPT male
7	663358	4	TUBE, horizontal
	919615	4	CONNECTOR, flare type, 3/4"tube, 1/2"NPT male
8	654125	2	CLAMP, supporting, horizontal tubes
	911026	2	NUT, 3/8"NC
	904206	2	LOCKWASHER, 3/8"
9	654123	1	VALVE ASSEMBLY, safety (Consists of items 10 thru 19)
10	------	1	BODY, relief valve (Not serviced separately)
	908944	1	PLUG, hex-socket, 1/2"NPT
11	654133	1	O-RING, relief valve seat

(Continued)

ITEM	PART NO.	QTY.	DESCRIPTION
12	654257	2	RING, back-up, valve seat o-ring
13	657204	1	PLUNGER ASSEMBLY, relief valve (Includes seat)
14	654033	1	O-RING, relief valve plunger
15	656895	1	RING, back-up , plunger o-ring
16	656896	1	SPRING, relief valve
17	656897	1	SCREW, relief valve adjustment
18	656898	1	GASKET, relief valve cap
19	656899	1	CAP, relief valve screw
20	663360	1	TUBE, vertical, left side
	920751	1	ELBOW, flare type, 90°, 3/4" tube, 1/2"NPT male
21	663359	1	TUBE, vertical, right side
	920751	1	ELBOW, flare type, 90°, 3/4" tube, 1/2"NPT male
22	654256	2	CLAMP, supporting, vertical tubes
	916271	2	CAPSCREW, 3/8"NC x 1"
	904206	2	LOCKWASHER, 3/8"
23	663458	2	HOSE, bucket lines to boom lines (See HOSE PARTS)
	919625	2	ELBOW, swivel, flare type, 90°, 1" tube
24	625221	2	CLAMP, hose supporting, bucket lines to boom lines
	916315	1	CAPSCREW, 1/2"NC x 2-1/4"
	904208	1	LOCKWASHER, 1/2"
	911028	1	NUT, 1/2"NC

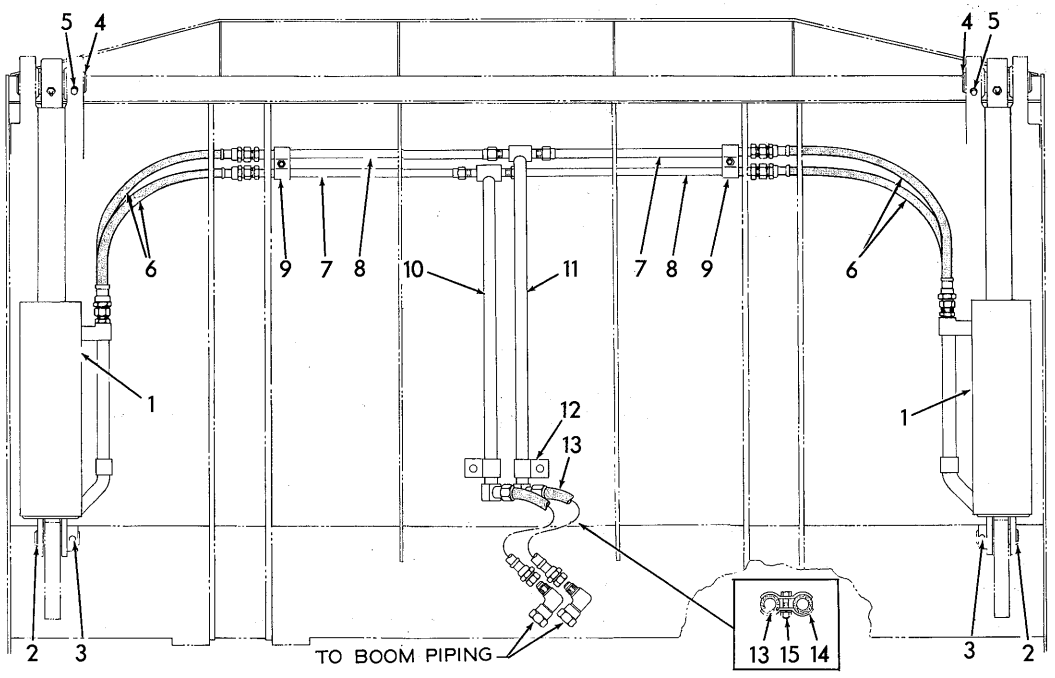

BUCKET HYDRAULICS

USAGE: Special equipment. For units with multi-purpose bucket effective November 1967.

ITEM	PART NO.	QTY.	DESCRIPTION
1	---------	2	CYLINDER ASSEMBLY, clam operating (See page 294 for parts)
2	0663354-9	2	PIN, clam cylinder, lower
3	0663455-4	2	PIN, retaining, cylinder lower pin
	0900806-1	2	PIN, cotter, 1/8" x 1"
4	0663355-6	2	PIN, clam cylinder, upper
5	0663456-2	2	PIN, retaining, cylinder upper pin
	0900806-1	2	PIN, cotter, 1/8" x 1"
6	0663459-6	4	HOSE, clam cylinder (See HOSE PARTS)
	0919342-6	4	CONNECTOR, flare type, 3/4" tube, 3/4"NPT male
7	0665512-0	2	TUBE ASSEMBLY, horizontal, short (Includes nut)
8	0665511-2	2	TUBE ASSEMBLY, horizontal, long (Includes nut)
9	0654125-4	2	CLAMP, supporting, horizontal tubes
	0911026-3	2	NUT, 3/8"NC
	0904206-0	2	LOCKWASHER, 3/8"
10	0665509-6	1	TUBE, vertical, left side
11	0665510-4	1	TUBE, vertical, right side
12	0654256-7	2	CLAMP, supporting, vertical tubes
	0916271-0	2	CAPSCREW, 3/8"NC x 1"
	0904206-0	2	LOCKWASHER, 3/8"
13	0663458-8	2	HOSE, bucket lines to boom lines (See HOSE PARTS)
	0919625-4	2	ELBOW, swivel, flare type, 90°, 1" tube
14	0625221-7	2	CLAMP, hose supporting, bucket lines to boom lines
	0916315-5	1	CAPSCREW, 1/2"NC x 2-1/4"
	0904208-6	1	LOCKWASHER, 1/2"
	0911028-9	1	NUT, 1/2"NC

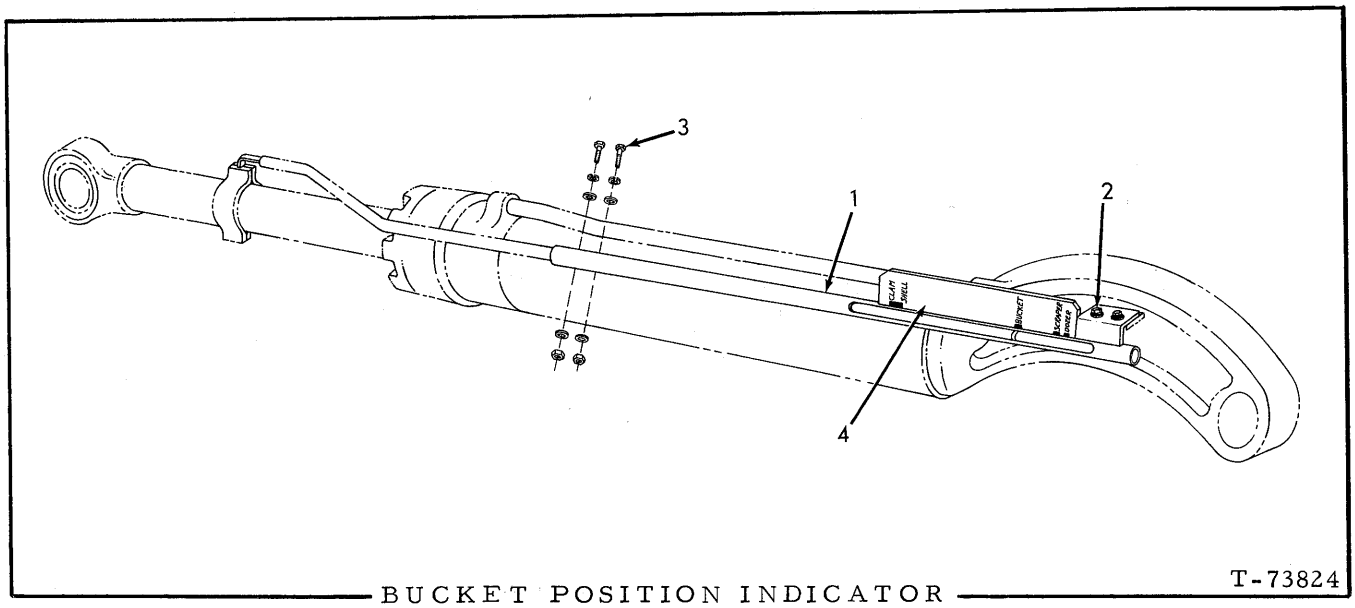

BUCKET POSITION INDICATOR

USAGE: Special equipment. For units with multi-purpose bucket.

ITEM	PART NO.	QTY.	DESCRIPTION
1	0664648-3	1	TUBE, guide, indicator rod (Replaces standard TUBE 0656416-5) (Used prior to Unit #1001)
	0678982-0	1	TUBE, guide, indicator rod (Replaces standard TUBE 0670492-8) (Unit # 1001 and up)
2	0044249-1	2	CAPSCREW, 3/8"NC x 1-1/8"
3	0040382-4	2	CAPSCREW, 3/8"NC x 1-3/8"
	0044973-6	6	WASHER, plain
	0904206-0	4	LOCKWASHER, 3/8"
	0911026-3	2	NUT, 3/8"NC
4	0664646-7	1	TRANSFER, position indication (2" x 12-1/2")

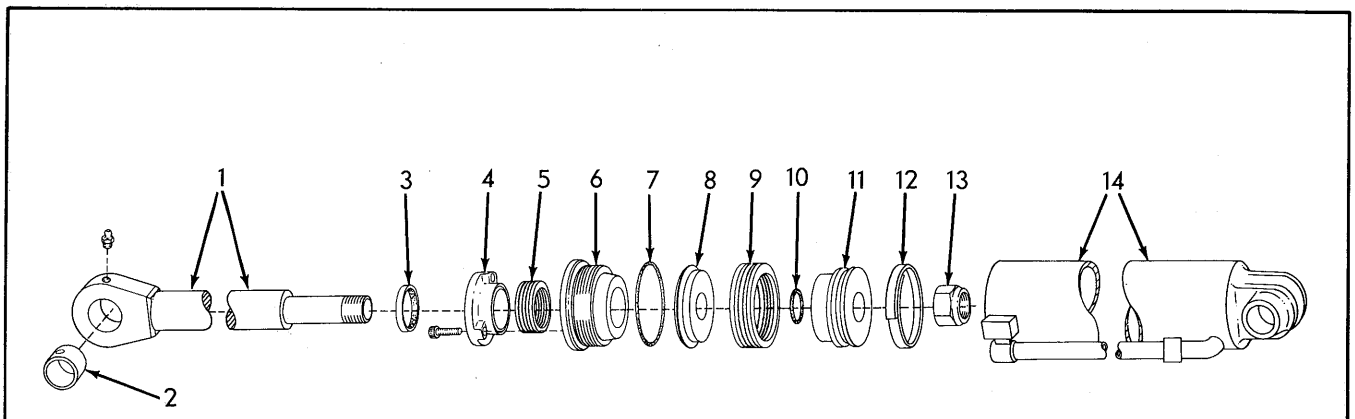

BUCKET CYLINDER PARTS T-72461

USAGE: See page 290 and 292

ITEM	PART NO.	QTY.	DESCRIPTION
-	0663269-9	2	CYLINDER ASSY. (Includes items 1 thru 14)
1	0663231-9	2	ROD, piston
	0914465-0	2	FITTING, lubricating, straight, 1/8"NPT
2	0663283-0	2	BUSHING, piston rod
3	0652890-5	2	SEAL, wiper, piston rod
4	0654169-2	2	FLANGE, piston rod packing
	0924796-6	6	CAPSCREW, Nylok, 3/8"NF x 1"
5	0654168-4	2	PACKING SET, piston rod
6	0663282-2	2	HEAD, cylinder
7	0923856-9	2	O-RING, cylinder head
8	0663229-3	2	PISTON, upper half
9	0663228-5	2	PACKING SET, piston
10	0923664-7	2	O-RING, lower piston
11	0663216-0	2	PISTON, lower half
12	0663227-7	2	RING, wear, lower piston
13	0917778-3	2	NUT, piston rod (1-1/2"NF)
14	0663230-1	2	TUBE, cylinder

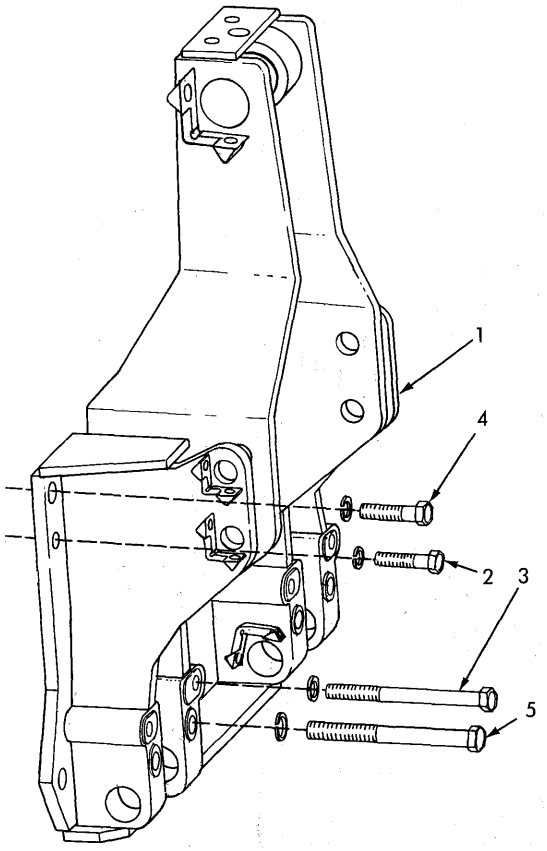

T-73568

RIPPER MOUNTING FRAME

ITEM	PART NO.	QTY.	DESCRIPTION
1	0656383-7	1	FRAME, mounting
2	0922175-5	2	CAPSCREW, 1"NF x 4"
3	0927621-3	4	CAPSCREW, 1"NF x 11-3/4"
	0914728-1	6	LOCKWASHER, 1"
4	0926856-6	6	CAPSCREW, 1-1/4"NF x 4"
5	0926241-1	4	CAPSCREW, 1-1/4"NF x 12-1/4"
	0914730-7	10	LOCKWASHER, 1-1/4"

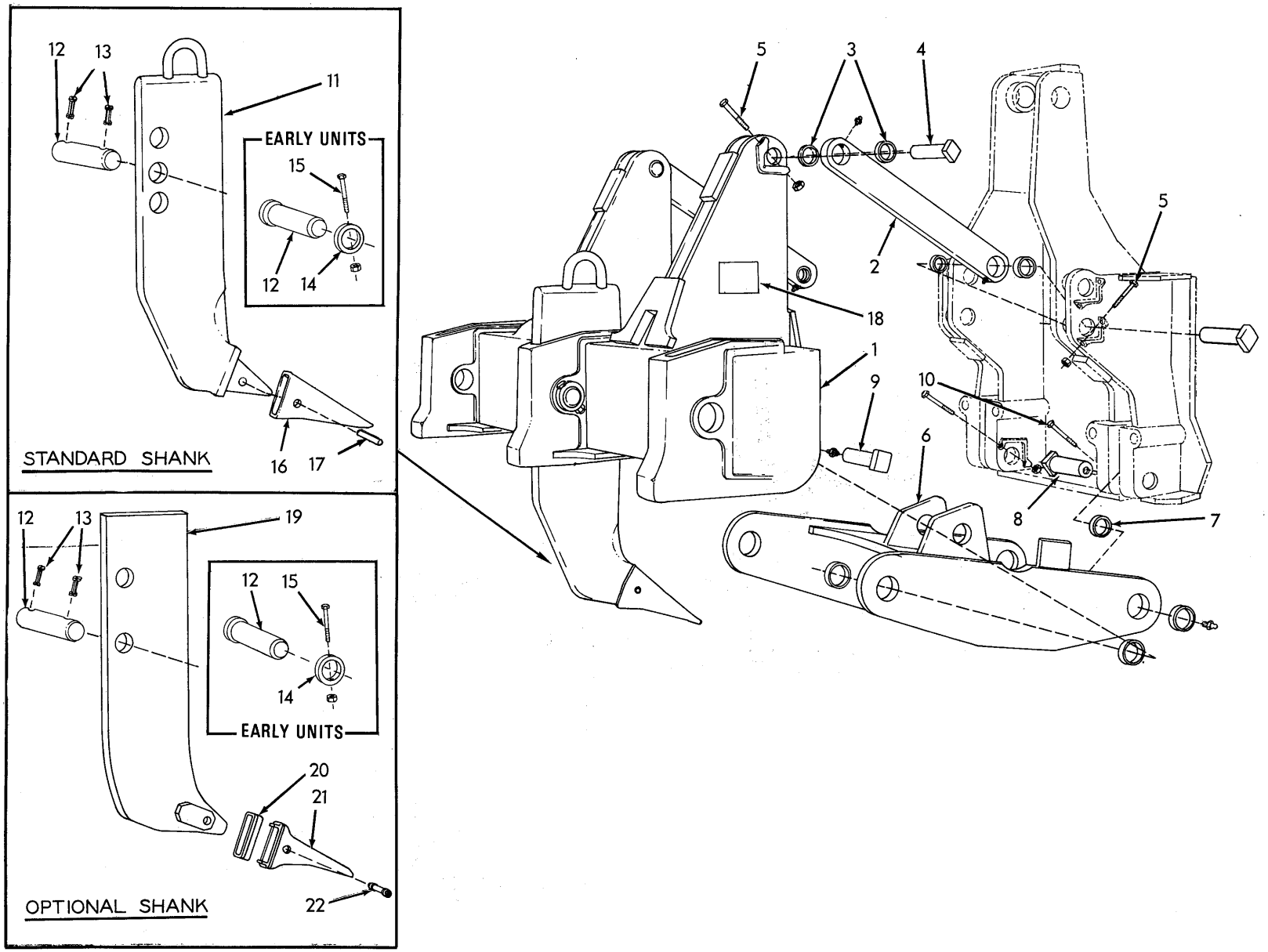

T-73570

TOOL BAR AND LINKAGE

TOOL BAR AND LINKAGE

ITEM	PART NO.	QTY.	DESCRIPTION
1	0656460-3	1	BAR, tool
2	0656345-6	2	STRUT ASSEMBLY, upper (Includes item 3)
	0914465-0	4	FITTING, lubricating, straight, 1/8"NPT
3	0656343-1	8	BUSHING, upper strut
4	0656326-6	4	PIN, upper strut
5	0917599-3	4	CAPSCREW, retaining, upper strut pin
	0915972-4	4	NUT, elastic stop, 1/2"NC
6	0656355-5	1	BEAM ASSEMBLY, lower (Includes item 7)
7	0656346-4	8	BUSHING, lower beam
8	0648944-7	2	PIN, lower beam, rear
	0912497-5	2	FITTING, lubricating, straight, 1/4"NPT
9	0656327-4	2	PIN, lower beam, front
	0912497-5	2	FITTING, lubricating, straight, 1/4"NPT
10	0918394-8	4	CAPSCREW, retaining, lower beam pins (5/8"NC x 7")
	0914501-2	4	NUT, elastic stop, 5/8"NC
11	0656329-0	3	SHANK, ripper tooth
12	0671944-7	3	PIN, shank retaining (late units)
	0656324-1	3	PIN, shank retaining (early units)
13	0666983-2	6	PIN, shank retaining pin (late units)
14	0656330-8	3	COLLAR, shank pin
15	0070934-5	3	CAPSCREW, 5/8"NC x 4" } Early units
	0914501-2	3	NUT, elastic stop, 5/8"NC
16	0656328-2	3	TOOTH, ripper shank
17	0924711-5	3	PIN, ripper tooth (Spirol, 5/8" x 3-1/2")
18	0662243-5	1	TRANSFER, installation torque data
			NOTE: Items listed below comprise the severe-service shank available as optional equipment.
19	0660300-5	3	SHANK ASSEMBLY (Includes items 20 thru 22)
20	0660302-1	3	COLLAR, ripper tooth
21	0660301-3	3	TOOTH, ripper shank
22	0660303-9	3	PIN, tooth retaining

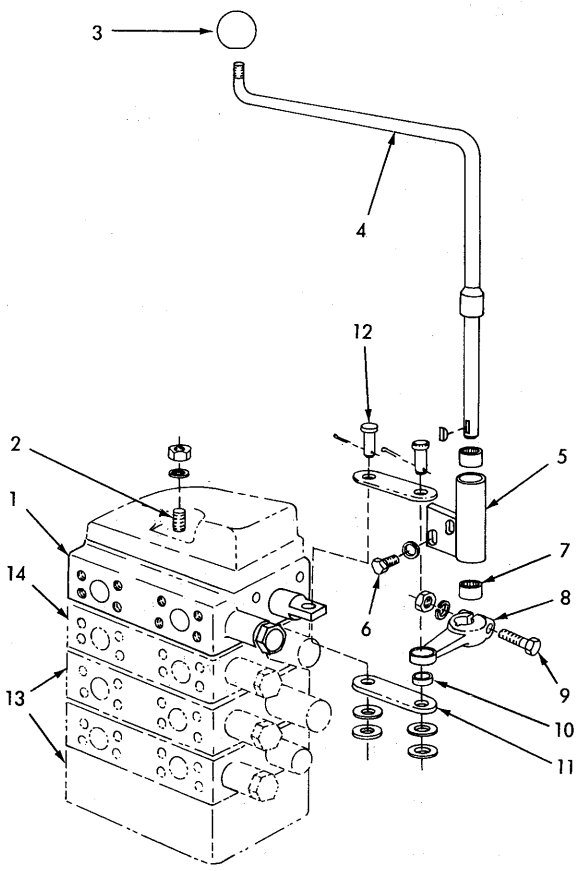

RIPPER VALVE AND CONTROLS T-76464

USAGE: Special equipment. Provides hydraulic outlet for operation of ripper or other rear-mounted auxiliary equipment.

* For units without special boom piping
** For units with special boom piping

ITEM	PART NO.	QTY. *	QTY. **	DESCRIPTION
1	0655655-9	1	1	VALVE ASSY., control (See page 250)
2	0659586-2	3	-	STUD (5/8"NC x 15-3/4")
	0659587-0	-	3	STUD (5/8"NC x 18-3/4")
	0659494-9	6	6	WASHER, plain
	0668231-4	6	6	NUT, 5/8"NC
3	0090020-9	1	1	KNOB, operating lever
4	0655411-7	1	-	LEVER, operating
	0655412-5	-	1	LEVER, operating
5	0655676-5	1	1	BRACKET, operating lever
6	0921076-6	2	2	CAPSCREW, 3/8"NC x 1-1/4"
	0677006-9	2	2	WASHER, plain

(Continued)

RIPPER VALVE AND CONTROLS (Continued)

ITEM	PART NO.	QTY. *	QTY. **	DESCRIPTION
7	0655215-2	2	2	BEARING, needle, lever bracket
8	0655680-7	1	1	LEVER, control valve (Includes item 10)
	0921396-8	1	1	KEY, #213 woodruff, 1/8" x 3/8"
9	0922286-0	1	1	CAPSCREW, 5/16"NF x 1-5/8"
	0910287-2	1	1	LOCKWASHER, 5/16"
	0911025-5	1	1	NUT, 5/16"NF
10	0049988-9	1	1	BUSHING, valve lever
11	0655654-2	2	2	LINK, control valve
12	0094317-5	2	2	PIN, valve link
	0910244-3	4	4	WASHER, plain, SAE std., 1/2"
	0900806-1	2	2	PIN, cotter, 1/8" x 1"
13	---------	1	1	VALVE ASSY. (See HYDRAULIC TANK AND CONTROL VALVE)
14	---------	-	1	VALVE ASSY. (See BOOM PIPING)

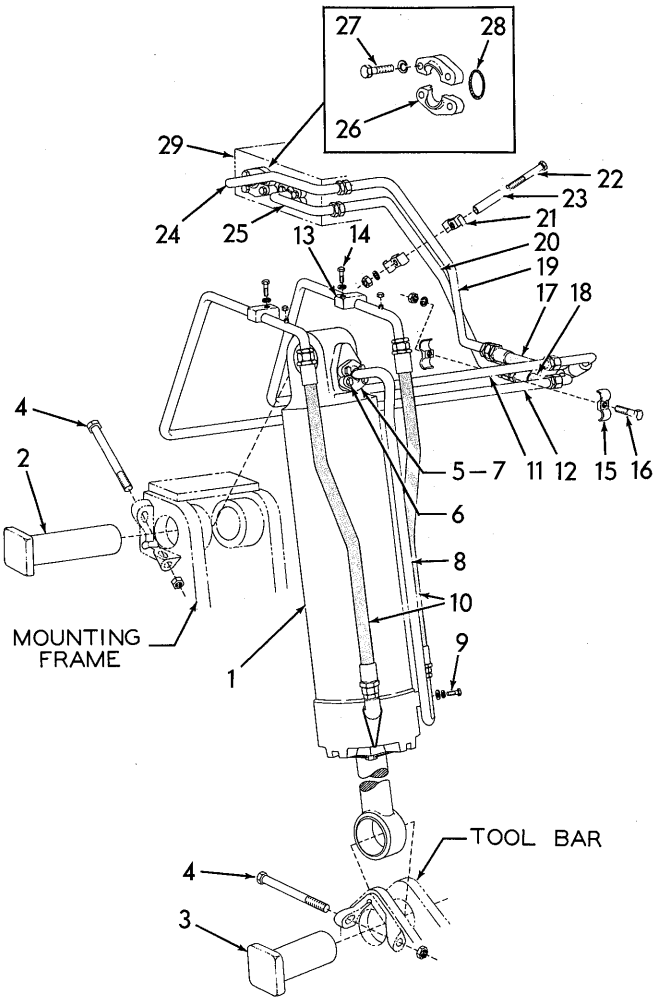

T-76922

RIPPER CYLINDER PIPING

ITEM	PART NO.	QTY.	DESCRIPTION
1	0656399-3	1	CYLINDER ASSEMBLY (See page 302)
2	0648172-5	1	PIN, cylinder attachment, upper
3	0648173-3	1	PIN, cylinder attachment, lower
4	0927181-8	2	CAPSCREW, pin retaining
	0914501-2	2	NUT, elastic stop, 5/8"NC
5	0921116-0	2	FLANGE, drop line hose (half only)
6	0915228-1	4	CAPSCREW, 3/8"NF x 1-1/4"
	0904206-0	4	LOCKWASHER, 3/8"
7	0924200-9	1	O-RING, drop line hose
8	0655015-6	1	TUBE, cylinder, drop line
9	0920603-8	1	CAPSCREW, 1/2"NF x 1-1/8"
	0904208-6	1	LOCKWASHER, 1/2"
	0064531-7	1	WASHER, plain

(Continued)

RIPPER CYLINDER AND PIPING (Continued)

ITEM	PART NO.	QTY.	DESCRIPTION
10	0654778-0	2	HOSE, rear (See HOSE PARTS)
	0919064-6	1	CONNECTOR, flare type, 1"tube, 1"NPT male
11	0655012-3	1	TUBE, drop line, rear section
	0921467-7	1	CAP, flare type, 1/4" tube
12	0655014-9	1	TUBE, raise line, rear section
	0921467-7	1	CAP, flare type, 1/4" tube
13	0660745-1	2	CLAMP, tube supporting
14	0916420-3	2	CAPSCREW, 1/2"NF x 2-1/4"
	0904208-6	2	LOCKWASHER, 1/2"
15	0635229-8	2	CLAMP, tube supporting
16	0919224-6	1	CAPSCREW, 3/8"NC x 1-1/8"
	0904206-0	1	LOCKWASHER, 3/8"
	0911026-3	1	NUT, 3/8"NC
17	0654779-8	1	HOSE, drop line, front (See HOSE PARTS)
18	0660794-9	1	HOSE, raise line, front (13-3/8" long)(Units without special boom piping)
	0666739-8	1	HOSE, raise line, front (12-1/8" long)(Units with special boom piping)
19	0655011-5	1	TUBE, drop line, intermediate section
20	0655013-1	1	TUBE, raise line, intermediate section
21	0624931-2	2	CLAMP, tube supporting
22	0919232-9	1	CAPSCREW, 1/2"NC x 4-3/4" (Not for units with special boom piping)
	0916318-9	1	CAPSCREW, 1/2"NC x 3-1/4" (Units with special boom piping only)
	0064531-7	1	WASHER, plain
	0904208-6	1	LOCKWASHER, 1/2"
	0911028-9	1	NUT, 1/2"NC
23	0613231-0	1	BLOCK, spacing, tube clip (Not for units with special boom piping)
24	0655006-5	1	TUBE, drop line, front section (Not for units with special boom piping)
	0655057-8	1	TUBE, drop line, front section (Units with special boom piping only)
25	0655016-4	1	TUBE, raise line, front section
26	0921117-8	4	FLANGE, attaching, control valve tubes (half only)
27	0921569-0	8	CAPSCREW, 7/16"NC x 1-1/4"
	0914678-8	8	LOCKWASHER, 7/16"
28	0924192-8	2	O-RING, valve tubes
29	---------	1	VALVE, control (See page 298)

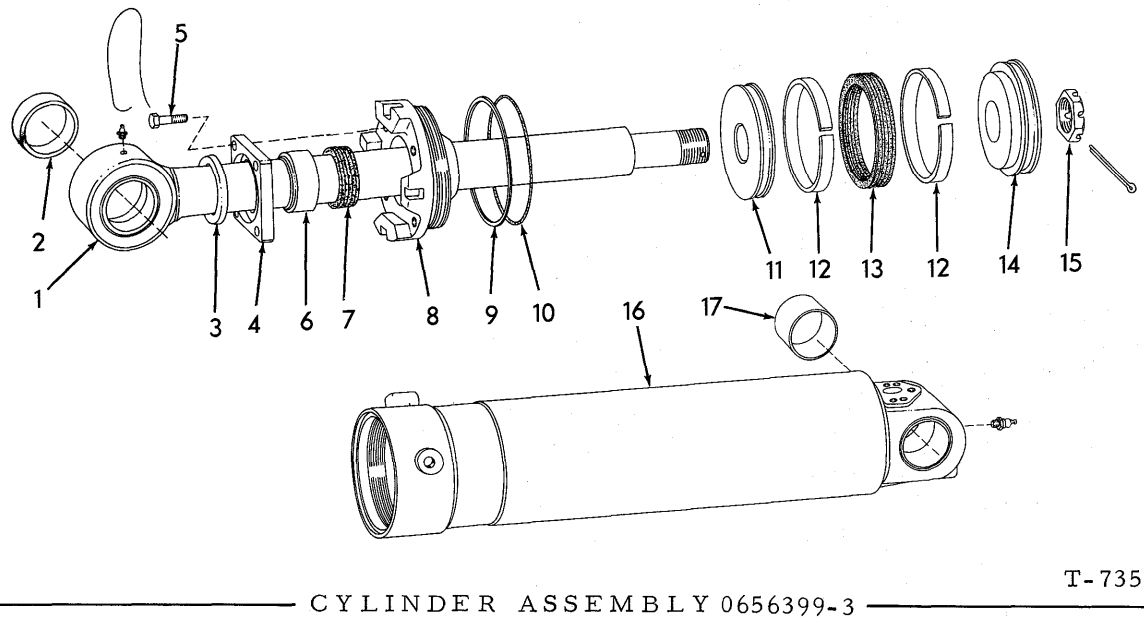

CYLINDER ASSEMBLY 0656399-3

USAGE: See page 300

ITEM	PART NO.	QTY.	DESCRIPTION
1	0656394-4	1	ROD ASSEMBLY, piston (Includes item 2)
	0914465-0	1	FITTING, lubricating, straight, 1/8"NPT
2	3008156-6	2	BUSHING, piston rod
3	0227072-6	1	SEAL, wiping, piston rod
4	3012753-4	1	PLATE, packing adjustment
5	0035814-3	4	CAPSCREW, drilled-hd., 1/2"NC x 1-3/4"
	0023756-0	1	WIRE, locking, 1/16" x 26"
6	0626553-2	1	BUSHING, piston rod packing
7	3008144-2	1	PACKING SET, piston rod
8	3012756-7	1	HEAD, cylinder
9	3012554-6	1	RING, back-up, cylinder head O-ring
10	0924166-2	1	O-RING, cylinder head
11	3008158-2	1	PISTON, front
12	3008159-0	2	RING, piston bearing
13	3008160-8	1	PACKING SET, piston
14	3008165-7	1	PISTON, rear
15	0922271-2	1	NUT, piston rod
	0911699-7	1	PIN, cotter, 3/8" x 3-1/4"
16	0656398-5	1	CYLINDER ASSEMBLY (Includes item 17)
	0914465-0	1	FITTING, lubricating, straight, 1/8"NPT
17	3008156-6	2	BUSHING, cylinder

Part No.	Page
0012561-7	183,185
0012767-0	145,183,185
0012992-4	81,141,127
0013058-3	73THRU 271
0013238-1	230,231
0021527-7	135
0023176-1	223
0023465-8	142,171
0023618-2	187
0023633-1	13THRU 246
0023756-0	139,302
0033074-6	159
0033182-7	246
0033288-2	143THRU 185
0033751-9	153
0034042-2	175,181
0034043-0	175,181
0034076-0	206
0034440-8	226
0035014-0	177,181
0035018-1	81THRU 289
0035061-1	91THRU 188
0035068-6	127,160
0035073-6	99THRU 169
0035167-6	106
0035190-8	51THRU 283
0035220-3	91THRU 147
0035221-1	39THRU 176
0035236-9	51THRU 245
0035244-3	41THRU 214
0035250-0	31THRU 191
0035278-1	129,160
0035336-7	282
0035420-9	230,231
0035423-3	175
0035439-9	52THRU 192
0035525-5	136
0035541-2	235
0035712-9	92,119
0035718-6	151,152
0035733-5	192,255,271
0035793-9	139,140
0035814-3	302
0035916-6	209
0035942-2	161
0035979-4	92
0036032-1	128
0036034-7	73,128
0036039-6	127,287,289
0037000-7	135
0040382-4	51THRU 293
0040475-6	139
0040981-3	220,221
0041250-2	96,271
0041917-6	97,105
0042873-0	177,181
0042898-7	177,181
0043024-9	209
0043491-0	182,184
0043881-2	160
0044249-1	95THRU 293
0044973-6	42THRU 293
0045295-3	93,104,131
0045312-6	124
0046321-6	93,131
0046419-8	127
0047558-2	58
0048679-5	183
0048681-1	183THRU 214
0048705-8	119
0048922-9	224
0049108-4	159,285
0049918-6	145
0049988-9	157,160,299
0049993-9	160
0050214-6	139
0050292-2	113
0050433-2	159
0050442-3	130
0050543-8	239
0050594-1	135
0050595-8	135
0050748-3	141,157
0051112-1	173
0051121-2	173,175
0051124-6	173,175
0051311-9	213
0051623-7	177,179,181
0051629-4	177,179
0051798-7	188
0051959-5	177,179,181
0052070-0	145
0052077-5	164
0052191-4	209
0052444-7	145
0052639-2	160
0052642-6	160
0052669-9	160,161
0052976-8	135
0052977-6	135
0053243-2	160
0053616-9	129THRU 268
0053667-2	59
0054073-2	99,100
0054890-9	143THRU 183
0055457-6	276
0055589-6	224
0056099-5	59
0056100-1	59
0056261-1	171
0056320-5	271
0056362-7	99
0056513-5	140
0056585-3	177,179,181
0056590-3	282,289
0056721-4	157
0056793-3	139
0056895-6	171
0056969-9	145
0056970-7	145
0056971-5	145
0057003-6	141
0057004-4	141
0057005-1	140
0057006-9	140
0057196-8	159
0058702-2	143
0058793-1	95,97,213
0058796-4	145
0058806-1	145
0058807-9	145
0058814-5	143
0058826-9	145
0058925-9	143
0058974-7	99
0059385-5	177,179,181
0059386-3	177,179,181
0059387-1	177,179,181
0059617-1	182,184
0059618-9	182,184
0059619-7	182,184
0059738-5	188
0059739-3	188
0059740-1	188
0059741-9	188
0059742-7	187
0059876-3	106
0061528-6	221,223
0061631-8	38
0061689-6	40THRU 231
0061702-7	230,231
0063222-4	55
0064377-5	135
0064531-7	41THRU 301
0064810-5	199,231
0065513-4	187
0065785-8	92
0066251-0	68
0066252-8	68
0066253-6	67
0066255-1	68
0066261-9	67
0066467-2	215
0066517-4	67
0066604-0	209
0066692-5	173,175
0066794-9	204,230,231
0066872-3	69
0066873-1	69
0066874-9	69
0066875-6	69
0066876-4	69
0067110-7	226
0067112-3	226
0067137-0	177,179
0067141-2	177,179,181
0067251-9	183,185
0067253-5	183,185
0067566-0	105
0067680-9	137
0067884-7	75
0067916-7	81
0068017-3	97
0068389-6	160
0068623-8	66
0068875-4	68
0068876-2	68
0068878-8	68
0068879-6	68
0068881-2	68
0069080-0	143
0069106-3	143
0069164-2	68
0069328-3	142,179
0069441-4	142
0069614-6	145
0069615-3	145
0070272-0	204
0070285-2	183,185
0070299-3	154
0070400-7	235
0070403-1	143
0070467-6	39THRU 163
0070469-2	140,151
0070792-7	235
0070934-5	297
0070960-0	91,122
0071113-5	235
0072366-8	177THRU 235
0073169-5	183
0073647-0	99,100
0074452-4	210,226
0074487-0	173,175
0074740-2	182,184
0074790-7	58
0075053-9	135
0075535-5	220,222
0075769-0	68
0075770-8	68
0075771-6	67
0075950-6	106
0076140-3	221,223
0076461-3	106
0076469-6	209
0076572-7	209
0077285-5	173,175
0077286-3	173,175
0077287-1	173,175
0077309-3	157
0078314-2	106
0078402-5	282
0078620-2	55
0078810-9	51THRU 285
0080942-6	285
0081405-3	177,179,181
0081406-1	177,179,181
0081787-4	143
0082189-2	41
0082343-5	119
0082366-6	285
0082915-0	169
0082937-4	58
0083209-7	177,179
0083212-1	173
0083617-1	167
0083987-8	222,223,227
0084236-9	145
0084271-6	143
0084277-3	145
0084278-1	145
0084289-8	145
0084297-1	142
0084299-7	145
0084303-7	143
0084311-0	143
0084312-8	143
0084313-6	143
0084319-3	141
0084337-5	143
0084432-4	143,145
0084895-2	209
0084903-4	141
0084904-2	141
0084905-9	141
0085038-8	91,283
0085452-1	97,211
0085680-7	209
0085918-1	106
0086238-3	93
0087026-1	175
0087027-9	173,175
0088561-6	83
0089107-7	19
0089320-6	142
0089894-0	19,41,71
0090020-9	282,289,298
0091375-6	113
0091571-0	145
0091972-0	143
0092160-1	67

Part No.	Page
0092163-5	72,192
0092652-7	19
0092727-7	41
0092758-2	19
0093972-8	212,214
0094317-5	299
0094467-8	148,213
0094527-9	133,148,219
0094630-1	222
0095265-5	210
0095267-1	210
0095869-4	76,97,289,12
0095951-0	42,230,231
0096803-2	190
0097273-7	55
0097324-8	145,167
0097611-8	209
0099506-8	177,179,181
0099575-3	127
0099963-1	135
0182763-3	224,225
0186266-3	130
0186392-7	93,131
0186451-1	102
0186531-0	104
0186563-3	104
0186668-0	130
0188168-9	93,131
0188182-0	100
0188436-0	197
0194321-6	123
0194324-0	123
0196130-9	247
0196131-7	247
0196132-5	247
0203188-8	127,282,283
0208960-5	220THRU 227
0211581-4	142
0211582-2	142
0227072-6	302
0237769-5	153
0239517-6	57
0240962-1	211
0243526-1	208
0243527-9	208
0243528-7	209
0248922-7	208
0600236-4	164
0603426-8	42
0604963-9	13
0606858-9	109
0607556-8	262,264,266,
0609705-9	263,269
0610563-9	97
0613231-0	301
0614478-6	159
0614516-3	97
0617932-9	127THRU 289
0620035-6	59
0620063-8	92,211
0620253-5	147
0620366-5	217
0620420-0	217
0620472-1	209
0620474-7	209
0620721-1	57
0621201-3	209
0621278-1	217
0621299-7	187
0621304-5	41,97
0621342-5	207
0621343-3	206
0621357-3	206
0621428-2	225
0621429-0	220,225
0621456-3	217
0621530-5	57
0621724-4	225
0622001-6	177
0622002-4	172
0622135-2	145
0622195-6	183
0622751-6	183,185
0622753-2	183
0623144-3	136,187
0623151-8	161
0623545-1	217
0623804-2	109
0623945-3	118
0623947-9	118
0623953-7	119
0623954-5	119
0623955-2	119
0623956-0	119
0623957-8	119
0623958-6	106
0623959-4	119
0623963-6	113
0623965-1	113
0623967-7	113
0623968-5	118
0623969-3	113
0623971-9	118
0623974-3	112
0623975-0	112
0623976-8	112
0623977-6	112
0623978-4	112
0623979-2	112
0623981-8	112
0623984-2	112
0623991-7	118
0623992-5	113
0624249-9	116
0624251-5	115
0624559-1	140
0624561-7	139
0624562-5	139
0624584-9	51,55,161
0624585-6	52
0624641-7	139
0624642-5	139
0624673-0	139
0624674-8	139
0624695-3	109
0624706-8	110
0624783-7	112
0624931-2	301
0625018-7	229
0625221-7	291,292
0625540-0	289
0626279-4	234
0626553-2	302
0627279-3	137
0627346-0	109
0627451-8	91
0628157-0	127,128
0628320-4	140
0628512-6	21
0628519-1	105
0628736-1	51,56,147
0628737-9	52
0628738-7	52,56
0628821-1	97,148
0628937-5	187
0628941-7	112
0628951-6	136
0629141-3	21
0629223-9	113
0629287-4	112
0629408-6	124
0629409-4	124
0629414-4	124
0629439-1	105
0629697-4	204
0629698-2	204
0629709-7	127
0629733-7	171
0629852-5	115
0629853-3	115
0629854-1	115
0629855-8	115
0629856-6	115
0629858-2	115
0629859-0	115
0629860-8	115
0629861-6	115
0629862-4	116
0629864-0	116
0629865-7	116
0629867-3	116
0629868-1	116
0629872-3	115
0629873-1	115
0630030-5	95
0630045-3	139,140
0630052-9	140
0630584-1	110
0630753-2	52
0630833-2	147
0630917-3	215
0631031-2	171
0631034-6	171
0631290-4	173,175
0631300-1	139
0631305-0	139
0631316-7	140
0631510-5	139
0631542-8	154
0631575-8	139
0631577-4	140
0631584-0	140
0631587-3	137
0631588-1	137
0631769-7	59
0631788-7	121
0631795-2	157,187
0631828-1	154
0631844-8	128
0631846-3	154
0631868-7	154
0631869-5	154
0631870-3	154
0631872-9	154
0631883-6	160,161
0631885-1	110
0632038-6	128
0632060-0	125,154
0632062-6	154
0632063-4	154
0632065-9	119
0632067-5	109
0632166-5	119
0632179-8	193,195
0632260-6	209
0632323-2	169
0632547-6	97,213
0632580-7	171
0632710-0	51,55
0632716-7	51,55
0632747-2	51,55
0632752-2	51,55
0632766-2	51,55
0632793-6	110
0632794-4	110
0632975-9	166
0632982-5	172,175
0632983-3	172
0633266-2	167
0633268-8	182,184
0633269-6	182
0633337-1	167
0633364-5	166
0633365-2	166
0633380-1	167
0633487-4	145
0633627-5	206
0633653-1	209
0633729-9	204
0633730-7	204
0633733-1	204
0633798-4	193,195
0633863-6	204
0633904-8	140
0634091-3	66
0634134-1	137
0634135-8	137
0634136-6	137
0634650-6	52
0634670-4	118
0634677-9	211
0635151-4	285
0635156-3	285
0635159-7	285
0635191-0	286
0635229-8	301
0635291-8	286
0635293-4	286
0636687-6	287
0637286-6	127,128
0637623-0	130
0637701-4	171
0637741-0	152
0637932-5	139
0638256-8	135
0638282-4	224
0638283-2	220,222
0638334-3	112
0638335-0	118
0638336-8	112
0638351-7	197
0638421-8	197
0638422-6	197
0638431-7	197
0638432-5	197
0638610-6	99
0638780-7	97,121,152
0638796-3	177,181
0638826-8	75
0639021-5	171

Part No.	Page
0639313-6	211
0639314-4	215,219
0639534-7	99
0639572-7	105
0639753-3	127
0639761-6	113
0639766-5	127
0639775-6	127
0639778-0	127
0639784-8	128
0639785-5	127
0639790-5	127
0639839-0	128
0639846-5	130
0639870-5	199
0639882-0	129
0639916-6	127,283,289
0639919-0	130
0639939-8	102,103,131
0639946-3	129
0639969-5	130
0639976-0	130
0640070-9	182
0640637-5	127
0640675-5	92
0640676-3	128
0640677-1	41,141,213,2
0640707-6	222THRU 227
0640727-4	215
0640780-3	125
0641008-8	51,128
0641027-8	125
0641029-4	39,125
0641031-0	125
0641125-0	6,139
0641248-0	197
0641249-8	197
0641250-6	197
0641504-6	211
0641555-8	97,133
0641563-2	219
0641633-3	112
0641820-6	161
0641849-5	121
0641979-0	128
0641989-9	286
0642048-3	135
0642130-9	283
0642435-2	135
0642441-0	73
0642485-7	6,39
0642498-0	197
0642499-8	197
0642500-3	197
0642533-4	92
0642535-9	97
0642536-7	97
0642563-1	13
0642746-2	210
0642787-6	109
0642788-4	109
0642849-4	130
0643028-4	119
0643080-5	110
0643081-3	110
0643726-3	209
0643799-0	109
0643810-5	110
0643932-7	39
0643941-8	39,121
0643958-2	115
0644006-9	213
0644064-8	127
0644065-5	128
0644162-0	214
0644255-2	187
0644276-8	130
0644330-3	187
0644381-6	167
0644666-0	209
0644758-5	211
0644797-3	115
0645028-2	201,203
0645320-3	137
0645586-9	263,268
0645638-8	122
0645734-0	167
0645920-0	166
0645934-1	166
0645947-3	166
0645976-2	173,175
0646045-5	171
0646054-7	285
0646198-2	6,250
0646302-0	154
0646532-2	125
0646631-2	289
0646912-6	157
0646994-4	157
0647000-9	124
0647080-1	171
0647108-0	246
0647122-1	246
0647130-4	245
0647151-0	246
0647448-0	39
0647563-6	107
0647807-7	239
0647819-2	234
0647823-4	234
0647972-9	113
0647998-4	115
0648027-1	116
0648138-6	157
0648143-6	91
0648167-5	157
0648172-5	300
0648173-3	300
0648238-4	201
0648262-4	217
0648294-7	201,203
0648331-7	232
0648795-3	157
0648944-7	297
0649205-2	157
0649520-4	219
0649983-4	82
0650026-8	160
0650039-1	161
0650061-5	136
0650062-3	136
0650128-2	141
0650131-6	197
0650132-4	197
0650133-2	197
0650134-0	197
0650135-7	197
0650136-5	197
0650137-3	197
0650138-1	197
0650139-9	197
0650140-7	197
0650141-5	197
0650142-3	197
0650143-1	197
0650144-9	197
0650145-6	197
0650146-4	197
0650147-2	197
0650179-5	153
0650180-3	153
0650181-1	153
0650199-3	197
0650245-4	153
0650253-8	157
0650254-6	157
0650264-5	136
0650269-4	157
0650280-1	157
0650282-7	157
0650299-1	215
0650328-8	157
0650397-3	121
0650427-8	125
0650428-6	125
0650430-2	125
0650431-0	125
0650497-1	161
0650509-3	41
0650587-9	207
0650657-0	139
0650679-4	153
0650686-9	52
0650724-8	118
0650740-4	51
0650828-7	139
0650835-2	140
0650853-5	125
0650862-6	6,39
0650901-2	79
0650999-6	52
0651001-0	52
0651005-1	52
0651036-6	129
0651245-3	157
0651564-7	149
0651565-4	149
0651566-2	149
0651567-0	149
0651570-4	149
0651571-2	149
0651572-0	149
0651573-8	149
0651574-6	149
0651575-3	149
0651576-1	149
0651577-9	149
0651639-7	115
0651642-1	115
0651644-7	115
0651648-8	115
0651739-5	147
0651745-2	139
0651893-0	147
0651894-8	207
0651978-9	136
0651996-1	145
0652567-9	41
0652586-9	41
0652587-7	41
0652590-1	41
0652792-3	285
0652890-5	294
0653701-3	128
0653706-2	129
0653741-9	81
0653808-6	81
0653809-4	81
0653812-8	81
0653814-4	42,203
0653915-9	96
0653967-0	95
0654005-8	95
0654011-6	95
0654033-0	291
0654096-7	76
0654098-3	76
0654123-9	290
0654125-4	290,292
0654127-0	237
0654133-8	290
0654168-4	294
0654169-2	294
0654171-8	237
0654172-6	237
0654256-7	291,292
0654257-5	291
0654294-8	107
0654306-0	121
0654307-8	121
0654310-2	109
0654365-6	220,221
0654402-7	91
0654453-0	159,160
0654454-8	161
0654523-0	149
0654537-0	199
0654542-0	193
0654551-1	199
0654556-0	164
0654557-8	164
0654558-6	76
0654559-4	81
0654560-2	76
0654562-8	81
0654563-6	73
0654564-4	73
0654565-1	75
0654566-9	73,75
0654567-7	75
0654568-5	75
0654569-3	75
0654570-1	81
0654571-9	76
0654575-0	75
0654578-4	75
0654579-2	75
0654580-0	81
0654581-8	73
0654582-6	75
0654584-2	81
0654585-9	75
0654586-7	82
0654587-5	72
0654588-3	76
0654592-5	161
0654594-1	199
0654633-7	75
0654637-8	193
0654646-9	193,195

NUMERICAL INDEX

Part No.	Page
0654652-7	226
0654654-3	193
0654657-6	72
0654658-4	72
0654678-2	81
0654679-0	81
0654680-8	81
0654681-6	81, 83
0654682-4	81, 83
0654683-2	81
0654684-0	81, 83
0654687-3	161
0654692-3	83
0654693-1	83
0654715-2	160
0654716-0	160
0654722-8	161
0654748-3	148
0654767-3	161
0654777-2	147
0654778-0	6, 301
0654779-8	6, 301
0654782-2	160
0654789-7	147
0654798-8	109
0654810-1	151
0654818-4	159
0654840-8	41
0654919-0	285
0654923-2	73
0654970-3	239
0654971-1	239
0654972-9	239
0654973-7	239
0654974-5	239
0654975-2	254, 257, 261
0654978-6	271, 273, 274
0654979-4	271, 273, 274
0654982-8	232
0654986-9	226
0654987-7	226
0654988-5	226
0654989-3	226
0654990-1	226
0654991-9	226
0654992-7	239
0654994-3	239
0655006-5	289, 301
0655011-5	301
0655012-3	301
0655013-1	301
0655014-9	301
0655015-6	300
0655016-4	289, 301
0655033-9	239
0655034-7	239
0655057-8	301
0655072-7	6, 91
0655079-2	245
0655081-8	245
0655083-4	245
0655084-2	245
0655088-3	246
0655193-1	169
0655207-9	286
0655208-7	286
0655211-1	286
0655212-9	285, 286
0655214-5	286
0655215-2	52 THRU 299
0655216-0	285
0655316-8	6, 254
0655317-6	7
0655326-7	66
0655341-6	271, 273, 274
0655342-4	271, 273, 274
0655348-1	271
0655390-3	7, 214
0655393-7	212
0655395-2	7, 12
0655397-8	212
0655398-6	212
0655399-4	212
0655400-0	214
0655404-2	7, 212
0655411-7	298
0655412-5	298
0655416-6	41
0655417-4	283
0655418-2	282
0655420-8	283
0655421-6	285
0655423-2	282
0655424-0	283
0655425-7	283
0655426-5	283
0655428-1	282
0655442-2	153
0655464-6	173, 175
0655497-6	182, 184
0655522-1	235
0655527-0	160
0655528-8	177, 179, 181
0655532-0	51
0655534-6	51
0655535-3	51
0655536-1	51
0655540-3	51
0655545-2	51
0655546-0	51
0655552-8	13
0655619-5	100
0655628-6	141
0655630-2	142
0655631-0	142
0655632-8	142
0655633-6	145
0655654-2	299
0655655-9	250, 298
0655662-5	128
0655663-3	128
0655666-6	128
0655667-4	133
0655668-2	133
0655669-0	133
0655670-8	133
0655671-6	133
0655672-4	129
0655673-2	133
0655674-0	133
0655675-7	133
0655676-5	298
0655680-7	299
0655712-8	289
0655713-6	250, 289
0655714-4	289
0655715-1	289
0655716-9	7, 289
0655717-7	289
0655718-5	289
0655721-9	289
0655723-5	289
0655725-0	289
0655739-1	169
0655740-9	169
0655741-7	169
0655742-5	169
0655747-4	169
0655748-2	169
0655749-0	169
0655750-8	169
0655752-4	171
0655756-5	164
0655765-6	171
0655766-4	169
0655777-1	127
0655778-9	7, 96
0655779-7	128
0655784-7	220, 221
0655785-4	222, 223, 227
0655786-2	220
0655791-2	222, 226
0655802-7	192
0655804-3	192
0655806-8	192
0655807-6	192
0655808-4	192
0655834-0	38
0655842-3	41
0655843-1	41
0655844-9	41
0655845-6	41
0655846-4	42
0655847-2	42
0655850-6	42
0655851-4	41
0655855-5	42
0655856-3	42
0655862-1	215
0655875-3	136
0655878-7	136
0655880-3	136
0655882-9	136
0655883-7	135
0655930-6	285
0655936-3	285
0655937-1	163
0655938-9	163
0655940-5	163
0655941-3	163
0655942-1	163
0655943-9	163
0655944-7	163
0655947-0	163
0655948-8	163
0655949-6	41
0655959-5	222
0655963-7	136
0655964-5	136
0655967-8	136
0655987-6	177, 179, 181
0655988-4	177
0655989-2	177, 179, 181
0655990-0	177, 179, 181
0655993-4	177, 181
0655994-2	177, 181
0655995-9	177, 181
0656060-1	199
0656062-7	106
0656063-5	106
0656078-3	209
0656123-7	79
0656129-4	79
0656131-0	79
0656134-4	79
0656155-9	127
0656159-1	127
0656190-6	149
0656191-4	149
0656192-2	149
0656193-0	13
0656201-1	188
0656202-9	188
0656203-7	189, 191
0656206-0	188
0656208-6	187
0656213-6	189
0656214-4	189
0656216-9	188
0656235-9	95
0656237-5	7, 96, 121
0656238-3	96
0656239-1	7, 92
0656241-7	95
0656242-5	95
0656243-3	91
0656245-8	91
0656246-6	7, 120, 151
0656249-0	91
0656250-8	91
0656251-6	91
0656252-4	95
0656253-2	96
0656254-0	95
0656255-7	92
0656256-5	91
0656259-9	151
0656261-5	151
0656262-3	147
0656270-6	151
0656271-4	151
0656272-2	148
0656273-0	151
0656274-8	151
0656275-5	147
0656276-3	147
0656277-1	151
0656278-9	151
0656279-7	151
0656281-3	152
0656283-9	7, 151
0656284-7	151
0656323-3	183, 185
0656324-1	297
0656326-6	297
0656327-4	297
0656328-2	297
0656329-0	297
0656330-8	297
0656337-3	163
0656342-3	199
0656343-1	297
0656345-6	297
0656346-4	297
0656355-5	297
0656357-1	160
0656359-7	159
0656361-3	159
0656362-1	161

Part No. Page

0656363-9..159
0656366-2..160
0656367-0..130
0656383-7..295
0656391-0..170
0656392-8..170
0656393-6..170
0656394-4..302
0656398-5..302
0656399-3..300

0656403-3..7,133,147
0656405-8..169
0656406-6..169
0656413-2..287
0656416-5..287
0656420-7..130
0656422-3..129
0656427-2..129
0656428-0..129
0656429-8..107

0656431-4..39
0656432-2..113
0656433-0..113
0656434-8..118
0656436-3..118
0656460-3..297
0656462-9..115
0656464-5..115
0656466-0..109
0656467-8..124

0656468-6..124
0656469-4..121
0656470-2..121
0656471-0..121
0656472-8..120
0656473-6..120
0656475-1..121
0656506-3..109
0656508-9..128
0656518-8..209

0656519-6..209
0656521-2..209
0656538-6..92
0656539-4..91
0656540-2..92
0656541-0..91
0656542-8..7,92
0656545-1..95
0656546-9..91
0656556-8..187

0656563-4..91
0656572-5..39
0656573-3..39
0656574-1..39
0656575-8..39
0656578-2..38
0656579-0..38
0656604-6..245
0656614-5..282
0656626-9..212

0656664-0..145
0656669-9..188
0656670-7..188
0656682-2..105
0656683-0..105
0656684-8..105
0656685-5..105
0656686-3..105
0656687-1..104
0656689-7..105

Part No. Page

0656691-3..105
0656692-1..103
0656693-9..105
0656695-4..104
0656697-0..103
0656699-6..103
0656700-2..103
0656701-0..105
0656702-8..130
0656703-6..103

0656704-4..102,103
0656706-9..99,100
0656709-3..99
0656710-1..100
0656711-9..100
0656712-7..100
0656713-5..105
0656714-3..99,100
0656715-0..99
0656716-8..99

0656717-6..99,100
0656718-4..99
0656719-2..100
0656720-0..99
0656721-8..99
0656723-4..105
0656724-2..105
0656725-9..105
0656726-7..105
0656727-5..105

0656733-3..93
0656735-8..93
0656749-9..170
0656750-7..170
0656774-7..99
0656775-4..153
0656776-2..105
0656807-5..160
0656808-3..124
0656819-0..95

0656834-9..188,191
0656895-0..291
0656896-8..291
0656897-6..291
0656898-4..291
0656899-2..291
0656905-7..210
0656923-0..210
0656989-1..135
0656990-9..135

0657204-4..291
0657243-2..59
0657273-9..255,261
0657274-7..255,261
0657281-2..271,273,275
0657290-3..286
0657291-1..286
0657300-0..206
0657301-8..206
0657335-6..75

0657382-8..239THRU 261
0657521-1..229
0657522-9..229
0657523-7..229
0657548-4..133
0657549-2..133
0657553-4..229
0657556-7..229
0657559-1..51
0657564-1..193,195

Part No. Page

0657675-5..289
0657708-4..147
0657777-9..179
0657778-7..179
0657959-3..103
0657964-3..103
0657965-0..103
0657968-4..103
0657969-2..103
0657973-4..103

0657974-2..103
0657999-9..105
0658000-5..129
0658004-7..93,131
0658005-4..131
0658006-2..131
0658007-0..131
0658008-8..93,129
0658009-6..131
0658010-4..93,131

0658011-2..131
0658012-0..131
0658013-8..93
0658014-6..131
0658015-3..131
0658016-1..131
0658017-9..131
0658019-5..131
0658068-2..247
0658069-0..206

0658245-6..249,253
0658278-7..251
0658279-5..251
0658280-3..251
0658281-1..251
0658282-9..250
0658284-5..250
0658286-0..250
0658293-6..214
0658313-2..212

0658315-7..253
0658316-5..253
0658317-3..253
0658347-0..251
0658348-8..211
0658360-3..251,252
0658361-1..251,253
0658363-7..251,252
0658364-5..251,252
0658365-2..251,253

0658397-5..211
0658429-6..247,252
0658430-4..253
0658432-0..253
0658433-8..253
0658434-6..253
0658435-3..253
0658436-1..253
0658437-9..253
0658441-1..253

0658466-8..250,252
0658569-9..286
0658570-7..283
0658576-4..286
0658609-3..82
0658627-5..115
0658759-6..59
0658770-3..163
0658774-5..58
0658781-0..59

Part No. Page

0658834-7..142
0658837-0..142
0658838-8..142
0658839-6..142
0658840-4..142
0658841-2..59
0658953-5..103
0659002-0..210
0659003-8..210
0659005-3..201

0659006-1..201
0659010-3..271,273
0659012-9..277,280
0659013-7..263
0659015-2..254,257,262
0659016-0..254,257,262
0659017-8..277,281
0659018-6..263
0659030-1..276,280
0659031-9..277

0659034-3..59
0659035-0..42,203
0659036-8..151
0659039-2..276
0659042-6..151
0659046-7..277,281
0659047-5..277,280
0659051-7..151
0659056-6..262
0659057-4..263,268

0659058-2..262
0659059-0..263,268
0659061-6..263,268
0659063-2..201
0659064-0..263,269
0659076-4..51
0659077-2..92
0659083-0..277,280
0659086-3..277,281
0659087-1..277,280

0659088-9..277,280
0659090-5..277
0659092-1..277
0659093-9..197
0659098-8..263,268
0659099-6..262,268
0659100-2..262,268
0659102-8..197
0659104-4..263,268
0659106-9..263

0659115-0..92
0659129-1..93
0659130-9..93
0659131-7..93
0659132-5..93
0659133-3..93
0659135-8..93,131
0659136-6..93
0659137-4..93
0659196-0..219

0659197-8..211
0659198-6..215
0659366-9..51
0659373-5..232
0659391-7..118
0659392-5..137
0659446-9..137
0659473-3..82
0659487-3..159
0659493-1..137

NUMERICAL INDEX

Part No.	Page
0659494-9	123THRU 298
0659496-4	247,251
0659497-2	246,251
0659498-0	253
0659504-5	251,253
0659506-0	251
0659514-4	125
0659519-3	121
0659533-4	57
0659534-2	206
0659555-7	251,252
0659575-5	147
0659586-2	289,298
0659587-0	298
0659613-4	201
0659680-3	229
0659681-1	229
0659686-0	139
0659687-8	139
0659725-6	160
0659759-5	201
0659760-3	201
0659876-7	201
0659883-3	201
0659884-1	201
0659887-4	201
0659888-2	201
0659898-1	276
0659901-3	263
0660030-8	245
0660033-2	245
0660045-6	233
0660057-1	149
0660066-2	234
0660107-4	233
0660118-1	233
0660147-0	199
0660148-8	199
0660300-5	297
0660301-3	297
0660302-1	297
0660303-9	297
0660345-0	207
0660417-7	231
0660422-7	231
0660603-2	163
0660745-1	301
0660767-5	119
0660769-1	246
0660780-8	251
0660792-3	251THRJ 261
0660793-1	251,252
0660794-9	301
0660800-4	151
0660829-3	251
0660830-1	247,250
0660918-4	96
0660919-2	96
0660998-6	199
0661101-6	71
0661162-8	57
0661163-6	57
0661236-0	93
0661237-8	131
0661268-3	125
0661345-9	211
0661526-4	155
0661527-2	155
0661528-0	155
0661529-8	155
0661534-8	125
0661548-8	38
0661556-1	206
0661557-9	206
0661558-7	206
0661583-5	103
0661584-3	103
0661594-2	139
0661595-9	139
0661603-1	153
0661604-9	153
0661605-6	153
0661676-7	149
0662037-1	155
0662053-8	81
0662054-6	81
0662243-5	297
0662445-6	231
0662446-4	231
0662477-9	57
0662618-8	58
0662814-3	123
0662881-2	112
0662882-0	112
0662883-8	102
0662884-6	102
0662916-6	102
0662917-4	102
0662918-2	102
0662919-0	102
0662920-8	102
0662938-0	112
0662954-7	112
0662964-6	109
0662973-7	103
0662982-8	120
0662983-6	121
0662986-9	95
0662994-3	100
0662995-0	122
0663059-4	234
0663060-2	234
0663062-8	233
0663067-7	234
0663068-5	234
0663071-9	233
0663077-6	234
0663078-4	234
0663080-0	233
0663117-0	139,140
0663123-8	149
0663124-6	149
0663191-5	109
0663216-0	294
0663227-7	294
0663228-5	294
0663229-3	294
0663230-1	294
0663231-9	294
0663266-5	237
0663267-3	237
0663269-9	294
0663273-1	237
0663276-4	237
0663277-2	237
0663278-0	237
0663279-8	237
0663280-6	237
0663282-2	294
0663283-0	294
0663353-1	237
0663354-9	290,292
0663355-6	290,292
0663356-4	237
0663357-2	237
0663358-0	290
0663359-8	291
0663360-6	291
0663455-4	237,292
0663456-2	290,292
0663458-8	7,291,292
0663459-6	7,290,292
0663526-2	103
0663629-4	277,280
0663630-2	263,268
0663633-6	276,280
0663967-8	171
0663970-2	167
0663991-8	205
0664015-5	205
0664019-7	123,243
0664020-5	123
0664021-3	123
0664023-9	123
0664024-7	123
0664025-4	123
0664026-2	123
0664027-0	123
0664052-8	205
0664169-0	187
0664170-8	187
0664171-6	187
0664173-2	187
0664174-0	188
0664185-6	79
0664186-4	79
0664267-2	95
0664289-6	209
0664330-8	140
0664334-0	209
0664337-3	139
0664339-9	58
0664482-7	263
0664483-5	277
0664646-7	293
0664647-5	237
0664648-3	293
0664683-0	286
0664813-3	188,191
0664815-8	188
0664843-0	188,191
0664844-8	188
0664847-1	188
0664850-5	135
0664851-3	135
0664852-1	135
0664866-1	41
0664867-9	41
0664868-7	41
0664875-2	187
0664877-8	188
0664879-4	188
0664885-1	239
0664956-0	166
0664957-8	166
0665040-2	187
0665069-1	187
0665104-6	250
0665174-9	251,253
0665212-7	258,261
0665213-5	258,261
0665214-3	257,261
0665215-0	258,261
0665216-8	261
0665217-6	261
0665218-4	258,261
0665219-2	258,261
0665221-8	275
0665222-6	273,275
0665223-4	273,274
0665224-2	274
0665225-9	241
0665226-7	241
0665229-1	261
0665230-9	261
0665231-7	96
0665232-5	151
0665233-3	96
0665250-7	251,253
0665265-5	234,237
0665266-3	234,237
0665274-7	258
0665275-4	258
0665276-2	273
0665277-0	273
0665278-8	241
0665317-4	255
0665334-9	239
0665335-6	152
0665347-1	234
0665348-9	234
0665373-7	234
0665374-5	234
0665376-0	233
0665383-6	166
0665384-4	234
0665392-7	83
0665398-4	239
0665399-2	239
0665400-8	239
0665401-6	239
0665415-6	239
0665498-2	201
0665509-6	292
0665510-4	292
0665511-2	292
0665512-0	292
0665693-8	253
0665694-6	247,252
0665695-3	253
0665696-1	250,252
0665714-2	250
0665815-7	173
0665835-5	100
0665837-1	100
0665841-3	246
0665850-4	103
0665851-2	103
0665852-0	103
0665859-5	247
0665879-3	245
0665886-8	245
0666134-2	247
0666157-3	243
0666176-3	249
0666177-1	249
0666180-5	249
0666185-4	212
0666238-1	235
0666273-8	273

Part No.	Page
0666274-6	273
0666313-2	233
0666321-5	234
0666322-3	234
0666324-9	140
0666366-0	139
0666441-1	99
0666494-0	137
0666497-3	207
0666519-4	82
0666585-5	181
0666586-3	181
0666587-1	181
0666588-9	206
0666591-3	175
0666592-1	175
0666593-9	175
0666604-4	184
0666615-0	175
0666616-8	184
0666645-7	185
0666679-6	66
0666724-0	185
0666734-9	184
0666739-8	301
0666799-2	145
0666814-9	145
0666820-6	145
0666821-4	206
0666824-8	81
0666876-8	81
0666877-6	81
0666878-4	81
0666879-2	193,195
0666880-0	193,195
0666882-6	199
0666917-0	258
0666920-4	163
0666922-0	163
0666923-8	163
0666926-1	147
0666942-8	163
0666982-4	235
0666983-2	235,297
0666984-0	235
0666996-4	201
0667055-8	103
0667081-4	187
0667085-5	247,250
0667086-3	251
0667089-7	247
0667104-4	187
0667167-1	247
0667195-2	245
0667252-1	30THRU 185
0667298-4	239
0667312-3	71
0667358-6	247,250
0667386-7	119
0667422-0	39
0667643-1	235
0667725-6	246
0667727-2	246
0667745-4	246
0667932-8	241
0668230-6	206
0668231-4	123THRU 298
0668252-0	41
0668262-9	41
0668263-7	41
0668279-3	103
0668281-9	104
0668282-7	105
0668283-5	105
0668290-0	157
0668291-8	157
0668292-6	157
0668293-4	157
0668295-9	157
0668329-6	157
0668351-0	93
0668352-8	93
0668353-6	93
0668412-0	246
0668413-8	243
0668414-6	246
0668470-8	241
0668483-1	241
0668484-9	241
0668495-5	241
0668511-9	242
0668512-7	242
0668513-5	242
0668514-3	242
0668515-0	241
0668517-6	243
0668519-2	243
0668520-0	243
0668521-8	243
0668522-6	243
0668530-9	249
0668531-7	249
0668532-5	248
0668533-3	249
0668534-1	249
0668535-8	249
0668536-6	249
0668537-4	249
0668538-2	249
0668539-0	249
0668543-2	249
0668544-0	249
0668548-1	249
0668549-9	145
0668550-7	249
0668551-5	249
0668552-3	249
0668553-1	145
0668555-6	249
0668571-3	258
0668591-1	83
0668596-0	83
0668733-9	55
0668735-4	55
0668745-3	55
0668752-9	55
0668804-8	41
0668805-5	41
0668806-3	41
0668807-1	247
0668843-6	245
0668846-9	245
0668869-1	147
0668921-0	247
0668944-7	166
0668950-9	166
0669152-1	115
0669181-0	239
0669183-6	102
0669188-5	249
0669189-3	249
0669198-4	249
0669209-9	38
0669210-7	38
0669215-6	39
0669249-5	164
0669298-2	179
0669302-2	179
0669303-0	179
0669330-3	145
0669335-2	245
0669483-0	39
0669484-8	39
0669485-5	39
0669567-0	145
0669576-1	116
0669593-6	169
0669594-4	169
0669595-1	169
0669596-9	169
0669606-6	235
0669612-4	241
0669614-0	116
0669616-5	243
0669617-3	243
0669618-1	243
0669619-9	243
0669620-7	243
0669621-5	243
0669622-3	243
0669623-1	243
0669624-9	243
0669625-6	243
0669629-8	243
0669630-6	243
0669631-4	243
0669636-3	241
0669639-7	258
0669640-5	258
0669641-3	241,258
0669642-1	241
0669659-5	241
0669664-5	242
0669669-4	241
0669677-7	102
0669678-5	99,100
0669682-7	172
0669683-5	172
0669692-6	243
0669693-4	243
0669695-9	243
0669696-7	246
0669697-5	246
0669699-1	249
0669701-5	249
0669702-3	242
0669703-1	179
0669704-9	99
0669705-6	99,100
0669708-0	95
0669713-0	253
0669763-5	237
0669786-6	179
0669791-6	179
0669852-6	203
0669860-9	254,251
0669861-7	255,257
0669864-1	75
0669871-6	203
0669872-4	203
0669873-2	203
0669874-0	203
0669875-7	203
0669876-5	203
0669912-8	195
0669924-3	170
0669933-4	207
0669937-5	170
0669938-3	170
0669942-5	195
0669974-8	42
0670071-0	173
0670073-6	173
0670074-4	173
0670084-3	75
0670091-8	199
0670093-4	199
0670132-0	55
0670133-8	55
0670134-6	55
0670138-7	55
0670216-1	135
0670275-7	235
0670281-5	141
0670282-3	141
0670378-9	136
0670385-4	103
0670386-2	103
0670410-0	103
0670411-8	99
0670416-7	102
0670448-0	31
0670450-6	55
0670458-9	31
0670459-7	31
0670461-3	31
0670462-1	283
0670463-9	55
0670485-2	287
0670492-8	287
0670623-8	177,179,181
0670648-5	187
0670649-3	187
0670655-0	287
0670711-1	234
0670762-4	221
0670774-9	221,223
0670962-0	190
0671157-6	183,184
0671158-4	183
0671160-0	183,185
0671161-8	183,184
0671162-6	182,184
0671163-4	182
0671178-2	149
0671205-3	223
0671239-2	40
0671376-2	148
0671377-0	147
0671378-8	148
0671413-3	142
0671428-1	148
0671831-6	237
0671944-7	297
0671983-5	246
0671984-3	247,252
0671986-8	252
0672569-1	78
0672828-1	137
0672955-2	105

NUMERICAL INDEX

Part No.	Page
0673159-0	199
0673350-5	190
0673415-6	173
0673769-6	258
0675161-4	83
0675246-3	187
0675282-8	103
0675322-2	172
0675323-0	172
0675326-3	172
0675327-1	172
0675510-2	116
0675511-0	115
0675536-7	185
0675564-9	195
0675568-0	223
0675569-8	213
0675674-6	116
0675675-3	116
0675678-7	115
0676107-6	8,105
0676108-4	9,105
0676214-0	124
0676215-7	124
0676352-8	234
0676355-1	234
0676356-9	234
0676364-3	179
0676365-0	233
0676366-8	233
0676367-6	233
0676368-4	233
0676387-4	199
0676389-0	199
0676405-4	179
0676455-9	187,190
0676456-7	187,190
0676692-7	250
0676806-3	56
0676808-9	56
0676871-7	166
0676872-5	166
0676915-2	234
0676916-0	234
0676917-8	234
0676918-6	234
0676919-4	234
0676920-2	234
0677006-9	66THRU 298
0677008-5	72THRU 289
0677012-7	169,199
0677066-3	153
0677067-1	153
0677068-9	153
0677155-4	234
0677156-2	234
0677276-8	183,185
0677623-1	166
0677781-7	195
0677810-4	190
0677855-9	79
0677995-3	179
0678374-0	190
0678385-6	171
0678386-4	171
0678420-1	190
0678428-4	191
0678434-2	190
0678436-7	190
0678437-5	190
0678438-3	190
0678591-9	110
0678716-2	183
0678835-0	191
0678836-8	191
0678839-2	191
0678840-0	191
0678843-4	191
0678844-2	191
0678846-7	190
0678848-3	171
0678982-0	293
0679115-6	110
0679118-0	110
0679206-3	235
0679282-4	235
0679375-6	110
0679613-0	173
0679637-9	190
0679707-0	79
0679734-4	167
0679918-3	73
0680081-7	191
0680082-5	191
0680631-9	173
0681070-9	104
0681969-2	31
0682371-0	131
0682843-8	76
0683209-1	41
0900686-7	285
0900801-2	147
0900805-3	159
0900806-1	13THRU 292
0900807-9	160
0900810-3	239
0900817-8	55
0900818-6	220
0900942-4	51THRU 285
0900970-5	52THRU 154
0901310-3	67
0901489-5	141
0901652-8	21,125
0901666-8	142
0901765-8	141
0901767-4	109
0901781-5	68
0903632-8	47
0903774-8	159
0903775-5	92,152
0904203-7	67
0904204-5	21,229
0904205-2	30THRU 253
0904206-0	19THRU 301
0904207-8	26THRU 275
0904208-6	278THRU 301
0904208-6	280
0904209-4	142THRU 241
0904210-2	164,230,231
0904273-0	59
0904369-6	42THRU 235
0905119-4	91
0905121-0	87
0905123-6	129
0905125-1	81,82
0905126-9	29,160,161
0905127-7	22
0905357-0	68THRU 185
0905358-8	38
0905655-7	222,227
0905656-5	215
0905662-3	155
0906652-3	159
0906835-4	286
0906959-2	155
0906960-0	209
0906961-8	217
0907856-9	157
0907859-3	243
0908191-0	187
0908944-2	290
0909367-5	215,219
0910002-5	29
0910011-6	105
0910017-3	15
0910123-9	44
0910195-7	19
0910210-4	137
0910224-5	33,44
0910231-0	131
0910244-3	39THRU 299
0910267-4	52
0910278-1	273
0910287-2	55THRU 299
0910308-6	179
0910324-3	31,255,261
0910325-0	31,60
0910329-2	249
0910819-2	124
0910847-3	15,87
0910867-1	81
0910916-6	42THRU 231
0910967-9	159
0910980-2	91
0910986-9	29
0911024-8	226,229
0911025-5	299
0911026-3	51THRU 359
0911028-9	31THRU 301
0911029-7	235
0911030-5	42THRU 235
0911032-1	42
0911034-7	52
0911040-4	59
0911041-2	285THRU 289
0911042-0	286
0911043-8	39
0911044-6	170,226
0911046-1	169
0911047-9	183,185
0911048-7	51,56,128
0911100-6	55,157
0911114-7	201
0911115-4	41THRU 286
0911116-2	83,169
0911159-2	160
0911169-1	87
0911201-2	102
0911699-7	302
0911992-6	251,252
0911993-4	218
0912069-2	27
0912182-3	219
0912201-1	43,47
0912298-7	29
0912415-7	15,85
0912441-3	21THRU 289
0912497-5	239THRU 297
0912597-2	34
0912731-7	224,225
0912739-0	224
0912942-0	179,190,241
0913039-4	29
0913077-4	204,232
0913097-2	232
0913105-3	179
0913177-2	248
0913274-7	203
0913280-4	13
0913432-1	258
0913463-6	248
0913706-8	67
0913811-6	234
0913830-6	161
0914321-5	131
0914330-6	209
0914373-5	41
0914392-6	30,43
0914452-8	51,55
0914465-0	86THRU 302
0914501-2	239,297,300
0914649-9	255
0914670-5	105
0914678-8	242THRU 301
0914687-9	106
0914726-5	40,171,173
0914727-3	169
0914728-1	163,295
0914730-7	295
0914847-9	88,266
0915228-1	300
0915275-2	81
0915361-0	31
0915408-9	27,31,97
0915432-9	68
0915486-5	67
0915488-1	67
0915513-6	99
0915556-5	67
0915557-3	67
0915569-8	55
0915659-7	164
0915797-5	157,282,286
0915813-0	33
0915903-9	153
0915904-7	131
0915905-4	130
0915963-3	199,231
0915969-0	19THRU 143
0915972-4	254THRU 297
0915987-2	218THRU 278
0915989-8	289
0916001-1	33
0916009-4	19
0916018-5	201
0916028-4	137
0916146-4	209
0916168-8	128
0916191-0	26,258,261
0916197-7	43,85,275
0916202-5	52
0916206-6	87
0916227-2	287
0916255-3	84
0916268-6	85,133
0916269-4	218,19,31,19
0916270-2	171
0916271-0	19THRU 292
0916272-8	193THRU 275
0916273-6	27

Part No.	Page
0916274-4	19THRU 273
0916277-7	19THRU 49
0916278-5	47
0916282-7	21,33
0916284-3	21
0916285-0	229
0916302-3	230
0916310-6	31THRU 195
0916311-4	34THRU 97
0916313-0	84THRU 241
0916314-8	170,261
0916315-5	105THRU 292
0916318-9	258,301
0916319-7	19,255,261
0916335-3	169
0916389-0	201
0916420-3	163,301
0916555-6	204,232
0916559-8	249
0916866-7	258,261
0916873-3	88
0916903-8	221,223
0916965-7	193,195
0917012-7	253
0917021-8	21
0917145-5	253
0917157-0	175
0917330-3	19
0917546-4	33
0917554-8	33
0917560-5	25
0917599-3	239THRU 297
0917663-7	91
0917673-6	22,25,33
0917680-1	87
0917778-3	294
0917806-2	41,49
0917807-0	43
0917809-6	41,49
0917810-4	43
0917835-1	239THRU 257
0917904-5	143
0917970-6	15,19
0918111-6	51,128
0918186-8	81
0918188-4	285,286
0918210-6	215
0918245-2	237
0918281-7	237
0918394-8	297
0918547-1	128,130
0918851-7	15
0918887-1	15
0918888-9	15
0918951-5	37
0919005-9	43
0919063-8	96,133,136
0919064-6	301
0919065-3	92
0919066-1	91
0919075-2	6,7
0919076-0	6,7
0919079-4	7
0919080-2	6,7
0919081-0	6
0919082-8	6,7
0919108-1	81,83
0919134-7	15THRU 155
0919135-4	43
0919140-4	41,212
0919141-2	41
0919143-8	6,7
0919144-6	7
0919155-2	6,7
0919156-0	6,7
0919171-9	141
0919174-3	212,359
0919194-1	7
0919196-6	6,7
0919205-5	96
0919214-7	212
0919217-0	6
0919218-8	6
0919224-6	30THRU 301
0919225-3	152,287
0919226-1	33
0919228-7	47
0919230-3	193,275
0919232-9	19,301
0919254-3	6
0919268-3	95,96
0919279-0	7
0919281-6	7
0919282-4	7
0919287-3	19,29
0919290-7	34
0919293-1	37
0919331-9	193,195
0919342-6	290,292
0919347-5	130
0919469-7	7
0919474-7	7
0919552-0	151
0919615-5	290
0919625-4	291,292
0919761-7	127
0919787-2	30
0919797-1	49
0919840-9	22,149
0920221-9	7
0920222-7	7
0920275-5	273,275
0920301-9	6
0920302-7	6
0920303-5	6,7
0920333-2	15,88,284
0920340-7	25
0920388-6	6
0920411-6	49
0920416-5	15
0920473-6	44
0920525-3	88,109
0920540-2	37
0920541-0	37
0920574-1	37THRU 199
0920582-4	21THRU 289
0920583-2	55THRU 258
0920584-0	241,242
0920585-7	83THRU 195
0920603-8	300
0920682-2	37
0920751-5	291
0920794-5	6,57
0920795-2	7
0920806-7	6
0920847-1	6
0920849-7	6
0920850-5	6,57
0920855-4	7
0920857-0	7
0920858-8	6,87
0920859-6	7
0920860-4	7
0920862-0	7
0920864-6	6,67
0920865-3	6
0920880-2	6
0920934-7	7
0920944-6	7
0920945-3	7
0920972-7	6,77
0920973-5	7
0920978-4	7
0920996-6	257
0921020-4	6
0921030-3	151
0921068-3	42,199,231
0921076-6	55THRU 298
0921116-0	255THRU 300
0921117-8	96THRU 301
0921118-6	242THRU 275
0921171-5	173
0921175-6	31,81,289
0921181-4	41
0921193-9	211
0921203-6	121
0921205-1	152
0921206-9	147
0921214-3	75THRU 254
0921217-6	96
0921227-5	95,121,151
0921228-3	95THRU 257
0921244-0	242
0921292-9	99
0921298-6	147
0921299-4	19
0921325-7	151
0921349-7	133,148
0921396-8	299
0921402-4	139
0921404-0	179
0921409-9	91THRU 148
0921467-7	96THRU 301
0921556-7	84THRU 276
0921565-8	285,163
0921569-0	273,289,301
0921573-2	139
0921598-9	241
0921599-7	241
0921717-5	105
0921728-2	95
0921731-6	135
0921839-7	83
0921865-2	37
0921883-5	130
0921887-6	121,151
0921911-4	157
0921912-2	27,121,209
0921914-8	157
0921919-7	59
0922055-9	97
0922065-8	105
0922066-6	84
0922155-7	173,175
0922175-5	295
0922195-3	289
0922211-8	81
0922262-1	55,121,199
0922271-2	302
0922286-0	299
0922300-9	141,289
0922319-9	179
0922457-7	92
0922464-3	171
0922465-0	37
0922522-8	92
0922526-9	246
0922726-5	163,181
0922763-8	55THRU 286
0922792-7	91
0922808-1	7
0922830-5	6
0922831-3	7
0922833-9	7
0922848-7	66,121
0922943-6	45
0922997-2	121
0923011-1	7
0923080-6	151
0923163-0	212
0923166-3	130
0923174-7	95
0923192-9	258
0923193-7	171,183,184,
0923279-4	6,7,251,252
0923280-2	51
0923376-8	21
0923438-6	125
0923560-7	69
0923574-8	85
0923576-3	250
0923578-9	253
0923585-4	183
0923586-2	183
0923587-0	120
0923588-8	173
0923589-6	155
0923596-1	279
0923645-6	149
0923649-8	125
0923663-9	38,149
0923664-7	96,294
0923689-4	263
0923713-2	120
0923719-9	131
0923737-1	91,147
0923813-0	85,88
0923814-8	253
0923815-5	15,31
0923816-3	20
0923820-5	19,173
0923827-0	187
0923831-2	245
0923836-1	125
0923846-0	249
0923850-2	246
0923856-9	294
0923867-6	7
0923884-1	179
0923894-0	92
0923931-0	183
0923934-4	43,216
0923947-6	147
0923948-4	246
0923950-0	245
0923979-9	41,43
0923988-0	149
0924069-8	254,255,257
0924112-6	249
0924139-9	44,277

Part No.	Page
0924140-7	99
0924153-0	263
0924166-2	302
0924169-6	197
0924189-4	49
0924192-8	242THRU 301
0924193-6	241,271,273
0924200-9	255THRU 300
0924270-2	249
0924306-4	206
0924416-1	149
0924463-3	206
0924549-9	206
0924552-3	206
0924686-9	241
0924691-9	245,266
0924692-7	246
0924696-8	249,253
0924711-5	297
0924772-7	173
0924775-0	251,252,253
0924796-6	294
0924838-6	229
0924854-3	251,253
0924864-2	258,285
0924902-0	41
0924924-4	265
0924926-9	263
0924927-7	277
0924950-9	210
0924957-4	59
0924989-7	149
0925069-7	251
0925081-2	251,253
0925108-3	206
0925109-1	206
0925110-9	206
0925192-7	250,253
0925193-5	242
0925196-8	239
0925271-9	246
0925280-0	241
0925466-5	103
0925590-2	235
0925758-5	31,85
0925785-8	268
0925786-6	268
0925787-4	280
0925788-2	280
0925807-0	241
0925832-8	261
0925919-3	245
0925928-4	251,253
0925929-2	251
0925930-0	251,253
0925931-8	251,252,253
0925932-6	251
0925933-4	249,253
0925934-2	249
0925935-9	249,250
0925936-7	241,253,275
0925937-5	247
0925938-3	246
0925947-4	173
0925954-0	171
0925966-4	102
0925986-2	245
0926059-7	95,99
0926077-9	185
0926078-7	175
0926079-5	181
0926241-1	295
0926260-1	235
0926269-2	250,253
0926283-3	164
0926286-6	246
0926287-4	246
0926288-2	246
0926289-0	245
0926290-8	245
0926298-1	235
0926339-3	83
0926354-2	248
0926356-7	249
0926391-4	265,267
0926392-2	279
0926533-1	261,275
0926534-9	242,261,275
0926537-2	241
0926538-0	261
0926566-1	179
0926635-4	265
0926637-0	266
0926693-3	249
0926699-0	41
0926715-4	279
0926819-4	265
0926820-2	279
0926841-8	249
0926842-6	249
0926843-4	249
0926844-2	243
0926856-6	295
0926860-8	99
0926865-7	267
0927157-8	285
0927172-7	81,242
0927180-0	257
0927181-8	300
0927199-0	40
0927235-2	285
0927236-0	163
0927473-9	103
0927475-4	13
0927508-2	116
0927509-0	116
0927513-2	242
0927514-0	31
0927522-3	81
0927574-4	81,163
0927608-0	205
0927621-3	295
0927637-9	163
0927972-0	185
0928130-4	190
0928146-0	169
0928197-3	197
0928235-1	163
0928342-5	242
1131019-0	153
3001559-8	239THRU 261
3002767-6	109
3002768-4	109
3002769-2	109
3008144-2	302
3008156-6	276THRU 302
3008158-2	302
3008159-0	302
3008160-8	302
3008165-7	302
3011625-5	239
3012554-6	302
3012753-4	302
3012756-7	302
3014553-6	239
3016323-2	289
3017556-6	277
3018616-7	239
3020678-3	262THRU 268
3020853-2	234
3021340-9	239
3029538-0	207
3034905-4	131
3034958-3	105
3035025-0	99
3037615-6	115
3037629-7	105
3037741-0	131
3037944-0	105
3037989-5	99,100
3039124-7	99
3042943-5	57
3045531-5	59
3045963-0	123
3045977-0	123
3046521-5	123
3046938-1	105,131
3051194-3	263,264,266
3051717-1	268
3051718-9	280
3051722-1	268
3051723-9	280
3052034-0	276,278
3052513-3	278
3052529-9	262,264,268
3052538-0	265
3052546-3	263,265
3052551-3	263,265
3052552-1	263,265
3052553-9	263,264
3052617-2	280
3052620-6	280
3052621-4	280
3052622-2	268
3052625-5	261
3052626-3	261
3052627-1	268
3052640-4	263,264
3052642-0	277,279
3052644-6	277,279
3052711-3	281
3052714-7	269
3052765-9	264
3052766-7	264
3052767-5	257,264
3052768-3	257,264
3052838-4	279
3052842-6	278
3052844-2	277,278
3052845-9	277,278
3052846-7	277,278
3052847-5	273
3052879-8	262,264,266
3052920-0	266
3052942-4	276,278
3052991-1	279
3052992-9	279
3052994-5	279
3052995-2	265
3052996-0	265
3052998-6	265
3053356-6	267
3053357-4	266
3053359-0	267
3053742-7	263
3053743-5	277
3053744-3	263
3053745-0	277
3053766-6	123
3053886-2	265,266
3053977-9	265,267
3054066-0	265,266
3054072-8	279
3054073-6	279
3054079-3	265
3054083-5	257,264
3054084-3	257,264
3054095-9	279
3054102-3	273
3054108-0	279
3054118-9	264,266
3054119-7	278
3054485-2	265,266
3054486-0	264,266
3054487-8	278
3054488-6	278
3054973-7	257,266
3054974-5	257,266
3055023-0	266
3055024-8	266
3056485-0	265
3056486-8	279
3056493-4	267
4003491-2	22
4004054-5	19
4021227-6	45
4025229-8	43
4025230-6	43
4025385-8	47
4025391-6	29
4027416-9	19
4027439-1	21
4027565-3	216
4027595-0	216
4027687-5	216
4028261-8	20
4041097-9	86
4042081-2	83
4044209-7	87
4044210-5	87
4044211-3	87
4044212-1	87
4048596-3	44
4048597-1	44
4048598-9	44
4053409-1	37
4053410-9	37
4053968-6	87
4054566-7	71
4054568-3	71
4054569-1	71
4055031-1	71
4055032-9	71
4055033-7	71
4055034-5	71
4055195-4	65
4055971-8	37
4056239-4	65
4056290-2	65
4056291-0	65

Part No.	Page
4056293-6	65
4056294-4	65
4056295-1	65
4056296-9	65
4056298-5	65
4056300-9	65
4056302-5	65
4056303-3	65
4056305-8	65
4056306-6	65
4056314-0	65
4059024-2	65
4059029-1	65
4059030-9	65
4059049-9	65
4059050-7	65
4059051-5	65
4059380-8	71
4059979-7	71
4115287-7	85
4181061-5	65
4250898-6	23
4251849-8	31
4253270-5	61
4253435-4	49
4253453-7	27
4253490-9	19
4253751-4	37
4253771-2	85
4253773-8	216
4253862-9	81, 83
4254154-0	31
4254173-0	27
4254363-7	29
4254891-7	19
4254951-9	71
4254977-4	33
4255003-8	66
4255010-3	43
4255286-9	71
4255287-7	71
4255336-2	20
4255465-9	17
4255585-4	22
4255606-8	63
4255644-9	63
4255723-1	29
4255757-9	47
4255916-1	30
4255961-7	216
4255962-5	216
4255977-3	63
4300145-2	75
4304907-1	20
4317554-6	89
4335056-0	87
4335320-0	87
4335371-3	19
4335382-0	33
4335455-4	15
4335456-2	15
4335534-6	15
4335550-2	19
4335608-8	34
4335666-6	37
4335711-0	19
4335712-8	19
4335808-4	87
4336127-8	25
4336128-6	25
4336129-4	26
4336130-2	26
4336131-0	26
4336142-7	29
4336143-5	29
4336145-0	29
4336146-8	26
4336148-4	26
4336153-4	26
4336156-7	88
4336157-5	25
4336178-1	26
4336182-3	88
4336234-2	29
4336249-0	47
4336250-8	47
4336263-1	89
4336432-2	15
4336436-3	63
4336491-8	19
4336506-3	88
4336531-1	47
4336532-9	47
4336546-9	49
4336558-4	63
4336609-5	21
4336646-7	29
4336676-4	21
4336681-4	49
4336758-0	26
4336897-6	21
4337047-7	33
4337455-2	63
4337478-4	29
4337479-2	29
4337602-9	89
4337683-9	23
4337684-7	23
4337685-4	23
4337686-2	23
4337687-0	23
4337688-8	23
4337689-6	23
4337690-4	23
4337698-7	23
4337699-5	23
4337700-1	23
4337701-9	17
4337702-7	17
4337703-5	17
4337704-3	17
4337705-0	17
4337710-0	22
4337711-8	22
4337712-6	22
4337713-4	22
4337714-2	22
4337715-9	23
4337716-7	23
4337723-3	29
4337764-7	15
4337972-6	16
4338143-3	29
4338242-3	89
4338243-1	88
4338299-3	29
4338310-8	27
4338663-0	87
4338684-6	60
4338803-2	45
4339017-8	17
4339021-0	37
4339022-8	37
4339036-8	15
4339037-6	15
4339038-4	15
4339103-6	86
4339116-8	84
4339118-4	85
4339119-2	84
4339123-4	37
4339127-5	85
4339128-3	37
4339150-7	37
4339151-5	85
4339198-6	37
4339219-0	29
4339220-8	29
4339378-4	60
4339434-5	26
4339454-3	37
4339496-4	63
4339498-0	26
4339499-8	26
4339503-7	87
4339505-2	26
4339532-6	63
4339533-4	63
4339546-6	25
4339547-4	25
4339559-9	47
4339560-7	47
4339561-5	47
4339562-3	47
4339563-1	47
4339606-8	63
4339624-1	25
4339625-8	25
4339659-7	29
4339691-0	49
4339697-7	84
4339698-5	84
4339712-4	47
4339827-0	63
4339848-6	25
4339851-0	44
4339949-2	49
4339954-2	19, 31
4343799-5	26
4344938-8	44
4346099-7	15
4346100-3	15
4346108-6	15
4346169-8	34
4346208-4	60, 61
4346246-4	19
4346307-4	29
4346456-9	19, 31, 75
4346744-8	87
4347031-9	89
4347061-6	16
4347413-9	15
4347416-2	15
4347419-6	15
4347465-9	16
4347511-0	29
4347543-3	31
4347572-2	34
4347619-1	26
4347659-7	33
4347832-0	29
4347872-6	75
4347924-5	27
4347938-5	33
4348020-1	33
4348038-3	33
4348044-1	33
4348083-9	33
4348107-6	19
4348129-0	29
4348130-8	29
4348133-2	27
4348136-5	19
4348184-5	37
4348185-2	85
4348215-7	33
4348218-1	34
4348303-1	33
4348440-1	29
4348757-8	87
4348825-3	87
4348856-8	16
4348857-6	16
4348858-4	16
4348859-2	16
4348883-2	33
4348885-7	33
4348891-5	33
4348894-9	33
4348900-4	16
4348991-3	22
4348992-1	22
4348993-9	22
4348994-7	22
4348995-4	22
4349157-0	29
4349193-5	63
4349257-8	29
4349305-5	27
4349629-8	15
4349630-6	15
4349631-4	15
4349632-2	15
4349953-2	87
4354163-0	19
4354175-4	15
4354261-2	22
4354291-9	9
4354294-3	25
4354295-0	25
4354304-0	19
4354306-5	19
4354391-7	43
4354393-3	43
4354394-1	43
4354407-1	26
4354414-7	19
4354415-4	19
4354449-3	31
4354490-7	26
4354537-5	89
4354538-3	13
4354553-2	22
4354568-0	33
4354573-0	33
4354635-7	15
4354681-1	30
4354684-5	34
4354687-8	34
4354714-0	66

NUMERICAL INDEX

Part No.	Page
4354748-8	17
4354750-4	34
4354778-5	17
4354787-6	17
4354788-4	17
4354831-2	47
4354954-2	44
4354963-3	44
4355843-6	216
4357323-7	22
4357328-6	19
4357409-4	19
4357429-2	43
4357430-0	6,43
4357434-2	47
4357554-7	84
4357643-8	61
4357644-6	61
4357645-3	63
4357646-1	66
4357647-9	63
4357655-2	63
4357656-0	63
4357689-1	85
4357690-9	85
4357691-7	85
4357692-5	85
4357696-6	218
4357701-4	85
4357705-5	85
4357706-3	85
4357732-9	26
4357733-7	27
4357735-2	27
4357736-0	27
4357744-4	218
4357745-1	218
4357775-8	27
4357792-3	19
4357805-3	31
4357810-3	31
4357828-5	218
4357837-6	31
4357855-8	31
4358582-7	15
4358587-6	84
4358696-5	9
4358724-5	49
4358728-6	63
4358745-0	17
4358753-4	9
4358754-2	89
4358763-3	85
4358786-4	86
4358787-2	87
4358790-6	21
4358840-9	21
4358911-8	63
4358934-0	63
4358984-5	25
4358988-6	29
4358989-4	29
4359029-8	25
4359030-6	25
4359056-1	33
4359059-5	47
4359072-8	25
4359097-5	20
4359106-4	47
4359112-2	25
4359113-0	25
4359114-8	25
4359115-5	25
4359116-3	25
4359117-1	25
4359168-4	21
4359192-4	25
4359193-2	25
4359231-0	216
4359237-7	216
4359248-4	71
4359271-6	216
4359278-1	22
4359280-7	87
4359281-5	86
4359293-0	216
4359308-6	216
4359310-2	33
4359360-7	17
4359425-8	19
4359564-4	216
4359565-1	31
4359567-7	47
4359568-5	31
4359569-3	216
4359570-1	13
4359583-4	16
4359584-2	26
4359586-7	16
4359587-5	218
4359588-3	216
4359603-0	10
4359625-3	31
4359639-4	44
4359650-1	21
4359741-8	60,61
4359757-4	17
4359758-2	17
4362338-8	15
4364422-8	29
4371021-9	37
4371323-9	27
4371324-7	27
4371503-6	22
4371718-0	44
4372325-3	37
4372864-1	26
4373069-6	30
4373610-7	37
4373612-3	37
4373613-1	37
4373614-9	37
4373770-9	30
4374127-1	34
4375686-5	86
4375937-2	26
4375953-9	63
4376294-7	34
4376497-6	26
4376749-0	21,26,37
4378031-1	45
4378033-7	45
4379263-9	37
4379268-3	37
4379269-6	37
4379305-8	29
4379723-2	63
4380652-0	45
4380656-1	45
4380662-9	45
4385480-1	29
4387529-3	217
4388202-6	26
4388205-9	26
4388349-5	63
4388648-0	59
4389058-1	15
4389732-1	34
4390838-3	22
4391160-1	15
4500230-0	16
4500300-1	21
4506607-3	136
4506737-8	85
4506946-5	29
4507084-4	87
4507091-9	86
4507359-0	47
4509035-4	34
4511213-3	45
4511243-0	45
4513552-2	47
4514091-0	85
4660358-5	16
4660369-2	29
4660408-8	216
4752075-4	21