CATERPILLAR®

SEBP3327-09
September 2004

VOLUME I
Pages 1-470

RUTHZIL TRATOR COMERCIAL DE PEÇAS LTDA 11 97083-6812 ROLANDO

Parts Manual

SIS

See “General Information” for New Parts Manual Features.

12H Motor Grader

CBK1-Up (Machine)
4ZF4479-Up (Engine)
BSZ1-Up (Transmission)

Powered By C-9 Engine
This Parts Manual is also Available in .PDF Format on Compact Disc (CD-ROM) - Caterpillar Form No. SERP3327

Product and Dealer Information

Note: For product identification plate locations, see the section “Product Identification Information” in the Operation and Maintenance Manual.

Delivery Date: _____

Product Information

Model: _____

Product Identification Number: _____

Engine Serial Number: _____

Transmission Serial Number: _____

Generator Serial Number: _____

Attachment Serial Numbers: _____

Attachment Information: _____

Customer Equipment Number: _____

Dealer Equipment Number: _____

Dealer Information

Name: _____ Branch: _____

Address: _____

_____

_____

	Dealer Contact	Phone Number	Hours
Sales:	_____	_____	_____
Parts:	_____	_____	_____
Service:	_____	_____	_____

Informations produit et concessionnaire

Nota: Voir l'emplacement de la plaque signalétique du produit au chapitre "Informations produit" du guide d'utilisation et d'entretien.

Date de livraison: _____

Informations produit

Modèle: _____

Numéro d'identification produit: _____

Numéro de série du moteur: _____

Numéro de série de la boîte de vitesses: _____

Numéro de série de l'alternateur: _____

Numéros de série d'équipement: _____

Informations sur l'équipement: _____

Numéro matériel client: _____

Numéro matériel concessionnaire: _____

Informations concessionnaire

Nom: _____ Agence: _____

Adresse: _____

_____

_____

	Contact concessionnaire	Numéro de téléphone	Heures
Ventes:			
Pièces:			
Service:			

Información del Producto/Distribuidor

Nota: Para saber la ubicación de las placas de identificación del producto, ver la sección “Información sobre identificación del producto” en el Manual de Operación y Mantenimiento.

Fecha de entrega: _____

Información del producto

Modelo: _____

Número de identificación del producto: _____

Número de serie del motor: _____

Número de serie de la transmisión: _____

Número de serie del generador: _____

Números de serie de los accesorios: _____

Información sobre los accesorios: _____

Número del equipo del cliente: _____

Número del equipo del distribuidor: _____

Información del distribuidor

Nombre: _____ Sucursal: _____

Dirección: _____

_____

_____

Comunicación con el distribuidor	Número de teléfono	Horas
Ventas: _____	_____	_____
Piezas: _____	_____	_____
Servicio: _____	_____	_____

Informações Sobre Produto e Revendedor

Nota: Para localizações da placa de identificação do produto, consulte a seção, “Informações Sobre Identificação do Produto” no Manual de Operação e Manutenção.

Data de Entrega: _____

Informações Sobre o Produto

Modelo: _____

Número de Identificação do Produto: _____

Número de Série do Motor: _____

Número de Série da Transmissão: _____

Número de Série do Gerador: _____

Números de Série de Acessórios: _____

Informações Sobre Acessórios: _____

Número do Equipamento do Cliente: _____

Número do Equipamento do Revendedor: _____

Informações Sobre o Revendedor

Nome: _____ Filial: _____

Endereço: _____

_____

_____

	Contato do Revendedor	Telefone	Horas
Vendas:	_____	_____	_____
Peças:	_____	_____	_____
Serviço:	_____	_____	_____

Produkt- und Händlerinformation

Anmerkung: Für die Lage der Produkt-Identnummer und Seriennummern siehe Abschnitt “Produkt-Identinformation” im Betriebs- und Wartungshandbuch.

Lieferdatum: _____

Produkt-Identinformation

Modell: _____

Produkt-Identnummer: _____

Seriennummer des Motors: _____

Seriennummer des Getriebes: _____

Seriennummer des Generators: _____

Seriennummern der Arbeitsgeräte: _____

Arbeitsgeräteinformation: _____

Kundennummer: _____

Händlernummer: _____

Händlerinformation

Name: _____ Niederlassung: _____

Adresse: _____

_____

_____

	Kontaktperson beim Händler	Telefon	Dienststunden
Verkauf:	_____	_____	_____
Ersatzteile:	_____	_____	_____
Service:	_____	_____	_____

MEMORANDA

TABLE OF CONTENTS

Name	Page
GENERAL INFORMATION	A24
REPAIR ALTERNATIVES	A43
SUPPLEMENTAL COOLANT ADDITIVES	A48
ENGLISH-PORTUGUESE PARTS NOMENCLATURE	A53
MAINTENANCE PARTS	A61
INDEX	A103
MACHINE ARRANGEMENT	1
CONVERSION AR-CERTIFICATION	1
GENERAL AR	2
ROADING AR	4
SNOW AR-MOTOR GRADER	5
ENGINE ARRANGEMENT	6
ENGINE AR	6
ENGINE AR-CORE	7
BASIC ENGINE	8
AIR COMPRESSOR GP	8
CAMSHAFT GP	11
COVER GP-CYLINDER BLOCK	12
COVER GP-FRONT HOUSING	13
COVER GP-VALVE MECHANISM	14
CRANKSHAFT GP	16
CYLINDER BLOCK GP	17
CYLINDER HEAD AS	19
CYLINDER HEAD GP	22
DAMPER & PULLEY GP	25
DRAIN GP-ENGINE OIL	26
FASTENER GP-CYLINDER HEAD	27
FLYWHEEL GP	28
GEAR GP-FRONT	29
HOUSING GP-FLYWHEEL	30
HOUSING GP-FRONT	31
LIFTING GP-ENGINE	33
MOUNTING GP-ENGINE & TMSN	34
PAN GP-OIL	36
PANEL GP-SOUND SUPPRESSION	37
PISTON & ROD GP	38
PISTON GP	39
PLUG GP-ENGINE	40
PULLEY GP-IDLER	41
ROCKER ARM GP	42
SEAL GP-CRANKSHAFT	44
SUPPORT GP-ENGINE	45
SUPPRESSION GP-SOUND	46
VALVE MECHANISM GP	47
LUBRICATION SYSTEM	49
FILTER GP-ENGINE OIL	49
FUMES DISPOSAL GP	52
GAUGE GP-OIL LEVEL (DIPSTICK)	54
LINES GP-ENGINE OIL	55
LINES GP-TURBOCHARGER OIL	57
PUMP GP-ENGINE OIL	58
COOLING SYSTEM	59
COOLER GP-ENGINE OIL	59
COOLING AR	60
ELBOW GP-WATER	62
FAN & MOTOR GP	63
FASTENER GP-RADIATOR	65
LINES GP-WATER	66
PLATE GP-RADIATOR	69
PUMP GP-WATER	70
RADIATOR GP	72
AIR INLET AND EXHAUST SYSTEM	74
AFTERCOOLER & MOUNTING GP	74
AIR CLEANER GP	75
ELBOW GP-AIR INLET	78
ELBOW GP-EXHAUST	79
LINES GP-AIR	80
MANIFOLD GP-EXHAUST	81
MUFFLER GP	82
TURBOCHARGER GP	83
FUEL SYSTEM	86
CONTROL GP-GOVERNOR	86
FASTENER GP-FUEL TANK	88
FILTER GP-FUEL	89
FILTER GP-WATER SEP & FUEL	91
INJECTOR GP-FUEL	92
LINES GP-FUEL	94
LINES GP-FUEL FILTER	101
MOUNTING GP-FUEL FILTER	103
PUMP & MTG GP-UNIT INJ HYD	104
PUMP GP-FUEL PRM & PRIM FILTER	106
PUMP GP-UNIT INJECTION	108
REGULATOR GP-FUEL PRESSURE	111
TANK GP-FUEL	113
WATER SEP & FUEL PRM PUMP GP	117
ELECTRICAL AND STARTING SYSTEM	118
ALARM GP	118
ALTERNATOR GP-CHARGING	120
BATTERY GP	127
BLOCK GP-JUNCTION	131
CIRCUIT BREAKER GP	132
CONTROL & MTG GP-ENGINE ELEK	134
CONTROL GP-ENGINE ELECTRONIC	135
CONTROL GP-SECONDARY STEERING	137

TABLE OF CONTENTS

Name	Page
CONTROL GP-UNPROGRAMMED	138
CONVERTER AR-ELECTRICAL	140
CONVERTER GP-ELECTRICAL	141
ELECTRONICS GP-MONITOR	146
ELECTRONICS GP-POWER TRAIN	146
HEATER GP-JACKET WATER	148
INSTALLATION GP-WARNING BEACON	150
LAMP GP-DOME	152
LAMP GP-FLOOD	153
LAMP GP-HEAD	158
LAMP GP-HEAD & SIGNAL	164
LAMP GP-MARKER	168
LAMP GP-REGISTRATION PLATE	169
LAMP GP-SIGNAL	170
LAMP GP-WARNING BEACON	173
LIGHTING AR-FLOOD	175
LIGHTING AR-FLOOD & SIGNAL	177
LIGHTING GP-BACKUP	178
LIGHTING GP-FLOOD	182
LIGHTING GP-ROADING	228
LIGHTING GP-SIGNAL	229
LIGHTING GP-WARNING	231
LIGHTING GP-WARNING BEACON	236
MOTOR GP-ELECTRIC	238
MOUNTING GP-SOLENOID	239
RECEPTACLE GP-AUXILIARY START	240
SENSOR GP-ENGINE	241
SENSOR GP-POSITION	243
SENSOR GP-PRESSURE	245
SENSOR GP-SPEED	251
SENSOR GP-TEMPERATURE	253
STARTING AID GP	258
STARTING MOTOR GP-ELECTRIC	260
SWITCH GP-BYPASS	265
SWITCH GP-DISCONNECT	266
SWITCH GP-LIGHT	267
SWITCH GP-MAGNETIC	269
SWITCH GP-WIPER	272
WIRING GP-BLADE CUSHION	273
WIRING GP-CAB	275
WIRING GP-ENGINE ELECTRONIC	286
WIRING GP-FRONT	293
WIRING GP-REAR	302
WIRING GP-SECONDARY STEERING	329
WIRING GP-SHIFT CONSOLE	332
WIRING GP-STEERING CONSOLE	338
POWER TRAIN	345
AUTOSHIFT AR	345
CASE & PARTS GP-TRANSMISSION	346
CHAIN GP-DRIVE	350
CLUTCH GP-TRANSMISSION	351
CONTROL GP-CLUTCH	361
CONTROL GP-DIFFERENTIAL LOCK	363
CONTROL GP-TRANSMISSION	365
CONTROL GP-TRANSMISSION HYD	367
COOLER GP-TRANSMISSION OIL	368
COUPLING GP-TORSIONAL	372
DIFFERENTIAL & BEVEL GEAR GP	373
DIFFERENTIAL GP	375
FILLER GP-POWER TRAIN OIL	377
FILTER & MTG GP-OIL	378
FILTER GP-OIL	380
FINAL DRIVE GP	381
LINES GP-TRANSMISSION OIL	383
MOUNTING GP-WHEEL	385
PUMP GP-GEAR	386
SCREEN GP-MAGNETIC	388
SHAFT GP-DRIVE	389
SHAFT GP-INPUT	390
TANDEM & COVER GP	391
TIRE & RIM AR	392
TRANSMISSION AR	393
UNIVERSAL JOINT GP	396
VALVE & MTG GP-DIFF LOCK	397
VALVE GP-SELECTOR & PRESS CONT	398
VALVE GP-SOLENOID	404
VALVE GP-TRANSMISSION CONTROL	406
WHEEL & TIRE AR	408
WHEEL & TIRE GP	426
WHEEL AR	464
WHEEL GP	466
FRAME AND BODY	471
AXLE GP-FRONT	471
CASE & FRAME GP	474
COVER GP-ACCESS	475
COVER GP-PROTECTION	476
ENCLOSURE GP-ENGINE	480
FASTENER GP	488
FRAME GP-FRONT	489
GUARD & SUPPORT GP-RADIATOR	491
GUARD GP-BOTTOM	494
GUARD GP-BRAKE LINES	495
GUARD GP-FUEL TANK	496
GUARD GP-PLATFORM	497
HITCH GP-ARTICULATING	501
HITCH GP-TOWING	503
LINES GP-GREASE	504
LINK GP-STEERING	505
MOUNTING GP-REGISTRATION	506
SHIELD GP-DRIVE SHAFT	507
SHIELD GP-HEAT	508
STEP GP	509
SUPPORT AR-REAR CHASSIS	510
SUPPORT GP-FUEL TANK	514
SUPPORT GP-PLATFORM	515

TABLE OF CONTENTS

Name	Page
BRAKING SYSTEM	516
AIR DRYER GP	516
BRAKE GP-PARKING	520
BRAKE GP-SERVICE	522
CONTROL GP-PARKING BRAKE	524
CONTROL GP-SERVICE BRAKE	526
LINES GP-AIR TANK	530
TANK GP-AIR	531
VALVE GP-AIR CONTROL	533
VALVE GP-SOLENOID	536
HYDRAULIC SYSTEM	538
ACCUMULATOR & MTG GP-HYDRAULIC	538
ACCUMULATOR AR-BLADE CUSHION	539
ACCUMULATOR GP	539
ACCUMULATOR GP-HYDRAULIC	541
ACCUMULATOR GP-STEERING	544
CONTROL AR-HYDRAULIC	545
CONTROL GP-HYDRAULIC LOCKOUT	547
CONTROL GP-STEERING	548
CYLINDER & MTG GP-ARTICULATION	549
CYLINDER & MTG GP-BLADE LIFT	551
CYLINDER & MTG GP-BLADE TIP	552
CYLINDER & MTG GP-CENTERSHIFT	553
CYLINDER & MTG GP-SCARIFIER	554
CYLINDER & MTG GP-SIDESHIFT	555
CYLINDER & MTG GP-STEERING	556
CYLINDER & MTG GP-WHEEL LEAN	557
CYLINDER GP-ARTICULATION	558
CYLINDER GP-BLADE TIP	560
CYLINDER GP-CENTERSHIFT	561
CYLINDER GP-LIFT	563
CYLINDER GP-RIPPER	564
CYLINDER GP-SCARIFIER	565
CYLINDER GP-SIDESHIFT	566
CYLINDER GP-STEERING	567
CYLINDER GP-WHEEL LEAN	570
DETENT GP-CONTROL VALVE	571
DRIVE GP-CIRCLE	574
HYDRAULIC AR	577
LINES GP-ACCUMULATOR	578
LINES GP-HYDRAULIC	580
LINES GP-HYDRAULIC FAN	591
LINES GP-PUMP	597
LINES GP-RIPPER	606
LINES GP-SECONDARY STEERING	611
LINES GP-STEERING	613
LOCK GP-CENTERSHIFT	616
MOTOR GP-GEAR	617
MOTOR GP-GEROTOR	618
PUMP & MOTOR GP-SEC STEERING	620
PUMP & MTG GP-PISTON	621
PUMP & MTG GP-SECONDARY STEER	622
PUMP GP-PISTON	623
ROTATING GP-PUMP	627
SHAFT GP-PUMP DRIVE	629
STEERING AR-SECONDARY	630
SWASHPLATE GP	631
SWIVEL GP	632
TANK & FILTER GP-HYDRAULIC	633
TANK & MTG GP-HYDRAULIC	635
VALVE & LINKAGE GP	636
VALVE GP-BANK 4	666
VALVE GP-BANK 5	670
VALVE GP-BANK 6	676
VALVE GP-BANK 7	678
VALVE GP-COMBINATION	679
VALVE GP-CONTROL	683
VALVE GP-PUMP CONTROL	721
VALVE GP-PURGE	725
VALVE GP-RELIEF	727
VALVE GP-SHUTTLE	739
VALVE GP-SOLENOID	741
VALVE GP-SOLENOID & MANIFOLD	743
IMPLEMENTS	745
CIRCLE GP	745
DRAWBAR GP	749
PLATE GP-PUSH	751
WORK TOOLS	752
BIT GP-END	752
BLADE GP	753
BRACKET GP-SCARIFIER	756
EDGE GP-CUTTING	757
EXTENSION GP-BLADE	758
LIFT GP-BLADE	761
MOUNTING GP-RIPPER	763
MOUNTING GP-SNOW WING	764
RIPPER AR	765
RIPPER GP	766
SCARIFIER AR	768
SCARIFIER GP	769
TOOTH GP-SCARIFIER	775
OPERATOR STATION	777
ACCESSORY GP-CAB	777
ADJUSTER GP-SEAT	779
AIR CONDITIONER & MOUNTING GP	781
AIR CONDITIONER AR	781
AIR CONDITIONER GP	782
ARMREST GP	786
CAB AR-HIGH PROFILE	788
CAB AR-NON-ROPS	788
CAB GP	788

TABLE OF CONTENTS

Name	Page
COMPRESSOR GP-REFRIGERANT	790
CONDENSER & MTG GP-REFRIGERANT	793
CONSOLE GP-OPERATOR	794
CONVERSION AR-NON-ROPS	798
DOOR GP	799
DOOR GP-CAB	804
DUCT & CONTROL GP	812
DUCT GP	813
EXTENSION GP-BACKREST	814
FAN GP-CIRCULATING	816
FILTER GP-CAB AIR	822
HAMMER & MOUNTING GP	823
HEATER & MTG GP-CAB	825
HEATER AR-CAB	825
HEATER GP-CAB	827
HORN GP-AIR	835
HOUSING GP-SEAT SUSPENSION	840
IDLER GP-BELT	843
INSTALLATION AR-RADIO	844
INSTALLATION GP-RADIO	845
INSULATION GP-WEATHER	847
LINER GP-CAB	849
LINES GP-AIR CONDITIONER	863
LINES GP-HEATER	866
LITERATURE GP	868
LOUVER GP-CAB	869
MIRROR GP-REAR VIEW	870
MODULE GP-QUAD GAUGE	878
MODULE GP-SPEEDOMETER & TACH	879
MOUNTING GP-CAB	880
MOUNTING GP-ROPS	881
PAN GP-BACKREST	884
PAN GP-SEAT	885
PANEL GP-CAB	887
PANEL GP-INSTRUMENT	891
ROPS AR-ENCLOSED	898
ROPS AR-OPEN	899
ROPS GP-ENCLOSED	899
ROPS GP-OPEN	901
SCREEN GP-SUN	902
SEAT BELT GP	903
SEAT GP	906
SEAT GP-STATIC	914
SEAT GP-SUSPENSION	919
SUPPORT GP-SEAT	929
SUSPENSION GP-SEAT	931
WASHER GP-WINDOW	935
WINDOW GP	940
WINDOW GP-CAB	942
WIPER AR-WINDOW	947
WIPER GP-WINDOW	948

Name	Page
SERVICE EQUIPMENT AND SUPPLIES	969
BOX GP-TOOL	969
FILM GP	970
JACK-HYDRAULIC	972
PLATE & FILM GP	972
PART NUMBER INDEX	B1

TABLE DES MATIÈRES

Désignation	Page
GÉNÉRALITÉS	A27
OPTIONS DE RÉPARATION	A44
ADDITIFS POUR LIQUIDE DE REFROIDISSEMENT	A49
PIÈCES DE RECHANGE	A68
INDEX	A119
VERSION DE MACHINE	1
VERSION DE TRANSFORMATION - HOMOLOGATION	1
VUE DU MODÈLE	2
ÉQUIPEMENT POUR DÉPLACEMENT ROUTIER (VERSION)	4
VERSION NEIGE - NIVELEUSE	5
MOTEUR COMPLET	6
MOTEUR (VERSION)	6
MOTEUR - PARTIE CENTRALE (VERSION)	7
MOTEUR STANDARD	8
COMPRESSEUR D'AIR (ASS)	8
ARBRE A CAMES (ASS)	11
BLOC-CYLINDRES - COUVERCLE (ASS)	12
COUVERCLE DE CARTER AV (ASS)	13
CACHE-SOUPAPES (ASS)	14
VILEBREQUIN (ASS)	16
BLOC-CYLINDRES (ASS)	17
CULASSE (ENS)	19
CULASSE (ASS)	22
AMORTISSEUR DE VIBRATIONS ET POULIE (ASS)	25
VIDANGE-HUILE DE MOTEUR (ASS)	26
BOULONNERIE DE LA CULASSE (ASS)	27
VOLANT MOTEUR (ASS)	28
PIGNONNERIE AV (ASS)	29
CARTER DE VOLANT (ASS)	30
CARTER AV (ASS)	31
OEILLETONS DE LEVAGE MOTEUR (ASS)	33
MONTAGE DE MOTEUR ET BOÎTE (ASS)	34
HUILE MOTEUR - CARTER (ASS)	36
PANNEAU D'INSONORISATION (ASS)	37
PISTON ET BIELLE (ASS)	38
PISTON (ASS)	39
BOUCHON DE MOTEUR (ASS)	40
POULIE-ROUE AVANT (ASS)	41
AXE DE CULBUTEUR (ASS)	42
JOINT DE VILEBREQUIN (ASS)	44
SUPPORT DE MOTEUR (ASS)	45
INSONORISATION (ASS)	46
CULBUTERIE (ASS)	47
CIRCUIT DE GRAISSAGE	49
FILTRE À HUILE MOTEUR (ASS)	49
DISPOSITIF D'EVACUATION DES VAPEURS DE CARTER	52
JAUGE D'HUILE MOTEUR (BAIONNETTE) (ASS)	54
CANALISATIONS D'HUILE MOTEUR (ASS)	55
CANALISATIONS D'HUILE DE TURBOCOMPRESSEUR (ASS)	57
POMPE A HUILE MOTEUR (ASS)	58
CIRCUIT DE REFROIDISSEMENT	59
REFROIDISSEUR D'HUILE MOTEUR (ASS)	59
REFROIDISSEMENT (VERSION)	60
COUDE D'EAU (ASS)	62
MOTEUR ET VENTILATEUR (ASS)	63
BOULONNERIE DU RADIATEUR (ASS)	65
CANALISATIONS D'EAU (ASS)	66
PLAQUE DE RADIATEUR (ASS)	69
POMPE A EAU (ASS)	70
RADIATEUR (ASS)	72
CIRCUIT D'ADMISSION D'AIR ET D'ÉCHAPPEMENT	74
REFROIDISSEUR D'ADMISSION ET MONTAGE (ASS)	74
FILTRE A AIR (ASS)	75
COUDE D'ADMISSION D'AIR (ASS)	78
COUDE D'ÉCHAPPEMENT (ASS)	79
CANALISATIONS D'AIR (ASS)	80
COLLECTEUR D'ÉCHAPPEMENT (ASS)	81
SILENCIEUX (ASS)	82
TURBOCOMPRESSEUR (ASS)	83
CIRCUIT DE CARBURANT	86
COMMANDE DE RÉGULATEUR (ASS)	86
RÉSERVOIR DE CARBURANT - BOULONNERIE (ASS)	88
FILTRE A CARBURANT (ASS)	89
FILTRE DE SÉPARATEUR D'EAU ET DE CARBURANT (ASS)	91
INJECTEUR DE CARBURANT (ASS)	92

* TRADUCTION NON DISPONIBLE AU MOMENT DE LA PUBLICATION

TABLE DES MATIÈRES

Désignation	Page
CANALISATIONS DE CARBURANT (ASS)	94
CANALISATIONS DU FILTRE A CARBURANT (ASS)	101
MONTAGE DE FILTRE À CARBURANT (ASS)	103
POMPE D'INJECTEURS-POMPES HYDRAU. ET MONTAGE	104
*PUMP GP-FUEL PRM & PRIM FILTER	106
POMPE D'INJECTION (ASS)	108
REGULATEUR DE PRESSION DE CARBURANT (ASS)	111
RÉSERVOIR DE CARBURANT (ASS)	113
POMPE DE SÉPARATEUR D'EAU ET D'AMORÇAGE DE CARBURANT (ASS)	117
CIRCUIT ÉLECTRIQUE ET DE DÉMARRAGE	118
AVERTISSEUR (ASS)	118
ALTERNATEUR DE CHARGE (ASS)	120
BATTERIE (ASS)	127
BLOC DE BRANCHEMENT (ASS)	131
DISJONCTEUR (ASS)	132
COMMANDE ET MONTAGE - MOTEUR	134
COMMANDE ELECTRONIQUE DE MOTEUR (ASS)	135
COMMANDE DE DIRECTION SECONDAIRE (ASS)	137
*CONTROL GP-UNPROGRAMMED	138
COMMANDE NON PROGRAMMEE (ASS)	139
TRANSFORMATION ÉLECTRIQUE (VERSION)	140
TRANSFORMATION ELECTRIQUE (ASS)	141
ÉLECTRONIQUE-MONITEUR (ASS)	146
ÉLECTRONIQUE DE TRANSMISSION (ASS)	146
EAU DES CHEMISES - RECHAUFFEUR (ASS)	148
MONTAGE - GYROPHARE (ASS)	150
PLAFONNIER (ASS)	152
LAMPE - PHARE (ASS)	153
PHARE AV (ASS)	158
LAMPE - PHARE ET CLIGNOTANT	164
REPÈRE DE LAMPE (ASS)	168
LAMPE-PLAQUE D'IMMATRICULATION (ASS)	169
LAMPE - CLIGNOTANT DE DIRECTION (ASS)	170
LAMPE - GYROPHARE (ASS)	173
ÉCLAIRAGE-PROJECTEURS (VERSION)	175
ÉCLAIRAGE (VERSION)-PROJECTEUR & SIGNAL	177
ECLAIRAGE AR (ASS)	178
ÉCLAIRAGE - PROJECTEURS (ASS)	182
ÉCLAIRAGE - FEUX DE ROUTE (ASS)	228
ÉCLAIRAGE CLIGNOTANT	229
ÉCLAIRAGE - AVERTISSEUR (ASS)	231
ÉCLAIRAGE - GYROPHARE (ASS)	236
MOTEUR ELECTRIQUE (ASS)	238
MONTAGE DE SOLÉNOÏDE (ASS)	239
PRISE DE BATTERIE AUXILIAIRE (ASS)	240
CAPTEUR - MOTEUR (ASS)	241
SONDE - CIRCUIT DE CARBURANT	243
CAPTEUR DE PRESSION (ASS)	245
CAPTEUR DE VITESSE (ASS)	251
CAPTEUR DE TEMPERATURE (ASS)	253
*STARTING AID GP	258
AUXILIAIRE DE DÉMARRAGE (ASS)	259
DÉMARREUR ÉLECTRIQUE (ASS)	260
INTERRUPTEUR - DÉRIVATION (ASS)	265
ROBINET DE BATTERIE (ASS)	266
INTERRUPTEUR D'ÉCLAIRAGE (ASS)	267
CONTACTEUR MAGNETIQUE (ASS)	269
INTERRUPTEUR D'ESSUIE-GLACE (ASS)	272
CÂBLE D'AMORTISSEUR DE LAME (ASS)	273
CABLAGE DE CABINE (ASS)	275
CABLAGE - ELECTRONIQUE DU MOTEUR (ASS)	286
CABLAGE AV (ASS)	293
CABLAGE AR (ASS)	302
CABLAGE DE DIRECTION AUXILIAIRE (ASS)	329
CABLAGE DE LA CONSOLE DE CHANGEMENTS DE VITESSE	332
CABLAGE DE LA CONSOLE DE DIRECTION	338
TRANSMISSION	345
CHANGEMENT DE VITESSES AUTOMATIQUE (VERSION)	345
CARTER ET PIECES DE BOITE (ASS)	346
ENTRAÎNEMENT DE CHAÎNE (ASS)	350
EMBRAYAGE DE BOÎTE DE VITESSES (ASS)	351
COMMANDE D'EMBRAYAGE (ASS)	361
COMMANDE DE DIFFÉRENTIEL - VERROUILLAGE (ASS)	363

* TRADUCTION NON DISPONIBLE AU MOMENT DE LA PUBLICATION

TABLE DES MATIÈRES

Désignation	Page
COMMANDE DE BOITE DE VITESSES (ASS)	365
COMMANDE HYDRAULIQUE DE BOÎTE (ASS)	367
REFROIDISSEUR D'HUILE DE BOÎTE (ASS)	368
ACCOUPLEMENT DE TORSION (ASS)	372
COURONNE ET DIFFERENTIEL (ASS)	373
DIFFERENTIEL (ASS)	375
GOULOTTE DE REMPLISSAGE D'HUILE DE TRANSMISSION	377
FILTRE À HUILE ET MONTAGE (ASS)	378
FILTRE A HUILE (ASS)	380
RÉDUCTEURS (ASS)	381
CANALISATIONS D'HUILE DE BOÎTE (ASS)	383
ROUE - GROUPE DE MONTAGE	385
POMPE A ENGRENAGES (ASS)	386
ÉCRAN MAGNÉTIQUE (ASS)	388
ARBRE D'ENTRAÎNEMENT (ASS)	389
ARBRE D'ENTRÉE (ASS)	390
TANDEM ET CARTER (ASS)	391
PNEU ET JANTE (VERSION)	392
BOÎTE DE VITESSES (VERSION)	393
JOINT UNIVERSEL (ASS)	396
SOUPAPE ET MONTAGE DE VERROUILLAGE DE DIF. (ASS)	397
SOUPAPE SELECTRICE ET REGULATRICE DE PRESSION	398
SOUPAPE - SOLÉNOÏDE (ASS)	404
DISTRIBUTEUR DE BOITE (ASS)	406
ROUE ET PNEU (VERSION)	408
ROUE ET PNEU (ASS)	426
ROUE (VERSION)	464
JANTE (ASS)	466
CHÂSSIS ET BENNE	471
ESSIEU AV (ASS)	471
CHÂSSIS ET CARTER (ASS)	474
COUVERCLE DE VISITE (ASS)	475
COUVERCLE DE PROTECTION (ASS)	476
CARENAGE DE MOTEUR (ASS)	480
BOULONNERIE (ASS)	488
CHÂSSIS AV (ASS)	489
PROTÈGE-RADIATEUR ET SUPPORT (ASS)	491
BLINDAGE INFÉRIEUR (ASS)	494
BLINDAGE DES CANALISATIONS DES FREINS	495
PROTECTION DU RÉSERVOIR DE CARBURANT (ASS)	496
PROTECTION DE PLATE-FORME (ASS)	497
ATTELAGE D'ARTICULATION (ASS)	501
ATTELAGE-REMORQUAGE (ASS)	503
CANALISATIONS DE GRAISSAGE (ASS)	504
ARTICULATION DE DIRECTION (ASS)	505
MONTAGE - IMMATRICULATION (ASS)	506
ÉCRAN D'ARBRE MOTEUR (ASS)	507
ÉCRAN THERMIQUE (ASS)	508
MARCHEPIED (ASS)	509
VERSION DE SUPPORT DE CHÂSSIS ARRIÈRE	510
SUPPORT DU RESERVOIR DE CARBURANT (ASS)	514
PLATE-FORME - SUPPORT (ASS)	515
CIRCUIT DE FREINAGE	516
DESHYDRATEUR (ASS)	516
FREIN DE STATIONNEMENT (ASS)	520
FREIN DE MANOEUVRE (ASS)	522
COMMANDE DE FREIN DE STATIONNEMENT (ASS)	524
FREIN DE MANOEUVRE - COMMANDE (ASS)	526
CANALISATIONS DU RÉSERVOIR D'AIR (ASS)	530
RÉSERVOIR PNEUMATIQUE (ASS)	531
DISTRIBUTEUR D'AIR (ASS)	533
SOUPAPE - SOLÉNOÏDE (ASS)	536
CIRCUIT HYDRAULIQUE	538
ACCUMULATEUR ET MONTAGE - HYDRAULIQUE (ASS)	538
ACCUMULATEUR - AMORTISSEUR DE LAME (VERSION)	539
ACCUMULATEUR (ASS)	539
ACCUMULATEUR HYDRAULIQUE (ASS)	541
ACCUMULATEUR - DIRECTION (ASS)	544
COMMANDE HYDRAULIQUE (VERSION)	545
*CONTROL GP-HYDRAULIC LOCKOUT	547
COMMANDE DE DIRECTION (ASS)	548
VÉRIN D'ARTICULATION ET MONTAGE (ASS)	549
VÉRIN DE RELEVAGE DE LAME ET MONTAGE (ASS)	551
VÉRIN D'INCLINAISON DE LAME ET MONTAGE (ASS)	552

* TRADUCTION NON DISPONIBLE AU MOMENT DE LA PUBLICATION

TABLE DES MATIÈRES

Désignation	Page
VÉRIN DE DÉPORT DE CERCLE ET MONTAGE (ASS)	553
VÉRIN DE SCARIFICATEUR ET MONTAGE (ASS)	554
VÉRIN DE DÉPORT DE LAME (ASS)	555
VERIN DE DIRECTION ET MONTAGE (ASS)	556
VÉRIN D'INCLINAISON DE ROUE ET MONTAGE (ASS)	557
VÉRIN D'ARTICULATION (ASS)	558
VÉRIN D'INCIDENCE DE LAME (ASS)	560
VÉRIN DE DÉPORT DE CERCLE (ASS)	561
VÉRIN DE LEVAGE (ASS)	563
VERIN DE RIPPER (ASS)	564
VÉRIN DE SCARIFICATEUR (ASS)	565
VÉRIN DE DÉPORT DE LAME (ASS)	566
VERIN DE DIRECTION (ASS)	567
VÉRIN D'INCLINAISON DE ROUE (ASS)	570
DISPOSITIF D'ARRÊT DE DISTRIBUTEUR (ASS)	571
ENTRAÎNEMENT DE CERCLE (ASS)	574
VERSION HYDRAULIQUE	577
CANALISATIONS D'ACCUMULATEUR (ASS)	578
CANALISATIONS HYDRAULIQUES (ASS)	580
CANALISATIONS HYDRAULIQUES DE VENTILATEUR (ASS)	591
CANALISATIONS DE POMPE (ASS)	597
CANALISATIONS DU RIPPER (ASS)	606
CANALISATION DE DIRECTION AUXILIAIRE	611
CANALISATIONS DE DIRECTION (ASS)	613
VERROUILLAGE DE DÉPORT DE CERCLE (ASS)	616
MOTEUR À ENGRENAGES (ASS)	617
MOTEUR HYDRAULIQUE (ASS)	618
POMPE DE DIRECTION AUXILIAIRE ET MONTAGE (ASS)	620
POMPE ET MONTAGE - PISTON (ASS)	621
POMPE DE DIRECTION AUXILIAIRE ET MONTAGE (ASS)	622
POMPE A PISTONS (ASS)	623
GROUPE DE ROTATION DE POMPE	627
ARBRE D'ENTRAÎNEMENT DE POMPE (ASS)	629
DIRECTION AUXILIAIRE (VERSION)	630
PLATEAU OSCILLANT (ASS)	631
GROUPE D'ORIENTATION	632
RÉSERVOIR HYDRAULIQUE ET FILTRE (ASS)	633
RÉSERVOIR HYDRAULIQUE ET MONTAGE (ASS)	635
SOUPAPE ET TIMONERIE (ASS)	636
DISTRIBUTEUR 4 ÉLÉMENTS (ASS)	666
DISTRIBUTEUR 5 ÉLÉMENTS (ASS)	670
DISTRIBUTEUR 6 ÉLÉMENTS (ASS)	676
DISTRIBUTEUR 7 ÉLÉMENTS (ASS)	678
SOUPAPE DE COMBINAISON (ASS)	679
DISTRIBUTEUR (ASS)	683
*VALVE GP-PUMP CONTROL	721
SOUPAPE DE PURGE (ASS)	725
CLAPET DE DECHARGE (ASS)	727
VANNE PILOTE (ASS)	739
SOUPAPE - SOLÉNOÏDE (ASS)	741
SOUPAGE - SOLÉNOIDE ET COLLECTEUR	743
ÉQUIPEMENTS	745
CERCLE (ASS)	745
BARRE D'ATTELAGE (ASS)	749
PLAQUE DE POUSSÉE (ASS)	751
OUTILS DE TRAVAIL	752
EMBOUT D'EXTRÉMITÉ (ASS)	752
LAME (ASS)	753
SUPPORT DE SCARIFICATEUR (ASS)	756
LAME DE COUPE (ASS)	757
RALLONGE DE LAME (ASS)	758
LEVAGE - LAME (ASS)	761
MONTAGE DE RIPPER (ASS)	763
MONTAGE D'AILERON CHASSE-NEIGE (ASS)	764
RIPPER (VERSION)	765
RIPPER (ASS)	766
SCARIFICATEUR (VERSION)	768
SCARIFICATEUR (ASS)	769
DENT DE SCARIFICATEUR (ASS)	775
POSTE DE CONDUITE	777
VISIÈRE - GROUPE AUXILIAIRE	777
REGLAGE DE SIEGE (ASS)	779
CLIMATISEUR ET MONTAGE (ASS)	781
CLIMATISEUR (VERSION)	781
CLIMATISEUR (ASS)	782
ACCOUDOIR (ASS)	786
CABINE - PROFIL ÉLEVÉ (VERSION)	788
CABINE SANS ROPS (VERSION)	788
CABINE (ASS)	788
COMPRESSEUR DE REFRIGERANT (ASS)	790

* TRADUCTION NON DISPONIBLE AU MOMENT DE LA PUBLICATION

TABLE DES MATIÈRES

Désignation	Page
CONDENSATEUR ET MONTAGE (RÉFRIGÉRANT)	793
CONSOLE DE CONDUITE (ASS)	794
VERSION DE TRANSFORMATION - SANS ROPS	798
PORTE (ASS)	799
PORTIÈRE DE CABINE (ASS)	804
CONDUIT ET COMMANDE (ASS)	812
CONDUIT (ASS)	813
RALLONGE DU DOSSIER DE SIEGE	814
VENTILATEUR DE CABINE (ASS)	816
FILTRE À AIR DE CABINE (ASS)	822
MARTEAU ET MONTAGE (ASS)	823
CHAUFFAGE ET MONTAGE - CABINE (ASS)	825
CHAUFFAGE DE CABINE (VERSION)	825
CHAUFFAGE DE CABINE (ASS)	827
KLAXON PNEUMATIQUE (ASS)	835
SUSPENSION DE SIEGE - CARTER (ASS)	840
COURROIE INTERMÉDIAIRE (ASS)	843
MONTAGE DE RADIO (VERSION)	844
MONTAGE DE RADIO (ASS)	845
ISOLATION DE CABINE (ASS)	847
CABINE - REVÊTEMENT (ASS)	849
CANALISATIONS DE CLIMATISEUR (ASS)	863
CANALISATIONS DE CHAUFFAGE (ASS)	866
LITTÉRATURE (ASS)	868
VOLET - CABINE (ASS)	869
RÉTROVISEUR (ASS)	870
MODULE - QUATRE INSTRUMENTS (ASS)	878
MODULE D'INDICATEUR DE VITESSE ET COMPTE-TOURS (ASS)	879
MONTAGE DE CABINE (ASS)	880
MONTAGE DU TOIT ROPS (ASS)	881
COUVERCLE INFÉRIEUR-DOSSIER (ASS)	884
SIEGE - COUVERCLE INFERIEUR (ASS)	885
TABLEAU DE BORD (ASS)	887
TOIT ROPS FERME (VERSION)	898
ROPS OUVERTE (VERSION)	899
CABINE ROPS FERMÉE (ASS)	899
TOIT ROPS - OUVERT (ASS)	901
PARE-SOLEIL (ASS)	902
CEINTURE DE SECURITE (ASS)	903
SIÈGE (ASS)	906
SIÈGE À ÉQUILIBRAGE STATIQUE (ASS)	914
SIÈGE AVEC SUSPENSION (ASS)	919
SUPPORT DE SIÈGE (ASS)	929
SIÈGE AVEC SUSPENSION (ASS)	931
LAVE-GLACE - VITRE (ASS)	935
VITRE (ASS)	940
VITRE DE CABINE (ASS)	942
ESSUIE-GLACE (VERSION)	947
ESSUIE-GLACE (ASS)	948
MATÉRIEL ET FOURNITURES D'ENTRETIEN	969
*BOX GP-TOOL	969
PLAQUE SIGNALÉTIQUE (ASS)	970
CRIC - HYDRAULIQUE	972
PLAQUES SIGNALETIQUES ET AUTOCOLLANTS (ASS)	972
INDEX DE NUMÉROS DE PIÈCES	B1

* TRADUCTION NON DISPONIBLE AU MOMENT DE LA PUBLICATION

CONTENIDO

Nombre	Página
INFORMACIÓN GENERAL	A31
ALTERNATIVAS DE REPARACIÓN	A45
ADITIVOS DE REFRIGERANTE SUPLEMENTARIOS	A50
PIEZAS DE MANTENIMIENTO	A77
INDICE	A137
CONFIGURACIÓN DE MÁQUINA	1
CONFIGURACIÓN DE TRANSFORMACIÓN PARA CERTIFICACIÓN	1
CONFIGURACIÓN GENERAL	2
CONFIGURACIÓN PARA CARRETERA	4
MOTONIVELADORA PARA LA NIEVE (CONFIG)	5
CONFIGURACIÓN DE MOTOR	6
CONFIGURACIÓN DE MOTORES	6
MOTOR - NÚCLEO (CONFIG)	7
MOTOR BÁSICO	8
COMPRESOR DE AIRE (GR)	8
ÁRBOL DE LEVAS (GR)	11
TAPA DEL BLOQUE MOTOR (GR)	12
TAPA DE LA CAJA DELANTERA (GR)	13
TAPA DEL MECANISMO DE VÁLVULAS (GR)	14
CIGÜEÑAL (GR)	16
BLOQUE MOTOR (GR)	17
CULATA DE CILINDROS (CONJ)	19
CULATA DE CILINDROS (GR)	22
AMORTIGUADOR Y POLEA (GR)	25
DRENAJE DEL ACEITE DE MOTOR	26
CULATA DE CILINDROS - TORNILLERÍA DE LA (GR)	27
VOLANTE (GR)	28
ENGRANAJE DELANTERO (GR)	29
VOLANTE - CAJA DE (GR)	30
CAJA DELANTERA (GR)	31
CÁNCAMOS DE LEVANTAMIENTO DEL MOTOR (GR)	33
MONTAJE DEL MOTOR Y LA TRANSMISIÓN (GR)	34
CÁRTER - COLECTOR DEL (GR)	36
PANEL DE INSONORIZACIÓN (GR)	37
PISTÓN Y BIELA (GR)	38
PISTON (GR)	39
TAPÓN DEL MOTOR (GR)	40
POLEA DE RUEDA GUIA (GR)	41
BALANCÍN (GR)	42
SELLO DE CIGÜEÑAL (GR)	44
MOTOR - SOPORTE DEL (GR)	45
INSONORIZADOR (GR)	46
MECANISMO DE VÁLVULAS (GR)	47
SISTEMA DE LUBRICACIÓN	49
FILTRO DE ACEITE DEL MOTOR (GR)	49
ESCAPE DE GASES (GR)	52
INDICADOR DEL NIVEL DE ACEITE (VARILLA) (GR)	54
TUBERÍAS DE ACEITE DEL MOTOR (GR)	55
TURBOCOMPRESOR - TUBERÍAS DE ACEITE DEL (GR)	57
BOMBA DE ACEITE DEL MOTOR (GR)	58
SISTEMA DE ENFRIAMIENTO	59
ENFRIADOR DE ACEITE DEL MOTOR (GR)	59
CONFIGURACIÓN DE ENFRIAMIENTO	60
CODO DE AGUA (GR)	62
MOTOR Y VENTILADOR (GR)	63
TORNILLERIA DEL RADIADOR	65
TUBERÍAS DEL AGUA (GR)	66
*PLATE GP-RADIATOR	69
BOMBA DE AGUA (GR)	70
RADIADOR (GR)	72
SISTEMA DE ADMISIÓN Y ESCAPE DE AIRE	74
GRUPO DE POSTENFRIAMIENTO Y MONTAJE	74
FILTRO DE AIRE (GR)	75
CODO DE ADMISIÓN DE AIRE (GR)	78
CODO DE ESCAPE (GR)	79
AIRE - TUBERÍAS DE (GR)	80
MÚLTIPLE DE ESCAPE (GR)	81
SILENCIADOR (GR)	82
TURBOCOMPRESOR (GR)	83
SISTEMA DE COMBUSTIBLE	86
CONTROL DE REGULADOR (GR)	86
TORNILLERÍA DEL TANQUE DE COMBUSTIBLE	88
FILTRO DE COMBUSTIBLE (GR)	89
FILTRO DE COMBUSTIBLE Y SEPARADOR DE AGUA (GR)	91
INYECTOR DE COMBUSTIBLE (GR)	92
TUBERÍAS DE COMBUSTIBLE (GR)	94

* NO HAY TRADUCCION DISPONIBLE EN EL MOMENTO DE LA IMPRESION

CONTENIDO

Nombre	Página
TUBERÍAS DEL FILTRO DE COMBUSTIBLE	101
GRUPO DE MONTAJE, FILTRO DE COMBUSTIBLE	103
BOMBA HIDRÁULICA DEL INYECTOR UNITARIO Y MONTAJE	104
*PUMP GP-FUEL PRM & PRIM FILTER	106
BOMBA DE INYECCIÓN UNITARIA (GR)	108
REGULADOR DE LA PRESION DE COMBUSTIBLE (GR)	111
COMBUSTIBLE - TANQUE DE (GR)	113
SEPARADOR DE AGUA Y BOMBA DE CEBADO DE COMBUSTIBLE (GR)	117
SISTEMA ELÉCTRICO Y DE ARRANQUE	118
ALARMA (GR)	118
CARGA - ALTERNADOR DE (GR)	120
BATERÍA (GR)	127
BLOQUE DE EMPALME (GR)	131
DISYUNTOR DE CIRCUITO (GR)	132
CONTROL ELECTRÓNICO DEL MOTOR Y MONTAJE	134
CONTROL ELECTRÓNICO DEL MOTOR (GR)	135
CONTROL DE LA DIRECCION SECUNDARIA (GR)	137
*CONTROL GP-UNPROGRAMMED	138
CONTROL NO PROGRAMADO (GR)	139
CONVERTIDOR ELÉCTRICO (CONFIG)	140
CONVERTIDOR ELÉCTRICO (GR)	141
ELECTRONICA DE MONITOR (GR)	146
TREN DE FUERZA-GRUPO ELECTRÓNICO	146
AGUA DE LAS CAMISAS - CALENTADOR DEL (GR)	148
BALIZA DE ADVERTENCIA (GR) - INSTALACIÓN	150
LÁMPARA DEL TECHO (GR)	152
REFLECTOR (GR)	153
LÁMPARA DE FARO DELANTERO (GR)	158
LÁMPARA DE LUZ DELANTERA Y DE SEÑAL (GR)	164
LAMPARA MARCADORA (GR)	168
LAMPARA DE PLACA DE REGISTRO (GR)	169
LUZ DE SEÑAL DE GIRO (GR)	170
LÁMPARA DE BALIZA DE ADVERTENCIA (GR)	173
REFLECTORES (CONFIG)	175
LUCES DE REFLECTOR Y SEÑAL (CONFIG)	177
LUCES DE RETROCESO (GR)	178
LUCES DE REFLECTOR (GR)	182
LUCES DE DESPLAZAMIENTO (GR)	228
LUCES DE GIRO (GR)	229
LUCES DE ADVERTENCIA (GR)	231
LUZ DE BALIZA (GR)	236
MOTOR ELÉCTRICO (GR)	238
MONTAJE DE SOLENOIDE (GR)	239
ENCHUFE DE ARRANQUE AUXILIAR (GR)	240
SENSOR DEL MOTOR (GR)	241
DETECTOR DE POSICIÓN (SISTEMA DE COMBUST.) (GR)	243
SENSOR DE PRESIÓN (GR)	245
SENSOR DE VELOCIDAD (GR)	251
SENSOR DE TEMPERATURA (GR)	253
*STARTING AID GP	258
AUXILIAR DE ARRANQUE (GR)	259
MOTOR DE ARRANQUE ELÉCTRICO (GR)	260
INTERRUPTOR DE DERIVACIÓN	265
DISYUNTOR (GR)	266
INTERRUPTOR DE LUZ (GR)	267
INTERRUPTOR MAGNÉTICO (GR)	269
INTERRUPTOR DEL LIMPIADOR (GR)	272
GRUPO DE CABLES, HOJA AMORTIGUADORA	273
CABLES DE LA CABINA (GR)	275
CABLES DEL SISTEMA ELECTRÓNICO DEL MOTOR (GR)	286
CABLES DELANTEROS (GR)	293
CABLES POSTERIORES (GR)	302
CABLES DE LA DIRECCIÓN SECUNDARIA	329
CABLES DE LA CONSOLA DE CAMBIOS (GR)	332
CABLES DE LA CONSOLA DE DIRECCIÓN (GR)	338
TREN DE FUERZA	345
CAMBIO AUTOMÁTICO DE VELOCIDADES (CONFIG)	345
CAJA Y PIEZAS DE LA TRANSMISIÓN (GR)	346
CADENA DE IMPULSIÓN (GR)	350
EMBRAGUE DE LA TRANSMISIÓN (GR)	351
CONTROL DEL EMBRAGUE (GR)	361
CONTROL DE TRABA DEL DIFERENCIAL (GR)	363
CONTROL DE LA TRANSMISIÓN (GR)	365

* NO HAY TRADUCCION DISPONIBLE EN EL MOMENTO DE LA IMPRESION

CONTENIDO

Nombre	Página
CONTROL HIDRÁULICO DE LA TRANSMISIÓN (GR)	367
ENFRIADOR DE ACEITE DE LA TRANSMISIÓN (GR)	368
ACOPLAMIENTO TORSIONAL (GR)	372
DIFERENCIAL Y CORONA (GR)	373
DIFERENCIAL (GR)	375
TUBO DE LLENADO DE ACEITE DE LA TRANSMISIÓN (GR)	377
FILTRO DE ACEITE Y MONTAJE (GR)	378
FILTRO DE ACEITE (GR)	380
MANDO FINAL (GR)	381
TUBERÍAS DE ACEITE DE LA TRANSMISIÓN (GR)	383
MONTAJE DE RUEDA (GR)	385
BOMBA DE ENGRANAJES (GR)	386
REJILLA MAGNÉTICA (GR)	388
EJE DE MANDO (GR)	389
EJE DE ENTRADA (GR)	390
TÁNDEM Y CUBIERTA (GR)	391
ARO Y RUEDA	392
TRANSMISION (CONFIG)	393
JUNTA UNIVERSAL (GR)	396
VÁLVULA DE LA TRABA DEL DIFERENCIAL Y MONTAJE (GR)	397
VÁLVULA SELECTORA Y DE CONTROL DE PRESIÓN (GR)	398
VÁLVULA DE SOLENOIDE (GR)	404
VÁLVULA DE CONTROL DE LA TRANSMISIÓN (GR)	406
RUEDA Y LLANTA (CONFIG)	408
RUEDA Y NEUMÁTICO (GR)	426
RUEDA (CONFIG)	464
RUEDA (GR)	466
BASTIDOR Y CAJA	471
EJE DELANTERO (GR)	471
CAJA Y BASTIDOR (GR)	474
GRUPO DE TAPA, ACCESO	475
CUBIERTA PROTECTORA (GR)	476
COMPARTIMIENTO DEL MOTOR (GR)	480
TORNILLERÍA (GR)	488
BASTIDOR DELANTERO (GR)	489
PROTECTOR Y SOPORTE DEL RADIADOR (GR)	491
PROTECTOR INFERIOR (GR)	494
PROTECTOR DE LAS TUBERÍAS DE LOS FRENOS (GR)	495
PROTECTOR DEL TANQUE DE COMBUSTIBLE (GR)	496
PROTECTOR DE LA PLATAFORMA (GR)	497
ENGANCHE ARTICULADO (GR)	501
ENGANCHE DE REMOLQUE (GR)	503
TUBERÍAS DE ENGRASE (GR)	504
TIRANTE DE DIRECCIÓN (GR)	505
MONTAJE-REGISTRO (GR)	506
PROTECTOR TÉRMICO DEL EJE DE MANDO (GR)	507
PROTECTOR TÉRMICO (GR)	508
ESTRIBO DEL OPERADOR (GR)	509
CONFIGURACIÓN DE SOPORTE DE CHASIS TRASERO	510
SOPORTE DEL TANQUE DE COMBUSTIBLE (GR)	514
SOPORTE DE PLATAFORMA (GR)	515
SISTEMA DE FRENOS	516
DESHIDRATADOR (GR)	516
FRENO DE ESTACIONAMIENTO (GR)	520
FRENO DE SERVICIO (GR)	522
CONTROL DEL FRENO DE ESTACIONAMIENTO	524
FRENO DE SERVICIO - CONTROL (GR)	526
TUBERÍAS DEL TANQUE DE AIRE (GR)	530
TANQUE DE AIRE (GR)	531
CONTROL DE AIRE-VÁLVULA	533
VÁLVULA DE SOLENOIDE (GR)	536
SISTEMA HIDRÁULICO	538
ACUMULADOR HIDRAULICO Y MONTAJE (GR)	538
ACUMULADOR DE AMORTIGUACIÓN DE LA HOJA (CONFIG)	539
ACUMULADOR (GR)	539
ACUMULADOR HIDRAULICO (GR)	541
ACUMULADOR DE LA DIRECCIÓN (GR)	544
CONTROL HIDRÁULICO (CONFIG)	545
*CONTROL GP-HYDRAULIC LOCKOUT	547
CONTROL DE DIRECCIÓN (GR)	548
CILINDRO DE ARTICULACIÓN Y MONTAJE (GR)	549
CILINDRO DE LEVANTAMIENTO DE HOJA Y MONTAJE (GR)	551
CILINDRO DE LA PUNTA DE LA HOJA Y MONTAJE (GR)	552
CILINDRO DE DESPLAZAMIENTO DEL CÍRCULO Y MONTAJE (GR)	553
CILINDRO DE ESCARIFICADOR Y MONTAJE (GR)	554

* NO HAY TRADUCCION DISPONIBLE EN EL MOMENTO DE LA IMPRESION

CONTENIDO

Nombre	Página
CILINDRO DE DESPLAZAMIENTO LATERAL Y MONTAJE (GR)	555
CILINDRO DE DIRECCIÓN Y MONTAJE (GR)	556
CILINDRO DE INCLINACIÓN DE RUEDA Y MONTAJE (GR)	557
ARTICULACIÓN DE CILINDRO (GR)	558
CILINDRO DE INCLINACIÓN DE LA HOJA (GR)	560
CILINDRO DE DESPLAZAMIENTO DEL CÍRCULO (GR)	561
CILINDRO DE LEVANTAMIENTO (GR)	563
CILINDRO DE DESGARRADOR (GR)	564
CILINDRO DE ESCARIFICADOR (GR)	565
CILINDRO DE DESPLAZAMIENTO LATERAL (GR)	566
CILINDRO DE DIRECCIÓN (GR)	567
CILINDRO DE INCLINACIÓN DE LAS RUEDAS (GR)	570
TOPE DE VÁLVULA DE CONTROL (GR)	571
MANDO DEL CIRCULO (GR)	574
HIDRÁULICA (CONFIG)	577
TUBERÍAS DEL ACUMULADOR (GR)	578
TUBERÍAS HIDRÁULICAS (GR)	580
TUBERÍAS HIDRÁULICAS DEL VENTILADOR (GR)	591
BOMBA - TUBERÍAS DE (GR)	597
TUBERÍAS DEL DESGARRADOR (GR)	606
TUBERÍAS DE LA DIRECCIÓN SECUNDARIA (GR)	611
TUBERÍAS DE DIRECCIÓN (GR)	613
TRABA DE DESPLAZAMIENTO DEL CIRCULO (GR)	616
MOTOR DE ENGRANAJES (GR)	617
MOTOR HIDRÁULICO DE ENGRANAJES (GR)	618
BOMBA Y MOTOR DE DIRECCION SECUNDARIA (GR)	620
BOMBA Y MONTAJE DEL PISTÓN (GR)	621
BOMBA Y MONTAJE DE LA DIRECCIÓN SECUNDARIA (GR)	622
BOMBA DE PISTONES (GR)	623
GRUPO GIRATORIO DE BOMBA	627
EJE DE MANDO DE LA BOMBA (GR)	629
DIRECCIÓN SECUNDARIA (CONFIG)	630
PLATO OSCILANTE (GR)	631
UNIÓN GIRATORIA (GR)	632
TANQUE Y FILTRO HIDRÁULICOS (GR)	633
TANQUE HIDRÁULICO Y MONTAJE (GR)	635
VÁLVULA Y VARILLAJE (GR)	636
GRUPO DE 4 VÁLVULAS HIDRÁULICAS	666
BANCADA 5 (GR)	670
VÁLVULAS HIDRÁULICAS - GRUPO DE 6	676
VÁLVULAS HIDRÁULICAS - GRUPO DE 7	678
VÁLVULA DE COMBINACIÓN (GR)	679
VÁLVULA DE CONTROL (GR)	683
*VALVE GP-PUMP CONTROL	721
VALVULA DE PURGA (GR)	725
VÁLVULA DE ALIVIO (GR)	727
VÁLVULA DE LANZADERA (GR)	739
VÁLVULA DE SOLENOIDE (GR)	741
VÁLVULA DE SOLENOIDE Y MÚLTIPLE (GR)	743
IMPLEMENTOS	745
CÍRCULO (GR)	745
BARRA DE TIRO (GR)	749
PLANCHA DE EMPUJE (GR)	751
HERRAMIENTAS	752
CANTONERA DE EXTREMO (GR)	752
HOJA (GR)	753
SOPORTE DEL ESCARIFICADOR (GR)	756
CUCHILLA (GR)	757
EXTENSIÓN DE LA HOJA (GR)	758
LEVANTAMIENTO - HOJA DE (GR)	761
MONTAJE DEL DESGARRADOR (GR)	763
GRUPO DE MONTAJE DE ALA PARA NIEVE	764
DESGARRADOR (CONFIG)	765
DESGARRADOR (GR)	766
ESCARIFICADOR (CONFIG)	768
GRUPO ESCARIFICADOR	769
DIENTE DE ESCARIFICADOR (GR)	775
PUESTO DEL OPERADOR	777
ACCESORIOS DE LA CABINA (GR)	777
AJUSTADOR DEL ASIENTO (GR)	779
ACONDICIONADOR DE AIRE Y MONTAJE (GR)	781
ACONDICIONADOR DE AIRE (CONFIG)	781
ACONDICIONADOR DE AIRE (GR)	782
POSABRAZOS (GR)	786
CABINA DE PERFIL ALTO (CONFIG)	788
CABINA SIN ROPS (CONFIG)	788

* NO HAY TRADUCCION DISPONIBLE EN EL MOMENTO DE LA IMPRESION

CONTENIDO

Nombre	Página
CABINA (GR)	788
COMPRESOR DE REFRIGERANTE (GR)	790
CONDENSADOR DEL REFRIGERANTE Y MONTAJE (GR)	793
CONSOLA DEL OPERADOR (GR)	794
CONJUNTO DE MODIFICACIÓN (SIN ROPS)	798
PUERTA (GR)	799
PUERTA DE CABINA	804
CONDUCTO Y CONTROL (GR)	812
CONDUCTO (GR)	813
EXTENSIÓN DEL RESPALDO (GR)	814
VENTILADOR DE CIRCULACION	816
FILTRO DE AIRE DE LA CABINA (GR)	822
MARTILLO Y MONTAJE (GR)	823
CALEFACCIÓN Y MONTAJE DE LA CABINA (GR)	825
CALEFACCIÓN DE LA CABINA (CONFIG)	825
CALEFACCIÓN DE LA CABINA (GR)	827
BOCINA DE AIRE (GR)	835
CAJA DE LA SUSPENSIÓN DEL ASIENTO (GR)	840
GRUPO DE GUIA, CORREA	843
INSTALACIÓN DE RADIO (CONFIG)	844
INSTALACIÓN DE RADIO (GR)	845
GRUPO DE AISLAMIENTO DE LA CABINA	847
REVESTIMIENTO DE LA CABINA (GR)	849
TUBERÍAS DE ACONDICIONADOR DE AIRE (GR)	863
TUBERÍAS DE LA CALEFACCIÓN (GR)	866
PUBLICACIONES (GR)	868
PERSIANAS DE LA CABINA (GR)	869
RETROVISOR (GR)	870
MODULO ELECTRÓNICO DE CUATRO INDICADORES (GR)	878
MÓDULO DEL TACÓMETRO Y DEL VELOCÍMETRO (GR)	879
GRUPO DE MONTAJE DE LA CABINA	880
MONTAJE DE LA ESTRUCTURA ROPS (GR)	881
GRUPO DE SOPORTE DEL RESPALDO	884
CUBIERTA INFERIOR DEL ASIENTO DEL OPERADOR (GR)	885
PANEL DE LA CABINA (GR)	887
TABLERO DE INSTRUMENTOS (GR)	891
INCLUYE ROPS (CONFIG)	898
ESTRUCTURA ROPS ABIERTA	899
CABINA ROPS CERRADA (GR)	899
ESTRUCTURA ROPS ABIERTA (GR)	901
PERSIANA PARA EL SOL (GR)	902
CINTURÓN DE SEGURIDAD (GR)	903
ASIENTO (GR)	906
ASIENTO FIJO (GR)	914
SUSPENSIÓN - ASIENTO CON (GR)	919
SOPORTE DEL ASIENTO (GR)	929
ASIENTO CON SUSPENSIÓN (GR)	931
LAVAPARABRISAS DE LA VENTANA (GR)	935
VENTANA (GR)	940
VENTANA DE LA CABINA (GR)	942
LIMPIAPARABRISAS (CONFIG)	947
LIMPIAPARABRISAS DE LA VENTANA (GR)	948
EQUIPO Y SUMINISTRO DE SERVICIOS	969
*BOX GP-TOOL	969
ETIQUETA DE ADVERTENCIA (GR)	970
GATO HIDRÁULICO	972
CALCOMANÍAS Y PLACAS DE IDENTIFICACIÓN (GR)	972
INDICE DE NUMEROS DE PIEZA	B1

* NO HAY TRADUCCION DISPONIBLE EN EL MOMENTO DE LA IMPRESION

ÍNDICE

Designação	Página
INFORMAÇÃO GERAL	A35
ALTERNATIVAS DE REPARO	A46
ADITIVOS SUPLEMENTARES DO LÍQUIDO ARREFECEDOR	A51
NOMENCLATURA DE PEÇAS INGLÊS-PORTUGUÊS	A53
PEÇAS DE MANUTENÇÃO	A86
ÍNDICE	A156
MÁQUINA - ARRANJO	1
GR. DE CONVERSÃO - CERTIFICADO	1
ARRANJO GERAL	2
ARRANJO RODOVIÁRIO	4
AR. PARA NEVE - MOTONIVELADORA	5
MOTOR - ARRANJO	6
MOTOR	6
MOTOR - NÚCLEO	7
MOTOR BÁSICO	8
COMPRESSOR DE AR	8
EIXO-COMANDO DE VÁLVULA	11
TAMPA - BLOCO DO MOTOR	12
TAMPA - CAIXA DIANTEIRA	13
TAMPA - MECANISMO DAS VÁLVULAS	14
VIRABREQUIM	16
BLOCO DO MOTOR	17
CABEÇOTE DO MOTOR	19
AMORTECEDOR DE VIBRAÇÕES E POLIA	25
DRENO - ÓLEO DO MOTOR	26
FIXADORES - CABEÇOTE DO MOTOR	27
VOLANTE DO MOTOR	28
ENGRENAGENS DE DISTRIBUIÇÃO	29
CAIXA DO VOLANTE DO MOTOR	30
CAIXA DIANTEIRA	31
LEVANTAMENTO DO MOTOR	33
MONTAGEM - MOTOR E TRANSMISSÃO	34
CÁRTER DO ÓLEO DO MOTOR	36
PAINEL- REDUÇÃO DE RUÍDO	37
PISTÃO E BIELA	38
PISTÃO	39
BUJÃO DO MOTOR	40
POLIA DA RODA-GUIA	41
BALANCIM	42
RETENTOR DO VIRABREQUIM	44
SUPORTE DO MOTOR	45
REDUÇÃO DE RUÍDO	46
MECANISMO DAS VÁLVULAS	47
SISTEMA DE LUBRIFICAÇÃO	49
FILTRO - ÓLEO DO MOTOR	49
ELIMINAÇÃO DE VAPORES DO CÁRTER	52
INDICADOR - NÍVEL DO ÓLEO (VARETA)	54
TUBOS - ÓLEO DO MOTOR	55
TUBOS - ÓLEO DO TURBOALIMENTADOR	57
BOMBA DE ÓLEO - MOTOR	58
SISTEMA DE ARREFECIMENTO	59
ARREFECEDOR - ÓLEO DO MOTOR	59
ARREFECIMENTO	60
COTOVELO D'ÁGUA	62
MOTOR E VENTILADOR	63
FIXADORES - RADIADOR	65
TUBOS - ÁGUA	66
PLACA-RADIADOR	69
BOMBA DE ÁGUA	70
RADIADOR	72
SISTEMA DE ADMISSÃO DE AR E DE ESCAPE	74
PÓS-ARREFECEDOR E MONTAGEM	74
PURIFICADOR DE AR	75
COTOVELO DE ADMISSÃO DE AR	78
COTOVELO DE ESCAPE	79
TUBOS - AR	80
COLETOR DE ESCAPE	81
SILENCIADOR	82
TURBOALIMENTADOR	83
SISTEMA DE COMBUSTÍVEL	86
CONTROLE DO GOVERNADOR	86
FIXADORES - TANQUE DE COMBUSTÍVEL	88
FILTRO - COMBUSTÍVEL	89
FILTRO DE COMBUSTÍVEL E SEPARADOR DE ÁGUA	91
INJETOR DE COMBUSTÍVEL	92
TUBOS - COMBUSTÍVEL	94
TUBOS - FILTRO DO COMBUSTÍVEL	101
MONTAGEM DO FILTRO DE COMBUSTÍVEL	103
BOMBA HIDRÁULICA E MONTAGEM - UNIDADE INJETORA	104

* TRADUÇÃO NÃO DISPONÍVEL NO MOMENTO DA IMPRESSÃO

ÍNDICE

Designação	Página
*PUMP GP-FUEL PRM & PRIM FILTER	106
BOMBA DA UNIDADE INJETORA	108
REGULADOR DE PRESSÃO DO COMBUSTÍVEL	111
TANQUE DE COMBUSTÍVEL	113
SEPARADOR DE ÁGUA E BOMBA DE ESCORVA DE COMBUSTÍVEL	117
SISTEMA ELÉTRICO E DE PARTIDA	118
ALARME	118
ALTERNADOR DE CORRENTE	120
BATERIA	127
BLOCO DE JUNÇÃO	131
INTERRUPTOR - CIRCUITO	132
CONTROLE ELETRÔNICO E MONTAGEM - MOTOR	134
CONTROLE ELETRÔNICO - MOTOR	135
CONTROLE DA DIREÇÃO SECUNDÁRIA	137
*CONTROL GP-UNPROGRAMMED	138
CONTROLE - NÃO PROGRAMADO	139
CONVERSOR ELÉTRICO	140
SISTEMA ELETRÔNICO - MONITOR	146
SISTEMA ELETRÔNICO - TREM DE FORÇA	146
AQUECEDOR DA ÁGUA DO MOTOR	148
INSTALAÇÃO DO PISCA-PISCA DE ADVERTÊNCIA	150
LÂMPADA - TETO	152
LÂMPADA - FAROL	153
FAROL DIANTEIRO	158
LÂMPADA DIANTEIRA E DE SINAL	164
LÀMPADA - MARCADORA	168
LAMPADA-PLACA DE REGISTRO	169
LÂMPADA - SINALIZAÇÃO	170
LUZ GIRATÓRIA DE ALARME	173
SISTEMA DE ILUMINAÇÃO - FARÓIS	175
ILUMINAÇÃO - FAROL E SINALIZAÇÃO	177
ILUMINAÇÃO - MARCHA A RÉ	178
SISTEMA DE ILUMINAÇÃO - FARÓIS	182
ILUMINAÇÃO - RODOVIÁRIA	228
ILUMINAÇÃO - SINALIZAÇÃO	229
SISTEMA DE ILUMINAÇÃO - ADVERTÊNCIA	231
SIST. DE ILUMINAÇÃO - PISCA-PISCA GIRATÓRIO DE ADVERTÊNCIA	236
MOTOR ELÉTRICO	238
MONTAGEM DO SOLENÓIDE	239
RECEPTÁCULO-PARTIDA AUXILIAR	240
SENSOR DO MOTOR	241
EMISSOR - POSIÇÃO	243
SENSOR - PRESSÃO	245
SENSOR DE VELOCIDADE	251
SENSOR - TEMPERATURA	253
*STARTING AID GP	258
AUXILIAR DE PARTIDA	259
MOTOR ELÉTRICO DE PARTIDA	260
INTERRUPTOR DE DERIVAÇÃO	265
CHAVE GERAL	266
INTERRUPTOR - LUZES	267
INTERRUPTOR - MAGNÉTICO	269
INTERRUPTOR - LIMPADOR DO PÁRA-BRISA	272
FIAÇÃO - AMORTECEDOR DA LÂMINA	273
CABOS/FIOS ELÉTRICOS - CABINE	275
CABOS/FIOS ELÉTRICOS - SISTEMA ELETRÔNICO	286
CABOS/FIOS ELÉTRICOS - DIANTEIROS	293
CABOS/FIOS ELÉTRICOS - TRASEIROS	302
CABOS/FIOS ELÉTRICOS - DIREÇÃO SECUNDÁRIA	329
CABOS/FIOS ELÉTRICOS - CONSOLE DA TRANSMISSÃO	332
CABOS/FIOS ELÉTRICOS - CONSOLE DA DIREÇÃO	338
TREM DE FORÇA	345
CONTROLE ELÉTRICO DAS MARCHAS	345
CAIXA E COMPONENTES - TRANSMISSÃO	346
CORRENTE - COMANDO	350
EMBREAGEM DA TRANSMISSÃO	351
CONTROLE DA EMBREAGEM	361
CONTROLE DA TRAVA DO DIFERENCIAL	363
CONTROLE DA TRANSMISSÃO	365
CONTROLE HIDRÁULICO DA TRANSMISSÃO	367
ARREFECEDOR DE ÓLEO DA TRANSMISSÃO	368
ACOPLAMENTO TORSIONAL	372
DIFERENCIAL E COROA	373
DIFERENCIAL	375
BOCAL DE ENCHIMENTO DE ÓLEO DO TREM DE FORÇA	377
FILTRO DO ÓLEO E MONTAGEM	378
FILTRO - ÓLEO	380
COMANDO FINAL	381
TUBOS - ÓLEO DA TRANSMISSÃO	383
MONTAGEM - RODA	385
BOMBA DE ENGRENAGENS	386

* TRADUÇÃO NÃO DISPONÍVEL NO MOMENTO DA IMPRESSÃO

ÍNDICE

Designação	Página
FILTRO - MAGNÉTICO	388
EIXO DE TRANSMISSÃO	389
EIXO DE ENTRADA	390
TANDEM E TAMPA	391
PNEU E ARO	392
TRANSMISSÃO	393
JUNTA UNIVERSAL	396
VÁLVULA E MONTAGEM - TRAVA DO DIFERENCIAL	397
VÁLVULA SELETORA E CONTROLE DE PRESSÃO	398
VÁLVULA SOLENÓIDE	404
VÁLVULA DE CONTROLE - TRANSMISSÃO	406
RODA E PNEU	408
RODA	464
CHASSI E CARROCERIA	471
EIXO DIANTEIRO	471
CAIXA E CHASSI	474
TAMPA - ACESSO	475
TAMPA - PROTEÇÃO	476
COBERTURA DO MOTOR	480
FIXADORES	488
CHASSI DIANTEIRO	489
PROTETOR E SUPORTE DO RADIADOR	491
PROTETOR INFERIOR	494
PROTETOR - TUBOS DO FREIO	495
PROTETOR - TANQUE DE COMBUSTÍVEL	496
PROTETOR - PLATAFORMA	497
ENGATE - ARTICULAÇÃO	501
ENGATE DO REBOQUE	503
TUBOS - GRAXA	504
ELO - DIREÇÃO	505
MONTAGEM DA PLACA DE REGISTRO	506
BLINDAGEM DO EIXO DA TRANSMISSÃO	507
DEFLETOR TÉRMICO DE CALOR	508
DEGRAU	509
SUPORTE - CHASSI TRASEIRO	510
SUPORTE DO TANQUE DE COMBUSTÍVEL	514
SUPORTE - PLATAFORMA	515
SISTEMA DE FREIO	516
SECADOR DE AR	516
FREIO DE ESTACIONAMENTO	520
FREIO DE SERVIÇO	522
CONTROLE DO FREIO DE ESTACIONAMENTO	524
CONTROLE DO FREIO DE SERVIÇO	526
TUBOS - TANQUE DE AR	530
TANQUE DE AR	531
VÁLVULA DE CONTROLE DO AR	533
VÁLVULA SOLENÓIDE	536
SISTEMA HIDRÁULICO	538
ACUMULADOR HIDRÁULICO E MONTAGEM	538
ACUMULADOR DO AMORTECEDOR DA LÂMINA	539
ACUMULADOR	539
ACUMULADOR HIDRÁULICO	541
ACUMULADOR - DIREÇÃO	544
CONTROLE HIDRÁULICO	545
*CONTROL GP-HYDRAULIC LOCKOUT	547
CONTROLE DE DIREÇÃO	548
CILINDRO E MONTAGEM - ARTICULAÇÃO	549
CILINDRO E MONTAGEM - LEVANTAMENTO DA LÂMINA	551
CILINDRO E MONTAGEM - TOMBAMENTO DA LÂMINA	552
CILINDRO E MONTAGEM - DESLOCAMENTO DO CÍRCULO	553
CILINDRO E MONTAGEM - ESCARIFICADOR	554
CILINDRO E MONTAGEM - DESLOCAMENTO DA LÂMINA	555
CILINDRO DE DIREÇÃO E MONTAGEM	556
CILINDRO E MONTAGEM - INCLINAÇÃO DAS RODAS	557
CILINDRO DE ARTICULAÇÃO	558
CILINDRO DE TOMBAMENTO DA LÂMINA	560
CILINDRO DE DESLOCAMENTO LATERAL	561
CILINDRO DE LEVANTAMENTO	563
CILINDRO DO RÍPER	564
CILINDRO DO ESCARIFICADOR	565
CILINDRO DE DESLIZAMENTO LONGITUDINAL	566
CILINDRO DA DIREÇÃO	567
CILINDRO DE INCLINAÇÃO LATERAL DAS RODAS	570
RETEM DA VÁLVULA DE CONTROLE	571
MOTOR DE REVERSÃO DO CÍRCULO	574
COMANDO HIDRÁULICO	577
TUBOS - ACUMULADOR	578
TUBOS - ÓLEO HIDRÁULICO	580

* TRADUÇÃO NÃO DISPONÍVEL NO MOMENTO DA IMPRESSÃO

ÍNDICE

Designação	Página
TUBOS - VENTILADOR HIDRÁULICOS	591
TUBOS - BOMBA	597
TUBOS - RIPER	606
TUBOS - DIREÇÃO SECUNDÁRIA	611
TUBOS - DIREÇÃO	613
TRAVA - DESLOCAMENTO LATERAL	616
MOTOR - ENGRENAGENS	617
MOTOR HIDRÁULICO DO GEROTOR	618
BOMBA DE DIREÇÃO SECUNDÁRIA E MOTOR	620
BOMBA E MONTAGEM - PISTÃO	621
BOMBA DA DIREÇÃO SECUNDÁRIA E MONTAGEM	622
BOMBA DE PISTÃO	623
GRUPO ROTATIVO DA BOMBA	627
EIXO DE COMANDO DA BOMBA	629
DIREÇÃO SECUNDÁRIA	630
PLACA BASCULANTE	631
ARTICULAÇÃO GIRATÓRIA	632
TANQUE HIDRÁULICO E FILTRO	633
TANQUE DE ÓLEO HIDRÁULICO E MONTAGEM	635
VÁLVULA E ARTICULAÇÕES	636
GRUPO DE VÁLVULAS DE CONTROLE - QUÁDRUPLO	666
GRUPO DE VÁLVULAS DE CONTROLE - CINCO	670
GRUPO DE VÁLVULAS DE CONTROLE - SEIS	676
GRUPO DE VÁLVULAS DE CONTROLE - SETE	678
VÁLVULA COMBINADA	679
VÁLVULA DE CONTROLE	683
*VALVE GP-PUMP CONTROL	721
VÁLVULA DE PURIFICAÇÃO	725
VÁLVULA DE ALÍVIO	727
VÁLVULA DE SEPARAÇÃO	739
VÁLVULA SOLENÓIDE	741
VÁLVULA - COLETOR E SOLENÓIDE	743
ACESSÓRIOS	745
CÍRCULO	745
BARRA DE TRAÇÃO	749
CHAPA DE EMPUXO	751
FERRAMENTAS DE TRABALHO	752
CANTO DE LÂMINA	752
LÂMINA	753
SUPORTE DO ESCARIFICADOR	756
BORDA CORTANTE	757
EXTENSÃO DA LÂMINA	758
LEVANTAMENTO DA LÂMINA	761
MONTAGEM - RIPER	763
MONTAGEM - REMOVEDOR DE NEVE	764
RIPER	765
ESCARIFICADOR	768
DENTE DO ESCARIFICADOR	775
ESTAÇÃO DO OPERADOR	777
ACESSÓRIO - CABINE	777
AJUSTADOR DO ASSENTO	779
CONDICIONADOR DE AR E MONTAGEM	781
CONDICIONADOR DE AR	781
BRAÇO DO ASSENTO	786
CABINE - PERFIL ALTO	788
CABINE OPERADOR - SEM ROPS	788
CABINE	788
COMPRESSOR DE REFRIGERANTE	790
CONDENSADOR DO REFRIGERANTE E MONTAGEM	793
CONSOLE DO OPERADOR	794
CONVERSÃO PARA ESTRUTURA NÃO ROPS	798
PORTA	799
PORTA DA CABINE	804
DUCTO E CONTROLE	812
DUCTO	813
EXTENSÃO - ENCOSTO	814
VENTILADOR DE CIRCULAÇÃO DE AR DA CABINE	816
FILTRO - AR DA CABINE	822
MARTELO E MONTAGEM	823
AQUECEDOR DA CABINE E MONTAGEM	825
AQUECEDOR DA CABINE	825
BUZINA DE AR	835
CAIXA - SUSPENSÃO DO ASSENTO	840
RODA-GUIA - CORREIA	843
INSTALAÇÃO DO RÁDIO - ARRANJO	844
INSTALAÇÃO DO RÁDIO	845
ISOLADOR - TEMPO	847
REVESTIMENTO DA CABINE	849
TUBOS - AR CONDICIONADO	863
TUBOS - AQUECEDOR	866
PUBLICAÇÃO	868
PERSIANA	869
ESPELHO RETROVISOR	870
MÓDULO ELETRÔNICO DE QUATRO INDICADORES	878
MÓDULO - VELOCÍMETRO E TACÔMETRO	879
MONTAGEM - CABINE	880
MONTAGEM - ESTRUTURA ROPS	881

* TRADUÇÃO NÃO DISPONÍVEL NO MOMENTO DA IMPRESSÃO

ÍNDICE

Designação	Página
FUNDO - ENCOSTO	884
ASSENTO - FUNDO	885
PAINEL - CABINE	887
PAINEL DE INSTRUMENTOS	891
ESTRUTURA ROPS FECHADA	898
ESTRUTURA ROPS ABERTA	899
ROPS FECHADA	899
ROPS ABERTA	901
TELA PÁRA-SOL	902
CINTO DE SEGURANÇA	903
ASSENTO	906
ASSENTO ESTÁTICO	914
ASSENTO COM SUSPENSÃO	919
SUPORTE - ASSENTO	929
SUSPENSÃO - ASSENTO	931
LAVADOR DO VIDRO	935
VIDRO	940
JANELA DA CABINE	942
LIMPADOR DO VIDRO	947
EQUIPAMENTOS DE SERVIÇO E SUPRIMENTOS	969
*BOX GP-TOOL	969
DECALQUE	970
CILINDRO HIDRÁULICO - MACACO	972
PLACA E DECALQUE	972
ÍNDICE DE NÚMERO DE PEÇA	B1

* TRADUÇÃO NÃO DISPONÍVEL NO MOMENTO DA IMPRESSÃO

INHALTSVERZEICHNIS

Bezeichnung	Seite
ALLGEMEINE HINWEISE	A39
REPARATURALTERNATIVEN	A47
KÜHLMITTELZUSATZ	A52
WARTUNGSTEILE	A95
STICHWORTVERZEICHNIS	A173
MASCHINE	1
UMBAUSATZ - ZULASSUNG	1
GRUNDAUSFÜHRUNG	2
AUSRÜSTUNG FÜR STRASSEN-FAHRT	4
SCHNEERÄUMVORRICHTUNG	5
MOTOR	6
MOTORAUSFÜHRUNG	6
MOTORKÜHLERBLOCK	7
MOTOR - GRUNDAUSFÜHRUNG	8
LUFTKOMPRESSOR	8
NOCKENWELLE	11
MOTORBLOCKDECKEL	12
STIRNRADGEHÄUSEDECKEL	13
VENTILDECKEL	14
KURBELWELLE	16
MOTORBLOCK	17
ZYLINDERKOPF	19
DÄMPFER UND RIEMENSCHEIBE	25
MOTORÖLABLASS	26
ZYLINDERKOPF-HALTETEILE	27
SCHWUNGRAD	28
STIRNRAD	29
SCHWUNGRADGEHÄUSE	30
STIRNRADGEHÄUSE	31
MOTORHUBÖSE	33
MOTOR- UND GETRIEBEAUFLAGER	34
ÖLWANNE	36
SCHALLDÄMPFUNG	37
PLEUELSTANGE UND KOLBEN	38
KOLBEN	39
MOTORSTOPFEN	40
RIEMENSPANNER	41
VENTILKIPPHEBEL	42
KURBELWELLENDICHTUNG	44
MOTORAUFHÄNGUNG	45
SCHALLDÄMPFUNG	46
VENTILSTEUERUNG	47
SCHMIERSYSTEM	49
ÖLFILTER	49
ENTDUNSTER	52
ÖLMESSSTAB	54
MOTORÖLLEITUNGEN	55
TURBOLADERÖLLEITUNGEN	57
SCHMIERPUMPE	58
KÜHLSYSTEM	59
MOTORÖLKÜHLER	59
KÜHLSYSTEM	60
WASSERKNIESTÜCK	62
MOTOR UND LÜFTER	63
KUEHLER-HALTETEILE	65
KÜHLWASSERLEITUNGEN	66
*PLATE GP-RADIATOR	69
KÜHLWASSERPUMPE	70
KÜHLER	72
LUFTANSAUG- UND ABGASSYSTEM	74
LADELUFTKÜHLER U. BEFESTIGUNG	74
LUFTREINIGER	75
LUFTEINLASSBOGEN	78
AUSPUFFBOGEN	79
DRUCKLUFTLEITUNGEN	80
AUSPUFFKRÜMMER	81
SCHALLDÄMPFER	82
TURBOLADER	83
KRAFTSTOFFSYSTEM	86
REGLERSTEUERUNG	86
KRAFTSTOFFTANK-HALTETEILE	88
KRAFTSTOFFILTER	89
WASSERABSCHEIDER- U. KRAFTSTOFFILTER	91
KRAFTSTOFFEINSPRITZDÜSE	92
KRAFTSTOFFLEITUNGEN	94
KRAFTSTOFFILTERLEITUNGEN	101
KRAFTSTOFFILTERBEFESTIGUNG	103
PUMPE UND BEFESTIGUNGSTEILE	104
*PUMP GP-FUEL PRM & PRIM FILTER	106
EINSPRITZDÜSENPUMPE	108
KRAFTSTOFFDRUCKREGLER	111
KRAFTSTOFFTANK	113
WASSERABSCHEIDER U. KRAFTSTOFFENTLÜFTUNGSPUMPE	117
ELEKTRISCHE ANLAGE UND STARTSYSTEM	118
WARNVORRICHTUNG	118
DREHSTROMGENERATOR	120
BATTERIE	127
KLEMMLEISTE	131
UNTERBRECHER	132

* ÜBERSETZUNG ZUM ZEITPUNKT DER DRUCKLEGUNG NICHT VORHANDEN

INHALTSVERZEICHNIS

Bezeichnung	Seite
STEUERUNGSEINHEIT, ELEKTRON. FÜR MOTOR UND BEFEST.	134
MOTORSTEUERUNG, ELEKTRON.	135
NOTLENKUNGSSTEUERUNG	137
*CONTROL GP-UNPROGRAMMED	138
STEUERUNG - NICHT PROGRAMMIERT	139
UMFORMER, ELEKTR.	140
ELEKTR. UMFORMER	141
ELEKTRONIK - MONITOR	146
KRAFTÜBERTRAGUNGSELEKTRONIK	146
UMLAUFKÜHLWASSERHEIZUNG	148
RUNDUMWARNLEUCHTE - EINBAUSATZ	150
FAHRERHAUSBELEUCHTUNG	152
ARBEITSLEUCHTEN	153
FRONTSCHEINWERFER	158
SCHEINWERFER U. RICHTUNGSLEUCHTE	164
MARKIERUNGSLEUCHTE	168
ZULASSUNGSSCHILDLEUCHTE	169
BLINKLEUCHTE	170
RUNDUM-KENNLEUCHTE	173
ARBEITSLEUCHTEN	175
ARBEITS- U. SIGNALBELEUCHTUNG	177
SCHEINWERFER, HINTEN	178
ARBEITSLEUCHTEN	182
BELEUCHTUNGSANLAGE (STRASSENAUSRÜSTUNG)	228
BLINKERLEUCHTEN	229
WARNLEUCHTEN	231
RUNDUM-KENNLEUCHTE	236
MOTOR, ELEKTR.	238
SOLENOIDBEFESTIGUNG	239
STARTHILFEANSCHLUSS	240
MOTORSENSOR	241
STELLUNGSSENSOR	243
DRUCKSENSOR	245
DREHZAHLSENSOR	251
TEMPERATURSENSOR	253
*STARTING AID GP	258
STARTHILFE	259
STARTERMOTOR	260
UMGEHUNGSSCHALTER	265
TRENNSCHALTER	266
LICHTSCHALTER	267
MAGNETSCHALTER	269
SCHEIBENWISCHERSCHALTER	272
VERDRAHTUNG - SCHARDÄMPFUNG	273
FAHRERHAUSVERDRAHTUNG	275
VERDRAHTUNG (ELEKTRONIKSYSTEM)	286
VERDRAHTUNG, VORNE	293
VERDRAHTUNG, HINTEN	302
NOTLENKUNGSVERDRAHTUNG	329
SCHALTKONSOLENVERDRAHTUNG	332
LENKKONSOLENVERDRAHTUNG	338
KRAFTÜBERTRAGUNG	345
SCHALTAUTOMATIK	345
GETRIEBEGEHÄUSE UND TEILE	346
ANTRIEBSKETTE	350
GETRIEBEKUPPLUNG	351
KUPPLUNGSGESTÄNGE	361
DIFFERENTIALSPERRENGESTÄNGE	363
GETRIEBESTEUERUNG	365
GETRIEBEHYDRAULIK	367
GETRIEBEÖLKÜHLER	368
TORSIONSKUPPLUNG	372
DIFFERENTIAL UND TELLERRAD	373
DIFFERENTIAL	375
GETRIEBEÖLFÜLLSTUTZEN	377
ÖLFILTER U. BEFESTIGUNGSTEILE	378
ÖLFILTER	380
SEITENANTRIEB	381
GETRIEBEÖLLEITUNGEN	383
RADAUFHAENGUNG	385
ZAHNRADPUMPE	386
MAGNETSIEB	388
ANTRIEBSWELLE	389
TANDEMGEHÄUSE UND DECKEL	391
REIFEN UND FELGE	392
GETRIEBE	393
KREUZGELENK	396
DIFFERENTIALSPERRE - VENTIL UND BEFESTIGUNGSTEILE	397
VENTIL - SCHALT- UND DRUCKSTEUERUNG	398
MAGNETVENTIL	404
GETRIEBESTEUERVENTIL	406
RAD UND REIFEN	408
RADSATZ	464
RAHMEN UND AUFBAU	471
VORDERACHSE	471
RAHMEN UND GEHÄUSE	474
ZUGANGSKLAPPE	475
SCHUTZABDECKUNG	476
MOTORVERKLEIDUNG	480
HALTETEILE	488
VORDERRAHMEN	489

* ÜBERSETZUNG ZUM ZEITPUNKT DER DRUCKLEGUNG NICHT VORHANDEN

INHALTSVERZEICHNIS

Bezeichnung	Seite
VERKLEIDUNG UND BEFESTIGUNG - KÜHLER	491
PANZERWANNE	494
BREMSLEITUNGSVERKLEIDUNG	495
KRAFTSTOFFTANKVERKLEIDUNG	496
FAHRERPLATTFORMVERKLEIDUNG	497
KNICKGELENK-ANHÄNGUNG	501
ANHÄNGEVORRICHTUNG	503
SCHMIERLEITUNGEN	504
LENKGESTÄNGE	505
TYPENSCHILDBEFESTIGUNG	506
ANTRIEBSWELLENSCHUTZ	507
WÄRMESCHIRM	508
STEIGLEITER	509
AUFHÄNGUNG - HINTERES FAHRWERK	510
KRAFTSTOFFTANKABSTÜTZUNG	514
PLATTFORMUNTERBAU	515
BREMSSYSTEM	516
LUFTTROCKNER	516
FESTSTELLBREMSE	520
BETRIEBSBREMSE	522
FESTSTELLBREMSGESTÄNGE	524
BREMSGESTÄNGE	526
DRUCKLUFTTANKLEITUNGEN	530
DRUCKLUFTBEHÄLTER	531
DRUCKLUFT-STEUERVENTIL	533
MAGNETVENTIL	536
HYDRAULIKSYSTEM	538
HYDRAULIKDRUCKSPEICHER U. BEFESTIGUNG	538
SCHARDRUCKSPEICHER	539
DRUCKSPEICHER	539
HYDRAULIKDRUCKSPEICHER	541
LENKDRUCKSPEICHER	544
HYDRAULIKSTEUERUNG	545
*CONTROL GP-HYDRAULIC LOCKOUT	547
LENKBETÄTIGUNG	548
GELENKZYLINDER UND BEFESTIGUNGS-TEILE	549
SCHARHUBZYLINDER UND BEFESTIGUNGSTEILE	551
SCHARKIPPZYLINDER UND BEFESTIGUNGSTEILE	552
SEITENSCHUBZYLINDER UND BEFESTIGUNGSTEILE	553
AUFREISSERZYLINDER UND BEFESTIGUNGSTEILE	554
SEITENSCHIEBERZYLINDER UND BEFESTIGUNGSTEILE	555
LENKZYLINDER UND AUFHÄNGUNG	556
RADSTURZZYLINDER UND BEFESTIGUNGSTEILE	557
KNICKLENKZYLINDER	558
SCHARNEIGEZYLINDER	560
SEITENSCHUBZYLINDER	561
HUBZYLINDER	563
AUFREISSERZYLINDER	564
FRONTAUFREISSERZYLINDER	565
SEITENSCHUBZYLINDER	566
LENKZYLINDER	567
RADSTURZZYLINDER	570
STEUERVENTILSPERRE	571
SCHARDREHWERK	574
HYDRAULIKSYSTEM	577
DRUCKSPEICHERLEITUNGEN	578
HYDRAULIKLEITUNGEN	580
HYDRAULIKLÜFTERLEITUNGEN	591
HYDRAULIKPUMPE UND LEITUN-GEN	597
AUFREISSERLEITUNGEN	606
NOTLENKUNGSLEITUNGEN	611
LENKÖLLEITUNGEN	613
SEITENSCHUBSPERRE	616
MOTORANTRIEB	617
ZAHNRADANTRIEB	618
NOTLENKUNGSPUMPE UND -MOTOR	620
KOLBENPUMPE UND BEFESTIGUNG	621
NOTLENKUNGSPUMPE UND BEFESTIGUNGSTEILE	622
KOLBENPUMPE	623
KOLBENPUMPENUMLAUFSATZ	627
PUMPENANTRIEBSWELLE	629
NOTLENKUNG	630
SCHWENKSCHEIBE	631
SCHWENKBLOCK	632
HYDRAULIKTANK UND SCHMIERFIL-TER	633
HYDRAULIKTANK UND BEFESTIGUNGS-TEILE	635
VENTIL UND GESTÄNGE	636
VENTILSATZ (4-VENTIL)	666
VENTILSATZ (5-VENTIL)	670
VENTILSATZ (6-VENTIL)	676
VENTILSATZ (7-VENTIL)	678
SAMMELVENTIL	679
STEUERVENTIL	683
*VALVE GP-PUMP CONTROL	721
ENTLEERVENTIL	725
ÜBERDRUCKVENTIL	727
PENDELVENTIL	739
MAGNETVENTIL	741

* ÜBERSETZUNG ZUM ZEITPUNKT DER DRUCKLEGUNG NICHT VORHANDEN

INHALTSVERZEICHNIS

Bezeichnung	Seite
VENTILSOLENOID U. -KRÜMMER	743
ARBEITSGERÄTE	745
SCHARDREHWERK	745
ZUGHAKEN	749
SCHUBPLATTE	751
ARBEITSGERÄTE	752
ENDMESSER	752
SCHAR	753
AUFREISSERTRÄGER	756
SCHNEIDMESSER	757
SCHARVERLÄNGERUNG	758
SCHILDHUB	761
AUFREISSERBEFESTIGUNG	763
SCHNEEFLÜGEL-BEFESTIGUNG	764
AUFREISSER	765
FRONTAUFREISSER	768
FRONTAUFREISSERZAHN	775
FAHRERHAUS	777
FAHRERHAUSZUBEHÖR	777
FAHRERSITZVERSTELLER	779
KLIMAANLAGE UND AUFHÄNGUNG	781
KLIMAANLAGE	781
ARMLEHNE	786
FAHRERHAUS, ERHÖHT	788
FAHRERHAUS (OHNE ÜBERROLL-SCHUTZ)	788
FAHRERHAUS	788
KÄLTEMITTELKOMPRESSOR	790
KÄLTEMITTELKONDENSATOR U. BEFESTIGUNGSTEILE	793
STEUERKONSOLE	794
UMBAUSATZ - OHNE ÜBERROLL-SCHUTZ	798
FAHRERHAUSTÜR	799
LUFTKANAL UND REGULIERUNG	812
LUFTKANAL	813
RÜCKLEHNENVERLÄNGERUNG	814
UMLAUFLÜFTER	816
FAHRERHAUSLUFTFILTER	822
HAMMER UND BEFESTIGUNG	823
FAHRERHAUSHEIZUNG U. BEFESTIGUNGSTEILE	825
FAHRERHAUSHEIZUNG	825
DRUCKLUFTHUPE	835
FAHRERSITZFEDERUNGSGEHÄUSE	840
LEITRAD - RIEMEN	843
RADIOEINBAUSATZ	844
WÄRMEISOLIERUNG	847
FAHRERHAUSAUSKLEIDUNG	849
KLIMAANLAGENLEITUNGEN	863
HEIZUNGSLEITUNGEN	866
DOKUMENTATION	868
FAHRERHAUSLUFTSCHLITZE	869
RÜCKSPIEGEL	870
MODUL - VIER ELEKTRON. ANZEIGEN	878
GESCHWINDIGKEITS- U. DREHZAHLMESSERMODUL	879
FAHRERHAUSANBAUSATZ	880
ÜBERROLLSCHUTZAUFLAGER	881
SCHALE - RÜCKENLEHNE	884
FAHRERSITZVERKLEIDUNG	885
VERKLEIDUNG - FAHRERHAUS	887
INSTRUMENTENTAFEL	891
ÜBERROLLSCHUTZKABINE	898
ÜBERROLLSCHUTZDACH	899
ÜBERROLL-SCHUTZKABINE	899
ÜBERROLL-SCHUTZDACH	901
SONNENBLENDE	902
SICHERHEITSGURT	903
FAHRERSITZ	906
FAHRERSITZ, FESTSTEHEND	914
SCHWINGSITZ	919
SITZUNTERBAU	929
FAHRERSITZFEDERUNG	931
SCHEIBENWASCHANLAGE	935
FAHRERHAUSFENSTER	940
SCHEIBENWISCHER	947
WARTUNGSAUSRÜSTUNG	969
*BOX GP-TOOL	969
AUFKLEBER	970
WAGENHEBER, HYDRAULISCH	972
SCHILD UND AUFKLEBER	972
ERSATZTEILNUMMERNINDEX	B1

* ÜBERSETZUNG ZUM ZEITPUNKT DER DRUCKLEGUNG NICHT VORHANDEN

GENERAL INFORMATION

1. MACHINE IDENTIFICATION

Caterpillar machines are identified by Product Identification Numbers (PIN). Some components included in a machine may be identified by Serial Numbers (S/N). Typical components that will be serialized include engines, transmissions, bulldozers, and rippers. The machine and engine are further identified by arrangement numbers and in some cases modification numbers. These numbers are shown on the product identification plate(s) and on the master plate in the operator's compartment.

Caterpillar dealers need all of these numbers to determine accurate parts identification.

SIS *New Feature*

Effective First Quarter 2001 the Caterpillar Product Identification Number (PIN) changed from 8 to 17 characters. In an effort to provide uniform equipment identification, Caterpillar and other construction equipment manufacturers are moving to comply with the latest version of the product identification numbering standard. Non-road machine PINs are defined by ISO 10261. The new PIN format will apply to all Caterpillar machines and generator sets. The PIN plates and frame marking will display the 17 character PIN. The new format will look like the following:

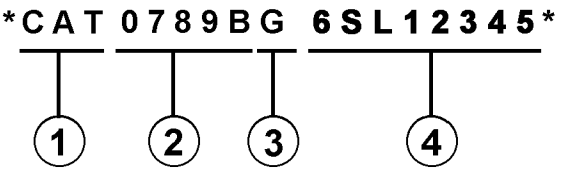

Where:

1. Caterpillar's World Manufacturing Code (characters 1-3)

2. Machine Descriptor (characters 4-8)

3. Check Character (character 9)

4. Machine Indicator Section (MIS) or Product Sequence Number (characters 10-17). These were previously referred to as the Serial Number.

Machines and generator sets produced before First Quarter 2001 will maintain their 8 character PIN format.

Components such as engines, transmissions, axles, etc. and work tools will continue to use an 8 character Serial Number (S/N).

2. ORDERING PARTS

⚠ WARNING

When replacement parts are required for this product Caterpillar recommends using Caterpillar replacement parts or parts with equivalent specifications including, but not limited to, physical dimensions, type, strength and material.

Failure to heed this warning can lead to premature failures, product damage, personal injury or death.

Quality Caterpillar replacement parts are available from Caterpillar dealers throughout the world. Their parts inventories are up to date and include all parts normally required to protect your investment in Caterpillar machines. Dealers may offer repair kits or remanufactured parts to allow selection of the most effective repair alternative for a particular situation. When ordering parts, your order should specify the quantity, part number, part name, and the serial number/product identification number of the machine for which the parts are needed.

3. PARTS MANUAL ORGANIZATION

Product information in this manual is presented as "information elements" that represent all of the components for the specific model. Engine Arrangement and Seat Group are examples of information elements. The information elements are organized alphabetically by part name and secondarily by part number within each major section of the manual.

4. TABLE OF CONTENTS

A table of contents (TOC) is found at the beginning of the manual. The TOC lists each section of the manual with a complete list of all information elements organized as they appear in the manual. Page numbers are provided for quick reference to detailed parts identification illustrations and serviceable consist lists.

5. MAINTENANCE PARTS INDEX

The Maintenance Parts Index, located near the beginning of the manual, references most frequently used maintenance part numbers, providing description, quantity, usage and page number. This information is organized alphabetically by part description.

6. INDEX

The index located near the front of the manual is an alphabetical listing of all information elements included in the manual. Page numbers are provided for quick reference to detailed parts identification illustrations and serviceable consist lists.

7. PART NUMBER INDEX

A numerical index listing all part numbers and the corresponding page number(s) appears at the back of the manual.

8. CAPTIONS

Captions located at the beginning of each information element identify the part number and part name along with additional descriptive information. PIN and S/N information found in each caption should be used to select correct information for a specific machine. Field replacement options, identification of optional attachment components, and where used ("part of") information is also provided.

The first line of a caption is shown in larger type font to indicate the beginning of an information element. Captions for additional pages that may be required to illustrate an information element will be shown in standard type font and will include the term *(contd.)* .

9. NON-SERVICED PARTS

In some instances it is necessary to display non-serviced parts that are a link to a lower level serviceable consist lists. These non-serviced part numbers are shown in *italic* type indicating that they are not available.

10. PARTS LIST REFERENCE NUMBERS

Numbers shown in the Ref No column correspond to numbers used in the associated graphic(s). An alphabetic suffix may be added to a reference number to identify lower level consist items. Numbers shown in the Graphic Ref column refer to the graphic number identifier displayed in the lower left corner of each illustration. The Graphic Ref number may be used in combination with the item Ref No to determine the correct part number. There may be intentional omission of a Ref No in a consist list as information is updated to reflect the latest serviceable part numbers.

11. INDENTED PART NAMES

When a part name is indented in a parts list, it is part of (included in) the group or assembly under which it is indented.

12. ILLUSTRATION REFERENCE LETTERS

When necessary, illustrations contain reference letters (A, B, C etc.) that are intended to track lines and harnesses from one point to another. They are also used to show where to reconnect illustrations that have been separated.

13. ABBREVIATIONS AND SYMBOLS

O.D. – Outside Diameter
I.D. – Inside Diameter
A – Not Part Of This Group
B – Use As Required
C – Change From Previous Type
D – Order By The Meter
E – Order By The Centimeter
F – Not Shown
G – Order By The Inch
I – Refer To Hydraulic Information System
M – Metric Part
R – Remfg Part May Be Available
Y – Separate Illustration
Z – Not Serviced Separately

SIS *New Feature*

14.<END>

This symbol indicates the end of an information element.

NOTE:

Continuing improvement and advancement of product design may cause changes to your machine which may not be included in this publication. Whenever a question arises regarding your caterpillar product or this publication, please consult your caterpillar dealer for the latest available information.

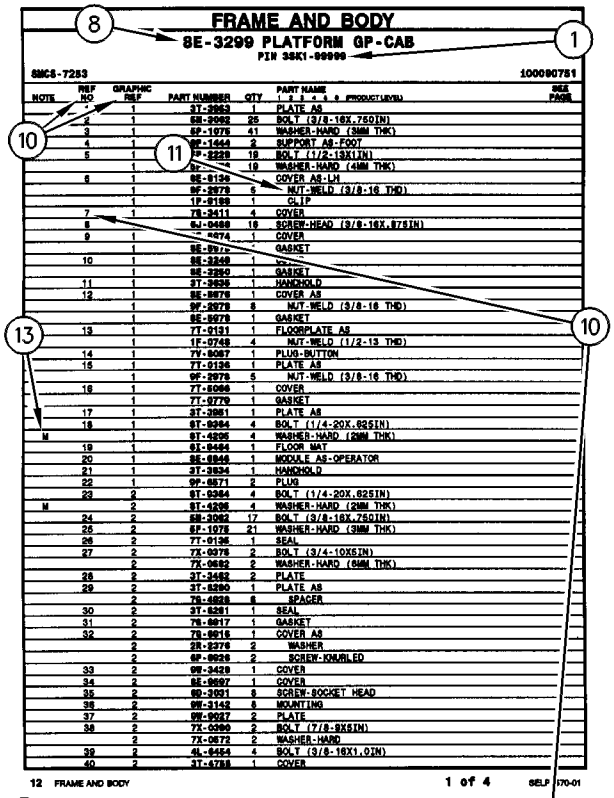
FRAME AND BODY
8E-3299 PLATFORM GP-CAB
PIN 3SK1-99999
SMCS-7283
100090751
NOTE REF NO GRAPHIC REF PART NUMBER QTY PART NAME SEE PAGE
1 1 3T-3963 1 PLATE AS
2 1 SM-2062 25 BOLT (3/8-16X.750IN)
3 1 SF-1075 41 WASHER-HARD (3MM THK)
4 1 9E-1443 2 SUPPORT AS-FOOT
5 1 SP-2229 19 BOLT (1/2-13X1IN)
1 19 WASHER-HARD (4MM THK)
6 1 8E-9139 1 COVER AS-LH
1 6 NUT-WELD (3/8-16 THD)
1 1P-8189 1 CLIP
7 1 7S-3411 4 COVER
8J-0468 18 SCREW-HEAD (3/8-16X.87SIN)
9 1 [illegible] 1 COVER
1 [illegible] GASKET
10 1 8E-3248 1 [illegible]
1 8E-3250 1 GASKET
11 1 3T-3836 1 HANDHOLD
12 1 8E-9078 1 COVER AS
1 9F-2079 8 NUT-WELD (3/8-16 THD)
1 8E-9079 1 GASKET
13 1 7T-9131 1 FLOORPLATE AS
1 1F-0748 4 NUT-WELD (1/2-13 THD)
14 1 7V-8067 1 PLUG-BUTTON
15 1 7T-9136 1 PLATE AS
1 9F-2079 5 NUT-WELD (3/8-16 THD)
16 1 7T-8066 1 COVER
1 7T-9779 1 GASKET
17 1 3T-3951 1 PLATE AS
18 1 9T-0264 4 BOLT (1/4-20X.88SIN)
M 1 3T-4295 4 WASHER-HARD (2MM THK)
19 1 9I-9454 1 FLOOR MAT
20 1 8E-8848 1 MODULE AS-OPERATOR
21 1 3T-3934 1 HANDHOLD
22 1 9P-8571 2 PLUG
23 2 9T-0264 4 BOLT (1/4-20X.88SIN)
M 2 3T-4295 4 WASHER-HARD (2MM THK)
24 2 SM-2062 17 BOLT (3/8-16X.750IN)
25 2 SF-1075 21 WASHER-HARD (3MM THK)
26 2 7T-9136 1 SEAL
27 2 7X-0075 2 BOLT (3/4-10X5IN)
2 7X-0682 2 WASHER-HARD (6MM THK)
28 2 3T-3482 2 PLATE
29 2 3T-8290 1 PLATE AS
2 7S-4828 6 SPACER
30 2 3T-8291 1 SEAL
31 2 7S-8817 1 GASKET
32 2 7S-8816 1 COVER AS
2 5R-2276 2 WASHER
2 9F-9028 2 SCREW-KNURLED
33 2 9M-3429 1 COVER
34 2 8E-9697 1 COVER
35 2 9D-3031 8 SCREW-SOCKET HEAD
36 2 9M-3142 8 MOUNTING
37 2 9M-9027 2 PLATE
38 2 7X-0360 2 BOLT (7/8-9X5IN)
2 7X-0672 2 WASHER-HARD
39 2 4L-8454 4 BOLT (3/8-16X1.0IN)
40 2 3T-4788 1 COVER
12 FRAME AND BODY
1 of 4
SELP4570-01

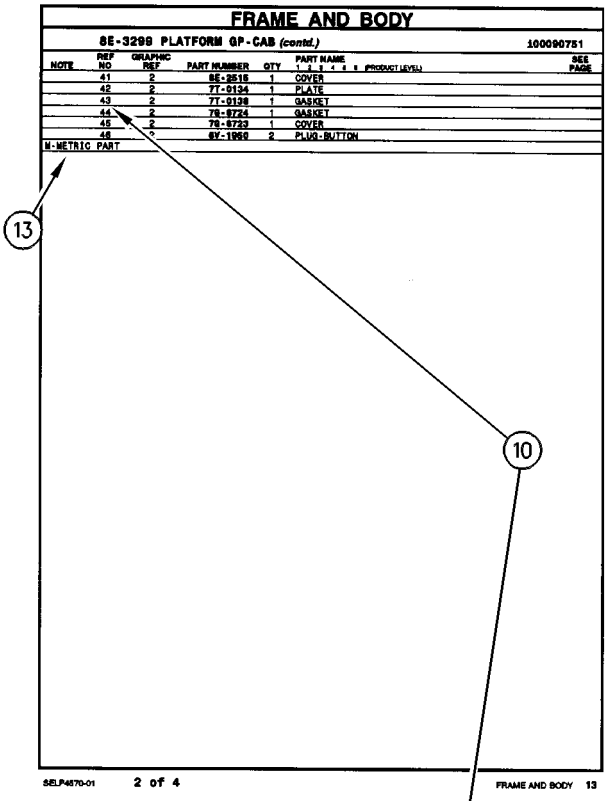
FRAME AND BODY
8E-3299 PLATFORM GP-CAB (contd.)
100090751
NOTE REF NO GRAPHIC REF PART NUMBER QTY PART NAME SEE PAGE
41 2 8E-2515 1 COVER
42 2 7T-9134 1 PLATE
43 2 7T-9138 1 GASKET
44 2 7S-8724 1 GASKET
45 2 7S-8723 1 COVER
46 * 8Y-1950 2 PLUG-BUTTON
M-METRIC PART
SELP4570-01
2 of 4
FRAME AND BODY 13

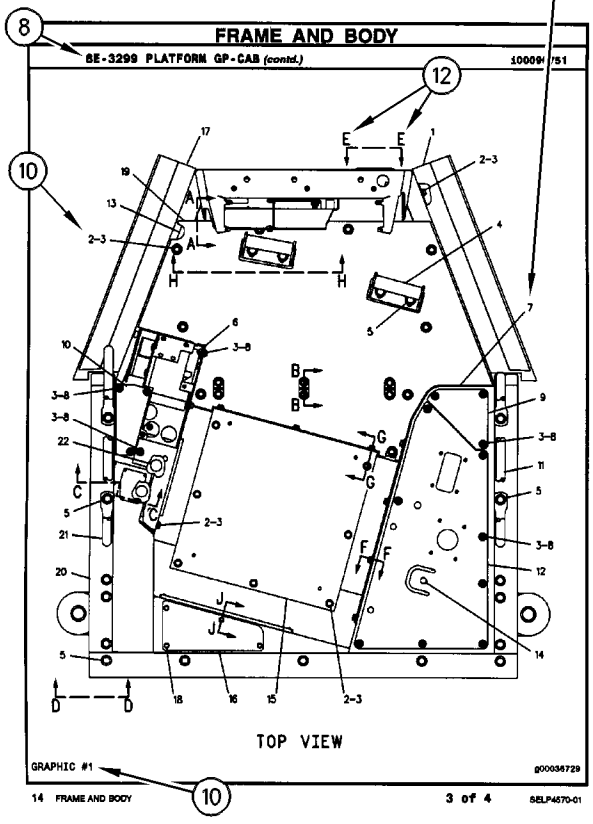
FRAME AND BODY
8E-3299 PLATFORM GP-CAB (contd.)
100090751
TOP VIEW
GRAPHIC #1
g00036729
14 FRAME AND BODY
3 of 4
SELP4570-01

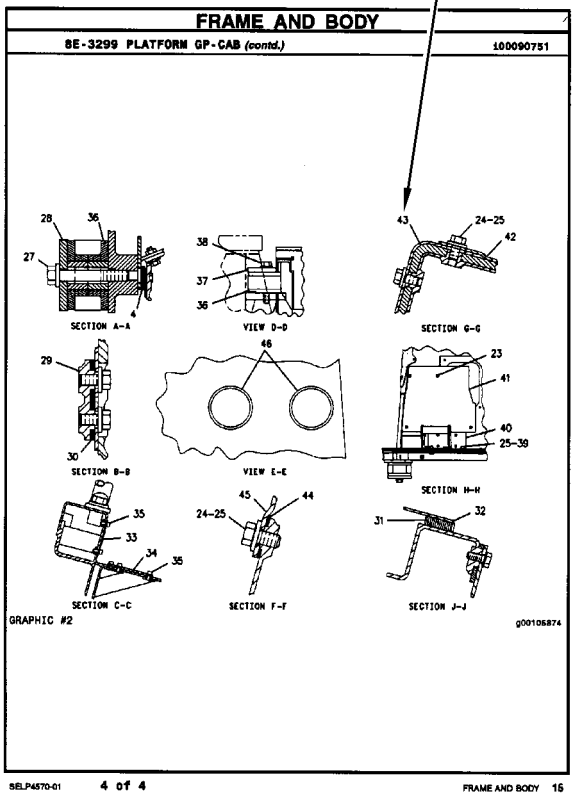
FRAME AND BODY
8E-3299 PLATFORM GP-CAB (contd.)
100090751
SECTION A-A
VIEW D-D
SECTION G-G
SECTION B-B
VIEW E-E
SECTION H-H
SECTION C-C
SECTION F-F
SECTION J-J
GRAPHIC #2
g00105874
SELP4570-01
4 of 4
FRAME AND BODY 15

GÉNÉRALITÉS

1. IDENTIFICATION DE LA MACHINE

Toutes les machines Caterpillar portent un numéro d'identification (PIN). Certains composants des machines peuvent porter des numéros de série (S/N). En général, parmi les composants qui portent des numéros de série il y a les moteurs, les transmissions, les bulldozers et les rippers. En plus, la machine et le moteur peuvent recevoir des numéros de version, et dans certains cas, de modification. Ces numéros figurent sur les plaques de numéro de série et sur la plaque signalétique principale qui se trouve dans le poste de conduite.

Les concessionnaires Caterpillar doivent connaître tous ces numéros pour identifier correctement les pièces.

SIS *Nouvelle Caractéristique*

À partir du premier trimestre 2001, le numéro d'identification produit (PIN) Caterpillar passe de 8 à 17 caractères. Afin de permettre une identification uniforme des matériels, Caterpillar et d'autres constructeurs de machines de travaux publics s'efforcent de se conformer à la norme la plus récente portant sur les numéros d'identification des produits. Les numéros d'identification (PIN) de machines de chantier sont définis par la norme ISO 10261. Le nouveau format du numéro d'identification est valable pour toutes les machines et tous les groupes électrogènes Caterpillar. Le numéro d'identification produit (PIN) figurant sur la plaque et sur le châssis se composera de 17 caractères. Le nouveau format ressemblera à ceci:

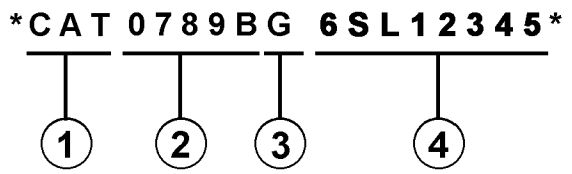

Il se décomposera de la façon suivante:

1. Code international de fabrication de Caterpillar (caractères 1 à 3)

2. Descriptif de la machine (caractères 4 à 8)

3. Contrôle (caractère 9)

4. Indicateur machine (MIS) ou numéro de séquence produit (caractères 10 à 17). Ceux-ci étaient auparavant désignés sous le terme de numéro de série.

Les machines et les groupes électrogènes construits avant le premier trimestre 2001 garderont le format à 8 caractères du numéro d'identification produit (PIN).

Les organes tels que les moteurs, les boîtes de vitesses, les essieux, etc., continueront d'être désignés par un numéro de série (S/N) à 8 caractères.

2. COMMANDE DE PIÈCES

⚠ DANGER

Lorsqu'il faut remplacer des pièces de rechange pour ce produit Caterpillar recommande d'utiliser les pièces de rechange Caterpillar ou les pièces qui ont des spécifications équivalentes dont les dimensions physiques, le type, la force et le matériau. Ces équivalences ne se limitent pas à l'énoncé précédent.

L'inobservation de cette mise en garde peut entraîner des défaillances prématurées, des dommages au produit, des blessures ou même la mort.

Les concessionnaires Caterpillar fournissent dans le monde entier des pièces de rechange de qualité Caterpillar. Leurs stocks de pièces sont constamment réapprovisionnés et comptent toutes les pièces nécessaires pour assurer la bonne marche de vos machines Caterpillar. Certains concessionnaires proposent également des kits de réparation ou des pièces rénovées, ce qui permet de choisir la solution la plus économique dans une situation donnée. Lors des commandes de pièces, mentionner la quantité, le numéro et la désignation des pièces ainsi que le numéro de série ou le numéro d'identification (PIN) de la machine pour laquelle ces pièces sont requises.

3. ORGANISATION DU CATALOGUE DE PIÈCES

Les renseignements sur les produits sont présentés sous forme de "Information element" (élément d'information) représentant tous les composants d'un modèle donné. "Engine Arrangement" (version de moteur) et "Seat Group" (assemblage de siège)" sont des exemples d'éléments d'information. Les éléments d'information sont classés par ordre alphabétique par la désignation standard des pièces et par numéros de pièces dans chaque partie importante du manuel.

4. TABLE DES MATIÈRES

SIS *Nouvelle Caractéristique*

La table des matières se trouve au début du manuel. La table des matières fournit la liste de tous les chapitres du manuel avec une liste complète de tous les éléments d'information classés par ordre d'apparition dans le manuel. Les numéros de page sont fournis afin que l'utilisateur puisse trouver rapidement les illustrations détaillées concernant l'identification des pièces et les listes des pièces d'entretien.

5. INDEX DES PIÈCES D'ENTRETIEN

La rubrique "Index des pièces d'entretien" qui se trouve au début du manuel renvoie aux pièces d'entretien les plus fréquemment utilisées en précisant la désignation, la quantité, là où la pièce est utilisée et le numéro de page. Ces pièces sont classés par ordre alphabétique.

6. INDEX

L'index qui se trouve vers le début du manuel est une liste alphabétique de tous les éléments d'information du manuel. Les numéros de page sont fournis afin que l'utilisateur puisse trouver rapidement les illustrations détaillées concernant l'identification des pièces et les listes des pièces d'entretien.

7. INDEX DES NUMÉROS DE PIÈCES

Une liste numérique de tous les numéros de pièces et des pages correspondantes se trouve à la fin du manuel.

8. LÉGENDES

Les légendes qui se trouvent en haut de chaque page de chaque élément d'information fournissent le numéro de pièce, la désignation ainsi que des renseignements supplémentaires sur les pièces. Les renseignements concernant les numéros de série (S/N) qui se trouvent dans chaque légende doivent être utilisés pour sélectionner les informations correctes pour un moteur donné. Les informations concernant les options de remplacement sur le chantier, l'identification des composants des équipements offerts en option et les lieux d'application sont aussi fournies.

SIS *Nouvelle Caractéristique*

Les lettres de la première ligne d'une légende sont présentées en police plus grande afin d'indiquer le début d'une unité d'information. Les légendes qui pourraient être requises pour des pages supplémentaires afin d'illustrer une unité d'information seront présentées en police standard et comprendront le terme (à suivre).

9. PIÈCES NON FOURNIES

SIS *Nouvelle Caractéristique*

Dans certains cas, il est nécessaire d'indiquer les pièces non fournies qui sont en aval de la liste des pièces d'entretien. Les numéros des pièces non fournies dans la liste des pièces et les légendes seront en italique pour signaler qu'ils ne sont pas disponibles.

10. NUMÉROS DE RÉFÉRENCE DE LA LISTE DES PIÈCES

SIS *Nouvelle Caractéristique*

Les numéros indiqués dans la colonne des numéros de références correspondent aux numéros utilisés dans les illustrations auxquelles ils sont associés. Un suffixe alphabétique peut être ajouté à un numéro de référence pour identifier la liste des articles en aval. Les numéros indiqués dans la colonne de référence de l'illustration renvoient à l'identification du numéro affiché dans le coin inférieur gauche de chaque illustration. Le numéro de référence de l'illustration pourrait être utilisé avec le numéro de référence de l'article pour déterminer le numéro de pièce correct. Il peut y avoir une omission intentionnelle d'un numéro de référence dans une liste de pièces suite à la mise à jour des informations en vue de refléter les numéros de pièces les plus récentes.

11. DÉSIGNATIONS DE PIÈCES EN RETRAIT

Lorsqu'une désignation de pièce est en retrait, cela veut dire que l'article en regard fait partie de l'ensemble sous lequel il figure.

12. LETTRES DE RÉFÉRENCE DES ILLUSTRATIONS

Quand cela est nécessaire, les illustrations comportent des lettres de référence (A, B, C, etc.) pour montrer le trajet des canalisations et faisceaux de câbles d'un point à l'autre. Elles sont utilisées également pour indiquer où relier les illustrations séparées auparavant.

13. ABRÉVIATIONS ET SYMBOLES

O.D. – Diamètre extérieur
I.D. – Diamètre intérieur
A – Ne fait pas partie de ce groupe
B – Utiliser selon besoin
C – Modification
D – Commander par mètre
E – Commander par centimètre
F – Non représenté
G – Commander par pouce
I – Voir "Hydraulic Information System"
M – Pièce métrique
R – Pièce rénovée éventuellement disponible
Y – Illustration séparée
Z – Non fourni séparément

NOTA:

En raison du progrès technique et des améliorations continuelles apportées au matériel, votre machine comporte peut-être des modifications qui n'apparaissent pas dans la présente publication. En cas de doute sur un détail de votre machine Caterpillar ou sur le texte de la présente publication, adressez-vous à votre concessionnaire Caterpillar.

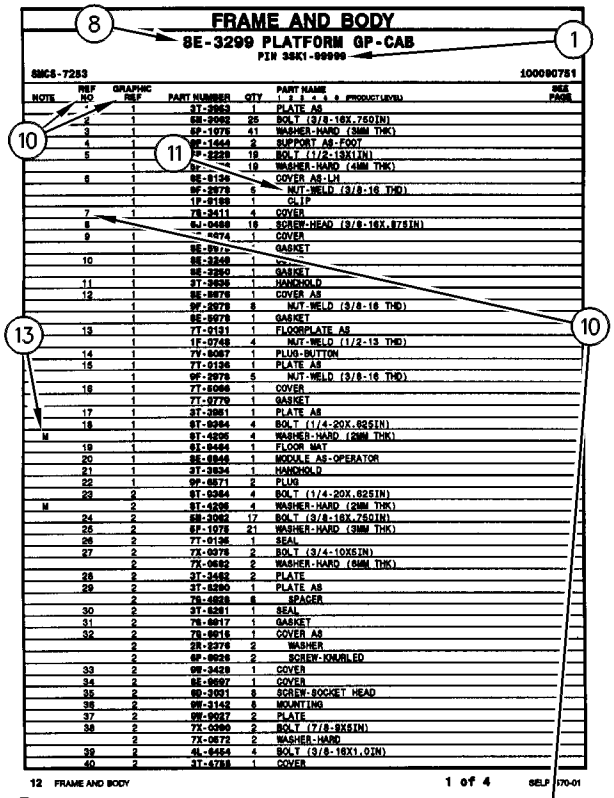
FRAME AND BODY
8E-3299 PLATFORM GP-CAB
PIN 3SK1-99999
SMCS-7283
100090751
1 of 4
SELP4570-01

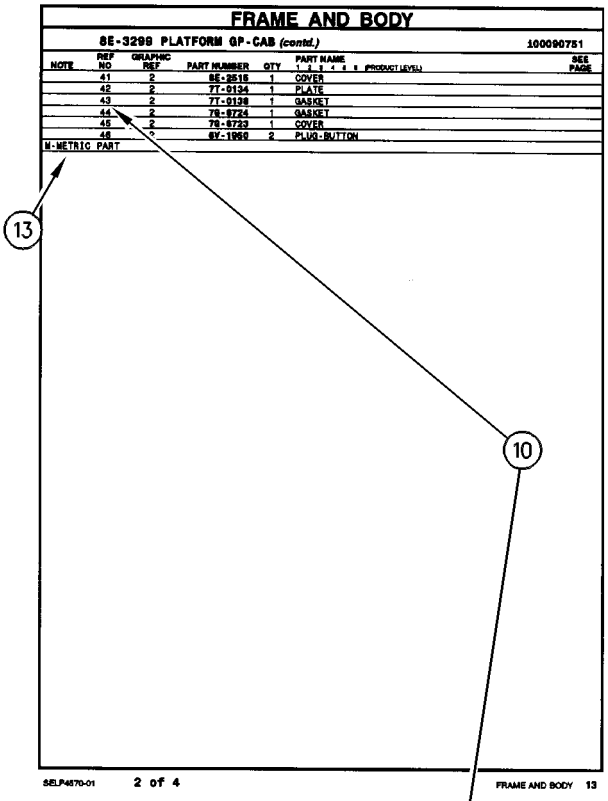
FRAME AND BODY
8E-3299 PLATFORM GP-CAB (contd.)
100090751
2 of 4
SELP4570-01

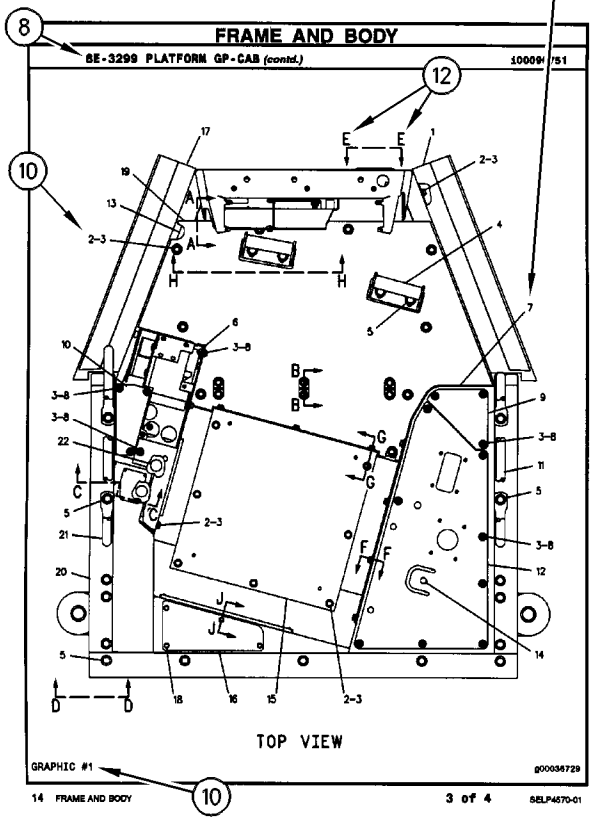
FRAME AND BODY
8E-3299 PLATFORM GP-CAB (contd.)
TOP VIEW
GRAPHIC #1
g00036729
3 of 4
SELP4570-01

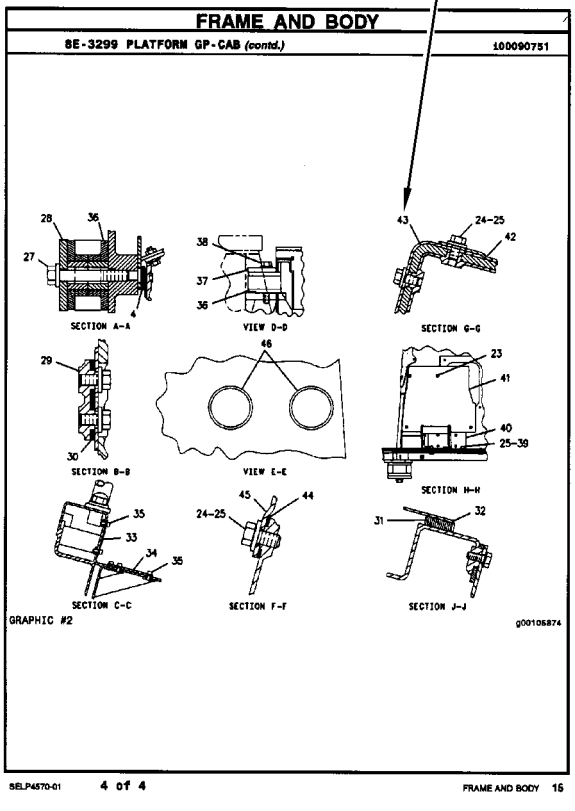
FRAME AND BODY
8E-3299 PLATFORM GP-CAB (contd.)
100090751
SECTION A-A
VIEW D-D
SECTION G-G
SECTION B-B
VIEW E-E
SECTION H-H
SECTION C-C
SECTION F-F
SECTION J-J
GRAPHIC #2
g00105874
4 of 4
SELP4570-01

INFORMACIÓN GENERAL

1. MÁQUINAS

Las máquinas Caterpillar se identifican con Números de Identificación del Producto (PIN). Algunos componentes incluídos en la máquina pueden estar identificados con Números de Serie (N/S). Los componentes que tienen típicamente esta identificación incluyen motores, transmisiones, hojas topadoras y desgarradores. La máquina y el motor se identifican además con Números de Configuración y en algunos casos, Números de Modificación. Estos números están en las placas de identificación del producto o en la placa principal en la cabina del operador.

Los distribuidores Caterpillar necesitan estos números para identificar con exactitud los números de piezas de repuesto.

SIS *Nueva Característica*

A partir del primer trimestre del 2001, el Número de Identificación de Producto (PIN) de Caterpillar cambió de 8 a 17 caracteres. Para hacer más uniforme el método de identificación de equipos, Caterpillar y otros fabricantes de equipo de construcción han tomado medidas para cumplir con la versión más reciente de la norma de numeración de identificación de productos. Los Números de Identificación de Producto para máquinas que no se operan en carreteras son definidos por la norma ISO 10261. El nuevo formato PIN corresponderá a todas las máquinas y grupos electrógenos Caterpillar. Las placas y los caracteres PIN estampados en el bastidor mostrarán el PIN de 17 caracteres. El nuevo formato tendrá la apariencia siguiente:

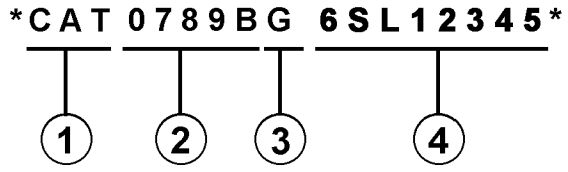

Significado de los caracteres:

1. Código de Fabricación Mundial de Caterpillar (caracteres 1-3)

2. Sección Descriptor de la Máquina (caracteres 4-8)

3. Carácter de Verificación (carácter 9)

4. Sección Indicador de la Máquina (MIS) o Número de Secuencia de Producto (caracteres 10-17). Anteriormente, estos caracteres constituían el Número de Serie.

Las máquinas y grupos electrógenos producidos antes del primer semestre del 2001 mantendrán su formato PIN de 8 caracteres.

Los componentes como motores, transmisiones, ejes, herramientas de trabajo, etc., continuarán usando un Número de Serie (S/N) de 8 caracteres.

2. COMO PEDIR REPUESTOS

⚠ ADVERTENCIA

Cuando se necesiten piezas de repuesto para este producto, Caterpillar recomienda usar piezas de repuesto Caterpillar o piezas que tengan especificaciones equivalentes incluyendo, pero sin estar limitadas a, dimensiones físicas, tipo, fortaleza y material.

El no hacer caso de esta advertencia puede llevar a fallas prematuras, daños al producto y lesiones graves o mortales.

Las piezas de repuesto Caterpillar de calidad están a la disposición de los distribuidores Caterpillar en todo el mundo. Sus existencias actualizadas incluyen todas las piezas normalmente requeridas para proteger su inversión en máquinas Caterpillar. Los distribuidores pueden tener juegos de reparación o piezas remanufacturadas para permitir la selección de la mejor alternativa de reparación en un caso en particular. Al pedir piezas de repuesto, especifique en su pedido la cantidad, el número de pieza, el nombre de la pieza y el número de serie/número de identificación del producto, de la máquina para la cual se necesitan estas piezas.

3. ORGANIZACION DEL MANUAL DE PIEZAS

La información sobre el producto, se presenta en este manual, como "elementos de información" que representan todos los componentes de un modelo específico. Las configuraciones de motores y los grupos de asientos son ejemplos de elementos de información. Los elementos de información están organizados primeramente por nombres de piezas en orden alfabético y en segundo lugar, por el número de pieza dentro de cada sección principal del manual.

4. CONTENIDO

La página de Contenido se encuentra al principio del manual. El Contenido indica cada sección del manual con una lista completa de todos los elementos de información organizados en el orden que aparecen en el manual. Los números de página proporcionan una referencia rápida a las ilustraciones detalladas de identificación de piezas y a las listas de componentes de repuesto de dichas piezas.

5. ÍNDICE DE PIEZAS DE MANTENIMIENTO

Al principio de este catálogo se encuentra un índice de los números de piezas utilizadas más frecuentemente para el mantenimiento, que incluye descripción, cantidad necesaria, lugar de utilización y número de página. Esta información está organizada alfabéticamente, por descripción de la pieza.

6. ÍNDICE

El Índice, ubicado cerca del principio del manual, es una lista en orden alfabético de todos los elementos de información incluídos en el manual. Los números de página proporcionan una referencia rápida a las ilustraciones detalladas de identificación de piezas y a las listas de componentes de repuesto de dichas piezas.

7. INDICE NUMÉRICO DE PIEZAS

Un índice numérico de piezas con el correspondiente número de página aparece al final de este catálogo.

8. TÍTULOS

Los títulos ubicados al principio de cada elemento de información identifican el número y el nombre de la pieza junto con información descriptiva. Se debe usar información sobre los Números de Identificación de Pieza (PIN) y los números de serie (S/N) para seleccionar la información que corresponda a una máquina en particular. También se suministra información sobre las opciones de reparación en el campo, la identificación de componentes de accesorios optativos y el lugar de ubicación de la pieza ("es parte de").

La primera línea del título se muestra con un tipo de letra más grande para indicar el comienzo de un elemento de información. Si se requieren páginas adicionales para ilustrar un elemento de información, los títulos se muestran con un tipo de letra normal y la continuación se indica entre paréntesis.

9. PIEZAS QUE NO SE SUMINISTRAN COMO REPUESTO

En algunos casos es necesario indicar piezas que no se suministran como repuesto pero que pueden estar conectadas a listas de componentes de otras piezas de repuesto. En tal caso, dichas piezas se muestran en cursiva para indicar que no son piezas disponibles.

10. NÚMEROS DE REFERENCIA

Los números en la columna de No. de Referencia corresponden a los números indicados en la ilustración que pertenece a ese número de pieza. Los números que tienen un sufijo alfabético identifican artículos de las listas de componentes de piezas. Los números en la columna de Referencia de la ilustración se identifican en la esquina inferior izquierda de cada ilustración. Para determinar el número de pieza correcto se puede utilizar tanto el No. de Referencia de la ilustración como el No. de Referencia del artículo. A medida que se actualiza la información para indicar los más recientes números de piezas de repuesto, puede omitirse intencionalmente un No. de Referencia en una lista de componentes de piezas.

11. NOMBRES DE PIEZA SANGRADOS

Cuando el nombre de una pieza está sangrado en una lista, significa que esta pieza forma parte del grupo o conjunto del renglón inmediatamente superior.

12. LETRAS DE REFERENCIA DE ILUSTRACIONES

Las ilustraciones contienen algunas veces letras de referencia (A, B, C etc.) cuyo propósito es seguir el trayecto de líneas y mazos de cables de un punto a otro. También se utilizan para mostrar dónde volver a unir ilustraciones que se habían separado.

13. ABREVIATURAS Y SIMBOLOS

O.D. – Diámetro exterior
I.D. – Diámetro interior
A – No es pieza de este grupo
B – Utilizado según la demanda
C – Indica cambio
D – Se pide por metro
E – Se pide por centímetro
F – No se muestra
G – Se pide por pulgada
I – Consulte el sistema de información hidráulica
M – Pieza métrica
R – Puede estar disponible como pieza remanufacturada
Y – Ilustración separada
Z – No se suministra por separado

SIS *Nueva Característica*

14.<END>

Este símbolo indica el final de un elemento de información.

NOTA:

Las contínuas mejoras y adelantos en diseño podrían originar cambios a su máquina que no se incluyen en esta publicación. Cuando tenga alguna pregunta acerca de su producto Caterpillar o de esta publicación, consulte al distribuidor Caterpillar para obtener la información más reciente.

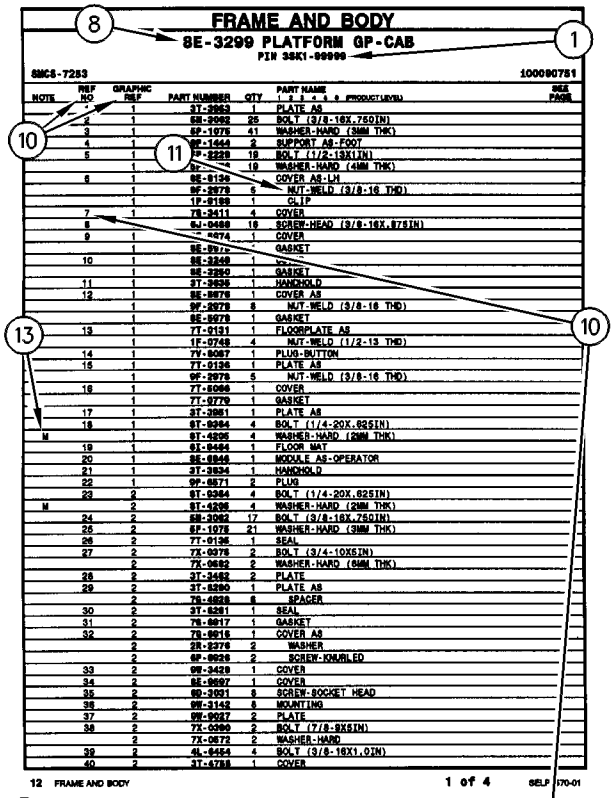

FRAME AND BODY
8E-3299 PLATFORM GP-CAB
PIN 3SK1-99999
SMCS-7253 100090751

NOTE	REF NO	GRAPHIC REF	PART NUMBER	QTY	PART NAME (1 2 3 4 5 6 PRODUCT LEVEL)	SEE PAGE
	*	1	3T-3963	1	PLATE AS	
	2	1	5H-3062	25	BOLT (3/8-16X.750IN)	
	3	1	6P-1075	41	WASHER-HARD (3MM THK)	
	4	1	9E-1444	2	SUPPORT AS-FOOT	
	5	1	9P-2228	18	BOLT (1/2-13X1IN)	
		1	9P-[illegible]	18	WASHER-HARD (4MM THK)	
	6	1	9E-9136	*	COVER AS-LH	
		1	9F-2978	6	NUT-WELD (3/8-16 THD)	
		1	1F-0189	1	CLIP	
	7	1	7S-3411	4	COVER	
	8	1	6J-0468	18	SCREW-HEAD (3/8-16X.87SIN)	
	9	1	[illegible]-0274	1	COVER	
		1	9E-9976	*	GASKET	
	10	1	9E-3248	1	[illegible]	
		1	9E-3250	1	GASKET	
	11	1	3T-3636	1	HANDHOLD	
	12	1	9E-9976	1	COVER AS	
		1	9F-2978	8	NUT-WELD (3/8-16 THD)	
		1	9E-9978	1	GASKET	
	13	1	7T-9131	1	FLOORPLATE AS	
		1	1F-0748	4	NUT-WELD (1/2-13 THD)	
	14	1	7V-5057	1	PLUG-BUTTON	
	15	1	7T-9136	1	PLATE AS	
		1	9F-2978	5	NUT-WELD (3/8-16 THD)	
	16	1	7T-5066	1	COVER	
		1	7T-9779	1	GASKET	
	17	1	3T-3951	1	PLATE AS	
	18	1	9T-0264	4	BOLT (1/4-20X.62SIN)	
M		1	9T-4296	4	WASHER-HARD (2MM THK)	
	19	1	9I-9464	1	FLOOR MAT	
	20	1	9E-6946	1	MODULE AS-OPERATOR	
	21	1	3T-3934	1	HANDHOLD	
	22	1	9P-0671	2	PLUG	
	23	2	9T-0264	4	BOLT (1/4-20X.62SIN)	
M		2	9T-4296	4	WASHER-HARD (2MM THK)	
	24	2	5H-3062	17	BOLT (3/8-16X.75QIN)	
	26	2	6P-1075	21	WASHER-HARD (3MM THK)	
	26	2	7T-9136	1	SEAL	
	27	2	7X-0078	2	BOLT (3/4-10X5IN)	
		2	7X-0682	2	WASHER-HARD (6MM THK)	
	28	2	3T-3482	2	PLATE	
	29	2	3T-5290	1	PLATE AS	
		2	7S-4828	6	SPACER	
	30	2	3T-5291	1	SEAL	
	31	2	7S-9817	1	GASKET	
	32	2	7S-9816	1	COVER AS	
		2	5R-2276	2	WASHER	
		2	9F-9928	2	SCREW-KNURLED	
	33	2	9W-3429	1	COVER	
	34	2	9E-9697	1	COVER	
	35	2	9D-3931	8	SCREW-SOCKET HEAD	
	36	2	9W-3143	8	MOUNTING	
	37	2	9W-9937	2	PLATE	
	38	2	7X-0360	2	BOLT (7/8-9X5IN)	
		2	7X-0672	2	WASHER-HARD	
	39	2	4L-6454	4	BOLT (3/8-16X1.0IN)	
	40	2	3T-4788	1	COVER	

12 FRAME AND BODY 1 of 4 SELP4570-01

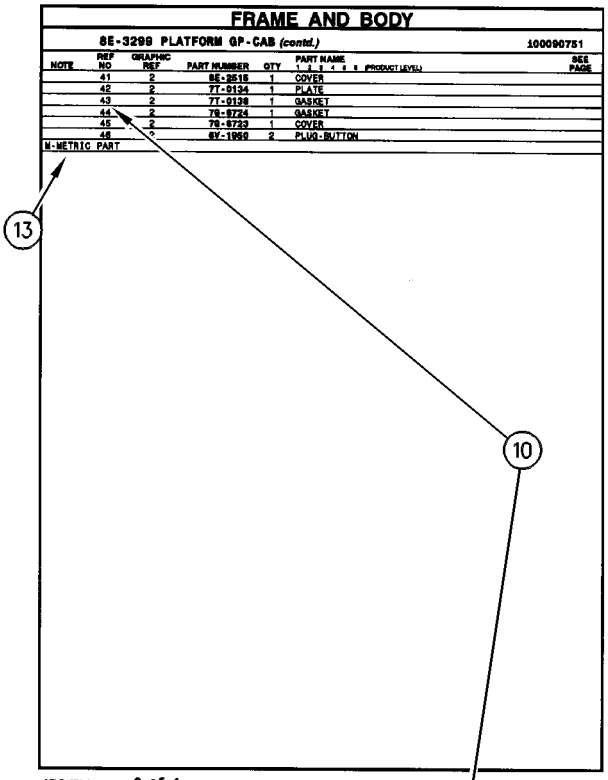

FRAME AND BODY
8E-3299 PLATFORM GP-CAB (contd.)
100090751

NOTE	REF NO	GRAPHIC REF	PART NUMBER	QTY	PART NAME (1 2 3 4 5 6 PRODUCT LEVEL)	SEE PAGE
	41	2	8E-2515	1	COVER	
	42	2	7T-9134	1	PLATE	
	43	2	7T-9138	1	GASKET	
	44	2	7S-9724	1	GASKET	
	45	2	7S-9723	1	COVER	
	46	*	8Y-1950	2	PLUG-BUTTON	

M-METRIC PART

SELP4570-01 2 of 4 FRAME AND BODY 13

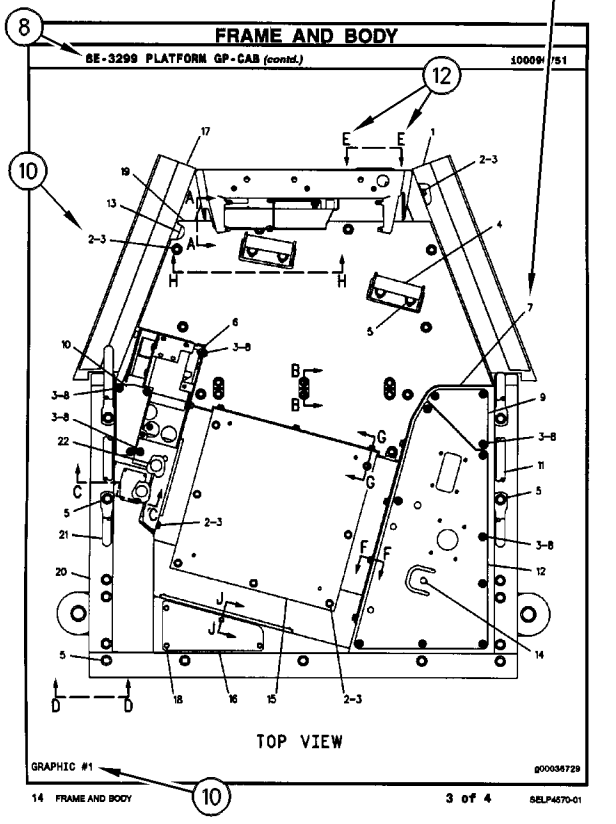

FRAME AND BODY
8E-3299 PLATFORM GP-CAB (contd.)
100090751

TOP VIEW

GRAPHIC #1 g00036729

14 FRAME AND BODY 3 of 4 SELP4570-01

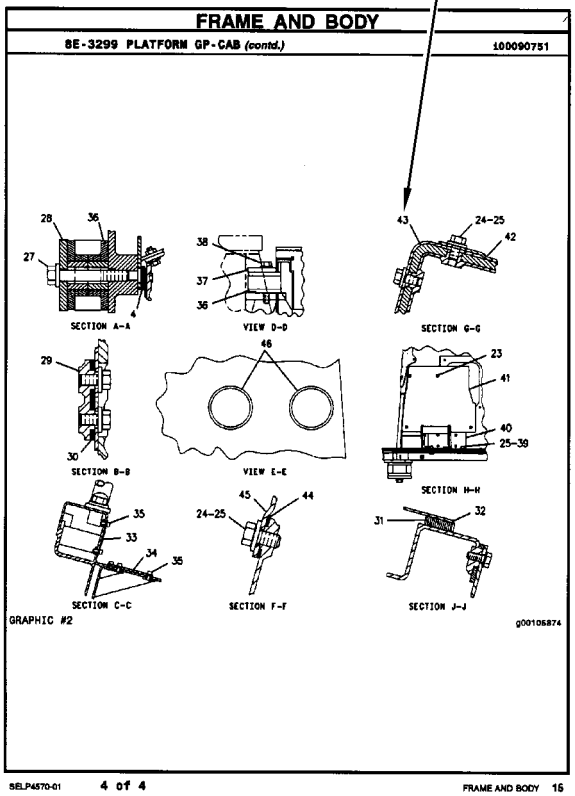

FRAME AND BODY
8E-3299 PLATFORM GP-CAB (contd.)
100090751

SECTION A-A
VIEW D-D
SECTION G-G
SECTION B-B
VIEW E-E
SECTION H-H
SECTION C-C
SECTION F-F
SECTION J-J

GRAPHIC #2 g00105874

SELP4570-01 4 of 4 FRAME AND BODY 15

INFORMAÇÃO GERAL

1. IDENTIFICAÇÃO DA MÁQUINA

As máquinas Caterpillar são identificadas pelos Números de Informação do Produto (PIN). Alguns componentes incluídos numa máquina podem ser identificados por Números de Série (S/N). Componentes típicos que serão enumerados com números de série incluem motores, transmissões, lâminas e ríperes. Além do número de série, a máquina e o motor são ainda identificados por números de arranjo e, em alguns casos, números de modificações. Tais números encontram-se na(s) placa(s) de identificação do produto e na placa mestre no compartimento do operador.

SIS *Novidades*

A partir do primeiro trimestre de 2001 o Número de Identificação de Produto da Caterpillar (PIN) precisa ser mudado de 8 para 17 caracteres. Esforçando-se para fornecer uma identificação uniforme de equipamentos, a Caterpillar e outros fabricantes de equipamento de construção estão mudando para atender a versão mais atualizada do padrão de identificação de produtos. Os números de PIN para produtos de aplicações não rodoviárias são definidos pela ISO 10261. O novo formato de número PIN será adotado em todas as máquinas e grupos geradores Caterpillar. As placas e as marcações do chassi mostrarão os 17 dígitos de PIN. O novo formato terá a seguinte disposição:

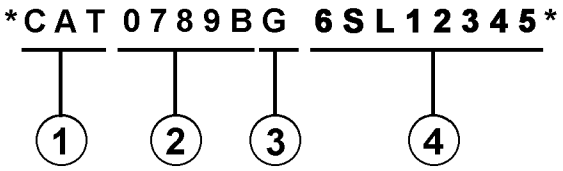

Onde:

1. Código de Fabricação Mundial da Caterpillar (dígitos 1-3)

2. Descrição da Máquina (dígitos 4-8)

3. Dígito de Verificação (dígito 9)

4. Seção de Indicador da Máquina (MIS) ou Número de Seqüência de Produto (dígitos 10-17). Estes eram anteriormente chamados de Número de Série.

Máquinas e grupos geradores produzidos antes do primeiro trimestre de 2001 manterão o formato de 8 caracteres de PIN.

Componentes como motores, transmissões, eixos, ferramentas de trabalho, etc. continuarão a usar Número de Série (S/N) com oito caracteres.

2. COMO OBTER PEÇAS

⚠ CUIDADO

Quando peças de substituição são exigidas para este produto, a Caterpillar recomenda a utilização de peças de substituição Caterpillar ou peças com as especificações equivalentes incluindo, mas não limitadas, à dimensões físicas, tipos, resistência e materiais.

A inobservância desta advertência poderá resultar em falhas prematuras, danos ao produto, ferimentos ou morte.

As Peças de Reposição de Qualidade Caterpillar encontram-se disponíveis nos revendedores Caterpillar no mundo inteiro. Seus estoques de peças são atualizados e incluem todas as peças normalmente necessárias para proteger seu investimento em máquinas Caterpillar. Alguns revendedores podem oferecer jogos de reparo ou peças de troca/remanufaturadas disponíveis como uma opção da alternativa de reparo mais eficaz para uma situação específica. Ao encomendar peças, seu pedido deve especificar a quantidade, o número e o nome da peça e o número de série/número de identificação do produto referentes à máquina para a qual as peças se destinam.

3. ORGANIZAÇÃO DO MANUAL DE PEÇAS

A informação do produto neste manual é apresentada em forma de "elementos de informação" que representam todos os componentes para o modelo específico. Arranjo de Motor e Grupo de Assento são exemplos de elementos de informação. Os elementos de informação são organizados em ordem alfabética por nome de peça ou secundariamente, por número de peça incluído em cada seção principal do manual.

4. LISTA DE CONTEÚDOS

A Lista de Conteúdos (TOC) se encontra no princípio do manual. A Lista de Conteúdos (TOC) relaciona em cada seção do manual uma lista completa com todos os elementos de informação organizados conforme aparecem no manual. Números de página são fornecidos para que se tenha referência rápida de ilustrações de peças detalhadas e listas de conteúdos que podem receber serviço de manutenção.

5. ÍNDICE DE PEÇAS DE MANUTENÇÃO

O Índice de Peças de Manutenção, localizado perto do princípio do manual, faz referência aos números de peça de manutenção usados com maior frequência, fornecendo uma descrição, a quantidade, o uso e o número de página. Esta informação é organizada com a descrição da peça em ordem alfabética.

6. ÍNDICE

O Índice localizado perto do princípio do manual, consiste de uma lista em ordem alfabética de todos os elementos de informação incluídos no manual. Números de página são fornecidos para que se tenha referência rápida de ilustrações de peças detalhadas e listas de conteúdos que podem receber serviço de manutenção.

7. ÍNDICE DE NÚMERO DE PEÇA

Um índice numérico relacionando todos os números de peça e a(s) página(s) correspondentes, aparece no final do manual.

8. LEGENDAS

As legendas localizadas no início de cada elemento de informação identificam o número e o nome de peça, juntamente com informação descritiva adicional. Informações sobre o Número de Informação do Produto (PIN) e o Número de Série (S/N) encontradas em cada legenda devem ser usadas para selecionar a informação correta sobre uma máquina específica. Opções de substituição no campo, identificação de componentes de acessórios opcionais e informações sobre onde são utilizados ("parte de") são também fornecidas.

A primeira linha de uma legenda é indicada em tipo maior para indicar o princípio de um elemento de informação. Legendas para páginas adicionais que podem ser necessárias para ilustrar um elemento de informação serão apresentadas em tipo padrão e incluirão o termo *(continua)* .

9. NÃO DISPONÍVEL SEPARADAMENTE

Em alguns casos, é necessário mostrar peças não disponíveis separadamente que têm uma ligação com listas de conteúdos de nível inferior que podem receber serviço de manutenção. Os números de peça destes componentes não disponíveis aparecerão em *itálico* , a fim de indicar que não estão disponíveis.

10. NÙMEROS DE REFERÊNCIA À LISTA DE PEÇAS

Os números indicados na coluna Ref No (No. de Referência) correspondem-se aos números usados no(s) gráfico(s) correspondente(s). Um sufixo com letras pode ser acrescentado a um número de referência para identificar itens de conteúdo de nível inferior. Os números indicados na coluna Graphic Ref (Referência de Gráfico) referem-se ao identificador de número de gráfico presente no canto esquerdo inferior de cada ilustração. O número de Referência de Gráfico pode ser usado em combinação com o item Ref No para determinar-se o número de peça correto. Poderá haver omissão intencional de um número de referência (Ref No) de uma lista de conteúdos uma vez que as informações são atualizadas para refletir os números de peça mais recentes que podem receber serviço de manutenção.

11. NOMES DE PEÇAS DESALINHADOS

Quando um nome de peça encontra-se desalinhado numa lista de peças, significa que tal item faz parte do (está incluído no) grupo ou conjunto sob o qual está relacionado.

12. LETRAS DE REFERÊNCIA NAS ILUSTRAÇÕES

Quando necessário, as ilustrações contêm letras de referência (A, B, C, etc.) que são utilizadas para seguir tubulações e cabos elétricos de um ponto a outro. Também foram utilizadas para indicar onde se pode reconectar as ilustrações que foram separadas.

13. ABREVIAÇÕES E SÍMBOLOS

O.D. – "Outside Diameter" (Diâmetro Externo)
I.D. – "Inside Diameter" (Diâmetro Interno)
A – Não faz parte deste grupo
B – Use conforme necessário
C – Indica modificação
D – Vendido por metro
E – Vendido por centímetro
F – Não ilustrado
G – Vendido por polegada
I – Consultar o Sistema de Informações Hidráulicas
M – Peça métrica
R – Peça remanufaturada pode estar disponível; consulte o seu revendedor Cat
Y – Ilustração separada
Z – Não disponível separadamente

SIS *Novidades*

14. <END>

Este símbolo indica o final de um elemento de informação.

NOTA:

Os contínuos aperfeiçoamentos e avanços no projeto do produto podem ocasionar modificações em sua máquina que talvez ainda não estejam incluídas nesta publicação. Sempre que surgirem dúvidas quanto a um produto Caterpillar ou quanto à presente publicação, consulte o seu revendedor Caterpillar para obter as informações mais recentes disponíveis.

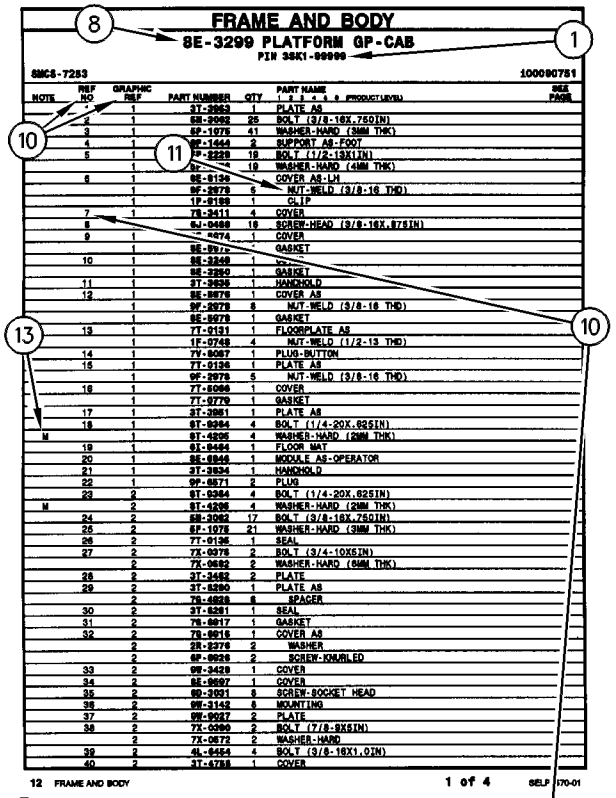

FRAME AND BODY

8E-3299 PLATFORM GP-CAB

PIN 3SK1-99999

SMCS-7283 100090751

NOTE	REF NO	GRAPHIC REF	PART NUMBER	QTY	PART NAME 1 2 3 4 5 6 (PRODUCT LEVEL)	SEE PAGE
	1	1	3T-3963	1	PLATE AS	
	2	1	5M-3062	25	BOLT (3/8-16X.750IN)	
	3	1	6P-1075	41	WASHER-HARD (3MM THK)	
	4	1	9E-1443	2	SUPPORT AS-FOOT	
	5	1	9P-2228	18	BOLT (1/2-13X1IN)	
		1	9P-[illegible]	18	WASHER-HARD (4MM THK)	
	6	1	9E-9136	1	COVER AS-LH	
		1	9F-2978	6	NUT-WELD (3/8-16 THD)	
		1	1P-0189	1	CLIP	
	7	1	7X-3411	4	COVER	
	8	1	6J-0468	18	SCREW-HEAD (3/8-16X.87SIN)	
	9	1	[illegible]074	1	COVER	
		1	9E-9[illegible]	1	GASKET	
	10	1	9E-3248	1	[illegible]	
		1	9E-3250	1	GASKET	
	11	1	3T-3636	1	HANDHOLD	
	12	1	9E-9076	1	COVER AS	
		1	9F-2979	8	NUT-WELD (3/8-16 THD)	
		1	9E-9078	1	GASKET	
	13	1	7T-9131	1	FLOORPLATE AS	
		1	1F-0748	4	NUT-WELD (1/2-13 THD)	
	14	1	7V-8067	1	PLUG-BUTTON	
	15	1	7T-9136	1	PLATE AS	
		1	9F-2979	5	NUT-WELD (3/8-16 THD)	
	16	1	7T-5066	1	COVER	
		1	7T-9779	1	GASKET	
	17	1	3T-3951	1	PLATE AS	
	18	1	9T-0264	4	BOLT (1/4-20X.62SIN)	
M		1	9T-4295	4	WASHER-HARD (2MM THK)	
	19	1	9I-9454	1	FLOOR MAT	
	20	1	9E-6946	1	MODULE AS-OPERATOR	
	21	1	3T-3934	1	HANDHOLD	
	22	1	9P-0671	2	PLUG	
	23	2	9T-0264	4	BOLT (1/4-20X.62SIN)	
M		2	9T-4295	4	WASHER-HARD (2MM THK)	
	24	2	5M-3062	17	BOLT (3/8-16X.75QIN)	
	25	2	6P-1075	21	WASHER-HARD (3MM THK)	
	26	2	7T-9136	1	SEAL	
	27	2	7X-0075	2	BOLT (3/4-10X5IN)	
		2	7X-0682	2	WASHER-HARD (6MM THK)	
	28	2	3T-3482	2	PLATE	
	29	2	3T-5290	1	PLATE AS	
		2	7S-4828	6	SPACER	
	30	2	3T-5291	1	SEAL	
	31	2	7S-8817	1	GASKET	
	32	2	7S-8816	1	COVER AS	
		2	5R-2276	2	WASHER	
		2	9F-9026	2	SCREW-KNURLED	
	33	2	9W-3429	1	COVER	
	34	2	8E-9697	1	COVER	
	35	2	9D-3031	8	SCREW-SOCKET HEAD	
	36	2	9W-3143	8	MOUNTING	
	37	2	9W-9037	2	PLATE	
	38	2	7X-0360	2	BOLT (7/8-9X5IN)	
		2	7X-0672	2	WASHER-HARD	
	39	2	4L-6454	4	BOLT (3/8-16X1.0IN)	
	40	2	3T-4788	1	COVER	

12 FRAME AND BODY 1 of 4 SELP4570-01

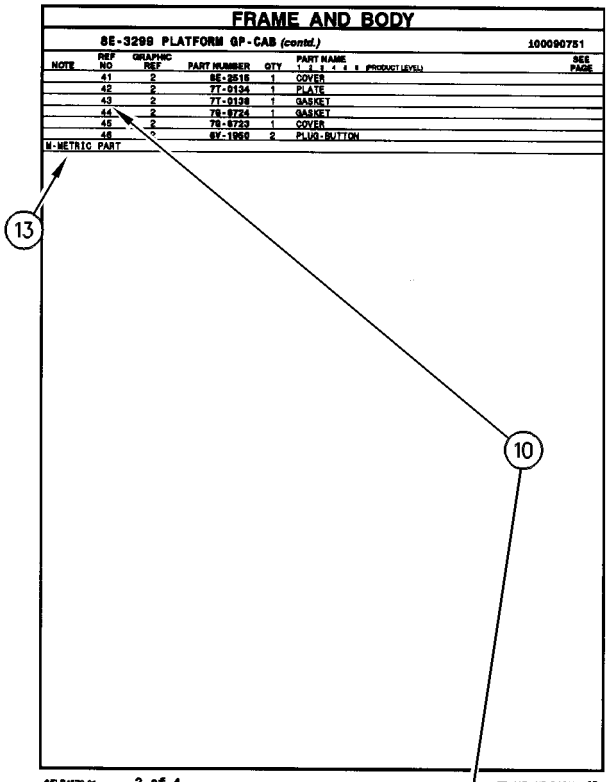

FRAME AND BODY

8E-3299 PLATFORM GP-CAB (contd.) 100090751

NOTE	REF NO	GRAPHIC REF	PART NUMBER	QTY	PART NAME 1 2 3 4 5 6 (PRODUCT LEVEL)	SEE PAGE
	41	2	8E-2515	1	COVER	
	42	2	7T-9134	1	PLATE	
	43	2	7T-9138	1	GASKET	
	44	2	7S-8724	1	GASKET	
	45	2	7S-8723	1	COVER	
	46	*	8Y-1950	2	PLUG-BUTTON	

M-METRIC PART

SELP4570-01 2 of 4 FRAME AND BODY 13

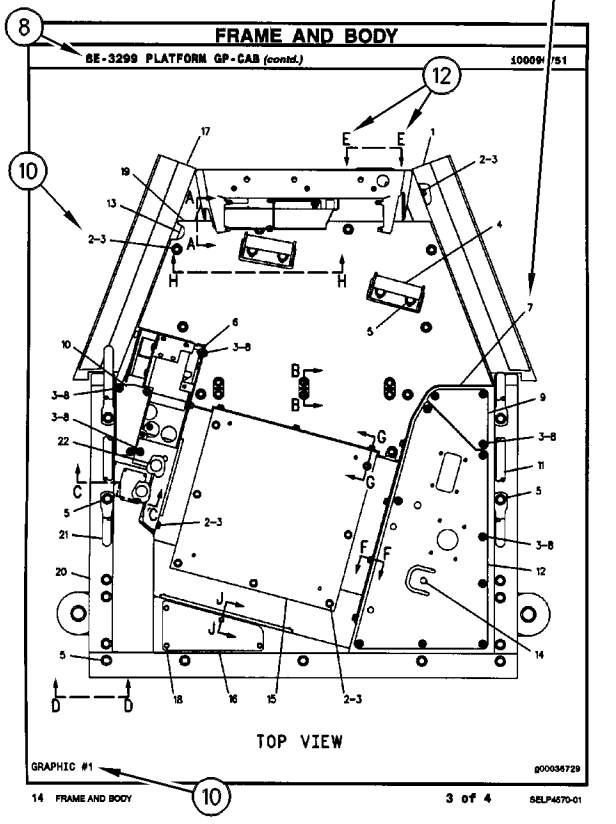

FRAME AND BODY

8E-3299 PLATFORM GP-CAB (contd.) 100090751

TOP VIEW

GRAPHIC #1 g00036729

14 FRAME AND BODY 3 of 4 SELP4570-01

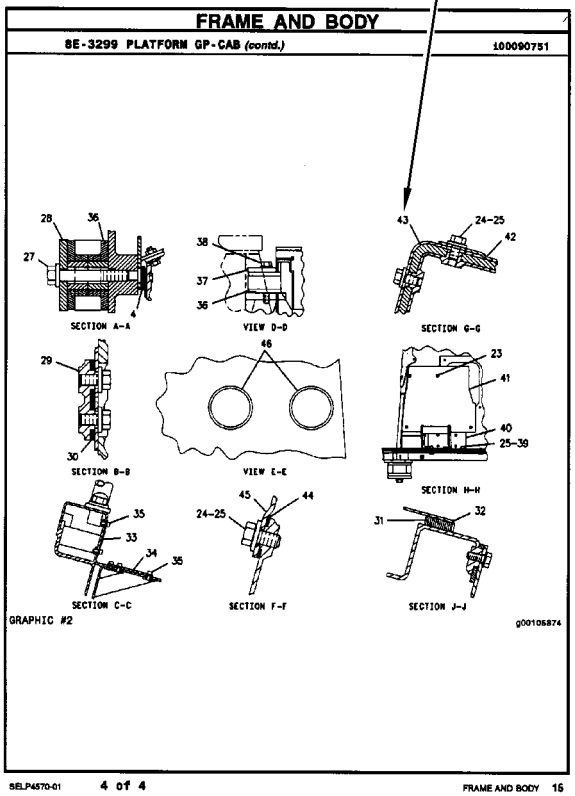

FRAME AND BODY

8E-3299 PLATFORM GP-CAB (contd.) 100090751

SECTION A-A

VIEW D-D

SECTION G-G

SECTION B-B

VIEW E-E

SECTION H-H

SECTION C-C

SECTION F-F

SECTION J-J

GRAPHIC #2 g00105874

SELP4570-01 4 of 4 FRAME AND BODY 15

ALLGEMEINE HINWEISE

1. MASCHINENKENNZEICHNUNG

Caterpillar-Maschinen sind mit PRODUCT IDENTIFICATION NUMBERS (PIN) (Produkt-Identnummern) gekennzeichnet. Einige Baugruppen, z.B. Motoren, Getriebe, Planierschilde und Aufreißer, sind mit SERIAL NUMBERS (S/N) (Seriennummern) gekennzeichnet. An der Maschine und am Motor befinden sich außerdem ARRANGEMENT NUMBERS (Ausrüstungsnummern) sowie in einigen Fällen MODIFICATION NUMBERS (Änderungsnummern). Sie befinden sich auf den PIN-Schildern und auf dem Typenschild im Fahrerhaus.

Bei Ersatzteilbestellungen müssen dem Händler alle diese Nummern zur Verfügung gestellt werden.

SIS *Neu im Parts Manual*

Vom ersten Quartal 2001 ab wurde die Caterpillar Produkt-Identnummer (PIN) von 8 auf 17 Zeichen geändert. Um zur Standardisierung der Produkt-Identnummer beizutragen, sind Caterpillar und andere Baumaschinenhersteller bestrebt, die aktuellste Norm zur Produkt-Identnummerierung einzuführen. Produkt-Identnummern für Baumaschinen sind durch ISO 10261 definiert. Das neue Format der Produkt-Identnummern gilt für alle Caterpillar-Maschinen und -Stromaggregate. Die Produkt-Identschilder und -Identrahmenmarkierung enthalten die aus 17 Zeichen bestehende Identnummer. Das neue Format hat folgende Abschnitte:

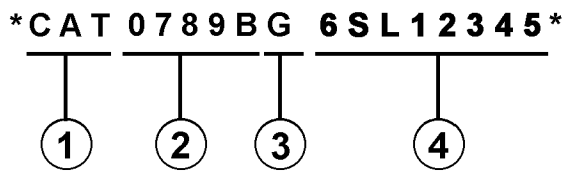

Abschnitte:

1. Caterpillars weltweiter Herstellungscode (Zeichen 1-3)

2. Modell (Zeichen 4-8)

3. Kontrollzeichen (Zeichen 9)

4. Maschinenspezifische Kennung (MIS) oder Produktsequenznummer (Zeichen 10-17). Diese wurde früher als Seriennummer bezeichnet.

Für vor dem ersten Quartal 2001 hergestellte Maschinen und Stromaggregate wird das aus 8 Zeichen bestehende PIN-Format beibehalten.

Bauteile wie z.B. Motoren, Getriebe, Achsen sowie Arbeitsgeräte werden weiterhin eine aus 8 Zeichen bestehende Seriennummer (S/N) aufweisen.

2. BESTELLEN VON ERSATZTEILEN

⚠ WARNUNG

Wenn für diese Maschine Ersatzteile benötigt werden, empfiehlt Caterpillar, ausschließlich Caterpillar-Ersatzteile oder solche zu verwenden, die die gleichen technischen Merkmale hinsichtlich Typ, Festigkeit, Werkzeugeigenschaften und die gleichen Maße aufweisen.

Bei Nichtbeachtung dieser Warnung besteht Verletzungs- oder sogar Lebensgefahr! Ferner kann Nichtbeachtung vorzeitige Ausfälle der Teile und Beschädigung der Maschine zur Folge haben.

Original Caterpillar-Ersatzteile können weltweit bei jedem Caterpillar-Händlern bestellt werden. Die umfangreichen Händlerlager enthalten normalerweise alle Teile, die Sie für Ihre Caterpillar-Maschine benötigen. Einige Händler bieten Reparatursätze, Austausch- oder werküberholte Teile an, so daß Sie eine Auswahl unter verschiedenen Reparaturmöglichkeiten treffen können. Ihre Bestellung muß folgende Angaben enthalten: Anzahl der benötigten Teile, Bestellnummer, Bezeichnung des Teils, Serien-Nr./Produkt-Ident-Nr., Ausrüstungs-Nr. und Änderungs-Nr. der Maschine, für die diese Teile benötigt werden.

3. AUFBAU DES PARTS MANUAL

Die Produktinformationen für alle Komponenten eines bestimmten Modells sind in INFORMATION ELEMENTS (Informationseinheiten) gegliedert. ENGINE ARRANGEMENT (Motorausführung) und SEAT GROUP (Fahrersitz) sind Beispiele für solche Informationseinheiten. Sie sind innerhalb jeder Gruppe alphabetisch, entsprechend der Ersatzteilbezeichnung, und zusätzlich numerisch, entsprechend der Ersatzteilnummer, geordnet.

4. INHALTSVERZEICHNIS

Das Inhaltsverzeichnis befindet sich am Anfang des Buches. Im Inhaltsverzeichnis werden die einzelnen Abschnitte des Buches aufgeführt. Die Abschnitte enthalten eine vollständige Aufstellung aller Informationseinheiten. Diese sind entsprechend ihrem Erscheinen im Buch geordnet. Das Inhaltsverzeichnis enthält Seitenangaben für Schnellverweise auf detaillierte Abbildungen und Teillisten.

5. INDEX FÜR WARTUNGSTEILE

Der Index für Wartungsteile vorn im Buch enthält die Bestellnummern, Seitenangaben, Mengenangaben und Informationen über den Einsatzbereich für die am häufigsten benötigten Ersatzteile. Die Angaben sind alphabetisch entsprechend der Teilebezeichnung geordnet.

6. INDEX

Der Index vorn im Buch enthält eine alphabetische Liste aller Informationseinheiten. Er enthält Seitenangaben für Schnellverweise auf detaillierte Abbildungen und Teillisten.

7. INDEX FÜR BESTELLNUMMERN

Hinten im Buch befindet sich ein numerischer Index, mit allen Bestellnummern und dem Hinweis auf die Seite, auf der sich die betreffende Abbildung befindet.

8. ÜBERSCHRIFTEN

Die Überschriften, die sich am Anfang jeder der Informationseinheiten befinden, enthalten Bestellnummern, Ersatzteilbezeichnungen und zusätzliche beschreibende Informationen. Produkt-Ident- und Seriennummern in den Überschriften sollten zur Auswahl der richtigen Informationen für die betreffende Maschine verwendet werden. Die Überschriften enthalten außerdem Informationen über möglichen Außendienstersatz, mögliche Baugerätekomponenten und die Baugruppe, zu der das Teil gehört.

Die erste Zeile einer Überschrift erscheint in einer größeren Schriftart, um den Anfang einer Informationseinheit zu kennzeichnen. Überschriften für zusätzliche Seiten, die zur Erläuterung einer Informationseinheit notwendig sind, erscheinen in normaler Schriftart und enthalten den Begriff "(contd.)".

9. NICHT EINZELN LIEFERBARE TEILE

In einigen Fällen ist es notwendig nicht lieferbare Teile, die selbst mit einer eigenen Teilliste im Buch vertreten sind, aufzuführen. Die Bestellnummern dieser nicht einzeln lieferbaren Teile erscheinen kursiv, wodurch angezeigt wird, daß sie nur in Verbindung mit anderen Teilen lieferbar sind.

10. REFERENZNUMMER FÜR ERSATZTEILE

Die Zahlen, die in der Spalte "Ref No" aufgeführt sind, stimmen mit den Zahlen in den beigefügten Abbildungen überein. Ein Buchstaben-Suffix kann zu einer Referenznummer hinzugefügt werden, um zu kennzeichnen, daß das Teil mit einer eigenen Teilliste im Buch aufgeführt ist. Die in der Spalte "Graphic Ref" angeführten Zahlen verweisen auf die Identifikationsnummer der Abbildung, die sich in der linken unteren Ecke der Abbildung befindet. Diese Nummer kann zusammen mit der Referenznummer des Teils angegeben werden, um die richtige Ersatzteilnummer zu ermitteln. Referenznummern können absichtlich weggelassen werden, da die Nummern der lieferbaren Ersatzteile ständig aktualisiert werden.

11. EINGERÜCKTE BEZEICHNUNGEN

Wenn eine Bezeichnung eingerückt ist, wird dadurch angezeigt, daß das Teil zu einer Baugruppe gehört, unter deren Bezeichnung es eingerückt ist.

12. REFERENZBUCHSTABEN

Falls erforderlich sind in den Abbildungen Referenzbuchstaben enthalten (z.B. A, B, C, usw.), die Leitungen und Kabelbäume von einem Punkt zum anderen verfolgen. Außerdem geben sie die Stelle an, an der getrennte Abbildungen fortgesetzt werden.

13. ABKÜRZUNGEN UND SYMBOLE

O.D. – Außendurchmesser
I.D. – Innendurchmesser
A – kein Teil dieser Gruppe
B – nach Bedarf verwenden
C – Hinweis auf eine Änderung
D – in Meter-Länge bestellen
E – in Zentimeter-Länge bestellen
F – nicht gezeigt
G – in Zoll-Länge bestellen
I – siehe Hydraulikinformationssystem
M – metrisches Teil
R – werküberholtes Teil unter Umständen lieferbar
Y – separate Abbildung
Z – nicht einzeln lieferbar

SIS *Neu im Parts Manual*

14. <END>

Dieses Symbol zeigt das Ende eines Informationselements an.

ALLGEMEINE HINWEISE

ANMERKUNG:

Ständig vorgenommene Verbesserungen und Weiterentwicklungen an Ihrer Maschine können Änderungen verursachen, die in der vorliegenden Ausgabe noch nicht berücksichtigt sind. Fragen zu Ihrer Caterpillar-Maschine oder diesem Ersatzteilbuch beantwortet Ihr Caterpillar-Händler.

ALLGEMEINE HINWEISE

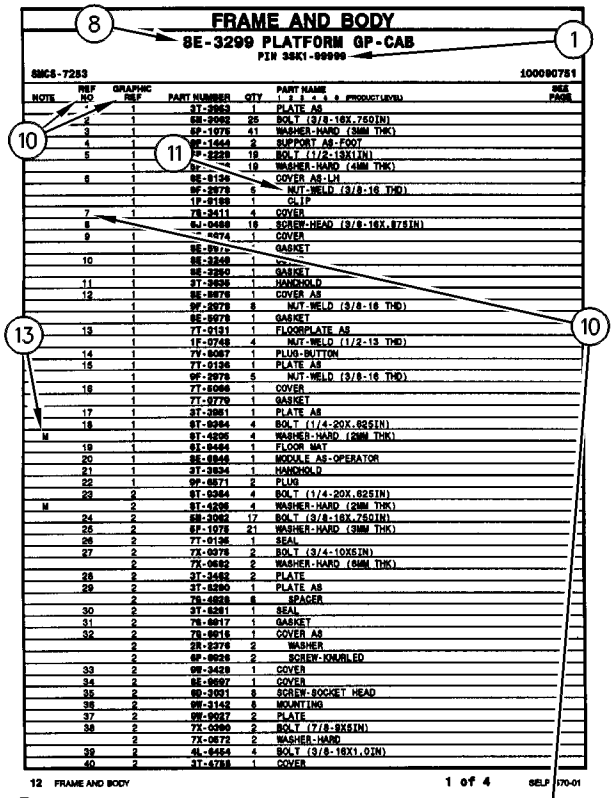

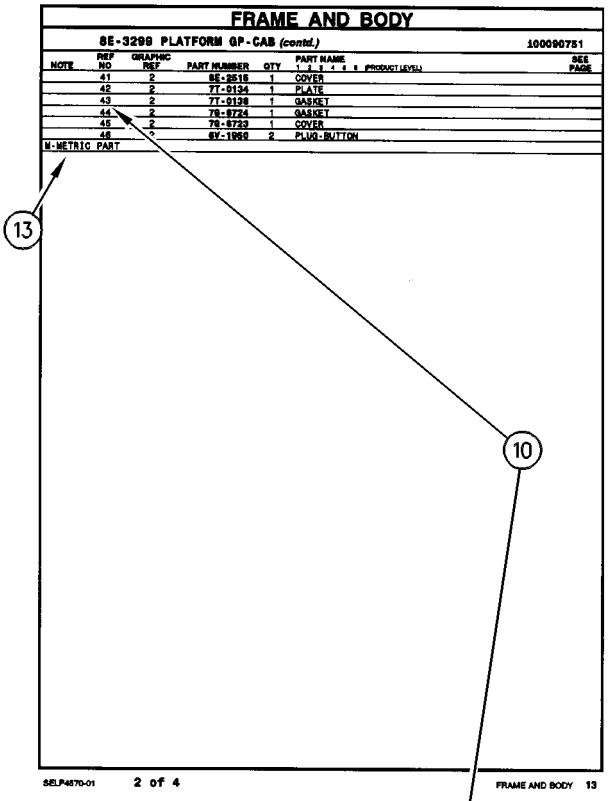

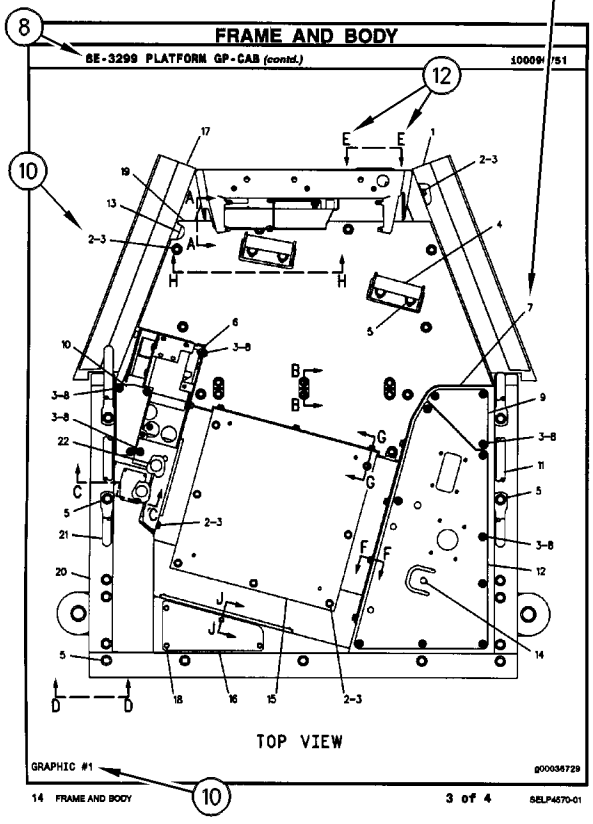

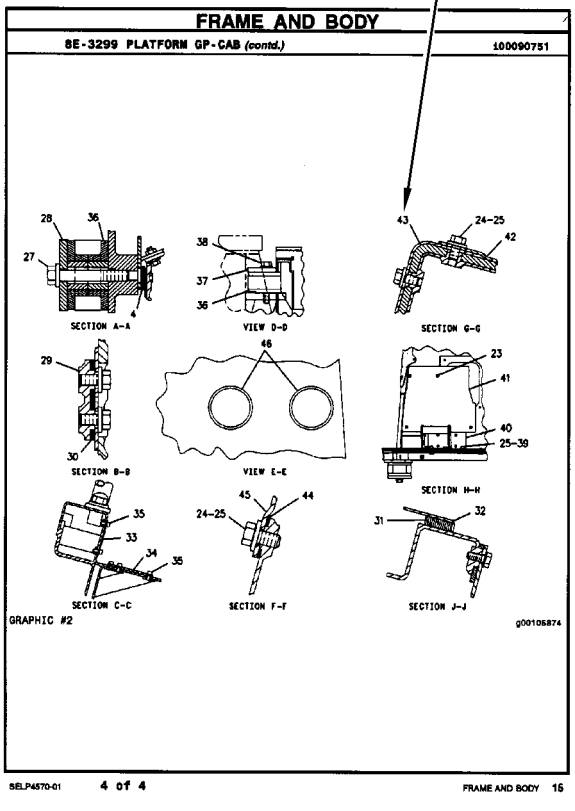

REMANUFACTURED COMPONENTS

As an option when making repairs consider Caterpillar Remanufactured Components. Components that are available through the Caterpillar Remanufactured Program are identified three ways in the parts book:

- with the letter R in the note field of the parts list
- with an R* at the beginning of the first line of the caption
- with an *R at the end of the first line of the caption

Typical components included in the Remanufacturing Program include:

ALTERNATORS
CONNECTING RODS
CRANKSHAFTS - UNDERSIZE
CRANKSHAFTS - UPGRADE TO NEW
CYLINDER HEADS
ELECTRONIC CONTROL MODULES (ECM)
ELECTRONIC SENSORS
FUEL INJECTORS
FUEL NOZZLES
FUEL PUMPS
GOVERNORS
OIL PUMPS
PISTONS
SHORT BLOCKS
STARTERS
TURBOCHARGERS - COMPLETE
TURBOCHARGER CARTRIDGES
WATER PUMPS

Caterpillar Remanufactured engines for many engine arrangements are also available.

OPTIONS DE RÉPARATION

COMPOSANTS RÉNOVÉS

Comme option de réparation, considérer les composants rénovés Caterpillar. Les composants disponibles dans le cadre du programme Caterpillar de composants rénovés sont identifiés de trois façons dans le catalogue de pièces:

- avec la lettre "R" dans l'espace note de la liste des pièces
- avec R* au début de la première ligne des légendes
- avec *R à la fin de la première ligne des légendes

Les composants suivants figurent parmi les composants typiques du programme de rénovation:

ALTERNATEURS
BIELLES
VILEBREQUINS - SOUS-DIMENSIONNÉS
VILEBREQUINS - REMIS À NEUF
CULASSES
MODULES DE COMMANDE ÉLECTRONIQUE (ECM)
CAPTEURS ÉLECTRONIQUES
INJECTEURS
TÊTES D'INJECTEURS
POMPES À CARBURANT
RÉGULATEURS
POMPES À HUILE
PISTONS
BLOCS EMBIELLÉS
DÉMARREURS
TURBOCOMPRESSEURS - COMPLETS
CARTOUCHES DE TURBOCOMPRESSEUR
POMPES À EAU

Des moteurs rénovés sont aussi disponibles pour plusieurs versions de moteur.

ALTERNATIVAS DE REPARACIÓN

COMPONENTES REMANUFACTURADOS

Al hacer reparaciones, tenga en cuenta la opción de Componentes Remanufacturados Caterpillar. Los componentes que están disponibles por medio del programa de Productos Remanufacturados Caterpillar se identifican de tres maneras en el manual de piezas:

- con la letra R en el espacio de Nota de la lista de piezas
- con una R* al comienzo de la primera línea de la leyenda
- con una *R al final de la primera línea de la leyenda

Los componentes que se incluyen típicamente en el Programa de Productos Remanufacturados son:

ALTERNADORES
BIELAS
CIGÜEÑALES - BAJOMEDIDA
CIGÜEÑALES - REMANUFACTURADOS A NUEVO
CULATAS
MÓDULOS DE CONTROL ELECTRÓNICO (ECM)
SENSORES ELECTRONICOS
INYECTORES
BOQUILLAS
BOMBAS DE COMBUSTIBLE
REGULADORES
BOMBAS DE ACEITE
PISTONES
MONOBLOQUES
MOTORES DE ARRANQUE
TURBOCOMPRESORES - COMPLETOS
NÚCLEOS DE TURBOCOMPRESOR
BOMBAS DE AGUA

También hay disponibles motores Remanufacturados Caterpillar para muchas de las configuraciones de motores.

ALTERNATIVAS DE REPARO

COMPONENTES REMANUFATURADOS

Considere o uso de Componentes Remanufaturados Caterpillar ao efetuar reparos. Os componentes disponíveis através do Programa de Remanufatura Caterpillar são identificados de três formas no manual de peças:

- com um R na área da nota da lista de peças
- com um R* no princípio da primeira linha da legenda
- com um *R no final da primeira linha da legenda

Os componentes típicos que constam no Programa de Remanufatura incluem:

ALTERNADORES
BIELAS
VIRABREQUINS - SUBMEDIDAS
VIRABREQUINS - ATUALIZAÇÃO
CABEÇOTES
MÓDULOS DE CONTROLE ELETRÔNICO (ECM)
SENSORES ELETRÔNICOS
INJETORES DE COMBUSTÍVEL
BICOS DE ABASTECIMENTO DE COMBUSTÍVEL
BOMBAS DE COMBUSTÍVEL
GOVERNADORES
BOMBAS DE ÓLEO
PISTÕES
BLOCOS BÁSICOS DO MOTOR
MOTORES DE PARTIDA
TURBOALIMENTADORES - COMPLETOS
CARTUCHOS DE TURBOALIMENTADORES
BOMBAS D'ÁGUA

Motores Remanufaturados Caterpillar também encontram-se disponíveis para diversos arranjos de motor.

WERKÜBERHOLTE AT-PRODUKTE

Bei Reparaturen sollten werküberholte AT-Produkte von Caterpillar in Betracht gezogen werden. Die durch das AT-Programm von Caterpillar erhältlichen Teile sind im Parts Book auf drei verschiedene Arten gekennzeichnet:

- mit dem Buchstaben R in der Spalte NOTE der Ersatzteilliste
- mit einem R* am Anfang der ersten Zeile der Überschrift
- mit einem *R am Ende der ersten Zeile der Überschrift

Das AT-Programm umfaßt u.a. folgende Produkte:

DREHSTROMGENERATOREN
PLEUELSTANGEN
KURBELWELLEN - MIT UNTERMASS
KURBELWELLEN - MIT ORIGINALMASS
ZYLINDERKÖPFE
ELEKTRONISCHE STEUEREINHEITEN (EMC)
ELEKTRONISCHE SENSOREN
PUMPENDÜSEN
EINSPRITZDÜSEN
KRAFTSTOFFPUMPEN
DREHZAHLREGLER
ÖLPUMPEN
KOLBEN
TEILMOTOREN
ANLASSER
TURBOLADER - KOMPLETT
TURBOLADERLAUFZEUGE
KÜHLWASSERPUMPEN

Viele Motoren können durch werküberholte AT-Motoren von Caterpillar ersetzt werden.

SUPPLEMENTAL COOLANT ADDITIVES

CUSTOMER BENEFITS:

Protects against cavitation, foam, erosion, corrosion, and scale buildup in cooling systems.

- Provides measured coolant conditioner.

DESCRIPTION:

Additives deplete from the coolant with normal operation. For this reason, Supplemental Coolant Additives (SCA) must be added to all heavy duty coolants at regular intervals. In addition, when not using a fully formulated, pre-charged antifreeze, like Caterpillar's DEAC, an initial charge of SCA must be added to the cooling system. The amount of SCA added to the system is dependent on the capacity of the system.

The SCA for initial fill is provided as a liquid. SCA's for maintenance intervals are available in liquid form and as a spin-on element. (No Spin-on available for 3600 Family of Engines)

NOTE:

The amount of SCA added at initial fill is not the same as the amount added at maintenance intervals.

The coolant additive elements can be used with any ethylene or propylene glycol type antifreeze which meets ASTM D4985 or ASTM D5345 Specifications.

NOTE:

For use with standard heavy duty coolant only, not for use with Extended Life Coolant.

PARTS NEEDED:

Cooling System Capacity		Liquid SCA at Initial Fill	Liquid SCA at Maintenance*	Spin-on SCA Maintenance Element*
Liters	Gallons			
22-30	(6-8)	3P-2044 (1)	6V-3542 (1)	111-2370 (1)
30-38	(8-10)	3P-2044 (1) 6V-3542 (1)	111-2372 (1)	111-2369 (1)
38-49	(10-13)	3P-2044 (1) 8T-1589 (1)	111-2372 (1)	111-2369 (1)
49-64	(13-17)	3P-2044 (2)	8T-1589 (1)	9N-3368 (1)
64-83	(17-22)	3P-2044 (2) 8T-1589 (1)	111-2372 (1) 6V-3542 (1)	111-2371 (1)
83-114	(22-30)	3P-2044 (3) 8T-1589 (1)	3P-2044 (1)	9N-3718 (1)
114-163	(30-43)	3P-2044 (5)	3P-2044 (1) 6V-3542 (1)	111-2371 (2)
163-242	(43-64)	3P-2044 (8)	3P-2044 (2)	9N-3718 (2)

** Normal maintenance period is 250 hrs. See your Operation and Maintenance Manual for complete coolant maintenance instructions.*

( ) Indicates quantity required.

ADDITIFS POUR LIQUIDE DE REFROIDISSEMENT

AVANTAGES POUR LE CLIENT

L'additif protège contre la cavitation, la mousse, l'érosion, la corrosion et l'accumulation de dépôts dans le circuit de refroidissement.

- L'additif complémentaire fournit une quantité mesurée d'additif.

DESCRIPTION:

Les additifs s'épuisent pendant l'utilisation du moteur. C'est pourquoi l'on doit ajouter de l'additif au liquide de refroidissement/antigel pour moteurs diesel à intervalles réguliers. En plus, si l'on n'utilise pas de l'antigel entièrement formulé et pré-chargé comme le liquide de refroidissement/antigel Caterpillar pour moteurs diesel, une quantité initiale d'additif doit être ajoutée au circuit de refroidissement. La quantité d'additif à ajouter au circuit dépend de la contenance du circuit.

L'additif pour le remplissage initial est fourni sous forme liquide. L'additif pour l'entretien ultérieur est disponible sous forme liquide et sous forme d'élément à visser. (Il n'y a pas d'élément à visser pour les moteurs de la famille 3600).

NOTA:

La quantité d'additif à ajouter au remplissage initial diffère de la quantité à ajouter aux intervalles d'entretien.

Les éléments d'additif peuvent être utilisés avec tout antigel de type éthylène ou propylène-glycol conforme à la norme ASTM D4985 ou ASTM D5345.

NOTA:

A utiliser uniquement avec du liquide de refroidissement pour moteurs diesel et non avec le liquide de refroidissement longue durée.

PIÈCES NÉCESSAIRES:

Contenance du circuit de refroidissement		Additif liquide au remplissage initial	Additif liquide aux intervalles d'entretien*	Elément d'additif à visser aux intervalles d'entretien*
Litres	Gallons U.S.			
22-30	(6-8)	3P-2044 (1)	6V-3542 (1)	111-2370 (1)
30-38	(8-10)	3P-2044 (1) 6V-3542 (1)	111-2372 (1)	111-2369 (1)
38-49	(10-13)	3P-2044 (1) 8T-1589 (1)	111-2372 (1)	111-2369 (1)
49-64	(13-17)	3P-2044 (2)	8T-1589 (1)	9N-3368 (1)
64-83	(17-22)	3P-2044 (2) 8T-1589 (1)	111-2372 (1) 6V-3542 (1)	111-2371 (1)
83-114	(22-30)	3P-2044 (3) 8T-1589 (1)	3P-2044 (1)	9N-3718 (1)
114-163	(30-43)	3P-2044 (5)	3P-2044 (1) 6V-3542 (1)	111-2371 (2)
163-242	(43-64)	3P-2044 (8)	3P-2044 (2)	9N-3718 (2)

** L'intervalle d'entretien normal est de 250 heures-service. Voir le Guide d'utilisation et d'entretien pour de plus amples renseignements concernant l'entretien du circuit de refroidissement.*

( ) Indique la quantité exigée.

ADITIVOS DE REFRIGERANTE SUPLEMENTARIOS

VENTAJAS PARA EL USUARIO:

Protegen contra la cavitación, la formación de espuma, la corrosión y la acumulación de escamas en los sistemas de enfriamiento.

- Suministra un acondicionador dosificado de refrigerante.

DESCRIPCIÓN:

Los aditivos en el refrigerante se agotan con la operación normal. Por esta razón, se debe agregar Aditivo de refrigerante suplementario (SCA) a todos los refrigerantes para servicio pesado, a intervalos regulares. Además, cuando no se usa un anticongelante de precarga completo, tal como el DEAC de Caterpillar, es necesario agregar una cantidad de aditivo de refrigerante suplementario inicial al sistema de enfriamiento. La cantidad de aditivo que se debe agregar depende de la capacidad del sistema.

El SCA de llenado inicial es líquido. El que se usa para el mantenimiento está disponible tanto en líquido como en un elemento enroscable. (No hay elemento enroscable disponible para la Familia de Motores 3600).

NOTA:

La cantidad de aditivo de llenado inicial no es la misma que se agrega en los intervalos de mantenimiento.

Los elementos de aditivo de refrigerante se pueden usar con cualquier anticongelante de tipo glicol etilénico o propílico que esté de acuerdo con las especificaciones de las normas ASTM D4985 o ASTM D5345.

NOTA:

Se debe utilizar únicamente con refrigerante estándar para servicio pesado; no se debe usar con Refrigerante de Larga Duración.

PIEZAS NECESARIAS:

Capacidad del Sistema de Enfriamiento		SCA líquido de llenado inicial	SCA líquido de mantenimiento*	Elemento de mantenimiento enroscable*
litros	gal EE.UU.			
22-30	6-8	3P-2044 (1)	6V-3542 (1)	111-2370 (1)
30-38	8-10	3P-2044 (1) 6V-3542 (1)	111-2372 (1)	111-2369 (1)
38-49	10-13	3P-2044 (1) 8T-1589 (1)	111-2372 (1)	111-2369 (1)
49-64	13-17	3P-2044 (2)	8T-1589 (1)	9N-3368 (1)
64-83	17-22	3P-2044 (2) 8T-1589 (1)	111-2372 (1) 6V-3542 (1)	111-2371 (1)
83-114	22-30	3P-2044 (3) 8T-1589 (1)	3P-2044 (1)	9N-3718 (1)
114-163	30-43	3P-2044 (5)	3P-2044 (1) 6V-3542 (1)	111-2371 (2)
163-242	43-64	3P-2044 (8)	3P-2044 (2)	9N-3718 (2)

** El período normal de mantenimiento es de 250 horas. Para ver las instrucciones completas sobre el mantenimiento del refrigerante, consulte el Manual de Operación y Mantenimiento.*

( ) Indica la cantidad necesaria.

ADITIVOS SUPLEMENTARES DO LÍQUIDO ARREFECEDOR

BENEFÍCIOS PARA O CLIENTE:

Protege contra cavitação, espuma, erosão, corrosão e acúmulo de crostas nos sistemas de arrefecimento.

- Fornece uma quantidade pré-determinada de condicionador de arrefecimento.

DESCRIÇÃO:

Com a operação normal, os aditivos se esgotam do líquido arrefecedor. Por isso, Aditivos Suplementares do Líquido Arrefecedor (SCA) devem ser acrescentados a todos os líquidos arrefecedores para serviço pesado em intervalos regulares. Além disso, quando um anticongelante pré-carregado, totalmente formulado não for usado, como o DEAC Caterpillar, uma carga inicial de SCA deve ser acrescentada ao sistema de arrefecimento. A quantidade de SCA acrescentada ao sistema depende da capacidade do sistema.

O SCA para abastecimento inicial é fornecido em forma de líquido. Os aditivos suplementares (SCA) para intervalos de manutenção estão à disposição em forma líquida e como um elemento com roscas. (Exceto os Motores da Família 3600)

NOTA:

A quantidade de SCA adicionada no abastecimento inicial não é a mesma que a acrescentada nos intervalos de manutenção.

Os elementos do aditivo do líquido arrefecedor podem ser usados com qualquer tipo de anticongelante etileno ou propileno que satisfaz as Especificações ASTM D4985 ou ASTM D5345.

NOTA:

Para uso apenas com líquido arrefecedor para serviço pesado padrão, não deve ser usado com Líquido Arrefecedor de Vida Longa.

PEÇAS NECESSÁRIAS:

Capacidade do Sistema de Arrefecimento		Líquido SCA Durante Abastecimento Inicial	Líquido SCA Durante Manutenção*	Elemento de Manutenção de SCA com Roscas*
Litros	Galões			
22-30	6-8	3P-2044 (1)	6V-3542 (1)	111-2370 (1)
30-38	8-10	3P-2044 (1) 6V-3542 (1)	111-2372 (1)	111-2369 (1)
38-49	10-13	3P-2044 (1) 8T-1589 (1)	111-2372 (1)	111-2369 (1)
49-64	13-17	3P-2044 (2)	8T-1589 (1)	9N-3368 (1)
64-83	17-22	3P-2044 (2) 8T-1589 (1)	111-2372 (1) 6V-3542 (1)	111-2371 (1)
83-114	22-30	3P-2044 (3) 8T-1589 (1)	3P-2044 (1)	9N-3718 (1)
114-163	30-43	3P-2044 (5)	3P-2044 (1) 6V-3542 (1)	111-2371 (2)
163-242	43-64	3P-2044 (8)	3P-2044 (2)	9N-3718 (2)

** O período normal de manutenção é de 250 horas. Consulte o Manual de Operação e Manutenção para obter instruções completas quanto à manutenção do líquido arrefecedor.*

( ) Indica a quantidade exigida.

KÜHLMITTELZUSATZ

VORTEILE FÜR DEN KUNDEN:

Schutz gegen Kavitation, Schaumbildung, Erosion, Korrosion und Kesselsteinbildung in Kühlsystemen.

- Richtig dosierter Kühlmittelzusatz

BESCHREIBUNG:

Additive erschöpfen sich während des Motorbetriebs. Deshalb muß allen HD-Kühlmitteln regelmäßig Kühlmittelzusatz beigefügt werden. Wenn bei Erstfüllung kein vollwertiges Fertigkühlmittel, wie das Frostschutz- und Kühlmittel für Dieselmotoren von Caterpiller (DEAC), verwendet wird, muß bei Erstfüllung Kühlmittelzusatz beigefügt werden. Wieviel Kühlmittelzusatz beigefügt werden muß, hängt vom Inhalt des Kühlsystems ab.

Für Erstfüllung ist Kühlmittelzusatz nur in flüssiger Form erhältlich. Für Wartungsintervalle ist Kühlmittelzusatz in flüssiger Form und als Zusatzelement erhältlich. (Für die Motorbaureihe 3600 sind keine Zusatzelemente erhältlich.)

ANMERKUNG:

Die Kühlmittelmenge bei Erstfüllung ist nicht die gleiche Menge, die bei Wartungsintervallen beigefügt werden muß.

Die Kühlmittelzusatzelemente können mit allen Frostschutzmitteln auf Ethylen- oder Propylenglykolbasis verwendet werden, die den Standards nach ASTM D4985 oder ASTM D5345 entsprechen.

ANMERKUNG:

Den Kühlmittelzusatz nicht mit Langzeitkühlmittel (ELC) von Caterpillar verwenden. Der Kühlmittelzusatz ist nur für HD-Kühlmittel bestimmt.

TEILEBEZEICHNUNG:

Kühlsysteminhalt		Kühlmittelzusatz bei Erstfüllung	Flüssiger Kühlmittelzusatz bei Wartung*	Kühlmittelzusatzelement bei Wartung*
Liter	US-Gall.			
22-30	(6-8)	3P-2044 (1)	6V-3542 (1)	111-2370 (1)
30-38	(8-10)	3P-2044 (1) 6V-3542 (1)	111-2372 (1)	111-2369 (1)
38-49	(10-13)	3P-2044 (1) 8T-1589 (1)	111-2372 (1)	111-2369 (1)
49-64	(13-17)	3P-2044 (2)	8T-1589 (1)	9N-3368 (1)
64-83	(17-22)	3P-2044 (2) 8T-1589 (1)	111-2372 (1) 6V-3542 (1)	111-2371 (1)
83-114	(22-30)	3P-2044 (3) 8T-1589 (1)	3P-2044 (1)	9N-3718 (1)
114-163	(30-43)	3P-2044 (5)	3P-2044 (1) 6V-3542 (1)	111-2371 (2)
163-242	(43-64)	3P-2044 (8)	3P-2044 (2)	9N-3718 (2)

** Der normale Wartungsintervall beträgt 250 Betriebsstunden. Für vollständige Anweisungen zur Wartung des Kühlsystems, siehe Betriebs- und Wartungshandbuch.*

( ) Erforderliche Anzahl

NOMENCLATURA DE PEÇAS INGLÊS-PORTUGUÊS

INGLÊS	PORTUGUÊS
ABOVE	Acima
ABSORBER	Amortecedor
ACCESSORY	Acessório
ACTUATOR	Acionador
ADAPTER	Adaptador
ADHESIVE	Adesivo
ADJUSTER	Adjustador
AFTERCOOLER	Pós-resfriador
AIR	Ar
AIR CLEANER	Purificador de ar
AIR SYSTEM	Sistema de ar
ALARM	Alarme
ALTERNATOR	Alternador
AMMETER	Amperímetro
ANCHOR	Âncora, fixador
ANGLE	Ângulo, canto
ANVIL A.	Bigorna conj.
ARBOR	Mandril, eixo
ARM	Braço
ARMATURE	Armadura, Induzida
ARM REST	Apoio para braço
ARRESTER	Detentor
ASSEM. = ASSEMBLY	Conjunto
ATTACHMENT	Acessório
AVAILABLE	Disponível
AXLE	Eixo
AXLE SHAFT	Semi-eixo, ponta
BACK-UP ALARM	Alarme de marcha à ré
BACK-UP LIGHT	Luz da marcha à ré
BACK-UP SWITCH	Interruptor de marcha à ré
BACKBOARD	Prancha traseira
BACK CUSHION	Encosto
BACKHOE	Retroescavadeira
BAFFLE	Defletor
BAG	Saco, sacola
BAIL	Alça
BALANCER	Balanceador
BALL	Esfera
BALLCHECK ASSEMBLY	Conjunto de (válvula) de esfera de retenção
BALL JOINT	Junta esférica
BALLSTUD	Munhão esférica
BAND	Banda, cinta, tira
BAND & LINING	Banda e revestimento
BAR	Barra
BARREL	Cilindro
BARRIER	Barreira
BASE	Base
BASIN	Bacia, coletor
BATTERY	Bateria
BEAM	Barra, viga, trave
BEARING	Mancal, rolamento
BEARING BALL	Rolamento de esferas
BEARING-SLEEVE	Mancal tipo luva
BEARING-NEEDLE	Rolamento de agulha
BEARING-ROLLER	Rolamento tipo roletes
BELL	Campânula
BELLCRANK	Alavanca angular
BELLOWS	Fole
BELOW	Abaixo
BELT	Correia, cinto
BELT TIGHTENER	Ajustador de correia
BEVEL GEAR	Coroa
BIT-CUTTER	Broca, fresa
BLACK	Preto
BLADE	Lâmina
BLEEDER	Sangrador
BLOCK	Bloco, calço
BLOWER	Ventilador
BLUE	Azul
BOARD	Prancha, tábua
BODY	Corpo
BOLT	Parafuso
BONNET	Tampa
BOOM	Lança
BOOSTER	Reforçador
BOOT	Protetor contra poeira
BORE	Furo
BOSS	Ressalto
BOTH	Ambos (as)
BOTTOM	Fundo
BOWL	Caçamba
BOX	Caixa
BRACE	Tirante
BRACKET	Suporte
BRAKE	Freio
BREAKER	Interruptor
BREATHER	Respiro
BRIDGE	Braço
BROWN	Marrom
BRUSH	Escova
BUCKET	Caçamba
BULB	Bulbo
BULLDOZER	Bulldozer
BUMPER	Pára-choque
BUSHING	Bucha
BUTTON	Botão
BUZZER WARNING	Alarme sonoro
C = CHANGE	Alteração
CAB	Cabina
CABINET	Gabinete
CABLE	Cabo
CAGE	Alojamento
CALIPER	Calibrador
CAM	Excêntrico, ressalto
CAMSHAFT	Eixo-comando-de-válvulas
CANOPY	Coberta, toldo

NOMENCLATURA DE PEÇAS INGLÊS-PORTUGUÊS

INGLÊS	PORTUGUÊS
CAP	Tampa
CAPACITOR	Capacitor, condensador
CARBURETOR	Caburador
CARCASS	Carcaça
CARRIER	Suporte
CARTON	Caixa de papelão
CARTRIDGE	Cartucho
CASE	Caixa, alojamento
CASING	Invólucro, revestimento
CASTER	Rolete, roldana
CAST IRON	Ferro fundido
CATWALK	Passadiço
CENTER	Centro
CHAIN	Corrente
CHAMBER	Câmara
CHANGEOVER	Modificação
CHANNEL	Canal
CHASSIS	Chassi, armação
CHECK-VALVE	Válvula de retenção
CIRCUIT	Circuito
CIRCUIT BREAKER	Interruptor de circuito
CLAMP	Braçadeira
CLASP	Fecho, grampo
CLEANER	Purificador
CLEVIS	Forquilha, garfo
CLIP	Clipe, presilha, grampo
CLOSURE	Fecho
CLUTCH	Embreagem
COARSE	Grosso, áspero
COATING	Capa, revestimento
COCK	Torneira
COIL	Bobina, serpentina
COLLAR	Colar
COLLECTOR	Coletor
COLLET	Mandril
COLUMN	Coluna
COMPACTOR	Compactador
COMPARTMENT	Compartimento
COMPLETE	Completo
COMPOUND	Composto
COMPRESSOR	Compressor
CONCAVE	Côncavo
CONDITIONER	Condicionador
CONDUIT	Conduite, eletroduto
CONE	Cone
CONNECTING	Ligação
CONNECTED ROD	Biela
CONNECTION	Conexão
CONNECTOR	Conetor
CONSISTS OF	Consiste de
CONSOLE	Consolo
CONTACT	Contato, platinado
CONTACTOR	Contactador
CONTINUED FROM	Continuação de
CONTROL	Controle
CONVERSION	Conversão
CONVERTER	Conversor
COOLER	Arrefecedor
COOLING	Arrefecimento
CORK	Cortiça
CORE	Núcleo
CORNER	Canto
COTTER PIN	Contrapino
COUNTER	Contador, tacômetro
COUNTERWEIGHT	Contrapeso
COUPLER	Acoplador, engate
COUPLING	Acoplamento, conexão
COVER	Tampa
COWL	Capota
COWLING	Capota
CRADLE	Armação, suporte
CRANK	Manivela
CRANKCASE	Cárter
CRANKSHAFT	Virabrequim
CROSS UNION	Junta transversal
CROSSBAR	Barra transversal
CUP	Capa, anel externa
CURTAIN	Cortina
CUSHION	Almofada, amortecedor
CUTTER	Fresa, cortador
CUTTING EDGE	Borda cortante
CYLINDER	Cilindro
CYLINDER BLOCK	Bloco do motor
CYLINDER HEAD	Cabeçote
DAMPER	Amortecedor
DARK GREEN	Verde escuro
DASH	Painel
DASH PANEL	Painel de Instrumento
DECELERATOR	Desacelerador
DEFLECTOR	Defletor
DETENT	Retém, pino de trava
DIAGRAM-WIRING	Diagrama dos circuitos elétricos
DIAL	Medidor de dial
DIAPHRAGM	Diafragma
DIESEL ENGINE COMPLETE	Motor diesel completo
DIFFERENTIAL	Diferencial
DIFFUSER	Difusor
DIMMER	Redutor de luminosidade
DIODE	Diodo
DIRECTOR	Diretor
DISC	Disco
DISCONNECT	Desligar
DISPOSABLE	Disponível, substituível
DISSIPATOR	Dissipador de calor
DISTRIBUTOR	Distribuidor
DM = DECIMETER	dm = decímetro

NOMENCLATURA DE PEÇAS INGLÊS-PORTUGUÊS

INGLÊS	PORTUGUÊS
DOME LIGHT	Lâmpada do teto
DOOR	Porta
DOWEL	Pino-guia, cavilha
DOWNSHIFT	Mudança para marcha mais baixa
DOZER	Bulldozer (lâmina)
DRAIN	Dreno
DRAWBAR	Barra de tração
DRILL	Broca
DRILLED	Broqueado, perturado
DRIVE	Comando, acionamento, propulsão
DRIVER	Acionador, mecanismo propulsor
DRIVESHAFT	Eixo acionador, eixo de transmissão
DRUM	Tambor
DUCT	Conduto, canal
EACH	Cada
EDGE	Borda, canto
EFFECTIVE WITH	Efetivo a partir de
EJECTOR	Ejetor
ELBOW	Cotovelo
ELEMENT	Elemento
ENCLOSURE	Cobertura
END	Extremidade
END BIT	Canto de lâmina
END VIEW	Vista traseira
ENGINE	Motor
ENGINE ARRANGEMENT	Arranjo do motor
EXCEPT	Exceto
EXHAUST	Escape
EXHAUST PIPE	Cano de escape
EXPANDER	Expansor
EXPANSION PLUG	Bujão de expansão
EXTENSION	Extensão
EXTINGUISHER	Extintor
EXTRACTOR	Extrator
EYE	Olhal
EYEBOLT	Parafuso de olhal
FABRIC	Tecido, tela textura
FACING	Revestimento, forro
FAN	Ventilador
FASTENED	Fixo, preso
FASTENER	Fixador, prendedor
FENDER	Pára-lamas
FERRULE	Virola
FIELD COIL	Bobina indutora, ou de campo
FIELD REPLACEMENT	Reposicão ou substituicão no campo
FILLER	Bocal de enchimento
FILM	Película
FILTER	Filtro
FINAL DRIVE	Comando final
FINGER	Dedo
FIREWALL	Parede contra fogo
FITTING	Graxeira, conexão
FIXTURE	Dispositivo, Aparelho
FLANGE	Flange
FLASHER	Luz intermitente
FLOAT	Flutuar, livre
FLOOD-LAMP	Farol
FLOOR	Piso
FLOORMAT	Tapete
FLOORPLATE	Chapa do piso
FLYWEIGHT	Peso volante
FLYWHEEL	Volante
FOLLOWER	Seguidor
FOOT	Pé
FORK	Garfo
FOR USE WITH	Para usar com
FOUNDATION	Assentamento, alicerce
FRAME	Armacão, chassi
FRONT	Frente, dianteiro
FT = FOOT	Pé
FUEL INJECTION	Injecão de combustível
FUEL PUMP	Bomba de combustível
FUEL RATIO	Limitador de combustível
FUEL SYSTEM	Sistema do combustível
FUEL TANK	Tanque do combustível
FUMES DISPOSAL	Eliminação de vapores do cárter
FUSE	Fusível
G = GROUP	Grupo
GAGE	Indicador, manômetro
GAP	Folga, lacuna, intervalo
GASKET	Junta
GASKET KIT	Jogo de junta
GATE	Entrada, trava
GAUGE	Indicador, manômetro
GEAR	Engrenagem, marcha
GEAR BOX	Caixa de engrenagem
GEAR PUMP	Bomba de engrenagem
GENERATOR	Gerador
GLAND	Junta, gaxeta, vedacão sobreposta
GLASS	Vidro
GLOW PLUG	Vela incandescente
GOVERNOR	Governador
GRAB IRON	Balaústre corrimão
GRATE	Grade, grelha
GRAY	Cinza
GRID	Grade, grelha
GRILL	Grade, grelha
GRIP	Pega, garra, cabo

NOMENCLATURA DE PEÇAS INGLÊS-PORTUGUÊS

INGLÊS	PORTUGUÊS
GROMMET	Ilhós
GROUND BRUSH	Escova-terra
GROUND (ELECTRIC)	Terra (eletricidade)
GROUSER	Garra (de sapata)
GUARD	Protetor
GUIDE	Guia
GUSSET	Cantoneira
HACKSAW	Serra para metais
HALF	Metade, meio (a)
HALF LINK	Semi-elo
HAMMER	Martelo
HAND CONTROL	Controle manual
HANDLE	Cabo, alça
HANDRAIL	Corrimão, balaústre
HANGER	Suporte, dispositivo de suspensão
HARDWARE	Ferragem
HARDWARE KIT	Jogo de ferragem
HARNESS	Chicote
HEAD = HD	Cabeça
HEADER	Coletor
HEADLAMP	Farol dianteiro
HEADLIGHT	Farol dianteiro
HEAT SINK	Difusor de calor
HEATER	Aquecedor
HIGH-IDLE	Marcha acelerada em vazio
HINGE	Dobradiça, articulacão
HITCH	Engate
HOIST	Guincho, talha
HOLD	Suporte, fixador
HOLD DOWN	Fixar, reter, manter abaixado
HOLDER	Fixador, suporte
HOLE	Furo, buraco
HOOD	Capô
HOOD & DASH	Capô e painel
HOOK	Gancho
HORN	Buzina
HOSE	Mangueira
HOUSING	Alojamento
HUB	Cubo
HYDRAULIC	Hidráulico
ID = INSIDE DIAMETER	Diâmetro interno
IDLER	Roda-guia
IDLER & SHAFT	Roda-guia e eixo
IDLER GEAR	Engrenagem intermediária
IDLER PULLEY	Polia intermediária
IMPELLER	Impulsor, rotor
IN = INCH	Polegada
INCLUDES	Inclui
INDICATE	Indicam
INDICATOR	Indicador
INLAY	Incrustação
INLET	Admissão, entrada
INPUT	Entrada
INSERT	Inserção
INSTALLATION	Instalação
INSTALLED ON MODEL	Instalação no modelo
INSTRUCTION	Instrução
INSTRUMENT	Instrumento
INSULATED BRUSH	Escova isolada
INSULATION	Isolação, isolamento
INSULATOR	Isolante, isolador
INTAKE	Admissão
INTERLOCK	Trava interna
INTERMEDIATE	Intermediário
INTERNAL	Interno
INVERTER	Inversor
IRON	Ferro
JACK	Macaco
JAW	Mandíbula, garra
JET	Jato, vaporizador
JOINT	Junta, articulação
JUNCTION	Junção
KEY	Chaveta
KINGBOLT	Pino de engate
KNIFE	Faca, lâmina
KNOB	Maçaneta, botão
LADDER	Escada
LAMP	Lâmpada
LARGE	Grande
LATCH	Trinco, lingüeta
LEAD	Condutor, cabo
LEG	Perna
LENS	Lente
LEVEL	Nível
LEVER	Alavanca
L.H. = LEFT HAND	Lado esquerdo
LID	Placa, tampa
LIFT	Levantar
LIFT CYLINDER	Cilindro de levantamento
LIFTER	Tucho
LIFTING EYE	Olhal de levantamento
LIGHT GREEN	Verde claro
LIGHTING	Sistema de iluminação
LINE	Tubulação
LINER	Camisa
LINES & PUMP	Tubulação e bomba
LINES & VALVE	Tubulação e válvula
LINING	Revestimento, lona
LINK	Elo
LINKAGE	Articulação
LIP	Lábio, borda
LISTED	Relacionamento
LITERATURE	Literatura
LOCATED	Localizado

NOMENCLATURA DE PEÇAS INGLÊS-PORTUGUÊS

INGLÊS	PORTUGUÊS
LOCATOR	Localizador
LOCK	Trava
LOCKNUT	Contraporca
LOCKWASHER	Arruela de pressão
LOCKWIRE	Arame de trava
LONG	Longo
LOOM	Tubo isolador
LOW IDLE	Marcha lenta
LOUVER	Persiana
LOWER	Abaixar, inferior
LUBRICANT	Lubrificante
LUG	Ressalto, orelha
MACHINE SCREW	Parafuso de fenda
MAGNET	Imã magneto
MAIN	Principal
MAINTENANCE	Manutenção
MANIFOLD	Coletor
MARKED	Marcado (a)
MARKER	Marcador
MASTER PIN	Pino mestre
MAT	Capacho, esteira
METER	Medidor, contador
MINOR	Menor
MIRROR	Espelho
MISCELLANEOUS	Miscelânea
MODIFICATION	Modificação
MOLDBOARD	Armação da lâmina
MOTOR	Motor
MOULDING	Moldura
MOUNT	Montar
MOUNTED	Montado (a)
MOUNTING	Montagem
MUFFLER	Silenciador
NAMEPLATE	Plaqueta de identificação
N.C. (THREAD)	Rosca grossa
NEEDLE	Agulha
N.F. (THREAD)	Rosca fina
NIB	Ponta, bico
NIPPLE	Conexão
NONE	Nenhum (a)
NORMALIZING	Normalização
NOT PART OF	Não faz parte de
NOZZLE	Bocal, bico injetor
N/S = NOT SERVICED	Não vendável
NUMBER (No)	Número (No)
NUT	Porca
NUT-WING	Porca borboleta
NUT-CASTLE	Porca acastelada
NUT-WELD	Porca-soldada
NUT-CAP	Porca cega
NUT-HEX	Porca sextavada
NUT-LOCK	Contraporca
NUT-IMPERIAL	Porca imperial
NUT-JAM	Porca de trava, contraporca
NUT-LOW CROWN	Porca de meia coroa
NUT-RETAINING	Porca de retenção
NUT-SELF LOCK	Porca de autotravamento
NUT-SLOTTED	Porca fendada
NUT-SPANNER	Porca para chaves
O.D. = OUTSIDE DIAMETER	Diâmetro externo
O-RING	Anel "O"
OIL	Óleo
OILPAN	Cárter
OIL PUMP	Bomba de óleo
OIL SYSTEM	Sistema de lubrificação
OILER	Almotolia, lubrificador
ORANGE	Laranja
TO ORDER	Para pedir
ORIFICE	Orifício
OUTER	Externo
OUTER RACE	Anel externo
OUTPUT	Saída
OVERALL	Geral, total
OVERHAUL	Revisão
OVER SIZE	Sobremedida
PACKING	Embalagem, gaxeta
PAD	Coxim, calço
PADLOCK	Cadeado
PAINT	Pintura
PAN	Cárter
PANEL	Painel
PARKING BRAKE	Freio de estacionamento
PARTITION	Separacão
PARTS G	Grupo de peças
PARTS OF	Peça de
PARTS OF ALL ENGINE ARRANGEMENTS	Peças de todos os arranjos do motor exceto
PAWL	Garra
PEDAL	Pedal
PEDESTAL	Pedestal
PERFORMANCE	Desempenho
PILOT	Piloto
PIN	Pino
PIN & BUSHING	Pino e bucha
PIN-COTTER	Contrapino
PINCH BAR	Pé de cabra
PINION	Pinhão
PIPE	Tubo
PISTON	Pistão
PIVOT	Articulação, pivô
PLANETARY	Planetário
PLATE	Placa
PLATFORM	Plataforma
PLUG	Bujão
PLUNGER	Pistão, êmbolo

NOMENCLATURA DE PEÇAS INGLÊS-PORTUGUÊS

INGLÊS	PORTUGUÊS
POINT	Ponta, ponto
POINTER	Ponteiro
POLE & COIL	Polo e bobina
POLE	Polo, lança, vara
POPPET	Gatilho
POST	Poste, coluna
POTENTIOMETER	Potenciômetro
POWER TAKE OFF	Tomada de força
POWER TRAIN	Trem de força
PRE-SCREENER	Tela protetora
PRECHAMBER	Câmara de pré-combustão
PRECLEANER	Pré-purificador
PRECOMBUSTION	Pré-combustão
PRESS	Prensa
PRESS = PRESSURE	Pressão
PREVIOUS	Prévio, anterior
PRIMARY	Primário, principal
PROBE	Prova
PROJECTOR	Projeter
PROTECTION	Proteção
PROTECTOR	Proteter
PULLER	Extrator, sacador
PULLEY	Polia
PUMP	Bomba
PURPLE	Roxo
PUSHROD	Haste de empuxo
QTY = QUANTITY	Quantidade
RACE	Pista
RACE & ROLLER	Pista e rolete
RACK	Cremalheira
RADIATOR	Radiador
RAIL	Trilho, guia
RANGE TRANSM	Transmissão manual
RATCHET	Catraca
REAR	Traseiro (a)
REBORED	Escareado, alargado
REBUILD KIT	Jogo de recondicionamento
RECEPTACLE	Recipiente
RECTIFIER	Retificador
RED	Vermelho
REDUCER	Redutor
REFER	Referir
REGULATOR	Regulador
RELATED REPAIR ITEMS	Itens de reparos relacionados
RELAY	Relé
RELIEF VALVE	Válvula de alívio
REPAIR G	Grupo de reparo
REPAIR KIT	Jogo de reparo
REPAIR ITEMS	Itens de reparo
REPLACEMENT	Reposição, substituição
REQUIRED	Necessário
RESERVOIR A	Reservatôrio
RESIN	Resina
RESISTOR	Resistência
RETAINER	Fixador
RETARDER	Retardador
REVERSIBLE	Reversível
R.H. = RIGHT HAND	Lado direito
RIM	Aro
RIM & TIRE	Aro e pneu
RING	Anel
RIVET	Rebite
ROCKET	Balancim
ROD	Haste
ROD END	Extremidade da haste
ROLLER	Rolete
ROPE-STARTING	Partida à corda
ROTATOR	Girador
ROTOCHAMBER	Càmara pneumática
ROTOCOIL	Girador de válvula
ROTOR	Rotor
RUST INHIBITOR	Antioxidante
SADDLE	Sela, assento
SAFETY	Segurança
SAFETY TREAD	Tiras antiderrapante
SCRAPER	Tampa
SCREEN	Tela
SCREW	Parafuso
SCREW-HEX HD	Parafuso de cabeça hexagonal
SCREW-KIT	Jogos de parafuso
SCREW-MACHINE	Parafuso de fenda
SCREW-ROUND HD	Parafuso de cabeça redonda
SCREW-FLANGED	Parafuso com flange
SCREW-LOCKING	Parafuso de trava
SCREW-THUMB	Parafuso de orelhas
SCREWDRIVER	Chave de fenda
SEAL	Retentor
SEALED UNIT	Unidade vedada
SEALER	Vedador isolante
SEAT	Assento
SECONDARY	Secundário
SECTION	Seção
SEGMENT	Segmento
SENDER	Emissor
SENSOR	Sensor
SEPARATE	Separar, separado
SEPARATOR	Separador
SERIAL NUMBER PLATE	Placa de número de série
SERVICE	Serviço, manutenção
SERVICE KIT	Jogo de manutenção
SERVICE METER	Horômetro
SETSCREW	Parafuso de fixação
SHACKLE	Grilheto, anel, manilha
SHAFT	Eixo

NOMENCLATURA DE PEÇAS INGLÊS-PORTUGUÊS

INGLÊS	PORTUGUÊS
SHANK	Porta-ponta do escarificador
SHEAVE	Polia, roldana
SHEET	Folha, lâmina
SHELL	Invólucro, cápsula, casquilho
SHIELD	Blindagem, protetor
SHIFT	Mudança
SHIM	Calço
SHIPPING	Embarque
SHOCK ABSORBER	Amortecedor de choques
SHOCKMOUNT	Montagem a prova de choques
SHOE	Sapata
SHORT	Curto
SHOWN	Ilustrado, mostrado
SHROUD	Tampa de proteção
SHUNT	Derivação
SHUT OFF	Desligar, parada
SHUTTLE	Pistão de vaivém
SIDE	Lateral
SIDE VIEW	Vista lateral
SILICONE	Silicone
SINK	Absorvente de calor
SKIVING	Desbaste
SLACK ADJUSTER	Adjustador de folga
SLEEVE	Luva, manga, camisa
SLIDER	Cursor, deslizador
SLIDE RAIL	Trilho deslizante
SLING	Cabos, amarras, linga
SLINGER	Defletor
SLUG	Pistão de reação, pistãozinho
SMALL	Pequeno
SNAP RING	Anel de retenção, anel de pressão
SNUBBER	Amortecedor
SOCKET	Soquete, tomada
SOLENOID	Solenóide
SPACER	Espaçador
SPARE	Sobressalente
SPARK PLUG	Vela de ignição
SPECIAL	Especial
SPEEDOMETER	Velocimetro
SPIDER	Cruzeta
SPINDLE	Ponta de eixo
SPLINE	Estria
SPOOL	Carretel
SPOUT	Calha, tubo
SPRING	Mola
SPROCKET	Roda motriz, roda dentada
STABILIZER	Estabilizador
STACK	Chaminé, cano de escapamento
STAND	Suporte, cavalete
STANDPIPE	Suporte vertical de sucção
STAPLE	Grampo
STARTER	Arranque motor de partida
STATOR	Estator
STEERING	Direção
STEM	Haste
STEP	Degrau
STICK	Vareta
STOP	Parar
STORAGE	Armazenagem
STRAINER	Tela filtrante
STRAP	Tira, cinta, suporte de fixação
STREET ELL	Conexão cotovelo
STRIP	Tira, fita, listra
STROKE	Curso do pistão
STUD	Prisioneiro
SUMP	Tanque, reservatório
SUPPLY VALVE	Válvula de suprimento
SUPPORT	Suporte
SUSPENSION	Suspensão
SWITCH	Interruptor
SWIVEL	Articulação giratória
TAB	Tira, aba, lingüeta
TABLE	Mesa
TACHOGRAPH	Tacógrafo
TACHOMETER	Tacômetro
TAG	Etiqueta
TAIL LAMP	Farol traseiro
TAN	Castanho
TANG	Lingüeta
TANK	Tanque
TAP	Macho
TAPE	Fita
TAPPET	Tucho
TEE	Conexão em "T"
TEMP. = TEMPERATURE	Temperatura
TERMINAL	Terminal
TEST UNIT	Unidade de teste
TESTER	Aparelho de teste
THERMISTOR	Termistor
THERMOCOUPLE	Termopar
THERMOMETER	Termômetro
THERMOSTAT	Termostato
THERMOSWITCH	Interruptor térmico
THICK	Grosso (a) espesso (a)
TIE	Ligação, tirante
THREAD (OF NUT)	Rosca (de porca)
THROTTLE	Acelerador de
THROWER	Defletor
THRU = THROUGH	Através de
TIGHTENER	Tensor
TILT CYLINDER	Cilindro de inclinação
TIMING	Sincronização, Distribuição

NOMENCLATURA DE PEÇAS INGLÊS-PORTUGUÊS

INGLÊS	PORTUGUÊS
TIP	Ponta
TIRE	Pneu
TIRE & RIM	Pneu e aro
TONGUE	Língua, lingueta
TOOL	Ferramenta
TOOLCABINET	Armário para ferramenta
TOOTH/TEETH	Dente/dentes
TOP	Topo, parte superior
TORQUE	Torque
TORQ. CONV.	Conversor de torque
TORQ. DIVIDER	Divisor de torque
TOWER	Torre
TRACK	Esteira
TRACK PIN	Pino de esteira
TRACTOR	Trator
TRAILING UNIT	Unidade rebocada
TRANSFER	Decalcomania
TRANSFORMER	Transformador
TRANSISTOR	Transistor
TRANSMISSION	Transmissão
TRANSMISSION OVERHAUL	Revisão da transmissão
TREAD	Piso, banda de rodagem
TREADLE	Pedal
TROLLY	Carrinho
TRUCK	Caminhão
TRUNNION	Munhão
TUBE	Tubo, cano
TUBING	Tubulagem canalização
TURBINE	Turbina
TURBOCHARGER	Turboalimentador
U-BOLT	Parafuso em "U"
U-JOINT	Junta universal
UNDERSIZE	Submedida
UNION	União
UPPER	Superior
USE AS REQUIRED	Usar conforme necessitar
VALUE	Valor
VALVE	Válvula
VALVE GRINDING	Retificação das válvulas
VEE BELT	Correia "V"
VEE BELT SET	Jogo de correia em "V"
VENT	Respiro
VIEW	Vista
VISE	Morsa, torno
VISOR	Pára-sol
WALKWAY	Passadiço, corredor
WARNING G.	Grupo de alarma
WASHER	Arruela
WATER PUMP	Bomba d'água
WEARPLATE	Placa de desgaste
WEDGE	Cunha
WEIGHT	Peso
WELD	Solda
WELDNUT	Porca soldada
WHEEL	Roda
WHITE	Branco
WICK	Mecha, pavio
WINCH	Guincho
WINDOW	Janela
WINDSHIELD	Pára-brisa
WIPER	Limpador
WIRE	Fio
WIRING	Sistema elétrico
WIRING DIAGRAM	Diagrama do sistema elétrico
WITH	Com
WRAPPER	Invólucro, envoltório
WRENCH	Chave
YELLOW	Amarelo
YOKE	Garfo

MAINTENANCE PARTS

DESCRIPTION	PART NUMBER	QTY	WHERE USED	PAGE
AIR INLET AND EXHAUST SYSTEM				
ELEMENT AS-PRIMARY	6I-0273	1	AIR CLEANER GP	76
ELEMENT AS-SECONDARY	6I-0274	1	AIR CLEANER GP	76
BASIC ENGINE				
BREATHER AS (ENGINE)	240-0041	1	COVER GP-CYLINDER BLOCK	12
CAP AS-FILLER (ENGINE OIL)	227-4531	1	COVER GP-VALVE MECHANISM	14
	241-5645	1	COVER GP-FRONT HOUSING	13
PLUG (ENGINE OIL PAN DRAIN)	9S-4183	1	PAN GP-OIL	36
BRAKING SYSTEM				
AIR DRYER GP (AIR DRYER)(24 VOLT)	203-2423	1	AIR DRYER GP	519
CARTRIDGE AS-DESICCANT (AIR DRYER)	203-2389	1	AIR DRYER GP	519
FUSE (10 AMP) (AIR DRYER)	9W-1442	1	AIR DRYER GP	516
COOLING SYSTEM				
CAP-RADIATOR (7-PSI)	6L-8617	1	RADIATOR GP	72
		1	RADIATOR GP	73
GASKET (REGULATOR HOUSING)	191-4457	1	LINES GP-WATER	68
GASKET (WATER REGULATOR)	219-2340	1	LINES GP-WATER	68
REGULATOR-WATER TEMPERATURE (92-DEG C)	4W-4794	1	LINES GP-WATER	68
REGULATOR-WATER TEMPERATURE (94-DEG C)	126-5869	1	LINES GP-WATER	68
SEAL-LIP TYPE (WATER REGULATOR)	3S-9643	1	LINES GP-WATER	68
ELECTRICAL AND STARTING SYSTEM				
BATTERY GP (12-VOLT)	153-5700	2	BATTERY GP	129
BATTERY GP (12-VOLT) (1100 AMPS)	153-5700	2	BATTERY GP	127
BATTERY (12-VOLT) (WET)	153-5710	2	BATTERY GP	128
BATTERY (12-VOLT, 750-AMPERE)	3T-5760	2	BATTERY GP	130
BELT	215-6673	1	LAMP GP-WARNING BEACON	174
BELT (ALTERNATOR)	191-6635	1	ALTERNATOR GP-CHARGING	122
BELT-DRIVE (WARNING BEACON)	9X-8139	1	LAMP GP-WARNING BEACON	173
CAP AS-DUST	6N-1604	1	HEATER GP-JACKET WATER	148
		1	HEATER GP-JACKET WATER	149
CIRCUIT BREAKER AS (15-AMPERE) (ENGINE CONTROL)	6T-3643	1	WIRING GP-REAR	317
		1	WIRING GP-REAR	321
CIRCUIT BREAKER AS (15-AMPERE) (HEADLAMPS)	3T-2662	1	CIRCUIT BREAKER GP	132
		1	CIRCUIT BREAKER GP	133
CIRCUIT BREAKER AS (15-AMPERE) (LIGHTBAR WORKLAMPS)	3T-2662	1	CIRCUIT BREAKER GP	132
CIRCUIT BREAKER AS (80-AMPERE) (ALTERNATOR)	171-2210	1	WIRING GP-REAR	316
		1	WIRING GP-REAR	320
CIRCUIT BREAKER AS (80-AMPERE) (MAIN)	171-2210	1	WIRING GP-REAR	322
		1	WIRING GP-REAR	316
ELEMENT AS-JACKET WATER HEATER (120 VOLT/1500 WATT)	9G-6655	1	HEATER GP-JACKET WATER	149

MAINTENANCE PARTS

DESCRIPTION	PART NUMBER	QTY	WHERE USED	PAGE
ELEMENT AS-JACKET WATER HEATER (240 VOLT/1500 WATT)	6T-3764	1	HEATER GP-JACKET WATER	148
FLASHER AS (12/24-VOLT) (TURN SIGNAL, HAZARD)	108-0358	1	LIGHTING GP-FLOOD	193
		1	LIGHTING GP-FLOOD	199
		1	LIGHTING GP-FLOOD	202
		1	LIGHTING GP-FLOOD	209
		1	LIGHTING GP-FLOOD	212
		1	SWITCH GP-LIGHT	267
		1	LIGHTING GP-FLOOD	196
FUSE (10-AMPERE)	3K-8782	1	WIRING GP-CAB	284
	9W-1442	1	LIGHTING GP-FLOOD	202
		1	LIGHTING GP-FLOOD	205
		1	LIGHTING GP-FLOOD	207
		1	LIGHTING GP-FLOOD	209
		1	LIGHTING GP-FLOOD	212
		1	LIGHTING GP-FLOOD	222
		1	LIGHTING GP-FLOOD	224
		1	LIGHTING GP-WARNING	231
		1	SWITCH GP-LIGHT	267
		1	WIRING GP-CAB	280
		1	WIRING GP-CAB	282
		2	WIRING GP-SECONDARY STEERING	329
		1	LIGHTING GP-FLOOD	193
		1	LIGHTING GP-FLOOD	199
		11	WIRING GP-STEERING CONSOLE	338
		12	WIRING GP-STEERING CONSOLE	341
FUSE (10-AMPERE) (AUXILIARY BACK-UP ALARM)	9W-1442	1	LIGHTING GP-BACKUP	180
FUSE (10-AMPERE) (BACKUP LAMP)	9W-1442	1	LIGHTING GP-BACKUP	178
FUSE (10-AMPERE) (BLADE LAMP)	9W-1442	2	LIGHTING GP-FLOOD	189
FUSE (10-AMPERE) (BLADE/FRONT FLOODLAMP)	9W-1442	2	LIGHTING GP-FLOOD	188
FUSE (10-AMPERE) (CONVERTER)	9W-1442	1	CONVERTER GP-ELECTRICAL	141
FUSE (10-AMPERE) (POWER CONVERTER)	9W-1442	1	CONVERTER GP-ELECTRICAL	143
FUSE (10-AMPERE) (TURN SIGNAL, HAZARD)	9W-1442	1	LIGHTING GP-FLOOD	196
FUSE (10-AMPERE) (WARNING BEACON)	9W-1442	1	LIGHTING GP-WARNING	232
		1	WIRING GP-CAB	277
FUSE (10-AMPERE) (WORK LIGHTS)	9W-1442	2	LIGHTING GP-FLOOD	191
		2	LIGHTING GP-FLOOD	192
FUSE (15-AMPERE)	9W-1441	1	WIRING GP-CAB	275
		1	WIRING GP-CAB	278
		1	WIRING GP-STEERING CONSOLE	338
		1	WIRING GP-STEERING CONSOLE	341
FUSE (15-AMPERE) (CAB FLOOD LIGHTS)	9W-1441	1	LIGHTING GP-FLOOD	191
		1	LIGHTING GP-FLOOD	192
FUSE (15-AMPERE) (CONVERTER-POWER)	9W-1441	1	CONVERTER GP-ELECTRICAL	142
FUSE (30-AMPERE)	8T-9636	2	CONVERTER GP-ELECTRICAL	144
HOLDER AS-BRUSH	7T-3278	1	STARTING MOTOR GP-ELECTRIC	260

MAINTENANCE PARTS

DESCRIPTION	PART NUMBER	QTY	WHERE USED	PAGE
KEY (BATTERY DISCONNECT)	8H-5306	1	SWITCH GP-DISCONNECT	266
LAMP AS	6C-0109	1	WIRING GP-REAR	309
		1	WIRING GP-REAR	312
	6C-0110	1	WIRING GP-REAR	309
		1	WIRING GP-REAR	312
LAMP GP-DOME (24-VOLT, WITH SWITCH)	3E-6389	1	WIRING GP-CAB	278
		1	WIRING GP-CAB	275
		1	WIRING GP-CAB	284
LAMP-HALOGEN (24-VOLT, 65-WATT)	9X-3463	1	LAMP GP-FLOOD	155
		1	LAMP GP-FLOOD	153
LAMP-HALOGEN (24-VOLT, 65-WATT) (BLADE)	9X-3463	1	LAMP GP-FLOOD	157
LAMP-HALOGEN (24-VOLT, 65-WATT) (FLOODLIGHT)	9X-3463	1	LAMP GP-FLOOD	156
		1	LAMP GP-FLOOD	154
LAMP-HALOGEN (24-VOLT, 65-WATT) (HIGH BEAM)	9X-3463	1	LAMP GP-HEAD	159
		1	LIGHTING GP-FLOOD	184
LAMP-HALOGEN (24-VOLT, 65-WATT) (LOW BEAM)	9X-3463	1	LAMP GP-HEAD	158
		1	LIGHTING GP-FLOOD	184
LAMP-LED (LED)	165-5674	1	LIGHTING GP-WARNING	234
		1	LIGHTING GP-WARNING	235
LAMP (24-VOLT)	3E-8825	1	INSTALLATION GP-WARNING BEACON	150
		1	LIGHTING GP-FLOOD	205
		1	LIGHTING GP-FLOOD	207
		1	LIGHTING GP-FLOOD	222
		1	LIGHTING GP-FLOOD	224
		1	LIGHTING GP-WARNING	234
		1	LIGHTING GP-WARNING	235
		1	LIGHTING GP-WARNING BEACON	236
		1	WIRING GP-CAB	280
		1	WIRING GP-CAB	282
		2	WIRING GP-SECONDARY STEERING	329
		2	WIRING GP-SHIFT CONSOLE	332
		2	WIRING GP-SHIFT CONSOLE	334
		1	WIRING GP-SHIFT CONSOLE	335
		1	WIRING GP-STEERING CONSOLE	338
		2	WIRING GP-STEERING CONSOLE	341
	7N-5876	1	WIRING GP-SHIFT CONSOLE	332
		1	WIRING GP-SHIFT CONSOLE	334
	7N-9943	1	LAMP GP-DOME	152
	9X-3465	1	LAMP GP-HEAD & SIGNAL	164
	100-3245	2	LAMP GP-HEAD & SIGNAL	164
	3E-8825	2	LIGHTING GP-FLOOD	193
		2	LIGHTING GP-FLOOD	199
		1	LIGHTING GP-FLOOD	202
		1	LIGHTING GP-FLOOD	209
		1	LIGHTING GP-FLOOD	210
		1	LIGHTING GP-FLOOD	212
		2	SWITCH GP-LIGHT	267

MAINTENANCE PARTS

DESCRIPTION	PART NUMBER	QTY	WHERE USED	PAGE
LAMP (24-VOLT) (AUXILIARY BACK-UP ALARM)	3E-8825	1	LIGHTING GP-BACKUP	180
LAMP (24-VOLT) (AUXILIARY BACKUP LAMP)	3E-8825	2	LIGHTING GP-BACKUP	178
LAMP (24-VOLT) (BLADE CUSHION SWITCH)	3E-8825	1	WIRING GP-BLADE CUSHION	273
LAMP (24-VOLT) (BLADE FLOOD)	3E-8825	2	LIGHTING GP-FLOOD	191
		2	LIGHTING GP-FLOOD	192
LAMP (24-VOLT) (BLADE LAMP)	3E-8825	2	LIGHTING GP-FLOOD	189
LAMP (24-VOLT) (BLADE)(FRONT FLOODLAMP)	3E-8825	2	LIGHTING GP-FLOOD	188
LAMP (24 VOLT) (CAB POSITION)	9X-4494	1	LAMP GP-MARKER	168
LAMP (24-VOLT) (HEAD)	9X-3465	1	LAMP GP-HEAD & SIGNAL	166
LAMP (24-VOLT) (HEADLIGHTS, TAIL LIGHTS)	3E-8825	2	LIGHTING GP-FLOOD	196
LAMP (24-VOLT) (HIGH/LOW BEAM)	9X-3465	1	LAMP GP-HEAD	160
		1	LAMP GP-HEAD	162
LAMP (24-VOLT) (NG)	3E-8825	2	WIRING GP-SHIFT CONSOLE	335
LAMP (24-VOLT) (POSITION)	100-3245	1	LAMP GP-HEAD	160
		1	LAMP GP-HEAD	162
LAMP (24 VOLT) (REGISTRATION PLATE)	5C-9583	1	LAMP GP-REGISTRATION PLATE	169
LAMP (24-VOLT) (SIGNAL)	100-3245	2	LAMP GP-HEAD & SIGNAL	166
LAMP (24-VOLT) (TURN)	100-3245	1	LAMP GP-HEAD	160
		1	LAMP GP-HEAD	162
LAMP (24-VOLT, 21-WATT)	5C-9584	2	WIRING GP-REAR	309
		2	WIRING GP-REAR	312
LAMP (24-VOLT, 21-WATT) (SIGNAL)	9X-4493	1	LAMP GP-HEAD & SIGNAL	164
		1	LAMP GP-HEAD & SIGNAL	166
LAMP (24-VOLT, 21-WATT) (TURN)	9X-4493	1	LAMP GP-HEAD	160
		1	LAMP GP-HEAD	162
LAMP (24-VOLT, 5-WATT)	4V-8116	1	WIRING GP-REAR	309
		1	WIRING GP-REAR	309
		1	WIRING GP-REAR	312
LAMP (24-VOLT, 70-WATT)	9X-7849	1	LAMP GP-WARNING BEACON	174
LAMP (24-VOLT, 70-WATT) (WARNING BEACON)	9X-7849	1	LAMP GP-WARNING BEACON	173
LENS (AMBER) (SIGNAL)	100-3250	1	LAMP GP-HEAD & SIGNAL	164
		1	LAMP GP-HEAD & SIGNAL	166
LENS (AMBER) (TURN)	100-3250	1	LAMP GP-HEAD	160
		1	LAMP GP-HEAD	162
LENS (AMBER, WARNING BEACON)	9X-8121	1	LAMP GP-WARNING BEACON	173
LENS-AMBER (WARNING BEACON)	215-6672	1	LAMP GP-WARNING BEACON	174
LENS AS (AMBER) (SIGNAL)	136-3848	1	LAMP GP-HEAD & SIGNAL	166
		1	LAMP GP-HEAD & SIGNAL	164
LENS AS (AMBER) (TURN)	136-3848	1	LAMP GP-HEAD	160
		1	LAMP GP-HEAD	162
LENS AS (FLOODLIGHT)	202-6611	1	LAMP GP-FLOOD	155
		1	LAMP GP-FLOOD	157
	202-6614	1	LAMP GP-FLOOD	154
		1	LAMP GP-FLOOD	156
LENS AS (HEAD)	100-3249	1	LAMP GP-HEAD	160
		1	LAMP GP-HEAD	162
LENS AS (HEADLAMP)(LOW BEAM)	162-2077	1	LAMP GP-HEAD	158

MAINTENANCE PARTS

DESCRIPTION	PART NUMBER	QTY	WHERE USED	PAGE
LENS AS (HEADLIGHT)	100-3248	1	LAMP GP-HEAD & SIGNAL	164
		1	LAMP GP-HEAD & SIGNAL	166
LENS AS (LOW BEAM)	162-2077	1	LIGHTING GP-FLOOD	184
LENS (REGISTRATION PLATE)	134-6751	1	LAMP GP-REGISTRATION PLATE	169
SWITCH AS (AUXILIARY BACKUP)	161-1418	1	LIGHTING GP-BACKUP	178
FRAME AND BODY				
PLUG-MAGNETIC (TRANSMISSION CASE)	8M-3837	1	CASE & FRAME GP	474
FUEL SYSTEM				
BOWL AS	173-7126	1	FILTER GP-WATER SEP & FUEL	91
CAP GP-FUEL FILLER (EXTREME SERVICE, LOCKABLE)	164-4858	1	TANK GP-FUEL	115
FILTER AS-FUEL	1R-0762	1	FILTER GP-FUEL	89
FILTER AS-WATER SEP & FUEL	1R-0770	1	FILTER GP-WATER SEP & FUEL	91
GASKET	9R-7240	1	TANK GP-FUEL	114
SEAL	220-8678	1	FILTER GP-WATER SEP & FUEL	91
STRAINER-FUEL	199-9907	1	TANK GP-FUEL	115
HYDRAULIC SYSTEM				
CAP-FILLER (HYDRAULIC OIL TANK)	7H-1447	1	TANK & FILTER GP-HYDRAULIC	633
FILTER ELEMENT AS-OIL (HYDRAULIC) (STANDARD EFFICIENCY)	1R-0774	1	TANK & FILTER GP-HYDRAULIC	633
FITTING-GREASE (CENTERSHIFT CYLINDER SOCKET)	3B-8485	2	CYLINDER & MTG GP-CENTERSHIFT	553
PADLOCK GP	5P-8502	1	TANK & MTG GP-HYDRAULIC	635
STRAINER (FILLER) (HYDRAULIC OIL TANK)	9J-3047	1	TANK & FILTER GP-HYDRAULIC	633
LUBRICATION SYSTEM				
FILTER AS-ENGINE OIL	1R-0716	1	FILTER GP-ENGINE OIL	51
HOSE-FUMES DISPOSAL	193-5510	1	FUMES DISPOSAL GP	52
		1	FUMES DISPOSAL GP	53
OPERATOR STATION				
ACCUMULATOR (A/C)	197-6218	1	LINES GP-AIR CONDITIONER	863
BELT (AIR CONDITIONER)	173-7178	1	COMPRESSOR GP-REFRIGERANT	791
BLADE AS-WIPER	6V-5853	1	WIPER GP-WINDOW	966
		1	WIPER GP-WINDOW	967
		1	WIPER GP-WINDOW	968
	6V-8255	2	WINDOW GP	940
BLADE AS-WIPER (FRONT LOWER)	123-4355	2	WIPER GP-WINDOW	949
		2	WIPER GP-WINDOW	951
BLADE AS-WIPER (FRONT UPPER)	6V-5853	1	WIPER GP-WINDOW	951
BLADE AS-WIPER (HIGH PROFILE FRONT LOWER)	123-4355	2	WIPER GP-WINDOW	953
		2	WIPER GP-WINDOW	955
BLADE AS-WIPER (HIGH PROFILE FRONT UPPER)	6V-5853	1	WIPER GP-WINDOW	953
		1	WIPER GP-WINDOW	955
BLADE AS-WIPER (HIGH PROFILE REAR)	6V-5853	1	WIPER GP-WINDOW	961

MAINTENANCE PARTS

DESCRIPTION	PART NUMBER	QTY	WHERE USED	PAGE
BLADE AS-WIPER (LOW PROFILE FRONT UPPER)	6V-5853	1	WIPER GP-WINDOW	949
BLADE AS-WIPER (LOW PROFILE REAR)	6V-5849	1	WIPER GP-WINDOW	957
		1	WIPER GP-WINDOW	959
BLADE AS-WIPER (REAR)	6V-5853	1	WIPER GP-WINDOW	963
FILTER-AIR (CAB)	7T-7358	1	FILTER GP-CAB AIR	822
	231-4486	1	FILTER GP-CAB AIR	822
	232-1732	1	FILTER GP-CAB AIR	822
FUSE (10-AMPERE)	9W-1442	1	WIPER GP-WINDOW	957
FUSE (10-AMPERE) (FRONT DEFROSTER)	9W-1442	1	FAN GP-CIRCULATING	820
FUSE (10-AMPERE) (HEATED MIRRORS)	9W-1442	1	MIRROR GP-REAR VIEW	872
		1	MIRROR GP-REAR VIEW	876
FUSE (10-AMPERE) (REAR DEFROSTER)	9W-1442	1	FAN GP-CIRCULATING	821
FUSE (10-AMPERE) (WIPER)	9W-1442	1	WIPER GP-WINDOW	959
		1	WIPER GP-WINDOW	961
		1	WIPER GP-WINDOW	963
FUSE (15 AMP) (AIR CONDITIONER)	9W-1441	1	AIR CONDITIONER & MOUNTING GP	781
FUSE (15 AMP) (HEATER)	9W-1441	1	HEATER & MTG GP-CAB	825
LAMP (24-VOLT)	3E-8825	1	MIRROR GP-REAR VIEW	876
	7N-5876	2	MODULE GP-SPEEDOMETER & TACH	879
	8D-1429	1	AIR CONDITIONER GP	782
		1	HEATER GP-CAB	827
		1	HEATER GP-CAB	831
LAMP (24-VOLT) (ACTION)	107-1983	1	PANEL GP-INSTRUMENT	895
LAMP (24-VOLT) (AIR PRESSURE GAUGE)	7N-5876	2	PANEL GP-INSTRUMENT	891
		2	PANEL GP-INSTRUMENT	893
		2	PANEL GP-INSTRUMENT	895
LAMP (24-VOLT) (DIFFERENTIAL LOCK)	110-2079	1	PANEL GP-INSTRUMENT	891
		1	PANEL GP-INSTRUMENT	893
LAMP (24-VOLT) (EMS MASTER ACTION INDICATOR)	107-1983	1	PANEL GP-INSTRUMENT	891
LAMP (24-VOLT) (FRONT DEFROSTER)	3E-8825	1	FAN GP-CIRCULATING	820
LAMP (24-VOLT) (HEATED MIRRORS)	3E-8825	1	MIRROR GP-REAR VIEW	872
LAMP (24-VOLT) (MASTER ACTION INDICATOR)	107-1983	1	PANEL GP-INSTRUMENT	893
LAMP (24-VOLT) (QUAD GAUGE)	7N-5876	2	PANEL GP-INSTRUMENT	893
LAMP (24-VOLT) (QUAD GAUGE MODULE)	7N-5876	2	PANEL GP-INSTRUMENT	891
		4	PANEL GP-INSTRUMENT	895
LAMP (24-VOLT) (REAR DEFROSTER)	3E-8825	1	FAN GP-CIRCULATING	821
LAMP (24-VOLT, 3-WATT) (INDICATOR LIGHT)	115-1748	11	PANEL GP-INSTRUMENT	895
LAMP (24-VOLT, 3-WATT) (INSTRUMENT PANEL)	115-1748	9	PANEL GP-INSTRUMENT	891
		9	PANEL GP-INSTRUMENT	893
PADLOCK GP	5P-8502	1	CONVERSION AR-NON-ROPS	798
		1	ROPS AR-OPEN	899
	246-2641	1	CAB AR-HIGH PROFILE	788

MAINTENANCE PARTS

DESCRIPTION	PART NUMBER	QTY	WHERE USED	PAGE
POWER TRAIN				
BREATHER AS (POWER TRAIN OIL FILLER)	9G-5127	1	FILLER GP-POWER TRAIN OIL	377
BREATHER AS (TANDEM)	1F-8488	2	TANDEM & COVER GP	391
CAP-VALVE (STEM)	9K-7951	1	WHEEL & TIRE GP	427
		1	WHEEL & TIRE GP	428
		1	WHEEL & TIRE GP	429
		1	WHEEL & TIRE GP	430
		1	WHEEL & TIRE GP	431
		1	WHEEL & TIRE GP	432
		1	WHEEL & TIRE GP	455
		1	WHEEL & TIRE GP	462
FILTER ELEMENT AS-OIL (HIGH EFFICIENCY)	132-8875	1	LINES GP-TRANSMISSION OIL	383
FILTER ELEMENT AS-OIL (HIGH EFFICIENCY) (TRANSMISSION)	132-8875	1	FILTER GP-OIL	380
FILTER-MAGNETIC (TRANSMISSION)	8S-9129	1	SCREEN GP-MAGNETIC	388
FILTER-MAGNETIC (TRANSMISSION OIL)	8S-9129	1	CASE & PARTS GP-TRANSMISSION	346
LAMP (24-VOLT) (AUTOSHIFT)	3E-8825	1	AUTOSHIFT AR	345
PLUG (TRANSMISSION OIL DRAIN)	5P-4483	1	CASE & PARTS GP-TRANSMISSION	346
SCREEN-SUCTION (TRANSMISSION)	8S-9130	1	SCREEN GP-MAGNETIC	388
		1	CASE & PARTS GP-TRANSMISSION	346
SCREEN (TRANSMISSION CONTROL VALVE)	6I-9395	1	VALVE GP-TRANSMISSION CONTROL	406
SERVICE EQUIPMENT AND SUPPLIES				
PADLOCK GP (TOOL BOX)	5P-8502	1	BOX GP-TOOL	969

PIÈCES DE RECHANGE

DESCRIPTION	NUMÉRO DE PIECÈS	QTÉ	DOMAINE D'APPLICATION	PAGE
CHÂSSIS ET BENNE				
BOUCHON AIMANTÉ (CARTER DE BOITE DE VITESSES)	8M-3837	1	CHÂSSIS ET CARTER (ASS)	474
CIRCUIT D'ADMISSION D'AIR ET D'ÉCHAPPEMENT				
ÉLÉMENT PRINCIPAL (ENS)	6I-0273	1	FILTRE A AIR (ASS)	76
ÉLÉMENT SECONDAIRE (ENS)	6I-0274	1	FILTRE A AIR (ASS)	76
CIRCUIT DE CARBURANT				
BOUCHON DE GOULOTTE DE CARBURANT (ASS) (SERVICE INTENSIF, VERROUILLABLE)	164-4858	1	RÉSERVOIR DE CARBURANT (ASS)	115
BOURRELET D'ÉTANCHÉITÉ	220-8678	1	FILTRE DE SÉPARATEUR D'EAU ET DE CARBURANT (ASS)	91
FILTRE - SÉPARATEUR D'EAU ET DE CARBURANT (ENS)	1R-0770	1	FILTRE DE SÉPARATEUR D'EAU ET DE CARBURANT (ASS)	91
FILTRE À CARBURANT	199-9907	1	RÉSERVOIR DE CARBURANT (ASS)	115
FILTRE A CARBURANT (ENS)	1R-0762	1	FILTRE A CARBURANT (ASS)	89
JOINT PLAT	9R-7240	1	RÉSERVOIR DE CARBURANT (ASS)	114
MACHOIRE (ENS)	173-7126	1	FILTRE DE SÉPARATEUR D'EAU ET DE CARBURANT (ASS)	91
CIRCUIT DE FREINAGE				
*CARTRIDGE AS-DESICCANT (DÉSHYDRATEUR)	203-2389	1	DESHYDRATEUR (ASS)	519
DESHYDRATEUR (ASS) (DÉSHYDRATEUR)(24 VOLTS)	203-2423	1	DESHYDRATEUR (ASS)	519
FUSIBLE (10A) (DÉSHYDRATEUR)	9W-1442	1	DESHYDRATEUR (ASS)	516
CIRCUIT DE GRAISSAGE				
FILTRE A HUILE MOTEUR (ENS)	1R-0716	1	FILTRE À HUILE MOTEUR (ASS)	51
FLEXIBLE D'ÉVACUATION DES VAPEURS	193-5510	1	DISPOSITIF D'EVACUATION DES VAPEURS DE CARTER	52
		1	DISPOSITIF D'EVACUATION DES VAPEURS DE CARTER	53
CIRCUIT DE REFROIDISSEMENT				
CHAPEAU - RADIATEUR (7-PSI)	6L-8617	1	RADIATEUR (ASS)	72
CHAPEAU - RADIATEUR (*7-PSI)	6L-8617	1	RADIATEUR (ASS)	73
JOINT PLAT (CARTER DE RÉGULATEUR)	191-4457	1	CANALISATIONS D'EAU (ASS)	68
JOINT PLAT (RÉGULATEUR D'EAU)	219-2340	1	CANALISATIONS D'EAU (ASS)	68
THERMOSTAT-TEMPÉRATURE D'EAU (92-DEG C)	4W-4794	1	CANALISATIONS D'EAU (ASS)	68
THERMOSTAT-TEMPÉRATURE D'EAU (94-DEG C)	126-5869	1	CANALISATIONS D'EAU (ASS)	68
TYPE LÈVRE À JOINT (RÉGULATEUR D'EAU)	3S-9643	1	CANALISATIONS D'EAU (ASS)	68
CIRCUIT ÉLECTRIQUE ET DE DÉMARRAGE				
AMPOULE (*24-VOLT) (CLIGNOTANT)	100-3245	1	PHARE AV (ASS)	160
		1	PHARE AV (ASS)	162

* TRADUCTION NON DISPONIBLE AU MOMENT DE LA PUBLICATION

PIÈCES DE RECHANGE

DESCRIPTION	NUMÉRO DE PIECÈS	QTÉ	DOMAINE D'APPLICATION	PAGE
AMPOULE (*24-VOLT) (FEUX DE ROUTE/FEUX DE CROISEMENT)	9X-3465	1	PHARE AV (ASS)	160
		1	PHARE AV (ASS)	162
AMPOULE (*24-VOLT) (LAME)(PROJECTEUR AVANT)	3E-8825	2	ÉCLAIRAGE - PROJECTEURS (ASS)	188
AMPOULE (*24-VOLT) (POSITION)	100-3245	1	PHARE AV (ASS)	160
		1	PHARE AV (ASS)	162
AMPOULE (*24-VOLT, 21-WATT) (CLIGNOTANT)	9X-4493	1	PHARE AV (ASS)	160
		1	PHARE AV (ASS)	162
AMPOULE (24 VOLTS)	3E-8825	2	CABLAGE DE DIRECTION AUXILIAIRE (ASS)	329
		2	CABLAGE DE LA CONSOLE DE CHANGEMENTS DE VITESSE	332
		2	CABLAGE DE LA CONSOLE DE CHANGEMENTS DE VITESSE	334
		1	CABLAGE DE LA CONSOLE DE CHANGEMENTS DE VITESSE	335
		1	CABLAGE DE LA CONSOLE DE DIRECTION	338
		2	CABLAGE DE LA CONSOLE DE DIRECTION	341
		1	ÉCLAIRAGE - AVERTISSEUR (ASS)	234
		1	ÉCLAIRAGE - AVERTISSEUR (ASS)	235
		1	ÉCLAIRAGE - GYROPHARE (ASS)	236
		1	MONTAGE - GYROPHARE (ASS)	150
	7N-5876	1	CABLAGE DE LA CONSOLE DE CHANGEMENTS DE VITESSE	332
		1	CABLAGE DE LA CONSOLE DE CHANGEMENTS DE VITESSE	334
	7N-9943	1	PLAFONNIER (ASS)	152
	3E-8825	1	CABLAGE DE CABINE (ASS)	280
		1	CABLAGE DE CABINE (ASS)	282
		2	ÉCLAIRAGE - PROJECTEURS (ASS)	193
		1	ÉCLAIRAGE - PROJECTEURS (ASS)	199
		1	ÉCLAIRAGE - PROJECTEURS (ASS)	202
		1	ÉCLAIRAGE - PROJECTEURS (ASS)	205
		1	ÉCLAIRAGE - PROJECTEURS (ASS)	207
		1	ÉCLAIRAGE - PROJECTEURS (ASS)	209
		1	ÉCLAIRAGE - PROJECTEURS (ASS)	210
		1	ÉCLAIRAGE - PROJECTEURS (ASS)	212
		1	ÉCLAIRAGE - PROJECTEURS (ASS)	222
		1	ÉCLAIRAGE - PROJECTEURS (ASS)	224
		2	INTERRUPTEUR D'ÉCLAIRAGE (ASS)	267
	9X-3465	1	LAMPE - PHARE ET CLIGNOTANT	164
	100-3245	2	LAMPE - PHARE ET CLIGNOTANT	164
AMPOULE (24 VOLTS) (*AUXILIARY BACK-UP ALARM)	3E-8825	1	ECLAIRAGE AR (ASS)	180
AMPOULE (24 VOLTS) (CONTACTEUR D'AMORTISSEUR DE LAME)	3E-8825	1	CÂBLE D'AMORTISSEUR DE LAME (ASS)	273
AMPOULE (24 VOLTS) (LAMPE D'APPOINT AUXILIAIRE)	3E-8825	2	ECLAIRAGE AR (ASS)	178

* TRADUCTION NON DISPONIBLE AU MOMENT DE LA PUBLICATION

PIÈCES DE RECHANGE

DESCRIPTION	NUMÉRO DE PIECÈS	QTÉ	DOMAINE D'APPLICATION	PAGE
AMPOULE (24 VOLTS) (*NG)	3E-8825	2	CABLAGE DE LA CONSOLE DE CHANGEMENTS DE VITESSE	335
AMPOULE (24 VOLTS) (PHARES AVANT, FEUX ARRIÈRE)	3E-8825	2	ÉCLAIRAGE - PROJECTEURS (ASS)	196
AMPOULE (24 VOLTS) (PLAQUE D'IMMATRICULATION)	5C-9583	1	LAMPE-PLAQUE D'IMMATRICULATION (ASS)	169
AMPOULE (24 VOLTS) (POSITION DE CABINE)	9X-4494	1	REPÈRE DE LAMPE (ASS)	168
AMPOULE (24 VOLTS) (PROJECTEUR DE LAME)	3E-8825	2	ÉCLAIRAGE - PROJECTEURS (ASS)	189
AMPOULE (24 VOLTS) (PROJECTEUR SUR LAME)	3E-8825	2	ÉCLAIRAGE - PROJECTEURS (ASS)	191
		2	ÉCLAIRAGE - PROJECTEURS (ASS)	192
AMPOULE (24 VOLTS) (SIGNAL)	100-3245	2	LAMPE - PHARE ET CLIGNOTANT	166
AMPOULE (24 VOLTS) (TÊTE)	9X-3465	1	LAMPE - PHARE ET CLIGNOTANT	166
AMPOULE (24V, 21W)	5C-9584	2	CABLAGE AR (ASS)	309
		2	CABLAGE AR (ASS)	312
AMPOULE (24V, 21W) (SIGNAL)	9X-4493	1	LAMPE - PHARE ET CLIGNOTANT	164
		1	LAMPE - PHARE ET CLIGNOTANT	166
AMPOULE (24V, 5W)	4V-8116	1	CABLAGE AR (ASS)	309
		1	CABLAGE AR (ASS)	309
		1	CABLAGE AR (ASS)	312
AMPOULE (24V, 70W)	9X-7849	1	LAMPE - GYROPHARE (ASS)	174
AMPOULE (24V, 70W) (GYROPHARE)	9X-7849	1	LAMPE - GYROPHARE (ASS)	173
BATTERIE (ASS) (12 VOLTS)	153-5700	2	BATTERIE (ASS)	129
BATTERIE (ASS) (12 VOLTS) (1100A)	153-5700	2	BATTERIE (ASS)	127
BATTERIE (12 VOLTS) (HUMIDE)	153-5710	2	BATTERIE (ASS)	128
BATTERIE (12V, 750A)	3T-5760	2	BATTERIE (ASS)	130
CHAPEAU ANTI-POUSSIERE	6N-1604	1	EAU DES CHEMISES - RECHAUFFEUR (ASS)	148
		1	EAU DES CHEMISES - RECHAUFFEUR (ASS)	149
CLÉ (COUPE-BATTERIE)	8H-5306	1	ROBINET DE BATTERIE (ASS)	266
CLIGNOTANT (ENS) (12/24V) (CLIGNOTANT, FEUX DE DÉTRESSE)	108-0358	1	ÉCLAIRAGE - PROJECTEURS (ASS)	193
		1	ÉCLAIRAGE - PROJECTEURS (ASS)	196
		1	ÉCLAIRAGE - PROJECTEURS (ASS)	199
		1	ÉCLAIRAGE - PROJECTEURS (ASS)	202
		1	ÉCLAIRAGE - PROJECTEURS (ASS)	209
		1	ÉCLAIRAGE - PROJECTEURS (ASS)	212
		1	INTERRUPTEUR D'ÉCLAIRAGE (ASS)	267
CONTACTEUR (ENS) (*AUXILIARY BACKUP)	161-1418	1	ECLAIRAGE AR (ASS)	178
COURROIE	215-6673	1	LAMPE - GYROPHARE (ASS)	174
COURROIE (ALTERNATEUR)	191-6635	1	ALTERNATEUR DE CHARGE (ASS)	122
DIODE (LED)	165-5674	1	ÉCLAIRAGE - AVERTISSEUR (ASS)	234
		1	ÉCLAIRAGE - AVERTISSEUR (ASS)	235
DISJONCTEUR (ENS) (15A) (COMMANDE DU MOTEUR)	6T-3643	1	CABLAGE AR (ASS)	317
		1	CABLAGE AR (ASS)	321
DISJONCTEUR (ENS) (15A) (PHARES AVANT)	3T-2662	1	DISJONCTEUR (ASS)	132

* TRADUCTION NON DISPONIBLE AU MOMENT DE LA PUBLICATION

PIÈCES DE RECHANGE

DESCRIPTION	NUMÉRO DE PIECÈS	QTÉ	DOMAINE D'APPLICATION	PAGE
		1	DISJONCTEUR (ASS)	133
DISJONCTEUR (ENS) (15A) (PROJECTEURS DE TRAVAIL AVEC BARRE LUMINEUSE)	3T-2662	1	DISJONCTEUR (ASS)	132
DISJONCTEUR (ENS) (80A) (ALTERNATEUR)	171-2210	1	CABLAGE AR (ASS)	320
		1	CABLAGE AR (ASS)	316
DISJONCTEUR (ENS) (80A) (PRINCIPAL)	171-2210	1	CABLAGE AR (ASS)	316
		1	CABLAGE AR (ASS)	322
ÉLÉMENT DU RÉCHAUFFEUR D'EAU DES CHEMISES (ENS) (120 VOLTS/ 1500 WATTS)	9G-6655	1	EAU DES CHEMISES - RECHAUFFEUR (ASS)	149
ÉLÉMENT DU RÉCHAUFFEUR D'EAU DES CHEMISES (ENS) (240 VOLTS/1500 WATTS)	6T-3764	1	EAU DES CHEMISES - RECHAUFFEUR (ASS)	148
ENTRAÎNEMENT POUR COURROIE (GYROPHARE)	9X-8139	1	LAMPE - GYROPHARE (ASS)	173
FUSIBLE (*10-AMPERE) (LAME/ PROJECTEUR AVANT)	9W-1442	2	ÉCLAIRAGE - PROJECTEURS (ASS)	188
FUSIBLE (10A)	3K-8782	1	CABLAGE DE CABINE (ASS)	284
	9W-1442	1	CABLAGE DE CABINE (ASS)	280
		1	CABLAGE DE CABINE (ASS)	282
		2	CABLAGE DE DIRECTION AUXILIAIRE (ASS)	329
		11	CABLAGE DE LA CONSOLE DE DIRECTION	338
		12	CABLAGE DE LA CONSOLE DE DIRECTION	341
		1	ÉCLAIRAGE - AVERTISSEUR (ASS)	231
		1	ÉCLAIRAGE - PROJECTEURS (ASS)	193
		1	ÉCLAIRAGE - PROJECTEURS (ASS)	199
		1	ÉCLAIRAGE - PROJECTEURS (ASS)	202
		1	ÉCLAIRAGE - PROJECTEURS (ASS)	205
		1	ÉCLAIRAGE - PROJECTEURS (ASS)	207
		1	ÉCLAIRAGE - PROJECTEURS (ASS)	209
		1	ÉCLAIRAGE - PROJECTEURS (ASS)	212
		1	ÉCLAIRAGE - PROJECTEURS (ASS)	222
		1	ÉCLAIRAGE - PROJECTEURS (ASS)	224
		1	INTERRUPTEUR D'ÉCLAIRAGE (ASS)	267
FUSIBLE (10A) (*AUXILIARY BACK-UP ALARM)	9W-1442	1	ECLAIRAGE AR (ASS)	180
FUSIBLE (10A) (CLIGNOTANT, FEUX DE DÉTRESSE)	9W-1442	1	ÉCLAIRAGE - PROJECTEURS (ASS)	196
FUSIBLE (10A) (CONVERTISSEUR)	9W-1442	1	TRANSFORMATION ELECTRIQUE (ASS)	141
FUSIBLE (10A) (DÉVOLTEUR POUR COURANT)	9W-1442	1	TRANSFORMATION ELECTRIQUE (ASS)	143
FUSIBLE (10A) (GYROPHARE)	9W-1442	1	CABLAGE DE CABINE (ASS)	277
		1	ÉCLAIRAGE - AVERTISSEUR (ASS)	232
FUSIBLE (10A) (LAMPE D'APPOINT)	9W-1442	1	ECLAIRAGE AR (ASS)	178

* TRADUCTION NON DISPONIBLE AU MOMENT DE LA PUBLICATION

PIÈCES DE RECHANGE

DESCRIPTION	NUMÉRO DE PIECÈS	QTÉ	DOMAINE D'APPLICATION	PAGE
FUSIBLE (10A) (PROJECTEUR DE LAME)	9W-1442	2	ÉCLAIRAGE - PROJECTEURS (ASS)	189
FUSIBLE (10A) (PROJECTEURS)	9W-1442	2	ÉCLAIRAGE - PROJECTEURS (ASS)	191
		2	ÉCLAIRAGE - PROJECTEURS (ASS)	192
FUSIBLE (15A)	9W-1441	1	CABLAGE DE CABINE (ASS)	275
		1	CABLAGE DE CABINE (ASS)	278
		1	CABLAGE DE LA CONSOLE DE DIRECTION	338
		1	CABLAGE DE LA CONSOLE DE DIRECTION	341
FUSIBLE (15A) (CONVERTISSEUR DE PUISSANCE)	9W-1441	1	TRANSFORMATION ELECTRIQUE (ASS)	142
FUSIBLE (15A) (PROJECTEURS DE CABINE)	9W-1441	1	ÉCLAIRAGE - PROJECTEURS (ASS)	191
		1	ÉCLAIRAGE - PROJECTEURS (ASS)	192
FUSIBLE (30A)	8T-9636	2	TRANSFORMATION ELECTRIQUE (ASS)	144
*LAMP-HALOGEN (*24-VOLT, 65-WATT) (FEUX DE CROISEMENT)	9X-3463	1	PHARE AV (ASS)	158
LAMPE (ENS)	6C-0109	1	CABLAGE AR (ASS)	309
		1	CABLAGE AR (ASS)	312
	6C-0110	1	CABLAGE AR (ASS)	309
		1	CABLAGE AR (ASS)	312
LAMPE HALOGÈNE (24V, 65W)	9X-3463	1	LAMPE - PHARE (ASS)	153
		1	LAMPE - PHARE (ASS)	155
LAMPE HALOGÈNE (24V, 65W) (FEUX DE CROISEMENT)	9X-3463	1	ÉCLAIRAGE - PROJECTEURS (ASS)	184
LAMPE HALOGÈNE (24V, 65W) (FEUX DE ROUTE)	9X-3463	1	PHARE AV (ASS)	159
		1	ÉCLAIRAGE - PROJECTEURS (ASS)	184
LAMPE HALOGÈNE (24V, 65W) (LAME)	9X-3463	1	LAMPE - PHARE (ASS)	157
LAMPE HALOGÈNE (24V, 65W) (PROJECTEUR)	9X-3463	1	LAMPE - PHARE (ASS)	154
		1	LAMPE - PHARE (ASS)	156
LENTILLE (ENS) (FEUX DE CROISEMENT)	162-2077	1	ÉCLAIRAGE - PROJECTEURS (ASS)	184
LENTILLE (ENS) (*HEAD)	100-3249	1	PHARE AV (ASS)	162
		1	PHARE AV (ASS)	160
LENTILLE (ENS) (JAUNE) (CLIGNOTANT)	136-3848	1	PHARE AV (ASS)	160
		1	PHARE AV (ASS)	162
LENTILLE (ENS) (JAUNE) (SIGNAL)	136-3848	1	LAMPE - PHARE ET CLIGNOTANT	164
		1	LAMPE - PHARE ET CLIGNOTANT	166
LENTILLE (ENS) (PHARE AVANT)	100-3248	1	LAMPE - PHARE ET CLIGNOTANT	166
		1	LAMPE - PHARE ET CLIGNOTANT	164
LENTILLE (ENS) (PHARE AVANT)(FEUX DE CROISEMENT)	162-2077	1	PHARE AV (ASS)	158
LENTILLE (ENS) (PLAFONNIER)	202-6611	1	LAMPE - PHARE (ASS)	155
		1	LAMPE - PHARE (ASS)	157
	202-6614	1	LAMPE - PHARE (ASS)	154
		1	LAMPE - PHARE (ASS)	156
LENTILLE (GYROPHARE JAUNE)	9X-8121	1	LAMPE - GYROPHARE (ASS)	173

* TRADUCTION NON DISPONIBLE AU MOMENT DE LA PUBLICATION

PIÈCES DE RECHANGE

DESCRIPTION	NUMÉRO DE PIECÈS	QTÉ	DOMAINE D'APPLICATION	PAGE
LENTILLE (JAUNE) (CLIGNOTANT)	100-3250	1	PHARE AV (ASS)	160
		1	PHARE AV (ASS)	162
LENTILLE (JAUNE) (SIGNAL)	100-3250	1	LAMPE - PHARE ET CLIGNOTANT	164
		1	LAMPE - PHARE ET CLIGNOTANT	166
LENTILLE ORANGE (GYROPHARE)	215-6672	1	LAMPE - GYROPHARE (ASS)	174
LENTILLE (PLAQUE D'IMMATRICULATION)	134-6751	1	LAMPE-PLAQUE D'IMMATRICULATION (ASS)	169
PLAFONNIER (ASS) (24V, AVEC CONTACTEUR)	3E-6389	1	CABLAGE DE CABINE (ASS)	275
		1	CABLAGE DE CABINE (ASS)	278
		1	CABLAGE DE CABINE (ASS)	284
PORTE-BALAIS (ENS)	7T-3278	1	DÉMARREUR ÉLECTRIQUE (ASS)	260
CIRCUIT HYDRAULIQUE				
BOUCHON DE GOULOTTE DE REMPLISSAGE (RÉSERVOIR D'HUILE HYDRAULIQUE)	7H-1447	1	RÉSERVOIR HYDRAULIQUE ET FILTRE (ASS)	633
CREPINE (GOULOTTE DE REMPLISSAGE) (RÉSERVOIR D'HUILE HYDRAULIQUE)	9J-3047	1	RÉSERVOIR HYDRAULIQUE ET FILTRE (ASS)	633
ÉLÉMENT DE FILTRE À HUILE (ENS) (HYDRAULIQUE) (EFFICACITÉ NORMALE)	1R-0774	1	RÉSERVOIR HYDRAULIQUE ET FILTRE (ASS)	633
GRAISSEUR (CHAPE D'ANCRAGE DU VÉRIN DE DÉPORT DE CERCLE)	3B-8485	2	VÉRIN DE DÉPORT DE CERCLE ET MONTAGE (ASS)	553
*PADLOCK GP	5P-8502	1	RÉSERVOIR HYDRAULIQUE ET MONTAGE (ASS)	635
MATÉRIEL ET FOURNITURES D'ENTRETIEN				
CADENAS (ASS) (BOÎTE À OUTILS)	5P-8502	1	*BOX GP-TOOL	969
MOTEUR STANDARD				
BOUCHON DE GOULOTTE DE REMPLISSAGE (ENS) (HUILE MOTEUR)	227-4531	1	CACHE-SOUPAPES (ASS)	14
	241-5645	1	COUVERCLE DE CARTER AV (ASS)	13
BOUCHON FILETÉ (VIDANGE DE CARTER D'HUILE MOTEUR)	9S-4183	1	HUILE MOTEUR - CARTER (ASS)	36
RENIFLARD (ENS) (MOTEUR)	240-0041	1	BLOC-CYLINDRES - COUVERCLE (ASS)	12
POSTE DE CONDUITE				
ACCUMULATEUR (CLIMATISEUR)	197-6218	1	CANALISATIONS DE CLIMATISEUR (ASS)	863
AMPOULE (*24-VOLT) (DÉGIVREUR ARRIÈRE)	3E-8825	1	VENTILATEUR DE CABINE (ASS)	821
AMPOULE (*24-VOLT) (DÉGIVREUR AVANT)	3E-8825	1	VENTILATEUR DE CABINE (ASS)	820
AMPOULE (24 VOLTS)	3E-8825	1	RÉTROVISEUR (ASS)	876
	7N-5876	2	MODULE D'INDICATEUR DE VITESSE ET COMPTE-TOURS (ASS)	879
	8D-1429	1	CHAUFFAGE DE CABINE (ASS)	827

* TRADUCTION NON DISPONIBLE AU MOMENT DE LA PUBLICATION

PIÈCES DE RECHANGE

DESCRIPTION	NUMÉRO DE PIECÈS	QTÉ	DOMAINE D'APPLICATION	PAGE
		1	CHAUFFAGE DE CABINE (ASS)	831
		1	CLIMATISEUR (ASS)	782
AMPOULE (24 VOLTS) (MANOMÈTRE)	7N-5876	2	TABLEAU DE BORD (ASS)	891
		2	TABLEAU DE BORD (ASS)	893
		2	TABLEAU DE BORD (ASS)	895
AMPOULE (24 VOLTS) (MODULE QUATRE INSTRUMENTS)	7N-5876	2	TABLEAU DE BORD (ASS)	891
		4	TABLEAU DE BORD (ASS)	895
AMPOULE (24 VOLTS) (QUATRE INSTRUMENTS)	7N-5876	2	TABLEAU DE BORD (ASS)	893
AMPOULE (24 VOLTS) (RÉTROVISEURS À CHAUFFAGE INTÉGRÉ)	3E-8825	1	RÉTROVISEUR (ASS)	872
AMPOULE (24 VOLTS) (TÉMOIN D'ACTION PRINCIPAL)	107-1983	1	TABLEAU DE BORD (ASS)	893
AMPOULE (24 VOLTS) (TÉMOIN D'ACTIONNEMENT)	107-1983	1	TABLEAU DE BORD (ASS)	895
AMPOULE (24 VOLTS) (TÉMOIN PRINCIPAL DE MISE EN GARDE EMS)	107-1983	1	TABLEAU DE BORD (ASS)	891
AMPOULE (24 VOLTS) (VERROUILLAGE DE DIFFÉRENTIEL)	110-2079	1	TABLEAU DE BORD (ASS)	891
		1	TABLEAU DE BORD (ASS)	893
AMPOULE (24V, 3W) (TABLEAU DE BORD)	115-1748	9	TABLEAU DE BORD (ASS)	891
		9	TABLEAU DE BORD (ASS)	893
AMPOULE (24V, 3W) (TÉMOIN LUMINEUX)	115-1748	11	TABLEAU DE BORD (ASS)	895
BALAI D'ESSUIE-GLACE (ENS)	6V-8255	2	VITRE (ASS)	940
	6V-5853	1	ESSUIE-GLACE (ASS)	966
		1	ESSUIE-GLACE (ASS)	967
		1	ESSUIE-GLACE (ASS)	968
BALAI D'ESSUIE-GLACE (ENS) (ARRIÈRE)	6V-5853	1	ESSUIE-GLACE (ASS)	963
BALAI D'ESSUIE-GLACE (ENS) (INFÉRIEUR AVANT)	123-4355	2	ESSUIE-GLACE (ASS)	949
		2	ESSUIE-GLACE (ASS)	951
BALAI D'ESSUIE-GLACE (ENS) (PROFIL BAS ARRIÈRE)	6V-5849	1	ESSUIE-GLACE (ASS)	957
		1	ESSUIE-GLACE (ASS)	959
BALAI D'ESSUIE-GLACE (ENS) (PROFIL ÉLEVÉ ARRIÈRE)	6V-5853	1	ESSUIE-GLACE (ASS)	961
BALAI D'ESSUIE-GLACE (ENS) (PROFIL ÉLEVÉ AVANT INFÉRIEUR)	123-4355	2	ESSUIE-GLACE (ASS)	953
		2	ESSUIE-GLACE (ASS)	955
BALAI D'ESSUIE-GLACE (ENS) (PROFIL ÉLEVÉ SUPÉRIEUR AVANT)	6V-5853	1	ESSUIE-GLACE (ASS)	953
		1	ESSUIE-GLACE (ASS)	955
BALAI D'ESSUIE-GLACE (ENS) (SUPÉRIEUR AVANT)	6V-5853	1	ESSUIE-GLACE (ASS)	951
BALAI D'ESSUIE-GLACE (ENS) (SURBAISSÉ, AVANT SUPÉRIEUR)	6V-5853	1	ESSUIE-GLACE (ASS)	949
CADENAS (ASS)	246-2641	1	CABINE - PROFIL ÉLEVÉ (VERSION)	788

* TRADUCTION NON DISPONIBLE AU MOMENT DE LA PUBLICATION

PIÈCES DE RECHANGE

DESCRIPTION	NUMÉRO DE PIECÈS	QTÉ	DOMAINE D'APPLICATION	PAGE
	5P-8502	1	VERSION DE TRANSFORMATION - SANS ROPS	798
COURROIE (CLIMATISEUR)	173-7178	1	COMPRESSEUR DE REFRIGERANT (ASS)	791
FILTRE À AIR (CABINE)	7T-7358	1	FILTRE À AIR DE CABINE (ASS)	822
	231-4486	1	FILTRE À AIR DE CABINE (ASS)	822
	232-1732	1	FILTRE À AIR DE CABINE (ASS)	822
FUSIBLE (*10-AMPERE) (DÉGIVREUR ARRIÈRE)	9W-1442	1	VENTILATEUR DE CABINE (ASS)	821
FUSIBLE (*10-AMPERE) (DÉGIVREUR AVANT)	9W-1442	1	VENTILATEUR DE CABINE (ASS)	820
FUSIBLE (10A)	9W-1442	1	ESSUIE-GLACE (ASS)	957
FUSIBLE (10A) (ESSUIE-GLACE)	9W-1442	1	ESSUIE-GLACE (ASS)	959
		1	ESSUIE-GLACE (ASS)	961
		1	ESSUIE-GLACE (ASS)	963
FUSIBLE (10A) (RÉTROVISEURS À CHAUFFAGE INTÉGRÉ)	9W-1442	1	RÉTROVISEUR (ASS)	872
		1	RÉTROVISEUR (ASS)	876
FUSIBLE (15A) (CLIMATISEUR)	9W-1441	1	CLIMATISEUR ET MONTAGE (ASS)	781
FUSIBLE (15A) (RÉCHAUFFEUR)	9W-1441	1	CHAUFFAGE ET MONTAGE - CABINE (ASS)	825
*PADLOCK GP	5P-8502	1	ROPS OUVERTE (VERSION)	899

* TRADUCTION NON DISPONIBLE AU MOMENT DE LA PUBLICATION

PIÈCES DE RECHANGE

DESCRIPTION	NUMÉRO DE PIECÈS	QTÉ	DOMAINE D'APPLICATION	PAGE
TRANSMISSION				
AMPOULE (*24-VOLT) (CHANG. AUTOMATIQUE VITESSE)	3E-8825	1	CHANGEMENT DE VITESSES AUTOMATIQUE (VERSION)	345
BOUCHON FILETÉ (ROBINET DE VIDANGE DE BOÎTE DE VITESSES)	5P-4483	1	CARTER ET PIECES DE BOITE (ASS)	346
*BREATHER AS (REMPLISSAGE D'HUILE DE TRANSMISSION)	9G-5127	1	GOULOTTE DE REMPLISSAGE D'HUILE DE TRANSMISSION	377
CHAPEAU DE VALVE (TIGE)	9K-7951	1	ROUE ET PNEU (ASS)	427
		1	ROUE ET PNEU (ASS)	428
		1	ROUE ET PNEU (ASS)	429
		1	ROUE ET PNEU (ASS)	430
		1	ROUE ET PNEU (ASS)	431
		1	ROUE ET PNEU (ASS)	432
		1	ROUE ET PNEU (ASS)	455
		1	ROUE ET PNEU (ASS)	462
ÉCRAN (DISTRIBUTEUR DE BOÎTE DE VITESSES)	6I-9395	1	DISTRIBUTEUR DE BOITE (ASS)	406
ÉCRAN MAGNÉTIQUE (BOîTE DE VITESSES)	8S-9129	1	ÉCRAN MAGNÉTIQUE (ASS)	388
ÉCRAN MAGNÉTIQUE (HUILE DE BOÎTE)	8S-9129	1	CARTER ET PIECES DE BOITE (ASS)	346
ÉLÉMENT DE FILTRE À HUILE (ENS) (GRANDE EFFICACITÉ)	132-8875	1	CANALISATIONS D'HUILE DE BOÎTE (ASS)	383
ÉLÉMENT DE FILTRE À HUILE (ENS) (GRANDE EFFICACITÉ) (BOîTE DE VITESSES)	132-8875	1	FILTRE A HUILE (ASS)	380
RENIFLARD (ENS) (TANDEM)	1F-8488	2	TANDEM ET CARTER (ASS)	391
TAMIS D'ASPIRATION (BOîTE DE VITESSES)	8S-9130	1	CARTER ET PIECES DE BOITE (ASS)	346
		1	ÉCRAN MAGNÉTIQUE (ASS)	388

* TRADUCTION NON DISPONIBLE AU MOMENT DE LA PUBLICATION

PIEZAS DE MANTENIMIENTO

DESCRIPCION	NUMERO DE PIEZA	CANT	SE UTILIZA EN	PAGINA
BASTIDOR Y CAJA				
TAPÓN MAGNÉTICO (CAJA DE TRANSMISION)	8M-3837	1	CAJA Y BASTIDOR (GR)	474
EQUIPO Y SUMINISTRO DE SERVICIOS				
CANDADO (GR) (CAJA DE HERRAMIENTAS)	5P-8502	1	*BOX GP-TOOL	969
MOTOR BÁSICO				
RESPIRADERO (CONJ) (MOTOR)	240-0041	1	TAPA DEL BLOQUE MOTOR (GR)	12
TAPA DE LLENADO (CONJ) (ACEITE DEL MOTOR)	227-4531	1	TAPA DEL MECANISMO DE VÁLVULAS (GR)	14
	241-5645	1	TAPA DE LA CAJA DELANTERA (GR)	13
TAPÓN (DRENAJE DE COLECTOR DE ACEITE DE MOTOR)	9S-4183	1	CÁRTER - COLECTOR DEL (GR)	36
PUESTO DEL OPERADOR				
ACUMULADOR (A/A)	197-6218	1	TUBERÍAS DE ACONDICIONADOR DE AIRE (GR)	863
CANDADO (GR)	5P-8502	1	CONJUNTO DE MODIFICACIÓN (SIN ROPS)	798
	246-2641	1	CABINA DE PERFIL ALTO (CONFIG)	788
CINTURON DE SEGURIDAD (AIRE ACONDICIONADO)	173-7178	1	COMPRESOR DE REFRIGERANTE (GR)	791
FILTRO DE AIRE (CABINA)	7T-7358	1	FILTRO DE AIRE DE LA CABINA (GR)	822
	231-4486	1	FILTRO DE AIRE DE LA CABINA (GR)	822
	232-1732	1	FILTRO DE AIRE DE LA CABINA (GR)	822
FUSIBLE (*10-AMPERE) (DESCONGELADOR DELANTERO)	9W-1442	1	VENTILADOR DE CIRCULACION	820
FUSIBLE (*10-AMPERE) (DESCONGELADOR TRASERO)	9W-1442	1	VENTILADOR DE CIRCULACION	821
FUSIBLE (10-AMPERIOS)	9W-1442	1	LIMPIAPARABRISAS DE LA VENTANA (GR)	957
FUSIBLE (10-AMPERIOS) (*HEATED MIRRORS)	9W-1442	1	RETROVISOR (GR)	872
		1	RETROVISOR (GR)	876
FUSIBLE (10-AMPERIOS) (LIMPIADOR)	9W-1442	1	LIMPIAPARABRISAS DE LA VENTANA (GR)	959
		1	LIMPIAPARABRISAS DE LA VENTANA (GR)	961
		1	LIMPIAPARABRISAS DE LA VENTANA (GR)	963
FUSIBLE (15 A) (AIRE ACONDICIONADO)	9W-1441	1	ACONDICIONADOR DE AIRE Y MONTAJE (GR)	781
FUSIBLE (15 A) (CALEFACTOR)	9W-1441	1	CALEFACCIÓN Y MONTAJE DE LA CABINA (GR)	825
HOJA DE LIMPIAPARABRISAS (CONJ)	6V-5853	1	LIMPIAPARABRISAS DE LA VENTANA (GR)	966
		1	LIMPIAPARABRISAS DE LA VENTANA (GR)	967
		1	LIMPIAPARABRISAS DE LA VENTANA (GR)	968

* NO HAY TRADUCCION DISPONIBLE EN EL MOMENTO DE LA IMPRESION

PIEZAS DE MANTENIMIENTO

DESCRIPCION	NUMERO DE PIEZA	CANT	SE UTILIZA EN	PAGINA
	6V-8255	2	VENTANA (GR)	940
HOJA DE LIMPIAPARABRISAS (CONJ) (DELANTERO DE ALTO PERFIL)	123-4355	2	LIMPIAPARABRISAS DE LA VENTANA (GR)	953
		2	LIMPIAPARABRISAS DE LA VENTANA (GR)	955
HOJA DE LIMPIAPARABRISAS (CONJ) (DELANTERO SUPERIOR DE ALTO PERFIL)	6V-5853	1	LIMPIAPARABRISAS DE LA VENTANA (GR)	953
		1	LIMPIAPARABRISAS DE LA VENTANA (GR)	955
HOJA DE LIMPIAPARABRISAS (CONJ) (*FRONT LOWER)	123-4355	2	LIMPIAPARABRISAS DE LA VENTANA (GR)	949
		2	LIMPIAPARABRISAS DE LA VENTANA (GR)	951
HOJA DE LIMPIAPARABRISAS (CONJ) (*LOW PROFILE FRONT UPPER)	6V-5853	1	LIMPIAPARABRISAS DE LA VENTANA (GR)	949
HOJA DE LIMPIAPARABRISAS (CONJ) (PARTE TRASERA)	6V-5853	1	LIMPIAPARABRISAS DE LA VENTANA (GR)	963
HOJA DE LIMPIAPARABRISAS (CONJ) (POSICION DELANTERA / SUPERIOR)	6V-5853	1	LIMPIAPARABRISAS DE LA VENTANA (GR)	951
HOJA DE LIMPIAPARABRISAS (CONJ) (TRASERO DE ALTO PARFIL)	6V-5853	1	LIMPIAPARABRISAS DE LA VENTANA (GR)	961
HOJA DE LIMPIAPARABRISAS (CONJ) (TRSERO DE BAJO PERFIL)	6V-5849	1	LIMPIAPARABRISAS DE LA VENTANA (GR)	957
		1	LIMPIAPARABRISAS DE LA VENTANA (GR)	959
LÁMPARA (*24-VOLT) (DESCONGELADOR DELANTERO)	3E-8825	1	VENTILADOR DE CIRCULACION	820
LÁMPARA (*24-VOLT) (DESCONGELADOR TRASERO)	3E-8825	1	VENTILADOR DE CIRCULACION	821
LÁMPARA (24 VOLTIOS)	8D-1429	1	ACONDICIONADOR DE AIRE (GR)	782
		1	CALEFACCIÓN DE LA CABINA (GR)	827
		1	CALEFACCIÓN DE LA CABINA (GR)	831
	3E-8825	1	RETROVISOR (GR)	876
	7N-5876	2	MÓDULO DEL TACÓMETRO Y DEL VELOCÍMETRO (GR)	879
LÁMPARA (24 VOLTIOS) (ACCIONAMIENTO)	107-1983	1	TABLERO DE INSTRUMENTOS (GR)	895
LÁMPARA (24 VOLTIOS) (*AIR PRESSURE GAUGE)	7N-5876	2	TABLERO DE INSTRUMENTOS (GR)	895
		2	TABLERO DE INSTRUMENTOS (GR)	893
		2	TABLERO DE INSTRUMENTOS (GR)	891
LÁMPARA (24 VOLTIOS) (DE CUATRO MEDIDORES)	7N-5876	2	TABLERO DE INSTRUMENTOS (GR)	893
LÁMPARA (24 VOLTIOS) (*HEATED MIRRORS)	3E-8825	1	RETROVISOR (GR)	872
LÁMPARA (24 VOLTIOS) (LUZ DE INDICADOR DE ACCCIÓN MAESTRA)	107-1983	1	TABLERO DE INSTRUMENTOS (GR)	893
LÁMPARA (24 VOLTIOS) (LUZ INDIC. DE ACCION MAESTRA DE EMS)	107-1983	1	TABLERO DE INSTRUMENTOS (GR)	891
LÁMPARA (24 VOLTIOS) (MÓDULO DE CUATRO MEDIDORES)	7N-5876	4	TABLERO DE INSTRUMENTOS (GR)	895

* NO HAY TRADUCCION DISPONIBLE EN EL MOMENTO DE LA IMPRESION

PIEZAS DE MANTENIMIENTO

DESCRIPCION	NUMERO DE PIEZA	CANT	SE UTILIZA EN	PAGINA
		2	TABLERO DE INSTRUMENTOS (GR)	891
LÁMPARA (24 VOLTIOS) (TRABA DE DIFERENCIAL)	110-2079	1	TABLERO DE INSTRUMENTOS (GR)	891
		1	TABLERO DE INSTRUMENTOS (GR)	893
LÁMPARA (24-VOLTIOS, 3-VATIOS) (LUZ INDICADORA)	115-1748	11	TABLERO DE INSTRUMENTOS (GR)	895
LÁMPARA (24-VOLTIOS, 3-VATIOS) (TABLERO DE INSTRUMENTOS)	115-1748	9	TABLERO DE INSTRUMENTOS (GR)	891
		9	TABLERO DE INSTRUMENTOS (GR)	893
*PADLOCK GP	5P-8502	1	ESTRUCTURA ROPS ABIERTA	899
SISTEMA DE ADMISIÓN Y ESCAPE DE AIRE				
ELEMENTO PRIMARIO (CONJ)	6I-0273	1	FILTRO DE AIRE (GR)	76
ELEMENTO SECUNDARIO (CONJ)	6I-0274	1	FILTRO DE AIRE (GR)	76
SISTEMA DE COMBUSTIBLE				
COLADOR DE COMBUSTIBLE	199-9907	1	COMBUSTIBLE - TANQUE DE (GR)	115
EMPAQUETADURA	9R-7240	1	COMBUSTIBLE - TANQUE DE (GR)	114
FILTRO DE COMBUSTIBLE (CONJ)	1R-0762	1	FILTRO DE COMBUSTIBLE (GR)	89
FILTRO DE COMBUSTIBLE Y SEPARADOR DE AGUA (CONJ)	1R-0770	1	FILTRO DE COMBUSTIBLE Y SEPARADOR DE AGUA (GR)	91
SELLO	220-8678	1	FILTRO DE COMBUSTIBLE Y SEPARADOR DE AGUA (GR)	91
TAPA DEL TUBO DE LLENADO DE COMBUSTIBLE (GR) (SERVICIO PESADO, TRABABLE)	164-4858	1	COMBUSTIBLE - TANQUE DE (GR)	115
TAZA DE CUCHARÓN (CONJ)	173-7126	1	FILTRO DE COMBUSTIBLE Y SEPARADOR DE AGUA (GR)	91
SISTEMA DE ENFRIAMIENTO				
EMPAQUETADURA (CAJA DE REGULADOR)	191-4457	1	TUBERÍAS DEL AGUA (GR)	68
EMPAQUETADURA (REGULADOR DE AGUA)	219-2340	1	TUBERÍAS DEL AGUA (GR)	68
REGULADOR DE TEMPERATURA DEL AGUA (92 GRADOS CENTÍGRADOS)	4W-4794	1	TUBERÍAS DEL AGUA (GR)	68
REGULADOR DE TEMPERATURA DEL AGUA (94-GRADOS C)	126-5869	1	TUBERÍAS DEL AGUA (GR)	68
SELLO DE LABIO (REGULADOR DE AGUA)	3S-9643	1	TUBERÍAS DEL AGUA (GR)	68
TAPA DEL RADIADOR (7 LB/PULG2)	6L-8617	1	RADIADOR (GR)	72
TAPA DEL RADIADOR (*7-PSI)	6L-8617	1	RADIADOR (GR)	73
SISTEMA DE FRENOS				
*CARTRIDGE AS-DESICCANT (SECADOR DE AIRE)	203-2389	1	DESHIDRATADOR (GR)	519
DESHIDRATADOR (GR) (SECADOR DE AIRE, 24 VOLTIOS)	203-2423	1	DESHIDRATADOR (GR)	519
FUSIBLE (10 A) (SECADOR DE AIRE)	9W-1442	1	DESHIDRATADOR (GR)	516

* NO HAY TRADUCCION DISPONIBLE EN EL MOMENTO DE LA IMPRESION

PIEZAS DE MANTENIMIENTO

DESCRIPCION	NUMERO DE PIEZA	CANT	SE UTILIZA EN	PAGINA
SISTEMA DE LUBRICACIÓN				
FILTRO DE ACEITE DEL MOTOR (CONJ)	1R-0716	1	FILTRO DE ACEITE DEL MOTOR (GR)	51
MANGUERA DE ESCAPE DE GASES	193-5510	1	ESCAPE DE GASES (GR)	52
		1	ESCAPE DE GASES (GR)	53
SISTEMA ELÉCTRICO Y DE ARRANQUE				
BATERÍA (GR) (12 VOLTIOS)	153-5700	2	BATERÍA (GR)	129
BATERÍA (GR) (12 VOLTIOS) (*1100 AMPS)	153-5700	2	BATERÍA (GR)	127
BATERÍA (12 VOLTIOS) (HUMEDO)	153-5710	2	BATERÍA (GR)	128
BATERÍA (12-VOLTIOS, 750-AMPERIOS)	3T-5760	2	BATERÍA (GR)	130
CINTURON DE SEGURIDAD	215-6673	1	LÁMPARA DE BALIZA DE ADVERTENCIA (GR)	174
CINTURON DE SEGURIDAD (ALTERNADOR)	191-6635	1	CARGA - ALTERNADOR DE (GR)	122
CONJUNTO DE DESTELLADOR (12/24 VOLTIOS) (*TURN SIGNAL, HAZARD)	108-0358	1	LUCES DE REFLECTOR (GR)	193
		1	LUCES DE REFLECTOR (GR)	196
		1	LUCES DE REFLECTOR (GR)	199
		1	LUCES DE REFLECTOR (GR)	202
		1	LUCES DE REFLECTOR (GR)	209
		1	LUCES DE REFLECTOR (GR)	212
		1	INTERRUPTOR DE LUZ (GR)	267
CRISTAL (AMBAR, BALIZA DE ADVERTENCIA)	9X-8121	1	LÁMPARA DE BALIZA DE ADVERTENCIA (GR)	173
CRISTAL (AMBAR) (DE GIRO)	100-3250	1	LÁMPARA DE FARO DELANTERO (GR)	160
		1	LÁMPARA DE FARO DELANTERO (GR)	162
CRISTAL (AMBAR) (SEÑAL)	100-3250	1	LÁMPARA DE LUZ DELANTERA Y DE SEÑAL (GR)	164
		1	LÁMPARA DE LUZ DELANTERA Y DE SEÑAL (GR)	166
CRISTAL (PLACA DE REGISTRACIÓN)	134-6751	1	LAMPARA DE PLACA DE REGISTRO (GR)	169
DISYUNTOR (CONJ) (15 AMPERIOS) (BARRA DE LUCES DE TRABAJO)	3T-2662	1	DISYUNTOR DE CIRCUITO (GR)	132
DISYUNTOR (CONJ) (15 AMPERIOS) (CONTROL DEL MOTOR)	6T-3643	1	CABLES POSTERIORES (GR)	317
		1	CABLES POSTERIORES (GR)	321
DISYUNTOR (CONJ) (15 AMPERIOS) (FAROS)	3T-2662	1	DISYUNTOR DE CIRCUITO (GR)	132
		1	DISYUNTOR DE CIRCUITO (GR)	133
DISYUNTOR (CONJ) (80 AMPERIOS) (ALTERNADOR)	171-2210	1	CABLES POSTERIORES (GR)	316
		1	CABLES POSTERIORES (GR)	320
DISYUNTOR (CONJ) (80 AMPERIOS) (PRINCIPAL)	171-2210	1	CABLES POSTERIORES (GR)	316
		1	CABLES POSTERIORES (GR)	322
ELEMENTO DEL CALENTADOR DEL AGUA DE LAS CAMISAS (120 VOLTIOS/1500 VATIOS)	9G-6655	1	AGUA DE LAS CAMISAS - CALENTADOR DEL (GR)	149

* NO HAY TRADUCCION DISPONIBLE EN EL MOMENTO DE LA IMPRESION

PIEZAS DE MANTENIMIENTO

DESCRIPCION	NUMERO DE PIEZA	CANT	SE UTILIZA EN	PAGINA
ELEMENTO DEL CALENTADOR DEL AGUA DE LAS CAMISAS (240 VOLTIOS/1500 VATIOS)	6T-3764	1	AGUA DE LAS CAMISAS - CALENTADOR DEL (GR)	148
FUSIBLE (*10-AMPERE) (HOJA/FARO DELANTERO)	9W-1442	2	LUCES DE REFLECTOR (GR)	188
FUSIBLE (10-AMPERIOS)	9W-1442	11	CABLES DE LA CONSOLA DE DIRECCIÓN (GR)	338
		12	CABLES DE LA CONSOLA DE DIRECCIÓN (GR)	341
		2	CABLES DE LA DIRECCIÓN SECUNDARIA	329
		1	INTERRUPTOR DE LUZ (GR)	267
		1	LUCES DE ADVERTENCIA (GR)	231
		1	LUCES DE REFLECTOR (GR)	193
		1	LUCES DE REFLECTOR (GR)	199
		1	LUCES DE REFLECTOR (GR)	202
		1	LUCES DE REFLECTOR (GR)	205
		1	LUCES DE REFLECTOR (GR)	207
		1	LUCES DE REFLECTOR (GR)	209
		1	LUCES DE REFLECTOR (GR)	212
		1	LUCES DE REFLECTOR (GR)	222
		1	LUCES DE REFLECTOR (GR)	224
	3K-8782	1	CABLES DE LA CABINA (GR)	284
	9W-1442	1	CABLES DE LA CABINA (GR)	280
		1	CABLES DE LA CABINA (GR)	282
FUSIBLE (10-AMPERIOS) (*AUXILIARY BACK-UP ALARM)	9W-1442	1	LUCES DE RETROCESO (GR)	180
FUSIBLE (10-AMPERIOS) (BALIZA GIRATORIA DE ADVERTENCIA)	9W-1442	1	LUCES DE ADVERTENCIA (GR)	232
		1	CABLES DE LA CABINA (GR)	277
FUSIBLE (10-AMPERIOS) (CONVERTIDOR)	9W-1442	1	CONVERTIDOR ELÉCTRICO (GR)	141
FUSIBLE (10-AMPERIOS) (LAMPARA DE RETROCESO)	9W-1442	1	LUCES DE RETROCESO (GR)	178
FUSIBLE (10-AMPERIOS) (LUCES DE TRABAJO)	9W-1442	2	LUCES DE REFLECTOR (GR)	191
		2	LUCES DE REFLECTOR (GR)	192
FUSIBLE (10-AMPERIOS) (LUZ DE LA HOJA)	9W-1442	2	LUCES DE REFLECTOR (GR)	189
FUSIBLE (10-AMPERIOS) (TRANSFORMADOR DE CORRIENTE)	9W-1442	1	CONVERTIDOR ELÉCTRICO (GR)	143
FUSIBLE (10-AMPERIOS) (*TURN SIGNAL, HAZARD)	9W-1442	1	LUCES DE REFLECTOR (GR)	196
FUSIBLE (15 AMPERIOS)	9W-1441	1	CABLES DE LA CONSOLA DE DIRECCIÓN (GR)	338
		1	CABLES DE LA CONSOLA DE DIRECCIÓN (GR)	341
		1	CABLES DE LA CABINA (GR)	275
		1	CABLES DE LA CABINA (GR)	278
FUSIBLE (15 AMPERIOS) (*CAB FLOOD LIGHTS)	9W-1441	1	LUCES DE REFLECTOR (GR)	191
		1	LUCES DE REFLECTOR (GR)	192

* NO HAY TRADUCCION DISPONIBLE EN EL MOMENTO DE LA IMPRESION

PIEZAS DE MANTENIMIENTO

DESCRIPCION	NUMERO DE PIEZA	CANT	SE UTILIZA EN	PAGINA
FUSIBLE (15 AMPERIOS) (TRANSFORMADOR DE CORRIENTE)	9W-1441	1	CONVERTIDOR ELÉCTRICO (GR)	142
FUSIBLE (30-AMPERIOS)	8T-9636	2	CONVERTIDOR ELÉCTRICO (GR)	144
INTERRUPTOR (CONJ) (*AUXILIARY BACKUP)	161-1418	1	LUCES DE RETROCESO (GR)	178
*LAMP-HALOGEN (*24-VOLT, 65-WATT) (LUZ BAJA)	9X-3463	1	LÁMPARA DE FARO DELANTERO (GR)	158
LÁMPARA (CONJ)	6C-0109	1	CABLES POSTERIORES (GR)	309
		1	CABLES POSTERIORES (GR)	312
	6C-0110	1	CABLES POSTERIORES (GR)	309
		1	CABLES POSTERIORES (GR)	312
LÁMPARA DEL TECHO (GR) (24 VOLTIOS, CON INTERRUPTOR)	3E-6389	1	CABLES DE LA CABINA (GR)	278
		1	CABLES DE LA CABINA (GR)	284
		1	CABLES DE LA CABINA (GR)	275
LAMPARA-LED (LED)	165-5674	1	LUCES DE ADVERTENCIA (GR)	234
		1	LUCES DE ADVERTENCIA (GR)	235
LÁMPARA (*24-VOLT) (DE GIRO)	100-3245	1	LÁMPARA DE FARO DELANTERO (GR)	160
		1	LÁMPARA DE FARO DELANTERO (GR)	162
LÁMPARA (*24-VOLT) (HOJA)(FARO DELANTERO)	3E-8825	2	LUCES DE REFLECTOR (GR)	188
LÁMPARA (*24-VOLT) (LUZ ALTA/BAJA)	9X-3465	1	LÁMPARA DE FARO DELANTERO (GR)	160
		1	LÁMPARA DE FARO DELANTERO (GR)	162
LÁMPARA (*24-VOLT) (POSICION)	100-3245	1	LÁMPARA DE FARO DELANTERO (GR)	160
		1	LÁMPARA DE FARO DELANTERO (GR)	162
LÁMPARA (*24-VOLT, 21-WATT) (DE GIRO)	9X-4493	1	LÁMPARA DE FARO DELANTERO (GR)	160
		1	LÁMPARA DE FARO DELANTERO (GR)	162
LÁMPARA (24 VOLTIOS)	3E-8825	1	BALIZA DE ADVERTENCIA (GR) - INSTALACIÓN	150
		2	INTERRUPTOR DE LUZ (GR)	267
		2	LUCES DE REFLECTOR (GR)	193
		2	LUCES DE REFLECTOR (GR)	199
		1	LUCES DE REFLECTOR (GR)	202
		1	LUCES DE REFLECTOR (GR)	209
		1	LUCES DE REFLECTOR (GR)	210
		1	LUCES DE REFLECTOR (GR)	212
	7N-9943	1	LÁMPARA DEL TECHO (GR)	152
	9X-3465	1	LÁMPARA DE LUZ DELANTERA Y DE SEÑAL (GR)	164
	100-3245	2	LÁMPARA DE LUZ DELANTERA Y DE SEÑAL (GR)	164
	3E-8825	1	CABLES DE LA CABINA (GR)	280
		1	CABLES DE LA CABINA (GR)	282
		2	CABLES DE LA CONSOLA DE CAMBIOS (GR)	332
		2	CABLES DE LA CONSOLA DE CAMBIOS (GR)	334
		1	CABLES DE LA CONSOLA DE CAMBIOS (GR)	335
		1	CABLES DE LA CONSOLA DE DIRECCIÓN (GR)	338

* NO HAY TRADUCCION DISPONIBLE EN EL MOMENTO DE LA IMPRESION

PIEZAS DE MANTENIMIENTO

DESCRIPCION	NUMERO DE PIEZA	CANT	SE UTILIZA EN	PAGINA
		2	CABLES DE LA CONSOLA DE DIRECCIÓN (GR)	341
		2	CABLES DE LA DIRECCIÓN SECUNDARIA	329
		1	LUCES DE ADVERTENCIA (GR)	234
		1	LUCES DE ADVERTENCIA (GR)	235
		1	LUCES DE REFLECTOR (GR)	205
		1	LUCES DE REFLECTOR (GR)	207
		1	LUCES DE REFLECTOR (GR)	222
		1	LUCES DE REFLECTOR (GR)	224
		1	LUZ DE BALIZA (GR)	236
	7N-5876	1	CABLES DE LA CONSOLA DE CAMBIOS (GR)	332
		1	CABLES DE LA CONSOLA DE CAMBIOS (GR)	334
LÁMPARA (24 VOLTIOS) (*AUXILIARY BACK-UP ALARM)	3E-8825	1	LUCES DE RETROCESO (GR)	180
LÁMPARA (24 VOLTIOS) (DELANTERA)	9X-3465	1	LÁMPARA DE LUZ DELANTERA Y DE SEÑAL (GR)	166
LÁMPARA (24 VOLTIOS) (*HEADLIGHTS, TAIL LIGHTS)	3E-8825	2	LUCES DE REFLECTOR (GR)	196
LÁMPARA (24 VOLTIOS) (INTERRUPTOR DEL AMORTIGUADOR DE LA HOJA)	3E-8825	1	GRUPO DE CABLES, HOJA AMORTIGUADORA	273
LÁMPARA (24 VOLTIOS) (LUZ AUXILIAR DE RETROCESO)	3E-8825	2	LUCES DE RETROCESO (GR)	178
LÁMPARA (24 VOLTIOS) (LUZ DE LA HOJA)	3E-8825	2	LUCES DE REFLECTOR (GR)	189
LÁMPARA (24 VOLTIOS) (*NG)	3E-8825	2	CABLES DE LA CONSOLA DE CAMBIOS (GR)	335
LÁMPARA (24 VOLTIOS) (PLACA DE REGISTRACIÓN)	5C-9583	1	LAMPARA DE PLACA DE REGISTRO (GR)	169
LÁMPARA (24 VOLTIOS) (POSICIÓN DE LA CABINA)	9X-4494	1	LAMPARA MARCADORA (GR)	168
LÁMPARA (24 VOLTIOS) (REFLECTOR DE LA HOJA)	3E-8825	2	LUCES DE REFLECTOR (GR)	191
		2	LUCES DE REFLECTOR (GR)	192
LÁMPARA (24 VOLTIOS) (SEÑAL)	100-3245	2	LÁMPARA DE LUZ DELANTERA Y DE SEÑAL (GR)	166
LÁMPARA (24-VOLTIOS, 21 VATIOS)	5C-9584	2	CABLES POSTERIORES (GR)	309
		2	CABLES POSTERIORES (GR)	312
LÁMPARA (24-VOLTIOS, 21 VATIOS) (SEÑAL)	9X-4493	1	LÁMPARA DE LUZ DELANTERA Y DE SEÑAL (GR)	164
		1	LÁMPARA DE LUZ DELANTERA Y DE SEÑAL (GR)	166
LÁMPARA (24 VOLTIOS, 5 VATIOS)	4V-8116	1	CABLES POSTERIORES (GR)	309
		1	CABLES POSTERIORES (GR)	309
		1	CABLES POSTERIORES (GR)	312
LÁMPARA (24-VOLTIOS, 70-VATIOS)	9X-7849	1	LÁMPARA DE BALIZA DE ADVERTENCIA (GR)	174

* NO HAY TRADUCCION DISPONIBLE EN EL MOMENTO DE LA IMPRESION

PIEZAS DE MANTENIMIENTO

DESCRIPCION	NUMERO DE PIEZA	CANT	SE UTILIZA EN	PAGINA
LÁMPARA (24-VOLTIOS, 70-VATIOS) (BALIZA GIRATORIA DE ADVERTENCIA)	9X-7849	1	LÁMPARA DE BALIZA DE ADVERTENCIA (GR)	173
LENTE AMBAR (BALIZA GIRATORIA DE ADVERTENCIA)	215-6672	1	LÁMPARA DE BALIZA DE ADVERTENCIA (GR)	174
LLAVE (DESCONECTAR BATERIA)	8H-5306	1	DISYUNTOR (GR)	266
LUCES DE ALÓGENO (24 VOLTIOS, 65 VATIOS)	9X-3463	1	REFLECTOR (GR)	153
		1	REFLECTOR (GR)	155
LUCES DE ALÓGENO (24 VOLTIOS, 65 VATIOS) (HOJA)	9X-3463	1	REFLECTOR (GR)	157
LUCES DE ALÓGENO (24 VOLTIOS, 65 VATIOS) (LUZ BAJA)	9X-3463	1	LUCES DE REFLECTOR (GR)	184
LUCES DE ALÓGENO (24 VOLTIOS, 65 VATIOS) (REFLECTOR)	9X-3463	1	REFLECTOR (GR)	154
		1	REFLECTOR (GR)	156
LUCES DE ALÓGENO (24 VOLTIOS, 65 VATIOS) (VIGA ALTA)	9X-3463	1	LUCES DE REFLECTOR (GR)	184
		1	LÁMPARA DE FARO DELANTERO (GR)	159
MANDO DE CORREA (BALIZA DE ADVERTENCIA)	9X-8139	1	LÁMPARA DE BALIZA DE ADVERTENCIA (GR)	173
PORTAESCOBILLAS (CONJ)	7T-3278	1	MOTOR DE ARRANQUE ELÉCTRICO (GR)	260
TAPA CONTRA EL POLVO (CONJ)	6N-1604	1	AGUA DE LAS CAMISAS - CALENTADOR DEL (GR)	148
		1	AGUA DE LAS CAMISAS - CALENTADOR DEL (GR)	149
VIDRIO (CONJ) (AMBAR) (DE GIRO)	136-3848	1	LÁMPARA DE FARO DELANTERO (GR)	160
		1	LÁMPARA DE FARO DELANTERO (GR)	162
VIDRIO (CONJ) (AMBAR) (SEÑAL)	136-3848	1	LÁMPARA DE LUZ DELANTERA Y DE SEÑAL (GR)	164
		1	LÁMPARA DE LUZ DELANTERA Y DE SEÑAL (GR)	166
VIDRIO (CONJ) (FARO DELANTERO)	100-3248	1	LÁMPARA DE LUZ DELANTERA Y DE SEÑAL (GR)	164
		1	LÁMPARA DE LUZ DELANTERA Y DE SEÑAL (GR)	166
VIDRIO (CONJ) (*HEAD)	100-3249	1	LÁMPARA DE FARO DELANTERO (GR)	160
		1	LÁMPARA DE FARO DELANTERO (GR)	162
VIDRIO (CONJ) (LAMPARA-LUZ BAJA)	162-2077	1	LÁMPARA DE FARO DELANTERO (GR)	158
VIDRIO (CONJ) (LUZ BAJA)	162-2077	1	LUCES DE REFLECTOR (GR)	184
VIDRIO (CONJ) (REFLECTOR)	202-6611	1	REFLECTOR (GR)	155
		1	REFLECTOR (GR)	157
	202-6614	1	REFLECTOR (GR)	154
		1	REFLECTOR (GR)	156

* NO HAY TRADUCCION DISPONIBLE EN EL MOMENTO DE LA IMPRESION

PIEZAS DE MANTENIMIENTO

DESCRIPCION	NUMERO DE PIEZA	CANT	SE UTILIZA EN	PAGINA
SISTEMA HIDRÁULICO				
COLADOR (*FILLER) (TANQUE DE ACEITE HIDRÁULICO)	9J-3047	1	TANQUE Y FILTRO HIDRÁULICOS (GR)	633
CONEXIÓN DE ENGRASE (RECEPTACULO DE CILINDRO DE DESPLAZADOR CENTRAL)	3B-8485	2	CILINDRO DE DESPLAZAMIENTO DEL CÍRCULO Y MONTAJE (GR)	553
ELEMENTO DE FILTRO DE ACEITE (CONJ) (HIDRAULICO) (EFICIENCIA ESTANDAR)	1R-0774	1	TANQUE Y FILTRO HIDRÁULICOS (GR)	633
*PADLOCK GP	5P-8502	1	TANQUE HIDRÁULICO Y MONTAJE (GR)	635
TAPA DEL TUBO DE LLENADO (TANQUE DE ACEITE HIDRÁULICO)	7H-1447	1	TANQUE Y FILTRO HIDRÁULICOS (GR)	633
TREN DE FUERZA				
*BREATHER AS (TUBO DE LLENADO DE TREN DE FUERZA)	9G-5127	1	TUBO DE LLENADO DE ACEITE DE LA TRANSMISIÓN (GR)	377
ELEMENTO DE FILTRO DE ACEITE (CONJ) (ALTA EFICIENCIA)	132-8875	1	TUBERÍAS DE ACEITE DE LA TRANSMISIÓN (GR)	383
ELEMENTO DE FILTRO DE ACEITE (CONJ) (ALTA EFICIENCIA) (TRANSMISION)	132-8875	1	FILTRO DE ACEITE (GR)	380
FILTRO MAGNÉTICO (ACEITE DE LA TRANSMISIÓN)	8S-9129	1	CAJA Y PIEZAS DE LA TRANSMISIÓN (GR)	346
FILTRO MAGNÉTICO (TRANSMISION)	8S-9129	1	REJILLA MAGNÉTICA (GR)	388
LÁMPARA (*24-VOLT) (CAMBIO AUTOMÁTICO)	3E-8825	1	CAMBIO AUTOMÁTICO DE VELOCIDADES (CONFIG)	345
REJILLA DE SUCCIÓN (TRANSMISION)	8S-9130	1	CAJA Y PIEZAS DE LA TRANSMISIÓN (GR)	346
		1	REJILLA MAGNÉTICA (GR)	388
REJILLA (VALVULA DE CONTROL DE TRANSMISION)	6I-9395	1	VÁLVULA DE CONTROL DE LA TRANSMISIÓN (GR)	406
RESPIRADERO (CONJ) (TANDEM)	1F-8488	2	TÁNDEM Y CUBIERTA (GR)	391
TAPA (VASTAGO)	9K-7951	1	RUEDA Y NEUMÁTICO (GR)	427
		1	RUEDA Y NEUMÁTICO (GR)	428
		1	RUEDA Y NEUMÁTICO (GR)	429
		1	RUEDA Y NEUMÁTICO (GR)	430
		1	RUEDA Y NEUMÁTICO (GR)	431
		1	RUEDA Y NEUMÁTICO (GR)	432
		1	RUEDA Y NEUMÁTICO (GR)	455
		1	RUEDA Y NEUMÁTICO (GR)	462
TAPÓN (DRENAJE DE ACEITE DE TRANSMISION)	5P-4483	1	CAJA Y PIEZAS DE LA TRANSMISIÓN (GR)	346

* NO HAY TRADUCCION DISPONIBLE EN EL MOMENTO DE LA IMPRESION

PEÇAS DE MANUTENÇÃO

DESCRIÇÃO	NÚMERO DE PEÇA	QUANT	UTILIZADA EM	PÁGINA
CHASSI E CARROCERIA				
BUJÃO MAGNÉTICO (CAIXA DE TRANSMISSÃO)	8M-3837	1	CAIXA E CHASSI	474
EQUIPAMENTOS DE SERVIÇO E SUPRIMENTOS				
CADEADO (CAIXA DE FERRAMENTAS)	5P-8502	1	*BOX GP-TOOL	969
ESTAÇÃO DO OPERADOR				
ACUMULADOR (AR CONDICIONADO)	197-6218	1	TUBOS - AR CONDICIONADO	863
CADEADO	5P-8502	1	CONVERSÃO PARA ESTRUTURA NÃO ROPS	798
	246-2641	1	CABINE - PERFIL ALTO	788
CORREIA (AR CONDICIONADO)	173-7178	1	COMPRESSOR DE REFRIGERANTE	791
FILTRO - AR (CABINE)	7T-7358	1	FILTRO - AR DA CABINE	822
	231-4486	1	FILTRO - AR DA CABINE	822
	232-1732	1	FILTRO - AR DA CABINE	822
FUSÍVEL (*10-AMPERE) (DESCONGELADOR DIANTEIRO)	9W-1442	1	VENTILADOR DE CIRCULAÇÃO DE AR DA CABINE	820
FUSÍVEL (*10-AMPERE) (DESCONGELADOR TRASEIRO)	9W-1442	1	VENTILADOR DE CIRCULAÇÃO DE AR DA CABINE	821
FUSÍVEL (10 AMPERES)	9W-1442	1	LIMPADOR DO VIDRO	957
FUSÍVEL (10 AMPERES) (AQUECIMENTO DOS ESPELHOS)	9W-1442	1	ESPELHO RETROVISOR	872
		1	ESPELHO RETROVISOR	876
FUSÍVEL (10 AMPERES) (LIMPADOR)	9W-1442	1	LIMPADOR DO VIDRO	959
		1	LIMPADOR DO VIDRO	961
		1	LIMPADOR DO VIDRO	963
FUSÍVEL (15 A) (AQUECEDOR)	9W-1441	1	AQUECEDOR DA CABINE E MONTAGEM	825
FUSÍVEL (15 A) (AR CONDICIONADO)	9W-1441	1	CONDICIONADOR DE AR E MONTAGEM	781
LÂMINA DO LIMPADOR DE PÁRA-BRISA	6V-5853	1	LIMPADOR DO VIDRO	966
		1	LIMPADOR DO VIDRO	967
		1	LIMPADOR DO VIDRO	968
	6V-8255	2	VIDRO	940
LÂMINA DO LIMPADOR DE PÁRA-BRISA (ALTO PERFIL DIANTEIRO SUPERIOR)	6V-5853	1	LIMPADOR DO VIDRO	953
		1	LIMPADOR DO VIDRO	955
LÂMINA DO LIMPADOR DE PÁRA-BRISA (DIANTEIRO SUPERIOR)	6V-5853	1	LIMPADOR DO VIDRO	951
LÂMINA DO LIMPADOR DE PÁRA-BRISA (INFERIOR DIANTEIRO)	123-4355	2	LIMPADOR DO VIDRO	949
		2	LIMPADOR DO VIDRO	951
LÂMINA DO LIMPADOR DE PÁRA-BRISA (PERFIL ALTO - INFERIOR DIANTEIRO)	123-4355	2	LIMPADOR DO VIDRO	953
		2	LIMPADOR DO VIDRO	955
LÂMINA DO LIMPADOR DE PÁRA-BRISA (PERFIL ALTO - TRASEIRO)	6V-5853	1	LIMPADOR DO VIDRO	961
LÂMINA DO LIMPADOR DE PÁRA-BRISA (PERFIL BAIXO - DIANTEIRO SUPERIOR)	6V-5853	1	LIMPADOR DO VIDRO	949

* TRADUÇÃO NÃO DISPONÍVEL NO MOMENTO DA IMPRESSÃO

PEÇAS DE MANUTENÇÃO

DESCRIÇÃO	NÚMERO DE PEÇA	QUANT	UTILIZADA EM	PÁGINA
LÂMINA DO LIMPADOR DE PÁRA-BRISA (PERFIL BAIXO - TRASEIRO)	6V-5849	1	LIMPADOR DO VIDRO	957
		1	LIMPADOR DO VIDRO	959
LÂMINA DO LIMPADOR DE PÁRA-BRISA (TRASEIRO)	6V-5853	1	LIMPADOR DO VIDRO	963
LÂMPADA (*24-VOLT) (DESCONGELADOR DIANTEIRO)	3E-8825	1	VENTILADOR DE CIRCULAÇÃO DE AR DA CABINE	820
LÂMPADA (*24-VOLT) (DESCONGELADOR TRASEIRO)	3E-8825	1	VENTILADOR DE CIRCULAÇÃO DE AR DA CABINE	821
LÂMPADA (24 VOLTS)	3E-8825	1	ESPELHO RETROVISOR	876
	7N-5876	2	MÓDULO - VELOCÍMETRO E TACÔMETRO	879
	8D-1429	1	AQUECEDOR DA CABINE	827
		1	AQUECEDOR DA CABINE	831
		1	CONDICIONADOR DE AR	782
LÂMPADA (24 VOLTS) (AÇÃO)	107-1983	1	PAINEL DE INSTRUMENTOS	895
LÂMPADA (24 VOLTS) (AQUECIMENTO DOS ESPELHOS)	3E-8825	1	ESPELHO RETROVISOR	872
LÂMPADA (24 VOLTS) (GRUPO DE QUATRO MEDIDORES)	7N-5876	2	PAINEL DE INSTRUMENTOS	893
LÂMPADA (24 VOLTS) (INDICADOR DA AÇÃO PRINCIPAL DO EMS)	107-1983	1	PAINEL DE INSTRUMENTOS	891
LÂMPADA (24 VOLTS) (INDICADOR DE AÇÃO MESTRE)	107-1983	1	PAINEL DE INSTRUMENTOS	893
LÂMPADA (24 VOLTS) (INDICDOR DA PRESSÃO DO AR)	7N-5876	2	PAINEL DE INSTRUMENTOS	893
		2	PAINEL DE INSTRUMENTOS	891
		2	PAINEL DE INSTRUMENTOS	895
LÂMPADA (24 VOLTS) (MÓDULO DE QUATRO MEDIDORES)	7N-5876	2	PAINEL DE INSTRUMENTOS	891
		4	PAINEL DE INSTRUMENTOS	895
LÂMPADA (24 VOLTS) (TRAVA DO DIFERENCIAL)	110-2079	1	PAINEL DE INSTRUMENTOS	891
		1	PAINEL DE INSTRUMENTOS	893
LÂMPADA (24 VOLTS, 3 WATTS) (LUZ INDICADORA)	115-1748	11	PAINEL DE INSTRUMENTOS	895
LÂMPADA (24 VOLTS, 3 WATTS) (PAINEL DE INSTRUMENTOS)	115-1748	9	PAINEL DE INSTRUMENTOS	891
		9	PAINEL DE INSTRUMENTOS	893
*PADLOCK GP	5P-8502	1	ESTRUTURA ROPS ABERTA	899
MOTOR BÁSICO				
RESPIRO (MOTOR)	240-0041	1	TAMPA - BLOCO DO MOTOR	12
TAMPA - BOCAL DE ENCHIMENTO (ÓLEO DO MOTOR)	227-4531	1	TAMPA - MECANISMO DAS VÁLVULAS	14
	241-5645	1	TAMPA - CAIXA DIANTEIRA	13
TAMPÃO (DRENO DO CÁRTER DO MOTOR)	9S-4183	1	CÁRTER DO ÓLEO DO MOTOR	36
SISTEMA DE ADMISSÃO DE AR E DE ESCAPE				
ELEMENTO - PRIMÁRIO	6I-0273	1	PURIFICADOR DE AR	76
ELEMENTO - SECUNDÁRIO	6I-0274	1	PURIFICADOR DE AR	76

* TRADUÇÃO NÃO DISPONÍVEL NO MOMENTO DA IMPRESSÃO

PEÇAS DE MANUTENÇÃO

DESCRIÇÃO	NÚMERO DE PEÇA	QUANT	UTILIZADA EM	PÁGINA
SISTEMA DE ARREFECIMENTO				
JUNTA (ALOJAMENTO DO REGULADOR)	191-4457	1	TUBOS - ÁGUA	68
JUNTA (REGULADOR DE ÁGUA)	219-2340	1	TUBOS - ÁGUA	68
REGULADOR DE TEMPERATURA DA ÁGUA (92 GRAUS C)	4W-4794	1	TUBOS - ÁGUA	68
REGULADOR DE TEMPERATURA DA ÁGUA (94 GRAUS C)	126-5869	1	TUBOS - ÁGUA	68
TAMPA - RADIADOR (7 PSI)	6L-8617	1	RADIADOR	72
TAMPA - RADIADOR (*7-PSI)	6L-8617	1	RADIADOR	73
VEDADOR TIPO LABIO (REGULADOR DE ÁGUA)	3S-9643	1	TUBOS - ÁGUA	68
SISTEMA DE COMBUSTÍVEL				
CAÇAMBA	173-7126	1	FILTRO DE COMBUSTÍVEL E SEPARADOR DE ÁGUA	91
FILTRO - COMBUSTÍVEL	1R-0762	1	FILTRO - COMBUSTÍVEL	89
	199-9907	1	TANQUE DE COMBUSTÍVEL	115
FILTRO - SEPARADOR DE ÁGUA E COMBUSTÍVEL	1R-0770	1	FILTRO DE COMBUSTÍVEL E SEPARADOR DE ÁGUA	91
JUNTA	9R-7240	1	TANQUE DE COMBUSTÍVEL	114
RETENTOR	220-8678	1	FILTRO DE COMBUSTÍVEL E SEPARADOR DE ÁGUA	91
TAMPA - BOCAL DE ENCHIMENTO DE COMBUSTÍVEL (SERVIÇO PESADO, TRAVÁVEL)	164-4858	1	TANQUE DE COMBUSTÍVEL	115
SISTEMA DE FREIO				
*CARTRIDGE AS-DESICCANT (SECADOR A AR)	203-2389	1	SECADOR DE AR	519
FUSÍVEL (10 A) (SECADOR A AR)	9W-1442	1	SECADOR DE AR	516
SECADOR DE AR (SECADOR DE AR)(24 VOLTS)	203-2423	1	SECADOR DE AR	519
SISTEMA DE LUBRIFICAÇÃO				
FILTRO - ÓLEO DO MOTOR	1R-0716	1	FILTRO - ÓLEO DO MOTOR	51
MANGUEIRA - ELIMINAÇÃO DE VAPORES	193-5510	1	ELIMINAÇÃO DE VAPORES DO CÁRTER	52
		1	ELIMINAÇÃO DE VAPORES DO CÁRTER	53
SISTEMA ELÉTRICO E DE PARTIDA				
BATERIA (12-VOLTS)	153-5700	2	BATERIA	129
BATERIA (12-VOLTS) (MOLHADO)	153-5710	2	BATERIA	128
BATERIA (12-VOLTS) (1.100 AMPS)	153-5700	2	BATERIA	127
BATERIA (12 VOLTS, 750 AMPERES)	3T-5760	2	BATERIA	130
CHAVE (DESCONECTAR A BATERIA)	8H-5306	1	CHAVE GERAL	266
CORREIA	215-6673	1	LUZ GIRATÓRIA DE ALARME	174
CORREIA (ALTERNADOR)	191-6635	1	ALTERNADOR DE CORRENTE	122
CORREIA DE COMANDO (PISCA-ALERTA)	9X-8139	1	LUZ GIRATÓRIA DE ALARME	173

* TRADUÇÃO NÃO DISPONÍVEL NO MOMENTO DA IMPRESSÃO

PEÇAS DE MANUTENÇÃO

DESCRIÇÃO	NÚMERO DE PEÇA	QUANT	UTILIZADA EM	PÁGINA
DISJUNTOR AUTOMÁTICO DE CIRCUITO (15 AMPERES) (CONTROLE DO MOTOR)	6T-3643	1	CABOS/FIOS ELÉTRICOS - TRASEIROS	317
		1	CABOS/FIOS ELÉTRICOS - TRASEIROS	321
DISJUNTOR AUTOMÁTICO DE CIRCUITO (15 AMPERES) (FARÓIS)	3T-2662	1	INTERRUPTOR - CIRCUITO	132
		1	INTERRUPTOR - CIRCUITO	133
DISJUNTOR AUTOMÁTICO DE CIRCUITO (15 AMPERES) (LÂMPADAS DE TRABALHO - BARRA)	3T-2662	1	INTERRUPTOR - CIRCUITO	132
DISJUNTOR AUTOMÁTICO DE CIRCUITO (80 AMPERES) (ALTERNADOR)	171-2210	1	CABOS/FIOS ELÉTRICOS - TRASEIROS	316
		1	CABOS/FIOS ELÉTRICOS - TRASEIROS	320
DISJUNTOR AUTOMÁTICO DE CIRCUITO (80 AMPERES) (PRINCIPAL)	171-2210	1	CABOS/FIOS ELÉTRICOS - TRASEIROS	316
		1	CABOS/FIOS ELÉTRICOS - TRASEIROS	322
ELEMENTO - AQUECEDOR DE ÁGUA DA CAMISA (120 VOLTS/1.500 WATTS)	9G-6655	1	AQUECEDOR DA ÁGUA DO MOTOR	149
ELEMENTO - AQUECEDOR DE ÁGUA DA CAMISA (240 VOLTS/1500 WATT)	6T-3764	1	AQUECEDOR DA ÁGUA DO MOTOR	148
FUSÍVEL (*10-AMPERE) (FAROL DA LÂMINA - DIANTEIRO)	9W-1442	2	SISTEMA DE ILUMINAÇÃO - FARÓIS	188
FUSÍVEL (10 AMPERES)	3K-8782	1	CABOS/FIOS ELÉTRICOS - CABINE	284
	9W-1442	1	CABOS/FIOS ELÉTRICOS - CABINE	280
		1	CABOS/FIOS ELÉTRICOS - CABINE	282
		2	CABOS/FIOS ELÉTRICOS - DIREÇÃO SECUNDÁRIA	329
		1	INTERRUPTOR - LUZES	267
		11	CABOS/FIOS ELÉTRICOS - CONSOLE DA DIREÇÃO	338
		12	CABOS/FIOS ELÉTRICOS - CONSOLE DA DIREÇÃO	341
		1	SISTEMA DE ILUMINAÇÃO - FARÓIS	193
		1	SISTEMA DE ILUMINAÇÃO - FARÓIS	199
		1	SISTEMA DE ILUMINAÇÃO - ADVERTÊNCIA	231
		1	SISTEMA DE ILUMINAÇÃO - FARÓIS	202
		1	SISTEMA DE ILUMINAÇÃO - FARÓIS	205
		1	SISTEMA DE ILUMINAÇÃO - FARÓIS	207
		1	SISTEMA DE ILUMINAÇÃO - FARÓIS	209
		1	SISTEMA DE ILUMINAÇÃO - FARÓIS	212
		1	SISTEMA DE ILUMINAÇÃO - FARÓIS	222
		1	SISTEMA DE ILUMINAÇÃO - FARÓIS	224
FUSÍVEL (10 AMPERES) (*AUXILIARY BACK-UP ALARM)	9W-1442	1	ILUMINAÇÃO - MARCHA A RÉ	180
FUSÍVEL (10 AMPERES) (CONVERSOR)	9W-1442	1	CONVERSOR ELÉTRICO	141
FUSÍVEL (10 AMPERES) (CONVERSOR DE ENERGIA)	9W-1442	1	CONVERSOR ELÉTRICO	143

* TRADUÇÃO NÃO DISPONÍVEL NO MOMENTO DA IMPRESSÃO

PEÇAS DE MANUTENÇÃO

DESCRIÇÃO	NÚMERO DE PEÇA	QUANT	UTILIZADA EM	PÁGINA
FUSÍVEL (10 AMPERES) (LÂMPADA DA LÂMINA)	9W-1442	2	SISTEMA DE ILUMINAÇÃO - FARÓIS	189
FUSÍVEL (10 AMPERES) (LUZ DE MARCHA À RÉ)	9W-1442	1	ILUMINAÇÃO - MARCHA A RÉ	178
FUSÍVEL (10 AMPERES) (LUZES DE TRABALHO)	9W-1442	2	SISTEMA DE ILUMINAÇÃO - FARÓIS	191
		2	SISTEMA DE ILUMINAÇÃO - FARÓIS	192
FUSÍVEL (10 AMPERES) (PISCA-PISCA DE ADVERTÊNCIA)	9W-1442	1	CABOS/FIOS ELÉTRICOS - CABINE	277
		1	SISTEMA DE ILUMINAÇÃO - ADVERTÊNCIA	232
FUSÍVEL (10 AMPERES) (PISCA-PISCA, PISCA-ALERTA)	9W-1442	1	SISTEMA DE ILUMINAÇÃO - FARÓIS	196
FUSÍVEL (15 AMPERES)	9W-1441	1	CABOS/FIOS ELÉTRICOS - CABINE	275
		1	CABOS/FIOS ELÉTRICOS - CABINE	278
		1	CABOS/FIOS ELÉTRICOS - CONSOLE DA DIREÇÃO	338
		1	CABOS/FIOS ELÉTRICOS - CONSOLE DA DIREÇÃO	341
FUSÍVEL (15 AMPERES) (CONVERSOR - FORÇA)	9W-1441	1	CONVERSOR ELÉTRICO	142
FUSÍVEL (15 AMPERES) (HOLOFOTES - CABINE)	9W-1441	1	SISTEMA DE ILUMINAÇÃO - FARÓIS	191
		1	SISTEMA DE ILUMINAÇÃO - FARÓIS	192
FUSÍVEL (30 AMPERES)	8T-9636	2	CONVERSOR ELÉTRICO	144
INTERRUPTOR (*AUXILIARY BACKUP)	161-1418	1	ILUMINAÇÃO - MARCHA A RÉ	178
*LAMP-HALOGEN (*24-VOLT, 65-WATT) (FAROL BAIXO)	9X-3463	1	FAROL DIANTEIRO	158
LÂMPADA	6C-0109	1	CABOS/FIOS ELÉTRICOS - TRASEIROS	309
		1	CABOS/FIOS ELÉTRICOS - TRASEIROS	312
	6C-0110	1	CABOS/FIOS ELÉTRICOS - TRASEIROS	309
		1	CABOS/FIOS ELÉTRICOS - TRASEIROS	312
LÂMPADA - HALOGÊNEO (24 VOLTS, 65 WATTS)	9X-3463	1	LÂMPADA - FAROL	153
		1	LÂMPADA - FAROL	155
LÂMPADA - HALOGÊNEO (24 VOLTS, 65 WATTS) (FAROL)	9X-3463	1	LÂMPADA - FAROL	154
		1	LÂMPADA - FAROL	156
LÂMPADA - HALOGÊNEO (24 VOLTS, 65 WATTS) (FAROL BAIXO)	9X-3463	1	SISTEMA DE ILUMINAÇÃO - FARÓIS	184
LÂMPADA - HALOGÊNEO (24 VOLTS, 65 WATTS) (LÂMINA)	9X-3463	1	LÂMPADA - FAROL	157
LÂMPADA - HALOGÊNEO (24 VOLTS, 65 WATTS) (LUZ ALTA)	9X-3463	1	FAROL DIANTEIRO	159
		1	SISTEMA DE ILUMINAÇÃO - FARÓIS	184
LÂMPADA - LED (VISOR LED)	165-5674	1	SISTEMA DE ILUMINAÇÃO - ADVERTÊNCIA	234

* TRADUÇÃO NÃO DISPONÍVEL NO MOMENTO DA IMPRESSÃO

PEÇAS DE MANUTENÇÃO

DESCRIÇÃO	NÚMERO DE PEÇA	QUANT	UTILIZADA EM	PÁGINA
		1	SISTEMA DE ILUMINAÇÃO - ADVERTÊNCIA	235
LÂMPADA - TETO (24 VOLTS, COM INTERRUPTOR)	3E-6389	1	CABOS/FIOS ELÉTRICOS - CABINE	275
		1	CABOS/FIOS ELÉTRICOS - CABINE	278
		1	CABOS/FIOS ELÉTRICOS - CABINE	284
LÂMPADA (24 V) (PLACA DE REGISTRO)	5C-9583	1	LAMPADA-PLACA DE REGISTRO	169
LÂMPADA (24 V) (POSIÇÃO DA CABINE)	9X-4494	1	LÀMPADA - MARCADORA	168
LÂMPADA (*24-VOLT) (LÂMINA)(LÂMPADA DIANTEIRA)	3E-8825	2	SISTEMA DE ILUMINAÇÃO - FARÓIS	188
LÂMPADA (*24-VOLT) (LUZ ALTA/BAIXA)	9X-3465	1	FAROL DIANTEIRO	160
		1	FAROL DIANTEIRO	162
LÂMPADA (*24-VOLT) (POSIÇÃO)	100-3245	1	FAROL DIANTEIRO	160
		1	FAROL DIANTEIRO	162
LÂMPADA (*24-VOLT) (VIRADA)	100-3245	1	FAROL DIANTEIRO	160
		1	FAROL DIANTEIRO	162
LÂMPADA (*24-VOLT, 21-WATT) (VIRADA)	9X-4493	1	FAROL DIANTEIRO	160
		1	FAROL DIANTEIRO	162
LÂMPADA (24 VOLTS)	3E-8825	1	CABOS/FIOS ELÉTRICOS - CABINE	280
		1	CABOS/FIOS ELÉTRICOS - CABINE	282
		1	CABOS/FIOS ELÉTRICOS - CONSOLE DA DIREÇÃO	338
		2	CABOS/FIOS ELÉTRICOS - CONSOLE DA DIREÇÃO	341
		1	CABOS/FIOS ELÉTRICOS - CONSOLE DA TRANSMISSÃO	332
		2	CABOS/FIOS ELÉTRICOS - CONSOLE DA TRANSMISSÃO	334
		1	CABOS/FIOS ELÉTRICOS - CONSOLE DA TRANSMISSÃO	335
		2	CABOS/FIOS ELÉTRICOS - DIREÇÃO SECUNDÁRIA	329
		1	INSTALAÇÃO DO PISCA-PISCA DE ADVERTÊNCIA	150
		2	INTERRUPTOR - LUZES	267
		1	SIST. DE ILUMINAÇÃO - PISCA-PISCA GIRATÓRIO DE ADVERTÊNCIA	236
		1	SISTEMA DE ILUMINAÇÃO - ADVERTÊNCIA	234
		1	SISTEMA DE ILUMINAÇÃO - ADVERTÊNCIA	235
		2	SISTEMA DE ILUMINAÇÃO - FARÓIS	193
		1	SISTEMA DE ILUMINAÇÃO - FARÓIS	199
		1	SISTEMA DE ILUMINAÇÃO - FARÓIS	202
		1	SISTEMA DE ILUMINAÇÃO - FARÓIS	205
		1	SISTEMA DE ILUMINAÇÃO - FARÓIS	207
		1	SISTEMA DE ILUMINAÇÃO - FARÓIS	209
		1	SISTEMA DE ILUMINAÇÃO - FARÓIS	210
		1	SISTEMA DE ILUMINAÇÃO - FARÓIS	212
		1	SISTEMA DE ILUMINAÇÃO - FARÓIS	222

* TRADUÇÃO NÃO DISPONÍVEL NO MOMENTO DA IMPRESSÃO

PEÇAS DE MANUTENÇÃO

DESCRIÇÃO	NÚMERO DE PEÇA	QUANT	UTILIZADA EM	PÁGINA
		1	SISTEMA DE ILUMINAÇÃO - FARÓIS	224
	7N-5876	1	CABOS/FIOS ELÉTRICOS - CONSOLE DA TRANSMISSÃO	332
		1	CABOS/FIOS ELÉTRICOS - CONSOLE DA TRANSMISSÃO	334
	7N-9943	1	LÂMPADA - TETO	152
	9X-3465	1	LÂMPADA DIANTEIRA E DE SINAL	164
	100-3245	2	LÂMPADA DIANTEIRA E DE SINAL	164
LÂMPADA (24 VOLTS) (*AUXILIARY BACK-UP ALARM)	3E-8825	1	ILUMINAÇÃO - MARCHA A RÉ	180
LÂMPADA (24 VOLTS) (CABEÇA)	9X-3465	1	LÂMPADA DIANTEIRA E DE SINAL	166
LÂMPADA (24 VOLTS) (FARÓIS DIANTEIROS, LUZES TRASEIRAS)	3E-8825	2	SISTEMA DE ILUMINAÇÃO - FARÓIS	196
LÂMPADA (24 VOLTS) (FAROL DA LÂMINA)	3E-8825	2	SISTEMA DE ILUMINAÇÃO - FARÓIS	191
		2	SISTEMA DE ILUMINAÇÃO - FARÓIS	192
LÂMPADA (24 VOLTS) (INTERRUPTOR DO AMORTECEDOR DA LÂMINA)	3E-8825	1	FIAÇÃO - AMORTECEDOR DA LÂMINA	273
LÂMPADA (24 VOLTS) (LÂMPADA DA LÂMINA)	3E-8825	2	SISTEMA DE ILUMINAÇÃO - FARÓIS	189
LÂMPADA (24 VOLTS) (LÂMPADA DE MARCHA À RÉ AUXILIAR)	3E-8825	2	ILUMINAÇÃO - MARCHA A RÉ	178
LÂMPADA (24 VOLTS) (*NG)	3E-8825	2	CABOS/FIOS ELÉTRICOS - CONSOLE DA TRANSMISSÃO	335
LÂMPADA (24 VOLTS) (SINAL)	100-3245	2	LÂMPADA DIANTEIRA E DE SINAL	166
LÂMPADA (24 VOLTS, 21 WATTS)	5C-9584	2	CABOS/FIOS ELÉTRICOS - TRASEIROS	309
		2	CABOS/FIOS ELÉTRICOS - TRASEIROS	312
LÂMPADA (24 VOLTS, 21 WATTS) (SINAL)	9X-4493	1	LÂMPADA DIANTEIRA E DE SINAL	164
		1	LÂMPADA DIANTEIRA E DE SINAL	166
LÂMPADA (24 VOLTS, 5 WATTS)	4V-8116	1	CABOS/FIOS ELÉTRICOS - TRASEIROS	309
		1	CABOS/FIOS ELÉTRICOS - TRASEIROS	309
		1	CABOS/FIOS ELÉTRICOS - TRASEIROS	312
LÂMPADA (24 VOLTS, 70 WATTS)	9X-7849	1	LUZ GIRATÓRIA DE ALARME	174
LÂMPADA (24 VOLTS, 70 WATTS) (PISCA-PISCA DE ADVERTÊNCIA)	9X-7849	1	LUZ GIRATÓRIA DE ALARME	173
LENTE (ÂMBAR, PISCA-ALERTA)	9X-8121	1	LUZ GIRATÓRIA DE ALARME	173
LENTE ÂMBAR (PISCA-PISCA DE ADVERTÊNCIA)	215-6672	1	LUZ GIRATÓRIA DE ALARME	174
LENTE (ÂMBER) (SINAL)	100-3250	1	LÂMPADA DIANTEIRA E DE SINAL	164
		1	LÂMPADA DIANTEIRA E DE SINAL	166
	136-3848	1	LÂMPADA DIANTEIRA E DE SINAL	166
		1	LÂMPADA DIANTEIRA E DE SINAL	164
LENTE (ÂMBER) (VIRADA)	136-3848	1	FAROL DIANTEIRO	160
		1	FAROL DIANTEIRO	162
	100-3250	1	FAROL DIANTEIRO	160
		1	FAROL DIANTEIRO	162

* TRADUÇÃO NÃO DISPONÍVEL NO MOMENTO DA IMPRESSÃO

PEÇAS DE MANUTENÇÃO

DESCRIÇÃO	NÚMERO DE PEÇA	QUANT	UTILIZADA EM	PÁGINA
LENTE (FAROL BAIXO)	162-2077	1	SISTEMA DE ILUMINAÇÃO - FARÓIS	184
LENTE (FAROL) (FAIXA BAIXA)	162-2077	1	FAROL DIANTEIRO	158
LENTE (*HEAD)	100-3249	1	FAROL DIANTEIRO	160
		1	FAROL DIANTEIRO	162
LENTE (HOLOFOTE)	202-6611	1	LÂMPADA - FAROL	155
		1	LÂMPADA - FAROL	157
	202-6614	1	LÂMPADA - FAROL	154
		1	LÂMPADA - FAROL	156
LENTE (LUZES DIANTEIRAS)	100-3248	1	LÂMPADA DIANTEIRA E DE SINAL	164
		1	LÂMPADA DIANTEIRA E DE SINAL	166
LENTE (PLACA DE REGISTRO)	134-6751	1	LAMPADA-PLACA DE REGISTRO	169
LUZ INTERMITENTE (12/24 VOLTS) (PISCA-PISCA, PISCA-ALERTA)	108-0358	1	INTERRUPTOR - LUZES	267
		1	SISTEMA DE ILUMINAÇÃO - FARÓIS	193
		1	SISTEMA DE ILUMINAÇÃO - FARÓIS	196
		1	SISTEMA DE ILUMINAÇÃO - FARÓIS	199
		1	SISTEMA DE ILUMINAÇÃO - FARÓIS	202
		1	SISTEMA DE ILUMINAÇÃO - FARÓIS	209
		1	SISTEMA DE ILUMINAÇÃO - FARÓIS	212
SUPORTE - ESCOVA	7T-3278	1	MOTOR ELÉTRICO DE PARTIDA	260
TAMPA CONTRA POEIRA	6N-1604	1	AQUECEDOR DA ÁGUA DO MOTOR	148
		1	AQUECEDOR DA ÁGUA DO MOTOR	149
SISTEMA HIDRÁULICO				
ELEMENTO FILTRANTE - ÓLEO (HIDRÁULICO) (EFICIÊNCIA PADRÃO)	1R-0774	1	TANQUE HIDRÁULICO E FILTRO	633
GRAXEIRA (SOQUETE DO CILINDRO DE DESLOCAMENTO LATERAL)	3B-8485	2	CILINDRO E MONTAGEM - DESLOCAMENTO DO CÍRCULO	553
*PADLOCK GP	5P-8502	1	TANQUE DE ÓLEO HIDRÁULICO E MONTAGEM	635
TAMPA - BOCAL DE ENCHIMENTO (TANQUE DE ÓLEO HIDRÁULICO)	7H-1447	1	TANQUE HIDRÁULICO E FILTRO	633
TELA FILTRANTE (BOCAL DE ENCHIMENTO) (TANQUE DE ÓLEO HIDRÁULICO)	9J-3047	1	TANQUE HIDRÁULICO E FILTRO	633

* TRADUÇÃO NÃO DISPONÍVEL NO MOMENTO DA IMPRESSÃO

PEÇAS DE MANUTENÇÃO

DESCRIÇÃO	NÚMERO DE PEÇA	QUANT	UTILIZADA EM	PÁGINA
TREM DE FORÇA				
*BREATHER AS (BOCAL DE ENCHIMENTO DE ÓLEO DE TREM DE FORÇA)	9G-5127	1	BOCAL DE ENCHIMENTO DE ÓLEO DO TREM DE FORÇA	377
ELEMENTO FILTRANTE - ÓLEO (ALTA EFICIÊNCIA)	132-8875	1	TUBOS - ÓLEO DA TRANSMISSÃO	383
ELEMENTO FILTRANTE - ÓLEO (ALTA EFICIÊNCIA) (TRANSMISSÃO)	132-8875	1	FILTRO - ÓLEO	380
FILTRO - MAGNÉTICO (ÓLEO DA TRANSMISSÃO)	8S-9129	1	CAIXA E COMPONENTES - TRANSMISSÃO	346
FILTRO - MAGNÉTICO (TRANSMISSÃO)	8S-9129	1	FILTRO - MAGNÉTICO	388
LÂMPADA (*24-VOLT) (MUDANÇA AUTOMÁTICA)	3E-8825	1	CONTROLE ELÉTRICO DAS MARCHAS	345
RESPIRO (TANDEM)	1F-8488	2	TANDEM E TAMPA	391
TAMPA DA VÁLVULA (HASTE)	9K-7951	1	RODA E PNEU	427
		1	RODA E PNEU	428
		1	RODA E PNEU	429
		1	RODA E PNEU	430
		1	RODA E PNEU	431
		1	RODA E PNEU	432
		1	RODA E PNEU	455
		1	RODA E PNEU	462
TAMPÃO (DRENO DO ÓLEO DA TRANSMISSÃO)	5P-4483	1	CAIXA E COMPONENTES - TRANSMISSÃO	346
TELA DE SUCÇÃO (TRANSMISSÃO)	8S-9130	1	CAIXA E COMPONENTES - TRANSMISSÃO	346
		1	FILTRO - MAGNÉTICO	388
TELA FILTRANTE (VÁLVULA DE CONTROLE DE TRANSMISSÃO)	6I-9395	1	VÁLVULA DE CONTROLE - TRANSMISSÃO	406

* TRADUÇÃO NÃO DISPONÍVEL NO MOMENTO DA IMPRESSÃO

WARTUNGSTEILE

BESCHREIBUNG	ERSATZTEIL-NUMMER	MENGE	VERWENDET IN	SEITE
BREMSSYSTEM				
*CARTRIDGE AS-DESICCANT (LUFTTROCKNER)	203-2389	1	LUFTTROCKNER	519
LUFTTROCKNER (LUFTTROCKNER)(24 VOLT)	203-2423	1	LUFTTROCKNER	519
SICHERUNG (10 A) (LUFTTROCKNER)	9W-1442	1	LUFTTROCKNER	516
ELEKTRISCHE ANLAGE UND STARTSYSTEM				
ABDECKGLAS (ABBLENDLICHT)	162-2077	1	ARBEITSLEUCHTEN	184
ABDECKGLAS (ARBEITSSCHEIN-WERFER)	202-6611	1	ARBEITSLEUCHTEN	155
		1	ARBEITSLEUCHTEN	157
	202-6614	1	ARBEITSLEUCHTEN	154
		1	ARBEITSLEUCHTEN	156
ABDECKGLAS (FRONTSCHEINWER-FER)	100-3248	1	SCHEINWERFER U. RICHTUNGSLEUCHTE	164
		1	SCHEINWERFER U. RICHTUNGSLEUCHTE	166
ABDECKGLAS (FRONTSCHEINWER-FER)(ABBLENDLICHT)	162-2077	1	FRONTSCHEINWERFER	158
ABDECKGLAS (GELB) (RECHTS- U. LINKSWENDUNG)	100-3250	1	FRONTSCHEINWERFER	160
		1	FRONTSCHEINWERFER	162
	136-3848	1	FRONTSCHEINWERFER	162
		1	FRONTSCHEINWERFER	160
ABDECKGLAS (GELB) (RUNDUM-KENNLEUCHTE)	215-6672	1	RUNDUM-KENNLEUCHTE	174
ABDECKGLAS (GELB, RUNDUM-KENNLEUCHTE)	9X-8121	1	RUNDUM-KENNLEUCHTE	173
ABDECKGLAS (GELB) (SIGNAL)	100-3250	1	SCHEINWERFER U. RICHTUNGSLEUCHTE	164
		1	SCHEINWERFER U. RICHTUNGSLEUCHTE	166
	136-3848	1	SCHEINWERFER U. RICHTUNGSLEUCHTE	164
		1	SCHEINWERFER U. RICHTUNGSLEUCHTE	166
ABDECKGLAS (*HEAD)	100-3249	1	FRONTSCHEINWERFER	160
		1	FRONTSCHEINWERFER	162
ABDECKGLAS (KENNZEICHEN)	134-6751	1	ZULASSUNGSSCHILDLEUCHTE	169
BATTERIE (12 V)	153-5700	2	BATTERIE	129
BATTERIE (12 V) (NASS)	153-5710	2	BATTERIE	128
BATTERIE (12 V) (*1100 AMPS)	153-5700	2	BATTERIE	127
BATTERIE (12V, 750 A)	3T-5760	2	BATTERIE	130
BELEUCHTUNGSANLAGE	6C-0109	1	VERDRAHTUNG, HINTEN	309
		1	VERDRAHTUNG, HINTEN	312
	6C-0110	1	VERDRAHTUNG, HINTEN	309
		1	VERDRAHTUNG, HINTEN	312
BLINKER (12/24 VOLT) (RICHTUNGSBLINKER, WARNLEUCHTE)	108-0358	1	ARBEITSLEUCHTEN	193
		1	ARBEITSLEUCHTEN	196

* ÜBERSETZUNG ZUM ZEITPUNKT DER DRUCKLEGUNG NICHT VORHANDEN

WARTUNGSTEILE

BESCHREIBUNG	ERSATZTEIL-NUMMER	MENGE	VERWENDET IN	SEITE
		1	ARBEITSLEUCHTEN	199
		1	ARBEITSLEUCHTEN	202
		1	ARBEITSLEUCHTEN	209
		1	ARBEITSLEUCHTEN	212
		1	LICHTSCHALTER	267
BÜRSTENHALTER	7T-3278	1	STARTERMOTOR	260
FAHRERHAUSBELEUCHTUNG (24 V, MIT SCHALTER)	3E-6389	1	FAHRERHAUSVERDRAHTUNG	275
		1	FAHRERHAUSVERDRAHTUNG	278
		1	FAHRERHAUSVERDRAHTUNG	284
HALOGENSCHINWERFER (24V)(65W)	9X-3463	1	ARBEITSLEUCHTEN	153
		1	ARBEITSLEUCHTEN	155
HALOGENSCHINWERFER (24V)(65W) (ABBLENDLICHT)	9X-3463	1	ARBEITSLEUCHTEN	184
HALOGENSCHINWERFER (24V)(65W) (ARBEITSSCHEINWERFER)	9X-3463	1	ARBEITSLEUCHTEN	154
		1	ARBEITSLEUCHTEN	156
HALOGENSCHINWERFER (24V)(65W) (FERNLICHT)	9X-3463	1	ARBEITSLEUCHTEN	184
		1	FRONTSCHEINWERFER	159
HALOGENSCHINWERFER (24V)(65W) (SCHILD)	9X-3463	1	ARBEITSLEUCHTEN	157
KEILRIEMEN	215-6673	1	RUNDUM-KENNLEUCHTE	174
KEILRIEMEN (DREHSTROMGENERATOR)	191-6635	1	DREHSTROMGENERATOR	122
*LAMP-HALOGEN (*24-VOLT, 65-WATT) (ABBLENDLICHT)	9X-3463	1	FRONTSCHEINWERFER	158
LAUFBAND UND ANTRIEB (RUNDUM-KENNLEUCHTE)	9X-8139	1	RUNDUM-KENNLEUCHTE	173
LEUCHTE, ROT (LED)	165-5674	1	WARNLEUCHTEN	234
		1	WARNLEUCHTEN	235
LEUCHTE (24 V)	3E-8825	2	ARBEITSLEUCHTEN	193
		2	ARBEITSLEUCHTEN	199
		2	ARBEITSLEUCHTEN	202
		1	ARBEITSLEUCHTEN	205
		1	ARBEITSLEUCHTEN	207
		1	ARBEITSLEUCHTEN	209
		1	ARBEITSLEUCHTEN	210
		1	ARBEITSLEUCHTEN	212
		1	ARBEITSLEUCHTEN	222
		1	ARBEITSLEUCHTEN	224
		1	FAHRERHAUSVERDRAHTUNG	280
		1	FAHRERHAUSVERDRAHTUNG	282
		1	LENKKONSOLENVERDRAHTUNG	338
		2	LENKKONSOLENVERDRAHTUNG	341
		2	LICHTSCHALTER	267
		2	NOTLENKUNGSVERDRAHTUNG	329
		1	RUNDUM-KENNLEUCHTE	236
		1	RUNDUMWARNLEUCHTE - EINBAUSATZ	150
		1	SCHALTKONSOLENVERDRAHTUNG	332
		2	SCHALTKONSOLENVERDRAHTUNG	334

* ÜBERSETZUNG ZUM ZEITPUNKT DER DRUCKLEGUNG NICHT VORHANDEN

WARTUNGSTEILE

BESCHREIBUNG	ERSATZTEIL-NUMMER	MENGE	VERWENDET IN	SEITE
		1	SCHALTKONSOLENVERDRAHTUNG	335
		1	WARNLEUCHTEN	234
		1	WARNLEUCHTEN	235
	7N-5876	1	SCHALTKONSOLENVERDRAHTUNG	332
		1	SCHALTKONSOLENVERDRAHTUNG	334
	7N-9943	1	FAHRERHAUSBELEUCHTUNG	152
	9X-3465	1	SCHEINWERFER U. RICHTUNGSLEUCHTE	164
	100-3245	2	SCHEINWERFER U. RICHTUNGSLEUCHTE	164
LEUCHTE (24 V) (AUSFALLSCHUTZ-RÜCKFAHRLEUCHTE)	3E-8825	2	SCHEINWERFER, HINTEN	178
LEUCHTE (24 V) (*AUXILIARY BACK-UP ALARM)	3E-8825	1	SCHEINWERFER, HINTEN	180
LEUCHTE (24 V) (FAHRERHAUSSTELLUNG)	9X-4494	1	MARKIERUNGSLEUCHTE	168
LEUCHTE (24 V) (FRONTSCHEINWERFER)	9X-3465	1	SCHEINWERFER U. RICHTUNGSLEUCHTE	166
LEUCHTE (24 V) (*HEADLIGHTS, TAIL LIGHTS)	3E-8825	2	ARBEITSLEUCHTEN	196
LEUCHTE (24 V) (KENNZEICHEN)	5C-9583	1	ZULASSUNGSSCHILDLEUCHTE	169
LEUCHTE (24 V) (*NG)	3E-8825	2	SCHALTKONSOLENVERDRAHTUNG	335
LEUCHTE (24 V) (SCHAR-ARBEITSSCHEINWERFER)	3E-8825	2	ARBEITSLEUCHTEN	191
		2	ARBEITSLEUCHTEN	192
LEUCHTE (24 V) (SCHARDÄMPFUNGSCHALTER)	3E-8825	1	VERDRAHTUNG - SCHARDÄMPFUNG	273
LEUCHTE (24 V) (SCHARLEUCHTE)	3E-8825	2	ARBEITSLEUCHTEN	189
LEUCHTE (24 V) (SIGNAL)	100-3245	2	SCHEINWERFER U. RICHTUNGSLEUCHTE	166
LEUCHTE (24 V, 5 W)	4V-8116	1	VERDRAHTUNG, HINTEN	309
		1	VERDRAHTUNG, HINTEN	312
LEUCHTE (24 V, 70 W)	9X-7849	1	RUNDUM-KENNLEUCHTE	174
LEUCHTE (24 V, 70 W) (RUNDUM-KENNLEUCHTE)	9X-7849	1	RUNDUM-KENNLEUCHTE	173
LEUCHTE (*24-VOLT) (FERNLICHT/ABBLENDLICHT)	9X-3465	1	FRONTSCHEINWERFER	162
		1	FRONTSCHEINWERFER	160
LEUCHTE (*24-VOLT) (RECHTS- U. LINKSWENDUNG)	100-3245	1	FRONTSCHEINWERFER	162
		1	FRONTSCHEINWERFER	160
LEUCHTE (*24-VOLT) (SCHAR)(VORDERER ARBEITSSCHEINWERFER)	3E-8825	2	ARBEITSLEUCHTEN	188
LEUCHTE (*24-VOLT) (STELLUNG)	100-3245	1	FRONTSCHEINWERFER	160
		1	FRONTSCHEINWERFER	162
LEUCHTE (*24-VOLT, 21-WATT) (RECHTS- U. LINKSWENDUNG)	9X-4493	1	FRONTSCHEINWERFER	160
		1	FRONTSCHEINWERFER	162
LEUCHTE (24V, 21W)	5C-9584	2	VERDRAHTUNG, HINTEN	309
		2	VERDRAHTUNG, HINTEN	312

* ÜBERSETZUNG ZUM ZEITPUNKT DER DRUCKLEGUNG NICHT VORHANDEN

WARTUNGSTEILE

BESCHREIBUNG	ERSATZTEIL-NUMMER	MENGE	VERWENDET IN	SEITE
LEUCHTE (24V, 21W) (SIGNAL)	9X-4493	1	SCHEINWERFER U. RICHTUNGSLEUCHTE	166
		1	SCHEINWERFER U. RICHTUNGSLEUCHTE	164
SCHALTER (*AUXILIARY BACKUP)	161-1418	1	SCHEINWERFER, HINTEN	178
SCHLÜSSEL (HAUPTSCHALTER)	8H-5306	1	TRENNSCHALTER	266
SICHERUNG (10 A)	3K-8782	1	FAHRERHAUSVERDRAHTUNG	284
	9W-1442	1	ARBEITSLEUCHTEN	202
		1	ARBEITSLEUCHTEN	205
		1	ARBEITSLEUCHTEN	207
		1	ARBEITSLEUCHTEN	209
		1	ARBEITSLEUCHTEN	212
		1	ARBEITSLEUCHTEN	222
		1	ARBEITSLEUCHTEN	224
		1	FAHRERHAUSVERDRAHTUNG	280
		1	FAHRERHAUSVERDRAHTUNG	282
		1	LICHTSCHALTER	267
		2	NOTLENKUNGSVERDRAHTUNG	329
		1	WARNLEUCHTEN	231
		1	ARBEITSLEUCHTEN	193
		1	ARBEITSLEUCHTEN	199
		11	LENKKONSOLENVERDRAHTUNG	338
		12	LENKKONSOLENVERDRAHTUNG	341
SICHERUNG (10 A) (ARBEITSSCHEINWERFER)	9W-1442	2	ARBEITSLEUCHTEN	191
		2	ARBEITSLEUCHTEN	192
SICHERUNG (10 A) (*AUXILIARY BACK-UP ALARM)	9W-1442	1	SCHEINWERFER, HINTEN	180
SICHERUNG (10 A) (RICHTUNGSBLINKER, WARNLEUCHTE)	9W-1442	1	ARBEITSLEUCHTEN	196
SICHERUNG (10 A) (RÜCKFAHRLEUCHTE)	9W-1442	1	SCHEINWERFER, HINTEN	178
SICHERUNG (10 A) (RUNDUM-KENNLEUCHTE)	9W-1442	1	FAHRERHAUSVERDRAHTUNG	277
		1	WARNLEUCHTEN	232
SICHERUNG (10 A) (SCHARLEUCHTE)	9W-1442	2	ARBEITSLEUCHTEN	189
SICHERUNG (10 A) (UMFORMER)	9W-1442	1	ELEKTR. UMFORMER	143
SICHERUNG (10 A) (WANDLER)	9W-1442	1	ELEKTR. UMFORMER	141
SICHERUNG (*10-AMPERE) (SCHAR/VORDER ARBEITSSCHEINWERFER)	9W-1442	2	ARBEITSLEUCHTEN	188
SICHERUNG (15 A)	9W-1441	1	FAHRERHAUSVERDRAHTUNG	275
		1	FAHRERHAUSVERDRAHTUNG	278
		1	LENKKONSOLENVERDRAHTUNG	338
		1	LENKKONSOLENVERDRAHTUNG	341
SICHERUNG (15 A) (*CAB FLOOD LIGHTS)	9W-1441	1	ARBEITSLEUCHTEN	191
		1	ARBEITSLEUCHTEN	192
SICHERUNG (15 A) (UMFORMER)	9W-1441	1	ELEKTR. UMFORMER	142
SICHERUNG (30 A)	8T-9636	2	ELEKTR. UMFORMER	144
STAUBKAPPE	6N-1604	1	UMLAUFKÜHLWASSERHEIZUNG	148

* ÜBERSETZUNG ZUM ZEITPUNKT DER DRUCKLEGUNG NICHT VORHANDEN

WARTUNGSTEILE

BESCHREIBUNG	ERSATZTEIL-NUMMER	MENGE	VERWENDET IN	SEITE
		1	UMLAUFKÜHLWASSERHEIZUNG	149
UMLAUFKÜHLWASSERHEIZUNGS-ELEMENT (120 V/1500 W)	9G-6655	1	UMLAUFKÜHLWASSERHEIZUNG	149
UMLAUFKÜHLWASSERHEIZUNGS-ELEMENT (240 V/1500 W)	6T-3764	1	UMLAUFKÜHLWASSERHEIZUNG	148
UNTERBRECHER (15 A) (FRONTSCHEINWERFER)	3T-2662	1	UNTERBRECHER	132
		1	UNTERBRECHER	133
UNTERBRECHER (15 A) (LICHTBALKEN - ARBEITSCHEINWERFER)	3T-2662	1	UNTERBRECHER	132
UNTERBRECHER (15 A) (MOTORSTEUERUNG)	6T-3643	1	VERDRAHTUNG, HINTEN	317
		1	VERDRAHTUNG, HINTEN	321
UNTERBRECHER (80 A) (DREHSTROMGENERATOR)	171-2210	1	VERDRAHTUNG, HINTEN	316
		1	VERDRAHTUNG, HINTEN	320
UNTERBRECHER (80 A) (HAUPTUNTERBRECHER)	171-2210	1	VERDRAHTUNG, HINTEN	316
		1	VERDRAHTUNG, HINTEN	322
FAHRERHAUS				
DRUCKSPEICHER (A/C)	197-6218	1	KLIMAANLAGENLEITUNGEN	863
KEILRIEMEN (KLIMAANLAGE)	173-7178	1	KÄLTEMITTELKOMPRESSOR	791
LEUCHTE (24 V)	3E-8825	1	RÜCKSPIEGEL	876
	7N-5876	2	GESCHWINDIGKEITS- U. DREHZAHLMESSERMODUL	879
	8D-1429	1	FAHRERHAUSHEIZUNG	827
		1	FAHRERHAUSHEIZUNG	831
		1	KLIMAANLAGE	782
LEUCHTE (24 V) (*AIR PRESSURE GAUGE)	7N-5876	2	INSTRUMENTENTAFEL	891
		2	INSTRUMENTENTAFEL	893
		2	INSTRUMENTENTAFEL	895
LEUCHTE (24 V) (DIFFERENTIALSPERRE)	110-2079	1	INSTRUMENTENTAFEL	891
		1	INSTRUMENTENTAFEL	893
LEUCHTE (24 V) (HAUPTANZEIGE)	107-1983	1	INSTRUMENTENTAFEL	893
LEUCHTE (24 V) (HAUPTFUNKTIONSLEUCHTE DES ELEKTRON. ÜBERWACHUNGSSYSTEMS)	107-1983	1	INSTRUMENTENTAFEL	891
LEUCHTE (24 V) (*HEATED MIRRORS)	3E-8825	1	RÜCKSPIEGEL	872
LEUCHTE (24 V) (VIERFACHANZEIGE)	7N-5876	2	INSTRUMENTENTAFEL	893
LEUCHTE (24 V) (VIERFACHANZEIGENMODUL)	7N-5876	4	INSTRUMENTENTAFEL	895
		2	INSTRUMENTENTAFEL	891
LEUCHTE (24 V) (WARNVORRICHTUNG)	107-1983	1	INSTRUMENTENTAFEL	895
LEUCHTE (24 V, 3 W) (INSTRUMENTENTAFEL)	115-1748	9	INSTRUMENTENTAFEL	891
		9	INSTRUMENTENTAFEL	893

* ÜBERSETZUNG ZUM ZEITPUNKT DER DRUCKLEGUNG NICHT VORHANDEN

WARTUNGSTEILE

BESCHREIBUNG	ERSATZTEIL-NUMMER	MENGE	VERWENDET IN	SEITE
LEUCHTE (24 V, 3 W) (KONTROLLEUCHTE)	115-1748	11	INSTRUMENTENTAFEL	895
LEUCHTE (*24-VOLT) (ENTFROSTER, HINTEN)	3E-8825	1	UMLAUFLÜFTER	821
LEUCHTE (*24-VOLT) (VORDERER ENTFROSTER)	3E-8825	1	UMLAUFLÜFTER	820
LUFTFILTER (FAHRERHAUS)	7T-7358	1	FAHRERHAUSLUFTFILTER	822
	231-4486	1	FAHRERHAUSLUFTFILTER	822
	232-1732	1	FAHRERHAUSLUFTFILTER	822
*PADLOCK GP	5P-8502	1	ÜBERROLLSCHUTZDACH	899
SCHEIBENWISCHERBLATT	6V-5853	1	SCHEIBENWISCHER	966
		1	SCHEIBENWISCHER	967
		1	SCHEIBENWISCHER	968
	6V-8255	2	FAHRERHAUSFENSTER	940
SCHEIBENWISCHERBLATT (HINTEN)	6V-5853	1	SCHEIBENWISCHER	963
SCHEIBENWISCHERBLATT (HOCHPROFIL VORNE OBEN)	6V-5853	1	SCHEIBENWISCHER	953
		1	SCHEIBENWISCHER	955
SCHEIBENWISCHERBLATT (HOHES PROFIL, HINTEN)	6V-5853	1	SCHEIBENWISCHER	961
SCHEIBENWISCHERBLATT (HOHES PROFIL, VORNE, UNTEN)	123-4355	2	SCHEIBENWISCHER	953
		2	SCHEIBENWISCHER	955
SCHEIBENWISCHERBLATT (*LOW PROFILE FRONT UPPER)	6V-5853	1	SCHEIBENWISCHER	949
SCHEIBENWISCHERBLATT (NIEDRIGES PROFIL, HINTEN)	6V-5849	1	SCHEIBENWISCHER	957
		1	SCHEIBENWISCHER	959
SCHEIBENWISCHERBLATT (VORNE OBEN)	6V-5853	1	SCHEIBENWISCHER	951
SCHEIBENWISCHERBLATT (VORNE UNTEN)	123-4355	2	SCHEIBENWISCHER	949
		2	SCHEIBENWISCHER	951
SICHERUNG (10 A)	9W-1442	1	SCHEIBENWISCHER	957
SICHERUNG (10 A) (*HEATED MIRRORS)	9W-1442	1	RÜCKSPIEGEL	876
		1	RÜCKSPIEGEL	872
SICHERUNG (10 A) (SCHEIBENWISCHER)	9W-1442	1	SCHEIBENWISCHER	959
		1	SCHEIBENWISCHER	961
		1	SCHEIBENWISCHER	963
SICHERUNG (*10-AMPERE) (ENTFROSTER, HINTEN)	9W-1442	1	UMLAUFLÜFTER	821
SICHERUNG (*10-AMPERE) (VORDERER ENTFROSTER)	9W-1442	1	UMLAUFLÜFTER	820
SICHERUNG (15 A) (HEIZUNG)	9W-1441	1	FAHRERHAUSHEIZUNG U. BEFESTIGUNGSTEILE	825
SICHERUNG (15 A) (KLIMAANLAGE)	9W-1441	1	KLIMAANLAGE UND AUFHÄNGUNG	781
VORHÄNGESCHLOSS	5P-8502	1	UMBAUSATZ - OHNE ÜBERROLLSCHUTZ	798
	246-2641	1	FAHRERHAUS, ERHÖHT	788

* ÜBERSETZUNG ZUM ZEITPUNKT DER DRUCKLEGUNG NICHT VORHANDEN

WARTUNGSTEILE

BESCHREIBUNG	ERSATZTEIL-NUMMER	MENGE	VERWENDET IN	SEITE
HYDRAULIKSYSTEM				
EINFÜLLSTUTZENKAPPE (HYDRAULIKÖLTANK)	7H-1447	1	HYDRAULIKTANK UND SCHMIERFILTER	633
ÖLFILTERELEMENT (HYDRAULISCH) (STANDARD EFFIZIENZ)	1R-0774	1	HYDRAULIKTANK UND SCHMIERFILTER	633
*PADLOCK GP	5P-8502	1	HYDRAULIKTANK UND BEFESTIGUNGSTEILE	635
SCHMIERNIPPEL (SCHARSCHWENKWERK - ZYLINDERANSCHLUSS)	3B-8485	2	SEITENSCHUBZYLINDER UND BEFESTIGUNGSTEILE	553
SIEB (FÜLLER) (HYDRAULIKÖLTANK)	9J-3047	1	HYDRAULIKTANK UND SCHMIERFILTER	633
KRAFTSTOFFSYSTEM				
DICHTUNG	9R-7240	1	KRAFTSTOFFTANK	114
	220-8678	1	WASSERABSCHEIDER- U. KRAFTSTOFFILTER	91
KRAFTSTOFFFILTERKAPPE (SCHWEREINSATZ, SPERRBAR)	164-4858	1	KRAFTSTOFFTANK	115
KRAFTSTOFFILTER	1R-0762	1	KRAFTSTOFFILTER	89
KRAFTSTOFFSIEB	199-9907	1	KRAFTSTOFFTANK	115
SCHALE	173-7126	1	WASSERABSCHEIDER- U. KRAFTSTOFFILTER	91
WASSERABSCHEIDER UND KRAFTSTOFFILTER	1R-0770	1	WASSERABSCHEIDER- U. KRAFTSTOFFILTER	91
KRAFTÜBERTRAGUNG				
ANSAUGSIEB (GETRIEBE)	8S-9130	1	GETRIEBEGEHÄUSE UND TEILE	346
		1	MAGNETSIEB	388
*BREATHER AS (KRAFTSÜBERTRAGUNG - ÖLEINFÜLLUNG)	9G-5127	1	GETRIEBEÖLFÜLLSTUTZEN	377
ENTLÜFTER (TANDEM)	1F-8488	2	TANDEMGEHÄUSE UND DECKEL	391
LEUCHTE (*24-VOLT) (AUTOMATIKSCHALTUNG)	3E-8825	1	SCHALTAUTOMATIK	345
MAGNETFILTER (GETRIEBE)	8S-9129	1	MAGNETSIEB	388
MAGNETFILTER (GETRIEBEÖL)	8S-9129	1	GETRIEBEGEHÄUSE UND TEILE	346
ÖLFILTERELEMENT (HOCHLEISTUNG)	132-8875	1	GETRIEBEÖLLEITUNGEN	383
ÖLFILTERELEMENT (HOCHLEISTUNG) (GETRIEBE)	132-8875	1	ÖLFILTER	380
SCHRAUBE (GETRIEBEÖLABLASS)	5P-4483	1	GETRIEBEGEHÄUSE UND TEILE	346
SCREEN (GETRIEBESTEUERVENTIL)	6I-9395	1	GETRIEBESTEUERVENTIL	406
VENTILKAPPE (SCHAFT)	9K-7951	1	RAD UND REIFEN	427
		1	RAD UND REIFEN	428
		1	RAD UND REIFEN	429
		1	RAD UND REIFEN	430
		1	RAD UND REIFEN	431
		1	RAD UND REIFEN	432
		1	RAD UND REIFEN	455
		1	RAD UND REIFEN	462

* ÜBERSETZUNG ZUM ZEITPUNKT DER DRUCKLEGUNG NICHT VORHANDEN

WARTUNGSTEILE

BESCHREIBUNG	ERSATZTEIL-NUMMER	MENGE	VERWENDET IN	SEITE
KÜHLSYSTEM				
DICHTUNG (REGULATORGEHÄUSE)	191-4457	1	KÜHLWASSERLEITUNGEN	68
DICHTUNG (THERMOSTAT)	219-2340	1	KÜHLWASSERLEITUNGEN	68
KÜHLERKAPPE (7 PSI)	6L-8617	1	KÜHLER	72
KÜHLERKAPPE (*7-PSI)	6L-8617	1	KÜHLER	73
LIPPENDICHTUNG (THERMOSTAT)	3S-9643	1	KÜHLWASSERLEITUNGEN	68
WASSERTEMPERATURREGLER (92 GRAD)	4W-4794	1	KÜHLWASSERLEITUNGEN	68
WASSERTEMPERATURREGLER (94 GRAD CELSIUS)	126-5869	1	KÜHLWASSERLEITUNGEN	68
LUFTANSAUG- UND ABGASSYSTEM				
HAUPTFILTER	6I-0273	1	LUFTREINIGER	76
SICHERHEITSFILTER	6I-0274	1	LUFTREINIGER	76
MOTOR - GRUNDAUSFÜHRUNG				
EINFÜLLKAPPE (MOTORÖL)	227-4531	1	VENTILDECKEL	14
	241-5645	1	STIRNRADGEHÄUSEDECKEL	13
ENTLÜFTER (MOTOR)	240-0041	1	MOTORBLOCKDECKEL	12
SCHRAUBE (MOTORÖLABLASSWANNE)	9S-4183	1	ÖLWANNE	36
RAHMEN UND AUFBAU				
MAGNETSTOPFEN (GETRIEBEGEHÄUSE)	8M-3837	1	RAHMEN UND GEHÄUSE	474
SCHMIERSYSTEM				
ENTDUNSTERSCHLAUCH	193-5510	1	ENTDUNSTER	52
		1	ENTDUNSTER	53
ÖLFILTER	1R-0716	1	ÖLFILTER	51
WARTUNGSAUSRÜSTUNG				
VORHÄNGESCHLOSS (WERKZEUGKASTEN)	5P-8502	1	*BOX GP-TOOL	969

* ÜBERSETZUNG ZUM ZEITPUNKT DER DRUCKLEGUNG NICHT VORHANDEN

INDEX

Name	Page
A	
ACCESSORY GP-CAB–HIGH PROFILE	778
ACCESSORY GP-CAB–LOW PROFILE	777
ACCUMULATOR & MTG GP-HYDRAULIC	538
ACCUMULATOR (A/C)	863
ACCUMULATOR AR-BLADE CUSHION	539
ACCUMULATOR GP	539
	540
ACCUMULATOR GP-HYDRAULIC	541
	542
	543
ACCUMULATOR GP-STEERING	544
ADJUSTER GP-SEAT	779
AFTERCOOLER & MOUNTING GP	74
AIR CLEANER GP	75
	76
	77
AIR COMPRESSOR GP	8
	10
AIR CONDITIONER & MOUNTING GP	781
AIR CONDITIONER AR	781
AIR CONDITIONER GP	782
AIR DRYER GP	516
	517
	519
AIR DRYER GP (AIR DRYER)(24 VOLT)	519
ALARM GP	119
ALARM GP–ACTION	118
ALTERNATOR GP-CHARGING	120
	122
	124
	125
ANTI-REACTION VALVE GP	731
ARMREST GP–LH	786
ARMREST GP–RH	787
ASHTRAY	851
	854
AUTOSHIFT AR–TRANSMISSION	345
AXLE GP-FRONT	471
B	
BASE GP-OIL FILTER (ENGINE)	51
BATTERY GP–EU	129
BATTERY GP–HEAVY DUTY	127
	128
BATTERY GP–MAINTENANCE FREE	130
BATTERY GP (12-VOLT)	129
BATTERY GP (12-VOLT) (1100 AMPS)	127
BATTERY (12-VOLT) (WET)	128
BATTERY (12-VOLT, 750-AMPERE)	130
BELT	174
BELT (AIR CONDITIONER)	791
BELT (ALTERNATOR)	122
BELT-DRIVE (WARNING BEACON)	173
BIT GP-END	752
BLADE AS-WIPER	940
	966
	967
	968
BLADE AS-WIPER (FRONT LOWER)	949
	951
BLADE AS-WIPER (FRONT UPPER)	951
BLADE AS-WIPER (HIGH PROFILE FRONT LOWER)	953
	955
BLADE AS-WIPER (HIGH PROFILE FRONT UPPER)	953
	955
BLADE AS-WIPER (HIGH PROFILE REAR)	961
BLADE AS-WIPER (LOW PROFILE FRONT UPPER)	949
BLADE AS-WIPER (LOW PROFILE REAR)	957
	959
BLADE AS-WIPER (REAR)	963
BLADE GP–12 FT	753
BLADE GP–14 FT	754
	755
BLOCK GP-JUNCTION	131
BODY AS-GAUGE	72
BODY AS-GAUGE (COOLANT LEVEL)	73
BOLT (5/8-11X2 IN)	549
	550
BOWL AS	91
BOX GP-TOOL	969
BRACKET GP-SCARIFIER	756
BRAKE GP-PARKING	520
BRAKE GP-SERVICE	522
BREATHER AS (ENGINE)	12
BREATHER AS (POWER TRAIN OIL FILLER)	377
BREATHER AS (TANDEM)	391
C	
CAB AR-HIGH PROFILE	788
CAB AR-NON-ROPS	788
CAB GP	789
CAB GP–HIGH PROFILE	788
CAMSHAFT GP	11
CAP AS-DUST	148
	149
CAP AS-FILLER (ENGINE OIL)	13
	14
CAP-FILLER (HYDRAULIC OIL TANK)	633
CAP GP-FUEL FILLER (EXTREME SERVICE, LOCKABLE)	115
CAP-RADIATOR (7-PSI)	72
	73
CAP-VALVE (STEM)	427

INDEX

Name	Page
	428
	429
	430
	431
	432
	455
	462
CARTRIDGE AS-DESICCANT (AIR DRYER)	519
CARTRIDGE GP-TURBOCHARGER	85
CASE & FRAME GP	474
CASE & PARTS GP-TRANSMISSION	346
CHAIN GP	350
CHAIN GP-DRIVE	350
CIRCLE GP	745
	747
CIRCUIT BREAKER AS (15-AMPERE) (ENGINE CONTROL)	317
CIRCUIT BREAKER AS (15-AMPERE) (ENGINE CONTROL)	321
CIRCUIT BREAKER AS (15-AMPERE) (HEADLAMPS)	132
	133
CIRCUIT BREAKER AS (15-AMPERE) (LIGHTBAR WORKLAMPS)	132
CIRCUIT BREAKER AS (80-AMPERE) (ALTERNATOR)	316
CIRCUIT BREAKER AS (80-AMPERE) (ALTERNATOR)	320
CIRCUIT BREAKER AS (80-AMPERE) (MAIN)	316
CIRCUIT BREAKER AS (80-AMPERE) (MAIN)	322
CIRCUIT BREAKER GP–DUAL	132
CIRCUIT BREAKER GP–SINGLE	133
CLUTCH GP-TRANSMISSION–FORWARD	357
CLUTCH GP-TRANSMISSION–HI & LO	354
CLUTCH GP-TRANSMISSION–REVERSE & 2ND	359
CLUTCH GP-TRANSMISSION–1ST & 3RD	351
COMPRESSOR GP-REFRIGERANT	790
	791
CONDENSER & MTG GP-REFRIGERANT	793
CONSOLE GP-OPERATOR	794
CONTROL & MTG GP-ENGINE ELEK	134
CONTROL AR-HYDRAULIC	545
	546
CONTROL GP-CLUTCH	361
CONTROL GP-DIFFERENTIAL LOCK	363
CONTROL GP-ENGINE ELECTRONIC	135
	136
CONTROL GP-GOVERNOR	86
CONTROL GP-HYDRAULIC LOCKOUT	547
CONTROL GP-PARKING BRAKE	524
CONTROL GP-SECONDARY STEERING	137
CONTROL GP-SERVICE BRAKE	526
CONTROL GP-STEERING	548
CONTROL GP-TRANSMISSION	365
CONTROL GP-TRANSMISSION HYD	367
CONTROL GP-UNPROGRAMMED	138
CONTROL GP-UNPROGRAMMED–POWER TRAIN	139
CONVERSION AR-CERTIFICATION–WITH A/C–EU	2
CONVERSION AR-CERTIFICATION–WITH HEATER–EU	1
CONVERSION AR-NON-ROPS	798
CONVERTER AR-ELECTRICAL–12V POWER PORT–HIGH	140
CONVERTER AR-ELECTRICAL–12V POWER PORT–LOW	140
CONVERTER GP-ELECTRICAL	144
CONVERTER GP-ELECTRICAL–12V POWER PORT	143
CONVERTER GP-ELECTRICAL–25 AMP	142
CONVERTER GP-ELECTRICAL–5/7.5 AMP	141
CONVERTER GP-ELECTRICAL (24-VOLT TO 12-VOLT)	141
	143
CONVERTER-POWER (24-VOLT TO 12-VOLT, 25-AMPERE)	144
COOLANT HEATER LINES	866
COOLER GP-ENGINE OIL	59
COOLER GP-TRANSMISSION OIL	368
	370
COOLING AR	60
	61
CORE AS	368
CORE AS-CONDENSER (AIR CONDITIONER)	793
CORE AS-HEATER	783
	828
	832
CORE AS-OIL COOLER (ENGINE)	59
CORE AS (TRANSMISSION OIL)	370
COUPLING GP-TORSIONAL	372
COVER GP-ACCESS	475
COVER GP-CYLINDER BLOCK	12
COVER GP-FRONT HOUSING	13
COVER GP-PROTECTION–PLATFORM	476
	477
COVER GP-VALVE MECHANISM	14
	15
CRANKSHAFT GP	16
CYLINDER & MTG GP-ARTICULATION	549
	550
CYLINDER & MTG GP-BLADE LIFT	551
CYLINDER & MTG GP-BLADE TIP	552
CYLINDER & MTG GP-CENTERSHIFT	553
CYLINDER & MTG GP-SCARIFIER	554
CYLINDER & MTG GP-SIDESHIFT	555
CYLINDER & MTG GP-STEERING	556
CYLINDER & MTG GP-WHEEL LEAN	557

INDEX

Name	Page
CYLINDER BLOCK GP	17, 18
CYLINDER GP-ARTICULATION	558, 559
CYLINDER GP-BLADE TIP	560
CYLINDER GP-CENTERSHIFT	561
CYLINDER GP-LIFT	563
CYLINDER GP-RIPPER	564
CYLINDER GP-SCARIFIER	565
CYLINDER GP-SIDESHIFT	566
CYLINDER GP-STEERING–LH	567
CYLINDER GP-STEERING–RH	568
CYLINDER GP-WHEEL LEAN	570
CYLINDER HEAD AS	19
CYLINDER HEAD GP	22, 24

D

Name	Page
DAMPER & PULLEY GP	25
DETENT GP-CONTROL VALVE	571, 572
DIFFERENTIAL & BEVEL GEAR GP	373
DIFFERENTIAL GP	375
DOOR GP–HIGH PROFILE–LH	802
DOOR GP–HIGH PROFILE–RH	799
DOOR GP (AIR VENT)	851, 854, 859, 861
DOOR GP-CAB–HIGH PROFILE	804
DOOR GP-CAB–LH	808
DOOR GP-CAB–LOW PROFILE	810
DOOR GP-CAB–RH	806
DRAIN GP-ENGINE OIL–ENGINE OIL	26
DRAWBAR GP	749
DRIVE GP-CIRCLE	574
DUCT & CONTROL GP–HEATER–AIR CONDITIONER	812
DUCT GP	813

E

Name	Page
EDGE GP-CUTTING–6 FT	757
EDGE GP-CUTTING–7 FT	757
ELBOW GP-AIR INLET	78
ELBOW GP-EXHAUST	79
ELBOW GP-WATER	62
ELECTRONICS GP-MONITOR	146
ELECTRONICS GP-POWER TRAIN–LIMITED ROAD SPEED–MOTOR GRADER	146
ELECTRONICS GP-POWER TRAIN–MOTOR GRADER	147
ELEMENT AS-JACKET WATER HEATER (120 VOLT/1500 WATT)	149
ELEMENT AS-JACKET WATER HEATER (240 VOLT/1500 WATT)	148
ELEMENT AS-PRIMARY	76
ELEMENT AS-SECONDARY	76
ENCLOSURE GP-ENGINE	480, 484
ENGINE AR	6
ENGINE AR-CORE	7
EXTENSION GP-BACKREST	920
EXTENSION GP-BACKREST–CLOTH	814
EXTENSION GP-BACKREST–VINYL	815
EXTENSION GP-BLADE–LH–2 FT	759
EXTENSION GP-BLADE–RH–2 FT	758
EXTENSION GP-BLADE–2 FT WITH 5/8 INCH BOLT–LH	760

F

Name	Page
FAN & MOTOR GP	63
FAN GP-CIRCULATING–FRONT	818
FAN GP-CIRCULATING–FRONT DEFROSTER	820
FAN GP-CIRCULATING–REAR	816
FAN GP-CIRCULATING–REAR DEFROSTER	821
FASTENER GP	488
FASTENER GP-CYLINDER HEAD	27
FASTENER GP-FUEL TANK	88
FASTENER GP-RADIATOR	65
FILLER GP-POWER TRAIN OIL	377
FILM-CONTROL (FAN SPEED, TEMPERATURE)	827, 831
FILM-CONTROL (HEATER & A/C)	782
FILM (COVER BLACK)	365
FILM-FACE (HEADLIGHTS HIGH, LOW BEAM)	193, 196, 199, 202, 209, 212, 267, 341
FILM-FACE (TURN SIGNAL, HAZARD)	193, 196, 199, 202, 209, 212, 341
FILM-FACE (TURN SIGNAL, HAZARD)	267
FILM-FUSE	278
FILM-FUSE (LH)	338
FILM-FUSE (LH)	341

INDEX

Name	Page
FILM-FUSE (LIGHTS, WASHER, WIPER, DEFROST)	275
FILM-FUSE (RH)	338
FILM GP	970
FILM GP–NON VHP	971
FILM GP–VARIABLE HORSE POWER	971
FILM GP–VARIABLE HORSEPOWER PLUS	971
FILM-IDENTIFICATION (BIODEGRADABLE HYDRAULIC OIL)	577
FILM-IDENTIFICATION (GROUP NUMBER) (AIR CONDITIONER)	782
FILM-INDICATOR (BLADE CENTERSHIFT)	973
FILM-INFORMATION (ENGINE, HIGH IDLE, HOLD)	365
FILM-INFORMATION (ENGINE, LOW IDLE, HOLD)	365
FILM-INSTRUCTION (ALT EXIT/REMOVE WINDOW)	823 824
FILM-INSTRUCTION (DO NOT DRILL, WELD ROPS)	899
FILM-INSTRUCTION (DO NOT DRILL/WELD ROPS)	900
FILM-INSTRUCTION (ENGINE SHUTDOWN)	305 325
FILM-INSTRUCTION (NO STEP)	496
FILM-INSTRUCTION (SEAT ADJUSTMENT)	933
FILM-MONITOR (CATERPILLAR MONITORING SYSTEM)	891 895
FILM-MONITOR (QUAD GAUGE MODULE)	893
FILM-PANEL (INDICATOR PANEL, LH)	893
FILM-PANEL (INDICATOR PANEL, LH)	895
FILM-PANEL (INDICATOR PANEL, RH)	893
FILM-PANEL (INDICATOR PANEL, RH)	896
FILM-PANEL (LH ACTION INDICATORS)	891
FILM-PANEL (RH ACTION INDICATORS)	891
FILM-PANEL (SPEED SELECT)	365
FILM-PANEL (TRANSMISSION INDICATOR PANEL)	365
FILM (PLATE-NAME) (ACCUMULATOR)	541
FILM-REFLECTOR (YELLOW)	974
FILM (SUNSHADE-CATERPILLAR)	887 888
FILM (VHP PLUS) (VHP PLUS)	971
FILM-WARNING (CABLE CONNECTION)	973
FILM-WARNING (HIGH PRESSURE CYLINDER)	973
FILM-WARNING (NO STEP)	114
FILM (WINDOW WASHER)	284
FILTER & MTG GP-OIL	378
FILTER-AIR (CAB)	822
FILTER AS-ENGINE OIL	51
FILTER AS-FUEL	89
FILTER AS-WATER SEP & FUEL	91
FILTER ELEMENT AS-OIL (HIGH EFFICIENCY)	383
FILTER ELEMENT AS-OIL (HIGH EFFICIENCY) (TRANSMISSION)	380
FILTER ELEMENT AS-OIL (HYDRAULIC) (STANDARD EFFICIENCY)	633
FILTER GP-CAB AIR	822
FILTER GP-ENGINE OIL	49 51
FILTER GP-FUEL	89
FILTER GP-OIL–TRANSMISSION	380
FILTER GP-WATER SEP & FUEL	91
FILTER-MAGNETIC (TRANSMISSION)	388
FILTER-MAGNETIC (TRANSMISSION OIL)	346
FINAL DRIVE GP	381
FITTING-GREASE (CENTERSHIFT CYLINDER SOCKET)	553
FLASHER AS (12/24-VOLT) (TURN SIGNAL, HAZARD)	267
FLASHER AS (12/24-VOLT) (TURN SIGNAL, HAZARD)	193 199 202 209 212
FLASHER AS (12/24-VOLT) (TURN SIGNAL, HAZARD)	196
FLASHER AS (24 VOLT)	341
FLOOR MAT (CAB)	847
FLYWHEEL GP	28
FRAME GP-FRONT	489
FUMES DISPOSAL GP	52 53
FUSE (10 AMP) (AIR DRYER)	516
FUSE (10-AMPERE)	193 199 202 205 207 209 212 222 224 231 267 280 282 284 329 338 341 957
FUSE (10-AMPERE) (AUXILIARY BACK-UP ALARM)	180
FUSE (10-AMPERE) (BACKUP LAMP)	178

INDEX

Name	Page
FUSE (10-AMPERE) (BLADE LAMP)	189
FUSE (10-AMPERE) (BLADE/FRONT FLOODLAMP)	188
FUSE (10-AMPERE) (CONVERTER)	141
FUSE (10-AMPERE) (FRONT DEFROSTER)	820
FUSE (10-AMPERE) (HEATED MIRRORS)	872
	876
FUSE (10-AMPERE) (POWER CONVERTER)	143
FUSE (10-AMPERE) (REAR DEFROSTER)	821
FUSE (10-AMPERE) (TURN SIGNAL, HAZARD)	196
FUSE (10-AMPERE) (WARNING BEACON)	232
	277
FUSE (10-AMPERE) (WIPER)	959
	961
	963
FUSE (10-AMPERE) (WORK LIGHTS)	191
	192
FUSE (15 AMP) (AIR CONDITIONER)	781
FUSE (15 AMP) (HEATER)	825
FUSE (15-AMPERE)	275
	278
	338
	341
FUSE (15-AMPERE) (CAB FLOOD LIGHTS)	191
	192
FUSE (15-AMPERE) (CONVERTER-POWER)	142
FUSE (30-AMPERE)	144

G

GASKET	114
GASKET (REGULATOR HOUSING)	68
GASKET (WATER REGULATOR)	68
GAUGE GP-AIR PRESSURE (LH)	891
	893
	895
GAUGE GP-AIR PRESSURE (RH)	891
	893
	895
GAUGE GP-OIL LEVEL (DIPSTICK)	54
GAUGE-SIGHT (HYDRAULIC OIL)	633
GEAR GP-FRONT	29
GENERAL AR	2
GUARD & SUPPORT GP-RADIATOR	491
GUARD GP-BOTTOM	494
GUARD GP-BRAKE LINES	495
GUARD GP-FUEL TANK	496
GUARD GP-PLATFORM–NON-ROPS	499
GUARD GP-PLATFORM–OPEN–HIGH PROFILE	497

H

HAMMER & MOUNTING GP–HIGH PROFILE	824
HAMMER & MOUNTING GP–LOW PROFILE	823
HARNESS AS-CAB	180
	222
	224
	282
	872
HARNESS AS-CAB (FRONT)	278
HARNESS AS-CAB (REAR)	275
HARNESS AS-CAB (REAR)	278
HARNESS AS-CAB (SWITCH PANEL)	275
HARNESS AS-CAB (SWITCH PANEL)	278
HARNESS AS-CHASSIS	219
	273
HARNESS AS-CHASSIS (MOLDBOARD)	220
HARNESS AS (CONSOLE)	341
HARNESS AS-CONSOLE	332
	334
HARNESS AS-CONSOLE (STEERING)	338
HARNESS AS-DASH (PANEL BACKLIGHTS)	895
HARNESS AS-ENGINE (ELECTRONIC CONTROL MODULE)	286
	288
HARNESS AS-ENGINE (FUEL INJECTOR)	290
HARNESS AS-ENGINE (FUEL INJECTOR)	286
HARNESS AS-ENGINE (SENSORS)	290
HARNESS AS-ENGINE (UNIT INJECTOR)	288
HARNESS AS-FRONT CHASSIS	193
	196
	199
	202
	297
HARNESS AS-FRONT CHASSIS (BOLSTER LIGHT BAR)	209
HARNESS AS-FRONT CHASSIS (WORK LIGHTS, FRONT)	212
HARNESS AS-FRONT LIGHTING	205
	207
	222
	224
	236
	298
HARNESS AS-FRONT LIGHTING (ELEVATED LIGHT BAR)	209
HARNESS AS-FRONT LIGHTING (WORK LIGHTS)	212
HARNESS AS-HEATER & AIR COND	783
	827
	831
HARNESS AS-HEATER (STARTING AID)	259
HARNESS AS-INSTRUMENT PANEL	891
	893
HARNESS AS-LIGHTING	199
	202
HARNESS AS-PANEL	178
	205

INDEX

Name	Page
	207
	280
HARNESS AS-PANEL (SWITCH)	876
HARNESS AS-PLATFORM	293
	297
HARNESS AS-REAR	320
HARNESS AS-REAR CHASSIS	305
	324
	325
HARNESS AS-REAR LIGHTING	215
	217
	302
	305
	309
	312
HARNESS AS-REAR LIGHTING (LH)	310
	312
HARNESS AS-REAR LIGHTING (RH)	309
	312
HARNESS AS-REAR (SERVICE CENTER-LH)	316
HARNESS AS-REAR (SERVICE CENTER-RH)	316
HARNESS AS-SENSOR (14-GA WIRE)	245
	254
HARNESS AS-SENSOR (14-GA WIRE) (INJECTION ACTUATION)	249
HARNESS AS-THERMOSTAT	863
HARNESS AS-TRANSMISSION	304
	324
	346
	367
HARNESS AS-WINDOW WIPER (CONTROL)	284
HARNESS AS-WINDOW WIPER (FUSE BOX)	284
HEATER & MTG GP-CAB	825
HEATER AR-CAB	825
	826
HEATER AS (22-VOLT, 1892-WATT)	258
HEATER GP-CAB	827
HEATER GP-CAB–LIGHT DUTY	831
HEATER GP-JACKET WATER–REAR	148
	149
HITCH GP-ARTICULATING	501
HITCH GP-TOWING	503
HOLDER AS-BRUSH	260
HORN GP-AIR	835
	836
	838
HOSE-FUMES DISPOSAL	52
	53
HOUSING GP-FLYWHEEL	30
HOUSING GP-FRONT	31
	32
HOUSING GP-SEAT SUSPENSION	840
HYDRAULIC AR	577

I

Name	Page
IDLER GP-BELT–ALTERNATOR, REFRIGERANT COMPRESSOR	843
INDICATOR GP-AIR FILTER CHANGE	75
INJECTOR GP-FUEL	92
	93
INSTALLATION AR-RADIO	844
INSTALLATION GP-RADIO	845
INSTALLATION GP-WARNING BEACON	150
INSULATION GP-WEATHER	847

J

Name	Page
JACK-HYDRAULIC	972

K

Name	Page
KEY (BATTERY DISCONNECT)	266
KIT-ADJUSTER	885
KIT-AIR CLEANER CLAMP	76
KIT-AIR CONTROL VALVE	534
KIT-ALTERNATOR TERMINAL (INDICATOR LIGHT)	125
KIT-ALTERNATOR TERMINAL (OUTPUT)	125
KIT-ALTERNATOR TERMINAL (RELAY)	125
KIT-BACK TILT	885
KIT-BEARING	841
KIT-BEARING (ALTERNATOR)	120
KIT-BELT TETHER	931
KIT-BIAS PISTON	623
KIT-BRUSH (STARTING MOTOR)	260
	263
KIT-BUMPER (WEIGHT ADJUSTMENT)	841
KIT-BUSHING (STARTING MOTOR)	260
KIT-BUSHING (STARTING MOTOR)	263
KIT-CONTROL PISTON	623
KIT-CUSHION	814
	815
KIT-DIAPHRAGM	835
KIT-FASTENER (SEAT)	933
KIT-FOLLOWER	840
	841
KIT-GOVERNOR OVERHAUL (AIR COMPRESSOR)	531
KIT-HAMMER	823
	824
KIT-HARDWARE (ALTERNATOR)	120
	125
KIT-INDICATOR (SEAT)	933
KIT-INDICATOR (WEIGHT ADJUSTMENT)	841
KIT-INSULATOR (STARTING MOTOR)	260
	263
KIT-LEVER (STARTING MOTOR)	260
	263

INDEX

Name	Page
KIT-RECEPTACLE (2 PIN)	176, 227, 741
KIT-RECEPTACLE (2 PIN)	168
KIT-RECEPTACLE (2 PIN) (REGISTRATION PLATE LAMP)	169
KIT-RECEPTACLE (2 PIN) (SOLENOID VALVE)	537
KIT-RECEPTACLE (2 PIN) (12V POWER PORT)	777, 778
KIT-RECEPTACLE (6-PIN)	949
KIT-RECTIFIER	125
KIT-RETAINING BOLT (M5X0.8X53.24-MM)	147
KIT-RETAINING BOLT (M5X0.8X53.24-MM) (CONTROL GP)	139
KIT-ROD	885
KIT-ROLLER (SEAT)	933
KIT-SEAL	540, 542, 548, 558, 560, 565, 741, 742, 744
KIT-SEAL (BLADE CUSHION ACCUMULATOR)	541
KIT-SEAL (DIFFERENTIAL LOCK)	397
KIT-SEAL (DIFFERENTIAL LOCK VALVE)	404
KIT-SEAL (TRANSMISSION SOLENOID)	405
KIT-SEAT CUSHION	910
KIT-SEAT CUSHION (VINYL)	912
KIT-SEAT TILT	885
KIT-SENSOR (FUEL LEVEL)	115
KIT-SHIM (INCLUDES 17 SHIMS)	623
KIT-SLIDER BLOCK	924
KIT-SLIDER BLOCK (INCLUDES BLOCKS AND BOLT)	920
KIT-SLIDER BLOCK (INCLUDES 4 BLOCKS)	921
KIT-SOLENOID (STARTING MOTOR)	263
KIT-SPRING	841
KIT-SPRING (HEIGHT ADJUSTMENT)	841
KIT-SUSPENSION BOOT	931
KIT-SUSPENSION ROLLER	931
KIT-TERMINAL (ALTERNATOR)	120
KIT-TETHER (SEAT)	933
KIT-TILT PAN	910, 912
KIT-WIPER BLADE (LOW PROFILE REAR)	957
KIT-WIPER BLADE (REAR)	959
KNOB AS-WEIGHT	840
KNOB-DAMPER (SEAT)	933

L

Name	Page
LAMP AS	309, 312
LAMP GP-DOME	152
LAMP GP-DOME (24-VOLT, WITH SWITCH)	278
LAMP GP-DOME (24-VOLT, WITH SWITCH)	275, 284
LAMP GP-FLOOD	155, 156, 157
LAMP GP-FLOOD–VERTICAL	153
LAMP GP-FLOOD–VERTICAL MOUNT	154
LAMP GP-FLOOD (24-VOLT, VERTICAL MOUNT)	209, 215, 219
LAMP GP-FLOOD (24-VOLT, VERTICAL MOUNT) (BLADE)	188, 191
LAMP GP-FLOOD (24-VOLT, VERTICAL MOUNT) (CAB)	182
LAMP GP-FLOOD (24-VOLT, VERTICAL MOUNT) (CAB-RH)	222
LAMP GP-FLOOD (24-VOLT, VERTICAL MOUNT) (RH)	205
LAMP GP-HEAD–HIGH BEAM	159
LAMP GP-HEAD–LH–EU	160
LAMP GP-HEAD–LOW BEAM	158
LAMP GP-HEAD–RH–EU	162
LAMP GP-HEAD & SIGNAL–LH	164
LAMP GP-HEAD & SIGNAL–RH	166
LAMP GP-MARKER	168
LAMP GP-REGISTRATION PLATE–EU	169
LAMP GP-SIGNAL	172
LAMP GP-SIGNAL–STOP/TAIL	170
LAMP GP-SIGNAL–TURN/PARK	171
LAMP GP (STOP, TAIL, TURN, LH)	309, 312
LAMP GP (STOP, TURN, TAIL, RH)	309, 312
LAMP GP-WARNING BEACON	173, 174
LAMP-HALOGEN (24-VOLT, 65-WATT)	153, 155
LAMP-HALOGEN (24-VOLT, 65-WATT) (BLADE)	157
LAMP-HALOGEN (24-VOLT, 65-WATT) (FLOODLIGHT)	154, 156
LAMP-HALOGEN (24-VOLT, 65-WATT) (HIGH BEAM)	184
LAMP-HALOGEN (24-VOLT, 65-WATT) (HIGH BEAM)	159

INDEX

Name	Page
LAMP-HALOGEN (24-VOLT, 65-WATT) (LOW BEAM)	184
LAMP-HALOGEN (24-VOLT, 65-WATT) (LOW BEAM)	158
LAMP-LED (LED)	234
	235
LAMP (24-VOLT)	150
	152
	164
	193
	199
	202
	205
	207
	209
	210
	212
	222
	224
	234
	235
	236
	267
	280
	282
	329
	332
	334
	335
	338
	341
	782
	827
	831
	876
	879
LAMP (24-VOLT)	164
LAMP (24-VOLT) (ACTION)	895
LAMP (24-VOLT) (AIR PRESSURE GAUGE)	893
	895
LAMP (24-VOLT) (AIR PRESSURE GAUGE)	891
LAMP (24-VOLT) (AUTOSHIFT)	345
LAMP (24-VOLT) (AUXILIARY BACK-UP ALARM)	180
LAMP (24-VOLT) (AUXILIARY BACKUP LAMP)	178
LAMP (24-VOLT) (BLADE CUSHION SWITCH)	273
LAMP (24-VOLT) (BLADE FLOOD)	191
	192
LAMP (24-VOLT) (BLADE LAMP)	189
LAMP (24-VOLT) (BLADE)(FRONT FLOODLAMP)	188
LAMP (24 VOLT) (CAB POSITION)	168
LAMP (24-VOLT) (DIFFERENTIAL LOCK)	891
	893
LAMP (24-VOLT) (EMS MASTER ACTION INDICATOR)	891
LAMP (24-VOLT) (FRONT DEFROSTER)	820
LAMP (24-VOLT) (HEAD)	166
LAMP (24-VOLT) (HEADLIGHTS, TAIL LIGHTS)	196
LAMP (24-VOLT) (HEATED MIRRORS)	872
LAMP (24-VOLT) (HIGH/LOW BEAM)	160
LAMP (24-VOLT) (HIGH/LOW BEAM)	162
LAMP (24-VOLT) (MASTER ACTION INDICATOR)	893
LAMP (24-VOLT) (NG)	335
LAMP (24-VOLT) (POSITION)	160
	162
LAMP (24-VOLT) (QUAD GAUGE)	893
LAMP (24-VOLT) (QUAD GAUGE MODULE)	891
	895
LAMP (24-VOLT) (REAR DEFROSTER)	821
LAMP (24 VOLT) (REGISTRATION PLATE)	169
LAMP (24-VOLT) (SIGNAL)	166
LAMP (24-VOLT) (TURN)	160
	162
LAMP (24-VOLT, 21-WATT)	309
	312
LAMP (24-VOLT, 21-WATT) (SIGNAL)	164
LAMP (24-VOLT, 21-WATT) (SIGNAL)	166
LAMP (24-VOLT, 21-WATT) (TURN)	160
	162
LAMP (24-VOLT, 3-WATT) (INDICATOR LIGHT)	895
LAMP (24-VOLT, 3-WATT) (INSTRUMENT PANEL)	891
	893
LAMP (24-VOLT, 5-WATT)	309
	312
LAMP (24-VOLT, 70-WATT)	174
LAMP (24-VOLT, 70-WATT) (WARNING BEACON)	173
LENS (AMBER) (SIGNAL)	164
	166
LENS (AMBER) (TURN)	160
	162
LENS (AMBER, WARNING BEACON)	173
LENS-AMBER (WARNING BEACON)	174
LENS AS (AMBER) (SIGNAL)	166
LENS AS (AMBER) (SIGNAL)	164
LENS AS (AMBER) (TURN)	160
	162
LENS AS (FLOODLIGHT)	154
	155
	156
	157
LENS AS (HEAD)	160
	162

INDEX

Name	Page
LENS AS (HEADLAMP)(LOW BEAM)	158
LENS AS (HEADLIGHT)	164
	166
LENS AS (LOW BEAM)	184
LENS (REGISTRATION PLATE)	169
LIFT GP-BLADE	761
LIFTING GP-ENGINE	33
LIGHTER AS (CIGAR, 24-VOLT)	332
	334
LIGHTING AR-FLOOD	175
LIGHTING AR-FLOOD–BOLSTER–TURN	175
LIGHTING AR-FLOOD–FRONT & REAR	175
LIGHTING AR-FLOOD–MOLDBOARD	175
LIGHTING AR-FLOOD–MOLDBOARD–EU	176
LIGHTING AR-FLOOD & SIGNAL–EXTENDED BOLSTER	177
LIGHTING AR-FLOOD & SIGNAL–HEAD–TURN	177
LIGHTING AR-FLOOD & SIGNAL–HEAD–TURN–BOLSTER	177
LIGHTING GP-BACKUP	178
LIGHTING GP-BACKUP–EU	180
LIGHTING GP-FLOOD	227
LIGHTING GP-FLOOD–BLADE	188
	189
	191
	192
LIGHTING GP-FLOOD–BOLSTER	199
	202
	226
LIGHTING GP-FLOOD–BOLSTER–DOUBLE WORKLAMPS	193
	196
LIGHTING GP-FLOOD–CAB	182
	183
LIGHTING GP-FLOOD–CAB–SNOW–RH	205
	207
	222
	224
LIGHTING GP-FLOOD–CAB–TURN	184
	186
LIGHTING GP-FLOOD–EXTENDED BOLSTER	209
	212
LIGHTING GP-FLOOD–MOLDBOARD	219
	220
LIGHTING GP-FLOOD–SNOW–REAR	215
	217
LIGHTING GP-ROADING–CAB POSITION LAMP–EU	228
LIGHTING GP-SIGNAL–REAR TURN LAMPS	229
	230
LIGHTING GP-WARNING	234
	235
LIGHTING GP-WARNING–ROTATING	231
	232
LIGHTING GP-WARNING BEACON	236
LINER GP-CAB–ENCLOSED – HIGH PROFILE	854
LINER GP-CAB–ENCLOSED–HIGH PROFILE	861
LINER GP-CAB–HIGH PROFILE	849
LINER GP-CAB–LOW PROFILE	851
LINER GP-CAB–OPEN–HIGH PROFILE	859
LINES GP-ACCUMULATOR	578
LINES GP-AIR–AFTERCOOLER	80
LINES GP-AIR CONDITIONER	863
LINES GP-AIR TANK	530
LINES GP-ENGINE OIL	55
LINES GP-FUEL	94
	96
	98
LINES GP-FUEL–REAR	100
LINES GP-FUEL FILTER	101
LINES GP-GREASE	504
LINES GP-HEATER	866
LINES GP-HYDRAULIC–CENTERSHIFT LOCK	584
LINES GP-HYDRAULIC–LH BANK	586
LINES GP-HYDRAULIC–PLOW/DOZER LIFT–LH	583
LINES GP-HYDRAULIC–PLOW/DOZER LIFT–PLOW, BULLDOZER LIFT	582
LINES GP-HYDRAULIC–RH BANK	589
LINES GP-HYDRAULIC–SCARIFIER	580
LINES GP-HYDRAULIC FAN	591
	595
LINES GP-HYDRAULIC FAN–RADIATOR	593
LINES GP-PUMP	597
	600
	603
LINES GP-RIPPER	606
	608
	610
LINES GP-SECONDARY STEERING	611
LINES GP-STEERING	613
LINES GP-TRANSMISSION OIL	383
LINES GP-TURBOCHARGER OIL	57
LINES GP-WATER	66
	68
LINK GP-STEERING	505
LITERATURE GP	868
LOCK GP-CENTERSHIFT	616
LOUVER GP-CAB	869

M

MANIFOLD GP-EXHAUST	81
MIRROR GP-REAR VIEW–INSIDE	870

INDEX

Name	Page
MIRROR GP-REAR VIEW–INSIDE–DUAL–EU	875
MIRROR GP-REAR VIEW–OUTSIDE	871
MIRROR GP-REAR VIEW–OUTSIDE–EU	874
MIRROR GP-REAR VIEW–OUTSIDE–HEATED	876
MIRROR GP-REAR VIEW–OUTSIDE–HEATED–EU	872
MODULE GP-QUAD GAUGE	878
MODULE GP-SPEEDOMETER & TACH	879
MODULE GP-SPEEDOMETER & TACH–SNOW	879
MODULE GP-SPEEDOMETER & TACH (INSTRUMENT PANEL)	895
MOTOR GP-ELECTRIC	238
	816
MOTOR GP-ELECTRIC (DEFROSTER FAN)	818
MOTOR GP-GEAR–HYDRAULIC FAN	617
MOTOR GP-GEROTOR	618
MOTOR GP-WINDOW WIPER	968
MOTOR GP-WINDOW WIPER (FRONT)	967
MOTOR GP-WINDOW WIPER (FRONT UPPER)	951
	955
MOTOR GP-WINDOW WIPER (REAR)	959
	963
MOTOR GP-WINDOW WIPER (24-VOLT)	948
MOTOR GP-WINDOW WIPER (24-VOLT) (FRONT LOWER)	951
MOTOR GP-WINDOW WIPER (24-VOLT) (LOWER)	955
MOUNTING GP-CAB–NON-ROPS, ENCLOSED	880
MOUNTING GP-ENGINE & TMSN	34
MOUNTING GP-FUEL FILTER	103
MOUNTING GP-REGISTRATION–EU	506
MOUNTING GP-RIPPER	763
MOUNTING GP-ROPS	881
MOUNTING GP-ROPS–OPEN–HIGH PROFILE	883
MOUNTING GP-SNOW WING	764
MOUNTING GP-SOLENOID	239
MOUNTING GP-WHEEL	385
MUFFLER GP	82

O

ORIFICE	398
	401

P

PADLOCK GP	635
	788
	798
	899
PADLOCK GP (TOOL BOX)	969
PAN GP-BACKREST	884
PAN GP-OIL	36
PAN GP-SEAT	885
PANEL GP-CAB–HIGH PROFILE	888
	889
PANEL GP-CAB–LOW PROFILE	887
PANEL GP-INSTRUMENT	891
PANEL GP-INSTRUMENT–EU	895
PANEL GP-INSTRUMENT–HIGH PROFILE	893
PANEL GP-SOUND SUPPRESSION	37
PISTON & ROD GP	38
PISTON GP	39
PLATE & FILM GP	1
	972
	977
PLATE & FILM GP–FRENCH	975
PLATE & FILM GP–GERMAN	976
PLATE & FILM GP–PORTUGUESE	976
PLATE & FILM GP–REFLECTOR–EU	974
PLATE & FILM GP–SPANISH	975
PLATE & FILM GP (REFLECTOR)	2
PLATE GP-PUSH	751
PLATE GP-RADIATOR	69
PLATE-IDENTIFICATION (ALTERNATOR)	316
	320
PLATE-IDENTIFICATION (ENGINE)	316
	320
PLATE-IDENTIFICATION (MAXIMUM WEIGHT)	4
PLATE-INSTRUCTION (AIR CONDITIONER)	782
PLATE-INSTRUCTION (BATTERY)	316
	320
PLATE-WARNING (NO CLEARANCE)	476
	477
	972
PLUG (ENGINE OIL PAN DRAIN)	36
PLUG GP-ENGINE	40
PLUG-MAGNETIC (TRANSMISSION CASE)	474
PLUG (TRANSMISSION OIL DRAIN)	346
PULLEY GP-IDLER	41
PUMP & MOTOR GP-SEC STEERING	620
PUMP & MTG GP-PISTON	621
PUMP & MTG GP-SECONDARY STEER	622
PUMP & MTG GP-UNIT INJ HYD	104
	105
PUMP GP-ENGINE OIL	58
PUMP GP-FUEL PRM & PRIM FILTER	106
	107
PUMP GP-FUEL PRM & WATER SEP	117
PUMP GP-GEAR–TRANSMISSION	386
	387
PUMP GP-PISTON–HYDRAULIC FAN	625

INDEX

Name	Page
PUMP GP-PISTON–HYDRAULIC STEERING–STEERING	623
PUMP GP-UNIT INJECTION	108, 109, 110
PUMP GP-UNIT INJECTOR HYD	104, 105
PUMP GP-WATER	70, 71

R

Name	Page
RADIATOR GP	72, 73
RECEIVER-DRYER GP (AIR CONDITIONER)	863
RECEPTACLE GP-AUXILIARY START	240
REGULATOR AS (FUEL PRESSURE)	111, 112
REGULATOR AS-VOLTAGE (24-VOLT)	120, 125
REGULATOR GP-FUEL PRESSURE	111, 112
REGULATOR-PRESSURE (FUEL)	106
REGULATOR-WATER TEMPERATURE (92-DEG C)	68
REGULATOR-WATER TEMPERATURE (94-DEG C)	68
RELAY AS (24-VOLT)	180
RELAY AS (24-VOLT)	324
RELAY AS (24-VOLT) (AUXILIARY BACKUP LAMP)	178
RELAY AS (24-VOLT) (START)	304
RELAY AS (24-VOLT) (TAIL, PANEL LAMPS)	338
RELAY AS (24-VOLT) (TAIL,PANEL LAMPS)	341
RELAY AS (24-VOLT) (WORK LIGHTS)	191
RELAY AS (24-VOLT) (WORK LIGHTS)	192
RIPPER AR	765
RIPPER GP	766
ROADING AR	4
ROCKER ARM GP	42, 43
ROPS AR-ENCLOSED–HIGH PROFILE	898
ROPS AR-ENCLOSED–HIGH PROFILE–EU	898
ROPS AR-ENCLOSED–LOW PROFILE	898
ROPS AR-OPEN–HIGH PROFILE	899
ROPS GP-ENCLOSED–HIGH PROFILE	899, 900
ROPS GP-ENCLOSED–HIGH PROFILE–EU	900
ROPS GP-ENCLOSED–LOW PROFILE	899
ROPS GP-OPEN–HIGH PROFILE	901
ROTATING GP-PUMP–HYDRAULIC FAN	628
ROTATING GP-PUMP–STEERING	627

S

Name	Page
SCARIFIER AR–STRAIGHT	768
SCARIFIER AR–VEE TYPE	768
SCARIFIER GP–STRAIGHT	772
SCARIFIER GP–VEE TYPE	769
SCREEN GP-MAGNETIC–TRANSMISSION	388
SCREEN GP-SUN	902
SCREEN-SUCTION (TRANSMISSION)	388
SCREEN-SUCTION (TRANSMISSION)	346
SCREEN (TRANSMISSION CONTROL VALVE)	406
SEAL	91
SEAL GP-CRANKSHAFT	44
SEAL GP-CRANKSHAFT (FRONT) (FRONT)	44
SEAL GP-CRANKSHAFT (REAR)	44
SEAL-LIP TYPE (WATER REGULATOR)	68
SEAT BELT GP	903, 904, 905, 925
SEAT BELT GP (RETRACTABLE)	920
SEAT GP–CLOTH	906, 910
SEAT GP–VINYL	908, 912
SEAT GP-STATIC–CLOTH	914, 915
SEAT GP-STATIC–VINYL	914, 917
SEAT GP-SUSPENSION	919, 922
SEAT GP-SUSPENSION–CLOTH	920, 924, 925, 926, 928
SEAT GP-SUSPENSION–VINYL	921, 923
SEGMENT-CIRCLE	747
SENDER AS-FUEL LEVEL	115
SENDER AS-POSITION (STEERING ARTICULATION)	304, 324
SENSOR GP-ENGINE	241
SENSOR GP-POSITION–CLUTCH	244
SENSOR GP-POSITION–THROTTLE	243
SENSOR GP-POSITION (ROTARY) (THROTTLE)	86
SENSOR GP-PRESSURE	246, 247, 248, 249, 250
SENSOR GP-PRESSURE–RADIATOR FAN	245

INDEX

Name	Page
SENSOR GP-PRESSURE (RADIATOR FAN)	593
SENSOR GP-SPEED	252
SENSOR GP-SPEED–TRANSMISSION OUTPUT	251
SENSOR GP-TEMPERATURE	255
	256
	257
SENSOR GP-TEMPERATURE–ENGINE OIL	254
SENSOR GP-TEMPERATURE–TRANSMISSION OIL	253
SERVICE GP-POWER TRAIN (MOTOR GRADER)	147
SHAFT GP-DRIVE	389
SHAFT GP-INPUT	390
SHAFT GP-PUMP DRIVE	629
SHIELD GP-DRIVE SHAFT	507
SHIELD GP-HEAT	508
SNOW AR-MOTOR GRADER	5
SOFTWARE GP-ENGINE (VARIABLE HORSEPOWER)	971
SOFTWARE GP-POWER TRAIN	146
SOFTWARE GP-POWER TRAIN (MOTOR GRADER)	147
SOLENOID AS (24 VOLT)	260
STARTING AID GP	259
STARTING AID GP–AIR INLET	258
STARTING MOTOR GP-ELECTRIC	260
	262
	263
STEERING AR-SECONDARY	630
STEP GP	509
STRAINER (FILLER) (HYDRAULIC OIL TANK)	633
STRAINER-FUEL	115
SUPPORT AR-REAR CHASSIS	510
	511
	512
	513
SUPPORT GP-ENGINE	45
SUPPORT GP-FUEL TANK	514
SUPPORT GP-PLATFORM–REAR	515
SUPPORT GP-SEAT	929
SUPPRESSION GP-SOUND–ENGINE ENCLOSURE–EU	46
SUSPENSION GP-SEAT	931
	933
SWASHPLATE GP–VARIABLE	631
SWITCH AS (AUTOSHIFT TRANSMISSION)	345
SWITCH AS (AUXILIARY BACKUP)	178
SWITCH AS-BALL (CENTERSHIFT INDICATOR)	293
	297
SWITCH AS (BLADE CUSHION)	273
SWITCH AS (CENTERSHIFT PIN PULLER)	335
SWITCH AS (CENTERSHIFT PIN PULLER)	332
SWITCH AS (DIFFERENTIAL LOCK)	338
	341
SWITCH AS (FRONT DEFROSTER)	820
SWITCH AS-LIMIT (BRAKE PEDAL)	342
SWITCH AS-LIMIT (INCHING PEDAL)	338
	341
SWITCH AS-MAGNETIC (24-VOLT) (INLET AIR HEATER)	271
SWITCH AS (PANEL BACKLIGHTS)	341
SWITCH AS (PANEL LAMP DIMMER)	338
SWITCH AS-PRESSURE (AIR BRAKE)	297
SWITCH AS-PRESSURE (AIR BRAKES)	293
SWITCH AS-PRESSURE (AIR CONDITIONER)	863
SWITCH AS-PRESSURE (PARKING BRAKE)	294
	297
SWITCH AS-PRESSURE (PRIMARY STEERING)	297
SWITCH AS-PRESSURE (SECONDARY STEERING)	329
SWITCH AS-PRESSURE (STOP LAMP)	293
	297
SWITCH AS-PUSH BUTTON (DISPLAY MODES)	893
	895
SWITCH AS-PUSH BUTTON (OPERATOR MODE)	891
SWITCH AS (REAR DEFROSTER)	821
SWITCH AS-ROCKER (BLADE FLOOD LAMP)	191
	192
SWITCH AS-ROCKER (BLADE LAMP)	189
SWITCH AS-ROCKER (BLADE)(FRONT FLOODLAMP)	188
SWITCH AS-ROCKER (HEADLIGHTS, TAIL LIGHTS)	209
	212
SWITCH AS-ROCKER (HEADLIGHTS, TAIL LIGHTS)	341
SWITCH AS-ROCKER (HEADLIGHTS, TAIL LIGHTS)	193
	196
	199
	202
	267
SWITCH AS-ROCKER (LIGHTBAR LOW BEAM)	199
	202
	209
SWITCH AS-ROCKER (THROTTLE LOCK SET, RESET)	334
SWITCH AS-ROCKER (WARNING BEACON)	150
SWITCH AS-ROCKER (WORK LIGHTS, FRONT)	212
SWITCH AS-ROTARY (FAN SPEED)	782
	827

INDEX

Name	Page
	831
SWITCH AS-ROTARY (HEADLIGHT DIMMER)	196
	199
	202
	209
	212
	341
SWITCH AS-ROTARY (HIGH, LOW BEAM)	193
SWITCH AS-ROTARY (TURN SIGNAL)	267
SWITCH AS-ROTARY (24-VOLT) (FRONT WIPER)	284
SWITCH AS-ROTARY (24-VOLT) (FRONT WIPER CONTROL)	275
SWITCH AS (TAIL LAMP)	338
SWITCH AS-TEMPERATURE (HYDRAULIC OIL)	293
	297
SWITCH AS-TEMPERATURE (REFRIGERANT)	782
SWITCH AS (THROTTLE HOLD MODE)	332
SWITCH AS (THROTTLE LOCK ENABLE)	334
SWITCH AS (THROTTLE SPEED SET)	332
SWITCH AS-TOGGLE (GROUND-LEVEL ENGINE SHUTDOWN)	304
SWITCH AS-TOGGLE (GROUND-LEVEL SHUTDOWN)	324
SWITCH AS (WARNING BEACON)	150
	234
	235
	236
SWITCH AS-WIPER (24-VOLT) (REAR)	957
SWITCH AS-WIPER (24-VOLT) (REAR)	959
	961
	963
SWITCH AS (24-VOLT) (AUXILIARY BACK-UP ALARM)	180
SWITCH AS (24-VOLT) (CAB-RH FLOOD)	222
	224
SWITCH AS (24-VOLT) (FLOODLAMP RH)	205
	207
SWITCH AS (24-VOLT) (HEATED MIRRORS)	872
	876
SWITCH AS (24-VOLT) (MOLDBOARD)	280
	282
SWITCH AS (24-VOLT) (SECONDARY STEERING TEST)	329
SWITCH GP-BYPASS–TRANSMISSION OIL FILTER	265
SWITCH GP-DISCONNECT–BATTERY	266
SWITCH GP-LIGHT–TURN	267
SWITCH GP-MAGNETIC–FUSE, RELAY–MAIN RELAY	270
SWITCH GP-MAGNETIC–INLET AIR HEATER	271
SWITCH GP-MAGNETIC–SECONDARY STEERING RELAY	269
SWITCH GP-MAGNETIC (24-VOLT) (START RELAY)	320
SWITCH GP-MAGNETIC (24-VOLT) (STARTING RELAY)	316
SWITCH GP-PRESSURE (FUEL) (FUEL)	89
SWITCH GP-ROTARY (TURN SIGNAL, HAZARD)	193
	196
	199
	202
	209
	212
	267
SWITCH GP-ROTARY (TURN SIGNAL, HAZARD)	341
SWITCH GP-START (KEY)	332
	334
SWITCH GP-WIPER	272
	965
SWITCH GP-WIPER (24-VOLT) (FRONT INTERMITTENT)	278
SWIVEL GP	632

T

TANDEM & COVER GP	391
TANK & FILTER GP-HYDRAULIC	633
TANK & MTG GP-HYDRAULIC	635
TANK GP-AIR	531
TANK GP-FUEL	113
TANK GP-FUEL–LH	115
TANK GP-FUEL–RH	114
TIE ROD GP (STEERING)	556
TIRE & RIM AR	392
TOOTH GP-SCARIFIER	775
	776
TRANSMISSION AR	393
TURBOCHARGER GP	83
	85

U

UNIVERSAL JOINT GP	396

V

VALVE & LINKAGE GP	658
VALVE & LINKAGE GP–BANK 4-LH – BANK 5-RH	656
VALVE & LINKAGE GP–BANK 4-LH– BANK 5-RH	654
VALVE & LINKAGE GP–BANK 4-LH,RH	642
	646

INDEX

Name	Page
VALVE & LINKAGE GP–BANK 4-RH–BANK 5-LH	638, 640, 650
VALVE & LINKAGE GP–BANK 4-RH–BANK 7-LH	662
VALVE & LINKAGE GP–BANK 5-LH–BANK 6-RH	664
VALVE & LINKAGE GP–BANK 5 LH-RH	636, 648
VALVE & LINKAGE GP–BANK 5-LH,RH	644, 652
VALVE & LINKAGE GP–BANK 5-RH–BANK 6-LH	660
VALVE & MTG GP-DIFF LOCK	397
VALVE-DRAIN	89
VALVE-DRAIN (AIR TANK)	531
VALVE-DRAIN (RADIATOR)	491
VALVE GP-AIR CONTROL	534
VALVE GP-AIR CONTROL–PARKING BRAKE	533
VALVE GP-BANK 4–LH	667, 669
VALVE GP-BANK 4–RH	666, 668
VALVE GP-BANK 5–LH	670, 673, 674
VALVE GP-BANK 5–RH	671, 672, 675
VALVE GP-BANK 6–RH	676, 677
VALVE GP-BANK 7–LH	678
VALVE GP-COMBINATION	679, 681
VALVE GP-CONTROL–ARTICULATION	683
VALVE GP-CONTROL–BLADE LIFT	689, 697
VALVE GP-CONTROL–BLADE LIFT (LH)	713
VALVE GP-CONTROL–BLADE LIFT (RH)	711
VALVE GP-CONTROL–BLADE TIP	691
VALVE GP-CONTROL–CENTERSHIFT	685
VALVE GP-CONTROL–CIRCLE DRIVE	693
VALVE GP-CONTROL–PLOW/DOZER ANGLE	705
VALVE GP-CONTROL–PLOW/DOZER LIFT	703, 715
VALVE GP-CONTROL–RIPPER	701, 709
VALVE GP-CONTROL–SCARIFIER	699, 707
VALVE GP-CONTROL–SIDESHIFT	695
VALVE GP-CONTROL–WHEEL LEAN	687
VALVE GP-CONTROL–WING LIFT	719
VALVE GP-CONTROL–WING TILT	717
VALVE GP-CONTROL (AIR)	534
VALVE GP-CONTROL (BLADE LIFT)	667, 670, 671
VALVE GP-CONTROL (BLADE TIP)	667, 669, 670, 674, 678
VALVE GP-CONTROL (BLADE TIP)	671, 673
VALVE GP-CONTROL (CIRCLE DRIVE)	667, 669, 670, 671, 673, 674, 678
VALVE GP-CONTROL (SCARIFIER)	671
VALVE GP-CONTROL (SIDESHIFT)	669, 670, 671, 673, 674, 678
VALVE GP-CONTROL (SIDESHIFT)	667
VALVE GP-PUMP CONTROL–HYDRAULIC FAN	723
VALVE GP-PUMP CONTROL–HYDRAULIC STEERING	721
VALVE GP-PURGE	725
VALVE GP-PURGE–HYDRAULIC STEERING–IMPLEMENT SIGNAL	726
VALVE GP-RELIEF	728, 731, 790
VALVE GP-RELIEF–HYDRAULIC	732, 733, 734
VALVE GP-RELIEF–IMPLEMENT SIGNAL	729
VALVE GP-RELIEF–MAIN	727
VALVE GP-RELIEF–RIPPER	735, 736
VALVE GP-RELIEF–SCARIFIER	737, 738
VALVE GP-RELIEF–STEERING	730
VALVE GP-SELECTOR & PRESS CONT–DIRECTION & RANGE	398
VALVE GP-SELECTOR & PRESS CONT–SPEED & RANGE	401
VALVE GP-SHUTTLE	740
VALVE GP-SHUTTLE–SIGNAL	739
VALVE GP-SOLENOID–AIR	537
VALVE GP-SOLENOID–AIR HORN	536
VALVE GP-SOLENOID–BLADE CUSHION	741

INDEX

Name	Page
VALVE GP-SOLENOID–CENTERSHIFT LOCK	742
VALVE GP-SOLENOID–DIFFERENTIAL LOCK	404
VALVE GP-SOLENOID–DIRECTION–SPEED	405
VALVE GP-SOLENOID & MANIFOLD–BLADE CUSHION –BLADE CUSHION	743
VALVE GP-SOLENOID & MANIFOLD–FAN SPEED	744
VALVE GP-TIRE	426
	427
	428
	429
	431
	432
	433
	434
	435
	436
	437
	438
	439
	440
	441
	442
	443
	446
	447
	448
	449
	450
	452
	453
	454
	455
	456
	457
	458
	459
	460
	461
	462
	463
	464
	466
	468
	469
	470
VALVE GP-TRANSMISSION CONTROL	406
VALVE MECHANISM GP	47
	48

W

Name	Page
WASHER GP-WINDOW–FRONT	935
	938
WASHER GP-WINDOW–REAR	937
WATER SEP & FUEL PRM PUMP GP	117
WHEEL & TIRE AR	408
	409
	410
	411
	412
	413
	414
	415
	416
	417
	418
	419
	420
	421
	422
	423
	424
	425
	426
WHEEL & TIRE GP	426
	427
	428
	429
	430
	431
	432
	433
	434
	435
	436
	437
	438
	439
	440
	441
	442
	443
	444
	445
	446
	447
	448
	449
	450
	451
	452
	453
	454
	455
	456
	457
	458

INDEX

Name	Page
	459
	460
	461
	462
	463
	464
WHEEL AR	464
	465
	466
WHEEL GP	467
	469
	470
WHEEL GP–BAREFOOT	466
	468
	469
WINDOW GP–SIDE SLIDING–LOW PROFILE	941
WINDOW GP–VENT–CAB	940
WINDOW GP-CAB–LH	945
WINDOW GP-CAB–RH	943
WINDOW GP-CAB–SIDE SLIDING–LOW PROFILE	942
WIPER AR-WINDOW–REAR–HIGH PROFILE	947
WIPER AR-WINDOW–REAR–LOW PROFILE	947
WIPER GP-WINDOW	948
WIPER GP-WINDOW–FRONT	965
WIPER GP-WINDOW–FRONT–HIGH PROFILE	953
	955
	966
	967
WIPER GP-WINDOW–FRONT–LOW PROFILE	949
	951
WIPER GP-WINDOW–HIGH PROFILE	968
WIPER GP-WINDOW–REAR–HIGH PROFILE	961
	963
WIPER GP-WINDOW–REAR–LOW PROFILE	957
	959
WIRING GP-BLADE CUSHION	273
WIRING GP-CAB	275
	284
WIRING GP-CAB–EU	278
WIRING GP-CAB–MOLDBOARD	280
	282
WIRING GP-CAB–WARNING BEACON	277
WIRING GP-ENGINE ELECTRONIC	286
	288
	290
WIRING GP-FRONT	293
WIRING GP-FRONT–EU	297
WIRING GP-REAR	324
WIRING GP-REAR–BACKUP ALARM, LIGHTS	302
WIRING GP-REAR–BACKUP ALARM, LIGHTS, EU	309
	312
WIRING GP-REAR–EU	304
WIRING GP-REAR–SERVICE CENTER	316
	320
WIRING GP-SECONDARY STEERING	329
WIRING GP-SHIFT CONSOLE	332
	334
WIRING GP-STEERING CONSOLE	338
WIRING GP-STEERING CONSOLE–EU	341

INDEX

Désignation	Page
A	
ACCOUDOIR (ASS)	786, 787
ACCOUPLEMENT DE TORSION (ASS)	372
ACCUMULATEUR - AMORTISSEUR DE LAME (VERSION)	539
ACCUMULATEUR - DIRECTION (ASS)	544
ACCUMULATEUR (ASS)	539, 540
ACCUMULATEUR (CLIMATISEUR)	863
ACCUMULATEUR ET MONTAGE - HYDRAULIQUE (ASS)	538
ACCUMULATEUR HYDRAULIQUE (ASS)	541, 542, 543
ALLUME-CIGARE (ENS) (CIGARE, 24V)	334
ALLUME-CIGARE (ENS) (CIGARE, 24V)	332
ALTERNATEUR DE CHARGE (ASS)	120, 122, 124, 125
AMORTISSEUR DE VIBRATIONS ET POULIE (ASS)	25
AMPOULE (*24-VOLT) (CHANG. AUTOMATIQUE VITESSE)	345
AMPOULE (*24-VOLT) (CLIGNOTANT)	160, 162
AMPOULE (*24-VOLT) (DÉGIVREUR ARRIÈRE)	821
AMPOULE (*24-VOLT) (DÉGIVREUR AVANT)	820
AMPOULE (*24-VOLT) (FEUX DE ROUTE/FEUX DE CROISEMENT)	160, 162
AMPOULE (*24-VOLT) (LAME)(PROJECTEUR AVANT)	188
AMPOULE (*24-VOLT) (POSITION)	160, 162
AMPOULE (*24-VOLT, 21-WATT) (CLIGNOTANT)	160, 162
AMPOULE (24 VOLTS)	150, 193, 199, 202, 209, 210, 212, 267, 332, 334, 341, 782, 827, 831, 879
AMPOULE (24 VOLTS)	152, 205, 207, 222, 224, 234, 235, 236, 280, 282, 329, 332, 334, 335, 338, 341, 876
AMPOULE (24 VOLTS)	164
AMPOULE (24 VOLTS) (*AUXILIARY BACK-UP ALARM)	180
AMPOULE (24 VOLTS) (CONTACTEUR D'AMORTISSEUR DE LAME)	273
AMPOULE (24 VOLTS) (LAMPE D'APPOINT AUXILIAIRE)	178
AMPOULE (24 VOLTS) (MANOMÈTRE)	891, 893, 895
AMPOULE (24 VOLTS) (MODULE QUATRE INSTRUMENTS)	891, 895
AMPOULE (24 VOLTS) (*NG)	335
AMPOULE (24 VOLTS) (PHARES AVANT, FEUX ARRIÈRE)	196
AMPOULE (24 VOLTS) (PLAQUE D'IMMATRICULATION)	169
AMPOULE (24 VOLTS) (POSITION DE CABINE)	168
AMPOULE (24 VOLTS) (PROJECTEUR DE LAME)	189
AMPOULE (24 VOLTS) (PROJECTEUR SUR LAME)	191, 192
AMPOULE (24 VOLTS) (QUATRE INSTRUMENTS)	893
AMPOULE (24 VOLTS) (RÉTROVISEURS À CHAUFFAGE INTÉGRÉ)	872
AMPOULE (24 VOLTS) (SIGNAL)	166
AMPOULE (24 VOLTS) (TÉMOIN D'ACTION PRINCIPAL)	893
AMPOULE (24 VOLTS) (TÉMOIN D'ACTIONNEMENT)	895

* TRADUCTION NON DISPONIBLE AU MOMENT DE LA PUBLICATION

INDEX

Désignation	Page
AMPOULE (24 VOLTS) (TÉMOIN PRINCIPAL DE MISE EN GARDE EMS)	891
AMPOULE (24 VOLTS) (TÊTE)	166
AMPOULE (24 VOLTS) (VERROUILLAGE DE DIFFÉRENTIEL)	891 893
AMPOULE (24V, 21W)	309 312
AMPOULE (24V, 21W) (SIGNAL)	164 166
AMPOULE (24V, 3W) (TABLEAU DE BORD)	891 893
AMPOULE (24V, 3W) (TÉMOIN LUMINEUX)	895
AMPOULE (24V, 5W)	309 312
AMPOULE (24V, 70W)	174
AMPOULE (24V, 70W) (GYROPHARE)	173
ARBRE A CAMES (ASS)	11
ARBRE D'ENTRAÎNEMENT (ASS)	389
ARBRE D'ENTRAÎNEMENT DE POMPE (ASS)	629
ARBRE D'ENTRÉE (ASS)	390
ARTICULATION DE DIRECTION (ASS)	505
ATTELAGE D'ARTICULATION (ASS)	501
ATTELAGE-REMORQUAGE (ASS)	503
AUTOCOLLANT - FUSIBLE	278
AUTOCOLLANT - FUSIBLE (DROITE)	338
AUTOCOLLANT - FUSIBLE (GAUCHE)	338 341
AUTOCOLLANT - FUSIBLE (TÉMOINS, LAVE-GLACE, ESSUIE-GLACE, DÉGIVREUR)	275
AUTOCOLLANT-COMMANDE (CHAUFFAGE ET CLIMATISATION)	782
AUTOCOLLANT-COMMANDE (TEMPÉRATURE, VITESSE DE VENTILATEUR)	831
AUTOCOLLANT-COMMANDE (TEMPÉRATURE, VITESSE DE VENTILATEUR)	827
AUTOCOLLANT (COUVERCLE NOIR)	365
AUTOCOLLANT DE MISE EN GARDE (N. D'ÉTAPE)	114
AUTOCOLLANT DE MISE EN GARDE (RACCORD DE CÂBLE)	973
AUTOCOLLANT DE MISE EN GARDE (VÉRIN HAUTE PRESSION)	973
AUTOCOLLANT D'IDENTIFICATION (*BIODEGRADABLE HYDRAULIC OIL)	577
AUTOCOLLANT D'IDENTIFICATION (NUMÉRO D'ASSEMBLAGE) (CLIMATISEUR)	782
AUTOCOLLANT DU PANNEAU (PANNEAU DE TÉMOIN DE TRANSMISSION)	365
AUTOCOLLANT DU PANNEAU (PANNEAU DE TÉMOINS, DROITE)	893 896
AUTOCOLLANT DU PANNEAU (PANNEAU DE TÉMOINS, GAUCHE)	893 895
AUTOCOLLANT DU PANNEAU (SÉLECTEUR DE VITESSE)	365
AUTOCOLLANT DU PANNEAU (TÉMOINS PRINCIPAUX DE DROITE)	891
AUTOCOLLANT DU PANNEAU (TÉMOINS PRINCIPAUX DE GAUCHE)	891
AUTOCOLLANT-INFORMATION (*ENGINE, HIGH IDLE, HOLD)	365
AUTOCOLLANT-INFORMATION (*ENGINE, LOW IDLE, HOLD)	365
AUTOCOLLANT (LAVE-VITRE)	284
AUTOCOLLANT (PLAQUE-NOM) (ACCUMULATEUR)	541
AUTOCOLLANT-RÉFLECTEUR (JAUNE)	974
AUTOCOLLANT (VISIÈRE CATERPILLAR)	887 888
AUXILIAIRE DE DÉMARRAGE (ASS)	259
AVERTISSEUR (ASS)	118 119
AXE DE CULBUTEUR (ASS)	42 43

B

BALAI D'ESSUIE-GLACE (ENS)	940 966
BALAI D'ESSUIE-GLACE (ENS)	968
BALAI D'ESSUIE-GLACE (ENS)	967
BALAI D'ESSUIE-GLACE (ENS) (ARRIÈRE)	963
BALAI D'ESSUIE-GLACE (ENS) (INFÉRIEUR AVANT)	949 951
BALAI D'ESSUIE-GLACE (ENS) (PROFIL BAS ARRIÈRE)	959
BALAI D'ESSUIE-GLACE (ENS) (PROFIL BAS ARRIÈRE)	957
BALAI D'ESSUIE-GLACE (ENS) (PROFIL ÉLEVÉ ARRIÈRE)	961
BALAI D'ESSUIE-GLACE (ENS) (PROFIL ÉLEVÉ AVANT INFÉRIEUR)	953
BALAI D'ESSUIE-GLACE (ENS) (PROFIL ÉLEVÉ AVANT INFÉRIEUR)	955
BALAI D'ESSUIE-GLACE (ENS) (PROFIL ÉLEVÉ SUPÉRIEUR AVANT)	953
BALAI D'ESSUIE-GLACE (ENS) (PROFIL ÉLEVÉ SUPÉRIEUR AVANT)	955

* TRADUCTION NON DISPONIBLE AU MOMENT DE LA PUBLICATION

INDEX

Désignation	Page
BALAI D'ESSUIE-GLACE (ENS) (SUPÉRIEUR AVANT)	951
BALAI D'ESSUIE-GLACE (ENS) (SURBAISSÉ, AVANT SUPÉRIEUR)	949
BARRE D'ACCOUPLEMENT (ASS) (DIRECTION)	556
BARRE D'ATTELAGE (ASS)	749
BATTERIE (ASS)	127
	128
	129
	130
BATTERIE (ASS) (12 VOLTS)	129
BATTERIE (ASS) (12 VOLTS) (1100A)	127
BATTERIE (12 VOLTS) (HUMIDE)	128
BATTERIE (12V, 750A)	130
BLINDAGE DES CANALISATIONS DES FREINS	495
BLINDAGE INFÉRIEUR (ASS)	494
BLOC-CYLINDRES - COUVERCLE (ASS)	12
BLOC-CYLINDRES (ASS)	17
	18
BLOC DE BRANCHEMENT (ASS)	131
BOÎTE DE VITESSES (VERSION)	393
BOUCHON AIMANTÉ (CARTER DE BOITE DE VITESSES)	474
BOUCHON DE GOULOTTE DE CARBURANT (ASS) (SERVICE INTENSIF, VERROUILLABLE)	115
BOUCHON DE GOULOTTE DE REMPLISSAGE (ENS) (HUILE MOTEUR)	13
	14
BOUCHON DE GOULOTTE DE REMPLISSAGE (RÉSERVOIR D'HUILE HYDRAULIQUE)	633
BOUCHON DE MOTEUR (ASS)	40
BOUCHON FILETÉ (ROBINET DE VIDANGE DE BOÎTE DE VITESSES)	346
BOUCHON FILETÉ (VIDANGE DE CARTER D'HUILE MOTEUR)	36
BOULON (5/8-11X2 PO)	549
	550
BOULONNERIE (ASS)	488
BOULONNERIE DE LA CULASSE (ASS)	27
BOULONNERIE DU RADIATEUR (ASS)	65
BOURRELET D'ÉTANCHÉITÉ	91
BOUTON D'AMORTISSEUR (SIÈGE)	933
BOUTON (ENS)-POIDS	840
*BOX GP-TOOL	969
*BREATHER AS (REMPLISSAGE D'HUILE DE TRANSMISSION)	377

C

Désignation	Page
CABINE - PROFIL ÉLEVÉ (VERSION)	788
CABINE - REVÊTEMENT (ASS)	849
	851
	854
	859
	861
CABINE (ASS)	788
	789
CABINE-FAISCEAU DE CÂBLES (ENS)	180
	222
	224
	872
CABINE-FAISCEAU DE CÂBLES (ENS)	282
CABINE-FAISCEAU DE CÂBLES (ENS) (ARRIÈRE)	275
	278
CABINE-FAISCEAU DE CÂBLES (ENS) (AVANT)	278
CABINE-FAISCEAU DE CÂBLES (ENS) (PANNEAU D'INTERRUPTEURS)	275
	278
CABINE ROPS FERMÉE (ASS)	899
	900
CABINE ROPS FERMÉE (ASS)	899
CABINE SANS ROPS (VERSION)	788
CABLAGE - ELECTRONIQUE DU MOTEUR (ASS)	286
	288
	290
CABLAGE AR (ASS)	302
	304
	309
	312
	316
CABLAGE AR (ASS)	320
	324
CABLAGE AV (ASS)	293
CABLAGE AV (ASS)	297
CABLAGE DE CABINE (ASS)	277
	278
	280
CABLAGE DE CABINE (ASS)	275
	282
	284
CABLAGE DE DIRECTION AUXILIAIRE (ASS)	329
CABLAGE DE LA CONSOLE DE CHANGEMENTS DE VITESSE	332
	334
CABLAGE DE LA CONSOLE DE DIRECTION	338
	341
CABLAGE MOTEUR (ENS) (CAPTEURS)	290
CABLAGE MOTEUR (ENS) (INJECTEUR DE CARBURANT)	286

* TRADUCTION NON DISPONIBLE AU MOMENT DE LA PUBLICATION

INDEX

Désignation	Page
	290
CABLAGE MOTEUR (ENS) (INJECTEUR D'UNITÉ)	288
CABLAGE MOTEUR (ENS) (MODULE DE COMMANDE ÉLECTRONIQUE)	286
	288
CÂBLE D'AMORTISSEUR DE LAME (ASS)	273
CACHE-SOUPAPES (ASS)	14
	15
CADENAS (ASS)	788
	798
CADENAS (ASS) (BOÎTE À OUTILS)	969
CANALISATION DE DIRECTION AUXILIAIRE	611
CANALISATIONS D'ACCUMULATEUR (ASS)	578
CANALISATIONS D'AIR (ASS)	80
CANALISATIONS DE CARBURANT (ASS)	94
	96
	98
	100
CANALISATIONS DE CHAUFFAGE (ASS)	866
CANALISATIONS DE CLIMATISEUR (ASS)	863
CANALISATIONS DE DIRECTION (ASS)	613
CANALISATIONS DE GRAISSAGE (ASS)	504
CANALISATIONS DE POMPE (ASS)	597
	600
	603
CANALISATIONS DE RÉCHAUFFEUR DE LIQUIDE DE REFROIDISSEMENT	866
CANALISATIONS D'EAU (ASS)	66
	68
CANALISATIONS D'HUILE DE BOÎTE (ASS)	383
CANALISATIONS D'HUILE DE TURBOCOMPRESSEUR (ASS)	57
CANALISATIONS D'HUILE MOTEUR (ASS)	55
CANALISATIONS DU FILTRE A CARBURANT (ASS)	101
CANALISATIONS DU RÉSERVOIR D'AIR (ASS)	530
CANALISATIONS DU RIPPER (ASS)	606
	608
	610
CANALISATIONS HYDRAULIQUES (ASS)	580
	582
	583
	584
	586
	589
CANALISATIONS HYDRAULIQUES DE VENTILATEUR (ASS)	591
	593
	595
CAPTEUR - MOTEUR (ASS)	241
CAPTEUR DE PRESSION (ASS)	245
	246
	247
	248
	249
	250
CAPTEUR DE PRESSION (ASS) (VENTILATEUR DE RADIATEUR)	593
CAPTEUR DE TEMPERATURE (ASS)	255
	256
	257
CAPTEUR DE TEMPERATURE (ASS)	253
	254
CAPTEUR DE VITESSE (ASS)	251
	252
CARENAGE DE MOTEUR (ASS)	480
	484
CARTER AV (ASS)	31
	32
CARTER DE VOLANT (ASS)	30
CARTER ET PIECES DE BOITE (ASS)	346
*CARTRIDGE AS-DESICCANT (DÉSHYDRATEUR)	519
CEINTURE DE SECURITE (ASS)	903
	904
	905
CEINTURE DE SECURITE (ASS)	925
CEINTURE DE SECURITE (ASS) (RÉTRACTABLE)	920
CENDRIER	851
	854
CERCLE (ASS)	745
	747
CHAINES (ASS)	350
CHANGEMENT DE VITESSES AUTOMATIQUE (VERSION)	345
CHAPEAU - RADIATEUR (7-PSI)	72
	73
CHAPEAU ANTI-POUSSIERE	148
	149
CHAPEAU DE VALVE (TIGE)	427
	428
	429
	430
	431
	432
	455
	462
CHÂSSIS AV (ASS)	489
CHÂSSIS ET CARTER (ASS)	474
CHAUFFAGE DE CABINE (ASS)	827
	831
CHAUFFAGE DE CABINE (VERSION)	825
	826

* TRADUCTION NON DISPONIBLE AU MOMENT DE LA PUBLICATION

INDEX

Désignation	Page
CHAUFFAGE ET MONTAGE - CABINE (ASS)	825
CLAPET DE DECHARGE (ASS)	727
	728
	729
	730
	731
	732
	733
	734
	735
	736
	737
	738
	790
CLÉ (COUPE-BATTERIE)	266
CLIGNOTANT (ENS) (12/24V) (CLIGNOTANT, FEUX DE DÉTRESSE)	193
	196
	199
	202
	209
	212
	267
CLIGNOTANT (ENS) (24 VOLTS)	341
CLIMATISEUR (ASS)	782
CLIMATISEUR ET MONTAGE (ASS)	781
CLIMATISEUR (VERSION)	781
COLLECTEUR D'ÉCHAPPEMENT (ASS)	81
COMMANDE DE BOITE DE VITESSES (ASS)	365
COMMANDE DE DIFFÉRENTIEL - VERROUILLAGE (ASS)	363
COMMANDE DE DIRECTION (ASS)	548
COMMANDE DE DIRECTION SECONDAIRE (ASS)	137
COMMANDE DE FREIN DE STATIONNEMENT (ASS)	524
COMMANDE DE RÉGULATEUR (ASS)	86
COMMANDE D'EMBRAYAGE (ASS)	361
COMMANDE ELECTRONIQUE DE MOTEUR (ASS)	135
	136
COMMANDE ET MONTAGE - MOTEUR	134
COMMANDE HYDRAULIQUE DE BOÎTE (ASS)	367
COMMANDE HYDRAULIQUE (VERSION)	545
	546
COMMANDE NON PROGRAMMEE (ASS)	139
COMPRESSEUR D'AIR (ASS)	8
	10
COMPRESSEUR DE REFRIGERANT (ASS)	790
	791
CONDENSATEUR ET MONTAGE (RÉFRIGÉRANT)	793
CONDUIT (ASS)	813
CONDUIT ET COMMANDE (ASS)	812
CONSOLE DE CONDUITE (ASS)	794
CONSOLE DE FAISCEAU (ENS)	332
	334
CONSOLE DE FAISCEAU (ENS) (DIRECTION)	338
CONTACTEUR (ENS) (ACTIVATION DU VERROUILLAGE DU PAPILLON DES GAZ)	334
CONTACTEUR (ENS) (AMORTISSEUR DE LAME)	273
CONTACTEUR (ENS) (*AUXILIARY BACKUP)	178
CONTACTEUR (ENS) (BOÎTE AVEC PASSAGE AUTOMATIQUE DES VITESSES)	345
CONTACTEUR (ENS) (DÉGIVREUR ARRIÈRE)	821
CONTACTEUR (ENS) (DÉGIVREUR AVANT)	820
CONTACTEUR (ENS) (EXTRACTEUR DE BROCHE DE DÉPORT DE CERCLE)	335
CONTACTEUR (ENS) (EXTRACTEUR DE BROCHE DE DÉPORT DE CERCLE)	332
CONTACTEUR (ENS) (FEU ARRIÈRE)	338
CONTACTEUR (ENS) (GYROPHARE)	236
CONTACTEUR (ENS) (GYROPHARE)	150
CONTACTEUR (ENS) (GYROPHARE)	234
	235
CONTACTEUR (ENS) (INVERSEUR D'ÉCLAIRAGE DU PANNEAU)	338
CONTACTEUR (ENS) (MODE BLOCAGE DU PAPILLON DES GAZ)	332
CONTACTEUR (ENS) (RÉGLAGE DE VITESSE DU PAPILLON DES GAZ)	332
CONTACTEUR (ENS) (RÉTROÉCLAIRAGE DE PANNEAU)	341
CONTACTEUR (ENS) (VERROUILLAGE DE DIFFÉRENTIEL)	338
	341
CONTACTEUR (ENS) (24 VOLTS) (*AUXILIARY BACK-UP ALARM)	180
CONTACTEUR (ENS) (24 VOLTS) (BOUCLIER)	282
CONTACTEUR (ENS) (24 VOLTS) (BOUCLIER)	280
CONTACTEUR (ENS) (24 VOLTS) (CABINE-PROJECTEUR DROIT)	222
	224
CONTACTEUR (ENS) (24 VOLTS) (ESSAI DE DIRECTION SECONDAIRE)	329
CONTACTEUR (ENS) (24 VOLTS) (PROJECTEUR DROIT)	205
	207

* TRADUCTION NON DISPONIBLE AU MOMENT DE LA PUBLICATION

INDEX

Désignation	Page
CONTACTEUR (ENS) (24 VOLTS) (RÉTROVISEURS À CHAUFFAGE INTÉGRÉ)	872
CONTACTEUR (ENS) (24 VOLTS) (RÉTROVISEURS À CHAUFFAGE INTÉGRÉ)	876
CONTACTEUR MAGNETIQUE (ASS)	269 270 271
CONTACTEUR MAGNETIQUE (ASS) (24 VOLTS) (RELAIS DE DÉMARRAGE)	316 320
CONTACTEUR MAGNETIQUE (ENS) (24 VOLTS) (RÉCHAUFFEUR D'AIR D'ADMISSION)	271
CONTACTEUR ROTATIF (ASS) (CLIGNOTANTS, FEUX DE DÉTRESSE)	341
CONTACTEUR ROTATIF (ASS) (CLIGNOTANTS, FEUX DE DÉTRESSE)	193 196 199 202 209 212 267
*CONTROL GP-HYDRAULIC LOCKOUT	547
*CONTROL GP-UNPROGRAMMED	138
*CORE AS	368
*CORE AS-HEATER	783 828 832
CORPS D'INDICATEUR	72
CORPS D'INDICATEUR (NIVEAU DE LIQUIDE DE REFROIDISSEMENT)	73
COUDE D'ADMISSION D'AIR (ASS)	78
COUDE D'EAU (ASS)	62
COUDE D'ÉCHAPPEMENT (ASS)	79
COURONNE ET DIFFERENTIEL (ASS)	373
COURROIE	174
COURROIE (ALTERNATEUR)	122
COURROIE (CLIMATISEUR)	791
COURROIE INTERMÉDIAIRE (ASS)	843
COUVERCLE DE CARTER AV (ASS)	13
COUVERCLE DE PROTECTION (ASS)	477
COUVERCLE DE PROTECTION (ASS)	476
COUVERCLE DE VISITE (ASS)	475
COUVERCLE INFÉRIEUR-DOSSIER (ASS)	884
CREPINE (GOULOTTE DE REMPLISSAGE) (RÉSERVOIR D'HUILE HYDRAULIQUE)	633
CRIC - HYDRAULIQUE	972
CULASSE (ASS)	22 24
CULASSE (ENS)	19
CULBUTERIE (ASS)	47 48

D

Désignation	Page
DÉMARREUR ÉLECTRIQUE (ASS)	260 262 263
DENT DE SCARIFICATEUR (ASS)	775 776
DESHYDRATEUR (ASS)	516 517 519
DESHYDRATEUR (ASS) (DÉSHYDRATEUR)(24 VOLTS)	519
DIFFERENTIEL (ASS)	375
DIODE (LED)	234 235
DIRECTION AUXILIAIRE (VERSION)	630
DISJONCTEUR (ASS)	132 133
DISJONCTEUR DE SECURITE (ENS) (PÉDALE D'APPROCHE LENTE)	341
DISJONCTEUR DE SECURITE (ENS) (PÉDALE D'APPROCHE LENTE)	338
DISJONCTEUR DE SECURITE (ENS) (PÉDALE DE FREIN)	342
DISJONCTEUR (ENS) (15A) (COMMANDE DU MOTEUR)	317 321
DISJONCTEUR (ENS) (15A) (PHARES AVANT)	132 133
DISJONCTEUR (ENS) (15A) (PROJECTEURS DE TRAVAIL AVEC BARRE LUMINEUSE)	132
DISJONCTEUR (ENS) (80A) (ALTERNATEUR)	316 320
DISJONCTEUR (ENS) (80A) (PRINCIPAL)	316 322
DISPOSITIF D'ARRÊT DE DISTRIBUTEUR (ASS)	571 572
DISPOSITIF D'EVACUATION DES VAPEURS DE CARTER	52 53
DISTRIBUTEUR (ASS)	683 685 687 689 691 693 695 697

* TRADUCTION NON DISPONIBLE AU MOMENT DE LA PUBLICATION

INDEX

Désignation	Page
	699
	701
	703
	705
	707
	709
	711
	713
	715
	717
	719
DISTRIBUTEUR (ASS) (AIR)	534
DISTRIBUTEUR (ASS) (DÉPORT LATÉRAL)	669
	670
	671
	673
	674
	678
DISTRIBUTEUR (ASS) (DÉPORT LATÉRAL)	667
DISTRIBUTEUR (ASS) (DEVERS DE LAME)	667
	669
	670
	671
	673
	674
	678
DISTRIBUTEUR (ASS) (ENTRAÎNEMENT DE CERCLE)	667
	669
	670
	671
	673
	674
	678
DISTRIBUTEUR (ASS) (LEVAGE DE LAME)	670
	671
DISTRIBUTEUR (ASS) (LEVAGE DE LAME)	667
DISTRIBUTEUR (ASS) (SCARIFICATEUR)	671
DISTRIBUTEUR D'AIR (ASS)	533
	534
DISTRIBUTEUR DE BOITE (ASS)	406
DISTRIBUTEUR 4 ÉLÉMENTS (ASS)	666
	667
	668
	669
DISTRIBUTEUR 5 ÉLÉMENTS (ASS)	670
	671
	672
	673
	674
	675
DISTRIBUTEUR 6 ÉLÉMENTS (ASS)	676
	677
DISTRIBUTEUR 7 ÉLÉMENTS (ASS)	678
*DOOR GP (*AIR VENT)	851
	854
	861

E

Désignation	Page
EAU DES CHEMISES - RECHAUFFEUR (ASS)	148
	149
ÉCLAIRAGE - AVERTISSEUR (ASS)	231
	232
	234
ÉCLAIRAGE - AVERTISSEUR (ASS)	235
ÉCLAIRAGE - FEUX DE ROUTE (ASS)	228
ÉCLAIRAGE - GYROPHARE (ASS)	236
ÉCLAIRAGE - PROJECTEURS (ASS)	182
	183
	184
	186
	188
	189
	191
	192
	193
	196
	199
	202
	205
	207
	209
	212
	215
	217
	220
	224
	226
	227
ÉCLAIRAGE - PROJECTEURS (ASS)	219
ÉCLAIRAGE - PROJECTEURS (ASS)	222
ECLAIRAGE AR (ASS)	180
ECLAIRAGE AR (ASS)	178
ÉCLAIRAGE CLIGNOTANT	229
	230
ÉCLAIRAGE-PROJECTEURS (VERSION)	175
	176
ÉCLAIRAGE (VERSION)-PROJECTEUR & SIGNAL	177
ÉCRAN D'ARBRE MOTEUR (ASS)	507
ÉCRAN (DISTRIBUTEUR DE BOÎTE DE VITESSES)	406
ÉCRAN MAGNÉTIQUE (ASS)	388

* TRADUCTION NON DISPONIBLE AU MOMENT DE LA PUBLICATION

INDEX

Désignation	Page
ÉCRAN MAGNÉTIQUE (BOÎTE DE VITESSES)	388
ÉCRAN MAGNÉTIQUE (HUILE DE BOÎTE)	346
ÉCRAN THERMIQUE (ASS)	508
ÉLECTRONIQUE DE TRANSMISSION (ASS)	146 147
ÉLECTRONIQUE-MONITEUR (ASS)	146
ÉLÉMENT DE FILTRE À HUILE (ENS) (GRANDE EFFICACITÉ)	383
ÉLÉMENT DE FILTRE À HUILE (ENS) (GRANDE EFFICACITÉ) (BOÎTE DE VITESSES)	380
ÉLÉMENT DE FILTRE À HUILE (ENS) (HYDRAULIQUE) (EFFICACITÉ NORMALE)	633
ÉLÉMENT DU RÉCHAUFFEUR D'EAU DES CHEMISES (ENS) (120 VOLTS/ 1500 WATTS)	149
ÉLÉMENT DU RÉCHAUFFEUR D'EAU DES CHEMISES (ENS) (240 VOLTS/1500 WATTS)	148
ÉLÉMENT PRINCIPAL (ENS)	76
ÉLÉMENT SECONDAIRE (ENS)	76
EMBOUT D'EXTRÉMITÉ (ASS)	752
EMBRAYAGE DE BOÎTE DE VITESSES (ASS)	351 354 357 359
ENTRAÎNEMENT DE CERCLE (ASS)	574
ENTRAÎNEMENT DE CHAÎNE (ASS)	350
ENTRAÎNEMENT POUR COURROIE (GYROPHARE)	173
ENTRETIEN DE LA TRANSMISSION (ASS) (MOTOR GRADER)	147
ÉQUIPEMENT POUR DÉPLACEMENT ROUTIER (VERSION)	4
ESSIEU AV (ASS)	471
ESSUIE-GLACE (ASS)	948 949 951 953 955 957 961 965 967 968
ESSUIE-GLACE (ASS)	959 963 966
ESSUIE-GLACE (VERSION)	947

F

Désignation	Page
FAISCEAU ARRIÈRE (ENS)	320
FAISCEAU ARRIÈRE (ENS) (CENTRE D'ENTRETIEN-DROITE)	316
FAISCEAU ARRIÈRE (ENS) (CENTRE D'ENTRETIEN, GAUCHE)	316
FAISCEAU-BOÎTE DE TRANSMISSION	304 324 346 367
FAISCEAU DE CABLES - CAPTEUR (ENS) (FIL DE CALIBRE 14)	245
FAISCEAU DE CABLES - CAPTEUR (ENS) (FIL DE CALIBRE 14) (COMMANDE D'INJECTION)	249
FAISCEAU DE CABLES - CAPTEUR (ENS) (*14-GA WIRE)	254
FAISCEAU DE CABLES - TABLEAU DE BORD (ENS)	891 893
FAISCEAU DE CABLES DE LA PLATE-FORME	293 297
FAISCEAU DE CABLES DU TABLEAU DE BORD (ENS) (RÉTROÉCLAIRAGE DE PANNEAU)	895
FAISCEAU DE CABLES (ENS) (CONSOLE)	341
FAISCEAU DE CHÂSSIS ARRIÈRE	305 324 325
FAISCEAU DE CHÂSSIS AVANT (ENS)	297
FAISCEAU DE CHÂSSIS AVANT (ENS)	193 196 199 202
FAISCEAU DE CHÂSSIS AVANT (ENS) (BARRE LUMINEUSE DU NEZ)	209
FAISCEAU DE CHÂSSIS AVANT (ENS) (PROJECTEURS AVANT)	212
FAISCEAU DE CHÂSSIS (ENS)	219 273
FAISCEAU DE CHÂSSIS (ENS) (BOUCLIER)	220
FAISCEAU DE CHAUFFAGE ET CLIMATISATION	783 827 831
FAISCEAU DE CONDENSEUR (ENS) (CLIMATISEUR)	793
FAISCEAU D'ÉCLAIRAGE ARRIÈRE (ENS)	217 305
FAISCEAU D'ÉCLAIRAGE ARRIÈRE (ENS)	215
FAISCEAU D'ÉCLAIRAGE ARRIÈRE (ENS)	302
FAISCEAU D'ÉCLAIRAGE ARRIÈRE (ENS)	309 312

* TRADUCTION NON DISPONIBLE AU MOMENT DE LA PUBLICATION

INDEX

Désignation	Page
FAISCEAU D'ÉCLAIRAGE ARRIÈRE (ENS) (DROITE)	309
	312
FAISCEAU D'ÉCLAIRAGE ARRIÈRE (ENS) (GAUCHE)	310
	312
FAISCEAU D'ÉCLAIRAGE AVANT (ENS)	236
	298
FAISCEAU D'ÉCLAIRAGE AVANT (ENS)	205
	207
	222
	224
FAISCEAU D'ÉCLAIRAGE AVANT (ENS) (BARRE LUMINEUSE SURÉLEVÉE)	209
FAISCEAU D'ÉCLAIRAGE AVANT (ENS) (PROJECTEURS)	212
FAISCEAU D'ÉCLAIRAGE (ENS)	199
	202
FAISCEAU D'ESSUIE-GLACE (ENS) (BOÎTIER À FUSIBLES)	284
FAISCEAU D'ESSUIE-GLACE (ENS) (COMMANDE)	284
FAISCEAU DU REFROIDISSEUR D'HUILE (ENS) (MOTEUR)	59
FAISCEAU (ENS) (HUILE DE BOÎTE)	370
*FILM (*VHP PLUS) (*VHP PLUS)	971
FILTRE - SÉPARATEUR D'EAU ET DE CARBURANT (ENS)	91
FILTRE A AIR (ASS)	75
	76
	77
FILTRE À AIR (CABINE)	822
FILTRE À AIR DE CABINE (ASS)	822
FILTRE À CARBURANT	115
FILTRE A CARBURANT (ASS)	89
FILTRE A CARBURANT (ENS)	89
FILTRE A HUILE (ASS)	380
FILTRE À HUILE ET MONTAGE (ASS)	378
FILTRE À HUILE MOTEUR (ASS)	49
	51
FILTRE A HUILE MOTEUR (ENS)	51
FILTRE DE SÉPARATEUR D'EAU ET DE CARBURANT (ASS)	91
FLEXIBLE D'ÉVACUATION DES VAPEURS	52
	53
FREIN DE MANOEUVRE - COMMANDE (ASS)	526
FREIN DE MANOEUVRE (ASS)	522
FREIN DE STATIONNEMENT (ASS)	520
FUSIBLE (*10-AMPERE) (DÉGIVREUR ARRIÈRE)	821
FUSIBLE (*10-AMPERE) (DÉGIVREUR AVANT)	820
FUSIBLE (*10-AMPERE) (LAME/ PROJECTEUR AVANT)	188
FUSIBLE (10A)	193
	199
	202
	205
	207
	209
	212
	222
	224
	231
	267
	280
	282
	284
	329
	338
	341
FUSIBLE (10A)	957
FUSIBLE (10A) (*AUXILIARY BACK-UP ALARM)	180
FUSIBLE (10A) (CLIGNOTANT, FEUX DE DÉTRESSE)	196
FUSIBLE (10A) (CONVERTISSEUR)	141
FUSIBLE (10A) (DÉSHYDRATEUR)	516
FUSIBLE (10A) (DÉVOLTEUR POUR COURANT)	143
FUSIBLE (10A) (ESSUIE-GLACE)	963
FUSIBLE (10A) (ESSUIE-GLACE)	961
FUSIBLE (10A) (ESSUIE-GLACE)	959
FUSIBLE (10A) (GYROPHARE)	232
	277
FUSIBLE (10A) (LAMPE D'APPOINT)	178
FUSIBLE (10A) (PROJECTEUR DE LAME)	189
FUSIBLE (10A) (PROJECTEURS)	191
	192
FUSIBLE (10A) (RÉTROVISEURS À CHAUFFAGE INTÉGRÉ)	872
	876
FUSIBLE (15A)	275
	278
	338
	341
FUSIBLE (15A) (CLIMATISEUR)	781
FUSIBLE (15A) (CONVERTISSEUR DE PUISSANCE)	142
FUSIBLE (15A) (PROJECTEURS DE CABINE)	191
	192
FUSIBLE (15A) (RÉCHAUFFEUR)	825
FUSIBLE (30A)	144

* TRADUCTION NON DISPONIBLE AU MOMENT DE LA PUBLICATION

INDEX

Désignation	Page
G	
GOULOTTE DE REMPLISSAGE D'HUILE DE TRANSMISSION	377
GRAISSEUR (CHAPE D'ANCRAGE DU VÉRIN DE DÉPORT DE CERCLE)	553
GROUPE DE ROTATION DE POMPE	627, 628
GROUPE D'ORIENTATION	632
H	
HUILE MOTEUR - CARTER (ASS)	36
I	
INDICATEUR DE COLMATAGE DE FILTRE À AIR (ASS)	75
INJECTEUR DE CARBURANT (ASS)	92, 93
INJECTEURS-POMPES HYDRAULIQUES (ENS)	104, 105
INSONORISATION (ASS)	46
INTERRUPTEUR - BOUTON-POUSSOIR (ENS) (MODE DU CONDUCTEUR)	891
INTERRUPTEUR - BOUTON-POUSSOIR (ENS) (MODES D'AFFICHAGE)	893, 895
INTERRUPTEUR - DÉRIVATION (ASS)	265
INTERRUPTEUR À BASCULE (ENS) (ARRÊT À HAUTEUR D'HOMME)	324
INTERRUPTEUR À BASCULE (ENS) (ARRÊT DU MOTEUR À HAUTEUR D'HOMME)	304
INTERRUPTEUR BALANCIER (ENS) (GYROPHARE)	150
INTERRUPTEUR BALANCIER (ENS) (INTERRUPTEUR D'ÉCLAIRAGE - POTENCE)	199, 202, 209
INTERRUPTEUR BALANCIER (ENS) (LAME)(PROJECTEUR AVANT)	188
INTERRUPTEUR BALANCIER (ENS) (PHARES AVANT, FEUX ARRIÈRE)	193, 196, 199, 202, 212, 341
INTERRUPTEUR BALANCIER (ENS) (PHARES AVANT, FEUX ARRIÈRE)	209
INTERRUPTEUR BALANCIER (ENS) (PHARES AVANT, FEUX ARRIÈRE)	267
INTERRUPTEUR BALANCIER (ENS) (PROJECTEUR DE LAME)	189, 191
INTERRUPTEUR BALANCIER (ENS) (PROJECTEUR DE LAME)	192
INTERRUPTEUR BALANCIER (ENS) (PROJECTEURS AVANT)	212
INTERRUPTEUR BALANCIER (ENS) (*THROTTLE LOCK SET, RESET)	334
INTERRUPTEUR DE DÉMARRAGE (ASS) (CLAVETTE)	332, 334
INTERRUPTEUR D'ÉCLAIRAGE (ASS)	267
INTERRUPTEUR D'ESSUIE-GLACE (ASS)	965
INTERRUPTEUR D'ESSUIE-GLACE (ASS)	272
INTERRUPTEUR D'ESSUIE-GLACE (ASS) (24 VOLTS) (AV, INTERMITTENT)	278
INTERRUPTEUR D'ESSUIE-GLACE (24 VOLTS) (ARRIÈRE)	957
INTERRUPTEUR D'ESSUIE-GLACE (24 VOLTS) (ARRIÈRE)	959
INTERRUPTEUR D'ESSUIE-GLACE (24 VOLTS) (ARRIÈRE)	961, 963
INTERRUPTEUR ROTATIF (ENS) (CLIGNOTANT DE DIRECTION)	267
INTERRUPTEUR ROTATIF (ENS) (*HIGH, LOW BEAM)	193
INTERRUPTEUR ROTATIF (ENS) (INVERSEUR D'INTENSITÉ DE PHARES AVANT)	196, 199, 202, 209, 212
INTERRUPTEUR ROTATIF (ENS) (INVERSEUR D'INTENSITÉ DE PHARES AVANT)	341
INTERRUPTEUR ROTATIF (ENS) (VITESSE DU VENTILATEUR)	827, 831
INTERRUPTEUR ROTATIF (ENS) (VITESSE DU VENTILATEUR)	782
INTERRUPTEUR ROTATIF (ENS) (24 VOLTS) (ESSUIE-GLACE AVANT)	284
INTERRUPTEUR ROTATIF (ENS) (24 VOLTS) (*FRONT WIPER CONTROL)	275
INTERRUPTEUR SPHÉRIQUE (ENS) (INDICATEUR DE DÉPORT DE CERCLE)	293, 297
ISOLATION DE CABINE (ASS)	847
J	
JANTE (ASS)	466

* TRADUCTION NON DISPONIBLE AU MOMENT DE LA PUBLICATION

INDEX

Désignation	Page
	467
	468
	469
	470
JAUGE D'HUILE MOTEUR (BAIONNETTE) (ASS)	54
JOINT DE VILEBREQUIN (ASS)	44
JOINT DE VILEBREQUIN (ASS) (ARRIÈRE)	44
JOINT DE VILEBREQUIN (ASS) (AVANT) (AVANT)	44
JOINT PLAT	114
JOINT PLAT (CARTER DE RÉGULATEUR)	68
JOINT PLAT (RÉGULATEUR D'EAU)	68
JOINT UNIVERSEL (ASS)	396

K

KIT - COUSSIN	814
	815
KIT D'ATTACHE DE CEINTURE DE SECURITE	931
KIT D'ATTACHE (SIÈGE)	933
KIT DE BAGUE (DÉMARREUR)	263
KIT DE BAGUE (DÉMARREUR)	260
KIT DE BALAI D'ESSUIE-GLACE (ARRIÈRE)	959
KIT DE BALAI D'ESSUIE-GLACE (PROFIL BAS ARRIÈRE)	957
KIT DE BALAIS (DÉMARREUR)	263
KIT DE BALAIS (DÉMARREUR)	260
KIT DE BLOC COULISSANT	924
KIT DE BLOC COULISSANT (COMPREND BLOCS ET BOULON)	920
KIT DE BLOC COULISSANT (COMPREND 4 BLOCS)	921
KIT DE BORNE (ALTERNATEUR)	120
KIT DE BORNE D'ALTERNATEUR (RELAIS)	125
KIT DE BORNE D'ALTERNATEUR (SORTIE)	125
KIT DE BORNE D'ALTERNATEUR (TÉMOIN LUMINEUX)	125
KIT DE BOULONNERIE (ALTERNATEUR)	120
	125
KIT DE BOULONNERIE (SIÈGE)	933
KIT DE BRIDE DE FIXATION DE FILTRE A AIR	76
KIT DE CALES (COMPREND 17 CALES)	623
KIT DE CAPTEUR (NIVEAU DE CARBURANT)	115
KIT DE COUSSIN DE SIEGE	910
KIT DE COUSSIN DE SIEGE (VINYLE)	912
KIT DE COUSSINET	841
KIT DE COUSSINET (ALTERNATEUR)	120
KIT DE DIAPHRAGME	835
KIT DE GAINE	931
KIT DE JOINTS	540
	542
	548
	558
	560
	565
	741
	742
	744
KIT DE JOINTS (ACCUMULATEUR D'AMORTISSEUR DE LAME)	541
KIT DE JOINTS (*DIFFERENTIAL LOCK VALVE)	404
KIT DE JOINTS (SOLÉNOÏDE DE BOÎTE DE VITESSES)	405
KIT DE JOINTS (VERROUILLAGE DE DIFFÉRENTIEL)	397
KIT DE LEVIER (DÉMARREUR)	260
	263
KIT DE MARTEAU HYDRAULIQUE	823
	824
KIT DE PANNEAU DU DOSSIER DU SIEGE	910
	912
KIT DE PARE-CHOCS (RÉGLAGE DU POIDS)	841
KIT DE PISTON DE COMMANDE	623
KIT DE PISTON EXCENTRIQUE	623
KIT DE POUSSOIR	840
	841
KIT DE PRISE FEMELLE (2 BROCHES)	168
	741
KIT DE PRISE FEMELLE (2 BROCHES)	227
KIT DE PRISE FEMELLE (2 BROCHES)	176
KIT DE PRISE FEMELLE (2 BROCHES) (ÉLECTROVANNE)	537
KIT DE PRISE FEMELLE (2 BROCHES) (LAMPE DE PLAQUE D'IMMATRICULATION)	169
KIT DE PRISE FEMELLE (2 BROCHES) (ORIFICE DE PUISSANCE 12V)	777
	778
KIT DE PRISE FEMELLE (6 BROCHES)	949
KIT DE REDRESSEMENT	885
KIT DE REDRESSEUR	125
KIT DE REGLAGE	885
KIT DE REGLAGE DE SIEGE - INCLINAISON	885
KIT DE RESSORTS	841
KIT DE RESSORTS (REGLAGE DE HAUTEUR)	841
KIT DE ROULEAU	931
KIT DE ROULEAU (SIÈGE)	933
KIT DE SOLÉNOÏDE (DÉMARREUR)	263
KIT DE SOUPAPE DE COMMANDE D'AIR	534
KIT DE TIGE	885

* TRADUCTION NON DISPONIBLE AU MOMENT DE LA PUBLICATION

INDEX

Désignation	Page
KIT DE VERIFICATION DU REGULATEUR (COMPRESSEUR D'AIR)	531
KIT DE VIS DE RETENUE (M5X0,8X53,24-MM)	147
KIT DE VIS DE RETENUE (*M5X0.8X53.24-MM) (COMMANDE (ASS))	139
KIT D'INDICATEUR (RÉGLAGE DU POIDS)	841
KIT D'INDICATEUR (SIÈGE)	933
KIT D'ISOLANT (DÉMARREUR)	260
	263
KLAXON PNEUMATIQUE (ASS)	835
	836
	838

L

LAME (ASS)	753
	754
	755
LAME DE COUPE (ASS)	757
*LAMP GP-FLOOD (*24-VOLT, VERTICAL MOUNT)	215
	219
*LAMP GP-FLOOD (*24-VOLT, VERTICAL MOUNT) (*BLADE)	188
*LAMP GP-FLOOD (*24-VOLT, VERTICAL MOUNT) (*BLADE)	191
*LAMP GP-FLOOD (*24-VOLT, VERTICAL MOUNT) (*CAB)	182
*LAMP-HALOGEN (*24-VOLT, 65-WATT) (FEUX DE CROISEMENT)	158
LAMPE - CLIGNOTANT DE DIRECTION (ASS)	170
	171
	172
LAMPE - GYROPHARE (ASS)	173
	174
LAMPE - PHARE (ASS)	153
LAMPE - PHARE (ASS)	155
	156
	157
LAMPE - PHARE (ASS)	154
LAMPE - PHARE (ASS) (24V, SUPPORT VERTICAL)	209
LAMPE - PHARE (ASS) (24V, SUPPORT VERTICAL) (*CAB-RH)	222
LAMPE - PHARE (ASS) (24V, SUPPORT VERTICAL) (DROITE)	205
LAMPE - PHARE ET CLIGNOTANT	164
	166
LAMPE (ENS)	309
	312
LAMPE HALOGÈNE (24V, 65W)	153
	155
LAMPE HALOGÈNE (24V, 65W) (FEUX DE CROISEMENT)	184
LAMPE HALOGÈNE (24V, 65W) (FEUX DE ROUTE)	184
LAMPE HALOGÈNE (24V, 65W) (FEUX DE ROUTE)	159
LAMPE HALOGÈNE (24V, 65W) (LAME)	157
LAMPE HALOGÈNE (24V, 65W) (PROJECTEUR)	154
	156
LAMPE-PLAQUE D'IMMATRICULATION (ASS)	169
LAVE-GLACE - VITRE (ASS)	935
	937
	938
LENTILLE (ENS) (FEUX DE CROISEMENT)	184
LENTILLE (ENS) (*HEAD)	162
LENTILLE (ENS) (*HEAD)	160
LENTILLE (ENS) (JAUNE) (CLIGNOTANT)	160
	162
LENTILLE (ENS) (JAUNE) (SIGNAL)	164
	166
LENTILLE (ENS) (PHARE AVANT)	166
LENTILLE (ENS) (PHARE AVANT)	164
LENTILLE (ENS) (PHARE AVANT)(FEUX DE CROISEMENT)	158
LENTILLE (ENS) (PLAFONNIER)	154
	155
	156
	157
LENTILLE (GYROPHARE JAUNE)	173
LENTILLE (JAUNE) (CLIGNOTANT)	160
	162
LENTILLE (JAUNE) (SIGNAL)	164
	166
LENTILLE ORANGE (GYROPHARE)	174
LENTILLE (PLAQUE D'IMMATRICULATION)	169
LEVAGE - LAME (ASS)	761
LITTÉRATURE (ASS)	868
LOGICIEL - TRANSMISSION (ASS)	146
LOGICIEL - TRANSMISSION (ENS) (MOTOR GRADER)	147
LOGICIEL MOTEUR (ASS) (PUISSANCE VARIABLE)	971
LOGICIEL MOTEUR (ASS) (PUISSANCE VARIABLE)	971

M

MACHOIRE (ENS)	91
MANOCONTACT (CARBURANT) (CARBURANT)	89

* TRADUCTION NON DISPONIBLE AU MOMENT DE LA PUBLICATION

INDEX

Désignation	Page
MANOCONTACT (ENS) (*AIR BRAKES)	293
MANOCONTACT (ENS) (AIR DE FREIN)	297
MANOCONTACT (ENS) (CLIMATISEUR)	863
MANOCONTACT (ENS) (DIRECTION AUXILIAIRE)	329
MANOCONTACT (ENS) (DIRECTION PRINCIPALE)	297
MANOCONTACT (ENS) (FEU D'ARRÊT)	293 297
MANOCONTACT (ENS) (FREIN DE STATIONNEMENT)	294 297
MANOMETRE D'AIR (ASS) (DROITE)	891 893 895
MANOMETRE D'AIR (ASS) (GAUCHE)	891 893 895
MARCHEPIED (ASS)	509
MARTEAU ET MONTAGE (ASS)	823 824
MODULE - QUATRE INSTRUMENTS (ASS)	878
MODULE D'INDICATEUR DE VITESSE ET COMPTE-TOURS (ASS)	879
MODULE D'INDICATEUR DE VITESSE ET COMPTE-TOURS (ASS) (TABLEAU DE BORD)	895
MONTAGE - GYROPHARE (ASS)	150
MONTAGE - IMMATRICULATION (ASS)	506
MONTAGE D'AILERON CHASSE-NEIGE (ASS)	764
MONTAGE DE CABINE (ASS)	880
MONTAGE DE FILTRE À CARBURANT (ASS)	103
MONTAGE DE MOTEUR ET BOÎTE (ASS)	34
MONTAGE DE RADIO (ASS)	845
MONTAGE DE RADIO (VERSION)	844
MONTAGE DE RIPPER (ASS)	763
MONTAGE DE SOLÉNOÏDE (ASS)	239
MONTAGE DU TOIT ROPS (ASS)	881 883
MOTEUR - PARTIE CENTRALE (VERSION)	7
MOTEUR À ENGRENAGES (ASS)	617
MOTEUR D'ESSUIE-GLACE (ASS)	968
MOTEUR D'ESSUIE-GLACE (ASS) (ARRIÈRE)	959 963
MOTEUR D'ESSUIE-GLACE (ASS) (AVANT)	967
MOTEUR D'ESSUIE-GLACE (ASS) (SUPÉRIEUR AVANT)	951 955
MOTEUR D'ESSUIE-GLACE (ASS) (24 VOLTS)	948
MOTEUR D'ESSUIE-GLACE (ASS) (24 VOLTS) (INFÉRIEUR)	955
MOTEUR D'ESSUIE-GLACE (ASS) (24 VOLTS) (INFÉRIEUR AVANT)	951
MOTEUR ELECTRIQUE (ASS)	238
MOTEUR ET VENTILATEUR (ASS)	63
MOTEUR HYDRAULIQUE (ASS)	618
MOTEUR (VERSION)	6
*MOTOR GP-ELECTRIC	816
*MOTOR GP-ELECTRIC (*DEFROSTER FAN)	818

O

OEILLETONS DE LEVAGE MOTEUR (ASS)	33
*ORIFICE	398 401

P

*PADLOCK GP	635 899
PANNEAU DE FAISCEAU (ENS)	178 205 207
PANNEAU DE FAISCEAU (ENS)	280
PANNEAU DE FAISCEAU (ENS) (CONTACTEUR)	876
PANNEAU D'INSONORISATION (ASS)	37
PARE-SOLEIL (ASS)	902
PHARE AV (ASS)	159 162
PHARE AV (ASS)	158 160
PIGNONNERIE AV (ASS)	29
PISTON (ASS)	39
PISTON ET BIELLE (ASS)	38
PLAFONNIER (ASS)	152
PLAFONNIER (ASS) (24V, AVEC CONTACTEUR)	275 278 284
PLAQUE - AVERTISSEMENT (PAS DE DÉGAGEMENT)	972
PLAQUE - AVERTISSEMENT (PAS DE DÉGAGEMENT)	476 477
PLAQUE DE POUSSÉE (ASS)	751
PLAQUE DE RADIATEUR (ASS)	69
PLAQUE D'INSTRUCTIONS (BATTERIE)	316 320
PLAQUE D'INSTRUCTIONS (CLIMATISEUR)	782

* TRADUCTION NON DISPONIBLE AU MOMENT DE LA PUBLICATION

INDEX

Désignation	Page
PLAQUE (IDENTIFICATION) (ALTERNATEUR)	316, 320
PLAQUE (IDENTIFICATION) (MOTEUR)	316, 320
PLAQUE SIGNALÉTIQUE (ASS)	970, 971
PLAQUE SIGNALÉTIQUE (ASS)	971
PLAQUE SIGNALETIQUE (*BLADE CENTERSHIFT)	973
PLAQUE SIGNALETIQUE (CLIGNOTANTS, FEUX DE DÉTRESSE)	193, 196, 199, 202, 209, 212, 267, 341
PLAQUE SIGNALÉTIQUE DE CONTROLEUR (ÉLECTROMODULE DE SURVEILLANCE CATERPILLAR)	891, 895
PLAQUE SIGNALÉTIQUE DE CONTROLEUR (MODULE QUATRE INSTRUMENTS)	893
PLAQUE SIGNALETIQUE (FEUX DE ROUTE, FEUX DE CROISEMENT)	196, 199, 202, 212, 341
PLAQUE SIGNALETIQUE (FEUX DE ROUTE, FEUX DE CROISEMENT)	193, 209, 267
PLAQUES SIGNALETIQUES ET AUTOCOLLANTS (ASS)	1, 974, 975, 976, 977
PLAQUES SIGNALETIQUES ET AUTOCOLLANTS (ASS)	972
PLAQUES SIGNALETIQUES ET AUTOCOLLANTS (ASS) (RÉFLECTEUR)	2
PLATE-FORME - SUPPORT (ASS)	515
*PLATE-IDENTIFICATION (*MAXIMUM WEIGHT)	4
PLATEAU OSCILLANT (ASS)	631
PNEU - GROUPE DE VALVE	426, 427, 428, 429, 431, 432, 433, 434, 435, 436, 437, 438, 439, 440, 441, 442, 443, 446, 447, 448, 449, 450, 452, 453, 454, 455, 456, 457, 458, 459, 460, 461, 462, 463, 464, 466, 468, 469, 470
PNEU ET JANTE (VERSION)	392
POMPE A EAU (ASS)	70, 71
POMPE A ENGRENAGES (ASS)	386, 387
POMPE A HUILE MOTEUR (ASS)	58
POMPE A PISTONS (ASS)	623, 625
POMPE D'AMORÇAGE DE CARBURANT ET SÉPARATEUR D'EAU (ASS)	117
POMPE DE DIRECTION AUXILIAIRE ET MONTAGE (ASS)	620, 622
POMPE DE SÉPARATEUR D'EAU ET D'AMORÇAGE DE CARBURANT (ASS)	117
POMPE D'INJECTEURS-POMPES HYDRAU. ET MONTAGE	104, 105

* TRADUCTION NON DISPONIBLE AU MOMENT DE LA PUBLICATION

INDEX

Désignation	Page
POMPE D'INJECTION (ASS)	108, 109, 110
POMPE ET MONTAGE - PISTON (ASS)	621
PORTE (ASS)	799, 802
PORTE (ASS) (PURGEUR D'AIR)	859
PORTE-BALAIS (ENS)	260
PORTIÈRE DE CABINE (ASS)	804, 806, 808, 810
POULIE-ROUE AVANT (ASS)	41
PRISE DE BATTERIE AUXILIAIRE (ASS)	240
PROTECTION DE PLATE-FORME (ASS)	497, 499
PROTECTION DU RÉSERVOIR DE CARBURANT (ASS)	496
PROTÈGE-RADIATEUR ET SUPPORT (ASS)	491
*PUMP GP-FUEL PRM & PRIM FILTER	106, 107

R

Désignation	Page
RADIATEUR (ASS)	72, 73
RALLONGE DE LAME (ASS)	758, 759, 760
RALLONGE DU DOSSIER DE SIEGE	814, 815, 920
RÉCEPTEUR-DÉSHYDRATEUR (ASS) (CLIMATISEUR)	863
RÉCHAUFFEUR DE FAISCEAU (ENS) (AUXILIAIRE DE DÉMARRAGE)	259
RECHAUFFEUR (ENS) (*22-VOLT, 1892-WATT)	258
RÉDUCTEURS (ASS)	381
REFROIDISSEMENT (VERSION)	60, 61
REFROIDISSEUR D'ADMISSION ET MONTAGE (ASS)	74
REFROIDISSEUR D'HUILE DE BOÎTE (ASS)	368, 370
REFROIDISSEUR D'HUILE MOTEUR (ASS)	59
REGARD DE NIVEAU (HUILE HYDRAULIQUE)	633
REGLAGE DE SIEGE (ASS)	779
REGULATEUR DE LA TENSION (ENS) (24 VOLTS)	125
REGULATEUR DE PRESSION DE CARBURANT (ASS)	111
REGULATEUR DE PRESSION DE CARBURANT (ASS)	112
RÉGULATEUR (ENS) (PRESSION DE CARBURANT)	111, 112
RÉGULATEUR-PRESSION (CARBURANT)	106
*REGULATOR AS-VOLTAGE (*24-VOLT)	120
RELAIS (ENS) (24 VOLTS)	324
RELAIS (ENS) (24 VOLTS)	180
RELAIS (ENS) (24 VOLTS) (DÉMARRAGE)	304
RELAIS (ENS) (24 VOLTS) (LAMPE D'APPOINT AUXILIAIRE)	178
RELAIS (ENS) (24 VOLTS) (PROJECTEURS)	191
RELAIS (ENS) (24 VOLTS) (PROJECTEURS)	192
RELAIS (ENS) (24 VOLTS) (*TAIL, PANEL LAMPS)	338
RELAIS (ENS) (24 VOLTS) (TÉMOINS DE PANNEAU, ARRIÈRE)	341
RENIFLARD (ENS) (MOTEUR)	12
RENIFLARD (ENS) (TANDEM)	391
REPÈRE DE LAMPE (ASS)	168
RÉSERVOIR DE CARBURANT - BOULONNERIE (ASS)	88
RÉSERVOIR DE CARBURANT (ASS)	113, 114
RÉSERVOIR DE CARBURANT (ASS)	115
RÉSERVOIR HYDRAULIQUE ET FILTRE (ASS)	633
RÉSERVOIR HYDRAULIQUE ET MONTAGE (ASS)	635
RÉSERVOIR PNEUMATIQUE (ASS)	531
RÉTROVISEUR (ASS)	870, 871, 872
RÉTROVISEUR (ASS)	874, 875, 876
RIPPER (ASS)	766
RIPPER (VERSION)	765
ROBINET DE BATTERIE (ASS)	266
ROPS OUVERTE (VERSION)	899
ROTATION DE LA ROUE DU VENTILATEUR SOUFFLANT (ARRÊT MOTEUR)	325
ROTATION DE LA ROUE DU VENTILATEUR SOUFFLANT (ARRÊT MOTEUR)	305
ROTATION DE LA ROUE DU VENTILATEUR SOUFFLANT (*DO NOT DRILL, WELD ROPS)	899
ROTATION DE LA ROUE DU VENTILATEUR SOUFFLANT (ISSUE DE SECOURS/RETIRER VITRE)	823, 824

* TRADUCTION NON DISPONIBLE AU MOMENT DE LA PUBLICATION

INDEX

Désignation	Page
ROTATION DE LA ROUE DU VENTILATEUR SOUFFLANT (N. D'ÉTAPE)	496
ROTATION DE LA ROUE DU VENTILATEUR SOUFFLANT (NE PAS PERCER/SOUDER LE CADRE ROPS)	900
ROTATION DE LA ROUE DU VENTILATEUR SOUFFLANT (RÉGLAGE DU SIÈGE)	933
ROUE - GROUPE DE MONTAGE	385
ROUE ET PNEU (ASS)	426
	427
	428
	429
	430
	431
	432
	433
	434
	435
	436
	437
	438
	439
	440
	441
	442
	443
	444
	445
	446
	447
	448
	449
	450
	451
	452
	453
	454
	455
	456
	457
	458
	459
	460
	461
	462
	463
	464
ROUE ET PNEU (VERSION)	408
	409
	410
	411
	412
	413
	414
	415
	416
	417
	418
	419
	420
	421
	422
	423
	424
	425
	426
ROUE (VERSION)	464
	465
	466

S

SCARIFICATEUR (ASS)	769
	772
SCARIFICATEUR (VERSION)	768
SEGMENT-CERCLE	747
*SENSOR GP-POSITION (*ROTARY) (*THROTTLE)	86
SIEGE - COUVERCLE INFERIEUR (ASS)	885
SIÈGE À ÉQUILIBRAGE STATIQUE (ASS)	914
	915
	917
SIÈGE (ASS)	906
	908
	910
	912
SIÈGE AVEC SUSPENSION (ASS)	919
	920
	926
	928
	931
	933
SIÈGE AVEC SUSPENSION (ASS)	921
	922
	923
	924
	925
SILENCIEUX (ASS)	82
SOLÉNOÏDE (ENS) (24 VOLTS)	260
SONDE - CIRCUIT DE CARBURANT	243
	244
SONDE - NIVEAU DE CARBURANT (ENS)	115
SONDE (ENS)-POSITION (ARTICULATION DE DIRECTION)	304
	324
SOUPAGE - SOLÉNOIDE ET COLLECTEUR	743

* TRADUCTION NON DISPONIBLE AU MOMENT DE LA PUBLICATION

INDEX

Désignation	Page
	744
SOUPAPE - SOLÉNOÏDE (ASS)	404
	405
	536
	537
	741
SOUPAPE - SOLÉNOÏDE (ASS)	742
SOUPAPE ANTI-RÉACTION (ASS)	731
SOUPAPE DE COMBINAISON (ASS)	679
	681
SOUPAPE DE PURGE (ASS)	725
	726
SOUPAPE DE VIDANGE	89
SOUPAPE DE VIDANGE (RADIATEUR)	491
SOUPAPE DE VIDANGE (RÉSERVOIR PNEUMATIQUE)	531
SOUPAPE ET MONTAGE DE VERROUILLAGE DE DIF. (ASS)	397
SOUPAPE ET TIMONERIE (ASS)	636
	638
	640
	642
	644
	646
	648
	650
	652
	654
	656
	658
	660
	662
	664
SOUPAPE SELECTRICE ET REGULATRICE DE PRESSION	398
	401
*STARTING AID GP	258
SUPPORT DE FILTRE À HUILE (ASS) (MOTEUR)	51
SUPPORT DE MOTEUR (ASS)	45
SUPPORT DE SCARIFICATEUR (ASS)	756
SUPPORT DE SIÈGE (ASS)	929
SUPPORT DU RESERVOIR DE CARBURANT (ASS)	514
SUSPENSION DE SIEGE - CARTER (ASS)	840

T

TABLEAU DE BORD (ASS)	887
	888
	889
	891
	893
	895
TAMIS D'ASPIRATION (BOÎTE DE VITESSES)	346
	388
TANDEM ET CARTER (ASS)	391
TAPIS DE PLANCHER (CABINE)	847
TEMOINS (ASS) (*STOP, TAIL, TURN, LH)	309
TEMOINS (ASS) (*STOP, TAIL, TURN, LH)	312
TEMOINS (ASS) (*STOP, TURN, TAIL, RH)	309
TEMOINS (ASS) (*STOP, TURN, TAIL, RH)	312
THERMOCONTACT (ENS) (HUILE HYDRAULIQUE)	293
	297
THERMOCONTACT (ENS) (RÉFRIGÉRANT)	782
THERMOSTAT DE FAISCEAU (ENS)	863
THERMOSTAT-TEMPÉRATURE D'EAU (92-DEG C)	68
THERMOSTAT-TEMPÉRATURE D'EAU (94-DEG C)	68
TOIT ROPS - OUVERT (ASS)	901
TOIT ROPS FERME (VERSION)	898
TRANSFORMATEUR DE PUISSANCE (24V À 12V, 25A)	144
TRANSFORMATION ELECTRIQUE (ASS)	141
	142
	143
	144
TRANSFORMATION ELECTRIQUE (ASS) (24-VOLTS À 12-VOLTS)	143
TRANSFORMATION ELECTRIQUE (ASS) (24-VOLTS À 12-VOLTS)	141
TRANSFORMATION ÉLECTRIQUE (VERSION)	140
TURBOCOMPRESSEUR - CARTOUCHE (ASS)	85
TURBOCOMPRESSEUR (ASS)	83
	85
TYPE LÈVRE À JOINT (RÉGULATEUR D'EAU)	68

V

*VALVE GP-PUMP CONTROL	721
	723
VANNE PILOTE (ASS)	739
	740
VENTILATEUR DE CABINE (ASS)	816
	818
	820
	821
VÉRIN D'ARTICULATION (ASS)	558
	559

* TRADUCTION NON DISPONIBLE AU MOMENT DE LA PUBLICATION

INDEX

Désignation	Page
VÉRIN D'ARTICULATION ET MONTAGE (ASS)	549
	550
VÉRIN DE DÉPORT DE CERCLE (ASS)	561
VÉRIN DE DÉPORT DE CERCLE ET MONTAGE (ASS)	553
VÉRIN DE DÉPORT DE LAME (ASS)	555
	566
VERIN DE DIRECTION (ASS)	567
	568
VERIN DE DIRECTION ET MONTAGE (ASS)	556
VÉRIN DE LEVAGE (ASS)	563
VÉRIN DE RELEVAGE DE LAME ET MONTAGE (ASS)	551
VERIN DE RIPPER (ASS)	564
VÉRIN DE SCARIFICATEUR (ASS)	565
VÉRIN DE SCARIFICATEUR ET MONTAGE (ASS)	554
VÉRIN D'INCIDENCE DE LAME (ASS)	560
VÉRIN D'INCLINAISON DE LAME ET MONTAGE (ASS)	552
VÉRIN D'INCLINAISON DE ROUE (ASS)	570
VÉRIN D'INCLINAISON DE ROUE ET MONTAGE (ASS)	557
VERROUILLAGE DE DÉPORT DE CERCLE (ASS)	616
VERSION DE SUPPORT DE CHÂSSIS ARRIÈRE	510
	511
	512
	513
VERSION DE TRANSFORMATION - HOMOLOGATION	1
	2
VERSION DE TRANSFORMATION - SANS ROPS	798
VERSION HYDRAULIQUE	577
VERSION NEIGE - NIVELEUSE	5
VIDANGE-HUILE DE MOTEUR (ASS)	26
VILEBREQUIN (ASS)	16
VISIÈRE - GROUPE AUXILIAIRE	777
	778
VITRE (ASS)	940
VITRE (ASS)	941
VITRE DE CABINE (ASS)	942
	943
	945
VOLANT MOTEUR (ASS)	28
VOLET - CABINE (ASS)	869
VUE DU MODÈLE	2

* TRADUCTION NON DISPONIBLE AU MOMENT DE LA PUBLICATION

INDICE

Nombre	Página
A	
ACCESORIOS DE LA CABINA (GR)	777, 778
ACONDICIONADOR DE AIRE (CONFIG)	781
ACONDICIONADOR DE AIRE (GR)	782
ACONDICIONADOR DE AIRE Y MONTAJE (GR)	781
ACOPLAMIENTO TORSIONAL (GR)	372
ACUMULADOR (A/A)	863
ACUMULADOR DE AMORTIGUACIÓN DE LA HOJA (CONFIG)	539
ACUMULADOR DE LA DIRECCIÓN (GR)	544
ACUMULADOR (GR)	539, 540
ACUMULADOR HIDRAULICO (GR)	541
ACUMULADOR HIDRAULICO (GR)	542, 543
ACUMULADOR HIDRAULICO Y MONTAJE (GR)	538
AGUA DE LAS CAMISAS - CALENTADOR DEL (GR)	148, 149
AIRE - TUBERÍAS DE (GR)	80
AJUSTADOR DEL ASIENTO (GR)	779
ALARMA (GR)	118, 119
ALFOMBRILLA DEL PISO (CABINA)	847
AMORTIGUADOR Y POLEA (GR)	25
ÁRBOL DE LEVAS (GR)	11
ARO Y RUEDA	392
ARRANQUE - INTERRUPTOR DE (GR) (LLAVE)	332, 334
ARTICULACIÓN DE CILINDRO (GR)	558, 559
ASIENTO CON SUSPENSIÓN (GR)	933
ASIENTO CON SUSPENSIÓN (GR)	931
ASIENTO FIJO (GR)	914, 915, 917
ASIENTO (GR)	906, 908, 910, 912
AUXILIAR DE ARRANQUE (GR)	259
B	
BALANCÍN (GR)	42, 43
BALIZA DE ADVERTENCIA (GR) - INSTALACIÓN	150
BANCADA 5 (GR)	670, 671, 672, 673, 674, 675
BARRA DE TIRO (GR)	749
BASTIDOR DELANTERO (GR)	489
BATERÍA (GR)	127, 128, 129, 130
BATERÍA (GR) (12 VOLTIOS)	129
BATERÍA (GR) (12 VOLTIOS) (*1100 AMPS)	127
BATERÍA (12 VOLTIOS) (HUMEDO)	128
BATERÍA (12-VOLTIOS, 750-AMPERIOS)	130
BLOQUE DE EMPALME (GR)	131
BLOQUE DESLIZANTE-JUEGO	924
BLOQUE DESLIZANTE-JUEGO (INCLUYE BLOQUES Y PERNO)	920
BLOQUE DESLIZANTE-JUEGO (INCLUYE 4 BLOQUES)	921
BLOQUE MOTOR (GR)	17, 18
BOCINA DE AIRE (GR)	835, 836, 838
BOMBA - TUBERÍAS DE (GR)	597, 600, 603
BOMBA DE ACEITE DEL MOTOR (GR)	58
BOMBA DE AGUA (GR)	70, 71
BOMBA DE ENGRANAJES (GR)	386, 387
BOMBA DE INYECCIÓN UNITARIA (GR)	108, 109, 110
BOMBA DE PISTONES (GR)	623, 625
BOMBA DE SEPARADOR DE AGUA Y CEBADO DE COMBUSTIBLE (GR)	117
BOMBA HIDRÁULICA DEL INYECTOR UNITARIO (GR)	104, 105
BOMBA HIDRÁULICA DEL INYECTOR UNITARIO Y MONTAJE	104, 105
BOMBA Y MONTAJE DE LA DIRECCIÓN SECUNDARIA (GR)	622
BOMBA Y MONTAJE DEL PISTÓN (GR)	621
BOMBA Y MOTOR DE DIRECCION SECUNDARIA (GR)	620
*BOX GP-TOOL	969

* NO HAY TRADUCCION DISPONIBLE EN EL MOMENTO DE LA IMPRESION

INDICE

Nombre	Página
*BREATHER AS (TUBO DE LLENADO DE TREN DE FUERZA)	377

C

Nombre	Página
CABINA - MAZO DE CABLES DE LA	180, 222, 224, 282, 872
CABINA - MAZO DE CABLES DE LA (FRENTE)	278
CABINA - MAZO DE CABLES DE LA (PARTE TRASERA)	275, 278
CABINA - MAZO DE CABLES DE LA (TABLERO DE INTERRUPTOR)	275
CABINA - MAZO DE CABLES DE LA (TABLERO DE INTERRUPTOR)	278
CABINA DE PERFIL ALTO (CONFIG)	788
CABINA (GR)	788, 789
CABINA ROPS CERRADA (GR)	899, 900
CABINA SIN ROPS (CONFIG)	788
CABLES CONJ. -LIMPIADOR DE VENTANAS (CAJA DE FUSIBLES)	284
CABLES CONJ. -LIMPIADOR DE VENTANAS (CONTROL)	284
CABLES DE LA CABINA (GR)	277, 280
CABLES DE LA CABINA (GR)	275, 282, 284
CABLES DE LA CABINA (GR)	278
CABLES DE LA CONSOLA DE CAMBIOS (GR)	334
CABLES DE LA CONSOLA DE CAMBIOS (GR)	332
CABLES DE LA CONSOLA DE DIRECCIÓN (GR)	338, 341
CABLES DE LA DIRECCIÓN SECUNDARIA	329
CABLES DEL SISTEMA ELECTRÓNICO DEL MOTOR (GR)	286, 288, 290
CABLES DELANTEROS (GR)	293
CABLES DELANTEROS (GR)	297
CABLES POSTERIORES (GR)	302, 304, 309, 312, 316, 320, 324
CADENA DE IMPULSIÓN (GR)	350
CADENAS (GR)	350
CAJA DE LA SUSPENSIÓN DEL ASIENTO (GR)	840
CAJA DELANTERA (GR)	31, 32
CAJA Y BASTIDOR (GR)	474
CAJA Y PIEZAS DE LA TRANSMISIÓN (GR)	346
CALCOMANÍA (CUBIERTA NEGRA)	365
CALCOMANÍA DE ADVERTENCIA (ASIENTO AJUSTABLE)	933
CALCOMANÍA DE ADVERTENCIA (CILINDRO PARA ALTA PRESION)	973
CALCOMANÍA DE ADVERTENCIA (CONEXION DE CABLE)	973
CALCOMANÍA DE ADVERTENCIA (*DO NOT DRILL, WELD ROPS)	899
CALCOMANÍA DE ADVERTENCIA (NO PISAR)	114, 496
CALCOMANÍA DE ADVERTENCIA (NO TALADRE/SUELDE ROPS)	900
CALCOMANÍA DE ADVERTENCIA (PARADA DE MOTOR)	305, 325
CALCOMANÍA DE ADVERTENCIA (SALIDA ALTERNATIVA/QUITE VENTANA)	823, 824
CALCOMANIA DE FUSIBLE	278
CALCOMANIA DE FUSIBLE (LADO DERECHO)	338
CALCOMANIA DE FUSIBLE (LADO IZQUIERDO)	338, 341
CALCOMANIA DE FUSIBLE (LUCES, ARANDELA, LIMPIAPARABRISAS, DESCONGELADOR)	275
CALCOMANÍA DE IDENTIFICACIÓN (*BIODEGRADABLE HYDRAULIC OIL)	577
CALCOMANÍA DE IDENTIFICACIÓN (NOMBRE DE GRUPO) (AIRE ACONDICIONADO)	782
CALCOMANIA DEL TABLERO DE INSTRUMENTOS (*HEADLIGHTS HIGH, LOW BEAM)	267, 341
CALCOMANIA DEL TABLERO DE INSTRUMENTOS (*HEADLIGHTS HIGH, LOW BEAM)	193, 196

* NO HAY TRADUCCION DISPONIBLE EN EL MOMENTO DE LA IMPRESION

INDICE

Nombre	Página
	199
	202
	209
	212
CALCOMANIA DEL TABLERO DE INSTRUMENTOS (LUZ DE GIRO, PELIGRO)	193
	196
	199
	202
	209
	212
CALCOMANIA DEL TABLERO DE INSTRUMENTOS (LUZ DE GIRO, PELIGRO)	341
CALCOMANIA DEL TABLERO DE INSTRUMENTOS (LUZ DE GIRO, PELIGRO)	267
CALCOMANÍA (LAVAPARABRISAS)	284
CALCOMANÍA (PLACA, NOMBRE) (ACUMULADOR)	541
CALCOMANÍA (VISERA CATERPILLAR)	887
	888
CALCOMANÍAS Y PLACAS DE IDENTIFICACIÓN (GR)	1
	974
	975
	976
	977
CALCOMANÍAS Y PLACAS DE IDENTIFICACIÓN (GR)	972
CALCOMANÍAS Y PLACAS DE IDENTIFICACIÓN (GR) (REFLECTOR)	2
CALEFACCIÓN DE LA CABINA (CONFIG)	825
	826
CALEFACCIÓN DE LA CABINA (GR)	827
	831
CALEFACCIÓN Y MONTAJE DE LA CABINA (GR)	825
CALENTADOR (CONJ) (*22-VOLT, 1892-WATT)	258
CAMBIO AUTOMÁTICO DE VELOCIDADES (CONFIG)	345
CÁNCAMOS DE LEVANTAMIENTO DEL MOTOR (GR)	33
CANDADO (GR)	788
	798
CANDADO (GR) (CAJA DE HERRAMIENTAS)	969
CANTONERA DE EXTREMO (GR)	752
CARGA - ALTERNADOR DE (GR)	120
	122
	124
	125
CÁRTER - COLECTOR DEL (GR)	36
*CARTRIDGE AS-DESICCANT (SECADOR DE AIRE)	519
CENICERO	851
	854
CIGÜEÑAL (GR)	16
CILINDRO DE ARTICULACIÓN Y MONTAJE (GR)	549
	550
CILINDRO DE DESGARRADOR (GR)	564
CILINDRO DE DESPLAZAMIENTO DEL CÍRCULO (GR)	561
CILINDRO DE DESPLAZAMIENTO DEL CÍRCULO Y MONTAJE (GR)	553
CILINDRO DE DESPLAZAMIENTO LATERAL (GR)	566
CILINDRO DE DESPLAZAMIENTO LATERAL Y MONTAJE (GR)	555
CILINDRO DE DIRECCIÓN (GR)	567
	568
CILINDRO DE DIRECCIÓN Y MONTAJE (GR)	556
CILINDRO DE ESCARIFICADOR (GR)	565
CILINDRO DE ESCARIFICADOR Y MONTAJE (GR)	554
CILINDRO DE INCLINACIÓN DE LA HOJA (GR)	560
CILINDRO DE INCLINACIÓN DE LAS RUEDAS (GR)	570
CILINDRO DE INCLINACIÓN DE RUEDA Y MONTAJE (GR)	557
CILINDRO DE LA PUNTA DE LA HOJA Y MONTAJE (GR)	552
CILINDRO DE LEVANTAMIENTO DE HOJA Y MONTAJE (GR)	551
CILINDRO DE LEVANTAMIENTO (GR)	563
CINTURON DE SEGURIDAD	174
CINTURON DE SEGURIDAD (AIRE ACONDICIONADO)	791
CINTURON DE SEGURIDAD (ALTERNADOR)	122
CINTURÓN DE SEGURIDAD (GR)	903
	904
	905
	925
CINTURÓN DE SEGURIDAD (GR) (RETRACTIL)	920
CÍRCULO (GR)	745
	747
CODO DE ADMISIÓN DE AIRE (GR)	78
CODO DE AGUA (GR)	62
CODO DE ESCAPE (GR)	79
COLADOR DE COMBUSTIBLE	115

* NO HAY TRADUCCION DISPONIBLE EN EL MOMENTO DE LA IMPRESION

INDICE

Nombre	Página
COLADOR (*FILLER) (TANQUE DE ACEITE HIDRÁULICO)	633
COMBUSTIBLE - TANQUE DE (GR)	113
	114
	115
COMPARTIMIENTO DEL MOTOR (GR)	480
	484
COMPRESOR DE AIRE (GR)	8
	10
COMPRESOR DE REFRIGERANTE (GR)	790
	791
CONDENSADOR DEL REFRIGERANTE Y MONTAJE (GR)	793
CONDUCTO (GR)	813
CONDUCTO Y CONTROL (GR)	812
CONEXIÓN DE ENGRASE (RECEPTACULO DE CILINDRO DE DESPLAZADOR CENTRAL)	553
(CONFIG) CABLERIA, CHASIS DELANTERO	193
	196
	199
	202
	297
(CONFIG) CABLERIA, CHASIS DELANTERO (*BOLSTER LIGHT BAR)	209
(CONFIG) CABLERIA, CHASIS DELANTERO (LUCES DE TRABAJO, DELANTERAS)	212
CONFIGURACIÓN DE CABLERIA, CALENTADOR Y ACONDICIONADOR DE AIRE	783
	827
	831
CONFIGURACIÓN DE ENFRIAMIENTO	60
	61
CONFIGURACIÓN DE MOTORES	6
CONFIGURACIÓN DE SOPORTE DE CHASIS TRASERO	510
	511
	512
	513
CONFIGURACIÓN DE TRANSFORMACIÓN PARA CERTIFICACIÓN	1
	2
CONFIGURACIÓN GENERAL	2
CONFIGURACIÓN PARA CARRETERA	4
CONJUNTO DE CABLERIA, CHASIS TRASERO	305
	324
	325
CONJUNTO DE CABLES-CALENTADOR (AUXILIAR DE ARRANQUE)	259
CONJUNTO DE DESTELLADOR (12/24 VOLTIOS) (*TURN SIGNAL, HAZARD)	193
	196
	199
	202
	209
	212
	267
CONJUNTO DE DESTELLADOR (24 VOLTIOS)	341
CONJUNTO DE MAZO DE CABLES DE LA CONSOLA	332
	334
CONJUNTO DE MAZO DE CABLES DE LA CONSOLA (DIRECCIÓN)	338
CONJUNTO DE MODIFICACIÓN (SIN ROPS)	798
CONJUNTO DE NÚCLEO (ACEITE DE LA TRANSMISIÓN)	370
CONJUNTO DE NÚCLEO-CONDENSADOR (AIRE ACONDICIONADO)	793
CONJUNTO, MAZO DE CABLES, LUCES DELANTERAS	205
	207
	224
	236
	298
CONJUNTO, MAZO DE CABLES, LUCES DELANTERAS	222
CONJUNTO, MAZO DE CABLES, LUCES DELANTERAS (*ELEVATED LIGHT BAR)	209
CONJUNTO, MAZO DE CABLES, LUCES DELANTERAS (LUCES DE TRABAJO)	212
CONSOLA DEL OPERADOR (GR)	794
CONTROL DE AIRE-VÁLVULA	533
	534
CONTROL DE DIRECCIÓN (GR)	548
CONTROL DE LA DIRECCION SECUNDARIA (GR)	137
CONTROL DE LA TRANSMISIÓN (GR)	365
CONTROL DE REGULADOR (GR)	86
CONTROL DE TRABA DEL DIFERENCIAL (GR)	363
CONTROL DEL EMBRAGUE (GR)	361
CONTROL DEL FRENO DE ESTACIONAMIENTO	524
CONTROL ELECTRÓNICO DEL MOTOR (GR)	135
	136
CONTROL ELECTRÓNICO DEL MOTOR Y MONTAJE	134
*CONTROL GP-HYDRAULIC LOCKOUT	547
*CONTROL GP-UNPROGRAMMED	138
CONTROL HIDRÁULICO (CONFIG)	545
	546

* NO HAY TRADUCCION DISPONIBLE EN EL MOMENTO DE LA IMPRESION

INDICE

Nombre	Página
CONTROL HIDRÁULICO DE LA TRANSMISIÓN (GR)	367
CONTROL NO PROGRAMADO (GR)	139
CONVERTIDOR DE VOLTAJE (24 VOLTIS A 12 VOLTIOS, 25 AMPERIOS)	144
CONVERTIDOR ELÉCTRICO (CONFIG)	140
CONVERTIDOR ELÉCTRICO (GR)	141 142 143 144
CONVERTIDOR ELÉCTRICO (GR) (24 VOLTIOS A 12 VOLTIOS)	141 143
*CORE AS	368
*CORE AS-HEATER	783 828 832
CRISTAL (AMBAR, BALIZA DE ADVERTENCIA)	173
CRISTAL (AMBAR) (DE GIRO)	160 162
CRISTAL (AMBAR) (SEÑAL)	164 166
CRISTAL (PLACA DE REGISTRACIÓN)	169
CUBIERTA INFERIOR DEL ASIENTO DEL OPERADOR (GR)	885
CUBIERTA PROTECTORA (GR)	476
CUBIERTA PROTECTORA (GR)	477
CUCHILLA (GR)	757
CUERPO DEL MEDIDOR (CONJ)	72
CUERPO DEL MEDIDOR (CONJ) (NIVEL DE REFRIGERANTE)	73
CULATA DE CILINDROS - TORNILLERÍA DE LA (GR)	27
CULATA DE CILINDROS (CONJ)	19
CULATA DE CILINDROS (GR)	22 24

D

Nombre	Página
DESGARRADOR (CONFIG)	765
DESGARRADOR (GR)	766
DESHIDRATADOR (GR)	516 517 519
DESHIDRATADOR (GR) (SECADOR DE AIRE, 24 VOLTIOS)	519
DETECTOR DE NIVEL DEL COMBUSTIBLE	115
DETECTOR DE POSICIÓN (SISTEMA DE COMBUST.) (GR)	243 244
DIENTE DE ESCARIFICADOR (GR)	775 776
DIFERENCIAL (GR)	375
DIFERENCIAL Y CORONA (GR)	373
DIRECCIÓN SECUNDARIA (CONFIG)	630
DISYUNTOR (CONJ) (15 AMPERIOS) (BARRA DE LUCES DE TRABAJO)	132
DISYUNTOR (CONJ) (15 AMPERIOS) (CONTROL DEL MOTOR)	317 321
DISYUNTOR (CONJ) (15 AMPERIOS) (FAROS)	132 133
DISYUNTOR (CONJ) (80 AMPERIOS) (ALTERNADOR)	316 320
DISYUNTOR (CONJ) (80 AMPERIOS) (PRINCIPAL)	316 322
DISYUNTOR DE CIRCUITO (GR)	132 133
DISYUNTOR (GR)	266
*DOOR GP (*AIR VENT)	851 854 861
DRENAJE DEL ACEITE DE MOTOR	26

E

Nombre	Página
EJE DE ENTRADA (GR)	390
EJE DE MANDO DE LA BOMBA (GR)	629
EJE DE MANDO (GR)	389
EJE DELANTERO (GR)	471
ELECTRONICA DE MONITOR (GR)	146
ELEMENTO DE FILTRO DE ACEITE (CONJ) (ALTA EFICIENCIA)	383
ELEMENTO DE FILTRO DE ACEITE (CONJ) (ALTA EFICIENCIA) (TRANSMISION)	380
ELEMENTO DE FILTRO DE ACEITE (CONJ) (HIDRAULICO) (EFICIENCIA ESTANDAR)	633
ELEMENTO DEL CALENTADOR DEL AGUA DE LAS CAMISAS (120 VOLTIOS/1500 VATIOS)	149
ELEMENTO DEL CALENTADOR DEL AGUA DE LAS CAMISAS (240 VOLTIOS/1500 VATIOS)	148
ELEMENTO PRIMARIO (CONJ)	76
ELEMENTO SECUNDARIO (CONJ)	76
EMBRAGUE DE LA TRANSMISIÓN (GR)	351 354 357 359
EMISOR DE POSICION (CONJ) (DIRECCIÓN ARTICULADA)	304

* NO HAY TRADUCCION DISPONIBLE EN EL MOMENTO DE LA IMPRESION

INDICE

Nombre	Página
EMISOR DE POSICION (CONJ) (DIRECCIÓN ARTICULADA)	324
EMPAQUETADURA	114
EMPAQUETADURA (CAJA DE REGULADOR)	68
EMPAQUETADURA (REGULADOR DE AGUA)	68
ENCENDEDOR (CONJ) (ENCENDEDOR, 24 VOLTIOS)	334
ENCENDEDOR (CONJ) (ENCENDEDOR, 24 VOLTIOS)	332
ENCHUFE DE ARRANQUE AUXILIAR (GR)	240
ENFRIADOR DE ACEITE DE LA TRANSMISIÓN (GR)	368
	370
ENFRIADOR DE ACEITE DEL MOTOR (GR)	59
ENGANCHE ARTICULADO (GR)	501
ENGANCHE DE REMOLQUE (GR)	503
ENGRANAJE DELANTERO (GR)	29
ESCAPE DE GASES (GR)	52
	53
ESCARIFICADOR (CONFIG)	768
ESTRIBO DEL OPERADOR (GR)	509
ESTRUCTURA ROPS ABIERTA	899
ESTRUCTURA ROPS ABIERTA (GR)	901
ETIQUETA DE ADVERTENCIA (GR)	970
	971
ETIQUETA REFLECTORA (AMARILLO)	974
EXTENSIÓN DE LA HOJA (GR)	758
	759
	760
EXTENSIÓN DEL RESPALDO (GR)	814
	815
	920

F

*FILM (*VHP PLUS) (*VHP PLUS)	971
FILTRO DE ACEITE - BASE DEL (GR) (MOTOR)	51
FILTRO DE ACEITE DEL MOTOR (CONJ)	51
FILTRO DE ACEITE DEL MOTOR (GR)	49
	51
FILTRO DE ACEITE (GR)	380
FILTRO DE ACEITE Y MONTAJE (GR)	378
FILTRO DE AIRE (CABINA)	822
FILTRO DE AIRE DE LA CABINA (GR)	822
FILTRO DE AIRE (GR)	75
	76
	77
FILTRO DE COMBUSTIBLE (CONJ)	89
FILTRO DE COMBUSTIBLE (GR)	89
FILTRO DE COMBUSTIBLE Y SEPARADOR DE AGUA (CONJ)	91
FILTRO DE COMBUSTIBLE Y SEPARADOR DE AGUA (GR)	91
FILTRO MAGNÉTICO (ACEITE DE LA TRANSMISIÓN)	346
FILTRO MAGNÉTICO (TRANSMISION)	388
FRENO DE ESTACIONAMIENTO (GR)	520
FRENO DE SERVICIO - CONTROL (GR)	526
FRENO DE SERVICIO (GR)	522
FUSIBLE (10 A) (SECADOR DE AIRE)	516
FUSIBLE (*10-AMPERE) (DESCONGELADOR DELANTERO)	820
FUSIBLE (*10-AMPERE) (DESCONGELADOR TRASERO)	821
FUSIBLE (*10-AMPERE) (HOJA/FARO DELANTERO)	188
FUSIBLE (10-AMPERIOS)	193
	199
	202
	205
	207
	209
	212
	222
	224
	231
	267
	280
	282
	284
	329
	338
	341
	957
FUSIBLE (10-AMPERIOS) (*AUXILIARY BACK-UP ALARM)	180
FUSIBLE (10-AMPERIOS) (BALIZA GIRATORIA DE ADVERTENCIA)	277
FUSIBLE (10-AMPERIOS) (BALIZA GIRATORIA DE ADVERTENCIA)	232
FUSIBLE (10-AMPERIOS) (CONVERTIDOR)	141
FUSIBLE (10-AMPERIOS) (*HEATED MIRRORS)	872
	876
FUSIBLE (10-AMPERIOS) (LAMPARA DE RETROCESO)	178
FUSIBLE (10-AMPERIOS) (LIMPIADOR)	959
FUSIBLE (10-AMPERIOS) (LIMPIADOR)	961
	963
FUSIBLE (10-AMPERIOS) (LUCES DE TRABAJO)	191
	192
FUSIBLE (10-AMPERIOS) (LUZ DE LA HOJA)	189

* NO HAY TRADUCCION DISPONIBLE EN EL MOMENTO DE LA IMPRESION

INDICE

Nombre	Página
FUSIBLE (10-AMPERIOS) (TRANSFORMADOR DE CORRIENTE)	143
FUSIBLE (10-AMPERIOS) (*TURN SIGNAL, HAZARD)	196
FUSIBLE (15 A) (AIRE ACONDICIONADO)	781
FUSIBLE (15 A) (CALEFACTOR)	825
FUSIBLE (15 AMPERIOS)	338
	341
FUSIBLE (15 AMPERIOS)	275
	278
FUSIBLE (15 AMPERIOS) (*CAB FLOOD LIGHTS)	191
	192
FUSIBLE (15 AMPERIOS) (TRANSFORMADOR DE CORRIENTE)	142
FUSIBLE (30-AMPERIOS)	144

G

GATO HIDRÁULICO	972
GRUPO DE AISLAMIENTO DE LA CABINA	847
GRUPO DE CABLES, HOJA AMORTIGUADORA	273
GRUPO DE GUIA, CORREA	843
GRUPO DE MONTAJE DE ALA PARA NIEVE	764
GRUPO DE MONTAJE DE LA CABINA	880
GRUPO DE MONTAJE, FILTRO DE COMBUSTIBLE	103
GRUPO DE POSTENFRIAMIENTO Y MONTAJE	74
GRUPO DE SOPORTE DEL RESPALDO	884
GRUPO DE TAPA, ACCESO	475
GRUPO DE 4 VÁLVULAS HIDRÁULICAS	666
	667
	668
	669
GRUPO ESCARIFICADOR	769
	772
GRUPO GIRATORIO DE BOMBA	627
	628

H

*HARNESS AS-PLATFORM	293
	297
*HARNESS AS-REAR	320
*HARNESS AS-REAR (*SERVICE CENTER-LH)	316
*HARNESS AS-REAR (*SERVICE CENTER-RH)	316
*HARNESS AS-THERMOSTAT	863
HIDRÁULICA (CONFIG)	577
HOJA DE LIMPIAPARABRISAS (CONJ)	940
	966
	967
	968
HOJA DE LIMPIAPARABRISAS (CONJ) (DELANTERO DE ALTO PERFIL)	955
HOJA DE LIMPIAPARABRISAS (CONJ) (DELANTERO DE ALTO PERFIL)	953
HOJA DE LIMPIAPARABRISAS (CONJ) (DELANTERO SUPERIOR DE ALTO PERFIL)	955
HOJA DE LIMPIAPARABRISAS (CONJ) (DELANTERO SUPERIOR DE ALTO PERFIL)	953
HOJA DE LIMPIAPARABRISAS (CONJ) (*FRONT LOWER)	949
	951
HOJA DE LIMPIAPARABRISAS (CONJ) (*LOW PROFILE FRONT UPPER)	949
HOJA DE LIMPIAPARABRISAS (CONJ) (PARTE TRASERA)	963
HOJA DE LIMPIAPARABRISAS (CONJ) (POSICION DELANTERA / SUPERIOR)	951
HOJA DE LIMPIAPARABRISAS (CONJ) (TRASERO DE ALTO PARFIL)	961
HOJA DE LIMPIAPARABRISAS (CONJ) (TRSERO DE BAJO PERFIL)	957
	959
HOJA (GR)	753
	754
	755

I

INCLUYE ROPS (CONFIG)	898
INDICADOR DE CAMBIO DE FILTRO DE ACEITE (GR)	75
INDICADOR DE PRESION DE AIRE (GR) (LADO DERECHO)	893
	895
INDICADOR DE PRESION DE AIRE (GR) (LADO DERECHO)	891
INDICADOR DE PRESION DE AIRE (GR) (LADO IZQUIERDO)	893
	895
INDICADOR DE PRESION DE AIRE (GR) (LADO IZQUIERDO)	891
INDICADOR DEL NIVEL DE ACEITE (VARILLA) (GR)	54
INSONORIZADOR (GR)	46
INSTALACIÓN DE RADIO (CONFIG)	844
INSTALACIÓN DE RADIO (GR)	845
INTERRUPTOR (CONJ) (AMORTIGUADOR DE LA HOJA)	273

* NO HAY TRADUCCION DISPONIBLE EN EL MOMENTO DE LA IMPRESION

INDICE

Nombre	Página
INTERRUPTOR (CONJ) (*AUXILIARY BACKUP)	178
INTERRUPTOR (CONJ) (BALIZA GIRATORIA DE ADVERTENCIA)	150 234 235 236
INTERRUPTOR (CONJ) (DESCONGELADOR DELANTERO)	820
INTERRUPTOR (CONJ) (DESCONGELADOR TRASERO)	821
INTERRUPTOR (CONJ) (EXTRACTOR DE PASADOR DE DESPLAZADOR DEL CÍRCULO)	332 335
INTERRUPTOR (CONJ) (JUEGO DE ACELERACIÓN, VELOCIDAD)	332
INTERRUPTOR (CONJ) (LUZ DE COLA)	338
INTERRUPTOR (CONJ) (MÓDULO DE ACELERACIÓN)	332
INTERRUPTOR (CONJ) (REDUCTOR DE LUCES DEL TABLERO)	338
INTERRUPTOR (CONJ) (TABLERO DE LUCES TRASERAS)	341
INTERRUPTOR (CONJ) (TRABA DE ACTIVACION DEL ACELERADOR)	334
INTERRUPTOR (CONJ) (TRABA DE DIFERENCIAL)	341
INTERRUPTOR (CONJ) (TRABA DE DIFERENCIAL)	338
INTERRUPTOR (CONJ) (TRANSMISIÓN AUTOMÁTICA)	345
INTERRUPTOR (CONJ) (24 VOLTIOS) (*AUXILIARY BACK-UP ALARM)	180
INTERRUPTOR (CONJ) (24 VOLTIOS) (*HEATED MIRRORS)	872 876
INTERRUPTOR (CONJ) (24 VOLTIOS) (PRUEBA SECUNDARIA DE DIRECCIÓN)	329
INTERRUPTOR (CONJ) (24 VOLTIOS) (REFLECTOR LADO DERECHO, CABINA)	222 224
INTERRUPTOR (CONJ) (24 VOLTIOS) (REFLECTORES DEL LADO DERECHO)	205 207
INTERRUPTOR (CONJ) (24 VOLTIOS) (VERTEDERA)	280 282
INTERRUPTOR DE BOLA (CONJ) (INDICADOR DEL DESPLAZADOR DEL CÍRCULO)	293 297
INTERRUPTOR DE DERIVACIÓN	265
INTERRUPTOR DE LÍMITE (CONJ) (PEDAL DE FRENO)	342
INTERRUPTOR DE LÍMITE (CONJ) (PEDAL DE MOVIMIENTO ULTRALENTO)	341
INTERRUPTOR DE LÍMITE (CONJ) (PEDAL DE MOVIMIENTO ULTRALENTO)	338
INTERRUPTOR DE LUZ (GR)	267
INTERRUPTOR DE PRESIÓN (CONJ) (*AIR BRAKES)	293
INTERRUPTOR DE PRESIÓN (CONJ) (AIRE ACONDICIONADO)	863
INTERRUPTOR DE PRESIÓN (CONJ) (DIRECCION PRINCIPAL)	297
INTERRUPTOR DE PRESIÓN (CONJ) (DIRECCIÓN SECUNDARIA)	329
INTERRUPTOR DE PRESIÓN (CONJ) (FRENO DE AIRE)	297
INTERRUPTOR DE PRESIÓN (CONJ) (FRENO DE ESTACIONAMIENTO)	297
INTERRUPTOR DE PRESIÓN (CONJ) (FRENO DE ESTACIONAMIENTO)	294
INTERRUPTOR DE PRESIÓN (CONJ) (LUZ DE PARADA)	293
INTERRUPTOR DE PRESIÓN (CONJ) (LUZ DE PARADA)	297
INTERRUPTOR DE PRESIÓN (GR) (COMBUSTIBLE) (COMBUSTIBLE)	89
INTERRUPTOR DE TEMPERATURA (CONJ) (ACEITE HIDRÁULICO)	293 297
INTERRUPTOR DE TEMPERATURA (CONJ) (REFRIGERANTE)	782
INTERRUPTOR DE VOLQUETE (CONJ) (BALIZA GIRATORIA DE ADVERTENCIA)	150
INTERRUPTOR DE VOLQUETE (CONJ) (*HEADLIGHTS, TAIL LIGHTS)	193 196 199 202 209 267 341
INTERRUPTOR DE VOLQUETE (CONJ) (*HEADLIGHTS, TAIL LIGHTS)	212
INTERRUPTOR DE VOLQUETE (CONJ) (HOJA)(FARO DELANTERO)	188
INTERRUPTOR DE VOLQUETE (CONJ) (LUCES DE TRABAJO, DELANTERAS)	212
INTERRUPTOR DE VOLQUETE (CONJ) (LUZ BAJA DE BARRA DE LUCES)	199 202 209

* NO HAY TRADUCCION DISPONIBLE EN EL MOMENTO DE LA IMPRESION

INDICE

Nombre	Página
INTERRUPTOR DE VOLQUETE (CONJ) (LUZ DE LA HOJA)	189
INTERRUPTOR DE VOLQUETE (CONJ) (PARADA DEL MOTOR DESDE EL SUELO)	304
INTERRUPTOR DE VOLQUETE (CONJ) (PARADA DESDE EL SUELO)	324
INTERRUPTOR DE VOLQUETE (CONJ) (REFLECTOR DE LA HOJA)	191, 192
INTERRUPTOR DE VOLQUETE (CONJ) (*THROTTLE LOCK SET, RESET)	334
INTERRUPTOR DEL LIMPIADOR (GR)	272, 965
INTERRUPTOR DEL LIMPIADOR (GR) (24 VOLTIOS) (INTERMITENTE DELANTERO)	278
INTERRUPTOR DEL LIMPIAPARABRISAS (CONJ) (24 VOLTIOS) (PARTE TRASERA)	959
INTERRUPTOR DEL LIMPIAPARABRISAS (CONJ) (24 VOLTIOS) (PARTE TRASERA)	961, 963
INTERRUPTOR DEL LIMPIAPARABRISAS (CONJ) (24 VOLTIOS) (PARTE TRASERA)	957
INTERRUPTOR MAGNÉTICO (CONJ) (24 VOLTIOS) (CALENTADOR DEL AIRE DE ADMISION)	271
INTERRUPTOR MAGNÉTICO (GR)	269, 270, 271
INTERRUPTOR MAGNÉTICO (GR) (24 VOLTIOS) (RELE DE ARRANQUE)	316
INTERRUPTOR MAGNÉTICO (GR) (24 VOLTIOS) (RELÉ DE ARRANQUE)	320
INTERRUPTOR PULSADOR (CONJ) (*DISPLAY MODES)	893, 895
INTERRUPTOR PULSADOR (CONJ) (MODALIDAD DE OPERADOR)	891
INTERRUPTOR ROTATIVO (CONJ) (*HIGH, LOW BEAM)	193
INTERRUPTOR ROTATIVO (CONJ) (INTERRUPTOR DE CAMBIO DE LUCES)	196, 199, 202, 209, 212
INTERRUPTOR ROTATIVO (CONJ) (INTERRUPTOR DE CAMBIO DE LUCES)	341
INTERRUPTOR ROTATIVO (CONJ) (SEÑAL DE VIRAJE)	267
INTERRUPTOR ROTATIVO (CONJ) (VELOCIDAD DEL VENTILADOR)	782
INTERRUPTOR ROTATIVO (CONJ) (VELOCIDAD DEL VENTILADOR)	827, 831
INTERRUPTOR ROTATIVO (CONJ) (24 VOLTIOS) (*FRONT WIPER CONTROL)	275
INTERRUPTOR ROTATIVO (CONJ) (24 VOLTIOS) (LIMPIAPARABRISAS DELANTERO)	284
INYECTOR DE COMBUSTIBLE (GR)	92, 93

J

JUEGO (AISLADOR) (MOTOR DE ARRANQUE)	260
JUEGO (AISLADOR) (MOTOR DE ARRANQUE)	263
JUEGO DE ABRAZADERA DEL FILTRO DE AIRE	76
JUEGO DE AJUSTE DEL ASIENTO	885
JUEGO DE AMORTIGUADOR	814, 815
JUEGO DE ATADURA (ASIENTO)	933
JUEGO DE BUJES (MOTOR DE ARRANQUE)	260, 263
JUEGO DE CALCES (INCLUYE 17 CALCES)	623
JUEGO DE COJÍN DEL ASIENTO	910
JUEGO DE COJÍN DEL ASIENTO (VINILO)	912
JUEGO DE COJINETES	841
JUEGO DE COJINETES (ALTERNADOR)	120
JUEGO DE CONTROL DE PISTÓN	623
JUEGO DE DIAFRAGMA	835
JUEGO DE ESCOBILLAS (MOTOR DE ARRANQUE)	260, 263
JUEGO DE FUNDA DE LA SUSPENSIÓN DEL ASIENTO	931
JUEGO DE HOJA DE LIMPIAPARABRISAS (PARTE TRASERA)	959
JUEGO DE HOJA DE LIMPIAPARABRISAS (TRSERO DE BAJO PERFIL)	957
JUEGO DE INCLINACIÓN DE ASIENTO	885
JUEGO DE INCLINACIÓN TRASERA	885
JUEGO DE INDICADOR (AJUSTE DE PESO)	841
JUEGO DE INDICADOR (ASIENTO)	933
JUEGO DE MARTILLO	823, 824
JUEGO DE PALANCA (MOTOR DE ARRANQUE)	260, 263
JUEGO DE PANEL DEL RESPALDO DEL ASIENTO	910

* NO HAY TRADUCCION DISPONIBLE EN EL MOMENTO DE LA IMPRESION

INDICE

Nombre	Página
	912
JUEGO DE PARAGOLPES (AJUSTE DE PESO)	841
JUEGO DE PERNO RETENEDOR (M5X0.8X53.24 MM)	147
JUEGO DE PERNO RETENEDOR (*M5X0.8X53.24-MM) (GRUPO DE CONTROL)	139
JUEGO DE PISTÓN	623
JUEGO DE REACONDICIONAMIENTO DEL REGULADOR (COMPRESOR DE AIRE)	531
JUEGO DE RECEPTÁCULO (2 CLAVIJAS)	176
	227
JUEGO DE RECEPTÁCULO (2 CLAVIJAS)	168
	741
JUEGO DE RECEPTÁCULO (2 CLAVIJAS) (ENTRADA DE CORRIENTE DE 12 VOLTIOS)	777
	778
JUEGO DE RECEPTÁCULO (2 CLAVIJAS) (PLACA DE REGISTRACIÓN DE LAS LUCES)	169
JUEGO DE RECEPTÁCULO (2 CLAVIJAS) (VALVULA DE SOLENOIDE)	537
JUEGO DE RECEPTÁCULO (6-CLAVIJAS)	949
JUEGO DE RESORTES	841
JUEGO DE RESORTES (AJUSTE DE ALTURA)	841
JUEGO DE RESTRICCIÓN DEL CINTURÓN	931
JUEGO DE RODILLO	931
JUEGO DE RODILLO (ASIENTO)	933
JUEGO DE SEGUIDOR	840
	841
JUEGO DE SELLOS	540
	542
	548
	558
	560
	565
	741
	742
	744
JUEGO DE SELLOS (ACUMULADOR DE AMORTIGUADOR DE LA HOJA)	541
JUEGO DE SELLOS (*DIFFERENTIAL LOCK VALVE)	404
JUEGO DE SELLOS (SOLENOIDE DE TRANSMISION)	405
JUEGO DE SELLOS (TRABA DE DIFERENCIAL)	397
JUEGO DE SENSOR (NIVEL DE COMB)	115
JUEGO DE SOLENOIDE (MOTOR DE ARRANQUE)	263
JUEGO DE TERMINAL (ALTERNADOR)	120
JUEGO DE TERMINAL DE ALTERNADOR (LUZ INDICADORA)	125
JUEGO DE TERMINAL DE ALTERNADOR (RELE)	125
JUEGO DE TERMINAL DE ALTERNADOR (SALIDA)	125
JUEGO DE TORNILLERÍA (ALTERNADOR)	120
	125
JUEGO DE TORNILLERÍA (ASIENTO)	933
JUEGO DE VARILLA	885
JUNTA UNIVERSAL (GR)	396

K

*KIT-AIR CONTROL VALVE	534
*KIT-RECTIFIER	125

L

*LAMP GP-FLOOD (*24-VOLT, VERTICAL MOUNT)	215
	219
*LAMP GP-FLOOD (*24-VOLT, VERTICAL MOUNT) (*BLADE)	188
*LAMP GP-FLOOD (*24-VOLT, VERTICAL MOUNT) (*BLADE)	191
*LAMP GP-FLOOD (*24-VOLT, VERTICAL MOUNT) (*CAB)	182
*LAMP-HALOGEN (*24-VOLT, 65-WATT) (LUZ BAJA)	158
LÁMPARA (CONJ)	309
	312
LÁMPARA DE BALIZA DE ADVERTENCIA (GR)	173
	174
LÁMPARA DE FARO DELANTERO (GR)	159
	160
LÁMPARA DE FARO DELANTERO (GR)	158
	162
LÁMPARA DE LUZ DELANTERA Y DE SEÑAL (GR)	166
LÁMPARA DE LUZ DELANTERA Y DE SEÑAL (GR)	164
LAMPARA DE PLACA DE REGISTRO (GR)	169
LÁMPARA DEL TECHO (GR)	152
LÁMPARA DEL TECHO (GR) (24 VOLTIOS, CON INTERRUPTOR)	275
	284
LÁMPARA DEL TECHO (GR) (24 VOLTIOS, CON INTERRUPTOR)	278
LAMPARA-LED (LED)	234
	235

* NO HAY TRADUCCION DISPONIBLE EN EL MOMENTO DE LA IMPRESION

INDICE

Nombre	Página
LAMPARA MARCADORA (GR)	168
LÁMPARA (*24-VOLT) (CAMBIO AUTOMÁTICO)	345
LÁMPARA (*24-VOLT) (DE GIRO)	160, 162
LÁMPARA (*24-VOLT) (DESCONGELADOR DELANTERO)	820
LÁMPARA (*24-VOLT) (DESCONGELADOR TRASERO)	821
LÁMPARA (*24-VOLT) (HOJA)(FARO DELANTERO)	188
LÁMPARA (*24-VOLT) (LUZ ALTA/BAJA)	160, 162
LÁMPARA (*24-VOLT) (POSICION)	160, 162
LÁMPARA (*24-VOLT, 21-WATT) (DE GIRO)	160, 162
LÁMPARA (24 VOLTIOS)	150, 152, 164, 193, 199, 202, 209, 210, 212, 267, 332, 334, 341, 782, 879
LÁMPARA (24 VOLTIOS)	205, 207, 222, 224, 234, 235, 236, 280, 282, 329, 332, 334, 335, 338, 341, 827, 831, 876
LÁMPARA (24 VOLTIOS) (ACCIONAMIENTO)	895
LÁMPARA (24 VOLTIOS) (*AIR PRESSURE GAUGE)	891
	895
LÁMPARA (24 VOLTIOS) (*AIR PRESSURE GAUGE)	893
LÁMPARA (24 VOLTIOS) (*AUXILIARY BACK-UP ALARM)	180
LÁMPARA (24 VOLTIOS) (DE CUATRO MEDIDORES)	893
LÁMPARA (24 VOLTIOS) (DELANTERA)	166
LÁMPARA (24 VOLTIOS) (*HEADLIGHTS, TAIL LIGHTS)	196
LÁMPARA (24 VOLTIOS) (*HEATED MIRRORS)	872
LÁMPARA (24 VOLTIOS) (INTERRUPTOR DEL AMORTIGUADOR DE LA HOJA)	273
LÁMPARA (24 VOLTIOS) (LUZ AUXILIAR DE RETROCESO)	178
LÁMPARA (24 VOLTIOS) (LUZ DE INDICADOR DE ACCCIÓN MAESTRA)	893
LÁMPARA (24 VOLTIOS) (LUZ DE LA HOJA)	189
LÁMPARA (24 VOLTIOS) (LUZ INDIC. DE ACCION MAESTRA DE EMS)	891
LÁMPARA (24 VOLTIOS) (MÓDULO DE CUATRO MEDIDORES)	891, 895
LÁMPARA (24 VOLTIOS) (*NG)	335
LÁMPARA (24 VOLTIOS) (PLACA DE REGISTRACIÓN)	169
LÁMPARA (24 VOLTIOS) (POSICIÓN DE LA CABINA)	168
LÁMPARA (24 VOLTIOS) (REFLECTOR DE LA HOJA)	191, 192
LÁMPARA (24 VOLTIOS) (SEÑAL)	166
LÁMPARA (24 VOLTIOS) (TRABA DE DIFERENCIAL)	891
LÁMPARA (24 VOLTIOS) (TRABA DE DIFERENCIAL)	893
LÁMPARA (24-VOLTIOS, 21 VATIOS)	309, 312
LÁMPARA (24-VOLTIOS, 21 VATIOS) (SEÑAL)	164, 166
LÁMPARA (24-VOLTIOS, 3-VATIOS) (LUZ INDICADORA)	895
LÁMPARA (24-VOLTIOS, 3-VATIOS) (TABLERO DE INSTRUMENTOS)	891
LÁMPARA (24-VOLTIOS, 3-VATIOS) (TABLERO DE INSTRUMENTOS)	893
LÁMPARA (24 VOLTIOS, 5 VATIOS)	309, 312
LÁMPARA (24-VOLTIOS, 70-VATIOS)	174
LÁMPARA (24-VOLTIOS, 70-VATIOS) (BALIZA GIRATORIA DE ADVERTENCIA)	173

* NO HAY TRADUCCION DISPONIBLE EN EL MOMENTO DE LA IMPRESION

INDICE

Nombre	Página
LÁMPARAS (GR) (*STOP, TAIL, TURN, LH)	309
LÁMPARAS (GR) (*STOP, TAIL, TURN, LH)	312
LÁMPARAS (GR) (*STOP, TURN, TAIL, RH)	309
LÁMPARAS (GR) (*STOP, TURN, TAIL, RH)	312
LAVAPARABRISAS DE LA VENTANA (GR)	935
	937
	938
LENTE AMBAR (BALIZA GIRATORIA DE ADVERTENCIA)	174
LEVANTAMIENTO - HOJA DE (GR)	761
LIMPIAPARABRISAS (CONFIG)	947
LIMPIAPARABRISAS DE LA VENTANA (GR)	948
	949
	951
	953
	955
	957
	959
	961
	963
	965
	966
	967
	968
LLAVE (DESCONECTAR BATERIA)	266
LUCES DE ADVERTENCIA (GR)	231
	232
	234
	235
LUCES DE ALÓGENO (24 VOLTIOS, 65 VATIOS)	153
	155
LUCES DE ALÓGENO (24 VOLTIOS, 65 VATIOS) (HOJA)	157
LUCES DE ALÓGENO (24 VOLTIOS, 65 VATIOS) (LUZ BAJA)	184
LUCES DE ALÓGENO (24 VOLTIOS, 65 VATIOS) (REFLECTOR)	154
	156
LUCES DE ALÓGENO (24 VOLTIOS, 65 VATIOS) (VIGA ALTA)	184
LUCES DE ALÓGENO (24 VOLTIOS, 65 VATIOS) (VIGA ALTA)	159
LUCES DE DESPLAZAMIENTO (GR)	228
LUCES DE GIRO (GR)	229
	230
LUCES DE REFLECTOR (GR)	183
	184
	186
	188
	207
	217
	219
	220
	222
	224
LUCES DE REFLECTOR (GR)	189
LUCES DE REFLECTOR (GR)	182
	209
	226
	227
LUCES DE REFLECTOR (GR)	191
	192
	193
	196
	199
	202
	205
	212
	215
LUCES DE REFLECTOR Y SEÑAL (CONFIG)	177
LUCES DE RETROCESO (GR)	178
LUCES DE RETROCESO (GR)	180
LUZ DE BALIZA (GR)	236
LUZ DE SEÑAL DE GIRO (GR)	170
	171
	172

M

Nombre	Página
MANDO DE CORREA (BALIZA DE ADVERTENCIA)	173
MANDO DEL CIRCULO (GR)	574
MANDO FINAL (GR)	381
MANGUERA DE ESCAPE DE GASES	52
	53
MARTILLO Y MONTAJE (GR)	823
	824
MAZO DE CABLES (CONSOLA)	341
MAZO DE CABLES DE LA TRANSMISION	304
	324
	346
	367
MAZO DE CABLES DE LUCES TRASERAS (CONJ)	215
	302
	305
	309
	312
MAZO DE CABLES DE LUCES TRASERAS (CONJ)	217
MAZO DE CABLES DE LUCES TRASERAS (CONJ) (LADO DERECHO)	309
	312
MAZO DE CABLES DE LUCES TRASERAS (CONJ) (LADO IZQUIERDO)	310

* NO HAY TRADUCCION DISPONIBLE EN EL MOMENTO DE LA IMPRESION

INDICE

Nombre	Página
	312
MAZO DE CABLES DE SENSOR (CONJ) (CABLE DE 14 GA)	245
MAZO DE CABLES DE SENSOR (CONJ) (CABLE DE 14 GA) (ACCIONAMIENTO DE INYECCIÓN)	249
MAZO DE CABLES DE SENSOR (CONJ) (*14-GA WIRE)	254
MAZO DE CABLES DE TABLERO DE INSTRUMENTOS (CONJ)	891
	893
MAZO DE CABLES DEL CHASIS (CONJ)	273
MAZO DE CABLES DEL CHASIS (CONJ)	219
MAZO DE CABLES DEL CHASIS (CONJ) (VERTEDERA)	220
MAZO DE CABLES DEL MOTOR (CONJ) (BOMBA INYECTORA INDIVIDUAL)	288
MAZO DE CABLES DEL MOTOR (CONJ) (*ELECTRONIC CONTROL MODULE)	286
MAZO DE CABLES DEL MOTOR (CONJ) (*ELECTRONIC CONTROL MODULE)	288
MAZO DE CABLES DEL MOTOR (CONJ) (INYECTOR DE COMBUSTIBLE)	286
	290
MAZO DE CABLES DEL MOTOR (CONJ) (SENSORES)	290
MAZO DE CABLES DEL TABLERO (CONJ)	178
	205
	207
	280
MAZO DE CABLES DEL TABLERO (CONJ) (INTERRUPTOR)	876
MAZO DE CABLES DEL TABLERO (CONJ) (TABLERO DE LUCES TRASERAS)	895
MAZO DE CABLES, LUCES	199
	202
MECANISMO DE VÁLVULAS (GR)	47
	48
MIRILLA (ACEITE HIDRÁULICO)	633
MÓDULO DEL TACÓMETRO Y DEL VELOCÍMETRO (GR)	879
MÓDULO DEL TACÓMETRO Y DEL VELOCÍMETRO (GR) (TABLERO DE INSTRUMENTOS)	895
MODULO ELECTRÓNICO DE CUATRO INDICADORES (GR)	878
MONTAJE DE LA ESTRUCTURA ROPS (GR)	881
	883
MONTAJE DE RUEDA (GR)	385
MONTAJE DE SOLENOIDE (GR)	239
MONTAJE DEL DESGARRADOR (GR)	763
MONTAJE DEL MOTOR Y LA TRANSMISIÓN (GR)	34
MONTAJE-REGISTRO (GR)	506
MOTONIVELADORA PARA LA NIEVE (CONFIG)	5
MOTOR - NÚCLEO (CONFIG)	7
MOTOR - SOPORTE DEL (GR)	45
MOTOR DE ARRANQUE ELÉCTRICO (GR)	260
	262
	263
MOTOR DE ENGRANAJES (GR)	617
MOTOR ELÉCTRICO (GR)	238
*MOTOR GP-ELECTRIC	816
*MOTOR GP-ELECTRIC (*DEFROSTER FAN)	818
MOTOR HIDRÁULICO DE ENGRANAJES (GR)	618
MOTOR-LIMPIAPARABRISAS (GR)	968
MOTOR-LIMPIAPARABRISAS (GR) (FRENTE)	967
MOTOR-LIMPIAPARABRISAS (GR) (PARTE TRASERA)	959
	963
MOTOR-LIMPIAPARABRISAS (GR) (POSICION DELANTERA / SUPERIOR)	951
	955
MOTOR-LIMPIAPARABRISAS (GR) (24 VOLTIOS)	948
MOTOR-LIMPIAPARABRISAS (GR) (24 VOLTIOS) (*FRONT LOWER)	951
MOTOR-LIMPIAPARABRISAS (GR) (24 VOLTIOS) (INFERIOR)	955
MOTOR Y VENTILADOR (GR)	63
MÚLTIPLE DE ESCAPE (GR)	81
N	
NÚCLEO DE TURBOCOMPRESOR (GR)	85
NÚCLEO DEL ENFRIADOR DE ACEITE (CONJ) (MOTOR)	59
O	
*ORIFICE	398
	401
P	
*PADLOCK GP	635
	899
PANEL DE INSONORIZACIÓN (GR)	37
PANEL DE LA CABINA (GR)	887
	888
	889
PERILLA DE AMORTIGUADOR (ASIENTO)	933

* NO HAY TRADUCCION DISPONIBLE EN EL MOMENTO DE LA IMPRESION

INDICE

Nombre	Página
PERNO (5/8-11X2 PULGADAS)	549, 550
PERSIANA PARA EL SOL (GR)	902
PERSIANAS DE LA CABINA (GR)	869
PESO-PERILLA (CONJ)	840
PISTON (GR)	39
PISTÓN Y BIELA (GR)	38
PLACA DE ADVERTENCIA (NO ESPACIO LIBRE)	476, 477
PLACA DE ADVERTENCIA (NO ESPACIO LIBRE)	972
PLACA DE CONTROL (CALENTADOR Y ACOND. DE AIRE)	782
PLACA DE CONTROL (*FAN SPEED, TEMPERATURE)	827, 831
PLACA DE CONTROL (MÓDULO DE CUATRO MEDIDORES)	893
PLACA DE CONTROL (SISTEMA MONITOR CATERPILLAR)	891, 895
PLACA DE IDENTIFICACION (ALTERNADOR)	316, 320
PLACA DE IDENTIFICACION (MOTOR)	316, 320
PLACA DE INFORMACION (*ENGINE, HIGH IDLE, HOLD)	365
PLACA DE INFORMACION (*ENGINE, LOW IDLE, HOLD)	365
PLACA DE INSTRUCCIONES (ACONDICIONADOR DE AIRE)	782
PLACA DE INSTRUCCIONES (BATERÍA)	320
PLACA DE INSTRUCCIONES (BATERÍA)	316
PLACA DEL TABLERO (*INDICATOR PANEL, LH)	893
PLACA DEL TABLERO (*INDICATOR PANEL, LH)	895
PLACA DEL TABLERO (*INDICATOR PANEL, RH)	893, 896
PLACA DEL TABLERO (SELECCIÓN DE VELOCIDAD)	365
PLACA DEL TABLERO (SEÑALES DE ACCIÓN, PARTE DERECHA)	891
PLACA DEL TABLERO (SEÑALES DE ACCIÓN, PARTE IZQUIERDA)	891
PLACA DEL TABLERO (*TRANSMISSION INDICATOR PANEL)	365
PLACA INDICADORA (*BLADE CENTERSHIFT)	973
PLANCHA DE EMPUJE (GR)	751
*PLATE GP-RADIATOR	69
*PLATE-IDENTIFICATION (*MAXIMUM WEIGHT)	4
PLATO OSCILANTE (GR)	631
POLEA DE RUEDA GUIA (GR)	41
PORTAESCOBILLAS (CONJ)	260
POSABRAZOS (GR)	786, 787
PROTECTOR DE LA PLATAFORMA (GR)	497, 499
PROTECTOR DE LAS TUBERÍAS DE LOS FRENOS (GR)	495
PROTECTOR DEL TANQUE DE COMBUSTIBLE (GR)	496
PROTECTOR INFERIOR (GR)	494
PROTECTOR TÉRMICO DEL EJE DE MANDO (GR)	507
PROTECTOR TÉRMICO (GR)	508
PROTECTOR Y SOPORTE DEL RADIADOR (GR)	491
PUBLICACIONES (GR)	868
PUERTA DE CABINA	804, 806, 808, 810
PUERTA (GR)	799, 802
PUERTA (GR) (RESPIRADERO DE AIRE)	859
*PUMP GP-FUEL PRM & PRIM FILTER	106, 107

R

RADIADOR (GR)	73
RADIADOR (GR)	72
RECEPTOR-SECADOR (GR) (ACONDICIONADOR DE AIRE)	863
REFLECTOR (GR)	153, 154, 155, 156, 157
REFLECTOR (GR) (24-VOLTIOS, MONTAJE VERTICAL)	209
REFLECTOR (GR) (24-VOLTIOS, MONTAJE VERTICAL) (*CAB-RH)	222
REFLECTOR (GR) (24-VOLTIOS, MONTAJE VERTICAL) (LADO DERECHO)	205
REFLECTORES (CONFIG)	175, 176

* NO HAY TRADUCCION DISPONIBLE EN EL MOMENTO DE LA IMPRESION

INDICE

Nombre	Página
REGULADOR (CONJ) (PRESIÓN DE COMBUSTIBLE)	111
	112
REGULADOR DE LA PRESION DE COMBUSTIBLE (GR)	111
	112
REGULADOR DE PRESION (COMBUSTIBLE)	106
REGULADOR DE TEMPERATURA DEL AGUA (92 GRADOS CENTÍGRADOS)	68
REGULADOR DE TEMPERATURA DEL AGUA (94-GRADOS C)	68
REGULADOR DE VOLTAJE (24 VOLTIOS)	125
*REGULATOR AS-VOLTAGE (*24-VOLT)	120
REJILLA DE SUCCIÓN (TRANSMISION)	346
	388
REJILLA MAGNÉTICA (GR)	388
REJILLA (VALVULA DE CONTROL DE TRANSMISION)	406
RELÉ (CONJ) (24 VOLTIOS)	180
	324
RELÉ (CONJ) (24 VOLTIOS) (ARRANQUE)	304
RELÉ (CONJ) (24 VOLTIOS) (LUCES DE TRABAJO)	191
	192
RELÉ (CONJ) (24 VOLTIOS) (LUZ AUXILIAR DE RETROCESO)	178
RELÉ (CONJ) (24 VOLTIOS) (*TAIL, PANEL LAMPS)	338
RELÉ (CONJ) (24 VOLTIOS) (*TAIL,PANEL LAMPS)	341
RESPIRADERO (CONJ) (MOTOR)	12
RESPIRADERO (CONJ) (TANDEM)	391
RETROVISOR (GR)	870
	871
	872
	874
	875
	876
REVESTIMIENTO DE LA CABINA (GR)	849
	851
	854
	859
	861
RUEDA (CONFIG)	464
	465
	466
RUEDA (GR)	466
	467
	468
	469
	470
RUEDA Y LLANTA (CONFIG)	408
	409
	410
	411
	412
	413
	414
	415
	416
	417
	418
	419
	420
	421
	422
	423
	424
	425
	426
RUEDA Y NEUMÁTICO (GR)	426
	427
	428
	429
	430
	431
	432
	433
	434
	435
	436
	437
	438
	439
	440
	441
	442
	443
	444
	445
	446
	447
	448
	449
	450
	451
	452
	453
	454
	455
	456
	457
	458
	459
	460

* NO HAY TRADUCCION DISPONIBLE EN EL MOMENTO DE LA IMPRESION

INDICE

Nombre	Página
	461
	462
	463
	464
S	
SEGMENTO DE CIRCULO	747
SELLO	91
SELLO DE CIGÜEÑAL (GR)	44
SELLO DE CIGÜEÑAL (GR) (DELANTERO) (FRENTE)	44
SELLO DE CIGÜEÑAL (GR) (PARTE TRASERA)	44
SELLO DE LABIO (REGULADOR DE AGUA)	68
SENSOR DE PRESIÓN (GR)	245
	246
	247
	248
	249
	250
SENSOR DE PRESIÓN (GR) (VENTILADOR DE REDIADOR)	593
SENSOR DE TEMPERATURA (GR)	253
	254
	255
	256
	257
SENSOR DE VELOCIDAD (GR)	251
	252
SENSOR DEL MOTOR (GR)	241
*SENSOR GP-POSITION (*ROTARY) (*THROTTLE)	86
SEPARADOR DE AGUA Y BOMBA DE CEBADO DE COMBUSTIBLE (GR)	117
SERVICIO DE TREN DE FUERZA (GR) (MOTONIVELADORA)	147
SILENCIADOR (GR)	82
SOFTWARE DEL TREN DE FUERZA (GR)	146
SOFTWARE DEL TREN DE FUERZA (GR) (MOTONIVELADORA)	147
*SOFTWARE GP-ENGINE (*VARIABLE HORSEPOWER)	971
SOLENOIDE (CONJ) (24 VOLTIOS)	260
SOPORTE DE PLATAFORMA (GR)	515
SOPORTE DEL ASIENTO (GR)	929
SOPORTE DEL ESCARIFICADOR (GR)	756
SOPORTE DEL TANQUE DE COMBUSTIBLE (GR)	514
*STARTING AID GP	258
SUSPENSIÓN - ASIENTO CON (GR)	919
	920
	921
	922
	923
	924
	925
SUSPENSIÓN - ASIENTO CON (GR)	926
	928
*SWITCH GP-ROTARY (LUZ DE GIRO, PELIGRO)	193
	196
	199
	202
	209
	212
	267
*SWITCH GP-ROTARY (LUZ DE GIRO, PELIGRO)	341
T	
TABLERO DE INSTRUMENTOS (GR)	891
	893
	895
TÁNDEM Y CUBIERTA (GR)	391
TANQUE DE AIRE (GR)	531
TANQUE HIDRÁULICO Y MONTAJE (GR)	635
TANQUE Y FILTRO HIDRÁULICOS (GR)	633
TAPA CONTRA EL POLVO (CONJ)	148
	149
TAPA DE LA CAJA DELANTERA (GR)	13
TAPA DE LLENADO (CONJ) (ACEITE DEL MOTOR)	14
TAPA DE LLENADO (CONJ) (ACEITE DEL MOTOR)	13
TAPA DEL BLOQUE MOTOR (GR)	12
TAPA DEL MECANISMO DE VÁLVULAS (GR)	14
	15
TAPA DEL RADIADOR (7 LB/PULG2)	72
TAPA DEL RADIADOR (*7-PSI)	73
TAPA DEL TUBO DE LLENADO DE COMBUSTIBLE (GR) (SERVICIO PESADO, TRABABLE)	115
TAPA DEL TUBO DE LLENADO (TANQUE DE ACEITE HIDRÁULICO)	633
TAPA (VASTAGO)	427
	428
	429
	430
	431
	432
	455
	462
TAPÓN DEL MOTOR (GR)	40

* NO HAY TRADUCCION DISPONIBLE EN EL MOMENTO DE LA IMPRESION

INDICE

Nombre	Página
TAPÓN (DRENAJE DE ACEITE DE TRANSMISION)	346
TAPÓN (DRENAJE DE COLECTOR DE ACEITE DE MOTOR)	36
TAPÓN MAGNÉTICO (CAJA DE TRANSMISION)	474
TAZA DE CUCHARÓN (CONJ)	91
TIRANTE DE DIRECCIÓN (GR)	505
TIRANTE (GR) (DIRECCIÓN)	556
TOPE DE VÁLVULA DE CONTROL (GR)	571
	572
TORNILLERIA DEL RADIADOR	65
TORNILLERÍA DEL TANQUE DE COMBUSTIBLE	88
TORNILLERÍA (GR)	488
TRABA DE DESPLAZAMIENTO DEL CIRCULO (GR)	616
TRANSMISION (CONFIG)	393
TREN DE FUERZA-GRUPO ELECTRÓNICO	146
	147
TUBERÍAS DE ACEITE DE LA TRANSMISIÓN (GR)	383
TUBERÍAS DE ACEITE DEL MOTOR (GR)	55
TUBERÍAS DE ACONDICIONADOR DE AIRE (GR)	863
TUBERIAS DE CALEFACCION	866
TUBERÍAS DE COMBUSTIBLE (GR)	94
	96
	98
	100
TUBERÍAS DE DIRECCIÓN (GR)	613
TUBERÍAS DE ENGRASE (GR)	504
TUBERÍAS DE LA CALEFACCIÓN (GR)	866
TUBERÍAS DE LA DIRECCIÓN SECUNDARIA (GR)	611
TUBERÍAS DEL ACUMULADOR (GR)	578
TUBERÍAS DEL AGUA (GR)	66
	68
TUBERÍAS DEL DESGARRADOR (GR)	606
	608
	610
TUBERÍAS DEL FILTRO DE COMBUSTIBLE	101
TUBERÍAS DEL TANQUE DE AIRE (GR)	530
TUBERÍAS HIDRÁULICAS DEL VENTILADOR (GR)	591
	593
	595
TUBERÍAS HIDRÁULICAS (GR)	580
	582
	583
	584
	586
	589
TUBO DE LLENADO DE ACEITE DE LA TRANSMISIÓN (GR)	377
TURBOCOMPRESOR - TUBERÍAS DE ACEITE DEL (GR)	57
TURBOCOMPRESOR (GR)	83
	85

U

UNIÓN GIRATORIA (GR)	632

V

*VALVE GP-PUMP CONTROL	721
	723
VALVULA ANTIREACCION (GR)	731
VÁLVULA DE ALIVIO (GR)	732
	733
	734
	735
	736
	737
	738
	790
VÁLVULA DE ALIVIO (GR)	727
	728
	729
	730
	731
VÁLVULA DE COMBINACIÓN (GR)	679
	681
VÁLVULA DE CONTROL DE LA TRANSMISIÓN (GR)	406
VÁLVULA DE CONTROL (GR)	683
	685
	687
	689
	691
	693
	695
	697
	699
	701
	703
	705
	707
	709
	711
	713
	715
	717
	719
VÁLVULA DE CONTROL (GR) (AIRE)	534

* NO HAY TRADUCCION DISPONIBLE EN EL MOMENTO DE LA IMPRESION

INDICE

Nombre	Página
VÁLVULA DE CONTROL (GR) (DESPLAZADOR LATERAL)	667, 669, 670, 671, 673, 674, 678
VÁLVULA DE CONTROL (GR) (ESCARIFICADOR)	671
VÁLVULA DE CONTROL (GR) (LEVANTAMIENTO DE LA HOJA)	667, 670, 671
VÁLVULA DE CONTROL (GR) (MANDO DEL CÍRCULO)	667, 669, 670, 671, 673, 674, 678
VÁLVULA DE CONTROL (GR) (PUNTA DE HOJA)	667, 669, 670, 671, 673, 674, 678
VÁLVULA DE DRENAJE	89
VÁLVULA DE DRENAJE (RADIADOR)	491
VÁLVULA DE DRENAJE (TANQUE DE AIRE)	531
VÁLVULA DE LA TRABA DEL DIFERENCIAL Y MONTAJE (GR)	397
VÁLVULA DE LANZADERA (GR)	739, 740
VALVULA DE PURGA (GR)	725, 726
VÁLVULA DE SOLENOIDE (GR)	404, 405
VÁLVULA DE SOLENOIDE (GR)	536, 537
VÁLVULA DE SOLENOIDE (GR)	741, 742
VÁLVULA DE SOLENOIDE Y MÚLTIPLE (GR)	743, 744
VÁLVULA DEL NEUMÁTICO (GR)	426, 427, 428, 429, 431, 432, 433, 434, 435, 436, 437, 438, 439, 440, 441, 442, 443, 446, 447, 448, 449, 450, 452, 453, 454, 455, 456, 457, 458, 459, 460, 461, 462, 463, 464, 466, 468, 469, 470
VÁLVULA SELECTORA Y DE CONTROL DE PRESIÓN (GR)	398, 401
VÁLVULA Y VARILLAJE (GR)	636, 638, 640, 642, 644, 646, 648, 650, 652, 654, 656, 658, 660, 662, 664
VÁLVULAS HIDRÁULICAS - GRUPO DE 6	676, 677

* NO HAY TRADUCCION DISPONIBLE EN EL MOMENTO DE LA IMPRESION

INDICE

Nombre	Página
VÁLVULAS HIDRÁULICAS - GRUPO DE 7	678
VENTANA DE LA CABINA (GR)	942
	943
	945
VENTANA (GR)	940
	941
VENTILADOR DE CIRCULACION	816
	818
	820
	821
VIDRIO (CONJ) (AMBAR) (DE GIRO)	160
	162
VIDRIO (CONJ) (AMBAR) (SEÑAL)	164
VIDRIO (CONJ) (AMBAR) (SEÑAL)	166
VIDRIO (CONJ) (FARO DELANTERO)	164
	166
VIDRIO (CONJ) (*HEAD)	160
	162
VIDRIO (CONJ) (LAMPARA-LUZ BAJA)	158
VIDRIO (CONJ) (LUZ BAJA)	184
VIDRIO (CONJ) (REFLECTOR)	154
	155
	156
	157
VOLANTE - CAJA DE (GR)	30
VOLANTE (GR)	28

* NO HAY TRADUCCION DISPONIBLE EN EL MOMENTO DE LA IMPRESION

ÍNDICE

Designação	Página

A

ACENDEDOR (CIGARROS, 24 VOLTS) 332
334
ACESSÓRIO - CABINE 777
778
ACOPLAMENTO TORSIONAL 372
ACUMULADOR 539
540
ACUMULADOR - DIREÇÃO 544
ACUMULADOR (AR CONDICIONADO) 863
ACUMULADOR DO AMORTECEDOR DA LÂMINA 539
ACUMULADOR HIDRÁULICO 541
542
543
ACUMULADOR HIDRÁULICO E MONTAGEM . . . 538
AJUSTADOR DO ASSENTO 779
ALARME 118
119
ALTERNADOR DE CORRENTE 120
122
124
125
AMORTECEDOR DE VIBRAÇÕES E POLIA 25
AQUECEDOR DA ÁGUA DO MOTOR 148
149
AQUECEDOR DA CABINE 825
826
827
831
AQUECEDOR DA CABINE E MONTAGEM 825
AQUECEDOR (*22-VOLT, 1892-WATT) 258
AR. PARA NEVE - MOTONIVELADORA 5
ARRANJO GERAL 2
ARRANJO RODOVIÁRIO 4
ARREFECEDOR - ÓLEO DO MOTOR 59
ARREFECEDOR DE ÓLEO DA TRANSMISSÃO 368
370
ARREFECIMENTO 60
61
ARTICULAÇÃO GIRATÓRIA 632
ASSENTO 906
908
910
912
ASSENTO - FUNDO 885
ASSENTO COM SUSPENSÃO 919
920
921
922
923
924
925
926
928
ASSENTO ESTÁTICO 914
915
917
AUXILIAR DE PARTIDA 259

B

BALANCIM 42
43
BARRA DE DIREÇÃO (DIREÇÃO) 556
BARRA DE TRAÇÃO 749
BASE DO FILTRO DE ÓLEO (MOTOR) 51
BATERIA 127
128
129
130
BATERIA (12-VOLTS) 129
BATERIA (12-VOLTS) (MOLHADO) 128
BATERIA (12-VOLTS) (1.100 AMPS) 127
BATERIA (12 VOLTS, 750 AMPERES) 130
BLINDAGEM DO EIXO DA TRANSMISSÃO 507
BLOCO DE JUNÇÃO 131
BLOCO DO MOTOR 17
18
BOCAL DE ENCHIMENTO DE ÓLEO DO TREM DE FORÇA 377
BOMBA - ESCORVA DE COMBUSTÍVEL E SEPARADOR DE ÁGUA 117
BOMBA DA DIREÇÃO SECUNDÁRIA E MONTAGEM 622
BOMBA DA UNIDADE INJETORA 108
109
110
BOMBA DE ÁGUA 70
71
BOMBA DE DIREÇÃO SECUNDÁRIA E MOTOR 620
BOMBA DE ENGRENAGENS 386
387
BOMBA DE ÓLEO - MOTOR 58
BOMBA DE PISTÃO 623
625
BOMBA E MONTAGEM - PISTÃO 621
BOMBA HIDRÁULICA - UNIDADE INJETORA . . . 104
105
BOMBA HIDRÁULICA E MONTAGEM - UNIDADE INJETORA 104
105
BORDA CORTANTE 757
BOTÃO - PESO 840

* TRADUÇÃO NÃO DISPONÍVEL NO MOMENTO DA IMPRESSÃO

ÍNDICE

Designação	Página
*BOX GP-TOOL	969
BRAÇO DO ASSENTO	786
	787
*BREATHER AS (BOCAL DE ENCHIMENTO DE ÓLEO DE TREM DE FORÇA)	377
BUJÃO DO MOTOR	40
BUJÃO MAGNÉTICO (CAIXA DE TRANSMISSÃO)	474
BUZINA DE AR	835
	836
	838

C

CABEÇOTE DO MOTOR	19
	22
	24
CABINE	788
	789
CABINE - PERFIL ALTO	788
CABINE OPERADOR - SEM ROPS	788
CABOS/FIOS ELÉTRICOS - CABINE	275
	277
	278
	280
	282
	284
CABOS/FIOS ELÉTRICOS - CONSOLE DA DIREÇÃO	338
	341
CABOS/FIOS ELÉTRICOS - CONSOLE DA TRANSMISSÃO	332
	334
CABOS/FIOS ELÉTRICOS - DIANTEIROS	293
	297
CABOS/FIOS ELÉTRICOS - DIREÇÃO SECUNDÁRIA	329
CABOS/FIOS ELÉTRICOS - SISTEMA ELETRÔNICO	286
	288
	290
CABOS/FIOS ELÉTRICOS - TRASEIROS	302
	304
	309
	312
	316
	320
	324
CAÇAMBA	91
CADEADO	788
	798
CADEADO (CAIXA DE FERRAMENTAS)	969
CAIXA - SUSPENSÃO DO ASSENTO	840
CAIXA DIANTEIRA	31
	32
CAIXA DO VOLANTE DO MOTOR	30
CAIXA E CHASSI	474
CAIXA E COMPONENTES - TRANSMISSÃO	346
CANTO DE LÂMINA	752
CARCAÇA - INDICADOR	72
CARCAÇA - INDICADOR (NÍVEL DO LÍQUIDO ARREFECEDOR)	73
CÁRTER DO ÓLEO DO MOTOR	36
*CARTRIDGE AS-DESICCANT (SECADOR A AR)	519
CARTUCHO DO TURBOALIMENTADOR	85
CHAPA DE EMPUXO	751
CHASSI DIANTEIRO	489
CHAVE (DESCONECTAR A BATERIA)	266
CHAVE GERAL	266
CHICOTE - CABINE	180
	222
	224
	282
	872
CHICOTE - CABINE (DIANTEIRO)	278
CHICOTE - CABINE (PAINEL DE INSTRUMENTOS)	275
	278
CHICOTE - CABINE (TRASEIRO)	275
CHICOTE - CABINE (TRASEIRO)	278
CHICOTE - CHASSI	219
	273
CHICOTE - CHASSI (ARMAÇÃO DA LÂMINA)	220
CHICOTE - CONSOLE	332
	334
CHICOTE - CONSOLE (DIREÇÃO)	338
CHICOTE - ILUMINAÇÃO	199
	202
CHICOTE - MOTOR (INJETOR DE COMBUSTÍVEL)	286
	290
CHICOTE - MOTOR (MÓDULO DE CONTROLE ELETRÔNICO)	286
	288
CHICOTE - MOTOR (SENSORES)	290
CHICOTE - MOTOR (UNIDADE INJETORA)	288
CHICOTE - PAINEL DE INSTRUMENTOS	891
	893
CHICOTE - PAINEL DE INSTRUMENTOS (LUZES TRASEIRAS DO PAINEL)	895
CHICOTE - PLATAFORMA	293
	297
CHICOTE - SENSOR (FIAÇÃO 14-GA)	245
CHICOTE - SENSOR (FIAÇÃO 14-GA) (ACIONAMENTO DA INJEÇÃO)	249

* TRADUÇÃO NÃO DISPONÍVEL NO MOMENTO DA IMPRESSÃO

ÍNDICE

Designação	Página
CHICOTE - SENSOR (*14-GA WIRE)	254
CHICOTE - TRANSMISSÃO	304
	324
	346
	367
CHICOTE - TRASEIRO	320
CHICOTE - TRASEIRO (SERVIÇO - CENTRAL - LADO DIREITO)	316
CHICOTE - TRASEIRO (SERVI~CO - CENTRAL - LADO ESQUERDO)	316
CHICOTE-CHASSI DIANTEIRO	193
	196
	199
	202
	297
CHICOTE-CHASSI DIANTEIRO (BARRA DA LUZ DE REFORÇO)	209
CHICOTE-CHASSI DIANTEIRO (LUZES DE TRABALHO, DIANTEIRO)	212
CHICOTE-CHASSI TRASEIRO	305
	324
	325
CHICOTE (CONSOLE)	341
CILINDRO DA DIREÇÃO	567
	568
CILINDRO DE ARTICULAÇÃO	558
	559
CILINDRO DE DESLIZAMENTO LONGITUDINAL	566
CILINDRO DE DESLOCAMENTO LATERAL	561
CILINDRO DE DIREÇÃO E MONTAGEM	556
CILINDRO DE INCLINAÇÃO LATERAL DAS RODAS	570
CILINDRO DE LEVANTAMENTO	563
CILINDRO DE TOMBAMENTO DA LÂMINA	560
CILINDRO DO ESCARIFICADOR	565
CILINDRO DO RÍPER	564
CILINDRO E MONTAGEM - ARTICULAÇÃO	549
	550
CILINDRO E MONTAGEM - DESLOCAMENTO DA LÂMINA	555
CILINDRO E MONTAGEM - DESLOCAMENTO DO CÍRCULO	553
CILINDRO E MONTAGEM - ESCARIFICADOR	554
CILINDRO E MONTAGEM - INCLINAÇÃO DAS RODAS	557
CILINDRO E MONTAGEM - LEVANTAMENTO DA LÂMINA	551
CILINDRO E MONTAGEM - TOMBAMENTO DA LÂMINA	552
CILINDRO HIDRÁULICO - MACACO	972
CINTO DE SEGURANÇA	903
	904
	905
	925
CINTO DE SEGURANÇA (RETRÁTIL)	920
CINZEIRO	851
	854
CÍRCULO	745
	747
COBERTURA DO MOTOR	480
	484
COLETOR DE ESCAPE	81
COLMÉIA - ARREFECEDOR DE ÓLEO (MOTOR)	59
COLMEIA DO CONDENSADOR (AR CONDICIONADO)	793
COLMÉIA (ÓLEO DA TRANSMISSÃO)	370
COMANDO FINAL	381
COMANDO HIDRÁULICO	577
COMPRESSOR DE AR	8
	10
COMPRESSOR DE REFRIGERANTE	790
	791
CONDENSADOR DO REFRIGERANTE E MONTAGEM	793
CONDICIONADOR DE AR	781
	782
CONDICIONADOR DE AR E MONTAGEM	781
CONSOLE DO OPERADOR	794
*CONTROL GP-HYDRAULIC LOCKOUT	547
*CONTROL GP-UNPROGRAMMED	138
CONTROLE - NÃO PROGRAMADO	139
CONTROLE DA DIREÇÃO SECUNDÁRIA	137
CONTROLE DA EMBREAGEM	361
CONTROLE DA TRANSMISSÃO	365
CONTROLE DA TRAVA DO DIFERENCIAL	363
CONTROLE DE DIREÇÃO	548
CONTROLE DO FREIO DE ESTACIONAMENTO	524
CONTROLE DO FREIO DE SERVIÇO	526
CONTROLE DO GOVERNADOR	86
CONTROLE ELÉTRICO DAS MARCHAS	345
CONTROLE ELETRÔNICO - MOTOR	135
	136
CONTROLE ELETRÔNICO E MONTAGEM - MOTOR	134
CONTROLE HIDRÁULICO	545
	546
CONTROLE HIDRÁULICO DA TRANSMISSÃO	367
CONVERSÃO PARA ESTRUTURA NÃO ROPS	798
CONVERSOR DE POTÊNCIA (24 VOLTS PARA 12 VOLTS, 25 AMPÈRES)	144
CONVERSOR ELÉTRICO	140

* TRADUÇÃO NÃO DISPONÍVEL NO MOMENTO DA IMPRESSÃO

ÍNDICE

Designação	Página
	141
	142
	143
	144
CONVERSOR ELÉTRICO (24-VOLTS A 12-VOLTS)	143
CONVERSOR ELÉTRICO (24-VOLTS A 12-VOLTS)	141
*CORE AS	368
*CORE AS-HEATER	783
	828
	832
CORREIA	174
CORREIA (ALTERNADOR)	122
CORREIA (AR CONDICIONADO)	791
CORREIA DE COMANDO (PISCA-ALERTA)	173
CORRENTE	350
CORRENTE - COMANDO	350
COTOVELO D'ÁGUA	62
COTOVELO DE ADMISSÃO DE AR	78
COTOVELO DE ESCAPE	79
D	
DECALCOMANIA - FACIAL (FARÓIS, FACHO ALTO E BAIXO)	196
	199
	202
	209
	212
	267
	341
DECALCOMANIA - FACIAL (FARÓIS, FACHO ALTO E BAIXO)	193
DECALCOMANIA - FACIAL (PISCA-PISCA, PISCA-ALERTA)	193
	196
	199
	202
	209
	212
	341
DECALCOMANIA - FACIAL (PISCA-PISCA, PISCA-ALERTA)	267
DECALQUE	970
	971
DECALQUE - ADVERTÊNCIA (CILINDRO DE ALTA PRESSÃO)	973
DECALQUE - ADVERTÊNCIA (CONEXÃO DE CABO)	973
DECALQUE - ADVERTÊNCIA (SEM DEGRAUS)	114
DECALQUE - CONTROLE (AQUECEDOR & AR CONDITIONADO)	782
DECALQUE - CONTROLE (VELOCIDADE DO VENTILADOR, TEMPERATURA)	827
	831
DECALQUE - FUSÍVEL	278
DECALQUE - FUSÍVEL (DIREITO)	338
DECALQUE - FUSÍVEL (ESQUERDO)	338
	341
DECALQUE - FUSÍVEL (LUZES, LAVADOR, LIMPADOR, DESCONGELADOR)	275
DECALQUE - IDENTIFICAÇÃO (*BIODEGRADABLE HYDRAULIC OIL)	577
DECALQUE - IDENTIFICAÇÃO (NÚMERO DE GRUPO) (AR CONDICIONADO)	782
DECALQUE - INDICADOR (*BLADE CENTERSHIFT)	973
DECALQUE - INFORMAÇÕES (*ENGINE, HIGH IDLE, HOLD)	365
DECALQUE - INFORMAÇÕES (*ENGINE, LOW IDLE, HOLD)	365
DECALQUE - INSTRUÇÃO (AJUSTE DO ASSENTO)	933
DECALQUE - INSTRUÇÃO (*DO NOT DRILL, WELD ROPS)	899
DECALQUE - INSTRUÇÃO (NÃO FURE OU SOLDE A ESTRUTURA ROPS)	900
DECALQUE - INSTRUÇÃO (PARADA DO MOTOR)	305
	325
DECALQUE - INSTRUÇÃO (SEM DEGRAUS)	496
DECALQUE - INSTRUÇÃO (VIDRO DE SAÍDA EMERG./REMOVÍVEL)	823
	824
DECALQUE - PAINEL (INDICADORES DE AÇÃO DO LADO DIREITO)	891
DECALQUE - PAINEL (INDICADORES DE AÇÃO DO LADO ESQUERDO)	891
DECALQUE - PAINEL (PAINEL DE INDICADORES DA TRANSMISSÃO)	365
DECALQUE - PAINEL (PAINEL DE INDICADORES, DIREITO)	893
	896
DECALQUE - PAINEL (PAINEL DE INDICADORES, ESQUERDO)	893
	895
DECALQUE - PAINEL (SELECIONAR VELOCIDADE)	365
DECALQUE (LAVADOR DE VIDROS)	284
DECALQUE MONITOR (MÓDULO DE QUATRO MEDIDORES)	893

* TRADUÇÃO NÃO DISPONÍVEL NO MOMENTO DA IMPRESSÃO

ÍNDICE

Designação	Página
DECALQUE MONITOR (SISTEMA DE MONITORIZAÇÃO CATERPILLAR)	891, 895
DECALQUE (PÁRA-SOL - CATERPILLAR)	887, 888
DECALQUE (PLACA - NOME) (ACUMULADOR)	541
DECALQUE-REFLETOR (AMARELO)	974
DECALQUE (TAMPA - PRETA)	365
DEFLETOR TÉRMICO DE CALOR	508
DEGRAU	509
DENTE DO ESCARIFICADOR	775, 776
DIFERENCIAL	375
DIFERENCIAL E COROA	373
DIREÇÃO SECUNDÁRIA	630
DISJUNTOR AUTOMÁTICO DE CIRCUITO (15 AMPERES) (CONTROLE DO MOTOR)	317
DISJUNTOR AUTOMÁTICO DE CIRCUITO (15 AMPERES) (CONTROLE DO MOTOR)	321
DISJUNTOR AUTOMÁTICO DE CIRCUITO (15 AMPERES) (FARÓIS)	132, 133
DISJUNTOR AUTOMÁTICO DE CIRCUITO (15 AMPERES) (LÂMPADAS DE TRABALHO - BARRA)	132
DISJUNTOR AUTOMÁTICO DE CIRCUITO (80 AMPERES) (ALTERNADOR)	316
DISJUNTOR AUTOMÁTICO DE CIRCUITO (80 AMPERES) (ALTERNADOR)	320
DISJUNTOR AUTOMÁTICO DE CIRCUITO (80 AMPERES) (PRINCIPAL)	316
DISJUNTOR AUTOMÁTICO DE CIRCUITO (80 AMPERES) (PRINCIPAL)	322
*DOOR GP (*AIR VENT)	851, 854, 861
DRENO - ÓLEO DO MOTOR	26
DUCTO	813
DUCTO E CONTROLE	812
ELEMENTO - SECUNDÁRIO	76
ELEMENTO FILTRANTE - ÓLEO (ALTA EFICIÊNCIA)	383
ELEMENTO FILTRANTE - ÓLEO (ALTA EFICIÊNCIA) (TRANSMISSÃO)	380
ELEMENTO FILTRANTE - ÓLEO (HIDRÁULICO) (EFICIÊNCIA PADRÃO)	633
ELIMINAÇÃO DE VAPORES DO CÁRTER	52, 53
ELO - DIREÇÃO	505
EMBREAGEM DA TRANSMISSÃO	351, 354, 357, 359
EMISSOR - NÍVEL DO COMBUSTÍVEL	115
EMISSOR - POSIÇÃO	243, 244
EMISSOR - POSIÇÃO (ARTICULAÇÃO DA DIREÇÃO)	304, 324
ENGATE - ARTICULAÇÃO	501
ENGATE DO REBOQUE	503
ENGRENAGENS DE DISTRIBUIÇÃO	29
ESCARIFICADOR	768, 769, 772
ESPELHO RETROVISOR	870, 871, 872, 874, 875, 876
ESTRUTURA ROPS ABERTA	899
ESTRUTURA ROPS FECHADA	898
EXTENSÃO - ENCOSTO	814, 815, 920
EXTENSÃO DA LÂMINA	758, 759, 760

E

EIXO-COMANDO DE VÁLVULA	11
EIXO DE COMANDO DA BOMBA	629
EIXO DE ENTRADA	390
EIXO DE TRANSMISSÃO	389
EIXO DIANTEIRO	471
ELEMENTO - AQUECEDOR DE ÁGUA DA CAMISA (120 VOLTS/1.500 WATTS)	149
ELEMENTO - AQUECEDOR DE ÁGUA DA CAMISA (240 VOLTS/1500 WATT)	148
ELEMENTO - PRIMÁRIO	76

F

FAROL DIANTEIRO	158, 159, 160, 162
FIAÇÃO - AMORTECEDOR DA LÂMINA	273
FIAÇÃO - AQUECEDOR E AR CONDICIONADO	783, 827, 831
FIAÇÃO - LUZES TRASEIRAS	215

* TRADUÇÃO NÃO DISPONÍVEL NO MOMENTO DA IMPRESSÃO

ÍNDICE

Designação	Página
	217
	302
	305
	309
	312
FIAÇÃO - LUZES TRASEIRAS (DIREITO)	309
FIAÇÃO - LUZES TRASEIRAS (DIREITO)	312
FIAÇÃO - LUZES TRASEIRAS (ESQUERDO)	310
	312
FIAÇÃO - PAINEL	178
	205
	207
	280
FIAÇÃO - PAINEL (INTERRUPTOR)	876
FIAÇÃO -LUZES DIANTEIRAS	205
	207
	222
	224
	236
	298
FIAÇÃO -LUZES DIANTEIRAS (BARRA DA LUZ ELEVADA)	209
FIAÇÃO -LUZES DIANTEIRAS (LUZES DE TRABALHO)	212
FIAÇÃO ELÉTRICA-AQUECEDOR (AUXILIAR DE PARTIDA)	259
FIAÇÃO-LIMPADOR DE VIDROS (CAIXA DE FUSÍVEIS)	284
FIAÇÃO-LIMPADOR DE VIDROS (CONTROLE)	284
FIAÇÃO-TERMOSTATO	863
*FILM (*VHP PLUS) (*VHP PLUS)	971
FILTRO - AR (CABINE)	822
FILTRO - AR DA CABINE	822
FILTRO - COMBUSTÍVEL	89
	115
FILTRO - MAGNÉTICO	388
FILTRO - MAGNÉTICO (ÓLEO DA TRANSMISSÃO)	346
FILTRO - MAGNÉTICO (TRANSMISSÃO)	388
FILTRO - ÓLEO	380
FILTRO - ÓLEO DO MOTOR	49
	51
FILTRO - SEPARADOR DE ÁGUA E COMBUSTÍVEL	91
FILTRO DE COMBUSTÍVEL E SEPARADOR DE ÁGUA	91
FILTRO DO ÓLEO E MONTAGEM	378
FIXADORES	488
FIXADORES - CABEÇOTE DO MOTOR	27
FIXADORES - RADIADOR	65
FIXADORES - TANQUE DE COMBUSTÍVEL	88
FREIO DE ESTACIONAMENTO	520
FREIO DE SERVIÇO	522
FUNDO - ENCOSTO	884
FUSÍVEL (10 A) (SECADOR A AR)	516
FUSÍVEL (*10-AMPERE) (DESCONGELADOR DIANTEIRO)	820
FUSÍVEL (*10-AMPERE) (DESCONGELADOR TRASEIRO)	821
FUSÍVEL (*10-AMPERE) (FAROL DA LÂMINA - DIANTEIRO)	188
FUSÍVEL (10 AMPERES)	193
	199
	202
	205
	207
	209
	212
	222
	224
	231
	267
	280
	282
	284
	329
	338
	341
	957
FUSÍVEL (10 AMPERES) (AQUECIMENTO DOS ESPELHOS)	872
FUSÍVEL (10 AMPERES) (AQUECIMENTO DOS ESPELHOS)	876
FUSÍVEL (10 AMPERES) (*AUXILIARY BACK-UP ALARM)	180
FUSÍVEL (10 AMPERES) (CONVERSOR)	141
FUSÍVEL (10 AMPERES) (CONVERSOR DE ENERGIA)	143
FUSÍVEL (10 AMPERES) (LÂMPADA DA LÂMINA)	189
FUSÍVEL (10 AMPERES) (LIMPADOR)	959
	961
	963
FUSÍVEL (10 AMPERES) (LUZ DE MARCHA À RÉ)	178
FUSÍVEL (10 AMPERES) (LUZES DE TRABALHO)	191
	192
FUSÍVEL (10 AMPERES) (PISCA-PISCA DE ADVERTÊNCIA)	232
	277
FUSÍVEL (10 AMPERES) (PISCA-PISCA, PISCA-ALERTA)	196
FUSÍVEL (15 A) (AQUECEDOR)	825
FUSÍVEL (15 A) (AR CONDICIONADO)	781

* TRADUÇÃO NÃO DISPONÍVEL NO MOMENTO DA IMPRESSÃO

ÍNDICE

Designação	Página
FUSÍVEL (15 AMPERES)	275, 278, 338, 341
FUSÍVEL (15 AMPERES) (CONVERSOR - FORÇA)	142
FUSÍVEL (15 AMPERES) (HOLOFOTES - CABINE)	191, 192
FUSÍVEL (30 AMPERES)	144

G

GR. DE CONVERSÃO - CERTIFICADO	1, 2
GR. DE SERVICO - TREM DE FORÇA (MOTONIVELADORA)	147
GRAXEIRA (SOQUETE DO CILINDRO DE DESLOCAMENTO LATERAL)	553
GRUPO DE VÁLVULAS DE CONTROLE - CINCO	670, 671, 672, 673, 674, 675
GRUPO DE VÁLVULAS DE CONTROLE - QUÁDRUPLO	666, 667, 668, 669
GRUPO DE VÁLVULAS DE CONTROLE - SEIS	676, 677
GRUPO DE VÁLVULAS DE CONTROLE - SETE	678
GRUPO ROTATIVO DA BOMBA	627, 628

I

ILUMINAÇÃO - FAROL E SINALIZAÇÃO	177
ILUMINAÇÃO - MARCHA A RÉ	178, 180
ILUMINAÇÃO - RODOVIÁRIA	228
ILUMINAÇÃO - SINALIZAÇÃO	229, 230
INDICADOR - NÍVEL DO ÓLEO (VARETA)	54
INDICADOR - PRESSÃO DO AR (DIREITO)	893, 895
INDICADOR - PRESSÃO DO AR (DIREITO)	891
INDICADOR - PRESSÃO DO AR (ESQUERDO)	891, 893, 895
INDICADOR - TROCA DO FILTRO DE AR	75
INJETOR DE COMBUSTÍVEL	92, 93
INSTALAÇÃO DO PISCA-PISCA DE ADVERTÊNCIA	150
INSTALAÇÃO DO RÁDIO	845
INSTALAÇÃO DO RÁDIO - ARRANJO	844
INTERRUPTOR - BALANCIM (BARRA DE LUZ BAIXA)	199, 202, 209
INTERRUPTOR - BALANCIM (DESLIGAMENTO DO MOTOR NO SOLO)	304
INTERRUPTOR - BALANCIM (DESLIGAMENTO NO SOLO)	324
INTERRUPTOR - BALANCIM (FARÓIS DA LÂMINA)	191
INTERRUPTOR - BALANCIM (FARÓIS DA LÂMINA)	192
INTERRUPTOR - BALANCIM (FARÓIS DIANTEIROS, LUZES TRASEIRAS)	193, 196, 199, 202, 209, 212, 267, 341
INTERRUPTOR - BALANCIM (LÂMINA)(LÂMPADA DIANTEIRA)	188
INTERRUPTOR - BALANCIM (LÂMPADA DA LÂMINA)	189
INTERRUPTOR - BALANCIM (LUZES DE TRABALHO, DIANTEIRO)	212
INTERRUPTOR - BALANCIM (PISCA-PISCA DE ADVERTÊNCIA)	150
INTERRUPTOR - BALANCIM (*THROTTLE LOCK SET, RESET)	334
INTERRUPTOR - BOTÃO (MODALIDADES DE VISUALIZAÇÃO)	893, 895
INTERRUPTOR - BOTÃO (MODO DO OPERADOR)	891
INTERRUPTOR - CIRCUITO	132, 133
INTERRUPTOR - ESFERA (INDICADOR DE DESLOCAMENTO LATERAL)	293, 297
INTERRUPTOR - LIMITADOR (PEDAL - MOVIMENTO GRADUAL)	338, 341

* TRADUÇÃO NÃO DISPONÍVEL NO MOMENTO DA IMPRESSÃO

ÍNDICE

Designação	Página
INTERRUPTOR - LIMITADOR (PEDAL DO FREIO)	342
INTERRUPTOR - LIMPADOR DO PÁRA-BRISA	272 965
INTERRUPTOR - LIMPADOR DO PÁRA-BRISA (24 VOLTS) (PISCA-PISCA DIANTEIRA)	278
INTERRUPTOR - LIMPADOR (24 VOLTS) (TRASEIRO)	957 959 961 963
INTERRUPTOR - LUZES	267
INTERRUPTOR - MAGNÉTICO	269 270 271
INTERRUPTOR - MAGNÉTICO (24 VOLTS) (AQUECEDOR DO AR DE ADMISSÃO)	271
INTERRUPTOR - MAGNÉTICO (24 VOLTS) (RELÉ DE PARTIDA)	320
INTERRUPTOR - MAGNÉTICO (24 VOLTS) (RELÉ DE PARTIDA)	316
INTERRUPTOR - PARTIDA (CHAVE)	332 334
INTERRUPTOR - PRESSÃO (*AIR BRAKES)	293
INTERRUPTOR - PRESSÃO (AR CONDICIONADO)	863
INTERRUPTOR - PRESSÃO (COMBUSTÍVEL) (COMBUSTÍVEL)	89
INTERRUPTOR - PRESSÃO (DIREÇÃO PRIMÁRIA)	297
INTERRUPTOR - PRESSÃO (DIREÇÃO SECUNDÁRIA)	329
INTERRUPTOR - PRESSÃO (FREIO A AR)	297
INTERRUPTOR - PRESSÃO (FREIO DE ESTACIONAMENTO)	294 297
INTERRUPTOR - PRESSÃO (LUZ DO FREIO)	293 297
INTERRUPTOR - ROTATIVO (*HIGH, LOW BEAM)	193
INTERRUPTOR - ROTATIVO (REDUTOR DE LUMINOSIDADE - FAROL)	196 199 202 209 212 341
INTERRUPTOR - ROTATIVO (SETA DE DIREÇÃO)	267
INTERRUPTOR - ROTATIVO (VELOCIDADE DO VENTILADOR)	782 827
INTERRUPTOR - ROTATIVO (24 VOLTS) (*FRONT WIPER CONTROL)	831 275
INTERRUPTOR - ROTATIVO (24 VOLTS) (LIMPADOR DIANTEIRO)	284
INTERRUPTOR - TEMPERATURA (ÓLEO HIDRÁULICO)	293 297
INTERRUPTOR - TEMPERATURA (REFRIGERANTE)	782
INTERRUPTOR (ACIONADOR DE TRAVA DO ACELERADOR)	334
INTERRUPTOR (AJUSTE DE VELOCIDADE DO ACELERADOR)	332
INTERRUPTOR (AMORTECEDOR DA LÂMINA)	273
INTERRUPTOR (*AUXILIARY BACKUP)	178
INTERRUPTOR DE DERIVAÇÃO	265
INTERRUPTOR (DESCONGELADOR DIANTEIRO)	820
INTERRUPTOR (DESCONGELADOR TRASEIRO)	821
INTERRUPTOR GIRATÓRIO (PISCA-PISCA, PISCA-ALERTA)	193 196 199 202 209 212 267
INTERRUPTOR GIRATÓRIO (PISCA-PISCA, PISCA-ALERTA)	341
INTERRUPTOR (LUZ TRASEIRA)	338
INTERRUPTOR (LUZES TRASEIRAS DO PAINEL)	341
INTERRUPTOR (MODO DE RETENÇÃO DO ACLERADOR)	332
INTERRUPTOR (MUDANÇA AUTOMÁTICA DE MARCHA)	345
INTERRUPTOR (PISCA-PISCA DE ADVERTÊNCIA)	150 234 235 236
INTERRUPTOR (REDUTOR DE LUMINOSIDADE DO PAINEL)	338
INTERRUPTOR (SACA-PINO DE DESLOCAMENTO LATERAL)	335
INTERRUPTOR (SACA-PINO DE DESLOCAMENTO LATERAL)	332
INTERRUPTOR (TRAVA DO DIFERENCIAL)	338 341

* TRADUÇÃO NÃO DISPONÍVEL NO MOMENTO DA IMPRESSÃO

ÍNDICE

Designação	Página
INTERRUPTOR (24 VOLTS) (AQUECIMENTO DOS ESPELHOS)	876
INTERRUPTOR (24 VOLTS) (AQUECIMENTO DOS ESPELHOS)	872
INTERRUPTOR (24 VOLTS) (ARMAÇÃO DA LÂMINA)	280 282
INTERRUPTOR (24 VOLTS) (*AUXILIARY BACK-UP ALARM)	180
INTERRUPTOR (24 VOLTS) (CABINE - FAROL DO LADO DIREITO)	222 224
INTERRUPTOR (24 VOLTS) (FAROL DO LADO DIREITO)	205
INTERRUPTOR (24 VOLTS) (FAROL DO LADO DIREITO)	207
INTERRUPTOR (24 VOLTS) (TESTE DA DIREÇÃO SECUNDÁRIA)	329
ISOLADOR - TEMPO	847

J

Designação	Página
JANELA DA CABINE	942 943 945
JOGO - SENSOR (NÍVEL DE COMBUSTÍVEL)	115
JOGO DE ABRAÇADEIRA DO PURIFICADOR DE AR	76
JOGO DE AJUSTADOR	885
JOGO DE ALAVANCA (MOTOR DE PARTIDA)	260 263
JOGO DE ALMOFADA	814 815
JOGO DE ALMOFADA DO ASSENTO	910
JOGO DE ALMOFADA DO ASSENTO (VINIL)	912
JOGO DE BLOCO DESLIZADOR	924
JOGO DE BLOCO DESLIZADOR (INCLUI BLOCOS E PARARUSOS)	920
JOGO DE BLOCO DESLIZADOR (INCLUI 4 BLOCOS)	921
JOGO DE BUCHA (MOTOR DE PARTIDA)	260 263
JOGO DE CALÇOS (INCLUI 17 CALÇOS)	623
JOGO DE CÁRTER DE INCLINAÇÃO	910 912
JOGO DE COIFA DE SUSPENSÃO	931
JOGO DE CORDÃO (ASSENTO)	933
JOGO DE DIAFRAGMA	835
JOGO DE ESCOVA (MOTOR DE PARTIDA)	260 263
JOGO DE FIXADOR DE CORREIA	931
JOGO DE FIXADORES (ALTERNADOR)	120 125
JOGO DE FIXADORES (ASSENTO)	933
JOGO DE INCLINAÇÃO DO ASSENTO	885
JOGO DE INCLINAÇÃO TRASEIRA	885
JOGO DE INDICADOR (AJUSTAGEM DO PESO)	841
JOGO DE INDICADOR (ASSENTO)	933
JOGO DE ISOLADOR (MOTOR DE PARTIDA)	260 263
JOGO DE LÂMINA DO LIMPADOR DE PÁRA-BRISA (PERFIL BAIXO - TRASEIRO)	957
JOGO DE LÂMINA DO LIMPADOR DE PÁRA-BRISA (TRASEIRO)	959
JOGO DE MANCAL	841
JOGO DE MANCAL (ALTERNADOR)	120
JOGO DE MARTELO	823 824
JOGO DE MOLA	841
JOGO DE MOLA (AJUSTE DE ALTURA)	841
JOGO DE PÁRA-CHOQUE (AJUSTAGEM DO PESO)	841
JOGO DE PARAFUSO DE RETENÇÃO (*M5X0.8X53.24-MM) (CONTROLE)	139
JOGO DE PARAFUSO DE RETENÇÃO (M5X0,8X53,24MM)	147
JOGO DE PISTÃO	623
JOGO DE PISTÃO DE CONTROLE	623
JOGO DE RECEPTÁCULO (2 PINOS)	176 227 741
JOGO DE RECEPTÁCULO (2 PINOS)	168
JOGO DE RECEPTÁCULO (2 PINOS) (LÂMPADA DA PLACA DE REGISTRO)	169
JOGO DE RECEPTÁCULO (2 PINOS) (TOMADA DE FORÇA DE 12 VOLTS)	777 778
JOGO DE RECEPTÁCULO (2 PINOS) (VÁLVULA SOLENÓIDE)	537
JOGO DE RECEPTÁCULO (6 PINOS)	949
JOGO DE RETENTOR	540 542 548 558 560 565 741 742 744
JOGO DE RETENTOR (ACUMULADOR DA LÂMINA AMORTECEDORA)	541
JOGO DE RETENTOR (*DIFFERENTIAL LOCK VALVE)	404
JOGO DE RETENTOR (SOLENÓIDE DE TRANSMISSÃO)	405

* TRADUÇÃO NÃO DISPONÍVEL NO MOMENTO DA IMPRESSÃO

ÍNDICE

Designação	Página
JOGO DE RETENTOR (TRAVA DO DIFERENCIAL)	397
JOGO DE REVISÃO - GOVERNADOR (COMPRESSOR DE AR)	531
JOGO DE ROLETE DE SUSPENSÃO	931
JOGO DE ROLO (ASSENTO)	933
JOGO DE SEGUIDOR	840 841
JOGO DE SOLENÓIDE (MOTOR DE PARTIDA)	263
JOGO DE TERMINAL (ALTERNADOR)	120
JOGO DE TERMINAL ALTERNADOR (LUZ INDICADORA)	125
JOGO DE TERMINAL ALTERNADOR (RELÉ)	125
JOGO DE TERMINAL ALTERNADOR (SAÍDA)	125
JOGO-HASTE	885
JOGO-RETIFICADOR	125
JOGO-VÁLVULA DE CONTROLE DO AR	534
JUNTA	114
JUNTA (ALOJAMENTO DO REGULADOR)	68
JUNTA (REGULADOR DE ÁGUA)	68
JUNTA UNIVERSAL	396

L

LÂMINA	753 754 755
LÂMINA DO LIMPADOR DE PÁRA-BRISA	940 966 967 968
LÂMINA DO LIMPADOR DE PÁRA-BRISA (ALTO PERFIL DIANTEIRO SUPERIOR)	953 955
LÂMINA DO LIMPADOR DE PÁRA-BRISA (DIANTEIRO SUPERIOR)	951
LÂMINA DO LIMPADOR DE PÁRA-BRISA (INFERIOR DIANTEIRO)	949 951
LÂMINA DO LIMPADOR DE PÁRA-BRISA (PERFIL ALTO - INFERIOR DIANTEIRO)	953 955
LÂMINA DO LIMPADOR DE PÁRA-BRISA (PERFIL ALTO - TRASEIRO)	961
LÂMINA DO LIMPADOR DE PÁRA-BRISA (PERFIL BAIXO - DIANTEIRO SUPERIOR)	949
LÂMINA DO LIMPADOR DE PÁRA-BRISA (PERFIL BAIXO - TRASEIRO)	957 959
LÂMINA DO LIMPADOR DE PÁRA-BRISA (TRASEIRO)	963
*LAMP GP-FLOOD (*24-VOLT, VERTICAL MOUNT)	215 219
*LAMP GP-FLOOD (*24-VOLT, VERTICAL MOUNT) (*BLADE)	188
*LAMP GP-FLOOD (*24-VOLT, VERTICAL MOUNT) (*BLADE)	191
*LAMP GP-FLOOD (*24-VOLT, VERTICAL MOUNT) (*CAB)	182
*LAMP-HALOGEN (*24-VOLT, 65-WATT) (FAROL BAIXO)	158
LÂMPADA	309 312
LÂMPADA - FAROL	153 154 155 156 157
LÂMPADA - FAROL (24 VOLTS, MONTAGEM VERTICAL)	209
LÂMPADA - FAROL (24 VOLTS, MONTAGEM VERTICAL) (*CAB-RH)	222
LÂMPADA - FAROL (24 VOLTS, MONTAGEM VERTICAL) (DIREITO)	205
LÂMPADA - HALOGÊNEO (24 VOLTS, 65 WATTS)	153 155
LÂMPADA - HALOGÊNEO (24 VOLTS, 65 WATTS) (FAROL)	154 156
LÂMPADA - HALOGÊNEO (24 VOLTS, 65 WATTS) (FAROL BAIXO)	184
LÂMPADA - HALOGÊNEO (24 VOLTS, 65 WATTS) (LÂMINA)	157
LÂMPADA - HALOGÊNEO (24 VOLTS, 65 WATTS) (LUZ ALTA)	159 184
LÂMPADA - LED (VISOR LED)	234 235
LÀMPADA - MARCADORA	168
LÂMPADA - SINALIZAÇÃO	170 171 172
LÂMPADA - TETO	152
LÂMPADA - TETO (24 VOLTS, COM INTERRUPTOR)	275 278
LÂMPADA - TETO (24 VOLTS, COM INTERRUPTOR)	284
LÂMPADA DIANTEIRA E DE SINAL	164 166

* TRADUÇÃO NÃO DISPONÍVEL NO MOMENTO DA IMPRESSÃO

ÍNDICE

Designação	Página
LAMPADA-PLACA DE REGISTRO	169
LÂMPADA (*STOP, TAIL, TURN, LH)	309, 312
LÂMPADA (*STOP, TURN, TAIL, RH)	309, 312
LÂMPADA (24 V) (PLACA DE REGISTRO)	169
LÂMPADA (24 V) (POSIÇÃO DA CABINE)	168
LÂMPADA (*24-VOLT) (DESCONGELADOR DIANTEIRO)	820
LÂMPADA (*24-VOLT) (DESCONGELADOR TRASEIRO)	821
LÂMPADA (*24-VOLT) (LÂMINA)(LÂMPADA DIANTEIRA)	188
LÂMPADA (*24-VOLT) (LUZ ALTA/BAIXA)	160
LÂMPADA (*24-VOLT) (LUZ ALTA/BAIXA)	162
LÂMPADA (*24-VOLT) (MUDANÇA AUTOMÁTICA)	345
LÂMPADA (*24-VOLT) (POSIÇÃO)	160, 162
LÂMPADA (*24-VOLT) (VIRADA)	160, 162
LÂMPADA (*24-VOLT, 21-WATT) (VIRADA)	160, 162
LÂMPADA (24 VOLTS)	150, 152, 164, 193, 199, 202, 205, 207, 209, 210, 212, 222, 224, 234, 235, 236, 267, 280, 282, 329, 332, 334, 335, 338, 341, 782, 827, 831, 876, 879
LÂMPADA (24 VOLTS) (AÇÃO)	895
LÂMPADA (24 VOLTS) (AQUECIMENTO DOS ESPELHOS)	872
LÂMPADA (24 VOLTS) (*AUXILIARY BACK-UP ALARM)	180
LÂMPADA (24 VOLTS) (CABEÇA)	166
LÂMPADA (24 VOLTS) (FARÓIS DIANTEIROS, LUZES TRASEIRAS)	196
LÂMPADA (24 VOLTS) (FAROL DA LÂMINA)	191, 192
LÂMPADA (24 VOLTS) (GRUPO DE QUATRO MEDIDORES)	893
LÂMPADA (24 VOLTS) (INDICADOR DA AÇÃO PRINCIPAL DO EMS)	891
LÂMPADA (24 VOLTS) (INDICADOR DE AÇÃO MESTRE)	893
LÂMPADA (24 VOLTS) (INDICDOR DA PRESSÃO DO AR)	893
LÂMPADA (24 VOLTS) (INDICDOR DA PRESSÃO DO AR)	891, 895
LÂMPADA (24 VOLTS) (INTERRUPTOR DO AMORTECEDOR DA LÂMINA)	273
LÂMPADA (24 VOLTS) (LÂMPADA DA LÂMINA)	189
LÂMPADA (24 VOLTS) (LÂMPADA DE MARCHA À RÉ AUXILIAR)	178
LÂMPADA (24 VOLTS) (MÓDULO DE QUATRO MEDIDORES)	891, 895
LÂMPADA (24 VOLTS) (*NG)	335
LÂMPADA (24 VOLTS) (SINAL)	166
LÂMPADA (24 VOLTS) (TRAVA DO DIFERENCIAL)	891, 893
LÂMPADA (24 VOLTS, 21 WATTS)	309, 312
LÂMPADA (24 VOLTS, 21 WATTS) (SINAL)	164, 166
LÂMPADA (24 VOLTS, 3 WATTS) (LUZ INDICADORA)	895
LÂMPADA (24 VOLTS, 3 WATTS) (PAINEL DE INSTRUMENTOS)	891
LÂMPADA (24 VOLTS, 3 WATTS) (PAINEL DE INSTRUMENTOS)	893
LÂMPADA (24 VOLTS, 5 WATTS)	309, 312
LÂMPADA (24 VOLTS, 5 WATTS)	309, 312
LÂMPADA (24 VOLTS, 70 WATTS)	174
LÂMPADA (24 VOLTS, 70 WATTS) (PISCA-PISCA DE ADVERTÊNCIA)	173
LAVADOR DO VIDRO	935

* TRADUÇÃO NÃO DISPONÍVEL NO MOMENTO DA IMPRESSÃO

ÍNDICE

Designação	Página
	937
	938
LENTE (ÂMBAR, PISCA-ALERTA)	173
LENTE ÂMBAR (PISCA-PISCA DE ADVERTÊNCIA)	174
LENTE (ÂMBER) (SINAL)	164
	166
LENTE (ÂMBER) (SINAL)	164
LENTE (ÂMBER) (VIRADA)	160
	162
LENTE (ÂMBER) (VIRADA)	160
	162
LENTE (FAROL BAIXO)	184
LENTE (FAROL) (FAIXA BAIXA)	158
LENTE (*HEAD)	160
	162
LENTE (HOLOFOTE)	154
	155
	156
	157
LENTE (LUZES DIANTEIRAS)	164
	166
LENTE (PLACA DE REGISTRO)	169
LEVANTAMENTO DA LÂMINA	761
LEVANTAMENTO DO MOTOR	33
LIMPADOR DO VIDRO	947
	948
	949
	951
	953
	955
	957
	959
	961
	963
	965
	966
	967
	968
LUZ GIRATÓRIA DE ALARME	173
	174
LUZ INTERMITENTE (12/24 VOLTS) (PISCA-PISCA, PISCA-ALERTA)	193
	196
	199
	202
	209
	212
	267
LUZ INTERMITENTE (24 VOLT)	341

M

Designação	Página
MANGUEIRA - ELIMINAÇÃO DE VAPORES	52
	53
MARTELO E MONTAGEM	823
	824
MECANISMO DAS VÁLVULAS	47
	48
MÓDULO - VELOCÍMETRO E TACÔMETRO	879
MÓDULO - VELOCÍMETRO E TACÔMETRO (PAINEL DE INSTRUMENTOS)	895
MÓDULO ELETRÔNICO DE QUATRO INDICADORES	878
MONTAGEM - CABINE	880
MONTAGEM - ESTRUTURA ROPS	881
	883
MONTAGEM - MOTOR E TRANSMISSÃO	34
MONTAGEM - REMOVEDOR DE NEVE	764
MONTAGEM - RIPER	763
MONTAGEM - RODA	385
MONTAGEM DA PLACA DE REGISTRO	506
MONTAGEM DO FILTRO DE COMBUSTÍVEL	103
MONTAGEM DO SOLENÓIDE	239
MOTOR	6
MOTOR - ENGRENAGENS	617
MOTOR - LIMPADOR DO VIDRO	968
MOTOR - LIMPADOR DO VIDRO (DIANTEIRO)	967
MOTOR - LIMPADOR DO VIDRO (DIANTEIRO SUPERIOR)	951
	955
MOTOR - LIMPADOR DO VIDRO (TRASEIRO)	959
	963
MOTOR - LIMPADOR DO VIDRO (24 VOLTS)	948
MOTOR - LIMPADOR DO VIDRO (24 VOLTS) (INFERIOR)	955
MOTOR - LIMPADOR DO VIDRO (24 VOLTS) (INFERIOR DIANTEIRO)	951
MOTOR - NÚCLEO	7
MOTOR DE REVERSÃO DO CÍRCULO	574
MOTOR E VENTILADOR	63
MOTOR ELÉTRICO	238
MOTOR ELÉTRICO DE PARTIDA	260
	262
	263
*MOTOR GP-ELECTRIC	816
*MOTOR GP-ELECTRIC (*DEFROSTER FAN)	818
MOTOR HIDRÁULICO DO GEROTOR	618

O

Designação	Página
*ORIFICE	398
	401

* TRADUÇÃO NÃO DISPONÍVEL NO MOMENTO DA IMPRESSÃO

ÍNDICE

Designação	Página
P	
*PADLOCK GP	635, 899
PAINEL - CABINE	887, 888, 889
PAINEL- REDUÇÃO DE RUÍDO	37
PAINEL DE INSTRUMENTOS	891, 893, 895
PARAFUSO (5/8-11X2 POL)	549, 550
PERSIANA	869
PISTÃO	39
PISTÃO E BIELA	38
PLACA BASCULANTE	631
PLACA DE ADVERTÊNCIA (SEM ESPAÇO LIVRE)	476, 477, 972
PLACA DE IDENTIFICAÇÃO (ALTERNADOR)	316, 320
PLACA DE IDENTIFICAÇÃO (MOTOR)	316, 320
PLACA DE INSTRUÇÃO (BATERIA)	316, 320
PLACA DE INSTRUÇÃO (CONDICIONADOR DE AR)	782
PLACA E DECALQUE	1, 972, 974, 975, 976, 977
PLACA E DECALQUE (REFLECTOR)	2
PLACA-RADIADOR	69
*PLATE-IDENTIFICATION (*MAXIMUM WEIGHT)	4
PNEU E ARO	392
POLIA DA RODA-GUIA	41
PORTA	799, 802
PORTA DA CABINE	804, 806, 808, 810
PORTA (RESPIRO DE AR)	859
PÓS-ARREFECEDOR E MONTAGEM	74
PROTETOR - PLATAFORMA	497, 499
PROTETOR - TANQUE DE COMBUSTÍVEL	496
PROTETOR - TUBOS DO FREIO	495
PROTETOR E SUPORTE DO RADIADOR	491
PROTETOR INFERIOR	494
PUBLICAÇÃO	868
*PUMP GP-FUEL PRM & PRIM FILTER	106, 107
PURIFICADOR DE AR	75, 76, 77
PUXADOR-AMORTECEDOR (ASSENTO)	933
R	
RADIADOR	72, 73
RECEPTÁCULO-PARTIDA AUXILIAR	240
RECEPTOR - SECADOR (CONDICIONADOR DE AR)	863
REDUÇÃO DE RUÍDO	46
REGULADOR DE PRESSÃO (COMBUSTÍVEL)	106
REGULADOR DE PRESSÃO DO COMBUSTÍVEL	111, 112
REGULADOR DE TEMPERATURA DA ÁGUA (92 GRAUS C)	68
REGULADOR DE TEMPERATURA DA ÁGUA (94 GRAUS C)	68
REGULADOR DE VOLTAGEM (24 VOLTS)	125
REGULADOR (PRESSÃO DO COMBUSTÍVEL)	111, 112
*REGULATOR AS-VOLTAGE (*24-VOLT)	120
RELÉ (CONJ) (24 VOLTS)	180, 324
RELÉ (CONJ) (24 VOLTS) (LÂMPADA DE MARCHA À RÉ AUXILIAR)	178
RELÉ (CONJ) (24 VOLTS) (LUZES DE TRABALHO)	191, 192
RELÉ (CONJ) (24 VOLTS) (PARTIDA)	304
RELÉ (CONJ) (24 VOLTS) (*TAIL, PANEL LAMPS)	338
RELÉ (CONJ) (24 VOLTS) (TRASEIROS, LÂMPADAS DO PAINEL)	341
RESPIRO (MOTOR)	12
RESPIRO (TANDEM)	391
RETEM DA VÁLVULA DE CONTROLE	571, 572
RETENTOR	91
RETENTOR DO VIRABREQUIM	44
RETENTOR DO VIRABREQUIM (DIANTEIRO) (DIANTEIRO)	44
RETENTOR DO VIRABREQUIM (TRASEIRO)	44
REVESTIMENTO DA CABINE	849

* TRADUÇÃO NÃO DISPONÍVEL NO MOMENTO DA IMPRESSÃO

ÍNDICE

Designação	Página
	851
	854
	859
	861
RIPER	765
	766
RODA	464
	465
	466
	467
	468
	469
	470
RODA E PNEU	408
	409
	410
	411
	412
	413
	414
	415
	416
	417
	418
	419
	420
	421
	422
	423
	424
	425
	426
	427
	428
	429
	430
	431
	432
	433
	434
	435
	436
	437
	438
	439
	440
	441
	442
	443
	444
	445
	446
	447
	448
	449
	450
	451
	452
	453
	454
	455
	456
	457
	458
	459
	460
	461
	462
	463
	464
RODA-GUIA - CORREIA	843
ROPS ABERTA	901
ROPS FECHADA	899
	900

S

SECADOR DE AR	516
	517
	519
SECADOR DE AR (SECADOR DE AR)(24 VOLTS)	519
SEGMENTO DO CÍRCULO	747
SENSOR - PRESSÃO	245
	246
	247
	248
	249
	250
SENSOR - PRESSÃO (VENTILADOR DO RADIADOR)	593
SENSOR - TEMPERATURA	253
	254
	255
	256
	257
SENSOR DE VELOCIDADE	251
	252
SENSOR DO MOTOR	241
*SENSOR GP-POSITION (*ROTARY) (*THROTTLE)	86
SEPARADOR DE ÁGUA E BOMBA DE ESCORVA DE COMBUSTÍVEL	117
SILENCIADOR	82
SIST. DE ILUMINAÇÃO - PISCA-PISCA GIRATÓRIO DE ADVERTÊNCIA	236

* TRADUÇÃO NÃO DISPONÍVEL NO MOMENTO DA IMPRESSÃO

ÍNDICE

Designação	Página
SISTEMA DE ILUMINAÇÃO - ADVERTÊNCIA	231, 232, 234, 235
SISTEMA DE ILUMINAÇÃO - FARÓIS	175, 176, 182, 183, 184, 186, 188, 189, 191, 192, 193, 196, 199, 202, 205, 207, 209, 212, 215, 217, 219, 220, 222, 224, 226, 227
SISTEMA ELETRÔNICO - MONITOR	146
SISTEMA ELETRÔNICO - TREM DE FORÇA	146, 147
SOFTWARE - TREM DE FORÇA	146
SOFTWARE - TREM DE FORÇA (MOTONIVELADORA)	147
SOFTWARE-MOTOR (POTÊNCIA HP VARIÁVEL)	971
SOLENÓIDE (24 V)	260
*STARTING AID GP	258
SUPORTE - ASSENTO	929
SUPORTE - CHASSI TRASEIRO	510, 511, 512, 513
SUPORTE - ESCOVA	260
SUPORTE - PLATAFORMA	515
SUPORTE DO ESCARIFICADOR	756
SUPORTE DO MOTOR	45
SUPORTE DO TANQUE DE COMBUSTÍVEL	514
SUSPENSÃO - ASSENTO	931, 933

T

Designação	Página
TAMPA - ACESSO	475
TAMPA - BLOCO DO MOTOR	12
TAMPA - BOCAL DE ENCHIMENTO DE COMBUSTÍVEL (SERVIÇO PESADO, TRAVÁVEL)	115
TAMPA - BOCAL DE ENCHIMENTO (ÓLEO DO MOTOR)	13, 14
TAMPA - BOCAL DE ENCHIMENTO (TANQUE DE ÓLEO HIDRÁULICO)	633
TAMPA - CAIXA DIANTEIRA	13
TAMPA - MECANISMO DAS VÁLVULAS	14, 15
TAMPA - PROTEÇÃO	476, 477
TAMPA - RADIADOR (7 PSI)	72
TAMPA - RADIADOR (*7-PSI)	73
TAMPA CONTRA POEIRA	148, 149
TAMPA DA VÁLVULA (HASTE)	427, 428, 429, 430, 431, 432, 455, 462
TAMPÃO (DRENO DO CÁRTER DO MOTOR)	36
TAMPÃO (DRENO DO ÓLEO DA TRANSMISSÃO)	346
TANDEM E TAMPA	391
TANQUE DE AR	531
TANQUE DE COMBUSTÍVEL	113, 114, 115
TANQUE DE ÓLEO HIDRÁULICO E MONTAGEM	635
TANQUE HIDRÁULICO E FILTRO	633
TAPETE (CABINE)	847
TELA DE SUCÇÃO (TRANSMISSÃO)	346, 388
TELA FILTRANTE (BOCAL DE ENCHIMENTO) (TANQUE DE ÓLEO HIDRÁULICO)	633
TELA FILTRANTE (VÁLVULA DE CONTROLE DE TRANSMISSÃO)	406
TELA PÁRA-SOL	902
TRANSMISSÃO	393
TRAVA - DESLOCAMENTO LATERAL	616
TUBOS - ACUMULADOR	578
TUBOS - ÁGUA	66, 68
TUBOS - AQUECEDOR	866

* TRADUÇÃO NÃO DISPONÍVEL NO MOMENTO DA IMPRESSÃO

ÍNDICE

Designação	Página
TUBOS - AR	80
TUBOS - AR CONDICIONADO	863
TUBOS - BOMBA	597
	600
	603
TUBOS - COMBUSTÍVEL	94
	96
	98
	100
TUBOS - DIREÇÃO	613
TUBOS - DIREÇÃO SECUNDÁRIA	611
TUBOS - FILTRO DO COMBUSTÍVEL	101
TUBOS - GRAXA	504
TUBOS - ÓLEO DA TRANSMISSÃO	383
TUBOS - ÓLEO DO MOTOR	55
TUBOS - ÓLEO DO TURBOALIMENTADOR	57
TUBOS - ÓLEO HIDRÁULICO	580
	582
	583
	584
	586
	589
TUBOS - RIPER	606
	608
	610
TUBOS - TANQUE DE AR	530
TUBOS - VENTILADOR HIDRÁULICOS	591
	593
	595
TUBOS DO AQUECEDOR	866
TURBOALIMENTADOR	83
	85

V

*VALVE GP-PUMP CONTROL	721
	723
VÁLVULA - COLETOR E SOLENÓIDE	743
	744
VÁLVULA ANTI-REAÇÃO	731
VÁLVULA COMBINADA	679
	681
VÁLVULA DE ALÍVIO	727
	728
	729
	730
	731
	732
	733
	734
	735
	736
	737
	738
	790
VÁLVULA DE CONTROLE	683
	685
	687
	689
	691
	693
	695
	697
	699
	701
	703
	705
	707
	709
	711
	713
	715
	717
	719
VÁLVULA DE CONTROLE - TRANSMISSÃO	406
VÁLVULA DE CONTROLE (AR)	534
VÁLVULA DE CONTROLE (COMANDO DO CÍRCULO)	667
	669
	670
	671
	673
	674
	678
VÁLVULA DE CONTROLE (DESLOCAMENTO LATERAL)	667
	669
	670
	671
	673
	674
	678
VÁLVULA DE CONTROLE DO AR	533
	534
VÁLVULA DE CONTROLE (ESCARIFICADOR)	671
VÁLVULA DE CONTROLE (LEVANTAMENTO DA LÂMINA)	667
	670
	671
VÁLVULA DE CONTROLE (TOMBAMENTO DA LÂMINA)	667
	669
	670
	671
	673

* TRADUÇÃO NÃO DISPONÍVEL NO MOMENTO DA IMPRESSÃO

ÍNDICE

Designação	Página
	674
	678
VÁLVULA DE DRENAGEM	89
VÁLVULA DE DRENAGEM (RADIADOR)	491
VÁLVULA DE DRENAGEM (TANQUE DE AR)	531
VÁLVULA DE PNEU	426
	427
	428
	429
	431
	432
	433
	434
	435
	436
	437
	438
	439
	440
	441
	442
	443
	446
	447
	448
	449
	450
	452
	453
	454
	455
	456
	457
	458
	459
	460
	461
	462
	463
	464
	466
	468
	469
	470
VÁLVULA DE PURIFICAÇÃO	725
	726
VÁLVULA DE SEPARAÇÃO	739
	740
VÁLVULA E ARTICULAÇÕES	636
	638
	640
	642
	644
	646
	648
	650
	652
	654
	656
	658
	660
	662
	664
VÁLVULA E MONTAGEM - TRAVA DO DIFERENCIAL	397
VÁLVULA SELETORA E CONTROLE DE PRESSÃO	398
	401
VÁLVULA SOLENÓIDE	404
	405
	536
	537
	741
	742
VEDADOR TIPO LABIO (REGULADOR DE ÁGUA)	68
VENTILADOR DE CIRCULAÇÃO DE AR DA CABINE	816
	818
	820
	821
VIDRO	940
	941
VIGIA (ÓLEO HIDRÁULICO)	633
VIRABREQUIM	16
VOLANTE DO MOTOR	28

* TRADUÇÃO NÃO DISPONÍVEL NO MOMENTO DA IMPRESSÃO

STICHWORTVERZEICHNIS

Bezeichnung	Seite
A	
ABDECKGLAS (ABBLENDLICHT)	184
ABDECKGLAS (ARBEITSSCHEINWERFER)	154, 155, 156, 157
ABDECKGLAS (FRONTSCHEINWERFER)	164, 166
ABDECKGLAS (FRONTSCHEINWERFER) (ABBLENDLICHT)	158
ABDECKGLAS (GELB) (RECHTS- U. LINKSWENDUNG)	160, 162
ABDECKGLAS (GELB) (RECHTS- U. LINKSWENDUNG)	160
ABDECKGLAS (GELB) (RUNDUM-KENNLEUCHTE)	174
ABDECKGLAS (GELB, RUNDUM-KENNLEUCHTE)	173
ABDECKGLAS (GELB) (SIGNAL)	164, 166
ABDECKGLAS (*HEAD)	160, 162
ABDECKGLAS (KENNZEICHEN)	169
ABLASSVENTIL	89
ABLASSVENTIL (DRUCKLUFTTANK)	531
ABLASSVENTIL (KÜHLER)	491
ANHÄNGEVORRICHTUNG	503
ANSAUGSIEB (GETRIEBE)	346, 388
ANSCHLUSSKLEMMENSATZ (DREHSTROM-GENERATOR)	120
ANTRIEBSKETTE	350
ANTRIEBSSTRANG-WARTUNGSSATZ (MOTORGRADER)	147
ANTRIEBSWELLE	389, 390
ANTRIEBSWELLENSCHUTZ	507
ANZEIGEN-EINBAUSATZ (GEWICHTSEINSTEL-LUNG)	841
ANZEIGEN-EINBAUSATZ (SITZ)	933
ANZEIGENKÖRPER	72
ANZEIGENKÖRPER (KÜHLMITTELSTAND)	73
ANZUGSLEINE (SITZ)	933
ARBEITS- U. SIGNALBELEUCHTUNG	177
ARBEITSLEUCHTEN	153, 154, 155, 156, 157, 175, 176, 182, 183, 184, 186, 188, 189, 191, 192, 193, 196, 199, 202, 205, 207, 209, 212, 215, 217, 219, 220, 222, 224, 226, 227
ARBEITSLEUCHTEN (24 V, VERTIKALE AUFHÄNGUNG)	209
ARBEITSLEUCHTEN (24 V, VERTIKALE AUFHÄNGUNG) (*CAB-RH)	222
ARBEITSLEUCHTEN (24 V, VERTIKALE AUFHÄNGUNG) (RECHTS)	205
ARMLEHNE	786, 787
ASCHENBECHER	851, 854
AUFHÄNGUNG - HINTERES FAHRWERK	510, 511, 512, 513
AUFKLEBER	970, 971
AUFKLEBER - ANZEIGE (*BLADE CENTERSHIFT)	973
AUFKLEBER - INFORMATION (*ENGINE, HIGH IDLE, HOLD)	365
AUFKLEBER - INFORMATION (*ENGINE, LOW IDLE, HOLD)	365
AUFKLEBER - MONITOR (CATERPILLAR ÜBERWACHUNGSSYSTEM)	891
AUFKLEBER - MONITOR (CATERPILLAR ÜBERWACHUNGSSYSTEM)	895
AUFKLEBER - MONITOR (VIERFACHANZEI-GENMODUL)	893
AUFKLEBER - SICHERUNG	278

* ÜBERSETZUNG ZUM ZEITPUNKT DER DRUCKLEGUNG NICHT VORHANDEN

STICHWORTVERZEICHNIS

Bezeichnung	Seite
AUFKLEBER - SICHERUNG (BELEUCHTUNG, WASCHER, WISCHER, ENTFROSTER)	275
AUFKLEBER - SICHERUNG (LINKS)	341
AUFKLEBER - SICHERUNG (LINKS)	338
AUFKLEBER - SICHERUNG (RECHTS)	338
AUFKLEBER (ABDECKUNG - SCHWARZ)	365
AUFKLEBER (*HEADLIGHTS HIGH, LOW BEAM)	193
	196
	199
	202
	209
	212
	267
	341
AUFKLEBER (KONTROLLE) (*FAN SPEED, TEMPERATURE)	827
	831
AUFKLEBER (KONTROLLE) (HEIZUNG U. KLIMAANLAGE)	782
AUFKLEBER (NAMENSSCHILD) (DRUCKSPEICHER)	541
AUFKLEBER (RICHTUNGSBLINKER, WARNLEUCHTE)	193
	196
	202
	209
	212
	267
	341
AUFKLEBER (RICHTUNGSBLINKER, WARNLEUCHTE)	199
AUFKLEBER (SCHEIBENWASCHER)	284
AUFKLEBER (SONNENSCHUTZ - CATERPILLAR)	887
	888
AUFREISSER	765
	766
AUFREISSERBEFESTIGUNG	763
AUFREISSERLEITUNGEN	606
	608
	610
AUFREISSERTRÄGER	756
AUFREISSERZYLINDER	564
AUFREISSERZYLINDER UND BEFESTIGUNGS-TEILE	554
AUSPUFFBOGEN	79
AUSPUFFKRÜMMER	81
AUSRÜSTUNG FÜR STRASSENFAHRT	4

B

Bezeichnung	Seite
BATTERIE	127
	128
	129
	130
BATTERIE (12 V)	129
BATTERIE (12 V) (NASS)	128
BATTERIE (12 V) (*1100 AMPS)	127
BATTERIE (12V, 750 A)	130
BEFESTIGUNGSSCHRAUBENSATZ (M5X0,8X3,24 MM)	147
BEFESTIGUNGSSCHRAUBENSATZ (*M5X0.8X53.24-MM) (STEUERUNG)	139
BEFESTIGUNGSTEILE (DREHSTROMGENE-RATOR)	120
	125
BELEUCHTUNGSANLAGE	309
	312
BELEUCHTUNGSANLAGE (STRASSENAUSRÜ-STUNG)	228
BELEUCHTUNGSKABELSTRANG	199
	202
BETRIEBSBREMSE	522
BLINKER (12/24 VOLT) (RICHTUNGSBLINKER, WARNLEUCHTE)	193
	196
	202
	209
	212
	267
BLINKER (12/24 VOLT) (RICHTUNGSBLINKER, WARNLEUCHTE)	199
BLINKER (24 V)	341
BLINKERLEUCHTEN	229
	230
BLINKLEUCHTE	170
	171
	172
BLOCK (GETRIEBEÖL)	370
*BOX GP-TOOL	969
*BREATHER AS (KRAFTSÜBERTRAGUNG - ÖLEINFÜLLUNG)	377
BREMSGESTÄNGE	526
BREMSLEITUNGSVERKLEIDUNG	495
BUCHSEN-EINBAUSATZ (STARTERMOTOR)	260
BUCHSEN-EINBAUSATZ (STARTERMOTOR)	263
BÜRSTEN-EINBAUSATZ (STARTERMOTOR)	263
BÜRSTEN-EINBAUSATZ (STARTERMOTOR)	260
BÜRSTENHALTER	260

C

Bezeichnung	Seite
*CARTRIDGE AS-DESICCANT (LUFTTROCK-NER)	519
*CONTROL GP-HYDRAULIC LOCKOUT	547

* ÜBERSETZUNG ZUM ZEITPUNKT DER DRUCKLEGUNG NICHT VORHANDEN

STICHWORTVERZEICHNIS

Bezeichnung	Seite
*CONTROL GP-UNPROGRAMMED	138
*CORE AS	368
*CORE AS-HEATER	783, 828, 832

D

Bezeichnung	Seite
DÄMPFER UND RIEMENSCHEIBE	25
DÄMPFUNGSKNOPF (SITZ)	933
DICHTUNG	91, 114
DICHTUNG (REGULATORGEHÄUSE)	68
DICHTUNG (THERMOSTAT)	68
DICHTUNGSSATZ	540, 542, 548, 558, 560, 565, 741, 742, 744
DICHTUNGSSATZ (*DIFFERENTIAL LOCK VALVE)	404
DICHTUNGSSATZ (DIFFERENTIALSPERRE)	397
DICHTUNGSSATZ (GETRIEBESOLENOID)	405
DICHTUNGSSATZ (SCHARDÄMPFUNGS-DRUCKSPEICHER)	541
DIFFERENTIAL	375
DIFFERENTIAL UND TELLERRAD	373
DIFFERENTIALSPERRE - VENTIL UND BEFESTIGUNGSTEILE	397
DIFFERENTIALSPERRENGESTÄNGE	363
DOKUMENTATION	868
*DOOR GP (*AIR VENT)	851, 854, 861
DREHKNOPFSCHALTER (FAHRTRICHTUNGS-ANZEIGER)	267
DREHKNOPFSCHALTER (GEBLÄSEGE-SCHWINDIGKEIT)	827, 831
DREHKNOPFSCHALTER (GEBLÄSEGE-SCHWINDIGKEIT)	782
DREHKNOPFSCHALTER (*HEADLIGHT DIMMER)	199, 202, 209, 212, 341
DREHKNOPFSCHALTER (*HEADLIGHT DIMMER)	196
DREHKNOPFSCHALTER (*HIGH, LOW BEAM)	193
DREHKNOPFSCHALTER (24 V) (*FRONT WIPER CONTROL)	275
DREHKNOPFSCHALTER (24 V) (VORDERER SCHEIBENWISCHER)	284
DREHSCHALTER (RICHTUNGSBLINKER, WARNLEUCHTE)	193, 196, 199, 202, 209, 212, 267, 341
DREHSCHALTER (SEITENSCHUBANZEIGE)	293, 297
DREHSTROMGENERATOR	120, 122, 124, 125
DREHSTROMGENERATOR - AN-SCHLUSSKLEMMENSATZ (AUSGABE)	125
DREHSTROMGENERATOR - AN-SCHLUSSKLEMMENSATZ (KON-TROLLEUCHTE)	125
DREHSTROMGENERATOR - AN-SCHLUSSKLEMMENSATZ (RELAIS)	125
DREHZAHLSENSOR	251, 252
DRUCKKNOPFSCHALTER (ANZEIGEMODI)	893, 895
DRUCKKNOPFSCHALTER (FAHREREINSTEL-LUNGSMODUS)	891
DRUCKLUFT-STEUERVENTIL	533, 534
DRUCKLUFTBEHÄLTER	531
DRUCKLUFTHUPE	835, 836, 838
DRUCKLUFTLEITUNGEN	80
DRUCKLUFTTANKLEITUNGEN	530
DRUCKREGLER (KRAFTSTOFF)	106
DRUCKSCHALTER (*AIR BRAKES)	293
DRUCKSCHALTER (BREMSLEUCHTE)	293, 297
DRUCKSCHALTER (FESTSTELLBREMSE)	297
DRUCKSCHALTER (FESTSTELLBREMSE)	294
DRUCKSCHALTER (HAUPTLENKUNG)	297
DRUCKSCHALTER (HAUPTSCHALTER - ELEKTR.)	297
DRUCKSCHALTER (KLIMAANLAGE)	863

* ÜBERSETZUNG ZUM ZEITPUNKT DER DRUCKLEGUNG NICHT VORHANDEN

STICHWORTVERZEICHNIS

Bezeichnung	Seite
DRUCKSCHALTER (KRAFTSTOFF) (KRAFTSTOFF)	89
DRUCKSCHALTER (NOTLENKUNG)	329
DRUCKSENSOR	245
	246
	247
	248
	249
	250
DRUCKSENSOR (KÜHLERLÜFTER)	593
DRUCKSPEICHER	539
	540
DRUCKSPEICHER (A/C)	863
DRUCKSPEICHERLEITUNGEN	578
E	
EINFÜLLKAPPE (MOTORÖL)	13
	14
EINFÜLLSTUTZENKAPPE (HYDRAULIKÖL-TANK)	633
EINSPRITZDÜSENPUMPE	108
	109
	110
EINSTELLER-EINBAUSATZ	885
ELEKTR. UMFORMER	141
	142
	143
	144
ELEKTR. UMFORMER (24 BIS 12 V, 25 A)	144
ELEKTR. UMFORMER (24V - 24V)	141
	143
ELEKTRONIK - MONITOR	146
ENDMESSER	752
ENDSCHALTER (BREMSPEDAL)	342
ENDSCHALTER (KRIECHGANGPEDAL)	338
	341
ENTDUNSTER	52
	53
ENTDUNSTERSCHLAUCH	52
	53
ENTLEERVENTIL	725
	726
ENTLÜFTER (MOTOR)	12
ENTLÜFTER (TANDEM)	391
F	
FAHRERHAUS	788
	789
FAHRERHAUS, ERHÖHT	788
FAHRERHAUS-KABELBAUM	180
	222
	224
	282
	872
FAHRERHAUS-KABELBAUM (HINTEN)	275
FAHRERHAUS-KABELBAUM (HINTEN)	278
FAHRERHAUS-KABELBAUM (SCHLTTAFEL)	275
FAHRERHAUS-KABELBAUM (SCHLTTAFEL)	278
FAHRERHAUS-KABELBAUM (VORNE)	278
FAHRERHAUS (OHNE ÜBERROLLSCHUTZ)	788
FAHRERHAUSANBAUSATZ	880
FAHRERHAUSAUSKLEIDUNG	849
	851
	854
	859
	861
FAHRERHAUSBELEUCHTUNG	152
FAHRERHAUSBELEUCHTUNG (24 V, MIT SCHALTER)	275
	278
	284
FAHRERHAUSFENSTER	940
	941
	942
	943
	945
FAHRERHAUSHEIZUNG	825
	826
	827
	831
FAHRERHAUSHEIZUNG U. BEFESTIGUNGS-TEILE	825
FAHRERHAUSLUFTFILTER	822
FAHRERHAUSLUFTSCHLITZE	869
FAHRERHAUSTÜR	799
	802
	804
	806
	808
	810
FAHRERHAUSTÜR (ENTLÜFTUNGSVORRICH-TUNG)	859
FAHRERHAUSVERDRAHTUNG	275
	277
	278
	280
	282
	284
FAHRERHAUSZUBEHÖR	777
	778
FAHRERPLATTFORM-KABELSTRANG	293
	297
FAHRERPLATTFORMVERKLEIDUNG	497
	499

* ÜBERSETZUNG ZUM ZEITPUNKT DER DRUCKLEGUNG NICHT VORHANDEN

STICHWORTVERZEICHNIS

Bezeichnung	Seite
FAHRERSITZ	906, 908, 910, 912
FAHRERSITZ, FESTSTEHEND	914, 915, 917
FAHRERSITZ, KIPPVORRICHTUNG	885
FAHRERSITZFEDERUNG	931, 933
FAHRERSITZFEDERUNGSGEHÄUSE	840
FAHRERSITZVERKLEIDUNG	885
FAHRERSITZVERSTELLER	779
FAHRWERK-KABELBAUM	219, 273
FAHRWERK-KABELBAUM (ABSTREIF-SCHILD)	220
FEDER-EINBAUSATZ	841
FEDER-EINBAUSATZ (HÖHENEINSTEL-LUNG)	841
FEDERUNGS-EINBAUSATZ (MANSCHETTE)	931
FEDERUNGS-EINBAUSATZ (ROLLE)	931
FESTSTELLBREMSE	520
FESTSTELLBREMSGESTÄNGE	524
*FILM (*VHP PLUS) (*VHP PLUS)	971
FRONTAUFREISSER	768, 769, 772
FRONTAUFREISSERZAHN	775, 776
FRONTAUFREISSERZYLINDER	565
FRONTSCHEINWERFER	158, 159, 160, 162
FUSSMATTE (FAHRERHAUS)	847

G

Bezeichnung	Seite
GELENKZYLINDER UND BEFESTIGUNGSTEI-LE	549, 550
GESCHWINDIGKEITS- U. DREHZAHLMESSER-MODUL	879
GESCHWINDIGKEITS- U. DREHZAHLMESSER-MODUL (INSTRUMENTENTAFEL)	895
GETRIEBE	393
GETRIEBE-KABELBAUM	304, 324, 346, 367
GETRIEBEGEHÄUSE UND TEILE	346
GETRIEBEHYDRAULIK	367
GETRIEBEKUPPLUNG	351, 354, 357, 359
GETRIEBEÖLFÜLLSTUTZEN	377
GETRIEBEÖLKÜHLER	368, 370
GETRIEBEÖLLEITUNGEN	383
GETRIEBESTEUERUNG	365
GETRIEBESTEUERVENTIL	406
GLEICHRICHTER	125
GLEITSCHIENENBLOCK-EINBAUSATZ	924
GLEITSCHIENENBLOCK-EINBAUSATZ (EINSCHL. BLÖCKE U. SCHRAUBEN)	920
GLEITSCHIENENBLOCK-EINBAUSATZ (EINSCHL. 4 BLÖCKE)	921
GRUNDAUSFÜHRUNG	2

H

Bezeichnung	Seite
HALOGENSCHINWERFER (24V)(65W)	153
HALOGENSCHINWERFER (24V)(65W)	155
HALOGENSCHINWERFER (24V)(65W) (ABBLENDLICHT)	184
HALOGENSCHINWERFER (24V)(65W) (ARBEITSSCHEINWERFER)	154
HALOGENSCHINWERFER (24V)(65W) (ARBEITSSCHEINWERFER)	156
HALOGENSCHINWERFER (24V)(65W) (FERNLICHT)	184
HALOGENSCHINWERFER (24V)(65W) (FERNLICHT)	159
HALOGENSCHINWERFER (24V)(65W) (SCHILD)	157
HALTETEILE	488
HALTETEILESATZ (SITZ)	933
HAMMER UND BEFESTIGUNG	823, 824
*HARNESS AS-THERMOSTAT	863
HAUPTFILTER	76
HEBEL-EINBAUSATZ (STARTERMOTOR)	260, 263
HEIZUNG (*22-VOLT, 1892-WATT)	258
HEIZUNGSKABELSTRANG (STARTHILFE)	259
HEIZUNGSLEITUNGEN	866
HINTERER KABELSTRANG	320
HINTERER KABELSTRANG (*SERVICE CENTER-LH)	316
HINTERER KABELSTRANG (*SERVICE CENTER-RH)	316
HUBZYLINDER	563
HYDRAULIKDRUCKSPEICHER	541, 542

* ÜBERSETZUNG ZUM ZEITPUNKT DER DRUCKLEGUNG NICHT VORHANDEN

STICHWORTVERZEICHNIS

Bezeichnung	Seite
	543
HYDRAULIKDRUCKSPEICHER U. BEFESTIGUNG	538
HYDRAULIKHAMMER-EINBAUSATZ	823
	824
HYDRAULIKLEITUNGEN	580
	582
	583
	584
	586
	589
HYDRAULIKLÜFTERLEITUNGEN	591
	593
	595
HYDRAULIKPUMPE UND LEITUNGEN	597
	600
	603
HYDRAULIKSTEUERUNG	545
	546
HYDRAULIKSYSTEM	577
HYDRAULIKTANK UND BEFESTIGUNGSTEILE	635
HYDRAULIKTANK UND SCHMIERFILTER	633

I

IDENTIFIKATIONSSCHILD (DREHSTROMGENERATOR)	316
	320
IDENTIFIKATIONSSCHILD (MOTOR)	316
	320
IDENTIFIZIERUNGS-AUFKLEBER (*BIODEGRADABLE HYDRAULIC OIL)	577
IDENTIFIZIERUNGS-AUFKLEBER (GRUPPENNUMMER) (KLIMAANLAGE)	782
INSTRUKTIONS-AUFKLEBER (AM ÜBERROLLSCHUTZ NICHT BOHREN/ SCHWEISSEN)	900
INSTRUKTIONS-AUFKLEBER (*DO NOT DRILL, WELD ROPS)	899
INSTRUKTIONS-AUFKLEBER (FÜR SITZVERSTELLUNG)	933
INSTRUKTIONS-AUFKLEBER (MOTORABSTELLUNG)	305
INSTRUKTIONS-AUFKLEBER (MOTORABSTELLUNG)	325
INSTRUKTIONS-AUFKLEBER (NICHT BETRETEN)	496
INSTRUKTIONS-AUFKLEBER (NOTAUSGANG/ FENSTER ENTFERNEN)	823
	824
INSTRUKTONSSCHILD (BATTERIE)	316
	320
INSTRUKTONSSCHILD (KLIMAANLAGE)	782
INSTRUMENTENBRETT-AUFKLEBER (GANGWAHL)	365
INSTRUMENTENBRETT-AUFKLEBER (GETRIEBEANZEIGETAFEL)	365
INSTRUMENTENBRETT-AUFKLEBER (*INDICATOR PANEL, LH)	893
	895
INSTRUMENTENBRETT-AUFKLEBER (*INDICATOR PANEL, RH)	893
	896
INSTRUMENTENBRETT-AUFKLEBER (LINKE KONTROLLLEUCHTEN)	891
INSTRUMENTENBRETT-AUFKLEBER (RECHTE KONTROLLLEUCHTEN)	891
INSTRUMENTENBRETT-KABELBAUM	891
	893
INSTRUMENTENTAFEL	891
	893
	895
INSTRUMENTENTAFEL-KABELSTRANG	178
	205
	207
	280
INSTRUMENTENTAFEL-KABELSTRANG (SCHALTER)	876
INTRUMENTENBRETTVERKABELSTRANG (TAFEL HINTERGRUNDBELEUCHTUNG)	895
ISOLATOR-EINBAUSATZ (STARTERMOTOR)	260
	263

K

KABELSTRANG - HECKBELEUCHTUNG	215
	217
	302
	305
	309
	312
KABELSTRANG - HECKBELEUCHTUNG (LINKS)	310
	312
KABELSTRANG - HECKBELEUCHTUNG (RECHTS)	309
	312
KABELSTRANG - HEIZUNG U. KLIMAANLAGE	783
	827
	831
KABELSTRANG - HINTERES FAHRWERK	305
	324

* ÜBERSETZUNG ZUM ZEITPUNKT DER DRUCKLEGUNG NICHT VORHANDEN

STICHWORTVERZEICHNIS

Bezeichnung	Seite
	325
KABELSTRANG - VORDERE BELEUCHTUNG	205
	207
	222
	224
	236
	298
KABELSTRANG - VORDERE BELEUCHTUNG (ARBEITSSCHEINWERFER)	212
KABELSTRANG - VORDERE BELEUCHTUNG (*ELEVATED LIGHT BAR)	209
KABELSTRANG - VORDERES FAHRWERK	193
	196
	199
	202
	297
KABELSTRANG - VORDERES FAHRWERK (ARBEITSSCHEINWERFER, VORN)	212
KABELSTRANG - VORDERES FAHRWERK (*BOLSTER LIGHT BAR)	209
KABELSTRANG (KONSOLE)	341
KÄLTEMITTELKOMPRESSOR	790
	791
KÄLTEMITTELKONDENSATOR U. BEFESTIGUNGSTEILE	793
KÄLTEMITTELTROCKNER (KLIMAANLAGE)	863
KEILRIEMEN	174
KEILRIEMEN (DREHSTROMGENERATOR)	122
KEILRIEMEN (KLIMAANLAGE)	791
KETTE	350
KIPPSCHALTER (ABBLENDSCHEINWERFER)	199
	202
	209
KIPPSCHALTER (ABSTELLUNG AUF STANDEBENE)	324
KIPPSCHALTER (ARBEITSSCHEINWERFER, VORN)	212
KIPPSCHALTER (*HEADLIGHTS, TAIL LIGHTS)	193
	196
	199
	202
	209
	212
	267
KIPPSCHALTER (*HEADLIGHTS, TAIL LIGHTS)	341
KIPPSCHALTER (MOTORABSTELLUNG AUF STANDEBENE)	304
KIPPSCHALTER (RUNDUM-KENNLEUCHTE)	150
KIPPSCHALTER (SCHARARBEITSLEUCHTE)	192
KIPPSCHALTER (SCHARARBEITSLEUCHTE)	191
KIPPSCHALTER (SCHARLEUCHTE)	189
KIPPSCHALTER (SCHAR)(VORDERER ARBEITSSCHEINWERFER)	188
KIPPSCHALTER (*THROTTLE LOCK SET, RESET)	334
KIPPVORRICHTUNG NACH HINTEN, REPARATURSATZ	885
KIPPWANNENSATZ	910
	912
*KIT-AIR CONTROL VALVE	534
KLEMMLEISTE	131
KLIMAANLAGE	781
	782
KLIMAANLAGE UND AUFHÄNGUNG	781
KLIMAANLAGENLEITUNGEN	863
KNICKGELENK-ANHÄNGUNG	501
KNICKLENKZYLINDER	558
	559
KNOPF- GEWICHTSEINSTELLUNG	840
KOLBEN	39
KOLBENPUMPE	623
	625
KOLBENPUMPE UND BEFESTIGUNG	621
KOLBENPUMPENUMLAUFSATZ	627
	628
KONDENSATORBLOCK (KLIMAANLAGE)	793
KONSOLEN-VERDRAHTUNG	332
	334
KONSOLEN-VERDRAHTUNG (LENKUNG)	338
KRAFTSTOFFDRUCKREGLER	111
	112
KRAFTSTOFFEINSPRITZDÜSE	92
	93
KRAFTSTOFFFILTERKAPPE (SCHWEREINSATZ, SPERRBAR)	115
KRAFTSTOFFILTER	89
KRAFTSTOFFILTERBEFESTIGUNG	103
KRAFTSTOFFILTERLEITUNGEN	101
KRAFTSTOFFLEITUNGEN	94
	96
	98
	100
KRAFTSTOFFSIEB	115
KRAFTSTOFFSTANDGEBER	115
KRAFTSTOFFTANK	113
	114
	115
KRAFTSTOFFTANK-HALTETEILE	88
KRAFTSTOFFTANKABSTÜTZUNG	514

* ÜBERSETZUNG ZUM ZEITPUNKT DER DRUCKLEGUNG NICHT VORHANDEN

STICHWORTVERZEICHNIS

Bezeichnung	Seite
KRAFTSTOFFTANKVERKLEIDUNG	496
KRAFTÜBERTRAGUNGSELEKTRONIK	146
	147
KREISSEGMENT	747
KREUZGELENK	396
KUEHLER-HALTETEILE	65
KÜHLER	72
	73
KÜHLERKAPPE (7 PSI)	72
KÜHLERKAPPE (*7-PSI)	73
KÜHLSYSTEM	60
	61
KÜHLWASSERLEITUNGEN	66
	68
KÜHLWASSERPUMPE	70
	71
KUPPLUNGSGESTÄNGE	361
KURBELWELLE	16
KURBELWELLENDICHTUNG	44
KURBELWELLENDICHTUNG (HINTEN)	44
KURBELWELLENDICHTUNG (VORN) (VORNE)	44

L

LADELUFTKÜHLER U. BEFESTIGUNG	74
LAGERSATZ	841
LAGERSATZ (DREHSTROMGENERATOR)	120
*LAMP GP-FLOOD (*24-VOLT, VERTICAL MOUNT)	215
	219
*LAMP GP-FLOOD (*24-VOLT, VERTICAL MOUNT) (*BLADE)	191
*LAMP GP-FLOOD (*24-VOLT, VERTICAL MOUNT) (*BLADE)	188
*LAMP GP-FLOOD (*24-VOLT, VERTICAL MOUNT) (*CAB)	182
*LAMP-HALOGEN (*24-VOLT, 65-WATT) (ABBLENDLICHT)	158
LAUFBAND UND ANTRIEB (RUNDUM-KENNLEUCHTE)	173
LEITRAD - RIEMEN	843
LENKBETÄTIGUNG	548
LENKDRUCKSPEICHER	544
LENKGESTÄNGE	505
LENKKONSOLENVERDRAHTUNG	338
	341
LENKÖLLEITUNGEN	613
LENKZYLINDER	567
	568
LENKZYLINDER UND AUFHÄNGUNG	556
LEUCHTE, ROT (LED)	234
	235
LEUCHTE (*STOP, TAIL, TURN, LH)	309
	312
LEUCHTE (*STOP, TURN, TAIL, RH)	309
	312
LEUCHTE (24 V)	150
	152
	164
	193
	199
	202
	209
	210
	212
	267
	332
	334
	341
	782
	827
	831
	879
LEUCHTE (24 V)	234
	235
	236
	332
	334
	335
	338
	341
LEUCHTE (24 V)	205
	207
	222
	224
	280
	282
	329
	876
LEUCHTE (24 V) (*AIR PRESSURE GAUGE)	891
	893
	895
LEUCHTE (24 V) (AUSFALLSCHUTZ-RÜCKFAHRLEUCHTE)	178
LEUCHTE (24 V) (*AUXILIARY BACK-UP ALARM)	180
LEUCHTE (24 V) (DIFFERENTIALSPERRE)	891
	893
LEUCHTE (24 V) (FAHRERHAUSSTELLUNG)	168
LEUCHTE (24 V) (FRONTSCHEINWERFER)	166
LEUCHTE (24 V) (HAUPTANZEIGE)	893
LEUCHTE (24 V) (HAUPTFUNKTIONSLEUCHTE DES ELEKTRON. ÜBERWACHUNGSSY-STEMS)	891

* ÜBERSETZUNG ZUM ZEITPUNKT DER DRUCKLEGUNG NICHT VORHANDEN

STICHWORTVERZEICHNIS

Bezeichnung	Seite
LEUCHTE (24 V) (*HEADLIGHTS, TAIL LIGHTS)	196
LEUCHTE (24 V) (*HEATED MIRRORS)	872
LEUCHTE (24 V) (KENNZEICHEN)	169
LEUCHTE (24 V) (*NG)	335
LEUCHTE (24 V) (SCHAR-ARBEITSSCHEIN-WERFER)	191
	192
LEUCHTE (24 V) (SCHARDÄMPFUNGSCHAL-TER)	273
LEUCHTE (24 V) (SCHARLEUCHTE)	189
LEUCHTE (24 V) (SIGNAL)	166
LEUCHTE (24 V) (VIERFACHANZEIGE)	893
LEUCHTE (24 V) (VIERFACHANZEIGENMO-DUL)	891
	895
LEUCHTE (24 V) (WARNVORRICHTUNG)	895
LEUCHTE (24 V, 3 W) (INSTRUMENTENTA-FEL)	891
	893
LEUCHTE (24 V, 3 W) (KONTROLLEUCHTE)	895
LEUCHTE (24 V, 5 W)	309
	312
LEUCHTE (24 V, 70 W)	174
LEUCHTE (24 V, 70 W) (RUNDUM-KENNLEUCHTE)	173
LEUCHTE (*24-VOLT) (AUTOMATIKSCHAL-TUNG)	345
LEUCHTE (*24-VOLT) (ENTFROSTER, HINTEN)	821
LEUCHTE (*24-VOLT) (FERNLICHT/ ABBLENDLICHT)	162
LEUCHTE (*24-VOLT) (FERNLICHT/ ABBLENDLICHT)	160
LEUCHTE (*24-VOLT) (RECHTS- U. LINKSWENDUNG)	162
LEUCHTE (*24-VOLT) (RECHTS- U. LINKSWENDUNG)	160
LEUCHTE (*24-VOLT) (SCHAR)(VORDERER ARBEITSSCHEINWERFER)	188
LEUCHTE (*24-VOLT) (STELLUNG)	160
	162
LEUCHTE (*24-VOLT) (VORDERER ENTFROSTER)	820
LEUCHTE (*24-VOLT, 21-WATT) (RECHTS- U. LINKSWENDUNG)	160
	162
LEUCHTE (24V, 21W)	309
	312
LEUCHTE (24V, 21W) (SIGNAL)	166
LEUCHTE (24V, 21W) (SIGNAL)	164
LICHTSCHALTER	267
LIPPENDICHTUNG (THERMOSTAT)	68
LUFTDRUCKANZEIGE (LINKS)	891
LUFTDRUCKANZEIGE (LINKS)	893
	895
LUFTDRUCKANZEIGE (RECHTS)	891
	893
	895
LUFTEINLASSBOGEN	78
LUFTFILTER (FAHRERHAUS)	822
LUFTFILTERWARTUNGSANZEIGE	75
LUFTKANAL	813
LUFTKANAL UND REGULIERUNG	812
LUFTKOMPRESSOR	8
	10
LUFTREINIGER	75
	76
	77
LUFTREINIGERKLEMMEN-EINBAUSATZ	76
LUFTTROCKNER	516
	517
	519
LUFTTROCKNER (LUFTTROCKNER)(24 VOLT)	519

M

MAGNETFILTER (GETRIEBE)	388
MAGNETFILTER (GETRIEBEÖL)	346
MAGNETSCHALTER	269
	270
	271
MAGNETSCHALTER (24 V) (ANSAUGLUFT-VORWÄRMANLAGE)	271
MAGNETSCHALTER (24 V) (STARTERRE-LAIS)	316
MAGNETSCHALTER (24 V) (STARTRELAIS)	320
MAGNETSIEB	388
MAGNETSPULE (24 V)	260
MAGNETSTOPFEN (GETRIEBEGEHÄUSE)	474
MAGNETVENTIL	404
	405
	536
	537
	741
	742
MARKIERUNGSLEUCHTE	168
MEMBRANESATZ	835
MODUL - VIER ELEKTRON. ANZEIGEN	878
MOTOR- UND GETRIEBEAUFLAGER	34
MOTOR, ELEKTR.	238
*MOTOR GP-ELECTRIC	816
*MOTOR GP-ELECTRIC (*DEFROSTER FAN)	818
MOTOR UND LÜFTER	63

* ÜBERSETZUNG ZUM ZEITPUNKT DER DRUCKLEGUNG NICHT VORHANDEN

STICHWORTVERZEICHNIS

Bezeichnung	Seite
MOTORANTRIEB	617
MOTORAUFHÄNGUNG	45
MOTORAUSFÜHRUNG	6
MOTORBLOCK	17, 18
MOTORBLOCKDECKEL	12
MOTORHUBÖSE	33
MOTORKABELSTRANG (ELEKTRON. STEUERMODUL)	286, 288
MOTORKABELSTRANG (KRAFTSTOFFEIN-SPRITZDÜSE)	286, 290
MOTORKABELSTRANG (PUMPENDÜSE)	288
MOTORKABELSTRANG (SENSOREN)	290
MOTORKÜHLERBLOCK	7
MOTORÖLABLASS	26
MOTORÖLKÜHLER	59
MOTORÖLLEITUNGEN	55
MOTORSENSOR	241
MOTORSTEUERUNG, ELEKTRON.	135, 136
MOTORSTOPFEN	40
MOTORVERKLEIDUNG	480, 484

N

NOCKENWELLE	11
NOTLENKUNG	630
NOTLENKUNGSLEITUNGEN	611
NOTLENKUNGSPUMPE UND -MOTOR	620
NOTLENKUNGSPUMPE UND BEFESTIGUNGS-TEILE	622
NOTLENKUNGSSTEUERUNG	137
NOTLENKUNGSVERDRAHTUNG	329

O

ÖLFILTER	49, 51, 380
ÖLFILTER U. BEFESTIGUNGSTEILE	378
ÖLFILTERELEMENT (HOCHLEISTUNG)	383
ÖLFILTERELEMENT (HOCHLEISTUNG) (GETRIEBE)	380
ÖLFILTERELEMENT (HYDRAULISCH) (STANDARD EFFIZIENZ)	633
ÖLFILTERSOCKEL (MOTOR)	51
ÖLKÜHLERBLOCK (MOTOR)	59
ÖLMESSSTAB	54
ÖLWANNE	36
*ORIFICE	398
	401

P

*PADLOCK GP	635, 899
PANZERWANNE	494
PENDELVENTIL	739, 740
*PLATE GP-RADIATOR	69
*PLATE-IDENTIFICATION (*MAXIMUM WEIGHT)	4
PLATTFORMUNTERBAU	515
PLEUELSTANGE UND KOLBEN	38
POLSTEREINBAUSATZ	814, 815
*PUMP GP-FUEL PRM & PRIM FILTER	106, 107
PUMPE FÜR KRAFTSTOFFENTLÜFTUNG U. WASSERABSCHEIDER	117
PUMPE UND BEFESTIGUNGSTEILE	104, 105
PUMPENANTRIEBSWELLE	629
PUMPENDÜSE, HYDRAULISCH	104, 105

R

RAD UND REIFEN	408, 409, 410, 411, 412, 413, 414, 415, 416, 417, 418, 419, 420, 421, 422, 423, 424, 425, 426, 427, 428, 429, 430, 431, 432

* ÜBERSETZUNG ZUM ZEITPUNKT DER DRUCKLEGUNG NICHT VORHANDEN

STICHWORTVERZEICHNIS

Bezeichnung	Seite
	433
	434
	435
	436
	437
	438
	439
	440
	441
	442
	443
	444
	445
	446
	447
	448
	449
	450
	451
	452
	453
	454
	455
	456
	457
	458
	459
	460
	461
	462
	463
	464
RADAUFHAENGUNG	385
RADIOEINBAUSATZ	844
	845
RADSATZ	464
	465
	466
	467
	468
	469
	470
RADSTURZZYLINDER	570
RADSTURZZYLINDER UND BEFESTIGUNGS-TEILE	557
RAHMEN UND GEHÄUSE	474
REFLEKTORAUFKLEBER (GELB)	974
REGLER (KRAFTSTOFFDRUCK)	111
	112
REGLEREINBAUSATZ (LUFTKOMPRES-SOR)	531
REGLERSTEUERUNG	86
*REGULATOR AS-VOLTAGE (*24-VOLT)	120
REIFEN UND FELGE	392
REIFENVENTIL	426
	427
	428
	429
	431
	432
	433
	434
	435
	436
	437
	438
	439
	440
	441
	442
	443
	446
	447
	448
	449
	450
	452
	453
	454
	455
	456
	457
	458
	459
	460
	461
	462
	463
	464
	466
	468
	469
	470
RELAIS (24 V)	180
	324
RELAIS (24 V) (ARBEITSSCHEINWERFER)	191
	192
RELAIS (24 V) (AUSFALLSCHUTZ-RÜCKFAHRLEUCHTE)	178
RELAIS (24 V) (STARTEN)	304
RELAIS (24 V) (*TAIL, PANEL LAMPS)	338
RELAIS (24 V) (*TAIL,PANEL LAMPS)	341
RIEMENSPANNER	41
ROLLENSATZ (SITZ)	933
RÜCKKOPPLUNGSVENTIL	731
RÜCKLEHNENVERLÄNGERUNG	814

* ÜBERSETZUNG ZUM ZEITPUNKT DER DRUCKLEGUNG NICHT VORHANDEN

STICHWORTVERZEICHNIS

Bezeichnung	Seite
	815
	920
RÜCKSPIEGEL	870
	871
	872
	874
	875
	876
RUNDUM-KENNLEUCHTE	173
	174
	236
RUNDUMWARNLEUCHTE - EINBAUSATZ	150

S

SAMMELVENTIL	679
	681
SCHALE	91
SCHALE - RÜCKENLEHNE	884
SCHALLDÄMPFER	82
SCHALLDÄMPFUNG	37
	46
SCHALTAUTOMATIK	345
SCHALTER (AUTOM. SCHALTUNG AUTOSHIFT - GETRIEBE)	345
SCHALTER (*AUXILIARY BACKUP)	178
SCHALTER (DIFFERENTIALSPERRE)	341
SCHALTER (DIFFERENTIALSPERRE)	338
SCHALTER (ENTFROSTER, HINTEN)	821
SCHALTER (GASREGELSPERRE)	334
SCHALTER (GASREGELUNG - DREHZAHLEINSTELLUNG)	332
SCHALTER (GASREGELUNG - HALTEMODUS)	332
SCHALTER (HECKLEUCHTE)	338
SCHALTER (RUNDUM-KENNLEUCHTE)	150
	234
	235
	236
SCHALTER (SCHALTTAFEL-LICHTREGLER)	338
SCHALTER (SCHARDÄMPFUNG)	273
SCHALTER (SEITENSCHUB-BOLZENZIEHER)	332
	335
SCHALTER (TAFEL HINTERGRUNDBELEUCHTUNG)	341
SCHALTER (VORDERER ENTFROSTER)	820
SCHALTER (24 V) (ABSTREIFSCHILD)	280
	282
SCHALTER (24 V) (ARBEITSSCHEINWERFER, RECHTS)	205
	207
SCHALTER (24 V) (*AUXILIARY BACK-UP ALARM)	180
SCHALTER (24 V) (FAHRERHAUS - RECHTER ARBEITSSCHEINWERFER)	222
	224
SCHALTER (24 V) (*HEATED MIRRORS)	876
SCHALTER (24 V) (*HEATED MIRRORS)	872
SCHALTER (24 V) (NOTLENKUNGSPRÜFUNG)	329
SCHALTKONSOLENVERDRAHTUNG	332
	334
SCHAR	753
	754
	755
SCHARDREHWERK	574
	745
	747
SCHARDRUCKSPEICHER	539
SCHARHUBZYLINDER UND BEFESTIGUNGSTEILE	551
SCHARKIPPZYLINDER UND BEFESTIGUNGSTEILE	552
SCHARNEIGEZYLINDER	560
SCHARVERLÄNGERUNG	758
	759
	760
SCHAUGLAS (HYDRAULIKÖL)	633
SCHEIBENWASCHANLAGE	935
	937
	938
SCHEIBENWISCHER	947
	948
	949
	951
	953
	955
	957
	959
	961
	963
	965
	966
	967
	968
SCHEIBENWISCHERBLATT	940
	966
	967
	968
SCHEIBENWISCHERBLATT (HINTEN)	963
SCHEIBENWISCHERBLATT (HOCHPROFIL VORNE OBEN)	953
	955

* ÜBERSETZUNG ZUM ZEITPUNKT DER DRUCKLEGUNG NICHT VORHANDEN

STICHWORTVERZEICHNIS

Bezeichnung	Seite
SCHEIBENWISCHERBLATT (HOHES PROFIL, HINTEN)	961
SCHEIBENWISCHERBLATT (HOHES PROFIL, VORNE, UNTEN)	953
	955
SCHEIBENWISCHERBLATT (*LOW PROFILE FRONT UPPER)	949
SCHEIBENWISCHERBLATT (NIEDRIGES PROFIL, HINTEN)	957
	959
SCHEIBENWISCHERBLATT (VORNE OBEN)	951
SCHEIBENWISCHERBLATT (VORNE UNTEN)	949
	951
SCHEIBENWISCHERBLATTSATZ (HINTEN)	959
SCHEIBENWISCHERBLATTSATZ (NIEDRIGES PROFIL, HINTEN)	957
SCHEIBENWISCHERKABELSTRANG (FÜR STEUERUNG)	284
SCHEIBENWISCHERKABELSTRANG (SICHERUNGSKASTEN)	284
SCHEIBENWISCHERMOTOR	968
SCHEIBENWISCHERMOTOR (HINTEN)	959
	963
SCHEIBENWISCHERMOTOR (VORNE)	967
SCHEIBENWISCHERMOTOR (VORNE OBEN)	951
	955
SCHEIBENWISCHERMOTOR (24 V)	948
SCHEIBENWISCHERMOTOR (24 V) (UNTEN)	955
SCHEIBENWISCHERMOTOR (24 V) (VORNE UNTEN)	951
SCHEIBENWISCHERSCHALTER	272
	965
SCHEIBENWISCHERSCHALTER (24 V) (HINTEN)	959
	961
	963
SCHEIBENWISCHERSCHALTER (24 V) (HINTEN)	957
SCHEIBENWISCHERSCHALTER (24 V) (VORN, INTERVALLSCHALTUNG)	278
SCHEINWERFER, HINTEN	178
	180
SCHEINWERFER U. RICHTUNGSLEUCHTE	164
	166
SCHILD UND AUFKLEBER	1
	972
	974
	975
	976
	977
SCHILD UND AUFKLEBER (REFLEKTOR)	2
SCHILDHUB	761
SCHLÜSSEL (HAUPTSCHALTER)	266
SCHMIERLEITUNGEN	504
SCHMIERNIPPEL (SCHARSCHWENKWERK - ZYLINDERANSCHLUSS)	553
SCHMIERPUMPE	58
SCHNEEFLÜGEL-BEFESTIGUNG	764
SCHNEERÄUMVORRICHTUNG	5
SCHNEIDMESSER	757
SCHRÄGKOLBEN-EINBAUSATZ	623
SCHRAUBE (GETRIEBEÖLABLASS)	346
SCHRAUBE (MOTORÖLABLASSWANNE)	36
SCHRAUBE (5/8-11X2 ZOLL)	549
	550
SCHUBPLATTE	751
SCHUTZABDECKUNG	476
	477
SCHWENKBLOCK	632
SCHWENKSCHEIBE	631
SCHWINGSITZ	919
	920
	921
	922
	923
	924
	925
	926
	928
SCHWUNGRAD	28
SCHWUNGRADGEHÄUSE	30
SCREEN (GETRIEBESTEUERVENTIL)	406
SEITENANTRIEB	381
SEITENSCHIEBERZYLINDER UND BEFESTIGUNGSTEILE	555
SEITENSCHUBSPERRE	616
SEITENSCHUBZYLINDER	561
	566
SEITENSCHUBZYLINDER UND BEFESTIGUNGSTEILE	553
SENSOR-EINBAUSATZ (KRAFTSTOFFS-TAND)	115
*SENSOR GP-POSITION (*ROTARY) (*THROTTLE)	86
SENSOR, KABELSTRANG (STÄRKE 14)	245
SENSOR, KABELSTRANG (STÄRKE 14) (EINSPRITZBETÄTIGUNG)	249
SENSOR, KABELSTRANG (*14-GA WIRE)	254
SICHERHEITSFILTER	76
SICHERHEITSGURT	903
	904
	905
	925

* ÜBERSETZUNG ZUM ZEITPUNKT DER DRUCKLEGUNG NICHT VORHANDEN

STICHWORTVERZEICHNIS

Bezeichnung	Seite
SICHERHEITSGURT ((AUTOMATIKSICHERHEITSGURT))	920
SICHERUNG (10 A)	193
	199
	202
	205
	207
	209
	212
	222
	224
	231
	267
	280
	282
	284
	329
	338
	341
	957
SICHERUNG (10 A) (ARBEITSSCHEINWERFER)	191
	192
SICHERUNG (10 A) (*AUXILIARY BACK-UP ALARM)	180
SICHERUNG (10 A) (*HEATED MIRRORS)	872
SICHERUNG (10 A) (*HEATED MIRRORS)	876
SICHERUNG (10 A) (LUFTTROCKNER)	516
SICHERUNG (10 A) (RICHTUNGSBLINKER, WARNLEUCHTE)	196
SICHERUNG (10 A) (RÜCKFAHRLEUCHTE)	178
SICHERUNG (10 A) (RUNDUM-KENNLEUCHTE)	232
	277
SICHERUNG (10 A) (SCHARLEUCHTE)	189
SICHERUNG (10 A) (SCHEIBENWISCHER)	959
	961
	963
SICHERUNG (10 A) (UMFORMER)	143
SICHERUNG (10 A) (WANDLER)	141
SICHERUNG (*10-AMPERE) (ENTFROSTER, HINTEN)	821
SICHERUNG (*10-AMPERE) (SCHAR/VORDER ARBEITSSCHEINWERFER)	188
SICHERUNG (*10-AMPERE) (VORDERER ENTFROSTER)	820
SICHERUNG (15 A)	275
	278
	338
	341
SICHERUNG (15 A) (*CAB FLOOD LIGHTS)	191
	192
SICHERUNG (15 A) (HEIZUNG)	825
SICHERUNG (15 A) (KLIMAANLAGE)	781
SICHERUNG (15 A) (UMFORMER)	142
SICHERUNG (30 A)	144
SIEB (FÜLLER) (HYDRAULIKÖLTANK)	633
SITZGURT-HALTESEIL	931
SITZKISSENEINBAUSATZ	910
SITZKISSENEINBAUSATZ (PVC)	912
SITZUNTERBAU	929
SOFTWARE - KRAFTÜBERTRAGUNG	146
SOFTWARE - KRAFTÜBERTRAGUNG (MOTORGRADER)	147
*SOFTWARE GP-ENGINE (*VARIABLE HORSEPOWER)	971
SOLENOID-EINBAUSATZ (STARTERMOTOR)	263
SOLENOIDBEFESTIGUNG	239
SONNENBLENDE	902
SPANNUNGSREGLER (24 V)	125
SPURSTANGE (LENKUNG)	556
STANGENSATZ	885
STARTERMOTOR	260
	262
	263
STARTHILFE	259
STARTHILFEANSCHLUSS	240
*STARTING AID GP	258
STARTSCHALTER (TASTE)	332
	334
STAUBKAPPE	148
	149
STECKDOSEN - EINBAUSATZ (2POLIG)	168
	176
	227
	741
STECKDOSEN - EINBAUSATZ (2POLIG) (KENNZEICHENBELEUCHTUNG)	169
STECKDOSEN - EINBAUSATZ (2POLIG) (SOLENOIDVENTIL)	537
STECKDOSEN - EINBAUSATZ (2POLIG) (12 V STROMANSCHLUSS)	777
	778
STECKDOSEN - EINBAUSATZ (6 STIFTE)	949
STEIGLEITER	509
STELLUNGSGEBER (KNICKLENKUNG)	304
	324
STELLUNGSSENSOR	243
	244
STEUERKOLBENSATZ	623
STEUERKONSOLE	794
STEUERUNG - NICHT PROGRAMMIERT	139
STEUERUNGSEINHEIT, ELEKTRON. FÜR MOTOR UND BEFEST.	134
STEUERVENTIL	683

* ÜBERSETZUNG ZUM ZEITPUNKT DER DRUCKLEGUNG NICHT VORHANDEN

STICHWORTVERZEICHNIS

Bezeichnung	Seite
	685
	687
	689
	691
	693
	695
	697
	699
	701
	703
	705
	707
	709
	711
	713
	715
	717
	719
STEUERVENTIL (AUFREISSER)	671
STEUERVENTIL (DREHKRANZANTRIEB)	667
	669
	670
	671
	673
	674
	678
STEUERVENTIL (DRUCKLUFT)	534
STEUERVENTIL (SCHARHUB)	667
	670
	671
STEUERVENTIL (SCHARSTURZ)	667
	669
	670
STEUERVENTIL (SCHARSTURZ)	671
	673
	674
	678
STEUERVENTIL (SEITENSCHUB)	667
	669
	670
	671
	673
	674
	678
STEUERVENTILSPERRE	571
	572
STIRNRAD	29
STIRNRADGEHÄUSE	31
	32
STIRNRADGEHÄUSEDECKEL	13
STOSSSTANGEN-EINBAUSATZ (GEWICHTSEINSTELLUNG)	841

T

TANDEMGEHÄUSE UND DECKEL	391
TEMPERATURSCHALTER (HYDRAULIKÖL)	297
TEMPERATURSCHALTER (HYDRAULIKÖL)	293
TEMPERATURSCHALTER (KÜHLMITTEL)	782
TEMPERATURSENSOR	253
	254
	255
	256
	257
TORSIONSKUPPLUNG	372
TRENNSCHALTER	266
TURBOLADER	83
	85
TURBOLADEREINSATZ	85
TURBOLADERÖLLEITUNGEN	57
TYPENSCHILDBEFESTIGUNG	506

U

ÜBERDRUCKVENTIL	727
	728
	729
	730
	731
	732
	733
	734
	735
	736
	737
	738
	790
ÜBERROLL-SCHUTZDACH	901
ÜBERROLL-SCHUTZKABINE	899
	900
ÜBERROLLSCHUTZAUFLAGER	881
	883
ÜBERROLLSCHUTZDACH	899
ÜBERROLLSCHUTZKABINE	898
UMBAUSATZ - OHNE ÜBERROLLSCHUTZ	798
UMBAUSATZ - ZULASSUNG	1
	2
UMFORMER, ELEKTR.	140
UMGEHUNGSSCHALTER	265
UMLAUFKÜHLWASSERHEIZUNG	148
	149
UMLAUFKÜHLWASSERHEIZUNGS-ELEMENT (120 V/1500 W)	149
UMLAUFKÜHLWASSERHEIZUNGS-ELEMENT (240 V/1500 W)	148
UMLAUFLÜFTER	816
	818

* ÜBERSETZUNG ZUM ZEITPUNKT DER DRUCKLEGUNG NICHT VORHANDEN

STICHWORTVERZEICHNIS

Bezeichnung	Seite
	820
	821
UNTERBRECHER	132
	133
UNTERBRECHER (15 A) (FRONTSCHEINWERFER)	132
	133
UNTERBRECHER (15 A) (LICHTBALKEN - ARBEITSCHEINWERFER)	132
UNTERBRECHER (15 A) (MOTORSTEUERUNG)	317
	321
UNTERBRECHER (80 A) (DREHSTROMGENERATOR)	316
	320
UNTERBRECHER (80 A) (HAUPTUNTERBRECHER)	316
	322
UNTERLEGSCHEIBE (EINSCHL. 17 BEILAGSCHEIBEN)	623

V

Bezeichnung	Seite
*VALVE GP-PUMP CONTROL	721
	723
VENTIL - SCHALT- UND DRUCKSTEUERUNG	398
	401
VENTIL UND GESTÄNGE	636
	638
	640
	642
	644
	646
	648
	650
	652
	654
	656
	658
	660
	662
	664
VENTILDECKEL	14
	15
VENTILKAPPE (SCHAFT)	427
	428
	429
	430
	431
	432
	455
	462
VENTILKIPPHEBEL	42
	43
VENTILSATZ (4-VENTIL)	666
	667
	668
	669
VENTILSATZ (5-VENTIL)	670
	671
	672
	673
	674
	675
VENTILSATZ (6-VENTIL)	676
	677
VENTILSATZ (7-VENTIL)	678
VENTILSOLENOID U. -KRÜMMER	743
	744
VENTILSTEUERUNG	47
	48
VENTILSTÖSSELSATZ	840
	841
VERDRAHTUNG - SCHARDÄMPFUNG	273
VERDRAHTUNG (ELEKTRONIKSYSTEM)	286
	288
	290
VERDRAHTUNG, HINTEN	302
	304
	309
	312
	316
	320
	324
VERDRAHTUNG, VORNE	293
	297
VERKLEIDUNG - FAHRERHAUS	887
	888
	889
VERKLEIDUNG UND BEFESTIGUNG - KÜHLER	491
VORDERACHSE	471
VORDERRAHMEN	489
VORHÄNGESCHLOSS	788
	798
VORHÄNGESCHLOSS (WERKZEUGKASTEN)	969

W

Bezeichnung	Seite
WAGENHEBER, HYDRAULISCH	972
WÄRMEISOLIERUNG	847
WÄRMESCHIRM	508
WARNAUFKLEBER (HOCHDRUCKZYLINDER)	973

* ÜBERSETZUNG ZUM ZEITPUNKT DER DRUCKLEGUNG NICHT VORHANDEN

STICHWORTVERZEICHNIS

Bezeichnung	Seite
WARNAUFKLEBER (KABELVERBINDUNG)	973
WARNAUFKLEBER (NICHT BETRETEN)	114
WARNLEUCHTEN	231
	232
	234
	235
WARNSCHILD (QUETSCHGEFAHR)	476
	477
	972
WARNVORRICHTUNG	118
	119
WASSERABSCHEIDER- U. KRAFTSTOFFFILTER	91
WASSERABSCHEIDER U. KRAFTSTOFFENTLÜFTUNGSPUMPE	117
WASSERABSCHEIDER UND KRAFTSTOFFILTER	91
WASSERKNIESTÜCK	62
WASSERTEMPERATURREGLER (92 GRAD)	68
WASSERTEMPERATURREGLER (94 GRAD CELSIUS)	68

Z

ZAHNRADANTRIEB	618
ZAHNRADPUMPE	386
	387
ZIGARETTENANZÜNDER (ZIGARETENANZÜNDER, 24 V)	332
	334
ZUGANGSKLAPPE	475
ZUGHAKEN	749
ZULASSUNGSSCHILDLEUCHTE	169
ZYLINDERKOPF	19
	22
	24
ZYLINDERKOPF-HALTETEILE	27

* ÜBERSETZUNG ZUM ZEITPUNKT DER DRUCKLEGUNG NICHT VORHANDEN

MEMORANDA

MACHINE ARRANGEMENT

207-3700 CONVERSION AR-CERTIFICATION—WITH HEATER—EU

S/N: CBK1-UP

AN ATTACHMENT

SMCS-7000 **i02073588**

NOTE	PART NUMBER	QTY	PART NAME 1 2 3 4 5 6 (PRODUCT LEVEL)	SEE PAGE
Y	*198-4836*	1	ALTERNATOR GP-CHARGING	124
Y	*161-0764*	1	AUTOSHIFT AR (TRANSMISSION)	345
Y	*126-6933*	1	COVER GP-PROTECTION (PLATFORM)	476
Y	*203-2260*	1	GUARD GP-BOTTOM	494
Y	*176-1732*	1	HEATER AR-CAB	825
Y	*171-6458*	1	LINES GP-SECONDARY STEERING	611
Y	*152-7903*	1	CONTROL GP-HYDRAULIC LOCKOUT	547
Y	**197-2066**	1	MIRROR GP-REAR VIEW (INSIDE DUAL)	875
Y	*196-4909*	1	PANEL GP-INSTRUMENT	895
Y	*192-1434*	1	PLATE & FILM GP	974
Y	*8X-9751*	1	PUMP & MTG GP-SECONDARY STEER	622
Y	*212-3683*	1	SEAT GP-SUSPENSION (CLOTH)	928
Y	*174-3216*	1	SUPPORT AR-REAR CHASSIS	510
Y	*199-9970*	1	SUPPRESSION GP-SOUND (ENGINE ENCLOSURE)	46
Y	*121-4083*	1	VALVE & LINKAGE GP	646
Y	*193-7359*	1	WIRING GP-CAB	278
Y	*159-5865*	1	WIRING GP-FRONT	297
Y	*193-7360*	1	WIRING GP-REAR	304
Y	*193-8253*	1	WIRING GP-REAR (RADIATOR)	309
Y	*159-5841*	1	WIRING GP-SHIFT CONSOLE	334
Y	*159-5853*	1	WIRING GP-STEERING CONSOLE	341

Y-SEPARATE ILLUSTRATION

<END>

MACHINE ARRANGEMENT

210-2043 CONVERSION AR-CERTIFICATION—WITH A/C—EU

S/N: CBK1-UP

AN ATTACHMENT

SMCS-7000 **i02087922**

NOTE	PART NUMBER	QTY	PART NAME 1 2 3 4 5 6 (PRODUCT LEVEL)	SEE PAGE
Y	*176-1731*	1	AIR CONDITIONER AR	781
Y	*198-4836*	1	ALTERNATOR GP-CHARGING	124
Y	*161-0764*	1	AUTOSHIFT AR	345
Y	*126-6933*	1	COVER GP-PROTECTION (PLATFORM)	476
Y	*203-2260*	1	GUARD GP-BOTTOM	494
Y	*171-6458*	1	LINES GP-SECONDARY STEERING	611
Y	*152-7903*	1	CONTROL GP-HYDRAULIC LOCKOUT	547
Y	**197-2066**	1	MIRROR GP-REAR VIEW	875
Y	*196-4909*	1	PANEL GP-INSTRUMENT	895
Y	*192-1434*	1	PLATE & FILM GP (REFLECTOR)	974
Y	*8X-9751*	1	PUMP & MTG GP-SECONDARY STEER	622
Y	*212-3683*	1	SEAT GP-SUSPENSION	928
Y	*174-3216*	1	SUPPORT AR-REAR CHASSIS	510
Y	*199-9970*	1	SUPPRESSION GP-SOUND	46
Y	*121-4083*	1	VALVE & LINKAGE GP	646
Y	*193-7359*	1	WIRING GP-CAB	278
Y	*159-5865*	1	WIRING GP-FRONT	297
Y	*193-7360*	1	WIRING GP-REAR	304
Y	*193-8253*	1	WIRING GP-REAR (RADIATOR)	309
Y	*159-5841*	1	WIRING GP-SHIFT CONSOLE	334
Y	*159-5853*	1	WIRING GP-STEERING CONSOLE	341

Y-SEPARATE ILLUSTRATION

<END>

162-5605 GENERAL AR

S/N: CBK1-UP

SMCS-7000 **i02158680**

NOTE	PART NUMBER	QTY	PART NAME 1 2 3 4 5 6 (PRODUCT LEVEL)	SEE PAGE
Y	*172-9953*	1	AIR CLEANER GP	77
Y	*191-6630*	1	ALTERNATOR GP-CHARGING	122
Y	*134-1080*	1	AXLE GP-FRONT	471
Y	*8X-8011*	1	BLADE GP	753
Y	*111-1719*	1	BOX GP-TOOL	969
Y	*7D-8440*	1	BRAKE GP-SERVICE	522
Y	*172-7663*	1	CASE & FRAME GP	474
Y	*6G-1755*	1	CHAIN GP-DRIVE	350
Y	*112-7486*	1	CIRCLE GP	745
Y	*167-8053*	1	CONSOLE GP-OPERATOR	794
Y	*159-5933*	1	CONTROL GP-CLUTCH	361
Y	*160-7756*	1	CONTROL GP-DIFFERENTIAL LOCK	363
Y	*159-5935*	1	CONTROL GP-GOVERNOR	86
Y	*160-7753*	1	CONTROL GP-PARKING BRAKE	524
Y	*195-8714*	1	CONTROL GP-SERVICE BRAKE	526
Y	*7I-4718*	1	CONTROL GP-STEERING	548
Y	*167-9002*	1	CONTROL GP-TRANSMISSION	365
Y	*185-1542*	1	COOLING AR	60
			S/N: CBK1-534	
Y	*242-6181*	1	COOLING AR	61
			S/N: CBK535-UP	
Y	*8E-3366*	1	COUPLING GP-TORSIONAL	372
Y	*193-1474*	1	CYLINDER & MTG GP-ARTICULATION	549
Y	*8X-1947*	1	CYLINDER & MTG GP-BLADE LIFT	551
Y	*8X-1943*	1	CYLINDER & MTG GP-BLADE TIP	552

MACHINE ARRANGEMENT

162-5605 **GENERAL AR** ***(contd.)*** **i02158680**

NOTE	PART NUMBER	QTY	PART NAME 1 2 3 4 5 6 (PRODUCT LEVEL)	SEE PAGE
Y	*8X-1944*	1	CYLINDER & MTG GP-CENTERSHIFT	553
Y	*112-7463*	1	CYLINDER & MTG GP-SIDESHIFT	555
Y	*8W-2290*	1	CYLINDER & MTG GP-STEERING	556
Y	*8W-2737*	1	CYLINDER & MTG GP-WHEEL LEAN	557
Y	*8W-5430*	1	DIFFERENTIAL & BEVEL GEAR GP	373
Y	*190-2314*	1	DRAIN GP-ENGINE OIL	26
Y	*8X-1960*	1	DRAWBAR GP	749
Y	**5T-0570**	1	DRIVE GP-CIRCLE	574
Y	*178-9582*	1	SHAFT GP-PUMP DRIVE	629
Y	*186-4148*	1	ENCLOSURE GP-ENGINE	480
Y	**168-7967**	1	ENGINE AR	6
Y	*230-7570*	1	FASTENER GP (CENTRAL LUBRICATION MOUNTING)	488
Y	*230-4617*	1	FASTENER GP-FUEL TANK	88
Y	*230-5839*	1	FASTENER GP-RADIATOR	65
Y	*191-6004*	1	FILLER GP-POWER TRAIN OIL	377
Y	*204-0794*	1	FILM GP (NON VHP)	971
Y	*169-3651*	1	FILTER & MTG GP-OIL (TRANSMISSION)	378
Y	*159-6012*	1	FILTER GP-ENGINE OIL	49
Y	*8W-4368*	1	FINAL DRIVE GP	381
Y	*162-1510*	1	FRAME GP-FRONT	489
Y	*106-4884*	1	HITCH GP-ARTICULATING	501
Y	*228-7559*	1	HITCH GP-TOWING	503
Y	*160-7758*	1	HORN GP-AIR	836
Y	*8X-1935*	1	LIFT GP-BLADE	761
Y	*175-0418*	1	LINES GP-AIR (AFTERCOOLER)	80
Y	*212-7524*	1	LINES GP-AIR TANK	530
Y	*220-0768*	1	LINES GP-FUEL (REAR CROSSOVER)	100
Y	*175-0406*	1	LINES GP-FUEL FILTER	101
Y	*7I-4610*	1	LINES GP-GREASE	504
Y	*159-4729*	1	LINES GP-HYDRAULIC (CENTERSHIFT LOCK)	584
Y	*159-4730*	1	LINES GP-HYDRAULIC (LH)	586
Y	*159-4731*	1	LINES GP-HYDRAULIC (RH)	589
Y	*175-6978*	1	LINES GP-HYDRAULIC FAN	591
Y	*160-9178*	1	LINES GP-PUMP (IMPLEMENT CONTROL)	597
Y	*160-9179*	1	LINES GP-STEERING	613
Y	*175-0401*	1	LINES GP-TRANSMISSION OIL	383
Y	*176-7674*	1	LINES GP-WATER	66
Y	*6V-1970*	1	LITERATURE GP	868
Y	*164-8462*	1	LOCK GP-CENTERSHIFT	616
Y	**8X-2795**	1	MIRROR GP-REAR VIEW (INSIDE)	870
Y	*174-3428*	1	MOUNTING GP-ENGINE & TMSN	34
Y	*142-6203*	1	MOUNTING GP-WHEEL	385
Y	*175-1438*	1	MUFFLER GP	82
Y	*159-5812*	1	PANEL GP-INSTRUMENT	891
Y	*171-5829*	1	PLATE & FILM GP	972
Y	*160-9180*	1	PUMP & MTG GP-PISTON	621
Y	*179-3581*	1	ROPS AR-ENCLOSED (LOW PROFILE)	898
Y	*8X-8940*	1	SEAT GP-STATIC (CLOTH)	914
Y	*8W-5394*	1	SHAFT GP-DRIVE	389
Y	*8W-5870*	1	SHIELD GP-DRIVE SHAFT	507
Y	*8X-1030*	1	STEP GP	509
Y	*185-3142*	1	SUPPORT AR-REAR CHASSIS	512
Y	*172-8824*	1	SUPPORT GP-FUEL TANK	514
Y	*174-4546*	1	SUPPORT GP-SEAT	929
Y	*190-1688*	1	TANDEM & COVER GP	391
Y	*207-2409*	1	TANK & MTG GP-HYDRAULIC	635
Y	*173-7231*	1	TANK GP-FUEL	113
Y	**191-3606**	1	TRANSMISSION AR	393
Y	*8X-1949*	1	VALVE & LINKAGE GP	642

162-5605 **GENERAL AR** ***(contd.)*** **i02158680**

NOTE	PART NUMBER	QTY	PART NAME 1 2 3 4 5 6 (PRODUCT LEVEL)	SEE PAGE
Y	*159-5878*	1	WIRING GP-CAB	275
Y	*159-5856*	1	WIRING GP-FRONT	293
Y	*184-1299*	1	WIRING GP-REAR	302
Y	*193-8603*	1	WIRING GP-REAR	324
Y	*159-5839*	1	WIRING GP-SHIFT CONSOLE	332
Y	*159-5845*	1	WIRING GP-STEERING CONSOLE	338

Y-SEPARATE ILLUSTRATION

<END>

197-5572 ROADING AR

S/N: CBK1-UP

AN ATTACHMENT

SMCS-7000 **i01719342**

NOTE	PART NUMBER	QTY	PART NAME 1 2 3 4 5 6 (PRODUCT LEVEL)	SEE PAGE
Z		1	ELECTRONICS GP-POWER TRAIN (MOTOR GRADER) (ROAD SPEED LIMITING)	
Y	*211-1520*	1	LIGHTING GP-ROADING (CAB POSITION) (EU)	228
Y	**197-2064**	1	MIRROR GP-REAR VIEW (CLOSED ROPS OUTSIDE)	874
Y	*211-1519*	1	MOUNTING GP-REGISTRATION	506
	159-7342	1	PLATE-IDENTIFICATION (MAXIMUM WEIGHT)	

Y-SEPARATE ILLUSTRATION
Z-NOT SERVICED SEPARATELY

<END>

MACHINE ARRANGEMENT

197-5954 SNOW AR-MOTOR GRADER

S/N: CBK1-UP

AN ATTACHMENT

SMCS-7000 **i01884446**

NOTE	PART NUMBER	QTY	PART NAME 1 2 3 4 5 6 (PRODUCT LEVEL)	SEE PAGE
Y	*176-1731*	1	AIR CONDITIONER AR	781
Y	*161-0764*	1	AUTOSHIFT AR (TRANSMISSION)	345
Y	*188-9321*	1	LIGHTING AR-FLOOD	175
Y	*173-5318*	1	AIR DRYER GP	516
Y	*198-4836*	1	ALTERNATOR GP-CHARGING	124
Y	*177-9549*	1	BATTERY GP	128
Y	*193-4426*	1	CYLINDER & MTG GP-ARTICULATION	550
Y	*172-6834*	1	FAN GP-CIRCULATING (FRONT)	820
Y	*172-6835*	1	FAN GP-CIRCULATING (REAR)	821
Y	*201-0663*	1	FILM GP (VHP PLUS)	971
Y	*218-9739*	1	HEATER GP-JACKET WATER	149
Y	*161-1021*	1	LIGHTING GP-FLOOD (CAB)(RH)	205
Y	*231-6524*	1	MIRROR GP-REAR VIEW (OUTSIDE (HEATED)	876
Y	*177-9741*	1	MODULE GP-SPEEDOMETER & TACH	879
Y	*177-8784*	1	WIPER GP-WINDOW (FRONT)	965
Y	*161-1921*	1	WIRING GP-CAB (WARNING BEACON)	277

Y-SEPARATE ILLUSTRATION

<END>

236-3947 SNOW AR-MOTOR GRADER

S/N: CBK1-UP

AN ATTACHMENT

SMCS-7000 **i01999958**

NOTE	PART NUMBER	QTY	PART NAME 1 2 3 4 5 6 (PRODUCT LEVEL)	SEE PAGE
Y	*173-5318*	1	AIR DRYER GP	516
Y	*198-4836*	1	ALTERNATOR GP-CHARGING	124
Y	*161-0764*	1	AUTOSHIFT AR	345
Y	*177-9549*	1	BATTERY GP	128
Y	*193-4426*	1	CYLINDER & MTG GP-ARTICULATION	550
Y	*172-6834*	1	FAN GP-CIRCULATING	820
Y	*172-6835*	1	FAN GP-CIRCULATING	821
Y	*201-0663*	1	FILM GP	971
Y	*176-1732*	1	HEATER AR-CAB	825
Y	*218-9739*	1	HEATER GP-JACKET WATER	149
Y	*188-9321*	1	LIGHTING AR-FLOOD	175
Y	*161-1021*	1	LIGHTING GP-FLOOD	205
Y	*231-6524*	1	MIRROR GP-REAR VIEW	876
Y	*177-9741*	1	MODULE GP-SPEEDOMETER & TACH	879
Y	*177-8784*	1	WIPER GP-WINDOW	965
Y	*161-1921*	1	WIRING GP-CAB (WARNING BEACON)	277

Y-SEPARATE ILLUSTRATION

<END>

ENGINE ARRANGEMENT

168-7967 ENGINE AR

S/N: 4ZF4479-UP

PART OF 162-5605 GENERAL AR

SMCS-1000 **i01966599**

NOTE	PART NUMBER	QTY	PART NAME 1 2 3 4 5 6 (PRODUCT LEVEL)	SEE PAGE
Y	*159-6011*	1	AIR COMPRESSOR GP	8
Y	*226-3760*	1	CONTROL & MTG GP-ENGINE ELEK	134
Y	*174-6503*	1	COOLER GP-TRANSMISSION OIL	368
Y	*183-3649*	1	COVER GP-CYLINDER BLOCK	12
Y	*197-4563*	1	COVER GP-FRONT HOUSING	13
Y	*175-4131*	1	COVER GP-VALVE MECHANISM	15
			S/N: 4ZF4479-6309	
Y	*164-6490*	1	COVER GP-VALVE MECHANISM	14
			S/N: 4ZF6310-UP	
Y	*172-9950*	1	DAMPER & PULLEY GP	25
Y	*188-9037*	1	ELBOW GP-AIR INLET	78
Y	*190-1096*	1	ELBOW GP-EXHAUST	79
Y	*200-1215*	1	ELBOW GP-WATER (INLET)	62
Y	*168-7966*	1	ENGINE AR-CORE	7
Y	*205-5294*	1	FILTER GP-ENGINE OIL	51
Y	*176-5739*	1	FILTER GP-FUEL	89
Y	*172-6483*	1	FLYWHEEL GP	28
Y	*191-6632*	1	FUMES DISPOSAL GP	52
Y	*190-1101*	1	GAUGE GP-OIL LEVEL (DIPSTICK)	54
Y	*118-7284*	1	STARTING AID GP (AIR INLET HEATER)	258
Y	*187-4087*	1	HOUSING GP-FLYWHEEL	30
Y	*169-3113*	1	LIFTING GP-ENGINE	33
Y	*195-0328*	1	LINES GP-ENGINE OIL	55
Y	*190-1103*	1	LINES GP-FUEL	94
Y	*190-1097*	1	LINES GP-TURBOCHARGER OIL	57
Y	*223-5548*	1	LINES GP-WATER	68
Y	*189-9987*	1	MANIFOLD GP-EXHAUST	81
Y	*190-1048*	1	MOUNTING GP-FUEL FILTER	103
Y	*177-9816*	1	MOUNTING GP-SOLENOID	239
			S/N: 4ZF4479-5909	
Y	*179-3421*	1	PAN GP-OIL	36
Y	*224-7129*	1	PLUG GP-ENGINE	40
Y	*213-5158*	1	PULLEY GP-IDLER (BELT TENSIONER)	41
Y	*190-1105*	1	PUMP GP-FUEL PRM & PRIM FILTER	107
Y	*197-9564*	1	PUMP GP-WATER	70
Y	*178-3899*	1	SEAL GP-CRANKSHAFT	44
Y	*211-8620*	1	SENSOR GP-ENGINE	241
Y	*171-5288*	1	STARTING MOTOR GP-ELECTRIC	262
Y	*172-0961*	1	SUPPORT GP-ENGINE	45
Y	*222-9135*	1	WIRING GP-ENGINE ELECTRONIC	286
			S/N: 4ZF4479-5909, 7940-UP	
Y	*234-2432*	1	WIRING GP-ENGINE ELECTRONIC	290
			S/N: 4ZF5910-7939	
Y	*212-8150*	1	STARTING AID GP (WIRING)	259
			GASKET KITS WILL BE PROVIDED WHEN AVAILABLE	

Y-SEPARATE ILLUSTRATION

ENGINE ARRANGEMENT

168-7966 ENGINE AR-CORE

S/N: 4ZF4479-UP

PART OF 168-7967 ENGINE AR

SMCS-1000 **i01871426**

NOTE	PART NUMBER	QTY	PART NAME 1 2 3 4 5 6 (PRODUCT LEVEL)	SEE PAGE
Y	*164-6100*	1	CAMSHAFT GP	11
Y	*188-3826*	1	COOLER GP-ENGINE OIL	59
Y	*164-6148*	1	CRANKSHAFT GP	16
Y	*161-3406*	1	CYLINDER BLOCK GP	17
Y	*210-5987*	1	CYLINDER HEAD GP	24
	212-6700	1	ELECTRONICS GP-ENGINE RATINGS	
Y	*155-7918*	1	GEAR GP-FRONT	29
Y	*165-4446*	1	HOUSING GP-FRONT	31
Y	*177-7878*	1	PISTON GP	39
Y	*191-3517*	1	PUMP & MTG GP-UNIT INJ HYD	104
Y	*195-8098*	1	PUMP GP-ENGINE OIL	58
Y	*166-1759*	1	PUMP GP-UNIT INJECTION	108
Y	*190-1104*	1	TURBOCHARGER GP	83
Y	*155-7927*	1	VALVE MECHANISM GP	47

Y-SEPARATE ILLUSTRATION

BASIC ENGINE

159-6011 AIR COMPRESSOR GP

S/N: 4ZF4479-UP
250CC
PART OF 168-7967 ENGINE AR

SMCS-1803 **i02034914**

NOTE	REF NO	GRAPHIC REF	PART NUMBER	QTY	PART NAME 1 2 3 4 5 6 (PRODUCT LEVEL)	SEE PAGE
	1	1	**135-9819**	1	SEAL (INTEGRAL)	
I	2	1	**188-8715**	1	HOSE AS	
I	3	1	**189-3132**	1	HOSE AS	
	4	1	**193-2353**	1	TUBE AS	
	5	1	*148-8340*	1	CONNECTOR AS	
		1	**3K-0360**	1	SEAL-O-RING (16.36MM ID)	
		1	**6V-8398**	1	SEAL-O-RING (16.03MM OD)	
		1	**6V-8639**	1	CONNECTOR	
	6	1	*148-8364*	2	ELBOW AS	
					(EACH INCLUDES)	
		1	**3K-0360**	1	SEAL-O-RING (16.36MM ID)	
		1	**6V-8398**	1	SEAL-O-RING (16.03MM OD)	
		1	**6V-8625**	1	ELBOW	
	7	1	*148-8368*	1	ELBOW AS	
		1	**3J-1907**	1	SEAL-O-RING (11.89MM ID)	
		1	**4J-5477**	1	SEAL-O-RING (11.23MM OD)	
		1	**6V-8627**	1	ELBOW	
Y	8	1	**224-0003**	1	AIR COMPRESSOR GP	10
	9	1	**3J-7354**	1	SEAL-O-RING (8.92MM ID)	
	10	1	**3K-0360**	1	SEAL-O-RING (16.36MM ID)	
	11	1	**4J-5477**	1	SEAL-O-RING (11.23MM OD)	
M	12	1	**5C-7261**	2	NUT (M8X1.25-THD)	
	13	1	**5K-4778**	1	CLIP	
M	14	1	**5P-8245**	2	WASHER-HARD (13.5X25.5X3-MM THK)	
	15	1	**6D-4246**	2	CLIP	
	16	1	**6V-8628**	1	ELBOW	
	17	1	**8T-4121**	1	WASHER-HARD (11X21X2.5-MM THK)	
M	18	1	**8T-4185**	1	BOLT (M10X1.5X50-MM)	
	19	1	**8T-4224**	2	WASHER-HARD (8.8X16X2-MM THK)	
M	20	1	**8T-4648**	2	BOLT (M12X1.75X70-MM)	
	21	1	**9R-2216**	1	BOSS	

I-REFER TO HYDRAULIC INFORMATION SYSTEM
M-METRIC PART
Y-SEPARATE ILLUSTRATION

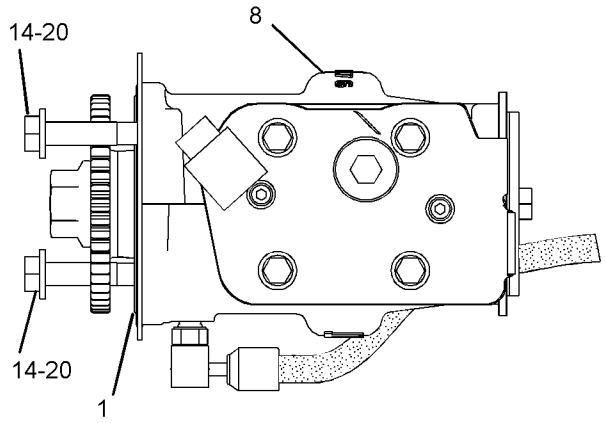

VIEW A-A

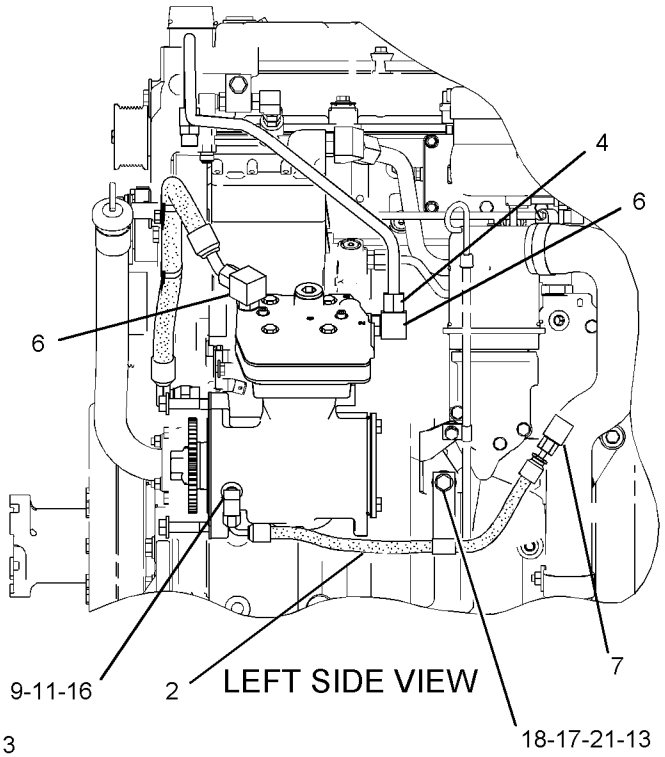

LEFT SIDE VIEW

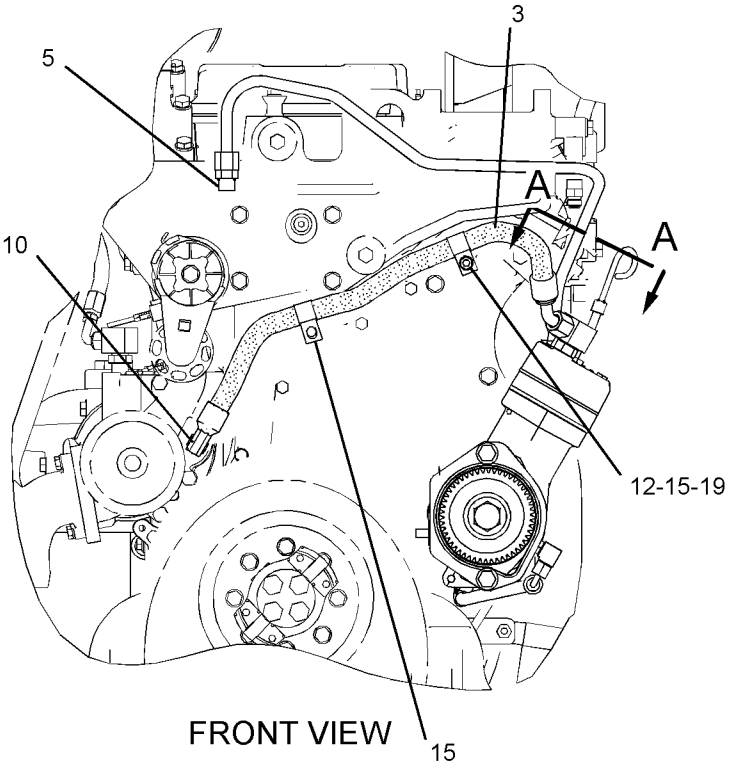

FRONT VIEW

GRAPHIC #1 **<END>** g01054116

BASIC ENGINE

224-0003 AIR COMPRESSOR GP

S/N: 4ZF4479-UP
10.9 CFM AT 1250 RPM
PART OF 159-6011 AIR COMPRESSOR GP

SMCS-1803 **i01871813**

NOTE	REF NO	GRAPHIC REF	PART NUMBER	QTY	PART NAME 1 2 3 4 5 6 (PRODUCT LEVEL)	SEE PAGE
	2	1	**2P-4358**	1	FLANGE	
	3	1	**179-7383**	1	SEAL-O-RING	
	4	1	**3K-0360**	1	SEAL-O-RING	
	5	1	**6D-1004**	1	GASKET	
M	6	1	**6V-1820**	2	BOLT (M10X1.5X30-MM)	
M	7	1	**6V-5221**	4	BOLT (M8X1.25X80-MM)	
	8	1	**6V-5839**	2	WASHER (11X21X2.5-MM THK)	
M	9	1	**8T-2396**	2	BOLT (M6X1X60-MM)	
	10	1	**9M-1974**	4	WASHER-HARD (8.8X16X2-MM THK)	
	11	1	**9S-8005**	1	PLUG	
	12	1	**9X-8267**	2	WASHER (6.6X12X2-MM THK)	

M-METRIC PART

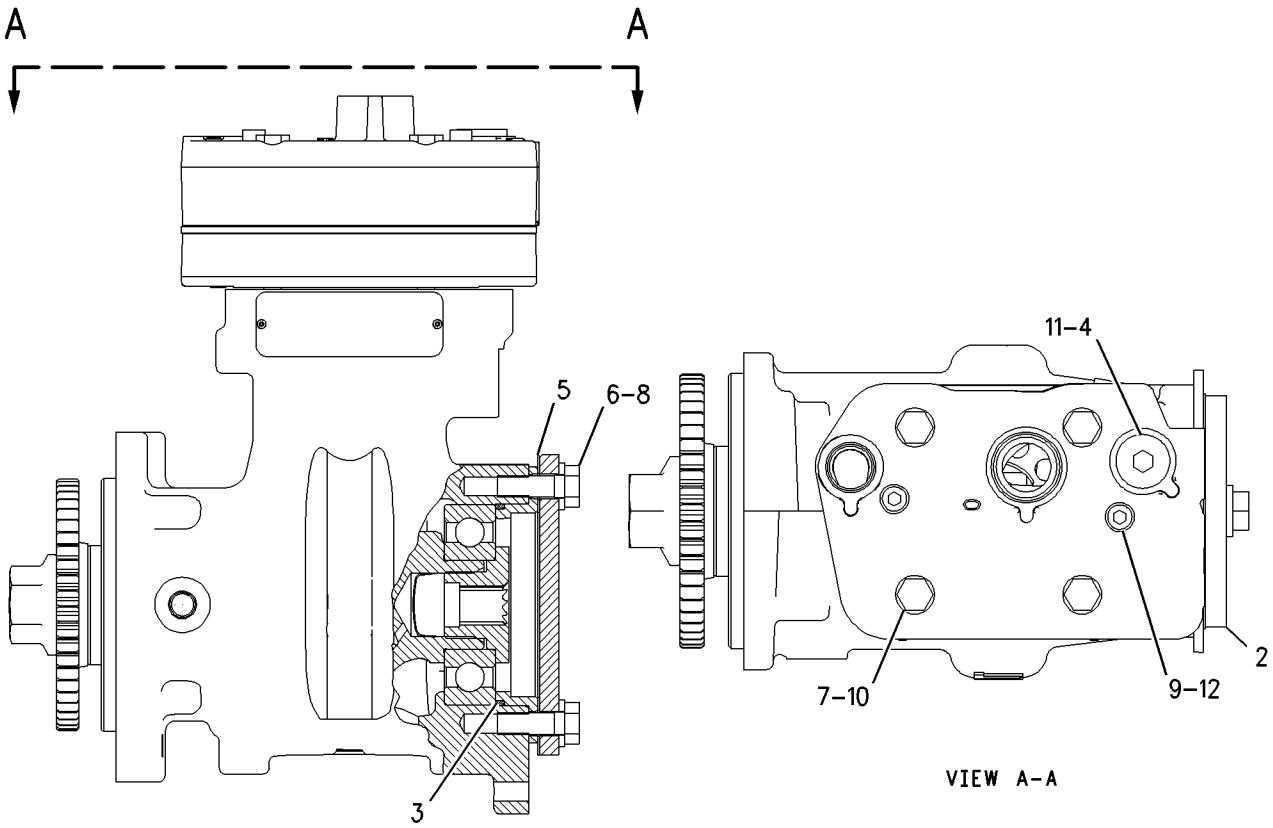

VIEW A-A

GRAPHIC #1 **<END>** g00939344

164-6100 CAMSHAFT GP

S/N: 4ZF4479-UP

PART OF 168-7966 ENGINE AR-CORE

SMCS-1210 **i01804055**

NOTE	REF NO	GRAPHIC REF	PART NUMBER	QTY	PART NAME 1 2 3 4 5 6 (PRODUCT LEVEL)	SEE PAGE
	1	1	**107-7694**	1	PLATE-THRUST	
	2	1	**216-9782**	1	CAMSHAFT AS	
	2A	1	**1B-8705**	1	KEY-WOODRUFF	
	2B	1	**205-1322**	1	GEAR-CAMSHAFT (100 TEETH)	
M	3	1	**6V-3940**	2	BOLT (M8X1.25X25MM)	

M-METRIC PART

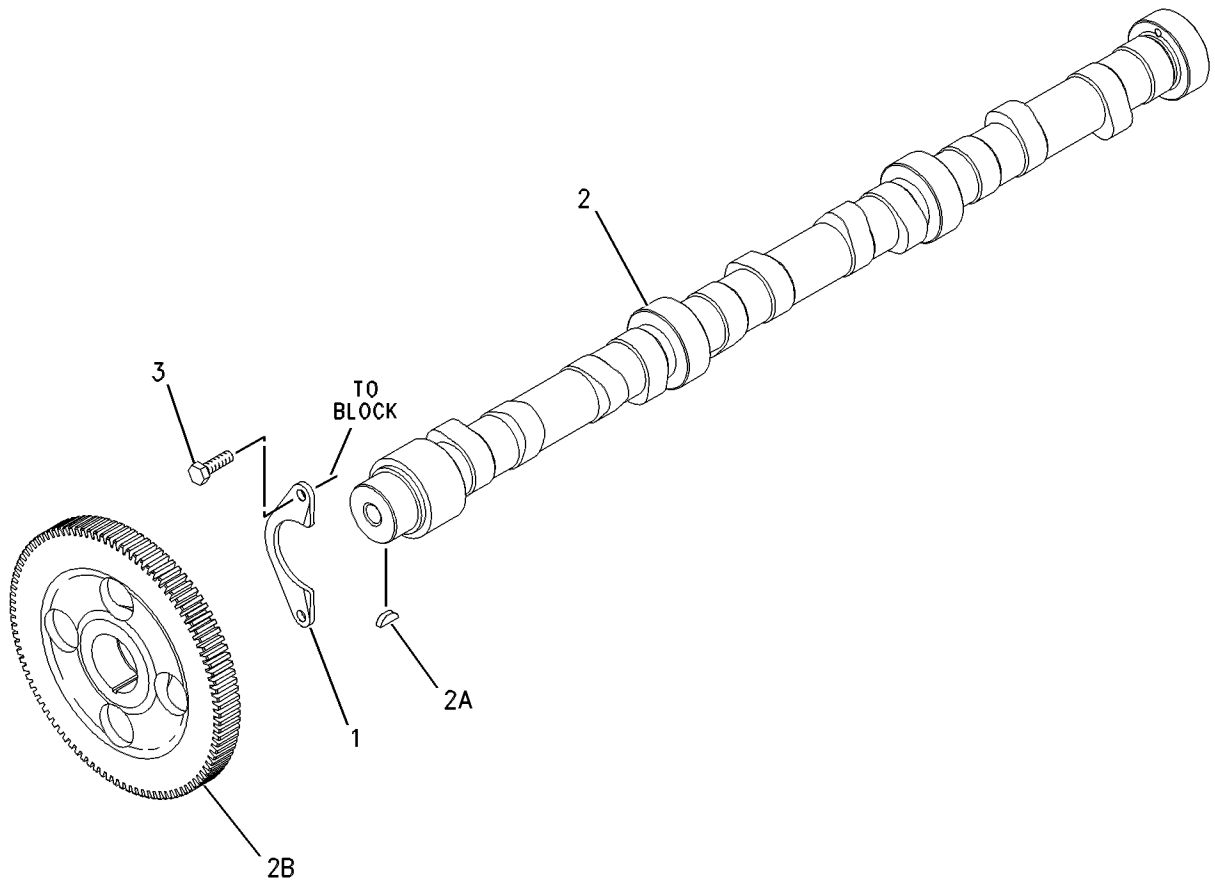

GRAPHIC #1 **<END>** g00626400

BASIC ENGINE

183-3649 COVER GP-CYLINDER BLOCK

S/N: 4ZF4479-UP

PROVIDES BREATHER, PROVIDES LH SIDE BLOCK COVER WITH PORTS FOR OIL ACCESS

PART OF 168-7967 ENGINE AR

SMCS-1201 **i02140794**

NOTE	REF NO	GRAPHIC REF	PART NUMBER	QTY	PART NAME 1 2 3 4 5 6 (PRODUCT LEVEL)	SEE PAGE
	1	1	**213-2410**	1	GASKET	
	2	1	**213-2411**	1	COVER	
	3	1	**240-0041**	1	BREATHER AS (ENGINE)	
M	4	1	**3E-8005**	1	BOLT (M8X1.25X160-MM)	
M	5	1	**6V-3918**	2	BOLT (M8X1.25X50-MM)	
M	6	1	**6V-3940**	9	BOLT (M8X1.25X25-MM)	
	7	1	**9F-4446**	1	SEAL-O-RING	
	8	1	**9M-1974**	12	WASHER-HARD (8.8X16X2-MM THK)	

M-METRIC PART

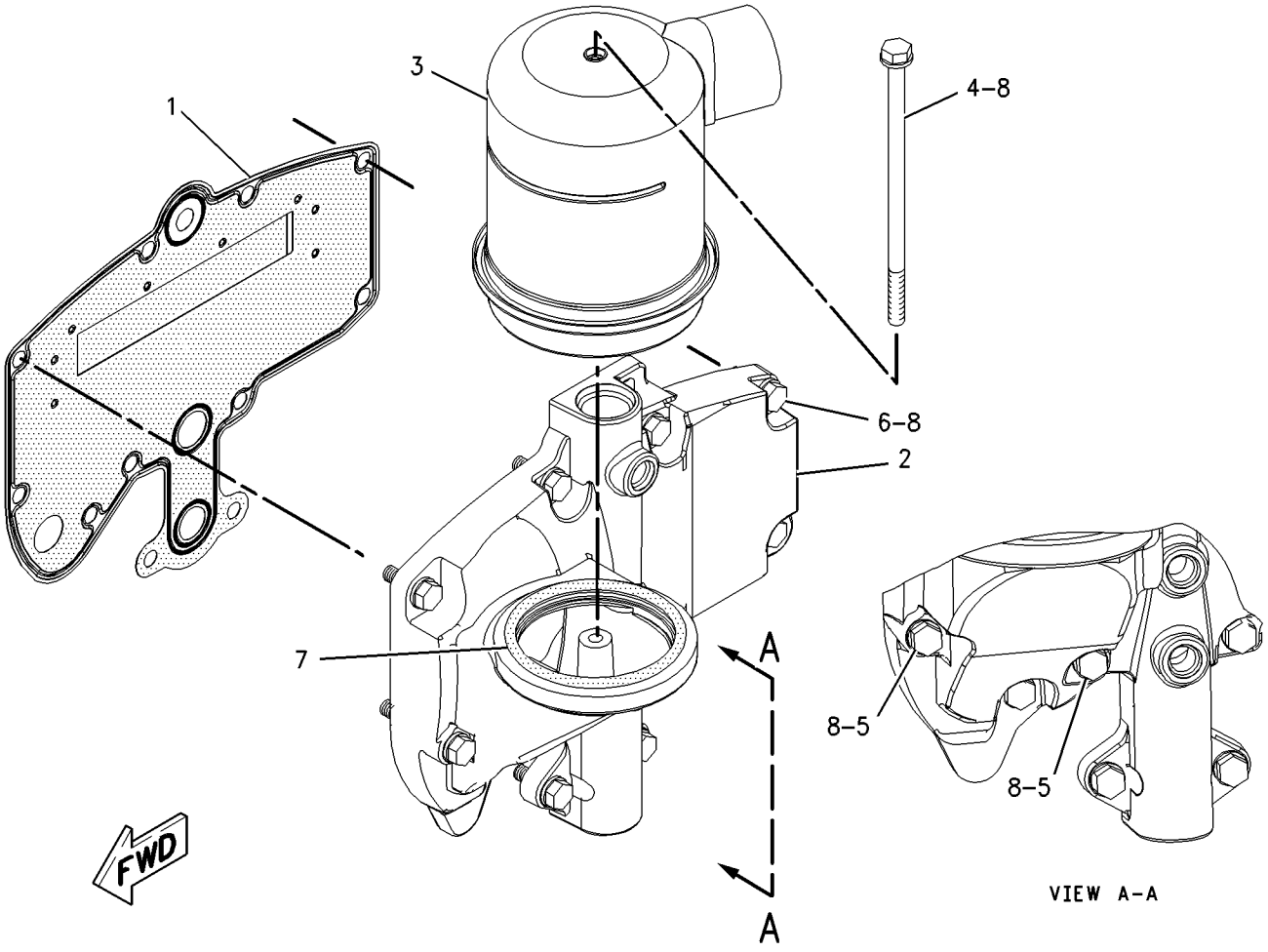

GRAPHIC #1 **<END>** g00838212

BASIC ENGINE

197-4563 COVER GP-FRONT HOUSING

S/N: 4ZF4479-UP

PART OF 168-7967 ENGINE AR

SMCS-1151, 1166 **i02036878**

NOTE	REF NO	GRAPHIC REF	PART NUMBER	QTY	PART NAME 1 2 3 4 5 6 (PRODUCT LEVEL)	SEE PAGE
M	1	1	**9X-2099**	3	STUD (M8X1.25-THD)	
	2	1	**002-3448**	1	CLIP	
	3	1	**108-3612**	1	SPACER (11.13X19.05X53-MM THK)	
	4	1	**159-0286**	1	TUBE AS-FILLER	
	5	1	**166-1776**	1	COVER AS-FRONT	
	5A	1	**126-1757**	2	WASHER (10.85X19.30X1.27-MM THK)	
	5B	1	**136-0822**	2	STUD	
	6	1	**166-1781**	1	GASKET	
M	7	1	**185-9356**	1	STUD	
	8	1	**241-5645**	1	CAP AS-FILLER (ENGINE OIL)	
	9	1	**061-9455**	1	SEAL-O-RING	
M	10	1	**5C-7261**	2	NUT (M8X1.25-THD)	
M	11	1	**6V-2317**	9	BOLT (M8X1.25X30-MM)	
	12	1	**6V-5839**	1	WASHER (11X21X2.5-MM THK)	
M	13	1	**8T-0100**	1	BOLT (M8X1.25X60-MM)	
M	14	1	**8T-0643**	1	BOLT (M10X1.50X80-MM)	
	15	1	**8T-4224**	2	WASHER-HARD (8.8X16X2-MM THK)	

M-METRIC PART

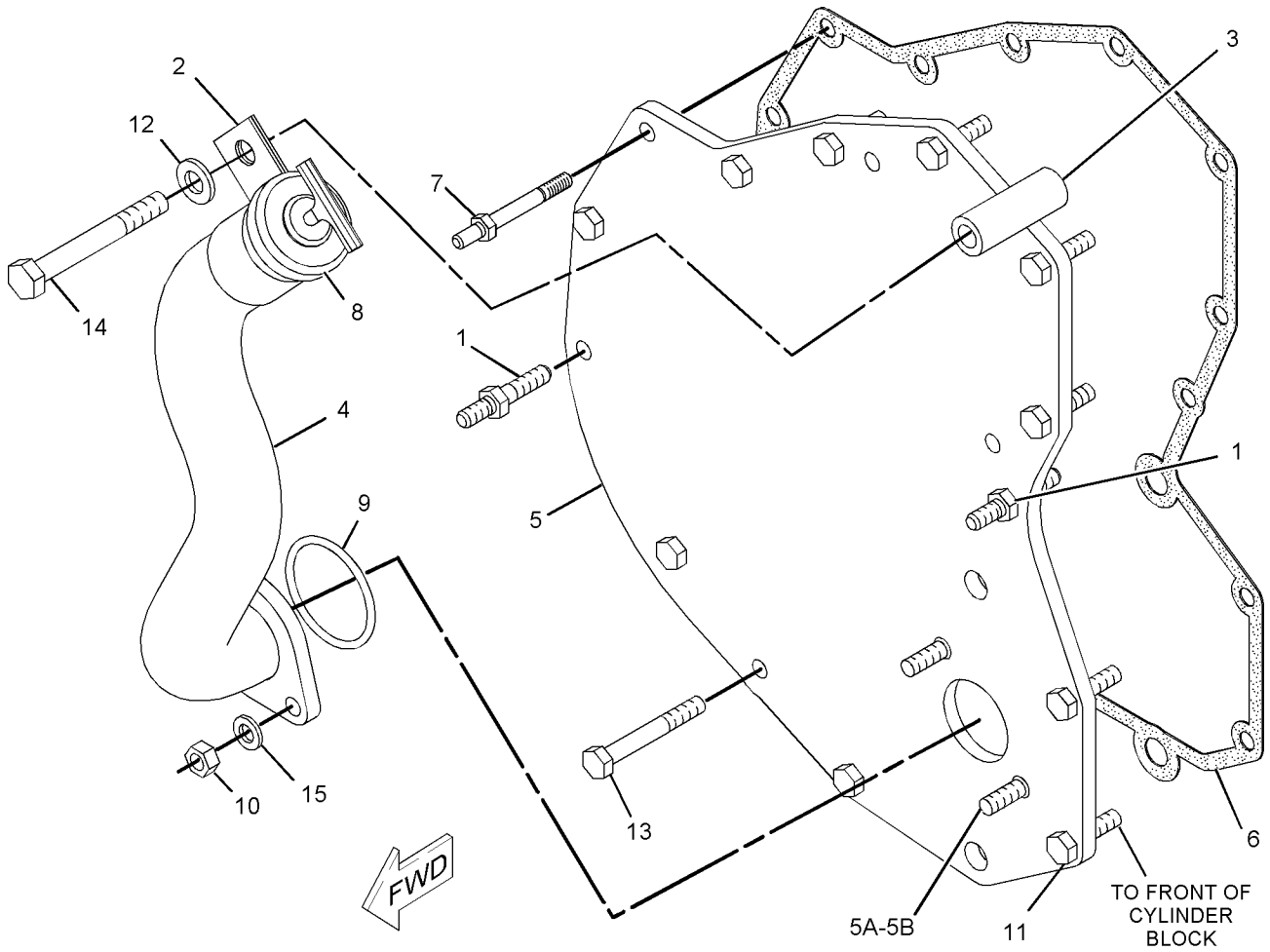

GRAPHIC #1 **<END>** g01058919

BASIC ENGINE

164-6490 COVER GP-VALVE MECHANISM

S/N: 4ZF6310-UP

PART OF 168-7967 ENGINE AR

SMCS-1107, 1120 **i01878800**

NOTE	REF NO	GRAPHIC REF	PART NUMBER	QTY	PART NAME 1 2 3 4 5 6 (PRODUCT LEVEL)	SEE PAGE
	1	1	**227-4531**	1	CAP AS-FILLER (ENGINE OIL)	
		1	**7F-8268**	1	SEAL-O-RING	
	2	1	**208-0039**	9	FASTENER AS	
	3	1	**218-0397**	1	COVER AS-BASE	
J	3A	1	**217-5701**		SEAL (2.3M)	
	4	1	**230-6156**	1	COVER GP (TOP)	
D	4A	1	**5P-5678**		SEAL (2.3M)	
M	5	1	**6V-5219**	11	BOLT (M8X1.25X40-MM)	
	6	1	**9M-1974**	11	WASHER-HARD (8.8X16X2-MM THK)	

D-ORDER BY THE METER
J-ORDER BY THE DECIMETER
M-METRIC PART

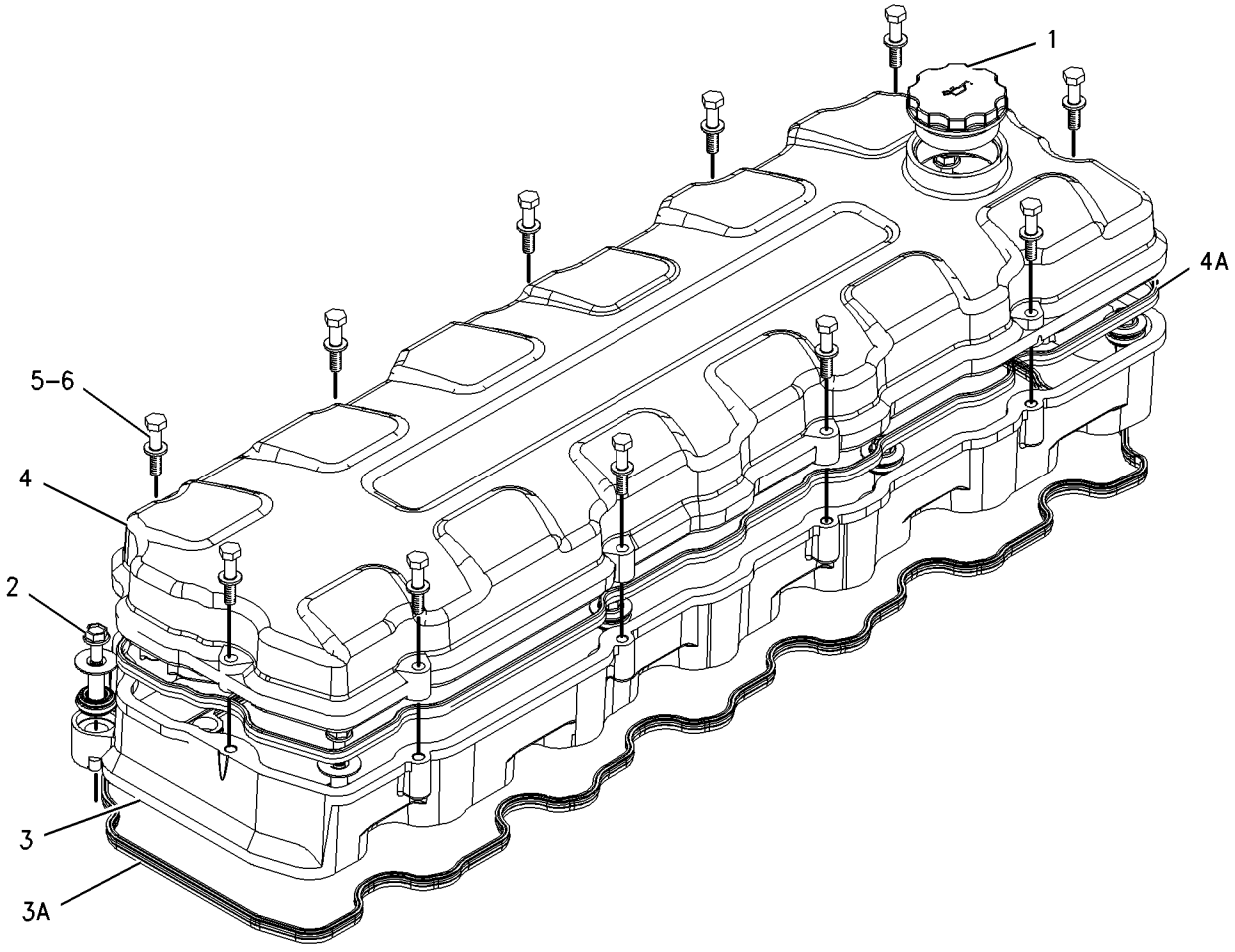

GRAPHIC #1 **<END>** g00976412

BASIC ENGINE

175-4131 COVER GP-VALVE MECHANISM

S/N: 4ZF4479-UP
PART OF 168-7967 ENGINE AR
CANNOT BE USED WITH TOP OIL FILL

SMCS-1107, 1120 **i01872034**

NOTE	REF NO	GRAPHIC REF	PART NUMBER	QTY	PART NAME 1 2 3 4 5 6 (PRODUCT LEVEL)	SEE PAGE
	1	1	**189-9302**	1	COVER AS	
D	1A	1	**5P-5678**		SEAL (2.3M)	
	2	1	**218-0397**	1	COVER AS-BASE	
J	3	1	**217-5701**	1	SEAL (23DM)	
	4	1	**208-0039**	9	FASTENER AS	
M	5	1	**6V-5219**	11	BOLT (M8X1.25X40-MM)	
	6	1	**9M-1974**	11	WASHER-HARD (8.8X16X2-MM THK)	

D-ORDER BY THE METER
J-ORDER BY THE DECIMETER
M-METRIC PART

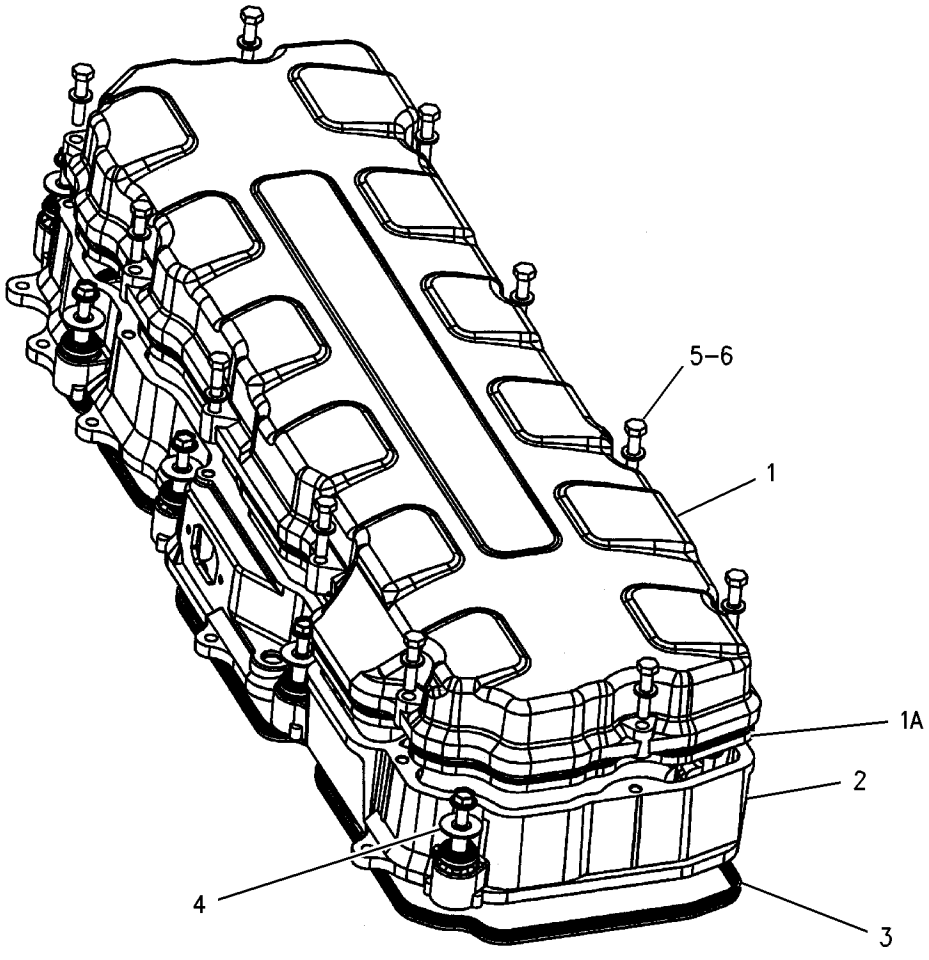

GRAPHIC #1 **<END>** g00859112

BASIC ENGINE

164-6148 CRANKSHAFT GP

S/N: 4ZF4479-UP

PART OF 168-7966 ENGINE AR-CORE

SMCS-1202, 1203, 1204, 1232 **i01678946**

NOTE	REF NO	GRAPHIC REF	PART NUMBER	QTY	PART NAME 1 2 3 4 5 6 (PRODUCT LEVEL)	SEE PAGE
	1	1	**151-2939**	7	BEARING-MAIN	
R	2	1	**160-8147**	1	CRANKSHAFT AS	
	2A	1	**1B-8705**	1	KEY-WOODRUFF	
	2B	1	**2W-8147**	1	GEAR (50 TEETH)	
	2C	1	**9Y-0810**	1	SLEEVE	
	3	1	**160-8166**	2	PLATE-THRUST	

R-REMFG PART MAY BE AVAILABLE

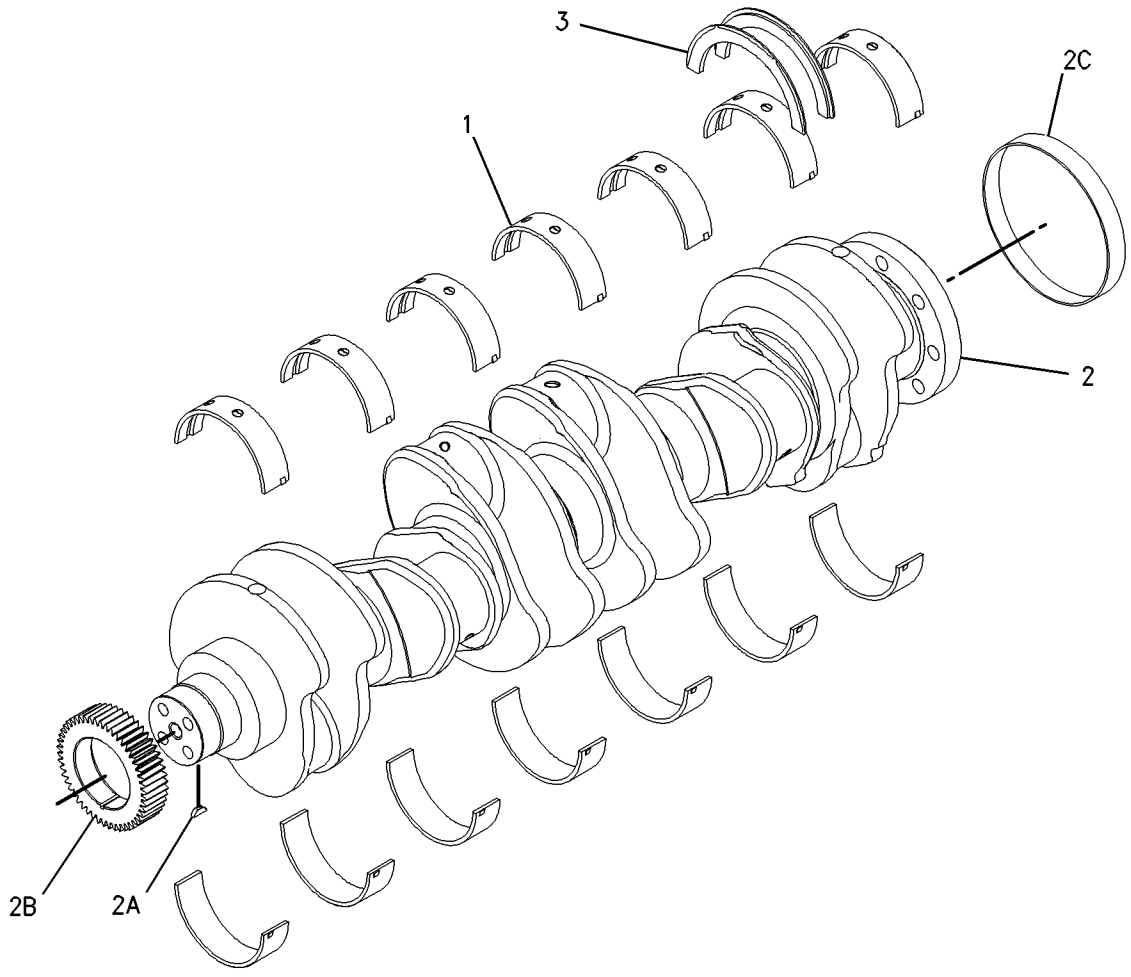

GRAPHIC #1 **<END>** g00789955

BASIC ENGINE

161-3406 CYLINDER BLOCK GP

S/N: 4ZF4479-UP

PART OF 168-7966 ENGINE AR-CORE

SMCS-1201 **i01833065**

NOTE	REF NO	GRAPHIC REF	PART NUMBER	QTY	PART NAME 1 2 3 4 5 6 (PRODUCT LEVEL)	SEE PAGE
	1	1	**0S-0519**	1	PLUG-CUP	
	2	1	**1W-8407**	2	SLEEVE	
	3	1	**4G-4972**	1	SEAL-O-RING	
CY	4	1	*220-1952*	1	CYLINDER BLOCK GP	18
	5	1	**6V-3538**	2	DOWEL	
	6	1	**7N-5683**	2	DOWEL	

C-CHANGE FROM PREVIOUS TYPE
Y-SEPARATE ILLUSTRATION

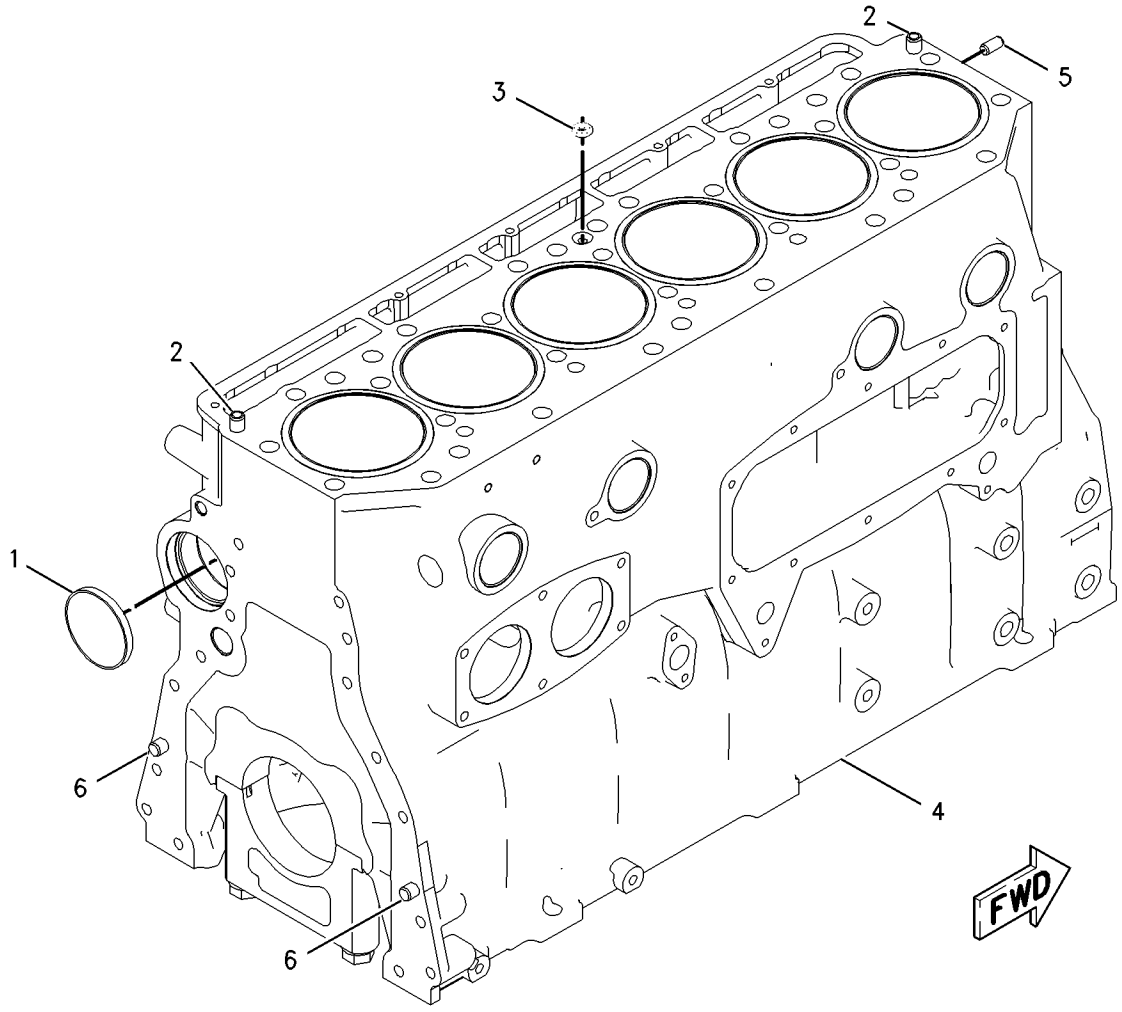

GRAPHIC #1 **<END>** g00838255

BASIC ENGINE

220-1952 CYLINDER BLOCK GP

S/N: 4ZF4479-UP

PART OF 161-3406 CYLINDER BLOCK GP

SMCS-1201 **i01836247**

NOTE	REF NO	GRAPHIC REF	PART NUMBER	QTY	PART NAME 1 2 3 4 5 6 (PRODUCT LEVEL)	SEE PAGE
	1	1	**167-0024**	6	SEAL-LINER	
	2	1	**9S-8002**	1	PLUG	
		1	**033-5853**	1	SEAL-O-RING	
	3	1	**190-3562**	6	LINER-CYLINDER	
	4	1	**221-3248**	1	CYLINDER BLOCK AS	
		1	**0L-1026**	2	PLUG-CUP	
		1	**3B-0623**	1	PLUG-CUP	
		1	**4F-5695**	4	PLUG-CUP	
		1	**9X-8268**	14	WASHER (17.5X30X3.5-MM THK)	
M		1	**175-0454**	14	BOLT (M16X2X160-MM)	
		1	**203-5805**	2	BEARING-SLEEVE	
		1	**203-6090**	1	BEARING-SLEEVE	
		1	**212-7002**	7	CAP-BEARING	
		1	**216-5586**	1	BEARING-SLEEVE (CAMSHAFT)	

M-METRIC PART

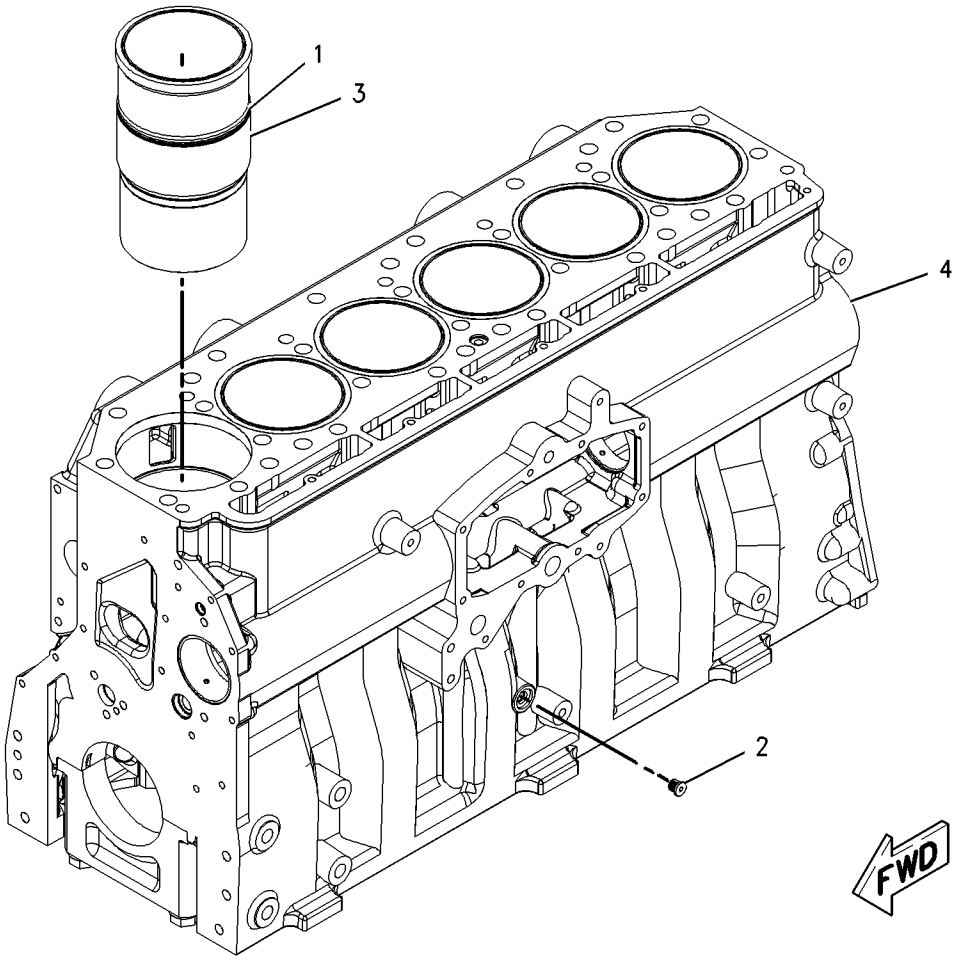

GRAPHIC #1 **<END>** g00938113

210-5985 CYLINDER HEAD AS

S/N: 4ZF4479-UP

PART OF 210-5984 CYLINDER HEAD GP

SMCS-1100 **i02182367**

NOTE	REF NO	GRAPHIC REF	PART NUMBER	QTY	PART NAME 1 2 3 4 5 6 (PRODUCT LEVEL)	SEE PAGE
	1	1	**3B-0623**	6	PLUG-CUP	
	2	1	**8M-5860**	18	PLUG-CUP	
	3	2	**176-7688**	12	SEAT-VALVE (INLET)	
	4	2	**176-7690**	12	SEAT-VALVE (EXHAUST)	
	5	2	**229-1490**	6	SLEEVE-INJECTOR	
	6	2	**8C-0563**	12	SEAL-O-RING	

210-5985 **CYLINDER HEAD AS** *(contd.)* **i02182367**

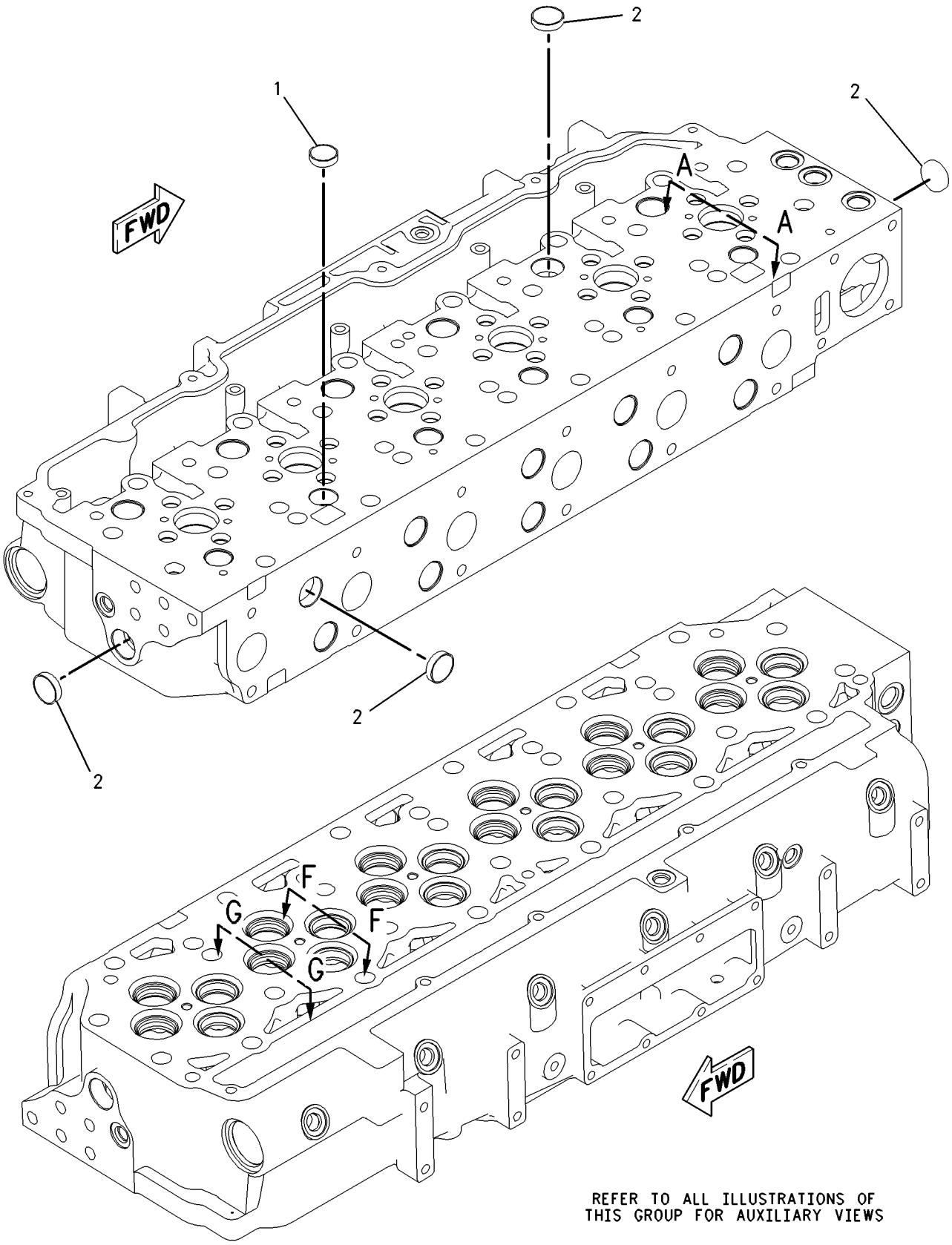

GRAPHIC #1 g00844116

210-5985 **CYLINDER HEAD AS** *(contd.)* **i02182367**

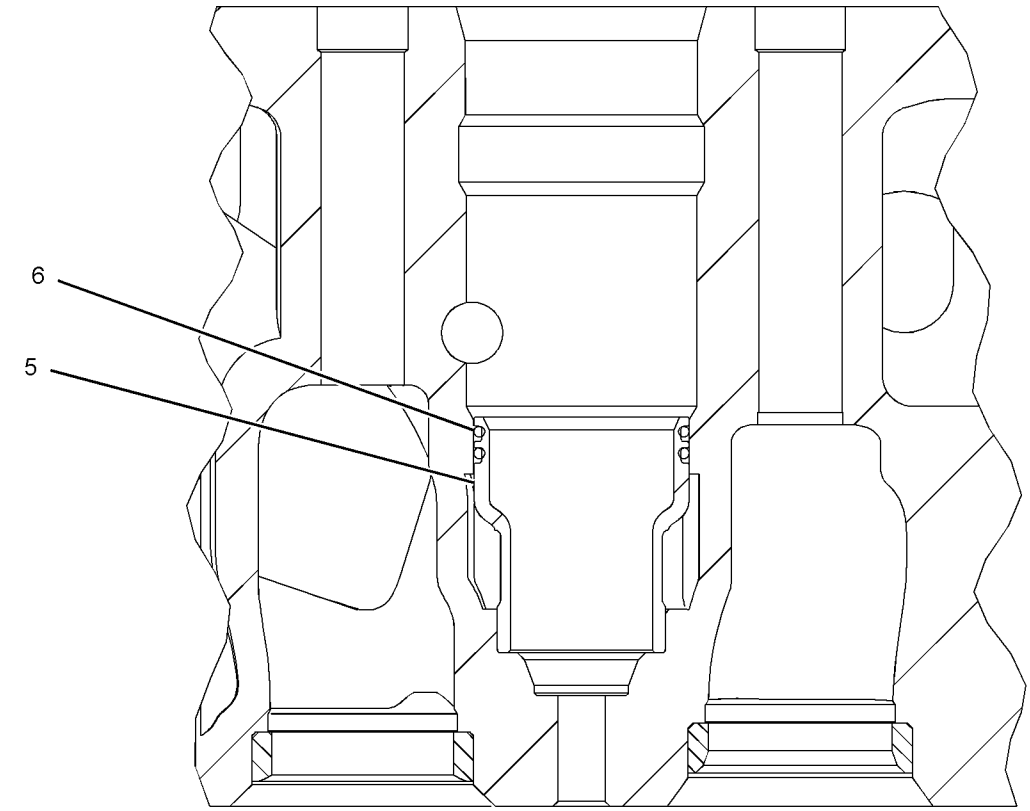

SECTION A-A

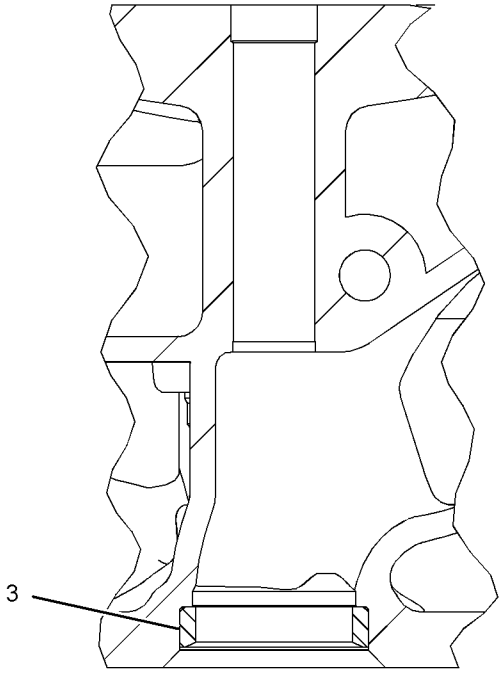

SECTION G-G

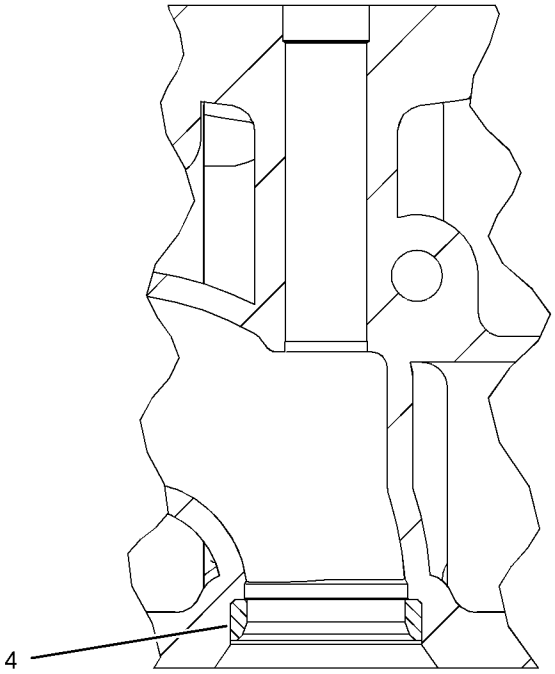

SECTION F-F

GRAPHIC #2 **<END>** g01026624

210-5984 CYLINDER HEAD GP

S/N: 4ZF4479-UP

PART OF 210-5987 CYLINDER HEAD GP

SMCS-1100 **i01694598**

NOTE	REF NO	GRAPHIC REF	PART NUMBER	QTY	PART NAME 1 2 3 4 5 6 (PRODUCT LEVEL)	SEE PAGE
	1	1	**2A-4429**	48	LOCK-RETAINER	
	2	1	**211-2134**	24	RETAINER	
	3	1	**163-2442**	12	VALVE-INLET	
	4	1	**163-2444**	24	GUIDE-VALVE	
	5	1	**163-2478**	24	SEAL-VALVE STEM	
	6	1	**9S-8004**	5	PLUG	
	6A	1	**153-4906**	5	SEAL-O-RING	
	7	1	**9S-8010**	1	PLUG	
	7A	1	**183-2317**	1	SEAL-O-RING	
	8	1	**183-7889**	12	SEAT-VALVE SPRING	
	9	1	**188-3122**	12	VALVE-EXHAUST	
	10	1	**190-6115**	24	SPRING-VALVE (INNER)	
	11	1	**190-6117**	24	SPRING-VALVE (OUTER)	
Y	12	1	*210-5985*	1	CYLINDER HEAD AS	19
	13	1	**3K-0360**	1	SEAL-O-RING	
	13A	1	**9S-8005**	1	PLUG	
	14	1	**8T-6764**	2	PLUG-PIPE	

Y-SEPARATE ILLUSTRATION

210-5984 CYLINDER HEAD GP *(contd.)* **i01694598**

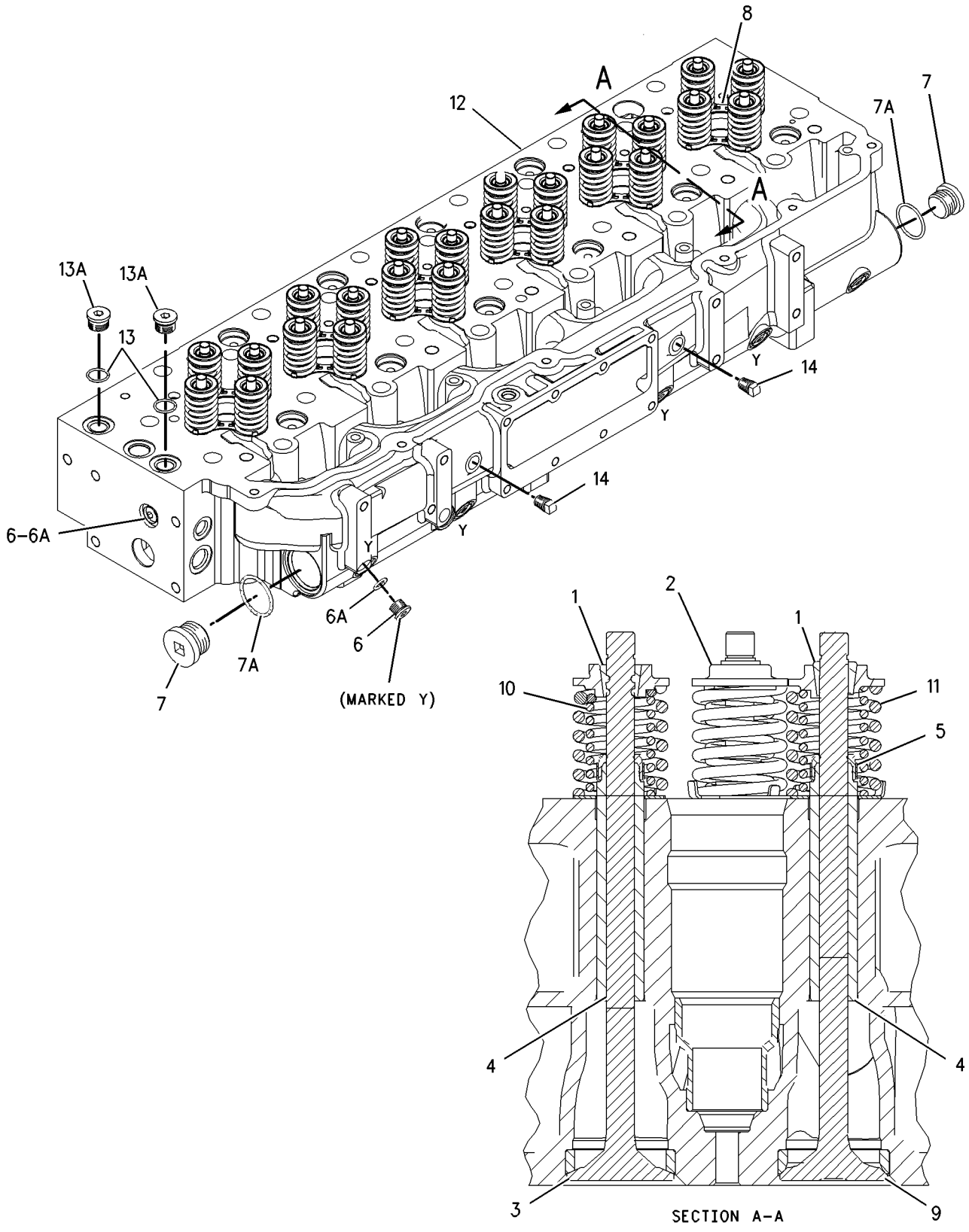

GRAPHIC #1 **<END>** g00872447

BASIC ENGINE

210-5987 CYLINDER HEAD GP

S/N: 4ZF4479-UP

PART OF 168-7966 ENGINE AR-CORE

SMCS-1100 **i01678950**

NOTE	REF NO	GRAPHIC REF	PART NUMBER	QTY	PART NAME 1 2 3 4 5 6 (PRODUCT LEVEL)	SEE PAGE
Y	1	1	*167-0171*	26	FASTENER GP-CYLINDER HEAD	27
	2	1	**187-1315**	1	GASKET AS	
Y	3	1	**210-5984**	1	CYLINDER HEAD GP	22
M	4	1	**8C-4984**	5	BOLT (M8X1.25X150MM)	
	5	1	**9M-1974**	5	WASHER-HARD (8.8X16X2MM THK)	

M-METRIC PART
Y-SEPARATE ILLUSTRATION

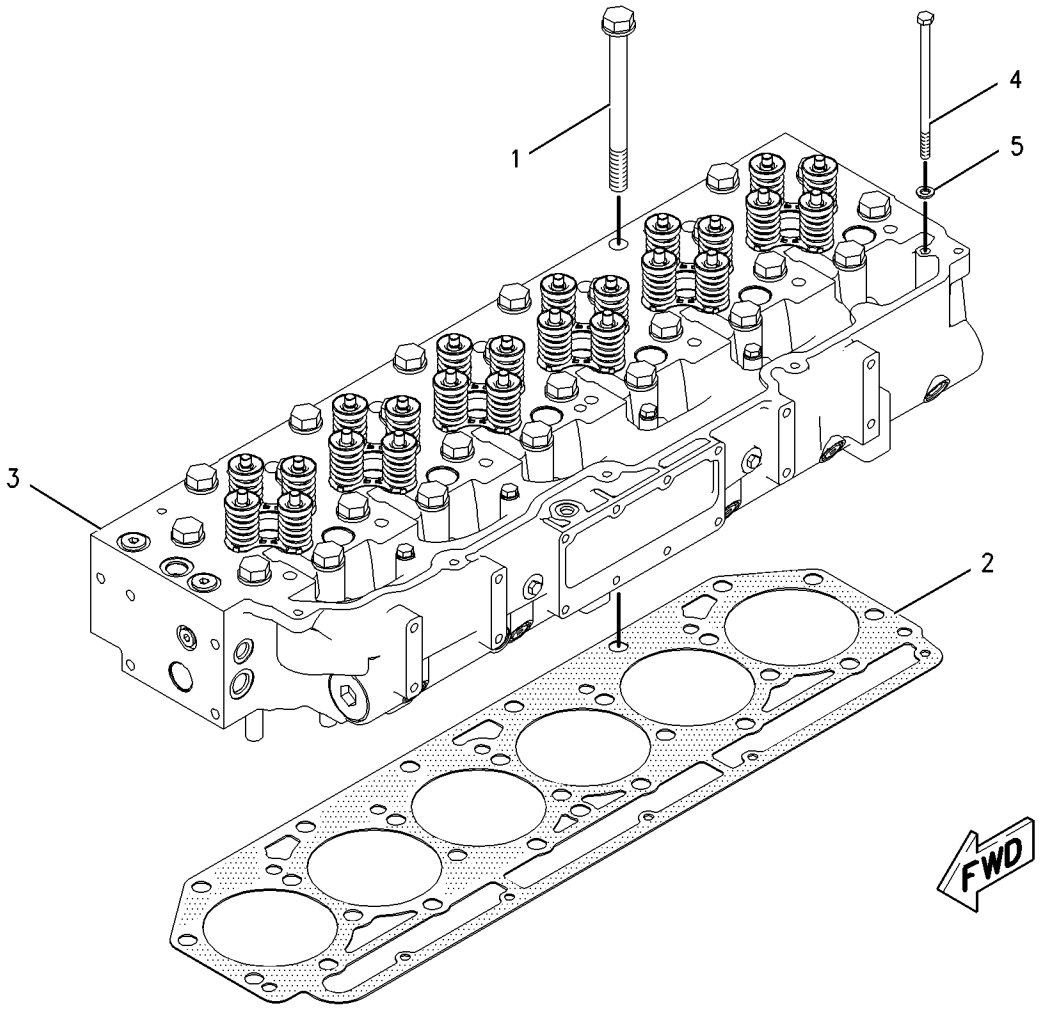

GRAPHIC #1 **<END>** g00827534

BASIC ENGINE

172-9950 DAMPER & PULLEY GP

S/N: 4ZF4479-UP

PART OF 168-7967 ENGINE AR

SMCS-1205 **i01871972**

NOTE	REF NO	GRAPHIC REF	PART NUMBER	QTY	PART NAME 1 2 3 4 5 6 (PRODUCT LEVEL)	SEE PAGE
	1	1	**172-9955**	1	YOKE	
	2	1	**2W-7381**	1	WASHER	
M	3	1	**8T-3666**	4	BOLT (M14X60MM)	
	4	1	**172-9367**	1	PULLEY-CRANKSHAFT	
	5	1	**208-9619**	1	DAMPER AS	
	6	1	**6V-5839**	8	WASHER (11X21X2.5MM THK)	
M	7	1	**6V-7981**	8	BOLT (M10X1.50X70MM)	

M-METRIC PART

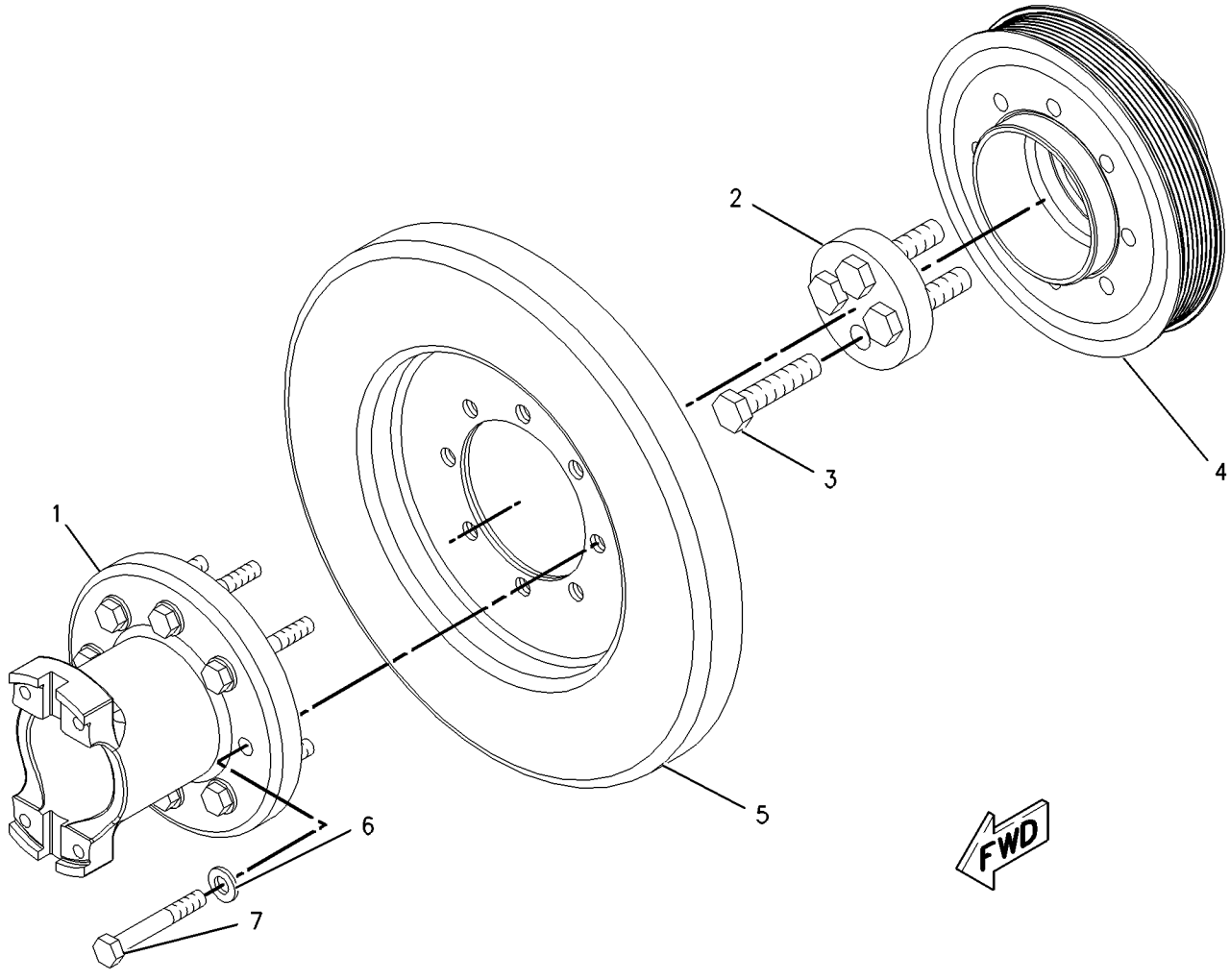

GRAPHIC #1 **<END>** g00862918

190-2314 DRAIN GP-ENGINE OIL—ENGINE OIL

S/N: CBK1-UP

PART OF 162-5605 GENERAL AR

SMCS-1302 **i02207287**

NOTE	REF NO	GRAPHIC REF	PART NUMBER	QTY	PART NAME 1 2 3 4 5 6 (PRODUCT LEVEL)	SEE PAGE
	1	1	**7X-7958**	1	CLAMP-HOSE	
I	2	1	**197-3609**	1	HOSE AS	
	3	1	**206-4669**	1	VALVE-DRAIN	
	4	1	**212-4174**	1	LOCKWASHER	
	5	1	*148-8327*	1	CONNECTOR AS	
		1	**6V-8637**	1	CONNECTOR	
		1	**3D-2824**	1	SEAL-O-RING	
		1	**6V-9746**	1	SEAL-O-RING	
	6	1	**2S-2053**	1	CLIP	
	7	1	**8T-4121**	1	WASHER-HARD (11X21X2.5-MM THK)	
M	8	1	**8T-4137**	1	BOLT (M10X1.5X20-MM)	
E	9	1	**146-7453**		HOSE (37-CM)	

E-ORDER BY THE CENTIMETER
I-REFER TO HYDRAULIC INFORMATION SYSTEM
M-METRIC PART

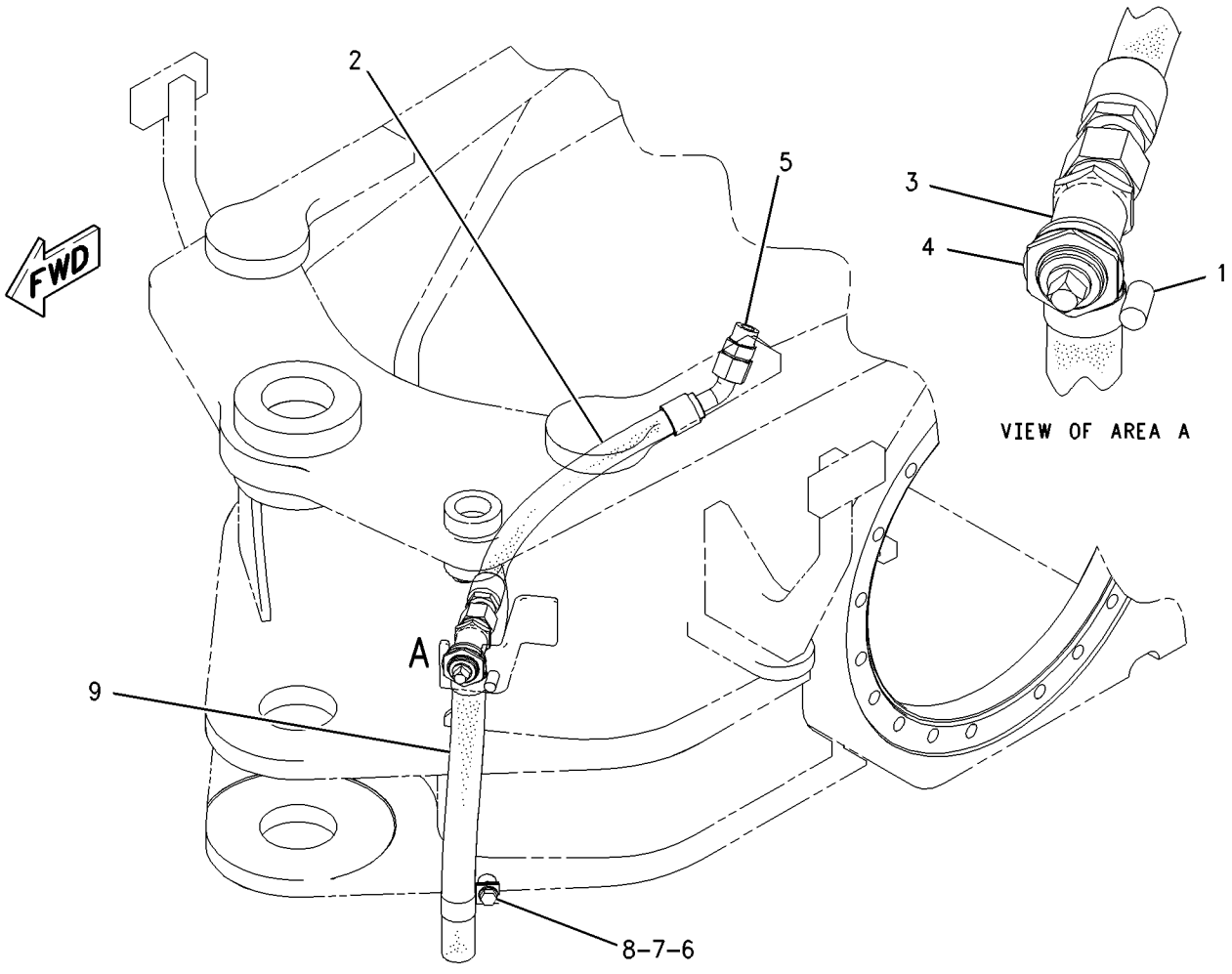

GRAPHIC #1 **<END>** g00876820

167-0171 FASTENER GP-CYLINDER HEAD

S/N: 4ZF4479-UP

PART OF 210-5987 CYLINDER HEAD GP

SMCS-1100 **i01682539**

NOTE	REF NO	GRAPHIC REF	PART NUMBER	QTY	PART NAME 1 2 3 4 5 6 (PRODUCT LEVEL)	SEE PAGE
M	1	1	**183-5163**	1	BOLT	
	2	1	**9X-8268**	1	WASHER (17.5X30X3.5MM THK)	

M-METRIC PART

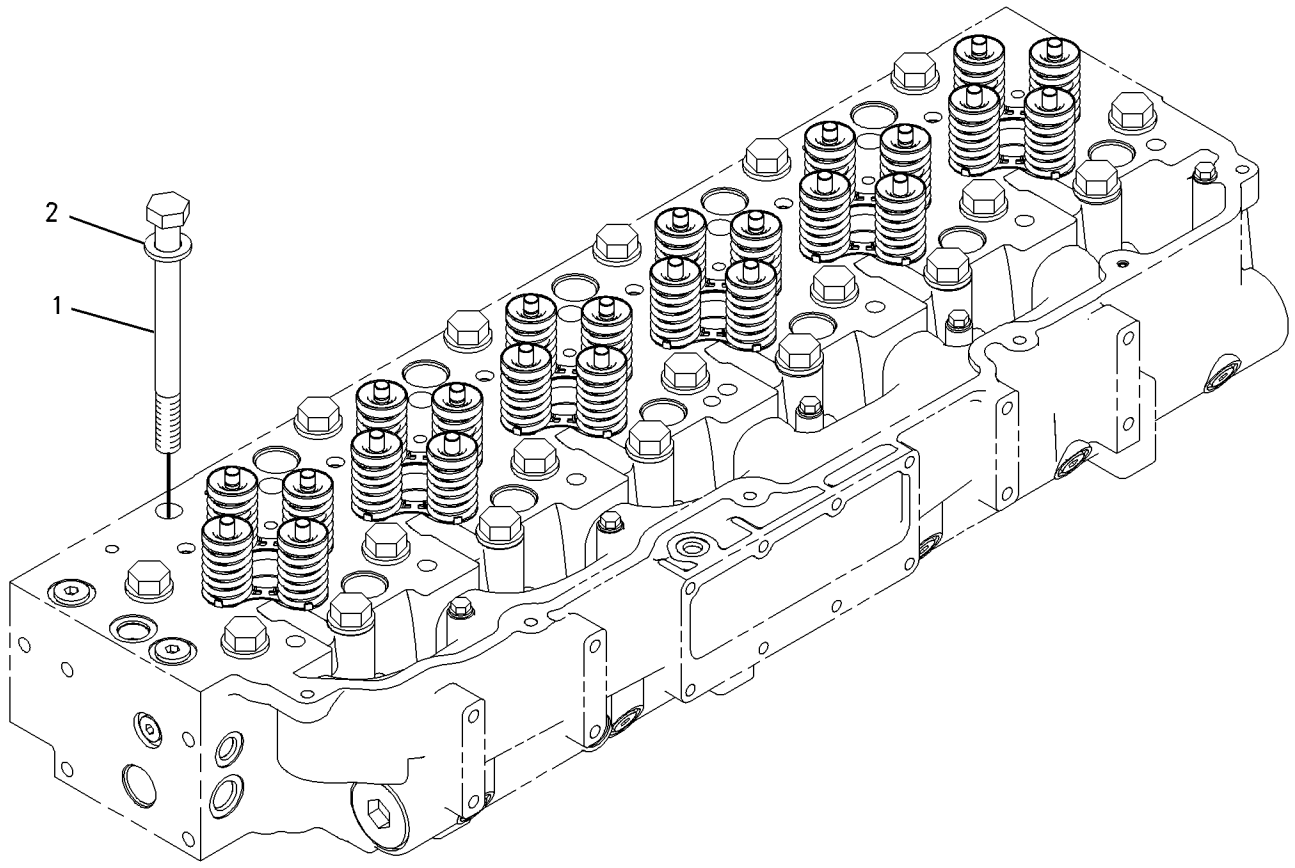

GRAPHIC #1 **<END>** g00792849

BASIC ENGINE

172-6483 FLYWHEEL GP

S/N: 4ZF4479-UP

PART OF 168-7967 ENGINE AR

SMCS-1156, 1158 **i01664293**

NOTE	REF NO	GRAPHIC REF	PART NUMBER	QTY	PART NAME 1 2 3 4 5 6 (PRODUCT LEVEL)	SEE PAGE
M	1	1	**103-6169**	8	BOLT	
	2	1	**172-6481**	1	FLYWHEEL AS	
	2A	1	**163-1387**	1	GEAR-FLYWHEEL (134 TEETH)	
	3	1	**171-3010**	8	WASHER-HARD (M17.5X32X7MM THK)	

M-METRIC PART

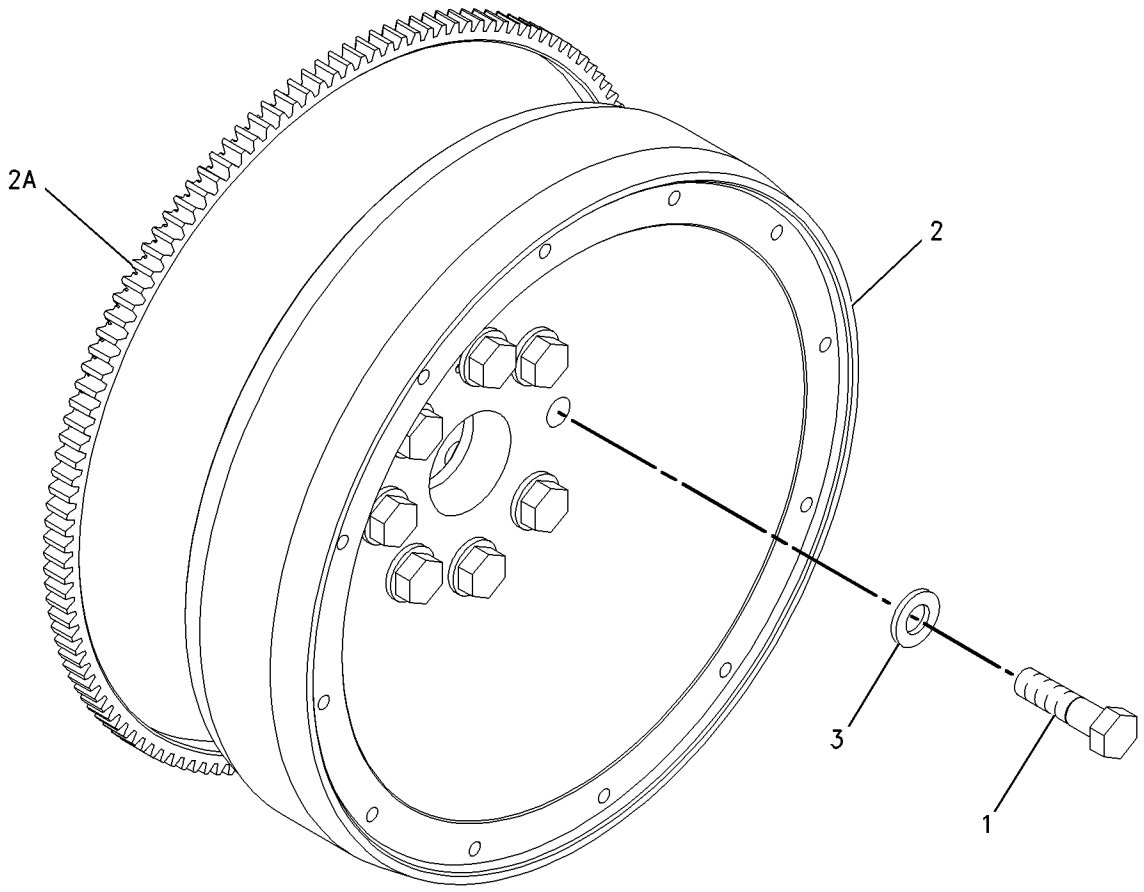

GRAPHIC #1 **<END>** g00859358

BASIC ENGINE

155-7918 GEAR GP-FRONT

S/N: 4ZF4479-UP

PART OF 168-7966 ENGINE AR-CORE

SMCS-1206 **i01781633**

NOTE	REF NO	GRAPHIC REF	PART NUMBER	QTY	PART NAME 1 2 3 4 5 6 (PRODUCT LEVEL)	SEE PAGE
	1	1	**113-6069**	1	PLATE-THRUST	
	2	1	**115-4219**	1	PLATE-RETAINING	
	3	1	**200-4495**	1	SHAFT-IDLER	
	4	1	**205-1320**	1	GEAR AS-IDLER (50 TEETH)	
		1	**115-4072**	1	BEARING	
M	5	1	**136-4183**	1	BOLT-12 POINT HEAD (M10X1.5X30MM)	
M	6	1	**6V-5843**	2	BOLT (M10X1.50X45MM)	

M-METRIC PART

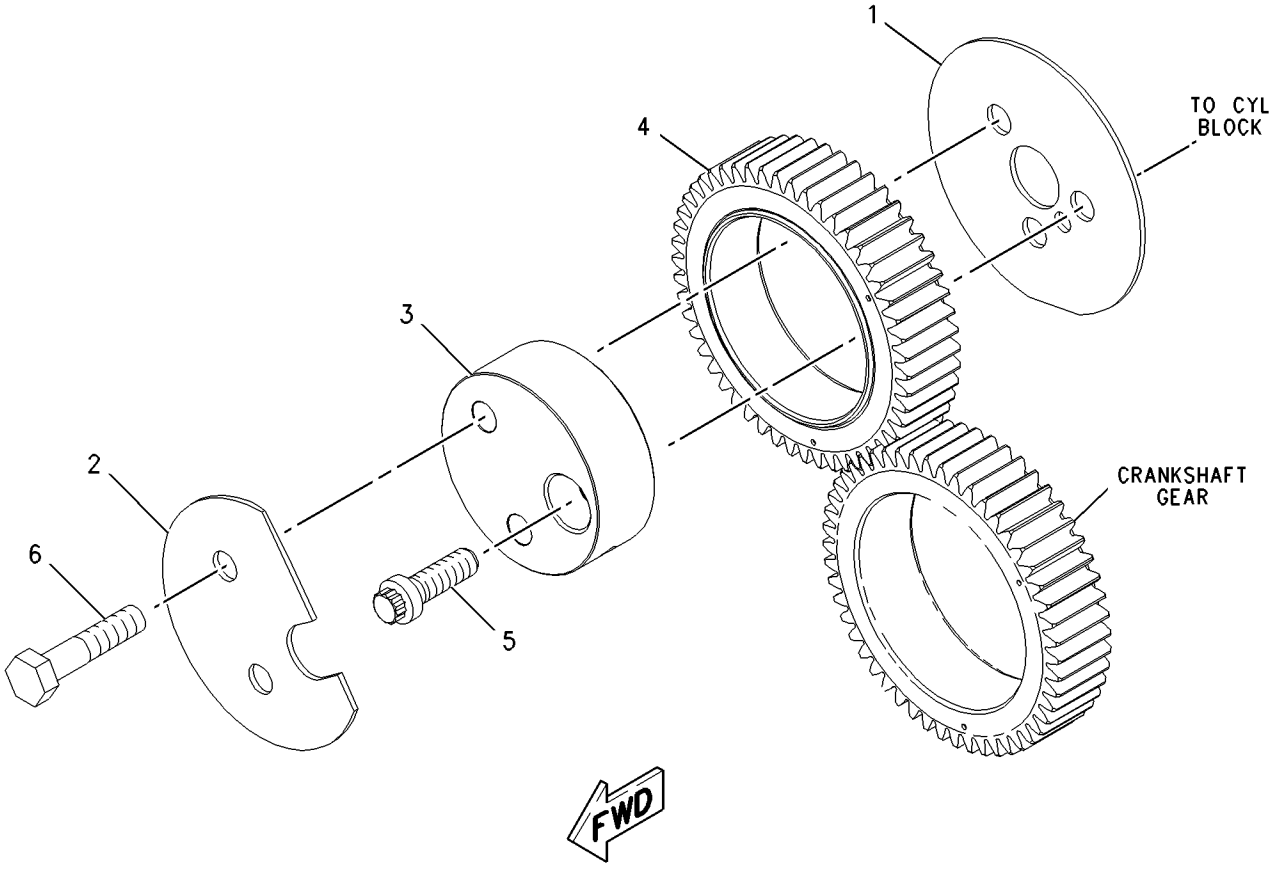

GRAPHIC #1 **<END>** g00906547

187-4087 HOUSING GP-FLYWHEEL

S/N: 4ZF4479-UP

PART OF 168-7967 ENGINE AR

SMCS-1157 **i01871542**

NOTE	REF NO	GRAPHIC REF	PART NUMBER	QTY	PART NAME 1 2 3 4 5 6 (PRODUCT LEVEL)	SEE PAGE
	1	1	**187-4088**	1	HOUSING-FLYWHEEL	
	2	1	**1J-9671**	2	SEAL-O-RING	
	3	1	**3K-8460**	2	PLUG	
M	4	1	**5P-8245**	14	WASHER-HARD (13.5X25.5X3-MM THK)	
M	5	1	**6V-8004**	2	BOLT (M12X1.75X120-MM)	
M	6	1	**6V-8197**	12	BOLT (M12X1.75X40-MM)	
B	7	1	**1U-8846**		SEALANT-GASKET	

B-USE AS REQUIRED
M-METRIC PART

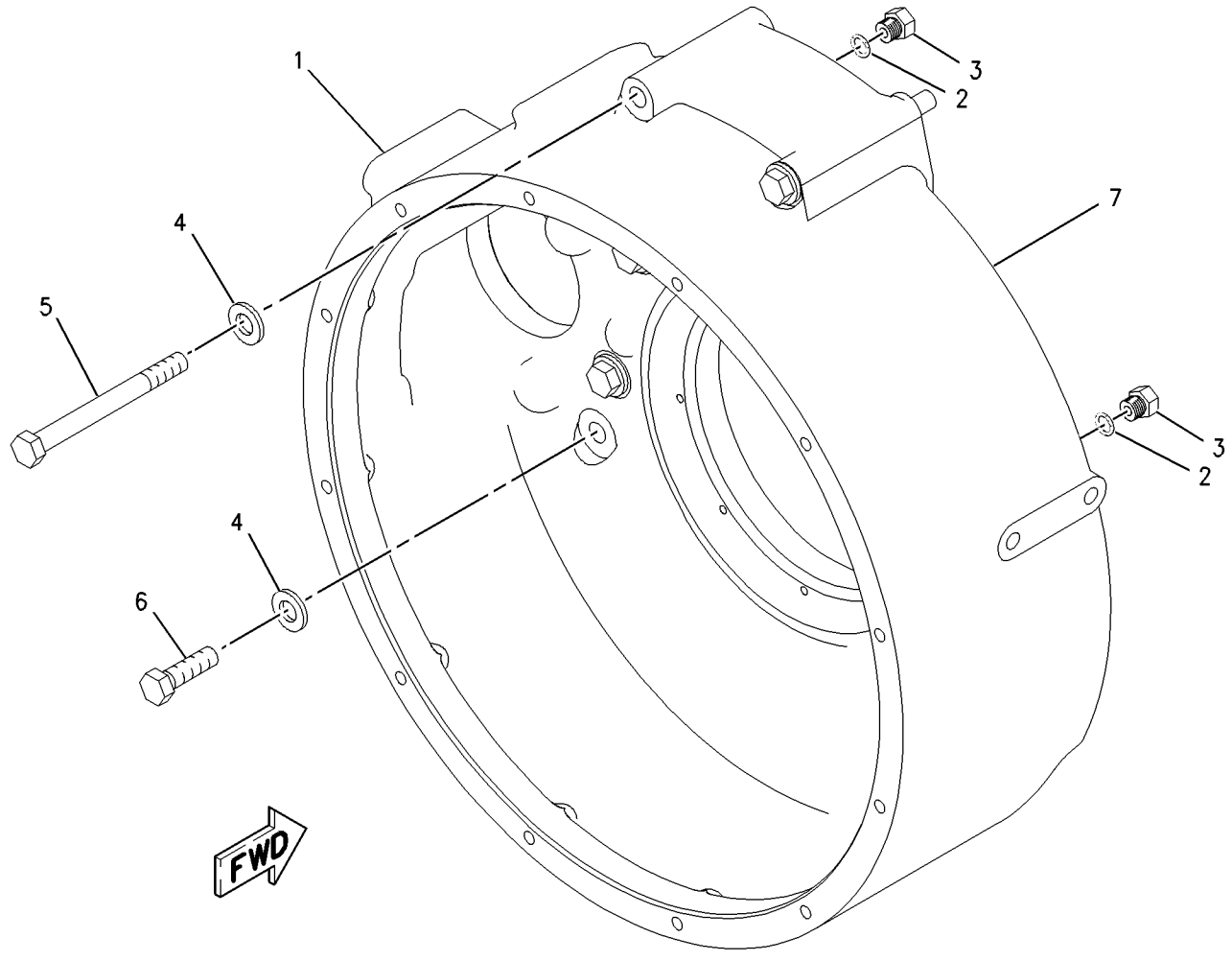

GRAPHIC #1 **<END>** g00939289

165-4446 HOUSING GP-FRONT

S/N: 4ZF4479-6877

PART OF 168-7966 ENGINE AR-CORE

SMCS-1151, 1162 **i01678956**

NOTE	REF NO	GRAPHIC REF	PART NUMBER	QTY	PART NAME 1 2 3 4 5 6 (PRODUCT LEVEL)	SEE PAGE
	1	1	**190-5166**	1	HOUSING-FRONT	
M	2	1	**6V-3918**	4	BOLT (M8X1.25X50-MM)	
M	3	1	**6V-5217**	8	BOLT (M8X1.25X20-MM)	
	4	1	**9M-1974**	12	WASHER-HARD (8.8X16X2-MM THK)	
B	5	1	**1U-8846**		SEALANT-GASKET	

B-USE AS REQUIRED
M-METRIC PART

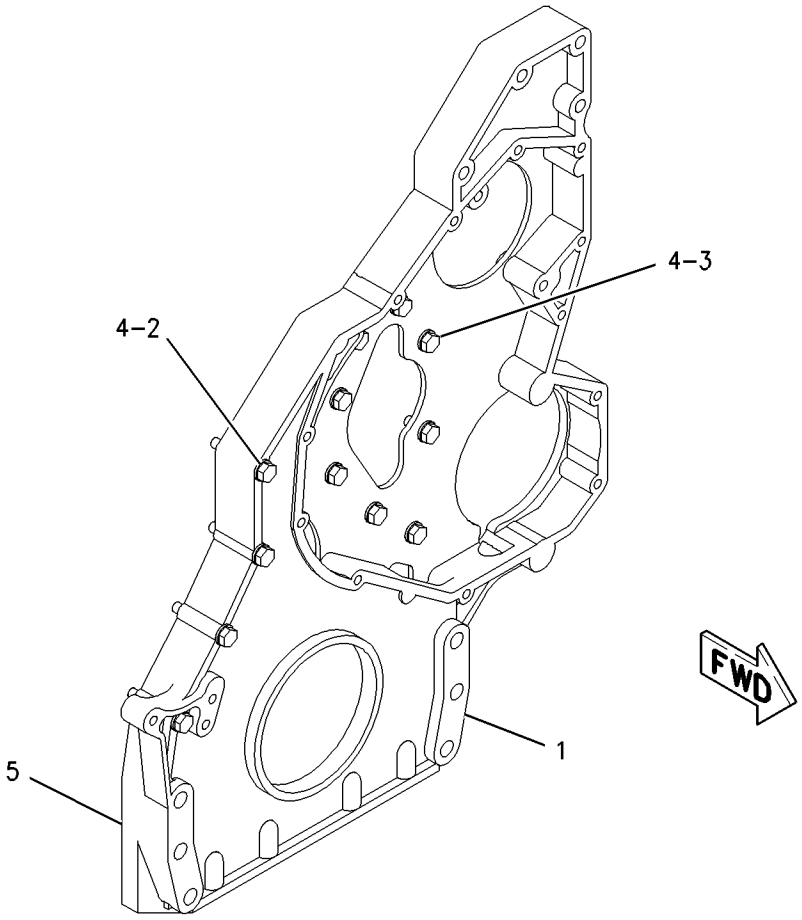

GRAPHIC #1 **<END>** g00713985

165-4446 HOUSING GP-FRONT

S/N: 4ZF6878-UP

PART OF 168-7966 ENGINE AR-CORE

SMCS-1151, 1162 **i02061168**

NOTE	REF NO	GRAPHIC REF	PART NUMBER	QTY	PART NAME 1 2 3 4 5 6 (PRODUCT LEVEL)	SEE PAGE
	1	1	**236-2216**	1	HOUSING-FRONT	
M	2	1	**6V-3918**	4	BOLT (M8X1.25X50-MM)	
M	3	1	**6V-5217**	8	BOLT (M8X1.25X20-MM)	
	4	1	**9M-1974**	12	WASHER-HARD (8.8X16X2-MM THK)	
B	5	1	**1U-8846**		SEALANT-GASKET	

B-USE AS REQUIRED
M-METRIC PART

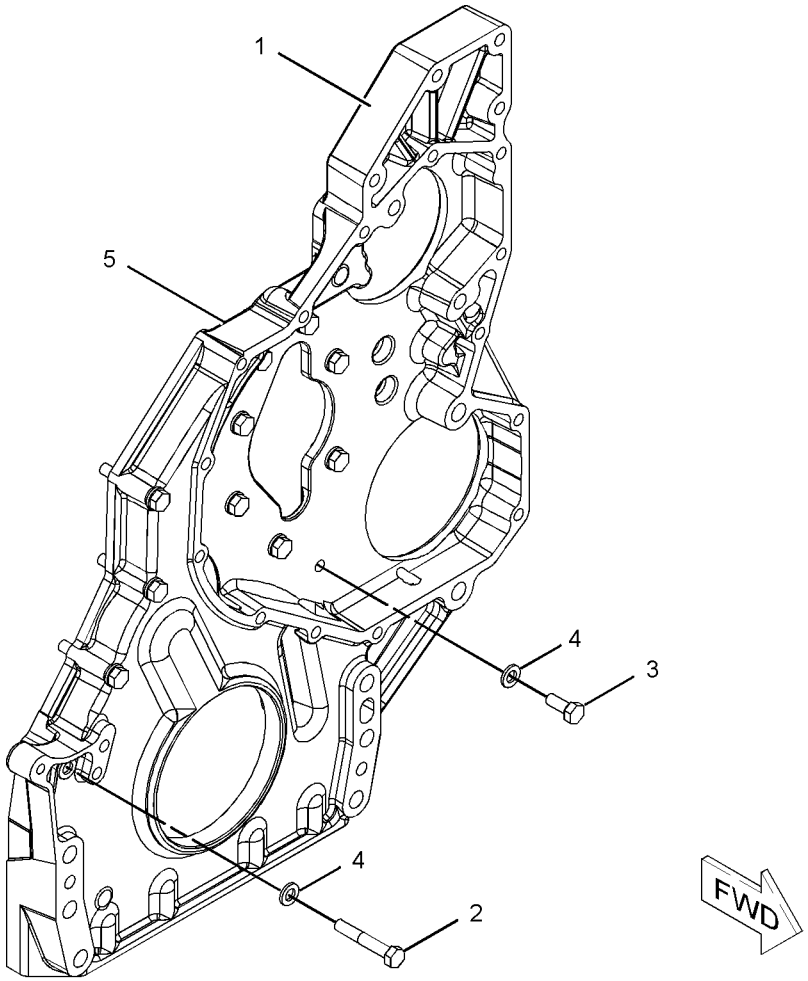

GRAPHIC #1 **<END>** g01060731

169-3113 LIFTING GP-ENGINE

S/N: 4ZF4479-UP
REAR
PART OF 168-7967 ENGINE AR

SMCS-1122 **i01872091**

NOTE	REF NO	GRAPHIC REF	PART NUMBER	QTY	PART NAME 1 2 3 4 5 6 (PRODUCT LEVEL)	SEE PAGE
	1	1	**166-1785**	1	PLATE-LIFTING	
	2	1	**5P-8245**	3	WASHER-HARD (13.5X25.5X3MM THK)	
M	3	1	**6V-8675**	3	BOLT (M12X1.75X35MM)	

M-METRIC PART

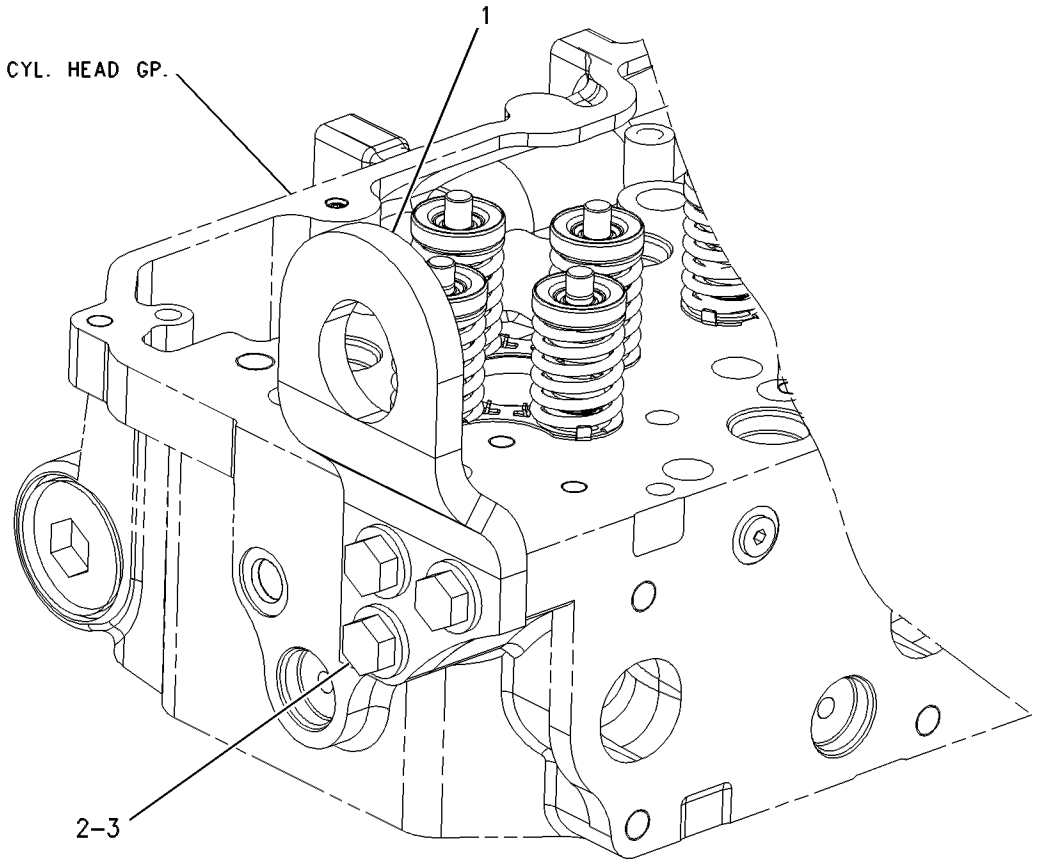

GRAPHIC #1 **<END>** g00626065

BASIC ENGINE

174-3428 MOUNTING GP-ENGINE & TMSN

S/N: CBK1-UP

PART OF 162-5605 GENERAL AR

SMCS-1152, 1153, 1154, 3082 **i01674551**

NOTE	REF NO	GRAPHIC REF	PART NUMBER	QTY	PART NAME 1 2 3 4 5 6 (PRODUCT LEVEL)	SEE PAGE
	1	1	**174-9529**	2	MOUNT AS	
					(EACH INCLUDES)	
		1	**9W-7385**	1	SLEEVE	
		1	**9W-7388**	2	WASHER (26X144X12MM THK)	
	2	1	**192-7357**	2	MOUNT AS	
					(EACH INCLUDES)	
		1	**9W-6582**	1	SLEEVE	
		1	**9W-6584**	1	WASHER (20.5X114X10MM THK)	
	3	1	**211-9274**	1	SUPPORT (RH)	
	4	1	**211-9275**	1	SUPPORT (LH)	
	5	1	**1J-5929**	2	BOLT (1-8X6 IN)	
	6	1	**8T-4123**	8	WASHER-PLATED (22X35X3.5MM THK)	
	7	1	**8T-4896**	12	WASHER-HARD (10.2X18.5X2.5MM THK)	
	8	1	**8T-4994**	2	WASHER-HARD (20X36.5X3.5MM THK)	
	9	1	**8T-5361**	2	WASHER-HARD (28X49X5MM THK)	
M	10	1	**8T-6430**	8	BOLT (M20X2.5X50MM)	
	11	1	**8T-9311**	2	BOLT (3/4-10X4.50 IN)	
	12	1	**9B-7237**	12	BOLT (3/8-16X1.25 IN)	

M-METRIC PART

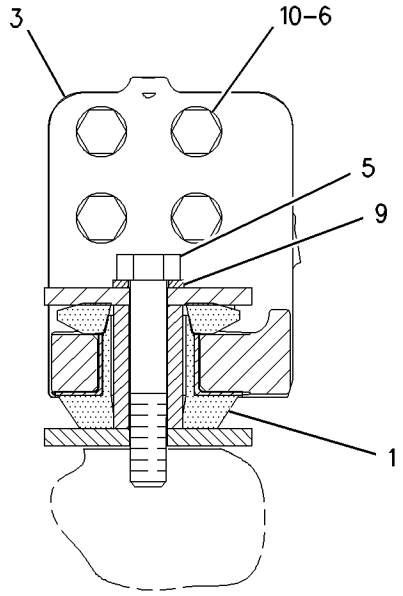

SECTION A-A

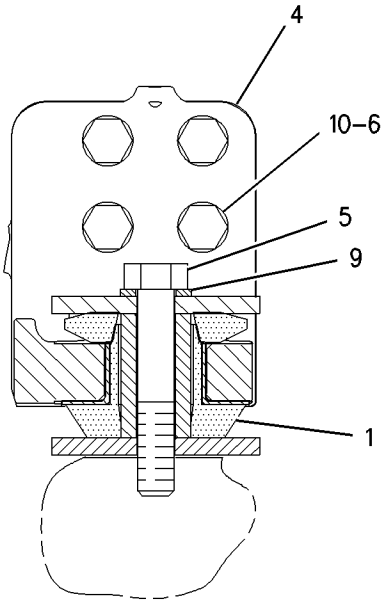

SECTION C-C

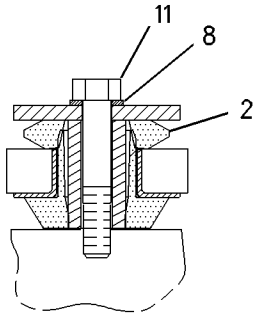

SECTION B-B

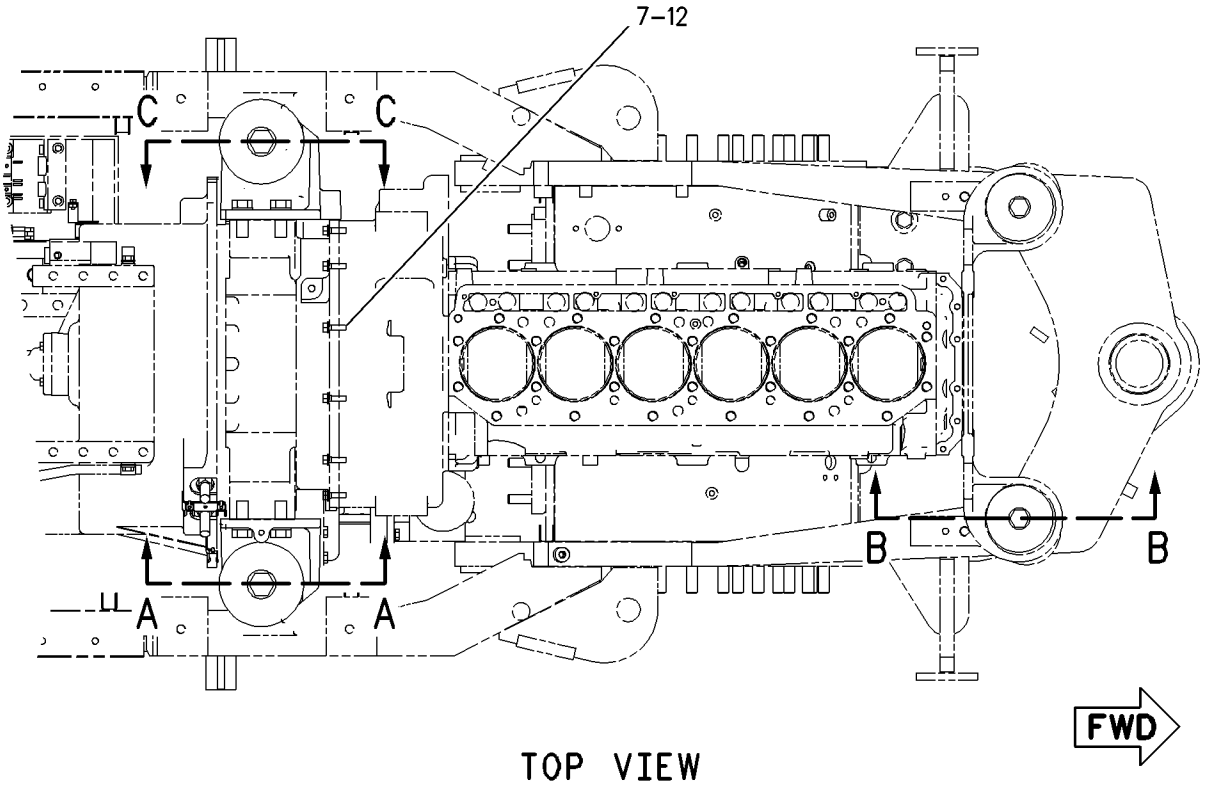

TOP VIEW

GRAPHIC #1 **<END>** g00863464

179-3421 PAN GP-OIL

S/N: 4ZF4479-UP

PART OF 168-7967 ENGINE AR

SMCS-1302 **i02067418**

NOTE	REF NO	GRAPHIC REF	PART NUMBER	QTY	PART NAME 1 2 3 4 5 6 (PRODUCT LEVEL)	SEE PAGE
	1	1	**8N-6854**	1	GASKET-ADAPTER	
	2	1	**189-6645**	1	PAN-OIL	
	3	1	**190-6114**	1	GASKET-OIL PAN	
	4	1	**197-3616**	1	ADAPTER-DRAIN	
	5	1	**3D-2824**	1	SEAL-O-RING	
M	6	1	**6V-3918**	32	BOLT (M8X1.25X50-MM)	
M	7	1	**6V-5192**	2	BOLT-SOCKET HEAD (M8X1.25X30-MM)	
	8	1	**9M-1974**	34	WASHER-HARD (8.8X16X2-MM THK)	
	9	1	**9S-4183**	1	PLUG (ENGINE OIL PAN DRAIN)	
B	10	1	**4C-9612**		SEALANT-SILICONE	

B-USE AS REQUIRED
M-METRIC PART

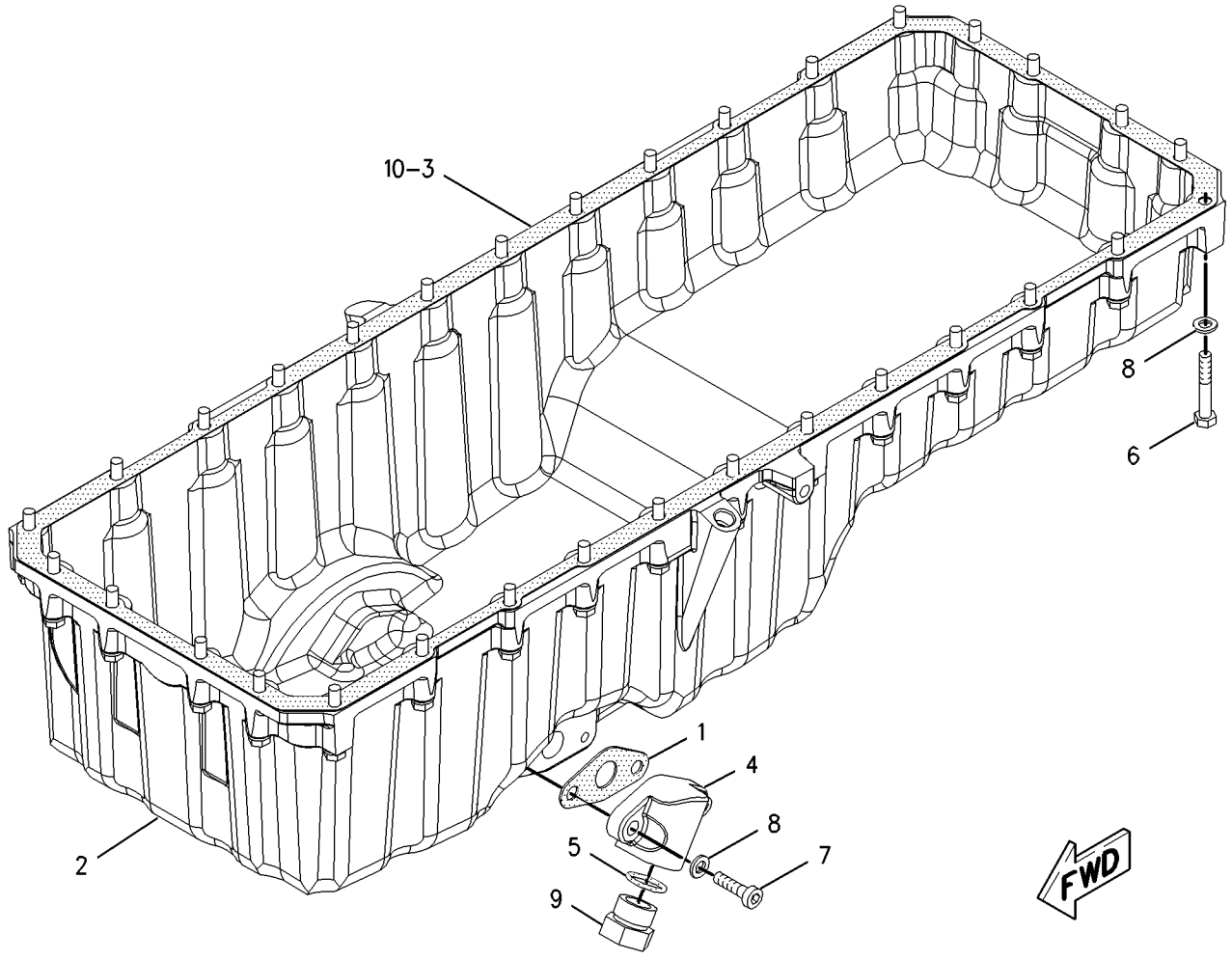

GRAPHIC #1 **<END>** g00861206

179-6588 PANEL GP-SOUND SUPPRESSION

S/N: CBK1-UP
AN ATTACHMENT

SMCS-1801 **i01873002**

NOTE	REF NO	GRAPHIC REF	PART NUMBER	QTY	PART NAME 1 2 3 4 5 6 (PRODUCT LEVEL)	SEE PAGE
	1	1	**8W-9227**	1	SHIELD (LH)	
	2	1	**8W-9228**	1	SHIELD (RH)	
	3	1	**4L-6454**	12	BOLT (3/8-16X1 IN)	
	4	1	**8T-4897**	12	WASHER (10.2X35X6MM THK)	

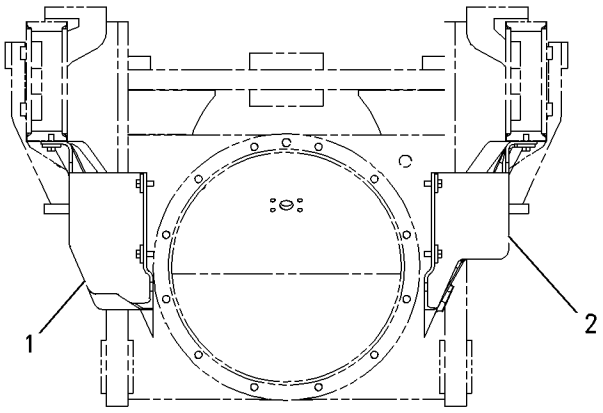

REAR VIEW

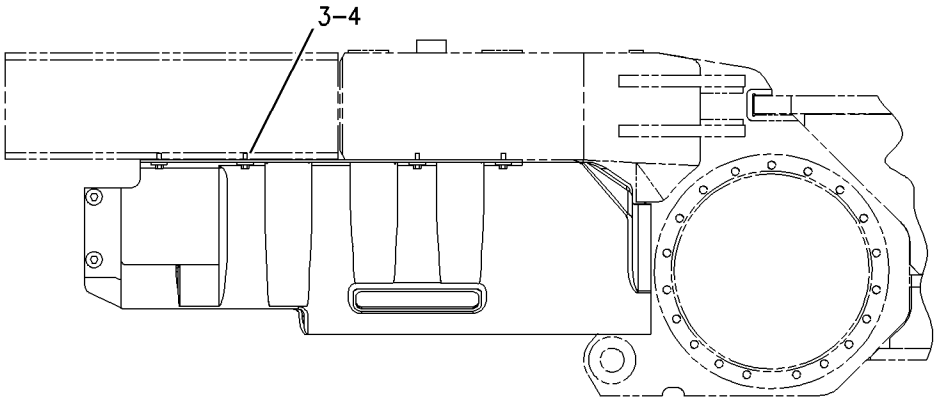

RIGHT SIDE VIEW

GRAPHIC #1 **<END>** g00846002

188-9141 PISTON & ROD GP

S/N: 4ZF4479-UP
16.1:1 RATIO
PART OF 177-7878 PISTON GP

SMCS-1225 **i01682540**

NOTE	REF NO	GRAPHIC REF	PART NUMBER	QTY	PART NAME 1 2 3 4 5 6 (PRODUCT LEVEL)	SEE PAGE
	1	1	**158-0451**	1	SKIRT-PISTON	
	2	1	**160-8172**	1	BEARING-CONNECTING ROD	
	3	1	**160-8199**	1	ROD AS	
M	3A	1	**160-8197**	2	BOLT	
	4	1	**161-3425**	1	RING-PISTON-INTERMEDIATE	
	5	1	**166-3648**	1	PIN-PISTON	
	6	1	**166-3657**	1	TUBE AS-OIL JET	
	7	1	**168-7209**	1	RING-PISTON (OIL CONTROL)	
	8	1	**197-9297**	1	CROWN AS-PISTON	
	9	1	**197-9299**	1	RING-PISTON (TOP)	
M	10	1	**6V-3940**	1	BOLT (M8X1.25X25MM)	
	11	1	**7X-2908**	2	RING-RETAINING	

M-METRIC PART

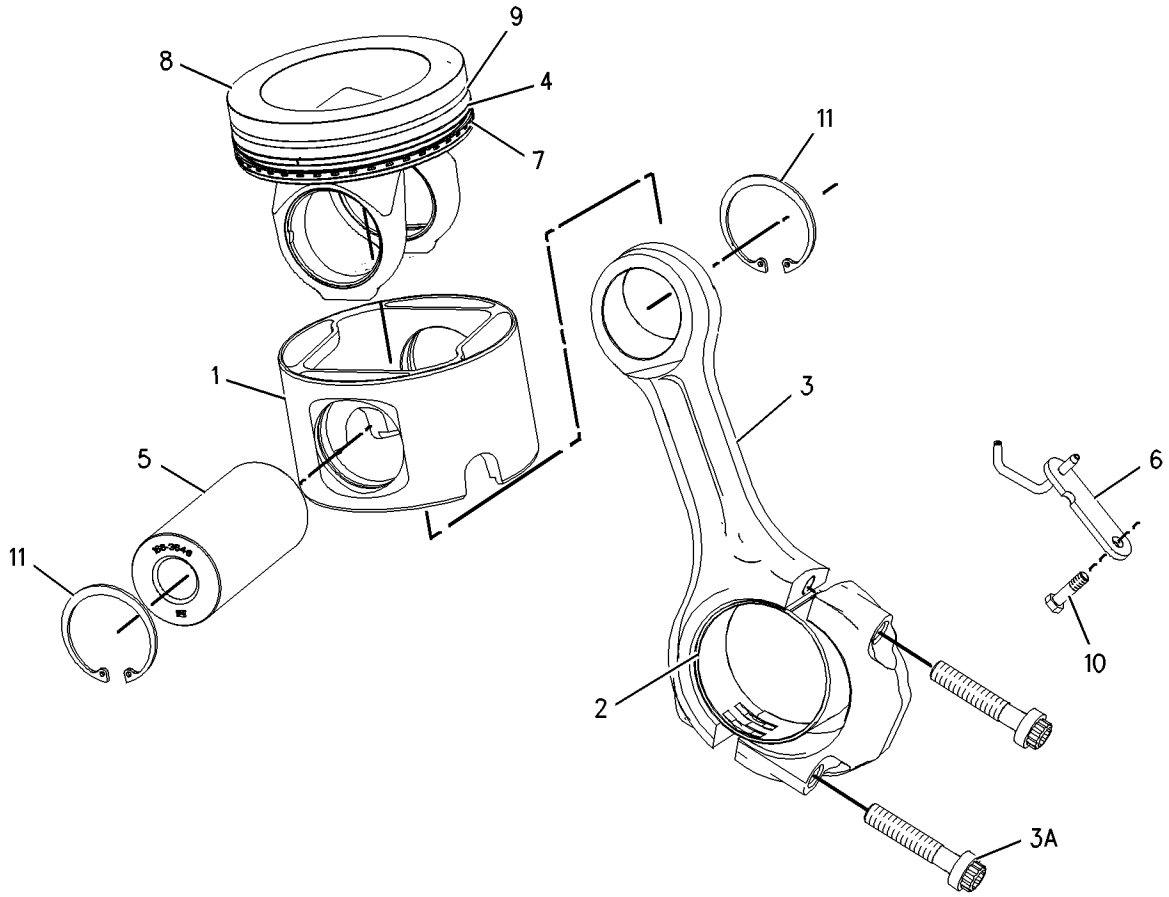

GRAPHIC #1 **<END>** g00787899

BASIC ENGINE

177-7878 PISTON GP

S/N: 4ZF4479-UP
FRACTURED ROD/NON EXHAUST GAS RECIRCULATION
PART OF 168-7966 ENGINE AR-CORE

SMCS-1214, 1215 **i01678961**

NOTE	PART NUMBER	QTY	PART NAME 1 2 3 4 5 6 (PRODUCT LEVEL)	SEE PAGE
Y	**188-9141**	6	PISTON & ROD GP	38

Y-SEPARATE ILLUSTRATION

<END>

BASIC ENGINE

224-7129 PLUG GP-ENGINE

S/N: 4ZF4479-UP

PART OF 168-7967 ENGINE AR

SMCS-1000, 1201 **i01985800**

NOTE	REF NO	GRAPHIC REF	PART NUMBER	QTY	PART NAME 1 2 3 4 5 6 (PRODUCT LEVEL)	SEE PAGE
	1	1	*183-3406*	1	PLUG AS	
		1	**9S-4191**	1	PLUG	
		1	**6V-5049**	1	SEAL-O-RING	
	2	1	**3D-2824**	1	SEAL-O-RING	
	3	1	**8L-2786**	2	SEAL-O-RING	
	4	1	**9S-4183**	1	PLUG	
	5	1	**9S-8005**	2	PLUG	

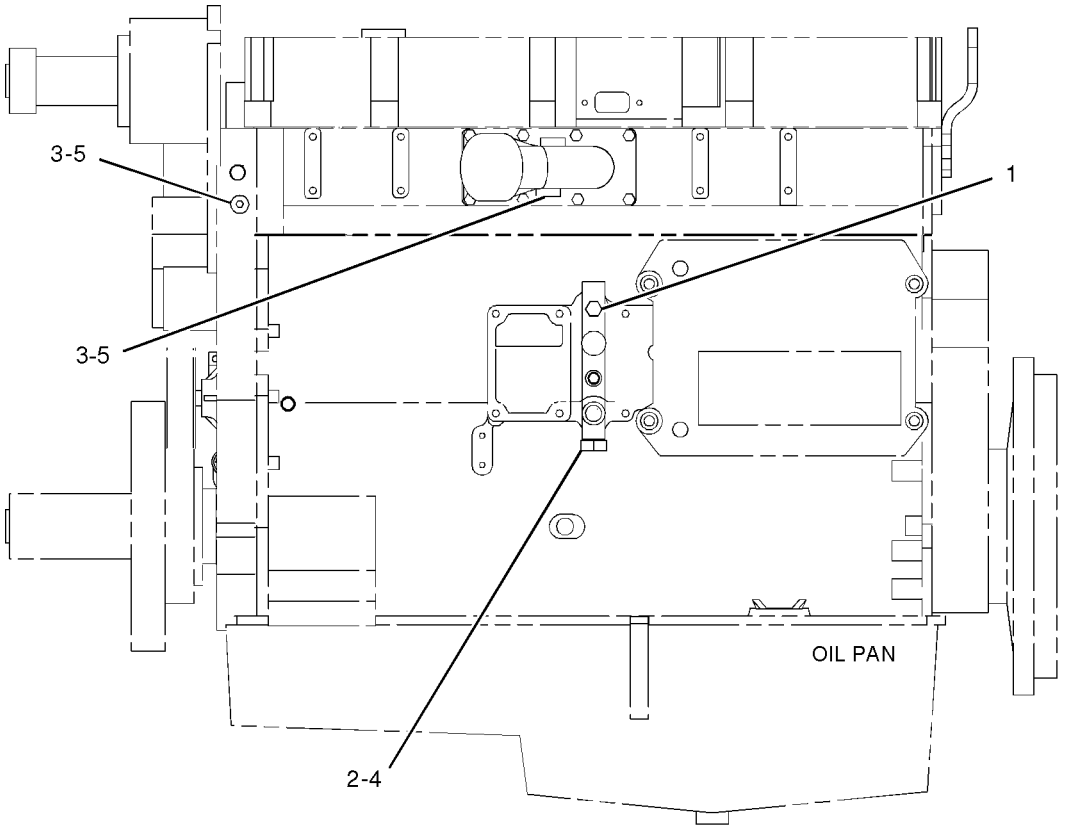

LEFT SIDE VIEW

GRAPHIC #1 **<END>** g01057271

213-5158 PULLEY GP-IDLER

S/N: 4ZF4479-UP

PART OF 168-7967 ENGINE AR

SMCS-1358 **i01696073**

NOTE	REF NO	GRAPHIC REF	PART NUMBER	QTY	PART NAME 1 2 3 4 5 6 (PRODUCT LEVEL)	SEE PAGE
	1	1	**144-1102**	1	BELT TIGHTENER	
	2	1	**173-1498**	1	PULLEY AS-IDLER (8-GROOVE)	
		1	**151-2900**	1	BOLT (M10X1.5X54.25-MM)	
		1	**166-6358**	1	COVER-DUST	
		1	**173-1500**	1	SPACER (10.4X45.1X1.8-MM THK)	
	3	1	**212-3246**	1	BRACKET	
	4	1	**8T-4121**	5	WASHER-HARD (11X21X2.5-MM THK)	
M	5	1	**8T-4137**	1	BOLT (M10X1.5X20-MM)	
M	6	1	**8T-4172**	1	BOLT (M10X1.5X80-MM)	
M	7	1	**8T-4196**	4	BOLT (M10X1.5X35-MM)	
	8	1	**8T-4226**	1	WASHER-PLATED (10.5X45X3-MM THK)	

M-METRIC PART

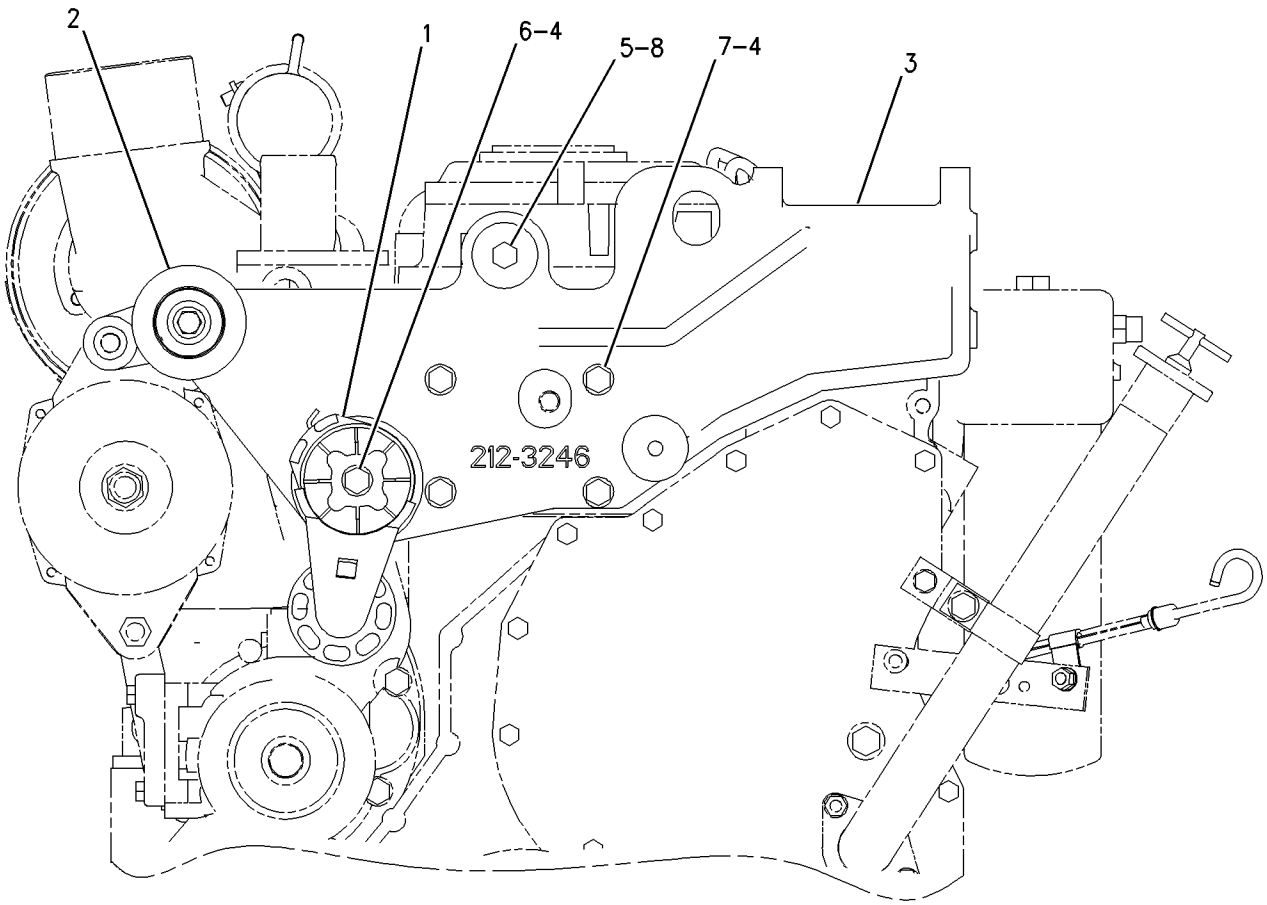

FRONT VIEW

GRAPHIC #1 **<END>** g00873564

BASIC ENGINE

213-9320 ROCKER ARM GP

S/N: 4ZF4479-UP

PART OF 215-9571 VALVE MECHANISM GP

SMCS-1102, 1123 **i01881412**

NOTE	REF NO	GRAPHIC REF	PART NUMBER	QTY	PART NAME 1 2 3 4 5 6 (PRODUCT LEVEL)	SEE PAGE
	1	1	**163-2447**	1	ARM AS-ROCKER	
M	2	1	**183-4365**	1	SCREW-ADJUSTING (M10X1.5 THD)	
M	3	1	**2Y-5829**	1	NUT (M10X1.5 THD)	

M-METRIC PART

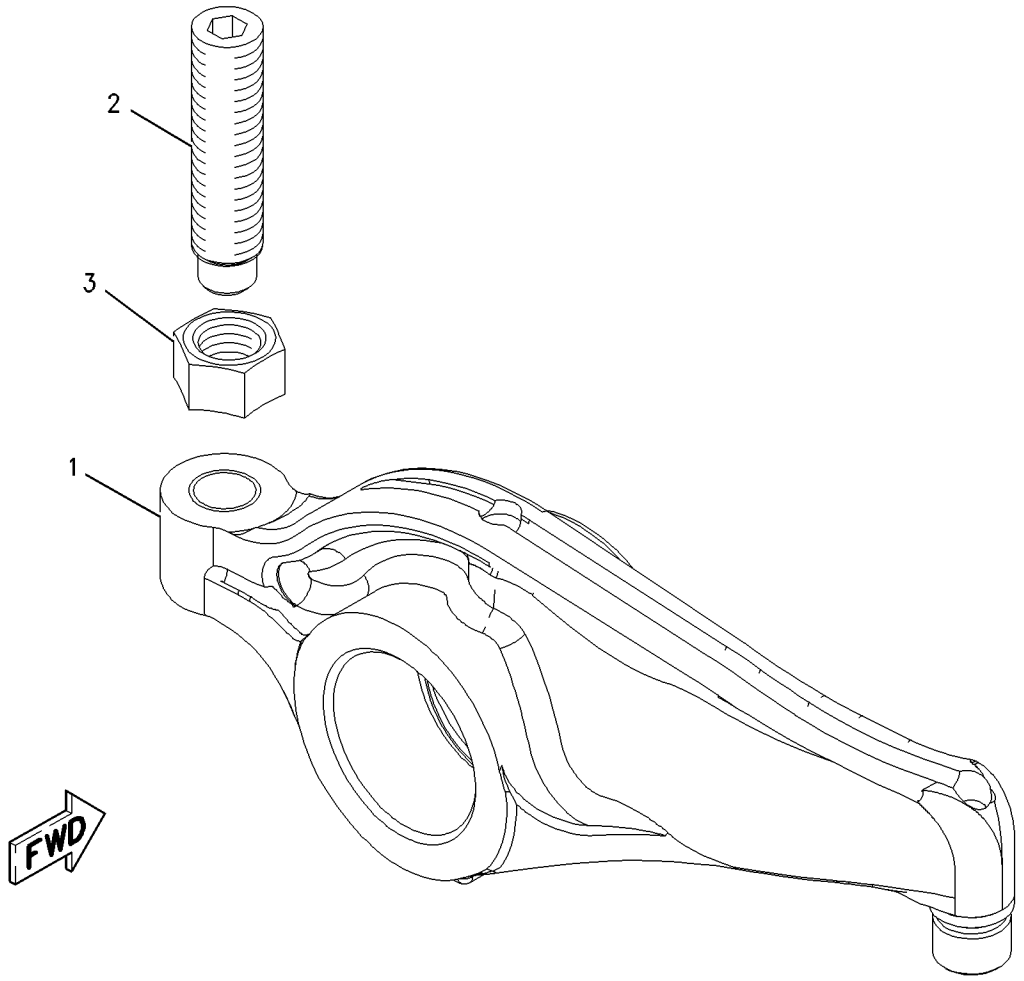

GRAPHIC #1 **<END>** g00979393

213-9321 ROCKER ARM GP

S/N: 4ZF4479-UP

PART OF 215-9571 VALVE MECHANISM GP

SMCS-1102, 1123 **i01881416**

NOTE	REF NO	GRAPHIC REF	PART NUMBER	QTY	PART NAME 1 2 3 4 5 6 (PRODUCT LEVEL)	SEE PAGE
	1	1	**163-2449**	1	ARM AS-ROCKER	
M	2	1	**183-4365**	1	SCREW-ADJUSTING (M10X1.5 THD)	
M	3	1	**2Y-5829**	1	NUT (M10X1.5 THD)	

M-METRIC PART

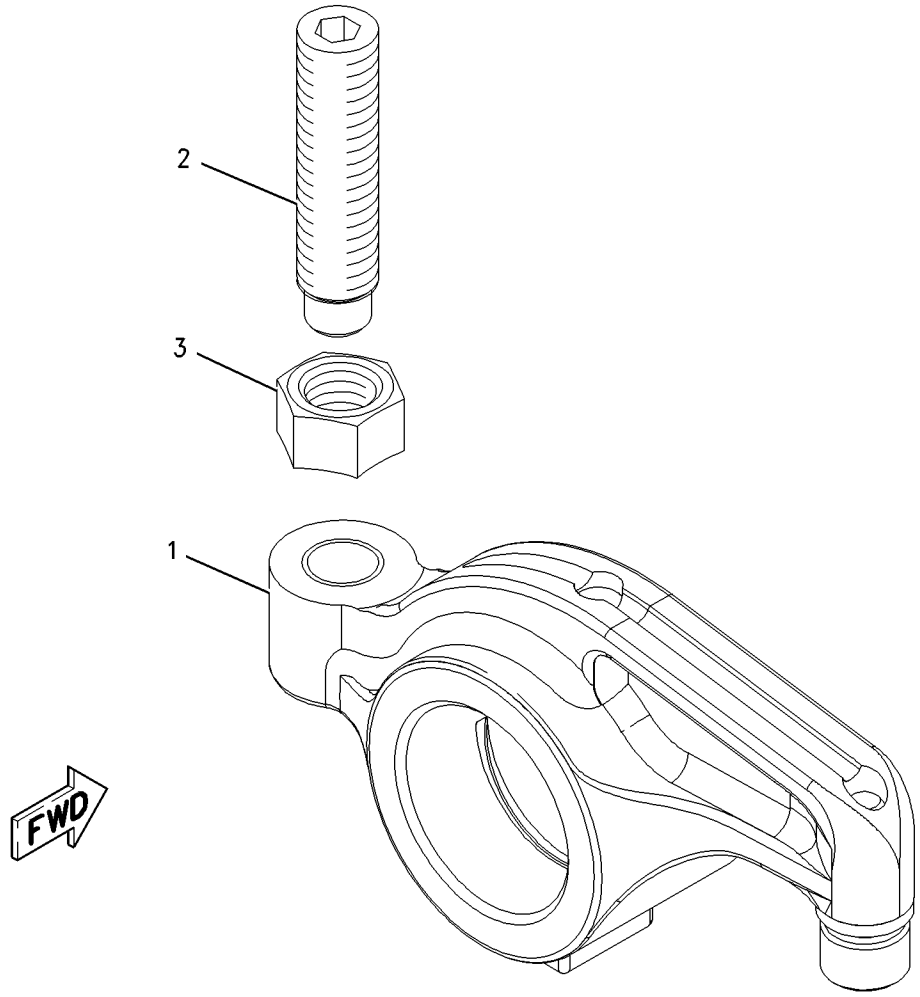

GRAPHIC #1 **<END>** g00979399

178-3899 SEAL GP-CRANKSHAFT

S/N: 4ZF4479-UP

PART OF 168-7967 ENGINE AR

SMCS-1160, 1161 **i01891409**

NOTE	REF NO	GRAPHIC REF	PART NUMBER	QTY	PART NAME 1 2 3 4 5 6 (PRODUCT LEVEL)	SEE PAGE
	1	1	**4R-9999**	1	EXCLUDER-CRANKSHAFT SEAL	
	2	1	**119-2921**	1	SEAL GP-CRANKSHAFT (FRONT) (FRONT)	
	3	1	**187-8961**	1	SEAL GP-CRANKSHAFT (REAR)	
	4	1	**199-6163**	1	SEAL-O-RING	
	5	1	**206-3719**	9	BOLT AS	

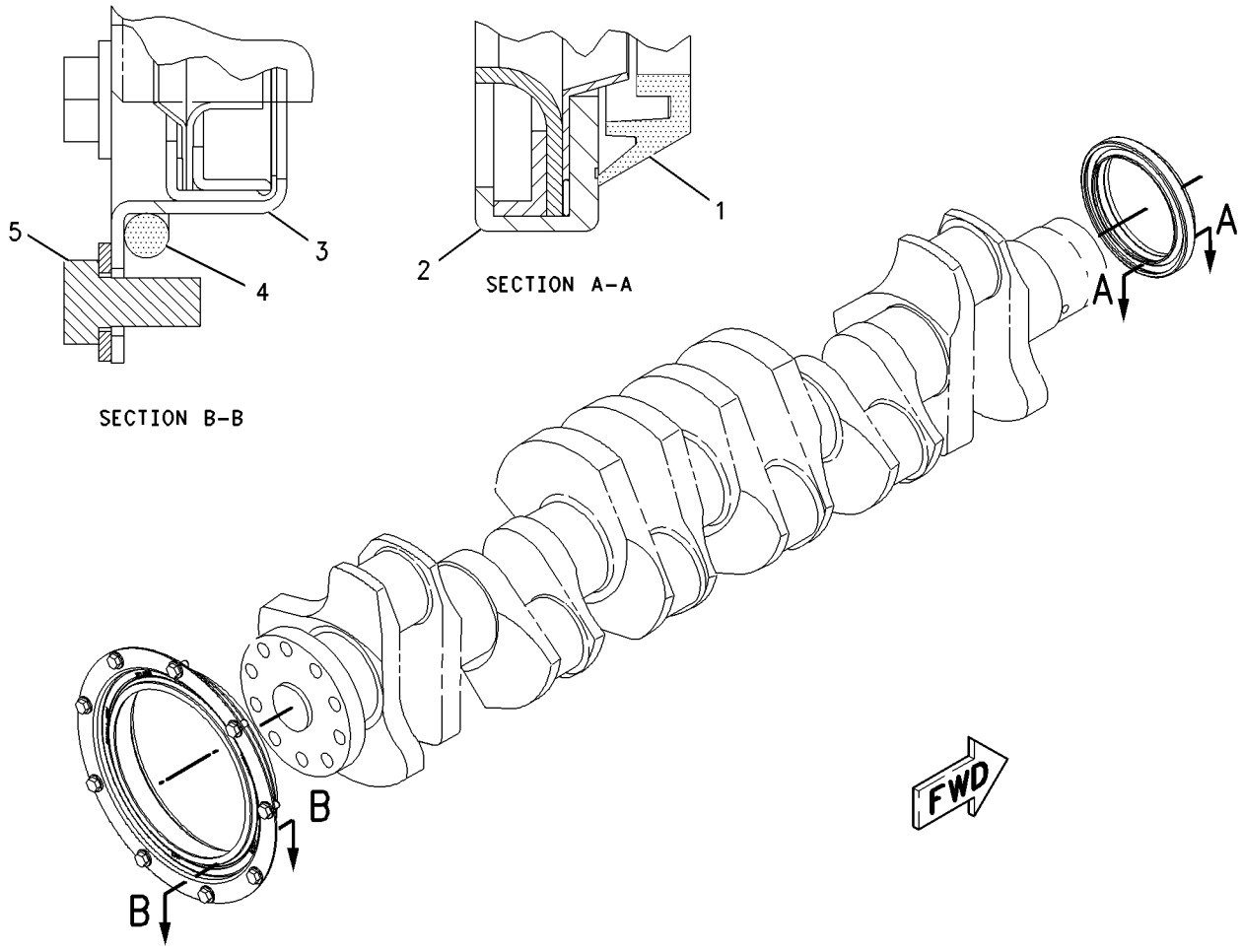

GRAPHIC #1 **<END>** g00848109

BASIC ENGINE

172-0961 SUPPORT GP-ENGINE

S/N: 4ZF4479-UP

PART OF 168-7967 ENGINE AR

SMCS-1154 **i01695952**

NOTE	REF NO	GRAPHIC REF	PART NUMBER	QTY	PART NAME 1 2 3 4 5 6 (PRODUCT LEVEL)	SEE PAGE
	1	1	**172-1001**	1	SUPPORT-FRONT	
	2	1	**5P-8245**	6	WASHER-HARD (13.5X25.5X3MM THK)	
M	3	1	**6V-5696**	1	BOLT (M12X1.75X80MM)	
M	4	1	**8T-0372**	5	BOLT (M12X1.75X90MM)	

M-METRIC PART

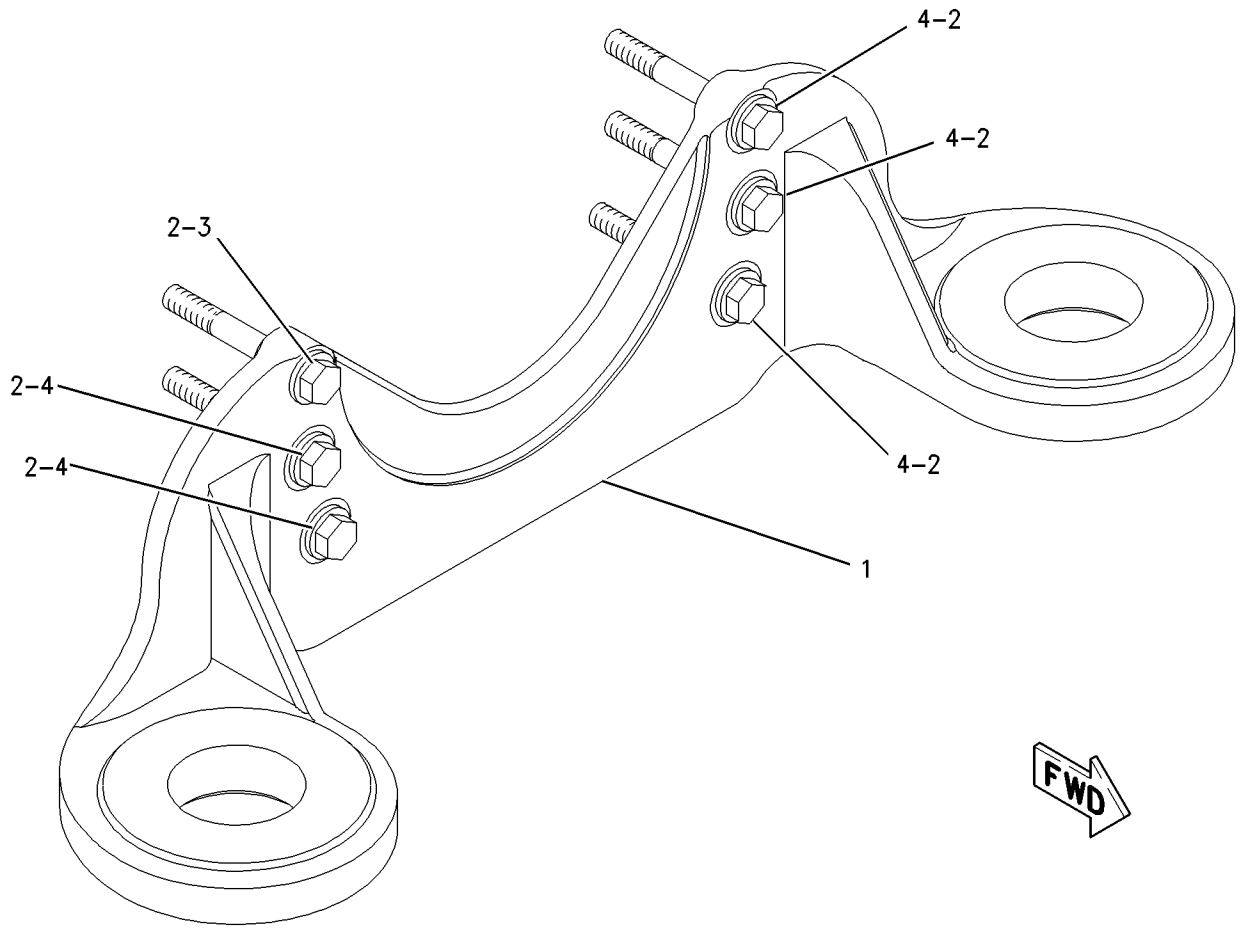

GRAPHIC #1 **<END>** g00859115

199-9970 SUPPRESSION GP-SOUND–ENGINE ENCLOSURE–EU

S/N: CBK1-UP

PART OF 207-3700, 210-2043 CONVERSION AR-CERTIFICATION

AN ATTACHMENT

SMCS-1801 **i01878726**

NOTE	REF NO	GRAPHIC REF	PART NUMBER	QTY	PART NAME 1 2 3 4 5 6 (PRODUCT LEVEL)	SEE PAGE
	1	1	**183-2304**	1	PANEL (DASH)	
	2	1	**199-9971**	1	PANEL (RH)	
	3	1	**199-9972**	1	PANEL (LH)	

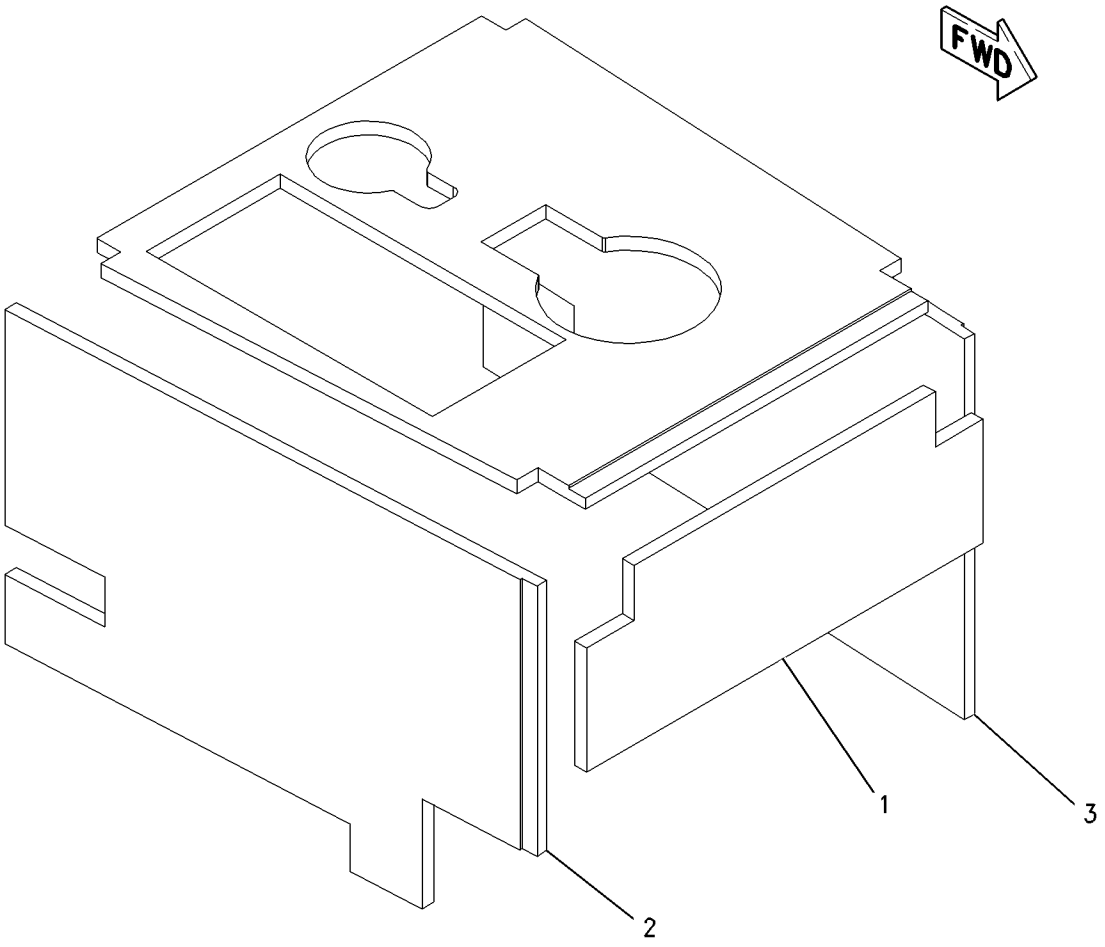

GRAPHIC #1 **<END>** g00956116

BASIC ENGINE

155-7927 VALVE MECHANISM GP

S/N: 4ZF4479-UP

PART OF 168-7966 ENGINE AR-CORE

SMCS-1102 **i02052558**

NOTE	REF NO	GRAPHIC REF	PART NUMBER	QTY	PART NAME 1 2 3 4 5 6 (PRODUCT LEVEL)	SEE PAGE
	1	1	**216-1598**	12	GUIDE	
	2	1	**133-6379**	12	ROD	
	3	1	**163-2437**	12	LIFTER AS-VALVE	
Y	4	1	*215-9571*	1	VALVE MECHANISM GP	48
	5	1	**175-4178**	12	BRIDGE-VALVE	

Y-SEPARATE ILLUSTRATION

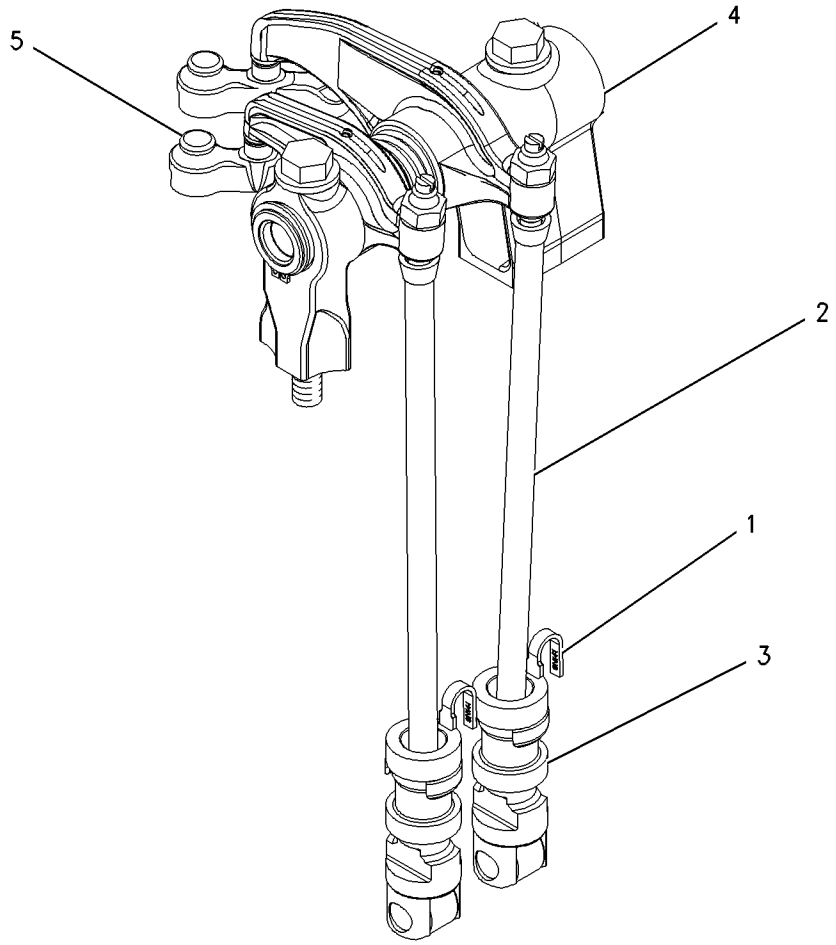

GRAPHIC #1 **<END>** g00755082

BASIC ENGINE

215-9571 VALVE MECHANISM GP

S/N: 4ZF4479-UP

PART OF 155-7927 VALVE MECHANISM GP

SMCS-1102 **i01682548**

NOTE	REF NO	GRAPHIC REF	PART NUMBER	QTY	PART NAME 1 2 3 4 5 6 (PRODUCT LEVEL)	SEE PAGE
	1	1	**163-2445**	1	SHAFT AS-ROCKER ARM	
	1A	1	**8F-6575**	2	PLUG-CUP	
	2	1	**163-2459**	6	SPRING	
	3	1	**164-5669**	2	STAND	
	4	1	**176-5913**	4	STAND	
	5	1	**176-5914**	1	STAND	
Y	6	1	*213-9320*	6	ROCKER ARM GP (EXHAUST)	42
Y	7	1	*213-9321*	6	ROCKER ARM GP (INTAKE)	43
	8	1	**5P-8245**	7	WASHER-HARD (13.5X25.5X3MM THK)	
M	9	1	**8T-0646**	7	BOLT (M12X1.75X110MM)	

M-METRIC PART
Y-SEPARATE ILLUSTRATION

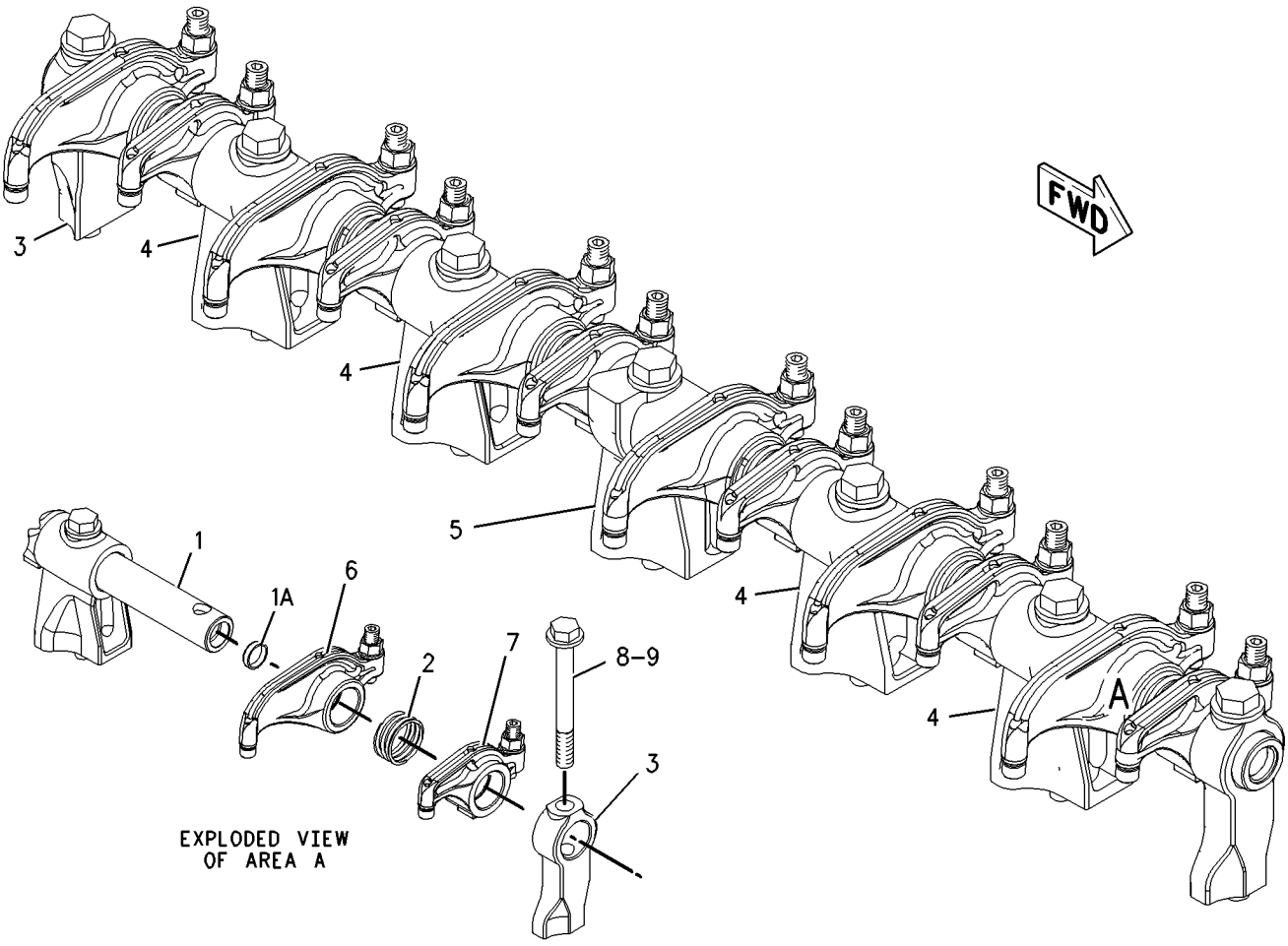

GRAPHIC #1 **<END>** g00851003

159-6012 FILTER GP-ENGINE OIL

S/N: CBK1-UP

PART OF 162-5605 GENERAL AR

SMCS-1308 **i01931466**

NOTE	REF NO	GRAPHIC REF	PART NUMBER	QTY	PART NAME 1 2 3 4 5 6 (PRODUCT LEVEL)	SEE PAGE
	1	1	**8C-3445**	1	CAP-DUST (ENGINE OIL)	
	2	1	**102-5828**	1	COVER	
	3	1	**102-5829**	1	ADAPTER	
	4	1	**186-3705**	1	ELBOW	
	5	1	**190-1098**	1	TUBE AS	
	6	1	**190-1099**	1	TUBE AS	
	7	1	**190-1106**	1	BASE AS-OIL FILTER	
		1	**2P-4304**	1	STUD-TAPERLOCK	
	8	1	**213-9190**	1	BRACKET AS	
	9	1	**228-5309**	1	BRACKET AS	
	10	1	**232-4723**	1	TUBE AS	
	11	1	**106-9586**	4	SEAL-O-RING	
	12	1	**3J-7354**	1	SEAL-O-RING	
	13	1	**5M-7087**	4	CLAMP-TUBE	
	14	1	**5P-7701**	5	SEAL-O-RING	
M	15	1	**6V-1820**	4	BOLT (M10X1.5X30-MM)	
	16	1	**6V-3908**	2	SEAL-O-RING	
	17	1	**6V-5839**	6	WASHER (11X21X2.5-MM THK)	
M	18	1	**6V-5842**	2	BOLT (M10X1.5X40-MM)	
	19	1	**6V-9005**	2	ELBOW	
	20	1	**6V-9008**	1	ELBOW	
	21	1	**8C-3446**	1	VALVE AS-FLUID SAMPLING (ENGINE OIL)	
	22	1	**8T-4121**	6	WASHER-HARD (11X21X2.5-MM THK)	
M	23	1	**8T-4133**	2	NUT (M10X1.5-THD)	
M	24	1	**8T-4195**	2	BOLT (M10X1.5X30-MM)	
M	25	1	**8T-4196**	2	BOLT (M10X1.5X35-MM)	
	26	1	**9S-4181**	1	PLUG	

M-METRIC PART

159-6012 **FILTER GP-ENGINE OIL** *(contd.)* **i01931466**

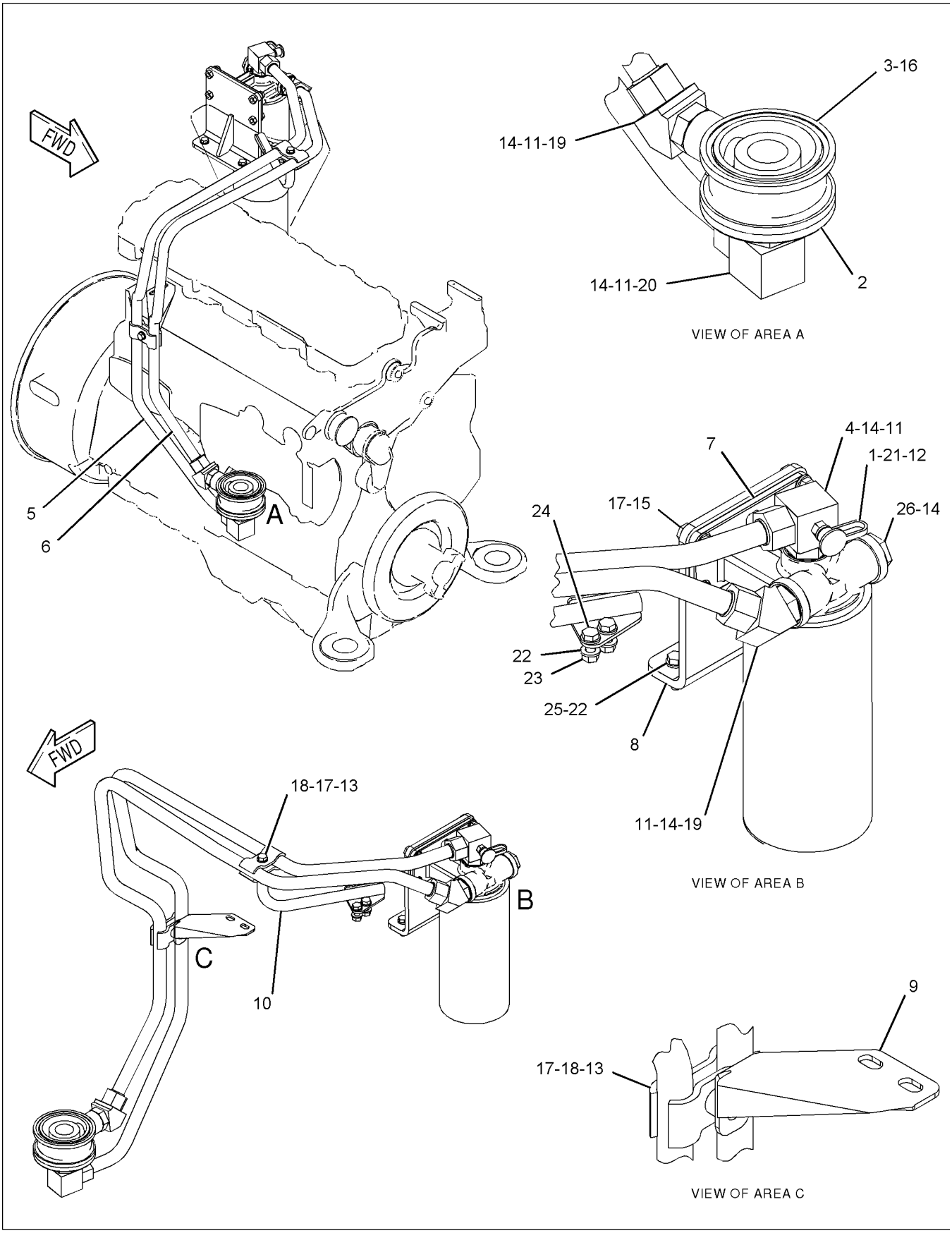

GRAPHIC #1 **<END>** g01008383

205-5294 FILTER GP-ENGINE OIL

S/N: 4ZF4479-UP

PART OF 168-7967 ENGINE AR

SMCS-1308 **i02049307**

NOTE	REF NO	GRAPHIC REF	PART NUMBER	QTY	PART NAME 1 2 3 4 5 6 (PRODUCT LEVEL)	SEE PAGE
	1	1	**1R-0716**	1	FILTER AS-ENGINE OIL	
	2	1	**7C-1493**	2	VALVE AS-BYPASS (ENGINE OIL FILTER)	
	3	1	**242-3864**	2	SPRING	
	4	1	**209-7290**	1	GASKET	
	5	1	**209-7291**	1	BASE GP-OIL FILTER (ENGINE)	
	5A	1	**2P-4304**	1	STUD-TAPERLOCK	
	6	1	**033-5853**	1	SEAL-O-RING	
	7	1	**2M-9780**	2	SEAL-O-RING	
M	8	1	**5P-8196**	2	PLUG	
M	9	1	**6V-5218**	12	BOLT (M8X1.25X35-MM)	
	10	1	**9M-1974**	12	WASHER-HARD (8.8X16X2-MM THK)	
	11	1	**9S-4182**	1	PLUG	

M-METRIC PART

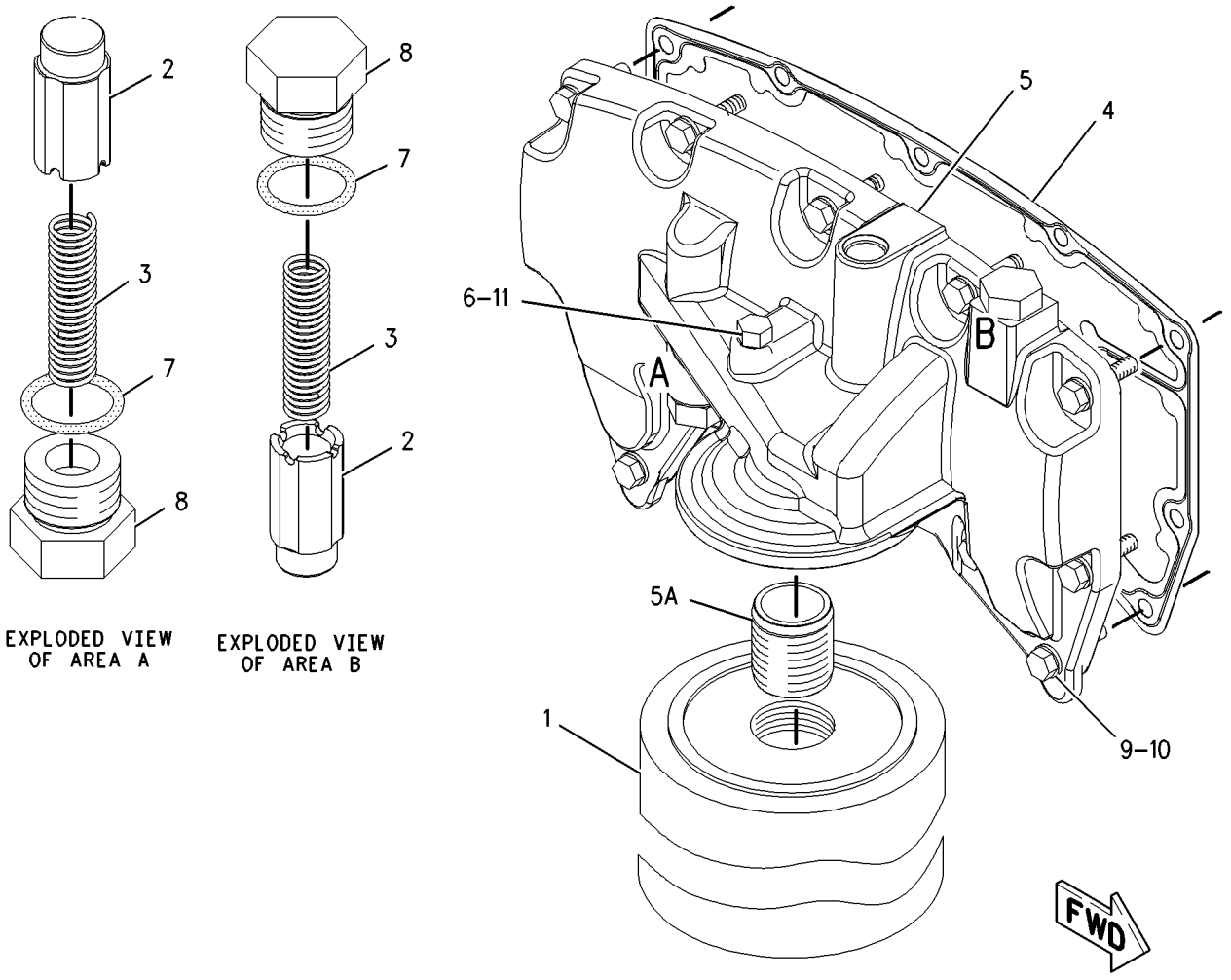

GRAPHIC #1 **<END>** g00954118

LUBRICATION SYSTEM

191-6632 FUMES DISPOSAL GP

S/N: 4ZF4479-12866

PART OF 168-7967 ENGINE AR

SMCS-1317 **i01891411**

NOTE	REF NO	GRAPHIC REF	PART NUMBER	QTY	PART NAME 1 2 3 4 5 6 (PRODUCT LEVEL)	SEE PAGE
	1	1	**5P-0597**	1	CLAMP-HOSE	
	2	1	**193-5510**	1	HOSE-FUMES DISPOSAL	
	3	1	**194-5133**	1	BRACKET AS	
M		1	**8T-3612**	1	NUT-WELD (M8X1.25 THD)	
	4	1	**5P-4325**	1	CLIP	
M	5	1	**6V-5217**	1	BOLT (M8X1.25X20MM)	
	6	1	**6V-5839**	1	WASHER (11X21X2.5MM THK)	
M	7	1	**6V-6317**	1	BOLT (M10X1.5X20MM)	
	8	1	**9M-1974**	1	WASHER-HARD (8.8X16X2MM THK)	

M-METRIC PART

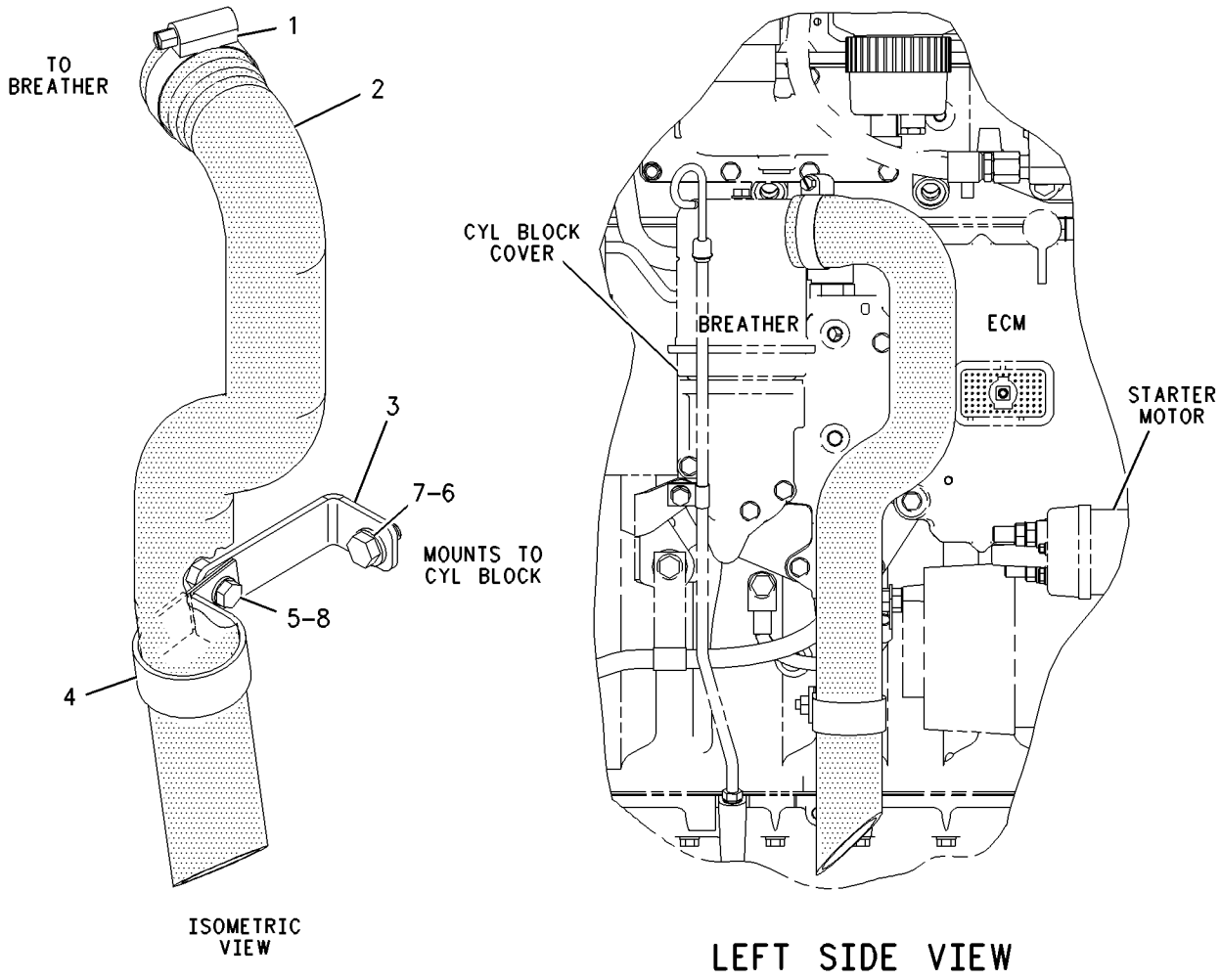

GRAPHIC #1 **<END>** g00954047

191-6632 FUMES DISPOSAL GP

S/N: 4ZF12867-UP

PART OF 168-7967 ENGINE AR

SMCS-1317 **i02140533**

NOTE	REF NO	GRAPHIC REF	PART NUMBER	QTY	PART NAME 1 2 3 4 5 6 (PRODUCT LEVEL)	SEE PAGE
	1	1	**5P-0597**	1	CLAMP-HOSE	
	2	1	**193-5510**	1	HOSE-FUMES DISPOSAL	
	3	1	**6V-5839**	1	WASHER (11X21X2.5-MM THK)	
M	4	1	**6V-6317**	1	BOLT (M10X1.5X20-MM)	

M-METRIC PART

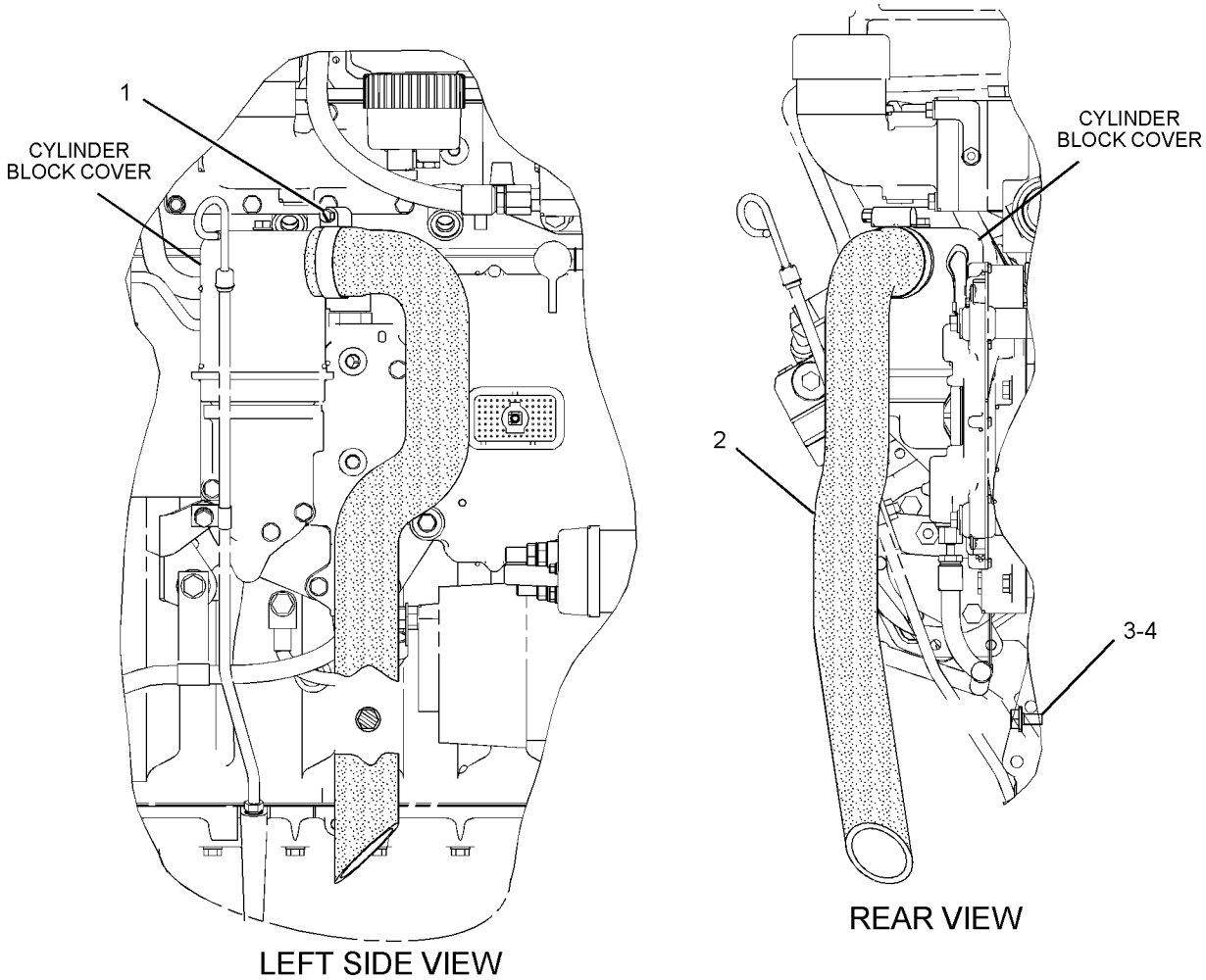

GRAPHIC #1 **<END>** g01087268

LUBRICATION SYSTEM

190-1101 GAUGE GP-OIL LEVEL (DIPSTICK)

S/N: 4ZF4479-UP

PART OF 168-7967 ENGINE AR

SMCS-1326 **i01872104**

NOTE	REF NO	GRAPHIC REF	PART NUMBER	QTY	PART NAME 1 2 3 4 5 6 (PRODUCT LEVEL)	SEE PAGE
	1	1	**196-4135**	1	BRACKET AS	
M		1	**8T-3490**	1	NUT-WELD (M10X1.5 THD)	
M		1	**8T-3612**	1	NUT-WELD (M8X1.25 THD)	
	2	1	**196-4796**	1	TUBE AS	
	3	1	**205-4058**	1	GAUGE-OIL LEVEL	
	4	1	**119-6764**	1	CLIP	
M	5	1	**6V-5217**	1	BOLT (M8X1.25X20MM)	
	6	1	**9M-1974**	1	WASHER-HARD (8.8X16X2MM THK)	

M-METRIC PART

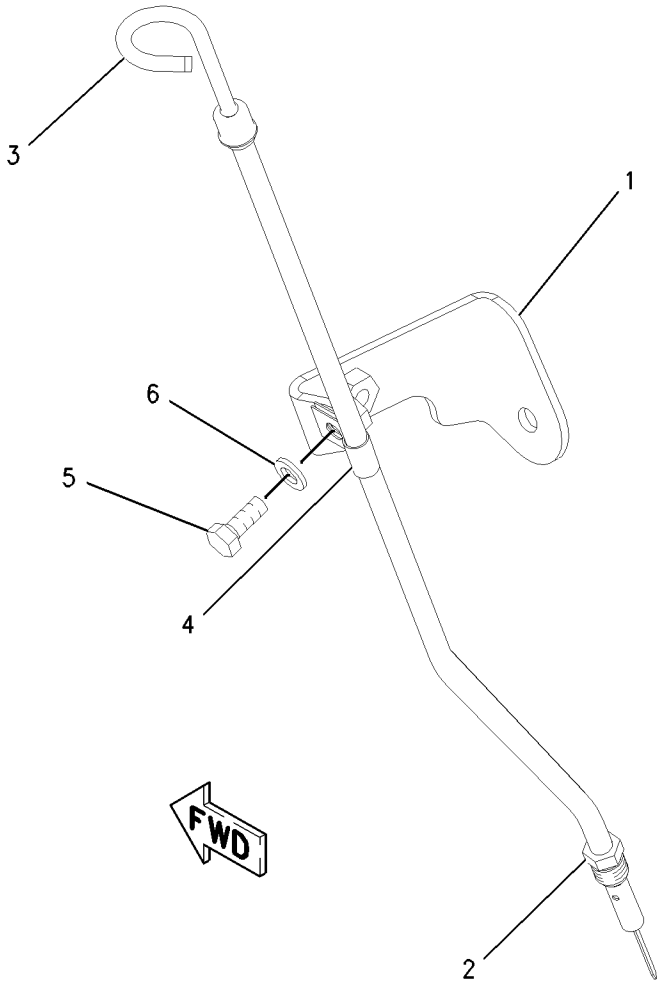

GRAPHIC #1 **<END>** g00860660

LUBRICATION SYSTEM

195-0328 LINES GP-ENGINE OIL

S/N: 4ZF4479-UP

PART OF 168-7967 ENGINE AR

SMCS-1307 **i01904952**

NOTE	REF NO	GRAPHIC REF	PART NUMBER	QTY	PART NAME 1 2 3 4 5 6 (PRODUCT LEVEL)	SEE PAGE
	1	1	**195-0452**	1	GASKET	
	2	1	**234-0203**	1	ELBOW-OUTLET	
	3	1	**213-1916**	1	TUBE AS	
	4	1	**033-6034**	1	SEAL-O-RING	
	5	1	**5P-7530**	1	SEAL-O-RING	
M	6	1	**6V-3940**	2	BOLT (M8X1.25X25MM)	
M	7	1	**6V-5217**	2	BOLT (M8X1.25X20MM)	
M	8	1	**8T-0292**	1	BOLT (M8X1.25X90MM)	
	9	1	**9M-1974**	5	WASHER-HARD (8.8X16X2MM THK)	
	10	1	**208-9282**	1	BOLT (M8X1.25X25MM)	

M-METRIC PART

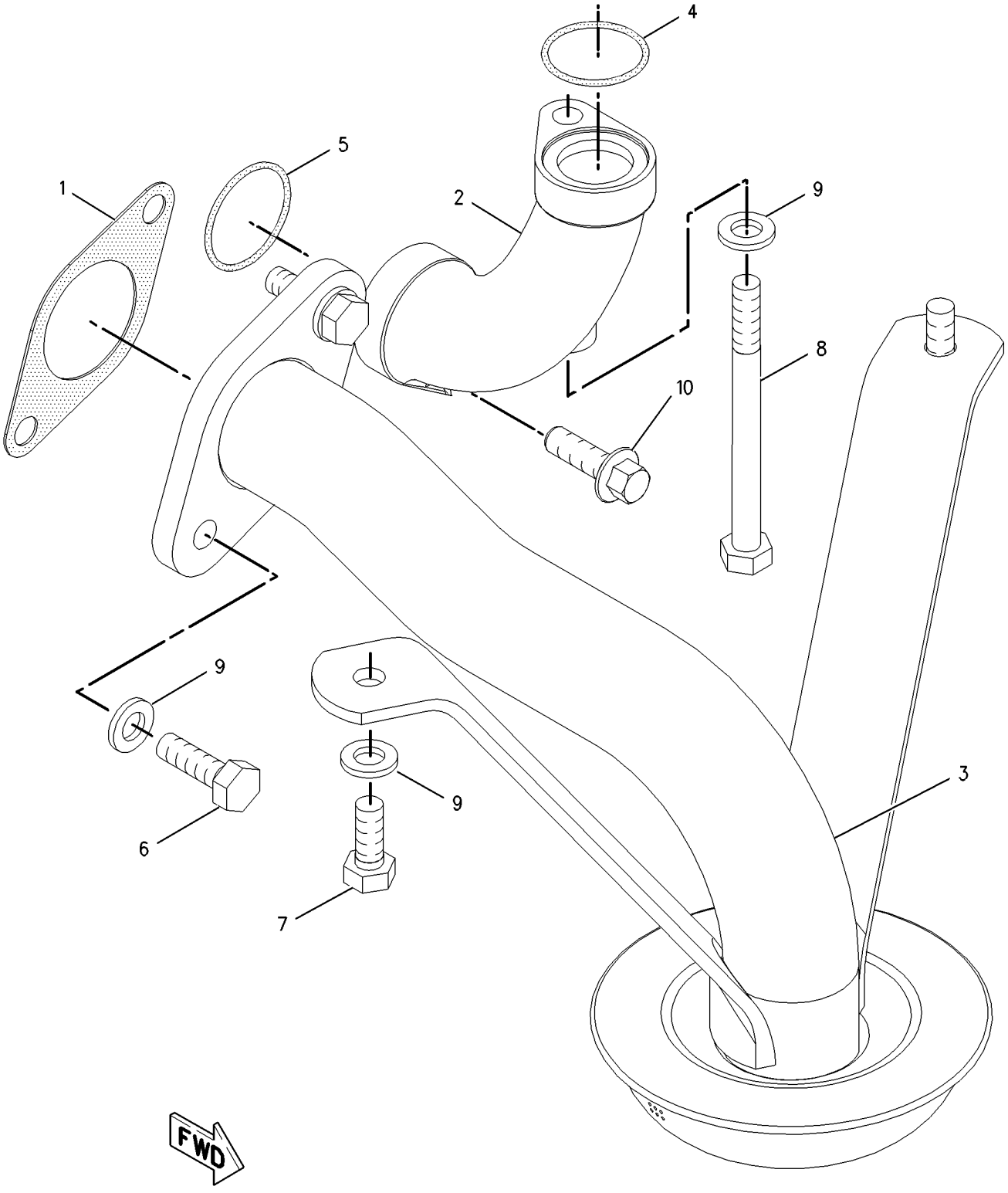

GRAPHIC #1 **<END>** g00953108

190-1097 LINES GP-TURBOCHARGER OIL

S/N: 4ZF4479-UP

PART OF 168-7967 ENGINE AR

SMCS-1052, 1307 **i01914982**

NOTE	REF NO	GRAPHIC REF	PART NUMBER	QTY	PART NAME 1 2 3 4 5 6 (PRODUCT LEVEL)	SEE PAGE
	1	1	**190-1107**	1	HOSE AS	
	2	1	**191-6626**	1	TUBE AS	
M	3	1	**2Y-5829**	1	NUT (M10X1.5 THD)	
	4	1	**3P-1156**	2	SEAL-O-RING	
	5	1	**3S-8665**	1	CLIP	
M	6	1	**6V-3940**	4	BOLT (M8X1.25X25MM)	
	7	1	**6V-5049**	1	SEAL-O-RING	
	8	1	**6V-5839**	2	WASHER (11X21X2.5MM THK)	
M	9	1	**6V-4248**	1	BOLT (M10X1.50X25MM)	
	10	1	**6V-8636**	1	CONNECTOR	
	11	1	**6V-8723**	1	ELBOW	
	12	1	**033-8248**	1	CLIP	
	13	1	**8L-2779**	2	SEAL-O-RING	
	14	1	**8L-2786**	1	SEAL-O-RING	
	15	1	**9M-1974**	4	WASHER-HARD (8.8X16X2MM THK)	

M-METRIC PART

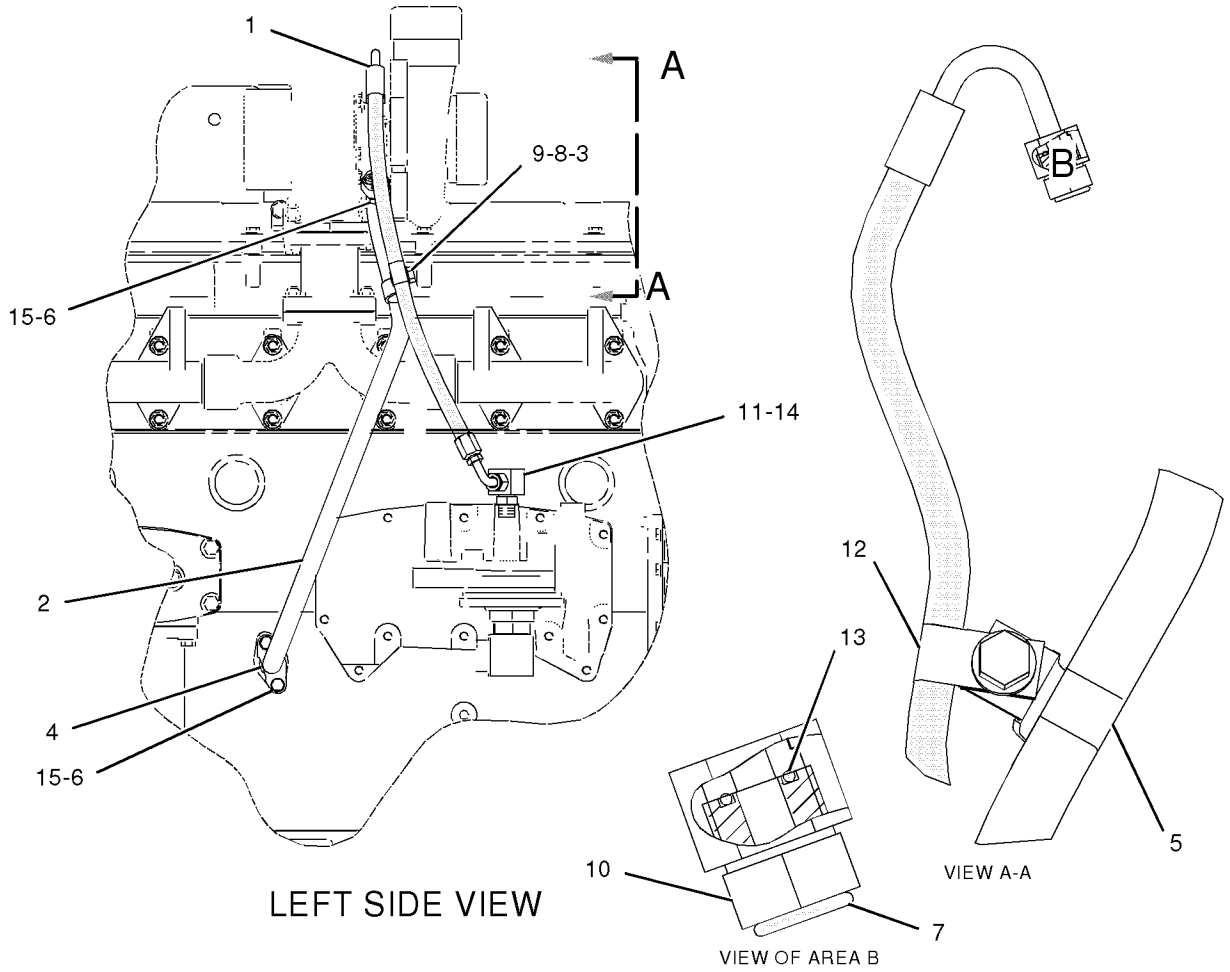

GRAPHIC #1 **<END>** g01010479

195-8098 PUMP GP-ENGINE OIL

S/N: 4ZF4479-UP

PART OF 168-7966 ENGINE AR-CORE

SMCS-1304, 1315 **i01836187**

NOTE	REF NO	GRAPHIC REF	PART NUMBER	QTY	PART NAME 1 2 3 4 5 6 (PRODUCT LEVEL)	SEE PAGE
	1	1	**211-0546**	1	PUMP GP-ENGINE OIL	
		1	**210-5522**	1	PUMP AS-ENGINE OIL	
	1A	1	**221-0144**	1	GEAR AS (60 TEETH)	
M	2	1	**6V-1819**	2	BOLT (M10X1.50X100MM)	
	3	1	**6V-5839**	2	WASHER (11X21X2.5MM THK)	

M-METRIC PART

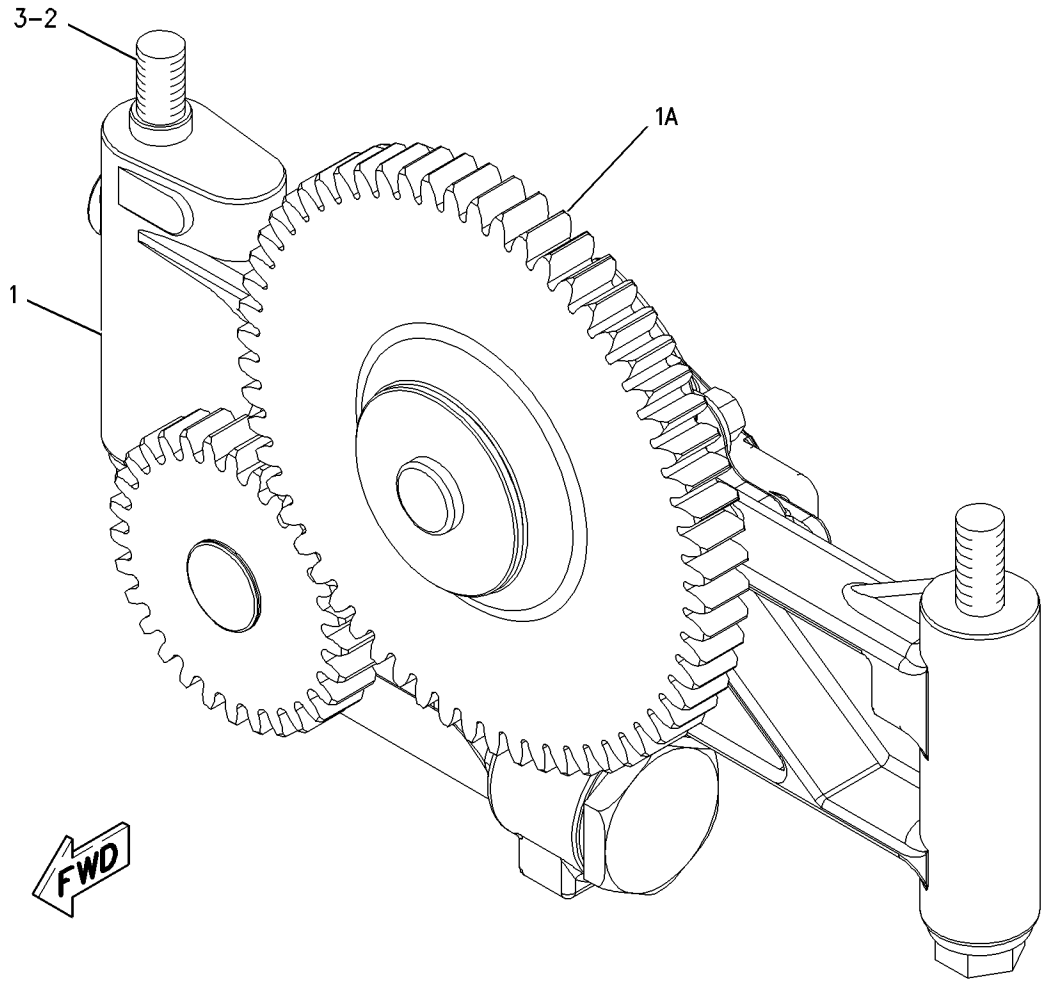

GRAPHIC #1 **<END>** g00909910

188-3826 COOLER GP-ENGINE OIL

S/N: 4ZF4479-UP

PART OF 168-7966 ENGINE AR-CORE

SMCS-1378 **i02014290**

NOTE	REF NO	GRAPHIC REF	PART NUMBER	QTY	PART NAME 1 2 3 4 5 6 (PRODUCT LEVEL)	SEE PAGE
	1	1	**237-4956**	1	CORE AS-OIL COOLER (ENGINE)	
	2	1	**209-7293**	1	GASKET	

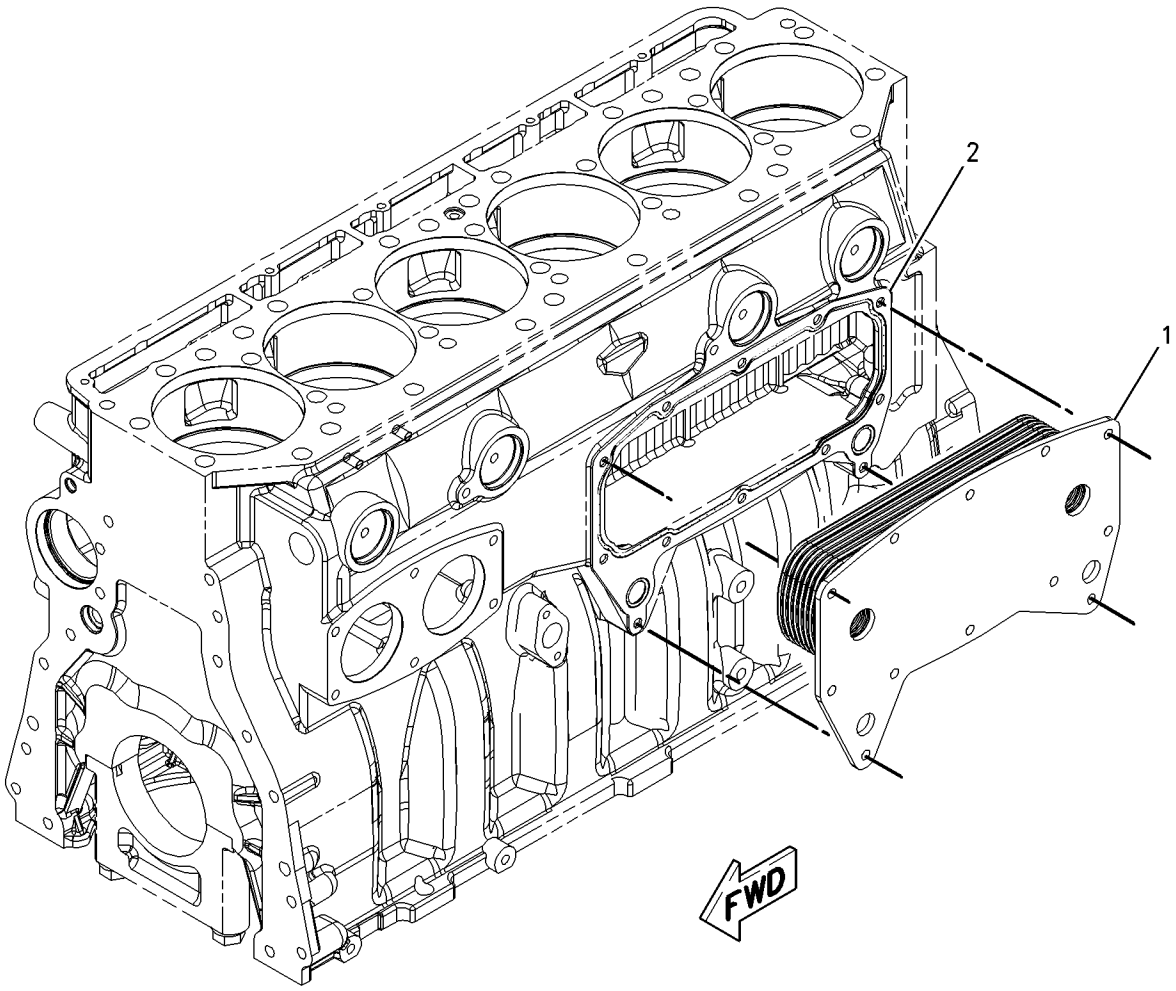

GRAPHIC #1 **<END>** g00837749

COOLING SYSTEM

185-1542 COOLING AR

S/N: CBK1-534

PART OF 162-5605 GENERAL AR

SMCS-1350 **i01879320**

NOTE	REF NO	GRAPHIC REF	PART NUMBER	QTY	PART NAME 1 2 3 4 5 6 (PRODUCT LEVEL)	SEE PAGE
Y	1	1	*163-0310*	1	AFTERCOOLER & MOUNTING GP	74
Y	2	1	*175-6981*	1	LINES GP-HYDRAULIC FAN	593
Y	3	1	*179-3261*	1	FAN & MOTOR GP	63
Y	4	1	**180-7004**	1	RADIATOR GP	72
	5	1	*184-0874*	1	PLATE GP-RADIATOR	
		1	**184-0871**	1	PLATE	
M	5A	1	**2Y-5829**	4	NUT (M10X1.5 THD)	
M	5B	1	**6V-4248**	4	BOLT (M10X1.50X25MM)	
	5C	1	**6V-5839**	8	WASHER (11X21X2.5MM THK)	
M	5D	1	**8T-4178**	2	BOLT (M10X1.5X90MM)	
	5E	1	**8T-4222**	2	WASHER-PLATED (11X32X2.5MM THK)	
	5F	1	**199-2711**	2	SPACER (7.82X26.67X75MM THK)	
Y	6	1	*197-1448*	1	GUARD & SUPPORT GP-RADIATOR	491

M-METRIC PART
Y-SEPARATE ILLUSTRATION

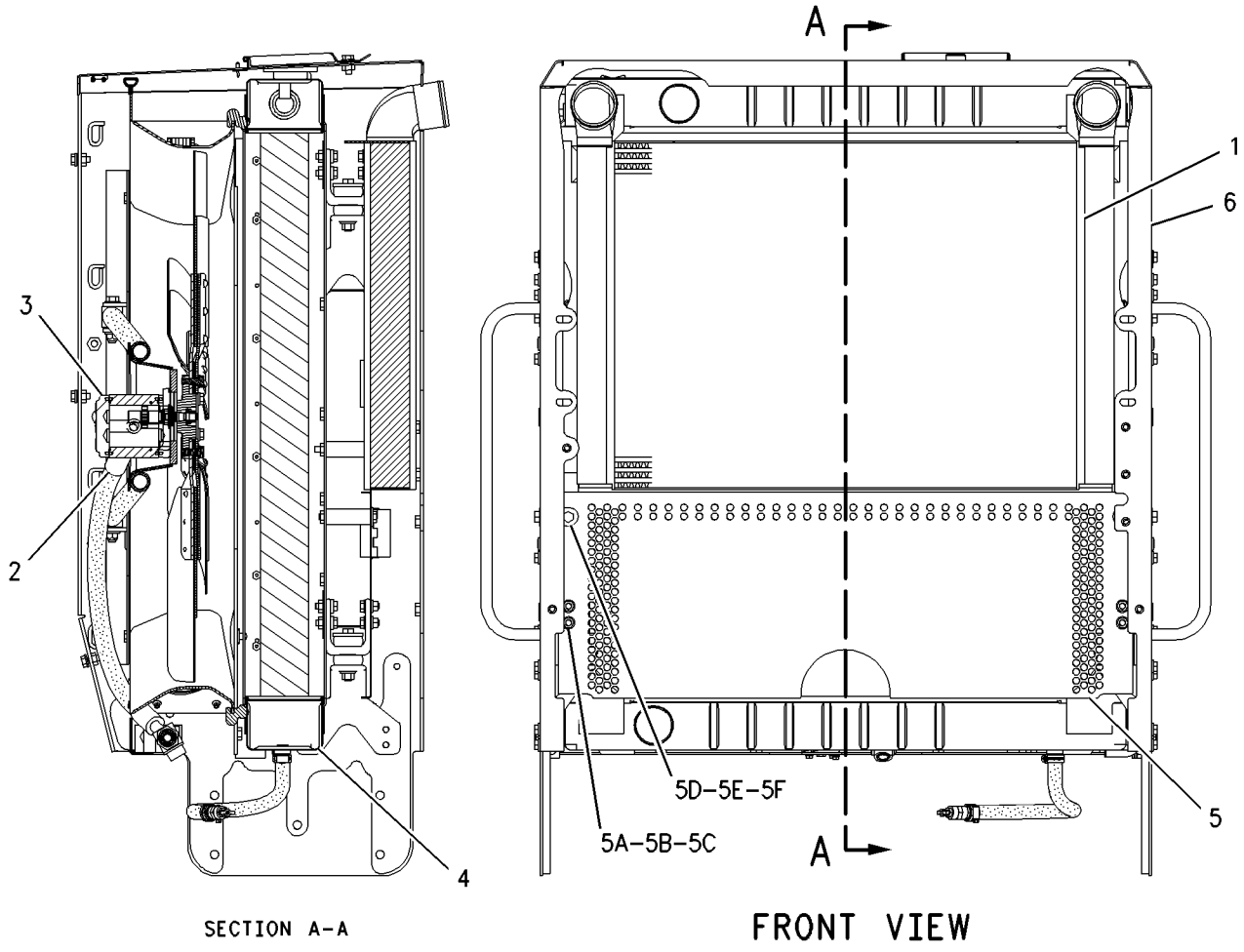

GRAPHIC #1 **<END>** g00940664

COOLING SYSTEM

242-6181 COOLING AR

S/N: CBK535-UP

PART OF 162-5605 GENERAL AR

SMCS-1350 **i02158682**

NOTE	REF NO	GRAPHIC REF	PART NUMBER	QTY	PART NAME 1 2 3 4 5 6 (PRODUCT LEVEL)	SEE PAGE
Y	1	1	*163-0310*	1	AFTERCOOLER & MOUNTING GP	74
Y	2	1	*179-3261*	1	FAN & MOTOR GP	63
Y	3	1	*184-0874*	1	PLATE GP-RADIATOR	69
Y	4	1	*197-1448*	1	GUARD & SUPPORT GP-RADIATOR	491
Y	5	1	**241-6949**	1	RADIATOR GP	73
Y	6	1	*242-3289*	1	LINES GP-HYDRAULIC FAN	595

Y-SEPARATE ILLUSTRATION

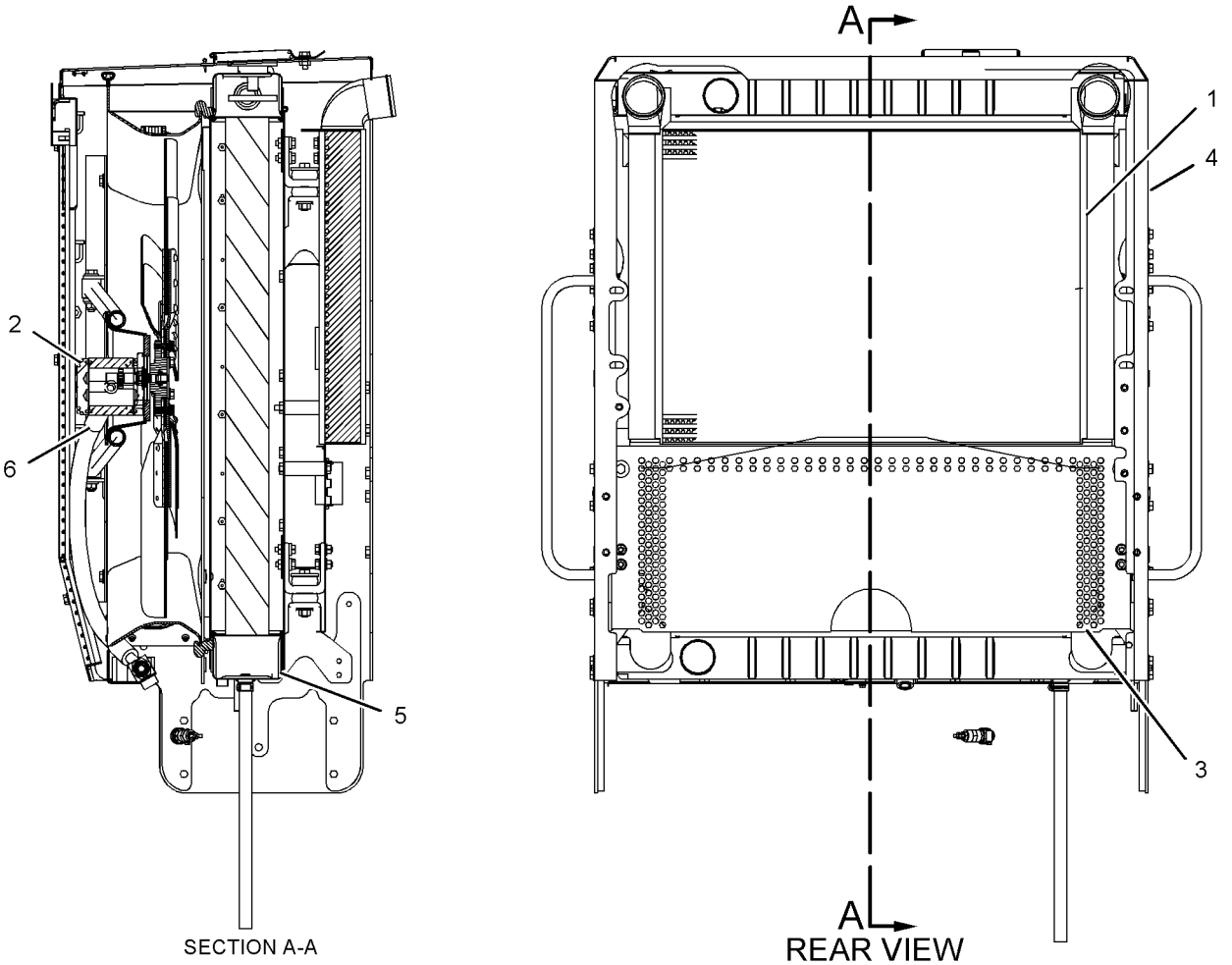

GRAPHIC #1 **<END>** g01078062

200-1215 ELBOW GP-WATER

S/N: 4ZF4479-UP
PART OF 168-7967 ENGINE AR
FOR USE WITH 197-9564—PAGE 70

SMCS-1380 **i01871260**

NOTE	REF NO	GRAPHIC REF	PART NUMBER	QTY	PART NAME 1 2 3 4 5 6 (PRODUCT LEVEL)	SEE PAGE
	1	1	**200-2257**	1	ELBOW	
	2	1	**200-2258**	1	GASKET	
	3	1	**3K-0360**	2	SEAL-O-RING	
M	4	1	**6V-3940**	2	BOLT (M8X1.25X25-MM)	
	5	1	**9M-1974**	2	WASHER-HARD (8.8X16X2-MM THK)	
	6	1	**9S-4185**	2	PLUG	

M-METRIC PART

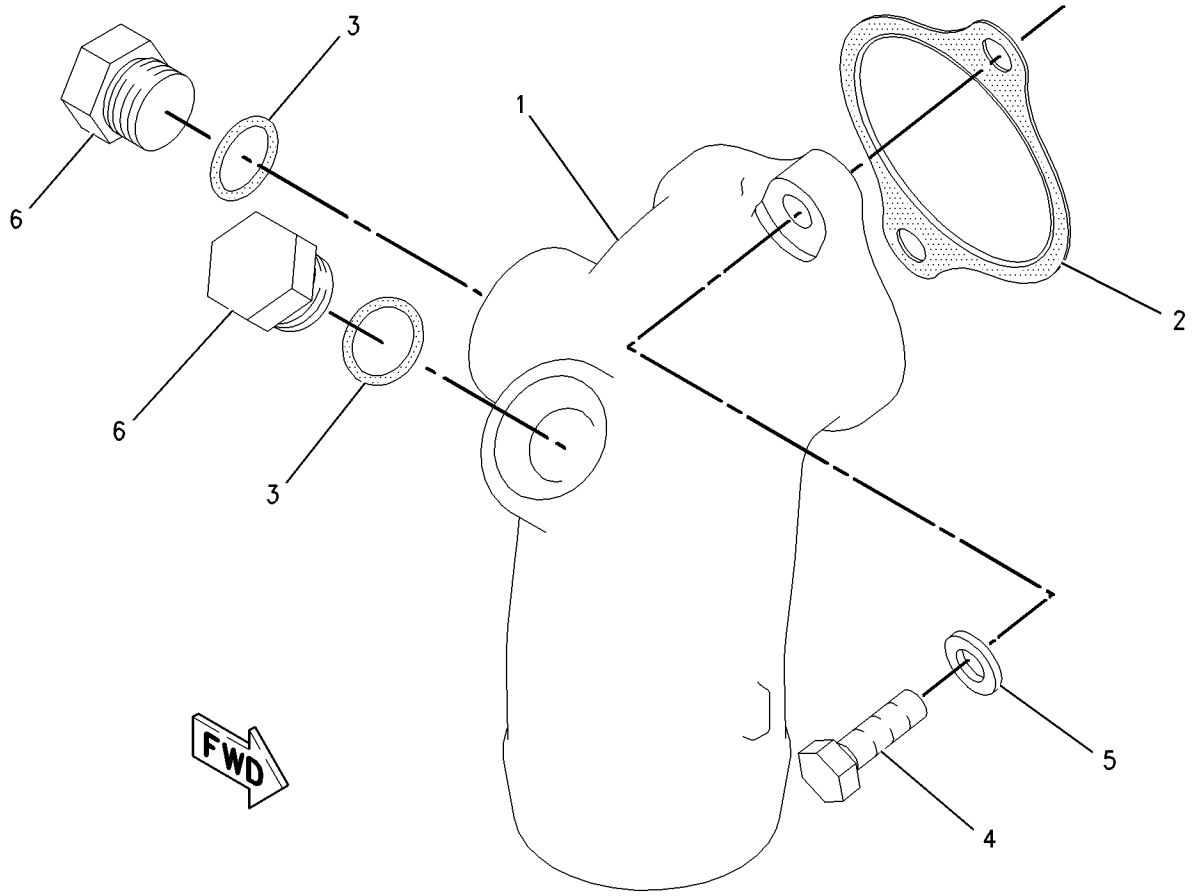

GRAPHIC #1 **<END>** g00795415

179-3261 FAN & MOTOR GP

S/N: CBK1-UP

PART OF 185-1542, 242-6181 COOLING AR

SMCS-1356, 1386 **i01815945**

NOTE	REF NO	GRAPHIC REF	PART NUMBER	QTY	PART NAME 1 2 3 4 5 6 (PRODUCT LEVEL)	SEE PAGE
Y	1	1	**224-7040**	1	MOTOR GP-GEAR	617
	2	1	**174-2104**	1	BRACKET AS	
	3	1	**177-5303**	1	SPIDER AS-FAN (6 BLADES)	
	4	1	**178-8993**	1	ADAPTER	
	5	1	**179-2509**	4	BRACKET AS	
M	6	1	**105-3484**	2	BOLT-SOCKET HEAD (M10X1.5X25-MM)	
	7	1	*153-6237*	2	ELBOW AS	
					(EACH INCLUDES)	
		1	**6V-9004**	1	ELBOW	
		1	**3D-2824**	1	SEAL-O-RING	
		1	**6V-9746**	1	SEAL-O-RING	
	8	1	**5P-1076**	4	WASHER-HARD (13.5X30X4-MM THK)	
M	9	1	**5P-8245**	1	WASHER-HARD (13.5X25.5X3-MM THK)	
	10	1	**6B-6684**	1	NUT-FULL (1/2-20-THD)	
M	11	1	**6V-7687**	4	LOCKNUT (M12X1.75-THD)	
M	12	1	**6V-8336**	4	BOLT (M12X1.75X70-MM)	
	13	1	**8T-4121**	8	WASHER-HARD (11X21X2.5-MM THK)	
M	14	1	**8T-4183**	4	BOLT (M12X1.75X40-MM)	
M	15	1	**8T-4195**	6	BOLT (M10X1.5X30-MM)	
M	16	1	**8T-4223**	8	WASHER-HARD (13.5X25.5X3-MM THK)	

M-METRIC PART
Y-SEPARATE ILLUSTRATION

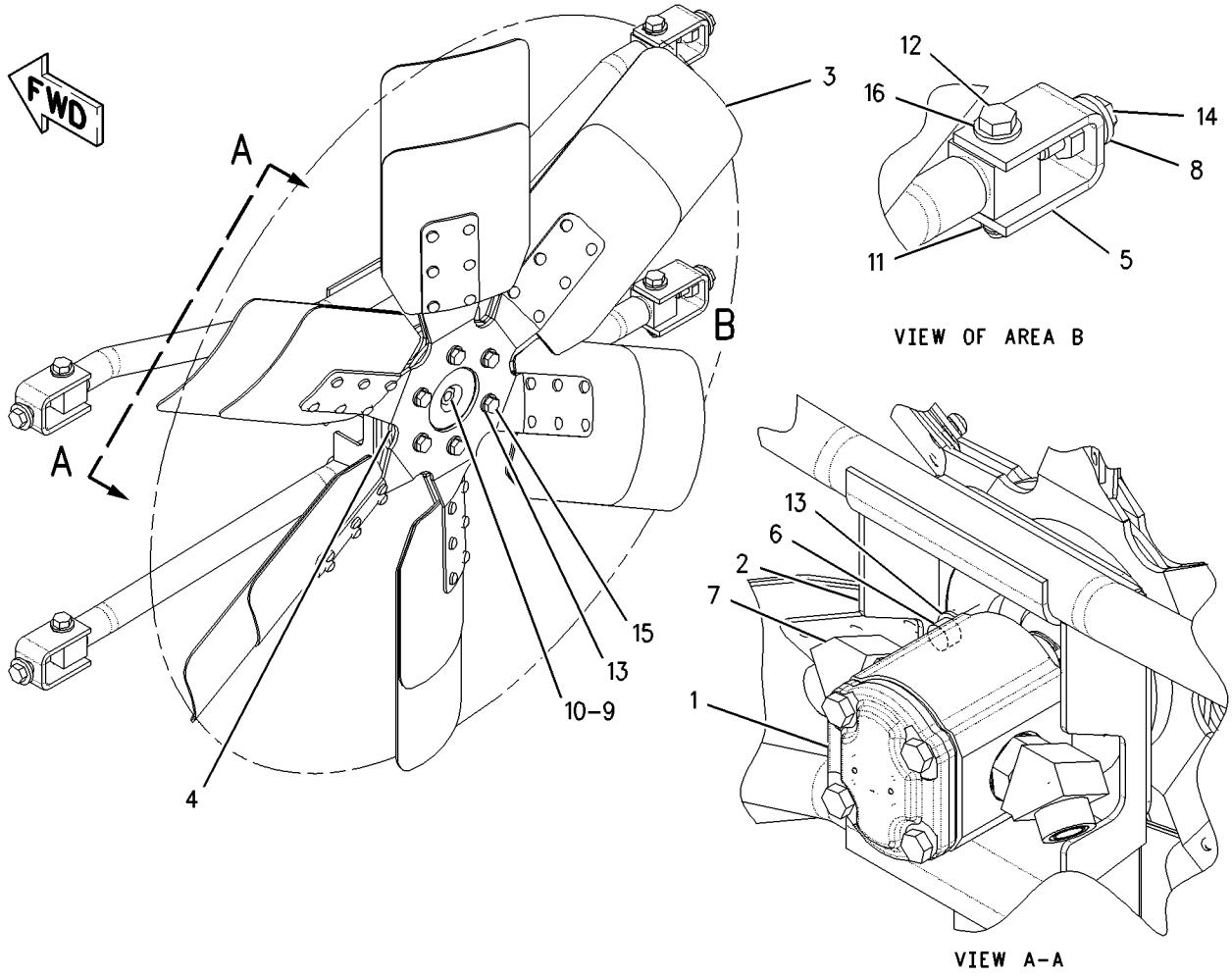

GRAPHIC #1 **<END>** g00788543

230-5839 FASTENER GP-RADIATOR

S/N: CBK1-UP

PART OF 162-5605 GENERAL AR

SMCS-1353 **i02158817**

NOTE	PART NUMBER	QTY	PART NAME 1 2 3 4 5 6 (PRODUCT LEVEL)	SEE PAGE
M	**8T-4136**	4	BOLT (M10X1.5X25-MM)	
M	**8T-4910**	10	BOLT (M12X1.75X60-MM)	
	242-3633	4	BOSS	
M	**8T-4223**	10	WASHER-HARD (13.5X25.5X3-MM THK)	

M-METRIC PART

<END>

176-7674 LINES GP-WATER

S/N: CBK1-UP

PART OF 162-5605 GENERAL AR

SMCS-1355, 1380, 1393 **i02207314**

NOTE	REF NO	GRAPHIC REF	PART NUMBER	QTY	PART NAME 1 2 3 4 5 6 (PRODUCT LEVEL)	SEE PAGE
	1	1	**1P-7297**	1	VALVE-DRAIN (COOLANT)	
	2	1	**5D-1026**	2	CLAMP-HOSE	
	3	1	**7D-7026**	2	CONNECTOR-HOSE	
E	4	1	**5P-1262**		HOSE (16-CM)	
	5	1	**111-7092**	1	HOSE	
	6	1	**184-5394**	1	CLIP	
	7	1	**193-8273**	1	TUBE AS	
	8	1	**193-8279**	1	HOSE	
	9	1	**193-8280**	1	HOSE	
	10	1	**196-8906**	1	TUBE AS	
	11	1	**003-9514**	1	COUPLING-PIPE	
	12	1	**154-9025**	1	VALVE-COOLANT SAMPLING	
	13	1	**208-6054**	7	CLAMP	
	14	1	**212-6933**	1	CLAMP	
	15	1	**4S-1962**	1	CLIP	
	16	1	**6V-0852**	1	CAP-DUST	
	17	1	**6V-1581**	2	CLIP (SLOT)	
	18	1	**6V-1582**	2	CLIP (TAB)	
	19	1	**8T-4121**	4	WASHER-HARD (11X21X2.5-MM THK)	
M	20	1	**8T-4137**	1	BOLT (M10X1.5X20-MM)	
M	21	1	**8T-4186**	1	BOLT (M10X1.5X40-MM)	
M	22	1	**8T-4195**	1	BOLT (M10X1.5X30-MM)	
E	23	1	**5P-0767**		HOSE (44-CM)	

E-ORDER BY THE CENTIMETER
M-METRIC PART

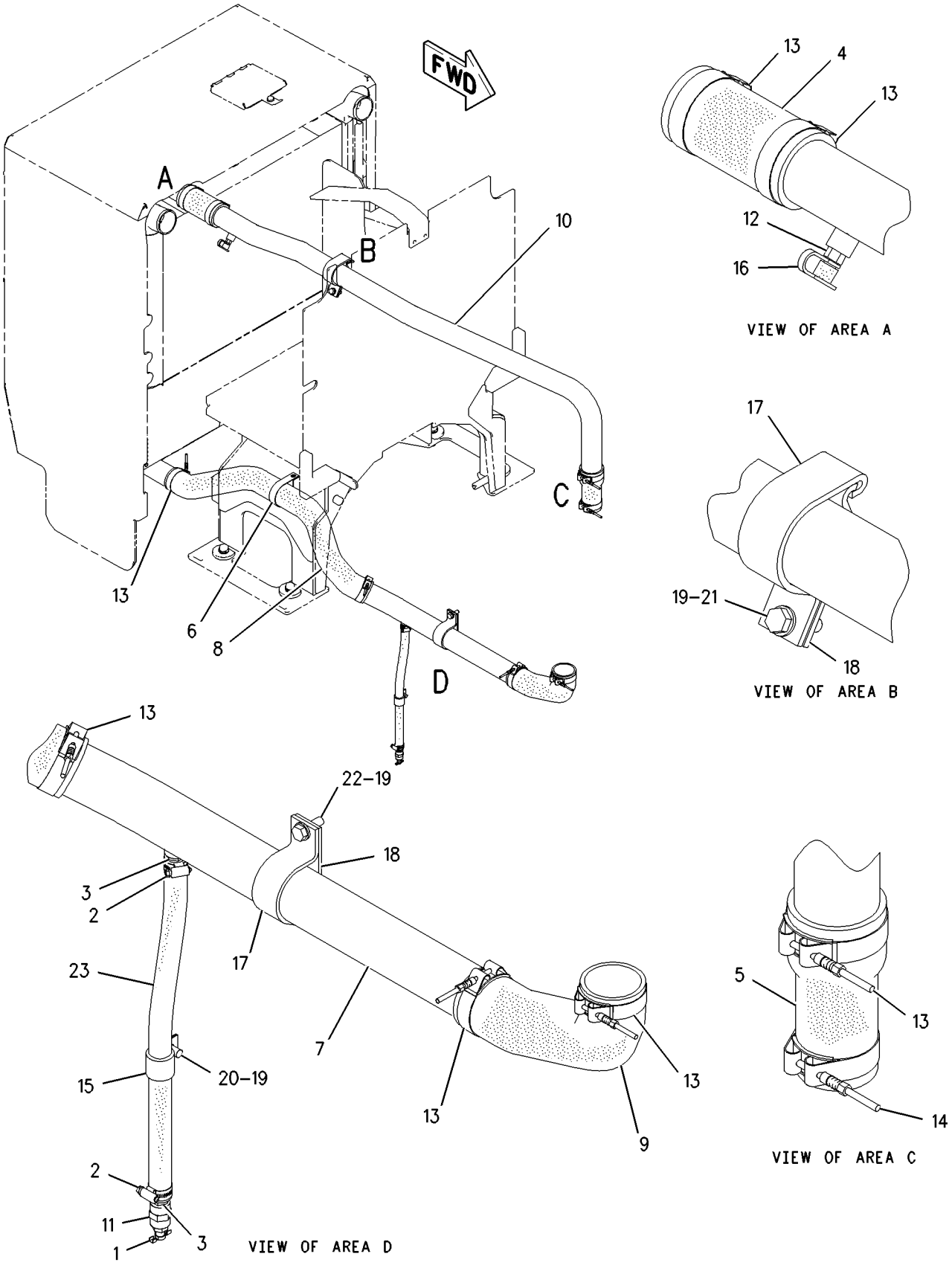

GRAPHIC #1 **<END>** g00975974

COOLING SYSTEM

223-5548 LINES GP-WATER

S/N: 4ZF4479-UP

PART OF 168-7967 ENGINE AR

SMCS-1355, 1380, 1393 **i01923927**

NOTE	REF NO	GRAPHIC REF	PART NUMBER	QTY	PART NAME 1 2 3 4 5 6 (PRODUCT LEVEL)	SEE PAGE
	1	1	**4W-4794**	1	REGULATOR-WATER TEMPERATURE (92-DEG C)	
	3	1	**8N-4485**	1	VALVE AS-VENT (WATER LINES)	
	4	1	**169-3124**	1	HOSE	
	5	1	**191-4457**	1	GASKET (REGULATOR HOUSING)	
	6	1	**219-2334**	1	HOUSING	
	7	1	**219-2335**	1	HOUSING AS	
	7A	1	**3S-9643**	1	SEAL-LIP TYPE (WATER REGULATOR)	
	8	1	**219-2340**	1	GASKET (WATER REGULATOR)	
	9	1	**224-8923**	2	CLAMP	
	10	1	**112-5282**	3	SEAL-O-RING	
	11	1	**126-5869**	1	REGULATOR-WATER TEMPERATURE (94-DEG C)	
M	12	1	**6V-4249**	2	BOLT (M10X1.5X50-MM)	
	13	1	**6V-5063**	1	SEAL-O-RING	
	14	1	**6V-5839**	10	WASHER (11X21X2.5-MM THK)	
M	15	1	**8T-0643**	4	BOLT (M10X1.5X80-MM)	
M	16	1	**8T-0644**	4	BOLT (M10X1.5X90-MM)	
	17	1	**9S-8005**	3	PLUG	
	18	1	**9S-8008**	1	PLUG	

M-METRIC PART

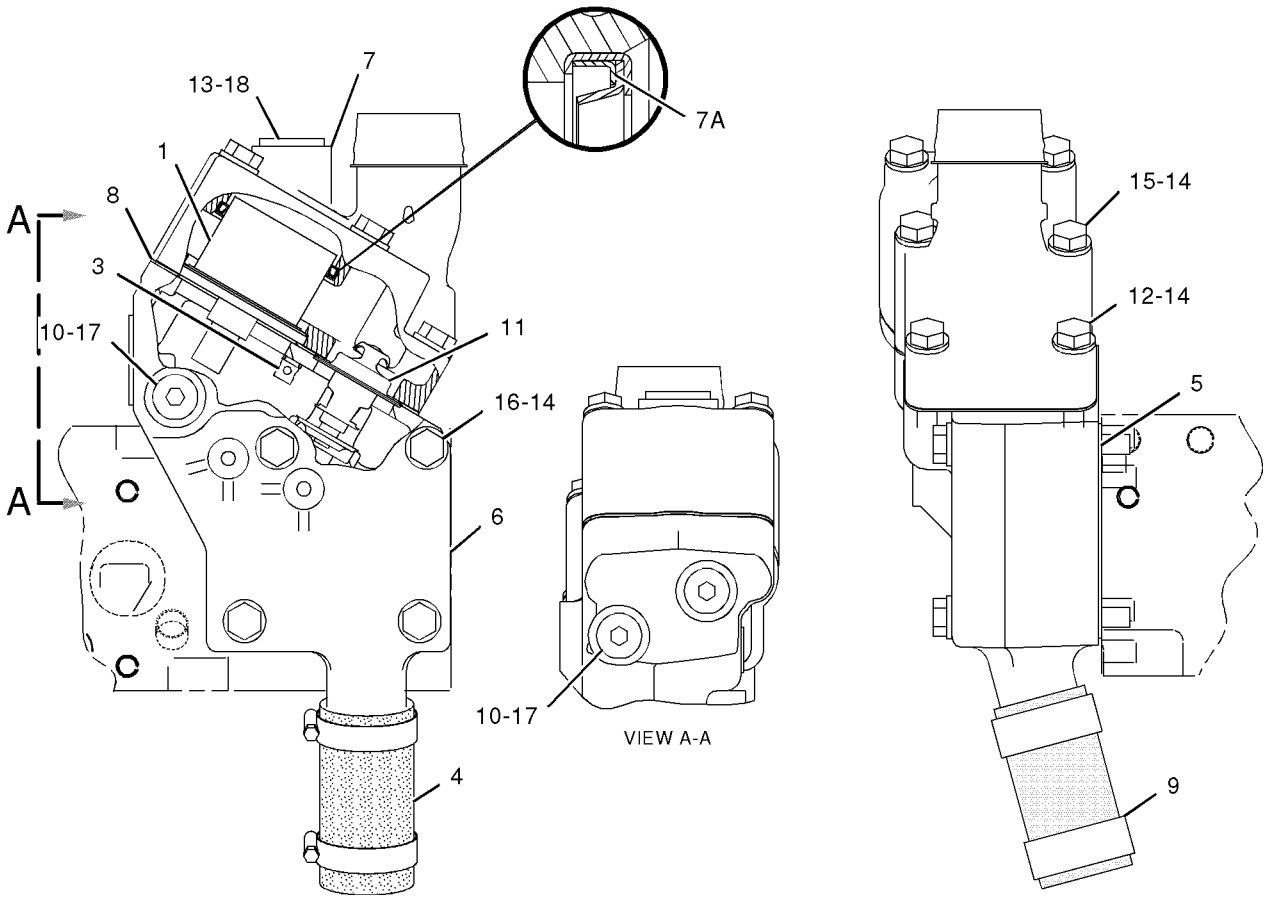

GRAPHIC #1 **<END>** g01001462

COOLING SYSTEM

184-0874 PLATE GP-RADIATOR

S/N: CBK535-UP

PART OF 242-6181 COOLING AR

SMCS-1353 **i02168705**

NOTE	REF NO	GRAPHIC REF	PART NUMBER	QTY	PART NAME 1 2 3 4 5 6 (PRODUCT LEVEL)	SEE PAGE
	1	1	**184-0871**	1	PLATE	
	2	1	**199-2711**	2	SPACER (7.82X26.67X75-MM THK)	
M	3	1	**2Y-5829**	4	NUT (M10X1.5-THD)	
M	4	1	**6V-4248**	4	BOLT (M10X1.5X25-MM)	
	5	1	**6V-5839**	8	WASHER (11X21X2.5-MM THK)	
M	6	1	**8T-4178**	2	BOLT (M10X1.5X90-MM)	
	7	1	**8T-4222**	2	WASHER-PLATED (11X32X2.5-MM THK)	

M-METRIC PART

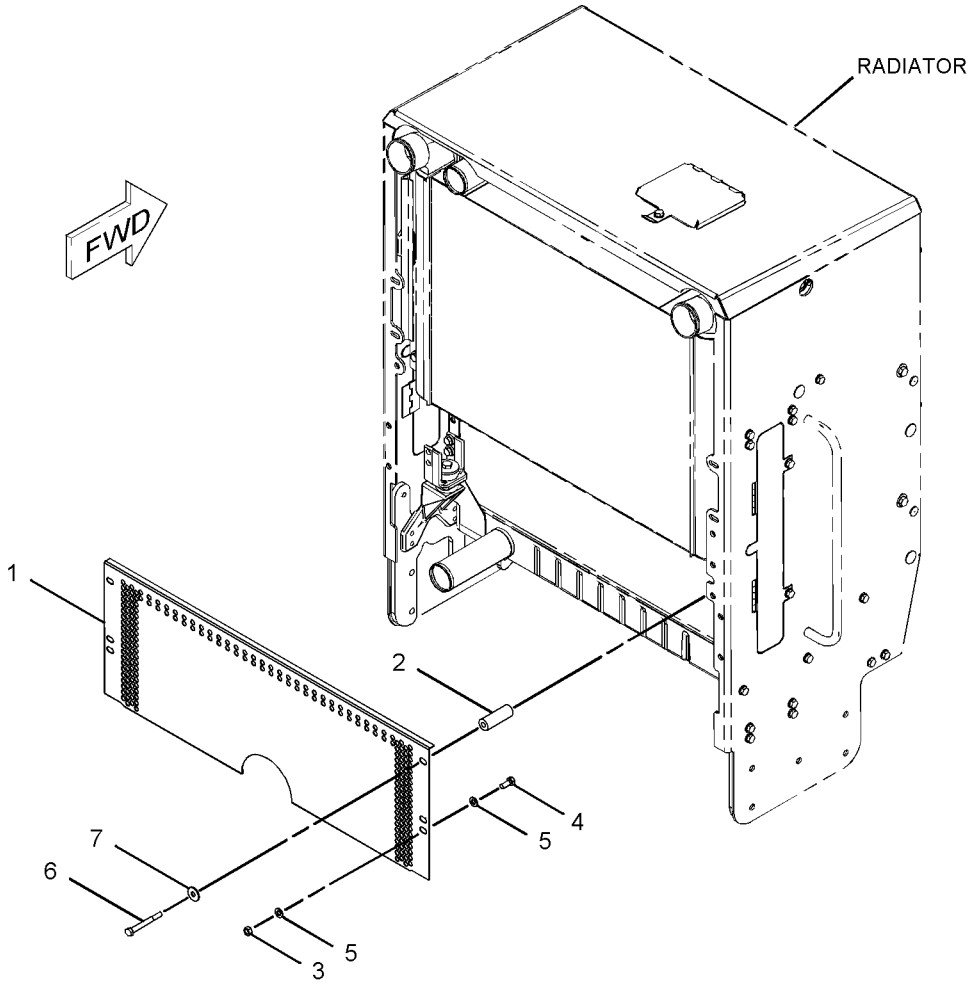

GRAPHIC #1 **<END>** g01074952

197-9564 PUMP GP-WATER

S/N: 4ZF4479-UP
PROVIDES SHORT FRONT WATER PUMP AND SMALL DIAMETER PULLEY
PART OF 168-7967 ENGINE AR
FOR USE WITH 200-1215—PAGE 62, 182.5MM DIAMETER CRANKSHAFT PULLEY

SMCS-1361 **i01871289**

NOTE	REF NO	GRAPHIC REF	PART NUMBER	QTY	PART NAME 1 2 3 4 5 6 (PRODUCT LEVEL)	SEE PAGE
Y	1	1	**227-4299**	1	PUMP GP-WATER	71
	2	1	**2M-4453**	1	SEAL-O-RING	
	3	1	**5F-8000**	1	SEAL-O-RING	
M	4	1	**8T-0644**	4	BOLT (M10X1.5X90-MM)	
	5	1	**9S-8008**	1	PLUG	
	6	1	**6V-5063**	1	SEAL-O-RING	
	7	1	**9S-8004**	1	PLUG	
	8	1	**3J-1907**	1	SEAL-O-RING	

M-METRIC PART
Y-SEPARATE ILLUSTRATION

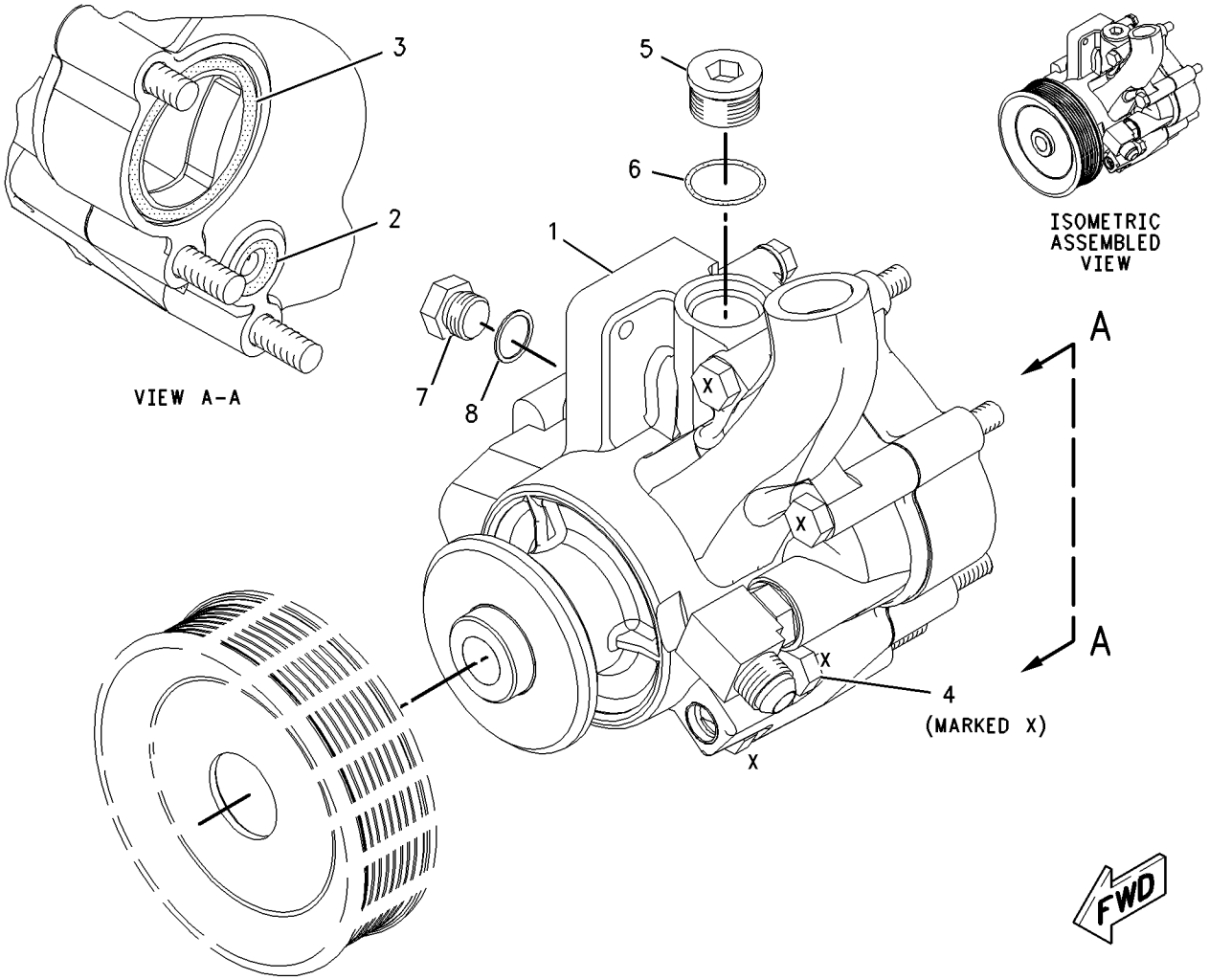

GRAPHIC #1 **<END>** g00919277

COOLING SYSTEM

227-4299 PUMP GP-WATER

S/N: 4ZF4479-UP

PART OF 197-9564 PUMP GP-WATER

SMCS-1361 **i01872785**

NOTE	REF NO	GRAPHIC REF	PART NUMBER	QTY	PART NAME 1 2 3 4 5 6 (PRODUCT LEVEL)	SEE PAGE
	1	1	*227-4301*	1	PUMP AS-WATER	
	1A	1	**203-6093**	1	HOUSING	
	1B	1	**177-1052**	1	SHAFT AS	
	1C	1	**177-1058**	1	PLUG	
	1D	1	**197-9581**	1	PULLEY	
	1E	1	**226-6039**	1	IMPELLER	
	1F	1	**147-5088**	1	SEAL AS-WATER PUMP	
	2	1	**226-6051**	1	COVER	
	3	1	**197-9580**	1	GASKET	
	4	1	*183-2931*	3	BOLT AS	
					(EACH INCLUDES)	
M		1	**6V-3918**	1	BOLT (M8X1.25X50MM)	
		1	**9M-1974**	1	WASHER-HARD (8.8X16X2MM THK)	

M-METRIC PART

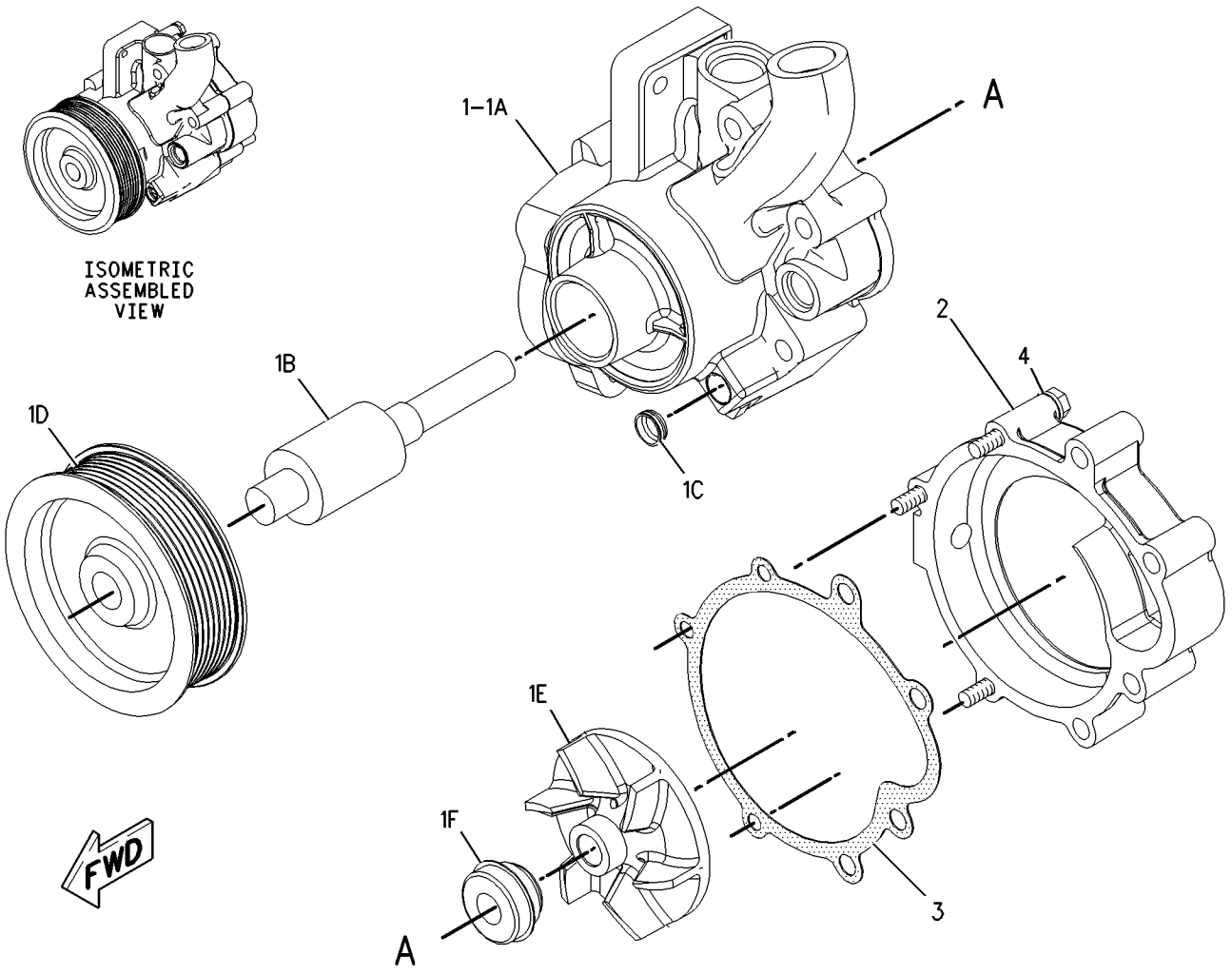

GRAPHIC #1 **<END>** g00949232

COOLING SYSTEM

180-7004 RADIATOR GP

S/N: CBK1-534

PART OF 185-1542 COOLING AR

SMCS-1353 **i02207315**

NOTE	REF NO	GRAPHIC REF	PART NUMBER	QTY	PART NAME 1 2 3 4 5 6 (PRODUCT LEVEL)	SEE PAGE
	1	1	**4H-2633**	4	CLIP	
	2	1	**6L-8617**	1	CAP-RADIATOR (7-PSI)	
	3	1	**8N-8846**	1	NECK-FILLER	
	4	1	**9Y-9236**	1	BODY AS-GAUGE	
G	5	1	**9X-2388**		HOSE (63-IN)	

G-ORDER BY THE INCH

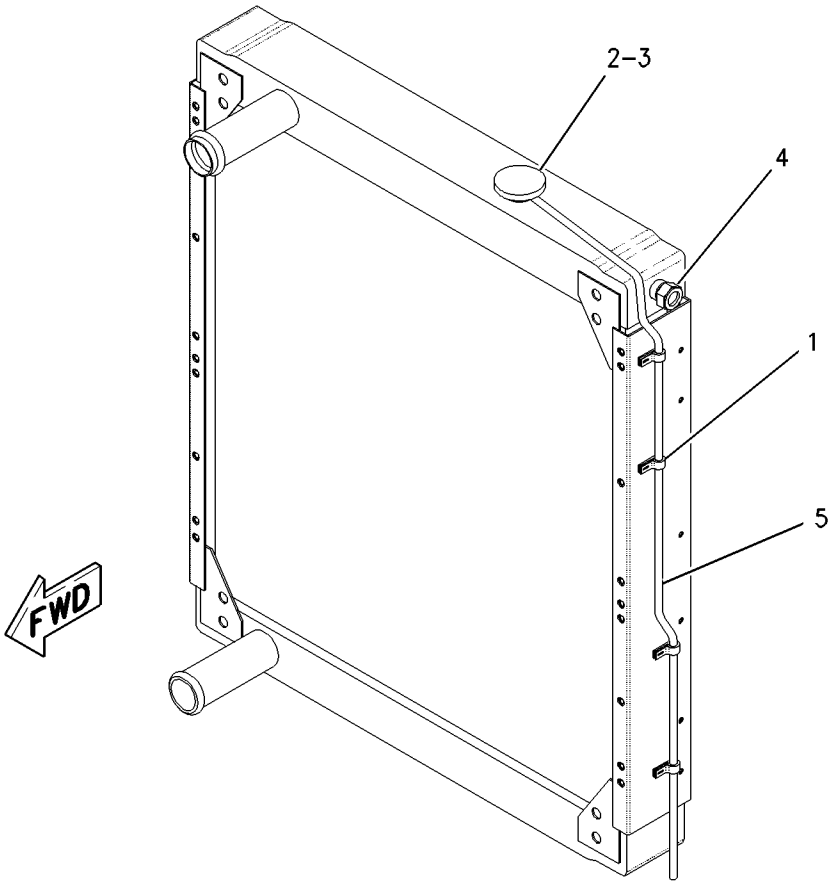

GRAPHIC #1 **<END>** g00954123

COOLING SYSTEM

241-6949 RADIATOR GP

S/N: CBK535-UP

PART OF 242-6181 COOLING AR

SMCS-1353 **i02158686**

NOTE	REF NO	GRAPHIC REF	PART NUMBER	QTY	PART NAME 1 2 3 4 5 6 (PRODUCT LEVEL)	SEE PAGE
	1	1	**4H-2633**	4	CLIP	
	2	1	**6L-8617**	1	CAP-RADIATOR (7-PSI)	
	3	1	**8N-8846**	1	NECK-FILLER	
	4	1	**9Y-9236**	1	BODY AS-GAUGE (COOLANT LEVEL)	
G	5	1	**9X-2388**		HOSE (63-IN)	

G-ORDER BY THE INCH

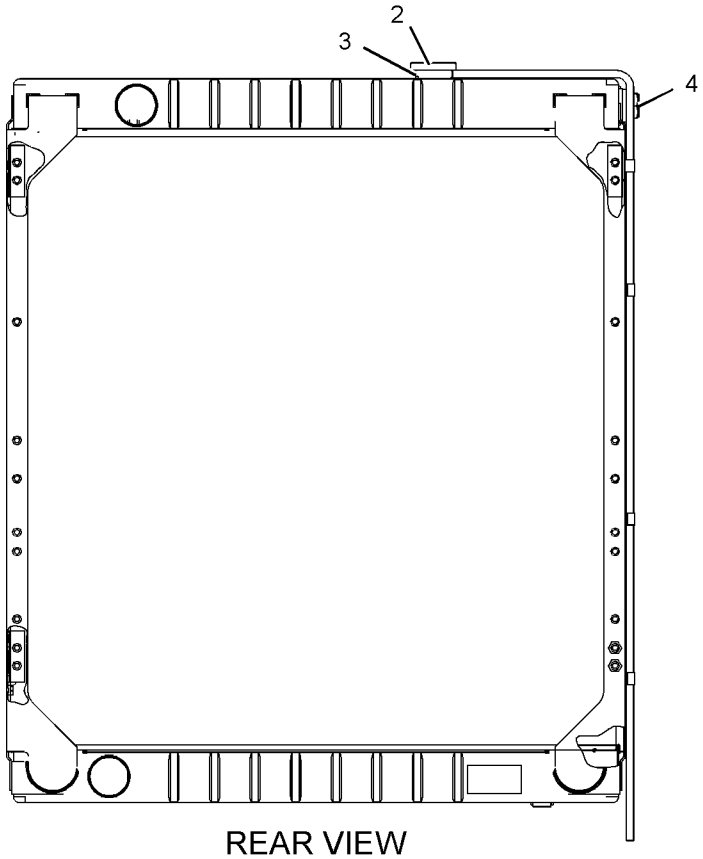

REAR VIEW

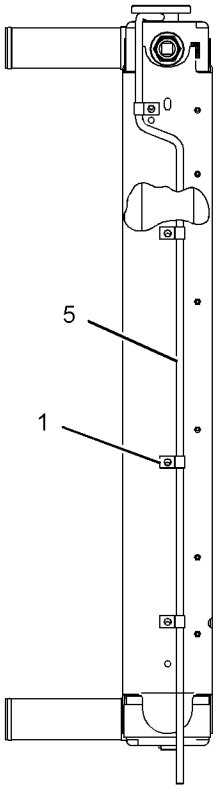

RIGHT SIDE VIEW

GRAPHIC #1 **<END>** g01079093

AIR INLET AND EXHAUST SYSTEM

163-0310 AFTERCOOLER & MOUNTING GP

S/N: CBK1-UP

PART OF 185-1542, 242-6181 COOLING AR

SMCS-1063 **i02203528**

NOTE	REF NO	GRAPHIC REF	PART NUMBER	QTY	PART NAME 1 2 3 4 5 6 (PRODUCT LEVEL)	SEE PAGE
	1	1	**167-3911**	1	CORE AS-AFTERCOOLER	
	2	1	**199-2711**	2	SPACER (7.82X26.67X75-MM THK)	
	3	1	**4S-9191**	4	WASHER (12X22.5X5-MM THK)	
M	4	1	**6V-1820**	4	BOLT (M10X1.5X30-MM)	
	5	1	**7X-7729**	2	WASHER (11X25X3-MM THK)	
M	6	1	**8T-5436**	2	BOLT (M10X1.5X130-MM)	
E	7	1	**123-3827**	2	SEAL (42-CM EACH)	

E-ORDER BY THE CENTIMETER
M-METRIC PART

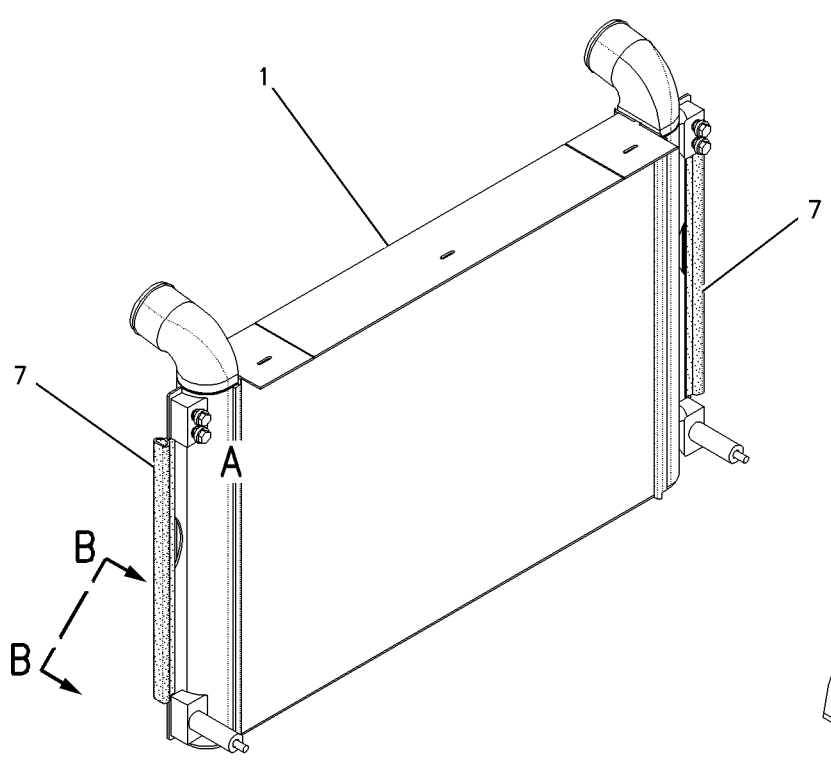

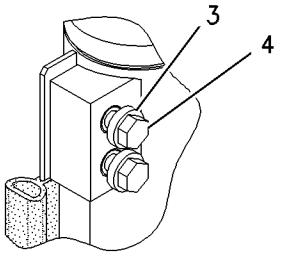

VIEW OF AREA A

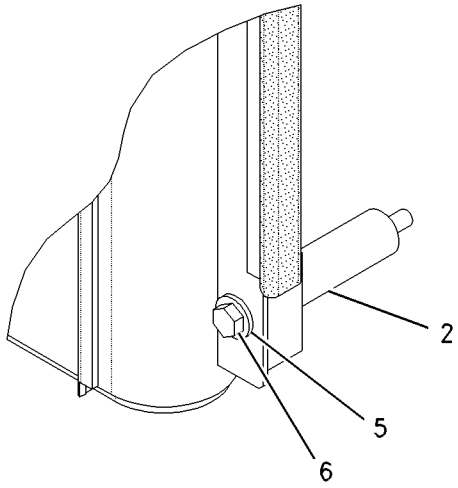

VIEW B-B

GRAPHIC #1 **<END>** g00954129

AIR INLET AND EXHAUST SYSTEM

7E-5677 AIR CLEANER GP

S/N: CBK1-UP

PART OF 172-9953 AIR CLEANER GP

SMCS-1051, 1054 **i02203400**

NOTE	REF NO	GRAPHIC REF	PART NUMBER	QTY	PART NAME 1 2 3 4 5 6 (PRODUCT LEVEL)	SEE PAGE
	1	1	**8T-4128**	1	ADAPTER	
	2	1	**7S-9396**	1	PRESCREENER AS	
		1	**0S-1591**	1	BOLT (3/8-16X1.5-IN)	
		1	**1D-4717**	1	NUT (3/8-16-THD)	
	3	1	**8N-2694**	1	INDICATOR GP-AIR FILTER CHANGE	
	4	1	**9S-6147**	1	BODY AS	
CY	5	1	**163-1850**	1	AIR CLEANER GP	76
	6	1	**2K-4973**	1	LOCKNUT (3/8-16-THD)	
	7	1	**5K-5068**	1	FITTING	
	8	1	**5P-1075**	4	WASHER-HARD (10.2X22.5X3-MM THK)	
	9	1	**7X-0492**	1	ELBOW	
	10	1	**5S-7382**	4	BOLT (3/8-16X1.375-IN)	
	11	1	**7S-7680**	1	CLAMP	
	12	1	**8T-4896**	2	WASHER-HARD (10.2X18.5X2.5-MM THK)	
	13	1	**8T-9377**	1	BOLT (3/8-16X2.25-IN)	
	14	1	**106-7657**		TUBE AS (39-DM)	

C-CHANGE FROM PREVIOUS TYPE
Y-SEPARATE ILLUSTRATION

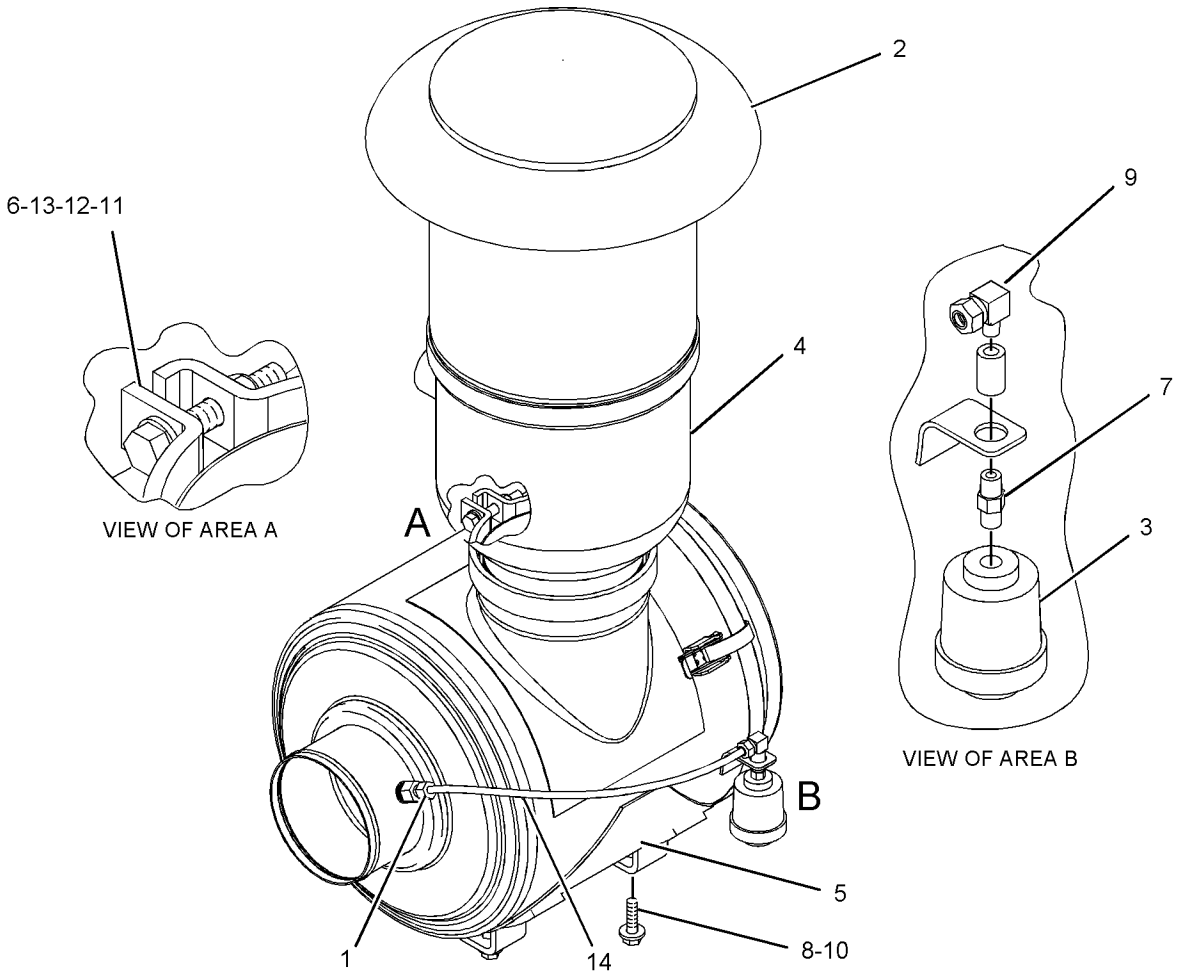

GRAPHIC #1 **<END>** g01044494

AIR INLET AND EXHAUST SYSTEM

163-1850 AIR CLEANER GP

S/N: CBK1-UP

PART OF 7E-5677 AIR CLEANER GP

SMCS-1051, 1054 **i02207311**

NOTE	REF NO	GRAPHIC REF	PART NUMBER	QTY	PART NAME 1 2 3 4 5 6 (PRODUCT LEVEL)	SEE PAGE
	1	1	**6I-0273**	1	ELEMENT AS-PRIMARY	
	2	1	**6I-0274**	1	ELEMENT AS-SECONDARY	
	3	1	**6I-0275**	1	COVER AS-AIR CLEANER	
		1	**4P-5524**	1	SEAL-O-RING	
	4	1	**8N-4617**	2	KIT-AIR CLEANER CLAMP	
					(EACH KIT INCLUDES CLIP ASSEMBLY AND RIVET)	

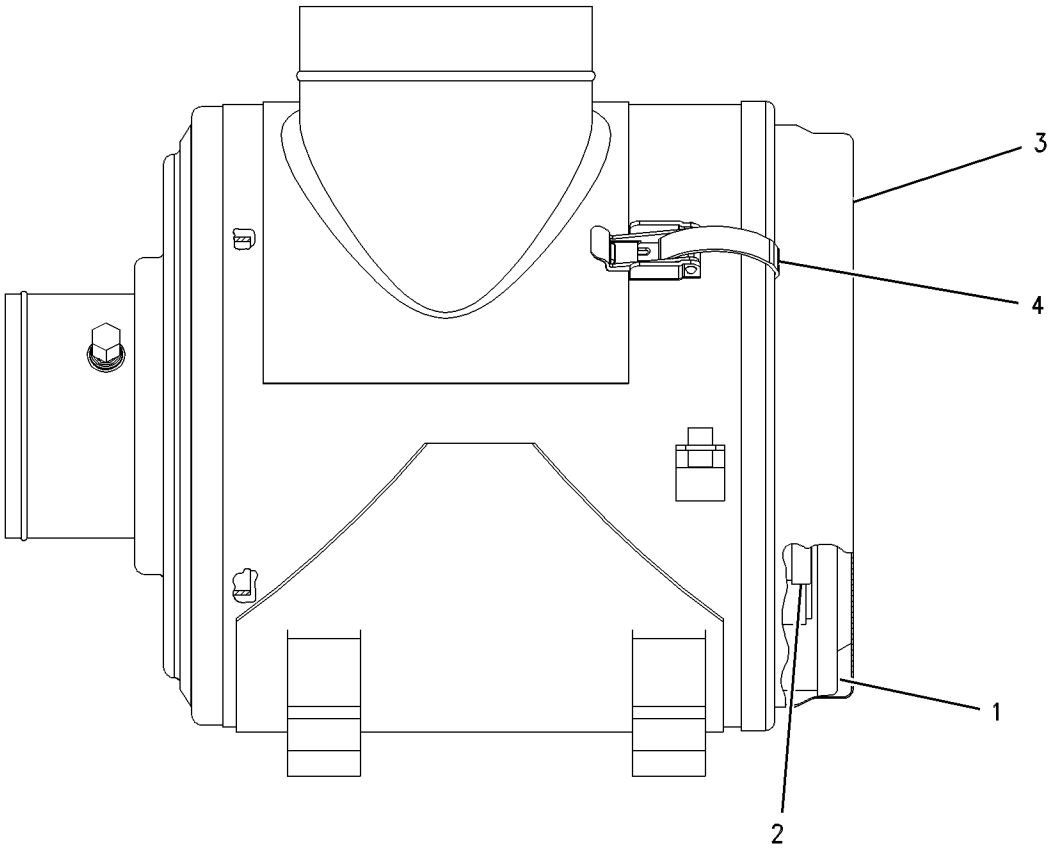

GRAPHIC #1 **<END>** g00497362

AIR INLET AND EXHAUST SYSTEM

172-9953 AIR CLEANER GP

S/N: CBK1-UP

PART OF 162-5605 GENERAL AR

SMCS-1051, 1054 **i02004348**

NOTE	REF NO	GRAPHIC REF	PART NUMBER	QTY	PART NAME 1 2 3 4 5 6 (PRODUCT LEVEL)	SEE PAGE
Y	1	1	*7E-5677*	1	AIR CLEANER GP	75
	2	1	**7X-7958**	1	CLAMP-HOSE	
	3	1	**9M-0164**	2	CLAMP-HOSE	
	4	1	**173-5514**	1	PLATE	
	5	1	**190-8939**	1	HOSE	
	6	1	**195-0434**	1	BRACKET	
	7	1	**195-1098**	1	TUBE	
	8	1	**200-1308**	1	HOSE	
	9	1	**246-5230**	1	PLATE AS	
	10	1	**247-1925**	1	CLAMP	
	11	1	*148-8317*	1	CONNECTOR GP	
		1	**6V-8714**	1	CONNECTOR	
		1	**3D-2824**	1	SEAL-O-RING	
		1	**5K-9090**	1	SEAL-O-RING	
	12	1	**216-2211**	1	CLAMP	
	13	1	**7C-4354**	1	CLIP	
	14	1	**8T-4121**	10	WASHER-HARD (11X21X2.5-MM THK)	
M	15	1	**8T-4133**	1	NUT (M10X1.5-THD)	
M	16	1	**8T-4136**	4	BOLT (M10X1.5X25-MM)	
M	17	1	**8T-4137**	1	BOLT (M10X1.5X20-MM)	
M	18	1	**8T-4195**	4	BOLT (M10X1.5X30-MM)	

M-METRIC PART
Y-SEPARATE ILLUSTRATION

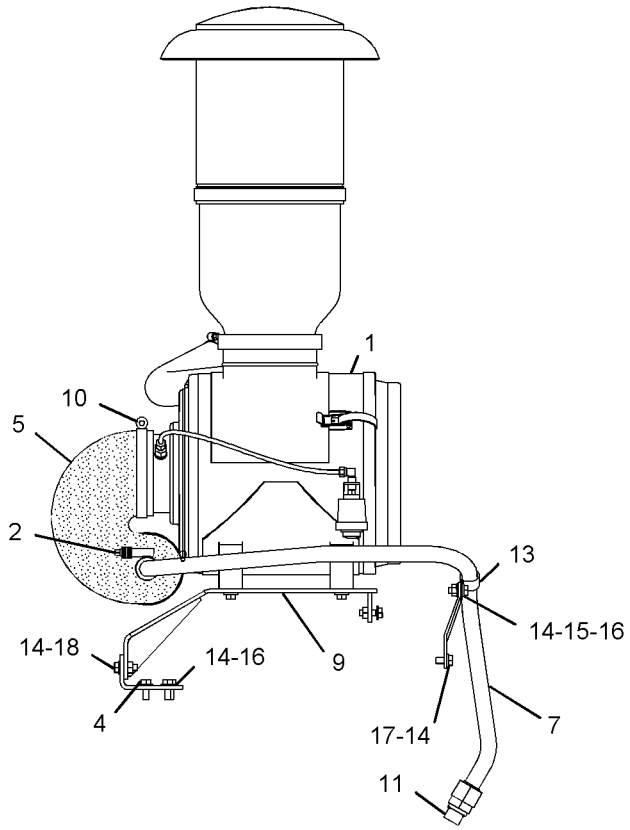

FRONT VIEW

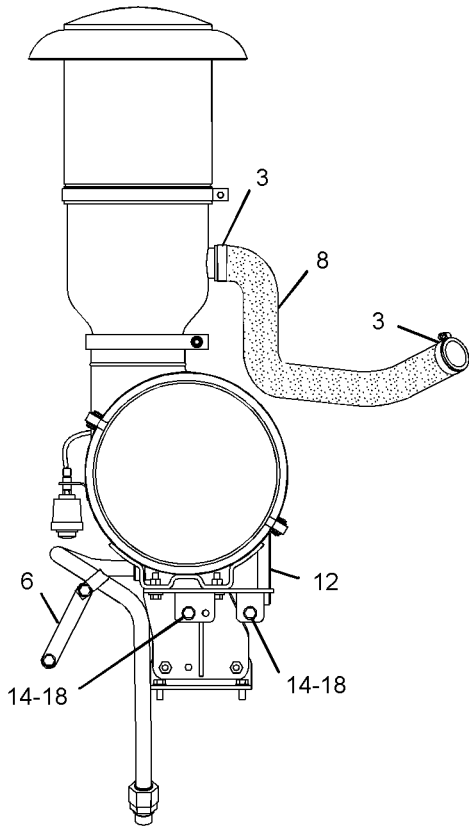

LEFT SIDE VIEW

GRAPHIC #1 **<END>** g01053744

AIR INLET AND EXHAUST SYSTEM

188-9037 ELBOW GP-AIR INLET

S/N: 4ZF4479-UP

PART OF 168-7967 ENGINE AR

SMCS-1087 **i01985781**

NOTE	REF NO	GRAPHIC REF	PART NUMBER	QTY	PART NAME 1 2 3 4 5 6 (PRODUCT LEVEL)	SEE PAGE
	1	1	**116-4663**	1	ELBOW	
M	2	1	**131-0353**	2	STUD	
	3	1	**195-1306**	1	STRAP-GROUNDING	
M	5	1	**8T-0100**	6	BOLT (M8X1.25X60-MM)	
	6	1	**9M-1974**	7	WASHER-HARD (8.8X16X2-MM THK)	
B	8	1	**1U-8846**		SEALANT-GASKET	
	9	1	**3E-4352**	1	WASHER-HARD (8.8X20.5X2.5-MM THK)	

B-USE AS REQUIRED
M-METRIC PART

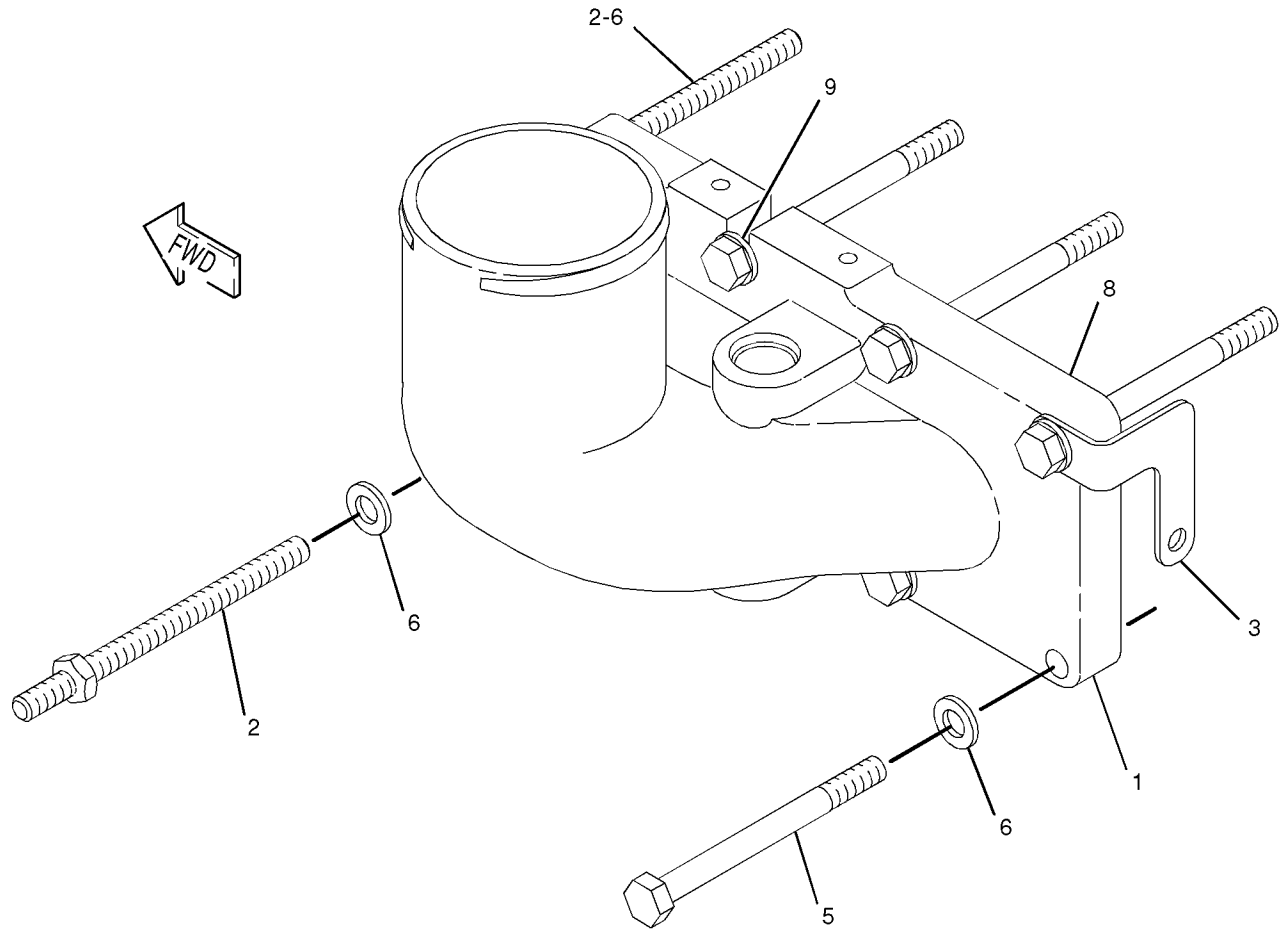

GRAPHIC #1 **<END>** g01038920

AIR INLET AND EXHAUST SYSTEM

190-1096 ELBOW GP-EXHAUST

S/N: 4ZF4479-UP

PART OF 168-7967 ENGINE AR

SMCS-1061 **i01871531**

NOTE	REF NO	GRAPHIC REF	PART NUMBER	QTY	PART NAME 1 2 3 4 5 6 (PRODUCT LEVEL)	SEE PAGE
	1	1	**189-9989**	1	ELBOW-EXHAUST	
M	2	1	**3E-8017**	4	LOCKNUT	
	3	1	**7C-7431**	1	GASKET	

M-METRIC PART

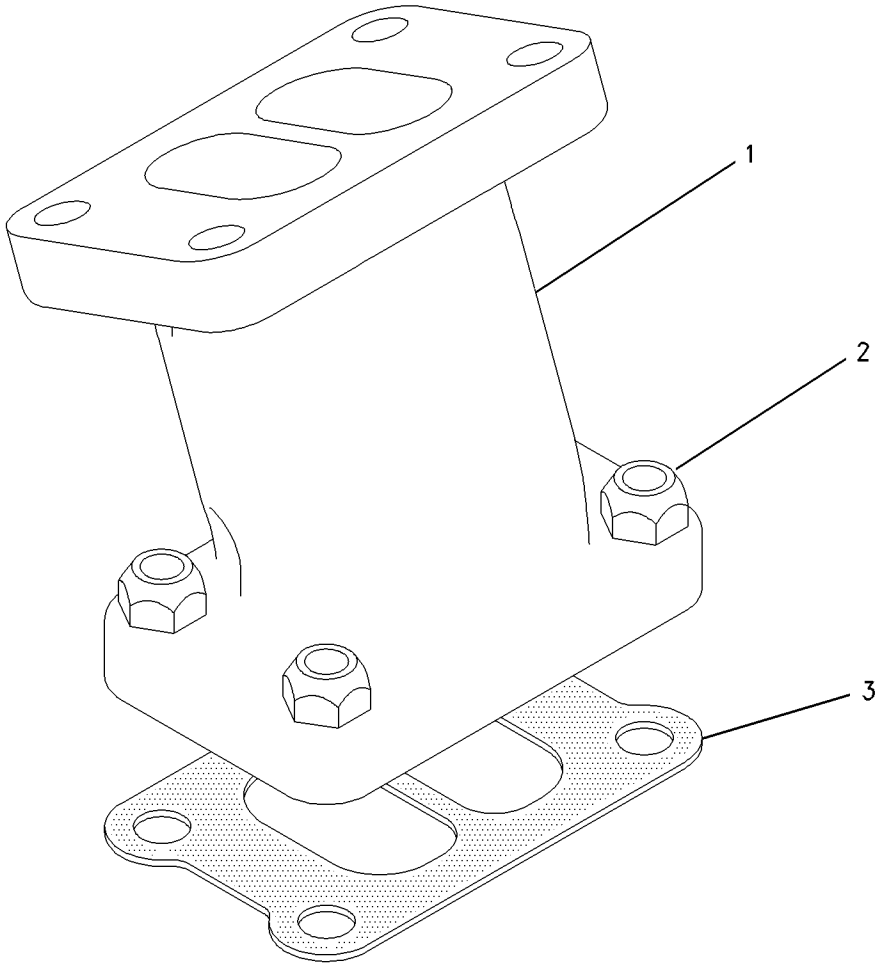

GRAPHIC #1 **<END>** g00718921

AIR INLET AND EXHAUST SYSTEM

175-0418 LINES GP-AIR–AFTERCOOLER

S/N: CBK1-UP

PART OF 162-5605 GENERAL AR

SMCS-1071 **i01933107**

NOTE	REF NO	GRAPHIC REF	PART NUMBER	QTY	PART NAME 1 2 3 4 5 6 (PRODUCT LEVEL)	SEE PAGE
	1	1	**9R-5008**	2	SPACER (11X20X6-MM THK)	
	2	1	**177-0581**	4	HOSE	
	3	1	**179-6017**	1	TUBE	
	4	1	**179-6021**	1	TUBE	
	5	1	**209-4578**	8	CLAMP	
	6	1	**2A-3034**	2	CLAMP-AIR CLEANER	
	7	1	**7X-7729**	2	WASHER (11X25X3-MM THK)	
M	8	1	**8T-4195**	2	BOLT (M10X1.5X30-MM)	

M-METRIC PART

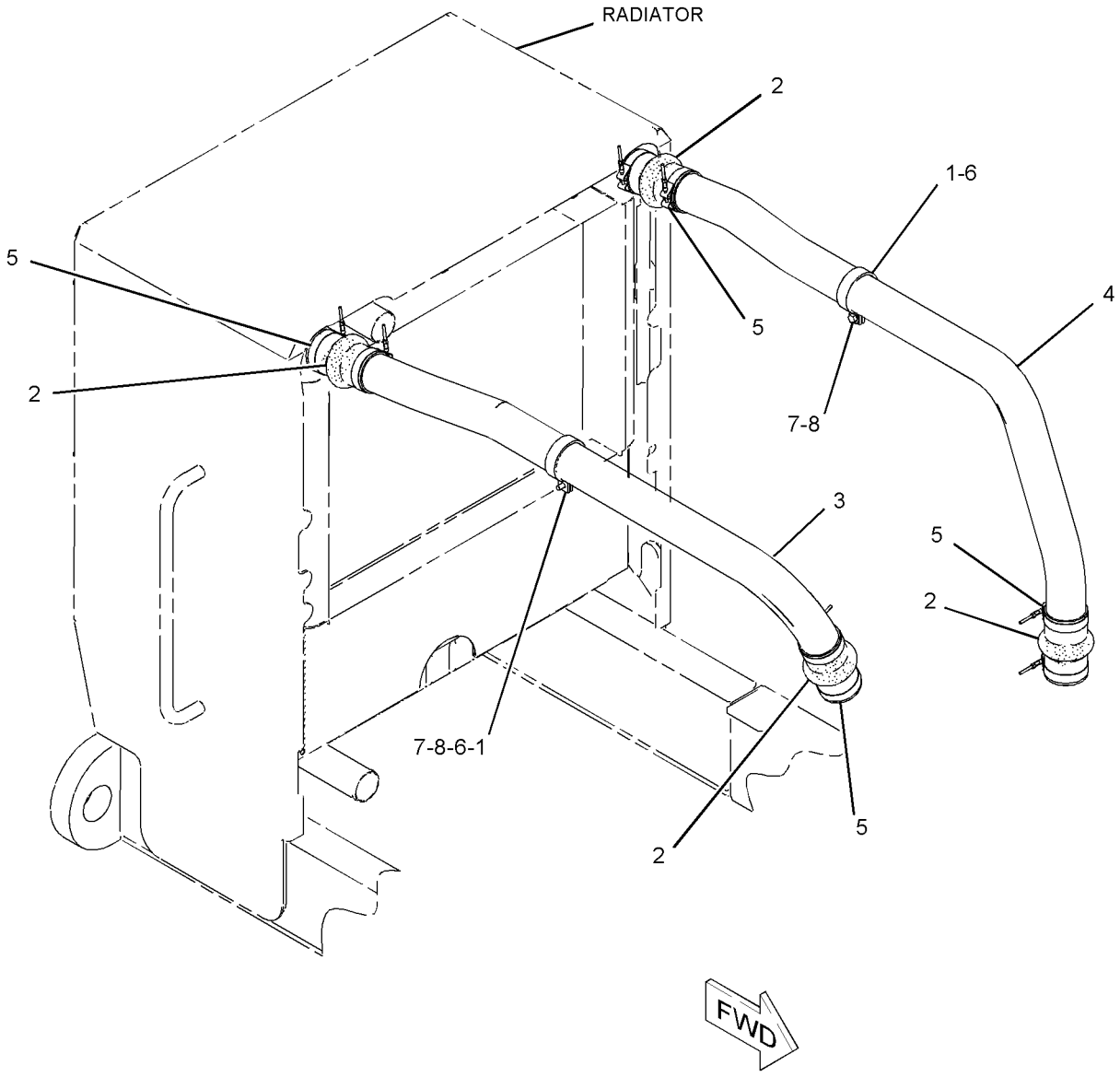

GRAPHIC #1 **<END>** g01077280

AIR INLET AND EXHAUST SYSTEM

189-9987 MANIFOLD GP-EXHAUST

S/N: 4ZF4479-UP

PART OF 168-7967 ENGINE AR

SMCS-1059 **i01872021**

NOTE	REF NO	GRAPHIC REF	PART NUMBER	QTY	PART NAME 1 2 3 4 5 6 (PRODUCT LEVEL)	SEE PAGE
	1	1	**161-3411**	6	GASKET	
	2	1	**167-0172**	1	MANIFOLD-EXHAUST	
	3	1	**203-7775**	1	MANIFOLD-EXHAUST	
	4	1	**203-7778**	1	MANIFOLD	
M	5	1	**116-3715**	12	STUD-TAPERLOCK (M10X85-MM OAL)	
M	6	1	**3E-8017**	12	LOCKNUT (M10X1.5-MM THD)	
	7	1	**4P-4369**	6	SPACER (12X19X23.5-MM THK)	
	8	1	**6V-5839**	12	WASHER (11X21X2.5-MM THK)	
M	9	1	**8T-7044**	4	STUD-TAPERLOCK (M10X1.5X40-MM)	

M-METRIC PART

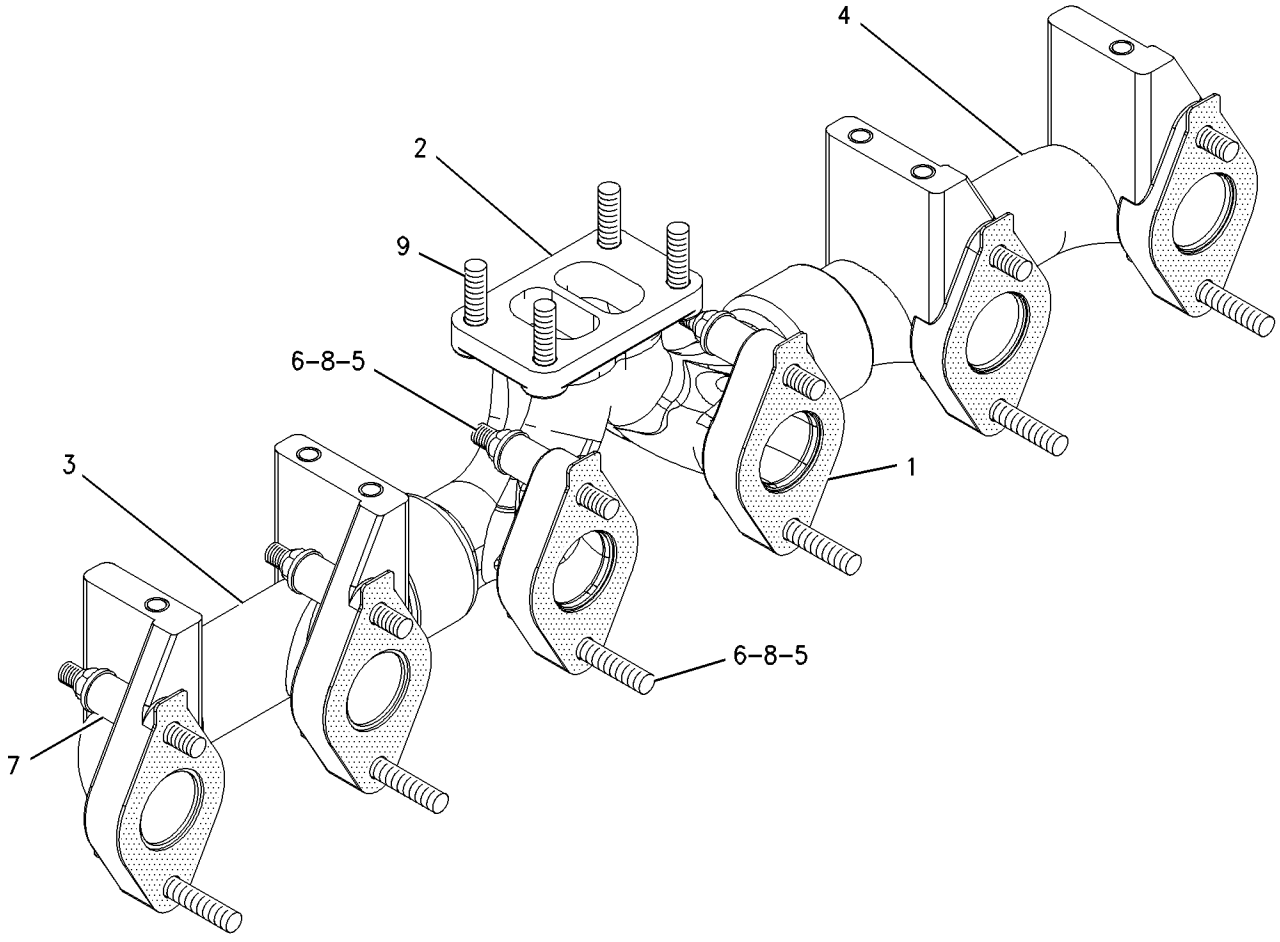

GRAPHIC #1 **<END>** g00719350

AIR INLET AND EXHAUST SYSTEM

175-1438 MUFFLER GP

S/N: CBK1-UP

PART OF 162-5605 GENERAL AR

SMCS-1062 **i02103008**

NOTE	REF NO	GRAPHIC REF	PART NUMBER	QTY	PART NAME 1 2 3 4 5 6 (PRODUCT LEVEL)	SEE PAGE
	1	1	**7C-0752**	1	CLAMP	
	2	1	**141-1480**	1	CLAMP AS	
	3	1	**192-7352**	2	PLATE	
	4	1	**192-7353**	1	PLATE AS	
	5	1	**192-7354**	1	PLATE AS	
	6	1	**198-4777**	6	WASHER-HARD (11X25X10-MM THK)	
	7	1	**201-0346**	1	MUFFLER AS	
	8	1	**216-9746**	1	EJECTOR AS	
	9	1	**8T-4121**	7	WASHER-HARD (11X21X2.5-MM THK)	
M	10	1	**8T-4133**	2	NUT (M10X1.5-THD)	
M	11	1	**8T-4136**	2	BOLT (M10X1.5X25-MM)	
M	12	1	**8T-4137**	1	BOLT (M10X1.5X20-MM)	
M	13	1	**8T-4185**	2	BOLT (M10X1.5X50-MM)	
M	14	1	**8T-4195**	4	BOLT (M10X1.5X30-MM)	
M	15	1	**8T-4196**	2	BOLT (M10X1.5X35-MM)	

M-METRIC PART

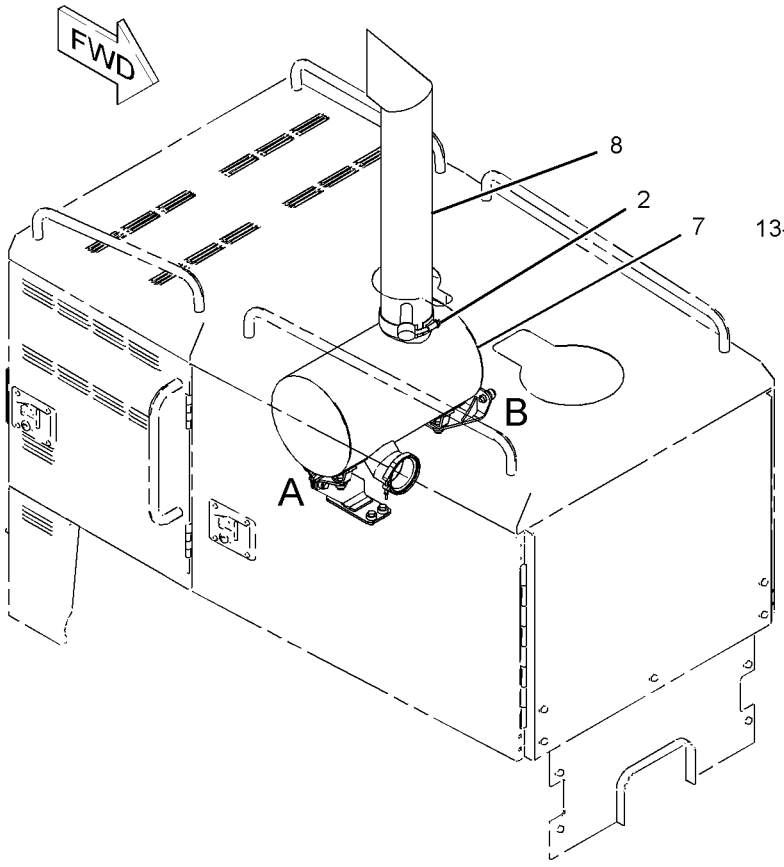

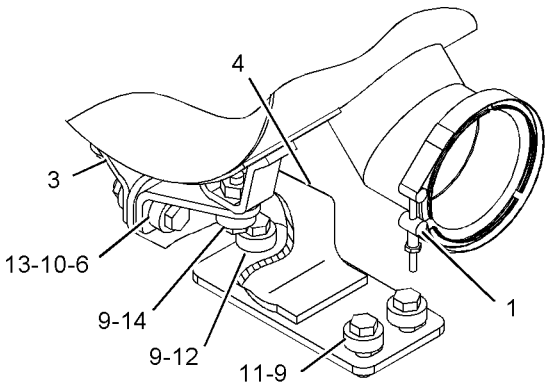

VIEW OF AREA A

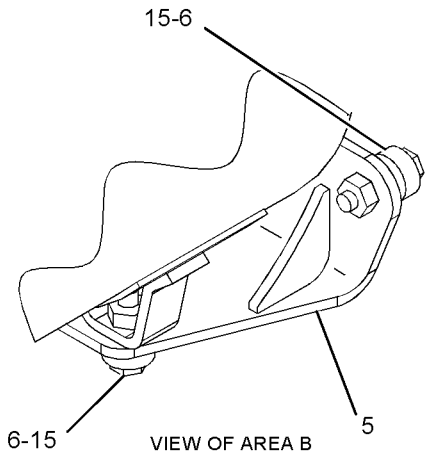

VIEW OF AREA B

GRAPHIC #1 **<END>** g01073707

AIR INLET AND EXHAUST SYSTEM

190-1104 TURBOCHARGER GP

S/N: 4ZF4479-UP

PART OF 168-7966 ENGINE AR-CORE

SMCS-1052, 1053 **i01914991**

NOTE	REF NO	GRAPHIC REF	PART NUMBER	QTY	PART NAME 1 2 3 4 5 6 (PRODUCT LEVEL)	SEE PAGE
	1	1	**205-1257**	2	PLUG	
	2	1	**205-1258**	1	PLUG	
Y	3	1	**190-4178**	1	TURBOCHARGER GP	85
M	4	1	**3E-8017**	4	LOCKNUT (M10X1.5-MM THD)	
	5	1	**7C-7431**	1	GASKET	
	6	1	**8T-4121**	4	WASHER-HARD (11X21X2.5-MM THK)	
M	7	1	**8T-4186**	4	BOLT (M10X1.5X40-MM)	

M-METRIC PART
Y-SEPARATE ILLUSTRATION

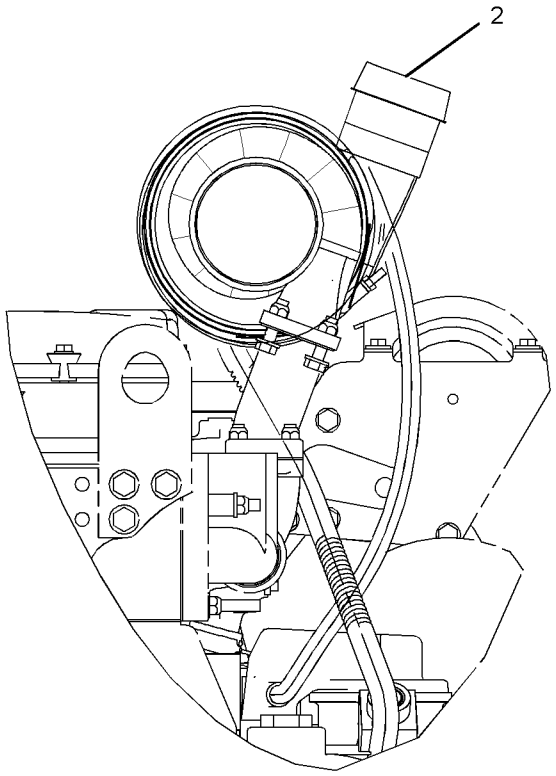

REAR VIEW

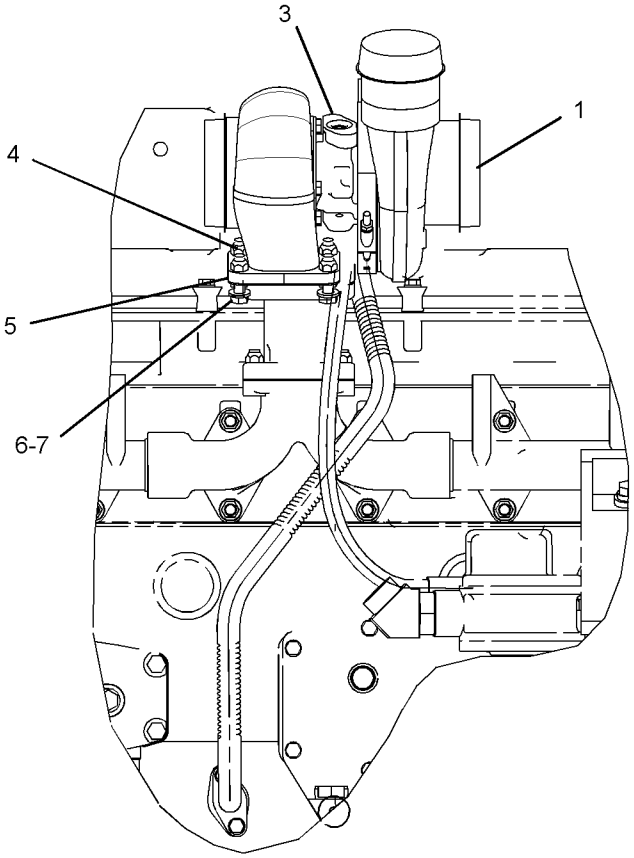

LEFT SIDE VIEW

GRAPHIC #1

<END>

g01013058

AIR INLET AND EXHAUST SYSTEM

190-4178 TURBOCHARGER GP

S/N: 4ZF4479-UP

PART OF 190-1104 TURBOCHARGER GP

SMCS-1052, 1053 **i01875024**

NOTE	REF NO	GRAPHIC REF	PART NUMBER	QTY	PART NAME 1 2 3 4 5 6 (PRODUCT LEVEL)	SEE PAGE
M	1	1	**7C-6670**	4	BOLT (M8X12.5MM)	
	2	1	**7C-6672**	2	PLATE-CLAMP (TURBINE)	
	3	1	**7M-9918**	1	LOCKNUT	
	4	1	**9Y-6479**	1	HOUSING-TURBINE	
	5	1	**158-6072**	1	CLAMP AS (COMPRESSOR)	
	6	1	**196-5463**	1	CARTRIDGE GP-TURBOCHARGER	
	7	1	**196-6028**	1	COVER-COMPRESSOR	

M-METRIC PART

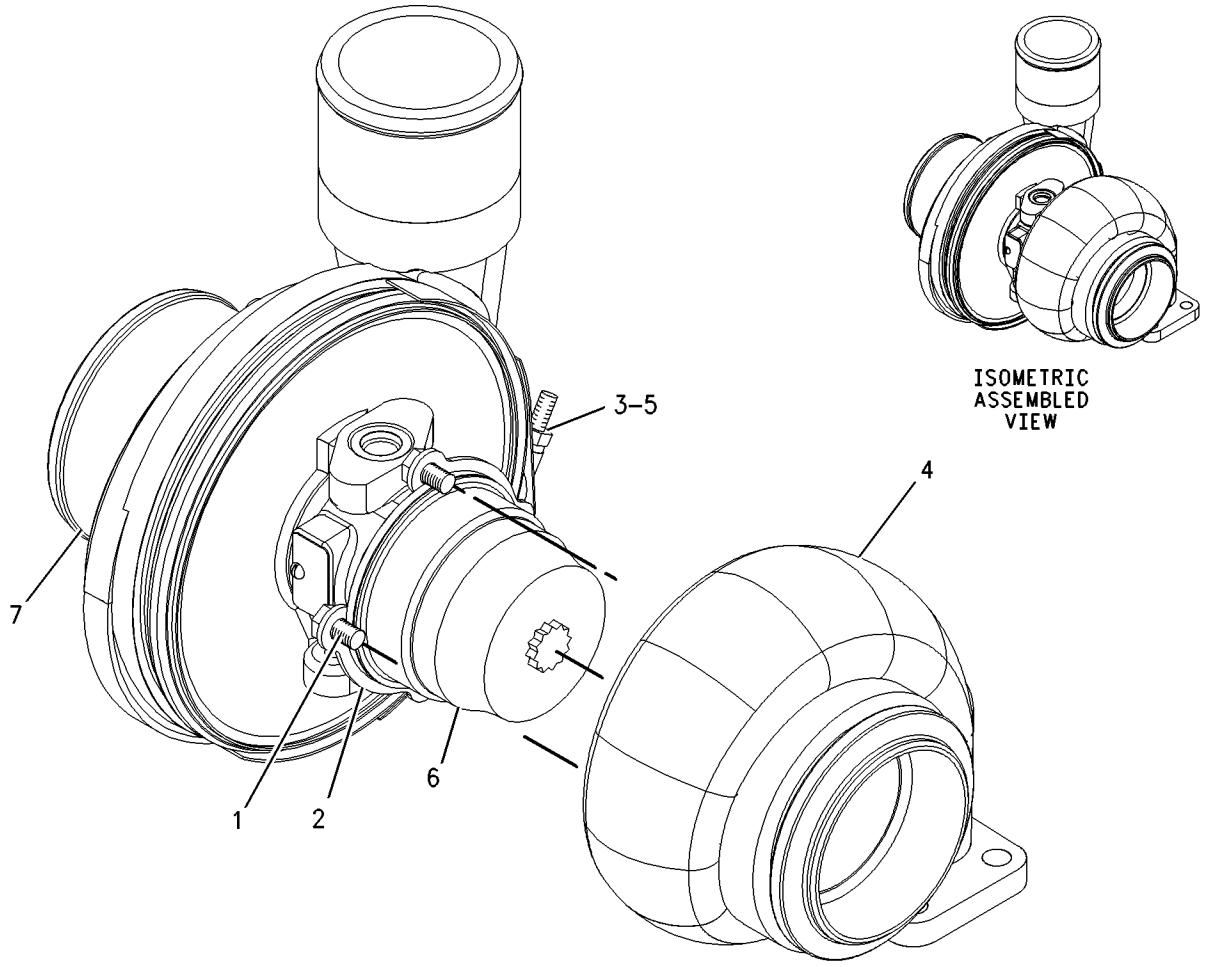

GRAPHIC #1 **<END>** g00955774

FUEL SYSTEM

159-5935 CONTROL GP-GOVERNOR

S/N: CBK1-UP

PART OF 162-5605 GENERAL AR

SMCS-1265, 1276 **i01673334**

NOTE	REF NO	GRAPHIC REF	PART NUMBER	QTY	PART NAME 1 2 3 4 5 6 (PRODUCT LEVEL)	SEE PAGE
	1	1	**1B-2578**	1	NUT (3/8-16-THD)	
	2	1	**141-6343**	1	SPRING	
	3	1	**4D-4064**	1	ROD END	
	4	1	**5P-9209**	2	BEARING AS-NEEDLE	
	5	1	**206-3599**	1	LEVER	
	6	1	**7F-0192**	1	BOLT (3/8-16X2-IN)	
	7	1	**7V-0446**	1	CLIP	
	8	1	**207-4927**	1	PEDAL-GOVERNOR CONTROL	
	9	1	**8X-3261**	1	LEVER	
	10	1	**116-5710**	1	GROMMET	
	11	1	**130-5300**	1	CLIP	
Y	12	1	**160-2443**	1	SENSOR GP-POSITION (ROTARY) (THROTTLE)	243
	13	1	**161-7062**	1	HOUSING	
	14	1	**162-8218**	1	GASKET	
	15	1	**162-8219**	1	COVER	
	16	1	**168-8683**	1	SHAFT	
	17	1	**169-0921**	1	ROD END (INTERNAL THREAD)	
	18	1	**169-0922**	1	ROD	
	19	1	**172-0165**	1	SHAFT	
	20	1	**172-4211**	1	SPACER (10.5X22X50.8-MM THK)	
	21	1	**009-0008**	1	SETSCREW-SOCKET (3/8-16X0.5-IN)	
	22	1	**206-3600**	1	LEVER	
	23	1	**129-3173**	1	BOLT-12 POINT HEAD (3/8-16X31.75-MM)	
	24	1	**1B-0676**	1	PIN	
	25	1	**1B-8704**	3	KEY-WOODRUFF	
B	26	1	**2N-9421**	2	SPRING-DISC	
	27	1	**5P-1075**	2	WASHER-HARD (10.2X22.5X3-MM THK)	
	28	1	**5P-1076**	1	WASHER-HARD (13.5X30X4-MM THK)	
	29	1	**5S-7382**	2	BOLT (3/8-16X1.375-IN)	
M	30	1	**6V-2313**	2	BOLT (M5X0.8X30-MM)	
	31	1	**6V-8801**	2	NUT (3/8-16-THD)	
	32	1	**8T-0328**	2	WASHER-HARD (5.5X10X1-MM THK)	
	33	1	**8T-4121**	3	WASHER-HARD (11X21X2.5-MM THK)	
M	34	1	**8T-4133**	2	NUT (M10X1.5-THD)	
M	35	1	**8T-4136**	3	BOLT (M10X1.5X25-MM)	
M	36	1	**8T-4182**	2	BOLT (M10X1.5X45-MM)	
	37	1	**8T-4226**	1	WASHER-PLATED (10.5X45X3-MM THK)	
	38	1	**8T-5390**	1	BOLT (3/8-16X3.5-IN)	
	39	1	**6V-0894**	1	SEAL-O-RING	
	40	1	**6V-8183**	1	NUT-FULL (3/8-24-THD)	

B-USE AS REQUIRED
M-METRIC PART
Y-SEPARATE ILLUSTRATION

159-5935 **CONTROL GP-GOVERNOR** *(contd.)* **i01673334**

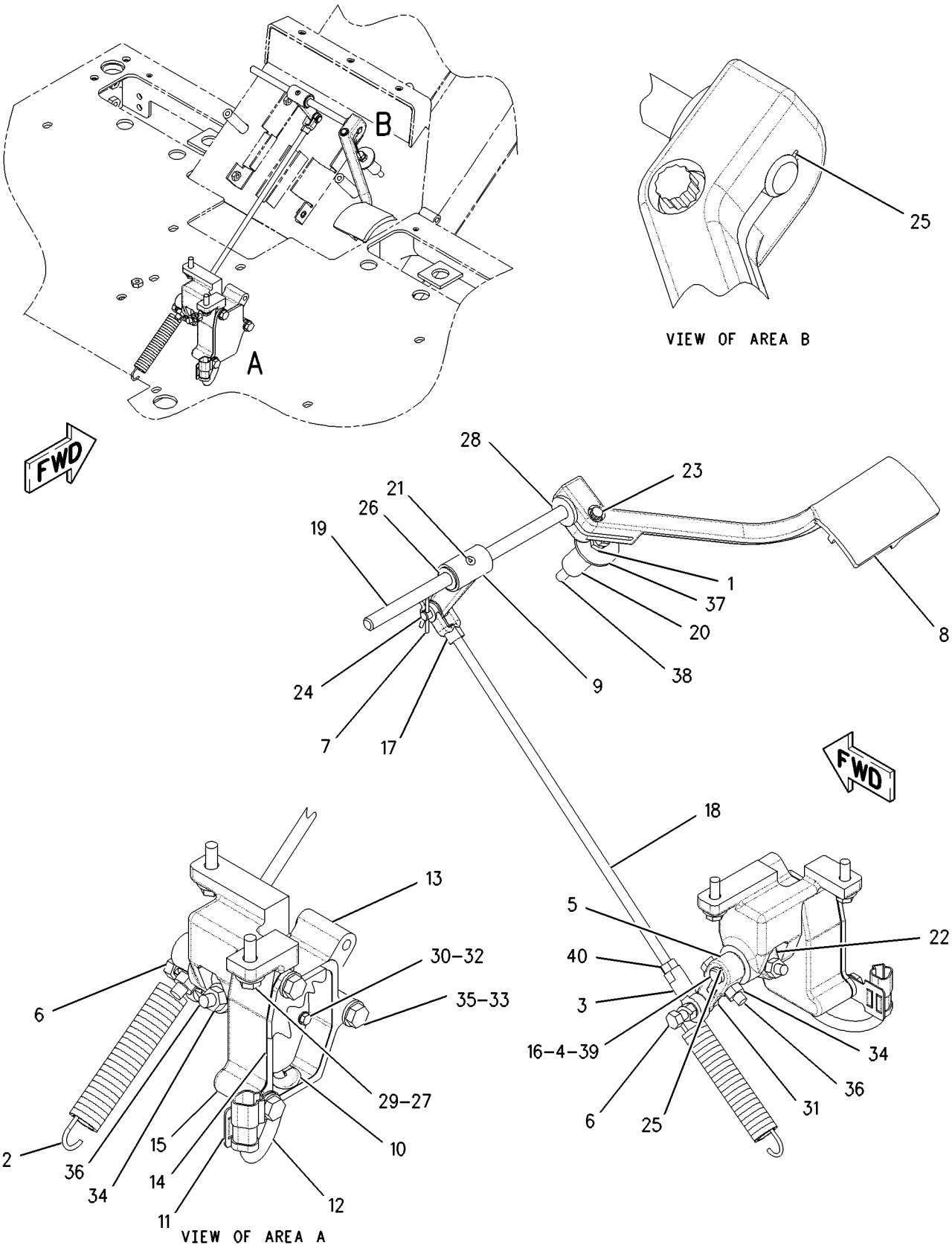

GRAPHIC #1 **<END>** g00906785

230-4617 FASTENER GP-FUEL TANK

S/N: CBK1-UP

PART OF 162-5605 GENERAL AR

SMCS-1273, 7553 **i01912811**

NOTE	REF NO	GRAPHIC REF	PART NUMBER	QTY	PART NAME 1 2 3 4 5 6 (PRODUCT LEVEL)	SEE PAGE
	1	1	**174-5692**	4	SPACER (13.87X21.33X28-MM THK)	
	2	1	**5P-1076**	12	WASHER-HARD (13.5X30X4-MM THK)	
M	3	1	**8T-4139**	14	BOLT (M12X1.75X30-MM)	
M	4	1	**8T-4223**	14	WASHER-HARD (13.5X25.5X3-MM THK)	
M	5	1	**8T-4910**	4	BOLT (M12X1.75X60-MM)	
M	6	1	**8T-4956**	8	BOLT (M12X1.75X35-MM)	

M-METRIC PART

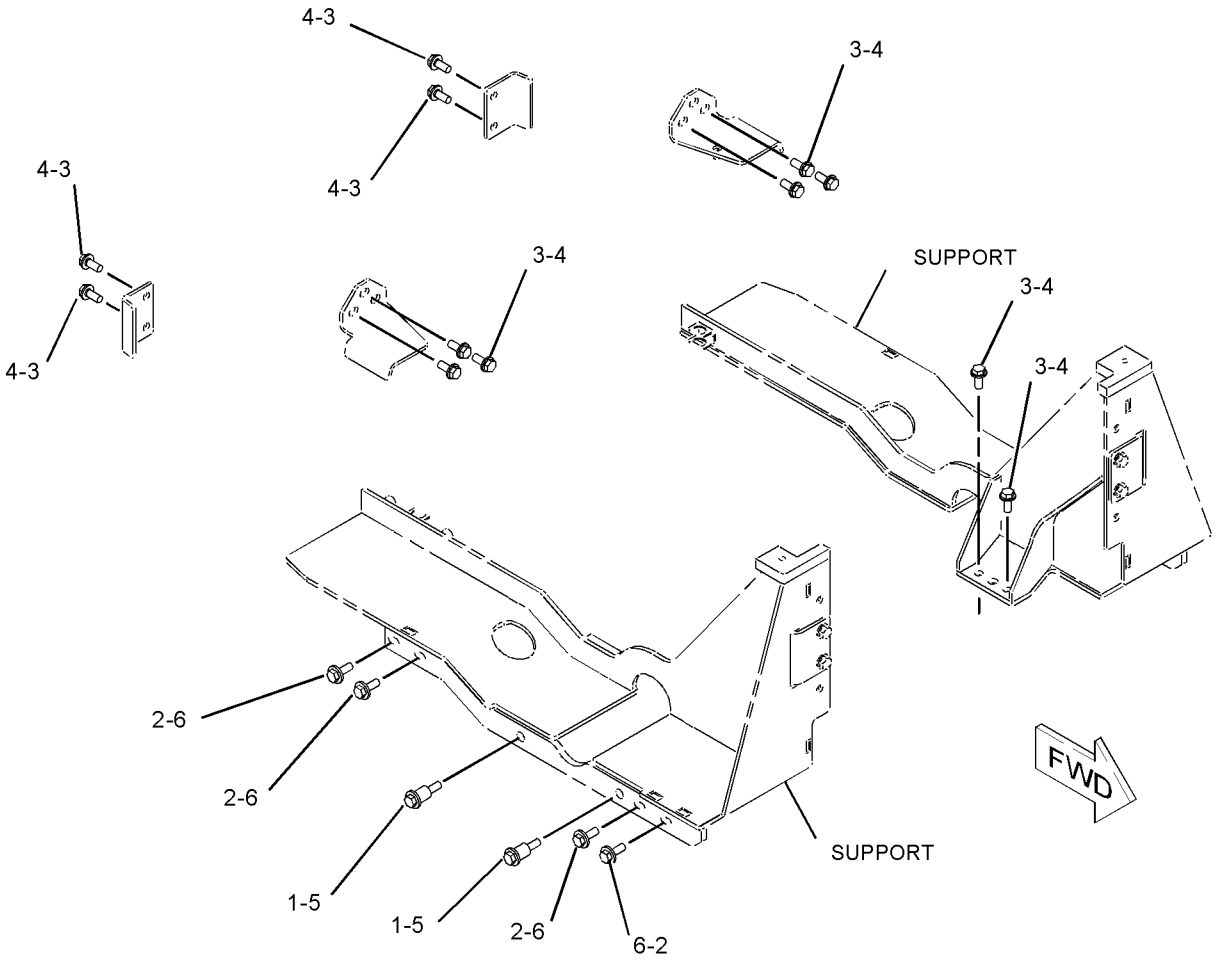

GRAPHIC #1

<END>

g01013497

176-5739 FILTER GP-FUEL

S/N: 4ZF4479-UP

PART OF 168-7967 ENGINE AR

SMCS-1261 **i01967036**

NOTE	REF NO	GRAPHIC REF	PART NUMBER	QTY	PART NAME 1 2 3 4 5 6 (PRODUCT LEVEL)	SEE PAGE
	1	1	**9S-4191**	2	PLUG	
	1A	1	**6V-5049**	2	SEAL-O-RING	
	2	1	**212-2768**	1	SWITCH GP-PRESSURE (FUEL) (FUEL)	
		1	**102-8802**	1	KIT-RECEPTACLE (2-PIN)	
					(INCLUDES RECEPTACLE AS & WEDGE)	
D		1	**9X-1813**		SLEEVE (1.4M)	
		1	**2M-9780**	1	SEAL-O-RING	
		1	**6V-3922**	1	SEAL-O-RING	
	3	1	**213-0064**	1	BASE AS	
		1	**9S-4167**	1	STUD-HOLLOW	
	4	1	**141-8275**	2	VALVE-DRAIN	
	5	1	**1R-0762**	1	FILTER AS-FUEL	
	6	1	**3E-4353**	4	WASHER-HARD (11X25X3-MM THK)	
	7	1	**3J-1907**	2	SEAL-O-RING	
M	8	1	**6V-4248**	4	BOLT (M10X1.5X25-MM)	
	9	1	*165-6365*	1	FITTING AS	
		1	**3J-1907**	1	SEAL-O-RING	
		1	**7W-7381**	1	FITTING-OUTLET	

D-ORDER BY THE METER
M-METRIC PART

176-5739 **FILTER GP-FUEL** *(contd.)* **i01967036**

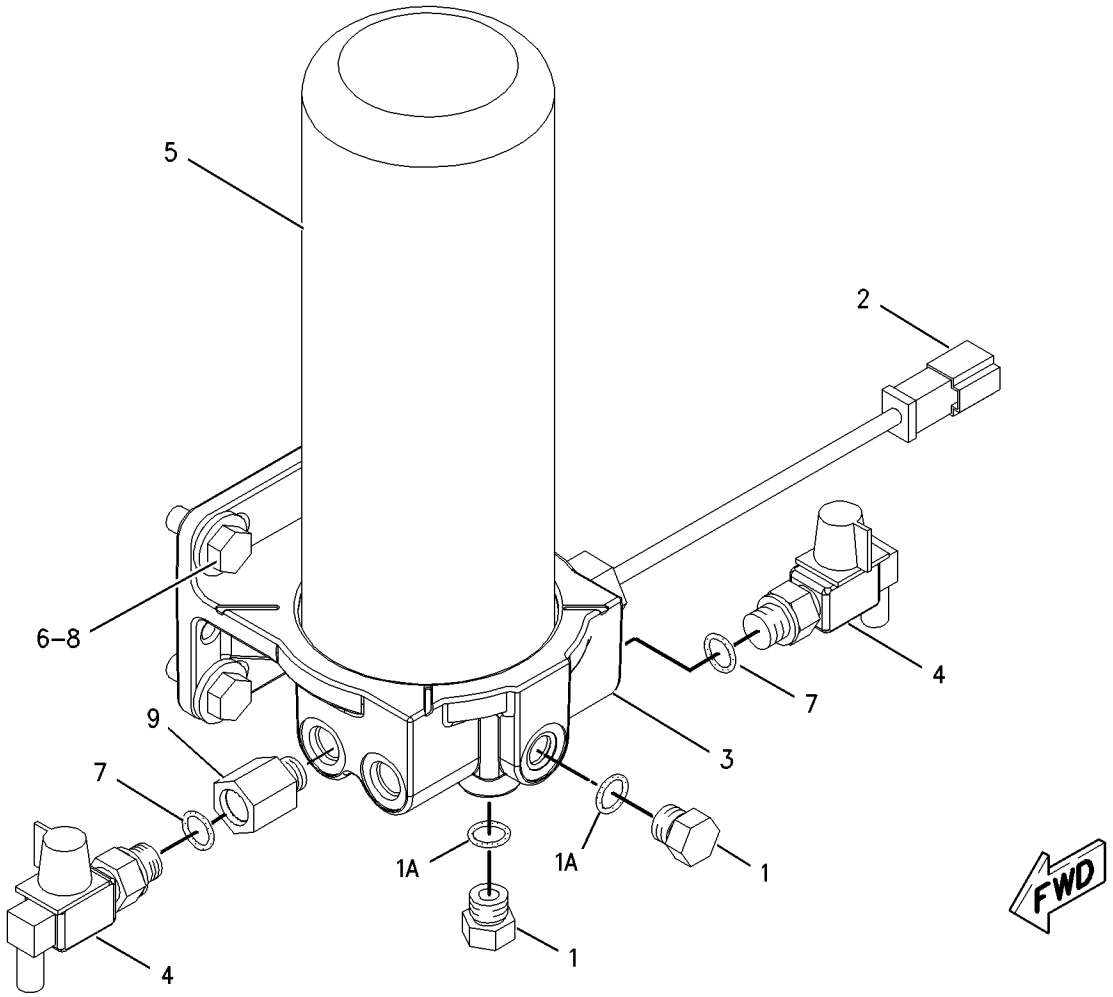

GRAPHIC #1 **<END>** g00995174

174-9570 FILTER GP-WATER SEP & FUEL

S/N: 4ZF4479-UP

PART OF 190-8977 WATER SEP & FUEL PRM PUMP GP

SMCS-1261, 1263 **i01882775**

NOTE	REF NO	GRAPHIC REF	PART NUMBER	QTY	PART NAME 1 2 3 4 5 6 (PRODUCT LEVEL)	SEE PAGE
	1	1	**173-7126**	1	BOWL AS	
	2	1	**1R-0770**	1	FILTER AS-WATER SEP & FUEL	
		1	**220-8678**	1	SEAL	

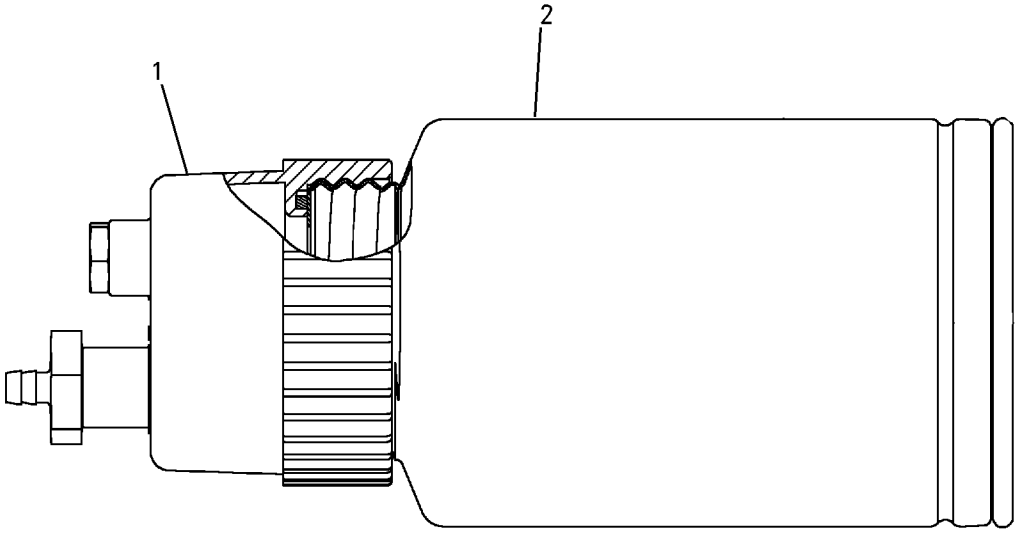

GRAPHIC #1 **<END>** g00787237

217-2570 INJECTOR GP-FUEL

S/N: 4ZF4479-7972

PART OF 172-5780 PUMP GP-UNIT INJECTION

SMCS-1251, 1254, 1290, 1713 **i01833115**

NOTE	REF NO	GRAPHIC REF	PART NUMBER	QTY	PART NAME 1 2 3 4 5 6 (PRODUCT LEVEL)	SEE PAGE
	1	1	**149-5240**	1	RING-BACKUP	
	2	1	**169-3104**	1	RING-BACKUP	
	3	1	**169-8598**	1	SEAL-O-RING	
	5	1	**109-3207**	1	SEAL-O-RING	
	6	1	**148-2903**	1	SEAL-O-RING	
	7	1	**169-8586**	1	RING-BACKUP	

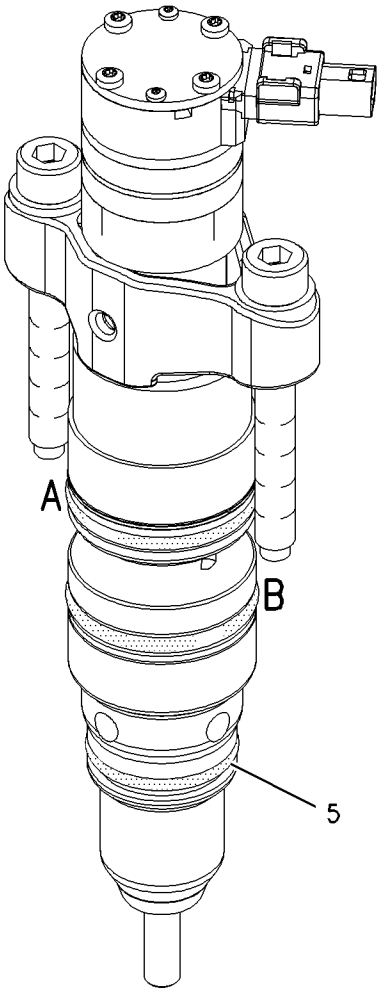

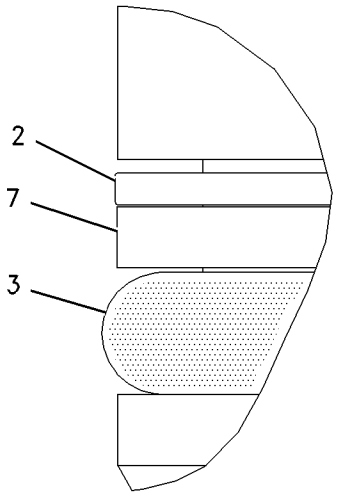

VIEW OF AREA A

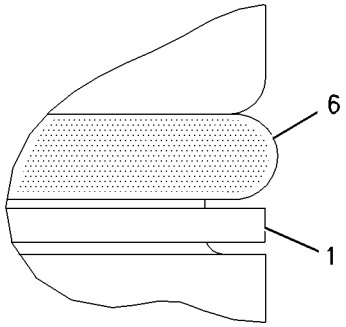

VIEW OF AREA B

GRAPHIC #1 **<END>** g00904814

236-0962 INJECTOR GP-FUEL

S/N: 4ZF7973-UP

PART OF 172-5780 PUMP GP-UNIT INJECTION

SMCS-1251, 1254, 1290, 1713 **i01967947**

NOTE	REF NO	GRAPHIC REF	PART NUMBER	QTY	PART NAME 1 2 3 4 5 6 (PRODUCT LEVEL)	SEE PAGE
	1	1	**149-5240**	1	RING-BACKUP	
	2	1	**169-3104**	1	RING-BACKUP	
	3	1	**169-8598**	1	SEAL-O-RING	
	5	1	**109-3207**	1	SEAL-O-RING	
	6	1	**148-2903**	1	SEAL-O-RING	
	7	1	**169-8586**	1	RING-BACKUP	

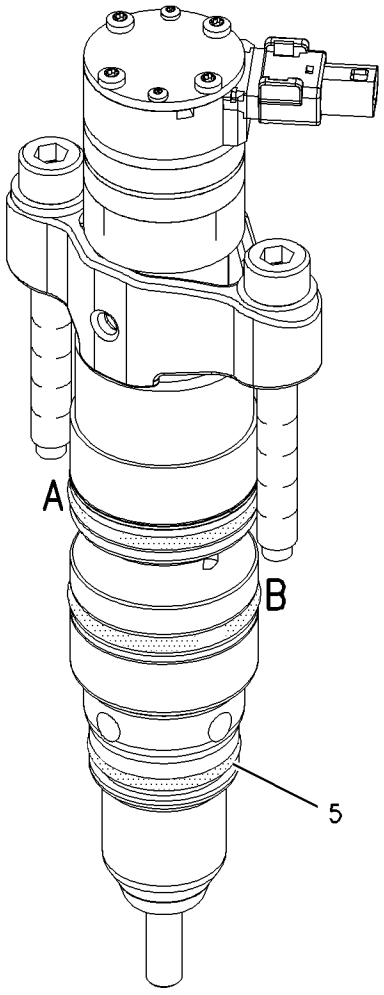

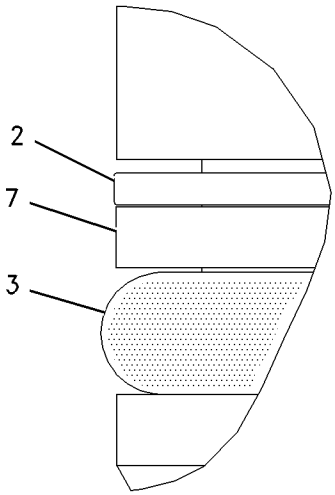

VIEW OF AREA A

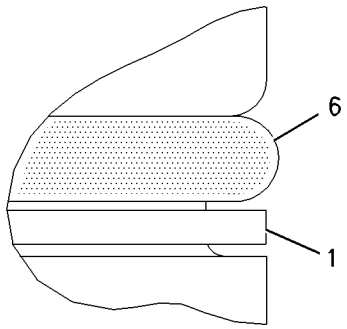

VIEW OF AREA B

GRAPHIC #1 **<END>** g00904814

FUEL SYSTEM

190-1103 LINES GP-FUEL

S/N: 4ZF4479-6049

PART OF 168-7967 ENGINE AR

SMCS-1274 **i01871451**

NOTE	REF NO	GRAPHIC REF	PART NUMBER	QTY	PART NAME 1 2 3 4 5 6 (PRODUCT LEVEL)	SEE PAGE
I	1	1	**111-7015**	1	HOSE AS	
	2	1	*169-5862*	1	ELBOW AS	
		1	**8C-6712**	1	ELBOW	
		1	**3J-1907**	1	SEAL-O-RING	
	3	1	**183-3405**	1	TEE AS	
		1	**7X-2459**	1	TEE-O-RING	
		1	**8L-2779**	1	SEAL-O-RING (9.25MM ID)	
		1	**6V-5049**	1	SEAL-O-RING (11.89MM ID)	
	4	1	**186-6315**	1	BLOCK-FUEL	
	5	1	**191-6637**	1	TUBE AS	
Y	6	1	**198-1897**	1	REGULATOR GP-FUEL PRESSURE	111
	7	1	*148-8336*	2	CONNECTOR AS	
					(EACH INCLUDES)	
		1	**6V-8636**	1	CONNECTOR	
		1	**3J-1907**	1	SEAL-O-RING (11.89MM ID)	
		1	**6V-8397**	1	SEAL-O-RING (9.27MM ID)	
	8	1	*148-8345*	1	CONNECTOR AS	
		1	**6V-8638**	1	CONNECTOR	
		1	**2M-9780**	1	SEAL-O-RING (19.18MM ID)	
		1	**6V-8398**	1	SEAL-O-RING (9.27MM ID)	
	9	1	*148-8372*	1	ELBOW AS	
		1	**6V-8721**	1	ELBOW	
		1	**2M-9780**	1	SEAL-O-RING (19.18MM ID)	
		1	**6V-8398**	1	SEAL-O-RING (12.47MM ID)	
	10	1	*148-8378*	2	ELBOW AS	
					(EACH INCLUDES)	
		1	**6V-8724**	1	ELBOW	
		1	**6V-8397**	1	SEAL-O-RING (9.27MM ID)	
		1	**3J-1907**	1	SEAL-O-RING (11.89MM ID)	
	11	1	*150-4043*	1	CONNECTOR AS	
		1	**3J-1907**	1	SEAL-O-RING (11.89MM ID)	
		1	**6V-8398**	1	SEAL-O-RING (12.47MM ID)	
		1	**6V-9873**	1	CONNECTOR	
I	12	1	**196-7917**	1	HOSE AS	
	13	1	**3J-7354**	1	SEAL-O-RING	
	14	1	**6V-0852**	1	CAP-DUST	
M	15	1	**6V-4249**	1	BOLT (M10X1.5X50-MM)	
	16	1	**6V-5839**	1	WASHER (11X21X2.5-MM THK)	
	17	1	**8C-3446**	1	VALVE AS-FLUID SAMPLING (FUEL)	

I-REFER TO HYDRAULIC INFORMATION SYSTEM
M-METRIC PART
Y-SEPARATE ILLUSTRATION

190-1103 **LINES GP-FUEL** *(contd.)* **i01871451**

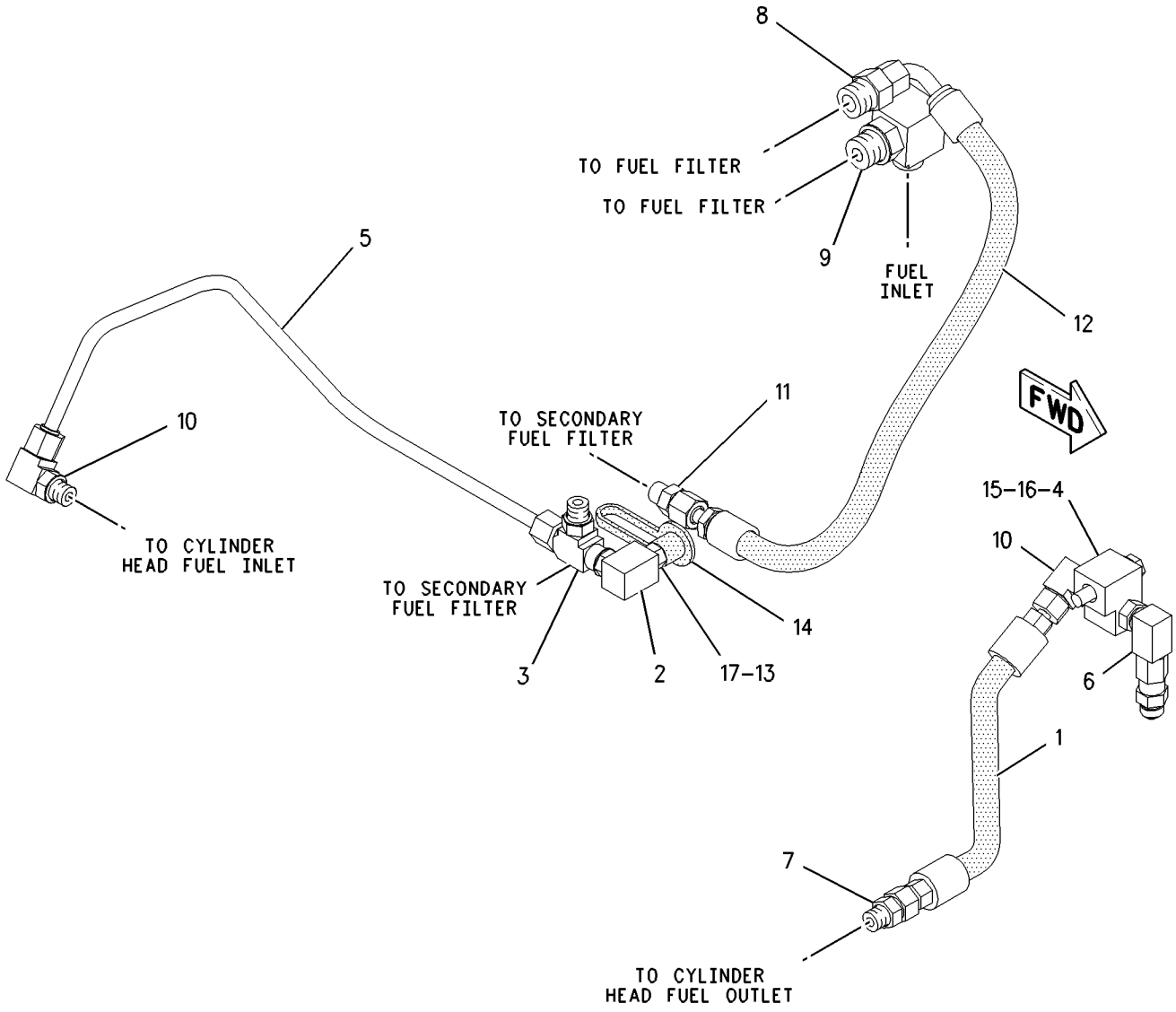

GRAPHIC #1 **<END>** g00953688

FUEL SYSTEM

190-1103 LINES GP-FUEL

S/N: 4ZF6050-7442

PART OF 168-7967 ENGINE AR

SMCS-1274 **i01967009**

NOTE	REF NO	GRAPHIC REF	PART NUMBER	QTY	PART NAME 1 2 3 4 5 6 (PRODUCT LEVEL)	SEE PAGE
I	1	1	**111-7015**	1	HOSE AS	
	2	1	*169-5862*	1	ELBOW AS	
		1	**8C-6712**	1	ELBOW	
		1	**3J-1907**	1	SEAL-O-RING	
	3	1	**183-3405**	1	TEE AS	
		1	**7X-2459**	1	TEE-O-RING	
		1	**8L-2779**	1	SEAL-O-RING (9.25MM ID)	
		1	**6V-5049**	1	SEAL-O-RING (11.89MM ID)	
	4	1	**186-6315**	1	BLOCK-FUEL	
	5	1	**191-6637**	1	TUBE AS	
CY	6	1	*205-1306*	1	REGULATOR GP-FUEL PRESSURE	112
	7	1	*148-8336*	2	CONNECTOR AS	
					(EACH INCLUDES)	
		1	**6V-8636**	1	CONNECTOR	
		1	**3J-1907**	1	SEAL-O-RING (11.89MM ID)	
		1	**6V-8397**	1	SEAL-O-RING (9.27MM ID)	
	8	1	*148-8345*	1	CONNECTOR AS	
		1	**6V-8638**	1	CONNECTOR	
		1	**2M-9780**	1	SEAL-O-RING (19.18MM ID)	
		1	**6V-8398**	1	SEAL-O-RING (9.27MM ID)	
	9	1	*148-8372*	1	ELBOW AS	
		1	**6V-8721**	1	ELBOW	
		1	**2M-9780**	1	SEAL-O-RING (19.18MM ID)	
		1	**6V-8398**	1	SEAL-O-RING (12.47MM ID)	
	10	1	*148-8378*	2	ELBOW AS	
					(EACH INCLUDES)	
		1	**6V-8724**	1	ELBOW	
		1	**6V-8397**	1	SEAL-O-RING (9.27MM ID)	
		1	**3J-1907**	1	SEAL-O-RING (11.89MM ID)	
	11	1	*150-4043*	1	CONNECTOR AS	
		1	**3J-1907**	1	SEAL-O-RING (11.89MM ID)	
		1	**6V-8398**	1	SEAL-O-RING (12.47MM ID)	
		1	**6V-9873**	1	CONNECTOR	
I	12	1	**196-7917**	1	HOSE AS	
	13	1	**3J-7354**	1	SEAL-O-RING	
	14	1	**6V-0852**	1	CAP-DUST	
M	15	1	**6V-4249**	1	BOLT (M10X1.5X50-MM)	
	16	1	**6V-5839**	1	WASHER (11X21X2.5-MM THK)	
	17	1	**8C-3446**	1	VALVE AS-FLUID SAMPLING (FUEL)	
C	18	1	**6V-5049**	1	SEAL-O-RING	
C	19	1	**2R-6806**	1	CONNECTOR	

C-CHANGE FROM PREVIOUS TYPE
I-REFER TO HYDRAULIC INFORMATION SYSTEM
M-METRIC PART
Y-SEPARATE ILLUSTRATION

190-1103 **LINES GP-FUEL** *(contd.)* **i01967009**

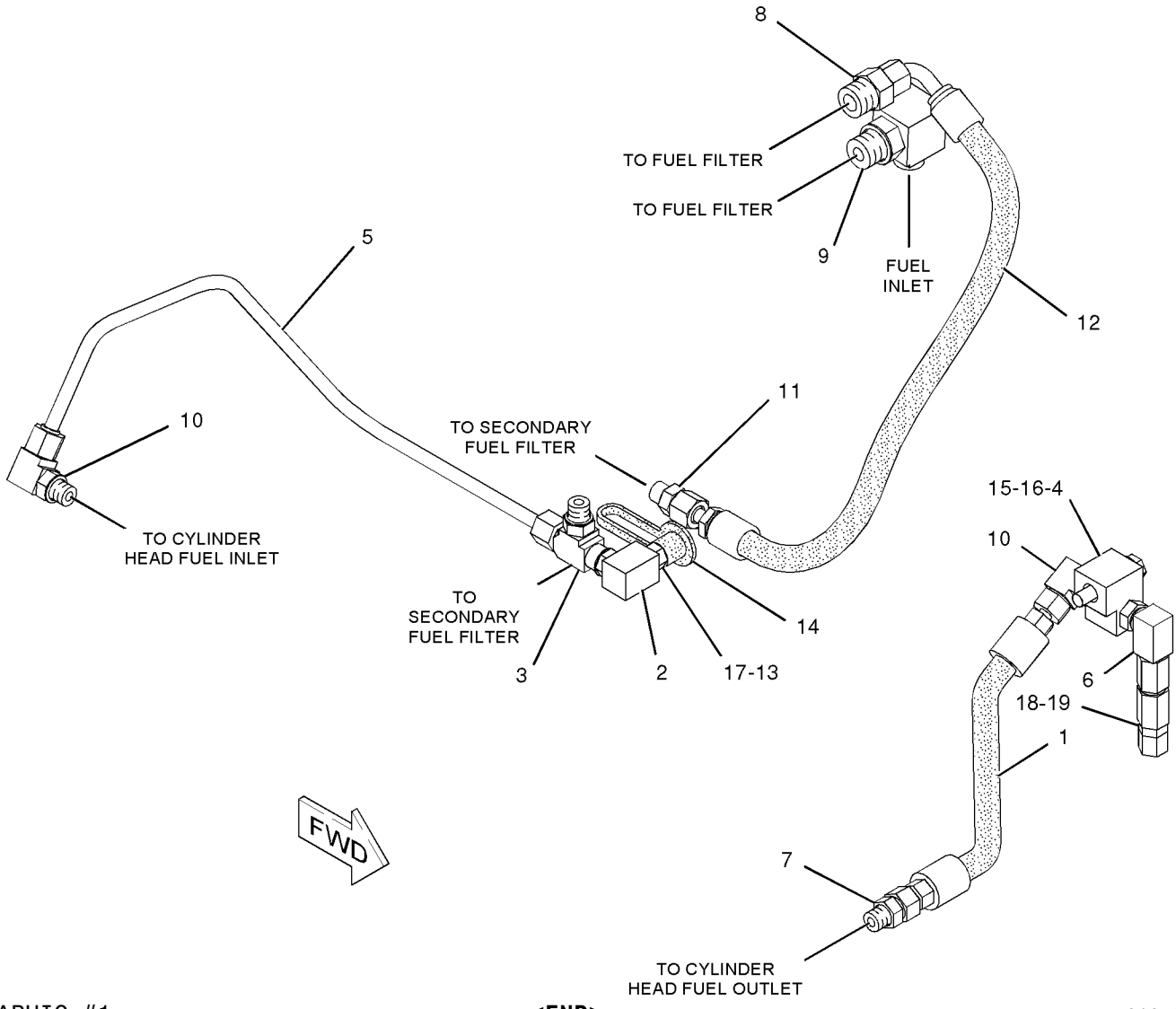

GRAPHIC #1 **<END>** g01058798

FUEL SYSTEM

190-1103 LINES GP-FUEL

S/N: 4ZF7443-UP

PART OF 168-7967 ENGINE AR

SMCS-1274 **i01985645**

NOTE	REF NO	GRAPHIC REF	PART NUMBER	QTY	PART NAME 1 2 3 4 5 6 (PRODUCT LEVEL)	SEE PAGE
I	1	1	**111-7015**	1	HOSE AS	
	2	1	**186-6315**	1	BLOCK-FUEL	
	3	1	**191-6637**	1	TUBE AS	
I	4	1	**205-0983**	1	HOSE AS	
Y	5	1	*205-1306*	1	REGULATOR GP-FUEL PRESSURE	112
	6	1	*148-8336*	1	CONNECTOR AS	
		1	**6V-8636**	1	CONNECTOR	
		1	**3J-1907**	1	SEAL-O-RING (11.89MM ID)	
		1	**6V-8397**	1	SEAL-O-RING (9.27MM ID)	
	7	1	*148-8345*	1	CONNECTOR AS	
		1	**6V-8638**	1	CONNECTOR	
		1	**2M-9780**	1	SEAL-O-RING (19.18MM ID)	
		1	**6V-8398**	1	SEAL-O-RING (9.27MM ID)	
	8	1	*148-8365*	1	ELBOW AS	
		1	**8T-6876**	1	ELBOW	
		1	**3J-1907**	1	SEAL-O-RING	
		1	**6V-8398**	1	SEAL-O-RING	
	9	1	*148-8372*	1	ELBOW AS	
		1	**6V-8721**	1	ELBOW	
		1	**2M-9780**	1	SEAL-O-RING (19.18MM ID)	
		1	**6V-8398**	1	SEAL-O-RING (12.47MM ID)	
C	10	1	*148-8378*	3	ELBOW AS	
					(EACH INCLUDES)	
		1	**6V-8724**	1	ELBOW	
		1	**6V-8397**	1	SEAL-O-RING (9.27MM ID)	
		1	**3J-1907**	1	SEAL-O-RING (11.89MM ID)	
	11	1	**2R-6806**	1	CONNECTOR	
M	12	1	**6V-4249**	1	BOLT (M10X1.5X50-MM)	
	13	1	**6V-5049**	1	SEAL-O-RING	
	14	1	**6V-5839**	1	WASHER (11X21X2.5-MM THK)	

C-CHANGE FROM PREVIOUS TYPE
I-REFER TO HYDRAULIC INFORMATION SYSTEM
M-METRIC PART
Y-SEPARATE ILLUSTRATION

190-1103 **LINES GP-FUEL** *(contd.)* **i01985645**

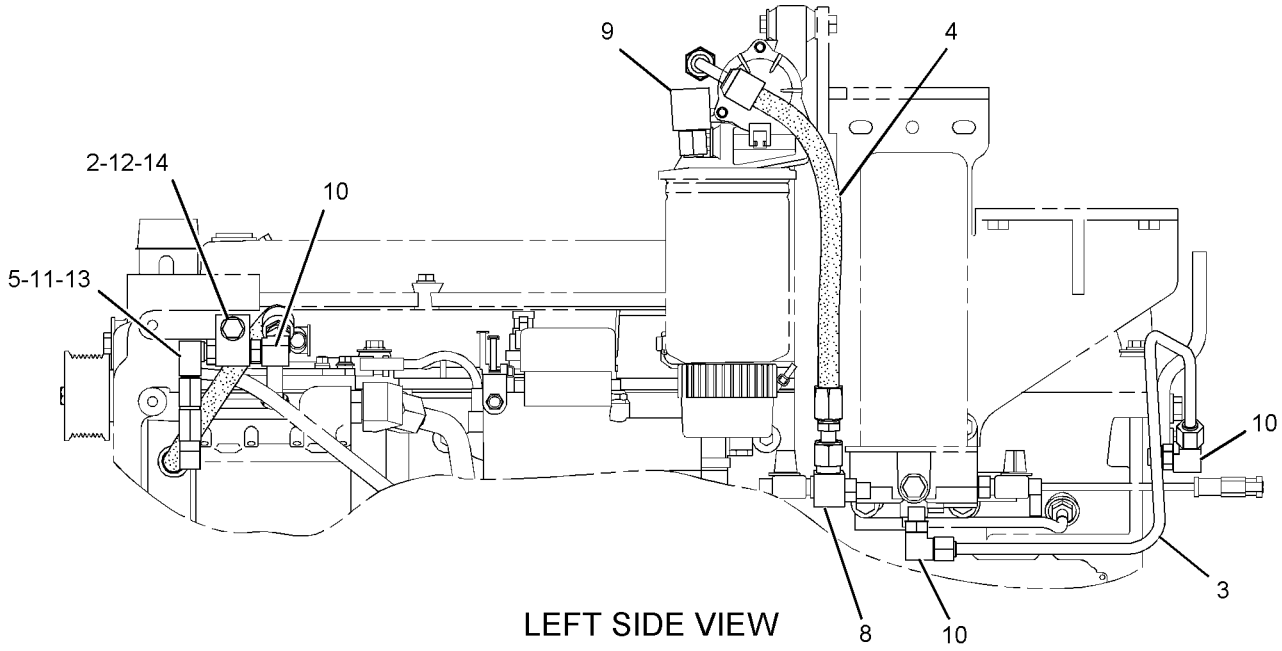

LEFT SIDE VIEW

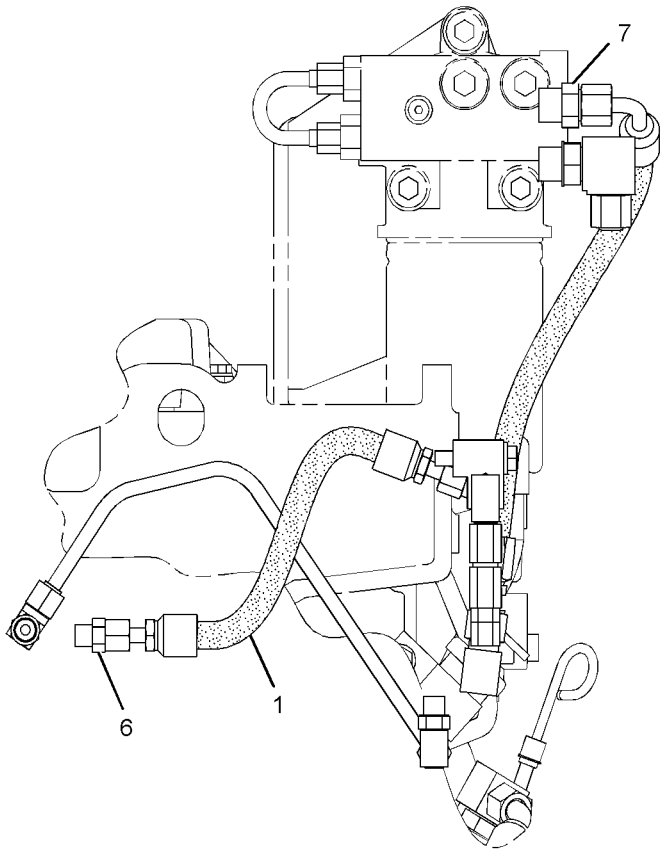

FRONT VIEW

GRAPHIC #1

<END>

g01064243

220-0768 LINES GP-FUEL–REAR

S/N: CBK1-UP

PART OF 162-5605 GENERAL AR

SMCS-1274 **i01906064**

NOTE	REF NO	GRAPHIC REF	PART NUMBER	QTY	PART NAME 1 2 3 4 5 6 (PRODUCT LEVEL)	SEE PAGE
	1	1	**8T-4984**	4	CLAMP-HOSE	
	2	1	**197-0949**	1	HOSE (RH)	
	3	1	**197-0951**	1	HOSE (LH)	
	4	1	**197-4637**	1	FITTING (QUICK)	
	5	1	**197-4638**	1	COUPLER (QUICK)	
	6	1	**162-9523**	2	GROMMET	
	7	1	**6V-1572**	2	CLIP (SLOT)	
	8	1	**6V-1573**	2	CLIP (TAB)	
	9	1	**8T-4121**	2	WASHER-HARD (11X21X2.5-MM THK)	
M	10	1	**8T-4195**	2	BOLT (M10X1.5X30-MM)	

M-METRIC PART

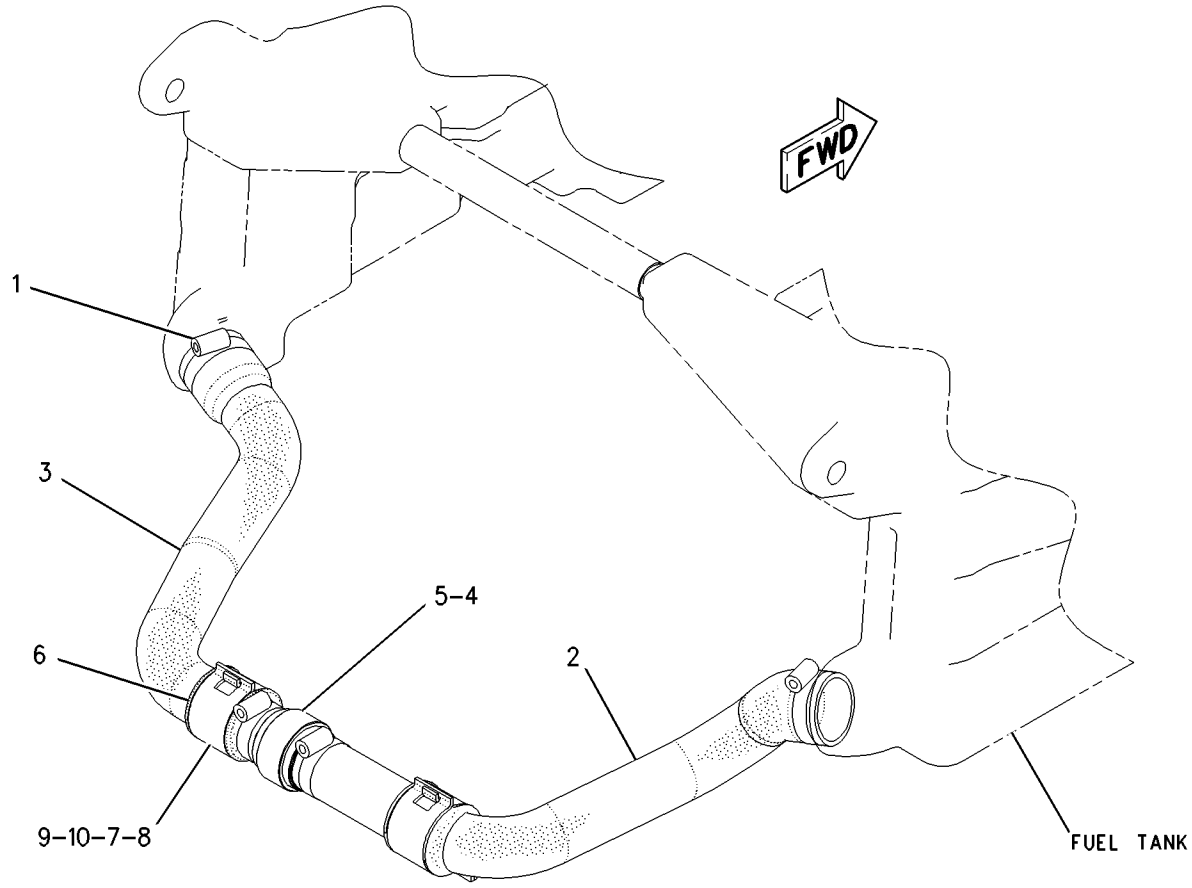

GRAPHIC #1 **<END>** g00876793

FUEL SYSTEM

175-0406 LINES GP-FUEL FILTER

S/N: CBK1-UP

PART OF 162-5605 GENERAL AR

SMCS-1261, 1274 **i02094212**

NOTE	REF NO	GRAPHIC REF	PART NUMBER	QTY	PART NAME 1 2 3 4 5 6 (PRODUCT LEVEL)	SEE PAGE
	1	1	**5P-4961**	1	CLAMP-HOSE	
I	2	1	**103-1743**	2	HOSE AS	
	3	1	**194-5133**	1	BRACKET AS	
	4	1	**195-0852**	1	HOSE AS	
I	5	1	**226-3475**	1	HOSE AS	
I	6	1	**226-3533**	1	HOSE AS	
	7	1	**250-7695**	2	FITTING (QUICK)	
	8	1	*148-8340*	1	CONNECTOR AS	
		1	**6V-8639**	1	CONNECTOR	
		1	**3K-0360**	1	SEAL-O-RING	
		1	**6V-8398**	1	SEAL-O-RING	
	9	1	**148-8354**	2	ELBOW AS	
					(EACH INCLUDES)	
		1	**6V-9002**	1	ELBOW	
		1	**3K-0360**	1	SEAL-O-RING	
		1	**6V-8398**	1	SEAL-O-RING	
	10	1	*148-8358*	2	ELBOW AS	
					(EACH INCLUDES)	
		1	**6V-8624**	1	ELBOW	
		1	**2M-9780**	1	SEAL-O-RING	
		1	**6V-8398**	1	SEAL-O-RING	
	11	1	*164-5605*	2	CONNECTOR AS	
					(EACH INCLUDES)	
		1	**8T-0076**	1	CONNECTOR	
		1	**3K-0360**	1	SEAL-O-RING	
		1	**6V-8397**	1	SEAL-O-RING	
	12	1	**3S-8665**	3	CLIP	
	13	1	**4D-7735**	2	CLIP	
	14	1	**4K-8864**	1	CLIP	
	15	1	**5P-4325**	1	CLIP	
M	16	1	**6V-5217**	1	BOLT (M8X1.25X20-MM)	
	17	1	**8S-0948**	1	CLIP	
	18	1	**8T-4121**	5	WASHER-HARD (11X21X2.5-MM THK)	
M	19	1	**8T-4137**	5	BOLT (M10X1.5X20-MM)	
	20	1	**9M-1974**	1	WASHER-HARD (8.8X16X2-MM THK)	
E	21	1	**8C-6959**		HOSE (100-CM)	
E	22	1	**9X-2023**		HOSE (104-CM)	

E-ORDER BY THE CENTIMETER
I-REFER TO HYDRAULIC INFORMATION SYSTEM
M-METRIC PART

175-0406 **LINES GP-FUEL FILTER** *(contd.)* **i02094212**

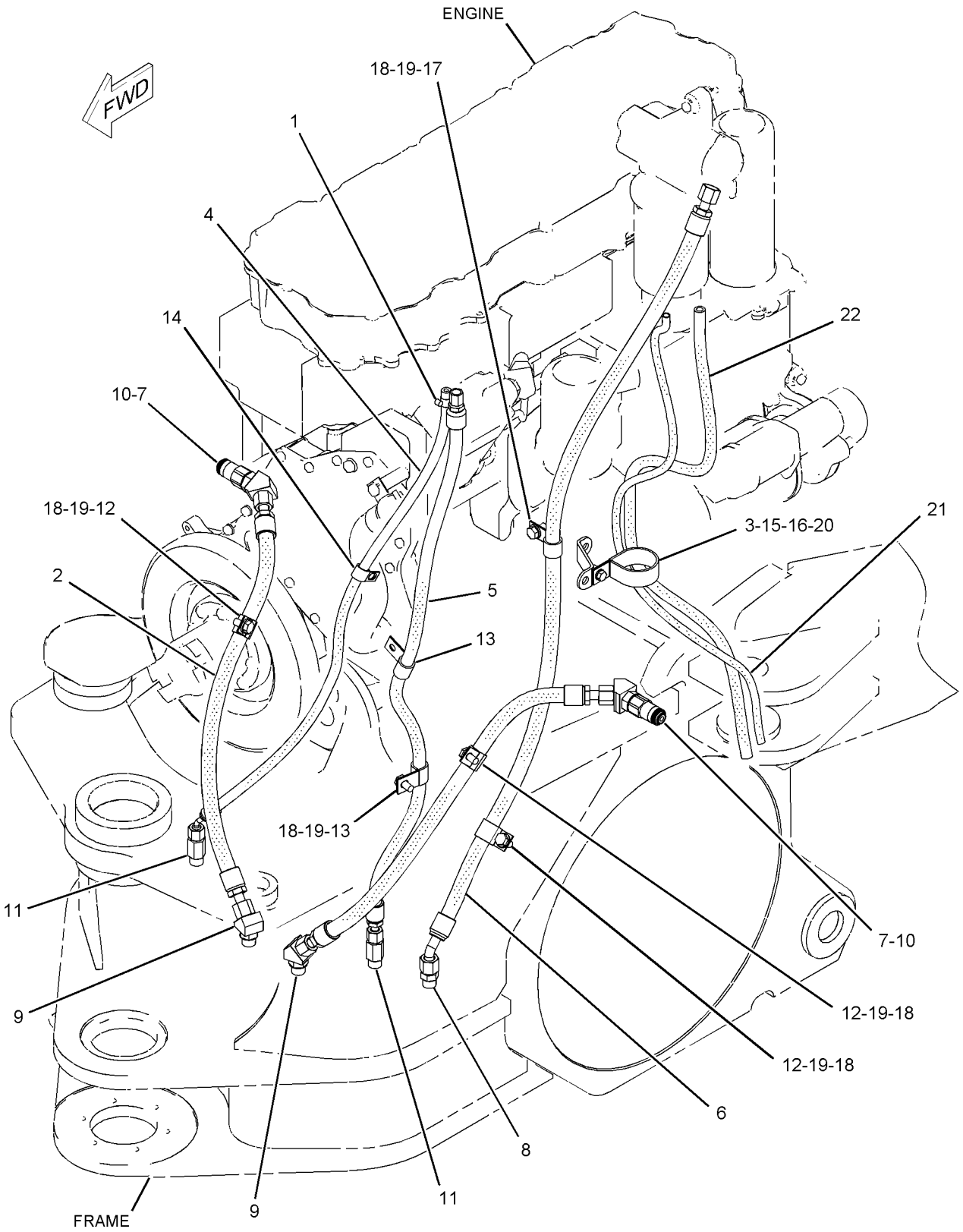

GRAPHIC #1 **<END>** g01068018

190-1048 MOUNTING GP-FUEL FILTER

S/N: 4ZF4479-UP

PART OF 168-7967 ENGINE AR

SMCS-1261, 1262 **i02149838**

NOTE	REF NO	GRAPHIC REF	PART NUMBER	QTY	PART NAME 1 2 3 4 5 6 (PRODUCT LEVEL)	SEE PAGE
	1	1	**190-1049**	1	SUPPORT AS	
	2	1	**246-5093**	1	PLATE	
	3	1	**8T-4121**	7	WASHER-HARD (11X21X2.5-MM THK)	
M	4	1	**8T-4136**	3	BOLT (M10X1.5X25-MM)	
M	5	1	**8T-4195**	4	BOLT (M10X1.5X30-MM)	

M-METRIC PART

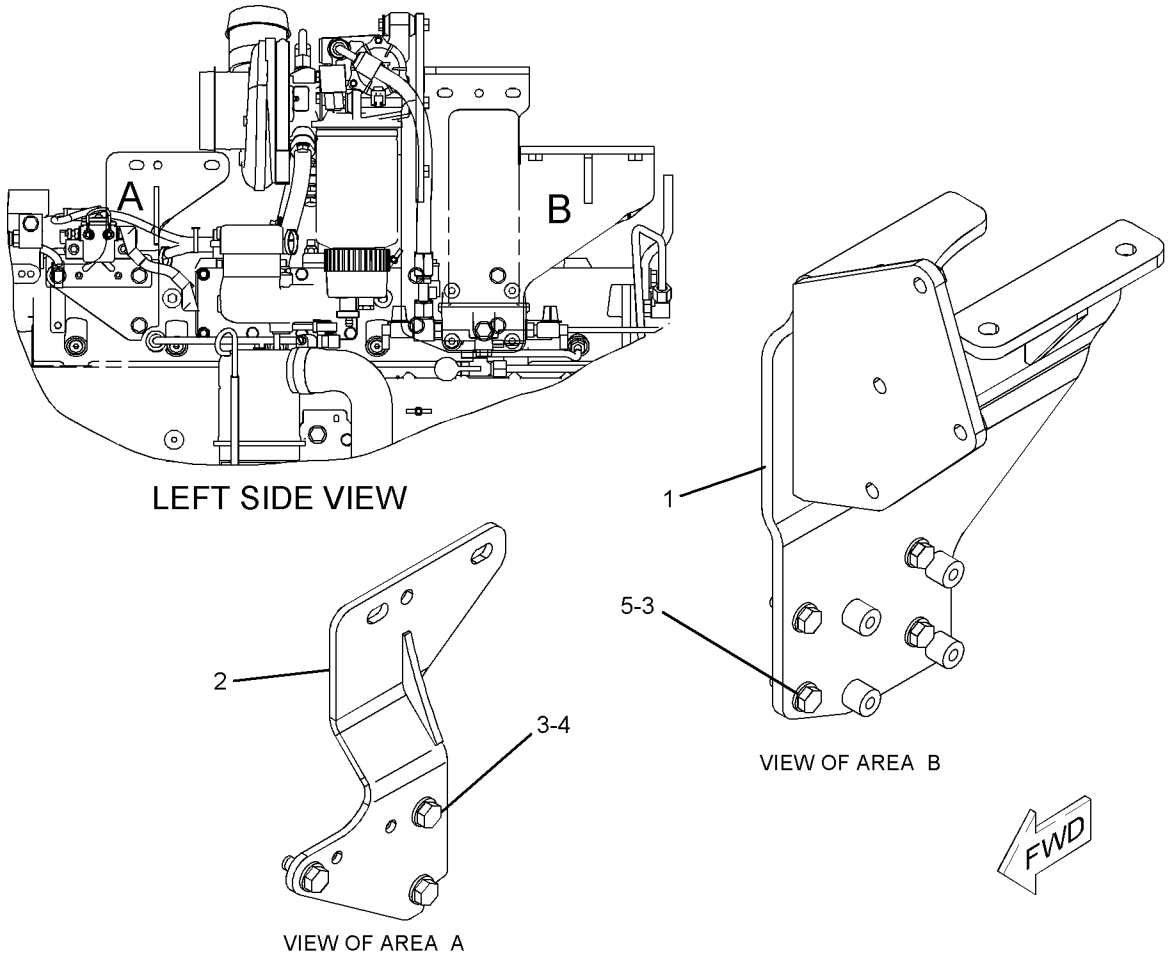

GRAPHIC #1 **<END>** g01091207

191-3517 PUMP & MTG GP-UNIT INJ HYD

S/N: 4ZF4479-9354

PART OF 168-7966 ENGINE AR-CORE

SMCS-1714 **i01891426**

NOTE	REF NO	GRAPHIC REF	PART NUMBER	QTY	PART NAME 1 2 3 4 5 6 (PRODUCT LEVEL)	SEE PAGE
	1A	1	**6V-8636**	2	CONNECTOR	
	1B	1	**214-7568**	2	SEAL-O-RING	
	1C	1	**221-3494**	2	SEAL-O-RING	
	2	1	**9S-8004**	1	PLUG	
		1	**153-4906**	1	SEAL-O-RING	
	3	1	**185-3241**	1	SEAL-O-RING	
	4	1	**193-2162**	1	TUBE AS	
	5	1	**201-5469**	1	TUBE AS	
	6	1	**204-4945**	1	PUMP GP-UNIT INJECTOR HYD	
	7	1	**030-7950**	1	ELBOW	
	8	1	**5P-3264**	1	ELBOW	
	9	1	**6V-4589**	1	SEAL-O-RING	
	10	1	**6V-5050**	1	SEAL-O-RING	
	11	1	**6V-5839**	2	WASHER (11X21X2.5-MM THK)	
M	12	1	**6V-7981**	2	BOLT (M10X1.5X70-MM)	

M-METRIC PART

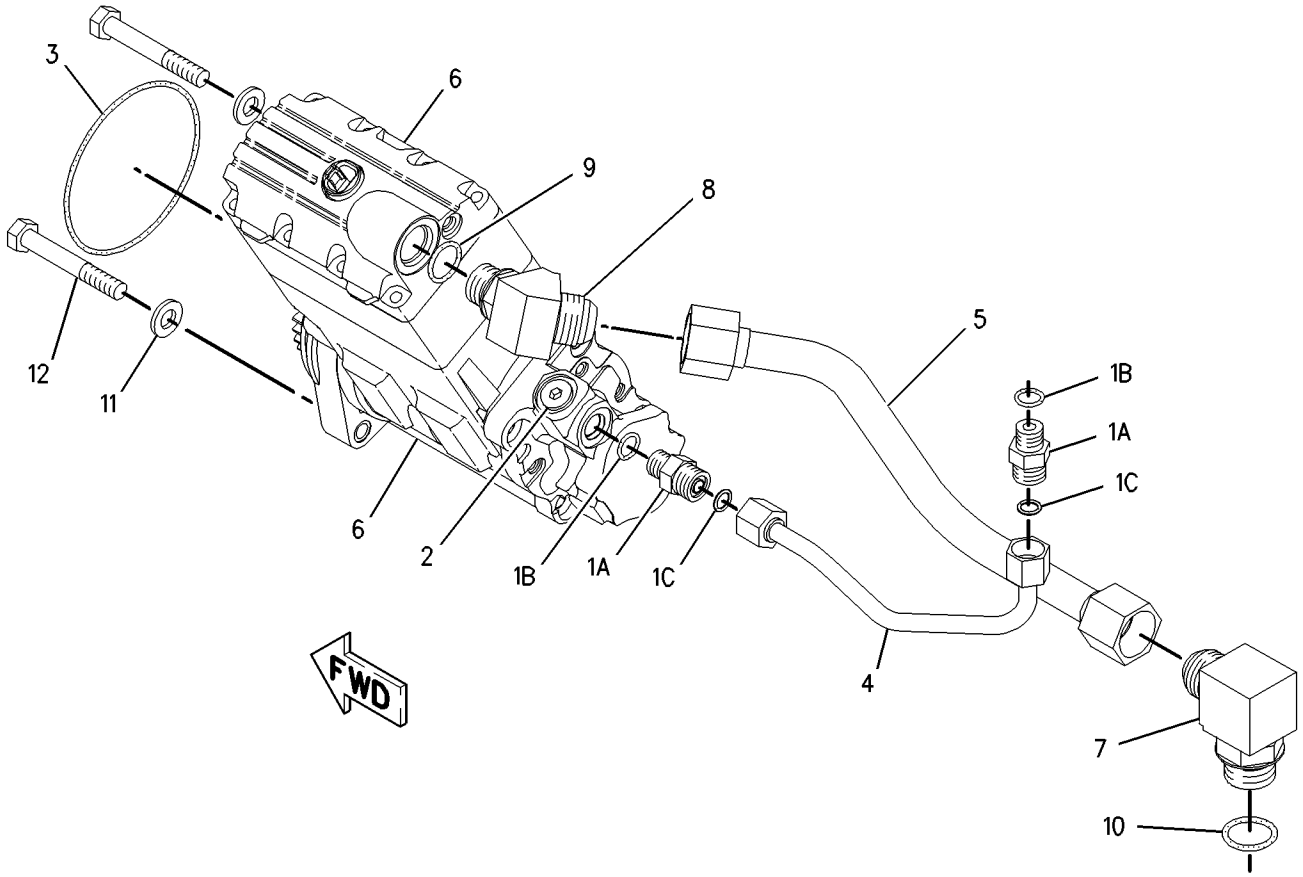

GRAPHIC #1 **<END>** g00793984

191-3517 PUMP & MTG GP-UNIT INJ HYD

S/N: 4ZF9355-UP

PART OF 168-7966 ENGINE AR-CORE

SMCS-1714 **i02162761**

NOTE	REF NO	GRAPHIC REF	PART NUMBER	QTY	PART NAME 1 2 3 4 5 6 (PRODUCT LEVEL)	SEE PAGE
	1	1	*183-3399*	2	CONNECTOR AS	
					(EACH INCLUDES)	
	1A	1	**6V-8636**	1	CONNECTOR	
	1B	1	**214-7568**	1	SEAL-O-RING	
	1C	1	**221-3494**	1	SEAL-O-RING	
	2	1	*183-3407*	1	PLUG AS	
		1	**9S-8004**	1	PLUG	
		1	**153-4906**	1	SEAL-O-RING	
	3	1	**193-2162**	1	TUBE AS	
	4	1	**201-5469**	1	TUBE AS	
	5	1	**227-5904**	1	SEAL-O-RING (UNIT INJECTOR HYD PUMP)	
	6	1	**254-4356**	1	PUMP GP-UNIT INJECTOR HYD	
	7	1	**030-7950**	1	ELBOW	
	8	1	**3E-9412**	1	DOWEL	
	9	1	**5P-3264**	1	ELBOW	
	10	1	**6V-4589**	1	SEAL-O-RING	
	11	1	**6V-5050**	1	SEAL-O-RING	
	12	1	**6V-5839**	2	WASHER (11X21X2.5-MM THK)	
M	13	1	**6V-7981**	2	BOLT (M10X1.5X70-MM)	

M-METRIC PART

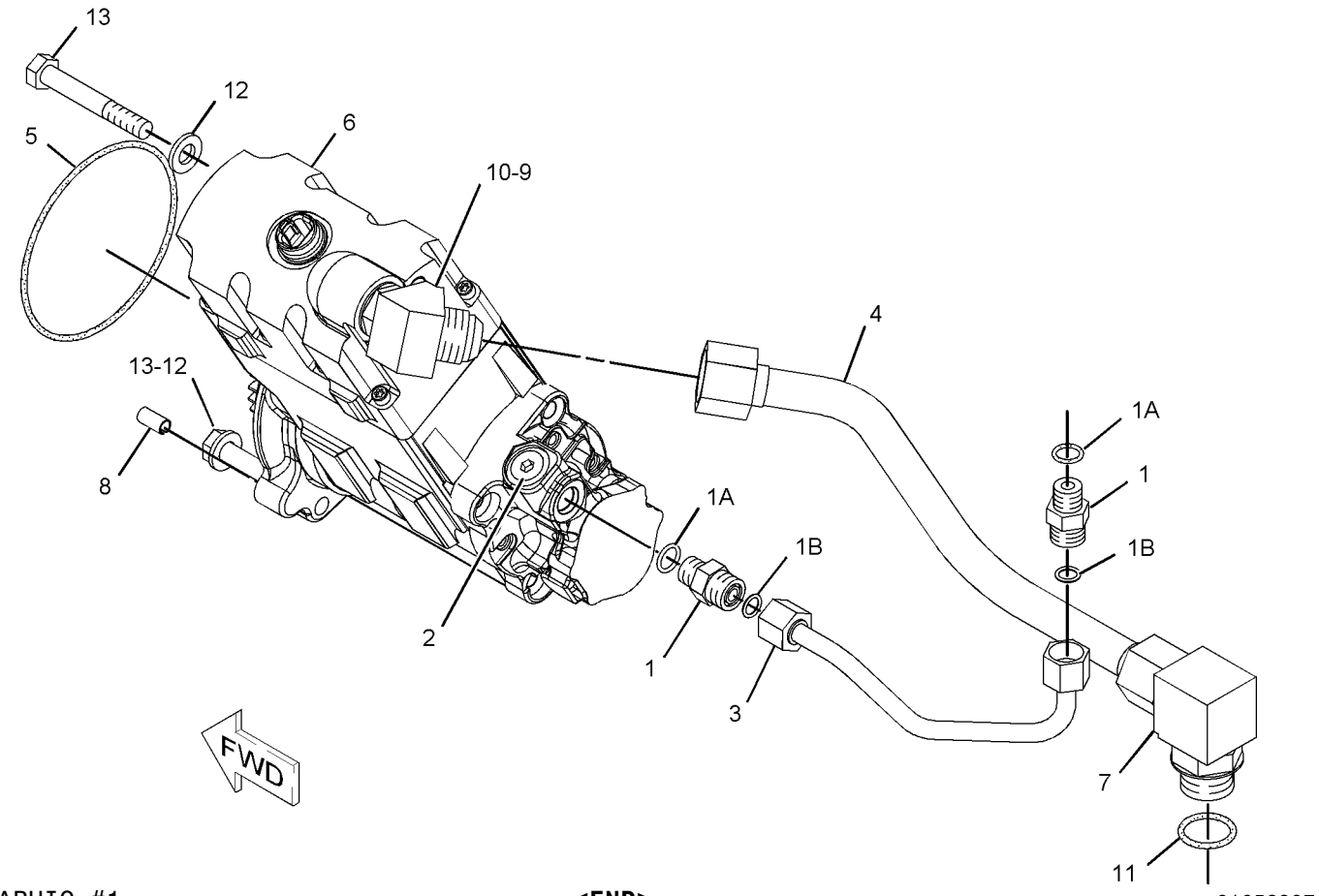

GRAPHIC #1 **<END>** g01058907

188-6121 PUMP GP-FUEL PRM & PRIM FILTER

S/N: 4ZF4479-UP

PART OF 190-1105 PUMP GP-FUEL PRM & PRIM FILTER

SMCS-1258, 1260, 1261 **i01891413**

NOTE	REF NO	GRAPHIC REF	PART NUMBER	QTY	PART NAME 1 2 3 4 5 6 (PRODUCT LEVEL)	SEE PAGE
Y	1	1	**190-8977**	1	WATER SEP & FUEL PRM PUMP GP	117
	2	1	**209-9234**	1	REGULATOR-PRESSURE (FUEL)	
	3	1	**211-7730**	1	TUBE AS	
	4	1	**030-8194**	1	CONNECTOR	
	5	1	**136-7227**	2	SEAL-O-RING	

Y-SEPARATE ILLUSTRATION

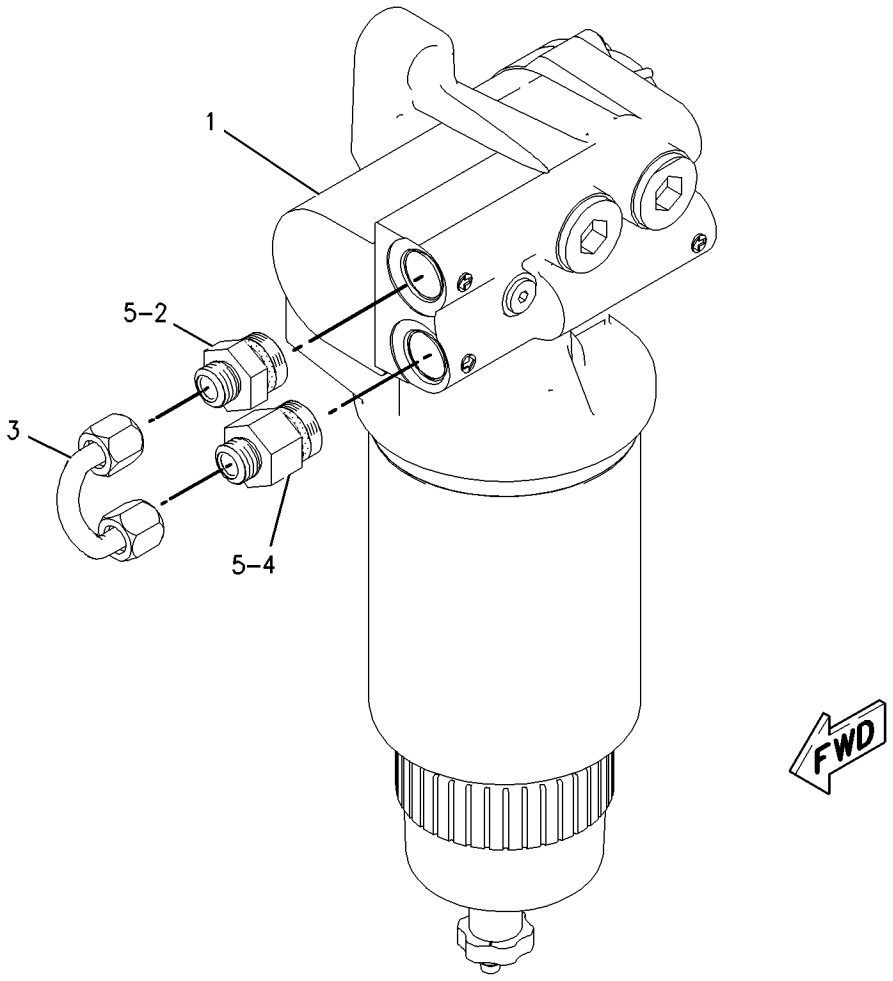

GRAPHIC #1 **<END>** g00850001

190-1105 PUMP GP-FUEL PRM & PRIM FILTER

S/N: 4ZF4479-UP

PART OF 168-7967 ENGINE AR

SMCS-1258, 1260, 1261 **i01871447**

NOTE	REF NO	GRAPHIC REF	PART NUMBER	QTY	PART NAME 1 2 3 4 5 6 (PRODUCT LEVEL)	SEE PAGE
	1	1	**8T-9655**	6	MOUNT (ISOLATION)	
Y	2	1	**188-6121**	1	PUMP GP-FUEL PRM & PRIM FILTER (WITH WATER SEPARATOR)	106
	3	1	**191-1782**	1	SPACER (8.5X12.7X38.2-MM THK)	
	4	1	**191-1783**	2	SPACER (8.5X12.7X87.3-MM THK)	
M	5	1	**7X-2539**	2	BOLT (M8X1.25X110-MM)	
M	6	1	**8T-6869**	1	BOLT (M8X1.25X60-MM)	
	7	1	**9N-0869**	6	WASHER-HARD (8.8X25.5X2-MM THK)	

M-METRIC PART
Y-SEPARATE ILLUSTRATION

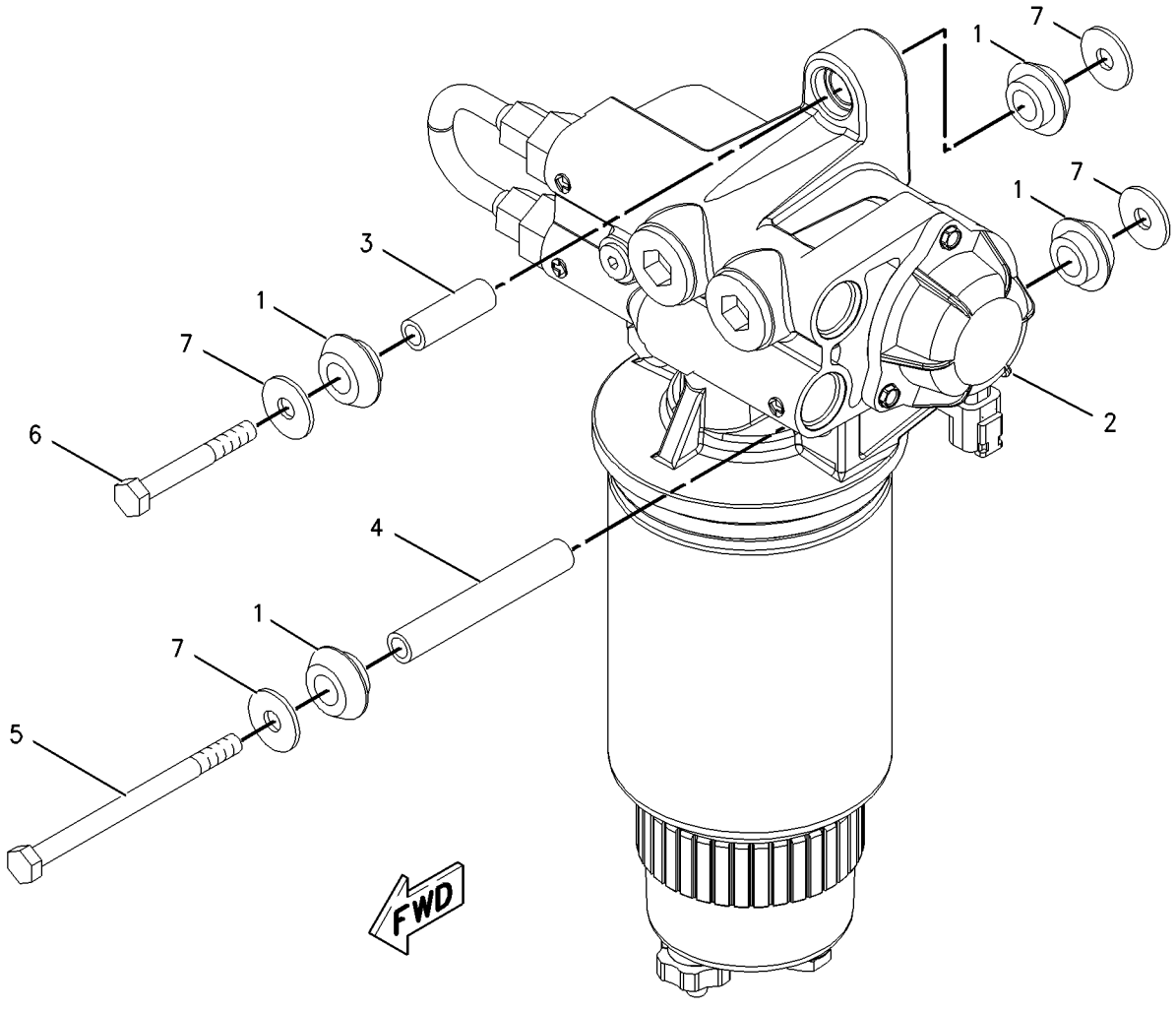

GRAPHIC #1 **<END>** g00859337

166-1759 PUMP GP-UNIT INJECTION

S/N: 4ZF4479-UP

PART OF 168-7966 ENGINE AR-CORE

SMCS-1251, 1290 **i01680027**

NOTE	REF NO	GRAPHIC REF	PART NUMBER	QTY	PART NAME 1 2 3 4 5 6 (PRODUCT LEVEL)	SEE PAGE
Y	1	1	*172-5780*	6	PUMP GP-UNIT INJECTION	109

Y-SEPARATE ILLUSTRATION

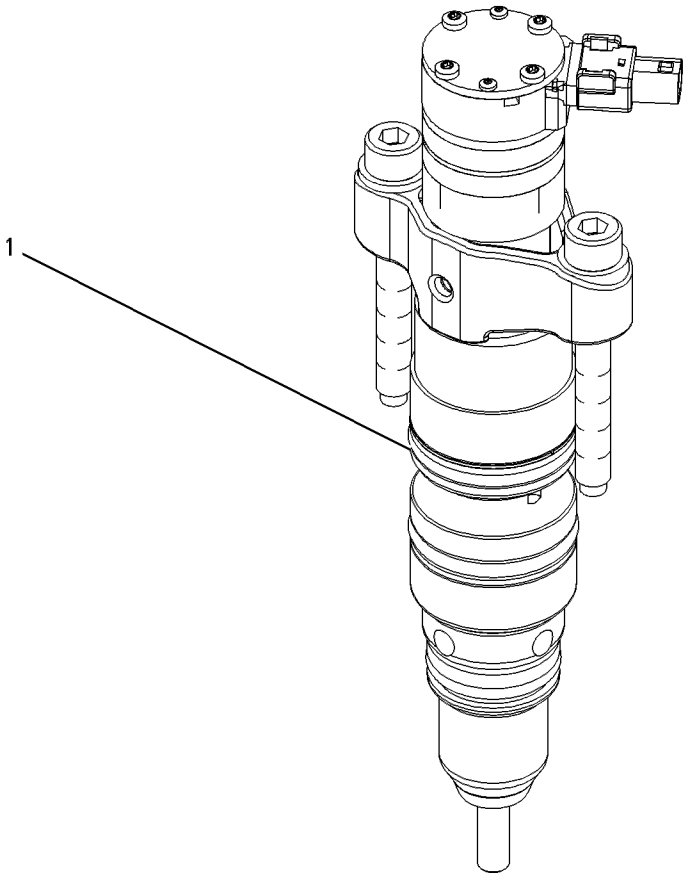

GRAPHIC #1 **<END>** g00632453

172-5780 PUMP GP-UNIT INJECTION

S/N: 4ZF4479-7972

PART OF 166-1759 PUMP GP-UNIT INJECTION

SMCS-1251, 1290 **i01808816**

NOTE	REF NO	GRAPHIC REF	PART NUMBER	QTY	PART NAME 1 2 3 4 5 6 (PRODUCT LEVEL)	SEE PAGE
Y	1	1	**217-2570**	1	INJECTOR GP-FUEL	92
M	2	1	**191-0920**	2	BOLT-SOCKET HEAD	

M-METRIC PART
Y-SEPARATE ILLUSTRATION

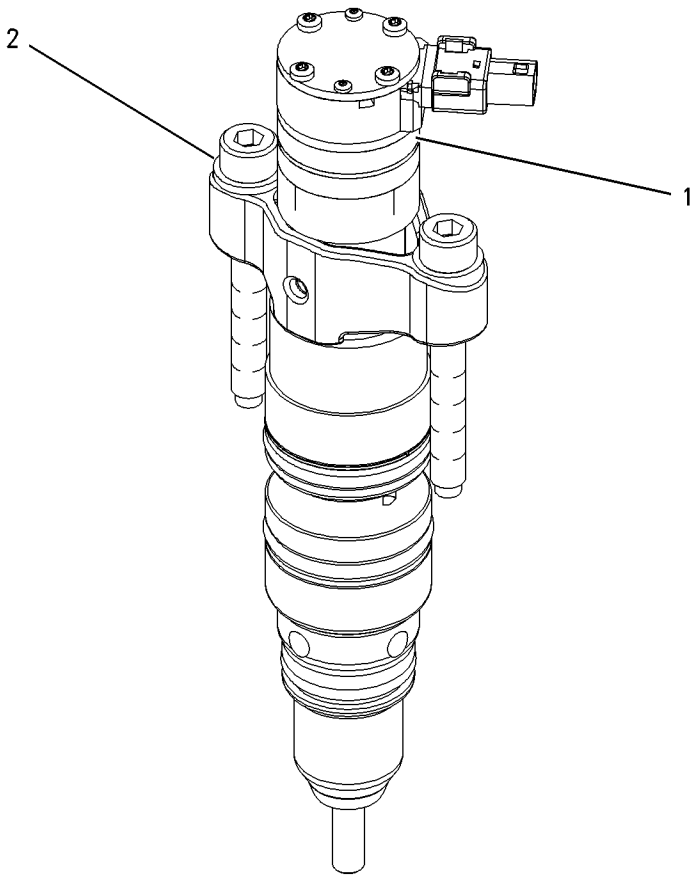

GRAPHIC #1 **<END>** g00905072

172-5780 PUMP GP-UNIT INJECTION

S/N: 4ZF7973-UP

PART OF 166-1759 PUMP GP-UNIT INJECTION

SMCS-1251, 1290 **i01967935**

NOTE	REF NO	GRAPHIC REF	PART NUMBER	QTY	PART NAME 1 2 3 4 5 6 (PRODUCT LEVEL)	SEE PAGE
Y	1	1	**236-0962**	1	INJECTOR GP-FUEL	93
	2	1	**235-9651**	2	BOLT-SOCKET HEAD (M8X1.25X65MM)	

Y-SEPARATE ILLUSTRATION

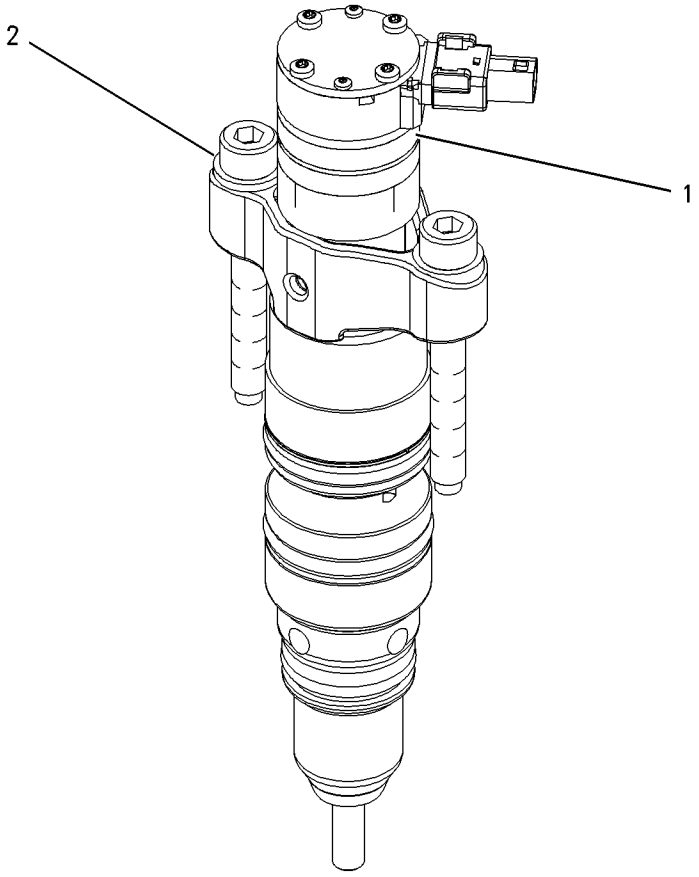

GRAPHIC #1 **<END>** g00905072

FUEL SYSTEM

198-1897 REGULATOR GP-FUEL PRESSURE

S/N: 4ZF4479-UP

PART OF 190-1103 LINES GP-FUEL

SMCS-1715 **i02202889**

NOTE	REF NO	GRAPHIC REF	PART NUMBER	QTY	PART NAME 1 2 3 4 5 6 (PRODUCT LEVEL)	SEE PAGE
	1	1	**196-6838**	1	ELBOW AS	
	2	1	**196-6840**	1	REGULATOR AS (FUEL PRESSURE)	
	3	1	**6V-5049**	2	SEAL-O-RING	

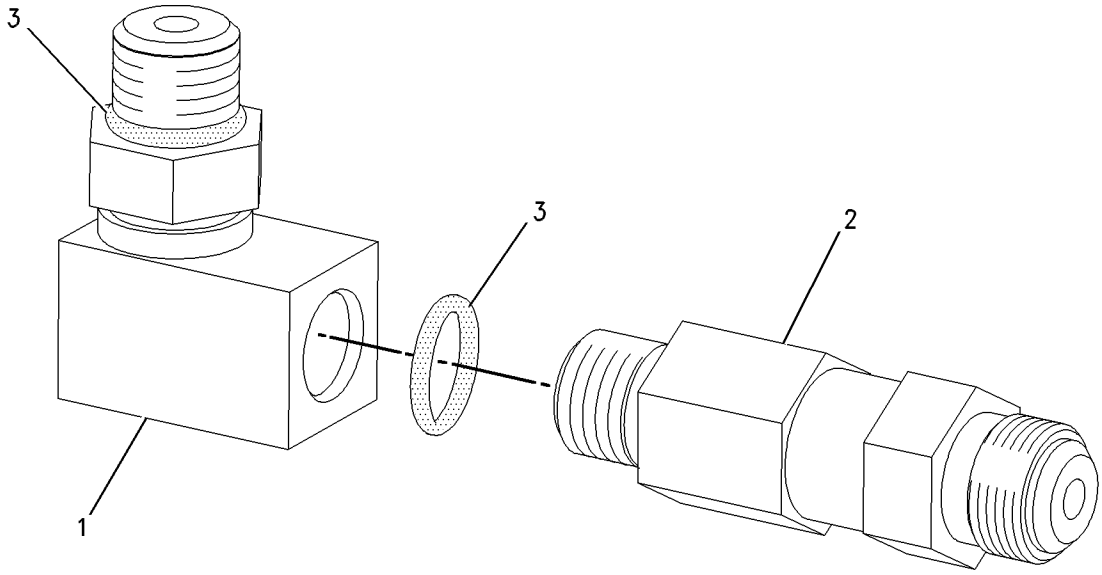

GRAPHIC #1 **<END>** g00745764

FUEL SYSTEM

205-1306 REGULATOR GP-FUEL PRESSURE

S/N: 4ZF6050-UP

PART OF 190-1103 LINES GP-FUEL

SMCS-1715 **i02191819**

NOTE	REF NO	GRAPHIC REF	PART NUMBER	QTY	PART NAME 1 2 3 4 5 6 (PRODUCT LEVEL)	SEE PAGE
	1	1	**196-6838**	1	ELBOW AS	
	2	1	**229-8870**	1	REGULATOR AS (FUEL PRESSURE)	
	3	1	**6V-5049**	2	SEAL-O-RING	

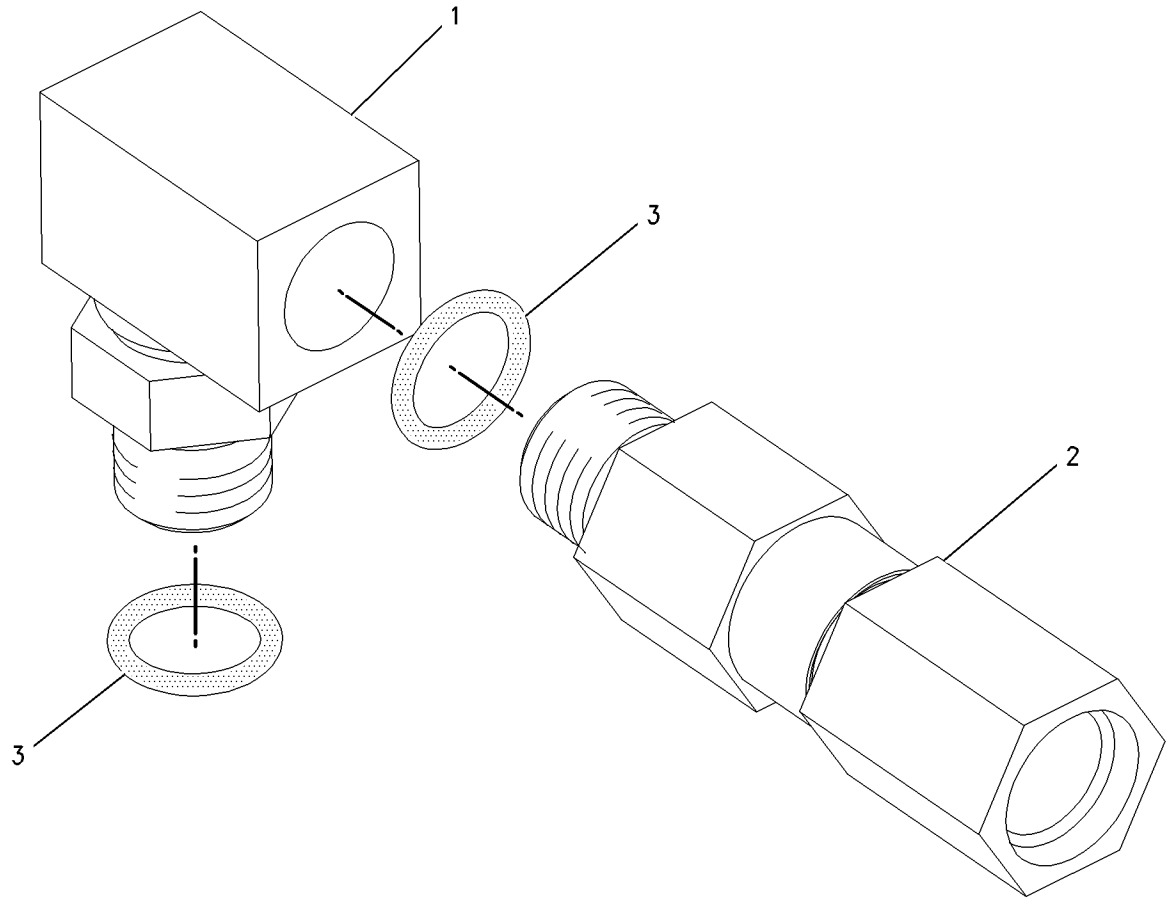

GRAPHIC #1 **<END>** g00822125

FUEL SYSTEM

173-7231 TANK GP-FUEL

S/N: CBK1-UP

PART OF 162-5605 GENERAL AR

SMCS-1273 **i02207313**

NOTE	REF NO	GRAPHIC REF	PART NUMBER	QTY	PART NAME 1 2 3 4 5 6 (PRODUCT LEVEL)	SEE PAGE
	1	1	**7X-1387**	4	WASHER (10.26X22.22X1.9-MM THK)	
	2	1	**8T-6703**	2	CLAMP-HOSE	
	3	1	**113-8457**	2	ROD	
Y	5	1	*195-6380*	1	TANK GP-FUEL (RH)	114
Y	6	1	*195-6381*	1	TANK GP-FUEL (LH)	115
	7	1	**3B-4615**	4	PIN-COTTER	
	9	1	**5P-8439**	2	GROMMET	
E	11	1	**5P-1469**		HOSE (34-CM)	

E-ORDER BY THE CENTIMETER
Y-SEPARATE ILLUSTRATION

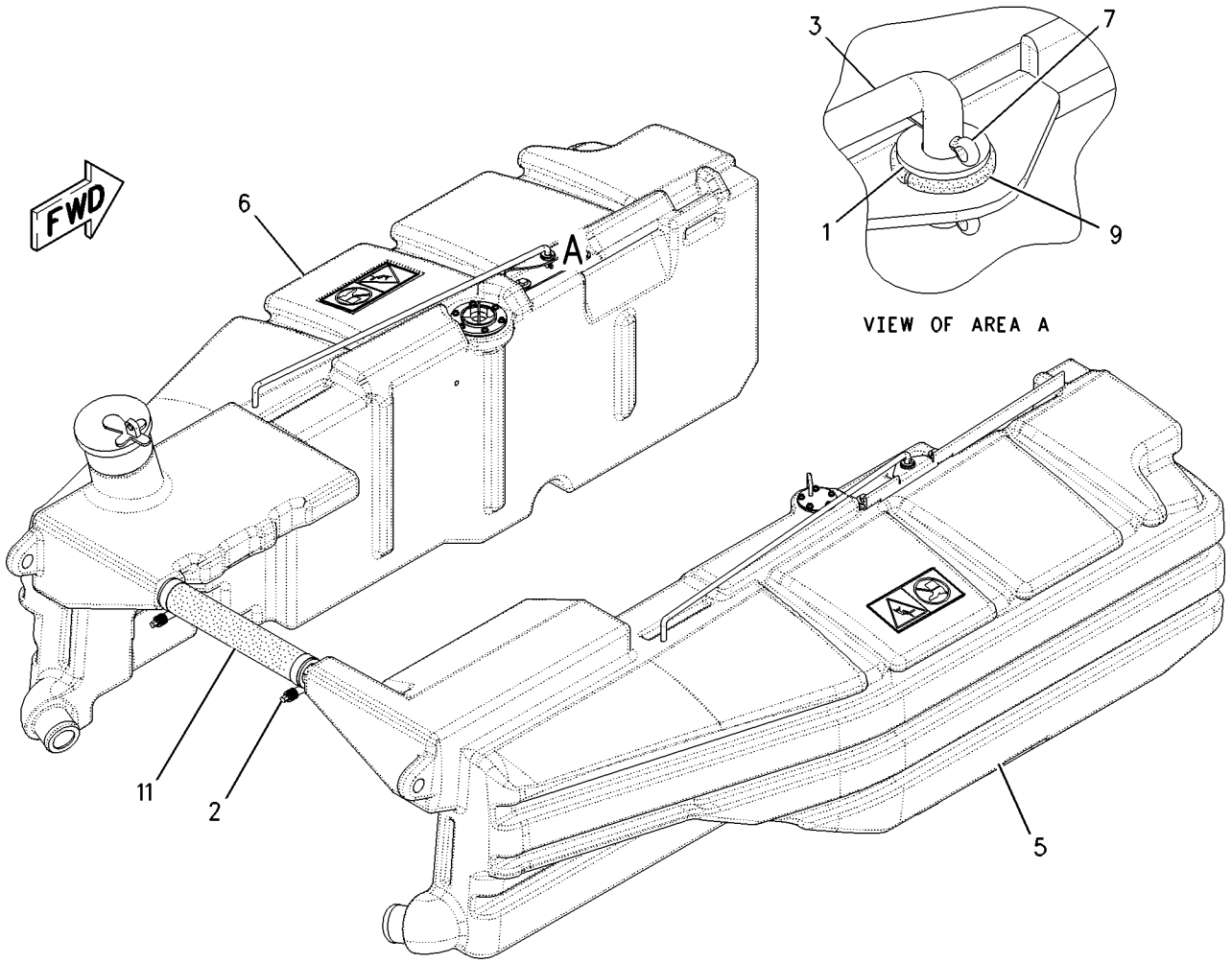

GRAPHIC #1 **<END>** g01007602

195-6380 TANK GP-FUEL–RH

S/N: CBK1-UP

PART OF 173-7231 TANK GP-FUEL

SMCS-1273 **i02202855**

NOTE	REF NO	GRAPHIC REF	PART NUMBER	QTY	PART NAME 1 2 3 4 5 6 (PRODUCT LEVEL)	SEE PAGE
	1	1	**6V-6959**	5	BOLT-SOCKET HEAD (8-32X0.625-IN)	
	2	1	**197-1708**	1	VENT AS	
	3	1	**229-5814**	1	TANK GP-FUEL (RH)	
		1	**002-6454**	1	NIPPLE-PIPE	
		1	**110-2445**	1	CLAMP-HOSE	
		1	**194-2612**	1	COUPLER	
		1	**230-4477**	1	FILM-WARNING (NO STEP)	
		1	**231-0221**	1	FILM-WARNING (NO STEP)	
	4	1	**230-7517**	1	BRACKET	
	5	1	**4B-4863**	5	WASHER (4.7X11X1.2-MM THK)	
	6	1	**7X-0579**	2	WASHER-HARD (8.8X25.5X2-MM THK)	
M	7	1	**8T-4189**	2	BOLT (M8X1.25X20-MM)	
	8	1	**9R-7240**	1	GASKET	

M-METRIC PART

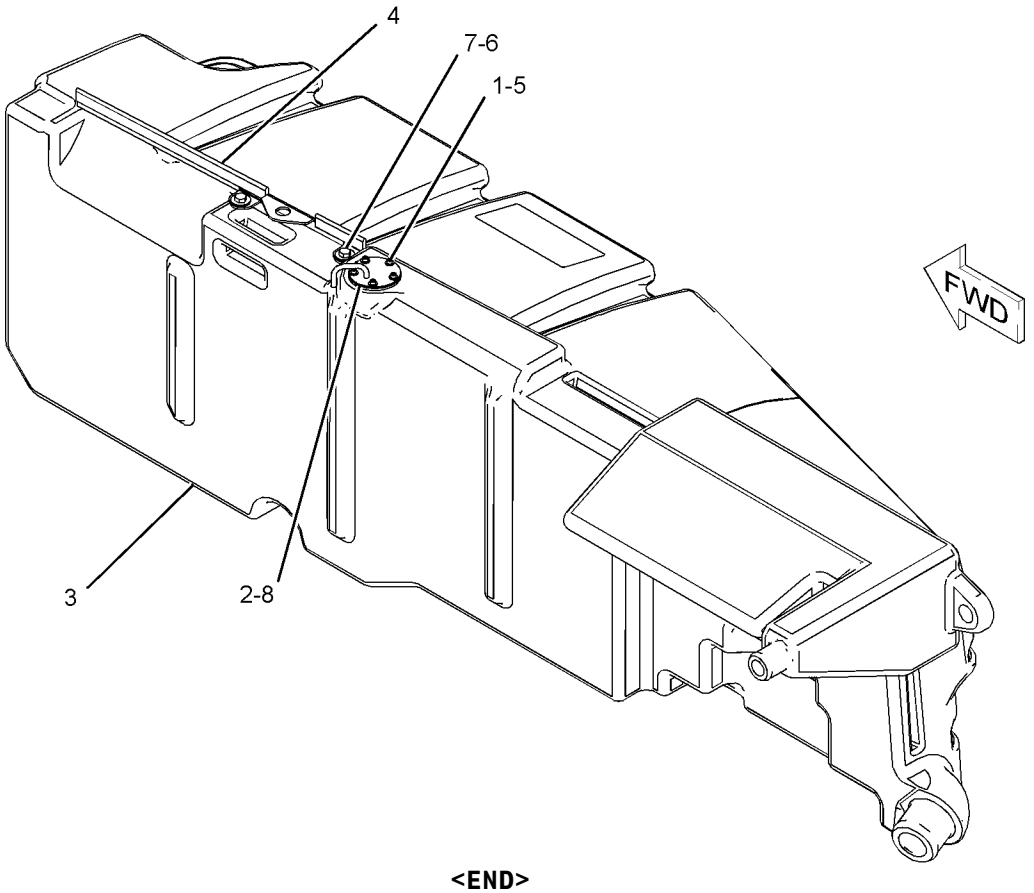

GRAPHIC #1 **<END>** g01070378

195-6381 TANK GP-FUEL–LH

S/N: CBK1-UP

PART OF 173-7231 TANK GP-FUEL

SMCS-1273 **i01935794**

NOTE	REF NO	GRAPHIC REF	PART NUMBER	QTY	PART NAME 1 2 3 4 5 6 (PRODUCT LEVEL)	SEE PAGE
	1	1	**6V-6959**	6	BOLT-SOCKET HEAD (8-32X0.625-IN)	
	2	1	**164-4858**	1	CAP GP-FUEL FILLER (EXTREME SERVICE, LOCKABLE)	
		1	**9X-8600**	1	SEAL-O-RING	
		1	**190-9775**	1	COVER AS-FILTER	
	3	1	**173-2018**	1	SENDER AS-FUEL LEVEL	
		1	**194-8535**	1	KIT-SENSOR (FUEL LEVEL)	
					(INCLUDES RECEPTACLE KIT, CONNECTOR PINS, & WEDGE)	
	4	1	**199-9907**	1	STRAINER-FUEL	
	5	1	**227-6672**	1	BRACKET	
	6	1	**229-5813**	1	TANK GP-FUEL (LH)	
		1	**002-6454**	1	NIPPLE-PIPE	
		1	**110-2445**	1	CLAMP-HOSE	
		1	**194-2612**	1	COUPLER	
		1	**230-4477**	1	FILM-WARNING (NO STEP)	
		1	**231-0221**	1	FILM-WARNING (NO STEP)	
	7	1	**103-2006**	1	SCREW-PAN HEAD (M6-19X9.52MM)	
	8	1	**194-6523**	1	ADAPTER	
	9	1	**4B-4863**	6	WASHER (4.7X11X1.2-MM THK)	
	10	1	**6C-3060**	1	GASKET	
	11	1	**7X-0579**	2	WASHER-HARD (8.8X25.5X2-MM THK)	
M	12	1	**8T-4189**	2	BOLT (M8X1.25X20-MM)	

M-METRIC PART

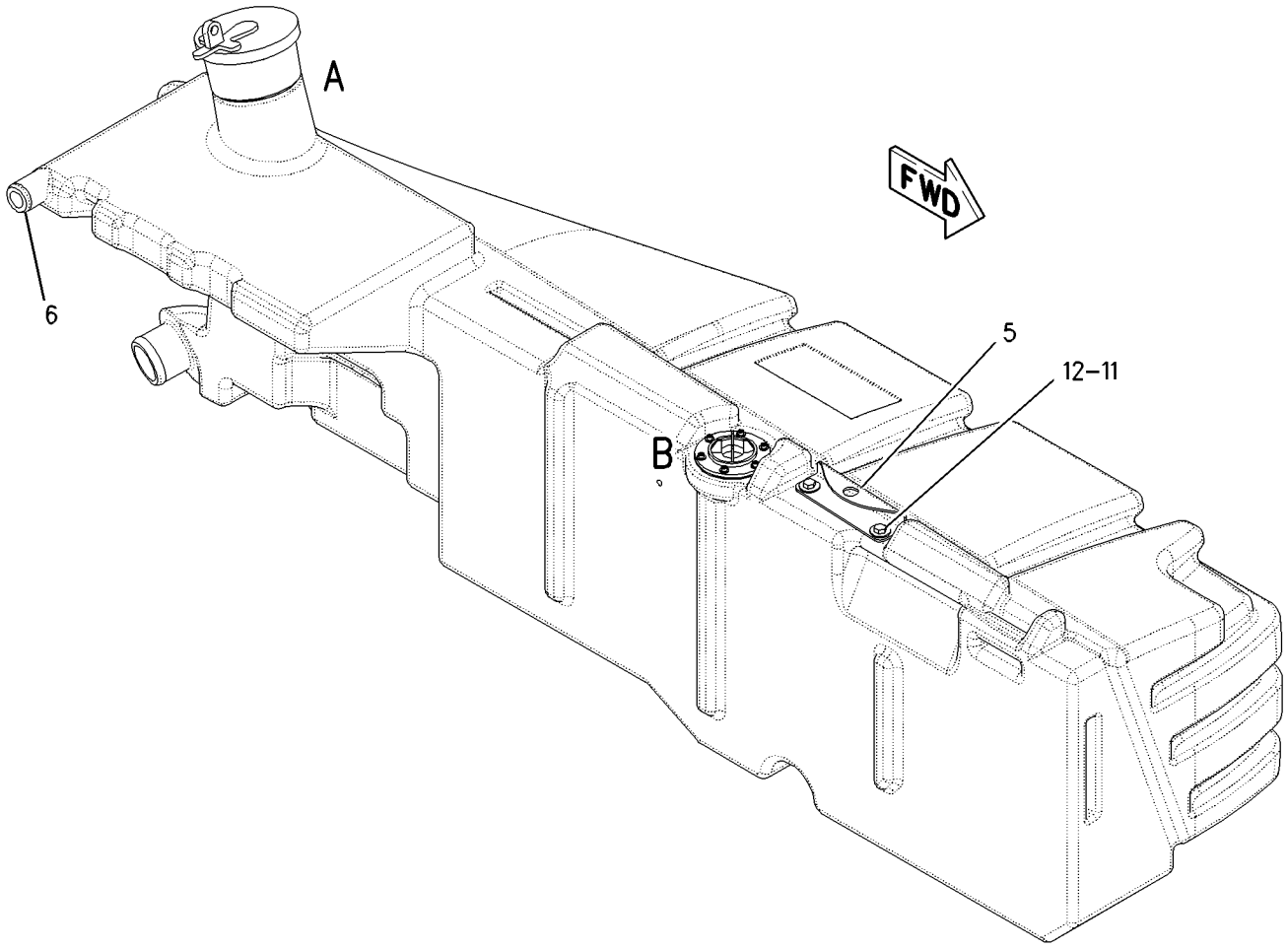

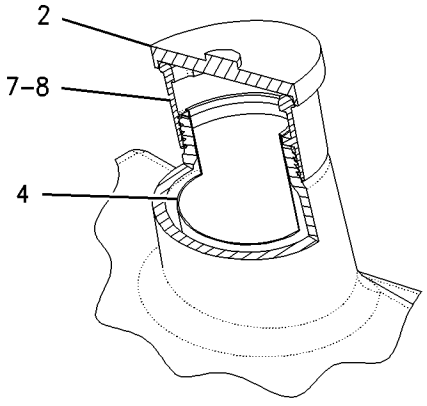

SECTIONED VIEW OF AREA A

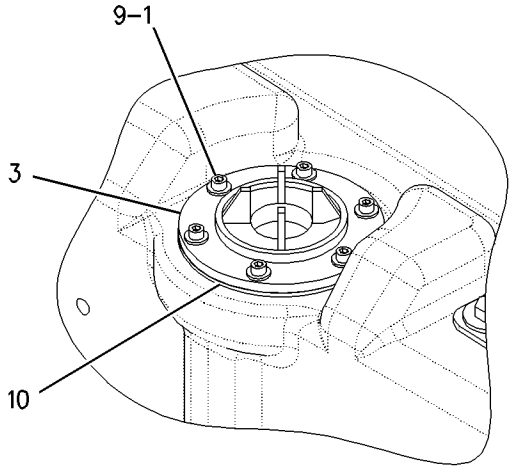

VIEW OF AREA B

GRAPHIC #1 **<END>** g01005927

190-8977 WATER SEP & FUEL PRM PUMP GP

S/N: 4ZF4479-UP

PART OF 188-6121 PUMP GP-FUEL PRM & PRIM FILTER

SMCS-1258, 1263 **i01934929**

NOTE	REF NO	GRAPHIC REF	PART NUMBER	QTY	PART NAME 1 2 3 4 5 6 (PRODUCT LEVEL)	SEE PAGE
Y	1	1	*174-9570*	1	FILTER GP-WATER SEP & FUEL (PRIMARY)	91
	2	1	**190-8970**	1	BASE AS	

Y-SEPARATE ILLUSTRATION

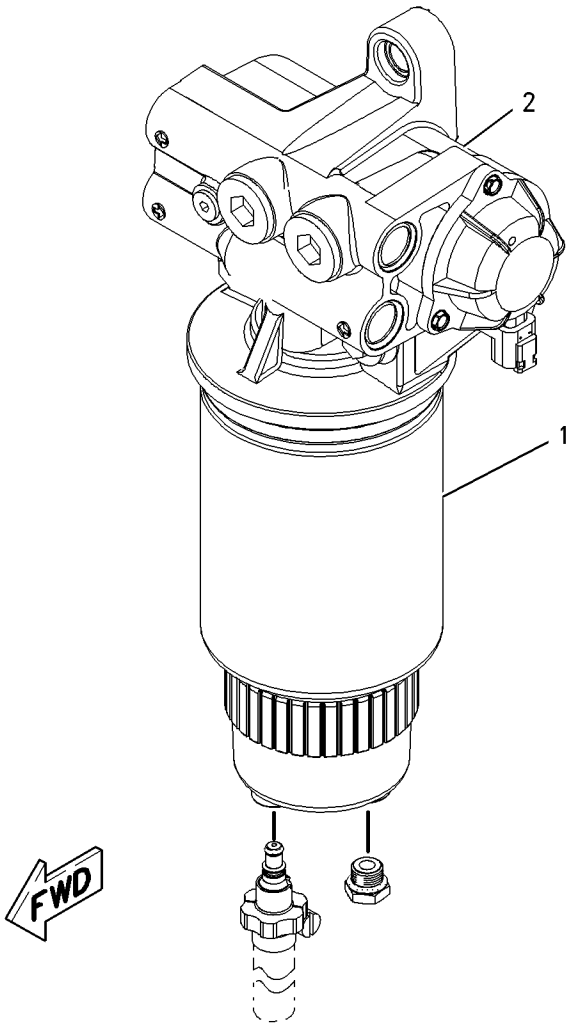

GRAPHIC #1 **<END>** g00904493

3E-6328 ALARM GP–ACTION

S/N: CBK1-UP
24 VOLT
PART OF 159-5839, 159-5841 WIRING GP-SHIFT CONSOLE
ALSO AN ATTACHMENT

SMCS-7400, 7402, 7407 **i02021590**

NOTE	REF NO	GRAPHIC REF	PART NUMBER	QTY	PART NAME 1 2 3 4 5 6 (PRODUCT LEVEL)	SEE PAGE
	1	1	**102-8802**	1	KIT-RECEPTACLE (2-PIN)	
					(INCLUDES RECEPTACLE AS & WEDGE)	
	2	1	**186-3735**	2	PIN-CONNECTOR	

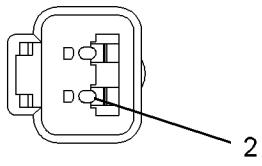

VIEW A–A

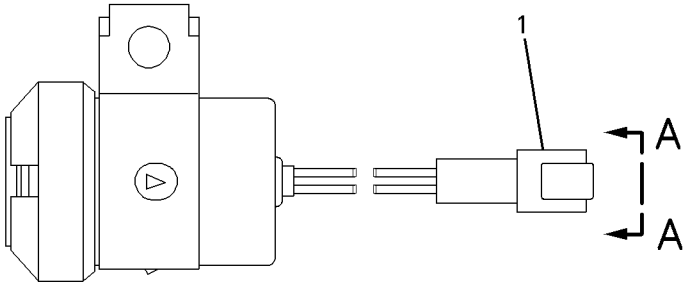

GRAPHIC #1 **<END>** g00697818

123-6449 ALARM GP

S/N: CBK1-UP

PART OF 193-8253 WIRING GP-REAR

AN ATTACHMENT

SMCS-7400, 7402, 7407 **i02207310**

NOTE	REF NO	GRAPHIC REF	PART NUMBER	QTY	PART NAME 1 2 3 4 5 6 (PRODUCT LEVEL)	SEE PAGE
	1	1	**102-8802**	1	KIT-RECEPTACLE (2-PIN) (BACK UP ALARM)	
					(INCLUDES RECEPTACLE AS & WEDGE)	
E	2	1	**9X-1813**		SLEEVE (28-CM)	
	3	1	**186-3735**	2	PIN-CONNECTOR	
B	4	1	**5P-5677**		WIRE (18-GA)	

B-USE AS REQUIRED
E-ORDER BY THE CENTIMETER

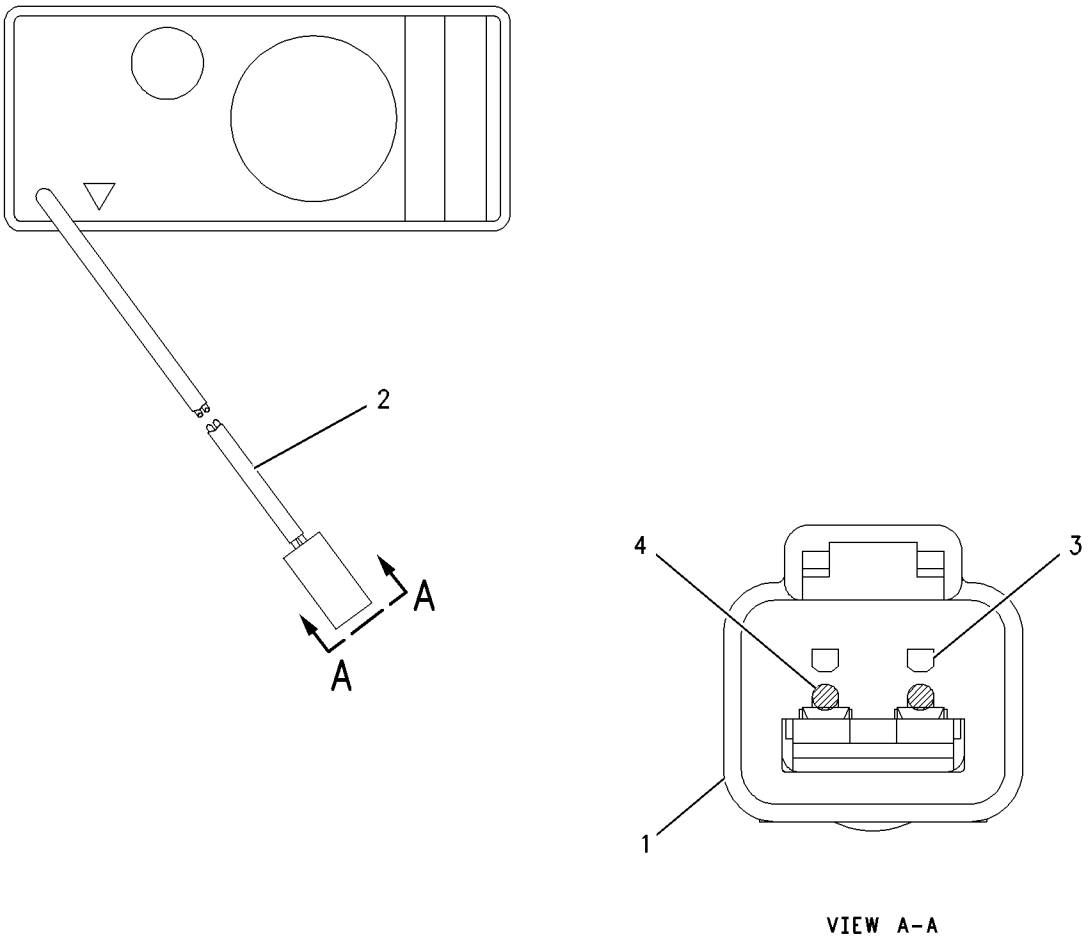

GRAPHIC #1 **<END>** g00942858

169-3345 ALTERNATOR GP-CHARGING*R

S/N: CBK1-UP
24 VOLT-50 AMPERE
PART OF 191-6630 ALTERNATOR GP-CHARGING

SMCS-1405 **i01589423**

NOTE	REF NO	GRAPHIC REF	PART NUMBER	QTY	PART NAME 1 2 3 4 5 6 (PRODUCT LEVEL)	SEE PAGE
	1	1	**185-2653**	1	FRAME	
	2	1	**185-2652**	1	FRAME AS	
	3	1	**185-2639**	1	FAN AS	
	4	1	**185-2640**	1	FRAME AS	
	5	1	**185-2645**	1	FRAME	
	6	1	**2K-4821**	1	LOCKNUT (5/8-18-THD)	
	7	1	**5P-8247**	1	WASHER-HARD (17X32X3.5-MM THK)	
	8	1	**185-2651**	1	COVER	
	9	1	**185-2646**	1	BUSHING	
	10	1	**185-2647**	1	GROMMET	
	11	1	**9L-6770**	1	CAP	
	12	1	**190-0065**	1	STATOR AS-ALTERNATOR	
	13	1	**185-2638**	2	COLLAR	
	14	1	**185-2654**	1	PLATE	
	15	1	**185-2650**	1	ROTOR AS	
	16	1	**185-2644**	1	COIL AS	
	17	1	**185-2648**	1	REGULATOR AS-VOLTAGE (24-VOLT)	
	18	1	**6V-8189**	1	NUT (5/16-18-THD)	
	19	1	**8T-4224**	1	WASHER-HARD (8.8X16X2-MM THK)	
	20	1	**3F-9556**	1	LOCKWASHER	
	21	1	**5S-7349**	1	BOLT (1/4-20X0.5-IN)	
	22	1	**8T-4205**	1	WASHER-HARD (7.2X14.5X2-MM THK)	
	23	1	**1H-3244**	1	LOCKWASHER	
					AVAILABLE REPAIR KIT(S):	
			185-2655	1	KIT-BEARING (ALTERNATOR)	
					(INCLUDES 2 BEARINGS)	
			185-2656	1	KIT-TERMINAL (ALTERNATOR)	
					(INCLUDES HOLDER AS, PLATE, INSULATOR, PIN, BOLT KITS, GROMMET AND NUT)	
			185-2657	1	KIT-TERMINAL (ALTERNATOR)	
					(INCLUDES INSULATORS, WASHERS AND NUTS)	
			185-2658	1	KIT-HARDWARE (ALTERNATOR)	
					(INCLUDES BOLT KITS)	

169-3345 ALTERNATOR GP-CHARGING *(contd.)* **i01589423**

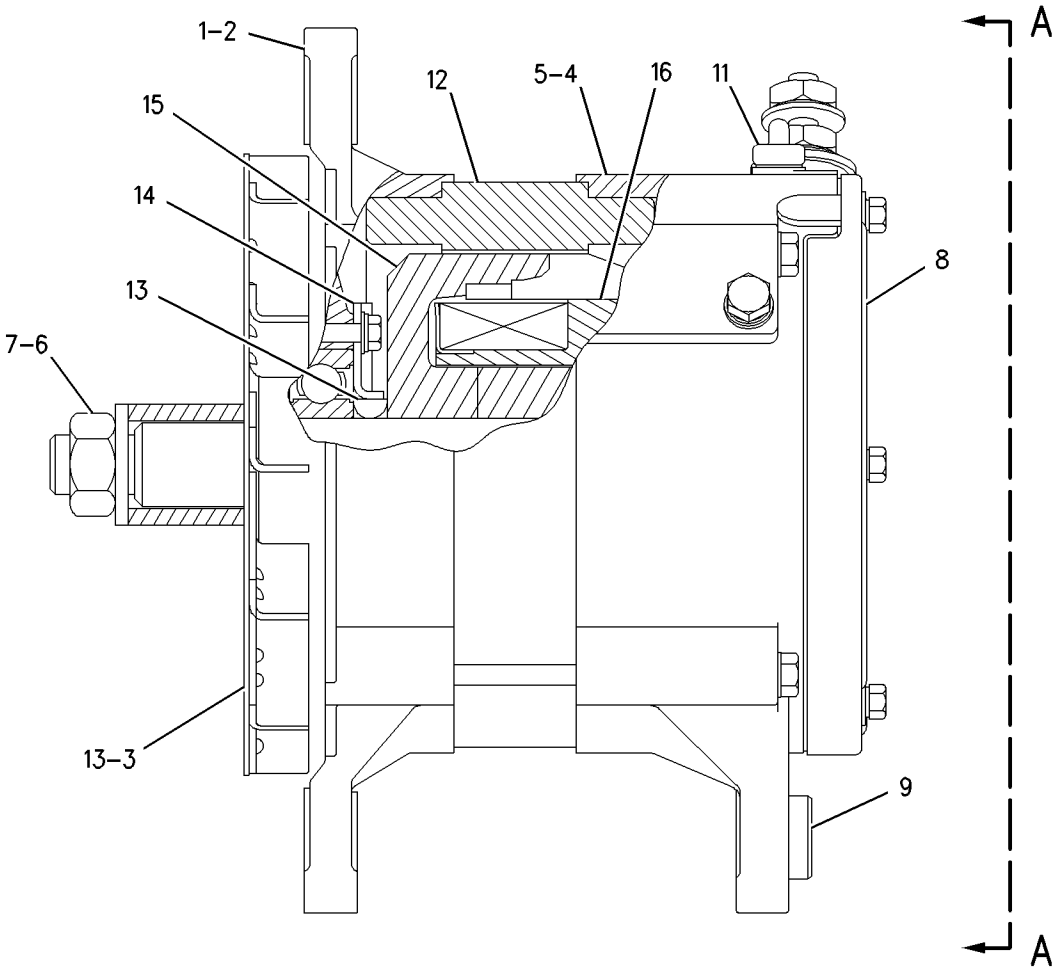

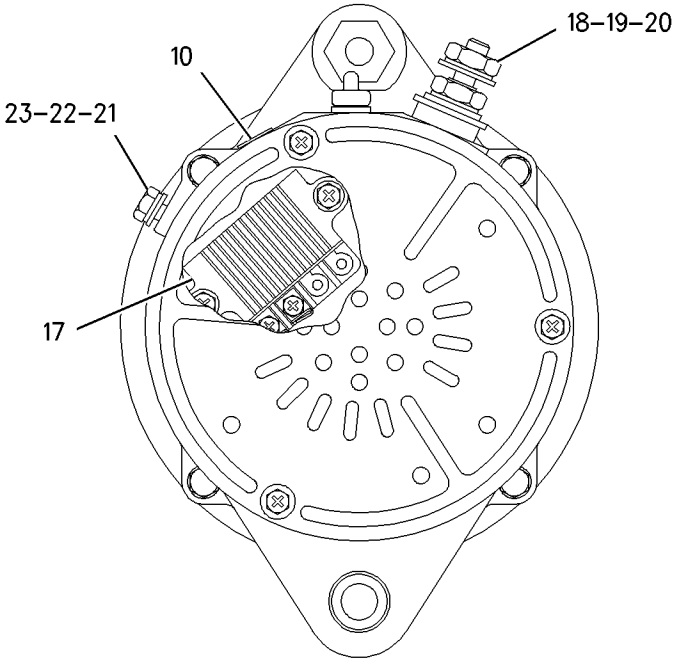

VIEW A-A

GRAPHIC #1 **<END>** g00724069

ELECTRICAL AND STARTING SYSTEM

191-6630 ALTERNATOR GP-CHARGING

S/N: CBK1-UP
55 AMP
PART OF 162-5605 GENERAL AR

SMCS-1405 **i01877477**

NOTE	REF NO	GRAPHIC REF	PART NUMBER	QTY	PART NAME 1 2 3 4 5 6 (PRODUCT LEVEL)	SEE PAGE
	1	1	**129-5096**	1	PULLEY-ALTERNATOR	
YR	2	1	**169-3345**	1	ALTERNATOR GP-CHARGING	120
	3	1	**173-1498**	1	PULLEY AS-IDLER (8-GROOVE)	
		1	**151-2900**	1	BOLT (M10X1.5X54.25-MM)	
		1	**166-6358**	1	COVER-DUST	
		1	**173-1500**	1	SPACER (10.4X45.1X1.8-MM THK)	
	4	1	**191-6627**	1	GUARD AS-BELT	
		1	**1V-6256**	1	SPACER (0.493X0.675X0.85-IN THK)	
	5	1	**191-6635**	1	BELT (ALTERNATOR)	
	6	1	**194-5142**	1	LINK	
	7	1	**211-2101**	2	SLEEVE	
	8	1	**216-6967**	1	SUPPORT	
	9	1	**8T-4121**	3	WASHER-HARD (11X21X2.5-MM THK)	
M	10	1	**8T-4183**	1	BOLT (M12X1.75X40-MM)	
M	11	1	**8T-4194**	1	BOLT (M12X1.75X50-MM)	
M	12	1	**8T-4196**	3	BOLT (M10X1.5X35-MM)	
M	13	1	**8T-4223**	5	WASHER-HARD (13.5X25.5X3-MM THK)	
M	14	1	**8T-4244**	1	NUT (M12X1.75-THD)	
M	15	1	**8T-4910**	1	BOLT (M12X1.75X60-MM)	
	16	1	**8T-8917**	1	BOLT (1/2-13X1.25-IN)	
	17	1	**9S-2396**	1	BUSHING-TERMINAL	

M-METRIC PART
R-REMFG PART MAY BE AVAILABLE
Y-SEPARATE ILLUSTRATION

191-6630 **ALTERNATOR GP-CHARGING** *(contd.)* **i01877477**

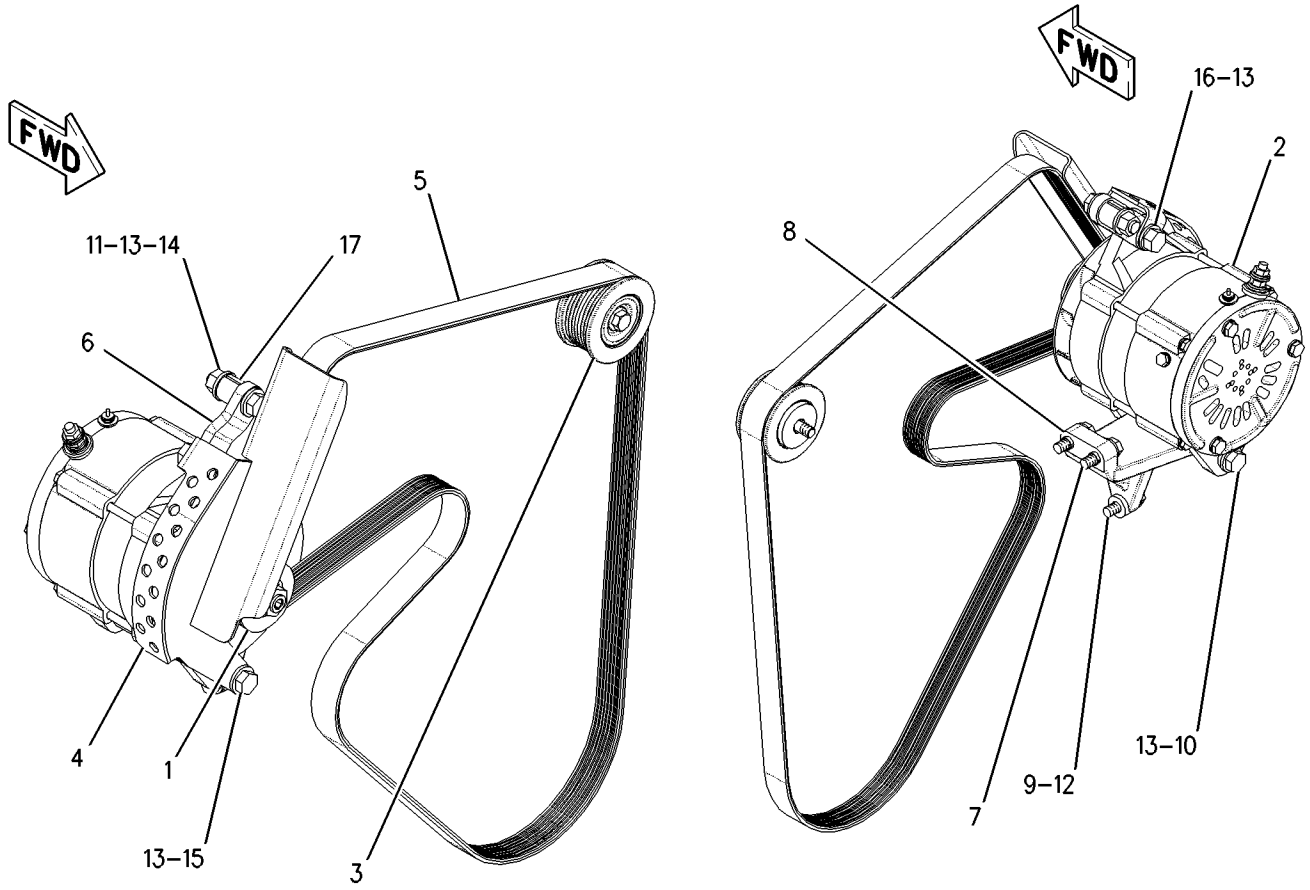

GRAPHIC #1 **<END>** g00863419

ELECTRICAL AND STARTING SYSTEM

198-4836 ALTERNATOR GP-CHARGING

S/N: CBK1-UP
75 AMP
PART OF 207-3700, 210-2043 CONVERSION AR-CERTIFICATION, 197-5954, 236-3947
SNOW AR-MOTOR GRADER
AN ATTACHMENT

SMCS-1405 **i01683563**

NOTE	PART NUMBER	QTY	PART NAME 1 2 3 4 5 6 (PRODUCT LEVEL)	SEE PAGE
YR	**200-8281**	1	ALTERNATOR GP-CHARGING	125

R-REMFG PART MAY BE AVAILABLE
Y-SEPARATE ILLUSTRATION

<END>

200-8281 ALTERNATOR GP-CHARGING*R

S/N: CBK1-UP
24VOLT-75AMP
PART OF 198-4836 ALTERNATOR GP-CHARGING
AN ATTACHMENT

SMCS-1405 **i02125263**

NOTE	REF NO	GRAPHIC REF	PART NUMBER	QTY	PART NAME 1 2 3 4 5 6 (PRODUCT LEVEL)	SEE PAGE
	1	1	**8T-4205**	2	WASHER-HARD (7.2X14.5X2-MM THK)	
	2	1	**1H-3244**	2	LOCKWASHER	
	3	1	**6V-8187**	1	NUT (1/4-28-THD)	
	4	1	**5S-7349**	1	BOLT (1/4-20X0.5-IN)	
	5	1	**9L-6770**	1	CAP	
	6	1	**231-6133**	1	KIT-BEARING	
					(INCLUDES BEARING AS AND RACE)	
	7	1	**231-6134**	1	KIT-RECTIFIER	
	8	1	**202-2708**	1	DIODE AS	
	9	1	**3T-6354**	1	REGULATOR AS-VOLTAGE (24-VOLT)	
	10	1	**229-8906**	1	CAPACITOR AS	
	11	1	**202-9897**	1	BEARING-SPECIAL BALL	
	12	1	**100-6531**	1	FAN-ALTERNATOR (14-BLADE)	
	13	1	**187-2034**	1	NUT-FLANGE (5/8-18-THD)	
	14	1	**202-2783**	1	PLATE	
	15	1	**202-2699**	1	HOUSING AS	
	16	1	**202-2700**	1	FRAME	
	17	1	**202-8647**	1	STATOR AS	
	18	1	**202-2703**	1	COIL AS	
	19	1	**9S-2390**	1	RETAINER	
	20	1	**9S-2302**	1	ROTOR AS	
	21	1	**4B-2047**	1	NUT (10-24-THD)	
	22	1	**8T-0328**	1	WASHER-HARD (5.5X10X1-MM THK)	
	23	1	**8F-1434**	1	LOCKWASHER	
	24	1	**202-2784**	1	KIT-ALTERNATOR TERMINAL (OUTPUT)	
					(INCLUDES NUT, LOCKWASHER, WASHERS, INSULATORS, SCREW, CONNECTOR, & ADAPTER)	
	25	1	**202-2785**	1	KIT-ALTERNATOR TERMINAL (RELAY)	
					(INCLUDES STUD, BUSHINGS, WASHERS, CONNECTOR, & NUT AS)	
	26	1	**202-2786**	1	KIT-ALTERNATOR TERMINAL (INDICATOR LIGHT)	
					(INCLUDES NUTS, LOCKWASHER, BUSHINGS, WASHERS, CONNECTOR, & STUD)	
					AVAILABLE REPAIR KIT(S):	
			202-2787	1	KIT-HARDWARE (ALTERNATOR)	
					(INCLUDES NUT AS, PLUG, SCREW AS, SCREWS, LOCKWASHER, NUT, CONNECTOR, BOLT, COLLAR, AND BOOT)	

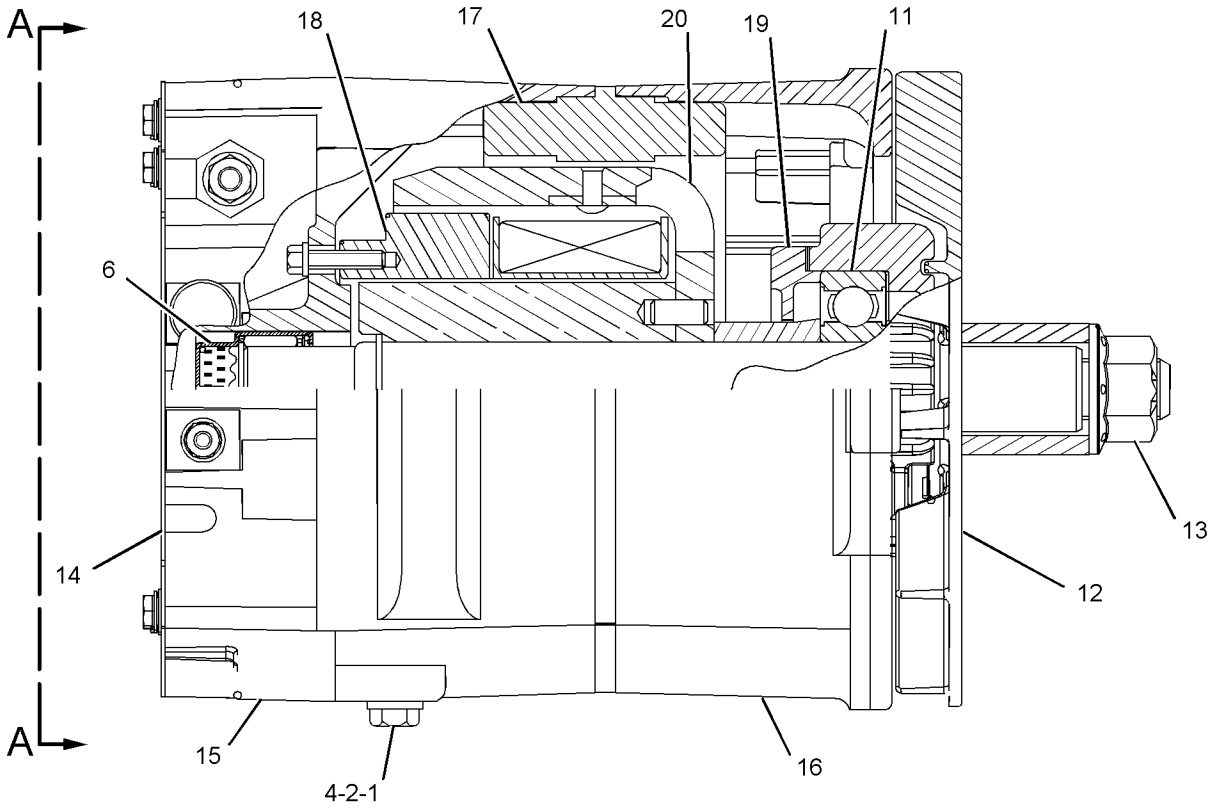

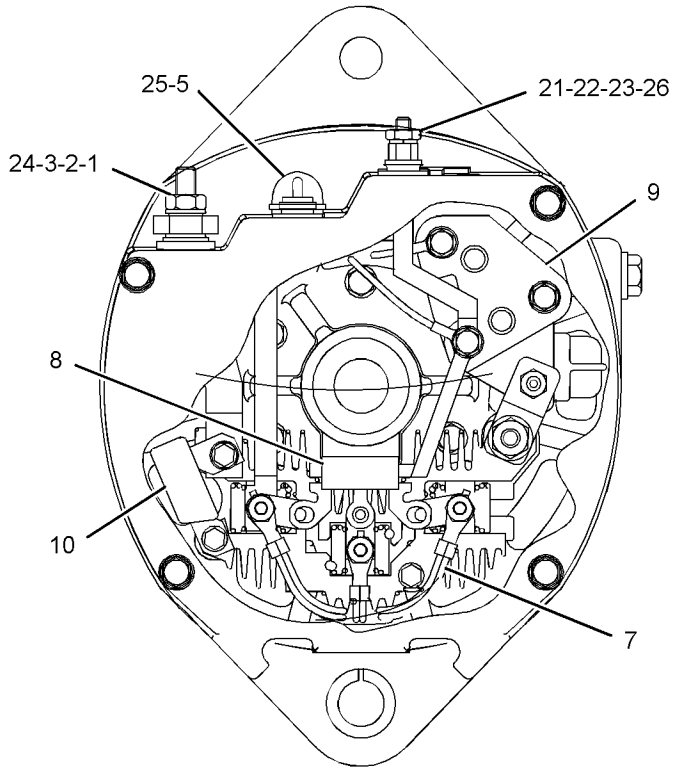

VIEW A-A
ROTATED 90° CCW
<END>

GRAPHIC #1

g01082777

177-9548 BATTERY GP–HEAVY DUTY

S/N: CBK1-UP
AN ATTACHMENT

SMCS-1401 **i02205175**

NOTE	REF NO	GRAPHIC REF	PART NUMBER	QTY	PART NAME 1 2 3 4 5 6 (PRODUCT LEVEL)	SEE PAGE
	1	1	**8V-0622**	1	CABLE AS	
		1	**8C-5917**	1	TERMINAL AS-BATTERY (POSITIVE)	
		1	**1M-6119**	2	BOLT (5/16-18X1.375-IN)	
		1	**1M-6120**	2	NUT (5/16-18-THD)	
E		1	**5P-0761**		CABLE (OO-GA, RED) (14-CM)	
		1	**8T-9757**	1	TERMINAL AS-BATTERY (NEGATIVE)	
		1	**9G-0003**	1	COVER-TERMINAL (BLACK)	
		1	**9G-0004**	1	COVER-TERMINAL (RED)	
	2	1	**153-5700**	2	BATTERY GP (12-VOLT) (1100 AMPS)	
	3	1	**189-0146**	1	HOLD-DOWN	
	4	1	**229-0674**	1	BAR	
	5	1	**174-5907**	2	CLIP	
M	6	1	**8T-0389**	2	LOCKNUT (M10X1.5-THD)	
	7	1	**8T-4121**	5	WASHER-HARD (11X21X2.5-MM THK)	
M	8	1	**8T-4133**	1	NUT (M10X1.5-THD)	
M	9	1	**8T-4136**	1	BOLT (M10X1.5X25-MM)	
M	10	1	**8T-4182**	2	BOLT (M10X1.5X45-MM)	
	11	1	**9R-6414**	2	ROD	

E-ORDER BY THE CENTIMETER
M-METRIC PART

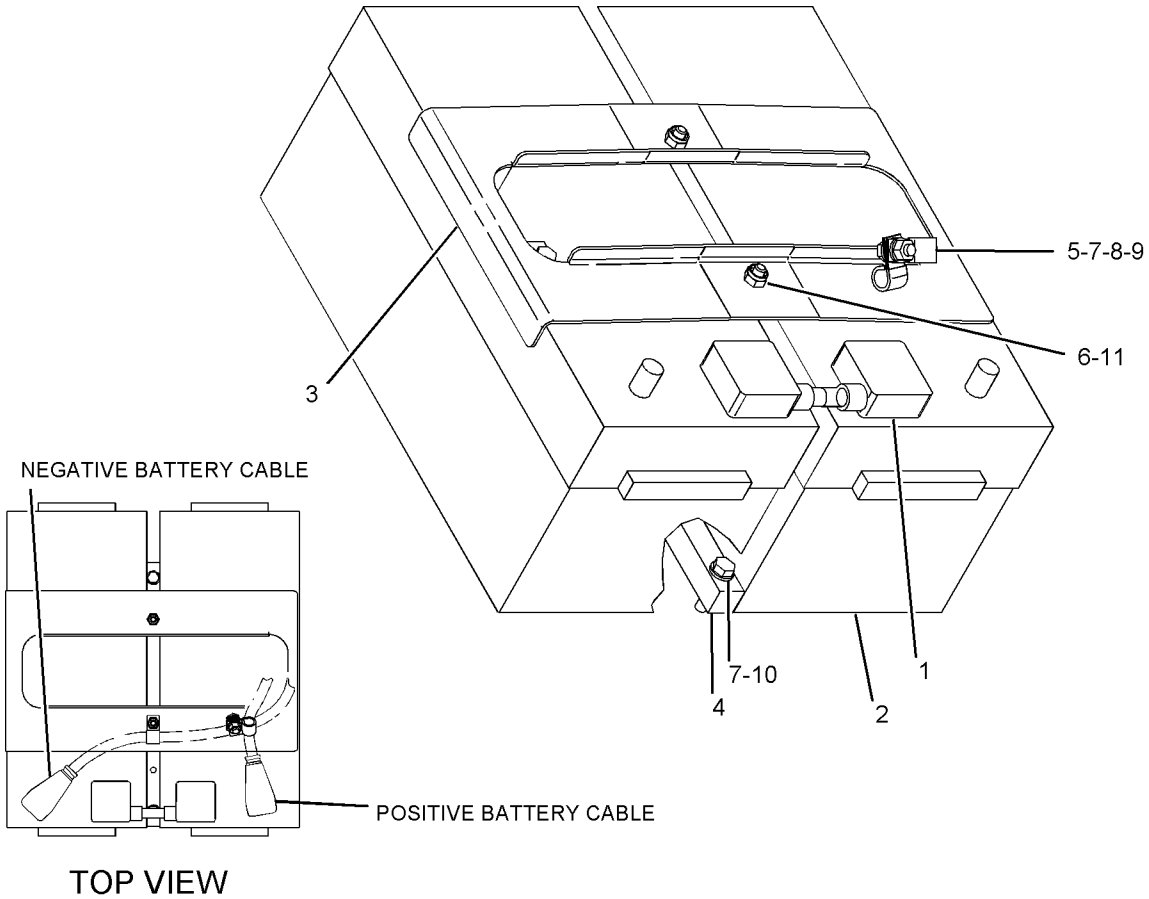

GRAPHIC #1 **<END>** g01064316

177-9549 BATTERY GP–HEAVY DUTY

S/N: CBK1-UP
PART OF 197-5954, 236-3947 SNOW AR-MOTOR GRADER
AN ATTACHMENT

SMCS-1401 **i02203568**

NOTE	REF NO	GRAPHIC REF	PART NUMBER	QTY	PART NAME 1 2 3 4 5 6 (PRODUCT LEVEL)	SEE PAGE
	1	1	**8V-0622**	1	CABLE AS	
		1	**1M-6119**	2	BOLT (5/16-18X1.375-IN)	
E		1	**5P-0761**		CABLE (00-GA, RED) (14-CM)	
		1	**9G-0003**	1	COVER-TERMINAL (BLACK)	
		1	**9G-0004**	1	COVER-TERMINAL (RED)	
		1	**1M-6120**	2	NUT (5/16-18-THD)	
		1	**8T-9757**	1	TERMINAL AS-BATTERY (NEGATIVE)	
		1	**8C-5917**	1	TERMINAL AS-BATTERY (POSITIVE)	
	2	1	**153-5710**	2	BATTERY (12-VOLT) (WET)	
	3	1	**189-0146**	1	HOLD-DOWN	
	4	1	**229-0674**	1	BAR	
	5	1	**174-5907**	2	CLIP	
M	6	1	**8T-0389**	2	LOCKNUT (M10X1.5-THD)	
	7	1	**8T-4121**	5	WASHER-HARD (11X21X2.5-MM THK)	
M	8	1	**8T-4133**	1	NUT (M10X1.5-THD)	
M	9	1	**8T-4136**	1	BOLT (M10X1.5X25-MM)	
M	10	1	**8T-4182**	2	BOLT (M10X1.5X45-MM)	
	11	1	**9R-6414**	2	ROD	

E-ORDER BY THE CENTIMETER
M-METRIC PART

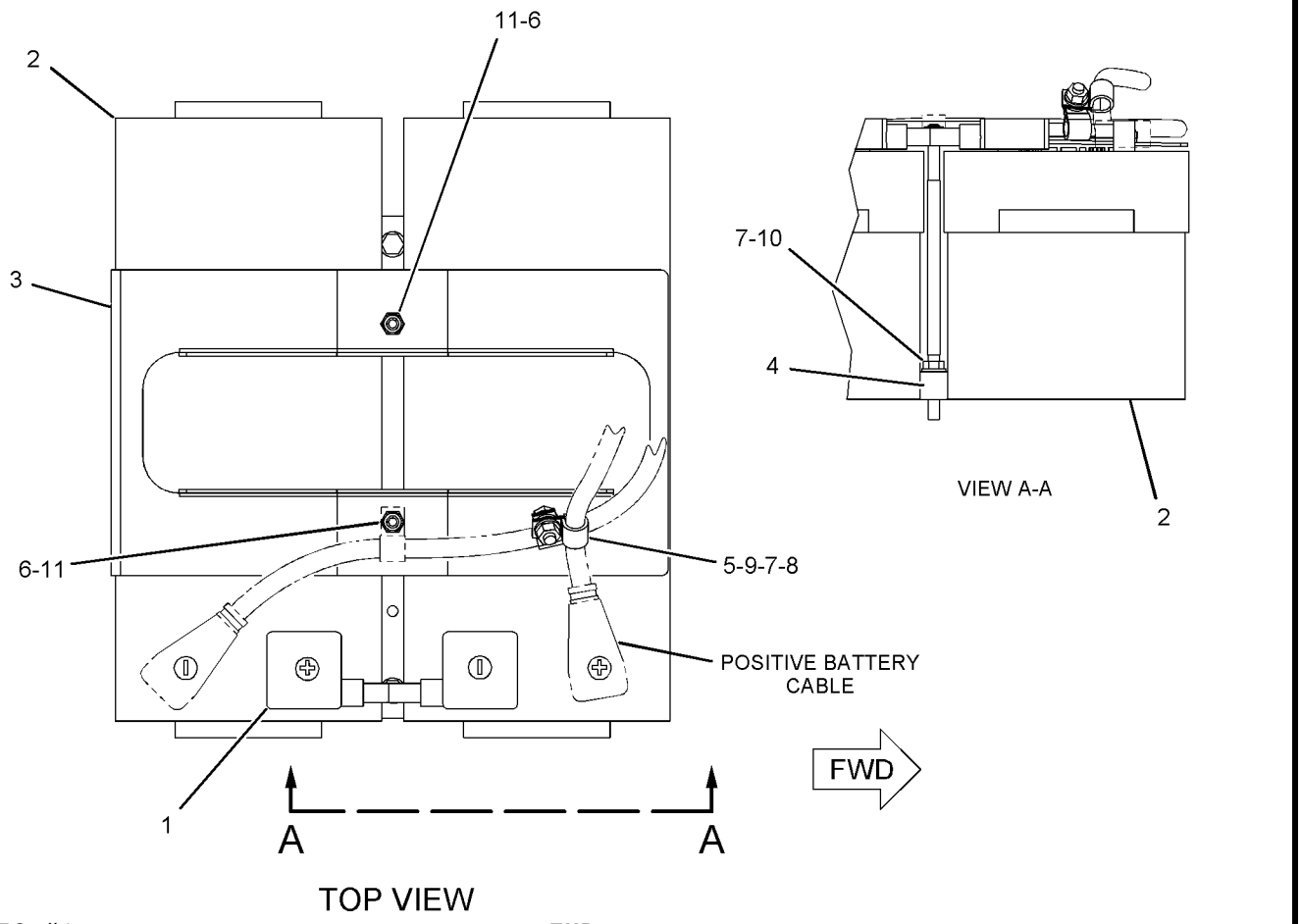

GRAPHIC #1 **<END>** g01038568

187-8028 BATTERY GP–EU

S/N: CBK1-UP
PART OF 174-3216 SUPPORT AR-REAR CHASSIS
AN ATTACHMENT

SMCS-1401 **i02203569**

NOTE	REF NO	GRAPHIC REF	PART NUMBER	QTY	PART NAME 1 2 3 4 5 6 (PRODUCT LEVEL)	SEE PAGE
	1	1	**8V-0622**	1	CABLE AS	
E		1	**5P-0761**		CABLE (00-GA, RED) (14-CM)	
		1	**8C-5917**	1	TERMINAL AS-BATTERY (POSITIVE)	
		1	**1M-6119**	2	BOLT (5/16-18X1.375-IN)	
		1	**1M-6120**	2	NUT (5/16-18-THD)	
		1	**8T-9757**	1	TERMINAL AS-BATTERY (NEGATIVE)	
		1	**9G-0003**	1	COVER-TERMINAL (BLACK)	
		1	**8L-8413**	1	STRAP-CABLE	
		1	**9G-0004**	1	COVER-TERMINAL (RED)	
		1	**8L-8413**	1	STRAP-CABLE	
	2	1	**153-5700**	2	BATTERY GP (12-VOLT)	
	3	1	**229-0674**	1	BAR	
	4	1	**189-0146**	1	HOLD-DOWN	
	5	1	**9R-6414**	2	ROD	
M	6	1	**8T-0389**	2	LOCKNUT (M10X1.5-THD)	
	7	1	**8T-4121**	5	WASHER-HARD (11X21X2.5-MM THK)	
M	8	1	**8T-4182**	2	BOLT (M10X1.5X45-MM)	
M	9	1	**8T-4133**	1	NUT (M10X1.5-THD)	
M	10	1	**8T-4136**	1	BOLT (M10X1.5X25-MM)	
	11	1	**174-5907**	2	CLIP	

E-ORDER BY THE CENTIMETER
M-METRIC PART

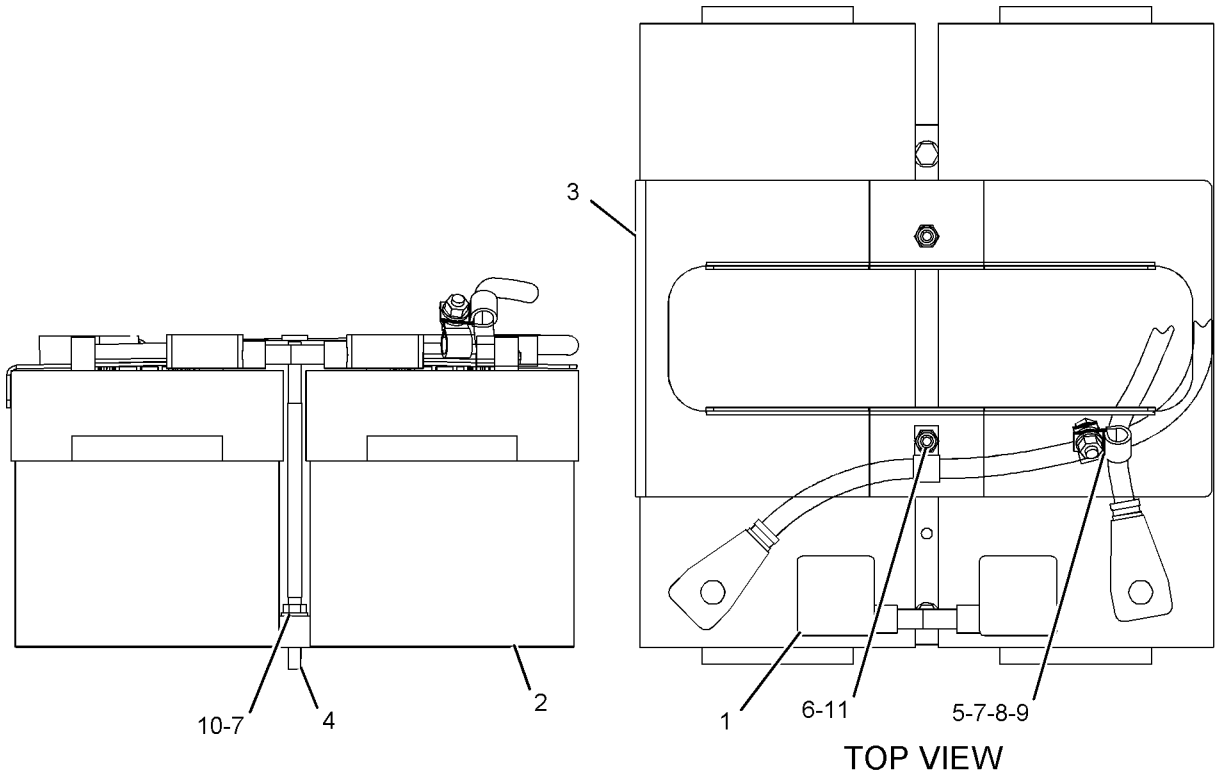

GRAPHIC #1 **<END>** g01069127

188-3951 BATTERY GP—MAINTENANCE FREE

S/N: CBK1-UP

PART OF 185-3142 SUPPORT AR-REAR CHASSIS

SMCS-1401 **i02089948**

NOTE	REF NO	GRAPHIC REF	PART NUMBER	QTY	PART NAME 1 2 3 4 5 6 (PRODUCT LEVEL)	SEE PAGE
	1	1	**111-7978**	1	HOLD-DOWN AS	
	2	1	**128-0314**	1	CABLE AS	
		1	**9G-0002**	1	COVER-TERMINAL (RED) (LH POS)	
		1	**9G-0005**	1	COVER-TERMINAL (BLACK) (RH NEG)	
E		1	**5P-0761**		CABLE (00-GA, RED) (29-CM)	
		1	**8C-5918**	1	TERMINAL AS (NEG) (RH)	
		1	**8T-9756**	1	TERMINAL AS (POSITIVE) (LH)	
	3	1	**188-3959**	1	BRACKET	
	4	1	**229-0674**	1	BAR	
	5	1	**3T-5760**	2	BATTERY (12-VOLT, 750-AMPERE)	
M	6	1	**8T-0389**	2	LOCKNUT (M10X1.5-THD)	
	7	1	**8T-4121**	3	WASHER-HARD (11X21X2.5-MM THK)	
M	8	1	**8T-4137**	1	BOLT (M10X1.5X20-MM)	
M	9	1	**8T-4182**	2	BOLT (M10X1.5X45-MM)	
	10	1	**9R-6414**	2	ROD	

E-ORDER BY THE CENTIMETER
M-METRIC PART

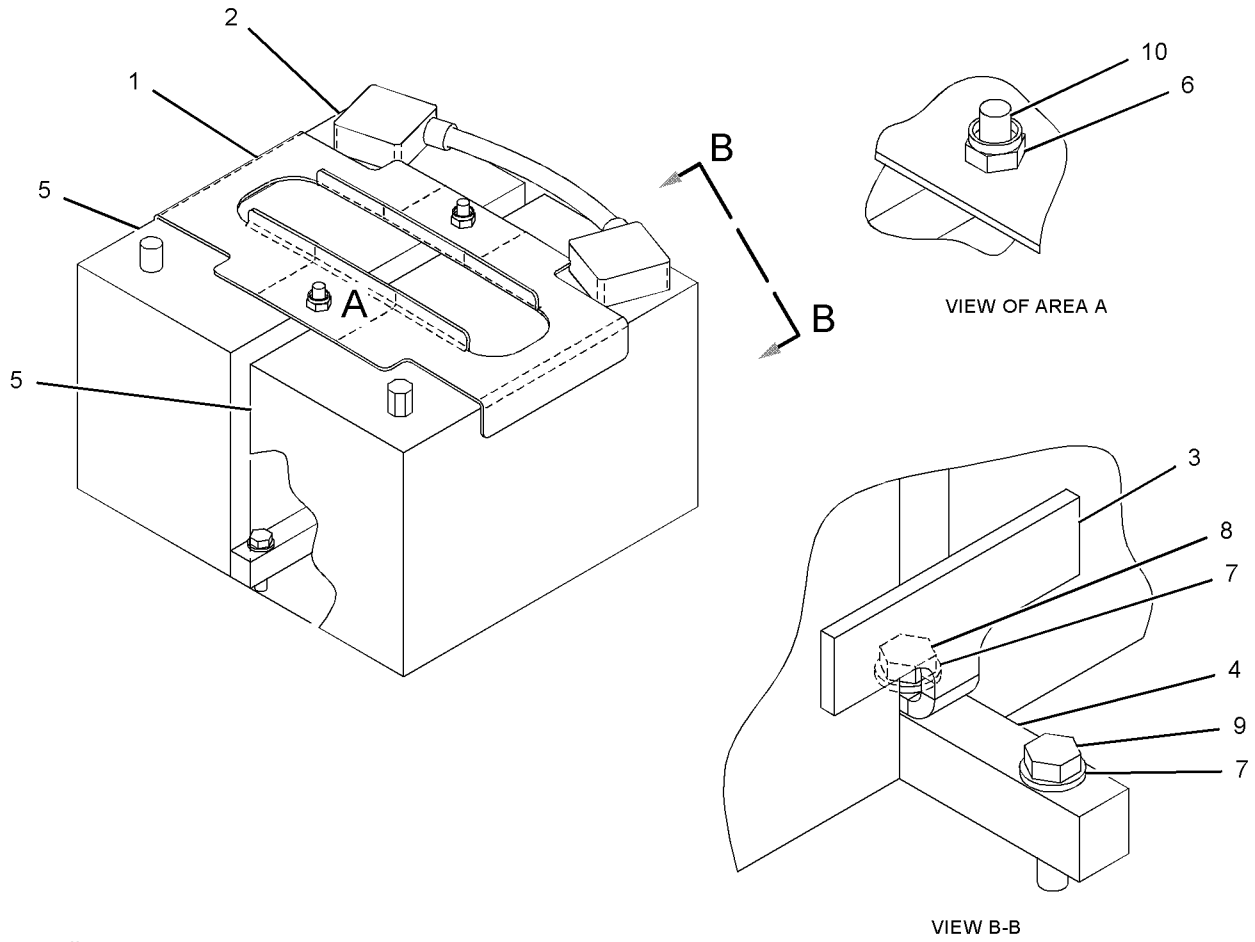

GRAPHIC #1 **<END>** g01066908

9W-0742 BLOCK GP-JUNCTION

S/N: CBK1-UP
PART OF 193-8255, 193-8256 WIRING GP-REAR
ALSO AN ATTACHMENT

SMCS-1408 **i02203621**

NOTE	REF NO	GRAPHIC REF	PART NUMBER	QTY	PART NAME 1 2 3 4 5 6 (PRODUCT LEVEL)	SEE PAGE
	1	1	**8C-6358**	1	JUNCTION BLOCK AS	
	2	1	**8T-3519**	3	BOLT-BRONZE (1/2-13X2-IN)	
	3	1	**8C-6921**	3	NUT-SPACER (1/2-13-THD)	
	4	1	**8T-3518**	6	NUT-FULL (1/2-13-THD)	
	5	1	**7F-0560**	6	WASHER (0.516X0.938X0.101-IN THK)	
BD	6	1	**6V-2722**		TUBE-HEAT SHRINK	

B-USE AS REQUIRED
D-ORDER BY THE METER

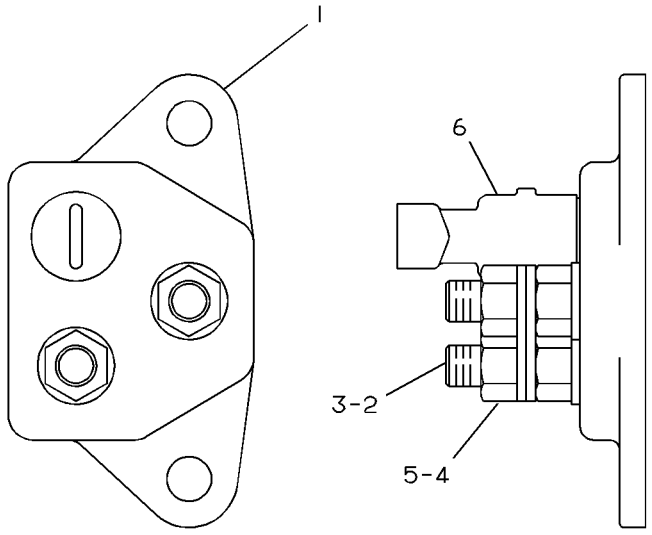

GRAPHIC #1 **<END>** g00082186

201-1036 CIRCUIT BREAKER GP–DUAL

S/N: CBK1-UP
PART OF 161-0771, 179-1548 LIGHTING AR-FLOOD & SIGNAL, 174-3216 SUPPORT AR-REAR CHASSIS AN ATTACHMENT

SMCS-1420 **i02203625**

NOTE	REF NO	GRAPHIC REF	PART NUMBER	QTY	PART NAME 1 2 3 4 5 6 (PRODUCT LEVEL)	SEE PAGE
	1	1	**195-2097**	1	WIRE AS	
	2	1	**201-8424**	1	STRAP	
	3	1	**3K-8106**	4	SCREW-MACHINE (8-32X1-IN)	
	4	1	**3T-2662**	1	CIRCUIT BREAKER AS (15-AMPERE) (LIGHTBAR WORKLAMPS)	
	4A	1	**3T-2662**	1	CIRCUIT BREAKER AS (15-AMPERE) (HEADLAMPS)	
					(EACH CIRCUIT BREAKER AS INCLUDES)	
		1	**6V-8376**	2	SCREW-MACHINE (8-32X0.25-IN)	
		1	**9B-7233**	2	LOCKWASHER	
	5	1	**7F-7685**	1	SCREW-MACHINE	
	6	1	**9B-7233**	4	LOCKWASHER	

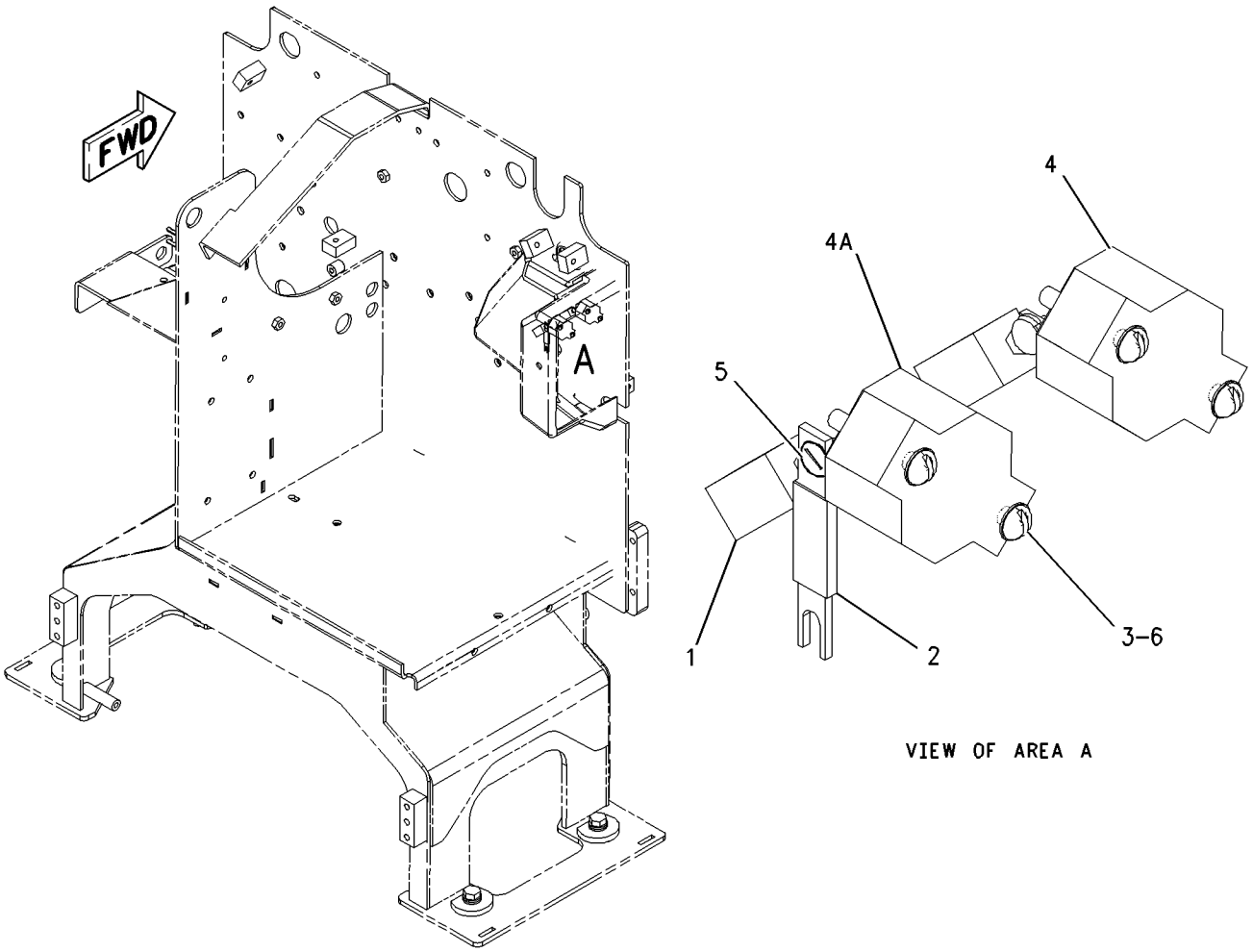

GRAPHIC #1 **<END>** g00983765

201-1038 CIRCUIT BREAKER GP–SINGLE

S/N: CBK1-UP

PART OF 188-9328 LIGHTING AR-FLOOD, 161-0770 LIGHTING AR-FLOOD & SIGNAL AN ATTACHMENT

SMCS-1420 **i02203642**

NOTE	REF NO	GRAPHIC REF	PART NUMBER	QTY	PART NAME 1 2 3 4 5 6 (PRODUCT LEVEL)	SEE PAGE
	1	1	**201-8424**	1	STRAP	
	2	1	**3K-8106**	2	SCREW-MACHINE (8-32X1-IN)	
	3	1	**3T-2662**	1	CIRCUIT BREAKER AS (15-AMPERE) (HEADLAMPS)	
		1	**6V-8376**	2	SCREW-MACHINE (8-32X0.25-IN)	
		1	**9B-7233**	2	LOCKWASHER	
	4	1	**9B-7233**	2	LOCKWASHER	

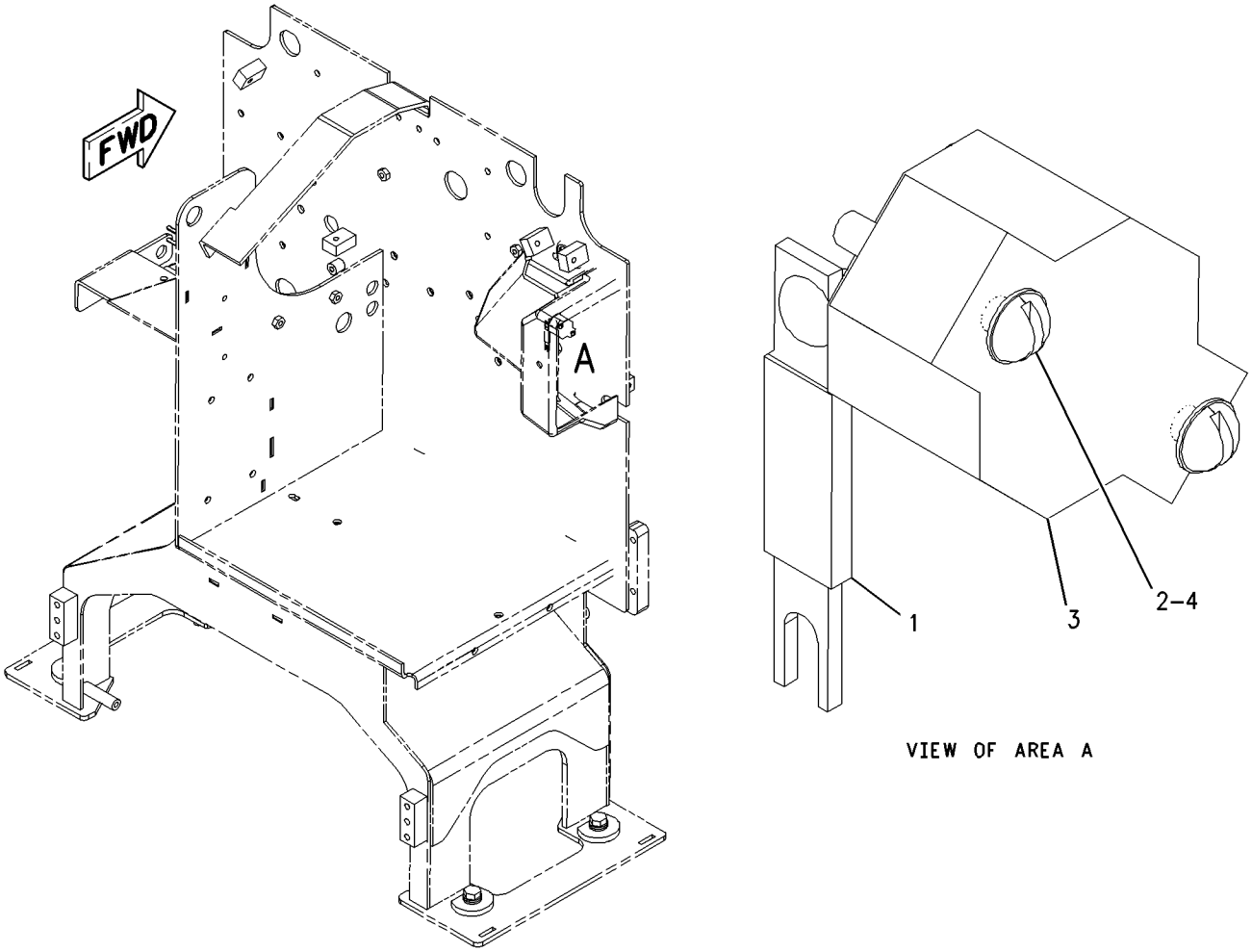

VIEW OF AREA A

GRAPHIC #1 **<END>** g00844652

226-3760 CONTROL & MTG GP-ENGINE ELEK

S/N: 4ZF4479-UP

PART OF 168-7967 ENGINE AR

SMCS-1901 **i01871166**

NOTE	REF NO	GRAPHIC REF	PART NUMBER	QTY	PART NAME 1 2 3 4 5 6 (PRODUCT LEVEL)	SEE PAGE
	1	1	**8T-9655**	8	MOUNT (ISOLATION)	
	2	1	**101-3128**	4	SPACER	
	3	1	**126-1773**	1	CAP-CONNECTOR	
Y	4	1	*196-4170*	1	CONTROL GP-ENGINE ELECTRONIC	135
	5	1	**4P-7581**	1	CLIP	
	6	1	**4P-8134**	1	CLIP	
M	7	1	**5P-8347**	2	BOLT (M8X1.25X70-MM)	
M	8	1	**6V-5221**	2	BOLT (M8X1.25X80-MM)	
	9	1	**9M-1974**	4	WASHER-HARD (8.8X16X2-MM THK)	
	10	1	**9N-0869**	4	WASHER-HARD (8.8X25.5X2-MM THK)	

M-METRIC PART
Y-SEPARATE ILLUSTRATION

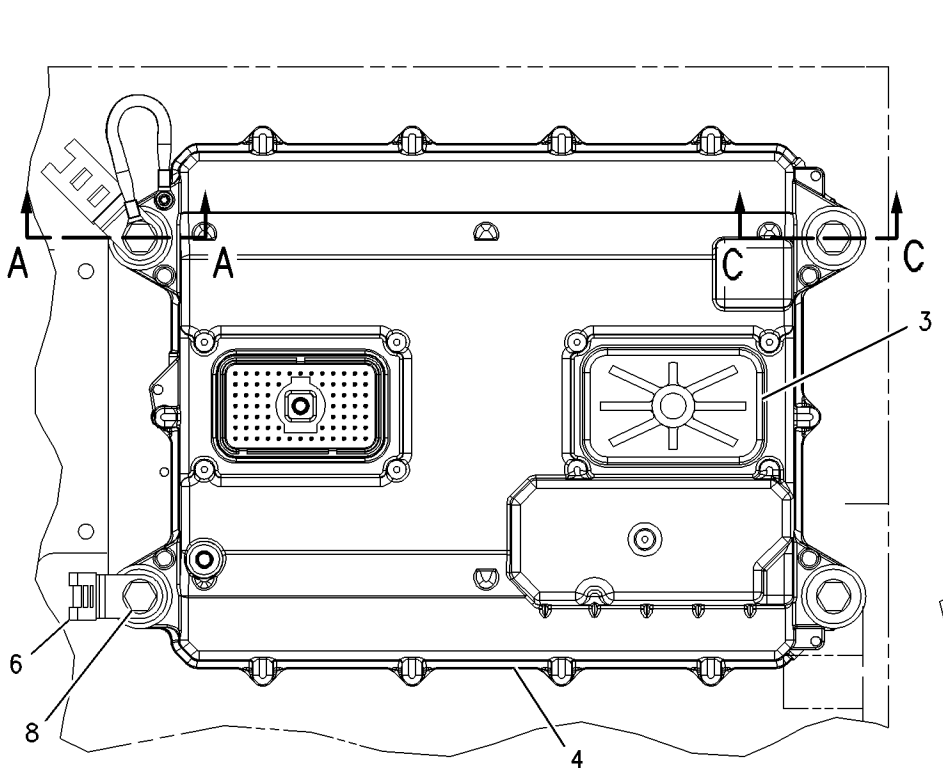

LEFT SIDE VIEW

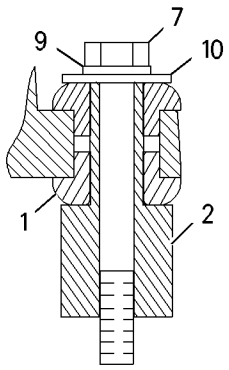

SECTION C-C

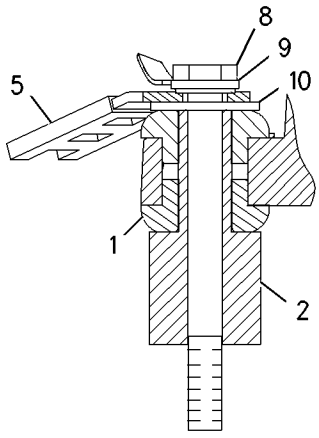

SECTION A-A

GRAPHIC #1 **<END>** g00954001

196-4170 CONTROL GP-ENGINE ELECTRONIC

S/N: 4ZF4479-UP

PART OF 226-3760 CONTROL & MTG GP-ENGINE ELEK

SMCS-1901 **i02202952**

NOTE	REF NO	GRAPHIC REF	PART NUMBER	QTY	PART NAME 1 2 3 4 5 6 (PRODUCT LEVEL)	SEE PAGE
Y	1	1	**239-8277**	1	CONTROL GP-ENGINE ELECTRONIC	136

Y-SEPARATE ILLUSTRATION

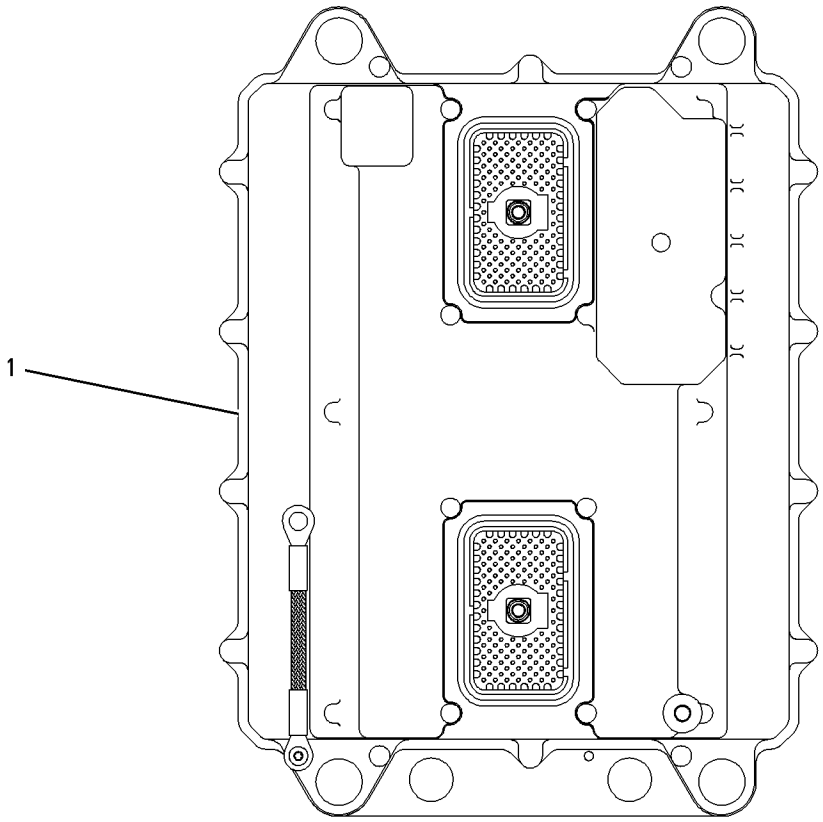

GRAPHIC #1 **<END>** g00838809

239-8277 CONTROL GP-ENGINE ELECTRONIC

S/N: 4ZF4479-UP

PART OF 196-4170 CONTROL GP-ENGINE ELECTRONIC

FIELD REPLACEMENT FOR 196-4170—PAGE 135

SMCS-1901 **i02038625**

NOTE	REF NO	GRAPHIC REF	PART NUMBER	QTY	PART NAME 1 2 3 4 5 6 (PRODUCT LEVEL)	SEE PAGE
	1	1	**7X-6315**	1	STRAP AS-GROUND	
	2	1	**184-2472**	1	SCREW-PAN HEAD (NO.8-32X9.52-MM)	

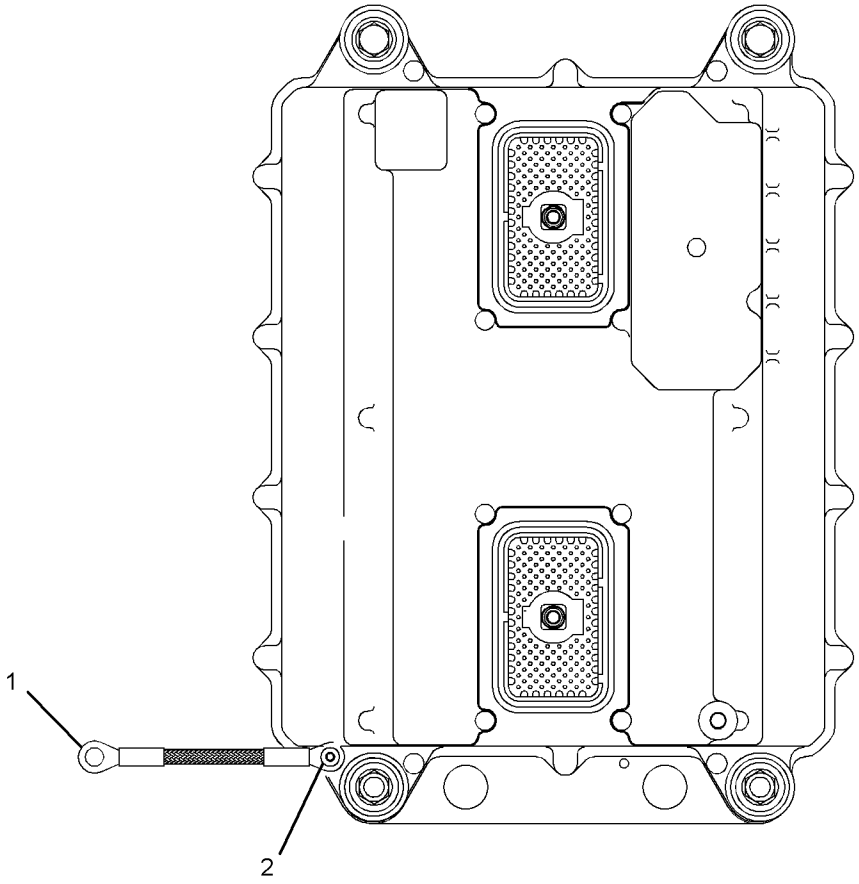

LEFT SIDE VIEW

GRAPHIC #1 **<END>** g01059736

132-6640 CONTROL GP-SECONDARY STEERING

S/N: CBK1-UP

PART OF 194-3353 WIRING GP-SECONDARY STEERING, 159-5841 WIRING GP-SHIFT CONSOLE

AN ATTACHMENT

SMCS-4343 **i01701309**

NOTE	REF NO	GRAPHIC REF	PART NUMBER	QTY	PART NAME 1 2 3 4 5 6 (PRODUCT LEVEL)	SEE PAGE
Z	1	1		1	CONTROL AS-STEERING	
	2	1	**102-8801**	1	KIT-RECEPTACLE (12-PIN)	
					(INCLUDES RECEPTACLE AS & WEDGE)	
	3	1	**3E-5180**	1	WEDGE-RECEPTACLE LOCK (12-PIN)	
	4	1	**186-3735**	11	PIN-CONNECTOR	
	5	1	**8T-8737**	1	PLUG-SEAL	
	6	1	**1S-9593**	4	STRAP-CABLE	

Z-NOT SERVICED SEPARATELY

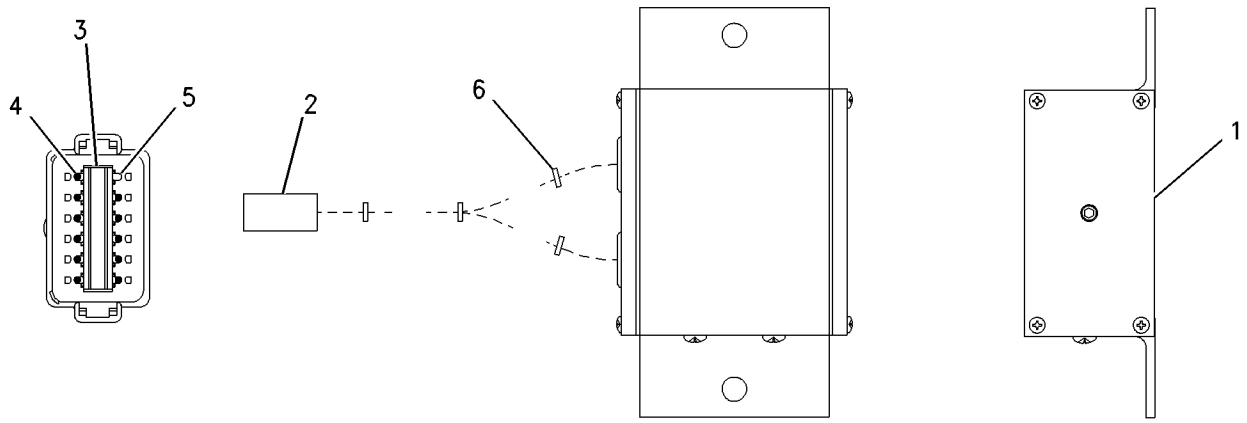

GRAPHIC #1 **<END>** g00672584

ELECTRICAL AND STARTING SYSTEM

160-6567 CONTROL GP-UNPROGRAMMED

S/N: CBK1-UP

PART OF 159-5812, 178-3030, 196-4909 PANEL GP-INSTRUMENT

ALSO AN ATTACHMENT

SMCS-7610 **i02140959**

NOTE	PART NUMBER	QTY	PART NAME 1 2 3 4 5 6 (PRODUCT LEVEL)	SEE PAGE
			(NO SERVICED PARTS)	

<END>

172-9389 CONTROL GP-UNPROGRAMMED—POWER TRAIN

S/N: CBK1-UP

PART OF 159-5856, 159-5865 WIRING GP-FRONT

ALSO AN ATTACHMENT

SMCS-7610 **i01885436**

NOTE	REF NO	GRAPHIC REF	PART NUMBER	QTY	PART NAME 1 2 3 4 5 6 (PRODUCT LEVEL)	SEE PAGE
	1	1	**7X-6315**	1	STRAP AS-GROUND	
	2	1	**101-0852**	1	SCREW-PAN HEAD (NO 8X3/8-IN)	
M	3	1	**6V-6703**	2	KIT-RETAINING BOLT (M5X0.8X53.24-MM) (CONTROL GP)	
					(EACH INCLUDES BOLT, RING, AND SEALS)	
	4	1	**134-4126**	1	WASHER (4.52X8.28X0.76-MM THK)	
					FOR SOFTWARE, SEE ELECTRONICS GP	

M-METRIC PART

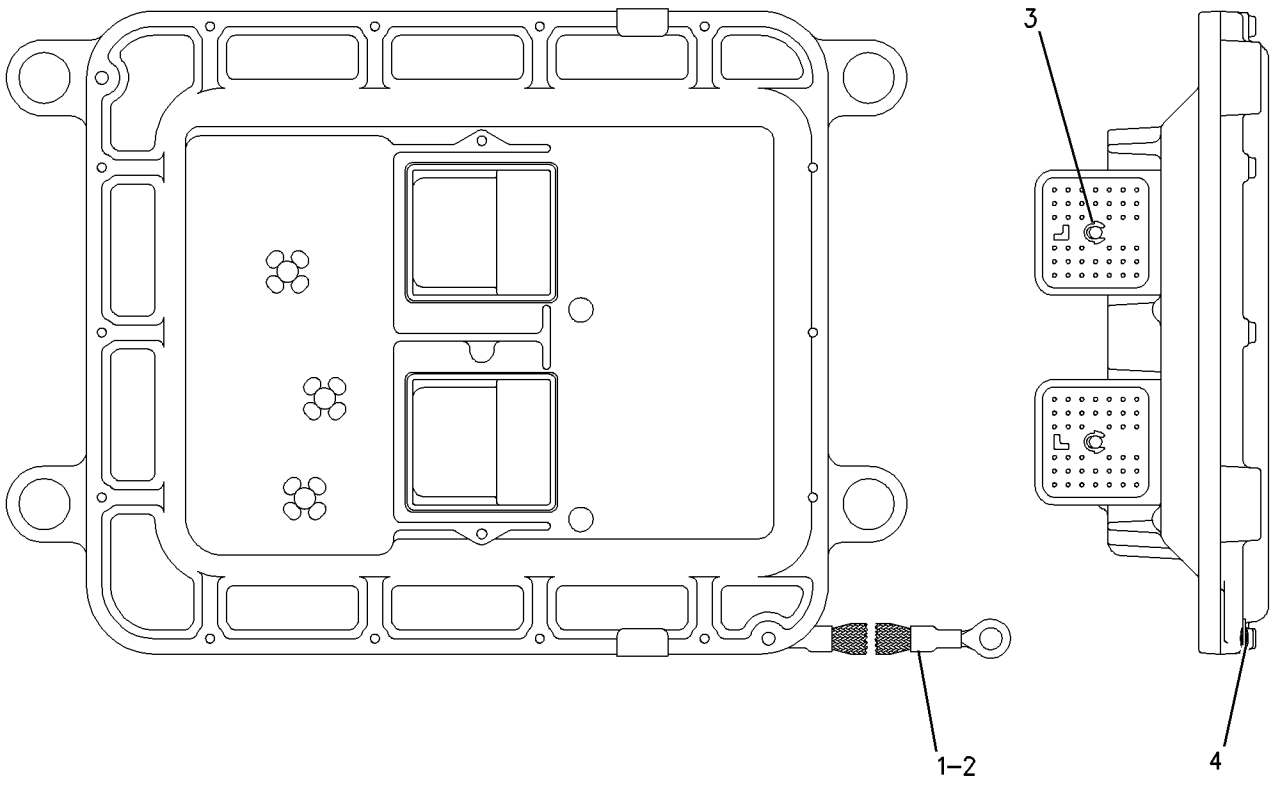

GRAPHIC #1 **<END>** g00951290

161-0776 CONVERTER AR-ELECTRICAL—12V POWER PORT—LOW

S/N: CBK1-UP
AN ATTACHMENT

SMCS-1421 **i01825605**

NOTE	PART NUMBER	QTY	PART NAME 1 2 3 4 5 6 (PRODUCT LEVEL)	SEE PAGE
Y	*171-7185*	1	ACCESSORY GP-CAB	777
Y	*180-4643*	1	CONVERTER GP-ELECTRICAL	143

Y-SEPARATE ILLUSTRATION

<END>

161-0777 CONVERTER AR-ELECTRICAL—12V POWER PORT—HIGH

S/N: CBK1-UP
AN ATTACHMENT

SMCS-1421 **i01677940**

NOTE	PART NUMBER	QTY	PART NAME 1 2 3 4 5 6 (PRODUCT LEVEL)	SEE PAGE
Y	*171-7186*	1	ACCESSORY GP-CAB	778
Y	*180-4643*	1	CONVERTER GP-ELECTRICAL	143

Y-SEPARATE ILLUSTRATION

<END>

145-1297 CONVERTER GP-ELECTRICAL–5/7.5 AMP

S/N: CBK1-UP

PART OF 145-1300 INSTALLATION AR-RADIO

AN ATTACHMENT

SMCS-1421 **i02203914**

NOTE	REF NO	GRAPHIC REF	PART NUMBER	QTY	PART NAME 1 2 3 4 5 6 (PRODUCT LEVEL)	SEE PAGE
	1	1	**8X-1853**	2	SPACER (13.1X15.9X30.4-MM THK) (10.3X15.9X30MM THK)	
	2	1	**9W-1442**	1	FUSE (10-AMPERE) (CONVERTER)	
	3	1	**205-4285**	1	CONVERTER GP-ELECTRICAL (24-VOLT TO 12-VOLT)	
	4	1	**208-7782**	1	PLATE AS	
	5	1	**096-6166**	2	WASHER-HARD (4.5X9X1-MM THK)	
M	6	1	**8T-0285**	2	SCREW-MACHINE (M4X0.7X12-MM)	
	7	1	**8T-2501**	2	BOLT (3/8-16X2-IN)	
	8	1	**8T-4896**	2	WASHER-HARD (10.2X18.5X2.5-MM THK)	

M-METRIC PART

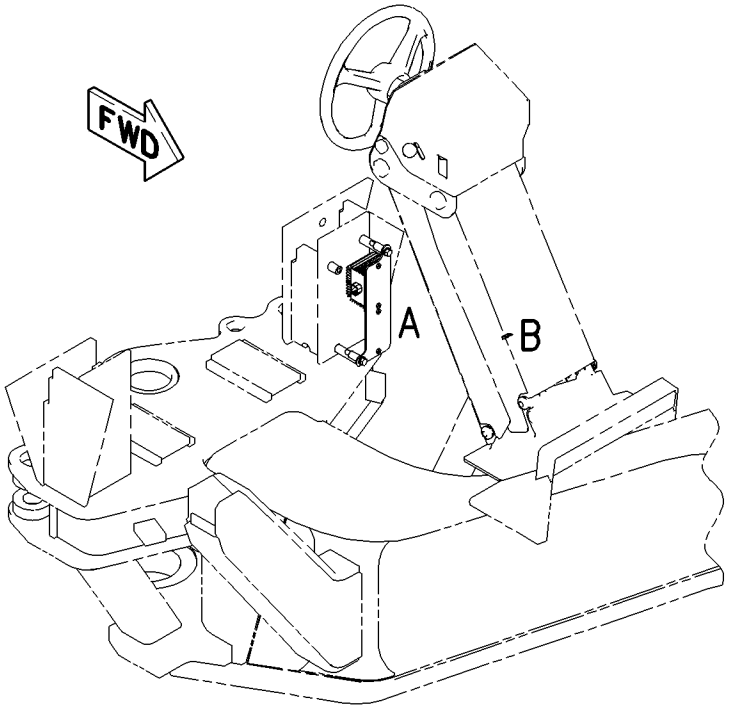

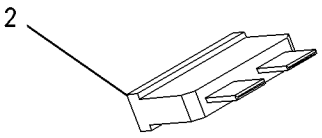

VIEW OF AREA B

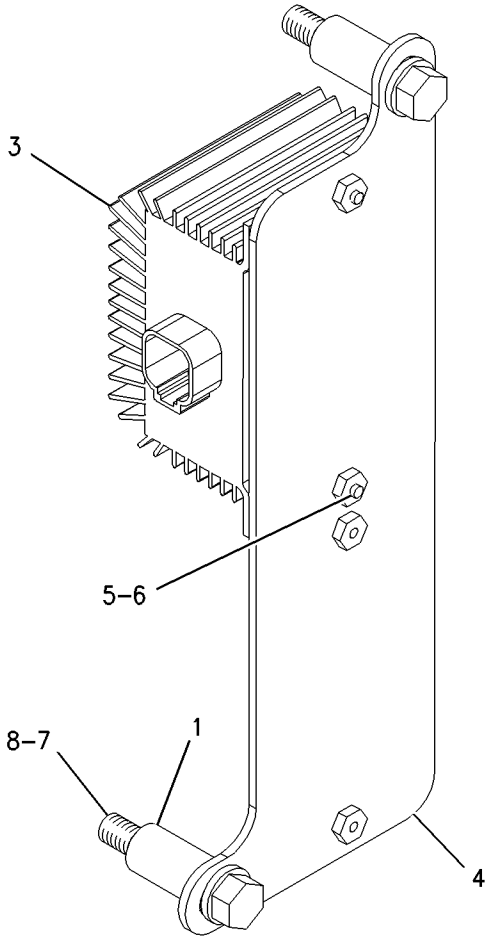

VIEW OF AREA A

GRAPHIC #1 **<END>** g00918329

ELECTRICAL AND STARTING SYSTEM

167-8382 CONVERTER GP-ELECTRICAL–25 AMP

S/N: CBK1-UP

AN ATTACHMENT

SMCS-1421 **i01991710**

NOTE	REF NO	GRAPHIC REF	PART NUMBER	QTY	PART NAME 1 2 3 4 5 6 (PRODUCT LEVEL)	SEE PAGE
	1	1	**9W-1441**	1	FUSE (15-AMPERE) (CONVERTER-POWER)	
Y	2	1	*233-6659*	1	CONVERTER GP-ELECTRICAL	144

Y-SEPARATE ILLUSTRATION

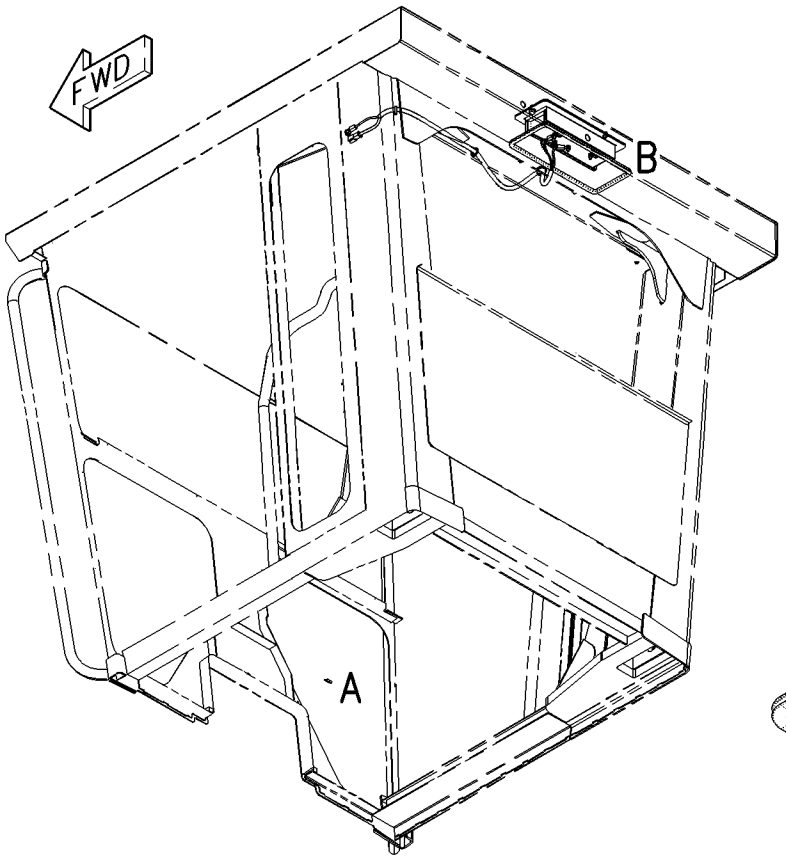

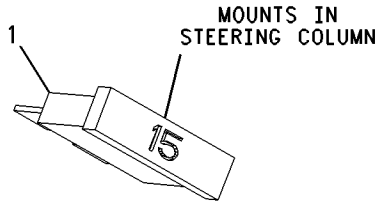

VIEW OF AREA A

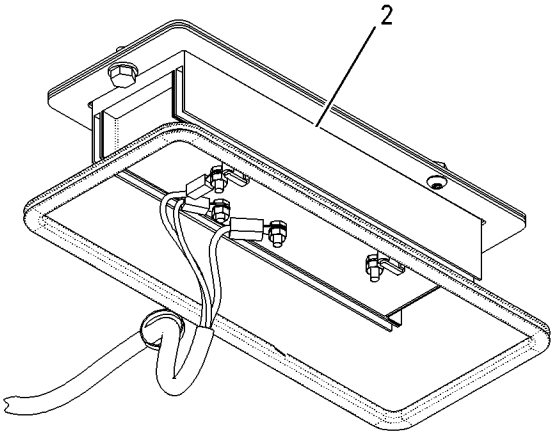

VIEW OF AREA B

GRAPHIC #1 **<END>** g00975196

180-4643 CONVERTER GP-ELECTRICAL–12V POWER PORT

S/N: CBK1-UP

PART OF 161-0776, 161-0777 CONVERTER AR-ELECTRICAL

AN ATTACHMENT

SMCS-1421 **i01936021**

NOTE	REF NO	GRAPHIC REF	PART NUMBER	QTY	PART NAME 1 2 3 4 5 6 (PRODUCT LEVEL)	SEE PAGE
	1	1	**9W-1442**	1	FUSE (10-AMPERE) (POWER CONVERTER)	
	2	1	**205-4285**	1	CONVERTER GP-ELECTRICAL (24-VOLT TO 12-VOLT)	
	3	1	**208-7782**	1	PLATE AS	
	4	1	**096-6166**	2	WASHER-HARD (4.5X9X1-MM THK)	
	5	1	**8T-2501**	2	BOLT (3/8-16X2-IN)	
M	6	1	**8T-0285**	2	SCREW-MACHINE (M4X0.7X12-MM)	
	7	1	**8T-4896**	2	WASHER-HARD (10.2X18.5X2.5-MM THK)	
	8	1	**8X-1853**	2	SPACER (13.1X15.9X30.4-MM THK)	

M-METRIC PART

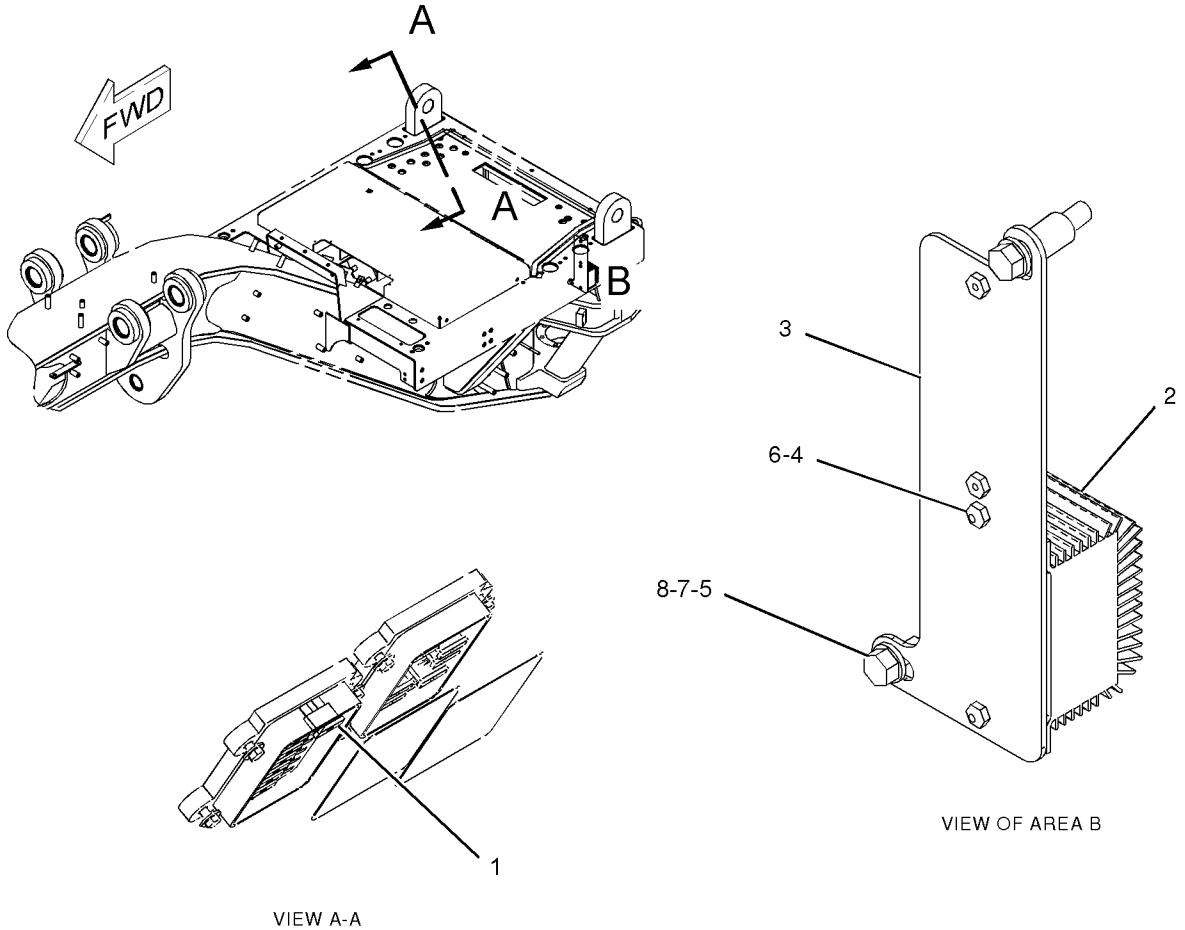

GRAPHIC #1 **<END>** g01010434

233-6659 CONVERTER GP-ELECTRICAL

S/N: CBK1-UP
25-A
PART OF 167-8382 CONVERTER GP-ELECTRICAL
AN ATTACHMENT

SMCS-1421 **i02207317**

NOTE	REF NO	GRAPHIC REF	PART NUMBER	QTY	PART NAME 1 2 3 4 5 6 (PRODUCT LEVEL)	SEE PAGE
	1	1	**3E-8646**	1	CONVERTER-POWER (24-VOLT TO 12-VOLT, 25-AMPERE)	
		1	**8T-9636**	2	FUSE (30-AMPERE)	
	2	1	**3S-2093**	3	STRAP-CABLE	
	3	1	**168-8233**	1	PLATE	
	4	1	**168-8235**	1	PLATE AS	
M		1	**6V-9632**	2	NUT-WELD (M6X1-THD)	
	5	1	**169-3523**	1	HARNESS AS-RADIO	
		1	**102-8802**	1	KIT-RECEPTACLE (2-PIN)	
					(INCLUDES RECEPTACLE AS & WEDGE)	
	6	1	**6V-8801**	1	NUT (3/8-16-THD)	
	7	1	**8T-4121**	2	WASHER-HARD (11X21X2.5-MM THK)	
M	8	1	**8T-4137**	2	BOLT (M10X1.5X20-MM)	
	9	1	**8T-4896**	1	WASHER-HARD (10.2X18.5X2.5-MM THK)	
M	10	1	**9X-2042**	2	SCREW-TRUSS HEAD (M6X1X12-MM)	
BE	11	1	**7X-7877**		STRIP-EDGING	

B-USE AS REQUIRED
E-ORDER BY THE CENTIMETER
M-METRIC PART

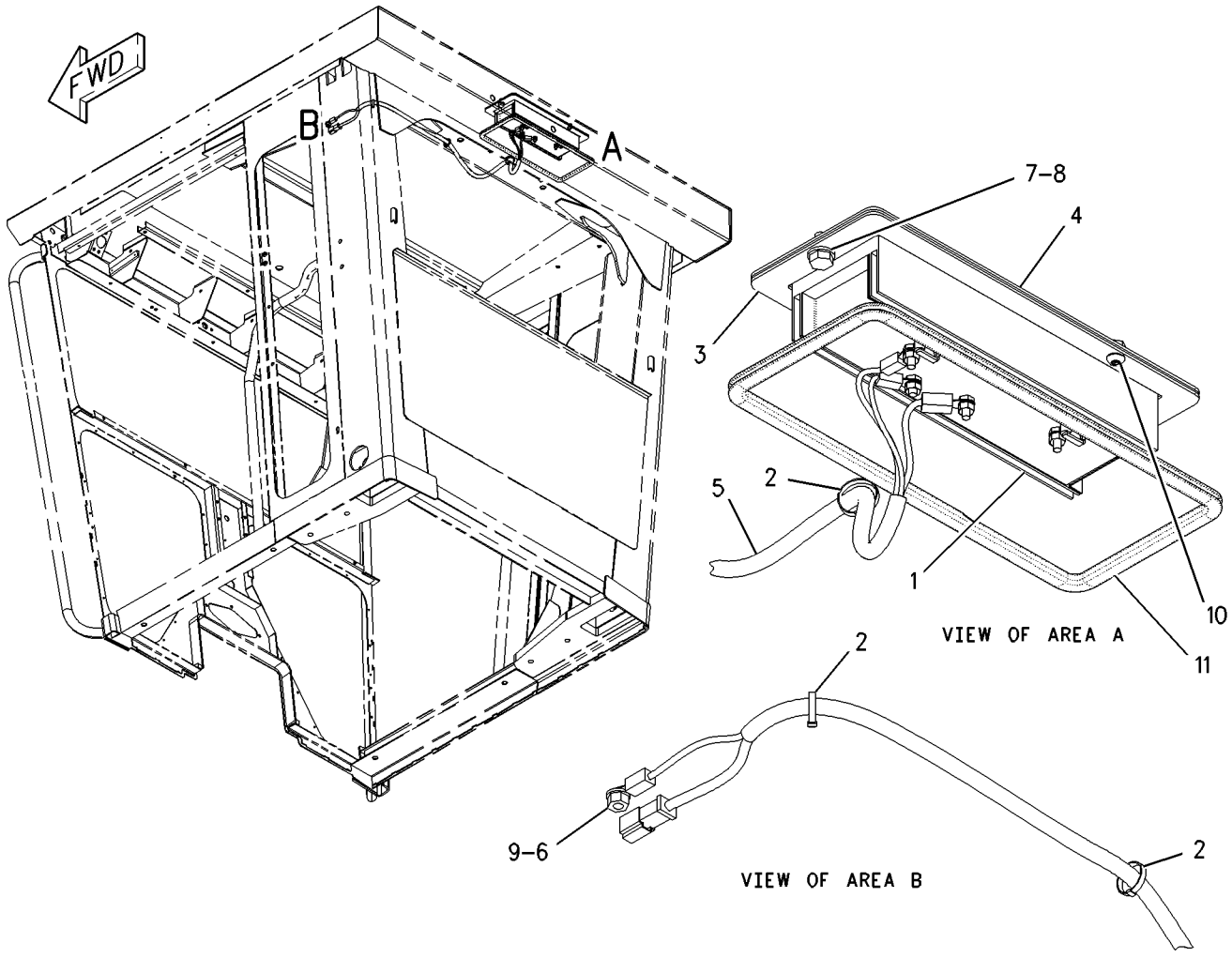

GRAPHIC #1 **<END>** g00847577

198-7332 ELECTRONICS GP-MONITOR

S/N: CBK1-UP
PART OF 159-5856, 159-5865 WIRING GP-FRONT
ALSO AN ATTACHMENT

SMCS-7490, 7610, 7620 **i01880479**

NOTE	PART NUMBER	QTY	PART NAME 1 2 3 4 5 6 (PRODUCT LEVEL)	SEE PAGE
	222-6457	1	SOFTWARE GP-MONITOR (CATERPILLAR MONITORING SYSTEM)	
			- OR-	
			(OPTIONAL SERVICE REPLACEMENT)	
	222-6458	1	SERVICE GP-MONITOR (CATERPILLAR MONITORING SYSTEM)	

<END>

161-1016 ELECTRONICS GP-POWER TRAIN–LIMITED ROAD SPEED–MOTOR GRADER

S/N: CBK1-UP
AN ATTACHMENT

SMCS-4800, 4808, 7610, 7620 **i01678619**

NOTE	PART NUMBER	QTY	PART NAME 1 2 3 4 5 6 (PRODUCT LEVEL)	SEE PAGE
			DO NOT SHOW - THIS IE AND CHILDREN ARE NOT SERVICED	

<END>

171-5941 ELECTRONICS GP-POWER TRAIN–MOTOR GRADER

S/N: CBK1-UP

PART OF 159-5856, 159-5865 WIRING GP-FRONT

ALSO AN ATTACHMENT

SMCS-4800, 4808, 7610, 7620 **i02203086**

NOTE	REF NO	GRAPHIC REF	PART NUMBER	QTY	PART NAME 1 2 3 4 5 6 (PRODUCT LEVEL)	SEE PAGE
	1	1	**225-5404**	1	SOFTWARE GP-POWER TRAIN (MOTOR GRADER)	
					–OR–	
	2	1	**225-5405**	1	SERVICE GP-POWER TRAIN (MOTOR GRADER)	
					(OPTIONAL SERVICE REPLACEMENT)	
		1	**225-5404**	1	SOFTWARE GP-POWER TRAIN (MOTOR GRADER)	
		1	**172-9389**	1	CONTROL GP-UNPROGRAMMED (POWER TRAIN)	
	2A	1	**101-0852**	1	SCREW-PAN HEAD (NO 8X3/8-IN)	
	2B	1	**7X-6315**	1	STRAP AS-GROUND	
M	2C	1	**6V-6703**	2	KIT-RETAINING BOLT (M5X0.8X53.24-MM)	
					(EACH INCLUDES BOLT, RING, AND SEAL)	

M-METRIC PART

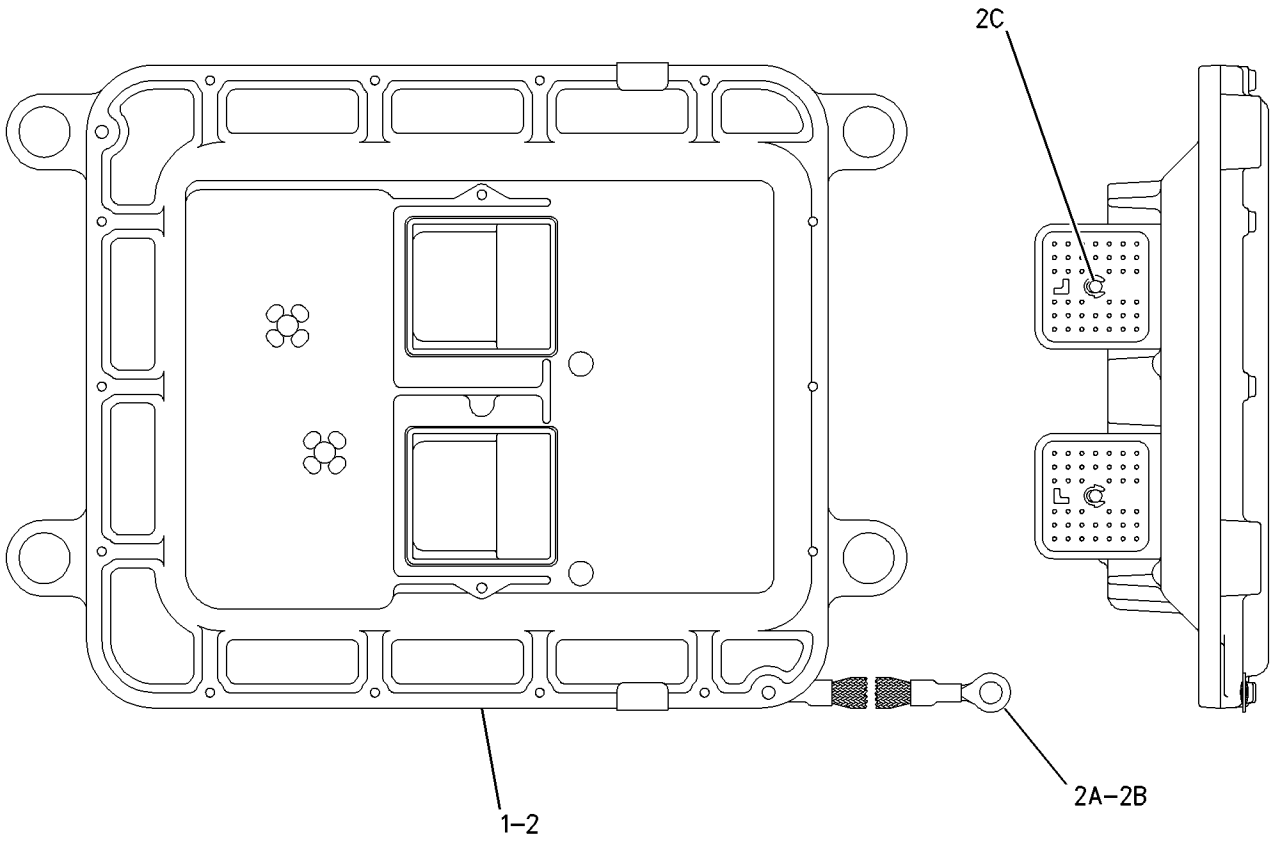

GRAPHIC #1 **<END>** g00914782

ELECTRICAL AND STARTING SYSTEM

218-9738 HEATER GP-JACKET WATER–REAR

S/N: CBK1-UP
240 VOLT
AN ATTACHMENT

SMCS-1383 **i01884426**

NOTE	REF NO	GRAPHIC REF	PART NUMBER	QTY	PART NAME 1 2 3 4 5 6 (PRODUCT LEVEL)	SEE PAGE
	1	1	**6N-1604**	1	CAP AS-DUST	
	2	1	**6T-3764**	1	ELEMENT AS-JACKET WATER HEATER (240 VOLT/1500 WATT)	
	3	1	**188-1588**	1	CORD AS	

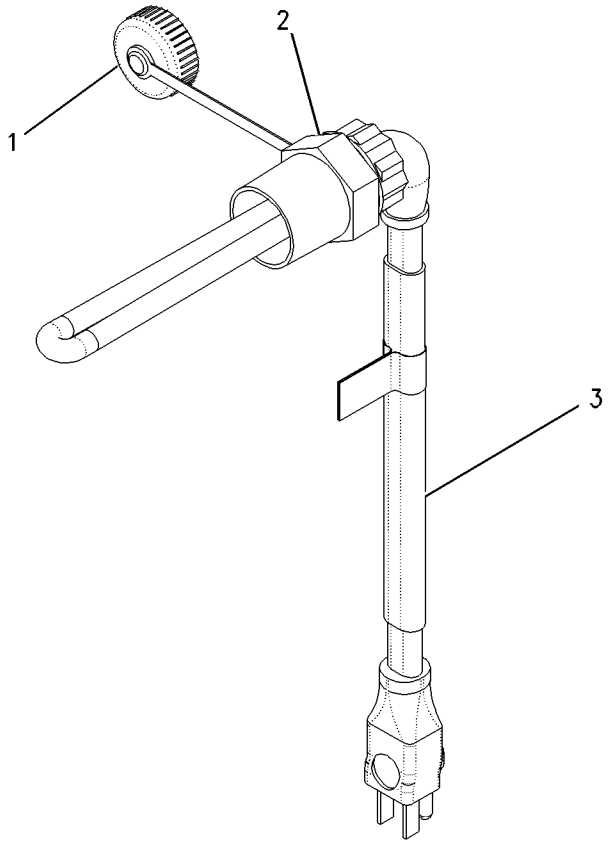

GRAPHIC #1 **<END>** g00897112

218-9739 HEATER GP-JACKET WATER–REAR

S/N: CBK1-UP
120 VOLT
PART OF 197-5954, 236-3947 SNOW AR-MOTOR GRADER
AN ATTACHMENT

SMCS-1383 **i01884424**

NOTE	REF NO	GRAPHIC REF	PART NUMBER	QTY	PART NAME 1 2 3 4 5 6 (PRODUCT LEVEL)	SEE PAGE
	1	1	**6N-1604**	1	CAP AS-DUST	
	2	1	**9G-6655**	1	ELEMENT AS-JACKET WATER HEATER (120 VOLT/1500 WATT)	
	3	1	**188-1336**	1	CORD AS	

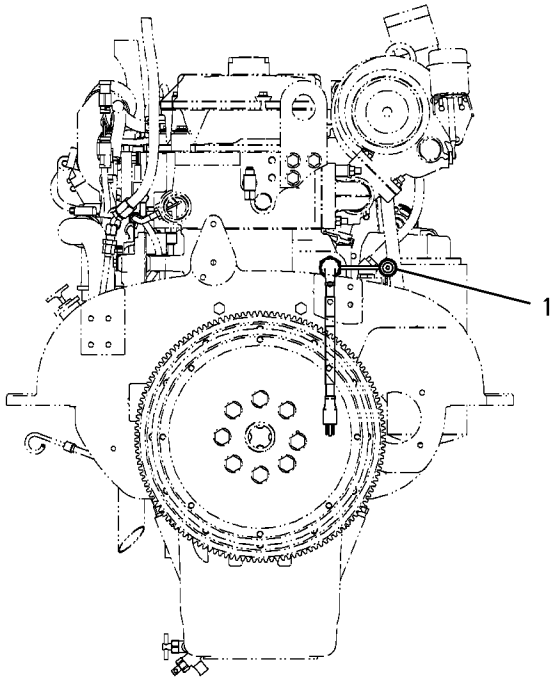

REAR VIEW

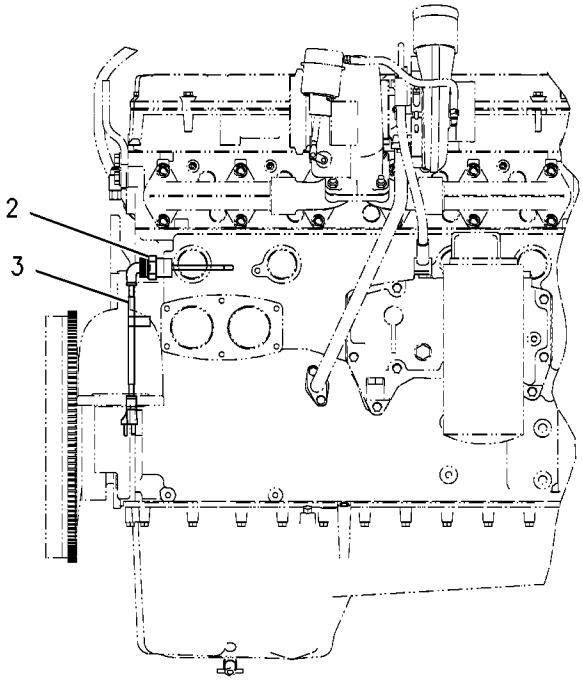

RIGHT SIDE VIEW

GRAPHIC #1 **<END>** g00984072

239-9362 INSTALLATION GP-WARNING BEACON

S/N: CBK1-UP

PART OF 161-1921 WIRING GP-CAB

AN ATTACHMENT

SMCS-1408, 1431 **i02013135**

NOTE	REF NO	GRAPHIC REF	PART NUMBER	QTY	PART NAME 1 2 3 4 5 6 (PRODUCT LEVEL)	SEE PAGE
	1	1	**107-4932**	1	PLATE AS	
	2	1	**130-5300**	1	CLIP	
	3	1	**5P-8525**	1	GROMMET	
	4	1	**8T-4121**	2	WASHER-HARD (11X21X2.5-MM THK)	
M	5	1	**8T-4136**	2	BOLT (M10X1.5X25-MM)	
	6	1	*9X-9639*	1	SWITCH AS-ROCKER (WARNING BEACON)	
		1	**3E-8822**	1	ACTUATOR-ROCKER	
		1	**3E-8825**	1	LAMP (24-VOLT)	
		1	**102-9862**	1	SWITCH AS (WARNING BEACON)	

M-METRIC PART

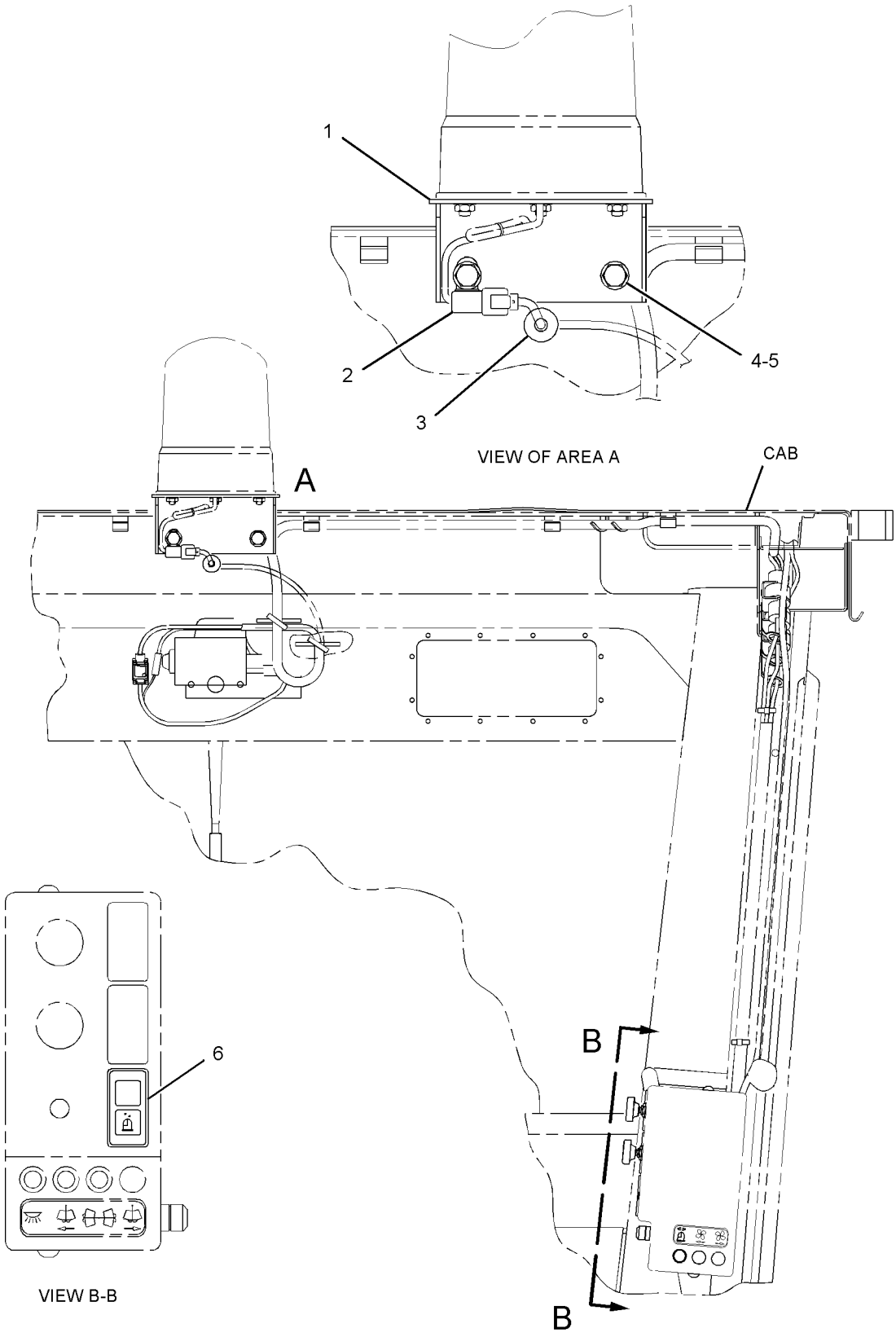

GRAPHIC #1

<END>

g01069654

3E-6389 LAMP GP-DOME

S/N: CBK1-UP
24 VOLT. WITH SWITCH
PART OF 159-5878, 193-7359, 223-3941 WIRING GP-CAB
ALSO AN ATTACHMENT

SMCS-1433 **i02207309**

NOTE	REF NO	GRAPHIC REF	PART NUMBER	QTY	PART NAME 1 2 3 4 5 6 (PRODUCT LEVEL)	SEE PAGE
	1	1	**7N-9943**	1	LAMP (24-VOLT)	
	2	1	**102-8803**	1	KIT-RECEPTACLE (3-PIN)	
					(INCLUDES RECEPTACLE AS & WEDGE)	
		1	**3E-3371**	1	WEDGE-RECEPTACLE LOCK (3-PIN)	
		1	**8T-8729**	3	PIN-CONNECTOR	
	3	1	**7T-0020**	1	LENS	

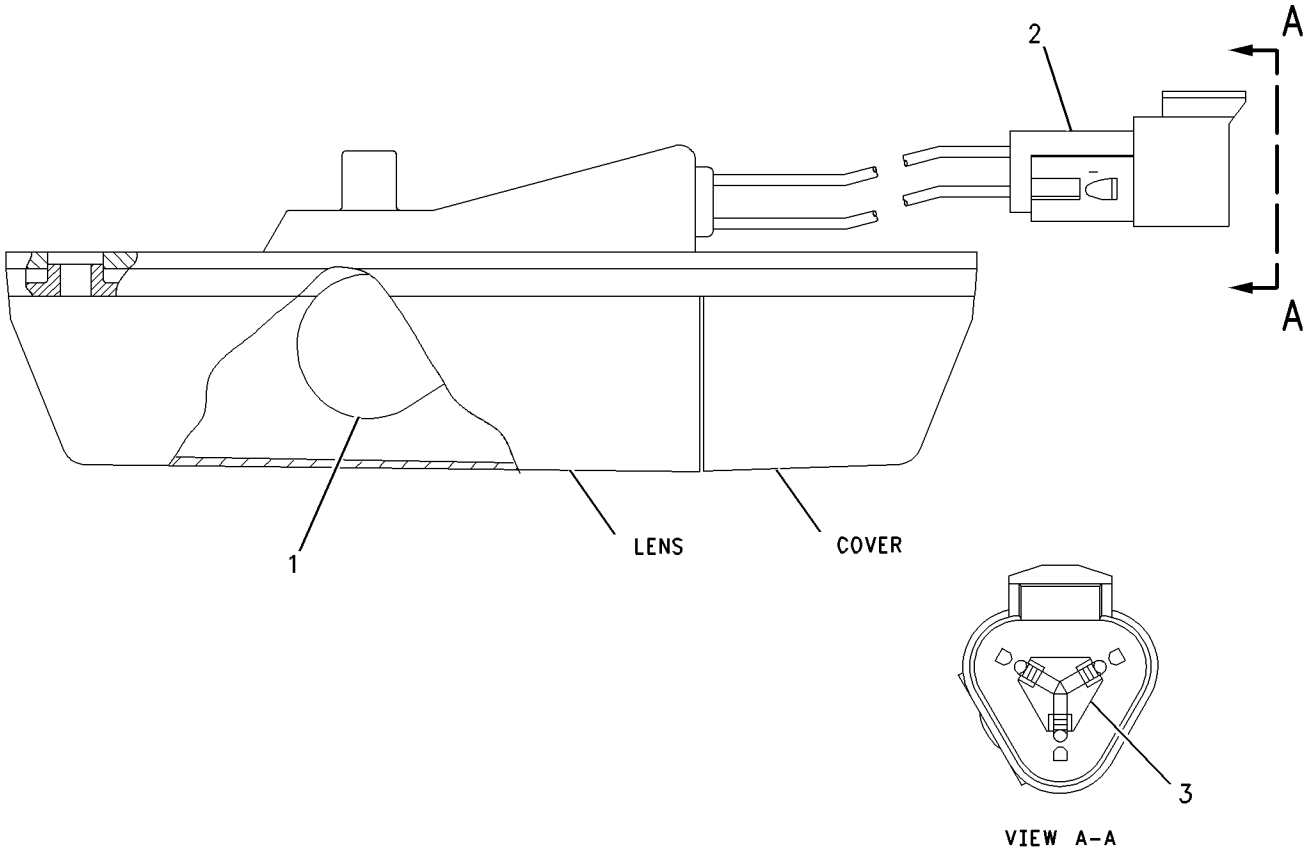

GRAPHIC #1 **<END>** g00892785

153-2073 LAMP GP-FLOOD–VERTICAL

S/N: CBK1-UP
24 VOLT
PART OF 161-0769, 161-0778, 161-0779, 161-1021, 183-4069, 188-9324, 196-8532, 196-8559 LIGHTING GP-FLOOD
AN ATTACHMENT

SMCS-1434 **i02207331**

NOTE	REF NO	GRAPHIC REF	PART NUMBER	QTY	PART NAME 1 2 3 4 5 6 (PRODUCT LEVEL)	SEE PAGE
	1	1	**9X-3463**	1	LAMP-HALOGEN (24-VOLT, 65-WATT)	
	2	1	**158-0250**	1	BODY AS-LAMP	
	3	1	**158-0248**	1	LENS AS	
	4	1	**158-0252**	1	BEZEL	
	5	1	**188-8849**	2	CLAMP	

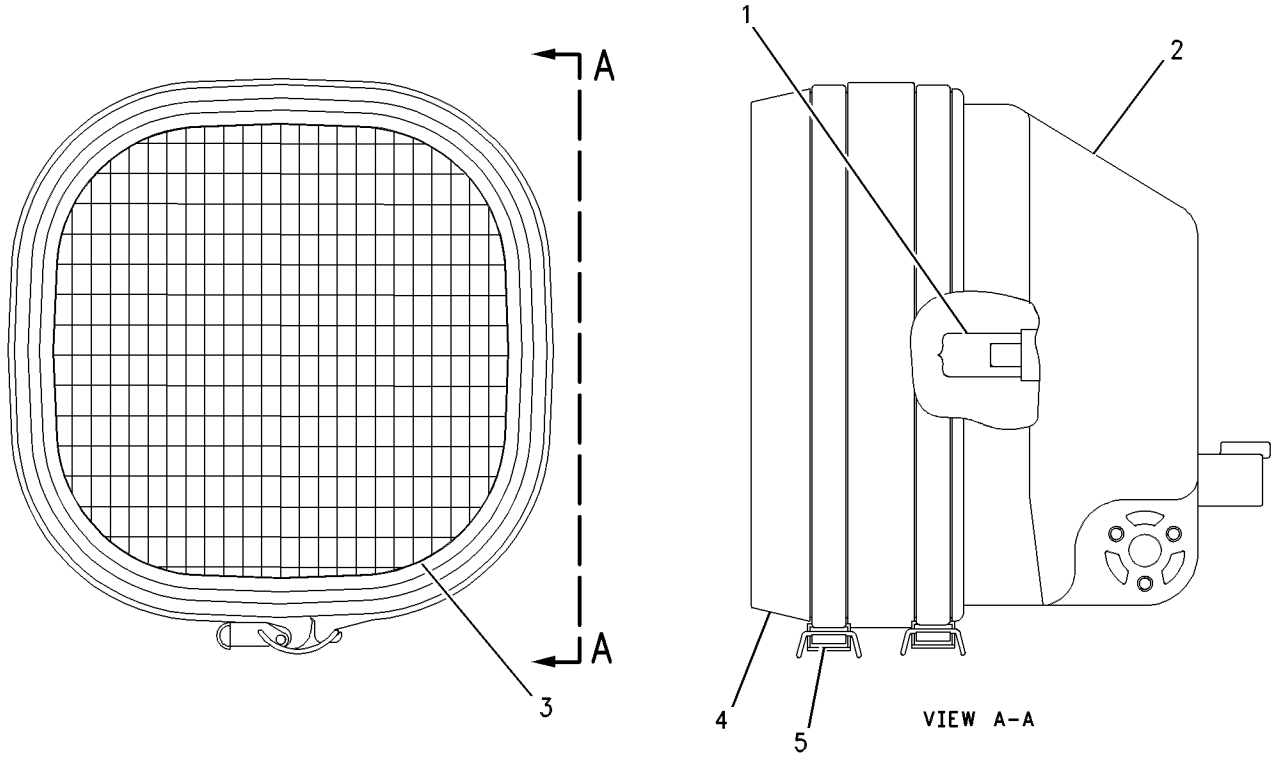

GRAPHIC #1 **<END>** g00449633

234-4323 LAMP GP-FLOOD–VERTICAL MOUNT

S/N: CBK1-UP
24-VOLT
PART OF 161-0778, 161-0779, 161-1015, 161-1017, 161-1021, 183-4069, 188-9324, 196-8559 LIGHTING GP-FLOOD
AN ATTACHMENT

SMCS-1434 **i02013814**

NOTE	REF NO	GRAPHIC REF	PART NUMBER	QTY	PART NAME 1 2 3 4 5 6 (PRODUCT LEVEL)	SEE PAGE
	1	1	**9X-3463**	1	LAMP-HALOGEN (24-VOLT, 65-WATT) (FLOODLIGHT)	
	2	1	**9X-4244**	2	SCREW	
	3	1	**202-6614**	1	LENS AS (FLOODLIGHT)	
	4	1	**234-7730**	1	BODY AS	
	5	1	**164-7556**	1	CLIP	
M	6	1	**8T-4133**	1	NUT (M10X1.5-THD)	
	7	1	**234-7731**	1	BRACKET AS	

M-METRIC PART

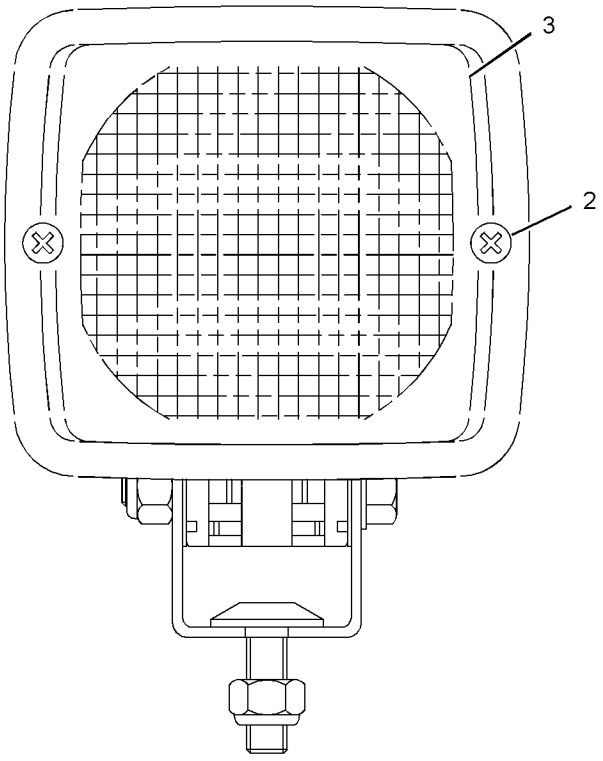

FRONT VIEW

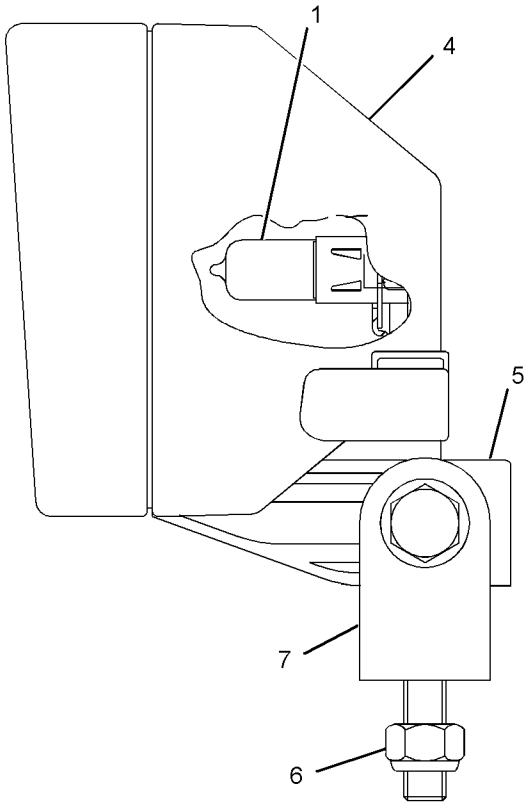

LEFT SIDE VIEW

GRAPHIC #1 **<END>** g01023946

234-4324 LAMP GP-FLOOD

S/N: CBK1-UP
PART OF 161-1015 LIGHTING GP-FLOOD
AN ATTACHMENT

SMCS-1434 **i02101291**

NOTE	REF NO	GRAPHIC REF	PART NUMBER	QTY	PART NAME 1 2 3 4 5 6 (PRODUCT LEVEL)	SEE PAGE
	1	1	**9X-3463**	1	LAMP-HALOGEN (24-VOLT, 65-WATT)	
	2	1	**9X-4244**	2	SCREW	
	3	1	**202-6611**	1	LENS AS (FLOODLIGHT)	
	4	1	**234-7730**	1	BODY AS	
	5	1	**164-7556**	1	CLIP	
M	6	1	**8T-4133**	1	NUT (M10X1.5-THD)	
	7	1	**234-7731**	1	BRACKET AS	

M-METRIC PART

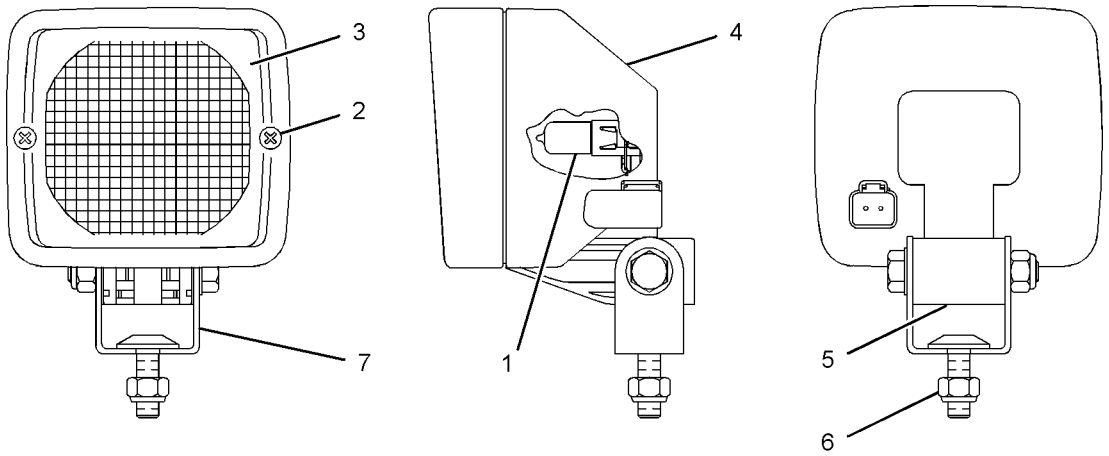

GRAPHIC #1 **<END>** g01091127

234-4325 LAMP GP-FLOOD

S/N: CBK1-UP

PART OF 161-0769, 161-0772, 196-8532 LIGHTING GP-FLOOD

AN ATTACHMENT

SMCS-1434 **i02011383**

NOTE	REF NO	GRAPHIC REF	PART NUMBER	QTY	PART NAME 1 2 3 4 5 6 (PRODUCT LEVEL)	SEE PAGE
	1	1	**9X-3463**	1	LAMP-HALOGEN (24-VOLT, 65-WATT) (FLOODLIGHT)	
M	2	1	**8T-4133**	1	NUT (M10X1.5-THD)	
	3	1	**9X-4244**	2	SCREW	
	4	1	**202-6614**	1	LENS AS (FLOODLIGHT)	
	5	1	**234-7730**	1	BODY AS	
	6	1	**164-7556**	1	CLIP	
	7	1	**234-7731**	1	BRACKET AS	

M-METRIC PART

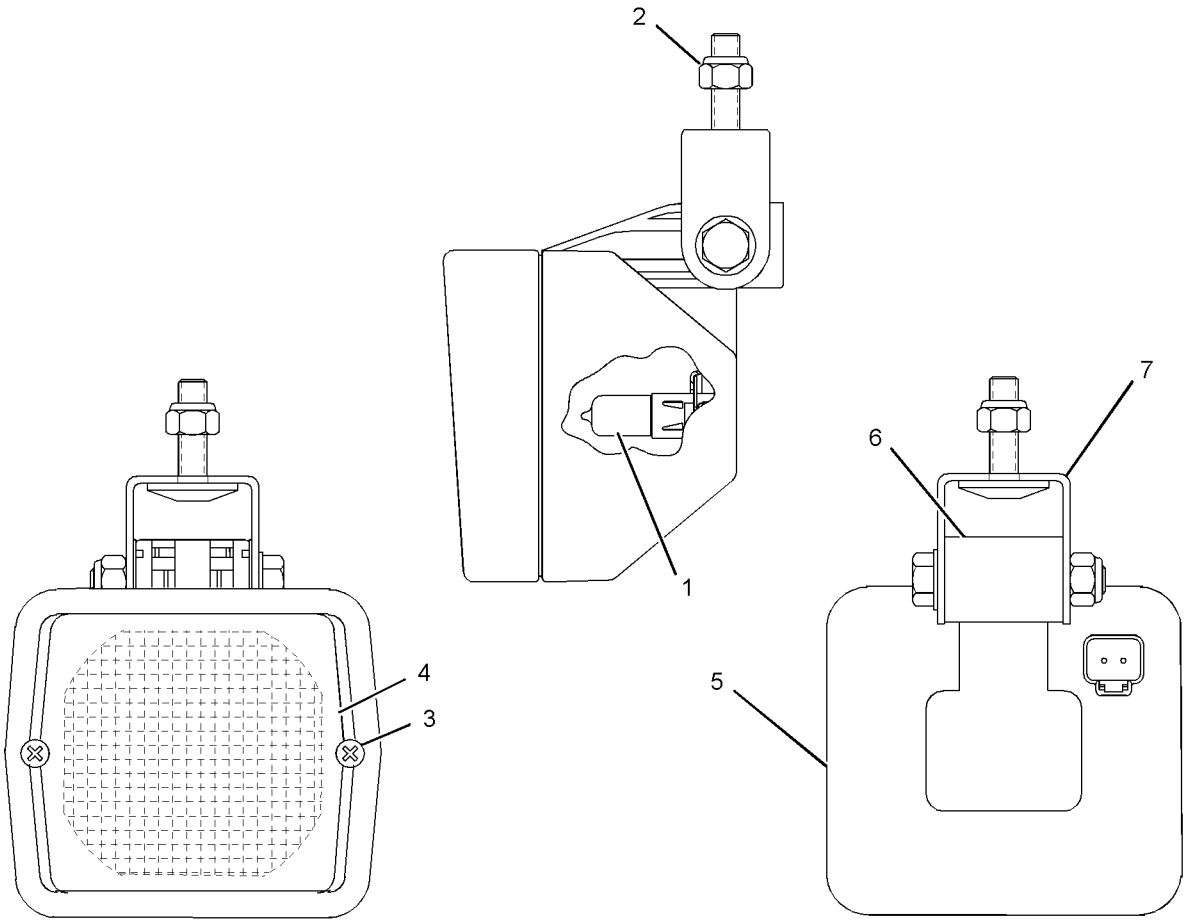

GRAPHIC #1 **<END>** g01026923

234-4326 LAMP GP-FLOOD

S/N: CBK1-UP
PART OF 161-0772 LIGHTING GP-FLOOD
AN ATTACHMENT

SMCS-1434 **i02028424**

NOTE	REF NO	GRAPHIC REF	PART NUMBER	QTY	PART NAME 1 2 3 4 5 6 (PRODUCT LEVEL)	SEE PAGE
	1	1	**9X-3463**	1	LAMP-HALOGEN (24-VOLT, 65-WATT) (BLADE)	
M	2	1	**8T-4133**	1	NUT (M10X1.5-THD)	
	3	1	**9X-4244**	2	SCREW	
	4	1	**202-6611**	1	LENS AS (FLOODLIGHT)	
	5	1	**234-7730**	1	BODY AS	
	6	1	**164-7556**	1	CLIP	
	7	1	**234-7731**	1	BRACKET AS	

M-METRIC PART

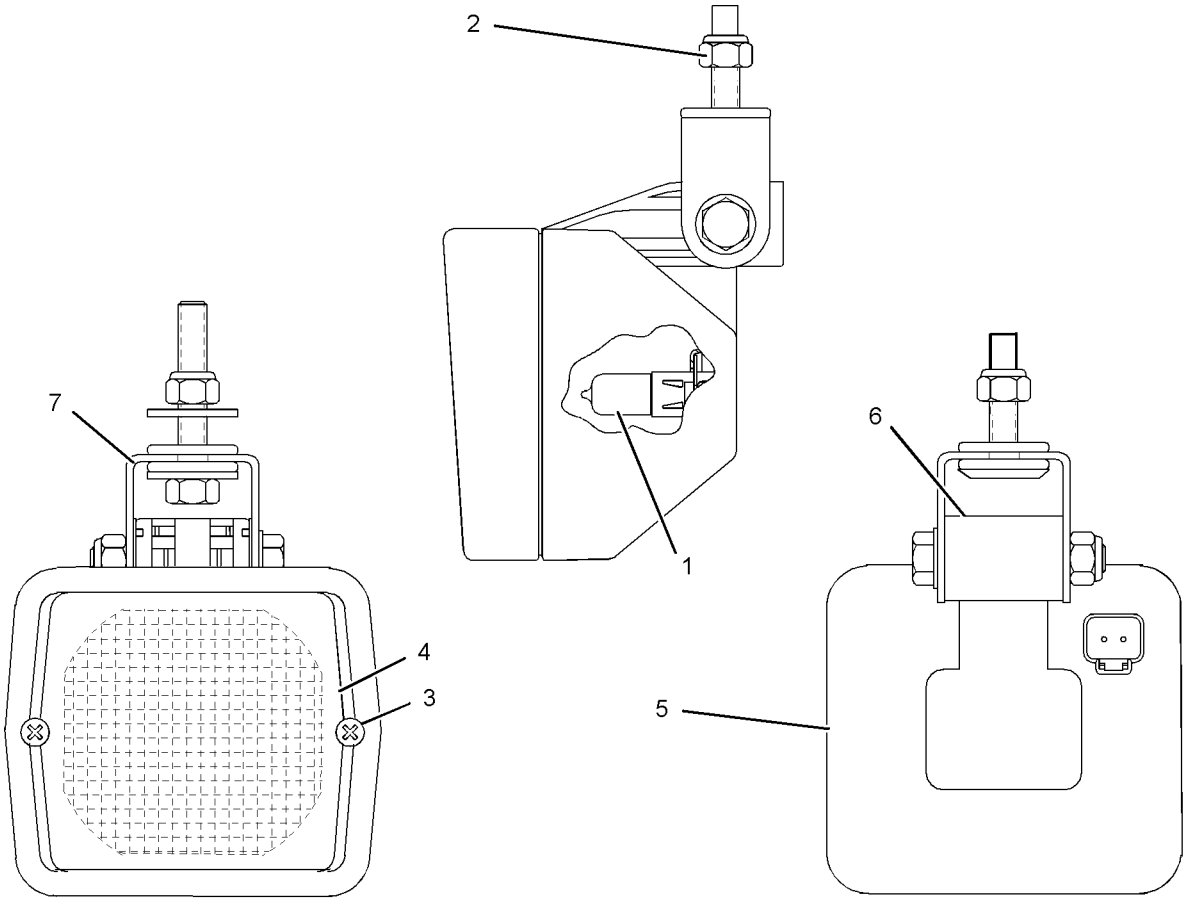

GRAPHIC #1 **<END>** g01044247

161-3509 LAMP GP-HEAD–LOW BEAM

S/N: CBK1-UP

PART OF 161-1015, 161-1017 LIGHTING GP-FLOOD

AN ATTACHMENT

SMCS-1429 **i01755148**

NOTE	REF NO	GRAPHIC REF	PART NUMBER	QTY	PART NAME 1 2 3 4 5 6 (PRODUCT LEVEL)	SEE PAGE
	1	1	**9X-3463**	1	LAMP-HALOGEN (24-VOLT, 65-WATT) (LOW BEAM)	
	2	1	**158-0250**	1	BODY AS-LAMP	
	3	1	**162-2077**	1	LENS AS (HEADLAMP)(LOW BEAM)	
	4	1	**158-0252**	1	BEZEL	
	5	1	**188-8849**	2	CLAMP	

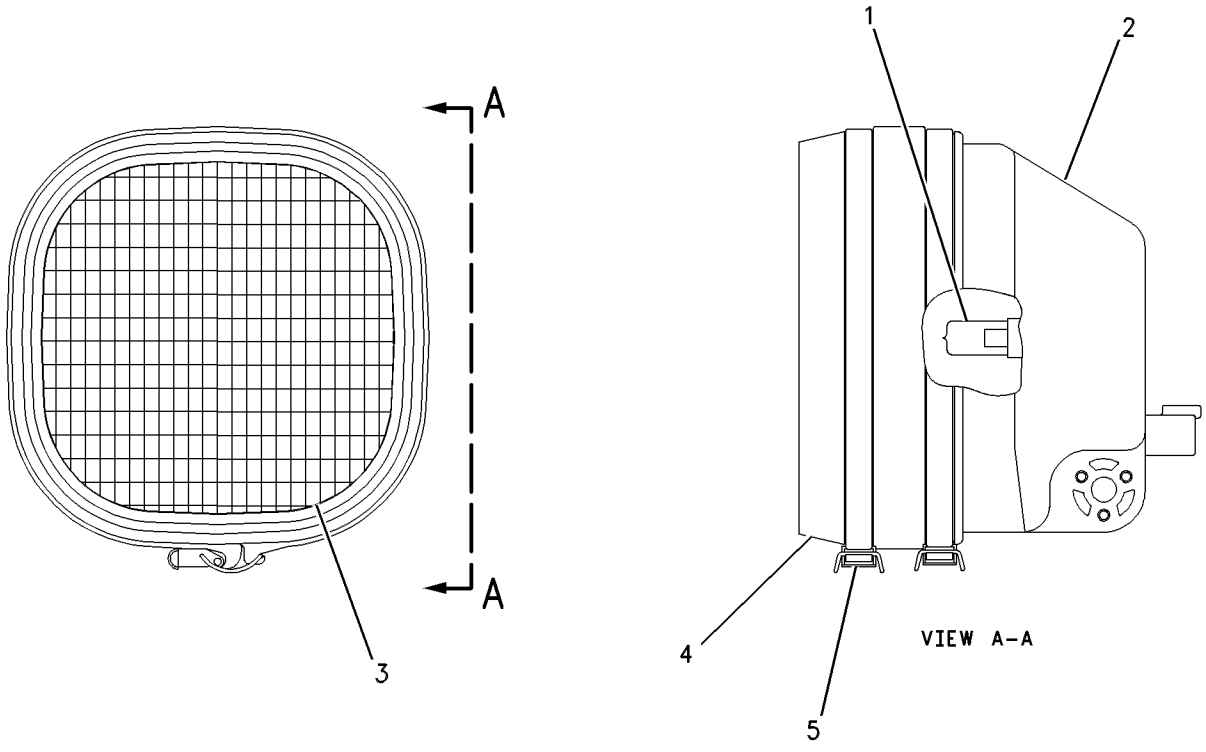

GRAPHIC #1 **<END>** g00514339

180-1300 LAMP GP-HEAD–HIGH BEAM

S/N: CBK1-UP
PART OF 161-1015 LIGHTING GP-FLOOD
AN ATTACHMENT

SMCS-1429 **i02204073**

NOTE	REF NO	GRAPHIC REF	PART NUMBER	QTY	PART NAME 1 2 3 4 5 6 (PRODUCT LEVEL)	SEE PAGE
	1	1	**9X-3463**	1	LAMP-HALOGEN (24-VOLT, 65-WATT) (HIGH BEAM)	
	2	1	**158-0250**	1	BODY AS-LAMP	
	3	1	**158-0249**	1	LENS AS (HIGH BEAM)	
	4	1	**158-0252**	1	BEZEL	
	5	1	**188-8849**	2	CLAMP	

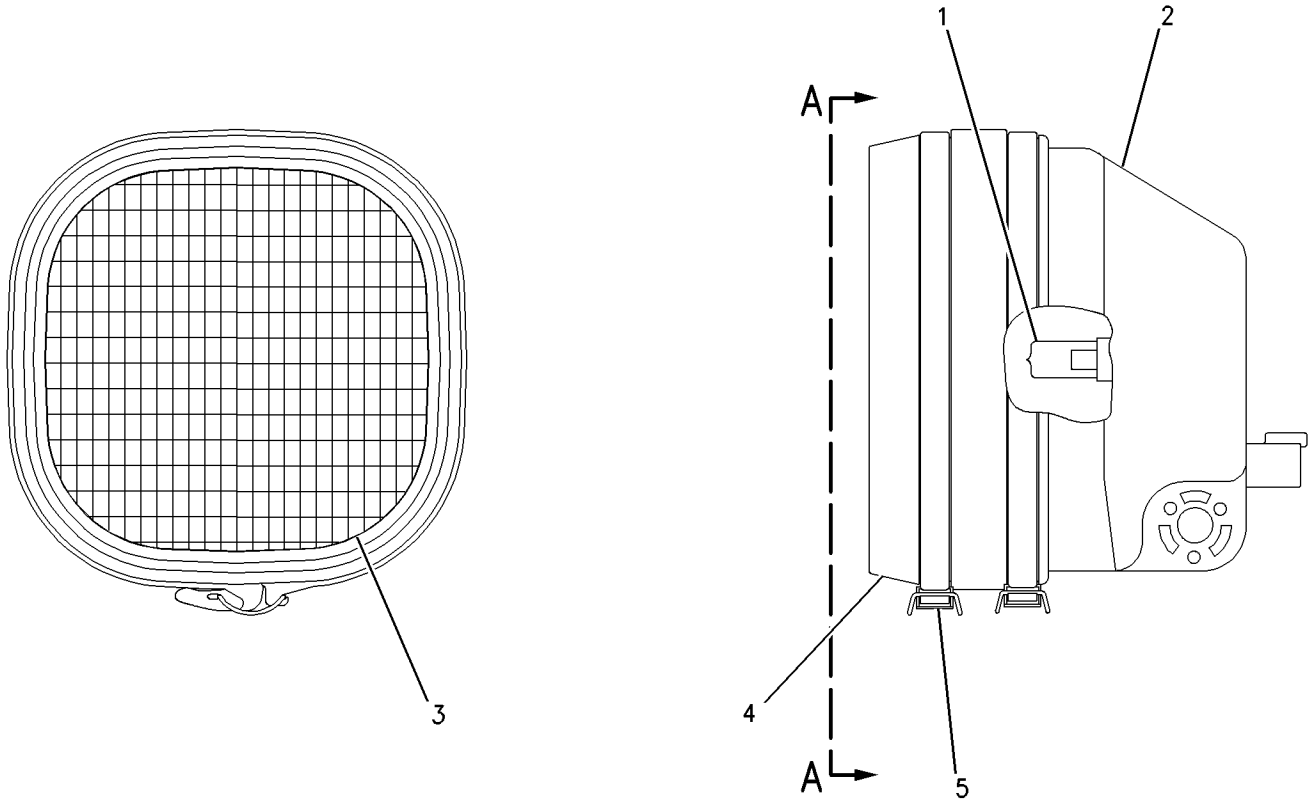

VIEW A-A

GRAPHIC #1 **<END>** g00703486

203-7625 LAMP GP-HEAD–LH–EU

S/N: CBK1-UP
24 VOLT
PART OF 203-7620 LIGHTING GP-FLOOD
AN ATTACHMENT

SMCS-1429 **i01862078**

NOTE	REF NO	GRAPHIC REF	PART NUMBER	QTY	PART NAME 1 2 3 4 5 6 (PRODUCT LEVEL)	SEE PAGE
	1	1	**9X-4244**	4	SCREW	
	2	1	**100-3251**	2	SCREW-LENS	
	3	1	**9X-9865**	1	SEAL	
	4	1	**100-3249**	1	LENS AS (HEAD)	
	5	1	**9X-3465**	1	LAMP (24-VOLT) (HIGH/LOW BEAM)	
	6	1	**136-3848**	1	LENS AS (AMBER) (TURN)	
M	7	1	**8T-5005**	1	BOLT (M10X1.50X70-MM)	
M	8	1	**8T-0389**	1	LOCKNUT (M10X1.5-THD)	
	9	1	**100-3253**	1	SPACER	
	10	1	**100-3254**	1	SPACER	
	11	1	**100-3255**	1	WASHER	
	12	1	**102-8805**	1	KIT-RECEPTACLE (6-PIN)	
					(INCLUDES RECEPTACLE AS & WEDGE)	
	13	1	**186-3735**	5	PIN-CONNECTOR	
	14	1	**3E-3383**	1	WEDGE-RECEPTACLE LOCK (6-PIN)	
	15	1	**8T-8737**	1	PLUG-SEAL	
	16	1	**100-3245**	1	LAMP (24-VOLT) (POSITION)	
	16A	1	**100-3245**	1	LAMP (24-VOLT) (TURN)	
	17	1	**9X-4493**	1	LAMP (24-VOLT, 21-WATT) (TURN)	
	18	1	**100-3250**	1	LENS (AMBER) (TURN)	
	19	1	**136-3845**	1	BODY AS-LAMP	

M-METRIC PART

203-7625 LAMP GP-HEAD *(contd.)* **i01862078**

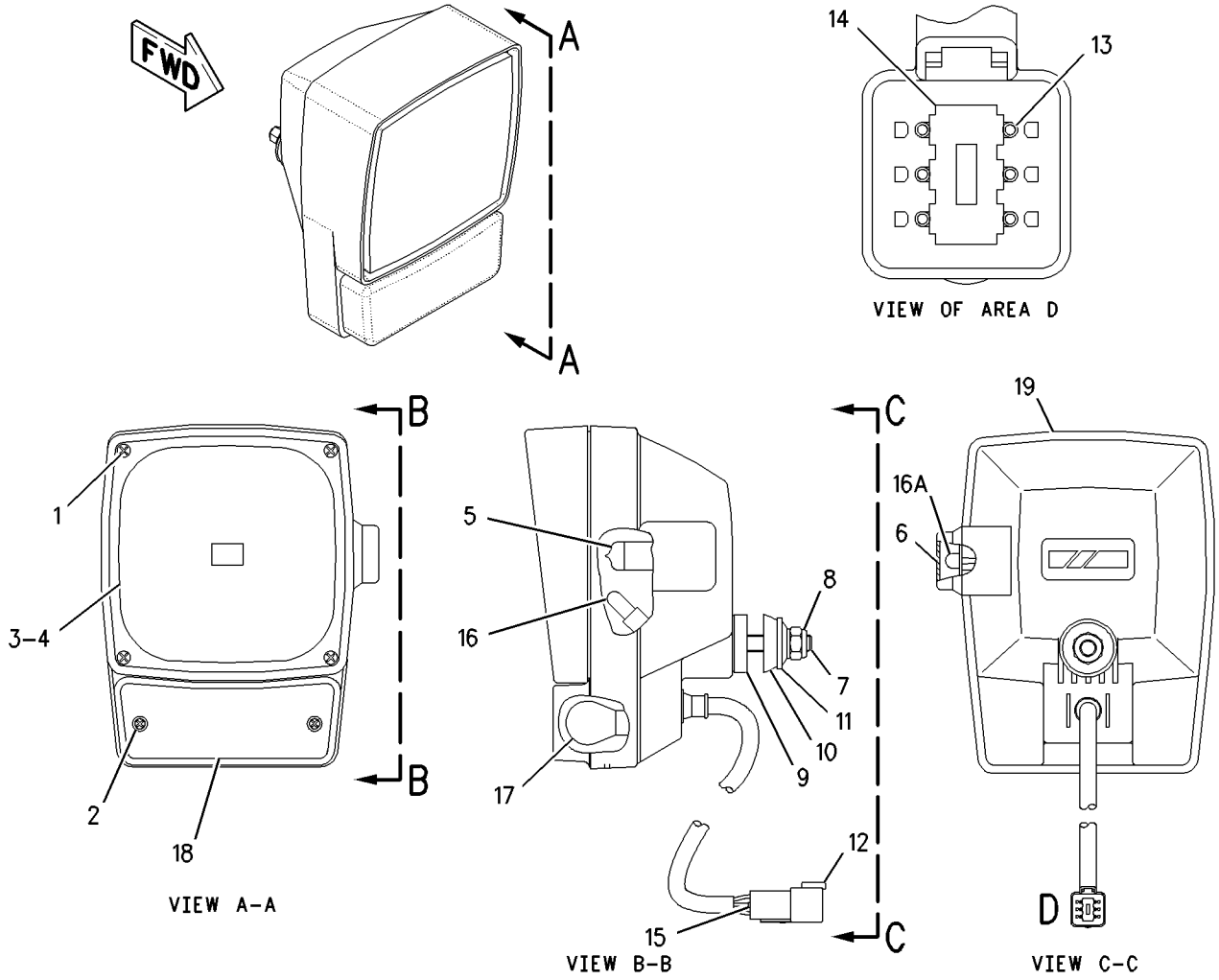

GRAPHIC #1

<END>

g00892357

203-7626 LAMP GP-HEAD–RH–EU

S/N: CBK1-UP
24 VOLT
PART OF 203-7620 LIGHTING GP-FLOOD
AN ATTACHMENT

SMCS-1429 **i01862084**

NOTE	REF NO	GRAPHIC REF	PART NUMBER	QTY	PART NAME 1 2 3 4 5 6 (PRODUCT LEVEL)	SEE PAGE
	1	1	**9X-4244**	4	SCREW	
	2	1	**100-3251**	2	SCREW-LENS	
	3	1	**9X-9865**	1	SEAL	
	4	1	**100-3249**	1	LENS AS (HEAD)	
	5	1	**9X-3465**	1	LAMP (24-VOLT) (HIGH/LOW BEAM)	
	6	1	**136-3848**	1	LENS AS (AMBER) (TURN)	
M	7	1	**8T-5005**	1	BOLT (M10X1.50X70-MM)	
M	8	1	**8T-0389**	1	LOCKNUT (M10X1.5-THD)	
	9	1	**100-3253**	1	SPACER	
	10	1	**100-3254**	1	SPACER	
	11	1	**100-3255**	1	WASHER	
	12	1	**102-8805**	1	KIT-RECEPTACLE (6-PIN)	
					(INCLUDES RECEPTACLE AS & WEDGE)	
	13	1	**186-3735**	5	PIN-CONNECTOR	
	14	1	**3E-3383**	1	WEDGE-RECEPTACLE LOCK (6-PIN)	
	15	1	**8T-8737**	1	PLUG-SEAL	
	16	1	**100-3245**	1	LAMP (24-VOLT) (POSITION)	
	16A	1	**100-3245**	1	LAMP (24-VOLT) (TURN)	
	17	1	**9X-4493**	1	LAMP (24-VOLT, 21-WATT) (TURN)	
	18	1	**100-3250**	1	LENS (AMBER) (TURN)	
	19	1	**136-3846**	1	BODY AS-LAMP	

M-METRIC PART

203-7626 LAMP GP-HEAD *(contd.)* **i01862084**

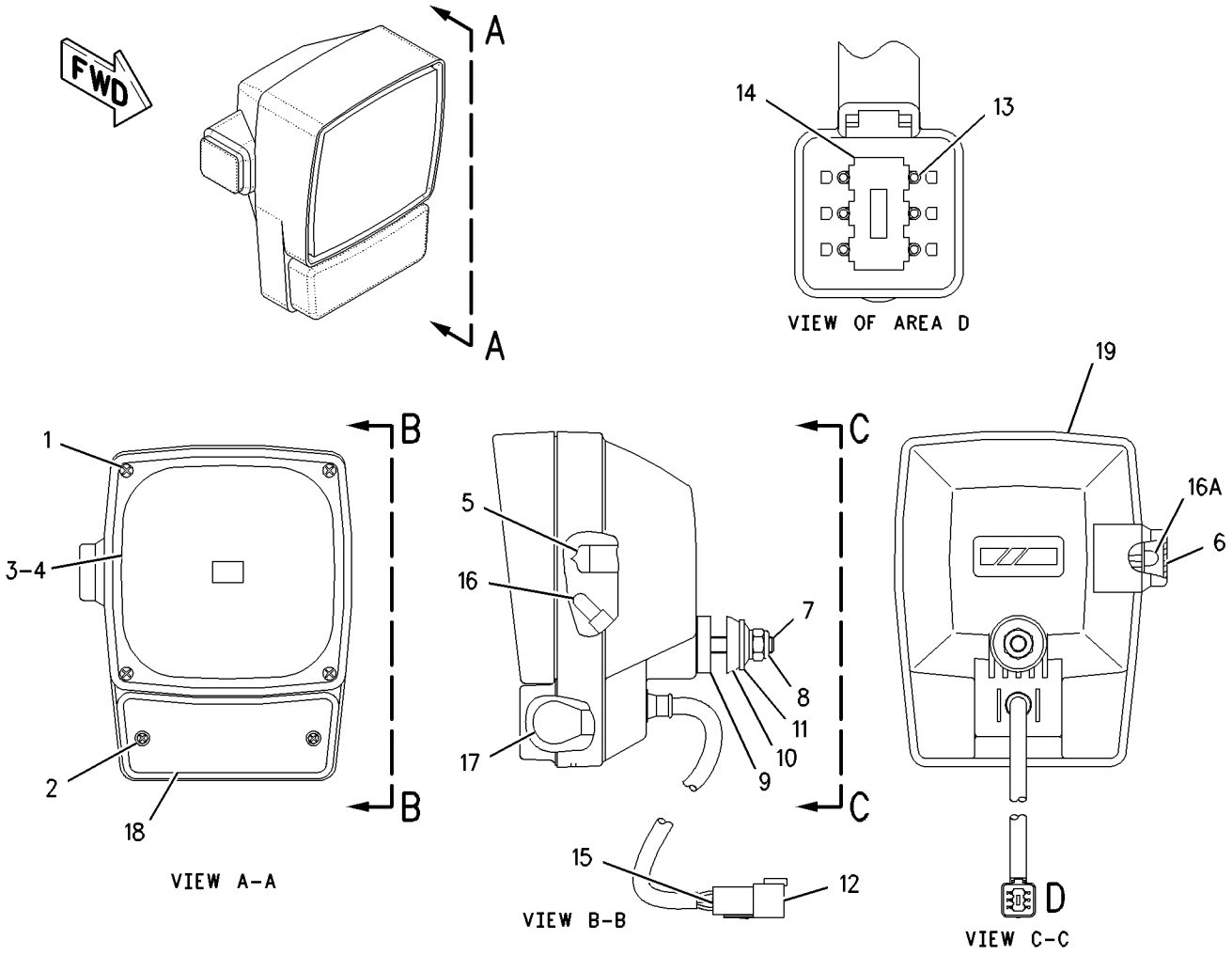

GRAPHIC #1

<END>

g00892432

105-4849 LAMP GP-HEAD & SIGNAL–LH

S/N: CBK1-UP
PART OF 159-5865 WIRING GP-FRONT
AN ATTACHMENT

SMCS-1429, 1430 **i02205177**

NOTE	REF NO	GRAPHIC REF	PART NUMBER	QTY	PART NAME 1 2 3 4 5 6 (PRODUCT LEVEL)	SEE PAGE
	1	1	**9X-4244**	4	SCREW	
	2	1	**100-3251**	2	SCREW-LENS	
	3	1	**9X-9865**	1	SEAL	
	4	1	**100-3248**	1	LENS AS (HEADLIGHT)	
	5	1	**9X-3465**	1	LAMP (24-VOLT)	
	6	1	**136-3848**	1	LENS AS (AMBER) (SIGNAL)	
M	7	1	**8T-5005**	1	BOLT (M10X1.5X70-MM)	
M	8	1	**8T-0389**	1	LOCKNUT (M10X1.5-THD)	
	9	1	**100-3253**	1	SPACER	
	10	1	**100-3254**	1	SPACER	
	11	1	**100-3255**	1	WASHER	
	13	1	**8T-8729**	5	PIN-CONNECTOR	
	14	1	**3E-3383**	1	WEDGE-RECEPTACLE LOCK (6-PIN)	
	15	1	**8T-8737**	1	PLUG-SEAL	
	16	1	**100-3245**	2	LAMP (24-VOLT)	
	17	1	**9X-4493**	1	LAMP (24-VOLT, 21-WATT) (SIGNAL)	
	18	1	**100-3250**	1	LENS (AMBER) (SIGNAL)	
	19	1	**136-3845**	1	BODY AS-LAMP	
	20	1	**102-8805**	1	KIT-RECEPTACLE (6-PIN)	
					(INCLUDES RECEPTACLE AS & WEDGE)	

M-METRIC PART

105-4849 LAMP GP-HEAD & SIGNAL *(contd.)* **i02205177**

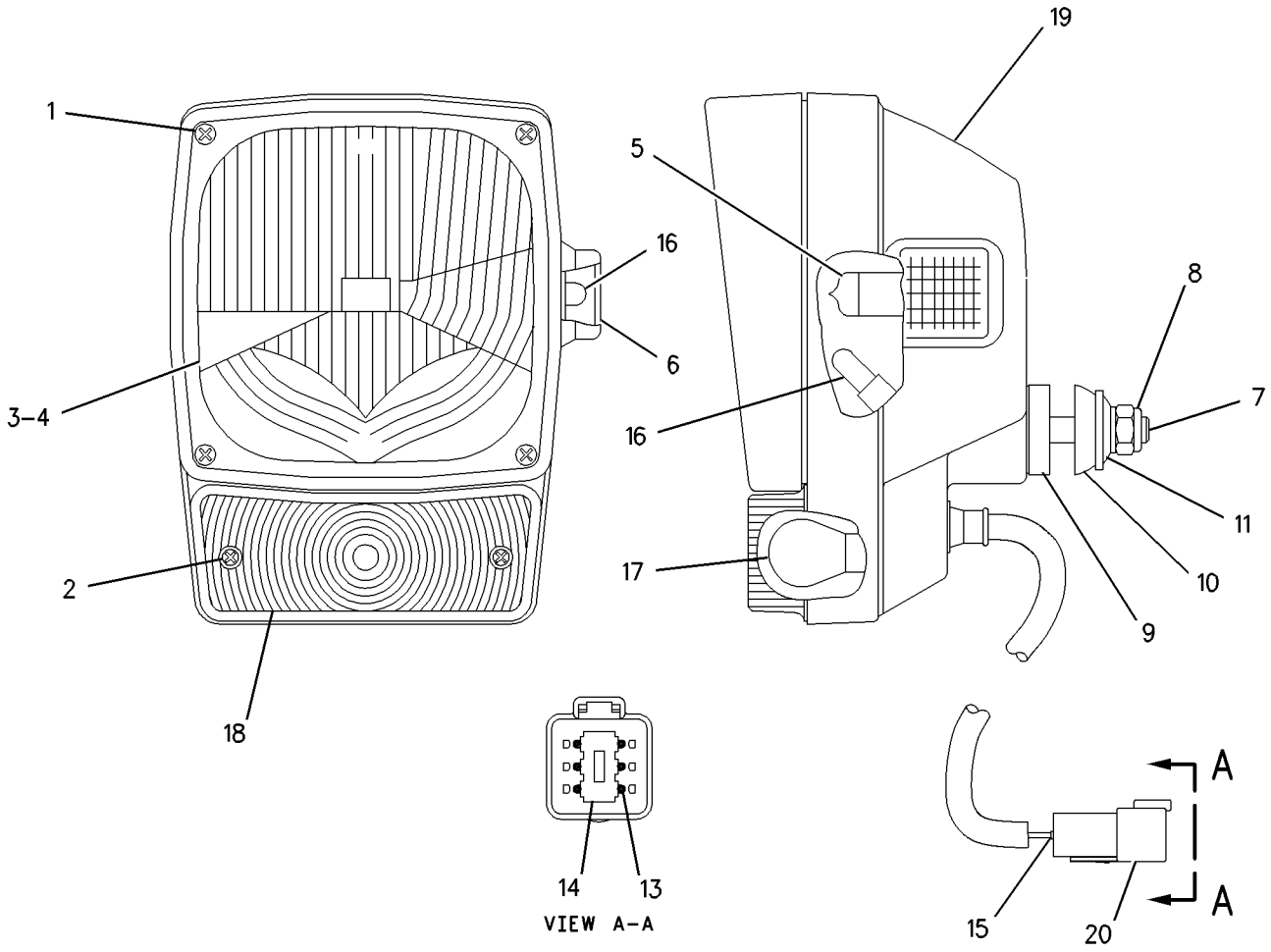

GRAPHIC #1 **<END>** g00661265

105-4850 LAMP GP-HEAD & SIGNAL–RH

S/N: CBK1-UP
PART OF 159-5865 WIRING GP-FRONT
AN ATTACHMENT

SMCS-1429, 1430 **i02205178**

NOTE	REF NO	GRAPHIC REF	PART NUMBER	QTY	PART NAME 1 2 3 4 5 6 (PRODUCT LEVEL)	SEE PAGE
	1	1	**9X-4244**	4	SCREW	
	2	1	**100-3251**	2	SCREW-LENS	
	3	1	**9X-9865**	1	SEAL	
	4	1	**100-3248**	1	LENS AS (HEADLIGHT)	
	5	1	**9X-3465**	1	LAMP (24-VOLT) (HEAD)	
	6	1	**136-3848**	1	LENS AS (AMBER) (SIGNAL)	
M	7	1	**8T-5005**	1	BOLT (M10X1.5X70-MM)	
M	8	1	**8T-0389**	1	LOCKNUT (M10X1.5-THD)	
	9	1	**100-3253**	1	SPACER	
	10	1	**100-3254**	1	SPACER	
	11	1	**100-3255**	1	WASHER	
	12	1	**102-8805**	1	KIT-RECEPTACLE (6-PIN)	
					(INCLUDES RECEPTACLE AS & WEDGE)	
	13	1	**186-3735**	5	PIN-CONNECTOR	
	14	1	**3E-3383**	1	WEDGE-RECEPTACLE LOCK (6-PIN)	
	15	1	**8T-8737**	1	PLUG-SEAL	
	16	1	**100-3245**	2	LAMP (24-VOLT) (SIGNAL)	
	17	1	**9X-4493**	1	LAMP (24-VOLT, 21-WATT) (SIGNAL)	
	18	1	**100-3250**	1	LENS (AMBER) (SIGNAL)	
	19	1	**136-3846**	1	BODY AS-LAMP	

M-METRIC PART

105-4850 LAMP GP-HEAD & SIGNAL *(contd.)* **i02205178**

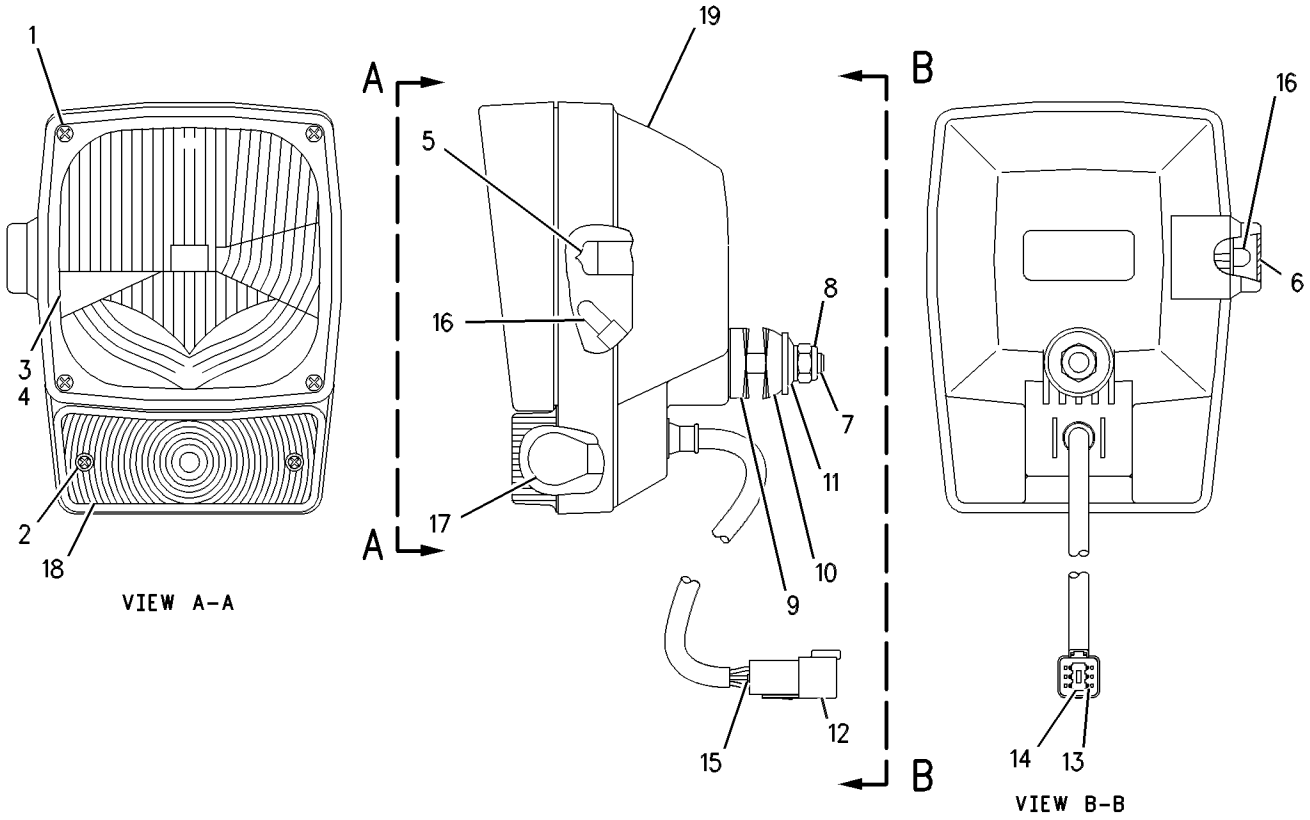

GRAPHIC #1 **<END>** g00610742

212-3924 LAMP GP-MARKER

S/N: CBK1-UP
PART OF 211-1520 LIGHTING GP-ROADING
AN ATTACHMENT

SMCS-1429 **i01745446**

NOTE	REF NO	GRAPHIC REF	PART NUMBER	QTY	PART NAME 1 2 3 4 5 6 (PRODUCT LEVEL)	SEE PAGE
	1	1	**102-8802**	1	KIT-RECEPTACLE (2 PIN)	
					(INCLUDES RECEPTACLE AS. & WEDGE)	
	2	1	**3E-3365**	1	WEDGE-RECEPTACLE LOCK (2 PIN)	
	3	1	**186-3735**	2	PIN-CONNECTOR	
	4	1	**9X-4494**	1	LAMP (24 VOLT) (CAB POSITION)	
M	5	1	**104-3601**	2	SCREW-MACHINE (M5X0.8X25MM)	
	6	1	**8H-3481**	2	LOCKWASHER	

M-METRIC PART

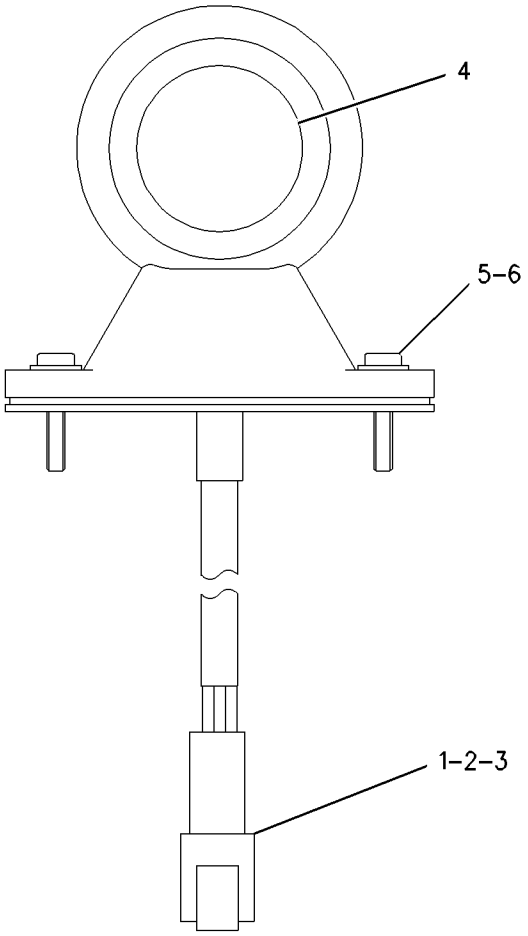

GRAPHIC #1 **<END>** g00939448

117-8319 LAMP GP-REGISTRATION PLATE–EU

S/N: CBK1-UP

PART OF 211-1519 MOUNTING GP-REGISTRATION

AN ATTACHMENT

SMCS-1429 **i01879060**

NOTE	REF NO	GRAPHIC REF	PART NUMBER	QTY	PART NAME 1 2 3 4 5 6 (PRODUCT LEVEL)	SEE PAGE
	1	1	**8T-8729**	2	PIN-CONNECTOR	
	2	1	**102-8802**	1	KIT-RECEPTACLE (2 PIN) (REGISTRATION PLATE LAMP)	
	3	1	**5C-9583**	1	LAMP (24 VOLT) (REGISTRATION PLATE)	
	4	1	**134-6751**	1	LENS (REGISTRATION PLATE)	
M	5	1	**5C-2874**	2	NUT (M5X.8 THD)	
	6	1	**8F-1434**	2	LOCKWASHER	
	7	1	**134-6749**	2	SCREW-LENS	

M-METRIC PART

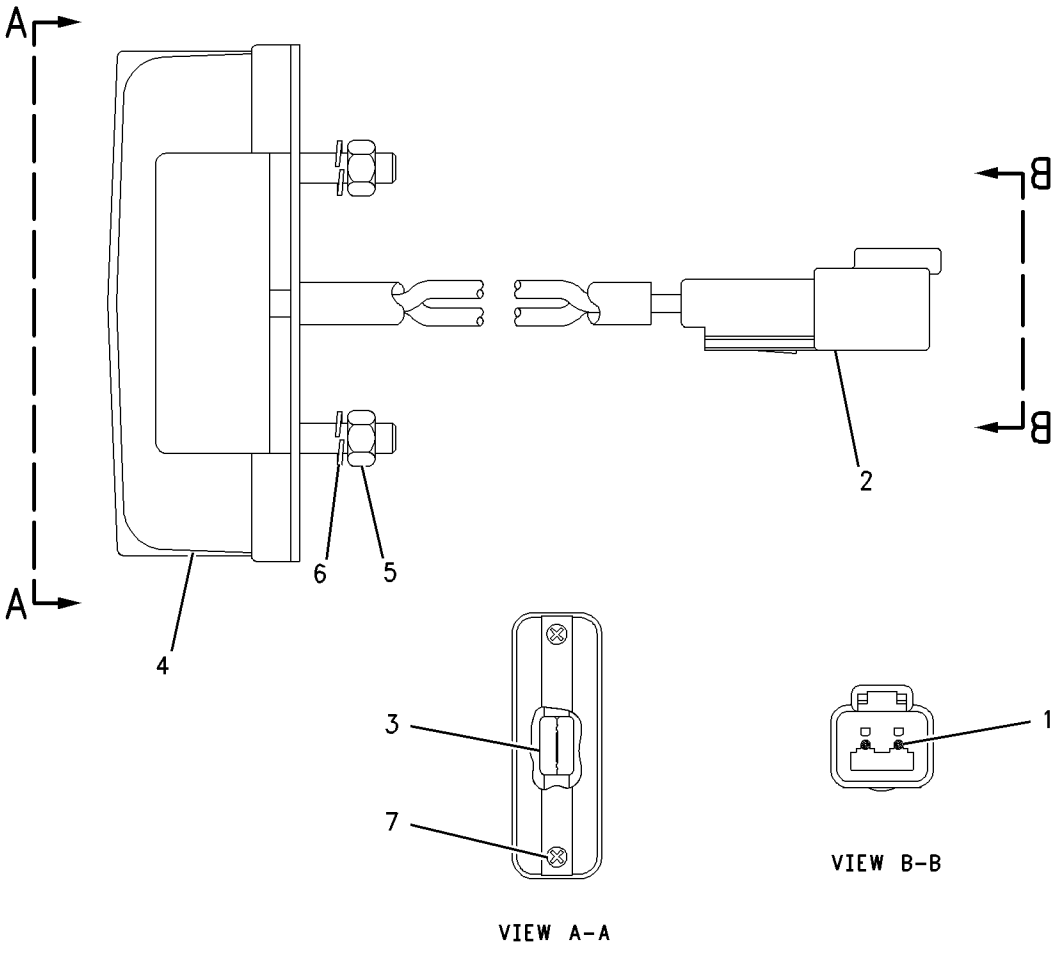

GRAPHIC #1 **<END>** g00711234

135-0426 LAMP GP-SIGNAL–STOP/TAIL

S/N: CBK1-UP
24 VOLT
PART OF 184-1299 WIRING GP-REAR

SMCS-1430 **i01638052**

NOTE	REF NO	GRAPHIC REF	PART NUMBER	QTY	PART NAME 1 2 3 4 5 6 (PRODUCT LEVEL)	SEE PAGE
	1	1	**102-8803**	1	KIT-RECEPTACLE (3-PIN) (STOP/TAIL LAMP)	
	2	1	**3E-3371**	1	WEDGE-RECEPTACLE LOCK (3-PIN)	
	3	1	**186-3735**	3	PIN-CONNECTOR	

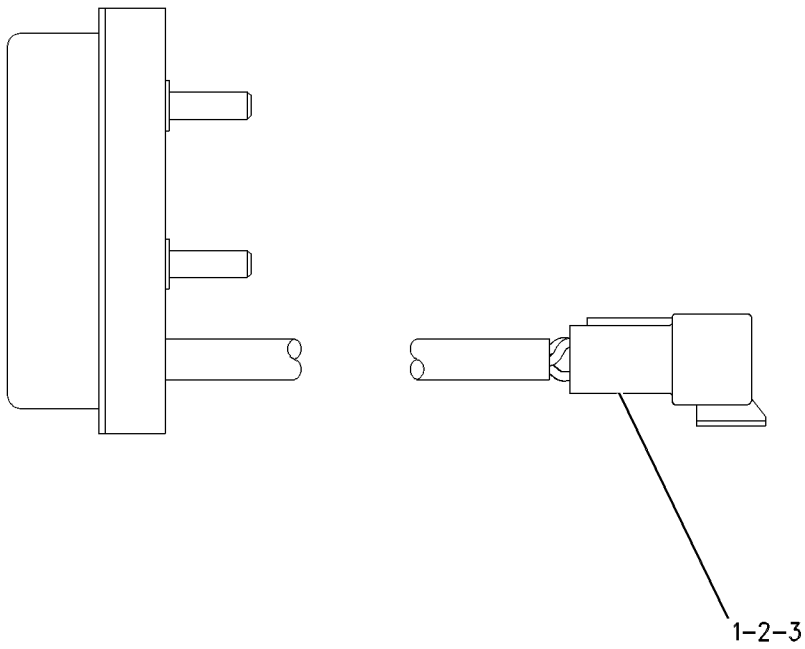

GRAPHIC #1 **<END>** g00305543

135-0427 LAMP GP-SIGNAL–TURN/PARK

S/N: CBK1-UP

PART OF 161-0772, 161-1015 LIGHTING GP-FLOOD, 188-9331 LIGHTING GP-SIGNAL AN ATTACHMENT

SMCS-1430 **i01687561**

NOTE	REF NO	GRAPHIC REF	PART NUMBER	QTY	PART NAME 1 2 3 4 5 6 (PRODUCT LEVEL)	SEE PAGE
	1	1	**102-8803**	1	KIT-RECEPTACLE (3-PIN)	
					(INCLUDES RECEPTACLE AS & WEDGE)	
	2	1	**3E-3371**	1	WEDGE-RECEPTACLE LOCK (3-PIN)	
	3	1	**186-3735**	3	PIN-CONNECTOR	

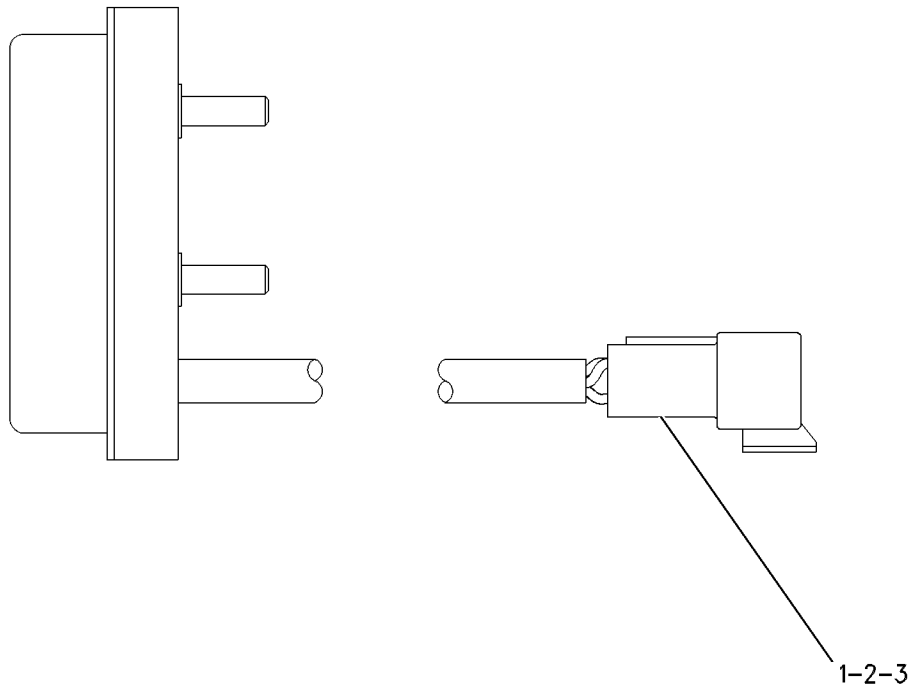

GRAPHIC #1 **<END>** g00305583

199-3368 LAMP GP-SIGNAL

S/N: CBK249-UP
PART OF 188-9331 LIGHTING GP-SIGNAL
AN ATTACHMENT

SMCS-1430 **i01930296**

NOTE	REF NO	GRAPHIC REF	PART NUMBER	QTY	PART NAME 1 2 3 4 5 6 (PRODUCT LEVEL)	SEE PAGE
	1	1	**102-8802**	1	KIT-RECEPTACLE (2-PIN)	
					(INCLUDES RECEPTACLE AS & WEDGE)	
	2	1	**3E-3365**	1	WEDGE-RECEPTACLE LOCK (2-PIN)	
	3	1	**186-3735**	2	PIN-CONNECTOR	

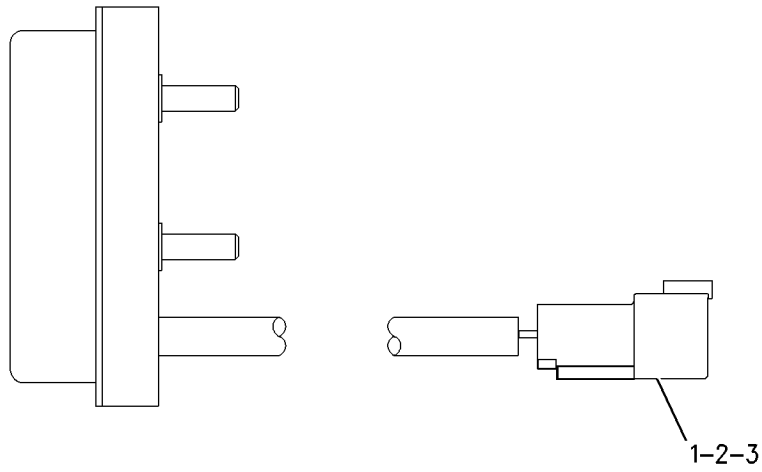

GRAPHIC #1 **<END>** g00777463

128-6983 LAMP GP-WARNING BEACON

S/N: CBK1-UP
24 VOLT
PART OF 233-4253 LIGHTING GP-WARNING, 239-9354 LIGHTING GP-WARNING BEACON AN ATTACHMENT

SMCS-1431 **i02200122**

NOTE	REF NO	GRAPHIC REF	PART NUMBER	QTY	PART NAME 1 2 3 4 5 6 (PRODUCT LEVEL)	SEE PAGE
	1	1	**9X-8121**	1	LENS (AMBER, WARNING BEACON)	
	2	1	**9X-7849**	1	LAMP (24-VOLT, 70-WATT) (WARNING BEACON)	
	3	1	**9X-8139**	1	BELT-DRIVE (WARNING BEACON)	
M	4	1	**6V-8225**	3	NUT (M6X1-THD)	
	5	1	**5P-0537**	3	WASHER-HARD (7.2X14.5X2-MM THK)	
	6	1	**102-8802**	1	KIT-RECEPTACLE (2-PIN)	
					(INCLUDES RECEPTACLE AS AND WEDGE)	
	7	1	**3E-3365**	1	WEDGE-RECEPTACLE LOCK (2-PIN)	
	8	1	**186-3735**	2	PIN-CONNECTOR	

M-METRIC PART

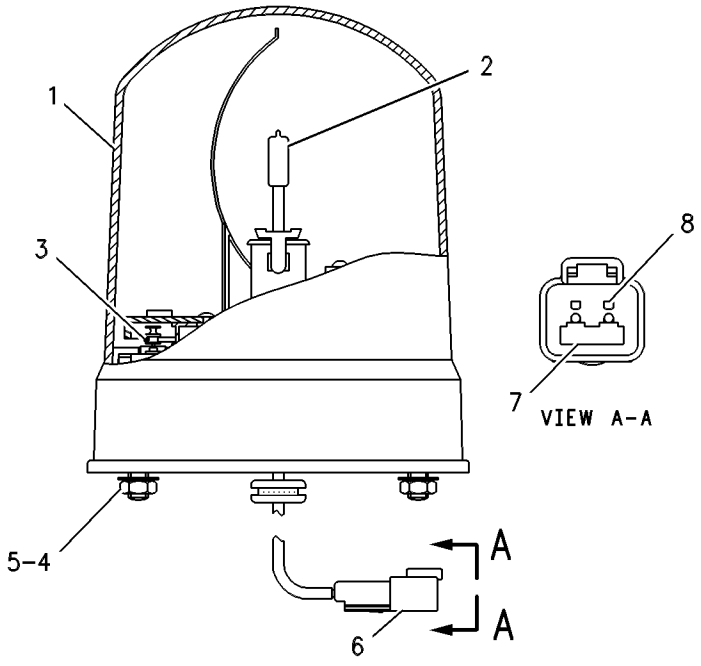

GRAPHIC #1 **<END>** g00109215

235-3937 LAMP GP-WARNING BEACON

S/N: CBK1-UP
24-VOLT
PART OF 233-4253 LIGHTING GP-WARNING
AN ATTACHMENT

SMCS-1431 **i02011370**

NOTE	REF NO	GRAPHIC REF	PART NUMBER	QTY	PART NAME 1 2 3 4 5 6 (PRODUCT LEVEL)	SEE PAGE
	1	1	**215-6672**	1	LENS-AMBER (WARNING BEACON)	
	2	1	**9X-7849**	1	LAMP (24-VOLT, 70-WATT)	
	3	1	**215-6673**	1	BELT	
	4	1	**215-6674**	1	CLIP	
M	5	1	**6V-8225**	3	NUT (M6X1-THD)	
	6	1	**5P-0537**	3	WASHER-HARD (7.2X14.5X2-MM THK)	
	7	1	**102-8802**	1	KIT-RECEPTACLE (2-PIN)	
					(KIT INCLUDES RECEPTACLE AS & WEDGE)	
	8	1	**3E-3365**	1	WEDGE-RECEPTACLE LOCK (2-PIN)	
	9	1	**186-3735**	2	PIN-CONNECTOR	

M-METRIC PART

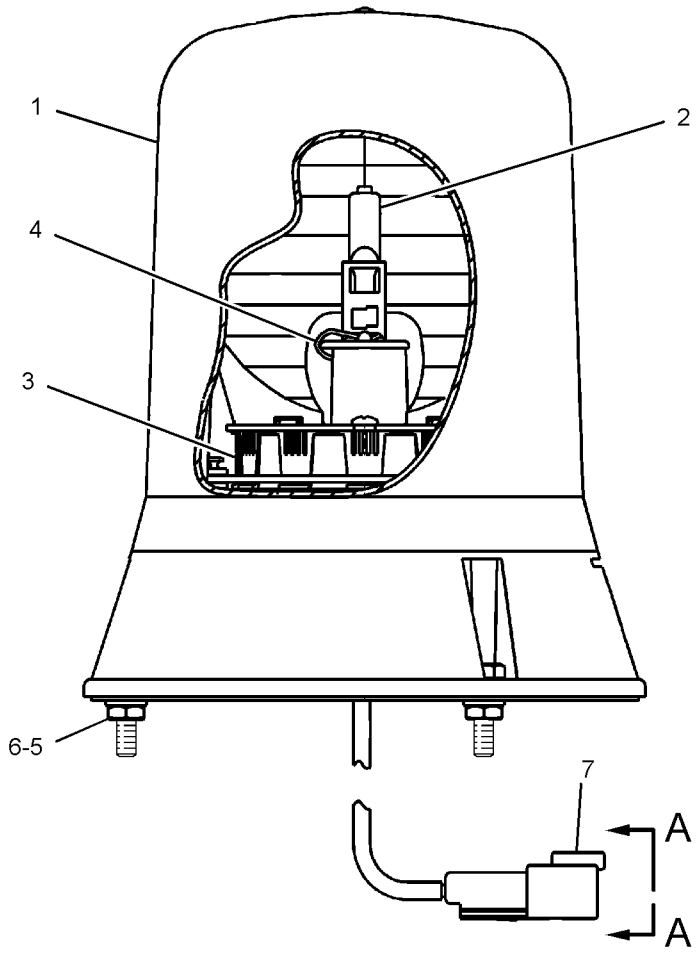

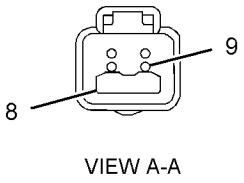

VIEW A-A

GRAPHIC #1 **<END>** g01047107

161-0768 LIGHTING AR-FLOOD

S/N: CBK1-UP
AN ATTACHMENT

SMCS-1434 **i01917159**

NOTE	PART NUMBER	QTY	PART NAME 1 2 3 4 5 6 (PRODUCT LEVEL)	SEE PAGE
Y	*161-0769*	1	LIGHTING GP-FLOOD (CAB)	182
Y	*161-0779*	1	LIGHTING GP-FLOOD (BLADE)	191
Y	*188-9324*	1	LIGHTING GP-FLOOD (REAR)	215

Y-SEPARATE ILLUSTRATION

<END>

188-9321 LIGHTING AR-FLOOD—FRONT & REAR

S/N: CBK1-UP
PART OF 197-5954, 236-3947 SNOW AR-MOTOR GRADER
AN ATTACHMENT

SMCS-1434 **i01861307**

NOTE	PART NUMBER	QTY	PART NAME 1 2 3 4 5 6 (PRODUCT LEVEL)	SEE PAGE
Y	*161-0778*	1	LIGHTING GP-FLOOD (BLADE)	188
Y	*188-9324*	1	LIGHTING GP-FLOOD (REAR)	215

Y-SEPARATE ILLUSTRATION

<END>

188-9328 LIGHTING AR-FLOOD—BOLSTER—TURN

S/N: CBK1-UP
AN ATTACHMENT

SMCS-1434 **i01861309**

NOTE	PART NUMBER	QTY	PART NAME 1 2 3 4 5 6 (PRODUCT LEVEL)	SEE PAGE
Y	*201-1038*	1	CIRCUIT BREAKER GP (SINGLE)	133
Y	*161-1015*	1	LIGHTING GP-FLOOD (DOUBLE BOLSTER)	193
Y	*188-9331*	1	LIGHTING GP-SIGNAL (TURN)	229

Y-SEPARATE ILLUSTRATION

<END>

203-6536 LIGHTING AR-FLOOD—MOLDBOARD

S/N: CBK1-UP
AN ATTACHMENT

SMCS-1434 **i01683936**

NOTE	PART NUMBER	QTY	PART NAME 1 2 3 4 5 6 (PRODUCT LEVEL)	SEE PAGE
Y	*196-8532*	1	LIGHTING GP-FLOOD (MOLDBOARD)	219
Y	*203-6551*	1	WIRING GP-CAB (MOLDBOARD)	280

Y-SEPARATE ILLUSTRATION

<END>

204-6109 LIGHTING AR-FLOOD–MOLDBOARD–EU

S/N: CBK1-UP

AN ATTACHMENT

SMCS-1434 **i01880922**

NOTE	REF NO	GRAPHIC REF	PART NUMBER	QTY	PART NAME 1 2 3 4 5 6 (PRODUCT LEVEL)	SEE PAGE
	1	1	**106-8704**	1	SUPPRESSOR AS-ARC	
		1	**186-3735**	2	PIN-CONNECTOR	
		1	**102-8802**	1	KIT-RECEPTACLE (2 PIN)	
					(INCLUDES RECEPTACLE AS & WEDGE)	
Y	2	1	*196-8532*	1	LIGHTING GP-FLOOD (MOLDBOARD)	219
Y	3	1	*204-6127*	1	WIRING GP-CAB (MOLDBOARD)	282

Y-SEPARATE ILLUSTRATION

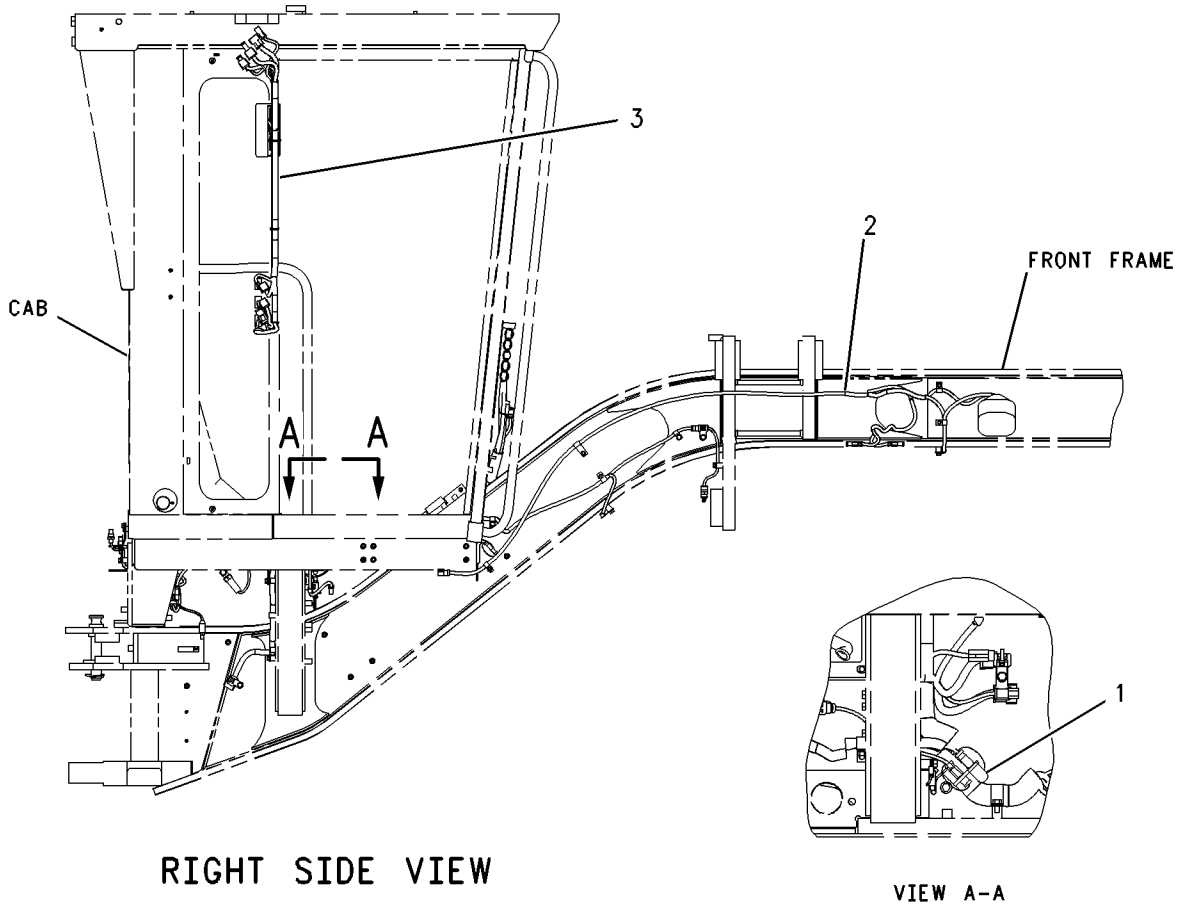

RIGHT SIDE VIEW

VIEW A-A

GRAPHIC #1 **<END>** g00938077

161-0770 LIGHTING AR-FLOOD & SIGNAL–HEAD–TURN

S/N: CBK1-UP
AN ATTACHMENT

SMCS-1430, 1434 **i01861314**

NOTE	PART NUMBER	QTY	PART NAME 1 2 3 4 5 6 (PRODUCT LEVEL)	SEE PAGE
Y	*201-1038*	1	CIRCUIT BREAKER GP (SINGLE)	133
Y	*161-0772*	1	LIGHTING GP-FLOOD (FRONT)(TURN)	184
Y	*188-9331*	1	LIGHTING GP-SIGNAL (REAR)	229
Y	*161-1018*	1	SWITCH GP-LIGHT (TURN)	267

Y-SEPARATE ILLUSTRATION

<END>

161-0771 LIGHTING AR-FLOOD & SIGNAL–HEAD–TURN–BOLSTER

S/N: CBK1-UP
AN ATTACHMENT

SMCS-1430, 1434 **i01861316**

NOTE	PART NUMBER	QTY	PART NAME 1 2 3 4 5 6 (PRODUCT LEVEL)	SEE PAGE
Y	*201-1036*	1	CIRCUIT BREAKER GP (DUEL)	132
Y	*161-0772*	1	LIGHTING GP-FLOOD (FRONT)	184
Y	*161-1017*	1	LIGHTING GP-FLOOD (BOLSTER)	199
Y	*188-9331*	1	LIGHTING GP-SIGNAL (REAR)	229

Y-SEPARATE ILLUSTRATION

<END>

179-1548 LIGHTING AR-FLOOD & SIGNAL–EXTENDED BOLSTER

S/N: CBK1-UP
AN ATTACHMENT

SMCS-1430, 1434 **i01861330**

NOTE	PART NUMBER	QTY	PART NAME 1 2 3 4 5 6 (PRODUCT LEVEL)	SEE PAGE
Y	*201-1036*	1	CIRCUIT BREAKER GP (DUEL)	132
Y	*161-0772*	1	LIGHTING GP-FLOOD (TURN)	184
Y	*183-4069*	1	LIGHTING GP-FLOOD (BOLSTER AND TURN)(ELEVATED)	209
Y	*188-9331*	1	LIGHTING GP-SIGNAL (TURN)	229

Y-SEPARATE ILLUSTRATION

<END>

171-7096 LIGHTING GP-BACKUP

S/N: CBK1-UP

AN ATTACHMENT

SMCS-1408 **i02205181**

NOTE	REF NO	GRAPHIC REF	PART NUMBER	QTY	PART NAME 1 2 3 4 5 6 (PRODUCT LEVEL)	SEE PAGE
	1	1	**3E-0109**	5	PLUG (ROCKER SWITCH)	
	2	1	**3E-5239**	1	RELAY AS (24-VOLT) (AUXILIARY BACKUP LAMP)	
	3	1	**3S-2093**	5	STRAP-CABLE	
	4	1	**9W-1442**	1	FUSE (10-AMPERE) (BACKUP LAMP)	
	5	1	**145-3350**	1	PLATE	
	6	1	**153-2147**	1	PLATE	
	7	1	**168-8243**	1	HARNESS AS-PANEL	
		1	**102-8802**	1	KIT-RECEPTACLE (2-PIN)	
		1	**102-8804**	2	KIT-RECEPTACLE (4-PIN)	
		1	**102-8806**	1	KIT-RECEPTACLE (8-PIN)	
		1	**102-8801**	1	KIT-RECEPTACLE (12-PIN)	
					(INCLUDES RECEPTACLE AS & WEDGE)	
		1	**155-2255**	1	KIT-CONNECTING PLUG (12-PIN)	
		1	**155-2265**	4	KIT-CONNECTING PLUG (8-PIN)	
		1	**155-2270**	1	KIT-CONNECTING PLUG (2-PIN)	
		1	**155-2271**	1	KIT-CONNECTING PLUG (4-PIN)	
					(INCLUDES PLUG AS & WEDGE)	
	8	1	**172-6556**	1	PANEL (UPPER SWITCH)	
	9	1	**178-6267**	1	HARNESS AS-ALARM	
		1	**102-8804**	1	KIT-RECEPTACLE (4-PIN)	
					(INCLUDES RECEPTACLE AS & WEDGE)	
		1	**9X-1054**	1	PLUG AS-CONNECTOR (4-PIN)	
	10	1	**188-3862**	1	BRACKET AS	
	11	1	**161-1418**	1	SWITCH AS (AUXILIARY BACKUP)	
		1	**3E-8825**	2	LAMP (24-VOLT) (AUXILIARY BACKUP LAMP)	
		1	**161-1417**	1	ACTUATOR-ROCKER	
M	12	1	**9X-2043**	7	SCREW-TRUSS HEAD (M6X1X14-MM)	
	13	1	**9X-8256**	1	WASHER (6.6X12X2-MM THK)	

M-METRIC PART

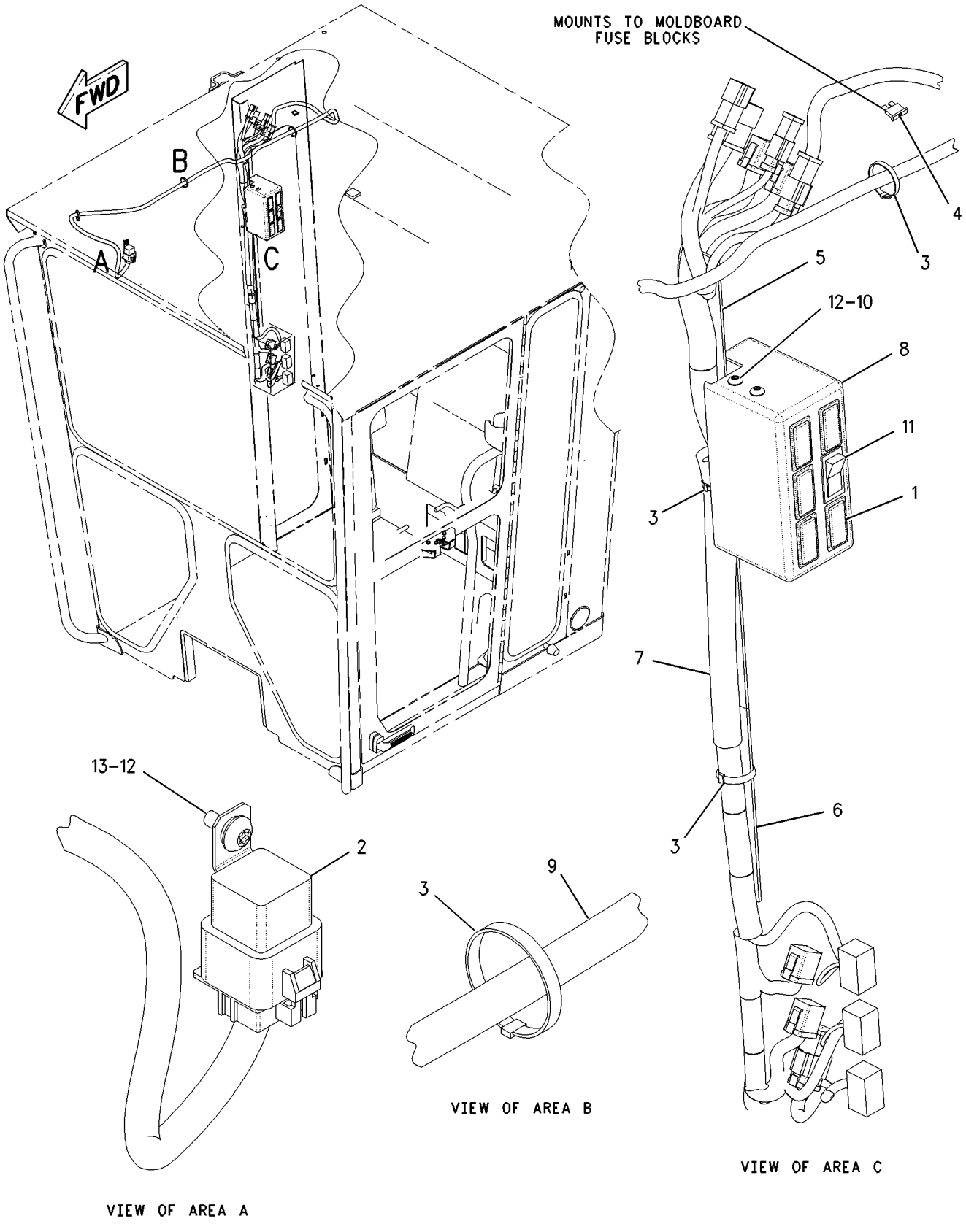

GRAPHIC #1 **<END>** g00846331

197-1744 LIGHTING GP-BACKUP–EU

S/N: CBK1-UP

AN ATTACHMENT

SMCS-1408 **i02205184**

NOTE	REF NO	GRAPHIC REF	PART NUMBER	QTY	PART NAME 1 2 3 4 5 6 (PRODUCT LEVEL)	SEE PAGE
	1	1	**3E-0109**	5	PLUG (ROCKER SWITCH)	
	2	1	**3E-5239**	1	RELAY AS (24-VOLT)	
	3	1	**3S-2093**	5	STRAP-CABLE	
	4	1	**9W-1442**	1	FUSE (10-AMPERE) (AUXILIARY BACK-UP ALARM)	
	5	1	**145-3350**	1	PLATE	
	6	1	**153-2147**	1	PLATE	
	7	1	**172-6556**	1	PANEL	
	8	1	**178-6267**	1	HARNESS AS-ALARM	
		1	**9X-1054**	1	PLUG AS-CONNECTOR (4-PIN)	
		1	**102-8804**	1	KIT-RECEPTACLE (4-PIN)	
	9	1	**188-3862**	1	BRACKET AS	
	10	1	**196-8557**	1	HARNESS AS-CAB	
		1	**155-2255**	1	KIT-CONNECTING PLUG (12-PIN)	
		1	**155-2265**	4	KIT-CONNECTING PLUG (8-PIN)	
		1	**155-2270**	1	KIT-CONNECTING PLUG (2-PIN) (SIDE FLOOD LAMP)	
		1	**155-2271**	1	KIT-CONNECTING PLUG (4-PIN)	
		1	**102-8802**	1	KIT-RECEPTACLE (2-PIN)	
		1	**102-8804**	2	KIT-RECEPTACLE (4-PIN)	
		1	**102-8806**	1	KIT-RECEPTACLE (8-PIN)	
		1	**102-8801**	1	KIT-RECEPTACLE (12-PIN)	
	11	1	**3E-8770**	1	SWITCH AS (24-VOLT) (AUXILIARY BACK-UP ALARM)	
		1	**141-2325**	1	ACTUATOR-ROCKER	
		1	**3E-8825**	1	LAMP (24-VOLT) (AUXILIARY BACK-UP ALARM)	
M	12	1	**9X-2043**	7	SCREW-TRUSS HEAD (M6X1X14-MM)	
	13	1	**9X-8256**	1	WASHER (6.6X12X2-MM THK)	

M-METRIC PART

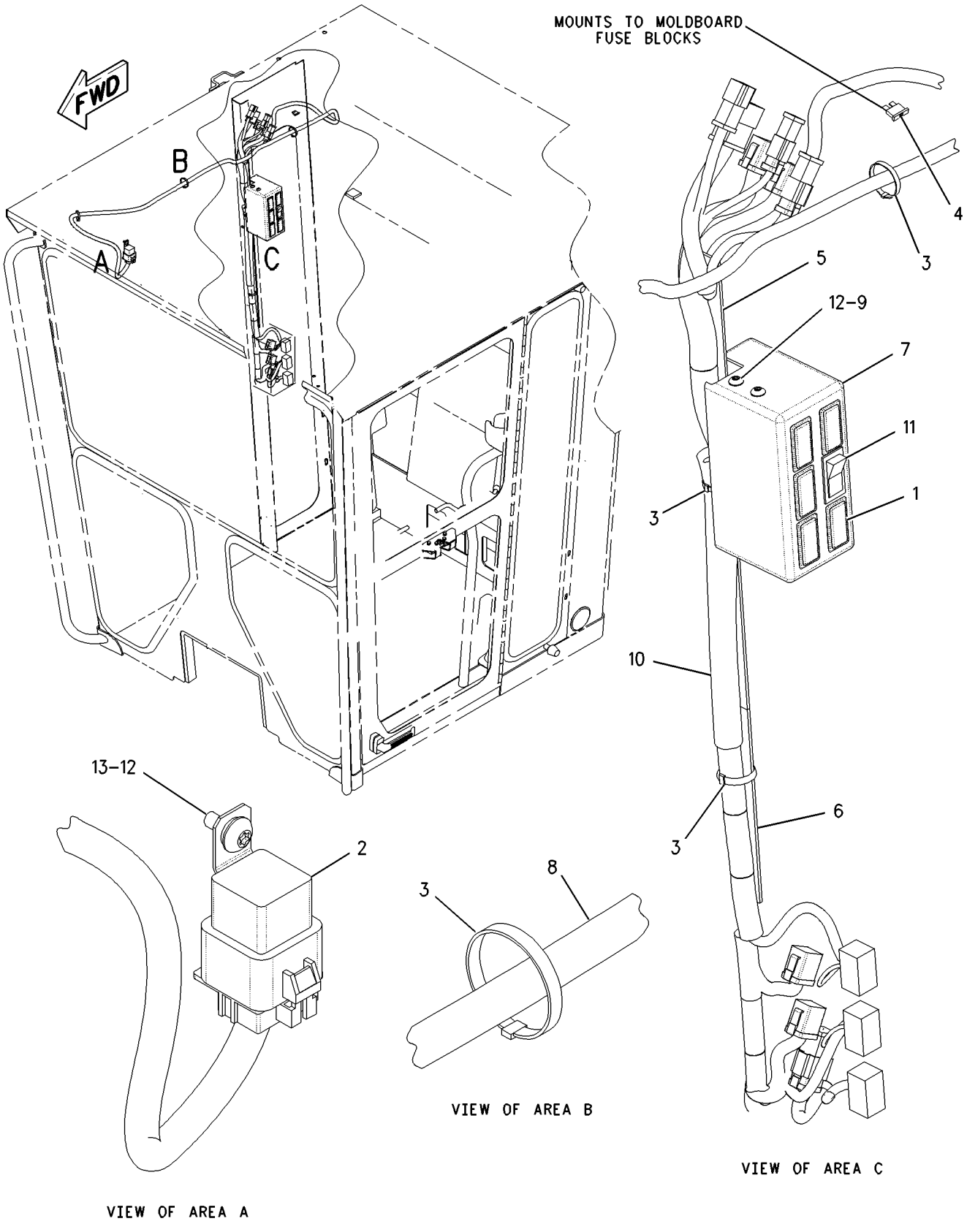

GRAPHIC #1 **<END>** g00849513

161-0769 LIGHTING GP-FLOOD–CAB

S/N: CBK1-UP
PART OF 161-0768 LIGHTING AR-FLOOD
AN ATTACHMENT
TYPE 1

SMCS-1434 **i01930235**

NOTE	REF NO	GRAPHIC REF	PART NUMBER	QTY	PART NAME 1 2 3 4 5 6 (PRODUCT LEVEL)	SEE PAGE
	1	1	**184-0903**	4	BRACKET AS	
Y	2	1	**153-2073**	4	LAMP GP-FLOOD (24-VOLT, VERTICAL MOUNT) (CAB)	153
	3	1	**9D-3768**	2	GROMMET	
M	4	1	**5C-7261**	4	NUT (M8X1.25-THD)	
	5	1	**8T-4121**	4	WASHER-HARD (11X21X2.5-MM THK)	
M	6	1	**8T-4137**	4	BOLT (M10X1.5X20-MM)	
	7	1	**8T-4224**	4	WASHER-HARD (8.8X16X2-MM THK)	
M	8	1	**8T-6869**	4	BOLT (M8X1.25X60-MM)	

M-METRIC PART
Y-SEPARATE ILLUSTRATION

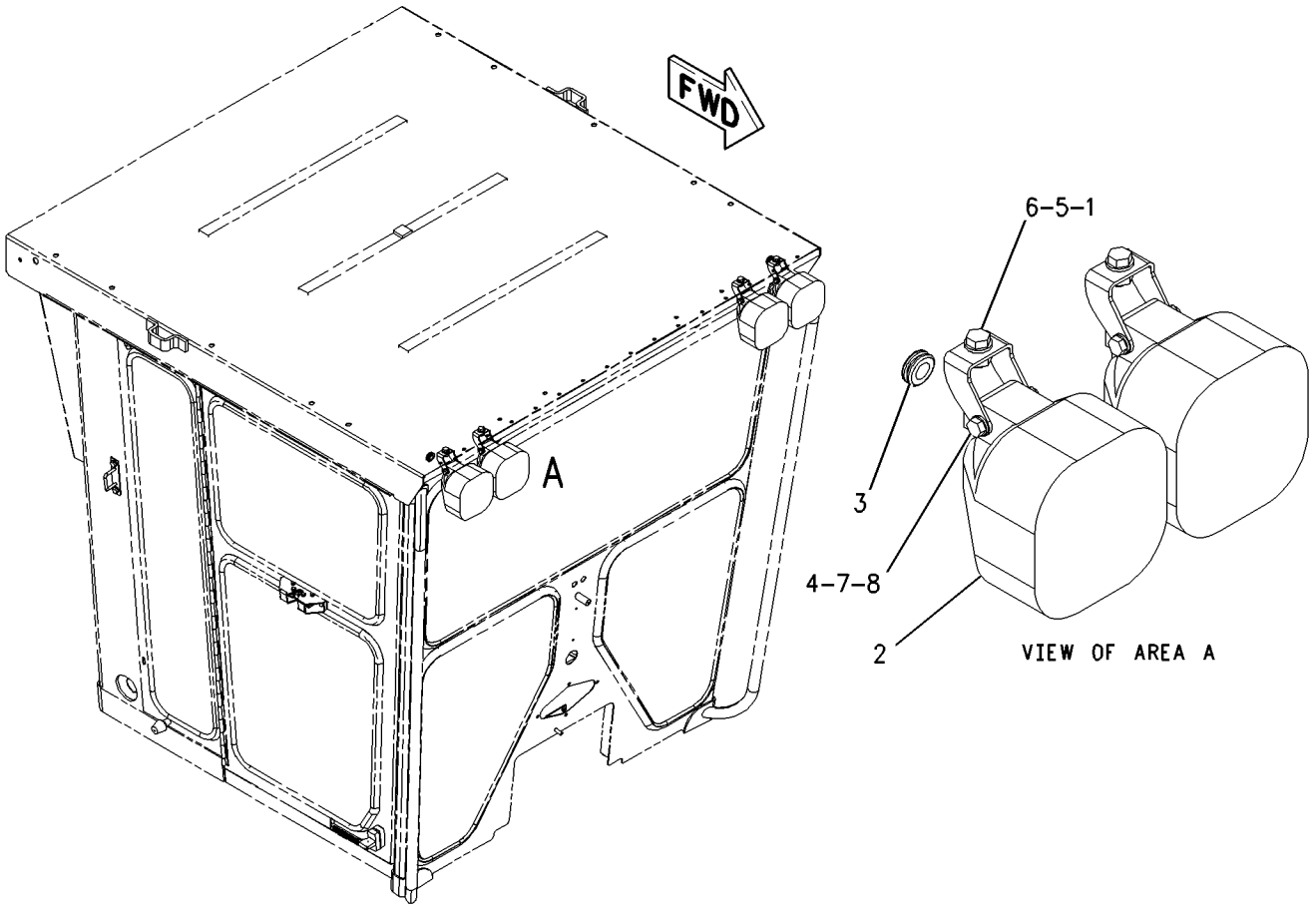

GRAPHIC #1 **<END>** g00843667

161-0769 LIGHTING GP-FLOOD–CAB

S/N: CBK1-UP
PART OF 161-0768 LIGHTING AR-FLOOD
AN ATTACHMENT
TYPE 2

SMCS-1434 **i02011377**

NOTE	REF NO	GRAPHIC REF	PART NUMBER	QTY	PART NAME 1 2 3 4 5 6 (PRODUCT LEVEL)	SEE PAGE
CY	1	1	**234-4325**	4	LAMP GP-FLOOD (24-VOLT, SUSPENDED MOUNT) (CAB)	156
	2	1	**8T-4121**	4	WASHER-HARD (11X21X2.5-MM THK)	
	3	1	**9D-3768**	2	GROMMET	

C-CHANGE FROM PREVIOUS TYPE
Y-SEPARATE ILLUSTRATION

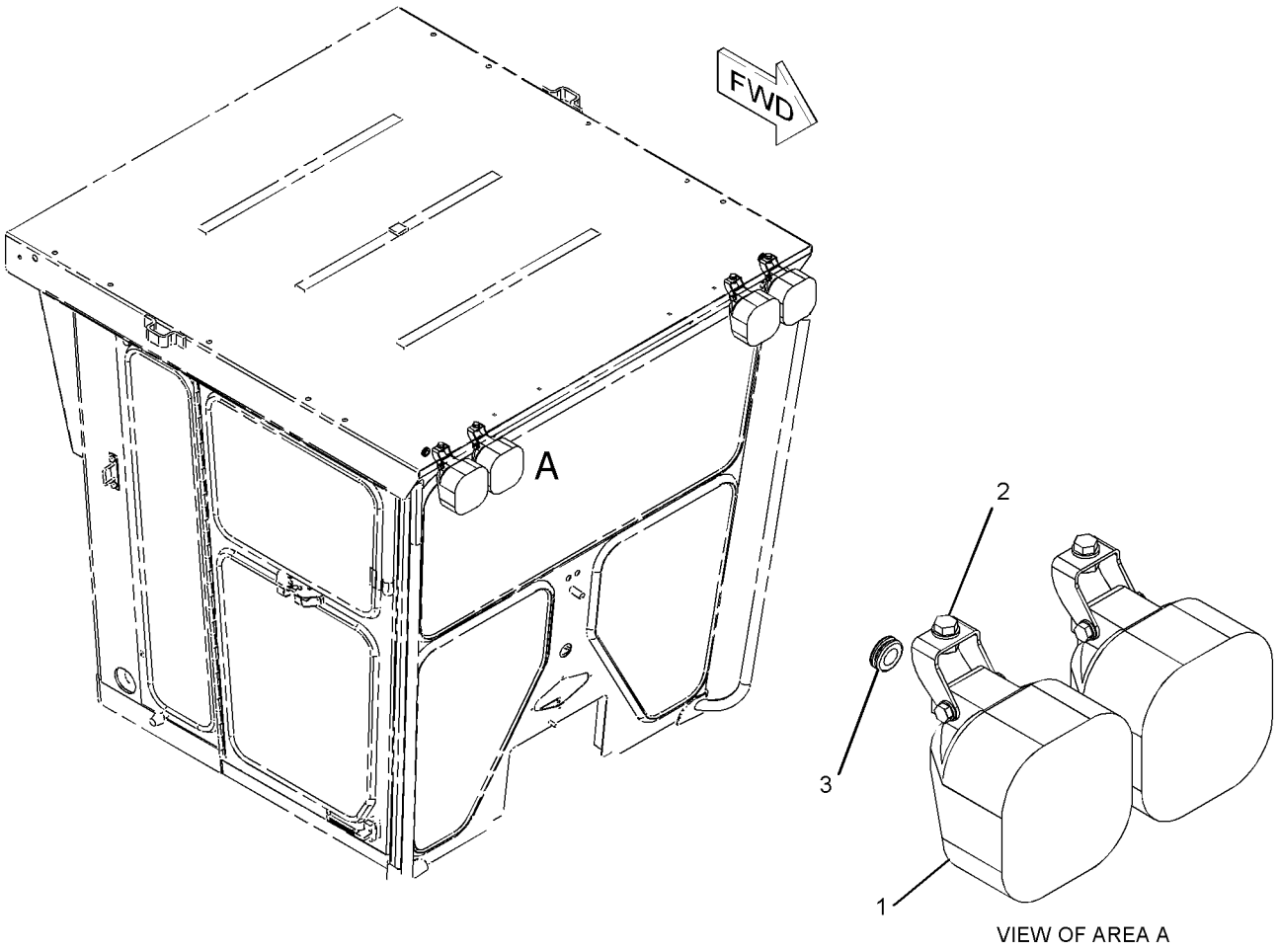

VIEW OF AREA A

GRAPHIC #1 **<END>** g01046640

161-0772 LIGHTING GP-FLOOD–CAB–TURN

S/N: CBK1-UP

PART OF 161-0770, 161-0771, 179-1548 LIGHTING AR-FLOOD & SIGNAL

AN ATTACHMENT

TYPE 1

SMCS-1434 **i01930488**

NOTE	REF NO	GRAPHIC REF	PART NUMBER	QTY	PART NAME 1 2 3 4 5 6 (PRODUCT LEVEL)	SEE PAGE
	1	1	**116-5710**	2	GROMMET	
	2	1	**135-0427**	1	LAMP GP-SIGNAL (24-VOLT) (LH)	
	2A	1	**135-0427**	1	LAMP GP-SIGNAL (24-VOLT) (RH)	
					(EACH LAMP GP INCLUDES)	
		1	**102-8803**	1	KIT-RECEPTACLE (3-PIN)	
					(INCLUDES RECEPTACLE AS & WEDGE)	
		1	**3E-3371**	1	WEDGE-RECEPTACLE LOCK (3-PIN)	
		1	**186-3735**	3	PIN-CONNECTOR	
	3	1	**184-0903**	4	BRACKET AS	
	4	1	**193-7416**	2	PLATE AS	
	5	1	**130-5300**	2	CLIP	
	6	1	**157-0305**	2	LAMP GP-FLOOD (24-VOLT) (HIGH BEAM)	
					(EACH INCLUDES)	
		1	**158-0249**	1	LENS AS (HIGH BEAM)	
		1	**158-0250**	1	BODY AS-LAMP	
		1	**158-0252**	1	BEZEL	
		1	**9X-3463**	1	LAMP-HALOGEN (24-VOLT, 65-WATT) (HIGH BEAM)	
		1	**188-8849**	2	CLAMP	
	7	1	**161-0908**	2	LAMP GP-HEAD (24-VOLT) (LOW BEAM)	
					(EACH INCLUDES)	
		1	**162-2077**	1	LENS AS (LOW BEAM)	
		1	**158-0250**	1	BODY AS-LAMP	
		1	**158-0252**	1	BEZEL	
		1	**9X-3463**	1	LAMP-HALOGEN (24-VOLT, 65-WATT) (LOW BEAM)	
		1	**188-8849**	2	CLAMP	
	8	1	**9D-3768**	2	GROMMET	
M	9	1	**5C-2890**	6	NUT (M6X1-THD)	
M	10	1	**5C-7261**	4	NUT (M8X1.25-THD)	
	11	1	**8T-4121**	8	WASHER-HARD (11X21X2.5-MM THK)	
M	12	1	**8T-4137**	8	BOLT (M10X1.5X20-MM)	
	13	1	**8T-4224**	8	WASHER-HARD (8.8X16X2-MM THK)	
M	14	1	**8T-6869**	4	BOLT (M8X1.25X60-MM)	
	15	1	**9X-8256**	6	WASHER (6.6X12X2-MM THK)	

M-METRIC PART

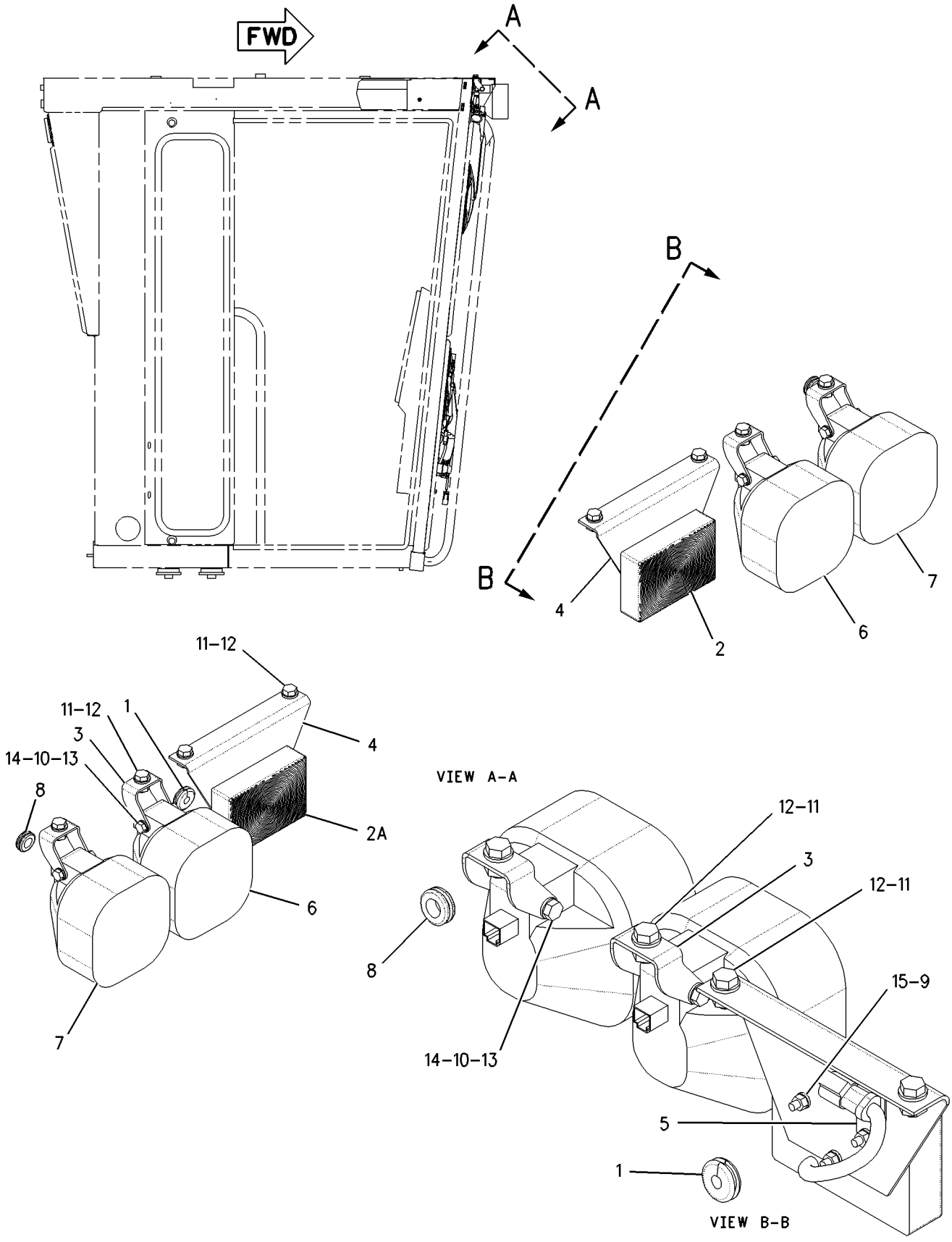

GRAPHIC #1 **<END>** g00844108

161-0772 LIGHTING GP-FLOOD–CAB–TURN

S/N: CBK1-UP

PART OF 161-0770, 161-0771, 179-1548 LIGHTING AR-FLOOD & SIGNAL

AN ATTACHMENT

TYPE 2

SMCS-1434 **i02108878**

NOTE	REF NO	GRAPHIC REF	PART NUMBER	QTY	PART NAME 1 2 3 4 5 6 (PRODUCT LEVEL)	SEE PAGE
	1	1	**116-5710**	2	GROMMET	
Y	2	1	**135-0427**	1	LAMP GP-SIGNAL (24-VOLT) (TURN LEFT, RIGHT)	171
	3	1	**193-7416**	2	PLATE AS	
					(EACH INCLUDES)	
M		1	**8T-3490**	2	NUT-WELD (M10X1.5-THD)	
CY	4	1	**234-4325**	2	LAMP GP-FLOOD (24-VOLT, SUSPENDED MOUNT) (LOW BEAM)	156
CY	5	1	**234-4326**	2	LAMP GP-FLOOD (HIGH BEAM)	157
	6	1	**130-5300**	2	CLIP	
M	7	1	**5C-2890**	6	NUT (M6X1-THD)	
	8	1	**8T-4121**	8	WASHER-HARD (11X21X2.5-MM THK)	
CM	9	1	**8T-4137**	4	BOLT (M10X1.5X20-MM)	
	10	1	**8T-4205**	6	WASHER-HARD (7.2X14.5X2-MM THK)	
	11	1	**9D-3768**	2	GROMMET	

C-CHANGE FROM PREVIOUS TYPE
M-METRIC PART
Y-SEPARATE ILLUSTRATION

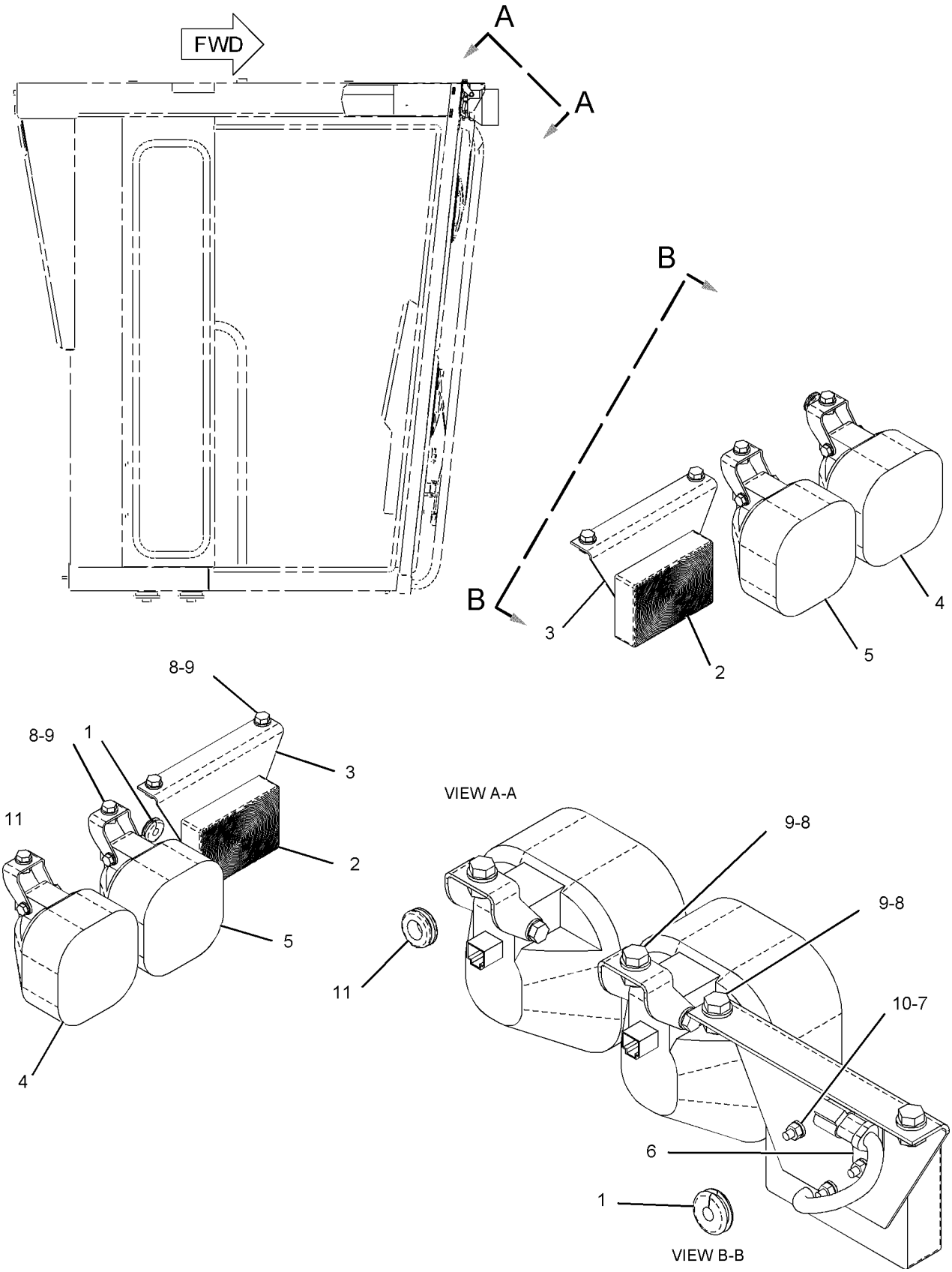

GRAPHIC #1 **<END>** g01083816

161-0778 LIGHTING GP-FLOOD—BLADE

S/N: CBK1-UP
PART OF 188-9321 LIGHTING AR-FLOOD
AN ATTACHMENT
TYPE 1

SMCS-1434 **i01825015**

NOTE	REF NO	GRAPHIC REF	PART NUMBER	QTY	PART NAME 1 2 3 4 5 6 (PRODUCT LEVEL)	SEE PAGE
	1	1	**9W-1442**	2	FUSE (10-AMPERE) (BLADE/FRONT FLOODLAMP)	
	2	1	**178-8067**	2	BRACKET AS	
Y	3	1	**153-2073**	2	LAMP GP-FLOOD (24-VOLT, VERTICAL MOUNT) (BLADE)	153
M	4	1	**5C-7261**	2	NUT (M8X1.25-THD)	
	5	1	**119-5708**	2	CLIP	
	8	1	**8T-4224**	2	WASHER-HARD (8.8X16X2-MM THK)	
M	9	1	**8T-6869**	2	BOLT (M8X1.25X60-MM)	
	10	1	**3E-8772**	1	SWITCH AS-ROCKER (BLADE)(FRONT FLOODLAMP)	
		1	**3E-8815**	1	ACTUATOR-ROCKER	
		1	**3E-8825**	2	LAMP (24-VOLT) (BLADE)(FRONT FLOODLAMP)	

M-METRIC PART
Y-SEPARATE ILLUSTRATION

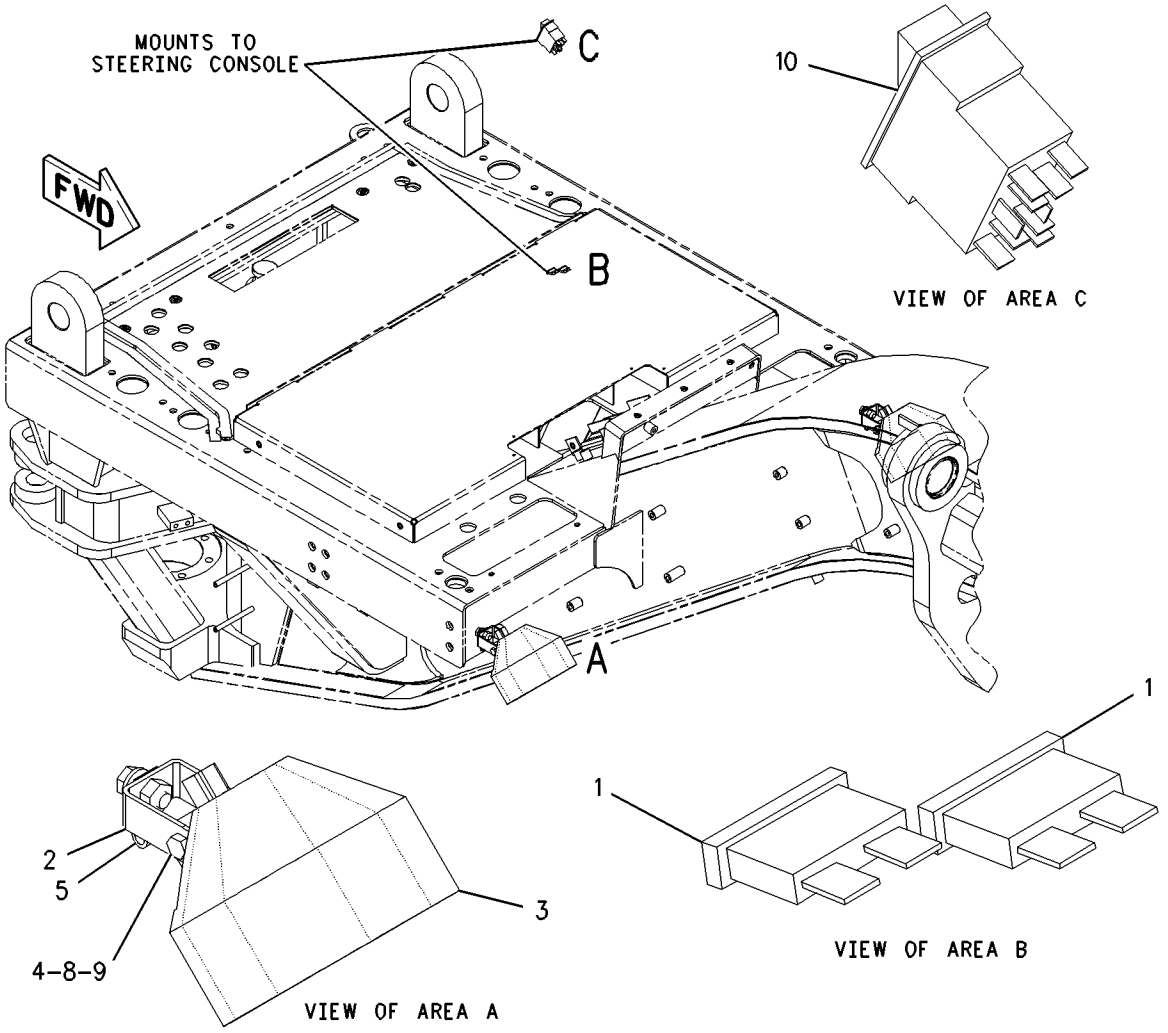

GRAPHIC #1 **<END>** g00931705

161-0778 LIGHTING GP-FLOOD–BLADE

S/N: CBK1-UP
PART OF 188-9321 LIGHTING AR-FLOOD
AN ATTACHMENT
TYPE 2

SMCS-1434 **i02034207**

NOTE	REF NO	GRAPHIC REF	PART NUMBER	QTY	PART NAME 1 2 3 4 5 6 (PRODUCT LEVEL)	SEE PAGE
	1	1	**9W-1442**	2	FUSE (10-AMPERE) (BLADE LAMP)	
CY	2	1	**234-4323**	2	LAMP GP-FLOOD (24-VOLT, VERTICAL MOUNT)	154
	3	1	**119-5708**	2	CLIP	
C	4	1	**8T-4121**	2	WASHER-HARD (11X21X2.5-MM THK)	
	5	1	**3E-8772**	1	SWITCH AS-ROCKER (BLADE LAMP)	
			3E-8815	1	ACTUATOR-ROCKER	
			3E-8825	2	LAMP (24-VOLT) (BLADE LAMP)	

C-CHANGE FROM PREVIOUS TYPE
Y-SEPARATE ILLUSTRATION

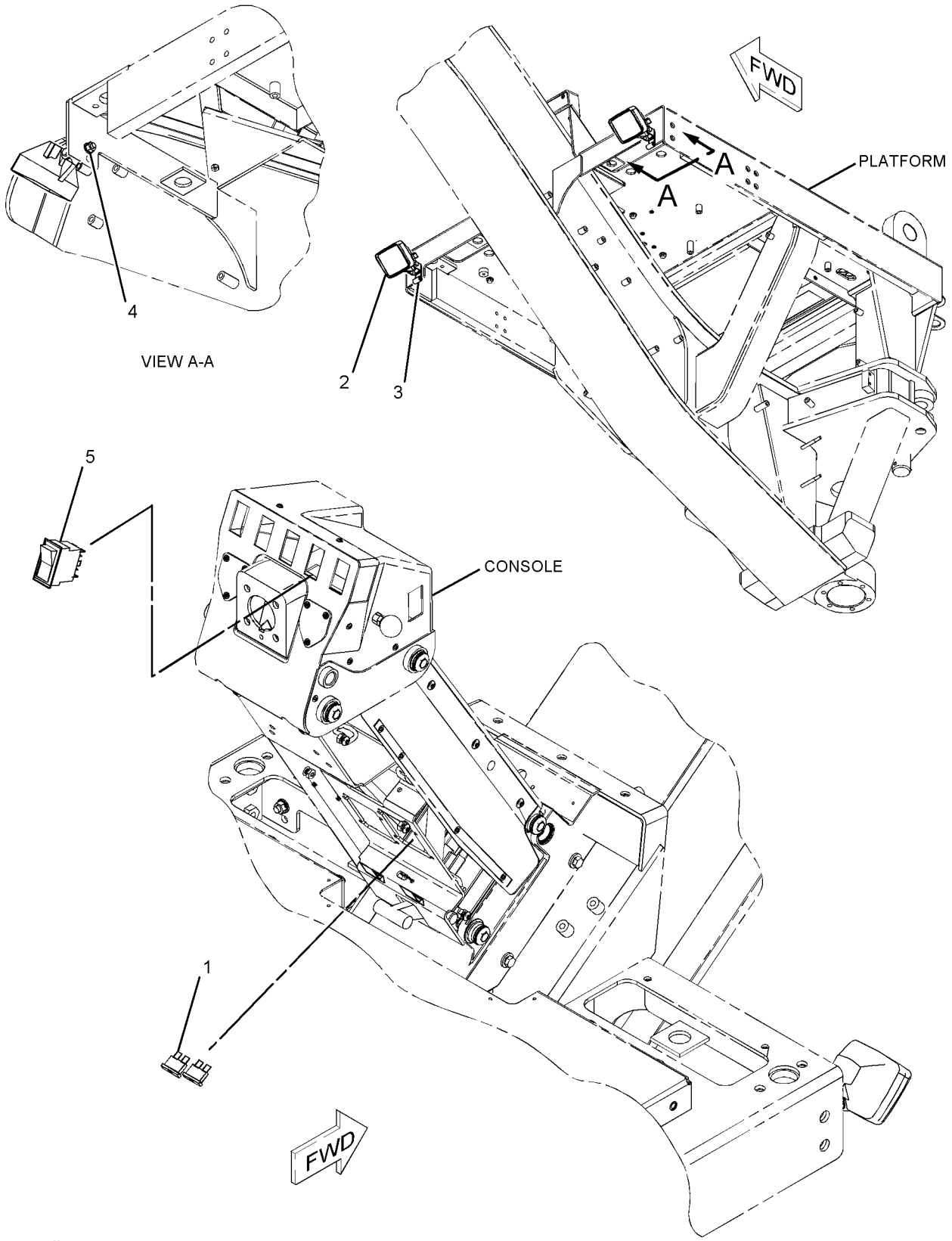

GRAPHIC #1 **<END>** g01072592

161-0779 LIGHTING GP-FLOOD–BLADE

S/N: CBK1-UP
PART OF 161-0768 LIGHTING AR-FLOOD
AN ATTACHMENT
TYPE 1

SMCS-1434 **i02038748**

NOTE	REF NO	GRAPHIC REF	PART NUMBER	QTY	PART NAME 1 2 3 4 5 6 (PRODUCT LEVEL)	SEE PAGE
	1	1	**3E-6477**	1	RELAY AS (24-VOLT) (WORK LIGHTS)	
	2	1	**9W-1441**	1	FUSE (15-AMPERE) (CAB FLOOD LIGHTS)	
	3	1	**9W-1442**	2	FUSE (10-AMPERE) (WORK LIGHTS)	
	4	1	**106-8704**	1	SUPPRESSOR AS-ARC	
		1	**102-8802**	1	KIT-RECEPTACLE (2-PIN)	
					(INCLUDES RECEPTACLE AS & WEDGE)	
		1	**3E-3365**	1	WEDGE-RECEPTACLE LOCK (2-PIN)	
		1	**186-3735**	2	PIN-CONNECTOR	
	5	1	**178-8067**	1	BRACKET AS	
	6	1	**119-5708**	2	CLIP	
Y	7	1	**153-2073**	2	LAMP GP-FLOOD (24-VOLT, VERTICAL MOUNT) (BLADE)	153
M	8	1	**5C-7261**	2	NUT (M8X1.25-THD)	
	9	1	**8T-4224**	2	WASHER-HARD (8.8X16X2-MM THK)	
M	10	1	**8T-6869**	2	BOLT (M8X1.25X60-MM)	
	11	1	**3E-8772**	1	SWITCH AS-ROCKER (BLADE FLOOD LAMP)	
			3E-8815	1	ACTUATOR-ROCKER	
			3E-8825	2	LAMP (24-VOLT) (BLADE FLOOD)	

M-METRIC PART
Y-SEPARATE ILLUSTRATION

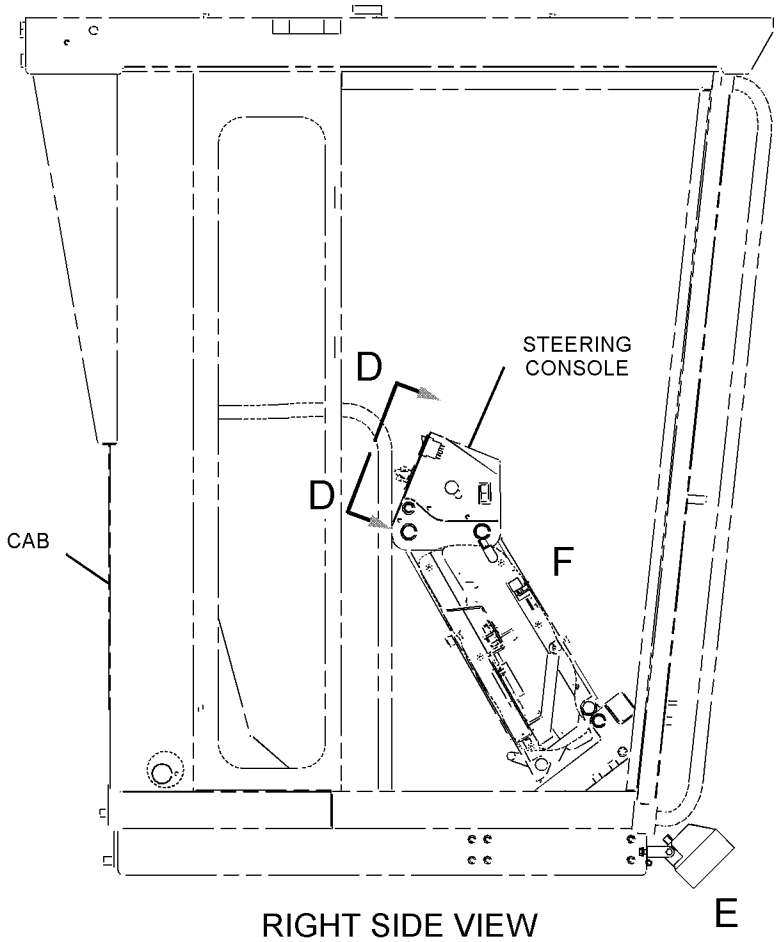

RIGHT SIDE VIEW

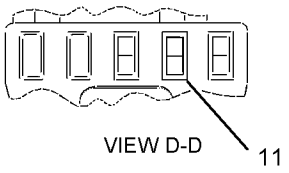

VIEW D-D

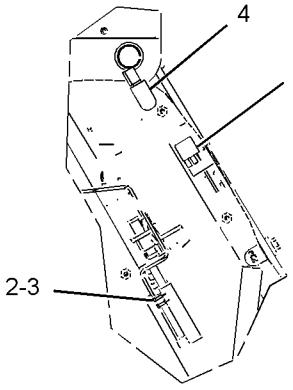

VIEW OF AREA F

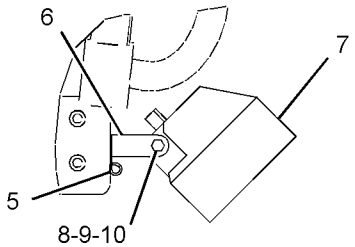

VIEW OF AREA E

GRAPHIC #1 **<END>** g01078050

161-0779 LIGHTING GP-FLOOD–BLADE

S/N: CBK1-UP
PART OF 161-0768 LIGHTING AR-FLOOD
AN ATTACHMENT
TYPE 2

SMCS-1434 **i02115091**

NOTE	REF NO	GRAPHIC REF	PART NUMBER	QTY	PART NAME 1 2 3 4 5 6 (PRODUCT LEVEL)	SEE PAGE
	1	1	**3E-6477**	1	RELAY AS (24-VOLT) (WORK LIGHTS)	
	2	1	**9W-1441**	1	FUSE (15-AMPERE) (CAB FLOOD LIGHTS)	
	3	1	**9W-1442**	2	FUSE (10-AMPERE) (WORK LIGHTS)	
	4	1	**106-8704**	1	SUPPRESSOR AS-ARC	
		1	**102-8802**	1	KIT-RECEPTACLE (2-PIN)	
					(INCLUDES RECEPTACLE AS & WEDGE)	
		1	**3E-3365**	1	WEDGE-RECEPTACLE LOCK (2-PIN)	
		1	**186-3735**	2	PIN-CONNECTOR	
CY	5	1	**234-4323**	2	LAMP GP-FLOOD (24-VOLT, VERTICAL MOUNT) (BLADE)	154
	6	1	**119-5708**	2	CLIP	
C	7	1	**8T-4121**	2	WASHER-HARD (11X21X2.5-MM THK)	
	8	1	**3E-8772**	1	SWITCH AS-ROCKER (BLADE FLOOD LAMP)	
			3E-8815	1	ACTUATOR-ROCKER	
			3E-8825	2	LAMP (24-VOLT) (BLADE FLOOD)	

C-CHANGE FROM PREVIOUS TYPE
Y-SEPARATE ILLUSTRATION

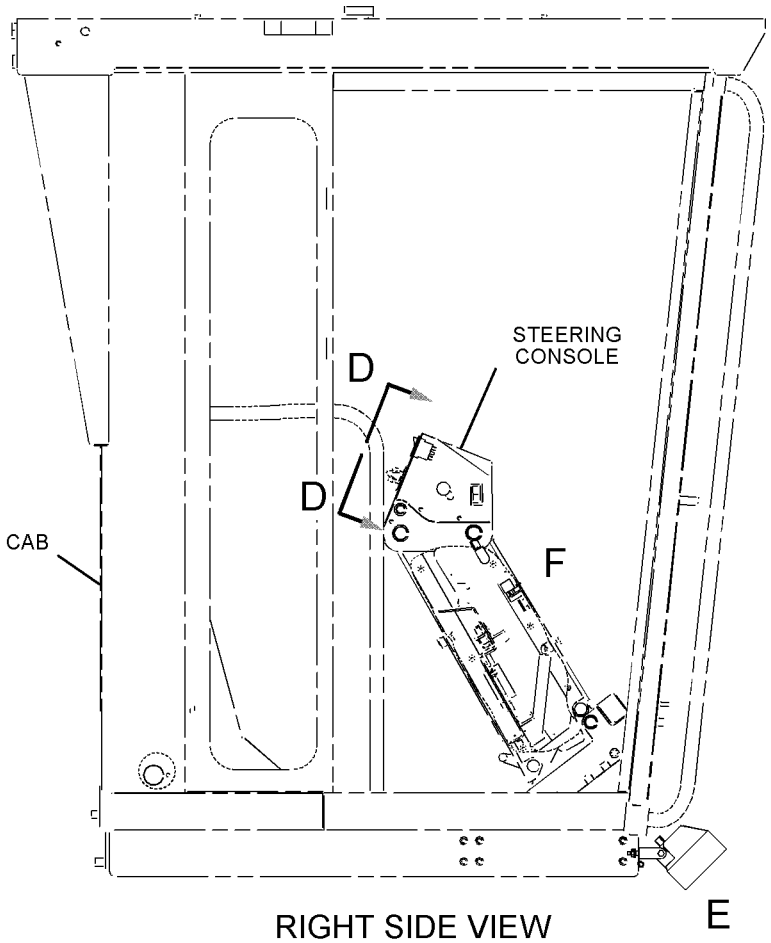

RIGHT SIDE VIEW

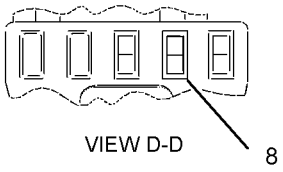

VIEW D-D

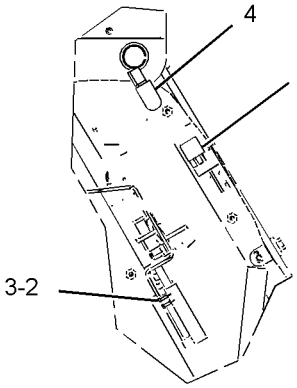

VIEW OF AREA F

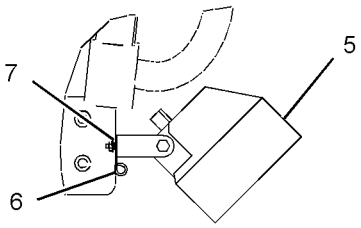

VIEW OF AREA E

GRAPHIC #1 **<END>** g01067851

161-1015 LIGHTING GP-FLOOD–BOLSTER–DOUBLE WORKLAMPS

S/N: CBK1-UP
PART OF 188-9328 LIGHTING AR-FLOOD
AN ATTACHMENT
TYPE 1

SMCS-1434 **i02204072**

NOTE	REF NO	GRAPHIC REF	PART NUMBER	QTY	PART NAME 1 2 3 4 5 6 (PRODUCT LEVEL)	SEE PAGE
	1	1	**2G-0617**	4	CLAMP	
	2	1	**2G-0988**	2	CAP	
	3	1	**3K-9520**	3	GROMMET	
	4	1	**3S-2093**	4	STRAP-CABLE	
	5	1	**5T-9313**	1	TUBE	
	6	1	**8X-5153**	1	FILM-FACE (TURN SIGNAL, HAZARD)	
	7	1	**8X-5154**	1	FILM-FACE (HEADLIGHTS HIGH, LOW BEAM)	
	8	1	**9W-1442**	1	FUSE (10-AMPERE)	
	9	1	**103-1592**	2	PLATE	
	10	1	**103-5678**	1	SWITCH AS-ROTARY (HIGH, LOW BEAM)	
		1	**5L-7200**	1	SCREW (8-32X0.375-IN)	
		1	**9B-7233**	1	LOCKWASHER	
	11	1	**108-0358**	1	FLASHER AS (12/24-VOLT) (TURN SIGNAL, HAZARD)	
Y	12	1	**135-0427**	2	LAMP GP-SIGNAL (24-VOLT) (PARK, TURN)	171
	13	1	**137-9410**	4	CLAMP	
	14	1	**169-3176**	1	HARNESS AS-LIGHTING	
		1	**155-2260**	2	KIT-CONNECTING PLUG (3-PIN) (TURN SIGNAL)	
		1	**155-2270**	4	KIT-CONNECTING PLUG (2-PIN) (HEADLAMP)	
		1	**102-8801**	1	KIT-RECEPTACLE (12-PIN)	
	15	1	**173-3064**	1	SWITCH GP-ROTARY (TURN SIGNAL, HAZARD)	
		1	**5L-7200**	1	SCREW (8-32X0.375-IN)	
		1	**9B-7233**	1	LOCKWASHER	
	16	1	**178-8067**	4	BRACKET AS	
					(EACH INCLUDES)	
M		1	**8T-3490**	1	NUT-WELD (M10X1.5-THD)	
	17	1	**179-8700**	1	HARNESS AS-FRONT CHASSIS	
		1	**155-2270**	2	KIT-CONNECTING PLUG (2-PIN)	
		1	**102-8801**	1	KIT-RECEPTACLE (12-PIN)	
Y	18	1	**180-1300**	2	LAMP GP-HEAD (24-VOLT) (HIGH BEAM)	159
	19	1	**108-3519**	4	CLAMP	
	20	1	**130-5300**	2	CLIP	
Y	21	1	**161-3509**	2	LAMP GP-HEAD (24-VOLT. LOW BEAM, VERT MOUNT)	158
	22	1	**3E-8772**	1	SWITCH AS-ROCKER (HEADLIGHTS, TAIL LIGHTS)	
		1	**3E-8825**	2	LAMP (24-VOLT)	
		1	**3E-9326**	1	ACTUATOR-ROCKER	
	23	1	**4D-7794**	4	CLIP	
	24	1	**4K-8864**	2	CLIP	
	25	1	**4L-6454**	4	BOLT (3/8-16X1-IN)	
M	26	1	**5C-2890**	8	NUT (M6X1-THD)	
M	27	1	**5C-7261**	4	NUT (M8X1.25-THD)	
	28	1	**5M-3062**	1	BOLT (3/8-16X0.75-IN)	
	29	1	**5S-7379**	4	BOLT (3/8-16X0.875-IN)	
	30	1	**6V-8801**	4	NUT (3/8-16-THD)	
	31	1	**8T-4121**	4	WASHER-HARD (11X21X2.5-MM THK)	
M	32	1	**8T-4136**	4	BOLT (M10X1.5X25-MM)	
	33	1	**8T-4205**	2	WASHER-HARD (7.2X14.5X2-MM THK)	
	34	1	**8T-4224**	4	WASHER-HARD (8.8X16X2-MM THK)	
	35	1	**8T-4896**	9	WASHER-HARD (10.2X18.5X2.5-MM THK)	
M	36	1	**8T-6869**	4	BOLT (M8X1.25X60-MM)	
	37	1	**8X-6296**	1	LEVER (HEADLIGHT DIMMER)	
	37A	1	**8X-6296**	1	LEVER (TURN SIGNAL)	
	38	1	**9D-6164**	4	BOSS (3/8-16-THD)	
M	39	1	**9X-2043**	2	SCREW-TRUSS HEAD (M6X1X14-MM)	
	40	1	**9X-8256**	6	WASHER (6.6X12X2-MM THK)	

M-METRIC PART
Y-SEPARATE ILLUSTRATION

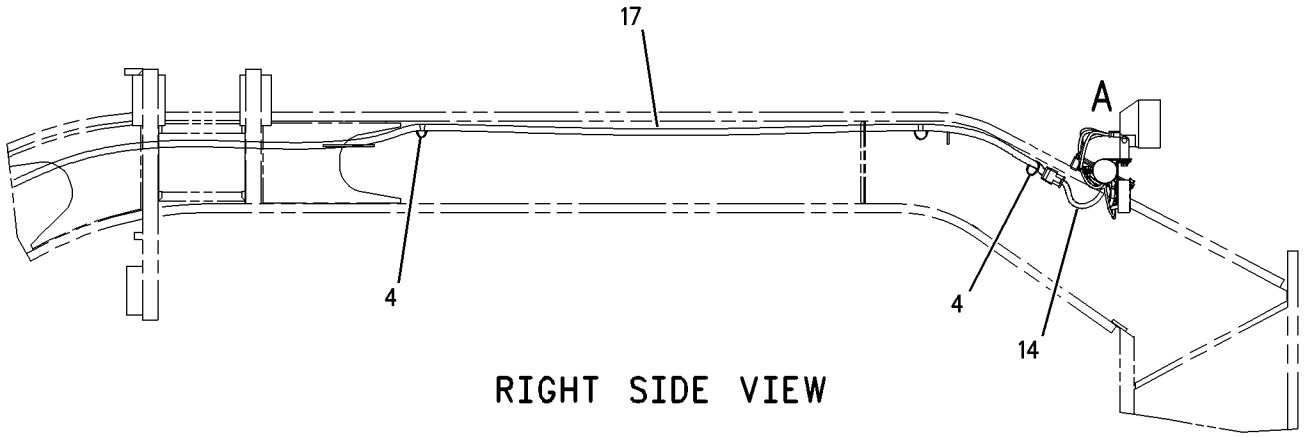

RIGHT SIDE VIEW

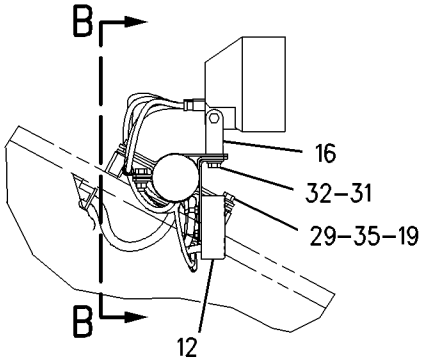

VIEW OF AREA A

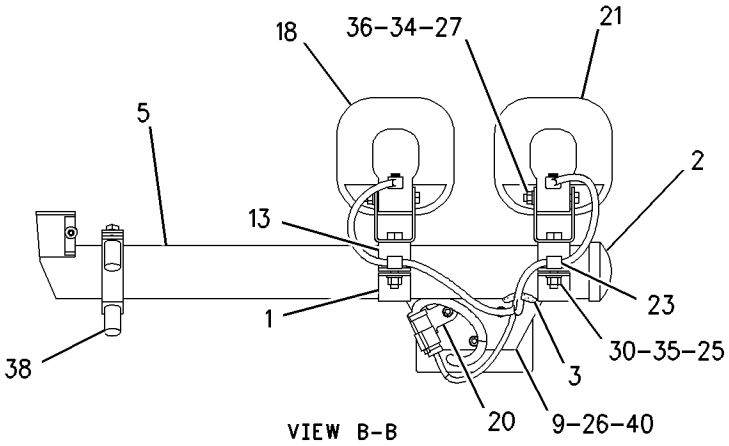

VIEW B-B

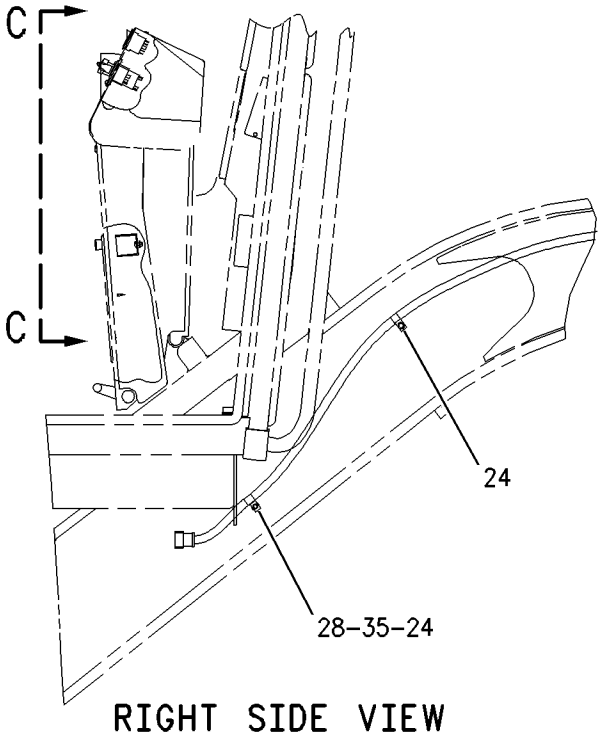

RIGHT SIDE VIEW

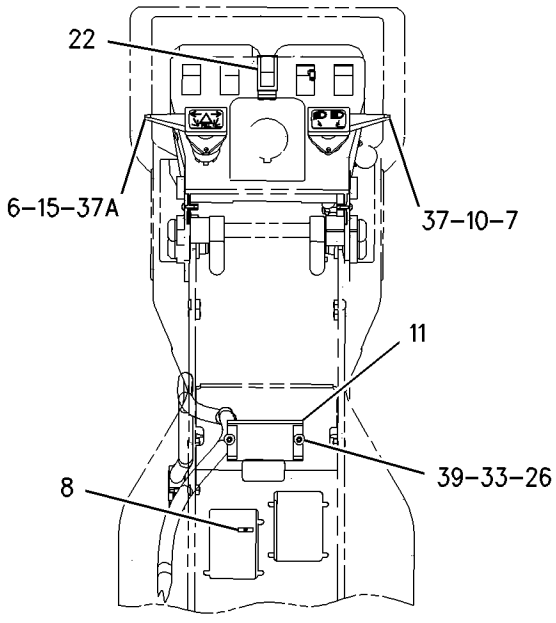

VIEW C-C

GRAPHIC #1 **<END>** g00845105

161-1015 LIGHTING GP-FLOOD–BOLSTER–DOUBLE WORKLAMPS

S/N: CBK1-UP
PART OF 188-9328 LIGHTING AR-FLOOD
AN ATTACHMENT
TYPE 2

SMCS-1434 **i02200299**

NOTE	REF NO	GRAPHIC REF	PART NUMBER	QTY	PART NAME 1 2 3 4 5 6 (PRODUCT LEVEL)	SEE PAGE
	1	1	**2G-0617**	4	CLAMP	
	2	1	**2G-0988**	2	CAP	
	3	1	**3K-9520**	3	GROMMET	
	4	1	**3S-2093**	4	STRAP-CABLE	
	5	1	**5T-9313**	1	TUBE	
	6	2	**8X-5153**	1	FILM-FACE (TURN SIGNAL, HAZARD)	
	7	2	**8X-5154**	1	FILM-FACE (HEADLIGHTS HIGH, LOW BEAM)	
	8	2	**9W-1442**	1	FUSE (10-AMPERE) (TURN SIGNAL, HAZARD)	
	9	1	**103-1592**	2	PLATE	
	10	2	**103-5678**	1	SWITCH AS-ROTARY (HEADLIGHT DIMMER)	
		2	**5L-7200**	1	SCREW (8-32X0.375-IN)	
		2	**9B-7233**	1	LOCKWASHER	
	11	2	**108-0358**	1	FLASHER AS (12/24-VOLT) (TURN SIGNAL, HAZARD)	
Y	12	1	**135-0427**	2	LAMP GP-SIGNAL (24-VOLT) (PARK, TURN)	171
	13	1	**137-9410**	4	CLAMP	
	14	1	**169-3176**	1	HARNESS AS-LIGHTING	
		1	**155-2260**	2	KIT-CONNECTING PLUG (3-PIN)	
		1	**155-2270**	4	KIT-CONNECTING PLUG (2-PIN)	
					(INCLUDES PLUG AS & WEDGE)	
		1	**102-8801**	1	KIT-RECEPTACLE (12-PIN)	
					(INCLUDES RECEPTACLE AS & WEDGE)	
	15	2	**173-3064**	1	SWITCH GP-ROTARY (TURN SIGNAL, HAZARD)	
		2	**5L-7200**	1	SCREW (8-32X0.375-IN)	
		2	**9B-7233**	1	LOCKWASHER	
	16	1	**179-8700**	1	HARNESS AS-FRONT CHASSIS	
		1	**155-2270**	2	KIT-CONNECTING PLUG (2-PIN)	
					(INCLUDES PLUG AS & WEDGE)	
		1	**102-8801**	1	KIT-RECEPTACLE (12-PIN)	
					(INCLUDES RECEPTACLE AS & WEDGE)	
Y	17	1	**234-4323**	2	LAMP GP-FLOOD (24-VOLT, VERTICAL MOUNT) (LOW BEAM)	154
Y	18	1	**234-4324**	2	LAMP GP-FLOOD (24-VOLT, VERTICAL MOUNT) (HIGH BEAM)	155
	19	1	**108-3519**	4	CLAMP	
	20	1	**130-5300**	2	CLIP	
	21	2	*3E-9317*	1	SWITCH AS-ROCKER	
		2	**3E-8772**	1	SWITCH AS-ROCKER (HEADLIGHTS, TAIL LIGHTS)	
		2	**3E-8825**	2	LAMP (24-VOLT) (HEADLIGHTS, TAIL LIGHTS)	
		2	**3E-9326**	1	ACTUATOR-ROCKER	
	22	1	**4D-7794**	4	CLIP	
	23	2	**4K-8864**	2	CLIP	
	24	1	**4L-6454**	4	BOLT (3/8-16X1-IN)	
M	25	1,2	**5C-2890**	8	NUT (M6X1-THD)	
	26	2	**5M-3062**	1	BOLT (3/8-16X0.75-IN)	
	27	1	**5S-7379**	4	BOLT (3/8-16X0.875-IN)	
	28	1	**6V-8801**	4	NUT (3/8-16-THD)	
	29	1	**8T-4121**	4	WASHER-HARD (11X21X2.5-MM THK)	
	30	1,2	**8T-4205**	8	WASHER-HARD (7.2X14.5X2-MM THK)	
	31	1,2	**8T-4896**	9	WASHER-HARD (10.2X18.5X2.5-MM THK)	
	32	2	**8X-6296**	1	LEVER (HEADLIGHT DIMMER)	
	32A	2	**8X-6296**	1	LEVER (TURN SIGNAL)	
	33	1	**9D-6164**	4	BOSS (3/8-16-THD)	
M	34	2	**9X-2043**	2	SCREW-TRUSS HEAD (M6X1X14-MM)	

M-METRIC PART
Y-SEPARATE ILLUSTRATION

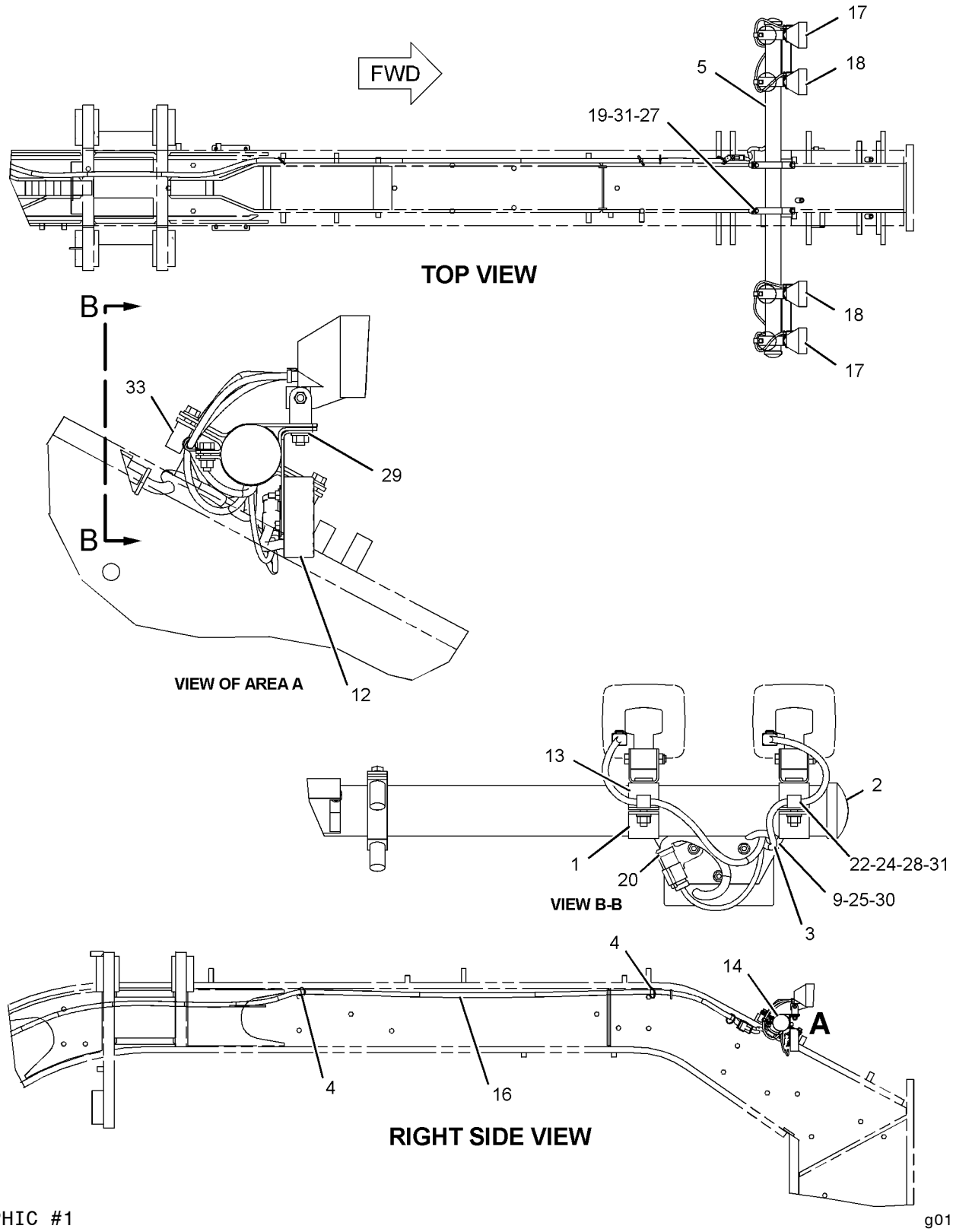

GRAPHIC #1

g01086888

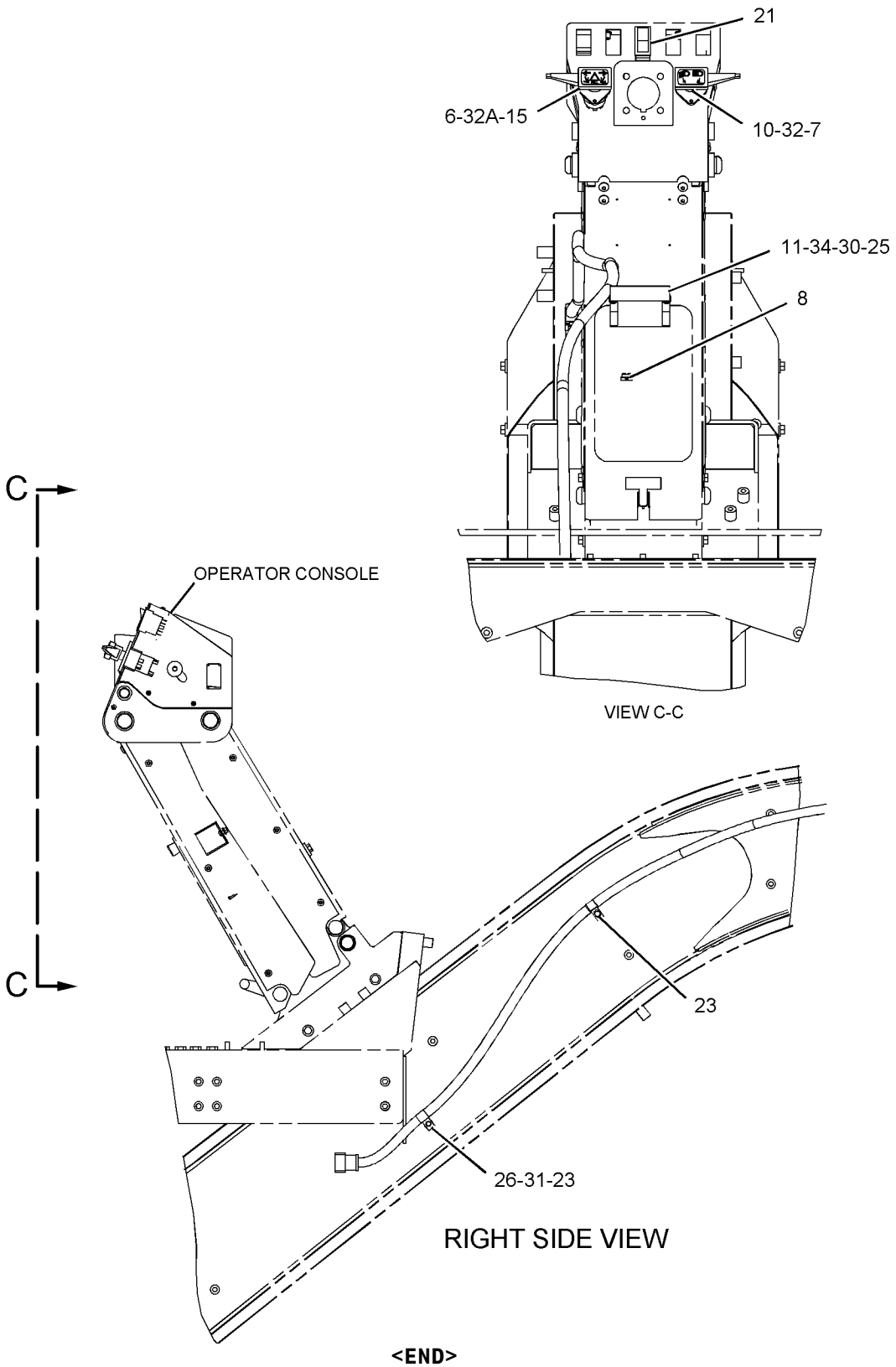

GRAPHIC #2 **<END>** g01086992

ELECTRICAL AND STARTING SYSTEM

161-1017 LIGHTING GP-FLOOD—BOLSTER

S/N: CBK1-UP
PART OF 161-0771 LIGHTING AR-FLOOD & SIGNAL
AN ATTACHMENT
TYPE 1

SMCS-1434 **i02204083**

NOTE	REF NO	GRAPHIC REF	PART NUMBER	QTY	PART NAME 1 2 3 4 5 6 (PRODUCT LEVEL)	SEE PAGE
	1	1	**2G-0617**	2	CLAMP	
	2	1	**2G-0988**	2	CAP	
	3	1	**3K-9520**	3	GROMMET	
	4	1	**3S-2093**	4	STRAP-CABLE	
	5	1	**5T-9313**	1	TUBE	
	6	1	**8X-5153**	1	FILM-FACE (TURN SIGNAL, HAZARD)	
	7	1	**8X-5154**	1	FILM-FACE (HEADLIGHTS HIGH, LOW BEAM)	
	8	1	**9W-1442**	1	FUSE (10-AMPERE)	
	9	1	**103-5678**	1	SWITCH AS-ROTARY (HEADLIGHT DIMMER)	
		1	**5L-7200**	1	SCREW (8-32X0.375-IN)	
		1	**9B-7233**	1	LOCKWASHER	
	10	1	**108-0358**	1	FLASHER AS (12/24-VOLT) (TURN SIGNAL, HAZARD)	
	11	1	**137-9410**	2	CLAMP	
	12	1	**169-3181**	1	HARNESS AS-LIGHTING	
		1	**155-2270**	2	KIT-CONNECTING PLUG (2-PIN)	
					(EACH INCLUDES PLUG AS & WEDGE)	
		1	**102-8801**	1	KIT-RECEPTACLE (12-PIN)	
					(INCLUDES RECEPTACLE AS & WEDGE)	
	13	1	**173-3064**	1	SWITCH GP-ROTARY (TURN SIGNAL, HAZARD)	
		1	**5L-7200**	1	SCREW (8-32X0.375-IN)	
		1	**9B-7233**	1	LOCKWASHER	
	14	1	**178-8067**	2	BRACKET AS	
	15	1	**179-8700**	1	HARNESS AS-FRONT CHASSIS	
		1	**155-2255**	2	KIT-CONNECTING PLUG (12-PIN)	
					(EACH INCLUDES PLUG AS & WEDGE)	
		1	**102-8801**	1	KIT-RECEPTACLE (12-PIN)	
					(INCLUDES RECEPTACLE AS & WEDGE)	
	16	1	**108-3519**	4	CLAMP	
Y	17	1	**161-3509**	2	LAMP GP-HEAD (24-VOLT. LOW BEAM, VERT MOUNT)	158
	18	1	**3E-8772**	1	SWITCH AS-ROCKER (HEADLIGHTS, TAIL LIGHTS)	
		1	**3E-8825**	2	LAMP (24-VOLT)	
		1	**3E-9326**	1	ACTUATOR-ROCKER	
	19	1	**4D-7794**	2	CLIP	
	20	1	**4L-6454**	2	BOLT (3/8-16X1-IN)	
M	21	1	**5C-2890**	2	NUT (M6X1-THD)	
M	22	1	**5C-7261**	2	NUT (M8X1.25-THD)	
	23	1	**5M-3062**	1	BOLT (3/8-16X0.75-IN)	
	24	1	**5S-7379**	4	BOLT (3/8-16X0.875-IN)	
	25	1	**6V-8801**	2	NUT (3/8-16-THD)	
	26	1	**8T-4121**	2	WASHER-HARD (11X21X2.5-MM THK)	
M	27	1	**8T-4136**	2	BOLT (M10X1.5X25-MM)	
	28	1	**8T-4205**	2	WASHER-HARD (7.2X14.5X2-MM THK)	
	29	1	**8T-4224**	2	WASHER-HARD (8.8X16X2-MM THK)	
	30	1	**8T-4896**	7	WASHER-HARD (10.2X18.5X2.5-MM THK)	
M	31	1	**8T-6869**	2	BOLT (M8X1.25X60-MM)	
	32	1	**8X-6296**	1	LEVER (TURN SIGNAL)	
	32A	1	**8X-6296**	1	LEVER (HEADLIGHT DIMMER)	
	33	1	**9D-6164**	4	BOSS (3/8-16-THD)	
M	34	1	**9X-2043**	2	SCREW-TRUSS HEAD (M6X1X14-MM)	
	35	1	**9X-9631**	1	SWITCH AS-ROCKER (LIGHTBAR LOW BEAM)	
		1	**3E-8814**	1	ACTUATOR-ROCKER	
		1	**3E-8825**	1	LAMP (24-VOLT)	
	36	1	**174-5907**	2	CLIP	

161-1017 **LIGHTING GP-FLOOD** *(contd.)* **i02204083**

M-METRIC PART
Y-SEPARATE ILLUSTRATION

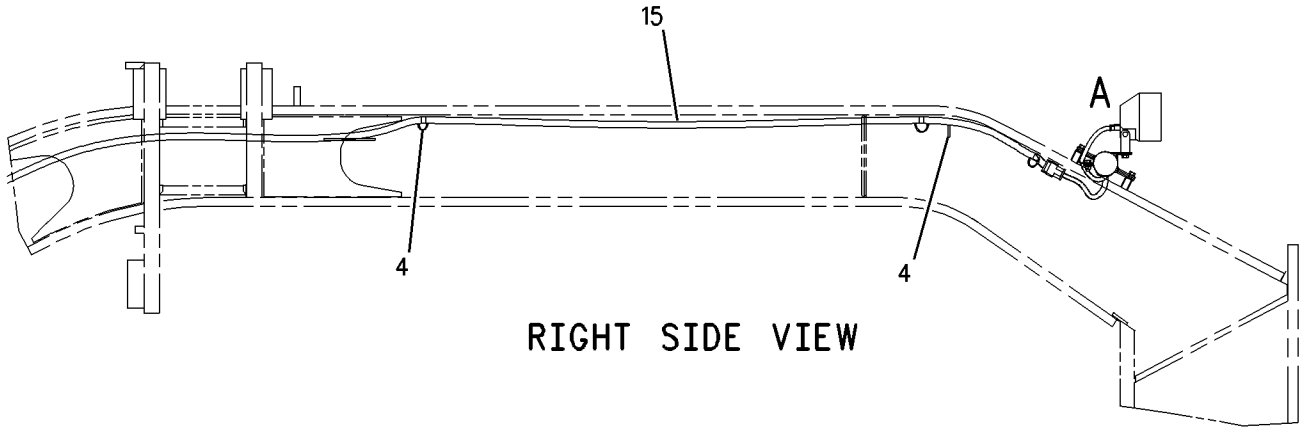

RIGHT SIDE VIEW

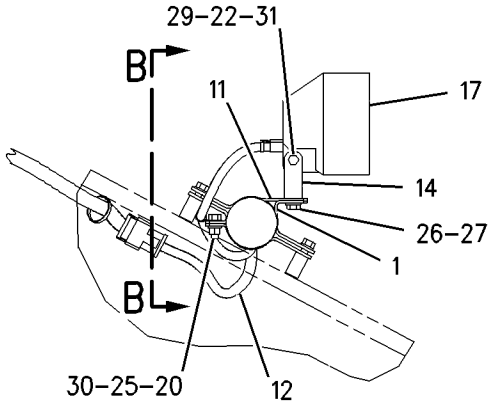

VIEW OF AREA A

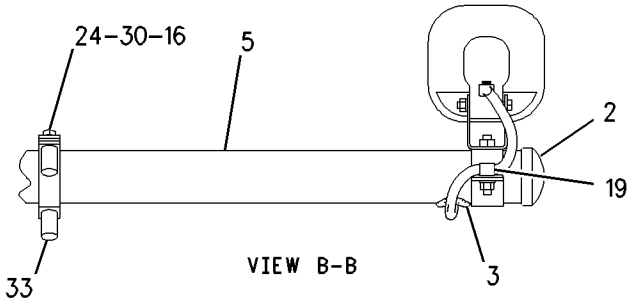

VIEW B-B

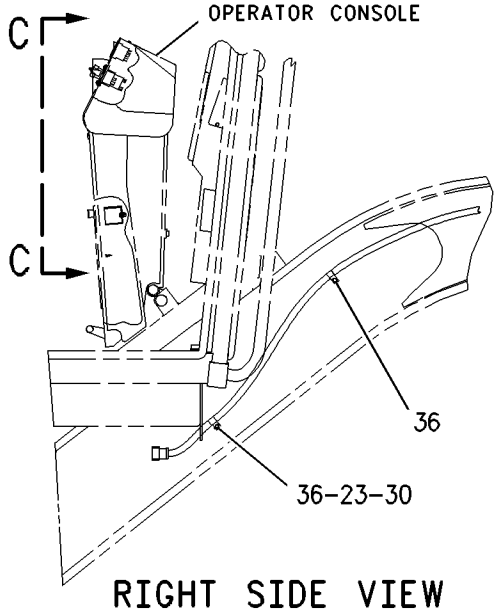

RIGHT SIDE VIEW

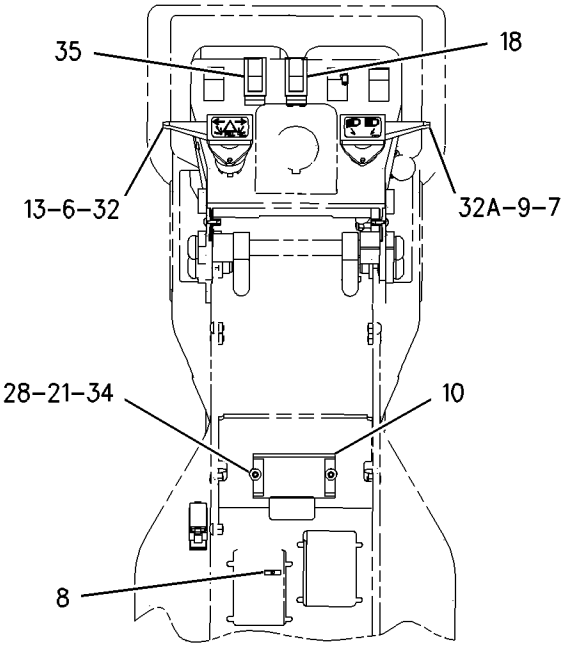

VIEW C-C

GRAPHIC #1 **<END>** g00921424

161-1017 LIGHTING GP-FLOOD–BOLSTER

S/N: CBK1-UP
PART OF 161-0771 LIGHTING AR-FLOOD & SIGNAL
AN ATTACHMENT
TYPE 2

SMCS-1434 **i02204084**

NOTE	REF NO	GRAPHIC REF	PART NUMBER	QTY	PART NAME 1 2 3 4 5 6 (PRODUCT LEVEL)	SEE PAGE
	1	1	**2G-0617**	2	CLAMP	
	2	1	**2G-0988**	2	CAP	
	3	1	**3K-9520**	3	GROMMET	
	4	1	**3S-2093**	4	STRAP-CABLE	
	5	1	**5T-9313**	1	TUBE	
	6	2	**8X-5153**	1	FILM-FACE (TURN SIGNAL, HAZARD)	
	7	2	**8X-5154**	1	FILM-FACE (HEADLIGHTS HIGH, LOW BEAM)	
	8	2	**9W-1442**	1	FUSE (10-AMPERE)	
	9	2	**103-5678**	1	SWITCH AS-ROTARY (HEADLIGHT DIMMER)	
		2	**5L-7200**	1	SCREW (8-32X0.375-IN)	
		2	**9B-7233**	1	LOCKWASHER	
	10	2	**108-0358**	1	FLASHER AS (12/24-VOLT) (TURN SIGNAL, HAZARD)	
	11	1	**137-9410**	2	CLAMP	
	12	1	**169-3181**	1	HARNESS AS-LIGHTING	
		1	**155-2270**	2	KIT-CONNECTING PLUG (2-PIN)	
					(EACH INCLUDES PLUG AS & WEDGE)	
		1	**102-8801**	1	KIT-RECEPTACLE (12-PIN)	
					(INCLUDES RECEPTACLE AS & WEDGE)	
	13	2	**173-3064**	1	SWITCH GP-ROTARY (TURN SIGNAL, HAZARD)	
		2	**5L-7200**	1	SCREW (8-32X0.375-IN)	
		2	**9B-7233**	1	LOCKWASHER	
	14	1	**179-8700**	1	HARNESS AS-FRONT CHASSIS	
		1	**155-2255**	2	KIT-CONNECTING PLUG (12-PIN)	
					(EACH INCLUDES PLUG AS & WEDGE)	
		1	**102-8801**	1	KIT-RECEPTACLE (12-PIN)	
					(INCLUDES RECEPTACLE AS & WEDGE)	
Y	15	1	**234-4323**	2	LAMP GP-FLOOD (24-VOLT, VERTICAL MOUNT) (LOW BEAM)	154
	16	1	**108-3519**	4	CLAMP	
	17	2	**174-5907**	2	CLIP	
	18	2	**3E-8772**	1	SWITCH AS-ROCKER (HEADLIGHTS, TAIL LIGHTS)	
		2	**3E-8825**	2	LAMP (24-VOLT)	
		2	**3E-9326**	1	ACTUATOR-ROCKER	
	19	1	**4D-7794**	2	CLIP	
	20	1	**4L-6454**	2	BOLT (3/8-16X1-IN)	
M	21	2	**5C-2890**	2	NUT (M6X1-THD)	
	22	2	**5M-3062**	1	BOLT (3/8-16X0.75-IN)	
	23	1	**5S-7379**	4	BOLT (3/8-16X0.875-IN)	
	24	1	**6V-8801**	2	NUT (3/8-16-THD)	
	25	1	**8T-4121**	2	WASHER-HARD (11X21X2.5-MM THK)	
	26	2	**8T-4205**	2	WASHER-HARD (7.2X14.5X2-MM THK)	
	27	1,2	**8T-4896**	7	WASHER-HARD (10.2X18.5X2.5-MM THK)	
	28	2	**8X-6296**	1	LEVER (TURN SIGNAL)	
	28A	2	**8X-6296**	1	LEVER (HEADLIGHT DIMMER)	
	29	1	**9D-6164**	4	BOSS (3/8-16-THD)	
M	30	2	**9X-2043**	2	SCREW-TRUSS HEAD (M6X1X14-MM)	
	31	2	**9X-9631**	1	SWITCH AS-ROCKER (LIGHTBAR LOW BEAM)	
		2	**3E-8814**	1	ACTUATOR-ROCKER	
		2	**3E-8825**	1	LAMP (24-VOLT)	

M-METRIC PART
Y-SEPARATE ILLUSTRATION

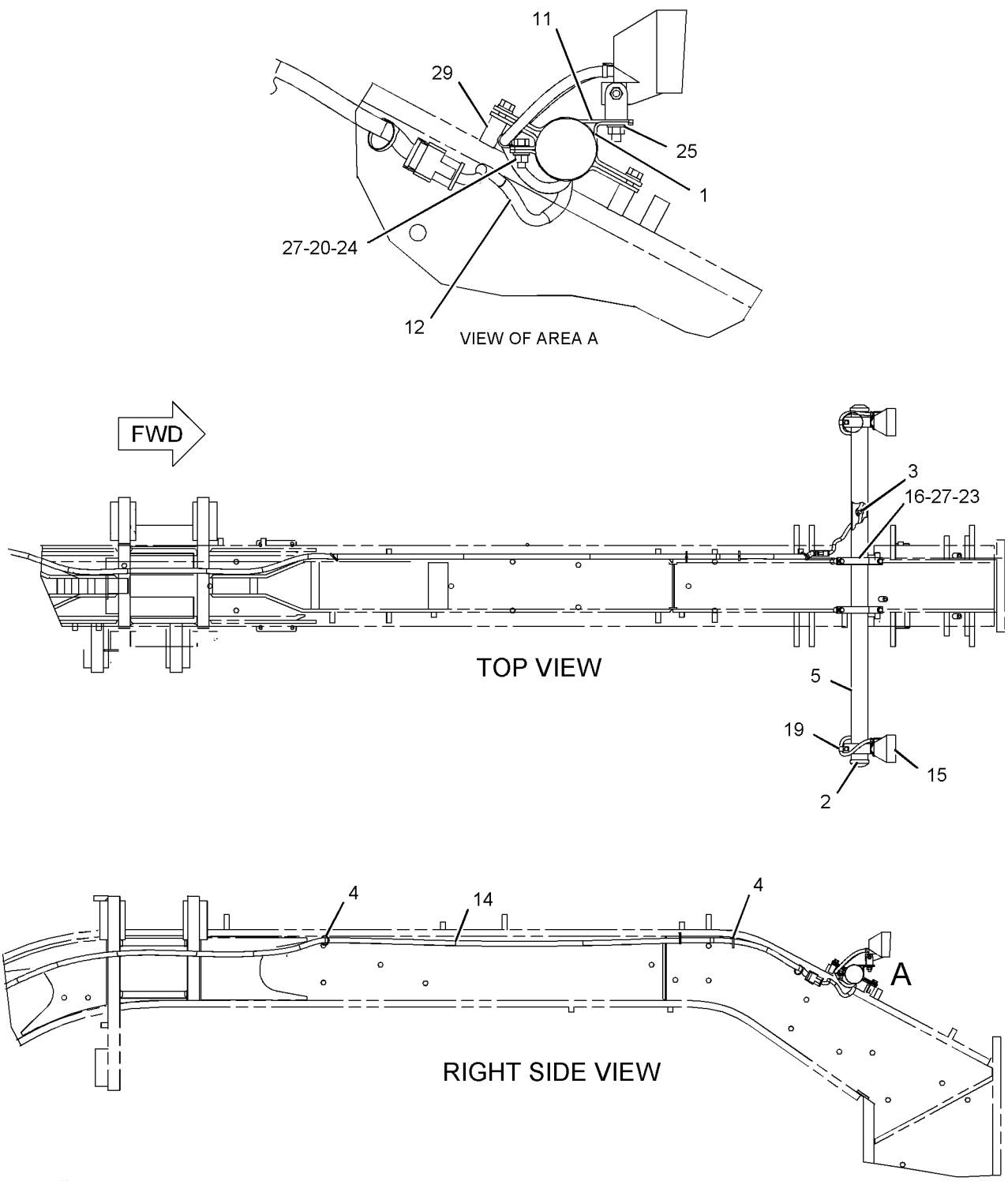

GRAPHIC #1 g01075288

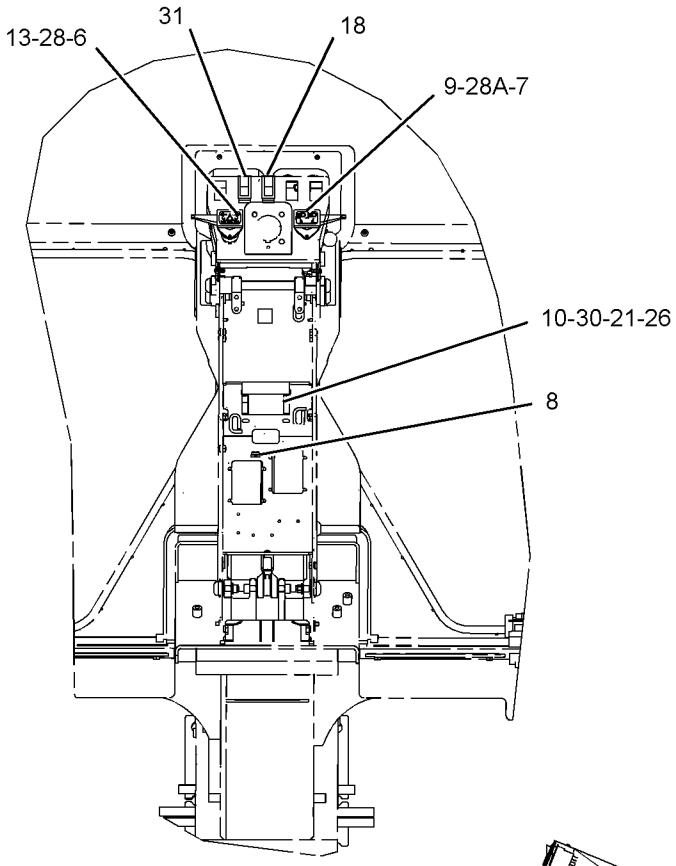

REAR VIEW

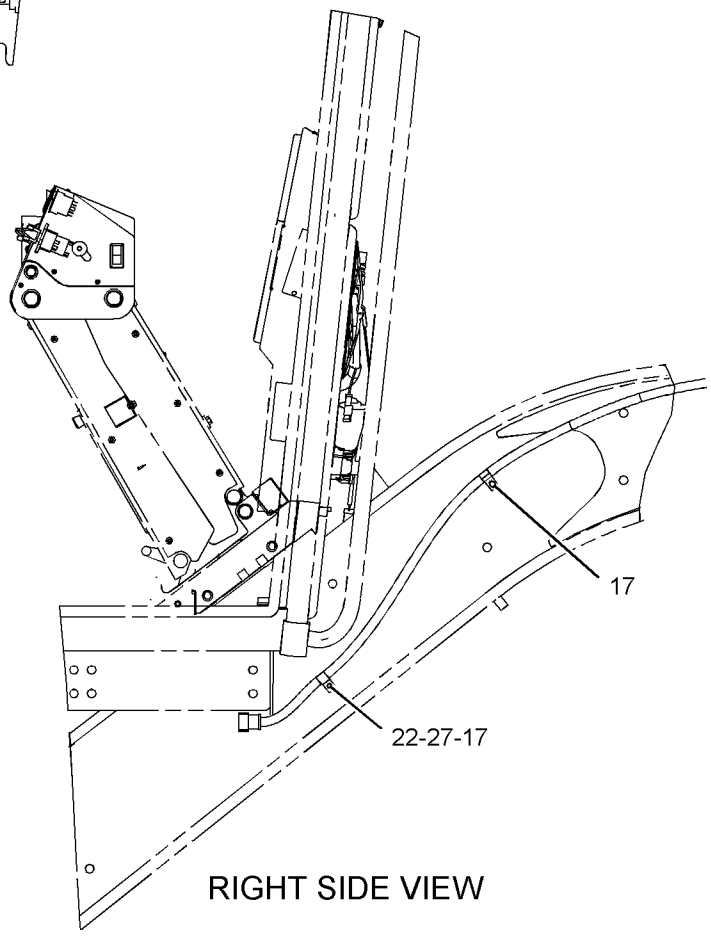

RIGHT SIDE VIEW

GRAPHIC #2

<END>

g01075730

ELECTRICAL AND STARTING SYSTEM

161-1021 LIGHTING GP-FLOOD—CAB—SNOW—RH

S/N: CBK1-UP
PART OF 197-5954, 236-3947 SNOW AR-MOTOR GRADER
AN ATTACHMENT
TYPE 1

SMCS-1434 **i02206895**

NOTE	REF NO	GRAPHIC REF	PART NUMBER	QTY	PART NAME 1 2 3 4 5 6 (PRODUCT LEVEL)	SEE PAGE
	1	1	**3E-0109**	5	PLUG (ROCKER SWITCH)	
C	2	1	**3S-2093**	2	STRAP-CABLE	
	3	1	**9W-1442**	1	FUSE (10-AMPERE)	
C	4	1	**145-3350**	1	PLATE	
C	5	1	**153-2147**	1	PLATE	
	6	1	**168-8243**	1	HARNESS AS-PANEL	
		1	**102-8802**	4	KIT-RECEPTACLE (2-PIN)	
		1	**102-8804**	4	KIT-RECEPTACLE (4-PIN)	
		1	**102-8806**	1	KIT-RECEPTACLE (8-PIN)	
		1	**102-8801**	1	KIT-RECEPTACLE (12-PIN)	
					(EACH INCLUDES RECEPTACLE AS & WEDGE)	
		1	**155-2255**	1	KIT-CONNECTING PLUG (12-PIN)	
		1	**155-2265**	1	KIT-CONNECTING PLUG (8-PIN)	
		1	**155-2270**	1	KIT-CONNECTING PLUG (2-PIN)	
		1	**155-2271**	1	KIT-CONNECTING PLUG (4-PIN)	
					(EACH INCLUDES PLUG AS & WEDGE)	
	7	1	**171-6175**	1	HARNESS AS-FRONT LIGHTING	
		1	**155-2270**	1	KIT-CONNECTING PLUG (2-PIN)	
					(INCLUDES PLUG AS & WEDGE)	
		1	**102-8802**	1	KIT-RECEPTACLE (2-PIN)	
					(INCLUDES RECEPTACLE AS & WEDGE)	
	8	1	**172-6556**	1	PANEL	
	9	1	**188-3862**	1	BRACKET AS	
	10	1	**190-1680**	1	BRACKET	
	11	1	**3E-8766**	1	SWITCH AS (24-VOLT) (FLOODLAMP RH)	
		1	**3E-8782**	1	ACTUATOR-ROCKER	
		1	**3E-8825**	1	LAMP (24-VOLT)	
Y	12	1	**153-2073**	1	LAMP GP-FLOOD (24-VOLT, VERTICAL MOUNT) (RH)	153
	13	1	**116-5710**	1	GROMMET	
	14	1	**5P-8525**	1	GROMMET	
M	15	1	**6V-9189**	1	LOCKNUT (M8X1.25-THD)	
	16	1	**8T-4224**	1	WASHER-HARD (8.8X16X2-MM THK)	
M	17	1	**8T-6869**	1	BOLT (M8X1.25X60-MM)	
M	18	1	**9X-2043**	6	SCREW-TRUSS HEAD (M6X1X14-MM)	

C-CHANGE FROM PREVIOUS TYPE
M-METRIC PART
Y-SEPARATE ILLUSTRATION

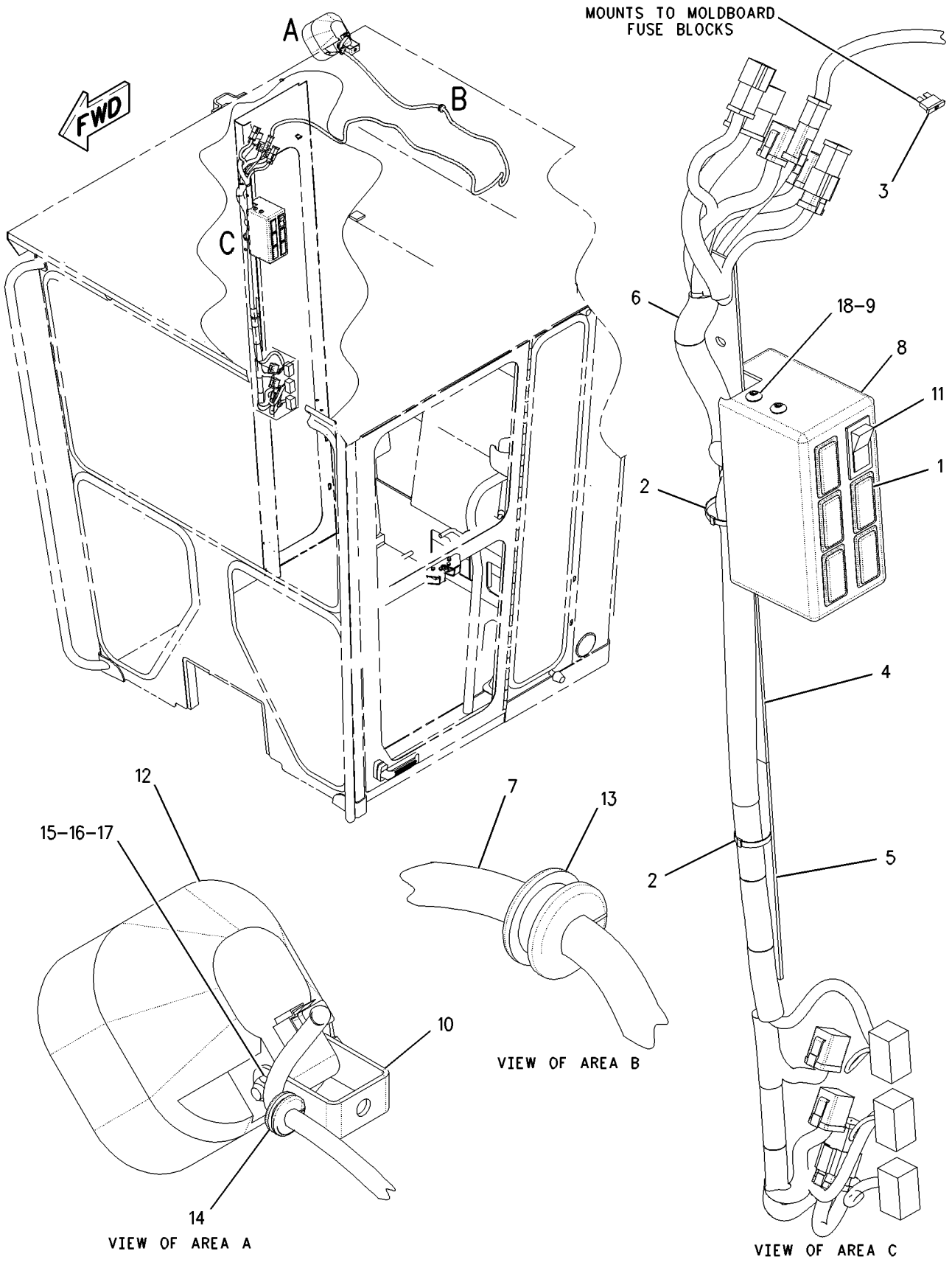

GRAPHIC #1 **<END>** g00846133

161-1021 LIGHTING GP-FLOOD–CAB–SNOW–RH

S/N: CBK1-UP
PART OF 197-5954, 236-3947 SNOW AR-MOTOR GRADER
AN ATTACHMENT
TYPE 2

SMCS-1434 **i02206894**

NOTE	REF NO	GRAPHIC REF	PART NUMBER	QTY	PART NAME 1 2 3 4 5 6 (PRODUCT LEVEL)	SEE PAGE
	1	1	**3E-0109**	5	PLUG (ROCKER SWITCH)	
	2	1	**3S-2093**	2	STRAP-CABLE	
C	3	1	**9L-1566**	1	SUPPORT	
	4	1	**9W-1442**	1	FUSE (10-AMPERE)	
	5	1	**116-5710**	1	GROMMET	
	6	1	**145-3350**	1	PLATE	
	7	1	**153-2147**	1	PLATE	
	8	1	**168-8243**	1	HARNESS AS-PANEL	
		1	**102-8802**	4	KIT-RECEPTACLE (2-PIN)	
		1	**102-8804**	4	KIT-RECEPTACLE (4-PIN)	
		1	**102-8806**	1	KIT-RECEPTACLE (8-PIN)	
		1	**102-8801**	1	KIT-RECEPTACLE (12-PIN)	
					(EACH INCLUDES RECEPTACLE AS & WEDGE)	
		1	**155-2255**	1	KIT-CONNECTING PLUG (12-PIN)	
		1	**155-2265**	1	KIT-CONNECTING PLUG (8-PIN)	
		1	**155-2270**	1	KIT-CONNECTING PLUG (2-PIN)	
		1	**155-2271**	1	KIT-CONNECTING PLUG (4-PIN)	
					(EACH INCLUDES PLUG AS & WEDGE)	
	9	1	**171-6175**	1	HARNESS AS-FRONT LIGHTING	
		1	**155-2270**	1	KIT-CONNECTING PLUG (2-PIN)	
					(INCLUDES PLUG AS & WEDGE)	
		1	**102-8802**	1	KIT-RECEPTACLE (2-PIN)	
					(INCLUDES RECEPTACLE AS & WEDGE)	
	10	1	**172-6556**	1	PANEL	
	11	1	**188-3862**	1	BRACKET AS	
CY	12	1	**234-4323**	1	LAMP GP-FLOOD (24-VOLT, VERTICAL MOUNT) (RH)	154
	13	1	**3E-8766**	1	SWITCH AS (24-VOLT) (FLOODLAMP RH)	
			3E-8782	1	ACTUATOR-ROCKER	
			3E-8825	1	LAMP (24-VOLT)	
	14	1	**5P-8525**	1	GROMMET	
C	15	1	**8T-4121**	1	WASHER-HARD (11X21X2.5-MM THK)	
M	16	1	**9X-2043**	6	SCREW-TRUSS HEAD (M6X1X14-MM)	

C-CHANGE FROM PREVIOUS TYPE
M-METRIC PART
Y-SEPARATE ILLUSTRATION

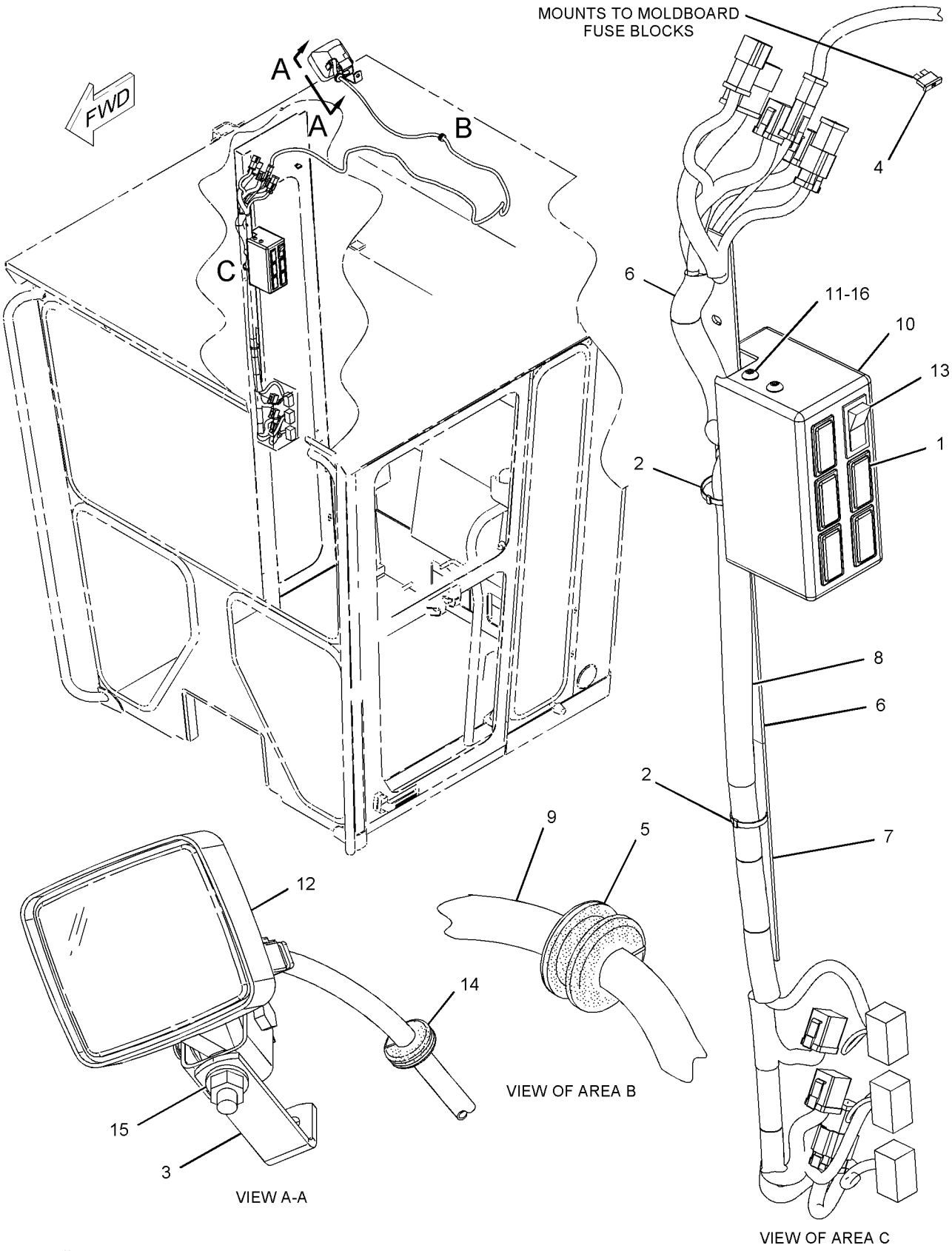

GRAPHIC #1 **<END>** g01070197

183-4069 LIGHTING GP-FLOOD—EXTENDED BOLSTER

S/N: CBK1-UP
PART OF 179-1548 LIGHTING AR-FLOOD & SIGNAL
AN ATTACHMENT
TYPE 1

SMCS-1434 **i02204102**

NOTE	REF NO	GRAPHIC REF	PART NUMBER	QTY	PART NAME 1 2 3 4 5 6 (PRODUCT LEVEL)	SEE PAGE
	1	1	**2G-0617**	2	CLAMP	
	2	1	**2G-0659**	2	BRACKET	
	3	1	**2G-0988**	2	CAP	
	4	1	**3K-9520**	3	GROMMET	
	5	1	**3S-2093**	4	STRAP-CABLE	
	6	1	**8X-5153**	1	FILM-FACE (TURN SIGNAL, HAZARD)	
	7	1	**8X-5154**	1	FILM-FACE (HEADLIGHTS HIGH, LOW BEAM)	
	8	1	**9W-1442**	1	FUSE (10-AMPERE)	
	9	1	**103-5678**	1	SWITCH AS-ROTARY (HEADLIGHT DIMMER)	
		1	**5L-7200**	1	SCREW (8-32X0.375-IN)	
		1	**9B-7233**	1	LOCKWASHER	
	10	1	**108-0358**	1	FLASHER AS (12/24-VOLT) (TURN SIGNAL, HAZARD)	
	11	1	**137-9410**	2	CLAMP	
	12	1	**173-3064**	1	SWITCH GP-ROTARY (TURN SIGNAL, HAZARD)	
		1	**5L-7200**	1	SCREW (8-32X0.375-IN)	
		1	**9B-7233**	1	LOCKWASHER	
	13	1	**178-8067**	2	BRACKET AS	
	14	1	**179-1549**	1	TUBE	
	15	1	**179-1550**	2	CLAMP	
	16	1	**179-8700**	1	HARNESS AS-FRONT CHASSIS (BOLSTER LIGHT BAR)	
		1	**155-2255**	1	KIT-CONNECTING PLUG (12-PIN)	
					(INCLUDES PLUG AS & WEDGE)	
		1	**102-8801**	1	KIT-RECEPTACLE (12-PIN)	
					(INCLUDES RECEPTACLE AS & WEDGE)	
	17	1	**179-8701**	1	HARNESS AS-FRONT LIGHTING (ELEVATED LIGHT BAR)	
		1	**155-2270**	2	KIT-CONNECTING PLUG (2-PIN)	
					(INCLUDES PLUG AS & WEDGE)	
		1	**102-8801**	1	KIT-RECEPTACLE (12-PIN)	
					(INCLUDES RECEPTACLE AS & WEDGE)	
Y	18	1	**153-2073**	2	LAMP GP-FLOOD (24-VOLT, VERTICAL MOUNT)	153
	19	1	**3E-8772**	1	SWITCH AS-ROCKER (HEADLIGHTS, TAIL LIGHTS)	
		1	**3E-8825**	1	LAMP (24-VOLT)	
		1	**3E-9326**	2	ACTUATOR-ROCKER	
	20	1	**174-5907**	2	CLIP	
M	21	1	**5C-2890**	2	NUT (M6X1-THD)	
M	22	1	**5C-7261**	2	NUT (M8X1.25-THD)	
	23	1	**5M-3062**	1	BOLT (3/8-16X0.75-IN)	
	24	1	**8M-2770**	2	CLIP	
	25	1	**8T-4121**	4	WASHER-HARD (11X21X2.5-MM THK)	
M	26	1	**8T-4133**	2	NUT (M10X1.5-THD)	
M	27	1	**8T-4136**	4	BOLT (M10X1.5X25-MM)	
	28	1	**8T-4205**	2	WASHER-HARD (7.2X14.5X2-MM THK)	
M	29	1	**8T-4223**	4	WASHER-HARD (13.5X25.5X3-MM THK)	
	30	1	**8T-4224**	2	WASHER-HARD (8.8X16X2-MM THK)	
M	31	1	**8T-4244**	4	NUT (M12X1.75-THD)	
	32	1	**8T-4896**	1	WASHER-HARD (10.2X18.5X2.5-MM THK)	
M	33	1	**8T-5412**	4	BOLT (M12X1.75X140-MM)	
M	34	1	**8T-6869**	2	BOLT (M8X1.25X60-MM)	
	35	1	**8X-6296**	1	LEVER (TURN SIGNAL)	
	35A	1	**8X-6296**	1	LEVER (HEADLIGHT DIMMER)	
M	36	1	**9X-2043**	2	SCREW-TRUSS HEAD (M6X1X14-MM)	
	37	1	**9X-9631**	1	SWITCH AS-ROCKER (LIGHTBAR LOW BEAM)	
		1	**3E-8814**	1	ACTUATOR-ROCKER	

183-4069 **LIGHTING GP-FLOOD** *(contd.)* **i02204102**

NOTE	REF NO	GRAPHIC REF	PART NUMBER	QTY	PART NAME 1 2 3 4 5 6 (PRODUCT LEVEL)	SEE PAGE
		1	**3E-8825**	1	LAMP (24-VOLT)	

M-METRIC PART
Y-SEPARATE ILLUSTRATION

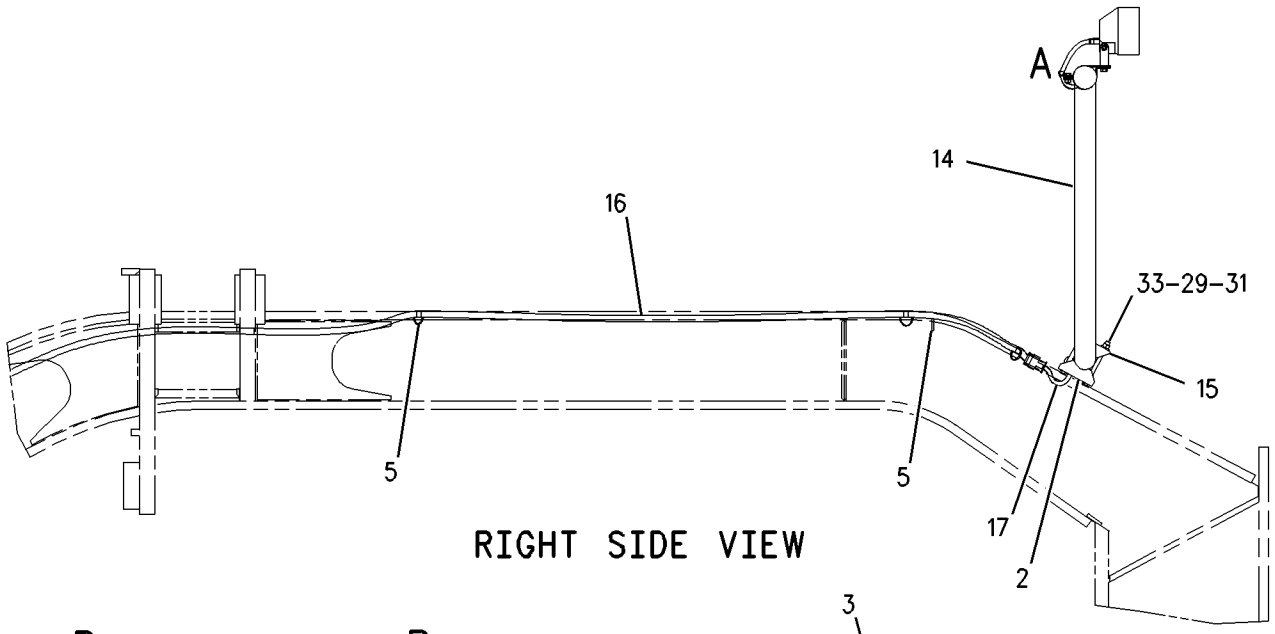

RIGHT SIDE VIEW

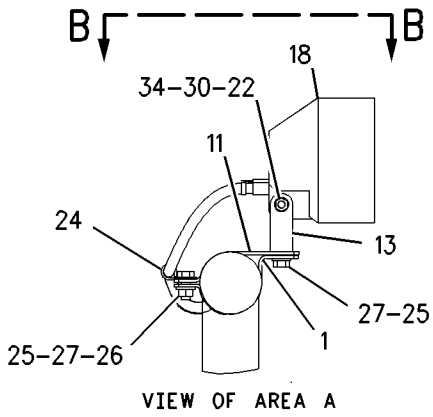

VIEW OF AREA A

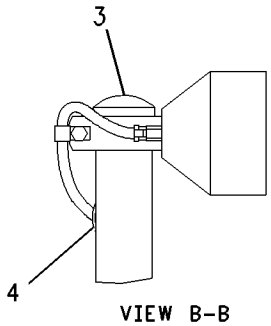

VIEW B-B

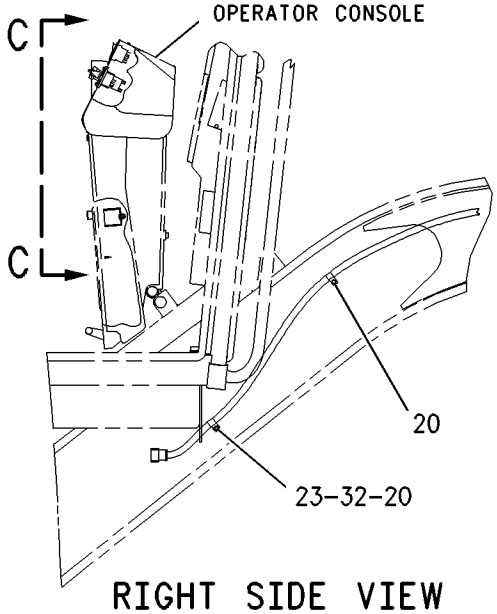

RIGHT SIDE VIEW

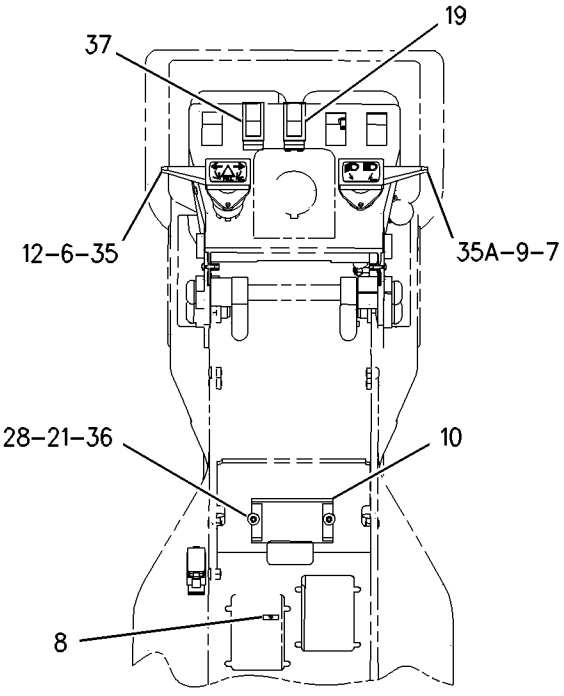

VIEW C-C

GRAPHIC #1 **<END>** g00845039

ELECTRICAL AND STARTING SYSTEM

183-4069 LIGHTING GP-FLOOD—EXTENDED BOLSTER

S/N: CBK1-UP
PART OF 179-1548 LIGHTING AR-FLOOD & SIGNAL
AN ATTACHMENT
TYPE 2

SMCS-1434 **i02204103**

NOTE	REF NO	GRAPHIC REF	PART NUMBER	QTY	PART NAME 1 2 3 4 5 6 (PRODUCT LEVEL)	SEE PAGE
	1	2	**2G-0617**	2	CLAMP	
	2	2	**2G-0659**	2	BRACKET	
	3	2	**2G-0988**	2	CAP	
	4	2	**3K-9520**	3	GROMMET	
	5	2	**3S-2093**	4	STRAP-CABLE	
	6	1	**8X-5153**	1	FILM-FACE (TURN SIGNAL, HAZARD)	
	7	1	**8X-5154**	1	FILM-FACE (HEADLIGHTS HIGH, LOW BEAM)	
	8	1	**9W-1442**	1	FUSE (10-AMPERE)	
	9	1	**103-5678**	1	SWITCH AS-ROTARY (HEADLIGHT DIMMER)	
		1	**5L-7200**	1	SCREW (8-32X0.375-IN)	
		1	**9B-7233**	1	LOCKWASHER	
	10	1	**108-0358**	1	FLASHER AS (12/24-VOLT) (TURN SIGNAL, HAZARD)	
	11	2	**137-9410**	2	CLAMP	
	12	1	**173-3064**	1	SWITCH GP-ROTARY (TURN SIGNAL, HAZARD)	
		1	**5L-7200**	1	SCREW (8-32X0.375-IN)	
		1	**9B-7233**	1	LOCKWASHER	
	13	2	**179-1549**	1	TUBE	
	14	2	**179-1550**	2	CLAMP	
	15	2	**179-8700**	1	HARNESS AS-FRONT CHASSIS (WORK LIGHTS, FRONT)	
		2	**155-2255**	1	KIT-CONNECTING PLUG (12-PIN)	
					(INCLUDES PLUG AS & WEDGE)	
		2	**102-8801**	1	KIT-RECEPTACLE (12-PIN)	
					(INCLUDES RECEPTACLE AS & WEDGE)	
	16	2	**179-8701**	1	HARNESS AS-FRONT LIGHTING (WORK LIGHTS)	
		2	**155-2270**	2	KIT-CONNECTING PLUG (2-PIN)	
					(EACH INCLUDES PLUG AS & WEDGE)	
		2	**102-8801**	1	KIT-RECEPTACLE (12-PIN)	
					(INCLUDES RECEPTACLE AS & WEDGE)	
CY	17	2	**234-4323**	2	LAMP GP-FLOOD (24-VOLT, VERTICAL MOUNT) (WORK LIGHTS)	154
	18	1	**174-5907**	2	CLIP	
	19	1	**3E-8772**	1	SWITCH AS-ROCKER (HEADLIGHTS, TAIL LIGHTS)	
		1	**3E-8825**	1	LAMP (24-VOLT)	
		1	**3E-9326**	2	ACTUATOR-ROCKER	
M	20	1	**5C-2890**	2	NUT (M6X1-THD)	
	21	1	**5M-3062**	1	BOLT (3/8-16X0.75-IN)	
	22	2	**8M-2770**	2	CLIP	
	23	2	**8T-4121**	4	WASHER-HARD (11X21X2.5-MM THK)	
M	24	1	**8T-4133**	2	NUT (M10X1.5-THD)	
CM	25	2	**8T-4136**	2	BOLT (M10X1.5X25-MM)	
	26	1	**8T-4205**	2	WASHER-HARD (7.2X14.5X2-MM THK)	
M	27	2	**8T-4223**	4	WASHER-HARD (13.5X25.5X3-MM THK)	
M	28	2	**8T-4244**	4	NUT (M12X1.75-THD)	
	29	1	**8T-4896**	1	WASHER-HARD (10.2X18.5X2.5-MM THK)	
M	30	2	**8T-5412**	4	BOLT (M12X1.75X140-MM)	
	31	1	**8X-6296**	1	LEVER (TURN SIGNAL)	
	31A	1	**8X-6296**	1	LEVER (HEADLIGHT DIMMER)	
M	32	1	**9X-2043**	2	SCREW-TRUSS HEAD (M6X1X14-MM)	
	33	1	**9X-9631**	1	SWITCH AS-ROCKER (WORK LIGHTS, FRONT)	
		1	**3E-8814**	1	ACTUATOR-ROCKER	
		1	**3E-8825**	1	LAMP (24-VOLT)	

C-CHANGE FROM PREVIOUS TYPE
M-METRIC PART
Y-SEPARATE ILLUSTRATION

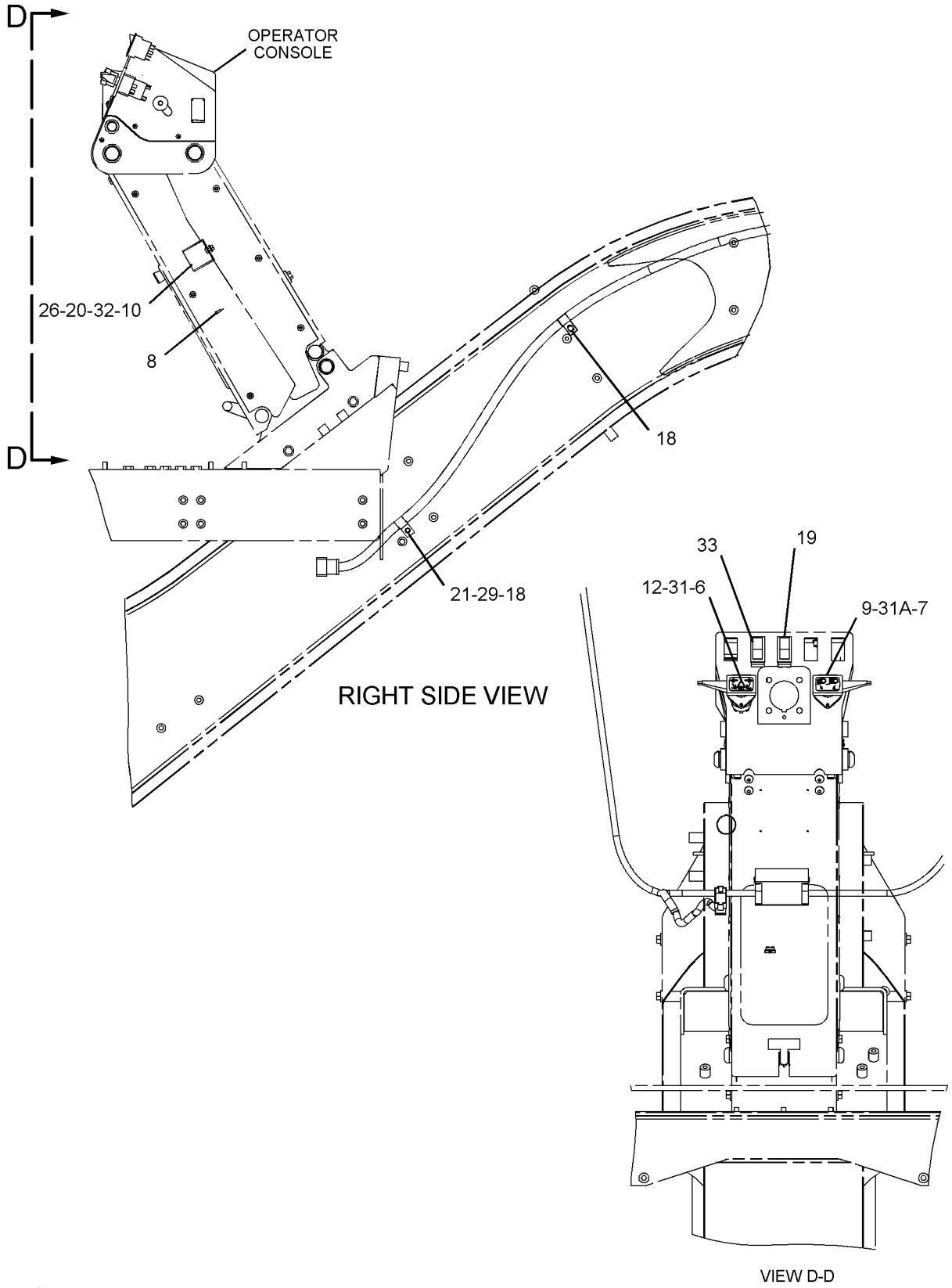

GRAPHIC #1

g01088161

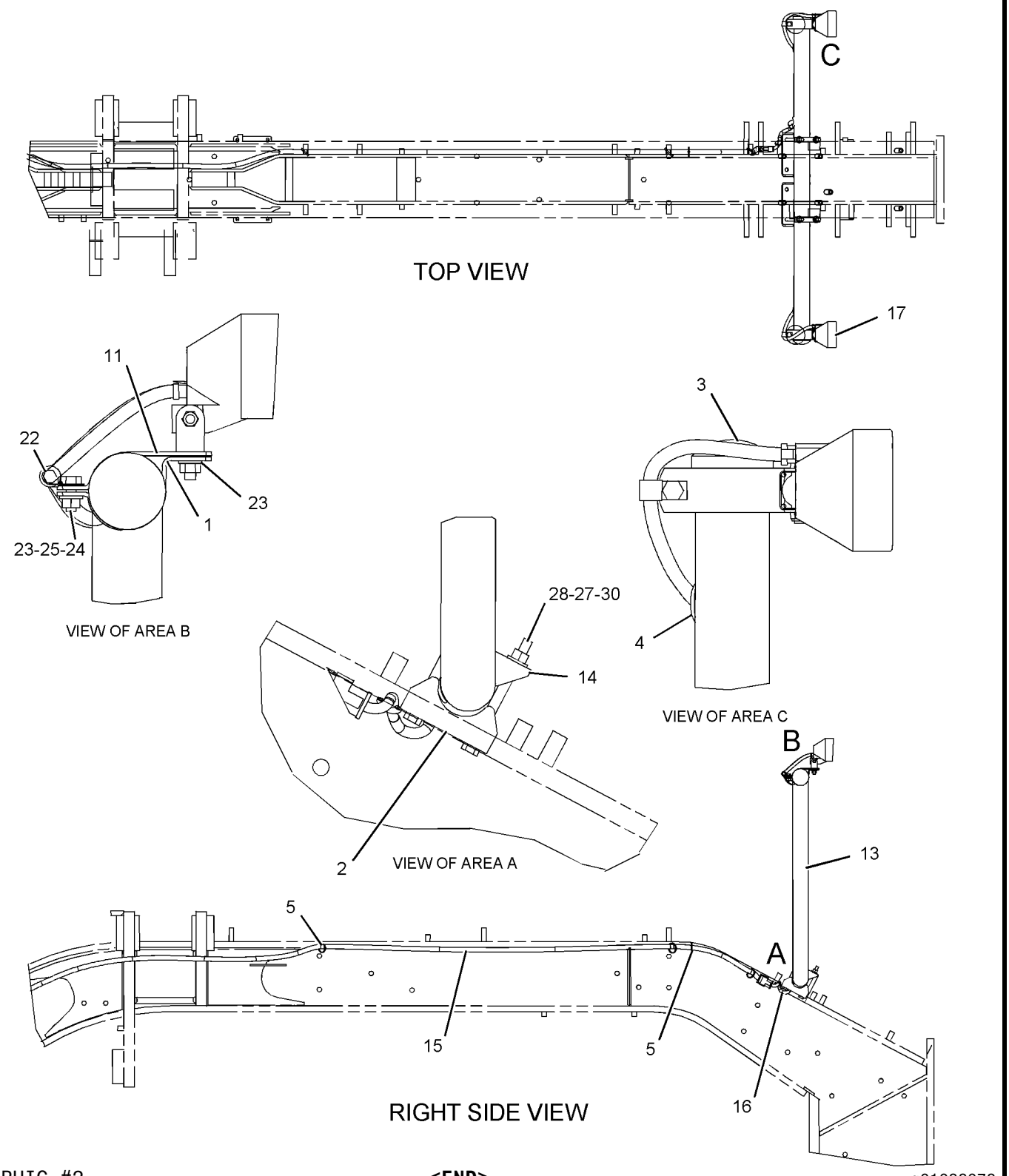

GRAPHIC #2 **<END>** g01088078

188-9324 LIGHTING GP-FLOOD—SNOW—REAR

S/N: CBK1-UP

PART OF 161-0768, 188-9321 LIGHTING AR-FLOOD

AN ATTACHMENT

TYPE 1

SMCS-1434 **i02200289**

NOTE	REF NO	GRAPHIC REF	PART NUMBER	QTY	PART NAME 1 2 3 4 5 6 (PRODUCT LEVEL)	SEE PAGE
	1	1	**9X-9365**	2	BRACKET	
	2	1	**116-5710**	2	GROMMET	
	3	1	**169-3520**	1	HARNESS AS-REAR LIGHTING	
		1	**155-2270**	2	KIT-CONNECTING PLUG (2-PIN)	
					(INCLUDES PLUG ASSEMBLY AND WEDGE)	
		1	**102-8802**	1	KIT-RECEPTACLE (2-PIN)	
					(INCLUDES RECEPTACLE ASSEMBLY AND WEDGE)	
	4	1	**178-8067**	2	BRACKET AS	
Y	5	1	**153-2073**	2	LAMP GP-FLOOD (24-VOLT, VERTICAL MOUNT)	153
M	6	1	**5C-7261**	2	NUT (M8X1.25-THD)	
	7	1	**5K-3294**	4	CLIP	
	8	1	**6V-3265**	6	CLIP	
	9	1	**8T-4121**	12	WASHER-HARD (11X21X2.5-MM THK)	
M	10	1	**8T-4136**	2	BOLT (M10X1.5X25-MM)	
M	11	1	**8T-4137**	10	BOLT (M10X1.5X20-MM)	
	12	1	**8T-4224**	4	WASHER-HARD (8.8X16X2-MM THK)	
M	13	1	**8T-6869**	2	BOLT (M8X1.25X60-MM)	

M-METRIC PART
Y-SEPARATE ILLUSTRATION

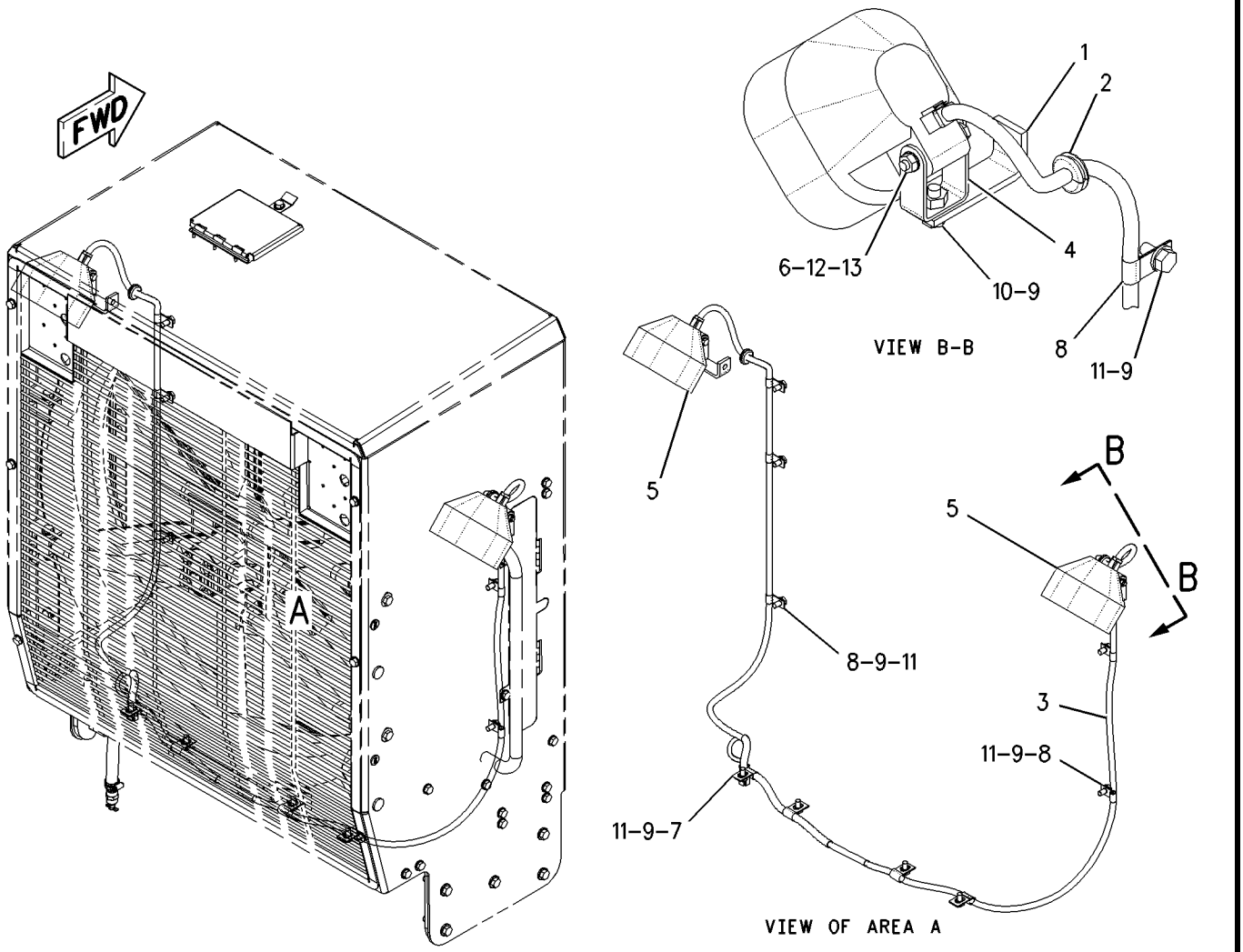

GRAPHIC #1 **<END>** g00844562

188-9324 LIGHTING GP-FLOOD—SNOW—REAR

S/N: CBK1-UP

PART OF 161-0768, 188-9321 LIGHTING AR-FLOOD

AN ATTACHMENT

TYPE 2

SMCS-1434 **i02200290**

NOTE	REF NO	GRAPHIC REF	PART NUMBER	QTY	PART NAME 1 2 3 4 5 6 (PRODUCT LEVEL)	SEE PAGE
	1	1	**9X-9365**	2	BRACKET	
	2	1	**116-5710**	2	GROMMET	
	3	1	**169-3520**	1	HARNESS AS-REAR LIGHTING	
		1	**155-2270**	2	KIT-CONNECTING PLUG (2-PIN)	
					(EACH INCLUDES PLUG ASSEMBLY & WEDGE)	
		1	**102-8802**	1	KIT-RECEPTACLE (2-PIN)	
					(INCLUDES RECEPTACLE ASSEMBLY & WEDGE)	
Y	4	1	**234-4323**	2	LAMP GP-FLOOD (24-VOLT, VERTICAL MOUNT) (REAR)	154
	5	1	**5K-3294**	4	CLIP	
	6	1	**6V-3265**	6	CLIP	
	7	1	**8T-4121**	12	WASHER-HARD (11X21X2.5-MM THK)	
M	8	1	**8T-4137**	10	BOLT (M10X1.5X20-MM)	

M-METRIC PART
Y-SEPARATE ILLUSTRATION

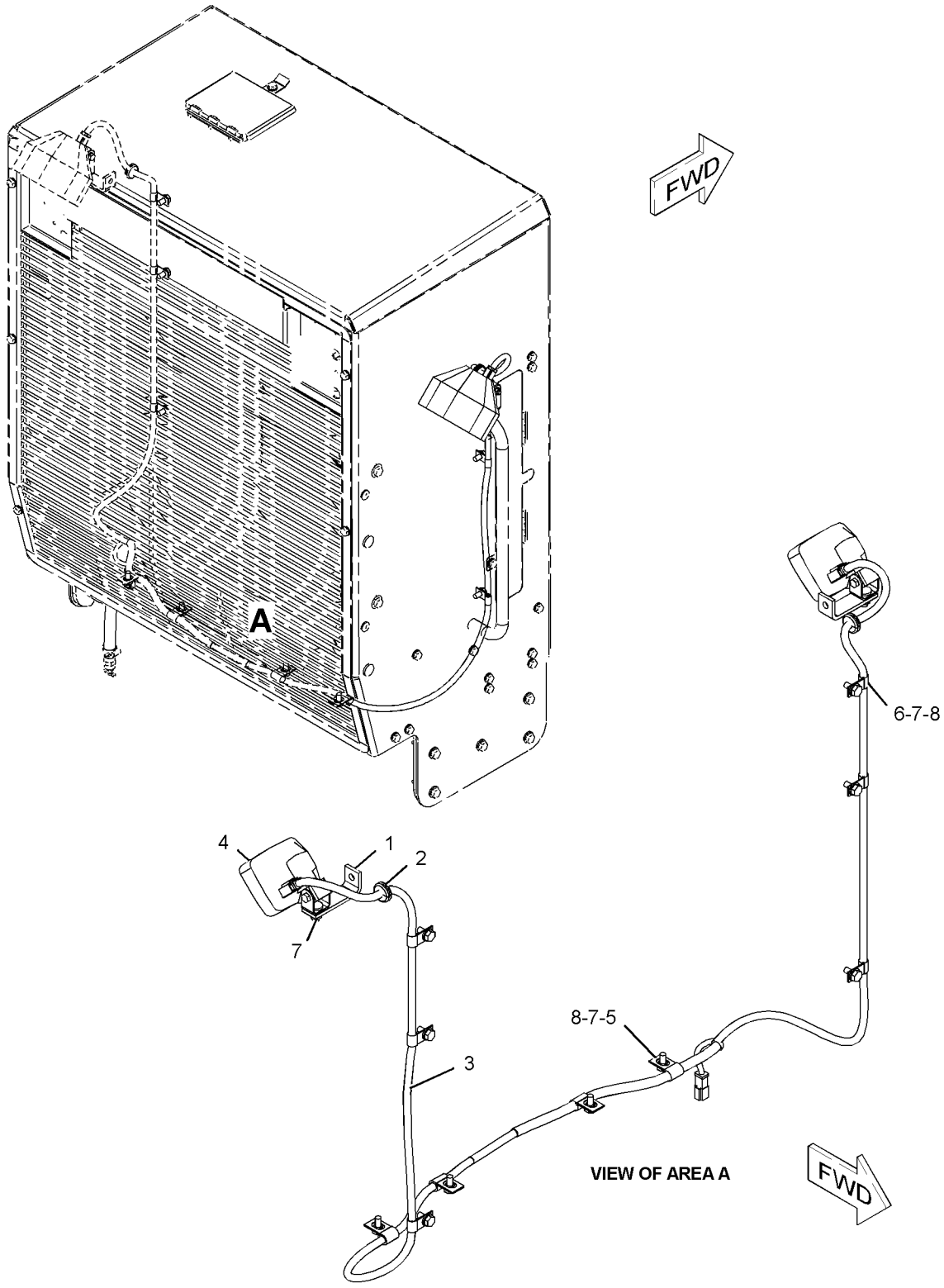

GRAPHIC #1 **<END>** g01092773

196-8532 LIGHTING GP-FLOOD—MOLDBOARD

S/N: CBK1-UP
PART OF 203-6536, 204-6109 LIGHTING AR-FLOOD
AN ATTACHMENT
TYPE 1

SMCS-1434 **i02200286**

NOTE	REF NO	GRAPHIC REF	PART NUMBER	QTY	PART NAME 1 2 3 4 5 6 (PRODUCT LEVEL)	SEE PAGE
	2	1	**169-3147**	1	HARNESS AS-CHASSIS	
		1	**102-8802**	4	KIT-RECEPTACLE (2-PIN)	
		1	**102-8803**	1	KIT-RECEPTACLE (3-PIN)	
					(EACH INCLUDES RECEPTACLES AS & WEDGE)	
	3	1	**183-9606**	2	BRACKET	
	4	1	**033-8248**	5	CLIP	
Y	5	1	**153-2073**	2	LAMP GP-FLOOD (24-VOLT, VERTICAL MOUNT)	153
	6	1	**4D-9517**	1	CLIP	
M	7	1	**5C-7261**	2	NUT (M8X1.25-THD)	
	8	1	**5P-8167**	3	BOLT (3/8-16X0.625-IN)	
	9	1	**8M-2770**	1	CLIP	
	10	1	**8T-4224**	2	WASHER-HARD (8.8X16X2-MM THK)	
	11	1	**8T-4896**	3	WASHER-HARD (10.2X18.5X2.5-MM THK)	
M	12	1	**8T-6869**	2	BOLT (M8X1.25X60-MM)	

M-METRIC PART
Y-SEPARATE ILLUSTRATION

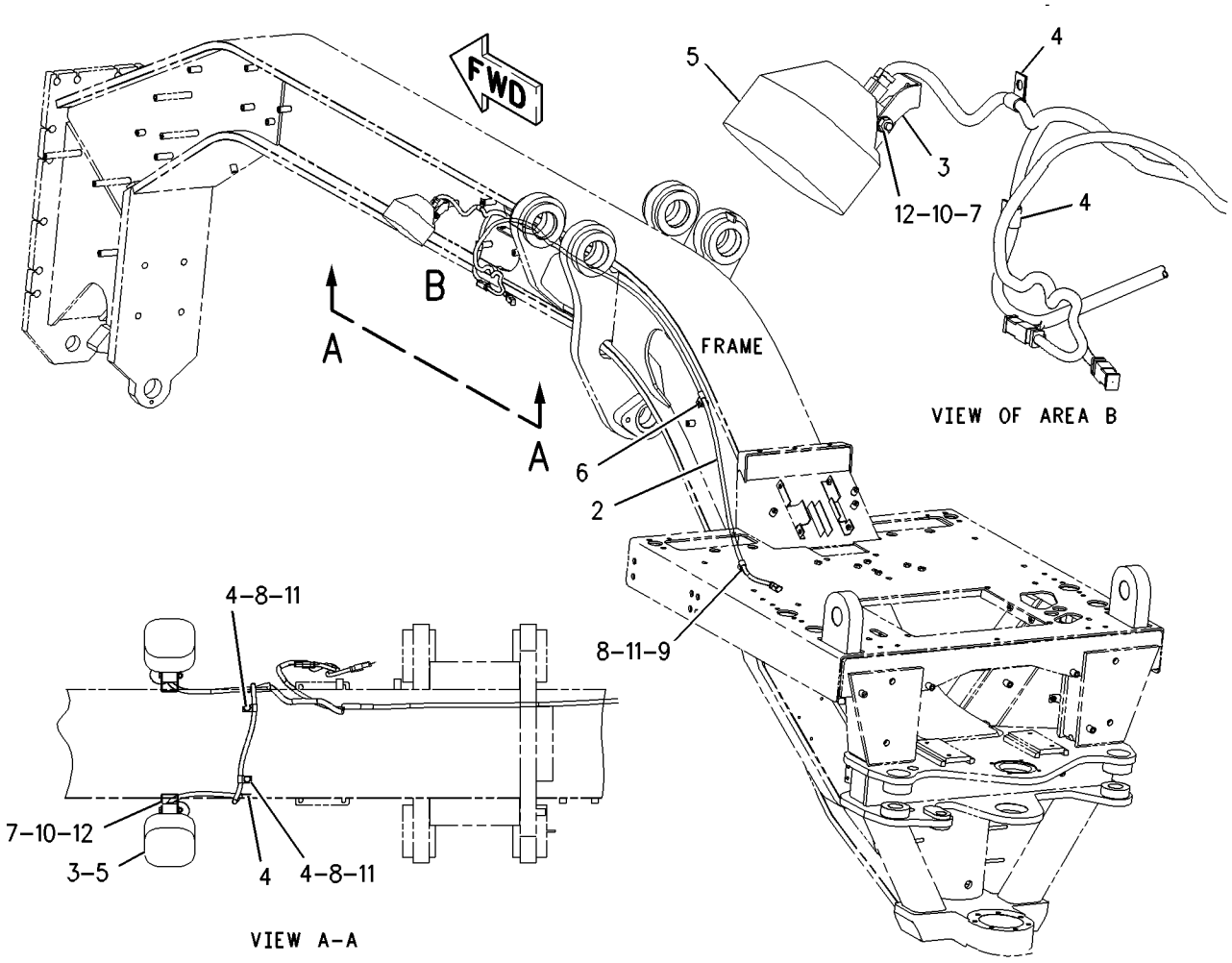

GRAPHIC #1 **<END>** g00890532

196-8532 LIGHTING GP-FLOOD—MOLDBOARD

S/N: CBK1-UP
PART OF 203-6536, 204-6109 LIGHTING AR-FLOOD
AN ATTACHMENT
TYPE 2

SMCS-1434 **i02102329**

NOTE	REF NO	GRAPHIC REF	PART NUMBER	QTY	PART NAME 1 2 3 4 5 6 (PRODUCT LEVEL)	SEE PAGE
	1	1	**9L-1566**	2	SUPPORT	
	3	1	**169-3147**	1	HARNESS AS-CHASSIS (MOLDBOARD)	
		1	**155-2270**	4	KIT-CONNECTING PLUG (2-PIN)	
					(INCLUDES PLUG AS & WEDGE)	
		1	**102-8802**	4	KIT-RECEPTACLE (2-PIN)	
		1	**102-8803**	1	KIT-RECEPTACLE (3-PIN)	
					(INCLUDES RECEPTACLE AS & WEDGE)	
Y	4	1	**234-4325**	2	LAMP GP-FLOOD (24-VOLT, SUSPENDED MOUNT)	156
	5	1	**033-8248**	5	CLIP	
	6	1	**147-0385**	2	CLIP	
	7	1	**5P-8167**	3	BOLT (3/8-16X0.625-IN)	
	8	1	**5S-7379**	2	BOLT (3/8-16X0.875-IN)	
	9	1	**8T-4121**	4	WASHER-HARD (11X21X2.5-MM THK)	
	10	1	**8T-4896**	3	WASHER-HARD (10.2X18.5X2.5-MM THK)	

Y-SEPARATE ILLUSTRATION

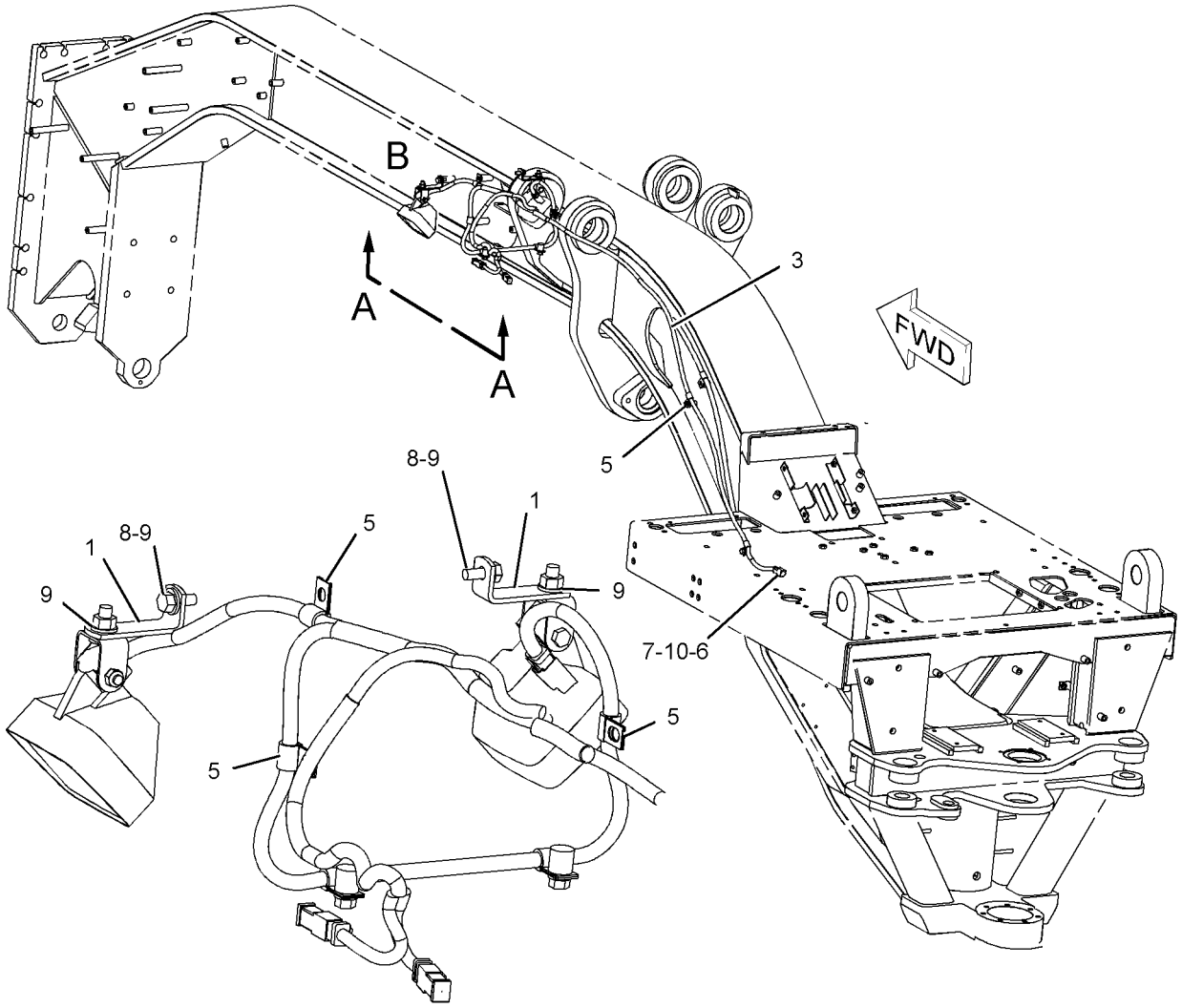

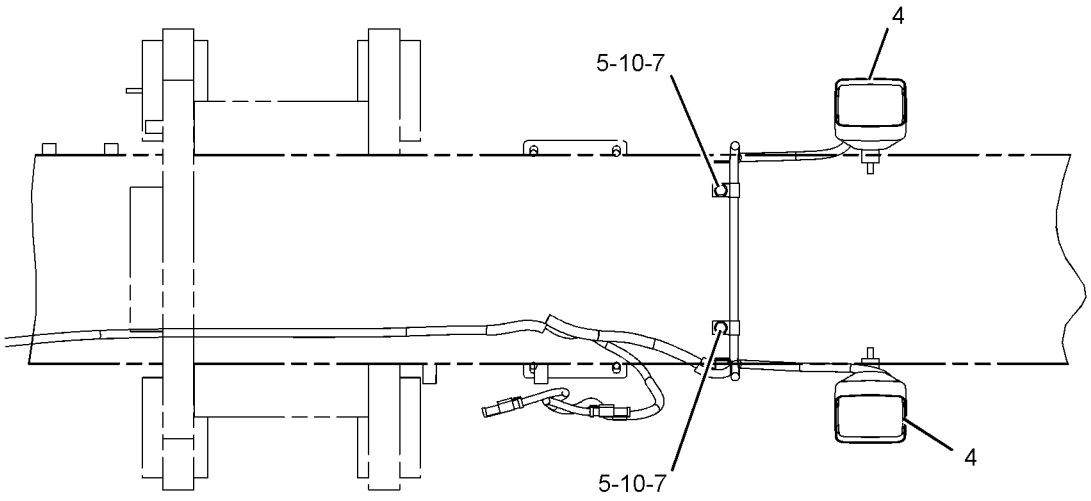

GRAPHIC #1 **<END>** g01075816

196-8559 LIGHTING GP-FLOOD–CAB–SNOW–RH

S/N: CBK1-UP
PART OF 221-5368 LIGHTING GP-FLOOD
AN ATTACHMENT
TYPE 1

SMCS-1434 **i02204124**

NOTE	REF NO	GRAPHIC REF	PART NUMBER	QTY	PART NAME 1 2 3 4 5 6 (PRODUCT LEVEL)	SEE PAGE
	1	1	**3E-0109**	5	PLUG (ROCKER SWITCH)	
	2	1	**3S-2093**	2	STRAP-CABLE	
	3	1	**9W-1442**	1	FUSE (10-AMPERE)	
	4	1	**145-3350**	1	PLATE	
B	5	1	**153-2147**	1	PLATE	
	6	1	**171-6175**	1	HARNESS AS-FRONT LIGHTING	
		1	**155-2270**	1	KIT-CONNECTING PLUG (2-PIN)	
					(INCLUDES PLUG AS & WEDGE)	
		1	**102-8802**	1	KIT-RECEPTACLE (2-PIN)	
					(INCLUDES RECEPTACLE AS & WEDGE)	
	7	1	**172-6556**	1	PANEL	
	8	1	**188-3862**	1	BRACKET AS	
	9	1	**190-1680**	1	BRACKET	
	10	1	**196-8557**	1	HARNESS AS-CAB	
		1	**155-2255**	1	KIT-CONNECTING PLUG (12-PIN)	
		1	**155-2265**	4	KIT-CONNECTING PLUG (8-PIN)	
		1	**155-2270**	4	KIT-CONNECTING PLUG (2-PIN)	
		1	**155-2271**	1	KIT-CONNECTING PLUG (4-PIN)	
					(EACH INCLUDES PLUG AS & WEDGE)	
		1	**102-8802**	1	KIT-RECEPTACLE (2-PIN)	
		1	**102-8804**	2	KIT-RECEPTACLE (4-PIN)	
		1	**102-8806**	1	KIT-RECEPTACLE (8-PIN)	
		1	**102-8801**	1	KIT-RECEPTACLE (12-PIN)	
					(EACH INCLUDES RECEPTACLE AS & WEDGE)	
	11	1	**3E-8766**	1	SWITCH AS (24-VOLT) (CAB-RH FLOOD)	
		1	**3E-8782**	1	ACTUATOR-ROCKER	
		1	**3E-8825**	1	LAMP (24-VOLT)	
Y	12	1	**153-2073**	1	LAMP GP-FLOOD (24-VOLT, VERTICAL MOUNT) (CAB-RH)	153
	13	1	**116-5710**	1	GROMMET	
	14	1	**5P-8439**	1	GROMMET	
M	15	1	**6V-9189**	1	LOCKNUT (M8X1.25-THD)	
	16	1	**8T-4224**	1	WASHER-HARD (8.8X16X2-MM THK)	
M	17	1	**8T-6869**	1	BOLT (M8X1.25X60-MM)	
M	18	1	**9X-2043**	6	SCREW-TRUSS HEAD (M6X1X14-MM)	

B-USE AS REQUIRED
M-METRIC PART
Y-SEPARATE ILLUSTRATION

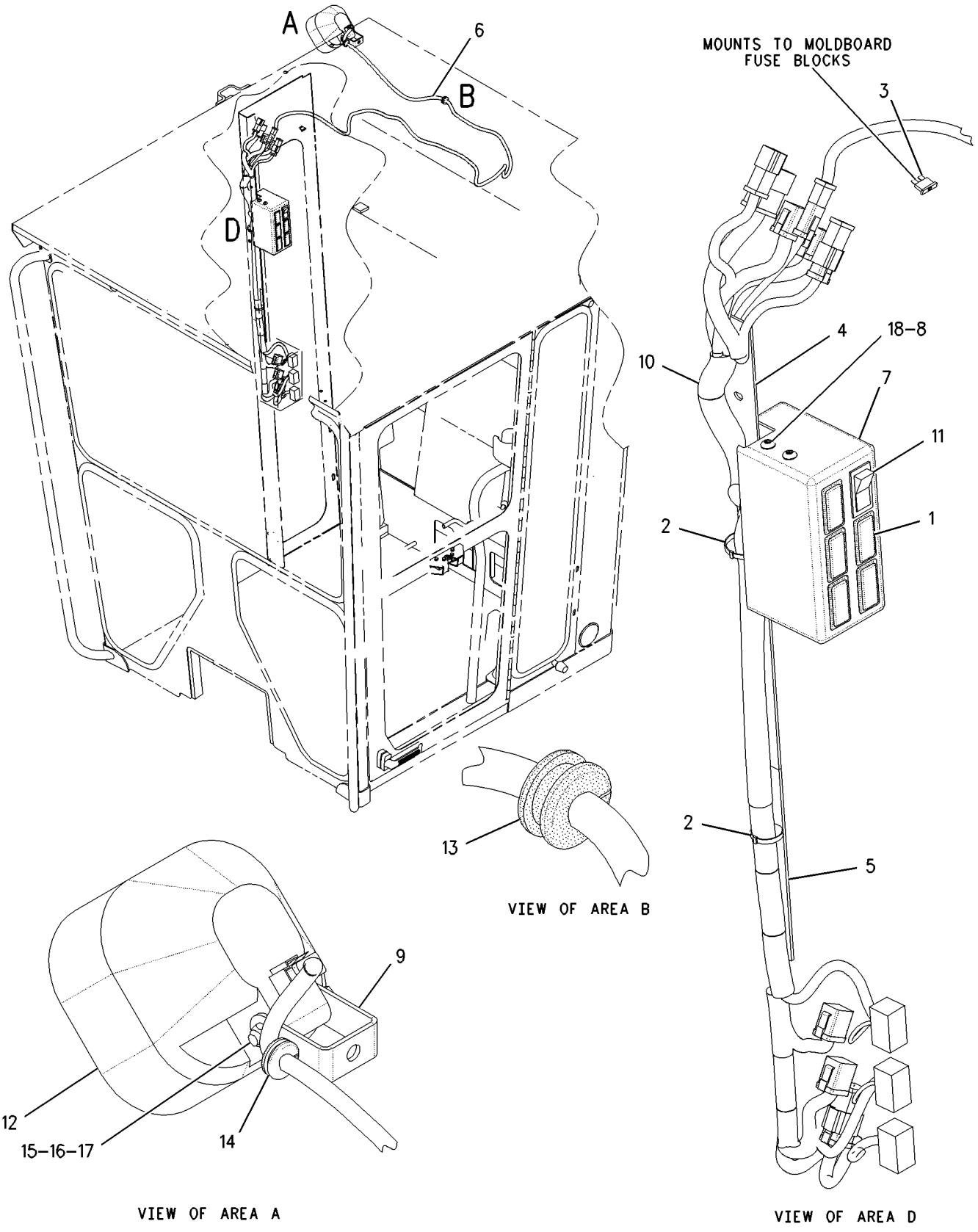

GRAPHIC #1 **<END>** g00917517

196-8559 LIGHTING GP-FLOOD—CAB—SNOW—RH

S/N: CBK1-UP
PART OF 221-5368 LIGHTING GP-FLOOD
AN ATTACHMENT
TYPE 2

SMCS-1434 **i02204125**

NOTE	REF NO	GRAPHIC REF	PART NUMBER	QTY	PART NAME 1 2 3 4 5 6 (PRODUCT LEVEL)	SEE PAGE
	1	1	**3E-0109**	5	PLUG (ROCKER SWITCH)	
	2	1	**3S-2093**	2	STRAP-CABLE	
C	3	1	**9L-1566**	1	SUPPORT	
	4	1	**9W-1442**	1	FUSE (10-AMPERE)	
	5	1	**116-5710**	1	GROMMET	
	6	1	**145-3350**	1	PLATE	
B	7	1	**153-2147**	1	PLATE	
	8	1	**171-6175**	1	HARNESS AS-FRONT LIGHTING	
		1	**155-2270**	1	KIT-CONNECTING PLUG (2-PIN)	
					(INCLUDES PLUG AS & WEDGE)	
		1	**102-8802**	1	KIT-RECEPTACLE (2-PIN)	
					(INCLUDES RECEPTACLE AS & WEDGE)	
	9	1	**172-6556**	1	PANEL	
	10	1	**188-3862**	1	BRACKET AS	
	11	1	**196-8557**	1	HARNESS AS-CAB	
		1	**155-2255**	1	KIT-CONNECTING PLUG (12-PIN)	
		1	**155-2265**	4	KIT-CONNECTING PLUG (8-PIN)	
		1	**155-2270**	4	KIT-CONNECTING PLUG (2-PIN)	
		1	**155-2271**	1	KIT-CONNECTING PLUG (4-PIN)	
					(EACH INCLUDES PLUG AS & WEDGE)	
		1	**102-8802**	1	KIT-RECEPTACLE (2-PIN)	
		1	**102-8804**	2	KIT-RECEPTACLE (4-PIN)	
		1	**102-8806**	1	KIT-RECEPTACLE (8-PIN)	
		1	**102-8801**	1	KIT-RECEPTACLE (12-PIN)	
					(EACH INCLUDES RECEPTACLE AS & WEDGE)	
CY	12	1	**234-4323**	1	LAMP GP-FLOOD (24-VOLT, VERTICAL MOUNT) (CAB-RH)	154
	13	1	**3E-8766**	1	SWITCH AS (24-VOLT) (CAB-RH FLOOD)	
			3E-8782	1	ACTUATOR-ROCKER	
			3E-8825	1	LAMP (24-VOLT)	
	14	1	**5P-8439**	1	GROMMET	
C	15	1	**8T-4121**	1	WASHER-HARD (11X21X2.5-MM THK)	
M	16	1	**9X-2043**	6	SCREW-TRUSS HEAD (M6X1X14-MM)	

B-USE AS REQUIRED
C-CHANGE FROM PREVIOUS TYPE
M-METRIC PART
Y-SEPARATE ILLUSTRATION

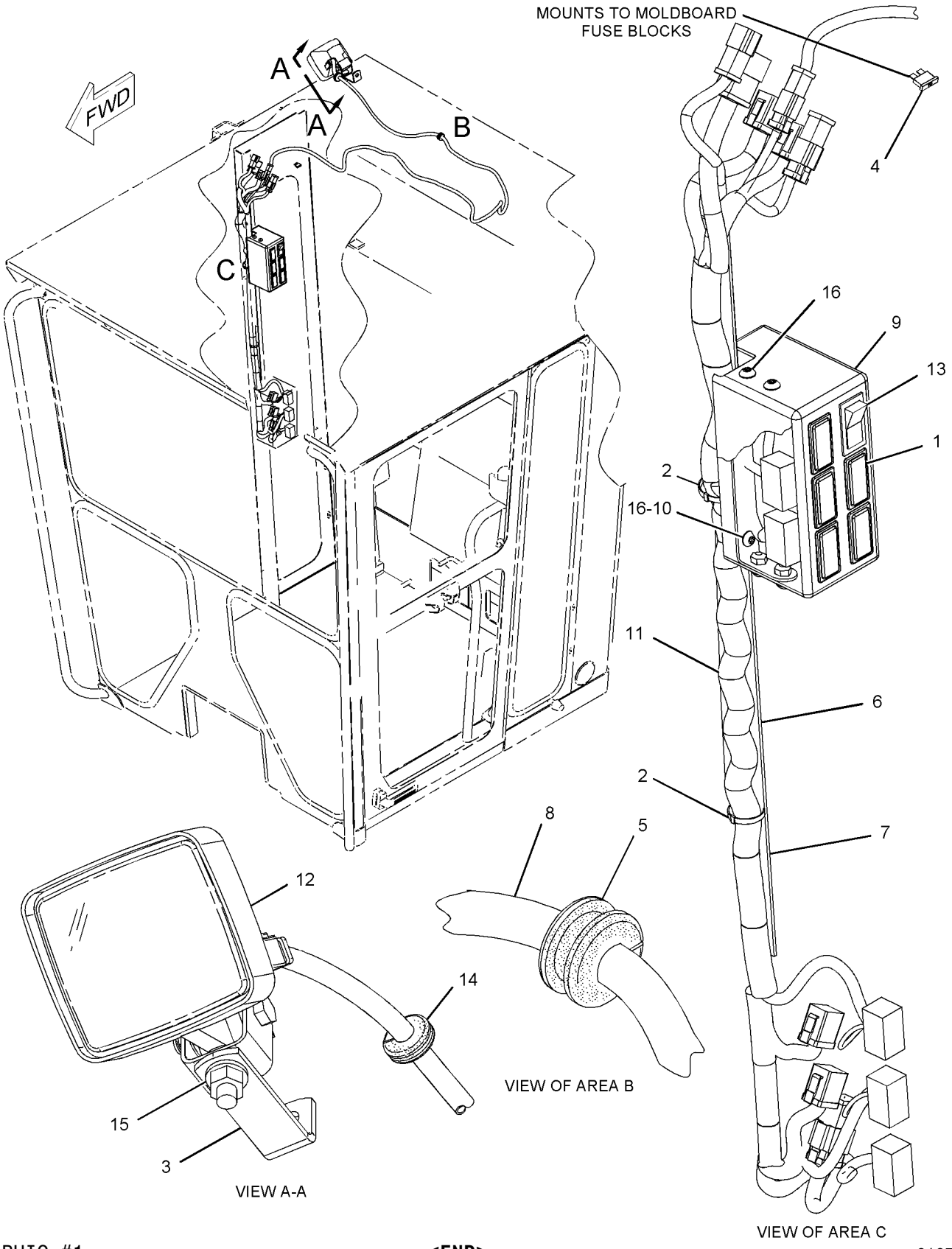

GRAPHIC #1 **<END>** g01070388

203-7620 LIGHTING GP-FLOOD—BOLSTER

S/N: CBK1-UP

AN ATTACHMENT

SMCS-1434 **i01683969**

NOTE	PART NUMBER	QTY	PART NAME 1 2 3 4 5 6 (PRODUCT LEVEL)	SEE PAGE
Y	**203-7625**	1	LAMP GP-HEAD (LH)	160
Y	**203-7626**	1	LAMP GP-HEAD (RH)	162

Y-SEPARATE ILLUSTRATION

<END>

221-5368 LIGHTING GP-FLOOD

S/N: CBK1-UP

AN ATTACHMENT

SMCS-1434 **i01835680**

NOTE	REF NO	GRAPHIC REF	PART NUMBER	QTY	PART NAME 1 2 3 4 5 6 (PRODUCT LEVEL)	SEE PAGE
	1	1	**106-8704**	1	SUPPRESSOR AS-ARC	
		1	**3E-3365**	1	WEDGE-RECEPTACLE LOCK (2 PIN)	
		1	**186-3735**	2	PIN-CONNECTOR	
		1	**102-8802**	1	KIT-RECEPTACLE (2 PIN)	
					(INCLUDES RECEPTACLE AS & WEDGE)	
Y	2	1	*196-8559*	1	LIGHTING GP-FLOOD (CAB)(RH)	222

Y-SEPARATE ILLUSTRATION

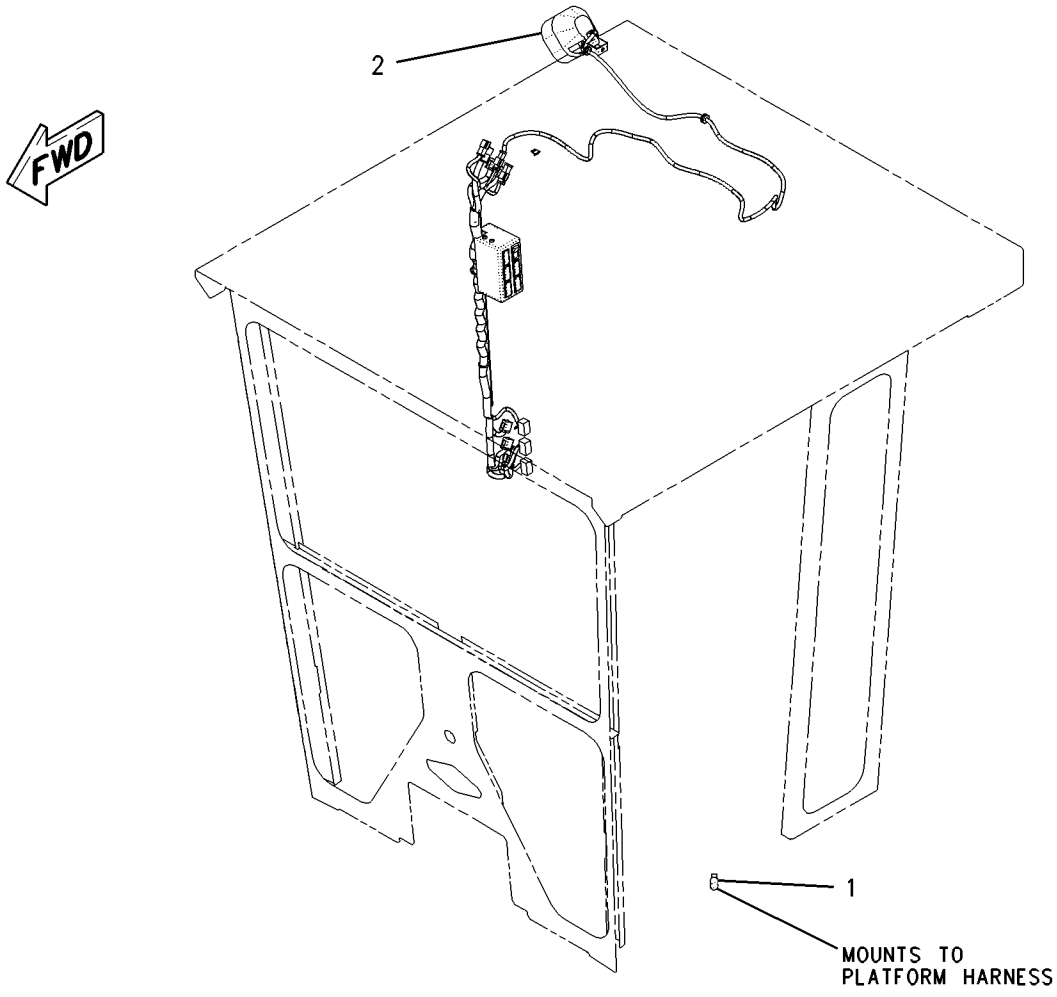

GRAPHIC #1 **<END>** g00915219

211-1520 LIGHTING GP-ROADING—CAB POSITION LAMP—EU

S/N: CBK1-UP
PART OF 197-5572 ROADING AR
AN ATTACHMENT

SMCS-1429 **i02204135**

NOTE	REF NO	GRAPHIC REF	PART NUMBER	QTY	PART NAME 1 2 3 4 5 6 (PRODUCT LEVEL)	SEE PAGE
Y	1	1	**212-3924**	2	LAMP GP-MARKER	168
	2	1	**130-5300**	2	CLIP	
M	3	1	**5C-2874**	4	NUT (M5X0.8-THD)	
	4	1	**8T-4121**	2	WASHER-HARD (11X21X2.5-MM THK)	
M	5	1	**8T-4137**	2	BOLT (M10X1.5X20-MM)	
	6	1	**8T-4205**	4	WASHER-HARD (7.2X14.5X2-MM THK)	

M-METRIC PART
Y-SEPARATE ILLUSTRATION

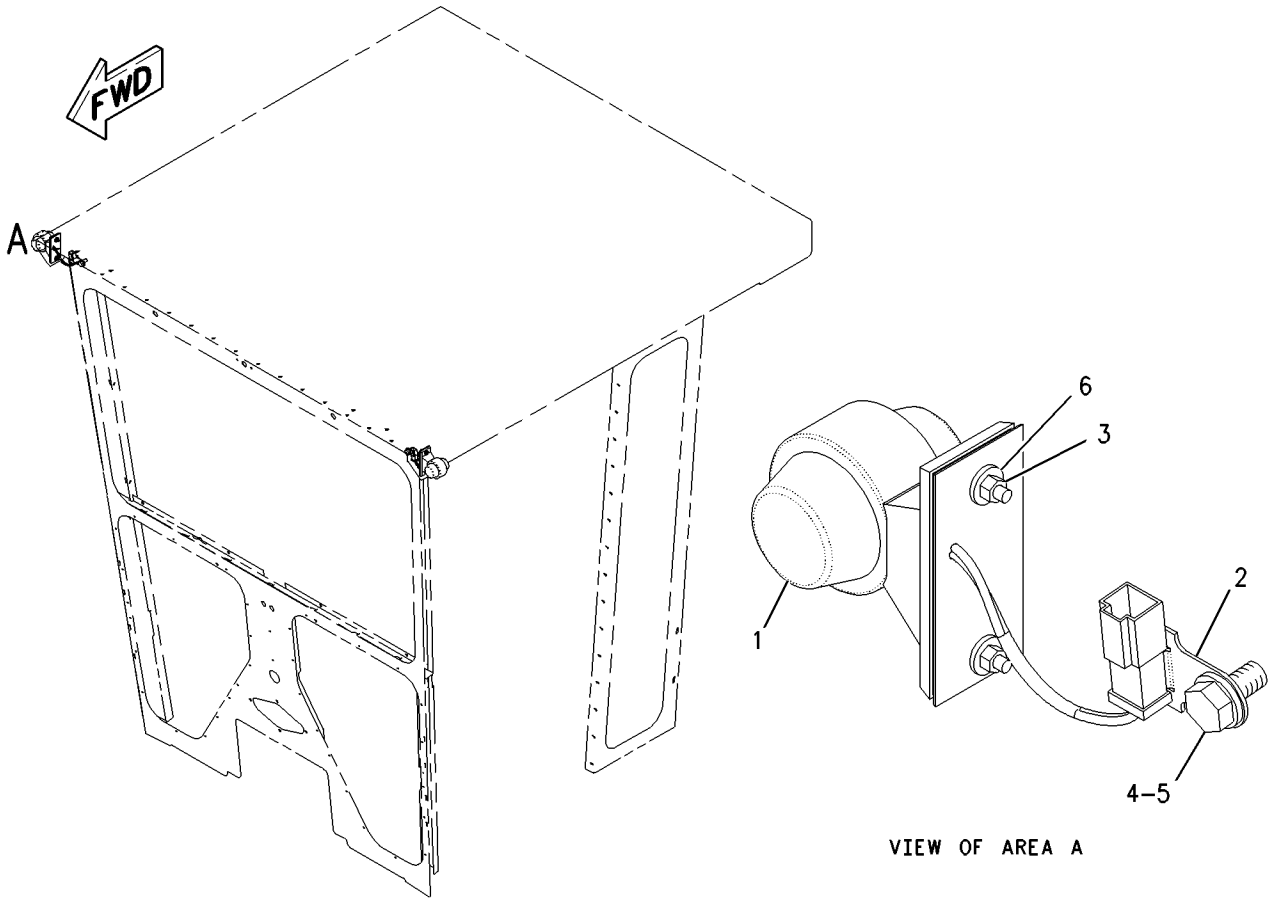

VIEW OF AREA A

GRAPHIC #1 **<END>** g00892028

188-9331 LIGHTING GP-SIGNAL–REAR TURN LAMPS

S/N: CBK1-248

PART OF 188-9328 LIGHTING AR-FLOOD, 161-0770, 161-0771, 179-1548 LIGHTING AR-FLOOD & SIGNAL AN ATTACHMENT

SMCS-1430 **i02204137**

NOTE	REF NO	GRAPHIC REF	PART NUMBER	QTY	PART NAME 1 2 3 4 5 6 (PRODUCT LEVEL)	SEE PAGE
Y	1	1	**135-0427**	2	LAMP GP-SIGNAL (24-VOLT) (PARK, TURN)	171
M	2	1	**5C-2890**	6	NUT (M6X1-THD)	
	3	1	**8T-4224**	6	WASHER-HARD (8.8X16X2-MM THK)	

M-METRIC PART
Y-SEPARATE ILLUSTRATION

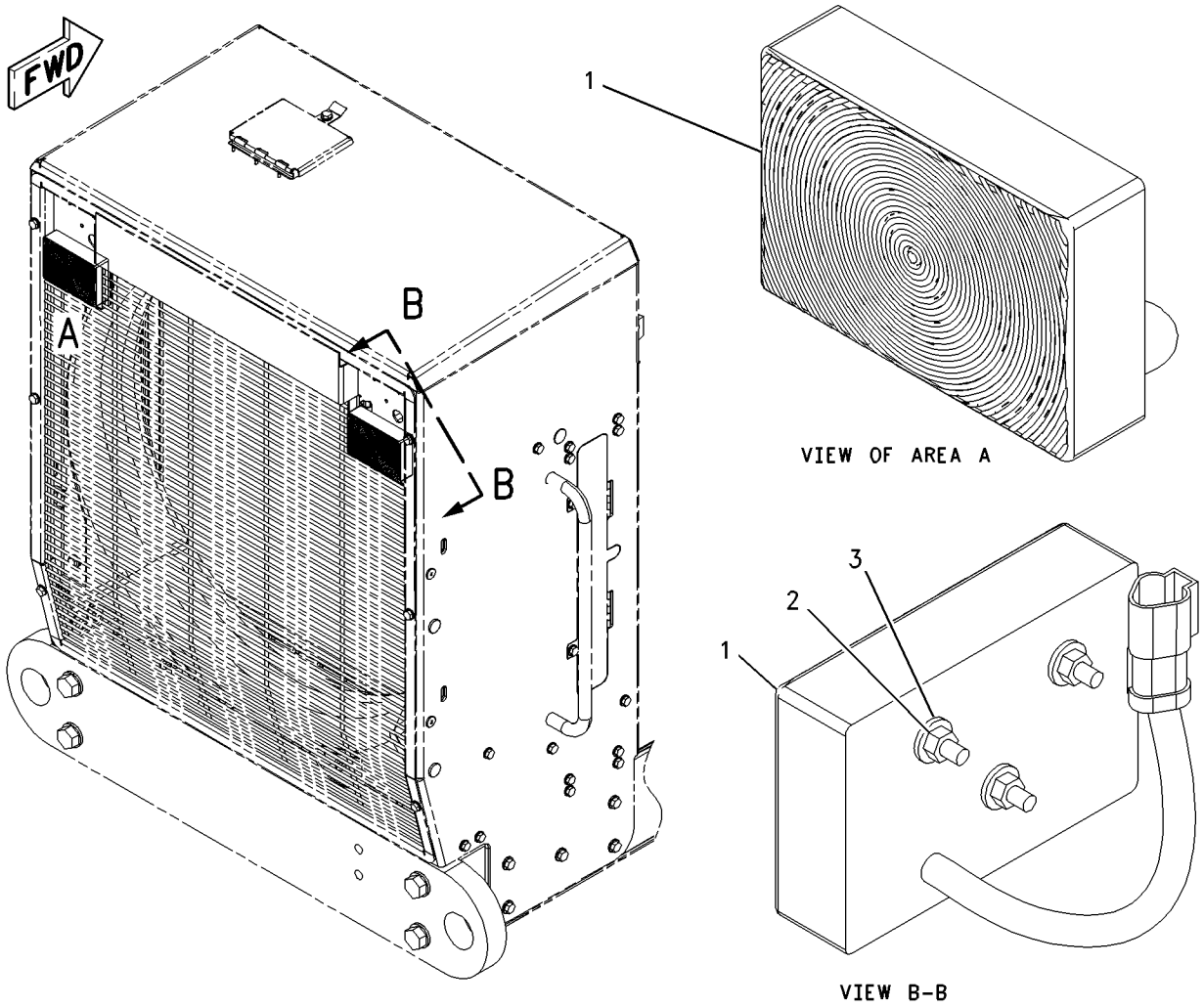

GRAPHIC #1 **<END>** g00843802

188-9331 LIGHTING GP-SIGNAL–REAR TURN LAMPS

S/N: CBK249-UP

PART OF 188-9328 LIGHTING AR-FLOOD, 161-0770, 161-0771, 179-1548 LIGHTING AR-FLOOD & SIGNAL

AN ATTACHMENT

SMCS-1430 **i02204141**

NOTE	REF NO	GRAPHIC REF	PART NUMBER	QTY	PART NAME 1 2 3 4 5 6 (PRODUCT LEVEL)	SEE PAGE
CY	1	1	**199-3368**	2	LAMP GP-SIGNAL (24-VOLT) (PARK, TURN)	172
M	2	1	**5C-2890**	6	NUT (M6X1-THD)	
	3	1	**8T-4224**	6	WASHER-HARD (8.8X16X2-MM THK)	

C-CHANGE FROM PREVIOUS TYPE
M-METRIC PART
Y-SEPARATE ILLUSTRATION

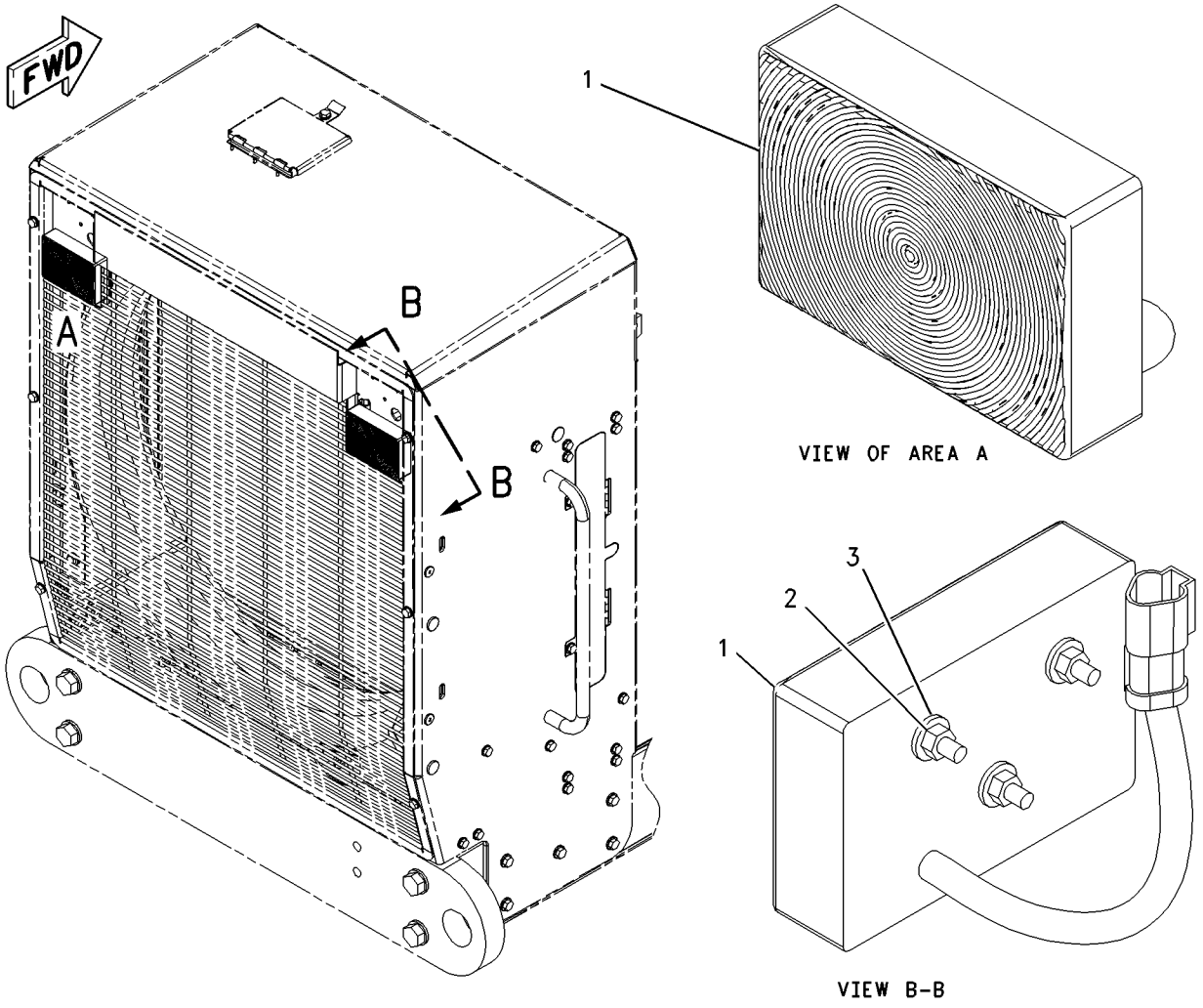

GRAPHIC #1 **<END>** g00843802

161-0773 LIGHTING GP-WARNING–ROTATING

S/N: CBK1-UP

AN ATTACHMENT

SMCS-1429, 1431 **i02204140**

NOTE	REF NO	GRAPHIC REF	PART NUMBER	QTY	PART NAME 1 2 3 4 5 6 (PRODUCT LEVEL)	SEE PAGE
	1	1	**9W-1442**	1	FUSE (10-AMPERE)	
Y	2	1	**233-4253**	1	LIGHTING GP-WARNING	234

Y-SEPARATE ILLUSTRATION

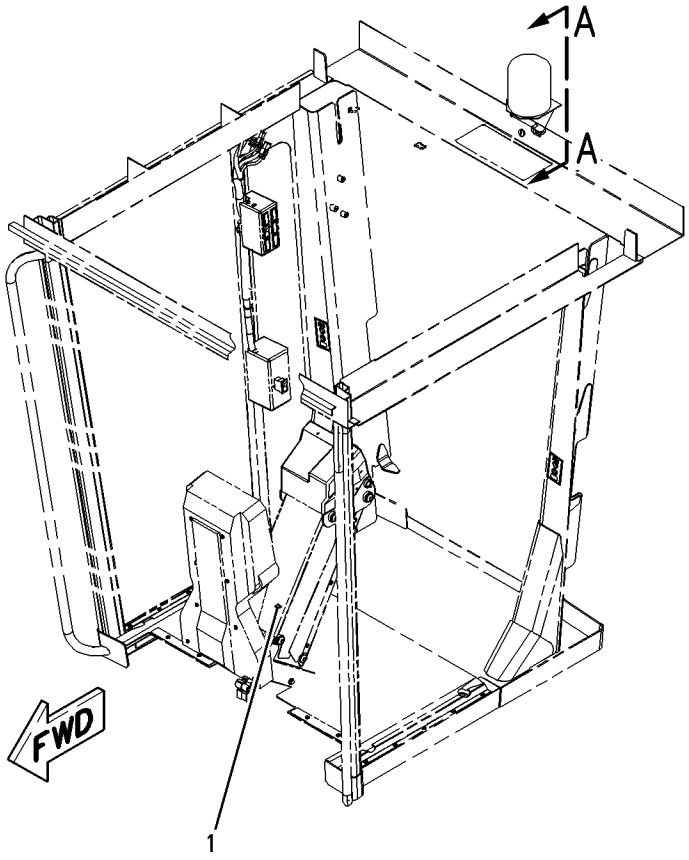

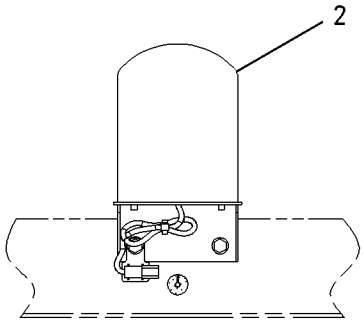

VIEW A–A

GRAPHIC #1 **<END>** g01005309

161-0774 LIGHTING GP-WARNING—ROTATING

S/N: CBK1-UP

AN ATTACHMENT

SMCS-1429, 1431 **i01990760**

NOTE	REF NO	GRAPHIC REF	PART NUMBER	QTY	PART NAME 1 2 3 4 5 6 (PRODUCT LEVEL)	SEE PAGE
	1	1	**9W-1442**	1	FUSE (10-AMPERE) (WARNING BEACON)	
Y	2	1	*239-9354*	1	LIGHTING GP-WARNING BEACON	236

Y-SEPARATE ILLUSTRATION

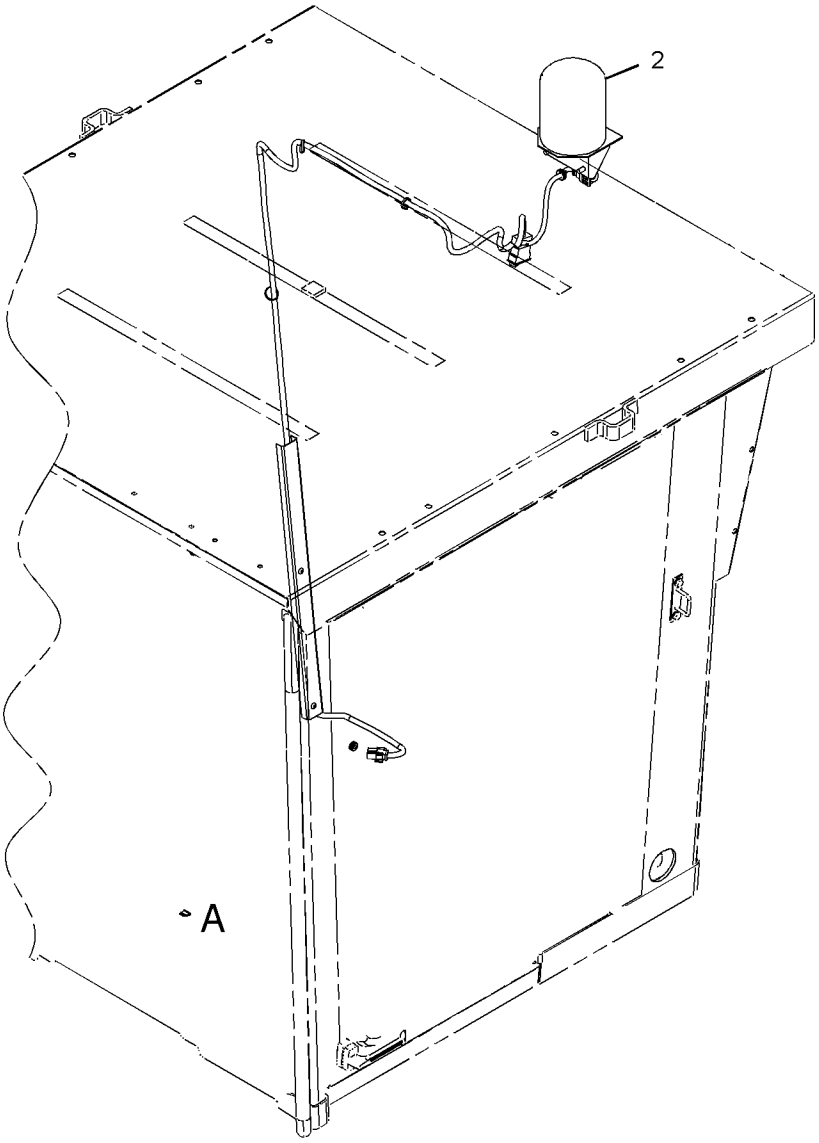

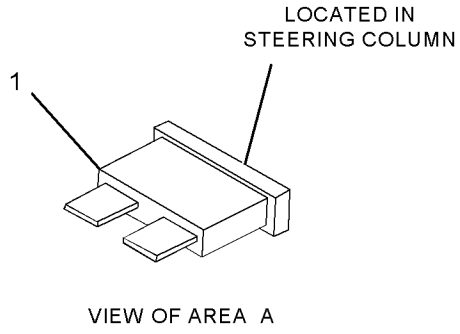

VIEW OF AREA A

GRAPHIC #1 **<END>** g01035618

233-4253 LIGHTING GP-WARNING

S/N: CBK1-UP
PART OF 161-0773 LIGHTING GP-WARNING
AN ATTACHMENT
TYPE 1

SMCS-1429, 1431 **i02204179**

NOTE	REF NO	GRAPHIC REF	PART NUMBER	QTY	PART NAME 1 2 3 4 5 6 (PRODUCT LEVEL)	SEE PAGE
	1	1	**3S-2093**	1	STRAP-CABLE	
	2	1	**107-4932**	1	PLATE AS	
Y	3	1	**128-6983**	1	LAMP GP-WARNING BEACON (24-VOLT, AMBER)	173
	4	1	**130-5300**	1	CLIP	
	5	1	**5P-8525**	1	GROMMET	
	6	1	**8T-4121**	2	WASHER-HARD (11X21X2.5-MM THK)	
M	7	1	**8T-4136**	2	BOLT (M10X1.5X25-MM)	
	8	1	**102-9862**	1	SWITCH AS (WARNING BEACON)	
		1	**3E-8822**	1	ACTUATOR-ROCKER	
		1	**3E-8825**	1	LAMP (24-VOLT)	
		1	**165-5674**	1	LAMP-LED (LED)	

M-METRIC PART
Y-SEPARATE ILLUSTRATION

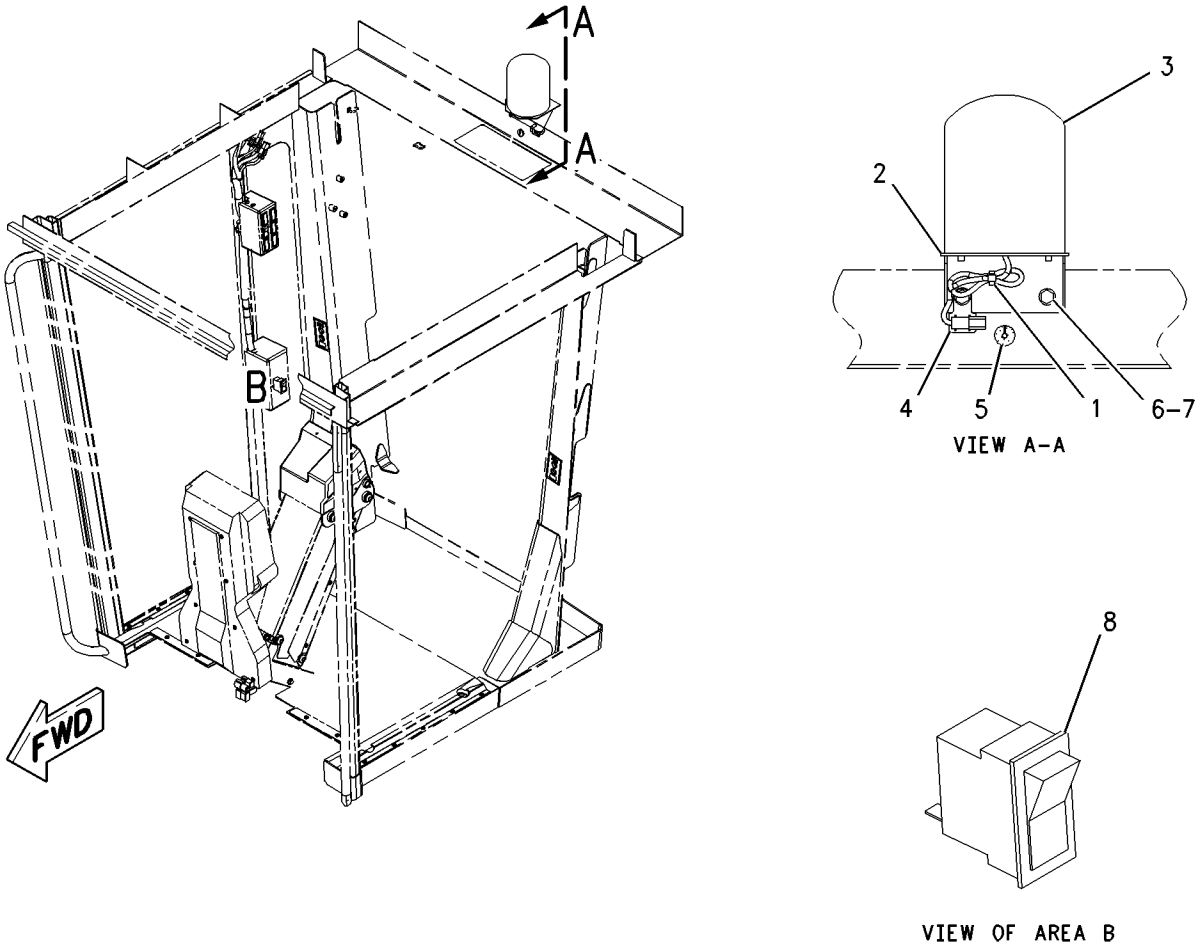

GRAPHIC #1 **<END>** g01005314

233-4253 LIGHTING GP-WARNING

S/N: CBK1-UP
PART OF 161-0773 LIGHTING GP-WARNING
AN ATTACHMENT
TYPE 2

SMCS-1429, 1431 **i02204180**

NOTE	REF NO	GRAPHIC REF	PART NUMBER	QTY	PART NAME 1 2 3 4 5 6 (PRODUCT LEVEL)	SEE PAGE
	1	1	**3S-2093**	1	STRAP-CABLE	
	2	1	**107-4932**	1	PLATE AS	
CY	3	1	**235-3937**	1	LAMP GP-WARNING BEACON (24-VOLT, AMBER)	174
	4	1	**130-5300**	1	CLIP	
	5	1	**5P-8525**	1	GROMMET	
	6	1	**8T-4121**	2	WASHER-HARD (11X21X2.5-MM THK)	
M	7	1	**8T-4136**	2	BOLT (M10X1.5X25-MM)	
	8	1	**102-9862**	1	SWITCH AS (WARNING BEACON)	
		1	**3E-8822**	1	ACTUATOR-ROCKER	
		1	**3E-8825**	1	LAMP (24-VOLT)	
		1	**165-5674**	1	LAMP-LED (LED)	

C-CHANGE FROM PREVIOUS TYPE
M-METRIC PART
Y-SEPARATE ILLUSTRATION

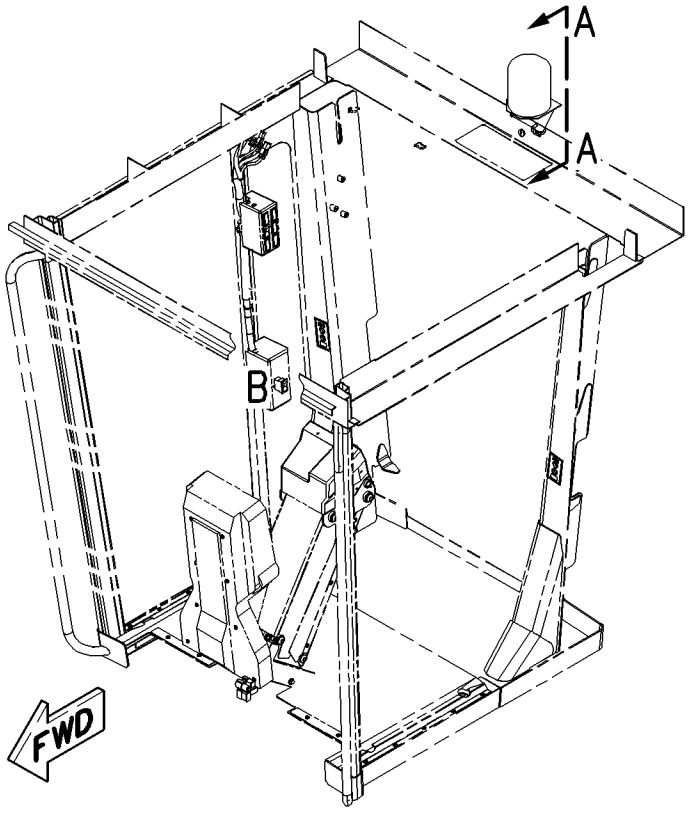

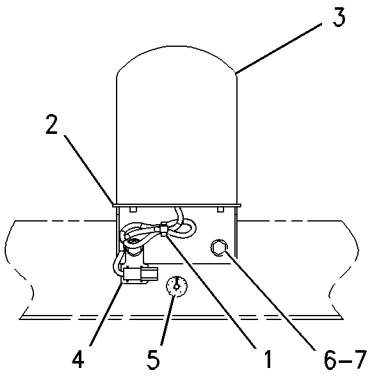

VIEW A-A

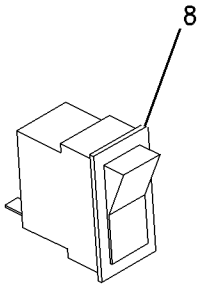

VIEW OF AREA B

GRAPHIC #1 **<END>** g01005314

ELECTRICAL AND STARTING SYSTEM

239-9354 LIGHTING GP-WARNING BEACON

S/N: CBK1-UP
ROTATING, AMBER, OPEN
PART OF 161-0774 LIGHTING GP-WARNING
AN ATTACHMENT

SMCS-1431 **i02204181**

NOTE	REF NO	GRAPHIC REF	PART NUMBER	QTY	PART NAME 1 2 3 4 5 6 (PRODUCT LEVEL)	SEE PAGE
	1	1	**3S-2093**	6	STRAP-CABLE	
	2	1	**107-4932**	1	PLATE AS	
Y	3	1	**128-6983**	1	LAMP GP-WARNING BEACON (24-VOLT, AMBER)	173
	4	1	**169-3230**	1	HARNESS AS-FRONT LIGHTING	
		1	**102-8804**	1	KIT-RECEPTACLE (4-PIN)	
					(INCLUDES RECEPTACLE AS & WEDGE)	
		1	**155-2270**	1	KIT-CONNECTING PLUG (2-PIN)	
					(INCLUDES PLUG AS & WEDGE)	
	5	1	**173-1885**	1	COVER	
	6	1	**115-3070**	1	CLIP AS-CONNECT (4-PIN)	
	7	1	**130-5300**	1	CLIP	
	8	1	**5P-8525**	1	GROMMET	
	9	1	**8T-4121**	2	WASHER-HARD (11X21X2.5-MM THK)	
M	10	1	**8T-4136**	2	BOLT (M10X1.5X25-MM)	
	11	1	**9D-8508**	1	GROMMET	
M	12	1	**9X-2043**	2	SCREW-TRUSS HEAD (M6X1X14-MM)	
	13	1	**102-9862**	1	SWITCH AS (WARNING BEACON)	
			3E-8822	1	ACTUATOR-ROCKER	
			3E-8825	1	LAMP (24-VOLT)	

M-METRIC PART
Y-SEPARATE ILLUSTRATION

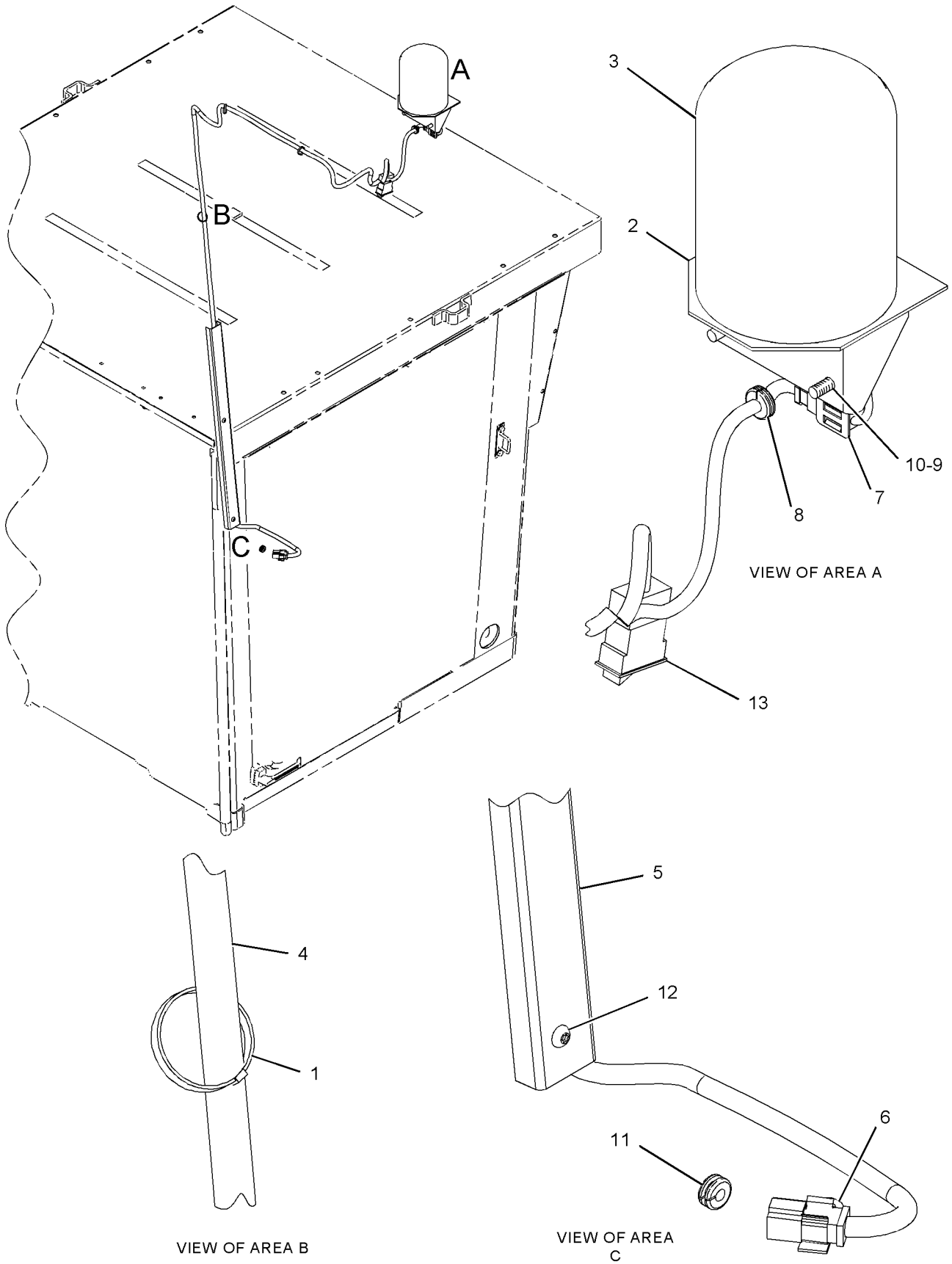

GRAPHIC #1 **<END>** g01070888

117-3915 MOTOR GP-ELECTRIC

S/N: CBK1-UP
24V
PART OF 123-8867 PUMP & MOTOR GP-SEC STEERING
AN ATTACHMENT

SMCS-5927 **i00138924**

NOTE	REF NO	GRAPHIC REF	PART NUMBER	QTY	PART NAME 1 2 3 4 5 6 (PRODUCT LEVEL)	SEE PAGE
	1	1	**6V-8801**	2	NUT (3/8-16-THD)	
	2	1	**7X-0608**	2	WASHER-HARD (10.2X16X2-MM THK)	

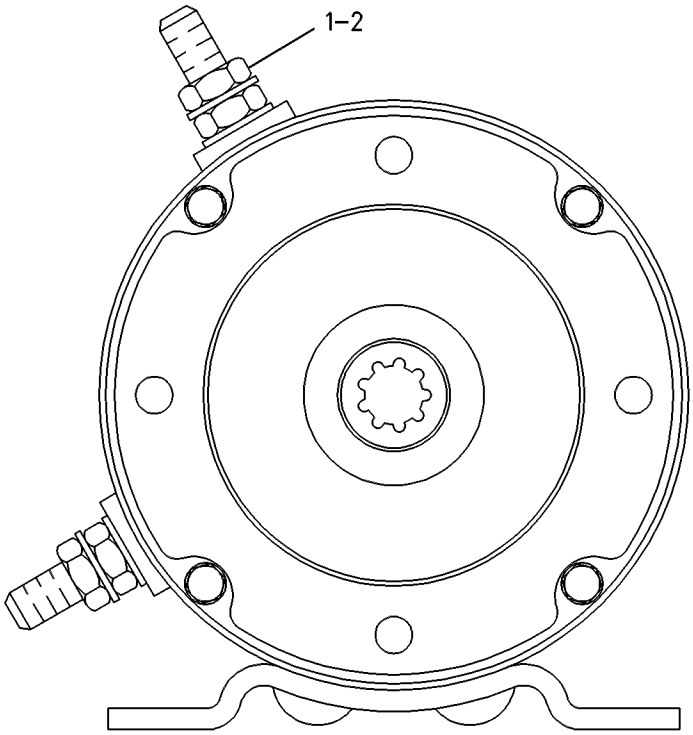

GRAPHIC #1 **<END>** g00085784

177-9816 MOUNTING GP-SOLENOID

S/N: 4ZF4479-5909
LEFT MOUNT
PART OF 168-7967 ENGINE AR
FOR USE WITH HEATER AND HEATER SOLENOIDS

SMCS-1090 **i01872752**

NOTE	REF NO	GRAPHIC REF	PART NUMBER	QTY	PART NAME 1 2 3 4 5 6 (PRODUCT LEVEL)	SEE PAGE
	1	1	**190-4985**	1	BRACKET	
	2	1	**3E-4353**	2	WASHER-HARD (11X25X3MM THK)	
M	3	1	**6V-6317**	2	BOLT (M10X1.5X20MM)	

M-METRIC PART

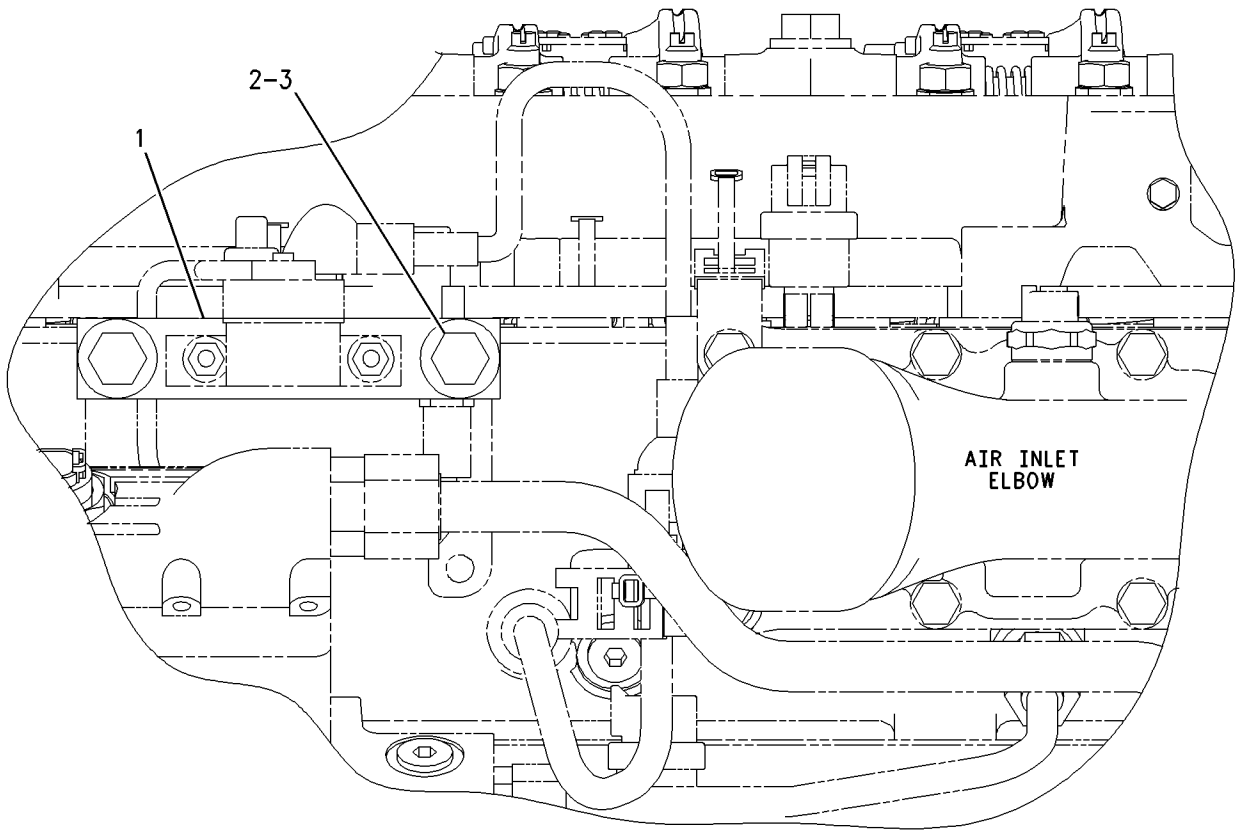

LEFT SIDE VIEW

GRAPHIC #1 **<END>** g00791498

183-6189 RECEPTACLE GP-AUXILIARY START

S/N: CBK1-UP

AN ATTACHMENT

SMCS-1463 **i02204183**

NOTE	REF NO	GRAPHIC REF	PART NUMBER	QTY	PART NAME 1 2 3 4 5 6 (PRODUCT LEVEL)	SEE PAGE
	1	1	**184-4467**	1	RECEPTACLE AS	
		1	**1S-7251**	2	TERMINAL-RING	
E		1	**5P-0747**		CABLE (00-GA, BLACK) (23-CM)	
E		1	**5P-0761**		CABLE (00-GA, RED) (65-CM)	
		1	**8N-0869**	1	COVER-TERMINAL (RED)	
	2	1	**4H-2558**	1	GROMMET	
	3	1	**4L-6454**	4	BOLT (3/8-16X1-IN)	
	4	1	**6V-8801**	4	NUT (3/8-16-THD)	
	5	1	**8S-2634**	1	COVER AS	
		1	**2P-2975**	2	SEAL-O-RING	
	6	1	**8T-4896**	4	WASHER-HARD (10.2X18.5X2.5-MM THK)	
	7	1	**9M-8406**	1	CLIP	

E-ORDER BY THE CENTIMETER

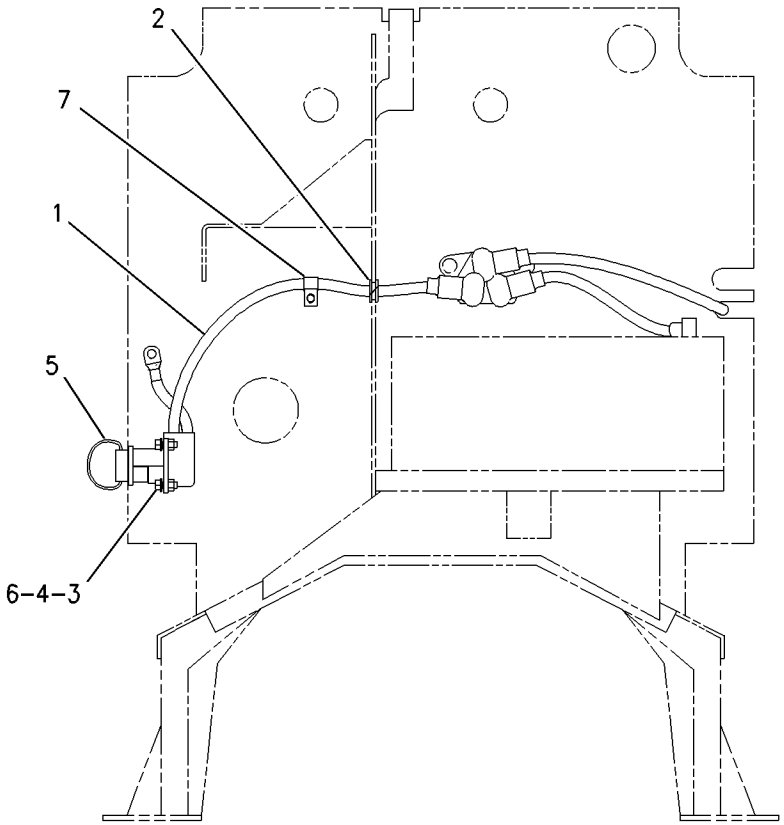

REAR VIEW

GRAPHIC #1 **<END>** g00846677

211-8620 SENSOR GP-ENGINE

S/N: 4ZF4479-UP

PART OF 168-7967 ENGINE AR

SMCS-1718, 1906, 1912, 1923, 1924, 1925, 1929 **i02148159**

NOTE	REF NO	GRAPHIC REF	PART NUMBER	QTY	PART NAME 1 2 3 4 5 6 (PRODUCT LEVEL)	SEE PAGE
	1	1	**3E-2332**	1	ELBOW	
	2	1	**9X-0262**	1	ADAPTER	
Y	3	1	**197-8391**	1	SENSOR GP-TEMPERATURE (INLET AIR)	255
Y	4	1	**197-8392**	1	SENSOR GP-TEMPERATURE (WATER, COOLANT)	256
Y	5	1	**197-8393**	1	SENSOR GP-PRESSURE (ATMOSPHERIC)	246
Y	6	1	**197-8394**	1	SENSOR GP-PRESSURE (ENGINE OIL)	247
Y	7	1	**204-0320**	2	SENSOR GP-TEMPERATURE (ENGINE OIL)	257
Y	8	1	**210-1747**	1	SENSOR GP-PRESSURE (TURBOCHARGER OUTLET)	248
Y	9	1	**236-6220**	1	SENSOR GP-PRESSURE (INJECTION ACTUATION)	250
Y	10	1	**236-6221**	1	SENSOR GP-SPEED (ENGINE TIMING)	252
	11	1	**153-4906**	4	SEAL-O-RING	
	12	1	**3E-4352**	1	WASHER-HARD (8.8X20.5X2.5-MM THK)	
M	13	1	**6V-3940**	1	BOLT (M8X1.25X25-MM)	
	14	1	**6V-5048**	3	SEAL-O-RING	

M-METRIC PART
Y-SEPARATE ILLUSTRATION

211-8620 **SENSOR GP-ENGINE** *(contd.)* **i02148159**

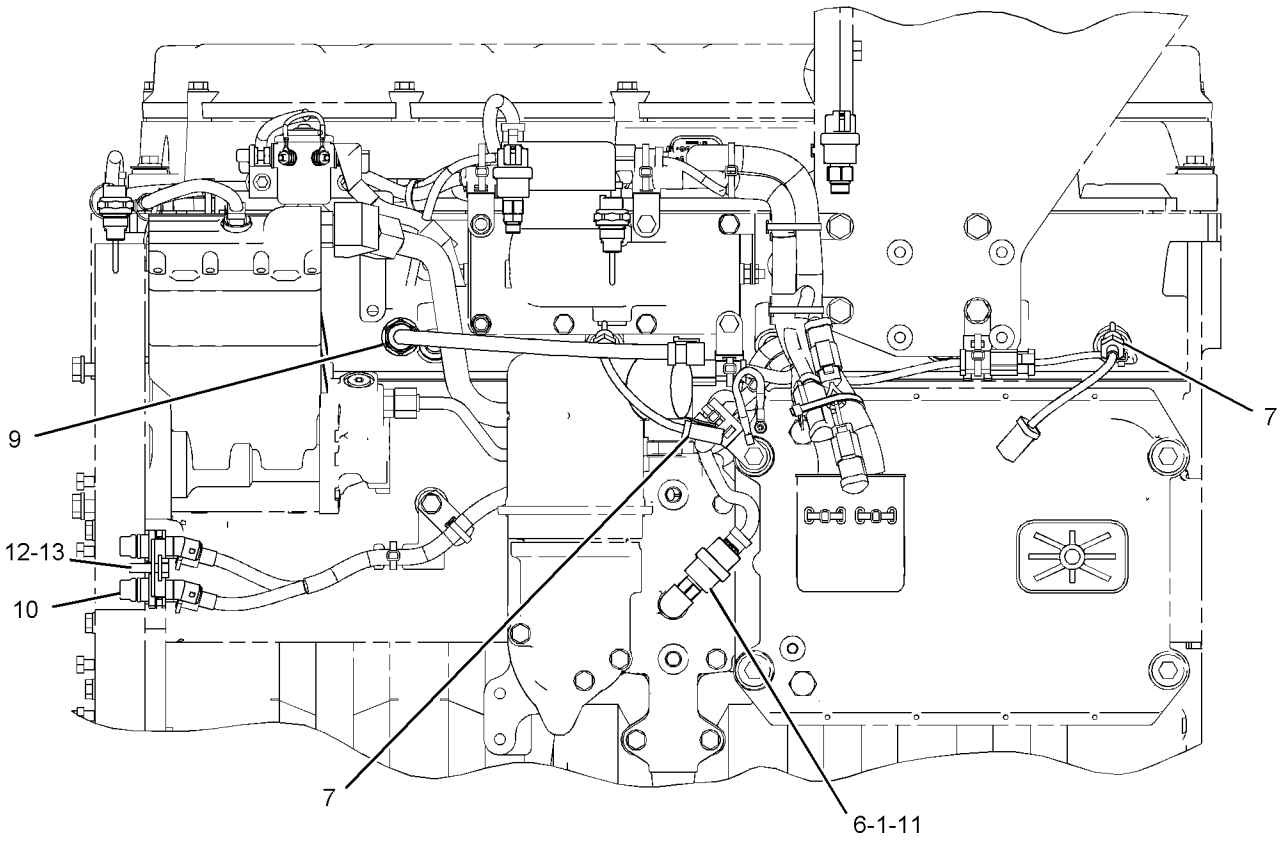

LEFT SIDE VIEW

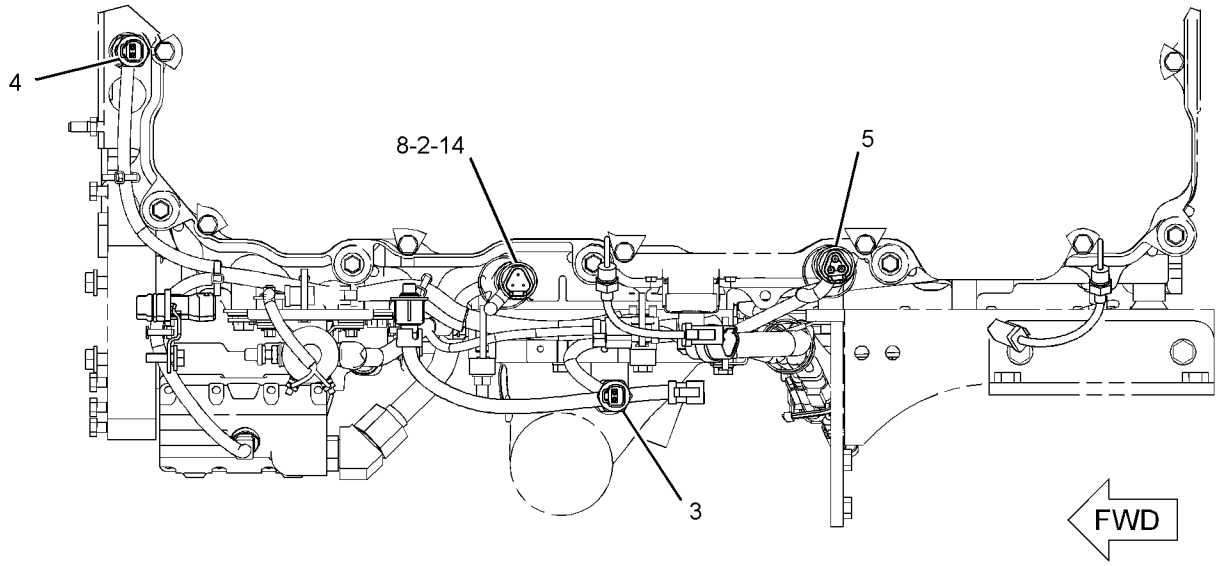

TOP VIEW

GRAPHIC #1

<END>

g01077920

160-2443 SENSOR GP-POSITION–THROTTLE

S/N: CBK1-UP
ROTARY
PART OF 159-5935 CONTROL GP-GOVERNOR

SMCS-1408, 1905 **i01431988**

NOTE	REF NO	GRAPHIC REF	PART NUMBER	QTY	PART NAME 1 2 3 4 5 6 (PRODUCT LEVEL)	SEE PAGE
	1	1	**102-8803**	1	KIT-RECEPTACLE (3-PIN)	
					(INCLUDES RECEPTACLE AS & WEDGE)	
	2	1	**8T-8729**	3	PIN-CONNECTOR	
	3	1	**3E-3371**	1	WEDGE-RECEPTACLE LOCK (3-PIN)	

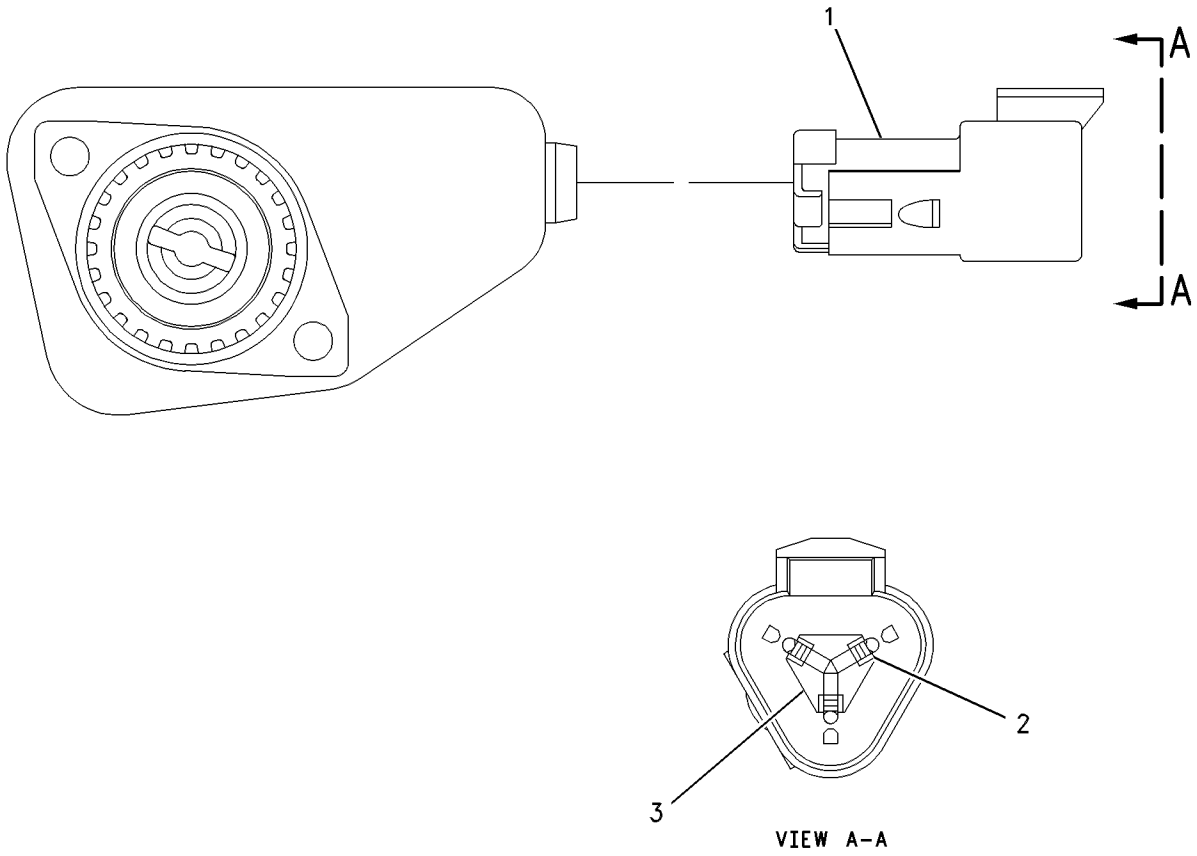

GRAPHIC #1 **<END>** g00637818

214-4863 SENSOR GP-POSITION–CLUTCH

S/N: CBK1-UP

PART OF 159-5933 CONTROL GP-CLUTCH

SMCS-1408, 1905 **i01898168**

NOTE	REF NO	GRAPHIC REF	PART NUMBER	QTY	PART NAME 1 2 3 4 5 6 (PRODUCT LEVEL)	SEE PAGE
	1	1	**102-8803**	1	KIT-RECEPTACLE (3-PIN)	
					(INCLUDES RECEPTACLE AS & WEDGE)	
	2	1	**186-3735**	1	PIN-CONNECTOR	
	3	1	**3E-3371**	1	WEDGE-RECEPTACLE LOCK (3-PIN)	

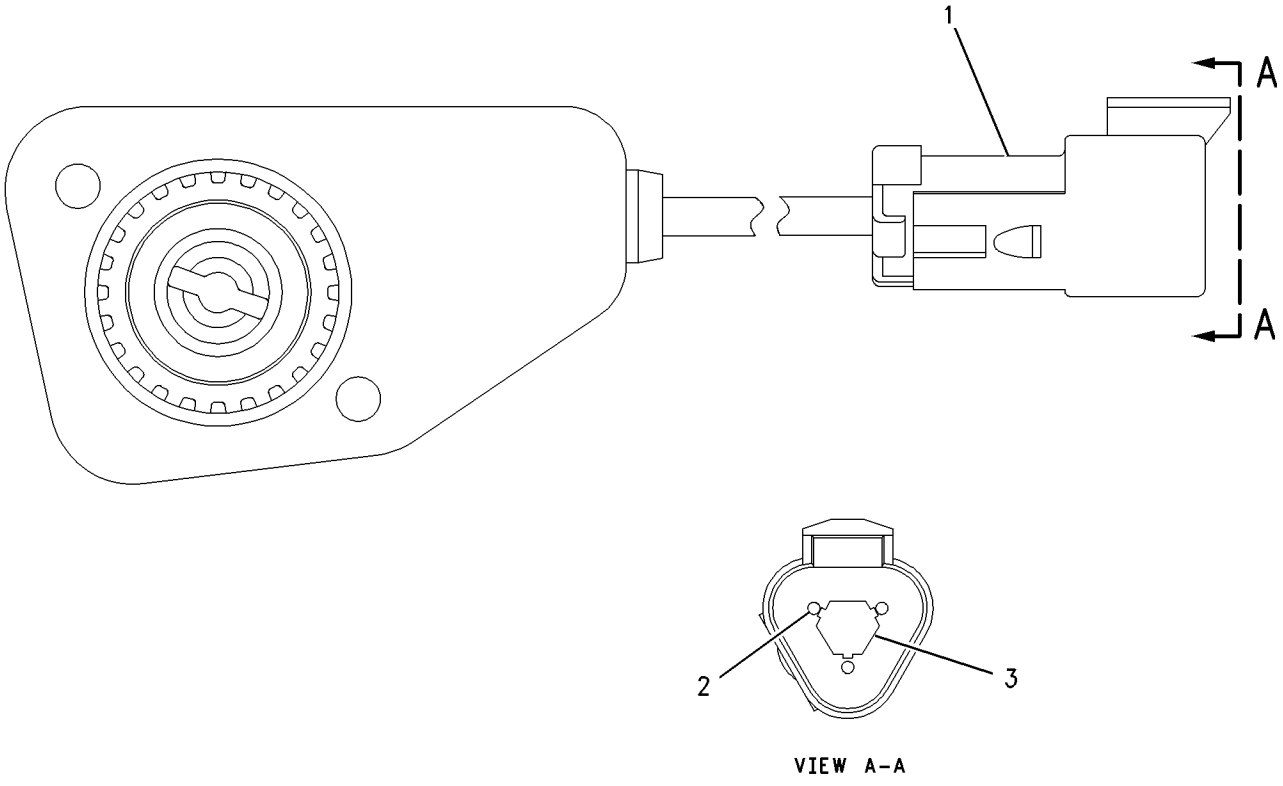

GRAPHIC #1 **<END>** g00925281

167-1709 SENSOR GP-PRESSURE–RADIATOR FAN

S/N: CBK1-UP

PART OF 175-6981 LINES GP-HYDRAULIC FAN

SMCS-4351, 4352 **i02207361**

NOTE	REF NO	GRAPHIC REF	PART NUMBER	QTY	PART NAME 1 2 3 4 5 6 (PRODUCT LEVEL)	SEE PAGE
E	1	1	**9X-1813**		SLEEVE (34-CM)	
	2	1	**155-2260**	1	KIT-CONNECTING PLUG (3-PIN)	
					(KIT INCLUDES PLUG AS & WEDGE)	
	3	1	**194-5226**	3	WIRE AS-HARNESS (16-GA TO 18-GA)	
					–OR–	
		1	**194-5227**	3	HARNESS AS-SENSOR (14-GA WIRE)	
	4	1	**3E-3368**	1	WEDGE-PLUG LOCK (3-PIN)	
E-ORDER BY THE CENTIMETER						

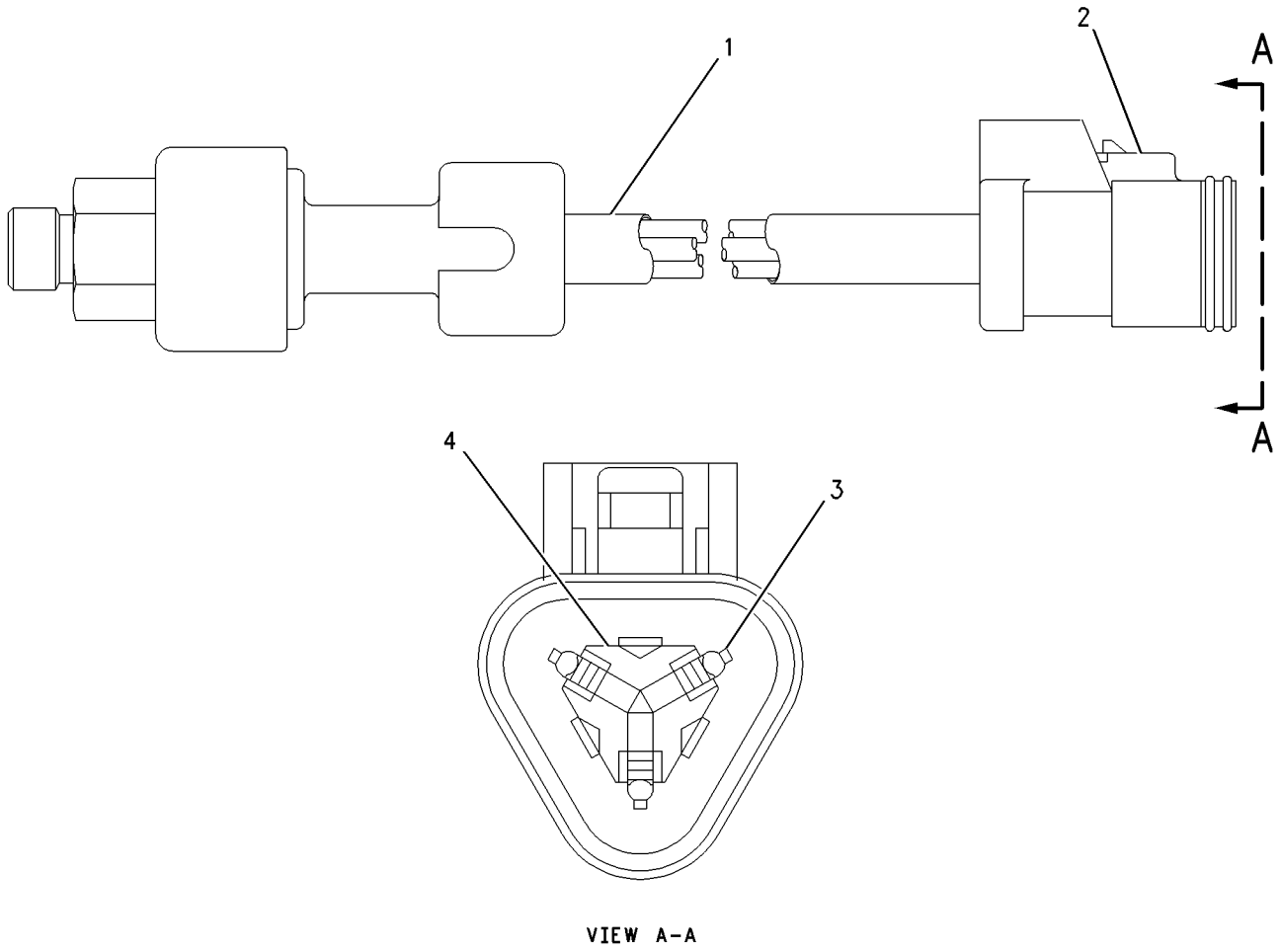

VIEW A-A

GRAPHIC #1 **<END>** g00888413

197-8393 SENSOR GP-PRESSURE

S/N: 4ZF4479-UP

PART OF 211-8620 SENSOR GP-ENGINE

SMCS-4351, 4352 **i01855744**

NOTE	REF NO	GRAPHIC REF	PART NUMBER	QTY	PART NAME 1 2 3 4 5 6 (PRODUCT LEVEL)	SEE PAGE
	1	1	**161-1703**	1	SENSOR GP-PRESSURE	
	2	1	**6V-5049**	1	SEAL-O-RING	

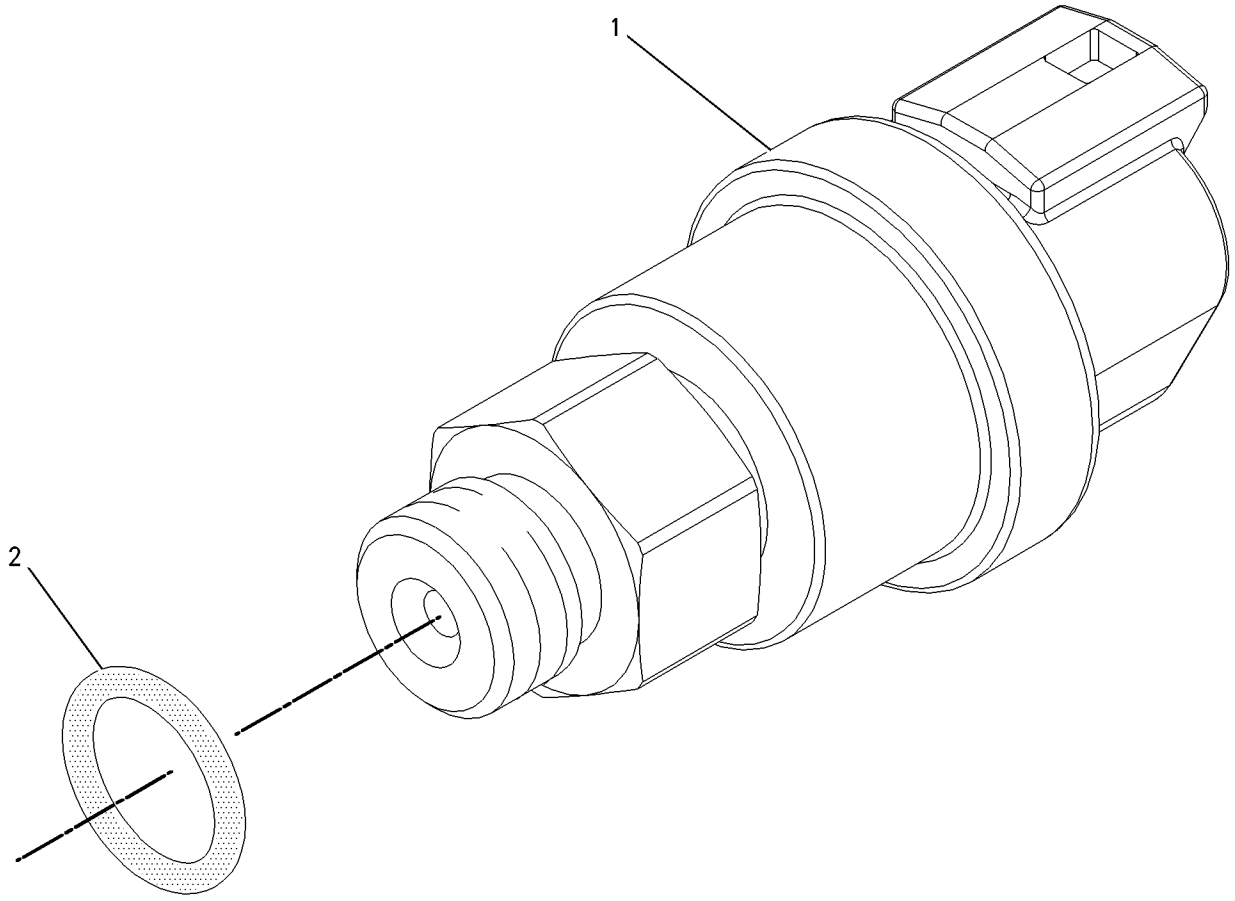

GRAPHIC #1 **<END>** g00855973

197-8394 SENSOR GP-PRESSURE

S/N: 4ZF4479-UP

PART OF 211-8620 SENSOR GP-ENGINE

SMCS-4351, 4352 **i01855745**

NOTE	REF NO	GRAPHIC REF	PART NUMBER	QTY	PART NAME 1 2 3 4 5 6 (PRODUCT LEVEL)	SEE PAGE
	1	1	**161-1705**	1	SENSOR GP-PRESSURE	
	2	1	**6V-5048**	1	SEAL-O-RING	

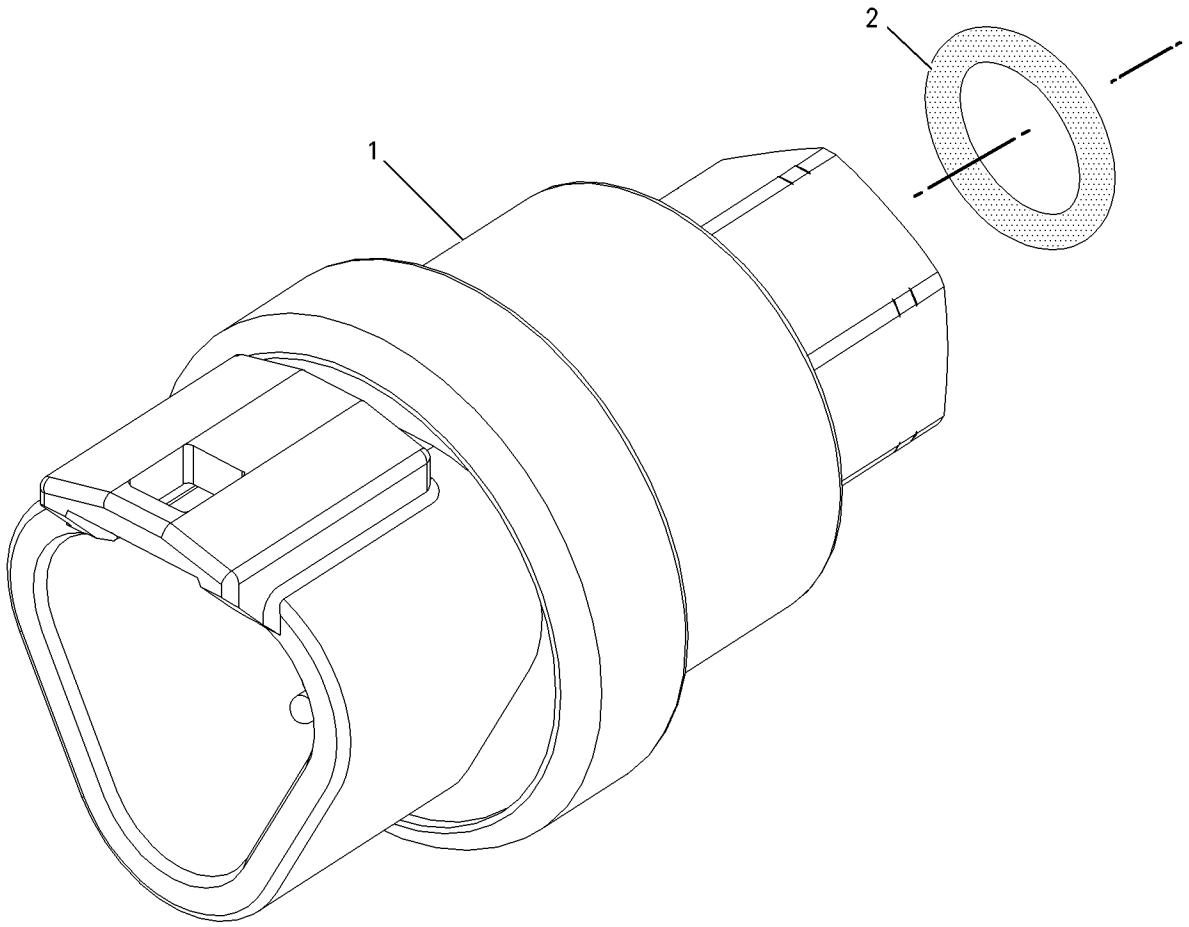

GRAPHIC #1 **<END>** g00856107

210-1747 SENSOR GP-PRESSURE

S/N: 4ZF4479-UP

PART OF 211-8620 SENSOR GP-ENGINE

SMCS-4351, 4352 **i02147083**

NOTE	REF NO	GRAPHIC REF	PART NUMBER	QTY	PART NAME 1 2 3 4 5 6 (PRODUCT LEVEL)	SEE PAGE
	1	1	**161-1704**	1	SENSOR GP-PRESSURE	
	2	1	**6V-5048**	1	SEAL-O-RING	

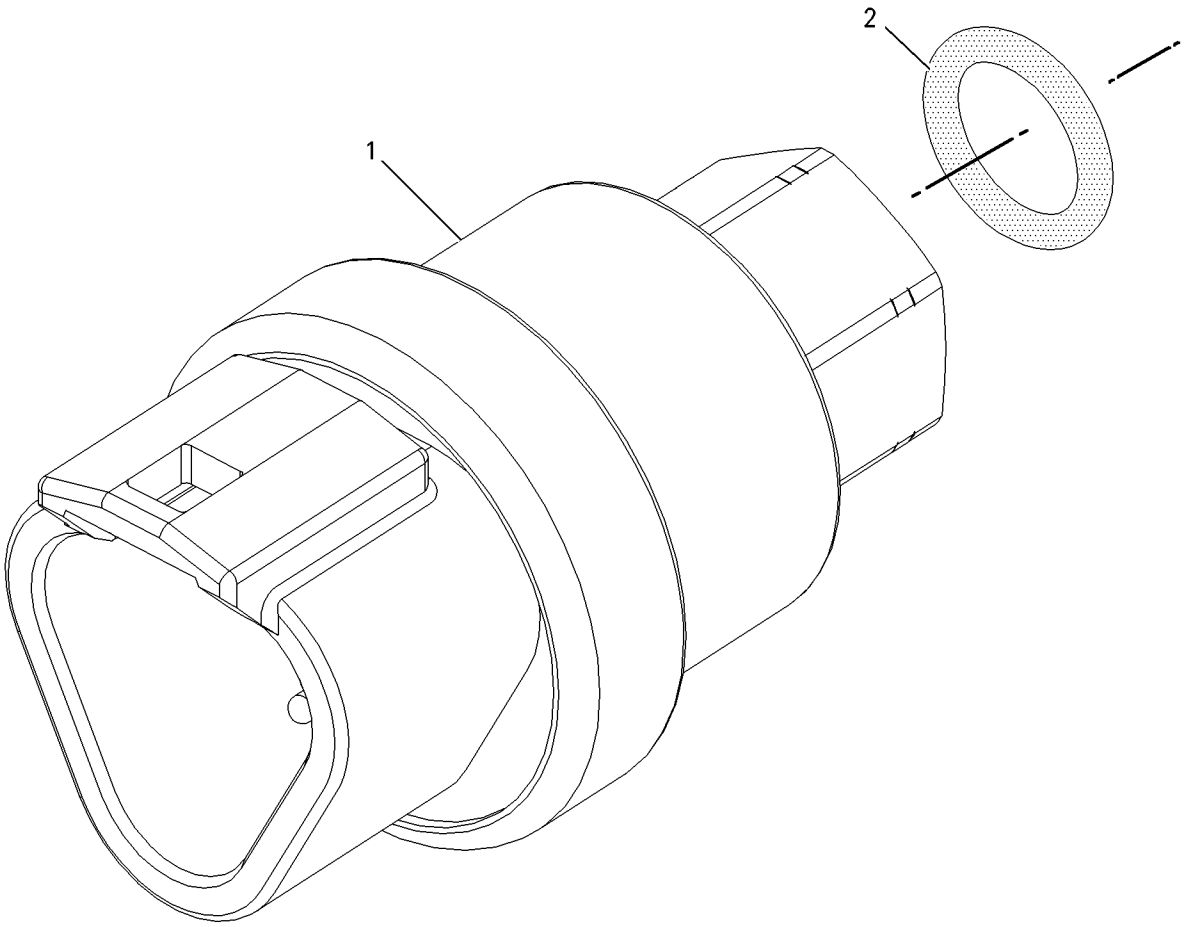

GRAPHIC #1 **<END>** g00856107

224-4536 SENSOR GP-PRESSURE

S/N: 4ZF4479-UP

PART OF 236-6220 SENSOR GP-PRESSURE

SMCS-4351, 4352 **i02154692**

NOTE	REF NO	GRAPHIC REF	PART NUMBER	QTY	PART NAME 1 2 3 4 5 6 (PRODUCT LEVEL)	SEE PAGE
E	1	1	**9X-1813**		SLEEVE (35-CM)	
	2	1	**155-2260**	1	KIT-CONNECTING PLUG (3-PIN)	
					(INCLUDES PLUG AS AND WEDGE)	
	3	1	**194-5226**	1	WIRE AS-HARNESS (16-GA TO 18-GA) (INJECTION ACTUATION)	
					—OR—	
		1	**194-5227**	1	HARNESS AS-SENSOR (14-GA WIRE) (INJECTION ACTUATION)	
	4	1	**155-2276**	1	WEDGE-PLUG LOCK (3-PIN)	

E-ORDER BY THE CENTIMETER

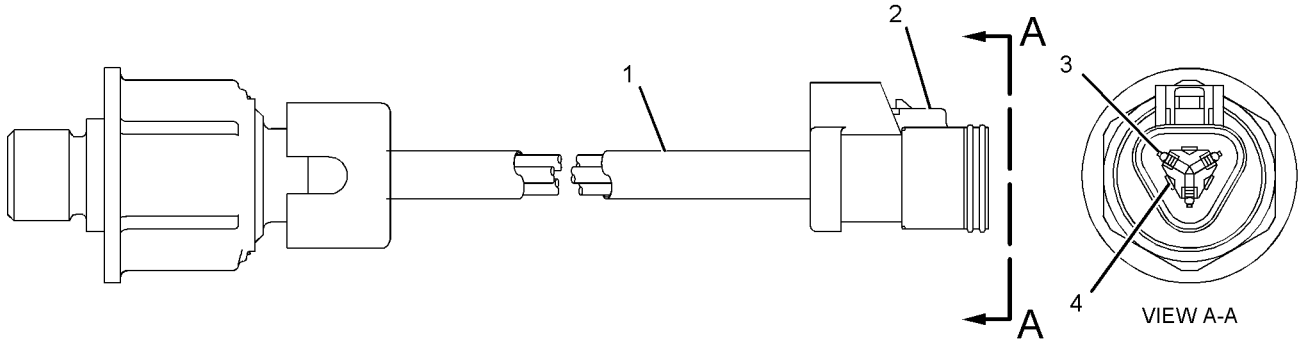

GRAPHIC #1 **<END>** g01040301

236-6220 SENSOR GP-PRESSURE

S/N: 4ZF4479-UP

PART OF 211-8620 SENSOR GP-ENGINE

SMCS-4351, 4352 **i02128119**

NOTE	REF NO	GRAPHIC REF	PART NUMBER	QTY	PART NAME 1 2 3 4 5 6 (PRODUCT LEVEL)	SEE PAGE
	1	1	**214-7567**	1	SEAL-O-RING	
Y	2	1	**224-4536**	1	SENSOR GP-PRESSURE (INJECTION ACTUATION)	249

Y-SEPARATE ILLUSTRATION

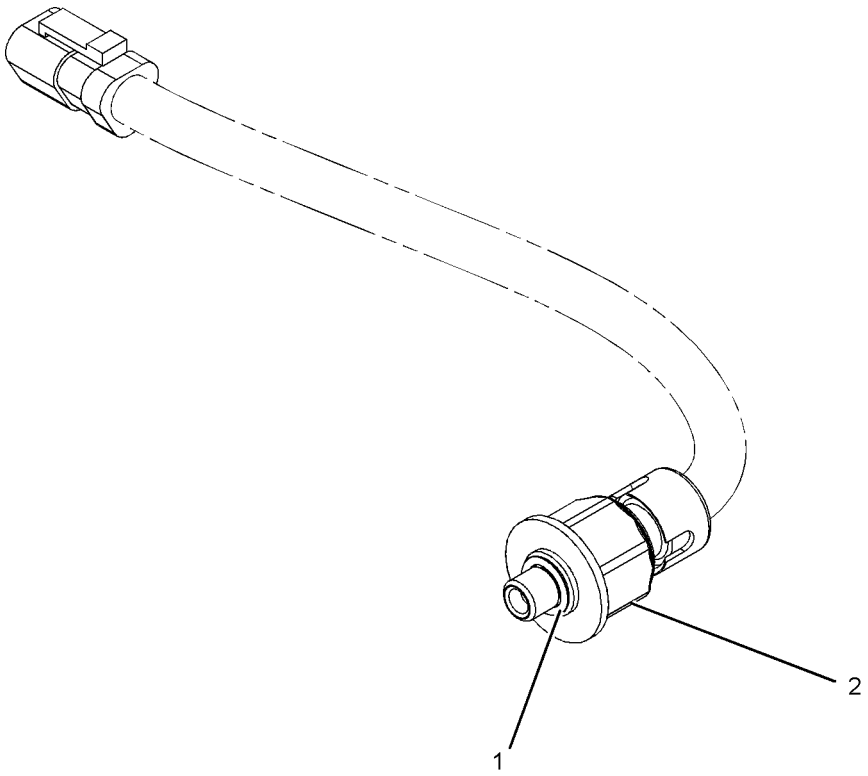

GRAPHIC #1 **<END>** g01054528

183-8597 SENSOR GP-SPEED–TRANSMISSION OUTPUT

S/N: BSZ1-UP

PART OF 180-9146 CASE & PARTS GP-TRANSMISSION

SMCS-1907, 3175 **i02207423**

NOTE	REF NO	GRAPHIC REF	PART NUMBER	QTY	PART NAME 1 2 3 4 5 6 (PRODUCT LEVEL)	SEE PAGE
	1	1	**171-5349**	1	MARKER	
	2	1	**102-8802**	1	KIT-RECEPTACLE (2-PIN)	
					(INCLUDES RECEPTACLE AS & WEDGE)	
	3	1	**186-3735**	2	PIN-CONNECTOR	
	4	1	**3E-3365**	1	WEDGE-RECEPTACLE LOCK (2-PIN)	
E	5	1	**9X-1813**		SLEEVE (14-CM)	

E-ORDER BY THE CENTIMETER

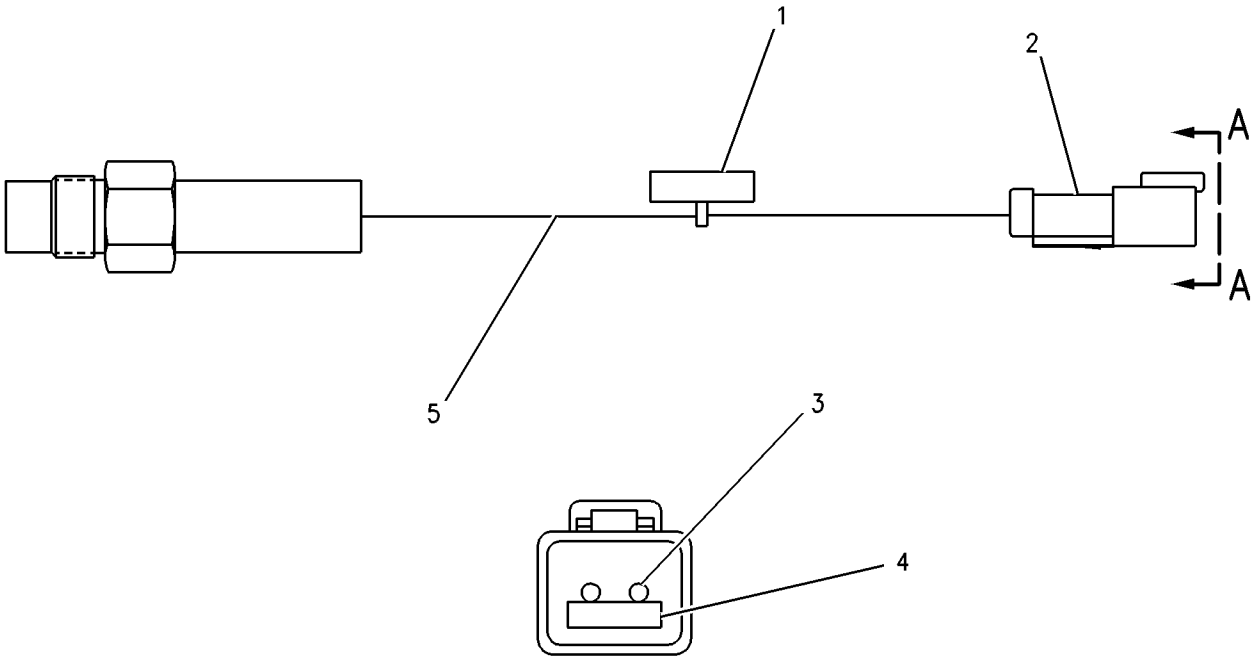

VIEW A-A

GRAPHIC #1 **<END>** g00680294

236-6221 SENSOR GP-SPEED

S/N: 4ZF4479-UP

PART OF 211-8620 SENSOR GP-ENGINE

SMCS-1907, 3175 **i02128118**

NOTE	REF NO	GRAPHIC REF	PART NUMBER	QTY	PART NAME 1 2 3 4 5 6 (PRODUCT LEVEL)	SEE PAGE
	1	1	**203-3940**	2	SEAL-O-RING	
	2	1	**245-4630**	1	SENSOR GP-SPEED (ENGINE TIMING)	

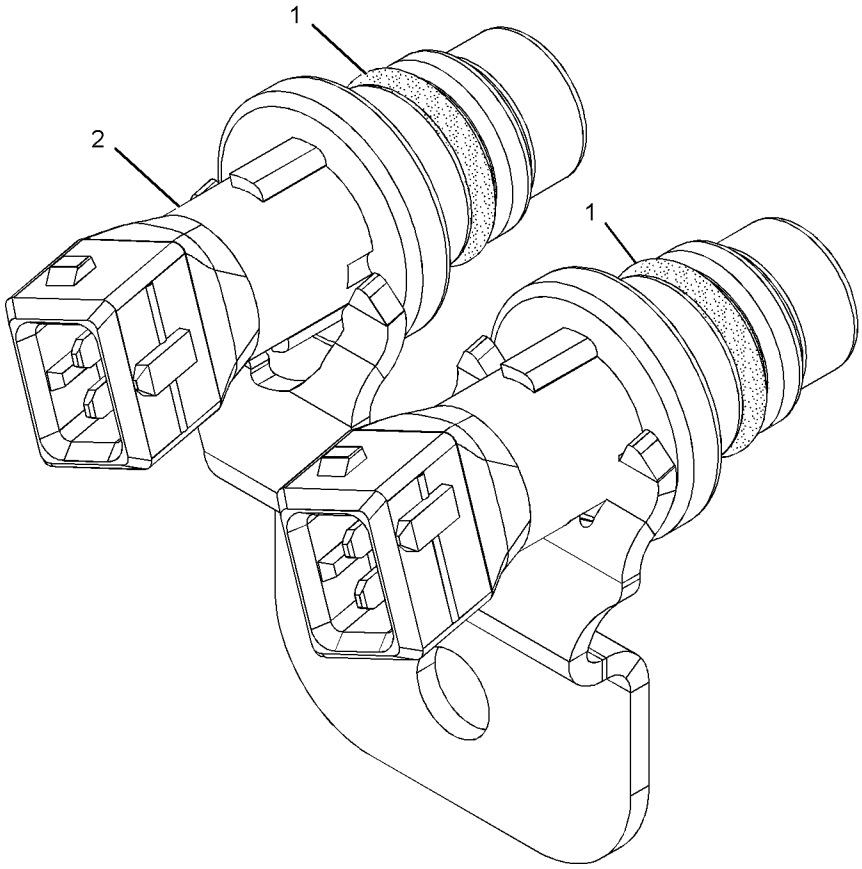

GRAPHIC #1 **<END>** g01013894

3E-8700 SENSOR GP-TEMPERATURE–TRANSMISSION OIL

S/N: BSZ1-UP

PART OF 180-9146 CASE & PARTS GP-TRANSMISSION

SMCS-1330 **i02204190**

NOTE	REF NO	GRAPHIC REF	PART NUMBER	QTY	PART NAME 1 2 3 4 5 6 (PRODUCT LEVEL)	SEE PAGE
	1	1	**8T-8730**	3	SOCKET-CONNECTOR	
	2	1	**102-8813**	1	SEAL	
	3	1	**102-8808**	1	KIT-CONNECTING PLUG (3-PIN)	
E	4	1	**9X-1813**		SLEEVE (31-CM)	
	5	1	**3E-3368**	1	WEDGE-PLUG LOCK (3-PIN)	

E-ORDER BY THE CENTIMETER

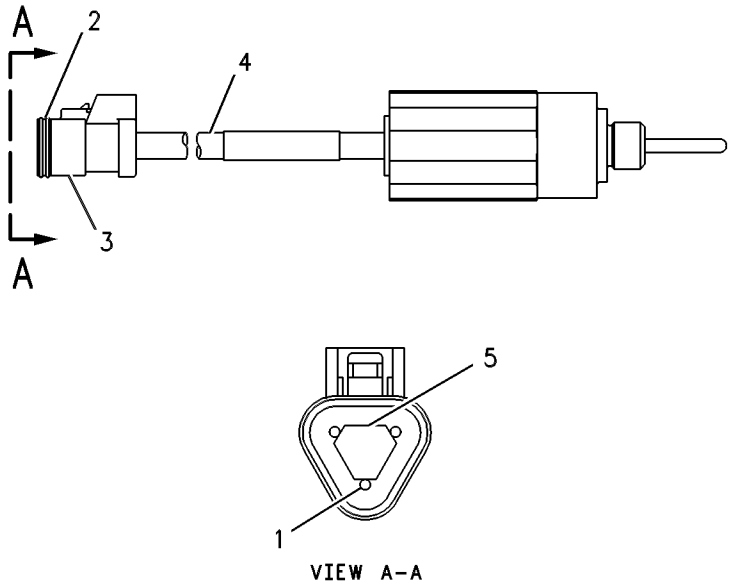

GRAPHIC #1 **<END>** g00248316

191-6587 SENSOR GP-TEMPERATURE–ENGINE OIL

S/N: 4ZF4479-UP

PART OF 204-0320 SENSOR GP-TEMPERATURE

SMCS-1330 **i01872179**

NOTE	REF NO	GRAPHIC REF	PART NUMBER	QTY	PART NAME 1 2 3 4 5 6 (PRODUCT LEVEL)	SEE PAGE
J	1	1	**153-5043**		SLEEVE (1.3DM)	
	2	1	**155-2270**	1	KIT-CONNECTING PLUG (2-PIN)	
					(INCLUDES PLUG AS & WEDGE)	
	3	1	**194-5226**	2	WIRE AS-HARNESS (16-GA TO 18-GA)	
					–OR–	
		1	**194-5227**	2	HARNESS AS-SENSOR (14-GA WIRE)	
	4	1	**155-2261**	1	WEDGE-PLUG LOCK (2-PIN)	
J-ORDER BY THE DECIMETER						

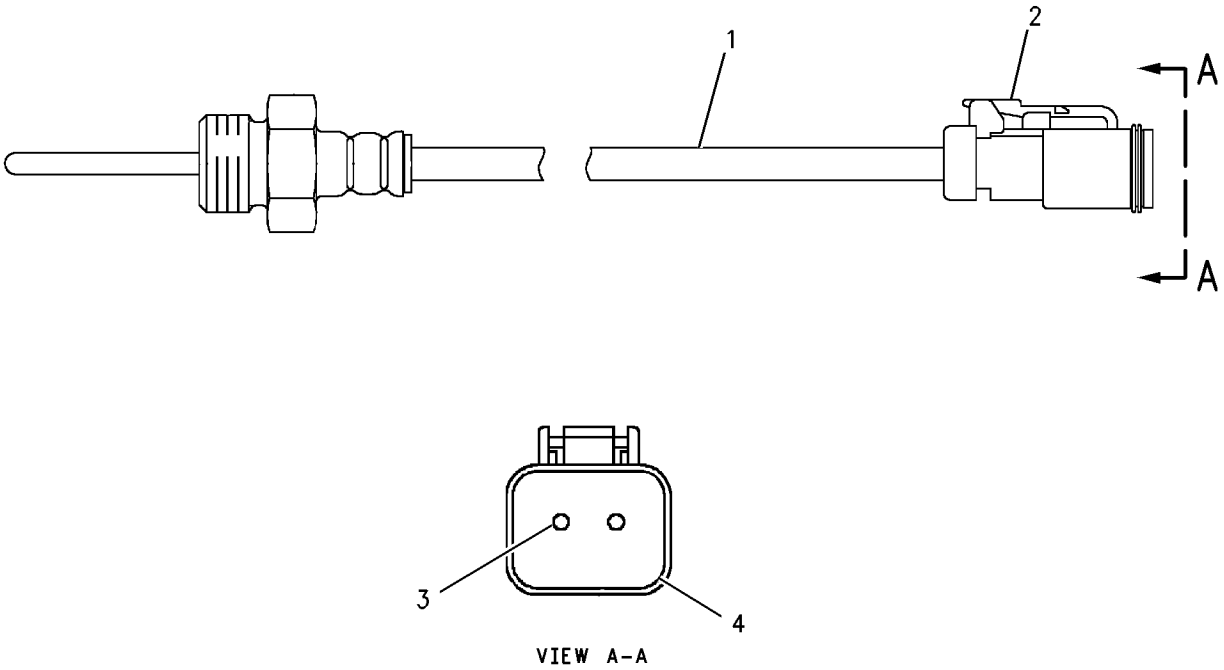

VIEW A–A

GRAPHIC #1 **<END>** g00865978

197-8391 SENSOR GP-TEMPERATURE

S/N: 4ZF4479-UP

PART OF 211-8620 SENSOR GP-ENGINE

SMCS-1330 **i02203394**

NOTE	REF NO	GRAPHIC REF	PART NUMBER	QTY	PART NAME 1 2 3 4 5 6 (PRODUCT LEVEL)	SEE PAGE
	1	1	**130-9811**	1	SENSOR GP-TEMPERATURE	
	2	1	**8L-2786**	1	SEAL-O-RING	

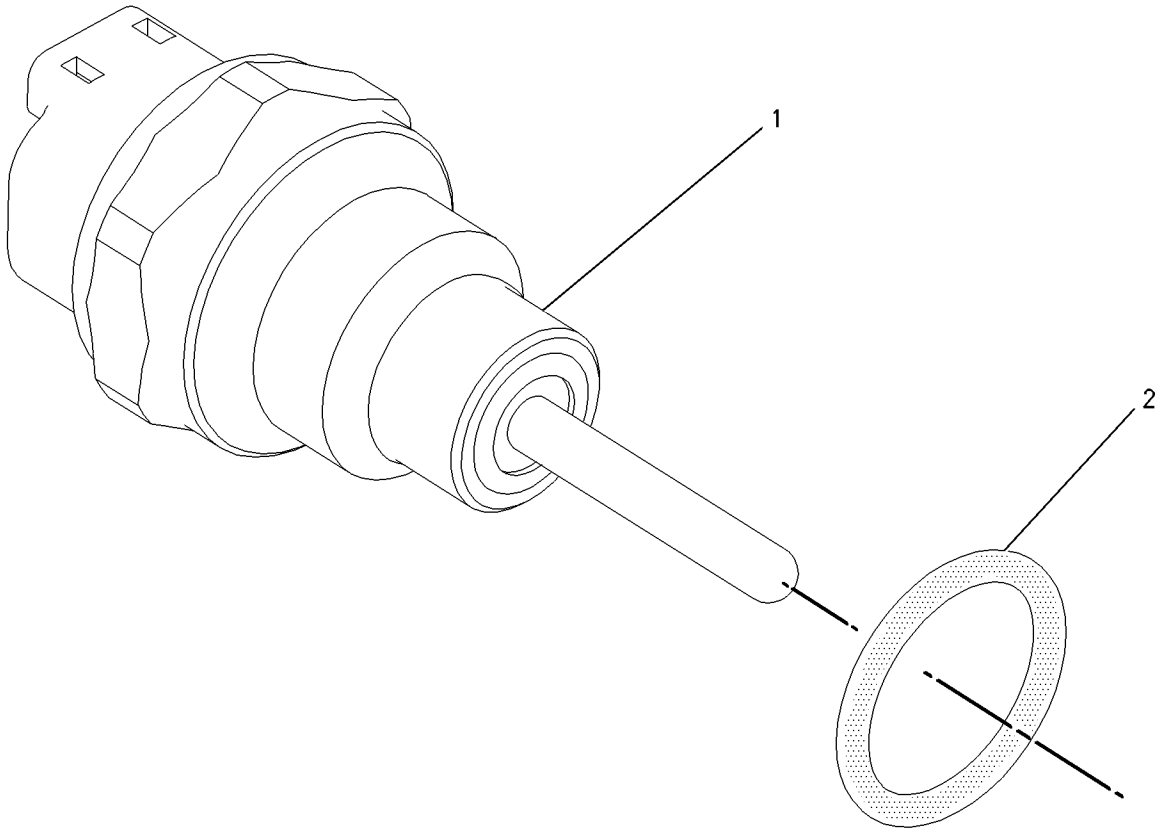

GRAPHIC #1 **<END>** g00856011

197-8392 SENSOR GP-TEMPERATURE

S/N: 4ZF4479-UP

PART OF 211-8620 SENSOR GP-ENGINE

SMCS-1330 **i02203395**

NOTE	REF NO	GRAPHIC REF	PART NUMBER	QTY	PART NAME 1 2 3 4 5 6 (PRODUCT LEVEL)	SEE PAGE
	1	1	**130-9811**	1	SENSOR GP-TEMPERATURE	
	2	1	**6V-6609**	1	SEAL-O-RING	

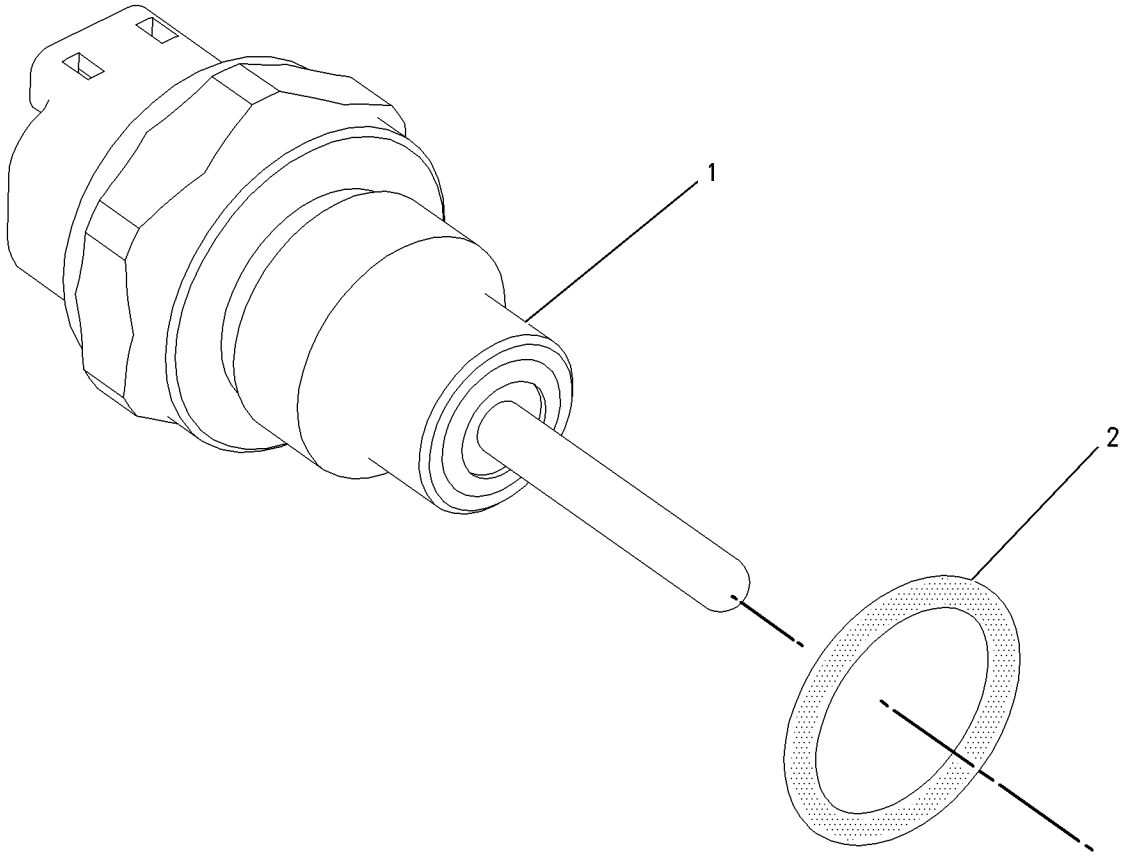

GRAPHIC #1 **<END>** g00856005

204-0320 SENSOR GP-TEMPERATURE

S/N: 4ZF4479-UP

PART OF 211-8620 SENSOR GP-ENGINE

SMCS-1330 **i02128115**

NOTE	REF NO	GRAPHIC REF	PART NUMBER	QTY	PART NAME 1 2 3 4 5 6 (PRODUCT LEVEL)	SEE PAGE
Y	1	1	**191-6587**	1	SENSOR GP-TEMPERATURE (ENGINE OIL)	254
	2	1	**214-7568**	1	SEAL-O-RING	

Y-SEPARATE ILLUSTRATION

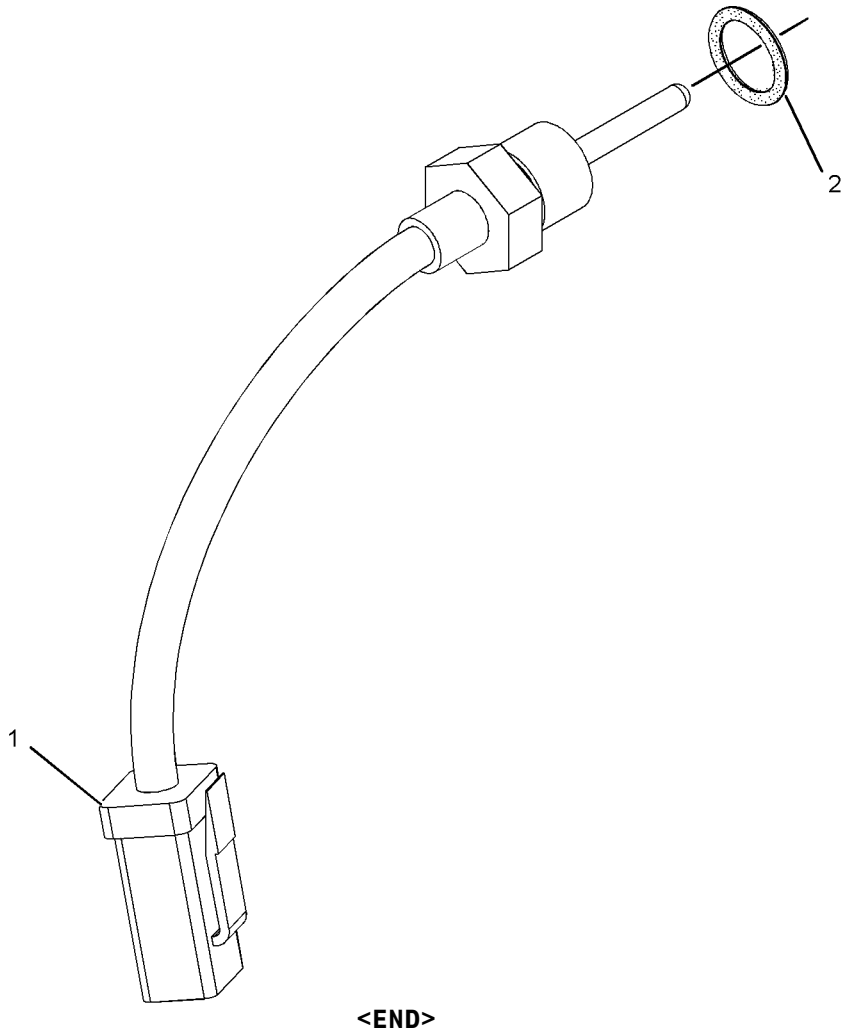

GRAPHIC #1 **<END>** g01057529

118-7284 STARTING AID GP–AIR INLET

S/N: 4ZF4479-UP

PART OF 168-7967 ENGINE AR

SMCS-1090 **i01895544**

NOTE	REF NO	GRAPHIC REF	PART NUMBER	QTY	PART NAME 1 2 3 4 5 6 (PRODUCT LEVEL)	SEE PAGE
B	1	1	**1U-8846**		SEALANT-GASKET	
	2	1	**159-3537**	1	HEATER AS (22-VOLT, 1892-WATT)	
M	3	1	**5C-2890**	2	NUT (M6X1-THD)	

B-USE AS REQUIRED
M-METRIC PART

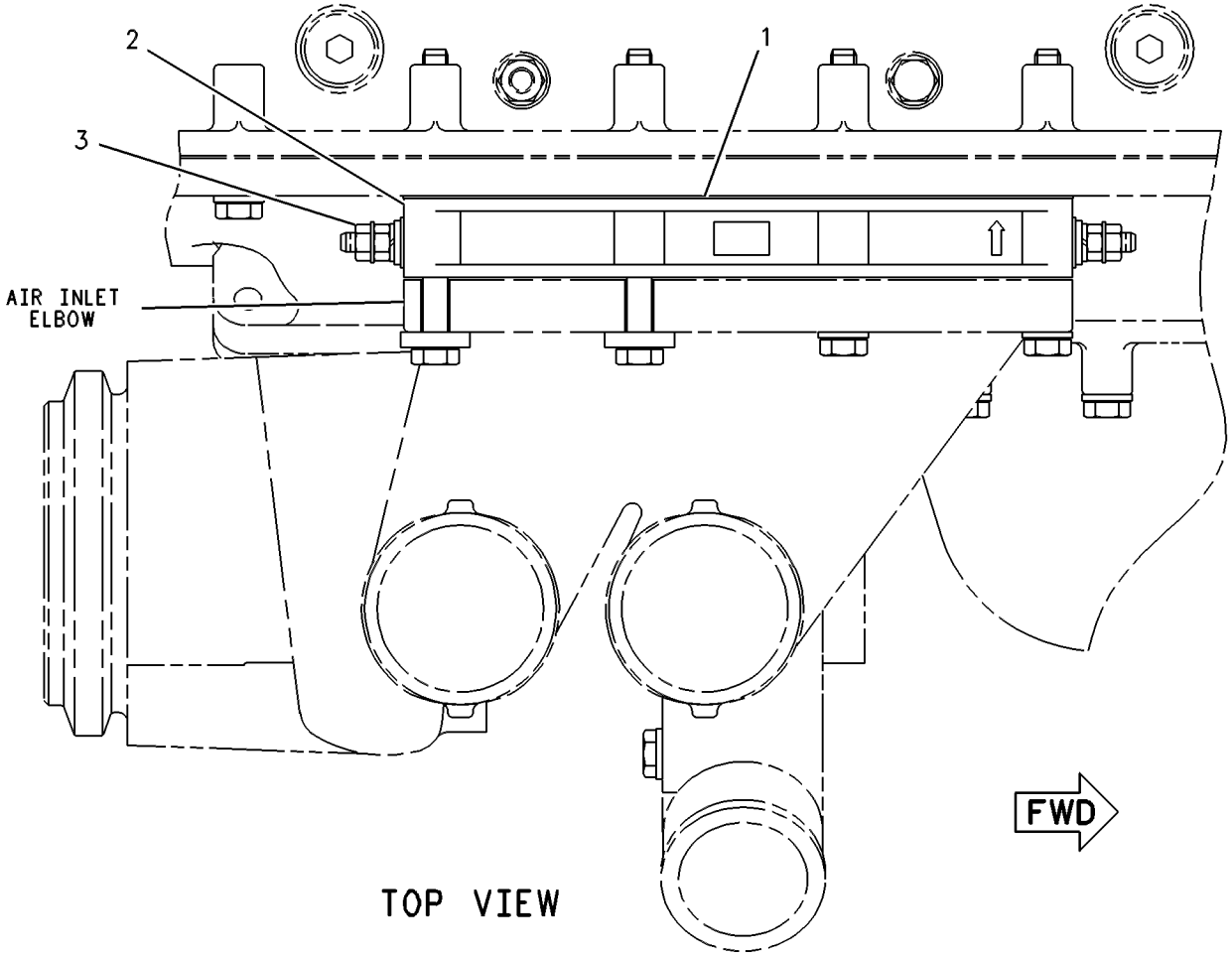

GRAPHIC #1 **<END>** g00250922

212-8150 STARTING AID GP

S/N: 4ZF4479-UP

PART OF 168-7967 ENGINE AR

SMCS-1090 **i02203403**

NOTE	REF NO	GRAPHIC REF	PART NUMBER	QTY	PART NAME 1 2 3 4 5 6 (PRODUCT LEVEL)	SEE PAGE
	1	1	**3S-2093**	5	STRAP-CABLE	
	2	1	**215-2315**	1	HARNESS AS-HEATER (STARTING AID)	
		1	**135-2543**		BOOT	

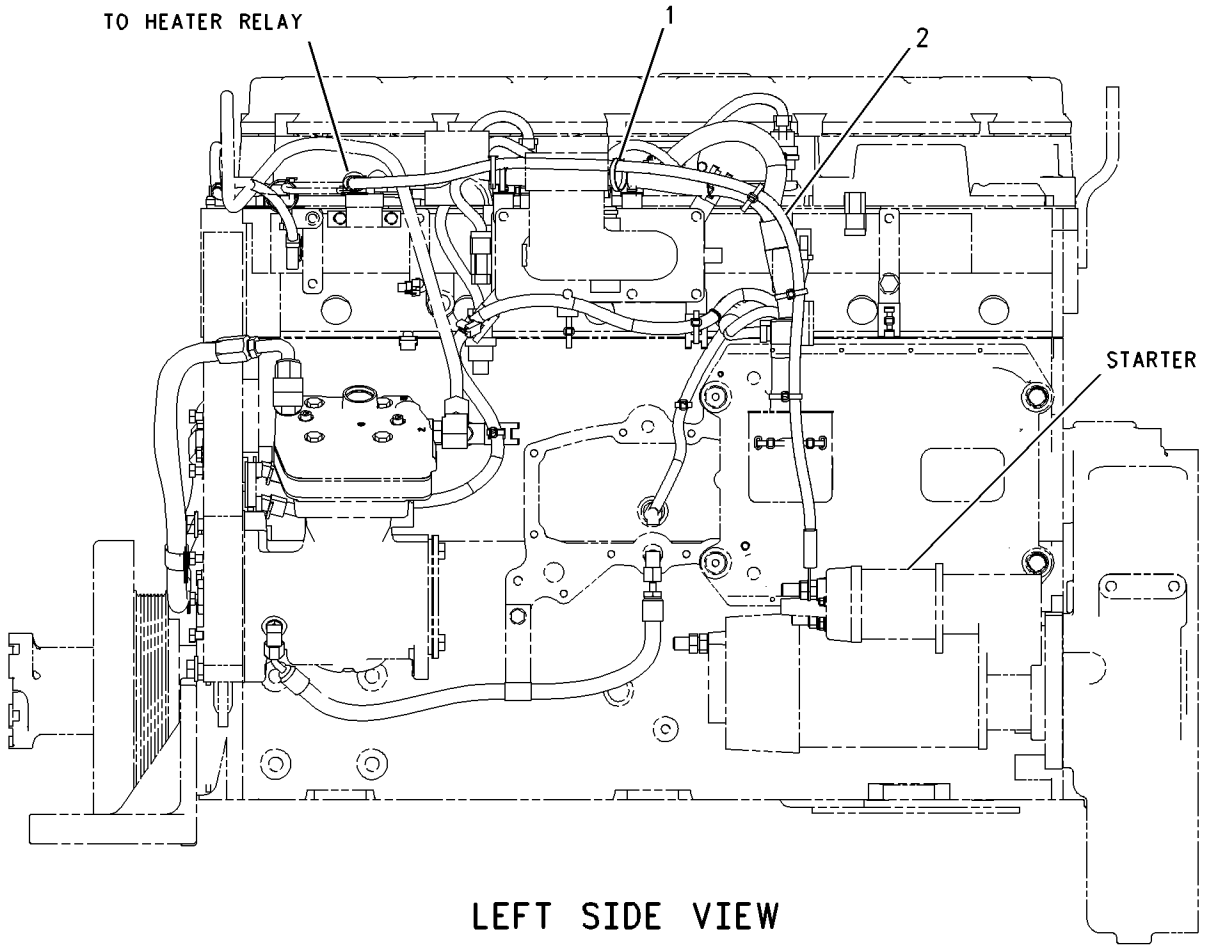

LEFT SIDE VIEW

GRAPHIC #1 **<END>** g00860576

104-7044 STARTING MOTOR GP-ELECTRIC

S/N: 4ZF4479-UP
24 VOLT
PART OF 171-5288 STARTING MOTOR GP-ELECTRIC
FIELD REPLACEMENT ORDER 207-1516—PAGE 263

SMCS-1453 **i01874993**

NOTE	REF NO	GRAPHIC REF	PART NUMBER	QTY	PART NAME 1 2 3 4 5 6 (PRODUCT LEVEL)	SEE PAGE
	1	1	**3T-3434**	6	PLUG	
	2	1	**7T-3279**	1	HOUSING AS	
	3	1	**8T-8566**	1	TERMINAL AS	
	4	1	**6V-8188**	4	NUT (1/2-13 THD)	
	5	1	**7X-0562**	4	WASHER-HARD (13.5X19X0.8MM THK)	
	6	1	**3T-3422**	1	WIRE AS	
	7	1	**7T-3278**	1	HOLDER AS-BRUSH	
	8	1	**7T-3277**	1	COIL AS-FIELD	
	9	1	**7T-3454**	1	INSULATOR	
	10	1	**7T-3271**	1	CONNECTOR	
	11	1	**7T-3451**	1	INSULATOR-TERMINAL	
	12	1	**8T-8569**	1	INSULATOR-TERMINAL	
	13	1	**5S-7349**	4	BOLT (1/4-20X0.5 IN)	
	14	1	**8T-4205**	4	WASHER-HARD (7.2X14.5X2MM THK)	
	15	1	**8H-1141**	4	SHOE-POLE	
	16	1	**3F-0379**	8	SCREW-POLE SHOE (3/8-24 THD)	
	17	1	**7T-3276**	1	ARMATURE AS (24 VOLT)	
	18	1	**3E-7775**	1	HOUSING AS	
	19	1	**4M-1831**	1	PLUG-LEVER HOUSING	
	20	1	**7L-2894**	1	GASKET	
	21	1	**036-9823**	5	BOLT	
	22	1	**6N-3827**	1	DRIVE AS-MOTOR	
	23	1	**7T-3974**	1	HOUSING AS-DRIVE	
	24	1	**7X-3373**	6	BOLT (5/16-18X0.88 IN)	
	25	1	**193-8570**	1	SOLENOID AS (24 VOLT)	
	26	1	**6V-8378**	3	NUT (10-32 THD)	
	27	1	**8F-1434**	2	LOCKWASHER	
	28	1	**8T-0328**	3	WASHER-HARD (5.5X10X1MM THK)	
	29	1	**9X-4824**	1	COVER-STARTING MOTOR	
	30	1	**8T-9884**	1	KIT-INSULATOR (STARTING MOTOR)	
					(INCLUDES O-RING SEALS, RETAINER, AND LEVER ASSEMBLIES.)	
	31	1	**8C-3655**	1	KIT-BRUSH (STARTING MOTOR)	
					(INCLUDES BUSHINGS, CUPS, PLUGS, O-RING SEALS, NUT, WASHER, RETAINER, SPACER, GASKET, AND SCREW ASSEMBLIES.)	
	32	1	**7T-3268**	1	KIT-LEVER (STARTING MOTOR)	
					(INCLUDES INSULATORS AND BRUSHES	
					AVAILABLE REPAIR KIT(S):	
			7T-3267		KIT-BUSHING (STARTING MOTOR)	
					(INCLUDES SPRINGS, BRUSHES, SCREWS, O-RING SEALS, AND SCREW ASSEMBLIES)	

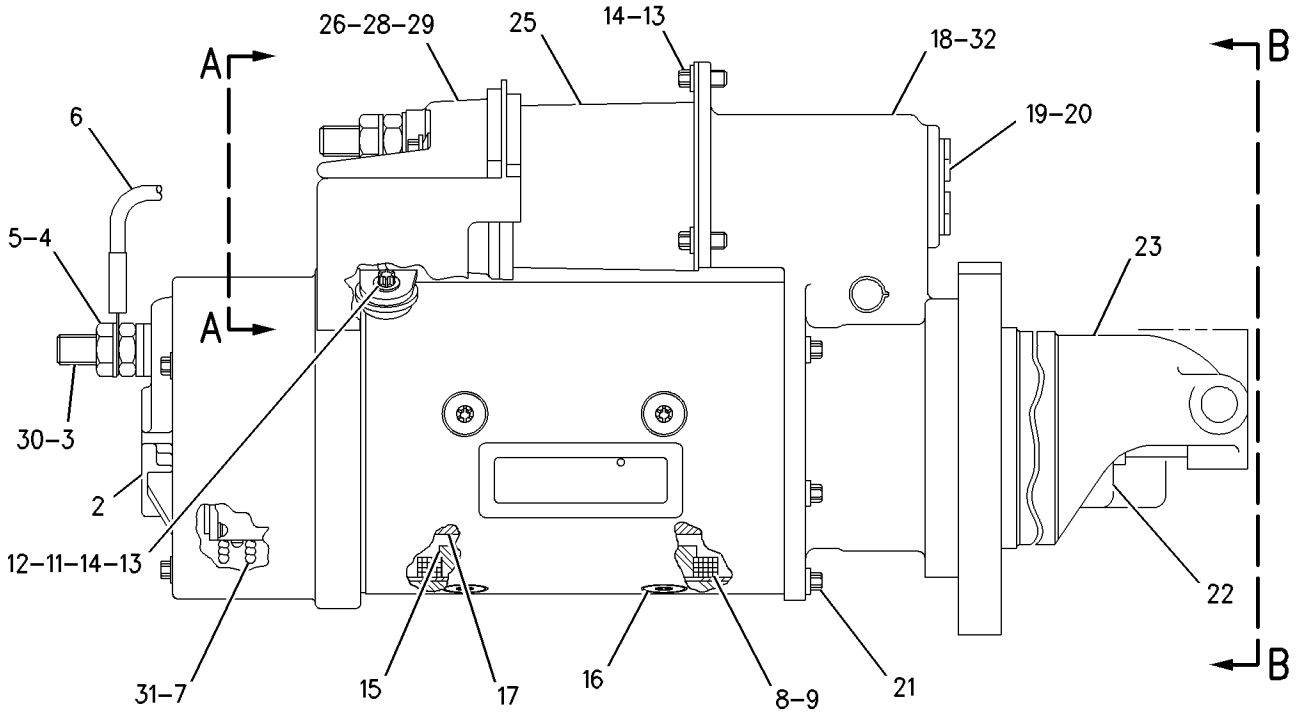

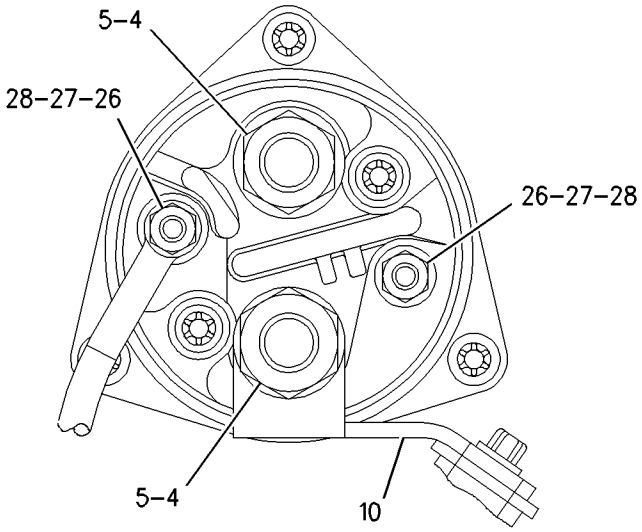

VIEW A–A

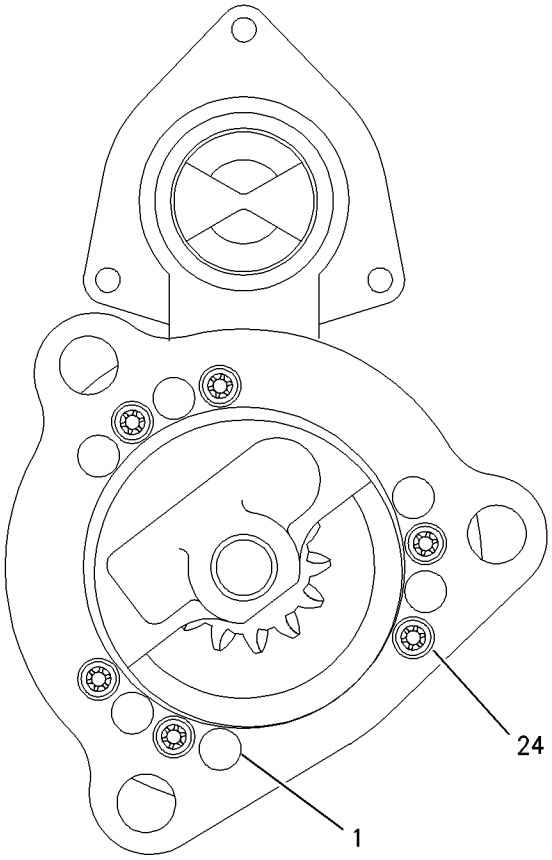

VIEW B–B

GRAPHIC #1 **<END>** g00889387

171-5288 STARTING MOTOR GP-ELECTRIC

S/N: 4ZF4479-UP
24 VOLT
PART OF 168-7967 ENGINE AR

SMCS-1453 **i02102214**

NOTE	REF NO	GRAPHIC REF	PART NUMBER	QTY	PART NAME 1 2 3 4 5 6 (PRODUCT LEVEL)	SEE PAGE
	1	1	**131-1449**	1	CABLE AS	
	2	1	**4H-7869**	1	GASKET	
Y	3	1	*104-7044*	1	STARTING MOTOR GP-ELECTRIC	260
	4	1	**7J-8902**	3	BOLT-12 POINT HEAD (5/8-11X1.50-IN)	
	6	1	**8T-4121**	1	WASHER-HARD (11X21X2.5-MM THK)	
M	7	1	**8T-4191**	1	BOLT (M10X1.5X16-MM)	

M-METRIC PART
Y-SEPARATE ILLUSTRATION

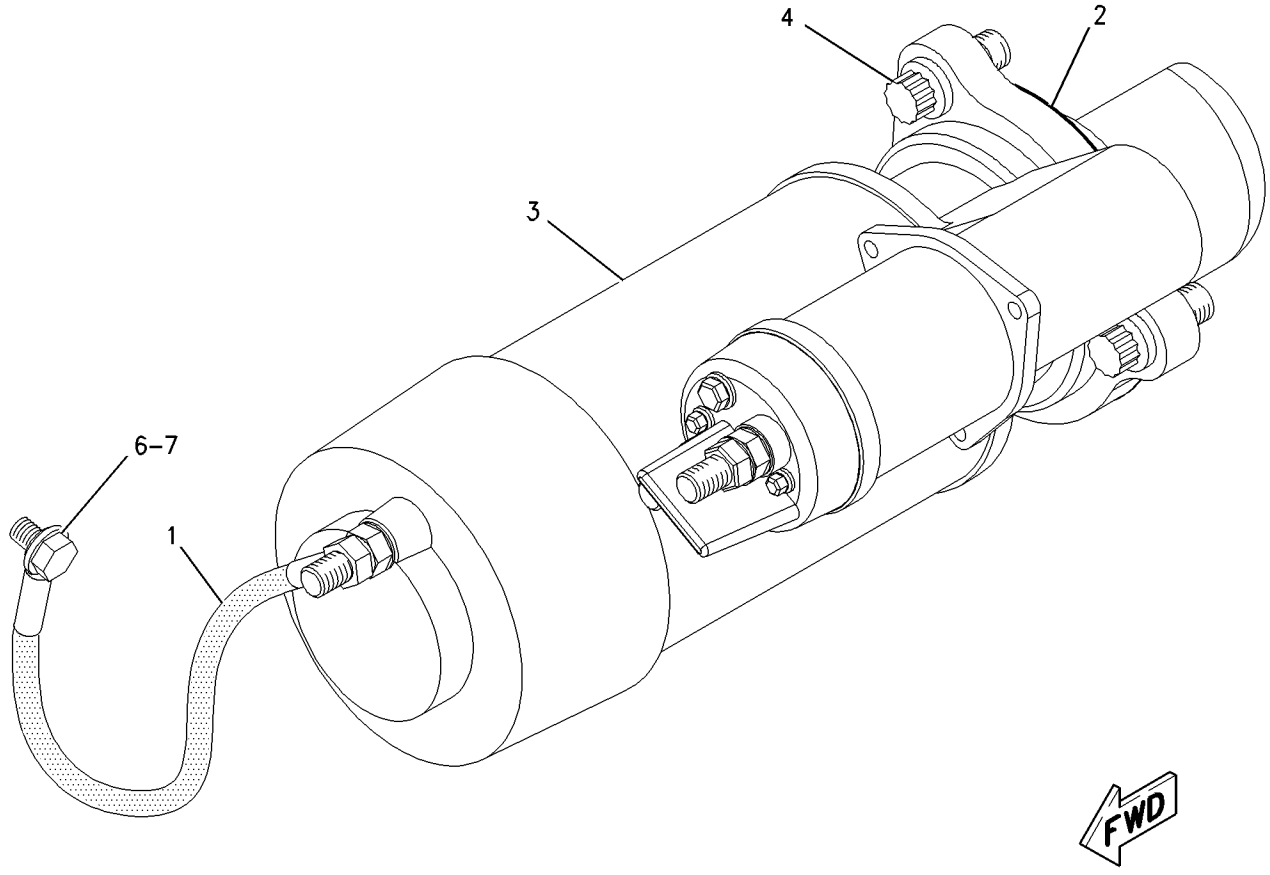

GRAPHIC #1 **<END>** g00820148

207-1516 STARTING MOTOR GP-ELECTRIC*R

S/N: 4ZF4479-UP
24 VOLT
FIELD REPLACEMENT FOR 104-7044—PAGE 260

SMCS-1453 **i02163335**

NOTE	REF NO	GRAPHIC REF	PART NUMBER	QTY	PART NAME 1 2 3 4 5 6 (PRODUCT LEVEL)	SEE PAGE
	1	1	**9X-4825**	1	KIT-BRUSH (STARTING MOTOR)	
	2	1	**106-7149**	1	HOUSING AS	
	3	1	**8T-9884**	1	KIT-INSULATOR (STARTING MOTOR)	
	4	1	**6V-8188**	4	NUT (1/2-13-THD)	
	5	1	**7X-0562**	4	WASHER-HARD (13.5X19X0.8-MM THK)	
	6	1	**8T-0328**	2	WASHER-HARD (5.5X10X1-MM THK)	
	7	1	**9X-4821**	1	PLATE AS	
	8	1	**3E-7852**	1	COIL-STARTING MOTOR	
	9	1	**7T-3454**	1	INSULATOR	
	10	1	**9X-4271**	1	CONNECTOR	
	11	1	**7T-3451**	1	INSULATOR-TERMINAL	
	12	1	**8T-8569**	1	INSULATOR-TERMINAL	
	13	1	**5S-7349**	4	BOLT (1/4-20X0.5-IN)	
	14	1	**8T-4205**	4	WASHER-HARD (7.2X14.5X2-MM THK)	
	15	1	**7X-1950**	4	SHOE-POLE	
	16	1	**3E-7861**	1	KIT-LEVER (STARTING MOTOR)	
	17	1	**3F-0379**	8	SCREW-POLE SHOE (3/8-24-THD)	
	18	1	**3E-7855**	1	ARMATURE AS-STARTER (24-VOLT)	
	19	1	**7X-1952**	1	HOUSING AS-LEVER	
	20	1	**4M-1831**	1	PLUG-LEVER HOUSING	
	21	1	**7L-2894**	1	GASKET	
	22	1	**036-9823**	5	BOLT (1/4-28X1-IN)	
	23	1	**3E-7857**	1	DRIVE AS-STARTING MOTOR	
	24	1	**137-1736**	1	HOUSING AS	
	25	1	**7X-3373**	6	BOLT (5/16-18X0.88-IN)	
	26	1	**250-8279**	1	KIT-SOLENOID (STARTING MOTOR)	
	27	1	**6V-8378**	2	NUT (10-32-THD)	
	28	1	**8F-1434**	1	LOCKWASHER	
	29	1	**102-9863**	1	TERMINAL AS	
	30	1	**9X-4824**	1	COVER-STARTING MOTOR	
	31	1	**3E-7853**	1	TERMINAL	
	32	1	**3T-3422**	1	WIRE AS	
					AVAILABLE REPAIR KIT(S):	
			3E-7860	1	KIT-BUSHING (STARTING MOTOR)	
					(INCLUDES BUSHING, SEAL, SPACER, WASHERS, CUP, RINGS, GASKETS, PLUG AND SCREWS)	

207-1516 STARTING MOTOR GP-ELECTRIC *(contd.)* i02163335

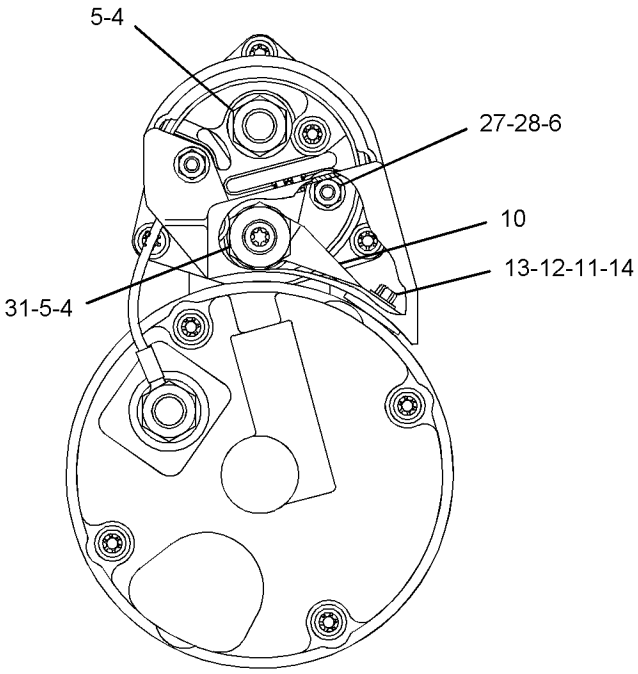

SECTION A-A

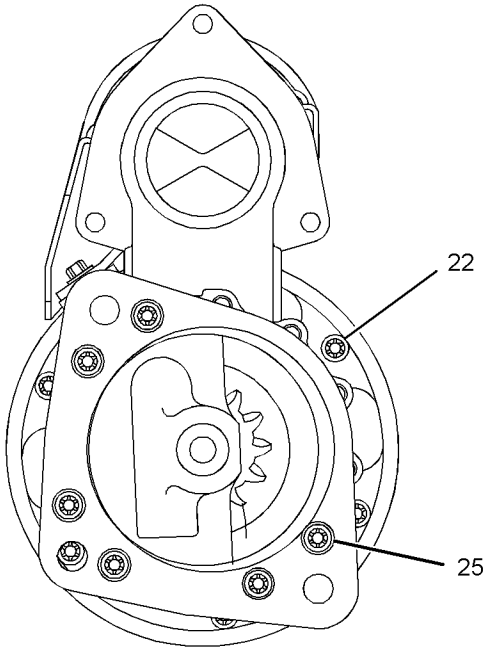

SECTION B-B

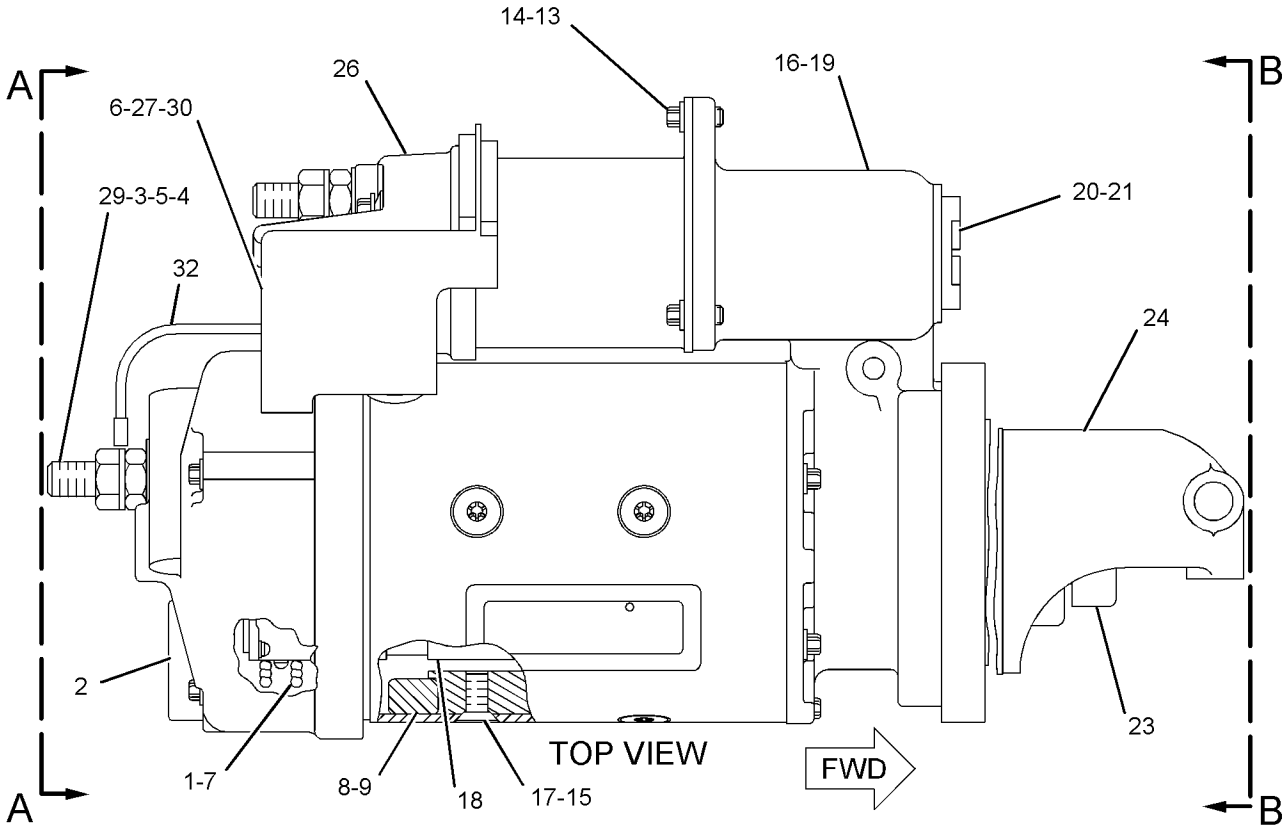

GRAPHIC #1 **<END>** g01098386

164-7577 SWITCH GP-BYPASS–TRANSMISSION OIL FILTER

S/N: CBK1-UP

PART OF 207-3819 FILTER GP-OIL

SMCS-1408, 1435 **i02204195**

NOTE	REF NO	GRAPHIC REF	PART NUMBER	QTY	PART NAME 1 2 3 4 5 6 (PRODUCT LEVEL)	SEE PAGE
E	1	1	**9X-1813**		SLEEVE (19-CM)	
	2	1	**102-8802**	1	KIT-RECEPTACLE (2-PIN)	
					(INCLUDES RECEPTACLE AS & WEDGE)	
	3	1	**186-3735**	2	PIN-CONNECTOR	
	4	1	**3E-3365**	1	WEDGE-RECEPTACLE LOCK (2-PIN)	
	5	1	**3D-2824**	1	SEAL-O-RING	
Z	6	1		1	SWITCH AS	

E-ORDER BY THE CENTIMETER
Z-NOT SERVICED SEPARATELY

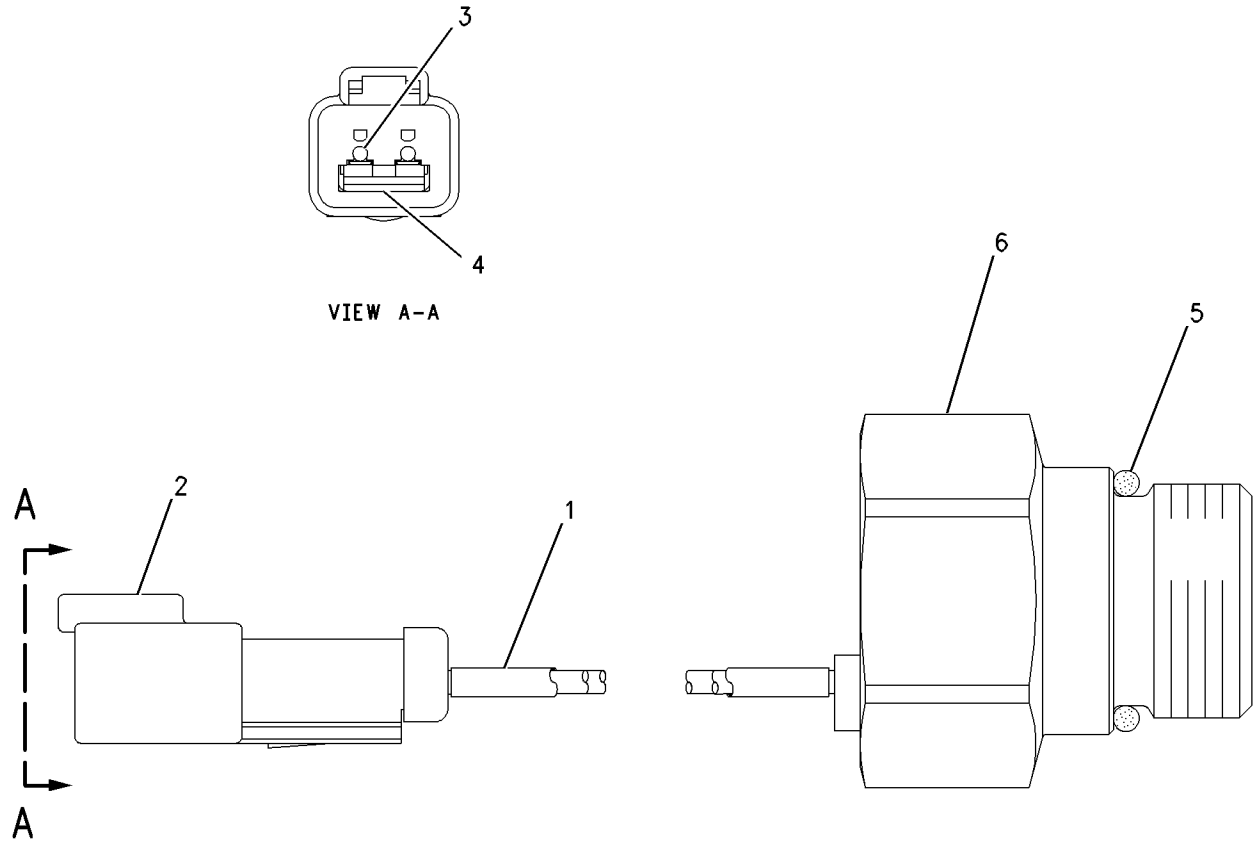

GRAPHIC #1 **<END>** g00750019

7N-0718 SWITCH GP-DISCONNECT–BATTERY

S/N: CBK1-UP

PART OF 193-8255, 193-8256 WIRING GP-REAR

ALSO AN ATTACHMENT

SMCS-1411 **i01810002**

NOTE	REF NO	GRAPHIC REF	PART NUMBER	QTY	PART NAME 1 2 3 4 5 6 (PRODUCT LEVEL)	SEE PAGE
	1	1	**8H-5306**	1	KEY (BATTERY DISCONNECT)	
	2	1	**8H-5303**	1	NUT (3/4-16 THD)	
	3	1	**2H-3922**	2	LOCKWASHER	
	4	1	**9F-5644**	2	LOCKWASHER	
	5	1	**6F-7045**	2	NUT-FULL (3/8X24 THD)	

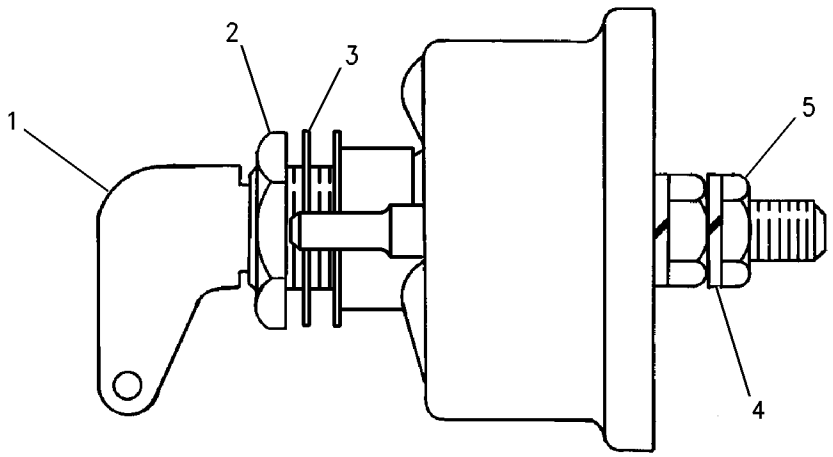

GRAPHIC #1 **<END>** g00715584

161-1018 SWITCH GP-LIGHT–TURN

S/N: CBK1-UP

PART OF 161-0770 LIGHTING AR-FLOOD & SIGNAL

AN ATTACHMENT

SMCS-1429, 1435, 7332 **i02204198**

NOTE	REF NO	GRAPHIC REF	PART NUMBER	QTY	PART NAME 1 2 3 4 5 6 (PRODUCT LEVEL)	SEE PAGE
	1	1	**8X-5153**	1	FILM-FACE (TURN SIGNAL, HAZARD)	
	2	1	**8X-5154**	1	FILM-FACE (HEADLIGHTS HIGH, LOW BEAM)	
	3	1	**9W-1442**	1	FUSE (10-AMPERE)	
	4	1	**103-5678**	1	SWITCH AS-ROTARY (TURN SIGNAL)	
		1	**5L-7200**	1	SCREW (8-32X0.375-IN)	
		1	**9B-7233**	1	LOCKWASHER	
	5	1	**108-0358**	1	FLASHER AS (12/24-VOLT) (TURN SIGNAL, HAZARD)	
	6	1	**173-3064**	1	SWITCH GP-ROTARY (TURN SIGNAL, HAZARD)	
		1	**5L-7200**	1	SCREW (8-32X0.375-IN)	
		1	**9B-7233**	1	LOCKWASHER	
	7	1	**3E-8772**	1	SWITCH AS-ROCKER (HEADLIGHTS, TAIL LIGHTS)	
		1	**3E-8825**	2	LAMP (24-VOLT)	
		1	**3E-9326**	1	ACTUATOR-ROCKER	
M	8	1	**5C-2890**	2	NUT (M6X1-THD)	
	9	1	**8X-6296**	1	LEVER (TURN SIGNAL)	
	9A	1	**8X-6296**	1	LEVER (HEADLIGHT DIMMER)	
M	10	1	**9X-2043**	2	SCREW-TRUSS HEAD (M6X1X14-MM)	
	11	1	**9X-8256**	2	WASHER (6.6X12X2-MM THK)	

M-METRIC PART

161-1018 **SWITCH GP-LIGHT** *(contd.)* **i02204198**

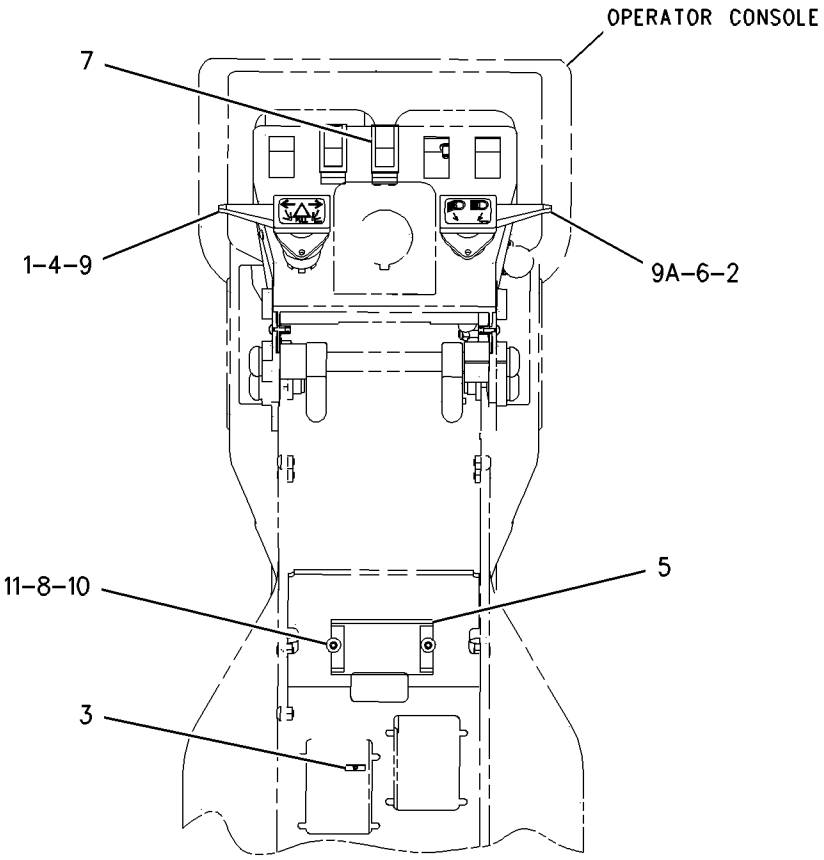

REAR VIEW

GRAPHIC #1 **<END>** g00846541

3E-0154 SWITCH GP-MAGNETIC—SECONDARY STEERING RELAY

S/N: CBK1-UP

PART OF 193-7360 WIRING GP-REAR, 194-3353 WIRING GP-SECONDARY STEERING AN ATTACHMENT

SMCS-7499 **i01676990**

NOTE	REF NO	GRAPHIC REF	PART NUMBER	QTY	PART NAME 1 2 3 4 5 6 (PRODUCT LEVEL)	SEE PAGE
	1	1	**7X-0620**	2	WASHER-HARD (5.5X13X1.6-MM THK)	
	2	1	**8F-1434**	2	LOCKWASHER	
	3	1	**6V-8378**	2	NUT (10-32-THD)	
	4	1	**6V-8801**	2	NUT (3/8-16-THD)	
	5	1	**7X-0608**	2	WASHER-HARD (10.2X16X2-MM THK)	
	6	1	**4D-1326**	2	LOCKWASHER	

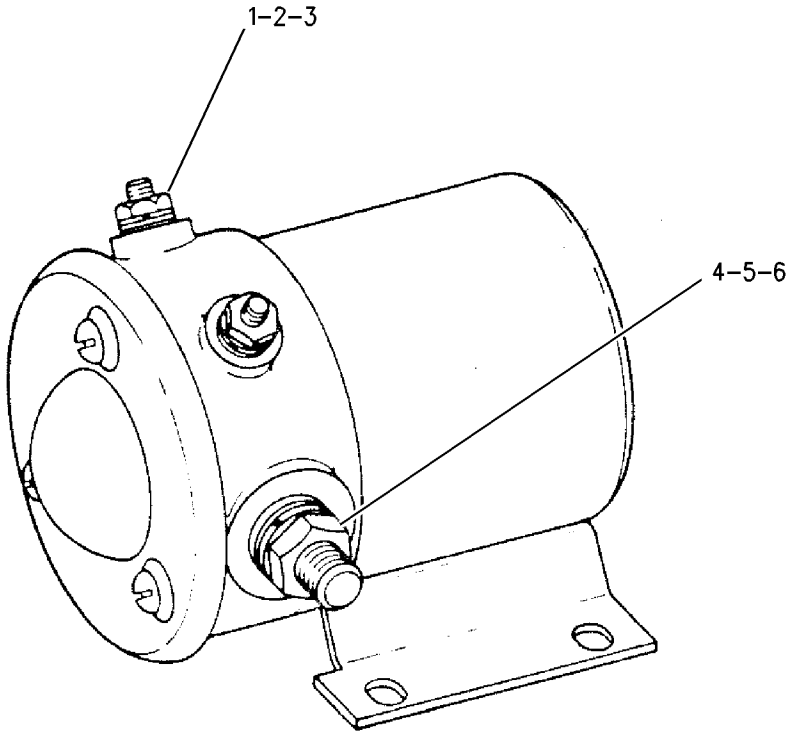

GRAPHIC #1 **<END>** g00726410

167-0138 SWITCH GP-MAGNETIC–FUSE, RELAY–MAIN RELAY

S/N: CBK1-UP
24V
PART OF 193-8255, 193-8256 WIRING GP-REAR
ALSO AN ATTACHMENT

SMCS-7499 **i02021607**

NOTE	REF NO	GRAPHIC REF	PART NUMBER	QTY	PART NAME 1 2 3 4 5 6 (PRODUCT LEVEL)	SEE PAGE
	1	1	**4F-2294**	2	NUT-JAM (5/16-24-THD)	
	2	1	**6V-8186**	2	NUT-FULL (5/16-24-THD)	
	3	1	**155-2270**	1	KIT-CONNECTING PLUG (2-PIN)	
	4	1	**8T-8730**	2	SOCKET-CONNECTOR	
	5	1	**155-2261**	1	WEDGE-PLUG LOCK (2-PIN)	

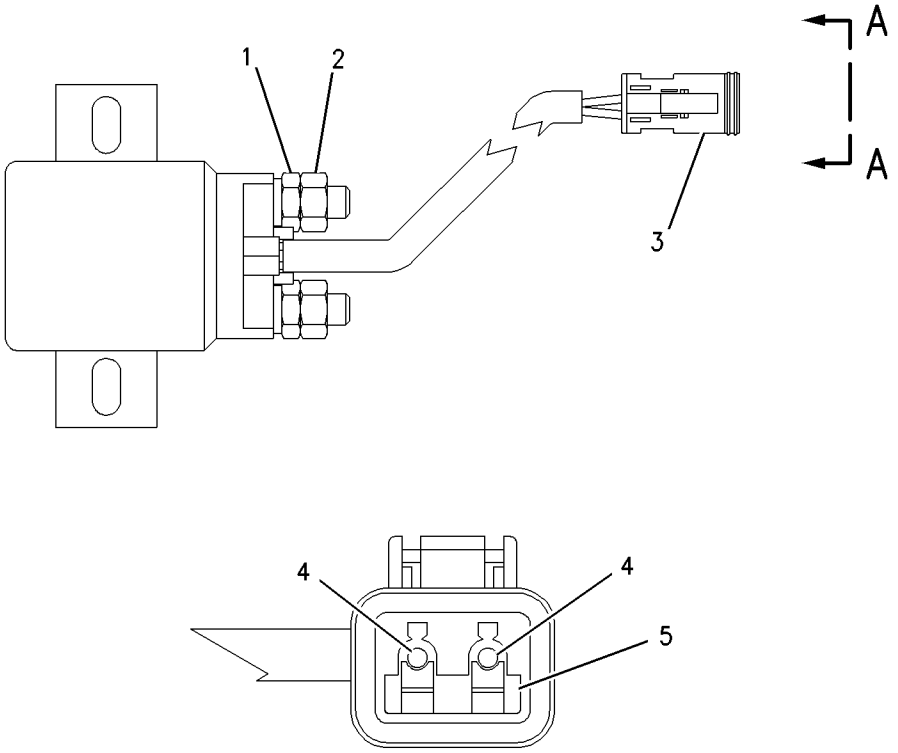

VIEW A-A

GRAPHIC #1 **<END>** g00823979

223-4453 SWITCH GP-MAGNETIC—INLET AIR HEATER

S/N: 4ZF4479-UP
24 VOLT
PART OF 222-9135, 234-2432 WIRING GP-ENGINE ELECTRONIC

SMCS-7499 **i02203402**

NOTE	REF NO	GRAPHIC REF	PART NUMBER	QTY	PART NAME 1 2 3 4 5 6 (PRODUCT LEVEL)	SEE PAGE
	1	1	*209-5582*	1	SWITCH AS-MAGNETIC (24-VOLT) (INLET AIR HEATER)	
	2	1	**102-8802**	1	KIT-RECEPTACLE (2-PIN)	
					(INCLUDES RECEPTACLE AS AND WEDGE)	
	3	1	**186-3735**	2	PIN-CONNECTOR	
	4	1	**3F-9556**	2	LOCKWASHER	
	5	1	**6V-8186**	2	NUT-FULL (5/16-24-THD)	
	6	1	**6V-8378**	2	NUT (10-32-THD)	
	7	1	**8F-1434**	2	LOCKWASHER	

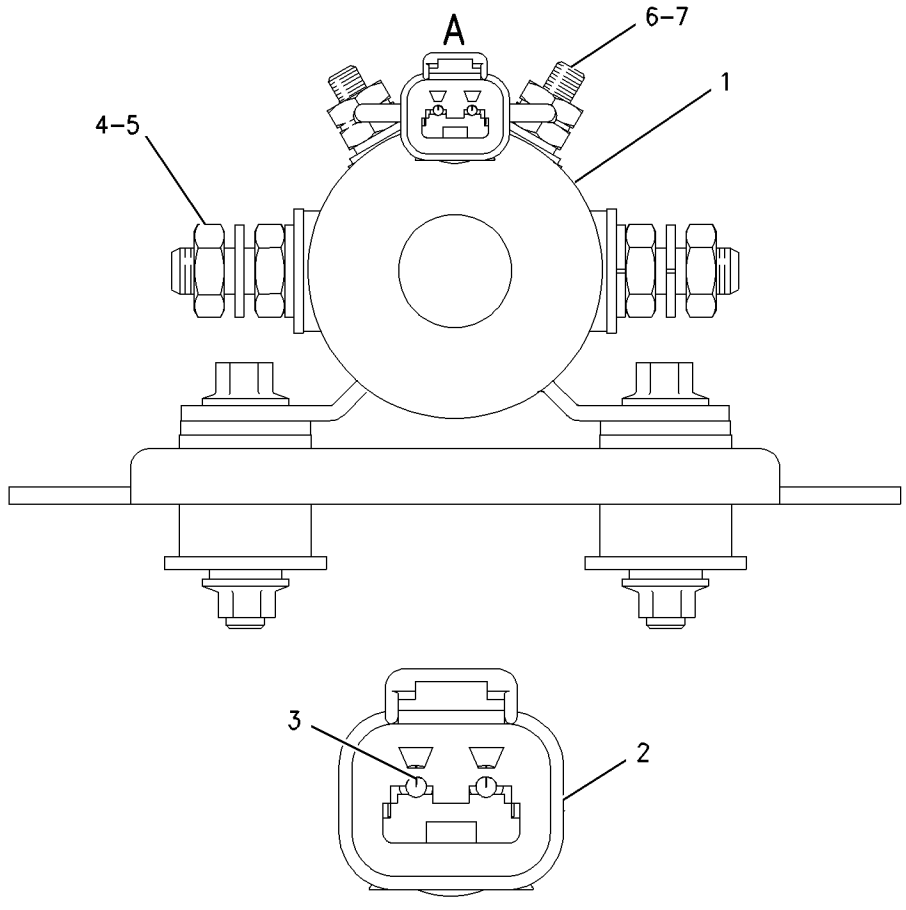

VIEW OF AREA A

GRAPHIC #1 **<END>** g00954596

3E-0155 SWITCH GP-WIPER

S/N: CBK1-UP
PART OF 177-8784 WIPER GP-WINDOW, 193-7359 WIRING GP-CAB
AN ATTACHMENT

SMCS-7305, 7332 **i01864892**

NOTE	REF NO	GRAPHIC REF	PART NUMBER	QTY	PART NAME 1 2 3 4 5 6 (PRODUCT LEVEL)	SEE PAGE
C	1	1	**102-8806**	1	KIT-RECEPTACLE (8-PIN)	
					(INCLUDES RECEPTACLE AS & WEDGE)	
	2	1	**7T-9302**	1	KNOB (WIPER, WASHER)	
		1	**014-0816**	1	SETSCREW (8-32X0.5-IN)	
	3	1	**8T-8737**	1	PLUG-SEAL	
	4	1	**3E-3389**	1	WEDGE-RECEPTACLE LOCK	
C	5	1	**8T-8729**	3	PIN-CONNECTOR	
	6	1	**6V-8369**	1	NUT (7/16-28-THD)	
	7	1	**2H-3920**	1	LOCKWASHER	
C	8	1	**9W-0852**	4	PIN-CONNECTOR	

C-CHANGE FROM PREVIOUS TYPE

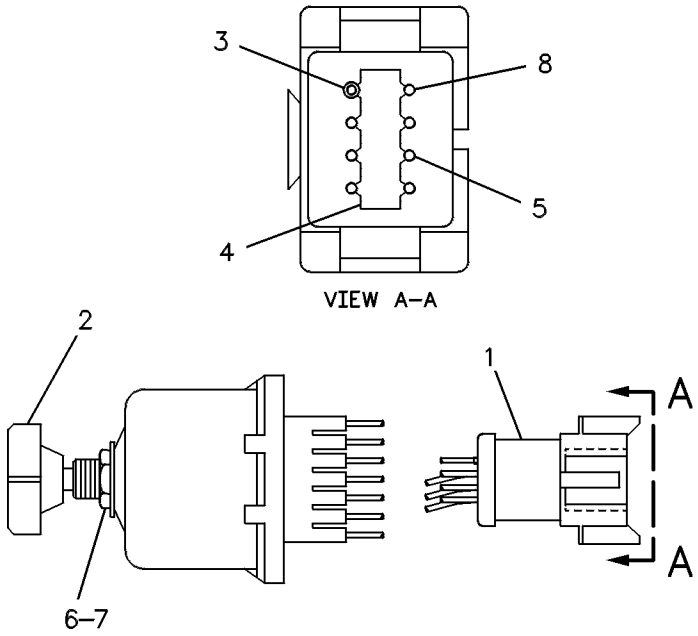

GRAPHIC #1 **<END>** g00120668

161-1022 WIRING GP-BLADE CUSHION

S/N: CBK1-UP

PART OF 166-3337, 221-2961 ACCUMULATOR AR-BLADE CUSHION

AN ATTACHMENT

SMCS-1408 **i02205195**

NOTE	REF NO	GRAPHIC REF	PART NUMBER	QTY	PART NAME 1 2 3 4 5 6 (PRODUCT LEVEL)	SEE PAGE
	1	1	**3S-2093**	2	STRAP-CABLE	
	2	1	**130-5300**	2	CLIP	
	3	1	**169-3147**	1	HARNESS AS-CHASSIS	
		1	**102-8802**	4	KIT-RECEPTACLE (2-PIN)	
		1	**102-8803**	1	KIT-RECEPTACLE (3-PIN)	
					(EACH INCLUDES RECEPTACLE AS & WEDGE)	
		1	**155-2270**	4	KIT-CONNECTING PLUG (2-PIN)	
					(INCLUDES PLUG AS & WEDGE)	
	4	1	**033-8248**	1	CLIP	
	5	1	**147-0385**	2	CLIP	
	6	1	**4L-6459**	2	BOLT (3/8-16X2.5-IN)	
	7	1	**5P-8167**	1	BOLT (3/8-16X0.625-IN)	
	8	1	**6V-8801**	2	NUT (3/8-16-THD)	
	10	1	**8T-4896**	5	WASHER-HARD (10.2X18.5X2.5-MM THK)	
	11	1	**3E-8763**	1	SWITCH AS (BLADE CUSHION)	
		1	**3E-8812**	1	ACTUATOR-ROCKER	
		1	**3E-8825**	1	LAMP (24-VOLT) (BLADE CUSHION SWITCH)	

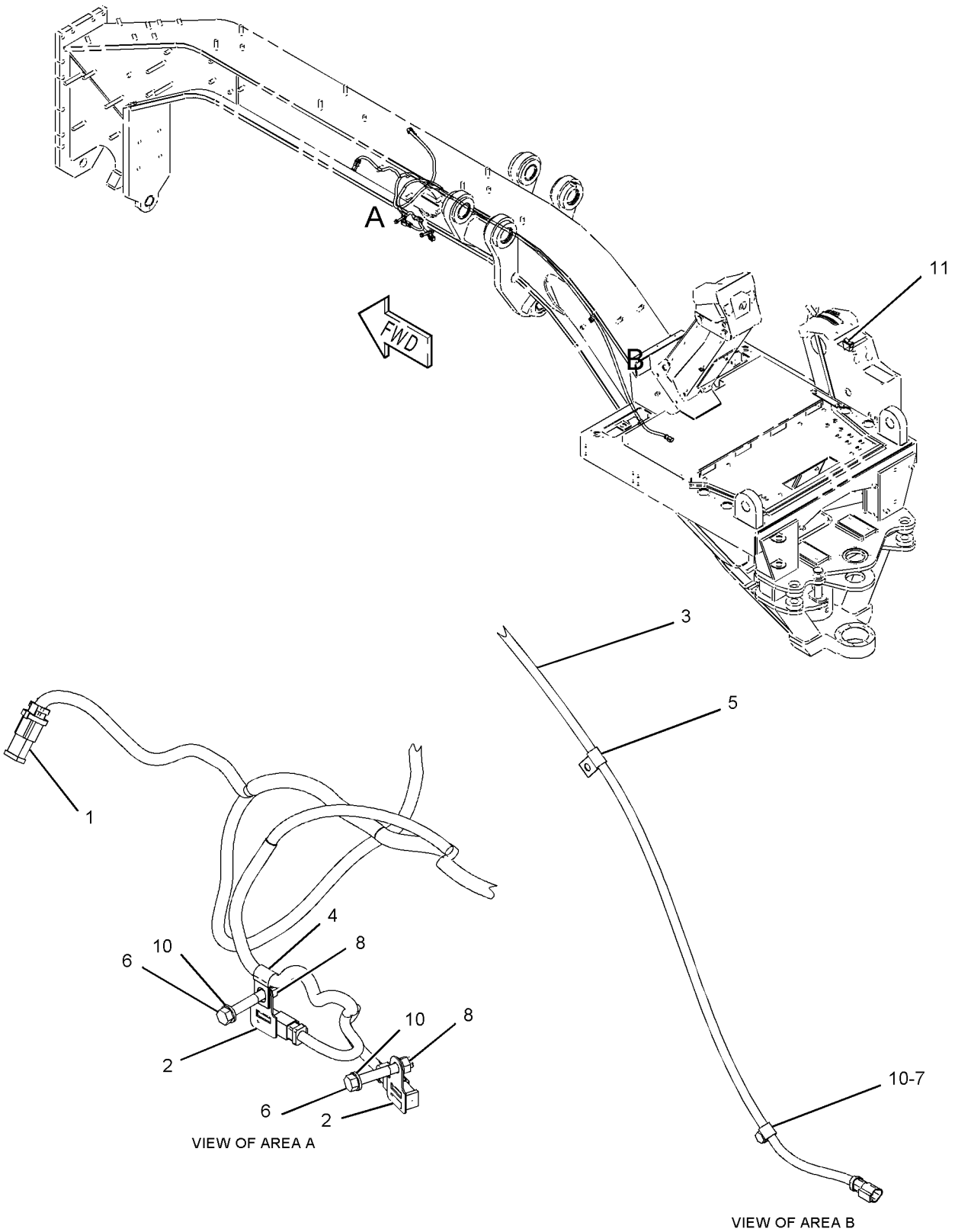

GRAPHIC #1 **<END>** g01113643

ELECTRICAL AND STARTING SYSTEM

159-5878 WIRING GP-CAB

S/N: CBK1-UP

PART OF 162-5605 GENERAL AR

SMCS-1408, 7301 **i02204202**

NOTE	REF NO	GRAPHIC REF	PART NUMBER	QTY	PART NAME 1 2 3 4 5 6 (PRODUCT LEVEL)	SEE PAGE
	1	1	**3E-0109**	3	PLUG (ROCKER SWITCH)	
Y	2	1	**3E-6389**	1	LAMP GP-DOME (24-VOLT, WITH SWITCH)	152
	3	1	**3S-2093**	23	STRAP-CABLE	
	4	1	**131-5171**	1	CLIP	
	5	1	**6V-6578**	2	RIVET-BLIND	
	6	1	**7T-9302**	2	KNOB (WIPER, WASHER) (FRONT)	
	7	1	**9W-1441**	1	FUSE (15-AMPERE)	
	8	1	**112-6174**	2	SWITCH AS-ROTARY (24-VOLT) (FRONT WIPER CONTROL)	
					(EACH INCLUDES)	
		1	**2H-3920**	1	LOCKWASHER	
		1	**3E-3389**	1	WEDGE-RECEPTACLE LOCK	
		1	**6V-8369**	1	NUT (7/16-28-THD)	
		1	**186-3735**	6	PIN-CONNECTOR	
		1	**8T-8737**	2	PLUG-SEAL	
		1	**102-8806**	1	KIT-RECEPTACLE (8-PIN)	
	9	1	**160-6382**	1	GROMMET	
	10	1	**167-7504**	1	HARNESS AS-CAB (SWITCH PANEL)	
		1	**102-8806**	1	KIT-RECEPTACLE (8-PIN)	
		1	**102-8801**	1	KIT-RECEPTACLE (12-PIN)	
		1	**155-2255**	1	KIT-CONNECTING PLUG (12-PIN)	
		1	**155-2265**	4	KIT-CONNECTING PLUG (8-PIN)	
	11	1	**167-7505**	1	HARNESS AS-CAB (REAR)	
		1	**102-8802**	2	KIT-RECEPTACLE (2-PIN)	
		1	**102-8805**	1	KIT-RECEPTACLE (6-PIN)	
		1	**102-8806**	1	KIT-RECEPTACLE (8-PIN)	
		1	**155-2270**	2	KIT-CONNECTING PLUG (2-PIN)	
		1	**155-2274**	1	KIT-CONNECTING PLUG (6-PIN)	
	12	1	**168-8248**	1	HARNESS AS-CAB (FRONT)	
		1	**102-8802**	9	KIT-RECEPTACLE (2-PIN)	
		1	**102-8803**	2	KIT-RECEPTACLE (3-PIN)	
		1	**102-8804**	1	KIT-RECEPTACLE (4-PIN)	
		1	**102-8806**	1	KIT-RECEPTACLE (8-PIN)	
		1	**102-8801**	2	KIT-RECEPTACLE (12-PIN)	
		1	**155-2255**	2	KIT-CONNECTING PLUG (12-PIN)	
		1	**155-2265**	1	KIT-CONNECTING PLUG (8-PIN)	
		1	**155-2260**	3	KIT-CONNECTING PLUG (3-PIN)	
		1	**155-2270**	9	KIT-CONNECTING PLUG (2-PIN)	
		1	**155-2274**	1	KIT-CONNECTING PLUG (6-PIN)	
	13	1	**169-8938**	1	PLATE AS	
	14	1	**172-6555**	1	PANEL	
	15	1	**172-8641**	1	PLATE	
	16	1	**172-9316**	1	FILM-FUSE (LIGHTS, WASHER, WIPER, DEFROST)	
	17	1	**096-6166**	3	WASHER-HARD (4.5X9X1-MM THK)	
M	18	1	**5C-8312**	3	NUT (M4X0.7-THD)	
	19	1	**6V-5645**	4	SCREW-MACHINE (10-32X0.87-IN)	
	20	1	**6V-8801**	1	NUT (3/8-16-THD)	
	21	1	**8T-4896**	1	WASHER-HARD (10.2X18.5X2.5-MM THK)	
M	22	1	**9X-1046**	3	SCREW (M4X0.7X18-MM)	
M	23	1	**9X-2042**	4	SCREW-TRUSS HEAD (M6X1X12-MM)	
E	24	1	**7X-7877**		STRIP-EDGING (10-CM)	

E-ORDER BY THE CENTIMETER
M-METRIC PART
Y-SEPARATE ILLUSTRATION

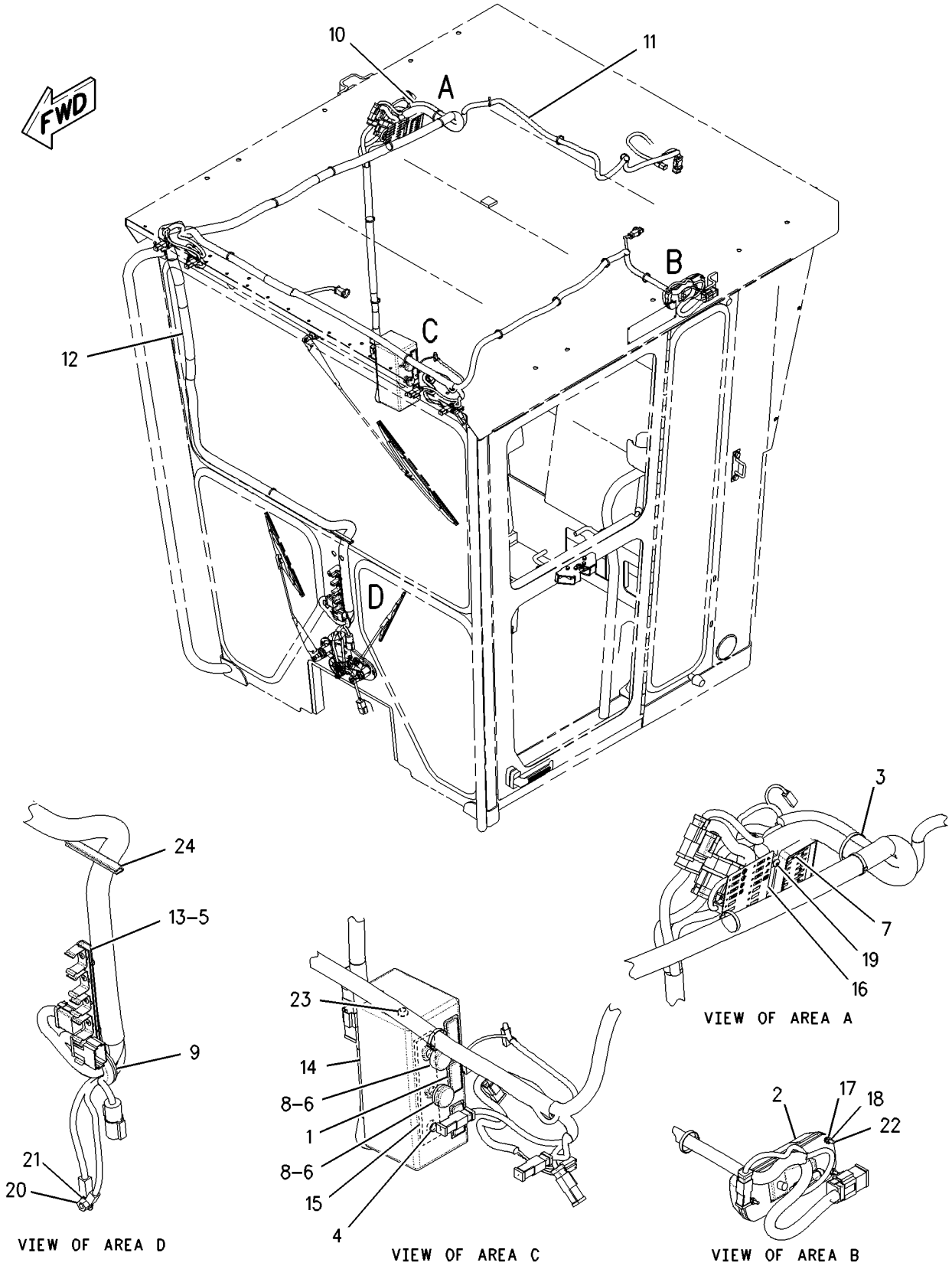

GRAPHIC #1 **<END>** g00808291

161-1921 WIRING GP-CAB–WARNING BEACON

S/N: CBK1-UP

PART OF 197-5954, 236-3947 SNOW AR-MOTOR GRADER

AN ATTACHMENT

SMCS-1408, 7301 **i02070958**

NOTE	REF NO	GRAPHIC REF	PART NUMBER	QTY	PART NAME 1 2 3 4 5 6 (PRODUCT LEVEL)	SEE PAGE
	1	1	**9W-1442**	1	FUSE (10-AMPERE) (WARNING BEACON)	
Y	2	1	**239-9362**	1	INSTALLATION GP-WARNING BEACON (WARNING)	150

Y-SEPARATE ILLUSTRATION

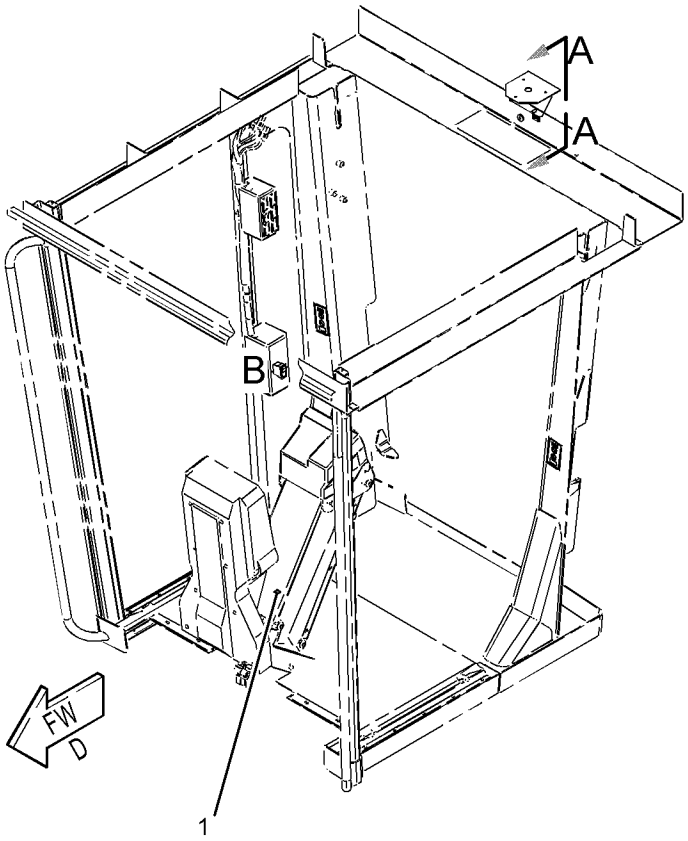

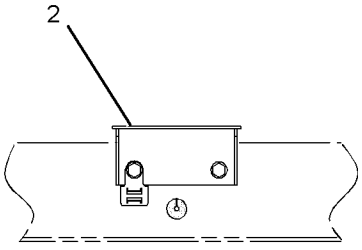

VIEW A-A

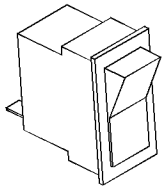

VIEW OF AREA B

GRAPHIC #1 **<END>** g01060901

ELECTRICAL AND STARTING SYSTEM

193-7359 WIRING GP-CAB–EU

S/N: CBK1-UP
PART OF 207-3700, 210-2043 CONVERSION AR-CERTIFICATION, 218-4759 ROPS
GP-ENCLOSED
AN ATTACHMENT

SMCS-1408, 7301 **i02204205**

NOTE	REF NO	GRAPHIC REF	PART NUMBER	QTY	PART NAME 1 2 3 4 5 6 (PRODUCT LEVEL)	SEE PAGE
	1	1	**3E-0109**	3	PLUG (ROCKER SWITCH)	
Y	2	1	**3E-0155**	2	SWITCH GP-WIPER (24-VOLT) (FRONT INTERMITTENT)	272
Y	3	1	**3E-6389**	1	LAMP GP-DOME (24-VOLT, WITH SWITCH)	152
	4	1	**3S-2093**	23	STRAP-CABLE	
	5	1	**131-5171**	1	CLIP	
	6	1	**6V-6578**	2	RIVET-BLIND	
	8	1	**9W-1441**	1	FUSE (15-AMPERE)	
	9	1	**160-6382**	1	GROMMET	
	10	1	**167-7504**	1	HARNESS AS-CAB (FRONT)	
		1	**155-2255**	1	KIT-CONNECTING PLUG (12-PIN)	
		1	**155-2265**	4	KIT-CONNECTING PLUG (8-PIN)	
					(KIT INCLUDES PLUG AS & WEDGE)	
		1	**102-8806**	1	KIT-RECEPTACLE (8-PIN)	
		1	**102-8801**	1	KIT-RECEPTACLE (12-PIN)	
					(KIT INCLUDES RECEPTACLE AS & WEDGE)	
	11	1	**167-7505**	1	HARNESS AS-CAB (REAR)	
		1	**155-2270**	2	KIT-CONNECTING PLUG (2-PIN)	
		1	**155-2274**	1	KIT-CONNECTING PLUG (6-PIN)	
					(KIT INCLUDES PLUG AS & WEDGE)	
		1	**102-8802**	2	KIT-RECEPTACLE (2-PIN)	
		1	**102-8805**	1	KIT-RECEPTACLE (6-PIN)	
		1	**102-8806**	1	KIT-RECEPTACLE (8-PIN)	
					(KIT INCLUDES RECEPTACLE AS & WEDGE)	
	12	1	**169-8938**	1	PLATE AS	
	13	1	**172-6555**	1	PANEL	
	14	1	**172-8641**	1	PLATE	
	15	1	**172-9316**	1	FILM-FUSE	
	16	1	**196-9373**	1	HARNESS AS-CAB (SWITCH PANEL)	
		1	**155-2255**	2	KIT-CONNECTING PLUG (12-PIN)	
		1	**155-2265**	1	KIT-CONNECTING PLUG (8-PIN)	
		1	**155-2260**	1	KIT-CONNECTING PLUG (3-PIN)	
		1	**155-2270**	11	KIT-CONNECTING PLUG (2-PIN)	
		1	**155-2271**	1	KIT-CONNECTING PLUG (4-PIN)	
		1	**155-2274**	1	KIT-CONNECTING PLUG (6-PIN)	
					(KITS INCLUDE PLUG AS & WEDGE)	
		1	**127-5484**	1	RECEPTACLE AS (1-PIN)	
		1	**102-8802**	11	KIT-RECEPTACLE (2-PIN)	
		1	**102-8804**	1	KIT-RECEPTACLE (4-PIN)	
		1	**102-8806**	1	KIT-RECEPTACLE (8-PIN)	
		1	**102-8801**	2	KIT-RECEPTACLE (12-PIN)	
					(KITS INCLUDE RECEPTACLE AS & WEDGE)	
	17	1	**096-6166**	3	WASHER-HARD (4.5X9X1-MM THK)	
M	18	1	**5C-8312**	3	NUT (M4X0.7-THD)	
	19	1	**6V-5645**	4	SCREW-MACHINE (10-32X0.87-IN)	
	20	1	**6V-8801**	1	NUT (3/8-16-THD)	
	21	1	**8T-4896**	1	WASHER-HARD (10.2X18.5X2.5-MM THK)	
M	22	1	**9X-1046**	3	SCREW (M4X0.7X18-MM)	
M	23	1	**9X-2042**	4	SCREW-TRUSS HEAD (M6X1X12-MM)	
BE	24	1	**7X-7877**		STRIP-EDGING	

B-USE AS REQUIRED
E-ORDER BY THE CENTIMETER
M-METRIC PART
Y-SEPARATE ILLUSTRATION

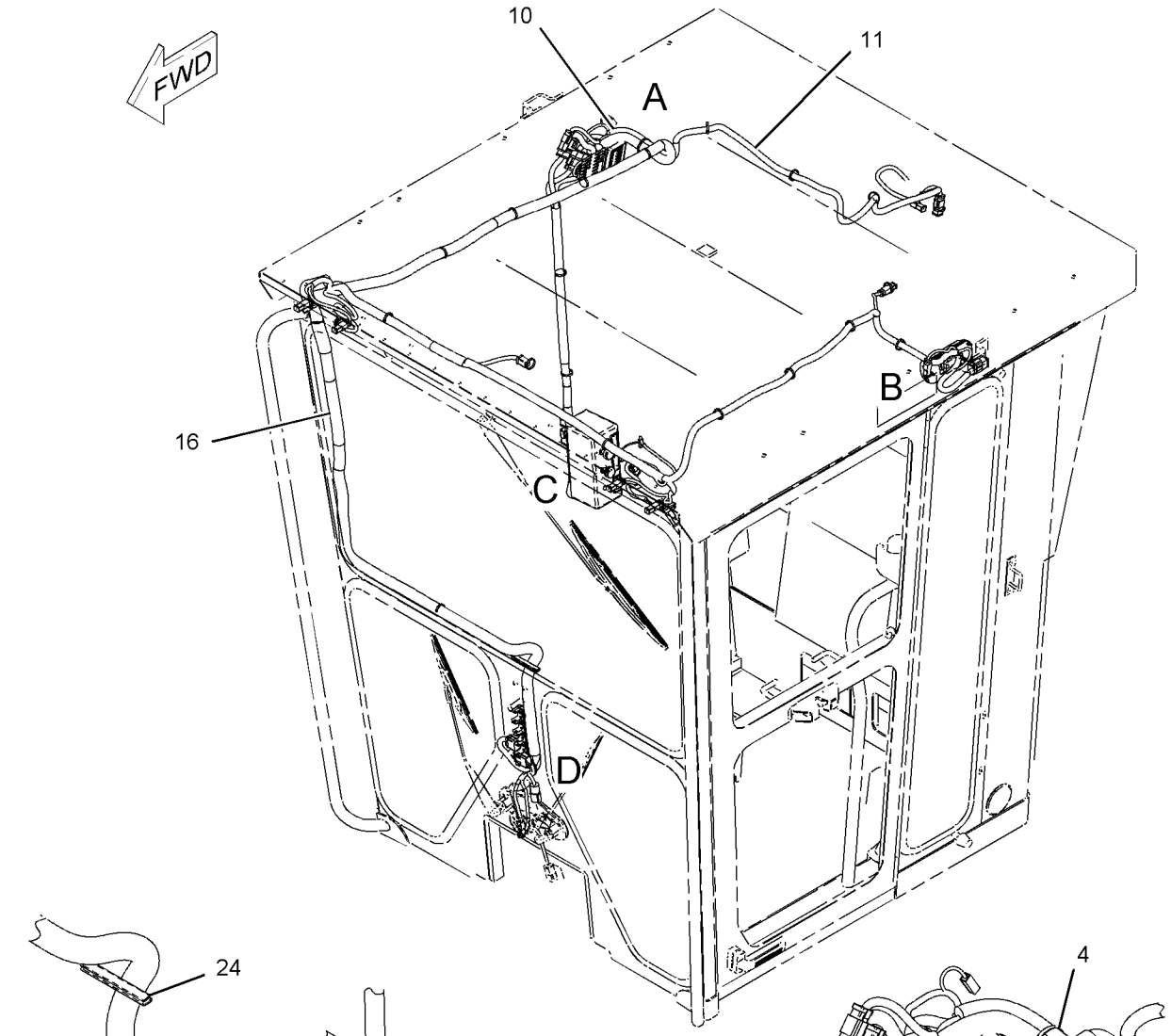

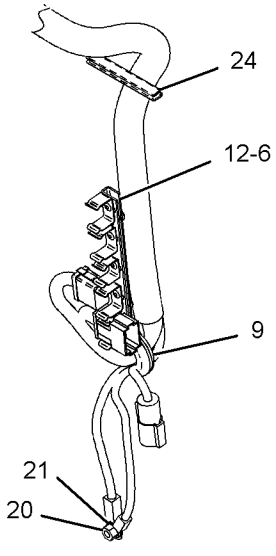

VIEW OF AREA D

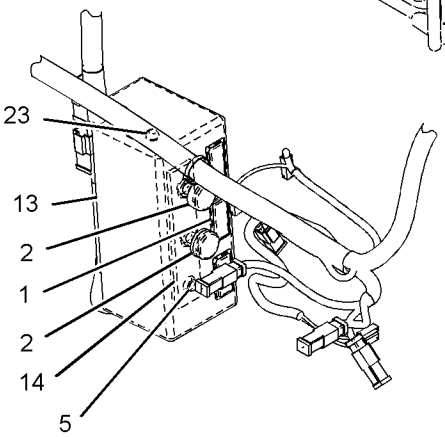

VIEW OF AREA C

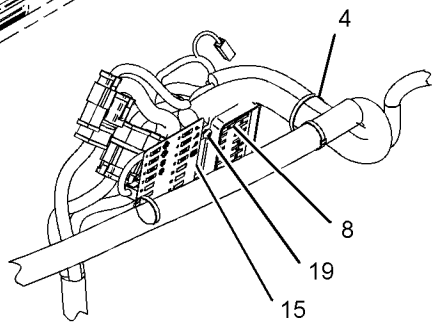

VIEW OF AREA A

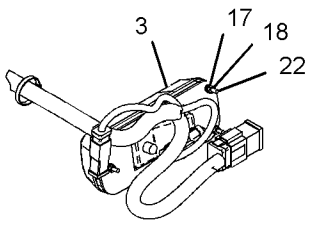

VIEW OF AREA B

GRAPHIC #1 **<END>** g01010923

203-6551 WIRING GP-CAB—MOLDBOARD

S/N: CBK1-UP

PART OF 203-6536 LIGHTING AR-FLOOD

AN ATTACHMENT

SMCS-1408, 7301 **i02204209**

NOTE	REF NO	GRAPHIC REF	PART NUMBER	QTY	PART NAME 1 2 3 4 5 6 (PRODUCT LEVEL)	SEE PAGE
	1	1	**3E-0109**	5	PLUG (ROCKER SWITCH)	
	2	1	**3S-2093**	2	STRAP-CABLE	
	3	1	**9W-1442**	1	FUSE (10-AMPERE)	
	4	1	**145-3350**	1	PLATE	
	5	1	**153-2147**	1	PLATE	
	6	1	**168-8243**	1	HARNESS AS-PANEL	
		1	**155-2255**	1	KIT-CONNECTING PLUG (12-PIN)	
		1	**155-2265**	4	KIT-CONNECTING PLUG (8-PIN)	
		1	**155-2270**	1	KIT-CONNECTING PLUG (2-PIN)	
		1	**155-2271**	1	KIT-CONNECTING PLUG (4-PIN)	
					(EACH INCLUDES A PLUG AS & WEDGE)	
		1	**102-8802**	1	KIT-RECEPTACLE (2-PIN)	
		1	**102-8804**	2	KIT-RECEPTACLE (4-PIN)	
		1	**102-8806**	1	KIT-RECEPTACLE (8-PIN)	
		1	**102-8801**	1	KIT-RECEPTACLE (12-PIN)	
					(EACH INCLUDES A RECEPTACLE AS & WEDGE)	
	7	1	**172-6556**	1	PANEL	
	8	1	**188-3862**	1	BRACKET AS	
	9	1	**3E-8766**	1	SWITCH AS (24-VOLT) (MOLDBOARD)	
		1	**3E-8782**	1	ACTUATOR-ROCKER	
		1	**3E-8825**	1	LAMP (24-VOLT)	
M	10	1	**9X-2043**	6	SCREW-TRUSS HEAD (M6X1X14-MM)	

M-METRIC PART

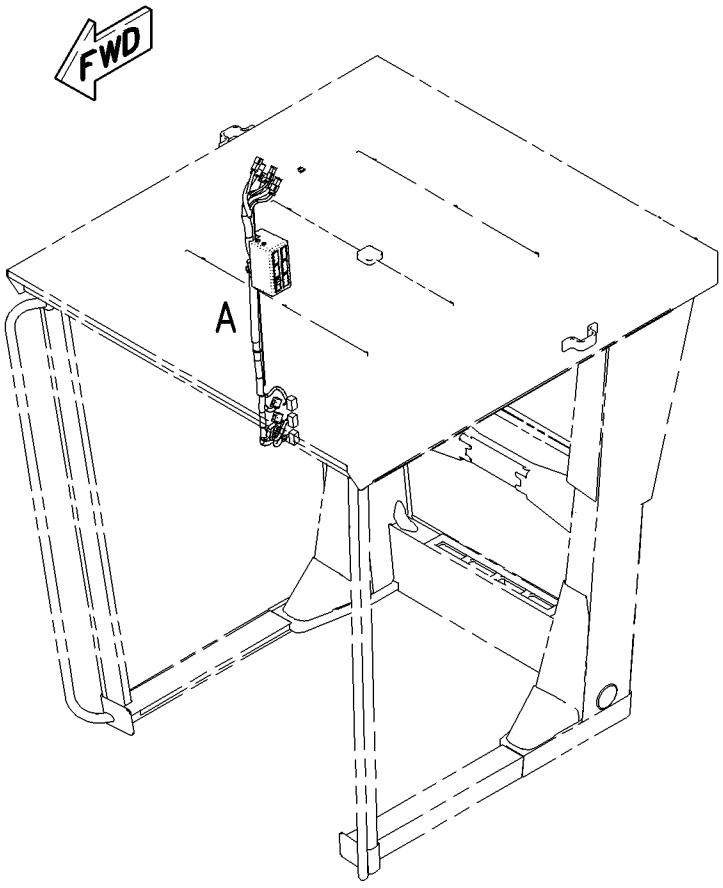

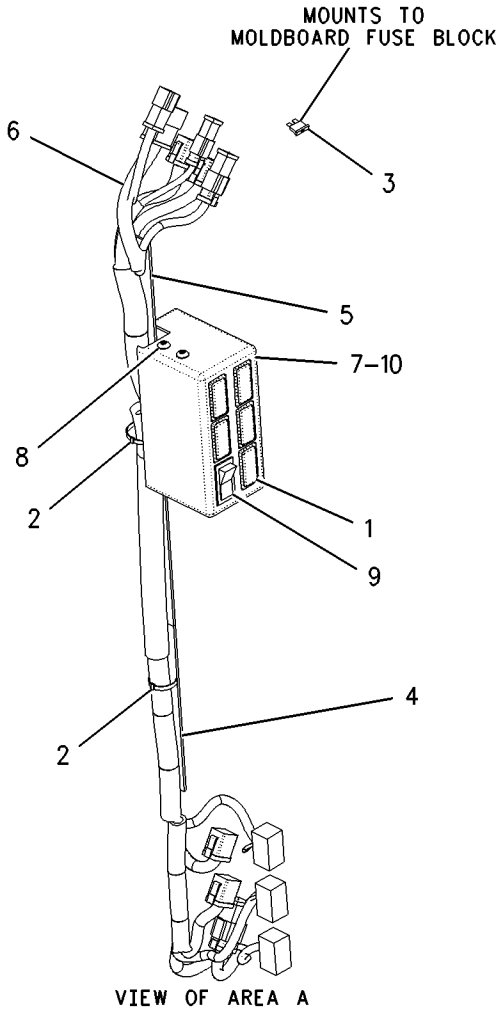

VIEW OF AREA A

GRAPHIC #1 **<END>** g00941003

204-6127 WIRING GP-CAB–MOLDBOARD

S/N: CBK1-UP

PART OF 204-6109 LIGHTING AR-FLOOD

AN ATTACHMENT

SMCS-1408, 7301 **i02204211**

NOTE	REF NO	GRAPHIC REF	PART NUMBER	QTY	PART NAME 1 2 3 4 5 6 (PRODUCT LEVEL)	SEE PAGE
	1	1	**3E-0109**	5	PLUG (ROCKER SWITCH)	
	2	1	**3S-2093**	2	STRAP-CABLE	
	3	1	**9W-1442**	1	FUSE (10-AMPERE)	
	4	1	**145-3350**	1	PLATE	
	5	1	**153-2147**	1	PLATE	
	6	1	**172-6556**	1	PANEL	
	7	1	**188-3862**	1	BRACKET AS	
	8	1	**196-8557**	1	HARNESS AS-CAB	
		1	**102-8802**	1	KIT-RECEPTACLE (2-PIN)	
		1	**102-8804**	2	KIT-RECEPTACLE (4-PIN)	
		1	**102-8806**	1	KIT-RECEPTACLE (8-PIN)	
		1	**102-8801**	1	KIT-RECEPTACLE (12-PIN)	
		1	**155-2255**	1	KIT-CONNECTING PLUG (12-PIN)	
		1	**155-2265**	4	KIT-CONNECTING PLUG (8-PIN)	
		1	**155-2270**	1	KIT-CONNECTING PLUG (2-PIN)	
		1	**155-2271**	1	KIT-CONNECTING PLUG (4-PIN)	
	9	1	**3E-8766**	1	SWITCH AS (24-VOLT) (MOLDBOARD)	
		1	**3E-8782**	1	ACTUATOR-ROCKER	
		1	**3E-8825**	1	LAMP (24-VOLT)	
M	10	1	**9X-2043**	6	SCREW-TRUSS HEAD (M6X1X14-MM)	

M-METRIC PART

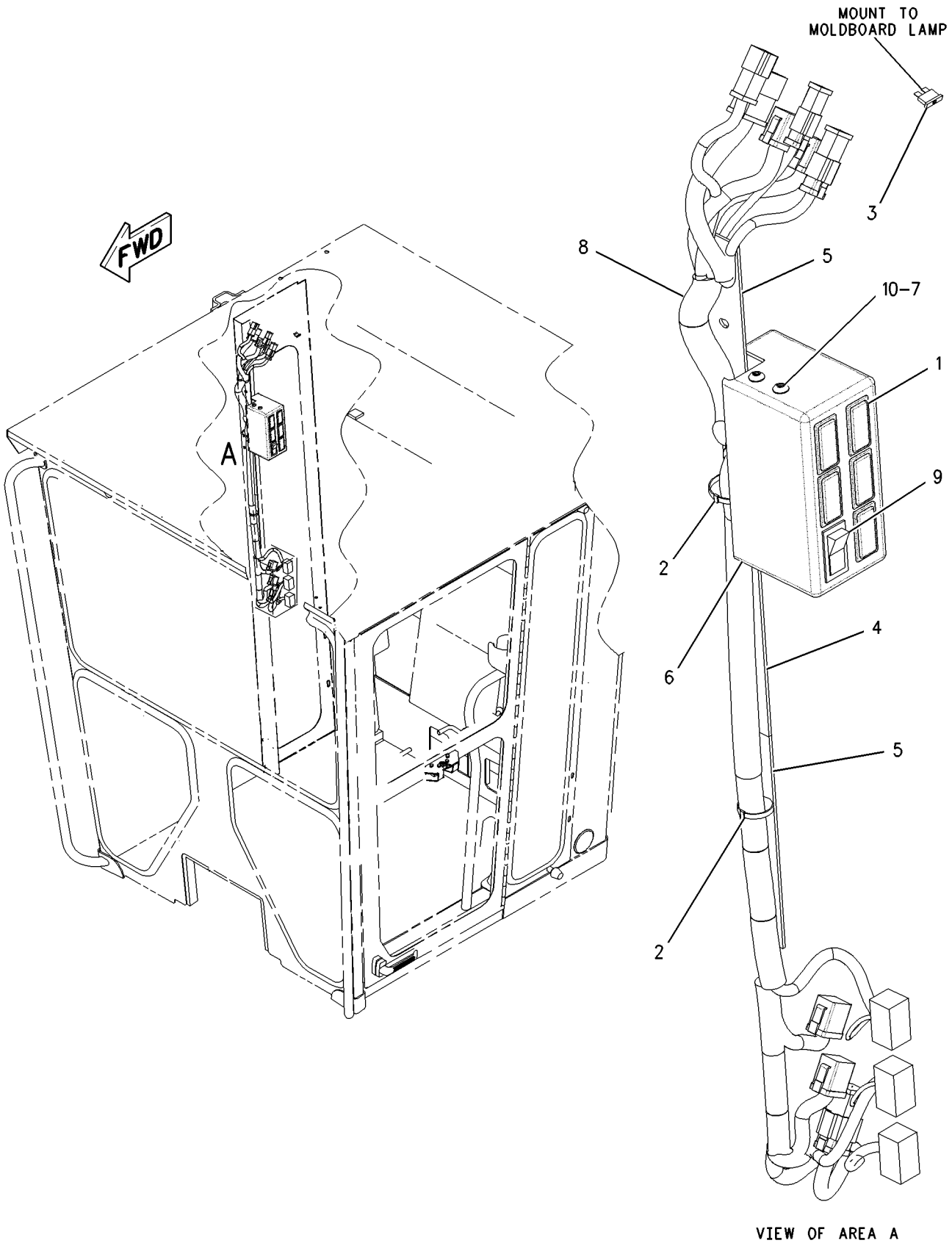

GRAPHIC #1 **<END>** g00843569

223-3941 WIRING GP-CAB

S/N: CBK1-UP
PART OF 223-3937 CAB GP
AN ATTACHMENT

SMCS-1408, 7301 **i02204213**

NOTE	REF NO	GRAPHIC REF	PART NUMBER	QTY	PART NAME 1 2 3 4 5 6 (PRODUCT LEVEL)	SEE PAGE
E	1	1	**7X-7877**		STRIP-EDGING (10-CM)	
Y	2	1	**3E-6389**	1	LAMP GP-DOME (24-VOLT, WITH SWITCH)	152
	3	1	**3S-2093**	6	STRAP-CABLE	
	4	1	**3V-4694**	1	PLUG-BUTTON	
	5	1	**7T-9302**	1	KNOB (WIPER, WASHER)	
		1	**014-0816**	1	SETSCREW (8-32X0.5-IN)	
	6	1	**112-6174**	1	SWITCH AS-ROTARY (24-VOLT) (FRONT WIPER)	
		1	**2H-3920**	1	LOCKWASHER	
		1	**3E-3389**	1	WEDGE-RECEPTACLE LOCK	
		1	**6V-8369**	1	NUT (7/16-28-THD)	
		1	**186-3735**	6	PIN-CONNECTOR	
		1	**8T-8737**	2	PLUG-SEAL	
		1	**102-8806**	1	KIT-RECEPTACLE (8-PIN)	
					(INCLUDES RECEPTACLE AS & WEDGE)	
	7	1	**129-4647**	1	PLATE	
	8	1	**169-8938**	1	PLATE AS	
	9	1	**171-6561**	1	FILM (WINDOW WASHER)	
	10	1	**223-3939**	1	HARNESS AS-WINDOW WIPER (CONTROL)	
		1	**155-2265**	2	KIT-CONNECTING PLUG (8-PIN)	
					(EACH INCLUDES PLUG AS & WEDGE)	
	11	1	**223-3940**	1	HARNESS AS-WINDOW WIPER (FUSE BOX)	
		1	**102-8806**	1	KIT-RECEPTACLE (8-PIN)	
		1	**102-8801**	1	KIT-RECEPTACLE (12-PIN)	
					(EACH INCLUDES RECEPTACLE AS & WEDGE)	
		1	**127-5484**	1	RECEPTACLE AS (1-PIN)	
		1	**155-2260**	1	KIT-CONNECTING PLUG (3-PIN)	
		1	**155-2274**	1	KIT-CONNECTING PLUG (6-PIN)	
	12	1	**096-6166**	3	WASHER-HARD (4.5X9X1-MM THK)	
	13	1	**3K-8782**	1	FUSE (10-AMPERE)	
	14	1	**4K-5122**	1	HOLDER AS-FUSE	
					(EACH INCLUDES)	
		1	**6T-8115**	1	NUT (1/2-24-THD)	
		1	**139-0178**	1	CAP (FUSE HOLDER)	
M	15	1	**5C-8312**	3	NUT (M4X0.7-THD)	
	16	1	**6V-6578**	2	RIVET-BLIND	
	17	1	**6V-8801**	1	NUT (3/8-16-THD)	
	18	1	**8T-4896**	1	WASHER-HARD (10.2X18.5X2.5-MM THK)	
M	19	1	**9X-1046**	3	SCREW (M4X0.7X18-MM)	
M	20	1	**9X-2043**	2	SCREW-TRUSS HEAD (M6X1X14-MM)	

E-ORDER BY THE CENTIMETER
M-METRIC PART
Y-SEPARATE ILLUSTRATION

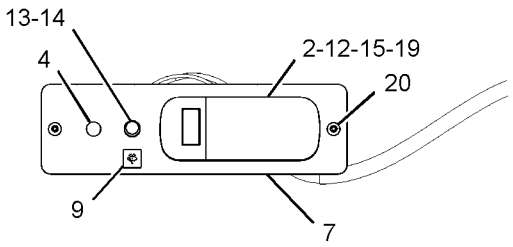

VIEW OF AREA A

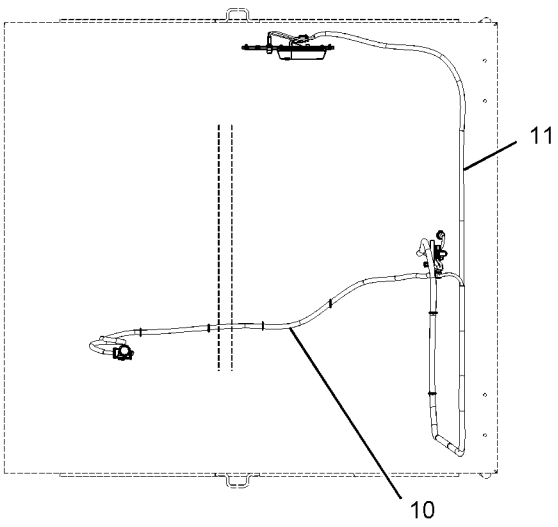

TOP VIEW

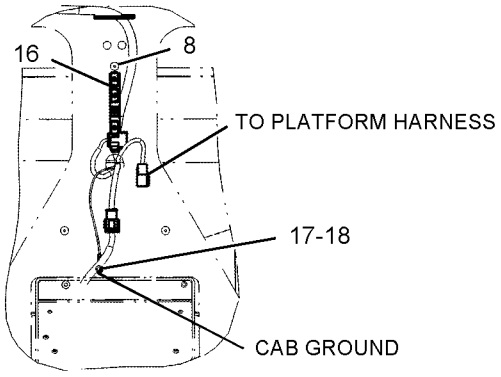

VIEW C-C

FWD

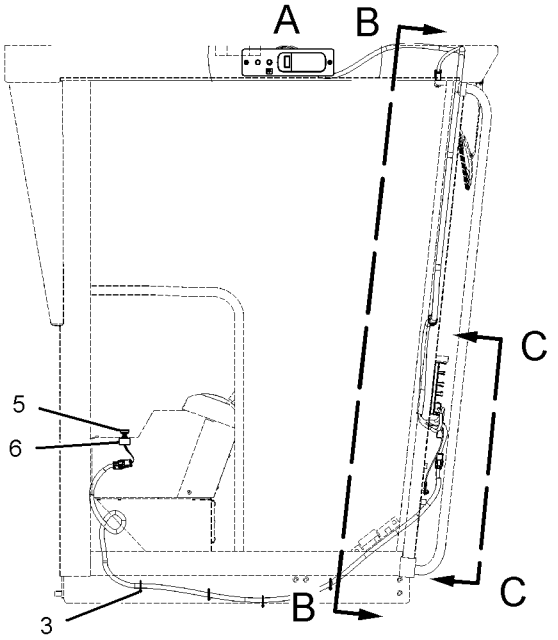

RIGHT SIDE VIEW

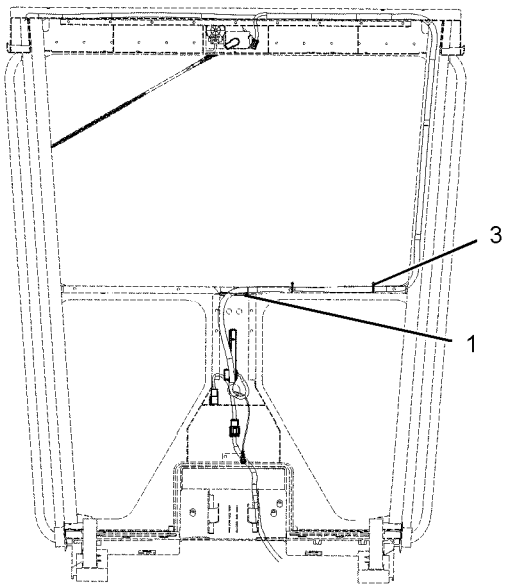

VIEW B-B

GRAPHIC #1 **<END>** g01031236

ELECTRICAL AND STARTING SYSTEM

222-9135 WIRING GP-ENGINE ELECTRONIC

S/N: 4ZF4479-5909, 7940-7972
PART OF 168-7967 ENGINE AR

SMCS-1408, 1901 **i02203410**

NOTE	REF NO	GRAPHIC REF	PART NUMBER	QTY	PART NAME 1 2 3 4 5 6 (PRODUCT LEVEL)	SEE PAGE
	1	1	**3S-2093**	24	STRAP-CABLE	
	2	1	**4P-5918**	1	CLIP	
	3	1	**188-9865**	1	HARNESS AS-ENGINE (FUEL INJECTOR)	
Y	4	1	**223-4453**	1	SWITCH GP-MAGNETIC (24-VOLT) (INLET AIR HEATER)	271
	5	1	**224-9222**	1	BRACKET	
	6	1	**226-0903**	1	CABLE AS	
	7	1	**230-6279**	1	HARNESS AS-ENGINE (ELECTRONIC CONTROL MODULE)	
		1	**102-8802**	2	KIT-RECEPTACLE (2-PIN)	
					(EACH INCLUDES RECEPTACLE AS AND WEDGE)	
		1	**102-8803**	4	KIT-RECEPTACLE (3-PIN)	
					(EACH INCLUDES RECEPTACLE AS AND WEDGE)	
		1	**100-3320**	1	PLUG AS-CONNECTOR (2-PIN)	
		1	**111-2416**	1	PLUG AS-CONNECTOR (2-PIN)	
		1	**155-2270**	4	KIT-CONNECTING PLUG (2-PIN)	
					(EACH INCLUDES PLUG AS AND WEDGE)	
		1	**160-7690**	1	PLUG AS-CONNECTOR (70-PIN)	
		1	**155-2260**	6	KIT-CONNECTING PLUG (3-PIN)	
					(EACH INCLUDES PLUG AS AND WEDGE)	
	8	1	**4P-7581**	4	CLIP	
	9	1	**4P-8134**	3	CLIP	
	10	1	**6V-4369**	1	CLIP	
M	11	1	**6V-5217**	1	BOLT (M8X1.25X20-MM)	
	12	1	**6V-5839**	1	WASHER (11X21X2.5-MM THK)	
M	13	1	**7I-2272**	2	BOLT (M5X0.8X12-MM)	
	14	1	**8T-0328**	2	WASHER-HARD (5.5X10X1-MM THK)	
M	15	1	**8T-4137**	1	BOLT (M10X1.5X20-MM)	
	16	1	**8T-4205**	1	WASHER-HARD (7.2X14.5X2-MM THK)	
M	17	1	**8T-5451**	1	BOLT (M6X1X12-MM)	
	18	1	**9M-1974**	1	WASHER-HARD (8.8X16X2-MM THK)	

M-METRIC PART
Y-SEPARATE ILLUSTRATION

222-9135 **WIRING GP-ENGINE ELECTRONIC** *(contd.)* **i02203410**

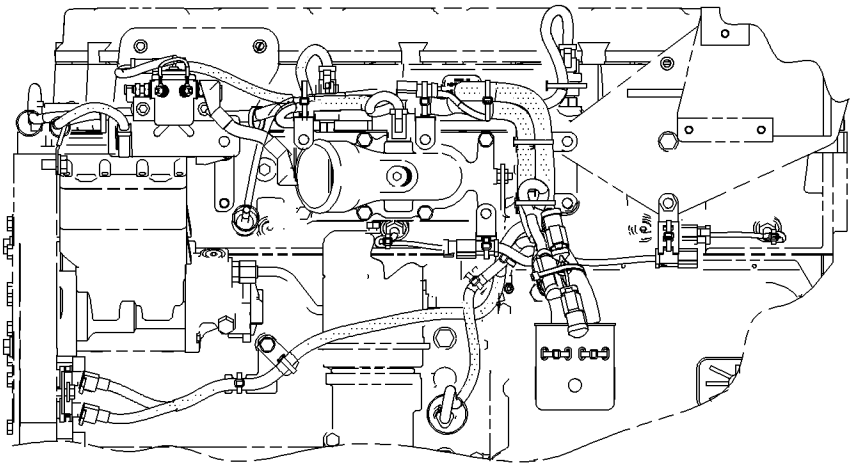

LEFT SIDE VIEW

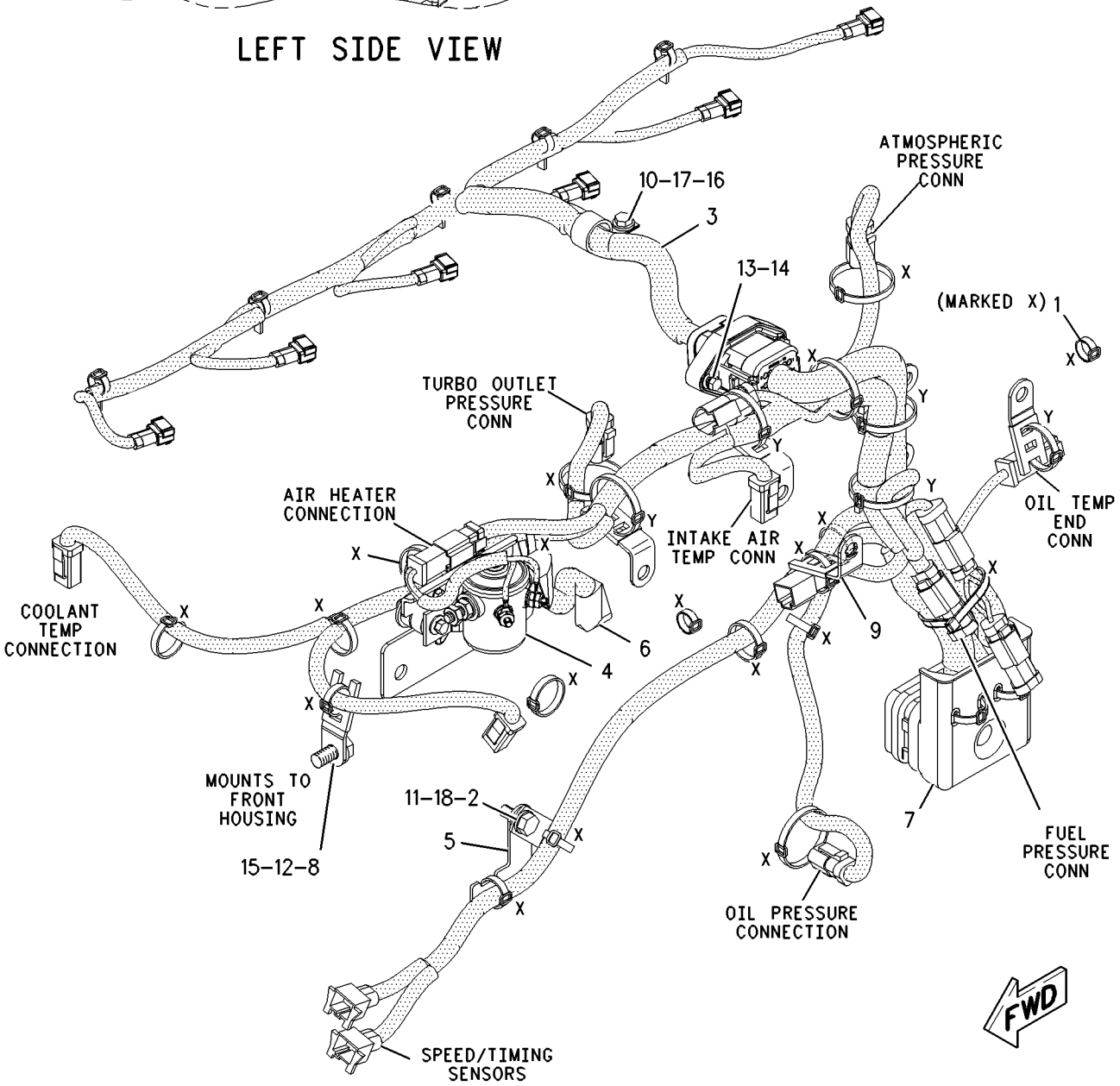

GRAPHIC #1 **<END>** g00954878

222-9135 WIRING GP-ENGINE ELECTRONIC

S/N: 4ZF7973-UP

PART OF 168-7967 ENGINE AR

SMCS-1408, 1901 **i02203411**

NOTE	REF NO	GRAPHIC REF	PART NUMBER	QTY	PART NAME 1 2 3 4 5 6 (PRODUCT LEVEL)	SEE PAGE
	1	1	**3S-2093**	24	STRAP-CABLE	
	2	1	**4P-5918**	1	CLIP	
C	3	1	**215-3249**	1	HARNESS AS-ENGINE (UNIT INJECTOR)	
		1	**3S-2093**	5	STRAP-CABLE	
Y	4	1	**223-4453**	1	SWITCH GP-MAGNETIC (24-VOLT) (AIR INLET HEATER)	271
	5	1	**224-9222**	1	BRACKET	
	6	1	**226-0903**	1	CABLE AS	
	7	1	**230-6279**	1	HARNESS AS-ENGINE (ELECTRONIC CONTROL MODULE)	
		1	**102-8802**	2	KIT-RECEPTACLE (2-PIN)	
					(EACH INCLUDES RECEPTACLE AS AND WEDGE)	
		1	**102-8803**	3	KIT-RECEPTACLE (3-PIN)	
					(EACH INCLUDES RECEPTACLE AS AND WEDGE)	
		1	**100-3320**	1	PLUG AS-CONNECTOR (2-PIN)	
		1	**126-5011**	1	SEAL-CONNECTOR	
		1	**111-2416**	1	PLUG AS-CONNECTOR (2-PIN)	
		1	**126-5011**	1	SEAL-CONNECTOR	
		1	**155-2270**	5	KIT-CONNECTING PLUG (2-PIN)	
					(EACH INCLUDES PLUG AS AND WEDGE)	
		1	**160-7690**	1	PLUG AS-CONNECTOR (70-PIN)	
		1	**159-9322**	1	SEAL-O-RING	
		1	**155-2260**	6	KIT-CONNECTING PLUG (3-PIN)	
					(EACH INCLUDES PLUG AS AND WEDGE)	
	8	1	**4P-7581**	4	CLIP	
	9	1	**4P-8134**	3	CLIP	
	10	1	**6V-4369**	1	CLIP	
M	11	1	**6V-5217**	1	BOLT (M8X1.25X20-MM)	
	12	1	**6V-5839**	1	WASHER (11X21X2.5-MM THK)	
M	13	1	**7I-2272**	2	BOLT (M5X0.8X12-MM)	
	14	1	**8T-0328**	2	WASHER-HARD (5.5X10X1-MM THK)	
M	15	1	**8T-4137**	1	BOLT (M10X1.5X20-MM)	
	16	1	**8T-4205**	1	WASHER-HARD (7.2X14.5X2-MM THK)	
M	17	1	**8T-5451**	1	BOLT (M6X1X12-MM)	
	18	1	**9M-1974**	1	WASHER-HARD (8.8X16X2-MM THK)	

C-CHANGE FROM PREVIOUS TYPE
M-METRIC PART
Y-SEPARATE ILLUSTRATION

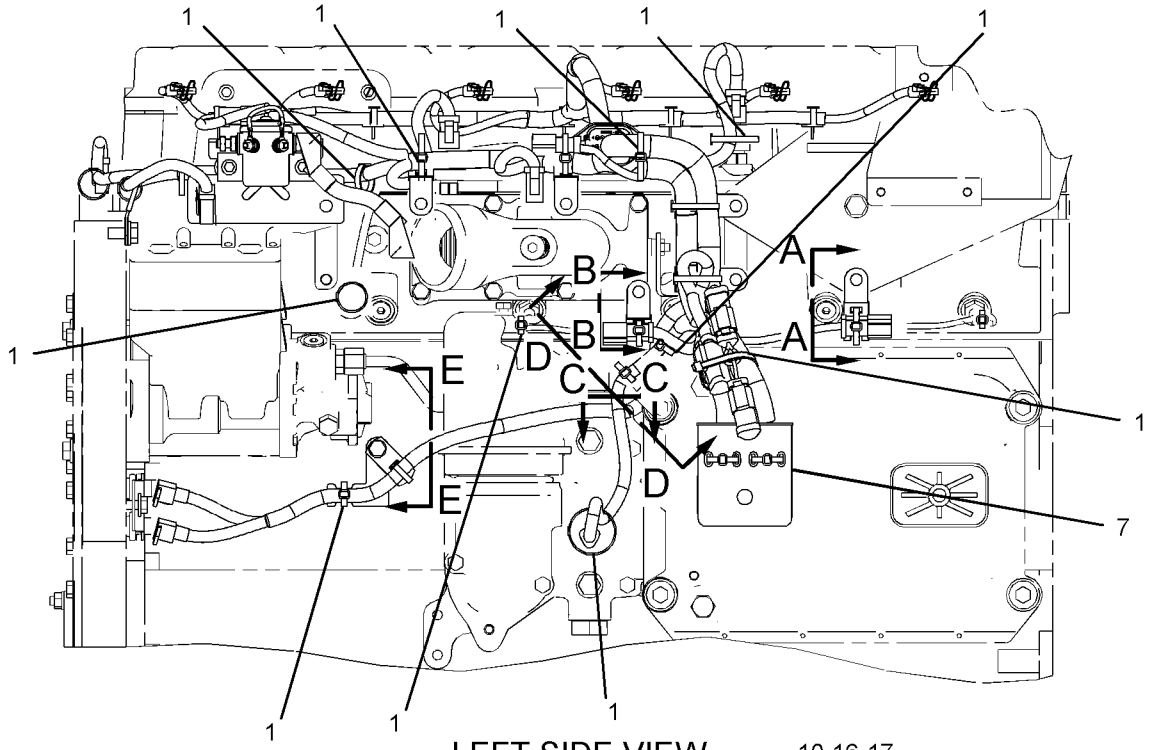

LEFT SIDE VIEW

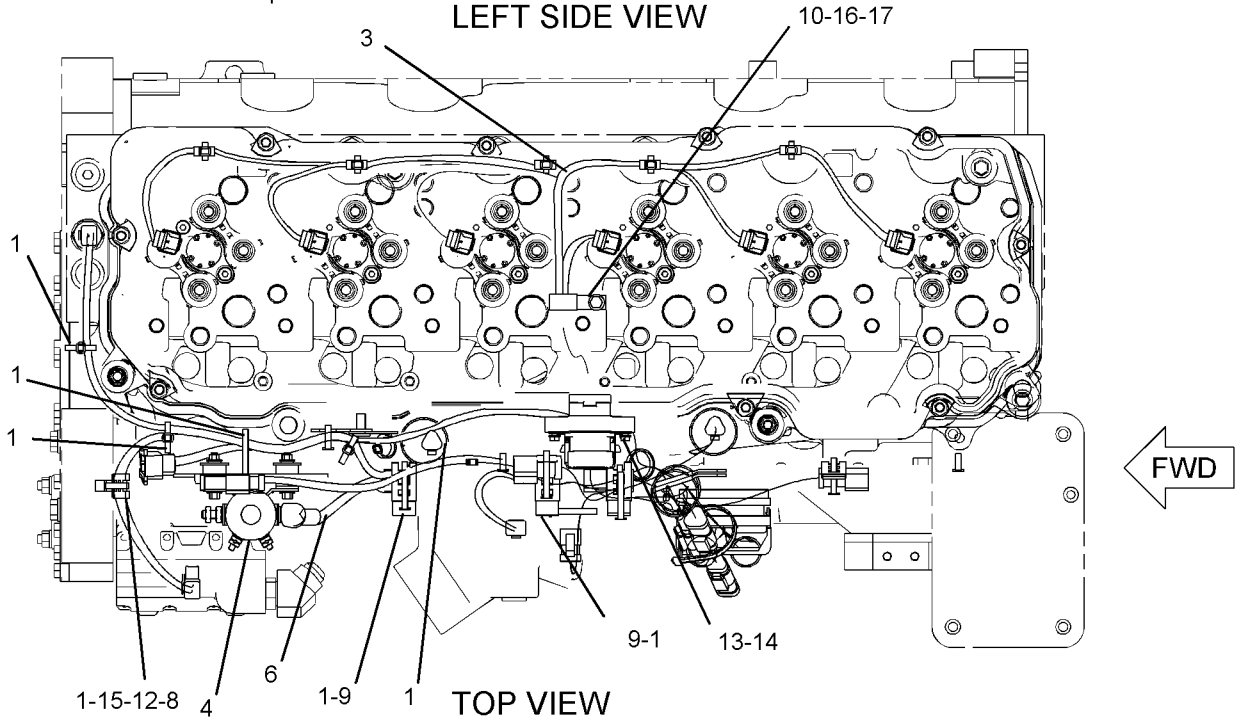

TOP VIEW

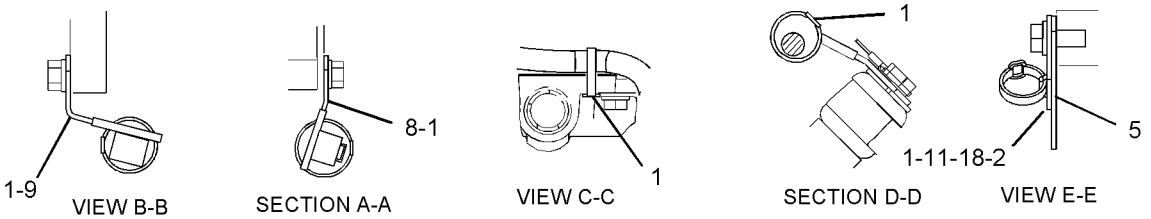

VIEW B-B SECTION A-A VIEW C-C SECTION D-D VIEW E-E

GRAPHIC #1

<END>

g01057096

234-2432 WIRING GP-ENGINE ELECTRONIC

S/N: 4ZF5910-UP

PART OF 168-7967 ENGINE AR

SMCS-1408, 1901 **i01905025**

NOTE	REF NO	GRAPHIC REF	PART NUMBER	QTY	PART NAME 1 2 3 4 5 6 (PRODUCT LEVEL)	SEE PAGE
	1	1,2	**3S-2093**	24	STRAP-CABLE	
	2	1	**4P-5918**	1	CLIP	
	3	2	**188-9865**	1	HARNESS AS-ENGINE (FUEL INJECTOR)	
Y	4	2	**223-4453**	1	SWITCH GP-MAGNETIC (24-VOLT)	271
	5	1	**224-9222**	1	BRACKET	
	6	2	**226-0903**	1	CABLE AS	
	7	1	**230-6279**	1	HARNESS AS-ENGINE (SENSORS)	
		1	**102-8802**	2	KIT-RECEPTACLE (2-PIN)	
					(EACH INCLUDES RECEPTACLE AS AND WEDGE)	
		1	**102-8803**	4	KIT-RECEPTACLE (3-PIN)	
					(EACH INCLUDES RECEPTACLE AS AND WEDGE)	
		1	**100-3320**	1	PLUG AS-CONNECTOR (2-PIN)	
		1	**126-5011**	1	SEAL-CONNECTOR	
		1	**111-2416**	1	PLUG AS-CONNECTOR (2-PIN)	
		1	**126-5011**	1	SEAL-CONNECTOR	
		1	**155-2270**	4	KIT-CONNECTING PLUG (2-PIN)	
					(EACH INCLUDES PLUG AS AND WEDGE)	
		1	**160-7690**	1	PLUG AS-CONNECTOR (70-PIN)	
		1	**159-9322**	1	SEAL-O-RING	
		1	**155-2260**	6	KIT-CONNECTING PLUG (3-PIN)	
					(EACH INCLUDES PLUG AS AND WEDGE)	
	8	1	**3E-4353**	3	WASHER-HARD (11X25X3-MM THK)	
	9	1,2	**4P-7581**	3	CLIP	
	10	1,2	**4P-8134**	4	CLIP	
M	11	1	**6V-4248**	1	BOLT (M10X1.5X25-MM)	
	12	2	**6V-4369**	1	CLIP	
M	13	1	**6V-5217**	1	BOLT (M8X1.25X20-MM)	
	14	2	**6V-5839**	1	WASHER (11X21X2.5-MM THK)	
M	15	1	**6V-6317**	2	BOLT (M10X1.5X20-MM)	
M	16	2	**7I-2272**	2	BOLT (M5X0.8X12-MM)	
	17	2	**8T-0328**	2	WASHER-HARD (5.5X10X1-MM THK)	
M	18	2	**8T-4137**	1	BOLT (M10X1.5X20-MM)	
	19	2	**8T-4205**	1	WASHER-HARD (7.2X14.5X2-MM THK)	
M	20	2	**8T-5451**	1	BOLT (M6X1X12-MM)	
	21	1	**9M-1974**	1	WASHER-HARD (8.8X16X2-MM THK)	

M-METRIC PART
Y-SEPARATE ILLUSTRATION

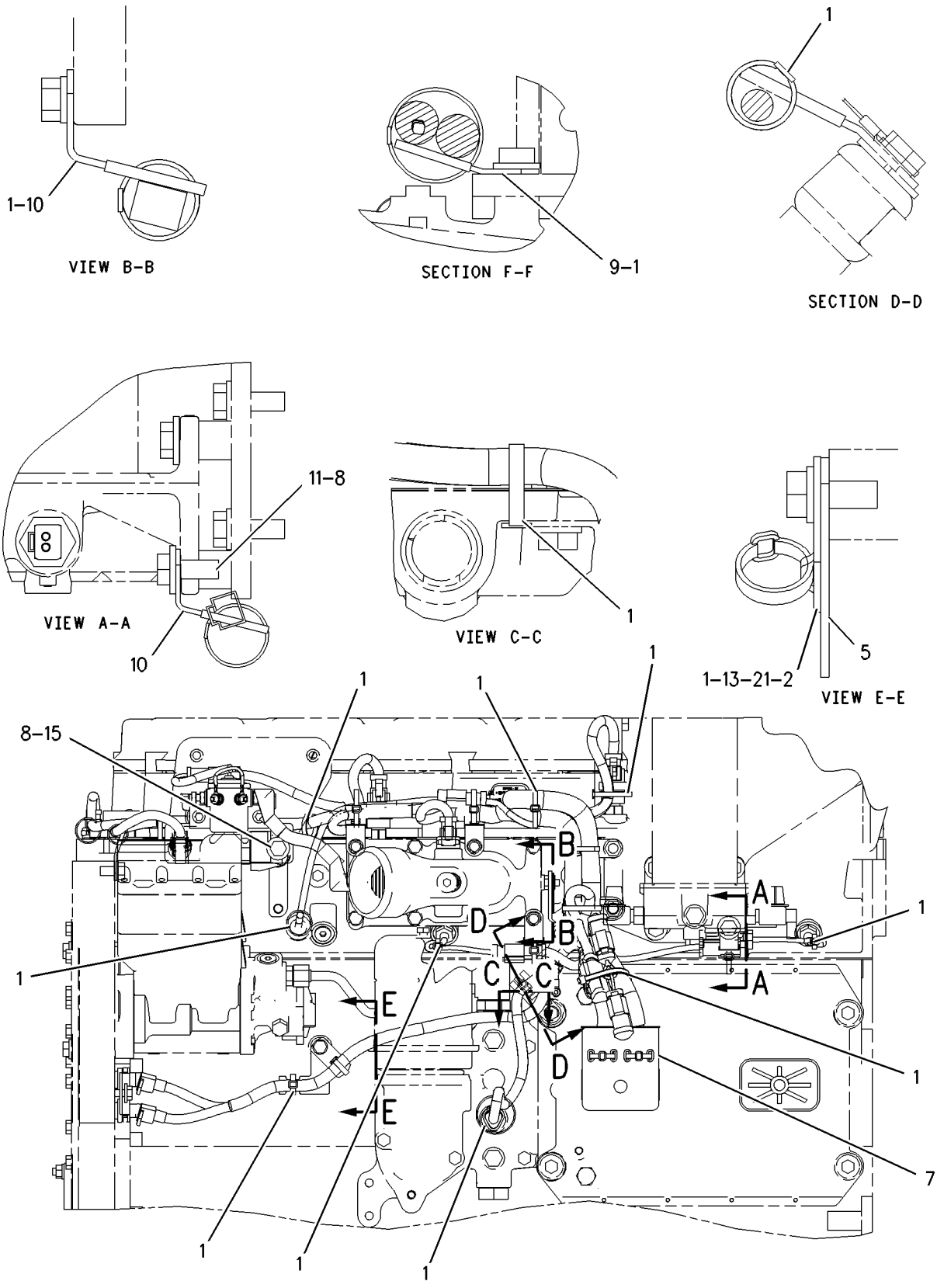

GRAPHIC #1 g01000307

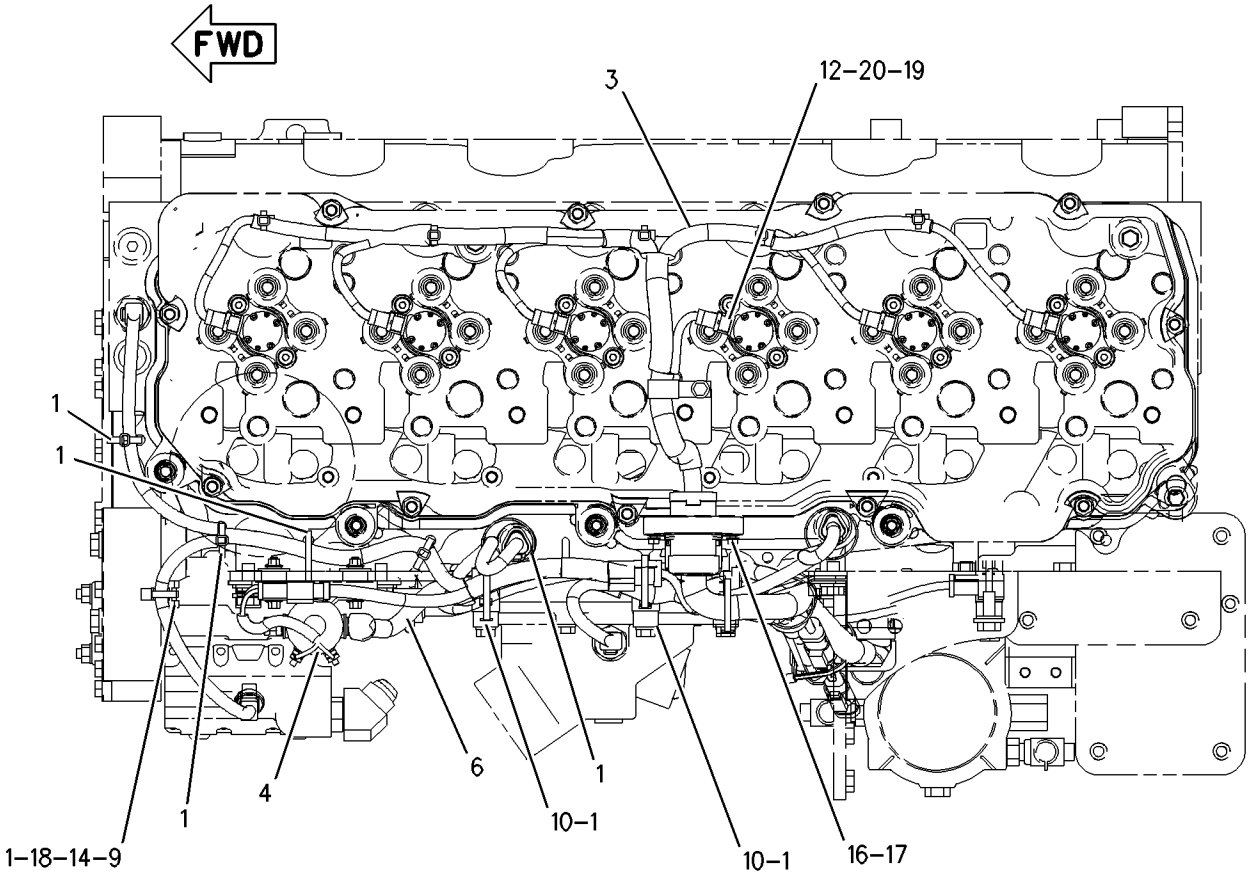

TOP VIEW

GRAPHIC #2 **<END>** g01000346

ELECTRICAL AND STARTING SYSTEM

159-5856 WIRING GP-FRONT

S/N: CBK1-UP

PART OF 162-5605 GENERAL AR

SMCS-1408 **i02204527**

NOTE	REF NO	GRAPHIC REF	PART NUMBER	QTY	PART NAME 1 2 3 4 5 6 (PRODUCT LEVEL)	SEE PAGE
	1	1	**1S-2342**	1	STRAP AS-GROUND	
	2	1	**3E-2026**	1	SWITCH AS-PRESSURE (STOP LAMP)	
		1	**186-3735**	2	PIN-CONNECTOR	
		1	**102-8802**	1	KIT-RECEPTACLE (2-PIN)	
					(INCLUDES RECEPTACLE AS & WEDGE)	
	3	1	**3E-3636**	1	SWITCH AS-BALL (CENTERSHIFT INDICATOR)	
		1	**186-3735**	4	PIN-CONNECTOR	
		1	**102-8804**	1	KIT-RECEPTACLE (4-PIN)	
					(INCLUDES RECEPTACLE AS & WEDGE)	
	4	1,2	**3S-2093**	15	STRAP-CABLE	
	5	2	**6I-1418**	4	SPACER (8.2X12.7X28.7-MM THK)	
	6	1,2	**7K-1181**	5	STRAP-CABLE	
	7	2	**8T-9655**	8	MOUNT (ISOLATION)	
	8	1,2	**9L-1566**	3	SUPPORT	
	9	1	**9L-6331**	1	BRACKET	
	10	1	**114-9281**	2	SWITCH AS-PRESSURE (AIR BRAKES)	
					(EACH INCLUDES)	
		1	**186-3735**	2	PIN-CONNECTOR	
		1	**102-8802**	1	KIT-RECEPTACLE (2-PIN)	
					(INCLUDES RECEPTACLE AS & WEDGE)	
	11	1	**131-4135**	1	SWITCH AS-TEMPERATURE (HYDRAULIC OIL)	
		1	**186-3735**	2	PIN-CONNECTOR	
		1	**102-8802**	1	KIT-RECEPTACLE (2-PIN)	
					(INCLUDES RECEPTACLE AS & WEDGE)	
	12	1,2	**169-5414**	5	CLIP	
Y	13	2	*171-5941*	1	ELECTRONICS GP-POWER TRAIN (MOTOR GRADER)	147
Y	14	2	**172-9389**	1	CONTROL GP-UNPROGRAMMED (POWER TRAIN)	139
	15	1	**185-4076**	1	HARNESS AS-PLATFORM	
		1	**9X-1343**	1	RECEPTACLE AS (40-PIN)	
		1	**127-5484**	3	RECEPTACLE AS (1-PIN)	
		1	**127-5486**	1	RECEPTACLE AS (1-PIN)	
		1	**129-7164**	1	RECEPTACLE AS (1-PIN)	
		1	**102-8802**	2	KIT-RECEPTACLE (2-PIN)	
		1	**102-8803**	2	KIT-RECEPTACLE (3-PIN)	
		1	**102-8805**	4	KIT-RECEPTACLE (6-PIN)	
		1	**102-8801**	8	KIT-RECEPTACLE (12-PIN)	
					(EACH INCLUDES RECEPTACLE AS & WEDGE)	
		1	**127-5483**	3	PLUG AS-CONNECTOR (1-PIN)	
		1	**127-5485**	1	PLUG AS-CONNECTOR (1-PIN)	
		1	**129-7163**	1	PLUG AS-CONNECTOR (1-PIN)	
		1	**155-2255**	6	KIT-CONNECTING PLUG (12-PIN)	
		1	**155-2265**	1	KIT-CONNECTING PLUG (8-PIN)	
		1	**155-2260**	4	KIT-CONNECTING PLUG (3-PIN)	
		1	**155-2270**	11	KIT-CONNECTING PLUG (2-PIN)	
		1	**155-2271**	1	KIT-CONNECTING PLUG (4-PIN)	
		1	**155-2274**	4	KIT-CONNECTING PLUG (6-PIN)	
					(EACH INCLUDES PLUG AS & WEDGE)	
	16	2	**201-5244**	1	PLATE AS	
	17	1	**6V-1889**	1	CLIP	
	18	2	**096-6166**	4	WASHER-HARD (4.5X9X1-MM THK)	
	19	1,2	**130-5300**	8	CLIP	
	20	1	**3J-1907**	1	SEAL-O-RING	
	21	1	**3K-0360**	1	SEAL-O-RING	
	22	1	**4D-7388**	2	CLIP	
	23	1,2	**4D-7794**	10	CLIP	
	24	1	**4K-8864**	1	CLIP	

159-5856 **WIRING GP-FRONT** ***(contd.)*** **i02204527**

NOTE	REF NO	GRAPHIC REF	PART NUMBER	QTY	PART NAME 1 2 3 4 5 6 (PRODUCT LEVEL)	SEE PAGE
	25	1,2	**4L-6454**	4	BOLT (3/8-16X1-IN)	
	26	1,2	**4P-8134**	2	CLIP	
	27	1	**4S-4455**	1	CLIP	
	28	1,2	**5M-3062**	31	BOLT (3/8-16X0.75-IN)	
	29	1	**5S-7379**	1	BOLT (3/8-16X0.875-IN)	
	30	1	**6D-4246**	1	CLIP	
	31	1,2	**6V-3265**	5	CLIP	
	32	2	**6V-3964**	4	WASHER-HARD (8.8X25.5X5-MM THK)	
	33	1,2	**6V-8801**	4	NUT (3/8-16-THD)	
	34	1	**7C-4354**	1	CLIP	
	35	2	**7X-0440**	4	BOLT (5/16-18X1.75-IN)	
B	36	1	**8F-1974**	10	SHIM (0.13-MM THK)	
	37	2	**8M-2770**	1	CLIP	
	38	1,2	**8T-4121**	5	WASHER-HARD (11X21X2.5-MM THK)	
M	39	1	**8T-4137**	1	BOLT (M10X1.5X20-MM)	
M	40	2	**8T-4647**	4	SCREW-MACHINE (M4X0.7X20-MM)	
	41	1,2	**8T-4896**	40	WASHER-HARD (10.2X18.5X2.5-MM THK)	
	42	1	**174-5907**	2	CLIP	
M	43	1,2	**8T-4195**	2	BOLT (M10X1.5X30-MM)	
M	44	1,2	**8T-4133**	2	NUT (M10X1.5-THD)	
	45	1,2	**7D-7233**	2	CLIP	
	46	1	**8M-2773**	1	CLIP	
	47	1	**114-9281**	1	SWITCH AS-PRESSURE (PARKING BRAKE)	
		1	**186-3735**	2	PIN-CONNECTOR	
		1	**102-8802**	1	KIT-RECEPTACLE (2-PIN) (INCLUDES RECEPTACLE AS & WEDGE)	
FY			*198-7332*	1	ELECTRONICS GP-MONITOR (CATERPILLAR MONITORING SYSTEM)	146

B-USE AS REQUIRED
F-NOT SHOWN
M-METRIC PART
Y-SEPARATE ILLUSTRATION

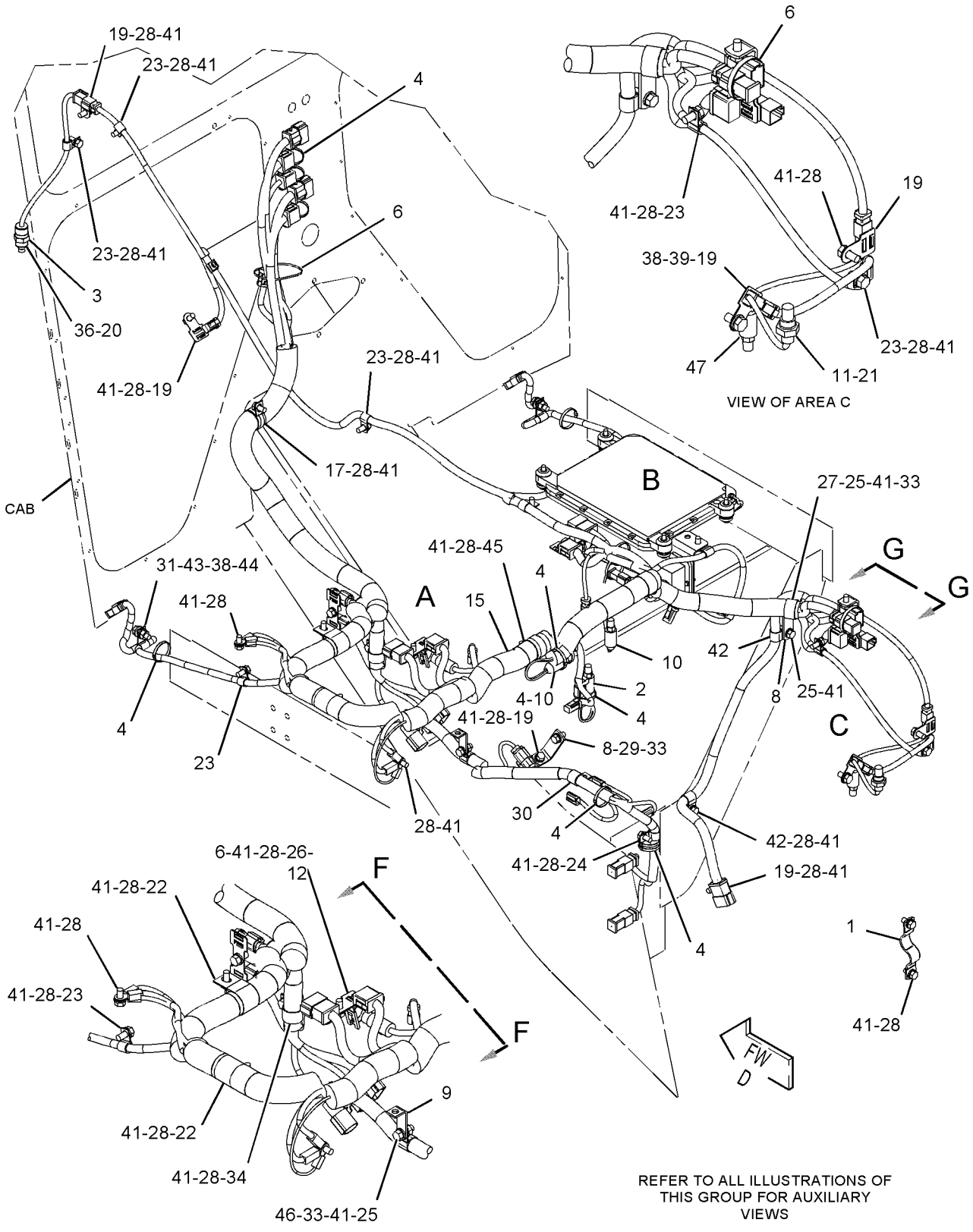

GRAPHIC #1 g01061211

159-5856 **WIRING GP-FRONT** *(contd.)* **i02204527**

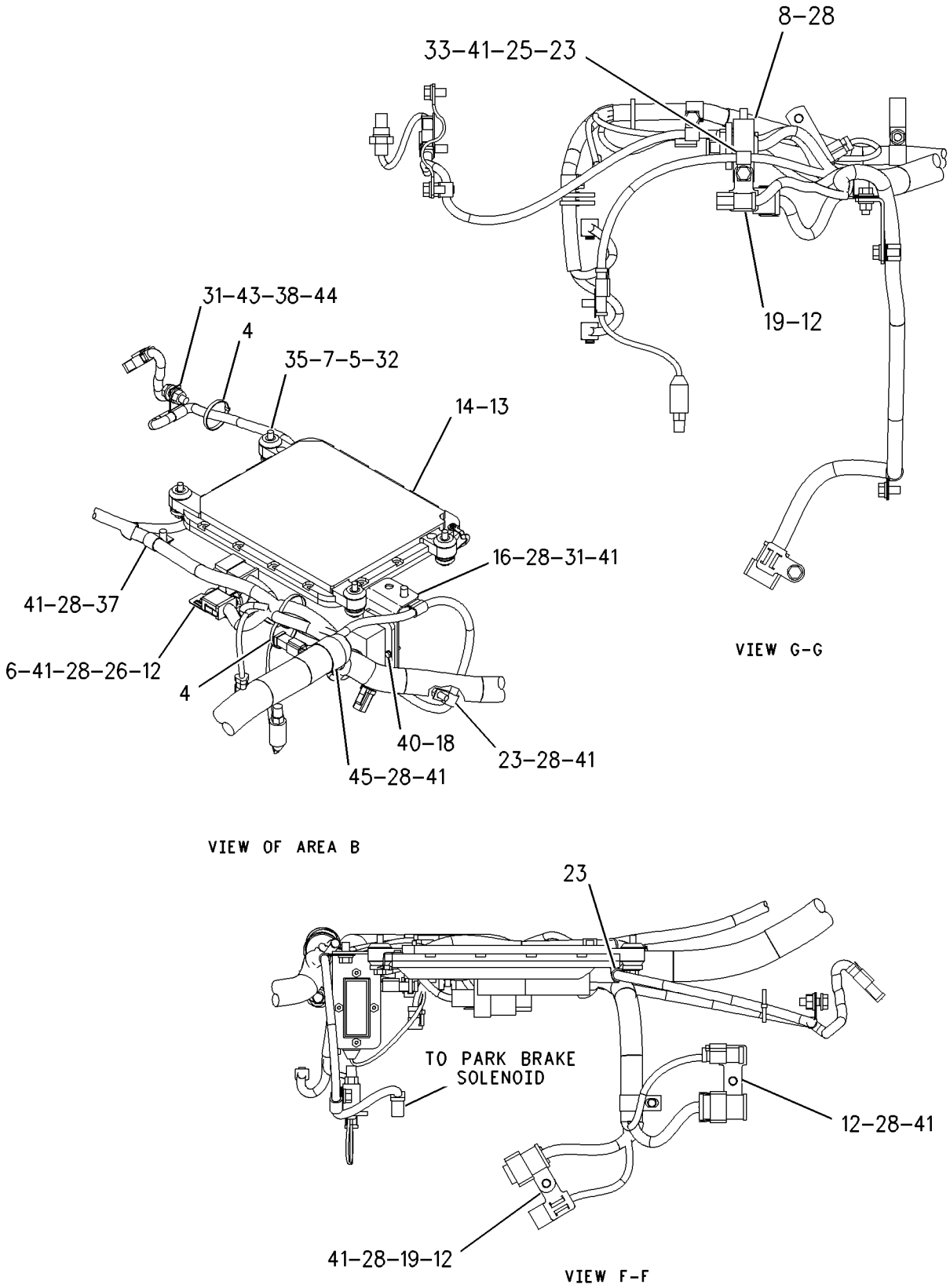

GRAPHIC #2 **<END>** g00941203

159-5865 WIRING GP-FRONT–EU

S/N: CBK1-UP

PART OF 207-3700, 210-2043 CONVERSION AR-CERTIFICATION AN ATTACHMENT

SMCS-1408 **i02206893**

NOTE	REF NO	GRAPHIC REF	PART NUMBER	QTY	PART NAME 1 2 3 4 5 6 (PRODUCT LEVEL)	SEE PAGE
	1	3	**1S-2342**	1	STRAP AS-GROUND	
	2	1	**2G-0617**	2	CLAMP	
	3	1	**2G-0988**	2	CAP	
	4	3	**2L-0273**	1	FITTING (RUBBER)	
	5	3	**3E-2026**	1	SWITCH AS-PRESSURE (STOP LAMP)	
		3	**186-3735**	2	PIN-CONNECTOR	
		3	**102-8802**	1	KIT-RECEPTACLE (2-PIN)	
					(INCLUDES RECEPTACLE AS & WEDGE)	
	6	2	**3E-3636**	1	SWITCH AS-BALL (CENTERSHIFT INDICATOR)	
		2	**186-3735**	4	PIN-CONNECTOR	
		2	**102-8804**	1	KIT-RECEPTACLE (4-PIN)	
					(INCLUDES RECEPTACLE AS & WEDGE)	
	7	3	**3E-6450**	1	SWITCH AS-PRESSURE (PRIMARY STEERING)	
		3	**186-3735**	3	PIN-CONNECTOR	
		3	**102-8803**	1	KIT-RECEPTACLE (3-PIN)	
					(INCLUDES RECEPTACLE AS & WEDGE)	
	8	1	**3K-9520**	3	GROMMET	
	9	1,2,3	**3S-2093**	17	STRAP-CABLE	
	10	3	**6I-1418**	4	SPACER (8.2X12.7X28.7-MM THK)	
	11	1,2,3	**7K-1181**	7	STRAP-CABLE	
	12	3	**8T-9655**	8	MOUNT (ISOLATION)	
	13	2,3	**9L-1566**	3	SUPPORT	
	14	3	**9L-6331**	1	BRACKET	
Y	15	1	**105-4849**	1	LAMP GP-HEAD & SIGNAL (LH)	164
Y	16	1	**105-4850**	1	LAMP GP-HEAD & SIGNAL (RH)	166
	17	3	**114-9281**	2	SWITCH AS-PRESSURE (AIR BRAKE)	
					(EACH INCLUDES)	
		3	**186-3735**	2	PIN-CONNECTOR	
		3	**102-8802**	1	KIT-RECEPTACLE (2-PIN)	
					(INCLUDES RECEPTACLE AS & WEDGE)	
	17A	2,3	**114-9281**	1	SWITCH AS-PRESSURE (PARKING BRAKE)	
		2,3	**186-3735**	2	PIN-CONNECTOR	
		2,3	**102-8802**	1	KIT-RECEPTACLE (2-PIN)	
					(INCLUDES RECEPTACLE AS & WEDGE)	
	18	3	**131-4135**	1	SWITCH AS-TEMPERATURE (HYDRAULIC OIL)	
		3	**186-3735**	2	PIN-CONNECTOR	
		3	**102-8802**	1	KIT-RECEPTACLE (2-PIN)	
					(INCLUDES RECEPTACLE AS & WEDGE)	
	19	1	**137-9410**	2	CLAMP	
	20	3	**140-8864**	1	CABLE AS	
	21	1	**159-3959**	1	TUBE	
	22	2,3	**169-5414**	5	CLIP	
Y	23	3	*171-5941*	1	ELECTRONICS GP-POWER TRAIN (MOTOR GRADER)	147
Y	24	3	**172-9389**	1	CONTROL GP-UNPROGRAMMED (EMS ELECTRONIC)	139
	25	1	**179-8700**	1	HARNESS AS-FRONT CHASSIS	
		1	**155-2255**	1	KIT-CONNECTING PLUG (12-PIN)	
					(INCLUDES PLUG AS & WEDGE)	
		1	**102-8801**	1	KIT-RECEPTACLE (12-PIN)	
					(INCLUDES RECEPTACLE AS & WEDGE)	
	26	3	*194-2903*	1	ELBOW AS	
		3	**3K-0360**	1	SEAL-O-RING	
		3	**8T-0119**	1	ELBOW	
	27	2	**196-4226**	1	HARNESS AS-PLATFORM	
		2	**127-5483**	3	PLUG AS-CONNECTOR (1-PIN)	
		2	**9X-1343**	1	RECEPTACLE AS (40-PIN)	

159-5865 **WIRING GP-FRONT** ***(contd.)*** **i02206893**

NOTE	REF NO	GRAPHIC REF	PART NUMBER	QTY	PART NAME 1 2 3 4 5 6 (PRODUCT LEVEL)	SEE PAGE
		2	**155-2255**	6	KIT-CONNECTING PLUG (12-PIN)	
		2	**155-2265**	1	KIT-CONNECTING PLUG (8-PIN)	
		2	**155-2260**	4	KIT-CONNECTING PLUG (3-PIN)	
		2	**155-2270**	13	KIT-CONNECTING PLUG (2-PIN)	
		2	**155-2271**	1	KIT-CONNECTING PLUG (4-PIN)	
		2	**155-2274**	4	KIT-CONNECTING PLUG (6-PIN)	
					(EACH INCLUDES PLUG AS & WEDGE)	
		2	**102-8802**	4	KIT-RECEPTACLE (2-PIN)	
		2	**102-8803**	1	KIT-RECEPTACLE (3-PIN)	
		2	**102-8805**	5	KIT-RECEPTACLE (6-PIN)	
		2	**102-8801**	7	KIT-RECEPTACLE (12-PIN)	
					(EACH INCLUDES RECEPTACLE AS & WEDGE)	
	28	1	**197-1988**	1	HARNESS AS-FRONT LIGHTING	
		1	**155-2274**	2	KIT-CONNECTING PLUG (6-PIN)	
					(EACH INCLUDES PLUG AS & WEDGE)	
		1	**102-8801**	1	KIT-RECEPTACLE (12-PIN) (PS)	
					(INCLUDES RECEPTACLE AS & WEDGE)	
	29	3	**201-5244**	1	PLATE AS	
	30	3	**096-6166**	4	WASHER-HARD (4.5X9X1-MM THK)	
	31	1	**108-3519**	4	CLAMP	
	32	2,3	**130-5300**	9	CLIP	
	33	2,3	**174-5907**	4	CLIP	
	35	2	**3J-1907**	1	SEAL-O-RING	
	36	3	**3K-0360**	2	SEAL-O-RING	
	37	2,3	**4D-7794**	10	CLIP	
	38	3	**4K-8864**	1	CLIP	
	39	1,2	**4L-6454**	6	BOLT (3/8-16X1-IN)	
	40	3	**4P-8134**	2	CLIP	
	41	2	**4S-4455**	1	CLIP	
	42	1	**5M-2894**	4	WASHER-HARD (10.2X18.5X2.5-MM THK)	
	43	2,3	**5M-3062**	32	BOLT (3/8-16X0.75-IN)	
	44	1,3	**5S-7379**	5	BOLT (3/8-16X0.875-IN)	
	45	3	**6D-4246**	1	CLIP	
	46	2	**6V-1889**	1	CLIP	
	47	2,3	**6V-3265**	5	CLIP	
	48	3	**6V-3964**	4	WASHER-HARD (8.8X25.5X5-MM THK)	
	49	1,2,3	**6V-8801**	6	NUT (3/8-16-THD)	
	50	3	**7C-4354**	1	CLIP	
	51	2	**7D-7233**	4	CLIP	
	52	3	**7X-0440**	4	BOLT (5/16-18X1.75-IN)	
B	53	2	**8F-1974**	10	SHIM (0.13-MM THK)	
	54	1,3	**8M-2770**	3	CLIP	
	55	3	**8M-2773**	1	CLIP	
	56	2,3	**8T-4121**	5	WASHER-HARD (11X21X2.5-MM THK)	
M	57	2,3	**8T-4133**	2	NUT (M10X1.5-THD)	
M	58	2	**8T-4137**	1	BOLT (M10X1.5X20-MM)	
M	59	2,3	**8T-4195**	2	BOLT (M10X1.5X30-MM)	
M	60	3	**8T-4647**	4	SCREW-MACHINE (M4X0.7X20-MM)	
	61	1,2,3	**8T-4896**	43	WASHER-HARD (10.2X18.5X2.5-MM THK)	
	62	1	**9D-6164**	4	BOSS (3/8-16-THD)	
FY			*198-7332*	1	ELECTRONICS GP-MONITOR (CATERPILLAR MONITORING SYSTEM)	146

B-USE AS REQUIRED
F-NOT SHOWN
M-METRIC PART
Y-SEPARATE ILLUSTRATION

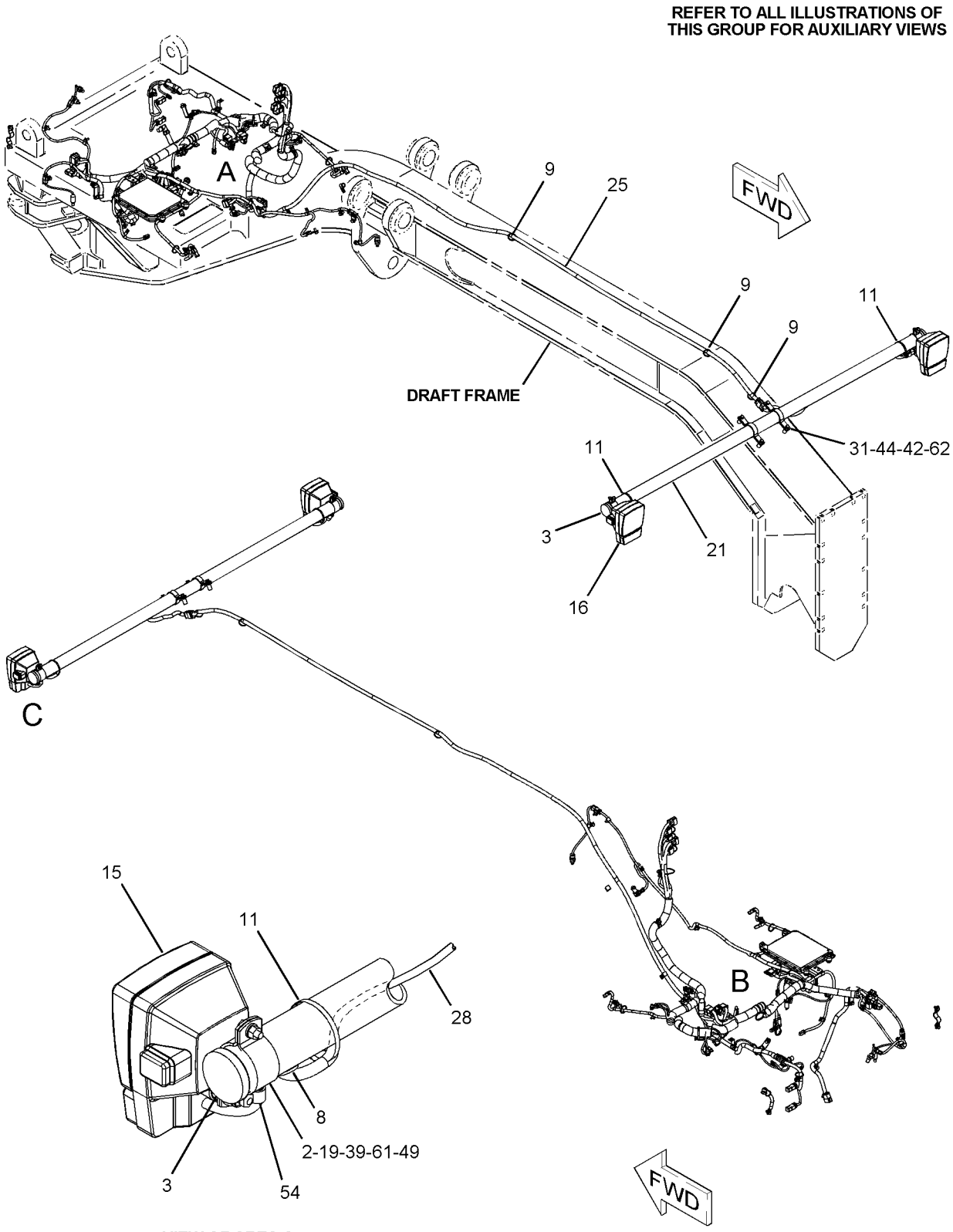

VIEW OF AREA C

GRAPHIC #1

g01086317

159-5865 **WIRING GP-FRONT** *(contd.)* **i02206893**

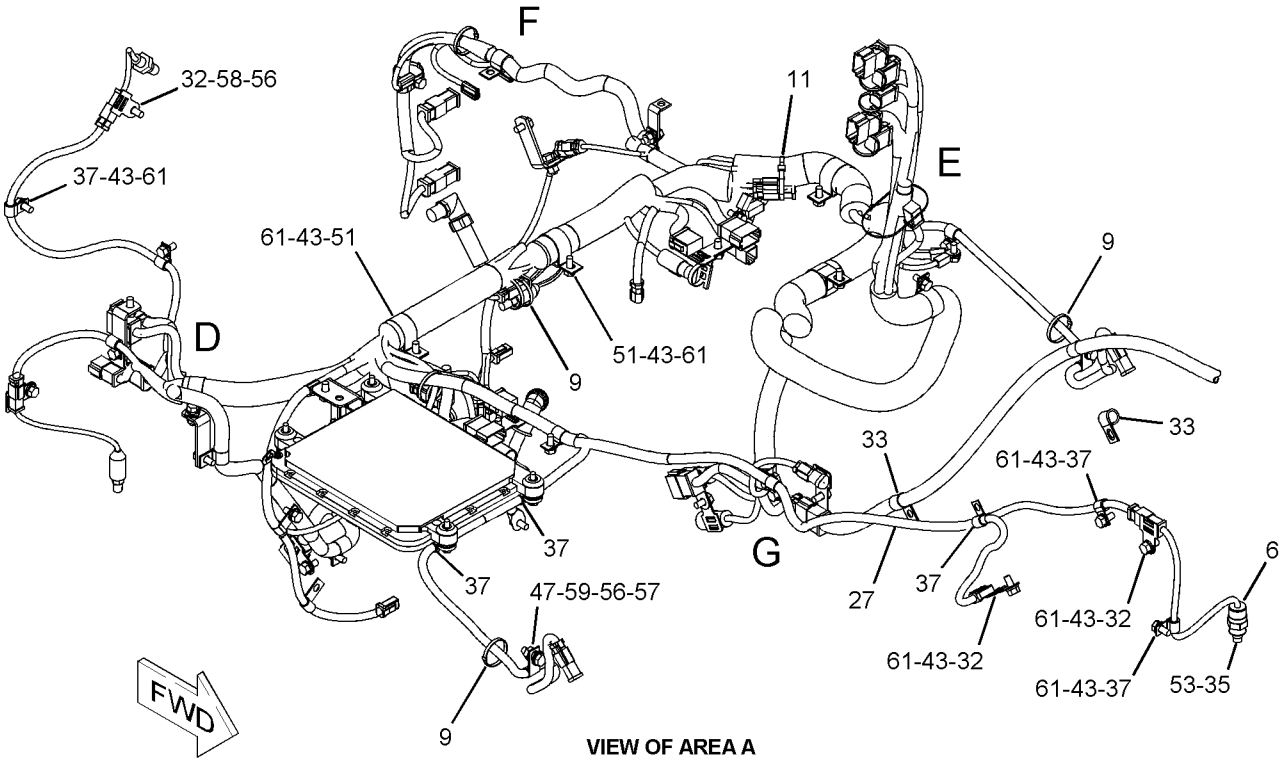

VIEW OF AREA A

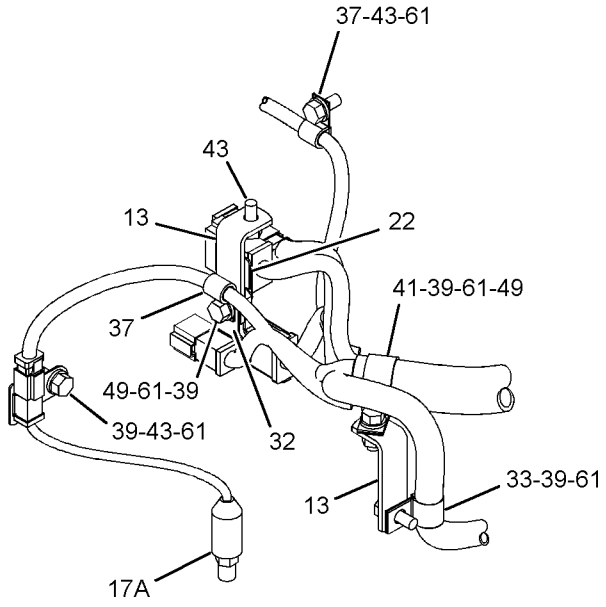

VIEW OF AREA D

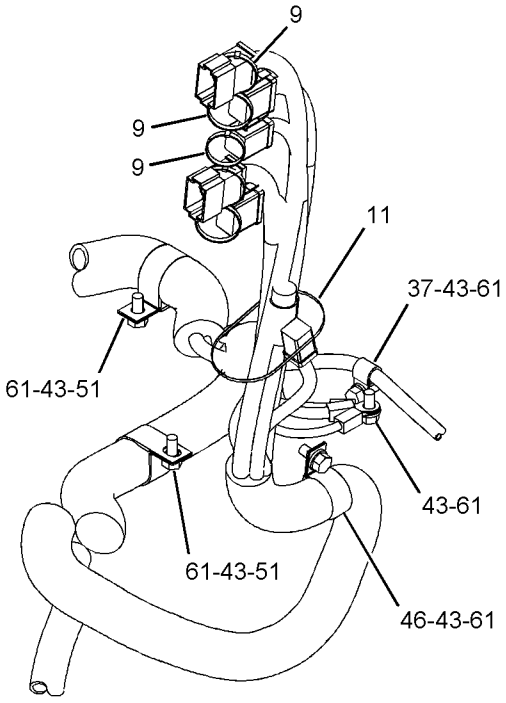

VIEW OF AREA E

REFER TO ALL ILLUSTRATIONS OF THIS GROUP FOR AUXILIARY VIEWS

GRAPHIC #2

g01086319

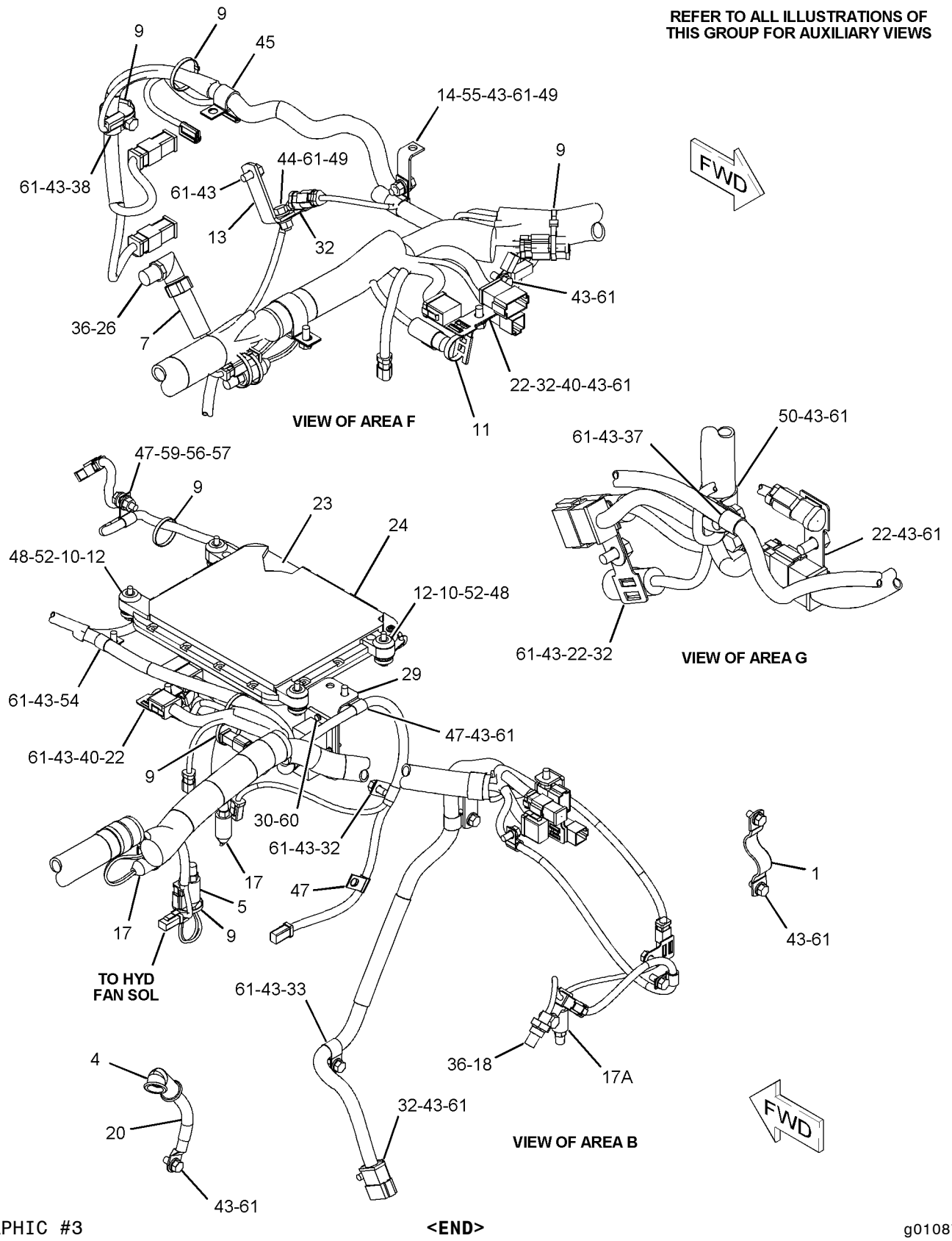

GRAPHIC #3 **<END>** g01087648

184-1299 WIRING GP-REAR–BACKUP ALARM, LIGHTS

S/N: CBK1-UP

PART OF 162-5605 GENERAL AR

SMCS-1408 **i02207436**

NOTE	REF NO	GRAPHIC REF	PART NUMBER	QTY	PART NAME 1 2 3 4 5 6 (PRODUCT LEVEL)	SEE PAGE
	1	1	**3S-2093**	9	STRAP-CABLE	
	2	1	**213-9100**	1	ALARM AS-BACKUP	
		1	**102-8802**	1	KIT-RECEPTACLE (2-PIN)	
					(INCLUDES RECEPTACLE AS & WEDGE)	
D		1	**5P-5623**		WIRE-ELECTRICAL (16-GA) (0.4-M)	
		1	**186-3735**	2	PIN-CONNECTOR	
E		1	**9X-1813**		SLEEVE (31-CM)	
	3	1	**231-4527**	1	HARNESS AS-REAR LIGHTING	
		1	**102-8802**	2	KIT-RECEPTACLE (2-PIN)	
		1	**102-8801**	1	KIT-RECEPTACLE (12-PIN)	
					(EACH INCLUDES RECEPTACLE AS & WEDGE)	
		1	**155-2260**	2	KIT-CONNECTING PLUG (3-PIN)	
		1	**155-2270**	3	KIT-CONNECTING PLUG (2-PIN)	
					(EACH INCLUDES PLUG AS & WEDGE)	
	4	1	**130-5300**	5	CLIP	
Y	5	1	**135-0426**	2	LAMP GP-SIGNAL (24-VOLT) (STOP, TAIL)	170
M	6	1	**5C-2890**	6	NUT (M6X1-THD)	
	7	1	**5P-4116**	4	WASHER-HARD (8.8X20.5X2-MM THK)	
M	8	1	**8T-4189**	4	BOLT (M8X1.25X20-MM)	
	9	1	**8T-4224**	6	WASHER-HARD (8.8X16X2-MM THK)	

D-ORDER BY THE METER
E-ORDER BY THE CENTIMETER
M-METRIC PART
Y-SEPARATE ILLUSTRATION

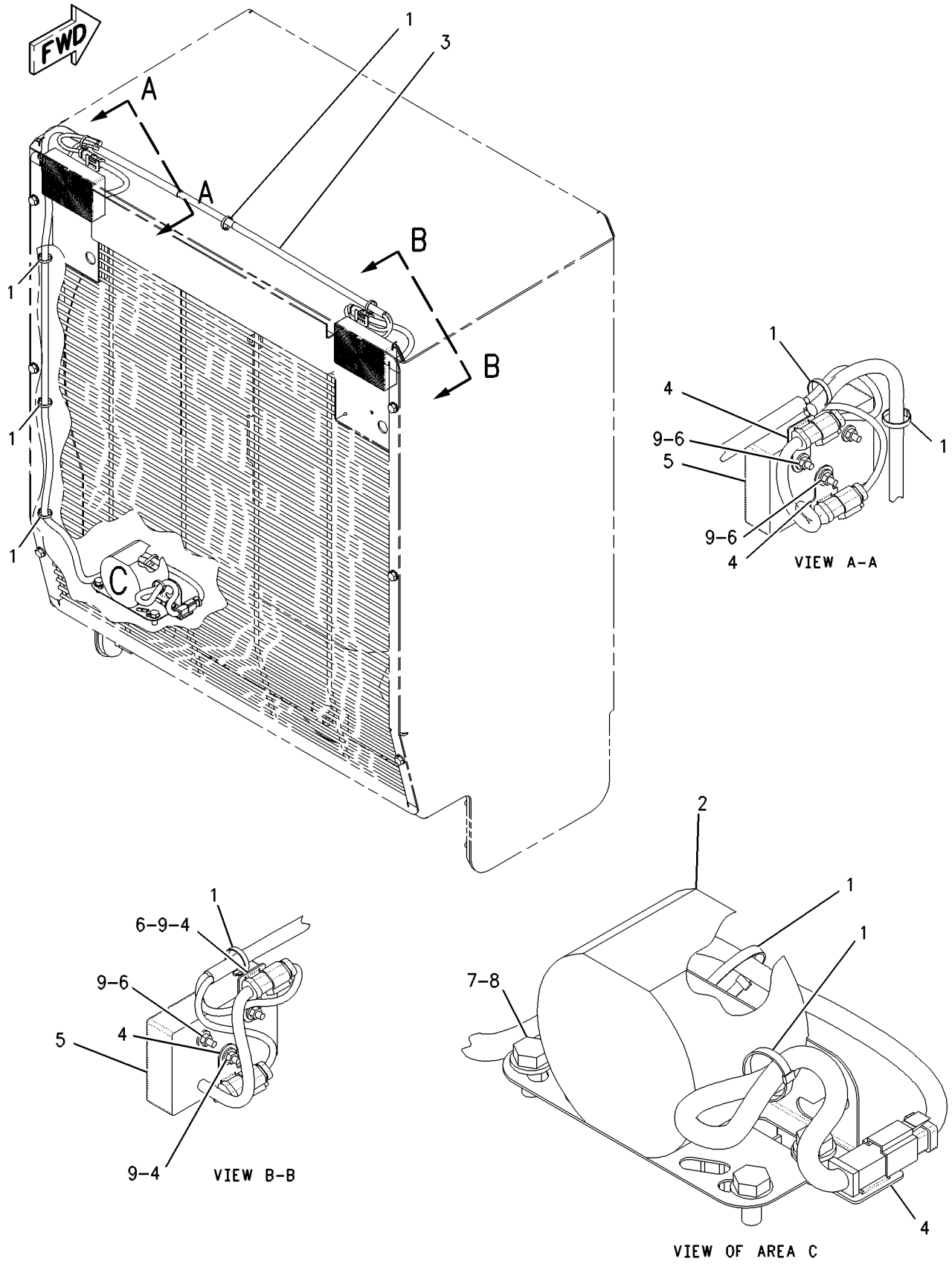

GRAPHIC #1 **<END>** g00940373

ELECTRICAL AND STARTING SYSTEM

193-7360 WIRING GP-REAR–EU

S/N: CBK1-UP

PART OF 207-3700, 210-2043 CONVERSION AR-CERTIFICATION AN ATTACHMENT

SMCS-1408 **i02207459**

NOTE	REF NO	GRAPHIC REF	PART NUMBER	QTY	PART NAME 1 2 3 4 5 6 (PRODUCT LEVEL)	SEE PAGE
Y	1	2	**3E-0154**	1	SWITCH GP-MAGNETIC (SECONDARY STEERING RELAY)	269
	2	1	**3E-5239**	1	RELAY AS (24-VOLT) (START)	
	3	1	**3E-7842**	1	RESISTOR AS	
	4	1,2	**3S-2093**	7	STRAP-CABLE	
	5	1	**6W-6672**	1	SPACER (10.5X20X38-MM THK)	
	6	1	**7C-3254**	1	PLATE	
	7	1	**7Y-8298**	1	CABLE AS	
		1	**1S-7251**	1	TERMINAL-RING	
E		1	**5P-0747**		CABLE (00-GA, BLACK) (50-CM)	
	8	1	**8W-1614**	1	CLIP	
	9	1	**8W-8527**	1	SLEEVE	
	10	1,2	**8W-8528**	4	SLEEVE	
	11	1	**9U-0858**	1	CABLE AS	
		1	**1S-7251**	2	TERMINAL-RING	
E		1	**5P-0761**		CABLE (00-GA, RED) (162-CM)	
		1	**8N-0869**	2	COVER-TERMINAL (RED)	
	12	1	**9U-2277**	1	CLIP AS	
	13	2	**106-8704**	1	SUPPRESSOR AS-ARC (A/C CLUTCH)	
		2	**186-3735**	2	PIN-CONNECTOR	
		2	**102-8802**	1	KIT-RECEPTACLE (2-PIN) (ARC SUPPRESSOR A/C CLUTCH)	
					(INCLUDES RECEPTACLE AS & WEDGE)	
	14	1	**123-3688**	1	PLATE AS	
		1	**7L-0811**	1	DOWEL	
	15	1	**123-3689**	1	PLATE AS	
		1	**5M-6687**	1	STUD-TAPERLOCK (3/8-16X1.28-IN OAL)	
	16	1	**123-3692**	1	ARM	
	17	1	**123-3695**	1	PLATE	
	18	1	**134-3355**	1	STRAP AS	
	19	1	**139-2116**	1	SWITCH AS-TOGGLE (GROUND-LEVEL ENGINE SHUTDOWN)	
		1	**186-3735**	3	PIN-CONNECTOR	
		1	**6T-3631**	2	NUT-HEX (15/32-32-THD)	
		1	**6T-3632**	1	LOCKWASHER	
		1	**6T-3633**	1	RING-LOCKING	
		1	**102-8803**	1	KIT-RECEPTACLE (3-PIN)	
					(INCLUDES RECEPTACLE AS & WEDGE)	
	20	1	**139-6122**	1	BOSS	
	21	2	**2T-3245**	1	CABLE AS	
		2	**1S-7251**	2	TERMINAL-RING	
E		2	**5P-0747**		CABLE (00-GA, BLACK) (45-CM)	
	22	2	**178-0103**	1	PLATE	
	23	1	**187-1008**	1	SENDER AS-POSITION (STEERING ARTICULATION)	
E		1	**9X-1813**		SLEEVE (15-CM)	
		1	**186-3735**	2	PIN-CONNECTOR	
		1	**102-8802**	1	KIT-RECEPTACLE (2-PIN) (STEERING ARTICULATION SENDER)	
					(INCLUDES RECEPTACLE AS & WEDGE)	
	24	1	**194-7195**	1	HARNESS AS-TRANSMISSION	
		1	**155-2271**	1	KIT-CONNECTING PLUG (4-PIN)	
		1	**155-2260**	1	KIT-CONNECTING PLUG (3-PIN)	
		1	**155-2270**	4	KIT-CONNECTING PLUG (2-PIN)	
		1	**155-2255**	3	KIT-CONNECTING PLUG (12-PIN)	
					(EACH INCLUDES PLUG AS & WEDGE)	
		1	**102-8802**	1	KIT-RECEPTACLE (2-PIN)	

193-7360 **WIRING GP-REAR** ***(contd.)*** **i02207459**

NOTE	REF NO	GRAPHIC REF	PART NUMBER	QTY	PART NAME 1 2 3 4 5 6 (PRODUCT LEVEL)	SEE PAGE
		1	**102-8803**	2	KIT-RECEPTACLE (3-PIN)	
		1	**102-8801**	2	KIT-RECEPTACLE (12-PIN)	
					(EACH INCLUDES RECEPTACLE AS & WEDGE)	
		1	**110-6846**	1	PLUG AS-CONNECTOR (40-PIN)	
		1	**110-6848**	1	PLUG AS-CONNECTOR (40-PIN)	
		1	**9X-0141**	1	PLUG AS-CONNECTOR (40-PIN)	
		1	**9X-1054**	1	PLUG AS-CONNECTOR (4-PIN)	
		1	**160-7689**	1	PLUG AS-CONNECTOR (70-PIN)	
	25	1	**194-7215**	1	HARNESS AS-REAR CHASSIS	
		1	**102-8802**	1	KIT-RECEPTACLE (2-PIN)	
		1	**102-8805**	1	KIT-RECEPTACLE (6-PIN)	
					(EACH INCLUDES RECEPTACLE AS & WEDGE)	
		1	**155-2255**	1	KIT-CONNECTING PLUG (12-PIN)	
		1	**155-2270**	2	KIT-CONNECTING PLUG (2-PIN)	
					(EACH INCLUDES PLUG AS & WEDGE)	
		1	**127-5483**	5	PLUG AS-CONNECTOR (1-PIN)	
	26	1	**195-2497**	1	BRACKET	
	27	1	**196-2970**	1	HARNESS AS-REAR LIGHTING	
		1	**155-2255**	2	KIT-CONNECTING PLUG (12-PIN)	
		1	**155-2270**	5	KIT-CONNECTING PLUG (2-PIN)	
					(EACH INCLUDES PLUG AS & WEDGE)	
		1	**102-8802**	2	KIT-RECEPTACLE (2-PIN)	
					(INCLUDES RECEPTACLE AS & WEDGE)	
	28	1	**197-5019**	1	CABLE AS	
		1	**1S-7251**	1	TERMINAL-RING	
E		1	**5P-0747**		CABLE (00-GA, BLACK) (105-CM)	
		1	**8N-0869**	2	COVER-TERMINAL (RED)	
		1	**9R-4286**	1	TERMINAL	
	29	1	**033-8248**	1	CLIP	
	30	1	**109-0361**	1	FILM-INSTRUCTION (ENGINE SHUTDOWN)	
	31	1	**115-3073**	1	CLIP AS-CONNECTING	
	32	1	**130-5300**	8	CLIP	
	33	1	**130-5301**	1	CLIP	
	34	1,2	**174-5907**	6	CLIP	
	35	1	**1S-0994**	3	CLIP	
	36	1	**2S-3770**	1	SPACER (11X19X33.5-MM THK) (11.13X19.05X33.50MM THK)	
	37	1	**2V-3216**	1	CLIP	
	38	1	**3E-5169**	1	GUARD-SWITCH (RED)	
	39	1	**4D-1432**	1	SPACER (1.8-IN THK)	
	40	1	**4D-7388**	1	CLIP	
	41	1,2	**4D-7794**	7	CLIP	
	42	1	**4S-4455**	4	CLIP	
M	43	1	**5C-2890**	1	NUT (M6X1-THD)	
M	44	1	**5C-9553**	1	BOLT (M6X1X16-MM)	
	45	1	**5M-3062**	1	BOLT (3/8-16X0.75-IN)	
	46	1	**5P-1075**	1	WASHER-HARD (10.2X22.5X3-MM THK)	
	47	1	**5P-4116**	1	WASHER-HARD (8.8X20.5X2-MM THK)	
	48	1	**5P-4295**	1	CLIP	
	49	1	**5P-8167**	2	BOLT (3/8-16X0.625-IN)	
	50	1	**6D-4244**	4	CLIP	
	51	1	**6D-4246**	2	CLIP	
M	52	1	**6V-5221**	1	BOLT (M8X1.25X80-MM)	
	53	1	**6V-6893**	3	BOLT (6-32X0.375-IN)	
	54	1	**6V-8801**	1	NUT (3/8-16-THD)	
	55	1,2	**7C-4354**	5	CLIP	
M	56	1	**7X-2541**	1	BOLT (M8X1.25X140-MM)	
M	57	2	**7X-2619**	4	BOLT (M6X1X20-MM)	
	58	2	**8M-2770**	1	CLIP	
	59	1	**8M-2773**	1	CLIP	

193-7360 **WIRING GP-REAR** ***(contd.)*** **i02207459**

NOTE	REF NO	GRAPHIC REF	PART NUMBER	QTY	PART NAME 1 2 3 4 5 6 (PRODUCT LEVEL)	SEE PAGE
	60	1,2	**8T-4121**	35	WASHER-HARD (11X21X2.5-MM THK)	
M	61	1,2	**8T-4133**	5	NUT (M10X1.5-THD)	
M	62	1	**8T-4136**	2	BOLT (M10X1.5X25-MM)	
M	63	1,2	**8T-4137**	22	BOLT (M10X1.5X20-MM)	
M	64	1,2	**8T-4179**	6	BOLT (M12X1.75X20-MM)	
M	65	1	**8T-4185**	1	BOLT (M10X1.5X50-MM)	
M	66	1	**8T-4191**	2	BOLT (M10X1.5X16-MM)	
M	67	1,2	**8T-4195**	2	BOLT (M10X1.5X30-MM)	
M	68	1	**8T-4200**	1	BOLT (M8X1.25X16-MM)	
	69	1	**8T-4205**	2	WASHER-HARD (7.2X14.5X2-MM THK)	
M	70	1,2	**8T-4223**	6	WASHER-HARD (13.5X25.5X3-MM THK)	
	71	1	**8T-4224**	1	WASHER-HARD (8.8X16X2-MM THK)	
	72	1	**8T-4226**	1	WASHER-PLATED (10.5X45X3-MM THK)	
	73	1	**8T-4896**	3	WASHER-HARD (10.2X18.5X2.5-MM THK)	
M	74	1	**8T-5005**	1	BOLT (M10X1.5X70-MM)	
	75	1	**8T-9364**	2	BOLT (1/4-20X0.625-IN)	
	76	1	**8W-8909**	2	SLEEVE	
	77	1	**8X-5489**	1	SLEEVE	
	78	1,2	**9X-8256**	6	WASHER (6.6X12X2-MM THK)	

E-ORDER BY THE CENTIMETER
M-METRIC PART
Y-SEPARATE ILLUSTRATION

193-7360 **WIRING GP-REAR** *(contd.)* **i02207459**

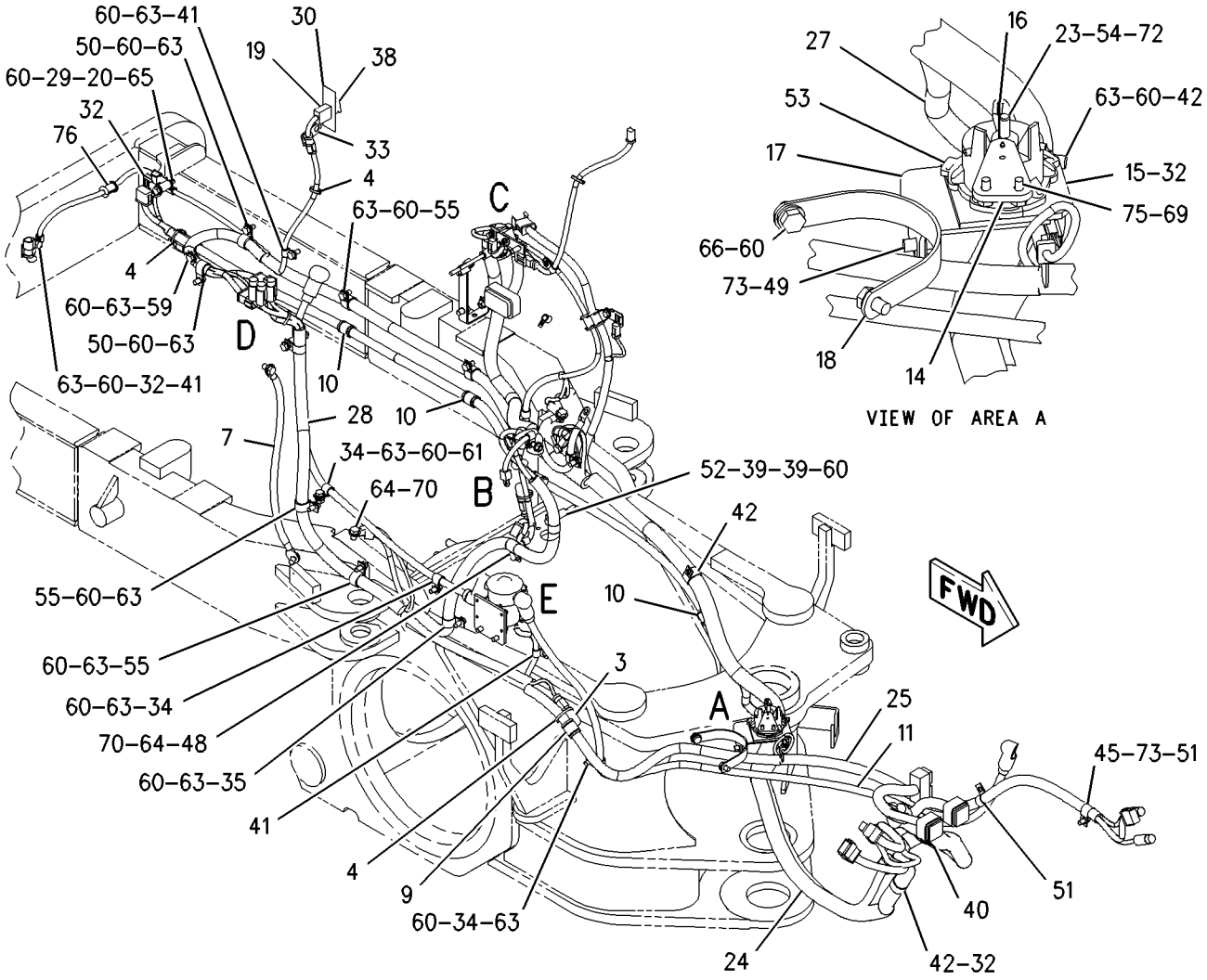

VIEW OF AREA A

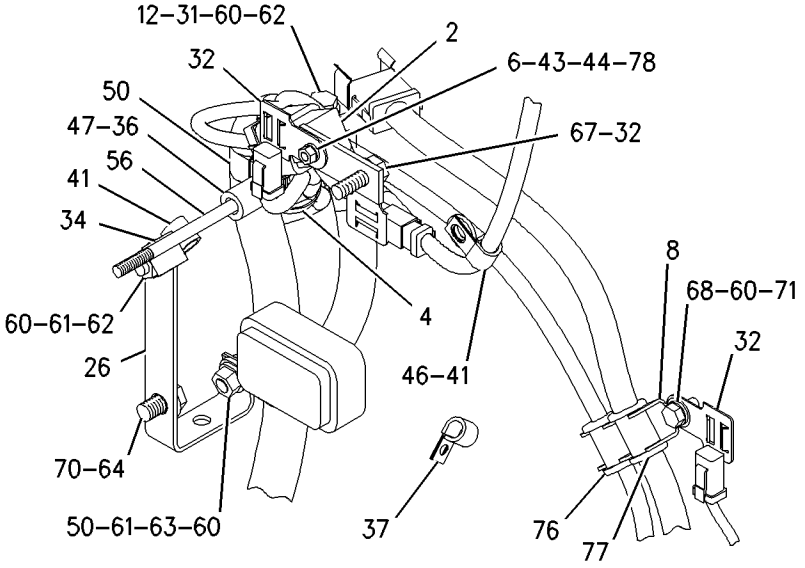

VIEW OF AREA C

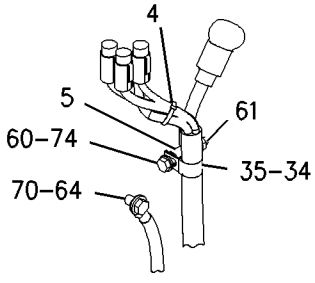

VIEW OF AREA D

REFER TO ALL ILLUSTRATIONS OF THIS GROUP FOR AUXILIARY VIEWS

GRAPHIC #1

g00975475

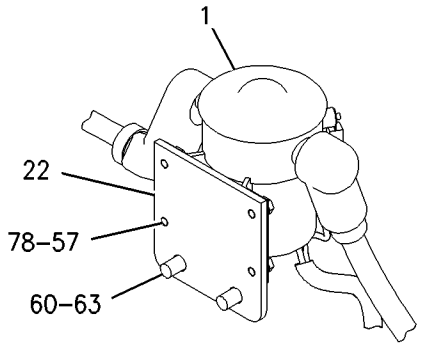

VIEW OF AREA E

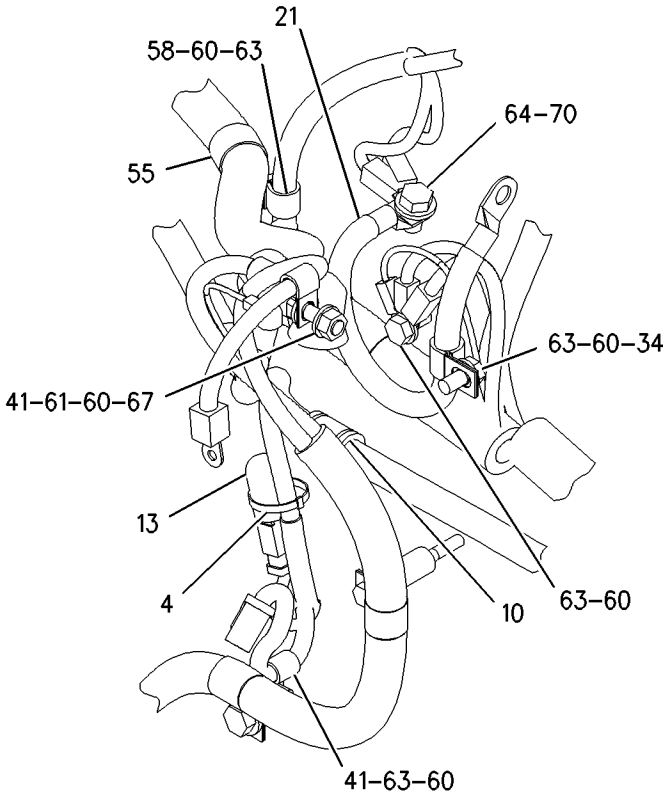

VIEW OF AREA B

GRAPHIC #2 **<END>** g00941355

193-8253 WIRING GP-REAR–BACKUP ALARM, LIGHTS, EU

S/N: CBK1-248

PART OF 207-3700, 210-2043 CONVERSION AR-CERTIFICATION

AN ATTACHMENT

SMCS-1408 **i02204557**

NOTE	REF NO	GRAPHIC REF	PART NUMBER	QTY	PART NAME 1 2 3 4 5 6 (PRODUCT LEVEL)	SEE PAGE
	1	1	**3S-2093**	12	STRAP-CABLE	
	2	1	*5C-9930*	1	LAMP GP (STOP, TURN, TAIL, RH)	
		1	**4V-8116**	1	LAMP (24-VOLT, 5-WATT)	
		1	**5C-9584**	2	LAMP (24-VOLT, 21-WATT)	
		1	**6C-0109**	1	LAMP AS	
		1	**5M-6725**	1	SCREW-TAPPING (8-18X0.625-IN)	
		1	**8L-5828**	1	SCREW-TAPPING (8-18X0.875-IN)	
		1	**188-9694**	1	LENS	
		1	**188-9695**	1	SEAL	
	3	1	*5C-9931*	1	LAMP GP (STOP, TAIL, TURN, LH)	
		1	**4V-8116**	1	LAMP (24-VOLT, 5-WATT)	
		1	**5C-9584**	2	LAMP (24-VOLT, 21-WATT)	
		1	**6C-0110**	1	LAMP AS	
		1	**5M-6725**	1	SCREW-TAPPING (8-18X0.625-IN)	
		1	**8L-5828**	1	SCREW-TAPPING (8-18X0.875-IN)	
		1	**188-9694**	1	LENS	
		1	**188-9695**	1	SEAL	
	4	1	**6C-5233**	1	BRACKET AS	
	5	1	**6C-5234**	1	BRACKET AS	
	6	1	**7V-7835**	1	ARM AS	
		1	**5C-9563**	1	SPACER (11.2X26.67X55-MM THK)	
	7	1	**7V-7838**	1	ARM AS	
		1	**5C-9563**	1	SPACER (11.2X26.67X55-MM THK)	
	8	1	**7X-2393**	4	BUMPER-CONICAL	
	9	1	**9S-1316**	2	SPRING	
	10	1	**112-5555**	2	ROD	
	11	1	**156-0283**	2	WASHER-HARD (8.4X35X2.5-MM THK)	
	12	1	**196-4609**	1	HARNESS AS-REAR LIGHTING	
		1	**102-8802**	2	KIT-RECEPTACLE (2-PIN)	
		1	**102-8801**	1	KIT-RECEPTACLE (12-PIN)	
					(EACH INCLUDES RECEPTACLE AS & WEDGE)	
		1	**155-2270**	2	KIT-CONNECTING PLUG (2-PIN)	
					(EACH INCLUDES PLUG AS & WEDGE)	
	13	1	**208-7933**	2	PLATE	
	15	1	**2V-3216**	2	CLIP	
	16	1	**3B-5301**	2	PIN-COTTER	
M	17	1	**5C-2890**	6	NUT (M6X1-THD)	
M	18	1	**5C-7261**	4	NUT (M8X1.25-THD)	
	19	1	**8D-5641**	4	BEARING	
	20	1	**8T-4121**	12	WASHER-HARD (11X21X2.5-MM THK)	
	21	1	**8T-4122**	4	WASHER-HARD (17X32X3.5-MM THK)	
M	22	1	**8T-4136**	8	BOLT (M10X1.5X25-MM)	
M	23	1	**8T-4171**	2	BOLT (M6X1X12-MM)	
M	24	1	**8T-4173**	2	BOLT (M16X2X110-MM)	
	25	1	**8T-4205**	6	WASHER-HARD (7.2X14.5X2-MM THK)	
M	26	1	**8T-4223**	2	WASHER-HARD (13.5X25.5X3-MM THK)	
	27	1	**8T-4224**	4	WASHER-HARD (8.8X16X2-MM THK)	
M	28	1	**8T-4778**	2	LOCKNUT (M16X2-THD)	
	29	1	**9M-5870**	2	GROMMET (11.11-MM ID)	
M	30	1	**8T-4133**	2	NUT (M10X1.5-THD)	
M	31	1	**8T-4198**	2	BOLT (M10X1.5X100-MM)	
Y	32	1	**123-6449**	1	ALARM GP	119
	33	1	**130-5300**	3	CLIP	
	34	1	**160-1744**	2	BRACKET	
	35	1	**213-1413**	1	HARNESS AS-REAR LIGHTING (RH)	

193-8253 **WIRING GP-REAR** ***(contd.)*** **i02204557**

NOTE	REF NO	GRAPHIC REF	PART NUMBER	QTY	PART NAME 1 2 3 4 5 6 (PRODUCT LEVEL)	SEE PAGE
		1	**102-8804**	1	KIT-RECEPTACLE (4-PIN)	
					(INCLUDES RECEPTACLE AS & WEDGE)	
	36	1	**213-1414**	1	HARNESS AS-REAR LIGHTING (LH)	
		1	**102-8804**	1	KIT-RECEPTACLE (4-PIN)	
					(INCLUDES RECEPTACLE AS & WEDGE)	

M-METRIC PART
Y-SEPARATE ILLUSTRATION

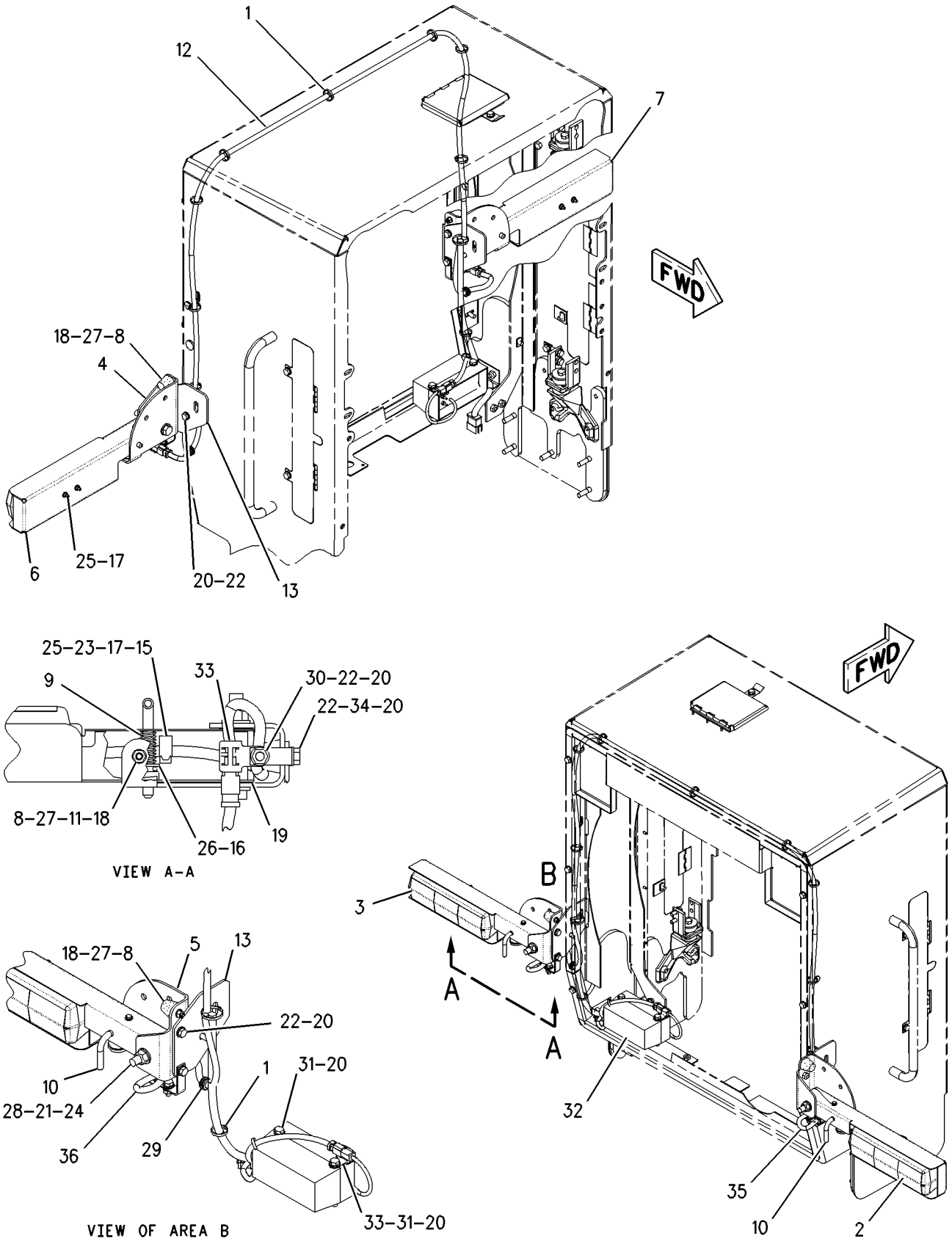

GRAPHIC #1 **<END>** g00845742

193-8253 WIRING GP-REAR–BACKUP ALARM, LIGHTS, EU

S/N: CBK249-UP

PART OF 207-3700, 210-2043 CONVERSION AR-CERTIFICATION AN ATTACHMENT

SMCS-1408 **i02204558**

NOTE	REF NO	GRAPHIC REF	PART NUMBER	QTY	PART NAME 1 2 3 4 5 6 (PRODUCT LEVEL)	SEE PAGE
C	1	1	**3S-2093**	13	STRAP-CABLE	
	2	1	*5C-9930*	1	LAMP GP (STOP, TURN, TAIL, RH)	
		1	**4V-8116**	1	LAMP (24-VOLT, 5-WATT)	
		1	**5C-9584**	2	LAMP (24-VOLT, 21-WATT)	
		1	**6C-0109**	1	LAMP AS	
	3	1	*5C-9931*	1	LAMP GP (STOP, TAIL, TURN, LH)	
		1	**4V-8116**	1	LAMP (24-VOLT, 5-WATT)	
		1	**5C-9584**	2	LAMP (24-VOLT, 21-WATT)	
		1	**6C-0110**	1	LAMP AS	
	4	1	**6C-5233**	1	BRACKET AS	
M		1	**8T-3490**	2	NUT-WELD (M10X1.5-THD)	
	5	1	**6C-5234**	1	BRACKET AS	
M		1	**8T-3490**	2	NUT-WELD (M10X1.5-THD)	
	6	1	**7V-7835**	1	ARM AS (RH)	
		1	**5C-9563**	1	SPACER (11.2X26.67X55-MM THK)	
	7	1	**7V-7838**	1	ARM AS (LH)	
		1	**5C-9563**	1	SPACER (11.2X26.67X55-MM THK)	
	8	1,2	**7X-2393**	4	BUMPER-CONICAL	
	9	2	**9S-1316**	2	SPRING	
	10	1	**112-5555**	2	ROD	
	11	2	**156-0283**	2	WASHER-HARD (8.4X35X2.5-MM THK)	
	12	2	**160-1744**	2	BRACKET	
	13	1	**196-4609**	1	HARNESS AS-REAR LIGHTING	
		1	**102-8802**	2	KIT-RECEPTACLE (2-PIN)	
		1	**102-8801**	1	KIT-RECEPTACLE (12-PIN)	
					(EACH INCLUDES RECEPTACLE AS & WEDGE)	
		1	**155-2270**	2	KIT-CONNECTING PLUG (2-PIN)	
		1	**155-2271**	2	KIT-CONNECTING PLUG (4-PIN)	
					(EACH INCLUDES PLUG AS & WEDGE)	
	14	1	**208-7933**	2	PLATE	
	15	2	**213-1413**	1	HARNESS AS-REAR LIGHTING (RH)	
		2	**102-8804**	1	KIT-RECEPTACLE (4-PIN)	
					(INCLUDES RECEPTACLE AS & WEDGE)	
	16	2	**213-1414**	1	HARNESS AS-REAR LIGHTING (LH)	
		2	**102-8804**	1	KIT-RECEPTACLE (4-PIN)	
					(INCLUDES RECEPTACLE AS & WEDGE)	
C	17	1	**213-9100**	1	ALARM AS-BACKUP	
	18	1,2	**130-5300**	3	CLIP	
	19	2	**2V-3216**	2	CLIP	
	20	2	**3B-5301**	2	PIN-COTTER	
M	21	1,2	**5C-2890**	6	NUT (M6X1-THD)	
M	22	1,2	**5C-7261**	4	NUT (M8X1.25-THD)	
C	23	1	**5P-1076**	2	WASHER-HARD (13.5X30X4-MM THK)	
	24	1	**5P-4116**	4	WASHER-HARD (8.8X20.5X2-MM THK)	
C	25	1,2	**7G-7053**	2	GROMMET	
	26	2	**8D-5641**	4	BEARING	
	27	1,2	**8T-4121**	8	WASHER-HARD (11X21X2.5-MM THK)	
	28	2	**8T-4122**	4	WASHER-HARD (17X32X3.5-MM THK)	
M	29	2	**8T-4133**	2	NUT (M10X1.5-THD)	
CM	30	1,2	**8T-4136**	6	BOLT (M10X1.5X25-MM)	
CM	31	1	**8T-4139**	2	BOLT (M12X1.75X30-MM)	
M	32	2	**8T-4171**	2	BOLT (M6X1X12-MM)	
M	33	2	**8T-4173**	2	BOLT (M16X2X110-MM)	
CM	34	1	**8T-4189**	4	BOLT (M8X1.25X20-MM)	
	35	1,2	**8T-4205**	6	WASHER-HARD (7.2X14.5X2-MM THK)	

193-8253 **WIRING GP-REAR** *(contd.)* **i02204558**

NOTE	REF NO	GRAPHIC REF	PART NUMBER	QTY	PART NAME 1 2 3 4 5 6 (PRODUCT LEVEL)	SEE PAGE
M	36	2	**8T-4223**	2	WASHER-HARD (13.5X25.5X3-MM THK)	
	37	1,2	**8T-4224**	4	WASHER-HARD (8.8X16X2-MM THK)	
M	38	2	**8T-4778**	2	LOCKNUT (M16X2-THD)	

C-CHANGE FROM PREVIOUS TYPE
M-METRIC PART

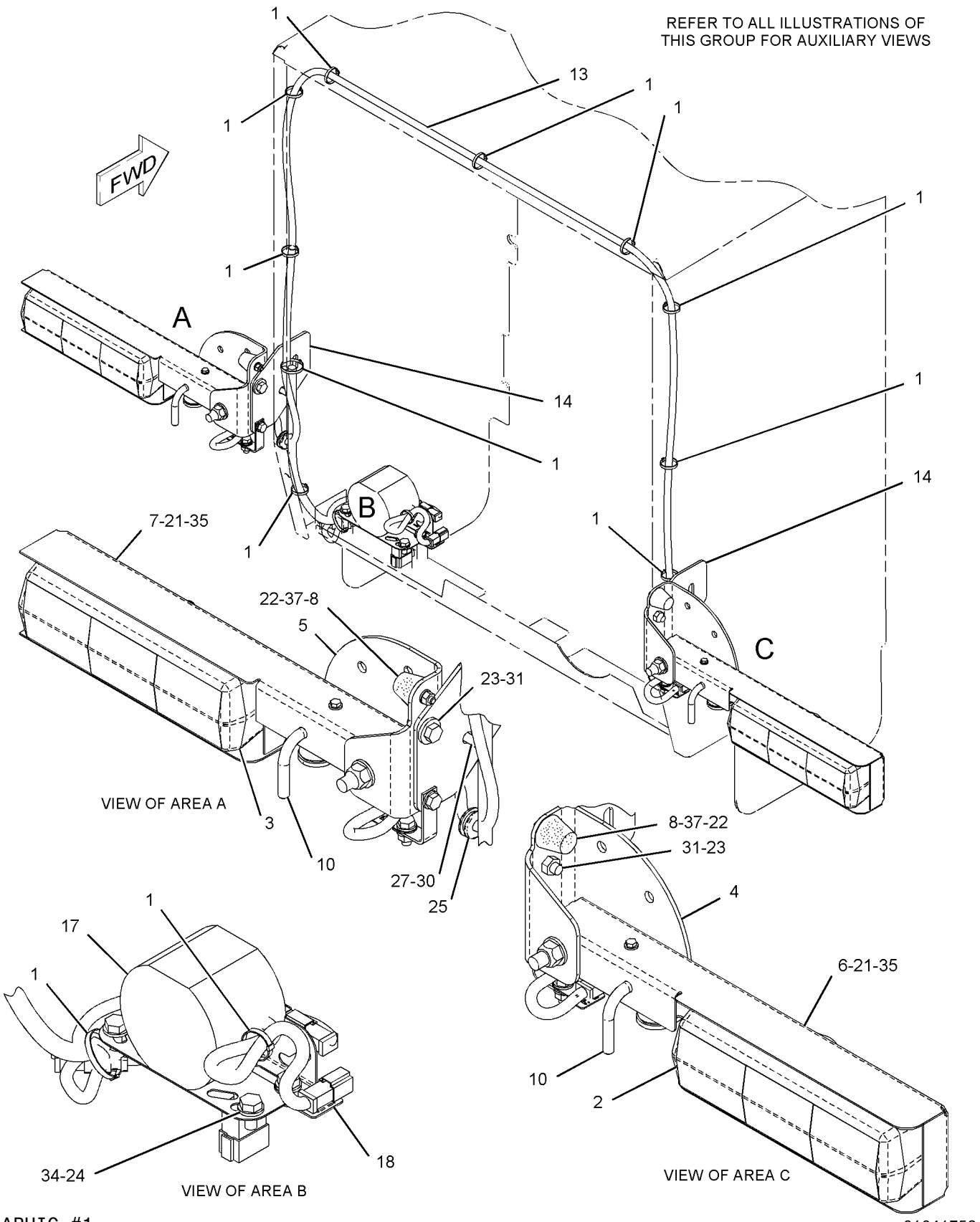

GRAPHIC #1

g01041753

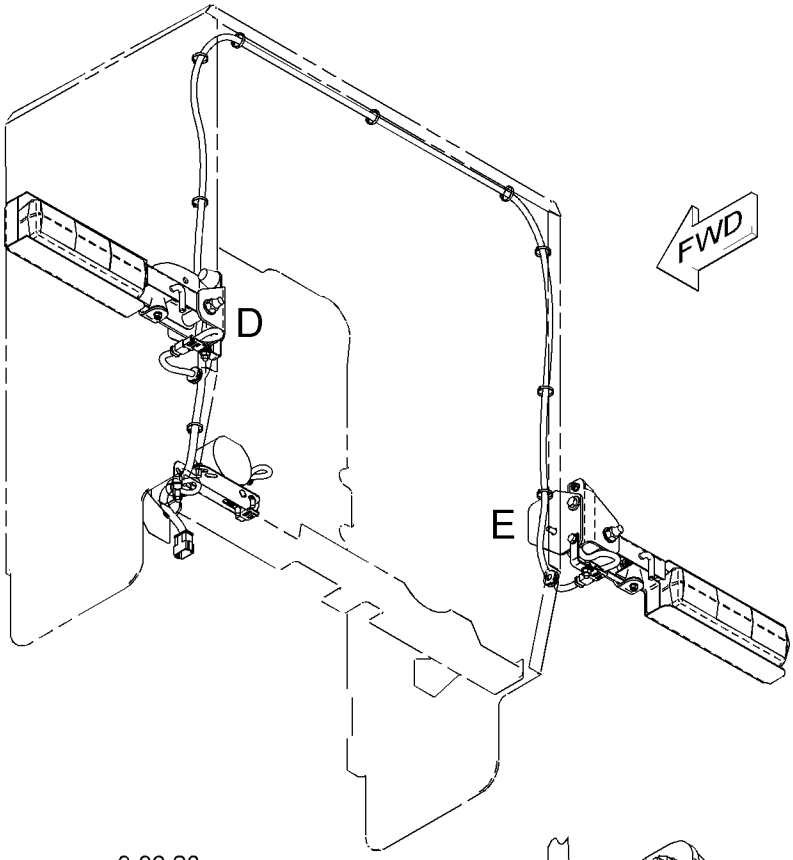

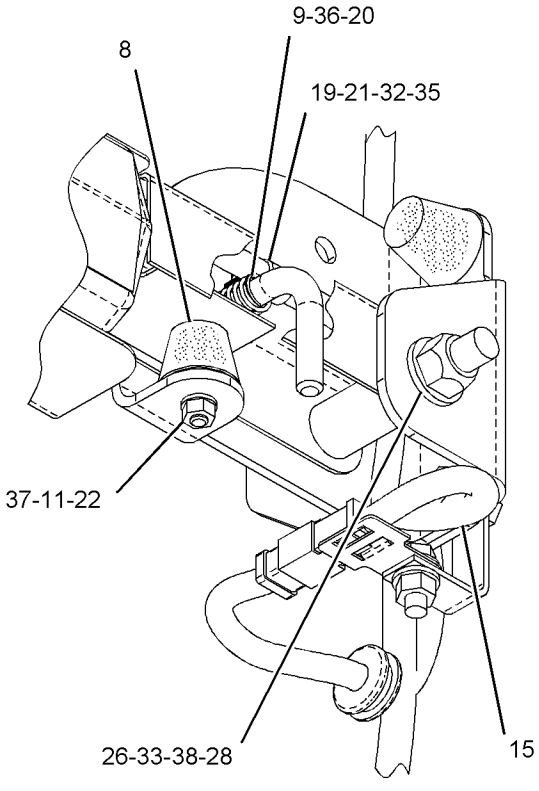

VIEW OF AREA D

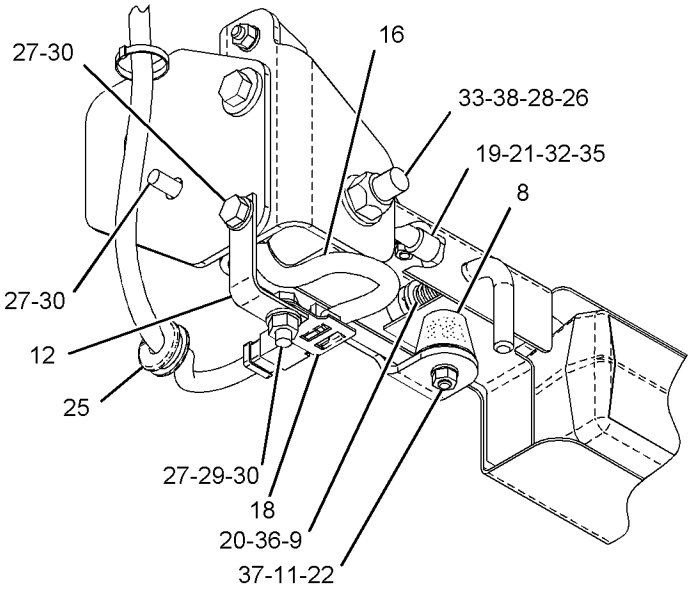

VIEW OF AREA E

GRAPHIC #2 **<END>** g01093417

193-8255 WIRING GP-REAR—SERVICE CENTER

S/N: CBK1-UP

PART OF 185-3142 SUPPORT AR-REAR CHASSIS

SMCS-1408 **i02207460**

NOTE	REF NO	GRAPHIC REF	PART NUMBER	QTY	PART NAME 1 2 3 4 5 6 (PRODUCT LEVEL)	SEE PAGE
	1	1	**2L-0273**	1	FITTING (RUBBER)	
	2	1	**3E-8320**	1	PLATE-INSTRUCTION (BATTERY)	
	3	1,2	**3S-2093**	2	STRAP-CABLE	
	4	2	**6V-4283**	1	PLATE-IDENTIFICATION (ALTERNATOR)	
	5	1,2	**7K-4743**	2	SPACER (10.31X25.4X6.35-MM THK)	
	6	2	**7V-9275**	1	STRAP	
	7	2	**9L-1566**	1	SUPPORT	
	8	2	**112-4428**	1	CABLE AS	
		2	**1S-7251**	1	TERMINAL-RING	
		2	**1S-7252**	1	TERMINAL-RING	
E		2	**5P-0747**		CABLE (00-GA, BLACK) (27-CM)	
	9	1	**115-5593**	1	CABLE AS	
		1	**1S-7252**	1	TERMINAL-RING	
E		1	**5P-0747**		CABLE (00-GA, BLACK) (119-CM)	
		1	**7N-5274**	1	COVER-TERMINAL (BLACK)	
		1	**3S-6050**	1	TERMINAL AS	
		1	**1M-6119**	1	BOLT (5/16-18X1.375-IN)	
		1	**1M-6120**	1	NUT (5/16-18-THD)	
	10	2	**118-3534**	1	SWITCH GP-MAGNETIC (24-VOLT) (STARTING RELAY)	
	11	2	**125-6390**	1	PLATE-IDENTIFICATION (ENGINE)	
Y	12	2	**167-0138**	1	SWITCH GP-MAGNETIC (24-VOLT) (MAIN POWER RELAY)	270
	13	2	**169-5414**	1	CLIP	
	14	2	**169-7262**	1	HARNESS AS-REAR (SERVICE CENTER-RH)	
		2	**155-2270**	1	KIT-CONNECTING PLUG (2-PIN)	
		2	**155-2274**	2	KIT-CONNECTING PLUG (6-PIN)	
					(EACH INCLUDES PLUG AS & WEDGE)	
		2	**102-8802**	1	KIT-RECEPTACLE (2-PIN)	
					(INCLUDES RECEPTACLE AS & WEDGE)	
	15	2	**169-7263**	1	HARNESS AS-REAR (SERVICE CENTER-LH)	
		2	**155-2270**	1	KIT-CONNECTING PLUG (2-PIN)	
		2	**155-2271**	1	KIT-CONNECTING PLUG (4-PIN)	
					(INCLUDES PLUG AS & WEDGE)	
		2	**102-8802**	1	KIT-RECEPTACLE (2-PIN)	
		2	**102-8804**	1	KIT-RECEPTACLE (4-PIN)	
		2	**102-8805**	1	KIT-RECEPTACLE (6-PIN)	
		2	**102-8801**	1	KIT-RECEPTACLE (12-PIN)	
					(EACH INCLUDES RECEPTACLE AS & WEDGE)	
	16	2	**171-2210**	1	CIRCUIT BREAKER AS (80-AMPERE) (MAIN)	
		2	**1H-3244**	2	LOCKWASHER	
		2	**6V-8187**	2	NUT (1/4-28-THD)	
		2	**8T-4205**	2	WASHER-HARD (7.2X14.5X2-MM THK)	
	16A	2	**171-2210**	1	CIRCUIT BREAKER AS (80-AMPERE) (ALTERNATOR)	
		2	**1H-3244**	2	LOCKWASHER	
		2	**6V-8187**	2	NUT (1/4-28-THD)	
		2	**8T-4205**	2	WASHER-HARD (7.2X14.5X2-MM THK)	
	17	1	**177-8802**	1	CABLE AS	
		1	**1S-7251**	1	TERMINAL-RING	
E		1	**5P-0761**		CABLE (00-GA, RED) (32-CM)	
		1	**8N-0869**	1	COVER-TERMINAL (RED)	
		1	**8N-1725**	1	COVER-TERMINAL (RED)	
	18	2	**177-9813**	1	CABLE AS	
		2	**8N-1546**	1	PIN-CONNECTOR	
D		2	**5P-5675**	1	WIRE (06-GA) (0.5-M)	
		2	**2L-8050**	1	TERMINAL (FOR 1/4-IN SCREW)	
		2	**2L-8058**	1	TERMINAL (FOR 1/4-IN SCREW)	

193-8255 **WIRING GP-REAR** ***(contd.)*** **i02207460**

NOTE	REF NO	GRAPHIC REF	PART NUMBER	QTY	PART NAME 1 2 3 4 5 6 (PRODUCT LEVEL)	SEE PAGE
		2	**127-5484**	1	RECEPTACLE AS (1-PIN)	
	19	2	**177-9814**	1	CABLE AS	
		2	**9G-4343**	1	TERMINAL	
D		2	**6V-2369**	1	WIRE (04-GA, BLACK) (0.4-M)	
		2	**8N-1548**	1	PIN-CONNECTOR	
		2	**127-5484**	1	RECEPTACLE AS (1-PIN)	
	20	2	**178-0160**	1	WIRE AS	
	21	2	**178-0162**	1	CABLE AS	
D		2	**5P-5689**		WIRE (08-GA) (.2-M)	
		2	**2L-8050**	2	TERMINAL (FOR 1/4-IN SCREW)	
		2	**2L-8058**	2	TERMINAL (FOR 1/4-IN SCREW)	
	22	2	**178-0555**	1	CABLE AS	
		2	**9G-4343**	1	TERMINAL	
		2	**5P-3454**	1	TERMINAL	
D		2	**6V-2369**		WIRE (04-GA, BLACK) (.2-M)	
	23	2	**189-0108**	1	PLATE	
	24	1	**194-1854**	1	COVER	
	25	2	**194-4230**	1	CABLE AS	
		2	**1S-7251**	1	TERMINAL-RING	
E		2	**5P-0761**		CABLE (00-GA, RED) (152-CM)	
		2	**8N-0869**	1	COVER-TERMINAL (RED)	
	26	1	**194-6738**	1	WIRE AS	
	27	1	**195-4990**	1	WIRE AS	
	28	1	**033-8248**	1	CLIP	
	29	1,2	**130-5300**	3	CLIP	
	30	2	**132-6938**	1	PLATE	
	31	2	**157-2528**	1	SPACER (7X16X20-MM THK)	
	32	1,2	**174-5907**	6	CLIP	
	33	2	**1S-0994**	2	CLIP	
	34		**1S-1015**	1	CLIP	
	35	2	**1V-6688**	1	GROMMET	
	36	2	**3K-8106**	2	SCREW-MACHINE (8-32X1-IN)	
	37	2	**4B-4274**	4	WASHER (5.5X13X1.2-MM THK)	
	38	2	**4B-4863**	2	WASHER (4.7X11X1.2-MM THK)	
	39	1,2	**4D-7794**	6	CLIP	
	40	2	**4D-8948**	1	CLIP	
	41	1	**4H-2558**	2	GROMMET	
M	42	2	**5C-9553**	1	BOLT (M6X1X16-MM)	
	43	2	**5L-4507**	4	SCREW-MACHINE (10-32X0.875-IN)	
	44	1	**5P-4116**	1	WASHER-HARD (8.8X20.5X2-MM THK)	
	45	2	**6D-3479**	1	CLIP	
	46	2	**6K-8178**	4	CLIP	
	47	2	**6T-3643**	1	CIRCUIT BREAKER AS (15-AMPERE) (ENGINE CONTROL)	
		2	**6V-8376**	2	SCREW-MACHINE (8-32X0.25-IN)	
		2	**9B-7233**	2	LOCKWASHER	
M	48	2	**6V-7357**	1	BOLT (M6X1X25-MM)	
Y	49	1	**7N-0718**	1	SWITCH GP-DISCONNECT (BATTERY)	266
	50	2	**7N-3718**	1	CLIP	
	51		**7Y-8169**	1	GROMMET	
M	52	2	**8C-8451**	1	BOLT (M6X1X40-MM)	
	53	2	**8M-2772**	1	CLIP	
M	54	2	**8T-0293**	1	BOLT (M12X1.75X20-MM)	
	55	1,2	**8T-4121**	22	WASHER-HARD (11X21X2.5-MM THK)	
M	56	2	**8T-4133**	1	NUT (M10X1.5-THD)	
M	57	1,2	**8T-4136**	13	BOLT (M10X1.5X25-MM)	
M	58	1,2	**8T-4137**	8	BOLT (M10X1.5X20-MM)	
M	59	2	**8T-4138**	2	BOLT (M6X1X20-MM)	
M	60	1,2	**8T-4189**	3	BOLT (M8X1.25X20-MM)	
M	61	1,2	**8T-4191**	2	BOLT (M10X1.5X16-MM)	

193-8255 **WIRING GP-REAR** *(contd.)* **i02207460**

NOTE	REF NO	GRAPHIC REF	PART NUMBER	QTY	PART NAME 1 2 3 4 5 6 (PRODUCT LEVEL)	SEE PAGE
	62	2	**8T-4205**	4	WASHER-HARD (7.2X14.5X2-MM THK)	
M	63	2	**8T-4223**	1	WASHER-HARD (13.5X25.5X3-MM THK)	
	64	2	**8T-4224**	3	WASHER-HARD (8.8X16X2-MM THK)	
Y	65	1	*9W-0742*	1	BLOCK GP-JUNCTION	131

D-ORDER BY THE METER
E-ORDER BY THE CENTIMETER
M-METRIC PART
Y-SEPARATE ILLUSTRATION

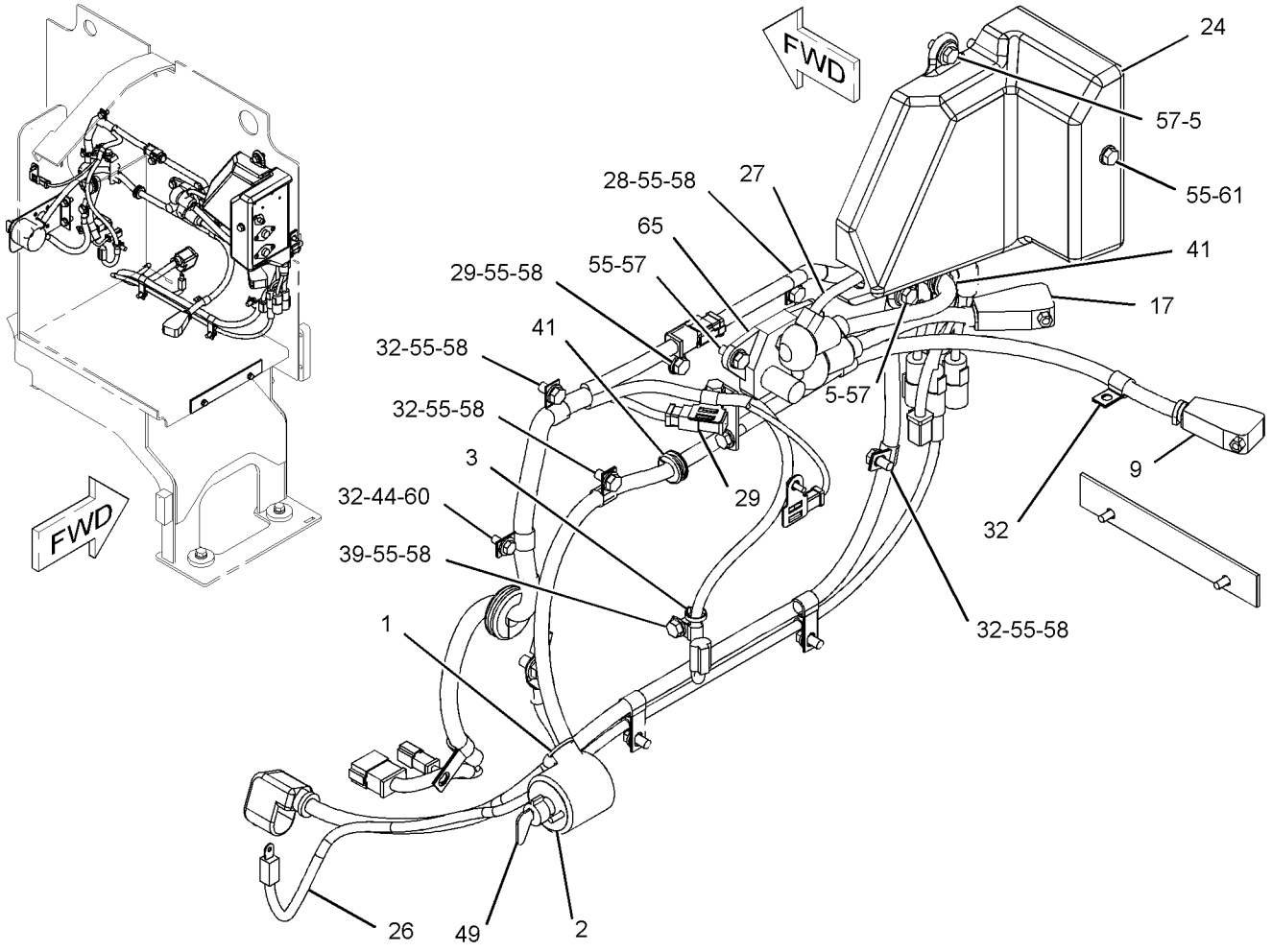

GRAPHIC #1 g01034058

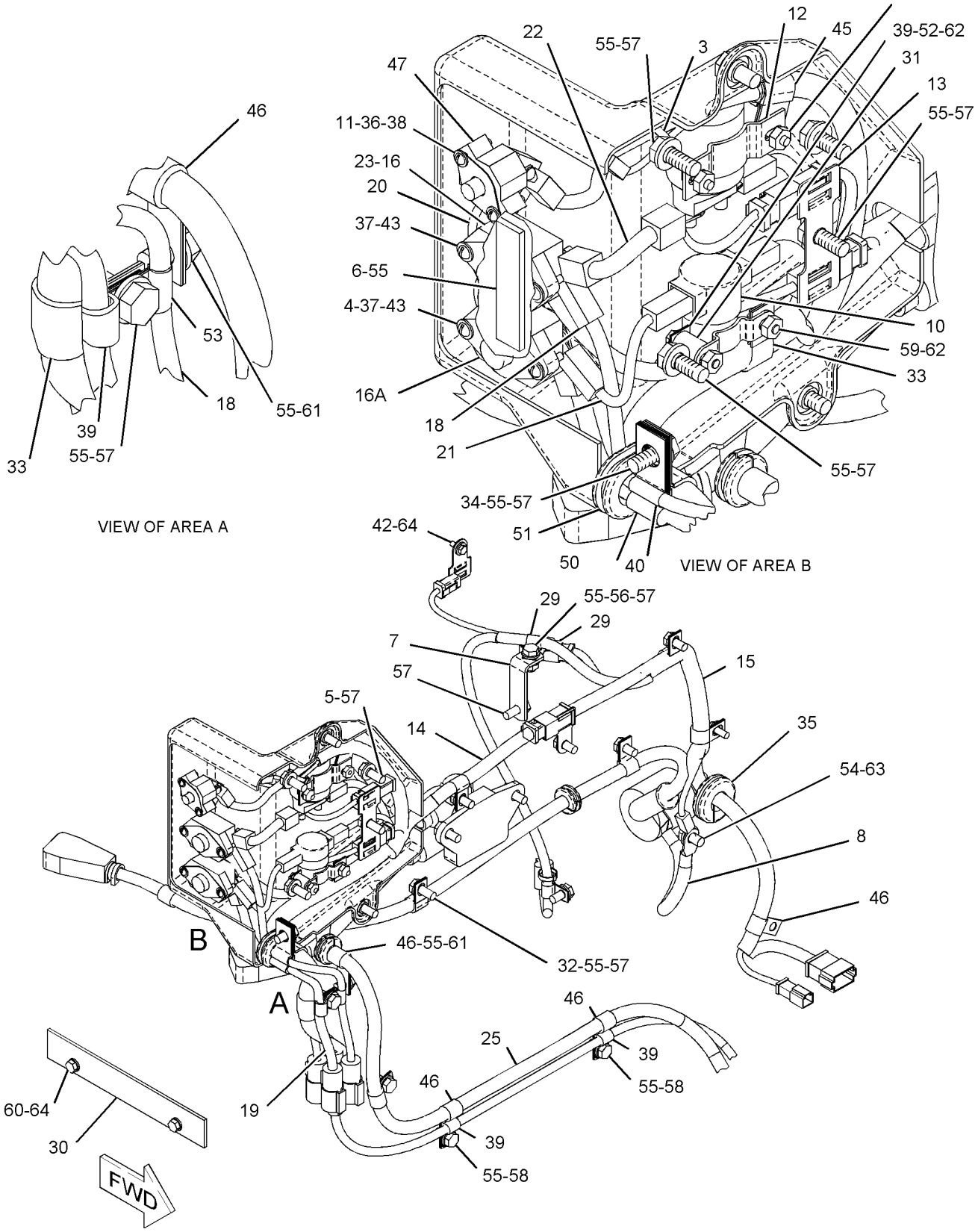

GRAPHIC #2 **<END>** g01034059

ELECTRICAL AND STARTING SYSTEM

193-8256 WIRING GP-REAR—SERVICE CENTER

S/N: CBK1-UP

PART OF 194-3351 STEERING AR-SECONDARY, 174-3216 SUPPORT AR-REAR CHASSIS AN ATTACHMENT

SMCS-1408 **i02207461**

NOTE	REF NO	GRAPHIC REF	PART NUMBER	QTY	PART NAME 1 2 3 4 5 6 (PRODUCT LEVEL)	SEE PAGE
	1	1	**2L-0273**	1	FITTING (RUBBER)	
	2	1	**3E-8320**	1	PLATE-INSTRUCTION (BATTERY)	
	3	1,2	**3S-2093**	2	STRAP-CABLE	
	4	2	**6V-4283**	1	PLATE-IDENTIFICATION (ALTERNATOR)	
	5	1,2	**7K-4743**	2	SPACER (10.31X25.4X6.35-MM THK)	
	6	2	**7V-9275**	1	STRAP	
	7	2	**9L-1566**	1	SUPPORT	
	8	2	**112-4428**	1	CABLE AS	
		2	**1S-7251**	1	TERMINAL-RING	
		2	**1S-7252**	1	TERMINAL-RING	
E		2	**5P-0747**		CABLE (00-GA, BLACK) (27 CM)	
	9	1	**115-5593**	1	CABLE AS	
		1	**1S-7252**	1	TERMINAL-RING	
		1	**5P-0747**		CABLE (00-GA, BLACK) (119 CM)	
		1	**7N-5274**	1	COVER-TERMINAL (BLACK)	
		1	**3S-6050**	1	TERMINAL AS	
	10	2	**118-3534**	1	SWITCH GP-MAGNETIC (24-VOLT) (START RELAY)	
	11	2	**125-6390**	1	PLATE-IDENTIFICATION (ENGINE)	
Y	12	2	**167-0138**	1	SWITCH GP-MAGNETIC (24-VOLT) (MAIN POWER RELAY)	270
	13	2	**169-5414**	1	CLIP	
	14	1	**169-7262**	1	HARNESS AS-REAR	
		1	**155-2270**	1	KIT-CONNECTING PLUG (2-PIN)	
		1	**155-2274**	2	KIT-CONNECTING PLUG (6-PIN)	
					(EACH INCLUDES PLUG AS & WEDGE)	
		1	**102-8802**	1	KIT-RECEPTACLE (2-PIN)	
					(INCLUDES RECEPTACLE AS & WEDGE)	
	15	2	**169-7263**	1	HARNESS AS-REAR	
		2	**155-2270**	1	KIT-CONNECTING PLUG (2-PIN)	
					(INCLUDES PLUG AS & WEDGE)	
		2	**155-2271**	1	KIT-CONNECTING PLUG (4-PIN)	
		2	**102-8802**	1	KIT-RECEPTACLE (2-PIN)	
		2	**102-8804**	1	KIT-RECEPTACLE (4-PIN)	
		2	**102-8805**	1	KIT-RECEPTACLE (6-PIN)	
		2	**102-8801**	1	KIT-RECEPTACLE (12-PIN)	
					(EACH INCLUDES RECEPTACLE AS & WEDGE)	
	16	2	**171-2210**	1	CIRCUIT BREAKER AS (80-AMPERE) (ALTERNATOR)	
		2	**1H-3244**	2	LOCKWASHER	
		2	**6V-8187**	2	NUT (1/4-28-THD)	
		2	**8T-4205**	2	WASHER-HARD (7.2X14.5X2-MM THK)	
	17	1	**177-8802**	1	CABLE AS	
		1	**1S-7251**	1	TERMINAL-RING	
E		1	**5P-0761**		CABLE (00-GA, RED) (32-CM)	
		1	**8N-0869**	1	COVER-TERMINAL (RED)	
		1	**8N-1725**	1	COVER-TERMINAL (RED)	
		1	**3S-6049**	1	TERMINAL AS-BATTERY (POSITIVE)	
	18	2	**177-9813**	1	CABLE AS	
BD		2	**5P-5675**		WIRE (06-GA)	
		2	**2L-8050**	1	TERMINAL (FOR 1/4-IN SCREW)	
		2	**2L-8058**	1	TERMINAL (FOR 1/4-IN SCREW)	
		2	**8N-1546**	1	PIN-CONNECTOR	
		2	**127-5484**	1	RECEPTACLE AS (1-PIN)	
	19	2	**177-9814**	1	CABLE AS	
		2	**9G-4343**	1	TERMINAL	
BD		2	**6V-2369**		WIRE (04-GA, BLACK)	

193-8256 **WIRING GP-REAR** ***(contd.)*** **i02207461**

NOTE	REF NO	GRAPHIC REF	PART NUMBER	QTY	PART NAME 1 2 3 4 5 6 (PRODUCT LEVEL)	SEE PAGE
		2	**8N-1548**	1	PIN-CONNECTOR	
		2	**127-5484**	1	RECEPTACLE AS (1-PIN)	
	20	2	**178-0160**	1	WIRE AS	
	21	2	**178-0162**	1	CABLE AS	
BD		2	**5P-5689**		WIRE (08-GA)	
		2	**2L-8050**	2	TERMINAL (FOR 1/4-IN SCREW)	
		2	**2L-8058**	2	TERMINAL (FOR 1/4-IN SCREW)	
	22	2	**178-0555**	1	CABLE AS	
		2	**9G-4343**	1	TERMINAL	
		2	**5P-3454**	1	TERMINAL	
BD		2	**6V-2369**		WIRE (04-GA, BLACK)	
	23	2	**189-0108**	1	PLATE	
	24	1	**194-1854**	1	COVER	
	25	1	**194-6738**	1	WIRE AS	
	26	2	**195-4990**	1	WIRE AS	
	27	2	**197-3287**	1	PLATE AS	
	28	1	**197-3739**	1	CABLE AS	
		1	**1S-7251**	2	TERMINAL-RING	
E		1	**5P-0761**		CABLE (00-GA, RED) (55-CM)	
		1	**8N-0869**	2	COVER-TERMINAL (RED)	
	29	2	**197-3740**	1	CABLE AS	
		2	**1S-7251**	1	TERMINAL-RING	
E		2	**5P-0761**		CABLE (00-GA, RED) (87-CM)	
		2	**8N-0869**	1	COVER-TERMINAL (RED)	
		2	**194-4046**	1	COVER	
		2	**194-4047**	1	TERMINAL-RING	
	30	1	**033-8248**	1	CLIP	
	31	1	**127-0724**	1	SPACER (10.5X16X20-MM THK)	
	32	1,2	**130-5300**	3	CLIP	
	33	2	**132-6938**	1	PLATE	
	34	2	**157-2528**	1	SPACER (7X16X20-MM THK)	
	35	1,2	**174-5907**	5	CLIP	
	36	2	**1S-0994**	2	CLIP	
	37	2	**1S-1015**	1	CLIP	
	38	2	**1V-6688**	1	GROMMET	
	39	2	**3K-8106**	2	SCREW-MACHINE (8-32X1-IN)	
	40	2	**4B-4274**	4	WASHER (5.5X13X1.2-MM THK)	
	41	2	**4B-4863**	2	WASHER (4.7X11X1.2-MM THK)	
	42	1,2	**4D-7794**	6	CLIP	
	43	2	**4D-8948**	1	CLIP	
	44	2	**4H-2558**	2	GROMMET	
M	45	2	**5C-9553**	1	BOLT (M6X1X16-MM)	
	46	2	**5L-4507**	4	SCREW-MACHINE (10-32X0.875-IN)	
	47	1,2	**5P-4116**	1	WASHER-HARD (8.8X20.5X2-MM THK)	
	48	2	**6D-3479**	1	CLIP	
	49	1	**6D-4246**	1	CLIP	
	50	1,2	**6K-8178**	3	CLIP	
	51	2	**6T-3643**	1	CIRCUIT BREAKER AS (15-AMPERE) (ENGINE CONTROL)	
		2	**6V-8376**	2	SCREW-MACHINE (8-32X0.25-IN)	
		2	**9B-7233**	2	LOCKWASHER	
M	52	2	**6V-7357**	1	BOLT (M6X1X25-MM)	
Y	53	1	**7N-0718**	1	SWITCH GP-DISCONNECT (BATTERY)	266
	54	2	**7N-3718**	1	CLIP	
	55	2	**7Y-8169**	1	GROMMET	
M	56	2	**8C-8451**	1	BOLT (M6X1X40-MM)	
	57	2	**8M-2772**	1	CLIP	
M	58	2	**8T-0293**	1	BOLT (M12X1.75X20-MM)	
	59	1,2	**8T-4121**	19	WASHER-HARD (11X21X2.5-MM THK)	
M	60	2	**8T-4133**	1	NUT (M10X1.5-THD)	

193-8256 **WIRING GP-REAR** *(contd.)* **i02207461**

NOTE	REF NO	GRAPHIC REF	PART NUMBER	QTY	PART NAME 1 2 3 4 5 6 (PRODUCT LEVEL)	SEE PAGE
M	61	1,2	**8T-4136**	9	BOLT (M10X1.5X25-MM)	
M	62	1,2	**8T-4137**	6	BOLT (M10X1.5X20-MM)	
M	63	2	**8T-4138**	2	BOLT (M6X1X20-MM)	
M	64	2	**8T-4185**	1	BOLT (M10X1.5X50-MM)	
M	65	1,2	**8T-4189**	3	BOLT (M8X1.25X20-MM)	
M	66	1,2	**8T-4191**	2	BOLT (M10X1.5X16-MM)	
M	67	2	**8T-4195**	2	BOLT (M10X1.5X30-MM)	
	68	2	**8T-4205**	4	WASHER-HARD (7.2X14.5X2-MM THK)	
M	69	2	**8T-4223**	1	WASHER-HARD (13.5X25.5X3-MM THK)	
	70	2	**8T-4224**	3	WASHER-HARD (8.8X16X2-MM THK)	
Y	71	1,2	*9W-0742*	2	BLOCK GP-JUNCTION	131
	72	2	**171-2210**	1	CIRCUIT BREAKER AS (80-AMPERE) (MAIN)	
		2	**1H-3244**	2	LOCKWASHER	
		2	**6V-8187**	2	NUT (1/4-28-THD)	
		2	**8T-4205**	2	WASHER-HARD (7.2X14.5X2-MM THK)	

B-USE AS REQUIRED
D-ORDER BY THE METER
E-ORDER BY THE CENTIMETER
M-METRIC PART
Y-SEPARATE ILLUSTRATION

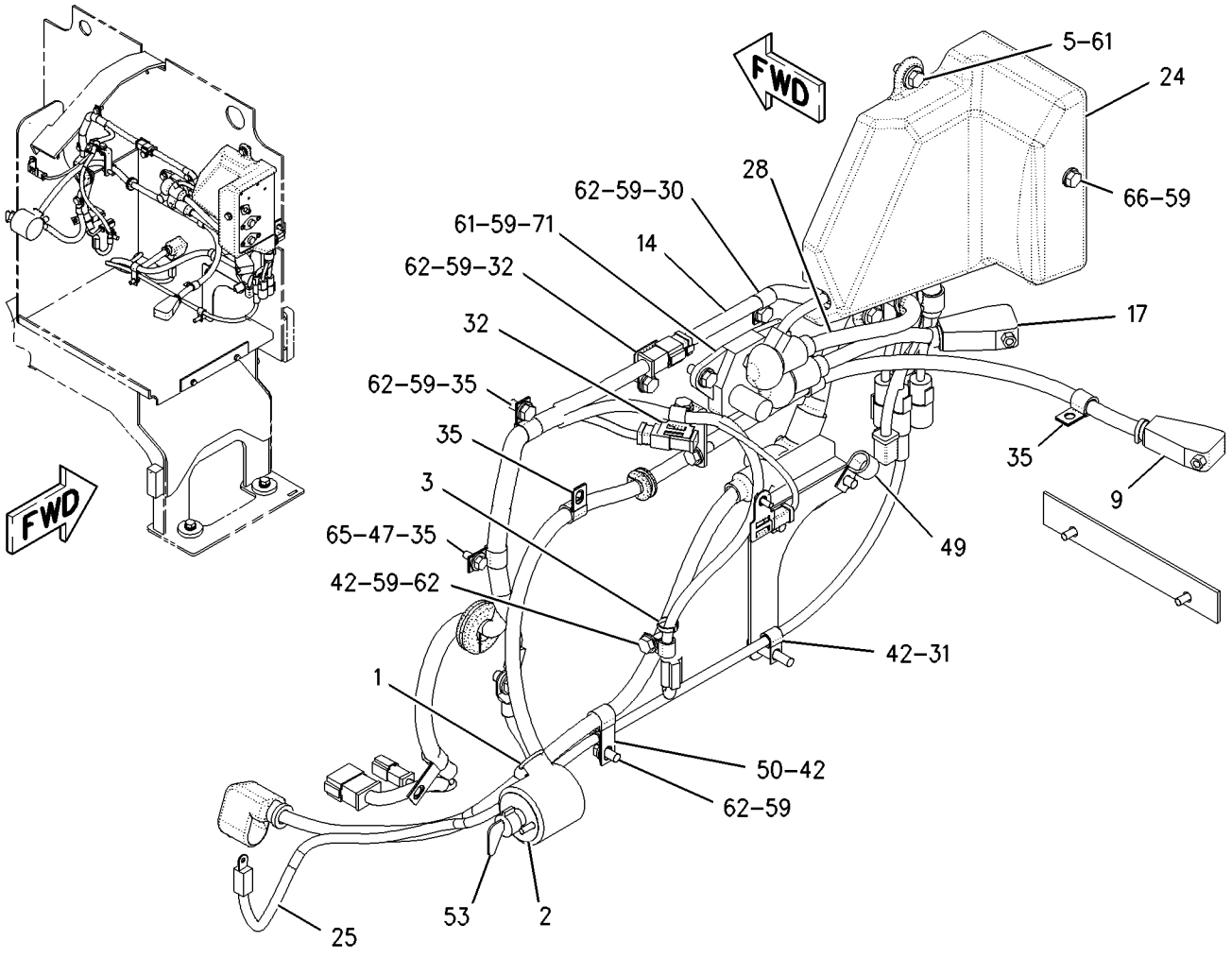

GRAPHIC #1 g00983715

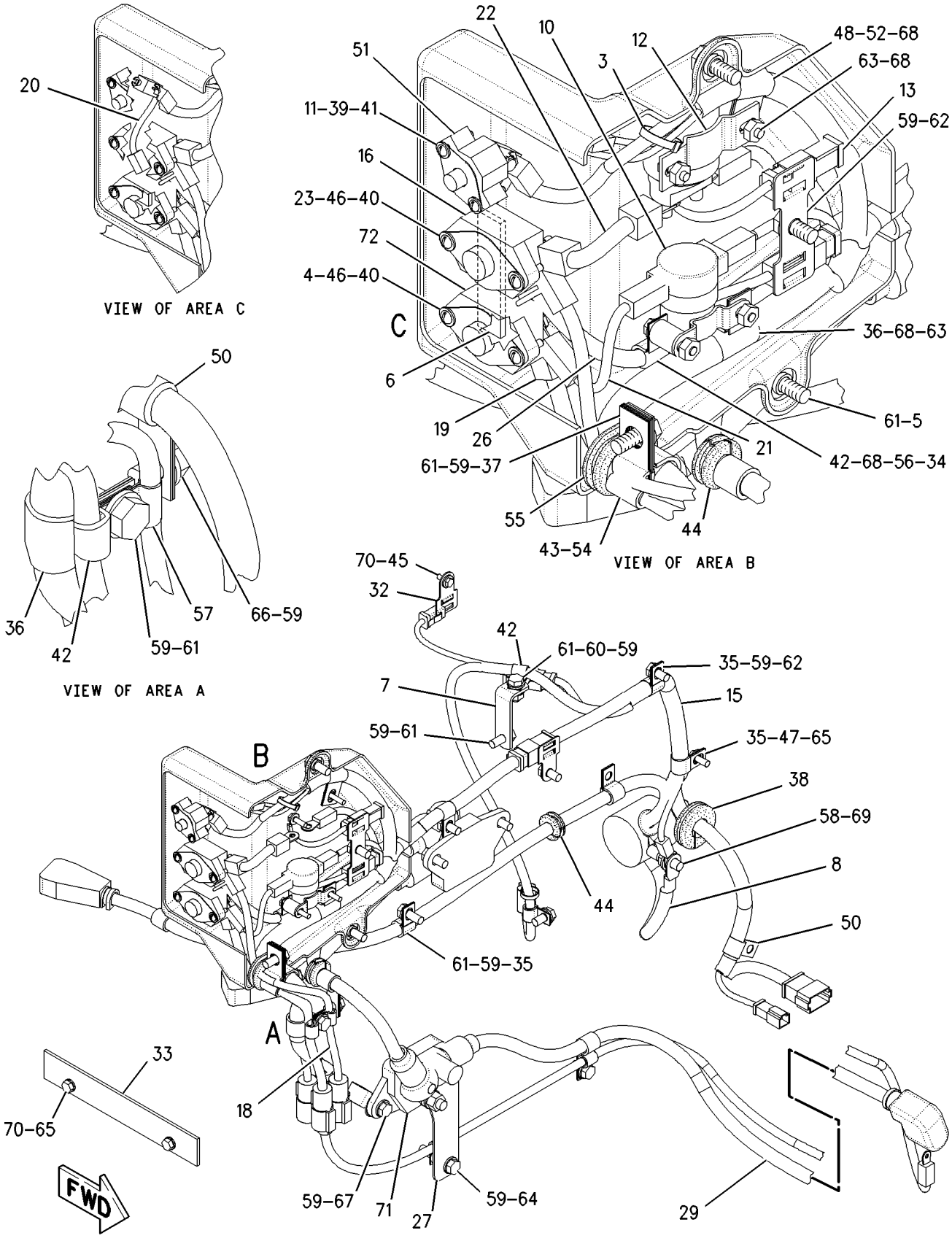

GRAPHIC #2 **<END>** g00983712

ELECTRICAL AND STARTING SYSTEM

193-8603 WIRING GP-REAR

S/N: CBK1-UP

PART OF 162-5605 GENERAL AR

SMCS-1408 **i02207462**

NOTE	REF NO	GRAPHIC REF	PART NUMBER	QTY	PART NAME 1 2 3 4 5 6 (PRODUCT LEVEL)	SEE PAGE
	1	2	**3E-5239**	1	RELAY AS (24-VOLT)	
	2	1,2	**3S-2093**	7	STRAP-CABLE	
	3	1,2	**7C-3254**	1	PLATE	
	4	1	**7G-1060**	1	STRAP AS-GROUND	
	5	2	**7Y-8298**	1	CABLE AS	
		2	**1S-7251**	2	TERMINAL-RING	
E		2	**5P-0747**		CABLE (00-GA, BLACK) (50-CM)	
	6	2	**8W-1614**	1	CLIP	
	7	1	**8W-8527**	1	SLEEVE	
	8	1,2	**8W-8528**	4	SLEEVE	
	9	2	**9U-2277**	1	CLIP AS	
	10	2	**106-8704**	1	SUPPRESSOR AS-ARC (A/C CLUTCH)	
		2	**102-8802**	1	KIT-RECEPTACLE (2-PIN)	
					(INCLUDES RECEPTACLE AS & WEDGE)	
		2	**3E-3365**	1	WEDGE-RECEPTACLE LOCK (2-PIN)	
		2	**186-3735**	2	PIN-CONNECTOR	
	11	1	**123-3688**	1	PLATE AS	
		1	**7L-0811**	1	DOWEL	
	12	1	**123-3689**	1	PLATE AS	
		1	**5M-6687**	1	STUD-TAPERLOCK (3/8-16X1.28-IN OAL)	
	13	1	**123-3692**	1	ARM	
	14	1	**123-3695**	1	PLATE	
	15	2	**139-2116**	1	SWITCH AS-TOGGLE (GROUND-LEVEL SHUTDOWN)	
		2	**186-3735**	3	PIN-CONNECTOR	
		2	**102-8803**	1	KIT-RECEPTACLE (3-PIN)	
					(INCLUDES RECEPTACLE AS & WEDGE)	
		2	**3E-3371**	1	WEDGE-RECEPTACLE LOCK (3-PIN)	
		2	**6T-3631**	2	NUT-HEX (15/32-32-THD)	
		2	**6T-3632**	1	LOCKWASHER	
		2	**6T-3633**	1	RING-LOCKING	
	16	2	**139-6122**	1	BOSS	
	17	2	**2T-3245**	1	CABLE AS	
		2	**1S-7251**	2	TERMINAL-RING	
E		2	**5P-0747**		CABLE (00-GA, BLACK) (45-CM)	
	18	1	**169-3502**	1	HARNESS AS-REAR CHASSIS	
		1	**102-8802**	2	KIT-RECEPTACLE (2-PIN)	
					(EACH INCLUDES RECEPTACLE ASSEMBLY & WEDGE)	
		1	**155-2255**	2	KIT-CONNECTING PLUG (12-PIN)	
		1	**155-2270**	5	KIT-CONNECTING PLUG (2-PIN)	
					(EACH INCLUDES PLUG ASSEMBLY AND WEDGE)	
	19	1	**187-1008**	1	SENDER AS-POSITION (STEERING ARTICULATION)	
		1	**3E-3365**	1	WEDGE-RECEPTACLE LOCK (2-PIN)	
E		1	**9X-1813**		SLEEVE (15-CM)	
		1	**102-8802**	1	KIT-RECEPTACLE (2-PIN)	
					(INCLUDES RECEPTACLE AS & WEDGE)	
		1	**186-3735**	2	PIN-CONNECTOR	
	20	1	**194-7195**	1	HARNESS AS-TRANSMISSION	
		1	**155-2260**	1	KIT-CONNECTING PLUG (3-PIN)	
		1	**155-2271**	1	KIT-CONNECTING PLUG (4-PIN)	
		1	**155-2255**	3	KIT-CONNECTING PLUG (12-PIN)	
		1	**155-2270**	4	KIT-CONNECTING PLUG (2-PIN)	
					(EACH INCLUDES PLUG AS & WEDGE)	
		1	**102-8802**	1	KIT-RECEPTACLE (2-PIN)	
		1	**102-8803**	2	KIT-RECEPTACLE (3-PIN)	
		1	**102-8801**	2	KIT-RECEPTACLE (12-PIN)	
					(EACH INCLUDES RECEPTACLE AS & WEDGE)	

193-8603 **WIRING GP-REAR** ***(contd.)*** **i02207462**

NOTE	REF NO	GRAPHIC REF	PART NUMBER	QTY	PART NAME 1 2 3 4 5 6 (PRODUCT LEVEL)	SEE PAGE
		1	**110-6848**	1	PLUG AS-CONNECTOR (40-PIN)	
		1	**110-6846**	1	PLUG AS-CONNECTOR (40-PIN)	
		1	**9X-0141**	1	PLUG AS-CONNECTOR (40-PIN)	
		1	**9X-1054**	1	PLUG AS-CONNECTOR (4-PIN)	
		1	**160-7689**	1	PLUG AS-CONNECTOR (70-PIN)	
	21	1	**194-7215**	1	HARNESS AS-REAR CHASSIS	
		1	**102-8802**	1	KIT-RECEPTACLE (2-PIN)	
		1	**102-8805**	1	KIT-RECEPTACLE (6-PIN)	
					(EACH INCLUDES RECEPTACLE AS & WEDGE)	
		1	**155-2255**	1	KIT-CONNECTING PLUG (12-PIN)	
		1	**155-2270**	2	KIT-CONNECTING PLUG (2-PIN)	
					(EACH INCLUDES PLUG AS & WEDGE)	
		1	**127-5483**	5	PLUG AS-CONNECTOR (1-PIN)	
	22	2	**195-2497**	1	BRACKET	
	23	2	**033-8248**	1	CLIP	
	24	2	**109-0361**	1	FILM-INSTRUCTION (ENGINE SHUTDOWN)	
	25	2	**115-3073**	1	CLIP AS-CONNECTING	
	26	1,2	**130-5300**	8	CLIP	
	27	2	**130-5301**	1	CLIP	
	28	2	**174-5907**	2	CLIP	
	29	1,2	**1S-0994**	3	CLIP	
	30	2	**2S-3770**	1	SPACER (11X19X33.5-MM THK) (11X19X33.5MM THK)	
	31	2	**2V-3216**	1	CLIP	
	32	2	**3E-5169**	1	GUARD-SWITCH (RED)	
	33	1	**4D-1432**	1	SPACER (1.8-IN THK)	
	34	1	**4D-7388**	1	CLIP	
	35	1,2	**4D-7794**	7	CLIP	
	36	1	**4S-4455**	4	CLIP	
M	37	2	**5C-2890**	1	NUT (M6X1-THD)	
M	38	2	**5C-9553**	1	BOLT (M6X1X16-MM)	
	39	1	**5M-3062**	1	BOLT (3/8-16X0.75-IN)	
	40	2	**5P-1075**	1	WASHER-HARD (10.2X22.5X3-MM THK)	
	41	2	**5P-4116**	1	WASHER-HARD (8.8X20.5X2-MM THK)	
	42	1	**5P-4295**	1	CLIP	
	43	1	**5P-8167**	2	BOLT (3/8-16X0.625-IN)	
	44	2	**6D-4244**	4	CLIP	
	45	1	**6D-4246**	2	CLIP	
M	46	1	**6V-5221**	1	BOLT (M8X1.25X80-MM)	
	47	1	**6V-6893**	3	BOLT (6-32X0.375-IN)	
	48	1	**6V-8801**	1	NUT (3/8-16-THD)	
	49	1,2	**7C-4354**	5	CLIP	
M	50	2	**7X-2541**	1	BOLT (M8X1.25X140-MM)	
	51	2	**8M-2770**	1	CLIP	
	52	1	**8M-2773**	1	CLIP	
	53	1,2	**8T-4121**	29	WASHER-HARD (11X21X2.5-MM THK)	
M	54	1,2	**8T-4133**	4	NUT (M10X1.5-THD)	
M	55	2	**8T-4136**	3	BOLT (M10X1.5X25-MM)	
M	56	1,2	**8T-4137**	17	BOLT (M10X1.5X20-MM)	
M	57	1,2	**8T-4179**	6	BOLT (M12X1.75X20-MM)	
M	58	2	**8T-4185**	1	BOLT (M10X1.5X50-MM)	
M	59	1	**8T-4191**	2	BOLT (M10X1.5X16-MM)	
M	60	1,2	**8T-4195**	2	BOLT (M10X1.5X30-MM)	
M	61	2	**8T-4200**	1	BOLT (M8X1.25X16-MM)	
	62	1,2	**8T-4205**	2	WASHER-HARD (7.2X14.5X2-MM THK)	
M	63	1,2	**8T-4223**	6	WASHER-HARD (13.5X25.5X3-MM THK)	
	64	1,2	**8T-4224**	1	WASHER-HARD (8.8X16X2-MM THK)	
	65	1	**8T-4226**	1	WASHER-PLATED (10.5X45X3-MM THK)	
	66	1	**8T-4896**	3	WASHER-HARD (10.2X18.5X2.5-MM THK)	
	67	1	**8T-9364**	2	BOLT (1/4-20X0.625-IN)	

193-8603 **WIRING GP-REAR** ***(contd.)*** **i02207462**

NOTE	REF NO	GRAPHIC REF	PART NUMBER	QTY	PART NAME 1 2 3 4 5 6 (PRODUCT LEVEL)	SEE PAGE
	68	2	**8W-8909**	2	SLEEVE	
	69	2	**8X-5489**	1	SLEEVE	
	70	1,2	**9X-8256**	2	WASHER (6.6X12X2-MM THK)	

E-ORDER BY THE CENTIMETER
M-METRIC PART

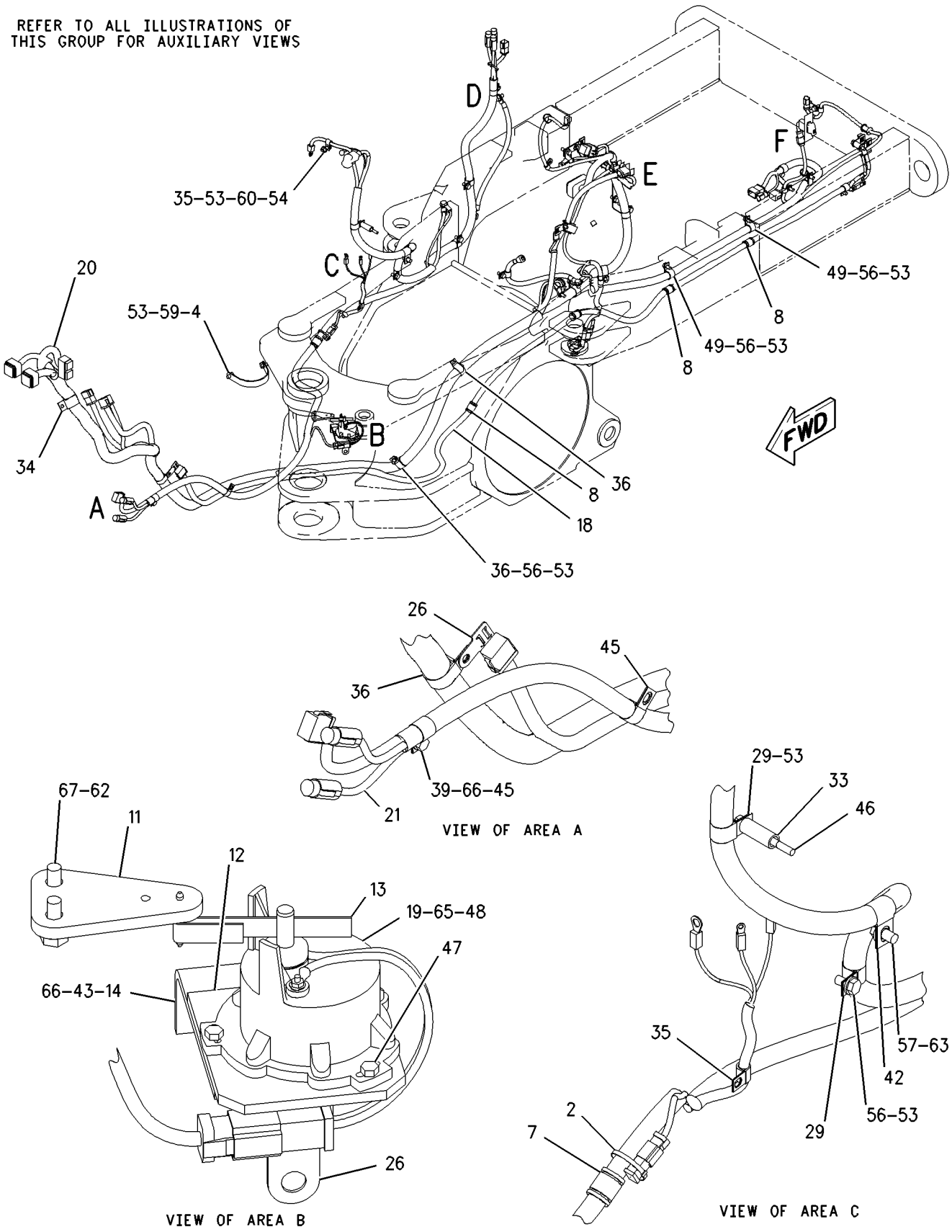

GRAPHIC #1 g00952963

193-8603 **WIRING GP-REAR** *(contd.)* **i02207462**

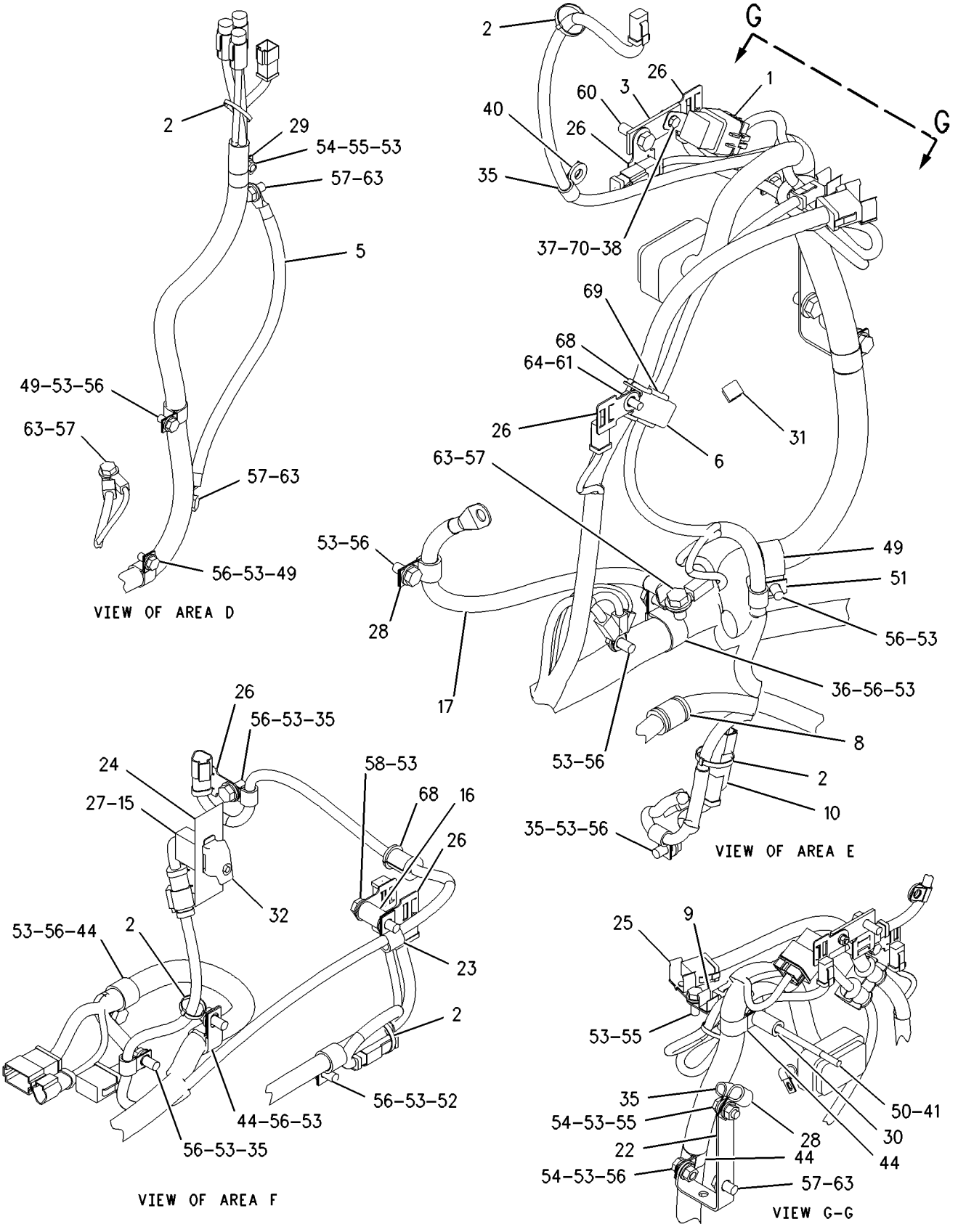

GRAPHIC #2 **<END>** g00941261

194-3353 WIRING GP-SECONDARY STEERING

S/N: CBK1-UP

PART OF 194-3351 STEERING AR-SECONDARY

AN ATTACHMENT

SMCS-1408, 4334 **i02207465**

NOTE	REF NO	GRAPHIC REF	PART NUMBER	QTY	PART NAME 1 2 3 4 5 6 (PRODUCT LEVEL)	SEE PAGE
	1	1	**2L-0273**	1	FITTING (RUBBER)	
Y	2	1	**3E-0154**	1	SWITCH GP-MAGNETIC (SECONDARY STEERING RELAY)	269
	3	1	**3E-6450**	1	SWITCH AS-PRESSURE (SECONDARY STEERING)	
		1	**102-8803**	1	KIT-RECEPTACLE (3-PIN)	
					(INCLUDES RECEPTACLE AS & WEDGE)	
		1	**3E-3371**	1	WEDGE-RECEPTACLE LOCK (3-PIN)	
		1	**8T-8729**	3	PIN-CONNECTOR	
	4	1	**3E-7842**	1	RESISTOR AS	
		1	**102-8802**	1	KIT-RECEPTACLE (2-PIN)	
					(INCLUDES RECEPTACLE AS & WEDGE)	
		1	**3E-3365**	1	WEDGE-RECEPTACLE LOCK (2-PIN)	
D		1	**5P-5677**		WIRE (18-GA) (0.1-M)	
		1	**6T-3610**	1	RESISTOR	
		1	**8T-8729**	2	PIN-CONNECTOR	
	5	1	**3S-2093**	1	STRAP-CABLE	
	6	1	**6W-6672**	1	SPACER (10.5X20X38-MM THK)	
	7	1	**9L-1566**	1	SUPPORT	
	8	1	**9U-0858**	1	CABLE AS	
		1	**1S-7251**	2	TERMINAL-RING	
E		1	**5P-0761**		CABLE (00-GA, RED) (162-CM)	
		1	**8N-0869**	2	COVER-TERMINAL (RED)	
	9	1	**9W-1442**	2	FUSE (10-AMPERE)	
Y	10	1	**132-6640**	1	CONTROL GP-SECONDARY STEERING	137
	11	1	**134-3355**	1	STRAP AS	
	12	1	**140-8864**	1	CABLE AS	
		1	**1S-7252**	2	TERMINAL-RING	
E		1	**5P-0747**		CABLE (00-GA, BLACK) (20-CM)	
	13	1	**178-0103**	1	PLATE	
	14	1	*194-2903*	1	ELBOW AS	
		1	**8T-0119**	1	ELBOW	
		1	**3K-0360**	1	SEAL-O-RING	
	15	1	**197-5019**	1	CABLE AS	
		1	**1S-7251**	1	TERMINAL-RING	
E		1	**5P-0747**		CABLE (00-GA, BLACK) (105-CM)	
		1	**8N-0869**	2	COVER-TERMINAL (RED)	
		1	**9R-4286**	1	TERMINAL	
	16	1	**130-5300**	1	CLIP	
	17	1	**174-5907**	4	CLIP	
	18	1	**3E-6754**	1	GROMMET	
	19	1	**3K-0360**	1	SEAL-O-RING	
M	20	1	**5C-2890**	2	NUT (M6X1-THD)	
	21	1	**5M-3062**	2	BOLT (3/8-16X0.75-IN)	
	22	1	**6V-8801**	2	NUT (3/8-16-THD)	
M	23	1	**7X-2619**	4	BOLT (M6X1X20-MM)	
	24	1	**8T-4121**	8	WASHER-HARD (11X21X2.5-MM THK)	
M	25	1	**8T-4133**	2	NUT (M10X1.5-THD)	
M	26	1	**8T-4137**	4	BOLT (M10X1.5X20-MM)	
	27	1	**8T-4896**	4	WASHER-HARD (10.2X18.5X2.5-MM THK)	
M	28	1	**8T-5005**	1	BOLT (M10X1.5X70-MM)	
M	29	1	**9X-2045**	2	SCREW-TRUSS HEAD (6X1X20-MM)	
	30	1	**9X-8256**	6	WASHER (6.6X12X2-MM THK)	
	31	1	**3E-8765**	1	SWITCH AS (24-VOLT) (SECONDARY STEERING TEST)	
		1	**3E-8816**	1	ACTUATOR-ROCKER	
		1	**3E-8825**	2	LAMP (24-VOLT)	

194-3353 **WIRING GP-SECONDARY STEERING** *(contd.)* **i02207465**

D-ORDER BY THE METER
E-ORDER BY THE CENTIMETER
M-METRIC PART
Y-SEPARATE ILLUSTRATION

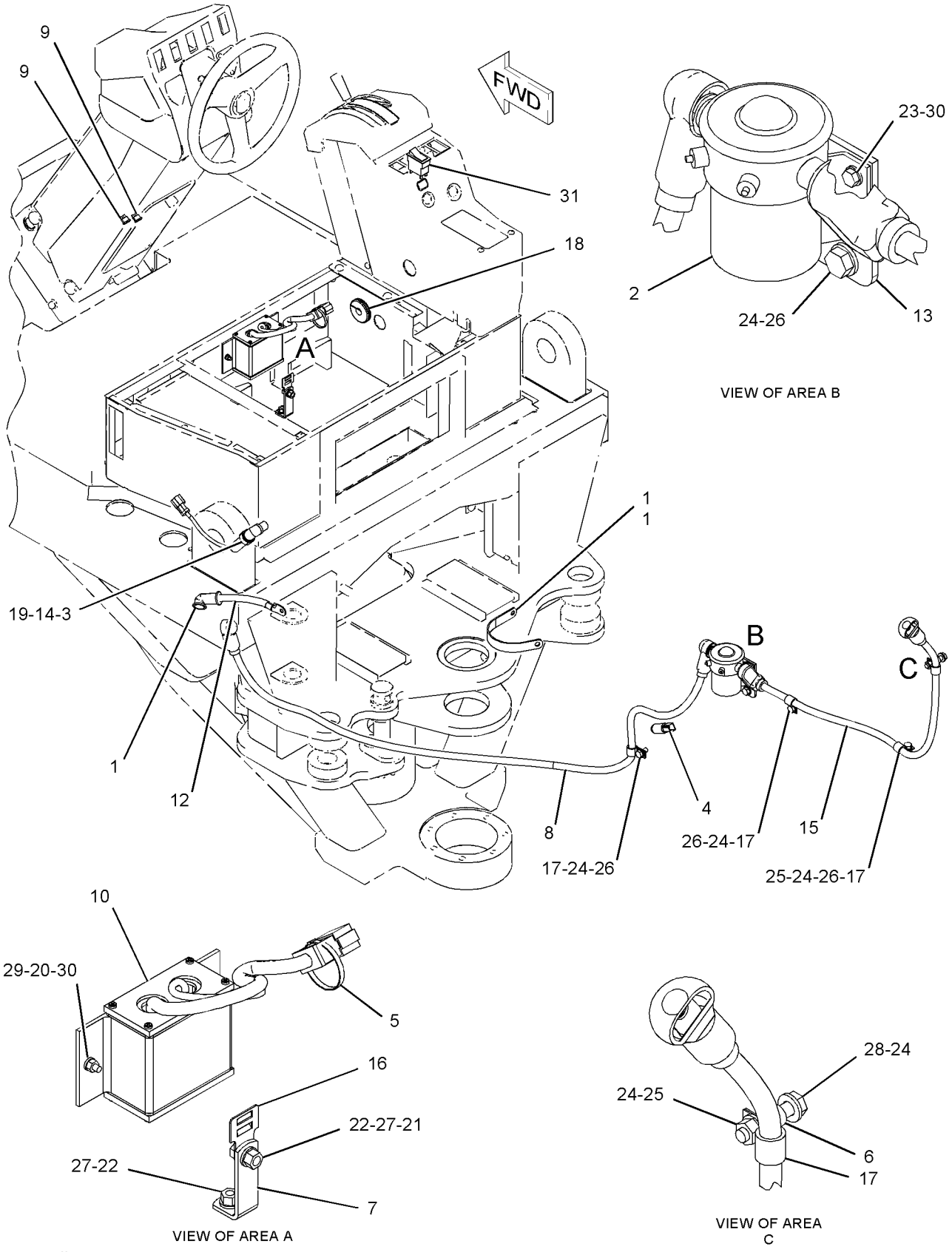

GRAPHIC #1 **<END>** g01074980

ELECTRICAL AND STARTING SYSTEM

159-5839 WIRING GP-SHIFT CONSOLE

S/N: CBK1-UP

PART OF 162-5605 GENERAL AR

SMCS-1408, 1435 **i02204645**

NOTE	REF NO	GRAPHIC REF	PART NUMBER	QTY	PART NAME 1 2 3 4 5 6 (PRODUCT LEVEL)	SEE PAGE
	1	1	**3E-0109**	4	PLUG (ROCKER SWITCH)	
Y	2	1	**3E-6328**	1	ALARM GP (24-VOLT) (ACTION)	118
	3	1	**3S-2093**	5	STRAP-CABLE	
	4	1	**7N-5876**	1	LAMP (24-VOLT)	
	5	1	**8C-6354**	1	CAP-RECEPTACLE (DUST)	
	6	1	**110-7887**	1	SWITCH GP-START (KEY)	
		1	**3E-3377**	1	WEDGE-RECEPTACLE LOCK (4-PIN)	
		1	**7T-6799**	1	NUT-MOUNTING (1-32-THD)	
		1	**186-3735**	4	PIN-CONNECTOR	
		1	**102-8804**	1	KIT-RECEPTACLE (4-PIN)	
	8	1	**167-7506**	1	HARNESS AS-CONSOLE	
		1	**102-8804**	1	KIT-RECEPTACLE (4-PIN)	
		1	**102-8805**	1	KIT-RECEPTACLE (6-PIN)	
		1	**102-8801**	1	KIT-RECEPTACLE (12-PIN)	
		1	**155-2255**	2	KIT-CONNECTING PLUG (12-PIN)	
		1	**155-2270**	1	KIT-CONNECTING PLUG (2-PIN)	
		1	**155-2271**	2	KIT-CONNECTING PLUG (4-PIN)	
		1	**155-2274**	2	KIT-CONNECTING PLUG (6-PIN)	
		1	**102-8801**	1	KIT-RECEPTACLE (12-PIN)	
	9	1	**167-7536**	1	HARNESS AS-CONSOLE	
		1	**7X-6222**	1	PLUG AS-CONNECTOR (24-PIN)	
		1	**102-8804**	1	KIT-RECEPTACLE (4-PIN)	
		1	**102-8801**	1	KIT-RECEPTACLE (12-PIN)	
		1	**155-2255**	1	KIT-CONNECTING PLUG (12-PIN)	
	10	1	**169-5414**	2	CLIP	
	11	1	**196-7268**	1	SWITCH AS (THROTTLE SPEED SET)	
		1	**3E-8825**	2	LAMP (24-VOLT)	
		1	**183-2136**	1	ACTUATOR-ROCKER	
	12	1	**190-0370**	1	SWITCH AS (THROTTLE HOLD MODE)	
		1	**3E-8825**	2	LAMP (24-VOLT)	
		1	**187-9380**	1	ACTUATOR-ROCKER	
	13	1	**130-5300**	2	CLIP	
	14	1	**2V-8259**	2	GROMMET	
	15	1	**3H-2900**	1	GROMMET	
	16	1	**4D-7794**	1	CLIP	
	17	1	**4L-6454**	1	BOLT (3/8-16X1-IN)	
	18	1	**4P-7581**	1	CLIP	
	19	1	**5M-3062**	3	BOLT (3/8-16X0.75-IN)	
	20	1	**5S-4246**	4	LOCKWASHER	
	21	1	**6B-4540**	4	NUT (4-40-THD)	
	22	1	**6V-2480**	4	SCREW (4-40X0.5-IN)	
	23	1	**6V-8801**	1	NUT (3/8-16-THD)	
	24	1	**7C-4354**	1	CLIP	
	25	1	**7G-7053**	1	GROMMET	
	26	1	**8M-2770**	1	CLIP	
	27	1	**8T-4121**	1	WASHER-HARD (11X21X2.5-MM THK)	
M	28	1	**8T-4137**	1	BOLT (M10X1.5X20-MM)	
	29	1	**8T-4896**	5	WASHER-HARD (10.2X18.5X2.5-MM THK)	
	30	1	**9W-0335**	1	LIGHTER AS (CIGAR, 24-VOLT)	
	31	1	**3E-9327**	1	SWITCH AS (CENTERSHIFT PIN PULLER)	
		1	**3E-8817**	1	ACTUATOR-ROCKER	
		1	**3E-8825**	1	LAMP (24-VOLT)	

M-METRIC PART
Y-SEPARATE ILLUSTRATION

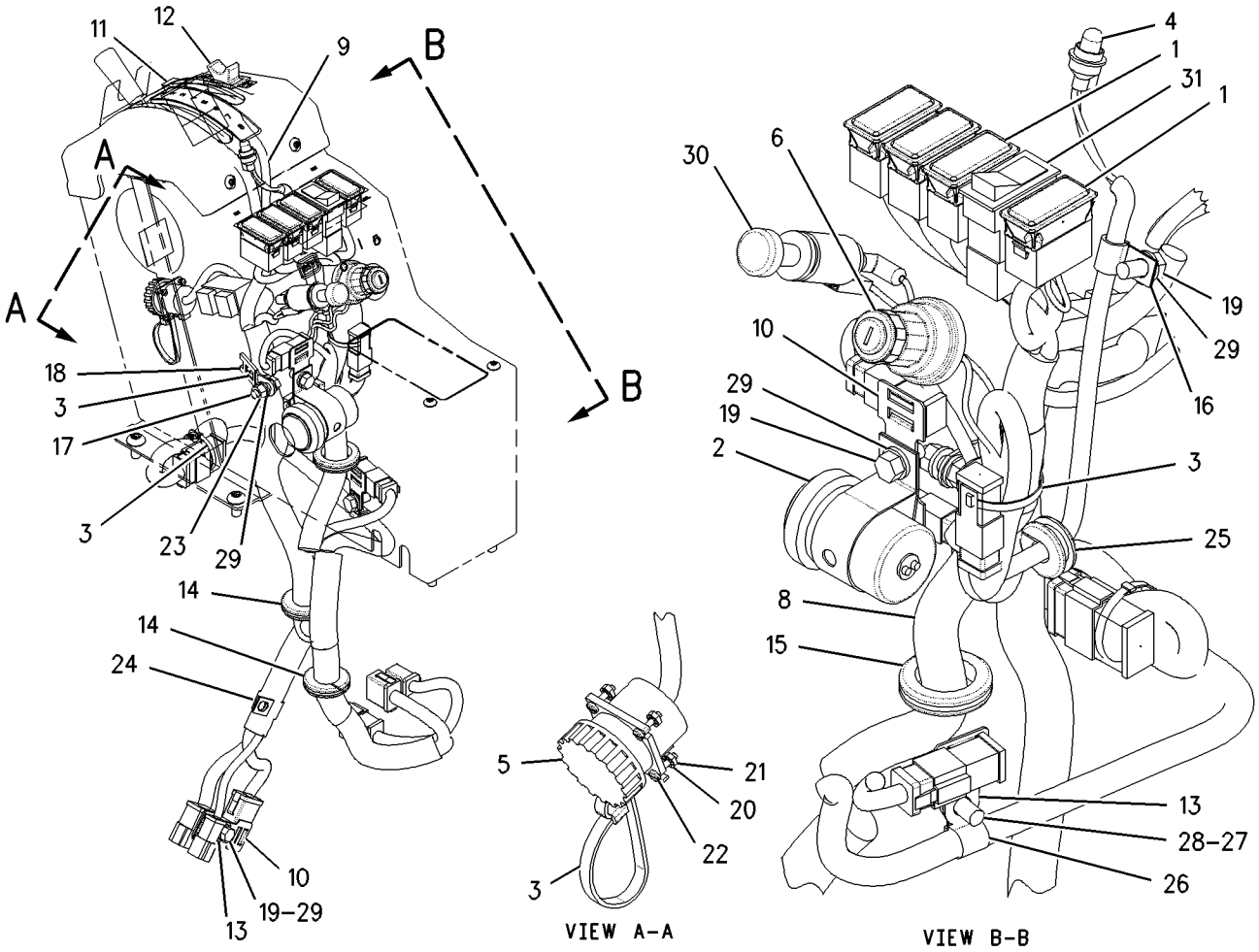

GRAPHIC #1 **<END>** g00865816

ELECTRICAL AND STARTING SYSTEM

159-5841 WIRING GP-SHIFT CONSOLE

S/N: CBK1-UP

PART OF 207-3700, 210-2043 CONVERSION AR-CERTIFICATION

AN ATTACHMENT

SMCS-1408, 1435 **i02204653**

NOTE	REF NO	GRAPHIC REF	PART NUMBER	QTY	PART NAME 1 2 3 4 5 6 (PRODUCT LEVEL)	SEE PAGE
	1	2	**3E-0109**	3	PLUG (ROCKER SWITCH)	
Y	2	1	**3E-6328**	1	ALARM GP (24-VOLT) (ACTION)	118
	3	1,2	**3S-2093**	6	STRAP-CABLE	
	4	1	**7N-5876**	1	LAMP (24-VOLT)	
	5	1	**8C-6354**	1	CAP-RECEPTACLE (DUST)	
	6	1	**110-7887**	1	SWITCH GP-START (KEY)	
		1	**3E-3377**	1	WEDGE-RECEPTACLE LOCK (4-PIN)	
		1	**7T-6799**	1	NUT-MOUNTING (1-32-THD)	
		1	**186-3735**	4	PIN-CONNECTOR	
		1	**102-8804**	1	KIT-RECEPTACLE (4-PIN)	
					(INCLUDES RECEPTACLE AS & WEDGE)	
Y	8	2	**132-6640**	1	CONTROL GP-SECONDARY STEERING	137
	9	1	**167-7506**	1	HARNESS AS-CONSOLE	
		1	**155-2255**	2	KIT-CONNECTING PLUG (12-PIN)	
		1	**155-2270**	1	KIT-CONNECTING PLUG (2-PIN)	
		1	**155-2271**	2	KIT-CONNECTING PLUG (4-PIN)	
		1	**155-2274**	2	KIT-CONNECTING PLUG (6-PIN)	
					(EACH INCLUDES PLUG AS & WEDGE)	
		1	**102-8804**	1	KIT-RECEPTACLE (4-PIN)	
		1	**102-8805**	1	KIT-RECEPTACLE (6-PIN)	
		1	**102-8801**	1	KIT-RECEPTACLE (12-PIN)	
					(EACH INCLUDES RECEPTACLE AS & WEDGE)	
	10	1	**167-7536**	1	HARNESS AS-CONSOLE	
		1	**155-2255**	1	KIT-CONNECTING PLUG (12-PIN)	
					(INCLUDES PLUG AS & WEDGE)	
		1	**102-8804**	1	KIT-RECEPTACLE (4-PIN)	
		1	**102-8801**	1	KIT-RECEPTACLE (12-PIN)	
					(EACH INCLUDES RECEPTACLE AS & WEDGE)	
		1	**7X-6222**	1	PLUG AS-CONNECTOR (24-PIN)	
	11	2	**169-5414**	2	CLIP	
	12	1	**196-7268**	1	SWITCH AS (THROTTLE LOCK ENABLE)	
		1	**183-2136**	1	ACTUATOR-ROCKER	
		1	**3E-8825**	2	LAMP (24-VOLT)	
	13	1	**185-2197**	1	SWITCH AS-ROCKER (THROTTLE LOCK SET, RESET)	
	14	1,2	**130-5300**	2	CLIP	
	15	1	**2V-8259**	2	GROMMET	
	16	2	**3E-6754**	1	GROMMET	
	17	1	**3H-2900**	1	GROMMET	
	18	1	**4D-7794**	1	CLIP	
	19	1	**4L-6454**	1	BOLT (3/8-16X1-IN)	
	20	1	**4P-7581**	1	CLIP	
M	21	2	**5C-2890**	2	NUT (M6X1-THD)	
	22	2	**5M-3062**	3	BOLT (3/8-16X0.75-IN)	
	23	1	**5S-4246**	4	LOCKWASHER	
	24	1	**6B-4540**	4	NUT (4-40-THD)	
	25	1	**6V-2480**	4	SCREW (4-40X0.5-IN)	
	26	1	**6V-8801**	1	NUT (3/8-16-THD)	
	27	1	**7C-4354**	1	CLIP	
	28	1	**7G-7053**	1	GROMMET	
	29	1	**8M-2770**	1	CLIP	
	30	1	**8T-4121**	1	WASHER-HARD (11X21X2.5-MM THK)	
M	31	1	**8T-4137**	1	BOLT (M10X1.5X20-MM)	
	32	1,2	**8T-4896**	5	WASHER-HARD (10.2X18.5X2.5-MM THK)	
	33	1	**9W-0335**	1	LIGHTER AS (CIGAR, 24-VOLT)	
M	34	2	**9X-2045**	2	SCREW-TRUSS HEAD (6X1X20-MM)	

159-5841 **WIRING GP-SHIFT CONSOLE** *(contd.)* **i02204653**

NOTE	REF NO	GRAPHIC REF	PART NUMBER	QTY	PART NAME 1 2 3 4 5 6 (PRODUCT LEVEL)	SEE PAGE
	35	2	**9X-8256**	2	WASHER (6.6X12X2-MM THK)	
	36	2	**9X-9633**	1	SWITCH AS-ROCKER (SECONDARY STEERING)	
		2	**3E-8816**	1	ACTUATOR-ROCKER	
		2	**3E-8825**	2	LAMP (24-VOLT) (NG)	
	37	2	**3E-9327**	1	SWITCH AS (CENTERSHIFT PIN PULLER)	
		2	**3E-8825**	1	LAMP (24-VOLT)	
		2	**3E-8817**	1	ACTUATOR-ROCKER	

M-METRIC PART
Y-SEPARATE ILLUSTRATION

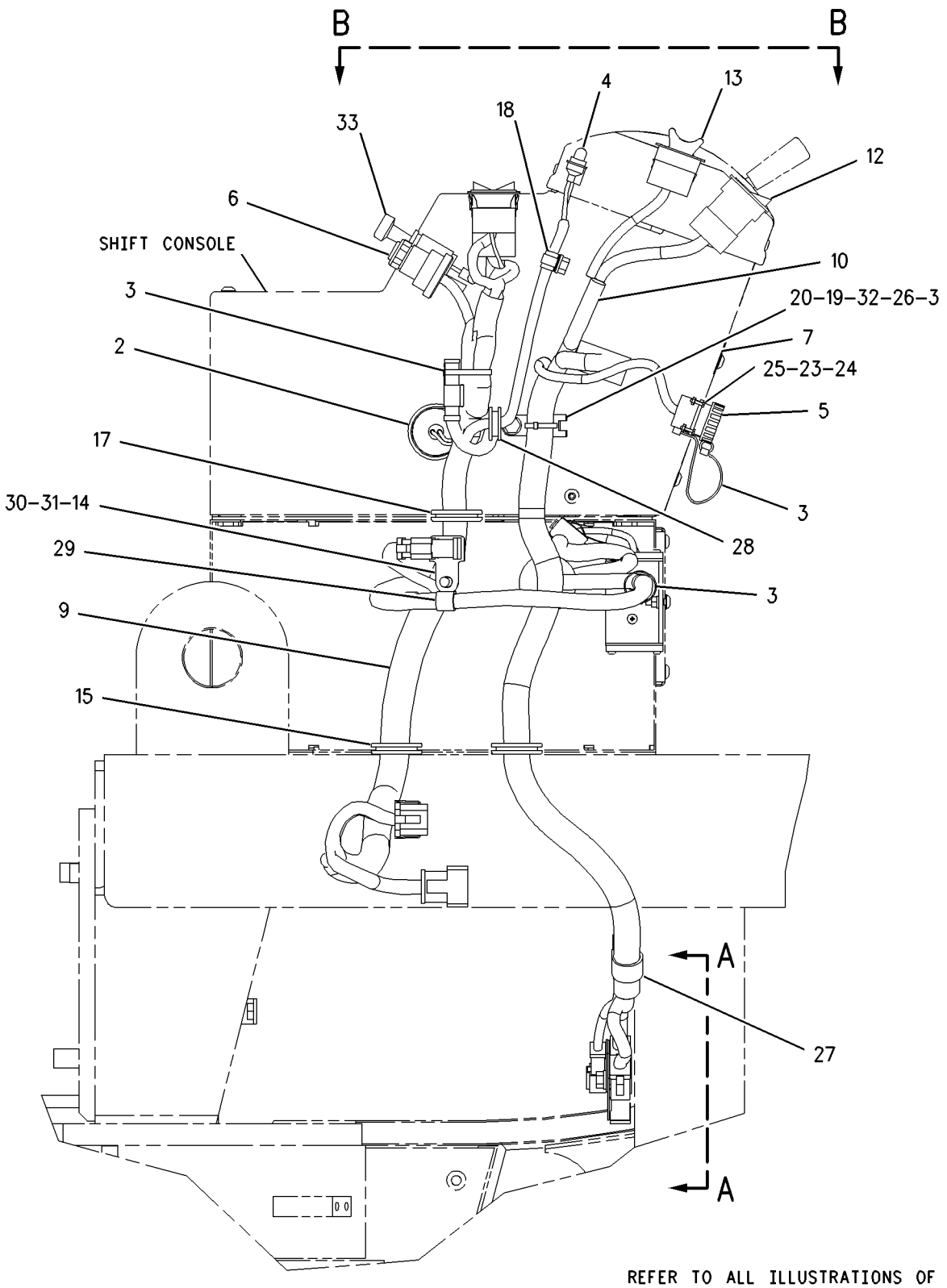

RIGHT SIDE VIEW

GRAPHIC #1 g00934782

159-5841 **WIRING GP-SHIFT CONSOLE** *(contd.)* **i02204653**

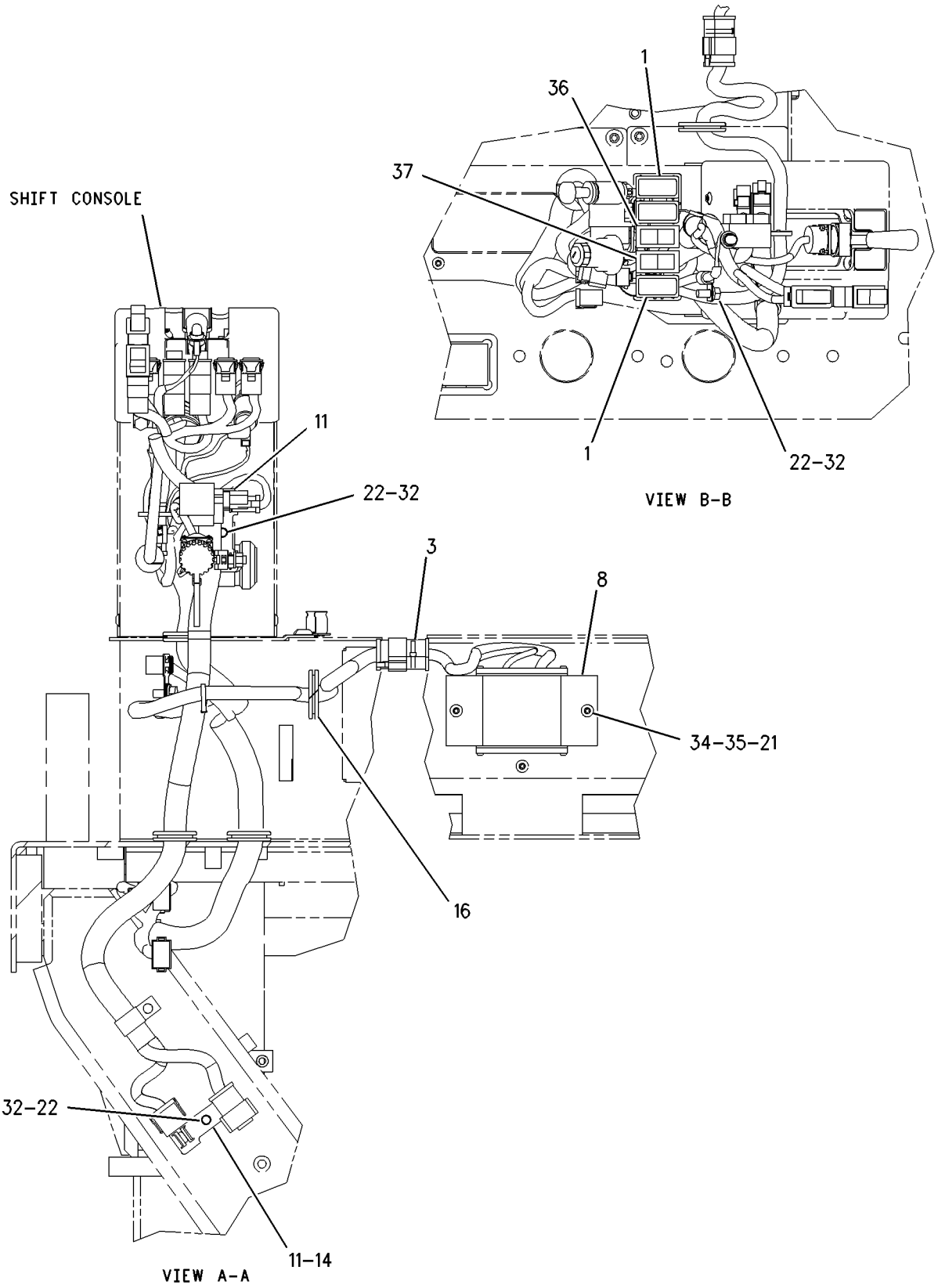

GRAPHIC #2 **<END>** g00934783

ELECTRICAL AND STARTING SYSTEM

159-5845 WIRING GP-STEERING CONSOLE

S/N: CBK1-UP

PART OF 162-5605 GENERAL AR

SMCS-4334 **i02204666**

NOTE	REF NO	GRAPHIC REF	PART NUMBER	QTY	PART NAME 1 2 3 4 5 6 (PRODUCT LEVEL)	SEE PAGE
	1	1	**3E-0109**	3	PLUG (ROCKER SWITCH)	
	2	1	**3E-6477**	1	RELAY AS (24-VOLT) (TAIL, PANEL LAMPS)	
	3	1	**3S-2093**	8	STRAP-CABLE	
	4	1	**9W-1441**	1	FUSE (15-AMPERE)	
	5	1	**9W-1442**	11	FUSE (10-AMPERE)	
	6	1	**102-9383**	1	PLATE	
	7	1	**112-6175**	2	SWITCH AS-LIMIT (INCHING PEDAL)	
					(EACH INCLUDES)	
		1	**6V-8376**	3	SCREW-MACHINE (8-32X0.25-IN)	
		1	**9B-7233**	3	LOCKWASHER	
	8	1	**239-8335**	1	HARNESS AS-CONSOLE (STEERING)	
		1	**127-5483**	1	PLUG AS-CONNECTOR (1-PIN)	
		1	**155-2255**	1	KIT-CONNECTING PLUG (12-PIN)	
		1	**155-2260**	1	KIT-CONNECTING PLUG (3-PIN)	
		1	**155-2270**	2	KIT-CONNECTING PLUG (2-PIN)	
		1	**155-2271**	1	KIT-CONNECTING PLUG (4-PIN)	
		1	**155-2255**	2	KIT-CONNECTING PLUG (12-PIN)	
		1	**155-2270**	2	KIT-CONNECTING PLUG (2-PIN)	
					(EACH INCLUDES PLUG AS & WEDGE)	
		1	**127-5484**	2	RECEPTACLE AS (1-PIN)	
		1	**102-8804**	1	KIT-RECEPTACLE (4-PIN)	
		1	**102-8801**	2	KIT-RECEPTACLE (12-PIN)	
					(EACH INCLUDES RECEPTACLE AS & WEDGE)	
	9	1	**180-4028**	2	BRACKET	
	10	1	**180-7033**	1	COVER	
	11	1	**186-1714**	1	FILM-FUSE (LH)	
	12	1	**186-1715**	1	FILM-FUSE (RH)	
	13	1	**194-4181**	1	RESISTOR AS	
		1	**8C-3334**	1	RIVET-TUBULAR	
		1	**186-3735**	2	PIN-CONNECTOR	
		1	**1S-9593**	1	STRAP-CABLE	
BE		1	**5P-6008**		TUBE	
		1	**102-8802**	1	KIT-RECEPTACLE (2-PIN)	
					(INCLUDES RECEPTACLE AS & WEDGE)	
	14	1	**130-5300**	2	CLIP	
	15	1	**139-2120**	1	SWITCH AS (DIFFERENTIAL LOCK)	
		1	**3E-8825**	2	LAMP (24-VOLT)	
		1	**123-5861**	1	ACTUATOR-ROCKER	
M	16	1	**151-4957**	4	BOLT-SOCKET HEAD (M3X0.5X25-MM)	
M	17	1	**174-8131**	1	SCREW-TRUSS HEAD	
	18	1	**228-5009**	4	CLIP	
M	19	1	**3C-6969**	4	NUT (M3X0.5-THD)	
	20	1	**3E-9324**	1	SWITCH AS (PANEL LAMP DIMMER)	
		1	**3E-8783**	1	ACTUATOR-ROCKER	
		1	**3E-8825**	1	LAMP (24-VOLT)	
	21	1	**3E-8763**	1	SWITCH AS (TAIL LAMP)	
		1	**3E-8825**	1	LAMP (24-VOLT)	
		1	**3E-9323**	1	ACTUATOR-ROCKER	
	22	1	**3L-8187**	4	LOCKWASHER	
	23	1	**4B-1281**	4	SCREW-MACHINE (1/4-20X0.625-IN)	
	24	1	**4B-4274**	16	WASHER (5.5X13X1.2-MM THK)	
	25	1	**4D-1212**	1	GROMMET	
M	26	1	**5C-2890**	3	NUT (M6X1-THD)	
M	27	1	**5C-8312**	1	NUT (M4X0.7-THD)	
M	28	1	**5C-9553**	2	BOLT (M6X1X16-MM)	
	29	1	**5P-4115**	2	WASHER-HARD (7.2X19X2-MM THK)	

159-5845 **WIRING GP-STEERING CONSOLE** *(contd.)* **i02204666**

NOTE	REF NO	GRAPHIC REF	PART NUMBER	QTY	PART NAME 1 2 3 4 5 6 (PRODUCT LEVEL)	SEE PAGE
	30	1	**6D-4244**	2	CLIP	
	31	1	**6J-0488**	1	SCREW-BUTTON HEAD (3/8-16X0.875-IN)	
	32	1	**6V-8185**	4	NUT (1/4-20-THD)	
	33	1	**6V-8801**	1	NUT (3/8-16-THD)	
	34	1	**8C-7508**	2	LOCKWASHER	
	36	1	**8L-6521**	8	BOLT (10-32X0.5-IN)	
	37	1	**8T-4205**	2	WASHER-HARD (7.2X14.5X2-MM THK)	
	38	1	**8T-4896**	1	WASHER-HARD (10.2X18.5X2.5-MM THK)	
M	39	1	**8T-4971**	1	BOLT (M6X1X30-MM)	
	40	1	**9P-2553**	1	SPACER (6.83X10.28X11-MM THK)	
M	41	1	**9X-1046**	6	SCREW (M4X0.7X18-MM)	
M	42	1	**9X-2042**	1	SCREW-TRUSS HEAD (M6X1X12-MM)	
	43	1	**9X-8256**	6	WASHER (6.6X12X2-MM THK)	
	44	1	**3E-0109**	1	PLUG (ROCKER SWITCH) (ETHER STARTING AID)	
	45	1	**3E-0109**	1	PLUG (ROCKER SWITCH) (FLOOD LAMP CONNECTOR)	

B-USE AS REQUIRED
E-ORDER BY THE CENTIMETER
M-METRIC PART

159-5845 **WIRING GP-STEERING CONSOLE** *(contd.)* **i02204666**

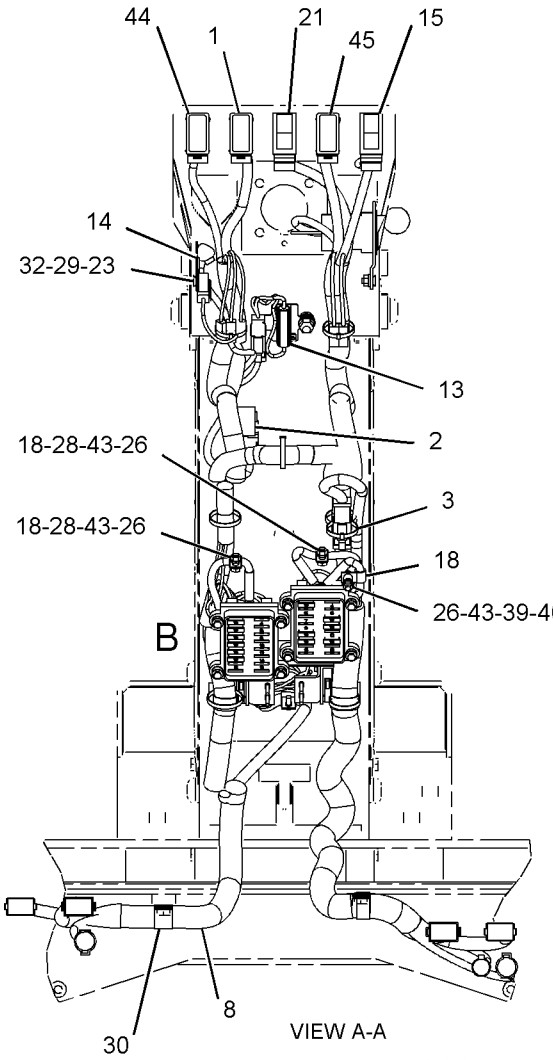

VIEW A-A

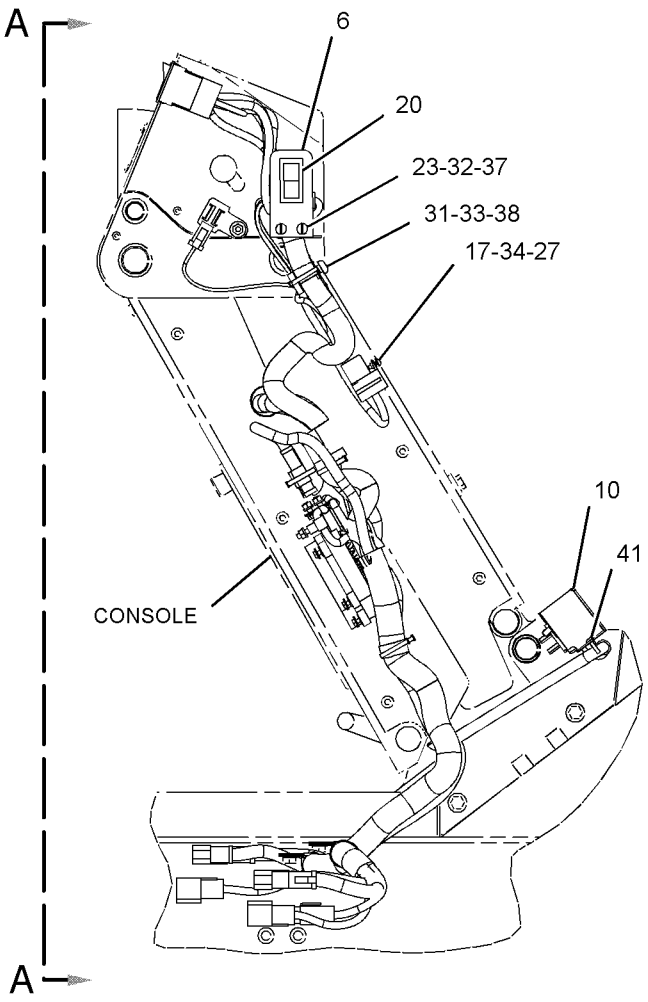

RIGHT SIDE VIEW

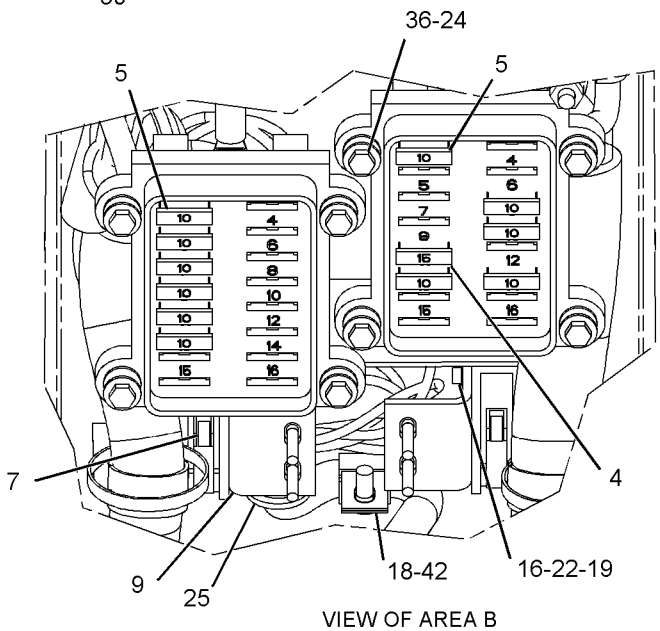

VIEW OF AREA B

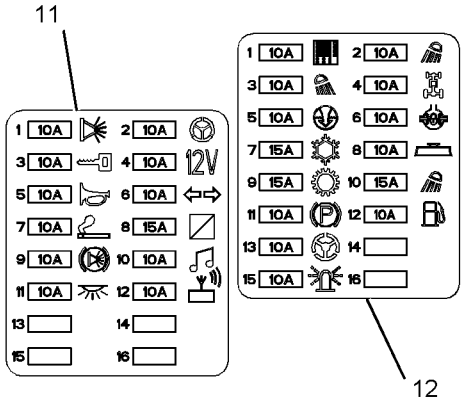

FUSE BLOCK COVERS

GRAPHIC #1 **<END>** g01056255

159-5853 WIRING GP-STEERING CONSOLE–EU

S/N: CBK1-UP

PART OF 207-3700, 210-2043 CONVERSION AR-CERTIFICATION

AN ATTACHMENT

SMCS-4334 **i02204687**

NOTE	REF NO	GRAPHIC REF	PART NUMBER	QTY	PART NAME 1 2 3 4 5 6 (PRODUCT LEVEL)	SEE PAGE
	1	1	**3E-0109**	3	PLUG (ROCKER SWITCH)	
	2	2	**3E-6477**	3	RELAY AS (24-VOLT) (TAIL,PANEL LAMPS)	
	3	1	**3S-2093**	8	STRAP-CABLE	
	4	1	**8X-5153**	1	FILM-FACE (TURN SIGNAL, HAZARD)	
	5	1	**8X-5154**	1	FILM-FACE (HEADLIGHTS HIGH, LOW BEAM)	
	6	1	**9W-1441**	1	FUSE (15-AMPERE)	
	7	1	**9W-1442**	12	FUSE (10-AMPERE)	
	8	2	**102-9383**	1	PLATE	
	9	2	**112-6175**	1	SWITCH AS-LIMIT (INCHING PEDAL)	
		2	**6V-8376**	3	SCREW-MACHINE (8-32X0.25-IN)	
		2	**9B-7233**	3	LOCKWASHER	
	10	1	**173-3064**	1	SWITCH GP-ROTARY (TURN SIGNAL, HAZARD)	
		1	**5L-7200**	1	SCREW (8-32X0.375-IN)	
		1	**9B-7233**	1	LOCKWASHER	
	11	1	**173-4490**	1	FLASHER AS (24 VOLT)	
	12	2	**180-4028**	2	BRACKET	
	13	2	**180-7033**	1	COVER	
	14	1	**186-1715**	1	FILM-FUSE (LH)	
	15	2	**194-4181**	1	RESISTOR AS (PANEL LAMP DIMMER)	
	16	1	**239-8336**	1	HARNESS AS (CONSOLE)	
		1	**127-5483**	1	PLUG AS-CONNECTOR (1-PIN)	
		1	**127-5484**	2	RECEPTACLE AS (1-PIN)	
		1	**102-8802**	1	KIT-RECEPTACLE (2-PIN)	
		1	**102-8803**	1	KIT-RECEPTACLE (3-PIN)	
		1	**102-8804**	1	KIT-RECEPTACLE (4-PIN)	
		1	**102-8801**	2	KIT-RECEPTACLE (12-PIN)	
					(EACH INCLUDES RECEPTACLE AS & WEDGE)	
		1	**155-2255**	2	KIT-CONNECTING PLUG (12-PIN)	
		1	**155-2260**	1	KIT-CONNECTING PLUG (3-PIN)	
		1	**155-2270**	4	KIT-CONNECTING PLUG (2-PIN)	
		1	**155-2271**	1	KIT-CONNECTING PLUG (4-PIN)	
		1	**155-2274**	1	KIT-CONNECTING PLUG (6-PIN)	
					(EACH INCLUDES PLUG AS & WEDGE)	
	17	1	**197-5453**	1	FILM-FUSE (RH)	
	18	1	**089-7960**	2	WASHER (5.3X25X1.6-MM THK)	
	19	1	**103-5678**	1	SWITCH AS-ROTARY (HEADLIGHT DIMMER)	
		1	**5L-7200**	1	SCREW (8-32X0.375-IN)	
		1	**9B-7233**	1	LOCKWASHER	
	20	1	**130-5300**	2	CLIP	
	21	1	**139-2120**	1	SWITCH AS (DIFFERENTIAL LOCK)	
		1	**3E-8825**	2	LAMP (24-VOLT)	
		1	**123-5861**	1	ACTUATOR-ROCKER	
M	22	2	**151-4957**	4	BOLT-SOCKET HEAD (M3X0.5X25-MM)	
M	23	2	**174-8131**	2	SCREW-TRUSS HEAD	
	24	1,2	**228-5009**	4	CLIP	
M	25	2	**3C-6969**	4	NUT (M3X0.5-THD)	
	26	1	**3E-8772**	1	SWITCH AS-ROCKER (HEADLIGHTS, TAIL LIGHTS)	
		1	**3E-8825**	2	LAMP (24-VOLT)	
		1	**3E-9326**	1	ACTUATOR-ROCKER	
	27	2	**3E-9324**	1	SWITCH AS (PANEL BACKLIGHTS)	
		2	**3E-8825**	1	LAMP (24-VOLT)	
		2	**3E-8783**	1	ACTUATOR-ROCKER	
	28	2	**3L-8187**	4	LOCKWASHER	
	29	1,2	**4B-1281**	4	SCREW-MACHINE (1/4-20X0.625-IN)	
	30	1	**4B-2047**	2	NUT (10-24-THD)	

159-5853 **WIRING GP-STEERING CONSOLE** *(contd.)* **i02204687**

NOTE	REF NO	GRAPHIC REF	PART NUMBER	QTY	PART NAME 1 2 3 4 5 6 (PRODUCT LEVEL)	SEE PAGE
	31	1	**4B-4274**	18	WASHER (5.5X13X1.2-MM THK)	
	32	2	**4D-1212**	1	GROMMET	
M	33	1	**5C-2890**	3	NUT (M6X1-THD)	
M	34	2	**5C-8312**	2	NUT (M4X0.7-THD)	
M	35	1	**5C-9553**	2	BOLT (M6X1X16-MM)	
	36	1	**5M-6755**	2	SCREW-MACHINE (NO 10X0.562-IN)	
	37	1	**5P-4115**	2	WASHER-HARD (7.2X19X2-MM THK)	
	38	1	**6D-4244**	2	CLIP	
	39	2	**6J-0488**	1	SCREW-BUTTON HEAD (3/8-16X0.875-IN)	
	40	1,2	**6V-8185**	4	NUT (1/4-20-THD)	
	41	2	**6V-8801**	1	NUT (3/8-16-THD)	
	42	2	**8C-7508**	4	LOCKWASHER	
	44	1	**8L-6521**	8	BOLT (10-32X0.5-IN)	
	45	2	**8T-4205**	2	WASHER-HARD (7.2X14.5X2-MM THK)	
	46	2	**8T-4896**	1	WASHER-HARD (10.2X18.5X2.5-MM THK)	
M	47	1	**8T-4971**	1	BOLT (M6X1X30-MM)	
	48	1	**8X-6296**	1	LEVER (TURN SIGNAL, HAZARD)	
	49	1	**9P-2553**	1	SPACER (6.83X10.28X11-MM THK)	
M	50	2	**9X-1046**	6	SCREW (M4X0.7X18-MM)	
M	51	2	**9X-2042**	1	SCREW-TRUSS HEAD (M6X1X12-MM)	
	52	1	**9X-8256**	6	WASHER (6.6X12X2-MM THK)	
	53	2	**112-6175**	1	SWITCH AS-LIMIT (BRAKE PEDAL)	
		2	**6V-8376**	3	SCREW-MACHINE (8-32X0.25-IN)	
		2	**9B-7233**	3	LOCKWASHER	
	54	1	**8X-6296**	1	LEVER (HEADLAMP DIMMER)	

M-METRIC PART

159-5853 **WIRING GP-STEERING CONSOLE** *(contd.)* **i02204687**

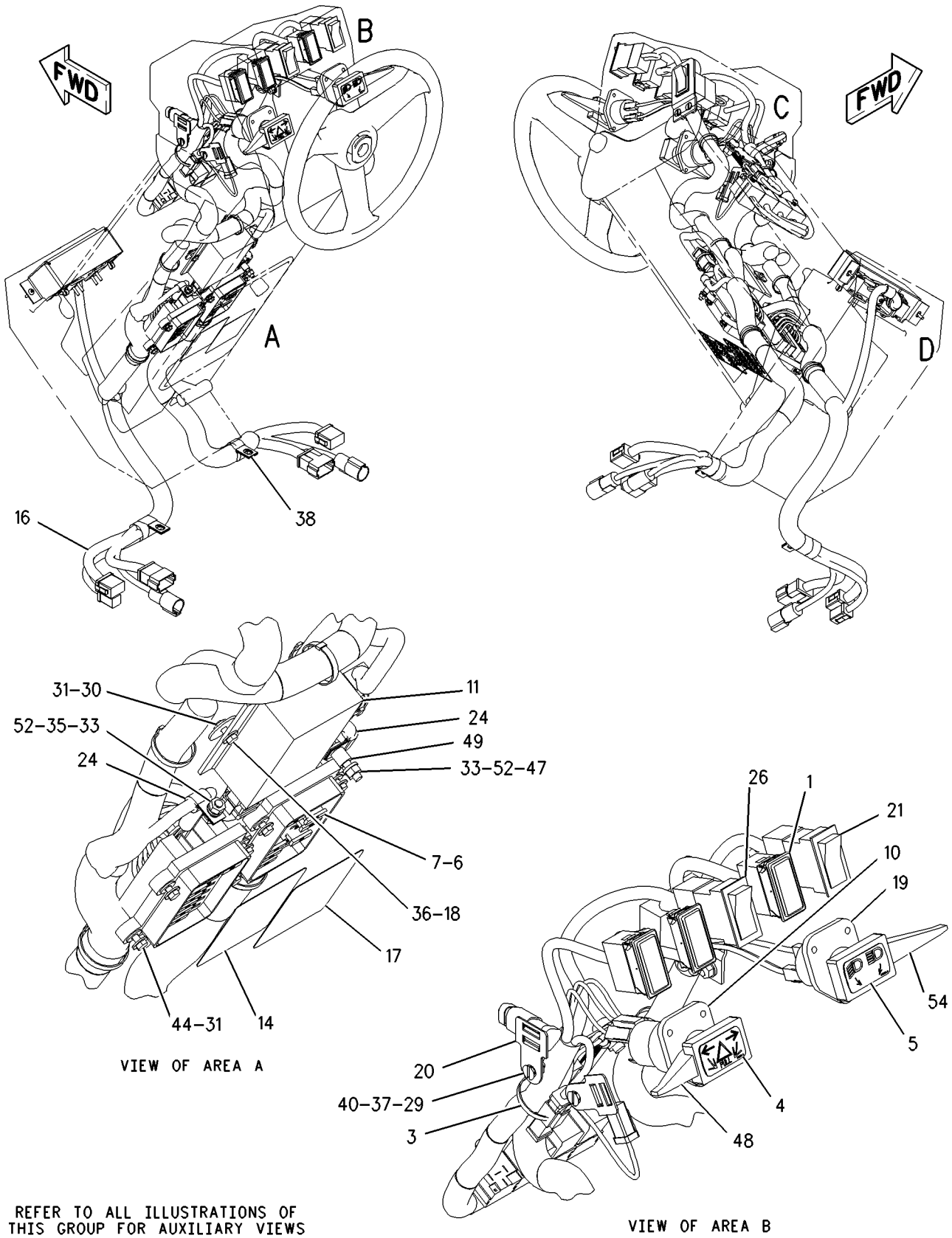

GRAPHIC #1 g00941586

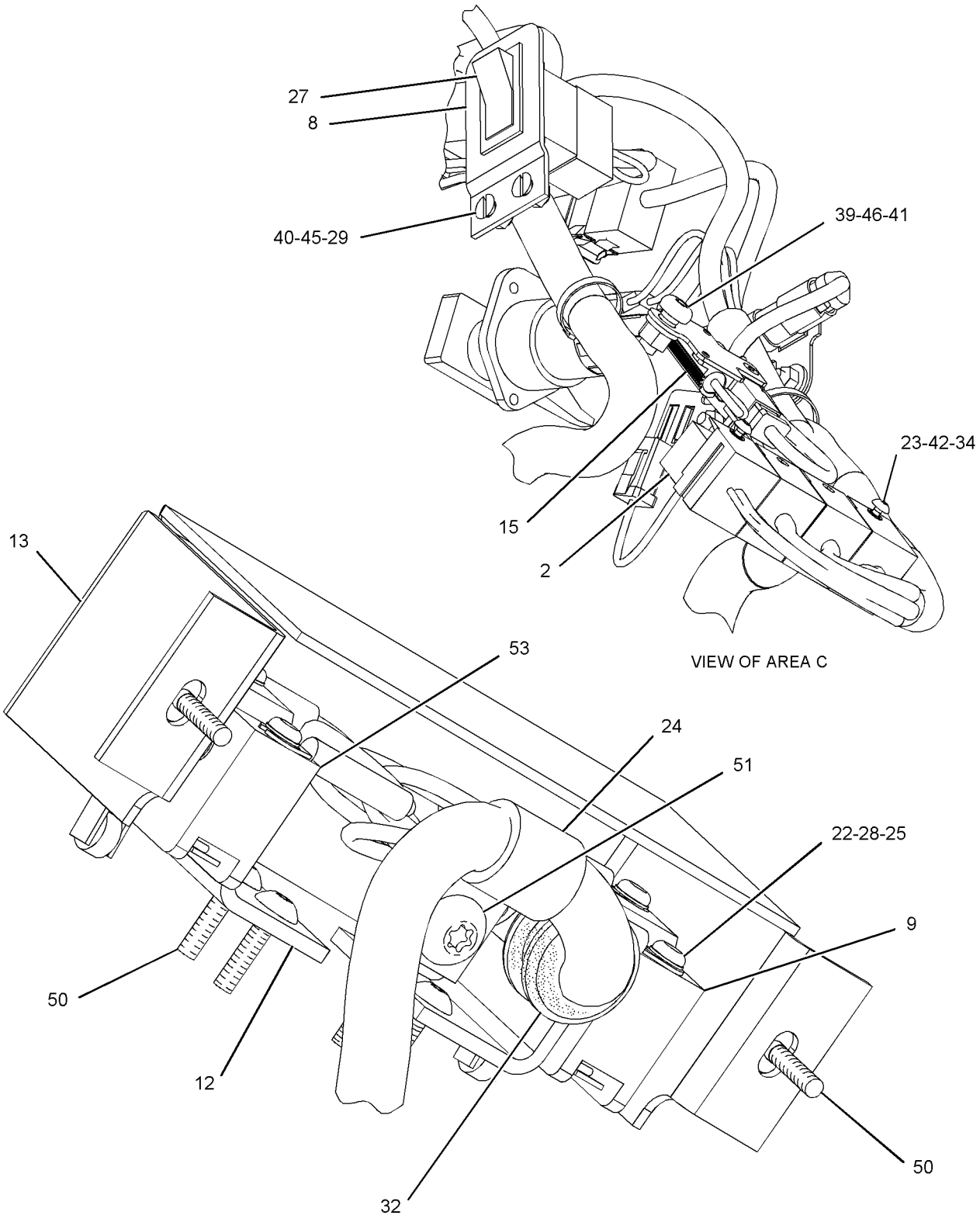

VIEW OF AREA C

VIEW OF AREA D

GRAPHIC #2 **<END>** g01056251

161-0764 AUTOSHIFT AR–TRANSMISSION

S/N: CBK1-UP
PART OF 207-3700, 210-2043 CONVERSION AR-CERTIFICATION, 197-5954, 236-3947
SNOW AR-MOTOR GRADER
AN ATTACHMENT

SMCS-3168 **i01816435**

NOTE	PART NUMBER	QTY	PART NAME 1 2 3 4 5 6 (PRODUCT LEVEL)	SEE PAGE
Z		1	ELECTRONICS GP-POWER TRAIN (AUTOSHIFT)	
	3E-8763	1	SWITCH AS (AUTOSHIFT TRANSMISSION)	
	3E-8784	1	ACTUATOR-ROCKER	
	3E-8825	1	LAMP (24-VOLT) (AUTOSHIFT)	

Z-NOT SERVICED SEPARATELY

<END>

POWER TRAIN

180-9146 CASE & PARTS GP-TRANSMISSION

S/N: BSZ1-UP

PART OF 191-3606 TRANSMISSION AR

SMCS-3064 **i02206841**

NOTE	REF NO	GRAPHIC REF	PART NUMBER	QTY	PART NAME 1 2 3 4 5 6 (PRODUCT LEVEL)	SEE PAGE
	1	1	**178-9158**	1	CASE AS	
		1	**7T-6496**	7	PLUG	
		1	**8M-6521**	2	DOWEL	
	2	1	**6Y-5728**	1	COVER AS-TRANSMISSION	
		1	**7T-6496**	1	PLUG	
M	3	1	**6V-1820**	35	BOLT (M10X1.5X30-MM)	
M	4	1	**8T-5436**	2	BOLT (M10X1.5X130-MM)	
	5	1,2	**9S-4185**	2	PLUG	
	6	1,2	**3K-0360**	9	SEAL-O-RING	
	7	1	**2J-0157**	1	SEAL-O-RING	
B	8	1,2	**1U-8846**		SEALANT-GASKET	
	9	1	**8T-6765**	1	PLUG-PIPE	
	10	1	**5M-6200**	1	SEAL-O-RING	
	11	1	**8E-1133**	1	TUBE AS	
	12	1	**6L-1650**	1	SEAL-O-RING	
M	13	1,2	**6V-5217**	13	BOLT (M8X1.25X20-MM)	
	14	1,2	**5P-3863**	5	SEAL-O-RING	
	15	1,2	**9W-1454**	5	COVER	
	16	1	**8S-9129**	1	FILTER-MAGNETIC (TRANSMISSION OIL)	
	17	1	**8S-9130**	1	SCREEN-SUCTION (TRANSMISSION)	
	18	1	**4M-6108**	2	RACE-BEARING OUTER	
	19	1	**148-1925**	2	VALVE-RELIEF	
	20	1	**9X-4609**	2	SEAL-O-RING	
	21	1	**9W-7038**	1	RING-SNAP	
M	22	1	**6V-3940**	4	BOLT (M8X1.25X25-MM)	
	23	1	**6Y-9763**	1	GEAR AS (38-TEETH)	
		1	**4K-8603**	1	PLUG-CUP	
	24	1	**2S-3029**	1	BALL BEARING	
	25	1	**9W-6465**	1	RETAINER-BEARING	
	26	2	**9S-4190**	5	PLUG	
	27	2	**2M-9780**	6	SEAL-O-RING	
	28	2	**9S-4191**	1	PLUG	
	29	1,2	**3J-1907**	2	SEAL-O-RING	
	30	1,2	**8T-4121**	13	WASHER-HARD (11X21X2.5-MM THK)	
	31	1	**190-1684**	1	PLATE AS	
M	32	1	**6V-8212**	1	BOLT (M10X1.5X16-MM)	
	33	1	**5P-4483**	1	PLUG (TRANSMISSION OIL DRAIN)	
	34	1	**7M-8485**	4	SEAL-O-RING	
M	35	1,2	**6V-7981**	5	BOLT (M10X1.5X70-MM)	
M	36	1,2	**6V-4248**	8	BOLT (M10X1.5X25-MM)	
	37	2	**9S-8006**	1	PLUG	
	38	2	**9S-8005**	2	PLUG	
	39	2	**4M-6109**	4	RACE-ROLLER BEARING	
	40	2	**5P-3924**	2	RACE-BEARING OUTER	
	41	2	**9M-2042**	1	RACE-BEARING OUTER	
	42	2	**191-3680**	1	COVER AS	
		2	**4F-2609**	2	DOWEL	
	43	2	**2H-6489**	1	RACE-BEARING OUTER	
	44	2	**198-6421**	1	HARNESS AS-TRANSMISSION	
		2	**155-2255**	1	KIT-CONNECTING PLUG (12-PIN)	
		2	**155-2270**	5	KIT-CONNECTING PLUG (2-PIN)	
					(EACH PLUG KIT INCLUDES PLUG ASSEMBLY AND WEDGE)	
	45	2	**191-9256**	2	CLIP	
M	46	1,2	**8T-4137**	4	BOLT (M10X1.5X20-MM)	
Y	48	2	**183-8597**	2	SENSOR GP-SPEED (TMSN INTERMEDIATE OUTPUT)	251

180-9146 **CASE & PARTS GP-TRANSMISSION** *(contd.)* **i02206841**

NOTE	REF NO	GRAPHIC REF	PART NUMBER	QTY	PART NAME 1 2 3 4 5 6 (PRODUCT LEVEL)	SEE PAGE
Y	48A	2	**183-8597**	1	SENSOR GP-SPEED (TRANSMISSION INPUT)	251
Y	48B	2	**183-8597**	2	SENSOR GP-SPEED (TRANSMISSION OUTPUT)	251
	49	2	**201-0387**	1	CLIP AS	
M	50	2	**8T-4133**	1	NUT (M10X1.5-THD)	
	51	2	**143-5373**	1	GUARD AS	
	52	1,2	**5P-9299**	3	CLIP	
Y	53	1	**3E-8700**	1	SENSOR GP-TEMPERATURE (TRANSMISSION OIL)	253
M	54	2	**6V-3822**	2	BOLT (M10X1.5X35-MM)	
	55	1	**9S-4181**	3	PLUG	
	56	1	**1B-5174**	1	PLUG-PIPE	
	57	2	**113-7745**	1	PLATE AS	
M		2	**8T-3490**	2	NUT-WELD (M10X1.5-THD)	
	58	1	**6D-3479**	1	CLIP	
	59	2	**206-3713**	1	PLATE AS	
M		2	**8T-3490**	3	NUT-WELD (M10X1.5-THD)	
	60	1	**145-8039**	3	LOCK	
	61	2	**133-5631**	1	PLUG	
	62	2	**5F-1678**	1	SEAL-O-RING	
M	63	2	**6V-5219**	4	BOLT (M8X1.25X40-MM)	
	64	2	**190-5212**	1	ROTOR	
M	65	2	**6V-8202**	4	BOLT-SOCKET HEAD (M8X1.25X16-MM)	
	66	1,2	**130-5300**	3	CLIP	
	67	2	**206-3714**	1	PLATE	
M	68	2	**6V-2317**	2	BOLT (M8X1.25X30-MM)	

B-USE AS REQUIRED
M-METRIC PART
Y-SEPARATE ILLUSTRATION

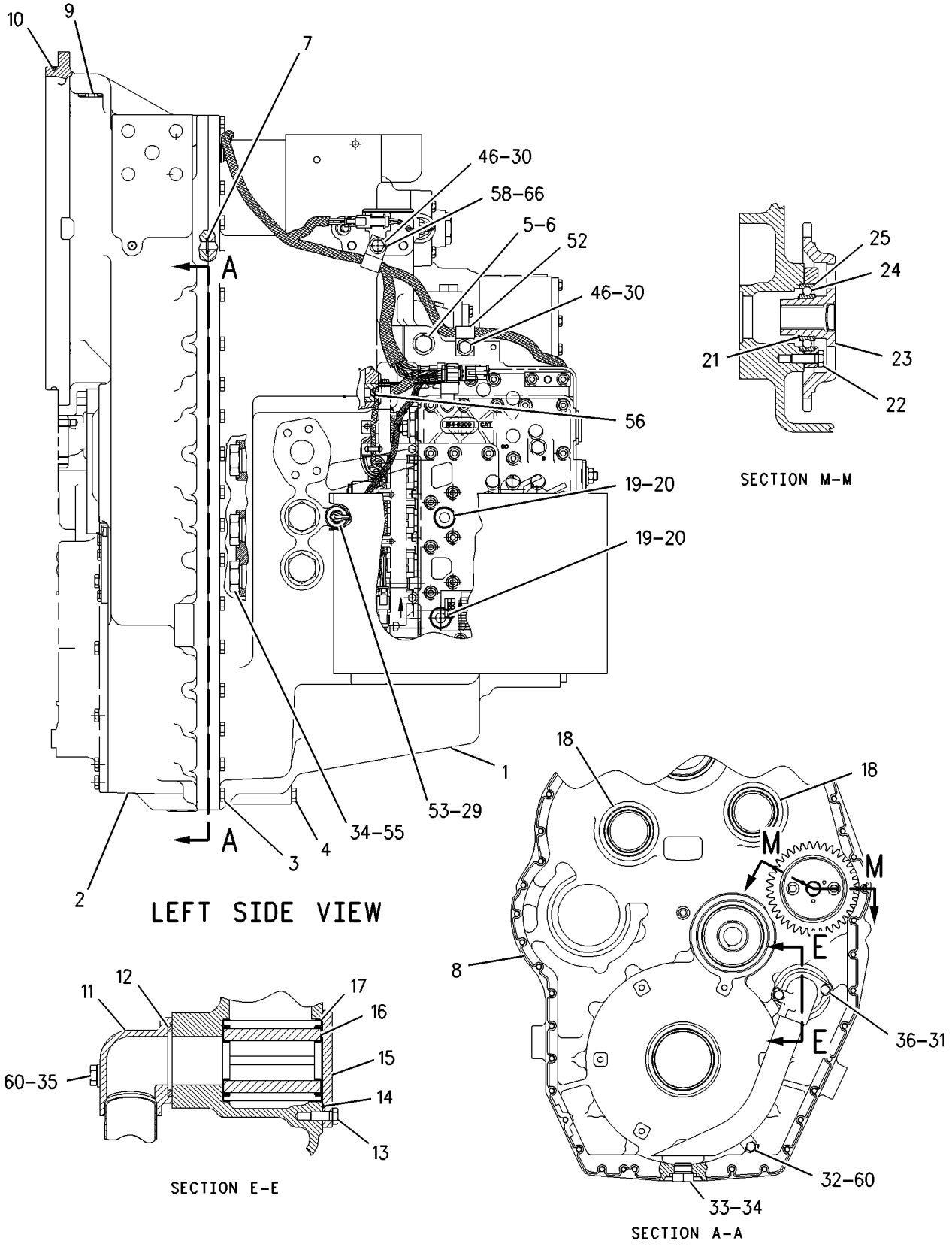

GRAPHIC #1 g00849253

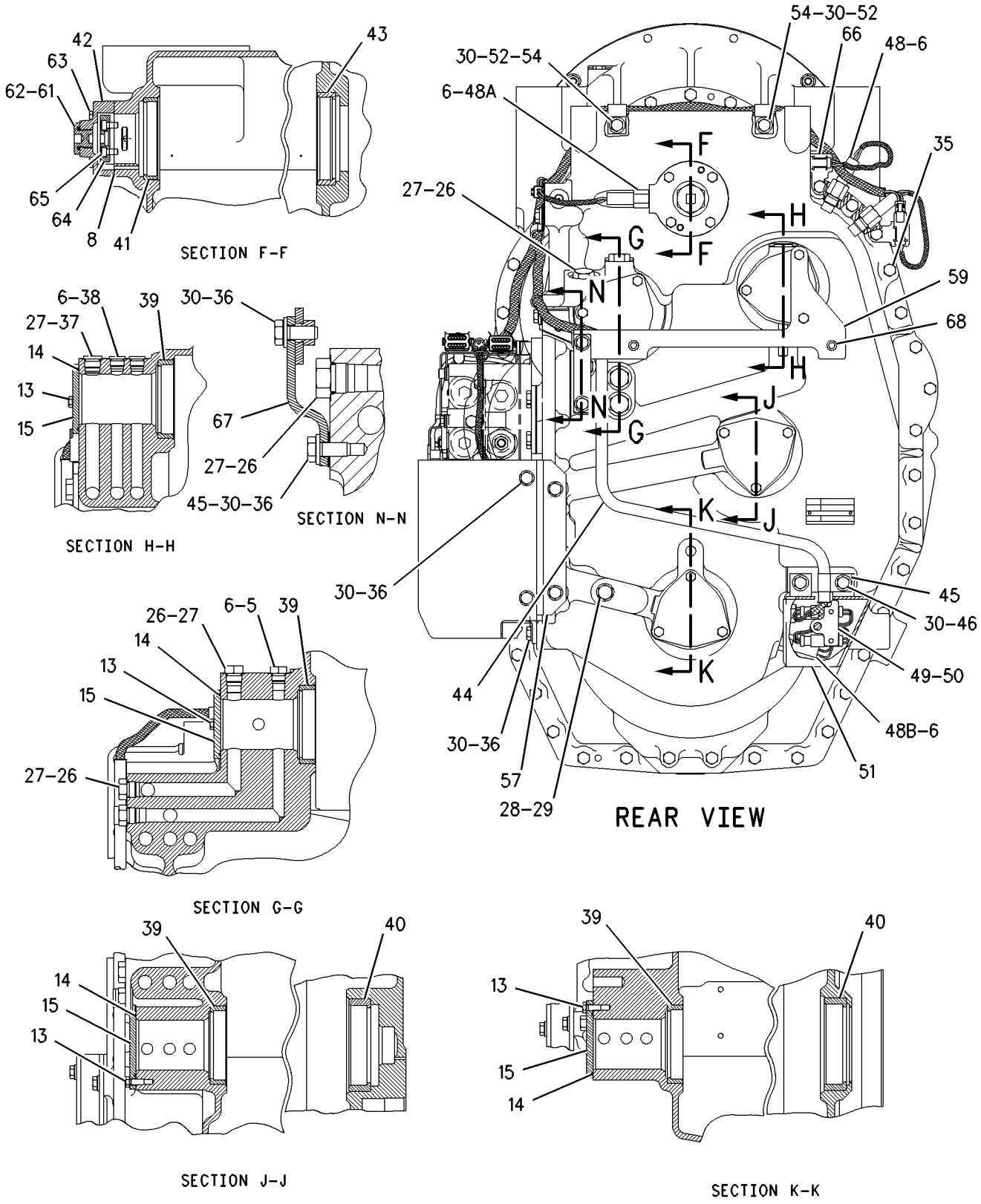

GRAPHIC #2 **<END>** g00849255

6G-1755 CHAIN GP-DRIVE

S/N: CBK1-UP

PART OF 162-5605 GENERAL AR

SMCS-3261, 4063 **i02202894**

NOTE	REF NO	GRAPHIC REF	PART NUMBER	QTY	PART NAME 1 2 3 4 5 6 (PRODUCT LEVEL)	SEE PAGE
	1	1	**6G-1633**	4	CHAIN GP	
					(EACH INCLUDES)	
	2	1	**6G-1631**	1	LINK-CONNECTING	
					(CHAIN TO CONSIST OF 24 PIN LINKS, 25 ROLLER LINKS, 1 CONNECTING LINK & COTTERS)	

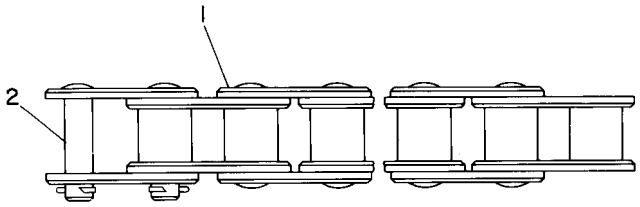

GRAPHIC #1 **<END>** g00108322

6Y-2303 CLUTCH GP-TRANSMISSION–1ST & 3RD

S/N: BSZ1-UP

PART OF 191-3606 TRANSMISSION AR

SMCS-3063, 3155, 3170 **i01052624**

NOTE	REF NO	GRAPHIC REF	PART NUMBER	QTY	PART NAME 1 2 3 4 5 6 (PRODUCT LEVEL)	SEE PAGE
	1	1,2	**6Y-1878**	1	SHAFT AS (64 TEETH)	
	2	1,2	**6Y-1000**	1	GEAR (69 TEETH)	
	3	1,2	**8E-1909**	1	GEAR AS (54 TEETH)	
	4	1,2	**6Y-1895**	1	BEARING-SLEEVE	
	5	1,2	**3B-8921**	1	BEARING-INNER	
	6	1,2	**6Y-8285**	1	RING-SEAL	
	7	1,2	**7T-4897**	2	DISC-THRUST	
	8	1,2	**6Y-1891**	1	HUB AS	
	9	1,2	**8E-5734**	2	RING-SEAL EXTENSION	
	10	1,2	**6Y-1887**	2	PISTON	
	11	1,2	**5H-8985**	1	PIN-SPRING	
	12	1,2	**6I-8912**	10	DISC-FRICTION	
	13	1,2	**110-7723**	8	PLATE-CLUTCH	
	14	1,2	**6Y-2312**	1	HUB AS	
	15	1,2	**8E-1910**	1	GEAR AS (79 TEETH)	
	16	1,2	**6Y-2419**	1	BEARING-SLEEVE	
	17	1,2	**6I-8641**	1	RACE & BEARING	
	18	1,2	**7G-4822**	3	RING-SEAL	
M	19	1,2	**6V-1819**	2	BOLT (M10X1.50X100MM)	
	20	1,2	**6Y-2425**	1	CARRIER-SEAL	
	21	1,2	**8F-3469**	3	SEAL (15.54MM ID)	
	22	1,2	**8E-8319**	4	DISC-THRUST	
	23	1,2	**6Y-1115**	4	RING-HALF	
	24	1,2	**6Y-1114**	2	WASHER	
	25	1,2	**9W-9905**	4	LOCKRING	
	26	1,2	**102-5881**	2	SPRING-WAVE	
	27	1,2	**8E-5742**	2	RING-SEAL	
	28	1,2	**6Y-0982**	1	GEAR (30 TEETH)	

M-METRIC PART

6Y-2303 **CLUTCH GP-TRANSMISSION** *(contd.)* **i01052624**

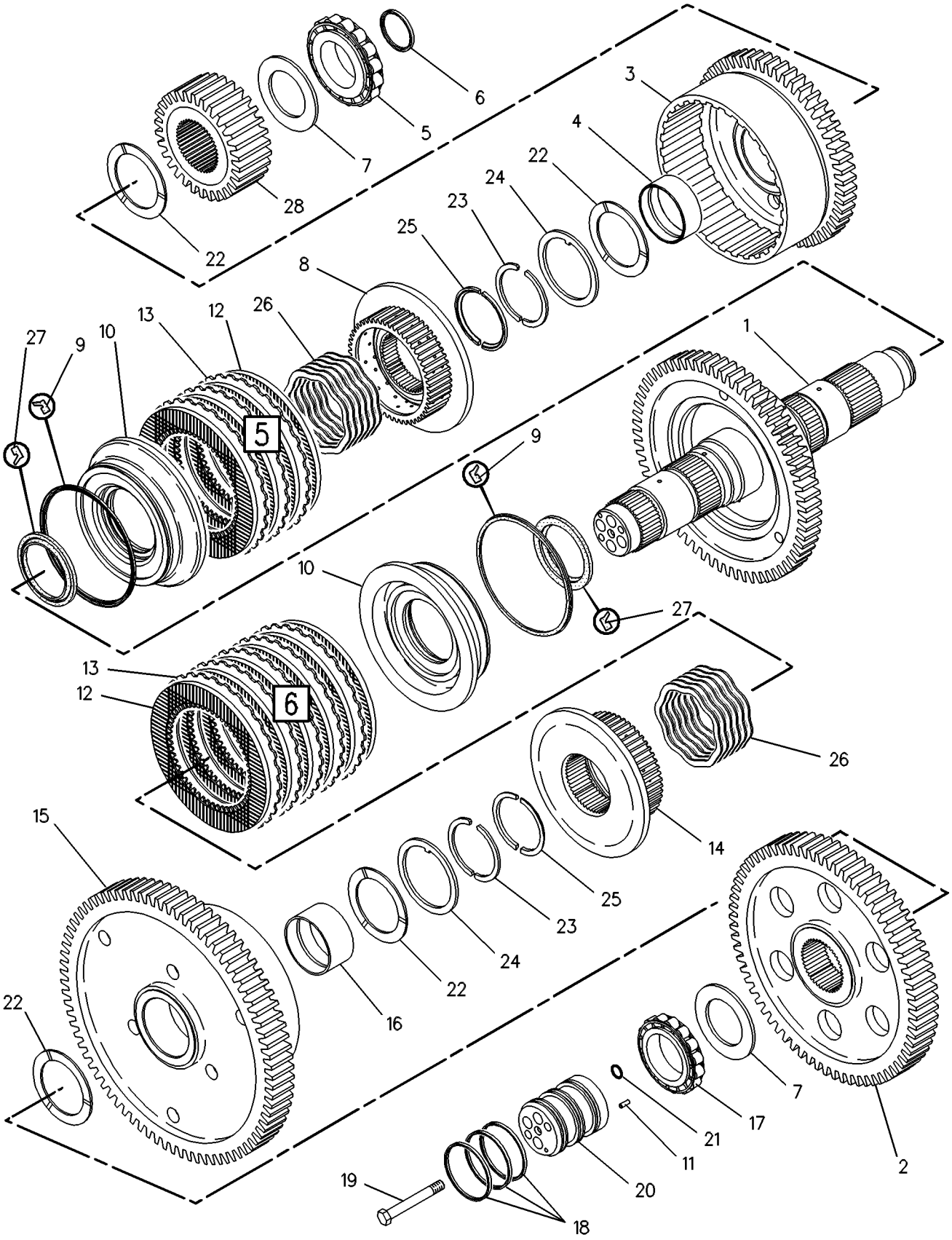

GRAPHIC #1 g00108910

6Y-2303 **CLUTCH GP-TRANSMISSION** *(contd.)* **i01052624**

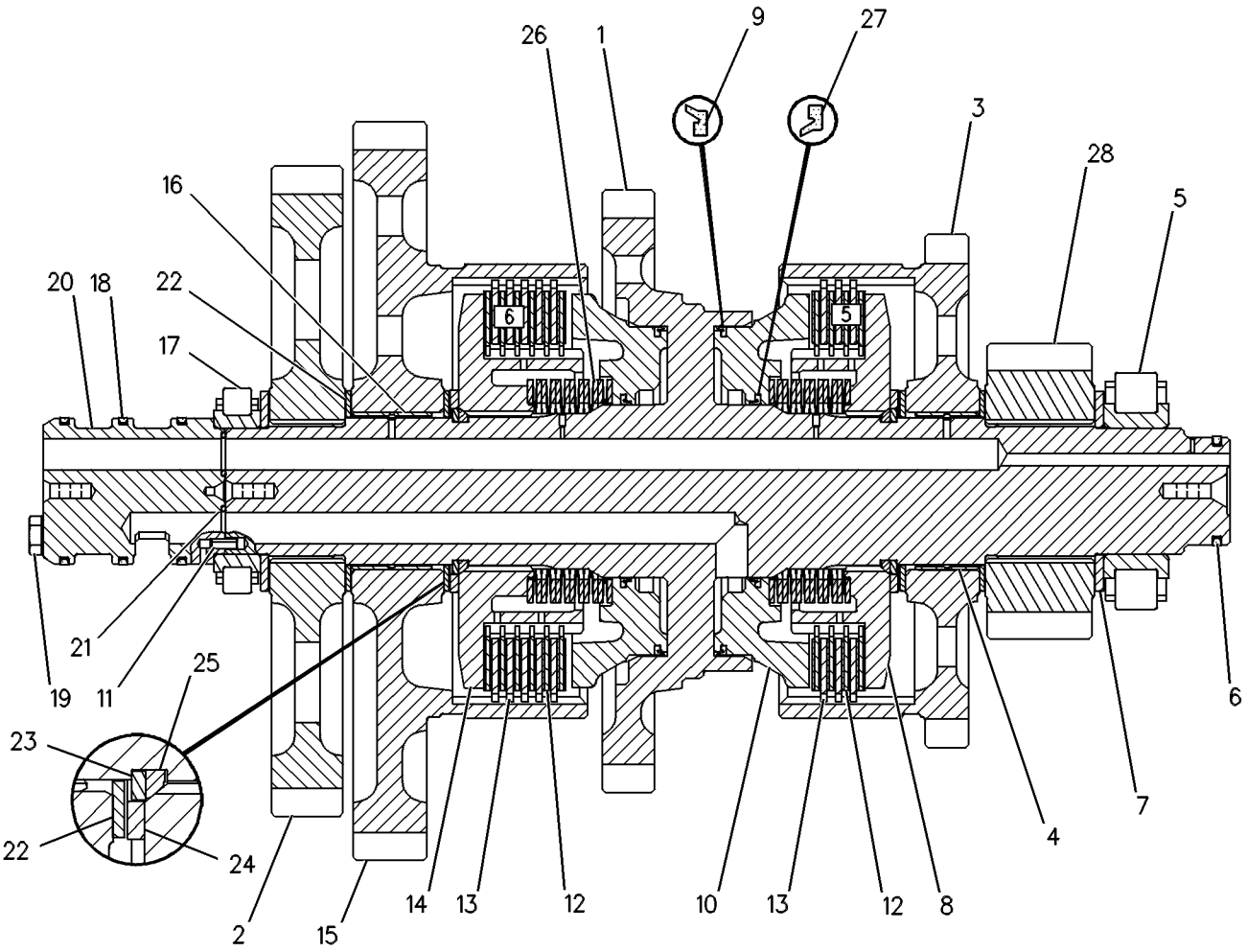

GRAPHIC #2 **<END>** g00108656

8E-9316 CLUTCH GP-TRANSMISSION—HI & LO

S/N: BSZ1-UP

PART OF 191-3606 TRANSMISSION AR

SMCS-3063, 3155, 3170 **i00131365**

NOTE	REF NO	GRAPHIC REF	PART NUMBER	QTY	PART NAME 1 2 3 4 5 6 (PRODUCT LEVEL)	SEE PAGE
	1	1,2	**6Y-1864**	1	SHAFT AS	
	2	1,2	**8M-4295**	15	SPRING	
	3	1,2	**6Y-2428**	1	PISTON	
	4	1,2	**6Y-1890**	1	RING-RETAINING	
	5	1,2	**9W-9905**	4	LOCKRING	
	6	1,2	**6Y-1114**	2	WASHER	
	7	1,2	**6Y-1115**	4	RING-HALF	
	8	1,2	**8E-8319**	4	DISC-THRUST	
	9	1,2	**7T-4897**	1	DISC-THRUST	
	10	1,2	**3B-8921**	1	BEARING-INNER	
	11	1,2	**8E-1913**	1	GEAR AS (84 TEETH)	
	12	1,2	**9W-6467**	2	BEARING-SLEEVE	
	13	1,2	**6Y-7981**	7	DISC-FRICTION	
	14	1,2	**3P-0337**	8	PLATE-CLUTCH	
	15	1,2	**8E-5736**	2	RING-SEAL EXTENSION	
	16	1,2	**6Y-2429**	1	PISTON-BALANCE	
	17	1,2	**102-5881**	1	SPRING-WAVE	
	18	1,2	**8E-5742**	2	RING-SEAL	
	19	1,2	**8E-5734**	1	RING-SEAL EXTENSION	
	20	1,2	**110-7723**	5	PLATE-CLUTCH	
	21	1,2	**6I-8912**	6	DISC-FRICTION	
	22	1,2	**8E-1914**	1	GEAR AS (45 TEETH)	
	23	1,2	**9W-6467**	2	BEARING-SLEEVE	
	24	1,2	**6I-8641**	1	RACE & BEARING	
	25	1,2	**6Y-2425**	1	CARRIER-SEAL	
M	26	1,2	**6V-1819**	2	BOLT (M10X1.50X100MM)	
	27	1,2	**7G-4822**	3	RING-SEAL	
	28	1,2	**8F-3469**	3	SEAL (15.54MM ID)	
	29	1,2	**6Y-2312**	1	HUB AS	
	30	1,2	**5H-8985**	1	PIN-SPRING	
	31	1,2	**6Y-1887**	1	PISTON	
	32	1,2	**6Y-2430**	1	HUB AS	
	33	1,2	**8E-1161**	1	ROTOR	

M-METRIC PART

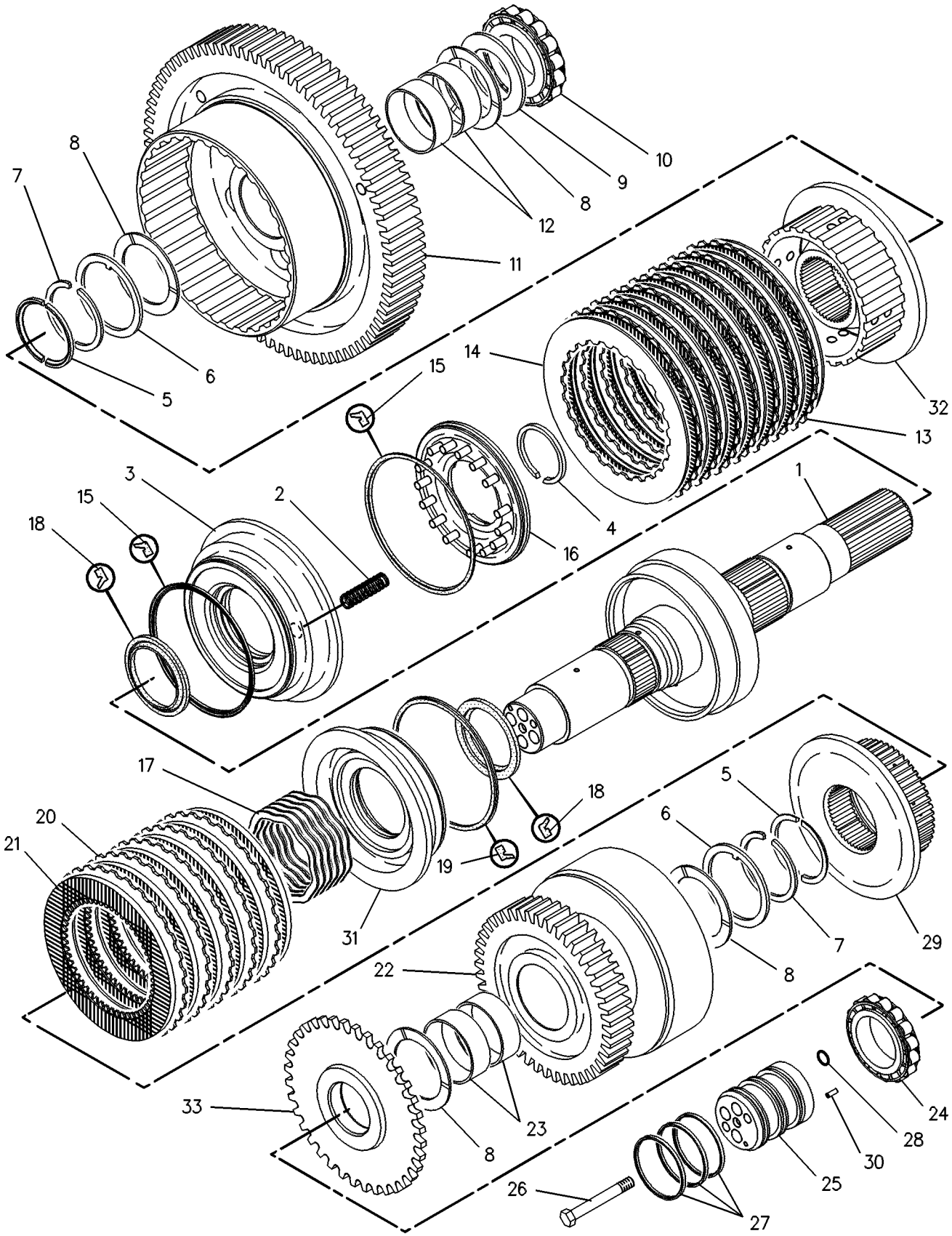

GRAPHIC #1 g00108549

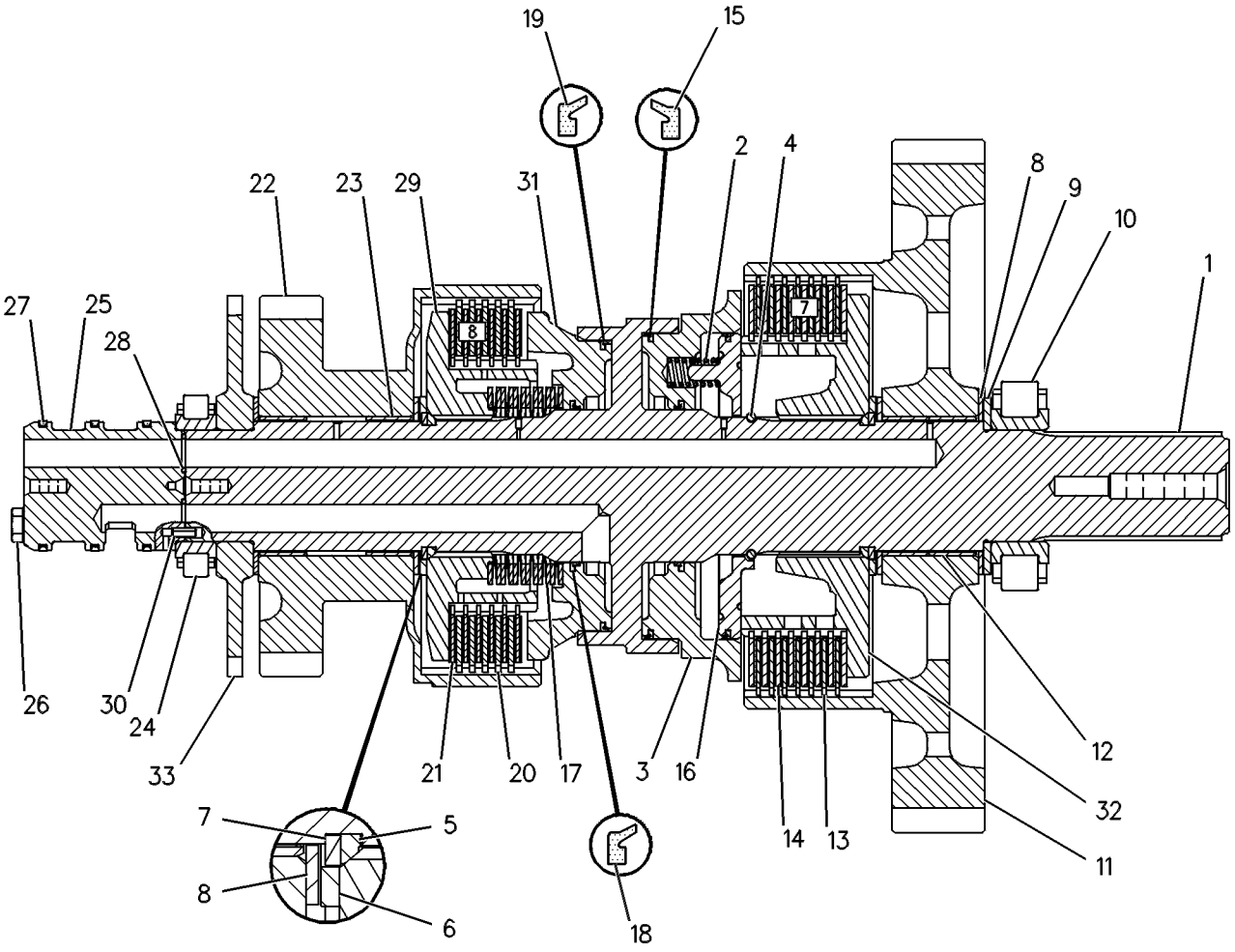

GRAPHIC #2 **<END>** g00108658

159-9228 CLUTCH GP-TRANSMISSION—FORWARD

S/N: BSZ1-UP

PART OF 191-3606 TRANSMISSION AR

SMCS-3063, 3155, 3170 **i02204737**

NOTE	REF NO	GRAPHIC REF	PART NUMBER	QTY	PART NAME 1 2 3 4 5 6 (PRODUCT LEVEL)	SEE PAGE
	1	1	**171-7091**	1	SHAFT AS	
		1	**1P-0604**	1	PLUG-CUP	
	2	1	**159-0308**	2	PISTON	
	3	1	**159-9258**	2	VALVE AS	
	4	1	**9U-8815**	2	SPRING	
	5	1	**161-6713**	2	PLATE-LOCK	
	6	1	**6Y-1115**	4	RING-HALF	
	7	1	**8E-8319**	4	DISC-THRUST	
	8	1	**5H-8985**	1	PIN-SPRING	
	9	1	**4M-6107**	1	BEARING-INNER	
	10	1	**9W-2029**	1	RACE-THRUST BEARING	
	11	1	**8E-1263**	2	BEARING-ROLLER	
	12	1	**132-9625**	1	GEAR AS (50-TEETH)	
	13	1	**171-7093**	2	HUB AS	
	14	1	**6I-8911**	5	DISC-FRICTION	
	15	1	**9U-9995**	6	PLATE-CLUTCH	
	16	1	**8E-5742**	2	RING-SEAL	
	17	1	**9W-9371**	2	RING-SEAL	
	18	1	**131-3919**	1	BEARING-ROLLER	
	19	1	**7G-4822**	3	RING-SEAL	
M	20	1	**6V-1819**	2	BOLT (M10X1.5X100-MM)	
	21	1	**6Y-1119**	1	CARRIER-SEAL	
	22	1	**8F-3469**	4	SEAL-O-RING	
	23	1	**7T-4897**	2	DISC-THRUST	
	24	1	**6Y-1116**	1	GEAR AS (43-TEETH)	
	25	1	**110-7723**	6	PLATE-CLUTCH	
	26	1	**6I-8912**	6	DISC-FRICTION	
	27	1	**108-5751**	2	DISC-FRICTION	
	28	1	**159-0927**	1	DISC-FRICTION	
	29	1	**9W-9905**	4	RING-LOCK	
M	30	1	**5C-7423**	4	SCREW (M6X1X16-MM)	

M-METRIC PART

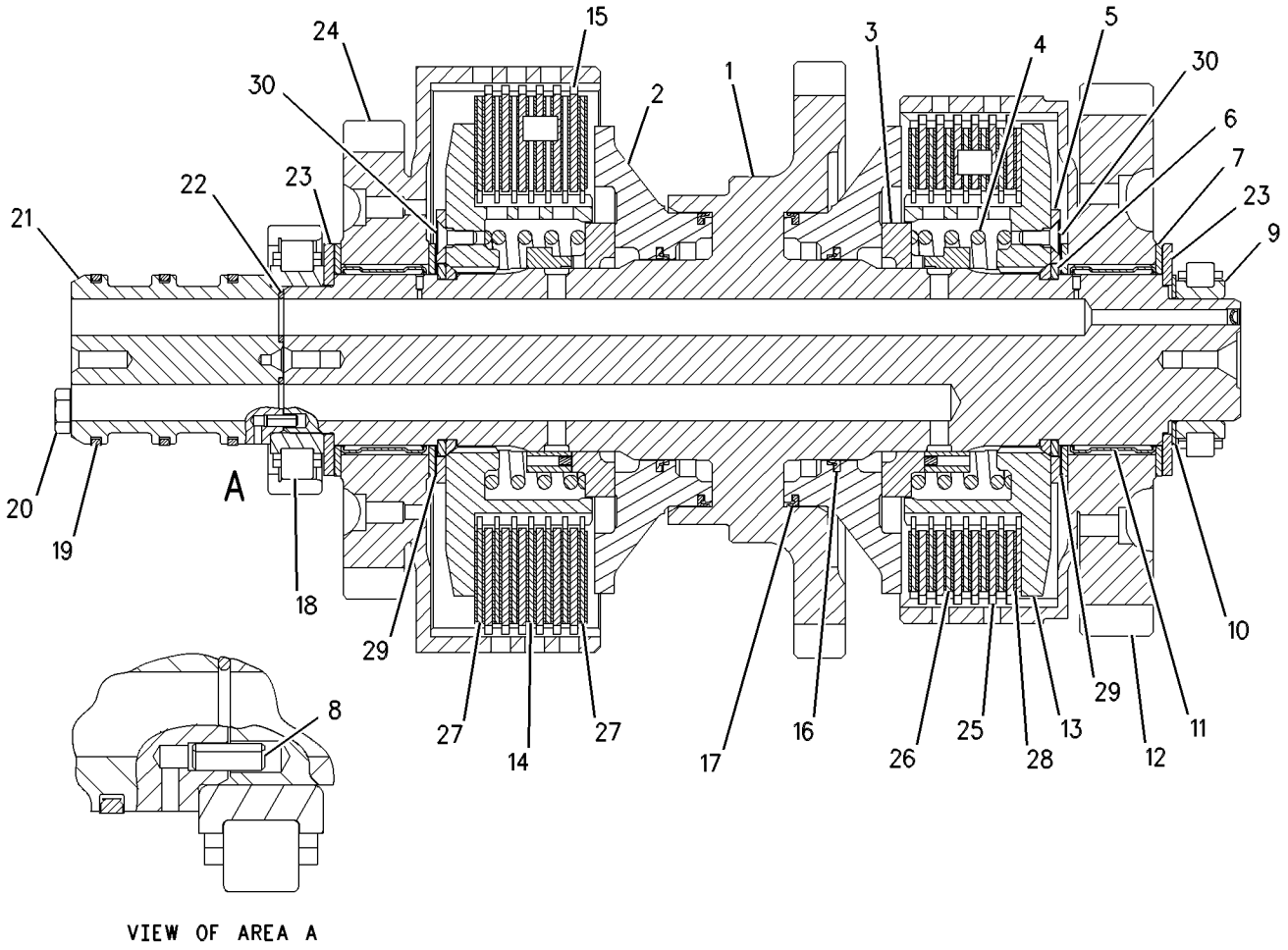

GRAPHIC #1 **<END>** g00574942

159-9229 CLUTCH GP-TRANSMISSION–REVERSE & 2ND

S/N: BSZ1-UP

PART OF 191-3606 TRANSMISSION AR

SMCS-3063, 3155, 3170 **i02204738**

NOTE	REF NO	GRAPHIC REF	PART NUMBER	QTY	PART NAME 1 2 3 4 5 6 (PRODUCT LEVEL)	SEE PAGE
	1	1	**171-7095**	1	SHAFT AS	
		1	**1P-0604**	1	PLUG-CUP	
	2	1	**159-0308**	1	PISTON	
	3	1	**159-9258**	1	VALVE AS	
	4	1	**9U-8815**	1	SPRING	
	5	1	**6Y-1114**	1	LOCKWASHER	
	6	1	**6Y-1115**	4	RING-HALF	
	7	1	**8E-8319**	4	DISC-THRUST	
	8	1	**7T-4897**	1	DISC-THRUST	
	9	1	**4M-6107**	1	BEARING-INNER	
	10	1	**6Y-3855**	1	GEAR AS (46-TEETH)	
	11	1	**9W-2029**	1	RACE-THRUST BEARING	
	12	1	**8E-1263**	1	BEARING-ROLLER	
	13	1	**171-7093**	1	HUB AS	
	14	1	**110-7723**	9	PLATE-CLUTCH	
	15	1	**6I-8912**	10	DISC-FRICTION	
	16	1	**5H-8985**	1	PIN-SPRING	
	17	1	**8E-5742**	2	RING-SEAL	
	18	1	**9W-9371**	1	RING-SEAL	
	19	1	**8E-5734**	1	RING-SEAL EXTENSION	
	20	1	**6Y-1888**	1	PLATE-CLUTCH	
	21	1	**6Y-0976**	1	GEAR (29-TEETH)	
	22	1	**6Y-2307**	1	SPACER (61X82.55X43.88-MM THK)	
	23	1	**131-3919**	1	BEARING-ROLLER	
	24	1	**6Y-1119**	1	CARRIER-SEAL	
M	25	1	**6V-1819**	2	BOLT (M10X1.5X100-MM)	
	26	1	**7G-4822**	3	RING-SEAL	
	27	1	**8F-3469**	4	SEAL-O-RING	
	28	1	**8E-1908**	1	GEAR AS (44-TEETH)	
		1	**6Y-1895**	1	BEARING-SLEEVE	
	29	1	**6Y-1891**	1	HUB AS	
	30	1	**6Y-1887**	1	PISTON	
	31	1	**102-5881**	1	SPRING-WAVE	
	32	1	**9W-9905**	4	RING-LOCK	
	33	1	**159-0927**	1	DISC-FRICTION	
	34	1	**161-6713**	1	PLATE-LOCK	
M	35	1	**5C-7423**	2	SCREW (M6X1X16-MM)	

M-METRIC PART

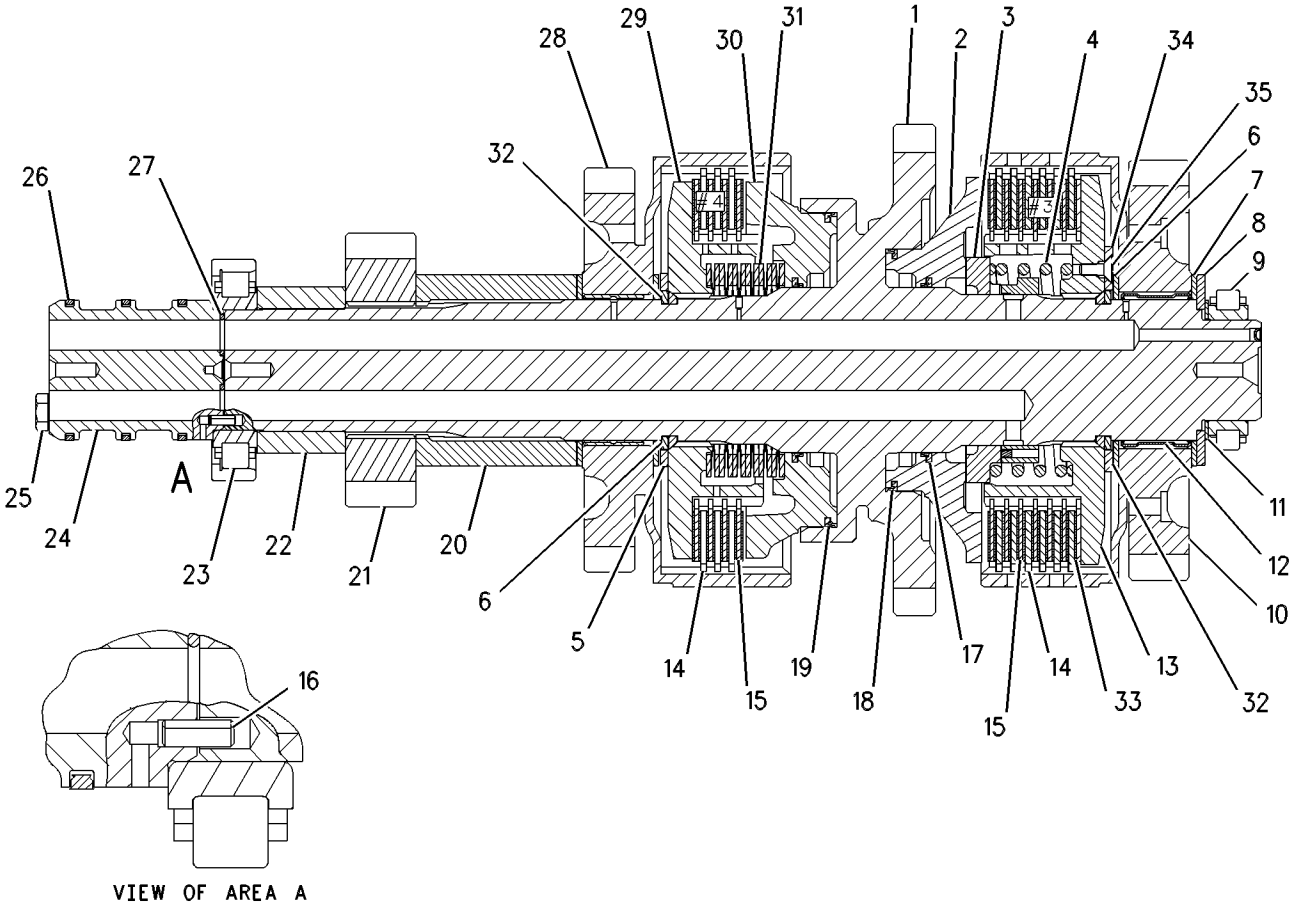

GRAPHIC #1 **<END>** g00574994

159-5933 CONTROL GP-CLUTCH

S/N: CBK1-UP

PART OF 162-5605 GENERAL AR

SMCS-5157 **i02200300**

NOTE	REF NO	GRAPHIC REF	PART NUMBER	QTY	PART NAME 1 2 3 4 5 6 (PRODUCT LEVEL)	SEE PAGE
	1	1	**1B-2578**	1	NUT (3/8-16-THD)	
	2	1	**1F-4622**	2	BEARING AS-NEEDLE	
	3	1	**5P-9209**	2	BEARING AS-NEEDLE	
	4	1	**7V-0446**	2	CLIP	
	5	1	**9J-8783**	1	SHIM (0.508-MM THK)	
	6	1	**116-5710**	1	GROMMET	
	7	1	**149-2065**	1	SPRING	
	8	1	**161-7062**	1	HOUSING	
	9	1	**161-7063**	1	SHAFT	
	10	1	**162-8218**	1	GASKET	
	11	1	**162-8219**	1	COVER	
	12	1	**169-0921**	1	ROD END (INTERNAL THREAD)	
	13	1	**169-0922**	1	ROD	
	14	1	**172-4211**	1	SPACER (10.5X22X50.8-MM THK)	
	15	1	**180-4027**	1	CAM	
	16	1	**180-7147**	1	LEVER	
	17	1	**190-3043**	1	BRACKET AS	
	18	1	**206-3599**	1	LEVER	
	19	1	**207-4922**	1	PEDAL-CLUTCH	
CY	20	1	**214-4863**	1	SENSOR GP-POSITION (ROTARY) (CLUTCH)	244
	21	1	**129-3173**	1	BOLT-12 POINT HEAD (3/8-16X31.75-MM)	
	22	1	**130-5300**	1	CLIP	
	23	1	**1B-0676**	1	PIN	
	24	1	**1B-8704**	1	KEY-WOODRUFF	
	25	1	**3H-8538**	1	PIN	
	26	1	**3S-2713**	1	NUT-FULL (3/8-24-THD)	
	27	1	**4B-6060**	1	SETSCREW-SOCKET (1/4-20X0.375-IN)	
	28	1	**4J-8922**	1	ROD END	
	29	1	**5P-1075**	2	WASHER-HARD (10.2X22.5X3-MM THK)	
	30	1	**5S-7382**	2	BOLT (3/8-16X1.375-IN)	
C	31	1	**6V-0894**	1	SEAL-O-RING	
M	32	1	**6V-2313**	2	BOLT (M5X0.8X30-MM)	
	33	1	**8T-0328**	2	WASHER-HARD (5.5X10X1-MM THK)	
	34	1	**8T-4121**	5	WASHER-HARD (11X21X2.5-MM THK)	
M	35	1	**8T-4133**	1	NUT (M10X1.5-THD)	
M	36	1	**8T-4136**	3	BOLT (M10X1.5X25-MM)	
M	37	1	**8T-4182**	1	BOLT (M10X1.5X45-MM)	
M	38	1	**8T-4195**	2	BOLT (M10X1.5X30-MM)	
	39	1	**8T-4226**	1	WASHER-PLATED (10.5X45X3-MM THK)	
	40	1	**8T-4896**	1	WASHER-HARD (10.2X18.5X2.5-MM THK)	
	41	1	**8T-5390**	1	BOLT (3/8-16X3.5-IN)	

C-CHANGE FROM PREVIOUS TYPE
M-METRIC PART
Y-SEPARATE ILLUSTRATION

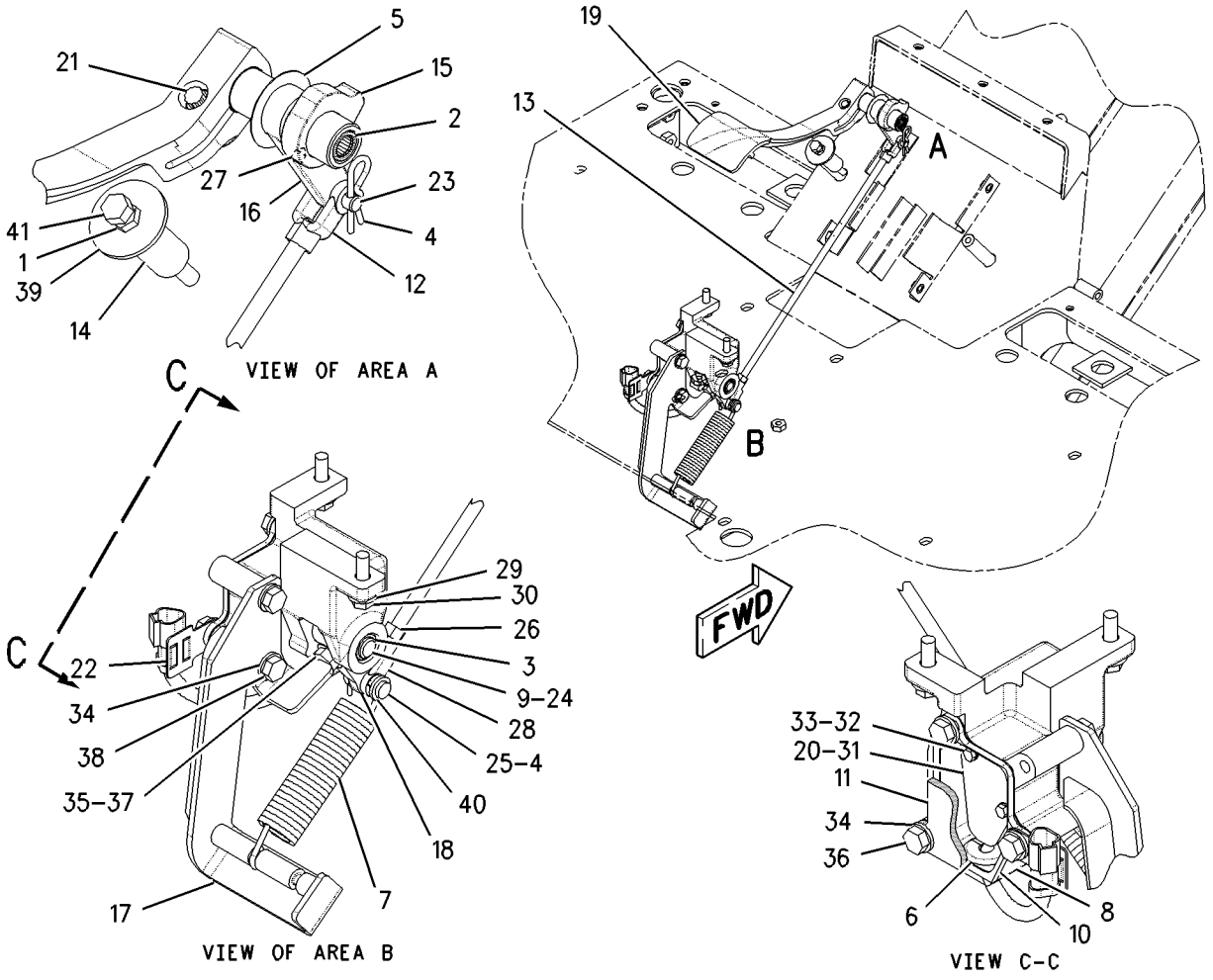

GRAPHIC #1 **<END>** g00921402

160-7756 CONTROL GP-DIFFERENTIAL LOCK

S/N: CBK1-UP

PART OF 162-5605 GENERAL AR

SMCS-3264 **i01811077**

NOTE	REF NO	GRAPHIC REF	PART NUMBER	QTY	PART NAME 1 2 3 4 5 6 (PRODUCT LEVEL)	SEE PAGE
	1	1	**6D-0580**	1	TUBE	
	2	1	**6V-0852**	1	CAP-DUST	
I	3	1	**7T-1159**	1	HOSE AS	
	4	1	*164-5567*	1	FITTING AS	
		1	**6V-3965**	1	FITTING AS (QUICK DISCONNECT)	
		1	**3J-1907**	1	SEAL-O-RING	
	5	1	**165-9928**	1	PLATE	
Y	6	1	**174-3705**	1	VALVE & MTG GP-DIFF LOCK	397
I	7	1	**178-9952**	1	HOSE AS	
	8	1	*180-9933*	1	ADAPTER GP	
		1	**135-9941**	1	ADAPTER-90 DEGREE	
		1	**3J-7354**	1	SEAL-O-RING	
	9	1	**130-5300**	1	CLIP	
	10	1	*148-8316*	1	CONNECTOR AS	
		1	**6V-8647**	1	CONNECTOR	
		1	**3J-7354**	1	SEAL-O-RING	
		1	**4J-5477**	1	SEAL-O-RING	
	11	1	*148-8368*	1	ELBOW AS	
		1	**6V-8627**	1	ELBOW	
		1	**3J-1907**	1	SEAL-O-RING	
		1	**4J-5477**	1	SEAL-O-RING	
	12	1	*148-8369*	1	ELBOW AS	
		1	**6V-8628**	1	ELBOW	
		1	**3J-7354**	1	SEAL-O-RING	
		1	**4J-5477**	1	SEAL-O-RING	
	13	1	**4J-2506**	2	SEAL-O-RING	
	14	1	**4P-8134**	1	CLIP	
	15	1	**8M-4438**	2	SEAL-O-RING	
	16	1	**8T-2501**	2	BOLT (3/8-16X2-IN)	
	17	1	**8T-4896**	2	WASHER-HARD (10.2X18.5X2.5-MM THK)	
	18	1	**9X-6772**	1	STRAP-CABLE	

I-REFER TO HYDRAULIC INFORMATION SYSTEM
Y-SEPARATE ILLUSTRATION

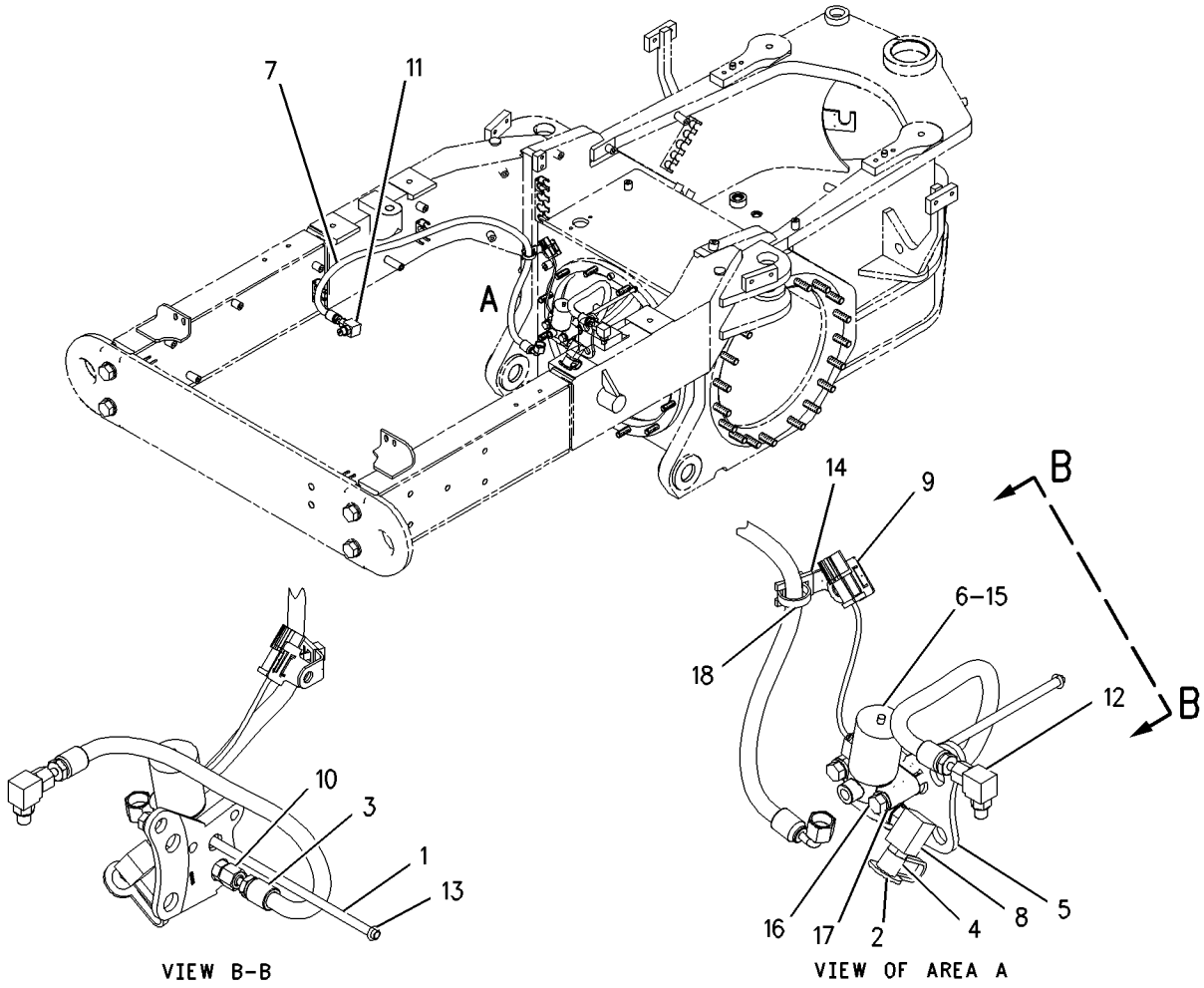

GRAPHIC #1 **<END>** g00803217

167-9002 CONTROL GP-TRANSMISSION

S/N: CBK1-UP

PART OF 162-5605 GENERAL AR

SMCS-3065 **i02204739**

NOTE	REF NO	GRAPHIC REF	PART NUMBER	QTY	PART NAME 1 2 3 4 5 6 (PRODUCT LEVEL)	SEE PAGE
	1	1	**7M-0706**	1	KNOB (TRANSMISSION CONTROL)	
	2	1	**8X-4879**	2	BRACKET AS	
M		1	**6V-9632**	1	NUT-WELD (M6X1-THD)	
	3	1	**8X-8096**	1	FILM (COVER BLACK)	
	4	1	**143-9290**	1	PLATE AS	
M		1	**6V-9632**	2	NUT-WELD (M6X1-THD)	
	5	1	**169-2621**	1	GATE AS	
	6	1	**169-3380**	1	PLATE AS	
	7	1	**180-3531**	1	CONTROL GP-TRANSMISSION	
	8	1	**171-2122**	1	COVER	
	9	1	**172-7105**	1	FILM-PANEL (TRANSMISSION INDICATOR PANEL)	
	10	1	**172-7106**	1	FILM-PANEL (SPEED SELECT)	
	11	1	**185-2274**	1	FILM-INFORMATION (ENGINE, HIGH IDLE, HOLD)	
	12	1	**185-2287**	1	FILM-INFORMATION (ENGINE, LOW IDLE, HOLD)	
	13	1	**187-0491**	1	COVER	
M	14	1	**9X-2041**	10	SCREW-TRUSS HEAD	
M	15	1	**9X-2042**	2	SCREW-TRUSS HEAD (M6X1X12-MM)	
M	16	1	**9X-2043**	10	SCREW-TRUSS HEAD (M6X1X14-MM)	
M	17	1	**9X-2045**	4	SCREW-TRUSS HEAD (6X1X20-MM)	

M-METRIC PART

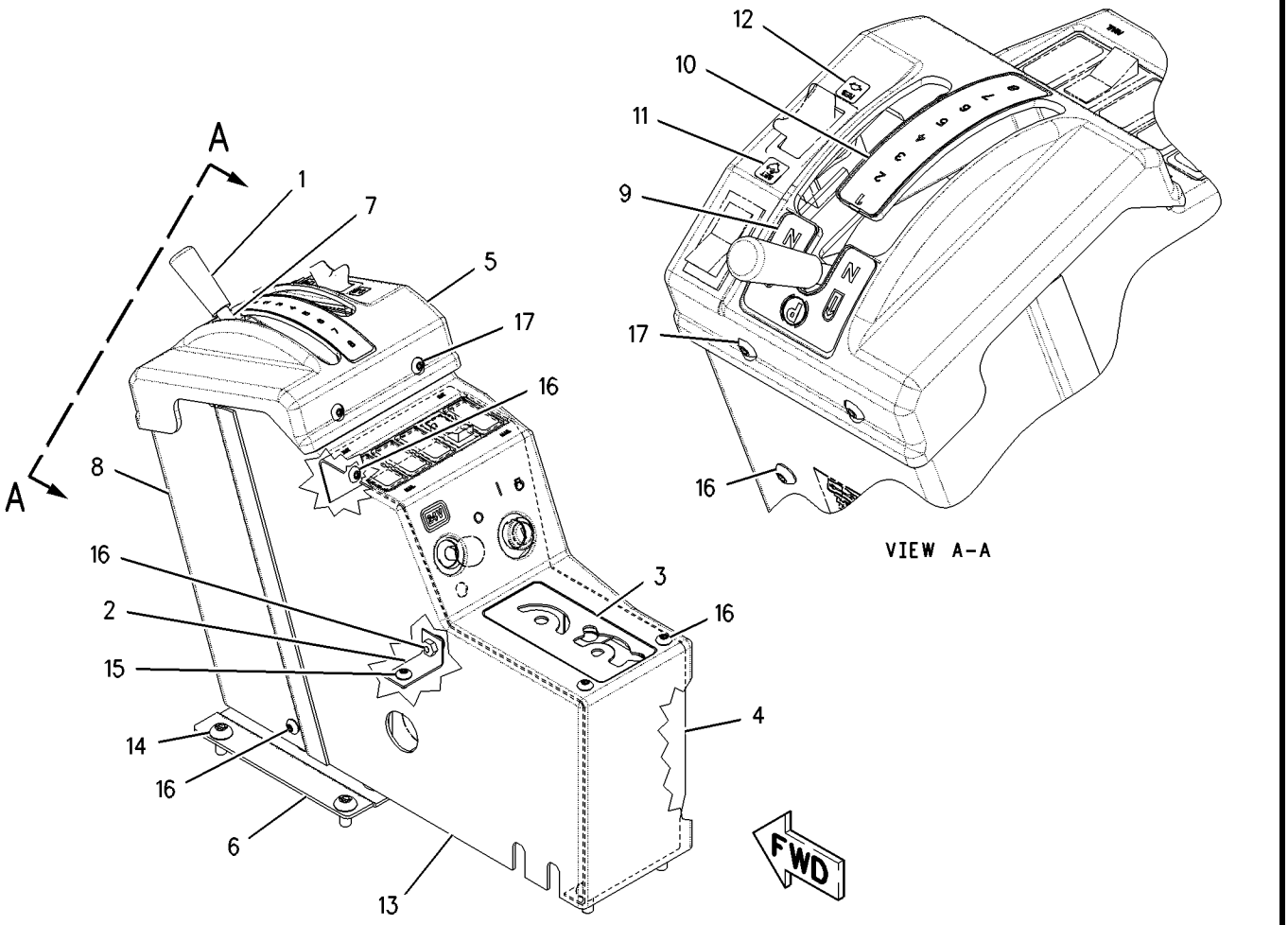

GRAPHIC #1 **<END>** g00937652

179-6064 CONTROL GP-TRANSMISSION HYD

S/N: BSZ1-UP

PART OF 191-3606 TRANSMISSION AR

SMCS-3073, 3167 **i02204746**

NOTE	REF NO	GRAPHIC REF	PART NUMBER	QTY	PART NAME 1 2 3 4 5 6 (PRODUCT LEVEL)	SEE PAGE
Y	1	1	**179-6063**	1	VALVE GP-TRANSMISSION CONTROL	406
M	2	1	**6V-3918**	5	BOLT (M8X1.25X50-MM)	
	3	1	**9P-9150**	66	WASHER (8.25X18X0.84-MM THK)	
	4	1	**1T-0738**	31	WASHER (8.4X19X1.83-MM THK)	
M	5	1	**8C-4984**	14	BOLT (M8X1.25X150-MM)	
M	6	1	**3E-8005**	14	BOLT (M8X1.25X160-MM)	
	7	1	**4S-5879**	1	SEAL-O-RING	
	8	1	**180-9322**	1	HARNESS AS-TRANSMISSION	
		1	**102-8801**	1	KIT-RECEPTACLE (12-PIN)	
					(INCLUDES RECEPTACLE AS & WEDGE)	
		1	**155-2270**	8	KIT-CONNECTING PLUG (2-PIN)	
					(EACH INCLUDES PLUG AS & WEDGE)	
M	9	1	**8T-0639**	2	BOLT (M6X1X12-MM)	
M	10	1	**6V-5217**	3	BOLT (M8X1.25X20-MM)	
	11	1	**198-7657**	1	BLOCK	

M-METRIC PART
Y-SEPARATE ILLUSTRATION

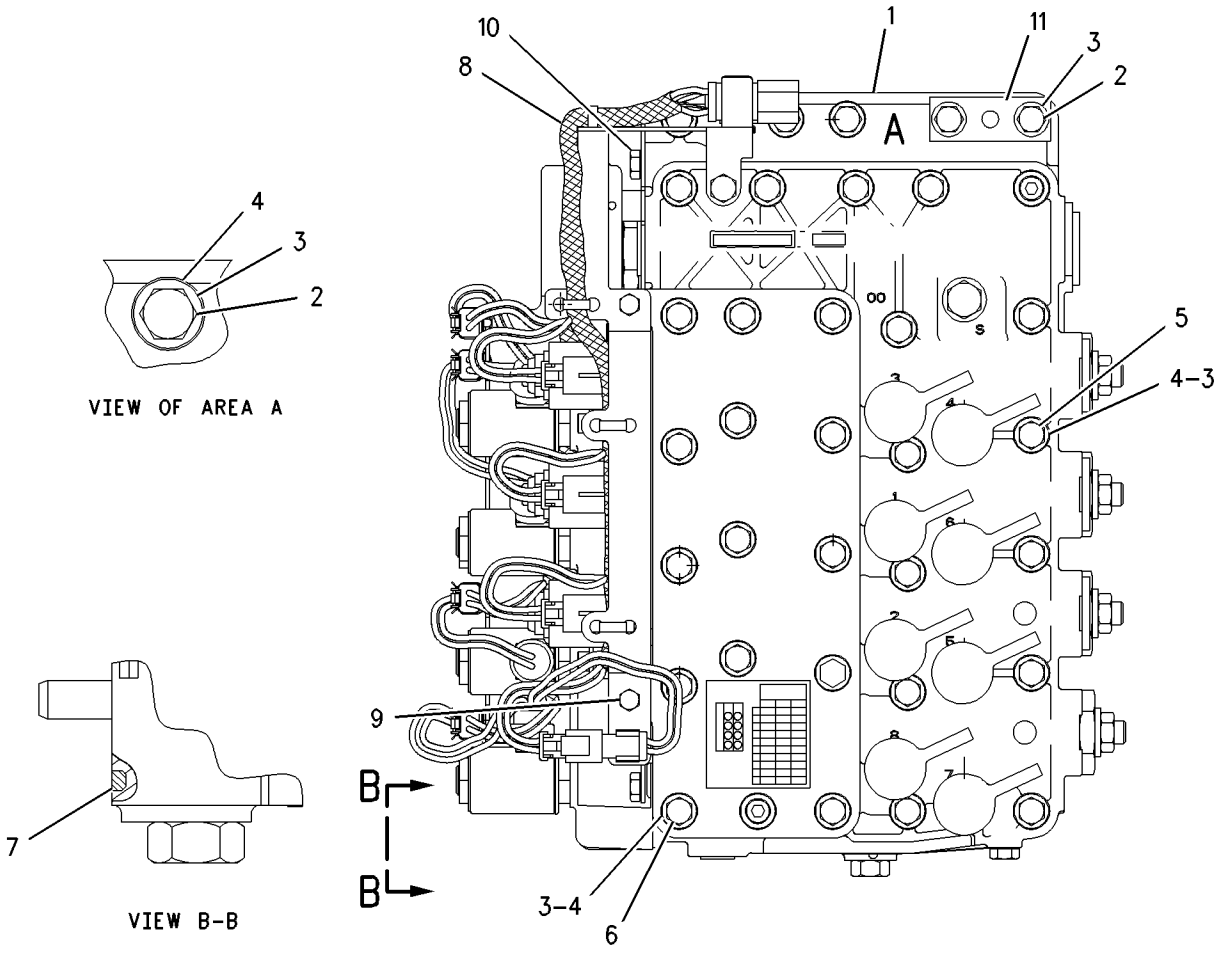

GRAPHIC #1 **<END>** g00864228

174-6503 COOLER GP-TRANSMISSION OIL

S/N: 4ZF4479-11786

PART OF 168-7967 ENGINE AR

SMCS-1375 **i01872106**

NOTE	REF NO	GRAPHIC REF	PART NUMBER	QTY	PART NAME 1 2 3 4 5 6 (PRODUCT LEVEL)	SEE PAGE
	1	1	**7E-8570**	1	BONNET	
	2	1	**124-2528**	1	SPACER (11X20X10-MM THK)	
	3	1	**174-6504**	1	BONNET-COOLER	
	4	1	**174-6506**	1	BRACKET AS	
	5	1	**175-7453**	1	CORE AS	
	6	1	**180-3907**	1	SEAL-INTEGRAL	
	7	1	**198-3462**	1	DIVERTER	
	8	1	**129-2861**	2	GASKET	
	9	1	**3J-1907**	1	SEAL-O-RING	
M	10	1	**6V-2317**	6	BOLT (M8X1.25X30-MM)	
M	11	1	**5P-8347**	2	BOLT (M8X1.25X70-MM)	
	12	1	**6V-5839**	2	WASHER (11X21X2.5-MM THK)	
M	13	1	**6V-8212**	2	BOLT (M10X1.5X16-MM)	
	14	1	**6V-9027**	1	SEAL-O-RING	
	15	1	**7M-8485**	1	SEAL-O-RING	
M	16	1	**7X-2544**	2	BOLT (M10X1.5X104-MM)	
M	17	1	**8T-0644**	3	BOLT (M10X1.5X90-MM)	
	18	1	**8T-6761**	1	PLUG-PIPE	
M	19	1	**8T-6854**	1	BOLT (M10X1.5X200-MM)	
	20	1	**9S-4181**	1	PLUG	
	21	1	**9S-4182**	1	PLUG	
	22	1	**9S-4191**	1	PLUG	

M-METRIC PART

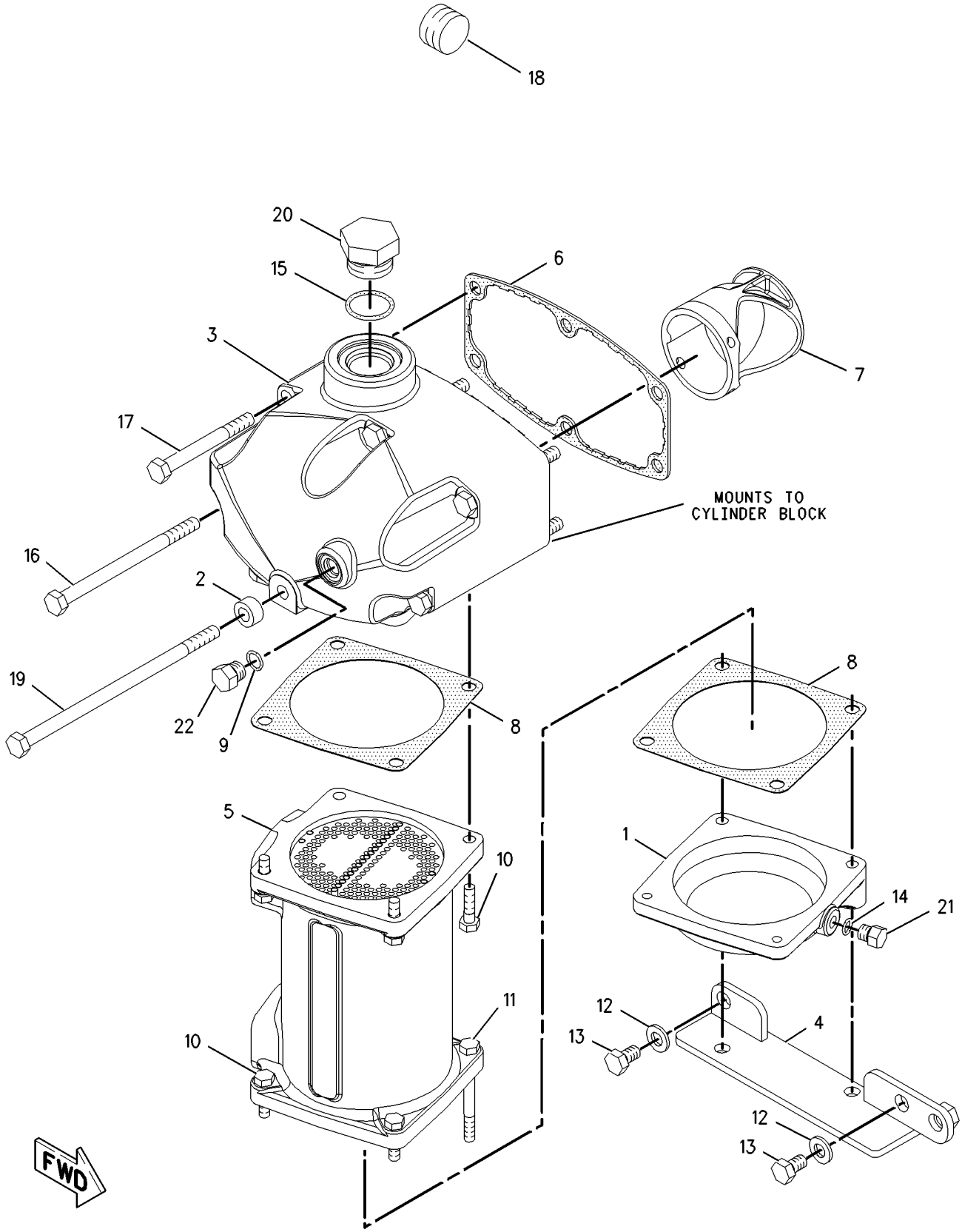

GRAPHIC #1 **<END>** g00860955

174-6503 COOLER GP-TRANSMISSION OIL

S/N: 4ZF11787-UP

PART OF 168-7967 ENGINE AR

SMCS-1375 **i02103014**

NOTE	REF NO	GRAPHIC REF	PART NUMBER	QTY	PART NAME 1 2 3 4 5 6 (PRODUCT LEVEL)	SEE PAGE
	1	1	**7E-8570**	1	BONNET	
	2	1	**175-7453**	1	CORE AS (TRANSMISSION OIL)	
	3	1	**180-3907**	1	SEAL-INTEGRAL	
	4	1	**198-3462**	1	DIVERTER	
C	5	1	**242-1792**	1	BRACKET AS	
C	6	1	**244-5692**	1	BONNET-COOLER	
	7	1	**129-2861**	2	GASKET	
	8	1	**3J-1907**	1	SEAL-O-RING	
M	9	1	**5P-8347**	2	BOLT (M8X1.25X70-MM)	
CM	10	1	**6V-1819**	3	BOLT (M10X1.5X100-MM)	
M	11	1	**6V-2317**	6	BOLT (M8X1.25X30-MM)	
	12	1	**6V-5839**	2	WASHER (11X21X2.5-MM THK)	
M	13	1	**6V-8212**	2	BOLT (M10X1.5X16-MM)	
	14	1	**6V-9027**	1	SEAL-O-RING	
	15	1	**7M-8485**	1	SEAL-O-RING	
CM	16	1	**7X-2545**	2	BOLT (M10X1.5X150-MM)	
	17	1	**8T-6761**	1	PLUG-PIPE	
M	18	1	**8T-6854**	1	BOLT (M10X1.5X200-MM)	
	19	1	**9S-4181**	1	PLUG	
	20	1	**9S-4182**	1	PLUG	
	21	1	**9S-4191**	1	PLUG	

C-CHANGE FROM PREVIOUS TYPE
M-METRIC PART

174-6503 **COOLER GP-TRANSMISSION OIL** *(contd.)* **i02103014**

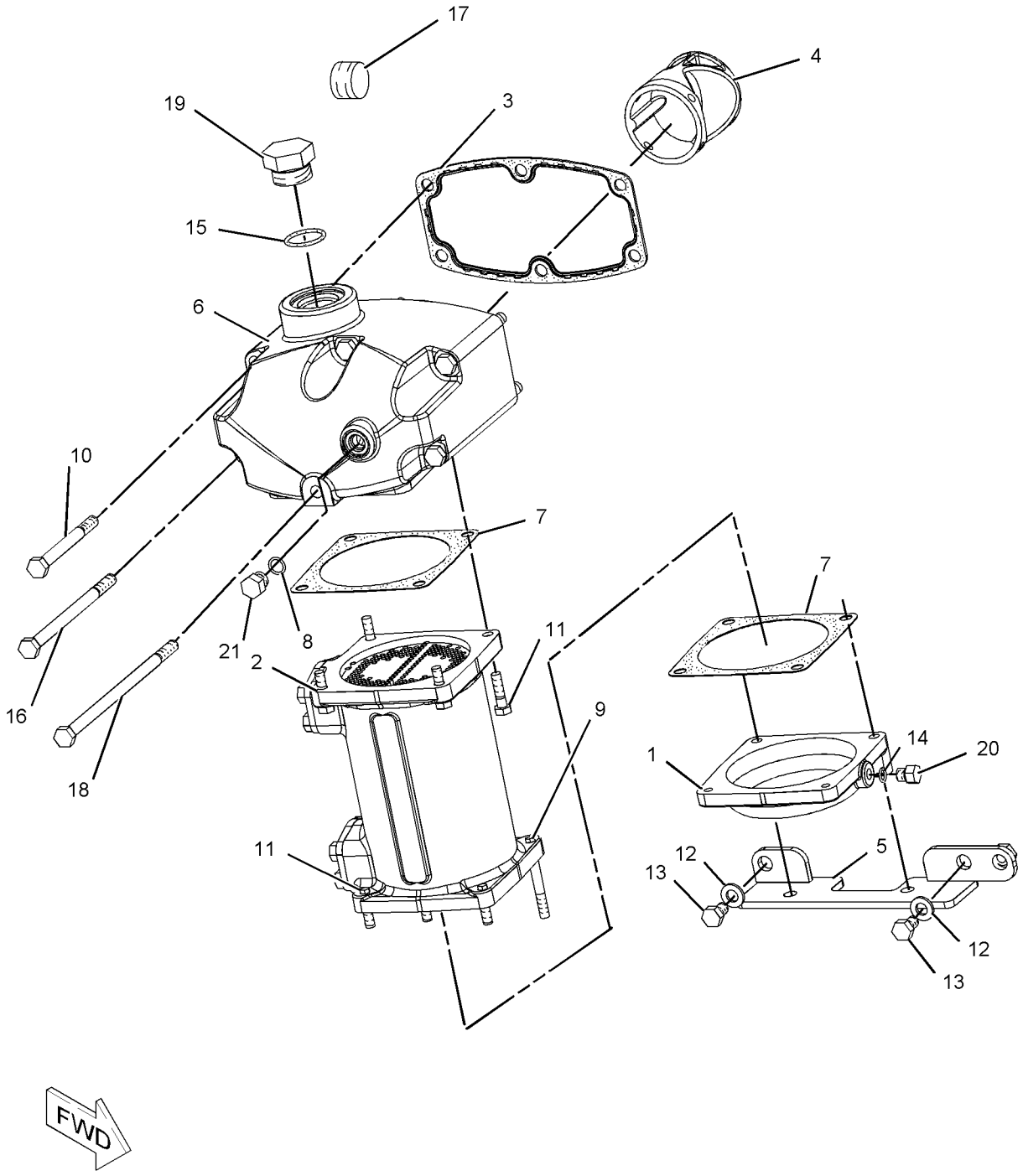

GRAPHIC #1 **<END>** g01074875

8E-3366 COUPLING GP-TORSIONAL

S/N: CBK1-UP
DRIVE
PART OF 162-5605 GENERAL AR

SMCS-3252, 3279 **i00131351**

NOTE	REF NO	GRAPHIC REF	PART NUMBER	QTY	PART NAME 1 2 3 4 5 6 (PRODUCT LEVEL)	SEE PAGE
	1	1	**8E-1368**	1	COUPLING AS	
	2	1	**0S-1594**	12	BOLT (3/8-16X1IN)	

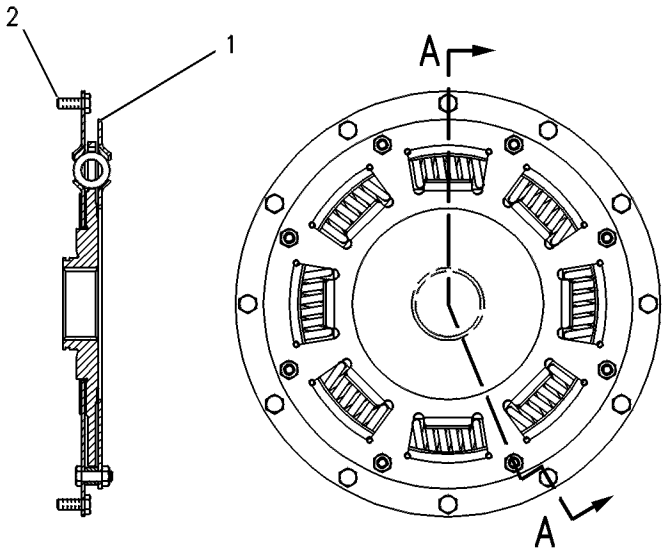

SECTION A-A

GRAPHIC #1 **<END>** g00108540

8W-5430 DIFFERENTIAL & BEVEL GEAR GP

S/N: CBK1-UP

PART OF 162-5605 GENERAL AR

SMCS-3256, 3258 **i02204763**

NOTE	REF NO	GRAPHIC REF	PART NUMBER	QTY	PART NAME 1 2 3 4 5 6 (PRODUCT LEVEL)	SEE PAGE
	1	1	**5D-9844**	1	BOLT-LOCKING (3/8-16X2-IN)	
	2	1	**5P-8247**	20	WASHER-HARD (17X32X3.5-MM THK)	
	3	1	**034-3557**	5	BOLT-LOCKING (3/8-16X1.125-IN)	
	4	1	**5M-2894**	8	WASHER-HARD (10.2X18.5X2.5-MM THK)	
	5	1	**2K-5109**	1	GASKET	
	6	1	**8W-5279**	1	RETAINER	
	7	1	**123-4003**	1	SEAL-LIP TYPE	
	8	1	**8T-8883**	1	SEAL-O-RING	
	9	1	**5P-5813**	1	LOCKNUT-BEARING	
	10	1	**9B-0143**	1	LOCK-NUT	
	11	1	**7D-8347**	1	WASHER-TAB	
	12	1	**8X-2534**	1	HOUSING	
	13	1	**5L-2031**	1	CUP-BEARING	
	14	1	**5L-2030**	1	CONE-BEARING	
	15	1	**9X-8880**	8	BOLT (5/8-11X2-IN)	
	16	1	**2K-5106**	1	SHIM (2.54-MM THK)	
	17	1	**4K-0367**	12	NUT-FULL (5/8-11-THD)	
	18	1	**4H-6520**	1	SEAL-O-RING	
	19	1	**1J-4757**	1	CONE-BEARING	
	20	1	**1J-2860**	1	CUP-BEARING	
	21	1	**8D-8197**	1	CAGE	
	22	1	**6G-4703**		NUT (5 1/4-12-THD)	
	23	1	**126-2729**	1	CONE-SPECIAL TAPERED	
	24	1	**5P-2503**	1	CUP	
	25	1	**6F-0698**	1	DOWEL	
	26	1	**8D-9784**	2	LOCK	
	27	1	**030-8535**	2	BOLT-LOCKING (3/8-16X0.875-IN)	
C	28	1	**154-2687**	1	CARRIER AS	
	29	1	**0S-1756**	4	BOLT (3/4-10X4.25-IN)	
	30	1	**5P-8248**	4	WASHER-HARD (20X36.5X3.5-MM THK)	
	31	1	**4D-5292**	1	RING-RETAINING	
	32	1	**1P-2662**	1	CONE-BEARING	
	33	1	**1P-2636**	1	CUP-BEARING	
	34	1	**6G-4701**	1	NUT (4 1/4-12-THD)	
	35	1	**8X-2308**	1	CAGE AS	
		1	**2D-6642**	1	BALL	
	36	1	**2H-5001**		SEAL-O-RING	
	37	1	**8W-5111**	1	SLEEVE	
	38	1	**169-1548**	1	SHAFT-PINION (15-TEETH)	
	40	1	**9G-2991**	2	RING-SEAL	
CY	42	1	**154-2688**	1	DIFFERENTIAL GP	375

C-CHANGE FROM PREVIOUS TYPE
Y-SEPARATE ILLUSTRATION

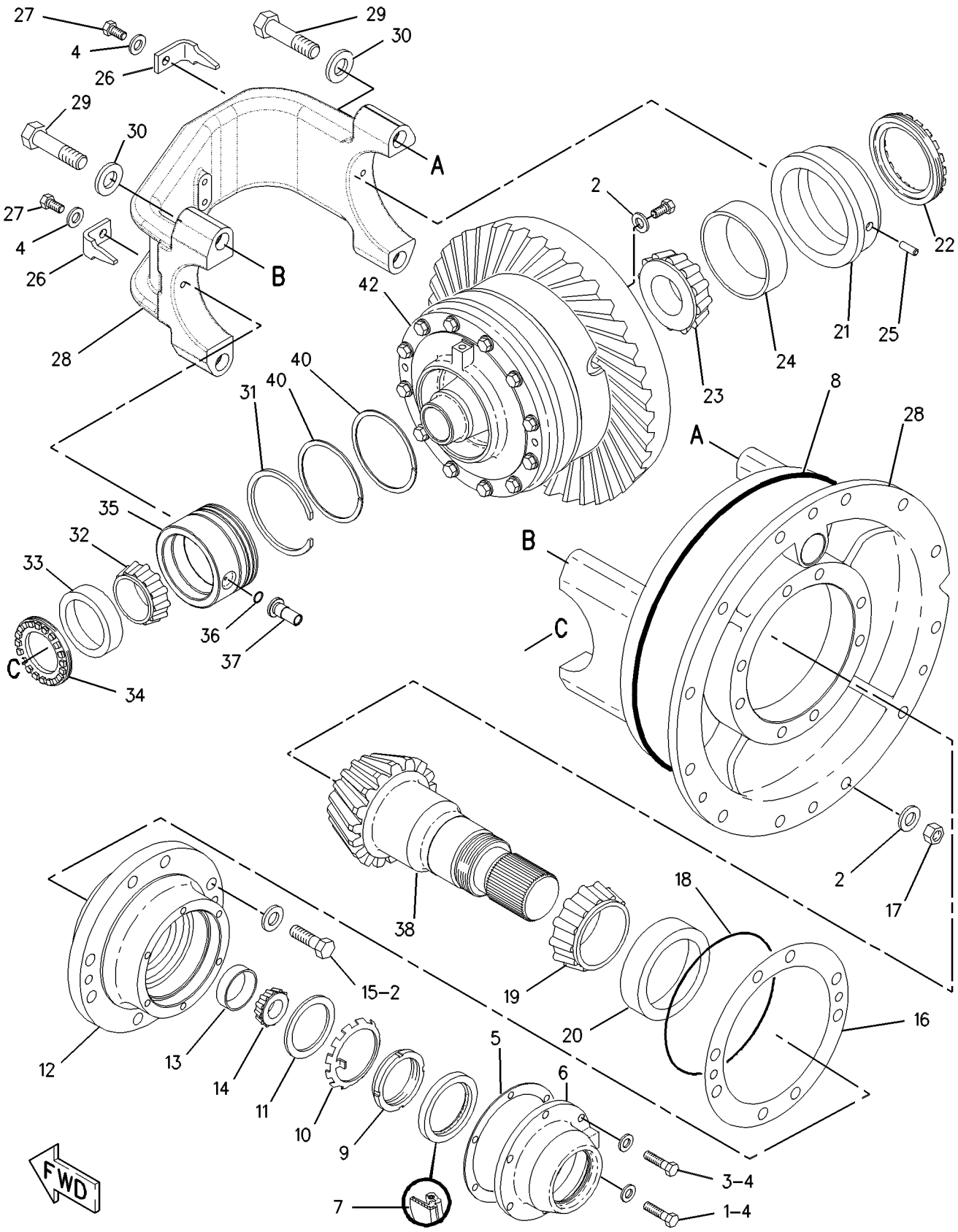

GRAPHIC #1 **<END>** g00635014

154-2688 DIFFERENTIAL GP

S/N: CBK1-UP

PART OF 8W-5430 DIFFERENTIAL & BEVEL GEAR GP

SMCS-3258 **i02204766**

NOTE	REF NO	GRAPHIC REF	PART NUMBER	QTY	PART NAME 1 2 3 4 5 6 (PRODUCT LEVEL)	SEE PAGE
	1	1	**5T-9628**	1	PISTON	
	2	1	**7D-8225**	1	SEAL-RING	
	3	1	**7D-8226**	1	SEAL-RING	
	4	1	**6Y-7954**	7	DISC-FRICTION	
	5	1	**169-1549**	1	GEAR-BEVEL (54-TEETH)	
	6	1	**8X-2528**	1	HOUSING AS	
	6A	1	**2D-6642**	1	BALL	
	6C	1	**3D-6509**	2	DOWEL	
	7	1	**8X-4641**	4	SPACER-THRUST	
	8	1	**155-2283**	4	PINION AS	
					(EACH INCLUDES)	
	8A	1	**155-2285**	1	BEARING-SLEEVE	
	9	1	**154-2692**	1	HOUSING AS	
	9A	1	**3D-6509**	2	DOWEL	
	10	1	**8D-4064**	2	WASHER-THRUST	
	11	1	**109-4582**	1	GEAR-BEVEL (24-TEETH)	
	12	1	**109-4583**	1	GEAR-BEVEL (24-TEETH)	
	13	1	**8D-4282**	1	DISC	
	14	1	**7D-8185**	8	DISC	
	15	1	**2B-0947**	12	BOLT (1/2-13X2.25-IN)	
M	16	1	**5P-8245**	12	WASHER-HARD (13.5X25.5X3-MM THK)	
	17	1	**5P-8247**	24	WASHER-HARD (17X32X3.5-MM THK)	
	18	1	**5B-0841**	24	BOLT (5/8-18X1.75-IN)	
	19	1	**154-2689**	1	SPIDER	

M-METRIC PART

154-2688 **DIFFERENTIAL GP** *(contd.)* **i02204766**

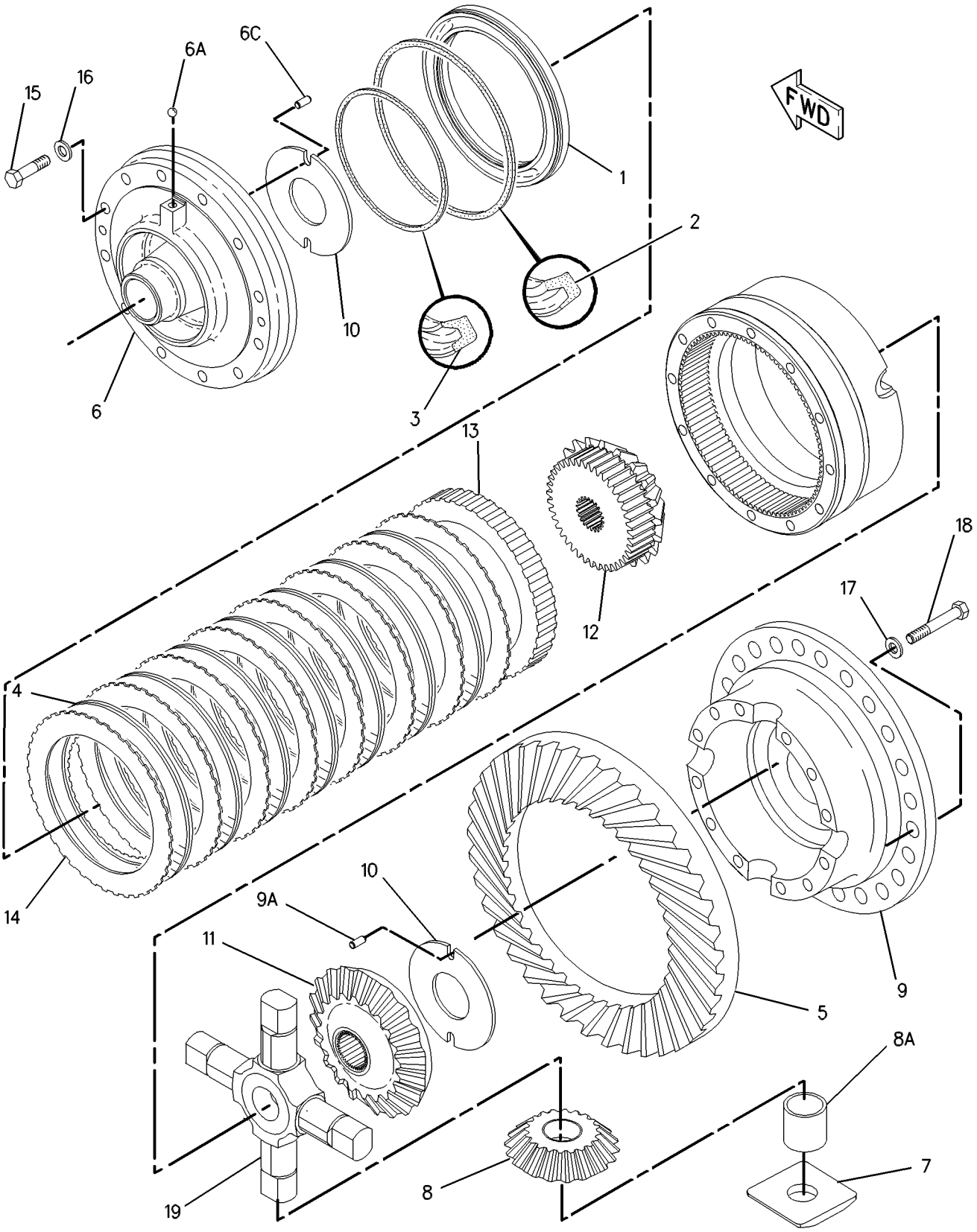

GRAPHIC #1 **<END>** g00597332

191-6004 FILLER GP-POWER TRAIN OIL

S/N: CBK1-UP

PART OF 162-5605 GENERAL AR

SMCS-3005, 3081 **i01877475**

NOTE	REF NO	GRAPHIC REF	PART NUMBER	QTY	PART NAME 1 2 3 4 5 6 (PRODUCT LEVEL)	SEE PAGE
	1	1	**9G-5127**	1	BREATHER AS (POWER TRAIN OIL FILLER)	
	2	1	**191-6003**	1	TUBE AS	
	3	1	**192-9927**	1	GAUGE AS	
	4	1	**7J-8611**	1	ELBOW	
	5	1	**8B-1615**	1	GASKET	
	6	1	**8T-4121**	2	WASHER-HARD (11X21X2.5-MM THK)	
M	7	1	**9X-2125**	2	BOLT-LOCKING (M10X1.5X25-MM)	

M-METRIC PART

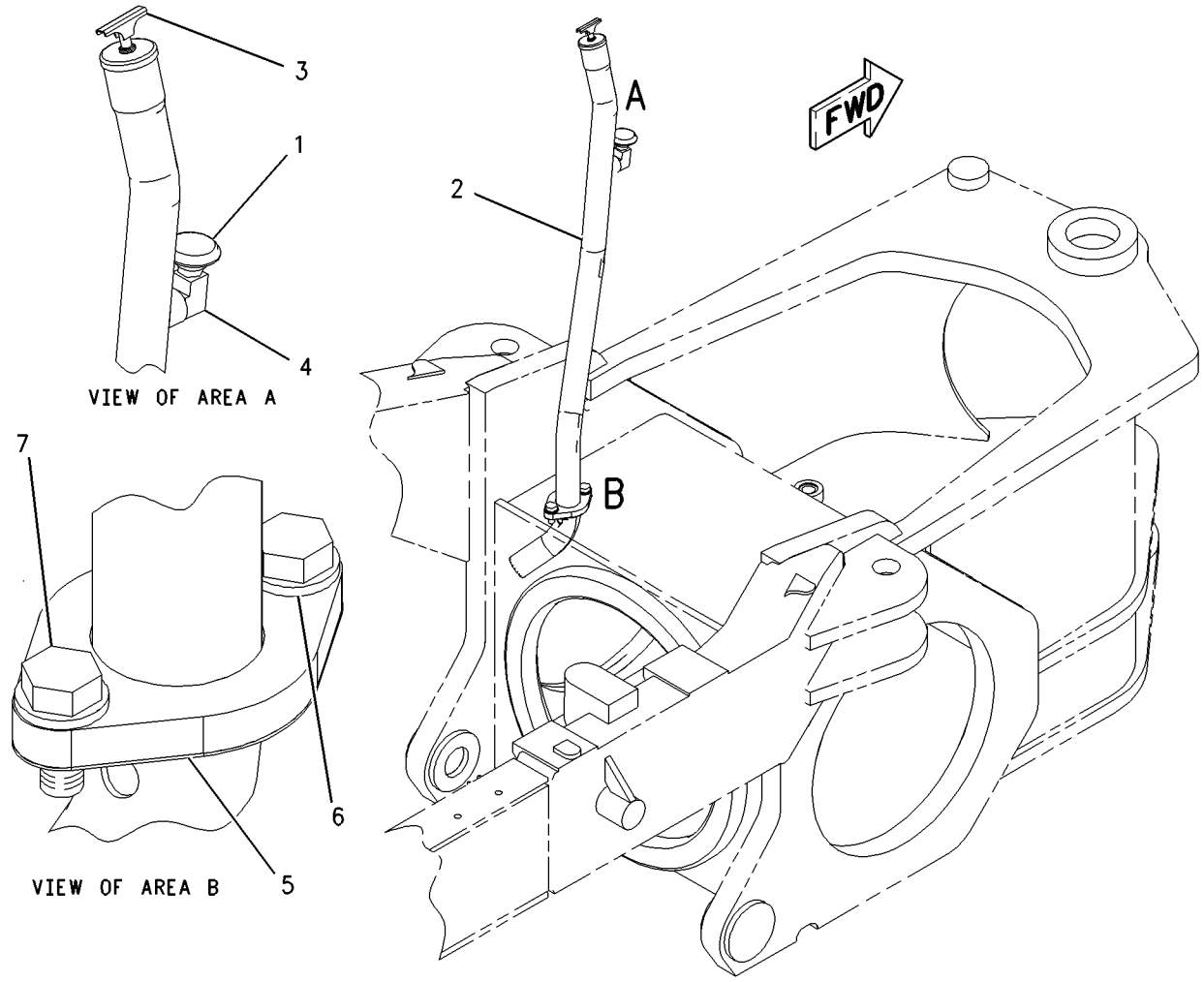

GRAPHIC #1 **<END>** g00864486

169-3651 FILTER & MTG GP-OIL

S/N: CBK1-UP

PART OF 162-5605 GENERAL AR, 185-3142 SUPPORT AR-REAR CHASSIS

SMCS-3067, 5068 **i02202907**

NOTE	REF NO	GRAPHIC REF	PART NUMBER	QTY	PART NAME 1 2 3 4 5 6 (PRODUCT LEVEL)	SEE PAGE
	1	1	**5P-4961**	1	CLAMP-HOSE	
	2	1	**8C-3446**	1	VALVE AS-FLUID SAMPLING (TRANSMISSION OIL)	
		1	**3J-7354**	1	SEAL-O-RING	
Y	3	1	**207-3819**	1	FILTER GP-OIL (TRANSMISSION)	380
	4	1	**242-0407**	1	VALVE-DRAIN (TRANSMISSION OIL)	
	5	1	*148-8339*	1	CONNECTOR GP	
		1	**6V-8716**	1	CONNECTOR	
		1	**6V-9746**	1	SEAL-O-RING	
		1	**7M-8485**	1	SEAL-O-RING	
	6	1	*148-8357*	1	ELBOW AS	
		1	**6V-9008**	1	ELBOW	
		1	**5K-9090**	1	SEAL-O-RING	
		1	**7M-8485**	1	SEAL-O-RING	
	7	1	*148-8392*	1	ELBOW AS	
		1	**6V-9853**	1	ELBOW	
		1	**6V-9746**	1	SEAL-O-RING	
	8	1	**3K-0360**	1	SEAL-O-RING	
	9	1	**5M-3062**	3	BOLT (3/8-16X0.75-IN)	
	10	1	**8C-3447**	1	CAP-DUST	
	11	1	**8T-4896**	3	WASHER-HARD (10.2X18.5X2.5-MM THK)	
	12	1	**8X-5489**	1	SLEEVE	
	13	1	**9S-8005**	1	PLUG	
E	14	1	**9X-2023**		HOSE (57-CM)	

E-ORDER BY THE CENTIMETER
Y-SEPARATE ILLUSTRATION

169-3651 **FILTER & MTG GP-OIL** *(contd.)* **i02202907**

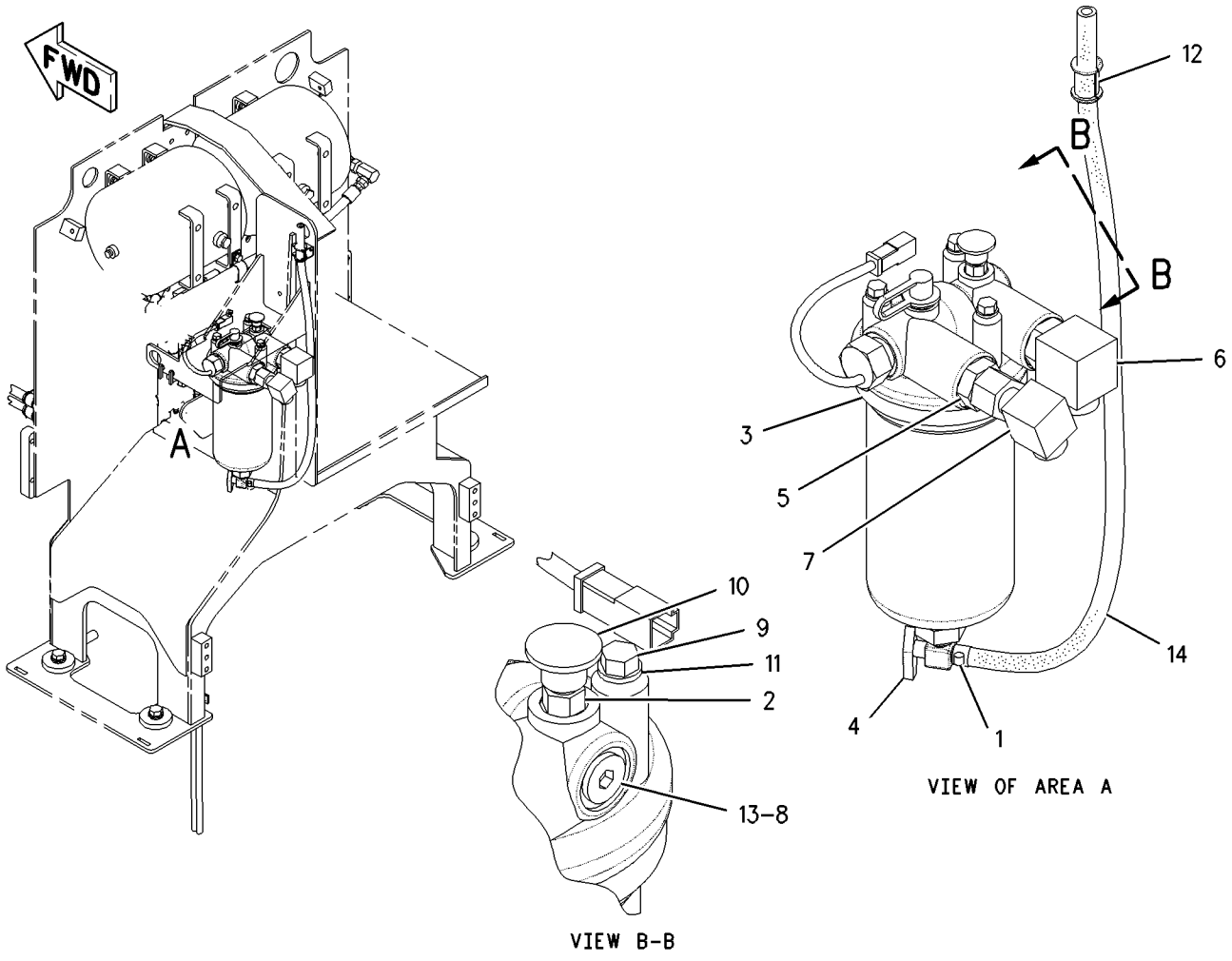

GRAPHIC #1 **<END>** g00860464

207-3819 FILTER GP-OIL—TRANSMISSION

S/N: CBK1-UP

PART OF 169-3651 FILTER & MTG GP-OIL

SMCS-3004, 3067 **i02204772**

NOTE	REF NO	GRAPHIC REF	PART NUMBER	QTY	PART NAME 1 2 3 4 5 6 (PRODUCT LEVEL)	SEE PAGE
	1	1	**9T-8326**	1	BASE	
Y	2	1	**164-7577**	1	SWITCH GP-BYPASS	265
	3	1	**6V-0852**	1	CAP-DUST	
	4	1	**6V-3965**	1	FITTING AS (QUICK DISCONNECT)	
	5	1	**3J-1907**	1	SEAL-O-RING	
	6	1	**2S-8439**	1	SEAL-O-RING	
	7	1	**133-1278**	1	HOUSING AS-OIL FILTER	
	8	1	**132-8875**	1	FILTER ELEMENT AS-OIL (HIGH EFFICIENCY) (TRANSMISSION)	
	9	1	**8M-6393**	1	RING-RETAINING	
	10	1	**133-1288**	1	RETAINER	
	11	1	**148-8407**	1	PLUG AS (TRANSMISSION OIL FILTER DRAIN)	
	12	1	**3S-8652**	1	SPRING	
	13	1	**6T-9222**	1	SPOOL	
	14	1	**133-2199**	1	SPRING	

Y-SEPARATE ILLUSTRATION

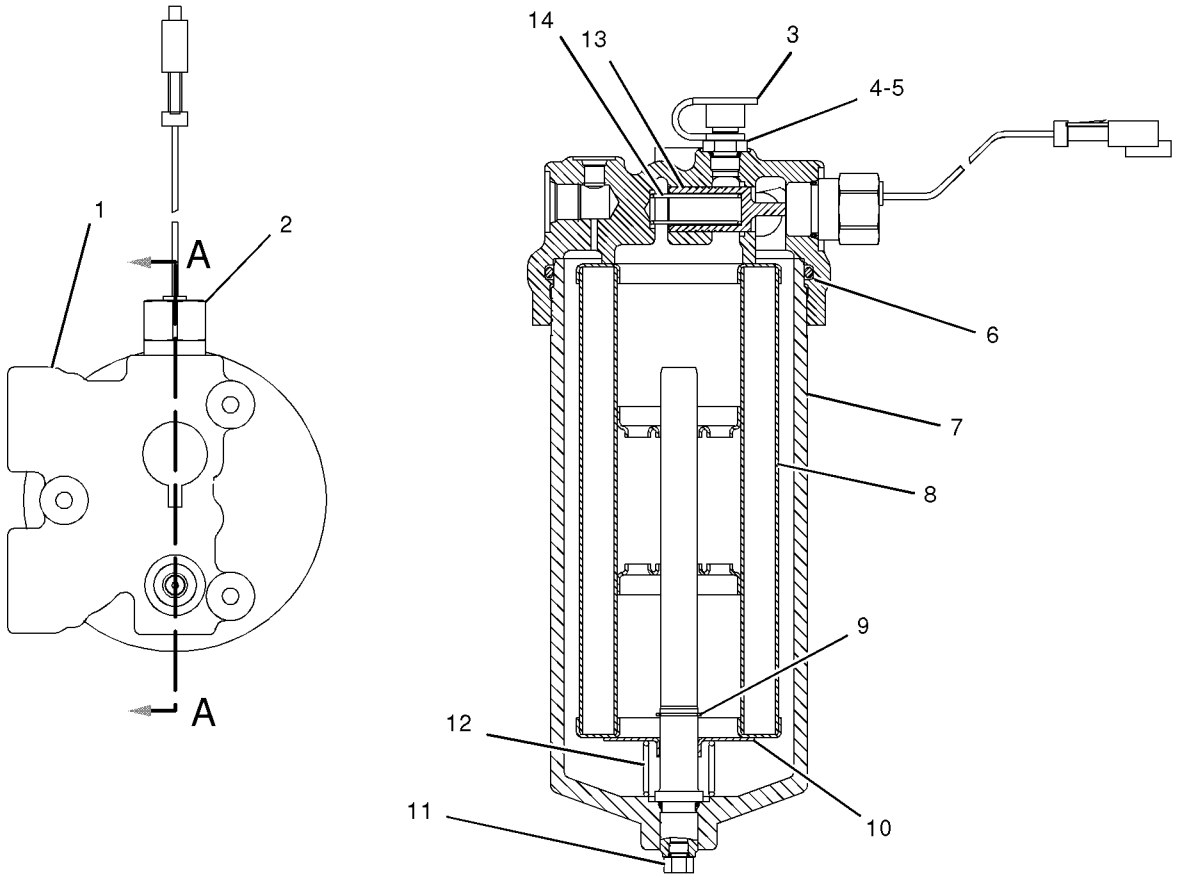

SECTION A-A

GRAPHIC #1 **<END>** g01034504

8W-4368 FINAL DRIVE GP

S/N: CBK1-UP

PART OF 162-5605 GENERAL AR

SMCS-4050 **i01922689**

NOTE	REF NO	GRAPHIC REF	PART NUMBER	QTY	PART NAME 1 2 3 4 5 6 (PRODUCT LEVEL)	SEE PAGE
	1	1	**191-5973**	2	SHAFT-SUN GEAR (18 TEETH)	
	2	1	**6V-8081**	2	SEAL-LIP	
	3	1	**8D-3591**	2	CARRIER-PLANETARY	
	4	1	**030-8535**	18	BOLT-LOCKING (3/8-16X0.875 IN)	
	5	1	**5M-2894**	30	WASHER-HARD (10.2X18.5X2.5MM THK)	
	6	1	**7D-7889**	2	GEAR-RING (72 TEETH)	
	7	1	**7D-0035**	8	PLATE	
	8	1	**7S-4571**	2	SEAL-O-RING	
	9	1	**5P-8248**	38	WASHER-HARD (20X36.5X3.5MM THK)	
	10	1	**2J-3506**	38	NUT-FULL (3/4-10 THD)	
	11	1	**9F-2247**	2	PLUG-PIPE	
	12	1	**3E-4307**	36	BOLT-LOCKING (5/8X11X2 IN)	
	13	1	**4D-3704**	32	WASHER-HARD (17X30X5MM THK)	
	14	1	**8W-8317**	2	SPROCKET (20 TEETH)	
	15	1	**214-3540**	2	RETAINER	
	16	1	**8W-8317**	2	SPROCKET (20 TEETH)	
	17	1	**4D-6695**	2	SEAL-O-RING	
B	18	1	**6G-3212**	2	SHIM PACK (INCLUDES 10 SHIMS)	
	19	1	**1P-4693**	4	CUP-BEARING	
	20	1	**5P-3490**	2	CONE-BEARING	
	21	1	**8W-4142**	2	SHAFT-DRIVE	
	22	1	**5D-0353**	12	BOLT-LOCKING (3/8-16X1 IN)	
	23	1	**7D-0028**	6	RETAINER	
	24	1	**8S-9092**	32	BOLT (5/8-11X2.25 IN)	
	25	1	**200-7929**	2	HOUSING	
	26	1	**218-4406**	4	RING-WEAR	
	27	1	**1P-4694**	2	CONE-BEARING	
	28	1	**6G-3206**	4	WASHER-THRUST	
	29	1	**5T-7129**	2	HOUSING	
	30	1	**8D-3902**	2	SEAL-LIP	
	31	1	**8W-2308**	6	SHAFT-PLANETARY	
	32	1	**8D-3540**	2	NUT (3 1/4-12 THD)	
	33	1	**129-2381**	6	GEAR-PLANET (26 TEETH)	
	34	1	**8W-4141**	2	LOCK	
	35	1	**1S-9110**	12	ROLLER AS	
	36	1	**8X-8377**	12	WASHER (47.57X82.55X2.92MM THK)	
	37	1	**8D-3886**	2	RING-RETAINING	
	38	1	**8D-3885**	2	WASHER (50.8X107.95X6.35MM THK)	
	39	1	**198-4768**	36	WASHER-HARD (17.5X32X8MM THK)	

B-USE AS REQUIRED

8W-4368 **FINAL DRIVE GP** *(contd.)* **i01922689**

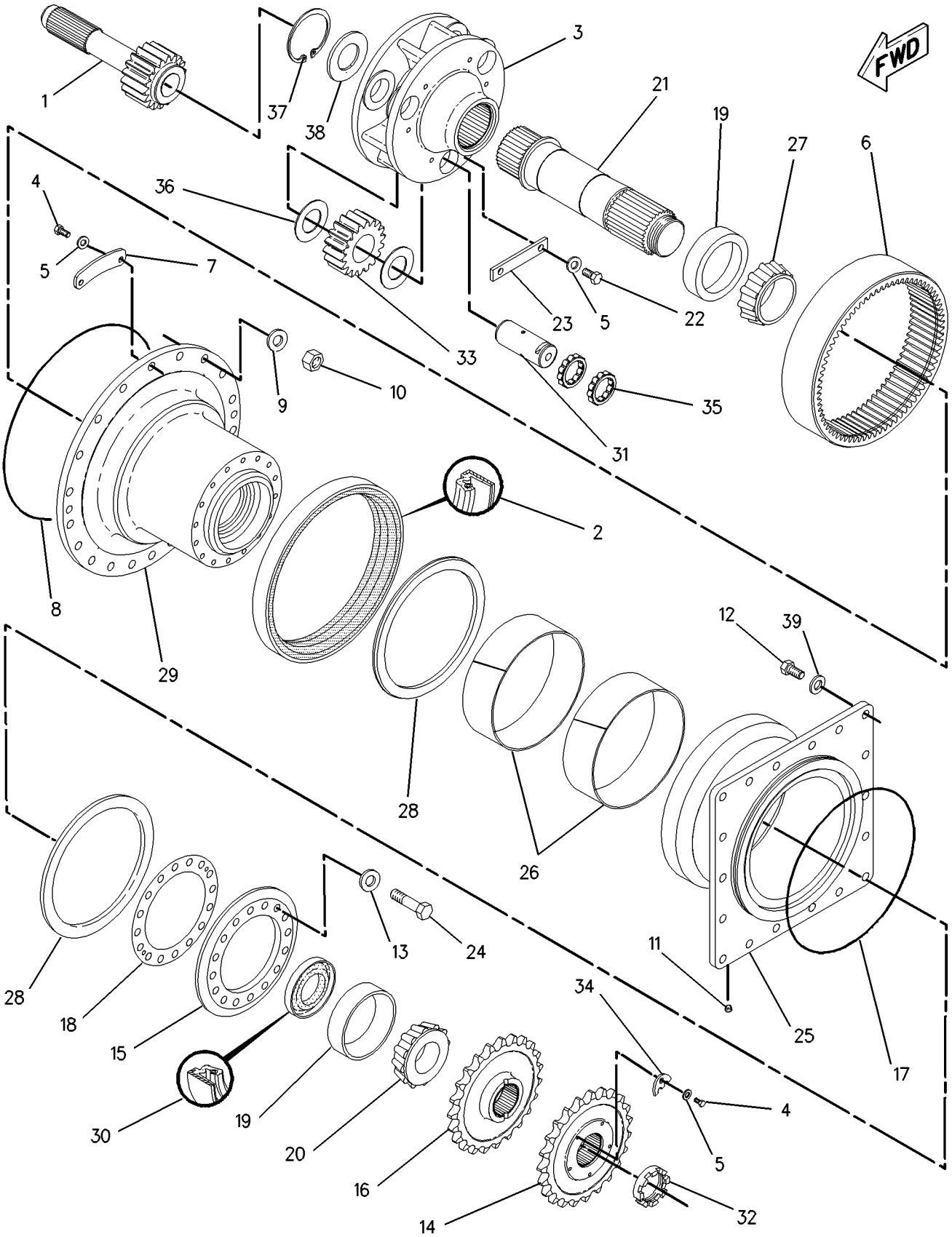

GRAPHIC #1 **<END>** g00954365

POWER TRAIN

175-0401 LINES GP-TRANSMISSION OIL

S/N: CBK1-UP

PART OF 162-5605 GENERAL AR

SMCS-3154 **i02165411**

NOTE	REF NO	GRAPHIC REF	PART NUMBER	QTY	PART NAME 1 2 3 4 5 6 (PRODUCT LEVEL)	SEE PAGE
	1	1	**3E-7445**	2	CLAMP-HOSE	
	2	1	**8T-4983**	2	CLAMP-HOSE	
	3	1	**8X-5121**	1	TUBE	
	4	1	**8X-7317**	1	HOSE	
	5	1	**8X-8916**	1	PLATE	
	6	1	**9C-5344**	1	SPACER (10.5X20X18-MM THK)	
	7	1	**9C-9467**	1	CLIP	
	8	1	**005-7898**	2	CONNECTOR-HOSE	
	9	1	**113-9048**	1	BAFFLE	
	10	1	**132-8875**	1	FILTER ELEMENT AS-OIL (HIGH EFFICIENCY)	
	11	1	**173-2087**	3	SPACER (11X20X28-MM THK)	
I	12	1	**175-3590**	1	HOSE AS	
I	13	1	**176-9747**	1	HOSE AS	
I	14	1	**177-1677**	1	HOSE AS	
	15	1	**178-3695**	1	ADAPTER	
	16	1	**183-1406**	2	CLIP	
I	17	1	**194-4492**	1	HOSE AS	
I	18	1	**203-6016**	1	HOSE AS	
	19	1	**203-6019**	1	TUBE AS	
	20	1	*148-8335*	1	CONNECTOR AS	
		1	**6V-8635**	1	CONNECTOR	
		1	**5K-9090**	1	SEAL-O-RING	
		1	**7M-8485**	1	SEAL-O-RING	
	21	1	*148-8339*	1	CONNECTOR GP	
		1	**6V-8716**	1	CONNECTOR	
		1	**6V-9746**	1	SEAL-O-RING	
		1	**7M-8485**	1	SEAL-O-RING	
	22	1	*148-8392*	1	ELBOW AS	
		1	**6V-9853**	1	ELBOW	
		1	**6V-9746**	1	SEAL-O-RING	
	23	1	*148-8407*	1	PLUG AS	
		1	**9S-4191**	1	PLUG	
		1	**3J-1907**	1	SEAL-O-RING	
	24	1	**1L-0509**	2	BOLT (3/8-16X0.74-IN)	
	25	1	**1P-4577**	10	FLANGE-HALF	
	26	1	**1P-4578**	2	FLANGE-HALF	
	27	1	**4F-7389**	2	SEAL-O-RING	
	28	1	**4J-0520**	6	SEAL-O-RING	
	29	1	**4J-0522**	1	SEAL-O-RING	
	30	1	**5S-7382**	8	BOLT (3/8-16X1.375-IN)	
	31	1	**6V-1889**	5	CLIP	
	32	1	**7X-0342**	1	BOLT (5/8-11X0.74-IN)	
M	33	1	**7X-2552**	1	BOLT (M16X2X30-MM)	
	34	1	**7X-7729**	1	WASHER (11X25X3-MM THK)	
M	35	1	**8T-0722**	4	BOLT-LOCKING (M10X1.5X30-MM)	
	36	1	**8T-4121**	16	WASHER-HARD (11X21X2.5-MM THK)	
M	37	1	**8T-4133**	1	NUT (M10X1.5-THD)	
M	38	1	**8T-4182**	2	BOLT (M10X1.5X45-MM)	
M	39	1	**8T-4195**	1	BOLT (M10X1.5X30-MM)	
M	40	1	**8T-4196**	8	BOLT (M10X1.5X35-MM)	
M	41	1	**8T-4223**	4	WASHER-HARD (13.5X25.5X3-MM THK)	
	42	1	**8T-4896**	10	WASHER-HARD (10.2X18.5X2.5-MM THK)	
M	43	1	**8T-4910**	4	BOLT (M12X1.75X60-MM)	
M	44	1	**8T-6466**	1	BOLT (M10X1.5X60-MM)	
	45	1	**9X-8257**	1	WASHER (17.5X30X3.5-MM THK)	
E	46	1	**5P-0765**		HOSE (47-CM)	

175-0401 **LINES GP-TRANSMISSION OIL** *(contd.)* **i02165411**

E-ORDER BY THE CENTIMETER
I-REFER TO HYDRAULIC INFORMATION SYSTEM
M-METRIC PART

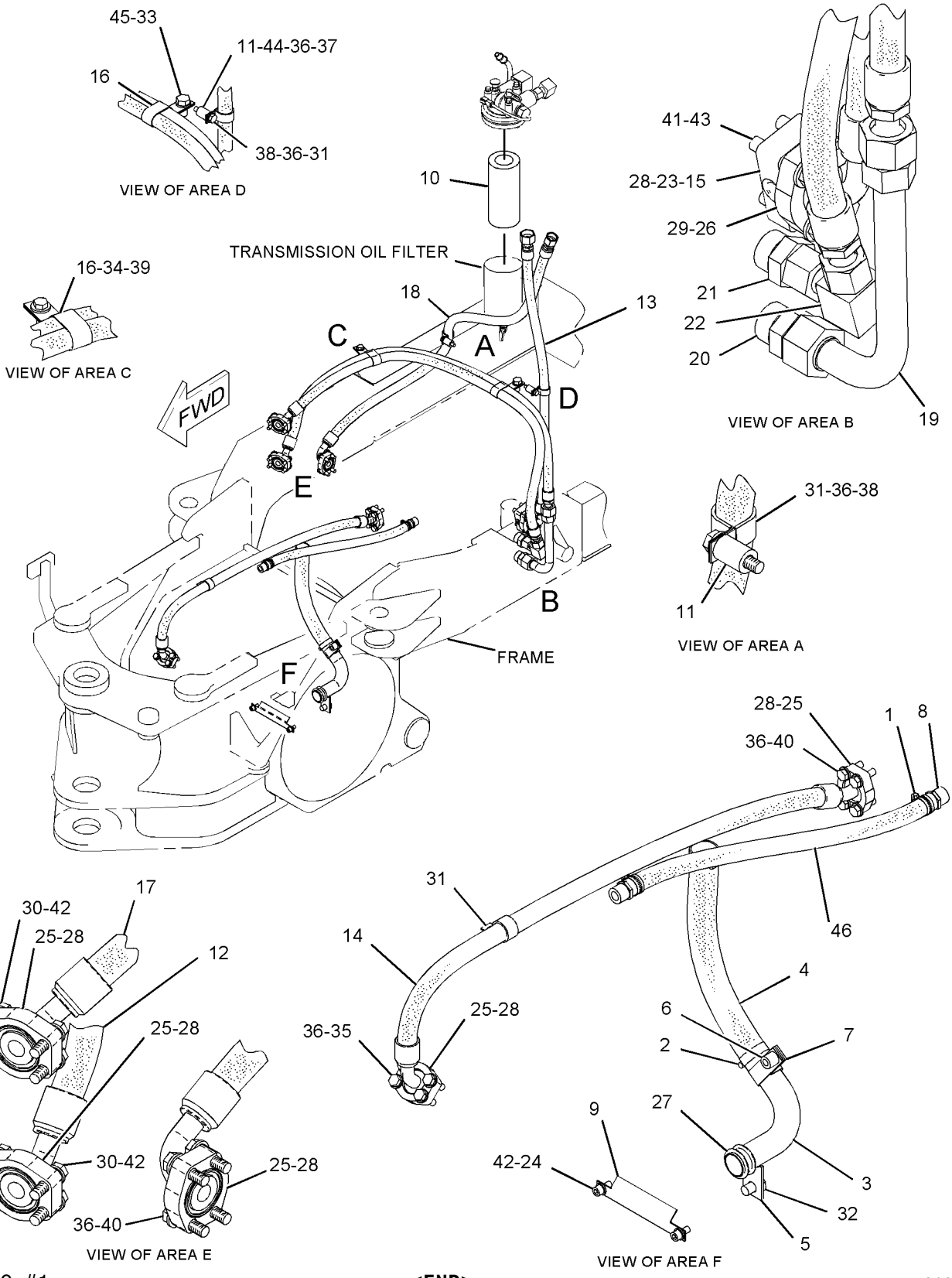

GRAPHIC #1 **<END>** g01028409

142-6203 MOUNTING GP-WHEEL

S/N: CBK1-UP

PART OF 162-5605 GENERAL AR

SMCS-4201 **i01055119**

NOTE	PART NUMBER	QTY	PART NAME 1 2 3 4 5 6 (PRODUCT LEVEL)	SEE PAGE
	0S-1973	60	BOLT (7/8-9X2IN)	
	4M-6953	60	WASHER-HARD (3.5MM THK)	

<END>

6Y-8764 PUMP GP-GEAR–TRANSMISSION

S/N: BSZ1-UP
2 SECTION
PART OF 6Y-8765 PUMP GP-GEAR

SMCS-3066, 3115, 5073 **i02204764**

NOTE	REF NO	GRAPHIC REF	PART NUMBER	QTY	PART NAME 1 2 3 4 5 6 (PRODUCT LEVEL)	SEE PAGE
	1	1	**9N-4163**	1	COVER AS-PUMP	
	2	1	**1M-3780**	2	BEARING-SLEEVE (23.81-MM THK)	
	3	1	**9N-4162**	1	GEAR AS-OIL PUMP (12-TEETH)	
		1	**2B-9373**	1	KEY-WOODRUFF	
	4	1	**9N-4159**	1	BODY AS-OIL PUMP	
	5	1	**1M-3780**	2	BEARING-SLEEVE (23.81-MM THK)	
	6	1	**5S-4385**	1	BODY AS-OIL PUMP	
		1	**8M-8489**	4	DOWEL	
	7	1	**9N-4158**	2	GEAR (8-TEETH)	
	8	1	**2B-9373**	1	KEY-WOODRUFF	
	9	1	**2D-8009**	3	SEAL-O-RING	
	10	1	**3S-0004**	6	WASHER (0.406X0.728X0.09-IN THK)	
M	11	1	**8T-5030**	2	BOLT (M10X1.5X120-MM)	
	12	1	**6Y-5010**	8	WASHER (10.16X19X0.84-MM THK)	
M	13	1	**8C-2926**	4	BOLT (M10X1.5X140-MM)	
	14	1	**9N-4161**	1	GEAR AS-OIL PUMP (12-TEETH)	
		1	**2B-9373**	1	KEY-WOODRUFF	
	15	1	**9N-4156**	1	MANIFOLD AS-PUMP	
		1	**8M-8489**	2	DOWEL	

M-METRIC PART

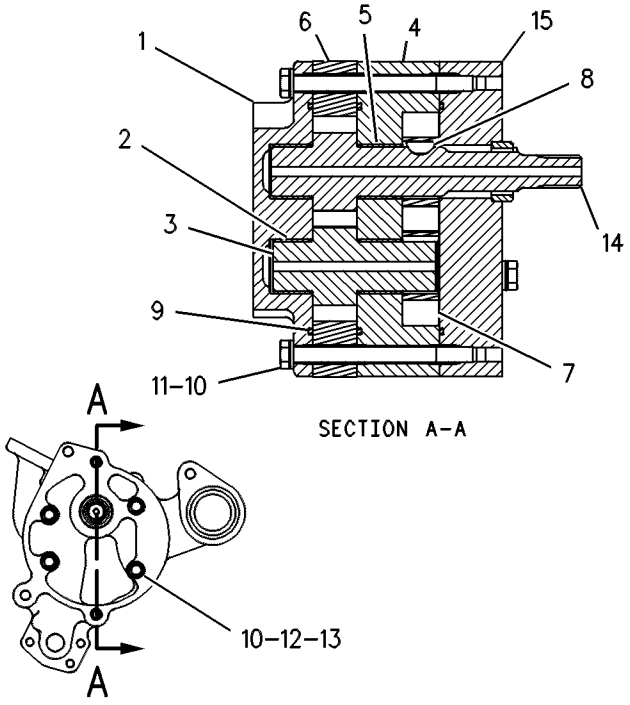

GRAPHIC #1 **<END>** g00108548

6Y-8765 PUMP GP-GEAR–TRANSMISSION

S/N: BSZ1-UP
2 SECTION
PART OF 191-3606 TRANSMISSION AR

SMCS-3066, 3115, 5073 **i02204765**

NOTE	REF NO	GRAPHIC REF	PART NUMBER	QTY	PART NAME 1 2 3 4 5 6 (PRODUCT LEVEL)	SEE PAGE
Y	1	1	**6Y-8764**	1	PUMP GP-GEAR	386
	2	1	**4F-7952**	1	SEAL-O-RING	
	3	1	**7F-8268**	1	SEAL-O-RING	
M	4	1	**6V-1820**	3	BOLT (M10X1.5X30-MM)	

M-METRIC PART
Y-SEPARATE ILLUSTRATION

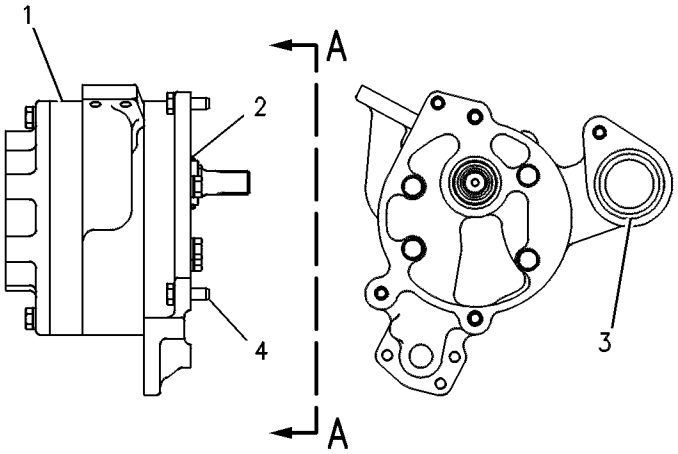

VIEW A–A

GRAPHIC #1 **<END>** g00108547

9W-5134 SCREEN GP-MAGNETIC–TRANSMISSION

S/N: BSZ1-UP

PART OF 191-3606 TRANSMISSION AR

SMCS-3067 **i01623693**

NOTE	REF NO	GRAPHIC REF	PART NUMBER	QTY	PART NAME 1 2 3 4 5 6 (PRODUCT LEVEL)	SEE PAGE
	1	1	**6Y-3861**	1	COVER AS	
	2	1	**6Y-3860**	1	HOUSING-FILTER	
	3	1	**8S-9130**	1	SCREEN-SUCTION (TRANSMISSION)	
	4	1	**8S-9129**	1	FILTER-MAGNETIC (TRANSMISSION)	
	5	1	**5P-3863**	1	SEAL-O-RING	
M	6	1	**6V-5219**	3	BOLT (M8X1.25X40MM)	
	7	1	**5F-8000**	1	SEAL-O-RING (50.39MM ID)	
M	8	1	**8T-0355**	3	BOLT (M10X1.50X110MM)	

M-METRIC PART

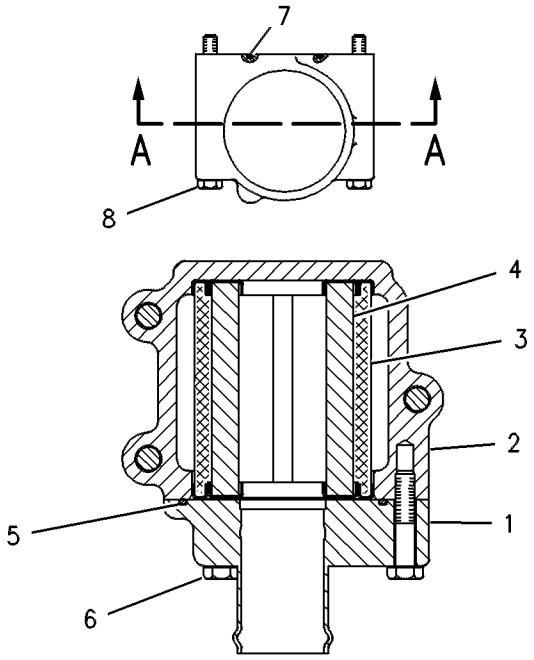

VIEW A–A

GRAPHIC #1 **<END>** g00108551

8W-5394 SHAFT GP-DRIVE

S/N: CBK1-UP

PART OF 162-5605 GENERAL AR

SMCS-3253 **i01701959**

NOTE	REF NO	GRAPHIC REF	PART NUMBER	QTY	PART NAME 1 2 3 4 5 6 (PRODUCT LEVEL)	SEE PAGE
	1	1	**8X-5620**	2	SHIELD AS	
					(EACH INCLUDES)	
M		1	**8T-3597**	1	NUT-WELD (M12X1.75-THD)	
	2	1	**8W-1592**	1	YOKE AS	
		1	**3K-0986**	1	PLUG	
	3	1	**3K-0196**	1	GUARD	
	4	1	**0S-1604**	4	BOLT (1/2-20X2.5-IN)	
	5	1	**5P-7213**	4	WASHER-HARD (13.5X20.5X2-MM THK)	
	6	1	**6B-6684**	4	NUT-FULL (1/2-20-THD)	
	7	1	**6V-1911**	4	BOLT-LOCKING	
Y	8	1	**8X-5005**	1	UNIVERSAL JOINT GP	396
M	9	1	**8T-4179**	2	BOLT (M12X1.75X20-MM)	
M	10	1	**8T-4223**	6	WASHER-HARD (13.5X25.5X3-MM THK)	
M	11	1	**8T-4192**	4	BOLT (M12X1.75X25-MM)	

M-METRIC PART
Y-SEPARATE ILLUSTRATION

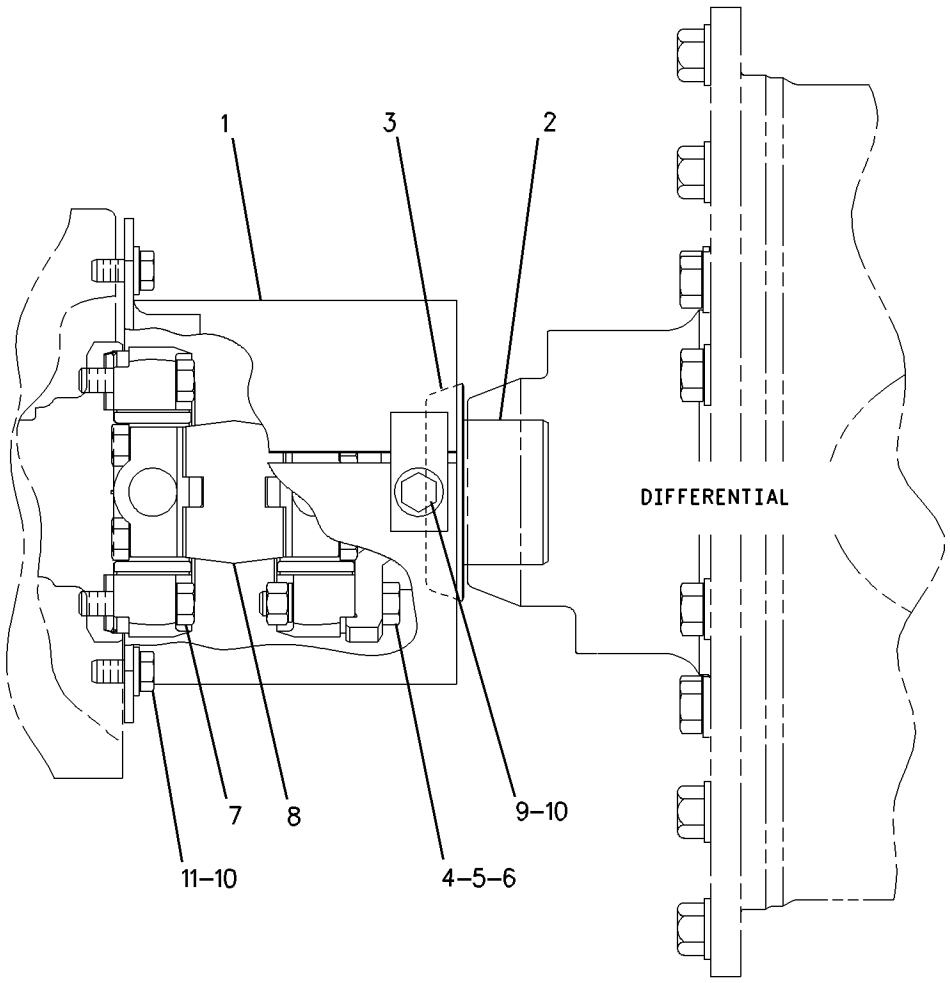

GRAPHIC #1 **<END>** g00718327

191-3602 SHAFT GP-INPUT

S/N: BSZ1-UP

PART OF 191-3606 TRANSMISSION AR

SMCS-3063 **i01850695**

NOTE	REF NO	GRAPHIC REF	PART NUMBER	QTY	PART NAME 1 2 3 4 5 6 (PRODUCT LEVEL)	SEE PAGE
	1	1	**191-7724**	1	SHAFT AS	
		1	**4B-4845**	1	PLUG	
	2	1	**3T-4377**	2	SEAL-RING	
	3	1	**6Y-0591**	1	GEAR (45 TEETH)	
	4	1	**6Y-0590**	1	GEAR (38 TEETH)	
	5	1	**2H-6490**	1	BEARING-INNER	
	6	1	**1M-4095**	1	BEARING-INNER	

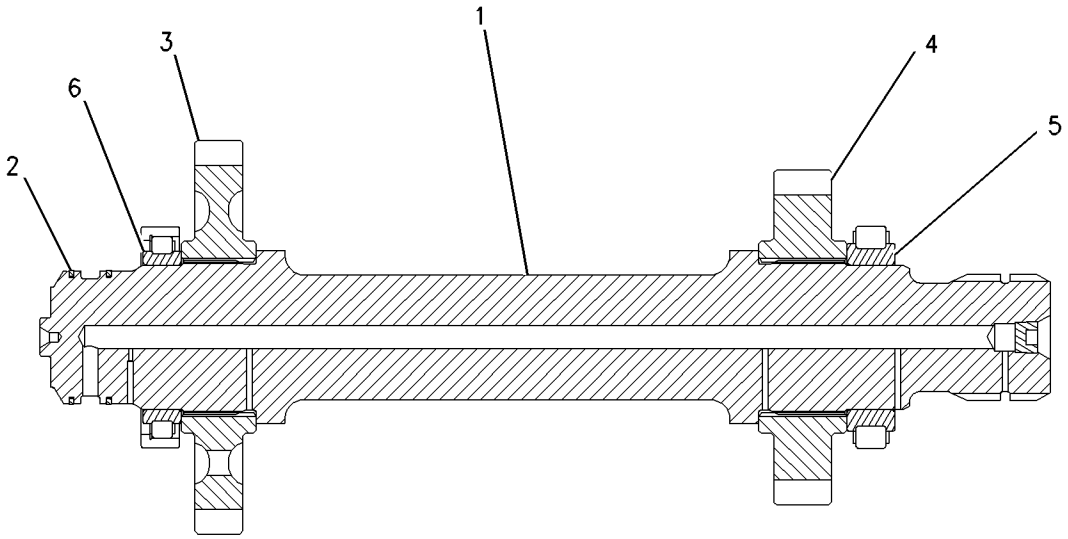

GRAPHIC #1 **<END>** g00788549

POWER TRAIN

190-1688 TANDEM & COVER GP

S/N: CBK1-UP

PART OF 162-5605 GENERAL AR

SMCS-4062, 4064 **i01814297**

NOTE	REF NO	GRAPHIC REF	PART NUMBER	QTY	PART NAME 1 2 3 4 5 6 (PRODUCT LEVEL)	SEE PAGE
	1	1	**1F-8488**	2	BREATHER AS (TANDEM)	
	2	1	**2A-6938**	2	COVER	
	3	1	**2B-3147**	8	GASKET	
	4	1	**2B-3148**	8	COVER	
	5	1	**3D-2981**	4	GASKET	
	6	1	**8T-6468**	48	BOLT (1/2-13X1-IN)	
	7	1	**002-6453**	2	ELBOW	
	8	1	**190-1690**	1	HOUSING AS-TANDEM DRIVE (RH)	
	9	1	**190-1691**	1	HOUSING AS-TANDEM DRIVE (LH)	
	10	1	**2G-9791**	2	GASKET	
	11	1	**2M-9780**	2	SEAL-O-RING	
	12	1	**3J-5389**	2	PLUG	
	13	1	**3K-0360**	2	SEAL-O-RING	
M	14	1	**5P-8245**	32	WASHER-HARD (13.5X25.5X3-MM THK)	
	15	1	**6B-5072**	2	BUSHING-TERMINAL	
	16	1	**6E-5047**	2	PLUG	
	17	1	**7D-6567**	4	COVER	
	18	1	**9S-4190**	2	PLUG (TRANSMISSION OIL)	

M-METRIC PART

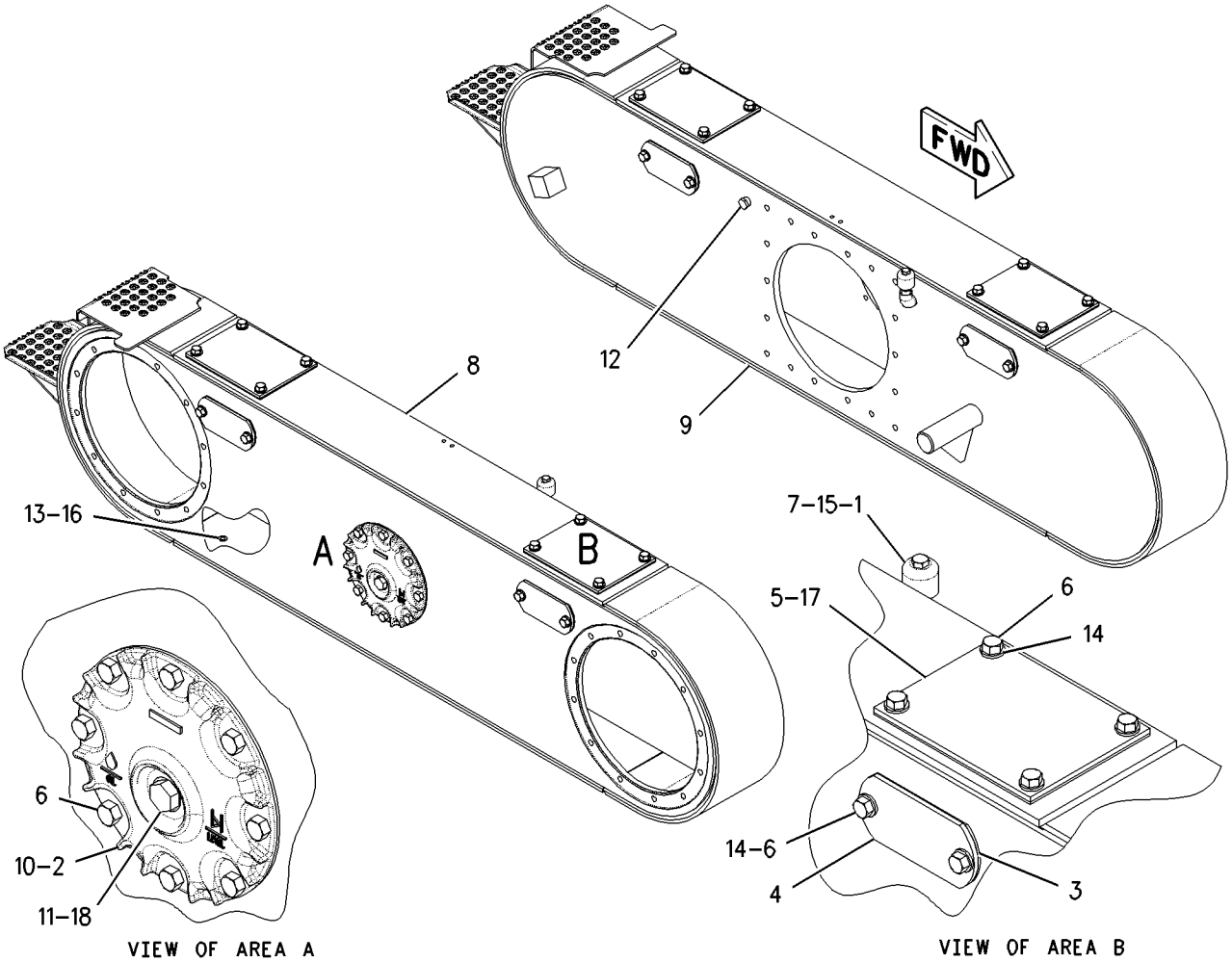

GRAPHIC #1 **<END>** g00828990

POWER TRAIN

250-2180 TIRE & RIM AR

S/N: CBK1-UP

AN ATTACHMENT

SMCS-4202, 4203, 4209 **i02164810**

NOTE	PART NUMBER	QTY	PART NAME 1 2 3 4 5 6 (PRODUCT LEVEL)	SEE PAGE
Y	*250-2178*	6	WHEEL & TIRE GP	464

Y-SEPARATE ILLUSTRATION

<END>

191-3606 TRANSMISSION AR

S/N: BSZ1-UP

PART OF 162-5605 GENERAL AR

SMCS-3030 **i01816053**

NOTE	REF NO	GRAPHIC REF	PART NUMBER	QTY	PART NAME 1 2 3 4 5 6 (PRODUCT LEVEL)	SEE PAGE
Y	1	1	*191-3602*	1	SHAFT GP-INPUT	390
Y	2	1	*159-9228*	1	CLUTCH GP-TRANSMISSION (FWD)	357
Y	3	1	*159-9229*	1	CLUTCH GP-TRANSMISSION (REV & 2ND)	359
Y	4	1	*6Y-2303*	1	CLUTCH GP-TRANSMISSION (1ST & 3RD)	351
Y	5	1	*8E-9316*	1	CLUTCH GP-TRANSMISSION (HI & LO)	354
Y	6	1	*180-9146*	1	CASE & PARTS GP-TRANSMISSION	346
Y	7	1	*9W-5132*	1	BRAKE GP-PARKING	520
Y	8	2	*9W-5134*	1	SCREEN GP-MAGNETIC (TRANSMISSION)	388
Y	9	2	*6Y-8765*	1	PUMP GP-GEAR (TRANSMISSION)	387
Y	10	2	*179-6064*	1	CONTROL GP-TRANSMISSION HYD	367

Y-SEPARATE ILLUSTRATION

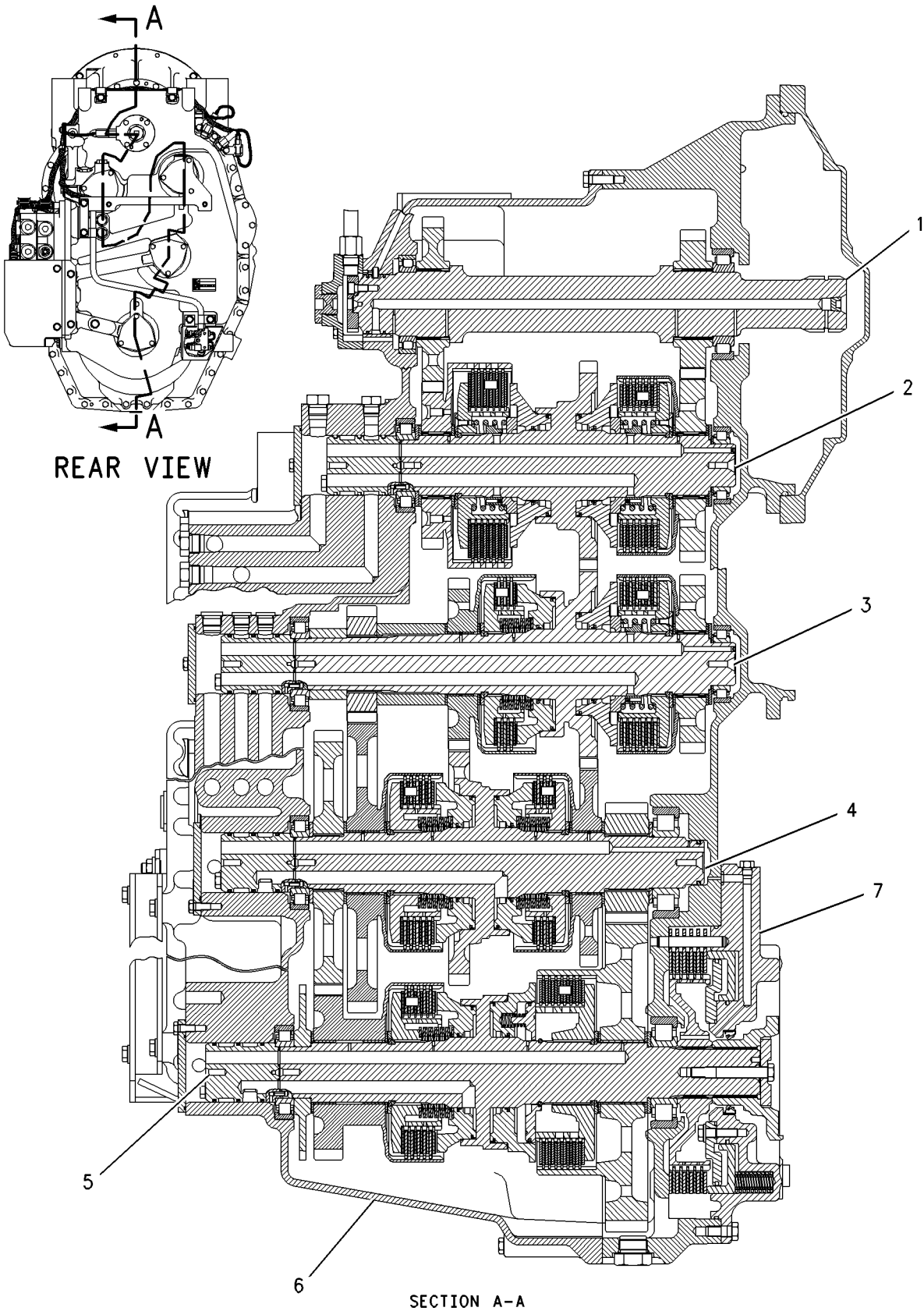

GRAPHIC #1 g00942057

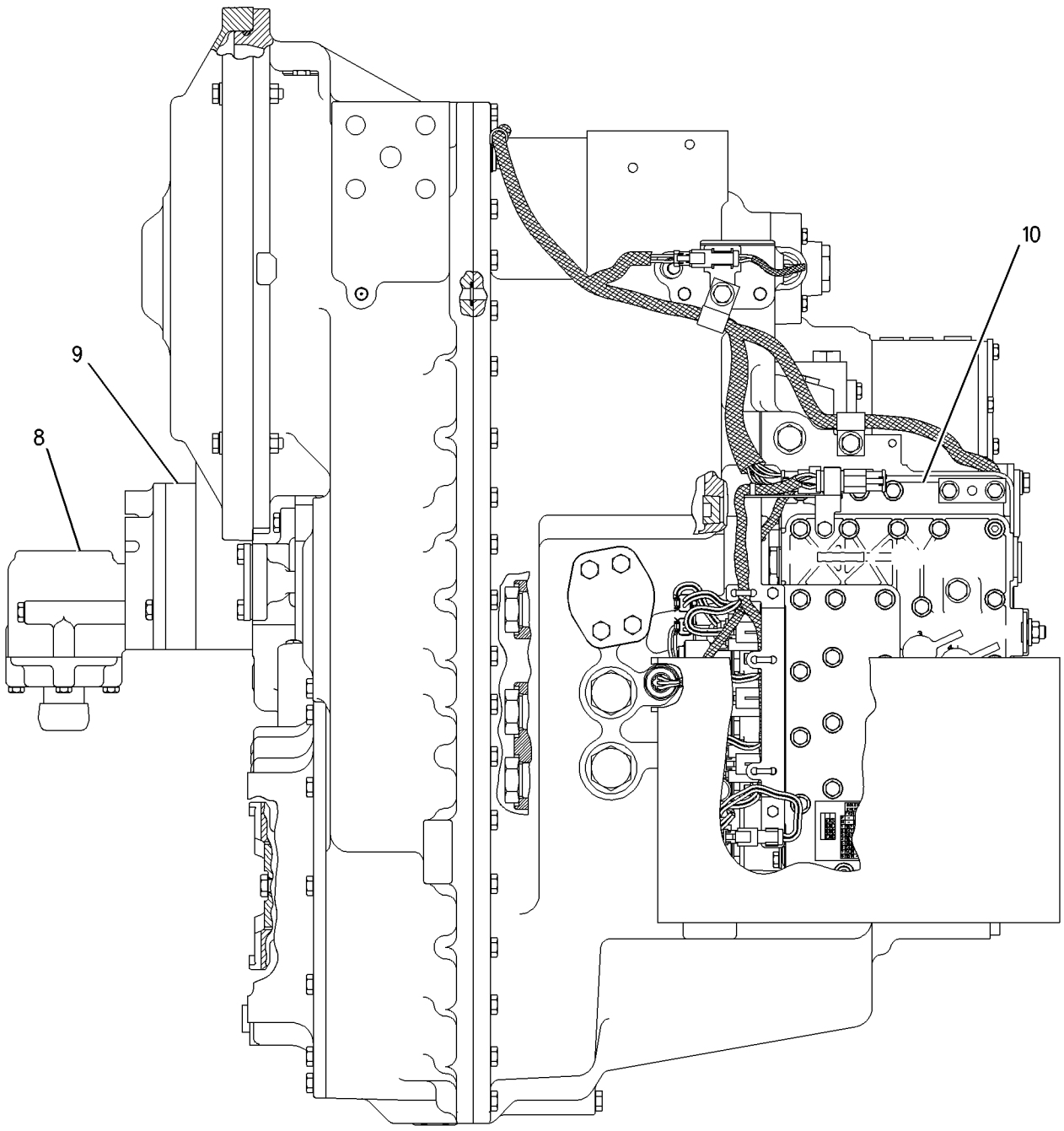

LEFT SIDE VIEW

GRAPHIC #2 **<END>** g00942060

8X-5005 UNIVERSAL JOINT GP

S/N: CBK1-UP

PART OF 8W-5394 SHAFT GP-DRIVE

SMCS-3251, 3253 **i00135798**

NOTE	REF NO	GRAPHIC REF	PART NUMBER	QTY	PART NAME 1 2 3 4 5 6 (PRODUCT LEVEL)	SEE PAGE
	1	1	**3D-6689**	1	YOKE-COUPLING	
	2	1	**9P-0356**	2	SPIDER & BEARING AS	
	3	1	**0S-1579**	8	BOLT (1/2-20X2IN)	

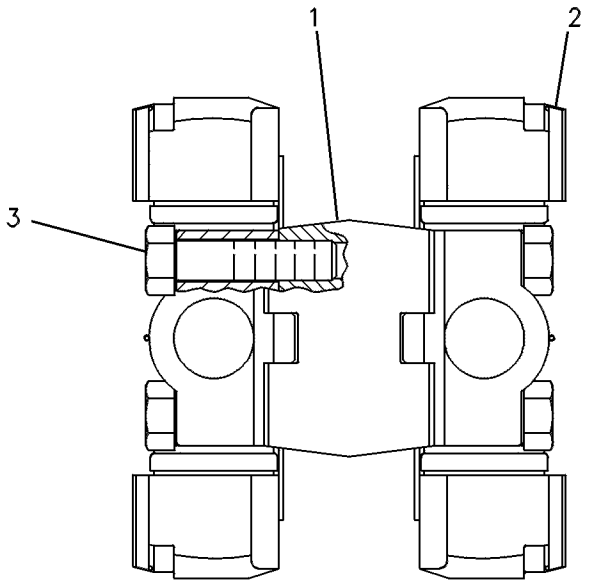

GRAPHIC #1 **<END>** g00108575

174-3705 VALVE & MTG GP-DIFF LOCK

S/N: CBK1-UP

PART OF 160-7756 CONTROL GP-DIFFERENTIAL LOCK

SMCS-3272 **i02204770**

NOTE	REF NO	GRAPHIC REF	PART NUMBER	QTY	PART NAME 1 2 3 4 5 6 (PRODUCT LEVEL)	SEE PAGE
	1	1	**6G-5979**	1	KIT-SEAL (DIFFERENTIAL LOCK)	
					(INCLUDES O-RINGS)	
Y	2	1	**154-3064**	1	VALVE GP-SOLENOID	404
	3	1	**148-2516**	1	MANIFOLD	

Y-SEPARATE ILLUSTRATION

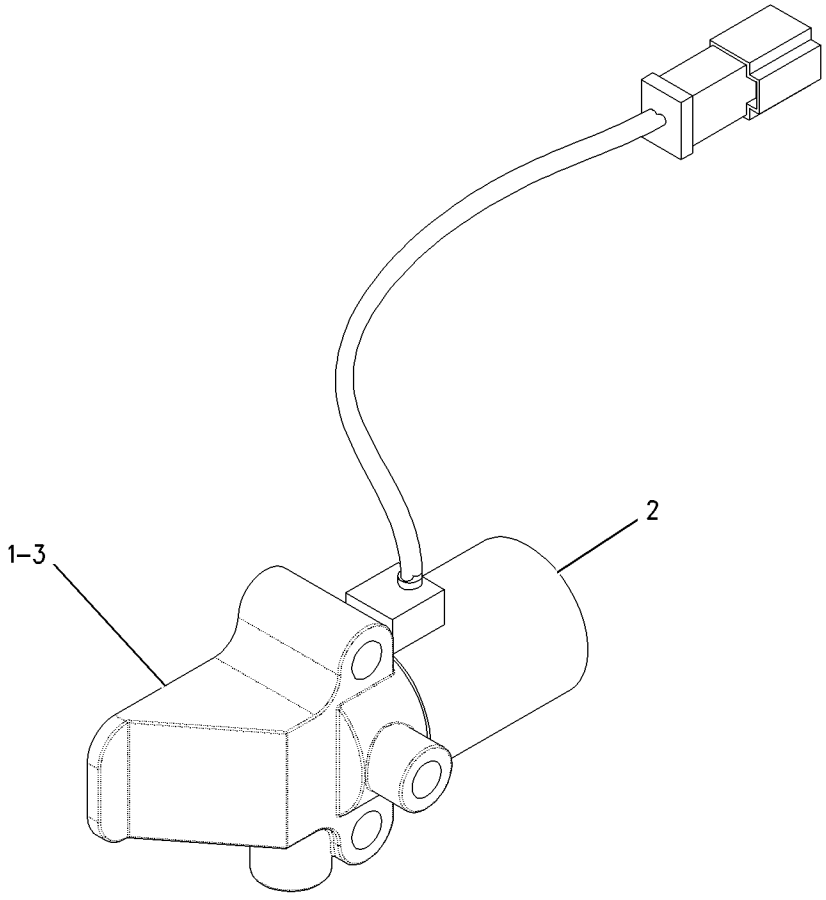

GRAPHIC #1 **<END>** g00806911

184-1130 VALVE GP-SELECTOR & PRESS CONT–
DIRECTION & RANGE
S/N: BSZ1-UP

PART OF 179-6063 VALVE GP-TRANSMISSION CONTROL

SMCS-3083 **i01696424**

NOTE	REF NO	GRAPHIC REF	PART NUMBER	QTY	PART NAME 1 2 3 4 5 6 (PRODUCT LEVEL)	SEE PAGE
	1	1	**154-6309**	1	BODY	
M	2	1	**149-4311**	5	BOLT-SOCKET HEAD (M6X1X16-MM)	
	3	1	**7M-8485**	5	SEAL-O-RING	
	4	1	**3D-4245**	1	SEAL-O-RING	
	5	1	**5F-9144**	1	SEAL-O-RING	
	6	1	**8E-9894**	1	SPOOL	
	7	1	**9U-8068**	1	SLUG	
	8	1	**9U-9282**	1	SPRING (OUTER)	
	9	1	**9U-9316**	1	SPRING (INNER)	
	10	1	**108-6523**	1	ADJUSTER AS	
		1	**4K-2039**	1	SEAL-O-RING	
		1	**7M-8485**	1	SEAL-O-RING	
M		1	**8T-4223**	1	WASHER-HARD (13.5X25.5X3-MM THK)	
		1	**9U-8069**	1	PLUG	
M		1	**095-1207**	1	NUT (M12X1.75-THD)	
		1	**101-9754**	1	SCREW-ADJUSTMENT (M12X1.75X18-MM THD)	
	11	1	**9U-8620**	1	ORIFICE	
	12	1	**9U-8067**	1	RETAINER	
	13	1	**8E-9895**	1	PISTON-LOAD	
	14	1	**9W-7412**	1	SPRING (OUTER)	
	15	1	**4J-2506**	1	SEAL-O-RING	
	16	1	**6F-4855**	1	SEAL-O-RING	
B	17	1	**5J-1036**	4	SHIM (0.8-MM THK)	
	18	1	**8E-9896**	1	PISTON-SELECTOR	
	19	1	**179-1298**	3	SPACER	
	20	1	**7T-0570**	1	SPRING (INNER)	
B	21	1	**4M-1751**	2	SPACER (15.09X0.4-MM THK)	
	22	1	**4J-7533**	1	SEAL-O-RING	
Y	23	1	**186-1526**	1	VALVE GP-SOLENOID (24-VOLT DC) (SELECTOR & PRESSURE RANGE)	405
	25	1	**9G-7132**	1	PLUG-ORIFICE	
	26	1	**9S-8004**	1	PLUG	
	27	1	**3J-1907**	1	SEAL-O-RING	
	28	1	**180-9327**	1	MANIFOLD	
	30	1	**3K-6116**	1	WASHER (0.27X0.47X0.03-IN THK)	
M	31	1	**8T-8442**	1	BOLT-SOCKET HEAD (M6X1X30-MM)	
	32	1	**5P-0537**	6	WASHER-HARD (7.2X14.5X2-MM THK)	
	33	1	**9X-7384**	3	SEAL-O-RING	
	34	1	**175-3893**	1	VALVE GP-SOLENOID (PROPN SOL FOR CL PACK 1)	
	34A	1	**175-3893**	1	VALVE GP-SOLENOID (PROPN SOL FOR CL PACK 2)	
	34B	1	**175-3893**	1	VALVE GP-SOLENOID (PROPN SOL FOR CL PACK 3)	
					(EACH CLUTCH PACK INCLUDES)	
		1	**145-1144**	1	COIL AS	
		1	**164-2108**	1	WASHER (13.03X25.4X2.38-MM THK)	
		1	**167-9524**	1	NUT-SELF-LOCKING (1/2-28-THD)	
	35	1	**183-6774**	1	PLATE	
M	36	1	**8C-6965**	1	BOLT-SOCKET HEAD (M6X1X45-MM)	
	37	1	**154-7172**	1	SPOOL	
	38	1	**6Y-4638**	5	PLUG-HEX SOCKET (1 5/16-12-2A THD)	
	39	1	**183-6775**	3	SPOOL AS	
					(EACH INCLUDES)	
		1	**167-0566**	1	CARTRIDGE	
	40	1	**154-7175**	3	SLUG	
	41	1	**154-7176**	3	SPRING (INNER)	
	42	1	**154-7177**	3	SPRING (OUTER)	

184-1130 **VALVE GP-SELECTOR & PRESS CONT** *(contd.)* **i01696424**

B-USE AS REQUIRED
M-METRIC PART
Y-SEPARATE ILLUSTRATION

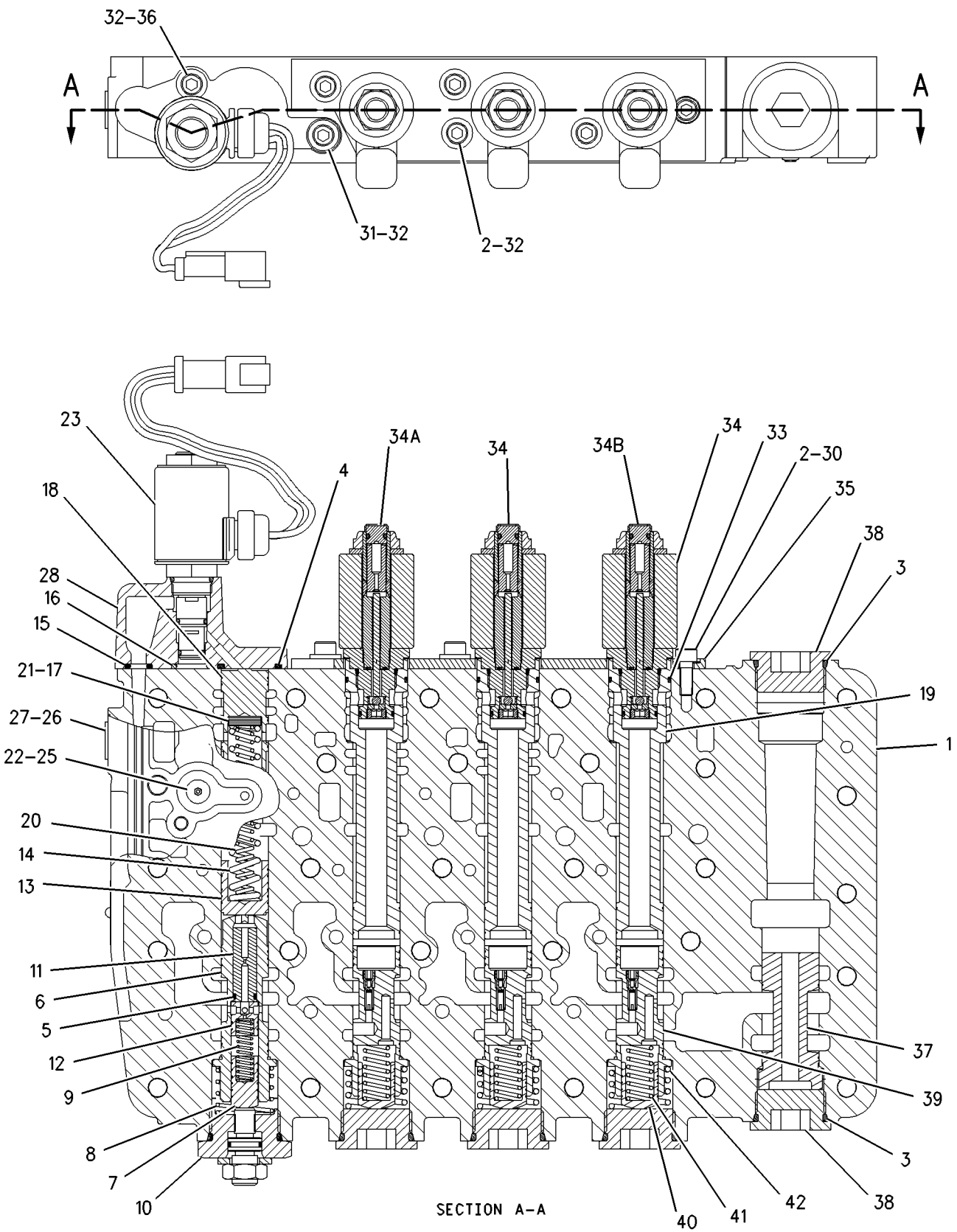

GRAPHIC #1 **<END>** g00876452

184-1132 VALVE GP-SELECTOR & PRESS CONT–

SPEED & RANGE

S/N: BSZ1-UP

PART OF 179-6063 VALVE GP-TRANSMISSION CONTROL

SMCS-3083 **i01755276**

NOTE	REF NO	GRAPHIC REF	PART NUMBER	QTY	PART NAME 1 2 3 4 5 6 (PRODUCT LEVEL)	SEE PAGE
	1	1	**110-5158**	1	BODY	
	2	1	**8E-7714**	2	ORIFICE	
	3	1	**5F-9144**	4	SEAL-O-RING	
	4	1	**8E-9894**	4	SPOOL	
	5	1	**9U-8068**	4	SLUG	
	6	1	**9U-9316**	4	SPRING (INNER)	
	7	1	**9U-9282**	4	SPRING (OUTER)	
	8	1	**7M-8485**	1	SEAL-O-RING	
	9	1	**9U-8067**	4	RETAINER	
	10	1	**8E-9895**	4	PISTON-LOAD	
	11	1	**4J-2506**	1	SEAL-O-RING	
	12	1	**6F-4855**	4	SEAL-O-RING	
	13	1	**8E-9896**	4	PISTON-SELECTOR	
B	14	1	**4M-1751**	3	SPACER (15.09X0.4-MM THK)	
B	15	1	**5J-1036**	14	SHIM (0.8-MM THK)	
	16	1	**3D-4245**	4	SEAL-O-RING	
	17	1	**9W-7410**	2	SPRING (OUTER)	
	18	1	**7T-0570**	2	SPRING (INNER)	
	19	1	**8E-1143**	1	SLUG	
	20	1	**9U-8668**	1	SPOOL AS	
		1	**3D-8317**	1	RING-RETAINING	
		1	**4B-9880**	1	BALL	
		1	**4M-2381**	1	SPRING	
		1	**8E-9893**	1	SPOOL-RELIEF	
		1	**9U-8669**	1	RETAINER	
	21	1	**9U-9595**	1	SPRING	
	22	1	**9N-4500**	1	SPRING (OUTER)	
	23	1	**9N-4498**	1	SPRING (INNER)	
	24	1	**8E-9897**	1	SPOOL	
	25	1	**9W-0898**	1	SLUG	
	26	1	**4J-7533**	4	SEAL-O-RING	
	27	1	**8E-6570**	1	MANIFOLD	
Y	28	1	**186-1526**	4	VALVE GP-SOLENOID (24-VOLT DC) (SELECTOR & PRESSURE RANGE)	405
M	31	1	**8C-6965**	4	BOLT-SOCKET HEAD (M6X1X45-MM)	
	32	1	**5P-0537**	5	WASHER-HARD (7.2X14.5X2-MM THK)	
M	33	1	**8T-8442**	1	BOLT-SOCKET HEAD (M6X1X30-MM)	
	34	1	**9U-8620**	1	ORIFICE	
	35	1	**9G-7132**	4	PLUG-ORIFICE	
	36	1	**3J-7354**	1	SEAL-O-RING	
	37	1	**9S-8002**	1	PLUG	
	38	1	**9S-8004**	1	PLUG	
	39	1	**3J-1907**	1	SEAL-O-RING	
	40	1	**108-6523**	5	ADJUSTER AS	
					(EACH INCLUDES)	
		1	**4K-2039**	1	SEAL-O-RING	
		1	**7M-8485**	1	SEAL-O-RING	
M		1	**8T-4223**	1	WASHER-HARD (13.5X25.5X3-MM THK)	
		1	**9U-8069**	1	PLUG	
M		1	**095-1207**	1	NUT (M12X1.75-THD)	
		1	**101-9754**	1	SCREW-ADJUSTMENT (M12X1.75X18-MM THD)	
	41	1	**6Y-4638**	1	PLUG-HEX SOCKET (1 5/16-12-2A THD)	
	42	1	**8E-7713**	1	ORIFICE	
	43	1	**9W-7412**	2	SPRING (OUTER)	
	44	1	**7G-5453**	1	SPRING (INNER)	

184-1132 VALVE GP-SELECTOR & PRESS CONT *(contd.)* i01755276

NOTE	REF NO	GRAPHIC REF	PART NUMBER	QTY	PART NAME 1 2 3 4 5 6 (PRODUCT LEVEL)	SEE PAGE
	45	1	**108-3129**	1	STOP	

B-USE AS REQUIRED
M-METRIC PART
Y-SEPARATE ILLUSTRATION

184-1132 **VALVE GP-SELECTOR & PRESS CONT** *(contd.)* **i01755276**

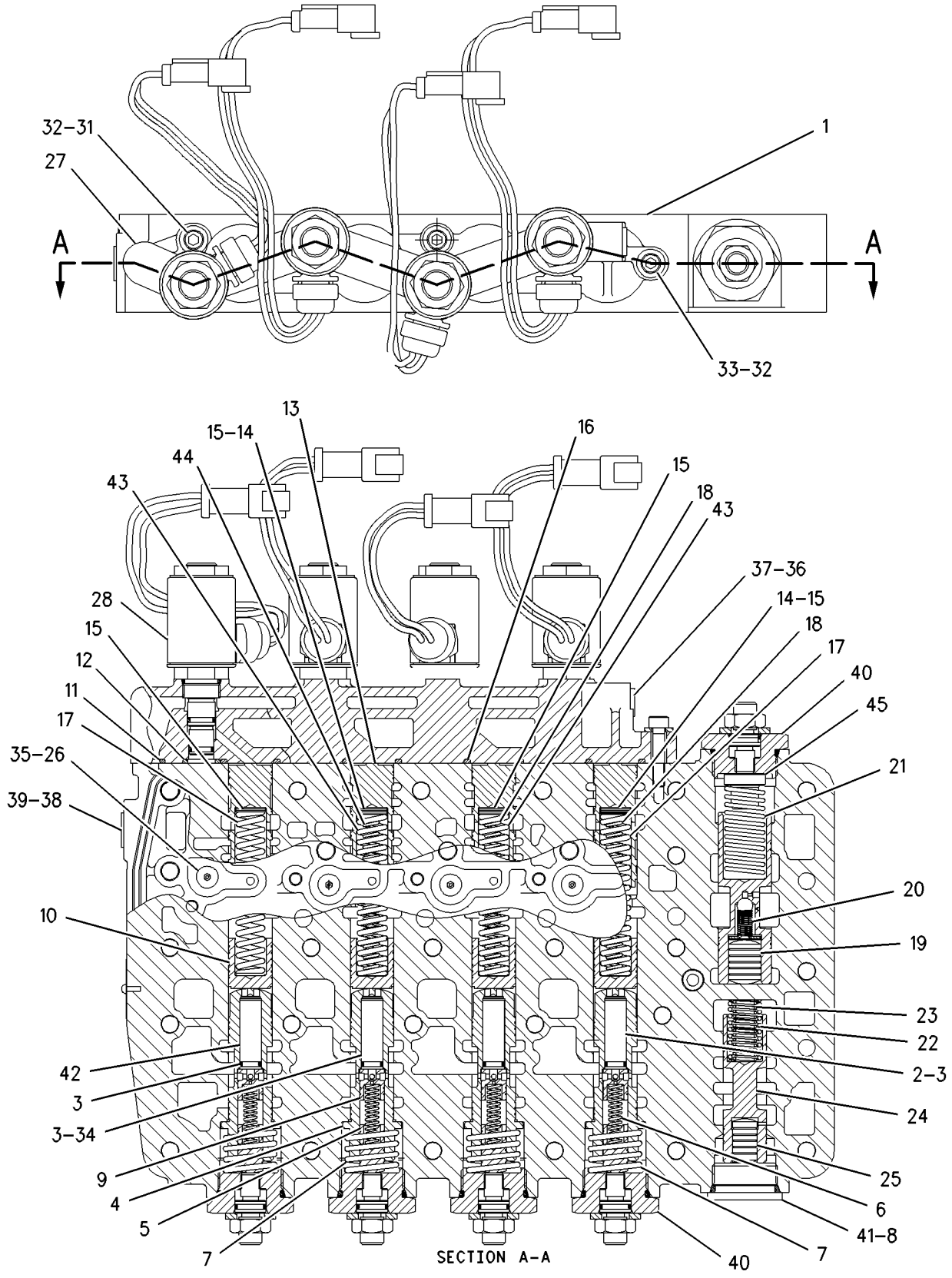

GRAPHIC #1 **<END>** g00898353

154-3064 VALVE GP-SOLENOID—DIFFERENTIAL LOCK

S/N: CBK1-UP
24V DC
PART OF 174-3705 VALVE & MTG GP-DIFF LOCK

SMCS-5479 **i02204767**

NOTE	REF NO	GRAPHIC REF	PART NUMBER	QTY	PART NAME 1 2 3 4 5 6 (PRODUCT LEVEL)	SEE PAGE
	1	1	**8C-9987**	1	WASHER (8.3X28X2.5-MM THK)	
	2	1	**111-0343**	1	LOCKNUT (5/16-18-THD)	
	3	1	**142-0350**	1	CARTRIDGE AS	
		1	**8C-9987**	1	WASHER (8.3X28X2.5-MM THK)	
		1	**111-0343**	1	LOCKNUT (5/16-18-THD)	
	4	1	**189-0189**	1	COIL AS	
		1	**1S-9593**	2	STRAP-CABLE	
		1	**102-8802**	1	KIT-RECEPTACLE (2-PIN)	
					(INCLUDES RECEPTACLE AS & WEDGE)	
		1	**3E-3365**	1	WEDGE-RECEPTACLE LOCK (2-PIN)	
		1	**186-3735**	2	PIN-CONNECTOR	
					AVAILABLE REPAIR KIT(S):	
			6G-5979	1	KIT-SEAL (DIFFERENTIAL LOCK VALVE)	

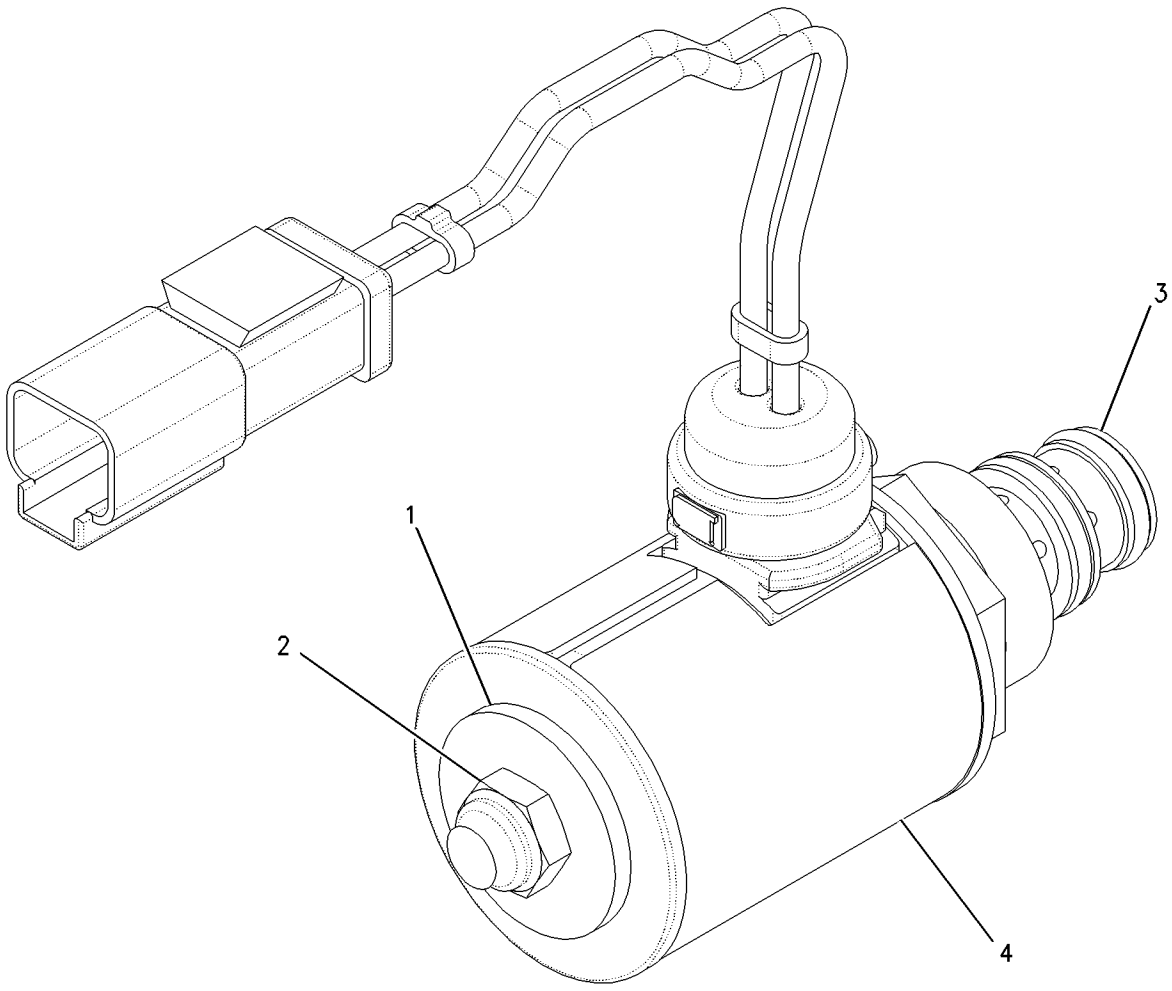

GRAPHIC #1 **<END>** g00877963

186-1526 VALVE GP-SOLENOID—DIRECTION—SPEED

S/N: BSZ1-UP

PART OF 184-1130, 184-1132 VALVE GP-SELECTOR & PRESS CONT

SMCS-5479 **i02204907**

NOTE	REF NO	GRAPHIC REF	PART NUMBER	QTY	PART NAME 1 2 3 4 5 6 (PRODUCT LEVEL)	SEE PAGE
J	1	1	**234-6666**	1	CARTRIDGE AS-VALVE	
	2	1	**104-3947**	1	LOCKNUT (5/8-11-THD)	
	3	1	**240-6822**	1	COIL AS	
	4	1	**1S-9593**	2	STRAP-CABLE	
	5	1	**102-8802**	1	KIT-RECEPTACLE (2-PIN)	
					(INCLUDES RECEPTACLE AS & WEDGE)	
	6	1	**3E-3365**	1	WEDGE-RECEPTACLE LOCK (2-PIN)	
	7	1	**186-3735**	2	PIN-CONNECTOR	
					AVAILABLE REPAIR KIT(S):	
J			**7T-4515**		KIT-SEAL (TRANSMISSION SOLENOID)	
					(INCLUDES SEAL-O-RINGS)	

J-KIT MARKED J SERVICES PART MARKED J

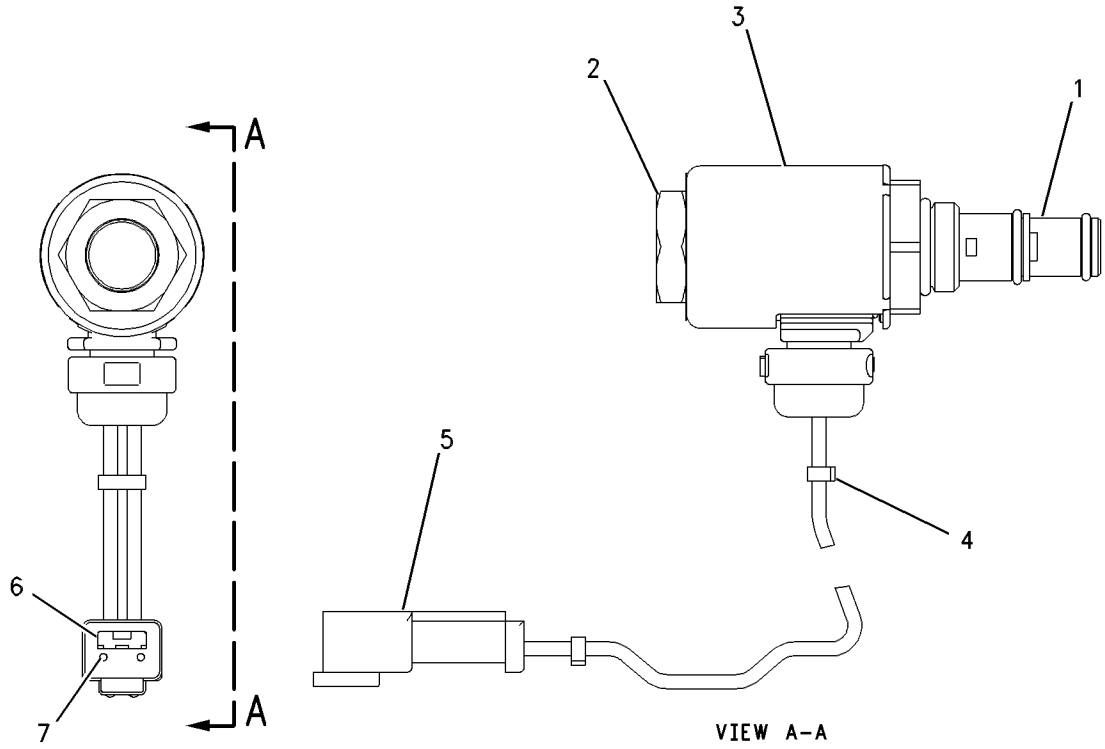

GRAPHIC #1 **<END>** g00661740

179-6063 VALVE GP-TRANSMISSION CONTROL

S/N: BSZ1-UP

PART OF 179-6064 CONTROL GP-TRANSMISSION HYD

SMCS-3073 **i02207516**

NOTE	REF NO	GRAPHIC REF	PART NUMBER	QTY	PART NAME 1 2 3 4 5 6 (PRODUCT LEVEL)	SEE PAGE
Y	1	1	**184-1130**	1	VALVE GP-SELECTOR & PRESS CONT (TRANSMISSION DIRECTION)	398
	2	1	**154-6306**	1	PLATE	
Y	3	1	**184-1132**	1	VALVE GP-SELECTOR & PRESS CONT (TRANSMISSION SPEED)	401
	4	1	**110-5161**	1	MANIFOLD	
	5	1	**154-6307**	1	PLATE	
	6	1	**8E-9474**	1	COVER	
	7	1	**6V-3965**	8	FITTING AS (QUICK DISCONNECT)	
	8	1	**3J-1907**	10	SEAL-O-RING	
	9	1	**6V-0852**	8	CAP-DUST	
	11	1	**1T-0738**	2	WASHER (8.4X19X1.83-MM THK)	
	12	1	**9P-9150**	4	WASHER (8.25X18XO.84-MM THK)	
M	13	1	**3E-8006**	2	BOLT (M8X1.25X130-MM)	
	15	1	**9L-9068**	6	DOWEL	
	16	1	**8F-6230**	1	SEAL-O-RING	
	17	1	**4D-6695**	4	SEAL-O-RING	
	18	1	**142-1767**	1	POPPET	
	19	1	**4D-1322**	1	RING-RETAINING	
	20	1	**6Y-2584**	1	RETAINER	
	21	1	**3J-6956**	1	SPRING	
	22	1	**6I-9395**	1	SCREEN (TRANSMISSION CONTROL VALVE)	
M	23	1	**6V-5217**	1	BOLT (M8X1.25X20-MM)	
	24	1	**9S-4191**	2	PLUG	

M-METRIC PART
Y-SEPARATE ILLUSTRATION

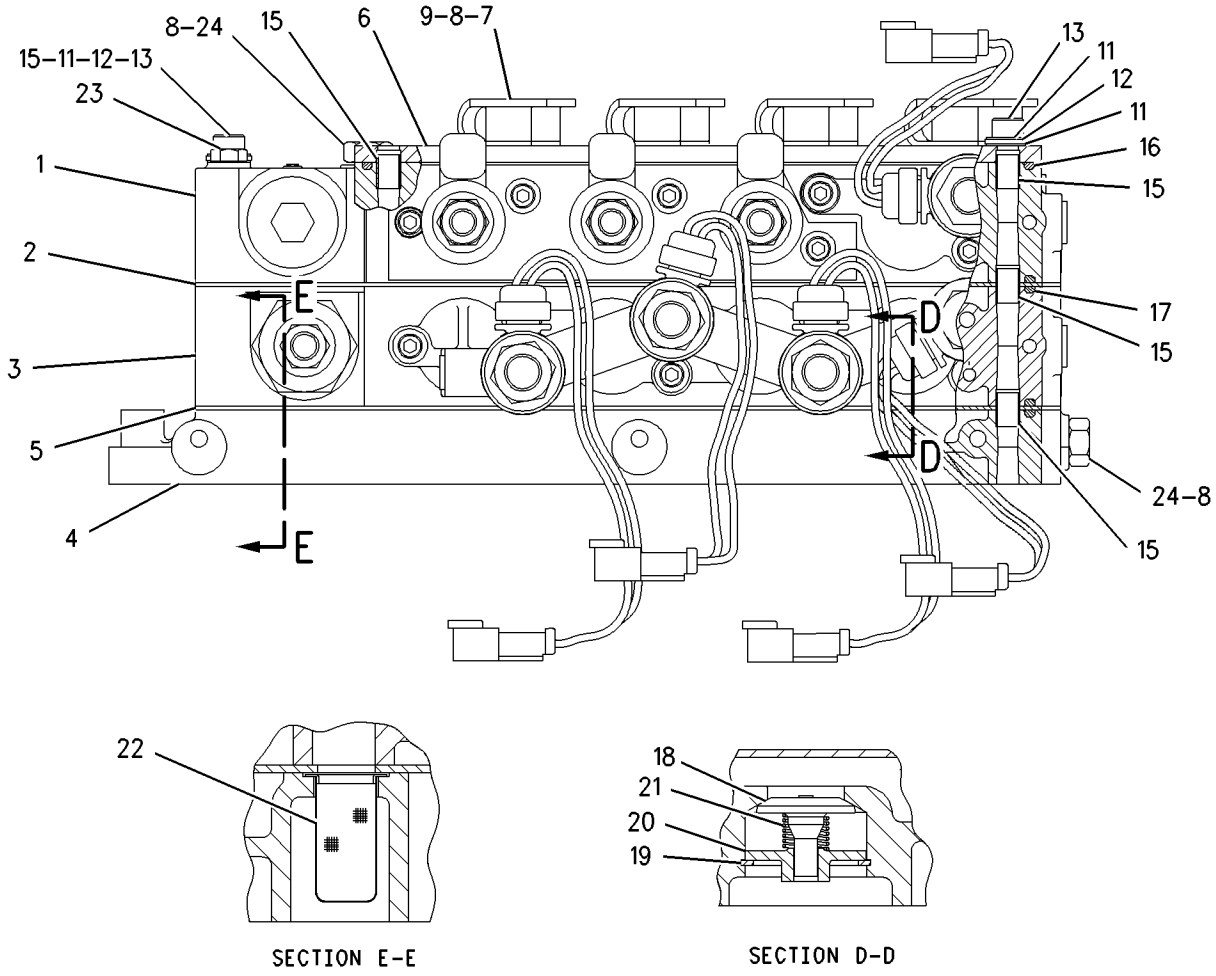

GRAPHIC #1 **<END>** g00928707

142-6390 WHEEL & TIRE AR

S/N: CBK1-UP
AN ATTACHMENT

SMCS-4200 **i00753232**

NOTE	PART NUMBER	QTY	PART NAME 1 2 3 4 5 6 (PRODUCT LEVEL)	SEE PAGE
Y	*142-6285*	6	WHEEL & TIRE GP	427

Y-SEPARATE ILLUSTRATION

<END>

142-6391 WHEEL & TIRE AR

S/N: CBK1-UP
AN ATTACHMENT

SMCS-4200 **i00753236**

NOTE	PART NUMBER	QTY	PART NAME 1 2 3 4 5 6 (PRODUCT LEVEL)	SEE PAGE
Y	*142-6286*	6	WHEEL & TIRE GP	428

Y-SEPARATE ILLUSTRATION

<END>

142-6392 WHEEL & TIRE AR

S/N: CBK1-UP
AN ATTACHMENT

SMCS-4200 **i00753233**

NOTE	PART NUMBER	QTY	PART NAME 1 2 3 4 5 6 (PRODUCT LEVEL)	SEE PAGE
Y	*142-6287*	6	WHEEL & TIRE GP	428

Y-SEPARATE ILLUSTRATION

<END>

142-6393 WHEEL & TIRE AR

S/N: CBK1-UP
AN ATTACHMENT

SMCS-4200 **i00753234**

NOTE	PART NUMBER	QTY	PART NAME 1 2 3 4 5 6 (PRODUCT LEVEL)	SEE PAGE
Y	*142-6288*	6	WHEEL & TIRE GP	429

Y-SEPARATE ILLUSTRATION

<END>

142-6395 WHEEL & TIRE AR

S/N: CBK1-UP
AN ATTACHMENT

SMCS-4200 **i00753239**

NOTE	PART NUMBER	QTY	PART NAME 1 2 3 4 5 6 (PRODUCT LEVEL)	SEE PAGE
Y	*142-6290*	6	WHEEL & TIRE GP	429

Y-SEPARATE ILLUSTRATION

<END>

142-6439 WHEEL & TIRE AR

S/N: CBK1-UP
AN ATTACHMENT

SMCS-4200 **i00753241**

NOTE	PART NUMBER	QTY	PART NAME 1 2 3 4 5 6 (PRODUCT LEVEL)	SEE PAGE
Y	*142-6291*	6	WHEEL & TIRE GP	430

Y-SEPARATE ILLUSTRATION

<END>

142-6440 WHEEL & TIRE AR

S/N: CBK1-UP
AN ATTACHMENT

SMCS-4200 **i00751768**

NOTE	PART NUMBER	QTY	PART NAME 1 2 3 4 5 6 (PRODUCT LEVEL)	SEE PAGE
Y	*142-6292*	6	WHEEL & TIRE GP	430

Y-SEPARATE ILLUSTRATION

<END>

142-6441 WHEEL & TIRE AR

S/N: CBK1-UP
AN ATTACHMENT

SMCS-4200 **i00751982**

NOTE	PART NUMBER	QTY	PART NAME 1 2 3 4 5 6 (PRODUCT LEVEL)	SEE PAGE
Y	*142-6293*	6	WHEEL & TIRE GP	431

Y-SEPARATE ILLUSTRATION

<END>

142-6442 WHEEL & TIRE AR

S/N: CBK1-UP
AN ATTACHMENT

SMCS-4200 **i00751980**

NOTE	PART NUMBER	QTY	PART NAME 1 2 3 4 5 6 (PRODUCT LEVEL)	SEE PAGE
Y	*142-6294*	6	WHEEL & TIRE GP	431

Y-SEPARATE ILLUSTRATION

<END>

142-6443 WHEEL & TIRE AR

S/N: CBK1-UP
AN ATTACHMENT

SMCS-4200 **i00751979**

NOTE	PART NUMBER	QTY	PART NAME 1 2 3 4 5 6 (PRODUCT LEVEL)	SEE PAGE
Y	*142-6295*	6	WHEEL & TIRE GP	432

Y-SEPARATE ILLUSTRATION

<END>

142-6444 WHEEL & TIRE AR

S/N: CBK1-UP
AN ATTACHMENT

SMCS-4200 **i00751978**

NOTE	PART NUMBER	QTY	PART NAME 1 2 3 4 5 6 (PRODUCT LEVEL)	SEE PAGE
Y	*142-6296*	6	WHEEL & TIRE GP	432

Y-SEPARATE ILLUSTRATION

<END>

142-6445 WHEEL & TIRE AR

S/N: CBK1-UP
AN ATTACHMENT

SMCS-4200 **i00751976**

NOTE	PART NUMBER	QTY	PART NAME 1 2 3 4 5 6 (PRODUCT LEVEL)	SEE PAGE
Y	*142-6297*	6	WHEEL & TIRE GP	433

Y-SEPARATE ILLUSTRATION

<END>

142-6446 WHEEL & TIRE AR

S/N: CBK1-UP
AN ATTACHMENT

SMCS-4200 **i00751969**

NOTE	PART NUMBER	QTY	PART NAME 1 2 3 4 5 6 (PRODUCT LEVEL)	SEE PAGE
Y	*142-6298*	6	WHEEL & TIRE GP	433

Y-SEPARATE ILLUSTRATION

<END>

142-6448 WHEEL & TIRE AR

S/N: CBK1-UP
AN ATTACHMENT

SMCS-4200 **i00758986**

NOTE	PART NUMBER	QTY	PART NAME 1 2 3 4 5 6 (PRODUCT LEVEL)	SEE PAGE
Y	*142-6300*	6	WHEEL & TIRE GP	434

Y-SEPARATE ILLUSTRATION

<END>

142-6449 WHEEL & TIRE AR

S/N: CBK1-UP
AN ATTACHMENT

SMCS-4200 **i00759108**

NOTE	PART NUMBER	QTY	PART NAME 1 2 3 4 5 6 (PRODUCT LEVEL)	SEE PAGE
Y	*142-6301*	6	WHEEL & TIRE GP	434

Y-SEPARATE ILLUSTRATION

<END>

142-6454 WHEEL & TIRE AR

S/N: CBK1-UP
AN ATTACHMENT

SMCS-4200 **i00758826**

NOTE	PART NUMBER	QTY	PART NAME 1 2 3 4 5 6 (PRODUCT LEVEL)	SEE PAGE
Y	*142-6306*	6	WHEEL & TIRE GP	435

Y-SEPARATE ILLUSTRATION

<END>

142-6455 WHEEL & TIRE AR

S/N: CBK1-UP
AN ATTACHMENT

SMCS-4200 **i00758972**

NOTE	PART NUMBER	QTY	PART NAME 1 2 3 4 5 6 (PRODUCT LEVEL)	SEE PAGE
Y	*142-6307*	6	WHEEL & TIRE GP	435

Y-SEPARATE ILLUSTRATION

<END>

142-6457 WHEEL & TIRE AR

S/N: CBK1-UP
AN ATTACHMENT

SMCS-4200 **i00758987**

NOTE	PART NUMBER	QTY	PART NAME 1 2 3 4 5 6 (PRODUCT LEVEL)	SEE PAGE
Y	*142-6309*	6	WHEEL & TIRE GP	436

Y-SEPARATE ILLUSTRATION

<END>

142-6458 WHEEL & TIRE AR

S/N: CBK1-UP
AN ATTACHMENT

SMCS-4200 **i00759110**

NOTE	PART NUMBER	QTY	PART NAME 1 2 3 4 5 6 (PRODUCT LEVEL)	SEE PAGE
Y	*142-6310*	6	WHEEL & TIRE GP	436

Y-SEPARATE ILLUSTRATION

<END>

142-6460 WHEEL & TIRE AR

S/N: CBK1-UP
AN ATTACHMENT

SMCS-4200 **i00758825**

NOTE	PART NUMBER	QTY	PART NAME 1 2 3 4 5 6 (PRODUCT LEVEL)	SEE PAGE
Y	*142-6312*	6	WHEEL & TIRE GP	437

Y-SEPARATE ILLUSTRATION

<END>

142-6461 WHEEL & TIRE AR

S/N: CBK1-UP
AN ATTACHMENT

SMCS-4200 **i00758822**

NOTE	PART NUMBER	QTY	PART NAME 1 2 3 4 5 6 (PRODUCT LEVEL)	SEE PAGE
Y	*142-6313*	6	WHEEL & TIRE GP	437

Y-SEPARATE ILLUSTRATION

<END>

142-6463 WHEEL & TIRE AR

S/N: CBK1-UP
AN ATTACHMENT

SMCS-4200 **i00758971**

NOTE	PART NUMBER	QTY	PART NAME 1 2 3 4 5 6 (PRODUCT LEVEL)	SEE PAGE
Y	*142-6315*	6	WHEEL & TIRE GP	438

Y-SEPARATE ILLUSTRATION

<END>

142-6464 WHEEL & TIRE AR

S/N: CBK1-UP
AN ATTACHMENT

SMCS-4200 **i00758982**

NOTE	PART NUMBER	QTY	PART NAME 1 2 3 4 5 6 (PRODUCT LEVEL)	SEE PAGE
Y	*142-6316*	6	WHEEL & TIRE GP	438

Y-SEPARATE ILLUSTRATION

<END>

142-6466 WHEEL & TIRE AR

S/N: CBK1-UP
AN ATTACHMENT

SMCS-4200 **i00766611**

NOTE	PART NUMBER	QTY	PART NAME 1 2 3 4 5 6 (PRODUCT LEVEL)	SEE PAGE
Y	*142-6318*	6	WHEEL & TIRE GP	439

Y-SEPARATE ILLUSTRATION

<END>

142-6467 WHEEL & TIRE AR

S/N: CBK1-UP
AN ATTACHMENT

SMCS-4200 **i00766609**

NOTE	PART NUMBER	QTY	PART NAME 1 2 3 4 5 6 (PRODUCT LEVEL)	SEE PAGE
Y	*142-6319*	6	WHEEL & TIRE GP	439

Y-SEPARATE ILLUSTRATION

<END>

142-6469 WHEEL & TIRE AR

S/N: CBK1-UP
AN ATTACHMENT

SMCS-4200 **i00766607**

NOTE	PART NUMBER	QTY	PART NAME 1 2 3 4 5 6 (PRODUCT LEVEL)	SEE PAGE
Y	*142-6321*	6	WHEEL & TIRE GP	440

Y-SEPARATE ILLUSTRATION

<END>

142-6470 WHEEL & TIRE AR

S/N: CBK1-UP
AN ATTACHMENT

SMCS-4200 **i00766617**

NOTE	PART NUMBER	QTY	PART NAME 1 2 3 4 5 6 (PRODUCT LEVEL)	SEE PAGE
Y	*142-6322*	6	WHEEL & TIRE GP	440

Y-SEPARATE ILLUSTRATION

<END>

142-6472 WHEEL & TIRE AR

S/N: CBK1-UP
AN ATTACHMENT

SMCS-4200 **i00766614**

NOTE	PART NUMBER	QTY	PART NAME 1 2 3 4 5 6 (PRODUCT LEVEL)	SEE PAGE
Y	*142-6324*	6	WHEEL & TIRE GP	441

Y-SEPARATE ILLUSTRATION

<END>

142-6474 WHEEL & TIRE AR

S/N: CBK1-UP
AN ATTACHMENT

SMCS-4200 **i00766612**

NOTE	PART NUMBER	QTY	PART NAME 1 2 3 4 5 6 (PRODUCT LEVEL)	SEE PAGE
Y	*142-6325*	6	WHEEL & TIRE GP	441

Y-SEPARATE ILLUSTRATION

<END>

142-6477 WHEEL & TIRE AR

S/N: CBK1-UP
AN ATTACHMENT

SMCS-4200 **i00766608**

NOTE	PART NUMBER	QTY	PART NAME 1 2 3 4 5 6 (PRODUCT LEVEL)	SEE PAGE
Y	*142-6328*	6	WHEEL & TIRE GP	442

Y-SEPARATE ILLUSTRATION

<END>

142-6479 WHEEL & TIRE AR

S/N: CBK1-UP
AN ATTACHMENT

SMCS-4200 **i00766605**

NOTE	PART NUMBER	QTY	PART NAME 1 2 3 4 5 6 (PRODUCT LEVEL)	SEE PAGE
Y	*142-6330*	6	WHEEL & TIRE GP	442

Y-SEPARATE ILLUSTRATION

<END>

151-0286 WHEEL & TIRE AR

S/N: CBK1-UP
AN ATTACHMENT

SMCS-4200 **i00759198**

NOTE	PART NUMBER	QTY	PART NAME 1 2 3 4 5 6 (PRODUCT LEVEL)	SEE PAGE
Y	*142-6283*	6	WHEEL & TIRE GP	426

Y-SEPARATE ILLUSTRATION

<END>

151-0287 WHEEL & TIRE AR

S/N: CBK1-UP
AN ATTACHMENT

SMCS-4200 **i00759199**

NOTE	PART NUMBER	QTY	PART NAME 1 2 3 4 5 6 (PRODUCT LEVEL)	SEE PAGE
Y	*142-6284*	6	WHEEL & TIRE GP	427

Y-SEPARATE ILLUSTRATION

<END>

151-0329 WHEEL & TIRE AR

S/N: CBK1-UP
AN ATTACHMENT

SMCS-4200 **i00759189**

NOTE	PART NUMBER	QTY	PART NAME 1 2 3 4 5 6 (PRODUCT LEVEL)	SEE PAGE
Y	*142-6335*	6	WHEEL & TIRE GP	443

Y-SEPARATE ILLUSTRATION

<END>

151-0330 WHEEL & TIRE AR

S/N: CBK1-UP
AN ATTACHMENT

SMCS-4200 **i00759120**

NOTE	PART NUMBER	QTY	PART NAME 1 2 3 4 5 6 (PRODUCT LEVEL)	SEE PAGE
Y	*142-6338*	6	WHEEL & TIRE GP	445

Y-SEPARATE ILLUSTRATION

<END>

151-0331 WHEEL & TIRE AR

S/N: CBK1-UP
AN ATTACHMENT

SMCS-4200 **i00759122**

NOTE	PART NUMBER	QTY	PART NAME 1 2 3 4 5 6 (PRODUCT LEVEL)	SEE PAGE
Y	*142-6341*	6	WHEEL & TIRE GP	446

Y-SEPARATE ILLUSTRATION

<END>

151-0347 WHEEL & TIRE AR

S/N: CBK1-UP
AN ATTACHMENT

SMCS-4200 **i00759191**

NOTE	PART NUMBER	QTY	PART NAME 1 2 3 4 5 6 (PRODUCT LEVEL)	SEE PAGE
Y	*142-6336*	6	WHEEL & TIRE GP	444

Y-SEPARATE ILLUSTRATION

<END>

151-0348 WHEEL & TIRE AR

S/N: CBK1-UP
AN ATTACHMENT

SMCS-4200 **i00759196**

NOTE	PART NUMBER	QTY	PART NAME 1 2 3 4 5 6 (PRODUCT LEVEL)	SEE PAGE
Y	*142-6339*	6	WHEEL & TIRE GP	445

Y-SEPARATE ILLUSTRATION

<END>

151-0355 WHEEL & TIRE AR

S/N: CBK1-UP
AN ATTACHMENT

SMCS-4200 **i00759125**

NOTE	PART NUMBER	QTY	PART NAME 1 2 3 4 5 6 (PRODUCT LEVEL)	SEE PAGE
Y	*142-6337*	6	WHEEL & TIRE GP	444

Y-SEPARATE ILLUSTRATION

<END>

151-0361 WHEEL & TIRE AR

S/N: CBK1-UP
AN ATTACHMENT

SMCS-4200 **i02164874**

NOTE	PART NUMBER	QTY	PART NAME 1 2 3 4 5 6 (PRODUCT LEVEL)	SEE PAGE
Y	*150-4467*	6	WHEEL & TIRE GP	456

Y-SEPARATE ILLUSTRATION

<END>

151-0362 WHEEL & TIRE AR

S/N: CBK1-UP
AN ATTACHMENT

SMCS-4200 **i00775616**

NOTE	PART NUMBER	QTY	PART NAME 1 2 3 4 5 6 (PRODUCT LEVEL)	SEE PAGE
Y	*142-6332*	6	WHEEL & TIRE GP	443

Y-SEPARATE ILLUSTRATION

<END>

151-0364 WHEEL & TIRE AR

S/N: CBK1-UP
AN ATTACHMENT

SMCS-4200 **i00759127**

NOTE	PART NUMBER	QTY	PART NAME 1 2 3 4 5 6 (PRODUCT LEVEL)	SEE PAGE
Y	*142-6353*	6	WHEEL & TIRE GP	446

Y-SEPARATE ILLUSTRATION

<END>

151-0365 WHEEL & TIRE AR

S/N: CBK1-UP
AN ATTACHMENT

SMCS-4200 **i00759194**

NOTE	PART NUMBER	QTY	PART NAME 1 2 3 4 5 6 (PRODUCT LEVEL)	SEE PAGE
Y	*142-6360*	6	WHEEL & TIRE GP	449

Y-SEPARATE ILLUSTRATION

<END>

151-0366 WHEEL & TIRE AR

S/N: CBK1-UP
AN ATTACHMENT

SMCS-4200 **i00759349**

NOTE	PART NUMBER	QTY	PART NAME 1 2 3 4 5 6 (PRODUCT LEVEL)	SEE PAGE
Y	*142-6363*	6	WHEEL & TIRE GP	450

Y-SEPARATE ILLUSTRATION

<END>

151-0367 WHEEL & TIRE AR

S/N: CBK1-UP
AN ATTACHMENT

SMCS-4200 **i00759353**

NOTE	PART NUMBER	QTY	PART NAME 1 2 3 4 5 6 (PRODUCT LEVEL)	SEE PAGE
Y	*142-6366*	6	WHEEL & TIRE GP	451

Y-SEPARATE ILLUSTRATION

<END>

151-0368 WHEEL & TIRE AR

S/N: CBK1-UP
AN ATTACHMENT

SMCS-4200 **i00759354**

NOTE	PART NUMBER	QTY	PART NAME 1 2 3 4 5 6 (PRODUCT LEVEL)	SEE PAGE
Y	*142-6371*	6	WHEEL & TIRE GP	452

Y-SEPARATE ILLUSTRATION

<END>

151-0371 WHEEL & TIRE AR

S/N: CBK1-UP
AN ATTACHMENT

SMCS-4200 **i00759269**

NOTE	PART NUMBER	QTY	PART NAME 1 2 3 4 5 6 (PRODUCT LEVEL)	SEE PAGE
Y	*142-6354*	6	WHEEL & TIRE GP	447

Y-SEPARATE ILLUSTRATION

<END>

151-0372 WHEEL & TIRE AR

S/N: CBK1-UP
AN ATTACHMENT

SMCS-4200 **i00759272**

NOTE	PART NUMBER	QTY	PART NAME 1 2 3 4 5 6 (PRODUCT LEVEL)	SEE PAGE
Y	*142-6372*	6	WHEEL & TIRE GP	452

Y-SEPARATE ILLUSTRATION

<END>

151-0374 WHEEL & TIRE AR

S/N: CBK1-UP
AN ATTACHMENT

SMCS-4200 **i00759278**

NOTE	PART NUMBER	QTY	PART NAME 1 2 3 4 5 6 (PRODUCT LEVEL)	SEE PAGE
Y	*142-6355*	6	WHEEL & TIRE GP	447

Y-SEPARATE ILLUSTRATION

<END>

151-0375 WHEEL & TIRE AR

S/N: CBK1-UP
AN ATTACHMENT

SMCS-4200 **i00759351**

NOTE	PART NUMBER	QTY	PART NAME 1 2 3 4 5 6 (PRODUCT LEVEL)	SEE PAGE
Y	*142-6373*	6	WHEEL & TIRE GP	453

Y-SEPARATE ILLUSTRATION

<END>

151-0378 WHEEL & TIRE AR

S/N: CBK1-UP
AN ATTACHMENT

SMCS-4200 **i00759357**

NOTE	PART NUMBER	QTY	PART NAME 1 2 3 4 5 6 (PRODUCT LEVEL)	SEE PAGE
Y	*142-6356*	6	WHEEL & TIRE GP	448

Y-SEPARATE ILLUSTRATION

<END>

151-0380 WHEEL & TIRE AR

S/N: CBK1-UP
AN ATTACHMENT

SMCS-4200 **i00759275**

NOTE	PART NUMBER	QTY	PART NAME 1 2 3 4 5 6 (PRODUCT LEVEL)	SEE PAGE
Y	*142-6364*	6	WHEEL & TIRE GP	450

Y-SEPARATE ILLUSTRATION

<END>

151-0381 WHEEL & TIRE AR

S/N: CBK1-UP
AN ATTACHMENT

SMCS-4200 **i00760333**

NOTE	PART NUMBER	QTY	PART NAME 1 2 3 4 5 6 (PRODUCT LEVEL)	SEE PAGE
Y	*142-6367*	6	WHEEL & TIRE GP	451

Y-SEPARATE ILLUSTRATION

<END>

151-0382 WHEEL & TIRE AR

S/N: CBK1-UP
AN ATTACHMENT

SMCS-4200 **i00760334**

NOTE	PART NUMBER	QTY	PART NAME 1 2 3 4 5 6 (PRODUCT LEVEL)	SEE PAGE
Y	*142-6374*	6	WHEEL & TIRE GP	453

Y-SEPARATE ILLUSTRATION

<END>

151-0385 WHEEL & TIRE AR

S/N: CBK1-UP
AN ATTACHMENT

SMCS-4200 **i00775615**

NOTE	PART NUMBER	QTY	PART NAME 1 2 3 4 5 6 (PRODUCT LEVEL)	SEE PAGE
Y	*142-6385*	6	WHEEL & TIRE GP	455

Y-SEPARATE ILLUSTRATION

<END>

151-0388 WHEEL & TIRE AR

S/N: CBK1-UP
AN ATTACHMENT

SMCS-4200 **i00760579**

NOTE	PART NUMBER	QTY	PART NAME 1 2 3 4 5 6 (PRODUCT LEVEL)	SEE PAGE
Y	*142-6357*	6	WHEEL & TIRE GP	448

Y-SEPARATE ILLUSTRATION

<END>

151-0389 WHEEL & TIRE AR

S/N: CBK1-UP
AN ATTACHMENT

SMCS-4200 **i00760599**

NOTE	PART NUMBER	QTY	PART NAME 1 2 3 4 5 6 (PRODUCT LEVEL)	SEE PAGE
Y	*142-6375*	6	WHEEL & TIRE GP	454

Y-SEPARATE ILLUSTRATION

<END>

151-0392 WHEEL & TIRE AR

S/N: CBK1-UP
AN ATTACHMENT

SMCS-4200 **i00760499**

NOTE	PART NUMBER	QTY	PART NAME 1 2 3 4 5 6 (PRODUCT LEVEL)	SEE PAGE
Y	*142-6358*	6	WHEEL & TIRE GP	449

Y-SEPARATE ILLUSTRATION

<END>

151-0393 WHEEL & TIRE AR

S/N: CBK1-UP
AN ATTACHMENT

SMCS-4200 **i00760539**

NOTE	PART NUMBER	QTY	PART NAME 1 2 3 4 5 6 (PRODUCT LEVEL)	SEE PAGE
Y	*142-6376*	6	WHEEL & TIRE GP	454

Y-SEPARATE ILLUSTRATION

<END>

153-5460 WHEEL & TIRE AR

S/N: CBK1-UP
AN ATTACHMENT

SMCS-4200 **i00767526**

NOTE	PART NUMBER	QTY	PART NAME 1 2 3 4 5 6 (PRODUCT LEVEL)	SEE PAGE
Y	*153-5459*	6	WHEEL & TIRE GP	457

Y-SEPARATE ILLUSTRATION

<END>

153-5464 WHEEL & TIRE AR

S/N: CBK1-UP
AN ATTACHMENT

SMCS-4200 **i00767583**

NOTE	PART NUMBER	QTY	PART NAME 1 2 3 4 5 6 (PRODUCT LEVEL)	SEE PAGE
Y	*153-5463*	6	WHEEL & TIRE GP	457

Y-SEPARATE ILLUSTRATION

<END>

153-5468 WHEEL & TIRE AR

S/N: CBK1-UP
AN ATTACHMENT

SMCS-4200 **i00767538**

NOTE	PART NUMBER	QTY	PART NAME 1 2 3 4 5 6 (PRODUCT LEVEL)	SEE PAGE
Y	*153-5467*	6	WHEEL & TIRE GP	458

Y-SEPARATE ILLUSTRATION

<END>

159-1782 WHEEL & TIRE AR

S/N: CBK1-UP
AN ATTACHMENT

SMCS-4200 **i01035793**

NOTE	PART NUMBER	QTY	PART NAME 1 2 3 4 5 6 (PRODUCT LEVEL)	SEE PAGE
Y	*159-1785*	6	WHEEL & TIRE GP	458

Y-SEPARATE ILLUSTRATION

<END>

163-0375 WHEEL & TIRE AR

S/N: CBK1-UP
AN ATTACHMENT

SMCS-4200 **i02164193**

NOTE	PART NUMBER	QTY	PART NAME 1 2 3 4 5 6 (PRODUCT LEVEL)	SEE PAGE
Y	*163-0376*	6	WHEEL & TIRE GP	459

Y-SEPARATE ILLUSTRATION

<END>

174-2304 WHEEL & TIRE AR

S/N: CBK1-UP
AN ATTACHMENT

SMCS-4200 **i01680354**

NOTE	PART NUMBER	QTY	PART NAME 1 2 3 4 5 6 (PRODUCT LEVEL)	SEE PAGE
Y	*173-7813*	6	WHEEL & TIRE GP	459

Y-SEPARATE ILLUSTRATION

<END>

183-1416 WHEEL & TIRE AR

S/N: CBK1-UP
AN ATTACHMENT

SMCS-4200 **i02164215**

NOTE	PART NUMBER	QTY	PART NAME 1 2 3 4 5 6 (PRODUCT LEVEL)	SEE PAGE
Y	*183-1415*	6	WHEEL & TIRE GP	460

Y-SEPARATE ILLUSTRATION

<END>

183-1417 WHEEL & TIRE AR

S/N: CBK1-UP
AN ATTACHMENT

SMCS-4200 **i02164201**

NOTE	PART NUMBER	QTY	PART NAME 1 2 3 4 5 6 (PRODUCT LEVEL)	SEE PAGE
Y	*183-1418*	6	WHEEL & TIRE GP	460

Y-SEPARATE ILLUSTRATION

<END>

190-7418 WHEEL & TIRE AR

S/N: CBK1-UP
AN ATTACHMENT

SMCS-4200 **i02164264**

NOTE	PART NUMBER	QTY	PART NAME 1 2 3 4 5 6 (PRODUCT LEVEL)	SEE PAGE
Y	*190-7417*	6	WHEEL & TIRE GP	461

Y-SEPARATE ILLUSTRATION

<END>

198-6565 WHEEL & TIRE AR

S/N: CBK1-UP
AN ATTACHMENT

SMCS-4200 **i02164297**

NOTE	PART NUMBER	QTY	PART NAME 1 2 3 4 5 6 (PRODUCT LEVEL)	SEE PAGE
Y	*198-6572*	6	WHEEL & TIRE GP	461

Y-SEPARATE ILLUSTRATION

<END>

204-8786 WHEEL & TIRE AR

S/N: CBK1-UP
AN ATTACHMENT

SMCS-4200 **i01562289**

NOTE	PART NUMBER	QTY	PART NAME 1 2 3 4 5 6 (PRODUCT LEVEL)	SEE PAGE
Y	*204-8785*	6	WHEEL & TIRE GP	462

Y-SEPARATE ILLUSTRATION

<END>

207-9862 WHEEL & TIRE AR

S/N: CBK1-UP
AN ATTACHMENT

SMCS-4200 **i02164332**

NOTE	PART NUMBER	QTY	PART NAME 1 2 3 4 5 6 (PRODUCT LEVEL)	SEE PAGE
Y	*207-9861*	6	WHEEL & TIRE GP	462

Y-SEPARATE ILLUSTRATION

<END>

216-7444 WHEEL & TIRE AR

S/N: CBK1-UP
AN ATTACHMENT

SMCS-4200 **i02164771**

NOTE	PART NUMBER	QTY	PART NAME 1 2 3 4 5 6 (PRODUCT LEVEL)	SEE PAGE
Y	*216-7443*	6	WHEEL & TIRE GP	463

Y-SEPARATE ILLUSTRATION

<END>

228-9265 WHEEL & TIRE AR

S/N: CBK1-UP
AN ATTACHMENT

SMCS-4200 **i02164807**

NOTE	PART NUMBER	QTY	PART NAME 1 2 3 4 5 6 (PRODUCT LEVEL)	SEE PAGE
Y	*226-0735*	6	WHEEL & TIRE GP	463

Y-SEPARATE ILLUSTRATION

<END>

250-2182 WHEEL & TIRE AR

S/N: CBK1-UP
AN ATTACHMENT

SMCS-4200 **i02164320**

NOTE	PART NUMBER	QTY	PART NAME 1 2 3 4 5 6 (PRODUCT LEVEL)	SEE PAGE
Y	*250-2181*	6	WHEEL & TIRE GP	464

Y-SEPARATE ILLUSTRATION

<END>

142-6283 WHEEL & TIRE GP

S/N: CBK1-UP
(9 X 24)
PART OF 151-0286 WHEEL & TIRE AR
AN ATTACHMENT

SMCS-4200 **i02207567**

NOTE	PART NUMBER	QTY	PART NAME 1 2 3 4 5 6 (PRODUCT LEVEL)	SEE PAGE
	123-3420	1	RIM AS (9X24)	
	142-6165	1	TIRE (13-24)	
	2D-2511	1	VALVE GP-TIRE	
	9K-7951	1	CAP-VALVE (STEM)	
	6F-3930	1	CORE-VALVE	
	7D-5252	1	SPUD AS	
	2D-2508	1	GROMMET	
	2D-2509	1	LOCKNUT (11/16-16-THD)	
	2D-2507	1	SPUD	

<END>

142-6284 WHEEL & TIRE GP

S/N: CBK1-UP
PART OF 151-0287 WHEEL & TIRE AR
AN ATTACHMENT

SMCS-4200 **i01456689**

NOTE	PART NUMBER	QTY	PART NAME 1 2 3 4 5 6 (PRODUCT LEVEL)	SEE PAGE
	2D-2565	1	SEAL-O-RING	
	142-6165	1	TIRE (13.00-24 10PR G-2)	
	110-4213	1	VALVE GP-TIRE	
	7D-5252	1	SPUD AS	
	2D-2508	1	GROMMET	
	2D-2509	1	LOCKNUT	
	110-4214	1	STEM AS	
	9K-7951	1	CAP-VALVE (STEM)	
	6F-3930	1	CORE-VALVE	
Y	*142-6226*	1	WHEEL GP	467

Y-SEPARATE ILLUSTRATION

<END>

142-6285 WHEEL & TIRE GP

S/N: CBK1-UP
(9 X 24)
PART OF 142-6390 WHEEL & TIRE AR
AN ATTACHMENT

SMCS-4200 **i02207566**

NOTE	PART NUMBER	QTY	PART NAME 1 2 3 4 5 6 (PRODUCT LEVEL)	SEE PAGE
	123-3420	1	RIM AS (9X24)	
	142-6166	1	TIRE (13.00-24 10PR G2/L2)	
	2D-2511	1	VALVE GP-TIRE	
	9K-7951	1	CAP-VALVE (STEM)	
	6F-3930	1	CORE-VALVE	
	7D-5252	1	SPUD AS	
	2D-2508	1	GROMMET	
	2D-2509	1	LOCKNUT (11/16-16-THD)	
	2D-2507	1	SPUD	

<END>

142-6286 WHEEL & TIRE GP

S/N: CBK1-UP
PART OF 142-6391 WHEEL & TIRE AR
AN ATTACHMENT

SMCS-4200 **i01456692**

NOTE	PART NUMBER	QTY	PART NAME 1 2 3 4 5 6 (PRODUCT LEVEL)	SEE PAGE
	2D-2565	1	SEAL-O-RING	
	142-6166	1	TIRE (13.00-24 10PR G2/L2)	
	110-4213	1	VALVE GP-TIRE	
	7D-5252	1	SPUD AS	
	2D-2508	1	GROMMET	
	2D-2509	1	LOCKNUT	
	110-4214	1	STEM AS	
	9K-7951	1	CAP-VALVE (STEM)	
	6F-3930	1	CORE-VALVE	
Y	*142-6226*	1	WHEEL GP	467

Y-SEPARATE ILLUSTRATION

<END>

142-6287 WHEEL & TIRE GP

S/N: CBK1-UP
(9 X 24)
PART OF 142-6392 WHEEL & TIRE AR
AN ATTACHMENT

SMCS-4200 **i02207565**

NOTE	PART NUMBER	QTY	PART NAME 1 2 3 4 5 6 (PRODUCT LEVEL)	SEE PAGE
	123-3420	1	RIM AS (9X24)	
	142-6167	1	TIRE (13-24)	
	2D-2511	1	VALVE GP-TIRE	
	9K-7951	1	CAP-VALVE (STEM)	
	6F-3930	1	CORE-VALVE	
	7D-5252		SPUD AS	
	2D-2508	1	GROMMET	
	2D-2509	1	LOCKNUT (11/16-16-THD)	

<END>

142-6288 WHEEL & TIRE GP

S/N: CBK1-UP
(9 X 24)
PART OF 142-6393 WHEEL & TIRE AR
AN ATTACHMENT

SMCS-4200 **i02207564**

NOTE	PART NUMBER	QTY	PART NAME 1 2 3 4 5 6 (PRODUCT LEVEL)	SEE PAGE
	123-3420	1	RIM AS (9X24)	
	142-6168	1	TIRE (13-24)	
	2D-2511	1	VALVE GP-TIRE	
	9K-7951	1	CAP-VALVE (STEM)	
	6F-3930	1	CORE-VALVE	
	7D-5252	1	SPUD AS	
	2D-2508	1	GROMMET	
	2D-2509	1	LOCKNUT (11/16-16-THD)	

<END>

142-6290 WHEEL & TIRE GP

S/N: CBK1-UP
PART OF 142-6395 WHEEL & TIRE AR
AN ATTACHMENT

SMCS-4200 **i01456697**

NOTE	PART NUMBER	QTY	PART NAME 1 2 3 4 5 6 (PRODUCT LEVEL)	SEE PAGE
	2D-2565	1	SEAL-O-RING	
	142-6167	1	TIRE (13.00-24 12PR G-2)	
	110-4213	1	VALVE GP-TIRE	
	7D-5252	1	SPUD AS	
	2D-2508	1	GROMMET	
	2D-2509	1	LOCKNUT	
	110-4214		STEM AS	
	9K-7951	1	CAP-VALVE (STEM)	
	6F-3930	1	CORE-VALVE	
Y	*142-6226*	1	WHEEL GP	467

Y-SEPARATE ILLUSTRATION

<END>

142-6291 WHEEL & TIRE GP

S/N: CBK1-UP
PART OF 142-6439 WHEEL & TIRE AR
AN ATTACHMENT

SMCS-4200 **i01457454**

NOTE	PART NUMBER	QTY	PART NAME 1 2 3 4 5 6 (PRODUCT LEVEL)	SEE PAGE
	2D-2565	1	SEAL-O-RING	
	142-6168	1	TIRE (13.00-24 12PR G-2/L2)	
	110-4213	1	VALVE GP-TIRE	
	7D-5252	1	SPUD AS	
	2D-2508	1	GROMMET	
	2D-2509	1	LOCKNUT	
	110-4214	1	STEM AS	
	9K-7951	1	CAP-VALVE (STEM)	
	6F-3930	1	CORE-VALVE	
Y	*142-6226*	1	WHEEL GP	467

Y-SEPARATE ILLUSTRATION

<END>

142-6292 WHEEL & TIRE GP

S/N: CBK1-UP
PART OF 142-6440 WHEEL & TIRE AR
AN ATTACHMENT

SMCS-4200 **i01457455**

NOTE	PART NUMBER	QTY	PART NAME 1 2 3 4 5 6 (PRODUCT LEVEL)	SEE PAGE
	2D-2565	1	SEAL-O-RING	
	142-6169	1	TIRE (13.00-24 12PR G-2)	
	110-4213	1	VALVE GP-TIRE	
	7D-5252	1	SPUD AS	
	2D-2508	1	GROMMET	
	2D-2509	1	LOCKNUT	
	110-4214	1	STEM AS	
	9K-7951	1	CAP-VALVE (STEM)	
	6F-3930	1	CORE-VALVE	
Y	*142-6226*	1	WHEEL GP	467

Y-SEPARATE ILLUSTRATION

<END>

142-6293 WHEEL & TIRE GP

S/N: CBK1-UP
(9 X 24)
PART OF 142-6441 WHEEL & TIRE AR
AN ATTACHMENT

SMCS-4200 **i02207563**

NOTE	PART NUMBER	QTY	PART NAME 1 2 3 4 5 6 (PRODUCT LEVEL)	SEE PAGE
	123-3420	1	RIM AS (9X24)	
	112-9924	1	TIRE (13-R24)	
	2D-2511	1	VALVE GP-TIRE	
	9K-7951	1	CAP-VALVE (STEM)	
	6F-3930	1	CORE-VALVE	
	7D-5252	1	SPUD AS	
	2D-2508	1	GROMMET	
	2D-2509	1	LOCKNUT (11/16-16-THD)	

<END>

142-6294 WHEEL & TIRE GP

S/N: CBK1-UP
PART OF 142-6442 WHEEL & TIRE AR
AN ATTACHMENT

SMCS-4200 **i01456706**

NOTE	PART NUMBER	QTY	PART NAME 1 2 3 4 5 6 (PRODUCT LEVEL)	SEE PAGE
	2D-2565	1	SEAL-O-RING	
	112-9924	1	TIRE (13.0 R24 XGLA2)	
	110-4213	1	VALVE GP-TIRE	
	7D-5252	1	SPUD AS	
	2D-2508	1	GROMMET	
	2D-2509	1	LOCKNUT	
	110-4214	1	STEM AS	
	9K-7951	1	CAP-VALVE (STEM)	
	6F-3930	1	CORE-VALVE	
Y	*142-6226*	1	WHEEL GP	467

Y-SEPARATE ILLUSTRATION

<END>

142-6295 WHEEL & TIRE GP

S/N: CBK1-UP
(9 X 24)
PART OF 142-6443 WHEEL & TIRE AR
AN ATTACHMENT

SMCS-4200 **i02207562**

NOTE	PART NUMBER	QTY	PART NAME 1 2 3 4 5 6 (PRODUCT LEVEL)	SEE PAGE
	123-3420	1	RIM AS (9X24)	
	2A-7327	1	TIRE (13-R24)	
	2D-2511	1	VALVE GP-TIRE	
	9K-7951	1	CAP-VALVE (STEM)	
	6F-3930	1	CORE-VALVE	
	7D-5252	1	SPUD AS	
	2D-2508	1	GROMMET	
	2D-2509	1	LOCKNUT (11/16-16-THD)	

<END>

142-6296 WHEEL & TIRE GP

S/N: CBK1-UP
PART OF 142-6444 WHEEL & TIRE AR
AN ATTACHMENT

SMCS-4200 **i01456356**

NOTE	PART NUMBER	QTY	PART NAME 1 2 3 4 5 6 (PRODUCT LEVEL)	SEE PAGE
	2D-2565	1	SEAL-O-RING	
	2A-7327	1	TIRE (13.0 R24 X RL2F)	
	110-4213	1	VALVE GP-TIRE	
	7D-5252	1	SPUD AS	
	2D-2508	1	GROMMET	
	2D-2509	1	LOCKNUT	
	110-4214	1	STEM AS	
	9K-7951	1	CAP-VALVE (STEM)	
	6F-3930	1	CORE-VALVE	
Y	*142-6226*	1	WHEEL GP	467

Y-SEPARATE ILLUSTRATION

<END>

142-6297 WHEEL & TIRE GP

S/N: CBK1-UP
(9 X 24)
PART OF 142-6445 WHEEL & TIRE AR
AN ATTACHMENT

SMCS-4200 **i02205244**

NOTE	PART NUMBER	QTY	PART NAME 1 2 3 4 5 6 (PRODUCT LEVEL)	SEE PAGE
	123-3420	1	RIM AS (9X24)	
	142-6170	1	TIRE (14-24)	
	2D-2511	1	VALVE GP-TIRE	
	9K-7951	1	CAP-VALVE (STEM)	
	6F-3930	1	CORE-VALVE	
	7D-5252	1	SPUD AS	
	2D-2508	1	GROMMET	
	2D-2509	1	LOCKNUT (11/16-16-THD)	
	2D-2507	1	SPUD	

<END>

142-6298 WHEEL & TIRE GP

S/N: CBK1-UP
PART OF 142-6446 WHEEL & TIRE AR
AN ATTACHMENT

SMCS-4200 **i02205245**

NOTE	PART NUMBER	QTY	PART NAME 1 2 3 4 5 6 (PRODUCT LEVEL)	SEE PAGE
Y	*142-6226*	1	WHEEL GP	467
	2D-2565	1	SEAL-O-RING	
	142-6170	1	TIRE (14-24)	
	110-4213	1	VALVE GP-TIRE	
	7D-5252	1	SPUD AS	
	2D-2508	1	GROMMET	
	2D-2509	1	LOCKNUT (11/16-16-THD)	
	110-4214	1	STEM AS	
	9K-7951	1	CAP-VALVE (STEM)	
	6F-3930	1	CORE-VALVE	

Y-SEPARATE ILLUSTRATION

<END>

142-6300 WHEEL & TIRE GP

S/N: CBK1-UP
(9 X 24)
PART OF 142-6448 WHEEL & TIRE AR
AN ATTACHMENT

SMCS-4200 **i02205249**

NOTE	PART NUMBER	QTY	PART NAME 1 2 3 4 5 6 (PRODUCT LEVEL)	SEE PAGE
	123-3420	1	RIM AS (9X24)	
	142-6171	1	TIRE (14-24)	
	2D-2511	1	VALVE GP-TIRE	
	9K-7951	1	CAP-VALVE (STEM)	
	6F-3930	1	CORE-VALVE	
	7D-5252	1	SPUD AS	
	2D-2508	1	GROMMET	
	2D-2509	1	LOCKNUT (11/16-16-THD)	
	2D-2507	1	SPUD	

<END>

142-6301 WHEEL & TIRE GP

S/N: CBK1-UP
PART OF 142-6449 WHEEL & TIRE AR
AN ATTACHMENT

SMCS-4200 **i02205296**

NOTE	PART NUMBER	QTY	PART NAME 1 2 3 4 5 6 (PRODUCT LEVEL)	SEE PAGE
Y	*142-6226*	1	WHEEL GP	467
	2D-2565	1	SEAL-O-RING	
	142-6171	1	TIRE (14-24)	
	110-4213	1	VALVE GP-TIRE	
	7D-5252	1	SPUD AS	
	2D-2508	1	GROMMET	
	2D-2509	1	LOCKNUT (11/16-16-THD)	
	110-4214	1	STEM AS	
	9K-7951	1	CAP-VALVE (STEM)	
	6F-3930	1	CORE-VALVE	

Y-SEPARATE ILLUSTRATION

<END>

142-6306 WHEEL & TIRE GP

S/N: CBK1-UP
(9 X 24)
PART OF 142-6454 WHEEL & TIRE AR
AN ATTACHMENT

SMCS-4200 **i02205305**

NOTE	PART NUMBER	QTY	PART NAME 1 2 3 4 5 6 (PRODUCT LEVEL)	SEE PAGE
	123-3420	1	RIM AS (9X24)	
	142-6173	1	TIRE (14-24)	
	2D-2511	1	VALVE GP-TIRE	
	9K-7951	1	CAP-VALVE (STEM)	
	6F-3930	1	CORE-VALVE	
	7D-5252	1	SPUD AS	
	2D-2508	1	GROMMET	
	2D-2509	1	LOCKNUT (11/16-16-THD)	
	2D-2507	1	SPUD	

<END>

142-6307 WHEEL & TIRE GP

S/N: CBK1-UP
PART OF 142-6455 WHEEL & TIRE AR
AN ATTACHMENT

SMCS-4200 **i02205306**

NOTE	PART NUMBER	QTY	PART NAME 1 2 3 4 5 6 (PRODUCT LEVEL)	SEE PAGE
Y	*142-6226*	1	WHEEL GP	467
	2D-2565	1	SEAL-O-RING	
	142-6173	1	TIRE (14-24)	
	110-4213	1	VALVE GP-TIRE	
	7D-5252	1	SPUD AS	
	2D-2508	1	GROMMET	
	2D-2509	1	LOCKNUT (11/16-16-THD)	
	110-4214	1	STEM AS	
	6F-3930	1	CORE-VALVE	
	9K-7951	1	CAP-VALVE (STEM)	

Y-SEPARATE ILLUSTRATION

<END>

142-6309 WHEEL & TIRE GP

S/N: CBK1-UP
(9 X 24)
PART OF 142-6457 WHEEL & TIRE AR
AN ATTACHMENT

SMCS-4200 **i02205309**

NOTE	PART NUMBER	QTY	PART NAME 1 2 3 4 5 6 (PRODUCT LEVEL)	SEE PAGE
	123-3420	1	RIM AS (9X24)	
	142-6174	1	TIRE (14-24)	
	2D-2511	1	VALVE GP-TIRE	
	9K-7951	1	CAP-VALVE (STEM)	
	6F-3930	1	CORE-VALVE	
	7D-5252	1	SPUD AS	
	2D-2508	1	GROMMET	
	2D-2509	1	LOCKNUT (11/16-16-THD)	
	2D-2507	1	SPUD	

<END>

142-6310 WHEEL & TIRE GP

S/N: CBK1-UP
(9X24)
PART OF 142-6458 WHEEL & TIRE AR
AN ATTACHMENT

SMCS-4200 **i02205321**

NOTE	PART NUMBER	QTY	PART NAME 1 2 3 4 5 6 (PRODUCT LEVEL)	SEE PAGE
Y	*142-6226*	1	WHEEL GP	467
	142-6174	1	TIRE (14-24)	
	2D-2565	1	SEAL-O-RING	
	110-4213	1	VALVE GP-TIRE	
	7D-5252	1	SPUD AS	
	2D-2508	1	GROMMET	
	2D-2509	1	LOCKNUT (11/16-16-THD)	
	110-4214	1	STEM AS	
	9K-7951	1	CAP-VALVE (STEM)	
	6F-3930	1	CORE-VALVE	

Y-SEPARATE ILLUSTRATION

<END>

142-6312 WHEEL & TIRE GP

S/N: CBK1-UP
(9 X 24)
PART OF 142-6460 WHEEL & TIRE AR
AN ATTACHMENT

SMCS-4200 **i02205329**

NOTE	PART NUMBER	QTY	PART NAME 1 2 3 4 5 6 (PRODUCT LEVEL)	SEE PAGE
	123-3420	1	RIM AS (9X24)	
	142-6175	1	TIRE (14-24)	
	2D-2511	1	VALVE GP-TIRE	
	9K-7951	1	CAP-VALVE (STEM)	
	6F-3930	1	CORE-VALVE	
	7D-5252	1	SPUD AS	
	2D-2508	1	GROMMET	
	2D-2509	1	LOCKNUT (11/16-16-THD)	
	2D-2507	1	SPUD	

<END>

142-6313 WHEEL & TIRE GP

S/N: CBK1-UP
PART OF 142-6461 WHEEL & TIRE AR
AN ATTACHMENT

SMCS-4200 **i02205334**

NOTE	PART NUMBER	QTY	PART NAME 1 2 3 4 5 6 (PRODUCT LEVEL)	SEE PAGE
Y	*142-6226*	1	WHEEL GP	467
	2D-2565	1	SEAL-O-RING	
	142-6175	1	TIRE (14-24)	
	110-4213	1	VALVE GP-TIRE	
	7D-5252	1	SPUD AS	
	2D-2508	1	GROMMET	
	2D-2509	1	LOCKNUT (11/16-16-THD)	
	110-4214		STEM AS	
	9K-7951	1	CAP-VALVE (STEM)	
	6F-3930	1	CORE-VALVE	

Y-SEPARATE ILLUSTRATION

<END>

142-6315 WHEEL & TIRE GP

S/N: CBK1-UP
(9 X 24)
PART OF 142-6463 WHEEL & TIRE AR
AN ATTACHMENT

SMCS-4200 **i02205330**

NOTE	PART NUMBER	QTY	PART NAME 1 2 3 4 5 6 (PRODUCT LEVEL)	SEE PAGE
	123-3420	1	RIM AS (9X24)	
	112-9813	1	TIRE (14-R24)	
	2D-2511	1	VALVE GP-TIRE	
	9K-7951	1	CAP-VALVE (STEM)	
	6F-3930	1	CORE-VALVE	
	7D-5252	1	SPUD AS	
	2D-2508	1	GROMMET	
	2D-2509	1	LOCKNUT (11/16-16-THD)	
	2D-2507	1	SPUD	

<END>

142-6316 WHEEL & TIRE GP

S/N: CBK1-UP
PART OF 142-6464 WHEEL & TIRE AR
AN ATTACHMENT

SMCS-4200 **i02205331**

NOTE	PART NUMBER	QTY	PART NAME 1 2 3 4 5 6 (PRODUCT LEVEL)	SEE PAGE
Y	*142-6226*	1	WHEEL GP	467
	2D-2565	1	SEAL-O-RING	
	112-9813	1	TIRE (14-R24)	
	110-4213	1	VALVE GP-TIRE	
	7D-5252	1	SPUD AS	
	2D-2508	1	GROMMET	
	2D-2509	1	LOCKNUT (11/16-16-THD)	
	110-4214	1	STEM AS	
	6F-3930	1	CORE-VALVE	
	9K-7951	1	CAP-VALVE (STEM)	

Y-SEPARATE ILLUSTRATION

<END>

142-6318 WHEEL & TIRE GP

S/N: CBK1-UP
(9 X 24)
PART OF 142-6466 WHEEL & TIRE AR
AN ATTACHMENT

SMCS-4200 **i02205332**

NOTE	PART NUMBER	QTY	PART NAME 1 2 3 4 5 6 (PRODUCT LEVEL)	SEE PAGE
	123-3420	1	RIM AS (9X24)	
	123-3178	1	TIRE (14-R24)	
	2D-2511	1	VALVE GP-TIRE	
	9K-7951	1	CAP-VALVE (STEM)	
	6F-3930	1	CORE-VALVE	
	7D-5252	1	SPUD AS	
	2D-2508	1	GROMMET	
	2D-2509	1	LOCKNUT (11/16-16-THD)	
	2D-2507	1	SPUD	

<END>

142-6319 WHEEL & TIRE GP

S/N: CBK1-UP
(9X24)
PART OF 142-6467 WHEEL & TIRE AR
AN ATTACHMENT

SMCS-4200 **i02205335**

NOTE	PART NUMBER	QTY	PART NAME 1 2 3 4 5 6 (PRODUCT LEVEL)	SEE PAGE
Y	*142-6226*	1	WHEEL GP	467
	2D-2565	1	SEAL-O-RING	
	123-3178	1	TIRE (14-R24)	
	110-4213	1	VALVE GP-TIRE	
	7D-5252	1	SPUD AS	
	2D-2508	1	GROMMET	
	2D-2509	1	LOCKNUT (11/16-16-THD)	
	110-4214	1	STEM AS	
	9K-7951	1	CAP-VALVE (STEM)	
	6F-3930	1	CORE-VALVE	

Y-SEPARATE ILLUSTRATION

<END>

142-6321 WHEEL & TIRE GP

S/N: CBK1-UP
(9 X 24)
PART OF 142-6469 WHEEL & TIRE AR
AN ATTACHMENT

SMCS-4200 **i02205364**

NOTE	PART NUMBER	QTY	PART NAME 1 2 3 4 5 6 (PRODUCT LEVEL)	SEE PAGE
	123-3420	1	RIM AS (9X24)	
	106-1567	1	TIRE (14-R24)	
	2D-2511	1	VALVE GP-TIRE	
	9K-7951	1	CAP-VALVE (STEM)	
	6F-3930	1	CORE-VALVE	
	7D-5252	1	SPUD AS	
	2D-2508	1	GROMMET	
	2D-2509	1	LOCKNUT (11/16-16-THD)	
	2D-2507	1	SPUD	

<END>

142-6322 WHEEL & TIRE GP

S/N: CBK1-UP
(9X24)
PART OF 142-6470 WHEEL & TIRE AR
AN ATTACHMENT

SMCS-4200 **i02205366**

NOTE	PART NUMBER	QTY	PART NAME 1 2 3 4 5 6 (PRODUCT LEVEL)	SEE PAGE
Y	*142-6226*	1	WHEEL GP	467
	2D-2565	1	SEAL-O-RING	
	106-1567	1	TIRE (14-R24)	
	110-4213	1	VALVE GP-TIRE	
	7D-5252	1	SPUD AS	
	2D-2508	1	GROMMET	
	2D-2509	1	LOCKNUT (11/16-16-THD)	
	110-4214	1	STEM AS	
	6F-3930	1	CORE-VALVE	
	9K-7951	1	CAP-VALVE (STEM)	

Y-SEPARATE ILLUSTRATION

<END>

142-6324 WHEEL & TIRE GP

S/N: CBK1-UP
(9 X 24)
PART OF 142-6472 WHEEL & TIRE AR
AN ATTACHMENT

SMCS-4200 **i02205367**

NOTE	PART NUMBER	QTY	PART NAME 1 2 3 4 5 6 (PRODUCT LEVEL)	SEE PAGE
	123-3420	1	RIM AS (9X24)	
	129-5454	1	TIRE (14-R24)	
	2D-2511	1	VALVE GP-TIRE	
	9K-7951	1	CAP-VALVE (STEM)	
	6F-3930	1	CORE-VALVE	
	7D-5252	1	SPUD AS	
	2D-2508	1	GROMMET	
	2D-2509	1	LOCKNUT (11/16-16-THD)	
	2D-2507	1	SPUD	

<END>

142-6325 WHEEL & TIRE GP

S/N: CBK1-UP
(9X24)
PART OF 142-6474 WHEEL & TIRE AR
AN ATTACHMENT

SMCS-4200 **i02205368**

NOTE	PART NUMBER	QTY	PART NAME 1 2 3 4 5 6 (PRODUCT LEVEL)	SEE PAGE
Y	*142-6226*	1	WHEEL GP	467
	2D-2565	1	SEAL-O-RING	
	129-5454	1	TIRE (14-R24)	
	110-4213	1	VALVE GP-TIRE	
	7D-5252	1	SPUD AS	
	2D-2508	1	GROMMET	
	2D-2509	1	LOCKNUT (11/16-16-THD)	
	110-4214	1	STEM AS	
	9K-7951	1	CAP-VALVE (STEM)	
	6F-3930	1	CORE-VALVE	

Y-SEPARATE ILLUSTRATION

<END>

142-6328 WHEEL & TIRE GP

S/N: CBK1-UP
(9X24)
PART OF 142-6477 WHEEL & TIRE AR
AN ATTACHMENT

SMCS-4200 **i02205369**

NOTE	PART NUMBER	QTY	PART NAME 1 2 3 4 5 6 (PRODUCT LEVEL)	SEE PAGE
Y	*142-6226*	1	WHEEL GP	467
	2D-2565	1	SEAL-O-RING	
	141-0360	1	TIRE (14-R24)	
	110-4213	1	VALVE GP-TIRE	
	7D-5252	1	SPUD AS	
	2D-2507	1	SPUD	
	2D-2508	1	GROMMET	
	2D-2509	1	LOCKNUT (11/16-16-THD)	
	110-4214	1	STEM AS	
	6F-3930	1	CORE-VALVE	
	9K-7951	1	CAP-VALVE (STEM)	

Y-SEPARATE ILLUSTRATION

<END>

142-6330 WHEEL & TIRE GP

S/N: CBK1-UP
(9X24)
PART OF 142-6479 WHEEL & TIRE AR
AN ATTACHMENT

SMCS-4200 **i02205370**

NOTE	PART NUMBER	QTY	PART NAME 1 2 3 4 5 6 (PRODUCT LEVEL)	SEE PAGE
Y	*142-6226*	1	WHEEL GP	467
	2D-2565	1	SEAL-O-RING	
	140-3607	1	TIRE (14-R24)	
	110-4213	1	VALVE GP-TIRE	
	7D-5252	1	SPUD AS	
	2D-2508	1	GROMMET	
	2D-2509	1	LOCKNUT (11/16-16-THD)	
	110-4214	1	STEM AS	
	9K-7951	1	CAP-VALVE (STEM)	
	6F-3930	1	CORE-VALVE	

Y-SEPARATE ILLUSTRATION

<END>

142-6332 WHEEL & TIRE GP

S/N: CBK1-UP
(9X24)
PART OF 151-0362 WHEEL & TIRE AR
AN ATTACHMENT

SMCS-4200 **i02205434**

NOTE	PART NUMBER	QTY	PART NAME 1 2 3 4 5 6 (PRODUCT LEVEL)	SEE PAGE
Y	*142-6226*	1	WHEEL GP	467
	2D-2565	1	SEAL-O-RING	
	8W-7957	1	TIRE (14-R24)	
	110-4213	1	VALVE GP-TIRE	
	7D-5252	1	SPUD AS	
	2D-2508	1	GROMMET	
	2D-2509	1	LOCKNUT (11/16-16-THD)	
	110-4214	1	STEM AS	
	9K-7951	1	CAP-VALVE (STEM)	
	6F-3930	1	CORE-VALVE	

Y-SEPARATE ILLUSTRATION

<END>

142-6335 WHEEL & TIRE GP

S/N: CBK1-UP
(13 X 25)
PART OF 151-0329 WHEEL & TIRE AR
AN ATTACHMENT

SMCS-4200 **i01757684**

NOTE	PART NUMBER	QTY	PART NAME 1 2 3 4 5 6 (PRODUCT LEVEL)	SEE PAGE
	8X-1160	1	RIM AS (13X25)	
	142-6176	1	TIRE (15.5-R25) (15.5-25 25PR L-2)	
	2G-6595	1	VALVE GP-TIRE	
	9K-7951	1	CAP-VALVE (STEM)	
	6F-3930	1	CORE-VALVE	
	7D-5252	1	SPUD AS	
	2D-2508	1	GROMMET	
	2D-2509	1	LOCKNUT (11/16-16-THD)	
	2D-2507	1	SPUD	

<END>

142-6336 WHEEL & TIRE GP

S/N: CBK1-UP
(13 X 25)
PART OF 151-0347 WHEEL & TIRE AR
AN ATTACHMENT

SMCS-4200 **i01757685**

NOTE	PART NUMBER	QTY	PART NAME 1 2 3 4 5 6 (PRODUCT LEVEL)	SEE PAGE
	8X-1160	1	RIM AS (13X25)	
	142-6177	1	TIRE (15.5-25 12PR L-2)	
	2G-6595	1	VALVE GP-TIRE	
	9K-7951	1	CAP-VALVE (STEM)	
	6F-3930	1	CORE-VALVE	
	7D-5252	1	SPUD AS	
	2D-2508	1	GROMMET	
	2D-2509	1	LOCKNUT (11/16-16-THD)	
	2D-2507	1	SPUD	

<END>

142-6337 WHEEL & TIRE GP

S/N: CBK1-UP
(13 X 25)
PART OF 151-0355 WHEEL & TIRE AR
AN ATTACHMENT

SMCS-4200 **i01757687**

NOTE	PART NUMBER	QTY	PART NAME 1 2 3 4 5 6 (PRODUCT LEVEL)	SEE PAGE
	8X-1160	1	RIM AS (13X25)	
	142-6178	1	TIRE (15.50-25 12PR L-2)	
	2G-6595	1	VALVE GP-TIRE	
	9K-7951	1	CAP-VALVE (STEM)	
	6F-3930	1	CORE-VALVE	
	7D-5252	1	SPUD AS	
	2D-2508	1	GROMMET	
	2D-2509	1	LOCKNUT (11/16-16-THD)	
	2D-2507	1	SPUD	

<END>

142-6338 WHEEL & TIRE GP

S/N: CBK1-UP
(13 X 25)
PART OF 151-0330 WHEEL & TIRE AR
AN ATTACHMENT

SMCS-4200 **i01757689**

NOTE	PART NUMBER	QTY	PART NAME 1 2 3 4 5 6 (PRODUCT LEVEL)	SEE PAGE
	8X-1160	1	RIM AS (13X25)	
	142-6179	1	TIRE (15.5-25 12PR L-3)	
	2G-6595	1	VALVE GP-TIRE	
	9K-7951	1	CAP-VALVE (STEM)	
	6F-3930	1	CORE-VALVE	
	7D-5252	1	SPUD AS	
	2D-2508	1	GROMMET	
	2D-2509	1	LOCKNUT (11/16-16-THD)	
	2D-2507	1	SPUD	

<END>

142-6339 WHEEL & TIRE GP

S/N: CBK1-UP
(13 X 25)
PART OF 151-0348 WHEEL & TIRE AR
AN ATTACHMENT

SMCS-4200 **i01757696**

NOTE	PART NUMBER	QTY	PART NAME 1 2 3 4 5 6 (PRODUCT LEVEL)	SEE PAGE
	8X-1160	1	RIM AS (13X25)	
	142-6180	1	TIRE (15.50-25 12PR L-3)	
	2G-6595	1	VALVE GP-TIRE	
	9K-7951	1	CAP-VALVE (STEM)	
	6F-3930	1	CORE-VALVE	
	7D-5252	1	SPUD AS	
	2D-2508	1	GROMMET	
	2D-2509	1	LOCKNUT (11/16-16-THD)	
	2D-2507	1	SPUD	

<END>

142-6341 WHEEL & TIRE GP

S/N: CBK1-UP
(13 X 25)
PART OF 151-0331 WHEEL & TIRE AR
AN ATTACHMENT

SMCS-4200 **i01755156**

NOTE	PART NUMBER	QTY	PART NAME 1 2 3 4 5 6 (PRODUCT LEVEL)	SEE PAGE
	8X-1160	1	RIM AS (13X25)	
	6C-3248	1	TIRE (15.5-R25)	
	2G-6595	1	VALVE GP-TIRE	
	9K-7951	1	CAP-VALVE (STEM)	
	6F-3930	1	CORE-VALVE	
	7D-5252	1	SPUD AS	
	2D-2508	1	GROMMET	
	2D-2509	1	LOCKNUT (11/16-16-THD)	
	2D-2507	1	SPUD	

<END>

142-6353 WHEEL & TIRE GP

S/N: CBK1-UP
(13 X 25)
PART OF 151-0364 WHEEL & TIRE AR
AN ATTACHMENT

SMCS-4200 **i02205435**

NOTE	PART NUMBER	QTY	PART NAME 1 2 3 4 5 6 (PRODUCT LEVEL)	SEE PAGE
	8X-1160	1	RIM AS (13X25)	
	142-6182	1	TIRE (7.5-25)	
	2G-6595	1	VALVE GP-TIRE	
	9K-7951	1	CAP-VALVE (STEM)	
	6F-3930	1	CORE-VALVE	
	7D-5252	1	SPUD AS	
	2D-2508	1	GROMMET	
	2D-2509	1	LOCKNUT (11/16-16-THD)	
	2D-2507	1	SPUD	

<END>

142-6354 WHEEL & TIRE GP

S/N: CBK1-UP
(13 X 25)
PART OF 151-0371 WHEEL & TIRE AR
AN ATTACHMENT

SMCS-4200 **i02205436**

NOTE	PART NUMBER	QTY	PART NAME 1 2 3 4 5 6 (PRODUCT LEVEL)	SEE PAGE
	8X-1160	1	RIM AS (13X25)	
	142-6183	1	TIRE (7.5X25)	
	2G-6595	1	VALVE GP-TIRE	
	9K-7951	1	CAP-VALVE (STEM)	
	6F-3930	1	CORE-VALVE	
	7D-5252	1	SPUD AS	
	2D-2508	1	GROMMET	
	2D-2509	1	LOCKNUT (11/16-16-THD)	
	2D-2507	1	SPUD	

<END>

142-6355 WHEEL & TIRE GP

S/N: CBK1-UP
(13 X 25)
PART OF 151-0374 WHEEL & TIRE AR
AN ATTACHMENT

SMCS-4200 **i02205437**

NOTE	PART NUMBER	QTY	PART NAME 1 2 3 4 5 6 (PRODUCT LEVEL)	SEE PAGE
	8X-1160	1	RIM AS (13X25)	
	142-6184	1	TIRE (17.5-25)	
	2G-6595	1	VALVE GP-TIRE	
	9K-7951	1	CAP-VALVE (STEM)	
	6F-3930	1	CORE-VALVE	
	7D-5252	1	SPUD AS	
	2D-2508	1	GROMMET	
	2D-2509	1	LOCKNUT (11/16-16-THD)	
	2D-2507	1	SPUD	

<END>

142-6356 WHEEL & TIRE GP

S/N: CBK1-UP
(13X25)
PART OF 151-0378 WHEEL & TIRE AR
AN ATTACHMENT

SMCS-4200 **i02205438**

NOTE	PART NUMBER	QTY	PART NAME 1 2 3 4 5 6 (PRODUCT LEVEL)	SEE PAGE
Y	*142-6229*	1	WHEEL GP	467
	8W-3686	1	SEAL-O-RING	
	142-6182	1	TIRE (7.5-25)	
	2G-6595	1	VALVE GP-TIRE	
	9K-7951	1	CAP-VALVE (STEM)	
	6F-3930	1	CORE-VALVE	
	7D-5252	1	SPUD AS	
	2D-2508	1	GROMMET	
	2D-2509	1	LOCKNUT (11/16-16-THD)	
	2D-2507	1	SPUD	

Y-SEPARATE ILLUSTRATION

<END>

142-6357 WHEEL & TIRE GP

S/N: CBK1-UP
(13X25)
PART OF 151-0388 WHEEL & TIRE AR
AN ATTACHMENT

SMCS-4200 **i02205458**

NOTE	PART NUMBER	QTY	PART NAME 1 2 3 4 5 6 (PRODUCT LEVEL)	SEE PAGE
Y	*142-6229*	1	WHEEL GP	467
	8W-3686	1	SEAL-O-RING	
	142-6183	1	TIRE (7.5X25)	
	2G-6595	1	VALVE GP-TIRE	
	9K-7951	1	CAP-VALVE (STEM)	
	6F-3930	1	CORE-VALVE	
	7D-5252	1	SPUD AS	
	2D-2508	1	GROMMET	
	2D-2509	1	LOCKNUT (11/16-16-THD)	
	2D-2507	1	SPUD	

Y-SEPARATE ILLUSTRATION

<END>

142-6358 WHEEL & TIRE GP

S/N: CBK1-UP
(13X25)
PART OF 151-0392 WHEEL & TIRE AR
AN ATTACHMENT

SMCS-4200 **i02205459**

NOTE	PART NUMBER	QTY	PART NAME 1 2 3 4 5 6 (PRODUCT LEVEL)	SEE PAGE
Y	*142-6229*	1	WHEEL GP	467
	8W-3686	1	SEAL-O-RING	
	142-6184	1	TIRE (17.5-25)	
	2G-6595	1	VALVE GP-TIRE	
	9K-7951	1	CAP-VALVE (STEM)	
	6F-3930	1	CORE-VALVE	
	7D-5252	1	SPUD AS	
	2D-2508	1	GROMMET	
	2D-2509	1	LOCKNUT (11/16-16-THD)	
	2D-2507	1	SPUD	

Y-SEPARATE ILLUSTRATION

<END>

142-6360 WHEEL & TIRE GP

S/N: CBK1-UP
(13 X 25)
PART OF 151-0365 WHEEL & TIRE AR
AN ATTACHMENT

SMCS-4200 **i01755157**

NOTE	PART NUMBER	QTY	PART NAME 1 2 3 4 5 6 (PRODUCT LEVEL)	SEE PAGE
	8X-1160	1	RIM AS (13X25)	
	6C-7366	1	TIRE (17.5-R25)	
	2G-6595	1	VALVE GP-TIRE	
	6F-3930	1	CORE-VALVE	
	9K-7951	1	CAP-VALVE (STEM)	
	7D-5252	1	SPUD AS	
	2D-2507	1	SPUD	
	2D-2508	1	GROMMET	
	2D-2509	1	LOCKNUT (11/16-16-THD)	

<END>

142-6363 WHEEL & TIRE GP

S/N: CBK1-UP
(13 X 25)
PART OF 151-0366 WHEEL & TIRE AR
AN ATTACHMENT

SMCS-4200 **i01755167**

NOTE	PART NUMBER	QTY	PART NAME 1 2 3 4 5 6 (PRODUCT LEVEL)	SEE PAGE
	8X-1160	1	RIM AS (13X25)	
	6C-3246	1	TIRE (17.5-R25)	
	2G-6595	1	VALVE GP-TIRE	
	6F-3930	1	CORE-VALVE	
	9K-7951	1	CAP-VALVE (STEM)	
	7D-5252	1	SPUD AS	
	2D-2507	1	SPUD	
	2D-2508	1	GROMMET	
	2D-2509	1	LOCKNUT (11/16-16-THD)	

<END>

142-6364 WHEEL & TIRE GP

S/N: CBK1-UP
(13X25)
PART OF 151-0380 WHEEL & TIRE AR
AN ATTACHMENT

SMCS-4200 **i02205476**

NOTE	PART NUMBER	QTY	PART NAME 1 2 3 4 5 6 (PRODUCT LEVEL)	SEE PAGE
Y	*142-6229*	1	WHEEL GP	467
	8W-3686	1	SEAL-O-RING	
	6C-3246	1	TIRE (17.5-R25)	
	2G-6595	1	VALVE GP-TIRE	
	6F-3930	1	CORE-VALVE	
	9K-7951	1	CAP-VALVE (STEM)	
	7D-5252	1	SPUD AS	
	2D-2507	1	SPUD	
	2D-2508	1	GROMMET	
	2D-2509	1	LOCKNUT (11/16-16-THD)	

Y-SEPARATE ILLUSTRATION

<END>

142-6366 WHEEL & TIRE GP

S/N: CBK1-UP
(13 X 25)
PART OF 151-0367 WHEEL & TIRE AR
AN ATTACHMENT

SMCS-4200 **i01755200**

NOTE	PART NUMBER	QTY	PART NAME 1 2 3 4 5 6 (PRODUCT LEVEL)	SEE PAGE
	8X-1160	1	RIM AS (13X25)	
	106-4835	1	TIRE (17.5-R25)	
	2G-6595	1	VALVE GP-TIRE	
	6F-3930	1	CORE-VALVE	
	9K-7951	1	CAP-VALVE (STEM)	
	7D-5252	1	SPUD AS	
	2D-2507	1	SPUD	
	2D-2508	1	GROMMET	
	2D-2509	1	LOCKNUT (11/16-16-THD)	

<END>

142-6367 WHEEL & TIRE GP

S/N: CBK1-UP
(13X25)
PART OF 151-0381 WHEEL & TIRE AR
AN ATTACHMENT

SMCS-4200 **i01755828**

NOTE	PART NUMBER	QTY	PART NAME 1 2 3 4 5 6 (PRODUCT LEVEL)	SEE PAGE
	8W-3686	1	SEAL-O-RING	
	106-4835	1	TIRE (17.5-R25)	
	2G-6595	1	VALVE GP-TIRE	
	6F-3930	1	CORE-VALVE	
	9K-7951	1	CAP-VALVE (STEM)	
	7D-5252	1	SPUD AS	
	2D-2507	1	SPUD	
	2D-2508	1	GROMMET	
	2D-2509	1	LOCKNUT (11/16-16-THD)	
Y	*142-6229*	1	WHEEL GP	467

Y-SEPARATE ILLUSTRATION

<END>

142-6371 WHEEL & TIRE GP

S/N: CBK1-UP
(13 X 25)
PART OF 151-0368 WHEEL & TIRE AR
AN ATTACHMENT

SMCS-4200 **i02205485**

NOTE	PART NUMBER	QTY	PART NAME 1 2 3 4 5 6 (PRODUCT LEVEL)	SEE PAGE
	8X-1160	1	RIM AS (13X25)	
	142-6185	1	TIRE (7.5-25)	
	2G-6595	1	VALVE GP-TIRE	
	9K-7951	1	CAP-VALVE (STEM)	
	6F-3930	1	CORE-VALVE	
	7D-5252	1	SPUD AS	
	2D-2508	1	GROMMET	
	2D-2509	1	LOCKNUT (11/16-16-THD)	
	2D-2507	1	SPUD	

<END>

142-6372 WHEEL & TIRE GP

S/N: CBK1-UP
(13 X 25)
PART OF 151-0372 WHEEL & TIRE AR
AN ATTACHMENT

SMCS-4200 **i01755168**

NOTE	PART NUMBER	QTY	PART NAME 1 2 3 4 5 6 (PRODUCT LEVEL)	SEE PAGE
	8X-1160	1	RIM AS (13X25)	
	142-6186	1	TIRE (7.5-25)	
	2G-6595	1	VALVE GP-TIRE	
	9K-7951	1	CAP-VALVE (STEM)	
	6F-3930	1	CORE-VALVE	
	7D-5252	1	SPUD AS	
	2D-2508	1	GROMMET	
	2D-2509	1	LOCKNUT (11/16-16-THD)	
	2D-2507	1	SPUD	

<END>

142-6373 WHEEL & TIRE GP

S/N: CBK1-UP
(13 X 25)
PART OF 151-0375 WHEEL & TIRE AR
AN ATTACHMENT

SMCS-4200 **i02205493**

NOTE	PART NUMBER	QTY	PART NAME 1 2 3 4 5 6 (PRODUCT LEVEL)	SEE PAGE
	8X-1160	1	RIM AS (13X25)	
	142-6187	1	TIRE (17.5-25)	
	2G-6595	1	VALVE GP-TIRE	
	9K-7951	1	CAP-VALVE (STEM)	
	6F-3930	1	CORE-VALVE	
	7D-5252	1	SPUD AS	
	2D-2508	1	GROMMET	
	2D-2509	1	LOCKNUT (11/16-16-THD)	
	2D-2507	1	SPUD	

<END>

142-6374 WHEEL & TIRE GP

S/N: CBK1-UP
PART OF 151-0382 WHEEL & TIRE AR
AN ATTACHMENT

SMCS-4200 **i02205510**

NOTE	PART NUMBER	QTY	PART NAME 1 2 3 4 5 6 (PRODUCT LEVEL)	SEE PAGE
Y	*142-6229*	1	WHEEL GP	467
	8W-3686	1	SEAL-O-RING	
	142-6185	1	TIRE (7.5-25)	
	2G-6595	1	VALVE GP-TIRE	
	9K-7951	1	CAP-VALVE (STEM)	
	6F-3930	1	CORE-VALVE	
	7D-5252	1	SPUD AS	
	2D-2508	1	GROMMET	
	2D-2509	1	LOCKNUT (11/16-16-THD)	
	2D-2507	1	SPUD	

Y-SEPARATE ILLUSTRATION

<END>

142-6375 WHEEL & TIRE GP

S/N: CBK1-UP
PART OF 151-0389 WHEEL & TIRE AR
AN ATTACHMENT

SMCS-4200 **i02205511**

NOTE	PART NUMBER	QTY	PART NAME 1 2 3 4 5 6 (PRODUCT LEVEL)	SEE PAGE
Y	*142-6229*	1	WHEEL GP	467
	8W-3686	1	SEAL-O-RING	
	142-6186	1	TIRE (7.5-25)	
	2G-6595	1	VALVE GP-TIRE	
	9K-7951	1	CAP-VALVE (STEM)	
	6F-3930	1	CORE-VALVE	
	7D-5252	1	SPUD AS	
	2D-2508	1	GROMMET	
	2D-2509	1	LOCKNUT (11/16-16-THD)	
	2D-2507	1	SPUD	

Y-SEPARATE ILLUSTRATION

<END>

142-6376 WHEEL & TIRE GP

S/N: CBK1-UP
PART OF 151-0393 WHEEL & TIRE AR
AN ATTACHMENT

SMCS-4200 **i02205503**

NOTE	PART NUMBER	QTY	PART NAME 1 2 3 4 5 6 (PRODUCT LEVEL)	SEE PAGE
Y	*142-6229*	1	WHEEL GP	467
	8W-3686	1	SEAL-O-RING	
	142-6187	1	TIRE (17.5-25)	
	2G-6595	1	VALVE GP-TIRE	
	9K-7951	1	CAP-VALVE (STEM)	
	6F-3930	1	CORE-VALVE	
	7D-5252	1	SPUD AS	
	2D-2508	1	GROMMET	
	2D-2509	1	LOCKNUT (11/16-16-THD)	
	2D-2507	1	SPUD	

Y-SEPARATE ILLUSTRATION

<END>

142-6385 WHEEL & TIRE GP

S/N: CBK1-UP
PART OF 151-0385 WHEEL & TIRE AR
AN ATTACHMENT

SMCS-4200 **i02205508**

NOTE	PART NUMBER	QTY	PART NAME 1 2 3 4 5 6 (PRODUCT LEVEL)	SEE PAGE
Y	*142-6229*	1	WHEEL GP	467
	8W-3686	1	SEAL-O-RING	
	105-3249	1	TIRE (17.5-R25)	
	2G-6595	1	VALVE GP-TIRE	
	9K-7951	1	CAP-VALVE (STEM)	
	6F-3930	1	CORE-VALVE	
	7D-5252	1	SPUD AS	
	2D-2508	1	GROMMET	
	2D-2509	1	LOCKNUT (11/16-16-THD)	
	2D-2507	1	SPUD	

Y-SEPARATE ILLUSTRATION

<END>

142-6405 WHEEL & TIRE GP

S/N: CBK1-UP
AN ATTACHMENT

SMCS-4200 **i01677017**

NOTE	PART NUMBER	QTY	PART NAME 1 2 3 4 5 6 (PRODUCT LEVEL)	SEE PAGE
	8W-3686	1	SEAL-O-RING	
	128-5164	1	TIRE (20.5X25 12PR L-2)	
	2G-6595	1	VALVE GP-TIRE	
	9K-7951	1	CAP-VALVE (STEM)	
	6F-3930	1	CORE-VALVE	
	7D-5252	1	SPUD AS	
	2D-2508	1	GROMMET	
	2D-2509	1	LOCKNUT	
	142-6232	1	WHEEL GP	
	179-5774	1	FLANGE AS	
	195-1122	1	RIM AS	
	4K-4881	1	RING-LOCK	

<END>

150-4467 WHEEL & TIRE GP

S/N: CBK1-UP
(9X24)
PART OF 151-0361 WHEEL & TIRE AR
AN ATTACHMENT

SMCS-4200 **i02164875**

NOTE	PART NUMBER	QTY	PART NAME 1 2 3 4 5 6 (PRODUCT LEVEL)	SEE PAGE
Y	*142-6226*	1	WHEEL GP	467
	2D-2565	1	SEAL-O-RING	
	150-7955	1	TIRE (14-24)	
	110-4213	1	VALVE GP-TIRE	
	7D-5252	1	SPUD AS	
	2D-2507	1	SPUD	
	2D-2508	1	GROMMET	
	2D-2509	1	LOCKNUT (11/16-16-THD)	
	110-4214	1	STEM AS	
	6F-3930	1	CORE-VALVE	
	9K-7951	1	CAP-VALVE (STEM)	

Y-SEPARATE ILLUSTRATION

<END>

150-4482 WHEEL & TIRE GP

S/N: CBK1-UP
(9X24)
PART OF 151-0370 WHEEL AR
AN ATTACHMENT

SMCS-4200 **i02164885**

NOTE	PART NUMBER	QTY	PART NAME 1 2 3 4 5 6 (PRODUCT LEVEL)	SEE PAGE
Y	*142-6226*	1	WHEEL GP	467
	2D-2565	1	SEAL-O-RING	
	150-7956	1	TIRE (14-24)	
	110-4213	1	VALVE GP-TIRE	
	7D-5252	1	SPUD AS	
	2D-2507	1	SPUD	
	2D-2508	1	GROMMET	
	2D-2509	1	LOCKNUT (11/16-16-THD)	
	110-4214	1	STEM AS	
	6F-3930	1	CORE-VALVE	
	9K-7951	1	CAP-VALVE (STEM)	

Y-SEPARATE ILLUSTRATION

<END>

153-5459 WHEEL & TIRE GP

S/N: CBK1-UP
(13 X 25)
PART OF 153-5460 WHEEL & TIRE AR
AN ATTACHMENT

SMCS-4200 **i02205539**

NOTE	PART NUMBER	QTY	PART NAME 1 2 3 4 5 6 (PRODUCT LEVEL)	SEE PAGE
	8X-1160	1	RIM AS (13X25)	
	153-5425	1	TIRE (15.5-25)	
	2G-6595	1	VALVE GP-TIRE	
	9K-7951	1	CAP-VALVE (STEM)	
	6F-3930	1	CORE-VALVE	
	7D-5252	1	SPUD AS	
	2D-2508	1	GROMMET	
	2D-2509	1	LOCKNUT (11/16-16-THD)	
	2D-2507	1	SPUD	

<END>

153-5463 WHEEL & TIRE GP

S/N: CBK1-UP
(13 X 25)
PART OF 153-5464 WHEEL & TIRE AR
AN ATTACHMENT

SMCS-4200 **i02205540**

NOTE	PART NUMBER	QTY	PART NAME 1 2 3 4 5 6 (PRODUCT LEVEL)	SEE PAGE
	8X-1160	1	RIM AS (13X25)	
	153-5427	1	TIRE (15.5-R25)	
	2G-6595	1	VALVE GP-TIRE	
	9K-7951	1	CAP-VALVE (STEM)	
	6F-3930	1	CORE-VALVE	
	7D-5252	1	SPUD AS	
	2D-2508	1	GROMMET	
	2D-2509	1	LOCKNUT (11/16-16-THD)	
	2D-2507	1	SPUD	

<END>

153-5467 WHEEL & TIRE GP

S/N: CBK1-UP
(13 X 25)
PART OF 153-5468 WHEEL & TIRE AR
AN ATTACHMENT

SMCS-4200 **i02205541**

NOTE	PART NUMBER	QTY	PART NAME 1 2 3 4 5 6 (PRODUCT LEVEL)	SEE PAGE
	8X-1160	1	RIM AS (13X25)	
	105-3249	1	TIRE (17.5-R25)	
	2G-6595	1	VALVE GP-TIRE	
	9K-7951	1	CAP-VALVE (STEM)	
	6F-3930	1	CORE-VALVE	
	7D-5252	1	SPUD AS	
	2D-2508	1	GROMMET	
	2D-2509	1	LOCKNUT (11/16-16-THD)	
	2D-2507	1	SPUD	

<END>

159-1785 WHEEL & TIRE GP

S/N: CBK1-UP
(13X25)
PART OF 159-1782 WHEEL & TIRE AR
AN ATTACHMENT

SMCS-4200 **i02205542**

NOTE	PART NUMBER	QTY	PART NAME 1 2 3 4 5 6 (PRODUCT LEVEL)	SEE PAGE
Y	*142-6229*	1	WHEEL GP	467
	8W-3686	1	SEAL-O-RING	
	154-0051	1	TIRE (17.5-R25)	
	2G-6595	1	VALVE GP-TIRE	
	9K-7951	1	CAP-VALVE (STEM)	
	6F-3930	1	CORE-VALVE	
	7D-5252	1	SPUD AS	
	2D-2507	1	SPUD	
	2D-2508	1	GROMMET	
	2D-2509	1	LOCKNUT (11/16-16-THD)	

Y-SEPARATE ILLUSTRATION

<END>

163-0376 WHEEL & TIRE GP

S/N: CBK1-UP
(13X25)
PART OF 163-0375 WHEEL & TIRE AR
AN ATTACHMENT

SMCS-4200 **i02205543**

NOTE	PART NUMBER	QTY	PART NAME 1 2 3 4 5 6 (PRODUCT LEVEL)	SEE PAGE
	8X-1160	1	RIM AS (13X25)	
	154-0051	1	TIRE (17.5-R25)	
	2G-6595	1	VALVE GP-TIRE	
	6F-3930	1	CORE-VALVE	
	9K-7951	1	CAP-VALVE (STEM)	
	7D-5252	1	SPUD AS	
	2D-2507	1	SPUD	
	2D-2508	1	GROMMET	
	2D-2509	1	LOCKNUT (11/16-16-THD)	

<END>

173-7813 WHEEL & TIRE GP

S/N: CBK1-UP
PART OF 174-2304 WHEEL & TIRE AR
AN ATTACHMENT

SMCS-4200 **i02205568**

NOTE	PART NUMBER	QTY	PART NAME 1 2 3 4 5 6 (PRODUCT LEVEL)	SEE PAGE
Y	*142-6226*	1	WHEEL GP	467
	2D-2565	1	SEAL-O-RING	
	173-7830	1	TIRE (14-R24)	
	110-4213	1	VALVE GP-TIRE	
	110-4214	1	STEM AS	
	6F-3930	1	CORE-VALVE	
	9K-7951	1	CAP-VALVE (STEM)	
	7D-5252	1	SPUD AS	
	2D-2508	1	GROMMET	
	2D-2509	1	LOCKNUT (11/16-16-THD)	

Y-SEPARATE ILLUSTRATION

<END>

183-1415 WHEEL & TIRE GP

S/N: CBK1-UP
(13X25)
PART OF 183-1416 WHEEL & TIRE AR
AN ATTACHMENT

SMCS-4200 **i02164214**

NOTE	PART NUMBER	QTY	PART NAME 1 2 3 4 5 6 (PRODUCT LEVEL)	SEE PAGE
Y	*142-6226*	1	WHEEL GP	467
	2D-2565	1	SEAL-O-RING	
	180-9853	1	TIRE (17.5-25)	
	2G-6595	1	VALVE GP-TIRE	
	9K-7951	1	CAP-VALVE (STEM)	
	6F-3930	1	CORE-VALVE	
	7D-5252	1	SPUD AS	
	2D-2507	1	SPUD	
	2D-2508	1	GROMMET	
	2D-2509	1	LOCKNUT (11/16-16-THD)	

Y-SEPARATE ILLUSTRATION

<END>

183-1418 WHEEL & TIRE GP

S/N: CBK1-UP
(13X25)
PART OF 183-1417 WHEEL & TIRE AR
AN ATTACHMENT

SMCS-4200 **i02164200**

NOTE	PART NUMBER	QTY	PART NAME 1 2 3 4 5 6 (PRODUCT LEVEL)	SEE PAGE
Y	*142-6229*	1	WHEEL GP	467
	8W-3686	1	SEAL-O-RING	
	180-9852	1	TIRE (17.5-R25)	
	2G-6595	1	VALVE GP-TIRE	
	9K-7951	1	CAP-VALVE (STEM)	
	6F-3930	1	CORE-VALVE	
	7D-5252	1	SPUD AS	
	2D-2507	1	SPUD	
	2D-2508	1	GROMMET	
	2D-2509	1	LOCKNUT (11/16-16-THD)	

Y-SEPARATE ILLUSTRATION

<END>

190-7417 WHEEL & TIRE GP

S/N: CBK1-UP
PART OF 190-7418 WHEEL & TIRE AR
AN ATTACHMENT

SMCS-4200 **i02164285**

NOTE	PART NUMBER	QTY	PART NAME 1 2 3 4 5 6 (PRODUCT LEVEL)	SEE PAGE
Y	*142-6226*	1	WHEEL GP	467
	2D-2565	1	SEAL-O-RING	
	190-7401	1	TIRE (13-R24)	
	110-4213	1	VALVE GP-TIRE	
	7D-5252	1	SPUD AS	
	2D-2507	1	SPUD	
	2D-2508	1	GROMMET	
	2D-2509	1	LOCKNUT (11/16-16-THD)	
	110-4214	1	STEM AS	
	6F-3930	1	CORE-VALVE	
	9K-7951	1	CAP-VALVE (STEM)	

Y-SEPARATE ILLUSTRATION

<END>

198-6572 WHEEL & TIRE GP

S/N: CBK1-UP
(13X25)
PART OF 198-6565 WHEEL & TIRE AR
AN ATTACHMENT

SMCS-4200 **i02164298**

NOTE	PART NUMBER	QTY	PART NAME 1 2 3 4 5 6 (PRODUCT LEVEL)	SEE PAGE
	8X-1160	1	RIM AS (13X25)	
	180-9852	1	TIRE (17.5-R25)	
	2G-6595	1	VALVE GP-TIRE	
	6F-3930	1	CORE-VALVE	
	9K-7951	1	CAP-VALVE (STEM)	
	7D-5252	1	SPUD AS	
	2D-2507	1	SPUD	
	2D-2508	1	GROMMET	
	2D-2509	1	LOCKNUT (11/16-16-THD)	

<END>

204-8785 WHEEL & TIRE GP

S/N: CBK1-UP
(17.5XR25)
PART OF 204-8786 WHEEL & TIRE AR
AN ATTACHMENT

SMCS-4200 **i01562298**

NOTE	PART NUMBER	QTY	PART NAME 1 2 3 4 5 6 (PRODUCT LEVEL)	SEE PAGE
	8W-3686	1	SEAL-O-RING	
	2G-6595	1	VALVE GP-TIRE	
	9K-7951	1	CAP-VALVE (STEM)	
	6F-3930	1	CORE-VALVE	
	7D-5252	1	SPUD AS	
	2D-2508	1	GROMMET	
	2D-2509	1	LOCKNUT	
Y	*142-6229*	1	WHEEL GP	467

Y-SEPARATE ILLUSTRATION

<END>

207-9861 WHEEL & TIRE GP

S/N: CBK1-UP
(13X25)
PART OF 207-9862 WHEEL & TIRE AR
AN ATTACHMENT

SMCS-4200 **i02164334**

NOTE	PART NUMBER	QTY	PART NAME 1 2 3 4 5 6 (PRODUCT LEVEL)	SEE PAGE
	8X-1160	1	RIM AS (13X25)	
	170-0432	1	TIRE (17.5-R25)	
	2G-6595	1	VALVE GP-TIRE	
	6F-3930	1	CORE-VALVE	
	9K-7951	1	CAP-VALVE (STEM)	
	7D-5252	1	SPUD AS	
	2D-2507	1	SPUD	
	2D-2508	1	GROMMET	
	2D-2509	1	LOCKNUT (11/16-16-THD)	

<END>

216-7443 WHEEL & TIRE GP

S/N: CBK1-UP
(9X24)
PART OF 216-7444 WHEEL & TIRE AR
AN ATTACHMENT

SMCS-4200 **i02164773**

NOTE	PART NUMBER	QTY	PART NAME 1 2 3 4 5 6 (PRODUCT LEVEL)	SEE PAGE
Y	*142-6226*	1	WHEEL GP	467
	2D-2565	1	SEAL-O-RING	
	216-7435	1	TIRE (14-24)	
	110-4213	1	VALVE GP-TIRE	
	7D-5252	1	SPUD AS	
	2D-2507	1	SPUD	
	2D-2508	1	GROMMET	
	2D-2509	1	LOCKNUT (11/16-16-THD)	
	110-4214	1	STEM AS	
	6F-3930	1	CORE-VALVE	
	9K-7951	1	CAP-VALVE (STEM)	

Y-SEPARATE ILLUSTRATION

<END>

226-0735 WHEEL & TIRE GP

S/N: CBK1-UP
(13X25)
PART OF 228-9265 WHEEL & TIRE AR
AN ATTACHMENT

SMCS-4200 **i02164805**

NOTE	PART NUMBER	QTY	PART NAME 1 2 3 4 5 6 (PRODUCT LEVEL)	SEE PAGE
Y	*142-6229*	1	WHEEL GP	467
	8W-3686	1	SEAL-O-RING	
	226-0733	1	TIRE (17.5-R25)	
	2G-6595	1	VALVE GP-TIRE	
	6F-3930	1	CORE-VALVE	
	9K-7951	1	CAP-VALVE (STEM)	
	7D-5252	1	SPUD AS	
	2D-2507	1	SPUD	
	2D-2508	1	GROMMET	
	2D-2509	1	LOCKNUT (11/16-16-THD)	

Y-SEPARATE ILLUSTRATION

<END>

250-2178 WHEEL & TIRE GP

S/N: CBK1-UP
PART OF 250-2180 TIRE & RIM AR
AN ATTACHMENT

SMCS-4200 **i02164809**

NOTE	PART NUMBER	QTY	PART NAME 1 2 3 4 5 6 (PRODUCT LEVEL)	SEE PAGE
	123-3420	1	RIM AS	
	250-2187	1	TIRE (13-R24)	
	2D-2511	1	VALVE GP-TIRE	
	3D-2239	1	VALVE GP-TIRE	
	6F-3930	1	CORE-VALVE	
	9K-7951	1	CAP-VALVE (STEM)	
	7D-5252	1	SPUD AS	
	2D-2507	1	SPUD	
	2D-2508	1	GROMMET	
	2D-2509	1	LOCKNUT (11/16-16-THD)	

<END>

250-2181 WHEEL & TIRE GP

S/N: CBK1-UP
PART OF 250-2182 WHEEL & TIRE AR
AN ATTACHMENT

SMCS-4200 **i02164323**

NOTE	PART NUMBER	QTY	PART NAME 1 2 3 4 5 6 (PRODUCT LEVEL)	SEE PAGE
Y	*142-6226*	1	WHEEL GP	467
	2D-2565	1	SEAL-O-RING	
	250-2187	1	TIRE (13-R24)	
	110-4213	1	VALVE GP-TIRE	
	7D-5252	1	SPUD AS	
	2D-2507	1	SPUD	
	2D-2508	1	GROMMET	
	2D-2509	1	LOCKNUT (11/16-16-THD)	
	110-4214	1	STEM AS	
	6F-3930	1	CORE-VALVE	
	9K-7951	1	CAP-VALVE (STEM)	

Y-SEPARATE ILLUSTRATION

<END>

142-6303 WHEEL AR

S/N: CBK1-UP
AN ATTACHMENT

SMCS-4208 **i00761194**

NOTE	PART NUMBER	QTY	PART NAME 1 2 3 4 5 6 (PRODUCT LEVEL)	SEE PAGE
Y	*142-6172*	6	WHEEL GP	466

Y-SEPARATE ILLUSTRATION

<END>

142-6305 WHEEL AR

S/N: CBK1-UP
AN ATTACHMENT

SMCS-4208 **i00761196**

NOTE	PART NUMBER	QTY	PART NAME 1 2 3 4 5 6 (PRODUCT LEVEL)	SEE PAGE
Y	*142-6304*	6	WHEEL GP	468

Y-SEPARATE ILLUSTRATION

<END>

148-2405 WHEEL AR

S/N: CBK1-UP
AN ATTACHMENT

SMCS-4208 **i01880496**

NOTE	PART NUMBER	QTY	PART NAME 1 2 3 4 5 6 (PRODUCT LEVEL)	SEE PAGE
Y	*148-2404*	6	WHEEL GP	468

Y-SEPARATE ILLUSTRATION

<END>

148-2409 WHEEL AR

S/N: CBK1-UP
AN ATTACHMENT

SMCS-4208 **i00762414**

NOTE	PART NUMBER	QTY	PART NAME 1 2 3 4 5 6 (PRODUCT LEVEL)	SEE PAGE
Y	*148-2408*	6	WHEEL GP	469

Y-SEPARATE ILLUSTRATION

<END>

151-0370 WHEEL AR

S/N: CBK1-UP
AN ATTACHMENT

SMCS-4208 **i02164886**

NOTE	PART NUMBER	QTY	PART NAME 1 2 3 4 5 6 (PRODUCT LEVEL)	SEE PAGE
Y	*150-4482*	6	WHEEL & TIRE GP	456

Y-SEPARATE ILLUSTRATION

<END>

174-7507 WHEEL AR

S/N: CBK1-UP
AN ATTACHMENT

SMCS-4208 **i01825874**

NOTE	PART NUMBER	QTY	PART NAME 1 2 3 4 5 6 (PRODUCT LEVEL)	SEE PAGE
Y	*170-0436*	6	WHEEL GP	469

Y-SEPARATE ILLUSTRATION

<END>

186-4461 WHEEL AR

S/N: CBK1-UP
AN ATTACHMENT

SMCS-4208 **i02164210**

NOTE	PART NUMBER	QTY	PART NAME 1 2 3 4 5 6 (PRODUCT LEVEL)	SEE PAGE
Y	*186-4460*	6	WHEEL GP	470

Y-SEPARATE ILLUSTRATION

<END>

216-7446 WHEEL AR

S/N: CBK1-UP
AN ATTACHMENT

SMCS-4208 **i02164777**

NOTE	PART NUMBER	QTY	PART NAME 1 2 3 4 5 6 (PRODUCT LEVEL)	SEE PAGE
Y	*216-7445*	6	WHEEL GP	470

Y-SEPARATE ILLUSTRATION

<END>

142-6172 WHEEL GP—BAREFOOT

S/N: CBK1-UP
(9 X 24)
PART OF 142-6303 WHEEL AR
AN ATTACHMENT

SMCS-4201, 4208 **i02205609**

NOTE	PART NUMBER	QTY	PART NAME 1 2 3 4 5 6 (PRODUCT LEVEL)	SEE PAGE
	123-3420	1	RIM AS (9X24)	
	2D-2511	1	VALVE GP-TIRE	
	9K-7951	1	CAP-VALVE (STEM)	
	6F-3930	1	CORE-VALVE	
	7D-5252	1	SPUD AS	
	2D-2508	1	GROMMET	
	2D-2509	1	LOCKNUT (11/16-16-THD)	
	2D-2507	1	SPUD	

<END>

142-6226 WHEEL GP

S/N: CBK1-UP
(10 X 24)
PART OF 142-6284, 142-6286, 142-6290, 142-6291, 142-6292, 142-6294, 142-6296, 142-6298, 142-6301, 142-6307, 142-6310, 142-6313, 142-6316, 142-6319, 142-6322, 142-6325, 142-6328, 142-6330, 142-6332, 150-4467, 150-4482, 173-7813, 183-1415, 190-7417, 216-7443, 250-2181 WHEEL & TIRE GP, 142-6304, 186-4460 WHEEL GP
AN ATTACHMENT

SMCS-4201, 4208 **i01457104**

NOTE	PART NUMBER	QTY	PART NAME 1 2 3 4 5 6 (PRODUCT LEVEL)	SEE PAGE
	8W-9566	1	FLANGE AS	
	2D-2654	1	LOCK RING	
	184-2309	1	RIM AS	

<END>

142-6229 WHEEL GP

S/N: CBK1-UP
(14 X 25)
PART OF 142-6356, 142-6357, 142-6358, 142-6364, 142-6367, 142-6374, 142-6375, 142-6376, 142-6385, 159-1785, 183-1418, 204-8785, 226-0735 WHEEL & TIRE GP, 148-2408, 170-0436, 216-7445 WHEEL GP
AN ATTACHMENT

SMCS-4201, 4208 **i00756189**

NOTE	PART NUMBER	QTY	PART NAME 1 2 3 4 5 6 (PRODUCT LEVEL)	SEE PAGE
	8W-9594	1	FLANGE AS	
	4K-4881	1	LOCKRING	
	6G-1528	1	WHEEL	

<END>

142-6304 WHEEL GP—BAREFOOT

S/N: CBK1-UP
(10X24)
PART OF 142-6305 WHEEL AR
AN ATTACHMENT

SMCS-4201, 4208 **i02205614**

NOTE	PART NUMBER	QTY	PART NAME 1 2 3 4 5 6 (PRODUCT LEVEL)	SEE PAGE
Y	*142-6226*	1	WHEEL GP	467
	2D-2565	1	SEAL-O-RING	
	110-4213	1	VALVE GP-TIRE	
	7D-5252	1	SPUD AS	
	2D-2508	1	GROMMET	
	2D-2509	1	LOCKNUT (11/16-16-THD)	
	110-4214	1	STEM AS	
	6F-3930	1	CORE-VALVE	
	9K-7951	1	CAP-VALVE (STEM)	

Y-SEPARATE ILLUSTRATION

<END>

148-2404 WHEEL GP—BAREFOOT

S/N: CBK1-UP
(13 X 25)
PART OF 148-2405 WHEEL AR
AN ATTACHMENT

SMCS-4201, 4208 **i01755146**

NOTE	PART NUMBER	QTY	PART NAME 1 2 3 4 5 6 (PRODUCT LEVEL)	SEE PAGE
	8X-1160	1	RIM AS (13X25)	
	2G-6595	1	VALVE GP-TIRE	
	9K-7951	1	CAP-VALVE (STEM)	
	6F-3930	1	CORE-VALVE	
	7D-5252	1	SPUD AS	
	2D-2508	1	GROMMET	
	2D-2509	1	LOCKNUT (11/16-16-THD)	
	2D-2507	1	SPUD	

<END>

148-2408 WHEEL GP–BAREFOOT

S/N: CBK1-UP
(14X25)
PART OF 148-2409 WHEEL AR
AN ATTACHMENT

SMCS-4201, 4208 **i02205621**

NOTE	PART NUMBER	QTY	PART NAME 1 2 3 4 5 6 (PRODUCT LEVEL)	SEE PAGE
Y	*142-6229*	1	WHEEL GP	467
	8W-3686	1	SEAL-O-RING	
	2G-6595	1	VALVE GP-TIRE	
	9K-7951	1	CAP-VALVE (STEM)	
	6F-3930	1	CORE-VALVE	
	7D-5252	1	SPUD AS	
	2D-2508	1	GROMMET	
	2D-2509	1	LOCKNUT (11/16-16-THD)	
	2D-2507	1	SPUD	

Y-SEPARATE ILLUSTRATION

<END>

170-0436 WHEEL GP

S/N: CBK1-UP
(14 X 25)
PART OF 174-7507 WHEEL AR
AN ATTACHMENT

SMCS-4201, 4208 **i02205662**

NOTE	PART NUMBER	QTY	PART NAME 1 2 3 4 5 6 (PRODUCT LEVEL)	SEE PAGE
Y	*142-6229*	1	WHEEL GP	467
	8W-3686	1	SEAL-O-RING	
	170-0432	1	TIRE (17.5-R25)	
	2G-6595	1	VALVE GP-TIRE	
	9K-7951	1	CAP-VALVE (STEM)	
	6F-3930	1	CORE-VALVE	
	7D-5252	1	SPUD AS	
	2D-2507	1	SPUD	
	2D-2508	1	GROMMET	
	2D-2509	1	LOCKNUT (11/16-16-THD)	

Y-SEPARATE ILLUSTRATION

<END>

186-4460 WHEEL GP

S/N: CBK1-UP
PART OF 186-4461 WHEEL AR
AN ATTACHMENT

SMCS-4201, 4208 **i02205670**

NOTE	PART NUMBER	QTY	PART NAME 1 2 3 4 5 6 (PRODUCT LEVEL)	SEE PAGE
Y	*142-6226*	1	WHEEL GP	467
	2D-2565	1	SEAL-O-RING	
	186-3696	1	TIRE (14-24)	
	110-4213	1	VALVE GP-TIRE	
	7D-5252	1	SPUD AS	
	2D-2507	1	SPUD	
	2D-2508	1	GROMMET	
	2D-2509	1	LOCKNUT (11/16-16-THD)	
	110-4214	1	STEM AS	
	6F-3930	1	CORE-VALVE	
	9K-7951	1	CAP-VALVE (STEM)	

Y-SEPARATE ILLUSTRATION

<END>

216-7445 WHEEL GP

S/N: CBK1-UP
PART OF 216-7446 WHEEL AR
AN ATTACHMENT

SMCS-4201, 4208 **i02164778**

NOTE	PART NUMBER	QTY	PART NAME 1 2 3 4 5 6 (PRODUCT LEVEL)	SEE PAGE
Y	*142-6229*	1	WHEEL GP	467
	8W-3686	1	SEAL-O-RING	
	216-7437	1	TIRE (17.5-25)	
	2G-6595	1	VALVE GP-TIRE	
	6F-3930	1	CORE-VALVE	
	9K-7951	1	CAP-VALVE (STEM)	
	7D-5252	1	SPUD AS	
	2D-2507	1	SPUD	
	2D-2508	1	GROMMET	
	2D-2509	1	LOCKNUT (11/16-16-THD)	

Y-SEPARATE ILLUSTRATION

<END>

PART NUMBER INDEX

Part	Page
0	
0A-3721	517
0L-0478	629
0L-1026	18
0L-1178	494
0S-0519	17
0S-1566	522
0S-1571	629
0S-1573	551
0S-1579	396
0S-1585	471
	501
	574
0S-1587	501
0S-1589	501
0S-1591	75
0S-1592	471
	557
0S-1594	372
	786
	787
0S-1604	389
0S-1621	554
0S-1756	373
	761
0S-1973	385
0V-0375	471
1	
1A-0224	769
	772
1A-1415	574
1A-1460	501
1A-2209	620
1A-4350	903
	904
	905
1A-5822	621
1A-8063	769
	772
1B-0676	86
	361
	526
1B-2578	86
	361
	526
1B-2713	816
	818
1B-2886	555
1B-4038	574
1B-4046	574
1B-4208	769
	772
1B-4367	505
1B-4430	933
1B-5174	347
	574
1B-8704	86
	361
1B-8705	11
	16
1B-8737	629
1C-0569	910
	912
1D-0503	745
1D-4569	501
1D-4612	769
	772
1D-4627	471
1D-4628	551
	553
1D-4677	931
1D-4689	509
1D-4717	75
1D-5119	749
1D-5120	629
1F-0748	636
	638
	640
	642
	644
	646
	650
	652
	654
	656
	658
	660
	664
	745
1F-0750	494
	915
	917
1F-4622	361
	526
1F-5339	476
	477
1F-7958	555
	574
	769
	772
1F-8488	391
1H-0337	679
	681
1H-1023	533
1H-3244	120
	125
	316
	320
	322
1H-3338	799
	802
	806
	808
1H-3340	943
	945
1H-3937	631
1H-7339	574
1H-7724	527
1H-8456	943
	945
1J-2860	373
1J-4757	373
1J-5929	34
1J-9671	30
	541
	544
	679
	681
1K-6872	509
	763
	766
1L-0509	383
1L-5072	633
1M-1230	816
	818
1M-3780	386
1M-4095	390
1M-4543	531
1M-6119	127
	128
	129
	316
1M-6120	127
	128
	129
	316
1M-6718	739
1N-5999	567
	568
	595
1P-0604	357
	359
1P-2378	870
	875
1P-2636	373
1P-2662	373
1P-2807	972
1P-3700	632
1P-4278	531
1P-4577	383
1P-4578	383
1P-4693	381
	522
1P-4694	381
1P-6356	863
1P-7297	66
	491
1P-7521	520
1P-9328	531
1R-0716	51
1R-0762	89
1R-0770	91
1R-0774	633
1S-0994	305
	317
	321
	325
	587
	590
	606
	608
1S-1015	317
	321
1S-2342	293
	297
1S-3618	610
1S-7251	240
	304
	305
	316
	317
	320
	321
	324
	329
1S-7252	316
	320
	329
1S-9110	381
1S-9593	137
	338
	404
	405
	741
	742
1T-0738	367
	406
1U-3998	567
	568
1U-8846	30
	31
	32
	78
	258
	346
1V-6256	122
1V-6688	317
	321
1W-3011	476
1W-8407	17
1Y-7927	840
2	
2A-1538	555
2A-3034	80
2A-3211	733
	734
	736
	737
2A-3398	474
2A-4429	22
2A-6684	845
2A-6926	949
	951
	953
	955
2A-6928	949
	951
	953
	955
2A-6929	949
	951
	953
	955
2A-6938	391
2A-6985	▶881
	898
	899
	900
2A-7081	586
2A-7089	747
2A-7184	794
2A-7327	432
2B-0941	580

▶ **PRIMARY REFERENCE**

PART NUMBER INDEX

Part	Page
	586
	589
2B-0947	375
2B-2673	745
2B-2695	910
	912
2B-3147	391
2B-3148	391
2B-7410	574
2B-9373	386
2D-0626	766
2D-2507	426
	427
	433
	434
	435
	436
	437
	438
	439
	440
	441
	442
	443
	444
	445
	446
	447
	448
	449
	450
	451
	452
	453
	454
	455
	456
	457
	458
	459
	460
	461
	462
	463
	464
	466
	468
	469
	470
2D-2508	426
	427
	428
	429
	430
	431
	432
	433
	434
	435
	436
	437
	438
	439
	440
	441
	442
	443
	444
	445
	446
	447
2D-2509	426
	427
	428
	429
	430
	431
	432
	433
	434
	435
	436
	437
	438
	439
	440
	441
	442
	443
	444
	445
	446
	447
	448
	449
	450
	451
	452
	453
	454
	455
	456
	457
	458
	459
	460
	461
	462
	463
2D-2511	426
	427
	428
	429
	431
	432
	433
	434
	435
	436
	437
	438
	439
	440
	441
	464
	466
2D-2565	427
	428
	429
	430
	431
	432
	433
	434
	435
	436
	437
	438
	439
	440
	441
	442
	443
	456
	459
	460
	461
	463
	464
	468
	470
2D-2654	467
2D-4202	633
2D-6006	534
2D-6235	816
	818
	840
2D-6642	373
	375
2D-7325	526
2D-8009	386
2D-8154	574
2D-8652	560
2D-8822	474
2F-7306	884
2F-8057	505
	556
2F-8509	623
2G-0478	574
2G-0617	193
	196
	199
	202
	209
	212
	297
2G-0659	209
	212
2G-0988	193
	196
	199
	202
	209
	212
	297
2G-1034	531
2G-3219	745
2G-3221	745
2G-3865	471
2G-3967	552
2G-3971	747
2G-4332	769
2G-5493	586
	589
2G-5667	471
	557
2G-5673	471
2G-6285	534
2G-6337	522
2G-6595	443
	444
	445
	446
	447
	448
	449
	450
	451
	452
	453
	454
	455
	457
	458
	459
	460
	461
	462
2G-6664	835
2G-6695	574
2G-6740	638
	644
	652
	660
	662
	664
2G-6747	636
	638
	640
	642

► **PRIMARY REFERENCE**

PART NUMBER INDEX

Part	Page	Part	Page	Part	Page	Part	Page
	644		654		881	2H-9247	574
	646		656	2G-7098	880	2H-9889	587
	648		658		881		590
	650		660	2G-7107	662	2J-0157	346
	652		662	2G-7108	662	2J-3505	471
	654		664	2G-7149	772	2J-3506	381
	656	2G-6753	636	2G-7309	769		574
	658		640		772		761
	660		648	2G-7728	769		769
	662		650		772		772
	664	2G-6754	636	2G-8233	761	2J-6089	733
2G-6748	636		644	2G-8241	870		734
	638		648		875		736
	640		652	2G-8242	870		737
	642		654	2G-8572	794	2J-6274	520
	644		656		851	2J-7761	633
	646		658		854	2J-8163	471
	648		660		859	2K-0120	766
	650		664		870	2K-0419	745
	652	2G-6755	636	2G-8573	794	2K-0420	549
	654		638		851		550
	656		640		854	2K-0703	766
	658		642		859	2K-4233	763
	660		644		870	2K-4821	120
	662		646	2G-8609	557	2K-4973	75
	664		648	2G-8615	471		633
2G-6749	636		650	2G-8624	471		763
	638		652	2G-8626	471		766
	640		654	2G-8631	471		779
	642		656		570		786
	644		658	2G-8633	471		787
	646		660	2G-8741	471		910
	648		662	2G-8742	471		912
	650		664	2G-8767	845		915
	652	2G-6756	636		851		917
	654		638		854		931
	656		640		859		933
	658		642	2G-8768	471	2K-5106	373
	660		644	2G-8777	471	2K-5109	373
	662		646	2G-9098	551	2K-5830	794
	664		648		553	2K-5986	480
2G-6751	636		650	2G-9103	551		484
	638		652		553	2K-6061	786
	640		654	2G-9791	391		787
	642		656	2H-3740	471		915
	644		658	2H-3746	769		917
	646		660		772	2K-6413	776
	648		662	2H-3764	749	2K-6830	564
	650		664	2H-3786	556	2K-7471	769
	652	2G-6757	636	2H-3920	272		772
	654		638		275	2K-7979	794
	656		640		284	2K-8199	572
	658		642		957		683
	660		644		959		685
	662		646		961		687
	664		648		963		689
2G-6752	636		650	2H-3922	266		691
	638		652		891		693
	640		654		896		695
	642		656	2H-3928	632		697
	644		658	2H-3931	616		699
	646		660	2H-3940	531		701
	648		662	2H-5001	373		703
	650		664	2H-6489	346		705
	652	2G-7097	880	2H-6490	390		707

► **PRIMARY REFERENCE**

PART NUMBER INDEX

Part	Page	Part	Page	Part	Page	Part	Page
	709		603	3C-1884	948	3E-0155	▶272
	711		679	3C-6969	338		278
	713		681		341		965
	715	2S-5100	633	3D-2239	464	3E-0400	782
	717	2S-8439	380	3D-2824	26		827
	719	2T-3245	304		36		831
2L-0273	297		324		40	3E-2026	293
	316	2V-0099	782		63		297
	320		827		77	3E-2332	241
	329		831		265	3E-3365	168
2L-3331	526	2V-3216	305		530		172
2L-5893	779		309		578		173
2L-8050	316		312		593		174
	317		325		595		191
	320	2V-4331	501		597		192
	321	2V-8259	332		598		227
2L-8058	316		334		600		251
	317	2W-7381	25		601		265
	320	2W-8147	16		603		324
	321	2Y-3209	868		604		329
2M-0849	551	2Y-5828	620		611		404
	761	2Y-5829	42		614		405
2M-4453	70		43		623		537
2M-4779	538		57		679		741
	543		60		681		742
2M-7819	840		69	3D-2981	391		782
2M-9780	51			3D-4245	398		816
	89				401		818
	94	**3**		3D-4904	769		827
	96				772		831
	98	3B-0623	18	3D-6399	838		836
	101		19	3D-6509	375		863
	346	3B-4501	783	3D-6689	396		872
	391	3B-4506	610	3D-8317	401		891
	520	3B-4607	534	3D-8747	816		893
	572		794		818		895
	586	3B-4610	534	3D-8748	816	3E-3368	245
	679		633		818		253
	681	3B-4615	113	3D-8749	816	3E-3371	152
2N-9421	86	3B-4618	471		818		170
2P-1279	733		556	3D-8752	816		171
	734	3B-4628	587		818		184
	736	3B-4647	555	3D-8884	524		243
	737	3B-5301	309	3D-9253	926		244
2P-2975	240		312	3E-0109	178		324
2P-4304	49	3B-5320	745		180		329
	51	3B-5325	776		205	3E-3377	332
2P-4339	782	3B-5329	552		207		334
	827	3B-6753	749		222	3E-3383	160
	831		761		224		162
2P-4358	10	3B-6769	504		275		164
2R-0694	534	3B-7721	527		278		166
2R-0719	534	3B-7733	504		280		878
2R-0724	534	3B-8485	551		282		879
2R-1600	474		553		332		895
2R-1922	926	3B-8489	471		334		953
2R-6806	96		504		338	3E-3389	272
	98		557		339		275
2S-2053	26		749		341		284
2S-3029	346		766		859		959
2S-3440	517		769		872		961
2S-3770	305		772		876		963
	325	3B-8822	524	3E-0154	▶269	3E-3636	293
2S-4078	597	3B-8921	351		304		297
	600		354		329	3E-3890	782

▶ **PRIMARY REFERENCE**

PART NUMBER INDEX

Part	Page	Part	Page	Part	Page	Part	Page
	827	3E-8646	144		199		646
	831	3E-8700	▶253		202		648
3E-4048	881		347		205		650
	883	3E-8763	273		207		652
3E-4302	623		338		209		654
3E-4307	381		345		210		656
3E-4335	884	3E-8765	329		212		658
3E-4336	884	3E-8766	205		222		660
3E-4352	78		207		224		662
	241		222		234		664
3E-4353	89		224		235	3G-0361	633
	239		280		236	3G-1701	836
	290		282		267		838
3E-4356	488		872		273	3G-2579	766
3E-4362	884		876		280	3G-2581	766
3E-5169	305	3E-8770	180		282	3G-3265	851
	325	3E-8772	188		329		854
3E-5180	137		189		332		859
3E-5239	178		191		334		861
	180		192		335	3G-3726	728
	304		193		338		729
	324		196		341		732
3E-5464	782		199		345	3G-6659	504
3E-6017	725		202		820	3G-7875	926
3E-6328	▶118		209		821	3G-8175	741
	332		212		872	3H-2900	332
	334		267		876		334
3E-6388	949		341	3E-9317	196		783
	953	3E-8782	205	3E-9323	338		828
3E-6389	▶152		207	3E-9324	338		831
	275		222		341	3H-8538	361
	278		224	3E-9326	193	3J-1907	8
	284		280		196		70
3E-6450	297		282		199		89
	329	3E-8783	338		202		94
3E-6477	191		341		209		96
	192	3E-8784	345		212		98
	338	3E-8812	273		267		293
	341	3E-8814	199		341		298
3E-6575	884		202	3E-9327	332		346
3E-6754	329		209		335		363
	334		212	3E-9330	820		368
3E-7417	623	3E-8815	188		821		370
3E-7445	383		189	3E-9412	105		380
3E-7775	260		191	3E-9413	887		383
3E-7842	304		192		888		398
	329	3E-8816	329		889		401
3E-7852	263		335	3E-9865	794		406
3E-7853	263	3E-8817	332	3F-0379	260		584
3E-7855	263		335		263		591
3E-7857	263	3E-8821	820	3F-1547	633		597
3E-7860	263		821	3F-5108	753		598
3E-7861	263	3E-8822	150		754		600
3E-8005	12		234		755		601
	367		235		758		603
3E-8006	406		236		759		604
3E-8017	79	3E-8825	150		760		611
	81		178	3F-7514	794		613
	83		180	3F-9556	120		679
3E-8020	891		188		271		681
	893		189		636		721
	896		191		638		728
3E-8043	794		192		640		729
3E-8320	316		193		642		732
	320		196		644		733

▶ **PRIMARY REFERENCE**

PART NUMBER INDEX

Part	Page
	734
	735
	736
	737
	738
	739
	740
3J-3679	679
3J-4818	933
3J-5389	391
3J-5390	517
	522
3J-5696	779
3J-6956	406
3J-7354	8
	49
	94
	96
	363
	378
	401
	520
	544
	584
	591
	597
	600
	603
	611
	613
	625
	679
	681
	723
	730
3J-8500	627
3K-0196	389
3K-0360	8
	10
	22
	62
	101
	293
	297
	298
	329
	346
	378
	391
	580
	582
	583
	586
	589
	591
	598
	601
	604
	606
	608
	610
	611
	613
	614
	679
	681
	683
	685
	687
	689
	691
	693
	695
	697
	699
	701
	703
	705
	707
	709
	711
	713
	715
	717
	719
	725
	727
	730
	866
3K-0835	891
	893
	895
3K-0986	389
3K-2889	505
3K-4897	725
	885
3K-6060	527
	794
3K-6116	398
3K-8106	132
	133
	317
	321
3K-8280	527
3K-8460	30
3K-8782	284
3K-9520	193
	196
	199
	202
	209
	212
	297
3L-8187	338
	341
3P-0337	354
3P-1156	57
3P-1461	761
3P-1932	591
3P-3839	497
	499
3P-9498	679
	681
3P-9554	872
	876
3P-9900	480
	484
3R-2437	679
3S-0004	386
3S-1349	769
	772
3S-2093	144
	178
	180
	193
	196
	199
	202
	205
	207
	209
	212
	222
	224
	234
	235
	236
	259
	273
	275
	278
	280
	282
	284
	286
	288
	290
	293
	297
	302
	304
	309
	312
	316
	320
	324
	329
	332
	334
	338
	341
	506
	526
	589
	613
	782
	827
	831
	845
	863
	872
	876
	895
	926
	935
	938
3S-2713	361
	526
3S-6049	320
3S-6050	316
	320
3S-6925	681
3S-7023	561
	563
	564
3S-8652	380
3S-8665	57
	101
3S-9643	68
3T-0050	526
3T-2662	132
	133
3T-3197	782
3T-3198	782
3T-3422	260
	263
3T-3434	260
3T-4377	390
3T-4965	598
	601
	604
3T-5760	130
3T-6354	125
3T-6774	816
	818
3T-6848	610
3T-7059	948
3T-7086	948
3T-8236	679
	681
3V-3816	937
3V-4694	284
	859
3V-9244	881
	883
3W-6485	547
3W-7254	763
3W-7256	763
3Y-2806	794
4B-1281	338
	341
4B-2047	125
	341
4B-2049	891
	893
	896
4B-2913	633
4B-3388	836
	838
4B-3604	749
4B-4158	899
4B-4274	317
	321
	338
	342
4B-4283	949
	951
	953
	955
	957
	959
	961
	963
	966
	967
	968

4

PART NUMBER INDEX

Part	Page	Part	Page	Part	Page	Part	Page
4B-4314	794		938	4G-4972	17		689
4B-4845	390	4D-7733	584	4H-2558	240		691
4B-4863	114	4D-7735	101		317		693
	115		531		321		695
	317	4D-7794	193	4H-2633	72		697
	321		196		73		699
4B-4909	480		199		863		701
	484		202	4H-6147	524		703
4B-5059	840		293	4H-6520	373		705
4B-5271	610		298	4H-6996	574		707
4B-5275	835		305	4H-7869	262		709
4B-6060	361		317	4H-9105	520		711
	527		321	4J-0520	383		713
4B-7270	522		325	4J-0521	598		715
4B-9302	863		332		601		717
4B-9880	401		334		604		719
4C-2959	790		504	4J-0522	383	4J-8524	533
4C-9612	36		635	4J-0523	598	4J-8527	533
4D-0577	527		863		601	4J-8922	361
4D-0582	527		926		604		527
4D-1135	533		937	4J-2506	363	4J-9224	570
4D-1138	533	4D-8148	474		398	4J-9225	560
4D-1212	338	4D-8948	317		401		567
	342		321	4J-3914	527		568
4D-1322	406	4D-9517	219	4J-3915	804	4J-9964	632
4D-1326	269	4D-9986	683		810	4K-0367	373
4D-1432	305		685	4J-5267	591		753
	325		687	4J-5468	580		754
4D-2297	717		689		586		755
	728		691		589		758
	729		693		613		759
	732		695	4J-5477	8		760
	733		697		363		880
	734		699		591		881
	735		701		597		883
	736		703		598	4K-1388	679
	737		705		600		681
	738		707		601	4K-2039	398
4D-2560	530		709		603		401
4D-2886	610		711		604	4K-3004	766
4D-3704	381		713		611	4K-3150	766
	471		715		613	4K-3330	▶775
	522		717		679	4K-4881	455
	557		719		681		467
4D-4064	86	4E-2392	613	4J-7533	398	4K-5122	284
4D-4375	747	4E-6867	611		401	4K-6781	501
4D-5292	373	4E-9628	593		572	4K-7463	501
4D-5497	522		595		666	4K-7464	501
4D-6086	769	4F-2294	270		667	4K-8603	346
	772	4F-2609	346		668	4K-8659	501
4D-6432	903	4F-3657	752		669	4K-8864	101
	904	4F-3658	752		670		193
	905		758		671		196
	910		759		672		293
	912		760		673		298
4D-6585	524	4F-4097	623		674	4K-9097	910
4D-6695	381	4F-4879	920		675		912
	406		921		676	4L-5966	782
4D-6885	526		924		677		827
4D-7246	574		933		678		831
4D-7388	293	4F-5695	18		679	4L-6454	37
	305	4F-7389	383		681		193
	325	4F-7390	520		683		196
	935	4F-7952	387		685		199
	937	4F-9653	574		687		202

▶ **PRIMARY REFERENCE**

PART NUMBER INDEX

Part	Page
	240
	294
	298
	332
	334
	476
	489
	497
	499
	527
	590
	610
	614
	836
	838
	935
4L-6459	273
	636
	644
	648
	652
	658
	660
	662
	664
4M-0061	818
4M-1751	398
	401
4M-1831	260
	263
4M-2381	401
4M-5281	497
	499
	847
4M-6107	357
	359
4M-6108	346
4M-6109	346
4M-6425	527
4M-6582	783
	828
	832
4M-6921	633
4M-6953	385
4N-2927	840
4N-5091	538
	543
4P-4369	81
4P-5524	76
4P-5918	286
	288
	290
4P-6422	972
4P-7581	134
	286
	288
	290
	332
	334
4P-8134	134
	286
	288
	290
	294
	298
	363
4R-9999	44
4S-1962	66
	866
4S-4455	294
	298
	305
	325
4S-5838	520
4S-5879	367
	522
4S-7529	524
4S-7560	531
4S-7606	524
	531
4S-8287	884
4S-9191	74
	491
4T-1700	730
4T-1860	679
	681
	▶739
4T-4207	681
4T-4509	730
4T-4935	679
	681
	▶727
4T-4942	727
4T-5070	739
4T-5071	739
4T-5074	730
4T-5613	561
	563
	564
	570
4T-6779	559
4T-6780	560
4T-6907	558
	565
	566
4T-7571	727
4T-8050	477
4T-8054	570
	616
4V-0015	501
4V-7875	840
4V-7877	840
4V-7884	931
	933
4V-7890	779
4V-7891	779
4V-8116	309
	312
4V-8556	933
4V-8577	931
4V-9803	509
4V-9804	509
4V-9809	509
4W-1413	972
4W-4794	68
4W-7356	617

5

Part	Page
5B-0577	769
	772
5B-0841	375
5B-6172	779
	906
	908
5B-8978	611
5B-9079	735
	738
5B-9318	571
	572
	683
	685
	687
	689
	691
	693
	695
	697
	699
	701
	703
	705
	707
	709
	711
	713
	715
	717
	719
5C-2874	169
	228
5C-2890	184
	186
	193
	196
	199
	202
	209
	212
	229
	230
	258
	267
	302
	305
	309
	312
	325
	329
	334
	338
	342
	527
	783
	813
	828
	832
	935
	938
5C-6565	507
5C-7261	8
	13
	182
	184
	188
	191
	193
	199
	209
	215
	219
	309
	312
	863
5C-7423	357
	359
	949
	951
	953
	955
5C-8312	275
	278
	284
	338
	342
	794
5C-9553	305
	317
	321
	325
	338
	342
	593
	595
	902
	948
5C-9563	309
	312
5C-9583	169
5C-9584	309
	312
5C-9930	309
	312
5C-9931	309
	312
5D-0269	891
	893
	895
	926
5D-0353	381
	471
5D-0768	534
5D-1026	66
	491
	866
5D-1911	633
5D-2645	586
	589
5D-3636	534
5D-4382	524
	▶533
5D-4822	840
5D-4988	589
5D-6644	745
5D-6993	835
5D-6994	835
5D-6996	835

▶ PRIMARY REFERENCE

PART NUMBER INDEX

Part	Page	Part	Page	Part	Page	Part	Page
5D-6997	835		217		804		640
5D-6998	▶835	5K-4778	8		810		642
	836	5K-5068	75		863		644
	838	5K-5129	574		931		646
5D-7778	533	5K-5288	471		935		648
5D-7780	533	5K-5552	552		938		650
5D-8159	769	5K-7577	891	5M-6200	346		652
	772		895	5M-6213	524		654
5D-8161	769	5K-8454	574		527		656
	772	5K-9090	77	5M-6687	304		658
5D-9553	753		378		324		660
5D-9554	754		383	5M-6725	309		662
5D-9558	757		597	5M-6755	342		664
5D-9559	757		598	5M-7087	49		751
5D-9561	755		600	5M-8500	794		783
5D-9844	373		601	5M-9695	942		794
5F-0149	761		603	5P-0537	173		804
5F-1678	347		604		174		810
5F-5434	531	5K-9107	969		398		828
5F-8000	70	5K-9238	526		401		832
	388	5K-9660	863		816		863
5F-9144	398	5L-2030	373		818		870
	401	5L-2031	373		948		929
5H-4778	524	5L-4507	317	5P-0597	52		931
	527		321		53		969
	531	5L-7200	193	5P-0599	589	5P-1076	63
	836		196	5P-0747	240		86
	838		199		304		88
5H-4909	574		202		305		312
5H-7826	504		209		316		480
5H-8848	598		212		320		484
	601		267		324		508
	604		341		329		509
5H-8936	926	5M-2057	679	5P-0761	127		514
5H-8985	351		681		128		636
	354	5M-2894	298		129		638
	357		373		130		640
	359		381		240		642
5J-1036	398		915		304		644
	401		917		316		646
5J-1086	520	5M-3062	193		317		648
5J-1246	632		196		320		650
5J-2974	633		199		321		652
5J-5402	564		202		329		654
5J-7010	560		209	5P-0765	383		656
5J-7333	751		212	5P-0767	66		658
5K-0871	501		294		491		660
5K-0983	501		298		527		662
5K-0984	501		305		866		664
5K-0985	501		325	5P-1075	75	5P-1175	972
5K-0987	501		329		86	5P-1262	66
5K-0988	501		332		305	5P-1291	597
5K-0989	501		334		325		600
5K-0991	501		378		361		603
5K-1458	769		476		471	5P-1295	597
	772		477		476		600
	775		489		477		603
5K-1459	769		524		489	5P-1465	531
	772		527		497	5P-1469	113
	775		541		499	5P-1838	866
5K-2408	524		606		507	5P-2228	766
	836		608		527	5P-2424	636
	838		751		614		638
	926		779		636		640
5K-3294	215		781		638		642

▶ **PRIMARY REFERENCE**

PART NUMBER INDEX

Part	Page
	644
	646
	650
	652
	654
	656
	658
	660
	662
	664
	766
5P-2503	373
5P-2566	499
	517
	632
5P-3264	104
	105
5P-3454	317
	321
5P-3490	381
5P-3863	346
	388
5P-3924	346
5P-3999	972
5P-4000	975
5P-4001	975
5P-4002	976
	977
5P-4003	976
5P-4077	973
5P-4086	976
	977
5P-4115	338
	342
	497
	499
	847
	851
	854
	935
	938
	949
	951
	953
	955
	957
	959
	961
	963
	966
	967
	968
5P-4116	302
	305
	312
	317
	321
	325
	506
	530
5P-4295	305
	325
5P-4325	52
	101
5P-4401	517
5P-4424	517
5P-4426	517
5P-4483	346
5P-4868	597
	600
	603
5P-4906	866
5P-4961	101
	378
5P-5454	851
	854
5P-5623	302
5P-5627	942
5P-5637	783
	795
	828
	832
5P-5639	795
5P-5675	316
	320
5P-5677	119
	329
5P-5678	14
	15
	799
5P-5680	943
	945
5P-5689	317
	321
5P-5768	802
	806
	808
	887
	888
	889
	901
5P-5813	373
5P-5824	851
	854
5P-5908	783
	828
	832
5P-5923	480
	485
	751
5P-5931	587
	590
5P-5969	489
	547
	804
	810
	847
	852
	855
	861
	869
	940
5P-6008	338
5P-6129	783
5P-6652	494
	749
	751
5P-6871	871
5P-6882	847
5P-7162	942
5P-7213	389
5P-7530	55
5P-7701	49
5P-7803	782
	827
	831
	851
	854
	859
	861
	929
5P-7854	591
	614
5P-7957	906
	908
5P-7958	910
5P-8167	219
	220
	273
	305
	325
	489
	794
	933
	937
5P-8196	51
5P-8197	899
5P-8244	522
5P-8245	8
	30
	33
	45
	48
	63
	375
	391
	501
	554
	555
	557
	574
	617
	621
	745
	769
	772
5P-8247	120
	373
	375
	501
	745
	758
	759
	760
5P-8248	373
	381
	555
	574
	629
	761
	769
	772
5P-8249	551
	553
5P-8250	769
	772
5P-8291	749
5P-8347	134
	368
	370
5P-8439	113
	222
	224
5P-8445	840
5P-8500	635
	788
	798
	868
	899
	969
5P-8502	635
	798
	899
	969
5P-8525	150
	205
	207
	234
	235
	236
	821
	845
5P-8842	471
	557
5P-8843	471
5P-8890	471
5P-9085	497
	499
5P-9118	522
5P-9135	783
	827
	831
5P-9209	86
	361
5P-9262	723
5P-9299	347
	531
5P-9617	613
5P-9810	578
5R-4787	621
5S-0003	836
	838
5S-4246	332
	334
5S-4385	386
5S-7349	120
	125
	260
	263
5S-7379	193
	196
	199
	202
	220
	294
	298
	471
	507
	556
	574

► **PRIMARY REFERENCE**

PART NUMBER INDEX

Part	Page
	584
	587
	590
	591
	614
	751
	794
	870
5S-7382	75
	86
	361
	383
	477
5S-7383	590
	786
	787
	794
	915
	917
5T-0570	3
	▶574
5T-0906	471
5T-1362	629
5T-1958	943
5T-1959	945
5T-1964	943
	945
5T-1969	943
5T-1972	943
	945
5T-3093	940
5T-3144	943
5T-3145	945
5T-3146	943
5T-3147	945
5T-3889	747
5T-3890	747
5T-4030	836
	838
5T-4267	747
5T-5295	555
5T-6775	749
5T-7129	381
5T-7486	799
	802
	806
	808
5T-8285	524
	526
5T-8366	745
5T-8417	555
5T-9313	193
	196
	199
	202
5T-9628	375
5T-9903	613
5T-9986	586
5V-0770	840
5V-1474	840
5V-1497	840
	931
5V-1498	786
	787

6

Part	Page
6A-9718	948
6B-0933	636
	638
	640
	642
	644
	646
	648
	650
	652
	654
	656
	658
	660
	662
	664
6B-3260	769
	772
	775
6B-4540	332
	334
6B-5072	391
6B-6684	63
	389
	617
6C-0109	309
	312
6C-0110	309
	312
6C-3060	115
6C-3246	450
6C-3248	446
6C-5233	309
	312
6C-5234	309
	312
6C-7366	449
6D-0580	363
6D-1004	10
6D-1432	524
6D-1641	866
6D-3479	317
	321
	347
6D-4161	836
6D-4244	305
	325
	339
	342
	476
	578
	587
	590
	614
6D-4246	8
	294
	298
	305
	321
	325
6D-4247	580
	606
	608

Part	Page
6D-6489	531
6D-6581	799
	802
	806
	808
6D-7146	621
6D-7563	758
6D-7564	759
	760
6D-9718	836
6D-9855	526
6E-0123	559
6E-0775	564
6E-1131	561
	563
6E-1343	553
	▶561
6E-1344	561
6E-1346	561
6E-1436	623
6E-1835	727
6E-1923	679
	681
6E-1924	679
6E-1925	679
6E-1926	597
	600
	603
6E-3006	733
	734
	736
6E-3007	683
	685
	687
	689
	691
	693
	695
	697
	699
	701
	703
	705
	707
	709
	711
	713
	715
	717
	719
6E-3013	683
	685
	687
	689
	691
	693
	695
	697
	699
	701
	703
	705
	707
	709
	711

Part	Page
	713
	715
	717
	719
6E-3019	683
	685
	687
	689
	691
	693
	695
	697
	699
	701
	703
	705
	707
	709
	711
	713
	715
	717
	719
6E-3028	666
	668
	672
	675
	676
	677
	▶683
6E-3029	666
	668
	672
	675
	676
	677
	▶685
6E-3030	666
	668
	672
	675
	676
	677
	▶687
6E-3031	666
	672
	676
	▶689
6E-3032	638
	640
	642
	▶666
6E-3033	689
	697
	703
	711
	713
	715
	▶728
6E-3034	667
	669
	670
	671
	673
	674

▶ **PRIMARY REFERENCE**

PART NUMBER INDEX

Part	Page	Part	Page	Part	Page	Part	Page
	678		699		442	6G-5533	574
	▶691		701		443	6G-5534	574
6E-3035	667		705		444	6G-5537	574
	669		707		445	6G-5538	574
	670		709		446	6G-5539	574
	671	6E-4703	679		447	6G-5542	574
	673		681		448	6G-5543	574
	674		▶729		449	6G-5544	574
	678	6E-4704	728		450	6G-5547	574
	▶693	6E-4940	560		451	6G-5548	574
6E-3036	667	6E-4974	570		452	6G-5979	397
	669	6E-5047	391		453		404
	670	6E-5153	683		454	6G-5987	816
	671		685		455		818
	673		687		456	6G-6122	574
	674		689		457	6G-7187	554
	678		691		458		557
	▶695		693		459	6G-7222	851
6E-3037	667		695		460		859
	670		697		461		861
	671		699		462	6G-8623	760
	▶697		701		463	6G-8814	794
6E-3038	642		703		464	6G-8831	871
	654		705		466		872
	▶667		707		468		874
6E-3043	689		709		469		876
	697		711		470	6H-0211	555
6E-3044	683		713	6F-4855	398	6H-1717	557
	685		715		401		574
	687		717	6F-6992	769		745
	693		719		772	6H-9691	533
6E-3058	695	6E-5200	730	6F-7045	266	6I-0273	76
6E-3059	703	6E-6140	721	6G-0417	501	6I-0274	76
6E-3268	723	6E-6141	721	6G-0905	522	6I-0275	76
6E-3269	723	6E-6142	721	6G-1528	467	6I-1418	293
6E-3272	723	6E-6419	721	6G-1631	350		297
6E-3273	723	6E-6420	721	6G-1633	350	6I-8641	351
6E-3274	723	6E-6527	723	6G-1755	2		354
6E-3275	723	6E-6528	723		▶350	6I-8911	357
6E-3276	723	6E-6536	723	6G-1908	574	6I-8912	351
6E-4090	558	6E-6537	723	6G-1914	749		354
6E-4224	623	6E-6538	723	6G-1915	749		357
6E-4228	721	6E-6539	723	6G-2395	851		359
6E-4230	721	6E-6540	723		854	6I-9395	406
6E-4239	721	6F-0253	835		859	6J-0488	339
6E-4502	683		891		861		342
	685		893	6G-2396	851	6J-0789	559
	687		895		854	6J-0790	559
	689	6F-0698	373		859	6J-0793	559
	691	6F-3930	426		861	6J-1381	559
	693		427	6G-2751	851	6J-1972	558
	695		428		854		561
	697		429	6G-2914	794		563
	699		430		851		565
	701		431		854		566
	703		432	6G-2946	747	6J-2797	564
	705		433	6G-2959	945	6J-5731	558
	707		434	6G-3206	381		561
	709		435	6G-3212	381		563
	711		436	6G-4526	749		565
	713		437	6G-4701	373		566
	715		438	6G-4703	373	6J-5733	558
	717		439	6G-5214	861		561
	719		440	6G-5442	749		563
6E-4599	691		441	6G-5532	574		565

▶ PRIMARY REFERENCE

PART NUMBER INDEX

Part	Page	Part	Page	Part	Page	Part	Page
	566		831		334		320
6J-6439	727	6T-7695	845	6V-2610	517	6V-4369	286
6K-0545	769	6T-8115	284	6V-2687	497		288
	772	6T-9222	380		499		290
6K-3273	851	6V-0292	851		869	6V-4589	104
	854		854	6V-2722	131		105
	859		861	6V-2773	799	6V-5048	241
6K-4076	489	6V-0467	614		802		247
6K-6826	526	6V-0505	823		806		248
6K-8178	317		824		808	6V-5049	40
	321		852	6V-3259	840		57
	517		855	6V-3265	215		89
6K-9632	937		859		217		94
	938	6V-0852	66		294		96
6L-1650	346		94		298		98
6L-1962	636		96	6V-3342	836		111
	638		363		838		112
	640		380	6V-3538	17		246
	642		406	6V-3668	520	6V-5050	104
	644		591	6V-3822	347		105
	646		597	6V-3908	49	6V-5063	68
	648		600	6V-3918	12		70
	650		603		31	6V-5158	804
	652		679		32		810
	654		681		36	6V-5163	804
	656	6V-0894	86		71		810
	658		361		367		852
	660	6V-1572	100	6V-3922	89		855
	662	6V-1573	100	6V-3928	849		859
	664	6V-1581	66		851	6V-5164	902
6L-8617	72	6V-1582	66		854	6V-5192	36
	73	6V-1668	783		859		627
6M-5062	541		828		861	6V-5217	31
	735		832	6V-3940	11		32
	738	6V-1722	614		12		52
6M-9537	526	6V-1819	58		38		54
6N-1604	148		351		55		55
	149		354		57		101
6N-3827	260		357		62		286
6P-0205	777		359		241		288
	778		370		346		290
	851	6V-1820	10	6V-3964	294		346
	854		49		298		367
	861		74	6V-3965	363		406
6P-3236	782		346		380	6V-5218	51
	827		387		406	6V-5219	14
	831		491		591		15
6P-5647	763	6V-1889	293		597		347
6P-6641	517		298		600		388
6T-2770	948		383		603	6V-5221	10
6T-3610	329		477		679		134
6T-3631	304		591		681		305
	324	6V-1911	389	6V-4245	527		325
6T-3632	304	6V-1970	3	6V-4248	57	6V-5230	679
	324		▶868		60		681
6T-3633	304	6V-2313	86		69	6V-5556	730
	324		361		89	6V-5586	739
6T-3643	317	6V-2317	13		290	6V-5645	275
	321		347		346		278
6T-3764	148		368		793	6V-5696	45
6T-5345	782		370	6V-4249	68		598
	827	6V-2369	317		94		601
	831		320		96		604
6T-6708	782		321		98	6V-5722	572
	827	6V-2480	332	6V-4283	316	6V-5834	845

▶ **PRIMARY REFERENCE**

PART NUMBER INDEX

Part	Page
6V-5839	10
	13
	25
	49
	52
	53
	57
	58
	60
	68
	69
	81
	94
	96
	98
	104
	105
	286
	288
	290
	368
	370
	520
	591
	793
6V-5842	49
	520
6V-5843	29
6V-5849	957
	959
6V-5853	949
	951
	953
	955
	961
	963
	966
	967
	968
6V-6209	948
6V-6213	948
6V-6214	948
6V-6219	948
6V-6317	52
	53
	239
	290
6V-6467	938
6V-6578	275
	278
	284
6V-6609	256
6V-6703	139
	147
6V-6888	948
	949
	951
	953
	955
6V-6889	948
	949
	951
	953
	955
6V-6893	305
	325
6V-6959	114
	115
6V-7357	317
	321
	527
6V-7418	681
6V-7636	799
	802
	806
	808
6V-7673	623
6V-7687	63
6V-7728	783
	828
	832
6V-7744	871
	872
	874
	876
6V-7981	25
	104
	105
	346
	591
6V-8004	30
6V-8077	611
6V-8081	381
6V-8183	86
	794
6V-8185	339
	342
6V-8186	270
	271
	636
	638
	640
	642
	644
	646
	648
	650
	652
	654
	656
	658
	660
	662
	664
6V-8189	120
	527
6V-8197	30
6V-8202	347
6V-8212	346
	368
	370
6V-8214	491
6V-8225	173
	174
6V-8237	558
	565
6V-8255	940
6V-8257	959
6V-8258	949
	951
	957
	961
	963
6V-8259	953
	955
	966
	967
	968
6V-8336	63
	623
6V-8337	623
6V-8352	723
6V-8362	782
	827
6V-8369	272
	275
	284
	957
	959
	961
	963
6V-8376	132
	133
	317
	321
	338
	341
	342
6V-8378	260
	263
	269
	271
6V-8397	94
	96
	98
	101
	580
	582
	583
	584
	586
	587
	589
6V-8398	8
	94
	96
	98
	101
	530
	578
	586
	589
	598
	601
	604
	611
	613
	614
	679
	681
	740
6V-8624	101
	586
6V-8625	8
	586
	589
	598
	600
	604
	611
	613
6V-8627	8
	363
	591
	597
	600
	603
6V-8628	8
	363
	591
6V-8633	578
6V-8634	580
	582
	583
	586
	589
6V-8635	383
6V-8636	57
	94
	96
	98
	104
	105
	584
6V-8637	26
	593
	595
6V-8638	94
	96
	98
6V-8639	8
	101

► **PRIMARY REFERENCE**

PART NUMBER INDEX

Part	Page
	586
	613
6V-8647	363
	597
	600
	603
	613
	679
	681
6V-8675	33
	621
6V-8714	77
6V-8716	378
	383
6V-8721	94
	96
	98
6V-8723	57
	580
	586
	589
	606
	608
	610
6V-8724	94
	96
	98
	584
6V-8765	621
6V-8777	598
	601
	604
6V-8801	86
	144
	193
	196
	199
	202
	238
	240
	269
	273
	275
	278
	284
	294
	298
	305
	325
	329
	332
	334
	339
	342
	476
	477
	524
	527
	538
	543
	587
	590
	610
	614
	783
	828
	832
	929
	935
6V-8837	623
6V-8918	527
6V-8928	851
	854
	859
6V-8936	740
6V-9001	591
6V-9002	101
	613
6V-9004	63
	598
	601
	604
6V-9005	49
6V-9007	595
	597
	600
	603
6V-9008	49
	378
6V-9027	368
	370
	843
6V-9168	606
	608
6V-9189	205
	222
6V-9632	144
	365
	497
	499
	794
	799
	806
	813
	847
	861
	891
	895
	902
	929
6V-9746	26
	63
	378
	383
	591
	593
	594
	597
	598
	600
	601
	603
	604
	613
	606
	598
	601
	604
	590
	578
6V-9839	593
	595
6V-9840	598
	601
	604
6V-9844	611
6V-9849	611
	613
6V-9850	584
6V-9851	578
6V-9853	378
	383
	591
	591
6V-9872	591
6V-9873	94
	96
	611
6V-9875	597
	600
	603
6V-9876	586
	589
6W-0108	779
6W-0111	779
6W-0590	779
6W-1885	779
6W-1890	906
	908
6W-1895	906
	908
6W-2373	906
	908
6W-3309	906
	908
6W-3628	915
	917
6W-5698	935
	938
6W-5740	906
	908
6W-5757	906
	908
6W-5817	526
6W-6672	304
	329
6W-9693	906
	908
6Y-0309	776
6Y-0590	390
6Y-0591	390
6Y-0976	359
6Y-0982	351
6Y-1000	351
6Y-1114	351
	354
	359
6Y-1115	351
	354
	357
	359
6Y-1116	357
6Y-1119	357
	359
6Y-1864	354
6Y-1878	351
6Y-1887	351
	354
	359
6Y-1888	359
6Y-1890	354
6Y-1891	351
	359
6Y-1895	351
	359
6Y-2303	▶351
	393
6Y-2307	359
6Y-2312	351
	354
6Y-2419	351
6Y-2425	351
	354
6Y-2428	354
6Y-2429	354
6Y-2430	354
6Y-2584	406
6Y-2932	618
6Y-2933	618
6Y-2934	618
6Y-2935	618
6Y-3849	520
6Y-3850	520
6Y-3852	520
6Y-3855	359
6Y-3860	388
6Y-3861	388
6Y-4280	623
6Y-4638	398
	401
6Y-5010	386
6Y-5230	769
	772
	775
6Y-5352	520
6Y-5728	346
6Y-7916	522
6Y-7953	574
6Y-7954	375
6Y-7981	354
6Y-8285	351
6Y-8764	▶386
	387
6Y-8765	▶387
	393
6Y-9763	346
	359
	351
	351
	351
	354
	359
7B-7525	910
	912
7B-9323	534
7C-0752	82
7C-1493	51
7C-3254	304
	324
7C-4354	77
	294
	298

7

▶ **PRIMARY REFERENCE**

PART NUMBER INDEX

Part	Page
	305
	325
	332
	334
7C-6670	85
7C-6672	85
7C-7431	79
	83
7D-0028	381
7D-0035	381
7D-0215	517
7D-1195	633
7D-1649	471
7D-2135	769
	772
7D-2136	769
	772
7D-2196	769
	772
7D-3963	524
7D-4903	517
7D-5252	426
	427
	428
	429
	430
	431
	432
	433
	434
	435
	436
	437
	438
	439
	440
	441
	442
	443
	444
	445
	446
	447
	448
	449
	450
	451
	452
	453
	454
	455
	456
	457
	458
	459
	460
	461
	462
	463
	464
	466
	468
	469
	470
7D-6567	391
7D-6671	▶752
7D-7026	66
	491
7D-7233	294
	298
7D-7496	494
7D-7767	530
7D-7889	381
7D-8185	375
7D-8225	375
7D-8226	375
7D-8245	770
	772
7D-8347	373
7D-8354	522
7D-8362	522
7D-8434	522
7D-8436	522
7D-8437	522
7D-8439	522
7D-8440	2
	▶522
7D-8441	522
7D-8636	471
7D-8637	471
7D-8643	471
7D-8825	769
7D-8826	769
7D-8875	761
7D-8876	761
7D-8877	761
7D-8878	761
7D-8879	761
7D-8881	761
7D-8882	761
7D-8883	761
7D-8884	761
7D-8889	761
7D-8891	761
7D-8912	471
	▶505
7D-8983	574
7D-8984	574
7D-9267	629
7E-5677	▶75
	77
7E-8570	368
	370
7F-0192	86
7F-0560	131
7F-1327	769
	772
7F-4617	606
	608
7F-7685	132
7F-8268	14
	387
7F-9223	480
7G-0437	520
7G-1060	324
7G-4326	935
7G-4822	351
	354
	357
	359
7G-4824	782
	827
	831
	851
	854
	859
	929
7G-5453	401
7G-7053	312
	332
	334
7G-7920	497
	499
7H-1447	633
7H-2423	567
	568
7H-2444	761
7H-3641	636
	638
	640
	642
	644
	646
	648
	650
	652
	654
	656
	658
	660
	662
	664
7I-2272	286
	288
	290
7I-4610	3
	▶504
7I-4621	▶636
7I-4622	545
	▶638
7I-4624	▶640
7I-4696	836
	838
7I-4698	836
	838
7I-4699	836
	838
7I-4718	2
	▶548
7I-4890	794
7I-5015	781
	▶813
	825
7I-5412	610
7J-0204	567
	568
	593
	595
7J-8611	377
	517
	531
	926
7J-8902	262
7J-9885	570
7J-9933	683
	685
	687
	689
	691
	693
	695
	697
	699
	701
	703
	705
	707
	709
	711
	713
	715
	717
	719
	727
7K-1181	293
	297
	497
	499
7K-4199	822
7K-4201	812
7K-4743	316
	320
7K-6117	549
	550
7K-9202	549
	550
	554
7K-9203	766
7L-0811	304
	324
7L-2894	260
	263
7L-8316	816
	818
7L-9061	623
7M-0706	365
7M-2360	574
7M-7219	840
7M-7410	527
7M-8485	346
	368
	370
	378
	383
	398
	401
7M-9918	85
7N-0718	▶266
	317
	321
7N-3718	317
	321
7N-5274	316
	320
7N-5683	17
7N-5876	332
	334
	879
	891
	893

▶ **PRIMARY REFERENCE**

PART NUMBER INDEX

Part	Page	Part	Page	Part	Page	Part	Page
	895	7X-0288	587	7X-2539	107		77
7N-9943	152		590		530	7Y-5226	940
7S-4571	381	7X-0289	578		791		943
7S-7680	75		580	7X-2540	572		945
7S-9396	75		590	7X-2541	305	7Y-7388	891
7T-0020	152		614		325		893
7T-0570	398	7X-0291	476	7X-2544	368		896
	401	7X-0292	763	7X-2545	370	7Y-8169	317
7T-0582	816	7X-0328	499	7X-2546	666		321
	818	7X-0333	538		667	7Y-8298	304
7T-1099	484		543		668		324
	782		763		669		
	794		766		670		
	827	7X-0334	745		671	**8**	
	831	7X-0342	383		672		
7T-1159	363	7X-0346	549		673	8B-1615	377
7T-1961	935		550		674	8C-0563	19
	938		616		675	8C-2926	386
7T-3267	260	7X-0354	880		676	8C-3085	725
7T-3268	260		881		677		739
7T-3271	260		883		678	8C-3089	623
7T-3276	260	7X-0375	880	7X-2552	383	8C-3205	591
7T-3277	260		881		863	8C-3309	597
7T-3278	260		883	7X-2607	623		603
7T-3279	260	7X-0390	769	7X-2619	305	8C-3334	338
7T-3451	260		772		329	8C-3425	621
	263	7X-0399	474	7X-2908	38	8C-3442	794
7T-3454	260	7X-0403	763	7X-3182	949	8C-3445	49
	263	7X-0404	503		953	8C-3446	49
7T-3974	260	7X-0440	294		957		94
7T-4003	820		298		961		96
	821	7X-0452	745		968		378
7T-4515	405	7X-0456	786	7X-3229	973		613
7T-4532	790		787	7X-3373	260	8C-3447	378
7T-4897	351	7X-0492	75		263	8C-3451	613
	354	7X-0550	745	7X-4736	524	8C-3655	260
	357	7X-0562	260	7X-4776	679	8C-3756	782
	359		263		681	8C-4586	782
7T-6496	346	7X-0579	114	7X-6222	332		827
7T-6799	332		115		334		831
	334	7X-0591	783	7X-6315	136	8C-4984	24
7T-7358	822		828		139		367
7T-8891	935		832		147	8C-5060	957
	937		929	7X-7644	973		959
	938	7X-0608	238	7X-7661	943	8C-5897	973
7T-9302	272		269		945	8C-5917	127
	275	7X-0620	269	7X-7729	74		128
	284	7X-0632	480		80		129
7T-9755	623		484		383	8C-5918	130
7T-9793	782	7X-0838	584		480	8C-6162	743
7U-4898	912	7X-0871	613		484	8C-6354	332
7U-4998	910	7X-0943	975		491		334
7V-0446	86	7X-0944	975		496	8C-6358	131
	361	7X-0945	976	7X-7731	471	8C-6712	94
	526	7X-0946	976	7X-7739	906		96
7V-5191	840	7X-1387	113		908	8C-6738	942
7V-7835	309	7X-1950	263		933	8C-6857	751
	312	7X-1952	263	7X-7877	144	8C-6913	769
7V-7838	309	7X-2049	863		275		772
	312	7X-2393	309		278	8C-6921	131
7V-9275	316		312		284	8C-6959	101
	320	7X-2459	94		491	8C-6965	398
7W-5672	586		96		906		401
	589	7X-2538	530		908	8C-7508	339
7W-7381	89		791	7X-7958	26		342

► **PRIMARY REFERENCE**

PART NUMBER INDEX

Part	Page
8C-8451	317
	321
8C-8454	804
	810
8C-8923	973
8C-9987	404
	741
	742
8D-1268	769
	772
8D-1429	782
	827
	831
8D-1470	517
8D-2429	556
8D-2638	556
8D-2811	471
	556
8D-3540	381
8D-3591	381
8D-3791	489
8D-3885	381
8D-3886	381
8D-3902	381
8D-4064	375
8D-4282	375
8D-4332	761
8D-4336	761
8D-4766	549
	550
8D-5632	636
	638
	640
	642
	644
	646
	648
	650
	652
	654
	656
	658
	660
	662
	664
8D-5633	636
	638
	640
	642
	644
	646
	648
	650
	652
	654
	656
	658
	660
	662
	664
8D-5634	636
	638
	640
	642
	644
	646
	648
	650
8D-5636	636
	638
	640
	642
	644
	646
	648
	650
8D-5637	636
	638
	640
	642
	644
	646
	648
	650
8D-5640	636
	638
	640
	642
	644
	646
	648
	650
	652
	654
	656
	658
	660
	662
	664
8D-5641	309
	312
	636
	638
	640
	642
	644
	646
	648
	650
	652
	654
8D-5949	745
8D-6687	552
8D-7026	526
8D-7086	549
	550
	554
8D-7225	554
8D-7423	574
8D-7424	574
8D-7425	574
8D-7426	574
8D-7678	552
8D-7960	794
8D-7996	551
8D-8168	761
8D-8197	373
8D-9092	587
8D-9159	489
8D-9784	373
8D-9882	747
8D-9886	747
8D-9887	747
8E-1118	845
8E-1133	346
8E-1143	401
8E-1161	354
8E-1263	357
	359
8E-1368	372
8E-1908	359
8E-1909	351
8E-1910	351
8E-1913	354
8E-1914	354
8E-3366	2
	▶372
8E-5531	753
	754
	755
8E-5734	351
	354
	359
8E-5736	354
8E-5742	351
	354
	357
	359
8E-6130	763
8E-6570	401
8E-7713	401
8E-7714	401
8E-7791	782
	827
	831
	851
	854
	859
8E-8319	351
	354
	357
	359
8E-9316	▶354
	393
8E-9474	406
8E-9893	401
8E-9894	398
	401
8E-9895	398
	401
8E-9896	398
	401
8E-9897	401
8F-0492	851
	854
	859
8F-1434	125
	169
	260
	263
	269
	271
	891
	893
	896
8F-1462	884
8F-1974	294
	298
8F-3469	351
	354
	357
	359
8F-4102	552
8F-6230	406
8F-6437	491
	636
	638
	640
	642
	644
	646
	648
	650
	652
	654
	656
	658
	660
	662
	664
8F-6575	48
8F-8151	866
8F-9836	749
8H-1141	260
8H-1728	870
8H-3481	168
8H-4040	769
	772
8H-5303	266
8H-5306	266
8I-1362	517
8J-0112	560

▶ PRIMARY REFERENCE

PART NUMBER INDEX

Part	Page	Part	Page	Part	Page	Part	Page
8J-1434	766		695		583		589
	▶776		697		586	8T-1683	589
8J-2331	632		699		589		606
8J-6273	617		701	8T-0100	13		608
8J-6371	559		703		78	8T-1687	586
8J-6384	563		705	8T-0119	297		589
8J-6815	679		707		329	8T-1698	618
8J-7008	766		709	8T-0249	611	8T-1715	866
8J-7024	765		711	8T-0285	141	8T-2275	633
	▶766		713		143	8T-2396	10
8J-9910	564		715	8T-0292	55	8T-2501	141
8J-9911	564		717	8T-0293	317		143
8K-0530	494		719		321		363
8L-2779	57	8M-4438	363	8T-0328	86		587
	94	8M-5860	19		125		590
	96	8M-6393	380		260		933
8L-2786	40	8M-6521	346		263	8T-2502	524
	57	8M-8489	386		286		527
	255	8N-0869	240		288		587
8L-5828	309		304		290	8T-2561	795
8L-6005	526		305		361	8T-2901	935
8L-6521	339		316		940	8T-3282	560
	342		317		943		567
8L-7905	794		320		945		568
8L-8413	129		321	8T-0335	940	8T-3426	852
	933		329	8T-0336	574		855
8L-8598	648	8N-1546	316	8T-0352	940		859
	650		320		943	8T-3490	54
	652	8N-1548	317		945		186
	656		321	8T-0355	388		193
	658	8N-1725	316	8T-0372	45		312
	660		320		520		347
	662	8N-2694	75		623		484
	664	8N-4485	68	8T-0389	127		496
8M-2769	866	8N-4617	76		128		497
8M-2770	209	8N-6854	36		129		499
	212	8N-8846	72		130		782
	219		73		160		799
	294	8P-5141	782		162		806
	298		827		164		827
	305		831		166		831
	325	8P-9679	526		480		929
	332	8R-1778	822		484	8T-3518	131
	334	8R-2054	908		496	8T-3519	131
	863	8R-2057	908	8T-0639	367	8T-3597	389
8M-2772	317	8R-3393	863	8T-0643	13		484
	321	8R-4519	915		68	8T-3612	52
8M-2773	294		917	8T-0644	68		54
	298	8S-0934	903		70	8T-3666	25
	305	8S-0948	101		368	8T-3957	598
	325	8S-2634	240	8T-0646	48		601
	584	8S-4790	915		598		604
	591		917		601	8T-4009	765
	781	8S-6109	863		604	8T-4121	8
8M-3175	679	8S-6110	863	8T-0667	566		26
	681	8S-7566	812	8T-0722	383		41
8M-3267	933	8S-7803	840	8T-1174	795		49
8M-3837	474	8S-9092	381	8T-1191	798		63
8M-4295	354	8S-9129	346		972		66
8M-4437	683		388	8T-1192	975		77
	685	8S-9130	346	8T-1193	975		82
	687		388	8T-1194	976		83
	689	8T-0076	101		977		86
	691		580	8T-1195	976		100
	693		582	8T-1296	587		101

▶ **PRIMARY REFERENCE**

PART NUMBER INDEX

Part	Page	Part	Page	Part	Page	Part	Page
	103		640		484		186
	122		642		606		215
	127		644		608		217
	128		646		795		228
	129		648		804		286
	130		650		810		288
	144		652		863		290
	150		654		871		294
	182		656		872		298
	183		658		874		306
	184		660		876		317
	186		662	8T-4136	65		322
	189		664		77		325
	192		799		82		329
	193		802		86		332
	196		804		103		334
	199		806		127		346
	202		808		128		495
	207		810		129		496
	209		845		150		497
	212		851		193		499
	215		854		199		517
	217		859		209		527
	220		863		212		531
	224		866		215		584
	228		871		234		591
	234		872		235		799
	235		874		236		802
	236		876		306		806
	262	8T-4122	309		309		808
	294		312		312		845
	298		549		317		871
	306		550		322		872
	309		616		325		874
	312		880		361		876
	317		881		480	8T-4138	317
	321		883		484		322
	325	8T-4123	34		491		683
	329	8T-4128	75		636		685
	332	8T-4133	49		638		687
	334		77		640		689
	346		82		642		691
	361		86		644		693
	377		127		646		695
	383		128		648		697
	480		129		650		699
	484		154		652		701
	491		155		654		703
	495		156		656		705
	497		157		658		707
	499		209		660		709
	517		212		662		711
	527		294		664		713
	531		298		863		715
	584		306		866		717
	591		309	8T-4137	26		719
	598		312		41		949
	601		317		66		951
	604		321		77		953
	606		325		82		955
	608		329		101	8T-4139	88
	633		347		130		312
	635		361		144		480
	636		383		182		484
	638		480		184		514

PART NUMBER INDEX

Part	Page
8T-4140	488
	515
8T-4171	309
	312
	783
	828
	832
	951
	955
	959
	963
	966
	967
8T-4172	41
	598
	601
	604
8T-4173	309
	312
8T-4178	60
	69
8T-4179	306
	325
	389
	480
	484
8T-4181	799
	802
	806
	808
8T-4182	86
	127
	128
	129
	130
	361
	383
	480
	485
	508
	851
	854
	859
	871
	872
	874
	876
8T-4183	63
	122
8T-4185	8
	82
	306
	322
	325
	496
	531
	863
8T-4186	66
	83
	666
	667
	668
	669
	872
	874
	876
8T-4189	114
	115
	302
	312
	317
	322
	517
	683
	685
	687
	689
	691
	693
	695
	697
	699
	701
	703
	705
	707
	709
	711
	713
	715
	717
	719
8T-4190	866
8T-4191	262
	306
	317
	322
	325
	491
	531
	635
	872
	876
8T-4192	389
8T-4194	122
8T-4195	49
	63
	66
	77
	80
	82
	100
	103
	294
	298
	306
	322
	325
	361
	383
	480
	485
	491
	633
	636
	638
	640
	642
	644
	646
	648
	650
	652
	654
	656
	658
	660
	662
	664
	804
	810
	851
	854
	859
	871
8T-4196	41
	49
	82
	122
	383
	480
	485
	491
8T-4198	309
8T-4200	306
	325
8T-4205	120
	125
	186
	193
	196
	199
	202
	209
	212
	228
	260
	263
	286
	288
	290
	306
	309
	312
	316
	318
	320
	322
	325
	517
	339
	527
	342
	572
	783
	683
	813
	685
	828
	687
	832
	689
8T-4222	60
	691
	69
8T-4223	63
	693
	65
	695
	88
	697
	122
	699
	209
	701
	212
	703
	306
	705
	309
	707
	313
	709
	318
	322
8T-4224	8
	13
	120
	182
	184
	188
	191
	193
	199
	205
	209
	215
	219
	222
	229
	230
	302
	306
	309
	313
	318
	322
	325
	517
	527
	572
	683
	685
	687
	689
	691
	693
	695
	697
	699
	701
	703
	705
	707
	709

► **PRIMARY REFERENCE**

PART NUMBER INDEX

Part	Page	Part	Page	Part	Page	Part	Page
	711		580	8T-5890	606		160
	713		584		608		162
	715		587	8T-6430	34		164
	717		590	8T-6466	383		166
	719		591		531		272
	791		606	8T-6468	391		275
	863		608	8T-6472	522		284
8T-4226	41		614	8T-6473	522		497
	86		781	8T-6631	783		499
	306		836	8T-6685	598		949
	325		838		601		953
	361		881		604		955
	527		883	8T-6703	113		957
8T-4244	122		935	8T-6757	531		959
	209		937	8T-6761	368		961
	212		938		370		963
	491	8T-4897	37	8T-6764	22	8T-8748	891
	514	8T-4908	506	8T-6765	346		893
8T-4647	294	8T-4910	65	8T-6854	368		895
	298		88		370	8T-8883	373
8T-4648	8		122	8T-6868	491	8T-8915	476
8T-4750	623		383	8T-6869	107		477
8T-4778	309	8T-4956	88		182	8T-8917	122
	313		598		184		616
8T-4835	635		601		188		751
	648		604		191	8T-8919	494
8T-4896	34	8T-4971	339		193		509
	75		342		199		761
	141	8T-4983	383		205	8T-8924	503
	143	8T-4984	100		209	8T-8987	679
	144	8T-4994	34		215		681
	193		480		219	8T-9006	794
	196		485		222	8T-9043	636
	199		503		689		638
	202		587		697		640
	209	8T-5004	480		703		642
	212	8T-5005	160	8T-6871	549		644
	219		162		550		646
	220		164	8T-6876	98		648
	240		166	8T-6974	531		650
	273		306	8T-7008	587		652
	275		329	8T-7044	81		654
	278		508	8T-7565	906		656
	284	8T-5030	386		908		658
	294	8T-5082	613	8T-7876	623		660
	298	8T-5255	▶972	8T-7971	507		662
	306	8T-5360	904	8T-8442	398		664
	325		905		401	8T-9056	527
	329	8T-5361	34		625	8T-9101	527
	332		474	8T-8566	260	8T-9107	600
	334		503	8T-8569	260	8T-9311	34
	339		763		263	8T-9364	306
	342	8T-5390	86	8T-8729	152		325
	361		361		164	8T-9377	75
	363		527		169	8T-9378	766
	378	8T-5401	851		243	8T-9381	903
	383		854		272		915
	489	8T-5412	209		329		917
	524		212		537	8T-9389	587
	527	8T-5429	611		742	8T-9530	972
	538	8T-5436	74		891	8T-9597	625
	543		346		895	8T-9636	144
	556	8T-5451	286	8T-8730	253	8T-9655	107
	574		288		270		134
	578		290	8T-8737	137		293

▶ PRIMARY REFERENCE

PART NUMBER INDEX

Part	Page	Part	Page	Part	Page	Part	Page
	297		451	8X-1032	509		953
8T-9756	130		453	8X-1135	935		955
8T-9757	127		454		938	8X-2680	526
	128		455	8X-1160	443	8X-2795	3
	129		458		444		788
8T-9834	891		460		445		▶870
	893		462		446	8X-2893	794
	895		463		447	8X-2913	497
8T-9884	260		469		449		499
	263		470		450		847
8U-6457	625	8W-3902	499		451	8X-2925	781
8V-0622	127	8W-4141	381		452		▶822
	128	8W-4142	381		453		825
	129	8W-4193	586		457	8X-3200	489
8W-0206	606	8W-4194	586		458	8X-3261	86
	608	8W-4368	3		459	8X-3434	471
8W-0220	589		▶381		461	8X-3435	471
8W-0225	613	8W-4652	471		462	8X-3615	761
8W-0302	589	8W-4653	471		468	8X-3616	761
8W-0456	636	8W-5092	574	8X-1853	141	8X-3663	769
	644	8W-5111	373		143		772
	648	8W-5279	373	8X-1904	794	8X-3749	616
	652	8W-5293	471	8X-1907	795	8X-3789	794
	658	8W-5394	3	8X-1908	794	8X-3806	799
	660		▶389	8X-1911	794		802
	662	8W-5430	3	8X-1913	794	8X-3938	799
	664		▶373	8X-1914	794		802
8W-0663	769	8W-5597	769	8X-1921	794	8X-3951	794
	772		772	8X-1935	3	8X-3965	794
8W-0681	756	8W-5651	534		▶761	8X-4066	806
8W-0684	756	8W-5870	3	8X-1943	2		808
8W-0934	935		▶507		▶552	8X-4243	799
	938	8W-6061	847	8X-1944	3		806
8W-0935	935	8W-6476	471		▶553	8X-4244	802
	938	8W-6497	472	8X-1947	2		808
8W-1028	943	8W-6590	621		▶551	8X-4245	799
8W-1029	945	8W-6626	494	8X-1949	3		802
8W-1592	389	8W-6627	494		▶642		806
8W-1614	304	8W-7957	443	8X-1960	3		808
	324	8W-8124	522		▶749	8X-4262	799
	530	8W-8317	381	8X-2160	794		806
8W-1749	745	8W-8412	494	8X-2161	794	8X-4263	802
8W-2213	759	8W-8527	304	8X-2226	497		808
8W-2214	758		324		847	8X-4276	636
8W-2290	3		526	8X-2228	888		638
	▶556		606		889		640
8W-2308	381		608	8X-2308	373		642
8W-2624	597	8W-8528	304	8X-2349	▶751		644
	600		324	8X-2366	751		646
	603		524	8X-2375	▶887		654
8W-2737	3		530		899	8X-4277	648
	▶557		863	8X-2385	788		664
8W-2761	754	8W-8532	526		▶888	8X-4317	▶799
8W-2768	753	8W-8903	526		900		804
8W-2842	551	8W-8909	306	8X-2528	375	8X-4318	▶802
8W-2913	▶554		326	8X-2534	373		804
	768	8W-9227	37	8X-2556	949	8X-4413	788
8W-3166	597	8W-9228	37		951		▶804
	600	8W-9566	467		953		900
	603	8W-9594	467		955	8X-4446	806
8W-3330	▶758	8X-0674	880	8X-2646	534		808
8W-3332	▶759		881	8X-2650	526	8X-4448	799
8W-3686	448		883		▶534		802
	449	8X-1030	3	8X-2663	949		806
	450		▶509		951		808

▶ **PRIMARY REFERENCE**

PART NUMBER INDEX

Part	Page
8X-4467	621
8X-4525	▶806
	810
8X-4526	▶808
	810
8X-4527	▶810
	899
8X-4641	375
8X-4741	551
	553
8X-4879	365
8X-5005	389
	▶396
8X-5102	813
8X-5106	761
8X-5107	761
8X-5108	761
8X-5109	761
8X-5110	761
8X-5111	761
8X-5121	383
8X-5123	794
8X-5153	193
	196
	199
	202
	209
	212
	267
	341
8X-5154	193
	196
	199
	202
	209
	212
	267
	341
8X-5160	524
8X-5280	935
	938
8X-5414	851
	854
	859
8X-5456	887
8X-5489	306
	326
	378
8X-5498	642
	646
8X-5499	636
	638
	640
	644
	648
	650
	652
	654
	656
	658
	660
	662
	664
8X-5536	782
	827
	831
	929
8X-5538	782
	827
	831
	929
8X-5540	782
	827
	831
	929
8X-5620	389
8X-6070	▶580
	768
8X-6075	769
	772
8X-6080	768
	▶769
8X-6131	880
	881
8X-6296	193
	196
	199
	202
	209
	342
8X-6419	499
8X-6475	497
	499
8X-6998	851
8X-6999	854
	859
8X-7152	782
8X-7153	782
8X-7317	383
8X-7603	526
8X-7820	597
	600
	603
8X-7845	851
	854
	861
8X-7951	749
8X-7956	749
8X-7973	597
	600
	603
8X-7974	597
	600
	603
8X-8011	2
	▶753
8X-8016	▶754
8X-8055	847
8X-8096	365
8X-8351	847
8X-8377	381
8X-8406	749
8X-8407	749
8X-8408	749
8X-8409	749
8X-8450	526
8X-8451	526
8X-8505	497
8X-8790	861
8X-8813	597
	600
	603
8X-8916	383
8X-8940	3
	▶914
8X-8945	788
	798
	899
	▶914
8X-9349	935
	938
8X-9387	836
	838
8X-9405	935
	938
8X-9464	499
8X-9675	898
	▶935
8X-9680	▶937
	947
8X-9751	1
	2
	▶622
	630
8X-9884	845
8Y-3912	▶906
	915
8Y-3913	906
8Y-4005	▶908
	917
8Y-4194	▶919
8Y-4398	799
	802
	806
	808
8Y-4399	802
	808
8Y-4400	799
	806
8Y-4401	799
	802
	806
	808
8Y-4408	935
	938
8Y-4409	935
8Y-4512	870
8Y-4619	799
	802
	806
	808
8Y-4620	799
	802
	806
	808
8Y-4801	799
	802
	806
	808
8Y-5874	▶814
	920
	925
8Y-5877	814
	815
8Y-5878	910
8Y-5890	910
8Y-5891	910
8Y-5903	884
8Y-5928	910
	912
8Y-5929	910
	912
8Y-5932	910
	912
8Y-5936	910
	912
8Y-5937	910
	912
8Y-5938	910
	912
8Y-5943	814
8Y-5944	931
8Y-5947	814
	815
	910
	912
8Y-5953	904
	905
8Y-5957	912
8Y-5959	▶815
	921
8Y-5960	815
8Y-5972	884
8Y-5979	910
	912
8Y-5981	910
	912
8Y-5999	885
8Y-6006	884
8Y-6010	884
8Y-6012	931
8Y-6022	931
8Y-6023	931
8Y-6024	931
8Y-6041	840
8Y-6044	840
8Y-6045	840
8Y-6046	840
8Y-6047	840
8Y-6051	910
	912
8Y-6060	840
8Y-6062	840
8Y-6063	840
8Y-6064	840
8Y-6066	840
8Y-6067	840
8Y-6068	840
8Y-6069	840
8Y-6277	786
	787
	915
	917
8Y-6364	635
	798
	899
	969

▶ **PRIMARY REFERENCE**

PART NUMBER INDEX

Part	Page
8Y-6379	823
	824
8Y-6388	782
	812
	813
	827
	869
8Y-6833	910
	912
8Y-6834	910
	912
8Y-6851	914
	▶915
8Y-6852	914
	▶917
8Y-6859	841
8Y-6860	841
8Y-6928	933
8Y-6933	910
	912
8Y-6981	942
8Y-6982	942
9	
9B-0143	373
9B-1565	758
	759
	760
9B-7233	132
	133
	193
	196
	199
	202
	209
	212
	267
	317
	321
	338
	341
	342
	782
	827
9B-7237	34
	590
	636
	638
	640
	642
	644
	646
	648
	650
	652
	654
	656
	658
9C-1587	906
	908
9C-2177	779
9C-5324	906
9C-5344	383
9C-5347	779
9C-5928	871
	872
	874
	876
9C-9467	383
9D-0953	578
	586
	613
9D-1142	574
9D-1377	761
9D-1491	574
9D-1589	880
	881
	883
9D-3075	522
9D-3311	489
9D-3523	472
9D-3583	761
9D-3767	491
	798
	899
9D-3768	182
	183
	184
	186
9D-5516	769
	772
9D-5659	476
9D-6164	193
	196
	199
	202
	298
	751
9D-6584	489
	616
9D-6589	489
9D-7047	522
9D-8121	534
9D-8508	236
9D-9256	489
9D-9797	471
9F-2247	381
9F-2978	507
	751
	786
	787
9F-4446	12
9F-5644	266
9F-6705	679
	681
9G-0002	130
9G-0003	127
	128
	129
9G-0004	127
	128
	129
9G-0005	130
9G-1950	782
	827
	831
9G-2991	373
9G-3695	836
	872
	948
	951
9G-4343	317
	320
	321
9G-5127	377
9G-5211	471
9G-6655	149
9G-7101	530
	863
9G-7132	398
	401
9H-1031	749
9H-6454	633
9J-0096	766
9J-0403	683
	685
	687
	689
	691
	693
	695
	697
	699
	701
	703
	705
	707
	709
	711
	713
	715
	719
9J-0404	683
	685
	687
	689
	691
	693
	695
	697
	699
	701
	703
	705
	707
	709
	711
	713
	715
9J-1979	633
9J-3047	633
9J-4963	618
9J-5498	522
9J-6586	776
9J-8783	361
	526
9K-7951	426
	427
	428
	429
9L-1566	207
	220
	224
	293
	297
	316
	320
	329
9L-6331	293
	297
9L-6770	120
	125
9L-7469	910
	912
9L-9068	406
9L-9814	915
	917
9M-0164	77
	597
	600
	603
9M-0402	531
9M-1853	636
	638
	640
	642

▶ **PRIMARY REFERENCE**

PART NUMBER INDEX

Part	Page
	644
	646
	648
	650
	652
	654
	656
	658
	660
	662
	664
9M-1974	10
	12
	14
	15
	24
	31
	32
	36
	51
	52
	54
	55
	57
	62
	71
	78
	101
	134
	286
	288
	290
	816
	818
	836
	838
9M-2042	346
9M-2092	471
9M-4335	520
9M-5590	795
9M-5733	884
	885
	912
9M-5870	309
9M-7394	633
9M-8406	240
	531
	783
	828
	832
9M-8662	891
	895
9N-0869	107
	134
9N-1995	475
	851
	854
9N-4156	386
9N-4158	386
9N-4159	386
9N-4161	386
9N-4162	386
9N-4163	386
9N-4498	401
9N-4500	401
9N-6152	520
9P-0356	396
9P-2369	935
	938
9P-2553	339
	342
9P-9150	367
	406
9R-1183	586
9R-2216	8
9R-2620	852
	854
9R-4286	305
	329
9R-5008	80
9R-6414	127
	128
	129
	130
9R-7240	114
9R-8870	589
9S-1302	526
9S-1316	309
	312
9S-1322	749
9S-1354	835
9S-1366	761
9S-2302	125
9S-2390	125
9S-2396	122
9S-2544	906
	908
9S-4167	89
9S-4180	666
	667
	668
	669
	670
	671
	672
	673
	674
	675
	676
	677
	678
9S-4181	49
	347
	368
	370
9S-4182	51
	368
	370
	520
9S-4183	36
	40
	598
	601
	604
	623
	679
	681
9S-4185	62
	346
9S-4189	679
	681
9S-4190	346
	391
9S-4191	40
	89
	346
	368
	370
	383
	406
	598
	601
	604
	721
9S-6147	75
9S-7706	526
9S-8001	572
	679
	681
	711
	713
	715
9S-8002	18
	401
	625
	679
	681
	723
9S-8003	679
	681
9S-8004	22
	70
	104
	105
	398
	401
9S-8005	10
	22
	40
	68
	346
	378
	683
	685
	687
	689
	691
	693
	695
	697
	699
	701
	703
	705
	707
	709
	717
	719
9S-8006	346
	572
9S-8008	68
	70
9S-8009	679
	681
9S-8010	22
9T-1013	611
9T-1636	623
9T-1652	623
9T-1699	623
9T-1710	623
9T-1857	721
9T-2186	721
9T-2388	567
	568
9T-2452	558
9T-2457	560
9T-2482	566
9T-2659	735
	738
9T-3133	564
9T-3727	567
	568
9T-4211	565
	566
9T-4213	558
9T-5241	818
9T-5603	632
9T-5934	679
9T-5935	679
9T-5957	597
	▶679
9T-6001	929
9T-6146	611
9T-7750	721
9T-7765	627
9T-7767	627
9T-7769	627
9T-7771	627
9T-7773	627
9T-7774	627
9T-7775	623
9T-8051	618
9T-8053	618
9T-8054	618
9T-8056	618
9T-8058	618
9T-8059	618
9T-8061	618
9T-8063	618
9T-8065	618
9T-8067	618
9T-8069	618
9T-8070	618
9T-8071	611
9T-8326	380
9T-8784	549
	▶558
9T-8958	564
9T-9040	570
9T-9071	618
9T-9072	618
9U-0858	304
	329
9U-2277	304
	324
9U-8067	398
	401
9U-8068	398
	401
9U-8069	398

▶ **PRIMARY REFERENCE**

PART NUMBER INDEX

Part	Page	Part	Page	Part	Page	Part	Page
	401		193	9X-0141	305		202
9U-8263	845		196		325		205
9U-8620	398		199	9X-0262	241		207
	401		202	9X-1046	275		209
9U-8668	401		205		278		212
9U-8669	401		207		284		222
9U-8815	357		209		339		224
	359		212		342		236
9U-9282	398		222		795		267
	401		224		820		280
9U-9316	398		231		821		282
	401		232	9X-1054	178		284
9U-9595	401		267		180		365
9U-9995	357		277		305		497
9V-3043	779		280		325		499
9V-7437	906		282	9X-1343	293		547
	908		329		297		812
9V-7440	779		338	9X-1813	89		813
	908		341		119		847
9V-7446	915		516		245		849
	917		820		249		852
9V-7447	786		821		251		855
	787		872		253		859
	915		876		265		861
	917		957		302		872
9V-7453	915		959		304		876
	917		961		324		891
9V-7454	915		963	9X-2023	101		896
	917	9W-1454	346		378	9X-2045	329
9V-7458	915	9W-1767	752	9X-2039	926		334
	917	9W-1768	752	9X-2040	783		365
9V-7943	779	9W-1835	758		828		783
9W-0335	332		759		832		799
	334	9W-2029	357		929		802
9W-0742	▶131		359	9X-2041	365		804
	318	9W-3073	845		783		806
	322	9W-3155	766		828		808
9W-0852	272	9W-4430	520		831		810
	782	9W-4431	520		852		821
	816	9W-4452	520		854		828
	818	9W-4453	520		859		832
	827	9W-5132	393		914		849
	831		▶520		919		852
	957	9W-5134	▶388		922		855
	959		393		923		859
	961	9W-6465	346		926		861
	963	9W-6467	354		928		929
9W-0898	401	9W-6582	34		929		935
9W-1441	142	9W-6584	34	9X-2042	144		938
	191	9W-6645	522		275	9X-2046	852
	192		574		278		855
	275	9W-7038	346		339		870
	278	9W-7385	34		342		875
	338	9W-7388	34		365	9X-2099	13
	341	9W-7410	401		795	9X-2125	377
	781	9W-7412	398		799	9X-2126	783
	825		401		802		828
9W-1442	141	9W-7469	763		806		832
	143	9W-7470	763		808	9X-2185	782
	178	9W-9371	357		938		827
	180		359	9X-2043	178		831
	188	9W-9905	351		180	9X-2388	72
	189		354		193		73
	191		357		196	9X-2488	782
	192		359		199		827

▶ **PRIMARY REFERENCE**

PART NUMBER INDEX

Part	Page
	831
9X-2546	799
	802
	806
	808
9X-3463	153
	154
	155
	156
	157
	158
	159
	184
9X-3465	160
	162
	164
	166
9X-4244	154
	155
	156
	157
	160
	162
	164
	166
9X-4271	263
9X-4493	160
	162
	164
	166
9X-4494	168
9X-4609	346
9X-4821	263
9X-4824	260
	263
9X-4825	263
9X-6019	942
9X-6032	625
9X-6395	727
	730
9X-6624	906
	908
9X-6772	363
9X-7378	790
	863
9X-7380	863
9X-7381	783
	863
9X-7382	783
	863
9X-7383	864
9X-7384	398
9X-7385	790
	864
9X-7680	625
	721
9X-7743	520
9X-7849	173
	174
9X-8121	173
9X-8122	822
9X-8139	173
9X-8256	178
	180
	184
	193
	267
	306
	326
	329
	335
	339
	342
	480
	485
	527
	531
	593
	595
	777
	778
	799
	802
	804
	806
	808
	810
	852
	855
	861
	902
9X-8257	383
	515
	864
	866
9X-8267	10
	491
9X-8268	18
	27
9X-8276	915
	917
9X-8277	906
	908
9X-8355	973
9X-8372	973
9X-8399	559
	570
9X-8600	115
9X-8606	526
9X-8875	769
	772
9X-8880	373
	758
	759
	760
9X-8881	745
9X-8883	745
9X-8887	574
9X-8979	625
9X-9365	215
	217
9X-9631	199
	202
	209
	212
9X-9633	335
9X-9639	150
9X-9653	782
9X-9688	891
	893
9X-9689	816
	818
9X-9865	160
	162
	164
	166
9Y-0810	16
9Y-6479	85
9Y-9236	72
	73
	895
0	
002-1212	623
002-3448	13
002-6453	391
	531
002-6454	114
	115
003-9514	66
	491
005-7898	383
005-8639	568
006-8663	623
009-0008	86
009-3681	885
	910
	912
009-4184	836
	838
009-4185	836
	838
014-0816	272
	284
	963
030-0060	471
030-0061	471
030-7950	104
	105
030-8194	106
030-8535	373
	381
	794
	881
	883
031-2666	794
031-4155	818
033-4843	906
	908
033-5853	18
	51
033-6027	721
033-6034	55
033-6036	623
	721
033-6043	723
033-8248	57
	219
	220
	273
	305
	317
	321
	325
034-1994	794
034-3557	373
036-9823	260
	263
037-4838	782
038-3987	880
061-9455	13
085-8091	863
086-0507	633
089-7960	341
089-7968	915
	917
090-9019	531
091-0081	926
091-9071	836
	838
092-3200	548
095-0878	840
	910
	912
095-0888	623
095-1207	398
	401
095-1260	547
096-6166	141
	143
	275
	278
	284
	293
	298
	794
098-7467	836
	838
099-0492	861
099-3095	617
1	
100-3224	841
100-3245	160
	162
	164
	166
100-3248	164
	166
100-3249	160
	162
100-3250	160
	162
	164
	166
100-3251	160
	162
	164
	166
100-3253	160
	162
	164
	166
100-3254	160
	162
	164

► **PRIMARY REFERENCE**

PART NUMBER INDEX

Part	Page
	166
100-3255	160
	162
	164
	166
100-3320	286
	288
	290
100-3402	623
100-3404	623
100-3405	623
100-3407	623
100-3408	623
100-3409	623
100-3410	627
100-3411	627
100-3412	623
	▶627
100-3413	623
100-3415	623
100-4318	744
100-4336	589
100-5179	841
100-5612	823
	824
100-6021	679
	681
	▶730
100-6531	125
101-0003	931
101-0509	666
	667
	668
	669
	670
	671
	672
	673
	674
	675
	676
	677
	678
101-0852	139
	147
101-1147	703
	715
101-1148	683
	701
101-1149	685
101-1150	689
	697
	711
	713
101-1151	693
101-1152	709
101-1153	695
101-1154	687
101-1155	691
101-1970	683
	685
	687
	689
	703
	705
	711
	715
101-1971	683
	685
	687
	689
	691
	693
	695
	697
	699
	701
	703
	705
	707
	709
	711
	713
	715
101-1972	689
	697
	703
	711
	713
	715
101-1973	683
	685
	687
	689
	691
	693
	695
	697
	699
	701
	703
	705
	707
	709
	711
	713
101-1974	571
	572
101-1975	571
101-1978	683
	685
	687
	691
	693
	695
	699
	701
	705
	707
	709
	711
	713
101-1980	689
	697
	703
	711
	713
	715
	717
	719
101-1982	691
	693
	695
	697
	699
	701
	707
	709
	713
	717
	719
101-1983	683
	685
	687
	689
	691
	693
	695
	697
	699
	701
	703
	705
	707
	709
	711
	713
	715
	717
	719
101-1984	683
	685
	687
	689
	691
	693
	695
	697
	699
	701
	703
	705
	707
	709
	711
	713
101-2457	636
	638
	640
	642
	644
	646
	648
	650
	652
	654
	656
	658
101-2458	636
	638
	640
	642
	644
	646
	648
	650
	652
	654
	656
	658
	660
	662
	664
101-2480	683
	685
	687
	689
	691
	693
	695
	697
	699
	701
	703
	705
	707
	709
	711
	713
	715
	717
	719
101-3055	851
	854
101-3128	134
101-4147	691
	695
	705
	▶731
101-4148	731
	▶732
101-4194	931
101-4195	931
101-9346	666
	667
	668
	669
	670
	671
	672
	673
	674
	675
	676
	677
	678
101-9754	398
	401
102-3645	935
	938
102-4108	623
102-4139	745
102-4577	717
102-4578	705

▶ **PRIMARY REFERENCE**

PART NUMBER INDEX

Part	Page	Part	Page	Part	Page	Part	Page
	719		316		404		162
102-5828	49		320		405		164
102-5829	49		324		537		166
102-5881	351		332		741		275
	354		334		742		278
	359		338		777		293
102-6238	666		341		778		298
	668		367		783		305
	672		497		790		316
	675		499		816		320
	676		872		818		325
	677		876		827		332
102-6317	933		891		831		334
102-7412	683		893		836		497
	685		895		863		499
	687	102-8802	89		872		783
	689		118		876		828
	691		119		891		832
	693		144		893		878
	695		168		895		879
	697		169	102-8803	152		891
	699		172		170		893
	701		173		171		895
	703		174		184		948
	705		176		219		949
	707		178		220		951
	709		180		243		953
	711		191		244		955
	713		192		273	102-8806	178
	715		205		275		180
	717		207		286		205
	719		215		288		207
102-7423	571		217		290		222
102-8385	667		219		293		224
	669		220		297		272
	670		222		298		275
	671		224		304		278
	673		227		305		280
	674		251		324		282
	678		265		329		284
102-8801	137		271		341		872
	178		273	102-8804	178		876
	180		275		180		891
	193		278		205		893
	196		280		207		895
	199		282		222		957
	202		286		224		959
	205		288		236		961
	207		290		275		963
	209		293		278	102-8808	253
	212		294		280	102-8813	253
	222		297		282	102-9372	888
	224		298		293		889
	275		302		297		901
	278		304		310	102-9381	887
	280		305		312	102-9383	338
	282		309		316		341
	284		312		320	102-9862	150
	293		316		332		234
	297		320		334		235
	298		324		338		236
	302		325		341	102-9863	263
	305		329		872	103-1592	193
	309		338		876		196
	312		341	102-8805	160	103-1597	658

PART NUMBER INDEX

Part	Page
	660
	662
	664
103-1743	101
103-2006	115
103-4771	881
	883
103-4953	880
	881
	883
103-5417	507
103-5419	507
103-5515	880
	881
	883
103-5516	880
	881
	883
103-5678	193
	196
	199
	202
	209
	212
	267
	341
103-6100	863
103-6169	28
103-9125	471
103-9425	851
	854
104-2091	783
	813
	828
	891
	896
104-3122	623
	▶721
104-3124	623
104-3601	168
104-3947	405
104-4286	597
	600
	603
104-4523	763
104-5958	942
104-7044	▶260
	262
104-7419	636
	638
	640
	642
	644
	646
	648
	650
	652
	654
	656
	658
	660
	662
	664
104-7429	636
	638
	640
	642
	644
	646
	648
	650
	652
	654
	656
	658
	660
	662
	664
104-7740	636
	638
	640
	642
	644
	646
	648
	650
	652
	654
	656
	658
	660
	662
	664
104-8645	638
	644
	664
	▶670
104-8646	636
	640
	▶671
104-8655	745
104-8671	636
	644
	654
	▶672
105-2080	745
105-2145	723
105-3196	574
	▶618
105-3249	455
	458
105-3484	63
105-4849	▶164
	297
105-4850	▶166
	297
105-7167	606
	608
106-1567	440
106-3658	683
	685
	687
	689
	691
	693
	695
	697
	699
	701
	703
	705
	707
	709
	711
	713
	715
	719
106-3659	683
	685
	687
	691
	693
	695
	699
	701
	705
	707
	709
	717
	719
106-3660	689
	697
	703
	711
	713
	715
106-4496	813
106-4835	451
106-4884	3
	▶501
106-6553	804
	810
106-7149	263
106-7389	731
	▶733
106-7390	728
	▶734
106-7657	75
106-8704	176
	191
	192
	227
	304
	324
	863
	895
106-9586	49
107-0516	689
107-0520	697
107-0543	671
	▶699
107-0545	670
	▶701
107-0547	672
	676
	▶703
107-1983	891
	893
	895
107-3392	▶757
107-3393	▶757
107-3395	▶752
107-4865	935
	938
107-4932	150
	234
	235
	236
107-5014	547
	851
	854
	861
107-6813	804
	810
107-7694	11
107-8140	589
107-8141	589
107-8142	589
107-8143	586
107-8144	586
107-8147	589
107-8148	589
107-8149	586
107-8150	586
	589
107-8374	769
	772
107-8375	769
	772
107-9641	799
	802
	806
	808
108-0358	193
	196
	199
	202
	209
	212
	267
108-0702	613
108-0706	578
108-0713	611
108-0714	613
108-1104	▶768
108-1610	586
	589
	613
108-2187	683
	685
	687
	689
	691
	693
	695
	697
	699
	701
	703
	705
	707
	709
	711
	713
	715
	717
	719
108-3129	402
108-3519	193
	196

▶ PRIMARY REFERENCE

PART NUMBER INDEX

Part	Page
	199
	202
	298
108-3612	13
108-4086	841
108-4087	840
108-4103	841
108-4814	721
108-4815	721
108-4816	721
108-4878	931
108-4916	▶571
	689
	697
	703
108-5157	730
108-5751	357
108-5949	802
	808
108-5950	799
	806
108-5951	802
	808
108-5952	799
	806
108-6523	398
	401
108-8421	▶884
	910
	912
108-8423	884
108-8424	884
108-8425	912
108-8426	910
109-0146	942
109-0361	305
	325
109-1144	726
109-2804	851
	854
109-3036	742
109-3204	623
109-3207	92
	93
109-4582	375
109-4583	375
109-6776	763
110-2079	891
	893
110-2445	114
	115
110-3003	589
110-3326	526
110-4213	427
	428
	429
	430
	431
	432
	433
	434
	435
	436
	437
	438
	439
	440
	441
	442
	443
	456
	459
	461
	463
	464
	468
	470
110-4214	427
	428
	429
	430
	431
	432
	433
	434
	435
	436
	437
	438
	439
	440
	441
	442
	443
	456
	459
	461
	463
	464
	468
	470
110-5158	401
110-5161	406
110-6241	794
110-6393	782
110-6846	305
	325
110-6848	305
	325
110-7723	351
	354
	357
	359
110-7885	957
	959
	961
	963
110-7886	957
	959
	961
	963
110-7887	332
	334
111-0343	404
	741
	742
111-1719	2
	▶969
111-2416	286
	288
	290
111-3883	768
	▶772
111-3945	489
111-5042	931
111-5754	733
	734
111-7015	94
	96
	98
111-7092	66
111-7978	130
111-8233	683
	685
	687
	691
	693
	695
	699
	701
	705
	707
	709
	717
	719
111-8234	689
	697
	703
	711
	713
	715
111-9110	541
112-1813	753
112-1814	754
	755
112-2240	578
	▶743
112-3199	580
112-3200	580
112-4428	316
	320
112-4834	524
112-5060	745
112-5061	745
112-5282	68
112-5499	545
	▶644
112-5555	309
	312
112-5575	555
	▶566
112-5852	751
112-5853	751
112-5855	751
112-6174	275
	284
112-6175	338
	341
	342
112-7462	555
112-7463	3
	▶555
112-7486	2
	▶745
112-9035	566
112-9104	919
	▶920
	928
112-9105	▶921
	922
	923
112-9164	847
112-9442	584
112-9555	822
112-9813	438
112-9924	431
113-0704	▶768
113-1689	▶922
113-4240	786
113-4242	▶786
	920
	921
	925
113-4243	787
113-4245	▶787
	920
	921
	925
113-5800	920
	921
	▶931
113-5801	840
113-5804	931
113-5805	840
113-5806	840
113-5807	840
113-5808	▶840
	931
113-5809	885
113-5810	▶885
	910
	912
113-6069	29
113-7745	347
113-7754	▶564
	765
113-7755	564
113-7756	564
113-8218	871
	872
	874
	876
113-8457	113
113-9048	383
113-9533	597
	600
	603
114-0025	▶582
114-0026	583
114-0027	582
114-0359	776
114-1067	885
114-1068	885
114-1069	885
114-1070	885
114-1081	885
114-1082	885
114-1083	885
114-1183	▶910
	920

▶ PRIMARY REFERENCE

PART NUMBER INDEX

Part	Page
	925
114-1185	▶912
	921
114-3469	790
114-5224	971
114-6635	733
	734
	736
	737
114-6685	▶948
	949
	953
	957
	961
	966
114-9190	799
	802
	806
	808
114-9281	293
	294
	297
115-0540	616
115-0541	616
115-1007	676
	677
	▶705
115-1008	664
	▶676
115-1748	891
	893
	895
115-3070	236
115-3072	497
	499
115-3073	305
	325
115-4072	29
115-4219	29
115-5593	316
	320
115-5852	971
	▶972
115-6804	849
115-6805	849
115-6806	888
115-6807	851
	854
	859
115-9923	851
	854
116-0374	709
	▶735
116-0379	▶756
	768
116-1965	▶903
	914
116-2013	779
116-2014	779
116-2015	779
116-2016	779
116-2327	779
116-2779	▶779
	915
	917
116-3196	970
116-3211	597
	600
	603
116-3715	81
	606
	608
116-4663	78
116-5710	86
	184
	186
	205
	207
	215
	217
	222
	224
	361
117-0472	658
	660
	664
117-2311	777
	778
117-3915	▶238
	620
117-4698	901
117-8319	▶169
	506
117-8810	859
117-9966	891
	895
118-2557	887
118-2558	854
118-3534	316
	320
118-7284	6
	▶258
118-7880	769
	772
118-7881	769
	772
118-9573	548
119-2921	44
119-5708	188
	189
	191
	192
119-6172	779
119-6194	915
	917
119-6764	54
119-9549	674
	▶707
119-9550	673
	678
	▶709
121-4083	1
	2
	▶646
121-4086	▶648
121-4095	▶650
121-4097	545
	▶652
121-9242	557
	▶570
121-9245	570
122-4617	▶904
	921
122-7045	891
	895
122-8146	891
	895
122-8154	813
122-8155	813
122-8677	851
122-8795	851
	854
122-9760	972
122-9761	972
122-9867	764
122-9868	764
122-9869	764
123-0872	781
	825
123-1076	570
123-3178	439
123-3420	426
	427
	428
	429
	431
	432
	433
	434
	435
	436
	437
	438
	439
	440
	441
	464
	466
123-3688	304
	324
123-3689	304
	324
123-3692	304
	324
123-3695	304
	324
123-3698	509
123-3699	509
123-3793	563
123-3827	74
	491
123-4003	373
123-4354	949
	951
	953
	955
123-4355	949
	951
	953
	955
123-4358	▶871
123-4586	871
	872
	874
	876
123-4587	871
	872
	874
	876
123-4618	782
	827
	831
	929
123-4701	782
	827
	831
	929
123-5798	740
123-5799	740
123-5857	872
	876
123-5861	338
	341
123-6449	▶119
	309
123-6661	730
123-6806	880
	881
123-7707	749
123-8157	933
123-8187	761
123-8408	929
123-8866	620
123-8867	▶620
	622
123-9128	933
124-0311	▶654
124-0435	761
124-0507	931
124-1431	782
	827
	831
124-1432	782
	827
	831
124-2456	496
124-2528	368
124-2887	572
124-2888	572
124-2889	572
124-2890	572
124-2891	572
124-3137	782
	827
	831
124-3138	782
	827
	831
124-3240	501
124-3771	▶656
124-3813	▶658
124-3814	545
	▶660
124-8843	804
	810
124-9006	782
	827
	831
124-9007	782
	827

▶ **PRIMARY REFERENCE**

PART NUMBER INDEX

Part	Page
	831
125-0438	782
125-0439	827
	831
125-0442	827
	831
125-2235	546
	▶662
125-4342	788
	▶938
125-4344	788
	▶880
125-4388	861
125-4389	861
125-5321	534
125-5520	861
125-6390	316
	320
125-6482	861
125-6483	861
125-7003	949
	951
	953
	955
125-7004	949
	951
	953
	955
125-9487	597
	600
	603
125-9584	861
125-9596	861
126-0208	943
	945
126-0209	943
	945
126-0210	943
	945
126-0228	943
	945
126-0961	▶940
126-1135	869
126-1136	869
126-1167	943
	945
126-1539	943
	945
126-1757	13
126-1773	134
126-2729	373
126-4966	804
	810
126-5011	288
	290
126-5869	68
126-6929	476
126-6930	476
126-6933	1
	2
	▶476
	▶477
126-7168	480
127-0724	321
127-1647	530
127-4038	480
	484
127-5483	293
	297
	305
	325
	338
	341
127-5484	278
	284
	293
	317
	320
	321
	338
	341
	497
	499
127-5485	293
127-5486	293
128-0037	799
	802
	806
	808
128-0314	130
128-0613	933
128-0686	933
128-2972	699
	707
128-5082	933
128-5084	933
128-5085	933
128-5164	455
128-5924	863
128-6983	▶173
	234
	236
128-7625	597
	600
	603
128-8643	572
128-8644	572
128-8645	711
	713
128-8646	715
128-8647	668
	675
	677
	▶711
128-9654	749
128-9656	749
129-1047	725
129-1052	725
129-1054	711
	713
	715
	▶725
129-2381	381
129-2861	368
	370
129-3173	86
	361
	526
129-3178	480
	484
	777
	778
	783
	804
	810
	828
	832
	851
	854
129-4618	789
	▶849
129-4622	849
129-4645	849
129-4646	849
129-4647	284
129-4935	782
	827
	831
129-5049	476
	477
129-5096	122
129-5454	441
129-7163	293
129-7164	293
129-7249	969
129-7632	721
129-7679	973
129-8614	789
	▶889
130-3110	669
	673
	674
	678
	▶713
130-3111	675
	677
	▶715
130-3116	646
	650
	662
	▶668
130-3117	646
	656
	658
	▶669
130-3118	652
	660
	▶673
130-3119	648
	650
	▶674
130-3122	662
	▶678
130-3123	648
	652
	656
	▶675
130-3124	658
	660
	▶677
130-3535	▶572
	711
	713
	715
130-3595	471
130-5300	86
	150
	184
	186
	193
	196
	228
	234
	235
	236
	273
	293
	298
	302
	305
	309
	312
	317
	321
	325
	329
	332
	334
	338
	341
	347
	361
	363
	506
	524
	783
	828
	831
	872
	876
130-5301	305
	325
130-5770	726
130-9041	556
	▶567
130-9042	556
	▶568
130-9044	567
130-9045	568
130-9432	844
	▶845
130-9811	255
	256
131-0353	78
131-0749	740
131-0752	740
131-0753	601
	▶740
131-1449	262
131-3736	556
131-3737	505
131-3738	505
131-3739	505
131-3919	357
	359
131-4135	293
	297
131-4242	840
131-4428	471
131-5167	840

▶ PRIMARY REFERENCE

PART NUMBER INDEX

Part	Page	Part	Page	Part	Page	Part	Page
131-5171	275		302		658	139-4612	▶902
	278	135-0427	▶171		660	139-6122	304
	491		184		662		324
131-5492	822		186		664		508
131-6009	851		193	137-5503	902		531
	854		196	137-6719	670	139-6128	▶941
	859		229		671	139-8472	701
131-7191	552	135-0450	589		672		717
	▶560	135-0451	586		673		▶736
131-7194	560	135-0452	586		674	139-8473	699
131-7195	560	135-0453	589		675		▶737
131-8350	679	135-0611	948	137-6720	666	139-8476	707
	681		951		667		719
	▶726		955		668		▶738
131-8777	735	135-1979	818		669	139-9132	942
	736	135-2543	259		670	139-9133	942
	737	135-3894	499		671	139-9134	942
	738	135-7123	541		672	139-9135	942
131-9311	▶923	135-9819	8		673	139-9136	942
132-1143	505	135-9941	363		674	139-9137	942
	556	136-0822	13		675	140-1336	613
132-1144	505	136-1953	783		676	140-3607	442
132-1340	747		828		677	140-8864	297
132-2906	597		832		678		329
	603	136-3845	160	137-6783	851	141-0360	442
132-3439	933		164		854	141-1480	82
132-4354	480	136-3846	162	137-6791	559	141-2325	180
	484		166	137-6792	550	141-6343	86
132-4928	563	136-3848	160		▶559	141-6787	741
132-4929	551		162	137-6794	559		742
	▶563		164	137-8065	851	141-6968	577
132-5789	863		166		854	141-8275	89
132-6478	546	136-4183	29	137-8104	678	141-9661	633
	▶664	136-6330	613		▶717	141-9784	783
132-6640	▶137	136-6331	613	137-8107	719		828
	329	136-7227	106	137-8130	559		832
	334	136-8308	776	137-9410	193	142-0308	568
132-6938	317	136-8423	625		196	142-0350	404
	321	137-1736	263		199	142-1767	406
132-8875	380	137-4515	636		202	142-4940	782
	383		638		209		827
132-9625	357		640		212		831
133-1278	380		642		297	142-5787	616
133-1288	380		644	138-4054	804	142-6165	426
133-2199	380		646		810		427
133-5631	347		648	138-7026	851	142-6166	427
133-6379	47		650		854		428
134-0744	578		652	138-7065	777	142-6167	428
134-0746	578		654	138-9910	851		429
134-0747	586		656		854	142-6168	429
	589		658	139-0178	284		430
134-1080	2		660	139-1117	851	142-6169	430
	▶471		662	139-1118	854	142-6170	433
134-1081	471		664	139-1153	778	142-6171	434
134-3355	304	137-4516	636	139-2116	304	142-6172	464
	329		638		324		▶466
134-4126	139		640	139-2120	338	142-6173	435
134-6474	849		642		341	142-6174	436
134-6749	169		644	139-2944	480	142-6175	437
134-6751	169		646		484	142-6176	443
134-8221	676		648	139-3593	851	142-6177	444
	677		650		854	142-6178	444
134-8233	941		652		859	142-6179	445
	▶942		654	139-3595	812	142-6180	445
135-0426	▶170		656	139-4605	902	142-6182	446

▶ **PRIMARY REFERENCE**

PART NUMBER INDEX

Part	Page	Part	Page	Part	Page	Part	Page
	448		▶429	142-6337	417	142-6461	▶413
142-6183	447	142-6290	409		▶444	142-6463	▶413
	448		▶429	142-6338	416	142-6464	▶413
142-6184	447	142-6291	409		▶445	142-6466	▶413
	449		▶430	142-6339	417	142-6467	▶414
142-6185	452	142-6292	409		▶445	142-6469	▶414
	453		▶430	142-6341	416	142-6470	▶414
142-6186	452	142-6293	409		▶446	142-6472	▶414
	454		▶431	142-6353	418	142-6474	▶415
142-6187	453	142-6294	410		▶446	142-6477	▶415
	454		▶431	142-6354	419	142-6479	▶415
142-6203	3	142-6295	410		▶447	143-5373	347
	▶385		▶432	142-6355	420	143-9290	365
142-6226	427	142-6296	410		▶447	144-0195	935
	428		▶432	142-6356	420		937
	429	142-6297	410		▶448		938
	430		▶433	142-6357	421	144-1102	41
	431	142-6298	411		▶448	144-2161	489
	432		▶433	142-6358	422	144-4107	851
	433	142-6300	411		▶449		854
	434		▶434	142-6360	418	144-5611	843
	435	142-6301	411		▶449	144-6695	548
	436		▶434	142-6363	418	144-7620	489
	437	142-6303	▶464		▶450	145-0326	933
	438	142-6304	465	142-6364	420	145-1144	398
	439		▶468		▶450	145-1297	▶141
	440	142-6305	▶465	142-6366	419		844
	441	142-6306	411		▶451	145-1300	▶844
	442		▶435	142-6367	421	145-2901	843
	443	142-6307	412		▶451	145-3261	760
	456		▶435	142-6371	419	145-3350	178
	459	142-6309	412		▶452		180
	460		▶436	142-6372	419		205
	461	142-6310	412		▶452		207
	463		▶436	142-6373	420		222
	464	142-6312	412		▶453		224
	▶467		▶437	142-6374	421		280
	468	142-6313	413		▶453		282
	470		▶437	142-6375	422		872
142-6229	448	142-6315	413		▶454		876
	449		▶438	142-6376	422	145-5968	489
	450	142-6316	413		▶454	145-5969	489
	451		▶438	142-6385	421	145-7214	859
	453	142-6318	413		▶455	145-7217	859
	454		▶439	142-6390	▶408	145-8039	347
	455	142-6319	414	142-6391	▶408	146-0705	648
	458		▶439	142-6392	▶408		650
	460	142-6321	414	142-6393	▶408		652
	462		▶440	142-6395	▶409		656
	463	142-6322	414	142-6405	▶455		658
	▶467		▶440	142-6439	▶409		660
	469	142-6324	414	142-6440	▶409		662
	470		▶441	142-6441	▶409	146-1842	471
142-6232	455	142-6325	415	142-6442	▶410		472
142-6283	415		▶441	142-6443	▶410	146-1843	471
	▶426	142-6328	415	142-6444	▶410		472
142-6284	416		▶442	142-6445	▶410	146-7453	26
	▶427	142-6330	415	142-6446	▶411	147-0385	220
142-6285	408		▶442	142-6448	▶411		273
	▶427	142-6332	418	142-6449	▶411	147-3310	522
142-6286	408		▶443	142-6454	▶411	147-3400	471
	▶428	142-6335	416	142-6455	▶412	147-4549	933
142-6287	408		▶443	142-6457	▶412	147-5088	71
	▶428	142-6336	417	142-6458	▶412	147-6143	747
142-6288	408		▶444	142-6460	▶412	147-6144	747

PART NUMBER INDEX

Part	Page	Part	Page	Part	Page	Part	Page
147-6522	933	148-8358	101		743	151-2898	843
147-6541	933		586	149-2611	741	151-2900	41
148-1925	346	148-8363	586	149-3409	887		122
148-2404	465		589		888		843
	▶468	148-8364	8		889	151-2939	16
148-2405	▶465		586	149-4311	398	151-4957	338
148-2408	465		589	149-4745	920		341
	▶469		597		921	151-5968	755
148-2409	▶465		600	149-5240	92	151-5969	▶755
148-2516	397		603		93	151-9849	578
148-2592	567		611	149-7226	840	152-5430	547
148-2593	561		613	150-1280	566	152-5431	547
	563	148-8365	98	150-4035	600	152-5436	547
148-2903	92	148-8367	584	150-4037	611	152-7903	1
	93	148-8368	8	150-4043	94		2
148-3749	933		363		96		▶547
148-8305	613		591		611	152-8346	616
148-8311	866		597	150-4467	417		▶742
148-8312	598		600		▶456	152-8352	742
	601		603	150-4482	▶456	153-0185	747
	604	148-8369	363		465	153-0187	747
148-8316	363		591	150-4868	613	153-2073	▶153
	597	148-8370	578	150-5105	943		182
	600	148-8372	94		945		188
	603		96	150-5106	940		191
	613		98		▶943		205
148-8317	77	148-8374	580	150-5107	940		209
148-8318	580		586		▶945		215
	582		589	150-5968	598		219
	583		606		601		222
	586		608		604	153-2147	178
	589		610	150-6649	678		180
148-8323	597	148-8378	94		▶719		205
	600		96	150-7955	456		207
	603		98	150-7956	456		222
148-8326	591		584	150-8006	719		224
148-8327	26	148-8381	611	151-0286	▶415		280
	593	148-8383	589	151-0287	▶416		282
	595		606	151-0329	▶416		872
148-8328	578		608	151-0330	▶416		876
148-8335	383	148-8392	378	151-0331	▶416	153-3580	745
148-8336	94		383	151-0347	▶417	153-4906	22
	96		591	151-0348	▶417		104
	98	148-8395	701	151-0355	▶417		105
	584	148-8407	380	151-0361	▶417		241
148-8339	378		383	151-0362	▶418	153-5043	254
	383		598	151-0364	▶418	153-5425	457
148-8340	8		601	151-0365	▶418	153-5427	457
	101		604	151-0366	▶418	153-5459	422
	586	148-8408	598	151-0367	▶419		▶457
	613		601	151-0368	▶419	153-5460	▶422
148-8345	94		604	151-0370	▶465	153-5463	423
	96		679	151-0371	▶419		▶457
	98	148-8429	598	151-0372	▶419	153-5464	▶423
148-8347	593		601	151-0374	▶420	153-5467	423
	595		604	151-0375	▶420		▶458
	597	148-8433	590	151-0378	▶420	153-5468	▶423
	600	148-8444	578	151-0380	▶420	153-5700	127
	603		613	151-0381	▶421		129
148-8351	611	148-8449	593	151-0382	▶421	153-5710	128
	613		595	151-0385	▶421	153-6237	63
148-8353	591	149-2065	361	151-0388	▶421		598
148-8354	101	149-2400	933	151-0389	▶422		601
	613	149-2402	933	151-0392	▶422		604
148-8357	378	149-2610	▶741	151-0393	▶422	153-6259	598

▶ **PRIMARY REFERENCE**

PART NUMBER INDEX

Part	Page	Part	Page	Part	Page	Part	Page
	601		284		332	155-9112	628
	604		286		334	155-9115	628
153-7383	749		288		338	155-9116	628
153-9360	745		290		341	155-9117	628
	▶747		293		346	155-9125	625
154-0051	458		298		367	155-9127	625
	459		302		506	155-9129	625
154-2687	373		304		783	155-9134	625
154-2688	373		324		827	155-9136	628
	▶375		338		831	155-9139	625
154-2689	375		341		863	155-9141	625
154-2692	375	155-2261	254		872	155-9142	625
154-3064	397		270		876	155-9143	625
	▶404	155-2265	178		891	156-0283	309
154-5732	▶924		180		893		312
	926		205		895	156-1148	▶905
154-6306	406		207	155-2271	178		920
154-6307	406		222		180		925
154-6309	398		224		205	156-4281	584
154-6579	567		275		207	156-5970	536
	568		278		222	156-7324	977
154-7172	398		280		224	156-8352	859
154-7175	398		282		278	157-0305	184
154-7176	398		284		280	157-2175	▶926
154-7177	398		293		282	157-2528	317
154-9025	66		298		293		321
155-2255	178		872		298	157-6129	926
	180		876		304	158-0248	153
	199	155-2270	178		312	158-0249	159
	202		180		316		184
	205		193		320	158-0250	153
	207		196		324		158
	209		199		332		159
	212		202		334		184
	222		205		338	158-0252	153
	224		207		341		158
	275		209		872		159
	278		212		876		184
	280		215	155-2274	275	158-0451	38
	282		217		278	158-3198	933
	293		220		284	158-6072	85
	297		222		293	159-0286	13
	298		224		298	159-0308	357
	304		236		316		359
	305		254		320	159-0927	357
	324		270		332		359
	325		273		334	159-1782	▶423
	332		275		341	159-1785	423
	334		278		891		▶458
	338		280		893	159-3537	258
	341		282		895	159-3759	898
	346		286	155-2276	249		899
	497		288	155-2283	375		900
	499		290	155-2285	375		901
	872		293	155-4077	▶583	159-3924	512
	876		298	155-4098	823		▶515
	891		302		824	159-3959	297
	893		304	155-5958	924	159-4729	3
	895		305		▶925		▶584
155-2260	193		309	155-5959	924	159-4730	3
	196		312		▶933		▶586
	245		316	155-7918	7	159-4731	3
	249		320		▶29		▶589
	275		324	155-7927	7	159-5812	3
	278		325		▶47		▶891

▶ PRIMARY REFERENCE

PART NUMBER INDEX

Part	Page
159-5839	4
	▶332
159-5841	1
	2
	▶334
159-5845	4
	▶338
159-5853	1
	2
	▶341
159-5856	4
	▶293
159-5865	1
	2
	▶297
159-5878	4
	▶275
159-5933	2
	▶361
159-5935	2
	▶86
159-6011	6
	▶8
159-6012	3
	▶49
159-7342	4
159-8127	745
159-9228	▶357
	393
159-9229	▶359
	393
159-9258	357
	359
159-9322	288
	290
160-1744	309
	312
160-2353	926
160-2443	86
	▶243
160-3662	933
160-6382	275
	278
	497
	499
160-6543	531
160-6567	▶138
	891
	893
	895
160-7689	305
	325
160-7690	286
	288
	290
160-7753	2
	▶524
160-7756	2
	▶363
160-7758	3
	▶836
	▶838
160-7765	933
160-7766	933
160-7767	933
160-8147	16
160-8166	16
160-8172	38
160-8197	38
160-8199	38
160-9178	3
	▶597
	▶600
	▶603
160-9179	3
	▶613
160-9180	3
	▶621
161-0764	1
	2
	5
	▶345
161-0768	▶175
161-0769	175
	▶182
	▶183
161-0770	▶177
161-0771	▶177
161-0772	177
	▶184
	▶186
161-0773	▶231
161-0774	▶232
161-0776	▶140
161-0777	▶140
161-0778	175
	▶188
	▶189
161-0779	175
	▶191
	▶192
161-0908	184
161-1015	175
	▶193
	▶196
161-1016	▶146
161-1017	177
	▶199
	▶202
161-1018	177
	▶267
161-1021	5
	▶205
	▶207
161-1022	▶273
	539
161-1141	▶898
161-1417	178
161-1418	178
161-1703	246
161-1704	248
161-1705	247
161-1921	5
	▶277
161-2444	926
161-2445	926
161-3406	7
	▶17
161-3411	81
161-3425	38
161-3509	▶158
	193
	199
161-6713	357
	359
161-7062	86
	361
161-7063	361
162-1510	3
	▶489
162-2077	158
	184
162-5605	▶2
162-6448	567
	568
	595
162-7449	538
	543
162-7450	538
	539
	▶541
162-7451	▶538
	539
162-8218	86
	361
162-8219	86
	361
162-9523	100
163-0310	60
	61
	▶74
163-0375	▶423
163-0376	423
	▶459
163-0872	▶790
	791
163-1387	28
163-1850	75
	▶76
163-2437	47
163-2442	22
163-2444	22
163-2445	48
163-2447	42
163-2449	43
163-2459	48
163-2478	22
163-4720	745
163-4721	745
163-6074	745
164-2108	398
	536
164-2465	880
	881
	883
164-4858	115
164-5567	363
	591
	597
	600
	603
164-5586	613
164-5590	613
164-5605	101
	580
164-5608	586
	589
164-5641	597
	600
	603
164-5669	48
164-6100	7
	▶11
164-6148	7
	▶16
164-6490	6
	▶14
164-7556	154
	155
	156
	157
164-7577	▶265
	380
164-8462	3
	▶616
164-8474	812
	869
165-2510	554
	▶565
165-4446	7
	▶31
	▶32
165-4632	591
165-4931	611
165-5674	234
	235
165-6365	89
165-7014	597
	603
165-9928	363
166-0939	491
166-1759	7
	▶108
166-1776	13
166-1781	13
166-1785	33
166-1997	881
	883
166-1999	881
	883
166-2829	887
166-2830	888
166-3305	▶545
166-3308	545
	546
	▶606
	▶608
166-3336	539
	▶578
166-3337	▶539
166-3648	38
166-3657	38
166-6358	41
	122
166-7064	▶497
	899

▶ **PRIMARY REFERENCE**

PART NUMBER INDEX

Part	Page
166-7065	▶499
	798
166-7224	933
166-7225	924
167-0024	18
167-0138	▶270
	316
	320
167-0165	781
	▶791
167-0171	24
	▶27
167-0172	81
167-0566	398
167-1709	▶245
	593
167-1776	515
167-1801	631
167-2186	560
	567
	568
167-2190	558
	565
	566
167-2192	559
167-2195	561
	563
	564
	570
167-2294	560
	567
	568
167-2300	558
	565
	566
167-2302	559
167-2304	561
	563
	564
	570
167-2307	616
167-3911	74
167-7504	275
	278
167-7505	275
	278
167-7506	332
	334
167-7536	332
	334
167-8053	2
	▶794
167-8101	781
	▶863
167-8382	▶142
167-8397	781
	825
	826
	▶866
167-9002	2
	▶365
167-9524	398
168-7209	38
168-7966	6
	▶7
168-7967	3
	▶6
168-8233	144
168-8235	144
168-8243	178
	205
	207
	280
	876
168-8248	275
168-8683	86
168-8758	538
	543
168-9108	565
168-9110	565
169-0450	489
169-0921	86
	361
	526
169-0922	86
	361
169-1548	373
169-1549	375
169-2621	365
169-3104	92
	93
169-3113	6
	▶33
169-3124	68
169-3145	836
	838
169-3147	219
	220
	273
169-3176	193
	196
169-3181	199
	202
169-3230	236
169-3263	891
	893
169-3264	777
	778
169-3290	623
	▶631
169-3345	▶120
	122
169-3380	365
169-3502	324
169-3520	215
	217
169-3523	144
169-3651	3
	▶378
	512
169-4882	621
	▶623
169-4883	621
	▶625
169-5414	293
	297
	316
	320
	332
	334
	497
	499
169-5862	94
	96
169-5937	900
169-7262	316
	320
169-7263	316
	320
169-7397	591
169-8586	92
	93
169-8598	92
	93
169-8938	275
	278
	284
170-0432	462
	469
170-0436	466
	▶469
170-0493	540
	541
	542
170-0503	541
170-0967	866
170-4820	▶816
	821
170-5334	▶818
	820
170-5335	816
	818
170-6570	788
170-9051	597
	600
	603
171-2122	365
171-2210	316
	320
	322
171-3010	28
171-5288	6
	▶262
171-5349	251
171-5829	3
	▶972
171-5941	▶147
	293
	297
171-6165	847
171-6175	205
	207
	222
	224
171-6458	1
	2
	▶611
	630
171-6466	578
171-6467	613
171-6470	611
171-6561	284
171-6728	611
171-7091	357
171-7093	357
	359
171-7095	359
171-7096	▶178
171-7185	140
	▶777
171-7186	140
	▶778
171-7626	788
172-0165	86
172-0961	6
	▶45
172-1001	45
172-1239	851
	854
172-4211	86
	361
	526
172-5376	▶851
	899
172-5377	898
	▶899
172-5378	788
	▶847
	898
172-5780	108
	▶109
	▶110
172-6481	28
172-6483	6
	▶28
172-6555	275
	278
172-6556	178
	180
	205
	207
	222
	224
	280
	282
	872
	876
172-6830	899
	▶949
	▶951
172-6831	900
	▶953
	▶955
172-6834	5
	▶820
172-6835	5
	▶821
172-7105	365
172-7106	365
172-7663	2
	▶474
172-7665	474
172-8641	275
	278
172-8824	3
	▶514
172-9316	275
	278
172-9367	25
172-9389	▶139

▶ PRIMARY REFERENCE

PART NUMBER INDEX

Part	Page	Part	Page	Part	Page	Part	Page
	147		570	174-6506	368	176-2945	526
	293	173-9685	560	174-7507	▶466	176-3896	591
	297		567	174-8131	338	176-5507	783
172-9950	6		568		341		827
	▶25	173-9779	558		794		831
172-9953	2		565	174-8961	591		929
	▶77	174-1494	782	174-9529	34	176-5640	759
172-9955	25		827	174-9570	▶91		760
173-1007	632		831		117	176-5641	758
173-1008	632	174-2104	63	175-0401	3	176-5642	758
173-1009	632	174-2253	597		▶383		759
173-1011	586		600	175-0403	517		760
	▶632		603	175-0406	3	176-5643	758
173-1498	41	174-2304	▶424		▶101		759
	122	174-2339	▶610	175-0418	3		760
173-1500	41		765		▶80	176-5739	6
	122	174-2863	491	175-0447	593		▶89
173-1885	236	174-3216	1		595	176-5767	480
173-2018	115		2	175-0454	18		484
173-2087	383		▶510	175-1343	891	176-5768	484
173-2751	899		▶511		893	176-5770	480
	▶901	174-3428	3	175-1438	3		484
173-3064	193		▶34		▶82	176-5775	480
	196	174-3705	363	175-2559	▶765		484
	199		▶397	175-3590	383	176-5913	48
	202	174-4140	854	175-3893	398	176-5914	48
	209	174-4141	851	175-4131	6	176-7674	3
	212	174-4492	783		▶15		▶66
	267		827	175-4178	47	176-7688	19
	341		831	175-5484	480	176-7690	19
173-3882	491		929		484	176-9747	383
173-3924	491	174-4546	3	175-6287	480	177-0279	517
173-3942	491		▶929		484	177-0581	80
173-3993	679	174-4547	825	175-6978	3	177-1052	71
173-4490	341		▶831		▶591	177-1058	71
173-5313	781	174-4548	781	175-6981	60	177-1677	383
173-5318	5		▶782		▶593	177-1713	526
	▶516	174-4552	825	175-7049	593	177-2932	480
173-5320	947	174-4971	783		595		484
	▶957		827	175-7162	863	177-3582	526
	▶959	174-5692	88	175-7453	368	177-4119	491
173-5321	947	174-5907	127		370	177-4120	480
	▶961		128	175-7895	560		484
	▶963		129		567	177-4255	617
173-5322	825		199		568	177-5303	63
	▶827		202	175-7896	558	177-6821	▶763
173-5360	▶825		209		561		765
	826		212		563	177-6822	763
173-5514	77		294		565	177-7448	794
173-6756	▶899		298		566	177-7858	783
	900		305	175-7897	559		827
173-7126	91		317	175-7898	570		831
173-7178	791		321	175-7900	564	177-7878	7
173-7231	3		325	176-0209	617		▶39
	▶113		329	176-1378	625	177-7891	781
173-7813	424	174-6051	831	176-1731	2		▶812
	▶459		929		5		825
173-7830	459	174-6353	783		▶781	177-8779	898
173-8290	597		827	176-1732	1		▶900
	600		831		5	177-8781	▶854
	603		929		▶825		900
173-9683	559	174-6503	6	176-2918	480	177-8784	5
	561		▶368		484		▶965
	563		▶370	176-2922	480	177-8802	316
	564	174-6504	368		484		320

▶ **PRIMARY REFERENCE**

PART NUMBER INDEX

Part	Page	Part	Page	Part	Page	Part	Page
177-8830	▶947	179-2140	847	180-9852	460		893
177-8831	▶947	179-2173	851		461		895
177-9548	▶127	179-2176	859	180-9853	460	184-4467	240
177-9549	5	179-2177	851	180-9867	526	184-5073	970
	▶128	179-2179	854	180-9903	▶496	184-5076	970
177-9741	5		859	180-9933	363	184-5394	66
	▶879	179-2190	863	183-1156	591	184-6665	526
177-9813	316	179-2509	63	183-1406	383	184-7303	▶545
	320	179-3261	60	183-1415	424	184-7307	▶545
177-9814	317		61		▶460	184-7309	▶545
	320		▶63	183-1416	▶424	184-9843	558
177-9816	6	179-3276	863	183-1417	▶424		565
	▶239	179-3421	6	183-1418	424		566
178-0103	304		▶36		▶460	185-0008	524
	329	179-3581	3	183-1425	794		▶536
178-0131	480		▶898	183-2136	332		838
	484	179-4814	836		334	185-1122	526
178-0160	317		838	183-2304	46	185-1542	2
	321	179-5774	455	183-2317	22		▶60
178-0162	317	179-5777	▶475	183-2931	71	185-2197	334
	321	179-6017	80	183-3017	▶798	185-2274	365
178-0555	317	179-6021	80	183-3399	105	185-2287	365
	321	179-6063	367	183-3405	94	185-2638	120
178-1685	745		▶406		96	185-2639	120
178-1686	745	179-6064	▶367	183-3406	40	185-2640	120
178-1688	745		393	183-3407	105	185-2644	120
178-3030	798	179-6588	▶37	183-3649	6	185-2645	120
	▶893	179-7383	10		▶12	185-2646	120
	899	179-8700	193	183-4069	177	185-2647	120
178-3086	749		196		▶209	185-2648	120
178-3695	383		199		▶212	185-2650	120
178-3899	6		202	183-4365	42	185-2651	120
	▶44		209		43	185-2652	120
178-4190	847		212	183-4691	526	185-2653	120
178-6267	178		297	183-5163	27	185-2654	120
	180	179-8701	209	183-5805	▶970	185-2655	120
178-7983	629		212		972	185-2656	120
178-7985	629	179-9398	▶539	183-6189	▶240	185-2657	120
178-8067	188	180-1300	▶159	183-6774	398	185-2658	120
	191		193	183-6775	398	185-3142	3
	193	180-1679	▶764	183-6933	491		▶512
	199	180-3531	365	183-7263	679		▶513
	209	180-3907	368	183-7595	744	185-3241	104
	215		370	183-7889	22	185-4076	293
178-8455	745	180-4027	361	183-7913	491	185-6362	891
178-8603	826		526	183-8597	▶251		893
	▶869	180-4028	338		346	185-6596	560
178-8894	804		341		347	185-7025	558
	810	180-4643	140	183-9606	219		565
178-8993	63		▶143	184-0871	60	185-9356	13
178-9158	346	180-5462	863		69	186-1526	398
178-9341	▶826	180-7004	60	184-0874	60		401
178-9582	3		▶72		61		▶405
	▶629	180-7033	338		▶69	186-1714	338
178-9952	363		341	184-0903	182	186-1715	338
178-9961	584	180-7147	361		184		341
178-9962	584		526	184-1130	▶398	186-3696	470
179-1298	398	180-9146	▶346		406	186-3705	49
179-1548	▶177		393	184-1132	▶401	186-3735	118
179-1549	209	180-9285	▶878		406		119
	212		891	184-1299	4		137
179-1550	209		893		▶302		160
	212		895	184-2309	467		162
179-2138	847	180-9322	367	184-2472	136		166
179-2139	847	180-9327	398	184-4322	891		168

▶ PRIMARY REFERENCE

PART NUMBER INDEX

Part	Page	Part	Page	Part	Page	Part	Page
	170	187-8028	▶129	190-0370	332		929
	171		510	190-1048	6	191-0920	109
	172		511		▶103	191-1782	107
	173	187-8961	44	190-1049	103	191-1783	107
	174	187-9380	332	190-1096	6	191-2314	531
	176	188-1336	149		▶79	191-3517	7
	184	188-1588	148	190-1097	6		▶104
	191	188-3122	22		▶57		▶105
	192	188-3826	7	190-1098	49	191-3602	▶390
	227		▶59	190-1099	49		393
	244	188-3862	178	190-1101	6	191-3606	3
	251		180		▶54		▶393
	265		205	190-1103	6	191-3645	517
	271		207		▶94	191-3680	346
	275		222		▶96	191-4457	68
	284		224		▶98	191-5236	781
	293		280	190-1104	7		825
	294		282		▶83	191-5292	591
	297		872	190-1105	6		▶744
	302		876		▶107	191-5293	489
	304	188-3951	▶130	190-1106	49	191-5973	381
	324		512	190-1107	57	191-6003	377
	332		513	190-1680	205	191-6004	3
	334	188-3959	130		222		▶377
	338	188-6121	▶106	190-1684	346	191-6587	▶254
	404		107	190-1688	3		257
	405	188-8715	8		▶391	191-6626	57
	741	188-8849	153	190-1690	391	191-6627	122
	836		158	190-1691	391	191-6630	2
	863		159	190-1697	▶495		▶122
	876		184	190-1699	495	191-6632	6
	878	188-9037	6	190-1700	495		▶52
	879		▶78	190-2314	3		▶53
	893	188-9141	▶38		▶26	191-6635	122
	948		39	190-2938	973	191-6637	94
	949	188-9250	▶537	190-3043	361		96
	951		836	190-3482	879		98
	953	188-9321	5		895	191-7581	625
	955		▶175	190-3562	18	191-7582	625
	957	188-9324	175	190-3850	540	191-7583	625
	959		▶215		541	191-7584	625
	961		▶217		542	191-7724	390
	963	188-9328	▶175	190-4178	83	191-8692	▶883
186-3736	863	188-9331	175		▶85		901
186-4148	3		177	190-4985	239	191-8695	▶859
	▶480		▶229	190-5166	31		901
	▶484		▶230	190-5212	347	191-9256	346
186-4460	466	188-9390	541	190-5386	766	192-1434	1
	▶470	188-9694	309		973		2
186-4461	▶466	188-9695	309		974		▶974
186-6315	94	188-9865	286	190-6114	36	192-1563	791
	96		290	190-6115	22		▶843
	98	189-0108	317	190-6117	22	192-4969	▶546
187-0491	365		321	190-7401	461	192-5490	744
187-0745	526	189-0146	127	190-7417	424	192-5629	480
187-0953	766		128		▶461		484
187-0976	480		129	190-7418	▶424	192-5638	480
	484	189-0189	404	190-8939	77		484
187-1008	304	189-3132	8	190-8970	117	192-7352	82
	324	189-6645	36	190-8977	106	192-7353	82
187-1315	24	189-9302	15		▶117	192-7354	82
187-2034	125	189-9987	6	190-9775	115	192-7357	34
187-4087	6		▶81	191-0027	783	192-9927	377
	▶30	189-9989	79		828	193-1036	723
187-4088	30	190-0065	120		832	193-1474	2

▶ **PRIMARY REFERENCE**

PART NUMBER INDEX

Part	Page
	▶549
193-2162	104
	105
193-2353	8
193-4426	5
	▶550
193-5510	52
	53
193-7359	1
	2
	▶278
	900
193-7360	1
	2
	▶304
193-7416	184
	186
193-8212	▶872
193-8253	1
	2
	▶309
	▶312
193-8255	▶316
	512
	513
193-8256	▶320
	510
	511
	630
193-8273	66
193-8279	66
193-8280	66
193-8570	260
193-8603	4
	▶324
193-9147	514
194-1854	317
	321
194-2612	114
	115
194-2903	297
	329
194-3351	▶630
194-3353	▶329
	630
194-3845	901
194-4020	▶546
194-4046	321
194-4047	321
194-4181	338
	341
194-4230	317
194-4492	383
194-4679	514
194-4863	491
194-4939	480
	484
194-5133	52
	101
194-5141	791
194-5142	122
194-5226	245
	249
	254
194-5227	245
	249
	254
194-6158	484
194-6183	863
194-6185	863
194-6523	115
194-6738	317
	321
194-7009	480
	484
194-7011	480
	484
194-7013	480
	484
194-7015	480
	484
194-7195	304
	324
194-7215	305
	325
194-7987	480
194-8535	115
194-9453	625
	▶628
194-9478	628
194-9479	628
194-9480	628
194-9481	628
195-0328	6
	▶55
195-0434	77
195-0452	55
195-0735	496
195-0737	496
195-0739	496
195-0741	496
195-0852	101
195-1098	77
195-1122	455
195-1306	78
195-2097	132
195-2274	974
195-2497	305
	325
195-4990	317
	321
195-6380	113
	▶114
195-6381	113
	▶115
195-7218	769
	775
195-7219	772
195-8098	7
	▶58
195-8714	2
	▶526
195-9634	625
195-9639	625
	▶723
196-0180	891
	893
	895
196-1264	530
196-1867	621
196-2970	305
196-4135	54
196-4150	891
	895
196-4170	134
	▶135
196-4226	297
196-4609	309
	312
196-4622	895
196-4796	54
196-4909	1
	2
	▶895
196-5463	85
196-6028	85
196-6838	111
	112
196-6840	111
196-7268	332
	334
196-7917	94
	96
196-8532	175
	176
	▶219
	▶220
196-8557	180
	222
	224
	282
	872
196-8559	▶222
	▶224
	227
196-8906	66
196-9295	514
196-9373	278
197-0949	100
197-0951	100
197-1351	496
197-1444	491
197-1448	60
	61
	▶491
197-1708	114
197-1744	▶180
197-1801	496
197-1988	298
197-2054	875
197-2055	874
197-2064	4
	▶874
197-2066	1
	2
	▶875
197-3287	321
197-3332	866
197-3609	26
197-3616	36
197-3739	321
197-3740	321
197-4563	6
	▶13
197-4637	100
197-4638	100
197-5019	305
	329
197-5453	341
197-5572	▶4
197-5867	974
197-5954	▶5
197-5964	891
	893
	895
197-6218	863
197-6663	▶899
197-7659	781
	▶793
197-8391	241
	▶255
197-8392	241
	▶256
197-8393	241
	▶246
197-8394	241
	▶247
197-8611	851
	854
	861
197-8624	851
	854
	861
197-8627	851
197-8628	851
197-8629	854
197-8630	854
197-9297	38
197-9299	38
197-9564	6
	▶70
197-9580	71
197-9581	71
198-1897	94
	▶111
198-3462	368
	370
198-4768	381
198-4777	82
198-4836	1
	2
	5
	▶124
198-5438	526
198-5439	526
198-5440	526
198-6421	346
198-6565	▶425
198-6572	425
	▶461
198-7332	▶146
	294
	298
198-7379	509
198-7380	509
198-7657	367
198-8588	497
	499
198-9811	770
	772

▶ PRIMARY REFERENCE

PART NUMBER INDEX

Part	Page
198-9812	770
	773
198-9942	491
199-2585	▶823
199-2586	823
199-2625	495
199-2626	495
199-2677	799
	802
	806
	808
199-2711	60
	69
	74
199-2712	799
	802
	806
	808
199-2737	806
199-2738	808
199-2739	799
199-2740	802
199-2756	491
199-3368	▶172
	230
199-4317	617
199-4318	475
199-4320	617
199-4321	617
199-4322	617
199-6163	44
199-7118	475
199-7119	475
199-9907	115
199-9970	1
	2
	▶46
199-9971	46
199-9972	46
199-9983	480
	484
2	
200-1173	876
200-1215	6
	▶62
200-1308	77
200-2257	62
200-2258	62
200-3967	497
	499
200-4495	29
200-5985	508
200-5997	▶508
	510
	511
	512
	513
200-7929	381
200-7933	824
200-7934	▶824
200-8281	124
	▶125
200-8623	851
	854
201-0346	82
201-0387	347
201-0662	▶971
201-0663	5
	▶971
201-1036	▶132
	177
	510
	511
201-1038	▶133
	175
	177
201-1055	970
201-5244	293
	298
201-5469	104
	105
201-5894	859
201-7603	476
	477
	972
201-7626	975
201-7627	976
201-7631	976
	977
201-7633	975
201-8327	623
201-8328	621
201-8424	132
	133
201-8430	597
	600
	603
202-1138	891
	895
202-2699	125
202-2700	125
202-2703	125
202-2708	125
202-2783	125
202-2784	125
202-2785	125
202-2786	125
202-2787	125
202-4322	▶975
202-4323	▶975
202-4324	▶976
202-6475	863
202-6476	863
202-6611	155
	157
202-6614	154
	156
202-8647	125
202-8649	872
	876
202-9824	972
202-9897	125
203-1124	951
	955
	959
	963
	967
	968
203-2260	1
	2
	▶494
203-2268	▶976
203-2389	519
203-2390	519
203-2391	519
203-2423	519
203-3175	623
203-3337	526
203-3340	526
203-3341	526
203-3342	526
203-3940	252
203-4213	863
203-5805	18
203-5957	520
203-5958	520
203-6016	383
203-6019	383
203-6090	18
203-6093	71
203-6536	▶175
203-6551	175
	▶280
203-7620	▶226
203-7625	▶160
	226
203-7626	▶162
	226
203-7775	81
203-7778	81
203-8466	▶760
204-0320	241
	▶257
204-0794	3
	▶971
204-0795	971
204-4376	783
	828
	832
204-4945	104
204-6109	▶176
204-6127	176
	▶282
204-6488	794
204-8785	425
	▶462
204-8786	▶425
204-9840	491
205-0983	98
205-1257	83
205-1258	83
205-1306	96
	98
	▶112
205-1320	29
205-1322	11
205-4058	54
205-4285	141
	143
205-5294	6
	▶51
205-7187	531
206-3599	86
	361
206-3600	86
206-3713	347
206-3714	347
206-3719	44
206-4669	26
206-9651	794
207-1516	▶263
207-2409	3
	▶635
207-2410	▶633
	635
207-2411	633
207-3700	▶1
207-3819	378
	▶380
207-4922	361
207-4924	526
207-4927	86
207-9861	425
	▶462
207-9862	▶425
208-0014	516
	▶517
208-0039	14
	15
208-0520	531
208-1512	517
208-1535	517
208-6054	66
208-6678	531
208-7782	141
	143
208-7933	309
	312
208-9282	55
208-9619	25
209-4578	80
209-5582	271
209-5776	973
209-7290	51
209-7291	51
209-7293	59
209-9234	106
209-9985	531
209-9986	510
	511
	512
	513
	▶531
210-1747	241
	▶248
210-2043	▶2
210-5522	58
210-5984	▶22
	24
210-5985	▶19
	22
210-5987	7
	▶24
211-0546	58
211-1519	4
	▶506
211-1520	4

▶ **PRIMARY REFERENCE**

PART NUMBER INDEX

Part	Page	Part	Page	Part	Page	Part	Page
	▶228	214-2466	526	220-1952	17	225-5404	147
211-2060	536	214-3540	381		▶18	225-5405	147
211-2101	122	214-4863	▶244	220-8678	91	226-0291	484
211-2134	22		361	221-0144	58	226-0295	799
211-4906	▶788	214-6867	491	221-2801	539		802
211-4907	▶788	214-7567	250		▶543		806
211-4908	788	214-7568	104	221-2961	▶539		808
211-4912	788		105	221-3248	18	226-0330	484
	▶861		257	221-3494	104	226-0342	799
211-4913	788	215-2315	259		105		802
	▶966	215-2413	475	221-5368	▶227		806
	▶967	215-2414	475	222-2367	540		808
211-7730	106	215-2415	475		542	226-0733	463
211-8620	6	215-2431	475	222-3769	548	226-0735	426
	▶241	215-3005	517	222-4737	666		▶463
211-9274	34		▶519		670	226-0903	286
211-9275	34	215-3249	288		671		288
212-2162	973	215-5648	973		672		290
212-2768	89	215-6425	633	222-6457	146	226-2870	633
212-3246	41	215-6672	174	222-6458	146	226-2871	633
212-3590	480	215-6673	174	222-9135	6	226-3475	101
	484	215-6674	174		▶286	226-3533	101
212-3591	480	215-9571	47		▶288	226-3760	6
	484		▶48	223-0580	632		▶134
212-3683	1	216-1598	47	223-3935	789	226-6039	71
	2	216-2211	77	223-3936	789	226-6051	71
	▶928	216-5586	18		▶968	226-8202	560
212-3924	▶168	216-6967	122	223-3937	788		567
	228	216-7313	516		▶789		568
212-4174	26	216-7435	463	223-3938	▶788	226-9996	491
212-6700	7	216-7437	470	223-3939	284	227-1143	559
212-6933	66	216-7443	425	223-3940	284	227-4299	70
212-7002	18		▶463	223-3941	▶284		▶71
212-7431	480	216-7444	▶425		789	227-4301	71
212-7432	480	216-7445	466	223-4453	▶271	227-4531	14
212-7524	3		▶470		286	227-4709	548
	▶530	216-7446	▶466		288	227-5904	105
212-8150	6	216-9746	82		290	227-6672	115
	▶259	216-9782	11	223-5548	6	228-2918	511
213-0064	89	217-2570	▶92		▶68		513
213-0430	975		109	224-0003	8	228-5009	338
213-0431	976	217-2661	633		▶10		341
213-0435	976	217-5701	14	224-2821	506	228-5309	49
	977		15	224-4536	▶249	228-7559	3
213-0437	975	217-8412	508		250		▶503
213-1413	309	218-0397	14	224-5132	544	228-9265	▶426
	312		15	224-5152	544	229-0119	970
213-1414	310	218-2971	519	224-5844	477	229-0674	127
	312	218-4406	381	224-5845	477		128
213-1916	55	218-4758	▶898	224-5912	477		129
213-2410	12	218-4759	898	224-6637	973		130
213-2411	12		▶900	224-6958	975	229-1490	19
213-3733	506	218-9738	▶148	224-6963	976	229-2559	510
213-4099	506	218-9739	5		977	229-5813	115
213-5132	875		▶149	224-6965	975	229-5814	114
213-5158	6	219-2334	68	224-7040	63	229-7155	600
	▶41	219-2335	68		▶617		603
213-9100	302	219-2340	68	224-7129	6		▶681
	312	219-6701	503		▶40	229-8870	112
213-9190	49	219-7258	▶542	224-8923	68	229-8906	125
213-9320	▶42	219-7265	▶540	224-9222	286	229-9382	561
	48		543		288		563
213-9321	▶43	220-0768	3		290		564
	48		▶100	225-4150	972		570
214-2242	526	220-1922	476	225-5182	514	230-4477	114

▶ PRIMARY REFERENCE

PART NUMBER INDEX

Part	Page	Part	Page	Part	Page	Part	Page
	115	235-3937	▶174	249-2843	891		
230-4617	3		235		893		
	▶88	235-9651	110		896		
230-5839	3	236-0737	794	250-2178	392		
	▶65	236-0962	▶93		▶464		
230-6156	14		110	250-2180	▶392		
230-6279	286	236-2216	32	250-2181	426		
	288	236-3947	▶5		▶464		
	290	236-6220	241	250-2182	▶426		
230-7517	114		▶250	250-2187	464		
230-7570	3	236-6221	241	250-7695	101		
	▶488		▶252	250-8279	263		
230-8089	600	237-4956	59	251-3179	793		
230-9138	794	237-7987	▶977	254-4356	105		
231-0221	114	238-0415	783				
	115		828				
231-3539	558		832				
	565	238-0417	783				
	566		828				
231-4486	822		832				
231-4487	822	238-4462	561				
231-4527	302	238-9421	971				
231-5251	477	238-9422	971				
231-6133	125	239-4990	973				
231-6134	125	239-6989	972				
231-6524	5	239-8277	135				
	▶876		▶136				
232-1732	822	239-8335	338				
232-4723	49	239-8336	341				
233-4253	231	239-9354	232				
	▶234		▶236				
	▶235	239-9362	▶150				
233-6659	142		277				
	▶144	240-0041	12				
234-0203	55	240-6822	405				
234-2432	6	241-3013	▶577				
	▶290	241-4943	891				
234-4323	▶154		893				
	189		895				
	192	241-5645	13				
	196	241-6949	61				
	202		▶73				
	207	242-0407	378				
	212	242-1792	370				
	217	242-3289	61				
	224		▶595				
234-4324	▶155	242-3633	65				
	196	242-3864	51				
234-4325	▶156	242-6181	2				
	183		▶61				
	186	242-9245	526				
	220	243-3769	973				
234-4326	▶157	243-5466	611				
	186	244-5692	370				
234-6666	405	245-4630	252				
234-7730	154	246-2641	788				
	155	246-5093	103				
	156	246-5230	77				
	157	247-1925	77				
234-7731	154	247-3995	613				
	155	248-6251	▶544				
	156		613				
	157	248-6772	783				
235-1122	484		828				
235-1123	484		832				

▶ **PRIMARY REFERENCE**

MEMORANDA



© 2004 Caterpillar
All Rights Reserved

Printed in U.S.A.

SEBP3327-09
VOLUME I
Pages 1-470

12H Motor Grader

CBK1-Up