CATERPILLAR®

SEBP4983
July 2009

RUTHZIL TRATOR COMERCIAL DE PEÇAS LTDA 11 97083-6812 ROLANDO

Parts Manual

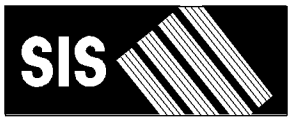

See "General Information" for New Parts Manual Features.

12K Motor Grader

JJA1-Up (Machine)
KHX1-Up (Engine)
DMJ1-Up (Transmission)

Powered By C7 Engine
This Parts Manuals is also available in .PDF format on Compact Disc (CD-ROM) - Caterpillar Form No. SERP4983

Product and Dealer Information

Note: For product identification plate locations, see the section “Product Identification Information” in the Operation and Maintenance Manual.

Delivery Date: _____

Product Information

Model: _____

Product Identification Number: _____

Engine Serial Number: _____

Transmission Serial Number: _____

Generator Serial Number: _____

Attachment Serial Numbers: _____

Attachment Information: _____

Customer Equipment Number: _____

Dealer Equipment Number: _____

Dealer Information

Name: _____ Branch: _____

Address: _____

_____

_____

	Dealer Contact	Phone Number	Hours
Sales:	_____	_____	_____
Parts:	_____	_____	_____
Service:	_____	_____	_____

MEMORANDA

TABLE OF CONTENTS

Name	Page
GENERAL INFORMATION	A5
REPAIR ALTERNATIVES	A8
SUPPLEMENTAL COOLANT ADDITIVES	A9
MAINTENANCE PARTS	A10
INDEX	A14
MACHINE ARRANGEMENT	1
GENERAL AR	1
OPTION AR-CAB	2
OPTION AR-CONFIGURATION	4
OPTION AR-ENGINE	4
OPTION AR-RIPPER	5
OPTION AR-WORK TOOL	5
ENGINE ARRANGEMENT	7
ENGINE AR-COMPLETE	7
ENGINE AR-CORE	8
BASIC ENGINE	9
AIR COMPRESSOR GP	9
CAMSHAFT GP	13
CARRIER GP-SEAL	14
COVER GP-CYLINDER BLOCK	15
COVER GP-FRONT HOUSING	16
COVER GP-VALVE MECHANISM	18
CRANKSHAFT GP	20
CYLINDER BLOCK GP	22
CYLINDER HEAD AS	26
CYLINDER HEAD GP	27
DAMPER & PULLEY GP	30
DRIVE GP-ACCESSORY	31
DRIVE GP-FAN	32
FASTENER GP-CYLINDER HEAD	34
FASTENER GP-ENGINE	35
FASTENER GP-FRONT HOUSING	36
FLYWHEEL GP	37
GEAR GP-FRONT	38
HOUSING GP-FLYWHEEL	39
HOUSING GP-FRONT	40
LIFTER GP-VALVE	41
LIFTING GP-ENGINE	42
MOUNTING GP-ENGINE	43
MOUNTING GP-ENGINE & XMSN	44
PAN GP-OIL	46
PISTON & ROD GP	48
PLUG GP-CYLINDER BLOCK	49
PLUG GP-ENGINE	51
SEAL GP-CRANKSHAFT	52
VALVE MECHANISM GP	53
LUBRICATION SYSTEM	56
ADAPTER GP-OIL LINE	56
BREATHER GP	57
FILTER GP-ENGINE OIL	58
FUMES DISPOSAL GP	59
LINES GP-ENGINE OIL	60
LINES GP-ENGINE OIL DRAIN	61
LINES GP-TURBOCHARGER OIL	62
MANIFOLD GP-ENGINE OIL	64
PUMP GP-ENGINE OIL	65
COOLING SYSTEM	67
COOLER GP-ENGINE OIL	67
COOLING AR	68
FAN GP-BLOWER	69
GUARD GP-FAN	70
LINES GP-WATER	71
PUMP GP-WATER	75
RADIATOR GP	78
TANK GP-COOLANT	79
AIR INLET AND EXHAUST SYSTEM	81
AFTERCOOLER GP-AIR	81
AIR CLEANER GP	82
COVER GP-AIR INLET	85
ELBOW GP-AIR INLET	86
LINES GP-AIR	87
MANIFOLD GP-EXHAUST	88
MUFFLER GP	89
TURBOCHARGER GP	90
FUEL SYSTEM	92
CONTROL GP-GOVERNOR	92
FILTER GP-WATER SEP & FUEL	94
INJECTOR GP-FUEL	95
LINES GP-FUEL	96
LINES GP-INJECTOR HYD PUMP	100
PUMP & MTG GP-UNIT INJ HYD	101
PUMP GP-FUEL INJECTION	102
PUMP GP-FUEL PRM & WATER SEP	103
REGULATOR GP-FUEL PRESSURE	104
TANK GP-FUEL	105
ELECTRICAL AND STARTING SYSTEM	106
ALARM GP	106
ALTERNATOR GP-CHARGING	107
APPLICATION GP-POWER TRAIN	110
BATTERY & WIRING GP	111
CONTROL & MTG GP-ENGINE ELEK	116
CONTROL GP-POWER TRAIN	117
CONTROL GP-UNPROGRAMMED	118
CONVERTER AR-ELECTRICAL	119
CONVERTER GP-ELECTRICAL	120
ELECTRONICS GP-COMMUNICATION	122

TABLE OF CONTENTS

Name	Page
ELECTRONICS GP-IMPLEMENT	122
ELECTRONICS GP-POWER TRAIN	122
GRADE CONTROL AR	123
GROUND GP-ELECTRICAL	125
HEATER GP-JACKET WATER	126
INSTALLATION AR-COMMUNICATION	127
INSTALLATION GP-COMMUNICATION	128
LAMP GP	130
LAMP GP-DOME	131
LAMP GP-FLOOD	132
LAMP GP-SIGNAL	136
LIGHTING AR-ROADING	140
LIGHTING GP-BACKUP	141
LIGHTING GP-FLOOD	143
LIGHTING GP-ROADING	147
LIGHTING GP-SIGNAL	150
MOTOR GP-ELECTRIC	151
MOUNTING GP-GRADE CONTROL	152
PLUG GP-CONNECTOR	154
RADIO GP-COMMUNICATION	155
SENSOR GP-ENGINE	156
SENSOR GP-POSITION	158
SENSOR GP-PRESSURE	160
SENSOR GP-SPEED	166
SENSOR GP-TEMPERATURE	169
STARTING AID GP-ETHER	173
STARTING MOTOR GP-ELECTRIC	175
SWITCH GP-BYPASS	176
SWITCH GP-DISCONNECT	177
SWITCH GP-LIGHT	178
SWITCH GP-MAGNETIC	179
SWITCH GP-PRESSURE	180
SWITCH GP-WIPER	181
VALVE GP-ETHER STARTING	183
WIRING GP-AIR CONDITIONER	184
WIRING GP-AUXILIARY	185
WIRING GP-BLADE CUSHION	188
WIRING GP-CAB	189
WIRING GP-CONSOLE	192
WIRING GP-ENGINE	194
WIRING GP-ETHER STARTING AID	196
WIRING GP-FRONT	197
WIRING GP-GRADE CONTROL	201
WIRING GP-REAR	205
WIRING GP-STEERING CONSOLE	212
WIRING GP-TRANSMISSION	214
POWER TRAIN	215
AUTOSHIFT AR	215
BASE GP-OIL FILTER	216
CASE & PARTS GP-PLANETARY	217
CHAIN GP-DRIVE	222
CLUTCH GP-TRANSMISSION	223
CONTROL GP-DIFFERENTIAL LOCK	232
CONTROL GP-TRANSMISSION HYD	234
COOLER GP-TRANSMISSION OIL	235
COUPLING GP-TORSIONAL	236
DIFFERENTIAL & BEVEL GEAR GP	237
DIFFERENTIAL GP	239
FINAL DRIVE GP	241
FILLER GP-POWER TRAIN OIL	243
FILTER GP-OIL	244
LINES GP-TRANSMISSION OIL	245
MOUNTING GP-WHEEL	248
PUMP GP-GEAR	249
SCREEN GP-MAGNETIC	252
SHAFT GP-DRIVE	253
SHAFT GP-INPUT	254
TANDEM & COVER GP	255
TRANSMISSION AR	256
UNIVERSAL JOINT GP	257
VALVE & MTG GP-DIFF LOCK	258
VALVE GP-SELECTOR & PRESS CONT	259
VALVE GP-SOLENOID	265
VALVE GP-TRANSMISSION CONTROL	267
WHEEL & TIRE AR	269
WHEEL & TIRE GP	270
WHEEL AR	271
WHEEL GP	273
FRAME AND BODY	277
AXLE GP-FRONT	277
BOSS GP-FRAME	280
BOX GP-BATTERY	282
BUMPER GP-REAR	283
CASE & FRAME GP	284
COVER GP-ACCESS	285
ENCLOSURE GP-ENGINE	286
FRAME GP-FRONT	290
GUARD GP-BOTTOM	292
GUARD GP-DRIVE SHAFT	293
GUARD GP-PLATFORM	294
HITCH GP-ARTICULATING	298
LINES GP-LUBRICATION	300
LINK GP-STEERING	301
STEP GP	302
SUPPORT GP-RADIATOR	303
BRAKING SYSTEM	305
AIR DRYER GP	305
BRAKE GP-PARKING	307
BRAKE GP-SERVICE	309
CONTROL GP-PARKING BRAKE	311
CONTROL GP-SERVICE BRAKE	313
DRYER & LINES GP-AIR	317
TANK GP-AIR	320
VALVE GP-SOLENOID	324

TABLE OF CONTENTS

Name	Page
HYDRAULIC SYSTEM	325
ACCUMULATOR & MTG GP-HYDRAULIC	325
ACCUMULATOR AR-BLADE CUSHION	326
ACCUMULATOR GP-HYDRAULIC	327
CONTROL AR-HYDRAULIC	328
CYLINDER & MTG GP-ARTICULATION	329
CYLINDER & MTG GP-BLADE LIFT	330
CYLINDER & MTG GP-BLADE TIP	331
CYLINDER & MTG GP-CENTERSHIFT	332
CYLINDER & MTG GP-SCARIFIER	333
CYLINDER & MTG GP-SIDESHIFT	334
CYLINDER & MTG GP-STEERING	335
CYLINDER & MTG GP-WHEEL LEAN	336
CYLINDER GP-ARTICULATION	337
CYLINDER GP-CENTERSHIFT	339
CYLINDER GP-HYDRAULIC	340
CYLINDER GP-LIFT	341
CYLINDER GP-RIPPER	342
CYLINDER GP-SCARIFIER	343
CYLINDER GP-SIDESHIFT	344
CYLINDER GP-STEERING	345
CYLINDER GP-WHEEL LEAN	349
DETENT GP-CONTROL VALVE	350
DRIVE GP-CIRCLE	351
LINES GP-ACCUMULATOR	354
LINES GP-HYDRAULIC	356
LINES GP-PUMP	369
LINES GP-RIPPER	374
LINES GP-STEERING	376
LOCK GP-CENTERSHIFT	379
MANIFOLD GP-CONTROL	380
MANIFOLD GP-VALVE	381
MOTOR GP-GEROTOR	384
PUMP & MTG GP-STEERING	386
PUMP GP-PISTON	387
ROTATING GP-PUMP	391
SHAFT GP-PUMP DRIVE	393
SWASHPLATE GP	394
SWIVEL GP	395
TANK & FILTER GP-HYDRAULIC	397
TANK & MTG GP-HYDRAULIC	399
VALVE & LINKAGE GP	400
VALVE GP-BANK 4	413
VALVE GP-BANK 5	416
VALVE GP-BANK 6	419
VALVE GP-COMBINATION	421
VALVE GP-CONTROL	423
VALVE GP-PUMP CONTROL	449
VALVE GP-PURGE	451
VALVE GP-RELIEF	452
VALVE GP-SHUTTLE	461
VALVE GP-SOLENOID	462

Name	Page
IMPLEMENTS	464
CIRCLE GP	464
DRAWBAR GP	468
PLATE GP-PUSH	470
OPERATOR STATION	471
ACCESSORY GP-CAB	471
ADJUSTER GP-SEAT	472
AIR CONDITIONER & HEATER GP	476
AIR CONDITIONER AR	480
AIR CONDITIONER GP	481
ARMREST GP	482
CAB AR	484
CAB GP	485
COMPRESSOR GP-REFRIGERANT	486
CONDENSER & MTG GP-REFRIGERANT	488
CONSOLE GP-OPERATOR	489
CONTROL GP-CLUTCH	494
CONTROL GP-STEERING	496
DOOR GP-CAB	497
DUCT & CONTROL GP	504
DUCT GP-CAB AIR	505
FAN GP-CIRCULATING	506
FILTER GP-CAB AIR	511
HEATER & MTG GP-CAB	512
HEATER AR-CAB	513
HEATER GP-CAB	514
HORN GP-ELECTRIC	518
HOUSING GP-SEAT SUSPENSION	519
INDICATOR GP-LEVEL	522
INSTALLATION AR-RADIO	523
INSTALLATION GP-RADIO	524
INSULATION GP-WEATHER	525
LINER GP-CAB	527
LINES GP-AIR CONDITIONER	534
LINES GP-HEATER	536
LOUVER GP-CAB	538
MIRROR GP-REAR VIEW	539
MODULE GP-QUAD GAUGE	542
MODULE GP-SPEEDOMETER & TACH	543
MOUNTING GP-CAB	545
MOUNTING GP-ROPS	546
PAN GP-BACKREST	548
PANEL GP-CAB	549
PANEL GP-INSTRUMENT	550
RECLINER GP-SEAT	553
ROPS AR	554
ROPS GP	556
SCREEN GP-SUN	560
SEAT BELT GP	561
SEAT GP	563
SEAT GP-STATIC	571
SEAT GP-SUSPENSION	574
SUPPORT GP-SEAT	576

TABLE OF CONTENTS

Name	Page	Name	Page
SUSPENSION GP-SEAT	578		
VALVE GP-AIR CONTROL	580		
WASHER GP-WINDOW	581		
WIPER AR-WINDOW	586		
WIPER GP-WINDOW	587		
WORK TOOLS	593		
BIT GP-END	593		
BLADE & TIP AR-POWER	594		
BLADE GP	595		
BLADE GP-BULLDOZER	597		
BRACKET GP-SCARIFIER	599		
CYLINDER GP-HYDRAULIC	600		
EDGE GP-CUTTING	602		
LIFT GP-BLADE	603		
MOUNTING GP-RIPPER	606		
RIPPER AR	607		
RIPPER GP	608		
SCARIFIER AR	610		
SCARIFIER GP	611		
TOOTH GP-RIPPER	614		
TOOTH GP-SCARIFIER	615		
SERVICE EQUIPMENT AND SUPPLIES	616		
BOX GP-TOOL	616		
FILM GP	617		
PLATE & FILM GP	618		
PART NUMBER INDEX	B1		

GENERAL INFORMATION

1. MACHINE IDENTIFICATION

Caterpillar machines are identified by Product Identification Numbers (PIN). Some components included in a machine may be identified by Serial Numbers (S/N). Typical components that will be serialized include engines, transmissions, bulldozers, and rippers. The machine and engine are further identified by arrangement numbers and in some cases modification numbers. These numbers are shown on the product identification plate(s) and on the master plate in the operator's compartment.

Caterpillar dealers need all of these numbers to determine accurate parts identification.

SIS *New Feature*

Effective First Quarter 2001 the Caterpillar Product Identification Number (PIN) changed from 8 to 17 characters. In an effort to provide uniform equipment identification, Caterpillar and other construction equipment manufacturers are moving to comply with the latest version of the product identification numbering standard. Non-road machine PINs are defined by ISO 10261. The new PIN format will apply to all Caterpillar machines and generator sets. The PIN plates and frame marking will display the 17 character PIN. The new format will look like the following:

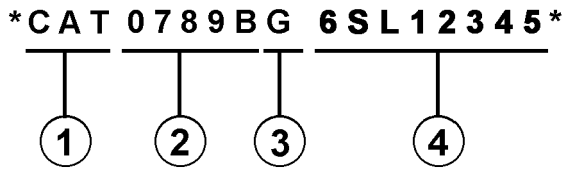

Where:

1. Caterpillar's World Manufacturing Code (characters 1-3)

2. Machine Descriptor (characters 4-8)

3. Check Character (character 9)

4. Machine Indicator Section (MIS) or Product Sequence Number (characters 10-17). These were previously referred to as the Serial Number.

Machines and generator sets produced before First Quarter 2001 will maintain their 8 character PIN format.

Components such as engines, transmissions, axles, etc. and work tools will continue to use an 8 character Serial Number (S/N).

2. ORDERING PARTS

⚠ WARNING

When replacement parts are required for this product Caterpillar recommends using Caterpillar replacement parts or parts with equivalent specifications including, but not limited to, physical dimensions, type, strength and material.

Failure to heed this warning can lead to premature failures, product damage, personal injury or death.

Quality Caterpillar replacement parts are available from Caterpillar dealers throughout the world. Their parts inventories are up to date and include all parts normally required to protect your investment in Caterpillar machines. Dealers may offer repair kits or remanufactured parts to allow selection of the most effective repair alternative for a particular situation. When ordering parts, your order should specify the quantity, part number, part name, and the serial number/product identification number of the machine for which the parts are needed.

3. PARTS MANUAL ORGANIZATION

Product information in this manual is presented as "information elements" that represent all of the components for the specific model. Engine Arrangement and Seat Group are examples of information elements. The information elements are organized alphabetically by part name and secondarily by part number within each major section of the manual.

4. TABLE OF CONTENTS

A table of contents (TOC) is found at the beginning of the manual. The TOC lists each section of the manual with a complete list of all information elements organized as they appear in the manual. Page numbers are provided for quick reference to detailed parts identification illustrations and serviceable consist lists.

5. MAINTENANCE PARTS INDEX

The Maintenance Parts Index, located near the beginning of the manual, references most frequently used maintenance part numbers, providing description, quantity, usage and page number. This information is organized alphabetically by part description.

GENERAL INFORMATION

6. INDEX

The index located near the front of the manual is an alphabetical listing of all information elements included in the manual. Page numbers are provided for quick reference to detailed parts identification illustrations and serviceable consist lists.

7. PART NUMBER INDEX

A numerical index listing all part numbers and the corresponding page number(s) appears at the back of the manual.

8. CAPTIONS

Captions located at the beginning of each information element identify the part number and part name along with additional descriptive information. PIN and S/N information found in each caption should be used to select correct information for a specific machine. Field replacement options, identification of optional attachment components, and where used ("part of") information is also provided.

The first line of a caption is shown in larger type font to indicate the beginning of an information element. Captions for additional pages that may be required to illustrate an information element will be shown in standard type font and will include the term *(contd.)* .

9. NON-SERVICED PARTS

In some instances it is necessary to display non-serviced parts that are a link to a lower level serviceable consist lists. These non-serviced part numbers are shown in *italic* type indicating that they are not available.

10. PARTS LIST REFERENCE NUMBERS

Numbers shown in the Ref No column correspond to numbers used in the associated graphic(s). An alphabetic suffix may be added to a reference number to identify lower level consist items. Numbers shown in the Graphic Ref column refer to the graphic number identifier displayed in the lower left corner of each illustration. The Graphic Ref number may be used in combination with the item Ref No to determine the correct part number. There may be intentional omission of a Ref No in a consist list as information is updated to reflect the latest serviceable part numbers.

11. INDENTED PART NAMES

When a part name is indented in a parts list, it is part of (included in) the group or assembly under which it is indented.

12. ILLUSTRATION REFERENCE LETTERS

When necessary, illustrations contain reference letters (A, B, C etc.) that are intended to track lines and harnesses from one point to another. They are also used to show where to reconnect illustrations that have been separated.

13. ABBREVIATIONS AND SYMBOLS

O.D. – Outside Diameter
I.D. – Inside Diameter
A – Not Part Of This Group
B – Use As Required
C – Change From Previous Type
D – Order By The Meter
E – Order By The Centimeter
F – Not Shown
G – Order By The Inch
I – Refer To Hydraulic Information System
M – Metric Part
R – Remfg Part May Be Available
Y – Separate Illustration
Z – Not Serviced Separately

SIS *New Feature*

14. DESCRIPTION OF TYPE CHANGES

Type - A type is defined as any configuration change that requires an additional Information Element for an Arrangement, Group, or Assembly. If serial number breaks for types are not available, a type # (Type 1, Type 2, etc.) will be displayed in the caption. These "type" changes are identified with a "C" note (change from previous type) in the Parts List. Only the "types" that apply to this Parts Manual will be included. Additional types may exist causing "C" notes to appear on an Information Element when no other types are shown.

15.<END>

This symbol indicates the end of an information element.

NOTE:

Continuing improvement and advancement of product design may cause changes to your machine which may not be included in this publication. Whenever a question arises regarding your caterpillar product or this publication, please consult your caterpillar dealer for the latest available information.

GENERAL INFORMATION

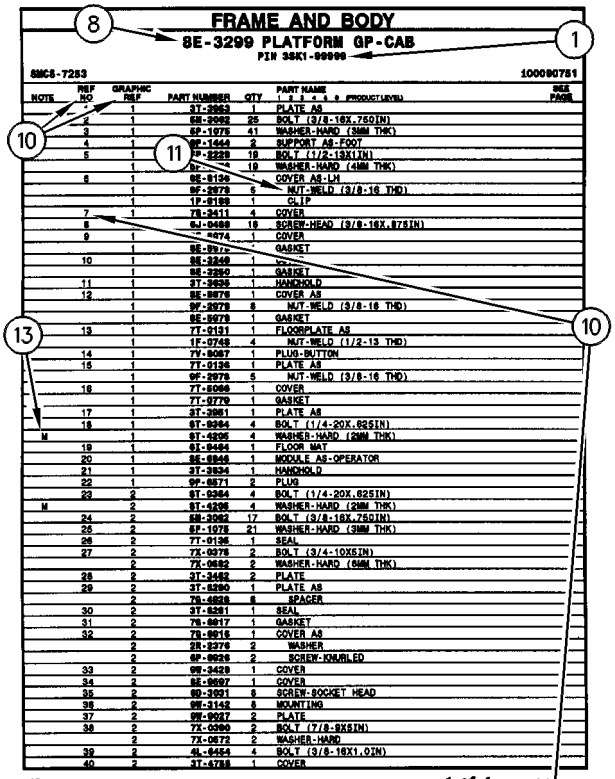

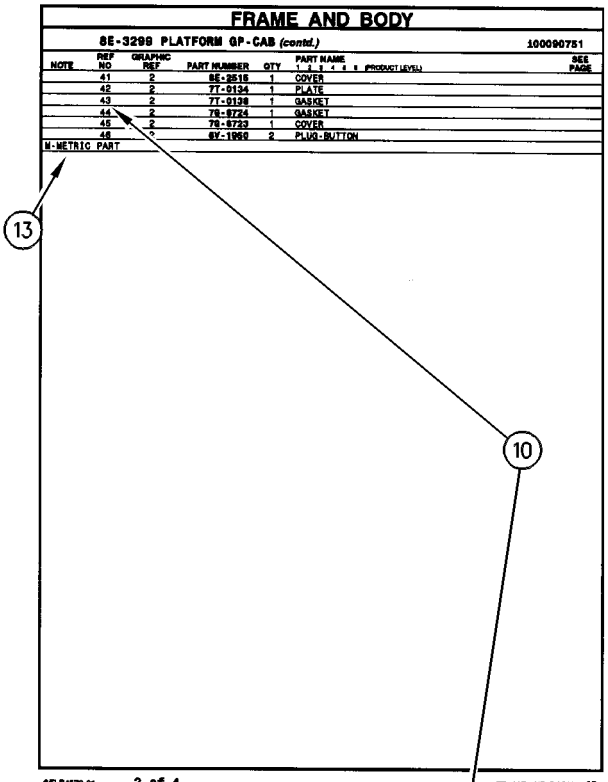

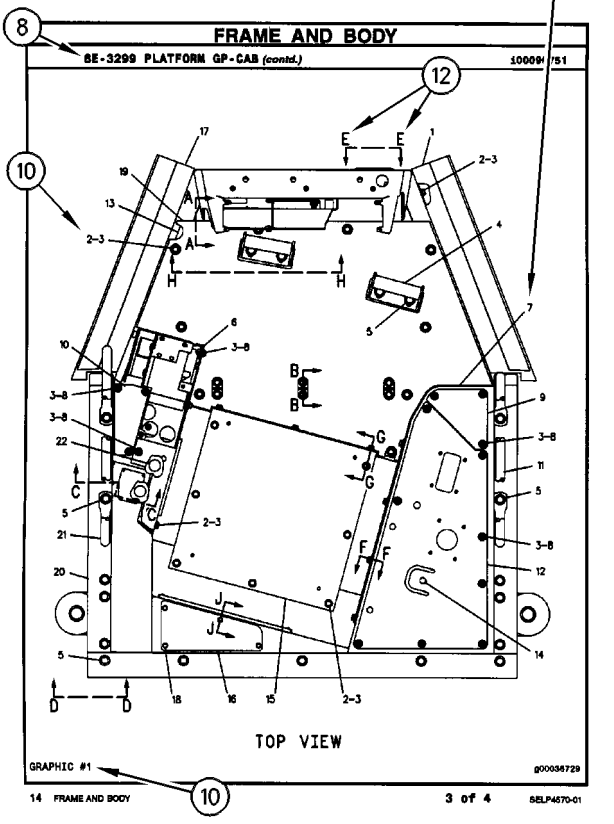

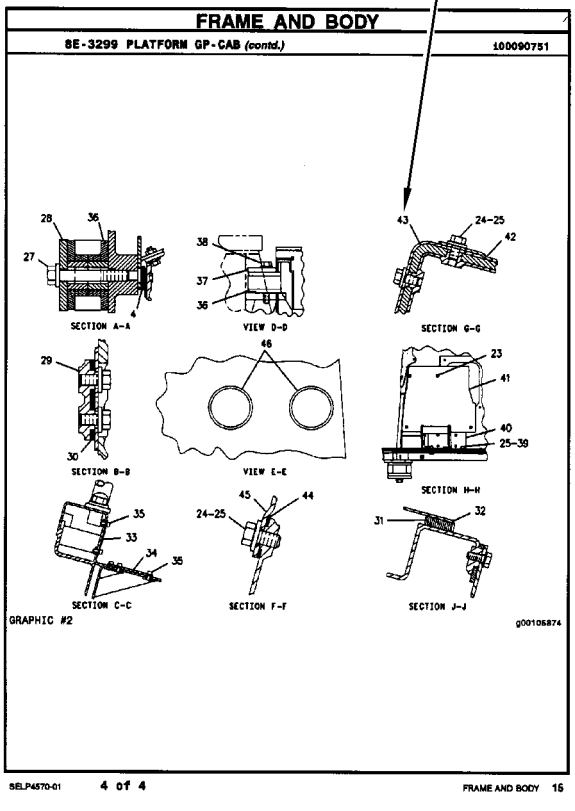

REPAIR ALTERNATIVES

REMANUFACTURED COMPONENTS

As an option when making repairs consider Caterpillar Remanufactured Components. Components that are available through the Caterpillar Remanufactured Program are identified three ways in the parts book:

- with the letter R in the note field of the parts list
- with an R* at the beginning of the first line of the caption
- with an *R at the end of the first line of the caption

Typical components included in the Remanufacturing Program include:

ALTERNATORS
CONNECTING RODS
CRANKSHAFTS - UNDERSIZE
CRANKSHAFTS - UPGRADE TO NEW
CYLINDER HEADS
ELECTRONIC CONTROL MODULES (ECM)
ELECTRONIC SENSORS
FUEL INJECTORS
FUEL NOZZLES
FUEL PUMPS
GOVERNORS
OIL PUMPS
PISTONS
SHORT BLOCKS
STARTERS
TURBOCHARGERS - COMPLETE
TURBOCHARGER CARTRIDGES
WATER PUMPS

Caterpillar Remanufactured engines for many engine arrangements are also available.

SUPPLEMENTAL COOLANT ADDITIVES

CUSTOMER BENEFITS:

Protects against cavitation, foam, erosion, corrosion, and scale buildup in cooling systems.

- Provides measured coolant conditioner.

DESCRIPTION:

Additives deplete from the coolant with normal operation. For this reason, Supplemental Coolant Additives (SCA) must be added to all heavy duty coolants at regular intervals. In addition, when not using a fully formulated, pre-charged antifreeze, like Caterpillar's DEAC, an initial charge of SCA must be added to the cooling system. The amount of SCA added to the system is dependent on the capacity of the system.

The SCA for initial fill is provided as a liquid. SCA's for maintenance intervals are available in liquid form and as a spin-on element. (No Spin-on available for 3600 Family of Engines)

NOTE:

The amount of SCA added at initial fill is not the same as the amount added at maintenance intervals.

The coolant additive elements can be used with any ethylene or propylene glycol type antifreeze which meets ASTM D4985 or ASTM D5345 Specifications.

NOTE:

For use with standard heavy duty coolant only, not for use with Extended Life Coolant.

PARTS NEEDED:

Cooling System Capacity		Liquid SCA at Initial Fill	Liquid SCA at Maintenance*	Spin-on SCA Maintenance Element*
Liters	Gallons			
22-30	(6-8)	3P-2044 (1)	6V-3542 (1)	111-2370 (1)
30-38	(8-10)	3P-2044 (1) 6V-3542 (1)	111-2372 (1)	111-2369 (1)
38-49	(10-13)	3P-2044 (1) 8T-1589 (1)	111-2372 (1)	111-2369 (1)
49-64	(13-17)	3P-2044 (2)	8T-1589 (1)	9N-3368 (1)
64-83	(17-22)	3P-2044 (2) 8T-1589 (1)	111-2372 (1) 6V-3542 (1)	111-2371 (1)
83-114	(22-30)	3P-2044 (3) 8T-1589 (1)	3P-2044 (1)	9N-3718 (1)
114-163	(30-43)	3P-2044 (5)	3P-2044 (1) 6V-3542 (1)	111-2371 (2)
163-242	(43-64)	3P-2044 (8)	3P-2044 (2)	9N-3718 (2)

** Normal maintenance period is 250 hrs. See your Operation and Maintenance Manual for complete coolant maintenance instructions.*

( ) Indicates quantity required.

MAINTENANCE PARTS

DESCRIPTION	PART NUMBER	QTY	WHERE USED	PAGE
AIR INLET AND EXHAUST SYSTEM				
FILTER ELEMENT AS-AIR (SECONDARY)	245-6376	1	AIR CLEANER GP	82
FILTER ELEMENT-AIR (PRIMARY)	245-6375	1	AIR CLEANER GP	82
BASIC ENGINE				
BELT-SERPENTINE	198-3611	1	MOUNTING GP-ENGINE & XMSN	44
CAP AS-ENGINE OIL FILLER	241-5645	1	COVER GP-FRONT HOUSING	17
PLUG AS-DRAIN (MAGNETIC) (ENGINE OIL PAN)	168-2288	1	PAN GP-OIL	46
SEAL-INTEGRAL	135-9819	1	AIR COMPRESSOR GP	9
SEAL-VALVE COVER	272-0388	1	COVER GP-VALVE MECHANISM	18
BRAKING SYSTEM				
FUSE (10-AMPERE)	9W-1442	1	AIR DRYER GP	306
KIT-HEATING ELEMENT (AIR DRYER)	203-2423	1	AIR DRYER GP	305
COOLING SYSTEM				
CAP AS-COOLANT TANK	251-3227	1	TANK GP-COOLANT	79
GASKET (TEMPERATURE REGULATOR HOUSING)	222-5915	1	LINES GP-WATER	71
REGULATOR-WATER TEMPERATURE (97-DEG C)	115-4223	2	LINES GP-WATER	71

MAINTENANCE PARTS

DESCRIPTION	PART NUMBER	QTY	WHERE USED	PAGE
ELECTRICAL AND STARTING SYSTEM				
BATTERY (12-VOLT, 1400-CCA)	153-5710	2	BATTERY & WIRING GP	111
BATTERY (12-VOLT, MAINTENANCE FREE, WET)	3T-5760	2	BATTERY & WIRING GP	114
CAP AS-FILLER (BATTERY)	123-1373	6	BATTERY & WIRING GP	114
CIRCUIT BREAKER AS (105-AMPERE) (ALTERNATOR)	171-2212	1	WIRING GP-AUXILIARY	185
CIRCUIT BREAKER AS (105-AMPERE) (MAIN)	171-2212	1	WIRING GP-AUXILIARY	185
FLASHER AS (24-VOLT)	108-0358	1	LIGHTING GP-ROADING	147
		1	SWITCH GP-LIGHT	178
FUSE (10-AMPERE)	9W-1442	1	CONVERTER GP-ELECTRICAL	121
		1	LIGHTING GP-FLOOD	143
		1	LIGHTING GP-ROADING	147
		1	SWITCH GP-LIGHT	178
		9	WIRING GP-STEERING CONSOLE	212
FUSE (10-AMPERE) (POWER CONVERTER)	9W-1442	1	CONVERTER GP-ELECTRICAL	120
FUSE (15-AMPERE)	9W-1441	1	LIGHTING GP-FLOOD	146
		1	LIGHTING GP-ROADING	147
		1	SWITCH GP-LIGHT	178
		1	WIRING GP-CAB	189
		2	WIRING GP-STEERING CONSOLE	212
KEY (BATTERY DISCONNECT)	8H-5306	1	SWITCH GP-DISCONNECT	177
LAMP (24-VOLT)	3E-8825	1	LIGHTING GP-FLOOD	143
		2	LIGHTING GP-FLOOD	146
		1	SWITCH GP-LIGHT	178
		1	WIRING GP-BLADE CUSHION	188
		1	WIRING GP-CONSOLE	192
		1	WIRING GP-STEERING CONSOLE	212
LAMP (24-VOLT) (DOME)	7N-9943	1	LAMP GP-DOME	131
LAMP (24-VOLT) (HEADLIGHTS, TAIL LIGHTS)	3E-8825	2	LIGHTING GP-ROADING	147
LAMP (24-VOLT, 0.2-AMPERE)	7N-5876	1	WIRING GP-CONSOLE	192
LAMP (24-VOLT, 21-WATT)	9X-4493	1	LAMP GP	130
LAMP (24-VOLT, 3-WATT)	115-1748	1	WIRING GP-GRADE CONTROL	201
LAMP GP-SIGNAL (24-VOLT, TURN) (LH)	199-3368	1	LIGHTING GP-SIGNAL	150
LAMP GP-SIGNAL (24-VOLT, TURN) (RH)	199-3368	1	LIGHTING GP-SIGNAL	150
LAMP-HALOGEN (24-VOLT, 70-WATT)	9X-3463	1	LAMP GP-FLOOD	132
		1	LAMP GP-FLOOD	133
		1	LAMP GP-FLOOD	135
LAMP-HALOGEN (24-VOLT, 70-WATT) (FLOODLIGHT)	9X-3463	1	LAMP GP-FLOOD	134
RELAY (24-VOLT)	111-4871	2	WIRING GP-GRADE CONTROL	202
FRAME AND BODY				
PLUG-MAGNETIC (DRAIN)	8M-3837	1	CASE & FRAME GP	284

MAINTENANCE PARTS

DESCRIPTION	PART NUMBER	QTY	WHERE USED	PAGE
FUEL SYSTEM				
CAP AS-FILLER (FUEL TANK)	7X-7700	1	TANK GP-FUEL	105
FILTER AS-WATER SEP & FUEL (PRIMARY)	326-1644	1	FILTER GP-WATER SEP & FUEL	94
FILTER-FUEL (ADVANCED EFFICIENCY)	1R-0762	1	LINES GP-FUEL	97
PLUG-O-RING	9S-8006	1	LINES GP-FUEL	96
STRAINER-FUEL	9P-7121	1	TANK GP-FUEL	105
HYDRAULIC SYSTEM				
CAP-FILLER (HYDRAULIC TANK)	7H-1447	1	TANK & FILTER GP-HYDRAULIC	397
FILTER ELEMENT AS-OIL (ADVANCED EFFICIENCY)	1R-0774	1	TANK & FILTER GP-HYDRAULIC	397
STRAINER (HYDRAULIC)	9J-3047	1	TANK & FILTER GP-HYDRAULIC	397
LUBRICATION SYSTEM				
BREATHER AS (CRANKCASE)	164-0210	1	BREATHER GP	57
FILTER AS-ENGINE OIL (ADVANCED EFFICIENCY)	1R-1807	1	FILTER GP-ENGINE OIL	58
OPERATOR STATION				
BELT-SERPENTINE	185-5872	1	COMPRESSOR GP-REFRIGERANT	487
BLADE AS-WIPER (300-MM) (FRONT, LOWER)	123-4355	2	WIPER GP-WINDOW	587
BLADE AS-WIPER (450-MM)	6V-5853	1	WIPER GP-WINDOW	590
BLADE AS-WIPER (450-MM) (FRONT)	6V-5853	1	WIPER GP-WINDOW	587
		1	WIPER GP-WINDOW	589
FILTER ELEMENT AS-CAB AIR	231-4486	1	FILTER GP-CAB AIR	511
	231-4487	2	FILTER GP-CAB AIR	511
	232-1732	1	FILTER GP-CAB AIR	511
	7T-7358	1	FILTER GP-CAB AIR	511
FUSE (10-AMPERE)	9W-1442	1	FAN GP-CIRCULATING	509
		1	FAN GP-CIRCULATING	510
		1	WIPER GP-WINDOW	590
FUSE (15-AMPERE) (HEATER)	9W-1441	1	HEATER & MTG GP-CAB	512
INDICATOR (ENGINE RPM)	336-6609	1	MODULE GP-SPEEDOMETER & TACH	543
INDICATOR (SPEED)	336-6608	1	MODULE GP-SPEEDOMETER & TACH	543
KEY	113-5805	1	HOUSING GP-SEAT SUSPENSION	519
LAMP (12-VOLT)	8M-6176	2	MODULE GP-QUAD GAUGE	542
LAMP (24-VOLT)	107-1983	4	PANEL GP-INSTRUMENT	550
		4	PANEL GP-INSTRUMENT	552
	3E-8825	1	FAN GP-CIRCULATING	509
		1	FAN GP-CIRCULATING	510
	8D-1429	1	AIR CONDITIONER & HEATER GP	476
		1	HEATER GP-CAB	514
LAMP (24-VOLT, 3-WATT)	115-1748	11	PANEL GP-INSTRUMENT	550
		10	PANEL GP-INSTRUMENT	552
RECEIVER AS	257-3227	1	LINES GP-AIR CONDITIONER	534
SEAT BELT GP (ADJUSTABLE, 3-IN)	8Y-4030	1	SEAT GP	565
SEAT BELT GP (RETRACTABLE)	222-0345	1	SEAT GP	568

MAINTENANCE PARTS

DESCRIPTION	PART NUMBER	QTY	WHERE USED	PAGE
POWER TRAIN				
BREATHER (POWER TRAIN OIL FILLER)	9G-5127	1	FILLER GP-POWER TRAIN OIL	243
BREATHER (TANDEM)	4H-6112	1	TANDEM & COVER GP	255
FILTER ELEMENT AS-OIL (ADVANCED EFFICIENCY) (TRANSMISSION)	328-3655	1	FILTER GP-OIL	244
		1	LINES GP-TRANSMISSION OIL	245
FILTER-MAGNETIC (TRANSMISSION)	8S-9129	1	CASE & PARTS GP-PLANETARY	217
		1	SCREEN GP-MAGNETIC	252
LAMP (24-VOLT)	3E-8825	1	AUTOSHIFT AR	215
		2	CONTROL GP-DIFFERENTIAL LOCK	232
SCREEN-SUCTION (TRANSMISSION)	8S-9130	1	CASE & PARTS GP-PLANETARY	217
		1	SCREEN GP-MAGNETIC	252

INDEX

Name	Page

A

ACCESSORY GP-CAB–HIGH PROFILE 471
ACCUMULATOR & MTG GP-HYDRAULIC–BLADE CUSHION 325
ACCUMULATOR AR-BLADE CUSHION 326
ACCUMULATOR GP-HYDRAULIC–CHARGED 327
ACCUMULATOR-REFRIGERANT 534
ADAPTER GP-OIL LINE–ENGINE 56
ADJUSTER GP-SEAT 472, 474, 475
AFTERCOOLER GP-AIR 81
AIR CLEANER GP 82, 83
AIR COMPRESSOR GP 9, 11
AIR CONDITIONER & HEATER GP 476
AIR CONDITIONER AR 480
AIR CONDITIONER GP 481
AIR DRYER GP 305, 306
ALARM GP 106
ALARM GP (BACKUP) 141
ALTERNATOR GP-CHARGING 107, 109
APPLICATION GP-POWER TRAIN 110
ARMREST GP–LH 483
ARMREST GP–RH 482
AUTOSHIFT AR 215
AXLE GP-FRONT 277

B

BASE GP-OIL FILTER–TRANSMISSION 216
BATTERY & WIRING GP 113
BATTERY & WIRING GP–WET 111
BATTERY (12-VOLT, 1400-CCA) 111
BATTERY (12-VOLT, MAINTENANCE FREE, WET) 114
BEARING GP-MAIN 20
BELT-SERPENTINE 44, 487
BIT GP-END 593
BLADE & TIP AR-POWER 594
BLADE AS-WIPER (300-MM) (FRONT, LOWER) 587
BLADE AS-WIPER (450-MM) 590
BLADE AS-WIPER (450-MM) (FRONT) 587, 589
BLADE GP 595, 596
BLADE GP-BULLDOZER–FRONT 597
BOSS GP-FRAME 280
BOX GP-BATTERY 282
BOX GP-TOOL 616
BRACKET GP-SCARIFIER 599
BRAKE GP-PARKING 307
BRAKE GP-SERVICE 309
BREATHER (POWER TRAIN OIL FILLER) 243
BREATHER (TANDEM) 255
BREATHER AS (CRANKCASE) 57
BREATHER GP 57
BUMPER GP-REAR 283

C

CAB AR–NON ROPS/FOPS 484
CAB GP–HIGH PROFILE 485
CAMSHAFT GP 13
CAP AS-COOLANT TANK 79
CAP AS-ENGINE OIL FILLER 17
CAP AS-FILLER (BATTERY) 114
CAP AS-FILLER (FUEL TANK) 105
CAP-FILLER (HYDRAULIC TANK) 397
CARRIER GP-SEAL 14
CASE & FRAME GP 284
CASE & PARTS GP-PLANETARY 217
CHAIN GP 222
CHAIN GP-DRIVE 222
CHAIN GP-DRIVE (TANDEM) 1
CIRCLE GP 464, 466
CIRCUIT BREAKER AS (105-AMPERE) (ALTERNATOR) 185
CIRCUIT BREAKER AS (105-AMPERE) (MAIN) 185
CLUTCH GP-TRANSMISSION–1ST & 3RD 223
CLUTCH GP-TRANSMISSION–FORWARD 228
CLUTCH GP-TRANSMISSION–HI & LO 226
CLUTCH GP-TRANSMISSION–REVERSE, SECOND 230
COMPRESSOR GP-REFRIGERANT 486, 487
CONDENSER & MTG GP-REFRIGERANT 488
CONSOLE GP-OPERATOR 489, 491
CONTROL & MTG GP-ENGINE ELEK 116
CONTROL AR-HYDRAULIC–RIPPER 328
CONTROL GP-CLUTCH 494
CONTROL GP-DIFFERENTIAL LOCK 232
CONTROL GP-GOVERNOR 92
CONTROL GP-PARKING BRAKE 311
CONTROL GP-POWER TRAIN 117
CONTROL GP-SERVICE BRAKE 313
CONTROL GP-STEERING 496
CONTROL GP-TRANSMISSION 489
CONTROL GP-TRANSMISSION HYD 234

INDEX

Name	Page
CONTROL GP-UNPROGRAMMED (POWER TRAIN)	110, 117
CONTROL GP-UNPROGRAMMED–HIGH PROFILE	118
CONVERTER AR-ELECTRICAL–HIGH PROFILE	119
CONVERTER GP-ELECTRICAL	120
CONVERTER GP-ELECTRICAL (24-VOLT TO 12-VOLT)	120, 121
CONVERTER GP-ELECTRICAL–RADIO	121
COOLER GP-ENGINE OIL	67
COOLER GP-TRANSMISSION OIL	235
COOLING AR	68
CORE AS-CONDENSER (REFRIGERANT)	488
CORE AS-ENGINE OIL COOLER	67
CORE AS-HYDRAULIC OIL COOLER	235
CORE AS-RADIATOR	78
COUPLING GP-TORSIONAL	236
COVER GP-ACCESS	285
COVER GP-AIR INLET	85
COVER GP-CYLINDER BLOCK	15
COVER GP-FRONT HOUSING	16, 17
COVER GP-VALVE MECHANISM	18
CRANKSHAFT GP	20
CYLINDER & MTG GP-ARTICULATION	329
CYLINDER & MTG GP-BLADE LIFT	330
CYLINDER & MTG GP-BLADE TIP	331
CYLINDER & MTG GP-CENTERSHIFT	332
CYLINDER & MTG GP-SCARIFIER	333
CYLINDER & MTG GP-SIDESHIFT	334
CYLINDER & MTG GP-STEERING	335
CYLINDER & MTG GP-WHEEL LEAN	336
CYLINDER BLOCK GP	22, 23, 24
CYLINDER GP-ARTICULATION–LH	338
CYLINDER GP-ARTICULATION–RH	337
CYLINDER GP-CENTERSHIFT	339
CYLINDER GP-HYDRAULIC	340, 600
CYLINDER GP-LIFT–BLADE	341
CYLINDER GP-RIPPER	342
CYLINDER GP-SCARIFIER	343
CYLINDER GP-SIDESHIFT	344
CYLINDER GP-STEERING–LH	345
CYLINDER GP-STEERING–RH	347
CYLINDER GP-WHEEL LEAN	349
CYLINDER HEAD AS	26
CYLINDER HEAD GP	27, 28, 29

D

Name	Page
DAMPER & PULLEY GP	30
DETENT GP-CONTROL VALVE–PLOW, BULLDOZER LIFT	350
DIFFERENTIAL & BEVEL GEAR GP	237
DIFFERENTIAL GP	239
DOOR GP (AIR VENTED)	527, 529, 557
DOOR GP-CAB–HIGH PROFILE	502
DOOR GP-CAB–HIGH PROFILE–LH	500
DOOR GP-CAB–HIGH PROFILE–RH	497
DRAWBAR GP	468
DRIVE GP-ACCESSORY	31
DRIVE GP-CIRCLE	351
DRIVE GP-FAN	32, 33
DRYER & LINES GP-AIR	317, 318
DUCT & CONTROL GP–A/C, HEATER DISTRIBUTOR	504
DUCT GP-CAB AIR–AIR CONDITIONER, HEATER	505

E

Name	Page
EDGE GP-CUTTING	602
ELBOW GP-AIR INLET	86
ELECTRONICS GP-COMMUNICATION–PRODUCT LINK 300	122
ELECTRONICS GP-IMPLEMENT	122
ELECTRONICS GP-POWER TRAIN	122
ENCLOSURE GP-ENGINE	286
ENGINE AR-COMPLETE	7
ENGINE AR-CORE	8
EXTENSION GP-BACKREST	568

F

Name	Page
FAN GP-BLOWER–RADIATOR	69
FAN GP-CIRCULATING–DEFROSTER	506
FAN GP-CIRCULATING–DEFROSTER, REAR	510
FAN GP-CIRCULATING–FRONT DEFROSTER	507, 509
FASTENER GP-CYLINDER HEAD	29, 34
FASTENER GP-ENGINE	35
FASTENER GP-FRONT HOUSING	36
FILLER GP-POWER TRAIN OIL	243
FILM (SUN VISOR)	549
FILM GP	617
FILM-CERTIFICATION (OPS, READ OMM)	555, 557

INDEX

Name	Page
FILM-CONTROL (AIR CONDITIONER, HEATER)	476
FILM-CONTROL (FAN SPEED, TEMPERATURE)	514
FILM-COVER	489
FILM-FACE (HEADLIGHTS HIGH, LOW BEAM)	147, 178
FILM-FACE (TURN SIGNAL, HAZARD)	147, 178
FILM-FUSE (PANEL ACTION LAMPS)	189
FILM-IDENTIFICATION (DRAIN, ENGINE COOLANT)	618
FILM-IDENTIFICATION (FUSE BOX)	212
FILM-IDENTIFICATION (HYDRAULIC SYSTEM MALFUNCTION) (INSTRUMENT CLUSTER)	550
FILM-IDENTIFICATION (REFRIGERANT CONDENSER) (AIR CONDITIONER)	476
FILM-IDENTIFICATION (REFRIGERANT CONDENSER) (HEATER)	514
FILM-INFORMATION (ENGINE, HIGH IDLE, HOLD)	489
FILM-INFORMATION (ENGINE, LOW IDLE, HOLD)	489
FILM-INSTRUCTION (BELT ROUTING)	480, 487
FILM-INSTRUCTION (ENGINE OIL DRAIN)	618
FILM-INSTRUCTION (ENGINE SHUTDOWN)	207
FILM-INSTRUCTION (SEAT ADJUSTMENT)	578
FILM-PANEL (LH) (INSTRUMENT CLUSTER)	550
FILM-PANEL (RH) (INSTRUMENT CLUSTER)	550
FILM-PANEL (SPEED CONTROL)	489
FILM-PANEL (TRANSMISSION, PARKING BRAKE)	489
FILM-REFLECTOR (ROUND RED REFLECTIVE)	608
FILM-WARNING (ACCUM, HIGH PRESS, READ OMM)	327
FILM-WARNING (CRUSH HAZARD, STAY BACK, INTL)	285
FILM-WARNING (NO STEP)	618
FILM-WARNING (NO WELD, NO DRILL, READ OMM)	555, 557
FILTER AS-ENGINE OIL (ADVANCED EFFICIENCY)	58
FILTER AS-WATER SEP & FUEL (PRIMARY)	94
FILTER ELEMENT AS-AIR (SECONDARY)	82
FILTER ELEMENT AS-CAB AIR	511
FILTER ELEMENT AS-OIL (ADVANCED EFFICIENCY)	397
FILTER ELEMENT AS-OIL (ADVANCED EFFICIENCY) (TRANSMISSION)	244, 245
FILTER ELEMENT-AIR (PRIMARY)	82
FILTER GP-CAB AIR–AIR CONDITIONER	511
FILTER GP-ENGINE OIL	58
FILTER GP-OIL	244
FILTER GP-OIL (WITH HOUSING) (BYPASS)	245
FILTER GP-WATER SEP & FUEL	94
FILTER-FUEL (ADVANCED EFFICIENCY)	97
FILTER-MAGNETIC (TRANSMISSION)	217, 252
FINAL DRIVE GP	241
FLASHER AS (24-VOLT)	147, 178
FLOOR MAT	294, 296
FLOOR MAT (CAB)	525
FLYWHEEL GP	37
FRAME GP-FRONT	290
FUMES DISPOSAL GP	59
FUSE (10-AMPERE)	121, 143, 147, 178, 212, 306, 509, 510, 590
FUSE (10-AMPERE) (POWER CONVERTER)	120
FUSE (15-AMPERE)	146, 147, 178, 189, 212
FUSE (15-AMPERE) (HEATER)	512

G

GASKET (TEMPERATURE REGULATOR HOUSING)	71
GAUGE AS-OIL LEVEL (DIPSTICK) (POWER TRAIN OIL)	243
GAUGE GP-AIR PRESSURE	552
GAUGE GP-AIR PRESSURE (BRAKE)	550
GAUGE-SIGHT (HYDRAULIC)	397
GEAR GP-FRONT	38
GENERAL AR	1
GRADE CONTROL AR	123
GROUND GP-ELECTRICAL	125
GUARD GP-BOTTOM	292
GUARD GP-DRIVE SHAFT	293
GUARD GP-FAN	70

INDEX

Name	Page
GUARD GP-PLATFORM	294, 296

H

Name	Page
HARNESS AS-CAB	471
HARNESS AS-CAB (FRONT)	189
HARNESS AS-CAB (REAR)	189
HARNESS AS-CAB (SWITCH PANEL)	189
HARNESS AS-CHASSIS	202
HARNESS AS-CONSOLE	192, 212
HARNESS AS-CONTROL (PRODUCT LINK)	127
HARNESS AS-ENGINE (ELECTRONIC CONTROL MODULE)	194
HARNESS AS-ENGINE (FUEL INJECTION)	194
HARNESS AS-FRAME	202
HARNESS AS-FRONT LIGHTING	143
HARNESS AS-FUEL TANK	185
HARNESS AS-HEATER & AIR COND	184, 476, 514
HARNESS AS-LIGHTING	143, 147
HARNESS AS-LIGHTING (BAR)	147
HARNESS AS-PANEL	550, 552
HARNESS AS-PLATFORM	197
HARNESS AS-RADIO (PRODUCT LINK)	127
HARNESS AS-REAR CHASSIS (RELAY)	207
HARNESS AS-REAR CHASSIS (TAIL)	207
HARNESS AS-REAR LIGHTING	145, 205
HARNESS AS-SENSOR (ANGLE)	202
HARNESS AS-SENSOR (ENGINE)	207
HARNESS AS-SENSOR (ROTATION)	202
HARNESS AS-SENSOR (SPEED)	217
HARNESS AS-SENSOR (TRANSMISSION SPEED)	207
HARNESS AS-SOLENOID	146, 185, 188
HARNESS AS-STARTING AID	196
HARNESS AS-TRANSMISSION	207, 214
HARNESS AS-WIRING	306, 543
HARNESS AS-WIRING (MAST)	202
HEATER & MTG GP-CAB	512
HEATER AR-CAB	513
HEATER GP-CAB	514
HEATER GP-JACKET WATER	126
HITCH GP-ARTICULATING	298
HORN GP-ELECTRIC	518
HOUSING GP-FLYWHEEL	39
HOUSING GP-FRONT	40
HOUSING GP-SEAT SUSPENSION	519

I

Name	Page
INDICATOR (ENGINE RPM)	543
INDICATOR (SPEED)	543
INDICATOR AS-ARTICULATION	542
INDICATOR AS-COOLANT TEMP	542
INDICATOR AS-FUEL LEVEL	542
INDICATOR GP-AIR FILTER CHANGE	83
INDICATOR GP-LEVEL	522
INDICATOR-LEVEL	522
INJECTOR GP-FUEL	95
INSTALLATION AR-COMMUNICATION–PRODUCT LINK 321SR	127
INSTALLATION AR-RADIO	523
INSTALLATION GP-COMMUNICATION–PRODUCT LINK	128
INSTALLATION GP-RADIO	524
INSULATION GP-WEATHER	525

K

Name	Page
KEY	519
KEY (BATTERY DISCONNECT)	177
KIT-AIR CONTROL VALVE	580
KIT-HEATING ELEMENT (AIR DRYER)	305
KIT-VALVE (PURGE) (AIR DRYER)	305

L

Name	Page
LAMP (12-VOLT)	542
LAMP (24-VOLT)	143, 146, 178, 188, 192, 212, 215, 232, 476, 509, 510, 514, 550, 552
LAMP (24-VOLT) (DOME)	131
LAMP (24-VOLT) (HEADLIGHTS, TAIL LIGHTS)	147
LAMP (24-VOLT, 0.2-AMPERE)	192
LAMP (24-VOLT, 21-WATT)	130
LAMP (24-VOLT, 3-WATT)	201, 550, 552

INDEX

Name	Page
LAMP GP	130
LAMP GP-DOME	131
LAMP GP-FLOOD	132, 133, 134, 135
LAMP GP-SIGNAL (24-VOLT, TURN) (LH)	150
LAMP GP-SIGNAL (24-VOLT, TURN) (RH)	150
LAMP GP-SIGNAL–PARK, TURN	137
LAMP GP-SIGNAL–STOP, TAIL	136, 139
LAMP GP-SIGNAL–TURN	138
LAMP-HALOGEN (24-VOLT, 70-WATT)	132, 133, 135
LAMP-HALOGEN (24-VOLT, 70-WATT) (FLOODLIGHT)	134
LIFT GP-BLADE	603
LIFTER GP-VALVE	41
LIFTING GP-ENGINE	42
LIGHTING AR-ROADING	140
LIGHTING GP-BACKUP	141
LIGHTING GP-FLOOD–FRONT	146
LIGHTING GP-FLOOD–RIPPER	143, 145
LIGHTING GP-ROADING	147
LIGHTING GP-ROADING–CAB FRONT	149
LIGHTING GP-SIGNAL–TURN	150
LINER GP-CAB–ENCLOSED, HIGH PROFILE	527, 529
LINES GP-ACCUMULATOR	354
LINES GP-AIR	87
LINES GP-AIR CONDITIONER	534
LINES GP-ENGINE OIL	60
LINES GP-ENGINE OIL DRAIN	61
LINES GP-FUEL	96, 99
LINES GP-HEATER	536
LINES GP-HYDRAULIC–BULLDOZER LIFT, PLOW, LH	365
LINES GP-HYDRAULIC–CENTERSHIFT LOCK	367
LINES GP-HYDRAULIC–FRONT	366
LINES GP-HYDRAULIC–LH	358
LINES GP-HYDRAULIC–RH	362
LINES GP-HYDRAULIC–SCARIFIER	356
LINES GP-INJECTOR HYD PUMP	100
LINES GP-LUBRICATION	300
LINES GP-PUMP	369, 373
LINES GP-RIPPER	374, 375
LINES GP-STEERING	376
LINES GP-TRANSMISSION OIL	245
LINES GP-TURBOCHARGER OIL	62
LINES GP-WATER	71, 73
LINK GP-STEERING	301
LITERATURE GP	2
LOCK GP-CENTERSHIFT	379
LOUVER GP-CAB	538

M

Name	Page
MANIFOLD GP-CONTROL	380
MANIFOLD GP-ENGINE OIL	64
MANIFOLD GP-EXHAUST	88
MANIFOLD GP-VALVE–LH	381
MANIFOLD GP-VALVE–RH	383
METER GP-SERVICE	212
MIRROR GP-REAR VIEW–DUAL INSIDE	539
MIRROR GP-REAR VIEW–DUAL INTERIOR	541
MIRROR GP-REAR VIEW–EXTERIOR, HEATED	540
MODULE GP-INTERFACE	543
MODULE GP-QUAD GAUGE	542
MODULE GP-SPEEDOMETER & TACH	543
MOTOR GP-ELECTRIC–CIRCULATING FAN	151
MOTOR GP-GEROTOR	384
MOTOR GP-WINDOW WIPER (24-VOLT) (FRONT UPPER)	587
MOTOR GP-WINDOW WIPER (24-VOLT) (REAR)	590
MOTOR GP-WINDOW WIPER (24-VOLT, 2-SPEED)	587, 589
MOTOR GP-WINDOW WIPER (24-VOLT, 2-SPEED) (FRONT, LOWER)	587
MOTOR GP-WINDOW WIPER (24-VOLT, 2-SPEED) (REAR)	590
MOTOR GP-WINDOW WIPER (FRONT)	589
MOUNTING GP-CAB–NON-ROPS, ENCLOSED	545
MOUNTING GP-ENGINE	43
MOUNTING GP-ENGINE & XMSN	44
MOUNTING GP-GRADE CONTROL	152, 153
MOUNTING GP-RIPPER	606
MOUNTING GP-ROPS–ENCLOSED	546
MOUNTING GP-WHEEL	2, 248
MUFFLER GP	89

O

Name	Page
OPTION AR-CAB	3
OPTION AR-CAB–HIGH PROFILE	3, 4
OPTION AR-CAB–NON ROPS/FOPS	2
OPTION AR-CONFIGURATION	4

INDEX

Name	Page
OPTION AR-ENGINE	5
OPTION AR-ENGINE–STARTING	4
OPTION AR-RIPPER	5
OPTION AR-WORK TOOL	5
	6
ORIFICE AS-AIR CONDITIONER	534

P

PADLOCK GP	105
	282
	399
	565
	567
PADLOCK GP (TOOL BOX)	616
PAN GP-BACKREST	548
PAN GP-OIL	46
	47
PANEL GP-CAB–HIGH PROFILE	549
PANEL GP-INSTRUMENT (ENCLOSED)	484
	555
PANEL GP-INSTRUMENT–ENCLOSED	550
PANEL GP-INSTRUMENT–OPEN	552
PISTON & ROD GP	48
PLATE & FILM GP	618
PLATE GP-CERTIFICATION	556
PLATE GP-PUSH	470
PLATE-INSTRUCTION (AIR CONDITIONER)	476
PLATE-SERIAL NUMBER (TRANSMISSION)	218
PLATE-WARNING (ROPS, FOPS, OPS, READ OMM)	556
PLUG AS-DRAIN (MAGNETIC) (ENGINE OIL PAN)	46
PLUG GP-CONNECTOR– ENGINE HARNESS, PROTECTIVE COVER	154
PLUG GP-CYLINDER BLOCK	49
	50
PLUG GP-ENGINE	51
PLUG-MAGNETIC (DRAIN)	284
PLUG-O-RING	96
PUMP & MTG GP-STEERING	386
PUMP & MTG GP-UNIT INJ HYD	101
PUMP GP-ENGINE OIL	65
	66
PUMP GP-FUEL INJECTION	102
PUMP GP-FUEL PRM & WATER SEP	103
PUMP GP-GEAR	249
	251
PUMP GP-METERING (HMU)	496
PUMP GP-PISTON	387
	389
PUMP GP-UNIT INJECTOR HYD	101
PUMP GP-WATER	75
	76

R

RADIATOR GP	78
RADIO GP-COMMUNICATION– PRODUCT LINK 121SR	155
RECEIVER AS	534
RECLINER GP-SEAT	553
REGULATOR AS-VOLTAGE (24-VOLT)	107
REGULATOR GP-FUEL PRESSURE	104
REGULATOR-WATER TEMPERATURE (97-DEG C)	71
RELAY (24-VOLT)	202
RELAY AS (24-VOLT)	185
	192
	212
RELAY AS (24-VOLT) (BACKUP LIGHT)	141
RELAY AS (24-VOLT) (ETHER STARTING AID)	196
RELAY AS (24-VOLT) (FUEL PRIMING)	207
RIPPER AR	607
RIPPER GP	608
ROCKER ARM GP (EXHAUST)	54
ROCKER ARM GP (INTAKE)	54
ROPS AR–ENCLOSED, HIGH PROFILE	555
ROPS AR–HIGH PROFILE, OPEN	554
ROPS GP–ENCLOSED	559
ROPS GP–HIGH PROFILE	556
ROPS GP–HIGH PROFILE, OPEN	556
	557
ROTATING GP-PUMP	391
	392

S

SCARIFIER AR–VEE TYPE	610
SCARIFIER GP–VEE TYPE	611
SCREEN GP-MAGNETIC–TRANSMISSION	252
SCREEN GP-SUN	560
SCREEN GP-SUN–REAR	560
SCREEN-SUCTION (TRANSMISSION)	217
	252
SEAL GP-CRANKSHAFT	52
SEAL GP-DUO-CONE	351
SEAL-CRANKSHAFT	52
SEAL-INTEGRAL	9
SEAL-VALVE COVER	18
SEAT BELT GP (ADJUSTABLE, 3-IN)	565
SEAT BELT GP (RETRACTABLE)	568
SEAT BELT GP–RETRACTABLE	561
	562
SEAT GP	566
SEAT GP–CLOTH	568
	569
SEAT GP–VINYL	563
	565

INDEX

Name	Page
	567
SEAT GP-STATIC	573
SEAT GP-STATIC–VINYL	571
SEAT GP-SUSPENSION–CLOTH	574
	575
SEGMENT-CIRCLE	464
SENDER AS-FUEL LEVEL	185
SENDER AS-POSITION (ARTICULATION)	207
SENDER-TEMPERATURE (ENGINE COOLANT)	207
SENSOR AS-PRESSURE	162
SENSOR AS-TEMPERATURE	170
SENSOR GP-ENGINE	156
SENSOR GP-POSITION	158
SENSOR GP-POSITION (ROTARY) (CLUTCH CONTROL)	494
SENSOR GP-POSITION–ROTARY	159
SENSOR GP-PRESSURE	160
	161
	162
	163
	164
	165
SENSOR GP-PRESSURE (ATMOSPHERIC AIR)	185
SENSOR GP-PRESSURE (ATMOSPHERIC)	156
SENSOR GP-PRESSURE (BOOST)	156
SENSOR GP-PRESSURE (ENGINE OIL)	156
SENSOR GP-PRESSURE (FUEL)	96
SENSOR GP-PRESSURE (RAIL)	156
SENSOR GP-SPEED	166
	167
	168
SENSOR GP-SPEED (ENGINE TIMING)	156
SENSOR GP-SPEED (MAGNETIC, HIGH OUTPUT)	207
SENSOR GP-SPEED (TRANSMISSION OUTPUT)	218
SENSOR GP-TEMPERATURE	169
	170
	171
	172
SENSOR GP-TEMPERATURE (FUEL)	96
SENSOR GP-TEMPERATURE (TRANSMISSION OIL)	218
SERVICE GP-COMMUNICATION (PRODUCT LINK 300)	122
SERVICE GP-POWER TRAIN	122
SHAFT GP-DRIVE–TRANSMISSION	253
SHAFT GP-INPUT	254
SHAFT GP-PUMP DRIVE	393
SLIP JOINT GP	393
SOFTWARE GP-COMMUNICATION (PRODUCT LINK 121SR)	155
SOFTWARE GP-COMMUNICATION (PRODUCT LINK 300)	122
SOFTWARE GP-POWER TRAIN	122
STARTING AID GP-ETHER	173
STARTING MOTOR GP-ELECTRIC	175
STEP GP	302
STRAINER (HYDRAULIC)	397
STRAINER-FUEL	105
SUPPORT GP-RADIATOR	303
SUPPORT GP-SEAT	576
SUSPENSION GP-SEAT	578
SWASHPLATE GP	387
SWASHPLATE GP–VARIABLE	394
SWITCH AS	188
	232
SWITCH AS (24-VOLT) (AUTOSHIFT ON, OFF)	215
SWITCH AS (24-VOLT) (AUXILIARY BACKUP LIGHTS)	143
SWITCH AS (24-VOLT) (TAIL LIGHTS)	212
SWITCH AS (CENTERSHIFT PIN)	192
SWITCH AS (CIRCULATING FAN)	509
	510
SWITCH AS (THROTTLE HOLD MODE)	192
SWITCH AS-BALL (CENTERSHIFT INDICATOR)	197
SWITCH AS-LIMIT	212
SWITCH AS-PRESSURE (AIR BRAKE)	197
SWITCH AS-PRESSURE (PARKING BRAKE)	197
SWITCH AS-PRESSURE (REFRIGERANT, HIGH, LOW)	534
SWITCH AS-PRESSURE (REFRIGERANT, LOW SIDE)	534
SWITCH AS-PRESSURE (STOP LIGHT)	197
SWITCH AS-ROCKER (24-VOLT)	146
	178
	212
	509
	510
SWITCH AS-ROCKER (24-VOLT) (AUXILIARY BACKUP LIGHTS)	143
SWITCH AS-ROCKER (24-VOLT) (BLADE CUSHION)	188
SWITCH AS-ROCKER (24-VOLT) (THROTTLE HOLD MODE)	192
SWITCH AS-ROCKER (AUTOSHIFT)	215
SWITCH AS-ROCKER (CENTERSHIFT PIN)	192
SWITCH AS-ROCKER (DIFFERENTIAL LOCK)	232
SWITCH AS-ROCKER (THROTTLE LOCK SET, RESET)	192
SWITCH AS-ROTARY	147
SWITCH AS-ROTARY (FAN SPEED)	476
	514
SWITCH AS-ROTARY (HIGH, LOW BEAM)	178

INDEX

Name	Page
SWITCH AS-ROTARY (WIPER, WASHER) (FRONT)	189
SWITCH AS-START (KEY)	192
SWITCH AS-TOGGLE (ENGINE SHUTDOWN)	207
SWITCH GP-BYPASS– POWER TRAIN OIL FILTER	176
SWITCH GP-DISCONNECT–BATTERY	177
SWITCH GP-LIGHT–TURN	178
SWITCH GP-MAGNETIC	179
SWITCH GP-PRESSURE–DIFFERENTIAL	180
SWITCH GP-ROTARY (TURN SIGNAL, HAZARD)	147 178
SWITCH GP-WIPER (24-VOLT, INTERMITTENT)	182
SWITCH GP-WIPER (24-VOLT, INTERMITTENT) (FRONT WIPER)	592
SWITCH GP-WIPER (24-VOLT, INTERMITTENT) (REAR)	590
SWITCH GP-WIPER–INTERMITTENT	181 182
SWITCH-ROCKER (AIR CONDITIONER, HEATER)	178
SWITCH-ROCKER (HEADLIGHTS, TAIL LIGHTS)	147
SWITCH-ROCKER (WORK LIGHTS)	146
SWIVEL GP–CIRCLE DRIVE	395

T

TANDEM & COVER GP	255
TANK & FILTER GP-HYDRAULIC	397
TANK & MTG GP-HYDRAULIC	399
TANK GP-AIR	320
TANK GP-COOLANT	79
TANK GP-FUEL	105
TIE ROD GP (LH THREAD, RH)	301
TIE ROD GP (RH THREAD, LH)	301
TIE ROD GP (STEERING)	335
TIMER AS-ON DELAY (24-VOLT) (AIR CONDITIONER)	184
TOOTH GP-RIPPER	614
TOOTH GP-SCARIFIER	615
TRANSMISSION AR	256
TURBOCHARGER GP	90 91

U

UNIVERSAL JOINT GP	257

V

VALVE & LINKAGE GP	400
VALVE & LINKAGE GP– 4-BANK, RH; 4-BANK, LH	406
VALVE & LINKAGE GP– 4-BANK, RH; 5-BANK, LH	408 410
VALVE & LINKAGE GP– 6-BANK, RH; 5-BANK, LH	403
VALVE & MTG GP-DIFF LOCK	258
VALVE AS	327
VALVE GP-AIR CONTROL	580
VALVE GP-BANK 4–LH	414
VALVE GP-BANK 4–RH	413 415
VALVE GP-BANK 5–LH	416 417
VALVE GP-BANK 6–RH	419 420
VALVE GP-CHECK	423 425 427 429 431 433 437 439 441
VALVE GP-CHECK E	381 383
VALVE GP-COMBINATION	421
VALVE GP-CONTROL	381 383
VALVE GP-CONTROL (AIR)	580
VALVE GP-CONTROL–ARTICULATION	425
VALVE GP-CONTROL–BLADE LIFT	443 445
VALVE GP-CONTROL–BLADE TIP	433
VALVE GP-CONTROL–BULLDOZER	431 439
VALVE GP-CONTROL– BULLDOZER LIFT, PLOW	447
VALVE GP-CONTROL–CENTERSHIFT	427
VALVE GP-CONTROL–CIRCLE DRIVE	435
VALVE GP-CONTROL–RIPPER	441
VALVE GP-CONTROL–SCARIFIER	423
VALVE GP-CONTROL–SIDESHIFT	437
VALVE GP-CONTROL–WHEEL LEAN	429
VALVE GP-COUNTERBALANCE	383
VALVE GP-ETHER STARTING	183
VALVE GP-PUMP CONTROL– PRESSURE, FLOW COMPENSATOR	449
VALVE GP-PURGE	451
VALVE GP-RELIEF	423 452 454 455

INDEX

Name	Page
	456
	457
	458
	459
	460
VALVE GP-RELIEF–BULLDOZER LIFT, PLOW	453
VALVE GP-SELECTOR & PRESS CONT	259
	262
VALVE GP-SHUTOFF (MANUAL) (FUEL)	96
VALVE GP-SHUTTLE	461
VALVE GP-SOLENOID	265
	266
	324
	462
	463
VALVE GP-SOLENOID & MANIFOLD	381
	383
VALVE GP-SOLENOID (24-VOLT) (CENTERSHIFT LOCK)	379
VALVE GP-SOLENOID (24-VOLT) (SELECTOR & PRESSURE RANGE)	259
VALVE GP-SOLENOID (24-VOLT) (SPEED, RANGE, TRANSMISSION)	262
VALVE GP-SOLENOID (PARKING BRAKE)	311
VALVE GP-SOLENOID (PROPN SOL FOR CL PACK 1)	259
VALVE GP-SOLENOID (PROPN SOL FOR CL PACK 2)	259
VALVE GP-SOLENOID (PROPN SOL FOR CL PACK 3)	259
VALVE GP-TIRE	276
VALVE GP-TIRE (BASIC)	275
VALVE GP-TIRE (TIRE INFLATION)	275
VALVE GP-TRANSMISSION CONTROL	267
VALVE MECHANISM GP	53
	54
VALVE-RELIEF	217
VOLTMETER GP	542

W

Name	Page
WASHER GP-WINDOW–FRONT	581
	584
WASHER GP-WINDOW–REAR	583
WATER SEP & FUEL PRM PUMP GP	103
WHEEL & TIRE AR	269
	270
WHEEL & TIRE GP	270
	271
WHEEL AR	271
	272
WHEEL GP	273
	274
	275
	276
WIPER AR-WINDOW–REAR	586
WIPER GP-WINDOW–FRONT	592
WIPER GP-WINDOW–FRONT–HIGH PROFILE	587
	589
WIPER GP-WINDOW–REAR	590
WIRING AS	201
WIRING GP-AIR CONDITIONER	184
WIRING GP-AUXILIARY–FUEL TANK	185
WIRING GP-BLADE CUSHION	188
WIRING GP-CAB	189
WIRING GP-CONSOLE	192
WIRING GP-ENGINE	194
WIRING GP-ETHER STARTING AID	196
WIRING GP-FRONT–PLATFORM	197
WIRING GP-GRADE CONTROL–ACCUGRADE	202
WIRING GP-GRADE CONTROL–CAB, INDICATOR LAMP	201
WIRING GP-REAR	207
WIRING GP-REAR–LIGHTS	205
WIRING GP-STEERING CONSOLE	212
WIRING GP-TRANSMISSION	214

MACHINE ARRANGEMENT

346-3710 GENERAL AR

S/N: JJA1-UP

SMCS-7000 **i03641346**

NOTE	PART NUMBER	QTY	PART NAME 1 2 3 4 5 6 (PRODUCT LEVEL)	SEE PAGE
Y	*310-5881*	1	COOLING AR	68
Y	**325-9710**	1	ENGINE AR-COMPLETE	7
Y	**275-6535**	1	TRANSMISSION AR	256
Y	*310-6459*	1	AIR CLEANER GP	83
Y	*313-2656*	1	AIR COMPRESSOR GP	9
Y	*345-7649*	1	ALTERNATOR GP-CHARGING	109
Y	*134-1080*	1	AXLE GP-FRONT	277
Y	*311-0795*	1	BATTERY & WIRING GP	113
Y	*320-9924*	1	BLADE GP	596
Y	*295-8090*	1	BOX GP-BATTERY	282
Y	*111-1719*	1	BOX GP-TOOL	616
Y	*7D-8440*	1	BRAKE GP-SERVICE	309
Y	*284-5378*	1	BUMPER GP-REAR	283
Y	*311-8138*	1	CASE & FRAME GP	284
Y	*6G-1755*	1	CHAIN GP-DRIVE (TANDEM)	222
Y	*338-7509*	1	CIRCLE GP	466
Y	*167-9002*	1	CONSOLE GP-OPERATOR (TRANSMISSION DIRECTION, SPEED)	489
Y	*282-2475*	1	CONSOLE GP-OPERATOR	491
Y	*282-2473*	1	CONTROL GP-CLUTCH	494
Y	*316-8363*	1	CONTROL GP-DIFFERENTIAL LOCK	232
Y	*282-2472*	1	CONTROL GP-GOVERNOR	92
Y	*284-5771*	1	CONTROL GP-PARKING BRAKE	311
Y	*283-3499*	1	CONTROL GP-SERVICE BRAKE	313
Y	*7I-4718*	1	CONTROL GP-STEERING	496
Y	*281-5641*	1	COOLER GP-TRANSMISSION OIL	235
Y	*337-3357*	1	COUPLING GP-TORSIONAL	236
Y	*112-5361*	1	CYLINDER & MTG GP-ARTICULATION	329
Y	*8X-1947*	1	CYLINDER & MTG GP-BLADE LIFT	330
Y	*8X-1943*	1	CYLINDER & MTG GP-BLADE TIP	331
Y	*8X-1944*	1	CYLINDER & MTG GP-CENTERSHIFT	332
Y	*112-7463*	1	CYLINDER & MTG GP-SIDESHIFT	334
Y	*8W-2290*	1	CYLINDER & MTG GP-STEERING	335
Y	*8W-2737*	1	CYLINDER & MTG GP-WHEEL LEAN	336
Y	*346-3597*	1	DIFFERENTIAL & BEVEL GEAR GP	237
Y	*338-7507*	1	DRAWBAR GP	468
Y	**253-4677**	1	DRIVE GP-CIRCLE	351
Y	*338-5871*	1	DRIVE GP-FAN	33
Y	*8W-4368*	1	DRIVE GP-FINAL	241
Y	*311-2741*	1	ENCLOSURE GP-ENGINE	286
Y	*284-0824*	1	FAN GP-BLOWER (RADIATOR)	69
Y	**315-4118**	1	FILLER GP-POWER TRAIN OIL	243
Y	*292-5315*	1	FRAME GP-FRONT	290
Y	*298-8895*	1	GUARD GP-DRIVE SHAFT	293
Y	*282-2469*	1	GUARD GP-PLATFORM	294
Y	*338-5276*	1	HITCH GP-ARTICULATING	298
Y	*295-4371*	1	HORN GP-ELECTRIC	518
Y	*261-8536*	1	LIFT GP-BLADE	603
Y	*284-5394*	1	LIGHTING GP-BACKUP	141
Y	*284-5362*	1	LIGHTING GP-FLOOD (RIPPER)	145
Y	*284-5376*	1	LIGHTING GP-FLOOD (FRONT)	146
Y	*311-0864*	1	LINES GP-AIR	87
Y	*310-6469*	1	LINES GP-ENGINE OIL DRAIN	61
Y	*311-2770*	1	LINES GP-FUEL	96
Y	*106-4787*	1	LINES GP-HYDRAULIC (LH)	358
Y	*110-2985*	1	LINES GP-HYDRAULIC (RH)	362

MACHINE ARRANGEMENT

346-3710 **GENERAL AR** ***(contd.)*** **i03641346**

NOTE	PART NUMBER	QTY	PART NAME 1 2 3 4 5 6 (PRODUCT LEVEL)	SEE PAGE
Y	*293-0648*	1	LINES GP-HYDRAULIC (CENTERSHIFT LOCK)	367
Y	*7I-4610*	1	LINES GP-LUBRICATION	300
Y	*299-5544*	1	LINES GP-PUMP	369
Y	*301-4376*	1	LINES GP-STEERING	376
Y	*315-5378*	1	LINES GP-TRANSMISSION OIL	245
Y	*311-0274*	1	LINES GP-WATER	73
Y	*164-8462*	1	LOCK GP-CENTERSHIFT	379
Y	*310-6437*	1	MOUNTING GP-ENGINE & XMSN	44
Y	*337-0732*	1	MOUNTING GP-WHEEL	248
Y	*310-6472*	1	MUFFLER GP	89
Y	*316-5238*	1	PANEL GP-INSTRUMENT (ENCLOSED)	552
Y	*302-4194*	1	PLATE & FILM GP	618
Y	*299-5543*	1	PUMP & MTG GP-STEERING	386
Y	*113-4254*	1	SEAT GP (VINYL)	565
Y	*8W-5394*	1	SHAFT GP-DRIVE (TRANSMISSION)	253
Y	*311-0514*	1	SHAFT GP-PUMP DRIVE	393
Y	*295-2933*	1	STEP GP	302
Y	*299-8307*	1	SUPPORT GP-RADIATOR	303
Y	*174-4546*	1	SUPPORT GP-SEAT	576
Y	*190-1688*	1	TANDEM & COVER GP	255
Y	*214-1983*	1	TANK & MTG GP-HYDRAULIC	399
Y	*314-9370*	1	TANK GP-AIR	320
Y	*311-2766*	1	TANK GP-COOLANT	79
Y	*311-2749*	1	TANK GP-FUEL	105
Y	*342-2154*	1	VALVE & LINKAGE GP (4-BANK, RH; 4-BANK, LH)	406
Y	*311-0802*	1	WIRING GP-AUXILIARY (FUEL TANK)	185
Y	*284-5346*	1	WIRING GP-CONSOLE	192
Y	*284-5343*	1	WIRING GP-FRONT (PLATFORM)	197
Y	*284-5348*	1	WIRING GP-REAR (LIGHTS) (RADIATOR)	205
Y	*311-0794*	1	WIRING GP-REAR	207
Y	*284-5347*	1	WIRING GP-STEERING CONSOLE	212
	6V-1970	1	LITERATURE GP	
	5P-7958	1	SLEEVE-CABLE SPLICE	
	5P-8500	2	KEY	

Y-SEPARATE ILLUSTRATION

<END>

339-4964 OPTION AR-CAB—NON ROPS/FOPS

S/N: JJA1-UP

AN ATTACHMENT

SMCS-7000, 7301 **i03542305**

NOTE	PART NUMBER	QTY	PART NAME 1 2 3 4 5 6 (PRODUCT LEVEL)	SEE PAGE
Y	*311-2751*	1	AIR CONDITIONER AR	480
Y	*320-0341*	1	CAB AR (NON ROPS/FOPS)	484
Y	*315-5327*	1	INDICATOR GP-LEVEL	522
Y	*123-4358*	1	MIRROR GP-REAR VIEW (EXTERIOR, HEATED)	540
Y	*126-2747*	1	SEAT GP (VINYL)	567
Y	*286-4825*	1	WIPER GP-WINDOW (FRONT)	592

Y-SEPARATE ILLUSTRATION

<END>

MACHINE ARRANGEMENT

339-4965 OPTION AR-CAB—HIGH PROFILE

S/N: JJA1-UP

AN ATTACHMENT

SMCS-7000, 7301 **i03542304**

NOTE	PART NUMBER	QTY	PART NAME 1 2 3 4 5 6 (PRODUCT LEVEL)	SEE PAGE
Y	*315-5327*	1	INDICATOR GP-LEVEL	522
Y	*123-4358*	1	MIRROR GP-REAR VIEW (EXTERIOR, HEATED)	540
Y	*320-0342*	1	ROPS AR (ENCLOSED)	555
Y	*126-2747*	1	SEAT GP (VINYL)	567
Y	*286-4825*	1	WIPER GP-WINDOW (FRONT)	592

Y-SEPARATE ILLUSTRATION

<END>

339-4966 OPTION AR-CAB—HIGH PROFILE

S/N: JJA1-UP

AN ATTACHMENT

SMCS-7000, 7301 **i03627186**

NOTE	PART NUMBER	QTY	PART NAME 1 2 3 4 5 6 (PRODUCT LEVEL)	SEE PAGE
Y	*311-2753*	1	HEATER AR-CAB	513
Y	*320-0342*	1	ROPS AR (ENCLOSED)	555
Y	*315-5327*	1	INDICATOR GP-LEVEL	522
Y	*123-4358*	1	MIRROR GP-REAR VIEW (EXTERIOR, HEATED)	540
Y	*293-4153*	1	MODULE GP-SPEEDOMETER & TACH	543
Y	*126-2747*	1	SEAT GP (VINYL)	567
Y	*286-4825*	1	WIPER GP-WINDOW (FRONT)	592

Y-SEPARATE ILLUSTRATION

<END>

339-4967 OPTION AR-CAB

S/N: JJA1-UP

AN ATTACHMENT

SMCS-7000, 7301 **i03627185**

NOTE	PART NUMBER	QTY	PART NAME 1 2 3 4 5 6 (PRODUCT LEVEL)	SEE PAGE
Y	*311-2751*	1	AIR CONDITIONER AR	480
Y	*320-0342*	1	ROPS AR (ENCLOSED)	555
Y	*315-5327*	1	INDICATOR GP-LEVEL	522
Y	*123-4358*	1	MIRROR GP-REAR VIEW (EXTERIOR, HEATED)	540
Y	*293-4153*	1	MODULE GP-SPEEDOMETER & TACH	543
Y	*126-2747*	1	SEAT GP (VINYL)	567
Y	*286-4825*	1	WIPER GP-WINDOW (FRONT)	592

Y-SEPARATE ILLUSTRATION

<END>

MACHINE ARRANGEMENT

339-4968 OPTION AR-CAB—HIGH PROFILE

S/N: JJA1-UP
AN ATTACHMENT

SMCS-7000, 7301 **i03542302**

NOTE	PART NUMBER	QTY	PART NAME 1 2 3 4 5 6 (PRODUCT LEVEL)	SEE PAGE
Y	*286-4415*	1	FAN GP-CIRCULATING (FRONT DEFROSTER)	509
Y	*286-4416*	1	FAN GP-CIRCULATING (DEFROSTER, REAR)	510
Y	*139-4612*	1	SCREEN GP-SUN	560
Y	*298-2426*	1	WIPER AR-WINDOW	586
Y-SEPARATE ILLUSTRATION				

<END>

340-1191 OPTION AR-CAB—HIGH PROFILE

S/N: JJA1-UP
AN ATTACHMENT

SMCS-7000, 7301 **i03609760**

NOTE	PART NUMBER	QTY	PART NAME 1 2 3 4 5 6 (PRODUCT LEVEL)	SEE PAGE
Y	*286-4328*	1	CONVERTER AR-ELECTRICAL (HIGH PROFILE)	119
Y	*295-7991*	1	INSTALLATION AR-RADIO	523
Y	**197-2066**	1	MIRROR GP-REAR VIEW (DUAL INTERIOR)	541
Y-SEPARATE ILLUSTRATION				

<END>

349-2488 OPTION AR-CONFIGURATION

S/N: JJA1-UP
AN ATTACHMENT

SMCS-7000 **i03641243**

NOTE	PART NUMBER	QTY	PART NAME 1 2 3 4 5 6 (PRODUCT LEVEL)	SEE PAGE
Y	*297-8448*	1	GRADE CONTROL AR	123
Y	*301-2237*	1	LINES GP-PUMP	373
Y-SEPARATE ILLUSTRATION				

<END>

339-4969 OPTION AR-ENGINE—STARTING

S/N: JJA1-UP
ARCTIC
AN ATTACHMENT

SMCS-1000 **i03627192**

NOTE	PART NUMBER	QTY	PART NAME 1 2 3 4 5 6 (PRODUCT LEVEL)	SEE PAGE
Y	*311-2737*	1	AIR DRYER GP	306
Y	*284-5358*	1	BATTERY & WIRING GP	111
Y	*332-1544*	1	HEATER GP-JACKET WATER	126
Y	*311-2771*	1	STARTING AID GP-ETHER	173
Y	*311-0801*	1	WIRING GP-ETHER STARTING AID	196
Y-SEPARATE ILLUSTRATION				

<END>

MACHINE ARRANGEMENT

339-4970 OPTION AR-ENGINE

S/N: JJA1-UP
AN ATTACHMENT

SMCS-1000 **i03542307**

NOTE	PART NUMBER	QTY	PART NAME 1 2 3 4 5 6 (PRODUCT LEVEL)	SEE PAGE
Y	*284-5358*	1	BATTERY & WIRING GP	111
Y	*311-2771*	1	STARTING AID GP-ETHER	173
Y	*311-0801*	1	WIRING GP-ETHER STARTING AID	196

Y-SEPARATE ILLUSTRATION

<END>

339-4971 OPTION AR-RIPPER

S/N: JJA1-UP
AN ATTACHMENT

SMCS-7000 **i03542320**

NOTE	PART NUMBER	QTY	PART NAME 1 2 3 4 5 6 (PRODUCT LEVEL)	SEE PAGE
Y	*334-5760*	1	GUARD GP-BOTTOM	292
Y	*336-1559*	1	PLATE GP-PUSH	470
Y	*285-4183*	1	RIPPER AR	607

Y-SEPARATE ILLUSTRATION

<END>

339-4972 OPTION AR-WORK TOOL

S/N: JJA1-UP
AN ATTACHMENT

SMCS-6700, 7000 **i03548180**

NOTE	PART NUMBER	QTY	PART NAME 1 2 3 4 5 6 (PRODUCT LEVEL)	SEE PAGE
Y	*340-5009*	1	SCARIFIER AR (VEE TYPE)	610
Y	*334-5760*	1	GUARD GP-BOTTOM	292

Y-SEPARATE ILLUSTRATION

<END>

339-4973 OPTION AR-WORK TOOL

S/N: JJA1-UP
AN ATTACHMENT

SMCS-6700, 7000 **i03628546**

NOTE	PART NUMBER	QTY	PART NAME 1 2 3 4 5 6 (PRODUCT LEVEL)	SEE PAGE
Y	*285-4183*	1	RIPPER AR	607
Y	*347-8846*	1	BLADE GP-BULLDOZER (FRONT)	597
Y	*334-5760*	1	GUARD GP-BOTTOM	292
Y	*114-0025*	1	LINES GP-HYDRAULIC (BULLDOZER LIFT, PLOW, LH)	365
Y	*279-8138*	1	LINES GP-HYDRAULIC (BULLDOZER) (FRONT)	366

Y-SEPARATE ILLUSTRATION

<END>

MACHINE ARRANGEMENT

339-4974 OPTION AR-WORK TOOL

S/N: JJA1-UP

AN ATTACHMENT

SMCS-6700, 7000 **i03581282**

NOTE	PART NUMBER	QTY	PART NAME 1 2 3 4 5 6 (PRODUCT LEVEL)	SEE PAGE
Y	*285-4183*	1	RIPPER AR	607
Y	*334-5760*	1	GUARD GP-BOTTOM	292

Y-SEPARATE ILLUSTRATION

<END>

339-4977 OPTION AR-WORK TOOL

S/N: JJA1-UP

AN ATTACHMENT

SMCS-6700, 7000 **i03575680**

NOTE	PART NUMBER	QTY	PART NAME 1 2 3 4 5 6 (PRODUCT LEVEL)	SEE PAGE
Y	*285-4154*	1	ACCUMULATOR AR-BLADE CUSHION	326
Y	*295-8278*	1	AUTOSHIFT AR	215
Y	*301-2237*	1	LINES GP-PUMP	373

Y-SEPARATE ILLUSTRATION

<END>

339-4978 OPTION AR-WORK TOOL

S/N: JJA1-UP

AN ATTACHMENT

SMCS-6700, 7000 **i03575546**

NOTE	PART NUMBER	QTY	PART NAME 1 2 3 4 5 6 (PRODUCT LEVEL)	SEE PAGE
Y	*329-3827*	1	BLADE & TIP AR-POWER	594
Y	*107-3398*	1	BIT GP-END	593
Y	*282-0506*	1	EDGE GP-CUTTING	602

Y-SEPARATE ILLUSTRATION

<END>

ENGINE ARRANGEMENT

325-9710 ENGINE AR-COMPLETE

S/N: KHX14117-UP
140 BRAKE KW (188 BHP) AT 2000 RPM
PART OF 346-3710 GENERAL AR

SMCS-1000 **i03630233**

NOTE	PART NUMBER	QTY	PART NAME 1 2 3 4 5 6 (PRODUCT LEVEL)	SEE PAGE
Y	*222-5946*	1	BREATHER GP	57
Y	*4W-3462*	1	CARRIER GP-SEAL	14
Y	**246-9345**	1	CONTROL & MTG GP-ENGINE ELEK	116
Y	*153-1794*	1	COVER GP-AIR INLET	85
Y	*229-8841*	1	COVER GP-CYLINDER BLOCK	15
Y	*118-1727*	1	COVER GP-FRONT HOUSING (ACCESSORY DRIVE)	16
Y	*275-0595*	1	COVER GP-FRONT HOUSING (OIL FILTER)	17
Y	*307-1735*	1	COVER GP-VALVE MECHANISM	18
Y	*194-5128*	1	DAMPER & PULLEY GP	30
Y	*313-4384*	1	DRIVE GP-ACCESSORY	31
Y	*322-0245*	1	ELBOW GP-AIR INLET	86
Y	*330-9360*	1	ENGINE AR-CORE	8
Y	*258-8723*	1	FASTENER GP-CYLINDER HEAD	34
Y	*322-0246*	1	FASTENER GP-ENGINE	35
Y	*116-4556*	1	FASTENER GP-FRONT HOUSING	36
Y	*323-8936*	1	FILTER GP-ENGINE OIL	58
Y	*275-8387*	1	FLYWHEEL GP	37
Y	*220-1194*	1	FUMES DISPOSAL GP	59
Y	*297-6867*	1	GROUND GP-ELECTRICAL	125
Y	*197-5210*	1	HOUSING GP-FLYWHEEL	39
Y	*237-9822*	1	LIFTING GP-ENGINE	42
Y	*253-2589*	1	LINES GP-ENGINE OIL	60
Y	*313-3967*	1	LINES GP-FUEL	99
Y	*187-6279*	1	LINES GP-TURBOCHARGER OIL	62
Y	*206-4228*	1	LINES GP-WATER (ENGINE)	71
Y	*237-8063*	1	MANIFOLD GP-ENGINE OIL	64
Y	*183-6845*	1	MANIFOLD GP-EXHAUST (DRY)	88
Y	*311-3542*	1	MOUNTING GP-ENGINE	43
Y	*193-6998*	1	PAN GP-OIL	47
Y	*235-8200*	1	PLUG GP-CONNECTOR (ENGINE HARNESS, PROT COVER)	154
Y	*159-0303*	1	PLUG GP-CYLINDER BLOCK	50
Y	*135-2141*	1	PLUG GP-CYLINDER BLOCK (ENGINE OIL)	49
Y	*162-8068*	1	PLUG GP-ENGINE	51
Y	*318-2076*	1	PUMP GP-WATER	76
Y	*7E-7590*	1	SEAL GP-CRANKSHAFT	52
Y	*297-5355*	1	SENSOR GP-ENGINE	156
Y	*347-7898*	1	STARTING MOTOR GP-ELECTRIC	175
Y	*198-2714*	1	WIRING GP-ENGINE	194
			PLEASE USE THE GASKET KIT LINK IN SIS OR CONTACT YOUR LOCAL DEALER FOR THE LATEST GASKET KIT INFORMATION	

Y-SEPARATE ILLUSTRATION

ENGINE ARRANGEMENT

330-9360 ENGINE AR-CORE

S/N: KHX14117-UP

PART OF 325-9710 ENGINE AR-COMPLETE

SMCS-1000 **i03630434**

NOTE	PART NUMBER	QTY	PART NAME 1 2 3 4 5 6 (PRODUCT LEVEL)	SEE PAGE
Y	*212-4289*	1	CAMSHAFT GP	13
Y	*117-3643*	1	COOLER GP-ENGINE OIL	67
Y	*210-5590*	1	CRANKSHAFT GP	20
Y	*221-4482*	1	CYLINDER BLOCK GP	22
Y	*219-5849*	1	CYLINDER HEAD GP	29
Y	*205-1321*	1	GEAR GP-FRONT	38
Y	*165-4446*	1	HOUSING GP-FRONT	40
Y	*191-0461*	1	LINES GP-INJECTOR HYD PUMP	100
YR	*210-5592*	6	PISTON & ROD GP	48
Y	*254-0095*	1	PUMP & MTG GP-UNIT INJ HYD	101
Y	*212-2270*	1	PUMP GP-ENGINE OIL	66
Y	*268-1839*	6	PUMP GP-FUEL INJECTION	102
Y	*340-1812*	1	TURBOCHARGER GP	91
Y	*232-3717*	1	VALVE MECHANISM GP	53
	330-9439	1	ELECTRONICS GP-ENGINE RATINGS	

R-REMFG PART MAY BE AVAILABLE
Y-SEPARATE ILLUSTRATION

BASIC ENGINE

313-2656 AIR COMPRESSOR GP

S/N: JJA1-UP

PART OF 346-3710 GENERAL AR

SMCS-1803 **i03435740**

NOTE	REF NO	GRAPHIC REF	PART NUMBER	QTY	PART NAME 1 2 3 4 5 6 (PRODUCT LEVEL)	SEE PAGE
	1	1	**135-9819**	1	SEAL-INTEGRAL	
I	2	1	**145-1849**	1	HOSE AS	
	3	1	**146-8121**	1	SPACER (10.5X14.5X25-MM THK)	
I	4	1	**313-2762**	1	HOSE AS	
	5	1	**313-6100**	1	TUBE AS	
Y	6	1	**314-6148**	1	AIR COMPRESSOR GP (AIR CONDITIONER)	11
	7	1	**315-4150**	1	TUBE AS	
	8	1	*148-8340*	2	CONNECTOR AS	
					(EACH INCLUDES)	
		1	**3K-0360**	1	SEAL-O-RING	
		1	**6V-8398**	1	SEAL-O-RING	
		1	**6V-8639**	1	CONNECTOR	
	9	1	*148-8347*	1	ELBOW AS	
		1	**3D-2824**	1	SEAL-O-RING	
		1	**6V-9007**	1	ELBOW	
		1	**6V-9746**	1	SEAL-O-RING	
	10	1	*148-8364*	1	ELBOW AS	
		1	**3K-0360**	1	SEAL-O-RING	
		1	**6V-8398**	1	SEAL-O-RING	
		1	**6V-8625**	1	ELBOW	
	11	1	*148-8368*	1	ELBOW AS	
		1	**3J-1907**	1	SEAL-O-RING	
		1	**4J-5477**	1	SEAL-O-RING	
		1	**6V-8627**	1	ELBOW	
	12	1	*148-8369*	1	ELBOW AS	
		1	**3J-7354**	1	SEAL-O-RING	
		1	**4J-5477**	1	SEAL-O-RING	
		1	**6V-8628**	1	ELBOW	
	13	1	*155-6258*	1	ELBOW AS	
		1	**3D-2824**	1	SEAL-O-RING	
		1	**6V-8398**	1	SEAL-O-RING	
		1	**127-1647**	1	ELBOW	
	14	1	*165-4927*	1	CONNECTOR AS	
		1	**2T-2991**	1	CONNECTOR	
		1	**4K-1388**	1	SEAL-O-RING	
		1	**6V-9746**	1	SEAL-O-RING	
	15	1	**225-5222**	1	VALVE AS-PRESSURE RELIEF	
		1	**2M-9780**	1	SEAL-O-RING	
	16	1	**1B-3057**	2	CLIP	
	17	1	**8T-4121**	1	WASHER-HARD (11X21X2.5-MM THK)	
M	18	1	**8T-4185**	1	BOLT (M10X1.5X50-MM)	
	19	1	**8T-4223**	2	WASHER-HARD (13.5X25.5X3-MM THK)	
M	20	1	**8T-6868**	2	BOLT (M12X1.75X80-MM)	

I-REFER TO HYDRAULIC INFORMATION SYSTEM
M-METRIC PART
Y-SEPARATE ILLUSTRATION

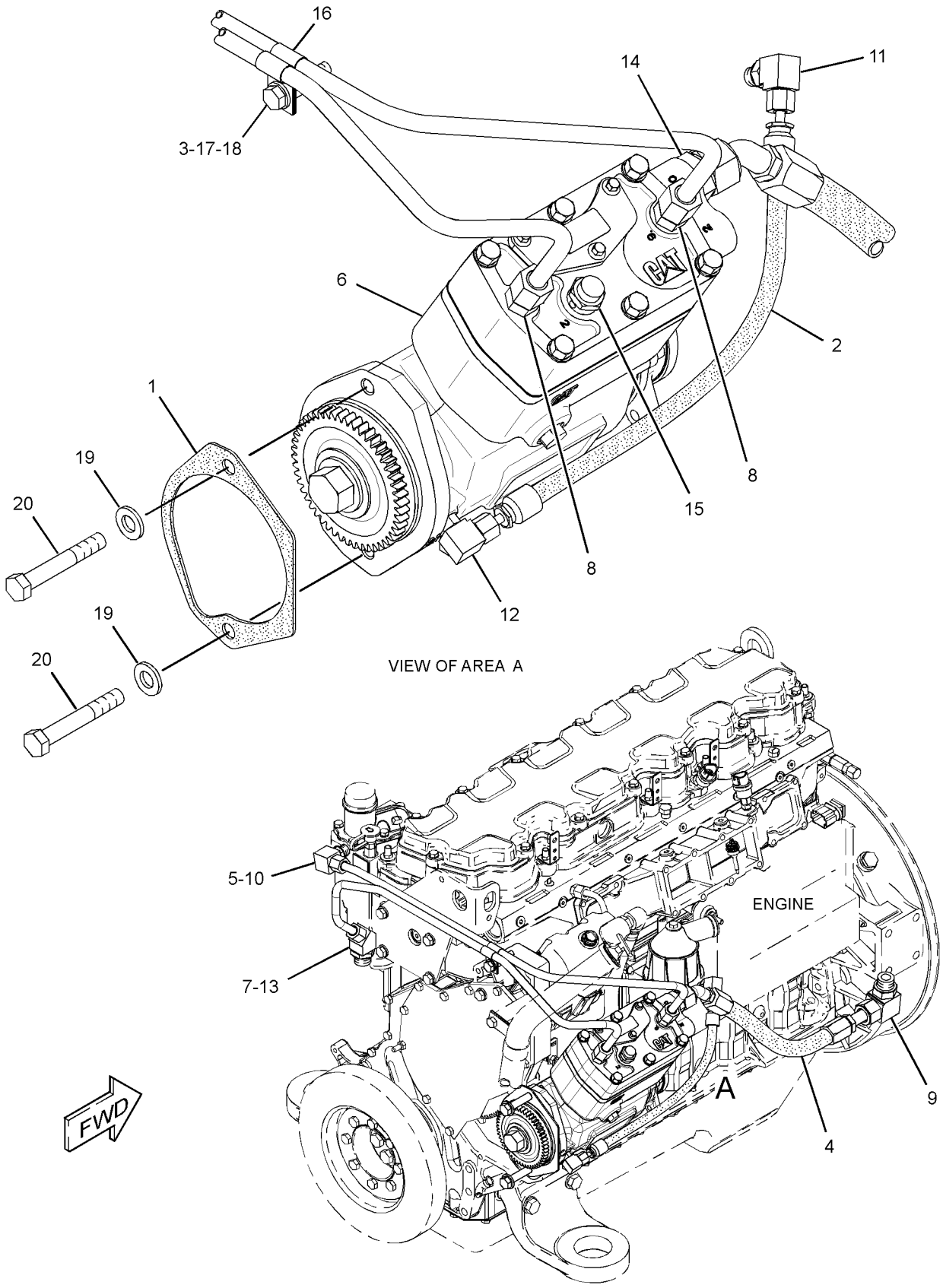

GRAPHIC #1 **<END>** g01689193

BASIC ENGINE

314-6148 AIR COMPRESSOR GP

S/N: JJA1-UP

PART OF 313-2656 AIR COMPRESSOR GP

SMCS-1803 **i03251941**

NOTE	REF NO	GRAPHIC REF	PART NUMBER	QTY	PART NAME 1 2 3 4 5 6 (PRODUCT LEVEL)	SEE PAGE
	1	1	**221-9361**	1	GEAR (50-TEETH)	
	2	1	**267-5212**	2	RING-RETAINING	
	3	1	**287-1690**	1	GASKET	
	4	1	**288-1347**	2	PLUG	
	5	1	**307-6192**	1	GASKET	
	6	1	**307-6200**	1	GASKET	
M	7	1	**271-8090**	3	BOLT-FLANGE HEAD (M6X1X65-MM)	
	8	1	**2P-4358**	1	FLANGE	
	9	1	**3J-1907**	1	SEAL-O-RING	
	10	1	**3K-0360**	1	SEAL-O-RING	
M	11	1	**5A-3604**	4	BOLT-SOCKET HEAD (M8X1.25X25-MM)	
	12	1	**5E-8769**	1	SEAL-O-RING	
	13	1	**6D-1004**	1	GASKET	
	14	1	**6D-7889**	2	SEAL-O-RING	
M	15	1	**6V-1820**	2	BOLT (M10X1.5X30-MM)	
	16	1	**6V-5839**	2	WASHER (11X21X2.5-MM THK)	
	17	1	**8T-4224**	6	WASHER-HARD (8.8X16X2-MM THK)	
	18	1	**9S-4185**	1	PLUG-O-RING	
	19	1	**9S-4191**	1	PLUG-O-RING	
	20	1	**199-4317**	6	BOLT (M10X1.5X115-MM)	
					AVAILABLE REPAIR KIT(S):	
			307-6205	1	KIT-UNLOADER (AIR COMPRESSOR)	
					(KIT INCLUDES SEAL-O-RINGS, SPRINGS, BOLTS, GASKET & GREASE-O-RING)	
			307-6209	1	KIT-CYLINDER HEAD (AIR COMPRESSOR)	
					(KIT INCLUDES HEAD AS, BOLTS & GASKET)	

M-METRIC PART

314-6148 AIR COMPRESSOR GP *(contd.)* i03251941

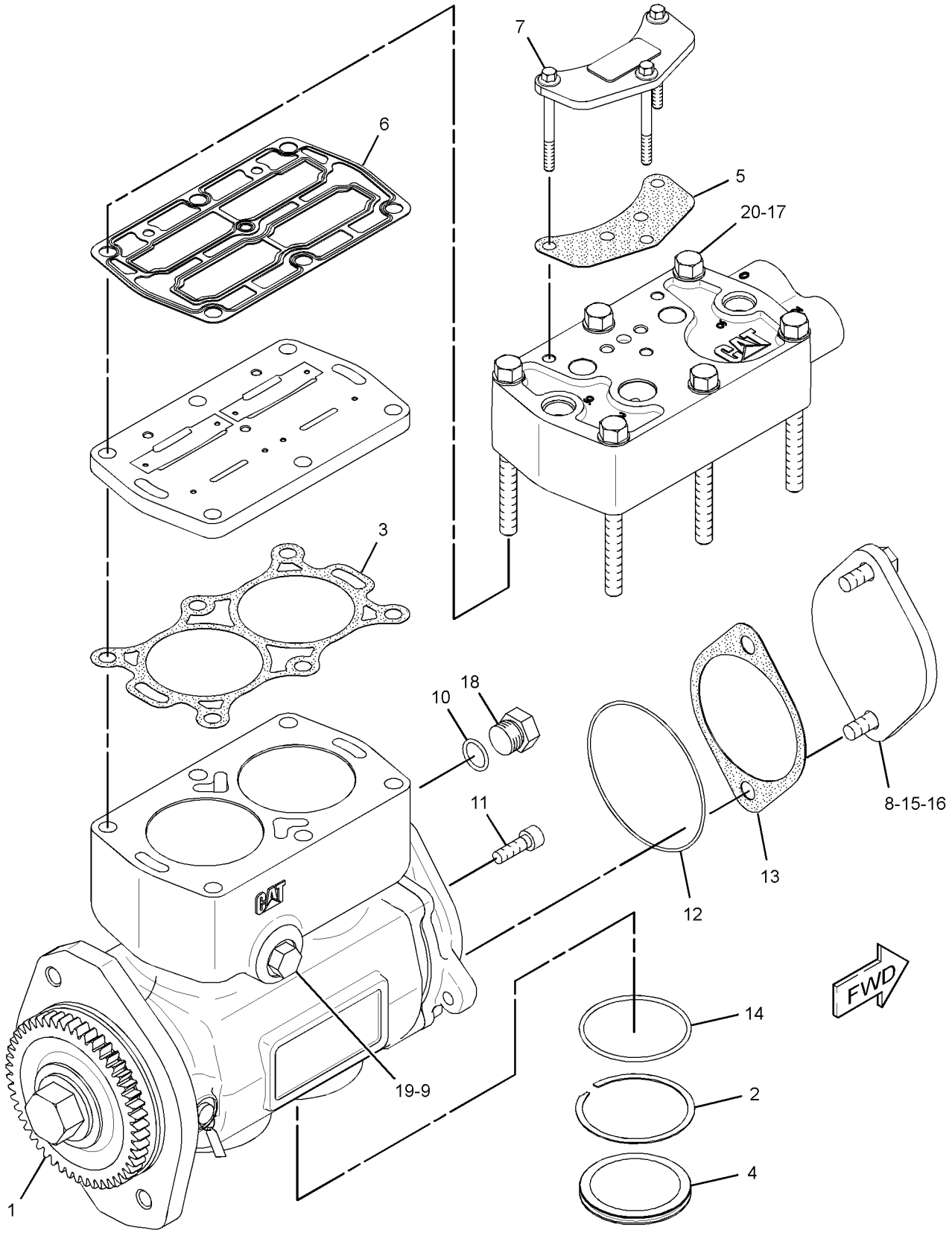

GRAPHIC #1 **<END>** g01689303

BASIC ENGINE

212-4289 CAMSHAFT GP

S/N: KHX14117-UP

PART OF 330-9360 ENGINE AR-CORE

SMCS-1210 **i02215726**

NOTE	REF NO	GRAPHIC REF	PART NUMBER	QTY	PART NAME 1 2 3 4 5 6 (PRODUCT LEVEL)	SEE PAGE
	1	1	**107-7694**	1	PLATE-THRUST	
R	2	1	**212-4288**	1	CAMSHAFT AS	
	2A	1	**1B-8705**	1	KEY-WOODRUFF	
	2B	1	**224-3247**	1	GEAR (100-TEETH)	
M	3	1	**6V-3940**	2	BOLT (M8X1.25X25-MM)	

M-METRIC PART
R-REMFG PART MAY BE AVAILABLE

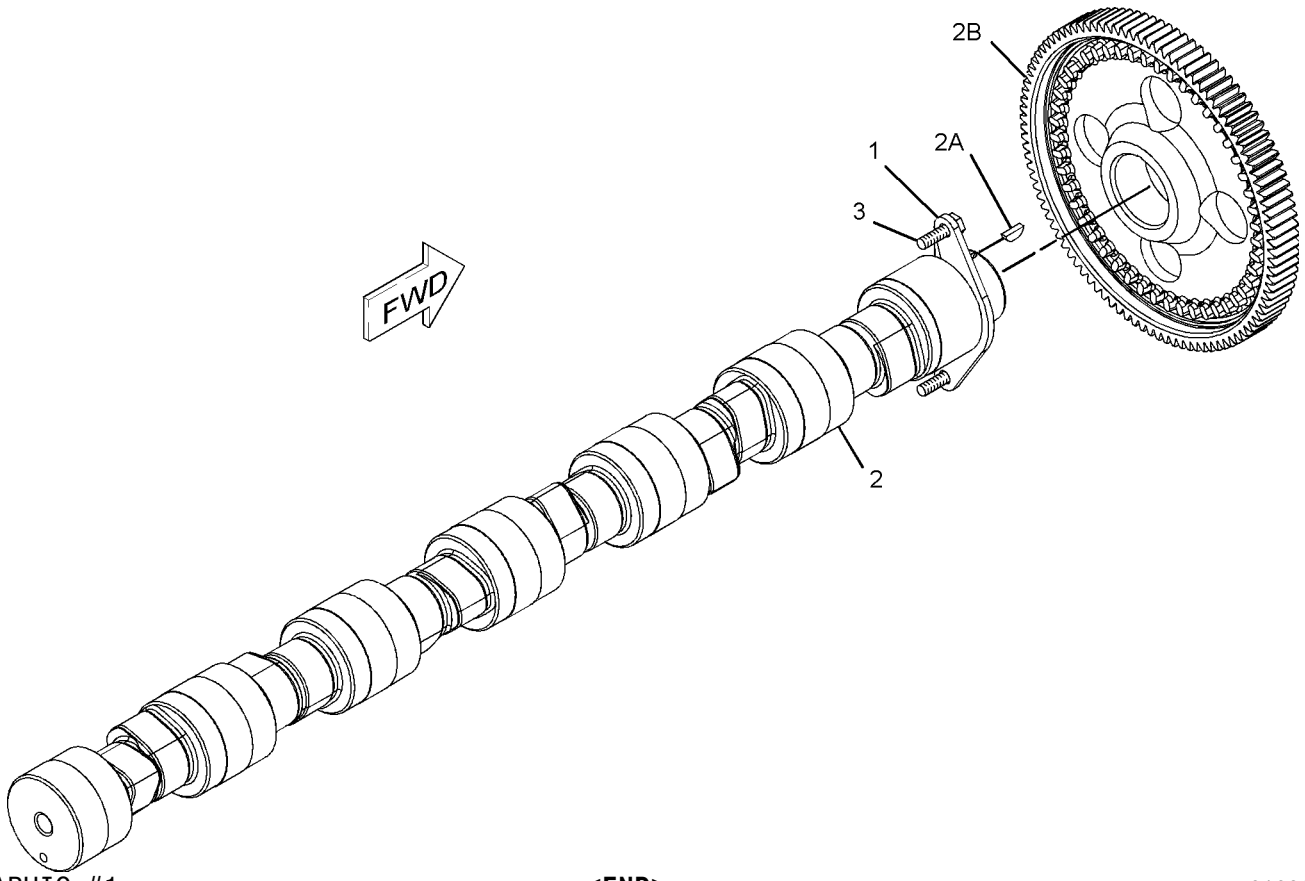

GRAPHIC #1 **<END>** g01099239

4W-3462 CARRIER GP-SEAL

S/N: KHX14117-UP

PART OF 325-9710 ENGINE AR-COMPLETE

SMCS-1161 **i02482079**

NOTE	REF NO	GRAPHIC REF	PART NUMBER	QTY	PART NAME 1 2 3 4 5 6 (PRODUCT LEVEL)	SEE PAGE
	1	1	**2W-6546**	1	COVER	
	2	1	**247-1876**	1	SEAL	
	3	1	**239-0583**	1	GASKET	
	4	1	**6V-3538**	2	DOWEL	
M	5	1	**6V-3940**	8	BOLT (M8X1.25X25-MM)	
	6	1	**9M-1974**	8	WASHER-HARD (8.8X16X2-MM THK)	
BF		1	**4C-9612**		SEALANT-SILICONE	

B-USE AS REQUIRED
F-NOT SHOWN
M-METRIC PART

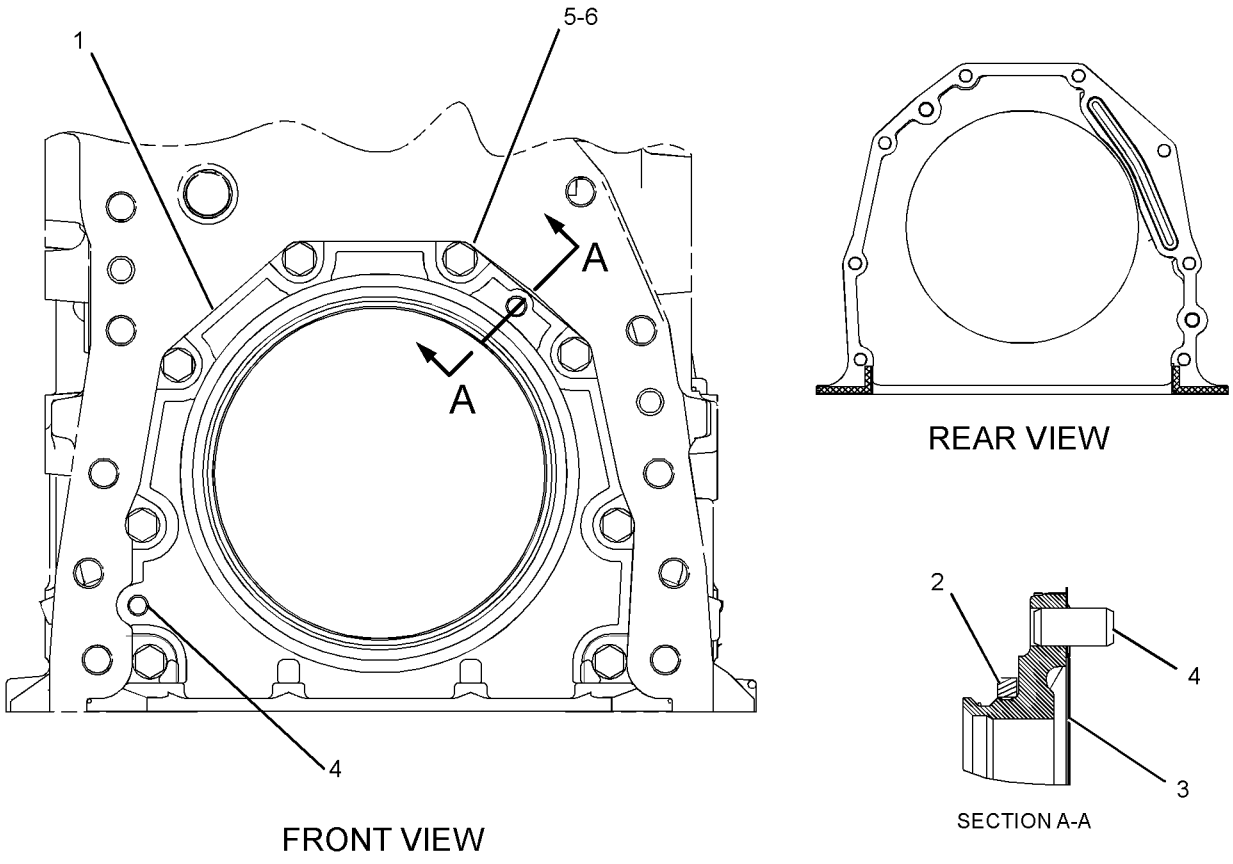

GRAPHIC #1 **<END>** g01239787

229-8841 COVER GP-CYLINDER BLOCK

S/N: KHX14117-UP

PART OF 325-9710 ENGINE AR-COMPLETE

SMCS-1201 **i03493980**

NOTE	REF NO	GRAPHIC REF	PART NUMBER	QTY	PART NAME 1 2 3 4 5 6 (PRODUCT LEVEL)	SEE PAGE
	1	1	**2W-6544**	1	COVER	
	2	1	**4P-5918**	3	CLIP	
	3	1	**4Y-9652**	3	GASKET	
	4	1	**342-4977**	2	COVER-SIDE	
	5	1	**7W-3872**	6	SLEEVE	
M	6	1	**110-7618**	4	BOLT AS (M8X1.25X10-MM)	
	8	1	**222-5893**	1	COVER AS	
M	8A	1	**6V-5698**	2	SCREW-BUTTON HEAD (M4X0.7X10-MM)	
	9	1	**210-3321**	1	STUD (M8X1.25-THD)	
M	10	1	**5C-7261**	1	NUT (M8X1.25-THD)	
M	11	1	**6V-2317**	23	BOLT (M8X1.25X30-MM)	
	12	1	**9M-1974**	22	WASHER-HARD (8.8X16X2-MM THK)	
B	13	1	**1U-8846**		SEALANT-GASKET	

B-USE AS REQUIRED
M-METRIC PART

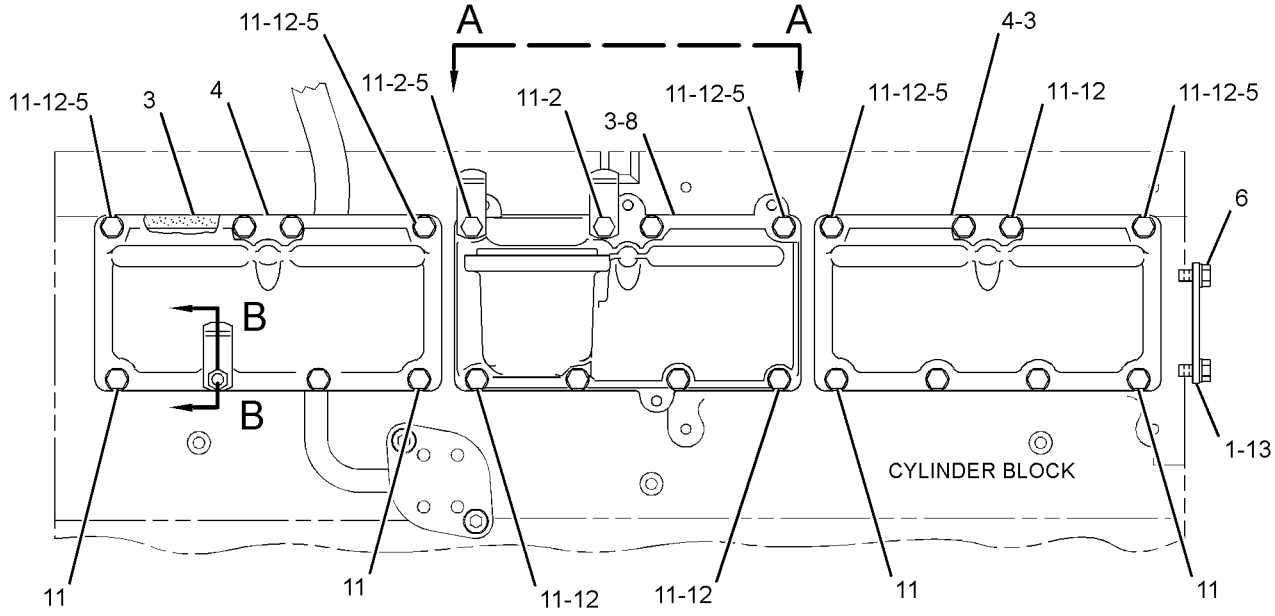

LEFT SIDE VIEW OF ENGINE

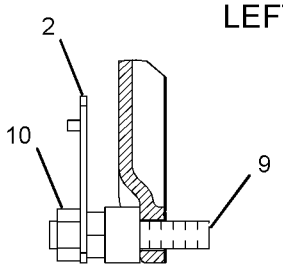

SECTION B-B

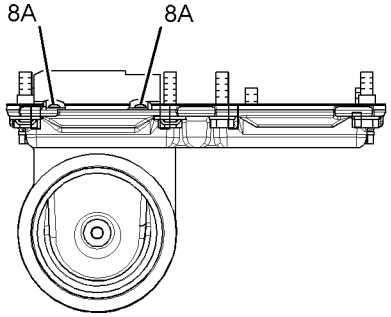

VIEW A-A

GRAPHIC #1 **<END>** g01830633

BASIC ENGINE

118-1727 COVER GP-FRONT HOUSING

S/N: KHX14117-UP

PART OF 325-9710 ENGINE AR-COMPLETE

SMCS-1151, 1166 **i01671188**

NOTE	REF NO	GRAPHIC REF	PART NUMBER	QTY	PART NAME 1 2 3 4 5 6 (PRODUCT LEVEL)	SEE PAGE
	1	1	**5P-8245**	4	WASHER-HARD (13.5X25.5X3-MM THK)	
M	2	1	**6V-5696**	2	BOLT (M12X1.75X80-MM)	
	3	1	**4W-2026**	1	COVER	
	4	1	**135-9819**	1	SEAL-INTEGRAL	
M	5	1	**6V-8149**	2	NUT (M12X1.75-THD)	

M-METRIC PART

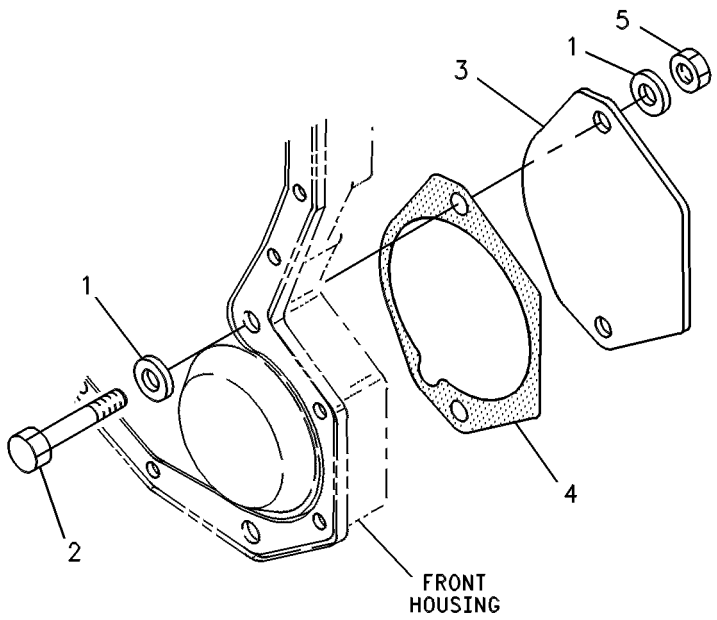

GRAPHIC #1 **<END>** g00245495

BASIC ENGINE

275-0595 COVER GP-FRONT HOUSING

S/N: KHX14117-UP

PART OF 325-9710 ENGINE AR-COMPLETE

SMCS-1151, 1166 **i03559003**

NOTE	REF NO	GRAPHIC REF	PART NUMBER	QTY	PART NAME 1 2 3 4 5 6 (PRODUCT LEVEL)	SEE PAGE
M	1	1	**9X-2099**	1	STUD (M8X1.25X52.75-MM)	
	2	1	**9C-9467**	1	CLIP	
	3	1	**108-3612**	1	SPACER (11.13X19.05X53-MM THK)	
	4	1	**265-7402**	1	TUBE AS	
	5	1	**166-1776**	1	COVER AS-FRONT	
		1	**126-1757**	2	WASHER (10.85X19.3X1.27-MM THK)	
		1	**136-0822**	2	STUD	
	6	1	**166-1781**	1	GASKET	
	7	1	**241-5645**	1	CAP AS-ENGINE OIL FILLER	
	8	1	**061-9455**	1	SEAL-O-RING	
M	9	1	**5C-7261**	2	NUT (M8X1.25-THD)	
M	10	1	**6V-2317**	11	BOLT (M8X1.25X30-MM)	
	11	1	**6V-5839**	1	WASHER (11X21X2.5-MM THK)	
M	12	1	**8T-0100**	2	BOLT (M8X1.25X60-MM)	
M	13	1	**8T-0643**	1	BOLT (M10X1.5X80-MM)	
	14	1	**8T-4224**	2	WASHER-HARD (8.8X16X2-MM THK)	

M-METRIC PART

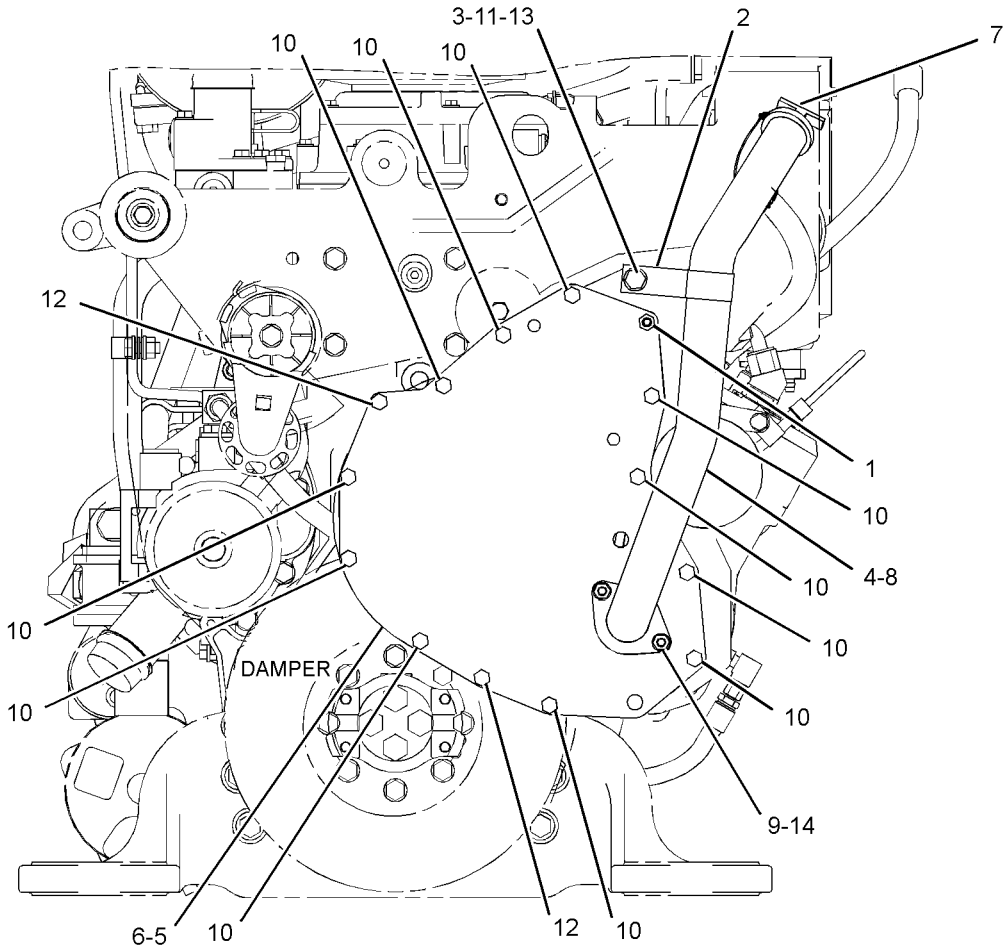

FRONT VIEW OF ENGINE

GRAPHIC #1

<END>

g01882234

BASIC ENGINE

307-1735 COVER GP-VALVE MECHANISM

S/N: KHX14117-UP

PART OF 325-9710 ENGINE AR-COMPLETE

SMCS-1107, 1120 **i03494700**

NOTE	REF NO	GRAPHIC REF	PART NUMBER	QTY	PART NAME 1 2 3 4 5 6 (PRODUCT LEVEL)	SEE PAGE
	1	1	**310-9247**	1	COVER GP-VALVE MECHANISM	
	1A	1	**304-4924**	1	SEAL AS	
		1	**245-6796**	1	COVER AS-BASE	
	2	1	**307-1738**	1	COVER GP-VALVE MECHANISM	
	2A	1	**272-0388**	1	SEAL-VALVE COVER	
M	3	1	**099-3649**	13	BOLT (M8X1.25X40-MM)	
	4	1	**8T-4224**	13	WASHER-HARD (8.8X16X2-MM THK)	

M-METRIC PART

307-1735 **COVER GP-VALVE MECHANISM** *(contd.)* **i03494700**

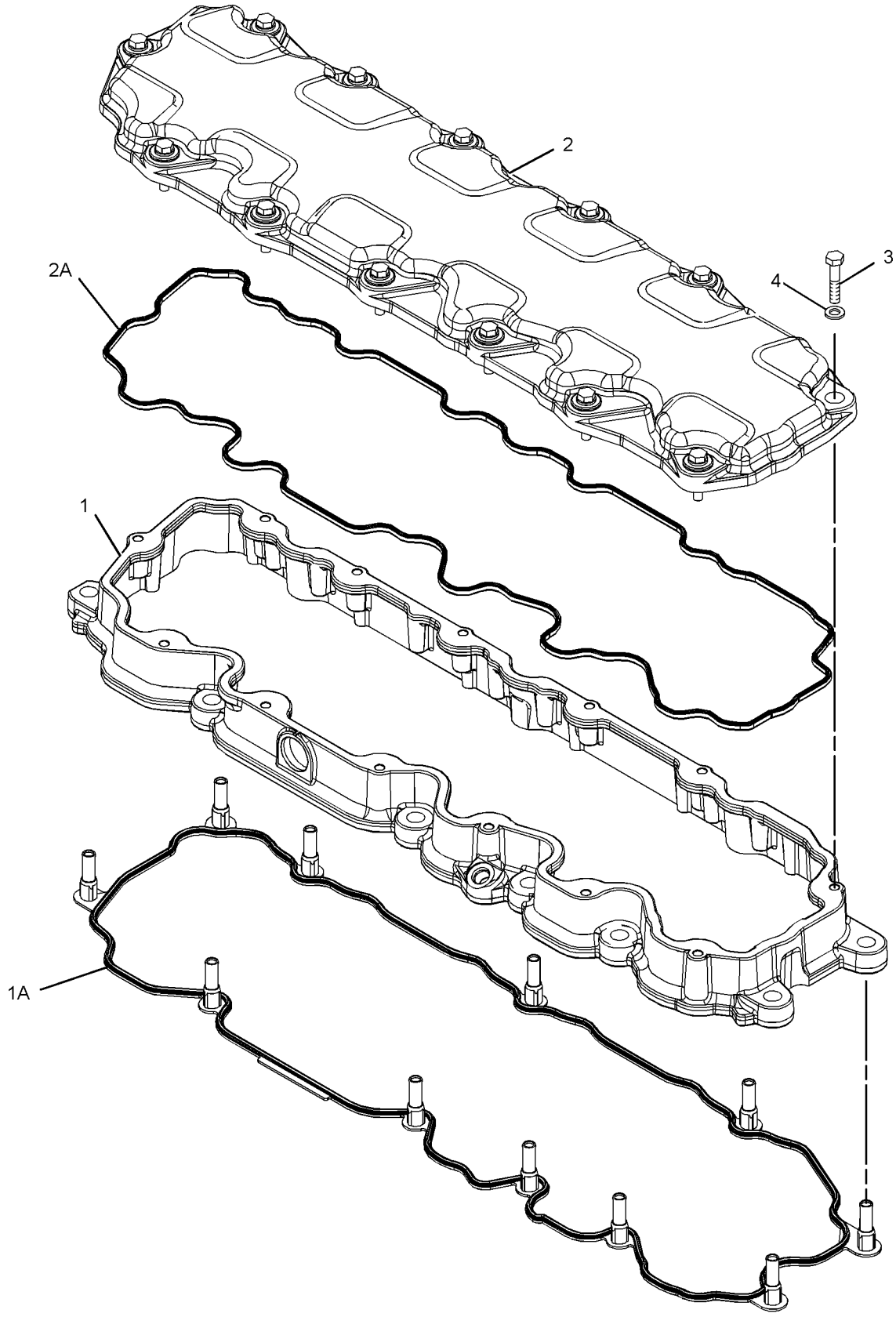

GRAPHIC #1 **<END>** g01348109

BASIC ENGINE

210-5590 CRANKSHAFT GP

S/N: KHX14117-UP

PART OF 330-9360 ENGINE AR-CORE

SMCS-1202, 1203, 1204, 1232 **i03571590**

NOTE	REF NO	GRAPHIC REF	PART NUMBER	QTY	PART NAME 1 2 3 4 5 6 (PRODUCT LEVEL)	SEE PAGE
	1	1	**271-5658**	1	CRANKSHAFT AS	
	1A	1	**1B-8705**	1	KEY-WOODRUFF	
	1B	1	**2W-8147**	1	GEAR (50-TEETH)	
J	2	1	**212-4893**	1	BEARING-THRUST (STANDARD)	
AB		1	**229-5153**		BEARING-THRUST (0.25-MM US)	
AB		1	**229-5154**		BEARING-THRUST (0.5-MM US)	
AB		1	**229-5155**		BEARING-THRUST (0.5-MM OS)	
AB		1	**229-5156**		BEARING-THRUST (0.5-MM US - 0.5-MM OS)	
J	3	1	**107-7708**	6	BEARING-MAIN (STANDARD)	
AB		1	**145-0168**		BEARING-MAIN (0.5-MM OS)	
AB		1	**145-0170**		BEARING-MAIN (0.5-MM US - 0.5-MM OS)	
AB		1	**145-0162**		BEARING-MAIN (0.25-MM US)	
AB		1	**145-0164**		BEARING-MAIN (0.5-MM US)	
ABF		1	**7C-7980**	1	SLEEVE-OIL SEAL	
					(THIS WEAR SLEEVE IS USED ONLY TO SALVAGE (REPAIR) THE REAR SEAL SURFACE OF THE CRANKSHAFT)	
					AVAILABLE REPAIR KIT(S):	
AJ			**196-9519**		BEARING GP-MAIN	

A-NOT PART OF THIS GROUP
B-USE AS REQUIRED
F-NOT SHOWN
J-KIT MARKED J SERVICES PARTS MARKED J

210-5590 **CRANKSHAFT GP** *(contd.)* **i03571590**

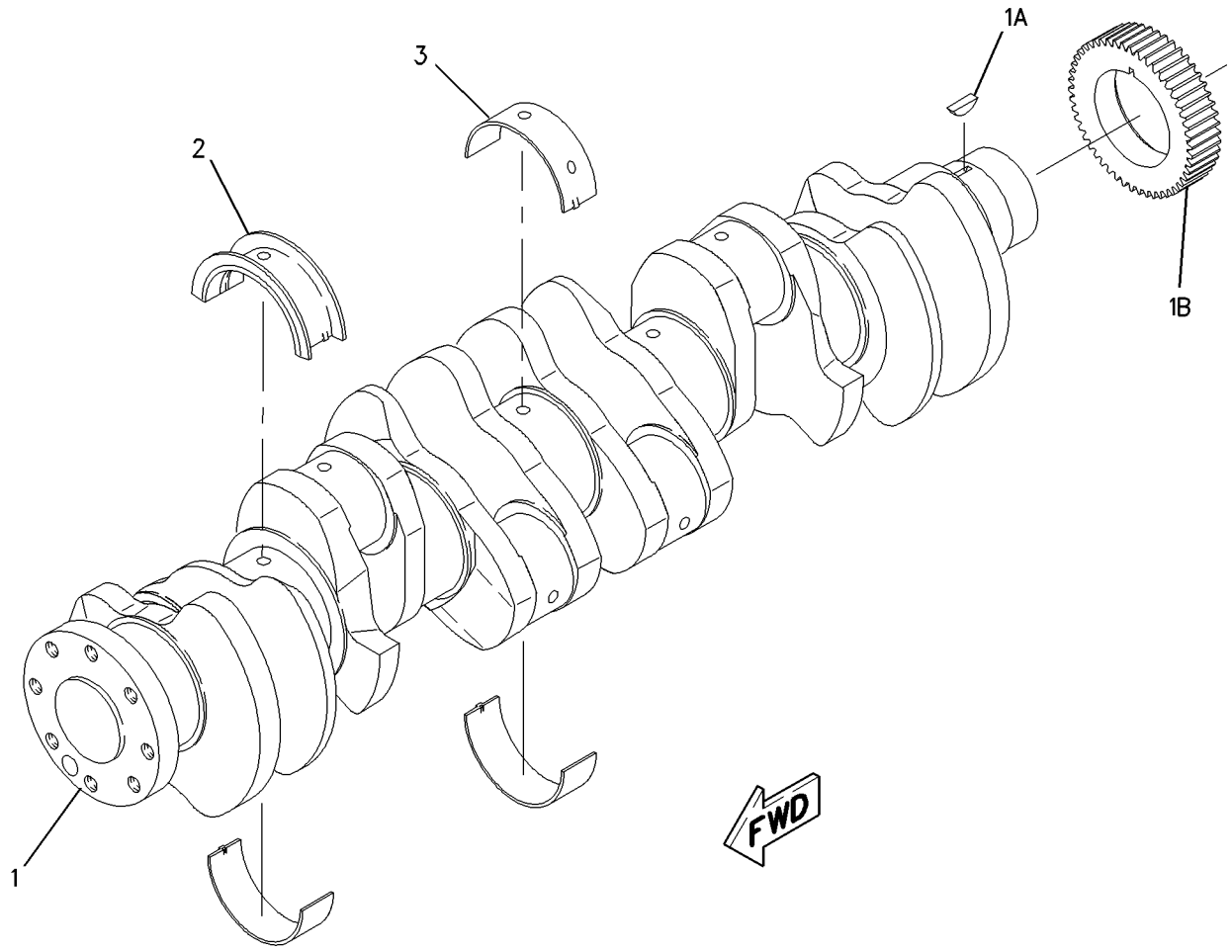

GRAPHIC #1 **<END>** g00977492

BASIC ENGINE

221-4482 CYLINDER BLOCK GP

S/N: KHX14117-UP

PART OF 330-9360 ENGINE AR-CORE

SMCS-1201 **i02690900**

NOTE	REF NO	GRAPHIC REF	PART NUMBER	QTY	PART NAME 1 2 3 4 5 6 (PRODUCT LEVEL)	SEE PAGE
CY	1	1	**305-8141**	1	CYLINDER BLOCK GP	24
	2	1	**7N-5683**	2	DOWEL	
	3	1	**1W-8407**	2	SLEEVE	
	4	1	**6V-3538**	2	DOWEL	

C-CHANGE FROM PREVIOUS TYPE
Y-SEPARATE ILLUSTRATION

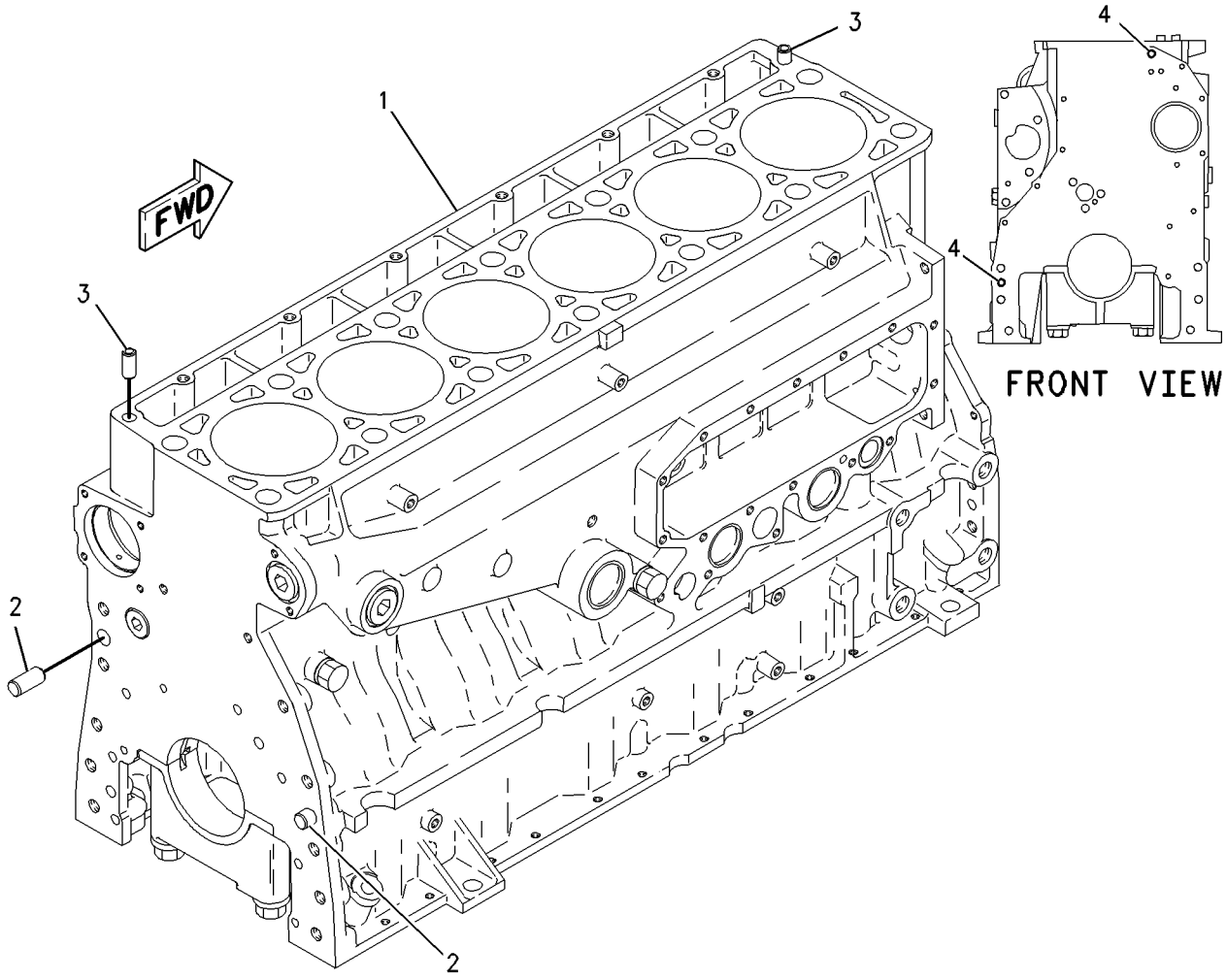

GRAPHIC #1 **<END>** g00800849

263-3774 CYLINDER BLOCK GP

S/N: KHX14117-UP

PART OF 305-8141 CYLINDER BLOCK GP

SMCS-1201 **i02696326**

NOTE	REF NO	GRAPHIC REF	PART NUMBER	QTY	PART NAME 1 2 3 4 5 6 (PRODUCT LEVEL)	SEE PAGE
	1	1	**7E-2968**	7	CAP-CRANKSHAFT BEARING	
M	2	1	**9X-8916**	14	BOLT (M16X2X140-MM)	
	3	1	**5P-8247**	14	WASHER-HARD (17X32X3.5-MM THK)	

M-METRIC PART

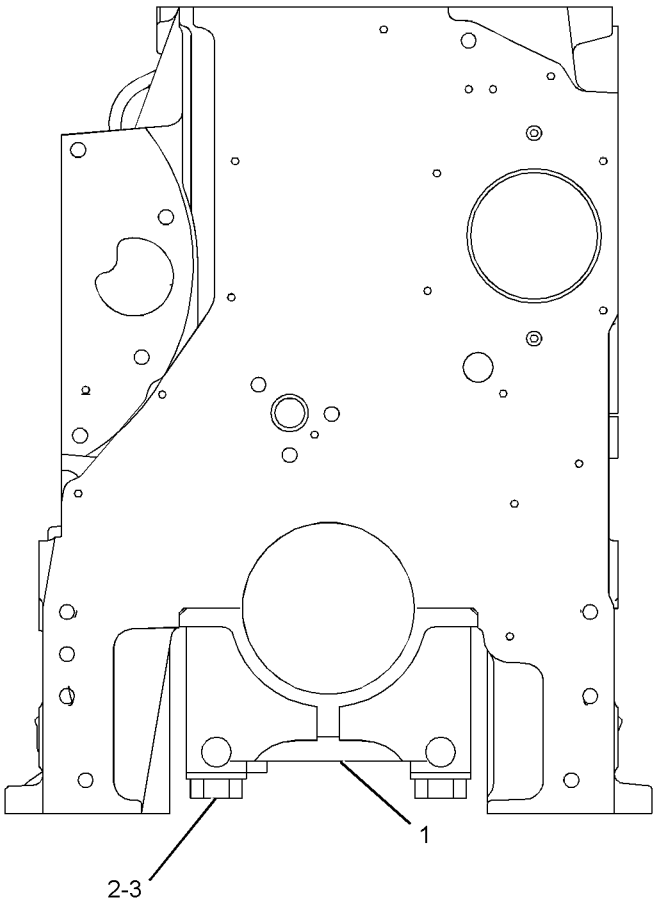

FRONT VIEW

GRAPHIC #1

<END>

g01352581

BASIC ENGINE

305-8141 CYLINDER BLOCK GP*R

S/N: KHX14117-UP

PART OF 221-4482 CYLINDER BLOCK GP

SMCS-1201 **i03624297**

NOTE	REF NO	GRAPHIC REF	PART NUMBER	QTY	PART NAME 1 2 3 4 5 6 (PRODUCT LEVEL)	SEE PAGE
Y	1	1	*263-3774*	1	CYLINDER BLOCK GP	23
	2	1	**2M-6471**	2	PLUG-CUP	
	3	1	**3H-5552**	1	PLUG-CUP	
	4	1	**9S-8006**	1	PLUG-O-RING	
	5	1	**2M-9780**	1	SEAL-O-RING	
	6	1	**216-5586**	1	BEARING-SLEEVE (CAMSHAFT)	
	7	1	**2W-7213**	6	BEARING-SLEEVE (CAMSHAFT)	
		1	**107-7604**		SLEEVE-CYLINDER	
					(FOR SALVAGE OF CYLINDER BORE IN BLOCK. QUANTITY TO BE DETERMINED BY USER.)	

Y-SEPARATE ILLUSTRATION

305-8141 **CYLINDER BLOCK GP** *(contd.)* **i03624297**

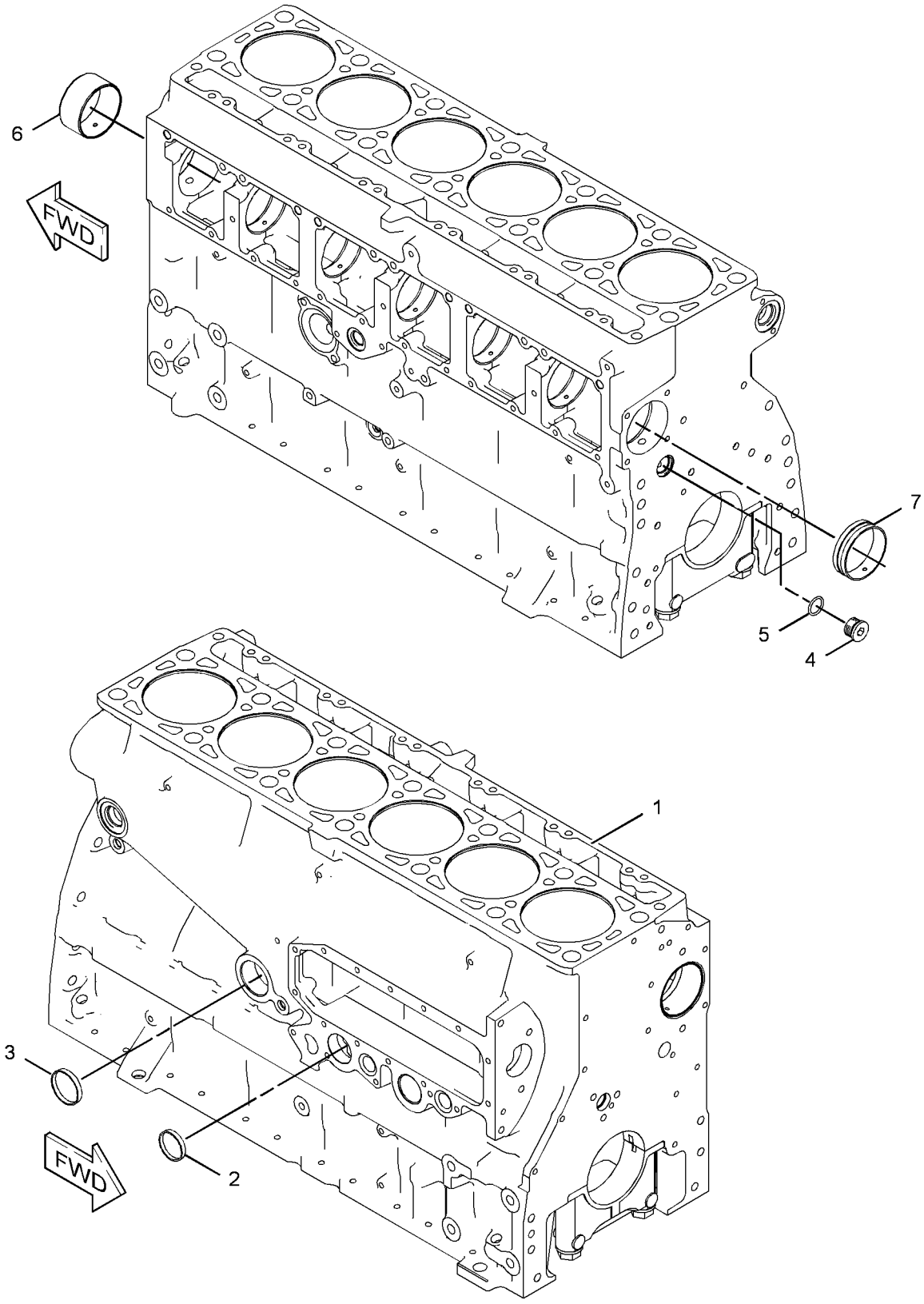

GRAPHIC #1 **<END>** g01348114

BASIC ENGINE

219-5844 CYLINDER HEAD AS

S/N: KHX14117-UP

PART OF 219-5846 CYLINDER HEAD GP

SMCS-1100 **i02215799**

NOTE	REF NO	GRAPHIC REF	PART NUMBER	QTY	PART NAME 1 2 3 4 5 6 (PRODUCT LEVEL)	SEE PAGE
	2	1	**8M-5860**	12	PLUG-CUP	
	3	1	**4F-5695**	2	PLUG-CUP	
	4	1	**227-1200**	6	SLEEVE-INJECTOR	
	5	1	**217-5213**	12	INSERT-VALVE SEAT (INLET)	
	6	1	**147-8218**	6	INSERT-VALVE SEAT (EXHAUST)	
	7	1	**8C-0563**	12	SEAL-O-RING	
	8	1	**9S-9334**	1	PLUG-O-RING	
	9	1	**9X-7712**	1	SEAL-O-RING	

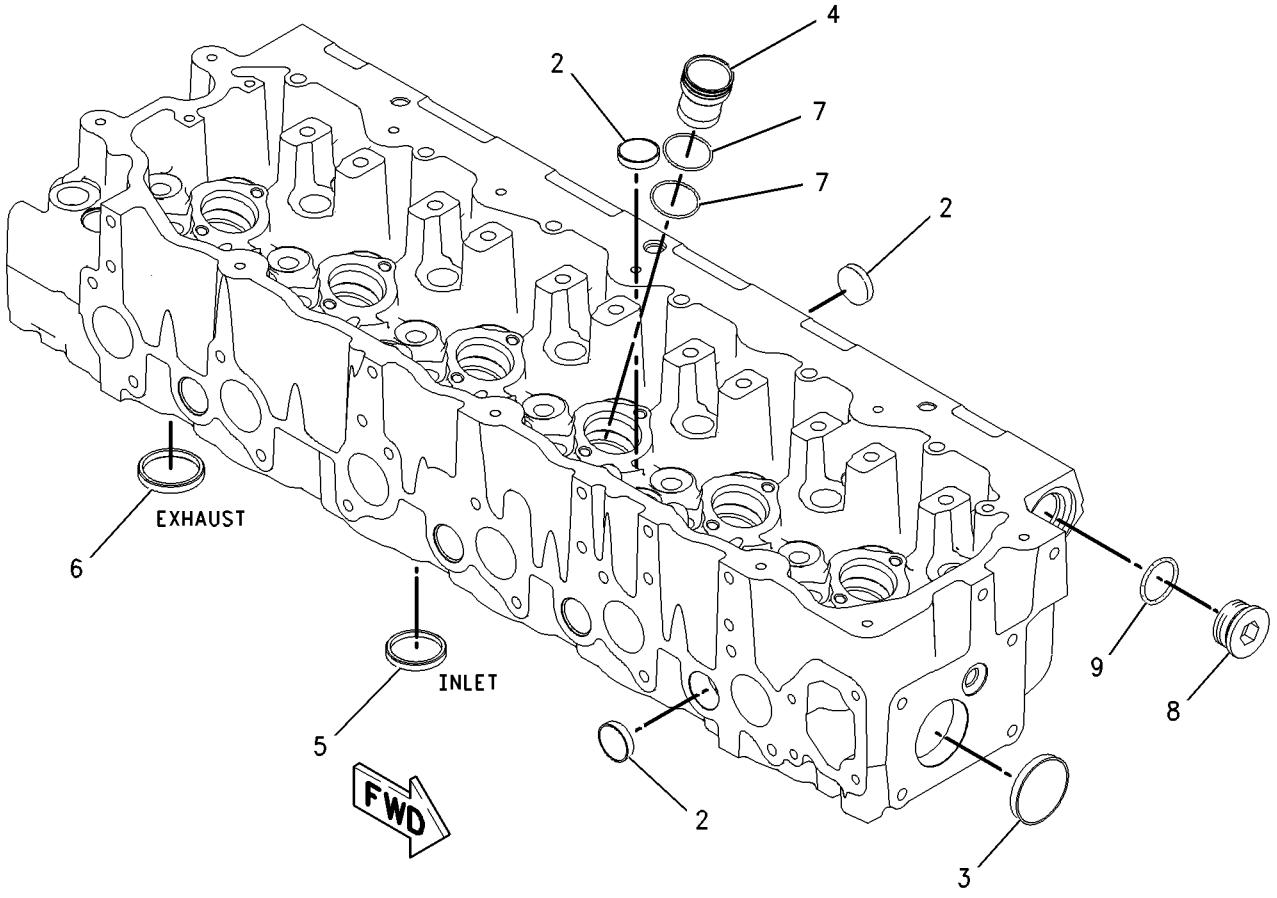

GRAPHIC #1 **<END>** g00948980

219-5846 CYLINDER HEAD GP*R

S/N: KHX14117-UP

PART OF 219-5847 CYLINDER HEAD GP

SMCS-1100 **i02215801**

NOTE	REF NO	GRAPHIC REF	PART NUMBER	QTY	PART NAME 1 2 3 4 5 6 (PRODUCT LEVEL)	SEE PAGE
Y	1	1	*219-5844*	1	CYLINDER HEAD AS	26
	2	1	**145-7390**	12	VALVE-INLET	
	3	1	**147-8211**	6	VALVE-EXHAUST	
	4	1	**1W-2715**	24	LOCK-RETAINER	
	5	1	**7E-7779**	12	RETAINER-SPRING	
	6	1	**147-8214**	12	SEAL-VALVE STEM	
	7	1	**140-9670**	12	GUIDE-VALVE	
	8	1	**137-6718**	6	SPRING-VALVE	
	9	1	**140-6188**	12	SPRING-VALVE	
	10	1	**2A-4429**	12	LOCK-RETAINER	
	11	1	**134-4483**	6	RETAINER-SPRING	
	12	1	**147-8220**	6	GUIDE-VALVE	
	13	1	**163-2478**	6	SEAL-VALVE STEM	
	14	1	**137-6715**	6	SEAT-VALVE SPRING	

Y-SEPARATE ILLUSTRATION

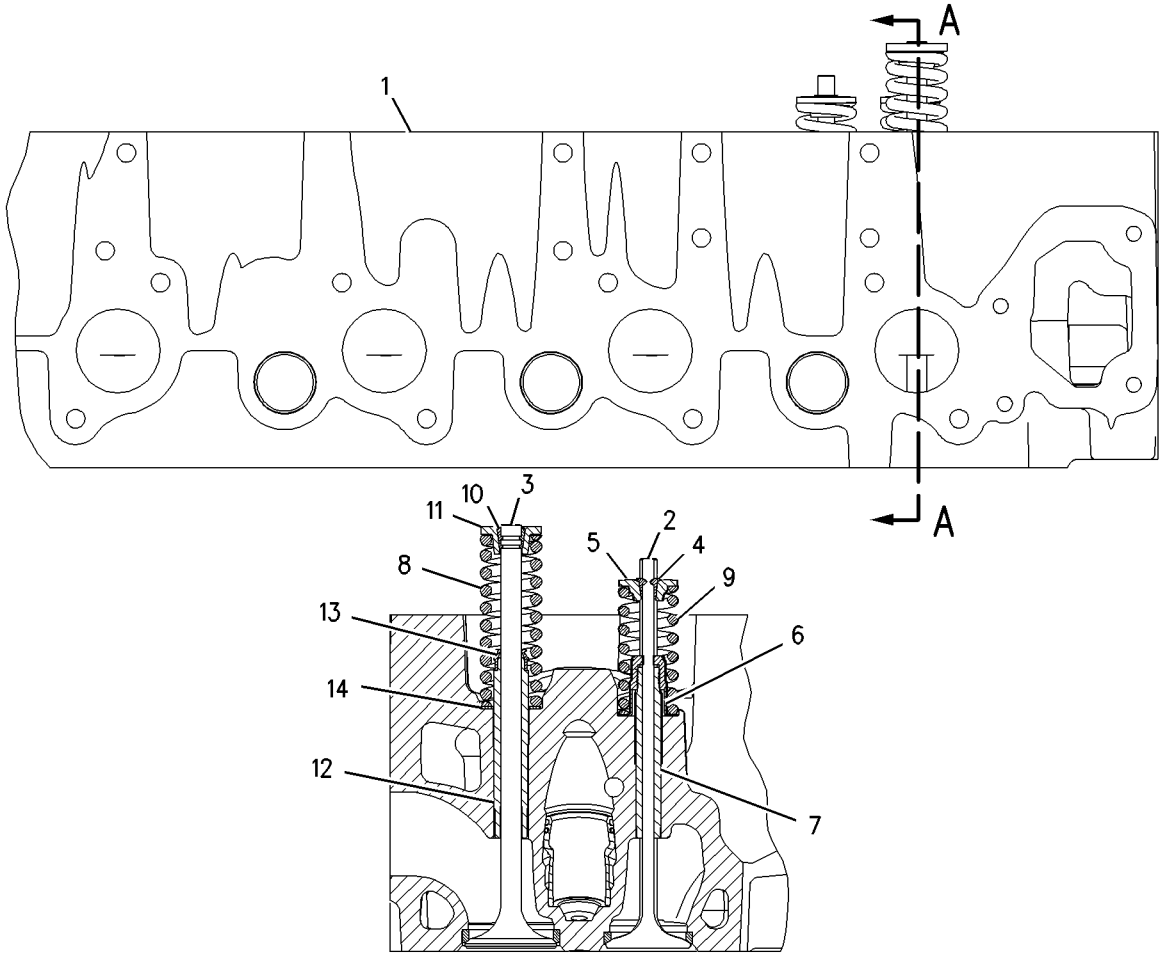

SECTION A-A

GRAPHIC #1 **<END>** g00947786

219-5847 CYLINDER HEAD GP*R

S/N: KHX14117-UP

PART OF 219-5849 CYLINDER HEAD GP

SMCS-1100 **i02215791**

NOTE	REF NO	GRAPHIC REF	PART NUMBER	QTY	PART NAME 1 2 3 4 5 6 (PRODUCT LEVEL)	SEE PAGE
YR	1	1	**219-5846**	1	CYLINDER HEAD GP	27
	2	1	**1N-5999**	2	PLUG-O-RING	
	3	1	**2M-9780**	1	SEAL-O-RING	
	4	1	**3J-1907**	2	SEAL-O-RING	
	5	1	**6V-5048**	6	SEAL-O-RING	
	6	1	**7J-0204**	2	SEAL-O-RING	
	7	1	**9S-8002**	6	PLUG-O-RING	
	8	1	**9S-8004**	2	PLUG-O-RING	
	9	1	**9S-8006**	1	PLUG-O-RING	
	10	1	**9S-9334**	1	PLUG-O-RING	
	11	1	**9X-7712**	1	SEAL-O-RING	

R-REMFG PART MAY BE AVAILABLE
Y-SEPARATE ILLUSTRATION

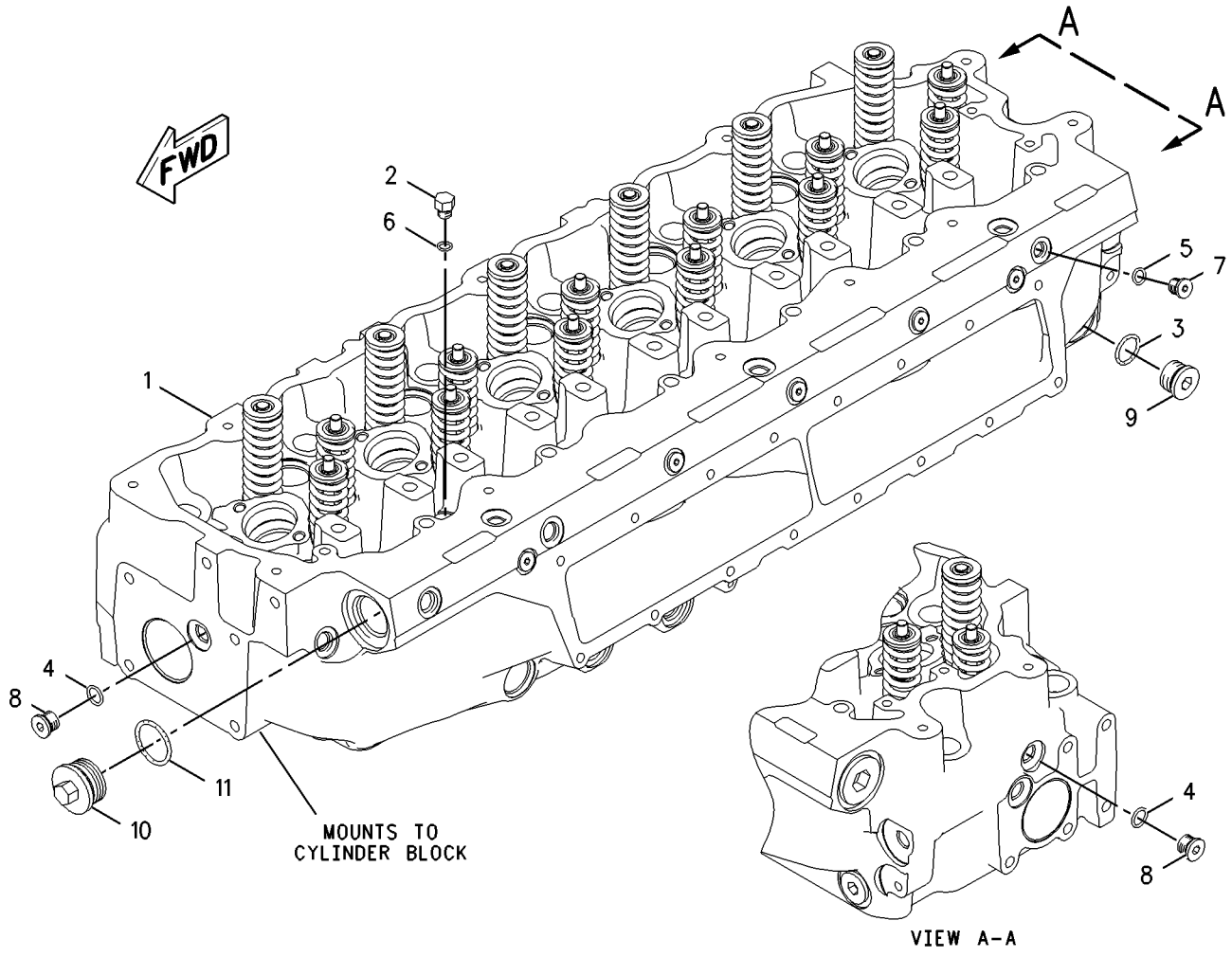

GRAPHIC #1 **<END>** g00947578

219-5849 CYLINDER HEAD GP

S/N: KHX14117-UP

PART OF 330-9360 ENGINE AR-CORE

SMCS-1100 **i02260856**

NOTE	REF NO	GRAPHIC REF	PART NUMBER	QTY	PART NAME 1 2 3 4 5 6 (PRODUCT LEVEL)	SEE PAGE
Y	1	1	*219-5847*	1	CYLINDER HEAD GP	28
	2	1	**133-4995**	1	GASKET-CYLINDER HEAD	
	3	1	*142-7289*	14	FASTENER GP-CYLINDER HEAD	
					(EACH INCLUDES)	
		1	**138-3252**	1	BOLT-12 POINT HEAD	
		1	**8T-3282**	1	WASHER-HARD (22X35X3.5-MM THK)	
M	4	1	**8T-7950**	6	BOLT (M10X1.5X180-MM)	
	5	1	**6V-5839**	6	WASHER (11X21X2.5-MM THK)	

M-METRIC PART
Y-SEPARATE ILLUSTRATION

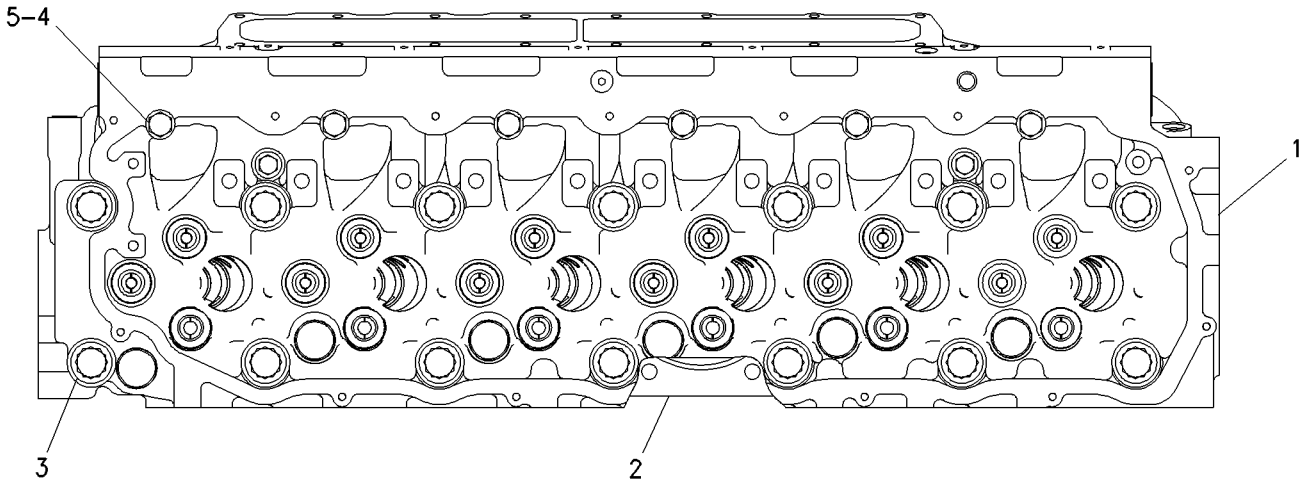

TOP VIEW

GRAPHIC #1 **<END>** g00760746

BASIC ENGINE

194-5128 DAMPER & PULLEY GP

S/N: KHX14117-UP

PART OF 325-9710 ENGINE AR-COMPLETE

SMCS-1205 **i01695045**

NOTE	REF NO	GRAPHIC REF	PART NUMBER	QTY	PART NAME 1 2 3 4 5 6 (PRODUCT LEVEL)	SEE PAGE
	1	1	**194-5127**	1	YOKE	
	2	1	**2W-7381**	1	PLATE-CLAMP	
	3	1	**167-8121**	1	DAMPER AS	
	4	1	**172-9367**	1	PULLEY-CRANKSHAFT	
	5	1	**6V-5839**	8	WASHER (11X21X2.5-MM THK)	
M	6	1	**6V-7981**	8	BOLT (M10X1.5X70-MM)	
M	7	1	**8T-3666**	4	BOLT (M14X2X60-MM)	

M-METRIC PART

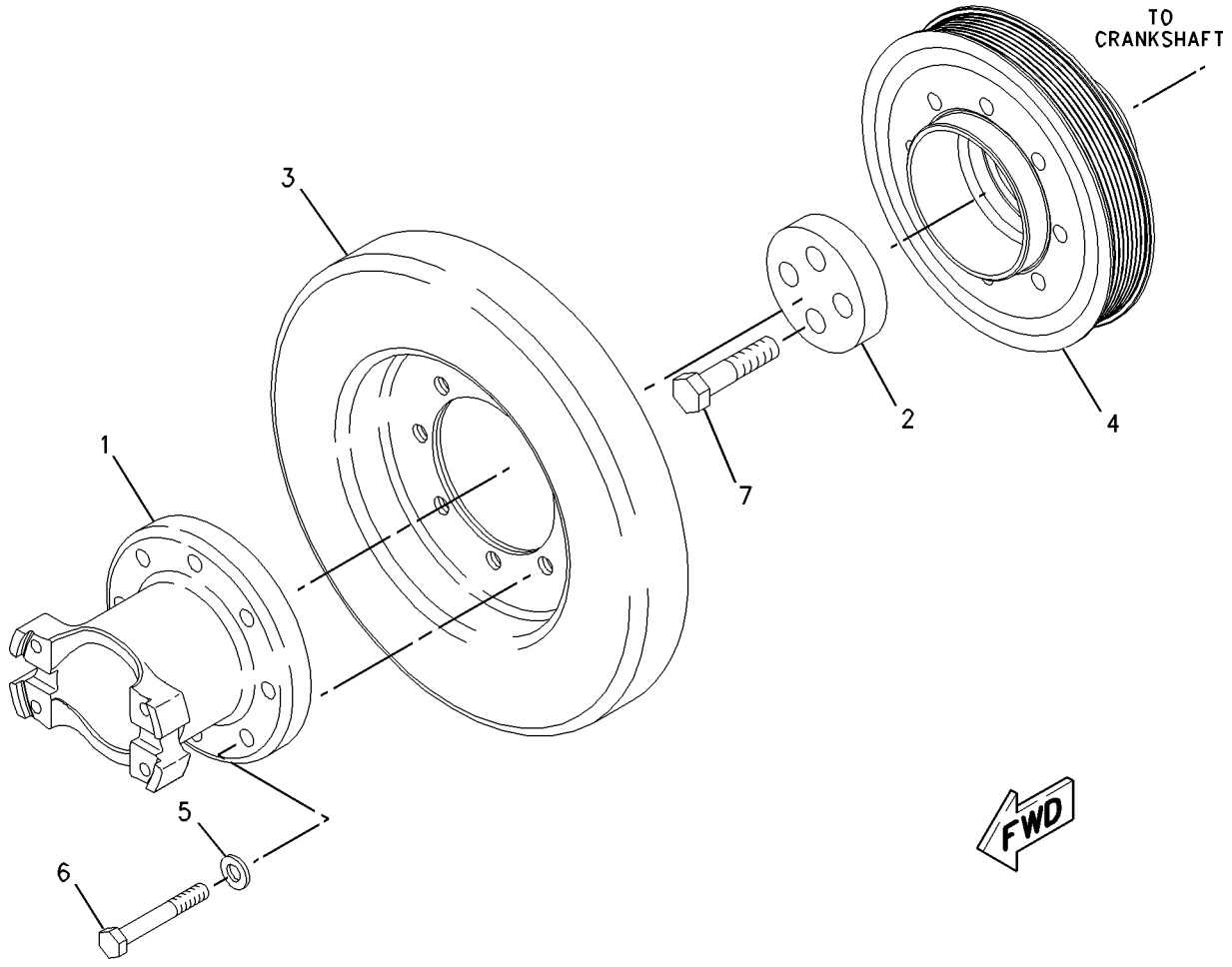

GRAPHIC #1 **<END>** g00873893

BASIC ENGINE

313-4384 DRIVE GP-ACCESSORY

S/N: KHX14117-UP

PART OF 325-9710 ENGINE AR-COMPLETE

SMCS-1207 **i03627005**

NOTE	REF NO	GRAPHIC REF	PART NUMBER	QTY	PART NAME 1 2 3 4 5 6 (PRODUCT LEVEL)	SEE PAGE
	1	1	**124-7792**	1	PULLEY AS-IDLER	
	2	1	**145-2901**	1	COVER-DUST	
	3	1	**220-1209**	1	BELT TENSIONER	
	4	1	**228-4766**	1	PLATE-LIFTING	
	5	1	**263-1786**	1	SPACER	
	6	1	**341-5000**	1	BRACKET AS	
	7	1	**285-9066**	1	BOLT (M8X1.25X65-MM)	
	8	1	**5P-4116**	1	WASHER-HARD (8.8X20.5X2-MM THK)	
	9	1	**8T-4121**	5	WASHER-HARD (11X21X2.5-MM THK)	
M	10	1	**8T-4172**	1	BOLT (M10X1.5X80-MM)	
M	11	1	**8T-4196**	4	BOLT (M10X1.5X35-MM)	

M-METRIC PART

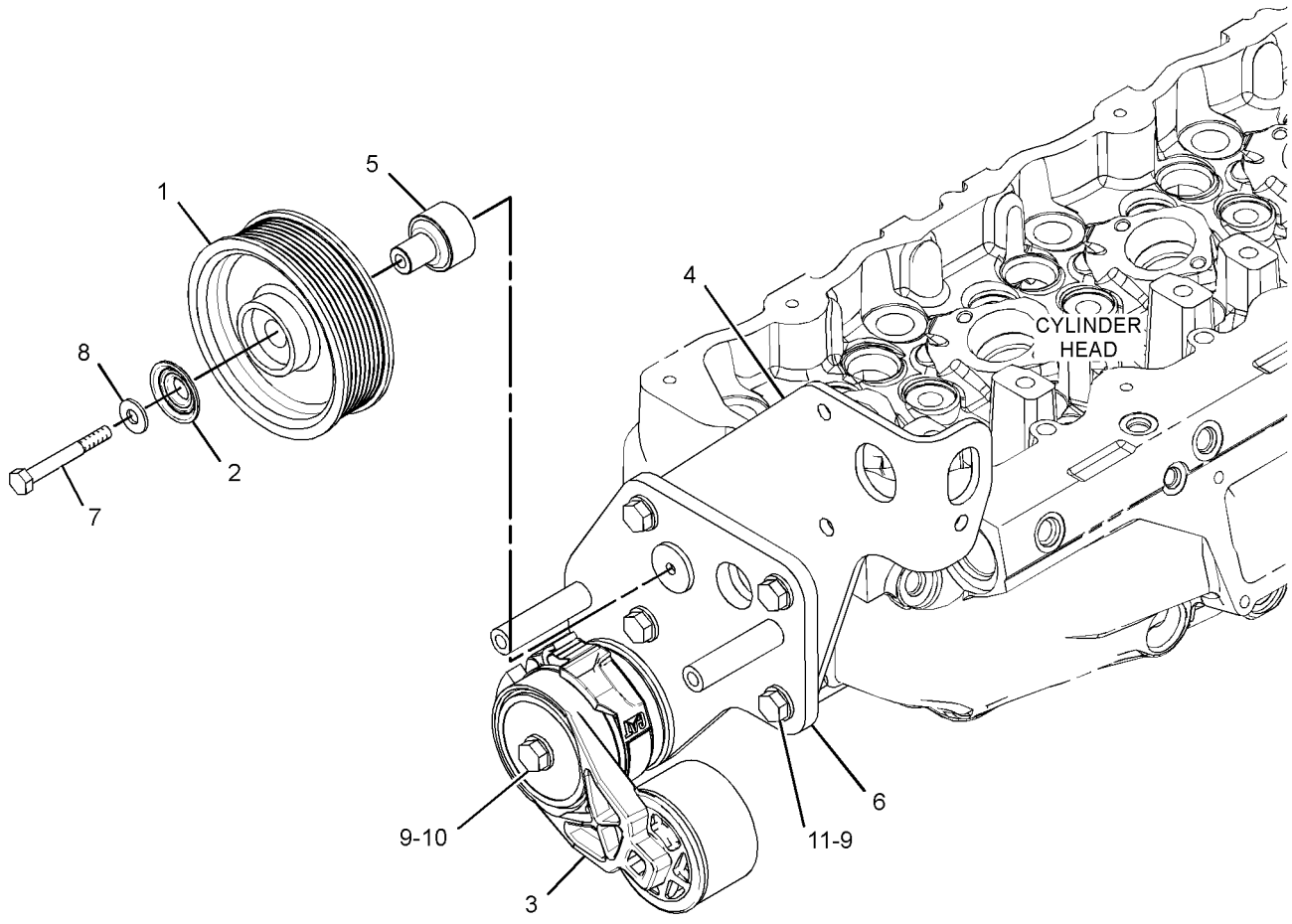

GRAPHIC #1 **<END>** g01947981

BASIC ENGINE

7C-8365 DRIVE GP-FAN

S/N: JJA1-UP

PART OF 338-5871 DRIVE GP-FAN

SMCS-1359 **i03432296**

NOTE	REF NO	GRAPHIC REF	PART NUMBER	QTY	PART NAME 1 2 3 4 5 6 (PRODUCT LEVEL)	SEE PAGE
	1	1	**5S-9062**	1	SPACER (35.032X50.8X15.88-MM THK)	
	2	1	**7C-8370**	1	CAP-DUST	
	3	1	**7C-8366**	1	BRACKET AS	
	4	1	**7C-8369**	1	HUB	
	5	1	**6V-9748**	1	SEAL-LIP TYPE	
	6	1	**4W-1203**	2	CUP-BEARING	
	7	1	**4W-1204**	2	CONE-BEARING	
	8	1	**4W-2042**	1	SPACER (35.3X45.5X38.331-MM THK)	
M	9	1	**6V-8004**	1	BOLT (M12X1.75X120-MM)	
	10	1	**7C-8634**	1	PLATE	

M-METRIC PART

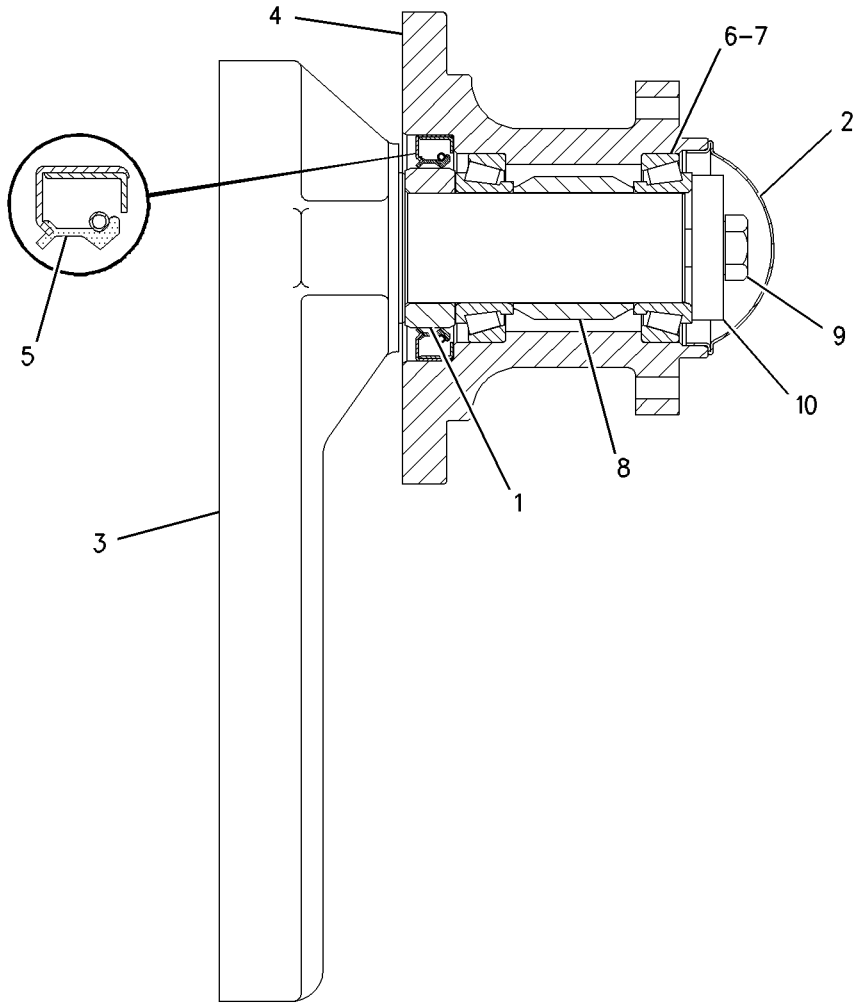

GRAPHIC #1 **<END>** g00799529

BASIC ENGINE

338-5871 DRIVE GP-FAN

S/N: JJA1-UP

PART OF 346-3710 GENERAL AR

SMCS-1359 **i03541295**

NOTE	REF NO	GRAPHIC REF	PART NUMBER	QTY	PART NAME 1 2 3 4 5 6 (PRODUCT LEVEL)	SEE PAGE
Y	1	1	**7C-8365**	1	DRIVE GP-FAN	32
	2	1	**7E-3372**	1	V-BELT SET (INCLUDES 3-BELTS)	
	3	1	**107-9579**	1	PULLEY	
	4	1	**276-7462**	1	ADAPTER-FAN	
	5	1	**294-1136**	1	SUPPORT AS	
	6	1	**294-1137**	1	PULLEY	
M	7	1	**7X-0818**	6	BOLT (M8X1.25X45-MM)	
M	8	1	**7X-2553**	4	BOLT (M16X2X40-MM)	
	9	1	**8T-4121**	8	WASHER-HARD (11X21X2.5-MM THK)	
M	10	1	**8T-4185**	4	BOLT (M10X1.5X50-MM)	
M	11	1	**8T-4196**	4	BOLT (M10X1.5X35-MM)	
	12	1	**8T-4224**	12	WASHER-HARD (8.8X16X2-MM THK)	
M	13	1	**8T-4908**	6	BOLT (M8X1.25X25-MM)	
	14	1	**9X-8257**	4	WASHER (17.5X30X3.5-MM THK)	

M-METRIC PART
Y-SEPARATE ILLUSTRATION

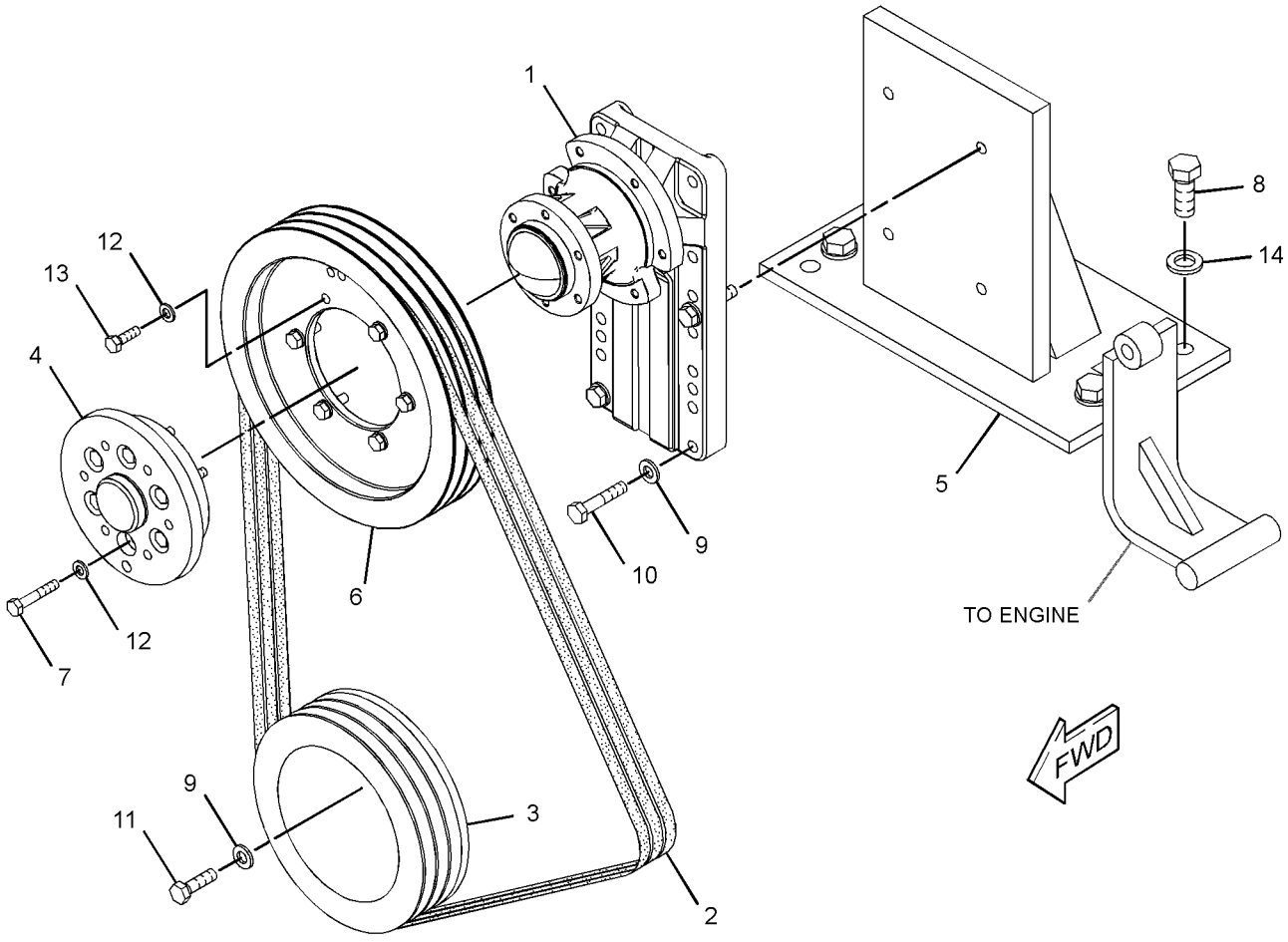

GRAPHIC #1 **<END>** g01927473

258-8723 FASTENER GP-CYLINDER HEAD

S/N: KHX14117-UP

PART OF 325-9710 ENGINE AR-COMPLETE

SMCS-1100 **i02310961**

NOTE	REF NO	GRAPHIC REF	PART NUMBER	QTY	PART NAME 1 2 3 4 5 6 (PRODUCT LEVEL)	SEE PAGE
	1	1	**229-8844**	3	CLIP	
	2	1	**244-4500**	11	SPRING	
M	3	1	**8T-0100**	11	BOLT (M8X1.25X60-MM)	
	4	1	**9N-0869**	11	WASHER-HARD (8.8X25.5X2-MM THK)	

M-METRIC PART

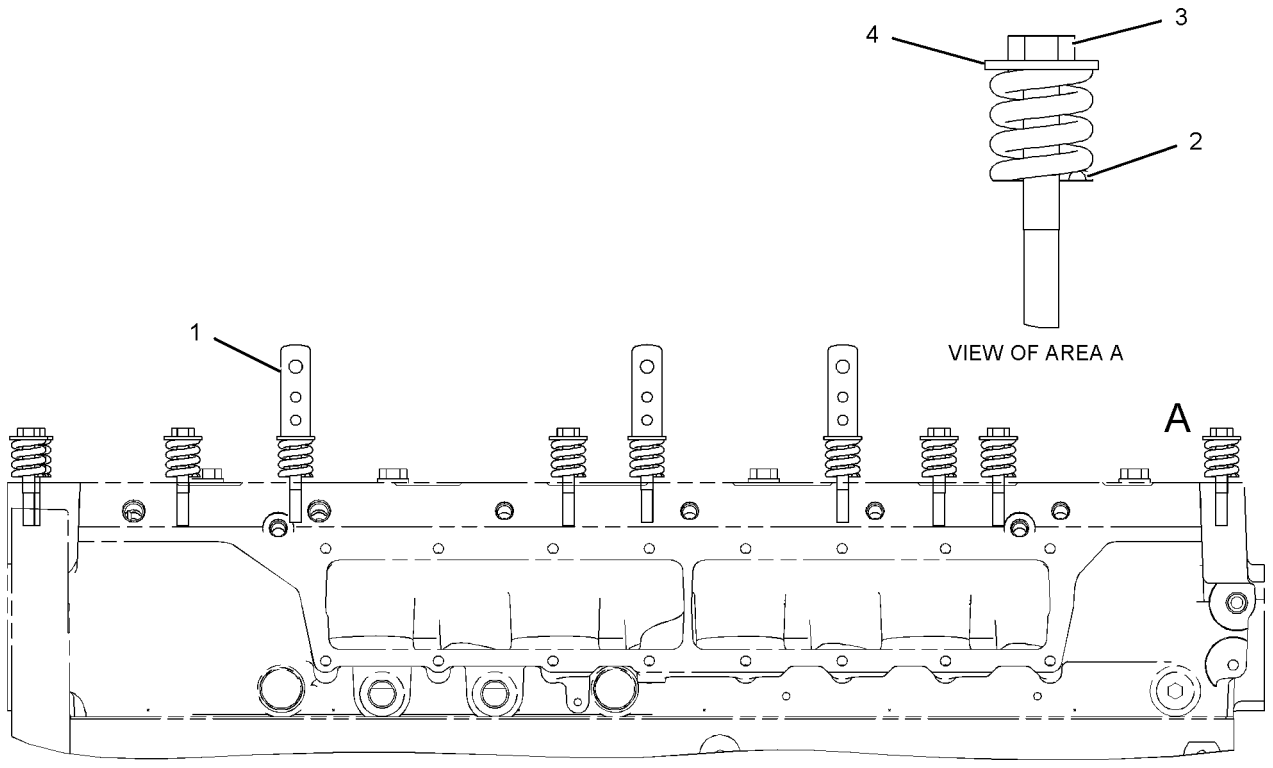

RIGHT SIDE VIEW

GRAPHIC #1 **<END>** g01125046

322-0246 FASTENER GP-ENGINE

S/N: KHX14117-UP

PART OF 325-9710 ENGINE AR-COMPLETE

SMCS-1000, 7553 **i02981180**

NOTE	REF NO	GRAPHIC REF	PART NUMBER	QTY	PART NAME 1 2 3 4 5 6 (PRODUCT LEVEL)	SEE PAGE
M	1	1	**6V-2317**	4	BOLT (M8X1.25X30-MM)	
M	2	1	**6V-5218**	2	BOLT (M8X1.25X35-MM)	
M	3	1	**6V-8337**	1	BOLT-SOCKET HEAD (M8X1.25X35-MM)	
	4	1	**9M-1974**	7	WASHER-HARD (8.8X16X2-MM THK)	

M-METRIC PART

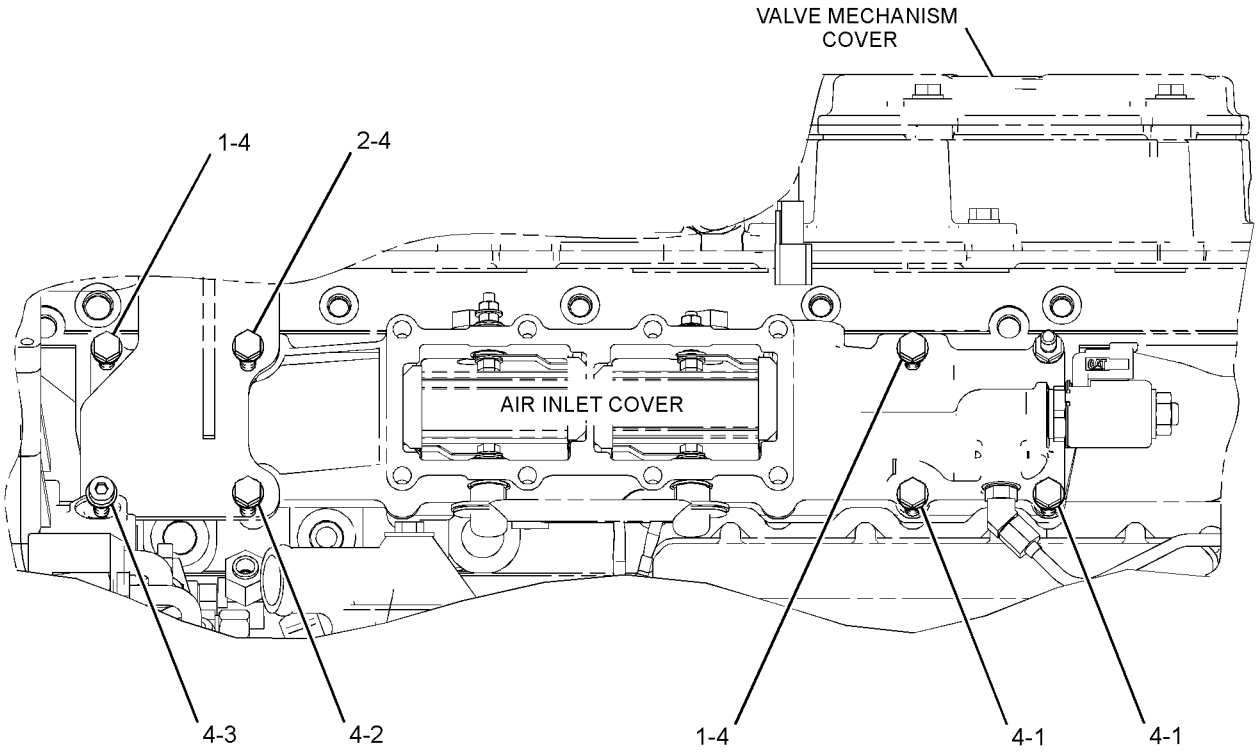

LEFT SIDE VIEW OF ENGINE

GRAPHIC #1 **<END>** g01528516

116-4556 FASTENER GP-FRONT HOUSING

S/N: KHX14117-UP

PART OF 325-9710 ENGINE AR-COMPLETE

SMCS-1151 **i01487429**

NOTE	REF NO	GRAPHIC REF	PART NUMBER	QTY	PART NAME 1 2 3 4 5 6 (PRODUCT LEVEL)	SEE PAGE
M	1	1	**6V-8336**	6	BOLT (M12X1.75X70-MM)	
		1	**5P-8245**	6	WASHER-HARD (13.5X25.5X3-MM THK)	

M-METRIC PART

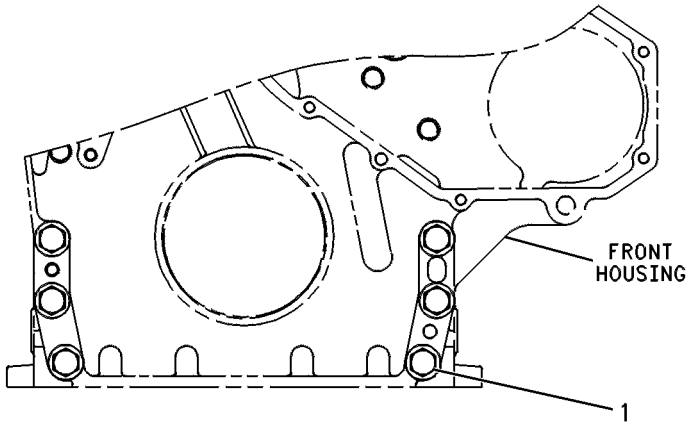

FRONT VIEW

GRAPHIC #1 **<END>** g00244671

BASIC ENGINE

275-8387 FLYWHEEL GP

S/N: KHX14117-UP

PART OF 325-9710 ENGINE AR-COMPLETE

SMCS-1156, 1158 **i03338762**

NOTE	REF NO	GRAPHIC REF	PART NUMBER	QTY	PART NAME 1 2 3 4 5 6 (PRODUCT LEVEL)	SEE PAGE
	1	1	**3E-3213**	1	PIN-SPRING	
M	2	1	**7X-7961**	8	BOLT-SELF-LOCKING (M12X1.75X100-MM)	
	3	1	**311-7210**	1	FLYWHEEL AS	
		1	**7W-5095**	1	GEAR-FLYWHEEL (134-TEETH)	
	4	1	**5P-8245**	8	WASHER-HARD (13.5X25.5X3-MM THK)	

M-METRIC PART

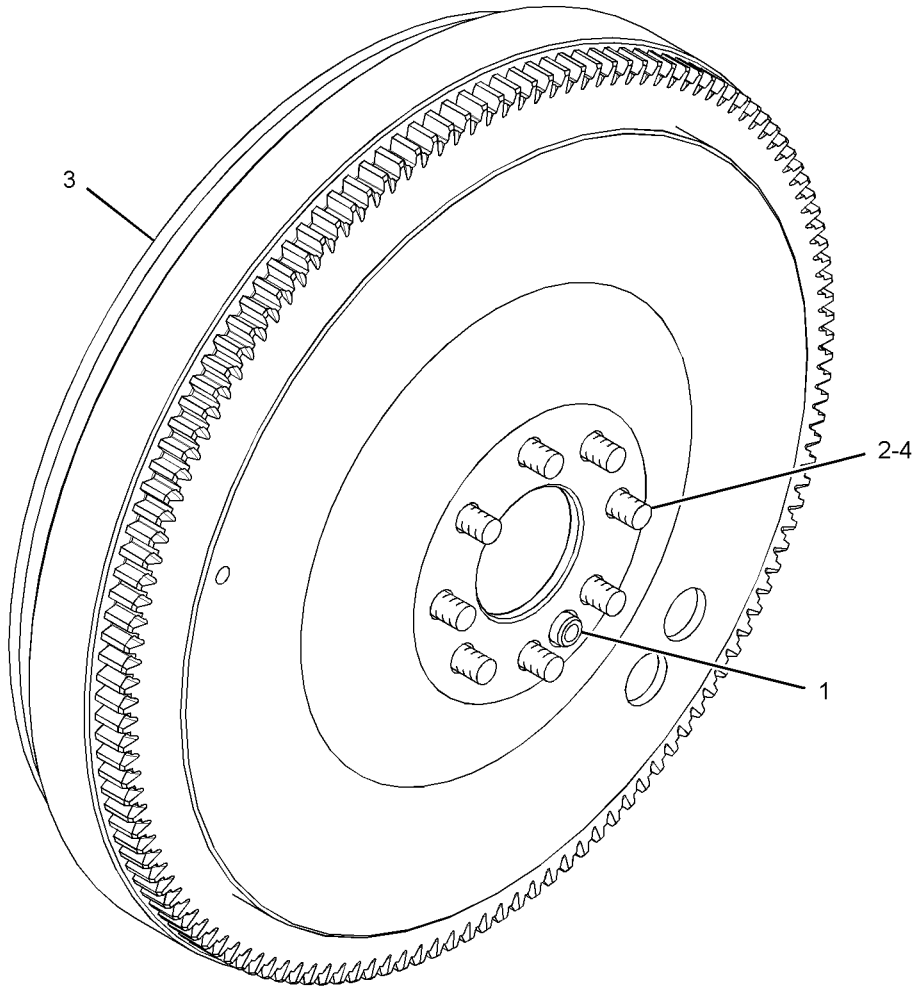

GRAPHIC #1 **<END>** g01717017

BASIC ENGINE

205-1321 GEAR GP-FRONT

S/N: KHX14117-UP

PART OF 330-9360 ENGINE AR-CORE

SMCS-1151, 1162, 1206 **i01696307**

NOTE	REF NO	GRAPHIC REF	PART NUMBER	QTY	PART NAME 1 2 3 4 5 6 (PRODUCT LEVEL)	SEE PAGE
	1	1	**113-6069**	1	PLATE-THRUST	
	2	1	**115-4219**	1	PLATE-RETAINING	
	3	1	**200-4495**	1	SHAFT-IDLER	
	4	1	**205-1320**	1	GEAR AS-IDLER (50 TEETH)	
	4A	1	**115-4072**	1	BEARING	
M	5	1	**136-4183**	1	BOLT-12 POINT HEAD (M10X1.5X30MM)	
M	6	1	**6V-5843**	2	BOLT (M10X1.50X45MM)	

M-METRIC PART

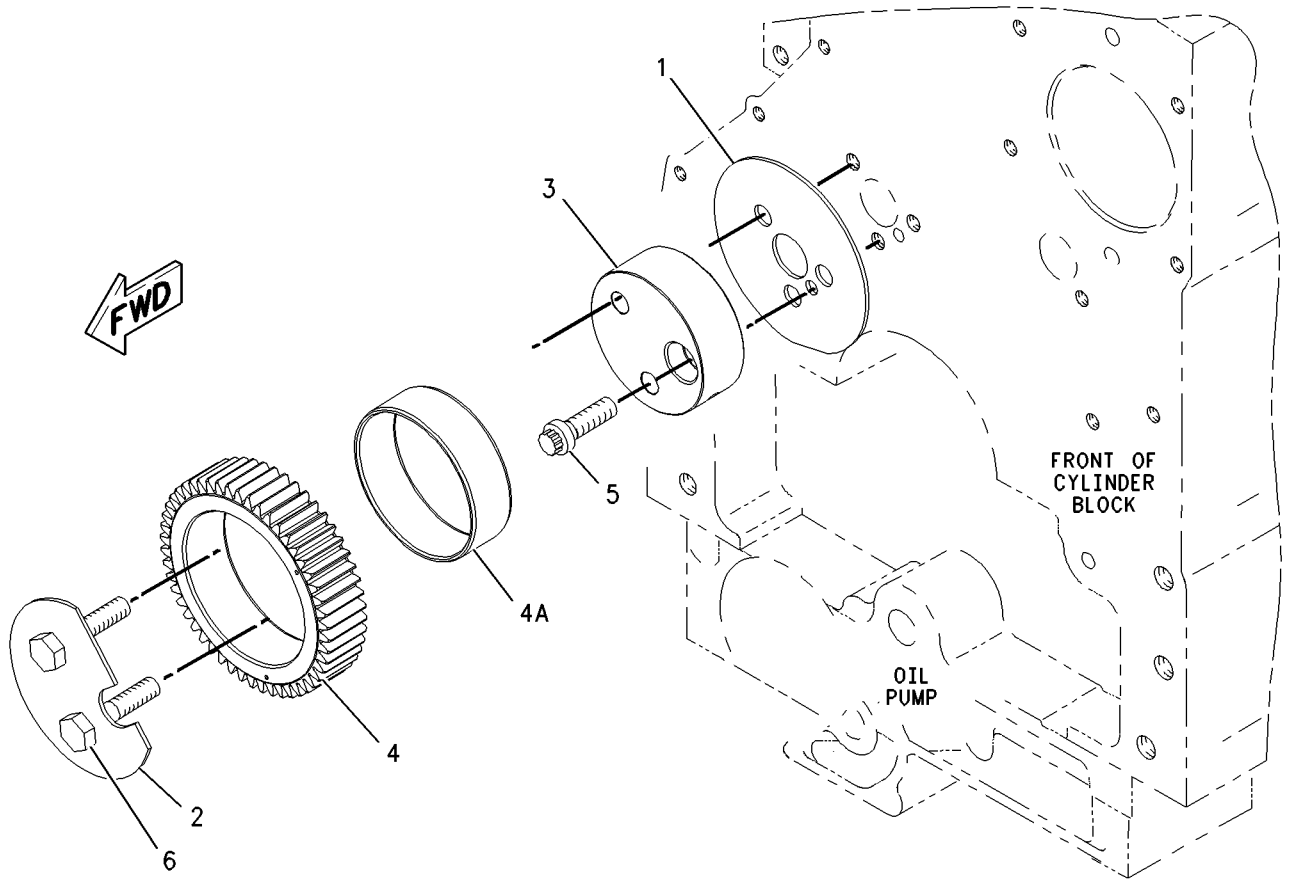

GRAPHIC #1 **<END>** g00873940

197-5210 HOUSING GP-FLYWHEEL

S/N: KHX14117-UP

PART OF 325-9710 ENGINE AR-COMPLETE

SMCS-1157 **i03499080**

NOTE	REF NO	GRAPHIC REF	PART NUMBER	QTY	PART NAME 1 2 3 4 5 6 (PRODUCT LEVEL)	SEE PAGE
	1	1	**5F-0304**	1	PLUG	
	2	1	**100-6551**	1	HOUSING-FLYWHEEL	
	4	1	**2A-1162**	1	GASKET	
	5	1	*148-8408*	1	PLUG AS	
	5A	1	**3D-2824**	1	SEAL-O-RING	
		1	**9S-4183**	1	PLUG-O-RING	
	6	1	*155-3624*	1	PLUG AS	
	6A	1	**3J-7354**	1	SEAL-O-RING	
		1	**9S-4182**	1	PLUG-O-RING	
M	7	1	**6V-5842**	2	BOLT (M10X1.5X40-MM)	
M	9	1	**8T-0226**	10	BOLT (M14X2X45-MM)	
BF			**1U-8846**		SEALANT-GASKET	

B-USE AS REQUIRED
F-NOT SHOWN
M-METRIC PART

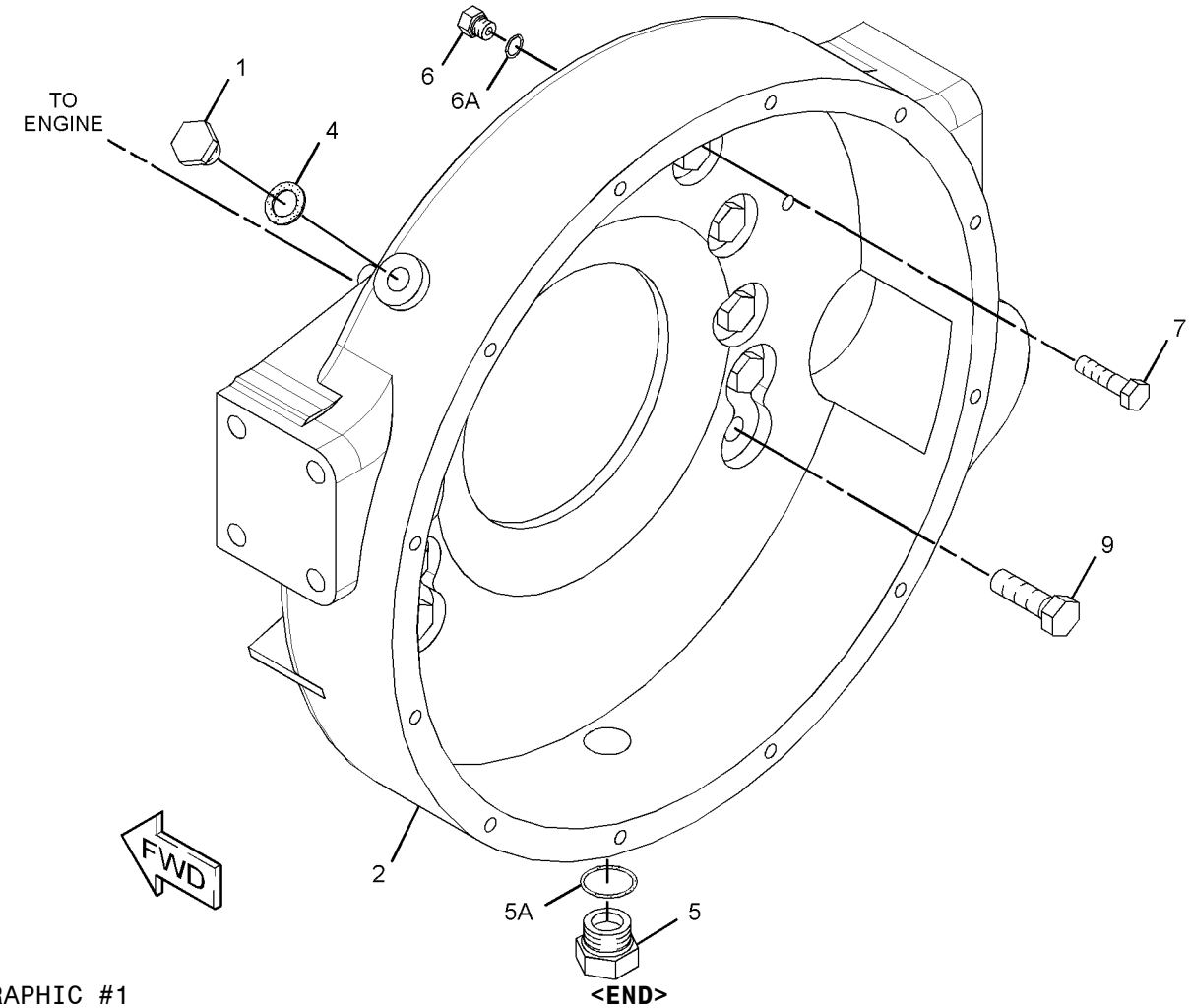

GRAPHIC #1 **<END>** g01448323

165-4446 HOUSING GP-FRONT

S/N: KHX14117-UP

PART OF 330-9360 ENGINE AR-CORE

SMCS-1151, 1162, 1206 **i03529802**

NOTE	REF NO	GRAPHIC REF	PART NUMBER	QTY	PART NAME 1 2 3 4 5 6 (PRODUCT LEVEL)	SEE PAGE
C	1	1	**245-3259**	1	HOUSING-FRONT	
M	2	1	**6V-3918**	4	BOLT (M8X1.25X50-MM)	
M	3	1	**6V-5217**	8	BOLT (M8X1.25X20-MM)	
	4	1	**9M-1974**	12	WASHER-HARD (8.8X16X2-MM THK)	
B	5	1	**1U-8846**		SEALANT-GASKET	

B-USE AS REQUIRED
C-CHANGE FROM PREVIOUS TYPE
M-METRIC PART

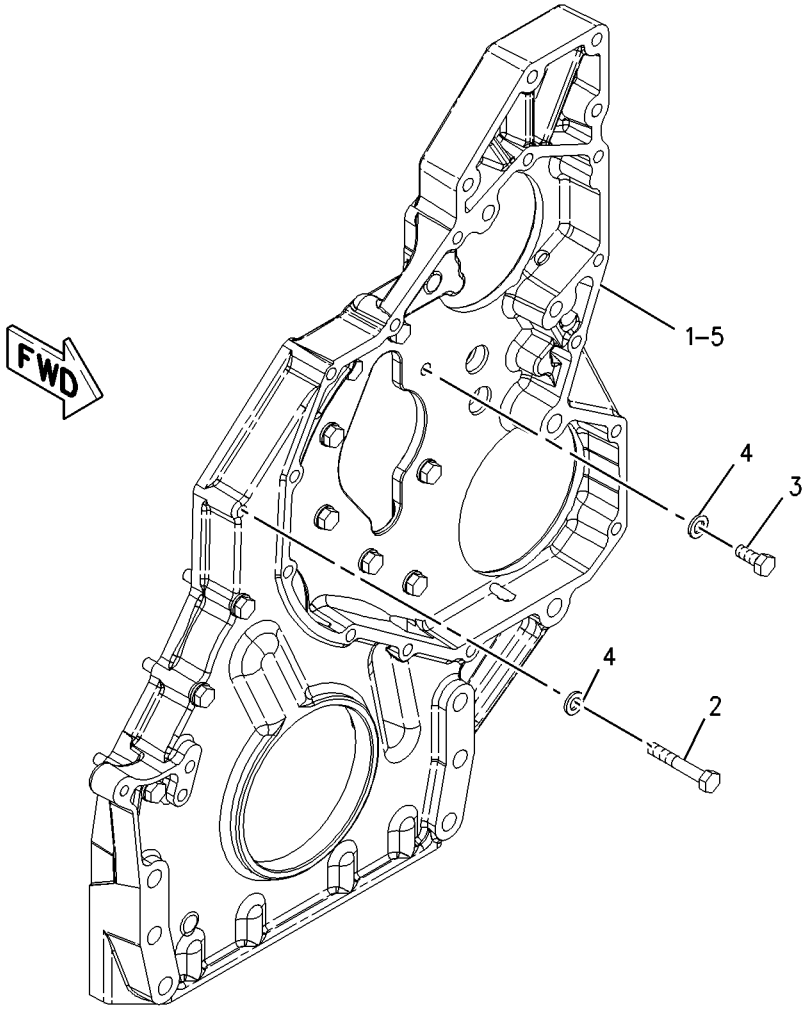

GRAPHIC #1 **<END>** g01005394

139-4081 LIFTER GP-VALVE

S/N: KHX14117-UP

PART OF 232-3717 VALVE MECHANISM GP

SMCS-1209 **i01615435**

NOTE	REF NO	GRAPHIC REF	PART NUMBER	QTY	PART NAME 1 2 3 4 5 6 (PRODUCT LEVEL)	SEE PAGE
	1	1	**139-9476**	1	SHAFT AS-LIFTER	
		1	**2D-6642**	2	BALL	
	2	1	**7E-6794**	4	ARM AS-LIFTER	
	3	1	**139-4084**	2	SPACER	

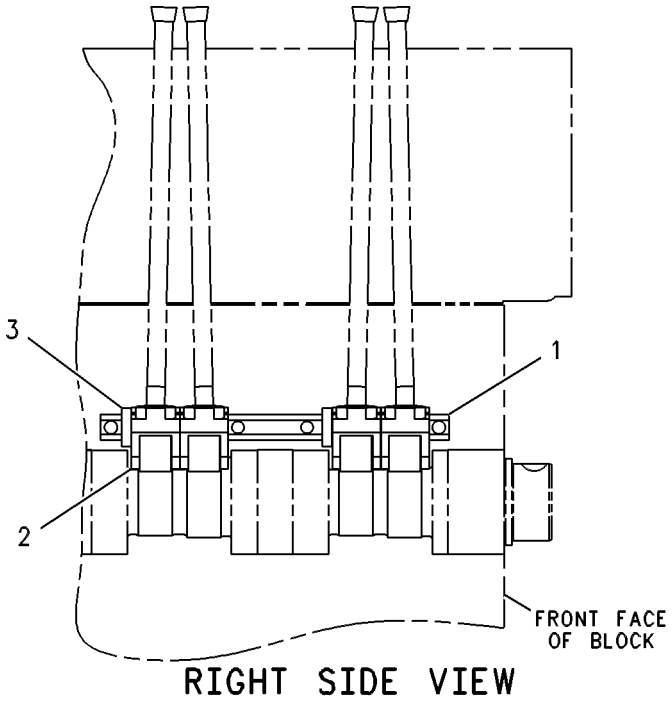

RIGHT SIDE VIEW

GRAPHIC #1 **<END>** g00288708

BASIC ENGINE

237-9822 LIFTING GP-ENGINE

S/N: KHX14117-UP

PART OF 325-9710 ENGINE AR-COMPLETE

SMCS-1122 **i02215501**

NOTE	REF NO	GRAPHIC REF	PART NUMBER	QTY	PART NAME 1 2 3 4 5 6 (PRODUCT LEVEL)	SEE PAGE
	1	1	**154-0896**	1	PLATE-LIFTING	
	2	1	**8T-4121**	4	WASHER-HARD (11X21X2.5-MM THK)	
M	3	1	**8T-4136**	4	BOLT (M10X1.5X25-MM)	

M-METRIC PART

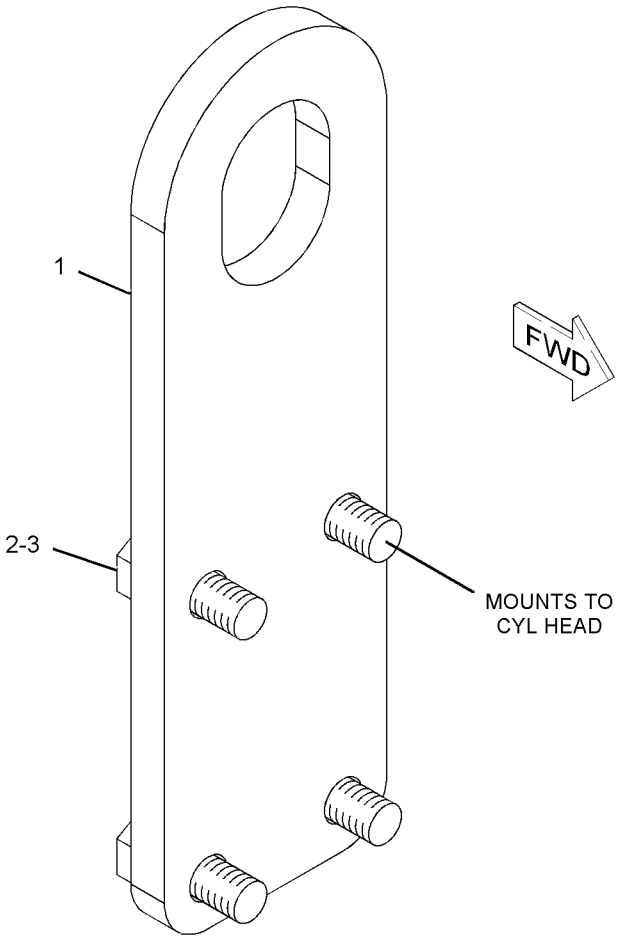

GRAPHIC #1 **<END>** g01118450

311-3542 MOUNTING GP-ENGINE

S/N: KHX14117-UP

PART OF 325-9710 ENGINE AR-COMPLETE

SMCS-1152, 1153, 1154 **i03338921**

NOTE	REF NO	GRAPHIC REF	PART NUMBER	QTY	PART NAME 1 2 3 4 5 6 (PRODUCT LEVEL)	SEE PAGE
M	1	1	**8T-3653**	4	BOLT (M14X2X80-MM)	
	2	1	**180-7344**	2	SUPPORT	
	3	1	**7X-0510**	8	WASHER-HARD (15.5X29X3-MM THK)	
M	4	1	**8C-3425**	4	BOLT (M14X2X35-MM)	

M-METRIC PART

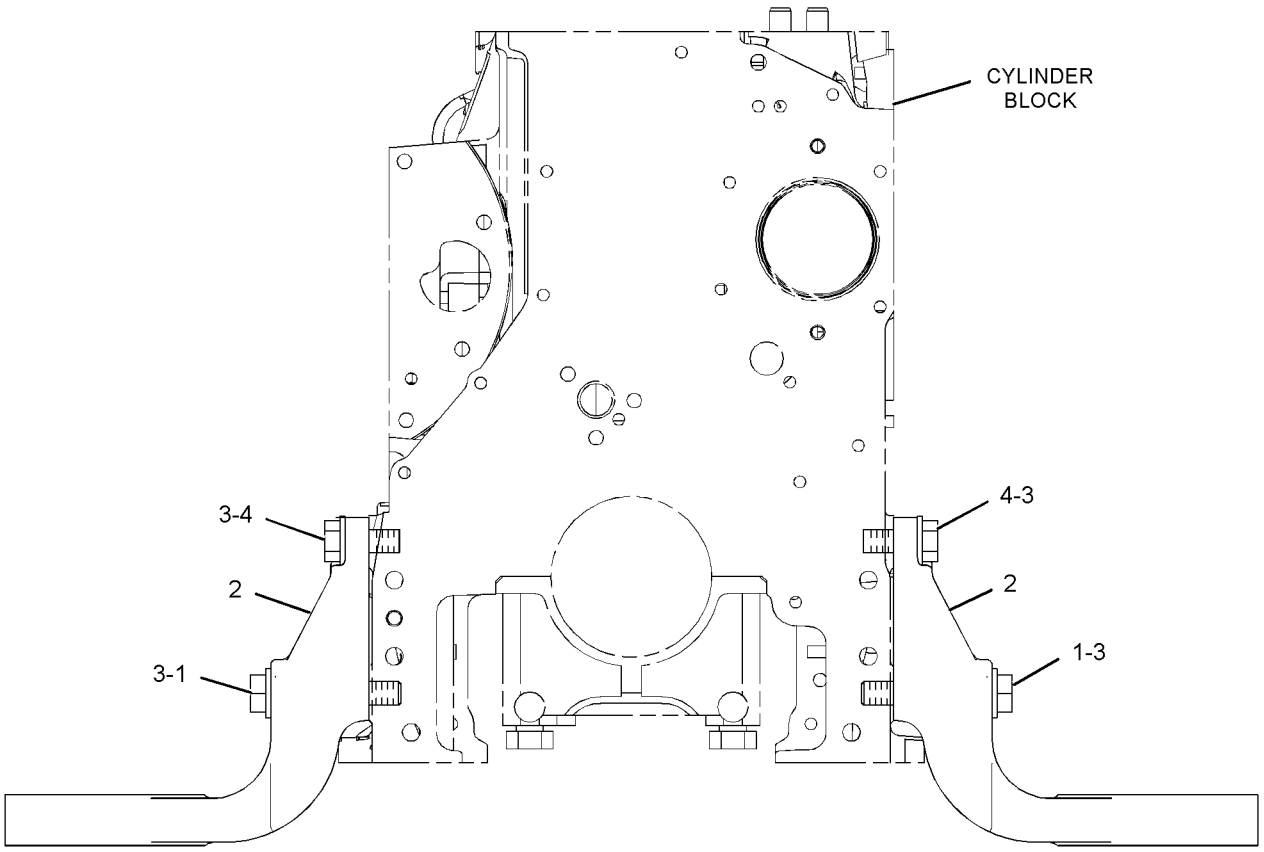

FRONT VIEW OF ENGINE

GRAPHIC #1 **<END>** g01722074

BASIC ENGINE

310-6437 MOUNTING GP-ENGINE & XMSN

S/N: JJA1-UP

PART OF 346-3710 GENERAL AR

SMCS-1152, 1153, 1154, 3082 **i03561101**

NOTE	REF NO	GRAPHIC REF	PART NUMBER	QTY	PART NAME 1 2 3 4 5 6 (PRODUCT LEVEL)	SEE PAGE
	1	1	**174-9529**	2	MOUNT AS	
					(EACH INCLUDES)	
		1	**6Y-9960**	1	MOUNT AS	
		1	**9W-7385**	1	SLEEVE	
		1	**9W-7388**	2	WASHER (26X144X12-MM THK)	
	2	1	*192-7357*	2	MOUNT AS	
					(EACH INCLUDES)	
		1	**9W-6582**	1	SLEEVE	
		1	**9W-6584**	1	WASHER (20.5X114X10-MM THK)	
		1	**9W-9920**	1	MOUNT AS	
	3	1	**211-9274**	1	SUPPORT (RH)	
	4	1	**211-9275**	1	SUPPORT (LH)	
	5	1	**198-3611**	1	BELT-SERPENTINE	
	6	1	**316-6682**	1	PLATE AS	
	7	1	**316-6686**	1	PLATE AS	
	8	1	**337-2233**	1	PLATE AS	
	9	1	**198-4776**	4	WASHER-HARD (8.8X20X8-MM THK)	
	10	1	**198-4777**	4	WASHER-HARD (11X25X10-MM THK)	
M	11	1	**8C-3290**	2	BOLT (M24X3X150-MM)	
	12	1	**8T-4121**	15	WASHER-HARD (11X21X2.5-MM THK)	
	13	1	**8T-4123**	10	WASHER (22X35X3.5-MM THK)	
M	14	1	**8T-4136**	4	BOLT (M10X1.5X25-MM)	
	15	1	**8T-4167**	2	WASHER-HARD (26X44X4-MM THK)	
M	16	1	**8T-4191**	3	BOLT (M10X1.5X16-MM)	
M	17	1	**8T-4196**	12	BOLT (M10X1.5X35-MM)	
M	18	1	**8T-4908**	4	BOLT (M8X1.25X25-MM)	
M	19	1	**8T-6381**	2	BOLT (M20X2.5X120-MM)	
M	20	1	**8T-6430**	8	BOLT (M20X2.5X50-MM)	

M-METRIC PART

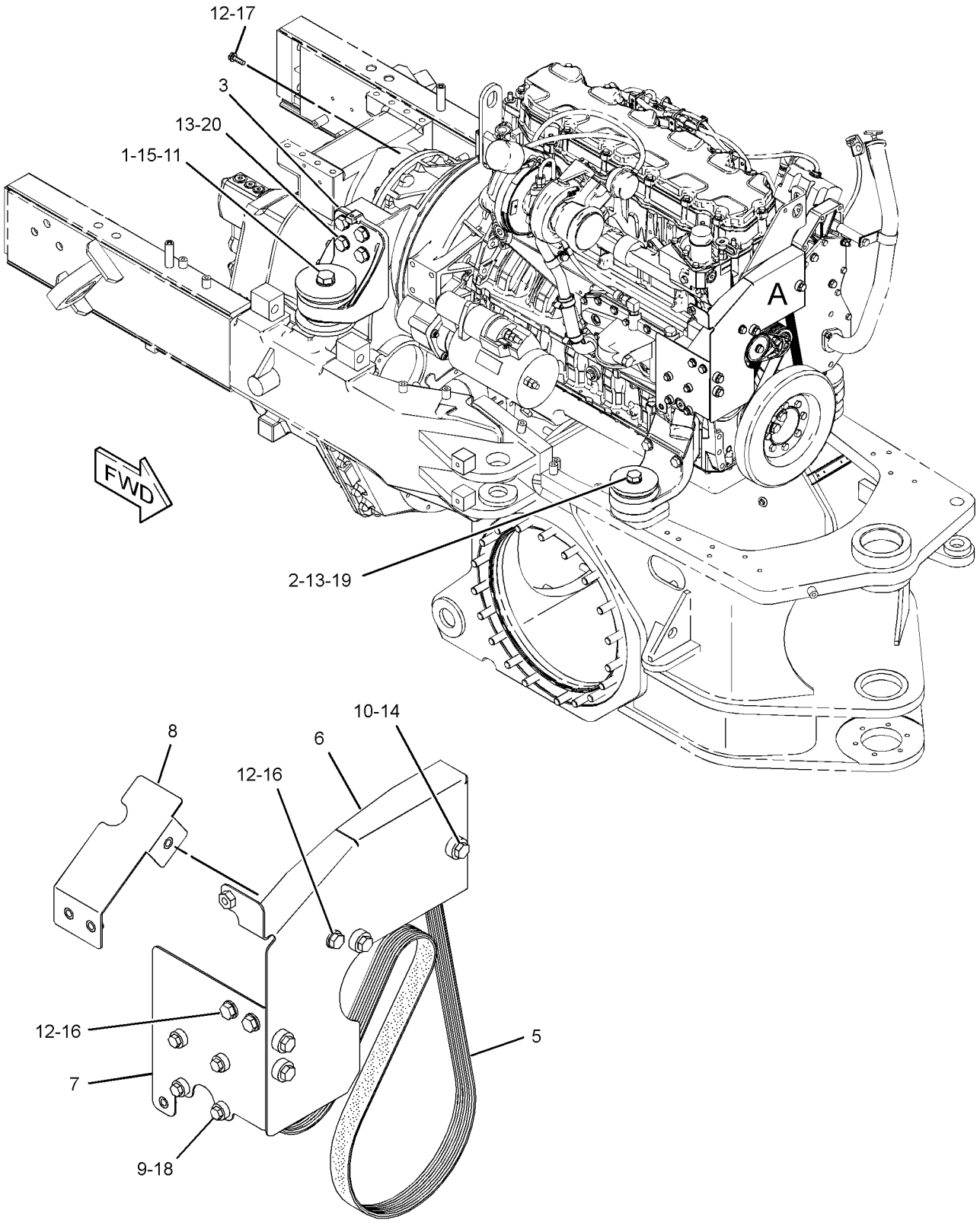

VIEW OF AREA A

GRAPHIC #1 **<END>** g01697633

BASIC ENGINE

193-6996 PAN GP-OIL

S/N: KHX14117-UP

PART OF 193-6998 PAN GP-OIL

SMCS-1302 **i03636098**

NOTE	REF NO	GRAPHIC REF	PART NUMBER	QTY	PART NAME 1 2 3 4 5 6 (PRODUCT LEVEL)	SEE PAGE
	1	1	**191-6241**	1	PAN AS-OIL	
	2	1	**168-2288**	1	PLUG AS-DRAIN (MAGNETIC) (ENGINE OIL PAN)	
		1	**169-7487**	1	SEAL-O-RING	
	3	1	**9S-8004**	1	PLUG-O-RING	
	4	1	**3J-1907**	1	SEAL-O-RING	

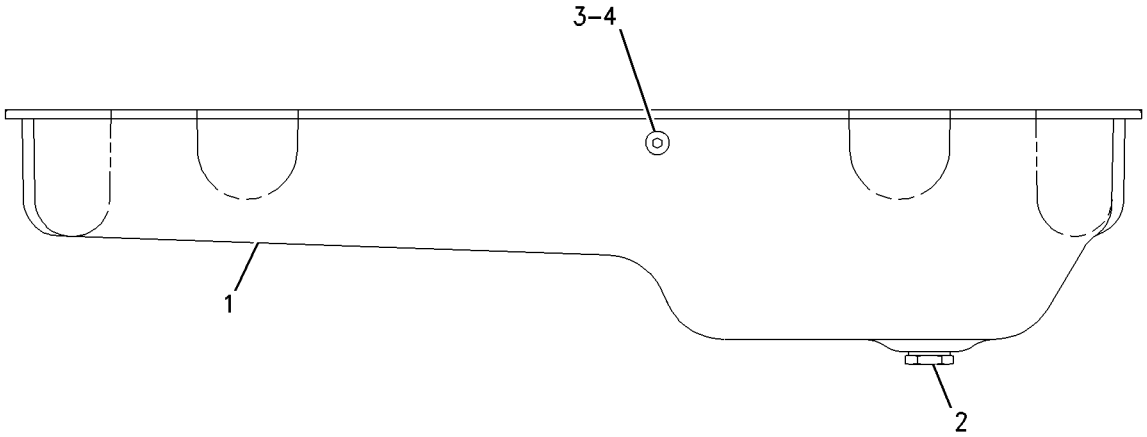

LEFT SIDE VIEW

GRAPHIC #1 **<END>** g00783675

193-6998 PAN GP-OIL

S/N: KHX14117-UP

PART OF 325-9710 ENGINE AR-COMPLETE

SMCS-1302 **i03506500**

NOTE	REF NO	GRAPHIC REF	PART NUMBER	QTY	PART NAME 1 2 3 4 5 6 (PRODUCT LEVEL)	SEE PAGE
Y	1	1	*193-6996*	1	PAN GP-OIL (ENGINE)	46
M	2	1	**175-3676**	36	BOLT (M8X1.25X19.5-MM)	
	3	1	**166-2905**	1	SEAL-INTEGRAL	
B	4	1	**4C-9612**		SEALANT-SILICONE	

B-USE AS REQUIRED
M-METRIC PART
Y-SEPARATE ILLUSTRATION

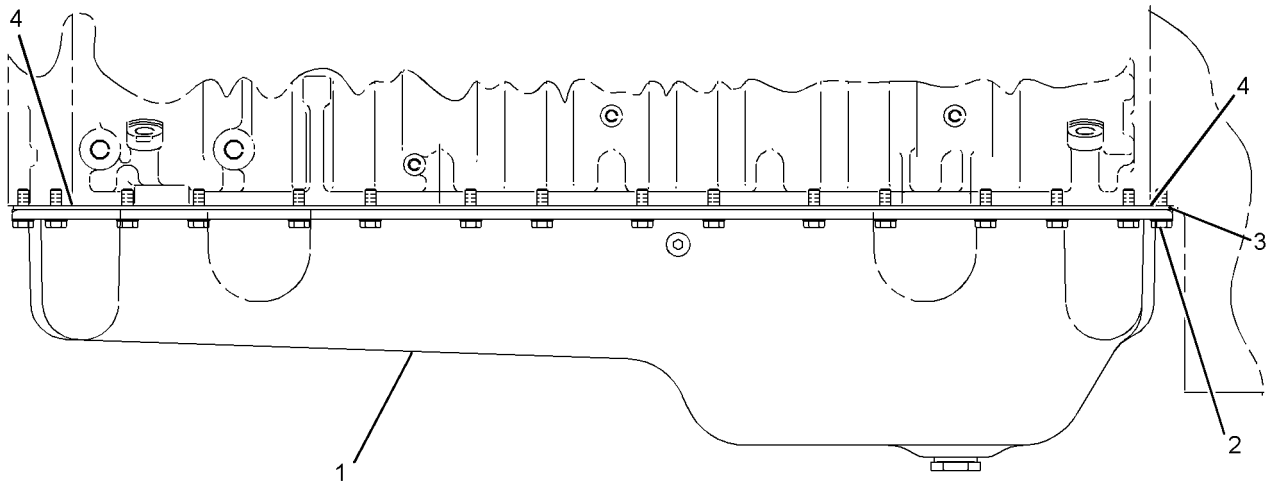

LEFT SIDE VIEW

GRAPHIC #1 **<END>** g01064655

BASIC ENGINE

210-5592 PISTON & ROD GP*R

S/N: KHX14117-UP

PART OF 330-9360 ENGINE AR-CORE

SMCS-1225 **i03626486**

NOTE	REF NO	GRAPHIC REF	PART NUMBER	QTY	PART NAME 1 2 3 4 5 6 (PRODUCT LEVEL)	SEE PAGE
R	1	1	**213-3193**	1	ROD AS-CONNECTING (NON-DRILLED)	
	1A	1	**2W-0027**	1	BEARING (EYE END)	
	1B	1	**195-0321**	2	BOLT	
	2	1	**224-6638**	1	BEARING-CONNECTING ROD (STANDARD)	
AB		1	**7C-6976**		BEARING-CONNECTING ROD (0.25-MM US)	
AB		1	**7C-6977**		BEARING-CONNECTING ROD (0.5-MM US)	
	3	1	**197-9354**	1	RING-PISTON (OIL CONTROL)	
	4	1	**197-9353**	1	RING-PISTON (INTERMEDIATE)	
	5	1	**197-9386**	1	RING-PISTON (TOP)	
	6	1	**168-7224**	1	PIN-PISTON	
	7	1	**173-0143**	1	JET AS-PISTON COOLING	
R	8	1	**238-2698**	1	BODY AS	
M	9	1	**6V-3940**	1	BOLT (M8X1.25X25-MM)	
	10	1	**7C-0111**	2	RETAINER-PIN	

A-NOT PART OF THIS GROUP
B-USE AS REQUIRED
M-METRIC PART
R-REMFG PART MAY BE AVAILABLE

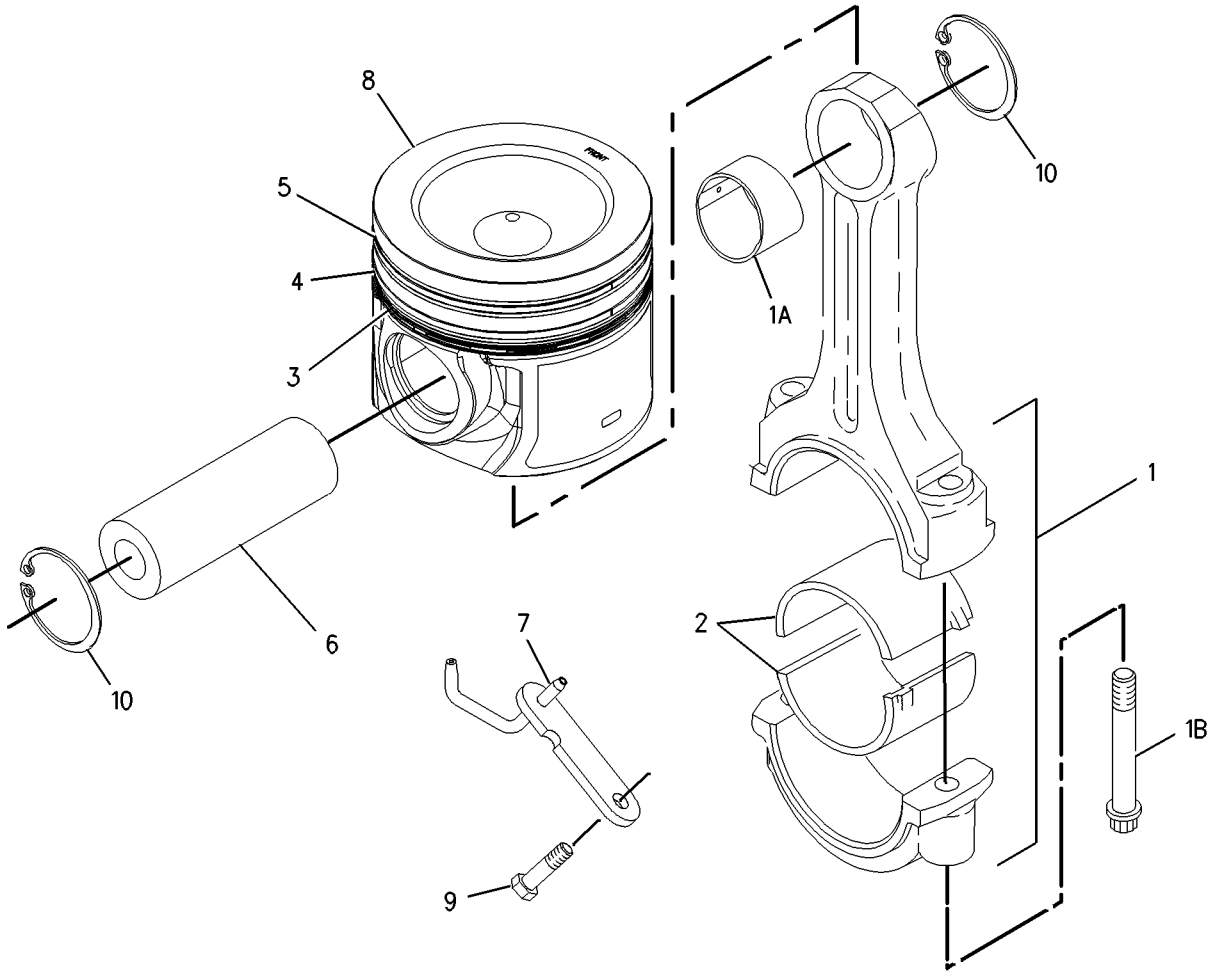

GRAPHIC #1 **<END>** g00903037

135-2141 PLUG GP-CYLINDER BLOCK

S/N: KHX14117-UP

PART OF 325-9710 ENGINE AR-COMPLETE

SMCS-1201 **i03630417**

NOTE	REF NO	GRAPHIC REF	PART NUMBER	QTY	PART NAME 1 2 3 4 5 6 (PRODUCT LEVEL)	SEE PAGE
	1	1	**1S-2563**	4	PLUG	

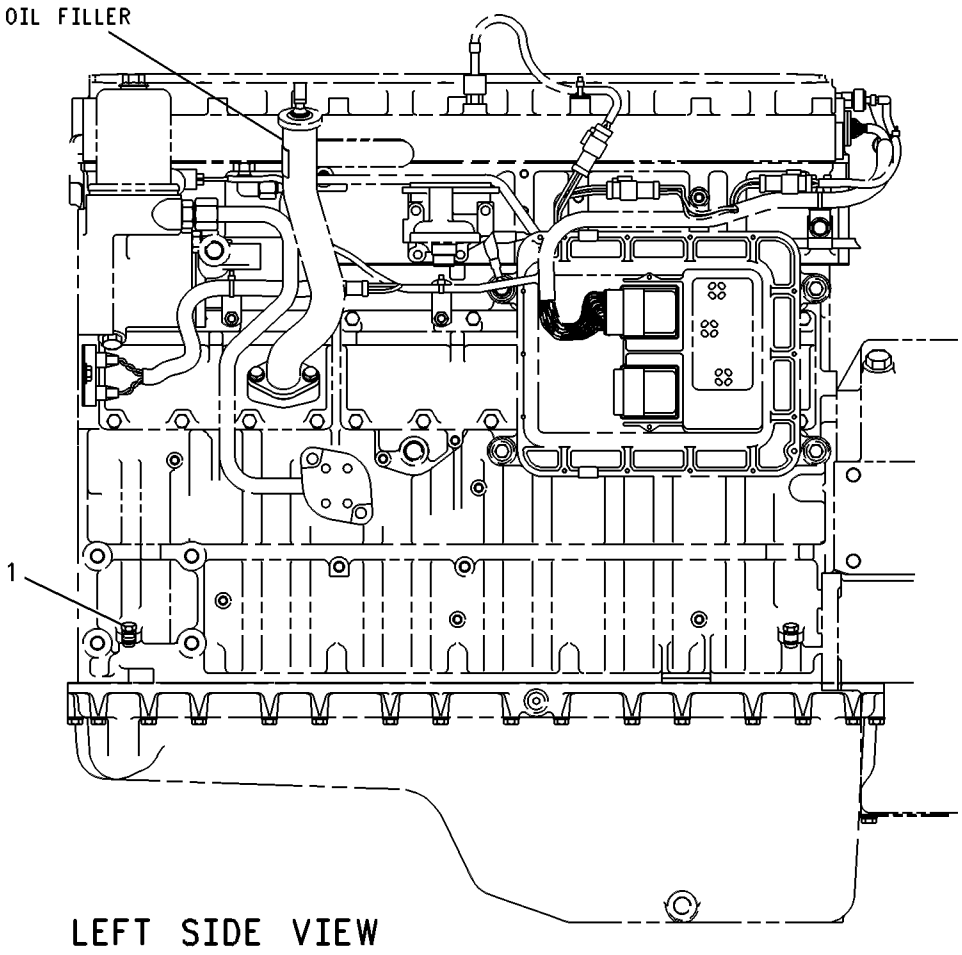

GRAPHIC #1 **<END>** g00265825

BASIC ENGINE

159-0303 PLUG GP-CYLINDER BLOCK

S/N: KHX14117-UP

PART OF 325-9710 ENGINE AR-COMPLETE

SMCS-1201 **i01370005**

NOTE	REF NO	GRAPHIC REF	PART NUMBER	QTY	PART NAME 1 2 3 4 5 6 (PRODUCT LEVEL)	SEE PAGE
M	1	1	**8T-0293**	1	BOLT (M12X1.75X20-MM)	
	2	1	**6F-7062**	1	WASHER (12.7X19.05X1.83-MM THK)	
	3	1	**9S-8008**	2	PLUG-O-RING	
	4	1	**3D-2824**	2	SEAL-O-RING	

M-METRIC PART

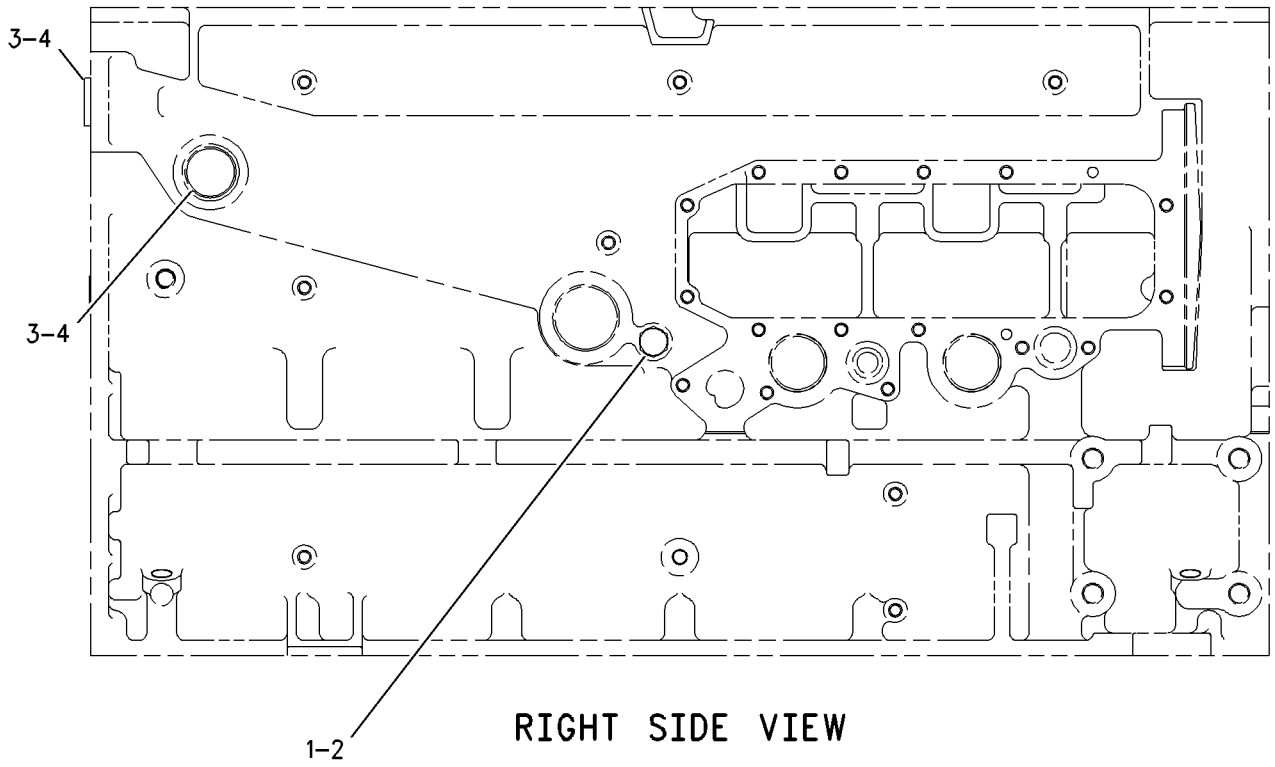

RIGHT SIDE VIEW

GRAPHIC #1 **<END>** g00677138

162-8068 PLUG GP-ENGINE

S/N: KHX14117-UP

PART OF 325-9710 ENGINE AR-COMPLETE

SMCS-1000, 1201 **i02940613**

NOTE	REF NO	GRAPHIC REF	PART NUMBER	QTY	PART NAME 1 2 3 4 5 6 (PRODUCT LEVEL)	SEE PAGE
	1	1	*148-8395*	1	PLUG AS	
		1	**9S-8005**	1	PLUG-O-RING	
		1	**3K-0360**	1	SEAL-O-RING	

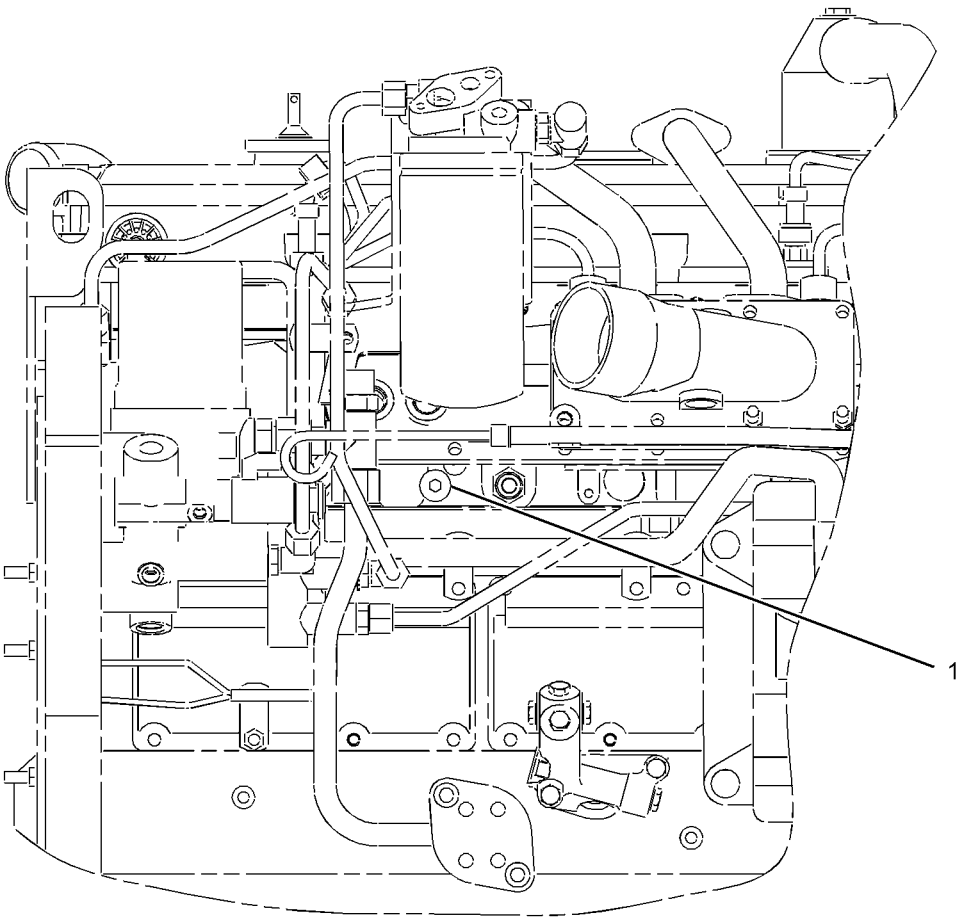

LEFT SIDE VIEW

GRAPHIC #1 **<END>** g01457732

BASIC ENGINE

7E-7590 SEAL GP-CRANKSHAFT

S/N: KHX14117-UP

PART OF 325-9710 ENGINE AR-COMPLETE

SMCS-1160, 1161 **i02891342**

NOTE	REF NO	GRAPHIC REF	PART NUMBER	QTY	PART NAME 1 2 3 4 5 6 (PRODUCT LEVEL)	SEE PAGE
	1	1	**7E-7589**	1	SEAL GP-CRANKSHAFT (REAR)	
	2	1	**245-7339**	1	SEAL-CRANKSHAFT	

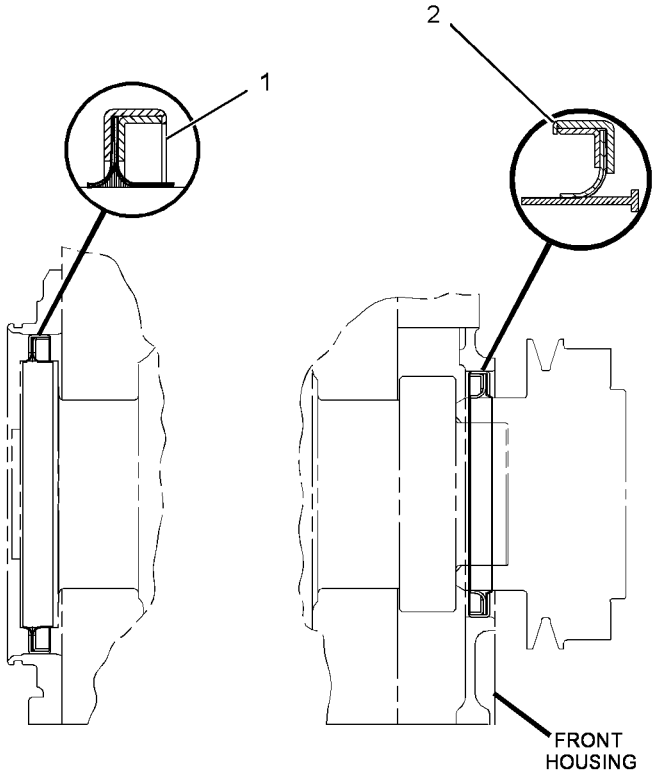

RIGHT SIDE VIEW

GRAPHIC #1 **<END>** g01438665

232-3717 VALVE MECHANISM GP

S/N: KHX14117-UP

PART OF 330-9360 ENGINE AR-CORE

SMCS-1102 **i03534860**

NOTE	REF NO	GRAPHIC REF	PART NUMBER	QTY	PART NAME 1 2 3 4 5 6 (PRODUCT LEVEL)	SEE PAGE
	1	1	**133-6379**	12	ROD-VALVE PUSH	
	2	1	**219-3309**	6	BRIDGE-VALVE	
Y	3	1	*139-4081*	3	LIFTER GP-VALVE	41
M	4	1	**8T-8442**	12	BOLT-SOCKET HEAD (M6X1X30-MM)	
	5	1	**3E-9412**	6	DOWEL	
CY	6	1	*235-5528*	1	VALVE MECHANISM GP	54
M	7	1	**6V-5696**	11	BOLT (M12X1.75X80-MM)	
	8	1	**9M-1974**	2	WASHER-HARD (8.8X16X2-MM THK)	
C	9	1	**3H-7654**	9	WASHER-HARD (13.5X22.5X3.0-MM THK)	
M	10	1	**8T-0100**	2	BOLT (M8X1.25X60-MM)	
	11	1	**232-1754**	1	CLIP	

C-CHANGE FROM PREVIOUS TYPE
M-METRIC PART
Y-SEPARATE ILLUSTRATION

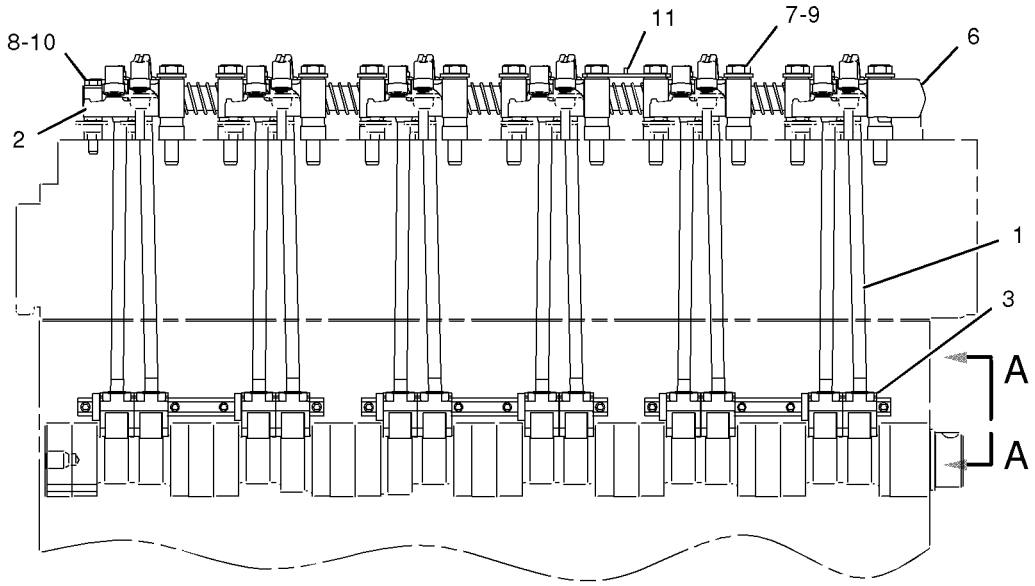

RIGHT SIDE VIEW

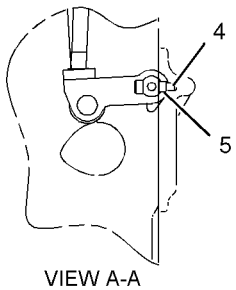

VIEW A-A

GRAPHIC #1

<END>

g01028897

BASIC ENGINE

235-5528 VALVE MECHANISM GP

S/N: KHX14117-UP

PART OF 232-3717 VALVE MECHANISM GP

SMCS-1102 **i02215718**

NOTE	REF NO	GRAPHIC REF	PART NUMBER	QTY	PART NAME 1 2 3 4 5 6 (PRODUCT LEVEL)	SEE PAGE
	1	1	**137-6717**	5	SPRING	
	2	1	*222-1185*	6	ROCKER ARM GP (INTAKE)	
					(EACH INCLUDES)	
M	2A	1	**2Y-5829**	1	NUT (M10X1.5-THD)	
M		1	**183-4365**	1	SCREW-ADJUSTMENT (M10X1.5-THD)	
R	2B	1	**153-8467**	1	ROCKER ARM AS	
	2C	1	**173-5549**	1	SEAL-O-RING	
	2D	1	**145-7376**	1	INSERT	
	2E	1	**145-7385**	1	SOCKET	
	3	1	**138-8403**	1	STAND	
	4	1	*222-1186*	6	ROCKER ARM GP (EXHAUST)	
					(EACH INCLUDES)	
M	4A	1	**2Y-5829**	1	NUT (M10X1.5-THD)	
M		1	**183-4365**	1	SCREW-ADJUSTMENT (M10X1.5-THD)	
R	4B	1	**153-8470**	1	ROCKER ARM AS	
	4C	1	**173-5549**	1	SEAL-O-RING	
	4D	1	**145-7376**	1	INSERT	
	4E	1	**145-7385**	1	SOCKET	
	5	1	**235-5527**	10	STAND	
	6	1	**138-8402**	1	STAND (END)	
	7	1	**138-9868**	1	RING-RETAINING	
	8	1	**8H-5244**	1	DOWEL	
	9	1	**138-7198**	1	SHAFT AS	
		1	**5B-1866**	1	PLUG-CUP	

M-METRIC PART
R-REMFG PART MAY BE AVAILABLE

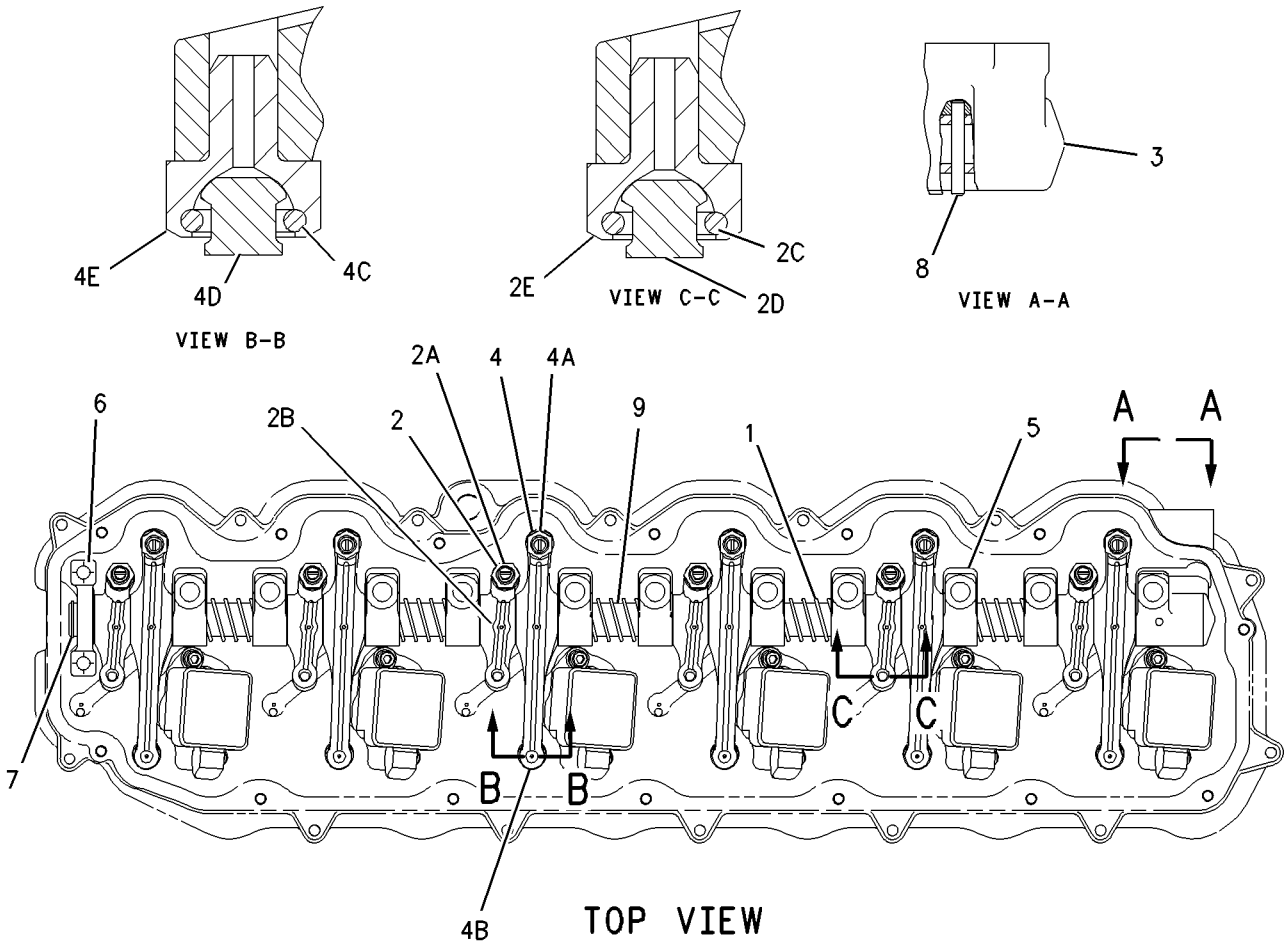

GRAPHIC #1 **<END>** g00901133

191-0523 ADAPTER GP-OIL LINE–ENGINE

S/N: KHX14117-UP

PART OF 191-0461 LINES GP-INJECTOR HYD PUMP

SMCS-1307 **i03363386**

NOTE	REF NO	GRAPHIC REF	PART NUMBER	QTY	PART NAME 1 2 3 4 5 6 (PRODUCT LEVEL)	SEE PAGE
	1	1	**191-0522**	1	ADAPTER	
	2	1	**033-6027**	1	SEAL-O-RING	

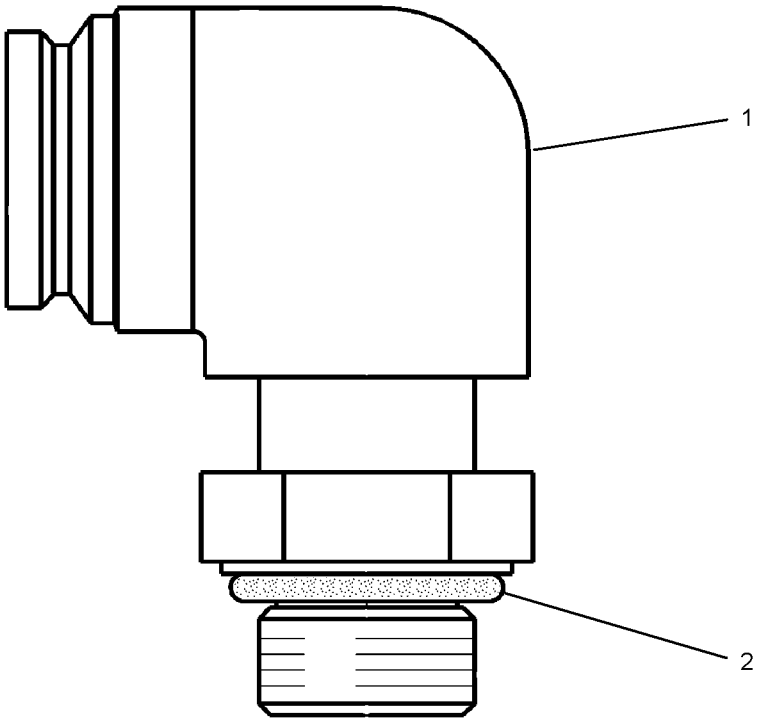

GRAPHIC #1 **<END>** g01735676

LUBRICATION SYSTEM

222-5946 BREATHER GP

S/N: KHX14117-UP

PART OF 325-9710 ENGINE AR-COMPLETE

SMCS-1317 **i02214598**

NOTE	REF NO	GRAPHIC REF	PART NUMBER	QTY	PART NAME 1 2 3 4 5 6 (PRODUCT LEVEL)	SEE PAGE
	1	1	**164-0210**	1	BREATHER AS (CRANKCASE)	
M	2	1	**143-4654**	1	BOLT (M8X1.25X105-MM)	
	3	1	**8H-2046**	1	SEAL-O-RING (BREATHER)	
	4	1	**9N-0869**	1	WASHER-HARD (8.8X25.5X2-MM THK)	

M-METRIC PART

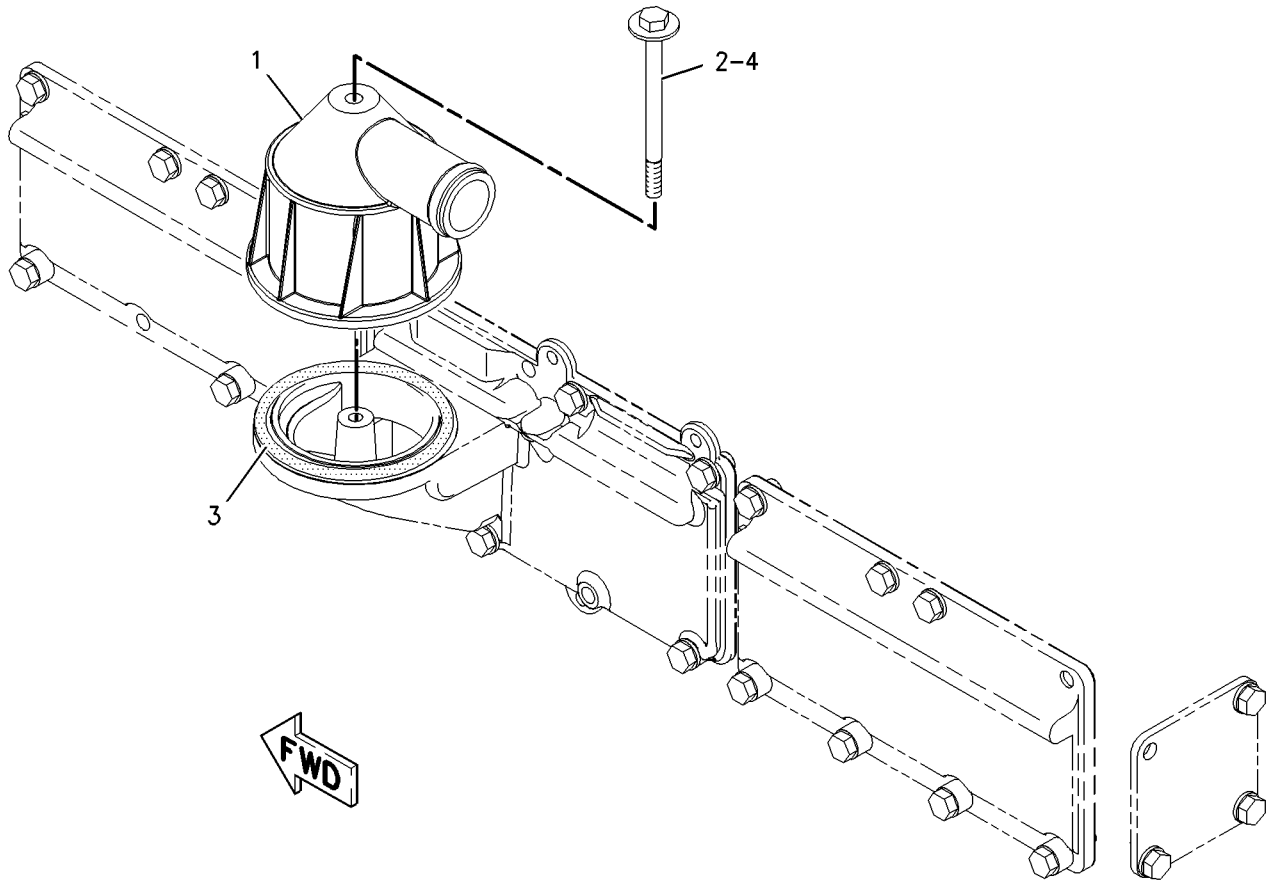

GRAPHIC #1 **<END>** g00947923

LUBRICATION SYSTEM

323-8936 FILTER GP-ENGINE OIL

S/N: KHX14117-UP

PART OF 325-9710 ENGINE AR-COMPLETE

SMCS-1306, 1308 **i03630678**

NOTE	REF NO	GRAPHIC REF	PART NUMBER	QTY	PART NAME 1 2 3 4 5 6 (PRODUCT LEVEL)	SEE PAGE
	1	1	**7C-1493**	2	VALVE AS-BYPASS	
	2	1	**201-9774**	1	BASE AS-OIL FILTER	
	2A	1	**2P-2537**	1	STUD-HOLLOW	
	3	1	**242-3864**	2	SPRING	
	4	1	**300-7933**	1	GASKET	
	6	1	**1R-1807**	1	FILTER AS-ENGINE OIL (ADVANCED EFFICIENCY)	
	7	1	**2M-9780**	2	SEAL-O-RING	
M	8	1	**5P-8196**	2	PLUG	
M	9	1	**6V-2317**	10	BOLT (M8X1.25X30-MM)	
M	10	1	**8T-0276**	5	BOLT (M8X1.25X45-MM)	
	11	1	**9M-1974**	15	WASHER-HARD (8.8X16X2-MM THK)	
	12	1	**214-7566**	1	SEAL-O-RING	
	13	1	**112-5282**	1	SEAL-O-RING	
	14	1	**8C-3446**	1	VALVE-FLUID SAMPLING	
	15	1	**8C-3445**	1	CAP-DUST	
	16	1	**3P-1932**	1	ADAPTER	

M-METRIC PART

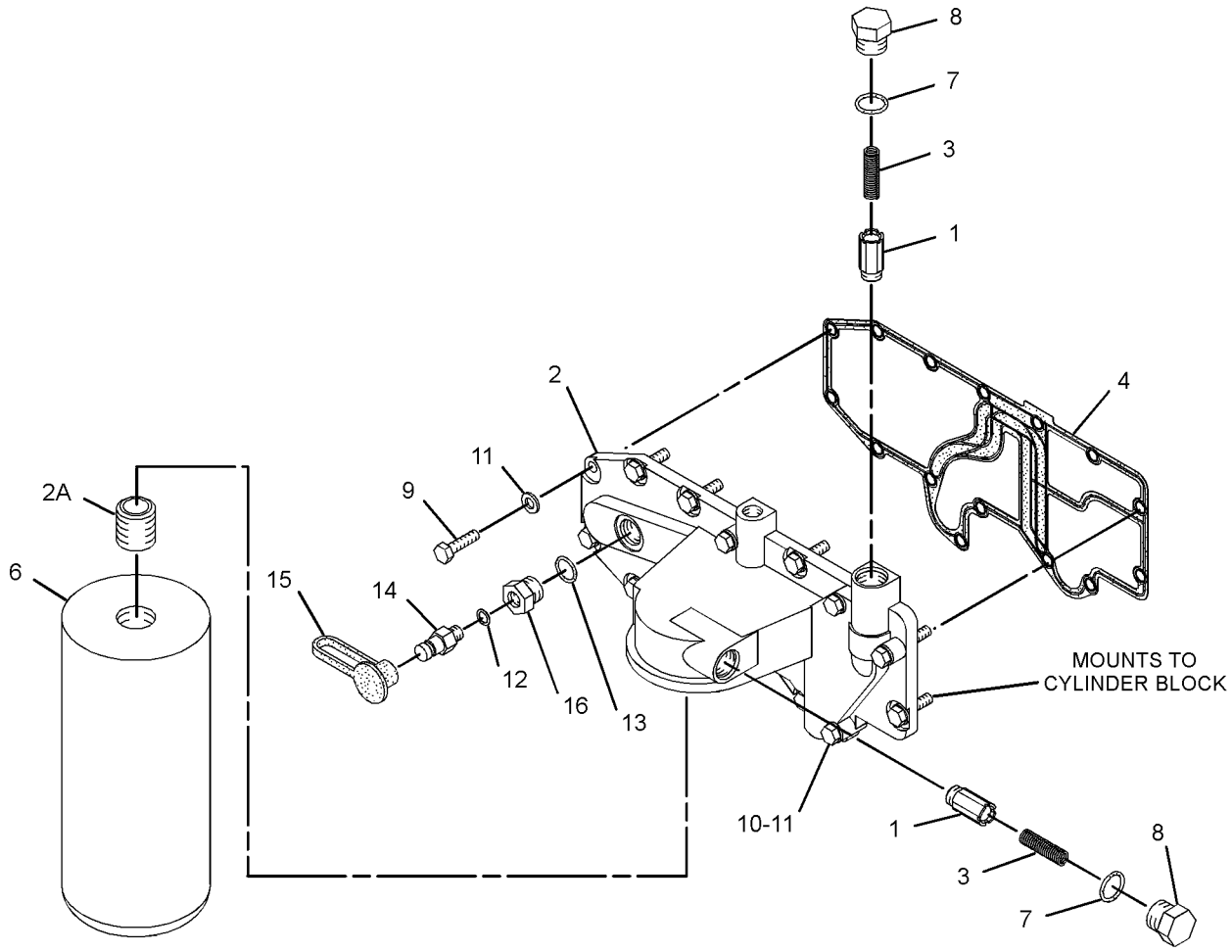

GRAPHIC #1 **<END>** g01949535

220-1194 FUMES DISPOSAL GP

S/N: KHX14117-UP

PART OF 325-9710 ENGINE AR-COMPLETE

SMCS-1317 **i02789603**

NOTE	REF NO	GRAPHIC REF	PART NUMBER	QTY	PART NAME 1 2 3 4 5 6 (PRODUCT LEVEL)	SEE PAGE
	1	1	**4P-4369**	1	SPACER (12X19X23.5-MM THK)	
	2	1	**9M-2904**	1	CLAMP-HOSE	
	3	1	**228-8510**	1	HOSE-DISPOSAL (FUMES)	
	4	1	**2S-2053**	1	CLIP	
	5	1	**3E-4352**	1	WASHER-HARD (8.8X20.5X2.5-MM THK)	
	6	1	**162-3148**	1	STUD (M8X1.25X40-MM, M8X1.25X17.5-MM)	

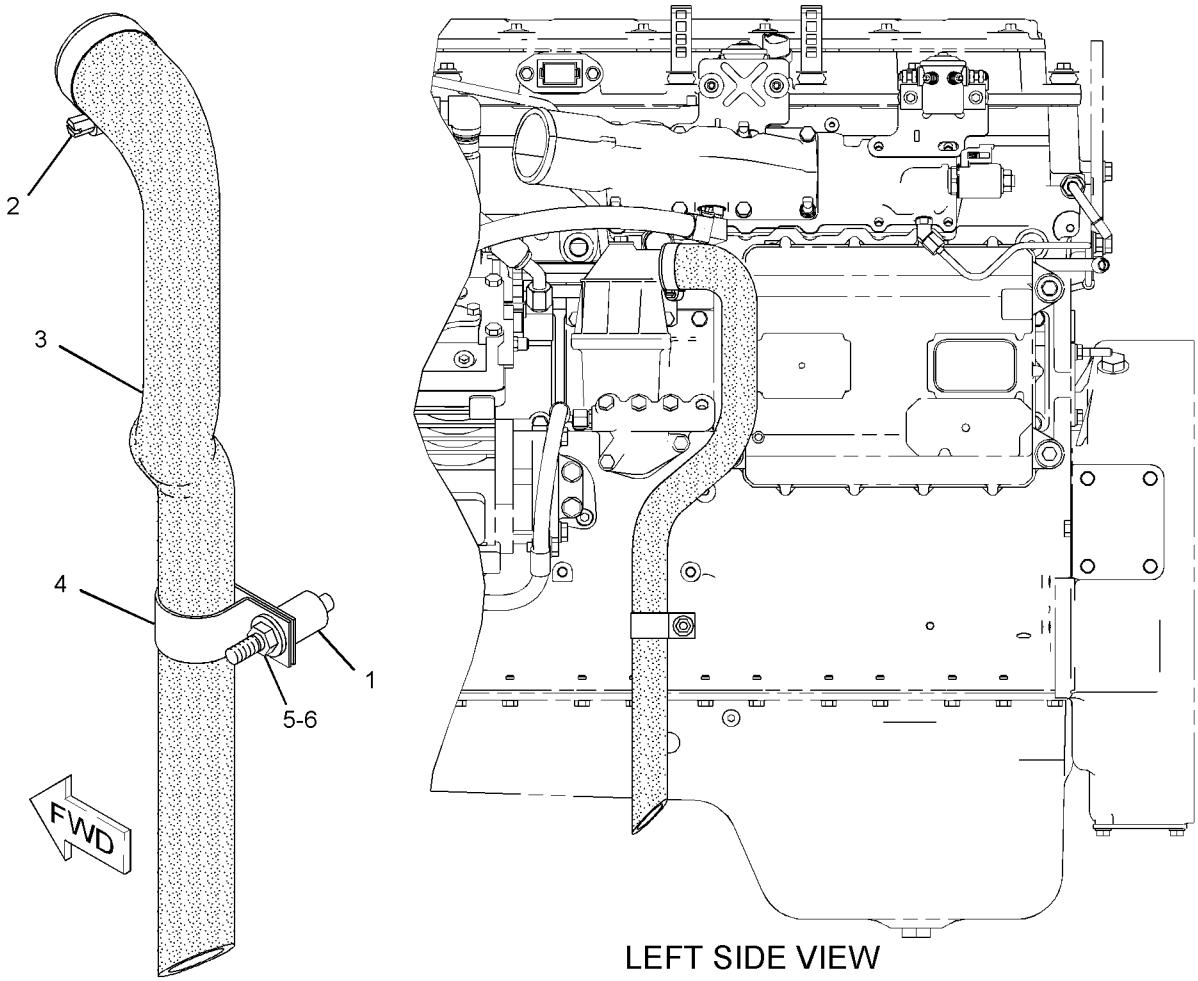

LEFT SIDE VIEW

GRAPHIC #1 **<END>** g01095248

LUBRICATION SYSTEM

253-2589 LINES GP-ENGINE OIL

S/N: KHX14117-UP

PART OF 325-9710 ENGINE AR-COMPLETE

SMCS-1307 **i03506486**

NOTE	REF NO	GRAPHIC REF	PART NUMBER	QTY	PART NAME 1 2 3 4 5 6 (PRODUCT LEVEL)	SEE PAGE
	1	1	**4W-2232**	1	ELBOW-OUTLET	
	2	1	**7W-5340**	1	GASKET	
	3	1	**252-8213**	1	TUBE AS	
	4	1	**3P-1156**	2	SEAL-O-RING	
M	5	1	**6V-3940**	4	BOLT (M8X1.25X25-MM)	
M	6	1	**6V-4248**	2	BOLT (M10X1.5X25-MM)	
	7	1	**6V-5839**	2	WASHER (11X21X2.5-MM THK)	
	8	1	**9M-1974**	2	WASHER-HARD (8.8X16X2-MM THK)	

M-METRIC PART

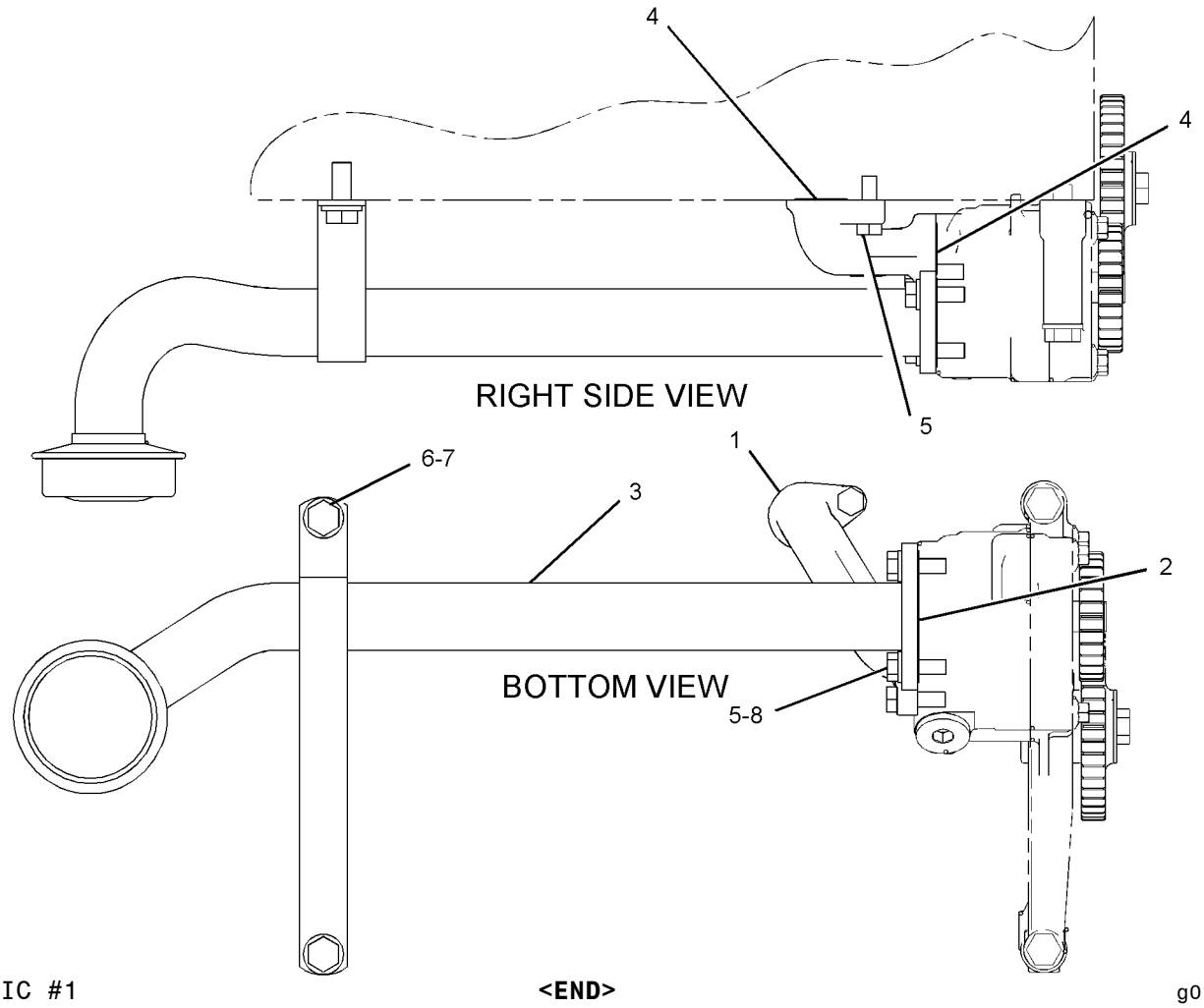

GRAPHIC #1 **<END>** g01075009

310-6469 LINES GP-ENGINE OIL DRAIN

S/N: JJA1-UP

PART OF 346-3710 GENERAL AR

SMCS-1307 **i03631530**

NOTE	REF NO	GRAPHIC REF	PART NUMBER	QTY	PART NAME 1 2 3 4 5 6 (PRODUCT LEVEL)	SEE PAGE
C	1	1	**124-6258**	1	CLAMP-HOSE	
	2	1	**206-4669**	1	VALVE-DRAIN	
	3	1	**212-4174**	1	LOCKWASHER	
I	4	1	**317-8063**	1	HOSE AS	
C	6	1	**033-6033**	1	SEAL-O-RING	
C	7	1	**1S-0994**	1	CLIP	
C	8	1	**228-7103**	1	SEAL-O-RING	
	9	1	**7X-7729**	1	WASHER (11X25X3-MM THK)	
C	10	1	**124-3109**	1	ELBOW	
	11	1	**8T-4121**	1	WASHER-HARD (11X21X2.5-MM THK)	
C	12	1	**5M-3062**	1	BOLT (3/8-16X0.75-IN)	
E	13	1	**146-7453**		HOSE (13-CM)	

C-CHANGE FROM PREVIOUS TYPE
E-ORDER BY THE CENTIMETER
I-REFER TO HYDRAULIC INFORMATION SYSTEM

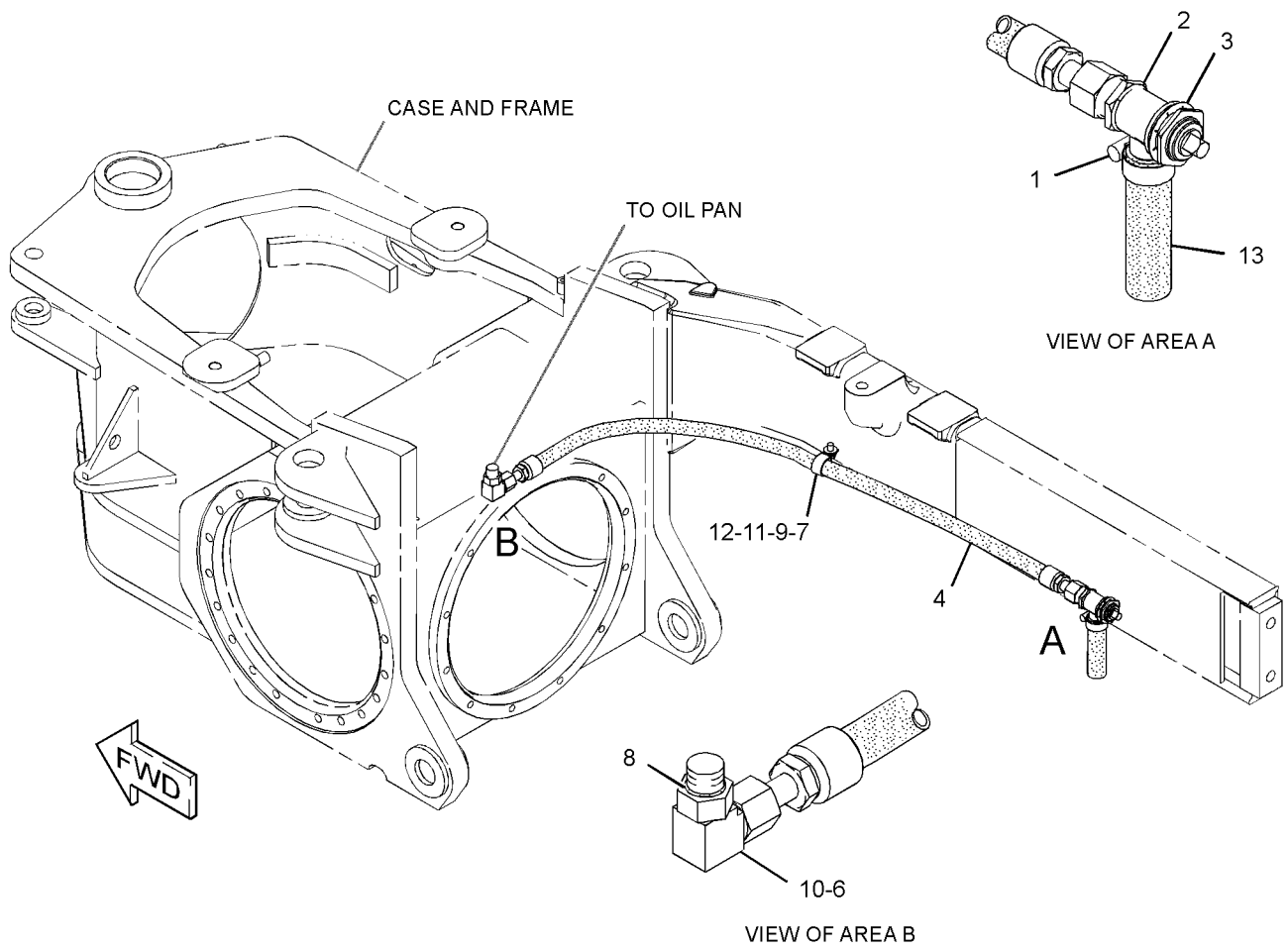

GRAPHIC #1 **<END>** g01896774

LUBRICATION SYSTEM

187-6279 LINES GP-TURBOCHARGER OIL

S/N: KHX14117-UP

PART OF 325-9710 ENGINE AR-COMPLETE

SMCS-1052, 1307 **i03523163**

NOTE	REF NO	GRAPHIC REF	PART NUMBER	QTY	PART NAME 1 2 3 4 5 6 (PRODUCT LEVEL)	SEE PAGE
	1	1	*183-3399*	1	CONNECTOR AS	
		1	**6V-8636**	1	CONNECTOR	
		1	**214-7568**	1	SEAL-O-RING (11.89MM ID)	
		1	**221-3494**	1	SEAL-O-RING (12.83MM OD)	
C	2	1	**246-6036**	1	HOSE	
	3	1	**187-6294**	1	HOSE AS-OIL SUPPLY	
	4	1	*148-8378*	1	ELBOW AS	
		1	**6V-8724**	1	ELBOW	
		1	**3J-1907**	1	SEAL-O-RING (11.89MM ID)	
		1	**6V-8397**	1	SEAL-O-RING (12.83MM OD)	
C	5	1	**197-8419**	1	GASKET (21.82MM ID)	
C	6	1	**210-9246**	1	SEAL-O-RING (32.92MM ID)	
M	7	1	**9X-2099**	2	STUD (M8X1.25X52.75-MM)	
	8	1	**8T-4224**	4	WASHER-HARD (8.8X16X2-MM THK)	
CM	9	1	**7X-2537**	2	BOLT (M8X1.25X35-MM)	
C	10	1	**260-8630**	1	TUBE AS-DRAIN	
C	11	1	**260-8631**	1	TUBE AS-DRAIN	
C	12	1	**269-8788**	2	CLAMP-BAND	
M	13	1	**2Y-5829**	1	NUT (M10X1.5-THD)	
M	14	1	**6V-4248**	1	BOLT (M10X1.5X25-MM)	
	15	1	**6V-5839**	2	WASHER (11X21X2.5-MM THK)	
	16	1	**7S-0530**	1	CLIP	
	17	1	**033-8248**	1	CLIP	

C-CHANGE FROM PREVIOUS TYPE
M-METRIC PART

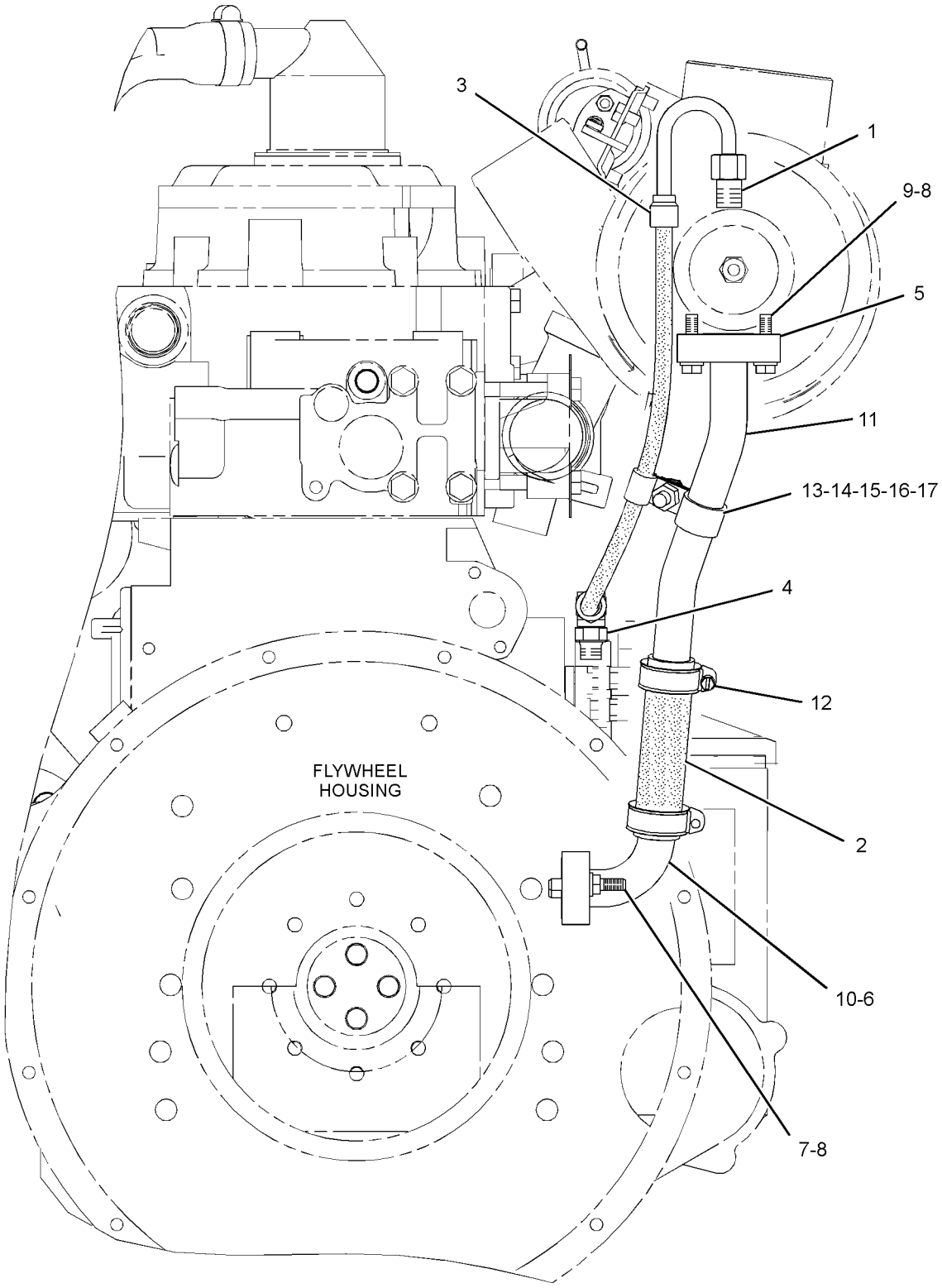

REAR VIEW OF ENGINE

GRAPHIC #1 **<END>** g01319683

LUBRICATION SYSTEM

237-8063 MANIFOLD GP-ENGINE OIL

S/N: KHX14117-UP

PART OF 325-9710 ENGINE AR-COMPLETE

SMCS-1307 **i02789607**

NOTE	REF NO	GRAPHIC REF	PART NUMBER	QTY	PART NAME 1 2 3 4 5 6 (PRODUCT LEVEL)	SEE PAGE
	1	1	**226-8696**	1	MANIFOLD-OIL (ENGINE)	
	2	1	**3J-1907**	4	SEAL-O-RING	
	3	1	**4F-9029**	1	SEAL	
M	4	1	**6V-5219**	2	BOLT (M8X1.25X40-MM)	
	5	1	**9S-4191**	4	PLUG-O-RING	

M-METRIC PART

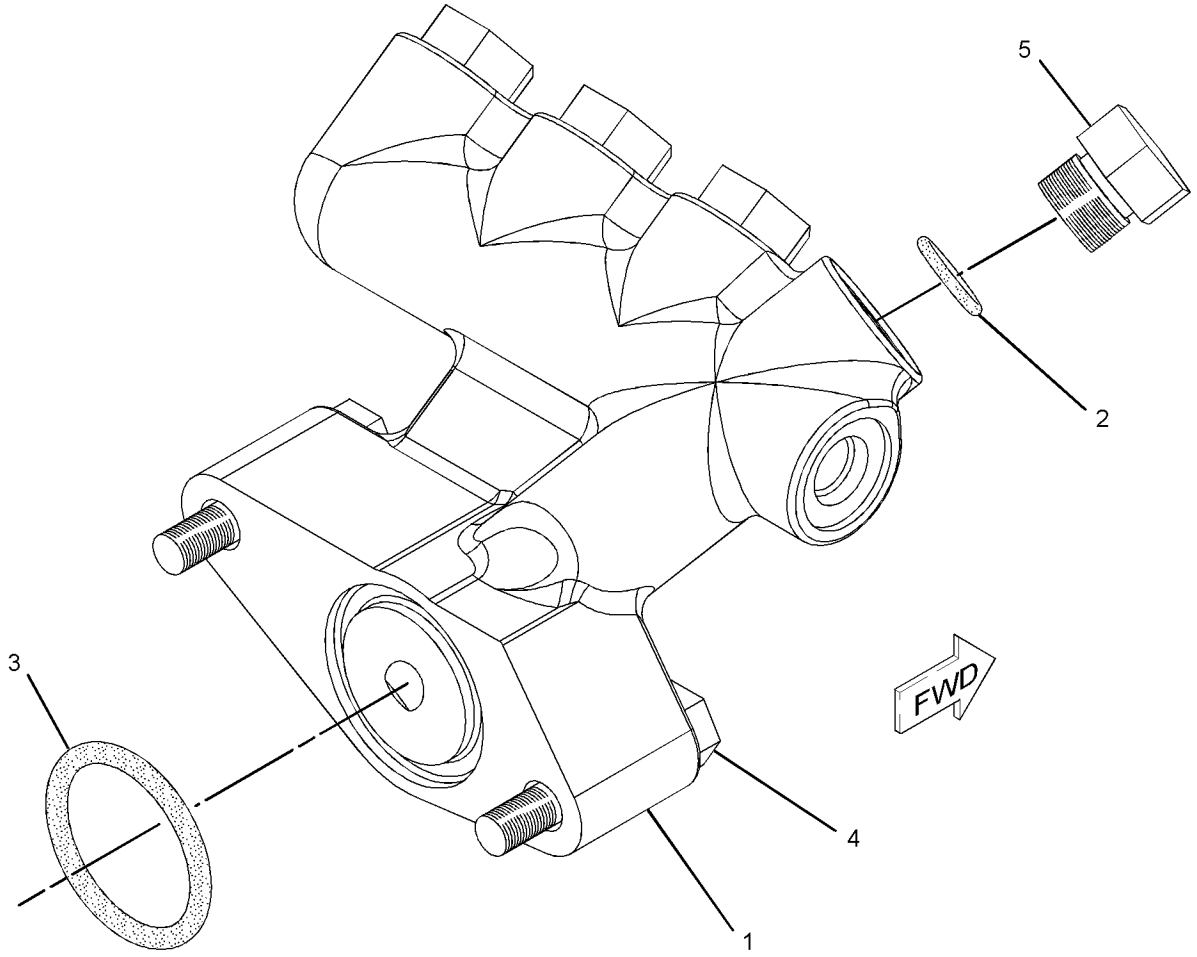

GRAPHIC #1 **<END>** g01099259

LUBRICATION SYSTEM

200-4497 PUMP GP-ENGINE OIL

S/N: KHX14117-UP

PART OF 212-2270 PUMP GP-ENGINE OIL

SMCS-1304, 1315 **i02120062**

NOTE	REF NO	GRAPHIC REF	PART NUMBER	QTY	PART NAME 1 2 3 4 5 6 (PRODUCT LEVEL)	SEE PAGE
	1	1	**7W-9737**	1	SHAFT	
	2	1	**7W-9738**	1	WASHER (10.5X38X1.6-MM THK)	
	3	1	**7W-9740**	1	GEAR AS-IDLER (43-TEETH)	
	3A	1	**7W-9930**	1	BEARING-SLEEVE	
M	4	1	**9X-2305**	1	BOLT-LOCKING (M10X1.5X50-MM)	
	5	1	**189-8777**	1	PUMP GP-ENGINE OIL	

M-METRIC PART

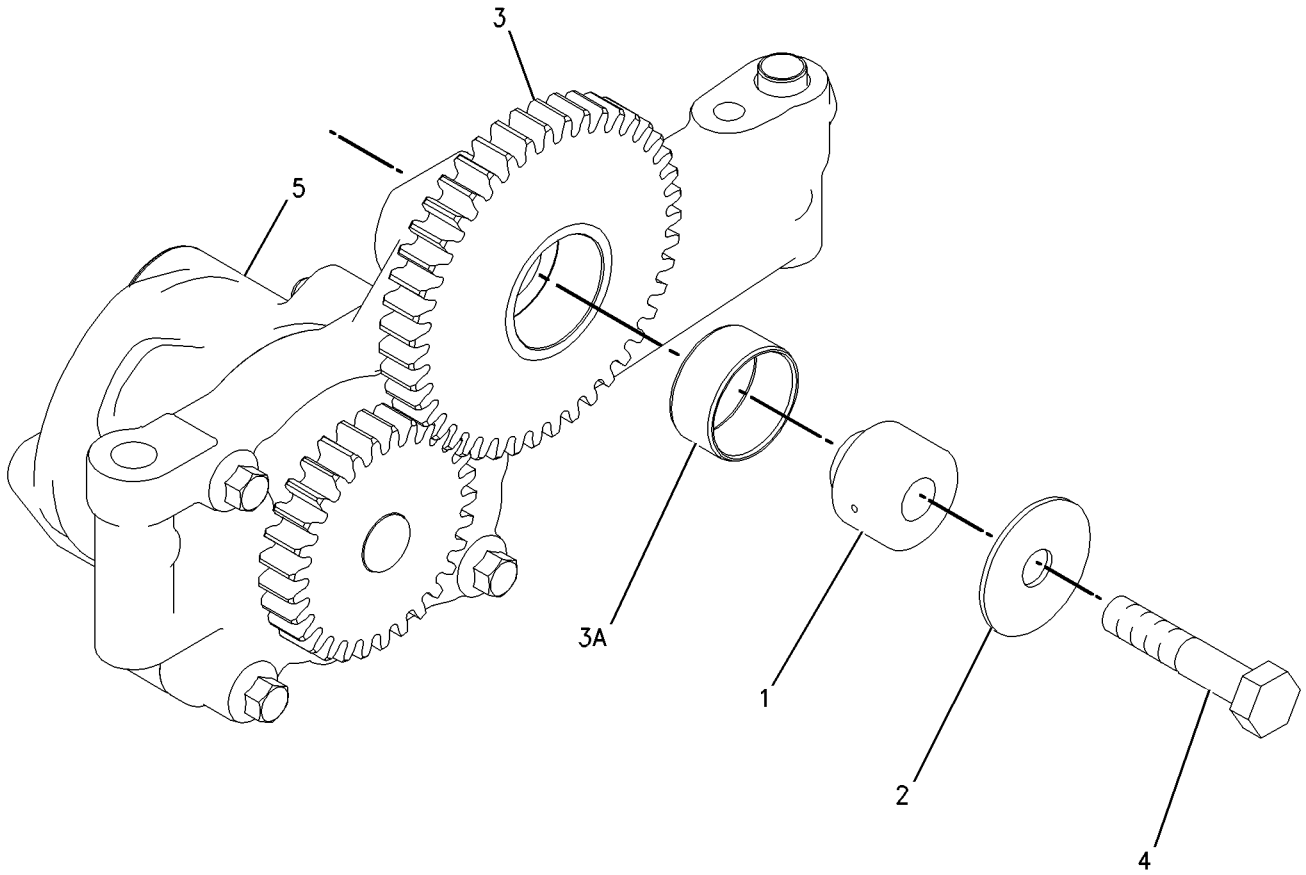

GRAPHIC #1 **<END>** g00775788

LUBRICATION SYSTEM

212-2270 PUMP GP-ENGINE OIL

S/N: KHX14117-UP

PART OF 330-9360 ENGINE AR-CORE

SMCS-1304, 1315 **i02294171**

NOTE	REF NO	GRAPHIC REF	PART NUMBER	QTY	PART NAME 1 2 3 4 5 6 (PRODUCT LEVEL)	SEE PAGE
Y	1	1	**200-4497**	1	PUMP GP-ENGINE OIL	65
M	2	1	**6V-5815**	2	BOLT (M10X1.5X75-MM)	
	3	1	**6V-5839**	2	WASHER (11X21X2.5-MM THK)	

M-METRIC PART
Y-SEPARATE ILLUSTRATION

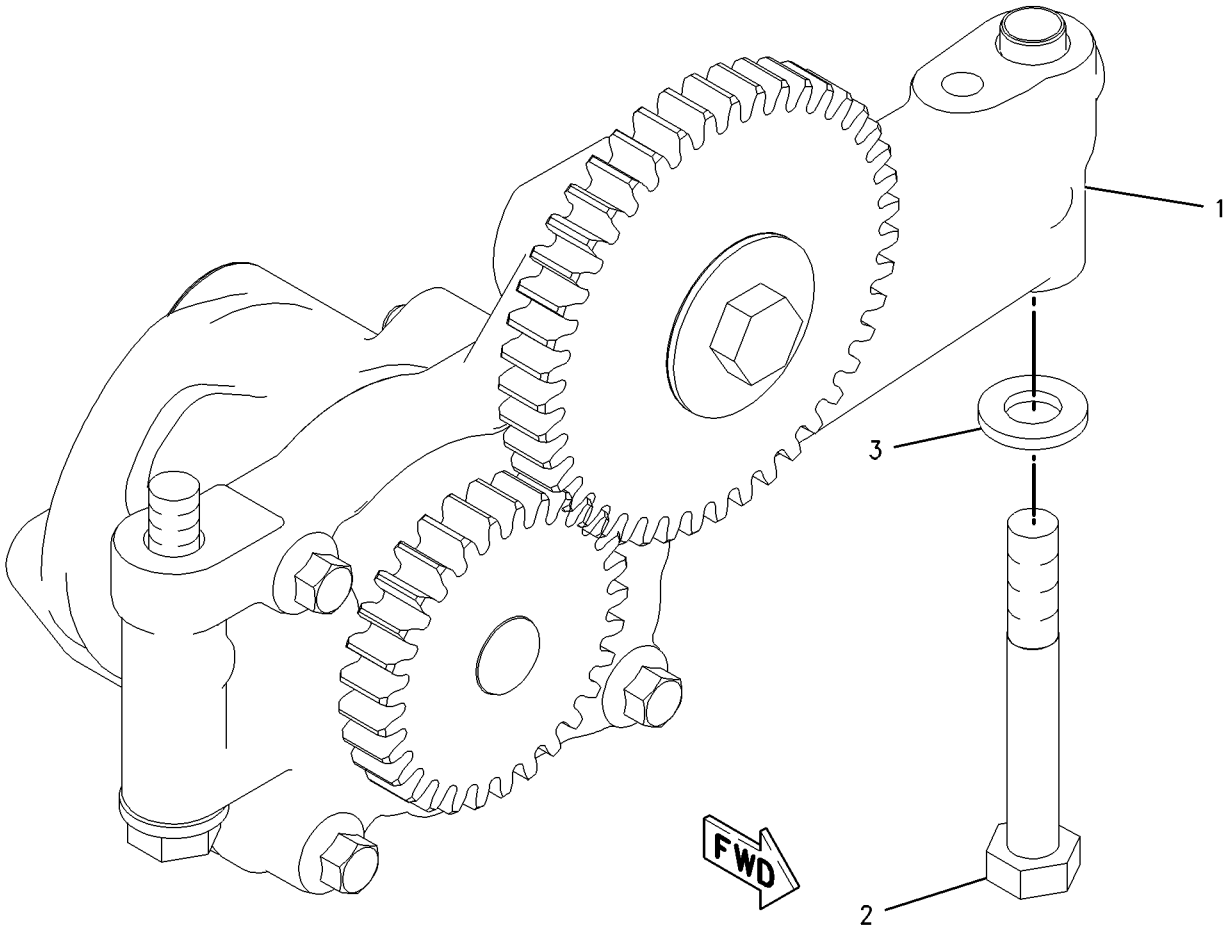

GRAPHIC #1 **<END>** g00849437

117-3643 COOLER GP-ENGINE OIL

S/N: KHX14117-UP

PART OF 330-9360 ENGINE AR-CORE

SMCS-1378 **i02835867**

NOTE	REF NO	GRAPHIC REF	PART NUMBER	QTY	PART NAME 1 2 3 4 5 6 (PRODUCT LEVEL)	SEE PAGE
R	1	1	**267-4743**	1	CORE AS-ENGINE OIL COOLER	
	2	1	**233-7655**	1	GASKET	
	3	1	**3P-1156**	2	SEAL-O-RING	

R-REMFG PART MAY BE AVAILABLE

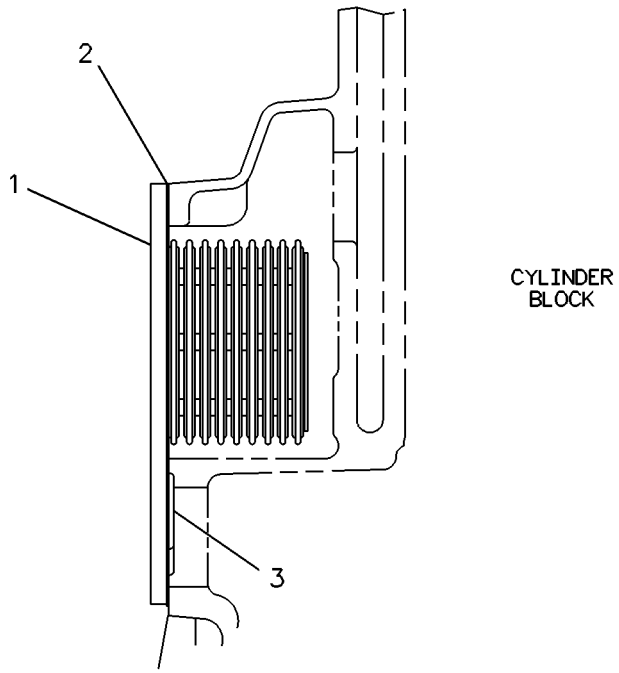

GRAPHIC #1 **<END>** g00117316

COOLING SYSTEM

310-5881 COOLING AR

S/N: JJA1-UP

PART OF 346-3710 GENERAL AR

SMCS-1350 **i03246252**

NOTE	REF NO	GRAPHIC REF	PART NUMBER	QTY	PART NAME 1 2 3 4 5 6 (PRODUCT LEVEL)	SEE PAGE
Y	1	1	*299-8311*	1	AFTERCOOLER GP-AIR	81
Y	2	1	*310-5882*	1	RADIATOR GP	78

Y-SEPARATE ILLUSTRATION

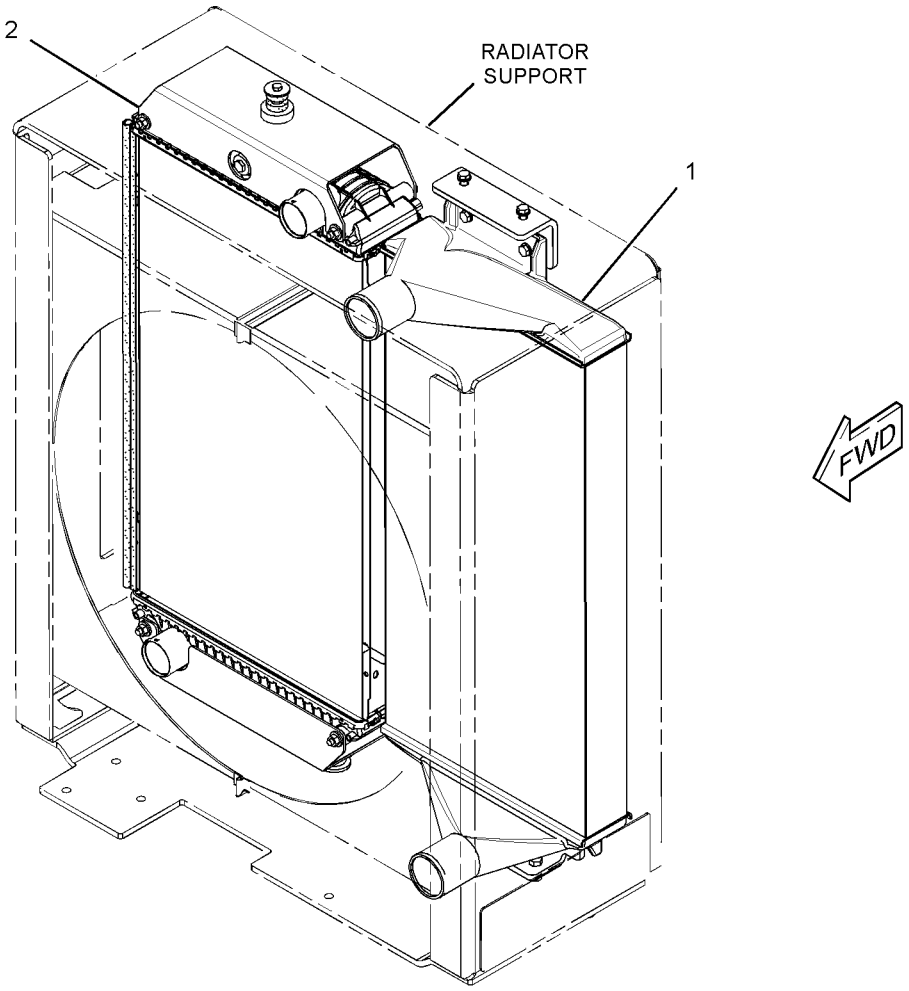

GRAPHIC #1 **<END>** g01691033

284-0824 FAN GP-BLOWER–RADIATOR

S/N: JJA1-UP

PART OF 346-3710 GENERAL AR

SMCS-1356 **i03247411**

NOTE	REF NO	GRAPHIC REF	PART NUMBER	QTY	PART NAME 1 2 3 4 5 6 (PRODUCT LEVEL)	SEE PAGE
	1	1	**241-8534**	1	SPIDER AS (8-BLADE)	
	2	1	**8T-4121**	6	WASHER-HARD (11X21X2.5-MM THK)	
M	3	1	**8T-4195**	6	BOLT (M10X1.5X30-MM)	

M-METRIC PART

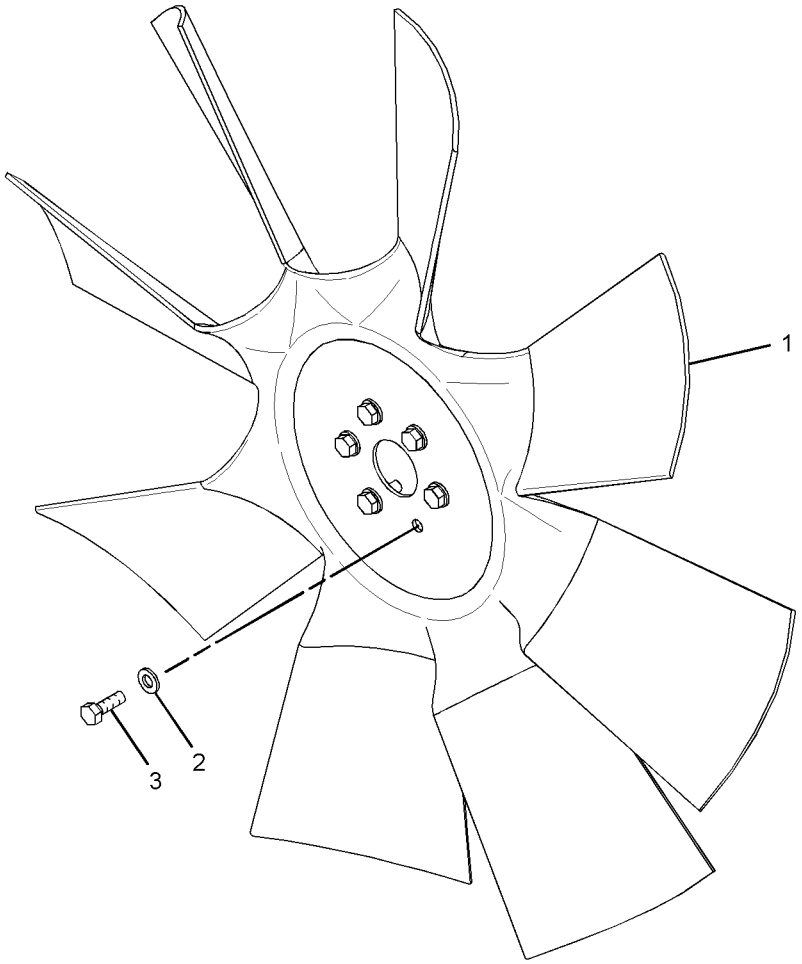

GRAPHIC #1 **<END>** g01687413

COOLING SYSTEM

303-6003 GUARD GP-FAN

S/N: JJA1-UP

PART OF 299-8307 SUPPORT GP-RADIATOR

SMCS-1360 **i03247380**

NOTE	REF NO	GRAPHIC REF	PART NUMBER	QTY	PART NAME 1 2 3 4 5 6 (PRODUCT LEVEL)	SEE PAGE
	1	1	**303-6009**	1	SHROUD AS (UPPER, LH)	
	2	1	**303-6010**	1	SHROUD AS (UPPER, RH)	
	3	1	**303-6011**	1	SHROUD AS (LOWER, RH)	
	4	1	**303-6012**	1	SHROUD AS (LOWER, LH)	
					(EACH SHROUD AS INCLUDES)	
		1	**6V-4604**	3	RIVET-POP	
M		1	**8T-3490**	3	NUT-WELD (M10X1.5-THD)	
	5	1	**303-6037**	2	BRUSH AS	
	6	1	**122-9764**	6	RIVET-POP	
E	7	1	**266-8568**		SEAL-BULK (17-CM EACH)	
E	7A	1	**266-8568**		SEAL-BULK (3.6-CM)	
E	7B	1	**266-8568**		SEAL-BULK (3-CM)	

E-ORDER BY THE CENTIMETER
M-METRIC PART

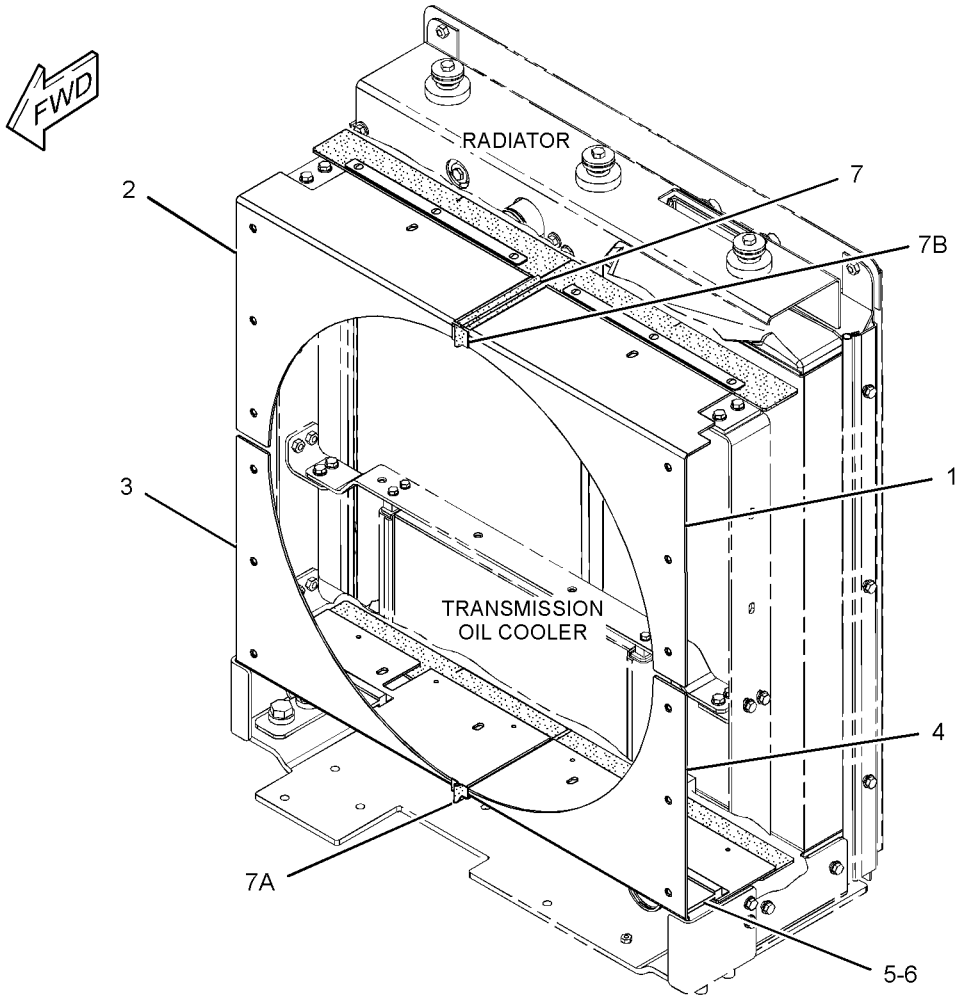

GRAPHIC #1 **<END>** g01696568

COOLING SYSTEM

206-4228 LINES GP-WATER

S/N: KHX14117-UP

PART OF 325-9710 ENGINE AR-COMPLETE

SMCS-1355, 1380, 1393 **i02838599**

NOTE	REF NO	GRAPHIC REF	PART NUMBER	QTY	PART NAME 1 2 3 4 5 6 (PRODUCT LEVEL)	SEE PAGE
	1	1	**7E-0759**	1	HOSE	
	3	1	**115-4223**	2	REGULATOR-WATER TEMPERATURE (97-DEG C)	
	4	1	**126-5466**	1	GASKET	
	5	1	**157-0670**	1	CAP-DUST	
	6	1	**160-5131**	1	PIPE (OUTLET)	
	7	1	*217-9060*	1	VALVE AS-FLUID SAMPLING (ENGINE COOLANT)	
	7A	1	**3J-7354**	1	SEAL-O-RING	
	7B	1	**154-9023**	1	VALVE-SAMPLING	
	8	1	**222-5915**	1	GASKET (TEMPERATURE REGULATOR HOUSING)	
	9	1	**227-5942**	1	HOUSING-WATER REGULATOR	
	10	1	**237-5176**	2	CLAMP-BAND	
	11	1	*148-8395*	1	PLUG AS	
		1	**3K-0360**	1	SEAL-O-RING	
		1	**9S-8005**	1	PLUG-O-RING	
M	12	1	**5P-8347**	2	BOLT (M8X1.25X70-MM)	
	13	1	**5P-9617**	1	ADAPTER	
	14	1	**6V-3250**	1	SEAL-O-RING	
M	15	1	**6V-3940**	6	BOLT (M8X1.25X25-MM)	
M	16	1	**6V-5223**	1	BOLT (M8X1.25X100-MM)	
	17	1	**6V-6609**	3	SEAL-O-RING	
	18	1	**6V-9027**	1	SEAL-O-RING	
	19	1	**9M-1974**	6	WASHER-HARD (8.8X16X2-MM THK)	
	20	1	**9S-4182**	1	PLUG-O-RING	
	21	1	**9S-4185**	3	PLUG-O-RING	

M-METRIC PART

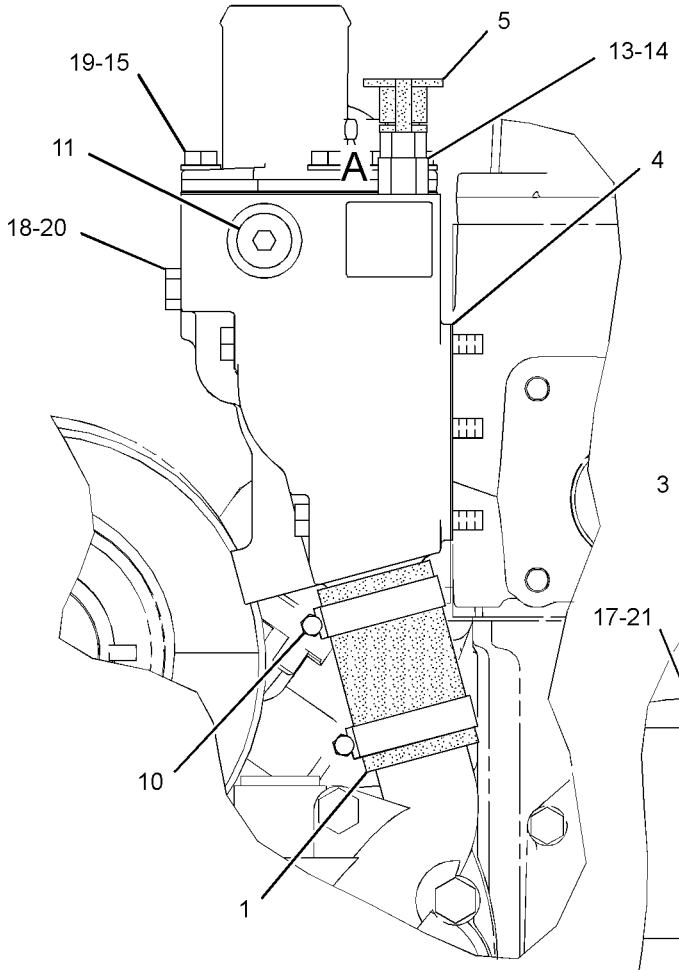

FRONT VIEW OF ENGINE

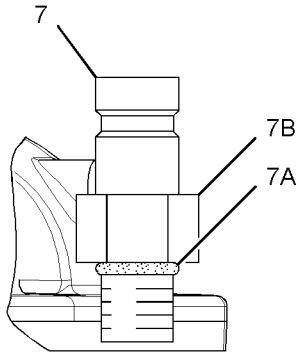

VIEW OF AREA A
(CAP REMOVED FOR CLARITY)

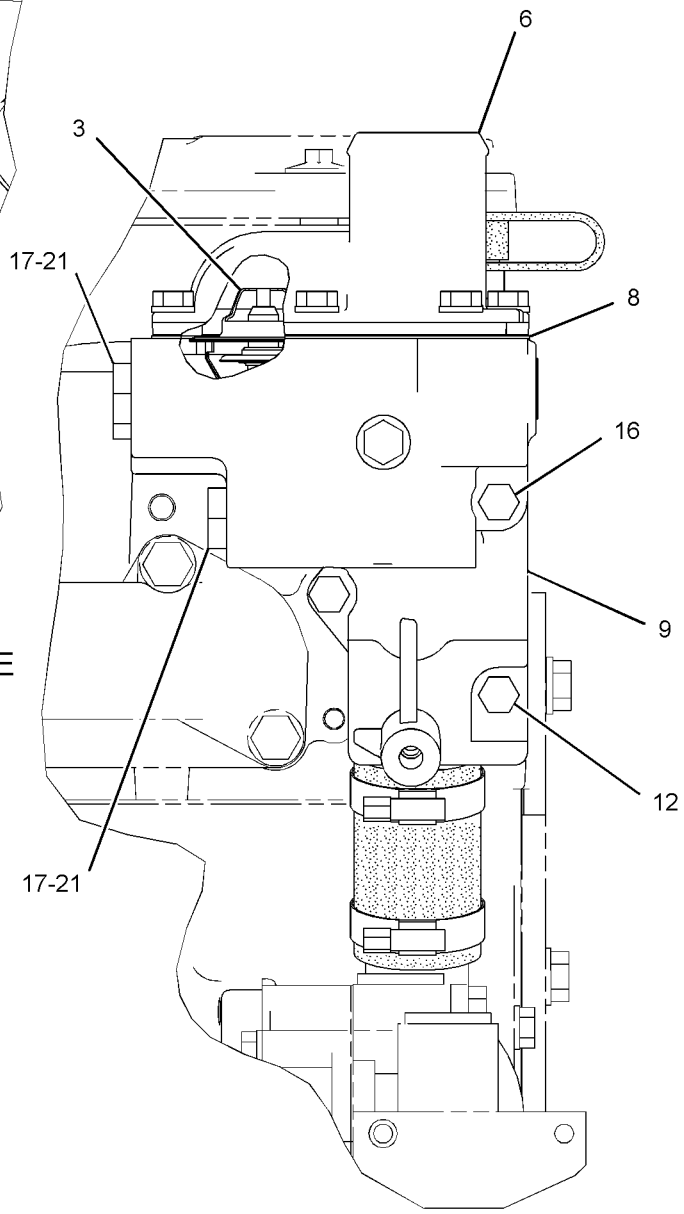

RIGHT SIDE VIEW OF ENGINE

GRAPHIC #1 **<END>** g01430061

COOLING SYSTEM

311-0274 LINES GP-WATER

S/N: JJA1-UP

PART OF 346-3710 GENERAL AR

SMCS-1355, 1380, 1393 **i03576420**

NOTE	REF NO	GRAPHIC REF	PART NUMBER	QTY	PART NAME 1 2 3 4 5 6 (PRODUCT LEVEL)	SEE PAGE
	1	1	**5D-1026**	1	CLAMP-HOSE	
	2	1	**5I-4376**	1	FITTING	
	3	1	**5P-4961**	4	CLAMP-HOSE	
	4	1	**157-0670**	1	CAP-DUST	
	5	1	*164-5562*	1	CONNECTOR AS	
		1	**3J-1907**	1	SEAL-O-RING	
		1	**5P-1046**	1	CONNECTOR	
	6	1	*184-2509*	1	VALVE GP-DRAIN (COOLANT)	
		1	**3K-0360**	1	SEAL-O-RING	
		1	**7E-4761**	1	VALVE-DRAIN	
	7	1	*215-7067*	3	ELBOW AS	
					(EACH INCLUDES)	
		1	**3J-1907**	1	SEAL-O-RING	
		1	**215-7066**	1	ELBOW	
	8	1	**263-6914**	1	HOSE	
	9	1	**265-5007**	1	HOSE	
	10	1	**266-7650**	1	ELBOW	
	11	1	**266-7651**	1	HOSE	
	12	1	**311-3025**	1	TUBE AS	
	13	1	**311-3026**	1	TUBE AS	
	14	1	**328-3496**	1	BRACKET	
	15	1	**154-9025**	1	VALVE-FLUID SAMPLING (COOLANT)	
	16	1	*184-2420*	1	ADAPTER AS	
		1	**3E-7401**	1	ADAPTER	
		1	**6V-8397**	1	SEAL-O-RING	
	17	1	**1P-7009**	1	CLIP	
	18	1	**208-6054**	4	CLAMP	
	19	1	**212-6933**	4	CLAMP	
	20	1	**2S-7010**	1	CLIP	
	21	1	**4D-7388**	1	CLIP	
	22	1	**6K-8178**	1	CLIP	
	23	1	**6V-2235**	1	CLIP	
	24	1	**6V-8367**	1	LOCKWASHER	
	25	1	**259-0017**	1	NUT (11/16-16-THD)	
	26	1	**7J-8611**	1	ELBOW-PIPE (90-DEG)	
	27	1	**8M-2773**	1	CLIP	
	28	1	**8T-4121**	7	WASHER-HARD (11X21X2.5-MM THK)	
M	29	1	**8T-4133**	1	NUT (M10X1.5-THD)	
M	30	1	**8T-4137**	6	BOLT (M10X1.5X20-MM)	
E	31	1	**5P-0767**		HOSE (18-CM)	
E	32	1	**6V-8523**		HOSE (133.8-CM)	
E	32A	1	**6V-8523**		HOSE (38.2-CM)	

E-ORDER BY THE CENTIMETER
M-METRIC PART

311-0274 **LINES GP-WATER** *(contd.)* **i03576420**

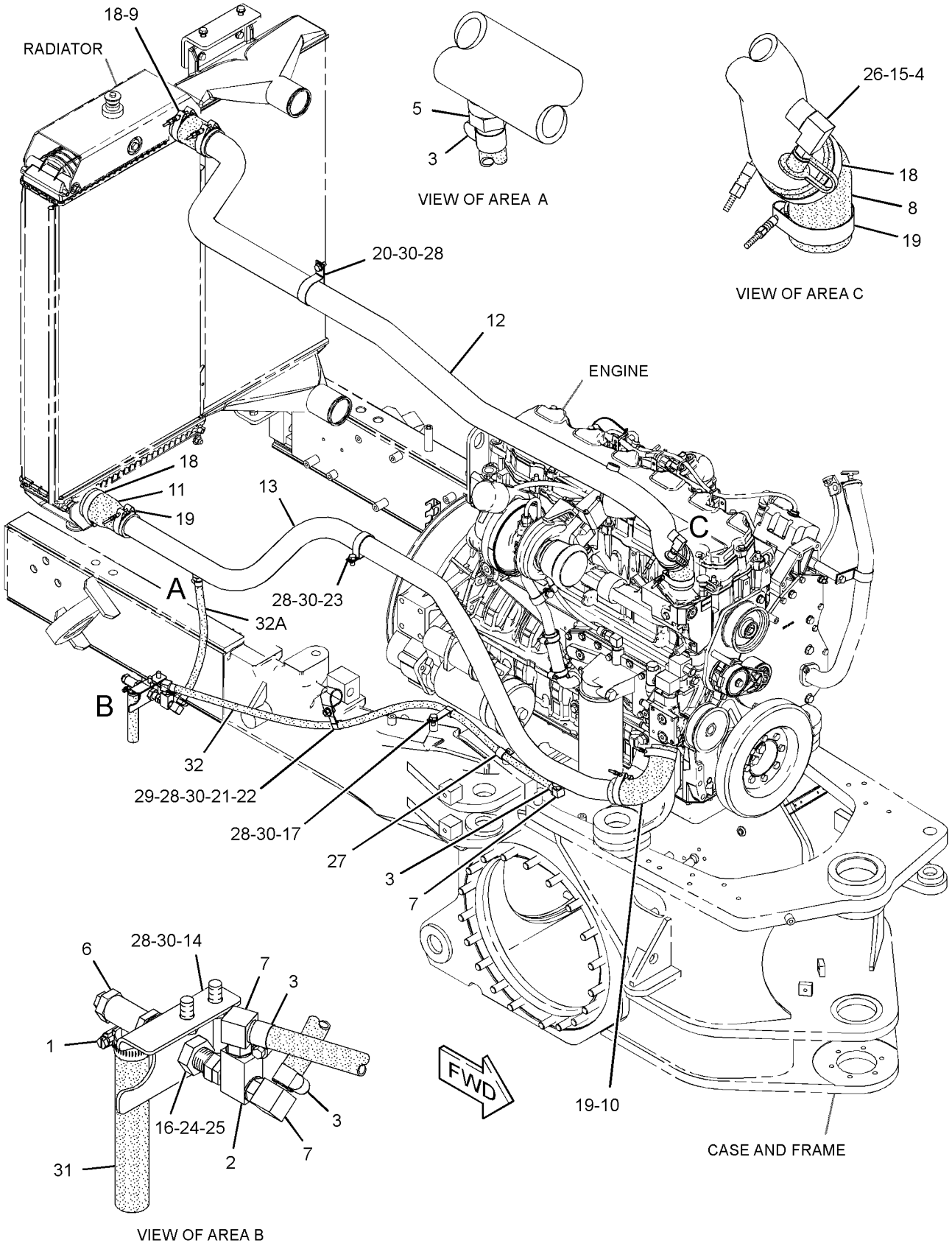

GRAPHIC #1 **<END>** g01710315

236-4413 PUMP GP-WATER*R

S/N: KHX14117-UP

PART OF 318-2076 PUMP GP-WATER

SMCS-1361 **i02871912**

NOTE	REF NO	GRAPHIC REF	PART NUMBER	QTY	PART NAME 1 2 3 4 5 6 (PRODUCT LEVEL)	SEE PAGE
	1	1	**4W-0253**	1	COVER	
	2	1	**4W-7592**	1	GASKET	
R	3	1	**236-4420**	1	PUMP AS-WATER	
		1	**117-3437**	1	PULLEY	
		1	**119-3025**	1	PLUG-FELT	
		1	**129-1170**	1	SHAFT AS	
		1	**147-5088**	1	SEAL AS-WATER PUMP	
		1	**152-3952**	1	IMPELLER-PUMP	
		1	**236-4421**	1	HOUSING-PUMP	
M	4	1	**6V-3918**	4	BOLT (M8X1.25X50-MM)	
	5	1	**9M-1974**	4	WASHER-HARD (8.8X16X2-MM THK)	

M-METRIC PART
R-REMFG PART MAY BE AVAILABLE

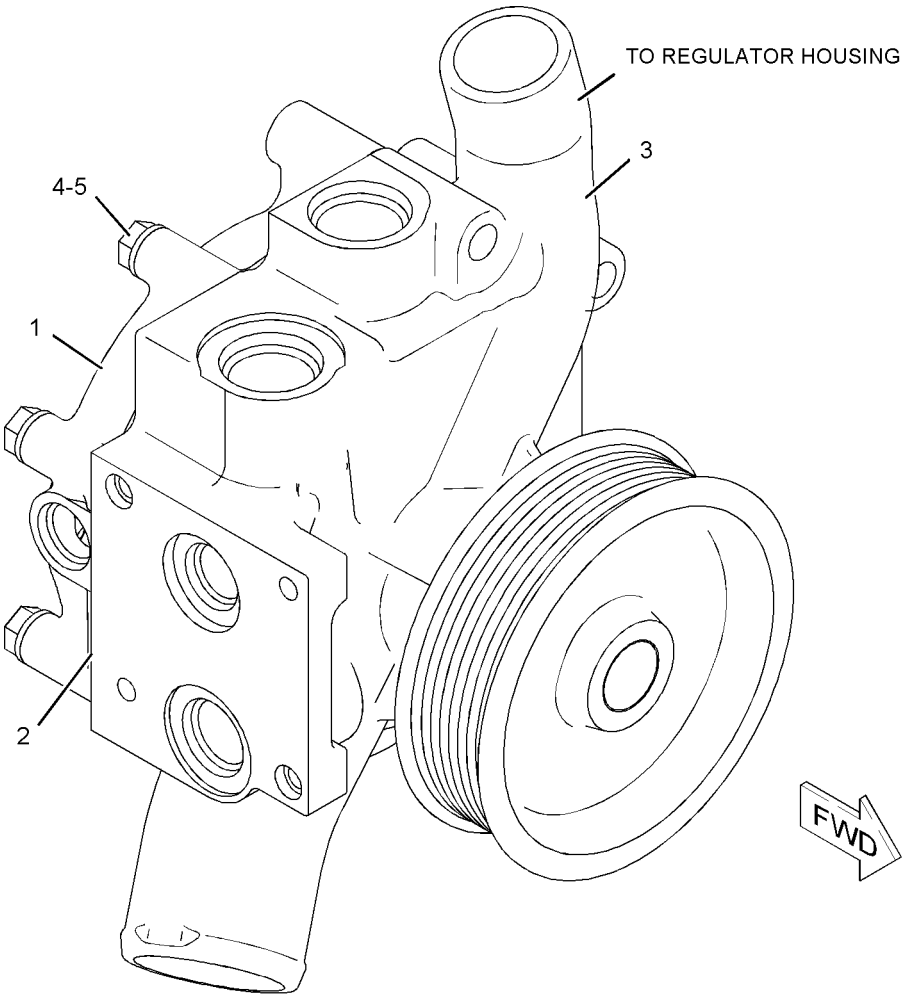

GRAPHIC #1 **<END>** g01040531

COOLING SYSTEM

318-2076 PUMP GP-WATER

S/N: KHX14117-UP

PART OF 325-9710 ENGINE AR-COMPLETE

SMCS-1361 **i03499632**

NOTE	REF NO	GRAPHIC REF	PART NUMBER	QTY	PART NAME 1 2 3 4 5 6 (PRODUCT LEVEL)	SEE PAGE
	1	1	**069-4269**	1	STEM	
YR	2	1	**236-4413**	1	PUMP GP-WATER	75
	3	1	*148-8395*	2	PLUG AS	
					(EACH INCLUDES)	
	3A	1	**3K-0360**	1	SEAL-O-RING	
		1	**9S-8005**	1	PLUG-O-RING	
	4	1	*155-6258*	1	ELBOW AS	
	4A	1	**3D-2824**	1	SEAL-O-RING	
	4B	1	**6V-8398**	1	SEAL-O-RING	
		1	**127-1647**	1	ELBOW	
	5	1	*164-5619*	1	PLUG AS	
	5A	1	**2M-9780**	1	SEAL-O-RING	
		1	**9S-8006**	1	PLUG-O-RING	
	6	1	**2M-4453**	1	SEAL-O-RING	
	7	1	**3D-2824**	1	SEAL-O-RING	
	8	1	*3J-3679*	1	PLUG AS	
	8A	1	**1J-9671**	1	SEAL-O-RING	
		1	**9S-8003**	1	PLUG	
	9	1	**4J-0524**	1	SEAL-O-RING	
M	10	1	**8T-0644**	4	BOLT (M10X1.5X90-MM)	

M-METRIC PART
R-REMFG PART MAY BE AVAILABLE
Y-SEPARATE ILLUSTRATION

318-2076 **PUMP GP-WATER** *(contd.)* **i03499632**

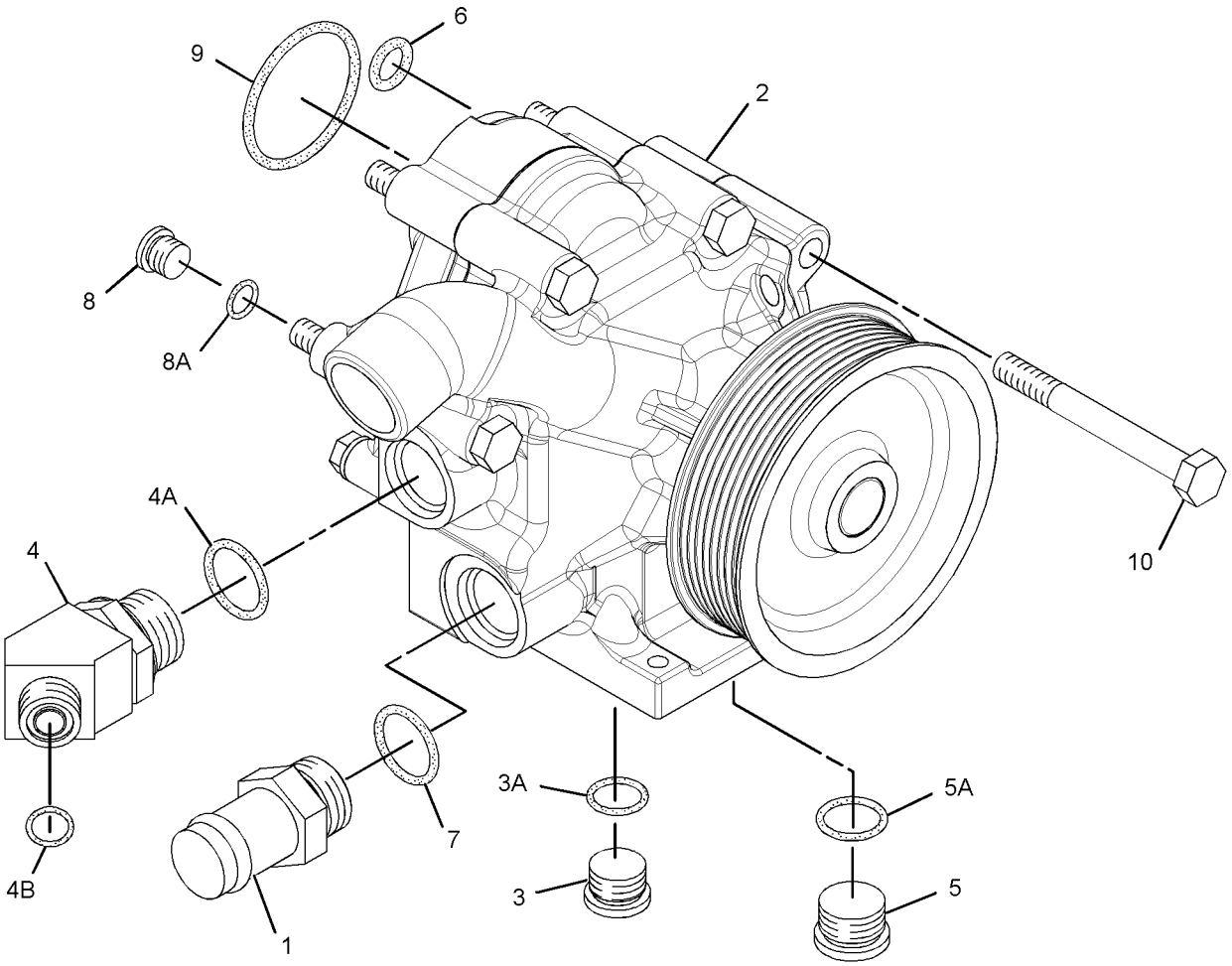

GRAPHIC #1 **<END>** g01722080

COOLING SYSTEM

310-5882 RADIATOR GP

S/N: JJA1-UP

PART OF 310-5881 COOLING AR

SMCS-1353 **i03246384**

NOTE	REF NO	GRAPHIC REF	PART NUMBER	QTY	PART NAME 1 2 3 4 5 6 (PRODUCT LEVEL)	SEE PAGE
	1	1	**6S-6251**	2	MOUNT	
	2	1	**121-3307**	1	MOUNT AS-RESILIENT	
M	3	1	**174-4181**	1	WASHER-HARD (8.5X40X3-MM THK)	
	4	1	**256-5308**	1	CORE AS-RADIATOR	
	5	1	**310-5883**	1	BRACKET AS	
	6	1	**310-5884**	1	BRACKET AS	
	7	1	**3J-5390**	1	PLUG	
M	8	1	**7X-2546**	4	BOLT (M10X1.5X180-MM)	
	9	1	**7X-7729**	8	WASHER (11X25X3-MM THK)	
M	10	1	**8T-4133**	4	NUT (M10X1.5-THD)	
M	11	1	**8T-4194**	2	BOLT (M12X1.75X50-MM)	
	12	1	**8T-4895**	2	WASHER (13.5X50X5-MM THK)	
M	13	1	**8T-6912**	1	BOLT (M8X1.25X50-MM)	
D	14	1	**5P-8309**		SEAL (1.8-M)	

D-ORDER BY THE METER
M-METRIC PART

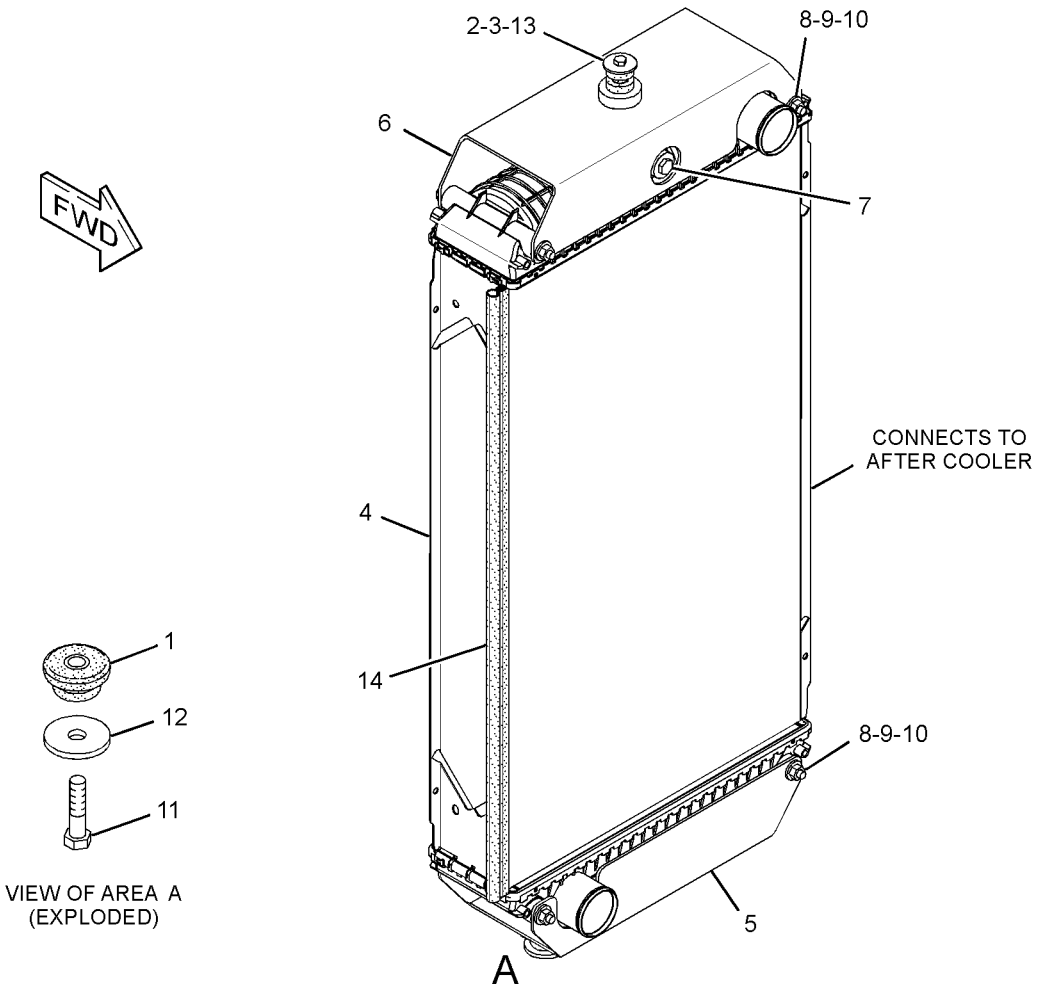

GRAPHIC #1 **<END>** g01661236

COOLING SYSTEM

311-2766 TANK GP-COOLANT

S/N: JJA1-UP

PART OF 346-3710 GENERAL AR

SMCS-1354, 1377 **i03630805**

NOTE	REF NO	GRAPHIC REF	PART NUMBER	QTY	PART NAME 1 2 3 4 5 6 (PRODUCT LEVEL)	SEE PAGE
	1	1	**6V-1230**	1	ELBOW	
	2	1	**277-4837**	1	TANK GP-COOLANT	
		1	**251-3227**	1	CAP AS-COOLANT TANK	
	3	1	**316-6689**	1	PLATE AS	
M		1	**8T-3490**	2	NUT-WELD (M10X1.5-THD)	
	4	1	**317-1529**	1	PLATE	
	5	1	**033-8248**	4	CLIP	
	6	1	**198-4776**	4	WASHER-HARD (8.8X20X8-MM THK)	
	7	1	**198-4777**	3	WASHER-HARD (11X25X10-MM THK)	
	8	1	**1S-0994**	1	CLIP	
	9	1	**3K-0360**	1	SEAL-O-RING	
	10	1	**4D-7388**	1	CLIP	
	11	1	**5D-1026**	2	CLAMP-HOSE	
	12	1	**8T-1117**	2	CLAMP-HOSE	
	13	1	**8T-4121**	10	WASHER-HARD (11X21X2.5-MM THK)	
M	14	1	**8T-4133**	3	NUT (M10X1.5-THD)	
M	15	1	**8T-4137**	6	BOLT (M10X1.5X20-MM)	
M	16	1	**8T-4195**	2	BOLT (M10X1.5X30-MM)	
M	17	1	**8T-4196**	1	BOLT (M10X1.5X35-MM)	
M	18	1	**8T-4908**	4	BOLT (M8X1.25X25-MM)	
E	19	1	**9X-2133**		HOSE (35-CM)	
E	20	1	**5P-1251**		HOSE (78-CM)	
E	21	1	**8C-3681**		HOSE (219-CM)	
	22	1	**345-0635**	1	BRACKET AS	
M		1	**8T-3490**	1	NUT-WELD (M10X1.5-THD)	
M	23	1	**8T-4136**	1	BOLT (M10X1.5X25-MM)	

E-ORDER BY THE CENTIMETER
M-METRIC PART

311-2766 **TANK GP-COOLANT** *(contd.)* **i03630805**

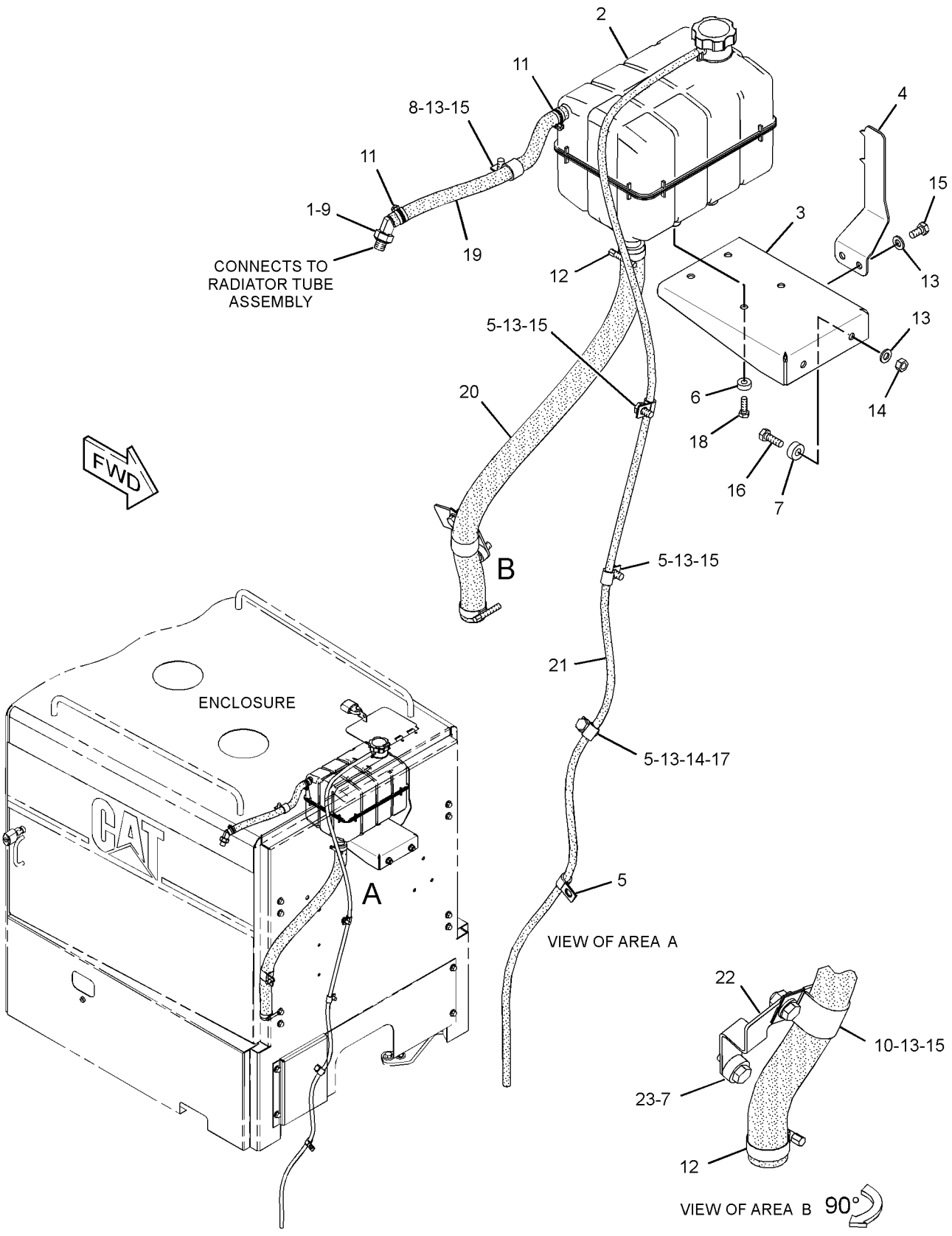

GRAPHIC #1 **<END>** g01951235

AIR INLET AND EXHAUST SYSTEM

299-8311 AFTERCOOLER GP-AIR

S/N: JJA1-UP

PART OF 310-5881 COOLING AR

SMCS-1063, 1064, 1079 **i03242667**

NOTE	REF NO	GRAPHIC REF	PART NUMBER	QTY	PART NAME 1 2 3 4 5 6 (PRODUCT LEVEL)	SEE PAGE
	1	1	**121-3307**	4	MOUNT AS-RESILIENT (RUBBER)	
	2	1	**243-5063**	1	AFTERCOOLER AS	
	3	1	**317-1538**	1	PLATE AS	
	4	1	**317-5601**	1	BRACKET AS	
	5	1	**8T-4121**	6	WASHER-HARD (11X21X2.5-MM THK)	
M	6	1	**8T-4133**	2	NUT (M10X1.5-THD)	
M	7	1	**8T-4196**	4	BOLT (M10X1.5X35-MM)	
	8	1	**8T-4226**	4	WASHER-PLATED (10.5X45X3-MM THK)	
M	9	1	**8T-6466**	4	BOLT (M10X1.5X60-MM)	

M-METRIC PART

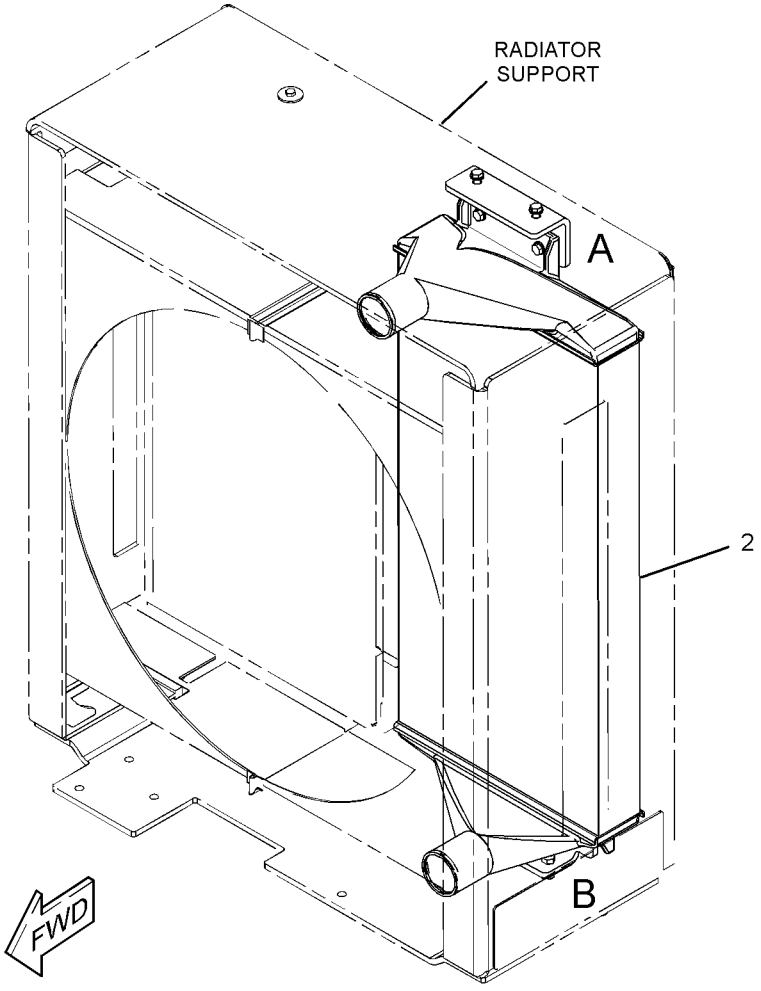

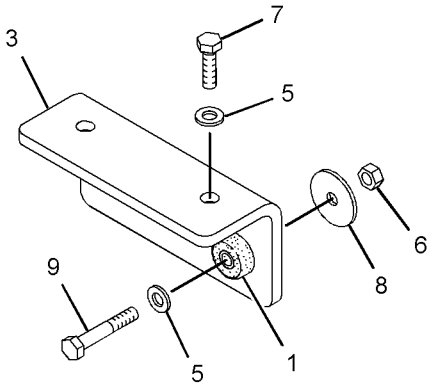

VIEW OF AREA A

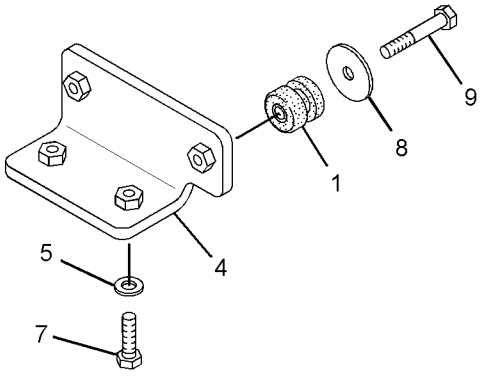

VIEW OF AREA B

GRAPHIC #1 **<END>** g01690853

AIR INLET AND EXHAUST SYSTEM

264-3762 AIR CLEANER GP

S/N: JJA1-UP

PART OF 310-6459 AIR CLEANER GP

SMCS-1051, 1054 **i03245923**

NOTE	REF NO	GRAPHIC REF	PART NUMBER	QTY	PART NAME 1 2 3 4 5 6 (PRODUCT LEVEL)	SEE PAGE
	1	1	**212-5081**	1	COVER AS	
	2	1	**245-6375**	1	FILTER ELEMENT-AIR (PRIMARY)	
	3	1	**245-6376**	1	FILTER ELEMENT AS-AIR (SECONDARY)	
	4	1	**246-4615**	2	BRACKET AS	
	5	1	**247-9730**	1	VALVE AS-CHECK	

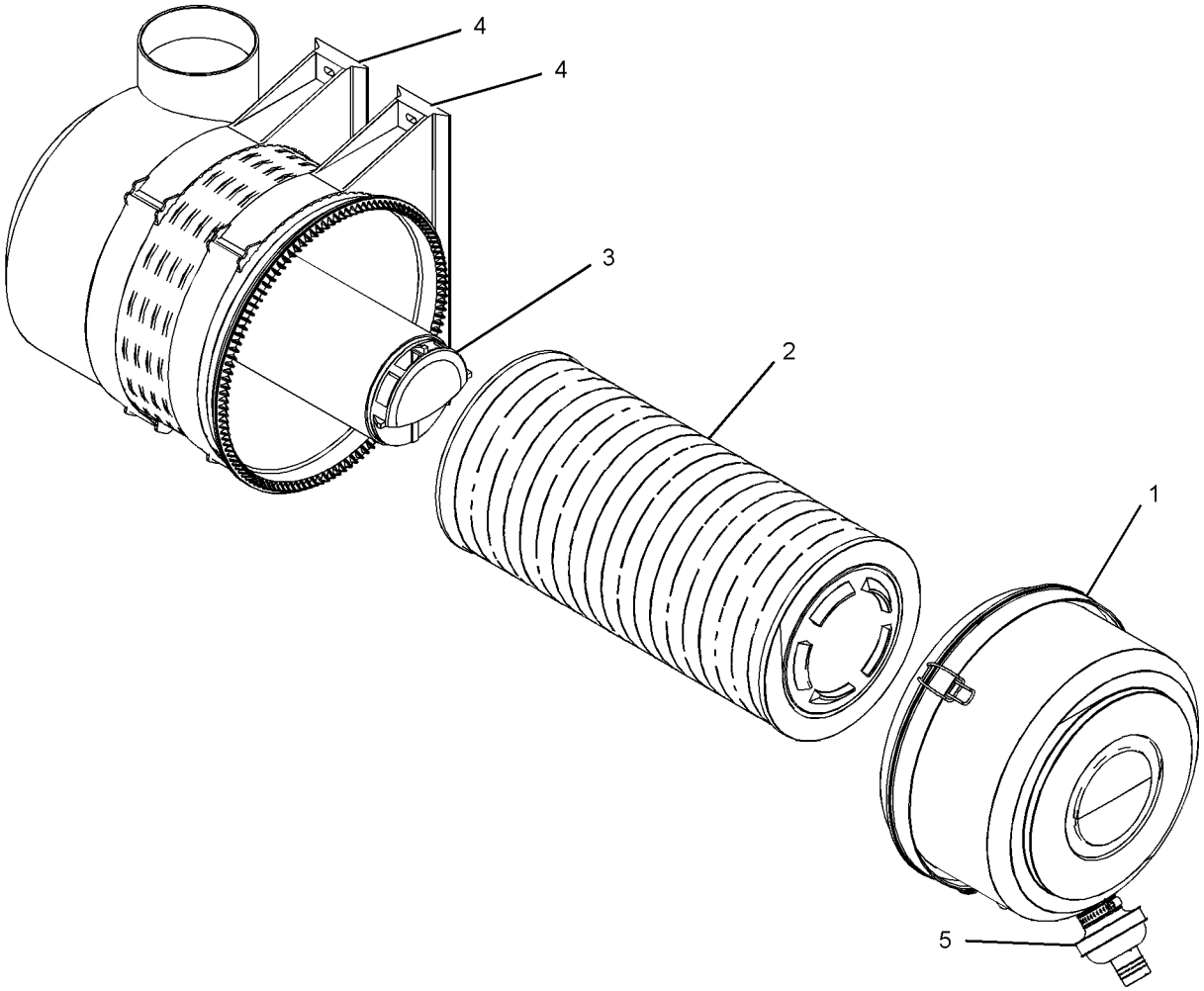

GRAPHIC #1 **<END>** g01691874

AIR INLET AND EXHAUST SYSTEM

310-6459 AIR CLEANER GP

S/N: JJA1-UP

PART OF 346-3710 GENERAL AR

SMCS-1051, 1054 **i03544083**

NOTE	REF NO	GRAPHIC REF	PART NUMBER	QTY	PART NAME 1 2 3 4 5 6 (PRODUCT LEVEL)	SEE PAGE
	1	1	**5P-2230**	2	CLAMP-HOSE	
	2	1	**8N-2694**	1	INDICATOR GP-AIR FILTER CHANGE	
	3	1	**119-6723**	1	FITTING	
	4	1	*150-3058*	1	TEE AS	
		1	**3J-1907**	1	SEAL-O-RING	
		1	**8C-8431**	1	TEE	
	5	1	**246-4611**	1	CAP AS-AIR CLEANER	
	6	1	**250-2984**	1	PIPE-EXTENSION	
Y	7	1	**264-3762**	1	AIR CLEANER GP	82
	8	1	**284-7774**	1	BRACKET	
	9	1	**311-4907**	1	HOSE AS	
I	10	1	**311-4908**	1	HOSE AS	
	11	1	**313-6096**	1	PLATE	
	12	1	**313-9542**	1	HOSE	
M	13	1	**099-3649**	4	BOLT (M8X1.25X40-MM)	
	14	1	*169-5862*	1	ELBOW AS	
		1	**3J-1907**	1	SEAL-O-RING	
		1	**8C-6712**	1	ELBOW	
	16	1	**219-0314**	1	CLAMP	
	17	1	**220-4125**	1	CLAMP	
	18	1	**224-0807**	1	CLAMP	
	19	1	**3J-7354**	1	SEAL-O-RING	
	20	1	**4D-7794**	1	CLIP	
M	21	1	**5C-2890**	2	NUT (M6X1-THD)	
	22	1	**7L-6326**	1	CLIP	
	23	1	**8T-4121**	6	WASHER-HARD (11X21X2.5-MM THK)	
M	24	1	**8T-4133**	1	NUT (M10X1.5-THD)	
M	25	1	**8T-4136**	1	BOLT (M10X1.5X25-MM)	
M	26	1	**8T-4137**	3	BOLT (M10X1.5X20-MM)	
M	27	1	**8T-4138**	2	BOLT (M6X1X20-MM)	
M	28	1	**8T-4191**	1	BOLT (M10X1.5X16-MM)	
	29	1	**5P-4116**	4	WASHER-HARD (8.8X20.5X2-MM THK)	
	30	1	**9X-8256**	4	WASHER (6.6X12X2-MM THK)	

I-REFER TO HYDRAULIC INFORMATION SYSTEM
M-METRIC PART
Y-SEPARATE ILLUSTRATION

310-6459 **AIR CLEANER GP** *(contd.)* **i03544083**

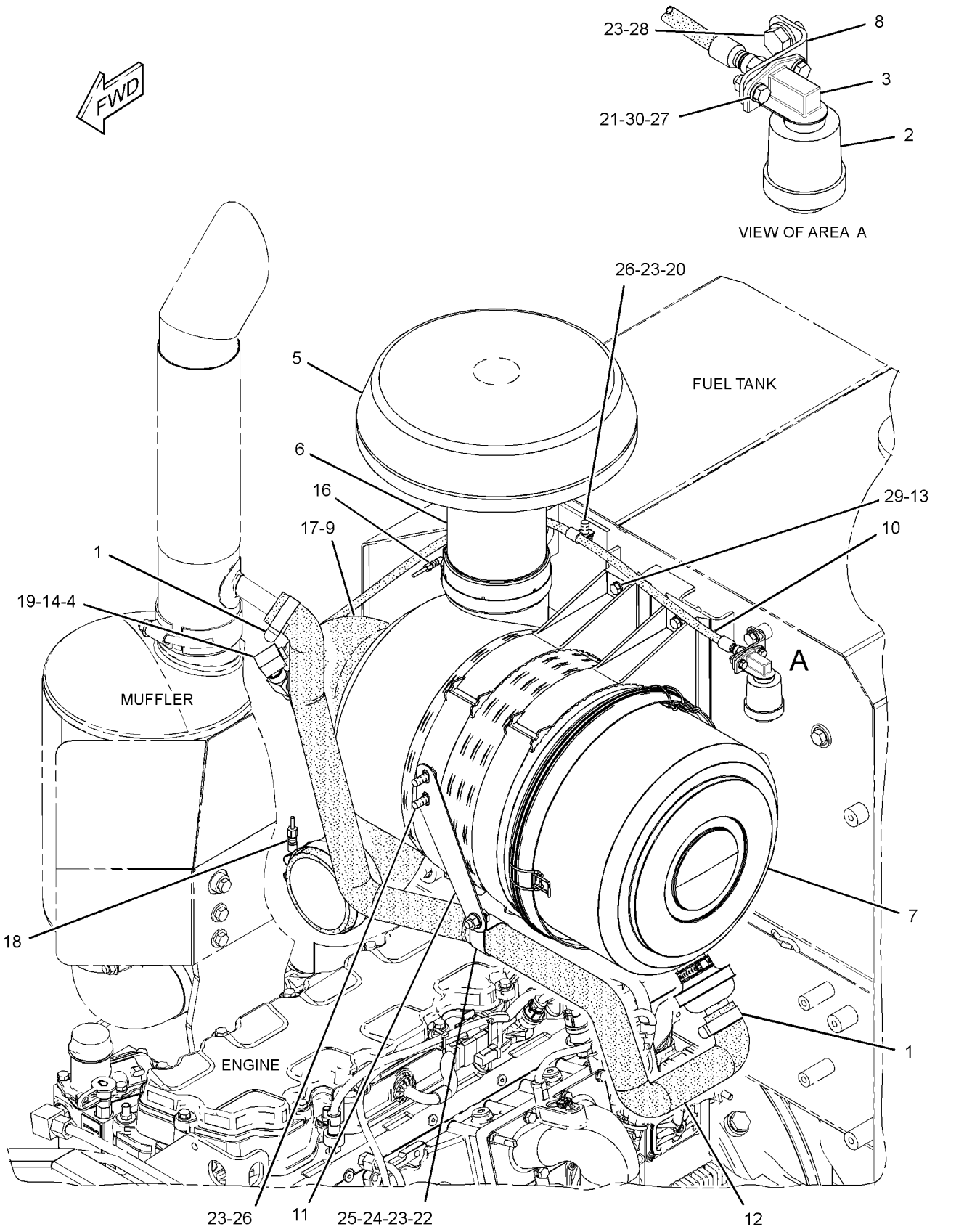

GRAPHIC #1 **<END>** g01872176

AIR INLET AND EXHAUST SYSTEM

153-1794 COVER GP-AIR INLET

S/N: KHX14117-UP

PART OF 325-9710 ENGINE AR-COMPLETE

SMCS-1087 **i03499680**

NOTE	REF NO	GRAPHIC REF	PART NUMBER	QTY	PART NAME 1 2 3 4 5 6 (PRODUCT LEVEL)	SEE PAGE
	1	1	**203-3769**	1	COVER	
B			**1U-8846**		SEALANT-GASKET	
	2	1	**9S-8005**	2	PLUG-O-RING	
	3	1	**3K-0360**	2	SEAL-O-RING	

B-USE AS REQUIRED

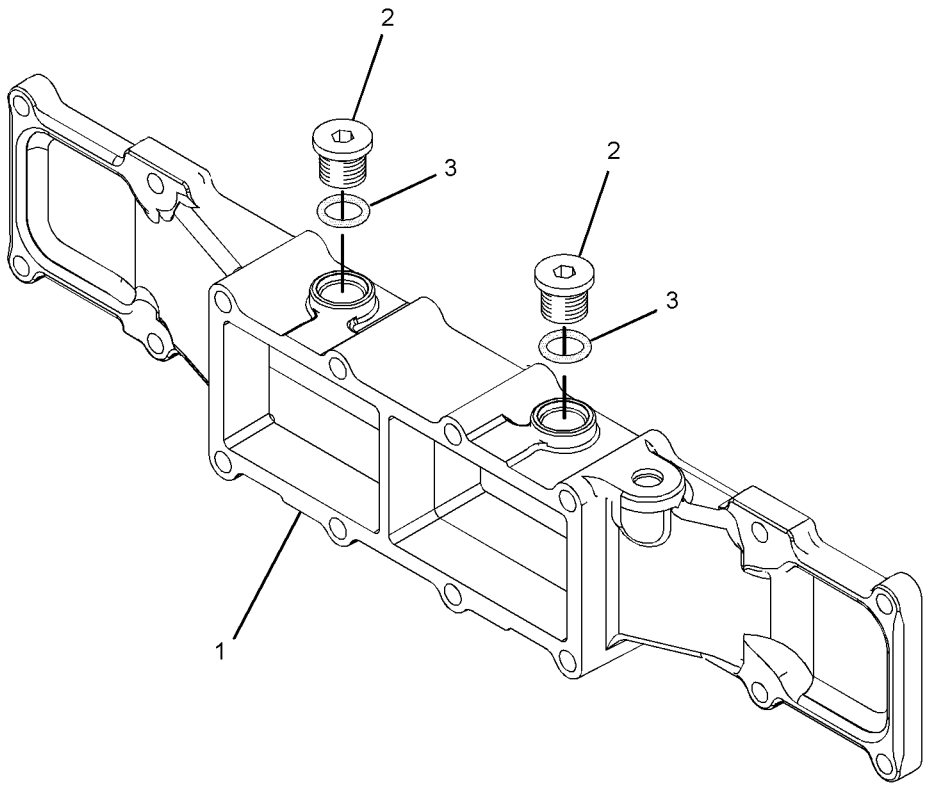

GRAPHIC #1 **<END>** g01835874

AIR INLET AND EXHAUST SYSTEM

322-0245 ELBOW GP-AIR INLET

S/N: KHX14117-UP

PART OF 325-9710 ENGINE AR-COMPLETE

SMCS-1087 **i03438862**

NOTE	REF NO	GRAPHIC REF	PART NUMBER	QTY	PART NAME 1 2 3 4 5 6 (PRODUCT LEVEL)	SEE PAGE
	1	1	**4P-5918**	1	CLIP	
	2	1	**7S-6369**	1	WASHER (0.344X0.75X0.188-IN THK)	
M	3	1	**123-4511**	4	STUD (M8X1.25-THD)	
	4	1	**197-0416**	1	ELBOW	
	5	1	*162-0177*	1	PLUG AS	
	5A	1	**3J-1907**	1	SEAL-O-RING	
	5B	1	**9S-8004**	1	PLUG-O-RING	
M	6	1	**8T-0292**	4	BOLT (M8X1.25X90-MM)	
	7	1	**9M-1974**	7	WASHER-HARD (8.8X16X2-MM THK)	
B	8	1	**1U-8846**	1	SEALANT-GASKET	

B-USE AS REQUIRED
M-METRIC PART

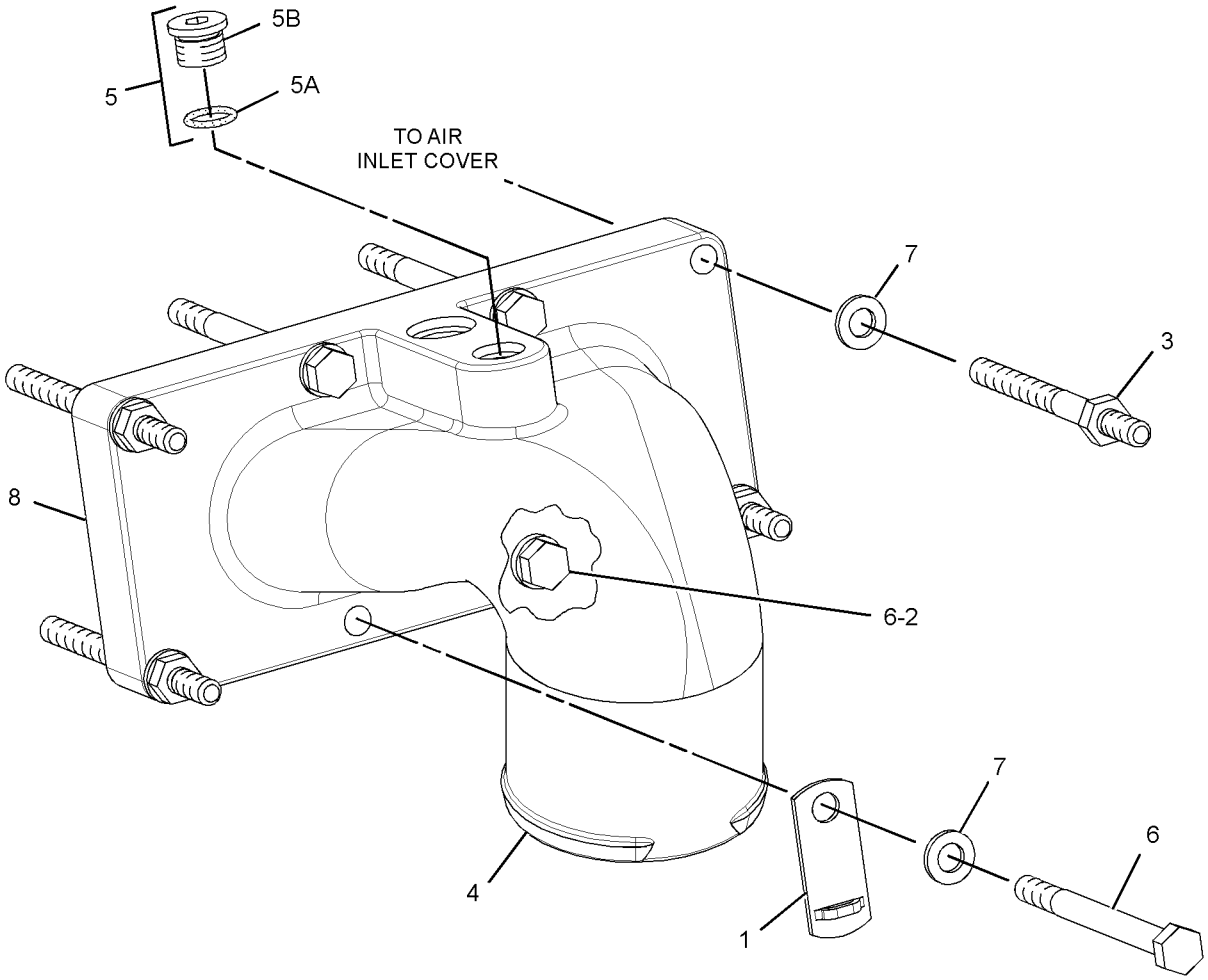

GRAPHIC #1 **<END>** g01721986

AIR INLET AND EXHAUST SYSTEM

311-0864 LINES GP-AIR

S/N: JJA1-UP

PART OF 346-3710 GENERAL AR

SMCS-1071 **i03353921**

NOTE	REF NO	GRAPHIC REF	PART NUMBER	QTY	PART NAME 1 2 3 4 5 6 (PRODUCT LEVEL)	SEE PAGE
	1	1	**177-0581**	2	HOSE	
	2	1	**209-4578**	8	CLAMP	
	3	1	**247-8602**	1	HOSE-ELBOW	
	4	1	**254-6802**	1	HOSE-ELBOW	
	5	1	**311-4959**	1	TUBE	
	6	1	**312-8434**	1	TUBE AS	
	7	1	**313-6098**	1	PLATE AS	
	8	1	**5L-3244**	2	CLIP	
M	9	1	**7X-2552**	3	BOLT (M16X2X30-MM)	
	10	1	**8T-4121**	2	WASHER-HARD (11X21X2.5-MM THK)	
M	11	1	**8T-4136**	1	BOLT (M10X1.5X25-MM)	
M	12	1	**8T-4195**	1	BOLT (M10X1.5X30-MM)	
	13	1	**9X-8257**	3	WASHER (17.5X30X3.5-MM THK)	

M-METRIC PART

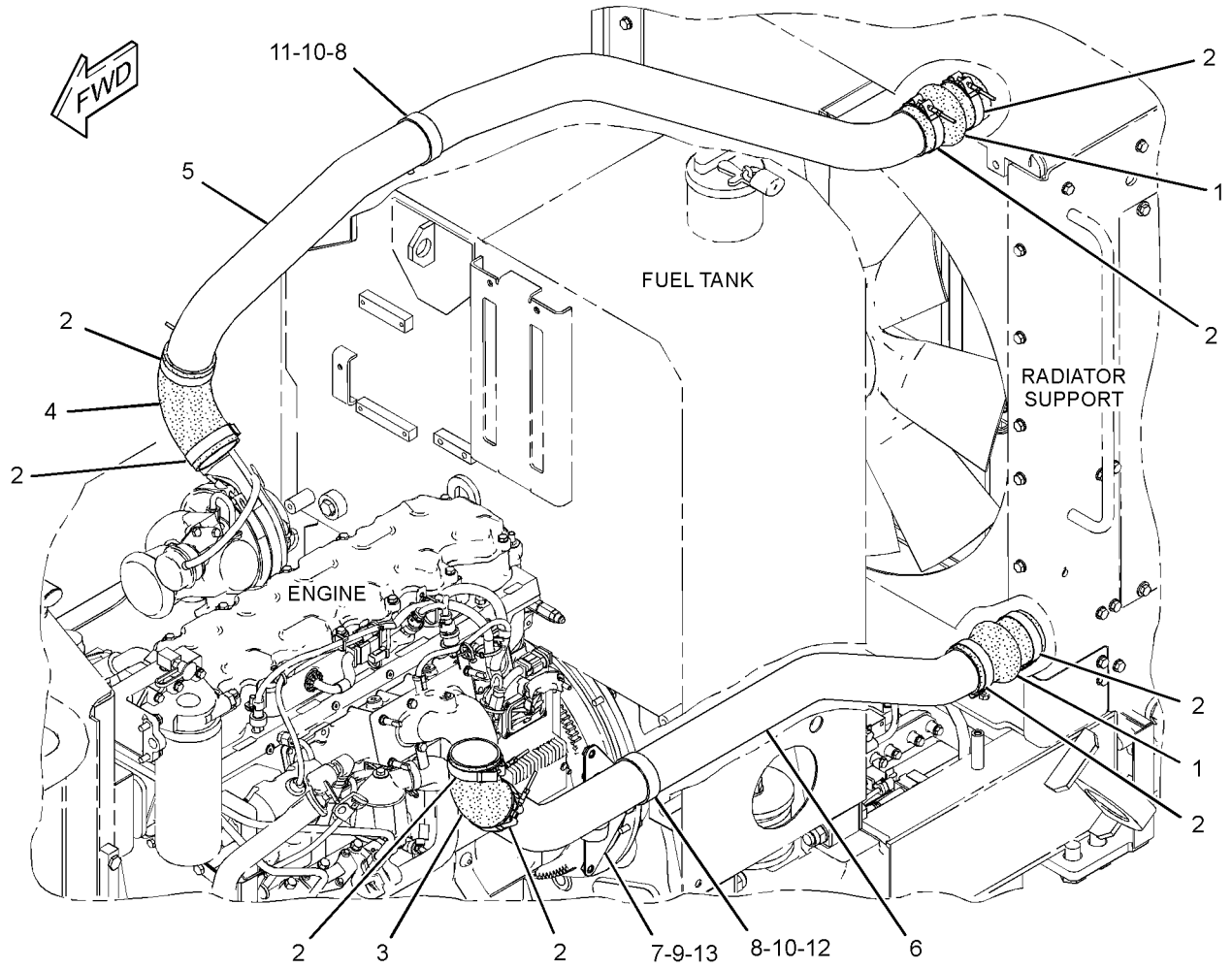

GRAPHIC #1 **<END>** g01704994

AIR INLET AND EXHAUST SYSTEM

183-6845 MANIFOLD GP-EXHAUST

S/N: KHX14117-UP

PART OF 325-9710 ENGINE AR-COMPLETE

SMCS-1059 **i02419842**

NOTE	REF NO	GRAPHIC REF	PART NUMBER	QTY	PART NAME 1 2 3 4 5 6 (PRODUCT LEVEL)	SEE PAGE
M	1	1	**8T-7044**	4	STUD-TAPERLOCK (M10X1.5X40-MM)	
	2	1	**272-1956**	6	GASKET	
M	3	1	**172-6298**	8	BOLT-FLANGE HEAD (M10)	
	4	1	**183-6854**	1	MANIFOLD-EXHAUST (CENTER)	
	5	1	**183-6856**	2	MANIFOLD-EXHAUST (END)	
	6	1	**189-8772**	8	SPACER (11X16X35-MM THK)	
	7	1	**203-3768**	4	SPACER (11X16X60-MM THK)	
	8	1	**210-7722**	4	BOLT-FLANGE HEAD (M10)	

M-METRIC PART

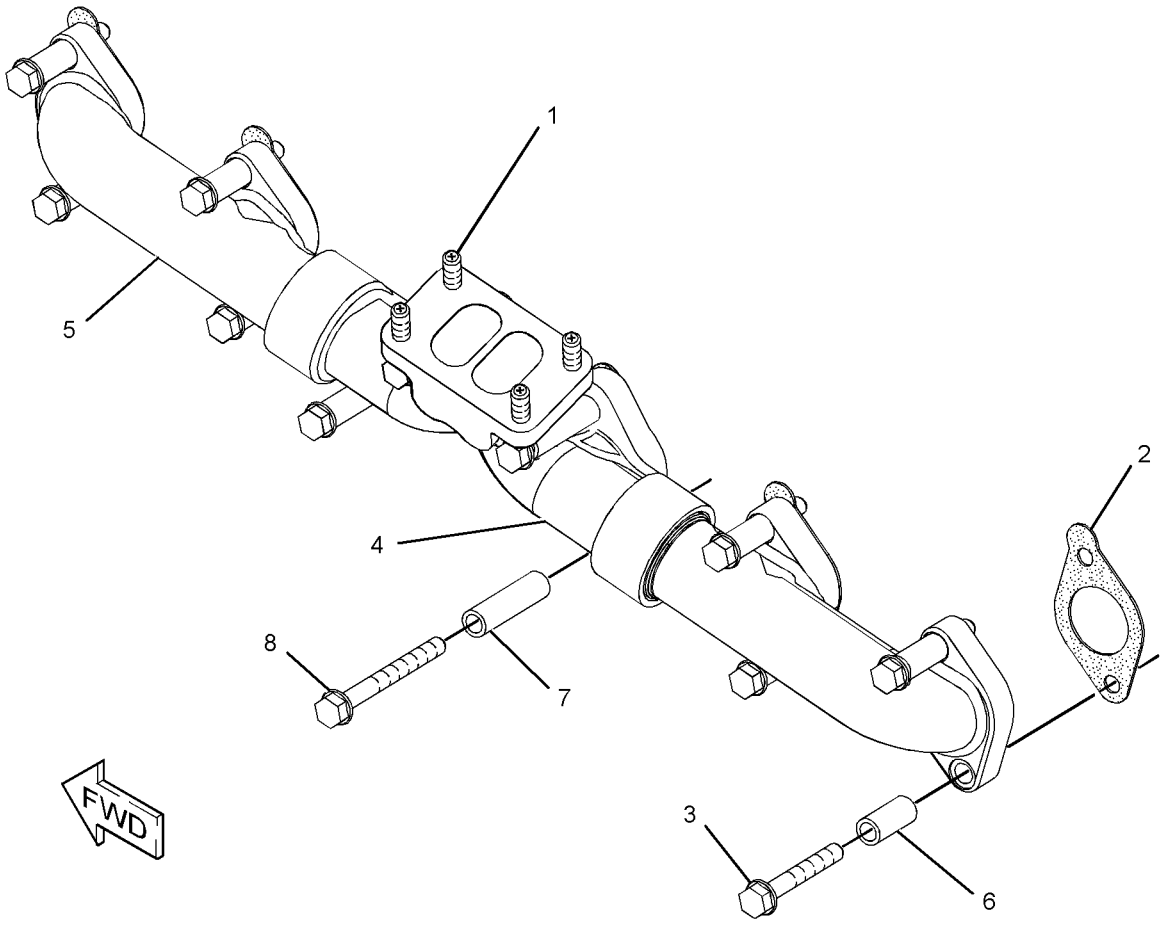

GRAPHIC #1 **<END>** g01211596

AIR INLET AND EXHAUST SYSTEM

310-6472 MUFFLER GP

S/N: JJA1-UP

PART OF 346-3710 GENERAL AR

SMCS-1062 **i03535964**

NOTE	REF NO	GRAPHIC REF	PART NUMBER	QTY	PART NAME 1 2 3 4 5 6 (PRODUCT LEVEL)	SEE PAGE
	1	1	**1W-2431**	1	CLAMP-BAND	
	2	1	**312-3542**	1	TUBE AS	
	3	1	**316-4806**	1	PLATE	
	4	1	**335-6122**	1	MUFFLER	
	5	1	**335-6123**	1	EJECTOR-EXHAUST	
	6	1	**198-4777**	6	WASHER-HARD (11X25X10-MM THK)	
M	7	1	**8T-4195**	4	BOLT (M10X1.5X30-MM)	
M	8	1	**8T-4196**	2	BOLT (M10X1.5X35-MM)	

M-METRIC PART

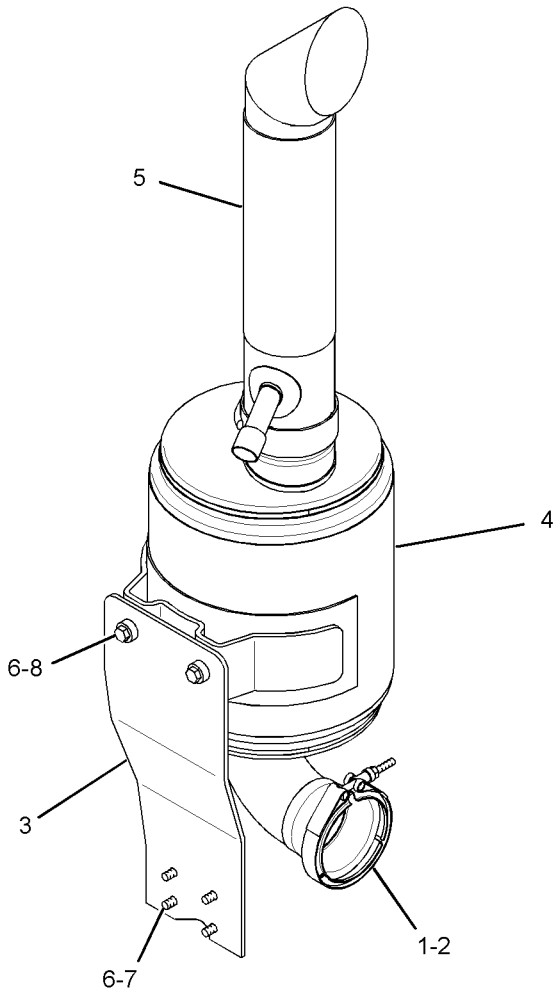

GRAPHIC #1 **<END>** g01846414

AIR INLET AND EXHAUST SYSTEM

338-1878 TURBOCHARGER GP

S/N: KHX14117-UP

PART OF 340-1812 TURBOCHARGER GP

SMCS-1052, 1053 **i03495526**

NOTE	REF NO	GRAPHIC REF	PART NUMBER	QTY	PART NAME 1 2 3 4 5 6 (PRODUCT LEVEL)	SEE PAGE
	1	1	**5P-4536**	1	ELBOW	
	2	1	**137-1602**	1	CLAMP AS (TURBINE)	
		1	**7M-9918**	1	LOCKNUT (1/4-28-THD)	
	3	1	**158-6072**	1	CLAMP AS (COMPRESSOR)	
	4	1	**161-6963**	2	CLAMP	
E	5	1	**242-3360**		HOSE (34-CM)	
	6	1	**261-9367**	1	CARTRIDGE GP-TURBOCHARGER	

E-ORDER BY THE CENTIMETER

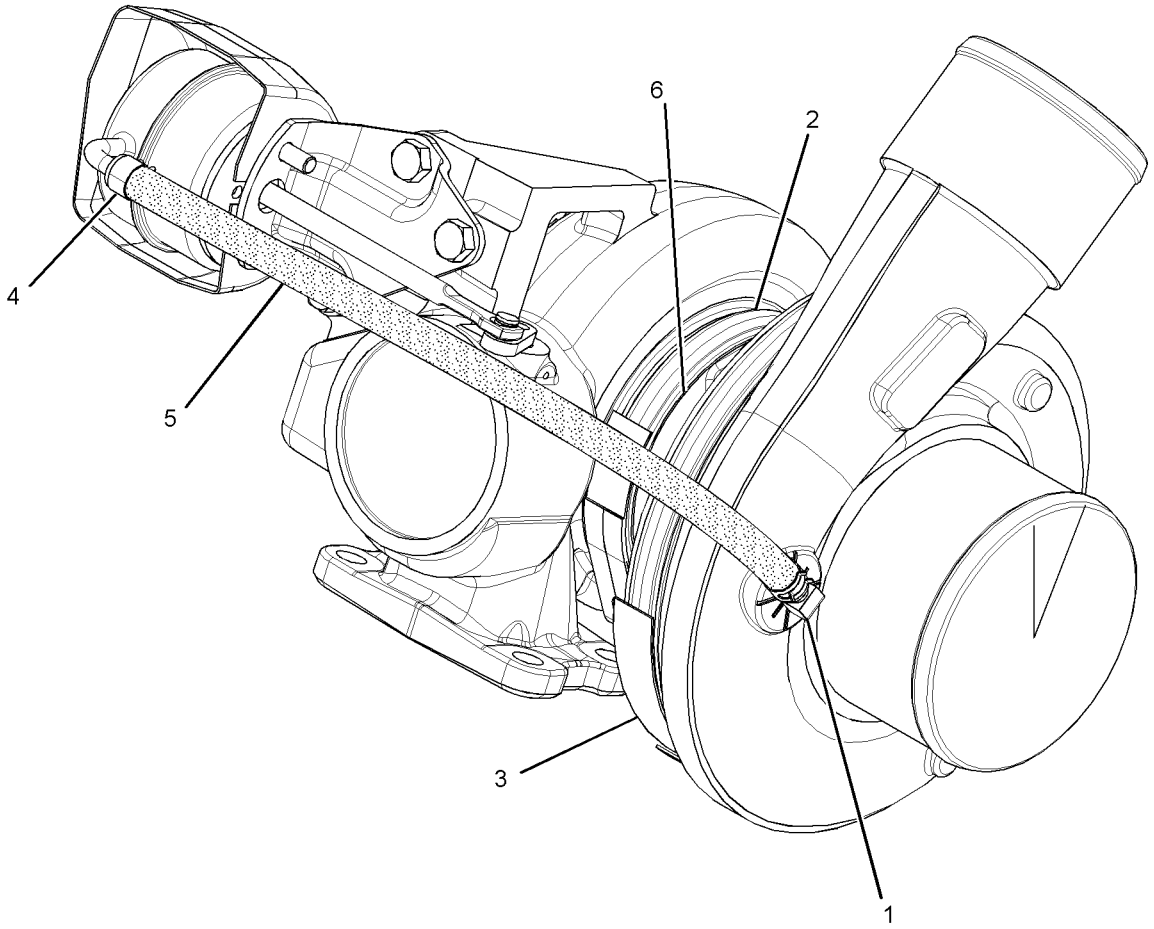

GRAPHIC #1 **<END>** g01844894

AIR INLET AND EXHAUST SYSTEM

340-1812 TURBOCHARGER GP

S/N: KHX14117-UP

PART OF 330-9360 ENGINE AR-CORE

SMCS-1052, 1053 **i03495205**

NOTE	REF NO	GRAPHIC REF	PART NUMBER	QTY	PART NAME 1 2 3 4 5 6 (PRODUCT LEVEL)	SEE PAGE
Y	1	1	**338-1878**	1	TURBOCHARGER GP	90
M	2	1	**3E-8017**	4	LOCKNUT (M10X1.5-THD)	
	3	1	**7C-7431**	1	GASKET	
E	7	1	**258-4524**		SLEEVE (34-CM)	

E-ORDER BY THE CENTIMETER
M-METRIC PART
Y-SEPARATE ILLUSTRATION

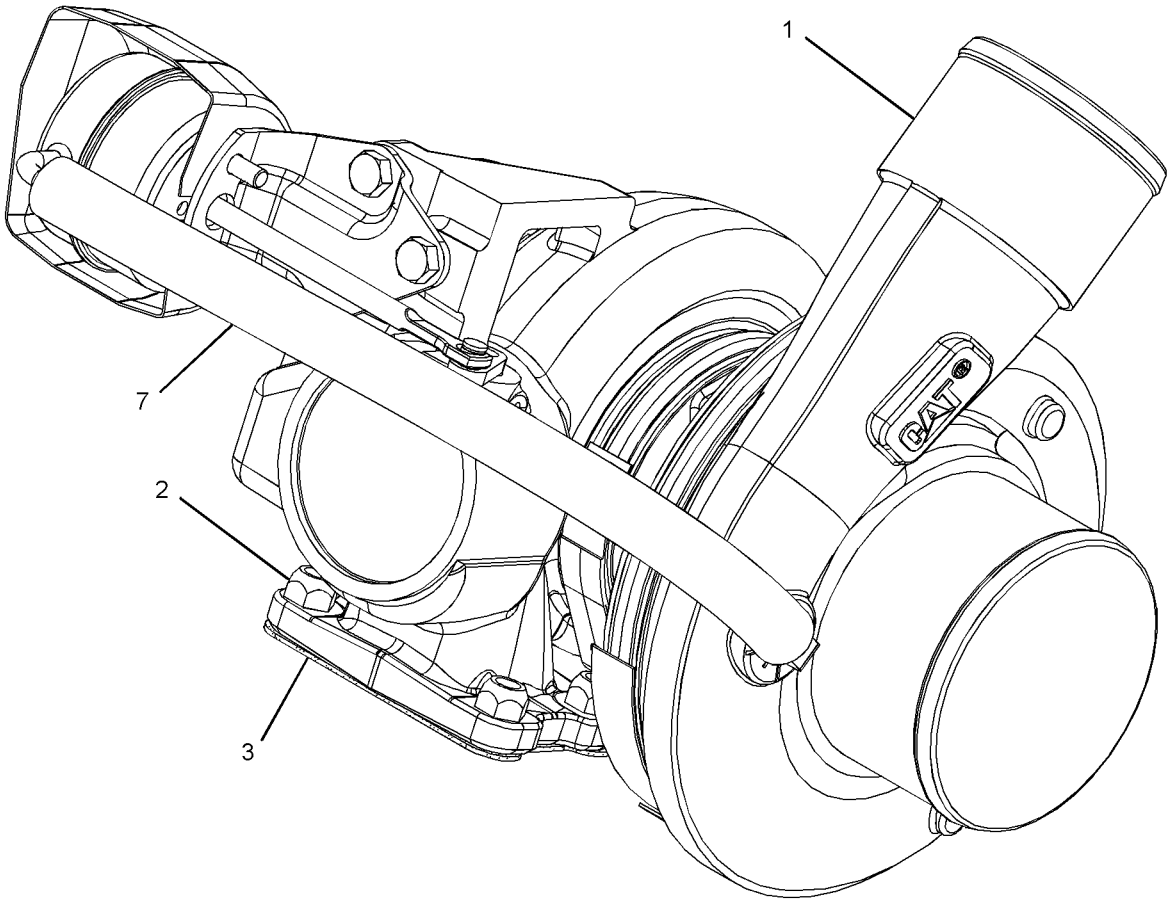

GRAPHIC #1 **<END>** g01836634

FUEL SYSTEM

282-2472 CONTROL GP-GOVERNOR

S/N: JJA1-UP

PART OF 346-3710 GENERAL AR

SMCS-1265, 1276 **i03247386**

NOTE	REF NO	GRAPHIC REF	PART NUMBER	QTY	PART NAME 1 2 3 4 5 6 (PRODUCT LEVEL)	SEE PAGE
	1	1	**2L-6267**	1	LOCKNUT (3/8-24-THD)	
B	2	1	**2N-9421**	2	SPRING-DISC	
	3	1	**4D-4064**	1	ROD END (3/8-24-THD)	
	4	1	**5P-9209**	2	BEARING AS-NEEDLE	
	5	1	**7F-0192**	1	BOLT (3/8-16X2-IN)	
	6	1	**7V-0446**	1	CLIP	
	7	1	**8X-3261**	1	LEVER	
	8	1	**116-5710**	1	GROMMET	
	9	1	**130-5300**	1	CLIP	
	10	1	**141-6343**	1	SPRING	
	11	1	**161-7062**	1	HOUSING	
	12	1	**162-8218**	1	GASKET	
	13	1	**162-8219**	1	COVER	
	14	1	**168-8683**	1	SHAFT	
	15	1	**169-0921**	1	ROD END-YOKE (3/8-24 LH-THD)	
	16	1	**169-0922**	1	ROD	
	17	1	**172-0165**	1	SHAFT	
	18	1	**172-4211**	1	SPACER (10.5X22X50.8-MM THK)	
	19	1	**206-3599**	1	LEVER	
	20	1	**206-3600**	1	LEVER	
	21	1	**207-4927**	1	PEDAL-GOVERNOR CONTROL	
Y	22	1	**266-1467**	1	SENSOR GP-POSITION (ROTARY) (GOVERNOR, BRAKE PEDAL)	159
	23	1	**009-0008**	1	SETSCREW-SOCKET (3/8-16X0.5-IN)	
	24	1	**129-3173**	1	BOLT-12 POINT HEAD (3/8-16X1.25-IN)	
M	25	1	**142-0485**	1	NUT (M10X1.5-THD)	
	26	1	**1B-0676**	1	PIN	
	27	1	**1B-8704**	3	KEY-WOODRUFF	
	28	1	**272-3089**	1	BOLT (M10X1.5X90-MM)	
	29	1	**5P-1075**	2	WASHER-HARD (10.2X22.5X3-MM THK)	
	30	1	**5P-1076**	1	WASHER-HARD (13.5X30X4-MM THK)	
M	31	1	**6V-2313**	2	BOLT (M5X0.8X30-MM)	
	32	1	**6V-8801**	2	NUT (3/8-16-THD)	
	33	1	**8T-0328**	2	WASHER-HARD (5.5X10X1-MM THK)	
	34	1	**8T-4121**	3	WASHER-HARD (11X21X2.5-MM THK)	
M	35	1	**8T-4133**	2	NUT (M10X1.5-THD)	
M	36	1	**8T-4136**	3	BOLT (M10X1.5X25-MM)	
M	37	1	**8T-4182**	2	BOLT (M10X1.5X45-MM)	
M	38	1	**8T-4196**	2	BOLT (M10X1.5X35-MM)	
	39	1	**8T-4226**	1	WASHER-PLATED (10.5X45X3-MM THK)	

B-USE AS REQUIRED
M-METRIC PART
Y-SEPARATE ILLUSTRATION

282-2472 **CONTROL GP-GOVERNOR** *(contd.)* **i03247386**

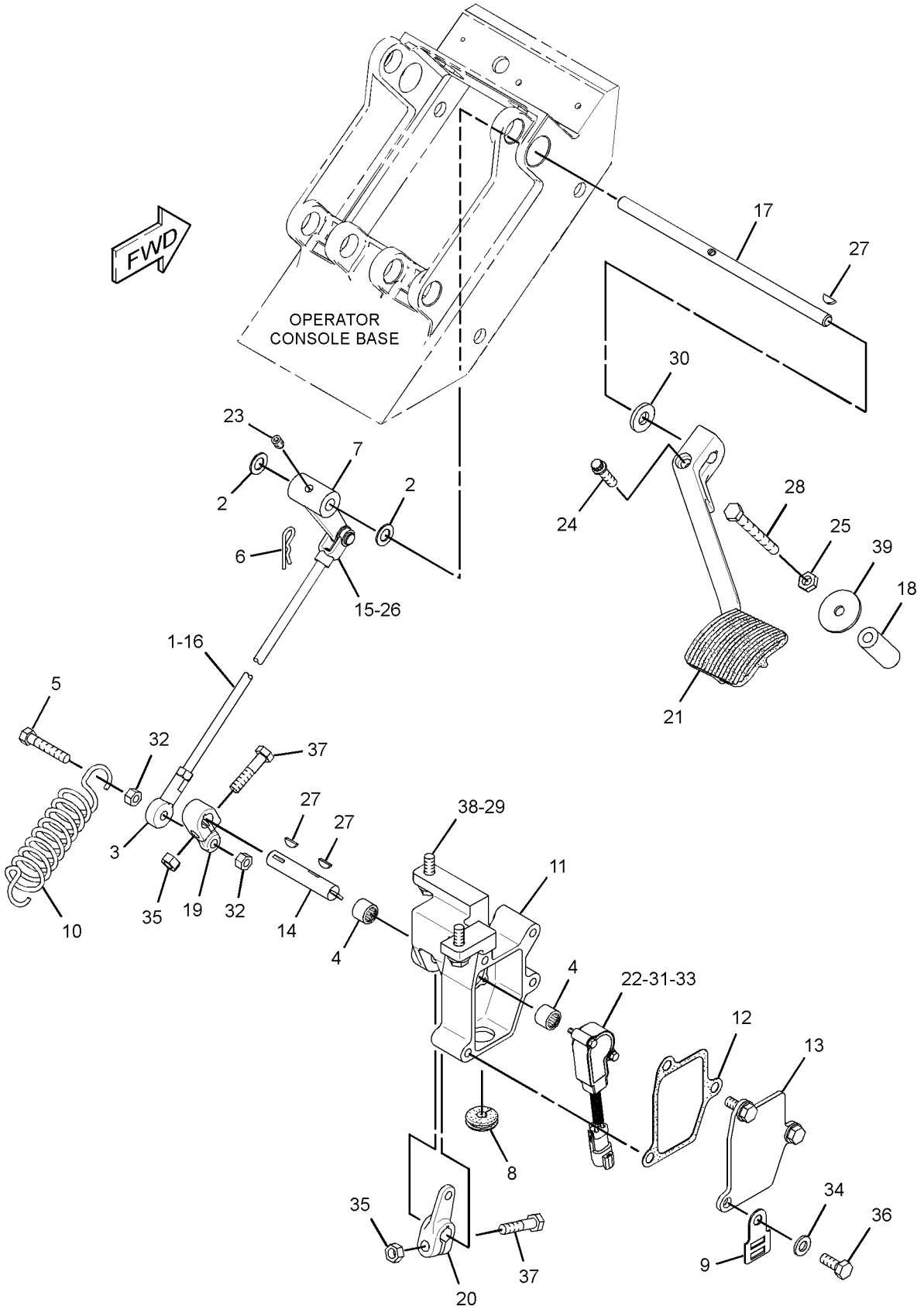

GRAPHIC #1 **<END>** g01705276

174-9570 FILTER GP-WATER SEP & FUEL

S/N: JJA1-UP

PART OF 190-8977 PUMP GP-FUEL PRM & WATER SEP

SMCS-1261, 1263 **i03181922**

NOTE	REF NO	GRAPHIC REF	PART NUMBER	QTY	PART NAME 1 2 3 4 5 6 (PRODUCT LEVEL)	SEE PAGE
	1	1	**326-1644**	1	FILTER AS-WATER SEP & FUEL (PRIMARY)	
	1A	1	**220-8678**	1	SEAL-RING (FUEL, WATER SEPARATOR)	
	2	1	**270-5320**	1	BOWL AS (FUEL, WATER SEPARATOR)	

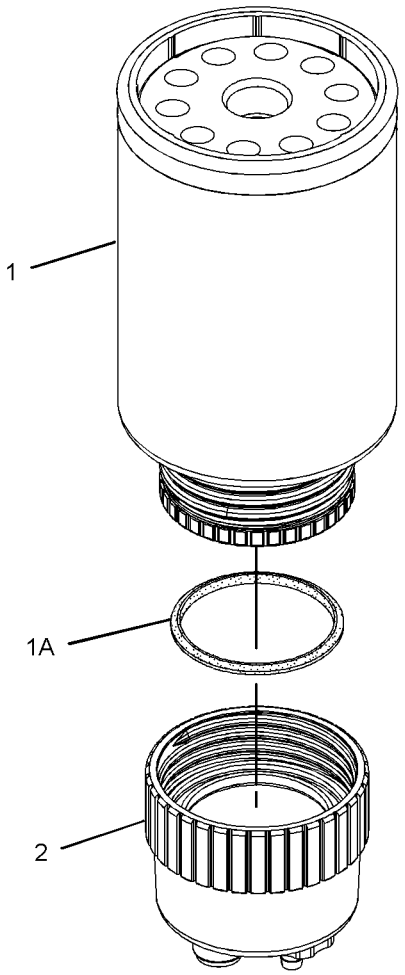

GRAPHIC #1 **<END>** g01179858

268-1835 INJECTOR GP-FUEL

S/N: KHX14117-UP

PART OF 268-1839 PUMP GP-FUEL INJECTION

SMCS-1251, 1254, 1290, 1713 **i02451153**

NOTE	REF NO	GRAPHIC REF	PART NUMBER	QTY	PART NAME 1 2 3 4 5 6 (PRODUCT LEVEL)	SEE PAGE
	1	1	**149-5240**	1	RING-BACKUP	
	2	1	**169-3104**	1	RING-BACKUP	
	3	1	**169-8598**	1	SEAL-O-RING	
	5	1	**109-3207**	1	SEAL-O-RING	
	6	1	**148-2903**	1	SEAL-O-RING	
	7	1	**169-8586**	1	RING-BACKUP	

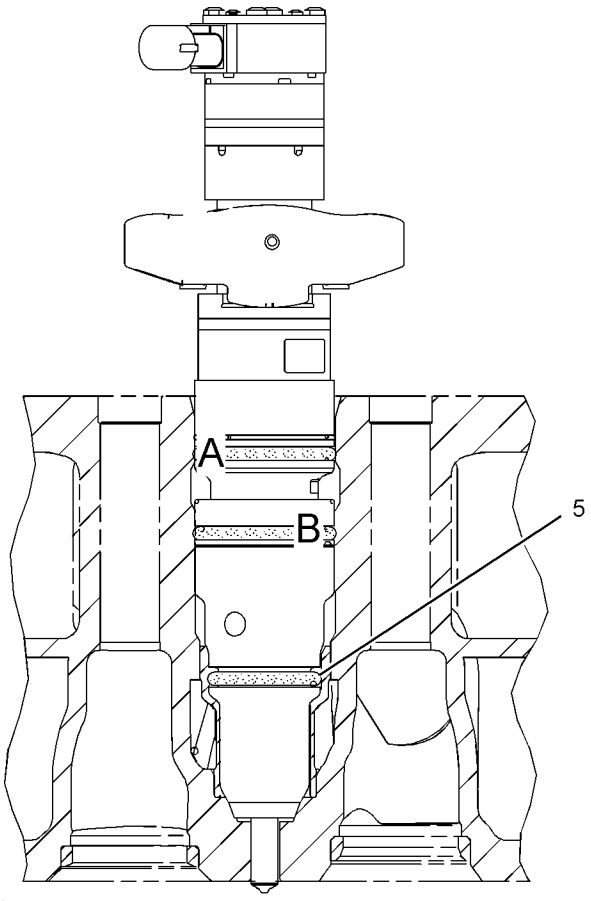

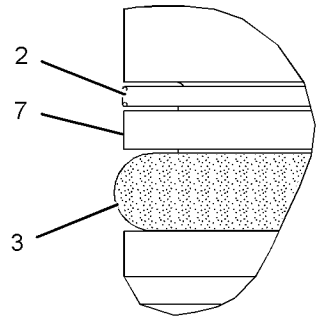

VIEW OF AREA A

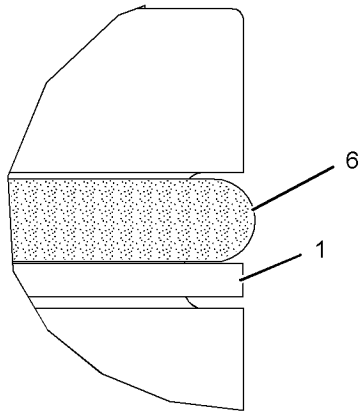

VIEW OF AREA B

GRAPHIC #1 **<END>** g01032697

FUEL SYSTEM

311-2770 LINES GP-FUEL

S/N: JJA1-UP

PART OF 346-3710 GENERAL AR

SMCS-1274 **i03641180**

NOTE	REF NO	GRAPHIC REF	PART NUMBER	QTY	PART NAME 1 2 3 4 5 6 (PRODUCT LEVEL)	SEE PAGE
	1	1	**3S-2093**	1	STRAP-CABLE	
	2	1	**8T-9655**	6	MOUNT-ISOLATION	
I	3	1	**170-0271**	1	HOSE AS	
	4	1	*171-6729*	1	VALVE GP-SHUTOFF (MANUAL) (FUEL)	
		1	**3K-0360**	1	SEAL-O-RING	
		1	**8T-0081**	1	VALVE-BALL	
	5	1	*173-7223*	1	ADAPTER AS	
		1	**3J-1907**	1	SEAL-O-RING	
		1	**3J-7354**	1	SEAL-O-RING	
		1	**9X-0261**	1	ADAPTER	
Y	6	1	**190-8977**	1	PUMP GP-FUEL PRM & WATER SEP	103
	7	1	**191-1782**	1	SPACER (8.5X12.7X38.2-MM THK)	
	8	1	**191-1783**	2	SPACER (8.5X12.7X87.3-MM THK)	
	9	1	**213-0064**	1	BASE AS (FUEL)	
		1	**9S-4167**	1	STUD-HOLLOW (1-14X1.47-IN)	
Y	10	1	*234-5013*	1	SENSOR GP-TEMPERATURE (FUEL)	170
	11	1	*268-1531*	1	ELBOW AS	
		1	**2M-9780**	1	SEAL-O-RING	
		1	**268-1530**	1	ELBOW	
	12	1	**274-6719**	1	SENSOR GP-PRESSURE (FUEL)	
Y	13	1	**275-1253**	1	SWITCH GP-PRESSURE (DIFFERENTIAL)	180
I	14	1	**311-7049**	1	HOSE AS	
I	15	1	**311-8756**	1	HOSE AS	
	16	1	**316-4351**	1	PLATE AS	
	17	1	**317-1533**	1	TUBE AS	
	18	1	**030-7962**	1	ELBOW	
	19	1	**033-8248**	1	CLIP	
	20	1	*148-8307*	1	ADAPTER AS	
		1	**3J-1907**	1	SEAL-O-RING	
		1	**5P-8874**	1	ADAPTER	
	21	1	*148-8336*	1	CONNECTOR AS	
		1	**3J-1907**	1	SEAL-O-RING	
		1	**6V-8397**	1	SEAL-O-RING	
		1	**6V-8636**	1	CONNECTOR	
	22	1	*148-8345*	2	CONNECTOR AS	
					(EACH INCLUDES)	
		1	**2M-9780**	1	SEAL-O-RING	
		1	**6V-8398**	1	SEAL-O-RING	
		1	**6V-8638**	1	CONNECTOR	
	23	1	*148-8364*	2	ELBOW AS	
					(EACH INCLUDES)	
		1	**3K-0360**	1	SEAL-O-RING	
		1	**6V-8398**	1	SEAL-O-RING	
		1	**6V-8625**	1	ELBOW	
	24	1	*148-8365*	1	ELBOW AS	
		1	**3J-1907**	1	SEAL-O-RING	
		1	**6V-8398**	1	SEAL-O-RING	
		1	**8T-6876**	1	ELBOW	
	25	1	*164-5570*	1	UNION AS	
		1	**6V-8397**	2	SEAL-O-RING	
		1	**6V-8730**	1	UNION (FACE SEAL)	
	26	1	*164-5619*	2	PLUG AS	
					(EACH INCLUDES)	
		1	**2M-9780**	1	SEAL-O-RING	
		1	**9S-8006**	1	PLUG-O-RING	

311-2770 **LINES GP-FUEL** *(contd.)* **i03641180**

NOTE	REF NO	GRAPHIC REF	PART NUMBER	QTY	PART NAME 1 2 3 4 5 6 (PRODUCT LEVEL)	SEE PAGE
	27	1	*183-3406*	2	PLUG AS (HIGH TEMPERATURE)	
					(EACH INCLUDES)	
		1	**214-7568**	1	SEAL-O-RING	
		1	**9S-4191**	1	PLUG-O-RING	
I	28	1	**192-1298**	1	HOSE AS	
	29	1	**198-4777**	4	WASHER-HARD (11X25X10-MM THK)	
	30	1	*239-5030*	1	ADAPTER AS	
		1	**3K-0360**	1	SEAL-O-RING	
		1	**9X-2493**	1	ADAPTER	
	31	1	*260-9171*	1	CONNECTOR AS	
		1	**3J-1907**	1	SEAL-O-RING	
		1	**6V-8397**	1	SEAL-O-RING	
		1	**8T-9041**	1	CONNECTOR	
	32	1	**1F-7567**	1	CLIP	
	33	1	**1R-0762**	1	FILTER-FUEL (ADVANCED EFFICIENCY)	
	34	1	**3J-1907**	1	SEAL-O-RING	
	35	1	**5P-4116**	1	WASHER-HARD (8.8X20.5X2-MM THK)	
	36	1	**5P-7462**	1	CLIP (SLOT)	
	37	1	**5P-7463**	1	CLIP (TAB)	
	38	1	**5P-7464**	2	CLIP (SLOT)	
	39	1	**5P-7465**	2	CLIP (TAB)	
	40	1	**6V-0683**	1	GROMMET	
	41	1	**6V-1249**	2	GROMMET	
	42	1	**6V-8397**	1	SEAL-O-RING	
	43	1	**6V-8724**	1	ELBOW	
M	44	1	**7X-2539**	2	BOLT (M8X1.25X110-MM)	
	45	1	**8T-4121**	6	WASHER-HARD (11X21X2.5-MM THK)	
M	46	1	**8T-4137**	1	BOLT (M10X1.5X20-MM)	
M	47	1	**8T-4139**	2	BOLT (M12X1.75X30-MM)	
M	48	1	**8T-4196**	9	BOLT (M10X1.5X35-MM)	
M	49	1	**8T-4189**	1	BOLT (M8X1.25X20-MM)	
	50	1	**8T-4223**	2	WASHER-HARD (13.5X25.5X3-MM THK)	
M	51	1	**8T-6869**	1	BOLT (M8X1.25X60-MM)	
	52	1	**7X-0579**	6	WASHER-HARD (8.8X25.5X2-MM THK)	
E	53	1	**8C-6959**		HOSE (135-CM)	
	54	1	**297-1546**	1	CLIP	
	55	1	**5P-1075**	1	WASHER-HARD (10.2X22.5X3-MM THK)	
	56	1	**4S-5719**	1	SPACER (10.31X25X12.7-MM THK)	

E-ORDER BY THE CENTIMETER
I-REFER TO HYDRAULIC INFORMATION SYSTEM
M-METRIC PART
Y-SEPARATE ILLUSTRATION

311-2770 **LINES GP-FUEL** *(contd.)* **i03641180**

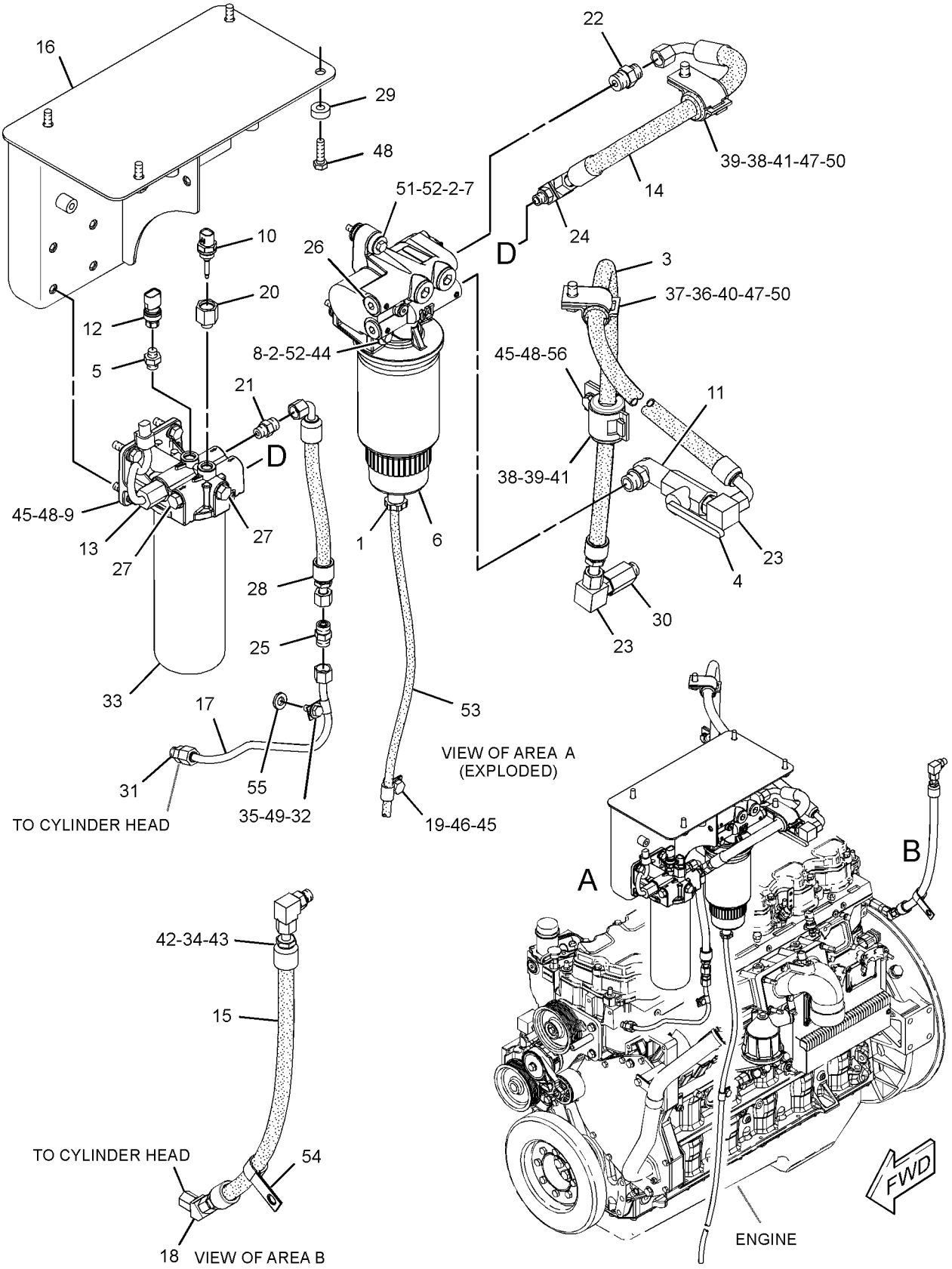

GRAPHIC #1 **<END>** g01933194

313-3967 LINES GP-FUEL

S/N: KHX14117-UP

PART OF 325-9710 ENGINE AR-COMPLETE

SMCS-1274 **i03435841**

NOTE	REF NO	GRAPHIC REF	PART NUMBER	QTY	PART NAME 1 2 3 4 5 6 (PRODUCT LEVEL)	SEE PAGE
	1	1	**164-6867**	2	CONNECTOR AS	
					(EACH INCLUDES)	
		1	**2R-6806**	1	CONNECTOR-O-RING	
		1	**3J-1907**	1	SEAL-O-RING	
Y	2	1	*232-0343*	1	REGULATOR GP-FUEL PRESSURE	104
	3	1	*162-0177*	1	PLUG AS	
		1	**3J-1907**	1	SEAL-O-RING	
		1	**9S-8004**	1	PLUG-O-RING	

Y-SEPARATE ILLUSTRATION

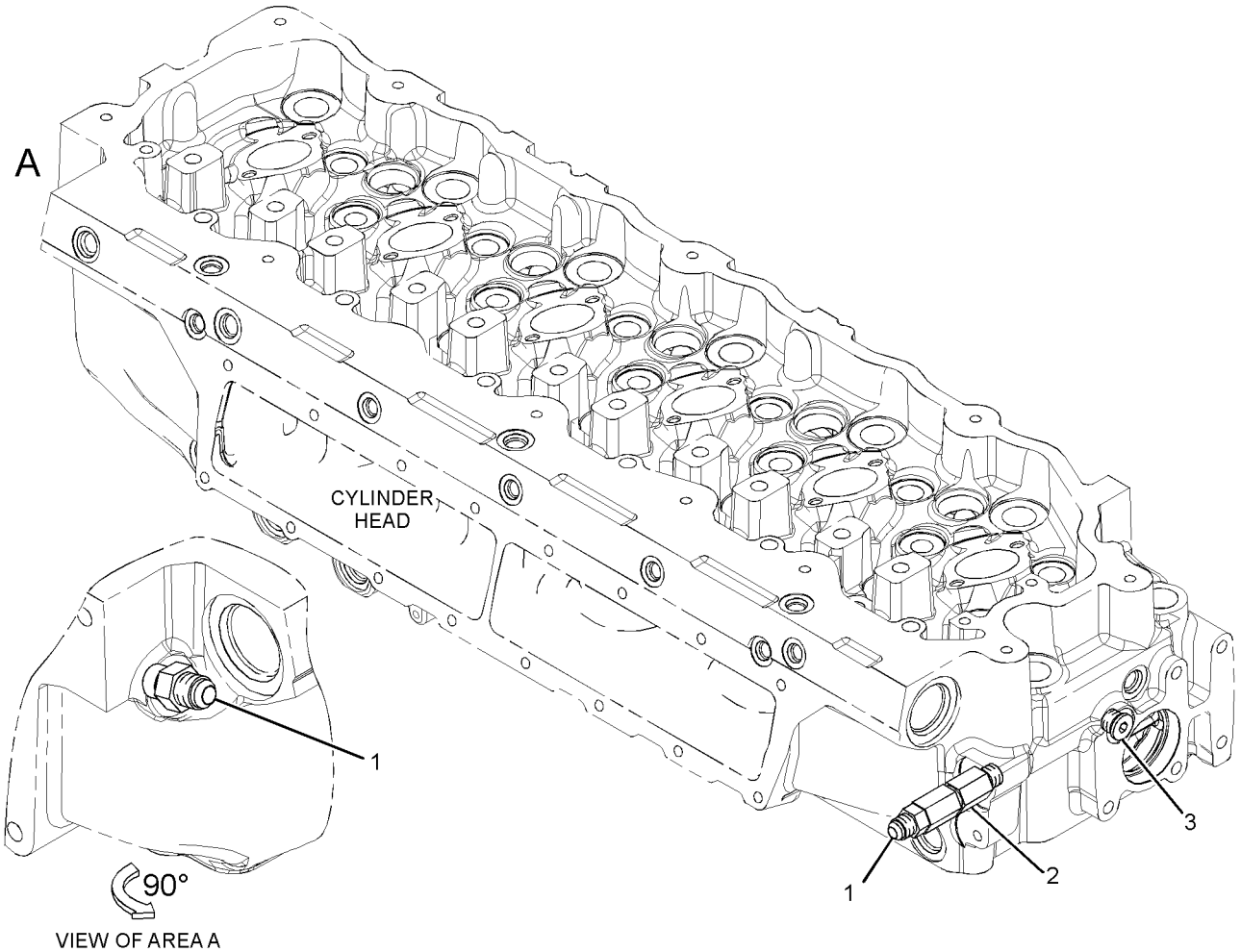

GRAPHIC #1 **<END>** g01717142

FUEL SYSTEM

191-0461 LINES GP-INJECTOR HYD PUMP

S/N: KHX14117-UP

PART OF 330-9360 ENGINE AR-CORE

SMCS-1714 **i02215817**

NOTE	REF NO	GRAPHIC REF	PART NUMBER	QTY	PART NAME 1 2 3 4 5 6 (PRODUCT LEVEL)	SEE PAGE
	1	1	*183-3399*	2	CONNECTOR AS	
					(EACH INCLUDES)	
		1	**6V-8636**	1	CONNECTOR	
		1	**214-7568**	1	SEAL-O-RING	
		1	**221-3494**	1	SEAL-O-RING	
Y	2	1	*191-0523*	1	ADAPTER GP-OIL LINE	56
	3	1	**205-1280**	1	HOSE AS	
	4	1	**212-3706**	1	TUBE AS	
	5	1	**3V-2431**	2	WASHER (10.2X16X2-MM THK)	
	6	1	**4F-9653**	1	SEAL-O-RING	
M	7	1	**8T-1159**	2	BOLT-SOCKET HEAD (M10X1.5X25-MM)	

M-METRIC PART
Y-SEPARATE ILLUSTRATION

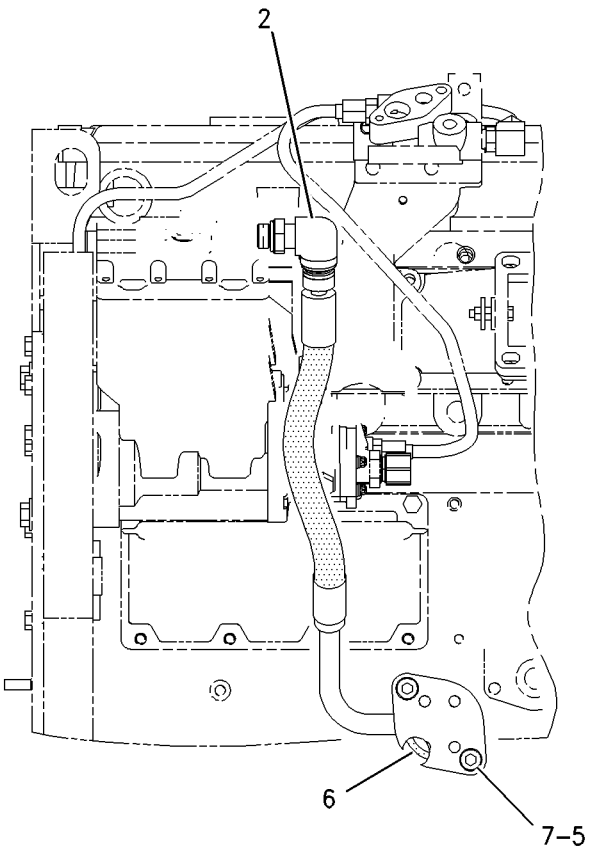

LEFT SIDE VIEW

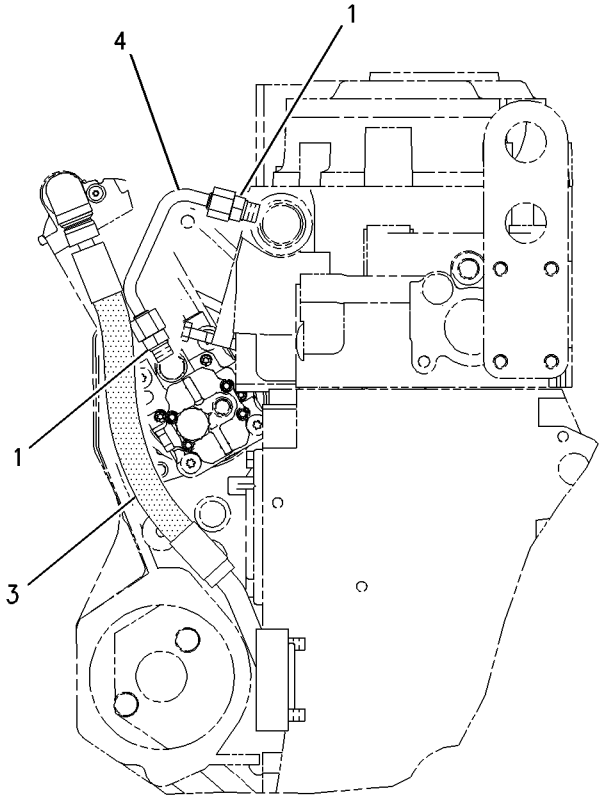

REAR VIEW

GRAPHIC #1 **<END>** g00881566

254-0095 PUMP & MTG GP-UNIT INJ HYD

S/N: KHX14117-UP

PART OF 330-9360 ENGINE AR-CORE

SMCS-1714 **i03531820**

NOTE	REF NO	GRAPHIC REF	PART NUMBER	QTY	PART NAME 1 2 3 4 5 6 (PRODUCT LEVEL)	SEE PAGE
	1	1	*321-8638*	2	PLUG AS	
					(EACH INCLUDES)	
		1	**214-7568**	1	SEAL-O-RING	
		1	**9S-8004**	1	PLUG-O-RING	
	2	1	**227-5904**	1	SEAL-O-RING (UNIT INJECTION HYD PUMP)	
C	3	1	**319-0607**	1	PUMP GP-UNIT INJECTOR HYD	
	4	1	**3E-9412**	1	DOWEL	
	5	1	**6V-5839**	2	WASHER (11X21X2.5-MM THK)	
M	6	1	**6V-7981**	2	BOLT (M10X1.5X70-MM)	

C-CHANGE FROM PREVIOUS TYPE
M-METRIC PART

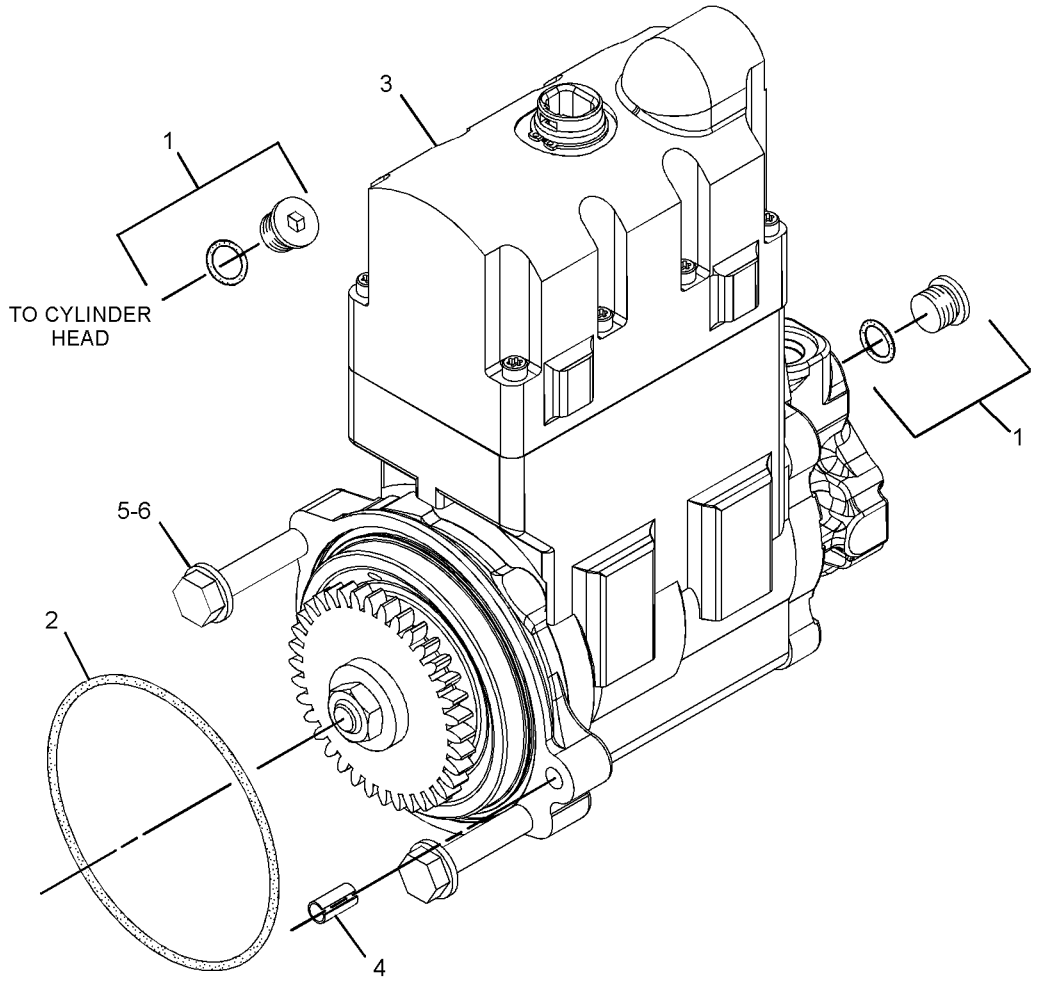

GRAPHIC #1 **<END>** g01789173

FUEL SYSTEM

268-1839 PUMP GP-FUEL INJECTION

S/N: KHX14117-UP

PART OF 330-9360 ENGINE AR-CORE

SMCS-1251, 1290 **i02451142**

NOTE	REF NO	GRAPHIC REF	PART NUMBER	QTY	PART NAME 1 2 3 4 5 6 (PRODUCT LEVEL)	SEE PAGE
	1	1	**235-9651**	2	BOLT-SOCKET HEAD (M8X1.25X65-MM)	
Y	2	1	**268-1835**	1	INJECTOR GP-FUEL	95

Y-SEPARATE ILLUSTRATION

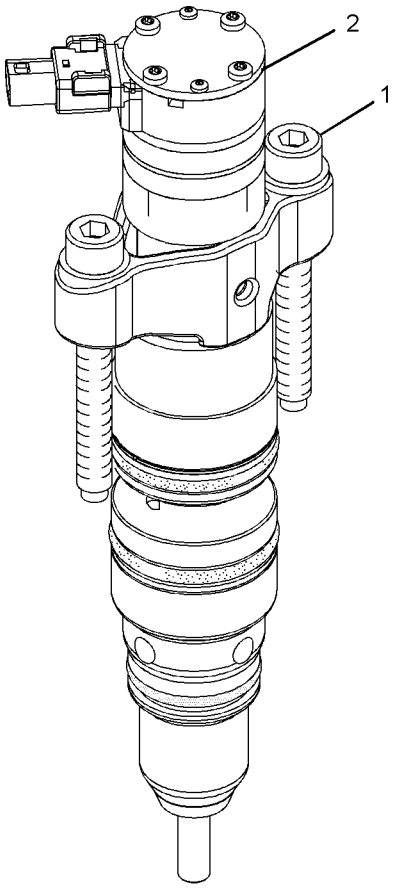

ISOMETRIC VIEW

GRAPHIC #1

<END>

g01038652

FUEL SYSTEM

190-8977 PUMP GP-FUEL PRM & WATER SEP

S/N: JJA1-UP

PART OF 311-2770 LINES GP-FUEL

SMCS-1258, 1261, 1263 **i01934929**

NOTE	REF NO	GRAPHIC REF	PART NUMBER	QTY	PART NAME 1 2 3 4 5 6 (PRODUCT LEVEL)	SEE PAGE
Y	1	1	*174-9570*	1	FILTER GP-WATER SEP & FUEL (PRIMARY)	94
	2	1	**190-8970**	1	PUMP AS-FUEL PRIMING	

Y-SEPARATE ILLUSTRATION

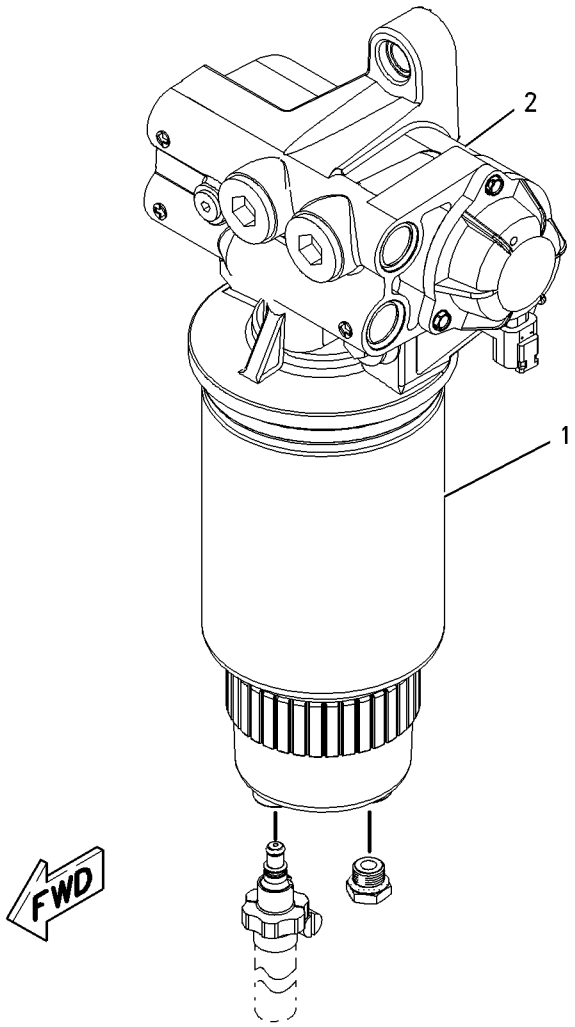

GRAPHIC #1 **<END>** g00904493

FUEL SYSTEM

232-0343 REGULATOR GP-FUEL PRESSURE

S/N: KHX14117-UP

PART OF 313-3967 LINES GP-FUEL

SMCS-1715 **i02676270**

NOTE	REF NO	GRAPHIC REF	PART NUMBER	QTY	PART NAME 1 2 3 4 5 6 (PRODUCT LEVEL)	SEE PAGE
	1	1	**6V-5049**	1	SEAL-O-RING	
	2	1	**294-8620**	1	REGULATOR AS (FUEL PRESSURE)	

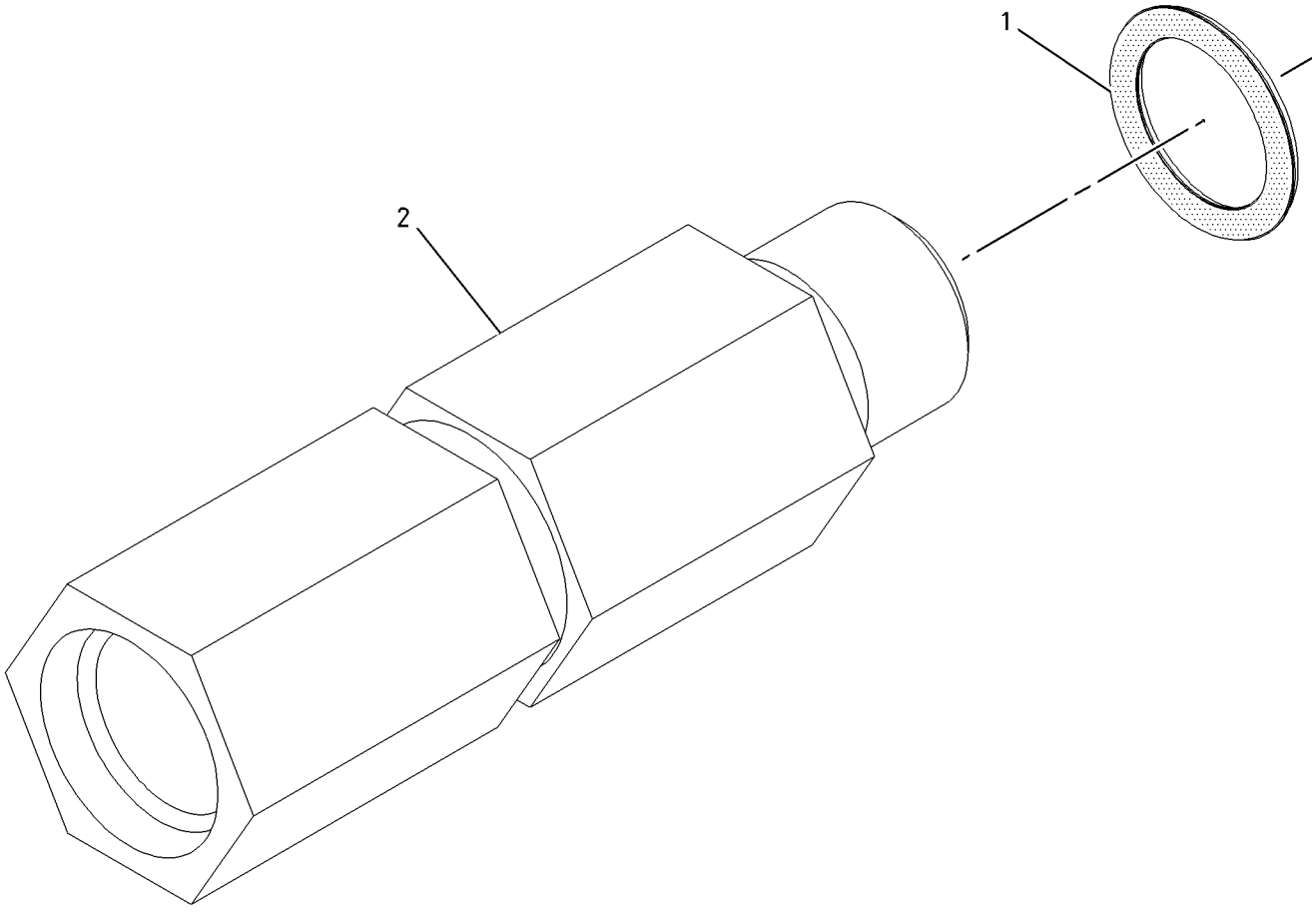

GRAPHIC #1 **<END>** g01004480

FUEL SYSTEM

311-2749 TANK GP-FUEL

S/N: JJA1-UP

PART OF 346-3710 GENERAL AR

SMCS-1273 **i03246377**

NOTE	REF NO	GRAPHIC REF	PART NUMBER	QTY	PART NAME 1 2 3 4 5 6 (PRODUCT LEVEL)	SEE PAGE
	1	1	**246-2641**	1	PADLOCK GP	
		1	**5P-8500**	1	KEY	
	2	1	**7X-7700**	1	CAP AS-FILLER (FUEL TANK)	
		1	**9X-2205**	1	KIT-CAP FILTER (FUEL TANK)	
		1	**9X-8600**	1	SEAL-O-RING	
	3	1	**9P-7121**	1	STRAINER-FUEL	
	4	1	**006-6586**	1	CONNECTOR-HOSE	
	5	1	**312-5109**	1	TANK AS-FUEL	
	6	1	**1H-8306**	1	SCREW-PURGE (1/2-20X1.625-IN)	
	7	1	**5D-1026**	1	CLAMP-HOSE	
M	8	1	**6V-7688**	4	LOCKNUT (M20X2.5-THD)	
M	9	1	**7X-2566**	4	BOLT (M20X2.5X110-MM)	
	10	1	**8T-4123**	8	WASHER (22X35X3.5-MM THK)	
E	11	1	**5P-0721**		HOSE (60-CM)	

E-ORDER BY THE CENTIMETER
M-METRIC PART

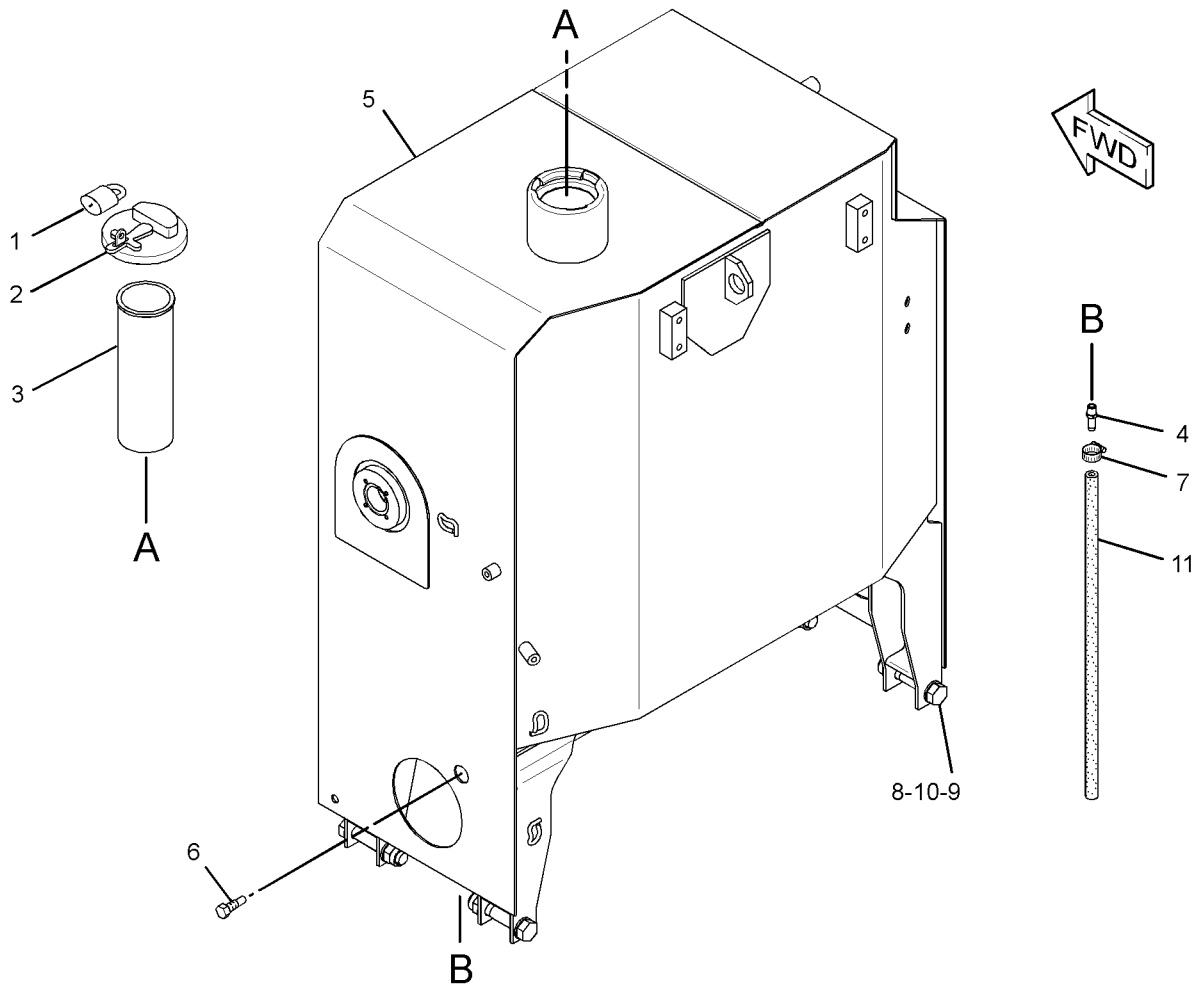

GRAPHIC #1 **<END>** g01689658

3E-6328 ALARM GP

S/N: JJA1-UP
24-VOLT
PART OF 284-5346 WIRING GP-CONSOLE

SMCS-7400, 7402, 7407 **i02942905**

NOTE	REF NO	GRAPHIC REF	PART NUMBER	QTY	PART NAME 1 2 3 4 5 6 (PRODUCT LEVEL)	SEE PAGE
	1	1	**102-8802**	1	KIT-RECEPTACLE (2-PIN)	
					(INCLUDES RECEPTACLE AS & WEDGE)	
	2	1	**186-3735**	2	PIN-CONNECTOR (16-GA TO 18-GA)	

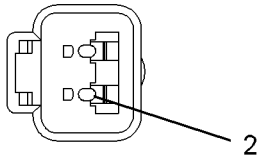

VIEW A–A

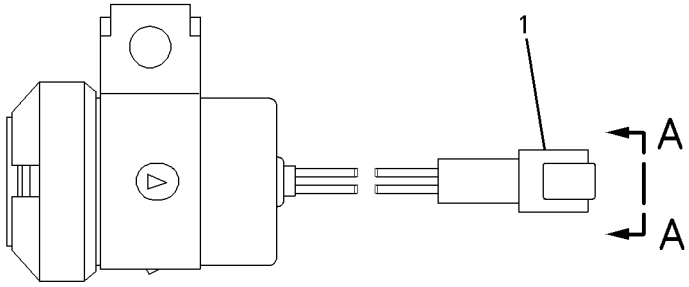

GRAPHIC #1 **<END>** g00697818

197-8820 ALTERNATOR GP-CHARGING*R

S/N: JJA1-UP
24-VOLT, 95-AMPERE
PART OF 345-7649 ALTERNATOR GP-CHARGING

SMCS-1405 **i03626650**

NOTE	REF NO	GRAPHIC REF	PART NUMBER	QTY	PART NAME 1 2 3 4 5 6 (PRODUCT LEVEL)	SEE PAGE
	1	1	**185-2653**	1	FRAME	
	2	1	**5S-7349**	1	BOLT (1/4-20X0.5-IN)	
	3	1	**185-2639**	1	FAN AS	
	4	1	**1H-3244**	1	LOCKWASHER	
	5	1	**185-2645**	1	FRAME	
	6	1	**2K-4821**	1	LOCKNUT (5/8-18-THD)	
	7	1	**5P-8247**	1	WASHER-HARD (17X32X3.5-MM THK)	
	8	1	**185-2651**	1	COVER	
	9	1	**8T-4205**	1	WASHER-HARD (7.2X14.5X2-MM THK)	
	10	1	**185-2647**	1	GROMMET	
	11	1	**9L-6770**	1	CAP-DUST (ALTERNATOR AC TAP)	
	12	1	**205-0626**	1	STATOR AS-ALTERNATOR	
	13	1	**185-2638**	2	COLLAR	
	14	1	**185-2654**	1	PLATE	
	15	1	**185-2650**	1	ROTOR AS	
	16	1	**185-2644**	1	COIL AS	
	17	1	**185-2648**	1	REGULATOR AS-VOLTAGE (24-VOLT)	
	18	1	**6V-8189**	1	NUT (5/16-18-THD)	
	19	1	**8T-4224**	1	WASHER-HARD (8.8X16X2-MM THK)	
	20	1	**3F-9556**	1	LOCKWASHER	
					AVAILABLE REPAIR KIT(S):	
			185-2655		KIT-BEARING (ALTERNATOR)	
					(INCLUDES BEARINGS)	
			199-8436		KIT-TERMINAL (ALTERNATOR)	
					(INCLUDES HOLDER AS, PLATE, INSULATOR, PIN, BOLTS, GROMMET, & NUT)	
			199-7891		KIT-TERMINAL (ALTERNATOR)	
					(INCLUDES INSULATORS, WASHERS, & NUTS)	
			185-2658		KIT-HARDWARE (ALTERNATOR)	
					(INCLUDES BOLTS)	

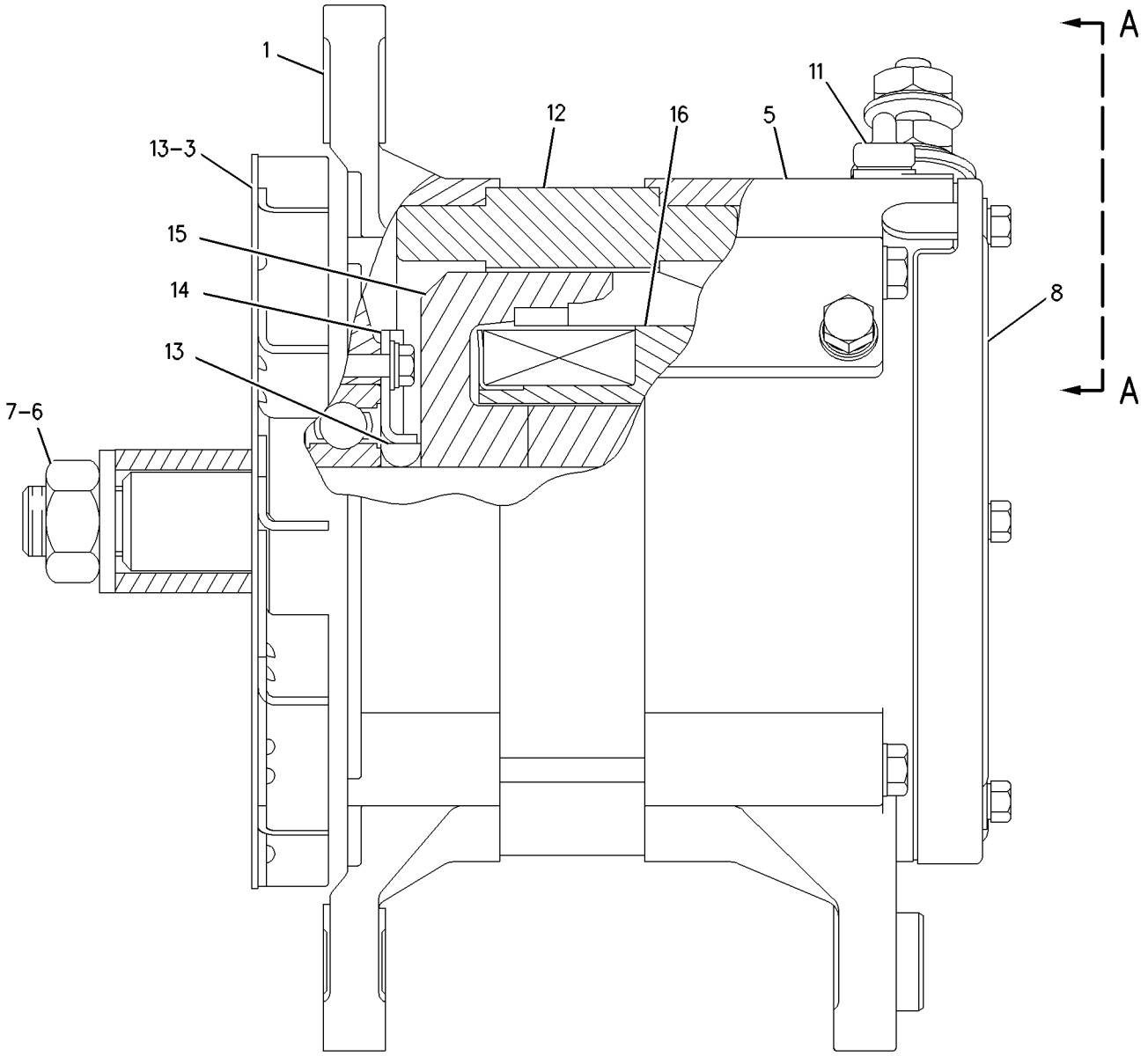

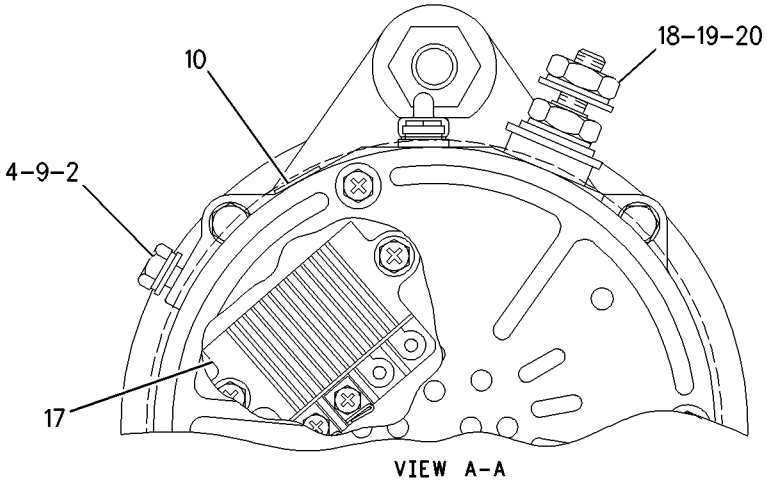

VIEW A-A

GRAPHIC #1 **<END>** g00873198

345-7649 ALTERNATOR GP-CHARGING

S/N: JJA1-UP
24-VOLT, 95-AMPERE
PART OF 346-3710 GENERAL AR

SMCS-1405 **i03575461**

NOTE	REF NO	GRAPHIC REF	PART NUMBER	QTY	PART NAME 1 2 3 4 5 6 (PRODUCT LEVEL)	SEE PAGE
	1	1	**8S-5383**	1	BLOCK	
	2	1	**8X-1805**	1	PULLEY	
	3	1	**9S-1240**	1	BRACKET AS	
YR	4	1	**197-8820**	1	ALTERNATOR GP-CHARGING (24-VOLT, 95-AMPERE)	107
	5	1	**4S-5780**	1	ROD	
	6	1	**5P-1076**	1	WASHER-HARD (13.5X30X4-MM THK)	
	7	1	**6V-8188**	1	NUT (1/2-13-THD)	
	8	1	**7X-0325**	1	BOLT (1/2-13X2.5-IN)	
	9	1	**7X-0339**	1	BOLT (1/2-13X6.25-IN)	
	10	1	**7X-0346**	1	BOLT (5/8-11X2-IN)	
	11	1	**7X-0448**	2	NUT (5/8-11-THD)	
	12	1	**8T-4122**	1	WASHER-HARD (17X32X3.5-MM THK)	
	13	1	**8T-4223**	2	WASHER-HARD (13.5X25.5X3-MM THK)	

R-REMFG PART MAY BE AVAILABLE
Y-SEPARATE ILLUSTRATION

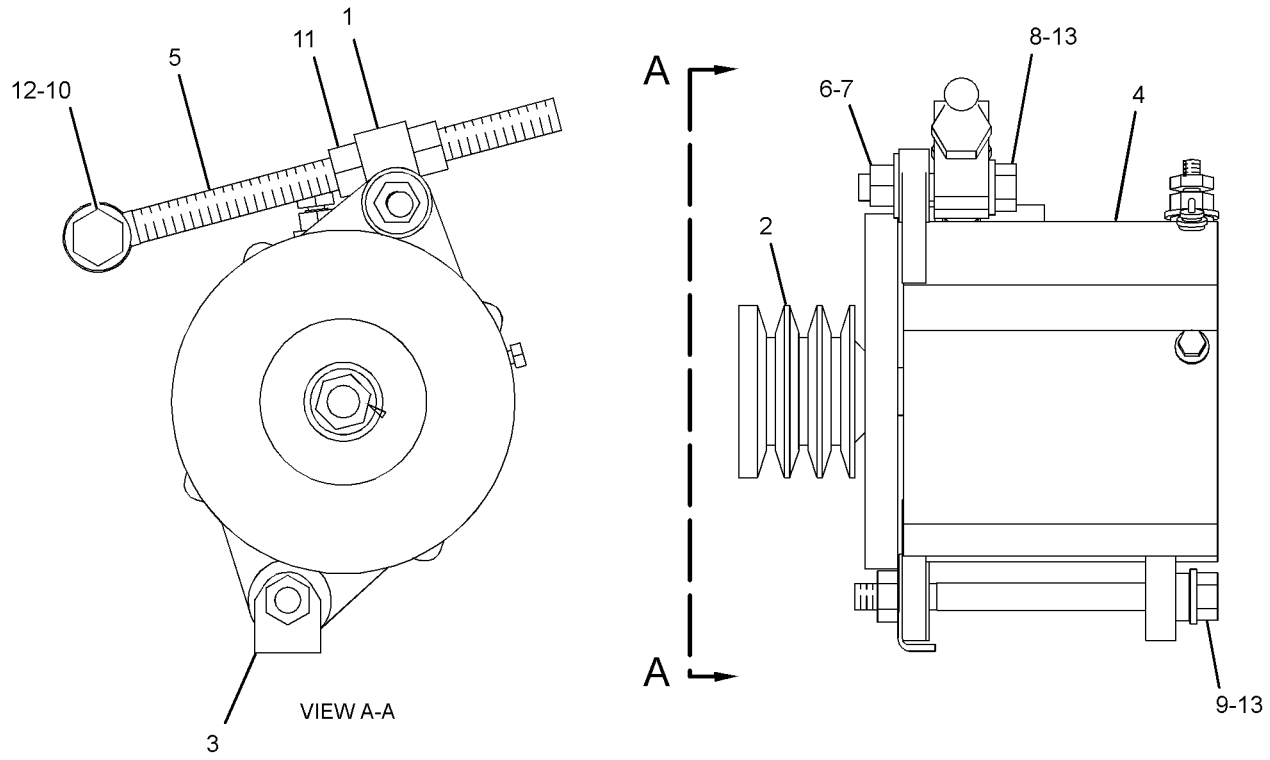

GRAPHIC #1 **<END>** g01931274

ELECTRICAL AND STARTING SYSTEM

260-7647 APPLICATION GP-POWER TRAIN

S/N: JJA1-UP

PART OF 294-3542 WIRING GP-GRADE CONTROL

AN ATTACHMENT

SMCS-7610 **i03193466**

NOTE	PART NUMBER	QTY	PART NAME 1 2 3 4 5 6 (PRODUCT LEVEL)	SEE PAGE
R	**304-5687**	1	CONTROL GP-UNPROGRAMMED (POWER TRAIN)	

R-REMFG PART MAY BE AVAILABLE

<END>

284-5358 BATTERY & WIRING GP–WET

S/N: JJA1-UP
12-VOLT, MAINTENANCE FREE
PART OF 339-4969, 339-4970 OPTION AR-ENGINE
AN ATTACHMENT

SMCS-1401, 1402, 1408 **i03537746**

NOTE	REF NO	GRAPHIC REF	PART NUMBER	QTY	PART NAME 1 2 3 4 5 6 (PRODUCT LEVEL)	SEE PAGE
M	1	1	**8T-4191**	1	BOLT (M10X1.5X16-MM)	
	2	1	**153-5710**	2	BATTERY (12-VOLT, 1400-CCA)	
	3	1	**295-1138**	1	HOLD-DOWN AS	
	4	1	**300-6496**	1	CABLE AS	
		1	**9G-0003**	1	COVER-TERMINAL (BLACK)	
		1	**9G-0004**	1	COVER-TERMINAL (RED)	
		1	**8C-5917**	1	TERMINAL AS-BATTERY (POSITIVE)	
		1	**8T-9757**	1	TERMINAL AS-BATTERY (NEGATIVE)	
E		1	**159-8049**		CABLE (00-GA, RED) (12-CM)	
	5	1	**305-0038**	1	CABLE AS	
		1	**1S-7252**	1	TERMINAL-CABLE (00-GA, 3/8-IN BOLT)	
		1	**7N-5274**	1	COVER-TERMINAL (BLACK) (BATTERY)	
		1	**9G-8909**	1	COVER-TERMINAL (BLACK) (DISCONNECT SWITCH)	
		1	**3S-6050**	1	TERMINAL AS-BATTERY (NEGATIVE)	
		1	**1M-6119**	1	BOLT (5/16-18X1.375-IN)	
		1	**1M-6120**	1	NUT (5/16-18-THD)	
E		1	**159-8050**		CABLE (00-GA, BLACK) (306-CM)	
	6	1	**2V-1771**	3	GROMMET	
	7	1	**6D-4246**	3	CLIP	
	8	1	**8T-4121**	3	WASHER-HARD (11X21X2.5-MM THK)	
M	9	1	**8T-4137**	2	BOLT (M10X1.5X20-MM)	
	10	1	**7K-1181**	4	STRAP-CABLE	

E-ORDER BY THE CENTIMETER
M-METRIC PART

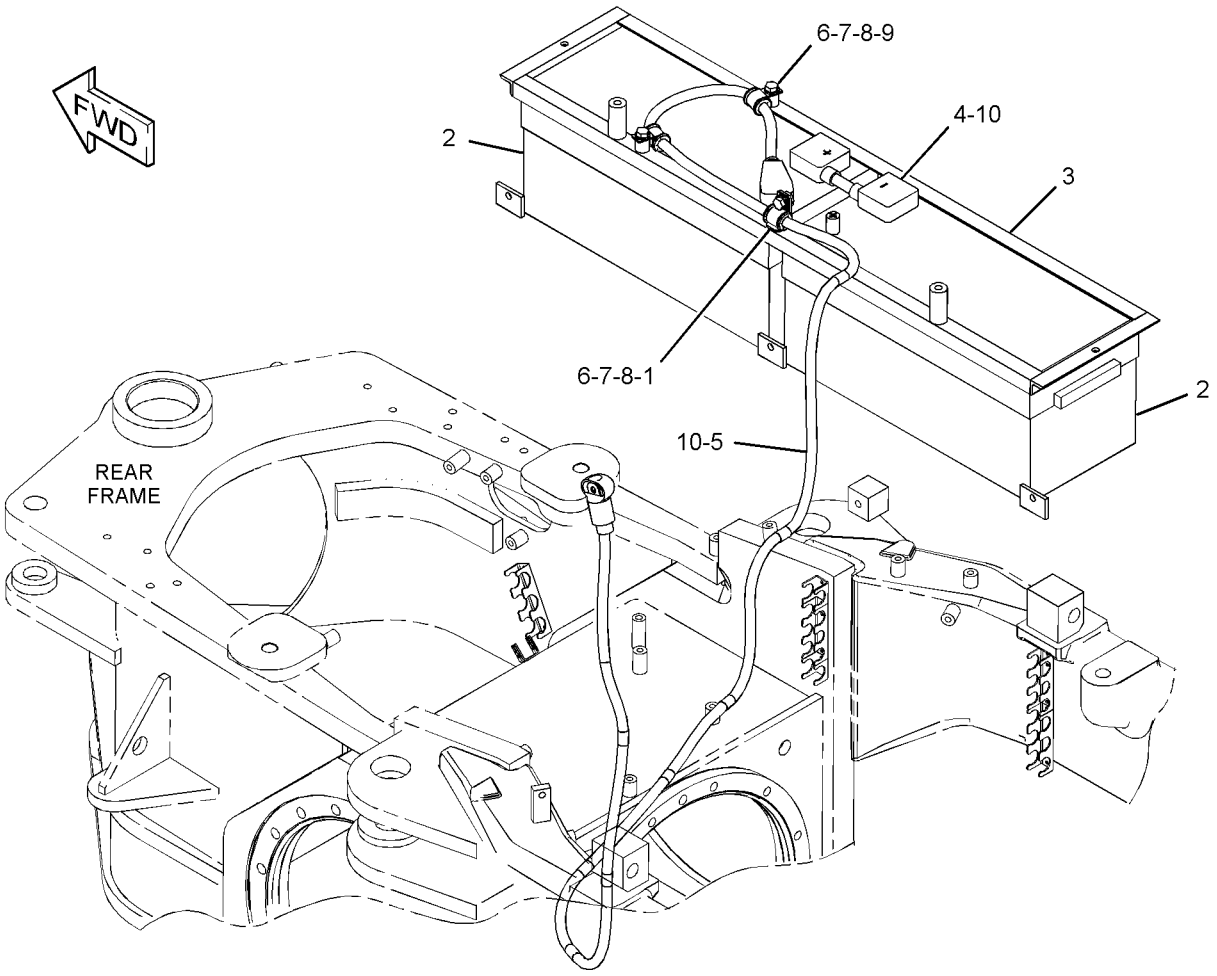

GRAPHIC #1 **<END>** g01929180

ELECTRICAL AND STARTING SYSTEM

311-0795 BATTERY & WIRING GP

S/N: JJA1-UP

PART OF 346-3710 GENERAL AR

SMCS-1401, 1402, 1408 **i03628522**

NOTE	REF NO	GRAPHIC REF	PART NUMBER	QTY	PART NAME 1 2 3 4 5 6 (PRODUCT LEVEL)	SEE PAGE
	1	1	**2G-8767**	2	WASHER (10.5X60X3-MM THK)	
	2	1	**6G-2256**	1	CLAMP	
	3	1	**6G-2263**	1	SPACER (10.5X19X28.5-MM THK)	
	4	1	**7K-1181**	4	STRAP-CABLE	
	5	1	**091-0081**	1	SPACER (10.5X20X10-MM THK)	
	6	1	**108-2949**	2	ROD	
	7	1	**295-1139**	1	HOLD-DOWN AS	
	8	1	**297-8049**	2	GROMMET	
	9	1	**300-6152**	1	CABLE AS	
		1	**9G-0003**	1	COVER-TERMINAL (BLACK)	
		1	**9G-0004**	1	COVER-TERMINAL (RED)	
		1	**8C-5917**	1	TERMINAL AS-BATTERY (POSITIVE)	
		1	**8T-9757**	1	TERMINAL AS-BATTERY (NEGATIVE)	
E		1	**159-8049**		CABLE (00-GA, RED) (9-CM)	
	10	1	**301-6664**	1	BRACKET	
	11	1	**311-6573**	1	BRACKET AS	
	12	1	**312-0377**	1	CABLE AS	
D		1	**6V-2369**		WIRE (4-GA, BLACK) (0.7-M)	
		1	**131-1478**	1	TERMINAL AS	
		1	**9G-4336**	1	TERMINAL-RING	
E		1	**1P-0810**		TAPE-ELECTRICAL (6-CM)	
	13	1	**312-0378**	1	CABLE AS	
D		1	**6V-2369**		WIRE (4-GA, BLACK) (1.1-M)	
		1	**8T-8827**	1	BOOT (RED)	
		1	**131-1478**	1	TERMINAL AS	
		1	**5P-3454**	1	TERMINAL (4-GA)	
		1	**135-2543**	1	BOOT (RED)	
E		1	**1P-0810**		TAPE-ELECTRICAL (10-CM)	
	14	1	**312-0379**	1	BRACKET AS	
	15	1	**314-7946**	1	BRACKET AS	
	16	1	**317-3164**	1	CABLE AS	
D		1	**5P-5689**		WIRE (8-GA, BLACK) (1-M)	
		1	**131-1488**	1	TERMINAL AS (6-GA TO 8-GA)	
E		1	**1P-0810**		TAPE-ELECTRICAL (10-CM)	
	17	1	**317-3165**	1	CABLE AS	
		1	**135-2543**	1	BOOT (RED)	
E		1	**1P-0810**		TAPE-ELECTRICAL (10-CM)	
		1	**131-1478**	1	TERMINAL AS	
		1	**131-1481**	1	TERMINAL AS	
D		1	**6V-2369**		WIRE (4-GA, BLACK) (0.8-M)	
	18	1	**317-3166**	1	CABLE AS	
		1	**208-4617**	1	TERMINAL-RING (00-GA, 90-DEG)	
D		1	**6V-2722**		TUBE-HEAT SHRINK (0.1-M)	
E		1	**159-8049**		CABLE (00-GA, RED) (96-CM)	
		1	**8N-1725**	1	COVER-TERMINAL (RED)	
		1	**194-4046**	1	COVER-TERMINAL (00-GA, POSITIVE, RED)	
E		1	**1P-0810**		TAPE-ELECTRICAL (10-CM)	
		1	**3S-6049**	1	TERMINAL AS-BATTERY (POSITIVE)	
	19	1	**317-3168**	1	CABLE AS	
E		1	**159-8050**		CABLE (00-GA, BLACK) (47-CM)	
E		1	**1P-0810**		TAPE-ELECTRICAL (10-CM)	
		1	**1S-7251**	2	TERMINAL-CABLE (00-GA, 1/2-IN BOLT)	
D		1	**6V-2722**		TUBE-HEAT SHRINK (0.1-M)	
	20	1	**318-2063**	1	CABLE AS	
		1	**1S-7252**	1	TERMINAL-CABLE (00-GA, 3/8-IN BOLT)	
D		1	**6V-2722**		TUBE-HEAT SHRINK (0.1-M)	

311-0795 **BATTERY & WIRING GP** *(contd.)* **i03628522**

NOTE	REF NO	GRAPHIC REF	PART NUMBER	QTY	PART NAME 1 2 3 4 5 6 (PRODUCT LEVEL)	SEE PAGE
E		1	**159-8050**		CABLE (00-GA, BLACK) (291-CM)	
		1	**7N-5274**	1	COVER-TERMINAL (BLACK)	
		1	**9G-8909**	1	COVER-TERMINAL (BLACK)	
E		1	**1P-0810**		TAPE-ELECTRICAL (30-CM)	
		1	**3S-6050**	1	TERMINAL AS-BATTERY (NEGATIVE)	
	21	1	**318-2064**	1	CABLE AS	
E		1	**159-8050**		CABLE (00-GA, BLACK) (60-CM)	
E		1	**1P-0810**		TAPE-ELECTRICAL (10-CM)	
		1	**1S-7252**	2	TERMINAL-CABLE (00-GA, 3/8-IN BOLT)	
D		1	**6V-2722**		TUBE-HEAT SHRINK (0.1-M)	
	22	1	**1P-7009**	1	CLIP	
	23	1	**2V-1771**	16	GROMMET	
	24	1	**3S-8664**	3	CLIP	
	25	1	**3T-5760**	2	BATTERY (12-VOLT, MAINTENANCE FREE, WET)	
					(EACH INCLUDES)	
		1	**123-1373**	6	CAP AS-FILLER (BATTERY)	
	26	1	**5P-4295**	3	CLIP	
	27	1	**6D-4246**	13	CLIP	
	28	1	**6K-8178**	1	CLIP	
	29	1	**6V-8188**	1	NUT (1/2-13-THD)	
	30	1	**6W-6672**	2	SPACER (10.5X20X38-MM THK)	
	31	1	**8S-0948**	4	CLIP	
M	32	1	**8T-0389**	2	LOCKNUT (M10X1.5-THD)	
	33	1	**8T-4121**	29	WASHER-HARD (11X21X2.5-MM THK)	
M	34	1	**8T-4133**	3	NUT (M10X1.5-THD)	
M	35	1	**8T-4137**	19	BOLT (M10X1.5X20-MM)	
M	36	1	**8T-4179**	1	BOLT (M12X1.75X20-MM)	
M	37	1	**8T-4195**	2	BOLT (M10X1.5X30-MM)	
M	38	1	**8T-4196**	1	BOLT (M10X1.5X35-MM)	
M	39	1	**8T-4198**	1	BOLT (M10X1.5X100-MM)	
	40	1	**8T-4223**	2	WASHER-HARD (13.5X25.5X3-MM THK)	
M	41	1	**8T-6466**	1	BOLT (M10X1.5X60-MM)	
	42	1	**8W-8909**	7	SLEEVE	

D-ORDER BY THE METER
E-ORDER BY THE CENTIMETER
M-METRIC PART

311-0795 **BATTERY & WIRING GP** *(contd.)* **i03628522**

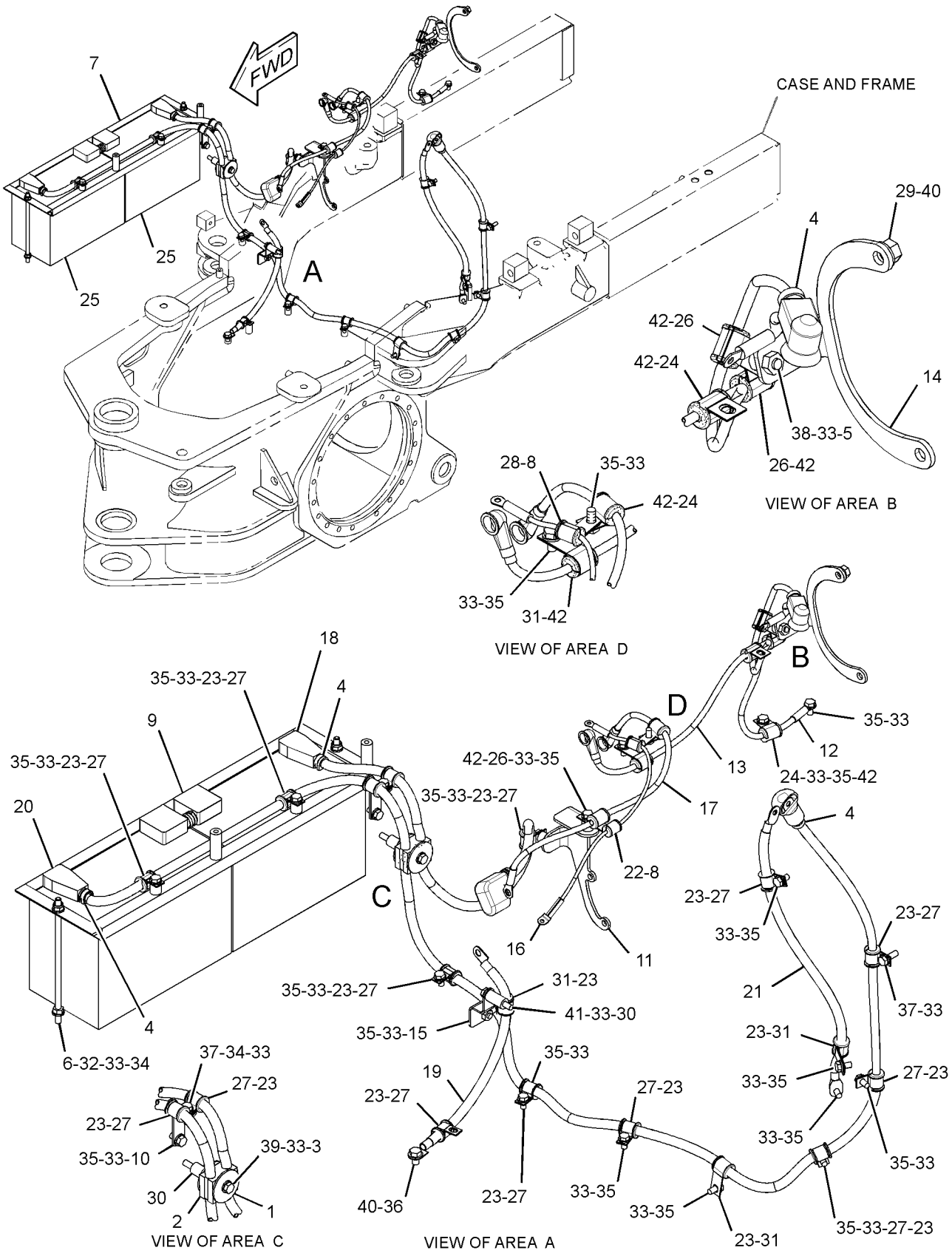

GRAPHIC #1

<END>

g01945021

246-9345 CONTROL & MTG GP-ENGINE ELEK

S/N: KHX14117-UP

PART OF 325-9710 ENGINE AR-COMPLETE

SMCS-1901 **i02320629**

NOTE	REF NO	GRAPHIC REF	PART NUMBER	QTY	PART NAME 1 2 3 4 5 6 (PRODUCT LEVEL)	SEE PAGE
	1	1	**8T-9655**	8	MOUNT-ISOLATION	
	2	1	**101-3128**	4	SPACER-SPECIAL	
M	3	1	**143-9392**	4	STUD (M8X1.25-THD)	
	4	1	**255-5284**	1	CONTROL GP-UNPROGRAMMED (ENGINE)	
	6	1	**244-3168**	1	BRACKET AS	
	7	1	**233-0891**	1	BRACKET AS	
	8	1	**9M-1974**	4	WASHER-HARD (8.8X16X2-MM THK)	
	9	1	**9N-0869**	4	WASHER-HARD (8.8X25.5X2-MM THK)	

M-METRIC PART

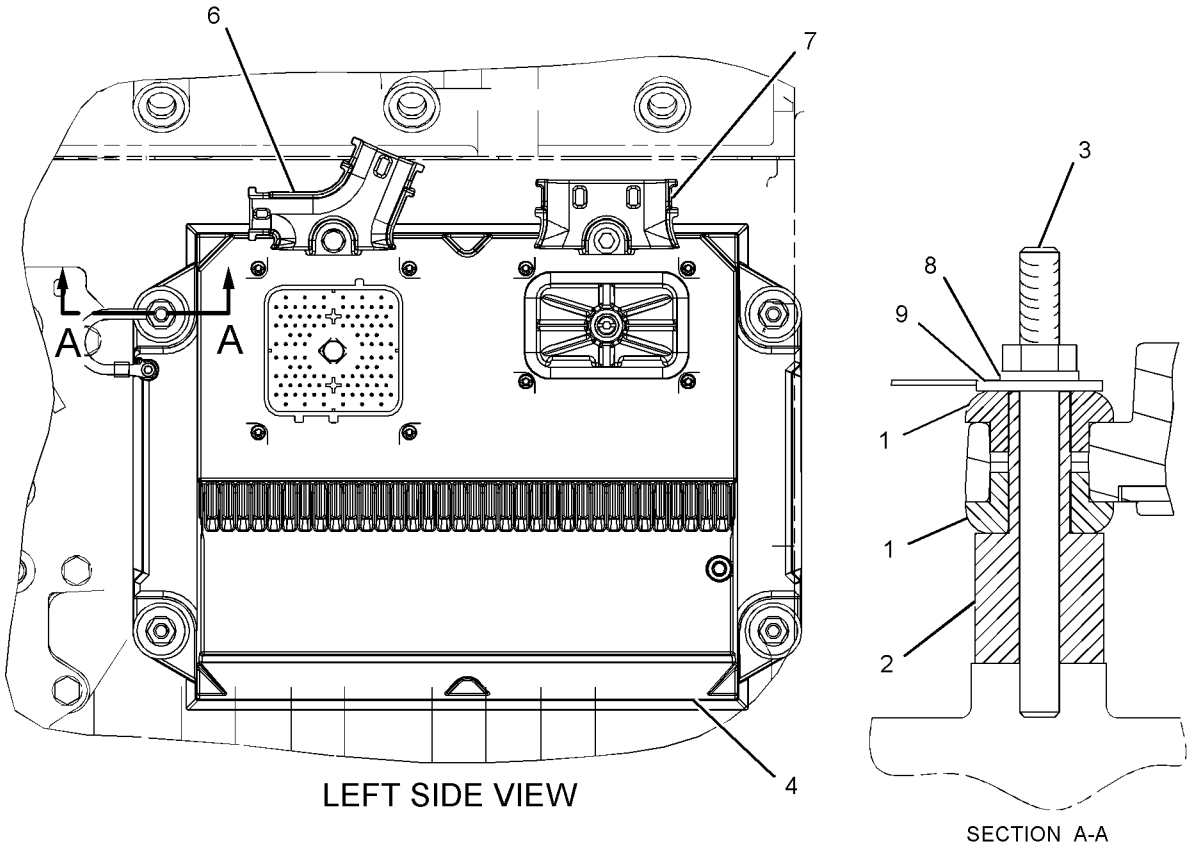

GRAPHIC #1 **<END>** g01093182

177-4493 CONTROL GP-POWER TRAIN

S/N: JJA1-UP

PART OF 284-5343 WIRING GP-FRONT

SMCS-4808, 7610 **i01310536**

NOTE	REF NO	GRAPHIC REF	PART NUMBER	QTY	PART NAME 1 2 3 4 5 6 (PRODUCT LEVEL)	SEE PAGE
Y	1	1	**172-9389**	1	CONTROL GP-UNPROGRAMMED (POWER TRAIN)	118

Y-SEPARATE ILLUSTRATION

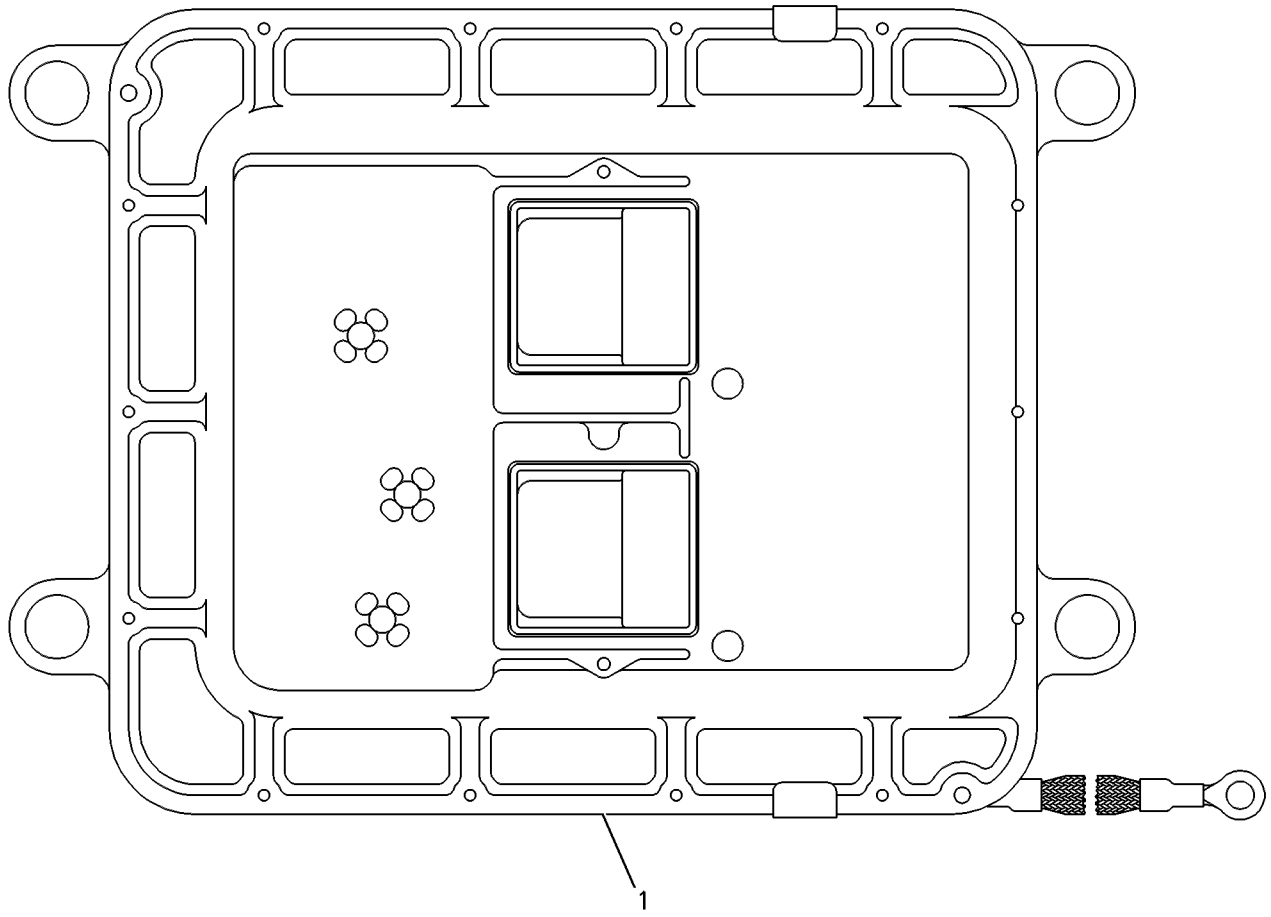

GRAPHIC #1 **<END>** g00415185

172-9389 CONTROL GP-UNPROGRAMMED–HIGH PROFILE*R

S/N: JJA1-UP

12-VOLT

PART OF 177-4493 CONTROL GP-POWER TRAIN

SMCS-7610 **i03558509**

NOTE	REF NO	GRAPHIC REF	PART NUMBER	QTY	PART NAME 1 2 3 4 5 6 (PRODUCT LEVEL)	SEE PAGE
	1	1	**7X-6315**	1	STRAP AS-GROUND	
	2	1	**101-0852**	1	SCREW-PAN HEAD (NO 8X3/8-IN)	
M	3	1	**6V-6703**	2	KIT-RETAINING BOLT	
					(EACH INCLUDES BOLT, RING & SEALS)	
	4	1	**134-4126**	1	WASHER (4.52X8.28X0.76-MM THK)	

M-METRIC PART

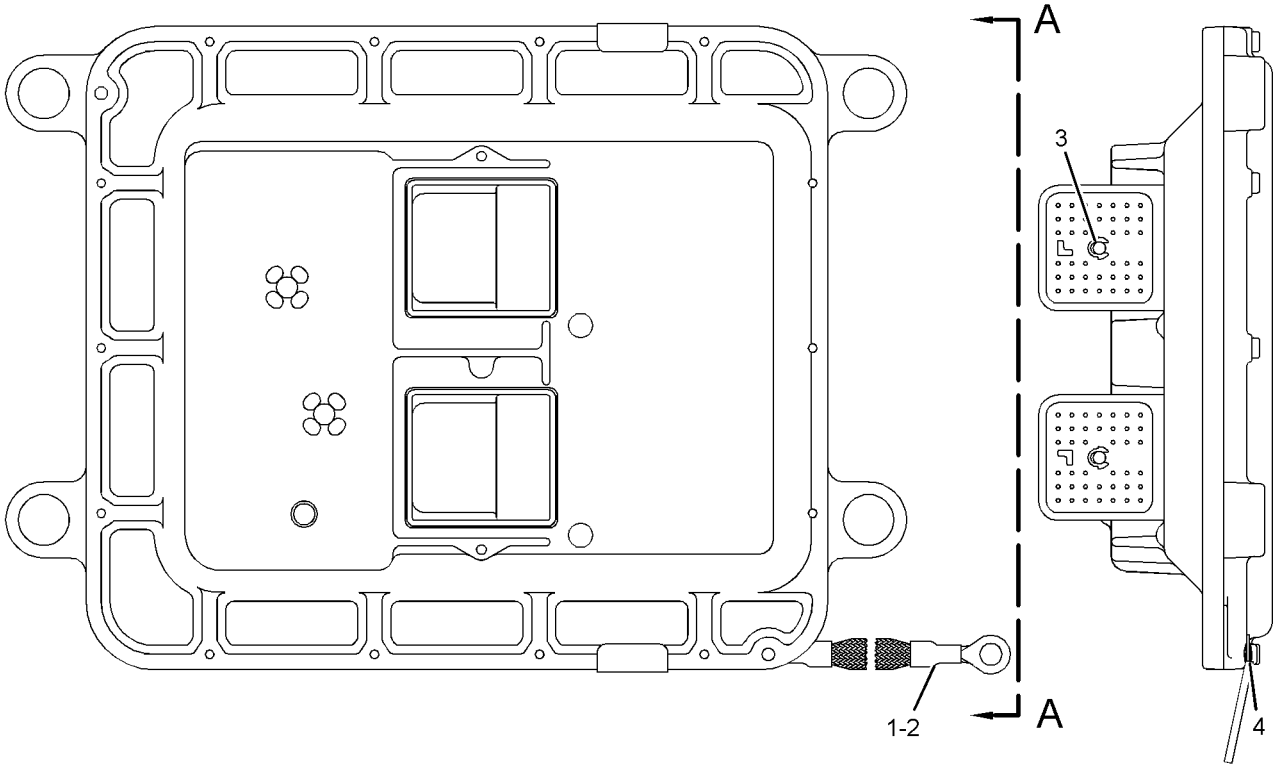

VIEW A-A

GRAPHIC #1 **<END>** g01859353

286-4328 CONVERTER AR-ELECTRICAL—HIGH PROFILE

S/N: JJA1-UP
12-VOLT
PART OF 340-1191 OPTION AR-CAB
AN ATTACHMENT

SMCS-1421 **i03641063**

NOTE	PART NUMBER	QTY	PART NAME 1 2 3 4 5 6 (PRODUCT LEVEL)	SEE PAGE
Y	*171-7186*	1	ACCESSORY GP-CAB (12-VOLT POWER PORT) (HIGH PROFILE)	471
Y	*180-4643*	1	CONVERTER GP-ELECTRICAL (12-VOLT)	120

Y-SEPARATE ILLUSTRATION

<END>

180-4643 CONVERTER GP-ELECTRICAL

S/N: JJA1-UP
12-VOLT
PART OF 286-4328 CONVERTER AR-ELECTRICAL
AN ATTACHMENT

SMCS-1421 **i01936021**

NOTE	REF NO	GRAPHIC REF	PART NUMBER	QTY	PART NAME 1 2 3 4 5 6 (PRODUCT LEVEL)	SEE PAGE
	1	1	**9W-1442**	1	FUSE (10-AMPERE) (POWER CONVERTER)	
	2	1	**205-4285**	1	CONVERTER GP-ELECTRICAL (24-VOLT TO 12-VOLT)	
	3	1	**208-7782**	1	PLATE AS	
	4	1	**096-6166**	2	WASHER-HARD (4.5X9X1-MM THK)	
	5	1	**8T-2501**	2	BOLT (3/8-16X2-IN)	
M	6	1	**8T-0285**	2	SCREW-MACHINE (M4X0.7X12-MM)	
	7	1	**8T-4896**	2	WASHER-HARD (10.2X18.5X2.5-MM THK)	
	8	1	**8X-1853**	2	SPACER (13.1X15.9X30.4-MM THK)	

M-METRIC PART

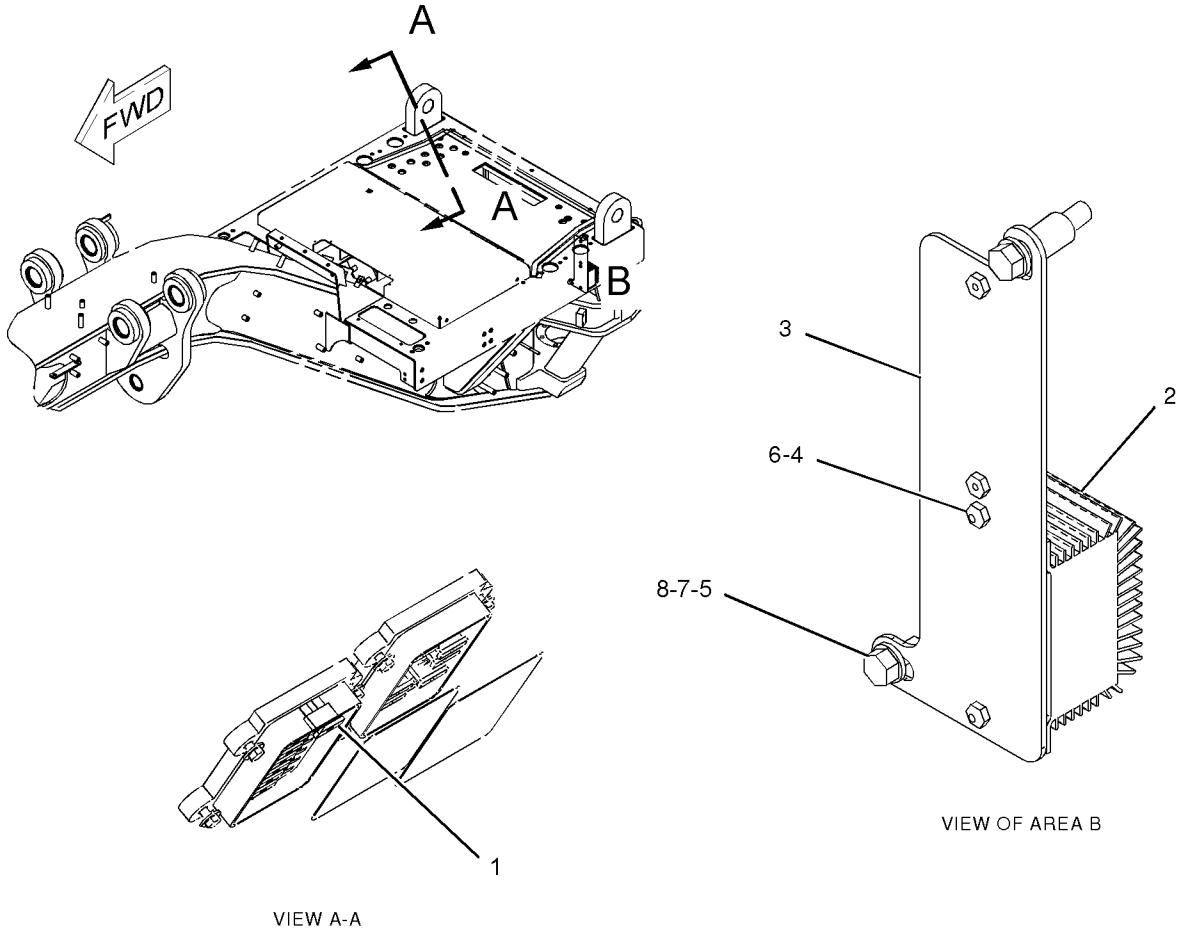

GRAPHIC #1 **<END>** g01010434

286-4330 CONVERTER GP-ELECTRICAL–RADIO

S/N: JJA1-UP
PART OF 295-7991 INSTALLATION AR-RADIO
AN ATTACHMENT

SMCS-1421 **i03256013**

NOTE	REF NO	GRAPHIC REF	PART NUMBER	QTY	PART NAME 1 2 3 4 5 6 (PRODUCT LEVEL)	SEE PAGE
	1	1	**8X-1853**	2	SPACER (13.1X15.9X30.4-MM THK)	
	2	1	**9W-1442**	1	FUSE (10-AMPERE)	
	3	1	**205-4285**	1	CONVERTER GP-ELECTRICAL (24-VOLT TO 12-VOLT)	
	4	1	**208-7782**	1	PLATE AS	
	5	1	**096-6166**	2	WASHER-HARD (4.5X9X1-MM THK)	
M	6	1	**8T-0285**	2	SCREW-MACHINE (M4X0.7X12-MM)	
	7	1	**8T-2501**	2	BOLT (3/8-16X2-IN)	
	8	1	**8T-4896**	2	WASHER-HARD (10.2X18.5X2.5-MM THK)	

M-METRIC PART

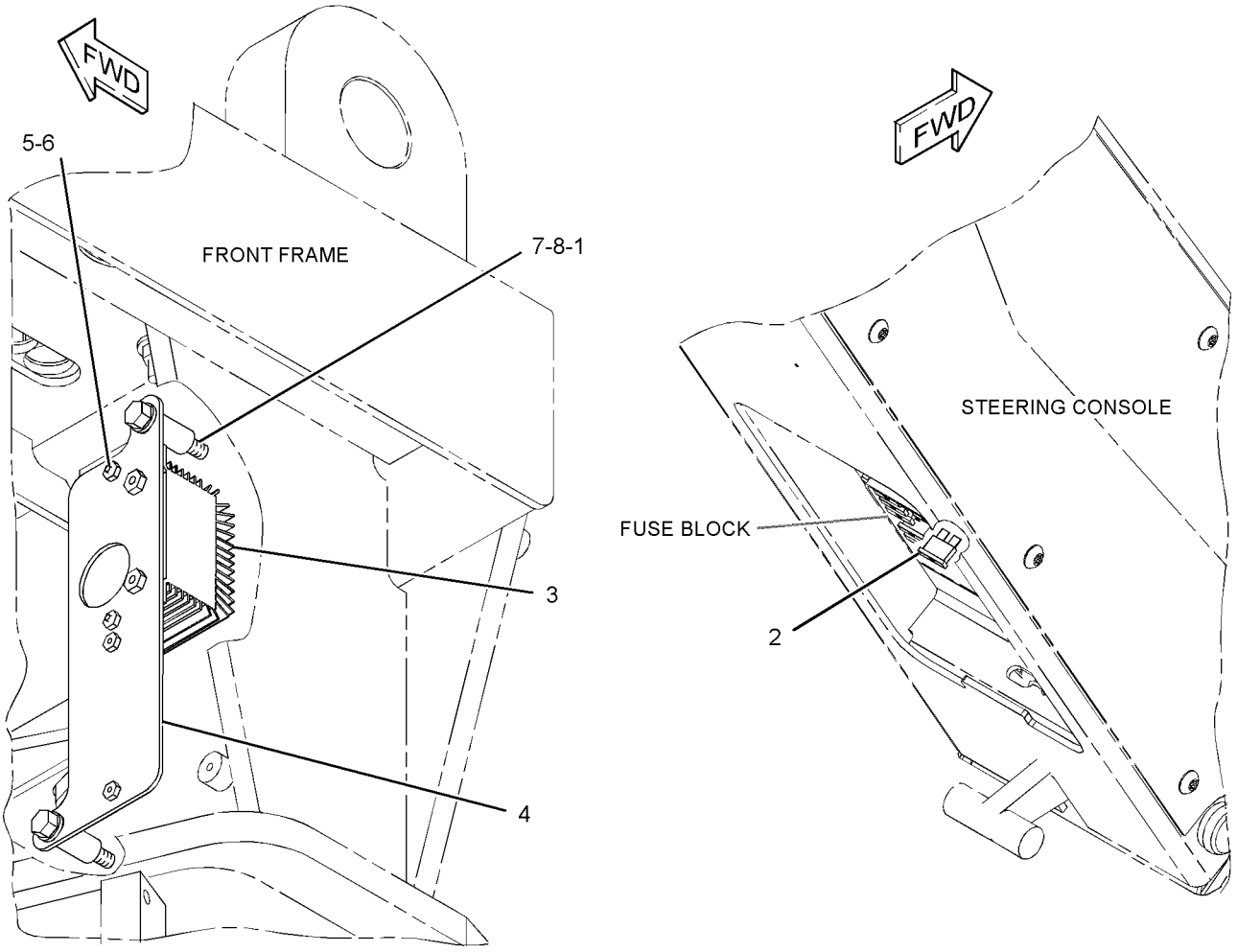

GRAPHIC #1 **<END>** g01689522

262-1421 ELECTRONICS GP-COMMUNICATION–
PRODUCT LINK 300
S/N: JJA1-UP
PART OF 302-5429 INSTALLATION AR-COMMUNICATION
AN ATTACHMENT

SMCS-7606, 7610, 7620 **i03601391**

NOTE	PART NUMBER	QTY	PART NAME 1 2 3 4 5 6 (PRODUCT LEVEL)	SEE PAGE
	330-3409	1	SOFTWARE GP-COMMUNICATION (PRODUCT LINK 300)	
			-OR-	
	330-3410	1	SERVICE GP-COMMUNICATION (PRODUCT LINK 300)	
			(OPTIONAL SERVICE REPLACEMENT)(INCLUDES CONTROL GP & SOFTWARE)	
	7X-6315	1	STRAP AS-GROUND	
	126-7574	1	SCREW-PAN HEAD (8-32X9.52-MM)	
	134-4126	1	WASHER (4.52X8.28X0.76-MM THK)	

<END>

253-2697 ELECTRONICS GP-IMPLEMENT
S/N: JJA1-UP
PART OF 297-8448 GRADE CONTROL AR
AN ATTACHMENT

SMCS-5701, 7610, 7620 **i03359962**

NOTE	PART NUMBER	QTY	PART NAME 1 2 3 4 5 6 (PRODUCT LEVEL)	SEE PAGE
	314-7803	1	SOFTWARE GP-IMPLEMENT	
			-OR-	
	335-2383	1	SERVICE GP-IMPLEMENT	
			(OPTIONAL SERVICE REPLACEMENT)	
			(INCLUDES CONTROL GP & SOFTWARE)	

<END>

291-5475 ELECTRONICS GP-POWER TRAIN
S/N: JJA1-UP
PART OF 295-8278 AUTOSHIFT AR
AN ATTACHMENT

SMCS-4800, 4808, 7610, 7620 **i03377411**

NOTE	PART NUMBER	QTY	PART NAME 1 2 3 4 5 6 (PRODUCT LEVEL)	SEE PAGE
	291-1400	1	SOFTWARE GP-POWER TRAIN	
			-OR-	
	291-1401	1	SERVICE GP-POWER TRAIN	
			(OPTIONAL SERVICE REPLACEMENT)(INCLUDES CONTROL GP & SOFTWARE)	

<END>

297-8448 GRADE CONTROL AR

S/N: JJA1-UP
PART OF 349-2488 OPTION AR-CONFIGURATION
AN ATTACHMENT

SMCS-7220 **i03641060**

NOTE	REF NO	GRAPHIC REF	PART NUMBER	QTY	PART NAME 1 2 3 4 5 6 (PRODUCT LEVEL)	SEE PAGE
	1	1	**3S-2093**	6	STRAP-CABLE	
Y	2	1	*336-5530*	1	COVER GP-ACCESS (PLATFORM)	285
	3	1	**152-6824**	1	KNOB AS (BLADE LIFT, RH)	
		1	**8T-8737**	1	PLUG-SEAL	
		1	**102-8804**	1	KIT-RECEPTACLE (4-PIN)	
					(INCLUDES RECEPTACLE AS & WEDGE)	
		1	**186-3735**	3	PIN-CONNECTOR (16-GA TO 18-GA)	
	4	1	**152-6825**	1	KNOB AS (BLADE LIFT, LH)	
		1	**8T-8737**	1	PLUG-SEAL	
		1	**102-8804**	1	KIT-RECEPTACLE (4-PIN)	
					(INCLUDES RECEPTACLE AS & WEDGE)	
		1	**186-3735**	3	PIN-CONNECTOR (16-GA TO 18-GA)	
	5	1	**246-6561**	1	KNOB AS (RH) (ARTICULATION)	
		1	**102-8804**	1	KIT-RECEPTACLE (4-PIN)	
					(INCLUDES RECEPTACLE AS & WEDGE)	
		1	**186-3735**	4	PIN-CONNECTOR (16-GA TO 18-GA)	
	6	1	**246-6562**	1	KNOB AS (LH) (BLADE LIFT, LOWER)	
		1	**102-8804**	1	KIT-RECEPTACLE (4-PIN)	
					(INCLUDES RECEPTACLE AS & WEDGE)	
		1	**186-3735**	4	PIN-CONNECTOR (16-GA TO 18-GA)	
Y	7	1	*247-6449*	1	MOUNTING GP-GRADE CONTROL (DRAWBAR)	152
Y	8	1	*252-5709*	1	WIRING GP-GRADE CONTROL (CAB, INDICATOR LAMP)	201
Y	9	1	*254-5960*	1	MOUNTING GP-GRADE CONTROL (CIRCLE)	153
Y	10	1	*294-3542*	1	WIRING GP-GRADE CONTROL (ACCUGRADE)	202
Y	11	1	*297-8449*	1	BOSS GP-FRAME (ACCUGRADE)	280
	12	1	**130-5300**	4	CLIP	
	13	1	**1V-7368**	2	SPACER (0.364X0.54X1.06-IN THK)	
	15	1	**8T-4896**	2	WASHER-HARD (10.2X18.5X2.5-MM THK)	
M	16	1	**9X-2480**	2	BOLT (M6X1X45-MM)	
FY			*253-2697*	1	ELECTRONICS GP-IMPLEMENT (GRADE CONTROL)	122

F-NOT SHOWN
M-METRIC PART
Y-SEPARATE ILLUSTRATION

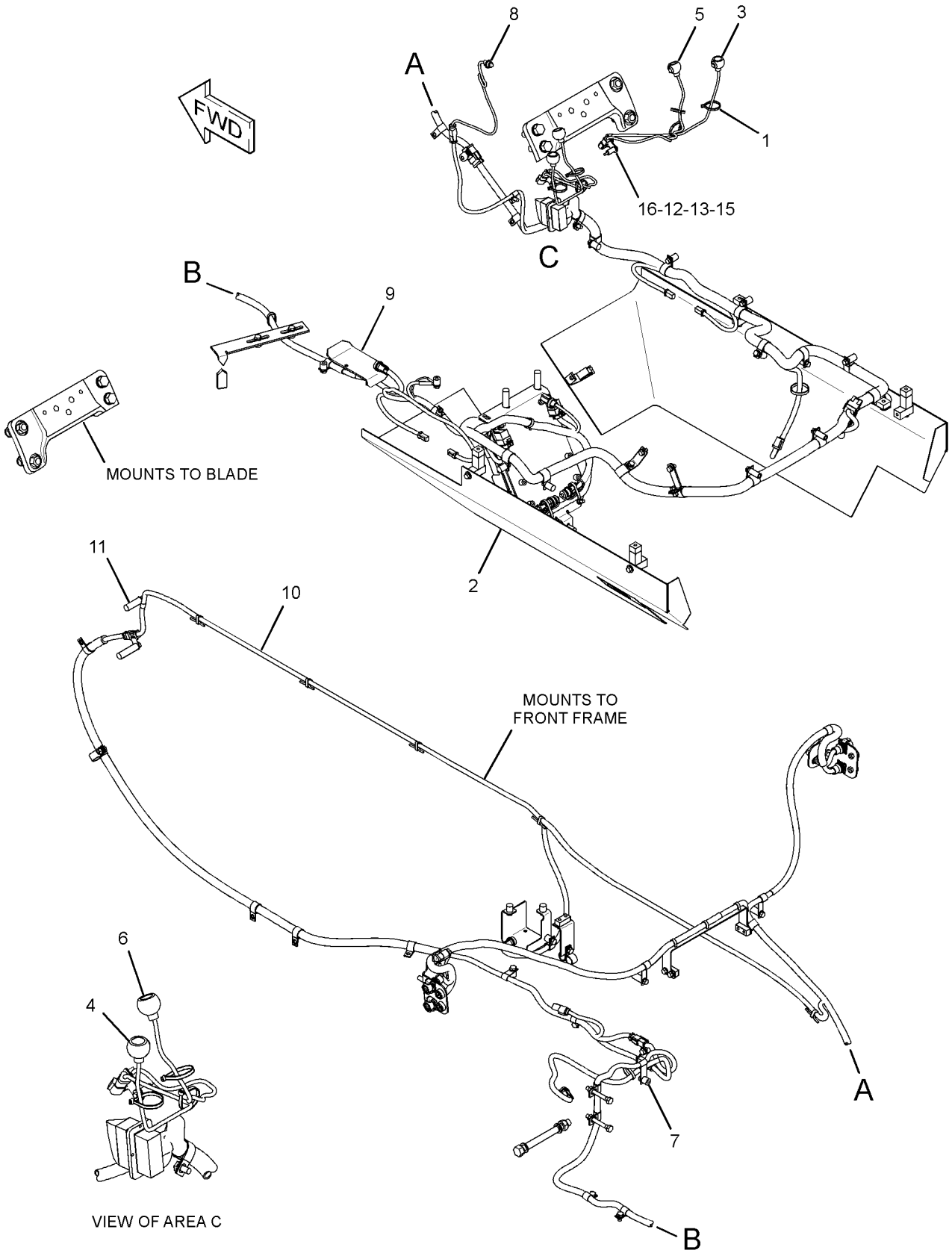

GRAPHIC #1 **<END>** g01783393

297-6867 GROUND GP-ELECTRICAL

S/N: KHX14117-UP

PART OF 325-9710 ENGINE AR-COMPLETE

SMCS-1405, 1453 **i02789819**

NOTE	REF NO	GRAPHIC REF	PART NUMBER	QTY	PART NAME 1 2 3 4 5 6 (PRODUCT LEVEL)	SEE PAGE
M	1	1	**5C-7261**	1	NUT (M8X1.25-THD)	
	2	1	**8T-4224**	2	WASHER-HARD (8.8X16X2-MM THK)	

M-METRIC PART

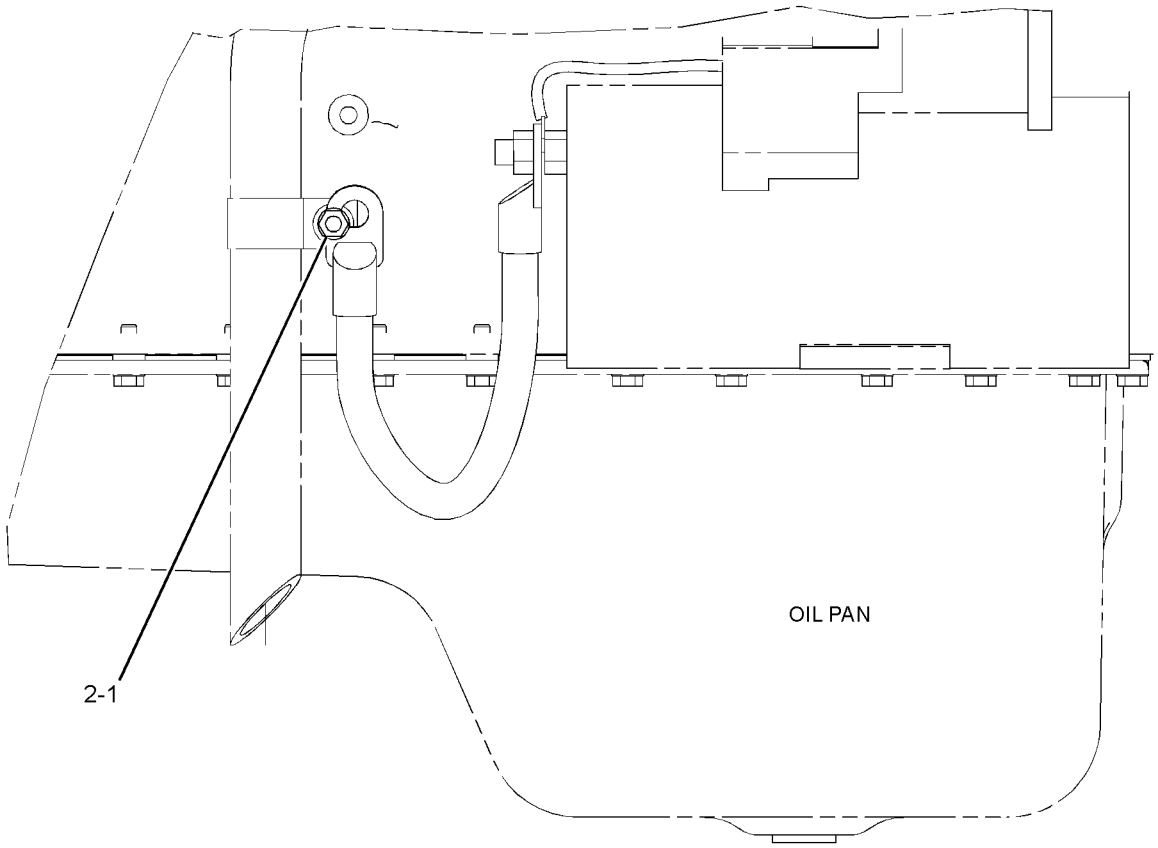

LEFT SIDE VIEW OF ENGINE

GRAPHIC #1 **<END>** g01352470

332-1544 HEATER GP-JACKET WATER

S/N: JJA1-UP
PART OF 339-4969 OPTION AR-ENGINE
AN ATTACHMENT

SMCS-1383 **i03537570**

NOTE	REF NO	GRAPHIC REF	PART NUMBER	QTY	PART NAME 1 2 3 4 5 6 (PRODUCT LEVEL)	SEE PAGE
	1	1	**246-8630**	1	CORD AS-HEATER	
	2	1	**321-8711**	1	ELEMENT AS-JACKET WATER HEATER (240-VOLT, 1000-WATT)	
		1	**4F-7952**	1	SEAL-O-RING	
	3	1	**7X-0599**	1	WASHER-HARD (13X20X2-MM THK)	
M	4	1	**8T-4192**	1	BOLT (M12X1.75X25-MM)	

M-METRIC PART

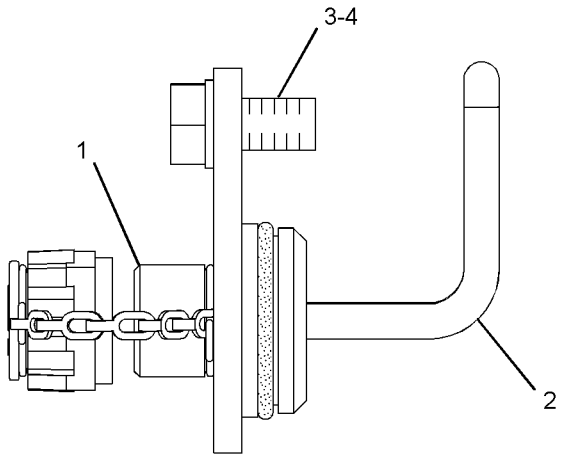

GRAPHIC #1 **<END>** g01879653

302-5429 INSTALLATION AR-COMMUNICATION–

PRODUCT LINK 321SR

S/N: JJA1-UP

AN ATTACHMENT

SMCS-7606 **i03258941**

NOTE	REF NO	GRAPHIC REF	PART NUMBER	QTY	PART NAME 1 2 3 4 5 6 (PRODUCT LEVEL)	SEE PAGE
	1	1	**256-6803**	1	HARNESS AS-RADIO (PRODUCT LINK)	
	2	1	**256-6804**	1	HARNESS AS-CONTROL (PRODUCT LINK)	
	3	1	**257-9363**	1	HARNESS AS-RADIO (PRODUCT LINK)	
Y	4	1	*262-1421*	1	ELECTRONICS GP-COMMUNICATION (PRODUCT LINK 300)	122
	5	1	*263-8948*	1	ANTENNA AS	
		1	**223-4296**	1	ANTENNA (FLEXIBLE)	
Y	6	1	**263-9088**	1	RADIO GP-COMMUNICATION (PRODUCT LINK 121SR)	155
Y	7	1	*302-5428*	1	INSTALLATION GP-COMMUNICATION (PRODUCT LINK 121SR)	128

Y-SEPARATE ILLUSTRATION

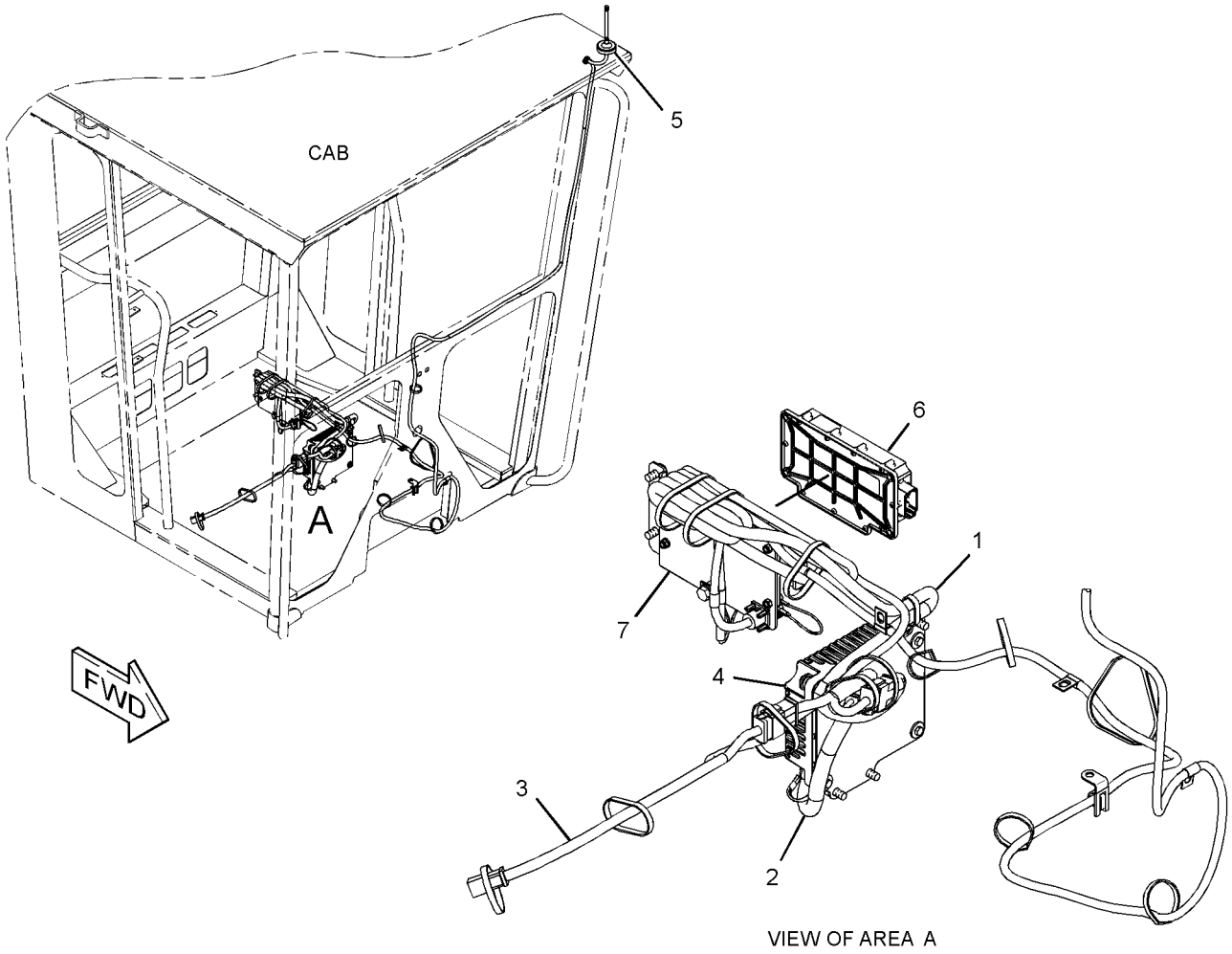

VIEW OF AREA A

GRAPHIC #1 **<END>** g01784959

302-5428 INSTALLATION GP-COMMUNICATION—PRODUCT LINK

S/N: JJA1-UP

PART OF 302-5429 INSTALLATION AR-COMMUNICATION

AN ATTACHMENT

SMCS-7606 **i03258960**

NOTE	REF NO	GRAPHIC REF	PART NUMBER	QTY	PART NAME 1 2 3 4 5 6 (PRODUCT LEVEL)	SEE PAGE
	1	1	**8C-5608**	4	SPACER (6.5X9.5X25.4-MM THK)	
	2	1	**090-8247**	1	BLOCK	
	3	1	**103-5304**	1	PLATE	
	4	1	**302-5210**	1	PLATE	
	5	1	**302-5211**	1	PLATE	
	6	1	**302-5212**	1	PLATE	
M	7	1	**129-3178**	8	LOCKNUT (M6X1-THD)	
	8	1	**174-5907**	3	CLIP	
	9	1	**5M-3062**	1	BOLT (3/8-16X0.75-IN)	
	10	1	**5S-4246**	4	LOCKWASHER	
M	11	1	**6V-8950**	4	NUT (M2.5X0.45-THD)	
M	12	1	**6V-9326**	4	SCREW-MACHINE (M2.5X0.45X10-MM)	
	13	1	**7K-1181**	10	STRAP-CABLE	
	14	1	**7T-1099**	2	LINK	
	15	1	**8J-1256**	1	CLIP	
	16	1	**8M-2770**	1	CLIP	
	17	1	**8T-4121**	10	WASHER-HARD (11X21X2.5-MM THK)	
M	18	1	**8T-4137**	10	BOLT (M10X1.5X20-MM)	
M	19	1	**8T-4138**	4	BOLT (M6X1X20-MM)	
	20	1	**8T-4896**	1	WASHER-HARD (10.2X18.5X2.5-MM THK)	
M	21	1	**9R-2613**	2	BOSS-WELD (M10X1.5X25-MM)	
M	22	1	**9R-2672**	3	BOSS (M10X1.5X20-MM)	
M	23	1	**9X-2480**	4	BOLT (M6X1X45-MM)	
	24	1	**9X-6165**	12	WASHER (6.5X22X2.5-MM THK)	
	25	1	**9X-8256**	8	WASHER (6.6X12X2-MM THK)	
	26	1	**9X-9896**	8	MOUNT (ISOLATION)	

M-METRIC PART

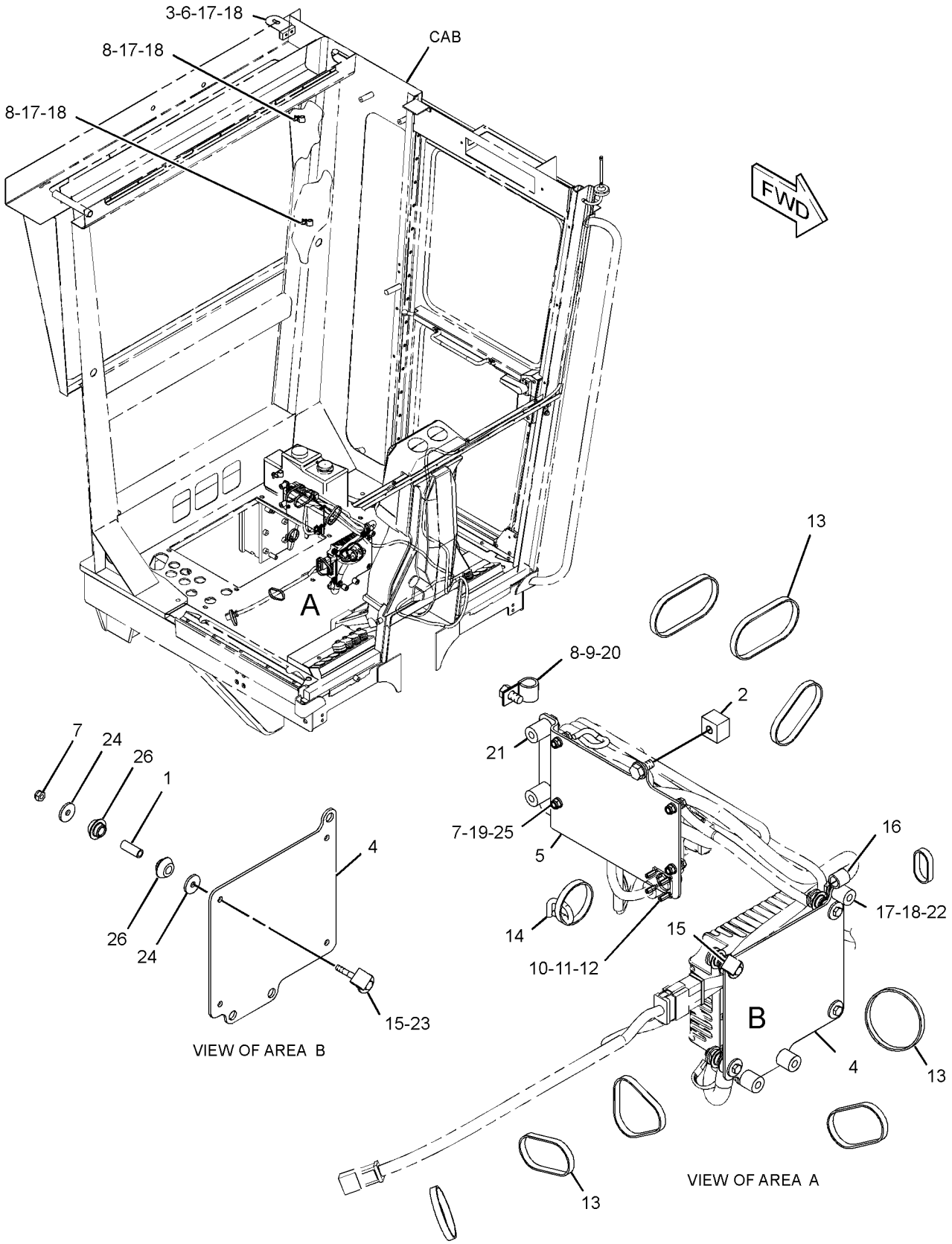

GRAPHIC #1

<END>

g01697993

171-5672 LAMP GP

S/N: JJA1-UP
24-VOLT
PART OF 284-5394 LIGHTING GP-BACKUP

SMCS-1429 **i03341367**

NOTE	REF NO	GRAPHIC REF	PART NUMBER	QTY	PART NAME 1 2 3 4 5 6 (PRODUCT LEVEL)	SEE PAGE
	1	1	**9X-3068**	1	LENS-CLEAR	
	2	1	**9X-4493**	1	LAMP (24-VOLT, 21-WATT)	
	3	1	**186-3735**	2	PIN-CONNECTOR (16-GA TO 18-GA)	
	4	1	**102-8802**	1	KIT-RECEPTACLE (2-PIN)	
					(INCLUDES RECEPTACLE AS & WEDGE)	
					PARTS SHOWN IN GRAPHIC(S) WITHOUT A REFERENCE NUMBER ARE NOT SERVICED SEPARATELY	

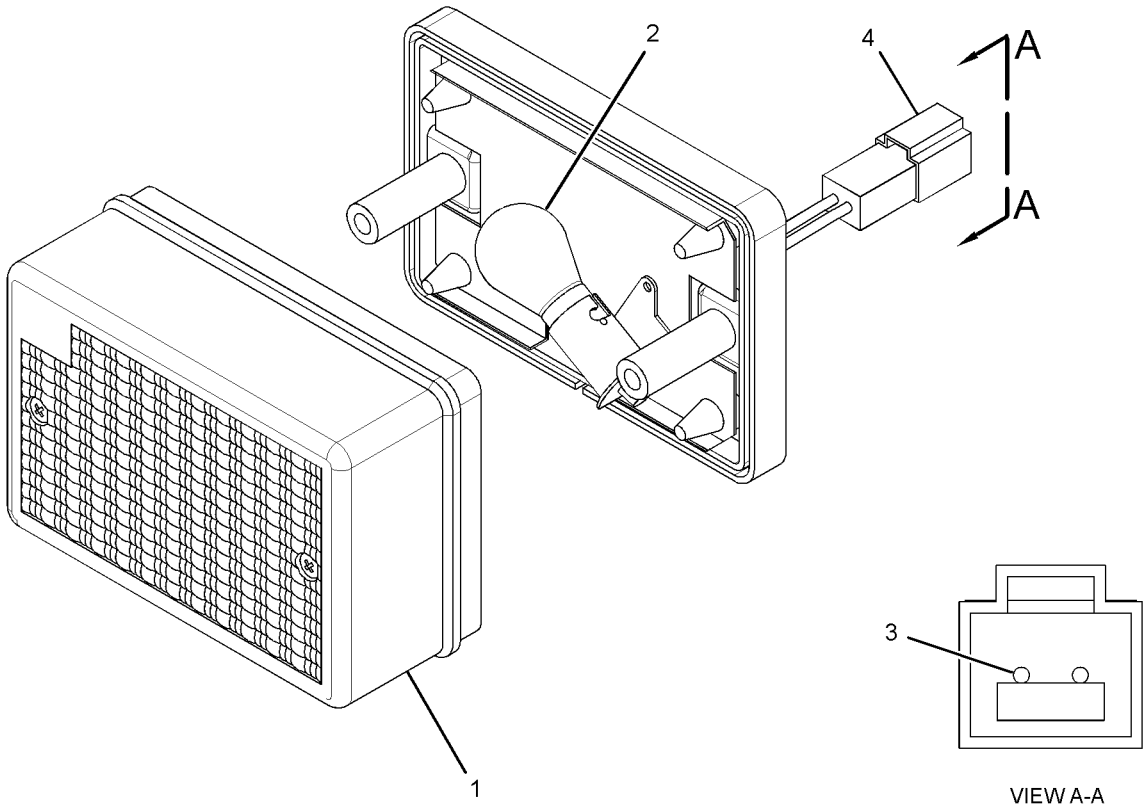

GRAPHIC #1 **<END>** g01676744

3E-6389 LAMP GP-DOME

S/N: JJA1-UP
24-VOLT, WITH SWITCH
PART OF 285-3361 WIRING GP-CAB
AN ATTACHMENT

SMCS-1433 **i02942903**

NOTE	REF NO	GRAPHIC REF	PART NUMBER	QTY	PART NAME 1 2 3 4 5 6 (PRODUCT LEVEL)	SEE PAGE
	1	1	**7N-9943**	1	LAMP (24-VOLT) (DOME)	
	2	1	**102-8803**	1	KIT-RECEPTACLE (3-PIN)	
					(INCLUDES RECEPTACLE AS & WEDGE)	
	3	1	**186-3735**	3	PIN-CONNECTOR (16-GA TO 18-GA)	
	4	1	**7T-0020**	1	LENS-DOME LAMP	

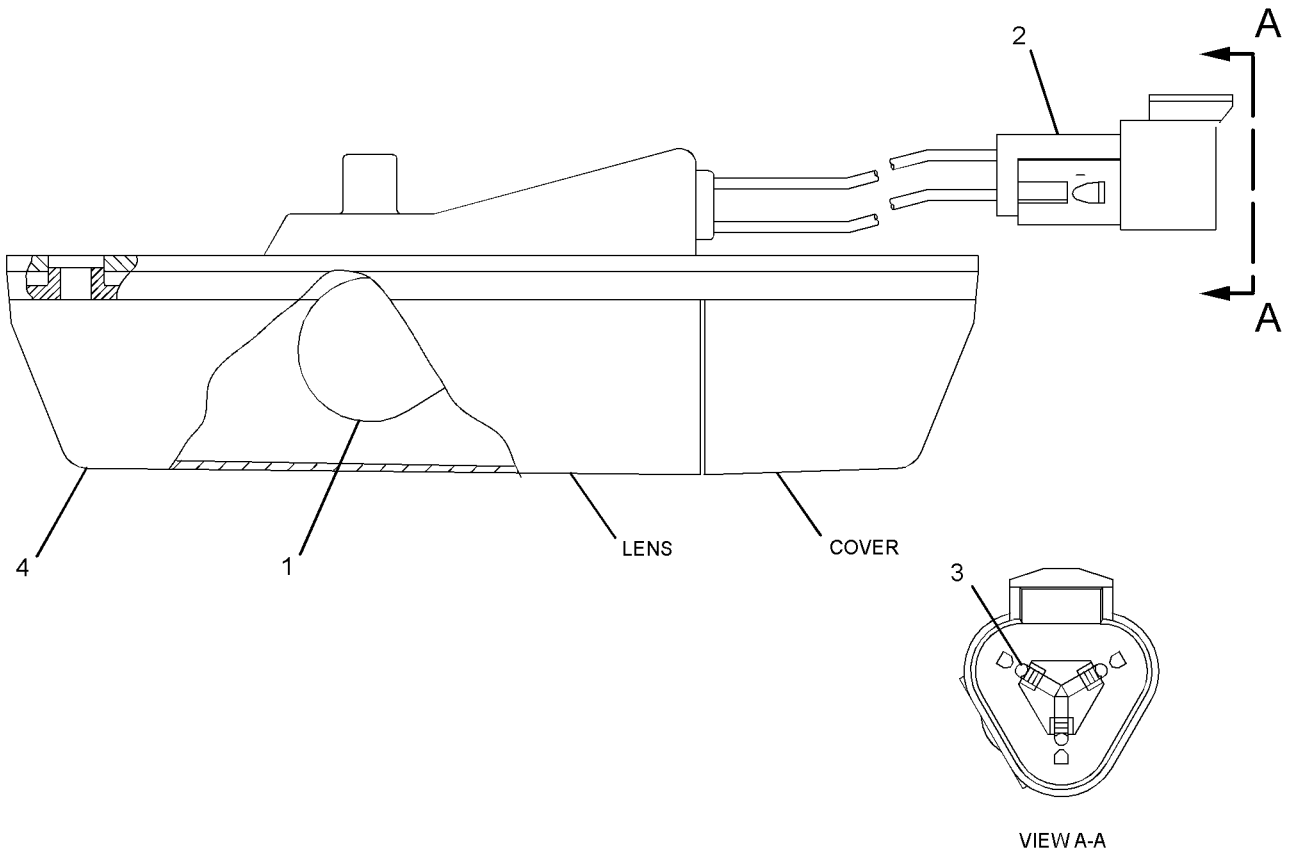

GRAPHIC #1 **<END>** g01270113

234-4323 LAMP GP-FLOOD

S/N: JJA1-UP
24-VOLT
PART OF 284-5354, 284-5362, 284-5376 LIGHTING GP-FLOOD, 284-5353 LIGHTING GP-ROADING
ALSO AN ATTACHMENT

SMCS-1434 **i02648056**

NOTE	REF NO	GRAPHIC REF	PART NUMBER	QTY	PART NAME 1 2 3 4 5 6 (PRODUCT LEVEL)	SEE PAGE
	1	1	**9X-3463**	1	LAMP-HALOGEN (24-VOLT, 70-WATT)	
	2	1	**9X-4244**	2	SCREW-SPECIAL (M4X1.79X25-MM)	
	3	1	**202-6614**	1	LENS AS	
	4	1	**234-7730**	1	BODY AS	
	5	1	**164-7556**	1	BRACKET (LAMP RETAINING)	
M	6	1	**8T-0389**	1	LOCKNUT (M10X1.5-THD)	
	7	1	**234-7731**	1	BRACKET AS	
	8	1	**8T-4121**	1	WASHER-HARD (11X21X2.5-MM THK)	

M-METRIC PART

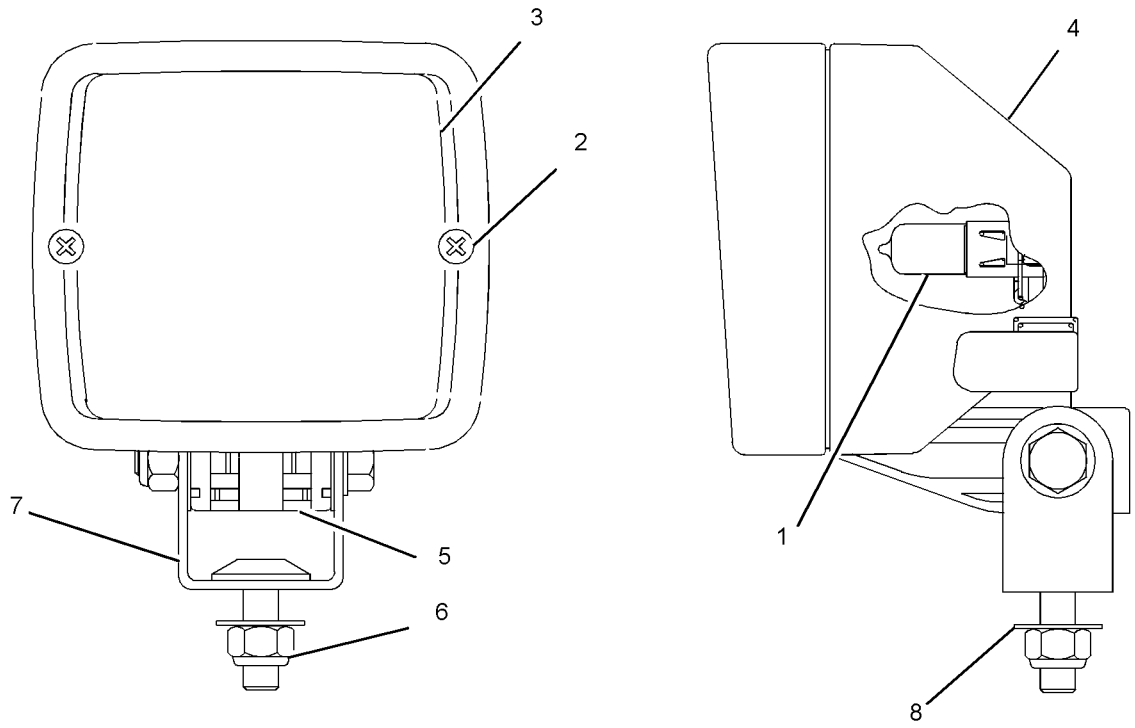

GRAPHIC #1 **<END>** g01329130

234-4324 LAMP GP-FLOOD

S/N: JJA1-UP
24-VOLT
PART OF 284-5353 LIGHTING GP-ROADING
AN ATTACHMENT

SMCS-1434 **i02549180**

NOTE	REF NO	GRAPHIC REF	PART NUMBER	QTY	PART NAME 1 2 3 4 5 6 (PRODUCT LEVEL)	SEE PAGE
	1	1	**9X-3463**	1	LAMP-HALOGEN (24-VOLT, 70-WATT)	
	2	1	**9X-4244**	2	SCREW-SPECIAL (M4X1.79X25-MM)	
	3	1	**202-6611**	1	LENS AS	
	4	1	**234-7730**	1	BODY AS	
	5	1	**164-7556**	1	BRACKET (LAMP RETAINING)	
M	6	1	**8T-0389**	1	LOCKNUT (M10X1.5-THD)	
	7	1	**234-7731**	1	BRACKET AS	
	8	1	**8T-4121**	1	WASHER-HARD (11X21X2.5-MM THK)	

M-METRIC PART

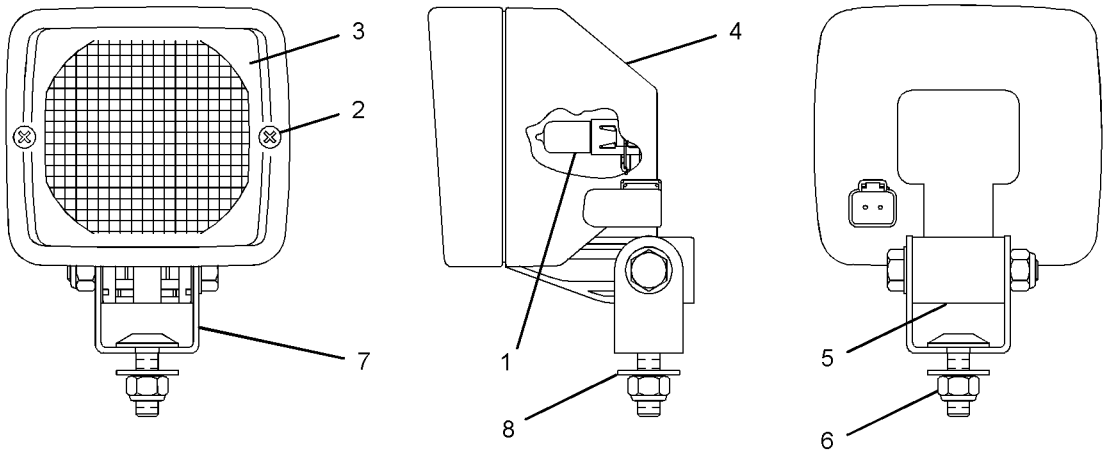

GRAPHIC #1 **<END>** g01276050

234-4325 LAMP GP-FLOOD

S/N: JJA1-UP
24-VOLT
PART OF 284-5376 LIGHTING GP-FLOOD, 284-5355 LIGHTING GP-ROADING
ALSO AN ATTACHMENT

SMCS-1434 **i03537655**

NOTE	REF NO	GRAPHIC REF	PART NUMBER	QTY	PART NAME 1 2 3 4 5 6 (PRODUCT LEVEL)	SEE PAGE
	1	1	**9X-3463**	1	LAMP-HALOGEN (24-VOLT, 70-WATT) (FLOODLIGHT)	
M	2	1	**8T-0389**	1	LOCKNUT (M10X1.5-THD)	
	3	1	**9X-4244**	2	SCREW-SPECIAL (M4X1.79X25-MM)	
	4	1	**202-6614**	1	LENS AS (FLOODLIGHT)	
	5	1	**234-7730**	1	BODY AS (FLOODLIGHT)	
	6	1	**164-7556**	1	BRACKET (LAMP RETAINING)	
	7	1	**234-7731**	1	BRACKET AS	
	8	1	**8T-4121**	1	WASHER-HARD (11X21X2.5-MM THK)	

M-METRIC PART

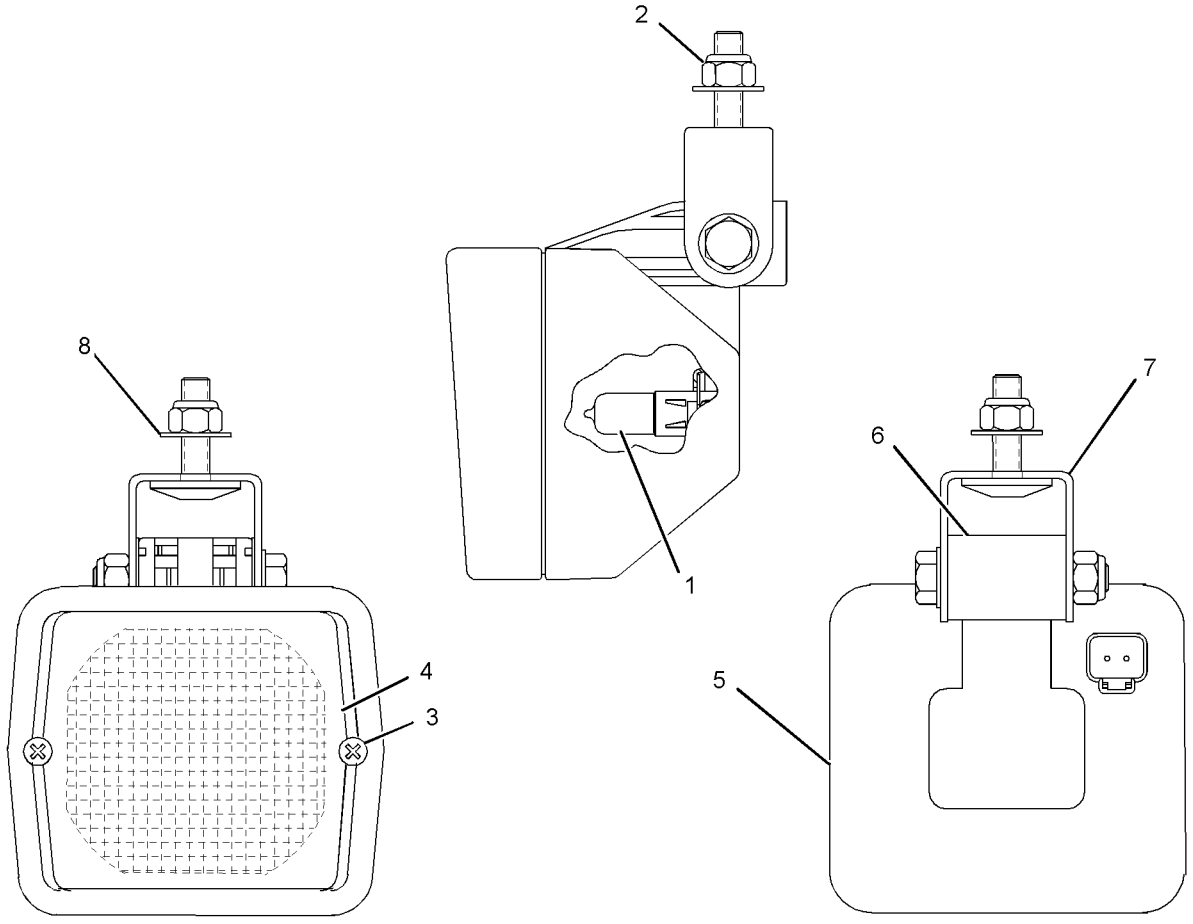

GRAPHIC #1 **<END>** g01329238

234-4326 LAMP GP-FLOOD

S/N: JJA1-UP
24-VOLT
PART OF 284-5355 LIGHTING GP-ROADING
AN ATTACHMENT

SMCS-1434 **i02549179**

NOTE	REF NO	GRAPHIC REF	PART NUMBER	QTY	PART NAME 1 2 3 4 5 6 (PRODUCT LEVEL)	SEE PAGE
	1	1	**9X-3463**	1	LAMP-HALOGEN (24-VOLT, 70-WATT)	
M	2	1	**8T-0389**	1	LOCKNUT (M10X1.5-THD)	
	3	1	**9X-4244**	2	SCREW-SPECIAL (M4X1.79X25-MM)	
	4	1	**202-6611**	1	LENS AS	
	5	1	**234-7730**	1	BODY AS	
	6	1	**164-7556**	1	BRACKET (LAMP RETAINING)	
	7	1	**234-7731**	1	BRACKET AS	
	8	1	**8T-4121**	1	WASHER-HARD (11X21X2.5-MM THK)	

M-METRIC PART

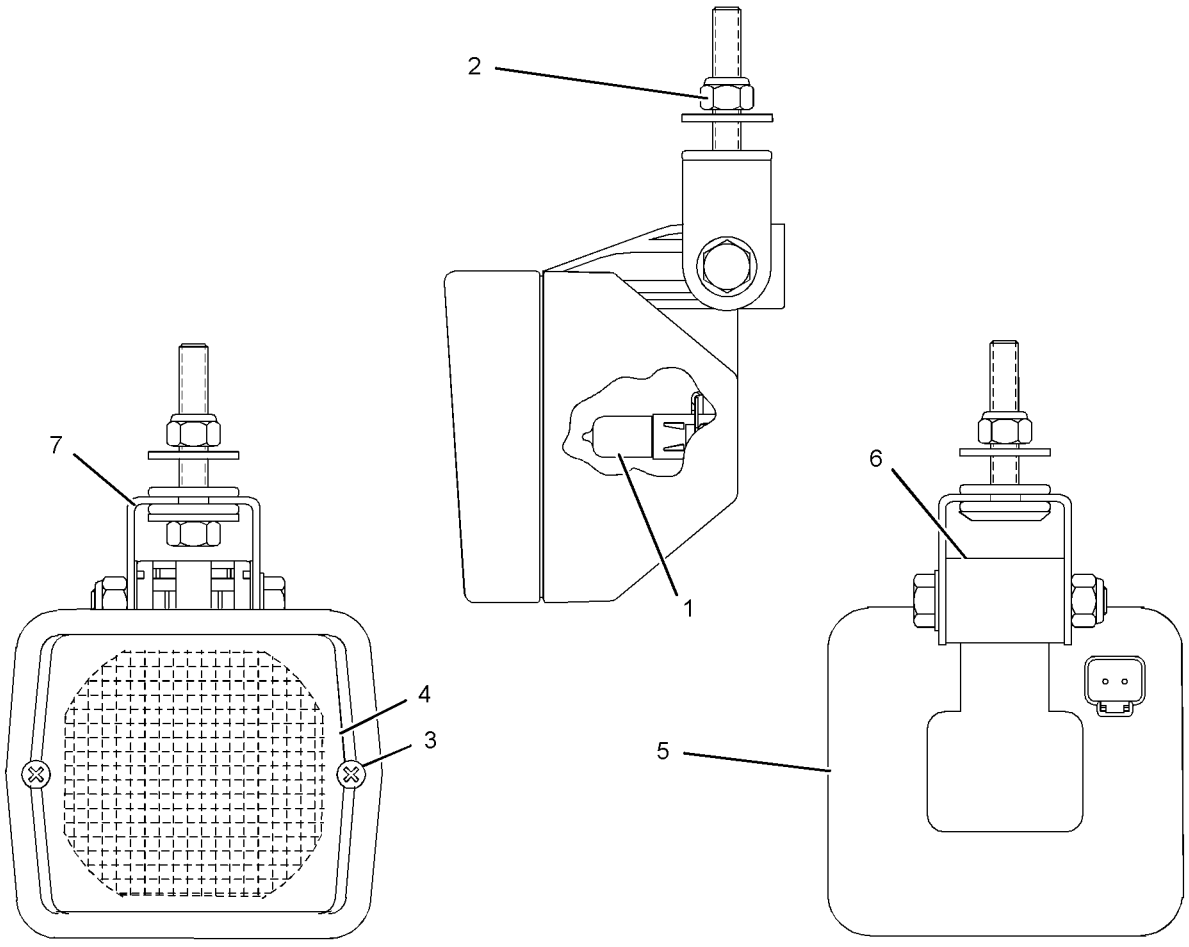

GRAPHIC #1 **<END>** g01276026

135-0426 LAMP GP-SIGNAL–STOP, TAIL

S/N: JJA1-UP
12-VOLT, 24-VOLT
PART OF 284-5348 WIRING GP-REAR
FIELD REPLACEMENT ORDER 334-8049–PAGE 139

SMCS-1430 **i02443767**

NOTE	REF NO	GRAPHIC REF	PART NUMBER	QTY	PART NAME 1 2 3 4 5 6 (PRODUCT LEVEL)	SEE PAGE
	1	1	**102-8803**	1	KIT-RECEPTACLE (3-PIN)	
					(INCLUDES RECEPTACLE AS & WEDGE)	
	2	1	**186-3735**	3	PIN-CONNECTOR (16-GA TO 18-GA)	

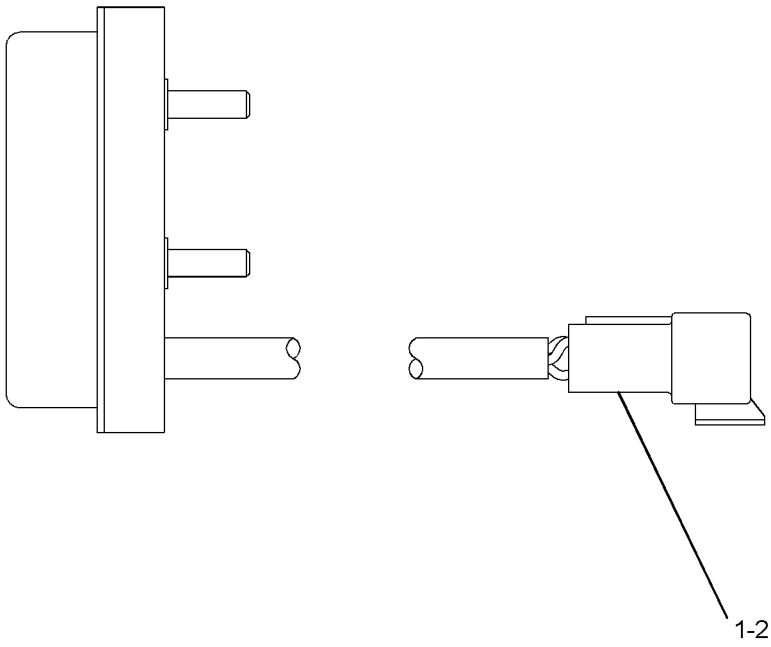

GRAPHIC #1 **<END>** g01213248

135-0427 LAMP GP-SIGNAL–PARK, TURN

S/N: JJA1-UP
24-VOLT
PART OF 284-5353, 284-5355 LIGHTING GP-ROADING
AN ATTACHMENT

SMCS-1430 **i02526811**

NOTE	REF NO	GRAPHIC REF	PART NUMBER	QTY	PART NAME 1 2 3 4 5 6 (PRODUCT LEVEL)	SEE PAGE
	1	1	**102-8803**	1	KIT-RECEPTACLE (3-PIN)	
					(INCLUDES RECEPTACLE AS & WEDGE)	
	2	1	**186-3735**	3	PIN-CONNECTOR (16-GA TO 18-GA)	

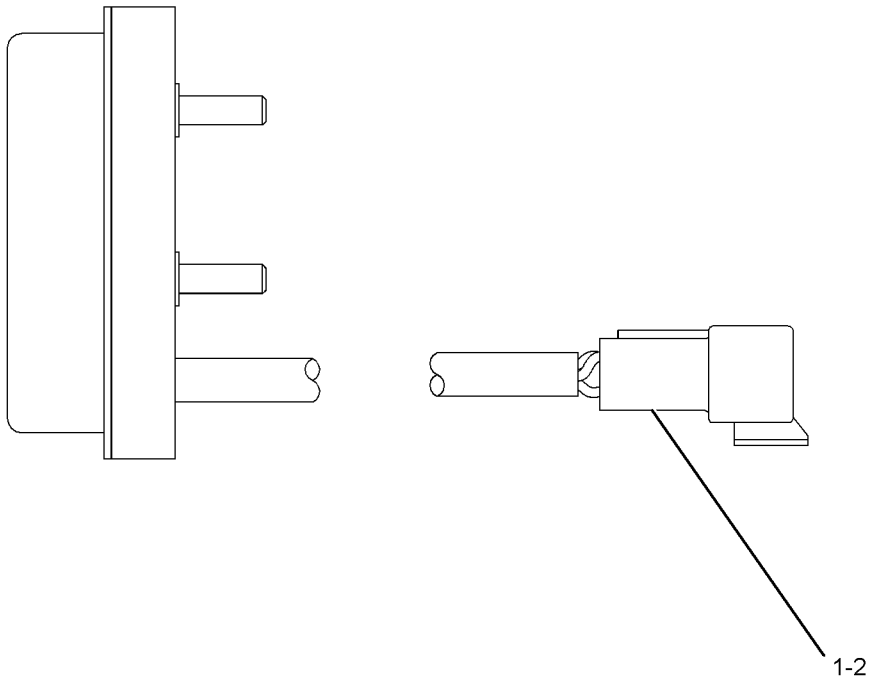

GRAPHIC #1 **<END>** g01273007

199-3368 LAMP GP-SIGNAL–TURN

S/N: JJA1-UP
24-VOLT
PART OF 284-5363 LIGHTING GP-SIGNAL
AN ATTACHMENT

SMCS-1430 **i03432182**

NOTE	REF NO	GRAPHIC REF	PART NUMBER	QTY	PART NAME 1 2 3 4 5 6 (PRODUCT LEVEL)	SEE PAGE
	1	1	**102-8802**	1	KIT-RECEPTACLE (2-PIN)	
					(INCLUDES RECEPTACLE AS & WEDGE)	
	2	1	**186-3735**	2	PIN-CONNECTOR (16-GA TO 18-GA)	

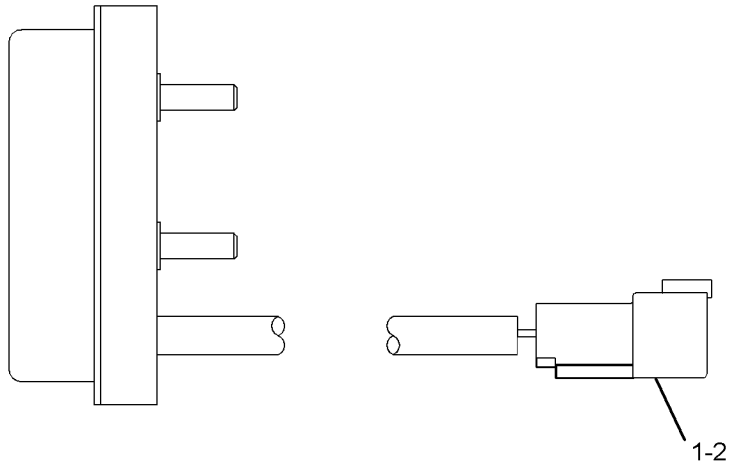

GRAPHIC #1 **<END>** g01217868

334-8049 LAMP GP-SIGNAL–STOP, TAIL

S/N: JJA1-UP
12-VOLT TO 24-VOLT
FIELD REPLACEMENT FOR 135-0426–PAGE 136

SMCS-1430 **i03518540**

NOTE	REF NO	GRAPHIC REF	PART NUMBER	QTY	PART NAME 1 2 3 4 5 6 (PRODUCT LEVEL)	SEE PAGE
	1	1	**102-8803**	1	KIT-RECEPTACLE (3-PIN)	
					(INCLUDES RECEPTACLE AS & WEDGE)	
	2	1	**186-3735**	3	PIN-CONNECTOR (16-GA TO 18-GA)	

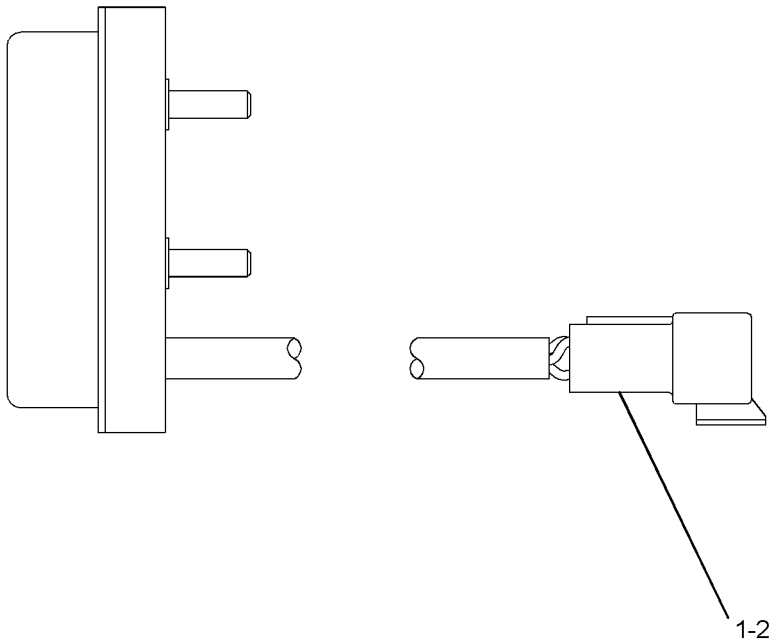

GRAPHIC #1 **<END>** g01213248

294-8545 LIGHTING AR-ROADING

S/N: JJA1-UP
AN ATTACHMENT

SMCS-1408, 1429 **i03641044**

NOTE	PART NUMBER	QTY	PART NAME 1 2 3 4 5 6 (PRODUCT LEVEL)	SEE PAGE
Y	*284-5355*	1	LIGHTING GP-ROADING (CAB FRONT, HIGH/LOW BEAM)	149
Y	*284-5354*	1	LIGHTING GP-FLOOD	143
Y	*284-5363*	1	LIGHTING GP-SIGNAL (TURN)	150
Y	*294-8641*	1	SWITCH GP-LIGHT (TURN)	178

Y-SEPARATE ILLUSTRATION

<END>

294-8546 LIGHTING AR-ROADING

S/N: JJA1-UP
AN ATTACHMENT

SMCS-1408, 1429 **i03641045**

NOTE	PART NUMBER	QTY	PART NAME 1 2 3 4 5 6 (PRODUCT LEVEL)	SEE PAGE
Y	*284-5353*	1	LIGHTING GP-ROADING	147
Y	*284-5363*	1	LIGHTING GP-SIGNAL (TURN)	150

Y-SEPARATE ILLUSTRATION

<END>

ELECTRICAL AND STARTING SYSTEM

284-5394 LIGHTING GP-BACKUP

S/N: JJA1-UP

PART OF 346-3710 GENERAL AR

SMCS-1408 **i03641925**

NOTE	REF NO	GRAPHIC REF	PART NUMBER	QTY	PART NAME 1 2 3 4 5 6 (PRODUCT LEVEL)	SEE PAGE
	1	1	**3E-5239**	1	RELAY AS (24-VOLT) (BACKUP LIGHT)	
	2	1	**7K-1181**	1	STRAP-CABLE	
	3	1	**213-9100**	1	ALARM GP (BACKUP)	
		1	**102-8802**	1	KIT-RECEPTACLE (2-PIN)	
					(INCLUDES RECEPTACLE AS & WEDGE)	
D		1	**5P-5623**		WIRE-ELECTRICAL (16-GA, BLACK) (0.4-M EACH)	
		1	**186-3735**		PIN-CONNECTOR (16-GA TO 18-GA)	
E		1	**9X-1813**		SLEEVE (29-CM)	
	4	1	**304-5794**	1	BRACKET AS	
	5	1	**344-6167**	1	COVER	
	6	1	**130-5300**	3	CLIP	
Y	7	1	**171-5672**	2	LAMP GP (24-VOLT) (ENGINE ENCLOSURE)	130
M	8	1	**5C-2890**	6	NUT (M6X1-THD)	
	9	1	**7X-7729**	2	WASHER (11X25X3-MM THK)	
	10	1	**8T-4121**	4	WASHER-HARD (11X21X2.5-MM THK)	
M	11	1	**8T-4133**	2	NUT (M10X1.5-THD)	
M	12	1	**8T-4137**	4	BOLT (M10X1.5X20-MM)	
	13	1	**8T-4224**	6	WASHER-HARD (8.8X16X2-MM THK)	
M	14	1	**8T-4970**	1	BOLT (M6X1X14-MM)	
	15	1	**9X-8256**	1	WASHER (6.6X12X2-MM THK)	

D-ORDER BY THE METER
E-ORDER BY THE CENTIMETER
M-METRIC PART
Y-SEPARATE ILLUSTRATION

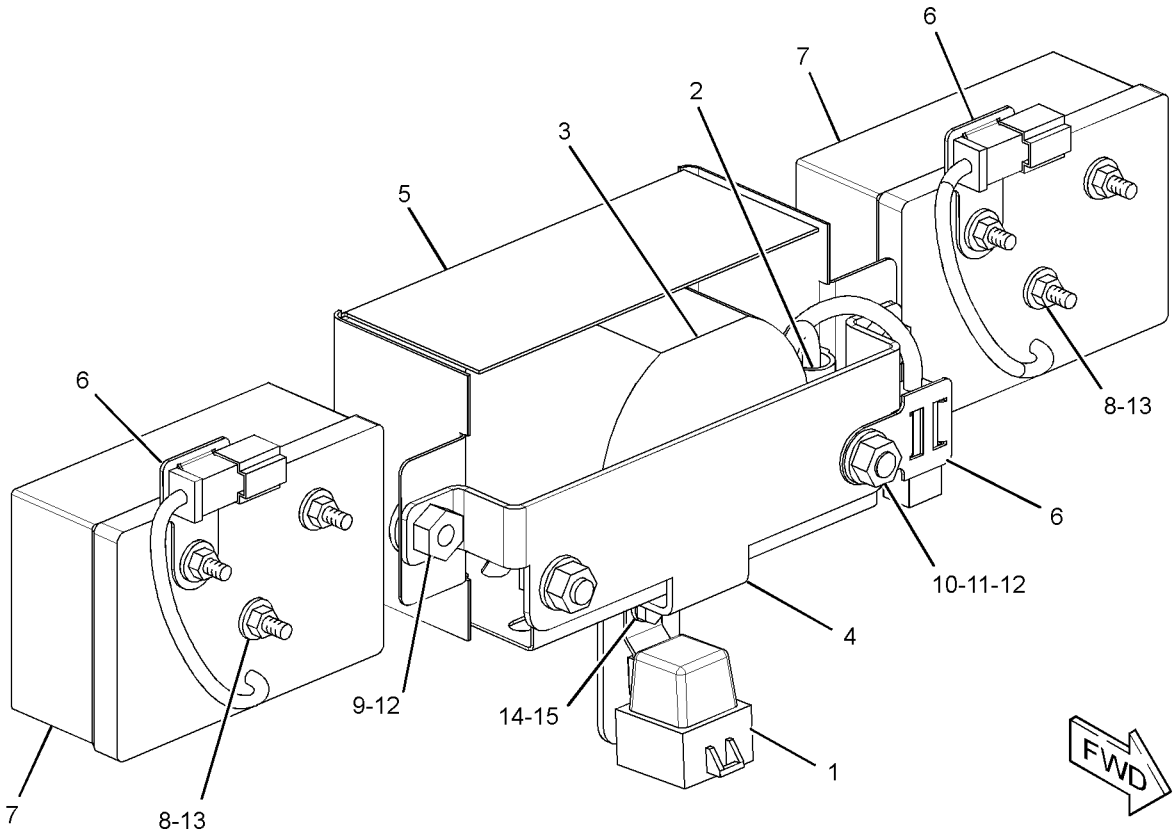

GRAPHIC #1 **<END>** g01916174

284-5354 LIGHTING GP-FLOOD—RIPPER

S/N: JJA1-UP
PART OF 294-8545 LIGHTING AR-ROADING
AN ATTACHMENT

SMCS-1434 **i03432180**

NOTE	REF NO	GRAPHIC REF	PART NUMBER	QTY	PART NAME 1 2 3 4 5 6 (PRODUCT LEVEL)	SEE PAGE
	1	1	**2G-0617**	2	CLAMP	
	2	1	**2G-0659**	2	BRACKET	
	3	1	**2G-0988**	2	CAP	
	4	1	**3K-9520**	3	GROMMET	
	5	1	**3S-2093**	4	STRAP-CABLE	
	6	1	**9W-1442**	1	FUSE (10-AMPERE)	
	7	1	**137-9410**	2	CLAMP	
	8	1	**179-1549**	1	TUBE	
	9	1	**179-1550**	2	CLAMP	
Y	10	1	**234-4323**	2	LAMP GP-FLOOD (24-VOLT)	132
	11	1	**336-0959**	1	HARNESS AS-LIGHTING	
	12	1	**336-0960**	1	HARNESS AS-FRONT LIGHTING	
	13	1	*123-5847*	1	SWITCH AS-ROCKER (24-VOLT) (AUXILIARY BACKUP LIGHTS)	
		1	**3E-8782**	1	ACTUATOR	
		1	**3E-8825**	1	LAMP (24-VOLT)	
		1	**3E-8766**	1	SWITCH AS (24-VOLT) (AUXILIARY BACKUP LIGHTS)	
	14	1	**5M-3062**	1	BOLT (3/8-16X0.75-IN)	
	15	1	**8M-2770**	2	CLIP	
	16	1	**8T-4121**	4	WASHER-HARD (11X21X2.5-MM THK)	
M	17	1	**8T-4133**	2	NUT (M10X1.5-THD)	
M	18	1	**8T-4136**	2	BOLT (M10X1.5X25-MM)	
	19	1	**8T-4223**	4	WASHER-HARD (13.5X25.5X3-MM THK)	
M	20	1	**8T-4244**	4	NUT (M12X1.75-THD)	
	21	1	**8T-4896**	1	WASHER-HARD (10.2X18.5X2.5-MM THK)	
M	22	1	**8T-5412**	4	BOLT (M12X1.75X140-MM)	
	23	1	**9M-8406**	2	CLIP	
E	24	1	**235-4765**		SEAL (4-CM)	

E-ORDER BY THE CENTIMETER
M-METRIC PART
Y-SEPARATE ILLUSTRATION

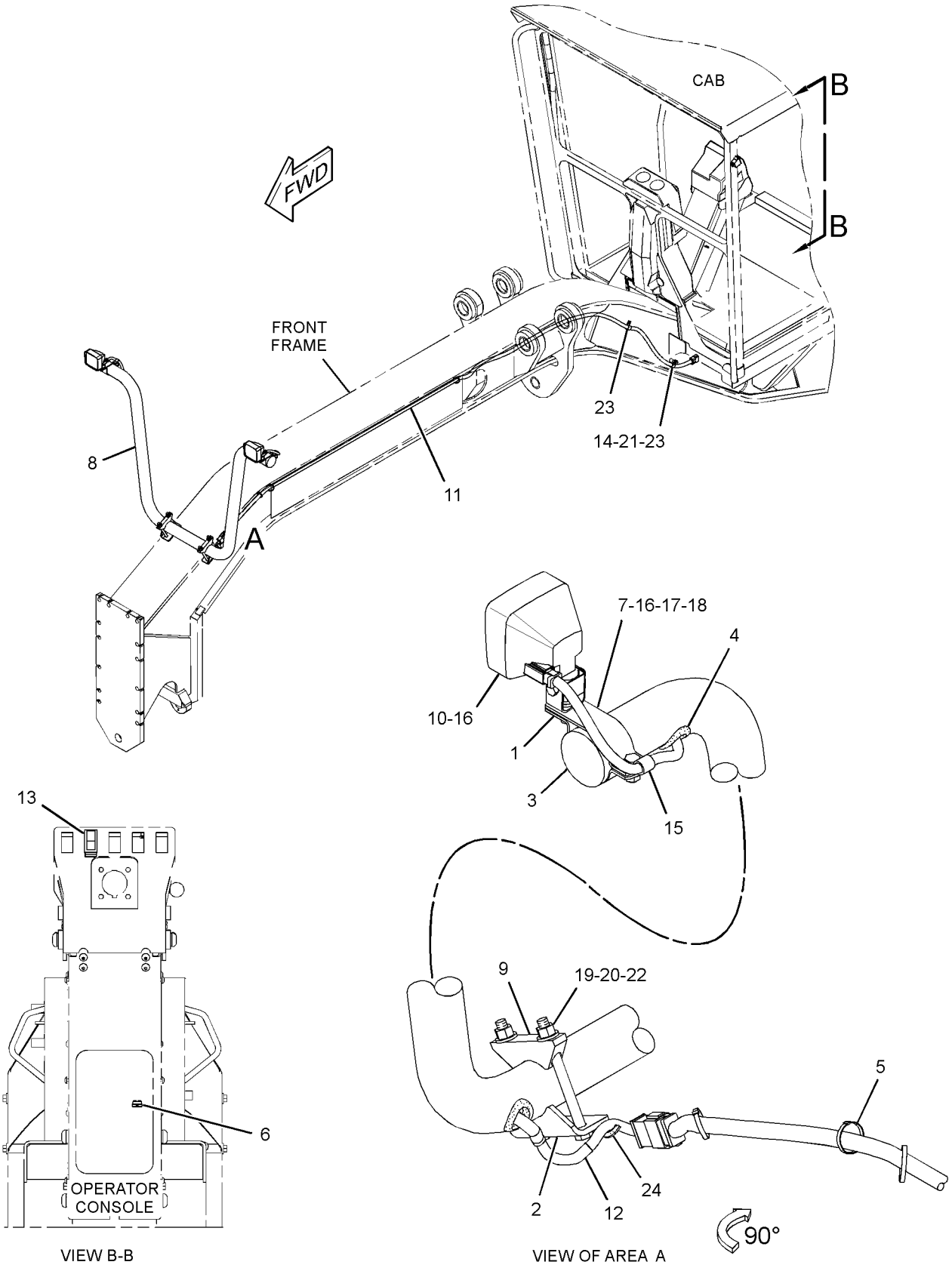

VIEW B-B

VIEW OF AREA A

GRAPHIC #1 **<END>** g01695116

ELECTRICAL AND STARTING SYSTEM

284-5362 LIGHTING GP-FLOOD—RIPPER

S/N: JJA1-UP

PART OF 346-3710 GENERAL AR

SMCS-1434 **i03258690**

NOTE	REF NO	GRAPHIC REF	PART NUMBER	QTY	PART NAME 1 2 3 4 5 6 (PRODUCT LEVEL)	SEE PAGE
	1	1	**9X-9365**	2	BRACKET	
Y	2	1	**234-4323**	2	LAMP GP-FLOOD (24-VOLT)	132
	3	1	**304-5880**	1	HARNESS AS-REAR LIGHTING	
	4	1	**6V-3265**	2	CLIP	
	5	1	**7G-7053**	2	GROMMET	
	6	1	**7K-1181**	9	STRAP-CABLE	
M	7	1	**8T-4195**	2	BOLT (M10X1.5X30-MM)	

M-METRIC PART
Y-SEPARATE ILLUSTRATION

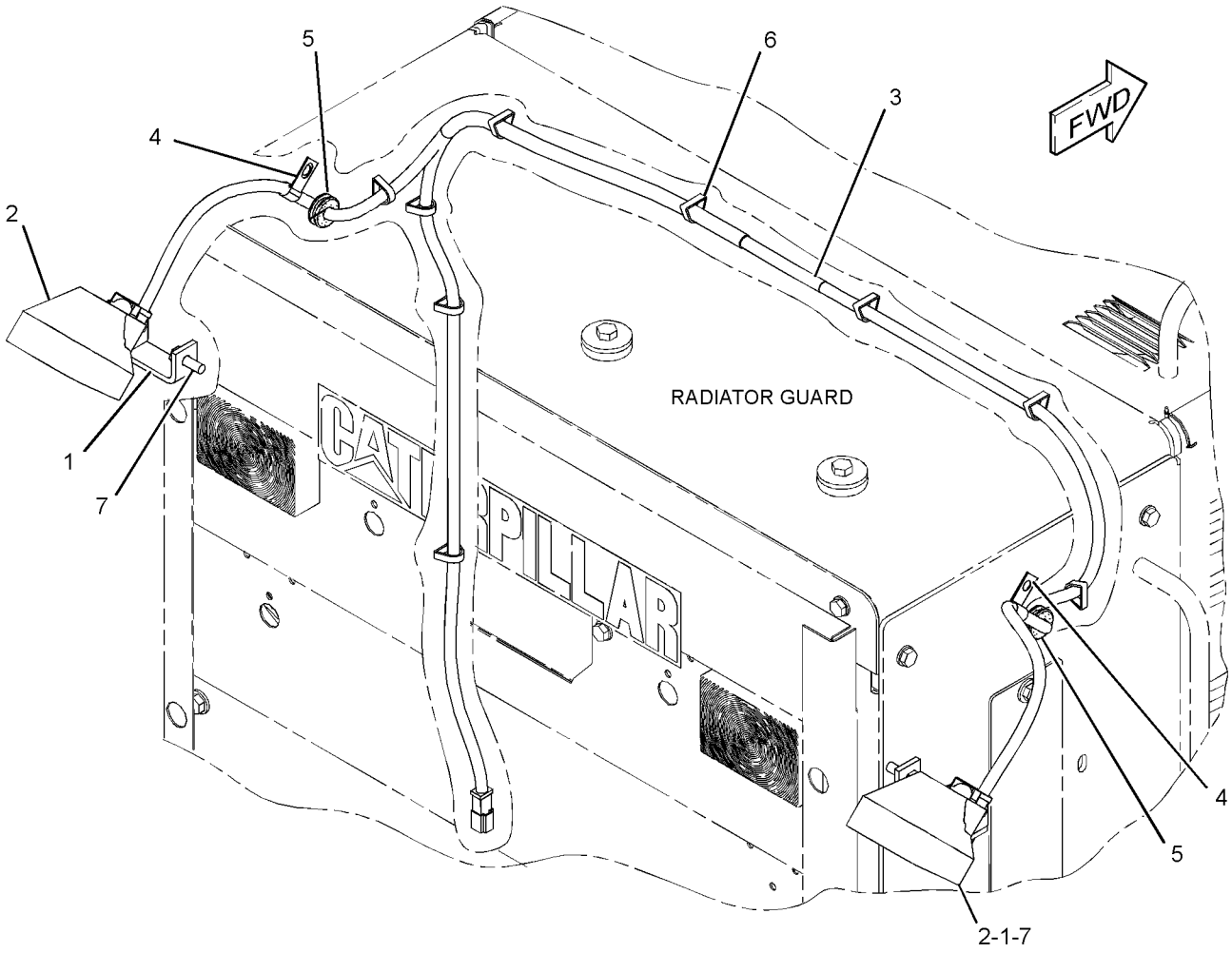

GRAPHIC #1 **<END>** g01755335

284-5376 LIGHTING GP-FLOOD—FRONT

S/N: JJA1-UP
24-VOLT
PART OF 346-3710 GENERAL AR

SMCS-1434 **i03641003**

NOTE	REF NO	GRAPHIC REF	PART NUMBER	QTY	PART NAME 1 2 3 4 5 6 (PRODUCT LEVEL)	SEE PAGE
	1	1	**9L-1566**	2	SUPPORT	
	2	1	**9W-1441**	1	FUSE (15-AMPERE)	
	3	1	**341-3192**	1	BOSS GP-FRAME	
	4	1	*9X-9632*	1	SWITCH AS-ROCKER (24-VOLT)	
		1	**3E-8772**	1	SWITCH-ROCKER (WORK LIGHTS)	
		1	**3E-8815**	1	ACTUATOR	
		1	**3E-8825**	2	LAMP (24-VOLT)	
Y	5	1	**234-4325**	2	LAMP GP-FLOOD (24-VOLT)	134
	6	1	**335-8402**	1	HARNESS AS-SOLENOID	
	7	1	**033-8248**	6	CLIP	
	8	1	**147-0385**	1	CLIP	
Y	9	1	**234-4323**	2	LAMP GP-FLOOD (24-VOLT)	132
	10	1	**5P-8167**	3	BOLT (3/8-16X0.625-IN)	
	11	1	**5S-7379**	2	BOLT (3/8-16X0.875-IN)	
	12	1	**7K-1181**	2	STRAP-CABLE	
	13	1	**8T-4121**	6	WASHER-HARD (11X21X2.5-MM THK)	
M	14	1	**8T-4133**	2	NUT (M10X1.5-THD)	
	15	1	**8T-4896**	3	WASHER-HARD (10.2X18.5X2.5-MM THK)	

M-METRIC PART
Y-SEPARATE ILLUSTRATION

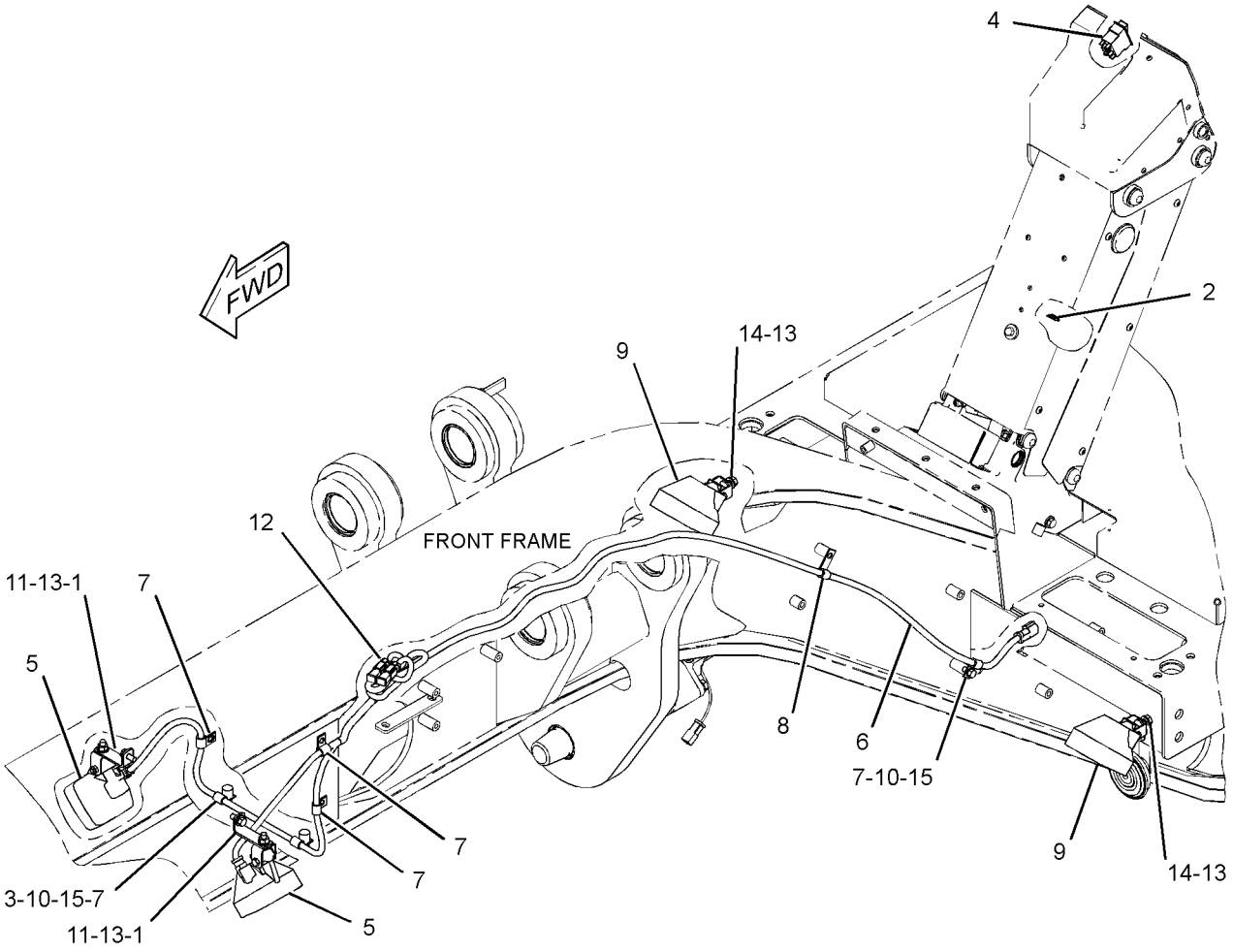

GRAPHIC #1 **<END>** g01831537

284-5353 LIGHTING GP-ROADING

S/N: JJA1-UP
PART OF 294-8546 LIGHTING AR-ROADING
AN ATTACHMENT

SMCS-1429 **i03432040**

NOTE	REF NO	GRAPHIC REF	PART NUMBER	QTY	PART NAME 1 2 3 4 5 6 (PRODUCT LEVEL)	SEE PAGE
	1	1	**2G-0617**	4	CLAMP	
	2	1	**2G-0659**	2	BRACKET	
	3	1	**2G-0988**	2	CAP	
	4	1	**3K-9520**	3	GROMMET	
	5	1	**5T-9313**	1	TUBE	
	6	1	**8X-5153**	1	FILM-FACE (TURN SIGNAL, HAZARD)	
	7	1	**8X-5154**	1	FILM-FACE (HEADLIGHTS HIGH, LOW BEAM)	
	8	1	**9W-1441**	1	FUSE (15-AMPERE)	
	9	1	**9W-1442**	1	FUSE (10-AMPERE)	
	10	1	**103-1592**	2	PLATE	
	11	1	**108-0358**	1	FLASHER AS (24-VOLT)	
Y	12	1	**135-0427**	2	LAMP GP-SIGNAL (24-VOLT, PARK, TURN)	137
	13	1	**137-9410**	4	CLAMP	
	14	1	**173-3064**	1	SWITCH GP-ROTARY (TURN SIGNAL, HAZARD)	
		1	**5L-7200**	1	SCREW (8-32X0.375-IN)	
		1	**9B-7233**	1	LOCKWASHER	
	15	1	**179-1550**	2	CLAMP	
Y	16	1	**234-4323**	2	LAMP GP-FLOOD (24-VOLT)	132
Y	17	1	**234-4324**	2	LAMP GP-FLOOD (24-VOLT)	133
	18	1	**336-0959**	1	HARNESS AS-LIGHTING	
	19	1	**336-0961**	1	HARNESS AS-LIGHTING (BAR)	
	20	1	**103-5678**	1	SWITCH AS-ROTARY	
		1	**5L-7200**	1	SCREW (8-32X0.375-IN)	
		1	**9B-7233**	1	LOCKWASHER	
	21	1	**130-5300**	2	CLIP	
	22	1	*3E-9317*	1	SWITCH AS-ROCKER (24-VOLT) (HEADLIGHTS, TAIL LIGHTS)	
		1	**3E-8772**	1	SWITCH-ROCKER (HEADLIGHTS, TAIL LIGHTS)	
		1	**3E-8825**	2	LAMP (24-VOLT) (HEADLIGHTS, TAIL LIGHTS)	
		1	**3E-9326**	1	ACTUATOR	
	23	1	**4D-7794**	4	CLIP	
	24	1	**4K-8864**	2	CLIP	
	25	1	**4L-6454**	4	BOLT (3/8-16X1-IN)	
M	26	1	**5C-2890**	8	NUT (M6X1-THD)	
	27	1	**5M-3062**	1	BOLT (3/8-16X0.75-IN)	
	28	1	**6V-8801**	4	NUT (3/8-16-THD)	
	29	1	**7K-1181**	4	STRAP-CABLE	
	30	1	**8T-4205**	8	WASHER-HARD (7.2X14.5X2-MM THK)	
	31	1	**8T-4223**	4	WASHER-HARD (13.5X25.5X3-MM THK)	
M	32	1	**8T-4244**	4	NUT (M12X1.75-THD)	
	33	1	**8T-4896**	5	WASHER-HARD (10.2X18.5X2.5-MM THK)	
M	34	1	**8T-5412**	4	BOLT (M12X1.75X140-MM)	
	35	1	**8X-6296**	2	LEVER	
M	36	1	**9X-2043**	2	SCREW-TRUSS HEAD (M6X1X14-MM)	

M-METRIC PART
Y-SEPARATE ILLUSTRATION

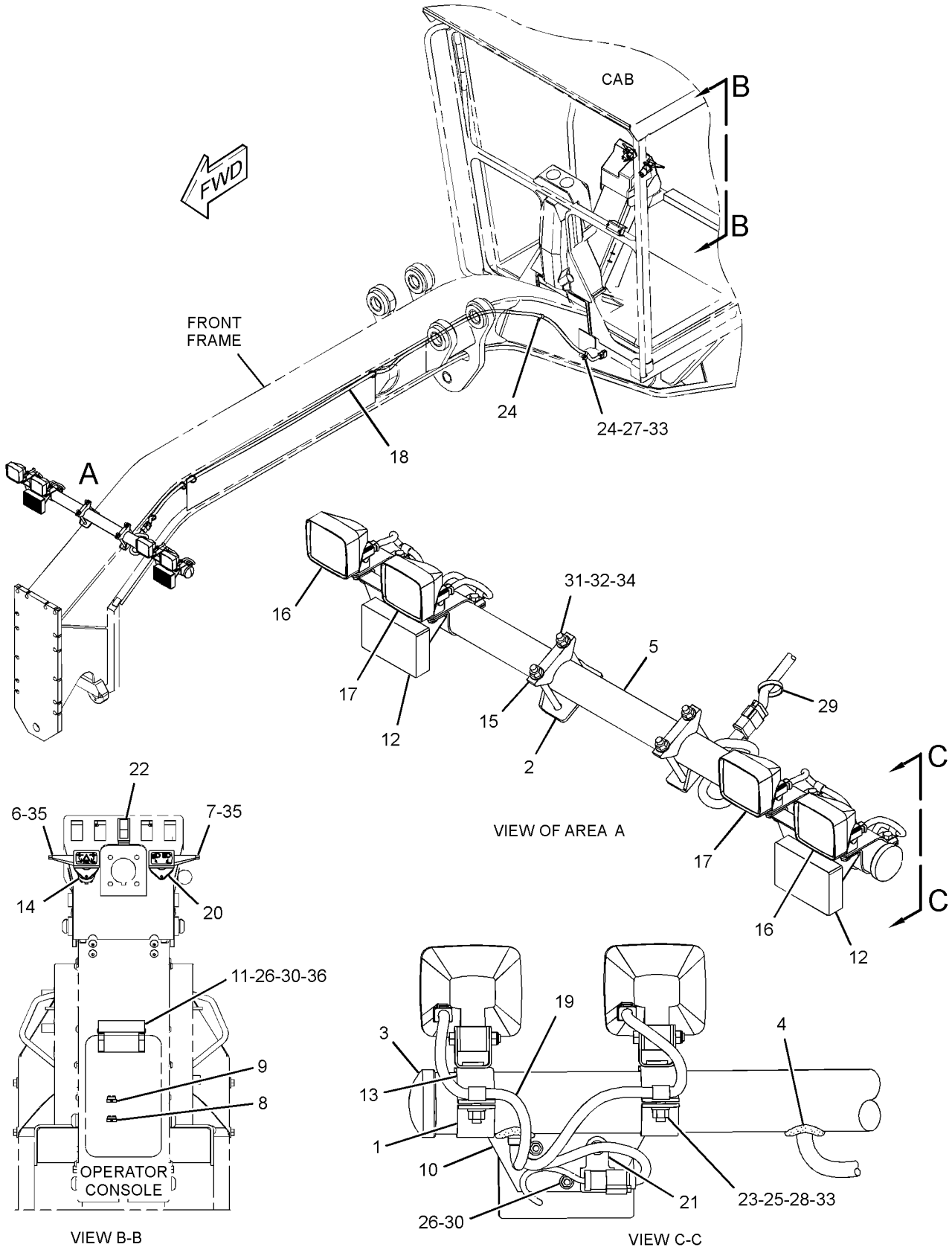

GRAPHIC #1

<END>

g01687683

284-5355 LIGHTING GP-ROADING–CAB FRONT

S/N: JJA1-UP
PART OF 294-8545 LIGHTING AR-ROADING
AN ATTACHMENT

SMCS-1429 **i03641004**

NOTE	REF NO	GRAPHIC REF	PART NUMBER	QTY	PART NAME 1 2 3 4 5 6 (PRODUCT LEVEL)	SEE PAGE
Y	1	1	**135-0427**	1	LAMP GP-SIGNAL (24-VOLT, PARK, TURN) (LH)	137
Y	1A	1	**135-0427**	1	LAMP GP-SIGNAL (24-VOLT, PARK, TURN) (RH)	137
	2	1	**193-7416**	2	PLATE AS	
Y	3	1	**234-4325**	1	LAMP GP-FLOOD (24-VOLT)	134
Y	3A	1	**234-4325**	1	LAMP GP-FLOOD (24-VOLT)	134
Y	4	1	**234-4326**	1	LAMP GP-FLOOD (24-VOLT)	135
Y	4A	1	**234-4326**	1	LAMP GP-FLOOD (24-VOLT)	135
	5	1	**130-5300**	2	CLIP	
M	6	1	**5C-2890**	6	NUT (M6X1-THD)	
	7	1	**8T-4121**	8	WASHER-HARD (11X21X2.5-MM THK)	
M	8	1	**8T-4137**	4	BOLT (M10X1.5X20-MM)	
	9	1	**8T-4205**	6	WASHER-HARD (7.2X14.5X2-MM THK)	
	10	1	**9D-3768**	2	GROMMET	
	11	1	**9G-1307**	2	GROMMET	

M-METRIC PART
Y-SEPARATE ILLUSTRATION

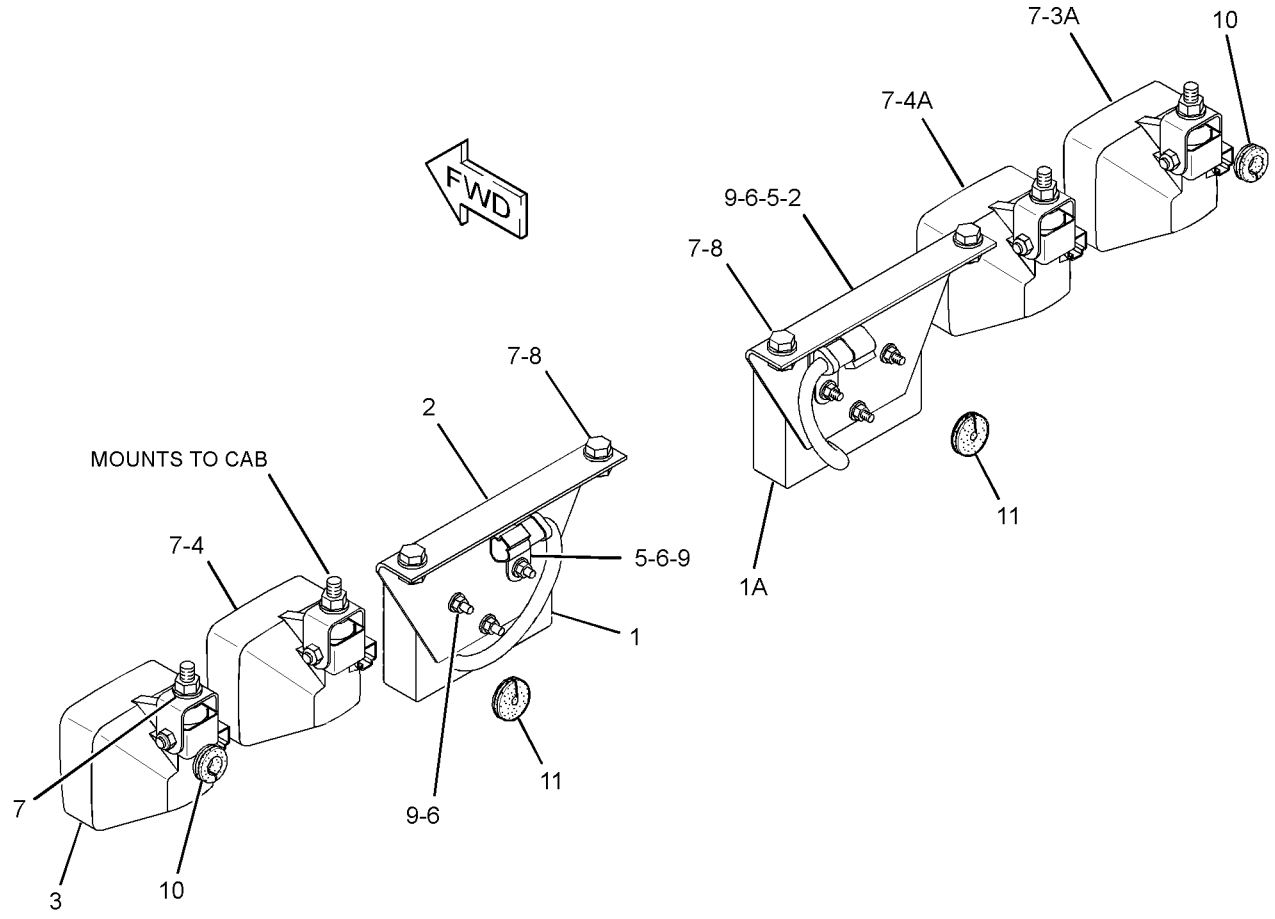

GRAPHIC #1 **<END>** g01703493

284-5363 LIGHTING GP-SIGNAL–TURN

S/N: JJA1-UP

PART OF 294-8545, 294-8546 LIGHTING AR-ROADING AN ATTACHMENT

SMCS-1430 **i03254704**

NOTE	REF NO	GRAPHIC REF	PART NUMBER	QTY	PART NAME 1 2 3 4 5 6 (PRODUCT LEVEL)	SEE PAGE
	1	1	**130-5300**	2	CLIP	
Y	2	1	**199-3368**	1	LAMP GP-SIGNAL (24-VOLT, TURN) (LH)	138
Y	2A	1	**199-3368**	1	LAMP GP-SIGNAL (24-VOLT, TURN) (RH)	138
M	3	1	**5C-2890**	6	NUT (M6X1-THD)	
	4	1	**8T-4205**	6	WASHER-HARD (7.2X14.5X2-MM THK)	

M-METRIC PART
Y-SEPARATE ILLUSTRATION

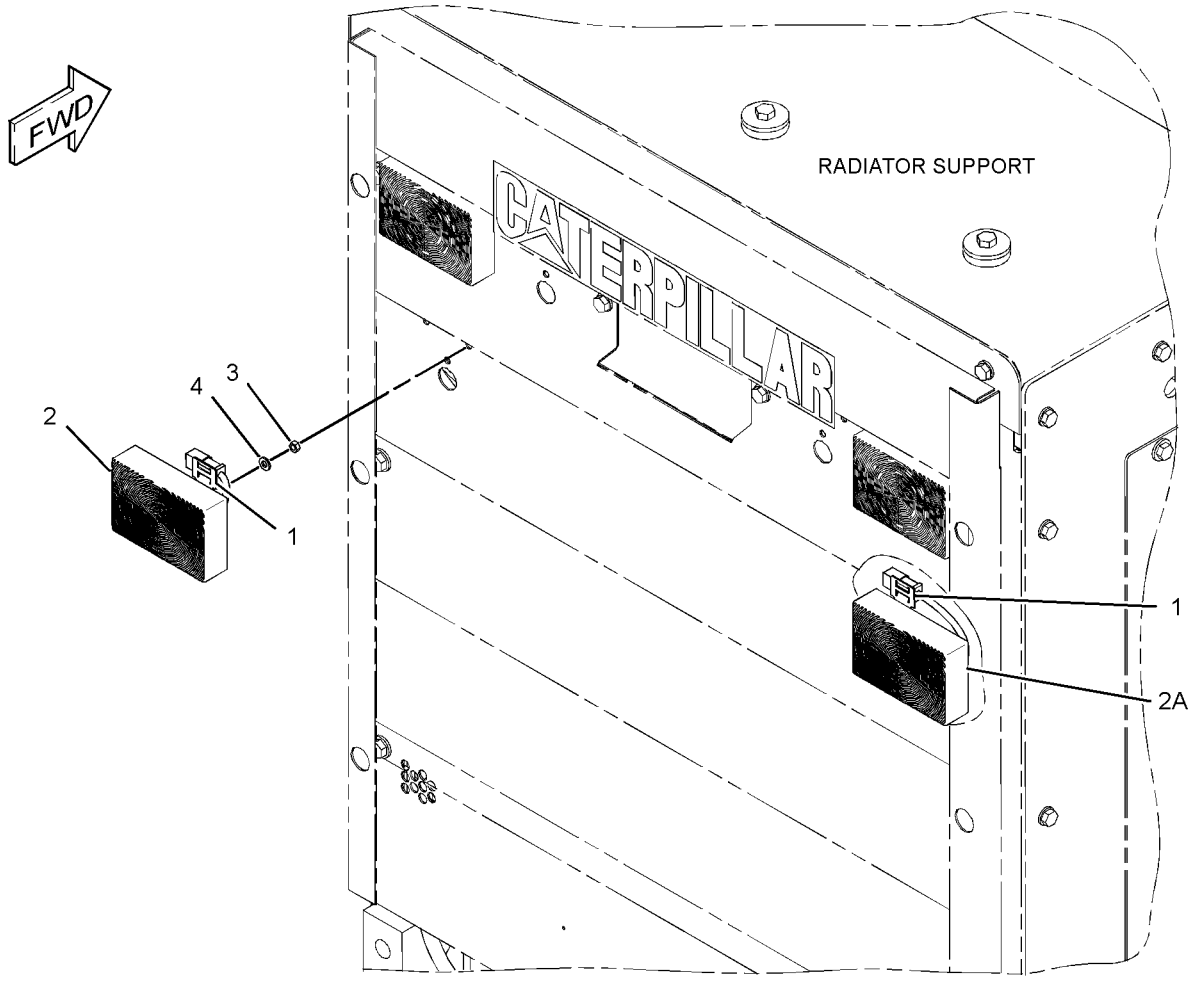

GRAPHIC #1 **<END>** g01705434

170-5335 MOTOR GP-ELECTRIC—CIRCULATING FAN

S/N: JJA1-UP
24-VOLT
PART OF 170-4820, 170-5334 FAN GP-CIRCULATING
AN ATTACHMENT

SMCS-5927 **i02463158**

NOTE	REF NO	GRAPHIC REF	PART NUMBER	QTY	PART NAME 1 2 3 4 5 6 (PRODUCT LEVEL)	SEE PAGE
	1	1	**102-8802**	1	KIT-RECEPTACLE (2-PIN)	
					(INCLUDES RECEPTACLE AS & WEDGE)	
	2	1	**9W-0852**	2	PIN-CONNECTOR (14-GA)	

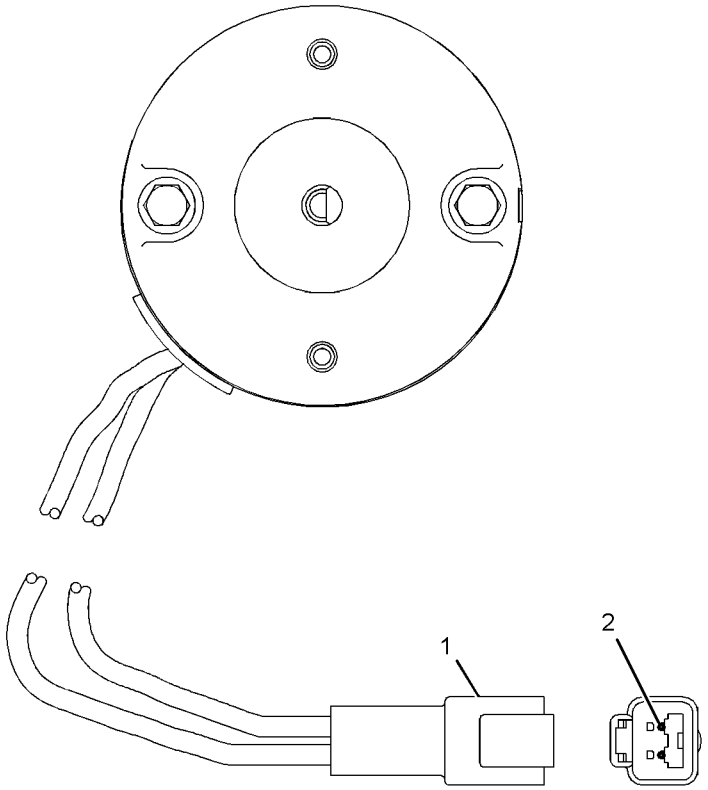

GRAPHIC #1 **<END>** g01240075

ELECTRICAL AND STARTING SYSTEM

247-6449 MOUNTING GP-GRADE CONTROL

S/N: JJA1-UP
PART OF 297-8448 GRADE CONTROL AR
AN ATTACHMENT

SMCS-7220 **i02389804**

NOTE	PART NUMBER	QTY	PART NAME 1 2 3 4 5 6 (PRODUCT LEVEL)	SEE PAGE
	269-9322	1	DRAWBAR AS	
	8X-7951	1	DRAWBAR & YOKE AS	
	5T-6775	2	REINFORCEMENT	
	8F-9836	12	BOSS (3/8-16-THD)	
	8X-7956	1	SHAFT AS	

<END>

254-5960 MOUNTING GP-GRADE CONTROL

S/N: JJA1-UP
PART OF 297-8448 GRADE CONTROL AR
AN ATTACHMENT

SMCS-7220 **i02457278**

NOTE	REF NO	GRAPHIC REF	PART NUMBER	QTY	PART NAME 1 2 3 4 5 6 (PRODUCT LEVEL)	SEE PAGE
	1	1	**187-7738**	2	WASHER-HARD (21X36.5X3.5-MM THK)	
	2	1	**236-1927**	1	BRACKET AS	
	3	1	**251-2382**	1	BOSS	
M	4	1	**9C-8895**	1	BOSS-TAPPED (M10X1.5-THD)	
Y	5	1	**153-9360**	1	CIRCLE GP	464

M-METRIC PART
Y-SEPARATE ILLUSTRATION

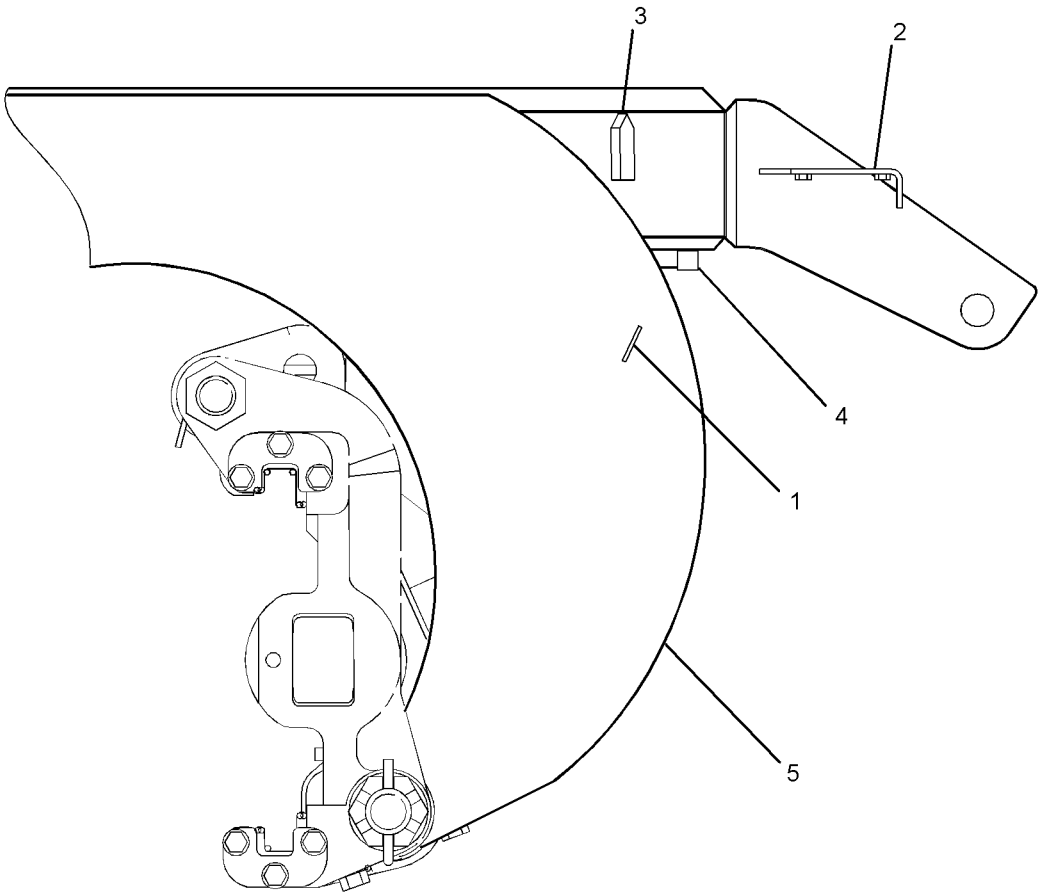

LEFT SIDE VIEW

GRAPHIC #1 **<END>** g01241625

235-8200 PLUG GP-CONNECTOR–
ENGINE HARNESS, PROTECTIVE COVER
S/N: KHX14117-UP
PART OF 325-9710 ENGINE AR-COMPLETE

SMCS-1403, 1408 **i02951921**

NOTE	REF NO	GRAPHIC REF	PART NUMBER	QTY	PART NAME 1 2 3 4 5 6 (PRODUCT LEVEL)	SEE PAGE
	1	1	**246-9353**	1	PLUG AS	
	1A	1	**8T-8737**	8	PLUG-SEAL	
	1B	1	**102-8806**	1	KIT-RECEPTACLE (8-PIN)	
					(INCLUDES RECEPTACLE AS & WEDGE)	
	2	1	**3S-2093**	1	STRAP-CABLE	

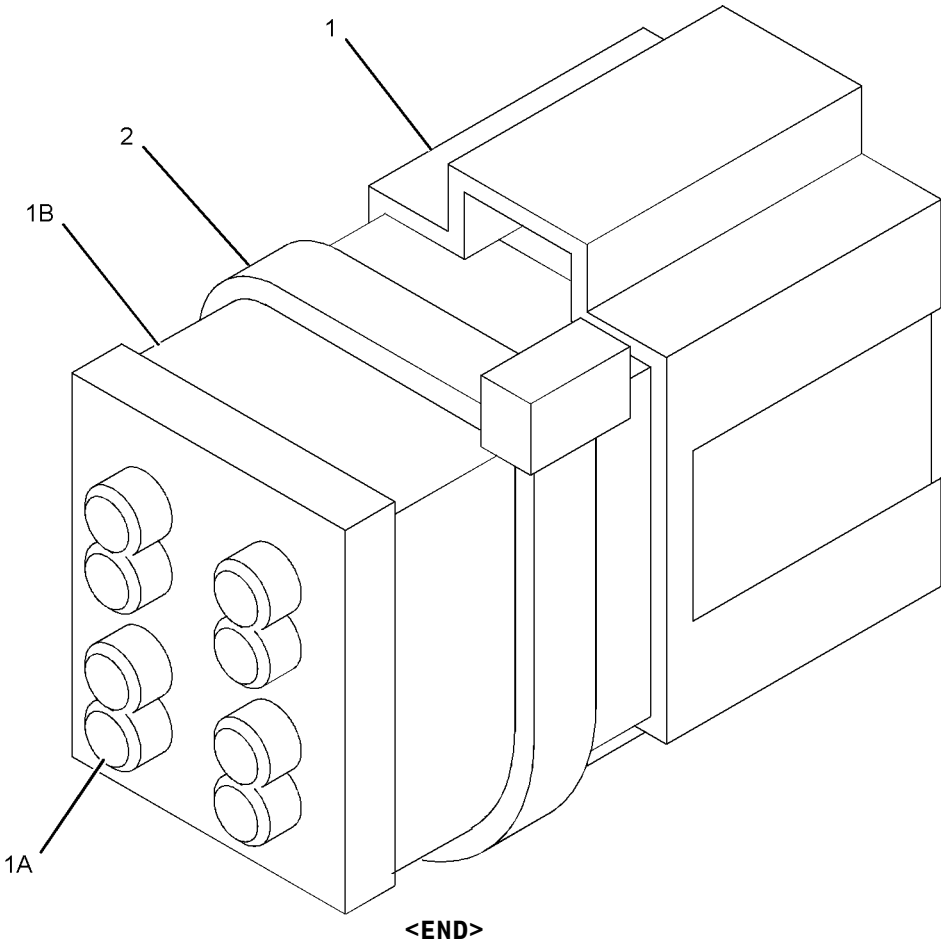

GRAPHIC #1 **<END>** g01105455

263-9088 RADIO GP-COMMUNICATION–PRODUCT LINK 121SR

S/N: JJA1-UP

PART OF 302-5429 INSTALLATION AR-COMMUNICATION

AN ATTACHMENT

SMCS-733T **i03194501**

NOTE	PART NUMBER	QTY	PART NAME 1 2 3 4 5 6 (PRODUCT LEVEL)	SEE PAGE
	330-3408	1	SOFTWARE GP-COMMUNICATION (PRODUCT LINK 121SR)	

<END>

297-5355 SENSOR GP-ENGINE

S/N: KHX14117-UP

PART OF 325-9710 ENGINE AR-COMPLETE

SMCS-1052, 1087, 1439, 1906, 1912, 1917, 1923, 1924, 1925

i02789817

NOTE	REF NO	GRAPHIC REF	PART NUMBER	QTY	PART NAME 1 2 3 4 5 6 (PRODUCT LEVEL)	SEE PAGE
	1	1	**9X-0262**	1	ADAPTER	
	2	1	**9X-8403**	1	ELBOW	
Y	3	1	*197-8393*	1	SENSOR GP-PRESSURE (ATMOSPHERIC)	161
Y	4	1	*197-8394*	1	SENSOR GP-PRESSURE (ENGINE OIL)	162
Y	5	1	*210-1747*	1	SENSOR GP-PRESSURE (BOOST)	163
Y	6	1	*236-6220*	1	SENSOR GP-PRESSURE (RAIL)	165
Y	7	1	*236-6221*	1	SENSOR GP-SPEED (ENGINE TIMING)	167
Y	8	1	*274-7395*	1	SENSOR GP-TEMPERATURE (AIR INLET MANIFOLD)	171
Y	9	1	*274-7396*	1	SENSOR GP-TEMPERATURE (ENGINE COOLANT)	172
	10	1	*169-5861*	1	PLUG AS	
		1	**3K-8460**	1	PLUG	
		1	**5P-7814**	1	SEAL-O-RING	
	11	1	*183-3406*	1	PLUG AS	
		1	**6V-5049**	1	SEAL-O-RING	
		1	**9S-4191**	1	PLUG-O-RING	
	12	1	*183-7263*	1	PLUG AS	
		1	**3J-7354**	1	SEAL-O-RING	
		1	**9S-8002**	1	PLUG-O-RING	
	13	1	**3E-4352**	1	WASHER-HARD (8.8X20.5X2.5-MM THK)	
M	14	1	**6V-3940**	1	BOLT (M8X1.25X25-MM)	
	15	1	**6V-5048**	2	SEAL-O-RING	
	16	1	**6V-5049**	1	SEAL-O-RING	
	17	1	**8T-2353**	1	ADAPTER	

M-METRIC PART
Y-SEPARATE ILLUSTRATION

297-5355 **SENSOR GP-ENGINE** *(contd.)* **i02789817**

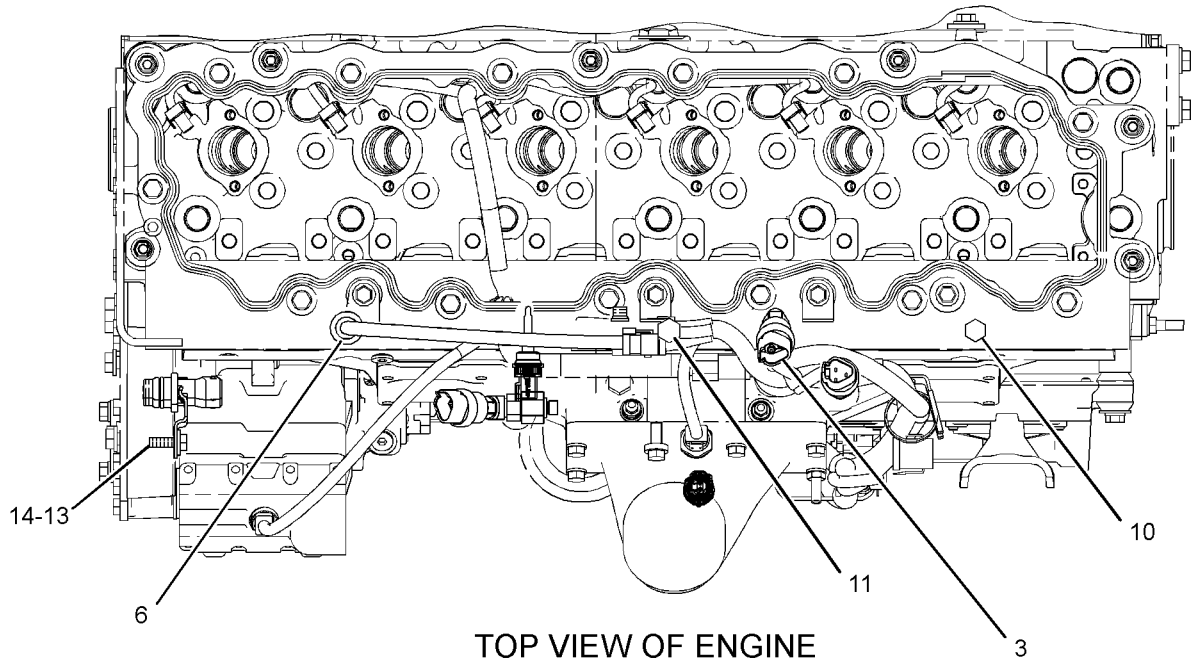

TOP VIEW OF ENGINE

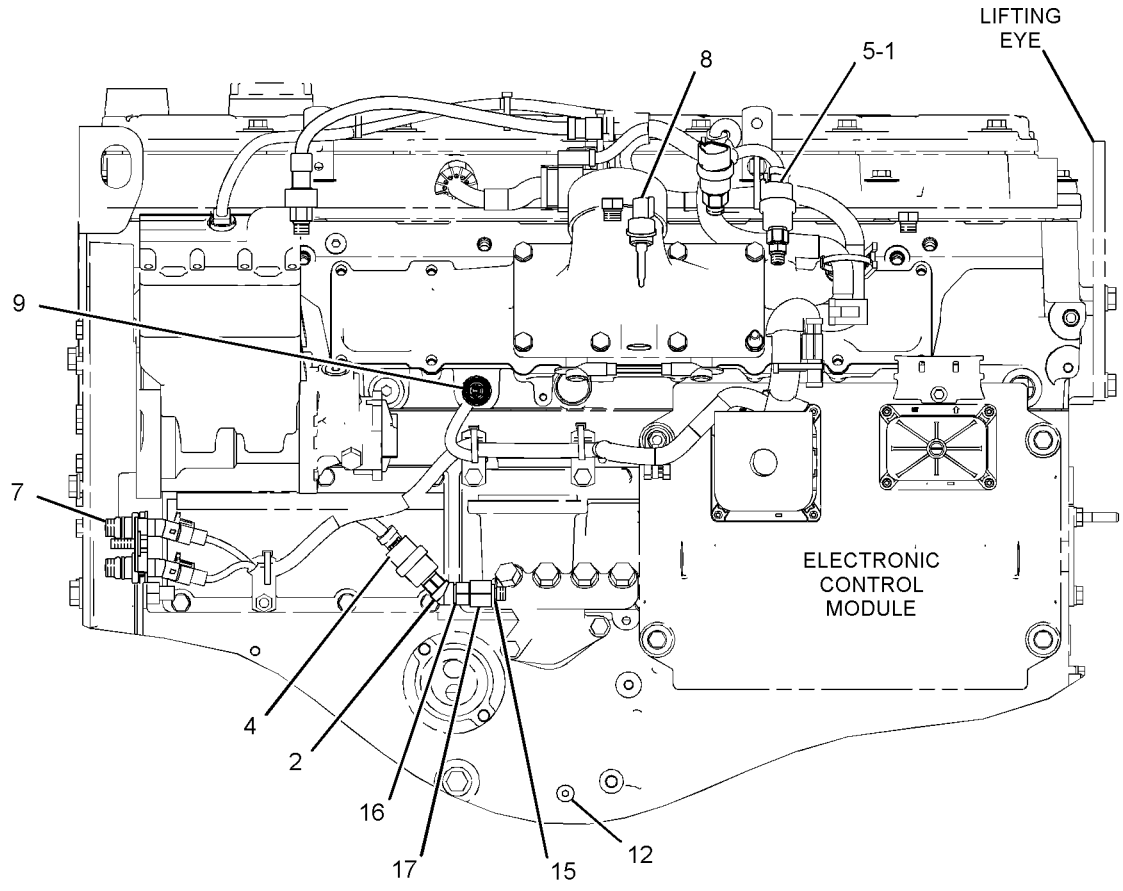

LEFT SIDE VIEW OF ENGINE

GRAPHIC #1 **<END>** g01335124

214-4863 SENSOR GP-POSITION

S/N: JJA1-UP
ROTARY
PART OF 282-2473 CONTROL GP-CLUTCH

SMCS-1408, 3168, 3175, 4269, 4809 **i01898168**

NOTE	REF NO	GRAPHIC REF	PART NUMBER	QTY	PART NAME 1 2 3 4 5 6 (PRODUCT LEVEL)	SEE PAGE
	1	1	**102-8803**	1	KIT-RECEPTACLE (3-PIN)	
					(INCLUDES RECEPTACLE AS & WEDGE)	
	2	1	**186-3735**	1	PIN-CONNECTOR (16-GA TO 18-GA)	
	3	1	**3E-3371**	1	WEDGE-RECEPTACLE LOCK (3-PIN)	

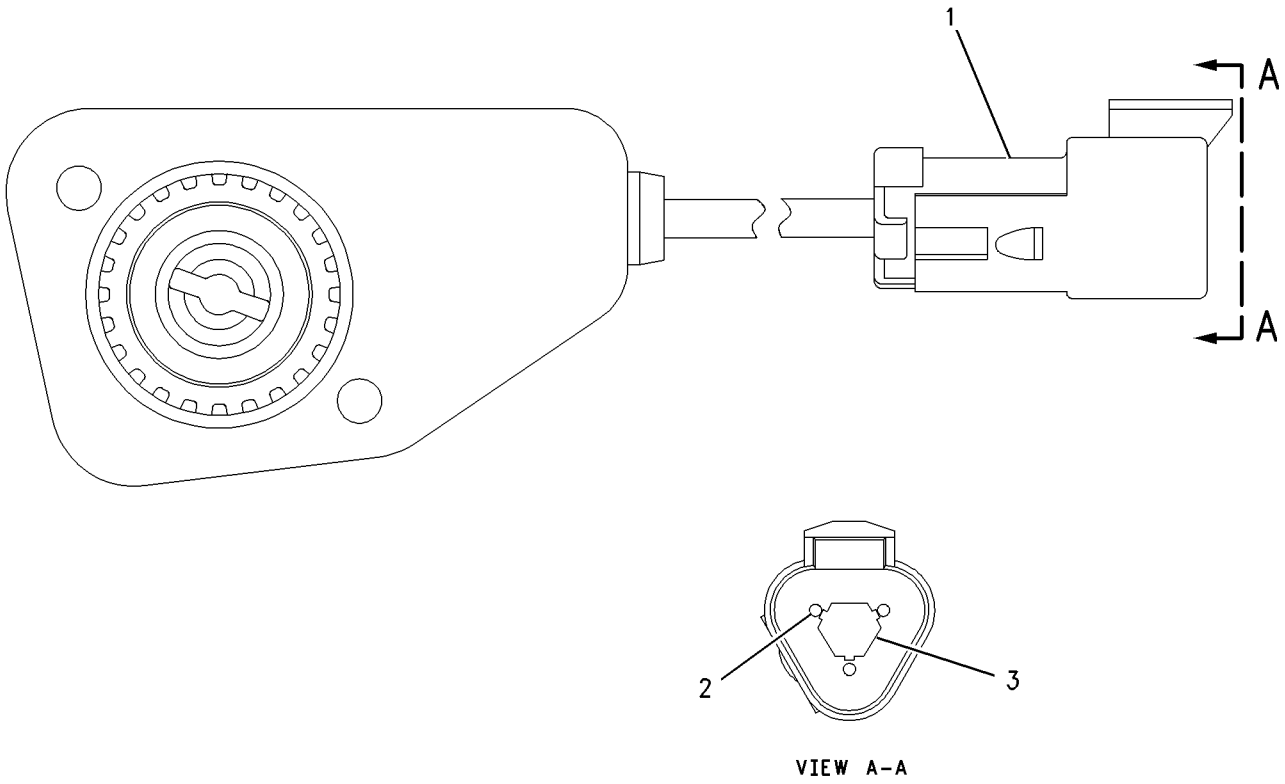

VIEW A-A

GRAPHIC #1 **<END>** g00925281

266-1467 SENSOR GP-POSITION–ROTARY

S/N: JJA1-UP

PART OF 282-2472 CONTROL GP-GOVERNOR

SMCS-1408, 3168, 3175, 4269, 4809 **i02987860**

NOTE	REF NO	GRAPHIC REF	PART NUMBER	QTY	PART NAME 1 2 3 4 5 6 (PRODUCT LEVEL)	SEE PAGE
	1	1	**9X-3401**	3	PIN-CONNECTOR (16-GA TO 18-GA)	
					–OR–	
		1	**126-1767**	3	PIN-CONNECTOR (14-GA)	
	2	1	**102-8803**	1	KIT-RECEPTACLE (3-PIN)	
					(INCLUDES RECEPTACLE AS & WEDGE)	
	3	1	**3E-3371**	1	WEDGE-RECEPTACLE LOCK (3-PIN)	

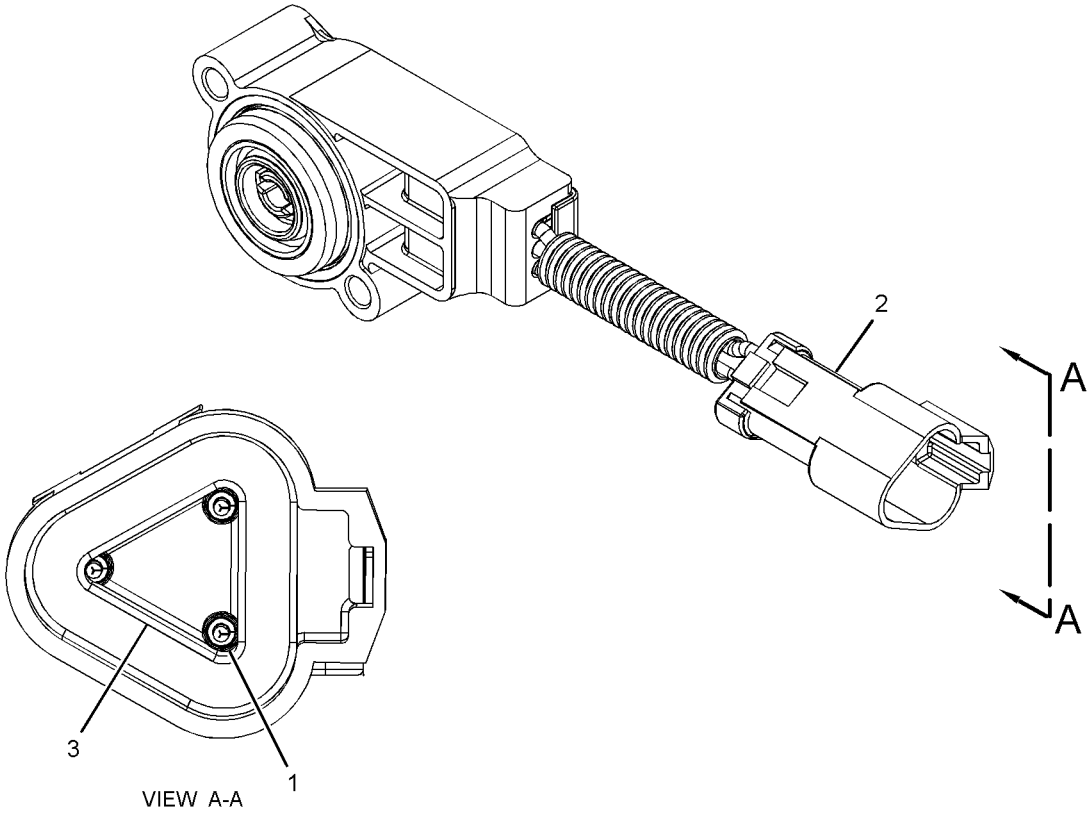

GRAPHIC #1 **<END>** g01514049

194-6722 SENSOR GP-PRESSURE

S/N: JJA1-UP

PART OF 311-0802 WIRING GP-AUXILIARY

SMCS-1052, 1058, 1439, 1718, 1917, 1923, 1924, 1925 **i03435061**

NOTE	REF NO	GRAPHIC REF	PART NUMBER	QTY	PART NAME 1 2 3 4 5 6 (PRODUCT LEVEL)	SEE PAGE
E	1	1	**9X-1813**		SLEEVE (34-CM)	
	2	1	**155-2260**	1	KIT-CONNECTING PLUG (3-PIN)	
					(INCLUDES PLUG AS, WEDGE & INTERFACE SEAL)	
	3	1	**180-9340**	3	SOCKET-CONNECTOR	

E-ORDER BY THE CENTIMETER

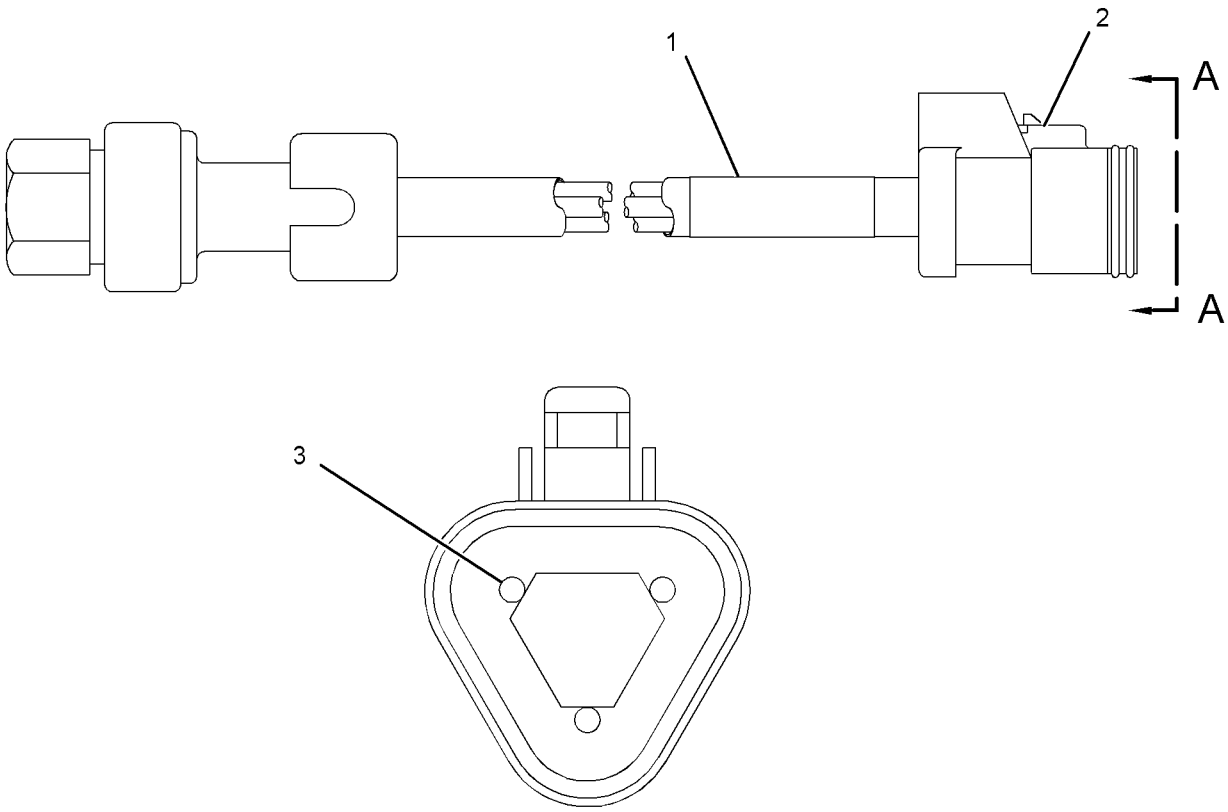

VIEW A-A

GRAPHIC #1 **<END>** g01381175

197-8393 SENSOR GP-PRESSURE

S/N: KHX14117-UP

PART OF 297-5355 SENSOR GP-ENGINE

SMCS-1052, 1058, 1439, 1718, 1917, 1923, 1924, 1925 **i03499761**

NOTE	REF NO	GRAPHIC REF	PART NUMBER	QTY	PART NAME 1 2 3 4 5 6 (PRODUCT LEVEL)	SEE PAGE
	1	1	**161-1703**	1	SENSOR GP-PRESSURE	
	2	1	**6V-5049**	1	SEAL-O-RING	

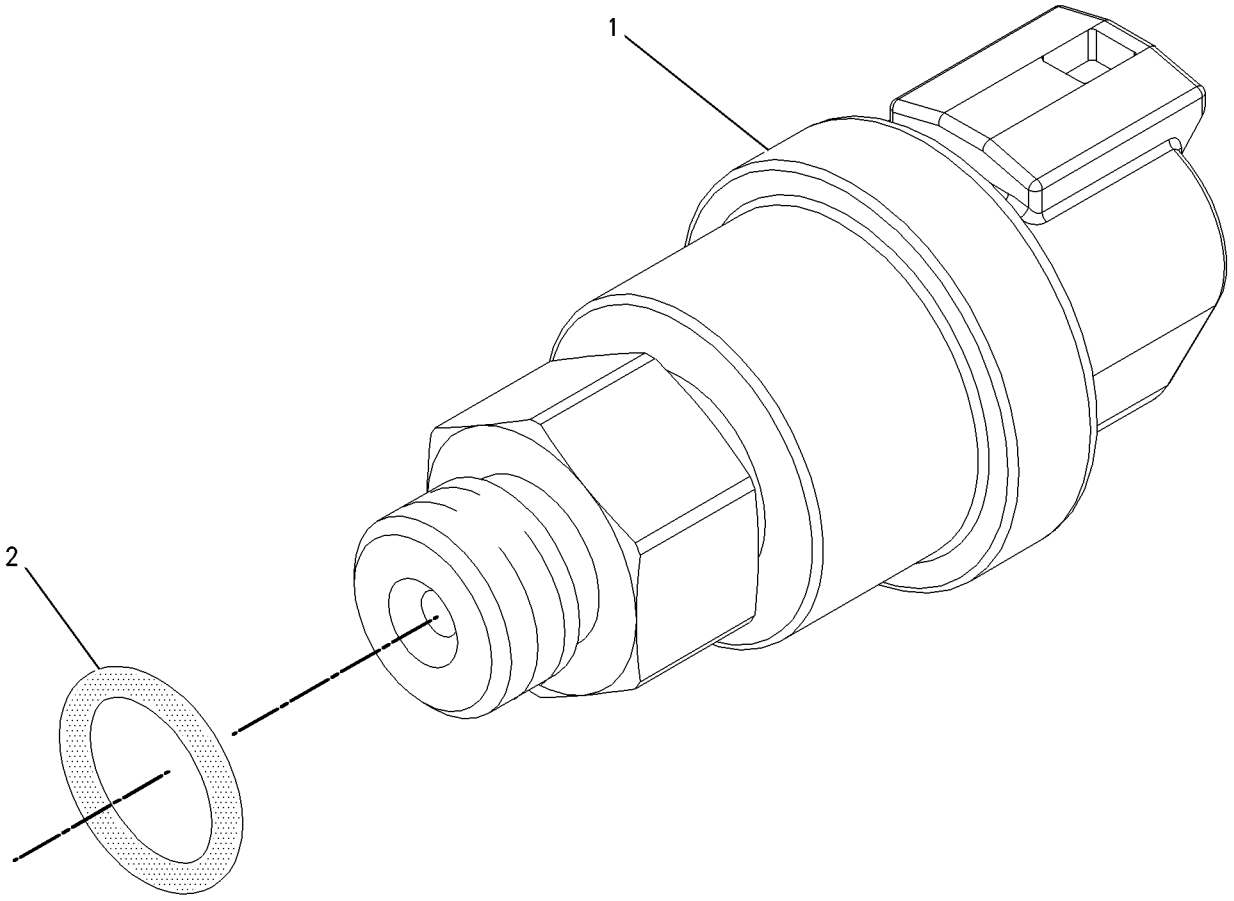

GRAPHIC #1 **<END>** g00855973

197-8394 SENSOR GP-PRESSURE

S/N: KHX14117-UP
ENGINE OIL
PART OF 297-5355 SENSOR GP-ENGINE

SMCS-1052, 1058, 1439, 1718, 1917, 1923, 1924, 1925 **i03499862**

NOTE	REF NO	GRAPHIC REF	PART NUMBER	QTY	PART NAME 1 2 3 4 5 6 (PRODUCT LEVEL)	SEE PAGE
	1	1	**161-1705**	1	SENSOR AS-PRESSURE	
	2	1	**6V-5048**	1	SEAL-O-RING	

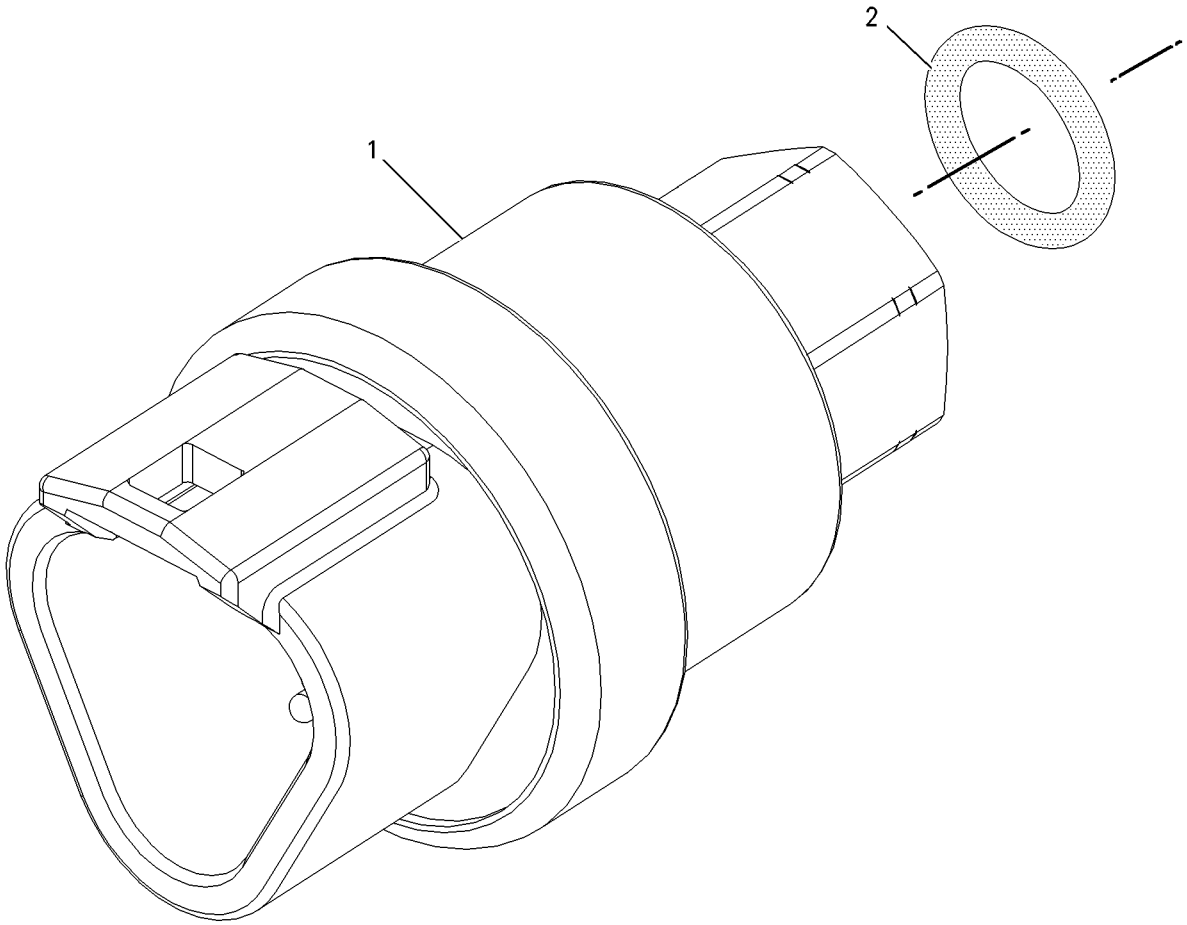

GRAPHIC #1 **<END>** g00856107

210-1747 SENSOR GP-PRESSURE

S/N: KHX14117-UP

PART OF 297-5355 SENSOR GP-ENGINE

SMCS-1052, 1058, 1439, 1718, 1917, 1923, 1924, 1925 **i03499901**

NOTE	REF NO	GRAPHIC REF	PART NUMBER	QTY	PART NAME 1 2 3 4 5 6 (PRODUCT LEVEL)	SEE PAGE
	1	1	**161-1704**	1	SENSOR GP-PRESSURE	
	2	1	**6V-5048**	1	SEAL-O-RING	

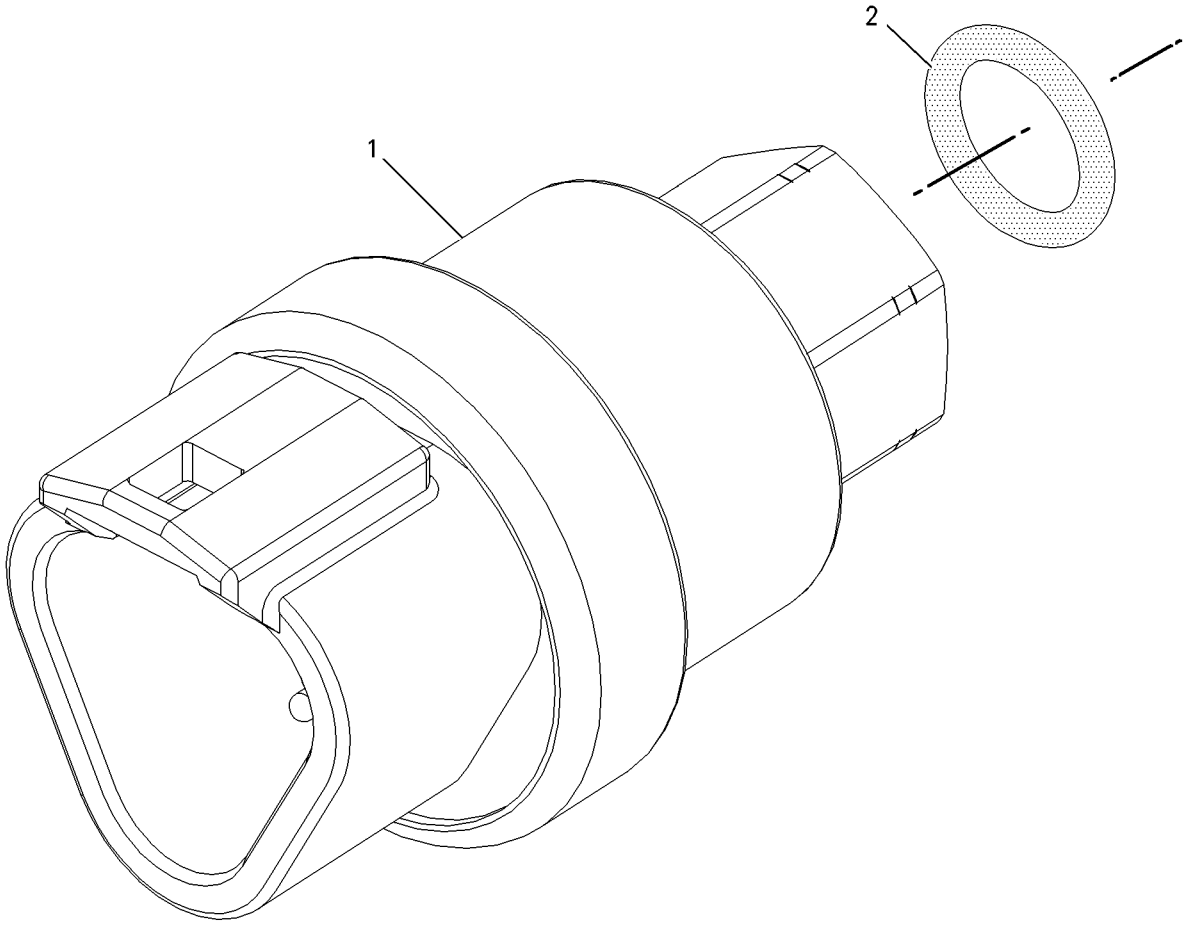

GRAPHIC #1 **<END>** g00856107

224-4536 SENSOR GP-PRESSURE

S/N: KHX14117-UP

PART OF 236-6220 SENSOR GP-PRESSURE

SMCS-1052, 1058, 1439, 1718, 1917, 1923, 1924, 1925 **i03172043**

NOTE	REF NO	GRAPHIC REF	PART NUMBER	QTY	PART NAME 1 2 3 4 5 6 (PRODUCT LEVEL)	SEE PAGE
BE	1	1	**9X-1813**		SLEEVE	
	2	1	**155-2260**	1	KIT-CONNECTING PLUG (3-PIN)	
					(INCLUDES PLUG AS, WEDGE, & INTERFACE SEAL)	
	3	1	**194-5226**	1	WIRE AS	
					—OR—	
		1	**194-5227**	1	WIRE AS (14-GA)	
	4	1	**155-2276**	1	WEDGE-PLUG LOCK (3-PIN)	

B-USE AS REQUIRED
E-ORDER BY THE CENTIMETER

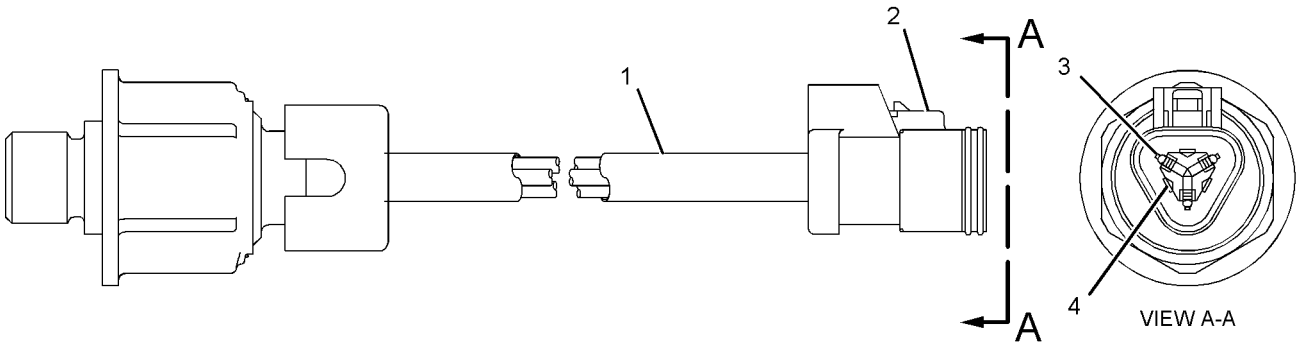

GRAPHIC #1 **<END>** g01040301

236-6220 SENSOR GP-PRESSURE

S/N: KHX14117-UP

PART OF 297-5355 SENSOR GP-ENGINE

SMCS-1052, 1058, 1439, 1718, 1917, 1923, 1924, 1925 **i03500600**

NOTE	REF NO	GRAPHIC REF	PART NUMBER	QTY	PART NAME 1 2 3 4 5 6 (PRODUCT LEVEL)	SEE PAGE
	1	1	**214-7567**	1	SEAL-O-RING	
Y	2	1	**224-4536**	1	SENSOR GP-PRESSURE	164

Y-SEPARATE ILLUSTRATION

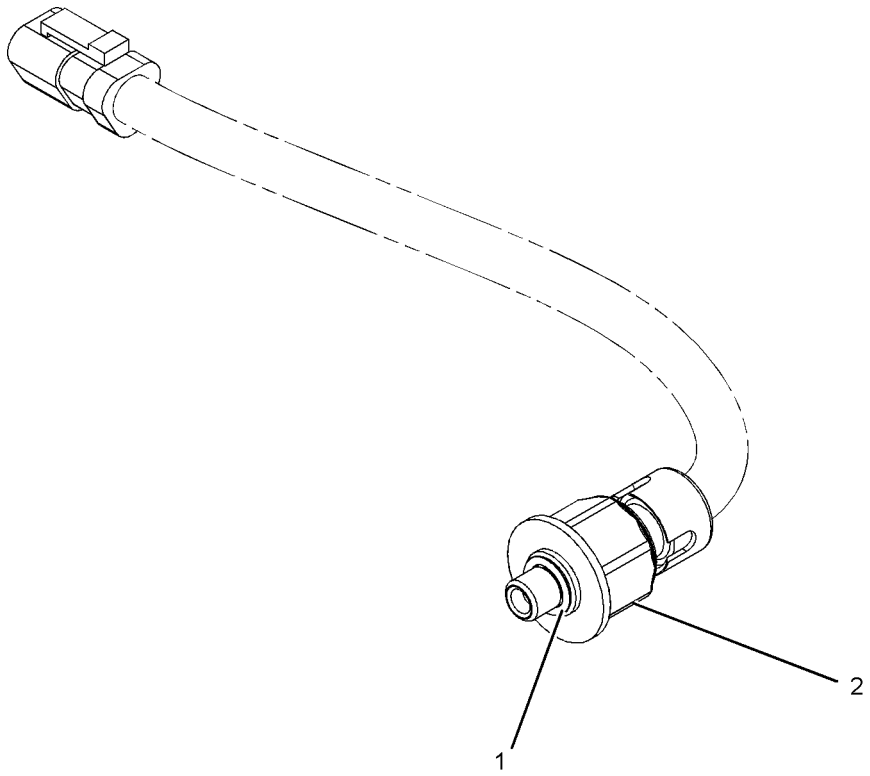

GRAPHIC #1 **<END>** g01054528

193-2550 SENSOR GP-SPEED

S/N: JJA1-UP

PART OF 311-0794 WIRING GP-REAR

SMCS-1439, 1907, 1912, 3141, 3175, 4803 **i02919909**

NOTE	REF NO	GRAPHIC REF	PART NUMBER	QTY	PART NAME 1 2 3 4 5 6 (PRODUCT LEVEL)	SEE PAGE
	1	1	**171-5349**	1	STRAP-MARKER	
	2	1	**102-8802**	1	KIT-RECEPTACLE (2-PIN)	
					(INCLUDES RECEPTACLE AS & WEDGE)	
	3	1	**9X-3401**	2	PIN-CONNECTOR (16-GA TO 18-GA)	
E	4	1	**9X-1813**		SLEEVE (14-CM)	

E-ORDER BY THE CENTIMETER

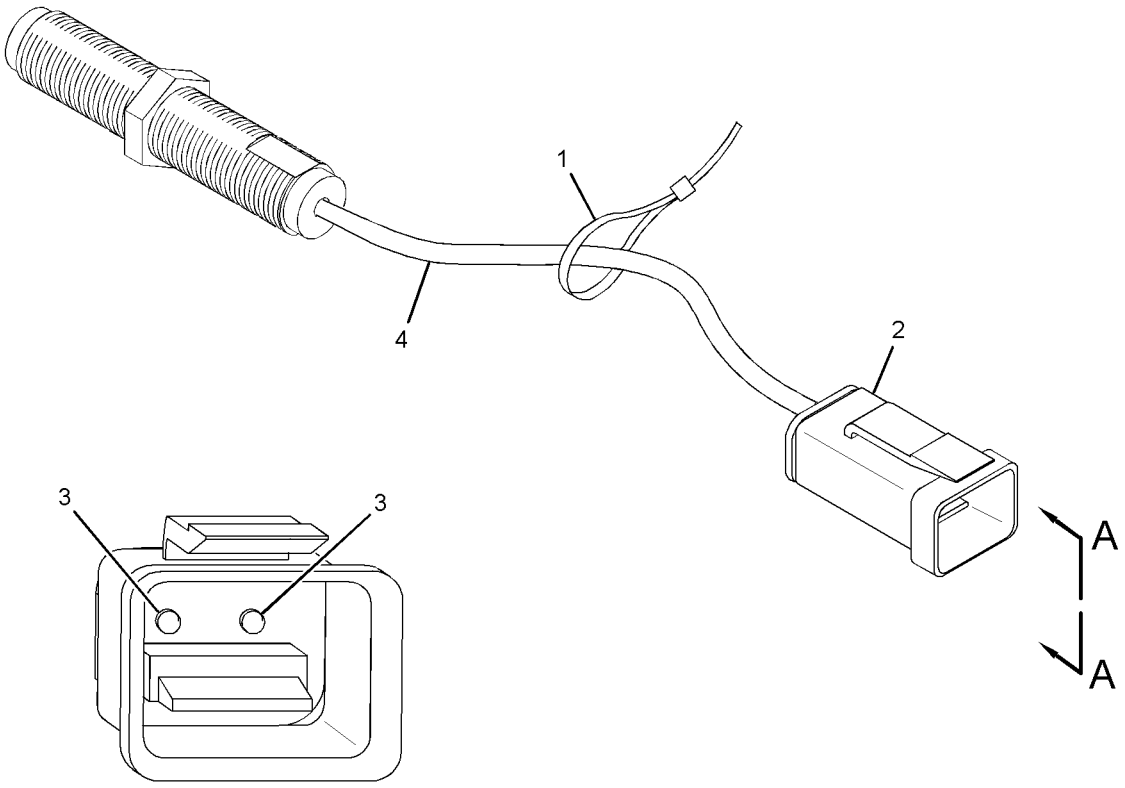

VIEW A-A

GRAPHIC #1 **<END>** g01454055

236-6221 SENSOR GP-SPEED

S/N: KHX14117-UP
ENGINE SPEED
PART OF 297-5355 SENSOR GP-ENGINE

SMCS-1439, 1907, 1912, 3141, 3175, 4803 **i03594258**

NOTE	REF NO	GRAPHIC REF	PART NUMBER	QTY	PART NAME 1 2 3 4 5 6 (PRODUCT LEVEL)	SEE PAGE
	1	1	**3P-0647**	2	SEAL-O-RING	
	2	1	**245-4630**	1	SENSOR GP-SPEED	

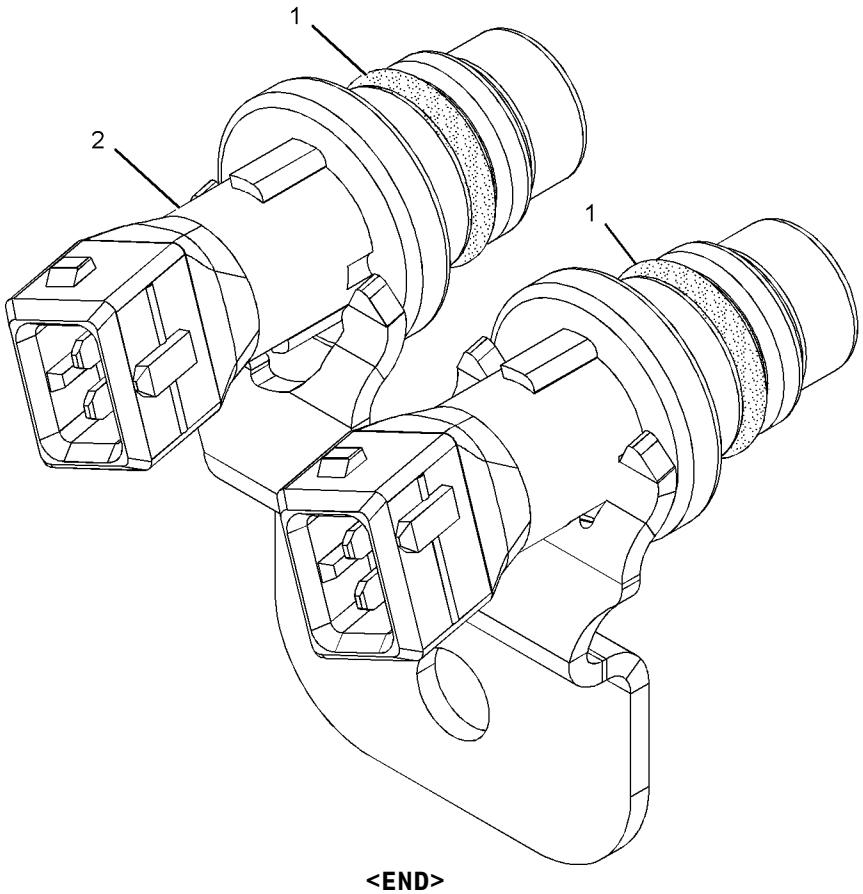

GRAPHIC #1 **<END>** g01013894

290-5792 SENSOR GP-SPEED

S/N: DMJ1-UP

PART OF 277-6433 CASE & PARTS GP-PLANETARY

SMCS-1439, 1907, 1912, 3141, 3175, 4803 **i02836788**

NOTE	REF NO	GRAPHIC REF	PART NUMBER	QTY	PART NAME 1 2 3 4 5 6 (PRODUCT LEVEL)	SEE PAGE
	1	1	**171-5349**	1	STRAP-MARKER	
	2	1	**102-8802**	1	KIT-RECEPTACLE (2-PIN)	
					(INCLUDES RECEPTACLE AS & WEDGE)	
	3	1	**186-3735**	2	PIN-CONNECTOR (16-GA TO 18-GA)	
E	4	1	**9X-1813**		SLEEVE (14-CM)	

E-ORDER BY THE CENTIMETER

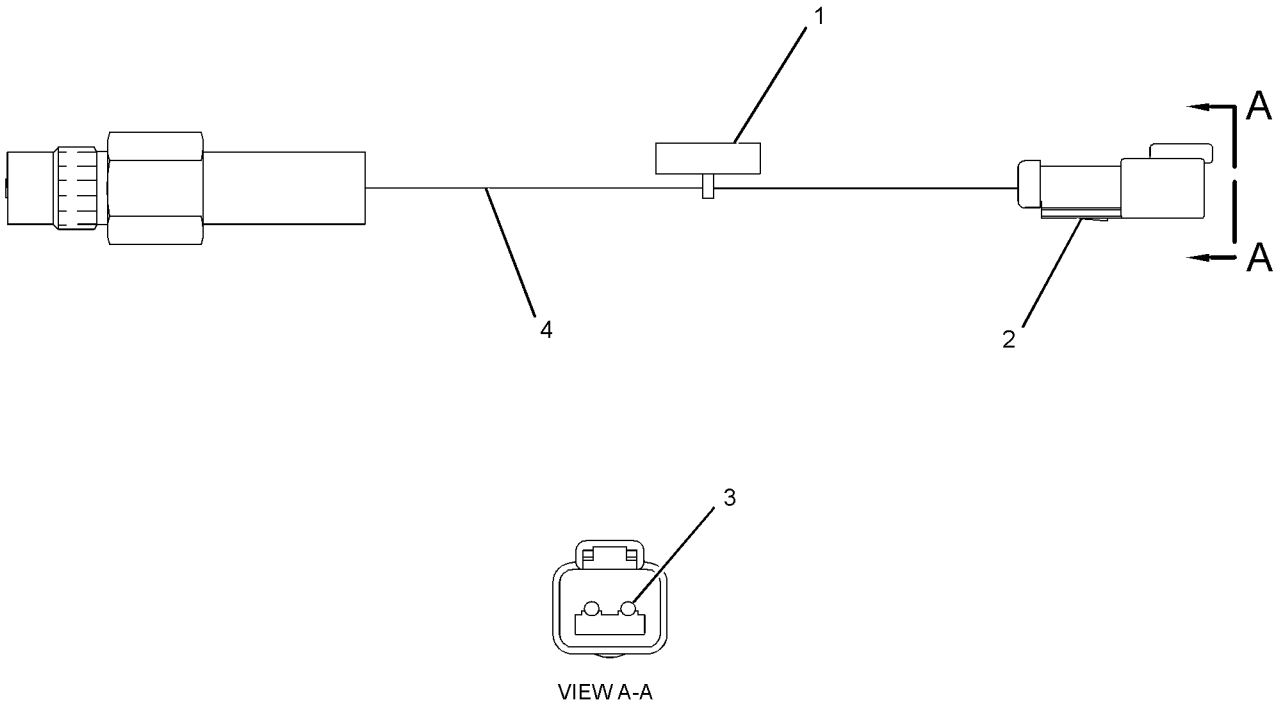

GRAPHIC #1 **<END>** g01409880

3E-8700 SENSOR GP-TEMPERATURE

S/N: DMJ1-UP

PART OF 277-6433 CASE & PARTS GP-PLANETARY

SMCS-1087, 1439, 1906, 1919, 1921, 1922, 1928, 1929, 192T, 1932, 301T, 3194, 3290, 429T, 509T, 7344

i03537155

NOTE	REF NO	GRAPHIC REF	PART NUMBER	QTY	PART NAME 1 2 3 4 5 6 (PRODUCT LEVEL)	SEE PAGE
	1	1	**186-3736**	3	SOCKET-CONNECTOR (16-GA TO 18-GA)	
	2	1	**155-2260**	1	KIT-CONNECTING PLUG (3-PIN)	
					(INCLUDES PLUG AS & WEDGE)	
E	3	1	**9X-1813**		SLEEVE (31-CM)	

E-ORDER BY THE CENTIMETER

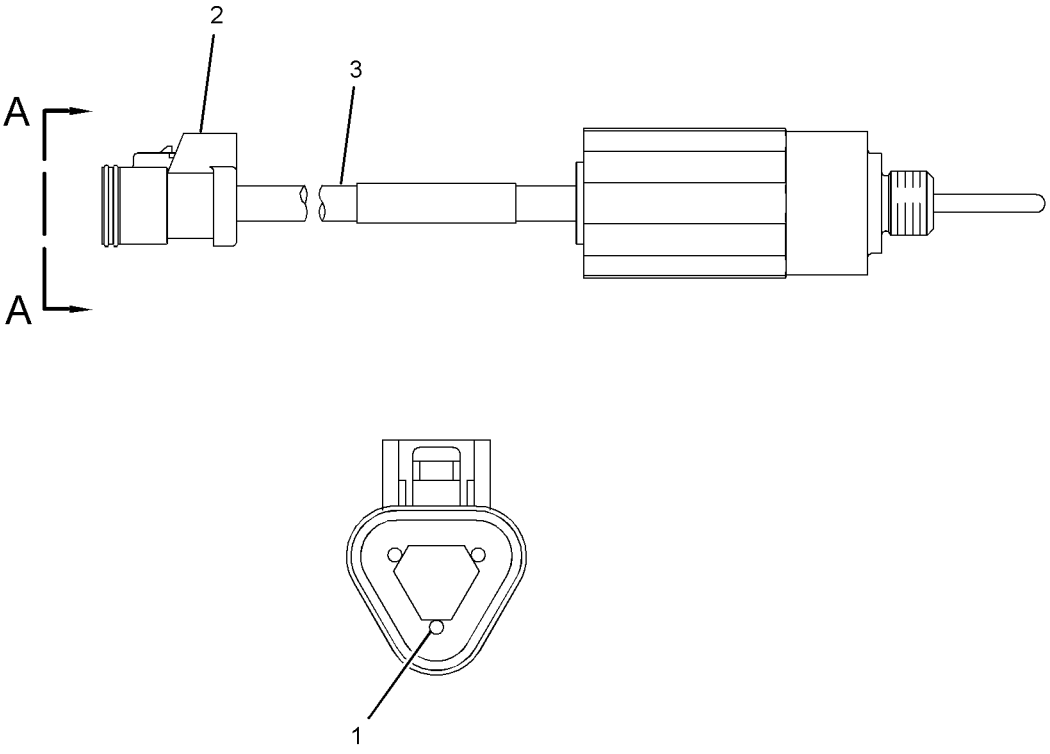

VIEW A-A

GRAPHIC #1

<END>

g01871960

234-5013 SENSOR GP-TEMPERATURE

S/N: JJA1-UP
AMPSEAL CONNECTOR
PART OF 311-2770 LINES GP-FUEL

SMCS-1087, 1439, 1906, 1919, 1921, 1922, 1928, 1929, 192T, 1932, 301T, 3194, 3290, 429T, 509T, 7344 **i03497285**

NOTE	REF NO	GRAPHIC REF	PART NUMBER	QTY	PART NAME 1 2 3 4 5 6 (PRODUCT LEVEL)	SEE PAGE
	1	1	**256-6453**	1	SENSOR AS-TEMPERATURE	
	2	1	**8L-2786**	1	SEAL-O-RING	

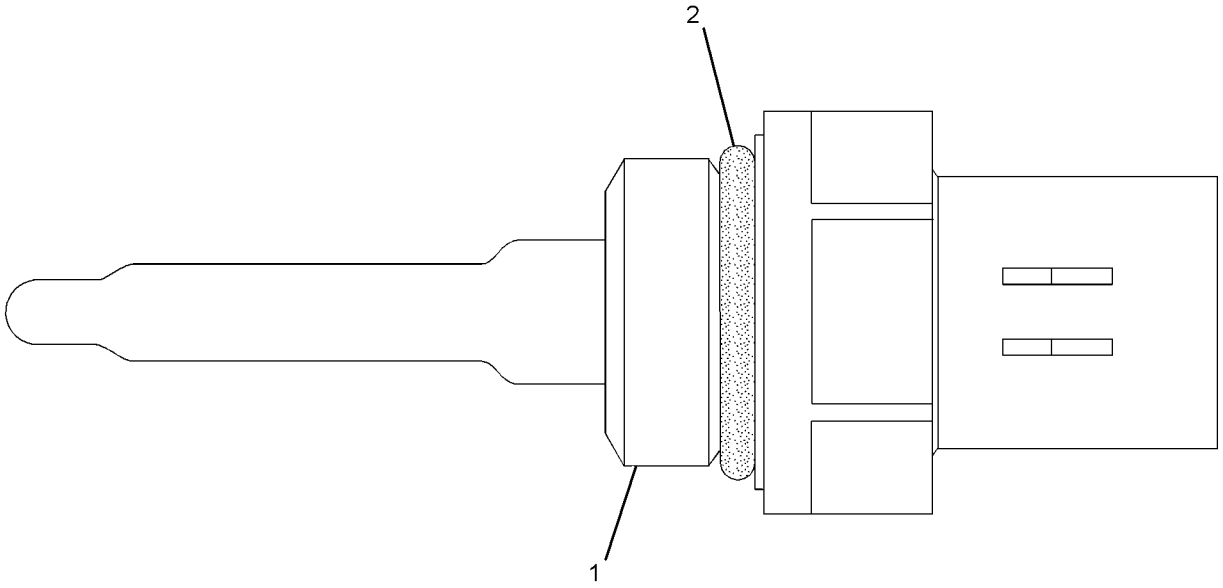

GRAPHIC #1 **<END>** g01164268

274-7395 SENSOR GP-TEMPERATURE

S/N: KHX14117-UP

PART OF 297-5355 SENSOR GP-ENGINE

SMCS-1087, 1439, 1906, 1919, 1921, 1922, 1928, 1929, 192T, 1932, 301T, 3194, 3290, 429T, 509T, 7344

i03435385

NOTE	REF NO	GRAPHIC REF	PART NUMBER	QTY	PART NAME 1 2 3 4 5 6 (PRODUCT LEVEL)	SEE PAGE
	1	1	**264-4297**	1	SENSOR GP-TEMPERATURE	
		1	**137-6645**	1	PAD	
	2	1	**8L-2786**	1	SEAL-O-RING	

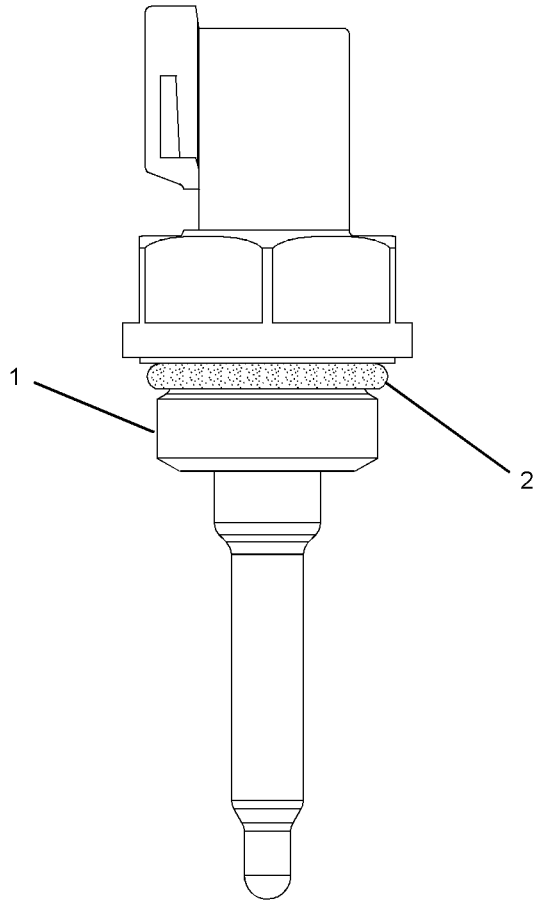

GRAPHIC #1

<END>

g01353734

274-7396 SENSOR GP-TEMPERATURE

S/N: KHX14117-UP

PART OF 297-5355 SENSOR GP-ENGINE

SMCS-1087, 1439, 1906, 1919, 1921, 1922, 1928, 1929, 192T, 1932, 301T, 3194, 3290, 429T, 509T, 7344 **i03435390**

NOTE	REF NO	GRAPHIC REF	PART NUMBER	QTY	PART NAME 1 2 3 4 5 6 (PRODUCT LEVEL)	SEE PAGE
	1	1	**264-4297**	1	SENSOR GP-TEMPERATURE	
		1	**137-6645**	1	PAD	
	2	1	**6V-6609**	1	SEAL-O-RING	

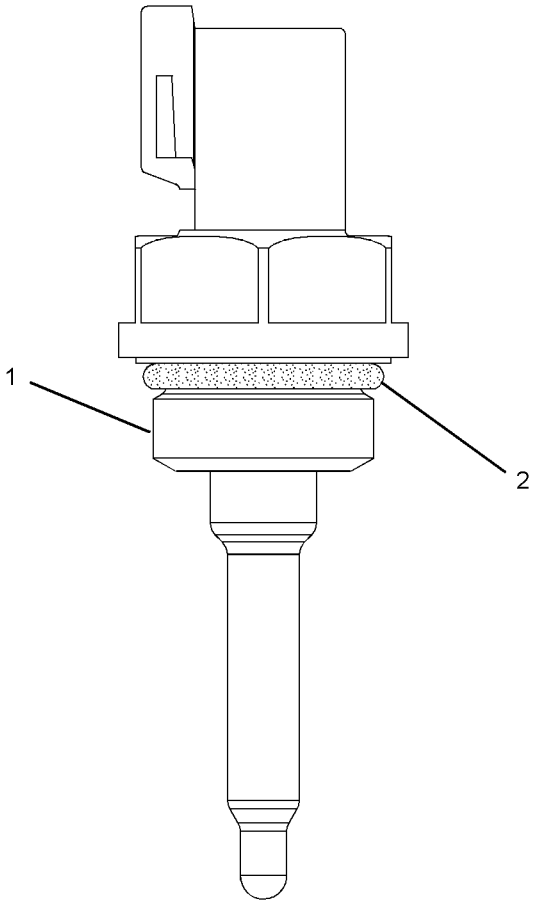

GRAPHIC #1 **<END>** g01353734

311-2771 STARTING AID GP-ETHER

S/N: JJA1-UP
PART OF 339-4969, 339-4970 OPTION AR-ENGINE
AN ATTACHMENT

SMCS-1456 **i03251801**

NOTE	REF NO	GRAPHIC REF	PART NUMBER	QTY	PART NAME 1 2 3 4 5 6 (PRODUCT LEVEL)	SEE PAGE
	1	1	**7N-2059**	1	CLAMP AS	
Y	2	1	**239-1134**	1	VALVE GP-ETHER STARTING (24-VOLT)	183
	3	1	**241-4194**	1	FITTING AS (CONTROL)	
	4	1	**258-0733**	1	ATOMIZER AS	
		1	**236-4545**	1	NUT-SLEEVE (5/16-24-THD)	
	5	1	**124-2528**	2	SPACER (11X20X10-MM THK)	
	6	1	**3J-1907**	1	SEAL-O-RING	
	7	1	**3Y-2888**	1	CONNECTOR	
	8	1	**5P-4116**	1	WASHER-HARD (8.8X20.5X2-MM THK)	
	9	1	**6V-2686**	3	CLIP	
M	10	1	**8T-4136**	2	BOLT (M10X1.5X25-MM)	
M	11	1	**8T-4200**	5	BOLT (M8X1.25X16-MM)	
	12	1	**8T-4224**	4	WASHER-HARD (8.8X16X2-MM THK)	
J	13	1	**5P-5630**		TUBE (9-DM)	
A			**275-3634**	1	CYLINDER AS-ETHER (U.S.)	
					(MUST BE PROCURED LOCALLY FROM YOUR CATERPILLAR DEALER)	

A-NOT PART OF THIS GROUP
J-ORDER BY THE DECIMETER
M-METRIC PART
Y-SEPARATE ILLUSTRATION

311-2771 **STARTING AID GP-ETHER** *(contd.)* **i03251801**

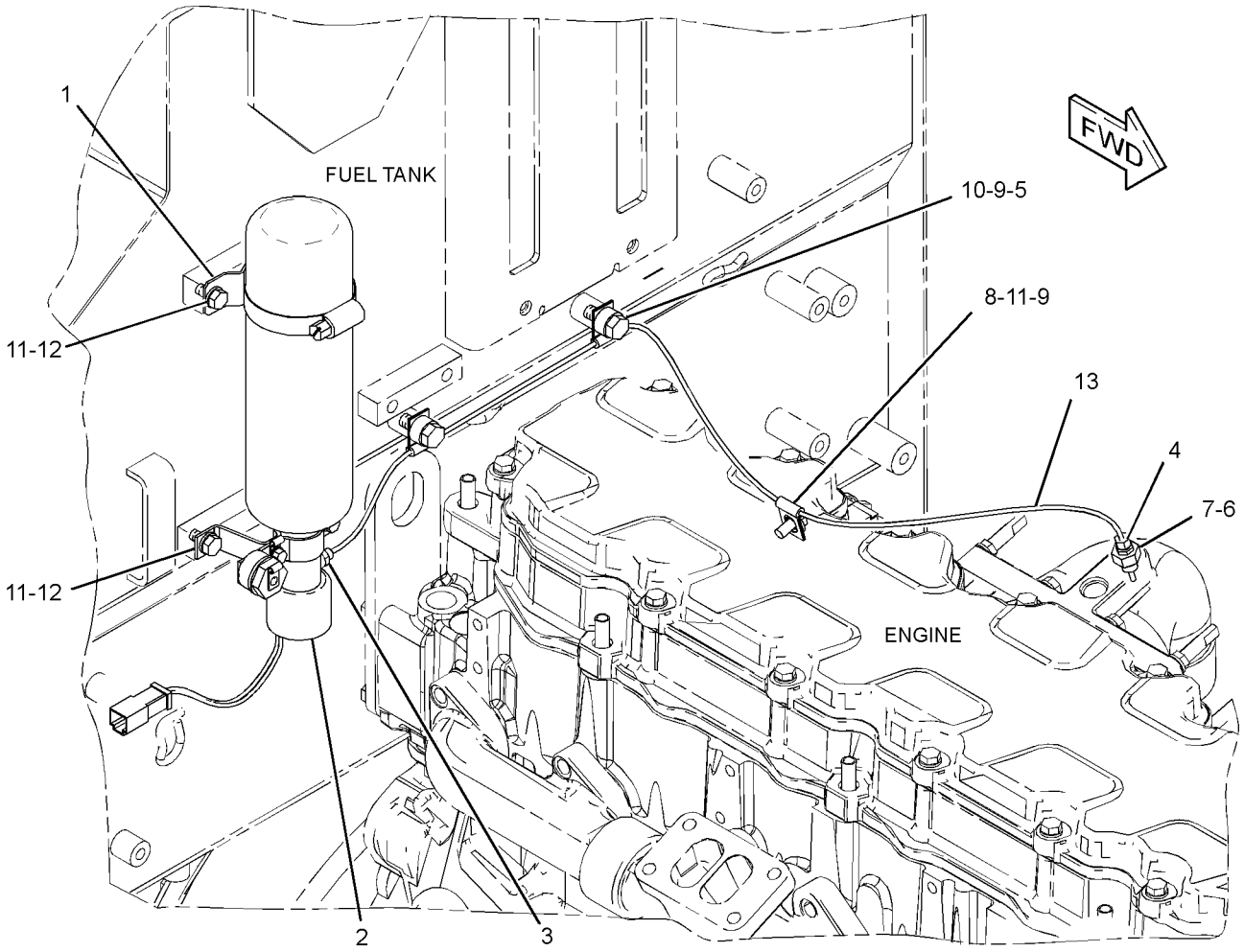

GRAPHIC #1 **<END>** g01731999

ELECTRICAL AND STARTING SYSTEM

347-7898 STARTING MOTOR GP-ELECTRIC

S/N: KHX14117-UP

PART OF 325-9710 ENGINE AR-COMPLETE

SMCS-1453 **i03626999**

NOTE	REF NO	GRAPHIC REF	PART NUMBER	QTY	PART NAME 1 2 3 4 5 6 (PRODUCT LEVEL)	SEE PAGE
	1	1	**3K-3257**	1	GASKET	
	2	1	**134-2730**	1	WIRE AS	
	3	1	**339-5406**	1	STARTING MOTOR GP-ELECTRIC	
M	4	1	**118-9573**	3	BOLT-12 POINT HEAD (M10X1.5X35-MM)	
	5	1	**6V-5839**	3	WASHER (11X21X2.5-MM THK)	
	6	1	**8T-4121**	1	WASHER-HARD (11X21X2.5-MM THK)	
M	7	1	**8T-4191**	1	BOLT (M10X1.5X16-MM)	

M-METRIC PART

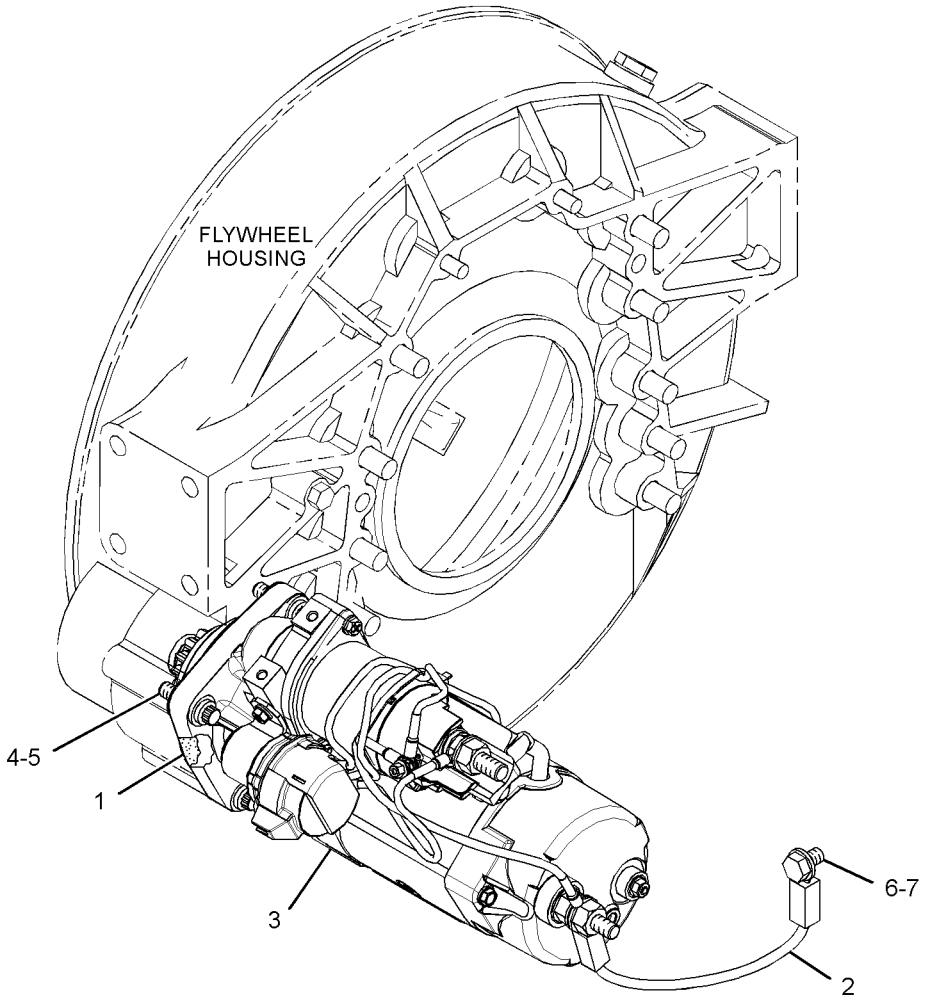

GRAPHIC #1 **<END>** g01947835

164-7577 SWITCH GP-BYPASS–POWER TRAIN OIL FILTER

S/N: JJA1-UP

PART OF 333-9308 BASE GP-OIL FILTER

SMCS-1408, 1435 **i02891455**

NOTE	REF NO	GRAPHIC REF	PART NUMBER	QTY	PART NAME 1 2 3 4 5 6 (PRODUCT LEVEL)	SEE PAGE
BE	1	1	**9X-1813**		SLEEVE	
	2	1	**102-8802**	1	KIT-RECEPTACLE (2-PIN)	
					(INCLUDES RECEPTACLE AS & WEDGE)	
	3	1	**186-3735**	2	PIN-CONNECTOR (16-GA TO 18-GA)	
	4	1	**3E-3365**	1	WEDGE-RECEPTACLE LOCK (2-PIN)	
	5	1	**3D-2824**	1	SEAL-O-RING	
Z	6	1		1	SWITCH AS	

B-USE AS REQUIRED
E-ORDER BY THE CENTIMETER
Z-NOT SERVICED SEPARATELY

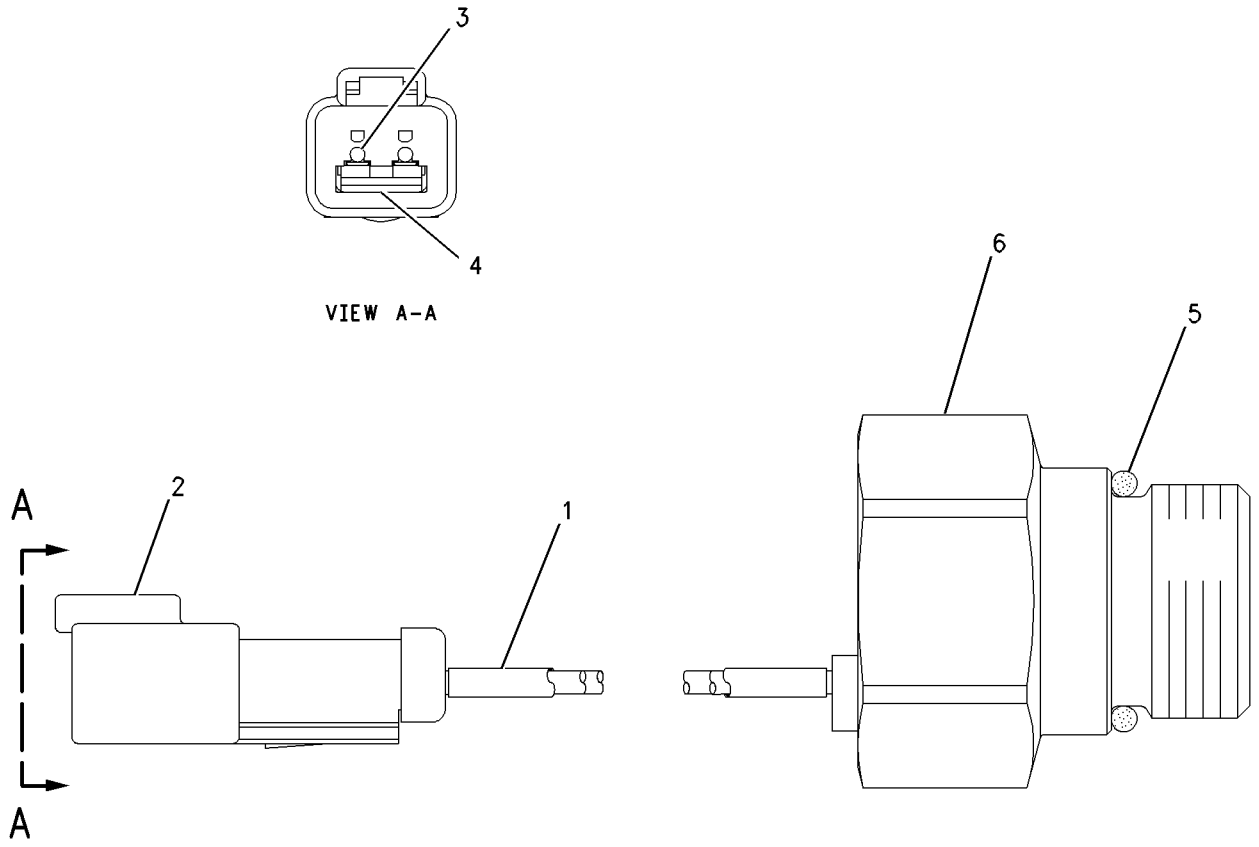

GRAPHIC #1 **<END>** g00750019

7N-0718 SWITCH GP-DISCONNECT–BATTERY

S/N: JJA1-UP
12-VOLT
PART OF 311-0802 WIRING GP-AUXILIARY

SMCS-1411 **i02587657**

NOTE	REF NO	GRAPHIC REF	PART NUMBER	QTY	PART NAME 1 2 3 4 5 6 (PRODUCT LEVEL)	SEE PAGE
	1	1	**8H-5306**	1	KEY (BATTERY DISCONNECT)	
	2	1	**8H-5303**	1	NUT (3/4-16-THD)	
	3	1	**2H-3922**	2	LOCKWASHER	
	4	1	**9F-5644**	2	LOCKWASHER	
	5	1	**6F-7045**	2	NUT-FULL (3/8-24-THD)	

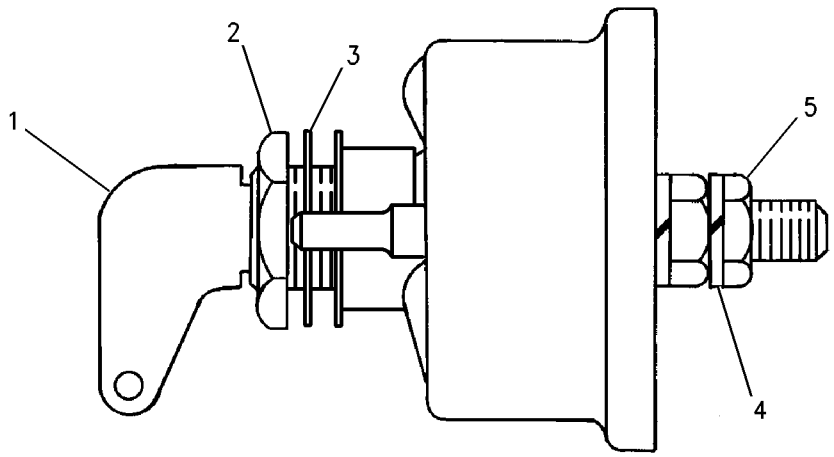

GRAPHIC #1 **<END>** g00715584

294-8641 SWITCH GP-LIGHT–TURN

S/N: JJA1-UP
PART OF 294-8545 LIGHTING AR-ROADING
AN ATTACHMENT

SMCS-1429, 1430, 7332 **i03643700**

NOTE	REF NO	GRAPHIC REF	PART NUMBER	QTY	PART NAME 1 2 3 4 5 6 (PRODUCT LEVEL)	SEE PAGE
	1	1	**8X-5153**	1	FILM-FACE (TURN SIGNAL, HAZARD)	
	2	1	**8X-5154**	1	FILM-FACE (HEADLIGHTS HIGH, LOW BEAM)	
	3	1	**9W-1442**	1	FUSE (10-AMPERE)	
	4	1	**9W-1441**	1	FUSE (15-AMPERE)	
	5	1	**108-0358**	1	FLASHER AS (24-VOLT)	
	6	1	**173-3064**	1	SWITCH GP-ROTARY (TURN SIGNAL, HAZARD)	
		1	**5L-7200**	1	SCREW (8-32X0.375-IN)	
		1	**9B-7233**	1	LOCKWASHER	
	7	1	**103-5678**	1	SWITCH AS-ROTARY (HIGH, LOW BEAM)	
		1	**5L-7200**	1	SCREW (8-32X0.375-IN)	
		1	**9B-7233**	1	LOCKWASHER	
	8	1	*3E-9317*	1	SWITCH AS-ROCKER (24-VOLT)	
		1	**3E-8772**	1	SWITCH-ROCKER (AIR CONDITIONER, HEATER)	
		1	**3E-8825**	1	LAMP (24-VOLT)	
		1	**3E-9326**	1	ACTUATOR	
M	9	1	**5C-2890**	2	NUT (M6X1-THD)	
	10	1	**8T-4205**	2	WASHER-HARD (7.2X14.5X2-MM THK)	
	11	1	**8X-6296**	2	LEVER	
M	12	1	**9X-2043**	2	SCREW-TRUSS HEAD (M6X1X14-MM)	

M-METRIC PART

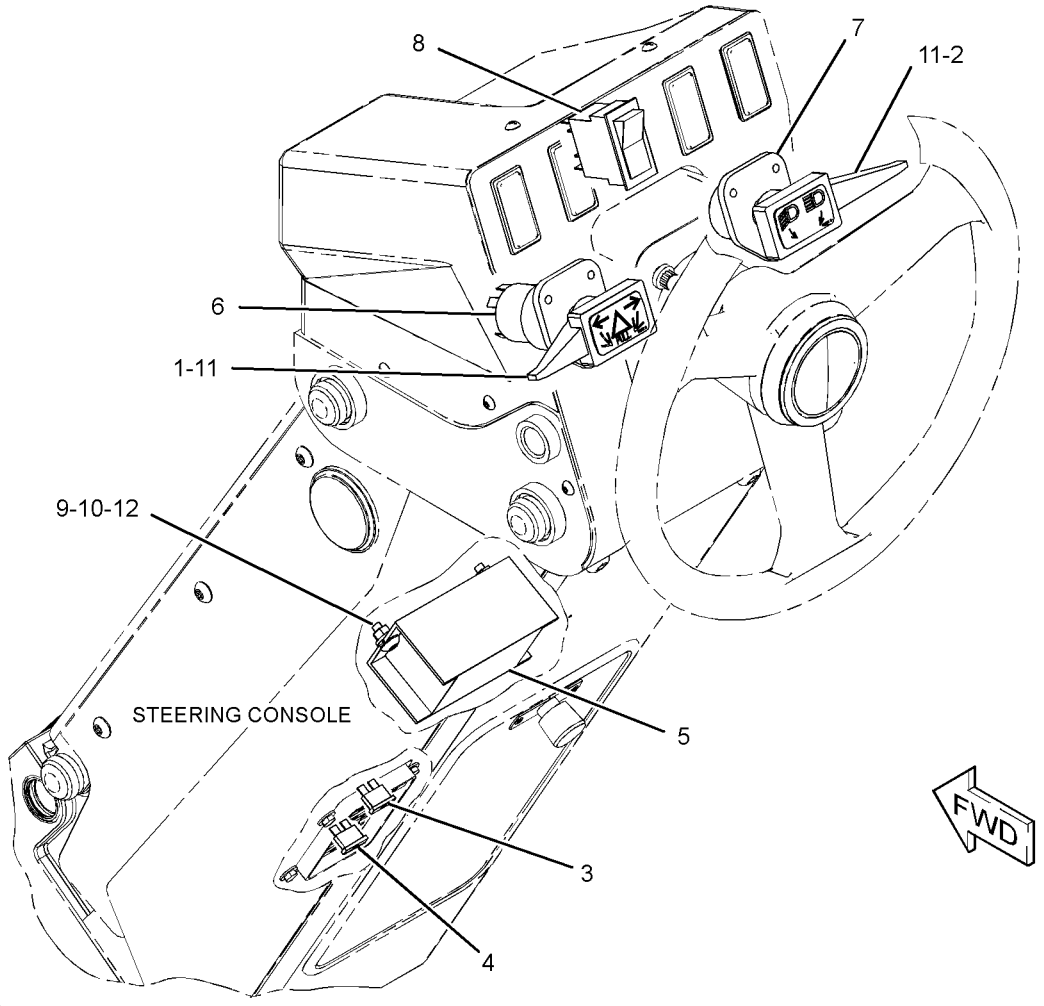

GRAPHIC #1 **<END>** g01697573

241-8368 SWITCH GP-MAGNETIC

S/N: JJA1-UP
24-VOLT
PART OF 311-0802 WIRING GP-AUXILIARY

SMCS-7499 **i02290099**

NOTE	REF NO	GRAPHIC REF	PART NUMBER	QTY	PART NAME 1 2 3 4 5 6 (PRODUCT LEVEL)	SEE PAGE
	1	1	**155-2270**	1	KIT-CONNECTING PLUG (2-PIN)	
					(INCLUDES PLUG AS, WEDGE & INTERFACE SEAL)	
	2	1	**4F-2294**	2	NUT-JAM (5/16-24-THD)	
	3	1	**186-3736**	2	SOCKET-CONNECTOR (16-GA TO 18-GA)	

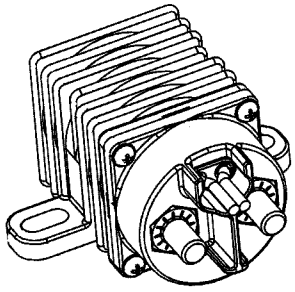

ISOMETRIC VIEW

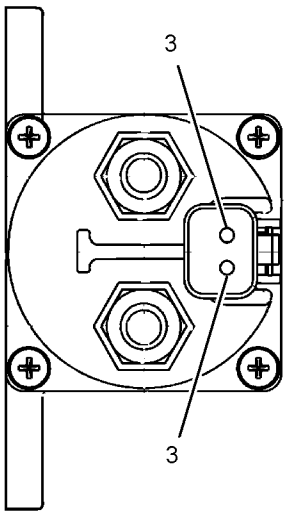

VIEW A-A

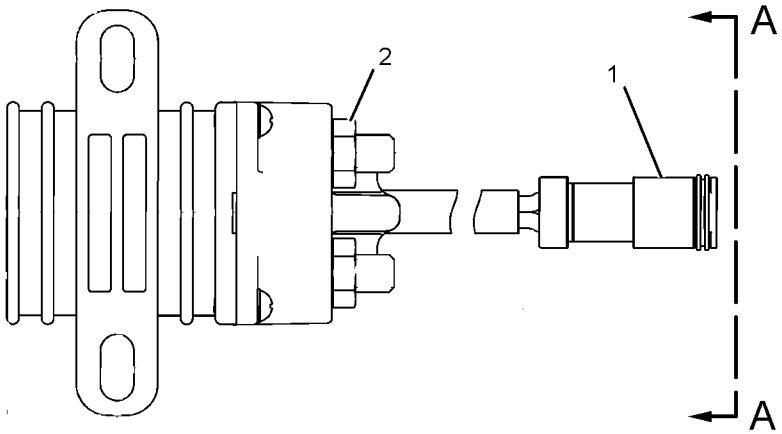

GRAPHIC #1 **<END>** g01077362

275-1253 SWITCH GP-PRESSURE–DIFFERENTIAL

S/N: JJA1-UP

PART OF 311-2770 LINES GP-FUEL

SMCS-1435 **i03525026**

NOTE	REF NO	GRAPHIC REF	PART NUMBER	QTY	PART NAME 1 2 3 4 5 6 (PRODUCT LEVEL)	SEE PAGE
	1	1	**230-4011**	1	PLUG AS-CONNECTOR (2-PIN)	
		1	**264-7029**	1	SEAL-CONNECTOR	
E	2	1	**9X-1813**		SLEEVE (14-CM)	
	3	1	**6V-4589**	1	SEAL-O-RING	
	4	1	**9X-7737**	1	SEAL-O-RING	
	5	1	**9X-3401**	2	PIN-CONNECTOR (16-GA TO 18-GA)	

E-ORDER BY THE CENTIMETER

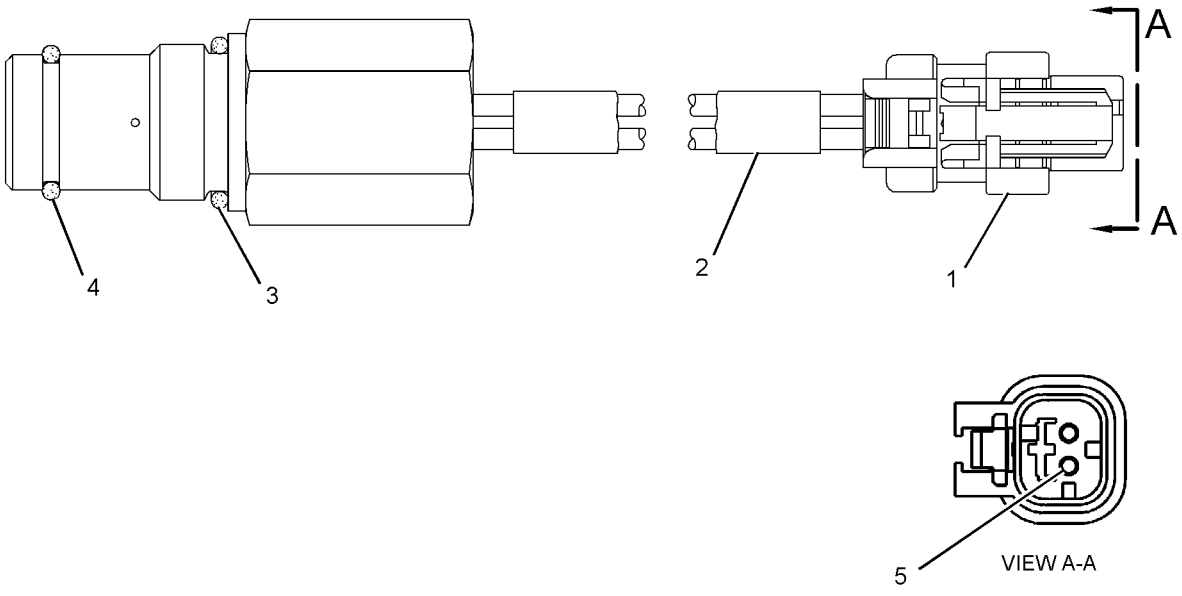

GRAPHIC #1 **<END>** g01238534

275-7741 SWITCH GP-WIPER–INTERMITTENT

S/N: JJA1-UP
24-VOLT
PART OF 275-7764 SWITCH GP-WIPER, 286-4823 WIPER GP-WINDOW
AN ATTACHMENT

SMCS-7305, 7332 **i02992478**

NOTE	REF NO	GRAPHIC REF	PART NUMBER	QTY	PART NAME 1 2 3 4 5 6 (PRODUCT LEVEL)	SEE PAGE
	1	1	**6V-8369**	1	NUT (7/16-28-THD)	
	2	1	**2H-3920**	1	LOCKWASHER	
	3	1	**8T-8737**	2	PLUG-SEAL	
	4	1	**186-3735**	6	PIN-CONNECTOR (16-GA TO 18-GA)	
	5	1	**102-8806**	1	KIT-RECEPTACLE (8-PIN)	
					(INCLUDES RECEPTACLE AS & WEDGE)	

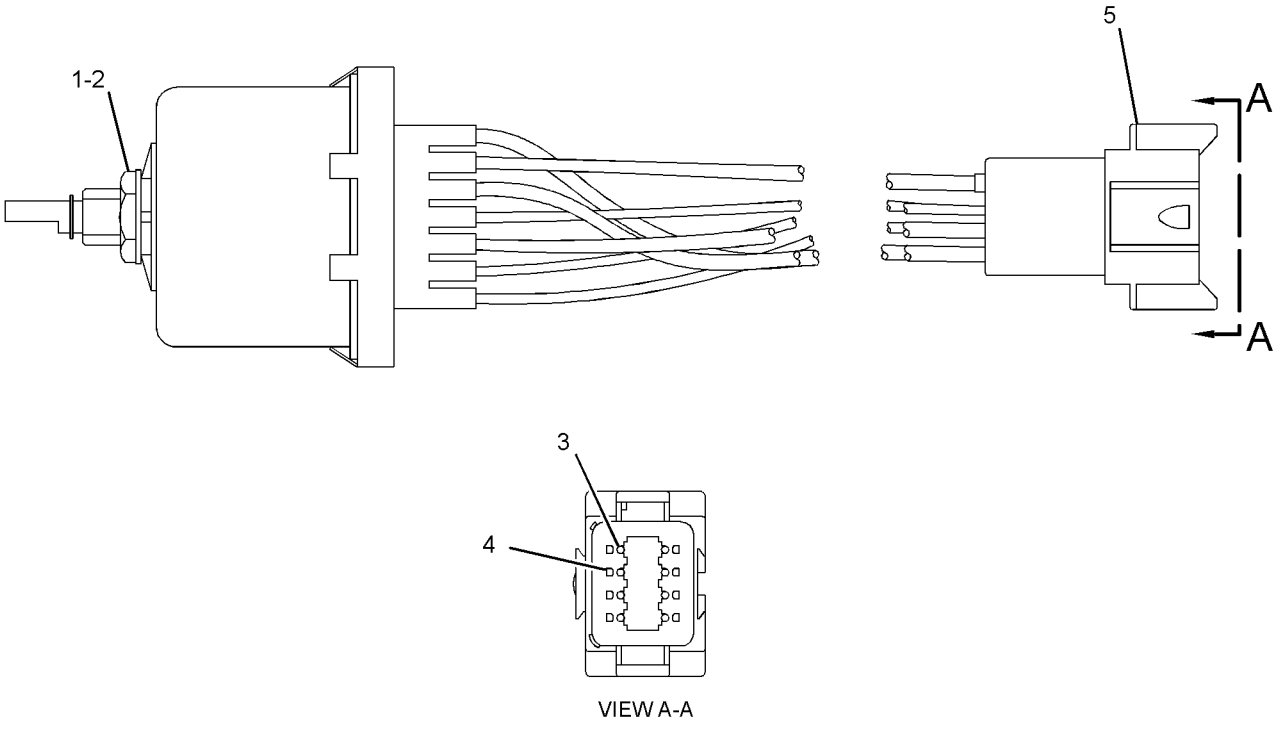

GRAPHIC #1 **<END>** g01445891

275-7764 SWITCH GP-WIPER–INTERMITTENT

S/N: JJA1-UP
24-VOLT
PART OF 286-4825 WIPER GP-WINDOW
AN ATTACHMENT

SMCS-7305, 7332 **i02978860**

NOTE	REF NO	GRAPHIC REF	PART NUMBER	QTY	PART NAME 1 2 3 4 5 6 (PRODUCT LEVEL)	SEE PAGE
Y	1	1	**275-7741**	1	SWITCH GP-WIPER (24-VOLT, INTERMITTENT)	181
	2	1	**7T-9302**	1	KNOB AS-WIPER SWITCH	
		1	**014-0816**	1	SETSCREW (8-32X0.5-IN)	

Y-SEPARATE ILLUSTRATION

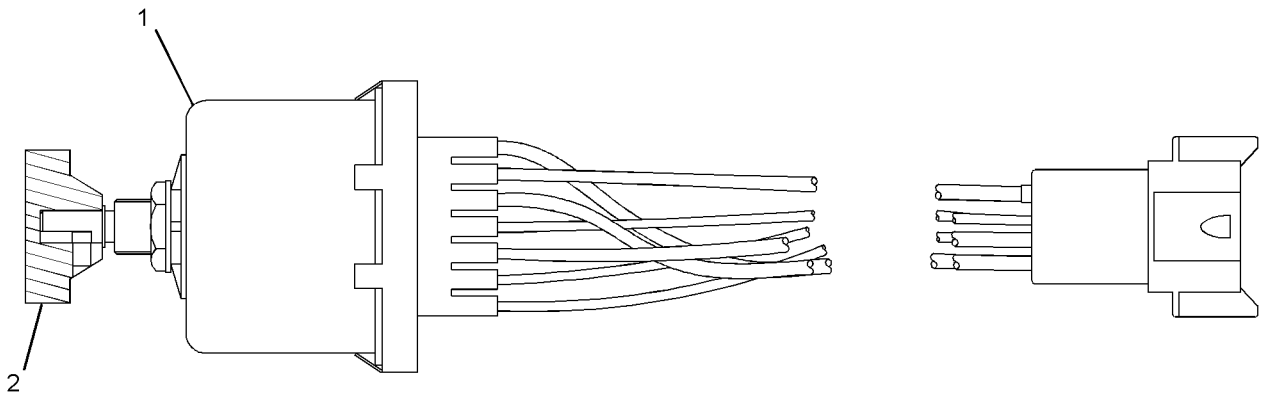

GRAPHIC #1 **<END>** g01516002

239-1134 VALVE GP-ETHER STARTING

S/N: JJA1-UP
24-VOLT
PART OF 311-2771 STARTING AID GP-ETHER
AN ATTACHMENT

SMCS-1456 **i03435882**

NOTE	REF NO	GRAPHIC REF	PART NUMBER	QTY	PART NAME 1 2 3 4 5 6 (PRODUCT LEVEL)	SEE PAGE
	1	1	**7N-9801**	1	GASKET	
	2	1	**102-8802**	1	KIT-RECEPTACLE (2-PIN)	
					(INCLUDES RECEPTACLE AS & WEDGE)	
	3	1	**186-3735**	2	PIN-CONNECTOR (16-GA TO 18-GA)	

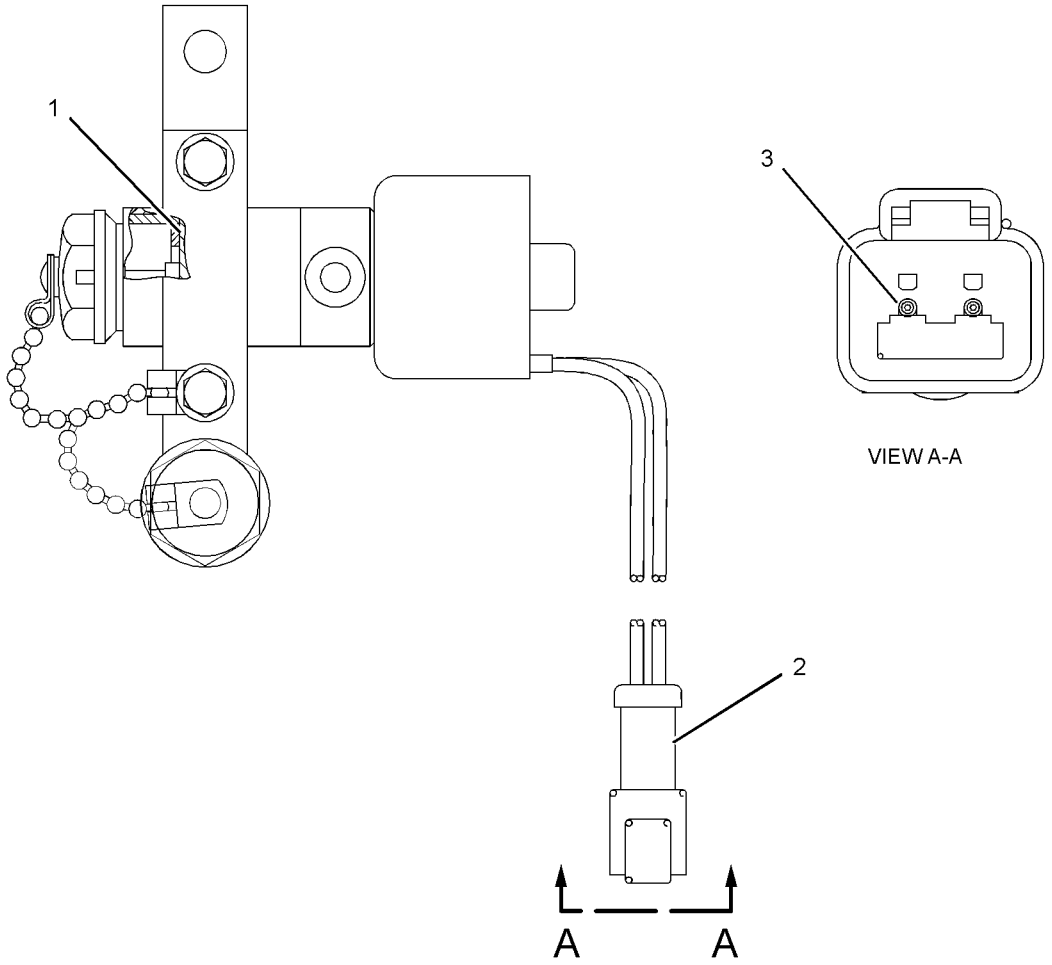

GRAPHIC #1 **<END>** g01375620

311-0803 WIRING GP-AIR CONDITIONER

S/N: JJA1-UP
PART OF 311-2751 AIR CONDITIONER AR
AN ATTACHMENT

SMCS-1408 **i03537709**

NOTE	REF NO	GRAPHIC REF	PART NUMBER	QTY	PART NAME 1 2 3 4 5 6 (PRODUCT LEVEL)	SEE PAGE
	1	1	**169-7443**	1	TIMER AS-ON DELAY (24-VOLT) (AIR CONDITIONER)	
		1	**102-8804**	1	KIT-RECEPTACLE (4-PIN)	
					(INCLUDES RECEPTACLE AS & WEDGE)	
		1	**186-3735**	4	PIN-CONNECTOR (16-GA TO 18-GA)	
	2	1	**313-7755**	1	HARNESS AS-HEATER & AIR COND	
	3	1	**317-8382**	1	BRACKET AS	
	4	1	**132-5789**	1	CLIP	
M	5	1	**8T-4137**	4	BOLT (M10X1.5X20-MM)	
	6	1	**125-8797**	1	CLIP	
	7	1	**130-5300**	4	CLIP	
	8	1	**8T-4121**	5	WASHER-HARD (11X21X2.5-MM THK)	
M	9	1	**8T-4133**	1	NUT (M10X1.5-THD)	
	10	1	**7D-1553**	1	CLIP	
	11	1	**7K-1181**	4	STRAP-CABLE	
	12	1	**8M-2770**	3	CLIP	

M-METRIC PART

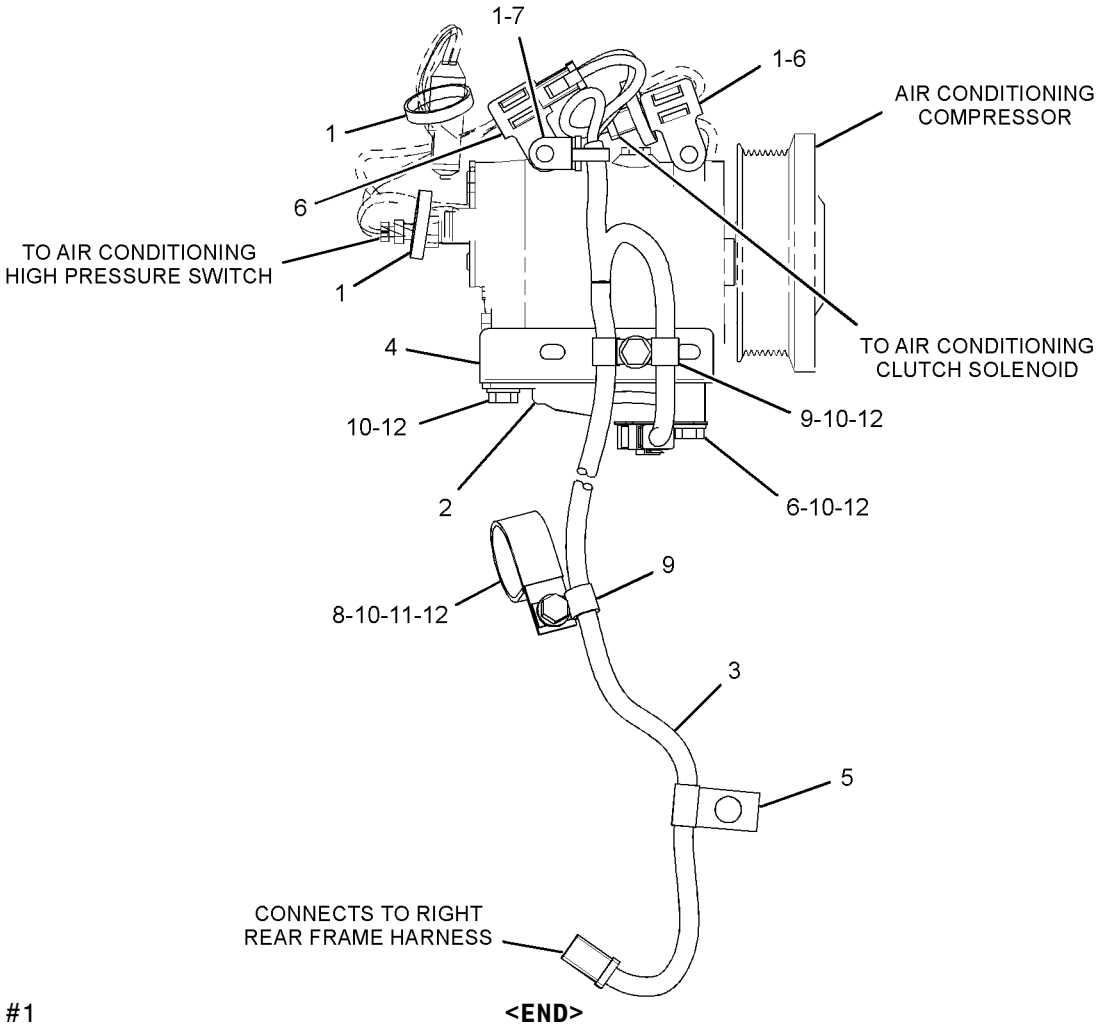

GRAPHIC #1 **<END>** g01859913

311-0802 WIRING GP-AUXILIARY–FUEL TANK

S/N: JJA1-UP

PART OF 346-3710 GENERAL AR

SMCS-1408 **i03641513**

NOTE	REF NO	GRAPHIC REF	PART NUMBER	QTY	PART NAME 1 2 3 4 5 6 (PRODUCT LEVEL)	SEE PAGE
	1	1	**3E-5239**	1	RELAY AS (24-VOLT)	
	2	1	**4S-5719**	1	SPACER (10.31X25X12.7-MM THK)	
	3	1	**6V-4283**	1	PLATE-IDENTIFICATION (ALTERNATOR RESET)	
	4	1	**6V-7555**	1	STRAP-CABLE	
	5	1	**7K-1181**	11	STRAP-CABLE	
Y	6	1	**7N-0718**	1	SWITCH GP-DISCONNECT (BATTERY)	177
	7	1	**9C-5344**	1	SPACER (10.5X20X18-MM THK)	
	8	1	**9G-2758**	1	LOCKOUT AS-SWITCH	
	9	1	**135-2543**	2	BOOT (RED)	
	10	1	**171-2212**	1	CIRCUIT BREAKER AS (105-AMPERE) (MAIN)	
	10A	1	**171-2212**	1	CIRCUIT BREAKER AS (105-AMPERE) (ALTERNATOR)	
					(EACH INCLUDES)	
		1	**6V-8187**	2	NUT (1/4-28-THD)	
		1	**8T-4205**	2	WASHER-HARD (7.2X14.5X2-MM THK)	
		1	**253-2111**	2	LOCKWASHER	
	11	1	**186-3223**	1	PLATE AS	
	12	1	**189-0108**	1	PLATE	
Y	13	1	**194-6722**	1	SENSOR GP-PRESSURE (ATMOSPHERIC AIR)	160
	14	1	**204-8000**	1	MOUNT (TIE WRAP)	
Y	15	1	**241-8368**	1	SWITCH GP-MAGNETIC (24-VOLT)	179
	16	1	**289-9354**	1	CABLE AS	
		1	**6V-2369**	1	WIRE (4-GA, BLACK)	
		1	**9G-4343**	1	TERMINAL (4-GA)	
		1	**5P-3454**	1	TERMINAL (4-GA)	
		1	**135-2543**	2	BOOT (RED)	
	17	1	**311-9296**	1	HARNESS AS-FUEL TANK	
		1	**102-8802**	1	KIT-RECEPTACLE (2-PIN)	
		1	**102-8803**	1	KIT-RECEPTACLE (3-PIN)	
		1	**102-8804**	1	KIT-RECEPTACLE (4-PIN)	
		1	**102-8801**	1	KIT-RECEPTACLE (12-PIN)	
					(EACH KIT INCLUDES RECEPTACLE AS & WEDGE)	
		1	**186-3735**	12	PIN-CONNECTOR (16-GA TO 18-GA)	
		1	**186-3736**	9	SOCKET-CONNECTOR (16-GA TO 18-GA)	
		1	**8T-8737**	10	PLUG-SEAL	
E		1	**125-7875**		TUBE-HEAT SHRINK (7.44-MM DIA) (5-CM)	
		1	**155-2270**	1	KIT-CONNECTING PLUG (2-PIN)	
		1	**155-2271**	2	KIT-CONNECTING PLUG (4-PIN)	
					(EACH KIT INCLUDES PLUG AS, WEDGE, & INTERFACE SEAL)	
E		1	**1P-0810**		TAPE-ELECTRICAL (10-CM)	
	18	1	**335-0806**	1	BRACKET AS	
M		1	**8T-3490**	1	NUT-WELD (M10X1.5-THD)	
	19	1	**344-9564**	1	HARNESS AS-SOLENOID	
		1	**102-8802**	1	KIT-RECEPTACLE (2-PIN)	
					(INCLUDES RECEPTACLE AS & WEDGE)	
		1	**186-3735**	2	PIN-CONNECTOR (16-GA TO 18-GA)	
		1	**9X-1054**	1	PLUG AS-CONNECTOR (4-PIN)	
E		1	**125-7874**		TUBE-HEAT SHRINK (5.72-MM DIA) (5-CM)	
	20	1	**124-9633**	1	CLIP	
	21	1	**130-5300**	5	CLIP	
	22	1	**132-5789**	1	CLIP	
	23	1	**332-7657**	1	SENDER AS-FUEL LEVEL	
		1	**102-8802**	1	KIT-RECEPTACLE (2-PIN)	
					(INCLUDES RECEPTACLE AS & WEDGE)	
		1	**186-3735**	2	PIN-CONNECTOR (16-GA TO 18-GA)	
	24	1	**3J-1907**	1	SEAL-O-RING	

311-0802 **WIRING GP-AUXILIARY** *(contd.)* **i03641513**

NOTE	REF NO	GRAPHIC REF	PART NUMBER	QTY	PART NAME 1 2 3 4 5 6 (PRODUCT LEVEL)	SEE PAGE
	25	1	**4D-7794**	1	CLIP	
M	26	1	**5C-9553**	5	BOLT (M6X1X16-MM)	
	27	1	**5L-4507**	4	SCREW-MACHINE (10-32X0.875-IN)	
M	28	1	**6V-7357**	1	BOLT (M6X1X25-MM)	
	29	1	**6V-7699**	4	WASHER-HARD (5.5X13X1.6-MM THK)	
	30	1	**8T-4121**	8	WASHER-HARD (11X21X2.5-MM THK)	
M	31	1	**8T-4133**	1	NUT (M10X1.5-THD)	
M	32	1	**8T-4136**	2	BOLT (M10X1.5X25-MM)	
M	33	1	**8T-4137**	3	BOLT (M10X1.5X20-MM)	
M	34	1	**8T-4138**	2	BOLT (M6X1X20-MM)	
M	35	1	**8T-4196**	2	BOLT (M10X1.5X35-MM)	
	36	1	**8T-4205**	5	WASHER-HARD (7.2X14.5X2-MM THK)	
	37	1	**9X-8256**	3	WASHER (6.6X12X2-MM THK)	
B	38	1	**8C-8422**		SEALANT	

B-USE AS REQUIRED
E-ORDER BY THE CENTIMETER
M-METRIC PART
Y-SEPARATE ILLUSTRATION

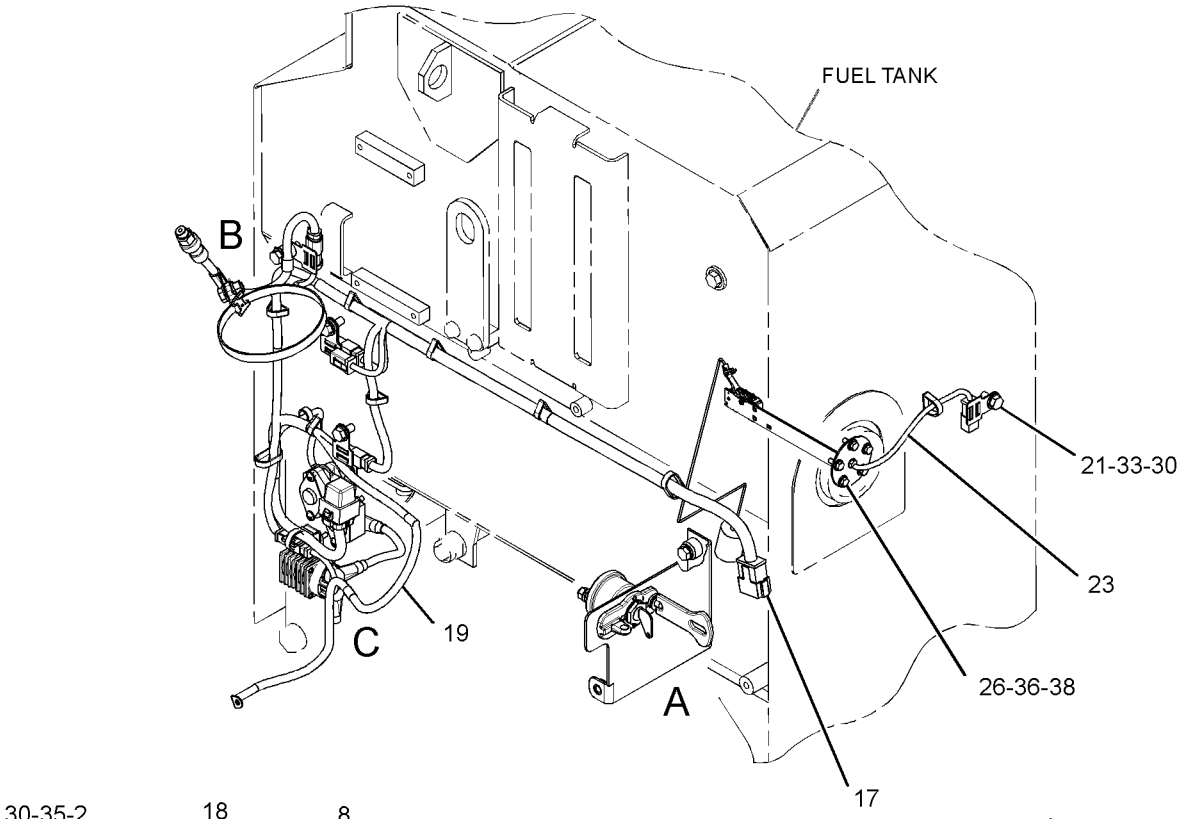

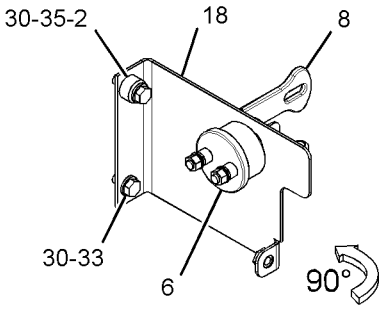

VIEW OF AREA A

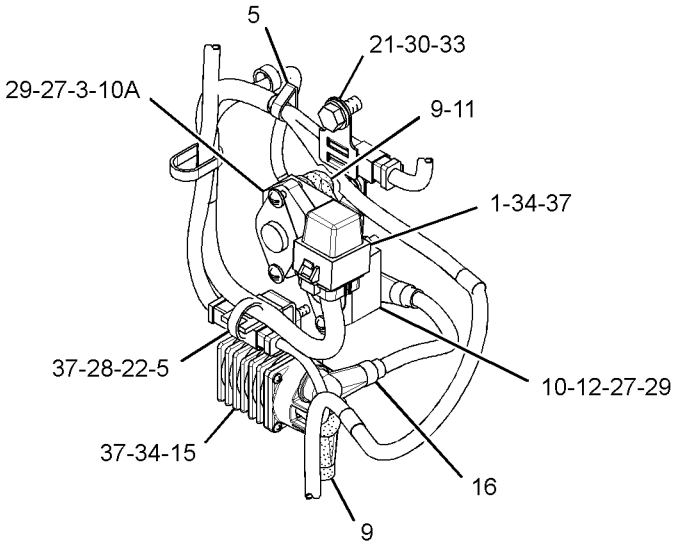

VIEW OF AREA C

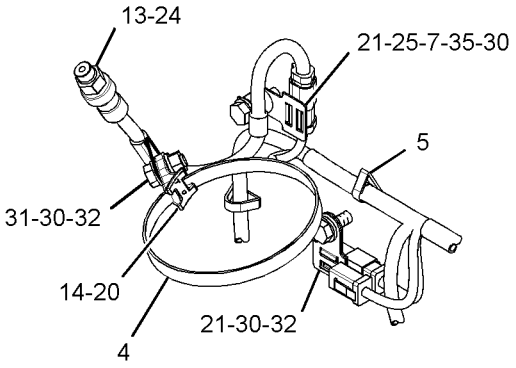

VIEW OF AREA B

GRAPHIC #1 **<END>** g01896753

284-5352 WIRING GP-BLADE CUSHION

S/N: JJA1-UP
PART OF 285-4154 ACCUMULATOR AR-BLADE CUSHION
AN ATTACHMENT

SMCS-1408 **i03432001**

NOTE	REF NO	GRAPHIC REF	PART NUMBER	QTY	PART NAME 1 2 3 4 5 6 (PRODUCT LEVEL)	SEE PAGE
	1	1	**335-8402**	1	HARNESS AS-SOLENOID	
	2	1	**033-8248**	2	CLIP	
	3	1	**130-5300**	2	CLIP	
	4	1	**147-0385**	1	CLIP	
	5	1	**4L-6459**	2	BOLT (3/8-16X2.5-IN)	
	6	1	**5P-8167**	1	BOLT (3/8-16X0.625-IN)	
	7	1	**6V-8801**	2	NUT (3/8-16-THD)	
	8	1	**7K-1181**	2	STRAP-CABLE	
	9	1	**8T-4896**	5	WASHER-HARD (10.2X18.5X2.5-MM THK)	
	10	1	*9X-9629*	1	SWITCH AS-ROCKER (24-VOLT) (BLADE CUSHION)	
		1	**3E-8763**	1	SWITCH AS	
		1	**3E-8812**	1	ACTUATOR-ROCKER	
		1	**3E-8825**	1	LAMP (24-VOLT)	

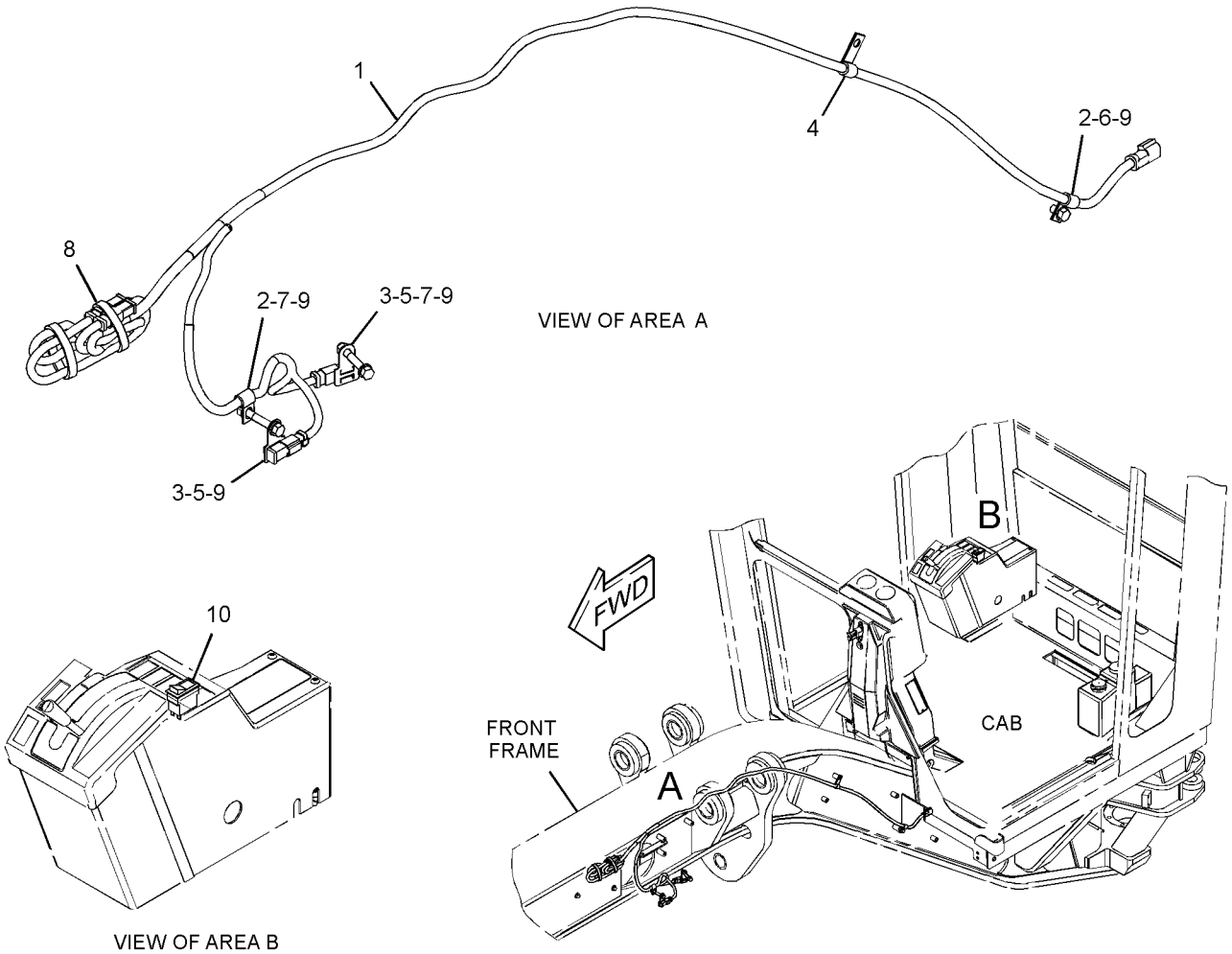

GRAPHIC #1

<END>

g01681934

285-3361 WIRING GP-CAB

S/N: JJA1-UP
PART OF 320-0341 CAB AR, 320-0342 ROPS AR
AN ATTACHMENT

SMCS-1408, 7301 **i03251670**

NOTE	REF NO	GRAPHIC REF	PART NUMBER	QTY	PART NAME 1 2 3 4 5 6 (PRODUCT LEVEL)	SEE PAGE
	1	2	**3E-0109**	3	PLUG (ROCKER SWITCH)	
Y	2	2	**3E-6389**	1	LAMP GP-DOME (24-VOLT)	131
	3	1,2	**3S-2093**	23	STRAP-CABLE	
	4	2	**6V-6578**	2	RIVET-BLIND	
	5	2	**7T-9302**	2	KNOB AS-WIPER SWITCH	
		2	**014-0816**	1	SETSCREW (8-32X0.5-IN)	
	6	2	**9W-1441**	1	FUSE (15-AMPERE)	
	7	2	**112-6174**	2	SWITCH AS-ROTARY (WIPER, WASHER) (FRONT)	
					(EACH INCLUDES)	
		2	**2H-3920**	1	LOCKWASHER	
		2	**3E-3389**	1	WEDGE-RECEPTACLE LOCK	
		2	**6V-8369**	1	NUT (7/16-28-THD)	
		2	**186-3735**	6	PIN-CONNECTOR (16-GA TO 18-GA)	
		2	**8T-8737**	2	PLUG-SEAL	
		2	**102-8806**	1	KIT-RECEPTACLE (8-PIN)	
					(INCLUDES RECEPTACLE AS & WEDGE)	
	8	2	**131-5171**	1	CLIP	
	9	2	**160-6382**	1	GROMMET	
	10	1	**167-7504**	1	HARNESS AS-CAB (SWITCH PANEL)	
	11	1	**167-7505**	1	HARNESS AS-CAB (REAR)	
	12	1	**168-8248**	1	HARNESS AS-CAB (FRONT)	
	13	2	**169-8938**	1	PLATE AS	
	14	2	**172-6555**	1	PANEL	
	15	2	**172-8641**	1	PLATE	
	16	2	**172-9316**	1	FILM-FUSE (PANEL ACTION LAMPS)	
	17	2	**096-6166**	3	WASHER-HARD (4.5X9X1-MM THK)	
M	18	2	**5C-8312**	3	NUT (M4X0.7-THD)	
	19	2	**6V-5645**	4	SCREW-MACHINE (10-32X0.87-IN)	
	20	2	**6V-8801**	1	NUT (3/8-16-THD)	
	21	2	**8T-4896**	1	WASHER-HARD (10.2X18.5X2.5-MM THK)	
M	22	2	**9X-1046**	3	SCREW (M4X0.7X18-MM)	
M	23	2	**9X-2042**	4	SCREW-TRUSS HEAD (M6X1X12-MM)	
E	24	2	**7X-7877**		STRIP-EDGING (10-CM)	

E-ORDER BY THE CENTIMETER
M-METRIC PART
Y-SEPARATE ILLUSTRATION

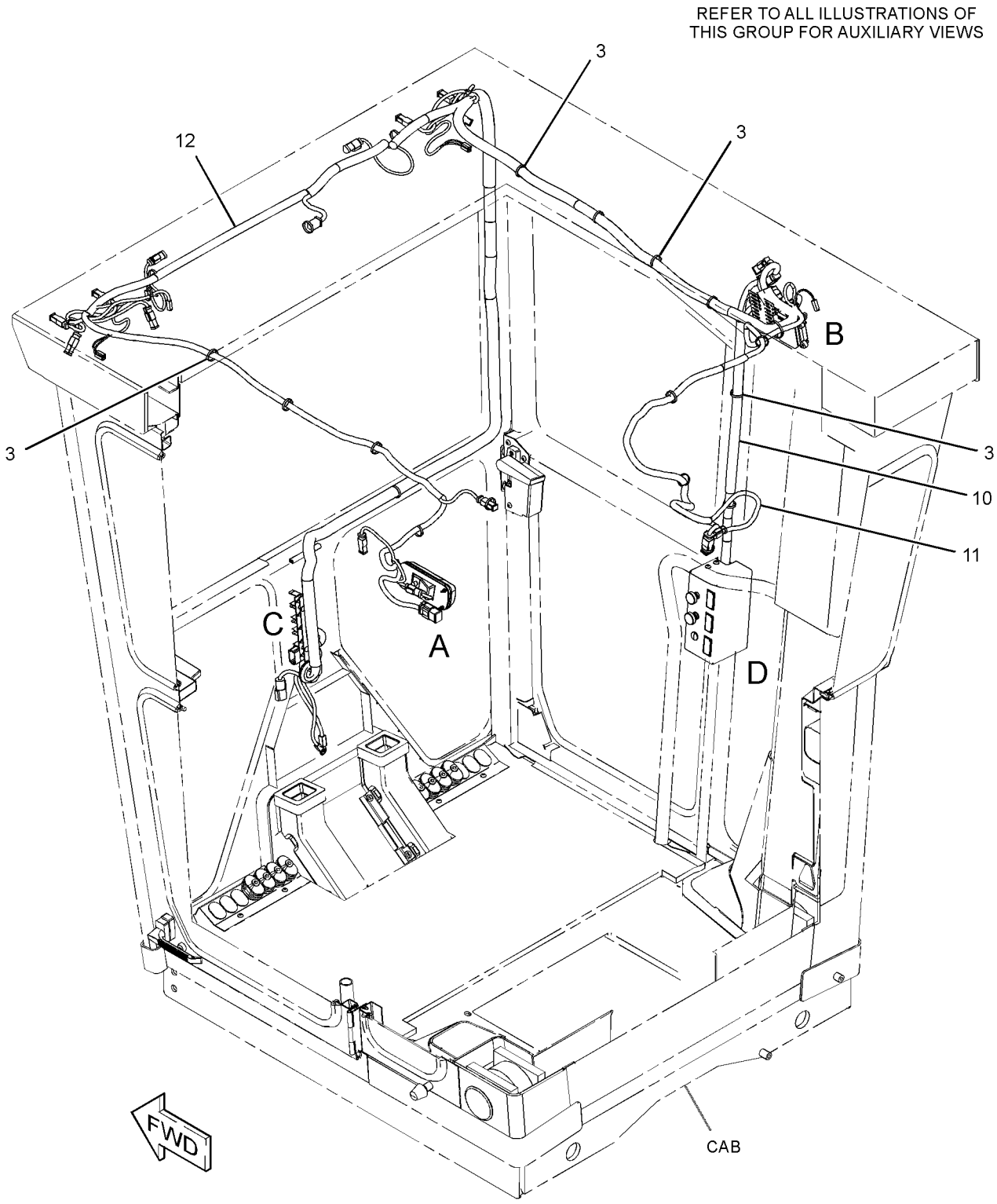

GRAPHIC #1 g01708016

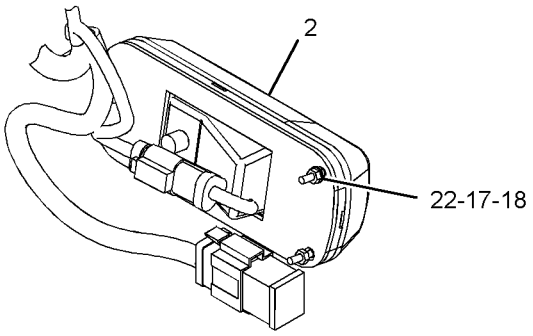

VIEW OF AREA A

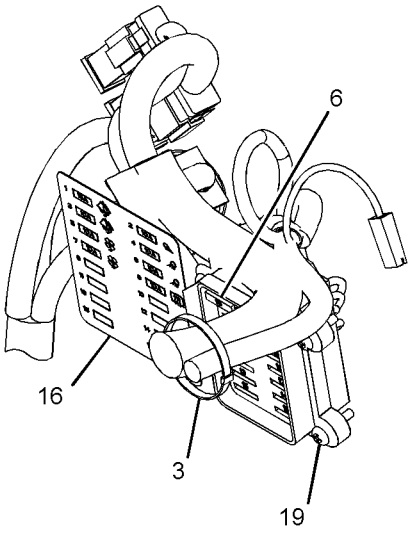

VIEW OF AREA B
(FUSE PANEL COVER REMOVED FOR CLARITY)

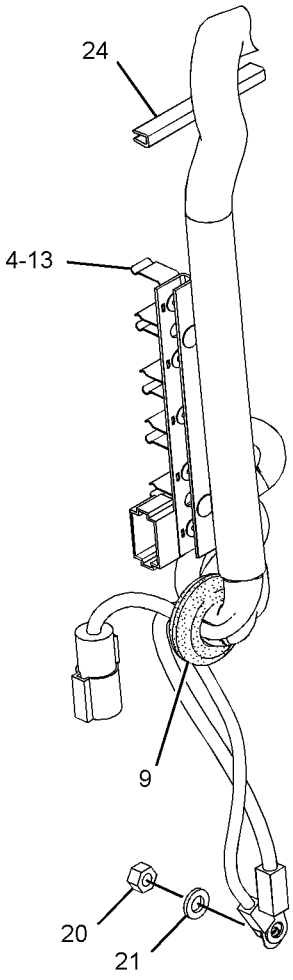

VIEW OF AREA C

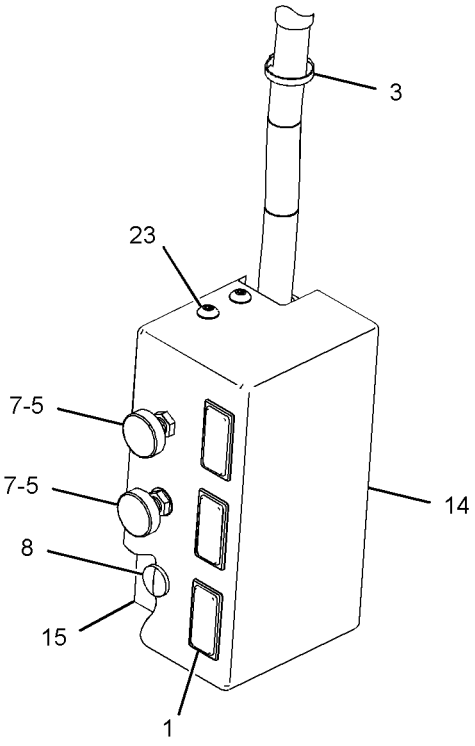

VIEW OF AREA D

GRAPHIC #2 **<END>** g01708015

ELECTRICAL AND STARTING SYSTEM

284-5346 WIRING GP-CONSOLE

S/N: JJA1-UP

PART OF 346-3710 GENERAL AR

SMCS-1408 **i03431980**

NOTE	REF NO	GRAPHIC REF	PART NUMBER	QTY	PART NAME 1 2 3 4 5 6 (PRODUCT LEVEL)	SEE PAGE
	1	1	**3E-0109**	4	PLUG (ROCKER SWITCH)	
Y	2	1	**3E-6328**	1	ALARM GP (24-VOLT) (ACTION)	106
	3	1	**3S-2093**	4	STRAP-CABLE	
	4	1	**5M-3724**	1	BRACKET	
	5	1	**7N-5876**	1	LAMP (24-VOLT, 0.2-AMPERE)	
	6	1	**8C-6354**	1	CAP-RECEPTACLE	
	7	1	**110-7887**	1	SWITCH AS-START (KEY)	
		1	**7T-6799**	1	NUT-MOUNTING (1-32-THD)	
		1	**102-8804**	1	KIT-RECEPTACLE (4-PIN)	
					(INCLUDES RECEPTACLE AS & WEDGE)	
		1	**186-3735**	4	PIN-CONNECTOR (16-GA TO 18-GA)	
	9	1	**169-5414**	3	CLIP	
	10	1	*183-2151*	1	SWITCH AS-ROCKER (24-VOLT) (THROTTLE HOLD MODE)	
		1	**3E-8825**	2	LAMP (24-VOLT)	
		1	**183-2136**	1	ACTUATOR	
		1	**196-7268**	1	SWITCH AS (THROTTLE HOLD MODE)	
	11	1	**185-2197**	1	SWITCH AS-ROCKER (THROTTLE LOCK SET, RESET)	
	12	1	**335-1894**	1	HARNESS AS-CONSOLE	
	13	1	**335-1895**	1	HARNESS AS-CONSOLE	
	14	1	**130-5300**	1	CLIP	
	15	1	**2V-8259**	2	GROMMET	
	16	1	**3E-5239**	1	RELAY AS (24-VOLT)	
	17	1	**4D-7794**	1	CLIP	
	18	1	**4L-6454**	1	BOLT (3/8-16X1-IN)	
	19	1	**4P-7581**	1	CLIP	
M	20	1	**5C-2890**	1	NUT (M6X1-THD)	
M	21	1	**5C-9553**	2	BOLT (M6X1X16-MM)	
	22	1	**5M-3062**	2	BOLT (3/8-16X0.75-IN)	
	23	1	**5S-4246**	4	LOCKWASHER	
	24	1	**6B-4540**	4	NUT (4-40-THD)	
	25	1	**6V-2480**	4	SCREW (4-40X0.5-IN)	
	26	1	**6V-8801**	1	NUT (3/8-16-THD)	
	27	1	**7C-4354**	1	CLIP	
	28	1	**7G-7053**	1	GROMMET	
	29	1	**7X-4743**	1	GROMMET	
	30	1	**8T-4121**	1	WASHER-HARD (11X21X2.5-MM THK)	
M	31	1	**8T-4137**	2	BOLT (M10X1.5X20-MM)	
	32	1	**8T-4896**	5	WASHER-HARD (10.2X18.5X2.5-MM THK)	
	33	1	**9X-8256**	2	WASHER (6.6X12X2-MM THK)	
	34	1	*9X-9634*	1	SWITCH AS-ROCKER (CENTERSHIFT PIN)	
		1	**3E-8817**	1	ACTUATOR	
		1	**3E-8825**	1	LAMP (24-VOLT)	
		1	**3E-9327**	1	SWITCH AS (CENTERSHIFT PIN)	
	35	1	**9R-2620**	1	PLUG	

M-METRIC PART
Y-SEPARATE ILLUSTRATION

284-5346 **WIRING GP-CONSOLE** *(contd.)* **i03431980**

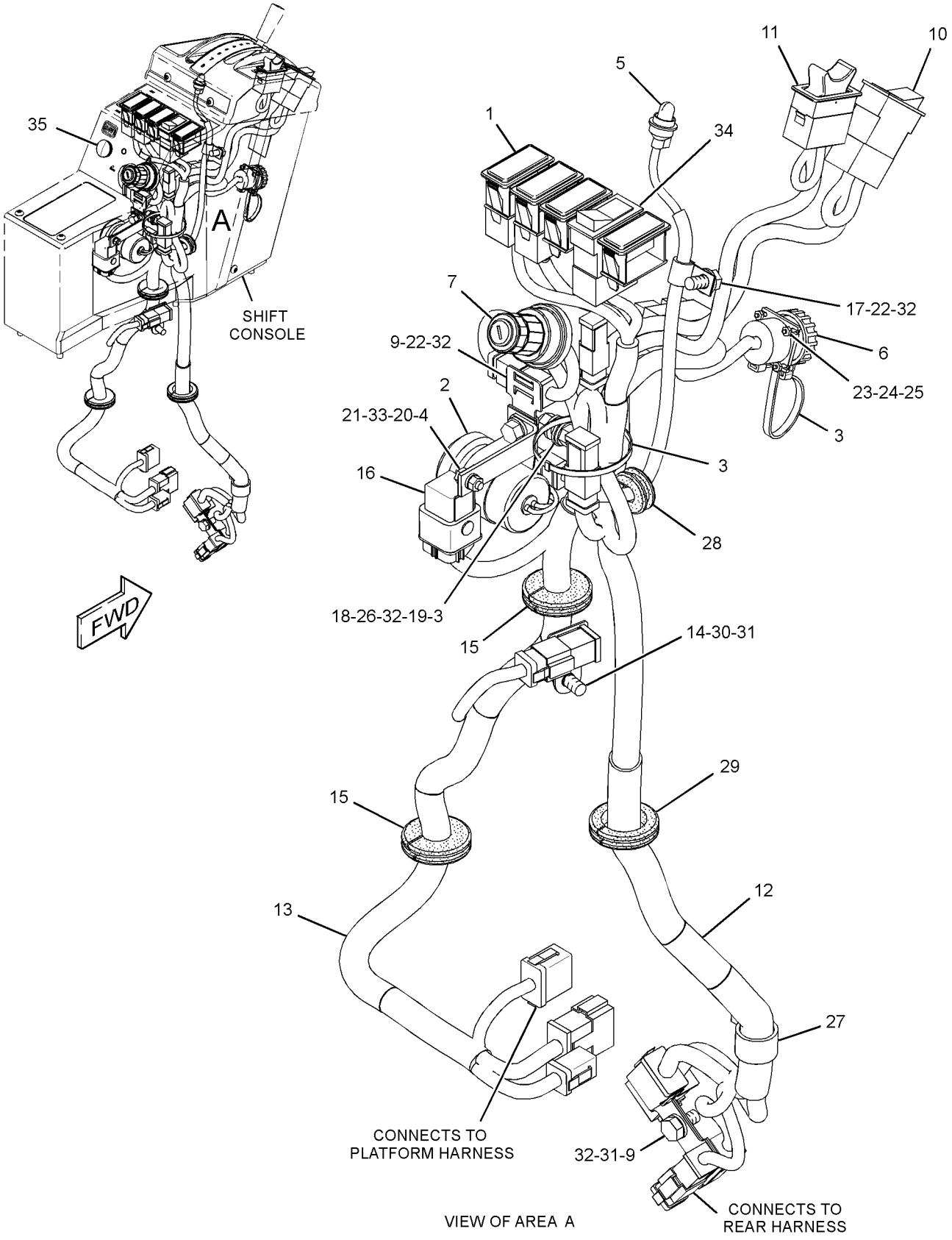

GRAPHIC #1

<END>

g01754234

ELECTRICAL AND STARTING SYSTEM

198-2714 WIRING GP-ENGINE

S/N: KHX14117-UP

PART OF 325-9710 ENGINE AR-COMPLETE

SMCS-1408 **i03562226**

NOTE	REF NO	GRAPHIC REF	PART NUMBER	QTY	PART NAME 1 2 3 4 5 6 (PRODUCT LEVEL)	SEE PAGE
	1	1	**3S-2093**	11	STRAP-CABLE	
	2	1	**4P-5918**	1	CLIP	
	4	1	**198-2713**	1	HARNESS AS-ENGINE (ELECTRONIC CONTROL MODULE)	
	5	1	**206-1345**	9	STRAP-CABLE	
	6	1	**222-5917**	1	HARNESS AS-ENGINE (FUEL INJECTION)	
	7	1	**4P-8134**	1	CLIP	
M	8	1	**6V-2317**	1	BOLT (M8X1.25X30-MM)	
	9	1	**9M-1974**	1	WASHER-HARD (8.8X16X2-MM THK)	

M-METRIC PART

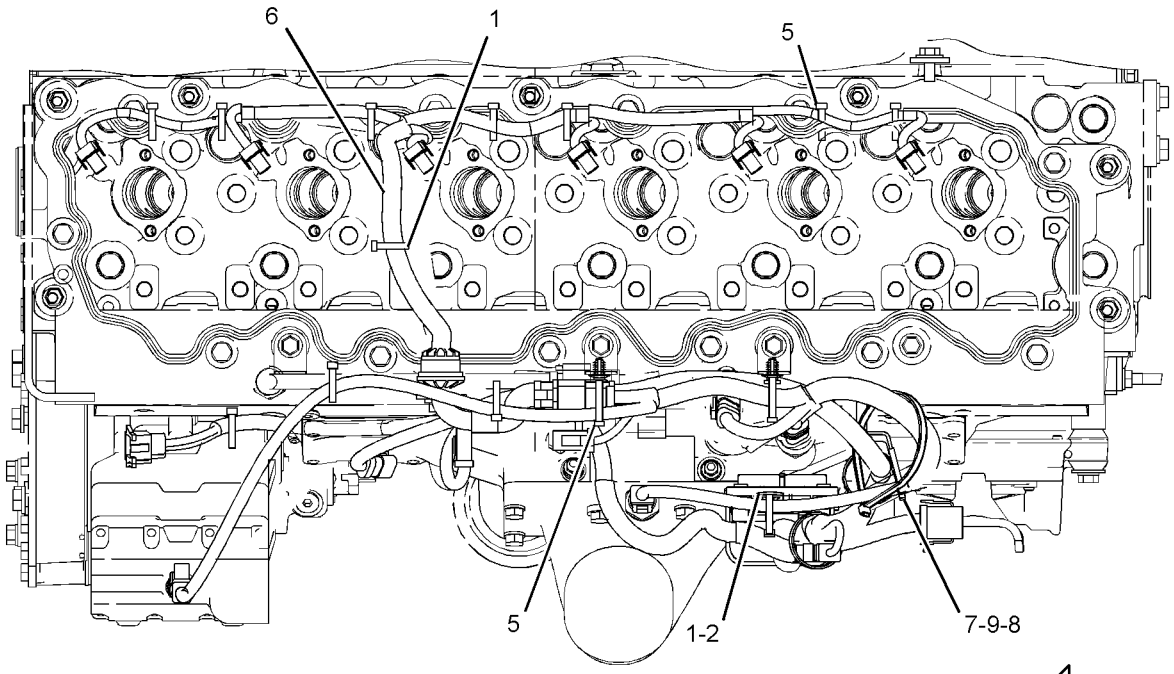

TOP VIEW

FWD

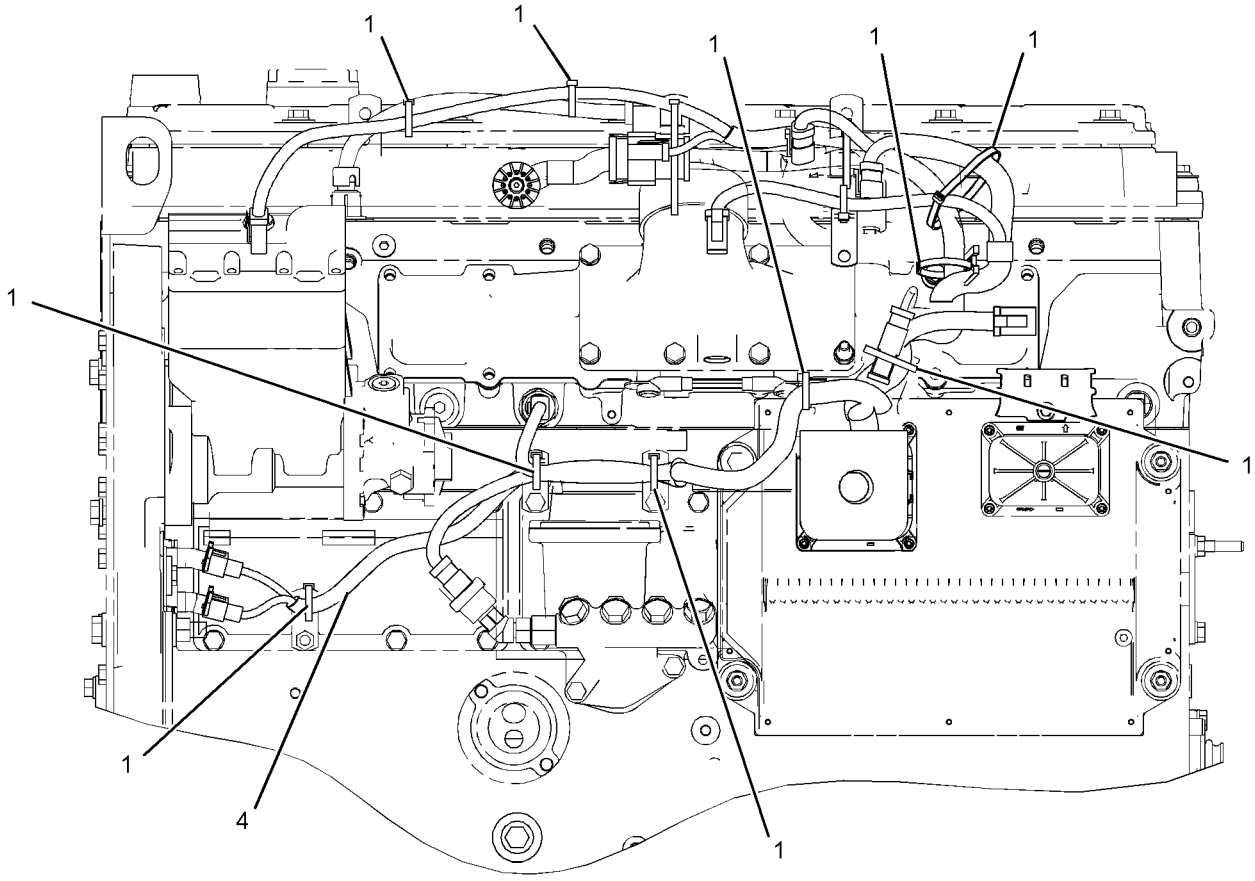

LEFT SIDE VIEW

GRAPHIC #1

<END>

g01884796

311-0801 WIRING GP-ETHER STARTING AID

S/N: JJA1-UP
PART OF 339-4969, 339-4970 OPTION AR-ENGINE
AN ATTACHMENT

SMCS-1408 **i03251663**

NOTE	REF NO	GRAPHIC REF	PART NUMBER	QTY	PART NAME 1 2 3 4 5 6 (PRODUCT LEVEL)	SEE PAGE
	1	1	**334-6872**	1	HARNESS AS-STARTING AID	
	2	1	**132-5789**	1	CLIP	
	3	1	**3E-5239**	1	RELAY AS (24-VOLT) (ETHER STARTING AID)	
M	4	1	**5C-9553**	1	BOLT (M6X1X16-MM)	
	5	1	**7K-1181**	1	STRAP-CABLE	
	6	1	**9X-8256**	1	WASHER (6.6X12X2-MM THK)	

M-METRIC PART

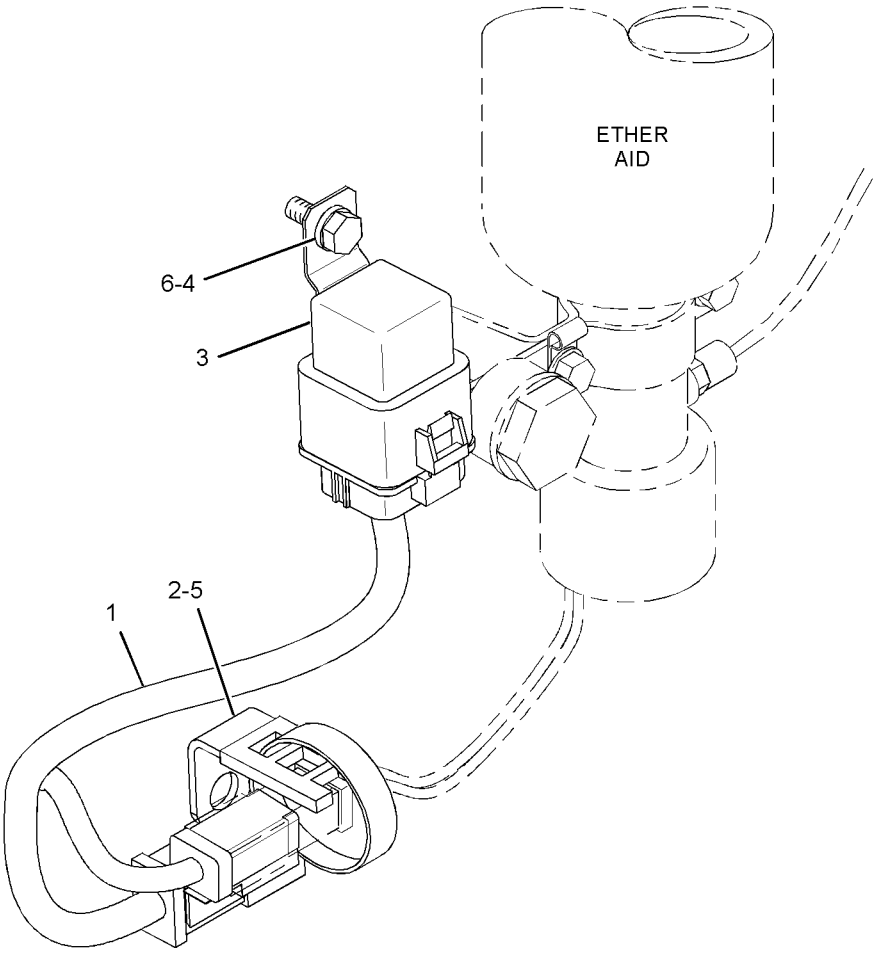

GRAPHIC #1 **<END>** g01703353

ELECTRICAL AND STARTING SYSTEM

284-5343 WIRING GP-FRONT–PLATFORM

S/N: JJA1-UP

PART OF 346-3710 GENERAL AR

SMCS-1408 **i03247447**

NOTE	REF NO	GRAPHIC REF	PART NUMBER	QTY	PART NAME 1 2 3 4 5 6 (PRODUCT LEVEL)	SEE PAGE
	1	1	**1S-2342**	1	STRAP AS-GROUND	
	2	2	**3E-2026**	1	SWITCH AS-PRESSURE (STOP LIGHT)	
		2	**102-8802**	1	KIT-RECEPTACLE (2-PIN)	
					(INCLUDES RECEPTACLE AS & WEDGE)	
		2	**186-3735**	2	PIN-CONNECTOR (16-GA TO 18-GA)	
	3	2	**3E-3636**	1	SWITCH AS-BALL (CENTERSHIFT INDICATOR)	
		2	**186-3735**	4	PIN-CONNECTOR (16-GA TO 18-GA)	
		2	**102-8804**	1	KIT-RECEPTACLE (4-PIN)	
					(INCLUDES RECEPTACLE AS & WEDGE)	
	4	2	**6I-1418**	4	SPACER (8.2X12.7X28.7-MM THK)	
	5	2	**8T-9655**	8	MOUNT-ISOLATION	
	6	2	**9L-1566**	2	SUPPORT	
	7	1	**9L-6331**	1	BRACKET	
	8	2	**114-9281**	2	SWITCH AS-PRESSURE (AIR BRAKE)	
					(EACH INCLUDES)	
		2	**102-8802**	1	KIT-RECEPTACLE (2-PIN)	
					(INCLUDES RECEPTACLE AS & WEDGE)	
		2	**186-3735**	2	PIN-CONNECTOR (16-GA TO 18-GA)	
	9	1,2	**169-5414**	5	CLIP	
Y	10	2	**177-4493**	1	CONTROL GP-POWER TRAIN	117
	11	2	**297-1140**	1	SWITCH AS-PRESSURE (PARKING BRAKE)	
		2	**102-8802**	1	KIT-RECEPTACLE (2-PIN)	
					(INCLUDES RECEPTACLE AS & WEDGE)	
		2	**186-3735**	2	PIN-CONNECTOR (16-GA TO 18-GA)	
	12	2	**320-8203**	1	PLATE AS	
	13	1	**334-9745**	1	HARNESS AS-PLATFORM	
	14	2	**096-6166**	4	WASHER-HARD (4.5X9X1-MM THK)	
	15	1,2	**130-5300**	6	CLIP	
	16	2	**174-5907**	2	CLIP	
	17	2	**3J-1907**	1	SEAL-O-RING	
	18	1,2	**4D-7388**	4	CLIP	
	19	1,2	**4D-7794**	8	CLIP	
	20	1	**4K-8864**	1	CLIP	
	21	1	**4L-6454**	1	BOLT (3/8-16X1-IN)	
	22	1,2	**4P-8134**	2	CLIP	
	23	1,2	**5M-3062**	4	BOLT (3/8-16X0.75-IN)	
	24	1	**6D-4246**	1	CLIP	
	25	2	**6D-4636**	1	CLIP	
	26	1	**6V-1889**	1	CLIP	
	27	1,2	**6V-3265**	6	CLIP	
	28	2	**7X-0613**	4	WASHER-HARD (8.8X25.5X5-MM THK)	
	29	1	**6V-8801**	1	NUT (3/8-16-THD)	
	30	1	**7C-4354**	1	CLIP	
	31	1,2	**7K-1181**	19	STRAP-CABLE	
	32	2	**7N-3718**	1	CLIP	
M	33	2	**7X-0818**	4	BOLT (M8X1.25X45-MM)	
B	34	2	**8F-1974**	10	SHIM (0.13-MM THK)	
	35	2	**8M-2770**	1	CLIP	
	36	1	**8M-2773**	1	CLIP	
	37	1,2	**8T-4121**	33	WASHER-HARD (11X21X2.5-MM THK)	
M	38	1,2	**8T-4133**	4	NUT (M10X1.5-THD)	
M	39	2	**8T-4136**	2	BOLT (M10X1.5X25-MM)	
M	40	1,2	**8T-4137**	24	BOLT (M10X1.5X20-MM)	
M	41	1,2	**8T-4195**	3	BOLT (M10X1.5X30-MM)	
M	42	2	**8T-4647**	4	SCREW-MACHINE (M4X0.7X20-MM)	
	43	1,2	**8T-4896**	6	WASHER-HARD (10.2X18.5X2.5-MM THK)	

284-5343 **WIRING GP-FRONT** ***(contd.)*** **i03247447**

B-USE AS REQUIRED
M-METRIC PART
Y-SEPARATE ILLUSTRATION

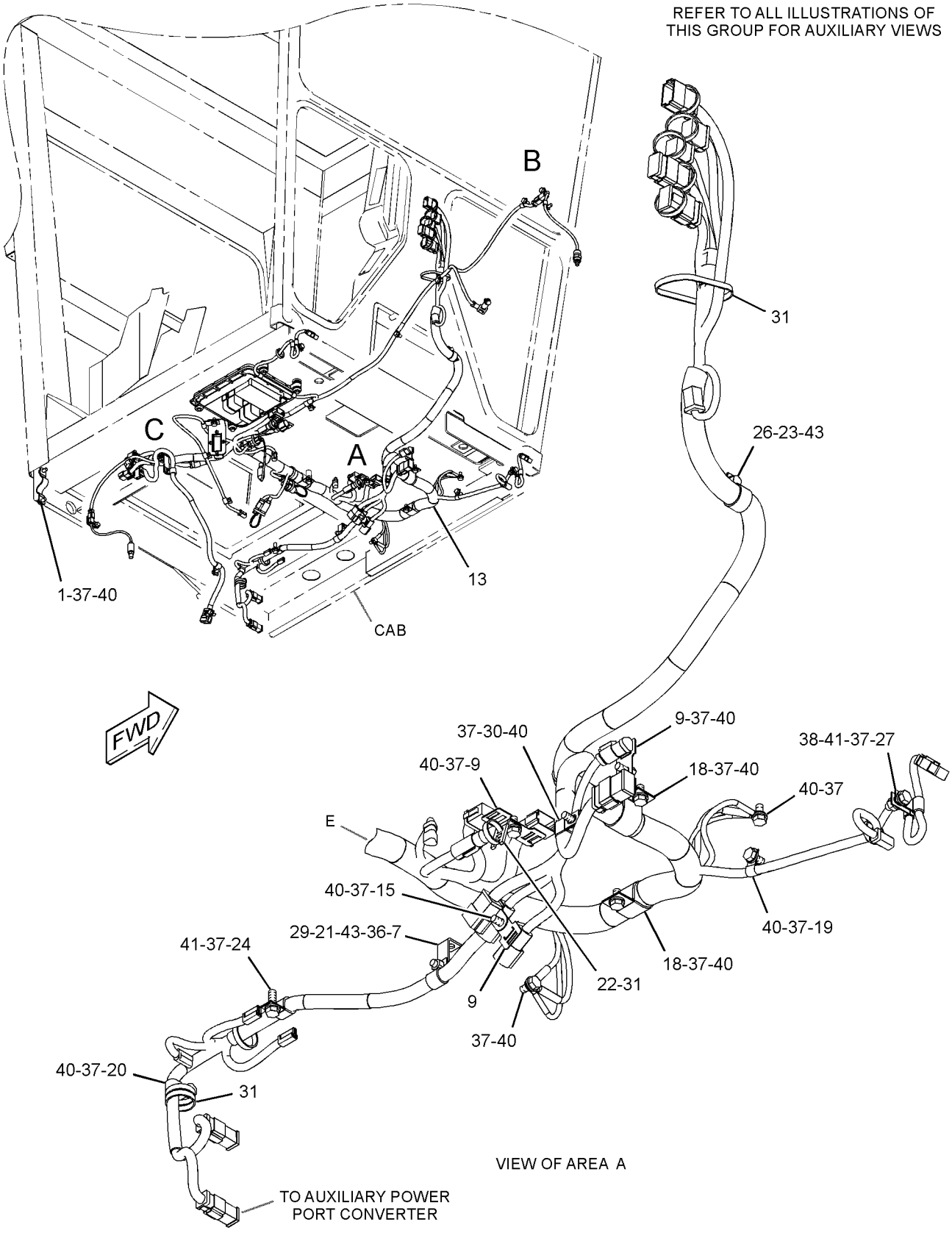

GRAPHIC #1 g01712254

284-5343 **WIRING GP-FRONT** *(contd.)* **i03247447**

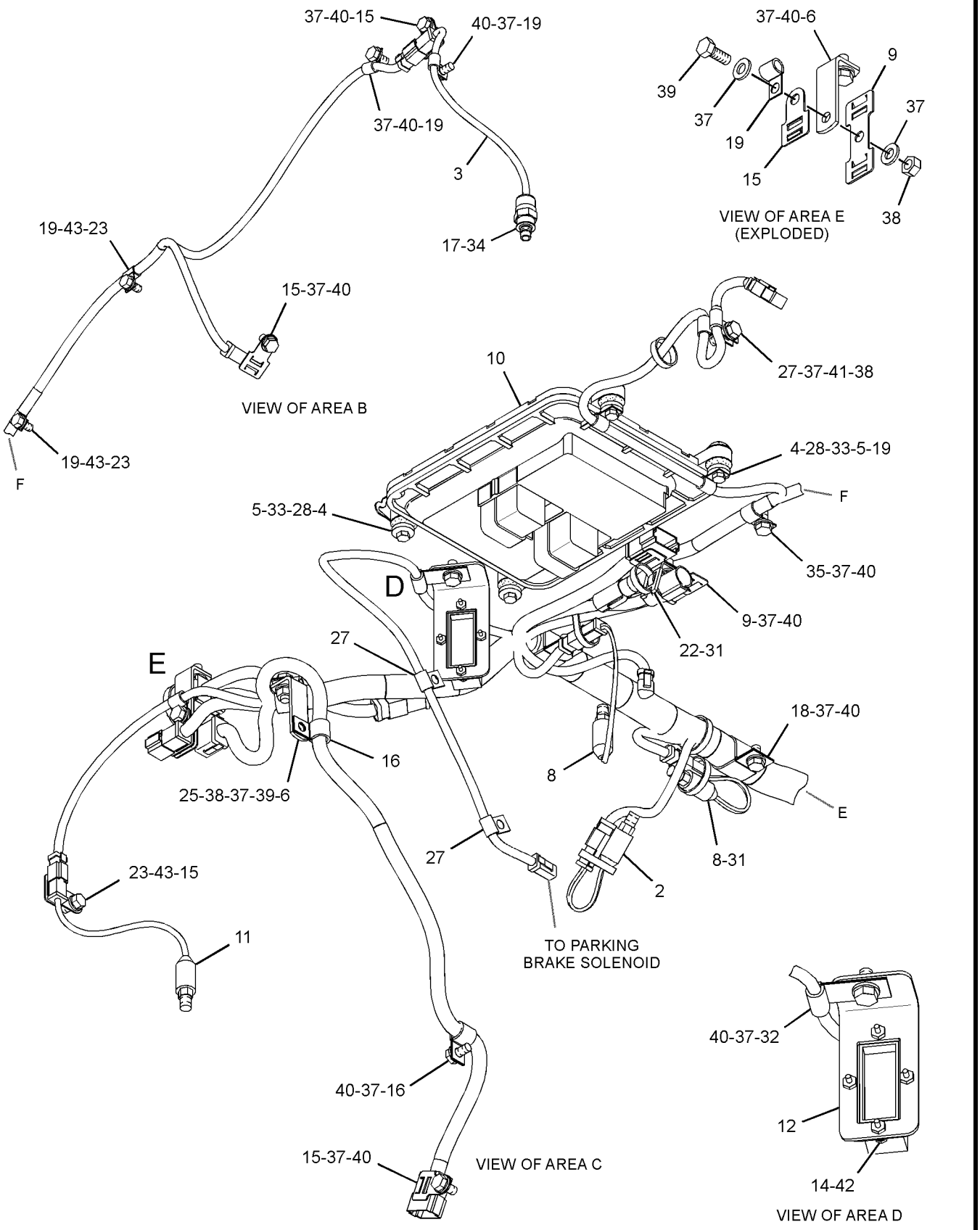

GRAPHIC #2 **<END>** g01712255

252-5709 WIRING GP-GRADE CONTROL–CAB, INDICATOR LAMP

S/N: JJA1-UP
PART OF 297-8448 GRADE CONTROL AR
AN ATTACHMENT

SMCS-1408 **i02397347**

NOTE	REF NO	GRAPHIC REF	PART NUMBER	QTY	PART NAME 1 2 3 4 5 6 (PRODUCT LEVEL)	SEE PAGE
	1	1	**115-1748**	1	LAMP (24-VOLT, 3-WATT)	
	2	1	**247-6457**	1	WIRING AS	

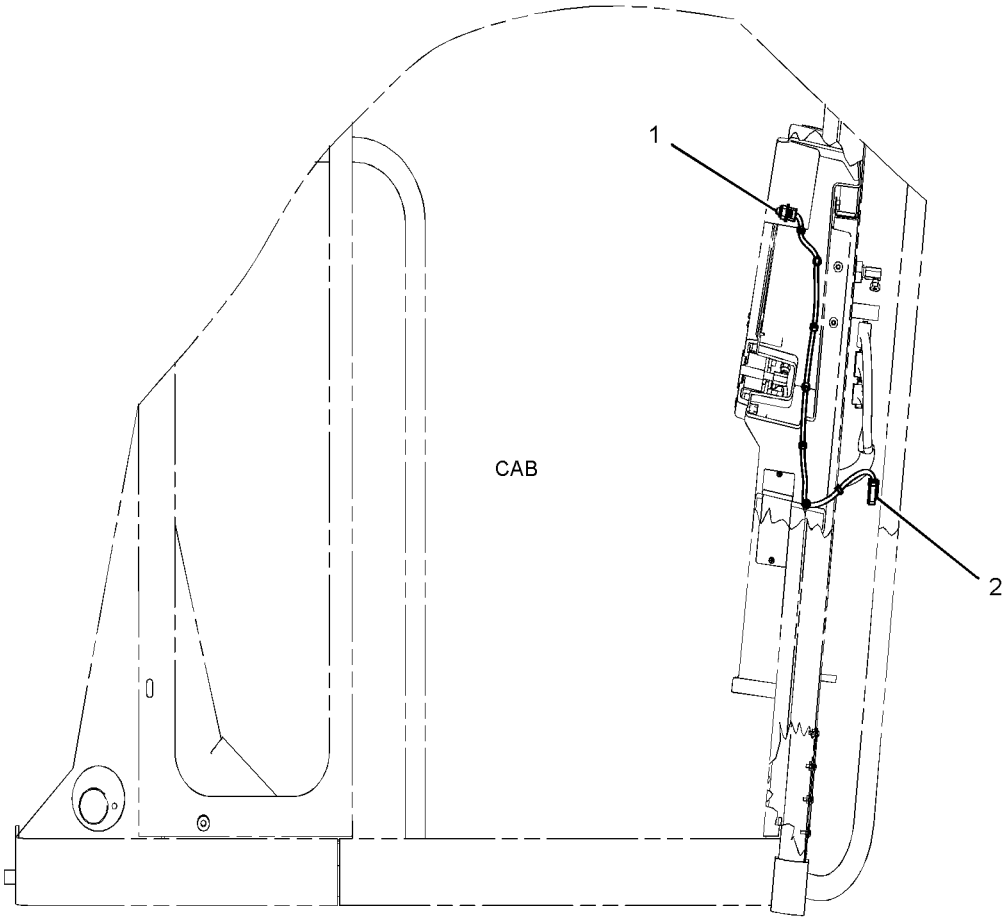

RIGHT SIDE VIEW

GRAPHIC #1 **<END>** g01239581

ELECTRICAL AND STARTING SYSTEM

294-3542 WIRING GP-GRADE CONTROL–ACCUGRADE

S/N: JJA1-UP

PART OF 297-8448 GRADE CONTROL AR

AN ATTACHMENT

SMCS-1408 **i03266020**

NOTE	REF NO	GRAPHIC REF	PART NUMBER	QTY	PART NAME 1 2 3 4 5 6 (PRODUCT LEVEL)	SEE PAGE
	1	1	**6D-3033**	16	SCREW-SOCKET HEAD (4-40X0.5-IN)	
	2	1	**8T-9655**	8	MOUNT-ISOLATION	
	3	1	**9L-1566**	2	SUPPORT	
	4	1	**132-8487**	4	NUT-RING	
	5	1	**169-5414**	1	CLIP	
	6	1	**236-2356**	1	HARNESS AS-SENSOR (ANGLE)	
	7	1	**236-8826**	4	BOSS (1-1/8-18X0.708-IN)	
	8	1	**243-3250**	1	HARNESS AS-SENSOR (ROTATION)	
	9	1	**244-5880**	1	BRACKET	
	10	1	**251-2383**	1	BRACKET	
Y	11	1	*260-7647*	1	APPLICATION GP-POWER TRAIN	110
	12	1	**288-5508**	1	BRACKET AS (LH)	
	13	1	**288-5509**	1	BRACKET AS (RH)	
	14	1	**336-9456**	1	HARNESS AS-CHASSIS	
	15	1	**313-4670**	1	BRACKET AS	
M		1	**8T-3612**	2	NUT-WELD (M8X1.25-THD)	
		1	**7T-1099**	1	LINK	
M		1	**6V-9632**	2	NUT-WELD (M6X1-THD)	
	16	1	**323-0327**	1	HARNESS AS-WIRING (MAST)	
	17	1	**323-5592**	1	HARNESS AS-FRAME	
	18	1	**324-3364**	1	PLATE	
	19	1	**324-3366**	1	PLATE AS	
	20	1	**327-0560**	1	BRACKET (RH)	
	21	1	**327-0561**	1	BRACKET (LH)	
	22	1	**331-1102**	1	BRACKET AS	
	23	1	**033-8248**	1	CLIP	
	24	1	**067-2551**	1	CLIP	
	25	1	**111-4871**	2	RELAY (24-VOLT)	
	26	1	**130-5300**	4	CLIP	
	27	1	**147-0385**	2	CLIP	
	28	1	**174-9692**	4	SPACER (20.5X35X16-MM THK)	
M	29	1	**188-9644**	4	SCREW-FLAT HEAD (M8X1.25X25-MM)	
	30	1	**1J-6762**	4	BOLT-PLOW (3/4-10X3-IN)	
	31	1	**1K-6870**	1	LOCKNUT (3/4-10-THD)	
	32	1	**1P-7009**	2	CLIP	
	33	1	**6V-8182**	4	NUT (3/4-10-THD)	
	34	1	**2Y-3812**	1	CLIP	
	35	1	**3P-2404**	1	CLIP	
	36	1	**4D-7794**	1	CLIP	
	37	1	**4K-8302**	2	CLIP	
	38	1	**4K-8864**	1	CLIP	
	39	1	**4S-1962**	6	CLIP	
M	40	1	**5C-7261**	2	NUT (M8X1.25-THD)	
M	41	1	**5C-9553**	2	BOLT (M6X1X16-MM)	
	42	1	**5M-3062**	28	BOLT (3/8-16X0.75-IN)	
	43	1	**5P-4135**	1	BOLT (3/4-10X8-IN)	
	44	1	**5P-9085**	1	CLIP	
	45	1	**5S-7379**	2	BOLT (3/8-16X0.875-IN)	
	46	1	**6D-4244**	8	CLIP	
	47	1	**6K-8178**	1	CLIP	
	48	1	**6V-1889**	7	CLIP	
	49	1	**6V-8801**	2	NUT (3/8-16-THD)	
	50	1	**7K-1181**	18	STRAP-CABLE	
	51	1	**7X-0550**	8	WASHER-HARD (13.5X32X5-MM THK)	
	52	1	**7X-0579**	8	WASHER-HARD (8.8X25.5X2-MM THK)	

294-3542 **WIRING GP-GRADE CONTROL** *(contd.)* **i03266020**

NOTE	REF NO	GRAPHIC REF	PART NUMBER	QTY	PART NAME 1 2 3 4 5 6 (PRODUCT LEVEL)	SEE PAGE
	53	1	**7X-0619**	4	WASHER-HARD (20X30X2.5-MM THK)	
M	54	1	**7Y-0589**	2	BOLT (M12X1.75X90-MM)	
	55	1	**8C-6857**	4	BOLT (3/4-10X2.75-IN)	
	56	1	**8M-2773**	4	CLIP	
	57	1	**8T-4121**	18	WASHER-HARD (11X21X2.5-MM THK)	
	58	1	**8T-4123**	4	WASHER (22X35X3.5-MM THK)	
M	59	1	**8T-4133**	1	NUT (M10X1.5-THD)	
M	60	1	**8T-4137**	14	BOLT (M10X1.5X20-MM)	
M	61	1	**8T-4191**	3	BOLT (M10X1.5X16-MM)	
	62	1	**8T-4223**	2	WASHER-HARD (13.5X25.5X3-MM THK)	
	63	1	**8T-4224**	4	WASHER-HARD (8.8X16X2-MM THK)	
M	64	1	**8T-4244**	2	NUT (M12X1.75-THD)	
	65	1	**8T-4835**	4	BOLT (1/2-13X2-IN)	
	66	1	**8T-4896**	32	WASHER-HARD (10.2X18.5X2.5-MM THK)	
M	67	1	**8T-6869**	4	BOLT (M8X1.25X60-MM)	
	68	1	**8T-9658**	4	SPACER (8.2X12.7X25.4-MM THK)	
	69	1	**9M-8406**	4	CLIP	
	70	1	**9X-8256**	2	WASHER (6.6X12X2-MM THK)	

M-METRIC PART
Y-SEPARATE ILLUSTRATION

294-3542 **WIRING GP-GRADE CONTROL** *(contd.)* **i03266020**

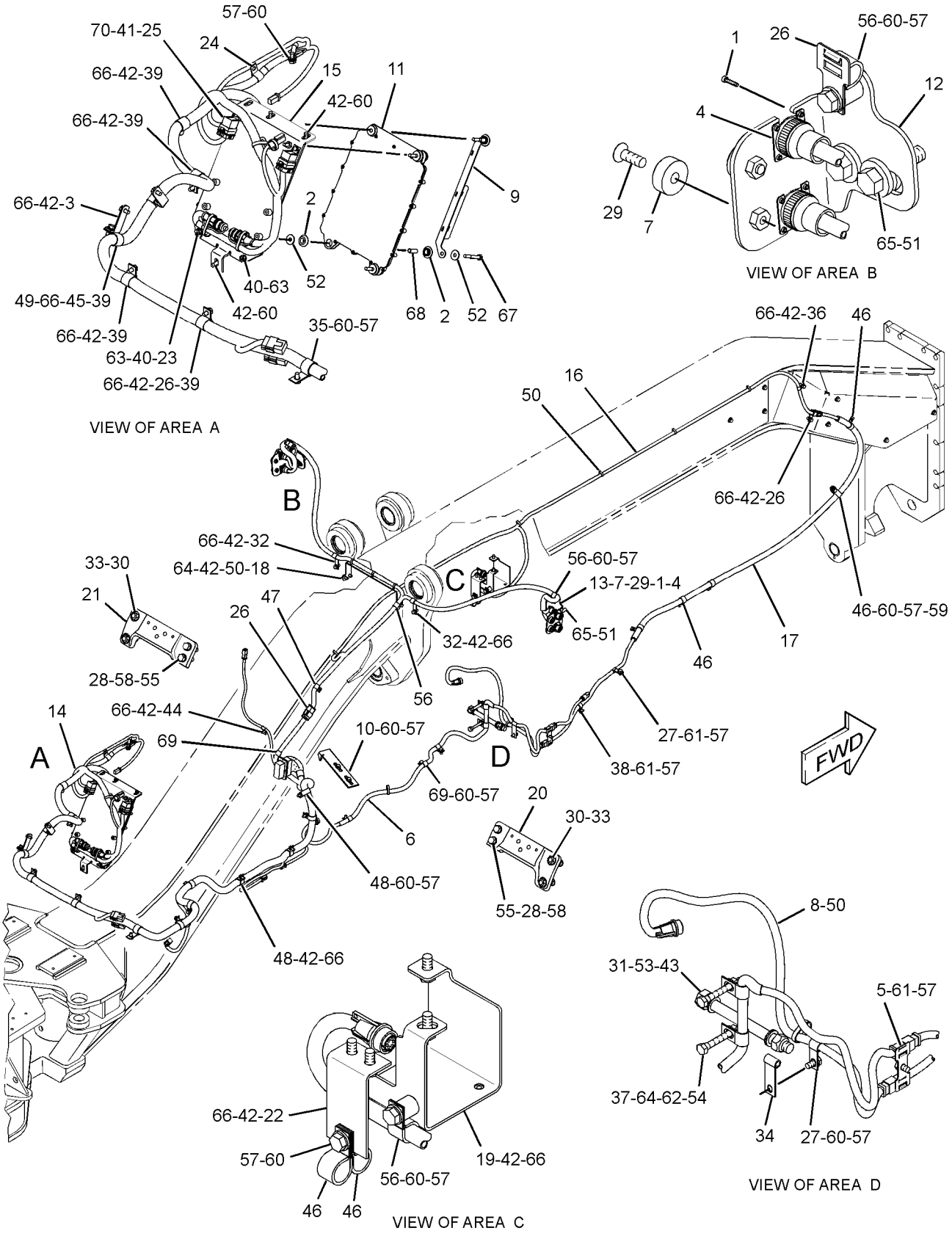

GRAPHIC #1 **<END>** g01716922

284-5348 WIRING GP-REAR–LIGHTS

S/N: JJA1-UP

PART OF 346-3710 GENERAL AR

SMCS-1408 **i03538999**

NOTE	REF NO	GRAPHIC REF	PART NUMBER	QTY	PART NAME 1 2 3 4 5 6 (PRODUCT LEVEL)	SEE PAGE
	1	1	**7K-1181**	9	STRAP-CABLE	
	2	1	**334-7633**	1	HARNESS AS-REAR LIGHTING	
		1	**102-8802**	3	KIT-RECEPTACLE (2-PIN)	
		1	**102-8801**	1	KIT-RECEPTACLE (12-PIN)	
					(EACH KIT INCLUDES RECEPTACLE AS & WEDGE)	
		1	**186-3735**	9	PIN-CONNECTOR (16-GA TO 18-GA)	
		1	**186-3736**	18	SOCKET-CONNECTOR (16-GA TO 18-GA)	
		1	**8T-8737**	9	PLUG-SEAL	
		1	**9X-1054**	1	PLUG AS-CONNECTOR (4-PIN)	
		1	**100-5041**	4	TERMINAL-RECEPTACLE (18-GA TO 20-GA)	
E		1	**119-3662**		TUBE-HEAT SHRINK (10.85-MM DIA) (7-CM)	
E		1	**125-7874**		TUBE-HEAT SHRINK (5.72-MM DIA) (5-CM)	
E		1	**125-7875**		TUBE-HEAT SHRINK (7.44-MM DIA) (5-CM)	
		1	**155-2260**	2	KIT-CONNECTING PLUG (3-PIN)	
		1	**155-2270**	6	KIT-CONNECTING PLUG (2-PIN)	
					(EACH KIT INCLUDES PLUG AS,WEDGE & INTERFACE SEAL)	
	3	1	**130-5300**	2	CLIP	
Y	4	1	**135-0426**	2	LAMP GP-SIGNAL (24-VOLT, STOP, TAIL)	136
M	5	1	**5C-2890**	6	NUT (M6X1-THD)	
	6	1	**8T-4224**	6	WASHER-HARD (8.8X16X2-MM THK)	

E-ORDER BY THE CENTIMETER
M-METRIC PART
Y-SEPARATE ILLUSTRATION

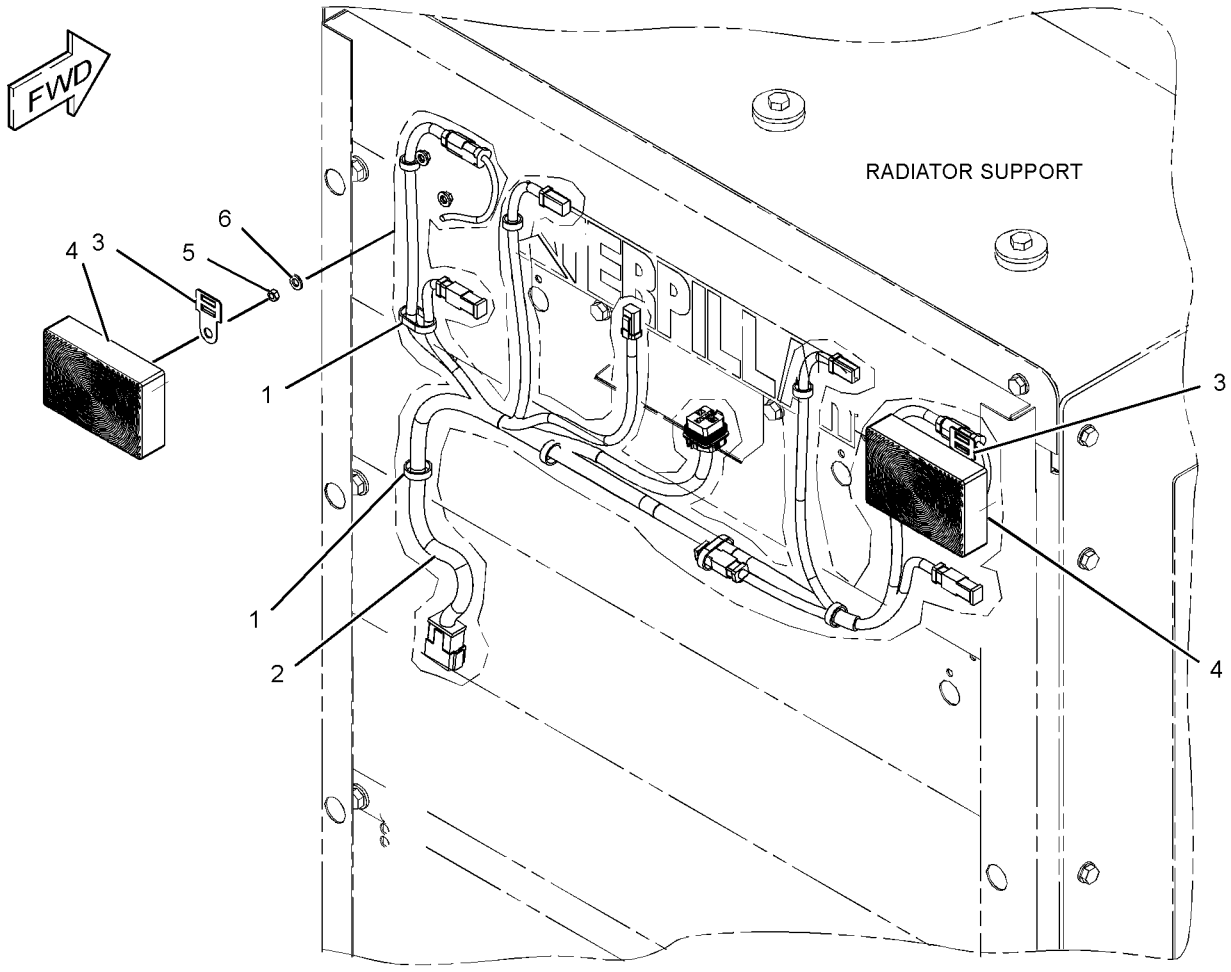

GRAPHIC #1 **<END>** g01923076

ELECTRICAL AND STARTING SYSTEM

311-0794 WIRING GP-REAR

S/N: JJA1-UP

PART OF 346-3710 GENERAL AR

SMCS-1408 **i03500960**

NOTE	REF NO	GRAPHIC REF	PART NUMBER	QTY	PART NAME 1 2 3 4 5 6 (PRODUCT LEVEL)	SEE PAGE
	1	1	**3E-5239**	1	RELAY AS (24-VOLT) (FUEL PRIMING)	
	2	1	**7G-1060**	1	STRAP AS-GROUND	
	3	2	**7W-9943**	1	SENDER-TEMPERATURE (ENGINE COOLANT)	
		2	**4B-4274**	1	WASHER (5.5X13X1.2-MM THK)	
		2	**6V-8378**	1	NUT (10-32-THD)	
		2	**8F-1434**	1	LOCKWASHER	
	4	2	**8W-8527**	1	SLEEVE	
	5	3	**123-3688**	1	PLATE AS	
		3	**7L-0811**	1	DOWEL	
	6	3	**123-3689**	1	PLATE AS	
		3	**9D-1541**	1	STUD	
	7	3	**123-3692**	1	ARM	
	8	3	**123-3695**	1	PLATE	
	9	2	**139-2116**	1	SWITCH AS-TOGGLE (ENGINE SHUTDOWN)	
		2	**6T-3631**	2	NUT-HEX (15/32-32-THD)	
		2	**6T-3632**	1	LOCKWASHER	
		2	**6T-3633**	1	RING-LOCKING	
		2	**186-3735**	3	PIN-CONNECTOR (16-GA TO 18-GA)	
		2	**102-8803**	1	KIT-RECEPTACLE (3-PIN)	
					(INCLUDES RECEPTACLE AS & WEDGE)	
	10	2	**177-2215**	3	STRAP-DUAL CLAMP	
	11	3	**187-1008**	1	SENDER AS-POSITION (ARTICULATION)	
		3	**102-8802**	1	KIT-RECEPTACLE (2-PIN)	
					(INCLUDES RECEPTACLE AS & WEDGE)	
E		3	**9X-1813**		SLEEVE (15-CM)	
		3	**186-3735**	2	PIN-CONNECTOR (16-GA TO 18-GA)	
	12	2	**308-0291**	1	HARNESS AS-SENSOR (TRANSMISSION SPEED)	
	13	2	**308-6403**	1	BRACKET AS	
	14	2	**322-7341**	1	BRACKET AS	
	15	3	**326-3120**	1	BRACKET AS	
	16	1	**334-0575**	1	HARNESS AS-TRANSMISSION	
	17	1	**334-0576**	1	HARNESS AS-REAR CHASSIS (RELAY)	
	18	1	**334-0577**	1	HARNESS AS-SENSOR (ENGINE)	
	19	1	**334-0578**	1	HARNESS AS-REAR CHASSIS (TAIL)	
	20	2	**109-0361**	1	FILM-INSTRUCTION (ENGINE SHUTDOWN)	
	21	1,2,3	**130-5300**	8	CLIP	
	22	1,2	**132-5789**	3	CLIP	
	23	2	**133-3260**	1	SPACER (11X19X10-MM THK)	
	24	2	**134-2540**	1	RESISTOR AS (3-PIN)	
	25	2	**147-0385**	1	CLIP	
	26	2	**172-6833**	1	CLIP (LOOP)	
Y	27	2	**193-2550**	1	SENSOR GP-SPEED (MAGNETIC, HIGH OUTPUT)	166
	28	2	**1V-1984**	1	CLIP	
	29	2	**277-1873**	1	CLIP	
	30	2	**3E-5169**	1	GUARD-SWITCH	
	31	2	**2A-1162**	1	GASKET	
	32	1,2,3	**4D-7794**	10	CLIP	
	33	2	**4D-8123**	1	CLIP	
	34	2	**4K-8864**	4	CLIP	
	35	1	**4S-1936**	1	CLIP	
	36	2	**4S-1962**	2	CLIP	
	37	2,3	**4S-4455**	4	CLIP	
	38	2,3	**5P-8167**	3	BOLT (3/8-16X0.625-IN)	
	39	2	**5P-9085**	1	CLIP	
	40	1	**6D-3479**	4	CLIP	
	41	2	**6D-4244**	4	CLIP	

311-0794 **WIRING GP-REAR** ***(contd.)*** **i03500960**

NOTE	REF NO	GRAPHIC REF	PART NUMBER	QTY	PART NAME 1 2 3 4 5 6 (PRODUCT LEVEL)	SEE PAGE
	42	2,3	**6D-4246**	4	CLIP	
	43	2	**6D-4636**	1	CLIP	
	44	3	**6V-1889**	1	CLIP	
	45	2	**6V-3265**	4	CLIP	
	46	3	**6V-6893**	3	BOLT (6-32X0.375-IN)	
	47	3	**6V-8801**	1	NUT (3/8-16-THD)	
M	48	1	**130-2792**	1	SCREW (M6X1X16-MM)	
	49	2	**7C-4354**	2	CLIP	
	50	2	**7D-7233**	1	CLIP	
	51	1,2	**7K-1181**	21	STRAP-CABLE	
	52	2,3	**7N-3718**	1	CLIP	
	53	2	**8D-9671**	1	CLIP	
	54	2	**8M-2773**	1	CLIP	
	55	1,2,3	**8T-4121**	57	WASHER-HARD (11X21X2.5-MM THK)	
M	56	2,3	**8T-4133**	4	NUT (M10X1.5-THD)	
M	57	1,2,3	**8T-4137**	53	BOLT (M10X1.5X20-MM)	
M	58	2	**8T-4195**	1	BOLT (M10X1.5X30-MM)	
	59	3	**8T-4205**	2	WASHER-HARD (7.2X14.5X2-MM THK)	
	60	3	**8T-4226**	1	WASHER-PLATED (10.5X45X3-MM THK)	
	61	3	**8T-4896**	2	WASHER-HARD (10.2X18.5X2.5-MM THK)	
	62	3	**8T-9364**	2	BOLT (1/4-20X0.625-IN)	
	63	2	**8W-8909**	1	SLEEVE	
	64	2,3	**8X-5489**	4	SLEEVE	
	65	3	**9M-4972**	3	CLIP	
	66	1	**9X-8256**	1	WASHER (6.6X12X2-MM THK)	

E-ORDER BY THE CENTIMETER
M-METRIC PART
Y-SEPARATE ILLUSTRATION

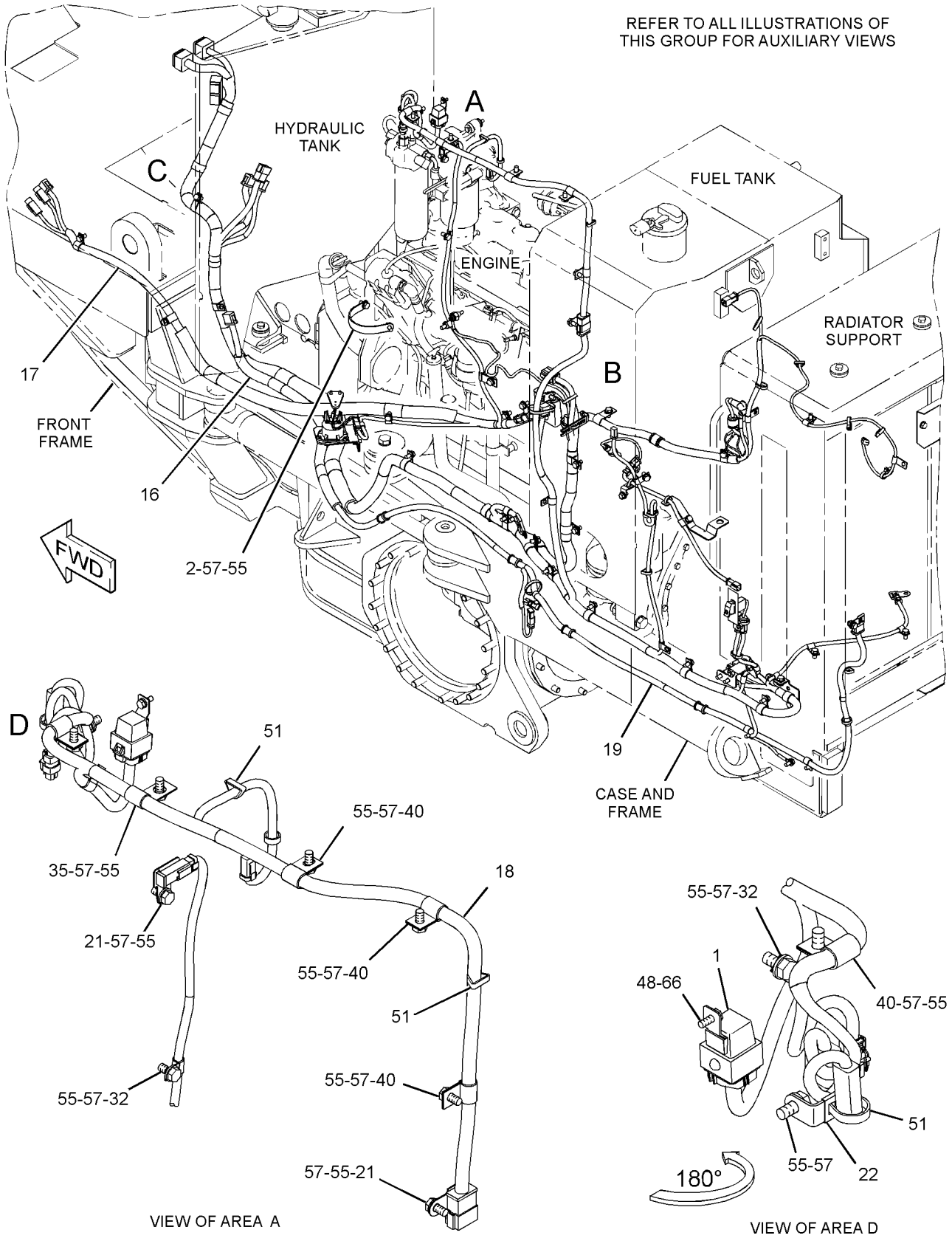

GRAPHIC #1 g01711953

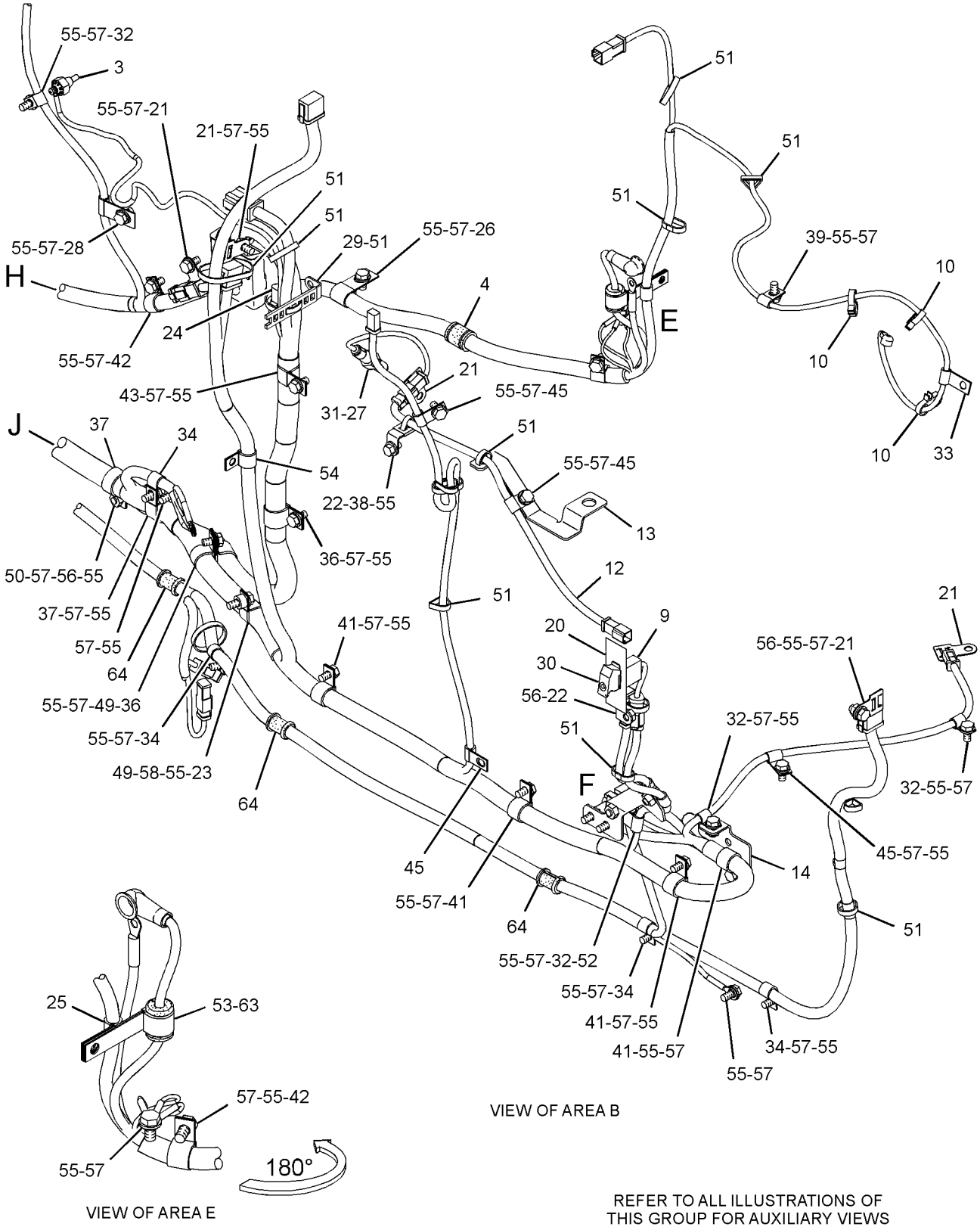

GRAPHIC #2 g01711954

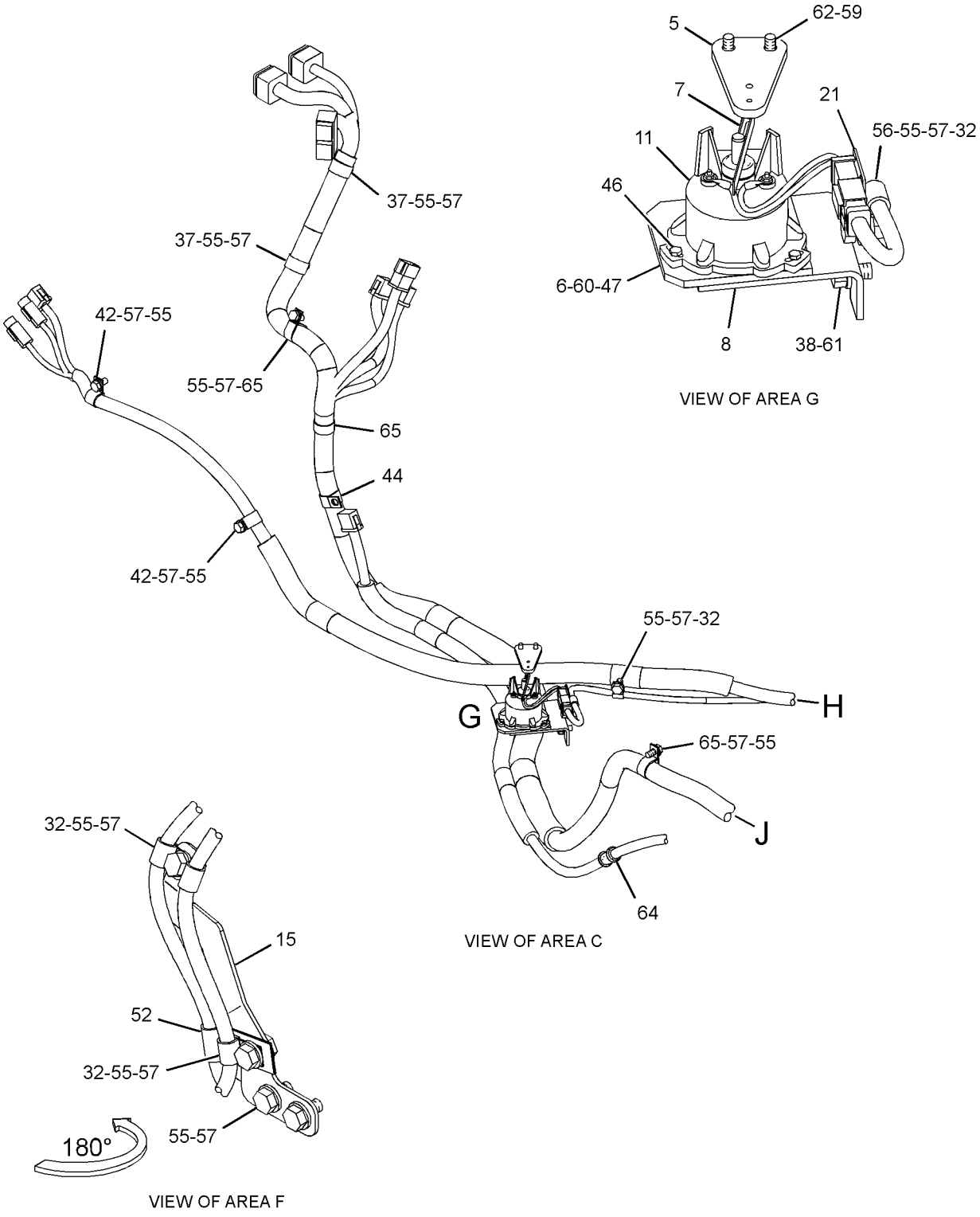

GRAPHIC #3 **<END>** g01711955

ELECTRICAL AND STARTING SYSTEM

284-5347 WIRING GP-STEERING CONSOLE

S/N: JJA1-UP

PART OF 346-3710 GENERAL AR

SMCS-4334 **i03643723**

NOTE	REF NO	GRAPHIC REF	PART NUMBER	QTY	PART NAME 1 2 3 4 5 6 (PRODUCT LEVEL)	SEE PAGE
	1	1	**3E-0109**	5	PLUG (ROCKER SWITCH)	
	2	1	**3E-6477**	2	RELAY AS (24-VOLT)	
	3	1	**3S-2093**	7	STRAP-CABLE	
	4	1	**9W-1441**	2	FUSE (15-AMPERE)	
	5	1	**9W-1442**	9	FUSE (10-AMPERE)	
	6	1	*112-6175*	2	SWITCH AS-LIMIT	
					(EACH INCLUDES)	
		1	**6V-8376**	3	SCREW-MACHINE (8-32X0.25-IN)	
		1	**9B-7233**	3	LOCKWASHER	
	7	1	*161-3932*	1	METER GP-SERVICE	
M		1	**5C-8312**	2	NUT (M4X0.7-THD)	
		1	**9B-7233**	2	LOCKWASHER	
		1	**096-6166**	2	WASHER-HARD (4.5X9X1-MM THK)	
	8	1	**180-4028**	2	BRACKET	
	9	1	**180-7033**	1	COVER	
	10	1	**228-5009**	4	CLIP	
	11	1	**338-8423**	1	HARNESS AS-CONSOLE	
	12	1	**295-1834**	1	FILM-IDENTIFICATION (FUSE BOX)	
	13	1	**295-1835**	1	FILM-IDENTIFICATION (FUSE BOX)	
	14	1	**130-5300**	1	CLIP	
M	15	1	**151-4957**	4	BOLT-SOCKET HEAD (M3X0.5X25-MM)	
M	16	1	**174-8131**	2	SCREW-TRUSS HEAD (M4X0.7X12-MM)	
	17	1	**1H-3244**	2	LOCKWASHER	
M	18	1	**3C-6969**	4	NUT (M3X0.5-THD)	
	19	1	*3E-9319*	1	SWITCH AS-ROCKER (24-VOLT)	
		1	**3E-8763**	1	SWITCH AS (24-VOLT) (TAIL LIGHTS)	
		1	**3E-8825**	1	LAMP (24-VOLT)	
		1	**3E-9323**	1	ACTUATOR	
	20	1	**3L-8187**	4	LOCKWASHER	
	21	1	**4B-1281**	1	SCREW-MACHINE (1/4-20X0.625-IN)	
	22	1	**4B-4274**	16	WASHER (5.5X13X1.2-MM THK)	
	23	1	**4D-1212**	1	GROMMET	
M	24	1	**5C-2890**	3	NUT (M6X1-THD)	
M	25	1	**5C-8312**	2	NUT (M4X0.7-THD)	
M	26	1	**5C-9553**	2	BOLT (M6X1X16-MM)	
	27	1	**5P-4115**	1	WASHER-HARD (7.2X19X2-MM THK)	
	28	1	**6D-4244**	2	CLIP	
	29	1	**6V-8185**	1	NUT (1/4-20-THD)	
	30	1	**8C-7508**	2	LOCKWASHER	
	31	1	**8L-6521**	8	BOLT (10-32X0.5-IN)	
M	32	1	**8T-4971**	1	BOLT (M6X1X30-MM)	
	33	1	**9P-2553**	1	SPACER (6.83X10.28X11-MM THK)	
M	34	1	**9X-1046**	6	SCREW (M4X0.7X18-MM)	
M	35	1	**9X-2042**	1	SCREW-TRUSS HEAD (M6X1X12-MM)	
	36	1	**9X-8256**	6	WASHER (6.6X12X2-MM THK)	

M-METRIC PART

284-5347 **WIRING GP-STEERING CONSOLE** *(contd.)* **i03643723**

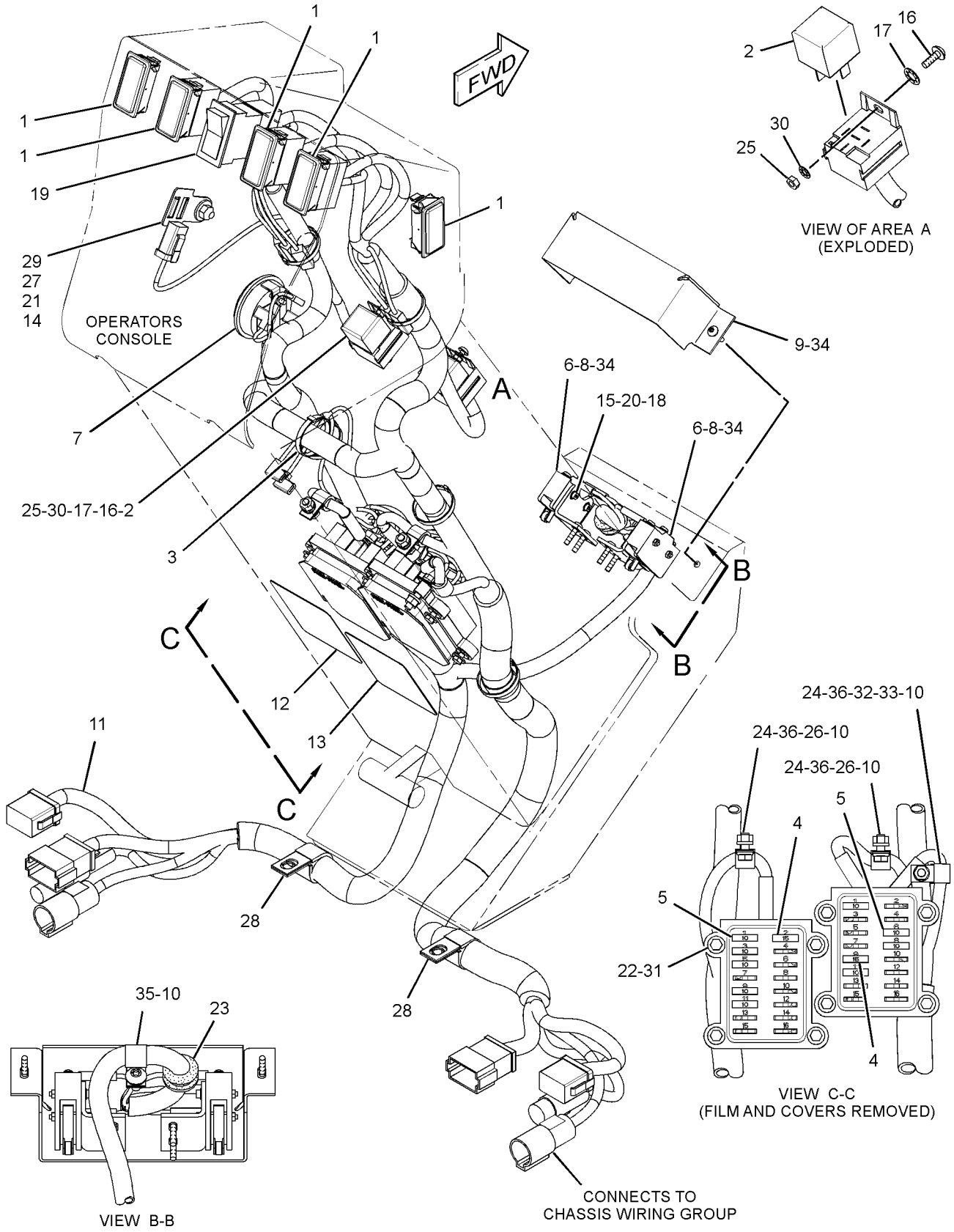

GRAPHIC #1 **<END>** g01753515

ELECTRICAL AND STARTING SYSTEM

180-9324 WIRING GP-TRANSMISSION

S/N: DMJ1-UP

PART OF 281-3165 CONTROL GP-TRANSMISSION HYD

SMCS-3104 **i02502591**

NOTE	REF NO	GRAPHIC REF	PART NUMBER	QTY	PART NAME 1 2 3 4 5 6 (PRODUCT LEVEL)	SEE PAGE
	1	1	**213-9842**	1	HARNESS AS-TRANSMISSION	
		1	**102-8801**	1	KIT-RECEPTACLE (12-PIN)	
					(INCLUDES RECEPTACLE AS & WEDGE)	
		1	**155-2270**	8	KIT-CONNECTING PLUG (2-PIN)	
					(EACH INCLUDES PLUG AS, WEDGE, & INTERFACE SEAL)	
	2	1	**207-6034**	1	PLATE AS	
	3	1	**205-8847**	1	PLATE AS	
	4	1	**3S-2093**	7	STRAP-CABLE	
	5	1	**205-8839**	1	CLIP AS	
M	6	1	**8T-0639**	1	BOLT (M6X1X12-MM)	

M-METRIC PART

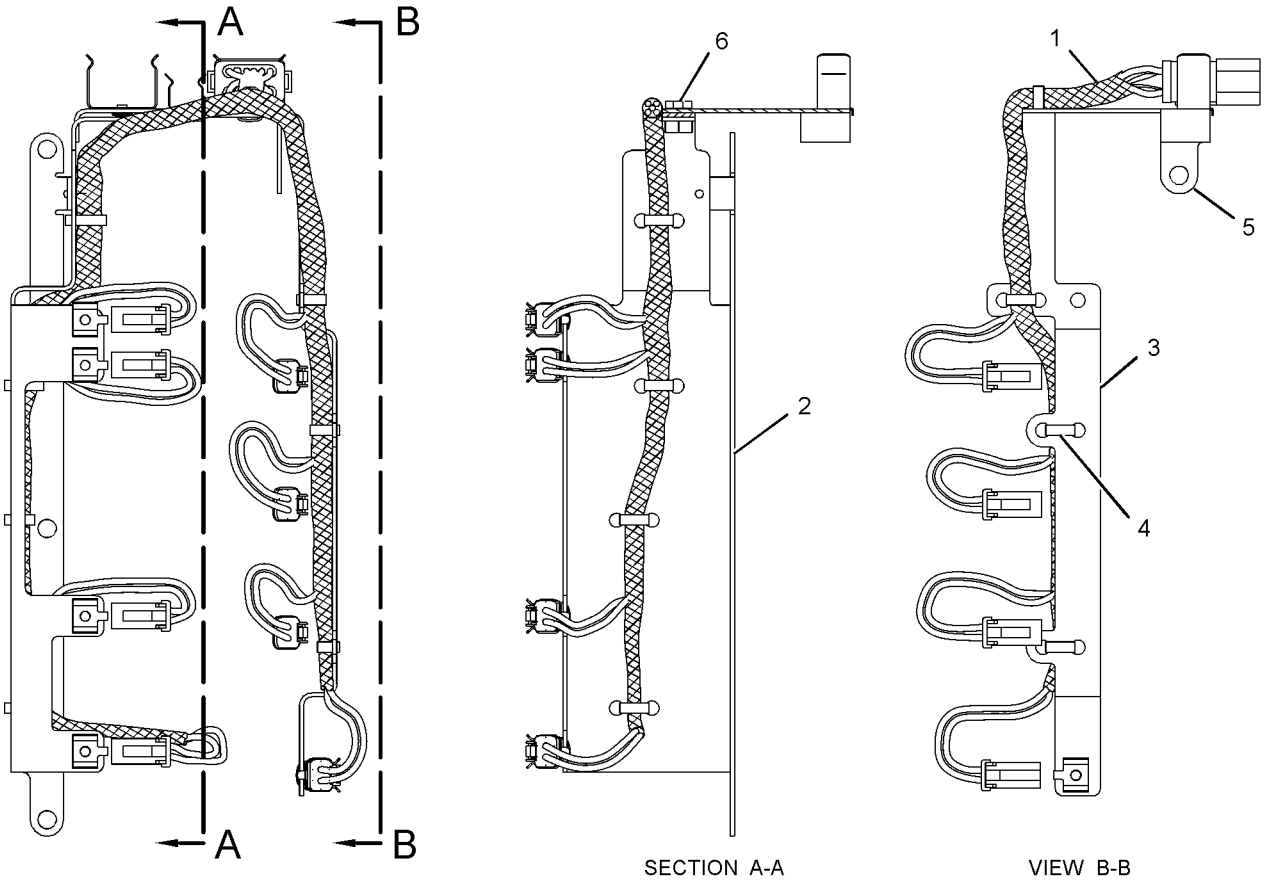

GRAPHIC #1 **<END>** g01256130

295-8278 AUTOSHIFT AR

S/N: JJA1-UP
PART OF 339-4977 OPTION AR-WORK TOOL
AN ATTACHMENT

SMCS-3168 **i03643726**

NOTE	PART NUMBER	QTY	PART NAME 1 2 3 4 5 6 (PRODUCT LEVEL)	SEE PAGE
Y	*291-5475*	1	ELECTRONICS GP-POWER TRAIN	122
	102-9861	1	SWITCH AS-ROCKER (AUTOSHIFT)	
	3E-8763	1	SWITCH AS (24-VOLT) (AUTOSHIFT ON, OFF)	
	3E-8784	1	ACTUATOR	
	3E-8825	1	LAMP (24-VOLT)	

Y-SEPARATE ILLUSTRATION

<END>

333-9308 BASE GP-OIL FILTER–TRANSMISSION

S/N: JJA1-UP

PART OF 333-6436 FILTER GP-OIL

SMCS-3004, 3067 **i03630674**

NOTE	REF NO	GRAPHIC REF	PART NUMBER	QTY	PART NAME 1 2 3 4 5 6 (PRODUCT LEVEL)	SEE PAGE
	1	1	**3T-9549**	1	ADAPTER	
	2	1	**7G-4998**	1	SPOOL-BYPASS	
Y	3	1	**164-7577**	1	SWITCH GP-BYPASS (POWER TRAIN OIL FILTER)	176
	4	1	**334-2679**	1	SPRING	
	5	1	**334-2680**	1	SPRING	
	6	1	**5P-7815**	1	SEAL-O-RING	
	7	1	**6V-5050**	1	SEAL-O-RING	
	8	1	**9S-8008**	1	PLUG-O-RING	
					PARTS SHOWN IN GRAPHIC(S) WITHOUT A REFERENCE NUMBER ARE NOT SERVICED SEPARATELY	

Y-SEPARATE ILLUSTRATION

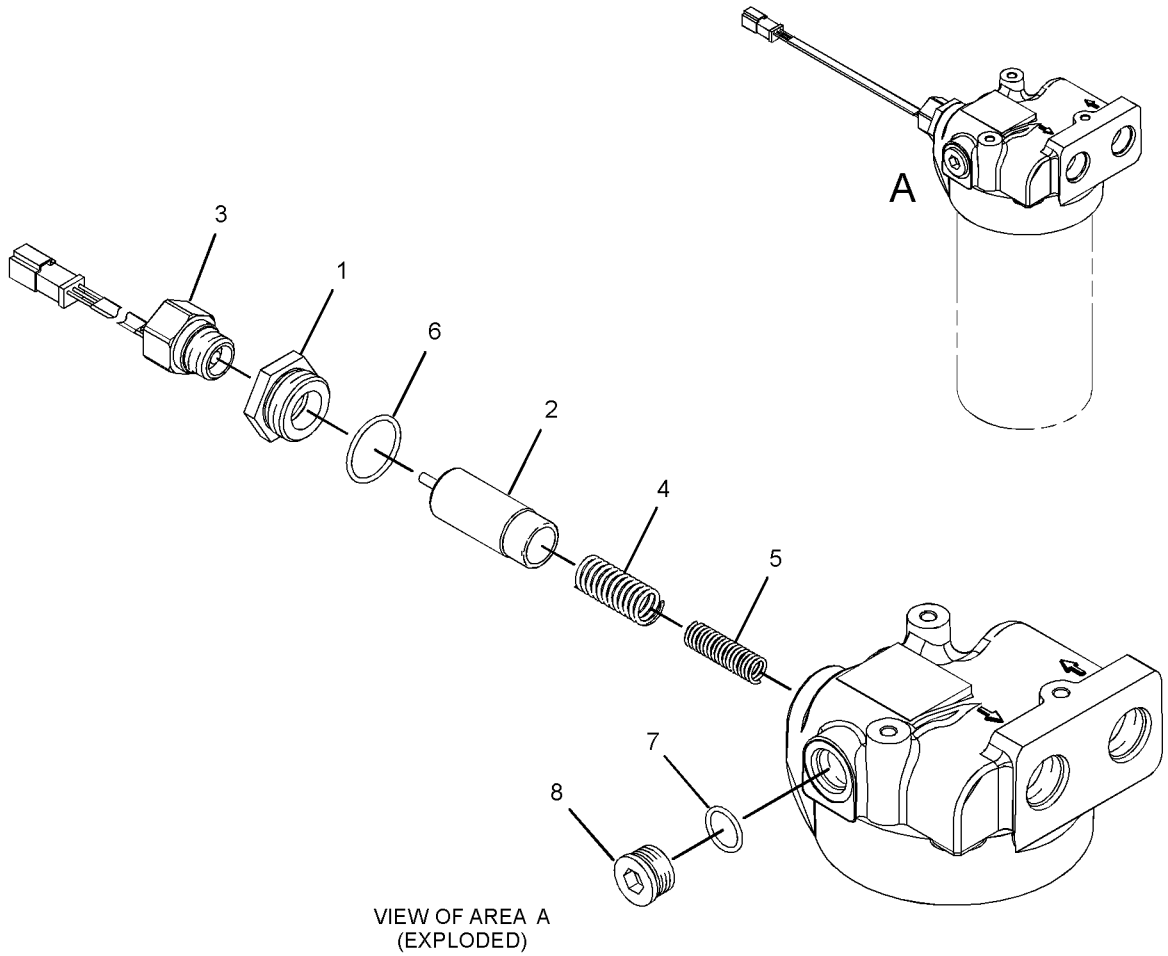

VIEW OF AREA A
(EXPLODED)

GRAPHIC #1 **<END>** g01863853

POWER TRAIN

277-6433 CASE & PARTS GP-PLANETARY

S/N: DMJ1-UP

PART OF 275-6535 TRANSMISSION AR

SMCS-3030, 3064, 3160 **i03304315**

NOTE	REF NO	GRAPHIC REF	PART NUMBER	QTY	PART NAME 1 2 3 4 5 6 (PRODUCT LEVEL)	SEE PAGE
	1	1	**277-6430**	1	CASE AS-TRANSMISSION	
		1	**7T-6496**	7	PLUG	
		1	**8M-6521**	2	DOWEL	
	2	1	**277-6432**	1	COVER AS-TRANSMISSION	
		1	**7T-6496**	1	PLUG	
M	3	1	**6V-1820**	37	BOLT (M10X1.5X30-MM)	
M	4	1	**8T-5436**	2	BOLT (M10X1.5X130-MM)	
	5	1,2	*148-8395*	4	PLUG AS	
					(EACH INCLUDES)	
		1,2	**9S-8005**	1	PLUG-O-RING	
		1,2	**3K-0360**	1	SEAL-O-RING	
	6	2	**3K-0360**	2	SEAL-O-RING	
	7	1	**2J-0157**	1	SEAL-O-RING	
B	8	2	**1U-8846**		SEALANT-GASKET	
	9	1	**8T-6765**	1	PLUG-PIPE	
	10	1	**5M-6200**	1	SEAL-O-RING	
	11	1	**8E-1133**	1	TUBE AS	
	12	1	**6L-1650**	1	SEAL-O-RING	
M	13	1,2,3	**6V-5217**	15	BOLT (M8X1.25X20-MM)	
	14	1,2,3	**5P-3863**	5	SEAL-O-RING	
	15	1,2,3	**9W-1454**	5	COVER	
	16	1	**8S-9129**	1	FILTER-MAGNETIC (TRANSMISSION)	
	17	1	**8S-9130**	1	SCREEN-SUCTION (TRANSMISSION)	
	18	3	**4M-6108**	2	RACE-BEARING OUTER	
	19	1	**148-1925**	2	VALVE-RELIEF	
	20	1	**9X-4609**	2	SEAL-O-RING	
	21	3	**9W-7038**	1	RING-SNAP	
M	22	3	**6V-3940**	4	BOLT (M8X1.25X25-MM)	
	23	3	**6Y-9763**	1	GEAR AS	
		3	**6Y-1007**	1	GEAR (38-TEETH)	
		3	**4K-8603**	1	PLUG-CUP	
	24	3	**2S-3029**	1	BALL BEARING	
	25	3	**9W-6465**	1	RETAINER-BEARING	
	26	2	*164-5619*	6	PLUG AS	
					(EACH INCLUDES)	
		2	**9S-8006**	1	PLUG-O-RING	
		2	**2M-9780**	1	SEAL-O-RING	
	28	2	*162-0177*	1	PLUG AS	
		2	**9S-8004**	1	PLUG-O-RING	
		2	**3J-1907**	1	SEAL-O-RING	
	29	1	**3J-1907**	1	SEAL-O-RING	
	30	1,2	**8T-4121**	10	WASHER-HARD (11X21X2.5-MM THK)	
	31	2	**190-1684**	1	PLATE AS	
M	32	2	**6V-8212**	1	BOLT (M10X1.5X16-MM)	
	33	2	*197-4977*	1	PLUG AS	
		2	**5P-4483**	1	PLUG-O-RING	
		2	**7M-8485**	1	SEAL-O-RING	
M	35	2	**6V-7981**	5	BOLT (M10X1.5X70-MM)	
M	36	2	**6V-4248**	7	BOLT (M10X1.5X25-MM)	
	39	2,3	**6I-8642**	4	RACE-BEARING OUTER	
	40	3	**5P-3924**	2	RACE-BEARING OUTER	
	41	3	**9M-2042**	1	RACE-BEARING OUTER	
	42	3	**2H-6489**	1	RACE-BEARING OUTER	
	43	2	**226-6621**	1	HARNESS AS-SENSOR (SPEED)	
	44	2	**191-9256**	2	CLIP	
M	45	1,2	**8T-4137**	4	BOLT (M10X1.5X20-MM)	

277-6433 CASE & PARTS GP-PLANETARY *(contd.)* i03304315

NOTE	REF NO	GRAPHIC REF	PART NUMBER	QTY	PART NAME 1 2 3 4 5 6 (PRODUCT LEVEL)	SEE PAGE
	46	2	**6V-1720**	1	PLATE-SERIAL NUMBER (TRANSMISSION)	
Y	47	2	**290-5792**	2	SENSOR GP-SPEED (TRANSMISSION OUTPUT)	168
	48	2	**201-0387**	1	CLIP AS	
M	49	2	**8T-4133**	1	NUT (M10X1.5-THD)	
	50	2	**143-5373**	1	GUARD AS	
	51	1	**5P-9299**	1	CLIP	
Y	52	1	**3E-8700**	1	SENSOR GP-TEMPERATURE (TRANSMISSION OIL)	169
	53	1	**4P-7581**	1	CLIP	
	54	1	*164-4180*	3	PLUG AS	
					(EACH INCLUDES)	
		1	**9S-4181**	1	PLUG-O-RING	
		1	**7M-8485**	1	SEAL-O-RING	
	55	1	**1B-5174**	1	PLUG-PIPE	
	56	2	**113-7745**	1	PLATE AS	
	57	1	**7K-1181**	1	STRAP-CABLE	
	58	2	**145-8039**	3	LOCK	
	59	1	**130-5300**	1	CLIP	
	60	3	**278-0642**	1	SEAL-LIP TYPE	

B-USE AS REQUIRED
M-METRIC PART
Y-SEPARATE ILLUSTRATION

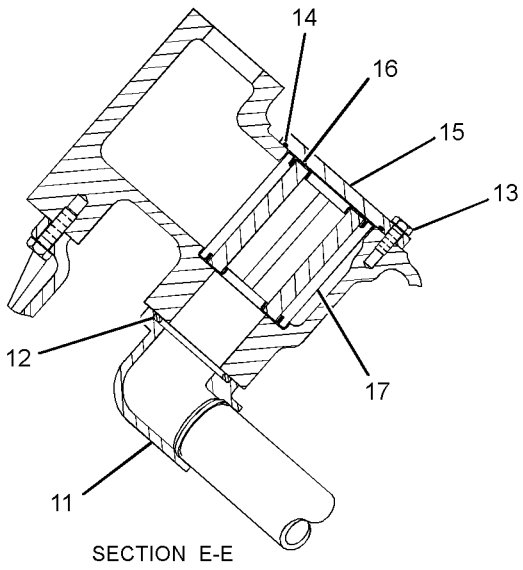

SECTION E-E

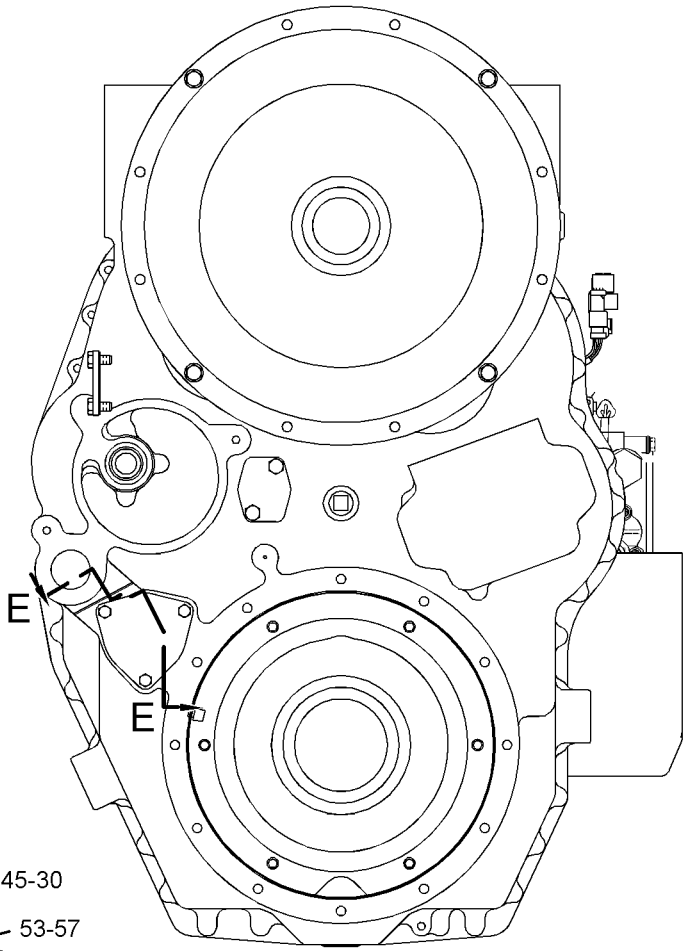

FRONT VIEW

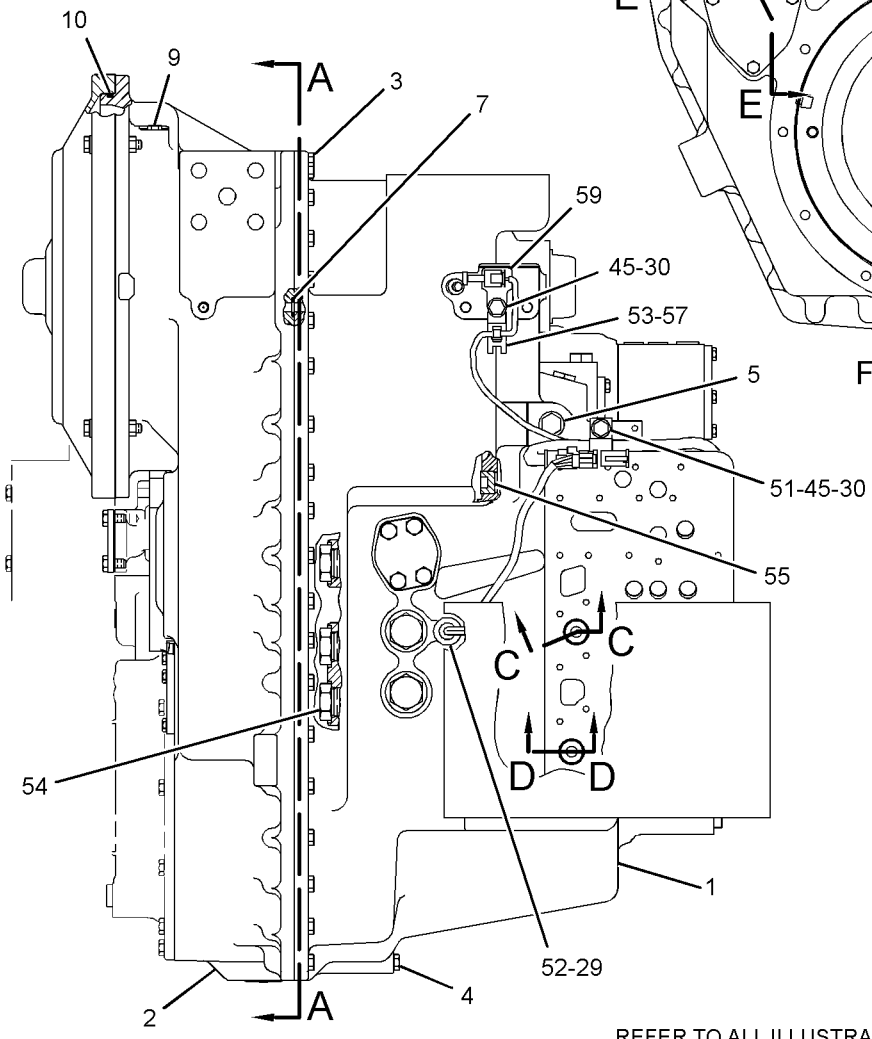

LEFT SIDE VIEW

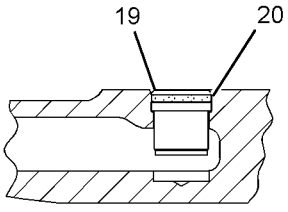

SECTION C-C

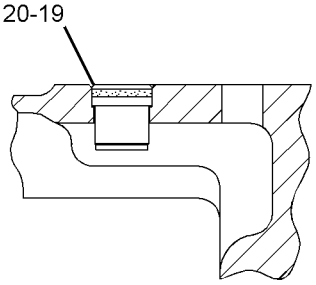

SECTION D-D

REFER TO ALL ILLUSTRATIONS OF THIS GROUP FOR AUXILIARY VIEWS

GRAPHIC #1

g01772113

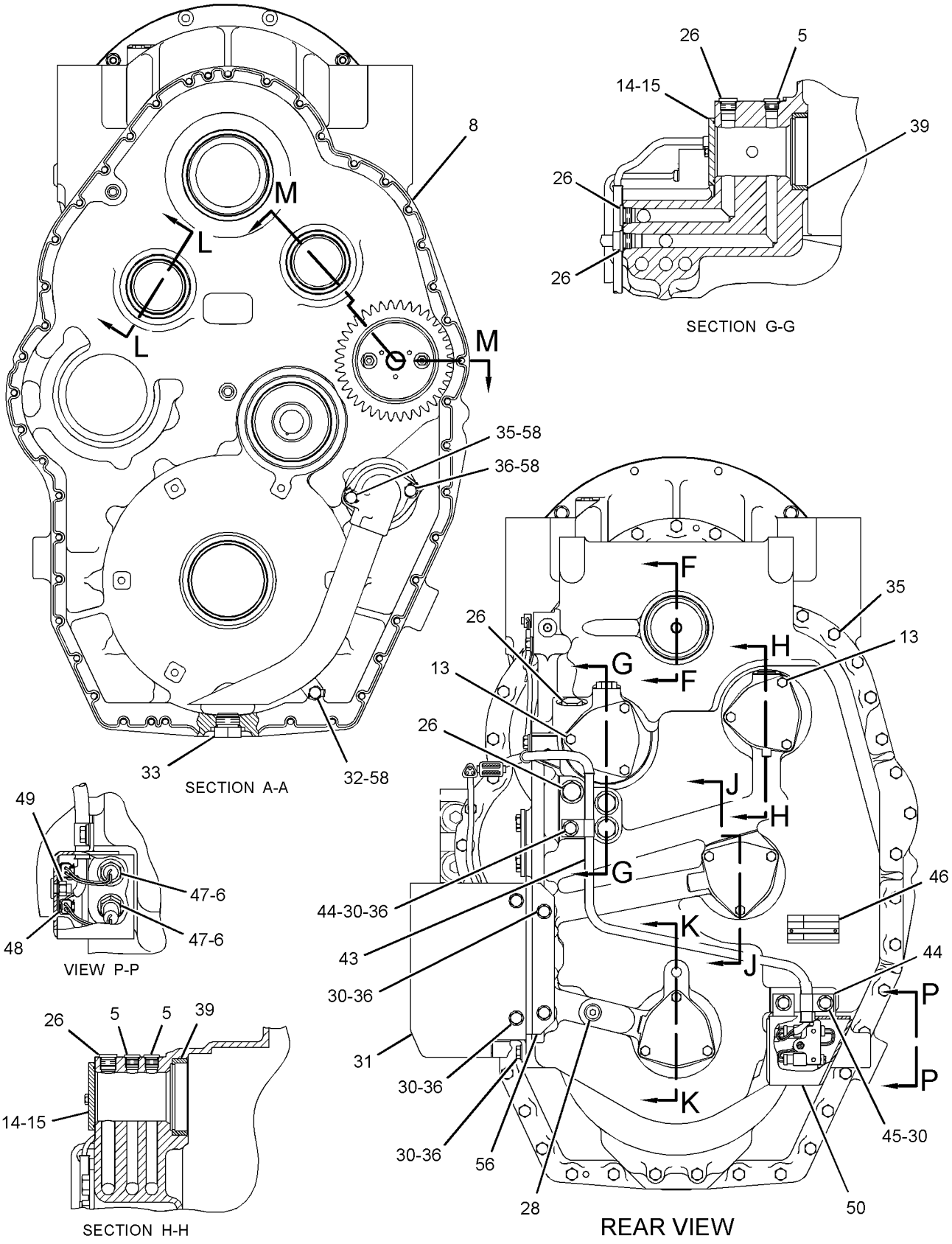

GRAPHIC #2

g01789333

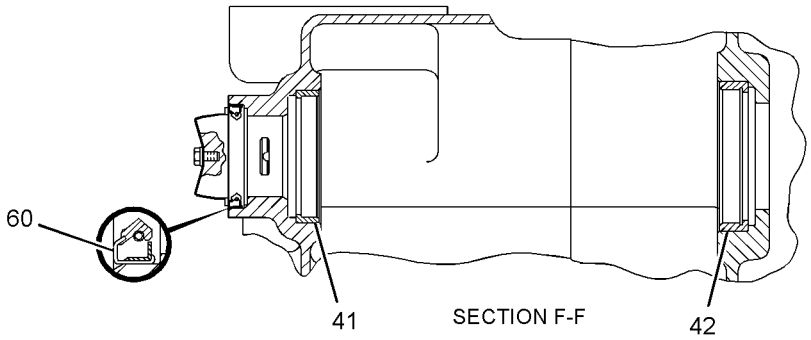

SECTION F-F

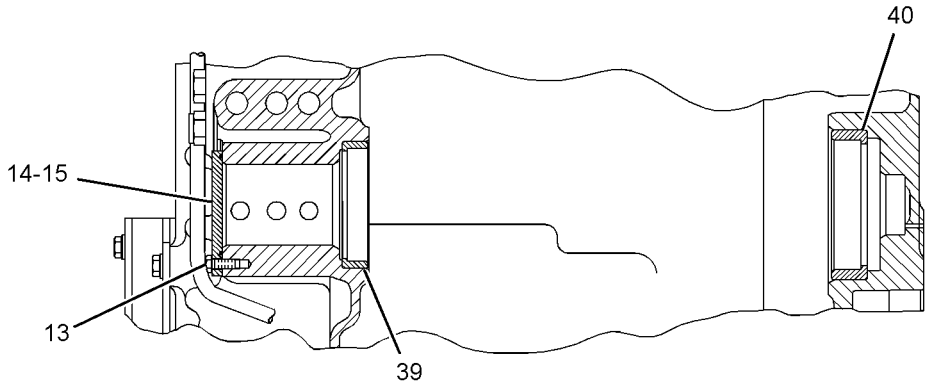

SECTION J-J

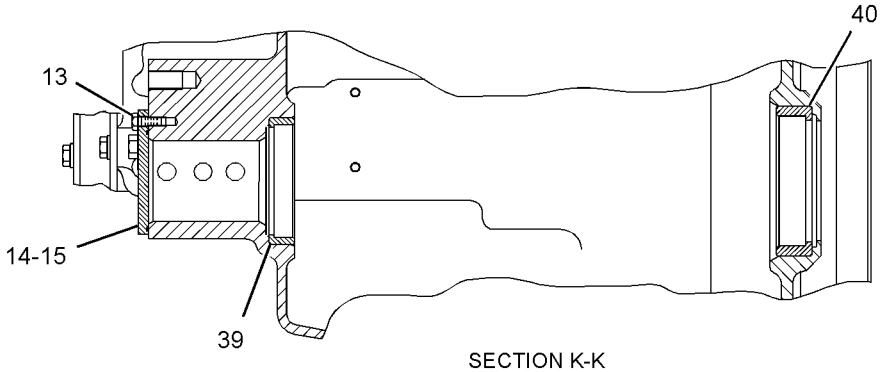

SECTION K-K

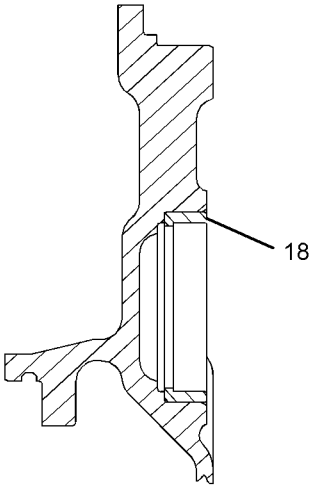

SECTION L-L

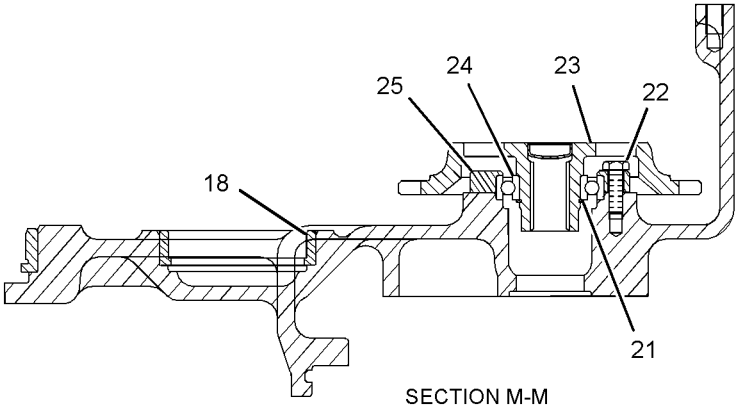

SECTION M-M

GRAPHIC #3 **<END>** g01772115

6G-1755 CHAIN GP-DRIVE

S/N: JJA1-UP

PART OF 346-3710 GENERAL AR

SMCS-3261, 4063 **i02202894**

NOTE	REF NO	GRAPHIC REF	PART NUMBER	QTY	PART NAME 1 2 3 4 5 6 (PRODUCT LEVEL)	SEE PAGE
	1	1	**6G-1633**	4	CHAIN GP	
					(EACH INCLUDES)	
	2	1	**6G-1631**	1	LINK-CONNECTING	
					(CHAIN TO CONSIST OF 24 PIN LINKS, 25 ROLLER LINKS, 1 CONNECTING LINK & COTTERS)	

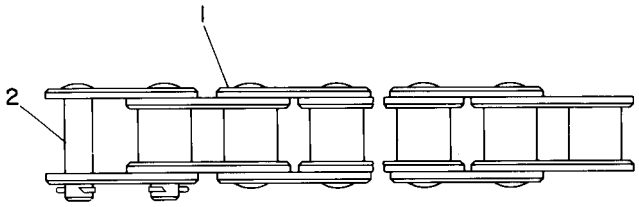

GRAPHIC #1 **<END>** g00108322

6Y-2303 CLUTCH GP-TRANSMISSION–1ST & 3RD

S/N: DMJ1-UP

PART OF 275-6535 TRANSMISSION AR

SMCS-3063, 3155, 3170 **i03576180**

NOTE	REF NO	GRAPHIC REF	PART NUMBER	QTY	PART NAME 1 2 3 4 5 6 (PRODUCT LEVEL)	SEE PAGE
	1	1,2	**6Y-1878**	1	SHAFT AS (64-TEETH)	
	2	1,2	**6Y-1000**	1	GEAR (69-TEETH)	
	3	1,2	**132-9630**	1	GEAR AS (54-TEETH)	
	4	1,2	**6Y-1895**	1	BEARING-SLEEVE	
	5	1,2	**3B-8921**	1	BEARING-INNER	
	6	1,2	**265-5287**	1	RING-SEAL	
	7	1,2	**7T-4897**	2	DISC-THRUST	
	8	1,2	**6Y-1891**	1	HUB AS	
	9	1,2	**8E-5734**	2	RING-SEAL EXTENSION	
	10	1,2	**6Y-1887**	2	PISTON	
	11	1,2	**5H-8985**	1	PIN-SPRING	
	12	1,2	**6I-8912**	10	DISC-FRICTION	
	13	1,2	**6I-9502**	8	PLATE-CLUTCH	
	14	1,2	**6Y-2312**	1	HUB AS	
	15	1,2	**132-9633**	1	GEAR AS (79-TEETH)	
	16	1,2	**6Y-2419**	1	BEARING-SLEEVE	
	17	1,2	**131-3919**	1	BEARING-ROLLER	
	18	1,2	**7G-4822**	3	RING-SEAL	
M	19	1,2	**6V-1819**	2	BOLT (M10X1.5X100-MM)	
	20	1,2	**6Y-2425**	1	CARRIER-SEAL	
	21	1,2	**8F-3469**	3	SEAL-O-RING	
	22	1,2	**8E-8319**	4	DISC-THRUST	
	23	1,2	**6Y-1115**	4	RING-HALF	
	24	1,2	**6Y-1114**	2	LOCKWASHER	
	25	1,2	**9W-9905**	4	RING-LOCK	
	26	1,2	**102-5881**	2	SPRING-WAVE	
	27	1,2	**8E-5742**	2	RING-SEAL	
	28	1,2	**6Y-0982**	1	GEAR (30-TEETH)	

M-METRIC PART

6Y-2303 **CLUTCH GP-TRANSMISSION** *(contd.)* **i03576180**

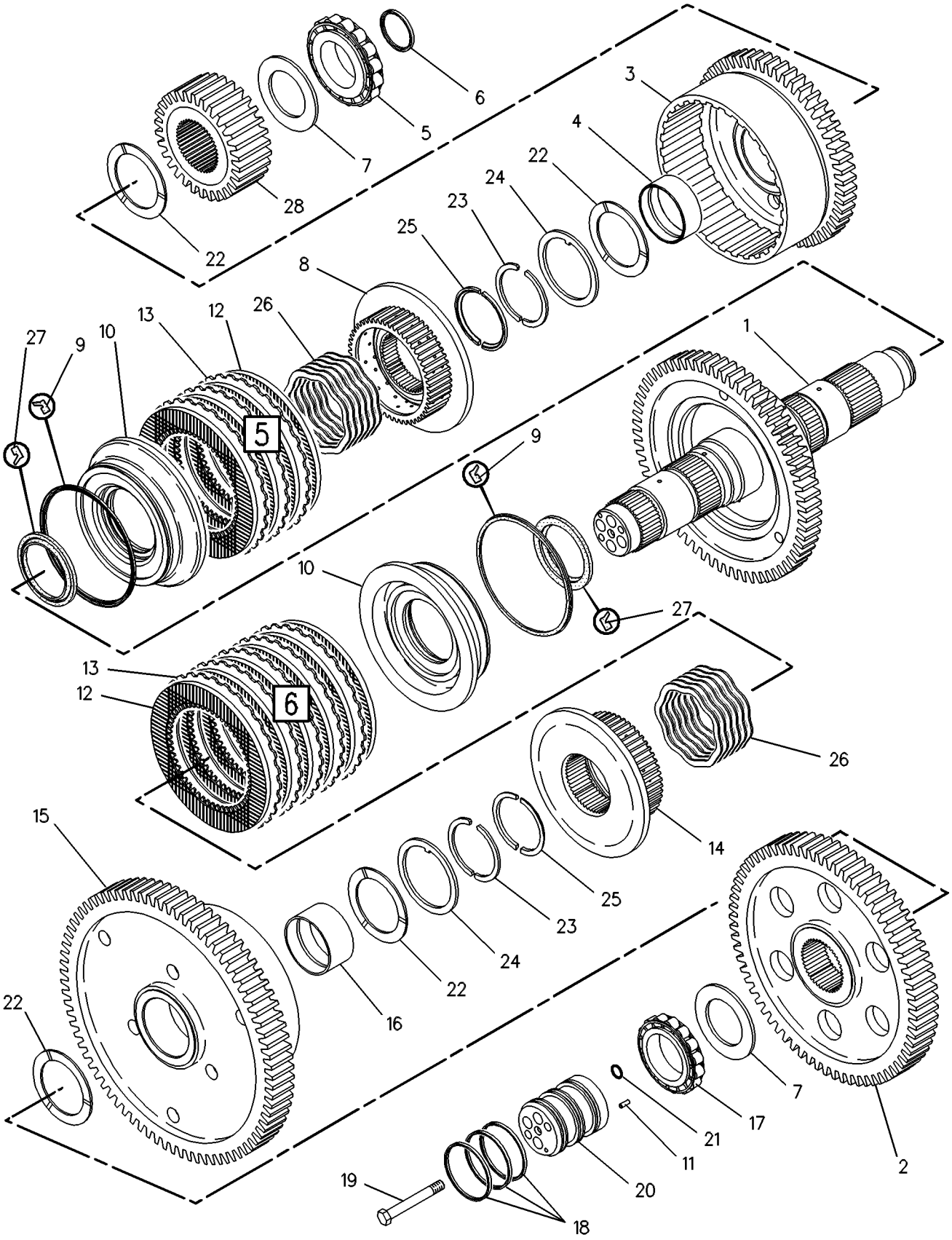

GRAPHIC #1 g00108910

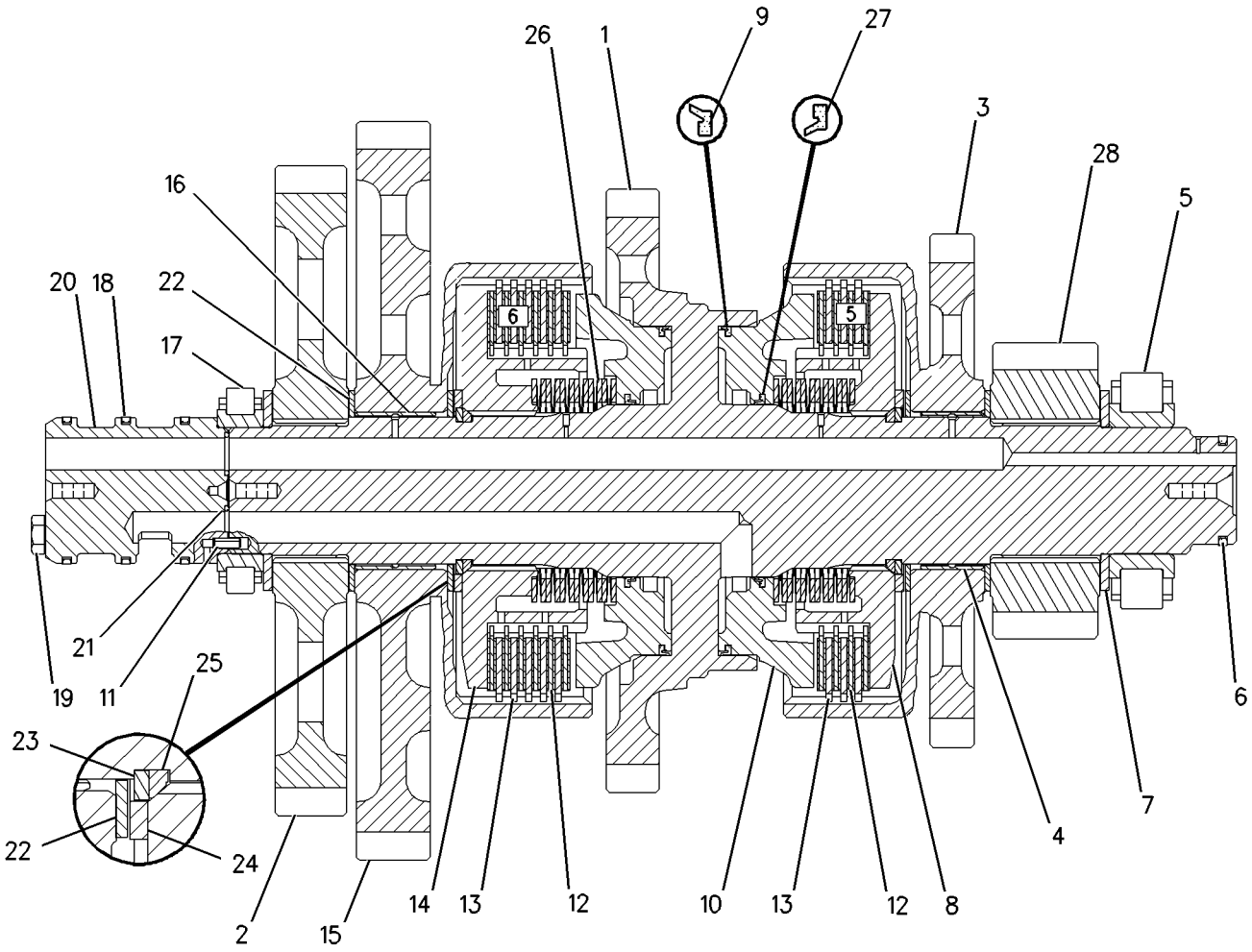

GRAPHIC #2 **<END>** g00775655

8E-9316 CLUTCH GP-TRANSMISSION—HI & LO

S/N: DMJ1-UP

PART OF 275-6535 TRANSMISSION AR

SMCS-3063, 3155, 3170 **i02826169**

NOTE	REF NO	GRAPHIC REF	PART NUMBER	QTY	PART NAME 1 2 3 4 5 6 (PRODUCT LEVEL)	SEE PAGE
	1	1	**307-6260**	1	SHAFT AS	
	2	1	**8M-4295**	15	SPRING	
	3	1	**6Y-2428**	1	PISTON	
	4	1	**6Y-1890**	1	RING-RETAINING	
	5	1	**9W-9905**	4	RING-LOCK	
	6	1	**6Y-1114**	2	LOCKWASHER	
	7	1	**6Y-1115**	4	RING-HALF	
	8	1	**8E-8319**	4	DISC-THRUST	
	9	1	**7T-4897**	1	DISC-THRUST	
	10	1	**3B-8921**	1	BEARING-INNER	
	11	1	**8E-1913**	1	GEAR AS (84-TEETH)	
	12	1	**9W-6467**	2	BEARING-SLEEVE	
	13	1	**6Y-7981**	7	DISC-FRICTION	
	14	1	**3P-0337**	8	PLATE-CLUTCH	
	15	1	**8E-5736**	2	RING-SEAL EXTENSION	
	16	1	**6Y-2429**	1	PISTON-BALANCE	
	17	1	**102-5881**	1	SPRING-WAVE	
	18	1	**8E-5742**	2	RING-SEAL	
	19	1	**8E-5734**	1	RING-SEAL EXTENSION	
	20	1	**6I-9502**	5	PLATE-CLUTCH	
	21	1	**6I-8912**	6	DISC-FRICTION	
	22	1	**132-9635**	1	GEAR AS (45-TEETH)	
	23	1	**9W-6467**	2	BEARING-SLEEVE	
	24	1	**131-3919**	1	BEARING-ROLLER	
	25	1	**6Y-2425**	1	CARRIER-SEAL	
M	26	1	**6V-1819**	2	BOLT (M10X1.5X100-MM)	
	27	1	**7G-4822**	3	RING-SEAL	
	28	1	**8F-3469**	3	SEAL-O-RING	
	29	1	**6Y-2312**	1	HUB AS	
	30	1	**5H-8985**	1	PIN-SPRING	
	31	1	**6Y-1887**	1	PISTON	
	32	1	**218-3339**	1	HUB AS	
	33	1	**8E-1161**	1	ROTOR	

M-METRIC PART

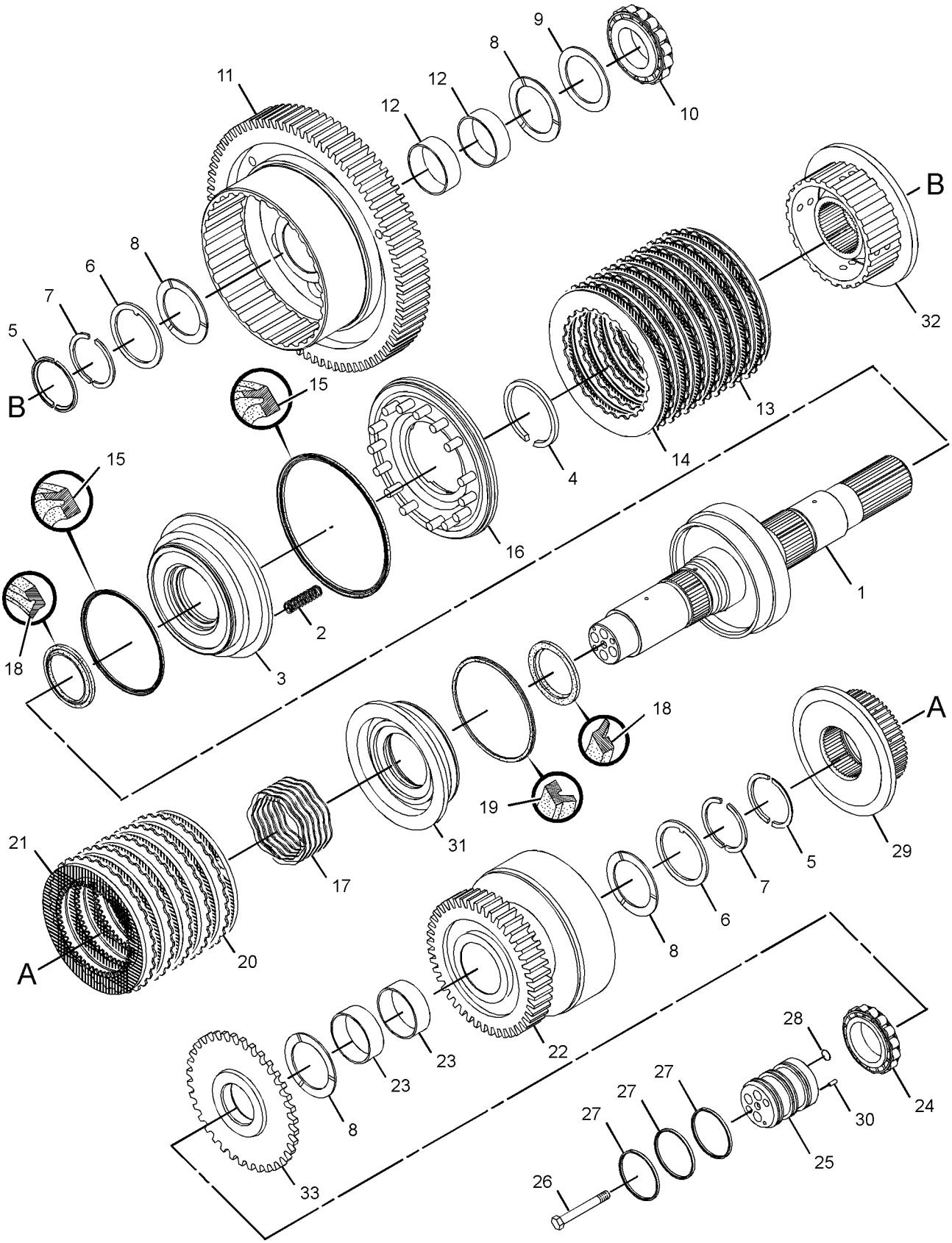

GRAPHIC #1 **<END>** g01525201

235-2412 CLUTCH GP-TRANSMISSION—FORWARD

S/N: DMJ1-UP

PART OF 275-6535 TRANSMISSION AR

SMCS-3063, 3155, 3170 **i02774944**

NOTE	REF NO	GRAPHIC REF	PART NUMBER	QTY	PART NAME 1 2 3 4 5 6 (PRODUCT LEVEL)	SEE PAGE
	1	1	**6I-8911**	5	DISC-FRICTION	
	2	1	**6I-8912**	6	DISC-FRICTION	
	3	1	**6I-9502**	6	PLATE-CLUTCH	
	4	1	**6Y-1115**	4	RING-HALF	
	5	1	**6Y-1116**	1	GEAR AS (43-TEETH)	
	6	1	**6Y-1119**	1	CARRIER-SEAL	
	7	1	**7G-4822**	3	RING-SEAL	
	8	1	**7T-4897**	2	DISC-THRUST	
	9	1	**8E-5742**	2	RING-SEAL	
	10	1	**8E-8319**	4	DISC-THRUST	
	11	1	**8F-3469**	4	SEAL-O-RING	
	12	1	**9U-8815**	2	SPRING	
	13	1	**9U-9995**	6	PLATE-CLUTCH	
	14	1	**9W-2029**	1	RACE-THRUST BEARING	
	15	1	**9W-9371**	2	RING-SEAL	
	16	1	**9W-9905**	4	RING-LOCK	
	17	1	**108-5751**	2	DISC-FRICTION	
	18	1	**132-9625**	1	GEAR AS (50-TEETH)	
	19	1	**159-0308**	2	PISTON	
	20	1	**159-0927**	1	DISC-FRICTION	
	21	1	**161-6713**	2	PLATE-LOCK	
	22	1	**171-7091**	1	SHAFT AS	
	23	1	**247-8629**	2	VALVE AS	
	24	1	**247-9711**	2	HUB AS	
	25	1	**2K-1738**	1	BEARING-INNER	
	26	1	**4M-6107**	1	BEARING-INNER	
M	27	1	**5C-7423**	4	SCREW (M6X1X16-MM)	
	28	1	**5H-8985**	1	PIN-SPRING	
M	29	1	**6V-1819**	2	BOLT (M10X1.5X100-MM)	
	30	1	**8E-1263**	2	BEARING-ROLLER	

M-METRIC PART

235-2412 **CLUTCH GP-TRANSMISSION** *(contd.)* **i02774944**

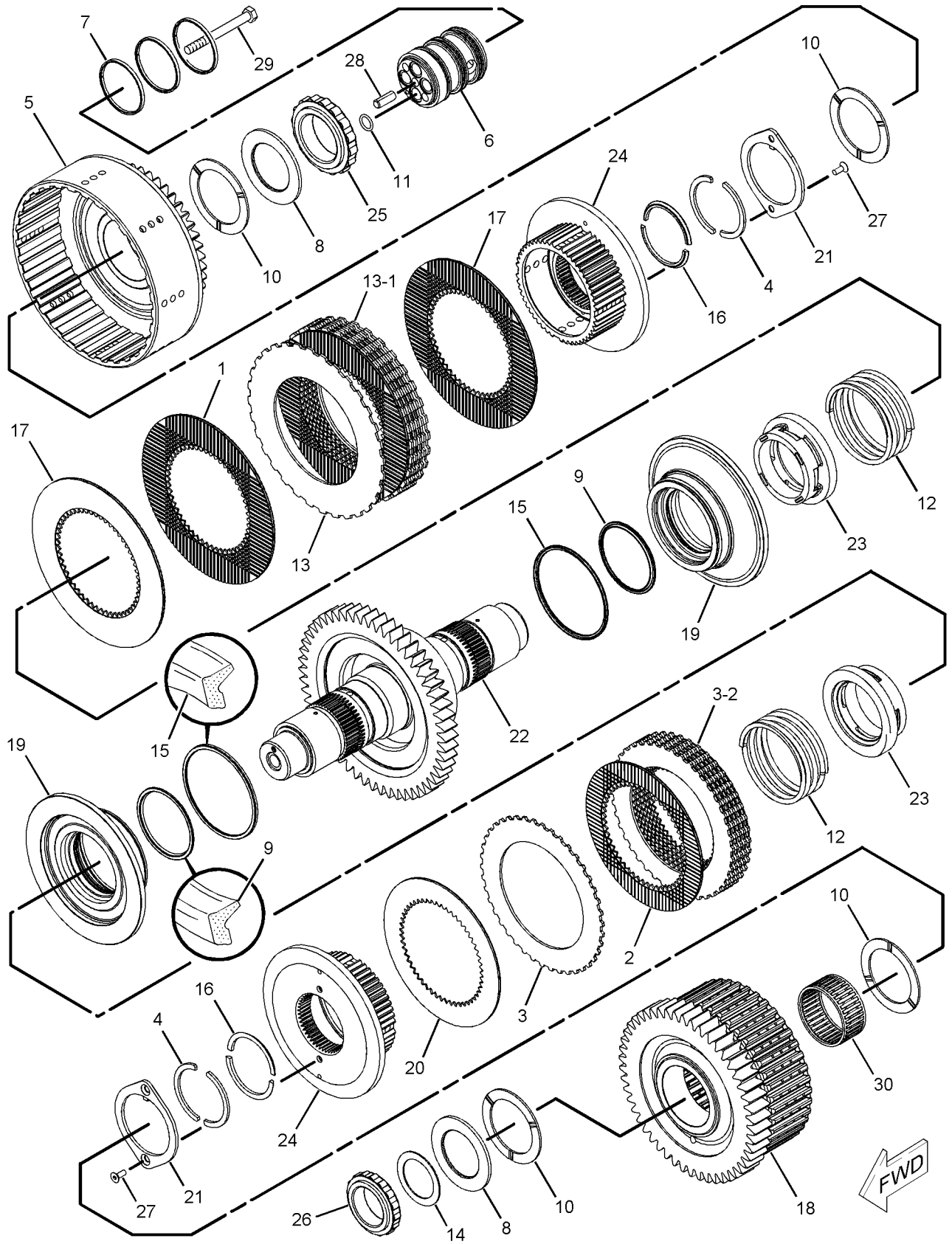

GRAPHIC #1 **<END>** g01137840

235-2413 CLUTCH GP-TRANSMISSION—REVERSE, SECOND

S/N: DMJ1-UP

PART OF 275-6535 TRANSMISSION AR

SMCS-3063, 3155, 3170 **i02774946**

NOTE	REF NO	GRAPHIC REF	PART NUMBER	QTY	PART NAME 1 2 3 4 5 6 (PRODUCT LEVEL)	SEE PAGE
	1	1	**131-3919**	1	BEARING-ROLLER	
	2	1	**4M-6107**	1	BEARING-INNER	
	3	1	**8E-1263**	1	BEARING-ROLLER	
	4	1	**6I-8912**	10	DISC-FRICTION	
	5	1	**6I-9502**	9	PLATE-CLUTCH	
	6	1	**6Y-0976**	1	GEAR (29-TEETH)	
	7	1	**6Y-1114**	1	LOCKWASHER	
	8	1	**6Y-1115**	4	RING-HALF	
	9	1	**6Y-1119**	1	CARRIER-SEAL	
	10	1	**6Y-1887**	1	PISTON	
	11	1	**6Y-1888**	1	PLATE-CLUTCH	
	12	1	**6Y-1891**	1	HUB AS	
	13	1	**6Y-2307**	1	SPACER (61X82.55X43.88-MM THK)	
	14	1	**7G-4822**	3	RING-SEAL	
	15	1	**7T-4897**	1	DISC-THRUST	
	16	1	**8E-5734**	1	RING-SEAL EXTENSION	
	17	1	**8E-5742**	2	RING-SEAL	
	18	1	**8E-8319**	4	DISC-THRUST	
	19	1	**8F-3469**	4	SEAL-O-RING	
	20	1	**9U-8815**	1	SPRING	
	21	1	**9W-2029**	1	RACE-THRUST BEARING	
	22	1	**9W-9371**	1	RING-SEAL	
	23	1	**9W-9905**	4	RING-LOCK	
	24	1	**102-5881**	1	SPRING-WAVE	
	25	1	**132-9628**	1	GEAR AS (44-TEETH)	
		1	**6Y-1895**	1	BEARING-SLEEVE	
	26	1	**159-0308**	1	PISTON	
	27	1	**159-0927**	1	DISC-FRICTION	
	28	1	**161-6713**	1	PLATE-LOCK	
	29	1	**171-7095**	1	SHAFT AS	
	30	1	**247-8629**	1	VALVE AS	
	31	1	**247-9711**	1	HUB AS	
	32	1	**248-2886**	1	GEAR AS (46-TEETH)	
M	33	1	**5C-7423**	2	SCREW (M6X1X16-MM)	
	34	1	**5H-8985**	1	PIN-SPRING	
M	35	1	**6V-1819**	2	BOLT (M10X1.5X100-MM)	

M-METRIC PART

235-2413 **CLUTCH GP-TRANSMISSION** *(contd.)* **i02774946**

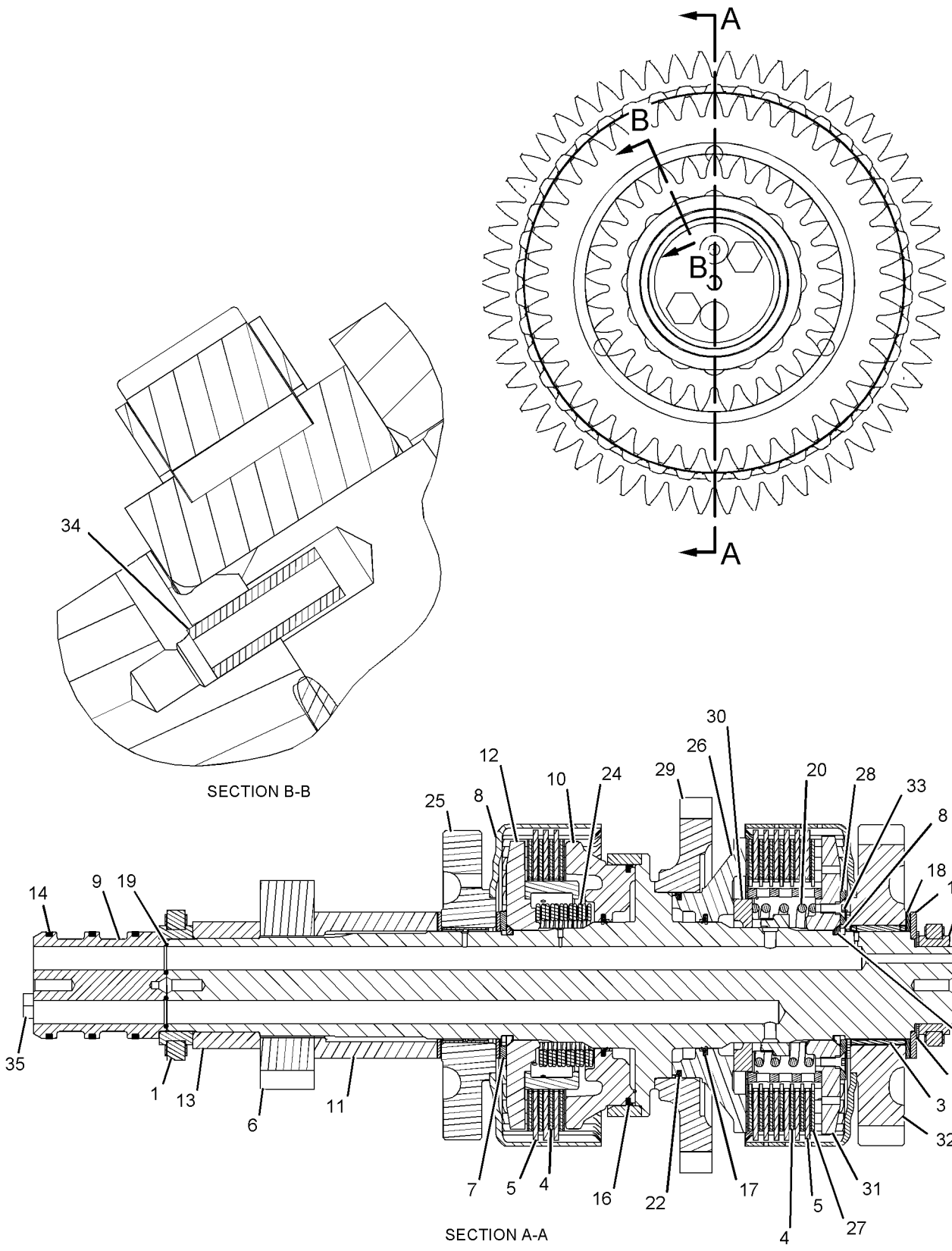

GRAPHIC #1 **<END>** g01132487

316-8363 CONTROL GP-DIFFERENTIAL LOCK

S/N: JJA1-UP

PART OF 346-3710 GENERAL AR

SMCS-3264 **i03568369**

NOTE	REF NO	GRAPHIC REF	PART NUMBER	QTY	PART NAME 1 2 3 4 5 6 (PRODUCT LEVEL)	SEE PAGE
	1	1	**6D-0580**	1	TUBE	
	2	1	**6V-0852**	1	CAP-DUST	
I	3	1	**7T-1159**	1	HOSE AS	
	4	1	**9G-9154**	1	CLIP	
	5	1	**165-9928**	1	PLATE	
Y	6	1	**174-3705**	1	VALVE & MTG GP-DIFF LOCK	258
	7	1	*180-9933*	1	ADAPTER GP (90-DEG)	
		1	**135-9941**	1	ADAPTER	
		1	**3J-7354**	1	SEAL-O-RING	
I	8	1	**313-6977**	1	HOSE AS	
	9	1	**130-5300**	1	CLIP	
	10	1	*139-2119*	1	SWITCH AS-ROCKER (DIFFERENTIAL LOCK)	
		1	**139-2120**	1	SWITCH AS	
		1	**3E-8825**	2	LAMP (24-VOLT)	
		1	**123-5861**	1	ACTUATOR	
	11	1	*148-8316*	1	CONNECTOR AS	
		1	**6V-8647**	1	CONNECTOR	
		1	**3J-7354**	1	SEAL-O-RING	
		1	**4J-5477**	1	SEAL-O-RING	
	12	1	*148-8368*	1	ELBOW AS	
		1	**6V-8627**	1	ELBOW	
		1	**3J-1907**	1	SEAL-O-RING	
		1	**4J-5477**	1	SEAL-O-RING	
	13	1	*148-8369*	1	ELBOW AS	
		1	**6V-8628**	1	ELBOW	
		1	**3J-7354**	1	SEAL-O-RING	
		1	**4J-5477**	1	SEAL-O-RING	
	14	1	*156-4281*	1	TEE AS	
		1	**7X-0838**	1	TEE-O-RING	
		1	**3J-7354**	1	SEAL-O-RING	
		1	**6V-8397**	2	SEAL-O-RING	
	15	1	*164-5567*	1	COUPLER AS-QUICK DISCONNECT (MALE)	
		1	**6V-3965**	1	FITTING (QUICK DISCONNECT)	
		1	**214-7568**	1	SEAL-O-RING	
	16	1	**174-5907**	1	CLIP	
	17	1	**4J-2506**	2	SEAL-O-RING	
	18	1	**4K-8864**	2	CLIP	
	19	1	**4P-8134**	1	CLIP	
	20	1	**4S-1962**	1	CLIP	
	21	1	**8M-4438**	2	SEAL-O-RING	
	22	1	**8T-2501**	2	BOLT (3/8-16X2-IN)	
	23	1	**8T-4121**	5	WASHER-HARD (11X21X2.5-MM THK)	
M	24	1	**8T-4133**	2	NUT (M10X1.5-THD)	
M	25	1	**8T-4136**	2	BOLT (M10X1.5X25-MM)	
M	26	1	**8T-4195**	1	BOLT (M10X1.5X30-MM)	
	27	1	**8T-4896**	2	WASHER-HARD (10.2X18.5X2.5-MM THK)	
	28	1	**8X-5489**	1	SLEEVE	
	29	1	**9X-6772**	1	STRAP-CABLE	

I-REFER TO HYDRAULIC INFORMATION SYSTEM
M-METRIC PART
Y-SEPARATE ILLUSTRATION

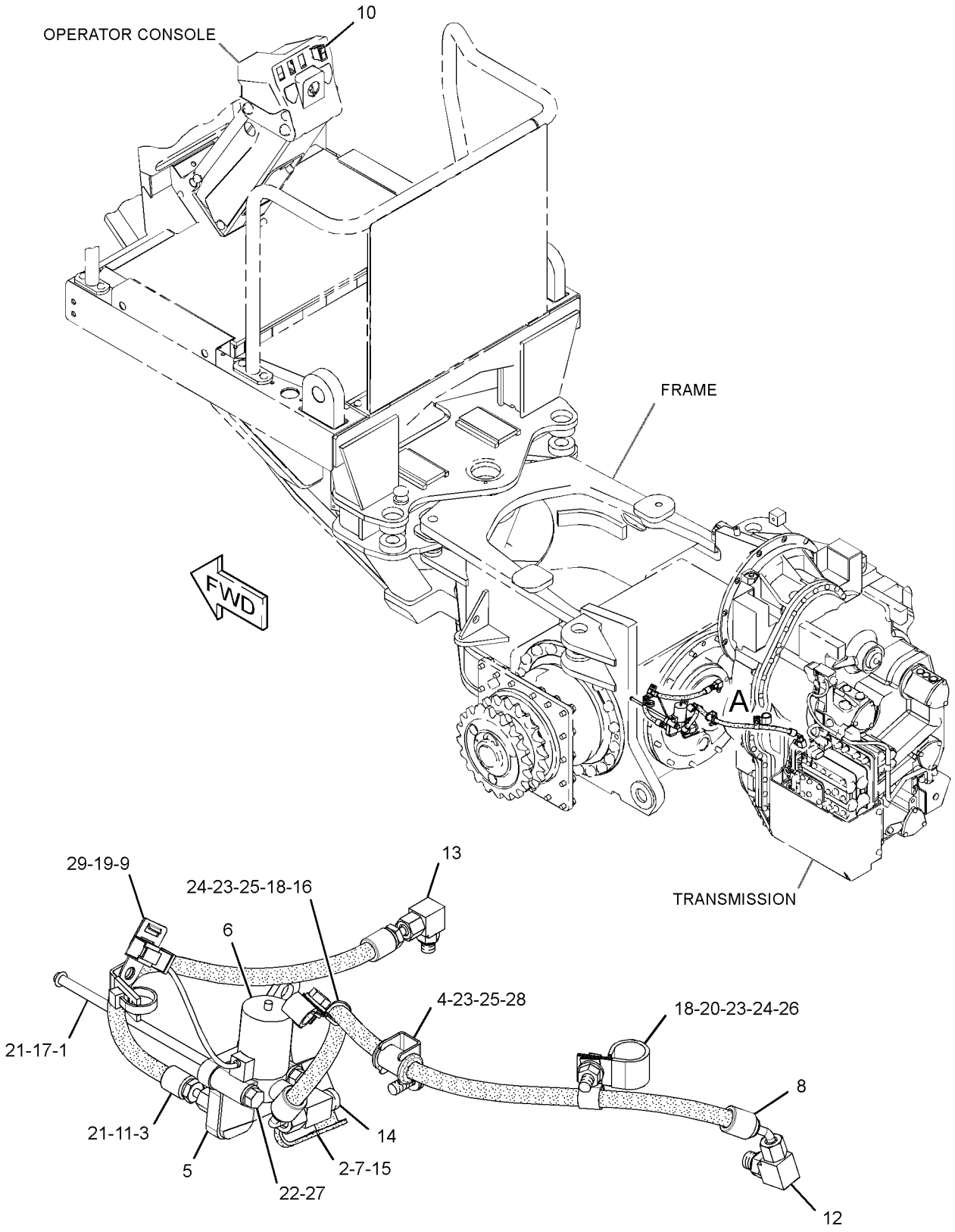

VIEW OF AREA A

GRAPHIC #1 **<END>** g01943680

281-3165 CONTROL GP-TRANSMISSION HYD

S/N: DMJ1-UP

PART OF 275-6535 TRANSMISSION AR

SMCS-3073, 3167 **i02490493**

NOTE	REF NO	GRAPHIC REF	PART NUMBER	QTY	PART NAME 1 2 3 4 5 6 (PRODUCT LEVEL)	SEE PAGE
Y	1	1	**281-3163**	1	VALVE GP-TRANSMISSION CONTROL	267
M	2	1	**6V-3918**	5	BOLT (M8X1.25X50-MM)	
	3	1	**9P-9150**	66	WASHER (8.25X18X0.84-MM THK)	
	4	1	**1T-0738**	31	WASHER (8.4X19X1.83-MM THK)	
M	5	1	**8C-4984**	14	BOLT (M8X1.25X150-MM)	
M	6	1	**3E-8005**	14	BOLT (M8X1.25X160-MM)	
	7	1	**4S-5879**	1	SEAL-O-RING	
Y	8	1	*180-9324*	1	WIRING GP-TRANSMISSION	214
M	9	1	**8T-0639**	2	BOLT (M6X1X12-MM)	
M	10	1	**6V-5217**	3	BOLT (M8X1.25X20-MM)	
	11	1	**198-7657**	1	BLOCK	

M-METRIC PART
Y-SEPARATE ILLUSTRATION

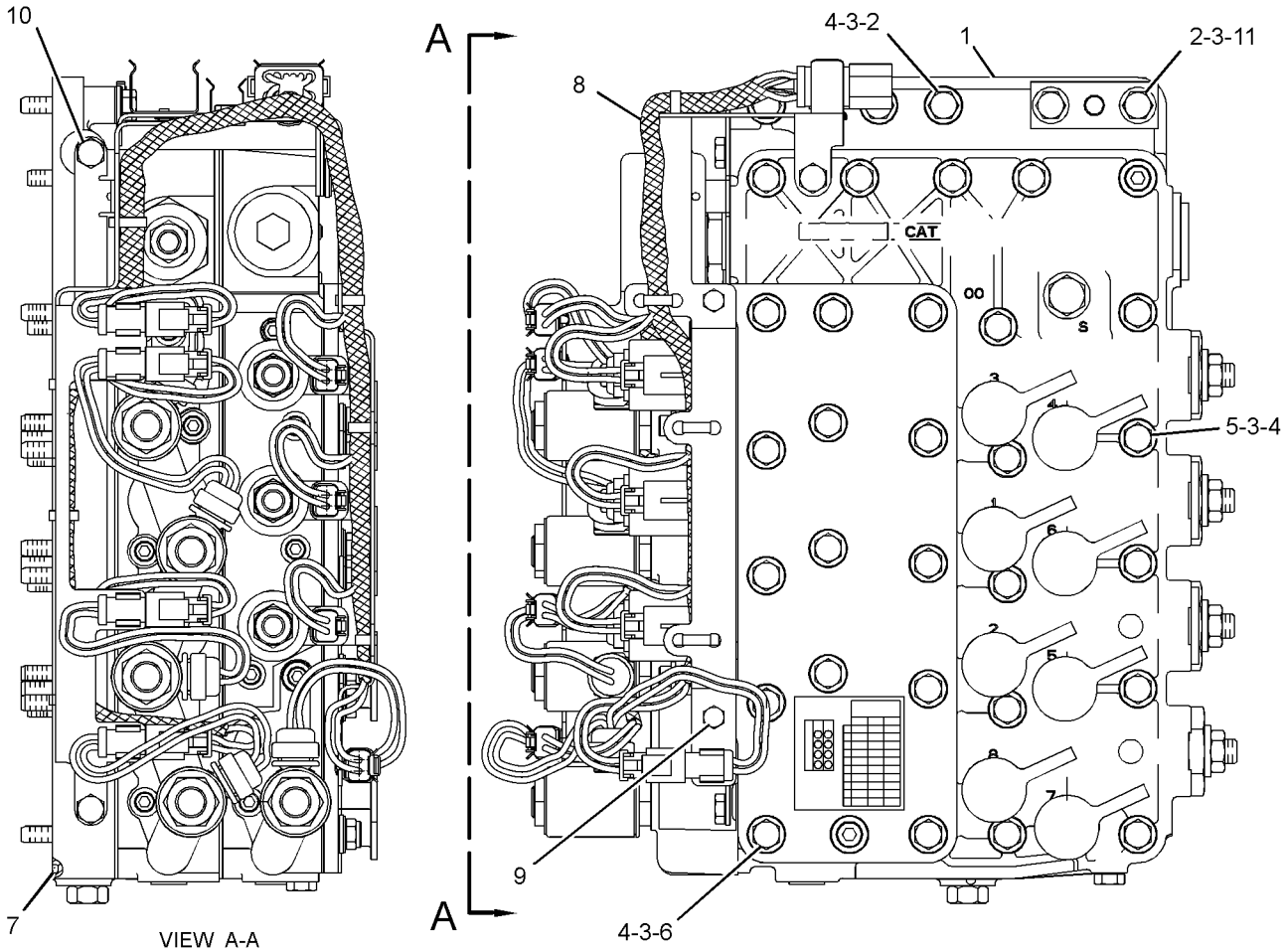

GRAPHIC #1 **<END>** g01254682

281-5641 COOLER GP-TRANSMISSION OIL

S/N: JJA1-UP

PART OF 346-3710 GENERAL AR

SMCS-1375 **i03247481**

NOTE	REF NO	GRAPHIC REF	PART NUMBER	QTY	PART NAME 1 2 3 4 5 6 (PRODUCT LEVEL)	SEE PAGE
	1	1	**242-7417**	1	CORE AS-HYDRAULIC OIL COOLER	
	2	1	**293-4277**	4	BRACKET AS	
	3	1	**303-6008**	2	BRACKET AS	
	4	1	*241-6185*	2	PLUG AS	
					(EACH INCLUDES)	
		1	**3D-2824**	1	SEAL-O-RING	
		1	**5P-9436**	1	PLUG	
	5	1	**8T-4121**	24	WASHER-HARD (11X21X2.5-MM THK)	
M	6	1	**8T-4133**	8	NUT (M10X1.5-THD)	
M	7	1	**8T-4189**	8	BOLT (M8X1.25X20-MM)	
M	8	1	**8T-4195**	16	BOLT (M10X1.5X30-MM)	
	9	1	**8T-4224**	8	WASHER-HARD (8.8X16X2-MM THK)	

M-METRIC PART

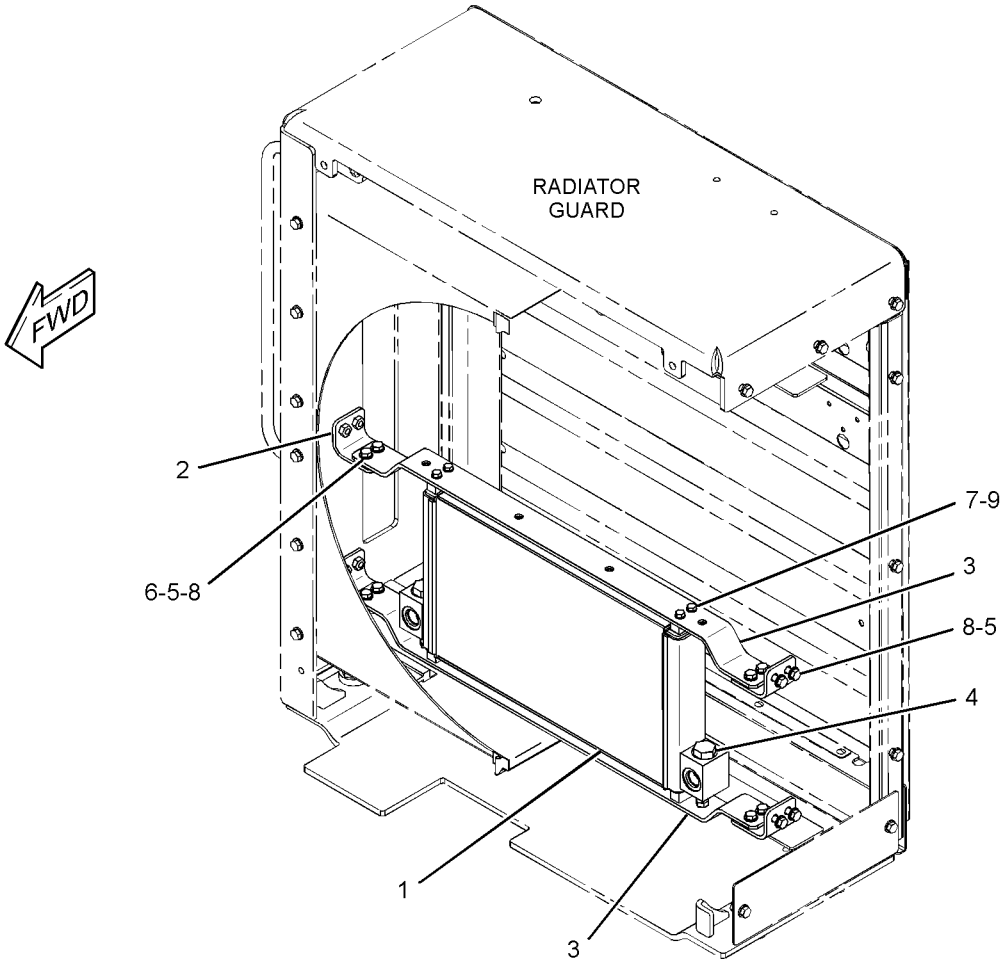

GRAPHIC #1 **<END>** g01699678

337-3357 COUPLING GP-TORSIONAL

S/N: JJA1-UP

PART OF 346-3710 GENERAL AR

SMCS-3252, 3279 **i03316061**

NOTE	REF NO	GRAPHIC REF	PART NUMBER	QTY	PART NAME 1 2 3 4 5 6 (PRODUCT LEVEL)	SEE PAGE
	1	1	**283-1099**	1	COUPLING AS	
M	2	1	**266-4360**	12	BOLT (M10X1.5X30-MM)	
	3	1	**6V-5839**	12	WASHER (11X21X2.5-MM THK)	

M-METRIC PART

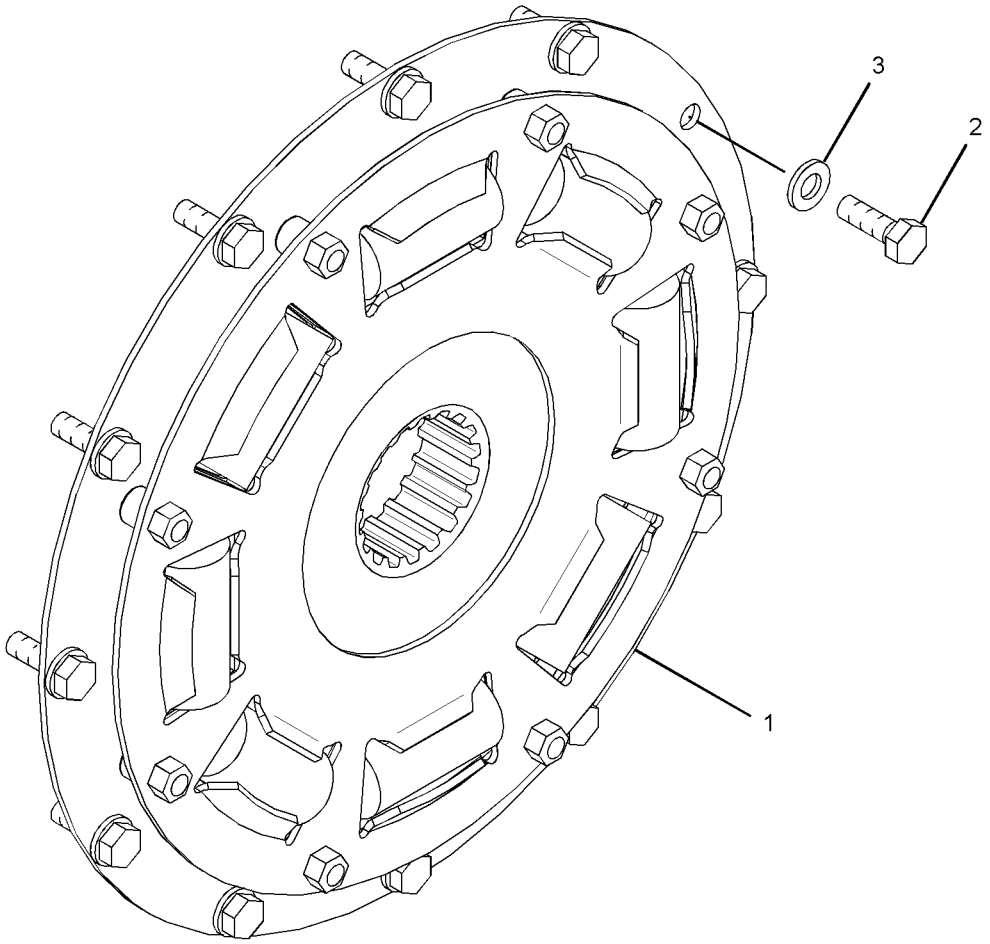

GRAPHIC #1 **<END>** g01769594

346-3597 DIFFERENTIAL & BEVEL GEAR GP

S/N: JJA1-UP

PART OF 346-3710 GENERAL AR

SMCS-3256, 3258 **i03572423**

NOTE	REF NO	GRAPHIC REF	PART NUMBER	QTY	PART NAME 1 2 3 4 5 6 (PRODUCT LEVEL)	SEE PAGE
	1	1	**5D-9844**	1	BOLT-LOCKING (3/8-16X2-IN)	
	2	1	**5P-8247**	8	WASHER-HARD (17X32X3.5-MM THK)	
	3	1	**034-3557**	5	BOLT-LOCKING (3/8-16X1.125-IN)	
	4	1	**5M-2894**	8	WASHER-HARD (10.2X18.5X2.5-MM THK)	
	5	1	**2K-5109**	1	GASKET	
	6	1	**8W-5279**	1	RETAINER	
	7	1	**123-4003**	1	SEAL-LIP TYPE	
	9	1	**5P-5813**	1	LOCKNUT-BEARING (2.751-18-THD)	
	10	1	**9B-0143**	1	LOCKWASHER	
	11	1	**7D-8347**	1	WASHER-TAB	
	12	1	**8X-2534**	1	HOUSING	
	13	1	**5L-2031**	1	CUP-BEARING	
	14	1	**5L-2030**	1	CONE-BEARING	
	15	1	**9X-8880**	8	BOLT (5/8-11X2-IN)	
	16	1	**2K-5106**	1	SHIM (2.54-MM THK)	
	17	1	**340-4515**	12	NUT (5/8-11-THD)	
	18	1	**4H-6520**	1	SEAL-O-RING	
	19	1	**1J-4757**	1	CONE-BEARING	
	20	1	**1J-2860**	1	CUP-BEARING	
	21	1	**8D-8197**	1	CAGE	
	22	1	**6G-4703**	1	NUT (5 1/4-12-THD)	
	23	1	**126-2729**	1	CONE-SPECIAL TAPERED	
	24	1	**5P-2503**	1	CUP	
	25	1	**6F-0698**	1	DOWEL	
	26	1	**8D-9784**	2	LOCK	
	27	1	**030-8535**	2	BOLT-LOCKING (3/8-16X0.875-IN)	
	28	1	**154-2687**	1	CARRIER AS	
		1	**0S-1756**	4	BOLT (3/4-10X4.25-IN)	
		1	**5P-8248**	4	WASHER-HARD (20X36.5X3.5-MM THK)	
Y	29	1	**154-2688**	1	DIFFERENTIAL GP	239
	30	1	**9G-2991**	2	RING-SEAL	
	31	1	**4D-5292**	1	RING-RETAINING	
	32	1	**1P-2662**	1	CONE-BEARING	
	33	1	**1P-2636**	1	CUP-BEARING	
	34	1	**6G-4701**	1	NUT-BEARING (4-1/4-12-THD)	
	35	1	**8X-2308**	1	CAGE AS	
		1	**2D-6642**	1	BALL	
	36	1	**2H-5001**	1	SEAL-O-RING	
	37	1	**8W-5111**	1	SLEEVE	
	38	1	**169-1548**	1	SHAFT-PINION	
	39	1	**8T-8883**	1	SEAL-O-RING	
	40	1	**340-4517**	12	WASHER-HARD (17X32X3.5-MM THK)	

Y-SEPARATE ILLUSTRATION

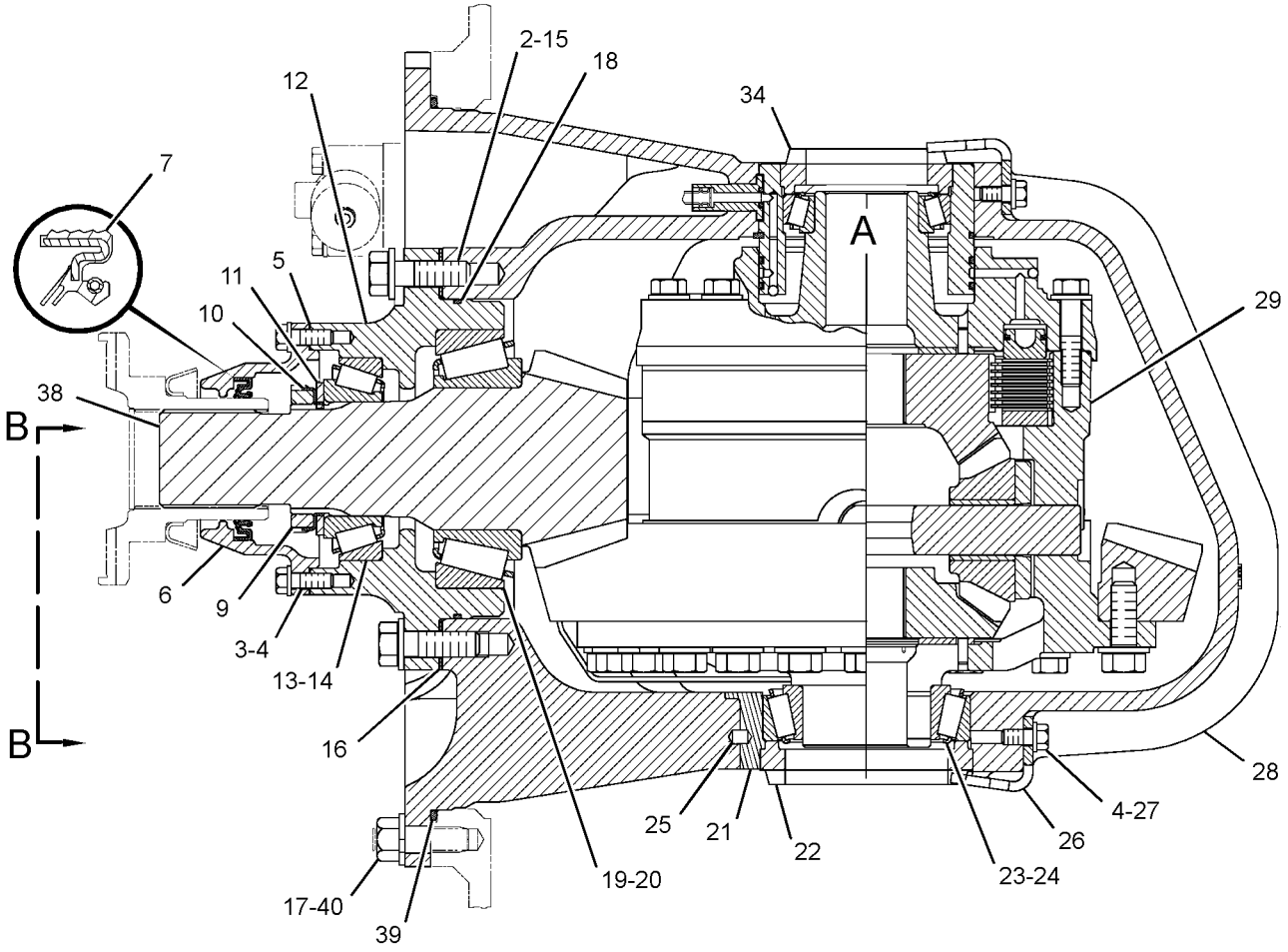

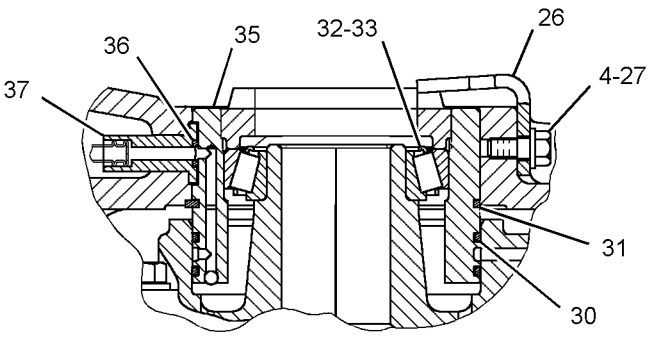

VIEW OF AREA A

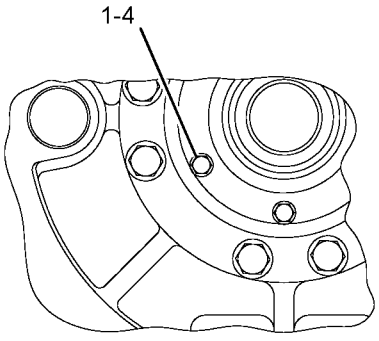

VIEW B-B

GRAPHIC #1 **<END>** g01937085

154-2688 DIFFERENTIAL GP

S/N: JJA1-UP

PART OF 346-3597 DIFFERENTIAL & BEVEL GEAR GP

SMCS-3258 **i02580119**

NOTE	REF NO	GRAPHIC REF	PART NUMBER	QTY	PART NAME 1 2 3 4 5 6 (PRODUCT LEVEL)	SEE PAGE
	1	1	**8D-4291**	1	PISTON	
	2	1	**7D-8225**	1	SEAL-RING	
	3	1	**7D-8226**	1	SEAL-RING	
	4	1	**6Y-7954**	7	DISC-FRICTION	
	5	1	**169-1549**	1	GEAR-BEVEL (54-TEETH)	
	6	1	**8X-2528**	1	HOUSING AS	
	6A	1	**2D-6642**	1	BALL	
	6C	1	**3D-6509**	2	DOWEL	
	7	1	**8X-4641**	4	SPACER-THRUST	
	8	1	**155-2283**	4	PINION AS (14-TEETH)	
					(EACH INCLUDES)	
	8A	1	**174-6819**	1	BEARING-SLEEVE	
	9	1	**154-2692**	1	HOUSING AS	
	9A	1	**3D-6509**	2	DOWEL	
	10	1	**8D-4064**	2	WASHER-THRUST	
	11	1	**109-4582**	1	GEAR-BEVEL (24-TEETH)	
	12	1	**109-4583**	1	GEAR-BEVEL (24-TEETH)	
	13	1	**8D-4282**	1	DISC (DIFFERENTIAL LOCK CLUTCH)	
	14	1	**7D-8185**	8	DISC (DIFFERENTIAL LOCK CLUTCH)	
	15	1	**2B-0947**	12	BOLT (1/2-13X2.25-IN)	
	16	1	**5P-8245**	12	WASHER-HARD (13.5X25.5X3-MM THK)	
	17	1	**5P-8247**	24	WASHER-HARD (17X32X3.5-MM THK)	
	18	1	**5B-0841**	24	BOLT (5/8-18X1.75-IN)	
	19	1	**154-2689**	1	SPIDER	

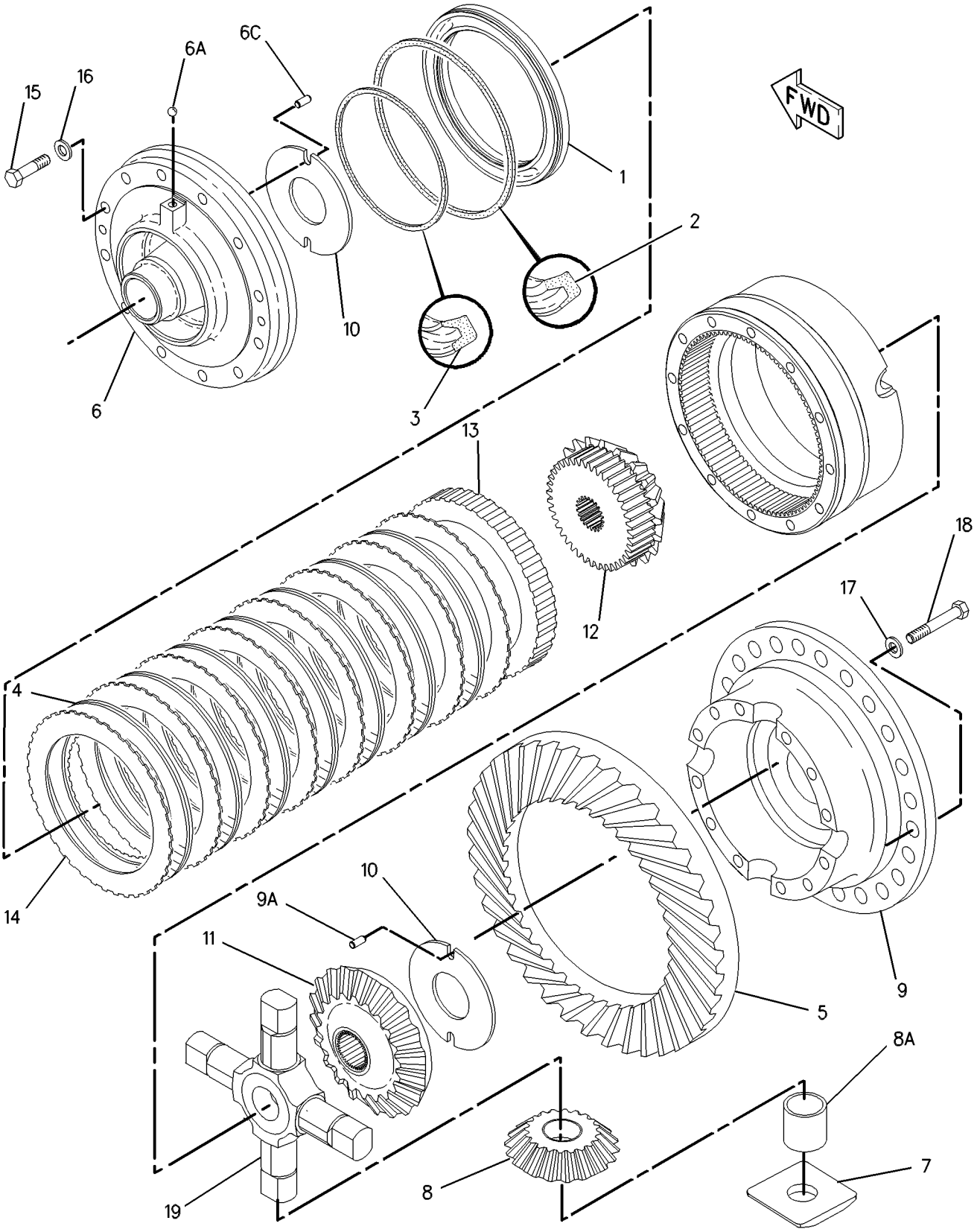

GRAPHIC #1 **<END>** g00597332

POWER TRAIN

8W-4368 FINAL DRIVE GP

S/N: JJA1-UP

PART OF 346-3710 GENERAL AR

SMCS-4050 **i02580081**

NOTE	REF NO	GRAPHIC REF	PART NUMBER	QTY	PART NAME 1 2 3 4 5 6 (PRODUCT LEVEL)	SEE PAGE
	1	1	**191-5973**	2	SHAFT-SUN GEAR (18-TEETH)	
	2	1	**282-4350**	2	SEAL-LIP TYPE	
	3	1	**8D-3591**	2	CARRIER-PLANETARY	
	4	1	**030-8535**	18	BOLT-LOCKING (3/8-16X0.875-IN)	
	5	1	**5M-2894**	30	WASHER-HARD (10.2X18.5X2.5-MM THK)	
	6	1	**7D-7889**	2	GEAR-RING	
	7	1	**7D-0035**	8	PLATE	
	8	1	**7S-4571**	2	SEAL-O-RING	
	9	1	**5P-8248**	38	WASHER-HARD (20X36.5X3.5-MM THK)	
	10	1	**2J-3506**	38	NUT-FULL (3/4-10-THD)	
	11	1	**9F-2247**	2	PLUG-PIPE	
	12	1	**3E-4307**	36	BOLT-LOCKING (5/8-11X1.75-IN)	
	13	1	**4D-3704**	32	WASHER-HARD (17X30X5-MM THK)	
	14	1	**8D-3743**	2	SPROCKET (20-TEETH)	
	15	1	**236-7724**	2	RETAINER	
	16	1	**8W-8317**	2	SPROCKET (20-TEETH)	
	17	1	**4D-6695**	2	SEAL-O-RING	
B	18	1	**6G-3212**	2	SHIM PACK (INCLUDES 10-SHIMS)	
	19	1	**1P-4693**	4	CUP-BEARING	
	20	1	**5P-3490**	2	CONE-BEARING	
	21	1	**8W-4142**	2	SHAFT-DRIVE	
	22	1	**5D-0353**	12	BOLT-LOCKING (3/8-16X1-IN)	
	23	1	**265-9125**	6	RETAINER	
	24	1	**8S-9092**	32	BOLT (5/8-11X2.25-IN)	
	25	1	**200-7929**	2	HOUSING	
	26	1	**218-4406**	4	RING-WEAR	
	27	1	**1P-4694**	2	CONE-BEARING	
	28	1	**6G-3206**	4	WASHER-THRUST (131.75X154.79X1.6-MM THK)	
	29	1	**5T-7129**	2	HOUSING	
	30	1	**8D-3902**	2	SEAL-LIP TYPE	
	31	1	**8W-2308**	6	SHAFT-PLANETARY	
	32	1	**8D-3540**	2	NUT (3 1/4-12-THD)	
	33	1	**129-2381**	6	GEAR-PLANETARY (26-TEETH)	
	34	1	**8W-4141**	2	LOCK	
	35	1	**1S-9110**	12	ROLLER AS	
	36	1	**8X-8377**	12	WASHER (47.57X82.55X2.92-MM THK)	
	37	1	**8D-3886**	2	RING-RETAINING	
	38	1	**8D-3885**	2	WASHER (50.8X107.95X6.35-MM THK)	
	39	1	**198-4768**	36	WASHER-HARD (17.5X32X8-MM THK)	

B-USE AS REQUIRED

8W-4368 **FINAL DRIVE GP** *(contd.)* **i02580081**

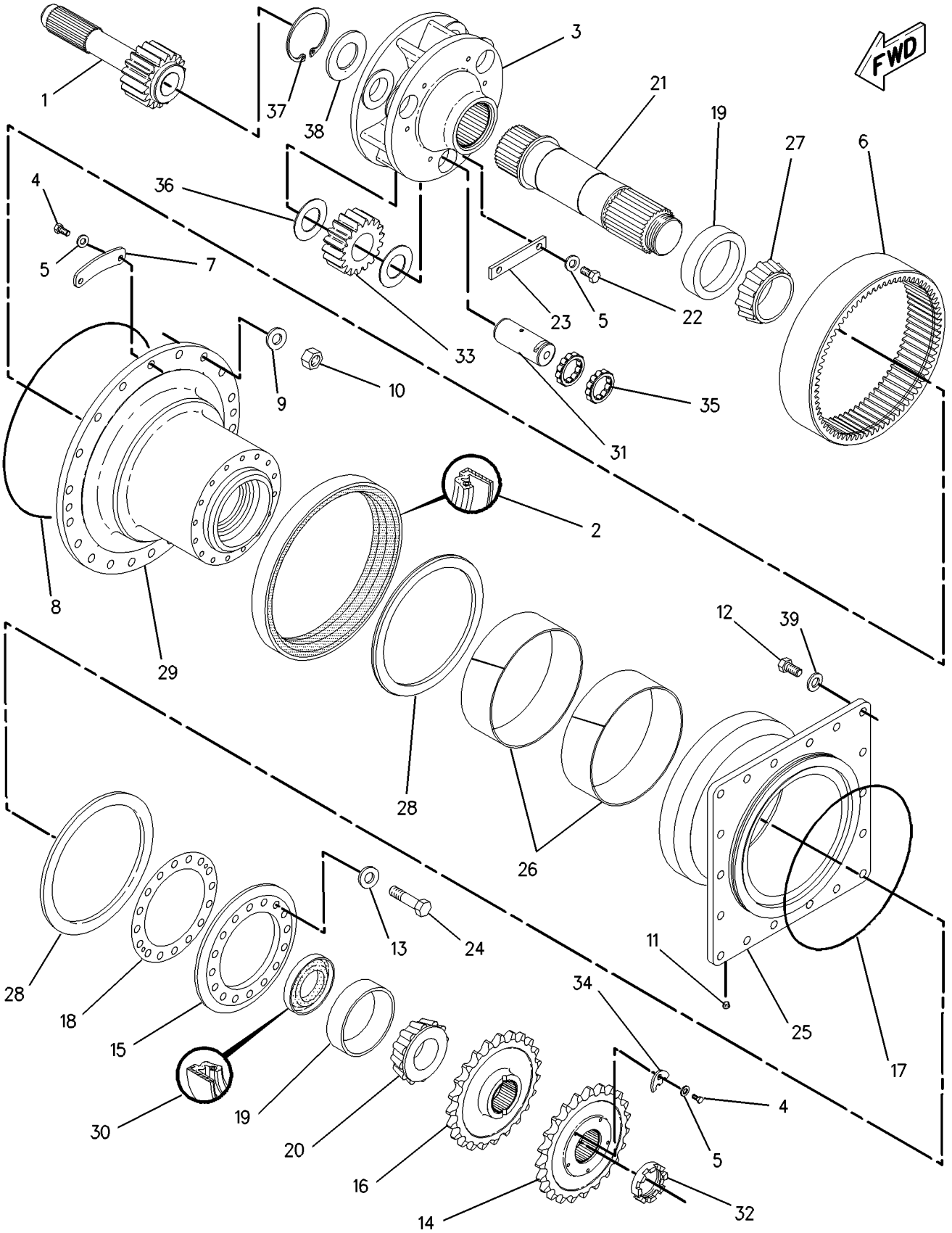

GRAPHIC #1 **<END>** g00954365

315-4118 FILLER GP-POWER TRAIN OIL

S/N: JJA1-UP

PART OF 346-3710 GENERAL AR

SMCS-3005, 3081, 7513 **i03643727**

NOTE	REF NO	GRAPHIC REF	PART NUMBER	QTY	PART NAME 1 2 3 4 5 6 (PRODUCT LEVEL)	SEE PAGE
	1	1	**7J-8611**	1	ELBOW-PIPE (90-DEG)	
	2	1	**9G-5127**	1	BREATHER (POWER TRAIN OIL FILLER)	
	3	1	**8T-4896**	2	WASHER-HARD (10.2X18.5X2.5-MM THK)	
	4	1	**315-6148**	1	GAUGE AS-OIL LEVEL (DIPSTICK) (POWER TRAIN OIL)	
	5	1	**5D-0353**	2	BOLT-LOCKING (3/8-16X1-IN)	
	6	1	**8B-1615**	1	GASKET	
					PARTS SHOWN IN GRAPHIC(S) WITHOUT A REFERENCE NUMBER ARE NOT SERVICED SEPARATELY	

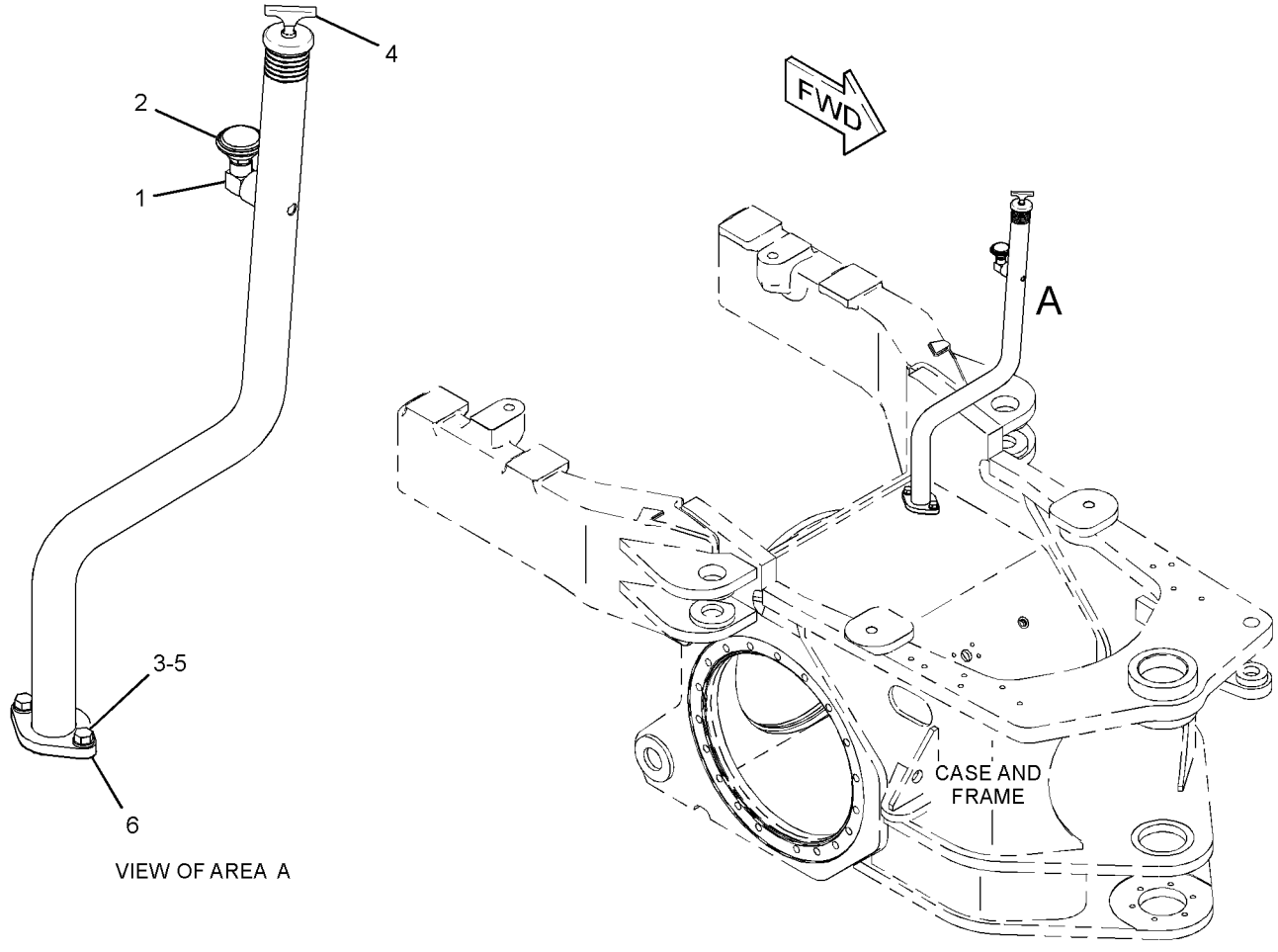

GRAPHIC #1 **<END>** g01690113

POWER TRAIN

333-6436 FILTER GP-OIL

S/N: JJA1-UP
WITH HOUSING BYPASS
PART OF 315-5378 LINES GP-TRANSMISSION OIL

SMCS-3004, 3067 **i03641486**

NOTE	REF NO	GRAPHIC REF	PART NUMBER	QTY	PART NAME 1 2 3 4 5 6 (PRODUCT LEVEL)	SEE PAGE
	1	1	*244-3712*	1	PLUG AS	
		1	**9S-4191**	1	PLUG-O-RING	
		1	**214-7568**	1	SEAL-O-RING	
	2	1	**321-5967**	1	HOUSING GP-FILTER	
		1	**9S-8004**	1	PLUG-O-RING	
		1	**214-7568**	1	SEAL-O-RING	
	3	1	**328-3655**	1	FILTER ELEMENT AS-OIL (ADVANCED EFFICIENCY) (TRANSMISSION)	
Y	4	1	**333-9308**	1	BASE GP-OIL FILTER (TRANSMISSION)	216
	5	1	*155-3624*	1	PLUG AS	
		1	**3J-7354**	1	SEAL-O-RING	
		1	**9S-4182**	1	PLUG-O-RING	
	6	1	**130-0229**	1	SEAL-O-RING	

Y-SEPARATE ILLUSTRATION

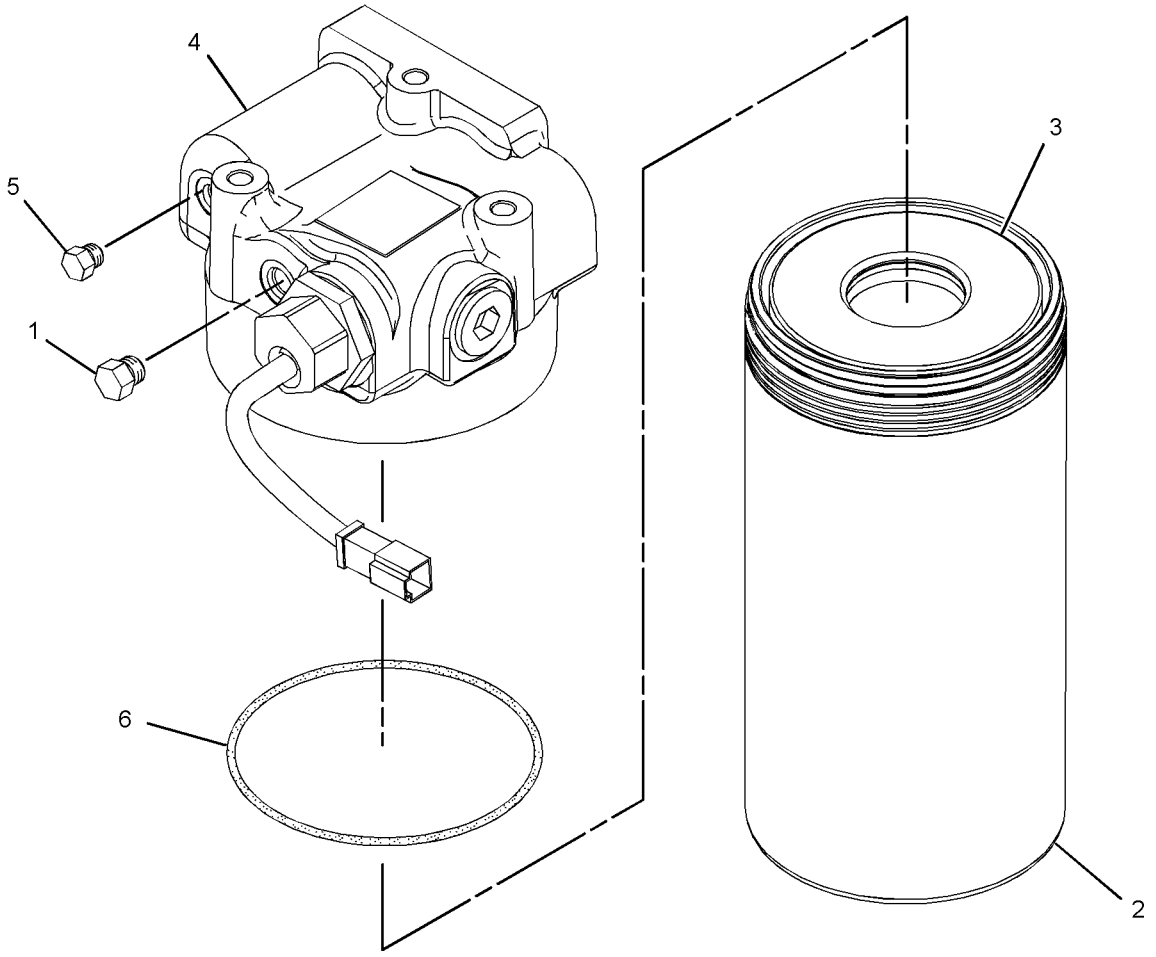

GRAPHIC #1 **<END>** g01849294

315-5378 LINES GP-TRANSMISSION OIL

S/N: JJA1-UP

PART OF 346-3710 GENERAL AR

SMCS-3154 **i03516500**

NOTE	REF NO	GRAPHIC REF	PART NUMBER	QTY	PART NAME 1 2 3 4 5 6 (PRODUCT LEVEL)	SEE PAGE
	1	1	**328-3655**	1	FILTER ELEMENT AS-OIL (ADVANCED EFFICIENCY) (TRANSMISSION)	
	2	1	**5D-1026**	2	CLAMP-HOSE	
	3	1	**8T-4983**	2	CLAMP-HOSE	
	4	1	**8X-5121**	1	TUBE	
	5	1	**8X-8916**	1	PLATE	
	6	1	**9C-5344**	1	SPACER (10.5X20X18-MM THK)	
	7	1	**005-7898**	2	CONNECTOR-HOSE	
	8	1	**113-9048**	1	BAFFLE	
	9	1	**118-0424**	1	ADAPTER	
	10	1	*164-5567*	1	COUPLER AS-QUICK DISCONNECT	
		1	**6V-3965**	1	FITTING (QUICK DISCONNECT)	
		1	**214-7568**	1	SEAL-O-RING	
	11	1	**178-3695**	1	ADAPTER	
	12	1	*244-3712*	1	PLUG AS	
		1	**9S-4191**	1	PLUG-O-RING	
		1	**214-7568**	1	SEAL-O-RING	
I	13	1	**266-6793**	1	HOSE AS	
	14	1	**285-6570**	1	TUBE AS	
I	15	1	**293-4285**	1	HOSE AS	
I	16	1	**303-6032**	1	HOSE AS	
Y	17	1	*333-6436*	1	FILTER GP-OIL (WITH HOUSING) (BYPASS)	244
I	18	1	**315-5668**	1	HOSE AS	
	19	1	**315-9792**	1	TUBE AS	
I	20	1	**316-6688**	1	HOSE AS	
	21	1	**000-7246**	1	ELBOW	
	22	1	*148-8327*	2	CONNECTOR AS	
					(EACH INCLUDES)	
		1	**3D-2824**	1	SEAL-O-RING	
		1	**6V-8637**	1	CONNECTOR	
		1	**6V-9746**	1	SEAL-O-RING	
	23	1	*148-8335*	2	CONNECTOR AS	
					(EACH INCLUDES)	
		1	**5K-9090**	1	SEAL-O-RING	
		1	**6V-8635**	1	CONNECTOR	
		1	**7M-8485**	1	SEAL-O-RING	
	24	1	*148-8339*	1	CONNECTOR AS	
		1	**6V-8716**	1	CONNECTOR	
		1	**6V-9746**	1	SEAL-O-RING	
		1	**7M-8485**	1	SEAL-O-RING	
	25	1	*148-8357*	1	ELBOW AS	
		1	**5K-9090**	1	SEAL-O-RING	
		1	**6V-9008**	1	ELBOW	
		1	**7M-8485**	1	SEAL-O-RING	
	26	1	**189-8772**	1	SPACER (11X16X35-MM THK)	
	27	1	**1L-0509**	2	BOLT (3/8-16X0.74-IN)	
	28	1	**1P-4577**	6	FLANGE-HALF	
	29	1	**1P-4578**	2	FLANGE-HALF	
	30	1	**4F-7389**	2	SEAL-O-RING	
	31	1	**4J-0520**	5	SEAL-O-RING	
	32	1	**4J-0522**	1	SEAL-O-RING	
	33	1	**5K-9090**	1	SEAL-O-RING	
	34	1	**5P-1075**	1	WASHER-HARD (10.2X22.5X3-MM THK)	
	35	1	**5P-9938**	4	BOLT-LOCKING (3/8-16X1.375-IN)	
	36	1	**6V-1889**	4	CLIP	
	37	1	**6V-9746**	1	SEAL-O-RING	

315-5378 LINES GP-TRANSMISSION OIL *(contd.)* i03516500

NOTE	REF NO	GRAPHIC REF	PART NUMBER	QTY	PART NAME 1 2 3 4 5 6 (PRODUCT LEVEL)	SEE PAGE
	38	1	**7X-0342**	1	BOLT (5/8-11X0.75-IN)	
M	39	1	**7X-2552**	2	BOLT (M16X2X30-MM)	
	40	1	**8C-3447**	1	CAP-DUST	
	41	1	**8M-2769**	2	CLIP	
	42	1	**8T-4121**	19	WASHER-HARD (11X21X2.5-MM THK)	
M	43	1	**8T-4196**	7	BOLT (M10X1.5X35-MM)	
	44	1	**8T-4224**	3	WASHER-HARD (8.8X16X2-MM THK)	
	45	1	**8T-4896**	2	WASHER-HARD (10.2X18.5X2.5-MM THK)	
M	46	1	**8T-4908**	3	BOLT (M8X1.25X25-MM)	
M	47	1	**8T-6466**	9	BOLT (M10X1.5X60-MM)	
	48	1	**9C-9467**	1	CLIP	
	49	1	**9X-8257**	2	WASHER (17.5X30X3.5-MM THK)	
	50	1	**8X-7317**	1	HOSE	
E	51	1	**5P-0765**		HOSE (46-CM)	

E-ORDER BY THE CENTIMETER
I-REFER TO HYDRAULIC INFORMATION SYSTEM
M-METRIC PART
Y-SEPARATE ILLUSTRATION

315-5378 **LINES GP-TRANSMISSION OIL** *(contd.)* **i03516500**

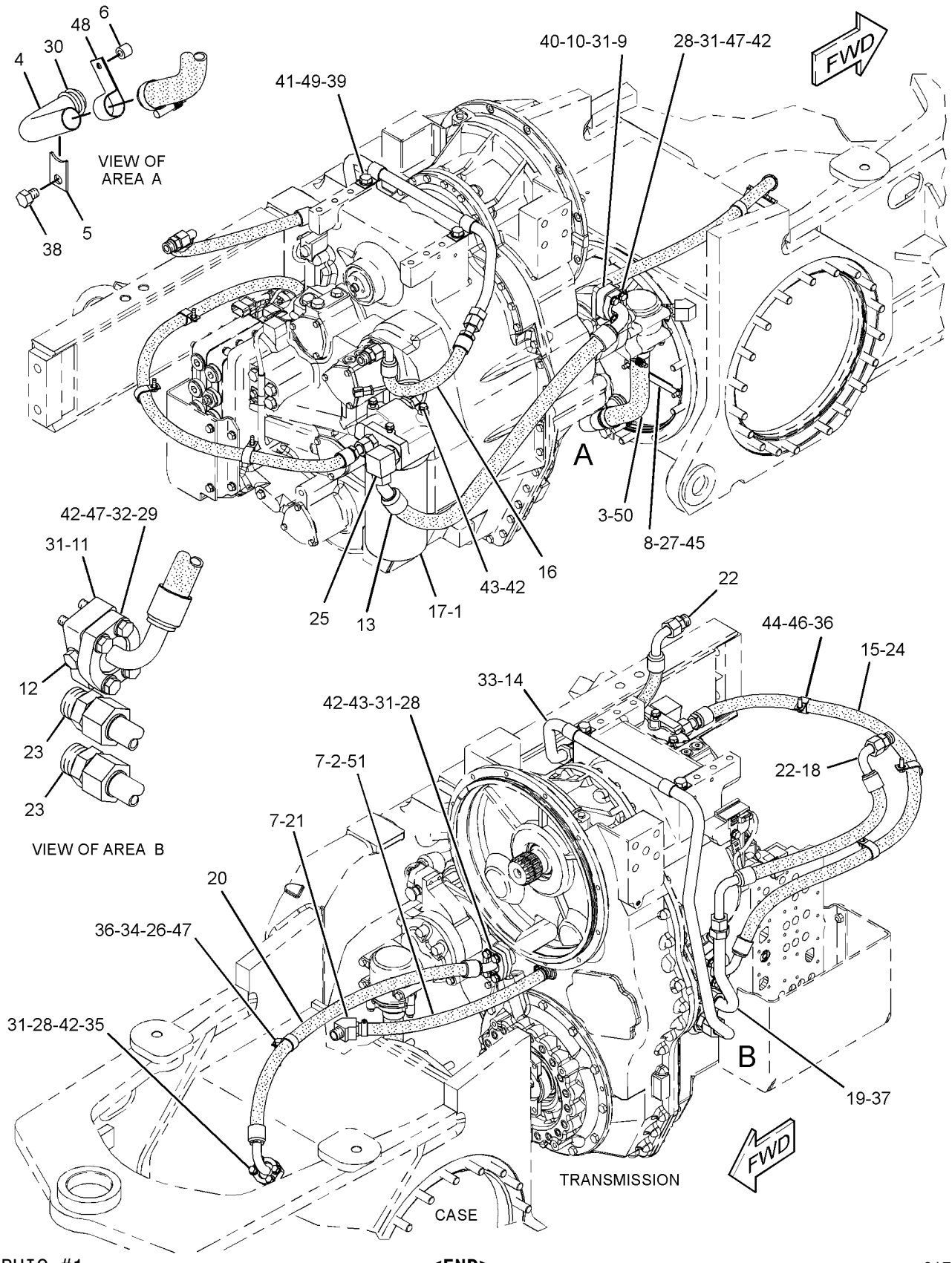

GRAPHIC #1 **<END>** g01712720

337-0732 MOUNTING GP-WHEEL

S/N: JJA1-UP

PART OF 346-3710 GENERAL AR

SMCS-4201 **i03536419**

NOTE	REF NO	GRAPHIC REF	PART NUMBER	QTY	PART NAME 1 2 3 4 5 6 (PRODUCT LEVEL)	SEE PAGE
	1	1	**267-3507**	60	WASHER-HARD (26X47X12-MM THK)	
	2	1	**338-8484**	60	BOLT (7/8-9X2.5-IN)	

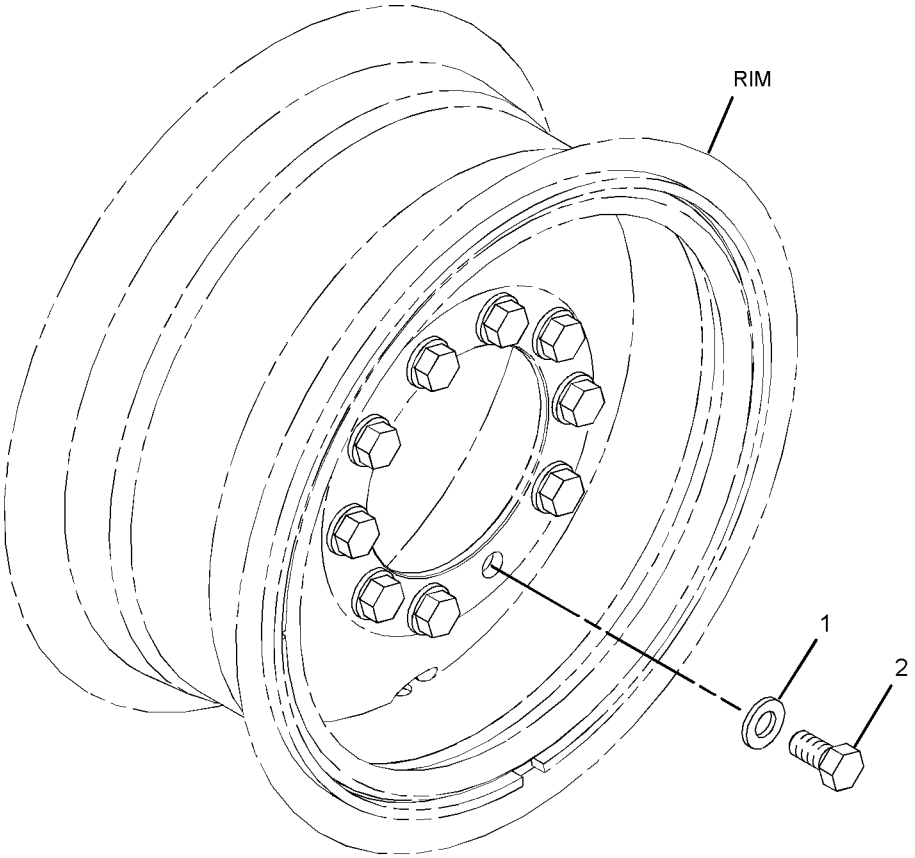

GRAPHIC #1 **<END>** g01841155

6Y-8764 PUMP GP-GEAR*R

S/N: DMJ1-UP
2-SECTION
PART OF 6Y-8765 PUMP GP-GEAR

SMCS-3066, 3115, 3203, 5073 **i03623743**

NOTE	REF NO	GRAPHIC REF	PART NUMBER	QTY	PART NAME 1 2 3 4 5 6 (PRODUCT LEVEL)	SEE PAGE
	1	1	**9N-4163**	1	COVER AS-PUMP	
	1A	1	**1M-3780**	2	BEARING-SLEEVE	
	2	1	**9N-4161**	1	GEAR AS-OIL PUMP (12-TEETH)	
	3	1	**9N-4162**	1	GEAR AS-OIL PUMP (12-TEETH)	
	4	1	**9N-4159**	1	BODY AS-OIL PUMP	
	4A	1	**1M-3780**	2	BEARING-SLEEVE	
	5	1	**9N-4156**	1	MANIFOLD AS-PUMP	
		1	**9N-4155**	1	ADAPTER	
		1	**8M-8489**	2	DOWEL	
	6	1	**5S-4385**	1	BODY AS-OIL PUMP	
		1	**8M-8489**	4	DOWEL	
	7	1	**9N-4158**	2	GEAR (8-TEETH)	
	8	1	**2B-9373**	1	KEY-WOODRUFF	
	9	1	**2D-8009**	3	SEAL-O-RING	
	10	1	**3S-0004**	6	WASHER (0.406X0.728X0.09-IN THK)	
M	11	1	**8T-5030**	2	BOLT (M10X1.5X120-MM)	
	12	1	**6Y-5010**	8	WASHER (10.16X19X0.84-MM THK)	
M	13	1	**8C-2926**	4	BOLT (M10X1.5X140-MM)	
F			**7B-3028**		SCREW-DRIVE (NO 4X0.187-IN)	
					PARTS SHOWN IN GRAPHIC(S) WITHOUT A REFERENCE NUMBER ARE NOT SERVICED SEPARATELY	

F-NOT SHOWN
M-METRIC PART

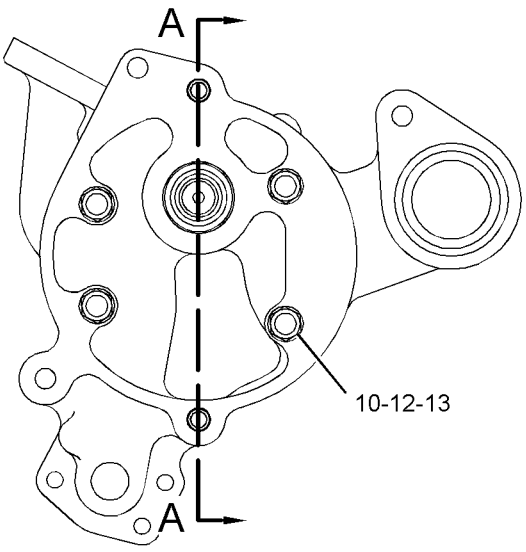

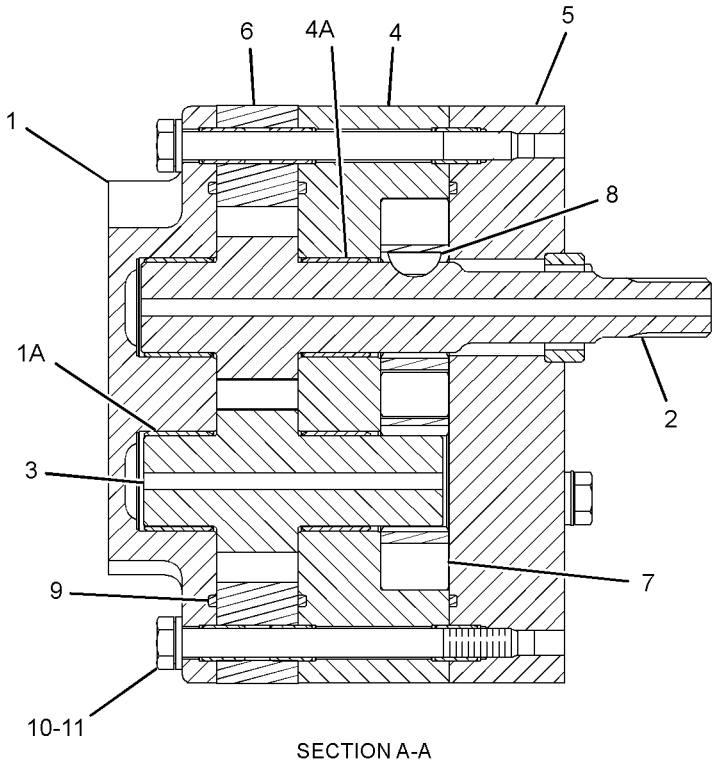

SECTION A-A

GRAPHIC #1 **<END>** g01943707

6Y-8765 PUMP GP-GEAR

S/N: DMJ1-UP
2-SECTION
PART OF 275-6535 TRANSMISSION AR

SMCS-3066, 3115, 3203, 5073 **i02588346**

NOTE	REF NO	GRAPHIC REF	PART NUMBER	QTY	PART NAME 1 2 3 4 5 6 (PRODUCT LEVEL)	SEE PAGE
YR	1	1	**6Y-8764**	1	PUMP GP-GEAR (TRANSMISSION)	249
	2	1	**4F-7952**	1	SEAL-O-RING	
	3	1	**7F-8268**	1	SEAL-O-RING	
M	4	1	**6V-1820**	3	BOLT (M10X1.5X30-MM)	

M-METRIC PART
R-REMFG PART MAY BE AVAILABLE
Y-SEPARATE ILLUSTRATION

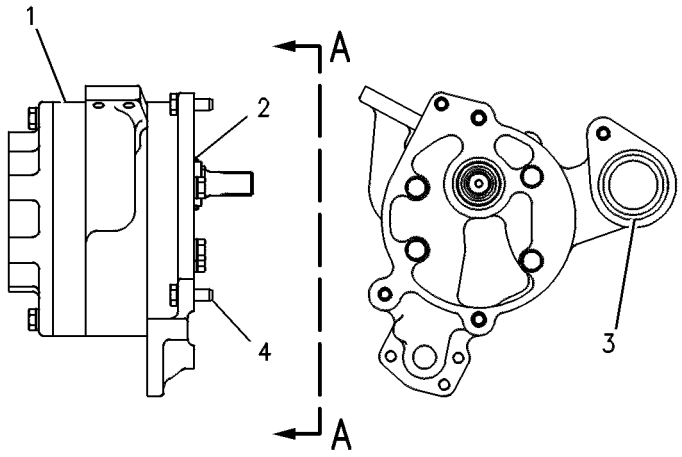

VIEW A-A

GRAPHIC #1 **<END>** g00108547

9W-5134 SCREEN GP-MAGNETIC–TRANSMISSION

S/N: DMJ1-UP

PART OF 275-6535 TRANSMISSION AR

SMCS-3067 **i01623693**

NOTE	REF NO	GRAPHIC REF	PART NUMBER	QTY	PART NAME 1 2 3 4 5 6 (PRODUCT LEVEL)	SEE PAGE
	1	1	**6Y-3861**	1	COVER AS	
	2	1	**6Y-3860**	1	HOUSING-FILTER	
	3	1	**8S-9130**	1	SCREEN-SUCTION (TRANSMISSION)	
	4	1	**8S-9129**	1	FILTER-MAGNETIC (TRANSMISSION)	
	5	1	**5P-3863**	1	SEAL-O-RING	
M	6	1	**6V-5219**	3	BOLT (M8X1.25X40-MM)	
	7	1	**5F-8000**	1	SEAL-O-RING	
M	8	1	**8T-0355**	3	BOLT (M10X1.5X110-MM)	

M-METRIC PART

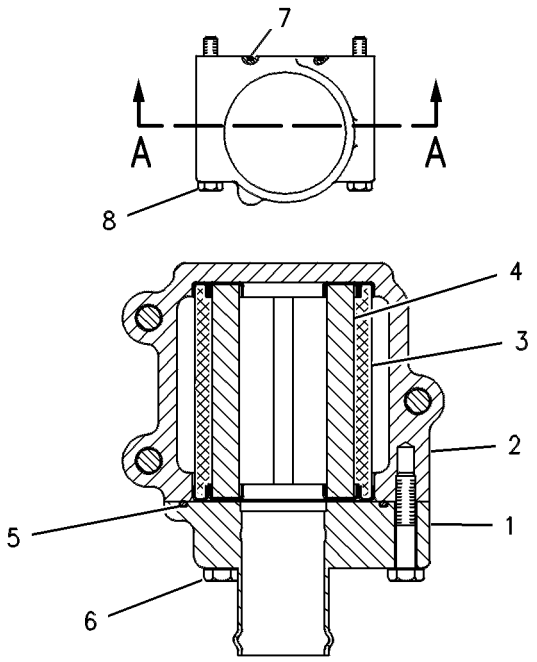

VIEW A–A

GRAPHIC #1 **<END>** g00108551

8W-5394 SHAFT GP-DRIVE–TRANSMISSION

S/N: JJA1-UP

PART OF 346-3710 GENERAL AR

SMCS-3253 **i03478021**

NOTE	REF NO	GRAPHIC REF	PART NUMBER	QTY	PART NAME 1 2 3 4 5 6 (PRODUCT LEVEL)	SEE PAGE
Y	1	1	**8X-5005**	1	UNIVERSAL JOINT GP (MAIN DRIVE SHAFT)	257
	2	1	**8W-1592**	1	YOKE AS	
		1	**3K-0986**	1	PLUG	
	3	1	**3K-0196**	1	GUARD	
	4	1	**0S-1604**	4	BOLT (1/2-20X2.5-IN)	
	5	1	**5P-7213**	4	WASHER-HARD (13.5X20.5X2-MM THK)	
	6	1	**6B-6684**	4	NUT-FULL (1/2-20-THD)	
	7	1	**6V-1911**	4	BOLT-LOCKING (1/2-20-THD)	

Y-SEPARATE ILLUSTRATION

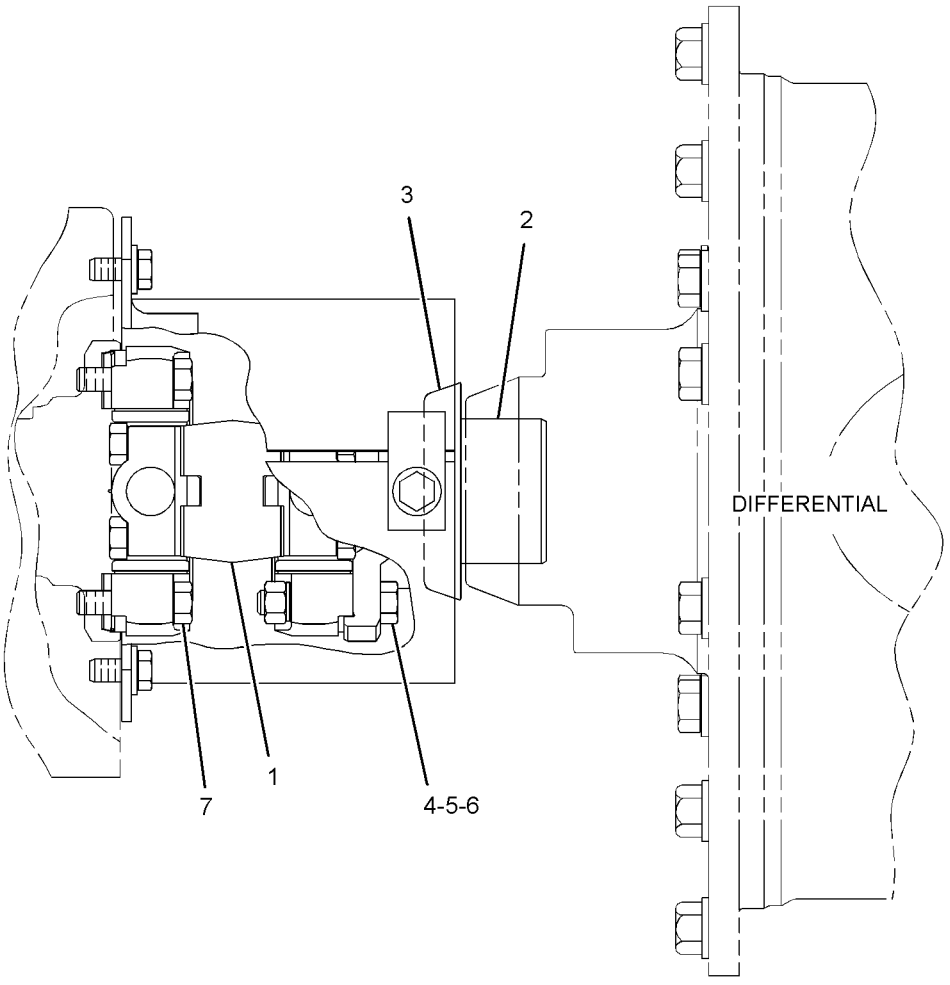

GRAPHIC #1 **<END>** g01786217

6Y-2300 SHAFT GP-INPUT

S/N: DMJ1-UP

PART OF 275-6535 TRANSMISSION AR

SMCS-3063 **i00134456**

NOTE	REF NO	GRAPHIC REF	PART NUMBER	QTY	PART NAME 1 2 3 4 5 6 (PRODUCT LEVEL)	SEE PAGE
	1	1	**6Y-1870**	1	SHAFT AS-INPUT	
	2	1	**0L-1026**	1	PLUG-CUP	
	3	1	**6Y-0591**	1	GEAR (45 TEETH)	
	4	1	**6Y-0590**	1	GEAR (38 TEETH)	
	5	1	**2H-6490**	1	BEARING-INNER	
	6	1	**1M-4095**	1	BEARING-INNER	
	7	1	**3T-4377**	2	SEAL-RING	

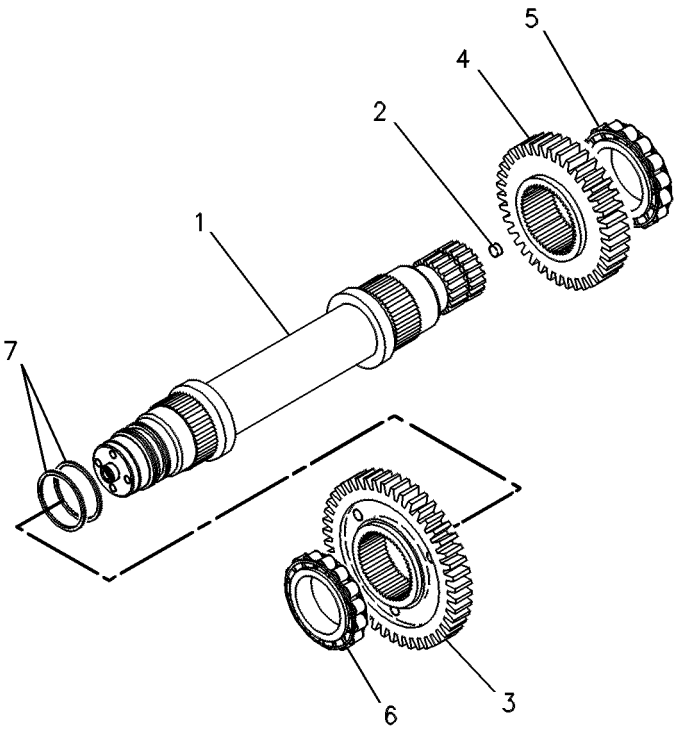

GRAPHIC #1 **<END>** g00108544

POWER TRAIN

190-1688 TANDEM & COVER GP

S/N: JJA1-UP

PART OF 346-3710 GENERAL AR

SMCS-4062, 4064 **i03501045**

NOTE	REF NO	GRAPHIC REF	PART NUMBER	QTY	PART NAME 1 2 3 4 5 6 (PRODUCT LEVEL)	SEE PAGE
	1	1	**2A-6938**	2	COVER	
	2	1	**2B-3147**	8	GASKET	
	3	1	**2B-3148**	6	COVER	
	4	1	**2G-9791**	2	GASKET	
	5	1	**3D-2981**	4	GASKET	
	6	1	**7D-6567**	4	COVER	
	7	1	**190-1690**	1	HOUSING AS-TANDEM DRIVE (RH)	
	8	1	**190-1691**	1	HOUSING AS-TANDEM DRIVE (LH)	
	9	1	**248-1377**	2	COVER AS	
					(EACH INCLUDES)	
		1	**4H-6112**	1	BREATHER (TANDEM)	
		1	**6B-5072**	1	BUSHING-REDUCING	
		1	**002-6453**	1	ELBOW	
	10	1	**2M-9780**	2	SEAL-O-RING	
	11	1	**3K-0360**	2	SEAL-O-RING	
	12	1	**5P-8245**	32	WASHER-HARD (13.5X25.5X3-MM THK)	
	13	1	**6E-5047**	2	PLUG	
	14	1	**8T-6468**	48	BOLT (1/2-13X1-IN)	
	15	1	**9S-4190**	2	PLUG-O-RING	

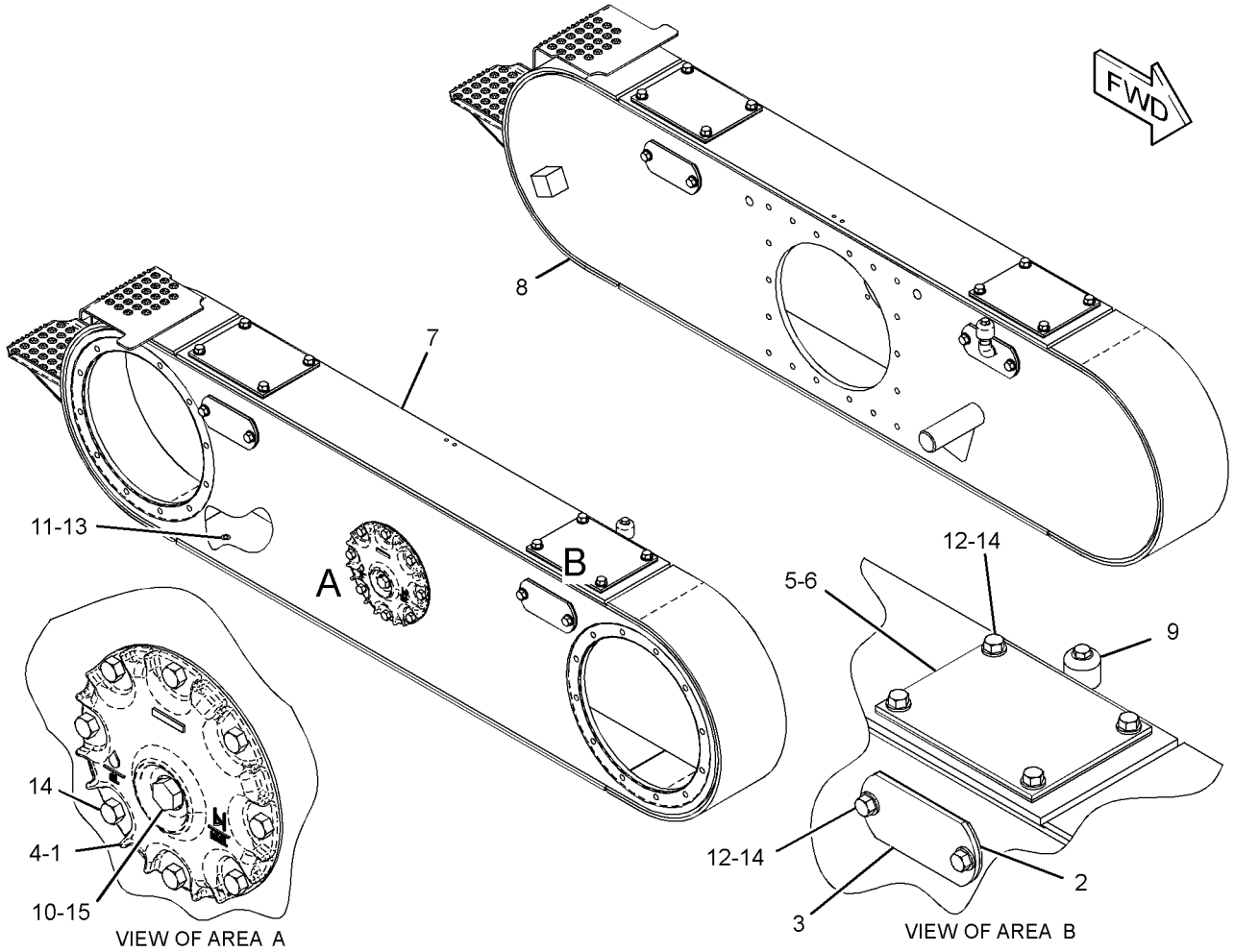

GRAPHIC #1 **<END>** g01329976

POWER TRAIN

275-6535 TRANSMISSION AR

S/N: DMJ1-UP

PART OF 346-3710 GENERAL AR

SMCS-3030 **i03304191**

NOTE	REF NO	GRAPHIC REF	PART NUMBER	QTY	PART NAME 1 2 3 4 5 6 (PRODUCT LEVEL)	SEE PAGE
Y	1	1	*6Y-2300*	1	SHAFT GP-INPUT	254
Y	2	1	*235-2412*	1	CLUTCH GP-TRANSMISSION (FORWARD)	228
Y	3	1	*235-2413*	1	CLUTCH GP-TRANSMISSION (REVERSE, 2ND)	230
Y	4	1	*6Y-2303*	1	CLUTCH GP-TRANSMISSION (FIRST, THIRD)	223
Y	5	1	*8E-9316*	1	CLUTCH GP-TRANSMISSION (HIGH, LOW)	226
Y	6	1	*277-6433*	1	CASE & PARTS GP-PLANETARY	217
Y	7	1	*9W-5132*	1	BRAKE GP-PARKING	307
Y	8	1	*9W-5134*	1	SCREEN GP-MAGNETIC (TRANSMISSION)	252
Y	9	1	*6Y-8765*	1	PUMP GP-GEAR	251
Y	10	1	*281-3165*	1	CONTROL GP-TRANSMISSION HYD	234

Y-SEPARATE ILLUSTRATION

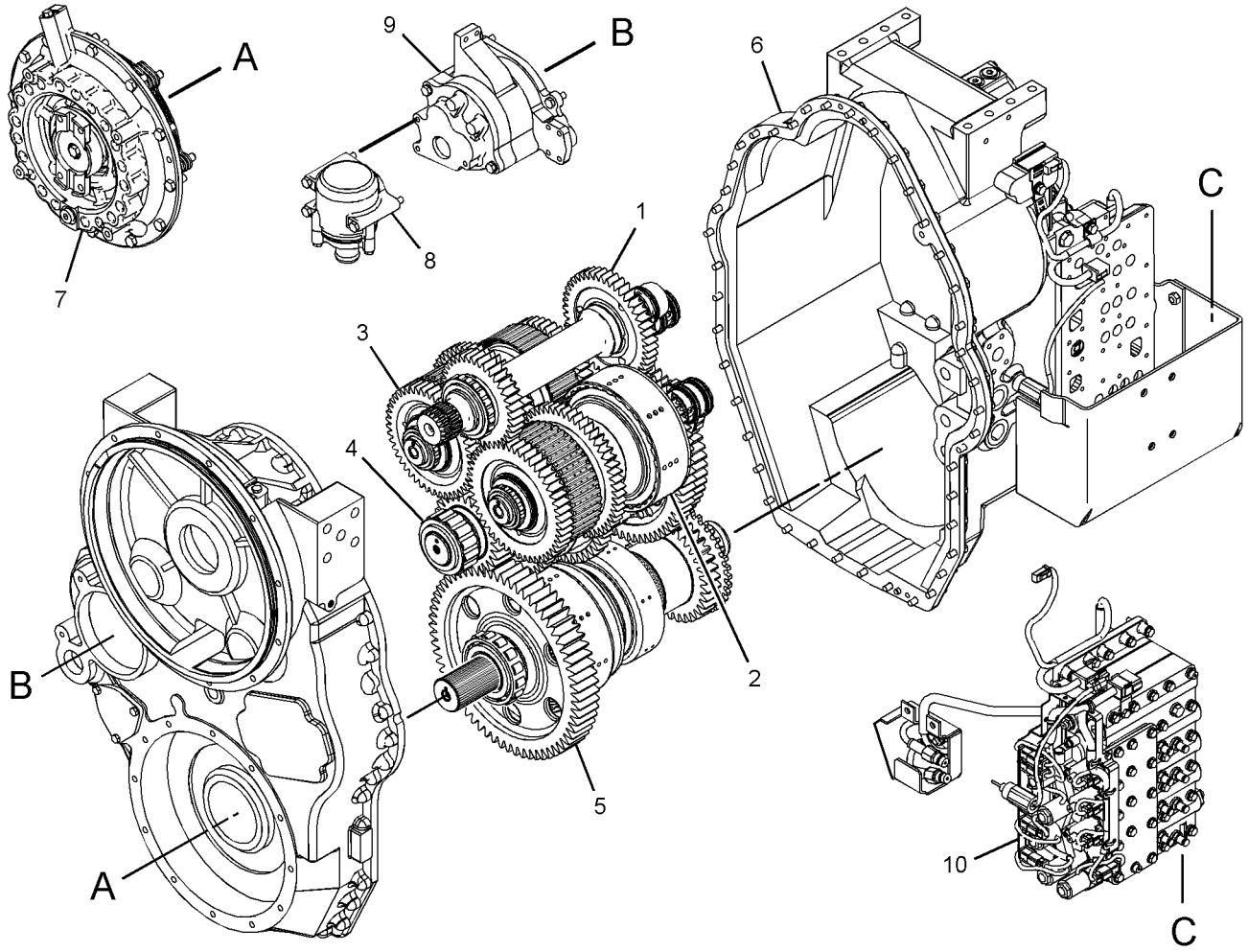

GRAPHIC #1 **<END>** g01770733

8X-5005 UNIVERSAL JOINT GP

S/N: JJA1-UP

PART OF 8W-5394 SHAFT GP-DRIVE

SMCS-3251, 3253 **i00135798**

NOTE	REF NO	GRAPHIC REF	PART NUMBER	QTY	PART NAME 1 2 3 4 5 6 (PRODUCT LEVEL)	SEE PAGE
	1	1	**3D-6689**	1	YOKE-COUPLING	
	2	1	**9P-0356**	2	SPIDER & BEARING AS	
	3	1	**0S-1579**	8	BOLT (1/2-20X2IN)	

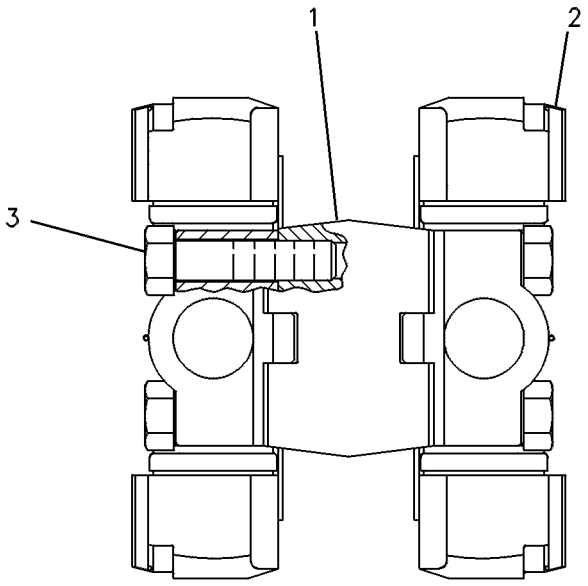

GRAPHIC #1 **<END>** g00108575

174-3705 VALVE & MTG GP-DIFF LOCK

S/N: JJA1-UP
WITH HOUSING BYPASS
PART OF 316-8363 CONTROL GP-DIFFERENTIAL LOCK

SMCS-3272 **i03182460**

NOTE	REF NO	GRAPHIC REF	PART NUMBER	QTY	PART NAME 1 2 3 4 5 6 (PRODUCT LEVEL)	SEE PAGE
	1	1	**6G-5979**	1	KIT-SEAL (DIFFERENTIAL LOCK)	
					(INCLUDES O-RINGS)	
Y	2	1	**154-3064**	1	VALVE GP-SOLENOID (DIFFERENTIAL LOCK)	265
	3	1	**148-2516**	1	MANIFOLD	

Y-SEPARATE ILLUSTRATION

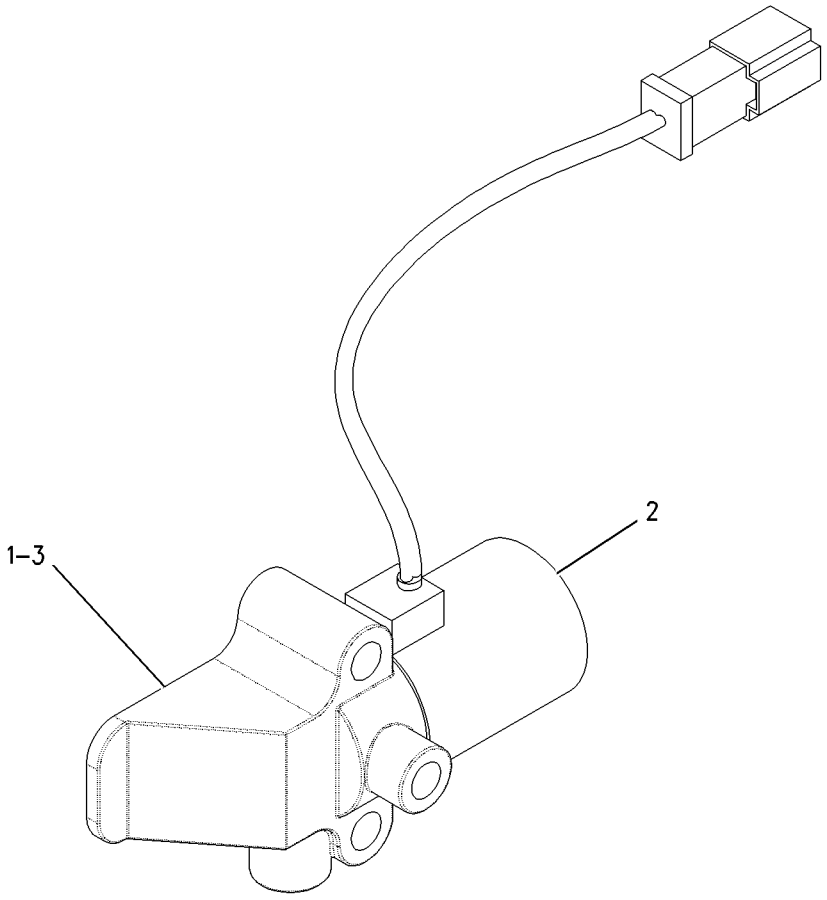

GRAPHIC #1 **<END>** g00806911

184-1130 VALVE GP-SELECTOR & PRESS CONT

S/N: DMJ1-UP

PART OF 281-3163 VALVE GP-TRANSMISSION CONTROL

SMCS-3083 **i03643729**

NOTE	REF NO	GRAPHIC REF	PART NUMBER	QTY	PART NAME 1 2 3 4 5 6 (PRODUCT LEVEL)	SEE PAGE
	1	1	**154-6309**	1	BODY	
M	2	1	**6V-5683**	5	BOLT (M6X1X16-MM)	
	4	1	**3D-4245**	1	SEAL-O-RING	
	6	1	**8E-9894**	1	SPOOL	
	7	1	**9U-8068**	1	SLUG	
	8	1	**9U-9282**	1	SPRING	
	9	1	**9U-9316**	1	SPRING	
	10	1	**108-6523**	1	ADJUSTER AS	
		1	**4K-2039**	1	SEAL-O-RING	
		1	**7M-8485**	1	SEAL-O-RING	
		1	**8T-4223**	1	WASHER-HARD (13.5X25.5X3-MM THK)	
		1	**9U-8069**	1	PLUG	
M		1	**095-1207**	1	NUT (M12X1.75-THD)	
		1	**101-9754**	1	SCREW-ADJUSTMENT (M12X1.75X18-MM)	
	11	1	*309-1877*	1	ORIFICE AS	
		1	**5F-9144**	1	SEAL-O-RING	
		1	**9U-8620**	1	ORIFICE	
	12	1	**9U-8067**	1	RETAINER	
	13	1	**8E-9895**	1	PISTON-LOAD	
	14	1	**9W-7412**	1	SPRING	
	15	1	**4J-2506**	1	SEAL-O-RING	
	16	1	**6F-4855**	1	SEAL-O-RING	
B	17	1	**5J-1036**	4	SHIM (0.8-MM THK)	
	18	1	**8E-9896**	1	PISTON-SELECTOR	
	19	1	**179-1298**	3	SPACER	
	20	1	**7T-0570**	1	SPRING	
B	21	1	**4M-1751**	2	SPACER (15.09X0.4-MM THK)	
Y	23	1	**186-1526**	1	VALVE GP-SOLENOID (24-VOLT) (SELECTOR & PRESSURE RANGE)	266
	25	1	*309-2995*	1	PLUG AS	
		1	**4J-7533**	1	SEAL-O-RING	
		1	**9G-7132**	1	PLUG-ORIFICE	
	26	1	*162-0177*	1	PLUG AS	
		1	**3J-1907**	1	SEAL-O-RING	
		1	**9S-8004**	1	PLUG-O-RING	
	28	1	**180-9327**	1	MANIFOLD	
	30	1	**3K-6116**	1	WASHER (0.266X0.47X0.031-IN THK)	
M	31	1	**8T-8442**	1	BOLT-SOCKET HEAD (M6X1X30-MM)	
	32	1	**5P-0537**	6	WASHER-HARD (7.2X14.5X2-MM THK)	
	33	1	**9X-7384**	3	SEAL-O-RING	
	34	1	**175-3893**	1	VALVE GP-SOLENOID (PROPN SOL FOR CL PACK 1)	
	34A	1	**175-3893**	1	VALVE GP-SOLENOID (PROPN SOL FOR CL PACK 2)	
	34B	1	**175-3893**	1	VALVE GP-SOLENOID (PROPN SOL FOR CL PACK 3)	
					(EACH VALVE GP INCLUDES)	
		1	**226-9622**	1	COIL AS-SOLENOID (24-VOLT)	
		1	**164-2108**	1	WASHER (13.03X25.4X2.38-MM THK)	
		1	**167-9524**	1	NUT-SELF-LOCKING (1/2-28-THD)	
	35	1	**183-6774**	1	PLATE	
M	36	1	**8C-6965**	1	BOLT-SOCKET HEAD (M6X1X45-MM)	
	37	1	**154-7172**	1	SPOOL	
	38	1	*309-2996*	5	PLUG AS	
					(EACH INCLUDES)	
		1	**6Y-4638**	1	PLUG-HEX SOCKET (1-5/16-12-THD)	
		1	**7M-8485**	1	SEAL-O-RING	
	39	1	**183-6775**	3	SPOOL AS	
					(EACH INCLUDES)	

184-1130 VALVE GP-SELECTOR & PRESS CONT *(contd.)* i03643729

NOTE	REF NO	GRAPHIC REF	PART NUMBER	QTY	PART NAME 1 2 3 4 5 6 (PRODUCT LEVEL)	SEE PAGE
		1	**167-0566**	1	CARTRIDGE	
	40	1	**154-7175**	3	SLUG	
	41	1	**154-7176**	3	SPRING	
	42	1	**154-7177**	3	SPRING	

B-USE AS REQUIRED
M-METRIC PART
Y-SEPARATE ILLUSTRATION

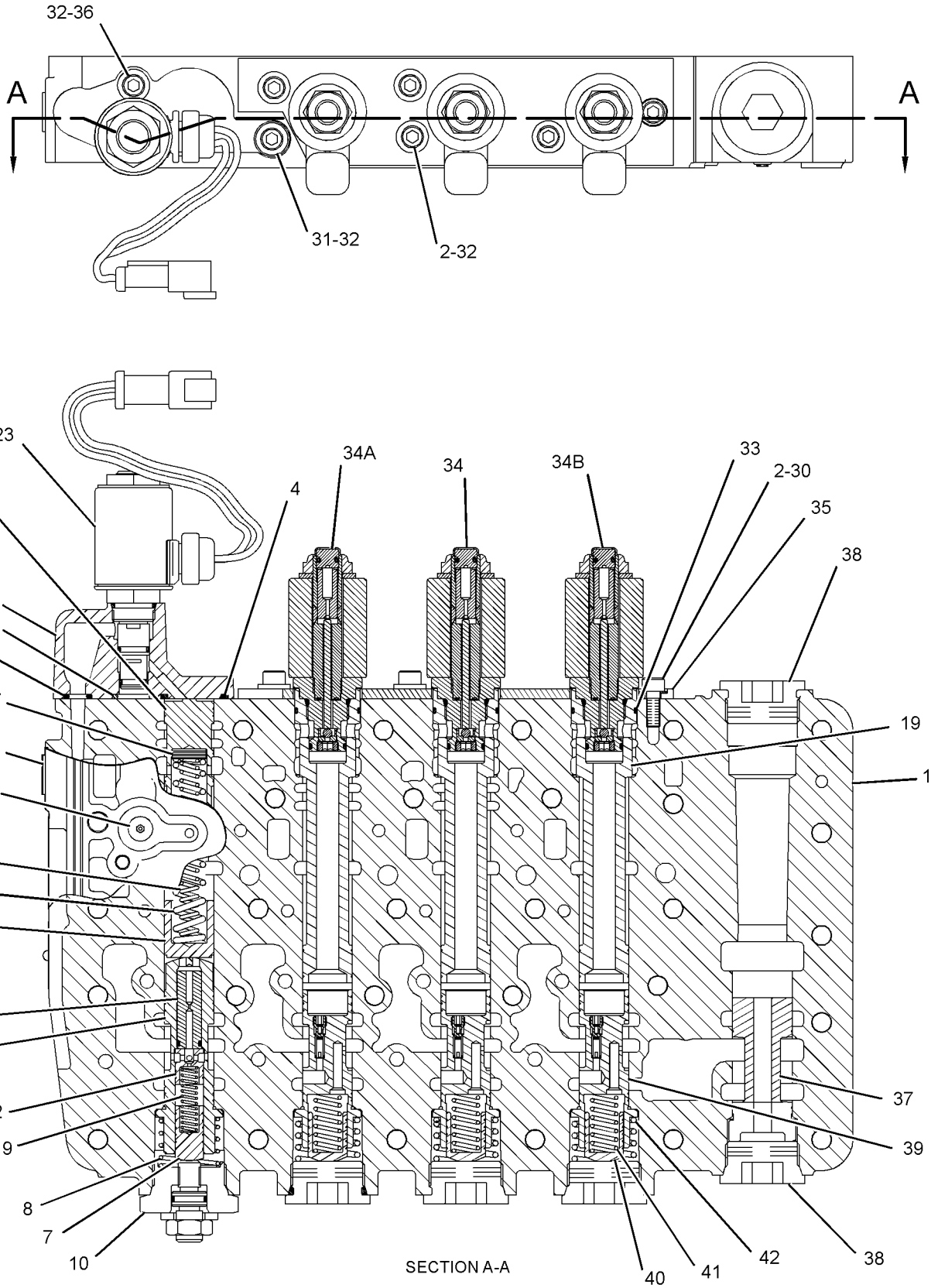

GRAPHIC #1 **<END>** g01415135

POWER TRAIN

281-3160 VALVE GP-SELECTOR & PRESS CONT

S/N: DMJ1-UP

PART OF 281-3163 VALVE GP-TRANSMISSION CONTROL

SMCS-3083 **i02840144**

NOTE	REF NO	GRAPHIC REF	PART NUMBER	QTY	PART NAME 1 2 3 4 5 6 (PRODUCT LEVEL)	SEE PAGE
	1	1	**161-7055**	1	BODY	
	2	1	*309-1876*	2	ORIFICE AS	
					(EACH INCLUDES)	
		1	**5F-9144**	1	SEAL-O-RING	
		1	**8E-7714**	1	ORIFICE	
	4	1	**8E-9894**	4	SPOOL	
	5	1	**9U-8068**	4	SLUG	
	6	1	**9U-9316**	4	SPRING	
	7	1	**9U-9282**	4	SPRING	
	9	1	**9U-8067**	4	RETAINER	
	10	1	**8E-9895**	4	PISTON-LOAD	
	11	1	**4J-2506**	1	SEAL-O-RING	
	12	1	**6F-4855**	4	SEAL-O-RING	
	13	1	**8E-9896**	4	PISTON-SELECTOR	
B	14	1	**4M-1751**	4	SPACER (15.09X0.4-MM THK)	
B	15	1	**5J-1036**	15	SHIM (0.8-MM THK)	
	16	1	**3D-4245**	4	SEAL-O-RING	
	17	1	**9W-7410**	1	SPRING	
	18	1	**7T-0570**	3	SPRING	
	19	1	**8E-1143**	1	SLUG	
	20	1	**9U-8668**	1	SPOOL AS	
		1	**3D-8317**	1	RING-RETAINING	
		1	**4B-9880**	1	BALL	
		1	**4M-2381**	1	SPRING	
		1	**8E-9893**	1	SPOOL-RELIEF	
		1	**9U-8669**	1	RETAINER	
	21	1	**9U-9595**	1	SPRING	
	22	1	**9N-4500**	1	SPRING	
	23	1	**9N-4498**	1	SPRING	
	24	1	**8E-9897**	1	SPOOL	
	25	1	**9W-0898**	1	SLUG	
	27	1	**8E-6570**	1	MANIFOLD	
Y	28	1	**186-1526**	4	VALVE GP-SOLENOID (24-VOLT) (SPEED, RANGE, TRANSMISSION)	266
M	31	1	**8C-6965**	4	BOLT-SOCKET HEAD (M6X1X45-MM)	
	32	1	**5P-0537**	5	WASHER-HARD (7.2X14.5X2-MM THK)	
M	33	1	**8T-8442**	1	BOLT-SOCKET HEAD (M6X1X30-MM)	
	34	1	*309-1877*	1	ORIFICE AS	
		1	**5F-9144**	1	SEAL-O-RING	
		1	**9U-8620**	1	ORIFICE	
	35	1	*309-2995*	4	PLUG AS	
					(EACH INCLUDES)	
		1	**4J-7533**	1	SEAL-O-RING	
		1	**9G-7132**	1	PLUG-ORIFICE	
	37	1	*183-7263*	1	PLUG AS	
		1	**3J-7354**	1	SEAL-O-RING	
		1	**9S-8002**	1	PLUG-O-RING	
	38	1	*162-0177*	1	PLUG AS	
		1	**3J-1907**	1	SEAL-O-RING	
		1	**9S-8004**	1	PLUG-O-RING	
	40	1	**108-6523**	5	ADJUSTER AS	
					(EACH INCLUDES)	
		1	**4K-2039**	1	SEAL-O-RING	
		1	**7M-8485**	1	SEAL-O-RING	
		1	**8T-4223**	1	WASHER-HARD (13.5X25.5X3-MM THK)	
		1	**9U-8069**	1	PLUG	

281-3160 VALVE GP-SELECTOR & PRESS CONT *(contd.)* i02840144

NOTE	REF NO	GRAPHIC REF	PART NUMBER	QTY	PART NAME 1 2 3 4 5 6 (PRODUCT LEVEL)	SEE PAGE
M		1	**095-1207**	1	NUT (M12X1.75-THD)	
		1	**101-9754**	1	SCREW-ADJUSTMENT (M12X1.75X18-MM)	
	41	1	*309-2996*	1	PLUG AS	
		1	**6Y-4638**	1	PLUG-HEX SOCKET (1-5/16-12-THD)	
		1	**7M-8485**	1	SEAL-O-RING	
	42	1	*309-1878*	1	ORIFICE AS	
		1	**5F-9144**	1	SEAL-O-RING	
		1	**8E-7713**	1	ORIFICE	
	43	1	**9W-7412**	3	SPRING	
	44	1	**7G-5453**	1	SPRING	
	45	1	**108-3129**	1	STOP	

B-USE AS REQUIRED
M-METRIC PART
Y-SEPARATE ILLUSTRATION

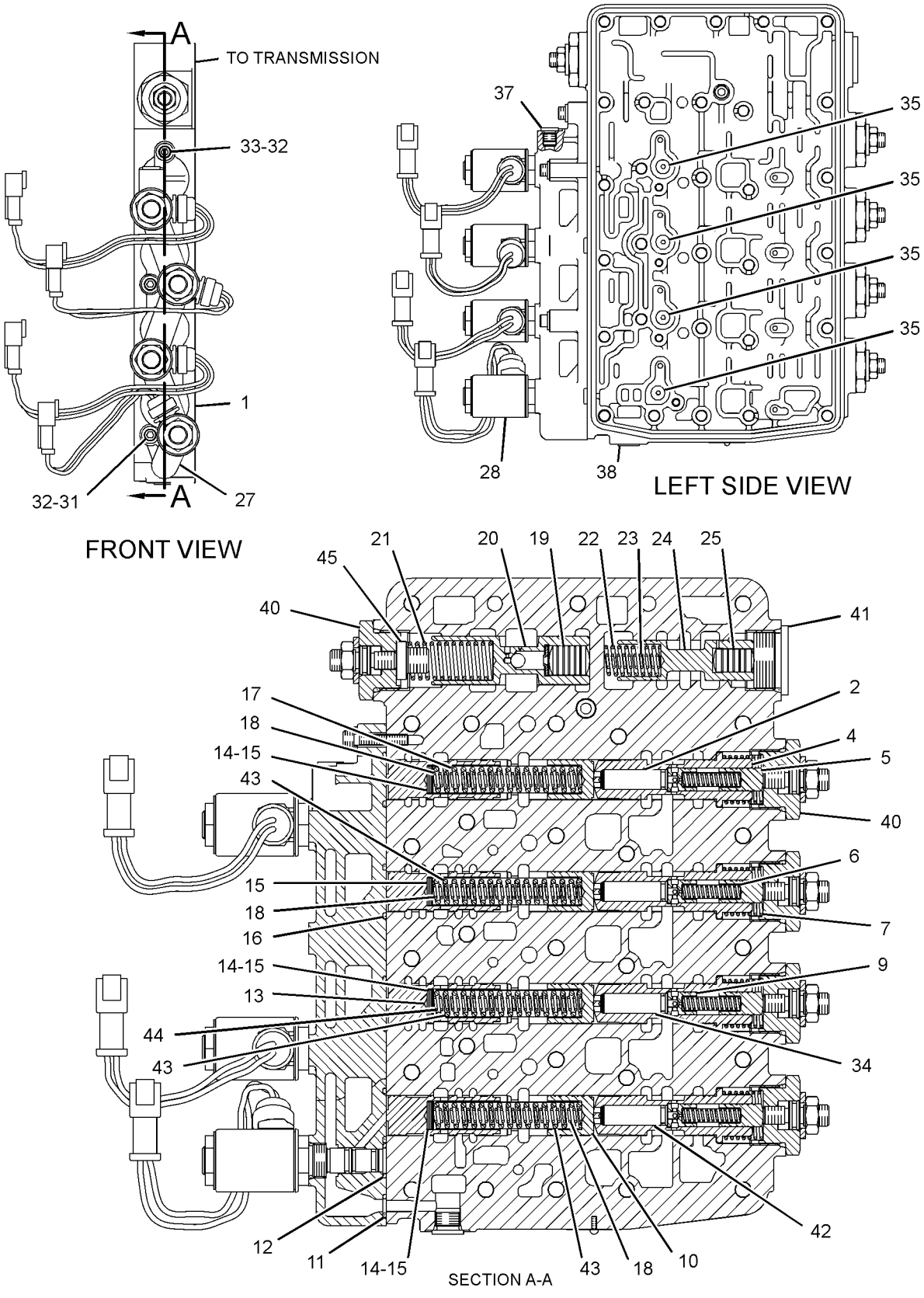

GRAPHIC #1 **<END>** g01419350

154-3064 VALVE GP-SOLENOID

S/N: JJA1-UP
24-VOLT
PART OF 174-3705 VALVE & MTG GP-DIFF LOCK

SMCS-5479 **i02204767**

NOTE	REF NO	GRAPHIC REF	PART NUMBER	QTY	PART NAME 1 2 3 4 5 6 (PRODUCT LEVEL)	SEE PAGE
	1	1	**8C-9987**	1	WASHER (8.3X28X2.5-MM THK)	
	2	1	**111-0343**	1	LOCKNUT (5/16-18-THD)	
	3	1	**142-0350**	1	CARTRIDGE AS	
		1	**8C-9987**	1	WASHER (8.3X28X2.5-MM THK)	
		1	**111-0343**	1	LOCKNUT (5/16-18-THD)	
	4	1	**189-0189**	1	COIL AS (24-VOLT)	
		1	**1S-9593**	2	STRAP-CABLE	
		1	**102-8802**	1	KIT-RECEPTACLE (2-PIN)	
					(INCLUDES RECEPTACLE AS & WEDGE)	
		1	**3E-3365**	1	WEDGE-RECEPTACLE LOCK (2-PIN)	
		1	**186-3735**	2	PIN-CONNECTOR (16-GA TO 18-GA)	
					AVAILABLE REPAIR KIT(S):	
			6G-5979	1	KIT-SEAL (DIFFERENTIAL LOCK VALVE)	

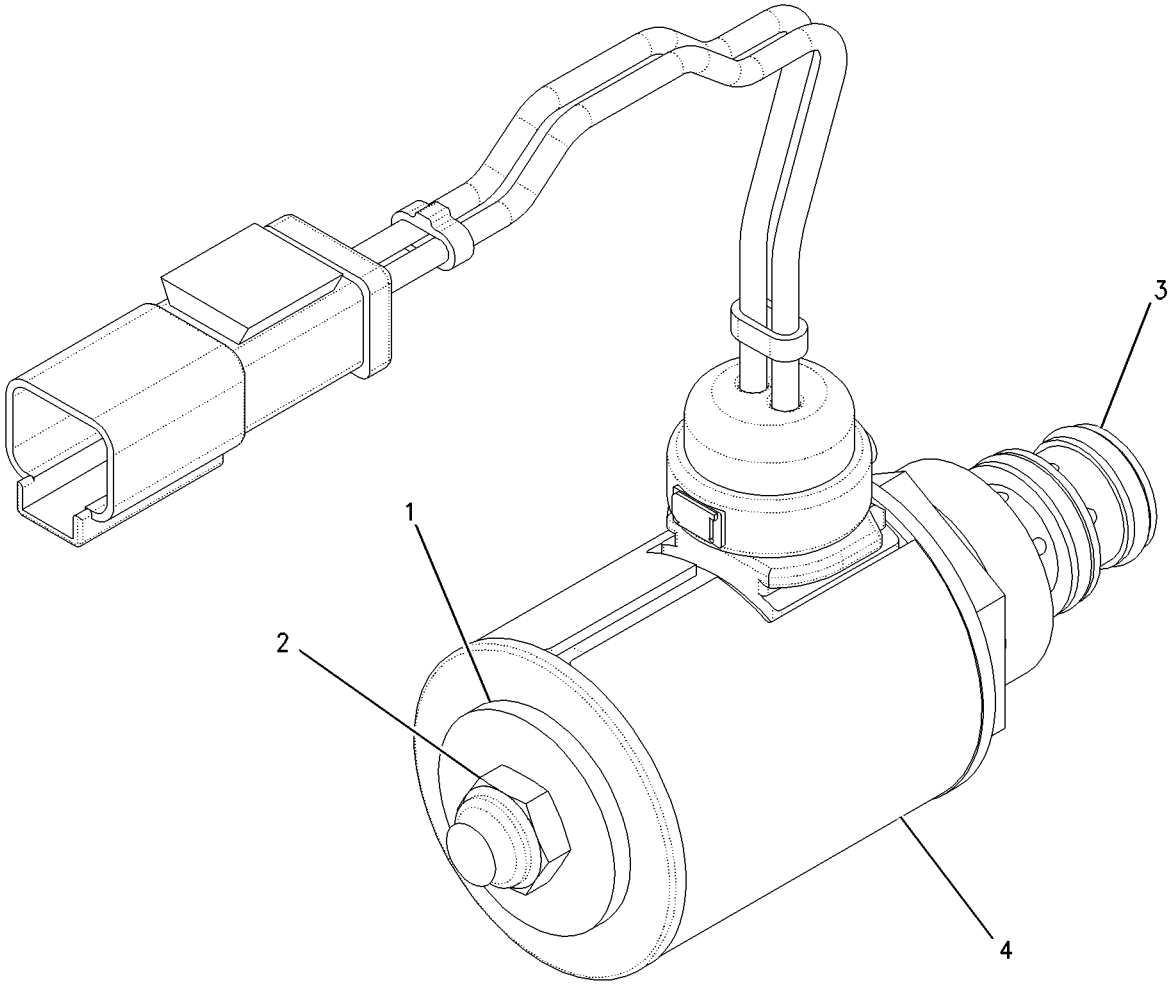

GRAPHIC #1 **<END>** g00877963

186-1526 VALVE GP-SOLENOID

S/N: DMJ1-UP
24-VOLT
PART OF 184-1130, 281-3160 VALVE GP-SELECTOR & PRESS CONT

SMCS-5479 **i03195180**

NOTE	REF NO	GRAPHIC REF	PART NUMBER	QTY	PART NAME 1 2 3 4 5 6 (PRODUCT LEVEL)	SEE PAGE
	1	1	**104-3947**	1	LOCKNUT (5/8-11-THD)	
J	2	1	**234-6666**	1	CARTRIDGE AS-VALVE	
	3	1	**301-3118**	1	COIL AS	
	3A	1	**1S-9593**	2	STRAP-CABLE	
	3B	1	**102-8802**	1	KIT-RECEPTACLE (2-PIN)	
					(INCLUDES RECEPTACLE AS & WEDGE)	
	3C	1	**186-3735**	2	PIN-CONNECTOR (16-GA TO 18-GA)	
					AVAILABLE REPAIR KIT(S):	
J			**7T-4515**	1	KIT-SEAL (TRANSMISSION SOLENOID)	
					(INCLUDES SEAL-O-RINGS)	

J-KIT MARKED J SERVICES PART MARKED J

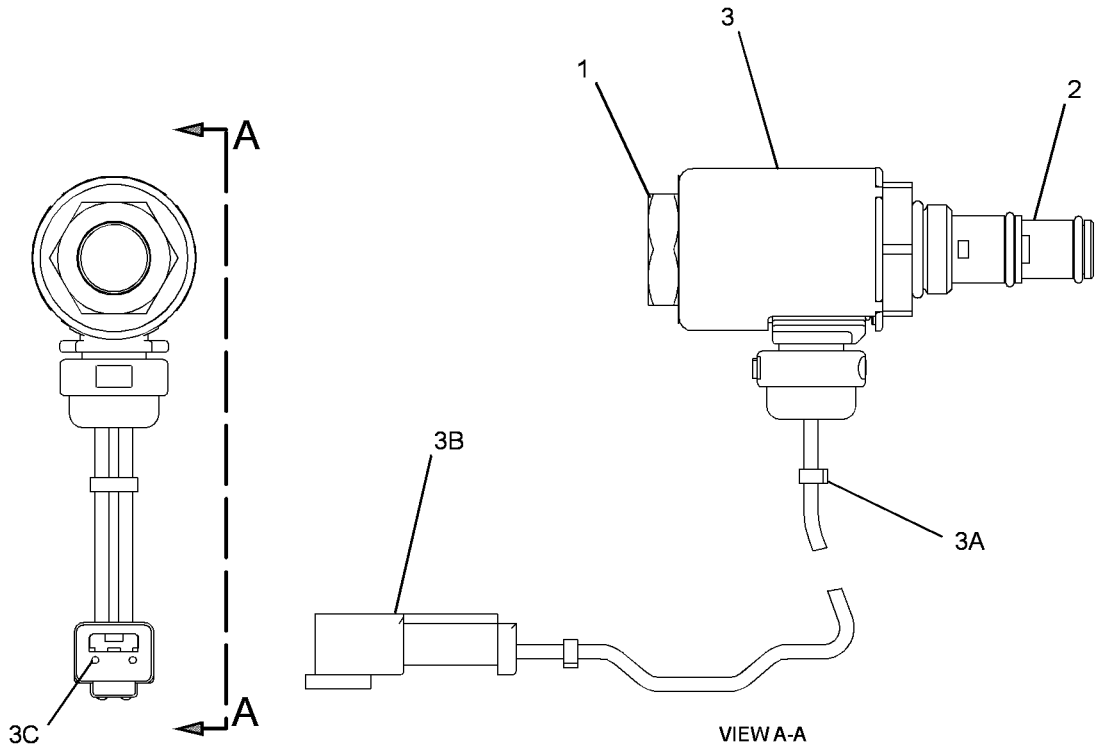

GRAPHIC #1 **<END>** g01628276

281-3163 VALVE GP-TRANSMISSION CONTROL

S/N: DMJ1-UP

PART OF 281-3165 CONTROL GP-TRANSMISSION HYD

SMCS-3073 **i02840282**

NOTE	REF NO	GRAPHIC REF	PART NUMBER	QTY	PART NAME 1 2 3 4 5 6 (PRODUCT LEVEL)	SEE PAGE
Y	1	1	**184-1130**	1	VALVE GP-SELECTOR & PRESS CONT (DIRECTION, RANGE, TRANSMISSION)	259
	2	1	**154-6306**	1	PLATE	
Y	3	1	**281-3160**	1	VALVE GP-SELECTOR & PRESS CONT (SPEED, RANGE, TRANSMISSION)	262
	4	1	**110-5161**	1	MANIFOLD	
	5	1	**154-6307**	1	PLATE	
	6	1	**8E-9474**	1	COVER	
	7	1	*164-5567*	8	COUPLER AS-QUICK DISCONNECT	
					(EACH INCLUDES)	
		1	**3J-1907**	1	SEAL-O-RING	
		1	**6V-3965**	1	FITTING (QUICK DISCONNECT)	
	8	1	*148-8407*	2	PLUG AS	
					(EACH INCLUDES)	
		1	**3J-1907**	1	SEAL-O-RING	
		1	**9S-4191**	1	PLUG-O-RING	
	9	1	**6V-0852**	8	CAP-DUST	
	11	1	**1T-0738**	2	WASHER (8.4X19X1.83-MM THK)	
	12	1	**9P-9150**	4	WASHER (8.25X18X0.84-MM THK)	
M	13	1	**3E-8006**	2	BOLT (M8X1.25X130-MM)	
	15	1	**9L-9068**	6	DOWEL	
	16	1	**8F-6230**	1	SEAL-O-RING	
	17	1	**4D-6695**	4	SEAL-O-RING	
	18	1	**142-1767**	1	POPPET	
	19	1	**4D-1322**	1	RING-RETAINING	
	20	1	**6Y-2584**	1	RETAINER	
	21	1	**3J-6956**	1	SPRING	
	22	1	**6I-9395**	1	SCREEN (TRANSMISSION CONTROL VALVE)	
M	23	1	**6V-5217**	1	BOLT (M8X1.25X20-MM)	

M-METRIC PART
Y-SEPARATE ILLUSTRATION

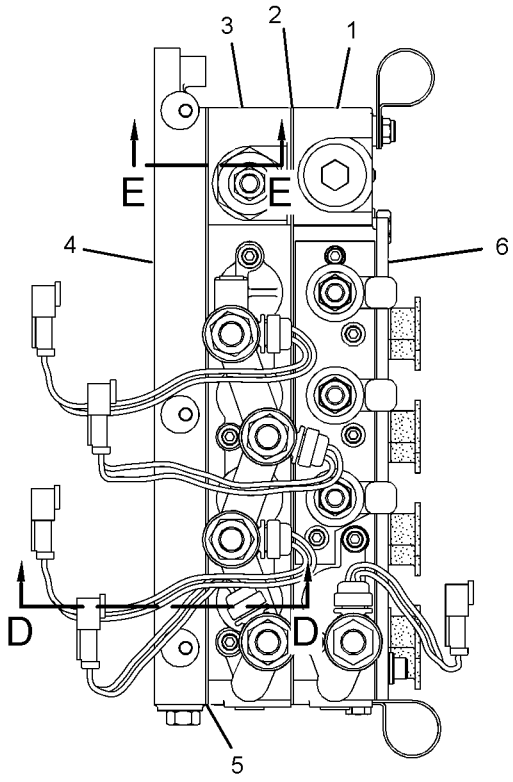

FRONT VIEW

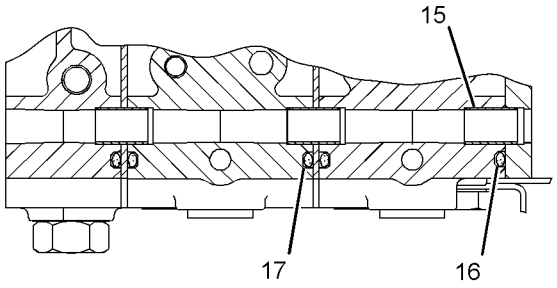

SECTION A-A

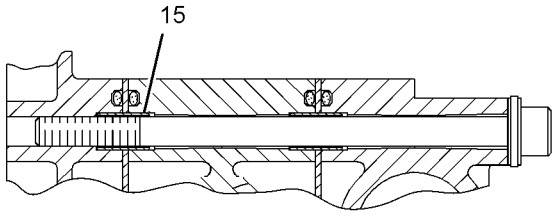

SECTION C-C

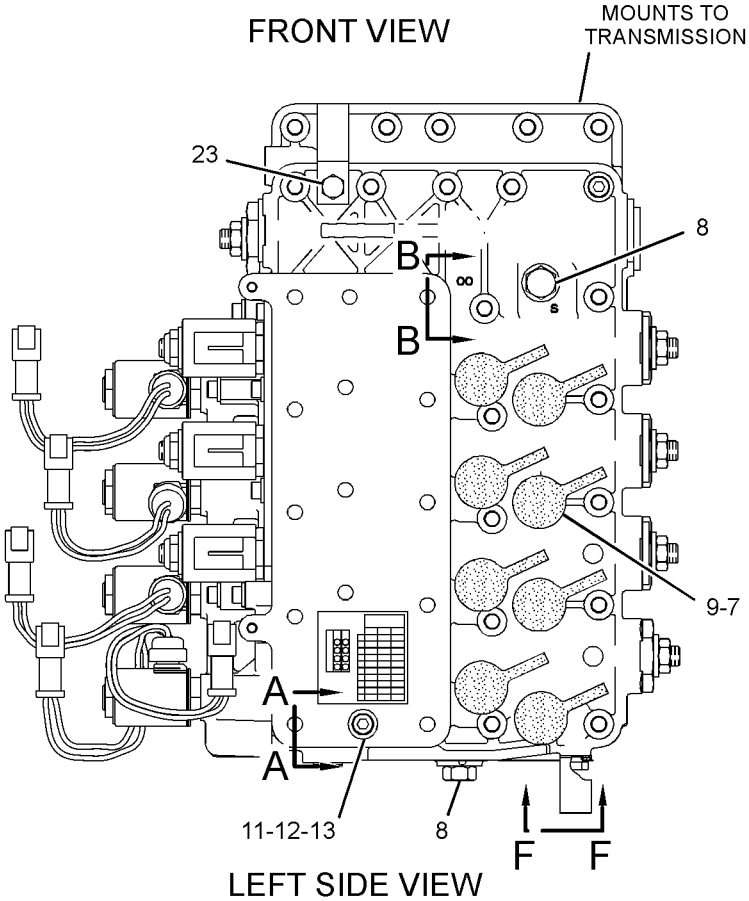

LEFT SIDE VIEW

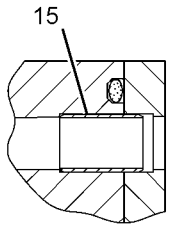

SECTION B-B

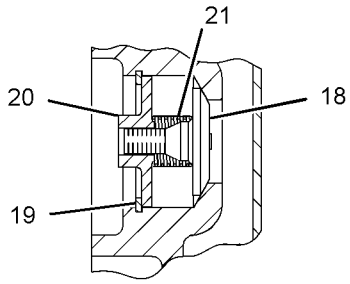

SECTION D-D

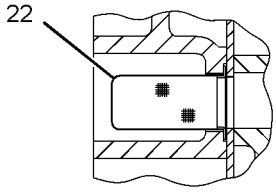

SECTION E-E

GRAPHIC #1 **<END>** g01419381

252-0671 WHEEL & TIRE AR

S/N: JJA1-UP
AN ATTACHMENT

SMCS-4200 **i03576422**

NOTE	PART NUMBER	QTY	PART NAME 1 2 3 4 5 6 (PRODUCT LEVEL)	SEE PAGE
Y	*252-0670*	6	WHEEL & TIRE GP	270
Y-SEPARATE ILLUSTRATION				

<END>

252-0731 WHEEL & TIRE AR

S/N: JJA1-UP
AN ATTACHMENT

SMCS-4200 **i02784689**

NOTE	PART NUMBER	QTY	PART NAME 1 2 3 4 5 6 (PRODUCT LEVEL)	SEE PAGE
Y	*252-0730*	6	WHEEL & TIRE GP	270
Y-SEPARATE ILLUSTRATION				

<END>

252-7948 WHEEL & TIRE AR

S/N: JJA1-UP
AN ATTACHMENT

SMCS-4200 **i02811275**

NOTE	PART NUMBER	QTY	PART NAME 1 2 3 4 5 6 (PRODUCT LEVEL)	SEE PAGE
Y	*252-7947*	6	WHEEL & TIRE GP	270
Y-SEPARATE ILLUSTRATION				

<END>

254-7964 WHEEL & TIRE AR

S/N: JJA1-UP
AN ATTACHMENT

SMCS-4200 **i02787646**

NOTE	PART NUMBER	QTY	PART NAME 1 2 3 4 5 6 (PRODUCT LEVEL)	SEE PAGE
Y	*254-7948*	6	WHEEL & TIRE GP	271
Y-SEPARATE ILLUSTRATION				

<END>

305-6159 WHEEL & TIRE AR

S/N: JJA1-UP
AN ATTACHMENT

SMCS-4200 **i02788599**

NOTE	PART NUMBER	QTY	PART NAME 1 2 3 4 5 6 (PRODUCT LEVEL)	SEE PAGE
Y	*305-6155*	6	WHEEL & TIRE GP	271
Y-SEPARATE ILLUSTRATION				

<END>

POWER TRAIN

340-2602 WHEEL & TIRE AR

S/N: JJA1-UP
AN ATTACHMENT

SMCS-4200 **i03519141**

NOTE	PART NUMBER	QTY	PART NAME 1 2 3 4 5 6 (PRODUCT LEVEL)	SEE PAGE
Y	*340-2614*	6	WHEEL & TIRE GP	271

Y-SEPARATE ILLUSTRATION

<END>

252-0670 WHEEL & TIRE GP

S/N: JJA1-UP
PART OF 252-0671 WHEEL & TIRE AR
AN ATTACHMENT

SMCS-4200 **i02781621**

NOTE	PART NUMBER	QTY	PART NAME 1 2 3 4 5 6 (PRODUCT LEVEL)	SEE PAGE
Y	*252-0108*	1	WHEEL GP	275
	142-6174	1	TIRE (14-24)	

Y-SEPARATE ILLUSTRATION

<END>

252-0730 WHEEL & TIRE GP

S/N: JJA1-UP
PART OF 252-0731 WHEEL & TIRE AR
AN ATTACHMENT

SMCS-4200 **i02784687**

NOTE	PART NUMBER	QTY	PART NAME 1 2 3 4 5 6 (PRODUCT LEVEL)	SEE PAGE
Y	*252-0112*	1	WHEEL GP	276
	142-6183	1	TIRE (17.5-25)	

Y-SEPARATE ILLUSTRATION

<END>

252-7947 WHEEL & TIRE GP

S/N: JJA1-UP
PART OF 252-7948 WHEEL & TIRE AR
AN ATTACHMENT

SMCS-4200 **i02785102**

NOTE	PART NUMBER	QTY	PART NAME 1 2 3 4 5 6 (PRODUCT LEVEL)	SEE PAGE
Y	*252-0106*	1	WHEEL GP	275
	142-6174	1	TIRE (14-24)	

Y-SEPARATE ILLUSTRATION

<END>

254-7948 WHEEL & TIRE GP

S/N: JJA1-UP
PART OF 254-7964 WHEEL & TIRE AR
AN ATTACHMENT

SMCS-4200 **i02787563**

NOTE	PART NUMBER	QTY	PART NAME 1 2 3 4 5 6 (PRODUCT LEVEL)	SEE PAGE
Y	*252-0111*	1	WHEEL GP	276
	142-6183	1	TIRE (17.5-25)	
Y-SEPARATE ILLUSTRATION				

<END>

305-6155 WHEEL & TIRE GP

S/N: JJA1-UP
PART OF 305-6159 WHEEL & TIRE AR
AN ATTACHMENT

SMCS-4200 **i02787784**

NOTE	PART NUMBER	QTY	PART NAME 1 2 3 4 5 6 (PRODUCT LEVEL)	SEE PAGE
Y	*252-0108*	1	WHEEL GP	275
	150-7955	1	TIRE (14-24)	
Y-SEPARATE ILLUSTRATION				

<END>

340-2614 WHEEL & TIRE GP

S/N: JJA1-UP
PART OF 340-2602 WHEEL & TIRE AR
AN ATTACHMENT

SMCS-4200 **i03519143**

NOTE	PART NUMBER	QTY	PART NAME 1 2 3 4 5 6 (PRODUCT LEVEL)	SEE PAGE
Y	*252-0106*	1	WHEEL GP	275
	142-6167	1	TIRE (13-24)	
Y-SEPARATE ILLUSTRATION				

<END>

252-0114 WHEEL AR

S/N: JJA1-UP
AN ATTACHMENT

SMCS-4208 **i02781349**

NOTE	PART NUMBER	QTY	PART NAME 1 2 3 4 5 6 (PRODUCT LEVEL)	SEE PAGE
Y	*252-0106*	6	WHEEL GP	275
Y-SEPARATE ILLUSTRATION				

<END>

252-0118 WHEEL AR

S/N: JJA1-UP

AN ATTACHMENT

SMCS-4208 **i02781890**

NOTE	PART NUMBER	QTY	PART NAME 1 2 3 4 5 6 (PRODUCT LEVEL)	SEE PAGE
Y	*252-0112*	6	WHEEL GP	276

Y-SEPARATE ILLUSTRATION

<END>

252-0102 WHEEL GP

S/N: JJA1-UP
(10X24)
PART OF 252-0108 WHEEL GP
AN ATTACHMENT

SMCS-4006, 4201, 4208 **i02781649**

NOTE	REF NO	GRAPHIC REF	PART NUMBER	QTY	PART NAME 1 2 3 4 5 6 (PRODUCT LEVEL)	SEE PAGE
	1	1	**2D-2654**	1	RING-LOCK	
	2	1	**8W-9566**	1	FLANGE AS	
	3	1	**290-1505**	1	RIM AS	

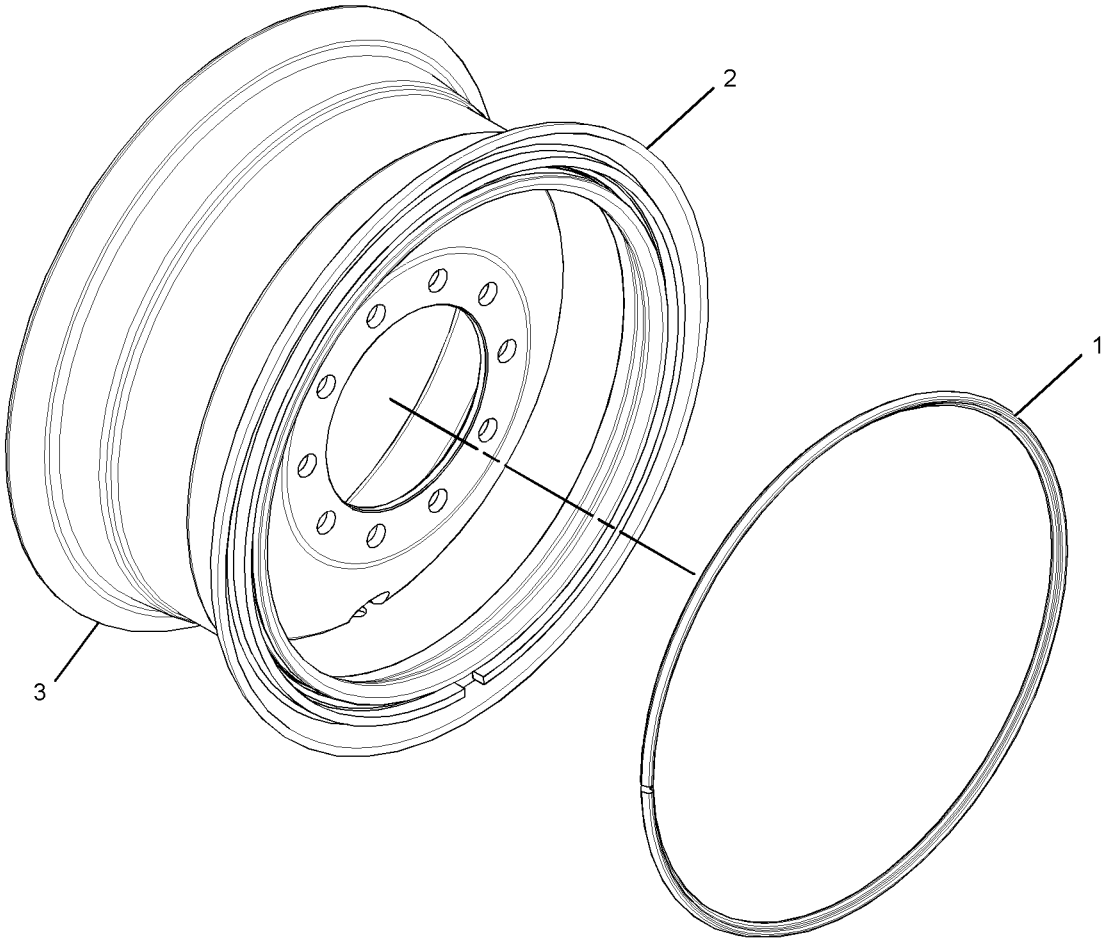

GRAPHIC #1 **<END>** g01393131

252-0104 WHEEL GP

S/N: JJA1-UP
(14X25)
PART OF 252-0112 WHEEL GP
AN ATTACHMENT

SMCS-4006, 4201, 4208 **i02781823**

NOTE	REF NO	GRAPHIC REF	PART NUMBER	QTY	PART NAME 1 2 3 4 5 6 (PRODUCT LEVEL)	SEE PAGE
	1	1	**4K-4881**	1	RING-LOCK	
	2	1	**8W-9594**	1	FLANGE AS	
	3	1	**289-9726**	1	RIM AS	

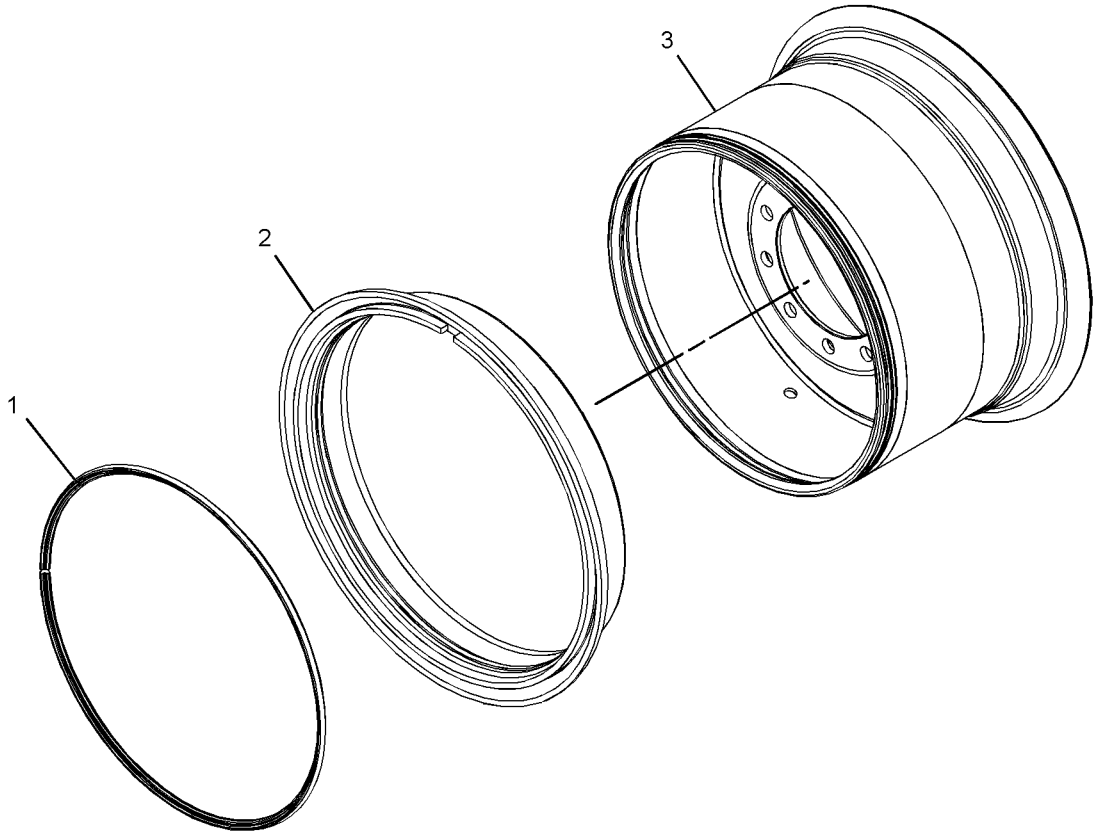

GRAPHIC #1 **<END>** g01392485

252-0106 WHEEL GP

S/N: JJA1-UP
(9X24)
PART OF 252-7947, 340-2614 WHEEL & TIRE GP, 252-0114 WHEEL AR
AN ATTACHMENT

SMCS-4006, 4201, 4208 **i02781471**

NOTE	PART NUMBER	QTY	PART NAME 1 2 3 4 5 6 (PRODUCT LEVEL)	SEE PAGE
	252-0098	1	RIM AS	
	2D-2511	1	VALVE GP-TIRE (BASIC)	
	3D-2239	1	VALVE AS-TIRE (TIRE INFLATION)	
	6F-3930	1	CORE-VALVE	
	9K-7951	1	CAP-VALVE (STEM)	
	7D-5252	1	SPUD AS	
	2D-2507	1	SPUD	
	2D-2508	1	GROMMET	
	2D-2509	1	LOCKNUT (11/16-16-THD)	

<END>

252-0108 WHEEL GP

S/N: JJA1-UP
PART OF 252-0670, 305-6155 WHEEL & TIRE GP
AN ATTACHMENT

SMCS-4006, 4201, 4208 **i02781628**

NOTE	PART NUMBER	QTY	PART NAME 1 2 3 4 5 6 (PRODUCT LEVEL)	SEE PAGE
Y	*252-0102*	1	WHEEL GP	273
	2D-2565	1	SEAL-O-RING	
	110-4213	1	VALVE GP-TIRE (TIRE INFLATION)	
	7D-5252	1	SPUD AS	
	2D-2507	1	SPUD	
	2D-2508	1	GROMMET	
	2D-2509	1	LOCKNUT (11/16-16-THD)	
	110-4214	1	STEM AS	
	6F-3930	1	CORE-VALVE	
	9K-7951	1	CAP-VALVE (STEM)	

Y-SEPARATE ILLUSTRATION

<END>

POWER TRAIN

252-0111 WHEEL GP

S/N: JJA1-UP
(13X25)
PART OF 254-7948 WHEEL & TIRE GP
AN ATTACHMENT

SMCS-4006, 4201, 4208 **i02781762**

NOTE	PART NUMBER	QTY	PART NAME 1 2 3 4 5 6 (PRODUCT LEVEL)	SEE PAGE
	252-0100	1	RIM AS	
	2G-6595	1	VALVE GP-TIRE	
	6F-3930	1	CORE-VALVE	
	9K-7951	1	CAP-VALVE (STEM)	
	7D-5252	1	SPUD AS	
	2D-2507	1	SPUD	
	2D-2508	1	GROMMET	
	2D-2509	1	LOCKNUT (11/16-16-THD)	

<END>

252-0112 WHEEL GP

S/N: JJA1-UP
PART OF 252-0730 WHEEL & TIRE GP, 252-0118 WHEEL AR
AN ATTACHMENT

SMCS-4006, 4201, 4208 **i02781820**

NOTE	PART NUMBER	QTY	PART NAME 1 2 3 4 5 6 (PRODUCT LEVEL)	SEE PAGE
Y	*252-0104*	1	WHEEL GP	274
	4K-4879	1	SEAL-O-RING	
	2G-6595	1	VALVE GP-TIRE	
	6F-3930	1	CORE-VALVE	
	9K-7951	1	CAP-VALVE (STEM)	
	7D-5252	1	SPUD AS	
	2D-2507	1	SPUD	
	2D-2508	1	GROMMET	
	2D-2509	1	LOCKNUT (11/16-16-THD)	

Y-SEPARATE ILLUSTRATION

<END>

FRAME AND BODY

134-1080 AXLE GP-FRONT

S/N: JJA1-UP

PART OF 346-3710 GENERAL AR

SMCS-4305, 4313, 5225 **i03518581**

NOTE	REF NO	GRAPHIC REF	PART NUMBER	QTY	PART NAME 1 2 3 4 5 6 (PRODUCT LEVEL)	SEE PAGE
R	1	1	**5K-5288**	2	SEAL GP-DUO-CONE	
					(EACH INCLUDES)	
		1	**5K-5129**	2	RING-SEALING	
	2	1	**2G-8626**	2	WASHER-THRUST (2.02X3.63X0.16-IN THK)	
	3	1	**3B-8489**	11	FITTING-GREASE	
	4	1	**4D-3704**	2	WASHER-HARD (17X30X5-MM THK)	
	5	1	**2G-8615**	4	WASHER-THRUST (2.015X3.625X0.11-IN THK)	
	6	1	**2G-8742**	2	WASHER-HARD (20X65X5-MM THK)	
	7	1	**2H-3740**	4	BOLT (3/4-16X1.25-IN)	
	8	1	**2G-8741**	4	RING-METAL SEAL	
	9	1	**2G-8777**	4	SEAL	
	10	1	**9M-2092**	4	SEAL-O-RING	
	11	1	**8W-5293**	4	PIN	
	12	1	**8W-4652**	1	HOUSING-SPINDLE	
	13	1	**8W-4653**	1	HOUSING-SPINDLE	
	14	1	**8D-2811**	2	WASHER (1.25X1.94X0.032-IN THK)	
	15	1	**2G-8633**	2	PIN	
	16	1	**1D-4627**	2	BOLT (7/8-9X3-IN)	
	17	1	**2J-3505**	2	NUT-FULL (7/8-9-THD)	
	18	1	**7X-7731**	2	PLUG-PIPE	
	19	1	**5P-8842**	8	SEAL-LIP TYPE	
	20	1	**9D-3523**	1	WASHER (2.062X4X0.188-MM THK)	
	21	1	**5P-1075**	4	WASHER-HARD (10.2X22.5X3-MM THK)	
	22	1	**5S-7379**	4	BOLT (3/8-16X0.875-IN)	
	23	1	**2G-8768**	4	WASHER (10.5X53.8X3-MM THK)	
	24	1	**103-9125**	1	BAR AS	
		1	**2G-8624**	2	BEARING-SLEEVE	
	25	1	**5P-8890**	2	SEAL-LIP TYPE	
	26	1	**030-0060**	2	CUP-BEARING	
	27	1	**030-0061**	2	CONE-BEARING	
	28	1	**7D-8637**	2	CUP-BEARING	
	29	1	**7D-8636**	2	CONE-BEARING	
	30	1	**3B-4618**	2	PIN-COTTER	
	31	1	**7D-8643**	2	RETAINER	
B	32	1	**2G-3865**	6	SHIM (0.127-MM THK)	
	33	1	**0V-0375**	6	BOLT (1/2-13X3.25-IN)	
	34	1	**9D-9797**	2	LOCK	
	35	1	**5T-0906**	2	COVER	
	36	1	**2J-8163**	2	SEAL-O-RING	
	37	1	**5D-0353**	4	BOLT-LOCKING (3/8-16X1-IN)	
	38	1	**5P-2566**	1	BOLT (1/2-13X1.5-IN)	
	39	1	**5P-1076**	1	WASHER-HARD (13.5X30X4-MM THK)	
	40	1	**5P-8843**	2	SEAL-LIP TYPE	
B	41	1	**2G-5673**	2	WASHER (2.031X4X0.06-IN THK)	
	42	1	**9G-5211**	1	SPACER (12.95X19.05X9-MM THK)	
	43	1	**130-3595**	1	PIN AS	
	44	1	**147-3400**	2	SPINDLE	
	45	1	**0S-1592**	2	BOLT (5/8-11X1.25-IN)	
	46	1	**2G-5667**	2	RETAINER	
Y	47	1	*131-3740*	1	LINK GP-STEERING	301
	48	1	**134-1081**	1	AXLE AS-FRONT	
	49	1	**2G-8631**	4	BEARING-SLEEVE	
	50	1	**131-4428**	2	BEARING-SLEEVE	
	51	1	**8X-3434**	1	ARM AS-LEANING (LH)	
	52	1	**146-1842**	1	BEARING-SLEEVE	
	53	1	**146-1843**	1	BEARING-SLEEVE	

134-1080 **AXLE GP-FRONT** *(contd.)* **i03518581**

NOTE	REF NO	GRAPHIC REF	PART NUMBER	QTY	PART NAME 1 2 3 4 5 6 (PRODUCT LEVEL)	SEE PAGE
	54	1	**8W-6476**	1	PIN	
	56	1	**8X-3435**	1	ARM AS-LEANING (RH)	
	57	1	**146-1842**	1	BEARING-SLEEVE	
	58	1	**146-1843**	1	BEARING-SLEEVE	
	59	1	**8W-6497**	1	PIN	

B-USE AS REQUIRED
R-REMFG PART MAY BE AVAILABLE
Y-SEPARATE ILLUSTRATION

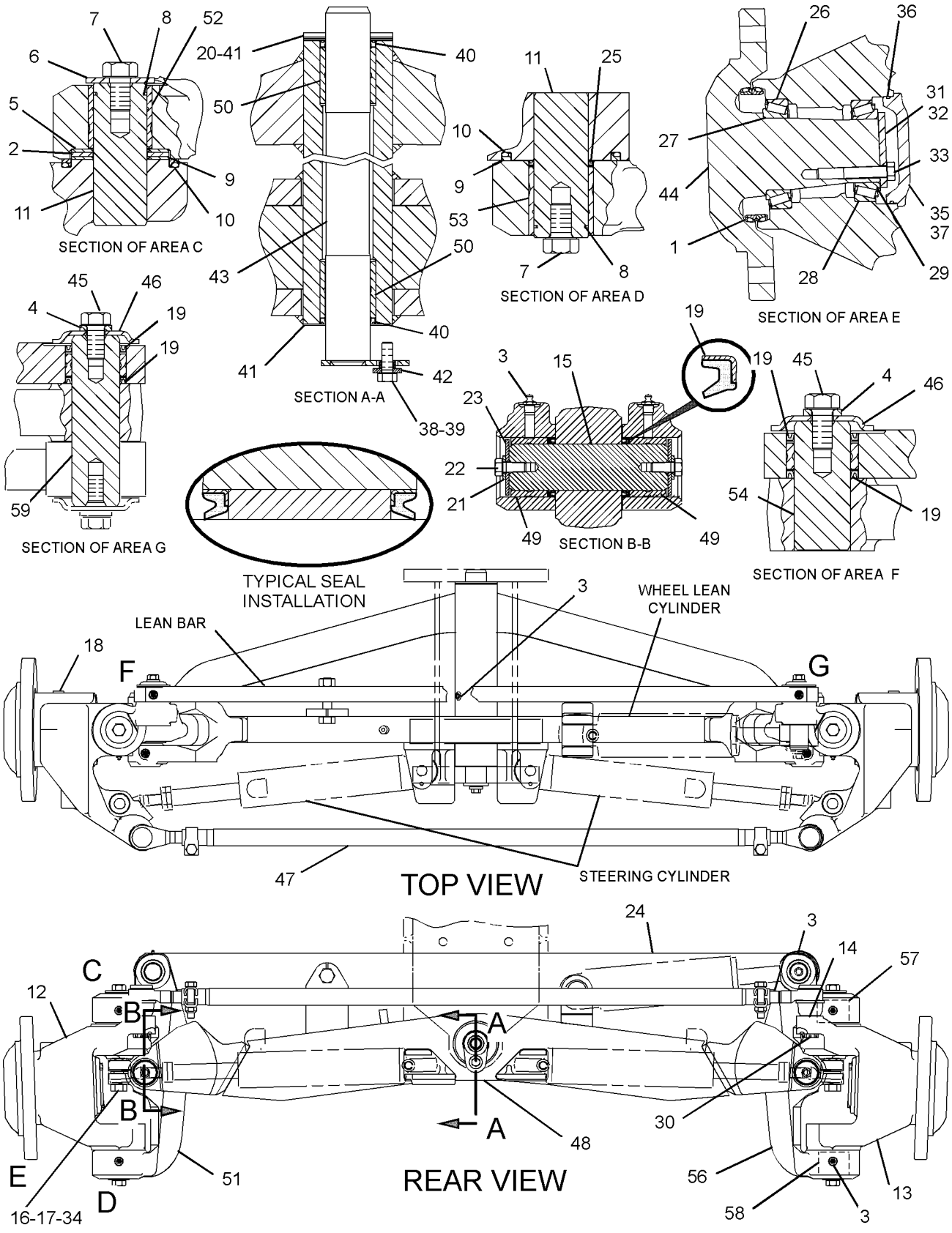

GRAPHIC #1 **<END>** g01857954

297-8449 BOSS GP-FRAME

S/N: JJA1-UP
PART OF 297-8448 GRADE CONTROL AR
AN ATTACHMENT

SMCS-7051 **i03349981**

NOTE	REF NO	GRAPHIC REF	PART NUMBER	QTY	PART NAME 1 2 3 4 5 6 (PRODUCT LEVEL)	SEE PAGE
	1	1	**5D-9629**	5	ROD	
	2	1	**1F-5339**	4	LUG (3/8-16-THD)	
	3	1	**3G-9190**	3	PLATE	
	4	1	**4D-8128**	2	COUPLING	
	5	1	**8X-5147**	1	BLOCK	
	6	1	**9D-5196**	1	BOSS (3/8-16X3.06-IN)	
	7	1	**9D-5567**	3	BOSS (3/8-16X2.44-IN)	
	8	1	**9D-5659**	6	BOSS (3/8-16X1.19-IN)	
	9	1	**9D-6164**	2	BOSS (3/8-16X1.44-IN)	
	10	1	**8D-3508**	1	BOSS (3/8-16X1-IN)	

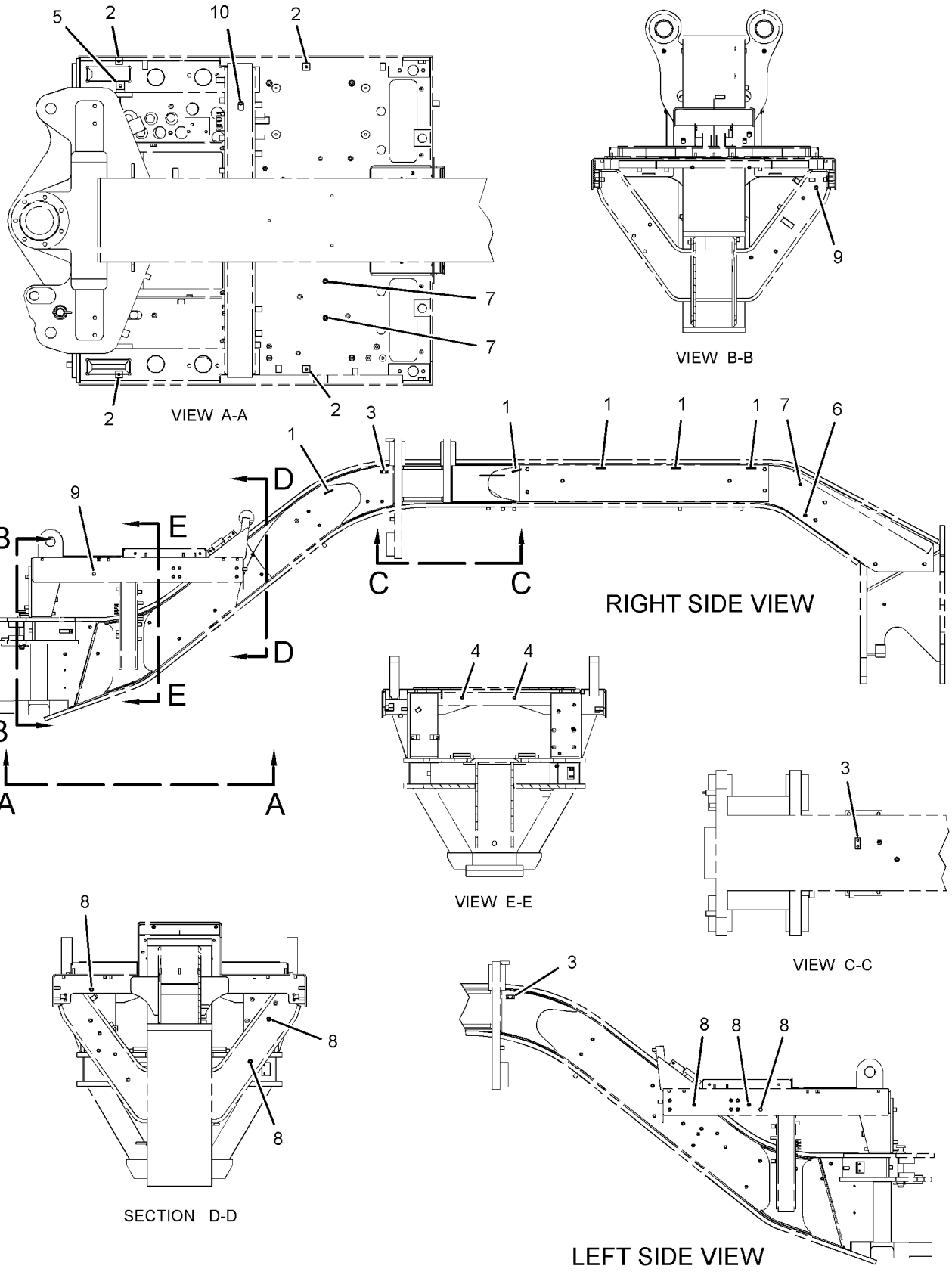

GRAPHIC #1 **<END>** g01768173

FRAME AND BODY

295-8090 BOX GP-BATTERY

S/N: JJA1-UP

PART OF 346-3710 GENERAL AR

SMCS-7257 **i03499063**

NOTE	REF NO	GRAPHIC REF	PART NUMBER	QTY	PART NAME 1 2 3 4 5 6 (PRODUCT LEVEL)	SEE PAGE
	1	1	**246-2641**	2	PADLOCK GP	
					(EACH INCLUDES)	
		1	**5P-8500**	1	KEY	
	2	1	**143-4792**	4	BUMPER	
	3	1	**295-8089**	1	SUPPORT AS	
		1	**161-4423**	2	LATCH AS	
	4	1	**295-8091**	1	COVER AS	
	5	1	**198-4778**	4	WASHER-HARD (13.5X30X12-MM THK)	
M	6	1	**8T-4194**	4	BOLT (M12X1.75X50-MM)	

M-METRIC PART

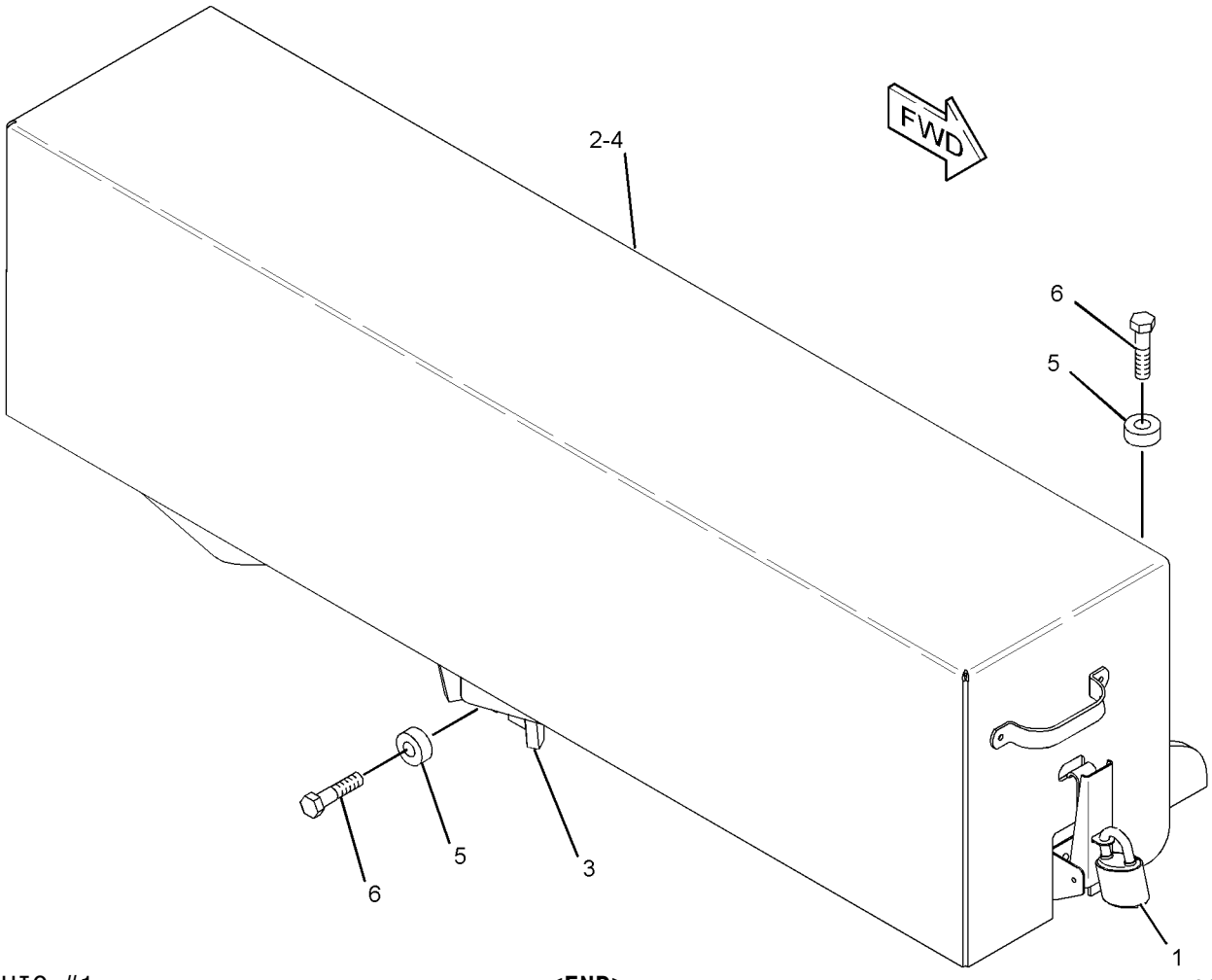

GRAPHIC #1 **<END>** g01701793

FRAME AND BODY

284-5378 BUMPER GP-REAR

S/N: JJA1-UP

PART OF 346-3710 GENERAL AR

SMCS-7156 **i03260160**

NOTE	REF NO	GRAPHIC REF	PART NUMBER	QTY	PART NAME 1 2 3 4 5 6 (PRODUCT LEVEL)	SEE PAGE
	1	1	**284-5379**	1	BUMPER AS	
M	2	1	**7X-2575**	6	BOLT (M24X3X60-MM)	
	3	1	**8T-5361**	6	WASHER-HARD (28X49X5-MM THK)	

M-METRIC PART

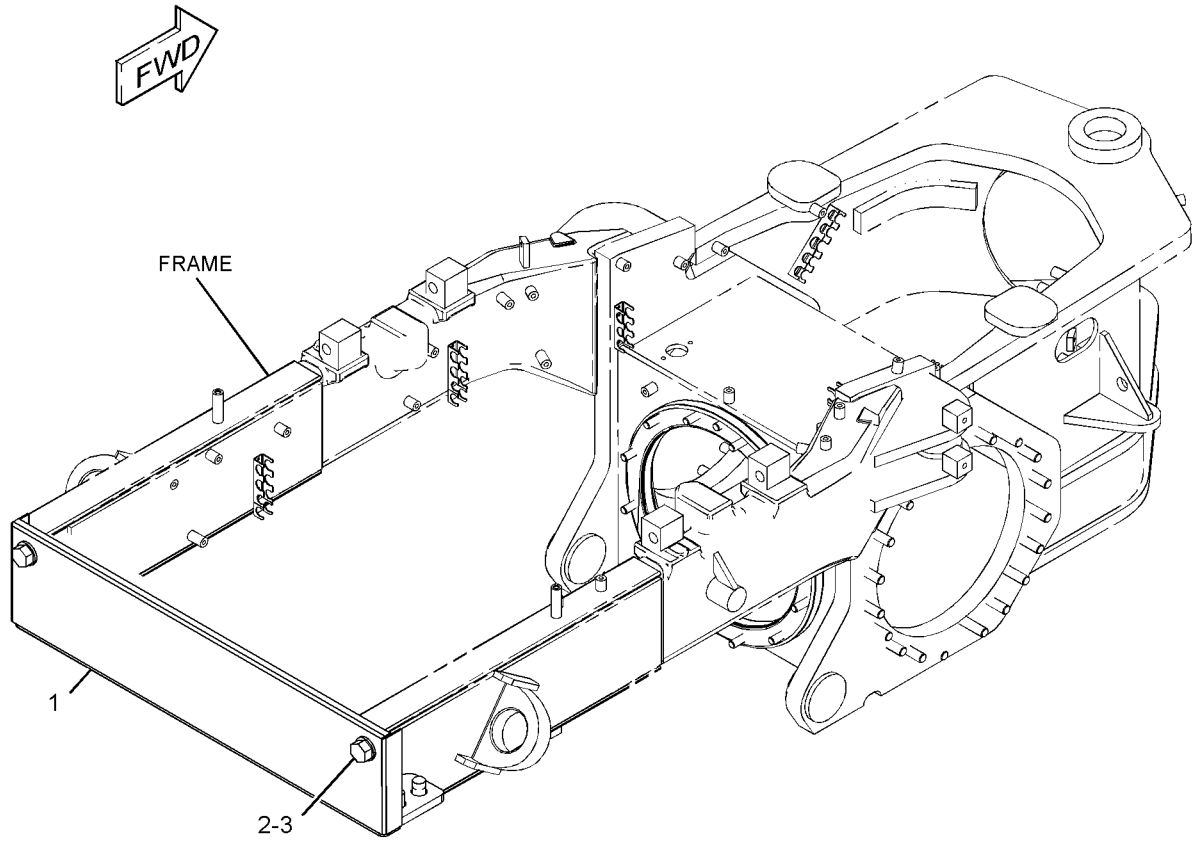

GRAPHIC #1 **<END>** g01667394

FRAME AND BODY

311-8138 CASE & FRAME GP

S/N: JJA1-UP

PART OF 346-3710 GENERAL AR

SMCS-7051 **i03518586**

NOTE	REF NO	GRAPHIC REF	PART NUMBER	QTY	PART NAME 1 2 3 4 5 6 (PRODUCT LEVEL)	SEE PAGE
	1	1	**2A-3398**	1	GASKET	
	2	1	**8M-3837**	1	PLUG-MAGNETIC (DRAIN)	
	3	1	**311-8139**	1	CASE & FRAME AS	
	4	1	**340-3688**	12	STUD-TAPERLOCK	
	5	1	**2R-1600**	38	STUD-TAPERLOCK	
	6	1	**4D-8148**	1	DOWEL	

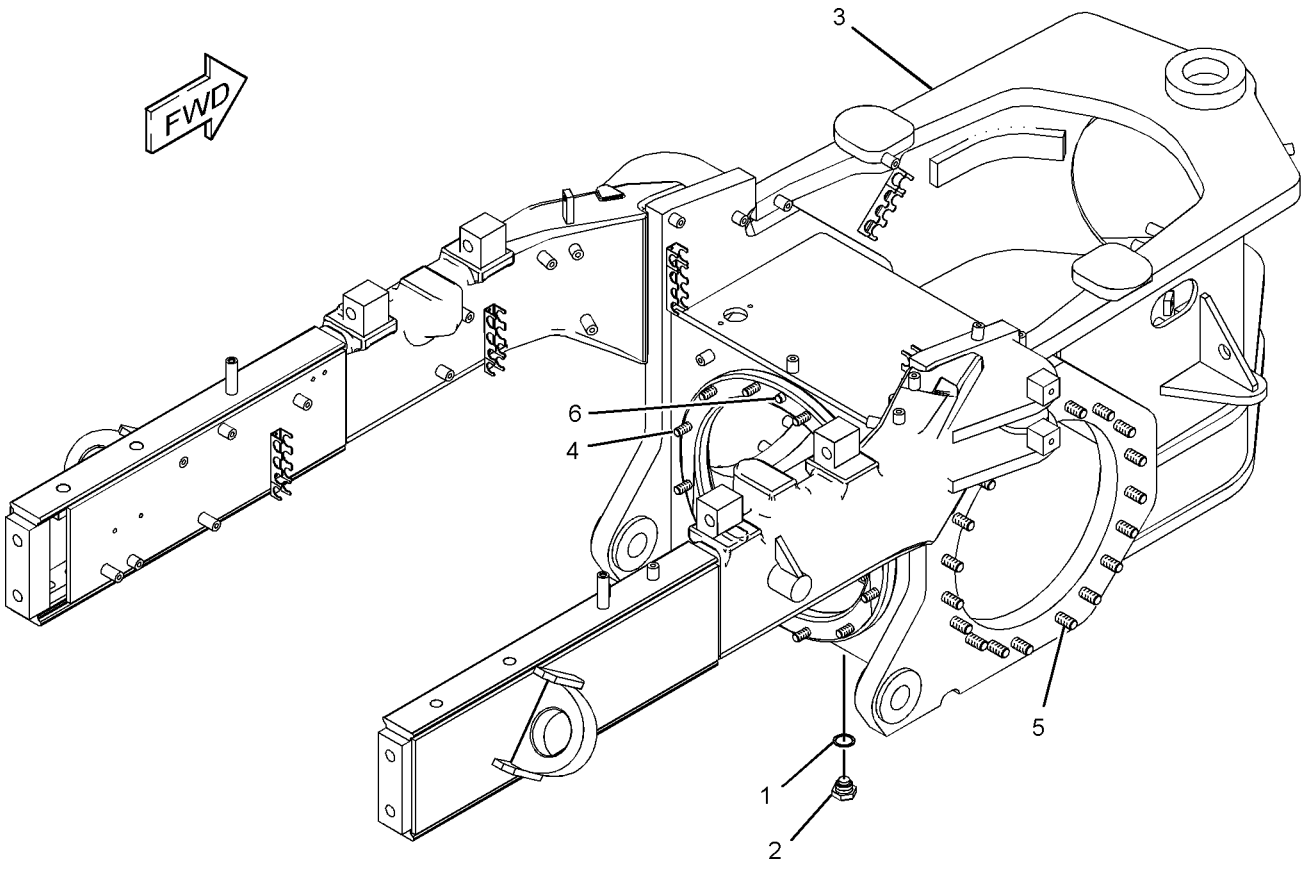

GRAPHIC #1 **<END>** g01667033

FRAME AND BODY

336-5530 COVER GP-ACCESS

S/N: JJA1-UP
PART OF 297-8448 GRADE CONTROL AR
AN ATTACHMENT

SMCS-726A **i03564962**

NOTE	REF NO	GRAPHIC REF	PART NUMBER	QTY	PART NAME 1 2 3 4 5 6 (PRODUCT LEVEL)	SEE PAGE
	1	1	**4T-8050**	1	SPACER (11X19X57-MM THK)	
	2	1	**129-5049**	4	BRACKET AS	
	3	1	**224-5912**	1	BRACKET	
	4	1	**226-1240**	2	FILM-WARNING (CRUSH HAZARD, STAY BACK, INTL)	
	5	1	**231-5251**	1	BRACKET	
	6	1	**245-3930**	1	COVER (RH)	
	7	1	**245-3933**	1	COVER (LH)	
	8	1	**5M-3062**	4	BOLT (3/8-16X0.75-IN)	
	9	1	**5P-1075**	12	WASHER-HARD (10.2X22.5X3-MM THK)	
	10	1	**5S-7382**	2	BOLT (3/8-16X1.375-IN)	
	11	1	**6V-1889**	1	CLIP	
	12	1	**6V-8801**	2	NUT (3/8-16-THD)	
	13	1	**8T-8915**	5	BOLT (3/8-16X3.25-IN)	

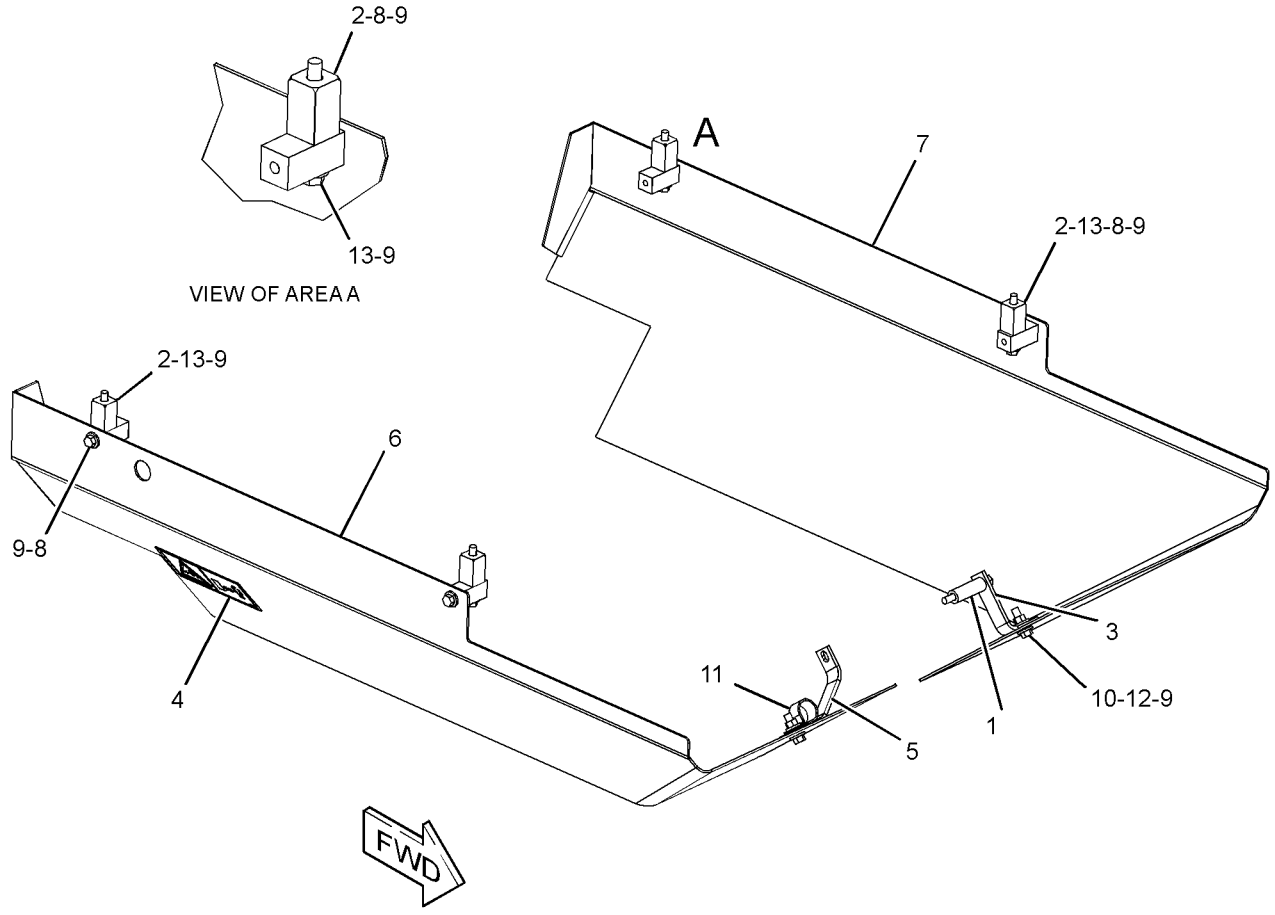

GRAPHIC #1 **<END>** g01927588

FRAME AND BODY

311-2741 ENCLOSURE GP-ENGINE

S/N: JJA1-UP

PART OF 346-3710 GENERAL AR

SMCS-7263 **i03486617**

NOTE	REF NO	GRAPHIC REF	PART NUMBER	QTY	PART NAME 1 2 3 4 5 6 (PRODUCT LEVEL)	SEE PAGE
	1	1	**3T-5763**	2	BUMPER	
	2	1,2	**7I-4959**	4	PLATE	
	3	2	**7I-4979**	2	HINGE AS	
	4	1	**7I-4981**	2	HINGE AS	
	5	2	**7X-1387**	4	WASHER (10.26X22.22X1.9-MM THK)	
	6	2	**8D-3786**	4	MOUNTING	
	7	2	**113-8457**	2	ROD	
	8	2	**134-0165**	6	WASHER (13.8X45X3-MM THK)	
	9	1	**177-4118**	2	HANDRAIL	
	10	1	**177-4119**	2	HANDRAIL	
	11	1	**177-4120**	2	HANDHOLD	
J	12	1	**275-0572**	1	LATCH AS	
	13	1	**326-0610**	2	LATCH AS	
					(EACH INCLUDES)	
M		1	**5C-2890**	4	NUT (M6X1-THD)	
		1	**8C-3398**	4	LOCKWASHER	
M		1	**160-8499**	2	NUT (M12X1.5-THD)	
		1	**326-0612**	2	WASHER-TAB	
	14	2	**294-4619**	1	PANEL AS (LH)	
	15	1	**294-4621**	1	PANEL AS (RH)	
		1	**7I-4949**	2	TUBE	
	16	1	**295-3839**	2	PAWL	
	17	2	**295-6180**	1	PLATE AS	
	18	1	**295-6224**	1	PLATE AS	
	19	1	**296-1252**	2	HINGE AS (LH)	
	20	2	**304-6573**	2	PLATE	
	21	2	**304-7252**	2	BRACKET AS	
					(EACH INCLUDES)	
M		2	**8T-3490**	2	NUT-WELD (M10X1.5-THD)	
	22	2	**304-7415**	2	HINGE AS (RH)	
	23	2	**304-7417**	2	PLATE AS	
	24	1,2	**304-7418**	8	PLATE AS	
	25	2	**304-7419**	2	PLATE AS	
					(EACH PLATE AS INCLUDES)	
M		2	**8T-3490**	2	NUT-WELD (M10X1.5-THD)	
	26	1	**312-8319**	1	HOOD AS	
	27	1	**312-8526**	1	DOOR AS-ACCESS (RH)	
	28	2	**312-8528**	1	DOOR AS-ACCESS (LH)	
	29	2	**312-8529**	1	BRACKET AS (RH)	
	30	1	**312-8530**	1	BRACKET AS (LH)	
					(EACH BRACKET AS INCLUDES)	
		1	**4K-9097**	1	NUT-WELD (5/16-18-THD)	
	31	1	**313-2484**	1	DASH AS	
	32	2	**313-4374**	2	BRACKET	
	33	1	**336-4756**	1	SUPPORT AS (RH)	
M		1	**8T-3490**	1	NUT-WELD (M10X1.5-THD)	
	34	1	**336-4754**	1	SUPPORT AS (LH)	
	35	1	**316-5743**	1	COVER AS	
		1	**3R-9322**	1	HINGE	
M		1	**6V-9632**	3	NUT-WELD (M6X1-THD)	
	36	1	**317-7250**	1	CAM-LATCH	
	37	2	**3B-4615**	4	PIN-COTTER	
	38	1	**3V-0613**	6	BUMPER	
M	39	1	**5C-9553**	3	BOLT (M6X1X16-MM)	
	40	2	**5P-8439**	2	GROMMET	
	41	1	**6V-8189**	2	NUT (5/16-18-THD)	

311-2741 **ENCLOSURE GP-ENGINE** *(contd.)* **i03486617**

NOTE	REF NO	GRAPHIC REF	PART NUMBER	QTY	PART NAME 1 2 3 4 5 6 (PRODUCT LEVEL)	SEE PAGE
	42	2	**7X-0550**	4	WASHER-HARD (13.5X32X5-MM THK)	
	43	1,2	**7X-7729**	69	WASHER (11X25X3-MM THK)	
	44	2	**8T-2561**	4	WASHER-HARD (10.5X28.5X5-MM THK)	
M	45	2	**8T-4133**	2	NUT (M10X1.5-THD)	
M	46	1,2	**8T-4136**	57	BOLT (M10X1.5X25-MM)	
M	47	1,2	**8T-4137**	4	BOLT (M10X1.5X20-MM)	
	48	2	**7X-0618**	2	WASHER-HARD (13.5X40X5-MM THK)	
M	49	2	**8T-4183**	4	BOLT (M12X1.75X40-MM)	
M	50	2	**8T-4195**	10	BOLT (M10X1.5X30-MM)	
M	51	2	**8T-4244**	2	NUT (M12X1.75-THD)	
	52	1	**8T-4224**	2	WASHER-HARD (8.8X16X2-MM THK)	
M	53	2	**8T-4910**	2	BOLT (M12X1.75X60-MM)	
	54	2	**8X-5155**	2	PLATE	
	55	1	**9X-8256**	3	WASHER (6.6X12X2-MM THK)	
M	56	2	**8T-4194**	2	BOLT (M12X1.75X50-MM)	

J-REQUIRES CORPORATE KEY
M-METRIC PART

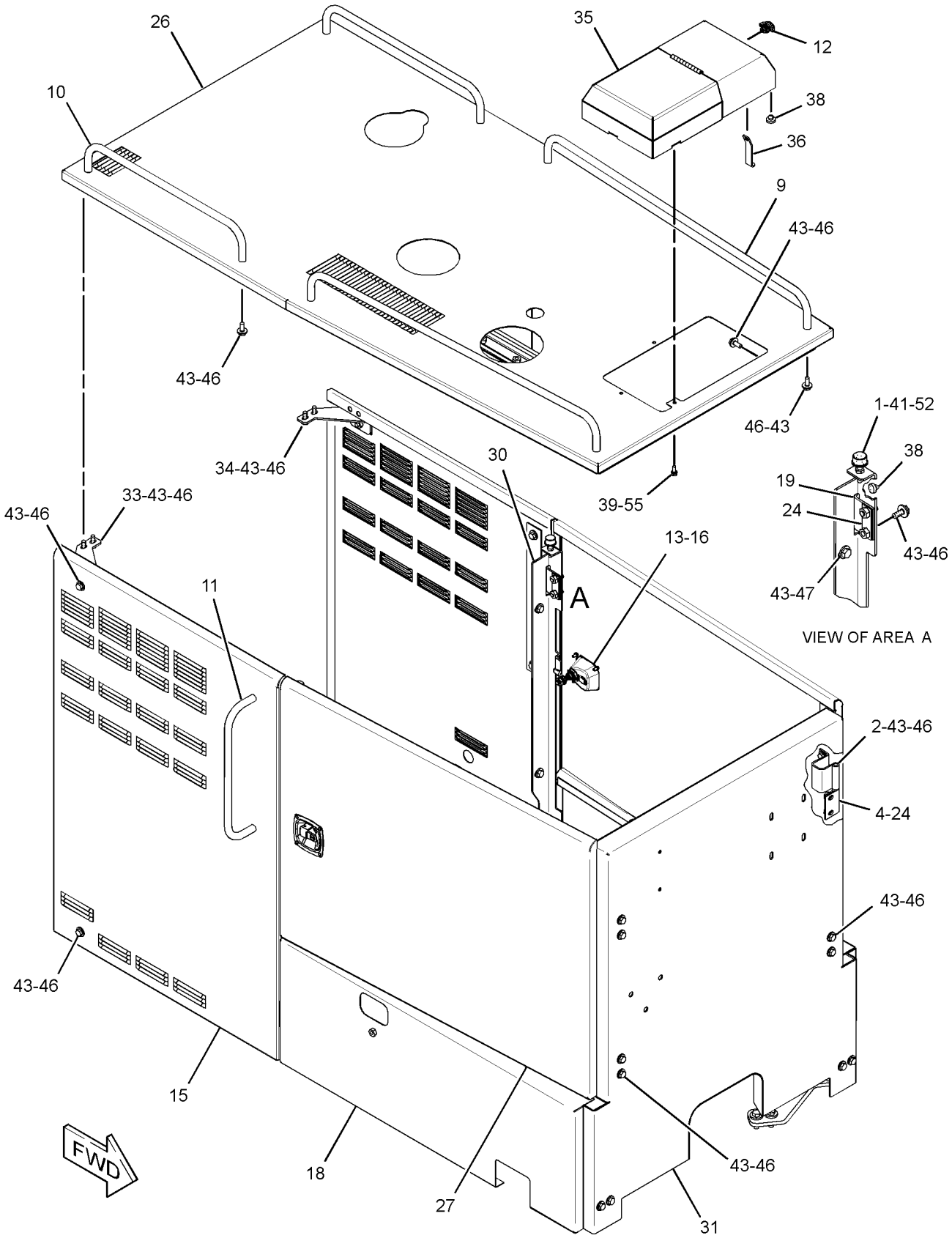

GRAPHIC #1

g01926074

311-2741 **ENCLOSURE GP-ENGINE** *(contd.)* **i03486617**

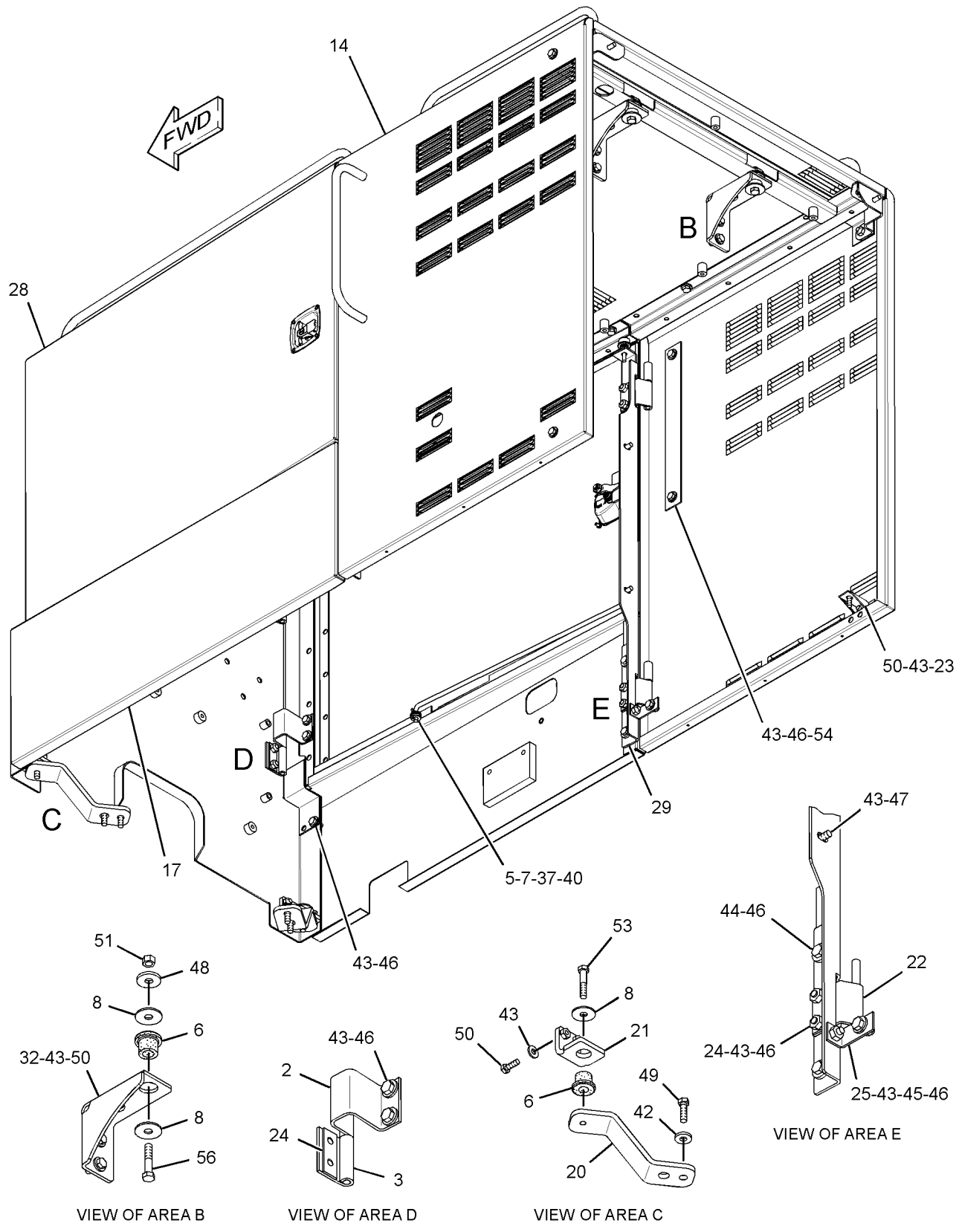

GRAPHIC #2 **<END>** g01925159

FRAME AND BODY

292-5315 FRAME GP-FRONT

S/N: JJA1-UP

PART OF 346-3710 GENERAL AR

SMCS-7050, 7051 **i03517361**

NOTE	REF NO	GRAPHIC REF	PART NUMBER	QTY	PART NAME 1 2 3 4 5 6 (PRODUCT LEVEL)	SEE PAGE
	1	1	**8D-3791**	1	PIN	
	2	1	**9D-6584**	1	SEAL-LIP TYPE	
	3	1	**9D-6589**	8	SEAL-LIP TYPE	
	4	1	**9D-9257**	1	PIN	
	5	1	**111-3945**	2	PLATE	
	6	1	**144-2161**	1	PLATE	
	7	1	**145-5968**	1	COVER (RH)	
	8	1	**145-5969**	1	COVER (LH)	
	9	1	**191-5293**	1	INSULATION	
	10	1	**298-6359**	1	FRAME AS	
	11	1	**283-0644**	1	PLATE AS	
	12	1	**5M-3062**	20	BOLT (3/8-16X0.75-IN)	
	13	1	**5P-1075**	27	WASHER-HARD (10.2X22.5X3-MM THK)	
	14	1	**5P-8167**	3	BOLT (3/8-16X0.625-IN)	
	15	1	**6K-4076**	1	BEARING-SLEEVE	
	16	1	**8D-9159**	4	BEARING-SLEEVE	
	17	1	**8T-4896**	16	WASHER-HARD (10.2X18.5X2.5-MM THK)	
	18	1	**9D-3311**	1	BEARING-SLEEVE	
M	19	1	**9X-2125**	7	BOLT-LOCKING (M10X1.5X25-MM)	
D	20	1	**5P-5969**		SEAL (0.05-M)(EACH)	
D	20A	1	**5P-5969**		SEAL (0.95-M)	
E	21	1	**144-7620**		TAPE (50-CM EACH)	
E	21A	1	**144-7620**		TAPE (88-CM)	
E	21B	1	**144-7620**		TAPE (27-CM EACH)	

D-ORDER BY THE METER
E-ORDER BY THE CENTIMETER
M-METRIC PART

292-5315 **FRAME GP-FRONT** *(contd.)* **i03517361**

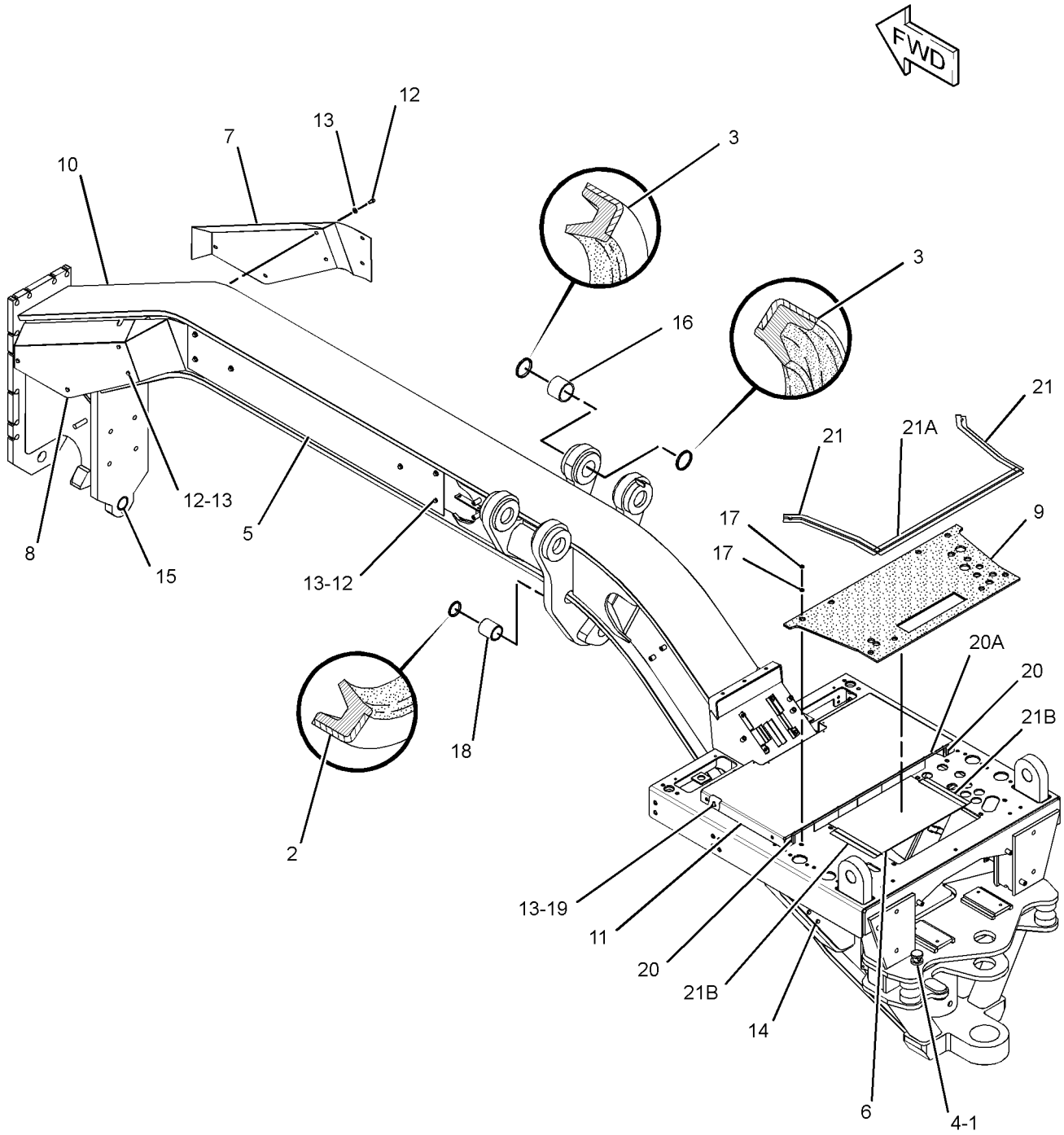

GRAPHIC #1 **<END>** g01882999

334-5760 GUARD GP-BOTTOM

S/N: JJA1-UP
PART OF 339-4971 OPTION AR-RIPPER, 339-4972, 339-4973, 339-4974 OPTION AR-WORK TOOL AN ATTACHMENT

SMCS-7153 **i03400520**

NOTE	REF NO	GRAPHIC REF	PART NUMBER	QTY	PART NAME 1 2 3 4 5 6 (PRODUCT LEVEL)	SEE PAGE
	1	1	**7D-7496**	2	PIN AS	
	2	1	**8W-6626**	2	CAP	
	3	1	**8W-6627**	1	SUPPORT AS	
		1	**1F-0750**	3	NUT-WELD (3/8-16-THD)	
	4	1	**8W-8412**	1	GUARD AS	
	5	1	**3B-7740**	2	NIPPLE-PIPE	
	6	1	**8K-0530**	2	PIN-CABLE SOCKET	
M	7	1	**8T-4183**	8	BOLT (M12X1.75X40-MM)	
	8	1	**8T-4223**	8	WASHER-HARD (13.5X25.5X3-MM THK)	
	9	1	**8T-5439**	4	WASHER-HARD (21.5X45X6-MM THK)	
M	10	1	**8T-6430**	4	BOLT (M20X2.5X50-MM)	

M-METRIC PART

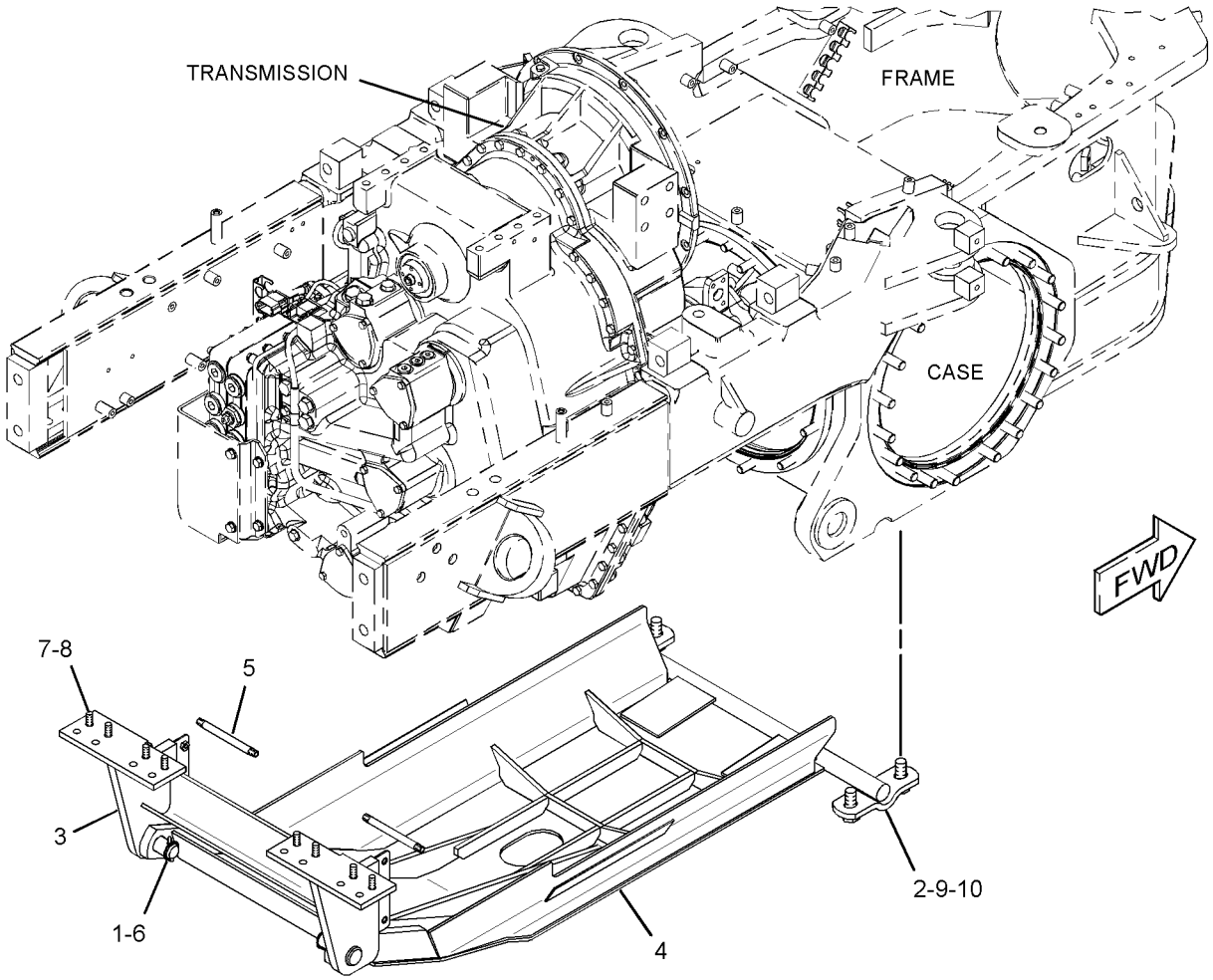

GRAPHIC #1 **<END>** g01768816

298-8895 GUARD GP-DRIVE SHAFT

S/N: JJA1-UP

PART OF 346-3710 GENERAL AR

SMCS-7153 **i03247369**

NOTE	REF NO	GRAPHIC REF	PART NUMBER	QTY	PART NAME 1 2 3 4 5 6 (PRODUCT LEVEL)	SEE PAGE
	1	1	**298-8898**	1	GUARD AS	
	2	1	**299-8249**	1	GUARD AS	
	3	1	**299-8251**	1	GUARD	
	4	1	**301-9593**	1	GUARD AS	
	5	1	**5C-6565**	4	BOLT (1/2-13X1.125-IN)	
	6	1	**5P-1075**	2	WASHER-HARD (10.2X22.5X3-MM THK)	
	7	1	**5S-7379**	2	BOLT (3/8-16X0.875-IN)	
	8	1	**8T-4121**	2	WASHER-HARD (11X21X2.5-MM THK)	
M	9	1	**8T-4136**	2	BOLT (M10X1.5X25-MM)	
M	10	1	**8T-4192**	4	BOLT (M12X1.75X25-MM)	
	11	1	**8T-4223**	4	WASHER-HARD (13.5X25.5X3-MM THK)	
	12	1	**8T-7971**	4	WASHER-HARD (13.5X25.5X5-MM THK)	

M-METRIC PART

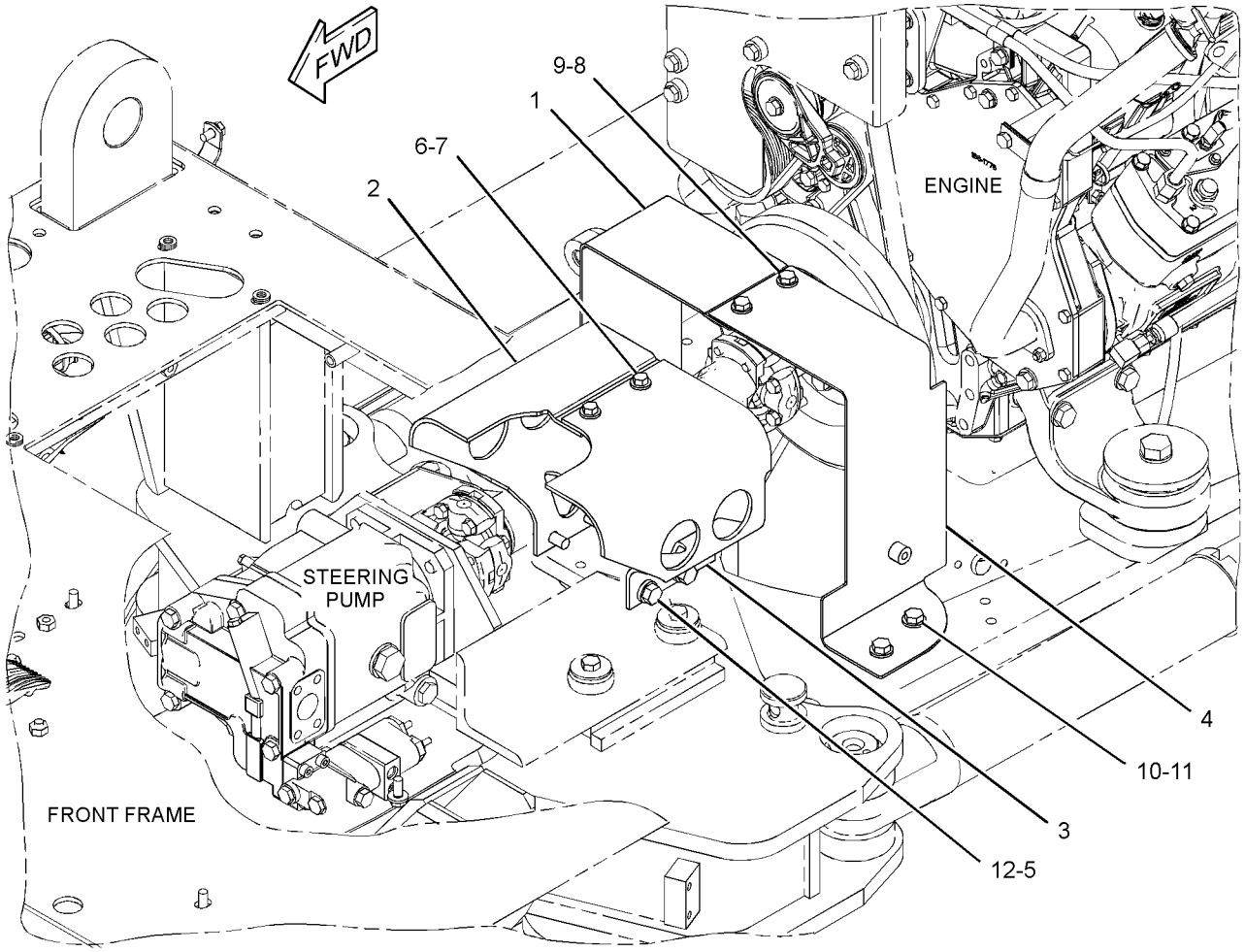

GRAPHIC #1 **<END>** g01696877

FRAME AND BODY

282-2469 GUARD GP-PLATFORM

S/N: JJA1-UP

PART OF 346-3710 GENERAL AR

SMCS-7150, 7253 **i03247405**

NOTE	REF NO	GRAPHIC REF	PART NUMBER	QTY	PART NAME 1 2 3 4 5 6 (PRODUCT LEVEL)	SEE PAGE
	1	1	**8W-3902**	1	SUPPORT AS	
	2	1	**8X-2913**	2	COVER AS	
					(EACH INCLUDES)	
M		1	**6V-9632**	2	NUT-WELD (M6X1-THD)	
	3	1	**8X-6419**	1	FLOOR MAT	
	4	1	**8X-6475**	2	PLATE	
	5	1	**8X-8505**	2	PLATE	
	6	1	**8X-9464**	2	STEP AS	
	7	1	**135-3894**	1	PIPE AS	
	8	1	**160-6382**	1	GROMMET	
	9	1	**169-5414**	1	CLIP	
	10	1	**198-8588**	1	PANEL	
	11	1	**200-3967**	1	PANEL AS	
	12	1	**115-3072**	1	CLIP AS-CONNECTOR (8-PIN)	
	13	1	**3P-3839**	1	GROMMET	
	14	1	**5P-1075**	7	WASHER-HARD (10.2X22.5X3-MM THK)	
	15	1	**5P-4115**	4	WASHER-HARD (7.2X19X2-MM THK)	
	16	1	**5P-9085**	2	CLIP	
	17	1	**6V-2687**	4	SCREW-PAN HEAD (10-24X1-IN)	
	18	1	**8T-4121**	2	WASHER-HARD (11X21X2.5-MM THK)	
M	19	1	**8T-4137**	2	BOLT (M10X1.5X20-MM)	
M	20	1	**8T-4138**	4	BOLT (M6X1X20-MM)	
M	21	1	**8T-4176**	4	BOLT (M12X1.75X90-MM)	
M	22	1	**8T-4183**	8	BOLT (M12X1.75X40-MM)	
	23	1	**8T-4223**	16	WASHER-HARD (13.5X25.5X3-MM THK)	
M	24	1	**8T-4244**	4	NUT (M12X1.75-THD)	
M	25	1	**9X-2043**	12	SCREW-TRUSS HEAD (M6X1X14-MM)	
M	26	1	**9X-2125**	7	BOLT-LOCKING (M10X1.5X25-MM)	

M-METRIC PART

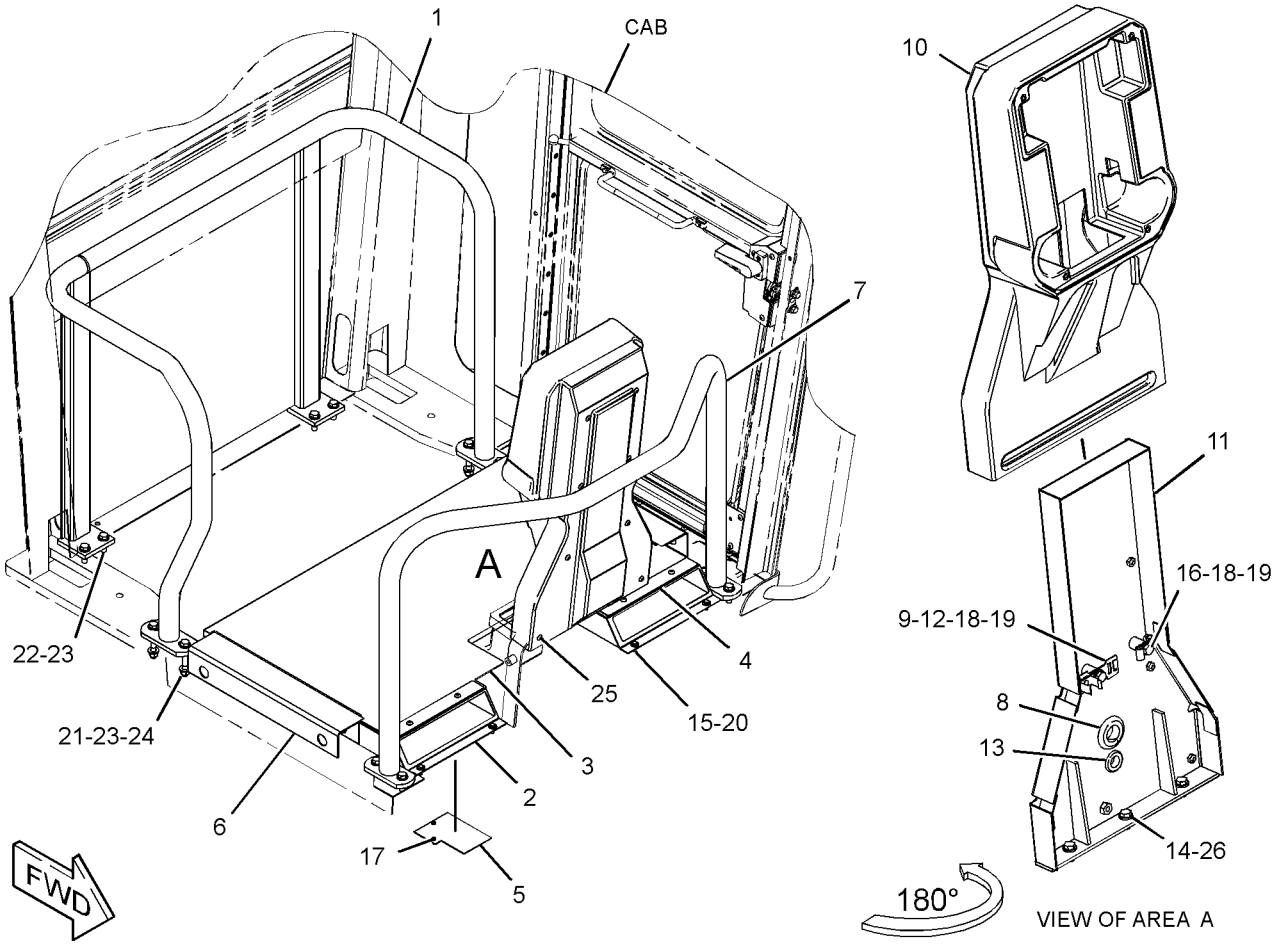

GRAPHIC #1 **<END>** g01700178

FRAME AND BODY

290-1148 GUARD GP-PLATFORM

S/N: JJA1-UP
PART OF 284-5400 ROPS AR
AN ATTACHMENT

SMCS-7150, 7253 **i03261504**

NOTE	REF NO	GRAPHIC REF	PART NUMBER	QTY	PART NAME 1 2 3 4 5 6 (PRODUCT LEVEL)	SEE PAGE
	1	1	**8X-2226**	2	PLATE	
	2	1	**8X-2913**	2	COVER AS	
					(EACH INCLUDES)	
M		1	**6V-9632**	2	NUT-WELD (M6X1-THD)	
	3	1	**8X-6475**	2	PLATE	
	4	1	**8X-8505**	2	PLATE	
	5	1	**124-8949**	1	FLOOR MAT	
	6	1	**160-6382**	1	GROMMET	
	7	1	**169-5414**	1	CLIP	
	8	1	**198-8588**	1	PANEL	
	9	1	**200-3967**	1	PANEL AS	
	10	1	**115-3072**	1	CLIP AS-CONNECTOR (8-PIN)	
	11	1	**3P-3839**	1	GROMMET	
	12	1	**5P-1075**	3	WASHER-HARD (10.2X22.5X3-MM THK)	
	13	1	**5P-4115**	4	WASHER-HARD (7.2X19X2-MM THK)	
	14	1	**5P-9085**	2	CLIP	
	15	1	**6V-2687**	4	SCREW-PAN HEAD (10-24X1-IN)	
M	16	1	**6V-7732**	3	BOLT (M10X1.5X25-MM)	
M	17	1	**6V-8214**	4	BOLT (M6X1X20-MM)	
	18	1	**8T-4121**	2	WASHER-HARD (11X21X2.5-MM THK)	
M	19	1	**8T-4137**	2	BOLT (M10X1.5X20-MM)	
M	20	1	**9X-2043**	22	SCREW-TRUSS HEAD (M6X1X14-MM)	

M-METRIC PART

290-1148 **GUARD GP-PLATFORM** *(contd.)* **i03261504**

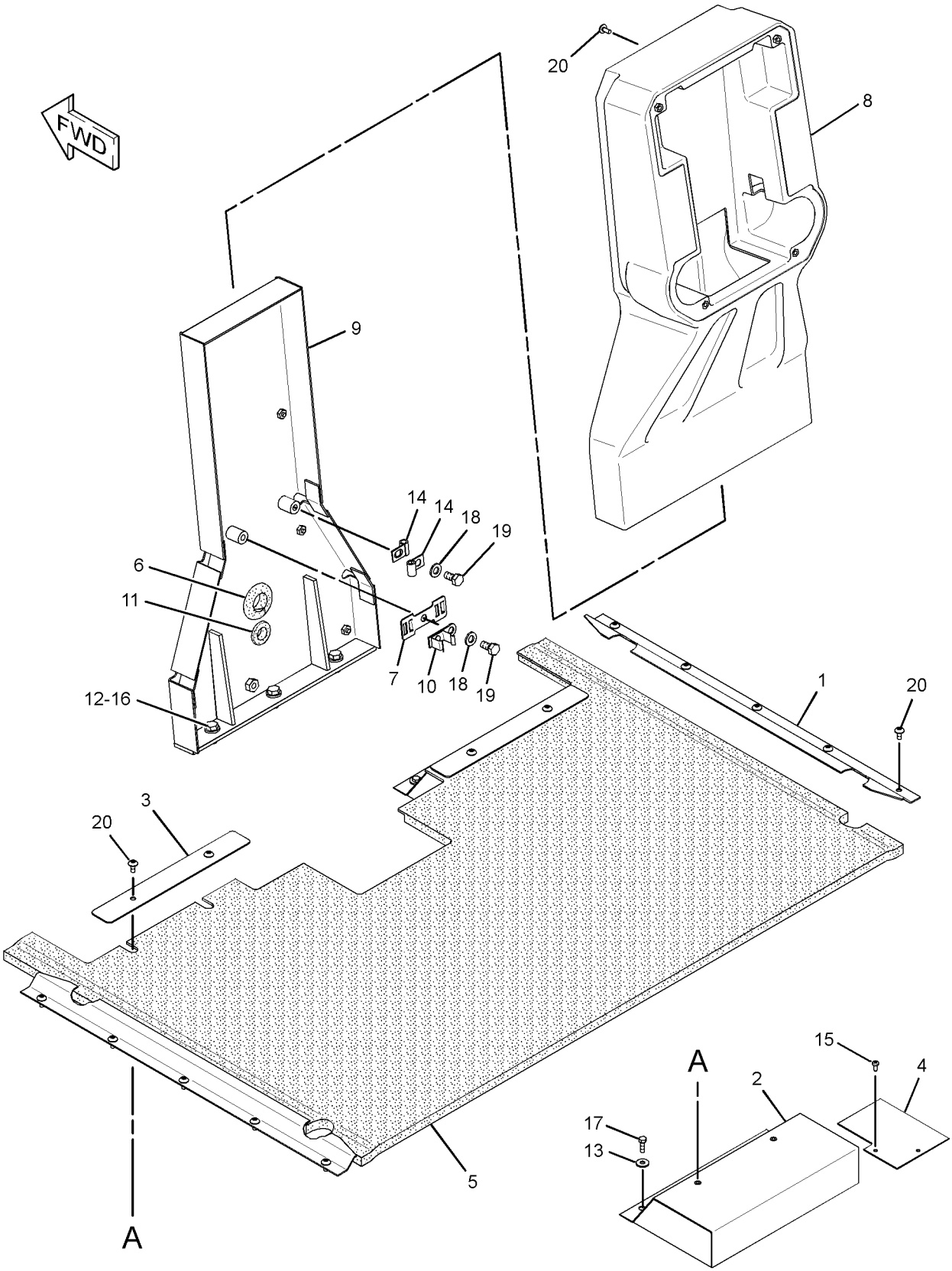

GRAPHIC #1 **<END>** g01671593

338-5276 HITCH GP-ARTICULATING

S/N: JJA1-UP

PART OF 346-3710 GENERAL AR

SMCS-7057, 7100 **i03518460**

NOTE	REF NO	GRAPHIC REF	PART NUMBER	QTY	PART NAME 1 2 3 4 5 6 (PRODUCT LEVEL)	SEE PAGE
	1	1	**2V-4331**	1	COLLAR	
	2	1	**4K-6781**	1	SPACER	
B	3	1	**4K-7464**	1	SHIM PACK (INCLUDES 19-SHIMS)	
	4	1	**4V-0015**	1	PLATE-LOCK	
	5	1	**5K-0871**	1	PIN-LOWER	
	6	1	**143-7356**	1	BEARING-TAPERED ROLLER	
	7	1	**5K-0987**	1	SPACER	
B	8	1	**5K-0988**	1	SHIM PACK (INCLUDES 35-SHIMS)	
	9	1	**5K-0989**	1	CAP-UPPER	
	10	1	**5K-0991**	1	CAP-LOWER	
	11	1	**6G-0417**	1	COVER	
	12	1	**124-3240**	1	PIN	
	13	1	**4K-7463**	2	SEAL-LIP TYPE	
	14	1	**4K-8659**	1	BEARING-SLEEVE	
	15	1	**5K-0983**	2	SEAL-LIP TYPE	
	16	1	**5K-0984**	1	BEARING-SLEEVE	
	17	1	**6C-3240**	4	BOLT (5/8-11X1.75-IN)	
	18	1	**6C-3241**	6	BOLT (1/2-13X1.5-IN)	
	19	1	**6C-3285**	2	BOLT (1/2-13X1.75-IN)	
	20	1	**7X-0331**	7	BOLT (1/2-13X4.25-IN)	
	21	1	**8T-4122**	4	WASHER-HARD (17X32X3.5-MM THK)	
	22	1	**8T-4223**	19	WASHER-HARD (13.5X25.5X3-MM THK)	
	23	1	**8T-4835**	4	BOLT (1/2-13X2-IN)	

B-USE AS REQUIRED

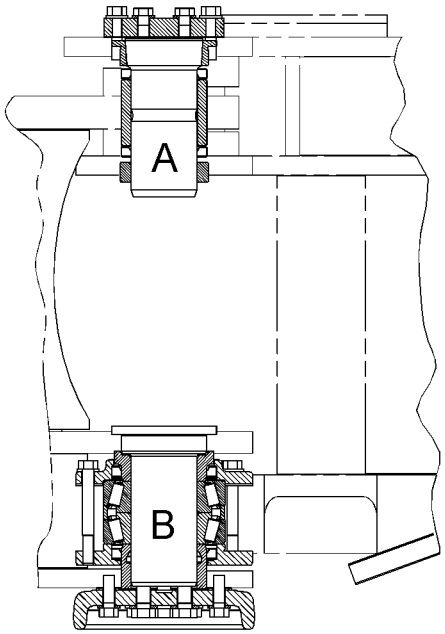

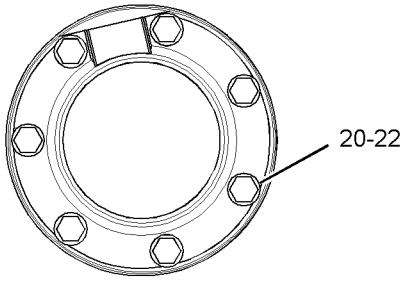

VIEW D-D

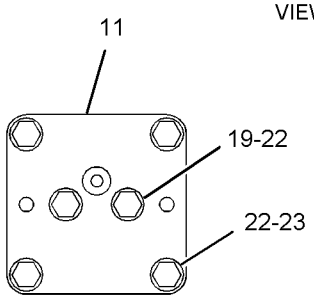

VIEW C-C

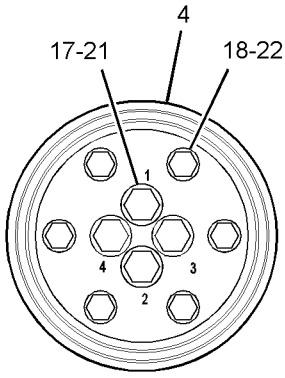

VIEW E-E

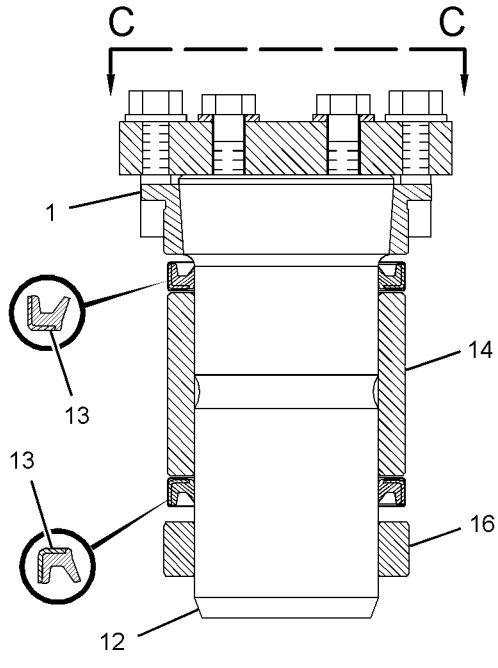

VIEW OF AREA A

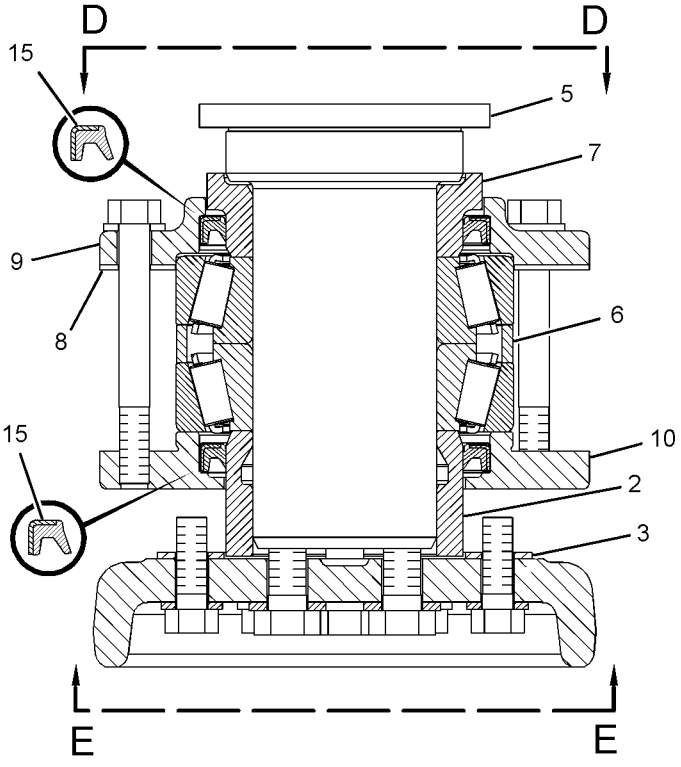

VIEW OF AREA B

GRAPHIC #1 **<END>** g01893357

FRAME AND BODY

7I-4610 LINES GP-LUBRICATION

S/N: JJA1-UP

PART OF 346-3710 GENERAL AR

SMCS-7510, 7540 **i01456162**

NOTE	REF NO	GRAPHIC REF	PART NUMBER	QTY	PART NAME 1 2 3 4 5 6 (PRODUCT LEVEL)	SEE PAGE
	1	1	**3B-7733**	1	FITTING	
	2	1	**3B-6769**	2	ELBOW	
	3	1	**3B-8489**	2	FITTING-GREASE (ARTICULATION HITCH)	
	4	1	**4D-7794**	1	CLIP	
	5	1	**5H-7826**	1	NIPPLE-PIPE	
I	6	1	**3G-6659**	2	HOSE AS	

I-REFER TO HYDRAULIC INFORMATION SYSTEM

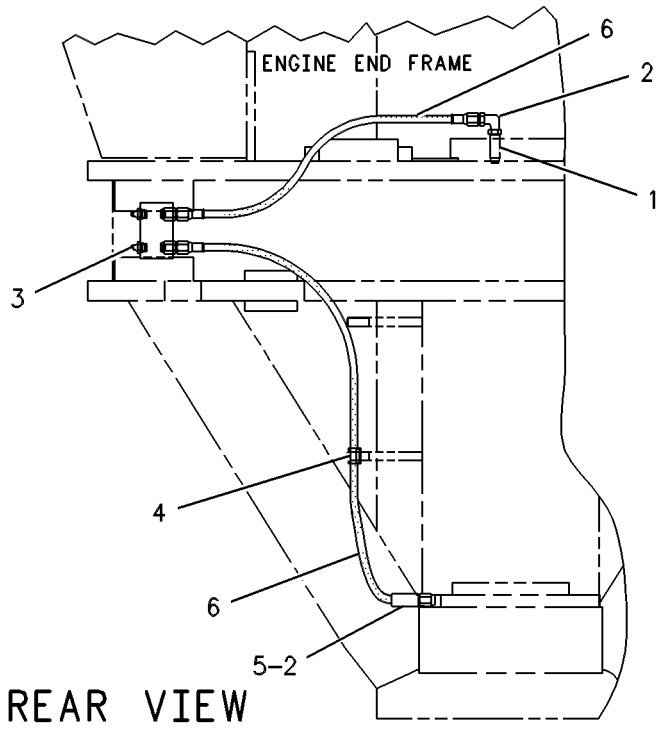

GRAPHIC #1 **<END>** g00109092

131-3740 LINK GP-STEERING

S/N: JJA1-UP

PART OF 134-1080 AXLE GP-FRONT

SMCS-4305 **i03643735**

NOTE	REF NO	GRAPHIC REF	PART NUMBER	QTY	PART NAME 1 2 3 4 5 6 (PRODUCT LEVEL)	SEE PAGE
	1	1	**131-3739**	1	TIE ROD	
	2	1	**131-3738**	1	TIE ROD GP (LH THREAD, RH)	
		1	**2F-8057**	1	NUT-SLOTTED	
		1	**132-1143**	1	SEAL-BOOT	
	3	1	**131-3737**	1	TIE ROD GP (RH THREAD, LH)	
		1	**2F-8057**	1	NUT-SLOTTED	
		1	**132-1143**	1	SEAL-BOOT	
	4	1	**132-1144**	2	CLAMP	
	5	1	**1B-4367**	2	BOLT (5/8-11X3-IN)	
	6	1	**3K-2889**	2	LOCKNUT (5/8-11-THD)	

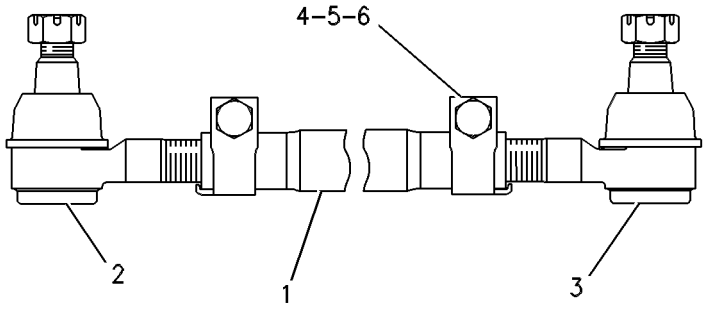

GRAPHIC #1 **<END>** g00109239

FRAME AND BODY

295-2933 STEP GP

S/N: JJA1-UP

PART OF 346-3710 GENERAL AR

SMCS-7254 **i03247345**

NOTE	REF NO	GRAPHIC REF	PART NUMBER	QTY	PART NAME 1 2 3 4 5 6 (PRODUCT LEVEL)	SEE PAGE
	1	1	**4V-9804**	8	PLATE	
	2	1	**4V-9809**	2	STEP AS	
					(EACH INCLUDES)	
		1	**4V-9803**	2	PLATE	
	3	1	**8X-1032**	4	SUPPORT-STEP (RUBBER)	
	4	1	**123-3698**	2	PLATE	
	5	1	**123-3699**	2	PLATE	
	6	1	**198-7379**	2	STEP AS	
					(EACH INCLUDES)	
		1	**4V-9803**	2	PLATE	
	7	1	**198-7380**	2	STEP AS	
					(EACH INCLUDES)	
		1	**4V-9803**	2	PLATE	
	8	1	**1D-4689**	24	BOLT (1/2-13X1.75-IN)	
	9	1	**1K-6872**	24	LOCKNUT (1/2-13-THD)	
	10	1	**5P-1076**	8	WASHER-HARD (13.5X30X4-MM THK)	
M	11	1	**8T-4183**	8	BOLT (M12X1.75X40-MM)	
	12	1	**8T-4223**	24	WASHER-HARD (13.5X25.5X3-MM THK)	

M-METRIC PART

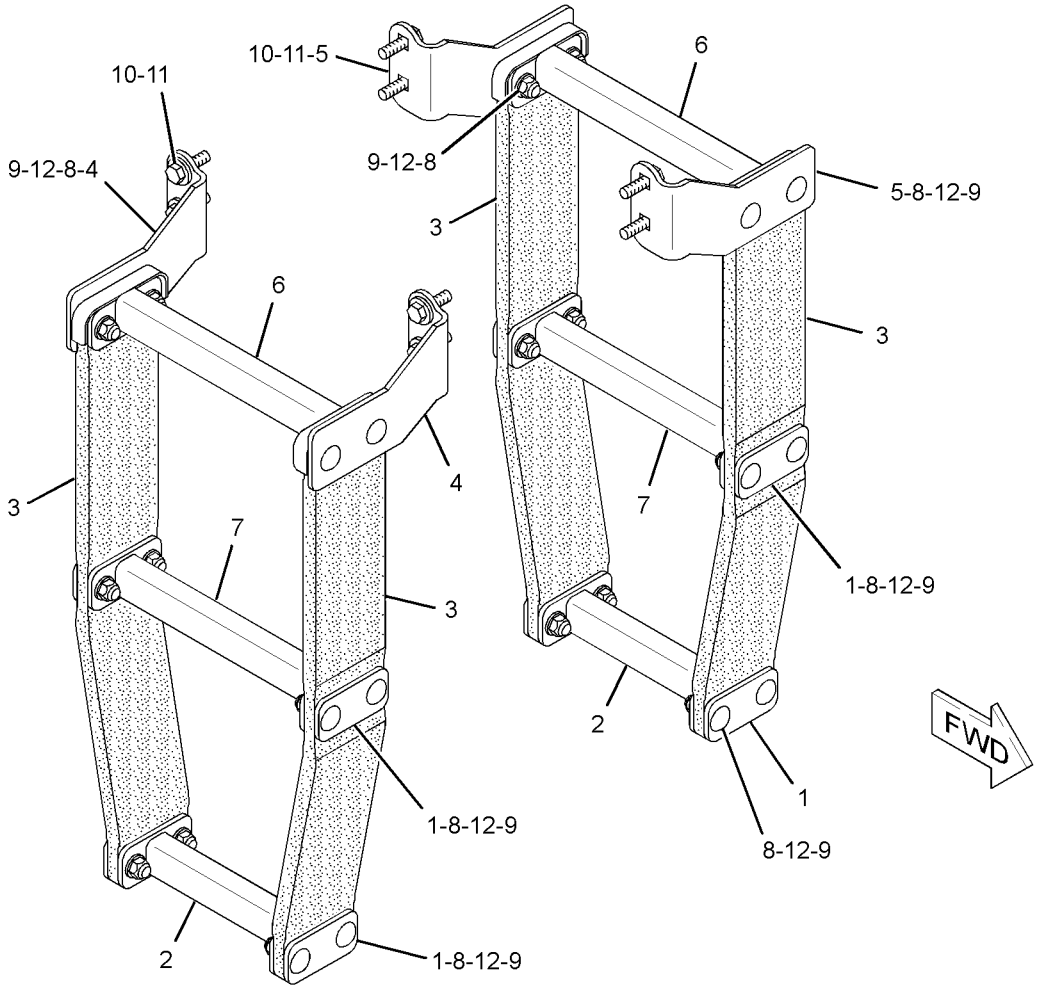

GRAPHIC #1 **<END>** g01708139

FRAME AND BODY

299-8307 SUPPORT GP-RADIATOR

S/N: JJA1-UP

PART OF 346-3710 GENERAL AR

SMCS-1353 **i03572578**

NOTE	REF NO	GRAPHIC REF	PART NUMBER	QTY	PART NAME 1 2 3 4 5 6 (PRODUCT LEVEL)	SEE PAGE
	1	1	**274-1704**	2	HANDHOLD	
	2	1	**299-8306**	1	BRACKET AS	
	3	1	**299-8318**	1	PLATE AS	
	4	1	**299-9478**	2	PLATE	
	5	1	**303-5996**	1	BRACKET AS	
	6	1	**303-5998**	1	BRACKET AS	
	7	1	**303-5999**	1	SUPPORT AS	
Y	8	1	*303-6003*	1	GUARD GP-FAN	70
	9	1	**303-6013**	1	BRACKET	
	10	1	**303-6014**	1	PLATE AS	
	11	1	**303-6015**	1	PLATE AS	
	12	1	**303-6017**	1	BRACKET AS	
	14	1	**317-1534**	1	PLATE AS	
		1	**5D-9629**	1	ROD	
		1	**6V-4604**	5	RIVET-POP	
	15	1	**317-1537**	2	PLATE	
	16	1	**320-0924**	1	PLATE	
	17	1	**198-4782**	4	WASHER-HARD (26X47X12-MM THK)	
M	18	1	**7X-2575**	4	BOLT (M24X3X60-MM)	
	19	1	**7X-7729**	8	WASHER (11X25X3-MM THK)	
C	20	1	**8T-4121**	56	WASHER-HARD (11X21X2.5-MM THK)	
M	21	1	**8T-4136**	39	BOLT (M10X1.5X25-MM)	
CM	22	1	**8T-4137**	14	BOLT (M10X1.5X20-MM)	
M	23	1	**8T-4195**	10	BOLT (M10X1.5X30-MM)	
M	24	1	**8T-4196**	1	BOLT (M10X1.5X35-MM)	
	25	1	**9D-3767**	1	PLUG-BUTTON	
D	26	1	**5P-8309**		SEAL (1.1-M EACH)	

C-CHANGE FROM PREVIOUS TYPE
D-ORDER BY THE METER
M-METRIC PART
Y-SEPARATE ILLUSTRATION

299-8307 **SUPPORT GP-RADIATOR** *(contd.)* **i03572578**

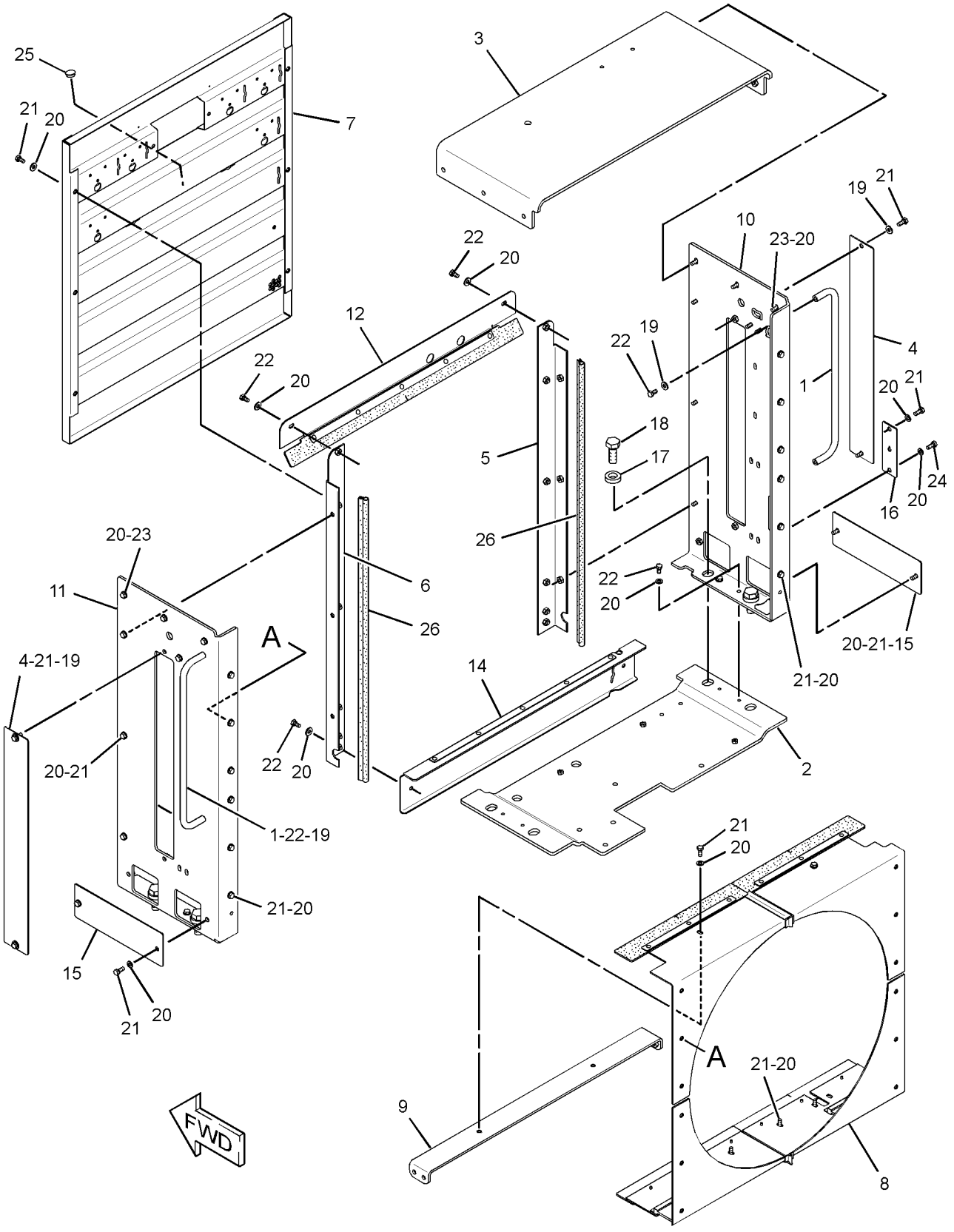

GRAPHIC #1 **<END>** g01914723

215-3005 AIR DRYER GP

S/N: JJA1-UP

PART OF 311-2739 DRYER & LINES GP-AIR

AN ATTACHMENT

SMCS-4285 **i03531120**

NOTE	REF NO	GRAPHIC REF	PART NUMBER	QTY	PART NAME 1 2 3 4 5 6 (PRODUCT LEVEL)	SEE PAGE
	1	1	**203-2390**	1	KIT-VALVE (CUTOFF)	
	2	1	**203-2391**	1	KIT-CHECK VALVE	
	3	1	**203-2423**	1	KIT-HEATING ELEMENT (AIR DRYER)	
	4	1	**203-2389**	1	KIT-CARTRIDGE (DESICCANT) (AIR DRYER)	
	5	1	**218-2971**	1	KIT-VALVE (PURGE) (AIR DRYER)	

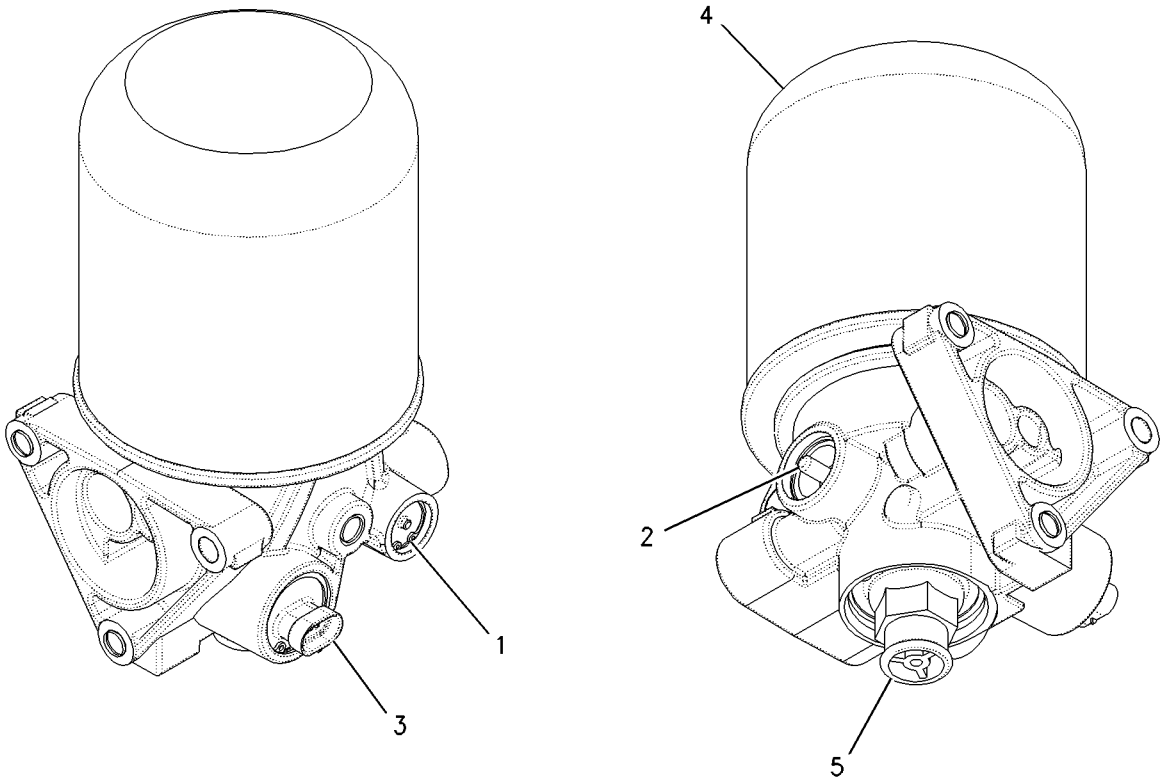

GRAPHIC #1 **<END>** g00945969

BRAKING SYSTEM

311-2737 AIR DRYER GP

S/N: JJA1-UP
PART OF 339-4969 OPTION AR-ENGINE
AN ATTACHMENT

SMCS-4285 **i03251482**

NOTE	REF NO	GRAPHIC REF	PART NUMBER	QTY	PART NAME 1 2 3 4 5 6 (PRODUCT LEVEL)	SEE PAGE
	1	1	**9W-1442**	1	FUSE (10-AMPERE)	
	2	1	**300-1377**	1	HARNESS AS-WIRING	
Y	3	1	*311-2738*	1	DRYER & LINES GP-AIR	317

Y-SEPARATE ILLUSTRATION

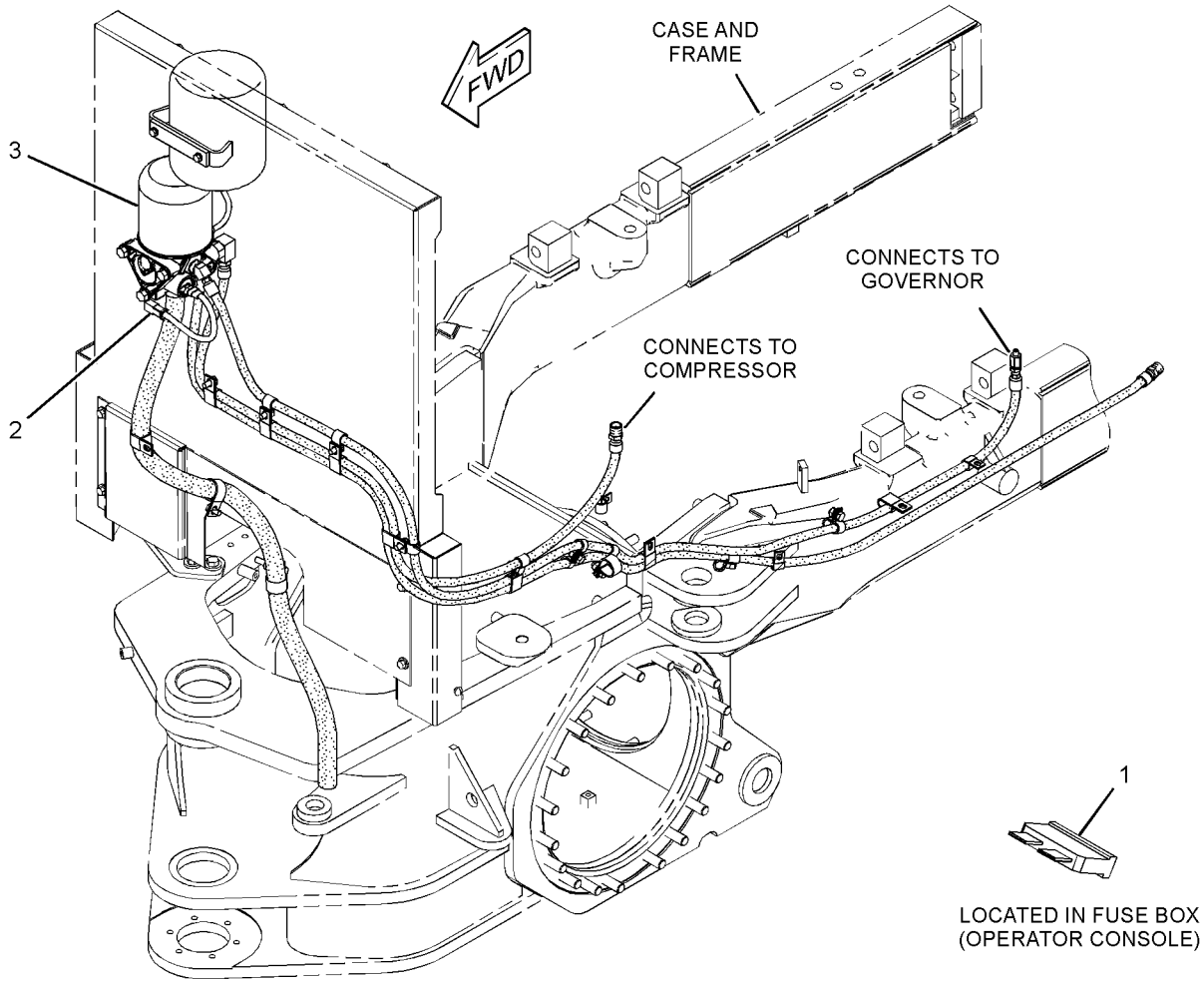

GRAPHIC #1 **<END>** g01689793

9W-5132 BRAKE GP-PARKING

S/N: DMJ1-UP

PART OF 275-6535 TRANSMISSION AR

SMCS-3077, 4267 **i02024329**

NOTE	REF NO	GRAPHIC REF	PART NUMBER	QTY	PART NAME 1 2 3 4 5 6 (PRODUCT LEVEL)	SEE PAGE
M	1	1	**6V-5842**	6	BOLT (M10X1.5X40-MM)	
	2	1	**6V-5839**	6	WASHER (11X21X2.5-MM THK)	
	3	1	**6Y-3849**	1	HUB-CLUTCH	
	4	1	**9M-4335**	6	DOWEL-REACTION	
	5	1	**5J-1086**	1	SEAL-O-RING	
	6	1	**6Y-3850**	1	HOUSING-BRAKE	
	7	1	**4S-5838**	1	RETAINER	
M	8	1	**8T-0372**	1	BOLT (M12X1.75X90-MM)	
	9	1	**4F-7390**	1	SEAL-O-RING	
	10	1	**1P-7521**	1	YOKE	
	11	1	**203-5957**	1	SEAL	
	12	1	**9W-4431**	20	SPRING	
	13	1	**9W-4430**	20	SPRING	
M	14	1	**6V-3668**	12	BOLT (M12X1.75X30-MM)	
	15	1	**7G-0437**	6	PLATE-CLUTCH	
	16	1	**6Y-5352**	5	DISC-FRICTION	
	17	1	**2J-6274**	1	SEAL-O-RING	
	18	1	**9S-4182**	1	PLUG-O-RING	
	19	1	**3J-7354**	1	SEAL-O-RING	
	20	1	**203-5958**	1	SEAL	
	21	1	**9W-4452**	1	PISTON	
	22	1	**9W-4453**	1	PISTON	
	23	1	**4H-9105**	1	SEAL-O-RING	
	24	1	**6Y-3852**	1	PLUG	
	25	1	**9N-6152**	1	PLUG	
	26	1	**2M-9780**	1	SEAL-O-RING	
	27	1	**9X-7743**	1	SEAL-LIP TYPE	

M-METRIC PART

9W-5132 **BRAKE GP-PARKING** *(contd.)* **i02024329**

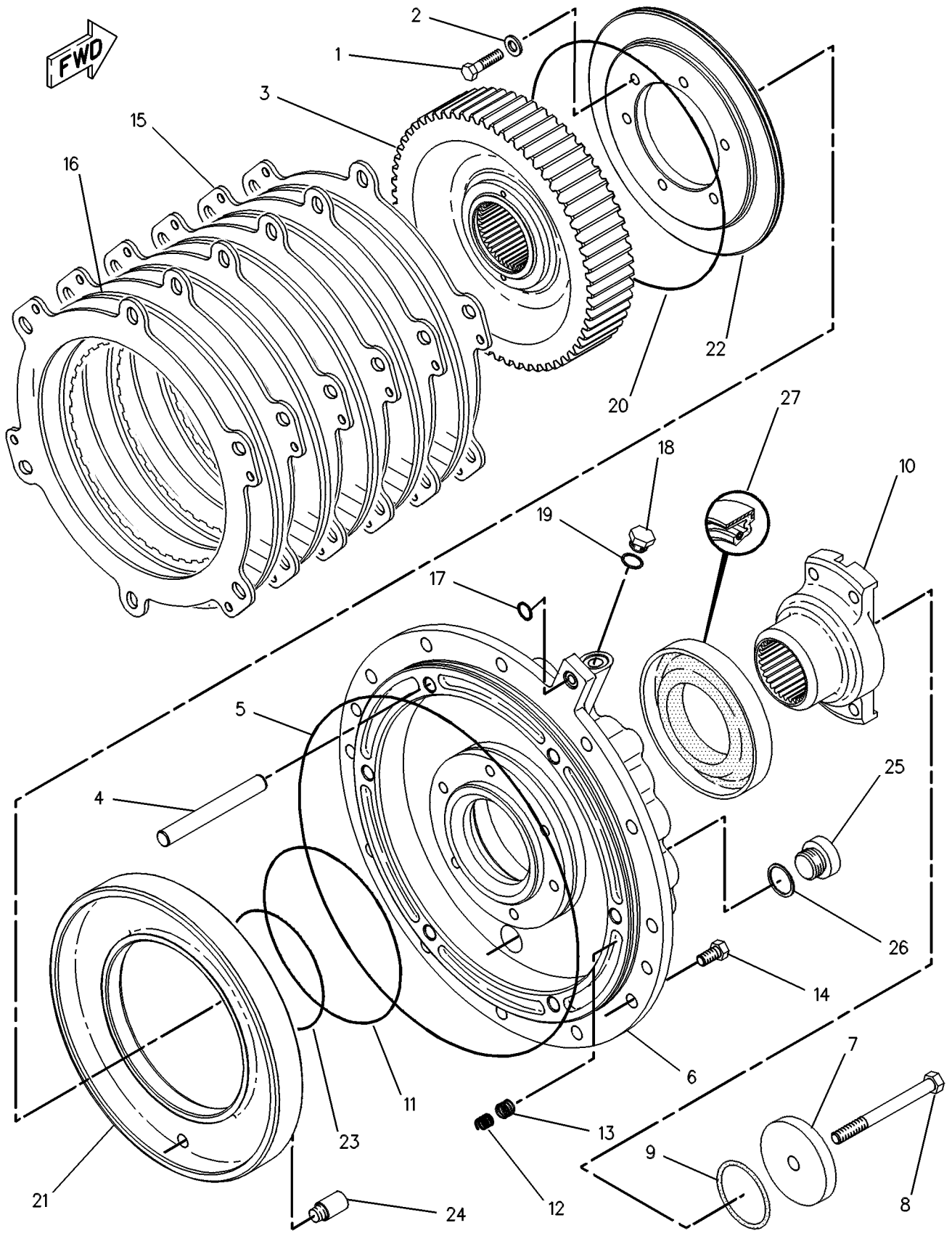

GRAPHIC #1 **<END>** g00108550

7D-8440 BRAKE GP-SERVICE

S/N: JJA1-UP

PART OF 346-3710 GENERAL AR

SMCS-4251 **i02267850**

NOTE	REF NO	GRAPHIC REF	PART NUMBER	QTY	PART NAME 1 2 3 4 5 6 (PRODUCT LEVEL)	SEE PAGE
	1	1	**7D-8354**	4	SPROCKET (20-TEETH)	
	2	1	**7D-8437**	4	CONE-BEARING	
	3	1	**1P-4693**	8	CUP-BEARING	
	4	1	**5P-9118**	12	BOLT-LOCKING (5/8-11X2.5-IN)	
B	5	1	**7D-8439**	20	SHIM (0.007-IN THK)	
B	6	1	**7D-8441**	28	SHIM (0.005-IN THK)	
B	7	1	**9D-7047**	8	SHIM (0.02-MM THK)	
	8	1	**9D-3075**	4	RETAINER	
	9	1	**4S-5879**	8	SEAL-O-RING	
C	10	1	**0S-1566**	16	BOLT (5/8-11X1.5-IN)	
C	11	1	**4D-3704**	64	WASHER-HARD (17X30X5-MM THK)	
	12	1	**7D-8434**	40	DISC	
	13	1	**4D-5497**	4	SEAL-D-RING	
	14	1	**6Y-7916**	36	DISC-FRICTION	
	15	1	**6G-0905**	24	BOLT (7/16-14X4.37-IN)	
	16	1	**9J-5498**	24	SPRING	
	17	1	**5P-8244**	24	WASHER-HARD (12X22.5X2.5-MM THK)	
	18	1	**4B-7270**	4	CONE-BEARING	
R	19	1	**5K-5288**	4	SEAL GP-DUO-CONE	
					(EACH INCLUDES)	
		1	**5K-5129**	2	RING-SEALING	
C	20	1	**147-3310**	4	SPINDLE-WHEEL	
C	21	1	**8W-8124**	4	HOUSING	
	22	1	**6G-3378**	4	PISTON	
	23	1	**7D-8436**	4	SEAL-D-RING	
	24	1	**2G-6337**	4	HUB-BRAKE	
C	25	1	**8T-6472**	40	BOLT-LOCKING (5/8-11X2.5-IN)	
	26	1	**7D-8362**	4	COVER	
	27	1	**3J-5390**	4	PLUG	
C	28	1	**8T-6473**	8	BOLT-LOCKING (5/8-11X2.75-IN)	

B-USE AS REQUIRED
C-CHANGE FROM PREVIOUS TYPE
R-REMFG PART MAY BE AVAILABLE

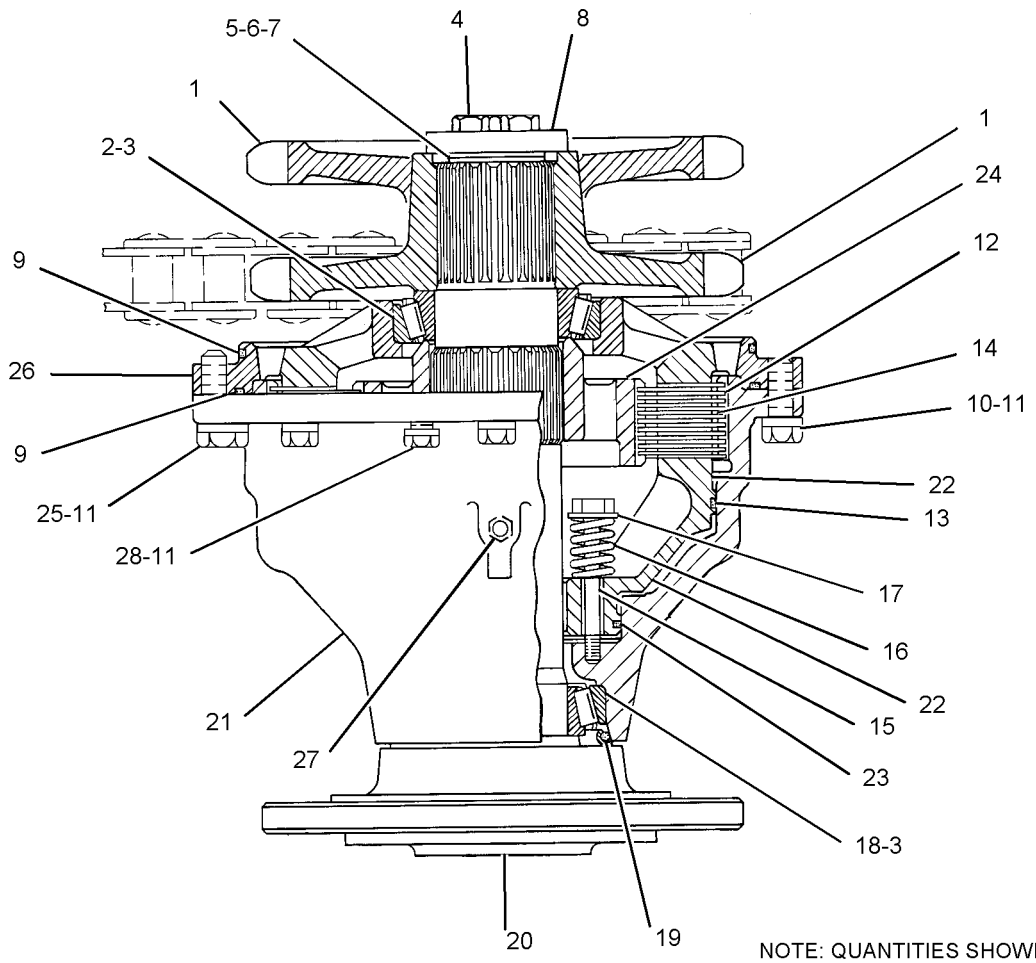

NOTE: QUANTITIES SHOWN ARE THOSE REQUIRED FOR BOTH RH & LH SIDES

GRAPHIC #1 **<END>** g01137517

BRAKING SYSTEM

284-5771 CONTROL GP-PARKING BRAKE

S/N: JJA1-UP

PART OF 346-3710 GENERAL AR

SMCS-4282, 4284 **i03598760**

NOTE	REF NO	GRAPHIC REF	PART NUMBER	QTY	PART NAME 1 2 3 4 5 6 (PRODUCT LEVEL)	SEE PAGE
	1	1	**3B-8822**	1	ELBOW	
I	2	1	**4S-7529**	1	HOSE AS	
	3	1	**4S-7606**	2	ELBOW	
	4	1	**5K-2408**	2	FITTING	
	5	1	**5T-8285**	1	JUNCTION BLOCK	
	6	1	**6D-1432**	1	VALVE-CHECK (PARKING BRAKE)	
	7	1	**7X-4736**	1	GROMMET	
	8	1	**8W-8528**	2	SLEEVE	
	9	1	**8X-5160**	1	GROMMET	
I	10	1	**112-4834**	1	HOSE AS	
Y	11	1	**185-0008**	1	VALVE GP-SOLENOID (PARKING BRAKE)	324
	12	1	**253-4347**	1	VALVE AS-AIR (PARKING BRAKE)	
		1	**1H-1023**	1	SEAL-O-RING	
		1	**6H-9691**	1	SEAL-O-RING	
	13	1	**316-6819**	1	PLATE	
I	14	1	**317-7375**	1	HOSE AS	
	16	1	**3D-8884**	1	ELBOW	
	17	1	**4D-6585**	1	ELBOW-PIPE	
	18	1	**4H-6147**	1	CONNECTOR	
	19	1	**4K-8864**	1	CLIP	
	20	1	**5H-4778**	2	ELBOW	
	21	1	**5K-1094**	1	LOCKWASHER	
	23	1	**5M-6213**	2	PLUG-PIPE	
	26	1	**4S-1962**	1	CLIP	
	27	1	**8T-2501**	2	BOLT (3/8-16X2-IN)	
	28	1	**8T-4121**	5	WASHER-HARD (11X21X2.5-MM THK)	
M	29	1	**8T-4133**	2	NUT (M10X1.5-THD)	
M	30	1	**8T-4195**	1	BOLT (M10X1.5X30-MM)	
M	31	1	**8T-4137**	2	BOLT (M10X1.5X20-MM)	
	32	1	**8T-4896**	2	WASHER-HARD (10.2X18.5X2.5-MM THK)	
	33	1	**9M-8406**	3	CLIP	

I-REFER TO HYDRAULIC INFORMATION SYSTEM
M-METRIC PART
Y-SEPARATE ILLUSTRATION

284-5771 **CONTROL GP-PARKING BRAKE** *(contd.)* **i03598760**

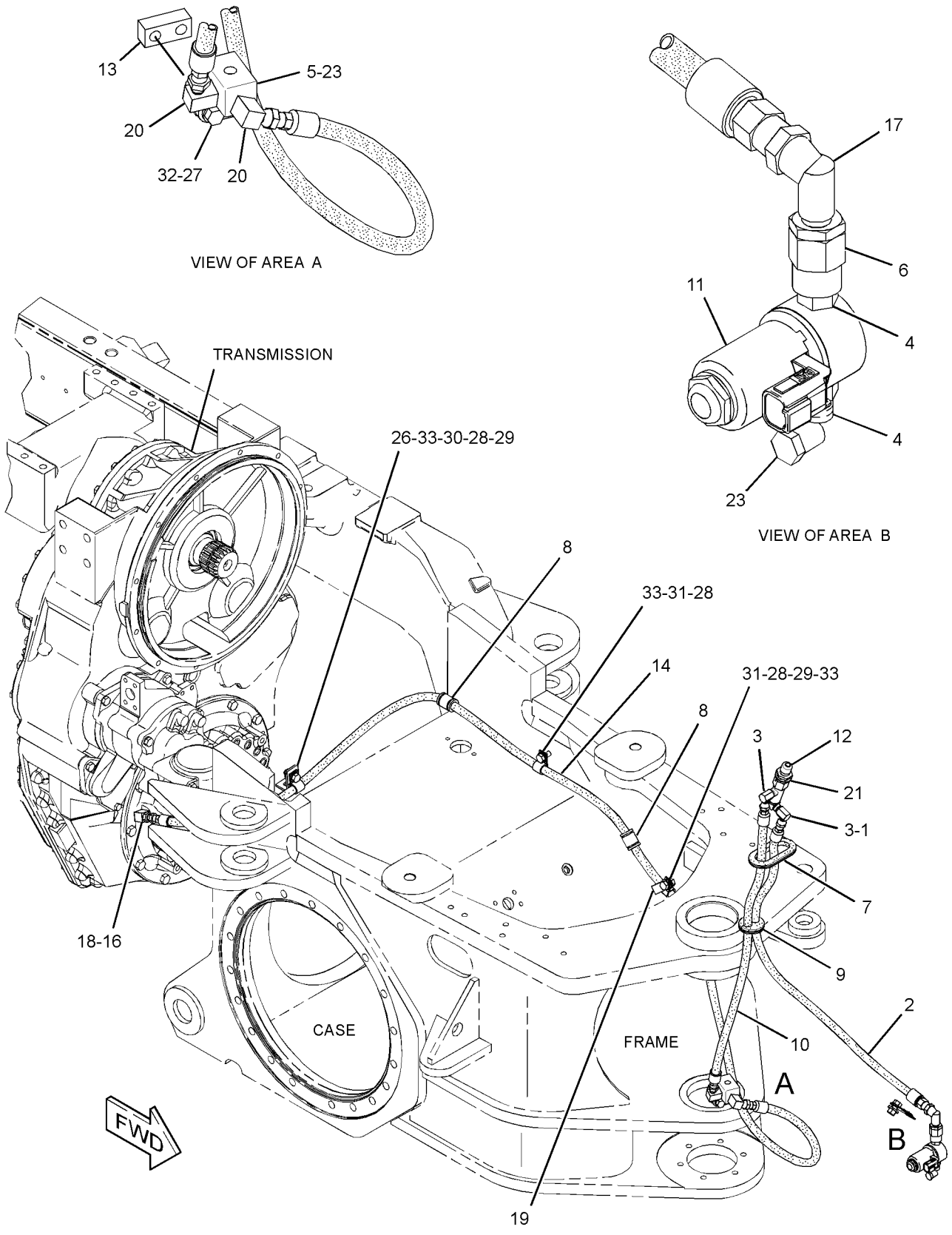

GRAPHIC #1 **<END>** g01884338

BRAKING SYSTEM

283-3499 CONTROL GP-SERVICE BRAKE

S/N: JJA1-UP

PART OF 346-3710 GENERAL AR

SMCS-4265, 4269 **i03571241**

NOTE	REF NO	GRAPHIC REF	PART NUMBER	QTY	PART NAME 1 2 3 4 5 6 (PRODUCT LEVEL)	SEE PAGE
	1	2	**1F-4622**	2	BEARING AS-NEEDLE	
	2	2	**2D-0193**	1	CONNECTOR-PIPE	
	3	2	**2D-7325**	1	TEE-PIPE	
	4	1,2	**2L-3331**	5	CONNECTOR-PIPE	
	5	2	**3S-2713**	1	NUT-FULL (3/8-24-THD)	
	6	1	**3T-0050**	2	CLIP	
	7	1	**5K-9238**	4	CONNECTOR	
	8	1	**5T-8285**	1	JUNCTION BLOCK	
	9	1	**6K-6826**	4	ELBOW (45-DEG)	
I	10	1	**6M-9537**	1	HOSE AS	
	11	2	**6W-5817**	1	SPRING	
	12	2	**7V-0446**	2	CLIP	
	13	1	**8D-7026**	4	GUARD	
	14	2	**8L-6005**	3	TEE-PIPE	
	15	1	**8W-8527**	14	SLEEVE	
	16	1	**8W-8903**	2	CLIP	
Y	17	2	*8X-2650*	1	VALVE GP-AIR CONTROL (SERVICE BRAKE)	580
	18	2	**8X-2680**	1	BRACKET AS	
	19	1	**8X-7603**	2	HOSE AS	
	20	1	**9G-8140**	1	SPACER (10.5X25X15-MM THK)	
	21	2	**9J-8783**	1	SHIM (0.508-MM THK)	
	22	1	**190-4375**	2	WASHER (26X40X2-MM THK)	
	23	1	**9S-7706**	2	ELBOW-FLARED	
	24	1	**9X-8606**	8	CLIP	
	25	1	**110-3326**	1	PLATE AS	
		1	**8X-8450**	1	PLATE	
		1	**3S-0391**	1	BOSS (3/8-16-THD)	
	26	1	**153-2446**	1	BRACKET	
	27	2	**169-0921**	1	ROD END-YOKE (3/8-24 LH-THD)	
	28	2	**172-4211**	1	SPACER (10.5X22X50.8-MM THK)	
	29	1	**176-2945**	2	FITTING-BULKHEAD	
	30	2	**177-1713**	1	ROD	
	31	2	**180-4027**	1	CAM	
	32	2	**180-7147**	1	LEVER	
	33	2	**185-1122**	1	BRACKET	
	34	1	**198-5438**	2	BLOCK	
	35	1	**198-5439**	1	TUBE AS	
	36	1	**198-5440**	1	TUBE AS	
	37	1	**203-3337**	1	TUBE AS	
	38	1	**203-3340**	1	TUBE AS	
	39	1	**203-3341**	1	TUBE AS	
	40	1	**203-3342**	1	TUBE AS	
	41	2	**207-4924**	1	PEDAL-BRAKE	
	42	1	**301-6395**	1	HOSE AS	
	43	1	**301-6398**	1	HOSE AS	
	44	1	**307-6241**	2	BLOCK-CLAMP	
	45	1	**307-6242**	2	BLOCK-CLAMP	
	46	1	**307-6243**	4	BLOCK-CLAMP	
	47	1	**307-7500**	2	BLOCK-CLAMP	
	48	1	**307-7501**	1	PLATE AS	
	49	1	**307-7502**	1	PLATE	
	50	1	**313-4181**	1	BRACKET AS	
	51	1	**316-8381**	1	HOSE AS	
	52	2	**129-3173**	1	BOLT-12 POINT HEAD (3/8-16X1.25-IN)	
	53	2	**1B-0676**	1	PIN	
	54	2	**1H-7724**	3	BUSHING-REDUCER	

283-3499 **CONTROL GP-SERVICE BRAKE** *(contd.)* **i03571241**

NOTE	REF NO	GRAPHIC REF	PART NUMBER	QTY	PART NAME 1 2 3 4 5 6 (PRODUCT LEVEL)	SEE PAGE
	55	2	**1L-2279**	1	ELBOW	
	56	1	**1S-0994**	1	CLIP	
	57	1	**242-9245**	2	HOSE AS	
	58	1	**302-3908**	1	SPACER (11X20X30-MM THK)	
	59	2	**3B-7721**	1	BUSHING-REDUCER	
	60	1	**3D-8913**	2	ELBOW	
	61	1	**3K-6060**	4	LOCKNUT (3/8-16-THD)	
	62	2	**3K-8280**	1	PIN-CLEVIS	
	63	1	**3S-8664**	5	CLIP	
	64	2	**4B-6060**	1	SETSCREW-SOCKET (1/4-20X0.375-IN)	
	65	2	**4D-0577**	1	ELBOW	
	66	1,2	**4D-0582**	4	ELBOW	
I	67	1	**4D-6885**	1	HOSE AS	
	68	1	**4D-7388**	1	CLIP	
	69	1	**4D-7735**	1	CLIP	
	70	2	**4J-8922**	1	ROD END-YOKE (3/8-24-THD)	
	71	2	**4M-6425**	1	BOLT (5/16-18X1-IN)	
M	72	2	**5C-2890**	3	NUT (M6X1-THD)	
	73	1	**5H-4778**	1	ELBOW	
	74	1	**5M-3062**	1	BOLT (3/8-16X0.75-IN)	
	75	1	**5M-6213**	1	PLUG-PIPE	
	76	1	**6V-1228**	1	CLIP	
	77	2	**6V-4245**	1	ELBOW	
M	78	2	**6V-7357**	1	BOLT (M6X1X25-MM)	
	79	2	**6V-8189**	3	NUT (5/16-18-THD)	
	80	1	**6V-8801**	2	NUT (3/8-16-THD)	
	81	2	**6V-8918**	2	BOLT (5/16-18X1.25-IN)	
	82	1,2	**7M-7410**	6	PLUG-PIPE	
	83	2	**7X-7729**	2	WASHER (11X25X3-MM THK)	
	84	1	**8T-4121**	22	WASHER-HARD (11X21X2.5-MM THK)	
M	85	1,2	**8T-4133**	9	NUT (M10X1.5-THD)	
M	86	2	**8T-4136**	2	BOLT (M10X1.5X25-MM)	
M	87	1	**8T-4137**	11	BOLT (M10X1.5X20-MM)	
M	88	2	**8T-4178**	1	BOLT (M10X1.5X90-MM)	
M	89	1	**8T-4185**	1	BOLT (M10X1.5X50-MM)	
M	90	1	**8T-4186**	2	BOLT (M10X1.5X40-MM)	
	91	2	**8T-4224**	5	WASHER-HARD (8.8X16X2-MM THK)	
	92	2	**8T-4226**	1	WASHER-PLATED (10.5X45X3-MM THK)	
	93	1,2	**8T-4896**	13	WASHER-HARD (10.2X18.5X2.5-MM THK)	
	94	1	**8T-9056**	4	BOLT (3/8-16X1.25-IN)	
	95	1	**8X-8450**	1	PLATE	
	96	1	**9B-7237**	1	BOLT (3/8-16X1.25-IN)	
	97	1	**9X-8250**	1	CLIP	
	98	2	**9X-8256**	1	WASHER (6.6X12X2-MM THK)	
E	99	1	**5P-0767**		HOSE (82-CM)	

E-ORDER BY THE CENTIMETER
I-REFER TO HYDRAULIC INFORMATION SYSTEM
M-METRIC PART
Y-SEPARATE ILLUSTRATION

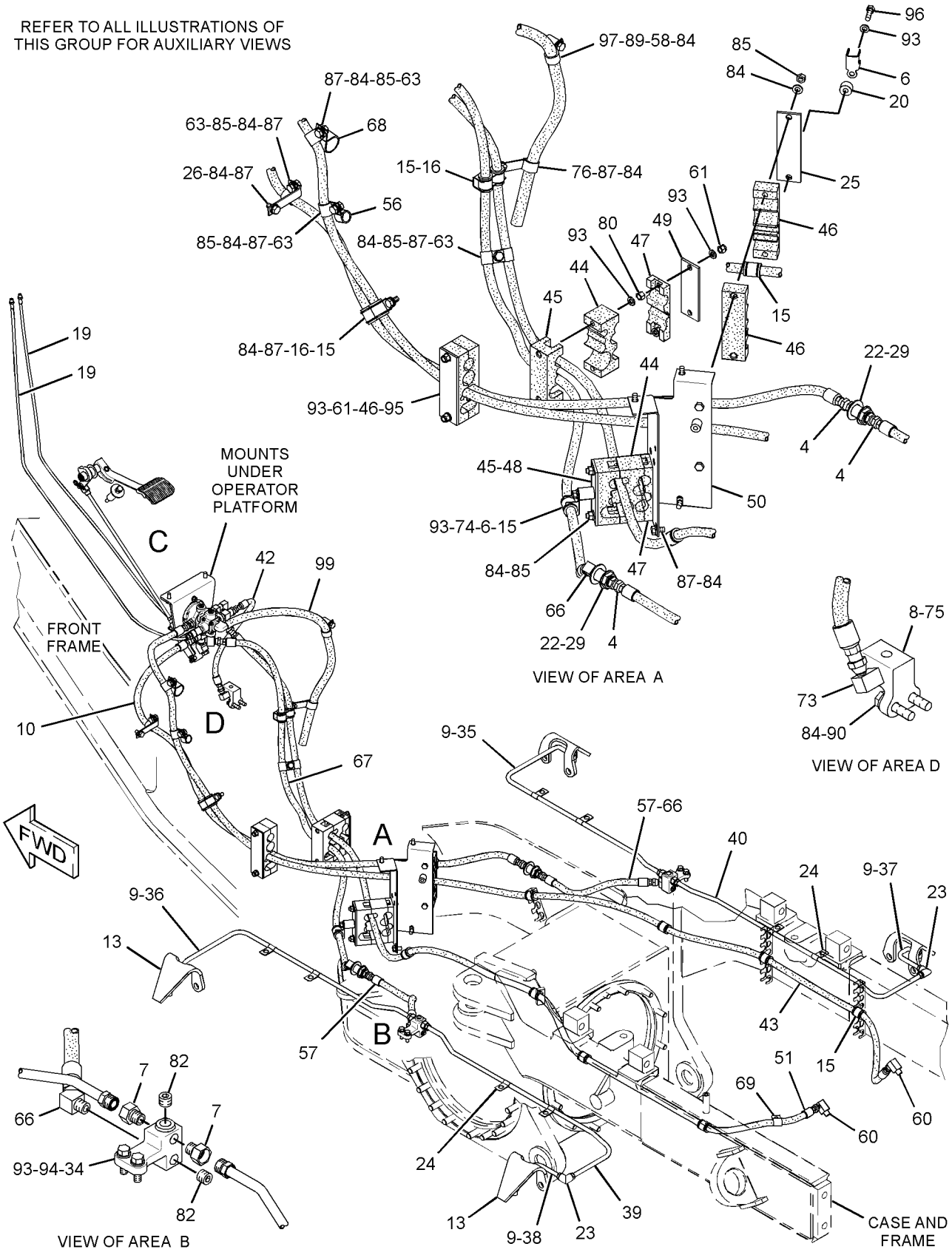

GRAPHIC #1

g01710518

283-3499 **CONTROL GP-SERVICE BRAKE** *(contd.)* **i03571241**

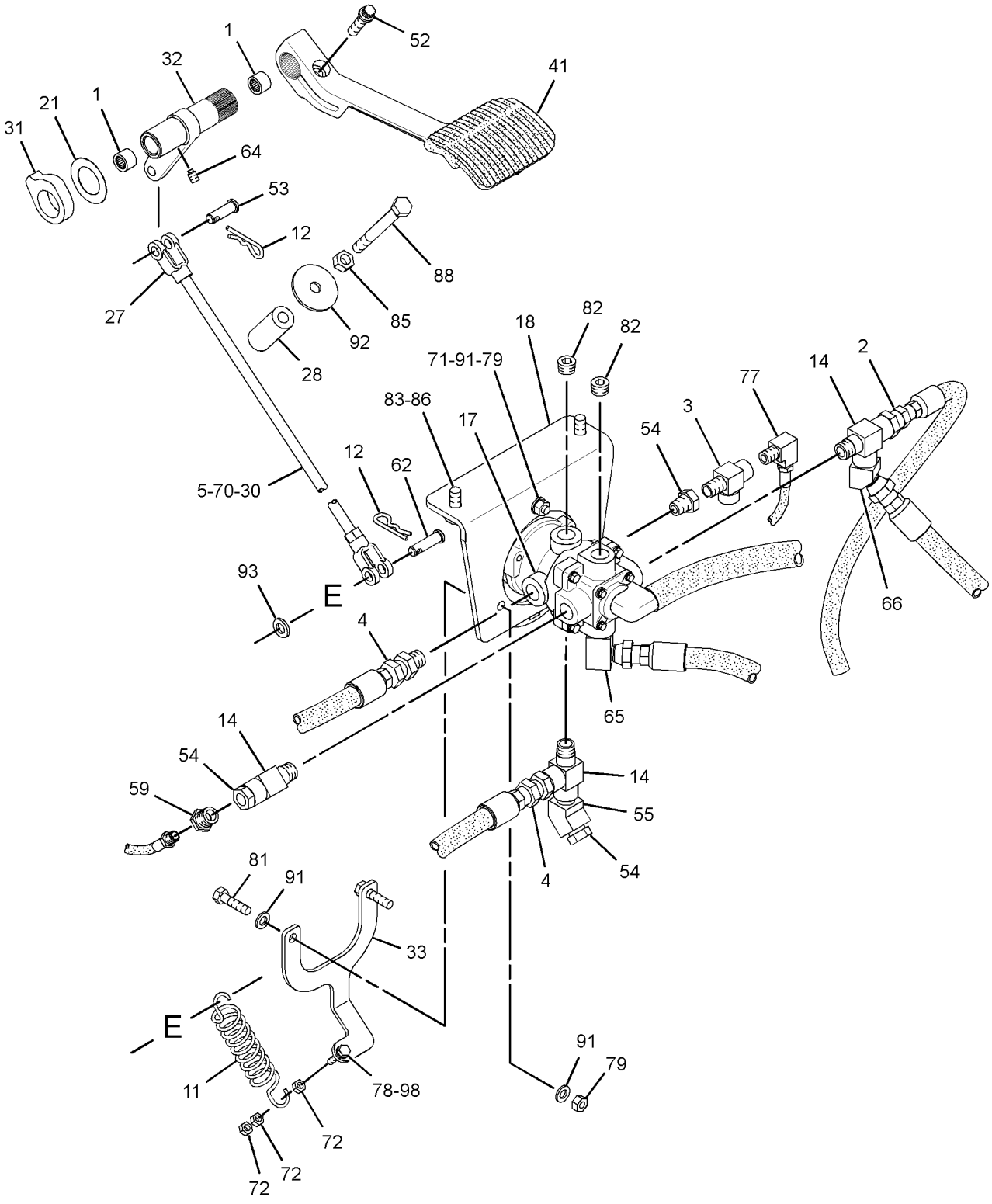

VIEW OF AREA C

GRAPHIC #2 **<END>** g01710519

311-2738 DRYER & LINES GP-AIR

S/N: JJA1-UP
PART OF 311-2737 AIR DRYER GP
AN ATTACHMENT

SMCS-4285 **i03633603**

NOTE	REF NO	GRAPHIC REF	PART NUMBER	QTY	PART NAME 1 2 3 4 5 6 (PRODUCT LEVEL)	SEE PAGE
Y	1	1	*311-2739*	1	DRYER & LINES GP-AIR	318
I	2	1	**342-1547**	1	HOSE AS	
	3	1	**174-5907**	1	CLIP	
	4	1	**7D-7233**	1	CLIP	
	5	1	**8T-4121**	2	WASHER-HARD (11X21X2.5-MM THK)	
M	6	1	**8T-4133**	1	NUT (M10X1.5-THD)	
M	7	1	**8T-4195**	1	BOLT (M10X1.5X30-MM)	
	8	1	**9M-8406**	1	CLIP	

I-REFER TO HYDRAULIC INFORMATION SYSTEM
M-METRIC PART
Y-SEPARATE ILLUSTRATION

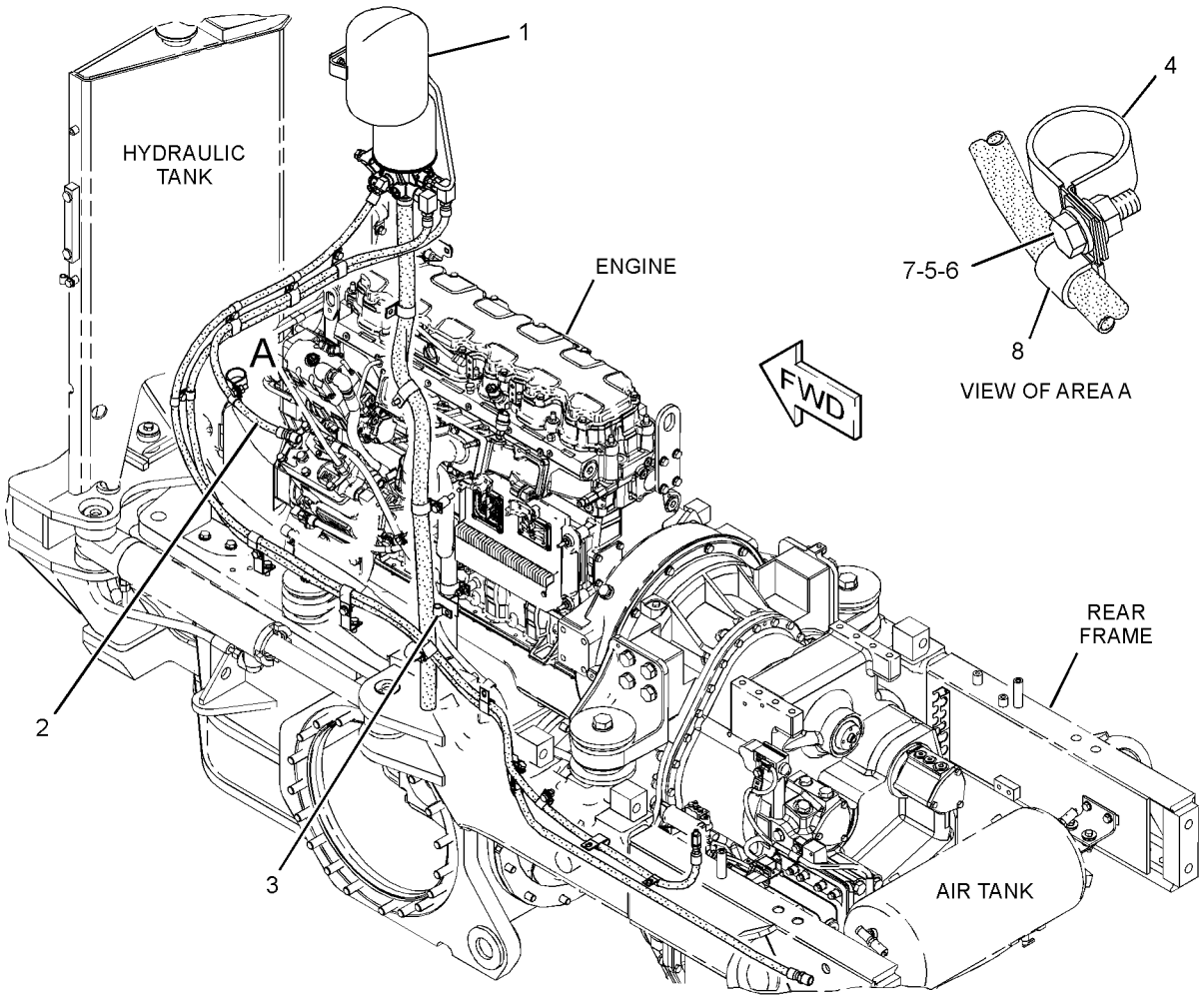

GRAPHIC #1 **<END>** g01945537

BRAKING SYSTEM

311-2739 DRYER & LINES GP-AIR

S/N: JJA1-UP

PART OF 311-2738 DRYER & LINES GP-AIR

AN ATTACHMENT

SMCS-4285 **i03633609**

NOTE	REF NO	GRAPHIC REF	PART NUMBER	QTY	PART NAME 1 2 3 4 5 6 (PRODUCT LEVEL)	SEE PAGE
	1	1	**2S-3440**	1	CLAMP-HOSE	
	2	1	**5P-4401**	1	CONNECTOR-AIR BRAKE	
	3	1	**5P-4424**	1	ELBOW-AIR BRAKE	
	4	1	**6V-2610**	1	FITTING	
	5	1	**127-9323**	2	BRACKET AS	
					(EACH INCLUDES)	
M		1	**8T-3490**	1	NUT-WELD (M10X1.5-THD)	
	6	1	**191-3645**	1	RESERVOIR	
Y	7	1	**215-3005**	1	AIR DRYER GP	305
	8	1	**260-9133**	1	PLATE	
	9	1	**301-3170**	1	TUBE	
I	10	1	**342-1548**	1	HOSE AS	
I	11	1	**344-9192**	1	HOSE AS	
	12	1	**174-5907**	1	CLIP	
	13	1	**205-7299**	5	CLIP	
	14	1	**302-3908**	1	SPACER (11X20X30-MM THK)	
	15	1	**3B-6772**	1	ELBOW-STREET	
	16	1	**3J-5390**	1	PLUG	
	17	1	**4D-7733**	7	CLIP	
	18	1	**4S-4455**	1	CLIP	
	19	1	**5C-6565**	3	BOLT (1/2-13X1.125-IN)	
	20	1	**5K-8451**	1	CLIP	
	21	1	**5P-7854**	3	CLIP	
	22	1	**6L-5652**	2	ADAPTER	
	23	1	**7D-0215**	1	CONNECTOR-PIPE	
	24	1	**8T-4121**	16	WASHER-HARD (11X21X2.5-MM THK)	
M	25	1	**8T-4133**	3	NUT (M10X1.5-THD)	
M	26	1	**8T-4136**	4	BOLT (M10X1.5X25-MM)	
M	27	1	**8T-4137**	5	BOLT (M10X1.5X20-MM)	
M	28	1	**8T-4195**	3	BOLT (M10X1.5X30-MM)	
	29	1	**8T-4223**	3	WASHER-HARD (13.5X25.5X3-MM THK)	
	30	1	**8T-4224**	2	WASHER-HARD (8.8X16X2-MM THK)	
M	31	1	**8T-6466**	1	BOLT (M10X1.5X60-MM)	
M	32	1	**8T-7547**	2	BOLT (M8X1.25X30-MM)	
	33	1	**9L-3560**	2	ELBOW	
	34	1	**9M-8406**	4	CLIP	
E	35	1	**8I-1362**		HOSE (131-CM)	

E-ORDER BY THE CENTIMETER
I-REFER TO HYDRAULIC INFORMATION SYSTEM
M-METRIC PART
Y-SEPARATE ILLUSTRATION

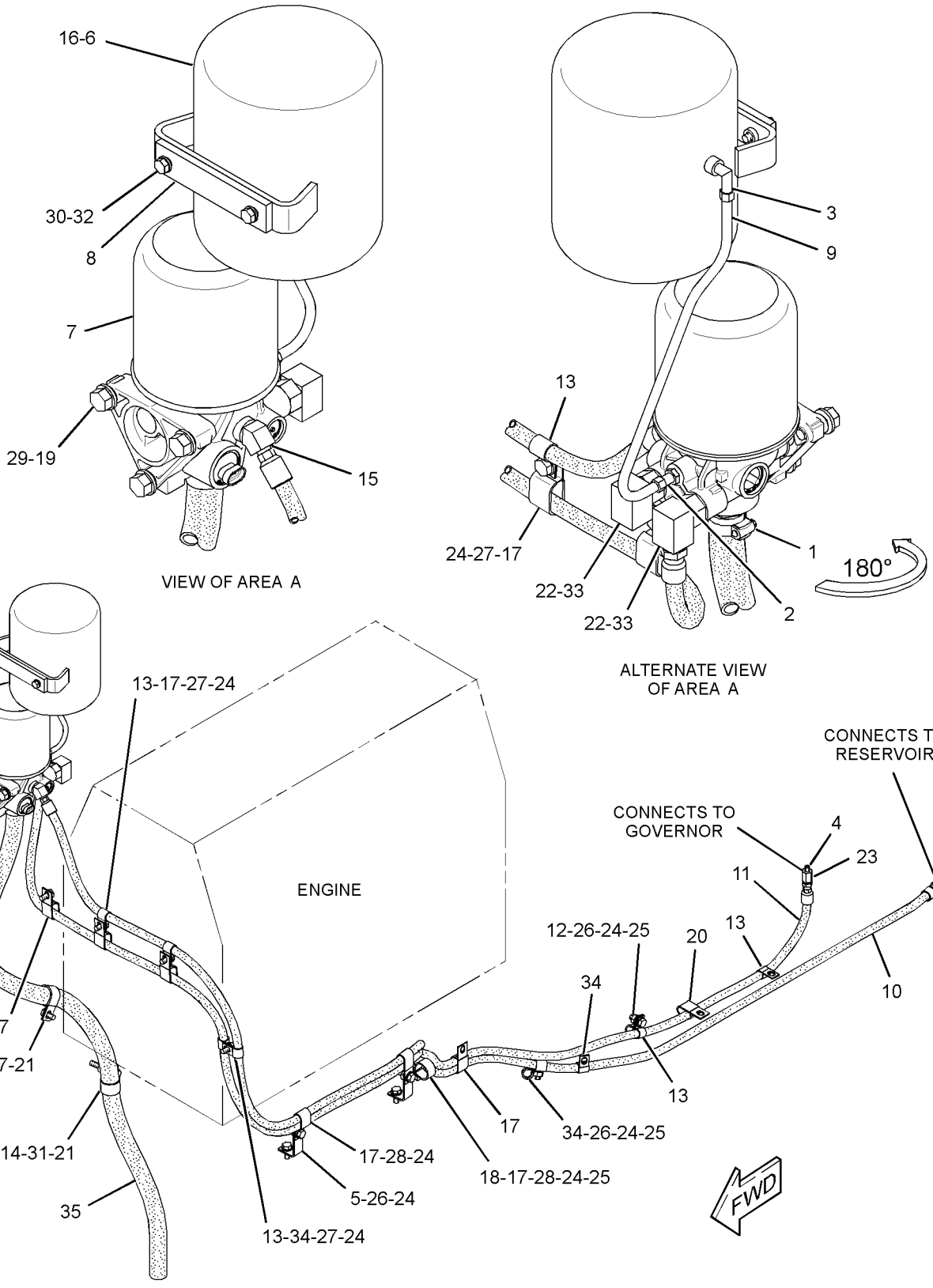

GRAPHIC #1 **<END>** g01946328

BRAKING SYSTEM

314-9370 TANK GP-AIR

S/N: JJA1-UP

PART OF 346-3710 GENERAL AR

SMCS-4272 **i03571239**

NOTE	REF NO	GRAPHIC REF	PART NUMBER	QTY	PART NAME 1 2 3 4 5 6 (PRODUCT LEVEL)	SEE PAGE
	1	2	**1P-7115**	4	GROMMET AS	
	2	1,2	**2G-1034**	2	VALVE-AIR RELIEF	
	3	2	**2H-3940**	1	ELBOW	
	4	2	**2H-9091**	1	CONNECTOR-PIPE	
	5	1	**3D-7587**	1	ELBOW	
	6	1	**4P-7048**	1	BRACKET	
	7	1	**5F-5434**	1	VALVE AS-VENT	
	8	2	**6A-3591**	1	TEE-PIPE	
	9	2	**8M-3368**	2	VALVE-CHECK	
	10	2	**8W-7915**	2	SHIM (2-MM THK)	
	11	2	**8W-8496**	2	PLATE	
	12	1	**8W-8528**	2	SLEEVE	
	13	1	**8W-8575**	1	RESERVOIR	
	14	2	**9D-6663**	2	VALVE-DRAIN	
	15	2	**9M-4594**	1	SPACER (0.406X0.875X0.75-IN THK)	
	16	1	**004-5933**	1	TEE-PIPE	
J	17	1	**205-7187**	1	GOVERNOR AS (AIR COMPRESSOR)	
		1	**2S-2923**	1	COVER AS	
	18	2	**217-4369**	1	BRACKET AS	
	19	1	**292-4772**	1	PLATE-SUPPORT	
	20	1	**334-5268**	1	HOSE AS	
	21	1	**334-5270**	1	HOSE AS	
I	22	1	**342-0724**	1	HOSE AS	
I	23	1	**342-0725**	1	HOSE AS	
	24	2	**002-6453**	2	ELBOW	
	25	2	**124-1479**	1	CLIP	
	26	1,2	**205-7299**	3	CLIP	
	27	2	**3D-8913**	2	ELBOW	
	28	2	**3E-6909**	1	CLIP	
	29	2	**4D-0577**	1	ELBOW	
	30	1,2	**4D-2560**	2	CONNECTOR-PIPE	
	31	2	**4D-7388**	1	CLIP	
	32	1,2	**4D-7733**	1	CLIP	
	33	1	**4H-6147**	1	CONNECTOR	
	34	1	**4K-8864**	1	CLIP	
	35	1	**4S-1936**	2	CLIP	
	36	1	**4S-7606**	1	ELBOW	
M	37	1	**5C-2890**	2	NUT (M6X1-THD)	
	38	2	**5P-8998**	2	FITTING	
	39	2	**5S-7383**	4	BOLT (3/8-16X1.75-IN)	
	40	2	**6L-5652**	1	ADAPTER	
	41	2	**6V-8801**	4	NUT (3/8-16-THD)	
	42	1	**7C-6921**	1	SPACER (11X20X22.8-MM THK)	
	43	2	**7D-4903**	1	ADAPTER	
	44	2	**7D-7233**	2	CLIP	
	45	2	**7F-9311**	4	FITTING	
	46	2	**7X-0578**	8	WASHER-HARD (10.2X32X2.5-MM THK)	
	47	1	**7X-7729**	4	WASHER (11X25X3-MM THK)	
	48	2	**8L-5008**	1	ELBOW-PIPE	
	49	1,2	**8T-4121**	18	WASHER-HARD (11X21X2.5-MM THK)	
M	50	1,2	**8T-4133**	7	NUT (M10X1.5-THD)	
M	51	1,2	**8T-4136**	12	BOLT (M10X1.5X25-MM)	
M	52	2	**8T-4182**	1	BOLT (M10X1.5X45-MM)	
M	53	1	**8T-4186**	1	BOLT (M10X1.5X40-MM)	
M	54	2	**8T-4195**	1	BOLT (M10X1.5X30-MM)	
	55	2	**8T-4896**	4	WASHER-HARD (10.2X18.5X2.5-MM THK)	

314-9370 **TANK GP-AIR** *(contd.)* **i03571239**

NOTE	REF NO	GRAPHIC REF	PART NUMBER	QTY	PART NAME 1 2 3 4 5 6 (PRODUCT LEVEL)	SEE PAGE
	56	1	**8T-6757**	4	PLUG-PIPE	
M	57	1	**8T-6974**	2	BOLT (M6X1X80-MM)	
	58	1,2	**9M-8406**	5	CLIP	
	59	1	**9X-8256**	4	WASHER (6.6X12X2-MM THK)	
					AVAILABLE REPAIR KIT(S):	
J			**9M-0402**	1	KIT-GOVERNOR OVERHAUL (AIR COMPRESSOR)	
					(INCLUDES GROMMETS, FILTERS, SPRING & VALVE)	

I-REFER TO HYDRAULIC INFORMATION SYSTEM
J-KIT MARKED J SERVICES PARTS MARKED J
M-METRIC PART

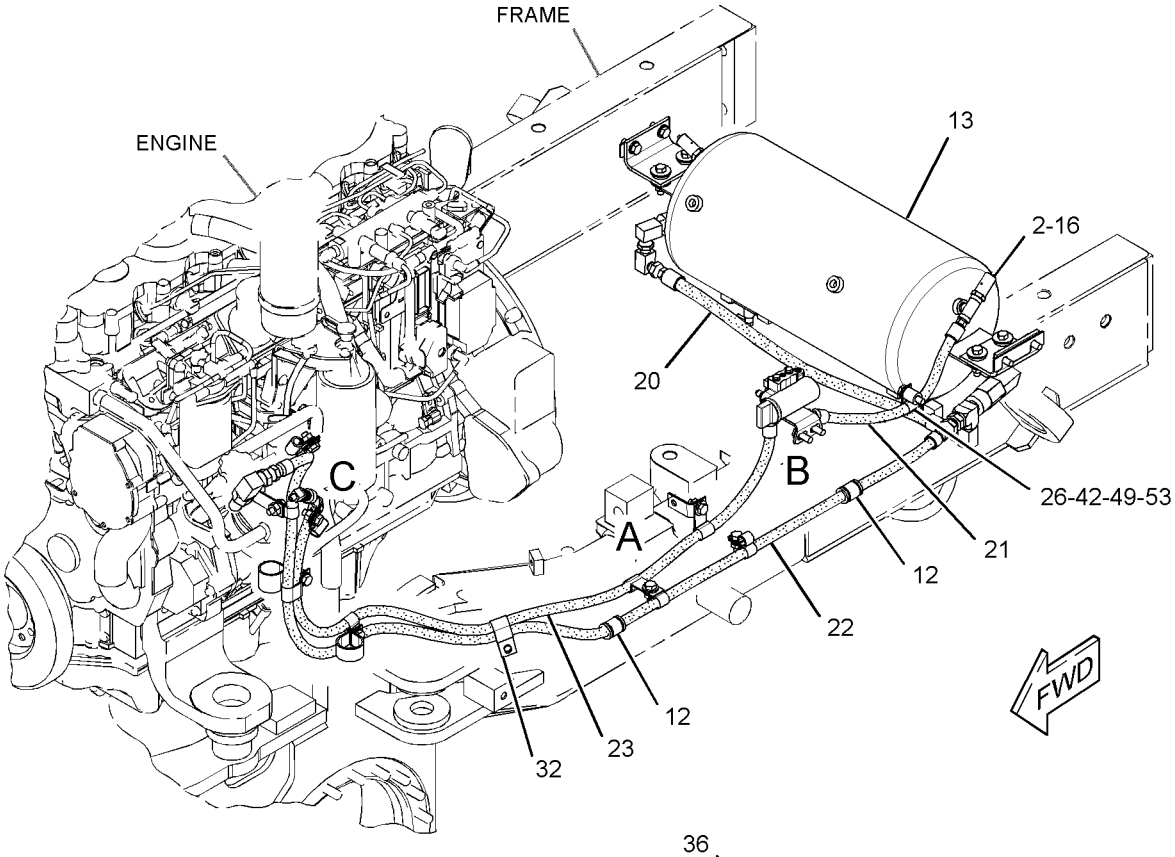

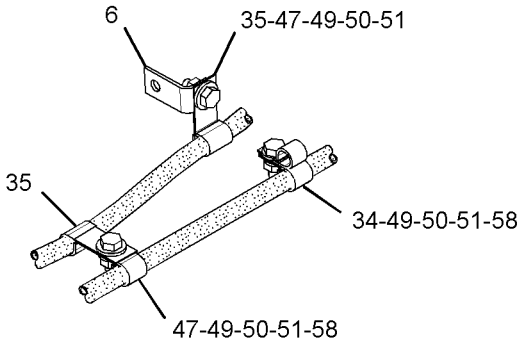

VIEW OF AREA A

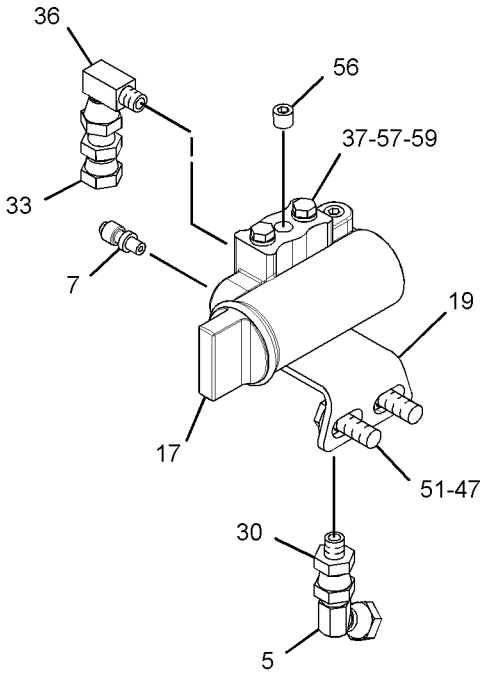

VIEW OF AREA B
(HOSES REMOVED FOR CLARITY AND EXPLODED)

REFER TO ALL ILLUSTRATIONS OF
THIS GROUP FOR AUXILIARY VIEWS

GRAPHIC #1

g01937953

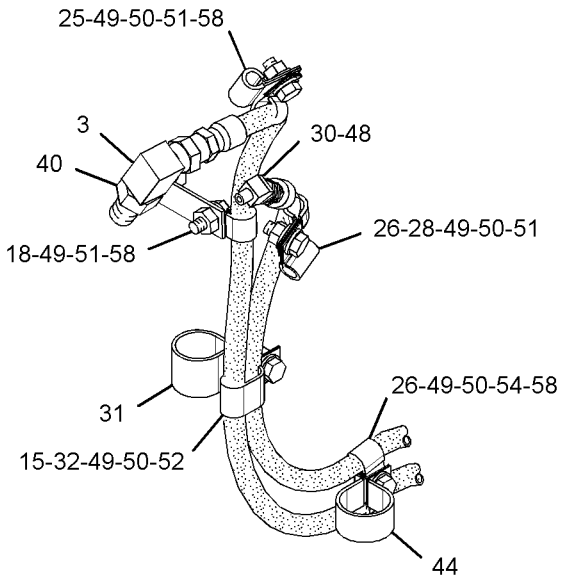

VIEW OF AREA C

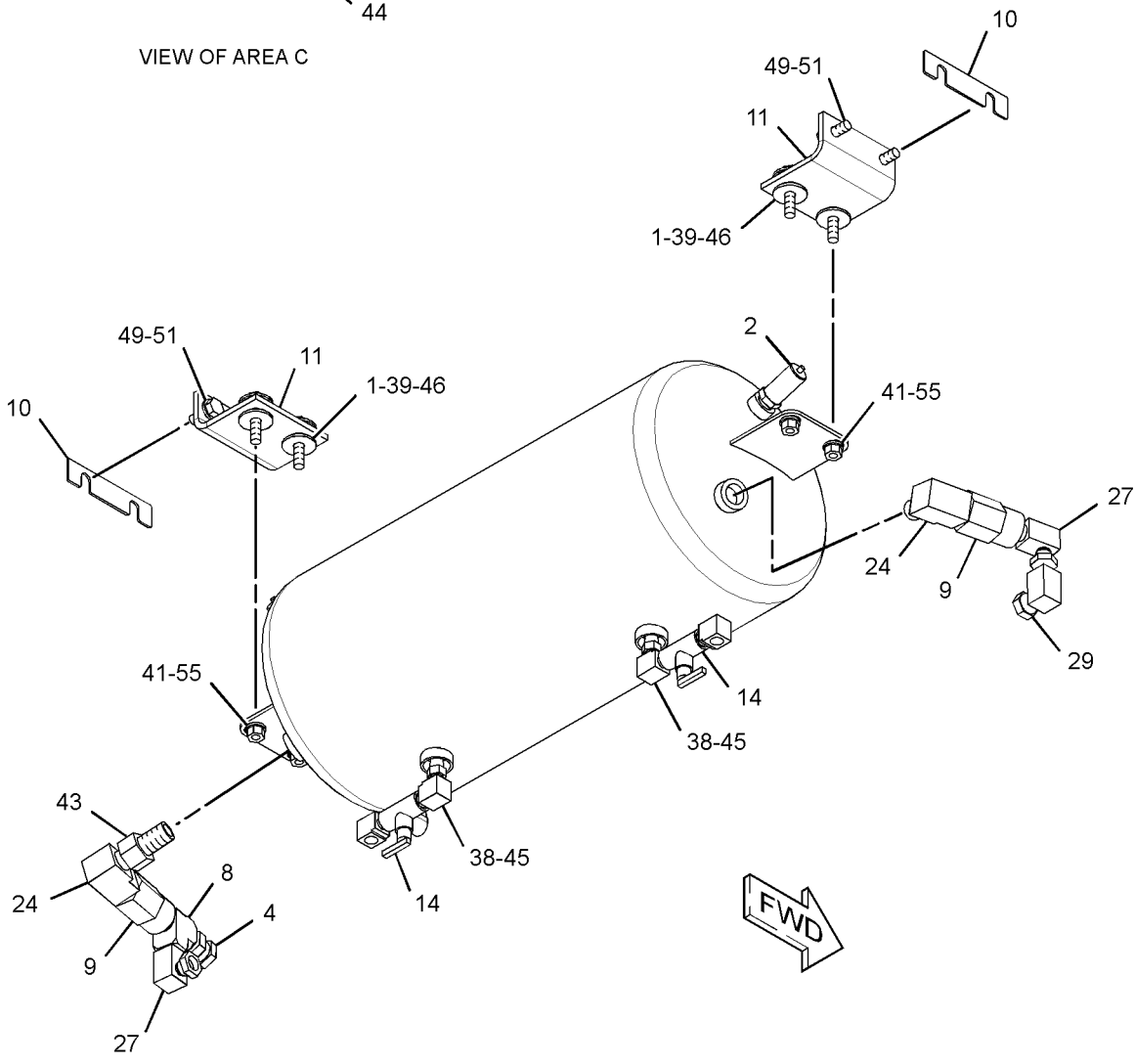

GRAPHIC #2 **<END>** g01937973

BRAKING SYSTEM

185-0008 VALVE GP-SOLENOID

S/N: JJA1-UP
24-VOLT
PART OF 284-5771 CONTROL GP-PARKING BRAKE

SMCS-5479 **i03252107**

NOTE	REF NO	GRAPHIC REF	PART NUMBER	QTY	PART NAME 1 2 3 4 5 6 (PRODUCT LEVEL)	SEE PAGE
	1	1	**156-5970**	1	NUT (1/2-20-THD)	
	2	1	**164-2108**	1	WASHER (13.03X25.4X2.38-MM THK)	
	3	1	**314-7646**	1	COIL AS	

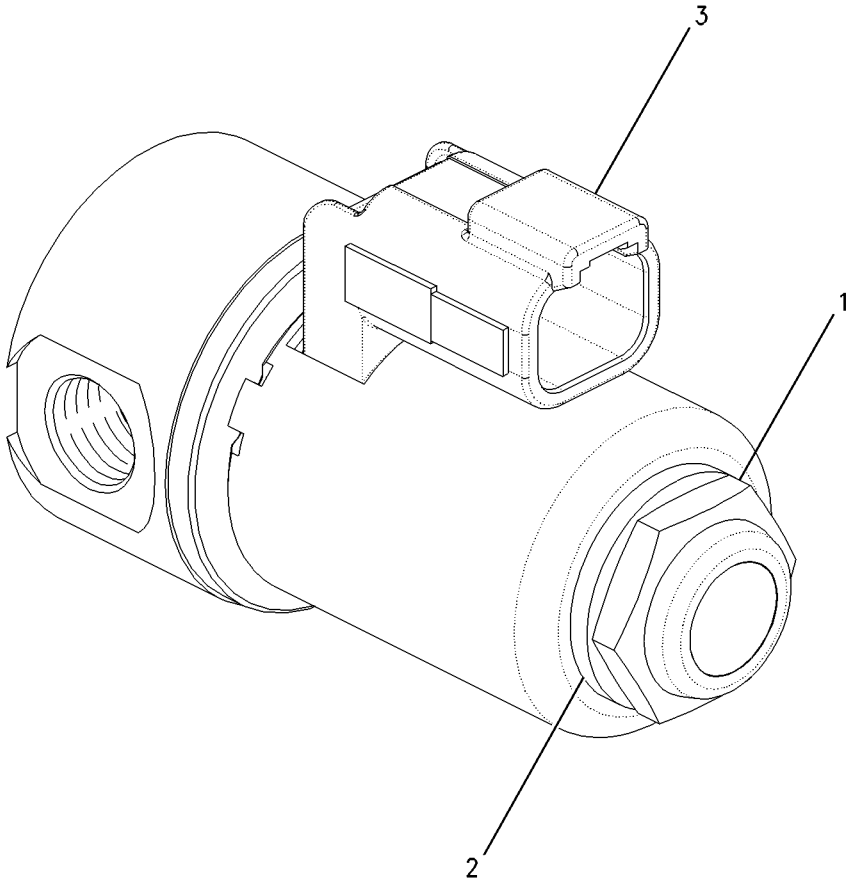

GRAPHIC #1 **<END>** g00925213

162-7451 ACCUMULATOR & MTG GP-HYDRAULIC–

BLADE CUSHION

S/N: JJA1-UP

PART OF 285-4154 ACCUMULATOR AR-BLADE CUSHION

AN ATTACHMENT

SMCS-5077 **i03641508**

NOTE	REF NO	GRAPHIC REF	PART NUMBER	QTY	PART NAME 1 2 3 4 5 6 (PRODUCT LEVEL)	SEE PAGE
	1	1	**4N-5091**	2	SPACER (0.53X1X3.375-IN THK)	
	2	1	**162-7449**	2	CLAMP	
Y	3	1	*162-7450*	2	ACCUMULATOR GP-HYDRAULIC (CHARGED)	327
	4	1	**168-8758**	1	PLATE AS	
	5	1	**2M-4779**	3	STUD-TAPERLOCK (3/8-16X0.177-IN)	
	6	1	**6V-8801**	3	NUT (3/8-16-THD)	
	7	1	**7X-0333**	2	BOLT (1/2-13X4.75-IN)	
	8	1	**8T-4223**	2	WASHER-HARD (13.5X25.5X3-MM THK)	
	9	1	**8T-4896**	3	WASHER-HARD (10.2X18.5X2.5-MM THK)	

Y-SEPARATE ILLUSTRATION

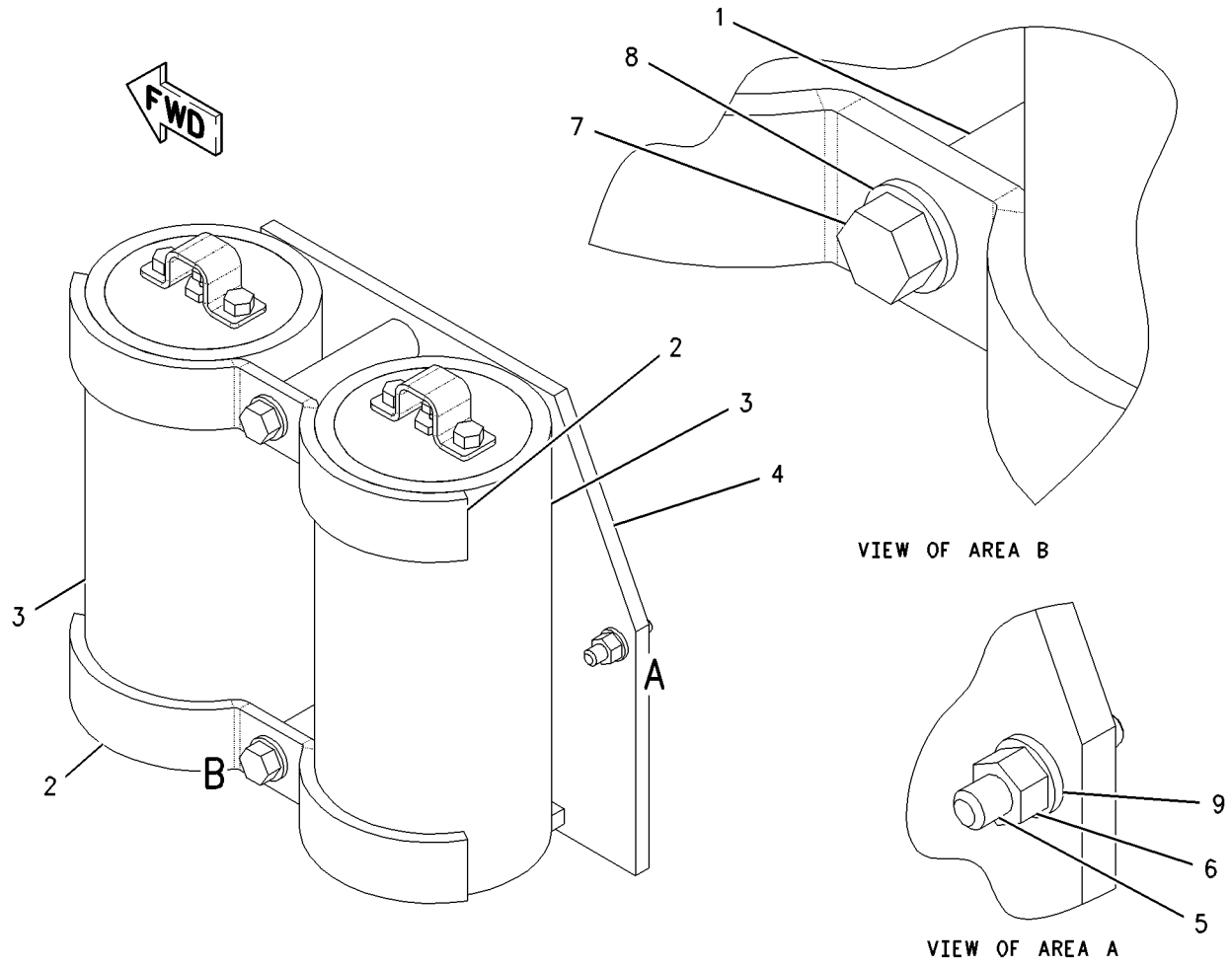

GRAPHIC #1 **<END>** g00788552

HYDRAULIC SYSTEM

285-4154 ACCUMULATOR AR-BLADE CUSHION

S/N: JJA1-UP

PART OF 339-4977 OPTION AR-WORK TOOL

AN ATTACHMENT

SMCS-5077, 5081 **i03261211**

NOTE	PART NUMBER	QTY	PART NAME 1 2 3 4 5 6 (PRODUCT LEVEL)	SEE PAGE
Y	*162-7451*	1	ACCUMULATOR & MTG GP-HYDRAULIC (BLADE CUSHION)	325
Y	*166-3336*	1	LINES GP-ACCUMULATOR	354
Y	*284-5352*	1	WIRING GP-BLADE CUSHION	188

Y-SEPARATE ILLUSTRATION

<END>

162-7450 ACCUMULATOR GP-HYDRAULIC—CHARGED

S/N: JJA1-UP

PART OF 162-7451 ACCUMULATOR & MTG GP-HYDRAULIC

AN ATTACHMENT

SMCS-5077 **i02863919**

NOTE	REF NO	GRAPHIC REF	PART NUMBER	QTY	PART NAME 1 2 3 4 5 6 (PRODUCT LEVEL)	SEE PAGE
	1	1	**135-7123**	1	PISTON	
	2	1	**170-0493**	1	KIT-SEAL (HYDRAULIC ACCUMULATOR)	
	3	1	**188-9390**	1	VALVE AS	
		1	**6M-5062**	1	SEAL-O-RING	
		1	**190-3850**	1	CORE	
	4	1	**111-9110**	1	PROTECTOR-GAS VALVE	
	5	1	**1J-9671**	1	SEAL-O-RING	
	6	1	**5M-3062**	2	BOLT (3/8-16X0.75-IN)	
	7	1	**170-0503**	1	FILM-WARNING (ACCUM, HIGH PRESS, READ OMM)	

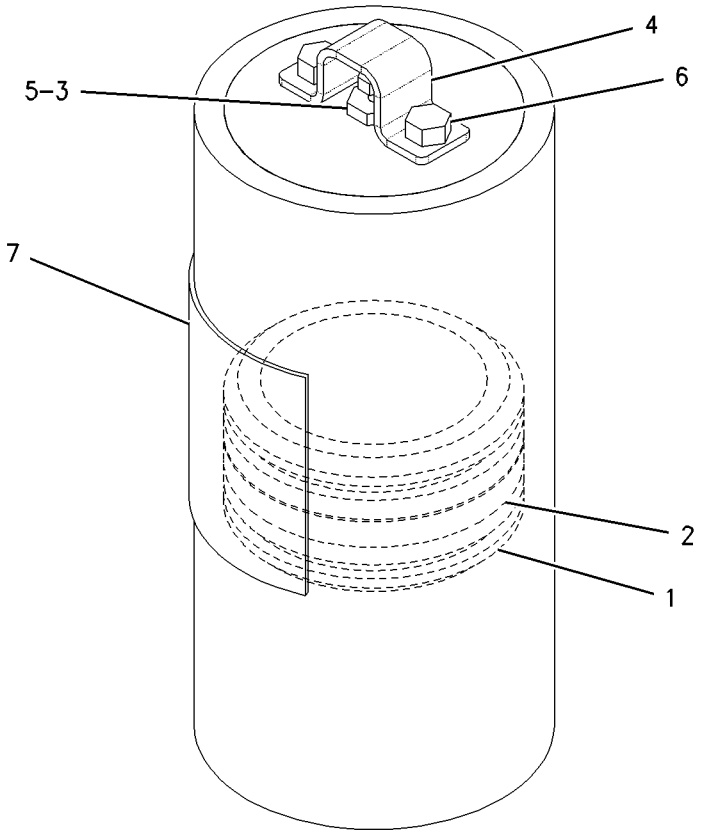

GRAPHIC #1 **<END>** g00789082

343-6219 CONTROL AR-HYDRAULIC—RIPPER

S/N: JJA1-UP

AN ATTACHMENT

SMCS-5050 **i03641515**

NOTE	PART NUMBER	QTY	PART NAME 1 2 3 4 5 6 (PRODUCT LEVEL)	SEE PAGE
Y	*302-7139*	1	LINES GP-RIPPER	375
Y	*342-2640*	1	VALVE & LINKAGE GP (4-BANK, RH; 5-BANK, LH)	408

Y-SEPARATE ILLUSTRATION

<END>

343-6222 CONTROL AR-HYDRAULIC—RIPPER

S/N: JJA1-UP

AN ATTACHMENT

SMCS-5050 **i03641514**

NOTE	PART NUMBER	QTY	PART NAME 1 2 3 4 5 6 (PRODUCT LEVEL)	SEE PAGE
Y	*302-7139*	1	LINES GP-RIPPER	375
Y	*343-6218*	1	VALVE & LINKAGE GP (4-BANK, RH; 5-BANK, LH)	410

Y-SEPARATE ILLUSTRATION

<END>

112-5361 CYLINDER & MTG GP-ARTICULATION

S/N: JJA1-UP

PART OF 346-3710 GENERAL AR

SMCS-5265 **i00130914**

NOTE	REF NO	GRAPHIC REF	PART NUMBER	QTY	PART NAME 1 2 3 4 5 6 (PRODUCT LEVEL)	SEE PAGE
	1	1	**7X-0346**	2	BOLT (5/8-11X2-IN)	
	2	1	**8T-4122**	4	WASHER-HARD (17X32X3.5-MM THK)	
	3	1	**7K-6117**	4	WASHER (0.656X2.5X0.5-IN THK)	
	4	1	**8D-4766**	4	PIN-CYLINDER	
	5	1	**8D-7086**	4	BEARING	
B	6	1	**2K-0420**	12	WASHER (1.766X3.5X0.032-IN THK)	
	7	1	**7K-9202**	8	SEAL-LIP TYPE	
Y	8	1	**9T-8784**	1	CYLINDER GP-ARTICULATION (LH)	338
	9	1	**8T-6871**	2	BOLT (5/8-11X2.5-IN)	
Y	10	1	**6E-1560**	1	CYLINDER GP-ARTICULATION (RH)	337

B-USE AS REQUIRED
Y-SEPARATE ILLUSTRATION

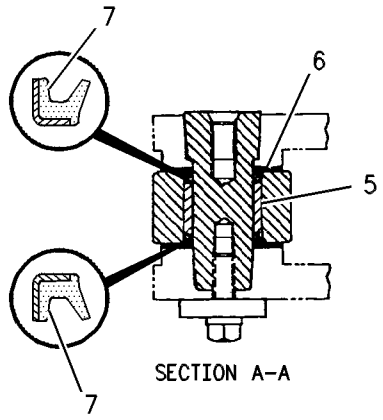

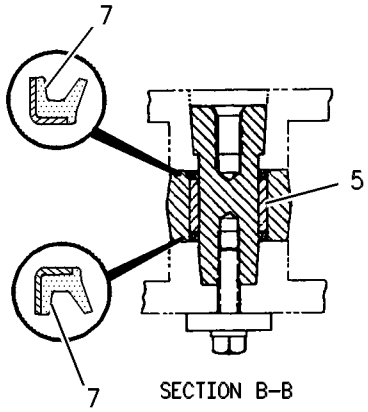

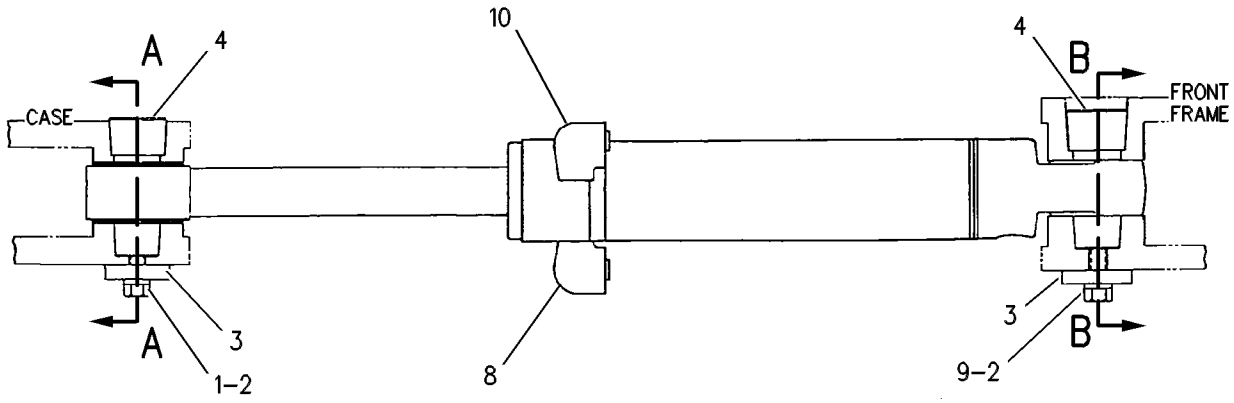

GRAPHIC #1 **<END>** g00108591

HYDRAULIC SYSTEM

8X-1947 CYLINDER & MTG GP-BLADE LIFT

S/N: JJA1-UP

PART OF 346-3710 GENERAL AR

SMCS-5102 **i03538291**

NOTE	REF NO	GRAPHIC REF	PART NUMBER	QTY	PART NAME 1 2 3 4 5 6 (PRODUCT LEVEL)	SEE PAGE
CY	1	1	**132-4929**	2	CYLINDER GP-LIFT (BLADE)	341
	2	1	**279-6631**	8	BOLT (M12X1.75X100-MM)	
	3	1	**279-6632**	8	WASHER (13.5X25.5X3-MM THK)	
	4	1	**299-3436**	4	BOLT (7/8-9X3.5-IN)	
	5	1	**299-3439**	4	WASHER-HARD (24X41.5X6-MM THK)	
	7	1	**8W-2842**	4	CAP AS	
					(EACH INCLUDES)	
		1	**8D-7996**	1	BEARING-SLEEVE	
		1	**3P-1461**	1	SEAL-LIP TYPE	
	8	1	**8X-4741**	4	INSERT	
B	9	1	**2G-9103**	8	SHIM (0.5-MM THK)	
	10	1	**3B-8485**	2	FITTING-GREASE (BLADE LIFT)	
	11	1	**2G-9098**	2	CAP	

QUANTITIES SHOWN ARE THOSE REQUIRED FOR BOTH LH AND RH SIDES
B-USE AS REQUIRED
C-CHANGE FROM PREVIOUS TYPE
Y-SEPARATE ILLUSTRATION

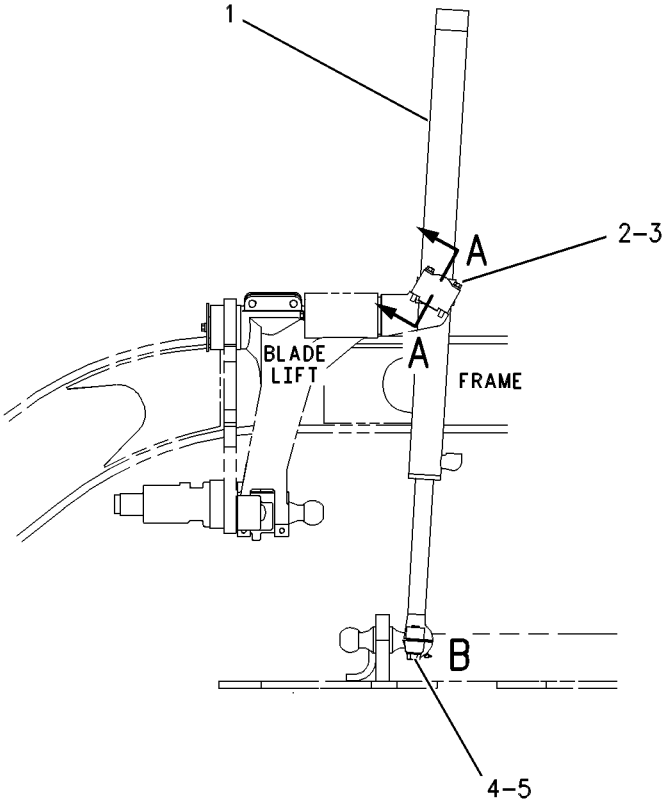

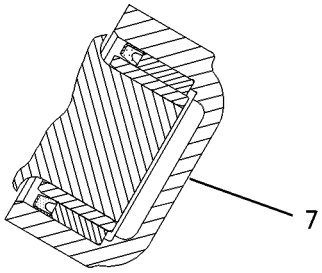

SECTION A-A

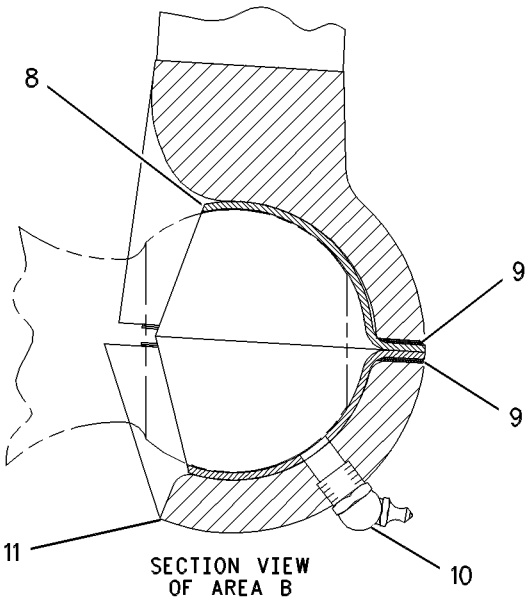

SECTION VIEW OF AREA B

GRAPHIC #1 **<END>** g00544601

8X-1943 CYLINDER & MTG GP-BLADE TIP

S/N: JJA1-UP

PART OF 329-3825 BLADE & TIP AR-POWER, 346-3710 GENERAL AR

ALSO AN ATTACHMENT

SMCS-5106 **i03178160**

NOTE	REF NO	GRAPHIC REF	PART NUMBER	QTY	PART NAME 1 2 3 4 5 6 (PRODUCT LEVEL)	SEE PAGE
	1	1	**3B-5329**	1	PIN-COTTER	
	2	1	**8D-7678**	1	PIN	
CY	3	1	**131-7191**	1	CYLINDER GP-HYDRAULIC (BLADE TIP)	340
	4	1	**2G-3967**	2	SPACER (1.266X3X0.781-IN)	
	5	1	**5K-5552**	1	BOLT-LOCKING (3/8-16X3-IN)	
	6	1	**8D-6687**	1	PIN	
	7	1	**8F-4102**	2	PLATE-SEAL	

C-CHANGE FROM PREVIOUS TYPE
Y-SEPARATE ILLUSTRATION

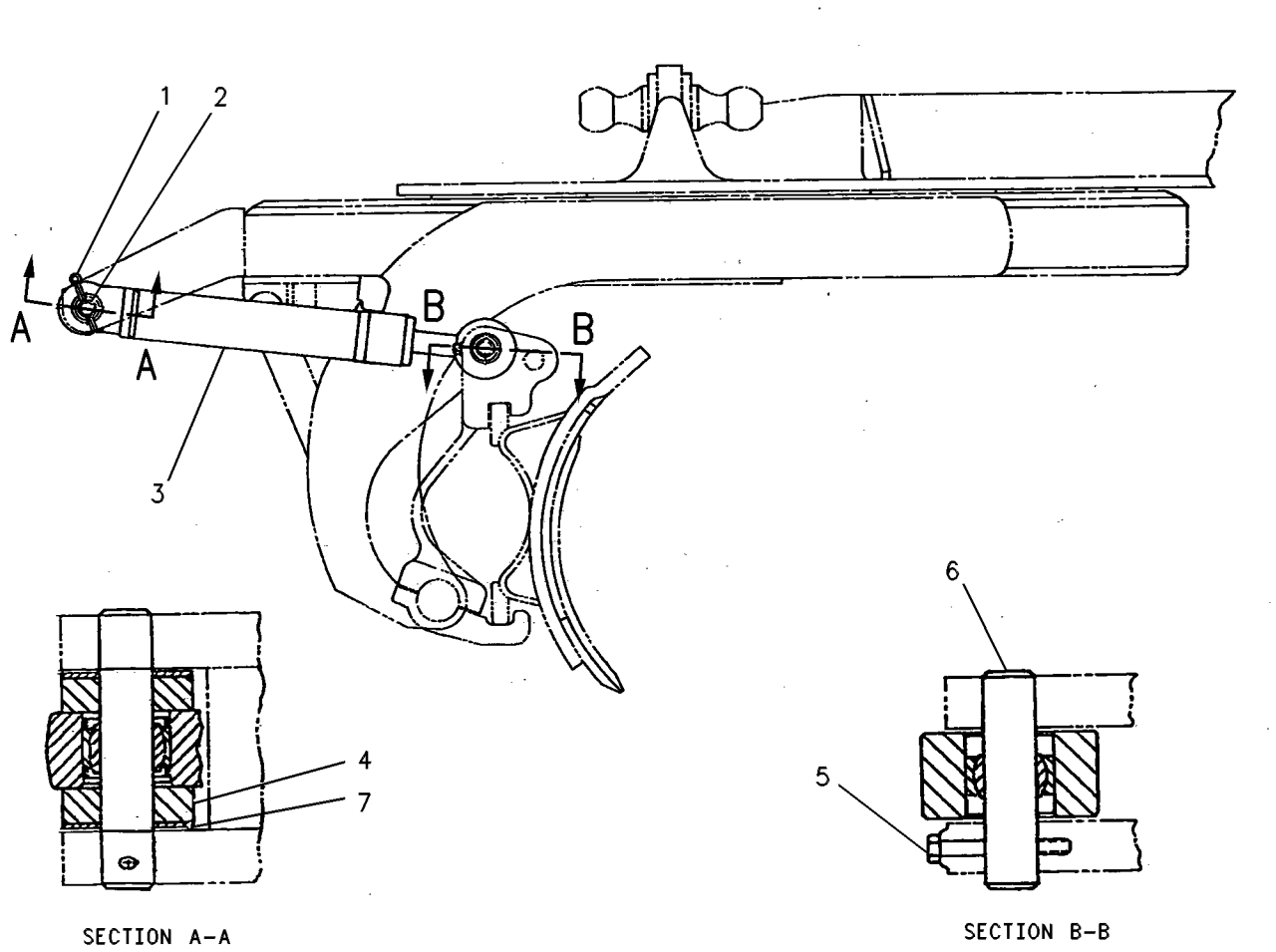

GRAPHIC #1 **<END>** g00108521

HYDRAULIC SYSTEM

8X-1944 CYLINDER & MTG GP-CENTERSHIFT

S/N: JJA1-UP

PART OF 346-3710 GENERAL AR

SMCS-5223 **i03571040**

NOTE	REF NO	GRAPHIC REF	PART NUMBER	QTY	PART NAME 1 2 3 4 5 6 (PRODUCT LEVEL)	SEE PAGE
Y	1	1	**6E-1343**	1	CYLINDER GP-CENTERSHIFT	339
	2	1	**2G-9098**	2	CAP	
	3	1	**3B-8485**	2	FITTING-GREASE (CENTERSHIFT CYLINDER SOCKET)	
B	4	1	**2G-9103**	8	SHIM (0.5-MM THK)	
	5	1	**8X-4741**	4	INSERT	
	6	1	**299-3436**	4	BOLT (7/8-9X3.5-IN)	
	7	1	**299-3439**	4	WASHER-HARD (24X41.5X6-MM THK)	

B-USE AS REQUIRED
Y-SEPARATE ILLUSTRATION

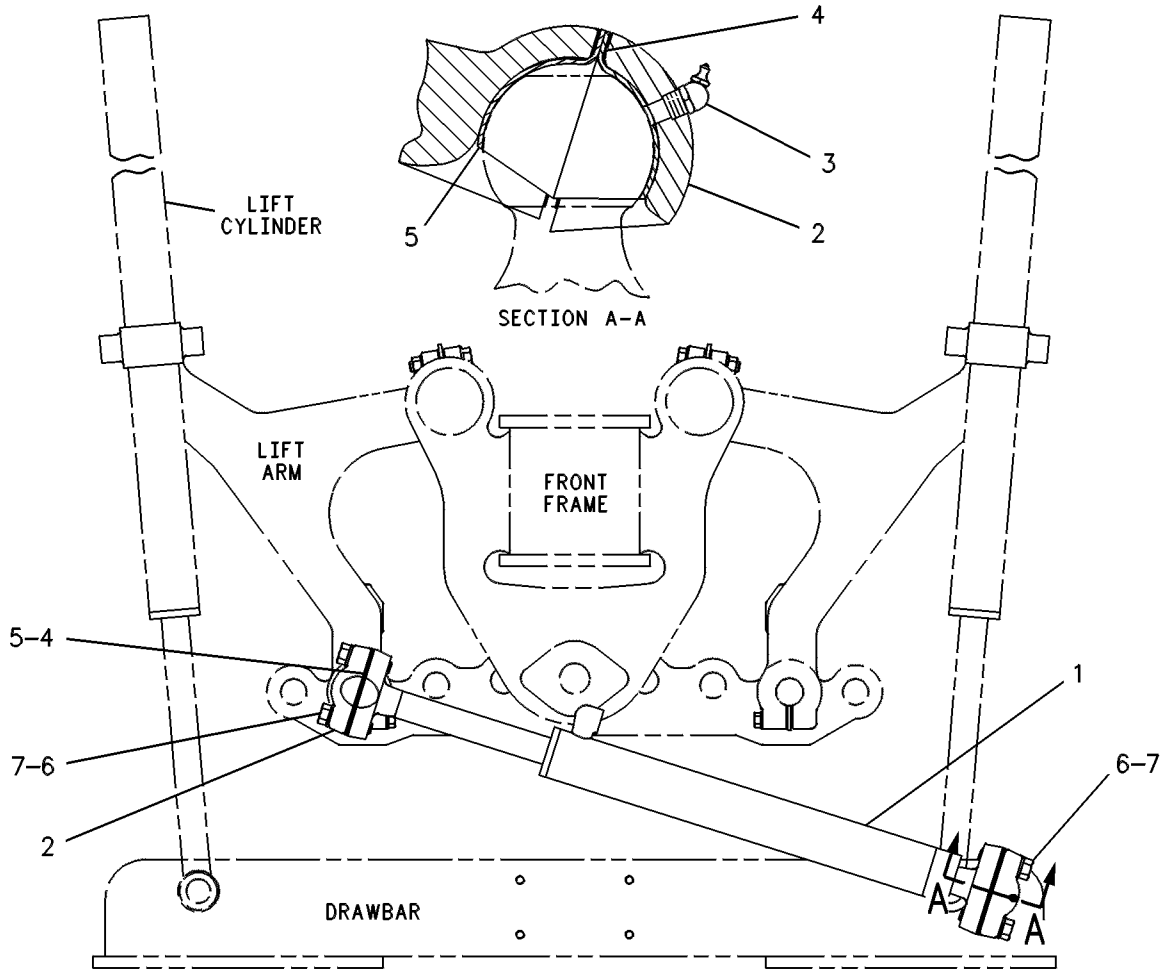

GRAPHIC #1 **<END>** g00108522

8W-2913 CYLINDER & MTG GP-SCARIFIER

S/N: JJA1-UP
PART OF 340-5009 SCARIFIER AR
AN ATTACHMENT

SMCS-5213, 6165 **i03301191**

NOTE	REF NO	GRAPHIC REF	PART NUMBER	QTY	PART NAME 1 2 3 4 5 6 (PRODUCT LEVEL)	SEE PAGE
	1	1	**7K-9202**	4	SEAL-LIP TYPE	
	2	1	**8D-7086**	2	BEARING	
Y	3	1	**165-2510**	1	CYLINDER GP-SCARIFIER	343
	4	1	**6G-7187**	2	LOCK	
	5	1	**8D-7225**	2	PIN	
	6	1	**5P-2228**	4	BOLT (1/2-13X1-IN)	
	7	1	**8T-4223**	4	WASHER-HARD (13.5X25.5X3-MM THK)	

Y-SEPARATE ILLUSTRATION

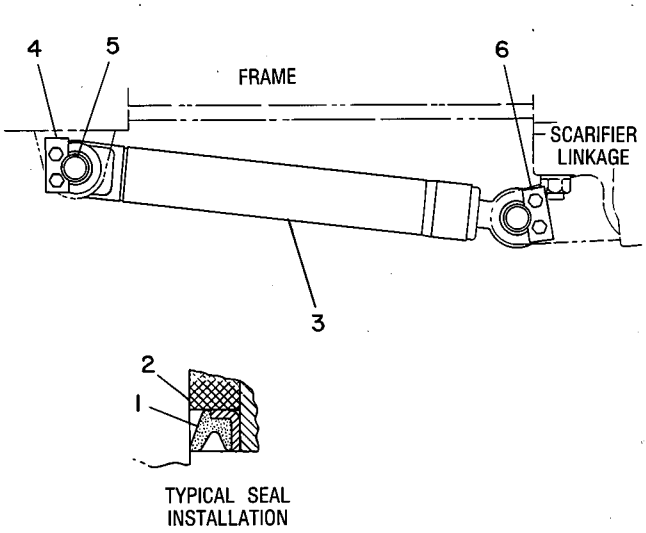

GRAPHIC #1 **<END>** g00108274

112-7463 CYLINDER & MTG GP-SIDESHIFT

S/N: JJA1-UP
PART OF 329-3825 BLADE & TIP AR-POWER, 346-3710 GENERAL AR
ALSO AN ATTACHMENT

SMCS-5229 **i03543663**

NOTE	REF NO	GRAPHIC REF	PART NUMBER	QTY	PART NAME 1 2 3 4 5 6 (PRODUCT LEVEL)	SEE PAGE
	1	1	**6H-0211**	2	WASHER (1.563X2.75X0.06-IN THK)	
	2	1	**5T-5295**	1	PIN	
	3	1	**8T-9391**	1	BOLT (1/2-13X3.75-IN)	
	5	1	**1K-6872**	1	LOCKNUT (1/2-13-THD)	
	6	1	**3B-4647**	1	PIN-COTTER	
	7	1	**5T-8417**	1	PIN	
	8	1	**112-7462**	1	BRACKET	
	9	1	**201-2184**	4	BOLT (3/4-10X2.25-IN)	
	10	1	**299-3427**	4	WASHER-HARD (20X36.5X3.5-MM THK)	
Y	11	1	**112-5575**	1	CYLINDER GP-SIDESHIFT	344

Y-SEPARATE ILLUSTRATION

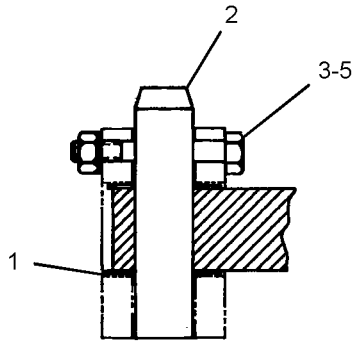

SECTION A-A

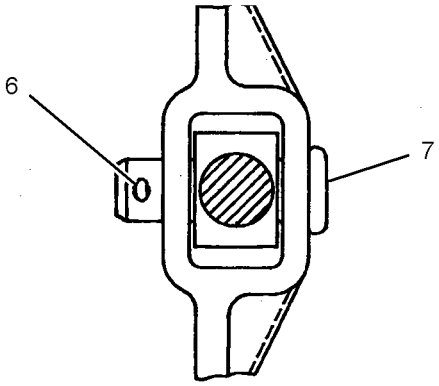

SECTION B-B

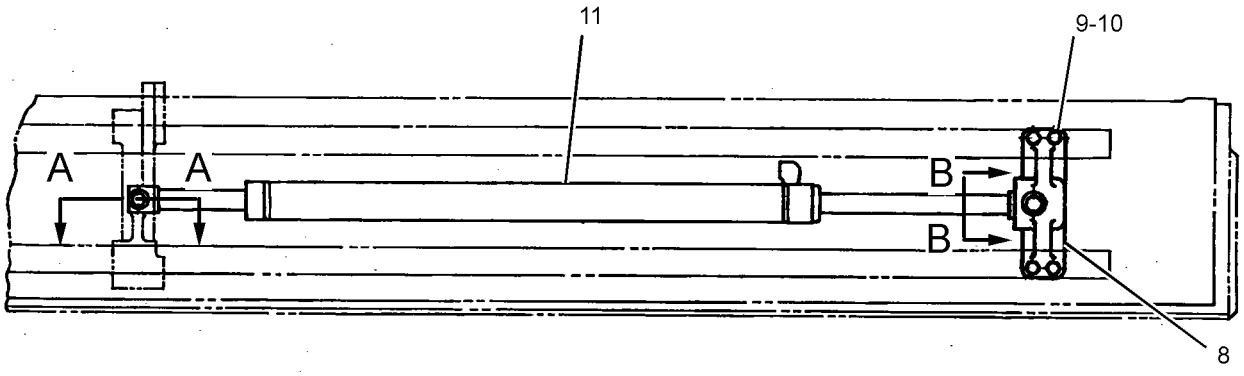

GRAPHIC #1 **<END>** g01827437

8W-2290 CYLINDER & MTG GP-STEERING

S/N: JJA1-UP

PART OF 346-3710 GENERAL AR

SMCS-4303 **i03478201**

NOTE	REF NO	GRAPHIC REF	PART NUMBER	QTY	PART NAME 1 2 3 4 5 6 (PRODUCT LEVEL)	SEE PAGE
	1	1	**2H-3786**	2	NUT-JAM (1-14-THD)	
	2	1	**8D-2429**	2	PIN AS	
	3	1	**8D-2638**	4	SPACER (1.016X1.25X0.39-IN THK)	
CY	4	1	**130-9041**	1	CYLINDER GP-STEERING (LH)	345
CY	5	1	**130-9042**	1	CYLINDER GP-STEERING (RH)	347
	6	1	**131-3736**	2	TIE ROD GP (STEERING)	
					(EACH INCLUDES)	
		1	**2F-8057**	1	NUT-SLOTTED	
		1	**132-1143**	1	SEAL-BOOT	
	7	1	**3B-4618**	2	PIN-COTTER	
	8	1	**5S-7379**	2	BOLT (3/8-16X0.875-IN)	
	9	1	**8D-2811**	2	WASHER (1.25X1.94X0.032-IN THK)	
	10	1	**8T-4896**	2	WASHER-HARD (10.2X18.5X2.5-MM THK)	

C-CHANGE FROM PREVIOUS TYPE
Y-SEPARATE ILLUSTRATION

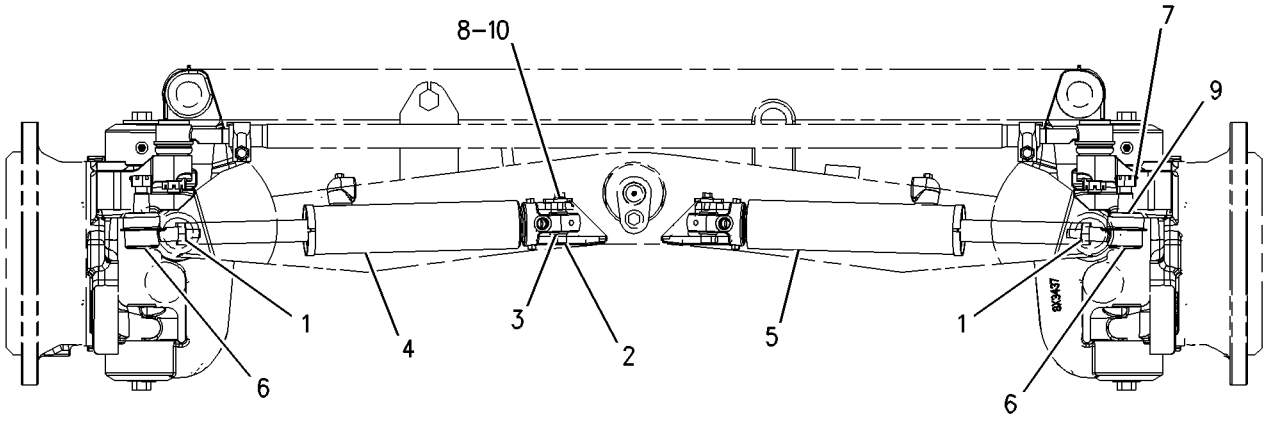

GRAPHIC #1 **<END>** g00743415

HYDRAULIC SYSTEM

8W-2737 CYLINDER & MTG GP-WHEEL LEAN

S/N: JJA1-UP

PART OF 346-3710 GENERAL AR

SMCS-5211 **i01458451**

NOTE	REF NO	GRAPHIC REF	PART NUMBER	QTY	PART NAME 1 2 3 4 5 6 (PRODUCT LEVEL)	SEE PAGE
	1	1	**6H-1717**	2	BOLT (1/2-13X1.125-IN)	
		1	**5P-8245**	2	WASHER-HARD (13.5X25.5X3-MM THK)	
	2	1	**3B-8489**	2	FITTING-GREASE (WHEEL LEAN)	
	3	1	**2G-8609**	1	PIN	
	4	1	**6G-7187**	1	LOCK	
Y	5	1	**121-9242**	1	CYLINDER GP-WHEEL LEAN	349
	6	1	**2G-5667**	1	RETAINER	
	7	1	**0S-1592**	1	BOLT (5/8-11X1.25-IN)	
		1	**4D-3704**	1	WASHER-HARD (17X30X5-MM THK)	
	8	1	**5P-8842**	4	SEAL-LIP TYPE	

Y-SEPARATE ILLUSTRATION

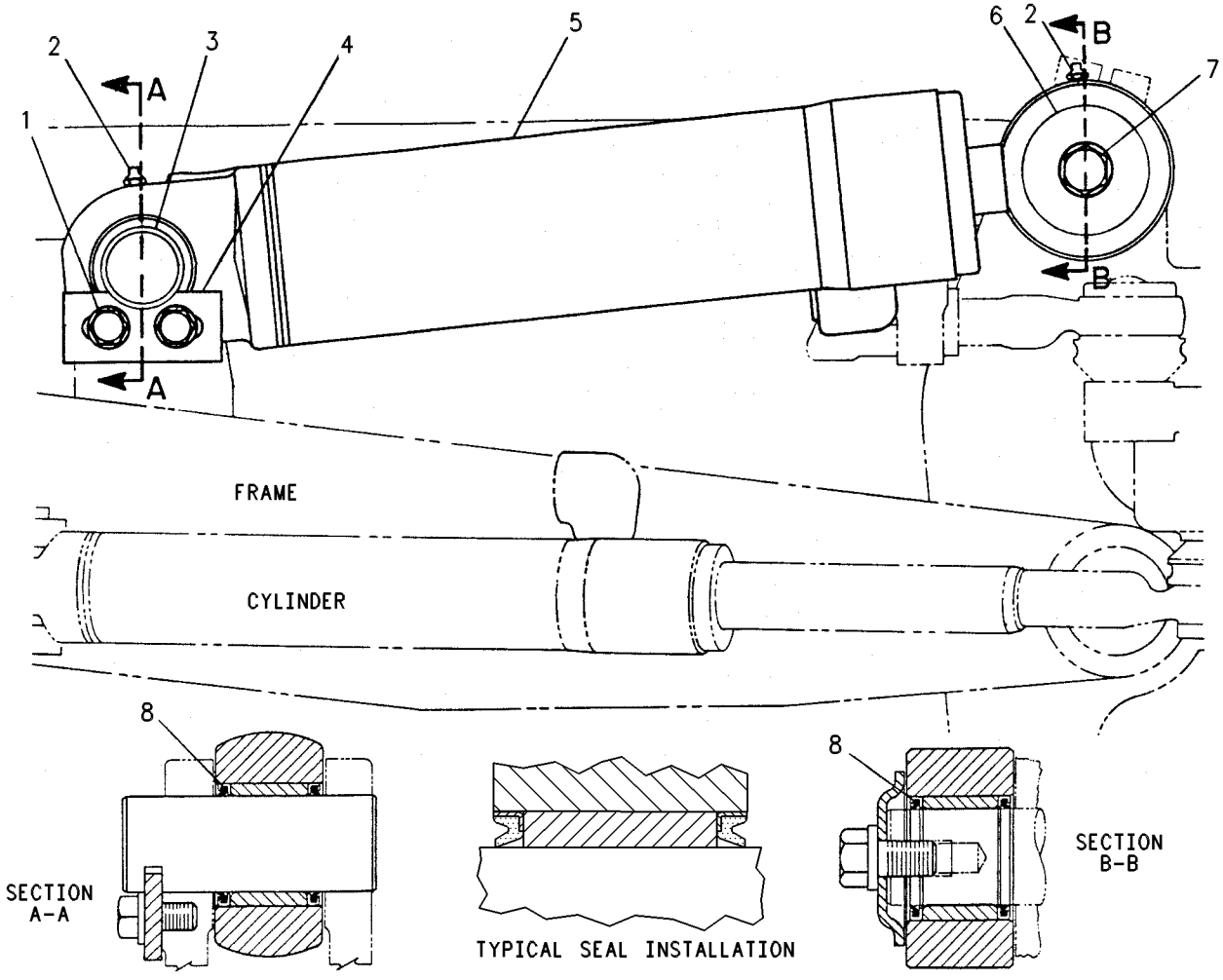

GRAPHIC #1 **<END>** g00108800

6E-1560 CYLINDER GP-ARTICULATION–RH

S/N: JJA1-UP
76.2-MM (3-IN) BORE X 284.3-MM (11.19-IN) STROKE
PART OF 112-5361 CYLINDER & MTG GP-ARTICULATION

SMCS-5265 **i01533651**

NOTE	REF NO	GRAPHIC REF	PART NUMBER	QTY	PART NAME 1 2 3 4 5 6 (PRODUCT LEVEL)	SEE PAGE
R	1	1	**6E-1561**	1	CYLINDER AS	
M	2	1	**173-9779**	1	BOLT (M24X3X80-MM)	
	3	1	**6V-8237**	1	WASHER (26X44X4-MM THK)	
	4	1	**6E-4090**	1	PISTON	
	5	1	**6J-1972**	1	SEAL AS	
					(INCLUDES EXPANDER RING & SEAL)	
	6	1	**6J-5733**	1	RING-WEAR	
R	7	1	**9T-4213**	1	ROD AS	
	8	1	**4T-6907**	1	RING-WEAR	
	9	1	**167-2190**	1	SEAL AS-BUFFER	
					(INCLUDES BUFFER SEAL & BACKUP RING)	
	10	1	**167-2300**	1	SEAL-U-CUP	
	11	1	**167-2452**	1	SEAL-WIPER	
	12	1	**175-7896**	1	SEAL-O-RING	
	13	1	**6J-5731**	1	RING-BACKUP	
	14	1	**184-9843**	1	HEAD	

M-METRIC PART
R-REMFG PART MAY BE AVAILABLE

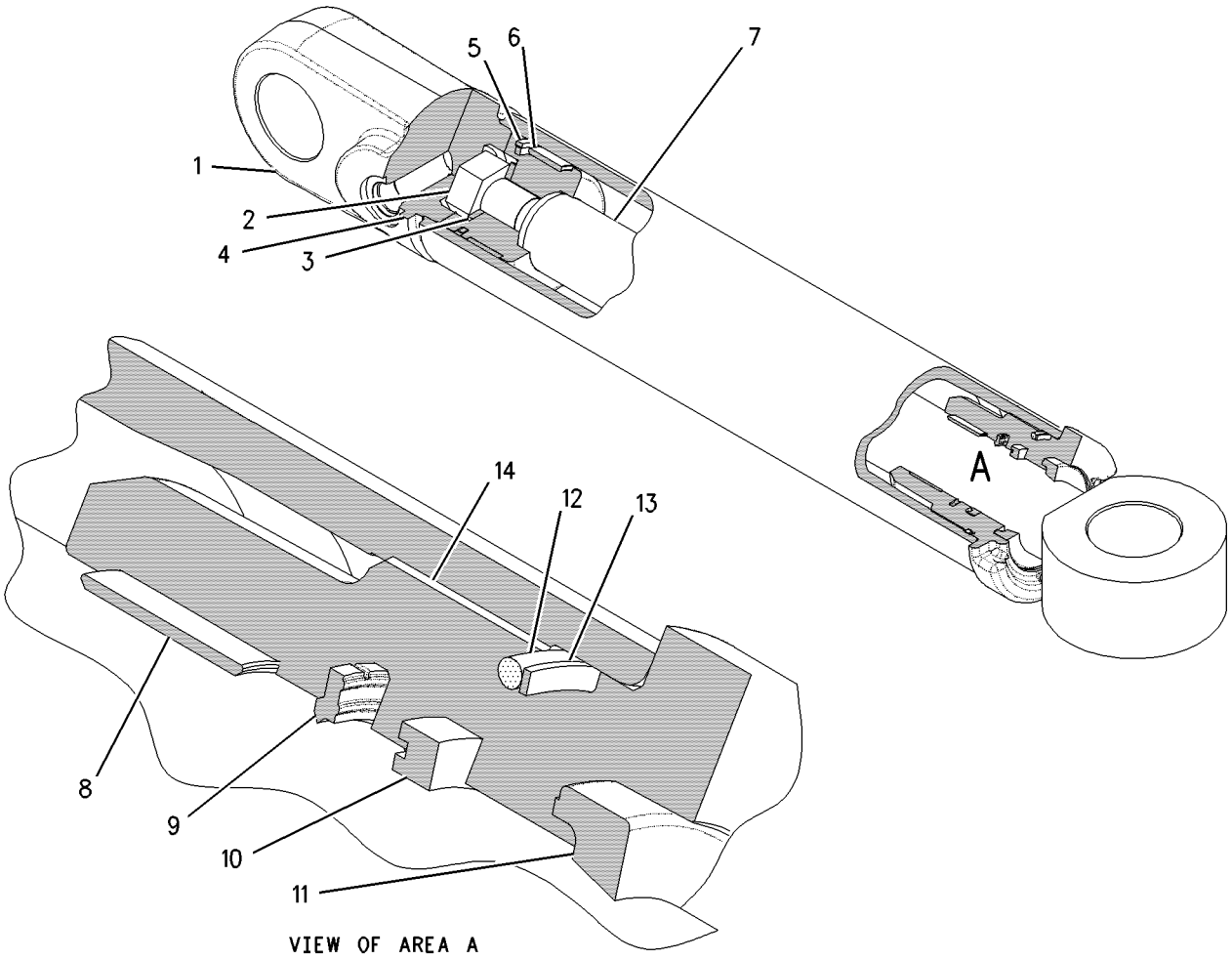

GRAPHIC #1 **<END>** g00764504

9T-8784 CYLINDER GP-ARTICULATION–LH

S/N: JJA1-UP
76.2-MM (3-IN) BORE X 284.3-MM (11.20-IN) STROKE
PART OF 112-5361 CYLINDER & MTG GP-ARTICULATION

SMCS-5265 **i03489644**

NOTE	REF NO	GRAPHIC REF	PART NUMBER	QTY	PART NAME 1 2 3 4 5 6 (PRODUCT LEVEL)	SEE PAGE
R	1	1	**9T-2452**	1	CYLINDER AS	
M	2	1	**173-9779**	1	BOLT (M24X3X80-MM)	
	3	1	**6V-8237**	1	WASHER (26X44X4-MM THK)	
	4	1	**6E-4090**	1	PISTON	
J	5	1	**6J-1972**	1	SEAL AS	
J	6	1	**6J-5733**	1	RING-WEAR	
R	7	1	**9T-4213**	1	ROD AS	
J	8	1	**4T-6907**	1	RING-WEAR	
CJ	9	1	**167-2190**	1	SEAL AS-BUFFER	
CJ	10	1	**167-2300**	1	SEAL-U-CUP	
J	11	1	**231-3539**	1	SEAL-WIPER	
CJ	12	1	**175-7896**	1	SEAL-O-RING	
J	13	1	**6J-5731**	1	RING-BACKUP	
C	14	1	**184-9843**	1	HEAD	

C-CHANGE FROM PREVIOUS TYPE
J-KIT MARKED J INCLUDES PARTS MARKED J
M-METRIC PART
R-REMFG PART MAY BE AVAILABLE

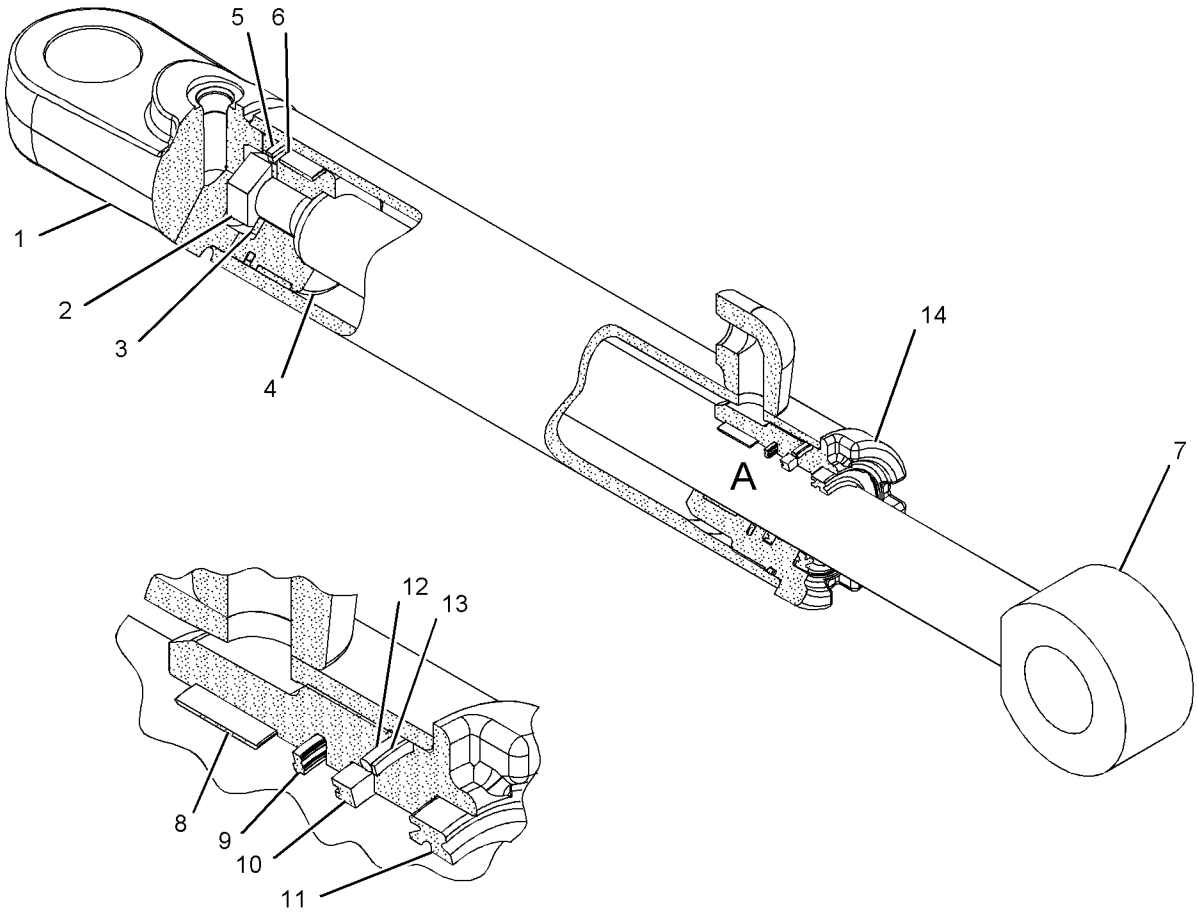

VIEW OF AREA A

GRAPHIC #1 **<END>** g01069017

6E-1343 CYLINDER GP-CENTERSHIFT

S/N: JJA1-UP
76.2-MM (3-IN) BORE X 630-MM (24.8-IN) STROKE
PART OF 8X-1944 CYLINDER & MTG GP-CENTERSHIFT

SMCS-5223 **i03489860**

NOTE	REF NO	GRAPHIC REF	PART NUMBER	QTY	PART NAME 1 2 3 4 5 6 (PRODUCT LEVEL)	SEE PAGE
	1	1	**6E-1344**	1	CYLINDER AS	
M	2	1	**173-9683**	1	BOLT (M30X3.5X90-MM)	
	3	1	**3S-7023**	1	WASHER (34X57X6-MM THK)	
	4	1	**6E-1131**	1	PISTON	
	5	1	**6E-1346**	1	ROD AS	
	6	1	**175-7896**	1	SEAL-O-RING	
	7	1	**6J-5731**	1	RING-BACKUP	
	8	1	**148-2593**	1	HEAD	
	9	1	**6J-5733**	1	RING-WEAR	
	10	1	**6J-1972**	1	SEAL AS	
	11	1	**229-9382**	1	SEAL-WIPER	
	12	1	**167-2304**	1	SEAL-U-CUP	
	13	1	**167-2195**	1	SEAL AS-BUFFER	
	14	1	**4T-5613**	1	RING-WEAR	

M-METRIC PART

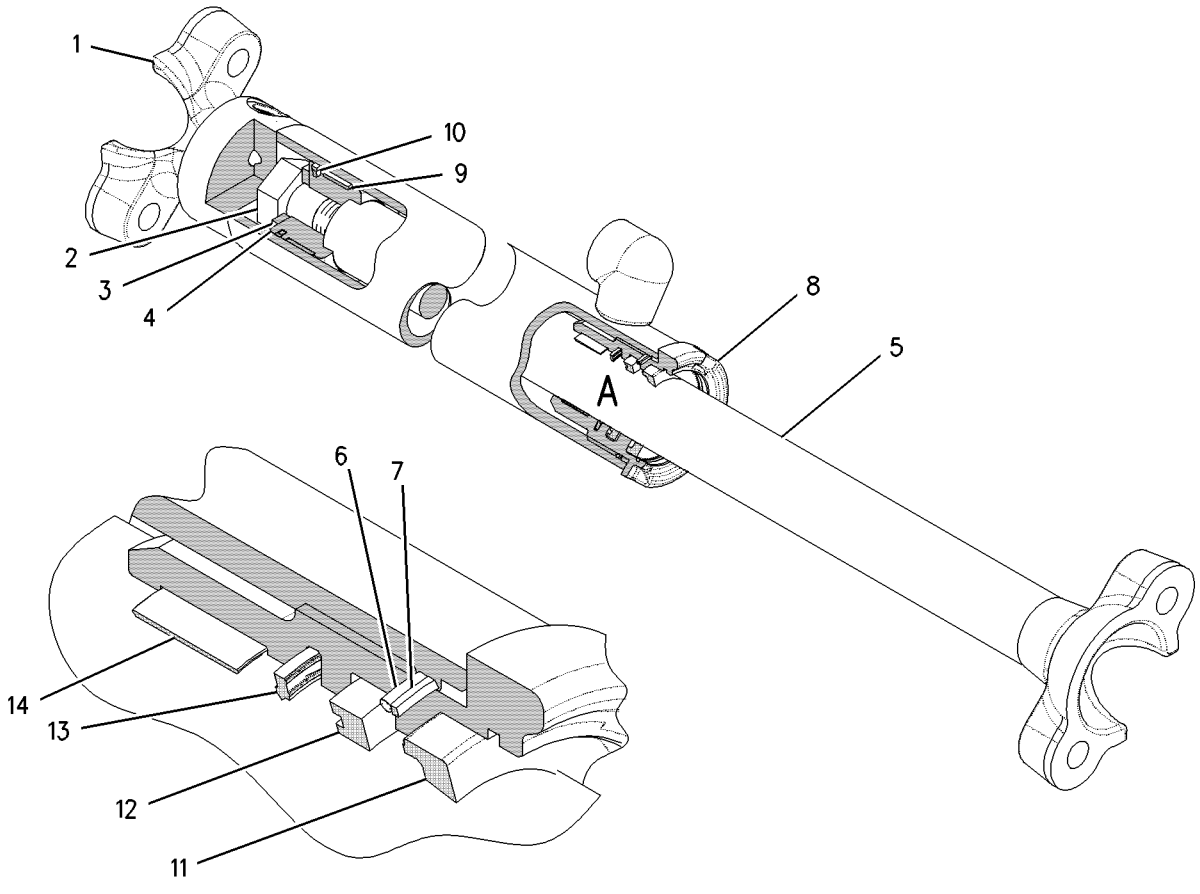

VIEW OF AREA A

GRAPHIC #1 **<END>** g00762040

HYDRAULIC SYSTEM

131-7191 CYLINDER GP-HYDRAULIC

S/N: JJA1-UP
69.85-MM (2.75-IN) BORE X 307-MM (12.09-IN) STROKE
PART OF 8X-1943 CYLINDER & MTG GP-BLADE TIP
ALSO AN ATTACHMENT

SMCS-7562 **i03490120**

NOTE	REF NO	GRAPHIC REF	PART NUMBER	QTY	PART NAME 1 2 3 4 5 6 (PRODUCT LEVEL)	SEE PAGE
	1	1	**131-7194**	1	CYLINDER AS	
		1	**2D-8652**	1	BEARING	
M	2	1	**173-9685**	1	BOLT (M20X2.5X70-MM)	
	3	1	**8T-3282**	1	WASHER-HARD (22X35X3.5-MM THK)	
	4	1	**5J-7010**	1	SEAL AS	
	5	1	**8J-0112**	1	RING-WEAR	
	6	1	**9T-2457**	1	PISTON	
	7	1	**175-7895**	1	SEAL-O-RING	
	8	1	**4J-9225**	1	RING-BACKUP	
	9	1	**6E-4940**	1	HEAD	
	10	1	**131-7195**	1	ROD AS	
		1	**2D-8652**	1	BEARING	
	11	1	**4T-6780**	1	RING-WEAR	
	12	1	**167-2186**	1	SEAL AS-BUFFER	
	13	1	**167-2294**	1	SEAL-U-CUP	
	14	1	**226-8202**	1	SEAL-WIPER	

M-METRIC PART

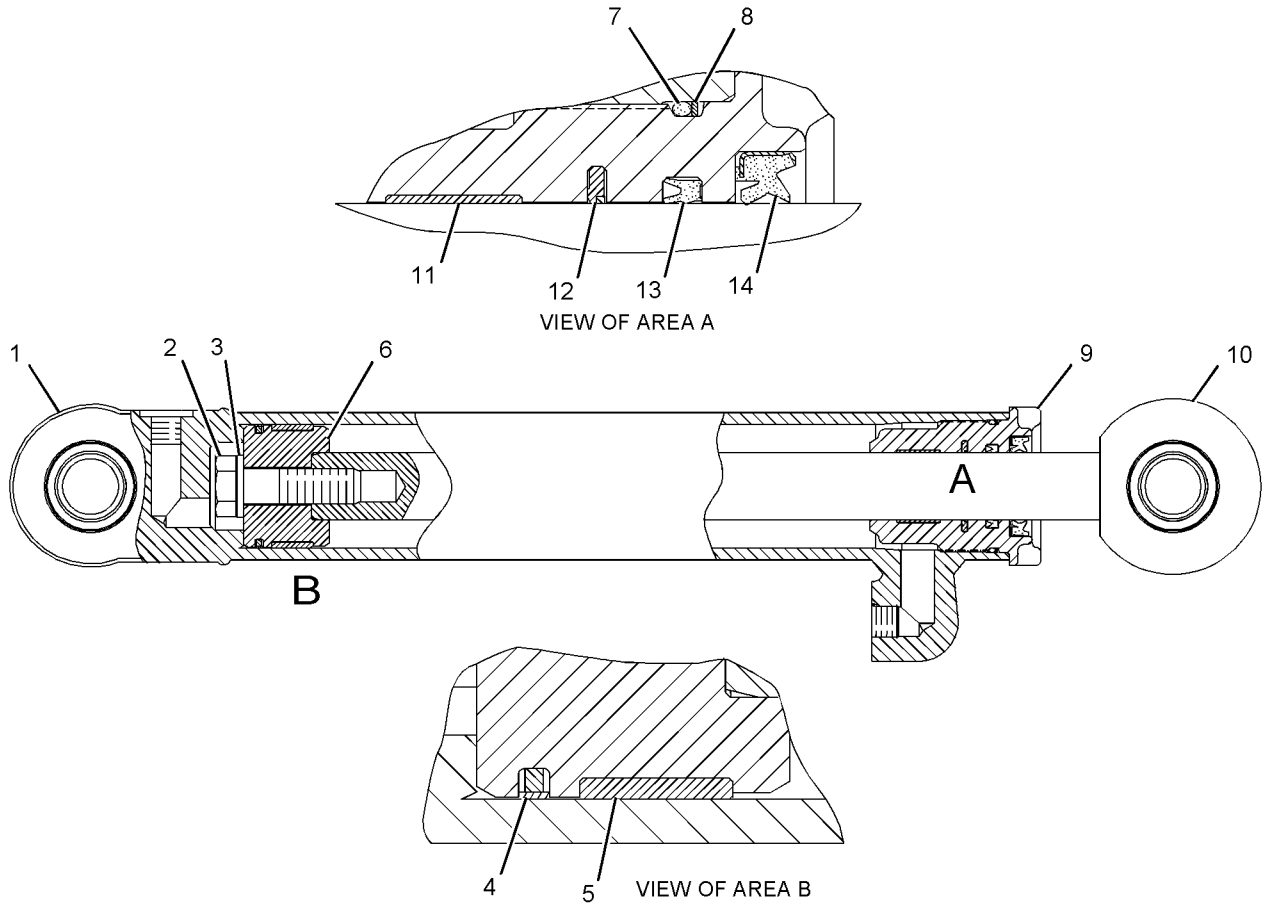

GRAPHIC #1 **<END>** g01097877

132-4929 CYLINDER GP-LIFT–BLADE

S/N: JJA1-UP
76.2-MM (3-IN) BORE X 1245-MM (49.02-IN) STROKE
PART OF 8X-1947 CYLINDER & MTG GP-BLADE LIFT

SMCS-5102 **i02108887**

NOTE	REF NO	GRAPHIC REF	PART NUMBER	QTY	PART NAME 1 2 3 4 5 6 (PRODUCT LEVEL)	SEE PAGE
R	1	1	**132-4928**	1	CYLINDER AS	
		1	**8J-6384**	2	BEARING-SLEEVE	
M	2	1	**173-9683**	1	BOLT (M30X3.5X90-MM)	
	3	1	**3S-7023**	1	WASHER (34X57X6-MM THK)	
	4	1	**6J-1972**	1	SEAL AS	
	5	1	**6J-5733**	1	RING-WEAR	
	6	1	**6E-1131**	1	PISTON	
	7	1	**175-7896**	1	SEAL-O-RING	
	8	1	**6J-5731**	1	RING-BACKUP	
	9	1	**148-2593**	1	HEAD	
R	10	1	**123-3793**	1	ROD AS	
	11	1	**229-9382**	1	SEAL-WIPER	
	12	1	**167-2304**	1	SEAL-U-CUP	
	13	1	**167-2195**	1	SEAL AS-BUFFER	
	14	1	**4T-5613**	1	RING-WEAR	

M-METRIC PART
R-REMFG PART MAY BE AVAILABLE

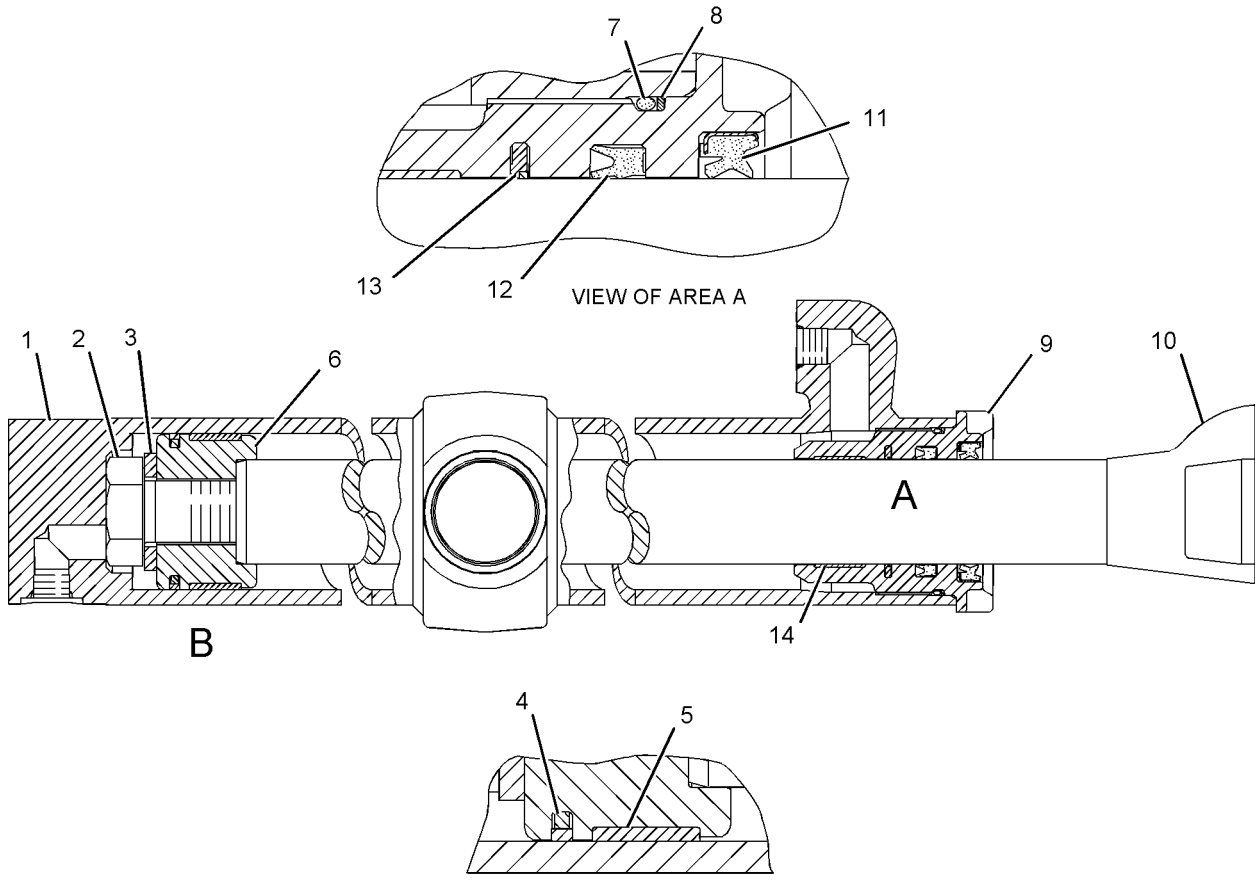

GRAPHIC #1

<END>

g01098705

HYDRAULIC SYSTEM

113-7754 CYLINDER GP-RIPPER

S/N: JJA1-UP
101.6-MM (4-IN)BORE X 482.6-MM (19-IN) STROKE
PART OF 285-4183 RIPPER AR
AN ATTACHMENT

SMCS-5352, 5356 **i01988942**

NOTE	REF NO	GRAPHIC REF	PART NUMBER	QTY	PART NAME 1 2 3 4 5 6 (PRODUCT LEVEL)	SEE PAGE
R	1	1	**113-7755**	1	CYLINDER AS	
	1A	1	**8J-9911**	2	BEARING-SLEEVE	
	1B	1	**9T-8958**	1	TRUNNION	
M	2	1	**173-9683**	1	BOLT (M30X3.5X90-MM)	
	3	1	**3S-7023**	1	WASHER (34X57X6-MM THK)	
	4	1	**5J-5402**	1	SEAL AS	
	5	1	**6J-2797**	1	RING-WEAR	
	6	1	**9T-3133**	1	PISTON	
R	7	1	**113-7756**	1	ROD AS	
	7A	1	**8J-9910**	1	BEARING-SLEEVE	
	8	1	**175-7900**	1	SEAL-O-RING	
	9	1	**2K-6830**	1	RING-BACKUP	
	10	1	**6E-0775**	1	HEAD	
	11	1	**4T-5613**	1	RING-WEAR	
	12	1	**167-2195**	1	SEAL AS-BUFFER	
	13	1	**167-2304**	1	SEAL-U-CUP	
	14	1	**229-9382**	1	SEAL-WIPER	

M-METRIC PART
R-REMFG PART MAY BE AVAILABLE

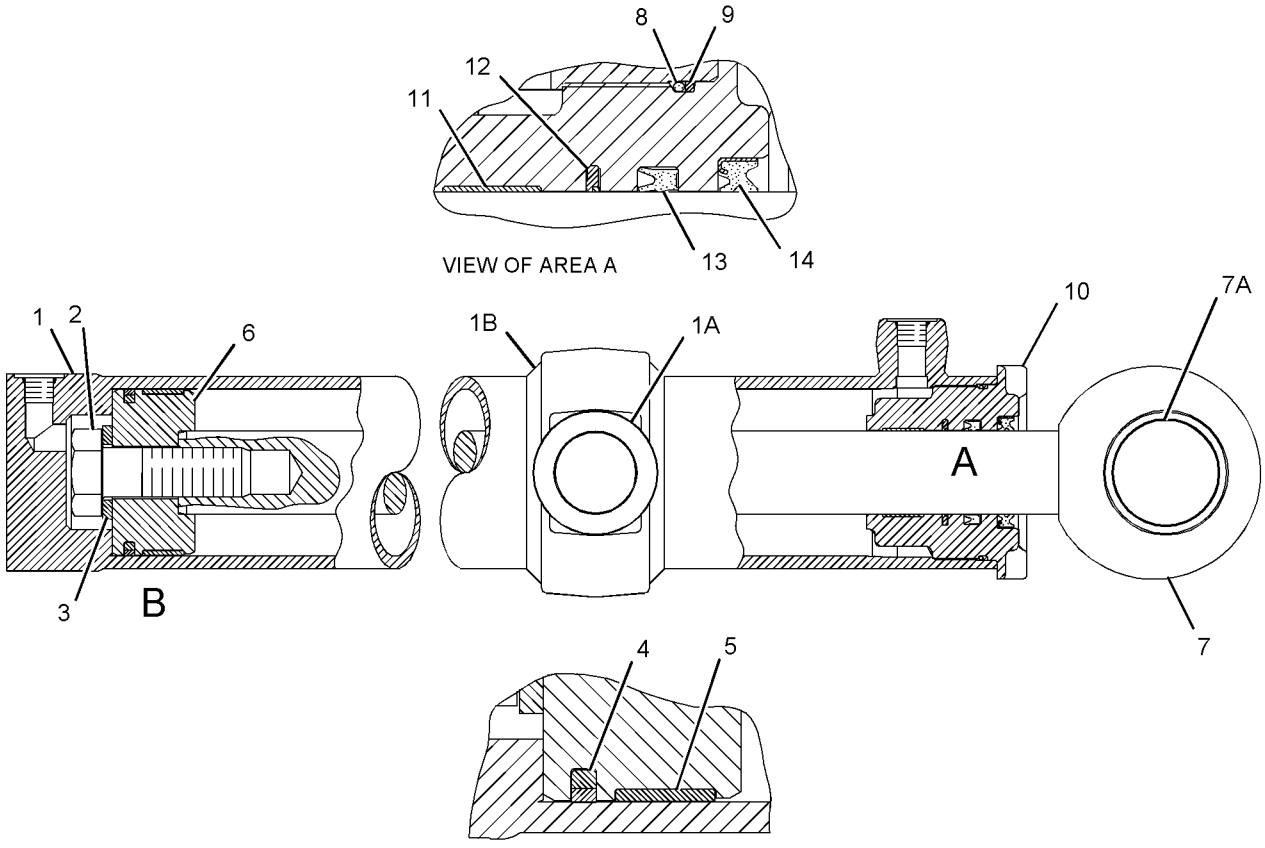

GRAPHIC #1

<END>

g01069015

HYDRAULIC SYSTEM

165-2510 CYLINDER GP-SCARIFIER

S/N: JJA1-UP
76.2-MM (3-IN) BORE X 406.5-MM (16-IN) STROKE
PART OF 8W-2913 CYLINDER & MTG GP-SCARIFIER
AN ATTACHMENT

SMCS-5213 **i03490141**

NOTE	REF NO	GRAPHIC REF	PART NUMBER	QTY	PART NAME 1 2 3 4 5 6 (PRODUCT LEVEL)	SEE PAGE
	1	1	**9T-4211**	1	PISTON	
	2	1	**168-9108**	1	CYLINDER AS	
	3	1	**168-9110**	1	ROD AS	
	4	1	**184-9843**	1	HEAD	
	5	1	**167-2190**	1	SEAL AS-BUFFER	
	6	1	**167-2300**	1	SEAL-U-CUP	
	7	1	**231-3539**	1	SEAL-WIPER	
M	8	1	**173-9779**	1	BOLT (M24X3X80-MM)	
	9	1	**175-7896**	1	SEAL-O-RING	
	10	1	**4T-6907**	1	RING-WEAR	
	11	1	**6J-1972**	1	SEAL AS	
	12	1	**6J-5731**	1	RING-BACKUP	
	13	1	**6J-5733**	1	RING-WEAR	
	14	1	**6V-8237**	1	WASHER (26X44X4-MM THK)	

M-METRIC PART

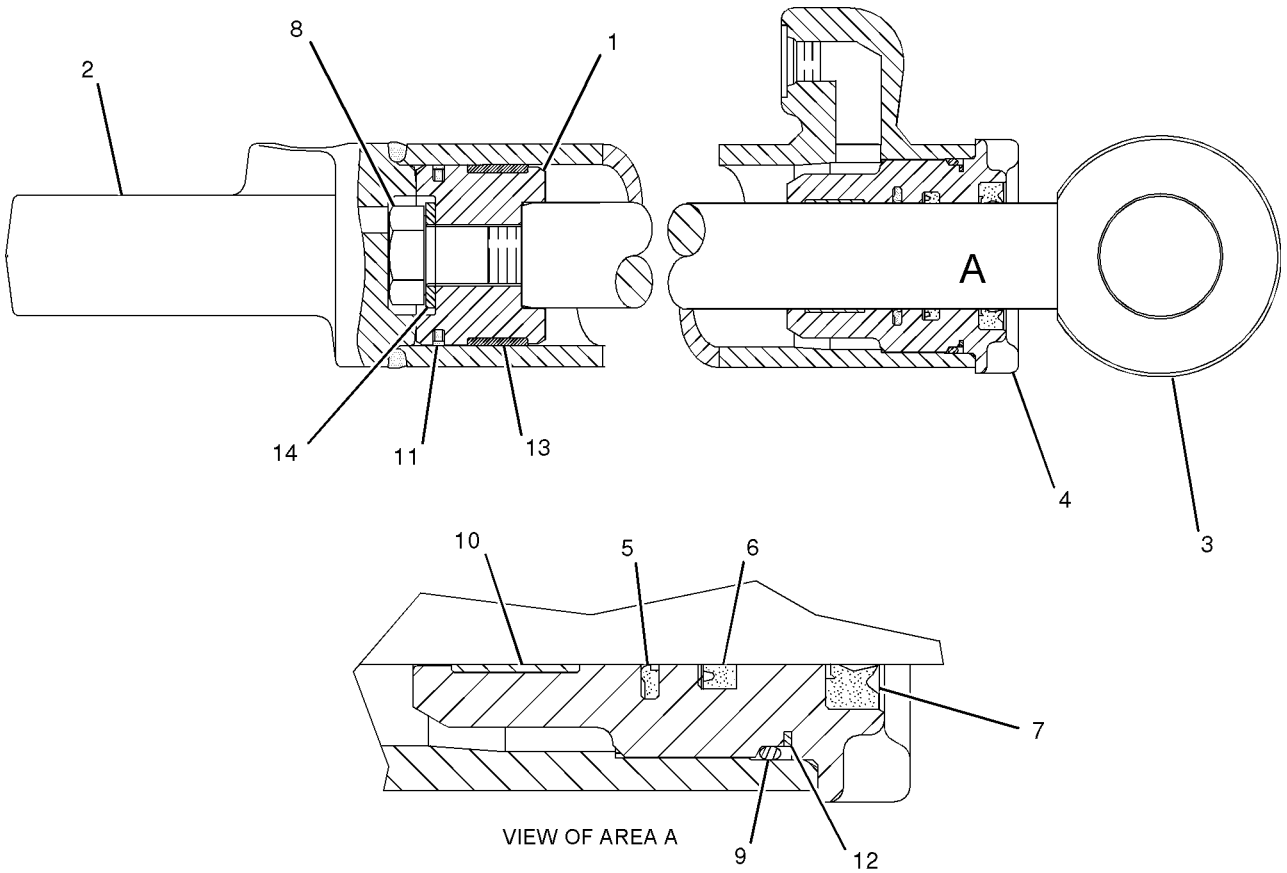

GRAPHIC #1 **<END>** g01045248

112-5575 CYLINDER GP-SIDESHIFT

S/N: JJA1-UP
76.2-MM (3-IN) BORE X 1185-MM (46.66-IN) STROKE
PART OF 112-7463 CYLINDER & MTG GP-SIDESHIFT
ALSO AN ATTACHMENT

SMCS-5229 **i02503930**

NOTE	REF NO	GRAPHIC REF	PART NUMBER	QTY	PART NAME 1 2 3 4 5 6 (PRODUCT LEVEL)	SEE PAGE
R	1	1	**9T-2482**	1	CYLINDER AS	
M	2	1	**8T-0667**	1	BOLT (M24X3X100-MM)	
	3	1	**150-1280**	1	WASHER-HARD (26X44X22-MM THK)	
	4	1	**9T-4211**	1	PISTON	
	5	1	**175-7896**	1	SEAL-O-RING	
	6	1	**6J-5731**	1	RING-BACKUP	
R	7	1	**112-9035**	1	ROD AS	
	8	1	**184-9843**	1	HEAD	
	9	1	**231-3539**	1	SEAL-WIPER	
	10	1	**167-2300**	1	SEAL-U-CUP	
	11	1	**167-2190**	1	SEAL AS-BUFFER	
	12	1	**4T-6907**	1	RING-WEAR	
	13	1	**6J-5733**	1	RING-WEAR	
	14	1	**6J-1972**	1	SEAL AS	

M-METRIC PART
R-REMFG PART MAY BE AVAILABLE

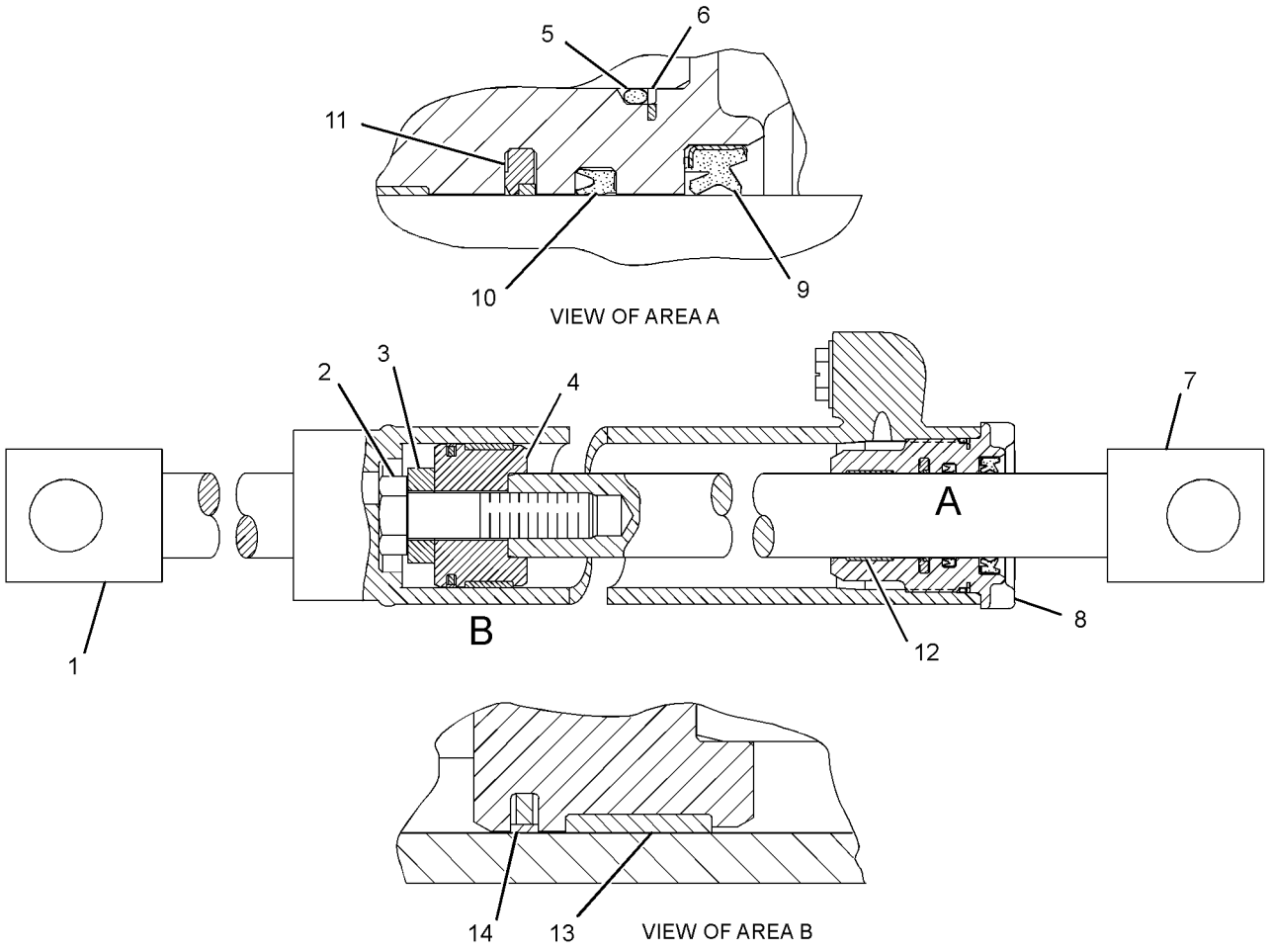

GRAPHIC #1 **<END>** g01259478

130-9041 CYLINDER GP-STEERING–LH

S/N: JJA1-UP
57.15-MM (2.25-IN) BORE X 267-MM (10.51-IN) STROKE
PART OF 8W-2290 CYLINDER & MTG GP-STEERING

SMCS-4303 **i03468227**

NOTE	REF NO	GRAPHIC REF	PART NUMBER	QTY	PART NAME 1 2 3 4 5 6 (PRODUCT LEVEL)	SEE PAGE
	1	1	**9T-2388**	1	PISTON	
R	2	1	**130-9044**	1	CYLINDER AS (LH)	
		1	*172-6876*	1	CAP AS	
		1	**005-8639**	1	BEARING-ALIGNING	
		1	**148-2592**	1	BOSS AS	
		1	**1N-5999**	1	PLUG-O-RING	
		1	**7J-0204**	1	SEAL-O-RING	
	3	1	**154-6579**	1	ROD	
	4	1	*162-6448*	2	PLUG AS	
					(EACH INCLUDES)	
		1	**1N-5999**	1	PLUG-O-RING	
		1	**7J-0204**	1	SEAL-O-RING	
	5	1	**167-2186**	1	SEAL AS-BUFFER	
	6	1	**167-2294**	1	SEAL-U-CUP	
M	7	1	**173-9685**	1	BOLT (M20X2.5X70-MM)	
	8	1	**175-7895**	1	SEAL-O-RING	
	9	1	**1U-3998**	1	SEAL AS	
	10	1	**226-8202**	1	SEAL-WIPER	
	11	1	**4J-9225**	1	RING-BACKUP	
	12	1	**7H-2423**	1	RING-WEAR	
	13	1	**8T-3282**	1	WASHER-HARD (22X35X3.5-MM THK)	
	14	1	**9T-3727**	1	HEAD	

M-METRIC PART
R-REMFG PART MAY BE AVAILABLE

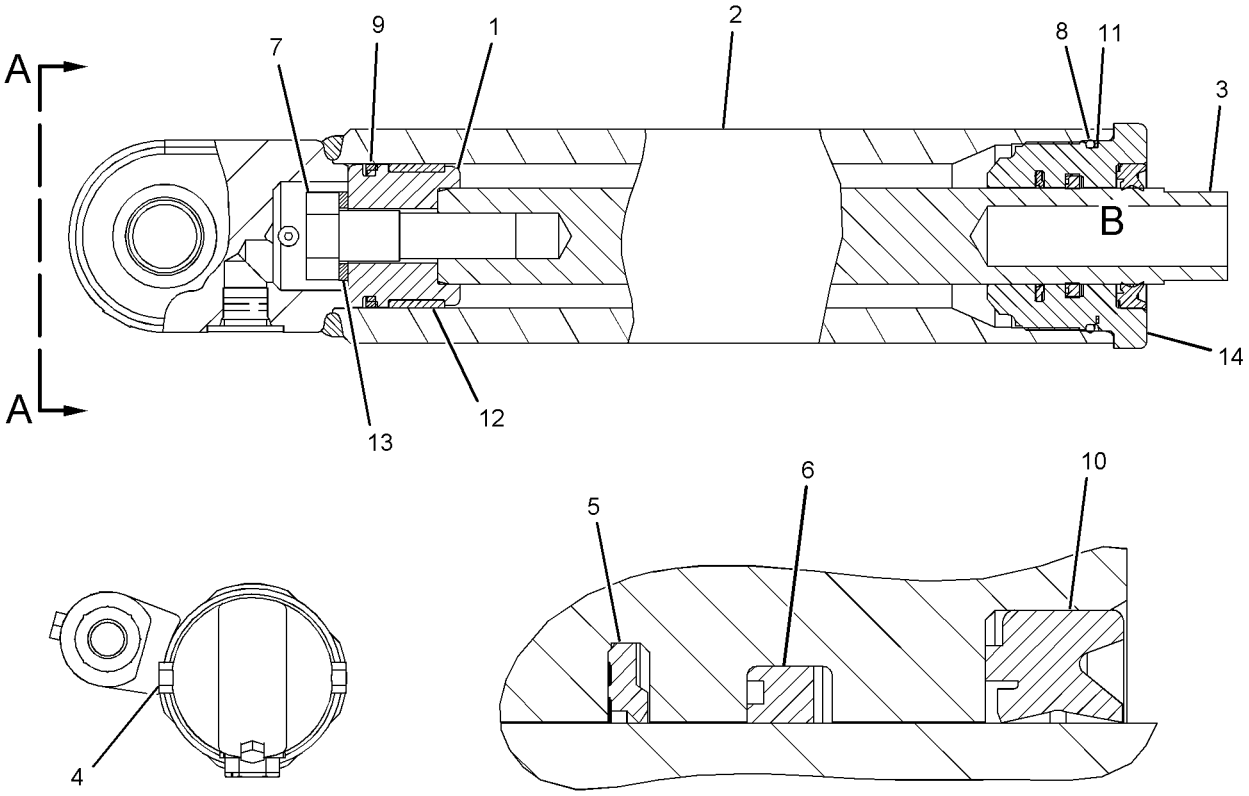

VIEW A-A

VIEW OF AREA B

GRAPHIC #1 **<END>** g01069447

130-9042 CYLINDER GP-STEERING–RH

S/N: JJA1-UP
57.15-MM (2.25-IN) BORE X 267-MM (10.51-IN) STROKE
PART OF 8W-2290 CYLINDER & MTG GP-STEERING

SMCS-4303 **i03618640**

NOTE	REF NO	GRAPHIC REF	PART NUMBER	QTY	PART NAME 1 2 3 4 5 6 (PRODUCT LEVEL)	SEE PAGE
	1	1	**9T-2388**	1	PISTON	
	2	1	**130-9045**	1	CYLINDER AS (RH)	
		1	**148-2592**	1	BOSS AS	
		1	**1N-5999**	1	PLUG-O-RING	
		1	**7J-0204**	1	SEAL-O-RING	
		1	*172-6876*	1	CAP AS	
		1	**005-8639**	1	BEARING-ALIGNING	
	3	1	**154-6579**	1	ROD	
	4	1	**167-2186**	1	SEAL AS-BUFFER	
	5	1	**167-2294**	1	SEAL-U-CUP	
	6	1	**226-8202**	1	SEAL-WIPER	
M	7	1	**173-9685**	1	BOLT (M20X2.5X70-MM)	
	8	1	**175-7895**	1	SEAL-O-RING	
	9	1	*162-6448*	2	PLUG AS	
					(EACH INCLUDES)	
		1	**1N-5999**	1	PLUG-O-RING	
		1	**7J-0204**	1	SEAL-O-RING	
	10	1	**1U-3998**	1	SEAL AS	
	11	1	**4J-9225**	1	RING-BACKUP	
	12	1	**7H-2423**	1	RING-WEAR	
	13	1	**8T-3282**	1	WASHER-HARD (22X35X3.5-MM THK)	
	14	1	**9T-3727**	1	HEAD	

M-METRIC PART

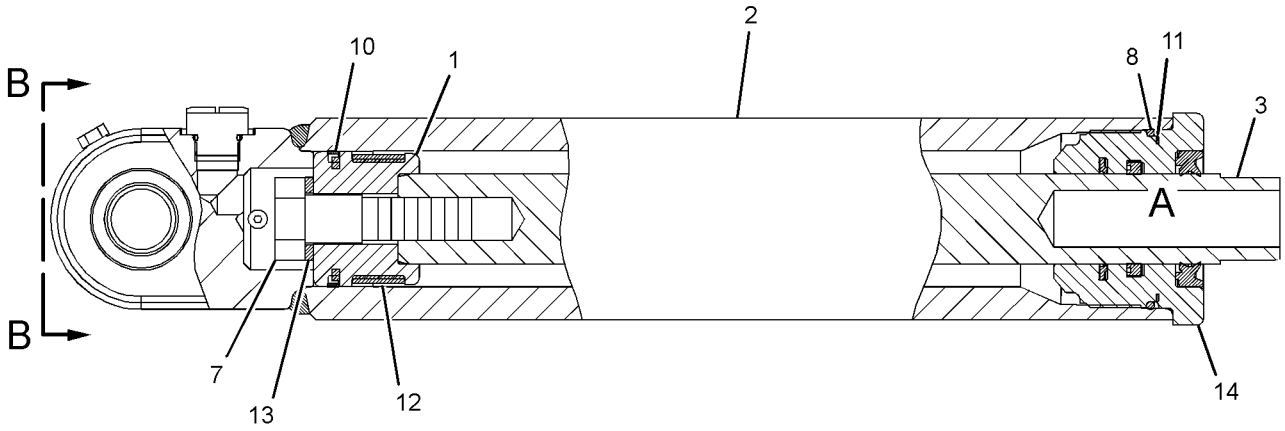

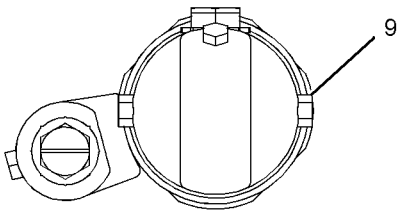

VIEW B-B

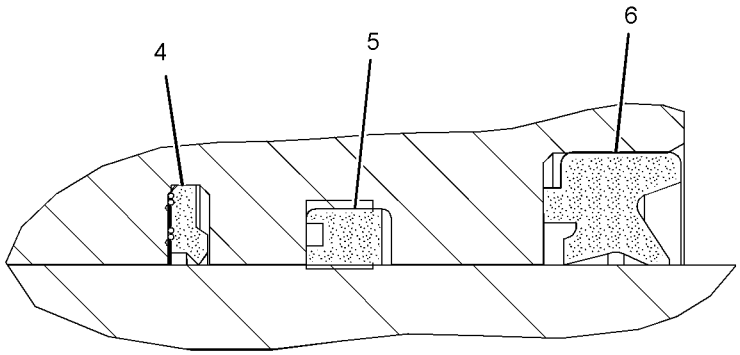

VIEW OF AREA A

GRAPHIC #1 **<END>** g01935793

HYDRAULIC SYSTEM

121-9242 CYLINDER GP-WHEEL LEAN

S/N: JJA1-UP
88.9-MM (3.5-IN) BORE X 149-MM (5.87-IN) STROKE
PART OF 8W-2737 CYLINDER & MTG GP-WHEEL LEAN

SMCS-5211 **i02108923**

NOTE	REF NO	GRAPHIC REF	PART NUMBER	QTY	PART NAME 1 2 3 4 5 6 (PRODUCT LEVEL)	SEE PAGE
	1	1	**123-1076**	1	CYLINDER AS	
M	2	1	**173-9683**	1	BOLT (M30X3.5X90-MM)	
	3	1	**9X-8399**	1	WASHER (33X56X6-MM THK)	
	4	1	**4T-8054**	1	SEAL AS	
	5	1	**7J-9885**	1	RING-WEAR	
	6	1	**9T-9040**	1	PISTON	
	7	1	**175-7898**	1	SEAL-O-RING	
	8	1	**4J-9224**	1	RING-BACKUP	
	9	1	**6E-4974**	1	HEAD	
	10	1	**121-9245**	1	ROD AS	
		1	**2G-8631**	1	BEARING-SLEEVE	
	11	1	**229-9382**	1	SEAL-WIPER	
	12	1	**167-2304**	1	SEAL-U-CUP	
	13	1	**167-2195**	1	SEAL AS-BUFFER	
	14	1	**4T-5613**	1	RING-WEAR	

M-METRIC PART

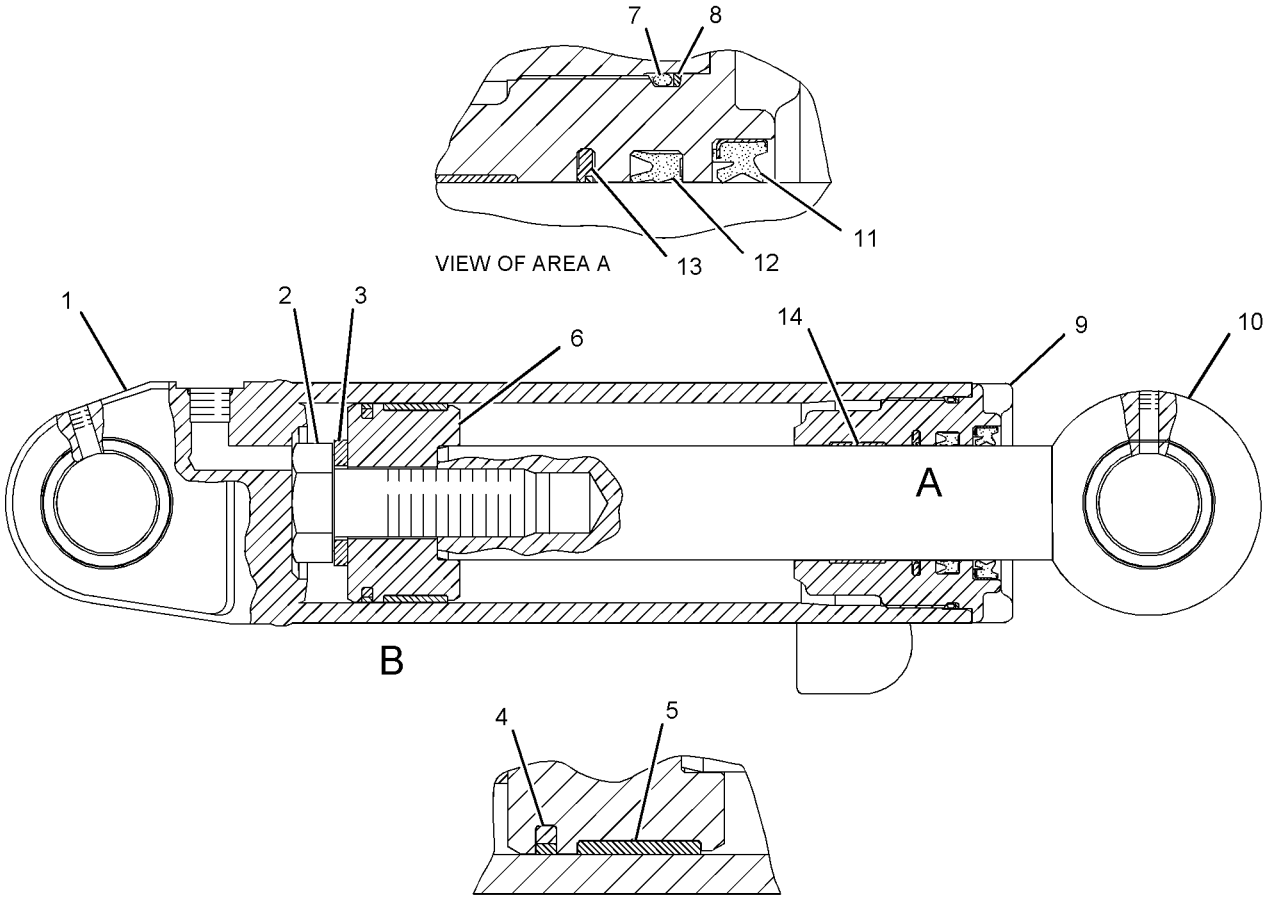

GRAPHIC #1

<END>

g01098821

108-4916 DETENT GP-CONTROL VALVE–PLOW, BULLDOZER LIFT

S/N: JJA1-UP
PART OF 6E-3031, 6E-3037 VALVE GP-CONTROL
AN ATTACHMENT

SMCS-5051 **i00131376**

NOTE	REF NO	GRAPHIC REF	PART NUMBER	QTY	PART NAME 1 2 3 4 5 6 (PRODUCT LEVEL)	SEE PAGE
	1	1	**101-1974**	1	RETAINER	
	2	1	**101-1975**	1	RETAINER	
	3	1	**102-7423**	1	SPRING	
	4	1	**5B-9318**	6	BALL	

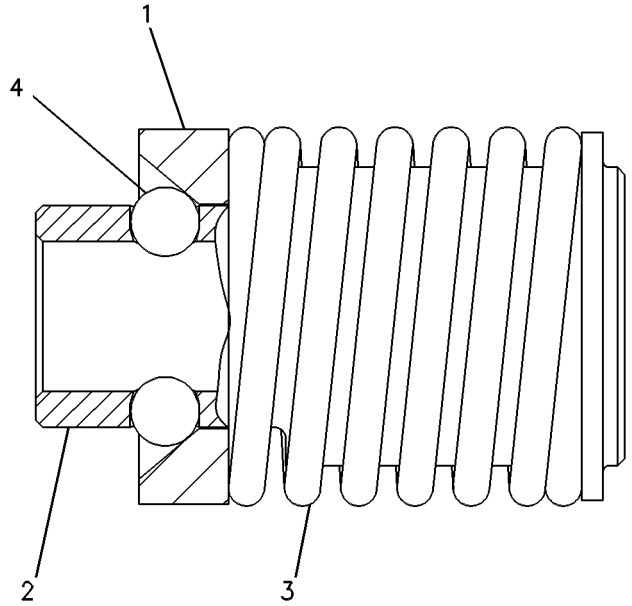

GRAPHIC #1 **<END>** g00108519

HYDRAULIC SYSTEM

253-4677 DRIVE GP-CIRCLE

S/N: JJA1-UP

PART OF 346-3710 GENERAL AR

SMCS-5207 **i03362502**

NOTE	REF NO	GRAPHIC REF	PART NUMBER	QTY	PART NAME 1 2 3 4 5 6 (PRODUCT LEVEL)	SEE PAGE
	1	2	**1B-4038**	2	CUP-BEARING	
	2	2	**1B-4046**	2	CONE-BEARING	
	3	1	**2G-0478**	5	DISC-FRICTION	
	4	2	**2G-6695**	1	BRACKET	
R	5	1	**5K-5288**	1	SEAL GP-DUO-CONE	
		1	**5K-5129**	2	RING-SEALING	
	6	1	**323-8674**	1	GEAR-WORM	
	7	1	**6G-5534**	1	COVER AS	
		1	**6G-5537**	1	BEARING	
	8	1	**6G-5538**	1	COVER	
	9	1	**6G-5542**	2	SPACER (119.2X178X9.3-MM THK)	
	10	1	**6G-6122**	1	SPRING-DISC	
	11	1	**6Y-7953**	6	DISC-FRICTION	
B	12	2	**7D-8983**	10	SHIM (0.005-IN THK)	
B	13	2	**7D-8984**	6	SHIM (0.007-IN THK)	
	14	1	**8D-7423**	1	WASHER-SPECIAL (1.906X3.19X1.6-MM THK)	
	15	1	**8D-7424**	1	SPACER (48X81X6-MM THK)	
	16	1	**8T-0336**	1	FITTING-PRESSURE RELIEF	
	17	2	**323-8675**	1	WORM-CIRCLE DRIVE	
	18	2	**9D-1491**	1	COUPLING	
Y	19	2	**105-3196**	1	MOTOR GP-GEROTOR (CIRCLE DRIVE)	384
	20	1	**253-4678**	1	HOUSING AS-DRIVE	
		1	**2D-8154**	4	STUD-TAPERLOCK (1/2-13X2.36-IN)	
		1	**8D-7426**	1	BEARING-SLEEVE	
		1	**286-2631**	4	STUD-TAPERLOCK	
	21	1	**261-8553**	1	PINION-CIRCLE DRIVE	
	22	1	**307-1958**	1	SHAFT-PINION DRIVE	
B	23	1	**307-1959**	6	SHIM (0.13-MM THK)	
B	24	1	**307-1960**	1	SHIM (0.25-MM THK)	
	25	1	**307-1961**	1	PLATE	
B	26	1	**307-1962**	4	SHIM (0.5-MM THK)	
	27	2	**0S-1585**	4	BOLT (1/2-13X1.5-IN)	
	28	1	**1A-1415**	1	NUT (23/4X17/8-THD)	
	29	1	**1B-5174**	1	PLUG-PIPE	
	30	2	**1F-7958**	4	NUT-FULL (1/2-13-THD)	
	31	2	**1H-7339**	1	SEAL-O-RING	
	32	1	**2B-0858**	1	PLUG-PIPE (OIL DRAIN)	
	33	2	**2H-9247**	1	SEAL-O-RING	
	34	1	**4F-9653**	1	SEAL-O-RING	
	35	2	**4H-6996**	1	PIN-SPRING	
	36	1	**5H-4909**	1	SEAL-O-RING	
	37	1	**5K-8454**	3	BOLT (1/2-13X1.12-IN)	
	38	1,2	**5P-8245**	16	WASHER-HARD (13.5X25.5X3-MM THK)	
	39	1	**5S-7379**	4	BOLT (3/8-16X0.875-IN)	
	40	1	**6G-5539**	1	GASKET	
	41	1	**6G-5548**	1	SPACER (69.5X89X0.8-MM THK)	
	42	1	**6H-1717**	5	BOLT (1/2-13X1.125-IN)	
M	43	1	**6V-5686**	3	BOLT (M16X2X50-MM)	
	44	1	**8D-5054**	3	WASHER-HARD (17X30X3-MM THK)	
	45	1	**8D-7425**	2	WASHER-THRUST (2.8X4.25X0.12-MM THK)	
	46	1	**8T-4896**	4	WASHER-HARD (10.2X18.5X2.5-MM THK)	

B-USE AS REQUIRED
M-METRIC PART
R-REMFG PART MAY BE AVAILABLE
Y-SEPARATE ILLUSTRATION

253-4677 DRIVE GP-CIRCLE *(contd.)* i03362502

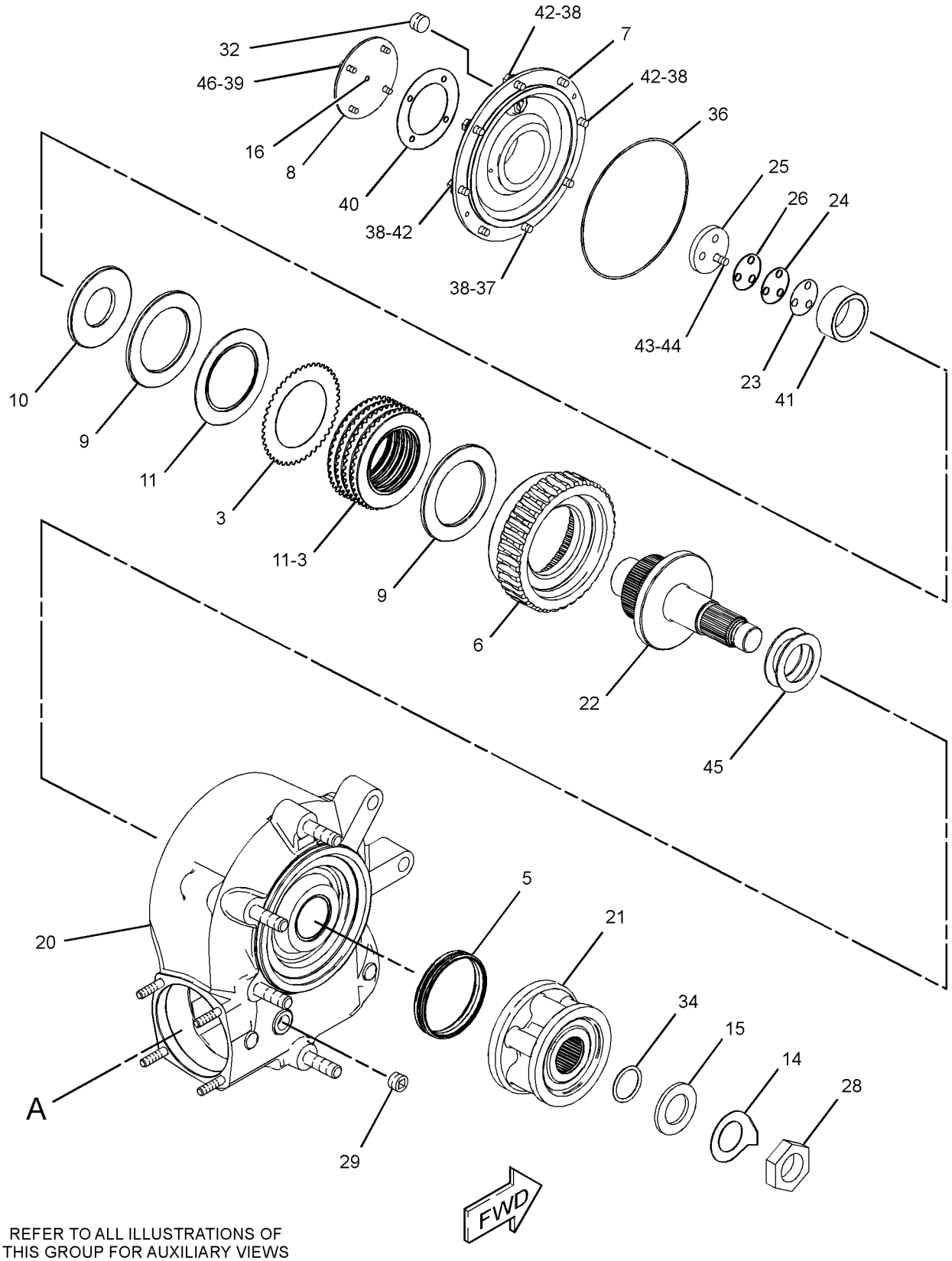

REFER TO ALL ILLUSTRATIONS OF
THIS GROUP FOR AUXILIARY VIEWS

GRAPHIC #1 g01426054

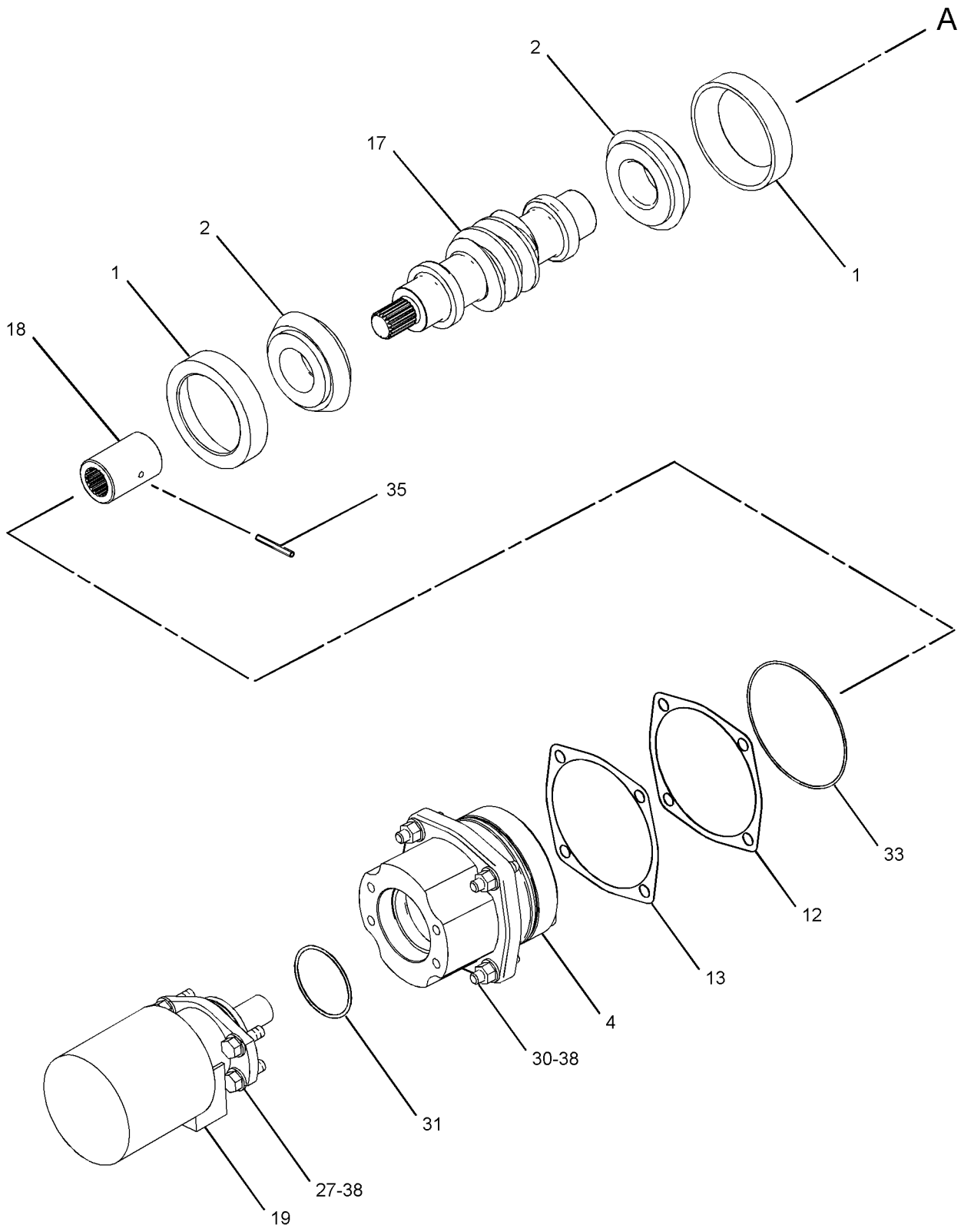

GRAPHIC #2 **<END>** g01426070

HYDRAULIC SYSTEM

166-3336 LINES GP-ACCUMULATOR

S/N: JJA1-UP
PART OF 285-4154 ACCUMULATOR AR-BLADE CUSHION
AN ATTACHMENT

SMCS-5057 **i01680380**

NOTE	REF NO	GRAPHIC REF	PART NUMBER	QTY	PART NAME 1 2 3 4 5 6 (PRODUCT LEVEL)	SEE PAGE
	1	1	**9D-0953**	1	SPACER (0.406X0.75X0.88-IN THK)	
I	2	1	**108-0706**	1	HOSE AS	
Y	3	1	**112-2240**	2	MANIFOLD GP-CONTROL (BLADE CUSHION)	380
I	4	1	**134-0744**	1	HOSE AS	
I	5	1	**134-0746**	1	HOSE AS	
I	6	1	**151-9849**	1	HOSE AS	
	7	1	*171-6466*	2	UNION AS	
					(EACH INCLUDES)	
		1	**5P-9810**	1	UNION	
		1	**3D-2824**	2	SEAL-O-RING	
	8	1	*148-8328*	2	CONNECTOR AS	
					(EACH INCLUDES)	
		1	**6V-8633**	1	CONNECTOR	
		1	**3D-2824**	1	SEAL-O-RING	
		1	**6V-8398**	1	SEAL-O-RING	
	9	1	*148-8370*	1	ELBOW AS	
		1	**6V-9851**	1	ELBOW	
		1	**6V-8398**	1	SEAL-O-RING	
	10	1	*148-8444*	2	TEE AS-SWIVEL	
					(EACH INCLUDES)	
		1	**6V-9837**	1	TEE-SWIVEL	
		1	**6V-8398**	2	SEAL-O-RING	
	11	1	**6D-4244**	2	CLIP	
	12	1	**7X-0289**	1	BOLT (3/8-16X1.875-IN)	
	13	1	**8T-4896**	1	WASHER-HARD (10.2X18.5X2.5-MM THK)	

I-REFER TO HYDRAULIC INFORMATION SYSTEM
Y-SEPARATE ILLUSTRATION

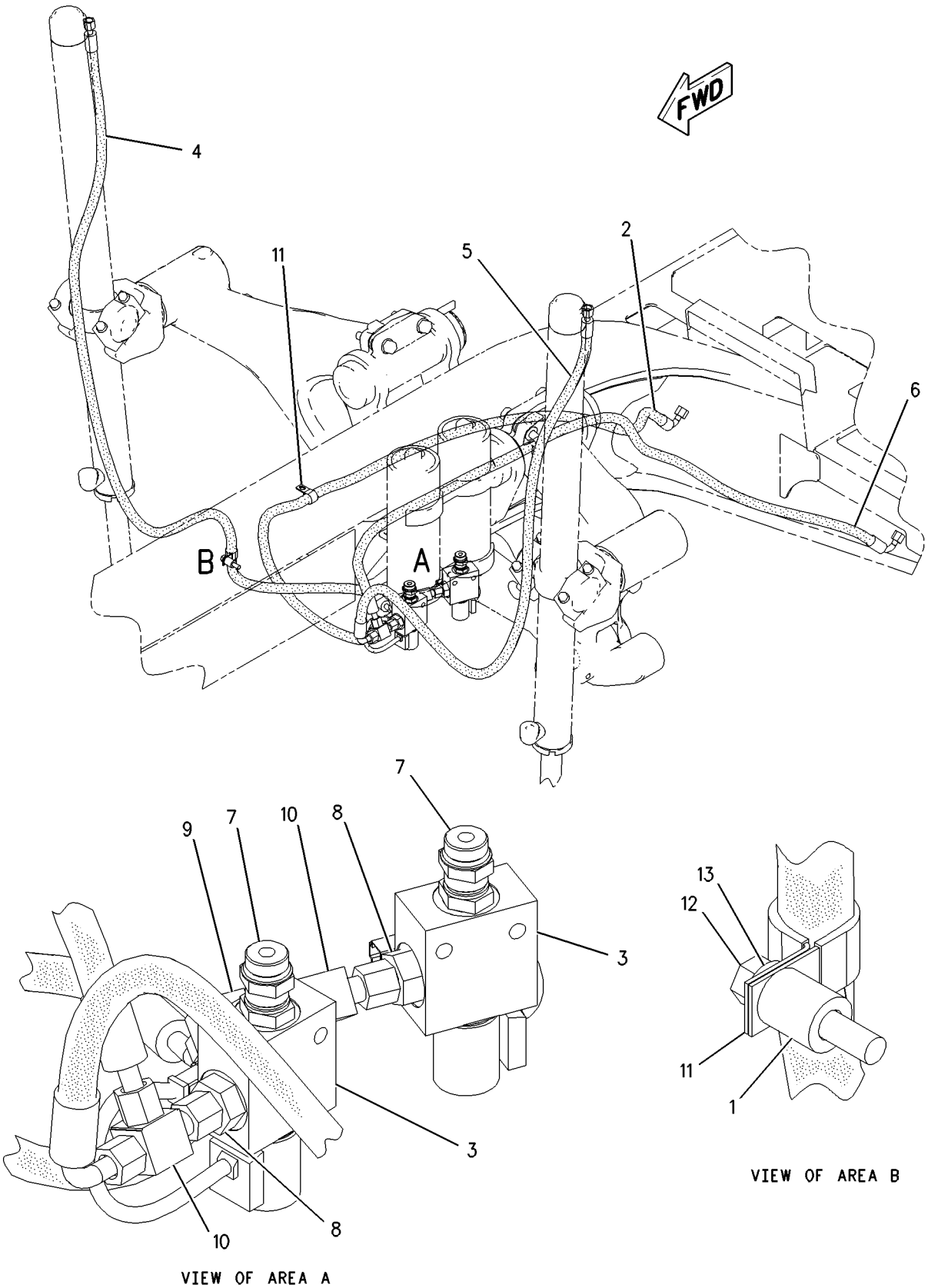

GRAPHIC #1 **<END>** g00889359

HYDRAULIC SYSTEM

8X-6070 LINES GP-HYDRAULIC–SCARIFIER

S/N: JJA1-UP
PART OF 340-5009 SCARIFIER AR
AN ATTACHMENT

SMCS-5057 **i01459260**

NOTE	REF NO	GRAPHIC REF	PART NUMBER	QTY	PART NAME 1 2 3 4 5 6 (PRODUCT LEVEL)	SEE PAGE
	1	1	**2B-0941**	1	SPACER (10.5X19X19-MM THK)	
	2	1	**4J-5468**	1	CLAMP	
I	3	1	**112-3199**	1	HOSE AS	
I	4	1	**112-3200**	1	HOSE AS	
	5	1	*164-5605*	1	CONNECTOR AS	
		1	**3K-0360**	1	SEAL-O-RING	
		1	**6V-8397**	1	SEAL-O-RING	
		1	**8T-0076**		CONNECTOR	
	6	1	*148-8318*	2	CONNECTOR AS	
					(EACH INCLUDES)	
		1	**3K-0360**	1	SEAL-O-RING	
		1	**6V-8397**	1	SEAL-O-RING	
		1	**6V-8634**	1	CONNECTOR	
	7	1	*148-8374*	1	ELBOW AS	
		1	**3K-0360**	1	SEAL-O-RING	
		1	**6V-8397**	1	SEAL-O-RING	
		1	**6V-8723**	1	ELBOW	
	8	1	**6D-4247**	1	CLIP	
	9	1	**7X-0289**	1	BOLT (3/8-16X1.875-IN)	
	10	1	**8T-4896**	1	WASHER-HARD (10.2X18.5X2.5-MM THK)	

I-REFER TO HYDRAULIC INFORMATION SYSTEM

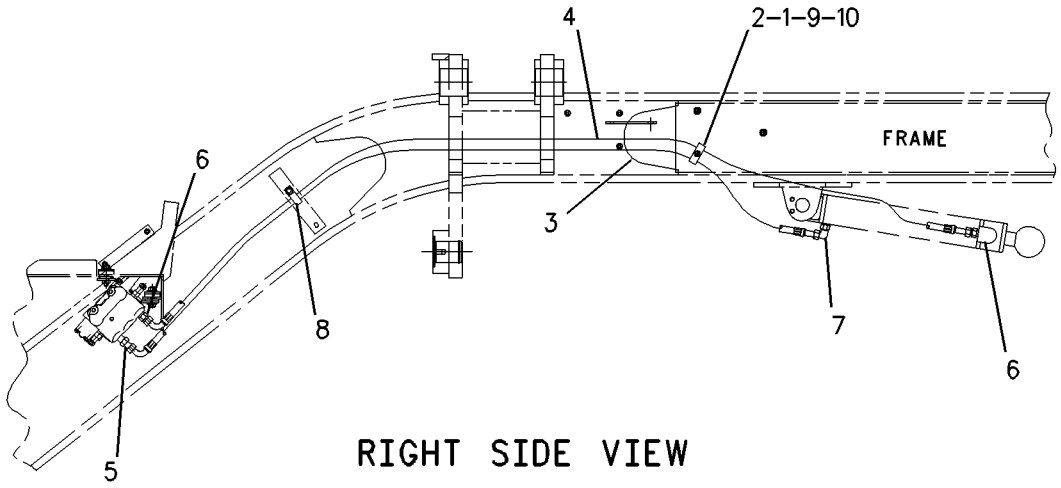

RIGHT SIDE VIEW

GRAPHIC #1 **<END>** g00633579

HYDRAULIC SYSTEM

106-4787 LINES GP-HYDRAULIC–LH

S/N: JJA1-UP
4 CIRCUITS
PART OF 329-3825 BLADE & TIP AR-POWER, 346-3710 GENERAL AR
ALSO AN ATTACHMENT

SMCS-5057 **i03543650**

NOTE	REF NO	GRAPHIC REF	PART NUMBER	QTY	PART NAME 1 2 3 4 5 6 (PRODUCT LEVEL)	SEE PAGE
	1	2	**2A-7081**	1	GUIDE AS-HOSE	
	2	1	**2B-0941**	3	SPACER (10.5X19X19-MM THK)	
	3	2	**2G-5493**	1	CLAMP	
	4	1	**4J-5468**	6	CLAMP	
	5	1	**5D-2645**	3	CLAMP	
I	6	2	**5T-9986**	1	HOSE AS	
I	7	1	**8W-4193**	1	HOSE AS	
I	8	2	**8W-4194**	1	HOSE AS	
	9	1	**9D-0953**	4	SPACER (0.406X0.75X0.88-IN THK)	
I	10	2	**9R-1183**	1	HOSE AS	
I	11	2	**107-8143**	2	HOSE AS	
I	12	2	**107-8144**	2	HOSE AS	
I	13	2	**107-8149**	2	HOSE AS	
I	14	2	**107-8150**	1	HOSE AS	
	15	1	**108-1610**	4	CLAMP	
I	16	2	**134-0747**	1	HOSE AS	
	17	1	**135-0451**	1	PLATE	
	18	1	**135-0452**	2	PLATE	
	19	2	**163-4195**	1	SLEEVE	
	20	2	*164-5605*	1	CONNECTOR AS	
		2	**3K-0360**	1	SEAL-O-RING	
		2	**6V-8397**	1	SEAL-O-RING	
		2	**8T-0076**	1	CONNECTOR	
	21	2	*164-5608*	2	CONNECTOR AS	
					(EACH INCLUDES)	
		2	**3K-0360**	1	SEAL-O-RING	
		2	**6V-8398**	1	SEAL-O-RING	
		2	**8T-1687**	1	CONNECTOR	
CY	22	2	**260-6502**	1	SWIVEL GP (CIRCLE DRIVE)	395
	23	1,2	*148-8318*	8	CONNECTOR AS	
					(EACH INCLUDES)	
		1,2	**3K-0360**	1	SEAL-O-RING	
		1,2	**6V-8397**	1	SEAL-O-RING	
		1,2	**6V-8634**	1	CONNECTOR	
	24	2	*148-8340*	1	CONNECTOR AS	
		2	**3K-0360**	1	SEAL-O-RING	
		2	**6V-8398**	1	SEAL-O-RING	
		2	**6V-8639**	1	CONNECTOR	
	25	1	*148-8358*	2	ELBOW AS	
					(EACH INCLUDES)	
		1	**2M-9780**	1	SEAL-O-RING	
		1	**6V-8398**	1	SEAL-O-RING	
		1	**6V-8624**	1	ELBOW	
	26	1,2	*148-8363*	6	ELBOW AS	
					(EACH INCLUDES)	
		1,2	**3K-0360**	1	SEAL-O-RING	
		1,2	**6V-9876**	1	ELBOW	
		1,2	**6V-8397**	1	SEAL-O-RING	
	27	1	*148-8364*	1	ELBOW AS	
		1	**3K-0360**	1	SEAL-O-RING	
		1	**6V-8398**	1	SEAL-O-RING	
		1	**6V-8625**	1	ELBOW	
	28	2	*148-8374*	3	ELBOW AS	
					(EACH INCLUDES)	

106-4787 **LINES GP-HYDRAULIC** *(contd.)* **i03543650**

NOTE	REF NO	GRAPHIC REF	PART NUMBER	QTY	PART NAME 1 2 3 4 5 6 (PRODUCT LEVEL)	SEE PAGE
		2	**3K-0360**	1	SEAL-O-RING	
		2	**6V-8397**	1	SEAL-O-RING	
		2	**6V-8723**	1	ELBOW	
	29	1,2	**1S-0994**	8	CLIP	
	30	2	**3B-4628**	2	PIN-COTTER	
B	31	2	**5P-1075**	4	WASHER-HARD (10.2X22.5X3-MM THK)	
	32	1,2	**5S-7379**	6	BOLT (3/8-16X0.875-IN)	
	33	1	**5S-7383**	3	BOLT (3/8-16X1.75-IN)	
	34	2	**6D-4244**	2	CLIP	
	35	1,2	**6V-8801**	6	NUT (3/8-16-THD)	
	36	2	**8D-9092**	1	PIN	
	37	1	**8T-2501**	2	BOLT (3/8-16X2-IN)	
	38	2	**8T-2502**	2	BOLT (3/8-16X1.125-IN)	
	39	2	**8T-4223**	4	WASHER-HARD (13.5X25.5X3-MM THK)	
CM	40	2	**8T-4648**	4	BOLT (M12X1.75X70-MM)	
	41	1,2	**8T-4896**	20	WASHER-HARD (10.2X18.5X2.5-MM THK)	
	42	2	**8T-4994**	2	WASHER-HARD (20X36.5X3.5-MM THK)	
	43	1	**8T-7008**	1	BOLT (3/8-16X3-IN)	
	44	2	**8T-9378**	1	BOLT (3/8-16X4-IN)	
	45	2	**9B-7237**	1	BOLT (3/8-16X1.25-IN)	
D	46	1	**5P-5931**		SEAL (0.45-M EACH)	

B-USE AS REQUIRED
C-CHANGE FROM PREVIOUS TYPE
D-ORDER BY THE METER
I-REFER TO HYDRAULIC INFORMATION SYSTEM
M-METRIC PART
Y-SEPARATE ILLUSTRATION

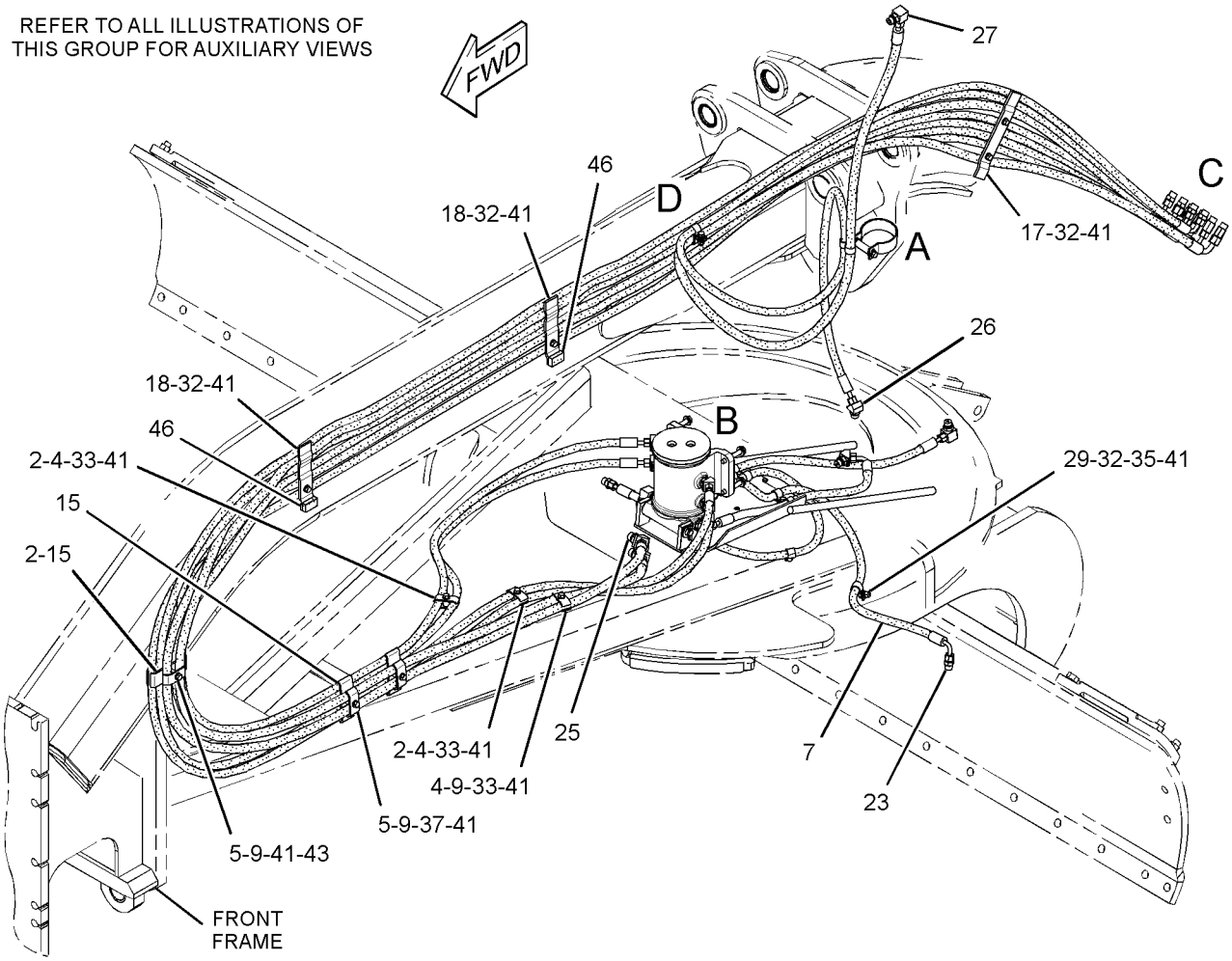

GRAPHIC #1 g01852953

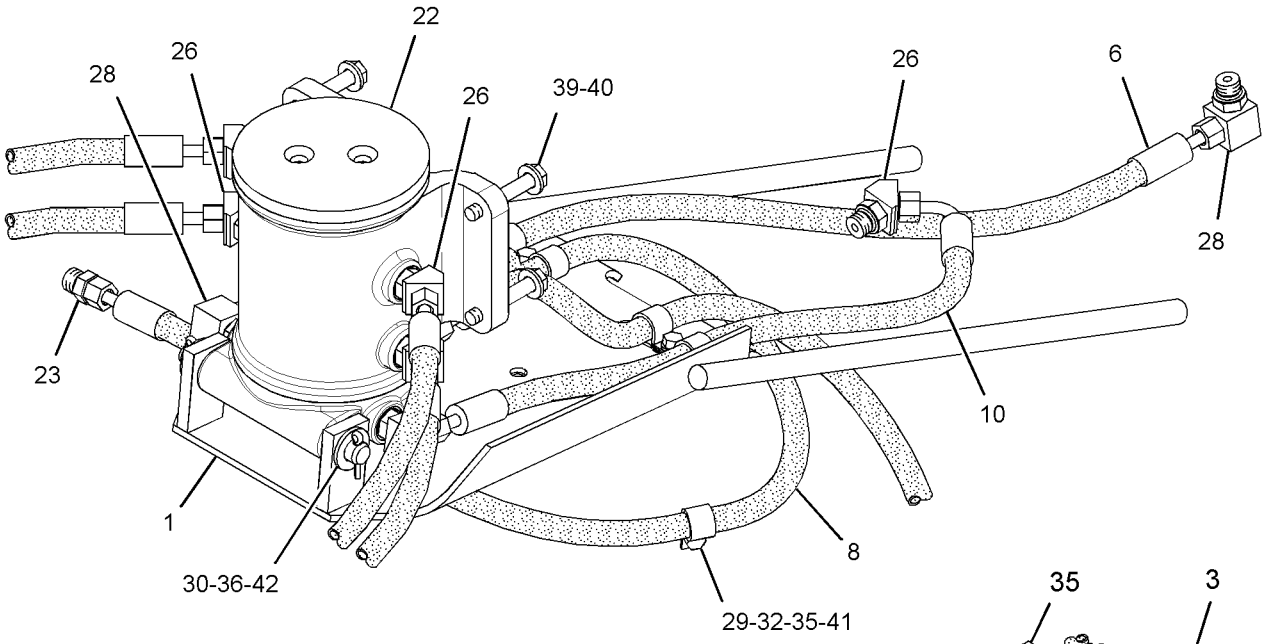

VIEW OF AREA B

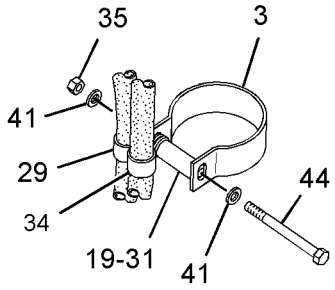

VIEW OF AREA A

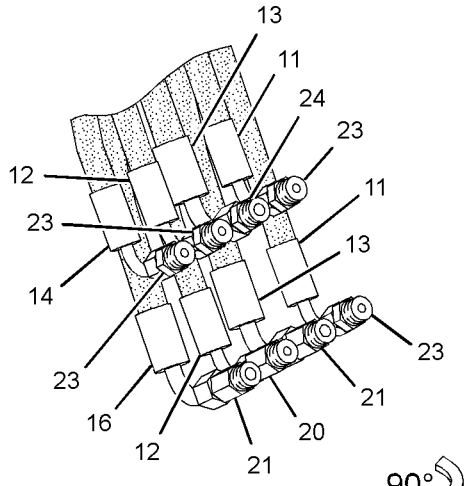

VIEW OF AREA C

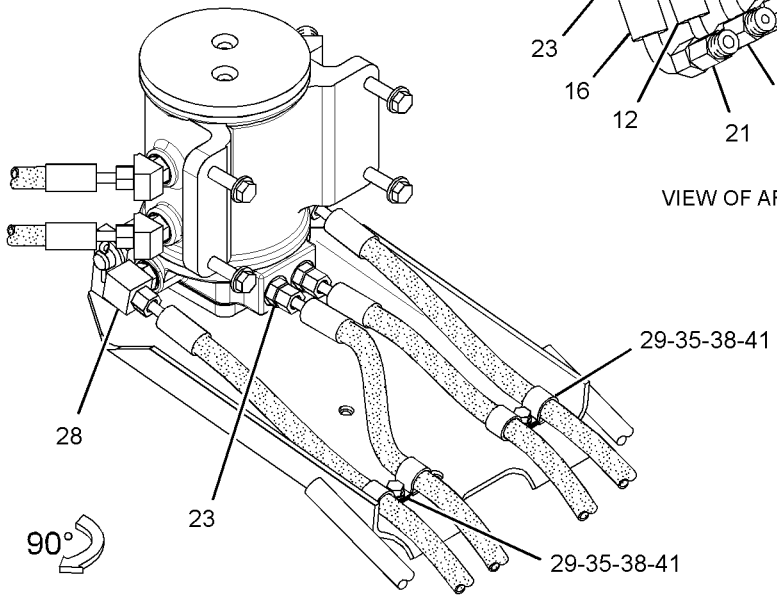

VIEW OF AREA B

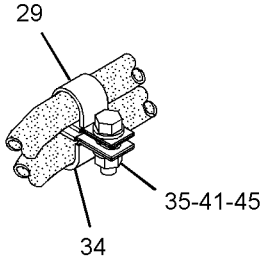

VIEW OF AREA D

GRAPHIC #2 **<END>** g01852974

HYDRAULIC SYSTEM

110-2985 LINES GP-HYDRAULIC–RH

S/N: JJA1-UP
4 CIRCUITS
PART OF 346-3710 GENERAL AR

SMCS-5057 **i03518584**

NOTE	REF NO	GRAPHIC REF	PART NUMBER	QTY	PART NAME 1 2 3 4 5 6 (PRODUCT LEVEL)	SEE PAGE
	1	2	**2B-0941**	4	SPACER (10.5X19X19-MM THK)	
	2	2	**2G-5493**	1	CLAMP	
	3	2	**3S-2093**	1	STRAP-CABLE	
	4	2	**4J-5468**	3	CLAMP	
	5	2	**5D-2645**	2	CLAMP	
	6	2	**5D-4988**	4	CLAMP	
	7	2	**5P-0599**	1	CLAMP-BAND	
I	8	2	**8W-0302**	1	HOSE AS	
	9	2	**9R-8870**	1	BLOCK	
I	10	2	**107-8147**	1	HOSE AS	
I	11	2	**107-8148**	1	HOSE AS	
I	12	2	**107-8150**	1	HOSE AS	
	13	2	**108-1610**	2	CLAMP	
I	14	2	**110-3003**	1	HOSE AS	
I	15	2	**134-0747**	1	HOSE AS	
	16	2	**135-0450**	2	PLATE	
	17	2	**135-0453**	1	PLATE	
	18	2	**163-4195**	1	SLEEVE	
	19	2	*164-5605*	3	CONNECTOR AS	
					(EACH INCLUDES)	
		2	**3K-0360**	1	SEAL-O-RING	
		2	**6V-8397**	1	SEAL-O-RING	
		2	**8T-0076**	1	CONNECTOR	
	20	2	*164-5608*	1	CONNECTOR AS	
		2	**3K-0360**	1	SEAL-O-RING	
		2	**6V-8398**	1	SEAL-O-RING	
		2	**8T-1687**	1	CONNECTOR	
	21	2	**100-4336**	1	CLIP	
I	22	2	**107-8140**	1	HOSE AS	
I	23	2	**107-8141**	1	HOSE AS	
I	24	2	**107-8142**	1	HOSE AS	
	25	2	*148-8318*	4	CONNECTOR AS	
					(EACH INCLUDES)	
		2	**3K-0360**	1	SEAL-O-RING	
		2	**6V-8397**	1	SEAL-O-RING	
		2	**6V-8634**	1	CONNECTOR	
	26	2	*148-8363*	3	ELBOW AS	
					(EACH INCLUDES)	
		2	**3K-0360**	1	SEAL-O-RING	
		2	**6V-8397**	1	SEAL-O-RING	
		2	**6V-9876**	1	ELBOW	
	27	2	*148-8364*	1	ELBOW AS	
		2	**3K-0360**	1	SEAL-O-RING	
		2	**6V-8398**	1	SEAL-O-RING	
		2	**6V-8625**	1	ELBOW	
	28	2	*148-8374*	4	ELBOW AS	
					(EACH INCLUDES)	
		2	**3K-0360**	1	SEAL-O-RING	
		2	**6V-8397**	1	SEAL-O-RING	
		2	**6V-8723**	1	ELBOW	
	29	2	*148-8383*	2	ELBOW AS	
					(EACH INCLUDES)	
		2	**3K-0360**	1	SEAL-O-RING	
		2	**6V-8397**	1	SEAL-O-RING	
		2	**8T-1683**	1	ELBOW	

110-2985 **LINES GP-HYDRAULIC** *(contd.)* **i03518584**

NOTE	REF NO	GRAPHIC REF	PART NUMBER	QTY	PART NAME 1 2 3 4 5 6 (PRODUCT LEVEL)	SEE PAGE
	30	2	*148-8433*	2	TEE AS	
					(EACH INCLUDES)	
		2	**6V-8397**	2	SEAL-O-RING	
		2	**6V-9836**	1	TEE-SWIVEL	
	31	2	**1S-0994**	6	CLIP	
	32	2	**4L-6454**	1	BOLT (3/8-16X1-IN)	
	33	2	**5P-1075**	4	WASHER-HARD (10.2X22.5X3-MM THK)	
	34	2	**5S-7379**	10	BOLT (3/8-16X0.875-IN)	
	35	2	**5S-7383**	1	BOLT (3/8-16X1.75-IN)	
	36	2	**6D-4244**	2	CLIP	
	37	2	**6V-8801**	3	NUT (3/8-16-THD)	
	38	2	**7X-0288**	1	BOLT (3/8-16X1.625-IN)	
	39	2	**7X-0289**	1	BOLT (3/8-16X1.875-IN)	
	40	2	**8T-2501**	1	BOLT (3/8-16X2-IN)	
	41	2	**8T-4896**	20	WASHER-HARD (10.2X18.5X2.5-MM THK)	
	42	2	**8T-9378**	1	BOLT (3/8-16X4-IN)	
I	43	2	**8W-0220**	1	HOSE AS	
	44	2	**9B-7237**	1	BOLT (3/8-16X1.25-IN)	
D	45	2	**5P-5931**		SEAL (0.1-M EACH)	

D-ORDER BY THE METER
I-REFER TO HYDRAULIC INFORMATION SYSTEM

REFER TO ALL ILLUSTRATIONS OF
THIS GROUP FOR AUXILIARY VIEWS

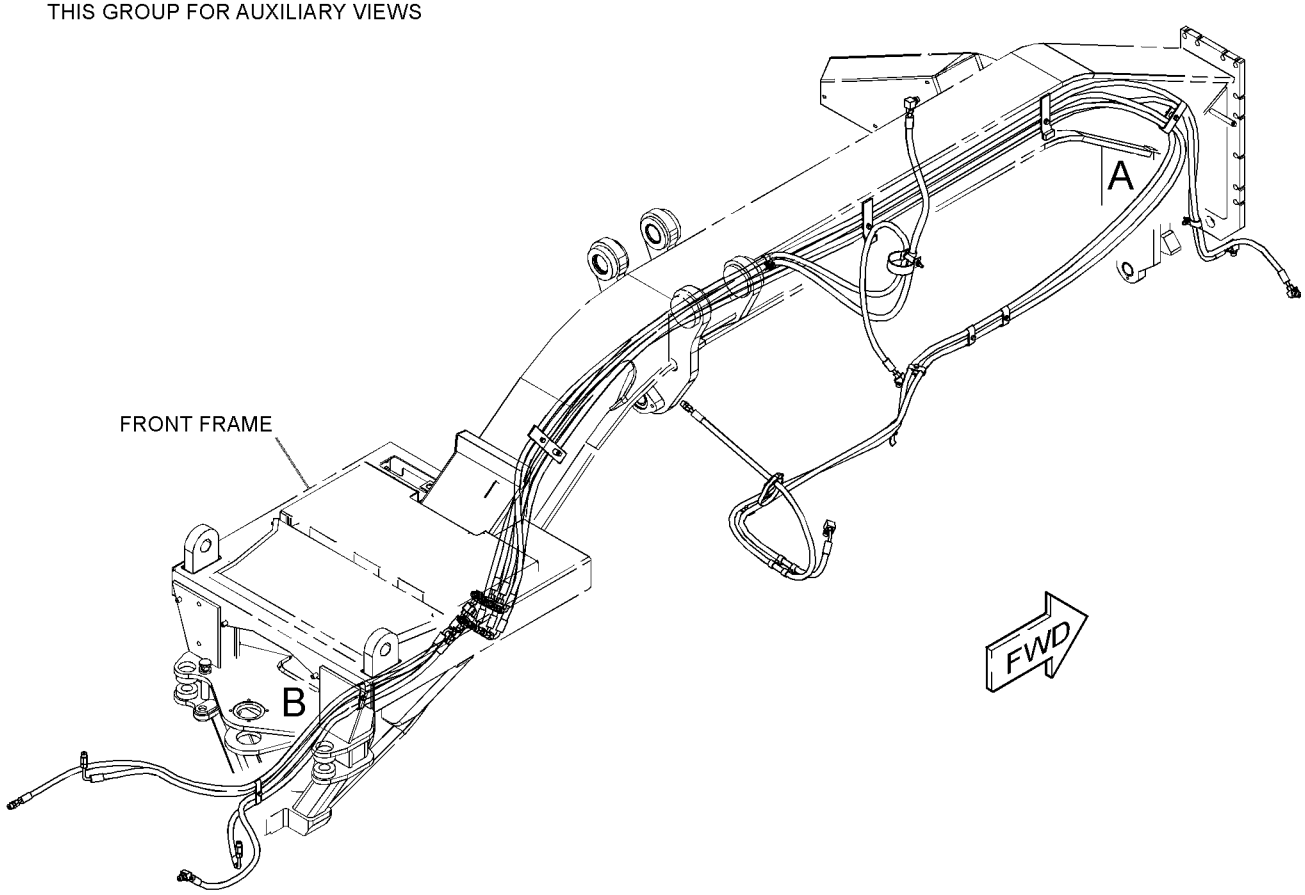

GRAPHIC #1 g01845337

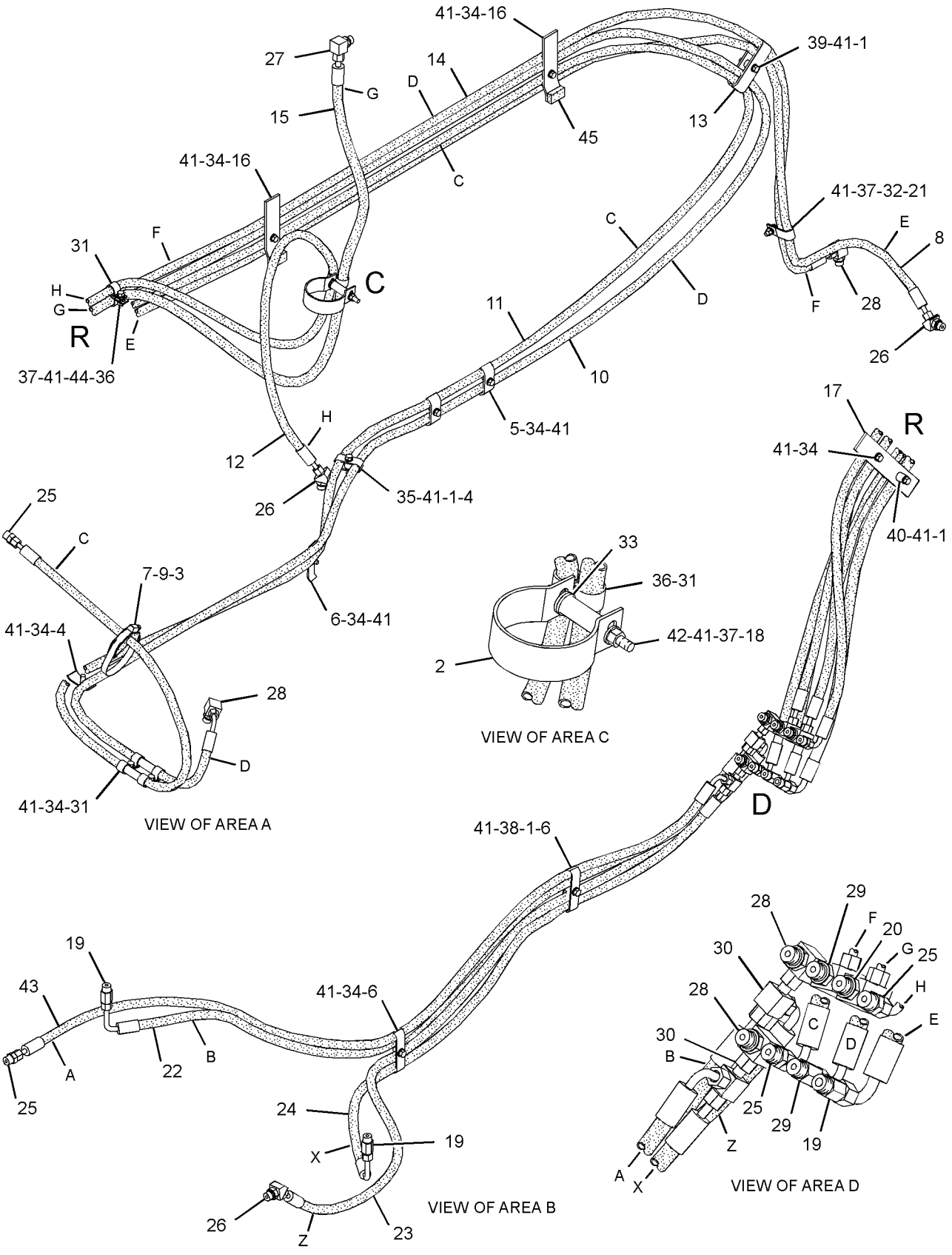

GRAPHIC #2 **<END>** g01845335

114-0025 LINES GP-HYDRAULIC—BULLDOZER LIFT, PLOW, LH

S/N: JJA1-UP
1-CIRCUIT
PART OF 339-4973 OPTION AR-WORK TOOL
AN ATTACHMENT

SMCS-5057 **i02585616**

NOTE	REF NO	GRAPHIC REF	PART NUMBER	QTY	PART NAME 1 2 3 4 5 6 (PRODUCT LEVEL)	SEE PAGE
I	1	1	**114-0027**	2	HOSE AS	
	2	1	*164-5605*	1	CONNECTOR AS	
		1	**8T-0076**	1	CONNECTOR	
		1	**3K-0360**	1	SEAL-O-RING	
		1	**6V-8397**	1	SEAL-O-RING	
	3	1	*148-8318*	1	CONNECTOR AS	
		1	**6V-8634**	1	CONNECTOR	
		1	**3K-0360**	1	SEAL-O-RING	
		1	**6V-8397**	1	SEAL-O-RING	

I-REFER TO HYDRAULIC INFORMATION SYSTEM

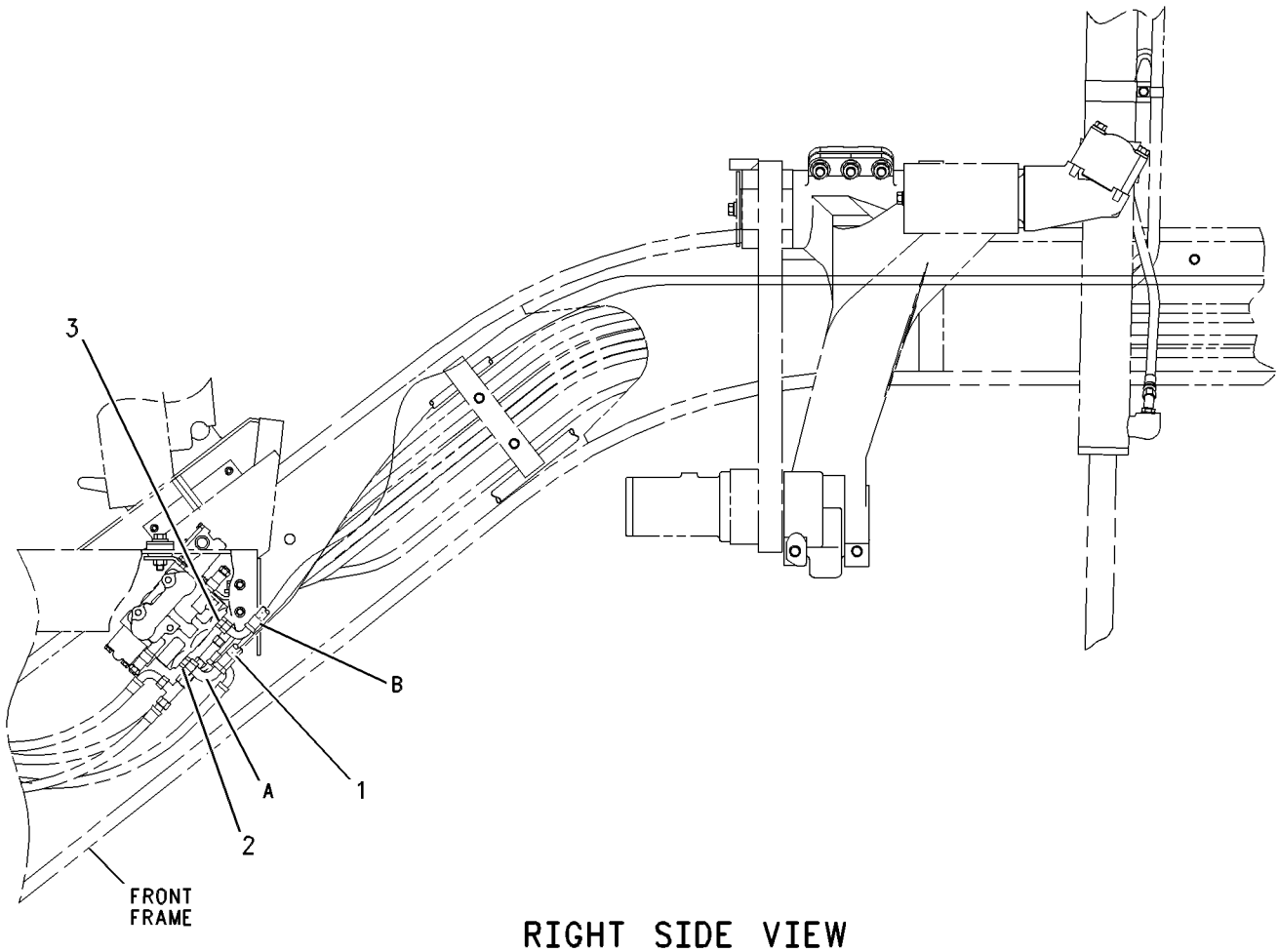

RIGHT SIDE VIEW

GRAPHIC #1 **<END>** g00636139

HYDRAULIC SYSTEM

279-8138 LINES GP-HYDRAULIC–FRONT

S/N: JJA1-UP
PART OF 339-4973 OPTION AR-WORK TOOL
AN ATTACHMENT

SMCS-5057 **i03553229**

NOTE	REF NO	GRAPHIC REF	PART NUMBER	QTY	PART NAME 1 2 3 4 5 6 (PRODUCT LEVEL)	SEE PAGE
I	1	1	**113-0999**	2	HOSE AS	
	2	1	*150-3028*	2	ELBOW AS	
					(EACH INCLUDES)	
		1	**6V-9343**	1	ELBOW	
		1	**3D-2824**	1	SEAL-O-RING	
		1	**6V-8397**	1	SEAL-O-RING	
	3	1	**6V-8397**	2	SEAL-O-RING	
	4	1	**6V-8987**	2	ELBOW	
	5	1	**6V-9168**	2	NUT (11/16-16-THD)	

I-REFER TO HYDRAULIC INFORMATION SYSTEM

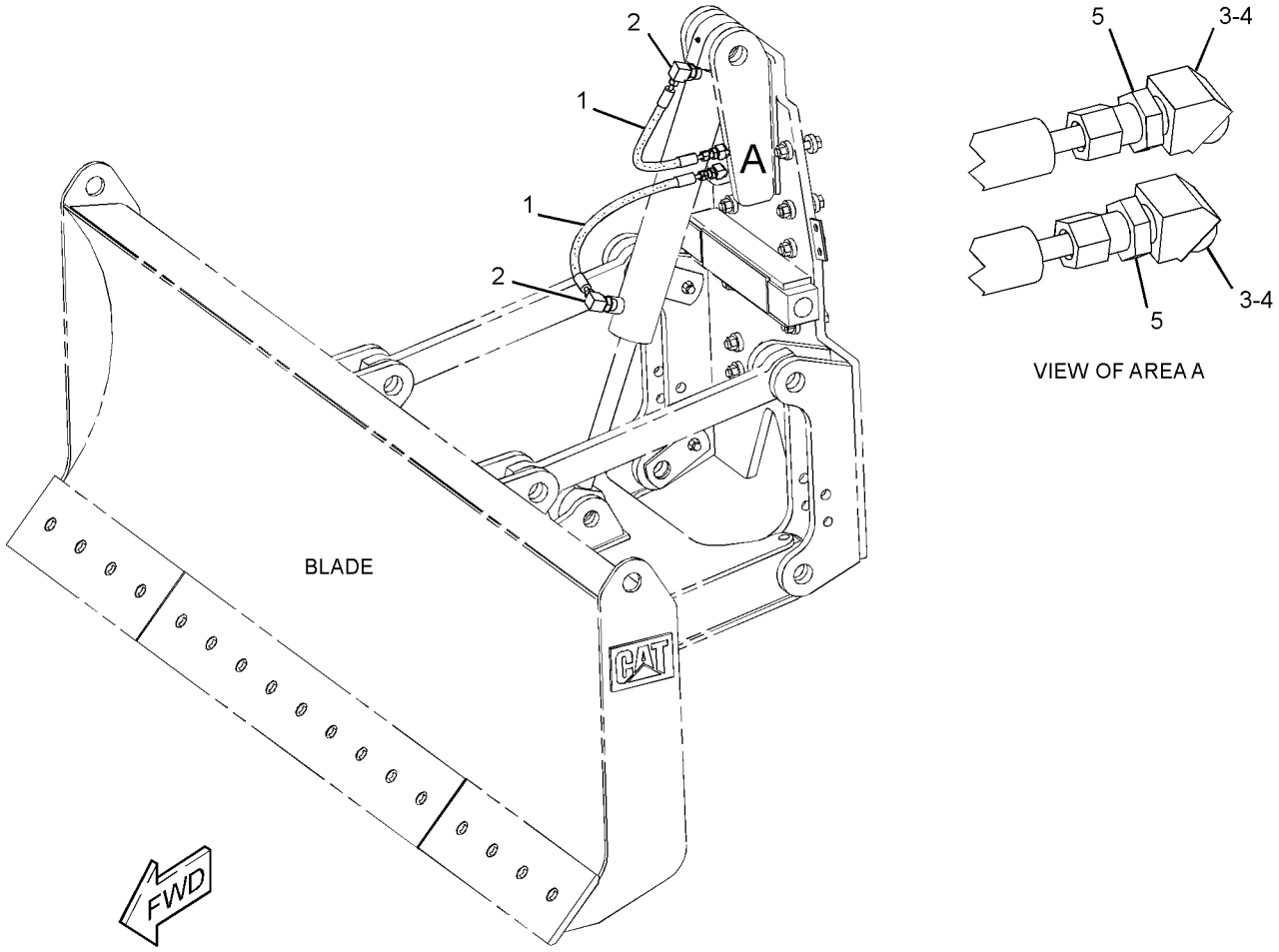

GRAPHIC #1 **<END>** g01935733

293-0648 LINES GP-HYDRAULIC—CENTERSHIFT LOCK

S/N: JJA1-UP

PART OF 346-3710 GENERAL AR

SMCS-5057 **i03628516**

NOTE	REF NO	GRAPHIC REF	PART NUMBER	QTY	PART NAME 1 2 3 4 5 6 (PRODUCT LEVEL)	SEE PAGE
	1	1	**8W-8527**	2	SLEEVE	
I	2	1	**148-7027**	1	HOSE AS	
I	3	1	**313-6976**	1	HOSE AS	
	4	1	*148-8336*	3	CONNECTOR AS	
					(EACH INCLUDES)	
		1	**6V-8636**	1	CONNECTOR	
		1	**3J-1907**	1	SEAL-O-RING	
		1	**6V-8397**	1	SEAL-O-RING	
	5	1	*148-8367*	2	ELBOW AS	
					(EACH INCLUDES)	
		1	**6V-9850**	1	ELBOW	
		1	**6V-8397**	1	SEAL-O-RING	
	6	1	*148-8378*	2	ELBOW AS	
					(EACH INCLUDES)	
		1	**6V-8724**	1	ELBOW	
		1	**3J-1907**	1	SEAL-O-RING	
		1	**6V-8397**	1	SEAL-O-RING	
I	7	1	**178-9962**	1	HOSE AS	
	8	1	**3S-8664**	1	CLIP	
	9	1	**4D-7733**	7	CLIP	
	10	1	**4S-4455**	1	CLIP	
	11	1	**8M-2773**	1	CLIP	
	12	1	**8T-4121**	8	WASHER-HARD (11X21X2.5-MM THK)	
M	13	1	**8T-4133**	2	NUT (M10X1.5-THD)	
M	14	1	**8T-4136**	1	BOLT (M10X1.5X25-MM)	
M	15	1	**8T-4137**	4	BOLT (M10X1.5X20-MM)	
M	16	1	**8T-4195**	1	BOLT (M10X1.5X30-MM)	
	17	1	**9M-8406**	1	CLIP	

I-REFER TO HYDRAULIC INFORMATION SYSTEM
M-METRIC PART

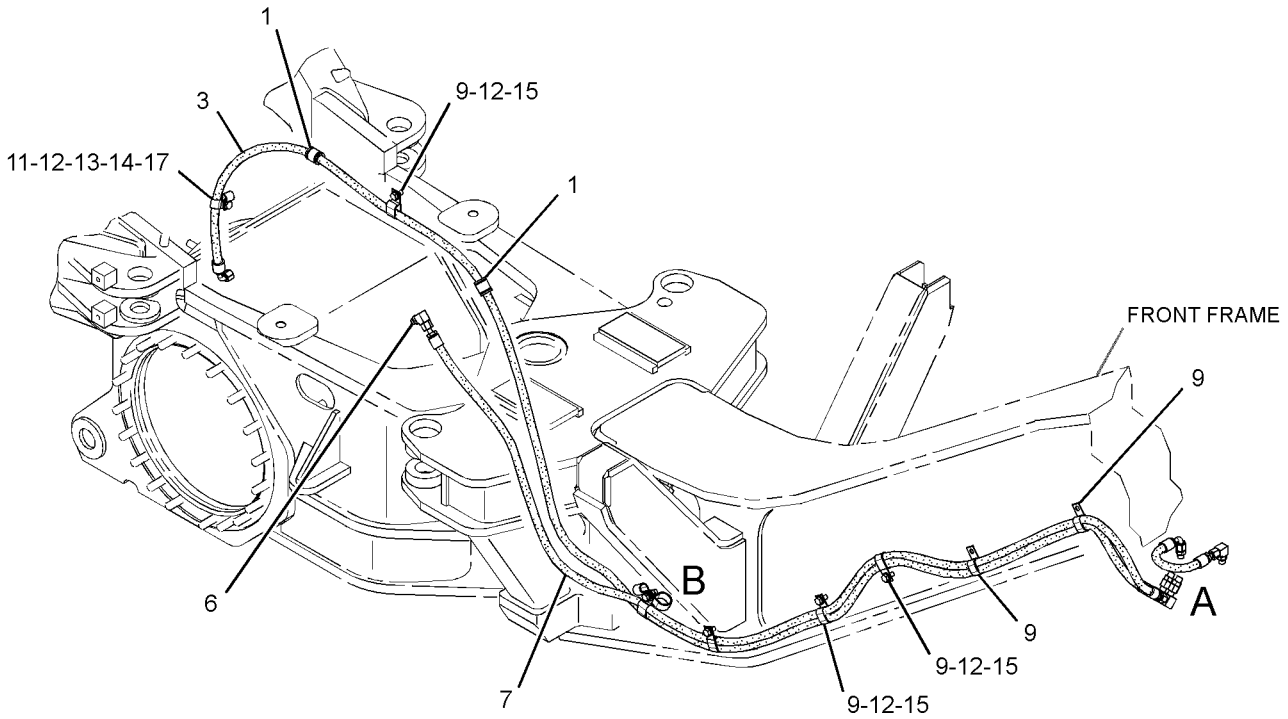



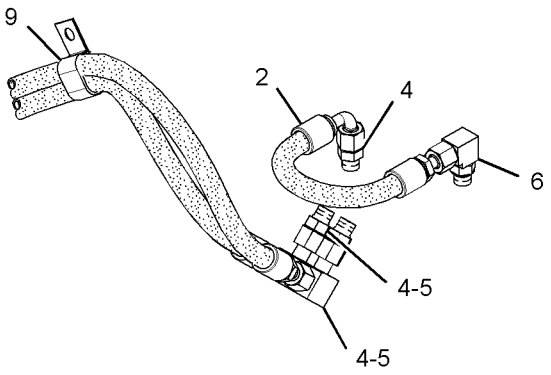

VIEW OF AREA A

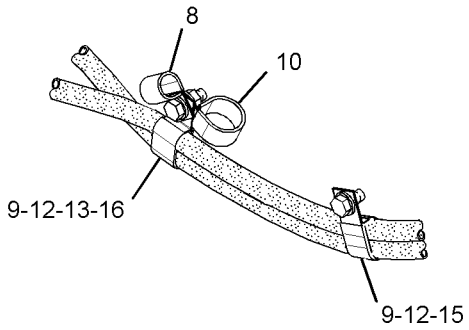

VIEW OF AREA B

GRAPHIC #1 **<END>** g01930775

HYDRAULIC SYSTEM

299-5544 LINES GP-PUMP

S/N: JJA1-UP

PART OF 346-3710 GENERAL AR

SMCS-5057 **i03518583**

NOTE	REF NO	GRAPHIC REF	PART NUMBER	QTY	PART NAME 1 2 3 4 5 6 (PRODUCT LEVEL)	SEE PAGE
	1	2	**5P-4868**	4	CLAMP-HOSE	
	2	2	**6E-1926**	1	ADAPTER	
I	3	2	**6R-7669**	1	HOSE AS	
	4	2	**6V-0852**	1	CAP-DUST	
	5	2	**7K-1181**	1	STRAP-CABLE	
E	6	2	**5P-1295**		HOSE (10-CM)	
Y	7	2	**9T-5957**	1	VALVE GP-COMBINATION	421
	8	2	**102-3659**	1	ELBOW	
	9	2	**104-4286**	1	TUBE	
	10	2	**156-4000**	1	HOSE	
	11	2	*165-7014*	1	TEE AS	
		2	**3J-1907**	1	SEAL-O-RING	
		2	**4J-5477**	1	SEAL-O-RING	
		2	**8C-3309**	1	TEE	
I	12	2	**175-3644**	1	HOSE AS	
I	13	2	**246-2822**	1	HOSE AS	
I	14	2	**246-4561**	1	HOSE AS	
I	15	2	**249-1054**	1	HOSE AS	
I	16	2	**318-8124**	1	HOSE AS	
I	17	2	**117-9683**	1	HOSE AS	
	18	2	*148-8316*	2	CONNECTOR AS	
					(EACH INCLUDES)	
		2	**3J-7354**	1	SEAL-O-RING	
		2	**4J-5477**	1	SEAL-O-RING	
		2	**6V-8647**	1	CONNECTOR	
	19	2	*148-8323*	1	CONNECTOR AS	
		2	**2S-4078**	1	SEAL-O-RING	
		2	**5K-9090**	1	SEAL-O-RING	
		2	**6V-9875**	1	CONNECTOR	
	20	2	*148-8327*	1	CONNECTOR AS	
		2	**3D-2824**	1	SEAL-O-RING	
		2	**6V-8637**	1	CONNECTOR	
		2	**6V-9746**	1	SEAL-O-RING	
	21	2	*148-8347*	5	ELBOW AS	
					(EACH INCLUDES)	
		2	**3D-2824**	1	SEAL-O-RING	
		2	**6V-9007**	1	ELBOW	
		2	**6V-9746**	1	SEAL-O-RING	
	22	2	*148-8364*	1	ELBOW AS	
		2	**3K-0360**	1	SEAL-O-RING	
		2	**6V-8398**	1	SEAL-O-RING	
		2	**6V-8625**	1	ELBOW	
	23	2	*148-8368*	2	ELBOW AS	
					(EACH INCLUDES)	
		2	**3J-1907**	1	SEAL-O-RING	
		2	**4J-5477**	1	SEAL-O-RING	
		2	**6V-8627**	1	ELBOW	
	24	2	*148-8381*	1	ELBOW AS	
		2	**3D-2824**	1	SEAL-O-RING	
		2	**6V-8398**	1	SEAL-O-RING	
		2	**8T-5429**	1	ELBOW	
	25	2	**149-7738**	2	CLIP	
	26	2	*150-5968*	1	TEE AS	
		2	**4J-5477**	2	SEAL-O-RING	
		2	**6V-9835**	1	TEE-SWIVEL	

299-5544 **LINES GP-PUMP** *(contd.)* **i03518583**

NOTE	REF NO	GRAPHIC REF	PART NUMBER	QTY	PART NAME 1 2 3 4 5 6 (PRODUCT LEVEL)	SEE PAGE
	27	2	*153-6237*	2	ELBOW AS	
					(EACH INCLUDES)	
		2	**3D-2824**	1	SEAL-O-RING	
		2	**6V-9004**	1	ELBOW	
		2	**6V-9746**	1	SEAL-O-RING	
	28	2	**174-5907**	2	CLIP	
I	29	2	**192-7238**	1	HOSE AS	
	30	2	**1H-8720**	1	SEAL-O-RING	
I	31	2	**301-2322**	1	HOSE AS	
	32	2	**3J-1907**	1	SEAL-O-RING	
	33	2	**4J-0521**	2	SEAL-O-RING	
	34	2	**6K-8178**	1	CLIP	
	35	2	**6V-3965**	1	FITTING (QUICK DISCONNECT)	
M	36	2	**8T-6868**	1	BOLT (M12X1.75X80-MM)	
	37	2	**319-6698**	3	BOLT	
M	38	2	**101-7402**	1	BOLT-SOCKET HEAD (M12X1.75X30-MM)	
	39	2	**8T-4121**	5	WASHER-HARD (11X21X2.5-MM THK)	
M	40	2	**8T-4133**	2	NUT (M10X1.5-THD)	
M	41	2	**8T-4136**	2	BOLT (M10X1.5X25-MM)	
M	42	2	**8T-4137**	1	BOLT (M10X1.5X20-MM)	
	43	2	**8T-4223**	5	WASHER-HARD (13.5X25.5X3-MM THK)	
M	44	2	**8T-4956**	4	BOLT (M12X1.75X35-MM)	
	45	2	**9M-4972**	1	CLIP	
	46	2	**279-6632**	3	WASHER (13.5X25.5X3-MM THK)	

E-ORDER BY THE CENTIMETER
I-REFER TO HYDRAULIC INFORMATION SYSTEM
M-METRIC PART
Y-SEPARATE ILLUSTRATION

299-5544 **LINES GP-PUMP** *(contd.)* **i03518583**

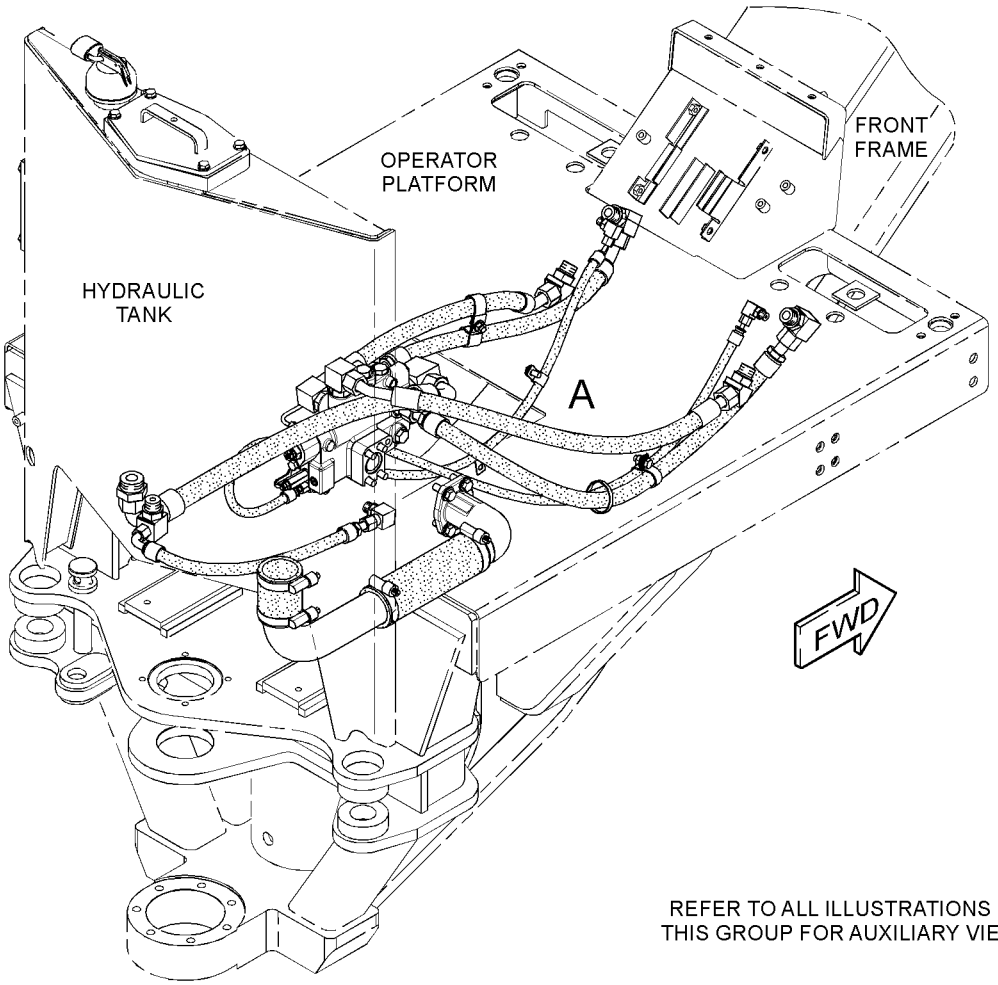

GRAPHIC #1 g01702797

299-5544 **LINES GP-PUMP** ***(contd.)*** **i03518583**

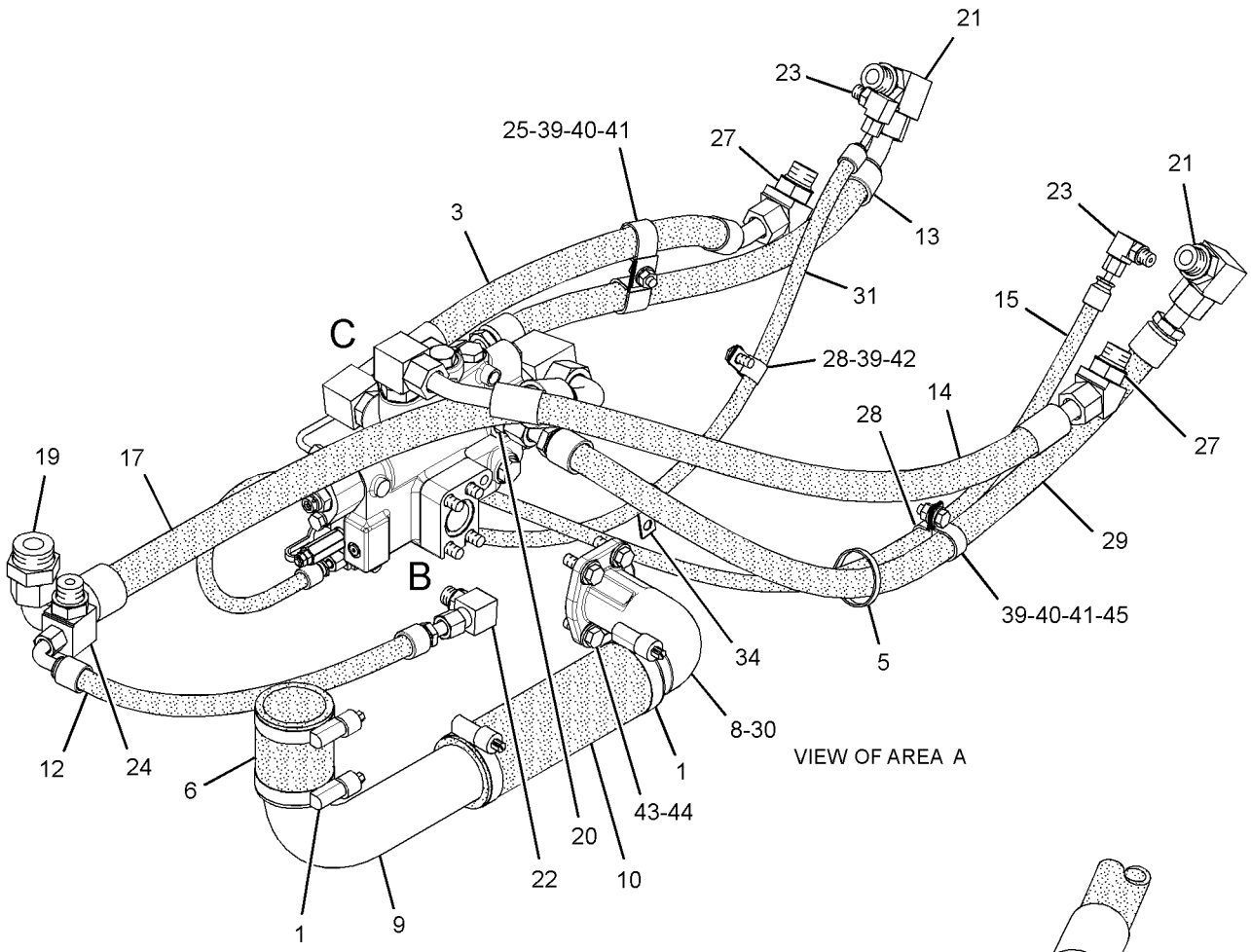

VIEW OF AREA A

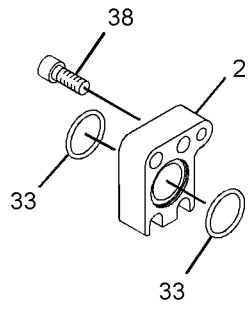

VIEW OF AREA B
(EXPLODED)

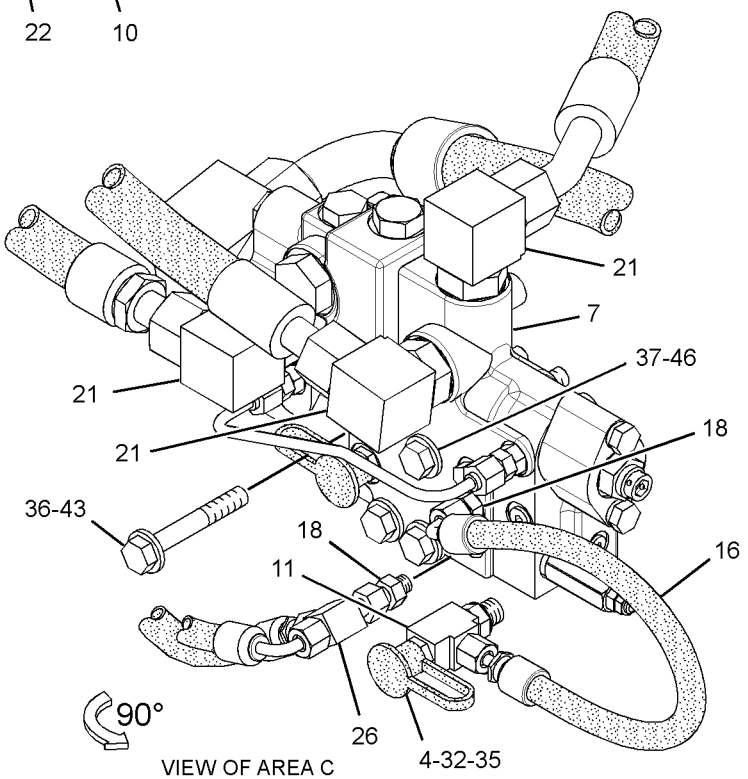

VIEW OF AREA C

GRAPHIC #2 **<END>** g01861265

HYDRAULIC SYSTEM

301-2237 LINES GP-PUMP

S/N: JJA1-UP

PART OF 349-2488 OPTION AR-CONFIGURATION, 339-4977 OPTION AR-WORK TOOL AN ATTACHMENT

SMCS-5057 **i03575664**

NOTE	REF NO	GRAPHIC REF	PART NUMBER	QTY	PART NAME 1 2 3 4 5 6 (PRODUCT LEVEL)	SEE PAGE
YR	1	1	**6E-3137**	1	PUMP GP-PISTON	389
	2	1	**8X-8813**	1	ELBOW	
	3	1	*148-8347*	2	ELBOW AS	
					(EACH INCLUDES)	
		1	**6V-9007**	1	ELBOW	
		1	**3D-2824**	1	SEAL-O-RING	
		1	**6V-9746**	1	SEAL-O-RING	
I	4	1	**270-3277**	1	HOSE AS	
	5	1	**5H-8848**	1	SEAL-O-RING	

I-REFER TO HYDRAULIC INFORMATION SYSTEM
R-REMFG PART MAY BE AVAILABLE
Y-SEPARATE ILLUSTRATION

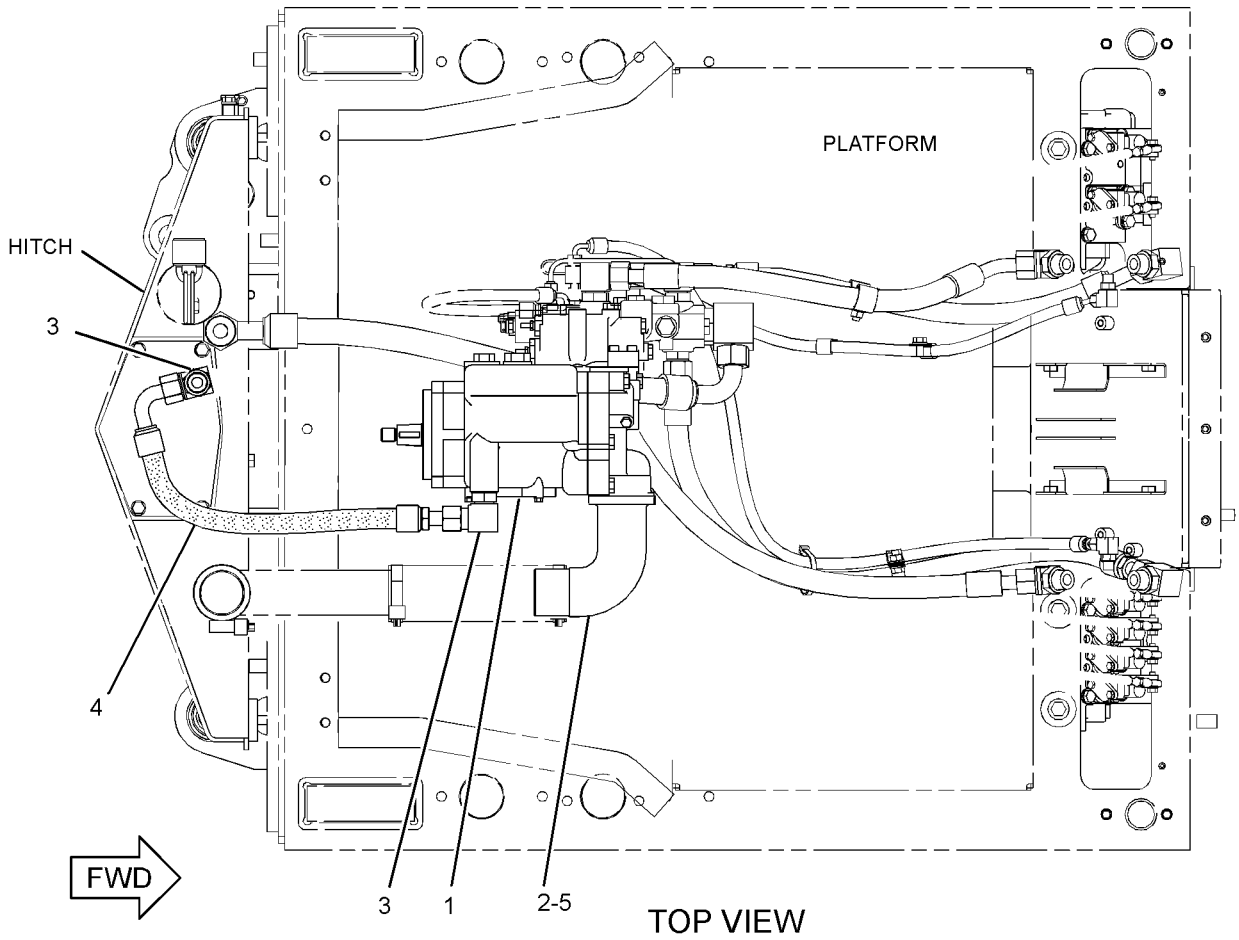

GRAPHIC #1 **<END>** g01861121

HYDRAULIC SYSTEM

174-2339 LINES GP-RIPPER

S/N: JJA1-UP
PART OF 285-4183 RIPPER AR
AN ATTACHMENT

SMCS-5057 **i02524935**

NOTE	REF NO	GRAPHIC REF	PART NUMBER	QTY	PART NAME 1 2 3 4 5 6 (PRODUCT LEVEL)	SEE PAGE
I	1	1	**3T-6848**	1	HOSE AS	
I	2	1	**7I-5412**	1	HOSE AS	
	3	1	*148-8374*	2	ELBOW AS	
					(EACH INCLUDES)	
		1	**6V-8723**	1	ELBOW	
		1	**3K-0360**	1	SEAL-O-RING	
		1	**6V-8397**	1	SEAL-O-RING	
	4	1	**1S-3618**	1	CLIP	
	5	1	**4D-2886**	1	CLIP	
	6	1	**4L-6454**	1	BOLT (3/8-16X1-IN)	
	7	1	**5P-1075**	2	WASHER-HARD (10.2X22.5X3-MM THK)	
	8	1	**6V-8801**	1	NUT (3/8-16-THD)	

I-REFER TO HYDRAULIC INFORMATION SYSTEM

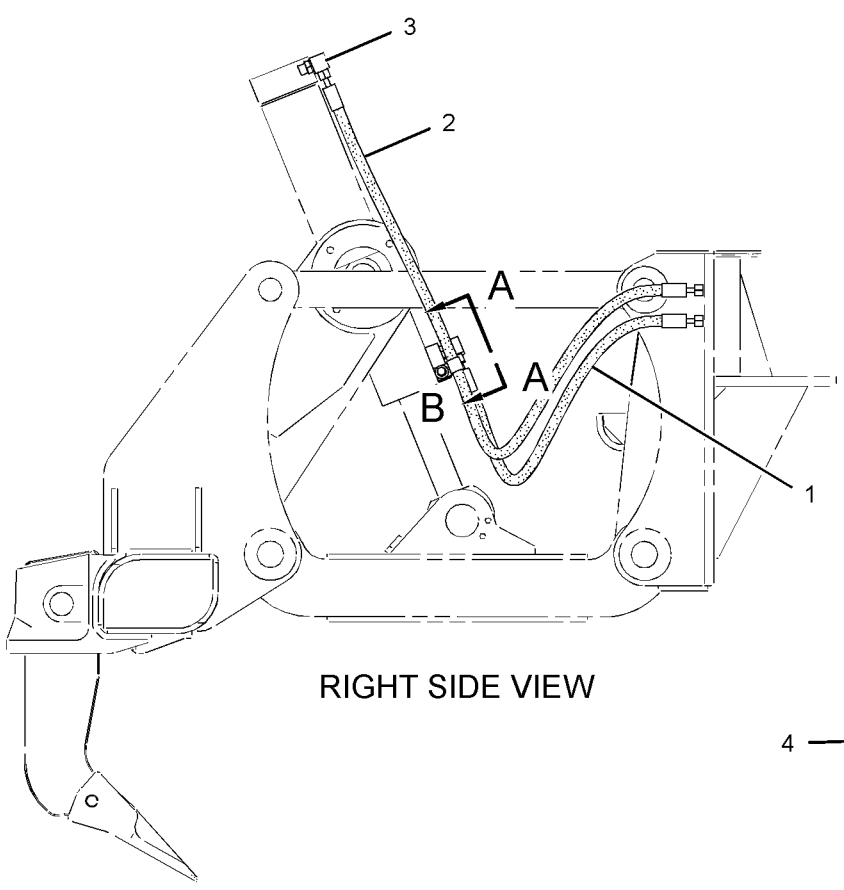

RIGHT SIDE VIEW

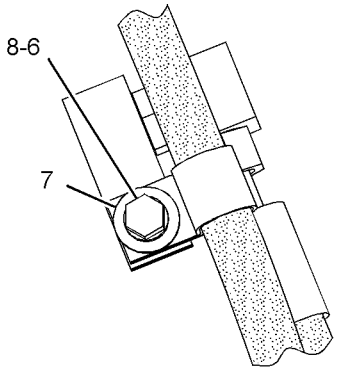

VIEW OF AREA B

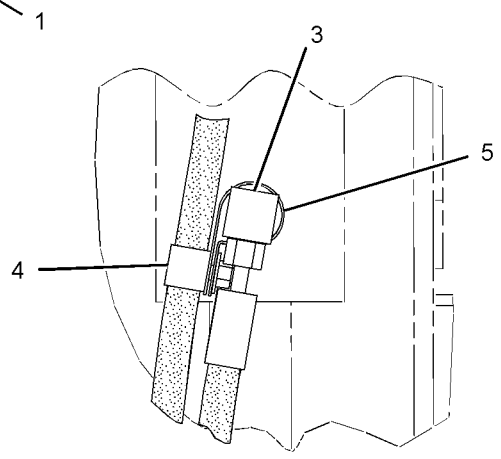

VIEW A-A

GRAPHIC #1 **<END>** g01277149

HYDRAULIC SYSTEM

302-7139 LINES GP-RIPPER

S/N: JJA1-UP

PART OF 343-6219, 343-6222 CONTROL AR-HYDRAULIC AN ATTACHMENT

SMCS-5057 **i03545503**

NOTE	REF NO	GRAPHIC REF	PART NUMBER	QTY	PART NAME 1 2 3 4 5 6 (PRODUCT LEVEL)	SEE PAGE
	1	1	**8W-8527**	8	SLEEVE	
	2	1	**100-4336**	1	CLIP	
I	3	1	**112-3837**	2	HOSE AS	
	4	1	*148-8374*	1	ELBOW AS	
		1	**6V-8723**	1	ELBOW	
		1	**3K-0360**	1	SEAL-O-RING	
		1	**6V-8397**	1	SEAL-O-RING	
	5	1	*148-8383*	1	ELBOW AS	
		1	**8T-1683**	1	ELBOW	
		1	**3K-0360**	1	SEAL-O-RING	
		1	**6V-8397**	1	SEAL-O-RING	
	6	1	**1S-0994**	2	CLIP	
	7	1	**6D-4247**	1	CLIP	
	8	1	**8T-4121**	3	WASHER-HARD (11X21X2.5-MM THK)	
M	9	1	**8T-4137**	2	BOLT (M10X1.5X20-MM)	
M	10	1	**8T-4186**	1	BOLT (M10X1.5X40-MM)	

I-REFER TO HYDRAULIC INFORMATION SYSTEM
M-METRIC PART

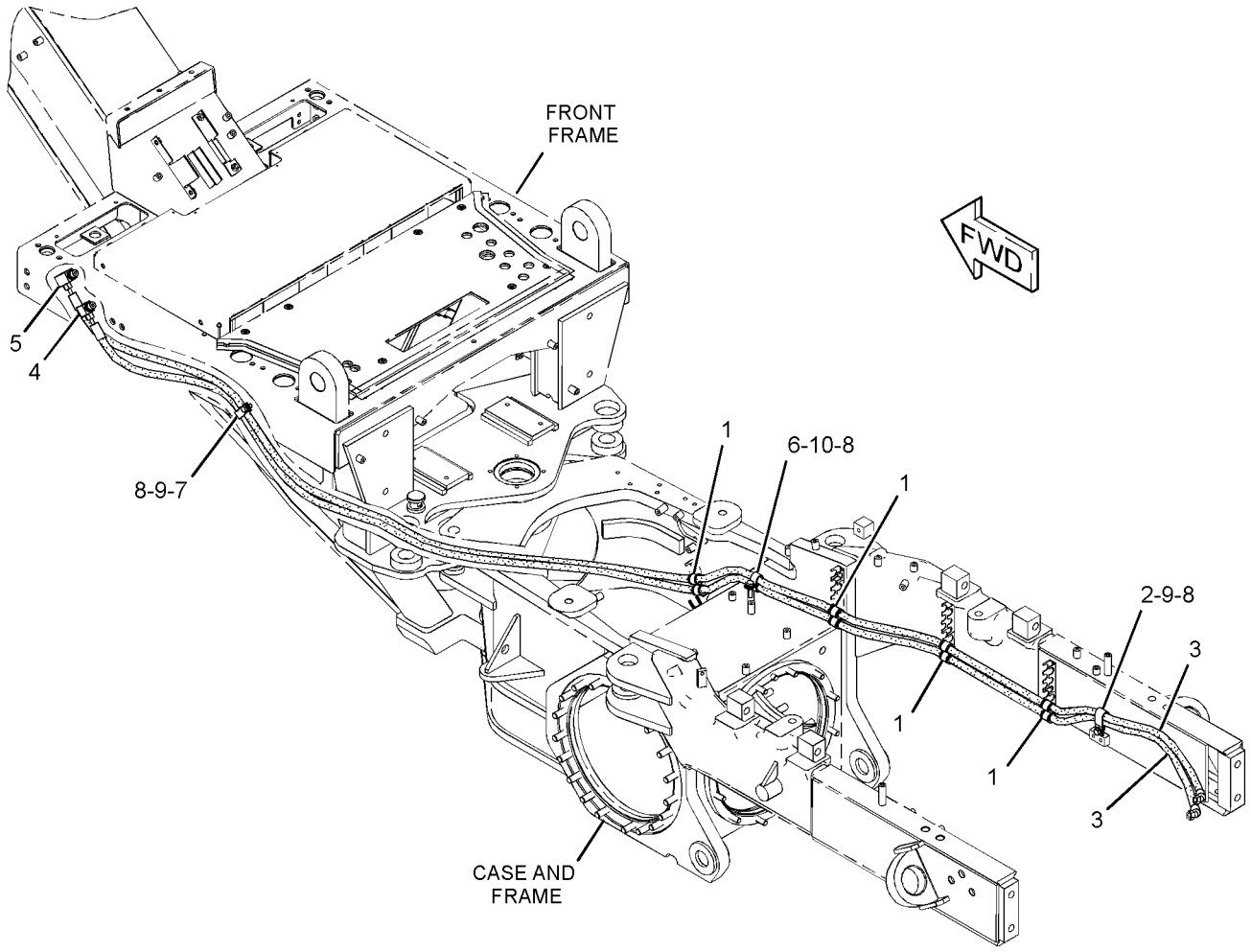

GRAPHIC #1 **<END>** g01895333

HYDRAULIC SYSTEM

301-4376 LINES GP-STEERING

S/N: JJA1-UP

PART OF 346-3710 GENERAL AR

SMCS-4304 **i03246405**

NOTE	REF NO	GRAPHIC REF	PART NUMBER	QTY	PART NAME 1 2 3 4 5 6 (PRODUCT LEVEL)	SEE PAGE
	1	2	**3S-2093**	2	STRAP-CABLE	
	2	2	**4J-5468**	2	CLAMP	
I	3	2	**5T-9903**	1	HOSE AS	
I	4	2	**8W-0225**	1	HOSE AS	
	5	2	**9D-0953**	1	SPACER (0.406X0.75X0.88-IN THK)	
I	6	1	**108-0714**	2	HOSE AS	
	7	2	**108-1610**	2	CLAMP	
I	8	2	**113-0981**	1	HOSE AS	
	9	2	**136-6330**	1	SEAL	
	10	2	**136-6331**	2	SEAL	
I	11	2	**150-4868**	1	HOSE AS	
	12	2	*164-5586*	1	TEE AS	
		2	**6V-8398**	1	SEAL-O-RING	
		2	**7X-0871**	1	TEE	
	13	2	*164-5590*	1	VALVE AS-FLUID SAMPLING	
		2	**3J-7354**	1	SEAL-O-RING	
		2	**8C-3446**	1	VALVE-FLUID SAMPLING	
	14	2	*171-6467*	4	UNION AS	
					(EACH INCLUDES)	
		2	**6V-8398**	1	SEAL-O-RING	
		2	**6V-9746**	1	SEAL-O-RING	
		2	**8T-5082**	1	UNION	
I	15	2	**301-4378**	1	HOSE AS	
I	16	2	**301-4380**	1	HOSE AS	
	17	2	**091-8792**	1	CLIP	
	18	2	*148-8316*	2	CONNECTOR AS	
					(EACH INCLUDES)	
		2	**3J-7354**	1	SEAL-O-RING	
		2	**4J-5477**	1	SEAL-O-RING	
		2	**6V-8647**	1	CONNECTOR	
	19	2	*148-8340*	6	CONNECTOR AS	
					(EACH INCLUDES)	
		2	**3K-0360**	1	SEAL-O-RING	
		2	**6V-8398**	1	SEAL-O-RING	
		2	**6V-8639**	1	CONNECTOR	
	20	2	*148-8351*	1	ELBOW AS	
		2	**4J-5477**	1	SEAL-O-RING	
		2	**6V-9849**	1	ELBOW	
	21	2	*148-8354*	1	ELBOW AS	
		2	**3K-0360**	1	SEAL-O-RING	
		2	**6V-8398**	1	SEAL-O-RING	
		2	**6V-9002**	1	ELBOW	
	22	2	*148-8364*	3	ELBOW AS	
					(EACH INCLUDES)	
		2	**3K-0360**	1	SEAL-O-RING	
		2	**6V-8398**	1	SEAL-O-RING	
		2	**6V-8625**	1	ELBOW	
	23	2	*148-8444*	2	TEE AS-SWIVEL	
					(EACH INCLUDES)	
		2	**6V-8398**	2	SEAL-O-RING	
		2	**6V-9837**	1	TEE-SWIVEL	
	24	2	*169-5862*	1	ELBOW AS	
		2	**3J-1907**	1	SEAL-O-RING	
		2	**8C-6712**	1	ELBOW	
I	25	2	**301-4379**	1	HOSE AS	
I	26	2	**4E-2392**	1	HOSE AS	

301-4376 **LINES GP-STEERING** *(contd.)* **i03246405**

NOTE	REF NO	GRAPHIC REF	PART NUMBER	QTY	PART NAME 1 2 3 4 5 6 (PRODUCT LEVEL)	SEE PAGE
	27	2	**4L-6454**	2	BOLT (3/8-16X1-IN)	
	28	2	**5P-1075**	2	WASHER-HARD (10.2X22.5X3-MM THK)	
	29	2	**5P-7854**	4	CLIP	
	30	2	**6D-4244**	15	CLIP	
	31	2	**6K-8178**	1	CLIP	
	32	2	**6V-8801**	2	NUT (3/8-16-THD)	
I	33	2	**7I-5405**	1	HOSE AS	
	34	2	**7X-0289**	1	BOLT (3/8-16X1.875-IN)	
	35	2	**8C-3451**	1	CAP-DUST	
	36	2	**8T-4121**	14	WASHER-HARD (11X21X2.5-MM THK)	
M	37	2	**8T-4133**	3	NUT (M10X1.5-THD)	
M	38	2	**8T-4136**	6	BOLT (M10X1.5X25-MM)	
M	39	2	**8T-4137**	5	BOLT (M10X1.5X20-MM)	
	40	2	**8T-4896**	3	WASHER-HARD (10.2X18.5X2.5-MM THK)	
	41	2	**9M-4972**	1	CLIP	
	42	2	**9X-8250**	2	CLIP	

I-REFER TO HYDRAULIC INFORMATION SYSTEM
M-METRIC PART

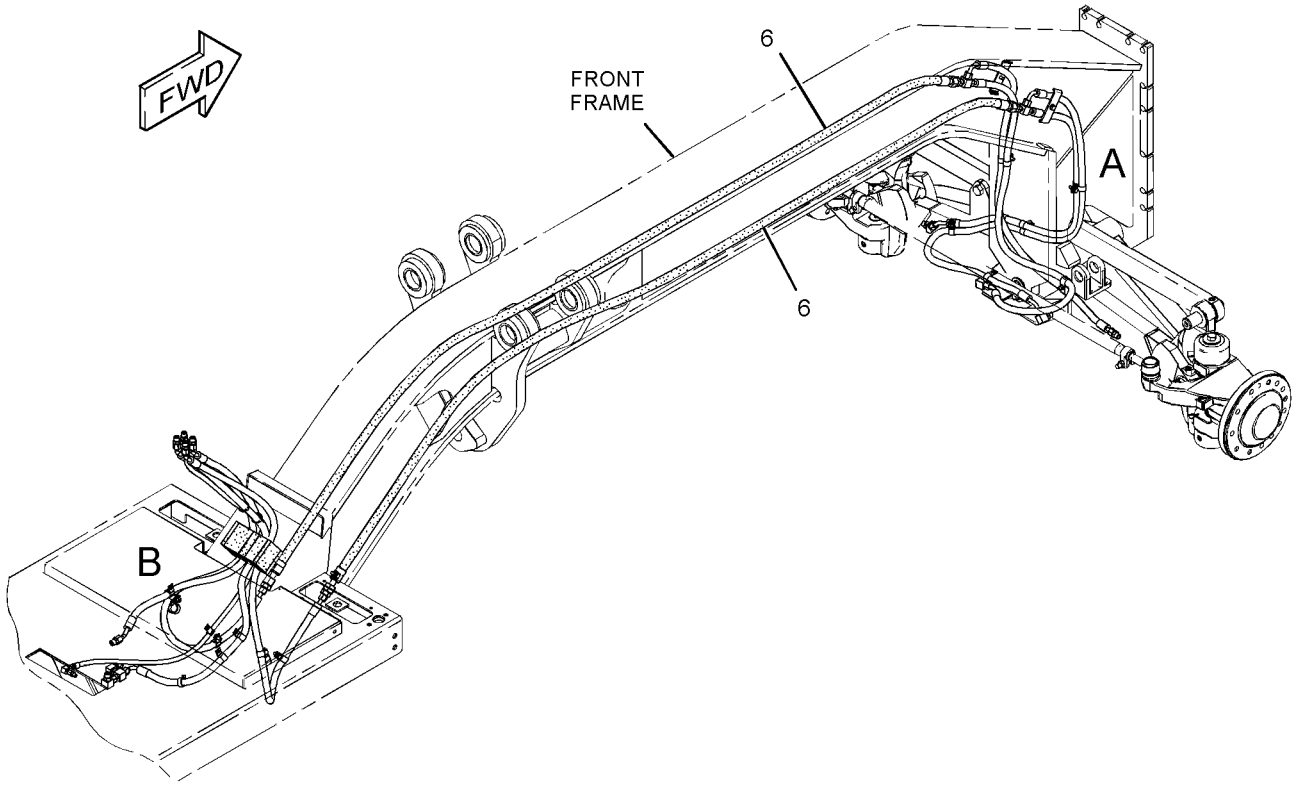

REFER TO ALL ILLUSTRATIONS OF
THIS GROUP FOR AUXILIARY VIEWS

GRAPHIC #1 g01663313

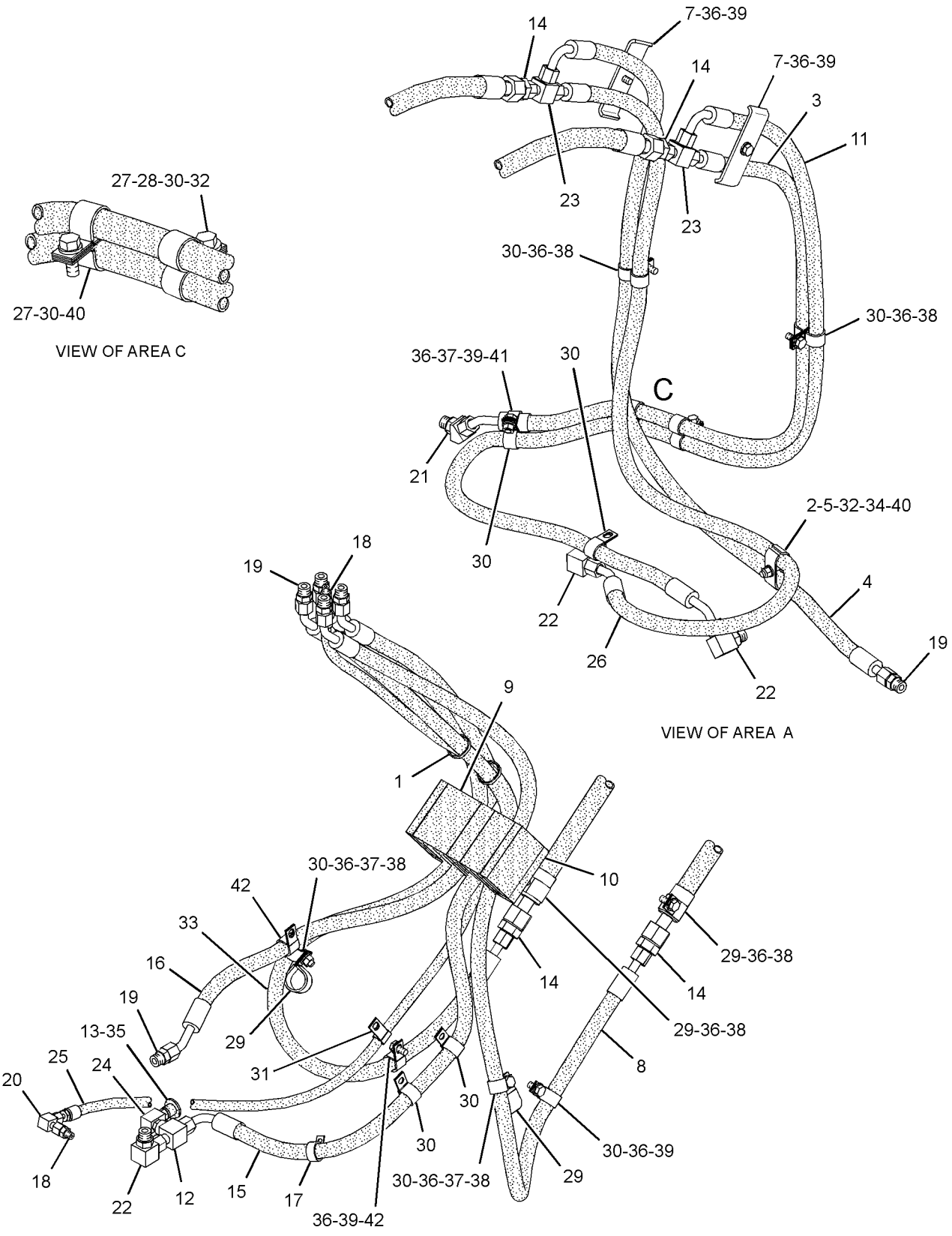

GRAPHIC #2 **<END>** g01663355

164-8462 LOCK GP-CENTERSHIFT

S/N: JJA1-UP

PART OF 346-3710 GENERAL AR

SMCS-5221 **i03291816**

NOTE	REF NO	GRAPHIC REF	PART NUMBER	QTY	PART NAME 1 2 3 4 5 6 (PRODUCT LEVEL)	SEE PAGE
	1	1	**2H-3931**	1	SEAL-O-RING	
	2	1	**4T-8054**	1	SEAL AS	
	3	1	**8X-3749**	1	PISTON	
	4	1	**9D-6584**	1	SEAL-LIP TYPE	
	5	1	**297-6979**	1	CYLINDER	
	6	1	**115-0541**	1	PIN	
	7	1	**142-5787**	1	CAP	
Y	8	1	**152-8346**	1	VALVE GP-SOLENOID (24-VOLT) (CENTERSHIFT LOCK)	463
	9	1	**167-2307**	1	SEAL-U-CUP	
	10	1	**7X-0346**	1	BOLT (5/8-11X2-IN)	
	11	1	**8T-4122**	1	WASHER-HARD (17X32X3.5-MM THK)	
	12	1	**8T-4223**	2	WASHER-HARD (13.5X25.5X3-MM THK)	
	13	1	**8T-8917**	2	BOLT (1/2-13X1.25-IN)	
	14	1	**7X-0350**	2	BOLT (5/8-11X3.5-IN)	
	15	1	**198-4780**	2	WASHER-HARD (17.5X32X8-MM THK)	

Y-SEPARATE ILLUSTRATION

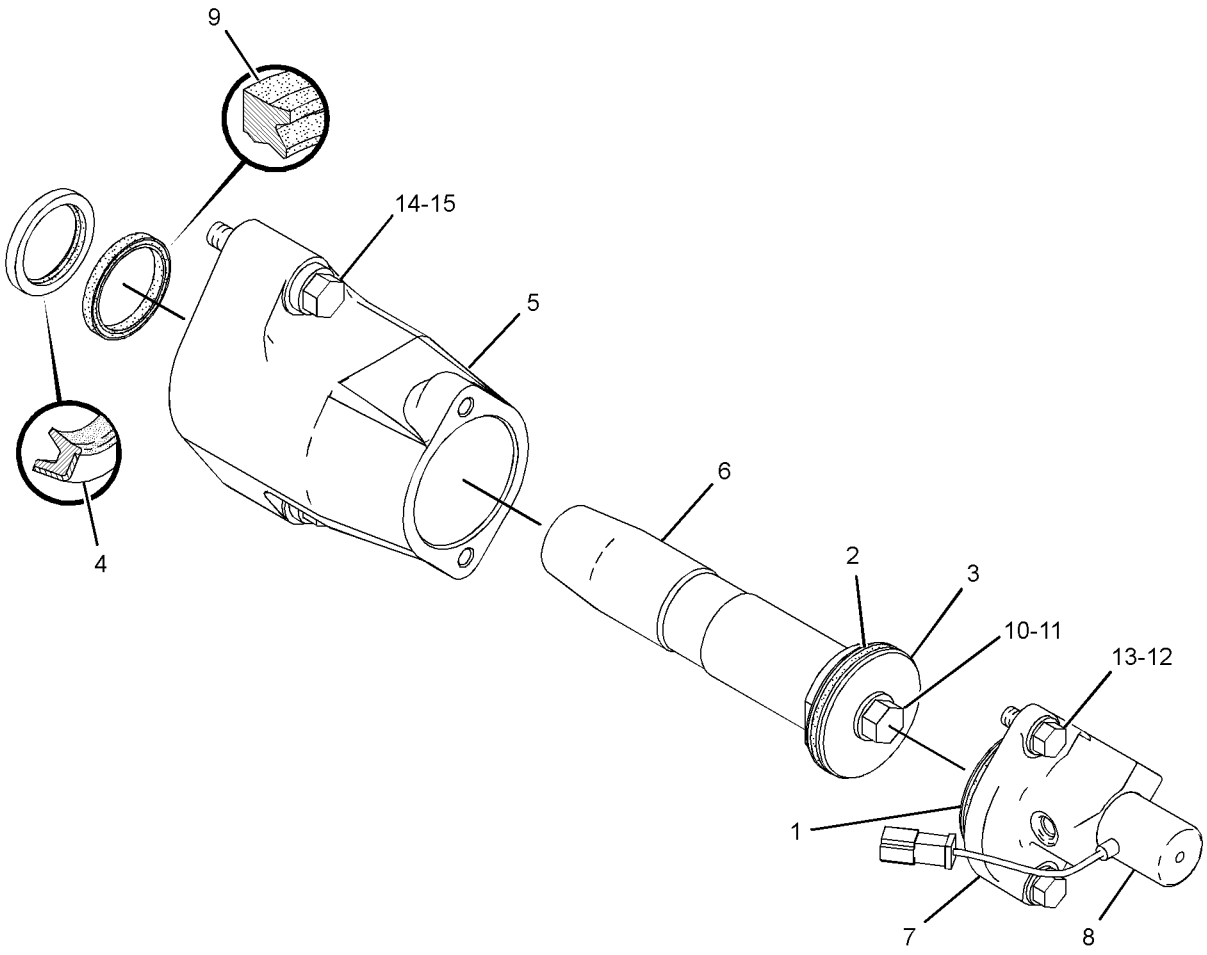

GRAPHIC #1 **<END>** g01702853

HYDRAULIC SYSTEM

112-2240 MANIFOLD GP-CONTROL

S/N: JJA1-UP
PART OF 166-3336 LINES GP-ACCUMULATOR
AN ATTACHMENT

SMCS-5051, 5069, 5264, 5467, 5479 **i02591821**

NOTE	REF NO	GRAPHIC REF	PART NUMBER	QTY	PART NAME 1 2 3 4 5 6 (PRODUCT LEVEL)	SEE PAGE
Y	1	1	**149-2610**	1	VALVE GP-SOLENOID (24-VOLT) (BLADE CUSHION)	462
	2	1	**8C-6162**	1	MANIFOLD	

Y-SEPARATE ILLUSTRATION

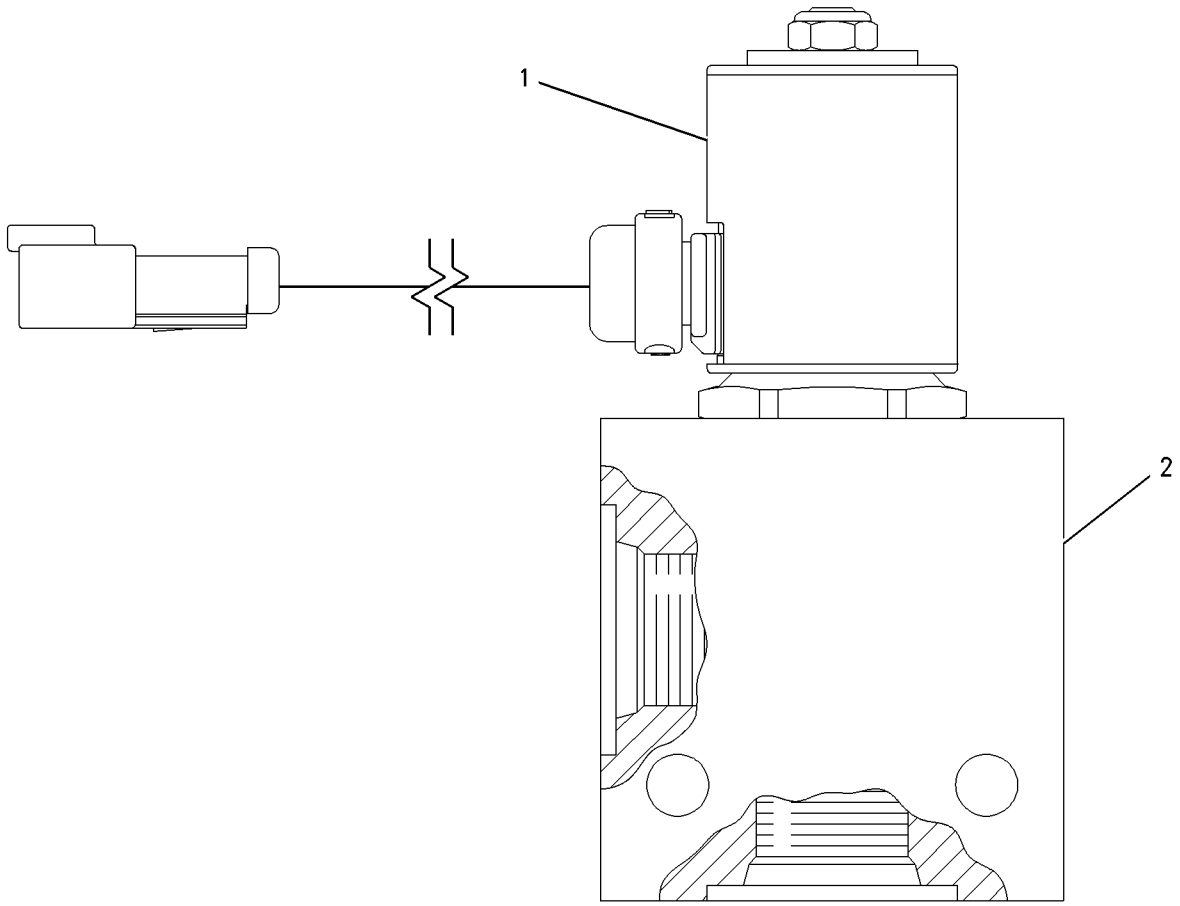

GRAPHIC #1 **<END>** g00995443

HYDRAULIC SYSTEM

239-9893 MANIFOLD GP-VALVE–LH

S/N: JJA1-UP

PART OF 250-0550 VALVE GP-BANK 5

AN ATTACHMENT

SMCS-5264 **i03643737**

NOTE	REF NO	GRAPHIC REF	PART NUMBER	QTY	PART NAME 1 2 3 4 5 6 (PRODUCT LEVEL)	SEE PAGE
J	1	1	**284-0815**	1	VALVE GP-CHECK E	
	2	1	**249-3251**	1	VALVE GP-CONTROL	
	3	1	**275-9638**	1	VALVE GP-CONTROL	
	4	1	**8C-6512**	4	BOLT-SOCKET HEAD (10-24X2-IN)	
	5	1	**241-5889**	1	VALVE GP-SHUTTLE	
	6	1	**266-1600**	1	VALVE GP-SOLENOID & MANIFOLD	
	7	1	**266-1599**	1	VALVE GP-SOLENOID & MANIFOLD	
	8	1	**9S-8003**	1	PLUG (HEX)	
	9	1	**3J-7354**	1	SEAL-O-RING	
	10	1	**9S-8001**	12	PLUG-O-RING (STRAIGHT THREAD O-RING)	
	11	1	**4J-7533**	12	SEAL-O-RING	
					AVAILABLE REPAIR KIT(S):	
J			**284-3045**	1	KIT-SEAL	

J-(KIT MARKED J SERVICES PARTS MARKED J)

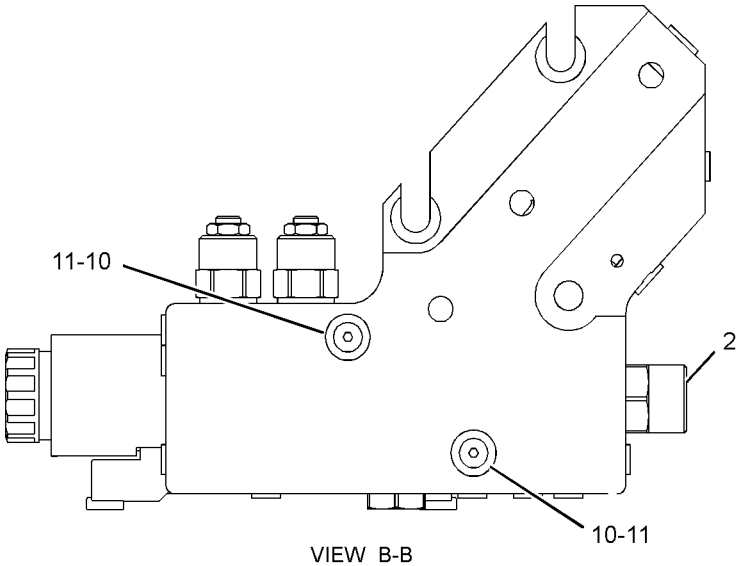

VIEW B-B

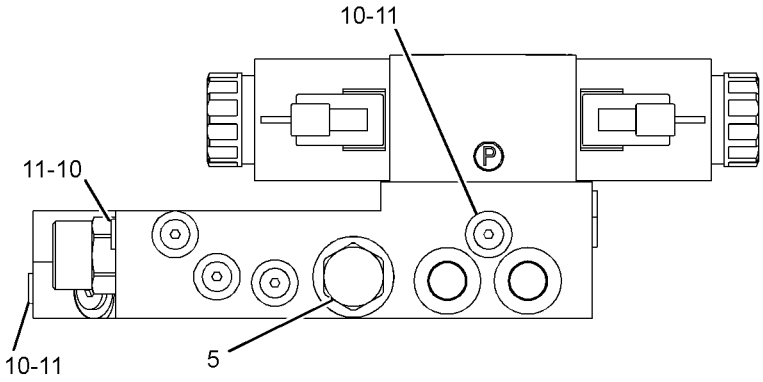

VIEW C-C

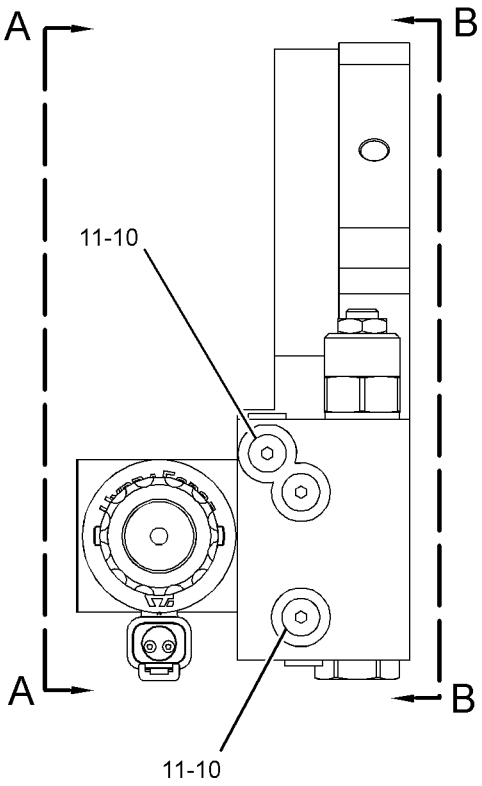

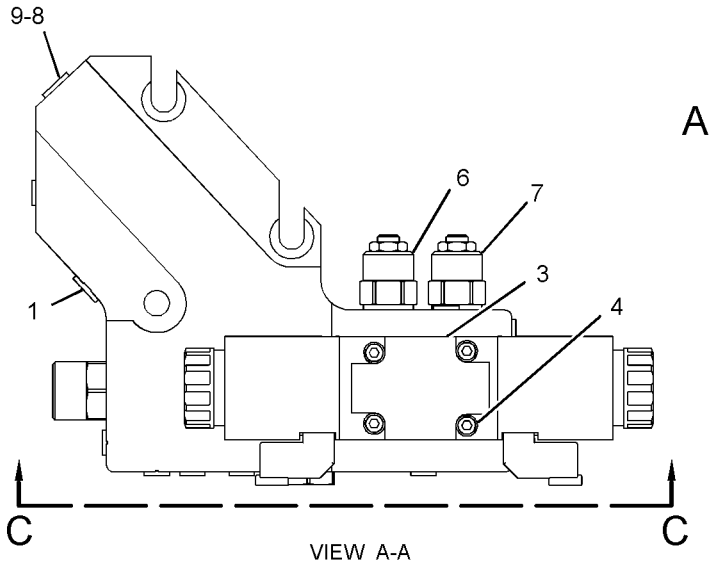

VIEW A-A

GRAPHIC #1 **<END>** g01249469

239-9894 MANIFOLD GP-VALVE–RH

S/N: JJA1-UP

PART OF 250-0544 VALVE GP-BANK 4, 341-6226 VALVE GP-BANK 6

AN ATTACHMENT

SMCS-5264 **i03643741**

NOTE	REF NO	GRAPHIC REF	PART NUMBER	QTY	PART NAME 1 2 3 4 5 6 (PRODUCT LEVEL)	SEE PAGE
J	1	1	**284-0815**	1	VALVE GP-CHECK E	
		1	**3J-7354**	1	SEAL-O-RING	
	2	1	**249-3251**	1	VALVE GP-CONTROL	
	3	1	**275-9638**	1	VALVE GP-CONTROL	
	4	1	**8C-6512**	4	BOLT-SOCKET HEAD (10-24X2-IN)	
	5	1	**241-5889**	1	VALVE GP-SHUTTLE	
	6	1	**266-1599**	1	VALVE GP-SOLENOID & MANIFOLD	
	7	1	**266-1598**	1	VALVE GP-COUNTERBALANCE	
	8	1	**9S-8003**	1	PLUG (HEX)	
	9	1	**3J-7354**	1	SEAL-O-RING	
	10	1	**9S-8001**	12	PLUG-O-RING (STRAIGHT THREAD O-RING)	
	11	1	**4J-7533**	12	SEAL-O-RING	
					AVAILABLE REPAIR KIT(S):	
J			**284-3045**	1	KIT-SEAL	

J-KIT MARKED J ICLUDES PARTS MARKED J

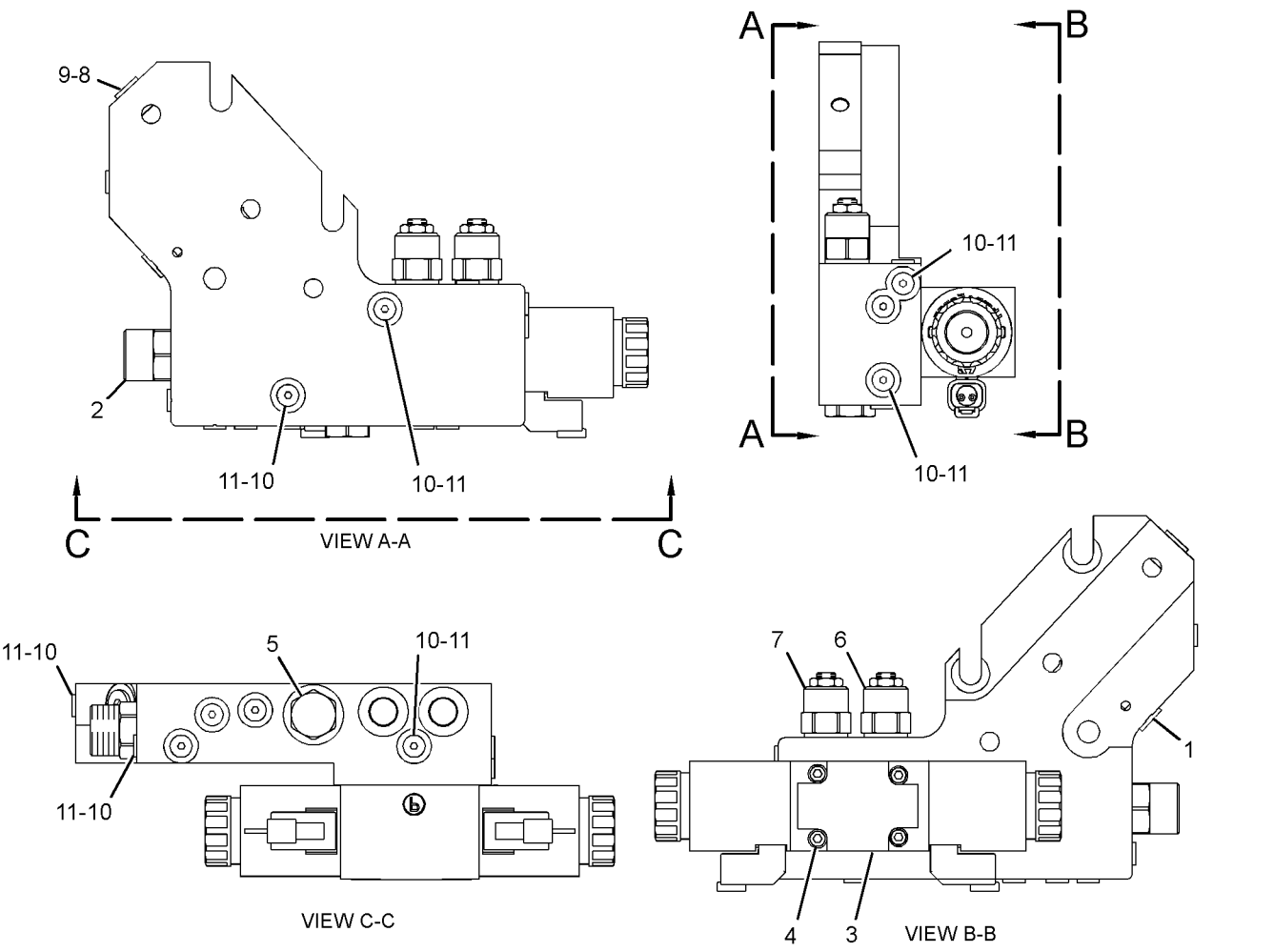

GRAPHIC #1 **<END>** g01249909

HYDRAULIC SYSTEM

105-3196 MOTOR GP-GEROTOR

S/N: JJA1-UP

PART OF 253-4677 DRIVE GP-CIRCLE

SMCS-5082 **i02205130**

NOTE	REF NO	GRAPHIC REF	PART NUMBER	QTY	PART NAME 1 2 3 4 5 6 (PRODUCT LEVEL)	SEE PAGE
	1	1	**9T-8051**	7	BOLT (3/8-24X4.12-IN)	
	2	1	**9T-8070**	1	HOUSING AS	
	3	1	**6Y-2934**	1	BEARING-ROLLER	
	4	1	**6Y-2933**	2	RING-THRUST	
	5	1	**6Y-2932**	1	BEARING-THRUST	
	6	1	**8T-1698**	1	BEARING AS-NEEDLE	
	7	1	**9T-9071**	1	SHIM	
	8	1	**9T-8058**	1	BACKUP	
	9	1	**9T-8059**	1	SEAL	
	10	1	**9T-8056**	1	SHAFT	
	11	1	**6Y-2935**	1	BEARING	
	12	1	**9T-8053**	5	SEAL	
	13	1	**9T-8054**	1	LINK	
	14	1	**9T-8061**	1	PLATE	
	15	1	**9T-8063**	1	ROTOR SET	
	16	1	**9T-8065**	1	MANIFOLD	
	17	1	**9J-4963**	1	RING	
	18	1	**9T-8069**	1	PLATE AS	
	19	1	**9T-8067**	1	COVER	
					AVAILABLE REPAIR KIT(S):	
			9T-9072	1	KIT-SEAL (MOTOR) (CIRCLE DRIVE)	
					(INCLUDES RING, SHIM, SEALS & GREASE PACK)	

105-3196 **MOTOR GP-GEROTOR** *(contd.)* **i02205130**

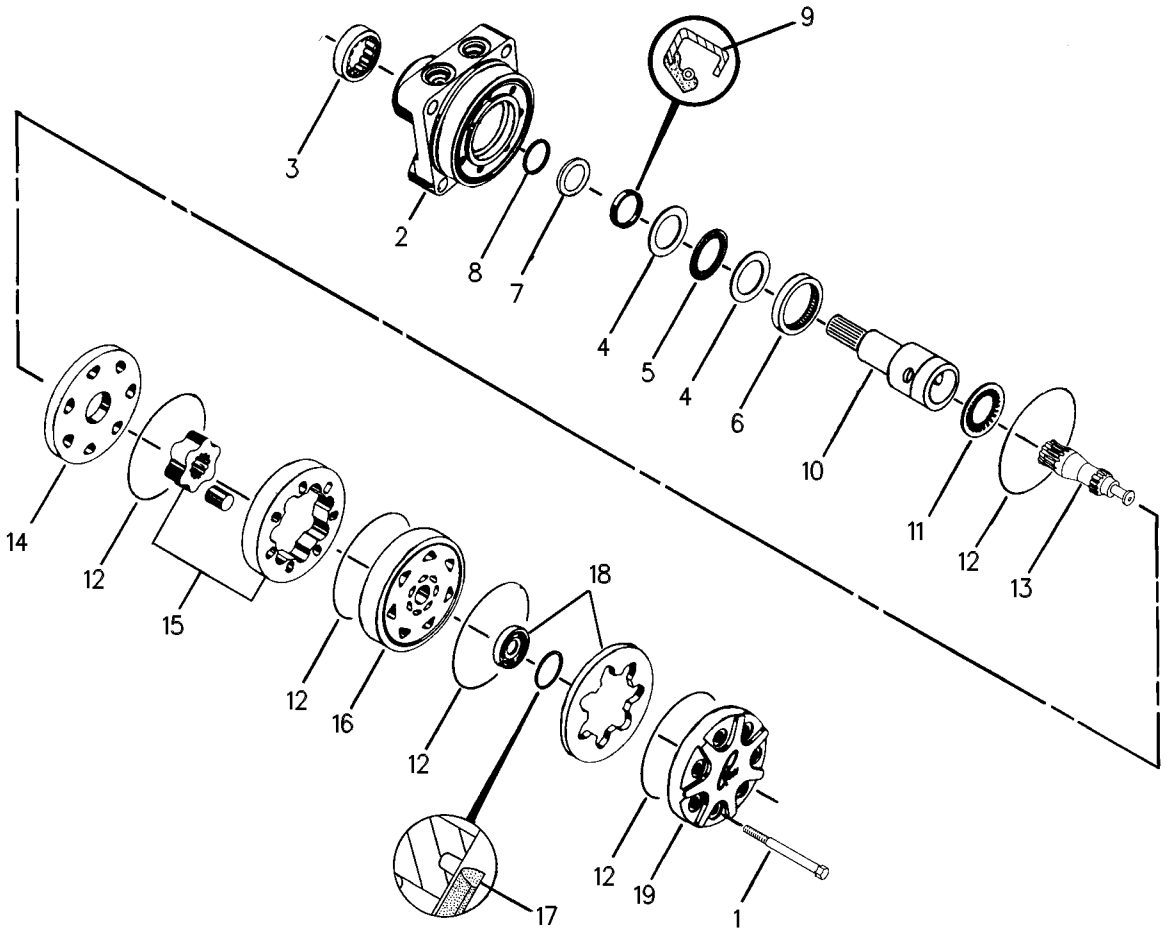

GRAPHIC #1 **<END>** g00108578

HYDRAULIC SYSTEM

299-5543 PUMP & MTG GP-STEERING

S/N: JJA1-UP

PART OF 346-3710 GENERAL AR

SMCS-4306, 4344 **i03571641**

NOTE	REF NO	GRAPHIC REF	PART NUMBER	QTY	PART NAME 1 2 3 4 5 6 (PRODUCT LEVEL)	SEE PAGE
	1	1	**1D-5120**	1	NUT-JAM (3/4-16-THD)	
	2	1	**5R-4787**	4	PLATE	
YR	3	1	**6E-3136**	1	PUMP GP-PISTON (STEERING)	387
	4	1	**112-4159**	4	MOUNTING AS	
	5	1	**8T-9389**	4	BOLT (1/2-13X2.75-IN)	
	6	1	**1B-8737**	1	KEY-WOODRUFF	
	7	1	**299-5545**	1	PLATE AS	
	8	1	**8T-4994**	1	WASHER-HARD (20X36.5X3.5-MM THK)	
	9	1	**6V-8765**	4	WASHER-HARD (15X26X3-MM THK)	
M	10	1	**8C-3425**	4	BOLT (M14X2X35-MM)	
M	11	1	**8T-4910**	6	BOLT (M12X1.75X60-MM)	
	12	1	**8T-7971**	6	WASHER-HARD (13.5X25.5X5-MM THK)	

M-METRIC PART
R-REMFG PART MAY BE AVAILABLE
Y-SEPARATE ILLUSTRATION

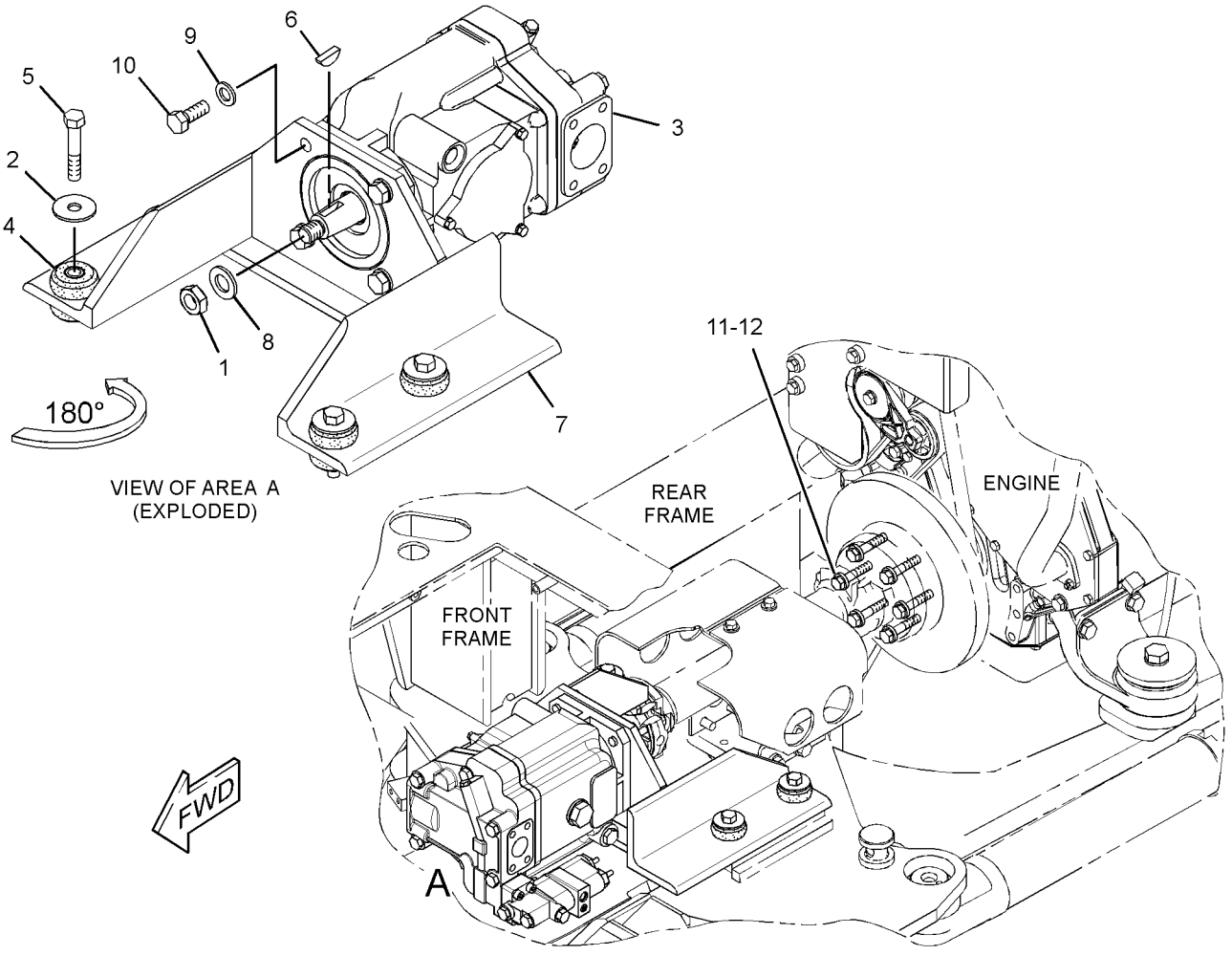

GRAPHIC #1 **<END>** g01698313

HYDRAULIC SYSTEM

6E-3136 PUMP GP-PISTON*R

S/N: JJA1-UP

PART OF 299-5543 PUMP & MTG GP-STEERING

SMCS-5070 **i03432324**

NOTE	REF NO	GRAPHIC REF	PART NUMBER	QTY	PART NAME 1 2 3 4 5 6 (PRODUCT LEVEL)	SEE PAGE
	1	1	**6E-6594**	1	BEARING-SWASH	
	2	1	**6E-4224**	1	PLUG-SWASHPLATE	
	3	1	**033-6036**	1	SEAL-O-RING	
	4	1	**102-2386**	1	HEAD-PUMP	
	5	1	**9T-1699**	1	SPRING	
	6	1	**9T-1710**	1	POPPET	
	7	1	**9T-1636**	1	SEAT	
	8	1	**6E-6596**	1	COVER-TRUNNION	
	9	1	**6V-3834**	1	SEAL-O-RING	
M	10	1	**3E-4302**	2	SCREW-FLAT HEAD (M4X0.7X10-MM)	
M	11	1	**6V-8214**	3	BOLT (M6X1X20-MM)	
	12	1	**6E-6597**	1	BEARING-SWASH	
M	13	1	**6V-7673**	2	BOLT (M12X1.75X50-MM)	
M	14	1	**8T-0372**	4	BOLT (M12X1.75X90-MM)	
Y	15	1	**104-3122**	1	VALVE GP-PUMP CONTROL (PRESSURE, FLOW COMPENSATOR)	449
	16	1	**109-3204**	3	SEAL-O-RING	
M	17	1	**6V-8337**	4	BOLT-SOCKET HEAD (M8X1.25X35-MM)	
	18	1	**095-0888**	2	PIN-SPRING	
	19	1	**102-2385**	1	SHAFT-PUMP	
	20	1	**102-2384**	1	HOUSING-PUMP	
	21	1	**006-8663**	1	RING	
	22	1	**8T-4750**	1	SEAL-LIP TYPE	
	23	1	**6E-6599**	1	KIT-BIAS PISTON	
					(INCLUDES SPRING,ROD,PISTON,SEAL)	
	24	1	**6E-6600**	1	SPRING-BIAS	
Y	25	1	**6E-6571**	1	ROTATING GP-PUMP (STEERING)	391
	26	1	**6E-6601**	1	GASKET	
	27	1	**7L-9061**	2	SEAL-O-RING	
	28	1	**3E-7417**	2	PLUG	
	29	1	**8T-7876**	2	SEAL-O-RING	
	30	1	**9T-1633**	1	PLATE	
B	31	1	**9T-2197**	1	SHIM PACK (INCLUDES 17-SHIMS)	
	32	1	**1P-6872**	1	CUP-BEARING	
	33	1	**004-9040**	1	CONE-BEARING	
	34	1	**9T-1652**	1	PIN	
	35	1	**6E-6602**	1	KIT-PISTON CONTROL	
					(INCLUDES ROD,PISTON,SEAL)	
	36	1	**167-1802**	1	SWASHPLATE GP	
		1	**167-1801**	2	STOP-SWASHPLATE	
		1	**1H-3937**	2	PIN	
	37	1	**7T-8273**	1	CUP-BEARING	
	38	1	**7T-8272**	1	CONE-BEARING	
	39	1	**3K-0360**	1	SEAL-O-RING	
	40	1	**9S-4185**	1	PLUG-O-RING	
	41	1	**104-3124**	1	SHIELD	

B-USE AS REQUIRED
M-METRIC PART
Y-SEPARATE ILLUSTRATION

6E-3136 PUMP GP-PISTON *(contd.)* i03432324

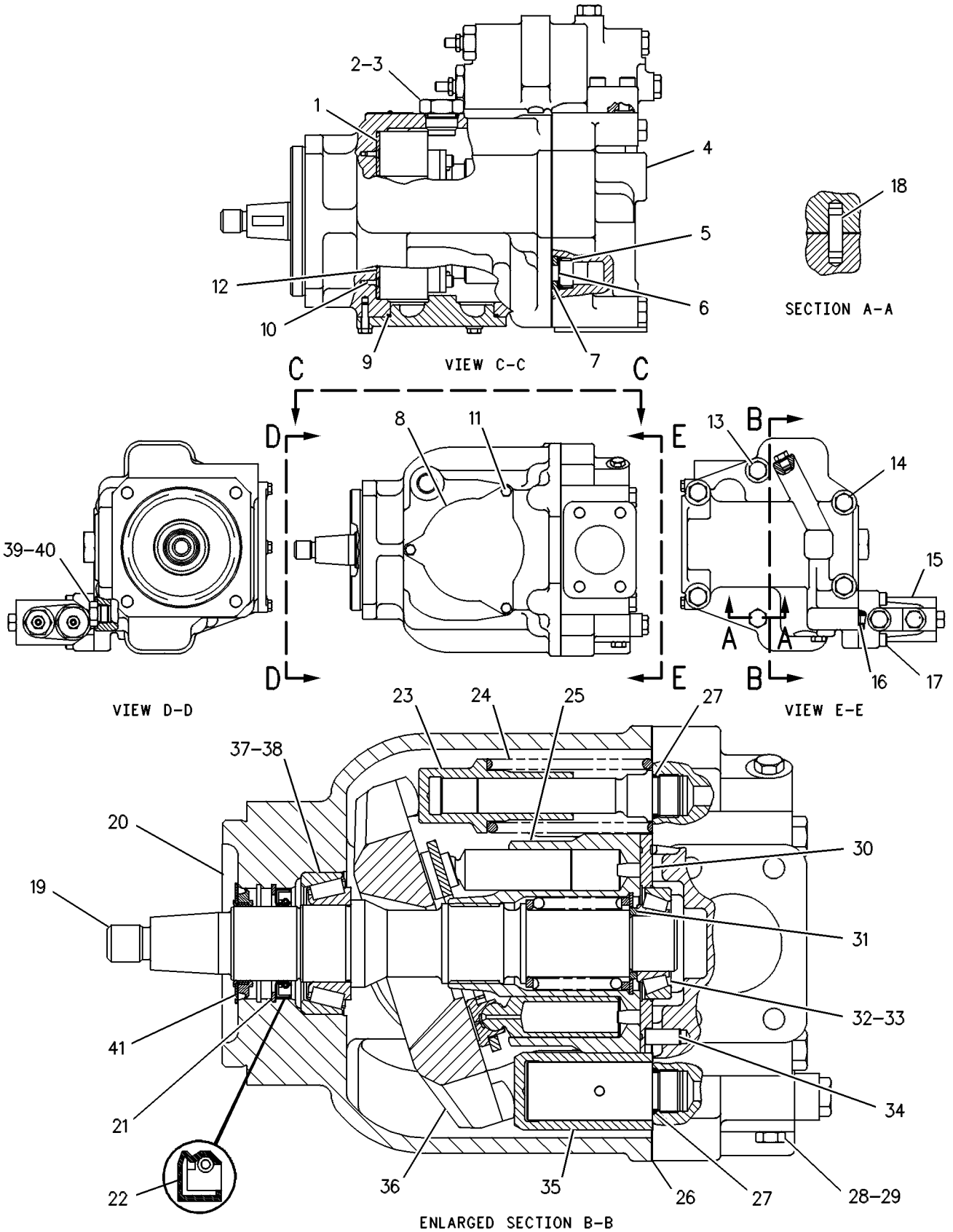

GRAPHIC #1 **<END>** g00108685

HYDRAULIC SYSTEM

6E-3137 PUMP GP-PISTON*R

S/N: JJA1-UP
PART OF 301-2237 LINES GP-PUMP
AN ATTACHMENT

SMCS-5070 **i03179021**

NOTE	REF NO	GRAPHIC REF	PART NUMBER	QTY	PART NAME 1 2 3 4 5 6 (PRODUCT LEVEL)	SEE PAGE
	1	1	**6E-4224**	1	PLUG-SWASHPLATE	
	2	1	**033-6036**	1	SEAL-O-RING	
	3	1	**100-3402**	1	BEARING-SWASH	
	4	1	**100-3405**	1	BEARING-SWASH	
M	5	1	**6V-8837**	3	BOLT (M6X1X16-MM)	
	6	1	**4F-4097**	1	SEAL-O-RING	
M	7	1	**3E-4302**	2	SCREW-FLAT HEAD (M4XO.7X1O-MM)	
	8	1	**100-3404**	1	COVER-TRUNNION	
	9	1	**9T-1636**	1	SEAT	
	10	1	**9T-1710**	1	POPPET	
	11	1	**9T-1699**	1	SPRING	
	12	1	**100-3403**	1	HEAD-PUMP	
B	13	1	**6E-1436**	1	SHIM PACK (INCLUDES 17-SHIMS)	
	14	1	**6Y-4280**	1	CONE-BEARING	
	15	1	**7T-9755**	1	CUP-BEARING	
	16	1	**9T-7775**	1	PLATE-VALVE	
	17	1	**3E-7417**	2	PLUG	
	18	1	**8T-7876**	2	SEAL-O-RING	
	19	1	**7L-9061**	2	SEAL-O-RING	
	20	1	**100-3413**	1	GASKET	
Y	21	1	**100-3412**	1	ROTATING GP-PUMP (STEERING)	392
	22	1	**100-3409**	1	SPRING-BIAS	
	23	1	**100-3408**	1	KIT-BIAS PISTON	
					(INCLUDES SPRING, ROD, PISTON, SEAL)	
	24	1	**002-1212**	1	CUP-BEARING	
	25	1	**2F-8509**	1	CONE-BEARING	
	26	1	**100-3401**	1	SHAFT-PUMP	
	27	1	**100-3407**	1	HOUSING-PUMP	
	28	1	**006-8663**	1	RING	
	29	1	**8T-4750**	1	SEAL-LIP TYPE	
Y	30	1	**100-3416**	1	SWASHPLATE GP	394
	31	1	**100-3415**	1	KIT-CONTROL PISTON	
					(INCLUDES SPRING, ROD, PISTON, SEAL)	
	32	1	**9T-1652**	1	PIN	
M	33	1	**6V-8336**	1	BOLT (M12X1.75X7O-MM)	
M	34	1	**6V-7673**	4	BOLT (M12X1.75X5O-MM)	
M	35	1	**8T-0372**	1	BOLT (M12X1.75X9O-MM)	
M	36	1	**6V-8337**	4	BOLT-SOCKET HEAD (M8X1.25X35-MM)	
Y	37	1	**104-3122**	1	VALVE GP-PUMP CONTROL (PRESSURE, FLOW COMPENSATOR)	449
	38	1	**9S-4190**	1	PLUG-O-RING	
	39	1	**033-6027**	1	SEAL-O-RING	
	40	1	**095-0888**	2	PIN-SPRING	
	41	1	**8T-5039**	3	SEAL-O-RING	
	42	1	**104-3124**	1	SHIELD	

B-USE AS REQUIRED
M-METRIC PART
Y-SEPARATE ILLUSTRATION

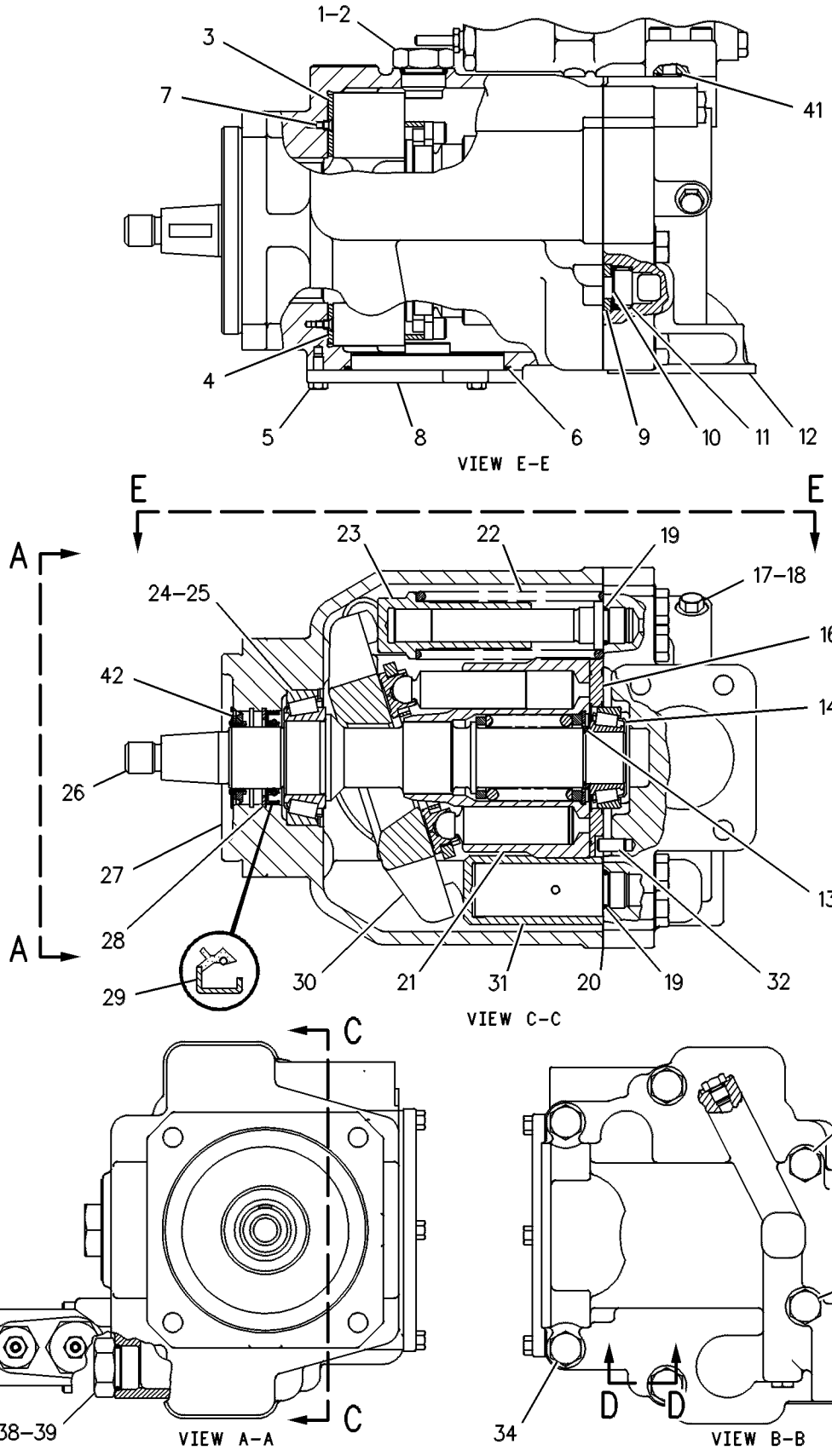

GRAPHIC #1 **<END>** g00108598

6E-6571 ROTATING GP-PUMP

S/N: JJA1-UP

PART OF 6E-3136 PUMP GP-PISTON

SMCS-5070 **i00131155**

NOTE	REF NO	GRAPHIC REF	PART NUMBER	QTY	PART NAME 1 2 3 4 5 6 (PRODUCT LEVEL)	SEE PAGE
	1	1	**6E-6604**	2	PLATE-SPACER	
	2	1	**6E-6605**	2	PLATE-LIMITER	
M	3	1	**3T-0849**	4	BOLT-SOCKET HEAD (M6X1X25-MM)	
	4	1	**9T-7755**	1	SPRING	
	5	1	**009-2069**	1	RING	
	6	1	**9T-7754**	1	GUIDE-OUTER	
	7	1	**9T-7757**	1	BARREL	
	8	1	**9T-7756**	1	GUIDE-INNER	
	9	1	**9T-7759**	1	PLATE-RETAINING	
	10	1	**9T-7761**	9	PISTON	

M-METRIC PART

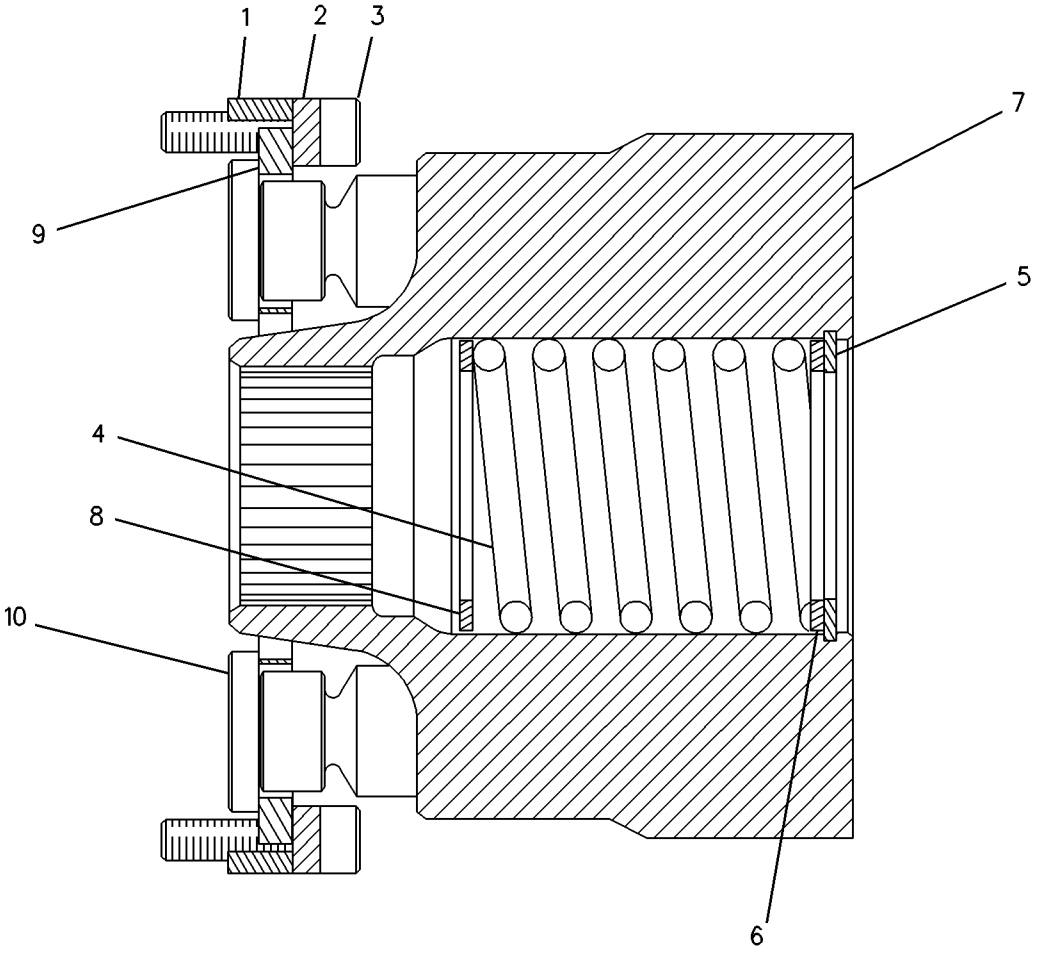

GRAPHIC #1 **<END>** g00083480

HYDRAULIC SYSTEM

100-3412 ROTATING GP-PUMP

S/N: JJA1-UP
PART OF 6E-3137 PUMP GP-PISTON
AN ATTACHMENT

SMCS-5070 **i00130809**

NOTE	REF NO	GRAPHIC REF	PART NUMBER	QTY	PART NAME 1 2 3 4 5 6 (PRODUCT LEVEL)	SEE PAGE
	1	1	**9T-7774**	1	BARREL	
	2	1	**3J-8500**	1	RING-RETAINING	
	3	1	**9T-7769**	1	GUIDE-OUTER	
M	4	1	**6V-5192**	4	BOLT-SOCKET HEAD (M8X1.25X30-MM)	
	5	1	**100-3410**	2	PLATE	
	6	1	**100-3411**	2	PLATE-SPACER	
	7	1	**9T-7765**	9	PISTON	
	8	1	**9T-7767**	1	PLATE-RETRACTION	
	9	1	**9T-7773**	1	GUIDE-INNER	
	10	1	**9T-7771**	1	SPRING	

M-METRIC PART

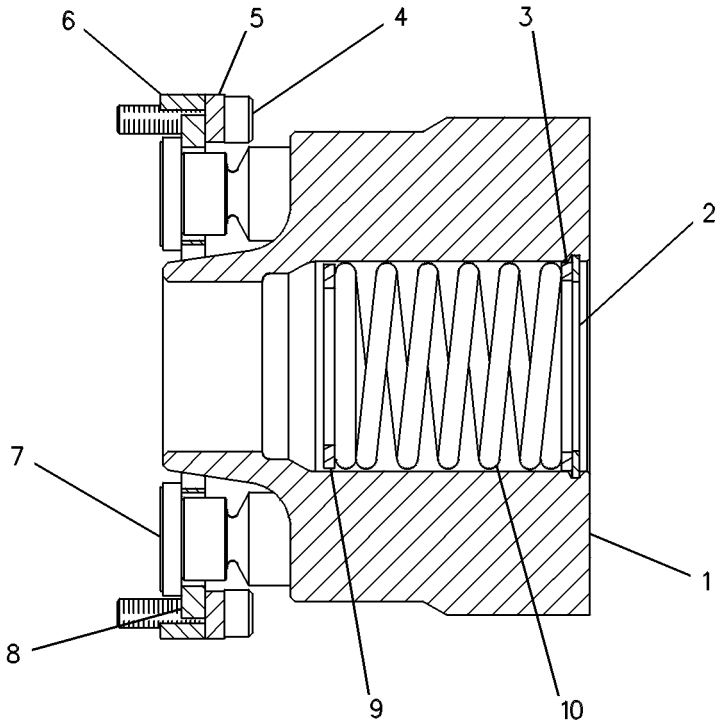

GRAPHIC #1 **<END>** g00084780

HYDRAULIC SYSTEM

311-0514 SHAFT GP-PUMP DRIVE

S/N: JJA1-UP

PART OF 346-3710 GENERAL AR

SMCS-3108 **i03246375**

NOTE	REF NO	GRAPHIC REF	PART NUMBER	QTY	PART NAME 1 2 3 4 5 6 (PRODUCT LEVEL)	SEE PAGE
	1	1	**7D-9267**	1	YOKE	
	2	1	**299-7700**	1	SLIP JOINT GP	
		1	**0L-0478**	8	BOLT (3/8-24X1.75-IN)	
		1	**5T-1362**	2	SPIDER & BEARING AS	
		1	**300-2688**	1	SHAFT AS-DRIVE	
	3	1	**0L-0478**	4	BOLT (3/8-24X1.75-IN)	
	4	1	**0S-1571**	4	BOLT (3/8-16X1.75-IN)	

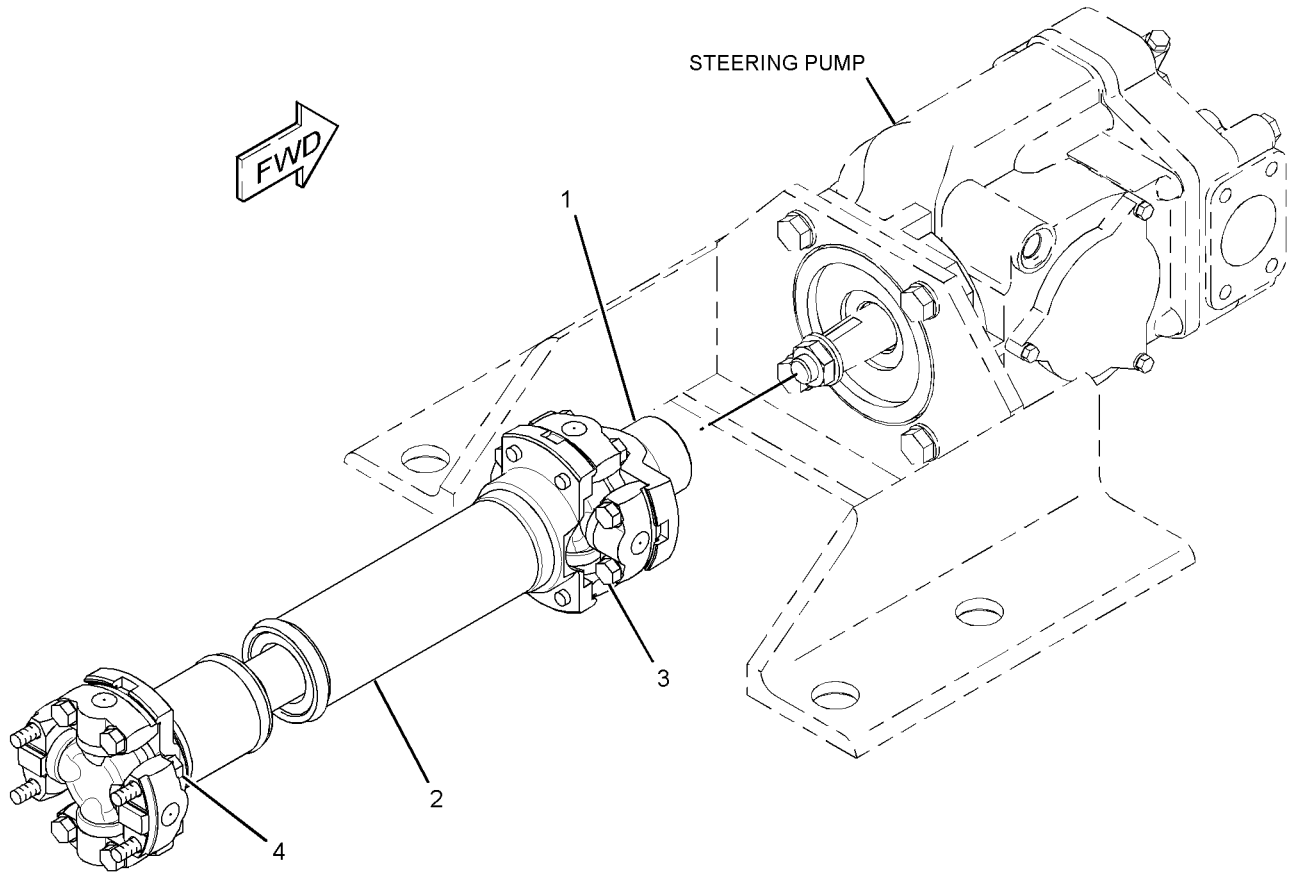

GRAPHIC #1 **<END>** g01703018

HYDRAULIC SYSTEM

100-3416 SWASHPLATE GP–VARIABLE

S/N: JJA1-UP
PART OF 6E-3137 PUMP GP-PISTON
AN ATTACHMENT

SMCS-5070 **i01093811**

NOTE	REF NO	GRAPHIC REF	PART NUMBER	QTY	PART NAME 1 2 3 4 5 6 (PRODUCT LEVEL)	SEE PAGE
	1	1	**139-0532**	2	BLOCK-STOP	
	2	1	**8F-7219**	2	SEAL-O-RING	

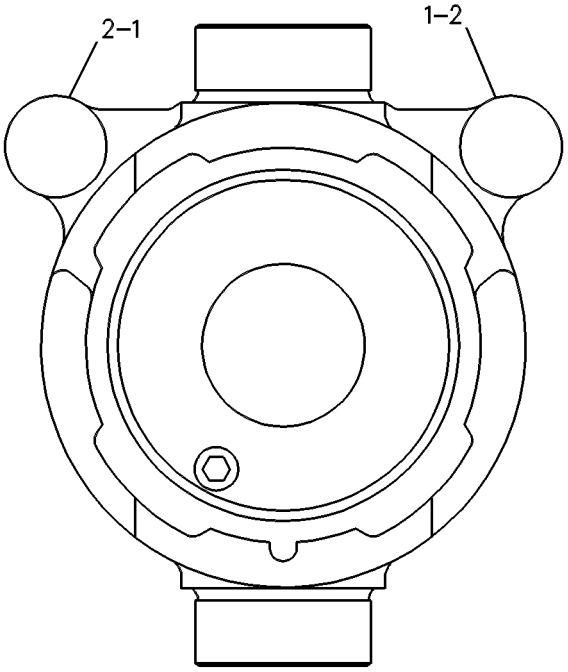

GRAPHIC #1 **<END>** g00088794

260-6502 SWIVEL GP—CIRCLE DRIVE

S/N: JJA1-UP

PART OF 106-4787 LINES GP-HYDRAULIC

ALSO AN ATTACHMENT

SMCS-5060 **i02322216**

NOTE	REF NO	GRAPHIC REF	PART NUMBER	QTY	PART NAME 1 2 3 4 5 6 (PRODUCT LEVEL)	SEE PAGE
B	1	1	**5J-1246**	6	SHIM (0.13-MM THK)	
	2	1	**8J-2331**	7	SEAL	
	3	1	**173-1008**	1	ROTOR	
	4	1	**173-1009**	1	RETAINER	
	5	1	**223-0580**	1	COVER	
	7	1	**260-6501**	1	BODY	
	8	1	**173-1007**	2	SEAL	
	9	1	**1P-3700**	4	SEAL-RECTANGULAR	
	10	1	**2H-3928**	7	SEAL-O-RING	
	11	1	**4J-9964**	2	SEAL	
	12	1	**5P-2566**	6	BOLT (1/2-13X1.5-IN)	
	13	1	**8T-4223**	4	WASHER-HARD (13.5X25.5X3-MM THK)	

B-USE AS REQUIRED

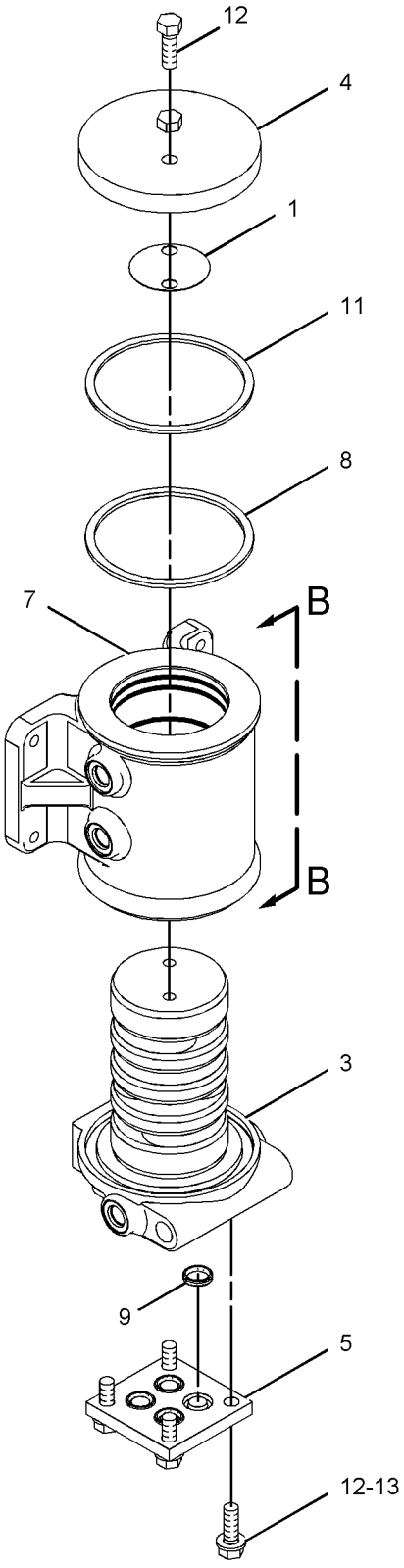

VIEW OF AREA A

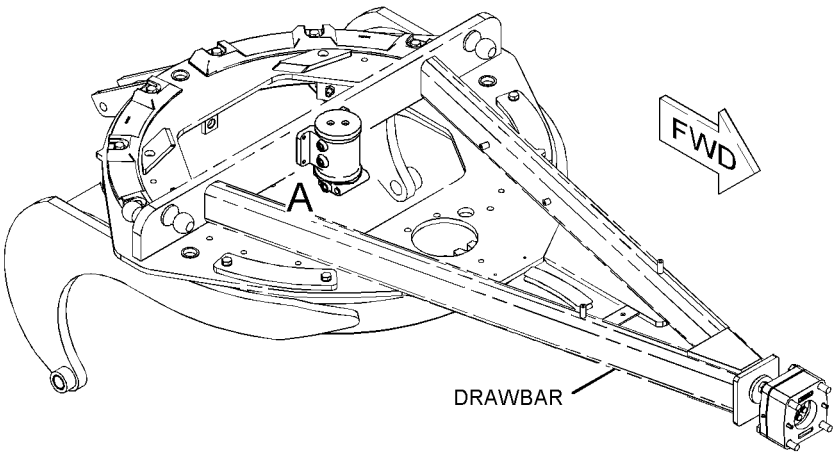

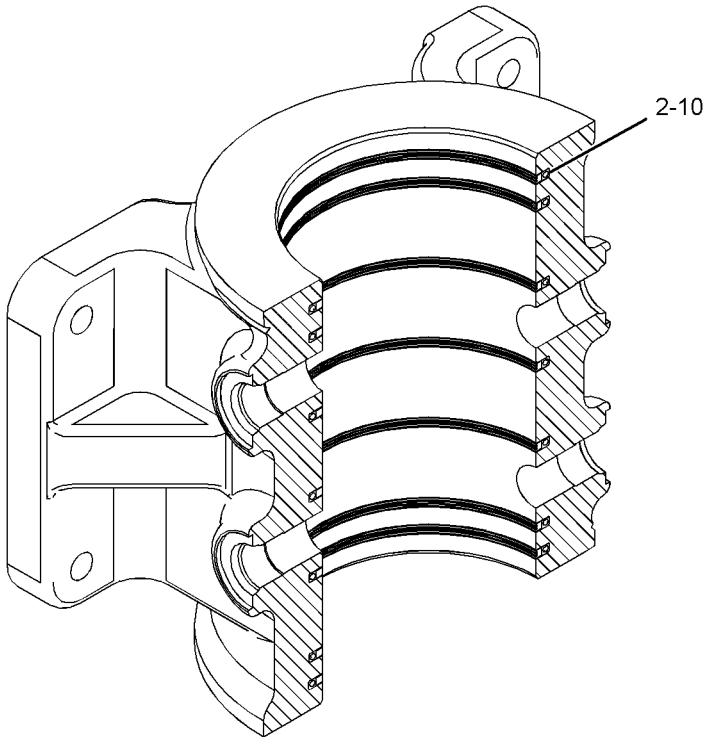

SECTION B-B

GRAPHIC #1 **<END>** g01142114

214-1984 TANK & FILTER GP-HYDRAULIC

S/N: JJA1-UP

PART OF 214-1983 TANK & MTG GP-HYDRAULIC

SMCS-4332, 5056, 5068 **i02938304**

NOTE	REF NO	GRAPHIC REF	PART NUMBER	QTY	PART NAME 1 2 3 4 5 6 (PRODUCT LEVEL)	SEE PAGE
	1	1	**4B-2913**	1	PIN-CLEVIS	
	2	1	**1R-0774**	1	FILTER ELEMENT AS-OIL (ADVANCED EFFICIENCY)	
	3	1	**2S-5100**	1	VALVE AS-MANUAL (HYDRAULIC TANK)	
	4	1	**3F-1547**	1	SEAL-O-RING	
	6	1	**4M-6921**	1	WASHER-SPRING	
	7	1	**5D-1911**	1	COVER-HYDRAULIC CAP	
	8	1	**226-2871**	1	ROD	
	9	1	**9J-1979**	1	RETAINER AS	
	12	1	**9J-3047**	1	STRAINER (HYDRAULIC)	
	13	1	**9M-7394**	1	LEVER	
	14	1	**141-9661**	1	SPACER (20X128X6-MM THK)	
	15	1	**226-2870**	1	CAP AS (HYDRAULIC TANK)	
	16	1	**214-1982**	1	TANK AS	
	17	1	**217-2661**	1	GAUGE-SIGHT (HYDRAULIC)	
	18	1	**086-0507**	1	PIN	
	19	1	**1L-5072**	1	DOWEL	
	20	1	**2D-4202**	1	PLATE	
	21	1	**2J-7761**	1	RING-RETAINING	
	22	1	**3K-6060**	1	LOCKNUT (3/8-16-THD)	
	23	1	**3G-0361**	1	GASKET (HYDRAULIC TANK FILL CAP)	
	25	1	**7D-1195**	1	SEAL-O-RING	
	26	1	**7H-1447**	1	CAP-FILLER (HYDRAULIC TANK)	
	27	1	**8T-2275**	1	BALL	
	28	1	**8T-4121**	4	WASHER-HARD (11X21X2.5-MM THK)	
M	29	1	**8T-4195**	4	BOLT (M10X1.5X30-MM)	
	30	1	**9H-6454**	1	GASKET	
	31	1	**3B-4610**	1	PIN-COTTER	

M-METRIC PART

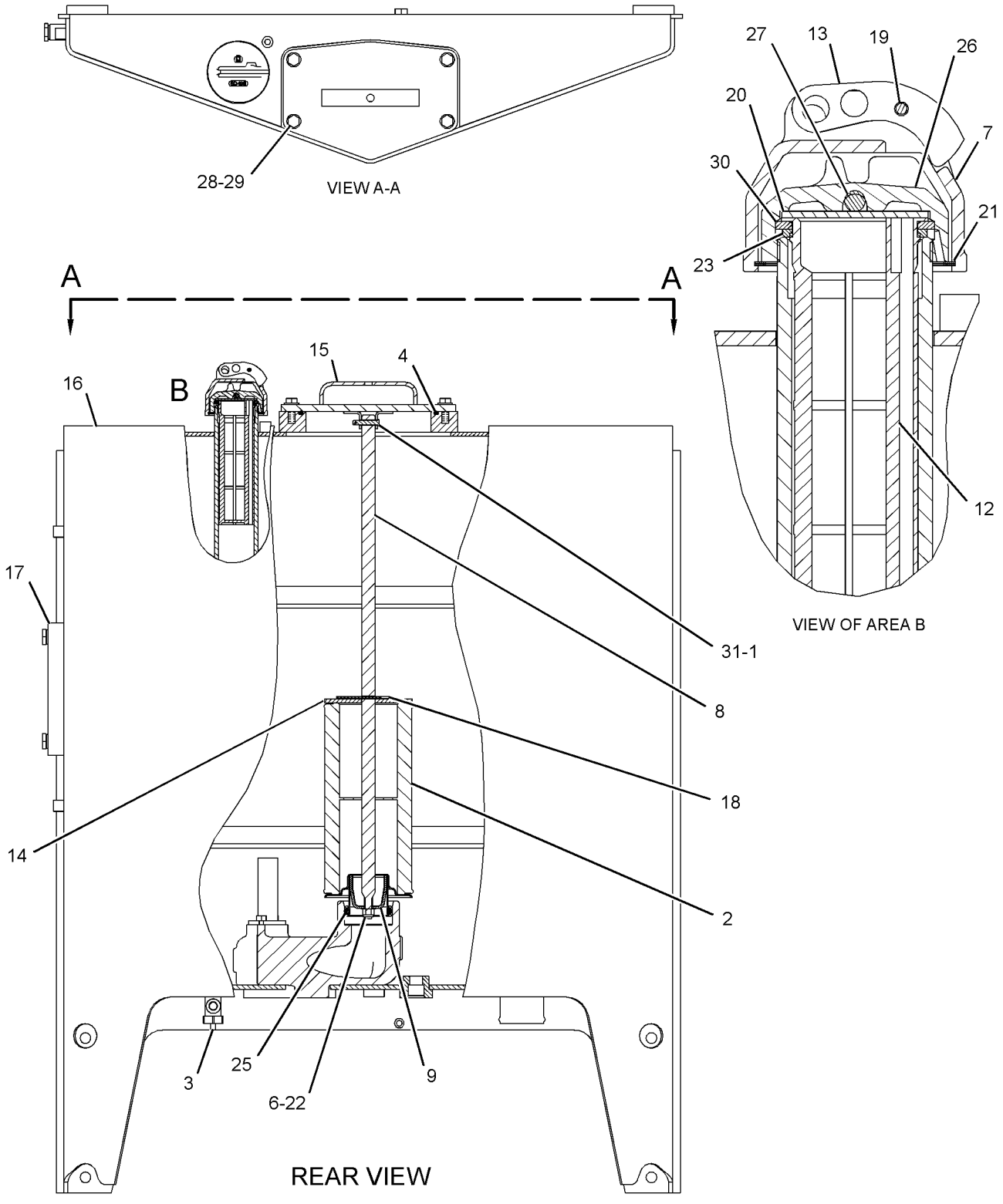

GRAPHIC #1 **<END>** g01514468

HYDRAULIC SYSTEM

214-1983 TANK & MTG GP-HYDRAULIC

S/N: JJA1-UP

PART OF 346-3710 GENERAL AR

SMCS-4332, 5056, 5068 **i03501061**

NOTE	REF NO	GRAPHIC REF	PART NUMBER	QTY	PART NAME 1 2 3 4 5 6 (PRODUCT LEVEL)	SEE PAGE
Y	1	1	*214-1984*	1	TANK & FILTER GP-HYDRAULIC	397
	2	1	**4D-7794**	3	CLIP	
	3	1	**246-2641**	1	PADLOCK GP	
		1	**5P-8500**	1	KEY	
	4	1	**7X-0325**	4	BOLT (1/2-13X2.5-IN)	
	5	1	**8T-4121**	3	WASHER-HARD (11X21X2.5-MM THK)	
M	6	1	**8T-4191**	3	BOLT (M10X1.5X16-MM)	
	7	1	**8T-4223**	4	WASHER-HARD (13.5X25.5X3-MM THK)	

M-METRIC PART
Y-SEPARATE ILLUSTRATION

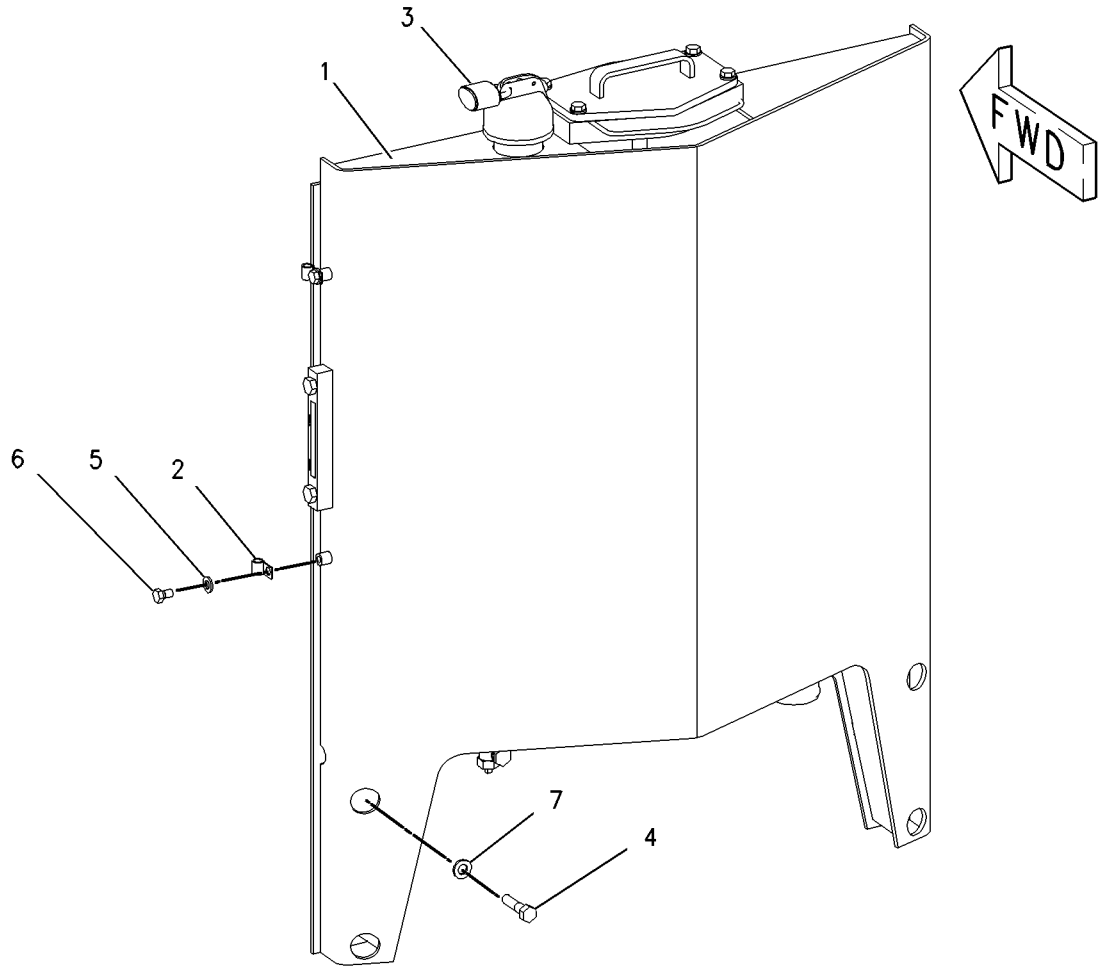

GRAPHIC #1 **<END>** g00894365

HYDRAULIC SYSTEM

341-6675 VALVE & LINKAGE GP

S/N: JJA1-UP

AN ATTACHMENT

SMCS-5051, 5063 **i03627275**

NOTE	REF NO	GRAPHIC REF	PART NUMBER	QTY	PART NAME 1 2 3 4 5 6 (PRODUCT LEVEL)	SEE PAGE
Y	1	1	*341-6220*	1	VALVE GP-BANK 6 (RH)	419
Y	2	1	**124-3329**	1	VALVE GP-BANK 5 (LH)	416
	3	1	**8X-5499**	2	RETAINER	
	4	1	**101-2457**	1	LEVER (RIPPER)	
	4A	1	**101-2457**	1	LEVER (ARTICULATION)	
	5	1	**8D-5634**	1	LEVER (BLADE LIFT, LH)	
	5A	1	**8D-5634**	1	LEVER (CENTERSHIFT)	
	6	1	**8X-4277**	11	ROD AS	
					(EACH INCLUDES)	
		1	**6V-8186**	1	NUT-FULL (5/16-24-THD)	
		1	**7H-3641**	1	END-ROD (5/16-24-THD)	
		1	**8L-8598**	1	ROD END	
		1	**146-0705**	1	ROD	
	7	1	**8D-5633**	1	LEVER (SIDESHIFT)	
	7A	1	**8D-5633**	1	LEVER (WHEEL LEAN)	
	8	1	**101-2458**	1	LEVER (BLADE TIP)	
	8A	1	**101-2458**	1	LEVER (SCARIFIER)	
	9	1	**137-4515**	2	BUSHING	
	10	1	**8D-5640**	13	BEARING	
B	11	1	**8D-5636**	4	SHIM (0.254-MM THK)	
B	12	1	**8D-5637**	4	SHIM (0.762-MM THK)	
	13	1	**6L-1962**	11	NUT-JAM (3/8-24-THD)	
	14	1	**8T-9043**	22	BOLT (5/16-18X0.875-IN)	
	15	1	**3F-9556**	22	LOCKWASHER	
	16	1	**8D-5641**	11	BEARING	
	17	1	**2G-6757**	1	KNOB-BLADE LIFT (LH)	
M	18	1	**8T-4136**	4	BOLT (M10X1.5X25-MM)	
	19	1	**2G-6749**	1	KNOB-SIDESHIFT	
	20	1	**2G-6747**	1	KNOB-BLADE TIP	
	21	1	**8D-5632**	1	LEVER (CIRCLE DRIVE)	
	21A	1	**8D-5632**	1	LEVER (BLADE LIFT, RH)	
	22	1	**2G-6751**	1	KNOB-CIRCLE DRIVE	
	23	1	**2G-6748**	1	KNOB-BLADE LIFT (RH)	
	24	1	**2G-6756**	1	KNOB-WHEEL LEAN	
	25	1	**2G-6752**	1	KNOB-ARTICULATION	
	26	1	**2G-6755**	1	KNOB-CENTERSHIFT	
	27	1	**5P-1075**	2	WASHER-HARD (10.2X22.5X3-MM THK)	
	28	1	**9M-1853**	6	MOUNTING	
	29	1	**5P-1076**	6	WASHER-HARD (13.5X30X4-MM THK)	
	30	1	**104-7740**	1	PLATE AS (LH)	
		1	**1F-0748**	2	NUT-WELD (1/2-13-THD)	
	31	1	**104-7419**	1	PLATE AS (RH)	
		1	**1F-0748**	2	NUT-WELD (1/2-13-THD)	
	32	1	**2G-6753**	1	KNOB-SCARIFIER	
	33	1	**104-7429**	2	PLATE	
	34	1	**137-4516**	1	SHAFT	
	35	1	**8T-4121**	8	WASHER-HARD (11X21X2.5-MM THK)	
	36	1	**6B-0933**	4	SPACER (10.31X19.05X6.35-MM THK)	
	37	1	**5P-2424**	6	BOLT (1/2-13X2.25-IN)	
	38	1	**6V-8188**	2	NUT (1/2-13-THD)	
M	39	1	**8T-4195**	4	BOLT (M10X1.5X30-MM)	
	40	1	**2G-6754**	1	KNOB (BULLDOZER LIFT, PLOW)	
	41	1	**2G-6740**	1	KNOB-RIPPER	
	42	1	**103-1597**	1	LEVER (BULLDOZER LIFT, PLOW)	
	43	1	**8W-0456**	2	SHAFT	
	44	1	**8F-6437**	6	WASHER (13.5X50.8X4.76-MM THK)	

341-6675 **VALVE & LINKAGE GP** *(contd.)* **i03627275**

NOTE	REF NO	GRAPHIC REF	PART NUMBER	QTY	PART NAME 1 2 3 4 5 6 (PRODUCT LEVEL)	SEE PAGE
	45	1	**4L-6459**	2	BOLT (3/8-16X2.5-IN)	

B-USE AS REQUIRED
M-METRIC PART
Y-SEPARATE ILLUSTRATION

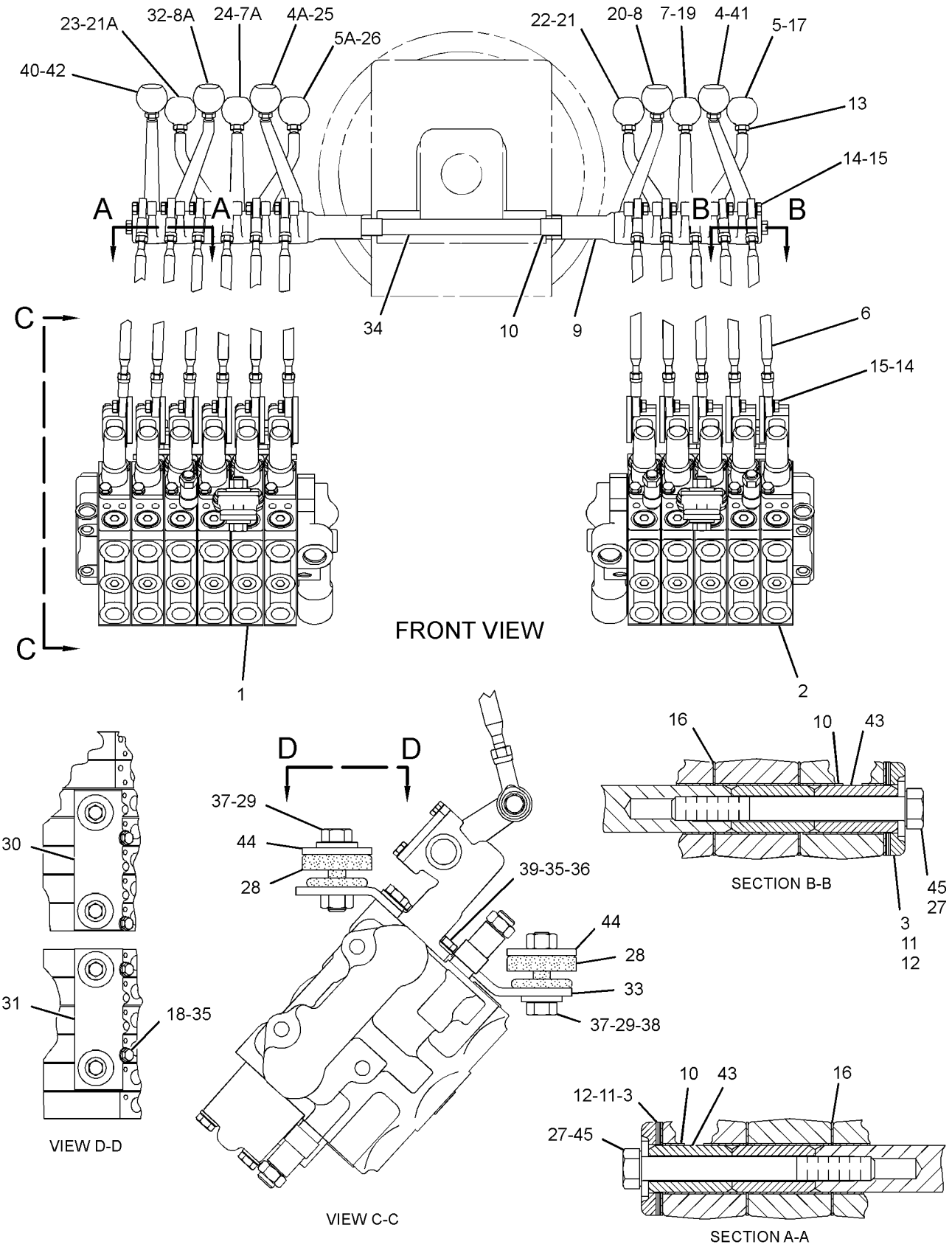

GRAPHIC #1 **<END>** g01943283

HYDRAULIC SYSTEM

341-8565 VALVE & LINKAGE GP—6-BANK, RH; 5-BANK, LH

S/N: JJA1-UP

AN ATTACHMENT

SMCS-5051, 5063 **i03627290**

NOTE	REF NO	GRAPHIC REF	PART NUMBER	QTY	PART NAME 1 2 3 4 5 6 (PRODUCT LEVEL)	SEE PAGE
	1	1	**3F-9556**	22	LOCKWASHER	
	2	1	**6B-0933**	4	SPACER (10.31X19.05X6.35-MM THK)	
	3	1	**6L-1962**	11	NUT-JAM (3/8-24-THD)	
	4	1	**8D-5632**	1	LEVER (CIRCLE DRIVE)	
	4A	1	**8D-5632**	1	LEVER (BLADE LIFT, RH)	
	5	1	**8D-5633**	1	LEVER (SIDESHIFT)	
	5A	1	**8D-5633**	1	LEVER (WHEEL LEAN)	
	6	1	**8D-5634**	1	LEVER (BLADE LIFT, LH)	
	6A	1	**8D-5634**	1	LEVER (CENTERSHIFT)	
B	7	1	**8D-5636**	4	SHIM (0.254-MM THK)	
B	8	1	**8D-5637**	4	SHIM (0.762-MM THK)	
	9	1	**8D-5640**	13	BEARING	
	10	1	**8D-5641**	11	BEARING	
	11	1	**8W-0456**	2	SHAFT	
	12	1	**8X-4277**	11	ROD AS	
					(EACH INCLUDES)	
		1	**6V-8186**	1	NUT-FULL (5/16-24-THD)	
		1	**7H-3641**	1	END-ROD (5/16-24-THD)	
		1	**8L-8598**	1	ROD END	
		1	**146-0705**	1	ROD	
	13	1	**8X-5499**	2	RETAINER	
	14	1	**9M-1853**	6	MOUNTING	
	15	1	**101-2457**	1	LEVER (RIPPER)	
	15A	1	**101-2457**	1	LEVER (ARTICULATION)	
	16	1	**101-2458**	1	LEVER (BLADE TIP)	
	16A	1	**101-2458**	1	LEVER (SCARIFIER)	
	17	1	**103-1597**	1	LEVER (BULLDOZER LIFT, PLOW)	
	18	1	**104-7419**	1	PLATE AS (RH)	
		1	**1F-0748**	2	NUT-WELD (1/2-13-THD)	
	19	1	**104-7429**	2	PLATE	
	20	1	**104-7740**	1	PLATE AS (LH)	
		1	**1F-0748**	2	NUT-WELD (1/2-13-THD)	
	21	1	**137-4515**	2	BUSHING	
	22	1	**137-4516**	1	SHAFT	
	23	1	*164-5608*	2	CONNECTOR AS	
					(EACH INCLUDES)	
		1	**8T-1687**	1	CONNECTOR	
		1	**3K-0360**	1	SEAL-O-RING	
		1	**6V-8398**	1	SEAL-O-RING	
	24	1	**244-2585**	1	TUBE AS	
	25	1	**244-2589**	1	TUBE AS	
	26	1	**244-2594**	1	TUBE AS	
	27	1	**244-2598**	1	TUBE AS	
Y	28	1	**250-0550**	1	VALVE GP-BANK 5 (LH)	417
Y	29	1	**341-6226**	1	VALVE GP-BANK 6 (RH)	420
	30	1	**2G-6754**	1	KNOB (BULLDOZER LIFT, PLOW)	
	31	1	*148-8318*	2	CONNECTOR AS	
					(EACH INCLUDES)	
		1	**6V-8634**	1	CONNECTOR	
		1	**3K-0360**	1	SEAL-O-RING	
		1	**6V-8397**	1	SEAL-O-RING	
	32	1	*206-5123*	2	TEE AS	
					(EACH INCLUDES)	
		1	**206-5122**	1	TEE	
		1	**6V-8397**	1	SEAL-O-RING	
		1	**6V-8398**	1	SEAL-O-RING	

341-8565 VALVE & LINKAGE GP *(contd.)* i03627290

NOTE	REF NO	GRAPHIC REF	PART NUMBER	QTY	PART NAME 1 2 3 4 5 6 (PRODUCT LEVEL)	SEE PAGE
	33	1	**2G-6740**	1	KNOB-RIPPER	
	34	1	**2G-6747**	1	KNOB-BLADE TIP	
	35	1	**2G-6748**	1	KNOB-BLADE LIFT (RH)	
	36	1	**2G-6749**	1	KNOB-SIDESHIFT	
	37	1	**2G-6751**	1	KNOB-CIRCLE DRIVE	
	38	1	**2G-6752**	1	KNOB-ARTICULATION	
	39	1	**2G-6753**	1	KNOB-SCARIFIER	
	40	1	**2G-6755**	1	KNOB-CENTERSHIFT	
	41	1	**2G-6756**	1	KNOB-WHEEL LEAN	
	42	1	**2G-6757**	1	KNOB-BLADE LIFT (LH)	
	43	1	**3J-1907**	4	SEAL-O-RING	
	44	1	**4L-6459**	2	BOLT (3/8-16X2.5-IN)	
	45	1	**5P-1075**	2	WASHER-HARD (10.2X22.5X3-MM THK)	
	46	1	**5P-1076**	6	WASHER-HARD (13.5X30X4-MM THK)	
	47	1	**5P-2424**	6	BOLT (1/2-13X2.25-IN)	
	48	1	**6V-8188**	2	NUT (1/2-13-THD)	
	49	1	**6V-8397**	8	SEAL-O-RING	
	50	1	**6V-9836**	2	TEE-SWIVEL	
	51	1	**8F-6437**	6	WASHER (13.5X50.8X4.76-MM THK)	
	52	1	**8T-4121**	8	WASHER-HARD (11X21X2.5-MM THK)	
M	53	1	**8T-4136**	4	BOLT (M10X1.5X25-MM)	
M	54	1	**8T-4195**	4	BOLT (M10X1.5X30-MM)	
	55	1	**8T-9041**	4	CONNECTOR	
	56	1	**8T-9043**	22	BOLT (5/16-18X0.875-IN)	

B-USE AS REQUIRED
M-METRIC PART
Y-SEPARATE ILLUSTRATION

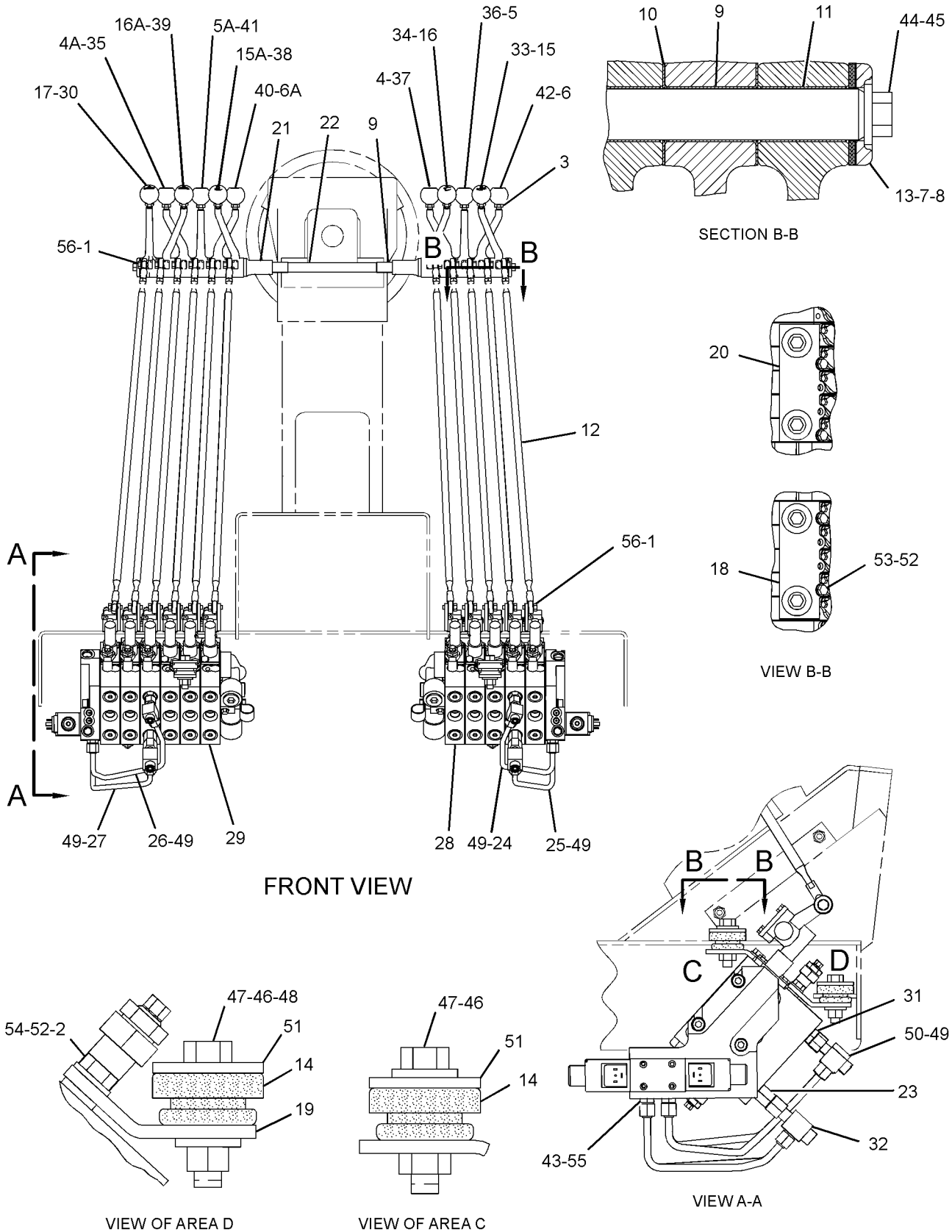

GRAPHIC #1 **<END>** g01943399

HYDRAULIC SYSTEM

342-2154 VALVE & LINKAGE GP—4-BANK, RH; 4-BANK, LH

S/N: JJA1-UP

PART OF 346-3710 GENERAL AR

SMCS-5051, 5063 **i03572513**

NOTE	REF NO	GRAPHIC REF	PART NUMBER	QTY	PART NAME 1 2 3 4 5 6 (PRODUCT LEVEL)	SEE PAGE
Y	1	1	**124-3325**	1	VALVE GP-BANK 4 (RH)	413
Y	2	1	**124-3327**	1	VALVE GP-BANK 4 (LH)	414
	3	1	**8X-5498**	2	RETAINER	
	4	1	**101-2457**	1	LEVER (ARTICULATION)	
	5	1	**8D-5634**	1	LEVER (BLADE LIFT, LH)	
	5A	1	**8D-5634**	1	LEVER (CENTERSHIFT)	
	6	1	*8X-4277*	8	ROD AS	
					(EACH INCLUDES)	
		1	**6V-8186**	1	NUT-FULL (5/16-24-THD)	
		1	**7H-3641**	1	END-ROD (5/16-24-THD)	
		1	**8L-8598**	1	ROD END	
		1	**146-0705**	1	ROD	
	7	1	**8D-5633**	1	LEVER (SIDESHIFT)	
	7A	1	**8D-5633**	1	LEVER (WHEEL LEAN)	
	8	1	**101-2458**	1	LEVER (BLADE TIP)	
	9	1	**137-4515**	2	BUSHING	
	10	1	**8D-5640**	10	BEARING	
B	11	1	**8D-5636**	4	SHIM (0.254-MM THK)	
B	12	1	**8D-5637**	4	SHIM (0.762-MM THK)	
	13	1	**6L-1962**	8	NUT-JAM (3/8-24-THD)	
	14	1	**8T-9043**	16	BOLT (5/16-18X0.875-IN)	
	15	1	**3F-9556**	16	LOCKWASHER	
	16	1	**9B-7237**	2	BOLT (3/8-16X1.25-IN)	
	17	1	**8D-5641**	8	BEARING	
	18	1	**2G-6757**	1	KNOB-BLADE LIFT (LH)	
M	19	1	**8T-4136**	4	BOLT (M10X1.5X25-MM)	
	20	1	**2G-6749**	1	KNOB-SIDESHIFT	
	21	1	**2G-6747**	1	KNOB-BLADE TIP	
	22	1	**8D-5632**	1	LEVER (CIRCLE DRIVE)	
	22A	1	**8D-5632**	1	LEVER (BLADE LIFT, RH)	
	23	1	**2G-6751**	1	KNOB-CIRCLE DRIVE	
	24	1	**2G-6748**	1	KNOB-BLADE LIFT (RH)	
	25	1	**2G-6756**	1	KNOB-WHEEL LEAN	
	26	1	**2G-6752**	1	KNOB-ARTICULATION	
	27	1	**2G-6755**	1	KNOB-CENTERSHIFT	
	28	1	**5P-1075**	2	WASHER-HARD (10.2X22.5X3-MM THK)	
	29	1	**9M-1853**	6	MOUNTING	
	30	1	**5P-1076**	6	WASHER-HARD (13.5X30X4-MM THK)	
	31	1	**104-7740**	1	PLATE AS (LH)	
		1	**1F-0748**	2	NUT-WELD (1/2-13-THD)	
	32	1	**104-7419**	1	PLATE AS (RH)	
		1	**1F-0748**	2	NUT-WELD (1/2-13-THD)	
	33	1	**104-7429**	2	PLATE	
	34	1	**137-4516**	1	SHAFT	
	35	1	**8T-4121**	8	WASHER-HARD (11X21X2.5-MM THK)	
	36	1	**6B-0933**	4	SPACER (10.31X19.05X6.35-MM THK)	
	37	1	**5P-2424**	6	BOLT (1/2-13X2.25-IN)	
	38	1	**6V-8188**	2	NUT (1/2-13-THD)	
M	39	1	**8T-4195**	4	BOLT (M10X1.5X30-MM)	
	40	1	**8F-6437**	6	WASHER (13.5X50.8X4.76-MM THK)	

B-USE AS REQUIRED
M-METRIC PART
Y-SEPARATE ILLUSTRATION

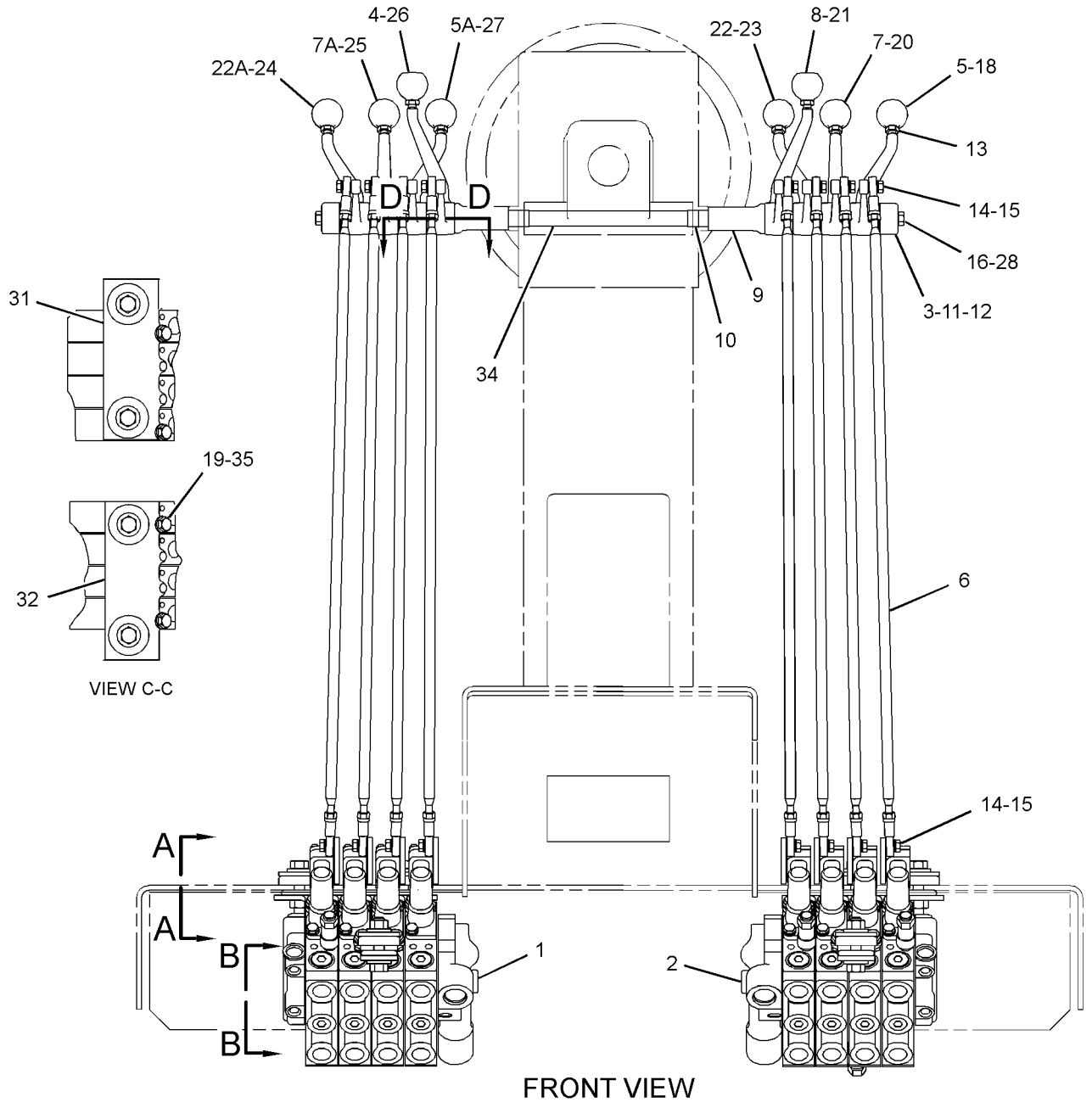

GRAPHIC #1

<END>

g01935345

HYDRAULIC SYSTEM

342-2640 VALVE & LINKAGE GP—4-BANK, RH; 5-BANK, LH

S/N: JJA1-UP

PART OF 343-6219 CONTROL AR-HYDRAULIC

AN ATTACHMENT

SMCS-5051, 5063 **i03557501**

NOTE	REF NO	GRAPHIC REF	PART NUMBER	QTY	PART NAME 1 2 3 4 5 6 (PRODUCT LEVEL)	SEE PAGE
Y	1	1	**124-3325**	1	VALVE GP-BANK 4 (RH)	413
Y	2	1	**124-3329**	1	VALVE GP-BANK 5 (LH)	416
	3	1	**8X-5499**	2	RETAINER	
	4	1	**101-2457**	1	LEVER (RIPPER)	
	4A	1	**101-2457**	1	LEVER (ARTICULATION)	
	5	1	**8D-5634**	1	LEVER (BLADE LIFT, LH)	
	5A	1	**8D-5634**	1	LEVER (CENTERSHIFT)	
	6	1	*8X-4277*	9	ROD AS	
					(EACH INCLUDES)	
		1	**6V-8186**	1	NUT-FULL (5/16-24-THD)	
		1	**7H-3641**	1	END-ROD (5/16-24-THD)	
		1	**8L-8598**	1	ROD END	
		1	**146-0705**	1	ROD	
	7	1	**8D-5633**	1	LEVER (SIDESHIFT)	
	7A	1	**8D-5633**	1	LEVER (WHEEL LEAN)	
	8	1	**101-2458**	1	LEVER (BLADE TIP)	
	9	1	**137-4515**	2	BUSHING	
	10	1	**8D-5640**	11	BEARING	
B	11	1	**8D-5636**	4	SHIM (0.254-MM THK)	
B	12	1	**8D-5637**	4	SHIM (0.762-MM THK)	
	13	1	**6L-1962**	9	NUT-JAM (3/8-24-THD)	
	14	1	**8T-9043**	18	BOLT (5/16-18X0.875-IN)	
	15	1	**3F-9556**	18	LOCKWASHER	
	16	1	**9B-7237**	2	BOLT (3/8-16X1.25-IN)	
	17	1	**8D-5641**	9	BEARING	
	18	1	**2G-6757**	1	KNOB-BLADE LIFT (LH)	
M	19	1	**8T-4136**	4	BOLT (M10X1.5X25-MM)	
	20	1	**2G-6749**	1	KNOB-SIDESHIFT	
	21	1	**2G-6747**	1	KNOB-BLADE TIP	
	22	1	**8D-5632**	1	LEVER (CIRCLE DRIVE)	
	22A	1	**8D-5632**	1	LEVER (BLADE LIFT, RH)	
	23	1	**2G-6751**	1	KNOB-CIRCLE DRIVE	
	24	1	**2G-6748**	1	KNOB-BLADE LIFT (RH)	
	25	1	**2G-6756**	1	KNOB-WHEEL LEAN	
	26	1	**2G-6752**	1	KNOB-ARTICULATION	
	27	1	**2G-6755**	1	KNOB-CENTERSHIFT	
	28	1	**5P-1075**	2	WASHER-HARD (10.2X22.5X3-MM THK)	
	29	1	**9M-1853**	6	MOUNTING	
	30	1	**5P-1076**	6	WASHER-HARD (13.5X30X4-MM THK)	
	31	1	**104-7740**	1	PLATE AS (LH)	
		1	**1F-0748**	2	NUT-WELD (1/2-13-THD)	
	32	1	**104-7419**	1	PLATE AS (RH)	
		1	**1F-0748**	2	NUT-WELD (1/2-13-THD)	
	33	1	**104-7429**	2	PLATE	
	34	1	**137-4516**	1	SHAFT	
	35	1	**2G-6740**	1	KNOB-RIPPER	
	36	1	**6B-0933**	4	SPACER (10.31X19.05X6.35-MM THK)	
	37	1	**5P-2424**	6	BOLT (1/2-13X2.25-IN)	
	38	1	**6V-8188**	2	NUT (1/2-13-THD)	
M	39	1	**8T-4195**	4	BOLT (M10X1.5X30-MM)	
	40	1	**8T-4121**	8	WASHER-HARD (11X21X2.5-MM THK)	
	41	1	**8F-6437**	6	WASHER (13.5X50.8X4.76-MM THK)	

B-USE AS REQUIRED
M-METRIC PART
Y-SEPARATE ILLUSTRATION

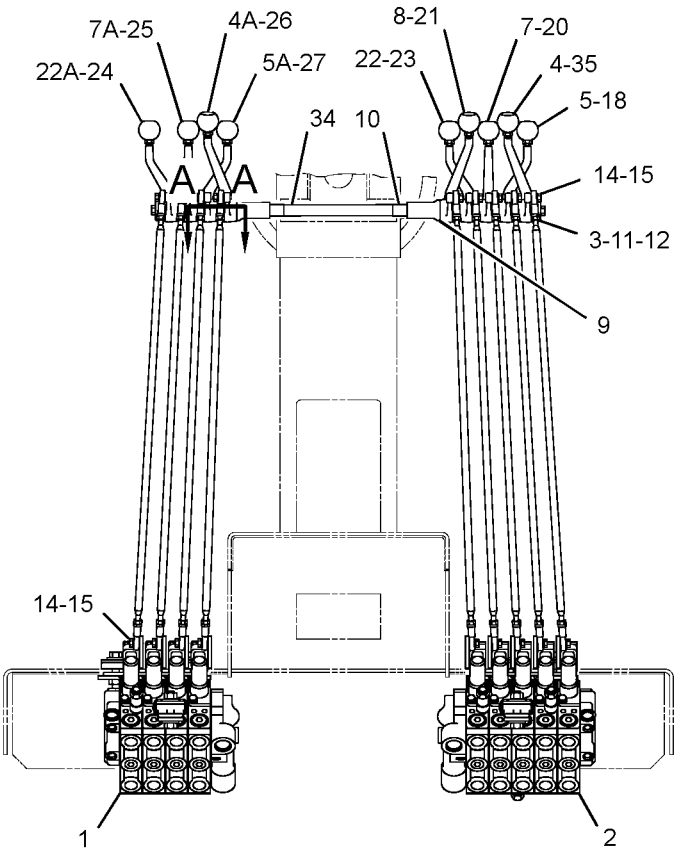

FRONT VIEW

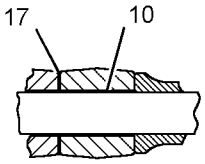

SECTION A-A

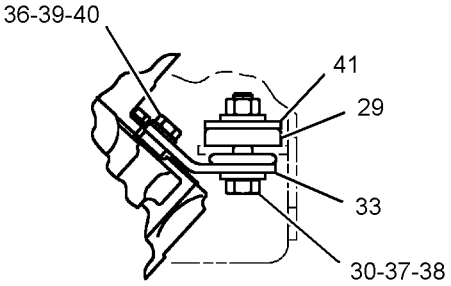

VIEW OF AREA B

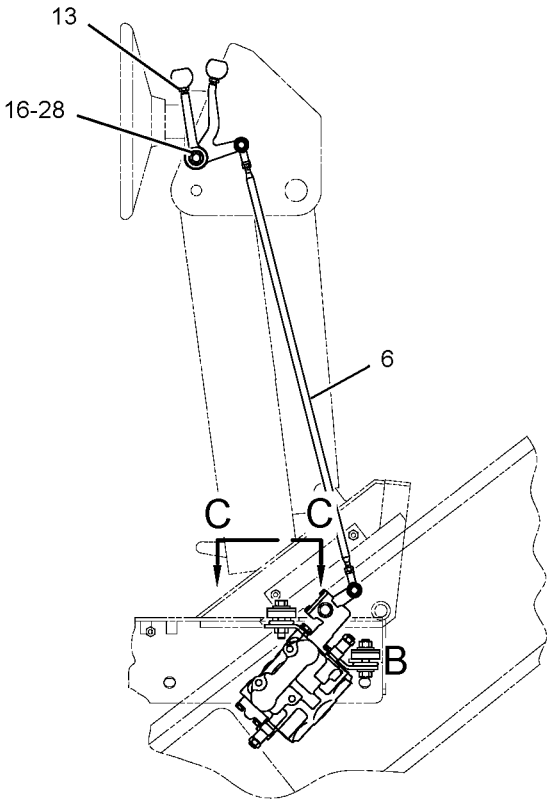

RIGHT SIDE VIEW

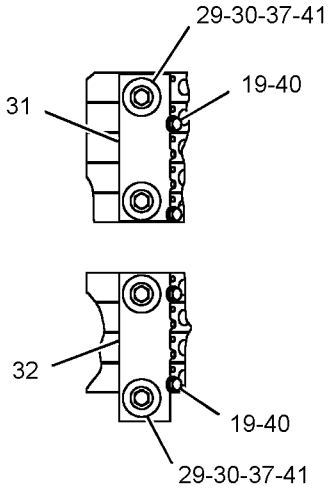

VIEW C-C

GRAPHIC #1 **<END>** g01931438

HYDRAULIC SYSTEM

343-6218 VALVE & LINKAGE GP—4-BANK, RH; 5-BANK, LH

S/N: JJA1-UP

PART OF 343-6222 CONTROL AR-HYDRAULIC

AN ATTACHMENT

SMCS-5051, 5063 **i03548168**

NOTE	REF NO	GRAPHIC REF	PART NUMBER	QTY	PART NAME 1 2 3 4 5 6 (PRODUCT LEVEL)	SEE PAGE
	1	1	**3F-9556**	18	LOCKWASHER	
	2	1	**6B-0933**	4	SPACER (10.31X19.05X6.35-MM THK)	
	3	1	**6L-1962**	9	NUT-JAM (3/8-24-THD)	
	4	1	**8D-5632**	1	LEVER (CIRCLE DRIVE)	
	4A	1	**8D-5632**	1	LEVER (BLADE LIFT, RH)	
	5	1	**8D-5633**	1	LEVER (SIDESHIFT)	
	5A	1	**8D-5633**	1	LEVER (WHEEL LEAN)	
	6	1	**8D-5634**	1	LEVER (BLADE LIFT, LH)	
	6A	1	**8D-5634**	1	LEVER (CENTERSHIFT)	
B	7	1	**8D-5636**	4	SHIM (0.254-MM THK)	
B	8	1	**8D-5637**	4	SHIM (0.762-MM THK)	
	9	1	**8D-5640**	11	BEARING	
	10	1	**8D-5641**	9	BEARING	
	11	1	**8X-4277**	9	ROD AS	
					(EACH INCLUDES)	
		1	**6V-8186**	1	NUT-FULL (5/16-24-THD)	
		1	**7H-3641**	1	END-ROD (5/16-24-THD)	
		1	**8L-8598**	1	ROD END	
		1	**146-0705**	1	ROD	
	12	1	**8X-5499**	2	RETAINER	
	13	1	**9M-1853**	6	MOUNTING	
	14	1	**101-2457**	1	LEVER (RIPPER)	
	14A	1	**101-2457**	1	LEVER (ARTICULATION)	
	15	1	**101-2458**	1	LEVER (BLADE TIP)	
	16	1	**104-7419**	1	PLATE AS (RH)	
		1	**1F-0748**	2	NUT-WELD (1/2-13-THD)	
	17	1	**104-7429**	2	PLATE	
	18	1	**104-7740**	1	PLATE AS (LH)	
		1	**1F-0748**	2	NUT-WELD (1/2-13-THD)	
	19	1	**137-4515**	2	BUSHING	
	20	1	**137-4516**	1	SHAFT	
	21	1	*164-5608*	2	CONNECTOR AS	
					(EACH INCLUDES)	
		1	**8T-1687**	1	CONNECTOR	
		1	**3K-0360**	1	SEAL-O-RING	
		1	**6V-8398**	1	SEAL-O-RING	
	22	1	**244-2585**	1	TUBE AS	
	23	1	**244-2589**	1	TUBE AS	
	24	1	**244-2592**	1	TUBE AS	
	25	1	**244-2596**	1	TUBE AS	
Y	26	1	**250-0544**	1	VALVE GP-BANK 4 (RH)	415
Y	27	1	**250-0550**	1	VALVE GP-BANK 5 (LH)	417
	28	1	*148-8318*	2	CONNECTOR AS	
					(EACH INCLUDES)	
		1	**6V-8634**	1	CONNECTOR	
		1	**3K-0360**	1	SEAL-O-RING	
		1	**6V-8397**	1	SEAL-O-RING	
	29	1	**153-1818**	1	ELBOW	
	30	1	*206-5123*	2	TEE AS	
					(EACH INCLUDES)	
		1	**206-5122**	1	TEE	
		1	**6V-8397**	1	SEAL-O-RING	
		1	**6V-8398**	1	SEAL-O-RING	
	31	1	**2G-6740**	1	KNOB-RIPPER	
	32	1	**2G-6747**	1	KNOB-BLADE TIP	

343-6218 **VALVE & LINKAGE GP** *(contd.)* **i03548168**

NOTE	REF NO	GRAPHIC REF	PART NUMBER	QTY	PART NAME 1 2 3 4 5 6 (PRODUCT LEVEL)	SEE PAGE
	33	1	**2G-6748**	1	KNOB-BLADE LIFT (RH)	
	34	1	**2G-6749**	1	KNOB-SIDESHIFT	
	35	1	**2G-6751**	1	KNOB-CIRCLE DRIVE	
	36	1	**2G-6752**	1	KNOB-ARTICULATION	
	37	1	**2G-6755**	1	KNOB-CENTERSHIFT	
	38	1	**2G-6756**	1	KNOB-WHEEL LEAN	
	39	1	**2G-6757**	1	KNOB-BLADE LIFT (LH)	
	40	1	**3J-1907**	4	SEAL-O-RING	
	41	1	**5P-1075**	2	WASHER-HARD (10.2X22.5X3-MM THK)	
	42	1	**5P-1076**	6	WASHER-HARD (13.5X30X4-MM THK)	
	43	1	**5P-2424**	6	BOLT (1/2-13X2.25-IN)	
	44	1	**6V-8188**	2	NUT (1/2-13-THD)	
	45	1	**6V-8397**	8	SEAL-O-RING	
	46	1	**6V-9836**	2	TEE-SWIVEL	
	47	1	**8F-6437**	6	WASHER (13.5X50.8X4.76-MM THK)	
	48	1	**8T-4121**	8	WASHER-HARD (11X21X2.5-MM THK)	
M	49	1	**8T-4136**	4	BOLT (M10X1.5X25-MM)	
M	50	1	**8T-4195**	4	BOLT (M10X1.5X30-MM)	
	51	1	**8T-9041**	3	CONNECTOR	
	52	1	**8T-9043**	18	BOLT (5/16-18X0.875-IN)	
	53	1	**9B-7237**	2	BOLT (3/8-16X1.25-IN)	

B-USE AS REQUIRED
M-METRIC PART
Y-SEPARATE ILLUSTRATION

343-6218 **VALVE & LINKAGE GP** *(contd.)* **i03548168**

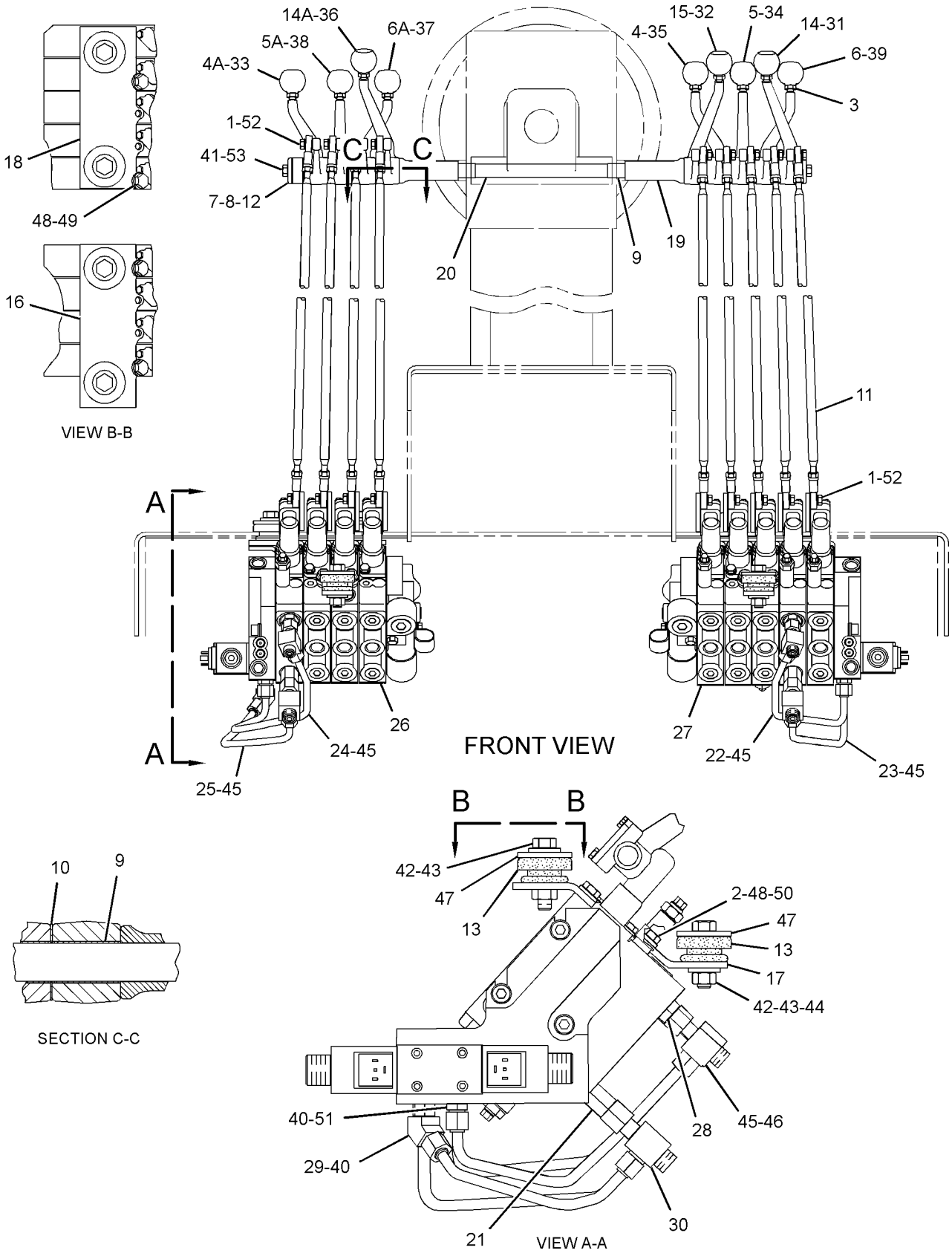

GRAPHIC #1

<END>

g01895273

124-3325 VALVE GP-BANK 4–RH

S/N: JJA1-UP

PART OF 342-2154, 342-2640 VALVE & LINKAGE GP

ALSO AN ATTACHMENT

SMCS-5051 **i03641556**

NOTE	REF NO	GRAPHIC REF	PART NUMBER	QTY	PART NAME 1 2 3 4 5 6 (PRODUCT LEVEL)	SEE PAGE
M	1	1	**7X-2546**	2	BOLT (M10X1.5X180-MM)	
M	2	1	**137-6720**	1	BOLT (M10X1.5X160-MM)	
	3	1	**102-6238**	1	MANIFOLD	
	4	1	**101-0509**	5	SEAL-INTEGRAL	
Y	5	1	**6E-3028**	1	VALVE GP-CONTROL (ARTICULATION)	425
Y	6	1	**6E-3029**	1	VALVE GP-CONTROL (CENTERSHIFT)	427
Y	7	1	**6E-3030**	1	VALVE GP-CONTROL (WHEEL LEAN)	429
Y	8	1	**124-2884**	1	VALVE GP-CONTROL (BLADE LIFT)	445
	9	1	**101-9346**	1	COVER	
M	10	1	**8T-4186**	3	BOLT (M10X1.5X40-MM)	
	11	1	*222-4737*	1	PLUG AS	
		1	**9S-4180**	1	PLUG	
		1	**4J-7533**	1	SEAL-O-RING	

M-METRIC PART
Y-SEPARATE ILLUSTRATION

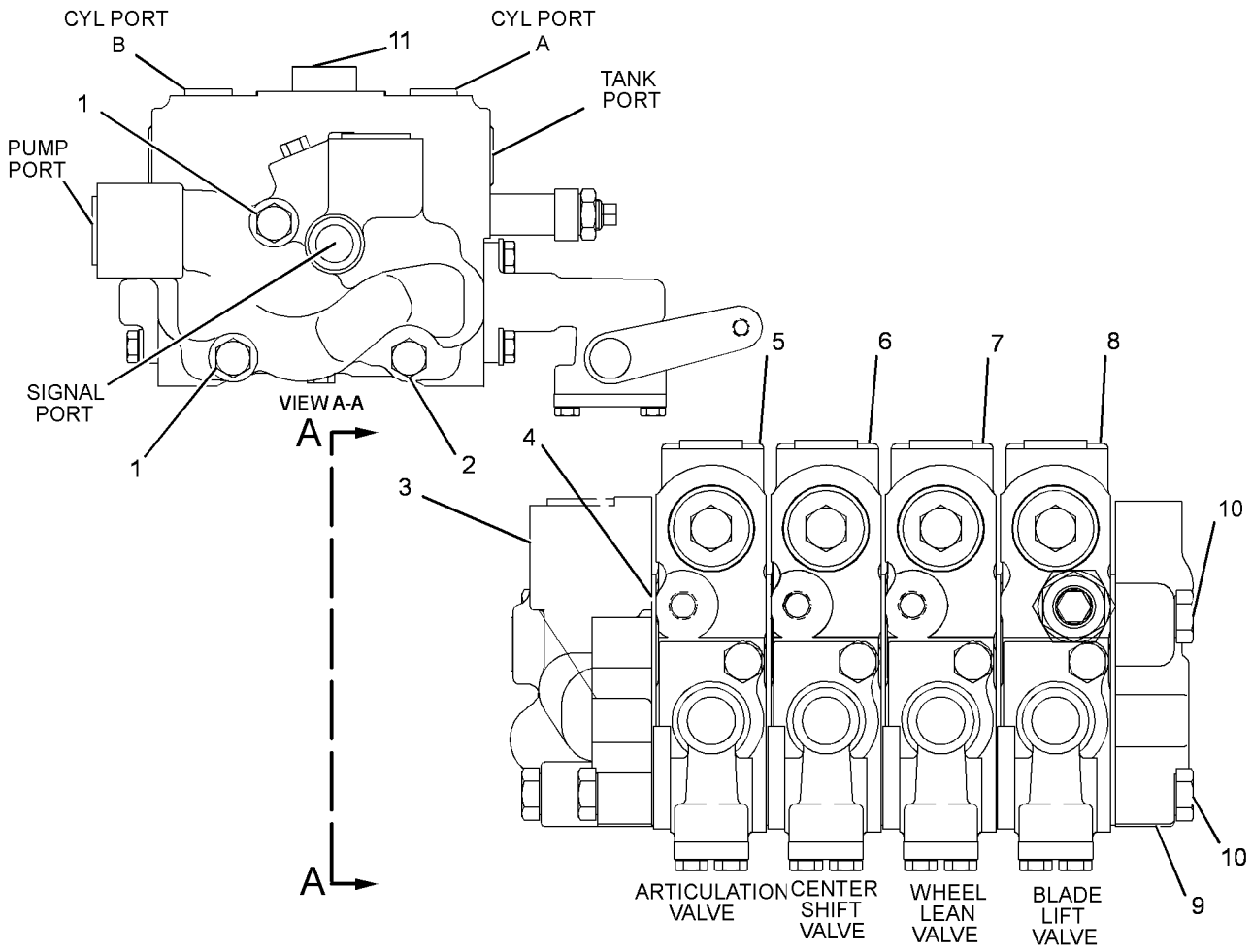

GRAPHIC #1 **<END>** g01625215

HYDRAULIC SYSTEM

124-3327 VALVE GP-BANK 4–LH

S/N: JJA1-UP

PART OF 342-2154 VALVE & LINKAGE GP

SMCS-5051 **i03643743**

NOTE	REF NO	GRAPHIC REF	PART NUMBER	QTY	PART NAME 1 2 3 4 5 6 (PRODUCT LEVEL)	SEE PAGE
M	1	1	**7X-2546**	2	BOLT (M10X1.5X180-MM)	
M	2	1	**137-6720**	1	BOLT (M10X1.5X160-MM)	
	3	1	**102-8385**	1	MANIFOLD	
	4	1	**101-0509**	5	SEAL-INTEGRAL	
Y	5	1	**124-2883**	1	VALVE GP-CONTROL (BLADE LIFT)	443
Y	6	1	**6E-3036**	1	VALVE GP-CONTROL (SIDESHIFT)	437
Y	7	1	**6E-3035**	1	VALVE GP-CONTROL (CIRCLE DRIVE)	435
Y	8	1	**6E-3034**	1	VALVE GP-CONTROL (BLADE TIP)	433
	9	1	**101-9346**	1	COVER	
M	10	1	**8T-4186**	3	BOLT (M10X1.5X40-MM)	
	11	1	**4J-7533**	1	SEAL-O-RING	
	12	1	**9S-4180**	1	PLUG	

M-METRIC PART
Y-SEPARATE ILLUSTRATION

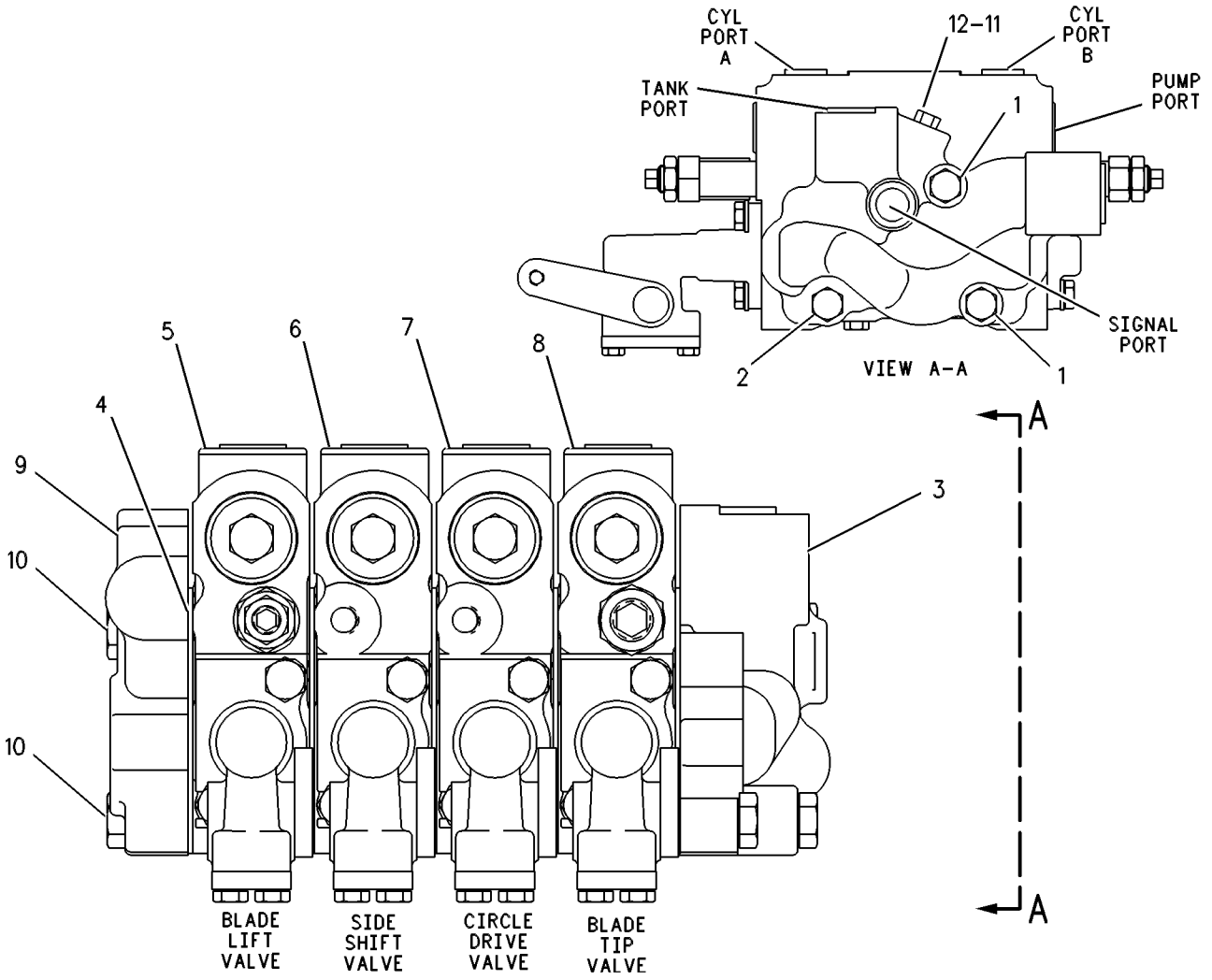

GRAPHIC #1 **<END>** g00109153

HYDRAULIC SYSTEM

250-0544 VALVE GP-BANK 4–RH

S/N: JJA1-UP
PART OF 343-6218 VALVE & LINKAGE GP
AN ATTACHMENT

SMCS-5051 **i03255862**

NOTE	REF NO	GRAPHIC REF	PART NUMBER	QTY	PART NAME 1 2 3 4 5 6 (PRODUCT LEVEL)	SEE PAGE
Y	1	1	**6E-3028**	1	VALVE GP-CONTROL (ARTICULATION)	425
Y	2	1	**6E-3029**	1	VALVE GP-CONTROL (CENTERSHIFT)	427
Y	3	1	**6E-3030**	1	VALVE GP-CONTROL (WHEEL LEAN)	429
Y	4	1	**6E-3031**	1	VALVE GP-CONTROL (BLADE LIFT)	431
	5	1	**101-0509**	5	SEAL-INTEGRAL	
	6	1	*222-4737*	1	PLUG AS	
		1	**4J-7533**	1	SEAL-O-RING	
		1	**9S-4180**	1	PLUG	
Y	7	1	**239-9894**	1	MANIFOLD GP-VALVE (RH)	383
	8	1	**8T-4896**	1	WASHER-HARD (10.2X18.5X2.5-MM THK)	
	9	1	**102-6238**	1	MANIFOLD	
M	10	1	**137-6720**	1	BOLT (M10X1.5X160-MM)	
	11	1	**3K-6113**	3	WASHER-HARD (12X18.5X3-MM THK)	
M	12	1	**7X-2546**	2	BOLT (M10X1.5X180-MM)	
M	13	1	**8T-4186**	3	BOLT (M10X1.5X40-MM)	

M-METRIC PART
Y-SEPARATE ILLUSTRATION

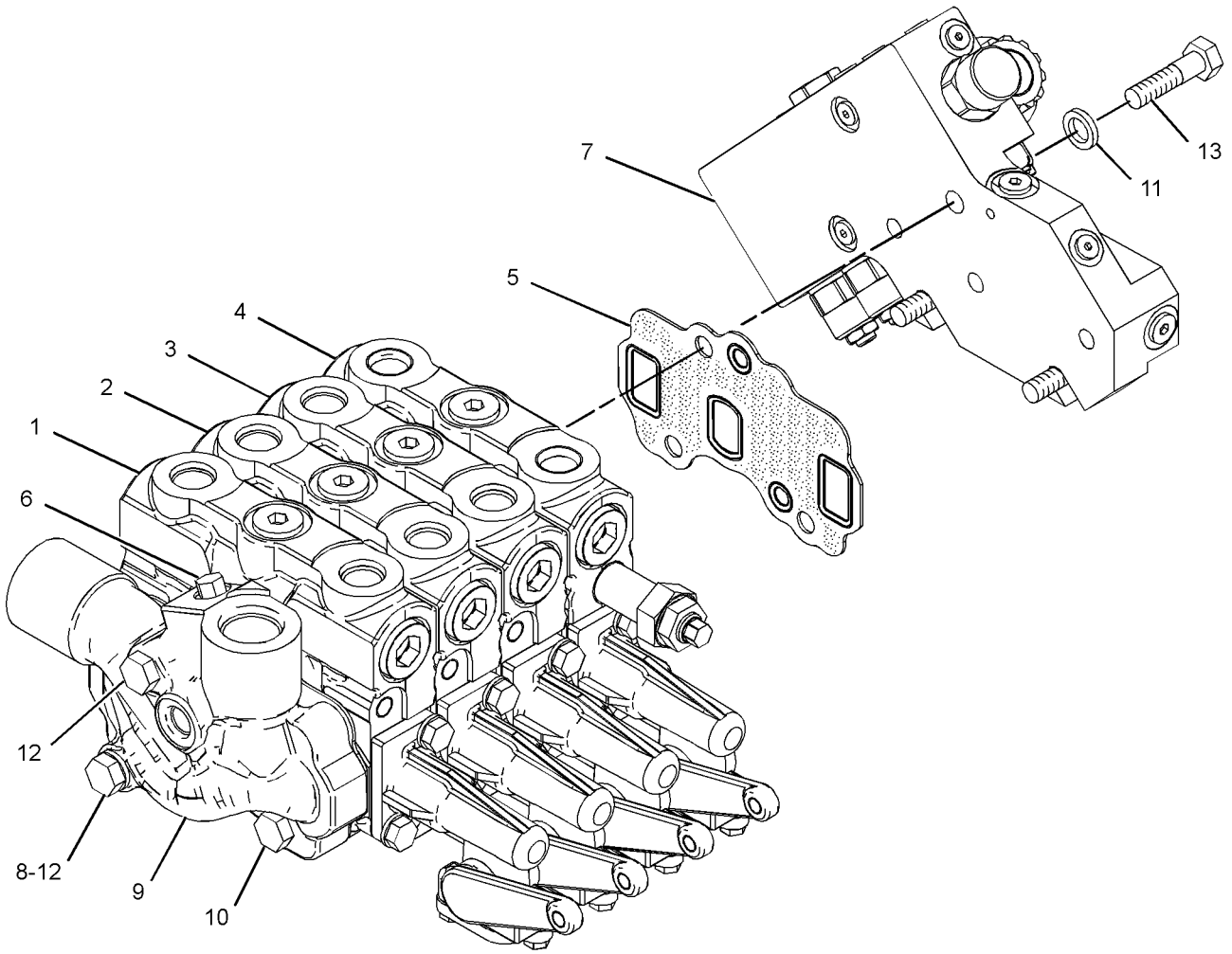

GRAPHIC #1 **<END>** g01693095

HYDRAULIC SYSTEM

124-3329 VALVE GP-BANK 5–LH

S/N: JJA1-UP
PART OF 341-6675, 342-2640 VALVE & LINKAGE GP
AN ATTACHMENT

SMCS-5051 **i00857872**

NOTE	REF NO	GRAPHIC REF	PART NUMBER	QTY	PART NAME 1 2 3 4 5 6 (PRODUCT LEVEL)	SEE PAGE
M	1	1	**7X-2546**	2	BOLT (M10X1.5X180-MM)	
M	2	1	**137-6720**	1	BOLT (M10X1.5X160-MM)	
	3	1	**102-8385**	1	MANIFOLD	
	4	1	**101-0509**	6	SEAL-INTEGRAL	
Y	5	1	**6E-3034**	1	VALVE GP-CONTROL (BLADE TIP)	433
Y	6	1	**6E-3035**	1	VALVE GP-CONTROL (CIRCLE DRIVE)	435
Y	7	1	**6E-3036**	1	VALVE GP-CONTROL (SIDESHIFT)	437
Y	8	1	**124-2883**	1	VALVE GP-CONTROL (BLADE LIFT)	443
Y	9	1	**107-0545**	1	VALVE GP-CONTROL (RIPPER)	441
	10	1	**101-9346**	1	COVER	
	11	1	**9S-4180**	1	PLUG	
	12	1	**4J-7533**	1	SEAL-O-RING	
M	13	1	**137-6719**	3	BOLT (M10X1.5X80-MM)	

M-METRIC PART
Y-SEPARATE ILLUSTRATION

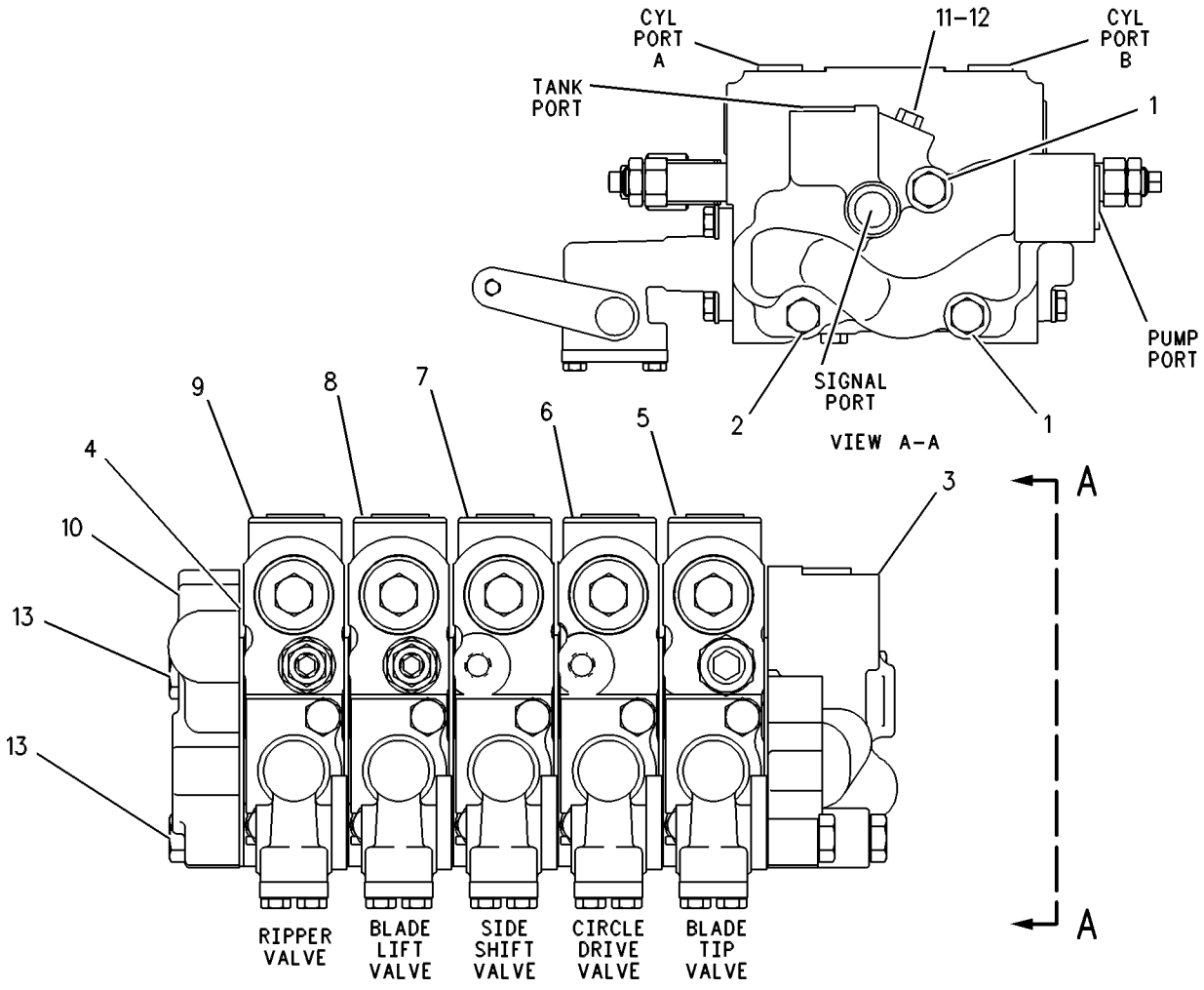

GRAPHIC #1 **<END>** g00252814

250-0550 VALVE GP-BANK 5—LH

S/N: JJA1-UP
PART OF 341-8565, 343-6218 VALVE & LINKAGE GP
AN ATTACHMENT

SMCS-5051 **i03303145**

NOTE	REF NO	GRAPHIC REF	PART NUMBER	QTY	PART NAME 1 2 3 4 5 6 (PRODUCT LEVEL)	SEE PAGE
Y	1	1	**6E-3034**	1	VALVE GP-CONTROL (BLADE TIP)	433
Y	2	1	**6E-3035**	1	VALVE GP-CONTROL (CIRCLE DRIVE)	435
Y	3	1	**6E-3036**	1	VALVE GP-CONTROL (SIDESHIFT)	437
Y	4	1	**6E-3037**	1	VALVE GP-CONTROL (BLADE LIFT)	439
	5	1	**101-0509**	6	SEAL-INTEGRAL	
	6	1	**102-8385**	1	MANIFOLD	
Y	7	1	**107-0545**	1	VALVE GP-CONTROL (RIPPER)	441
	8	1	*222-4737*	1	PLUG AS	
		1	**9S-4180**	1	PLUG	
		1	**4J-7533**	1	SEAL-O-RING	
Y	9	1	**239-9893**	1	MANIFOLD GP-VALVE (LH)	381
	10	1	**8T-4896**	1	WASHER-HARD (10.2X18.5X2.5-MM THK)	
M	11	1	**137-6719**	3	BOLT (M10X1.5X80-MM)	
M	12	1	**137-6720**	1	BOLT (M10X1.5X160-MM)	
	13	1	**3K-6113**	3	WASHER-HARD (12X18.5X3-MM THK)	
M	14	1	**7X-2546**	2	BOLT (M10X1.5X180-MM)	

M-METRIC PART
Y-SEPARATE ILLUSTRATION

250-0550 VALVE GP-BANK 5 *(contd.)* **i03303145**

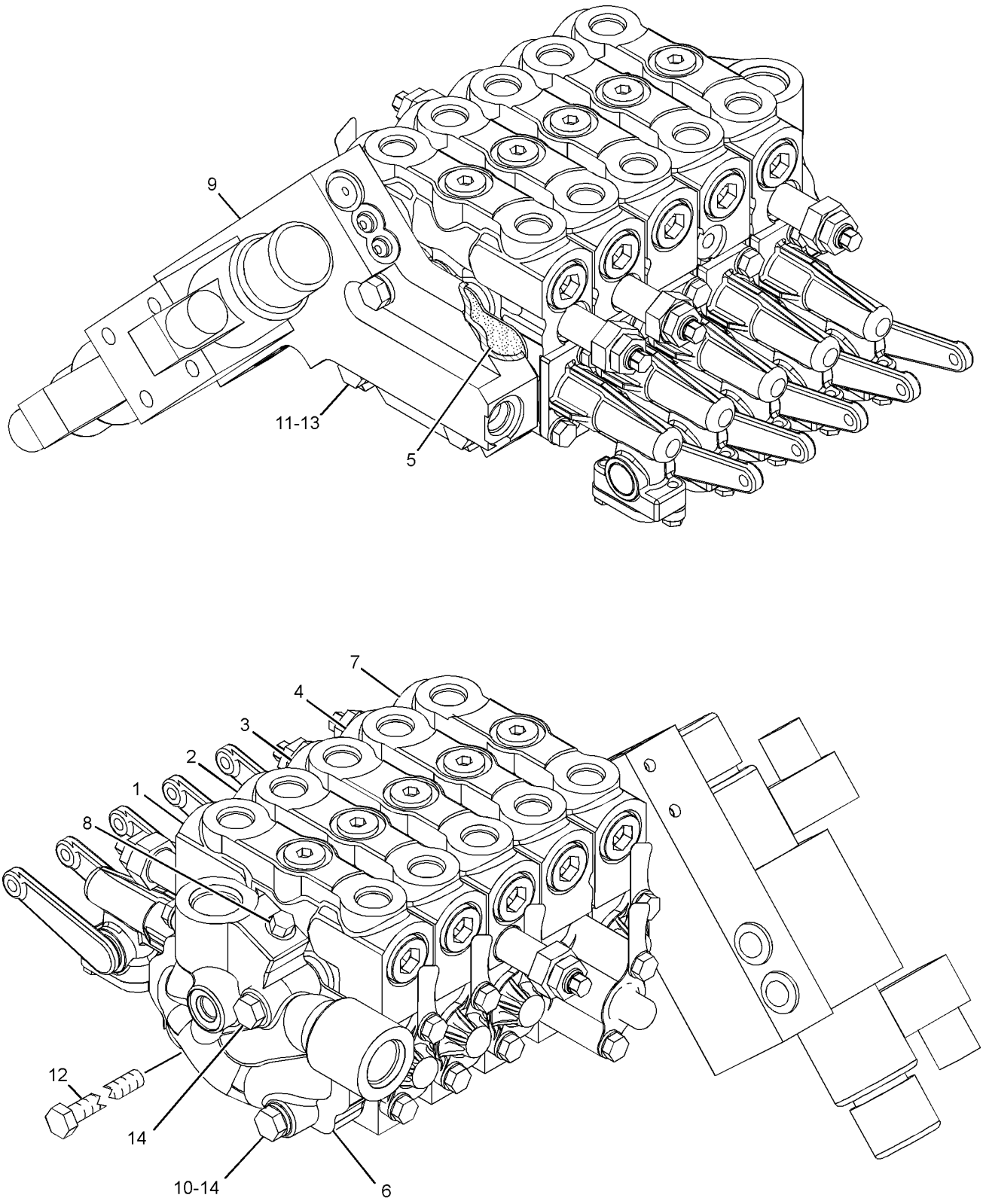

GRAPHIC #1 **<END>** g01700405

341-6220 VALVE GP-BANK 6–RH

S/N: JJA1-UP

PART OF 341-6675 VALVE & LINKAGE GP

AN ATTACHMENT

SMCS-5051 **i03627527**

NOTE	REF NO	GRAPHIC REF	PART NUMBER	QTY	PART NAME 1 2 3 4 5 6 (PRODUCT LEVEL)	SEE PAGE
Y	1	1	**4Z-6189**	1	VALVE GP-CONTROL (SCARIFIER)	423
Y	2	1	**6E-3028**	1	VALVE GP-CONTROL (ARTICULATION)	425
Y	3	1	**6E-3029**	1	VALVE GP-CONTROL (CENTERSHIFT)	427
Y	4	1	**6E-3030**	1	VALVE GP-CONTROL (WHEEL LEAN)	429
	5	1	**101-0509**	7	SEAL-INTEGRAL	
	6	1	**101-9346**	1	COVER	
	7	1	**102-6238**	1	MANIFOLD	
Y	8	1	**124-2884**	1	VALVE GP-CONTROL (BLADE LIFT)	445
Y	9	1	**124-2885**	1	VALVE GP-CONTROL (BULLDOZER LIFT, PLOW)	447
	10	1	**8T-4121**	6	WASHER-HARD (11X21X2.5-MM THK)	
M	11	1	**134-8221**	3	BOLT (M10X1.5X120-MM)	
M	12	1	**137-6720**	1	BOLT (M10X1.5X160-MM)	
	13	1	*222-4737*	1	PLUG AS	
		1	**9S-4180**	1	PLUG	
		1	**4J-7533**	1	SEAL-O-RING	
M	14	1	**7X-2546**	2	BOLT (M10X1.5X180-MM)	

M-METRIC PART
Y-SEPARATE ILLUSTRATION

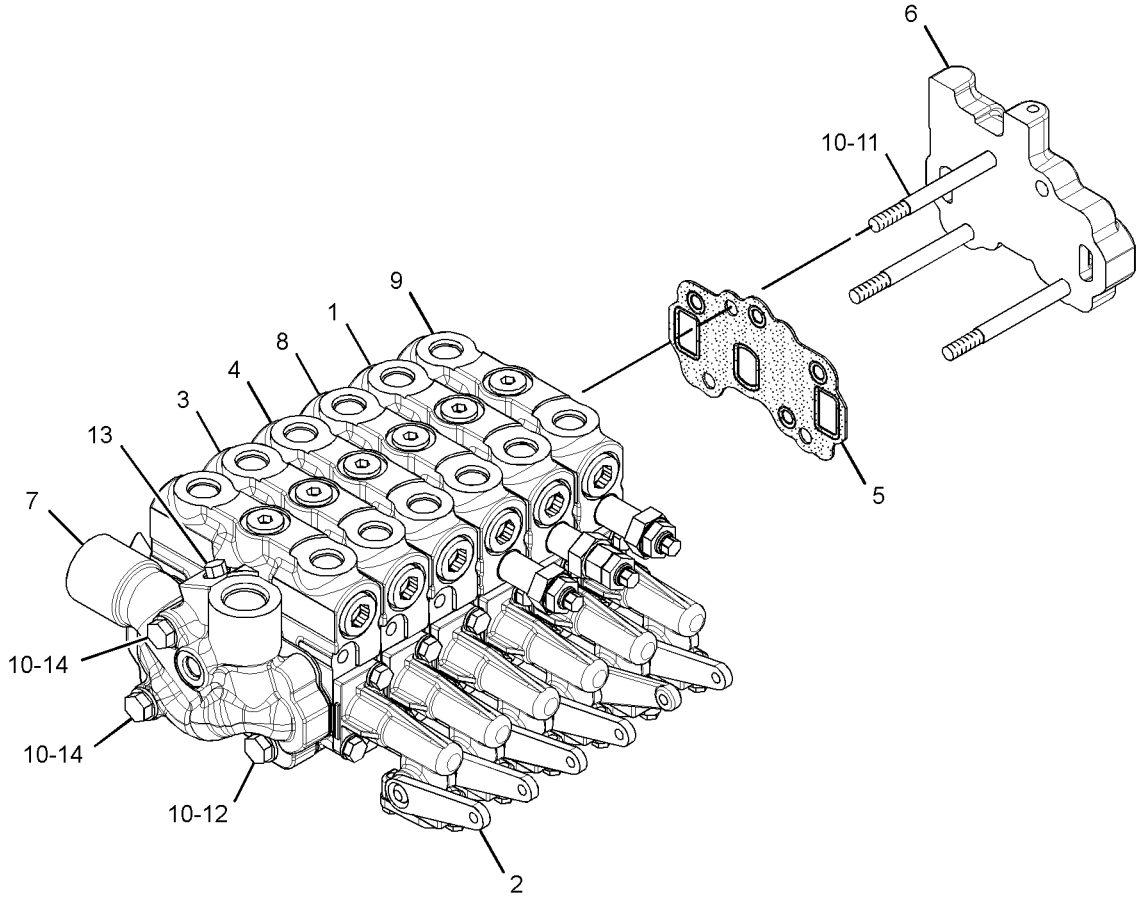

GRAPHIC #1 **<END>** g01945488

HYDRAULIC SYSTEM

341-6226 VALVE GP-BANK 6–RH

S/N: JJA1-UP
PART OF 341-8565 VALVE & LINKAGE GP
AN ATTACHMENT

SMCS-5051 **i03627366**

NOTE	REF NO	GRAPHIC REF	PART NUMBER	QTY	PART NAME 1 2 3 4 5 6 (PRODUCT LEVEL)	SEE PAGE
M	1	1	**7X-2546**	2	BOLT (M10X1.5X180-MM)	
M	2	1	**137-6720**	1	BOLT (M10X1.5X160-MM)	
Y	3	1	**4Z-6189**	1	VALVE GP-CONTROL (SCARIFIER)	423
	4	1	**101-0509**	7	SEAL-INTEGRAL	
Y	5	1	**6E-3028**	1	VALVE GP-CONTROL (ARTICULATION)	425
Y	6	1	**6E-3029**	1	VALVE GP-CONTROL (CENTERSHIFT)	427
Y	7	1	**6E-3030**	1	VALVE GP-CONTROL (WHEEL LEAN)	429
Y	8	1	**6E-3031**	1	VALVE GP-CONTROL (BLADE LIFT)	431
	9	1	**102-6238**	1	MANIFOLD	
Y	10	1	**124-2885**	1	VALVE GP-CONTROL (BULLDOZER LIFT, PLOW)	447
Y	11	1	**239-9894**	1	MANIFOLD GP-VALVE (RH)	383
	12	1	*222-4737*	1	PLUG AS	
		1	**4J-7533**	1	SEAL-O-RING	
		1	**9S-4180**	1	PLUG	
M	14	1	**134-8221**	3	BOLT (M10X1.5X120-MM)	
	15	1	**8T-4121**	6	WASHER-HARD (11X21X2.5-MM THK)	

M-METRIC PART
Y-SEPARATE ILLUSTRATION

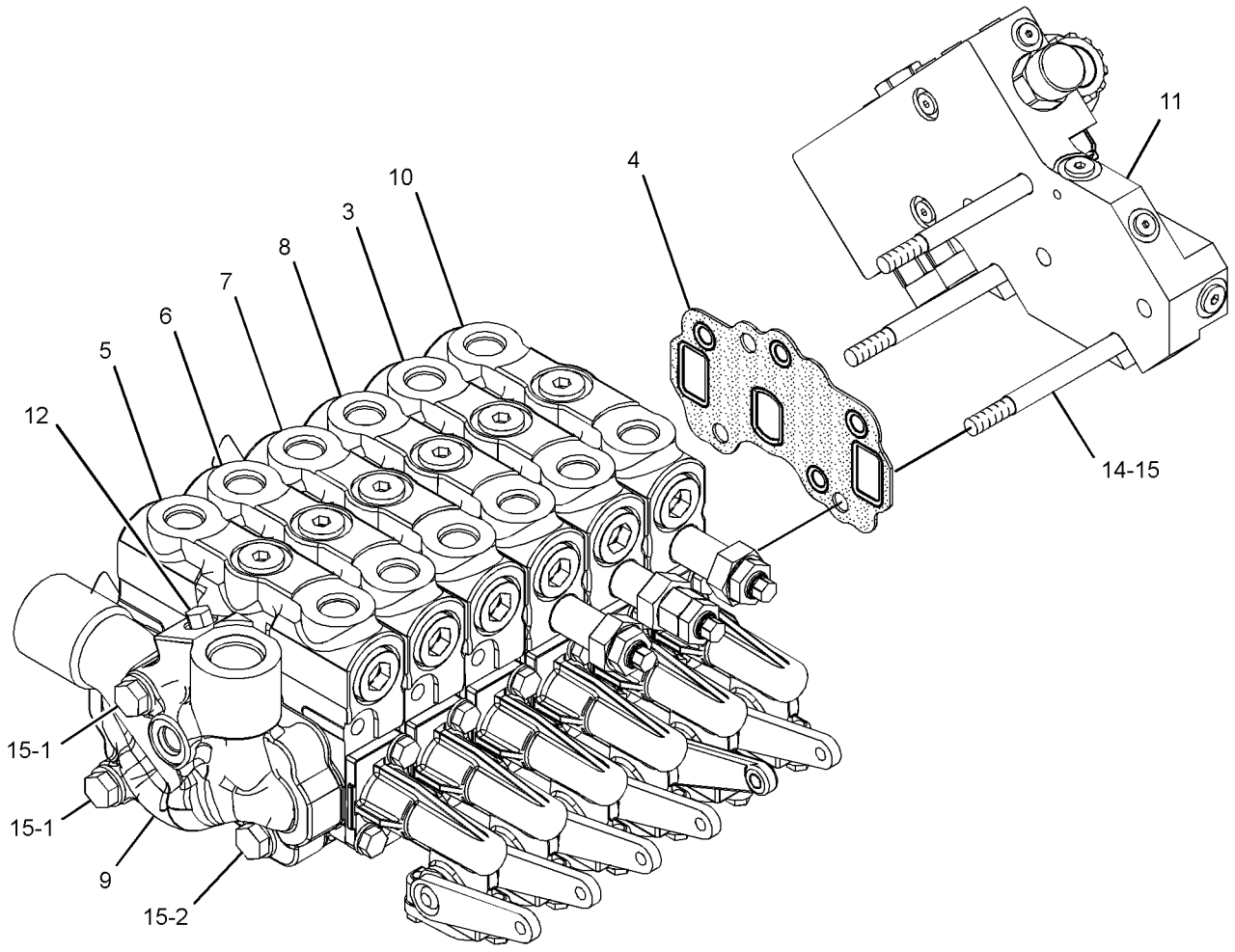

GRAPHIC #1 **<END>** g01935042

HYDRAULIC SYSTEM

9T-5957 VALVE GP-COMBINATION

S/N: JJA1-UP

PART OF 299-5544 LINES GP-PUMP

SMCS-5064 **i03641554**

NOTE	REF NO	GRAPHIC REF	PART NUMBER	QTY	PART NAME 1 2 3 4 5 6 (PRODUCT LEVEL)	SEE PAGE
C	1	1	**9T-5935**	1	BODY	
Y	2	1	**100-6021**	1	VALVE GP-RELIEF (STEERING)	456
	3	1	*3J-3679*	1	PLUG AS	
		1	**1J-9671**	1	SEAL-O-RING	
		1	**9S-8003**	1	PLUG	
	4	1	**3T-8236**	1	SPRING	
M	5	1	**6V-5230**	2	BOLT (M10X1.5X60-MM)	
	6	1	**6V-3965**	1	FITTING (QUICK DISCONNECT)	
	7	1	**3J-1907**	1	SEAL-O-RING	
	8	1	**6V-8647**	2	CONNECTOR	
	9	1	**3J-7354**	2	SEAL-O-RING	
	10	1	**6E-1923**	1	TUBE AS	
	11	1	**4J-5477**	2	SEAL-O-RING	
Y	12	1	**4T-4935**	1	VALVE GP-RELIEF (MAIN)	452
	13	1	**8T-8987**	1	ELBOW	
	14	1	**2M-9780**	1	SEAL-O-RING	
	15	1	**1H-0337**	1	VALVE	
	16	1	**9F-6705**	1	SPRING	
	17	1	**9S-4189**	1	PLUG	
	18	1	**6E-1924**	1	SPRING (OUTER)	
	19	1	**6E-1925**	1	SPRING (INNER)	
	20	1	**5M-2057**	1	SEAL-O-RING	
	21	1	**8M-3175**	2	WASHER-HARD (10.2X16X3-MM THK)	
	22	1	**6V-0852**	1	CAP-DUST	
Y	23	1	**6E-4703**	1	VALVE GP-RELIEF (IMPLEMENT SIGNAL)	454
C	24	1	**3K-0360**	1	SEAL-O-RING	
	25	1	*173-3993*	2	PLUG AS	
					(EACH INCLUDES)	
		1	**4J-7533**	1	SEAL-O-RING	
		1	**9S-8001**	1	PLUG-O-RING	
Y	27	1	**4T-1860**	1	VALVE GP-SHUTTLE (IMPLEMENT, STEERING)	461
	30	1	**2S-4078**	1	SEAL-O-RING	
	31	1	*3R-2437*	1	PLUG AS	
		1	**4K-1388**	1	SEAL-O-RING	
		1	**9S-8009**	1	PLUG-O-RING	
C	32	1	**6V-8398**	1	SEAL-O-RING	
C	33	1	**7X-4776**	2	RING-BACKUP	
	34	1	*183-7263*	1	PLUG AS	
		1	**3J-7354**	1	SEAL-O-RING	
		1	**9S-8002**	1	PLUG-O-RING	
CY	35	1	**131-8350**	1	VALVE GP-PURGE (IMPLEMENT SIGNAL)	451
C	36	1	**3P-9498**	1	PLUG-ORIFICE	
C	37	1	**9T-5934**	1	VALVE	
C	38	1	**8J-6815**	2	PLUG-ORIFICE	
	39	1	*148-8408*	3	PLUG AS	
					(EACH INCLUDES)	
		1	**9S-4183**	1	PLUG-O-RING	
		1	**3D-2824**	1	SEAL-O-RING	

C-CHANGE FROM PREVIOUS TYPE
M-METRIC PART
Y-SEPARATE ILLUSTRATION

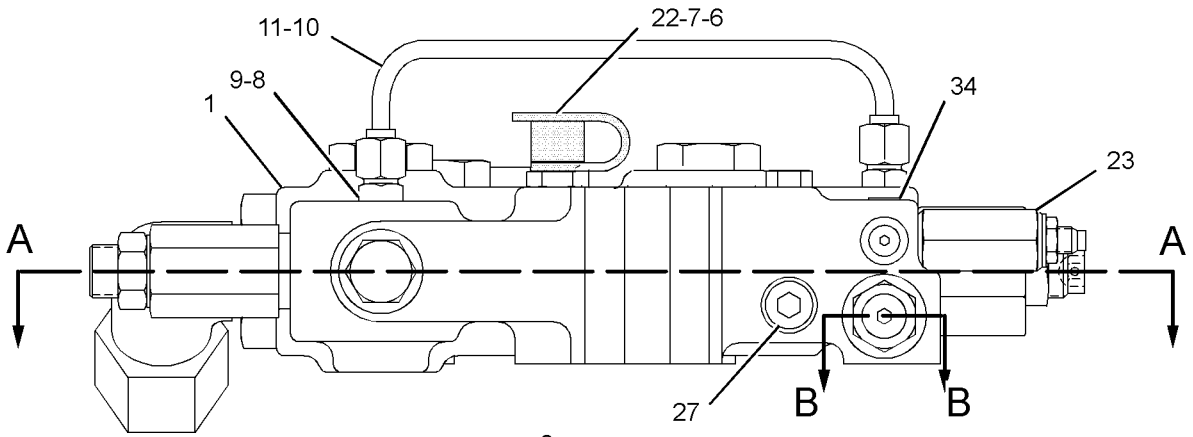

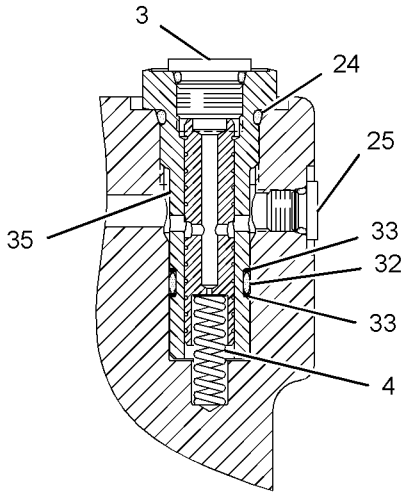

SECTION B-B

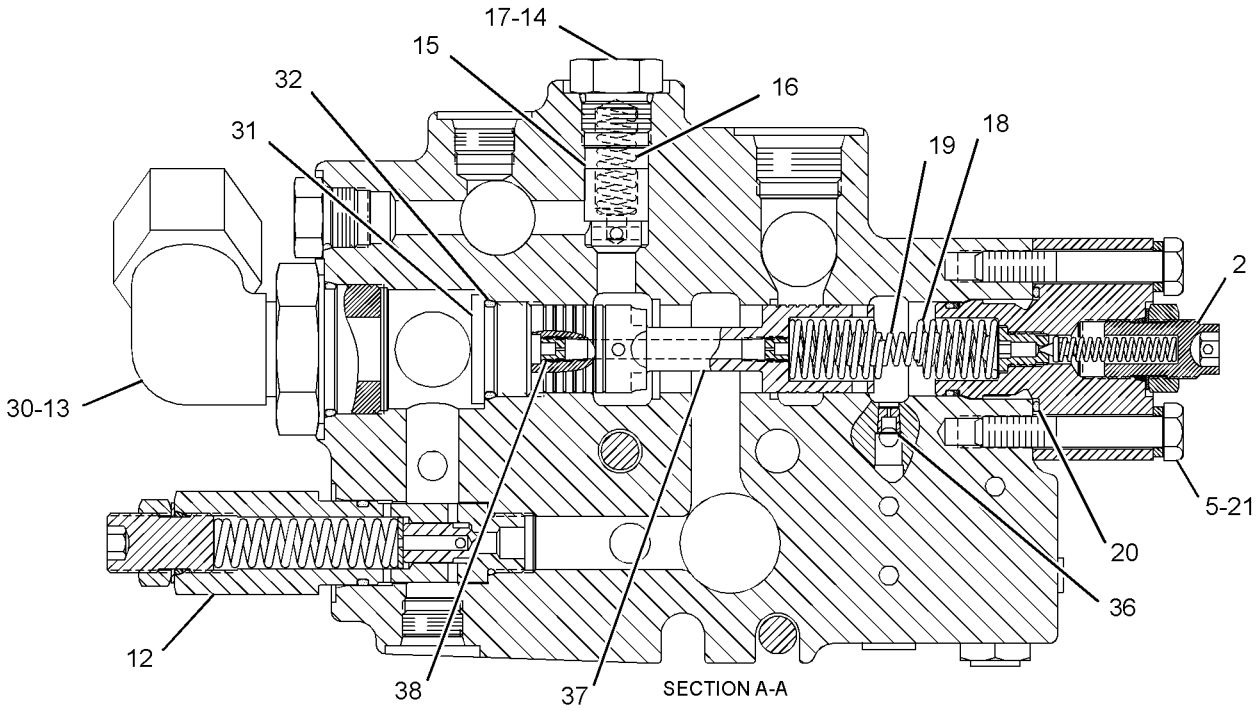

SECTION A-A

GRAPHIC #1 **<END>** g01297579

HYDRAULIC SYSTEM

4Z-6189 VALVE GP-CONTROL—SCARIFIER

S/N: JJA1-UP

PART OF 341-6220, 341-6226 VALVE GP-BANK 6

AN ATTACHMENT

SMCS-5051 **i03627400**

NOTE	REF NO	GRAPHIC REF	PART NUMBER	QTY	PART NAME 1 2 3 4 5 6 (PRODUCT LEVEL)	SEE PAGE
	1	1	**4D-9986**	1	SEAL-O-RING	
	3	1	**6E-3007**	1	SPRING	
	4	1	**6E-3019**	1	VALVE	
	5	1	**6E-4502**	1	PLUG	
	6	1	**6E-4599**	1	BODY	
	7	1	**6E-5153**	1	SPRING	
	8	1	**101-1148**	1	STEM	
	9	1	**101-1970**	1	LEVER AS	
	10	1	**101-1971**	1	LEVER	
	11	1	**101-1973**	4	RETAINER	
	12	1	**101-1978**	1	COVER	
	13	1	**101-1984**	1	BODY	
	14	1	**101-2480**	1	COVER	
	15	1	**102-7412**	1	SPRING	
	16	1	**106-3659**	1	PISTON	
	17	1	**111-8233**	1	SPRING	
	18	1	**325-6423**	2	VALVE GP-CHECK	
					(EACH INCLUDES)	
		1	**3K-0360**	1	SEAL-O-RING	
		1	**7J-9933**	1	SEAL-O-RING	
	19	1	**101-1983**	2	RING-BACKUP	
	20	1	**108-2187**	1	PLUG-PIPE	
	21	1	*148-8395*	1	PLUG AS	
		1	**3K-0360**	1	SEAL-O-RING	
		1	**9S-8005**	1	PLUG-O-RING	
	22	1	**263-9657**	1	VALVE GP-RELIEF	
		1	**3J-1907**	1	SEAL-O-RING	
		1	**4D-2297**	1	SEAL-O-RING	
	23	1	**2K-8199**	2	SEAL-O-RING	
	24	1	**4J-7533**	1	SEAL-O-RING	
	25	1	**5B-9318**	1	BALL	
	26	1	**8M-4437**	2	SEAL-O-RING	
M	27	1	**8T-4138**	2	BOLT (M6X1X20-MM)	
M	28	1	**8T-4189**	4	BOLT (M8X1.25X20-MM)	
	29	1	**8T-4224**	4	WASHER-HARD (8.8X16X2-MM THK)	

M-METRIC PART

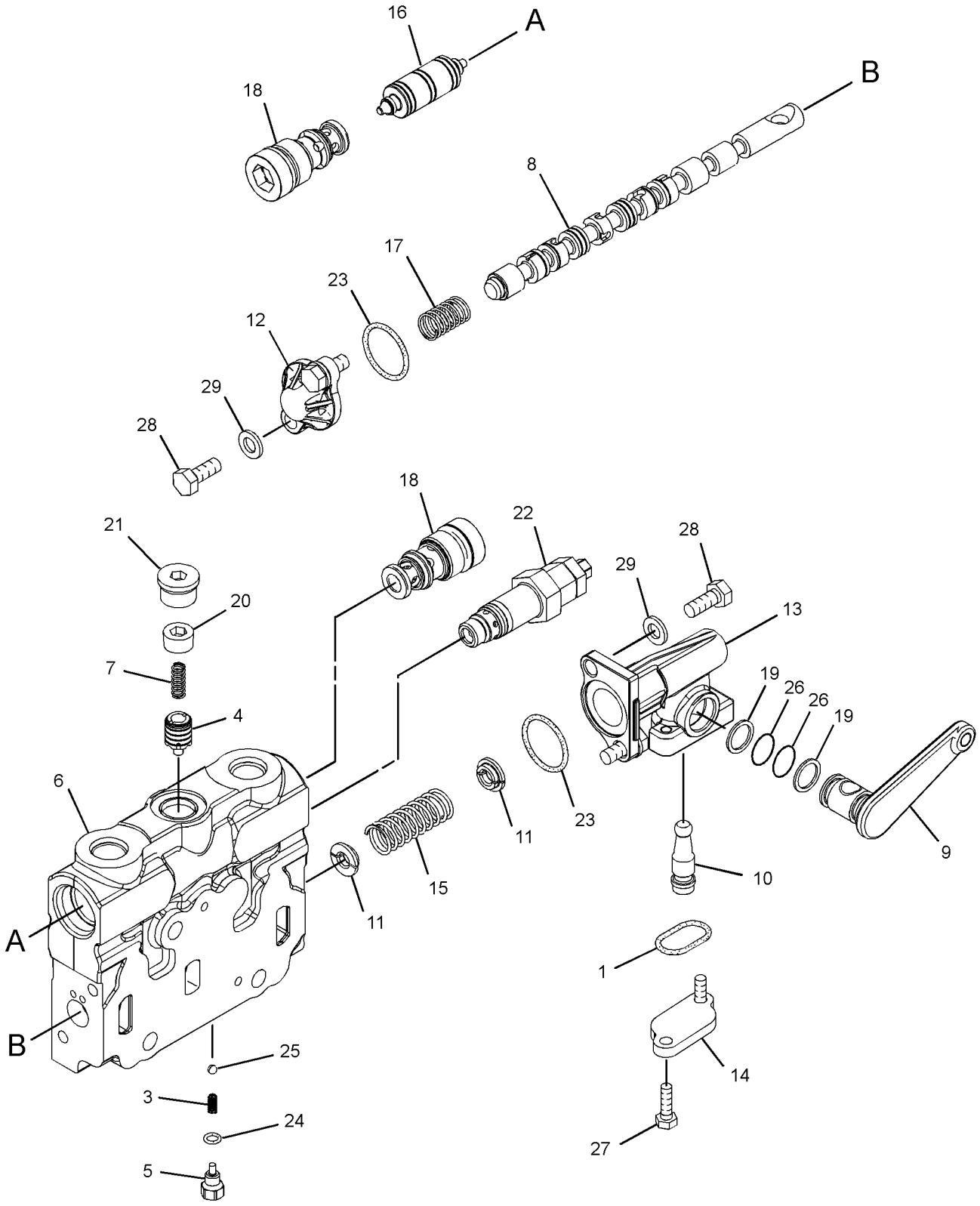

GRAPHIC #1 **<END>** g01939953

6E-3028 VALVE GP-CONTROL–ARTICULATION

S/N: JJA1-UP

PART OF 124-3325, 250-0544 VALVE GP-BANK 4, 341-6220, 341-6226 VALVE GP-BANK 6

ALSO AN ATTACHMENT

SMCS-5051 **i03372403**

NOTE	REF NO	GRAPHIC REF	PART NUMBER	QTY	PART NAME 1 2 3 4 5 6 (PRODUCT LEVEL)	SEE PAGE
	1	1	**6E-3044**	1	BODY	
	2	1	**101-1148**	1	STEM	
	3	1	**101-1978**	1	COVER	
	4	1	**2K-8199**	2	SEAL-O-RING	
M	5	1	**8T-4189**	4	BOLT (M8X1.25X20-MM)	
	6	1	**8T-4224**	4	WASHER-HARD (8.8X16X2-MM THK)	
	7	1	**101-1984**	1	BODY	
	8	1	**102-7412**	1	SPRING	
	9	1	**101-1973**	4	RETAINER	
	10	1	**101-1971**	1	LEVER	
	11	1	**101-1970**	1	LEVER AS	
C	12	1	**325-6423**	2	VALVE GP-CHECK	
					(EACH INCLUDES)	
		1	**3K-0360**	1	SEAL-O-RING	
		1	**7J-9933**	1	SEAL-O-RING	
	13	1	**101-1983**	2	RING-BACKUP	
	14	1	**101-2480**	1	COVER	
	15	1	**4D-9986**	1	SEAL-O-RING	
M	16	1	**8T-4138**	2	BOLT (M6X1X20-MM)	
	17	1	**5B-9318**	1	BALL	
	18	1	**6E-3007**	1	SPRING	
	19	1	**6E-4502**	1	PLUG	
	20	1	**4J-7533**	1	SEAL-O-RING	
	21	1	**6E-3019**	1	VALVE	
	22	1	**6E-5153**	1	SPRING	
	23	1	**108-2187**	1	PLUG-PIPE	
	24	1	**106-3659**	1	PISTON	
	26	1	**111-8233**	1	SPRING	
	27	1	*148-8395*	1	PLUG AS	
		1	**9S-8005**	1	PLUG-O-RING	
		1	**3K-0360**	1	SEAL-O-RING	
	28	1	**8M-4437**	2	SEAL-O-RING	

C-CHANGE FROM PREVIOUS TYPE
M-METRIC PART

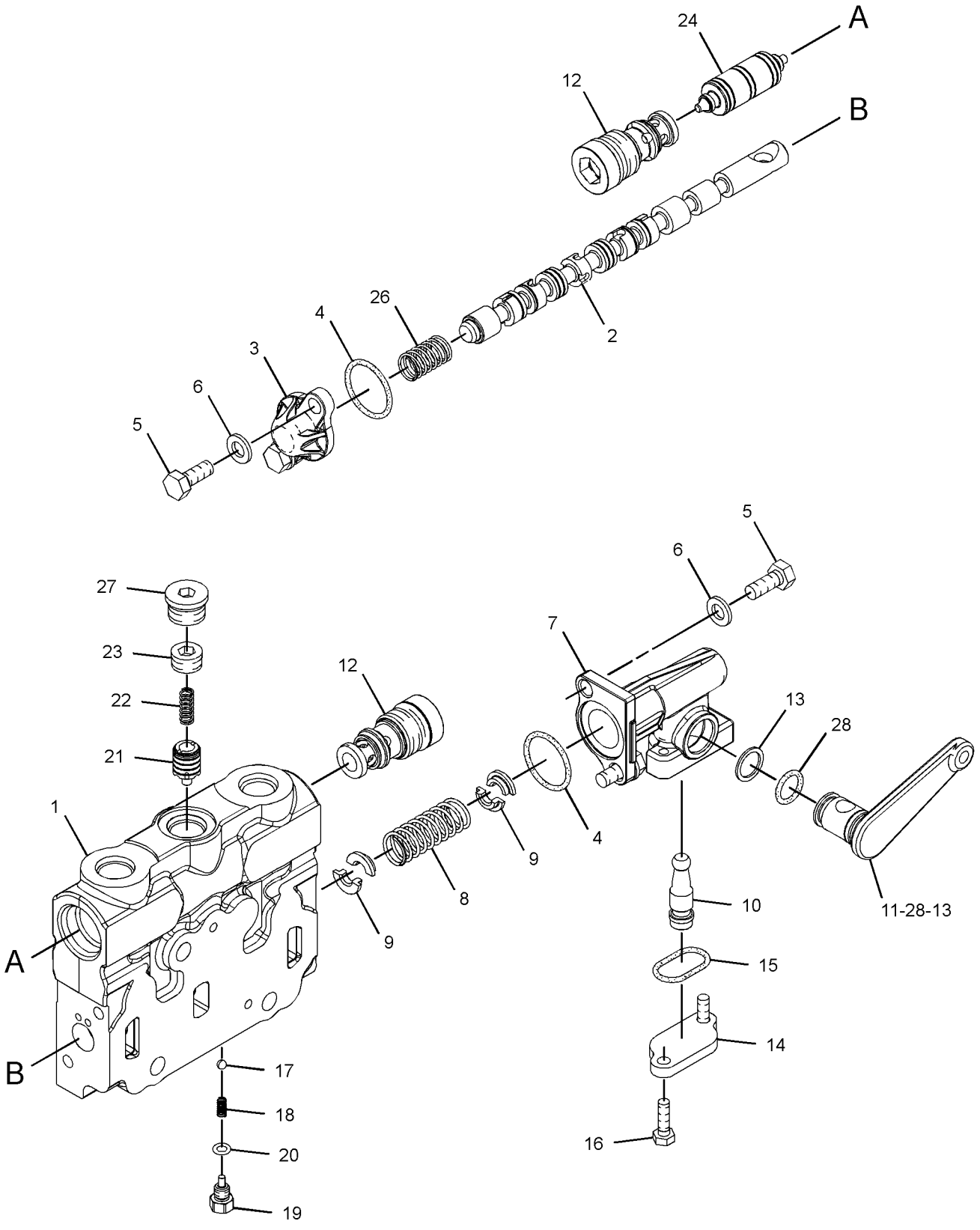

GRAPHIC #1 **<END>** g01748193

HYDRAULIC SYSTEM

6E-3029 VALVE GP-CONTROL—CENTERSHIFT

S/N: JJA1-UP

PART OF 124-3325, 250-0544 VALVE GP-BANK 4, 341-6220, 341-6226 VALVE GP-BANK 6

ALSO AN ATTACHMENT

SMCS-5051 **i03372660**

NOTE	REF NO	GRAPHIC REF	PART NUMBER	QTY	PART NAME 1 2 3 4 5 6 (PRODUCT LEVEL)	SEE PAGE
	1	1	**4D-9986**	1	SEAL-O-RING	
	2	1	**6E-3007**	1	SPRING	
	3	1	**6E-3019**	1	VALVE (COMPENSATOR)	
	4	1	**6E-3044**	1	BODY	
	5	1	**6E-4502**	1	PLUG	
	6	1	**6E-5153**	1	SPRING	
	7	1	**101-1970**	1	LEVER AS	
	8	1	**101-1971**	1	LEVER	
	9	1	**101-1973**	4	RETAINER	
	10	1	**101-1978**	1	COVER	
	11	1	**101-1984**	1	BODY	
	12	1	**101-2480**	1	COVER	
	13	1	**102-7412**	1	SPRING	
	14	1	**106-3659**	1	PISTON	
	15	1	**101-1149**	1	STEM	
	17	1	**111-8233**	1	SPRING	
C	18	1	**325-6423**	2	VALVE GP-CHECK	
					(EACH INCLUDES)	
		1	**3K-0360**	1	SEAL-O-RING	
		1	**7J-9933**	1	SEAL-O-RING	
	19	1	**101-1983**	2	RING-BACKUP	
	20	1	**108-2187**	1	PLUG-PIPE	
C	21	1	*148-8395*	1	PLUG AS	
		1	**9S-8005**	1	PLUG-O-RING	
		1	**3K-0360**	1	SEAL-O-RING	
	22	1	**2K-8199**	2	SEAL-O-RING	
	23	1	**4J-7533**	1	SEAL-O-RING	
	24	1	**5B-9318**	1	BALL	
	25	1	**8M-4437**	2	SEAL-O-RING	
M	26	1	**8T-4138**	2	BOLT (M6X1X20-MM)	
M	27	1	**8T-4189**	4	BOLT (M8X1.25X20-MM)	
	28	1	**8T-4224**	4	WASHER-HARD (8.8X16X2-MM THK)	

C-CHANGE FROM PREVIOUS TYPE
M-METRIC PART

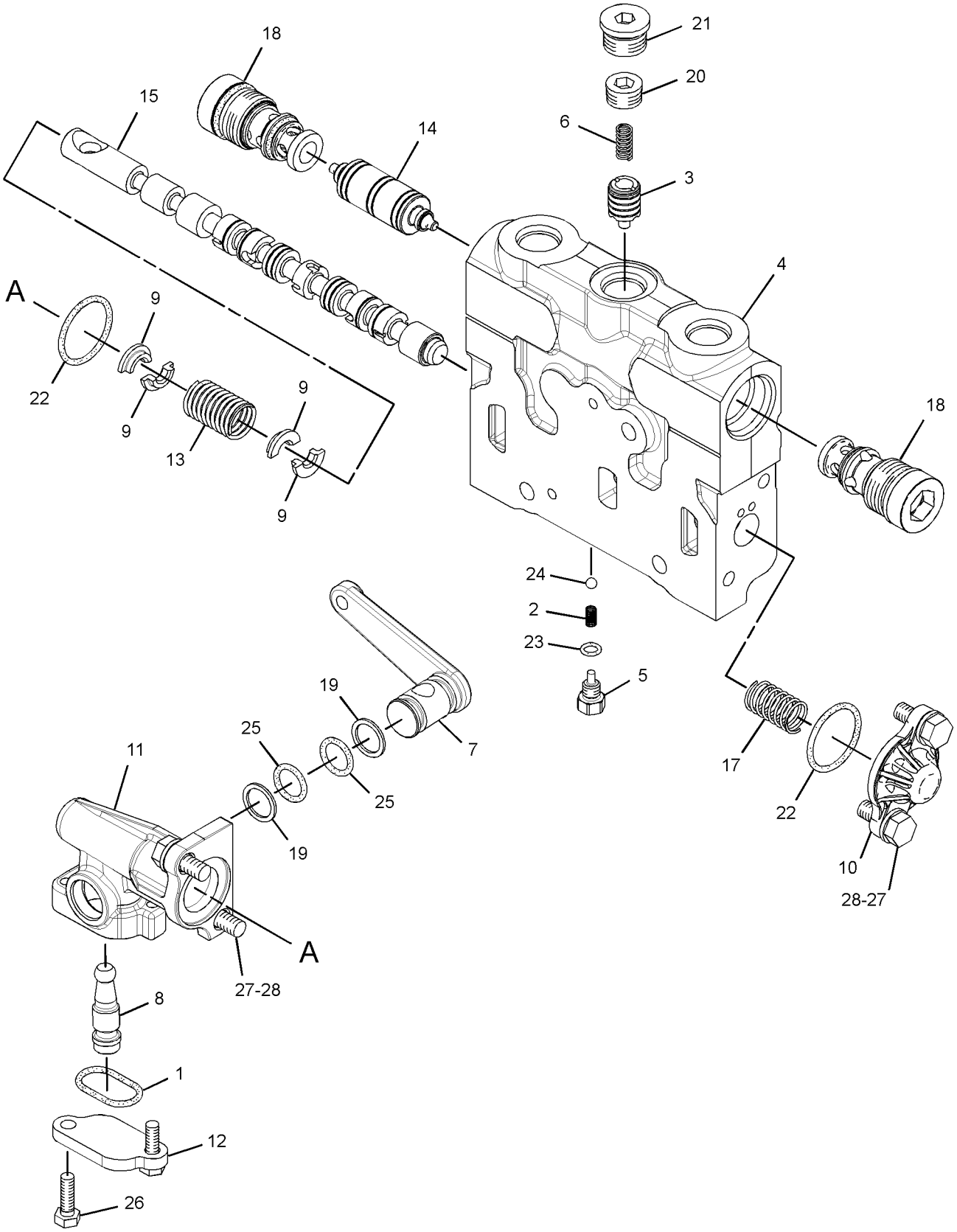

GRAPHIC #1 **<END>** g01688982

HYDRAULIC SYSTEM

6E-3030 VALVE GP-CONTROL—WHEEL LEAN

S/N: JJA1-UP

PART OF 124-3325, 250-0544 VALVE GP-BANK 4, 341-6220, 341-6226 VALVE GP-BANK 6

ALSO AN ATTACHMENT

SMCS-5051 **i03563860**

NOTE	REF NO	GRAPHIC REF	PART NUMBER	QTY	PART NAME 1 2 3 4 5 6 (PRODUCT LEVEL)	SEE PAGE
	1	1	**4D-9986**	1	SEAL-O-RING	
	2	1	**6E-3007**	1	SPRING	
	3	1	**6E-3019**	1	VALVE	
	4	1	**6E-3044**	1	BODY	
	5	1	**6E-4502**	1	PLUG	
	6	1	**6E-5153**	1	SPRING	
	7	1	**101-1154**	1	STEM	
	8	1	**101-1970**	1	LEVER AS	
	9	1	**101-1971**	1	LEVER	
	10	1	**101-1973**	4	RETAINER	
	11	1	**101-1978**	1	COVER	
	12	1	**101-1984**	1	BODY	
	13	1	**101-2480**	1	COVER	
	14	1	**102-7412**	1	SPRING	
	15	1	**106-3659**	1	PISTON	
	17	1	**111-8233**	1	SPRING	
C	18	1	**325-6423**	2	VALVE GP-CHECK	
					(EACH INCLUDES)	
		1	**3K-0360**	1	SEAL-O-RING	
		1	**7J-9933**	1	SEAL-O-RING	
	19	1	**101-1983**	2	RING-BACKUP	
	20	1	**108-2187**	1	PLUG-PIPE	
	21	1	*148-8395*	1	PLUG AS	
		1	**9S-8005**	1	PLUG-O-RING	
		1	**3K-0360**	1	SEAL-O-RING	
	22	1	**8M-4437**	2	SEAL-O-RING	
	23	1	**2K-8199**	2	SEAL-O-RING	
	24	1	**4J-7533**	1	SEAL-O-RING	
	25	1	**5B-9318**	1	BALL	
M	26	1	**8T-4138**	2	BOLT (M6X1X20-MM)	
M	27	1	**8T-4189**	4	BOLT (M8X1.25X20-MM)	
	28	1	**8T-4224**	4	WASHER-HARD (8.8X16X2-MM THK)	

C-CHANGE FROM PREVIOUS TYPE
M-METRIC PART

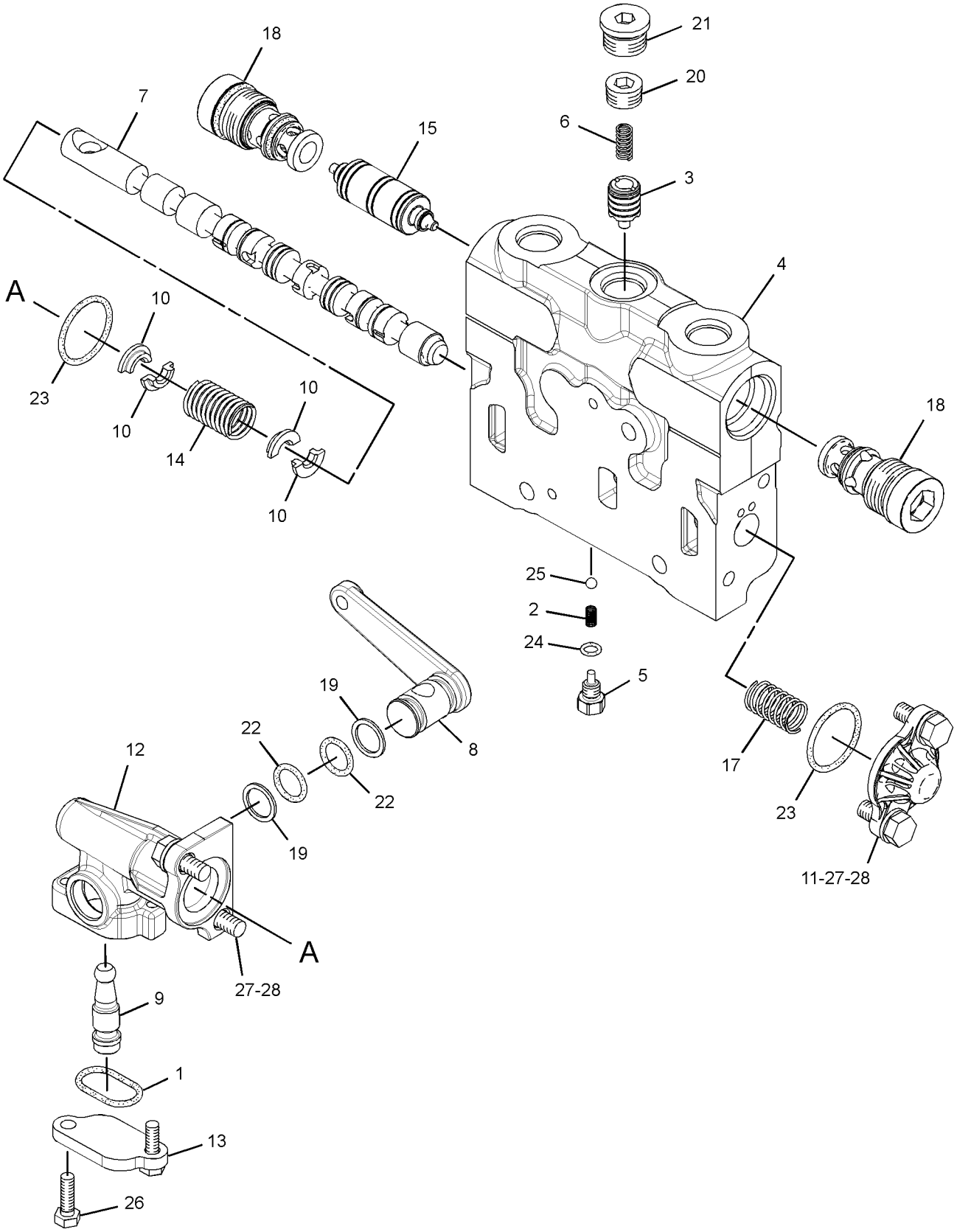

GRAPHIC #1 **<END>** g01668515

HYDRAULIC SYSTEM

6E-3031 VALVE GP-CONTROL—BULLDOZER

S/N: JJA1-UP

PART OF 250-0544 VALVE GP-BANK 4, 341-6226 VALVE GP-BANK 6

AN ATTACHMENT

SMCS-5051 **i03373022**

NOTE	REF NO	GRAPHIC REF	PART NUMBER	QTY	PART NAME 1 2 3 4 5 6 (PRODUCT LEVEL)	SEE PAGE
	1	1	**6E-3043**	1	BODY	
	2	1	**221-3676**	1	STEM	
	3	1	**101-1980**	1	HOUSING	
Y	4	1	**108-4916**	1	DETENT GP-CONTROL VALVE (BLADE LIFT)	350
	5	1	**5B-9318**	1	BALL	
M	6	1	**8T-6869**	2	BOLT (M8X1.25X60-MM)	
	7	1	**2K-8199**	2	SEAL-O-RING	
M	8	1	**8T-4189**	2	BOLT (M8X1.25X20-MM)	
	9	1	**8T-4224**	4	WASHER-HARD (8.8X16X2-MM THK)	
	10	1	**101-1984**	1	BODY	
	11	1	**102-7412**	1	SPRING	
	12	1	**101-1973**	4	RETAINER	
	13	1	**101-1971**	1	LEVER	
	14	1	**101-1970**	1	LEVER AS	
C	15	1	**325-6423**	2	VALVE GP-CHECK	
					(EACH INCLUDES)	
		1	**3K-0360**	1	SEAL-O-RING	
		1	**7J-9933**	1	SEAL-O-RING	
	16	1	**101-1983**	2	RING-BACKUP	
	17	1	**4D-9986**	1	SEAL-O-RING	
	18	1	**101-2480**	1	COVER	
M	19	1	**8T-4138**	2	BOLT (M6X1X20-MM)	
	20	1	**6E-3007**	1	SPRING	
	21	1	**6E-4502**	1	PLUG	
	22	1	**4J-7533**	1	SEAL-O-RING	
	23	1	**6E-3019**	1	VALVE	
	24	1	**6E-5153**	1	SPRING	
	25	1	**108-2187**	1	PLUG-PIPE	
	26	1	**106-3660**	2	PISTON	
Y	27	1	**222-7774**	1	VALVE GP-RELIEF (BLADE LIFT)	460
	29	1	**111-8234**	1	SPRING	
					SPRING MUST HAVE LIGHT BLUE STRIPE	
	30	1	*148-8395*	1	PLUG AS	
		1	**9S-8005**	1	PLUG-O-RING	
		1	**3K-0360**	1	SEAL-O-RING	
	31	1	**203-3940**	2	SEAL-O-RING	

C-CHANGE FROM PREVIOUS TYPE
M-METRIC PART
Y-SEPARATE ILLUSTRATION

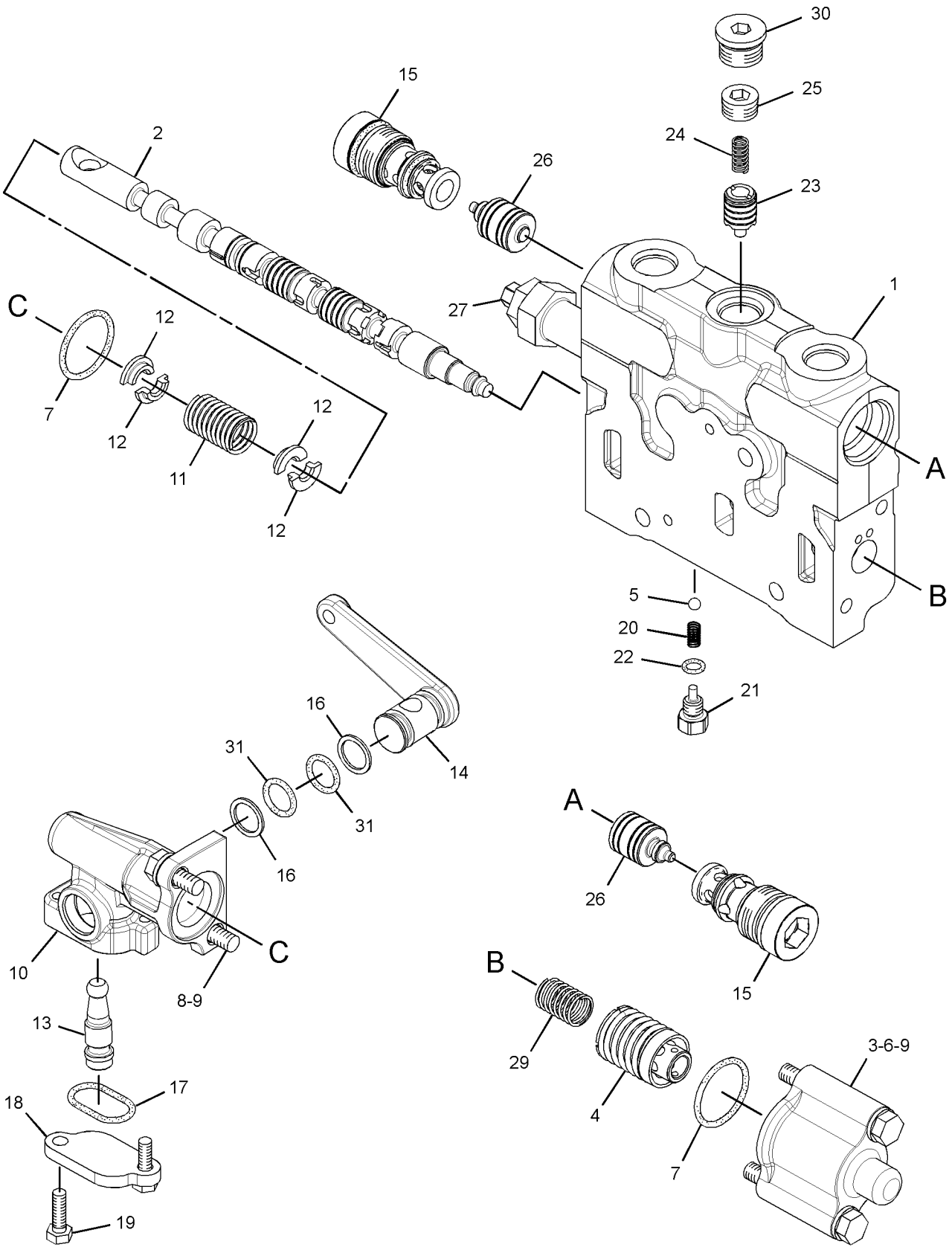

GRAPHIC #1 **<END>** g01668513

HYDRAULIC SYSTEM

6E-3034 VALVE GP-CONTROL—BLADE TIP

S/N: JJA1-UP

PART OF 124-3327 VALVE GP-BANK 4, 124-3329, 250-0550 VALVE GP-BANK 5

ALSO AN ATTACHMENT

SMCS-5051 **i03496421**

NOTE	REF NO	GRAPHIC REF	PART NUMBER	QTY	PART NAME 1 2 3 4 5 6 (PRODUCT LEVEL)	SEE PAGE
	1	1	**6E-4599**	1	BODY	
	2	1	**101-1155**	1	STEM	
	3	1	**101-1978**	1	COVER	
	4	1	**2K-8199**	2	SEAL-O-RING	
M	5	1	**8T-4189**	4	BOLT (M8X1.25X20-MM)	
	6	1	**8T-4224**	4	WASHER-HARD (8.8X16X2-MM THK)	
	7	1	**101-1984**	1	BODY	
Y	8	1	**139-8472**	1	VALVE GP-RELIEF (BLADE TIP)	458
	10	1	**102-7412**	1	SPRING	
	11	1	**101-1973**	4	RETAINER	
	12	1	**101-1971**	1	LEVER	
	13	1	**340-5472**	1	LEVER AS	
	14	1	**8M-4437**	2	SEAL-O-RING	
	16	1	**4D-9986**	1	SEAL-O-RING	
	17	1	**101-2480**	1	COVER	
M	18	1	**8T-4138**	2	BOLT (M6X1X20-MM)	
	19	1	**5B-9318**	1	BALL	
	20	1	**6E-3007**	1	SPRING	
	21	1	**6E-4502**	1	PLUG	
	22	1	**4J-7533**	1	SEAL-O-RING	
	23	1	**6E-3019**	1	VALVE	
	24	1	**6E-5153**	1	SPRING	
	25	1	**108-2187**	1	PLUG-PIPE	
	26	1	*148-8395*	1	PLUG AS	
		1	**9S-8005**	1	PLUG-O-RING	
		1	**3K-0360**	1	SEAL-O-RING	
	27	1	**106-3659**	1	PISTON	
	28	1	**111-8233**	1	SPRING	
C	29	1	**325-6423**	2	VALVE GP-CHECK	
					(EACH INCLUDES)	
		1	**3K-0360**	1	SEAL-O-RING	
		1	**7J-9933**	1	SEAL-O-RING	

C-CHANGE FROM PREVIOUS TYPE
M-METRIC PART
Y-SEPARATE ILLUSTRATION

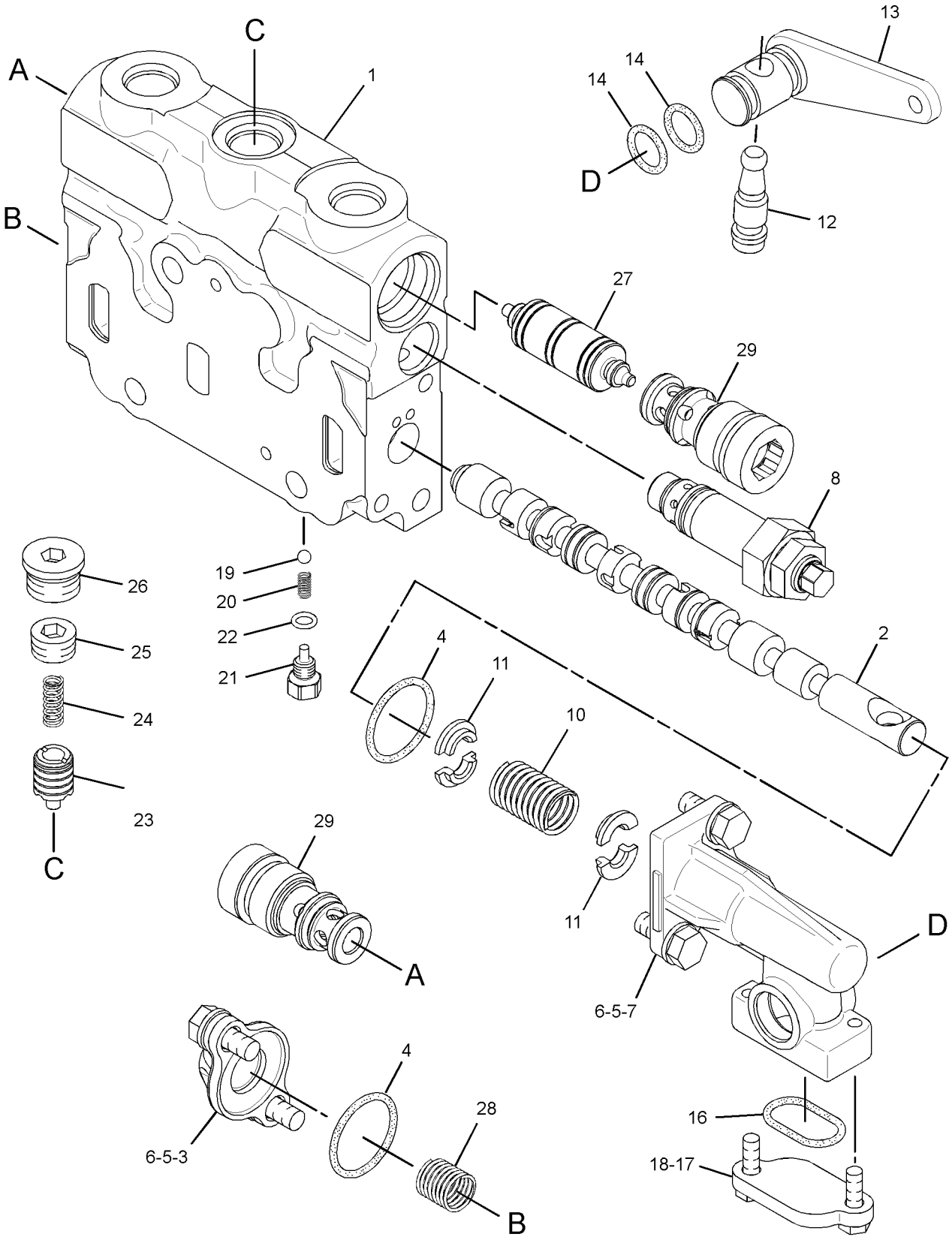

GRAPHIC #1 **<END>** g01833173

HYDRAULIC SYSTEM

6E-3035 VALVE GP-CONTROL—CIRCLE DRIVE

S/N: JJA1-UP

PART OF 124-3327 VALVE GP-BANK 4, 124-3329, 250-0550 VALVE GP-BANK 5

ALSO AN ATTACHMENT

SMCS-5051 **i03179442**

NOTE	REF NO	GRAPHIC REF	PART NUMBER	QTY	PART NAME 1 2 3 4 5 6 (PRODUCT LEVEL)	SEE PAGE
	1	1	**6E-3044**	1	BODY	
	2	1	**148-7906**	1	STEM	
	3	1	**101-1978**	1	COVER	
	4	1	**2K-8199**	2	SEAL-O-RING	
M	5	1	**8T-4189**	4	BOLT (M8X1.25X20-MM)	
	6	1	**8T-4224**	4	WASHER-HARD (8.8X16X2-MM THK)	
	7	1	**101-1984**	1	BODY	
	8	1	**102-7412**	1	SPRING	
	9	1	**101-1973**	4	RETAINER	
	10	1	**101-1971**	1	LEVER	
	11	1	**101-1982**	1	LEVER AS	
	12	1	**8M-4437**	2	SEAL-O-RING	
	13	1	**101-1983**	2	RING-BACKUP	
	14	1	**4D-9986**	1	SEAL-O-RING	
	15	1	**101-2480**	1	COVER	
M	16	1	**8T-4138**	2	BOLT (M6X1X20-MM)	
	17	1	**5B-9318**	1	BALL	
	18	1	**6E-3007**	1	SPRING	
	19	1	**6E-4502**	1	PLUG	
	20	1	**4J-7533**	1	SEAL-O-RING	
	21	1	**6E-3019**	1	VALVE	
	22	1	**6E-5153**	1	SPRING	
	23	1	**108-2187**	1	PLUG-PIPE	
	24	1	*148-8395*	1	PLUG AS	
		1	**9S-8005**	1	PLUG-O-RING	
		1	**3K-0360**	1	SEAL-O-RING	
	25	1	**3K-0360**	2	SEAL-O-RING	
	26	1	**106-3659**	1	PISTON	
	27	1	**6E-3013**	2	SEAT	
	28	1	**106-3658**	2	VALVE	
	29	1	**9J-0403**	2	SPRING	
	30	1	**9J-0404**	2	PLUG	
	31	1	**7J-9933**	2	SEAL-O-RING	
	32	1	**111-8233**	1	SPRING	

M-METRIC PART

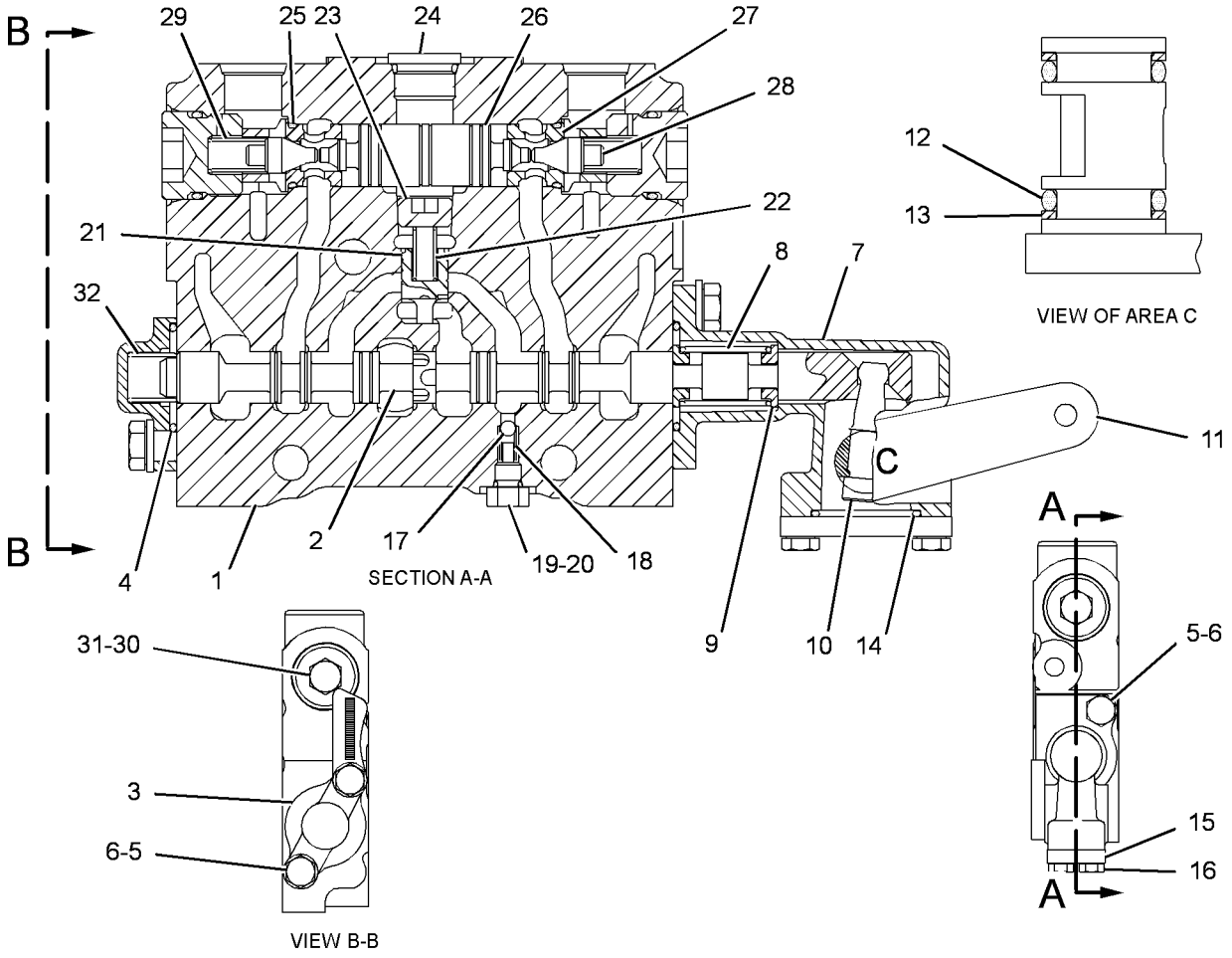

GRAPHIC #1 **<END>** g01625258

HYDRAULIC SYSTEM

6E-3036 VALVE GP-CONTROL—SIDESHIFT

S/N: JJA1-UP

PART OF 124-3327 VALVE GP-BANK 4, 124-3329, 250-0550 VALVE GP-BANK 5

ALSO AN ATTACHMENT

SMCS-5051 **i03496424**

NOTE	REF NO	GRAPHIC REF	PART NUMBER	QTY	PART NAME 1 2 3 4 5 6 (PRODUCT LEVEL)	SEE PAGE
	1	1	**4D-9986**	1	SEAL-O-RING	
	2	1	**6E-3007**	1	SPRING	
	3	1	**6E-3019**	1	VALVE	
	4	1	**6E-3058**	1	BODY	
	5	1	**6E-4502**	1	PLUG	
	6	1	**6E-5153**	1	SPRING	
	7	1	**101-1971**	1	LEVER	
	8	1	**101-1973**	4	RETAINER	
	9	1	**101-1978**	1	COVER	
	10	1	**340-5472**	1	LEVER AS	
	11	1	**101-1984**	1	BODY	
	12	1	**101-2480**	1	COVER	
	13	1	**102-4577**	1	STEM	
	14	1	**102-7412**	1	SPRING	
	15	1	**106-3659**	1	PISTON	
	17	1	**111-8233**	1	SPRING	
Y	18	1	**139-8472**	1	VALVE GP-RELIEF (SIDESHIFT)	458
C	19	1	**325-6423**	2	VALVE GP-CHECK	
					(EACH INCLUDES)	
		1	**3K-0360**	1	SEAL-O-RING	
		1	**7J-9933**	1	SEAL-O-RING	
	21	1	**108-2187**	1	PLUG-PIPE	
	22	1	*148-8395*	1	PLUG AS	
		1	**9S-8005**	1	PLUG-O-RING	
		1	**3K-0360**	1	SEAL-O-RING	
	23	1	**2K-8199**	2	SEAL-O-RING	
	24	1	**4J-7533**	1	SEAL-O-RING	
	25	1	**5B-9318**	1	BALL	
	26	1	**8M-4437**	2	SEAL-O-RING	
M	27	1	**8T-4138**	2	BOLT (M6X1X20-MM)	
M	28	1	**8T-4189**	4	BOLT (M8X1.25X20-MM)	
	29	1	**8T-4224**	4	WASHER-HARD (8.8X16X2-MM THK)	

C-CHANGE FROM PREVIOUS TYPE
M-METRIC PART
Y-SEPARATE ILLUSTRATION

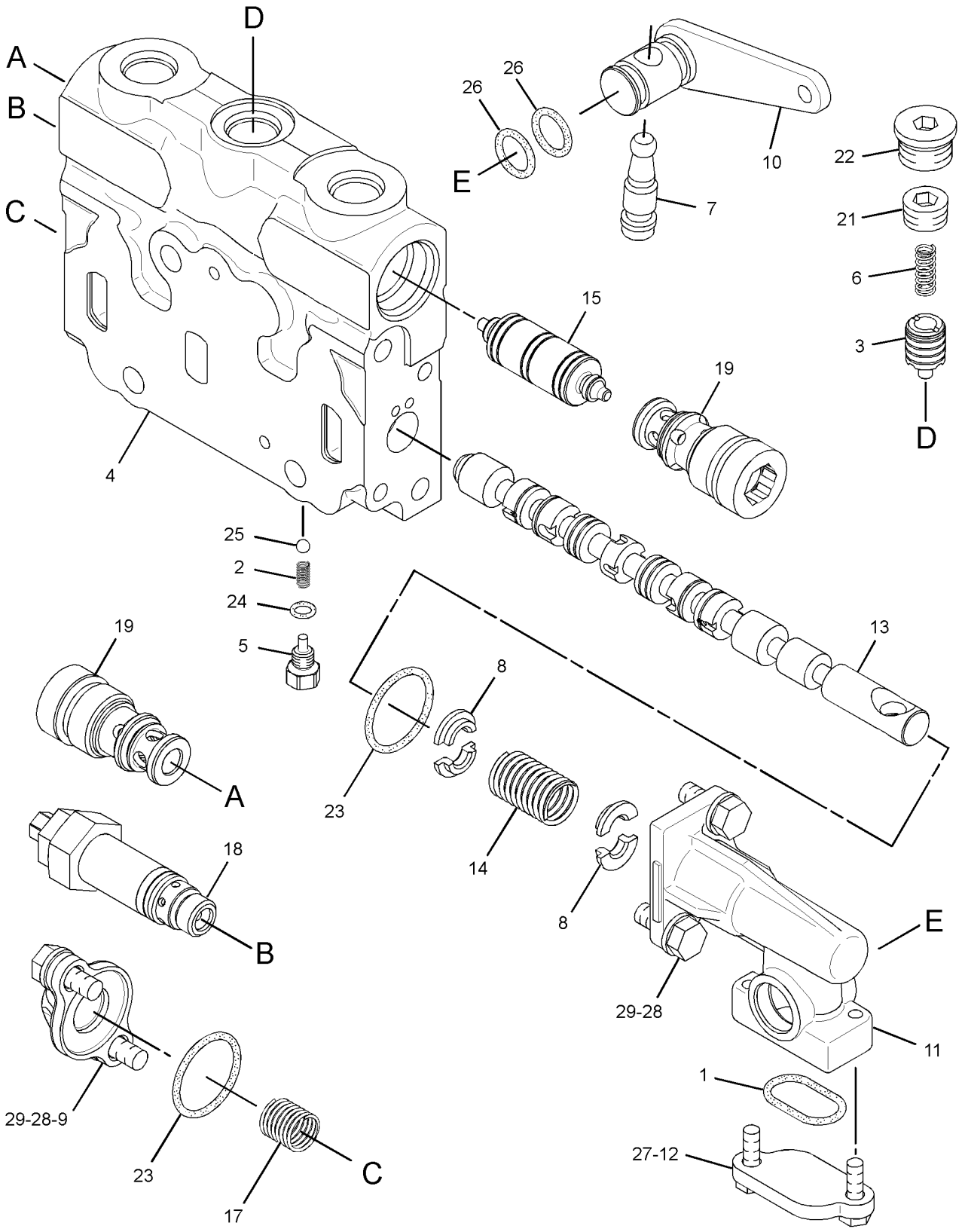

GRAPHIC #1 **<END>** g01833732

HYDRAULIC SYSTEM

6E-3037 VALVE GP-CONTROL—BULLDOZER

S/N: JJA1-UP

PART OF 250-0550 VALVE GP-BANK 5

AN ATTACHMENT

SMCS-5051 **i02872563**

NOTE	REF NO	GRAPHIC REF	PART NUMBER	QTY	PART NAME 1 2 3 4 5 6 (PRODUCT LEVEL)	SEE PAGE
	1	1	**6E-3043**	1	BODY	
	2	1	**221-3676**	1	STEM	
	3	1	**101-1980**	1	HOUSING	
	5	1	**5B-9318**	1	BALL	
M	6	1	**8T-6869**	2	BOLT (M8X1.25X60-MM)	
	7	1	**2K-8199**	2	SEAL-O-RING	
M	8	1	**8T-4189**	2	BOLT (M8X1.25X20-MM)	
	9	1	**8T-4224**	4	WASHER-HARD (8.8X16X2-MM THK)	
	10	1	**101-1984**	1	BODY	
	11	1	**102-7412**	1	SPRING	
	12	1	**101-1973**	4	RETAINER	
	13	1	**101-1971**	1	LEVER	
	14	1	**101-1982**	1	LEVER AS	
	15	1	**8M-4437**	2	SEAL-O-RING	
	16	1	**101-1983**	2	RING-BACKUP	
	17	1	**4D-9986**	1	SEAL-O-RING	
	18	1	**101-2480**	1	COVER	
M	19	1	**8T-4138**	2	BOLT (M6X1X20-MM)	
	20	1	**6E-3007**	1	SPRING	
	21	1	**6E-4502**	1	PLUG	
	22	1	**4J-7533**	1	SEAL-O-RING	
	23	1	**6E-3019**	1	VALVE	
	24	1	**6E-5153**	1	SPRING	
	25	1	**108-2187**	1	PLUG-PIPE	
	26	1	*148-8395*	1	PLUG AS	
		1	**3K-0360**	1	SEAL-O-RING	
		1	**9S-8005**	1	PLUG-O-RING	
	27	1	**3K-0360**	2	SEAL-O-RING	
	28	1	**106-3660**	2	PISTON	
	29	1	**229-5010**	2	VALVE GP-CHECK	
	31	1	**9J-0403**	2	SPRING	
	32	1	**9J-0404**	2	PLUG	
	33	1	**7J-9933**	2	SEAL-O-RING	
CY	34	1	**222-7774**	1	VALVE GP-RELIEF (BLADE LIFT)	460
Y	36	1	**108-4916**	1	DETENT GP-CONTROL VALVE (BLADE LIFT)	350
	37	1	**111-8234**	1	SPRING	

C-CHANGE FROM PREVIOUS TYPE
M-METRIC PART
Y-SEPARATE ILLUSTRATION

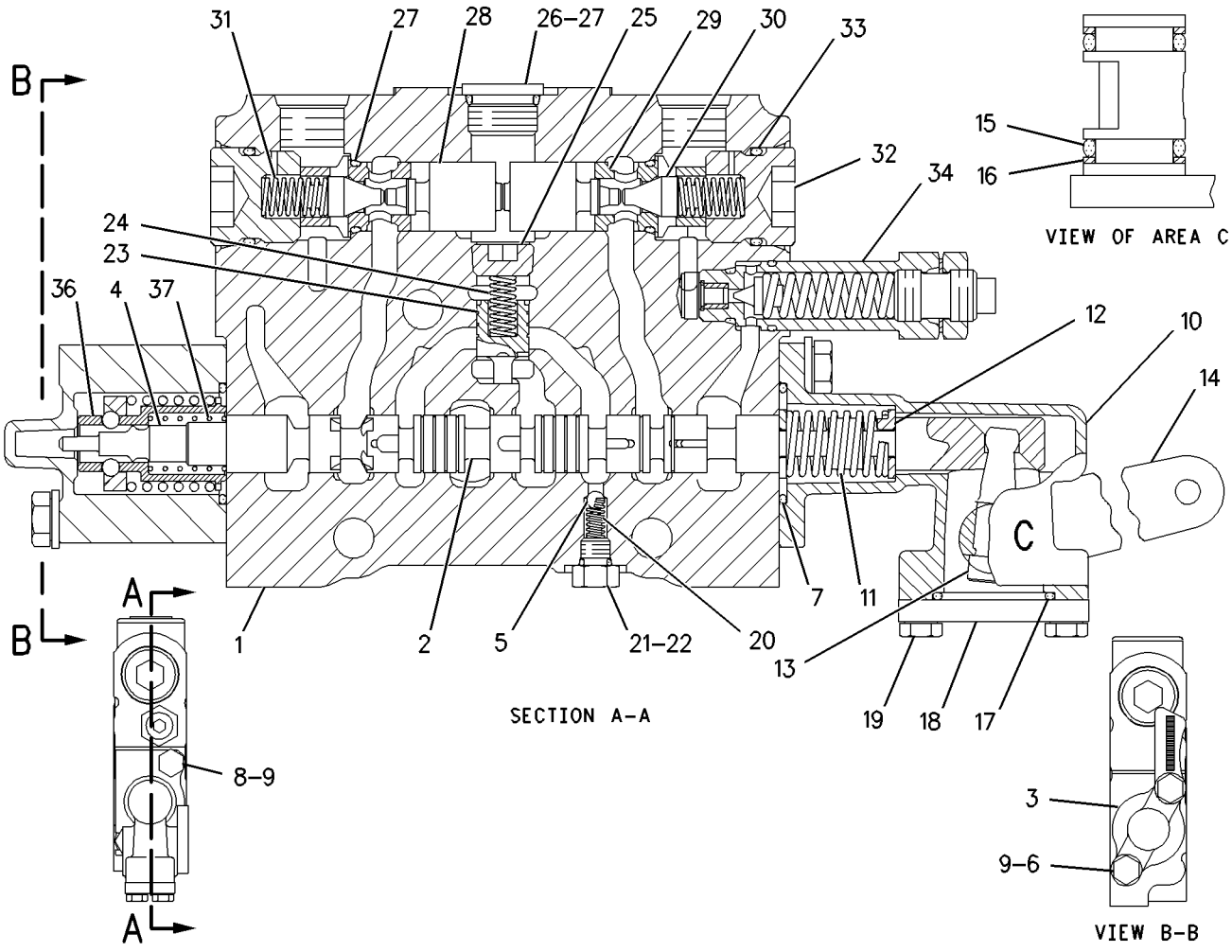

GRAPHIC #1 **<END>** g00922337

HYDRAULIC SYSTEM

107-0545 VALVE GP-CONTROL–RIPPER

S/N: JJA1-UP

PART OF 124-3329, 250-0550 VALVE GP-BANK 5

AN ATTACHMENT

SMCS-5051 **i03338460**

NOTE	REF NO	GRAPHIC REF	PART NUMBER	QTY	PART NAME 1 2 3 4 5 6 (PRODUCT LEVEL)	SEE PAGE
	1	1	**6E-4599**	1	BODY	
	2	1	**101-1148**	1	STEM	
	3	1	**101-1978**	1	COVER	
	4	1	**2K-8199**	2	SEAL-O-RING	
M	5	1	**8T-4189**	4	BOLT (M8X1.25X20-MM)	
	6	1	**8T-4224**	4	WASHER-HARD (8.8X16X2-MM THK)	
	7	1	**101-1984**	1	BODY	
C	8	1	**325-6423**	2	VALVE GP-CHECK	
					(EACH INCLUDES)	
		1	**3K-0360**	1	SEAL-O-RING	
		1	**7J-9933**	1	SEAL-O-RING	
Y	9	1	**139-8472**	1	VALVE GP-RELIEF (RIPPER)	458
	11	1	**102-7412**	1	SPRING	
	12	1	**101-1973**	4	RETAINER	
	13	1	**101-1971**	1	LEVER	
	14	1	**101-1982**	1	LEVER AS	
C	15	1	**8M-4437**	2	SEAL-O-RING	
	16	1	**101-1983**	2	RING-BACKUP	
	17	1	**4D-9986**	1	SEAL-O-RING	
	18	1	**101-2480**	1	COVER	
M	19	1	**8T-4138**	2	BOLT (M6X1X20-MM)	
	20	1	**5B-9318**	1	BALL	
	21	1	**6E-3007**	1	SPRING	
	22	1	**6E-4502**	1	PLUG	
	23	1	**4J-7533**	1	SEAL-O-RING	
	24	1	**6E-3019**	1	VALVE	
	25	1	**6E-5153**	1	SPRING	
	26	1	**108-2187**	1	PLUG-PIPE	
	29	1	*148-8395*	1	PLUG AS	
		1	**3K-0360**	1	SEAL-O-RING	
		1	**9S-8005**	1	PLUG-O-RING	
	31	1	**106-3659**	1	PISTON	
	34	1	**111-8233**	1	SPRING	

C-CHANGE FROM PREVIOUS TYPE
M-METRIC PART
Y-SEPARATE ILLUSTRATION

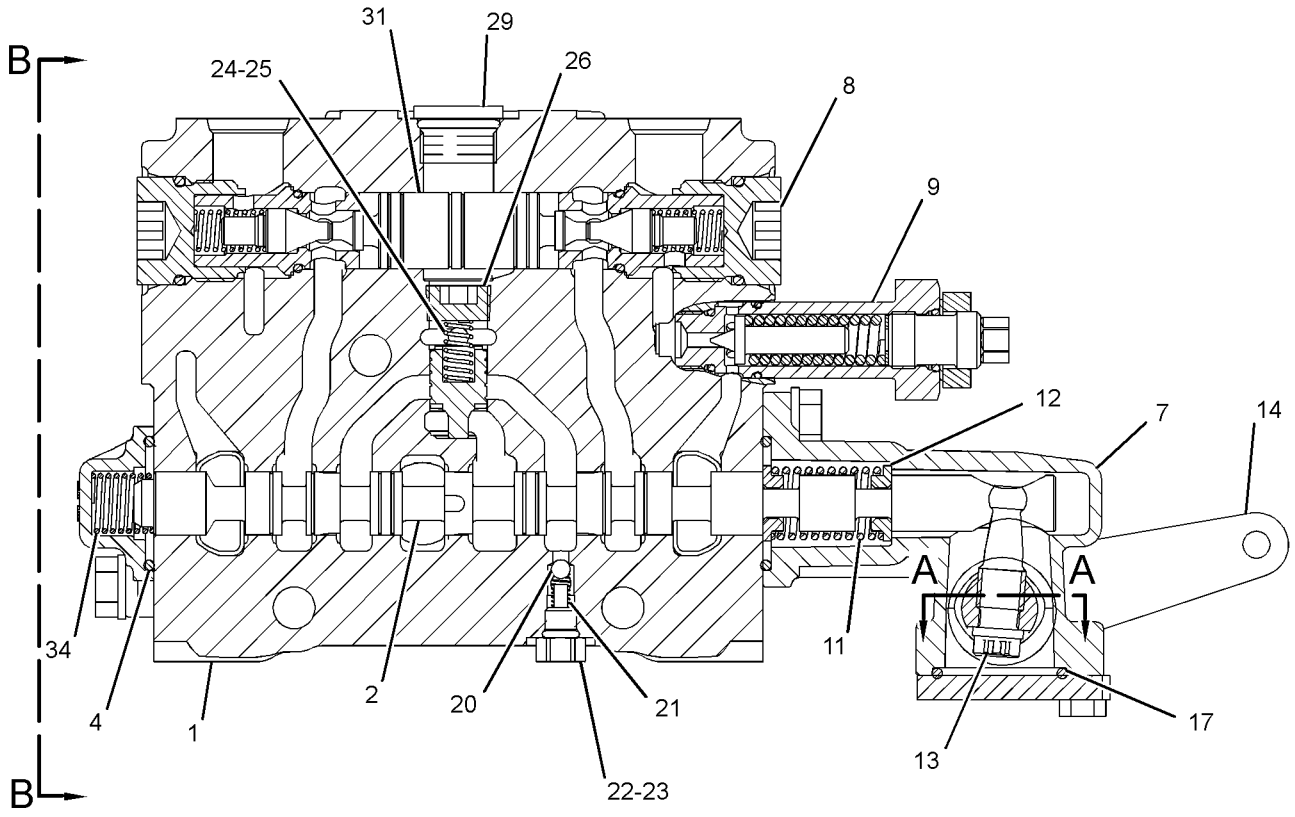

SECTION C-C

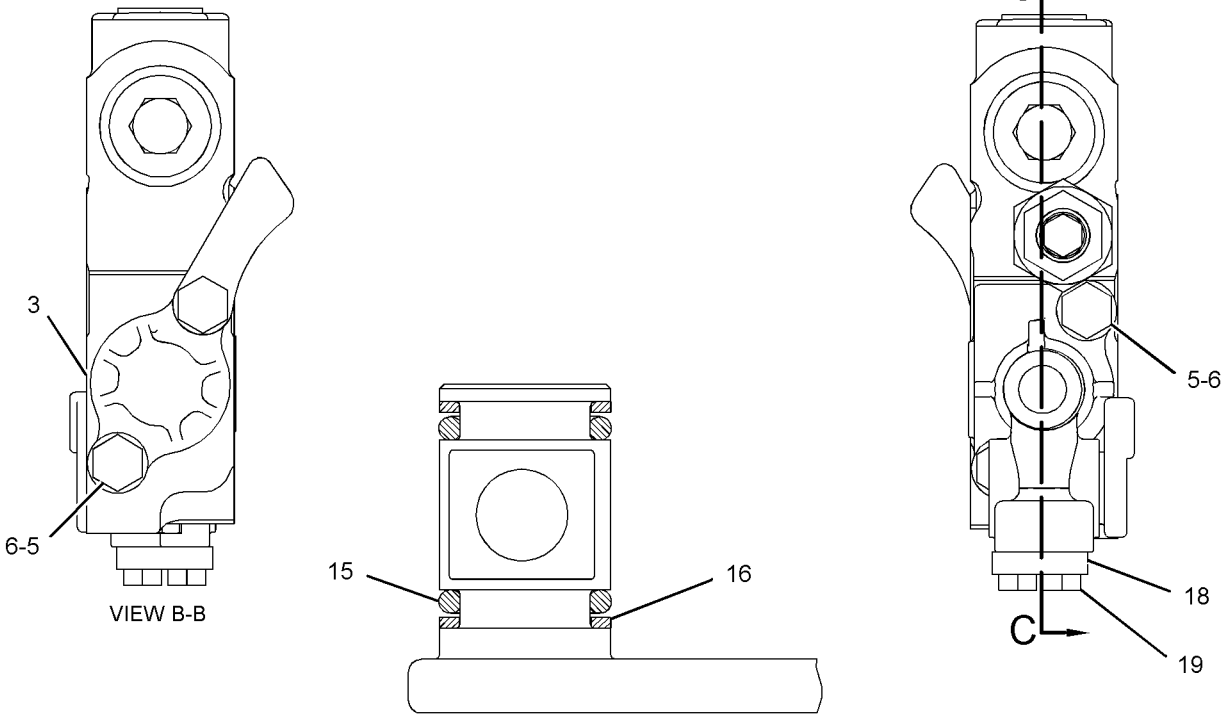

VIEW B-B

SECTION A-A

GRAPHIC #1 **<END>** g01619681

124-2883 VALVE GP-CONTROL–BLADE LIFT

S/N: JJA1-UP

PART OF 124-3327 VALVE GP-BANK 4, 124-3329 VALVE GP-BANK 5

ALSO AN ATTACHMENT

SMCS-5051 **i03483861**

NOTE	REF NO	GRAPHIC REF	PART NUMBER	QTY	PART NAME 1 2 3 4 5 6 (PRODUCT LEVEL)	SEE PAGE
	1	1	**111-8233**	1	SPRING	
	2	1	**124-1840**	1	STEM-BLADE LIFT	
	3	1	**101-1978**	1	COVER	
	4	1	**2K-8199**	2	SEAL-O-RING	
M	5	1	**8T-4189**	4	BOLT (M8X1.25X20-MM)	
	6	1	**8T-4224**	4	WASHER-HARD (8.8X16X2-MM THK)	
	7	1	**106-3658**	2	VALVE	
	8	1	**7J-9933**	2	SEAL-O-RING	
Y	9	1	**6E-3033**	1	VALVE GP-RELIEF (BLADE LIFT)	453
	10	1	**124-3385**	1	PISTON	
	11	1	**102-7412**	1	SPRING	
	12	1	**101-1973**	4	RETAINER	
	13	1	**101-1971**	1	LEVER	
	14	1	**101-1982**	1	LEVER AS	
	15	1	**8M-4437**	2	SEAL-O-RING	
	16	1	**101-1983**	2	RING-BACKUP	
	17	1	**4D-9986**	1	SEAL-O-RING	
	18	1	**101-2480**	1	COVER	
M	19	1	**8T-4138**	2	BOLT (M6X1X20-MM)	
	20	1	**5B-9318**	1	BALL	
	21	1	**6E-3007**	1	SPRING	
	22	1	**6E-4502**	1	PLUG	
	23	1	**4J-7533**	1	SEAL-O-RING	
	24	1	**3K-0360**	3	SEAL-O-RING	
	25	1	**6E-5153**	1	SPRING	
	26	1	**108-2187**	1	PLUG-PIPE	
	27	1	**9J-0403**	2	SPRING	
	28	1	**9J-0404**	2	PLUG	
	29	1	**9S-8005**	1	PLUG-O-RING	

M-METRIC PART
Y-SEPARATE ILLUSTRATION

124-2883 VALVE GP-CONTROL *(contd.)* **i03483861**

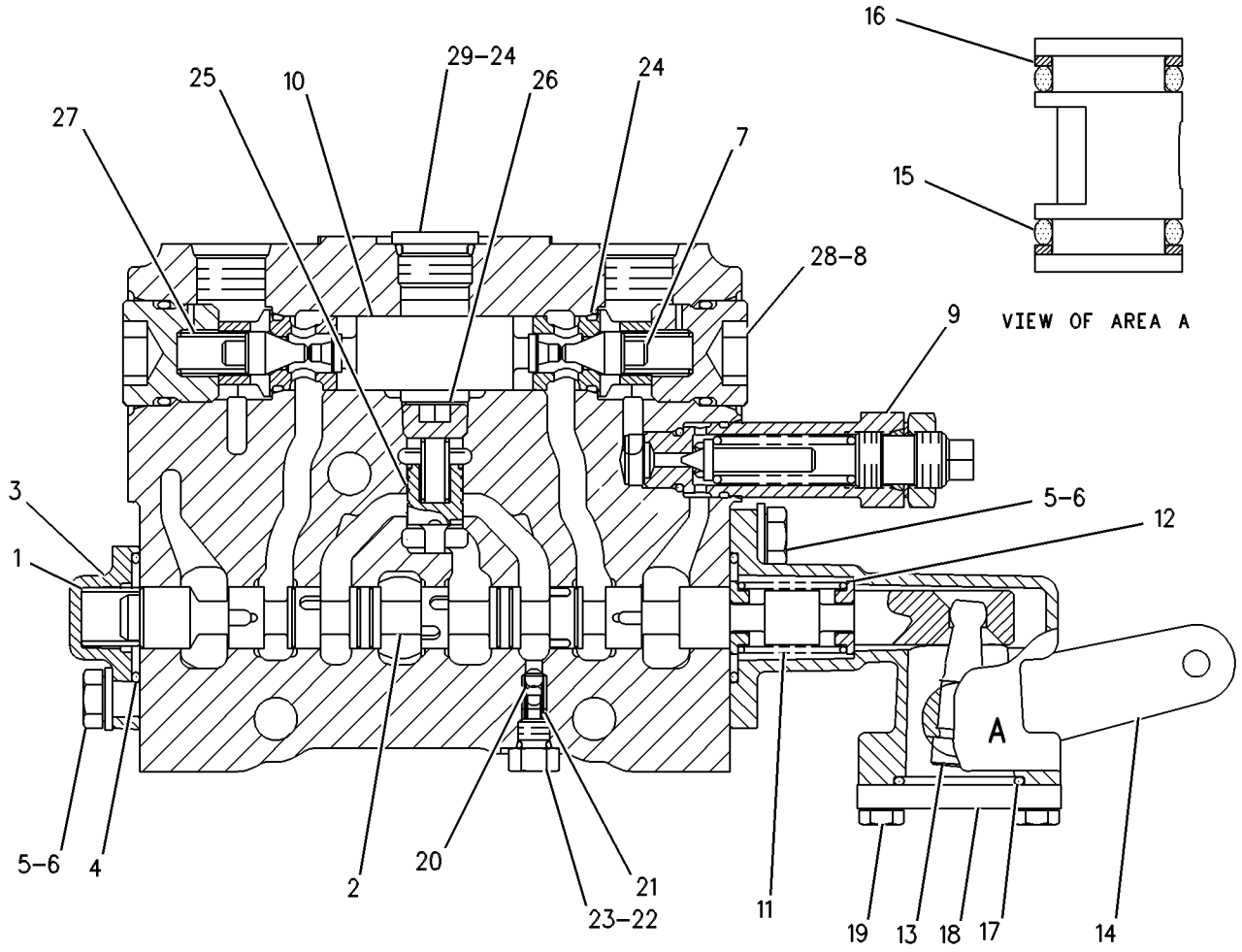

GRAPHIC #1 **<END>** g00109193

124-2884 VALVE GP-CONTROL—BLADE LIFT

S/N: JJA1-UP

PART OF 124-3325 VALVE GP-BANK 4, 341-6220 VALVE GP-BANK 6

ALSO AN ATTACHMENT

SMCS-5051 **i03179703**

NOTE	REF NO	GRAPHIC REF	PART NUMBER	QTY	PART NAME 1 2 3 4 5 6 (PRODUCT LEVEL)	SEE PAGE
	1	1	**111-8233**	1	SPRING	
	2	1	**124-1840**	1	STEM-BLADE LIFT	
	3	1	**101-1978**	1	COVER	
	4	1	**2K-8199**	2	SEAL-O-RING	
M	5	1	**8T-4189**	4	BOLT (M8X1.25X20-MM)	
	6	1	**8T-4224**	4	WASHER-HARD (8.8X16X2-MM THK)	
	7	1	**106-3658**	2	VALVE	
	8	1	**7J-9933**	2	SEAL-O-RING	
YC	9	1	**139-8474**	1	VALVE GP-RELIEF (BLADE LIFT)	459
C	10	1	**124-3385**	1	PISTON	
	11	1	**102-7412**	1	SPRING	
	12	1	**101-1973**	4	RETAINER	
	13	1	**101-1971**	1	LEVER	
	14	1	**101-1970**	1	LEVER AS	
	15	1	**8M-4437**	2	SEAL-O-RING	
	16	1	**101-1983**	2	RING-BACKUP	
	17	1	**4D-9986**	1	SEAL-O-RING	
	18	1	**101-2480**	1	COVER	
M	19	1	**8T-4138**	2	BOLT (M6X1X20-MM)	
	20	1	**5B-9318**	1	BALL	
	21	1	**6E-3007**	1	SPRING	
	22	1	**6E-4502**	1	PLUG	
	23	1	**4J-7533**	1	SEAL-O-RING	
	24	1	**3K-0360**	3	SEAL-O-RING	
	25	1	**6E-5153**	1	SPRING	
	26	1	**108-2187**	1	PLUG-PIPE	
	27	1	**9J-0403**	2	SPRING	
	28	1	**9J-0404**	2	PLUG	
	29	1	**9S-8005**	1	PLUG-O-RING	

C-CHANGE FROM PREVIOUS TYPE
M-METRIC PART
Y-SEPARATE ILLUSTRATION

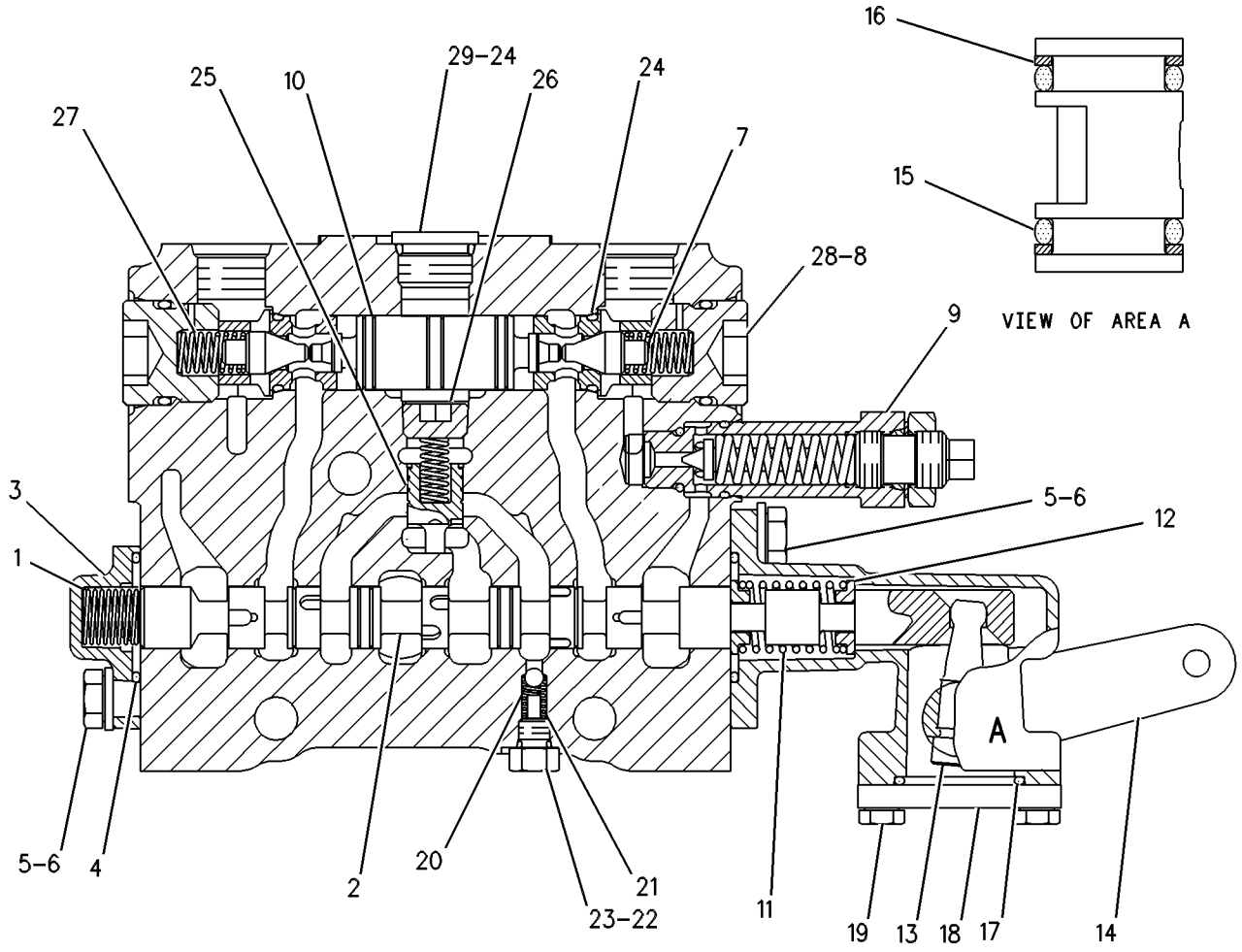

GRAPHIC #1 **<END>** g00273297

HYDRAULIC SYSTEM

124-2885 VALVE GP-CONTROL—BULLDOZER LIFT, PLOW

S/N: JJA1-UP

PART OF 341-6220, 341-6226 VALVE GP-BANK 6

AN ATTACHMENT

SMCS-5051 **i03483900**

NOTE	REF NO	GRAPHIC REF	PART NUMBER	QTY	PART NAME 1 2 3 4 5 6 (PRODUCT LEVEL)	SEE PAGE
	1	1	**6E-4599**	1	BODY	
	2	1	**124-1839**	1	STEM	
	3	1	**101-1978**	1	COVER	
	4	1	**2K-8199**	2	SEAL-O-RING	
M	5	1	**8T-4189**	4	BOLT (M8X1.25X20-MM)	
	6	1	**8T-4224**	4	WASHER-HARD (8.8X16X2-MM THK)	
	7	1	**101-1984**	1	BODY	
	8	1	**7J-9933**	2	SEAL-O-RING	
	9	1	**111-8233**	1	SPRING	
Y	10	1	**6E-3033**	1	VALVE GP-RELIEF (BULLDOZER LIFT, PLOW)	453
	11	1	**102-7412**	1	SPRING	
	12	1	**101-1973**	4	RETAINER	
	13	1	**101-1971**	1	LEVER	
	14	1	**101-1970**	1	LEVER AS	
	15	1	**8M-4437**	2	SEAL-O-RING	
	16	1	**101-1983**	2	RING-BACKUP	
	17	1	**4D-9986**	1	SEAL-O-RING	
	18	1	**101-2480**	1	COVER	
M	19	1	**8T-4138**	2	BOLT (M6X1X20-MM)	
	20	1	**5B-9318**	1	BALL	
	21	1	**6E-3007**	1	SPRING	
	22	1	**6E-4502**	1	PLUG	
	23	1	**4J-7533**	1	SEAL-O-RING	
	24	1	**6E-3019**	1	VALVE	
	25	1	**6E-5153**	1	SPRING	
	26	1	**108-2187**	1	PLUG-PIPE	
	27	1	**9J-0403**	2	SPRING	
	28	1	**9J-0404**	2	PLUG	
	29	1	**9S-8005**	1	PLUG-O-RING	
	30	1	**3K-0360**	3	SEAL-O-RING	
	31	1	**124-3385**	1	PISTON	
	32	1	**6E-3013**	2	SEAT	
	33	1	**106-3658**	2	VALVE	

M-METRIC PART
Y-SEPARATE ILLUSTRATION

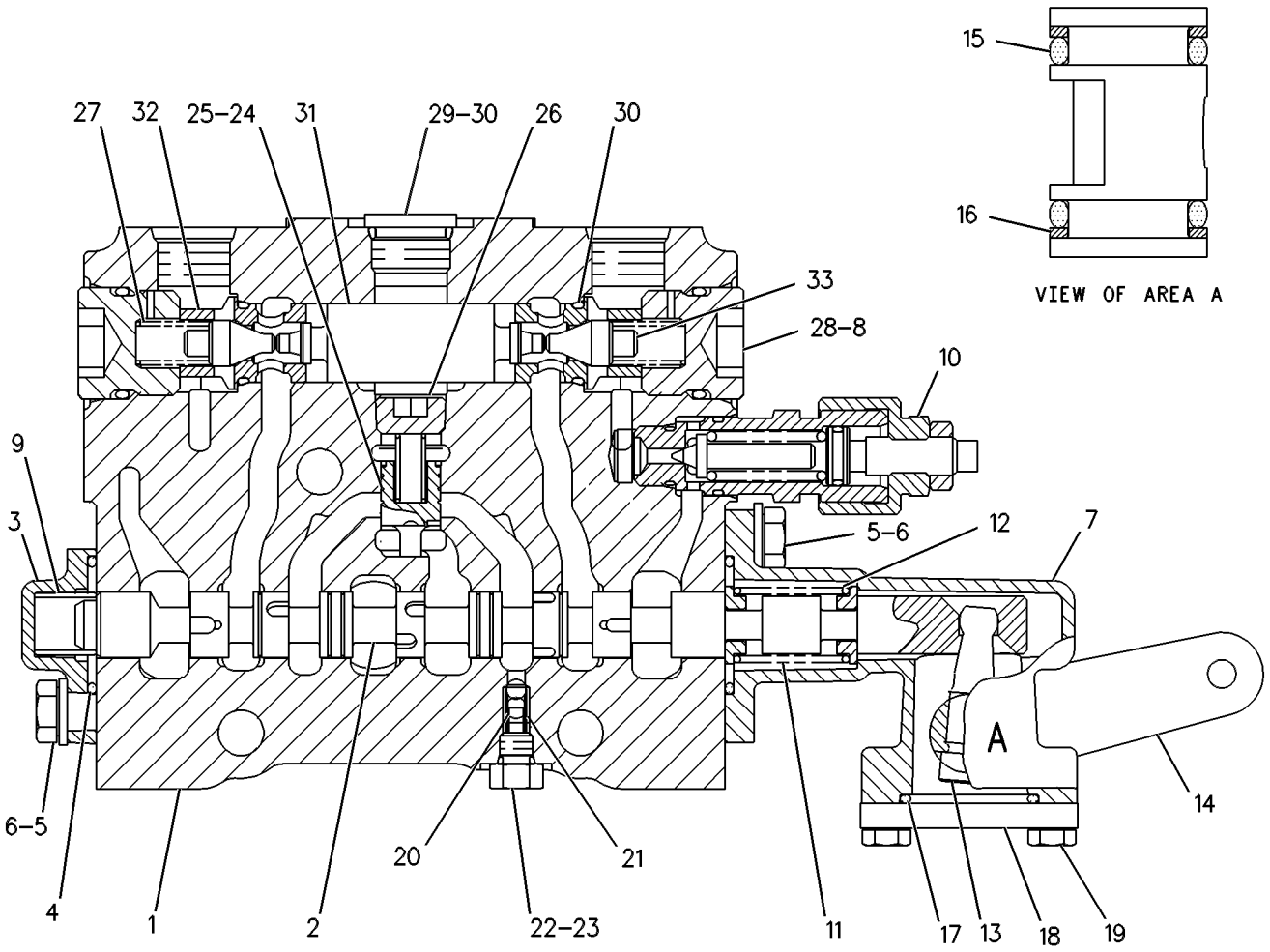

GRAPHIC #1 **<END>** g00108897

104-3122 VALVE GP-PUMP CONTROL–
PRESSURE, FLOW COMPENSATOR
S/N: JJA1-UP
PART OF 6E-3136, 6E-3137 PUMP GP-PISTON
ALSO AN ATTACHMENT

SMCS-5455 **i03614881**

NOTE	REF NO	GRAPHIC REF	PART NUMBER	QTY	PART NAME 1 2 3 4 5 6 (PRODUCT LEVEL)	SEE PAGE
	1	1	**9X-7680**	1	SEAL-O-RING	
	2	1	**9S-4191**	1	PLUG-O-RING	
	3	1	**3J-1907**	3	SEAL-O-RING	
	4	1	**9T-2186**	2	PLUG	
	5	1	**6E-4230**	2	GUIDE-SPRING	
	6	1	**6E-4228**	1	SPRING	
	7	1	**6E-6140**	1	PLUG-COMPENSATOR	
	8	1	**033-6036**	1	SEAL-O-RING	
	9	1	**6E-6141**	2	LOCKNUT-SEALING	
M	10	1	**129-7632**	2	SETSCREW-SOCKET (M8X1.25X45-MM)	
	11	1	**6E-6142**	1	PLUG-MARGIN	
	12	1	**033-6027**	1	SEAL-O-RING	
	13	1	**9T-7750**	1	SPRING	
	14	1	**108-4816**	1	PIN-SPRING STOP	
	15	1	**9T-1857**	2	GUIDE	
	16	1	**6E-6420**	1	VALVE-NEEDLE	
	17	1	**6E-6419**	1	RING	

PARTS SHOWN IN GRAPHIC(S) WITHOUT A REFERENCE NUMBER ARE NOT SERVICED SEPARATELY

M-METRIC PART

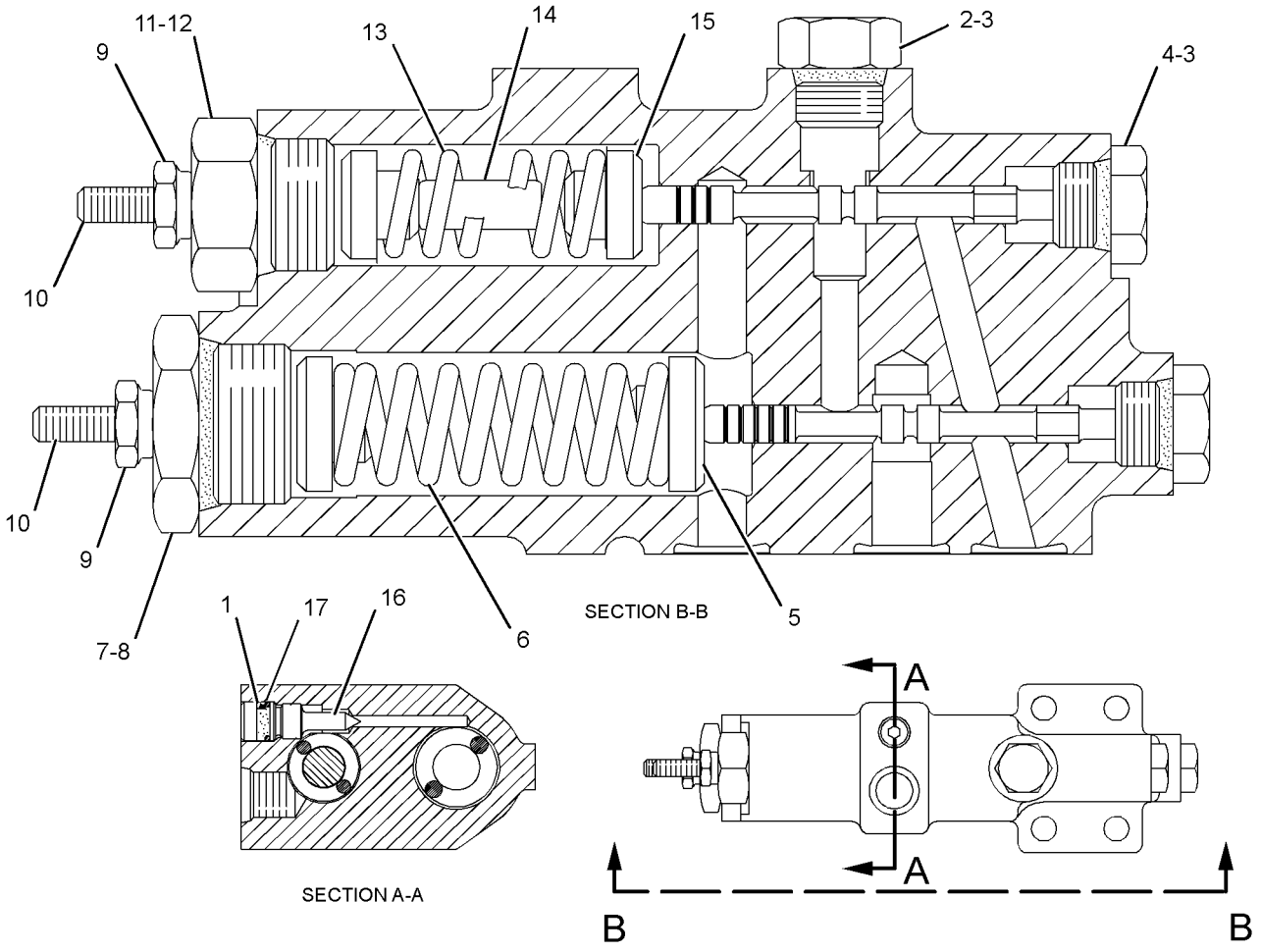

GRAPHIC #1 **<END>** g01938673

131-8350 VALVE GP-PURGE

S/N: JJA1-UP

PART OF 9T-5957 VALVE GP-COMBINATION

SMCS-4293 **i00139150**

NOTE	REF NO	GRAPHIC REF	PART NUMBER	QTY	PART NAME 1 2 3 4 5 6 (PRODUCT LEVEL)	SEE PAGE
	1	1	**109-1144**	1	VALVE	
	2	1	**130-5770**	1	SLEEVE	

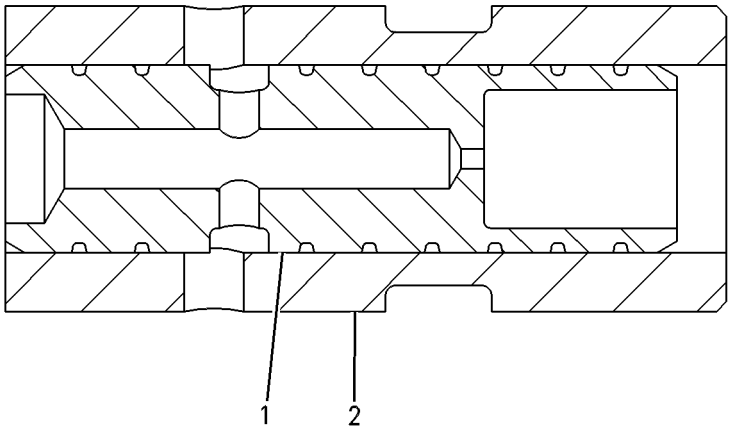

GRAPHIC #1 **<END>** g00087876

HYDRAULIC SYSTEM

4T-4935 VALVE GP-RELIEF

S/N: JJA1-UP

PART OF 9T-5957 VALVE GP-COMBINATION

SMCS-4322, 5069, 5072, 5117 **i00131002**

NOTE	REF NO	GRAPHIC REF	PART NUMBER	QTY	PART NAME 1 2 3 4 5 6 (PRODUCT LEVEL)	SEE PAGE
	1	1	**6E-1835**	1	RETAINER AS	
	2	1	**9X-6395**	1	NUT (3/4-16-THD)	
	3	1	**7J-9933**	1	SEAL-O-RING	
	4	1	**4T-7571**	1	PLATE	
	5	1	**6J-6439**	1	VALVE-POPPET	
	6	1	**3K-0360**	2	SEAL-O-RING	
	7	1	**4T-4942**	1	SPRING	

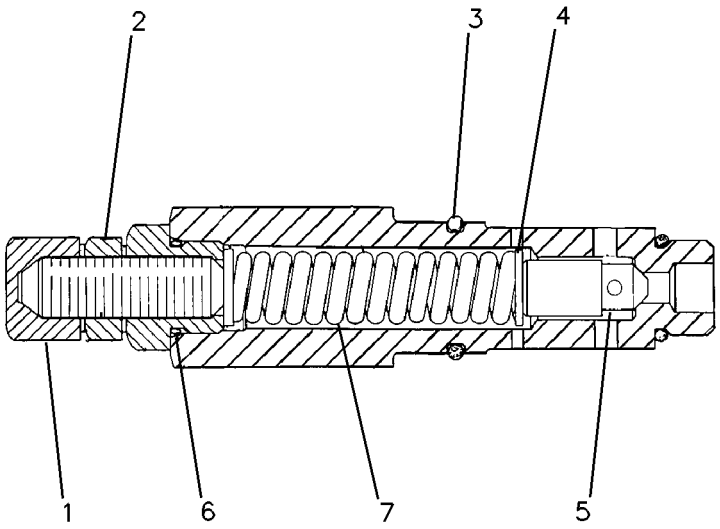

GRAPHIC #1 **<END>** g00082648

6E-3033 VALVE GP-RELIEF—BULLDOZER LIFT, PLOW

S/N: JJA1-UP

PART OF 124-2883, 124-2885 VALVE GP-CONTROL

FIELD REPLACEMENT FOR 6E-4704—PAGE 455, 106-7390—PAGE 457

ALSO AN ATTACHMENT

SMCS-4322, 5069, 5072, 5117 **i03498800**

NOTE	PART NUMBER	QTY	PART NAME 1 2 3 4 5 6 (PRODUCT LEVEL)	SEE PAGE
Y	*106-7390*	1	VALVE GP-RELIEF (HYDRAULIC)	457
			—OR—	
Y	*6E-4704*	1	VALVE GP-RELIEF (HYDRAULIC)	455
Y-SEPARATE ILLUSTRATION				

<END>

HYDRAULIC SYSTEM

6E-4703 VALVE GP-RELIEF

S/N: JJA1-UP

PART OF 9T-5957 VALVE GP-COMBINATION

SMCS-4322, 5069, 5072, 5117 **i00131105**

NOTE	REF NO	GRAPHIC REF	PART NUMBER	QTY	PART NAME 1 2 3 4 5 6 (PRODUCT LEVEL)	SEE PAGE
	1	1	**4D-2297**	1	SEAL-O-RING	
	2	1	**3J-1907**	1	SEAL-O-RING	
	3	1	**3G-3726**	1	NUT (3/8-40-THD)	

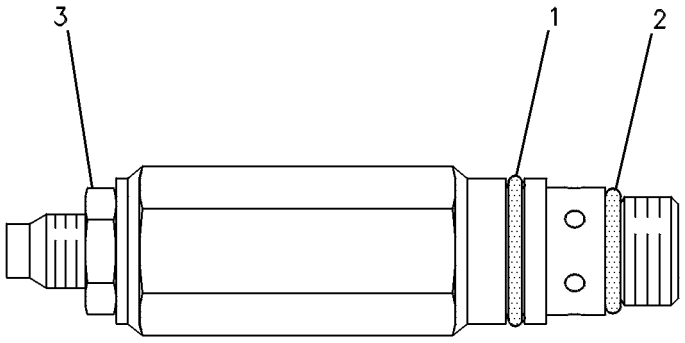

GRAPHIC #1 **<END>** g00084814

6E-4704 VALVE GP-RELIEF

S/N: JJA1-UP

PART OF 6E-3033 VALVE GP-RELIEF

FIELD REPLACEMENT ORDER 6E-3033–PAGE 453

ALSO AN ATTACHMENT

SMCS-4322, 5069, 5072, 5117 **i00131106**

NOTE	REF NO	GRAPHIC REF	PART NUMBER	QTY	PART NAME 1 2 3 4 5 6 (PRODUCT LEVEL)	SEE PAGE
	1	1	**4D-2297**	1	SEAL-O-RING	
	2	1	**3J-1907**	1	SEAL-O-RING	
	3	1	**3G-3726**	1	NUT (3/8-40-THD)	

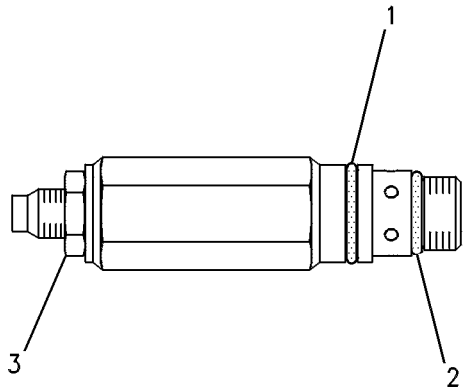

GRAPHIC #1 **<END>** g00084654

HYDRAULIC SYSTEM

100-6021 VALVE GP-RELIEF

S/N: JJA1-UP

PART OF 9T-5957 VALVE GP-COMBINATION

SMCS-4322, 5069, 5072, 5117 **i01853030**

NOTE	REF NO	GRAPHIC REF	PART NUMBER	QTY	PART NAME 1 2 3 4 5 6 (PRODUCT LEVEL)	SEE PAGE
	1	1	**4T-1700**	1	SPRING	
	2	1	**4T-4509**	1	SEAT	
	3	1	**4T-5074**	1	RING-BACKUP	
	4	1	**6E-5200**	1	RETAINER AS	
	5	1	**123-6661**	1	HOUSING	
	6	1	**108-5157**	1	VALVE	
	7	1	**3J-7354**	1	SEAL-O-RING	
	8	1	**3K-0360**	1	SEAL-O-RING	
	9	1	**6V-5556**	1	SEAL-O-RING	
	10	1	**9X-6395**	1	NUT (3/4-16-THD)	

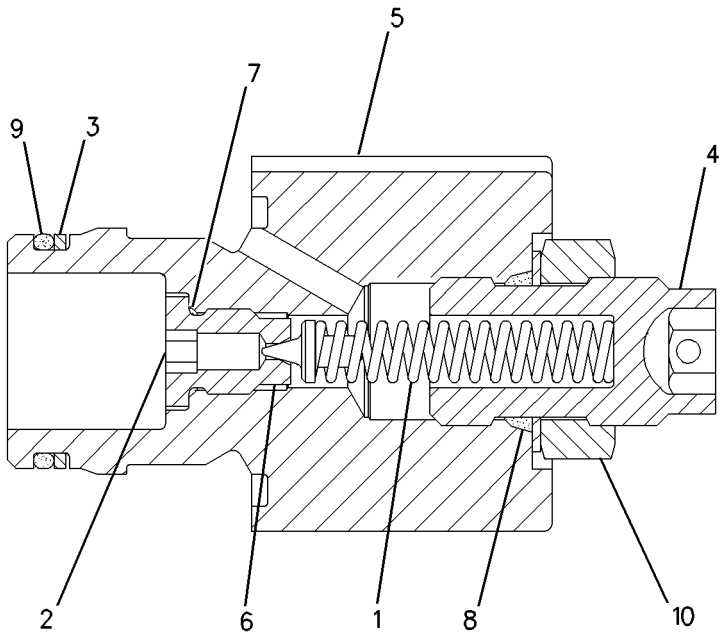

GRAPHIC #1 **<END>** g00949717

106-7390 VALVE GP-RELIEF

S/N: JJA1-UP
PART OF 6E-3033 VALVE GP-RELIEF
FIELD REPLACEMENT ORDER 6E-3033—PAGE 453
ALSO AN ATTACHMENT

SMCS-4322, 5069, 5072, 5117 **i01197997**

NOTE	REF NO	GRAPHIC REF	PART NUMBER	QTY	PART NAME 1 2 3 4 5 6 (PRODUCT LEVEL)	SEE PAGE
	1	1	**114-6635**	1	RETAINER AS	
	2	1	**2P-1279**	1	LOCKNUT (9/16-18-THD)	
	3	1	**3J-1907**	2	SEAL-O-RING	
	4	1	**2J-6089**	1	SPRING	
	6	1	**111-5754**	1	VALVE	
	7	1	**4D-2297**	1	SEAL-O-RING	

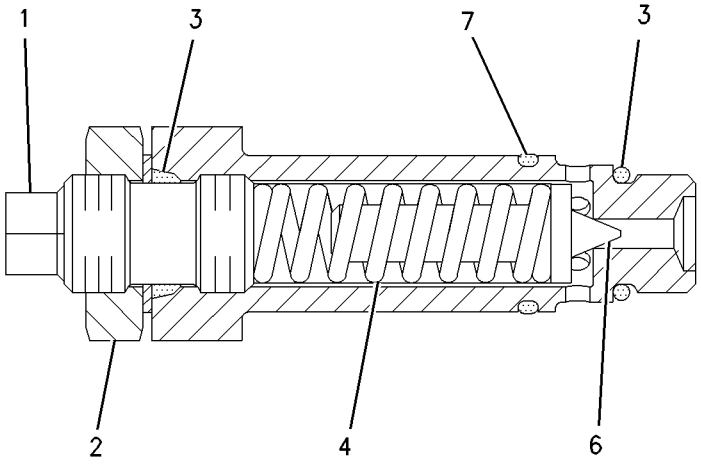

GRAPHIC #1 **<END>** g00638990

HYDRAULIC SYSTEM

139-8472 VALVE GP-RELIEF

S/N: JJA1-UP
PART OF 107-0545, 6E-3034, 6E-3036 VALVE GP-CONTROL
ALSO AN ATTACHMENT

SMCS-4322, 5069, 5072, 5117 **i03528308**

NOTE	REF NO	GRAPHIC REF	PART NUMBER	QTY	PART NAME 1 2 3 4 5 6 (PRODUCT LEVEL)	SEE PAGE
	1	1	**114-6635**	1	RETAINER AS	
	2	1	**2P-1279**	1	LOCKNUT (9/16-18-THD)	
	3	1	**3J-1907**	2	SEAL-O-RING	
	4	1	**2J-6089**	1	SPRING	
	5	1		1	BODY	
	6	1	**131-8777**	1	VALVE	
	7	1	**4D-2297**	1	SEAL-O-RING	
	8	1	**2A-3211**	1	WASHER (5.5X12.3X0.8-MM THK)	

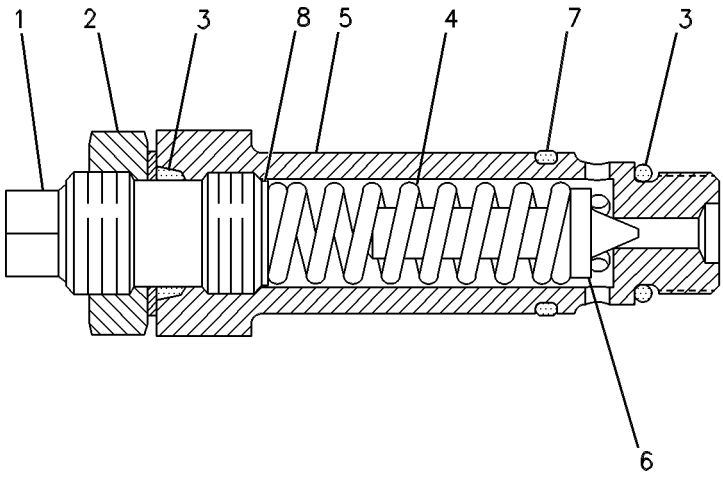

GRAPHIC #1 **<END>** g00109400

139-8474 VALVE GP-RELIEF

S/N: JJA1-UP
PART OF 124-2884 VALVE GP-CONTROL
ALSO AN ATTACHMENT

SMCS-4322, 5069, 5072, 5117 **i00606809**

NOTE	REF NO	GRAPHIC REF	PART NUMBER	QTY	PART NAME 1 2 3 4 5 6 (PRODUCT LEVEL)	SEE PAGE
	1	1	**114-6635**	1	RETAINER AS	
	2	1	**2P-1279**	1	LOCKNUT (9/16-18-THD)	
	3	1	**3J-1907**	2	SEAL-O-RING	
	4	1	**2J-6089**	1	SPRING	
	5	1	**2A-3211**	1	WASHER (5.5X12.3X0.8-MM THK)	
	6	1	**131-8777**	1	VALVE	
	7	1	**4D-2297**	1	SEAL-O-RING	

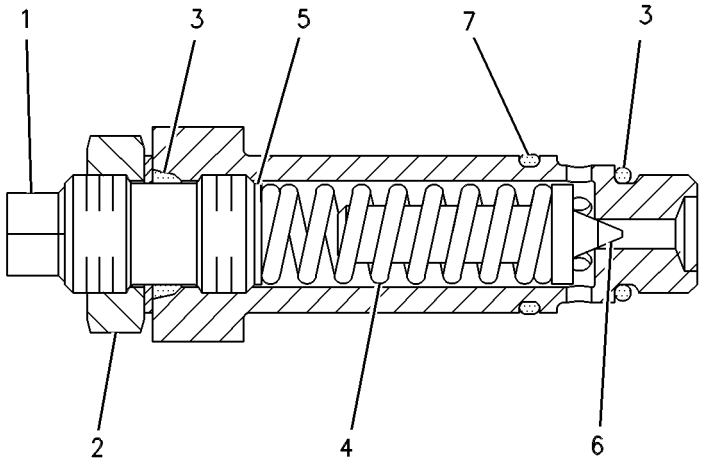

GRAPHIC #1 **<END>** g00089282

HYDRAULIC SYSTEM

222-7774 VALVE GP-RELIEF

S/N: JJA1-UP

PART OF 6E-3031, 6E-3037 VALVE GP-CONTROL

AN ATTACHMENT

SMCS-4322, 5069, 5072, 5117 **i03435404**

NOTE	REF NO	GRAPHIC REF	PART NUMBER	QTY	PART NAME 1 2 3 4 5 6 (PRODUCT LEVEL)	SEE PAGE
	1	1	**2J-6089**	1	SPRING	
	2	1	**114-6635**	1	RETAINER AS	
	3	1	**131-8777**	1	VALVE	
	5	1	**2A-3211**	1	WASHER (5.5X12.3X0.8-MM THK)	
	6	1	**2P-1279**	1	LOCKNUT (9/16-18-THD)	
	7	1	**3J-1907**	2	SEAL-O-RING	
	8	1	**4D-2297**	1	SEAL-O-RING	

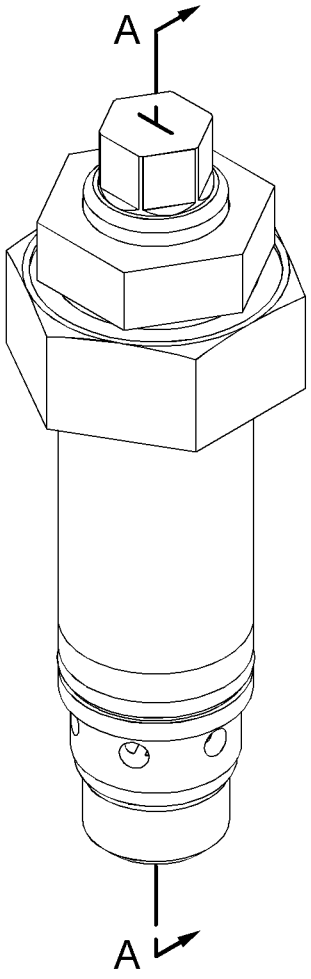

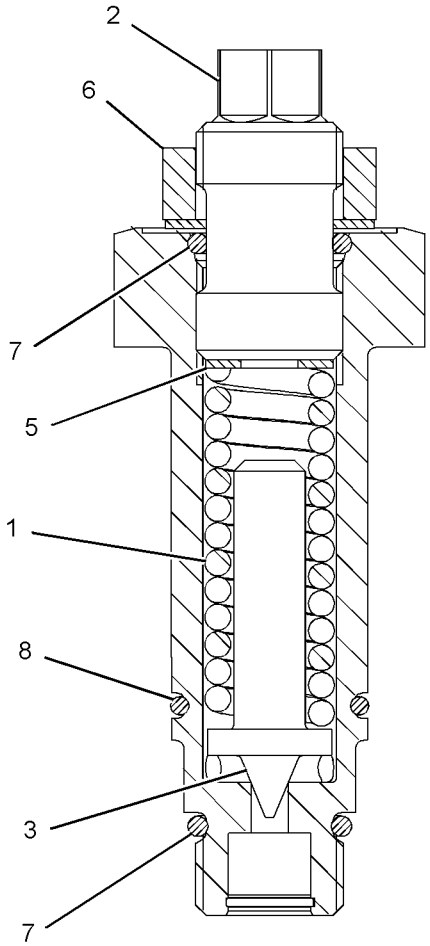

SECTION A-A

GRAPHIC #1 **<END>** g01785893

4T-1860 VALVE GP-SHUTTLE

S/N: JJA1-UP

PART OF 9T-5957 VALVE GP-COMBINATION

SMCS-5079 **i02400665**

NOTE	REF NO	GRAPHIC REF	PART NUMBER	QTY	PART NAME 1 2 3 4 5 6 (PRODUCT LEVEL)	SEE PAGE
Z	1	1		1	SEAT	
	2	1	**1M-6718**	1	BALL	
Z	3	1		1	VALVE	
	4	1	**6V-5324**	1	SEAL-O-RING	
	5	1	**147-6603**	1	SEAL-O-RING	
	6	1	**3J-1907**	1	SEAL-O-RING	
	7	1	**147-6604**	2	RING-BACKUP	
	8	1	**147-6605**	2	RING-BACKUP	

Z-NOT SERVICED SEPARATELY

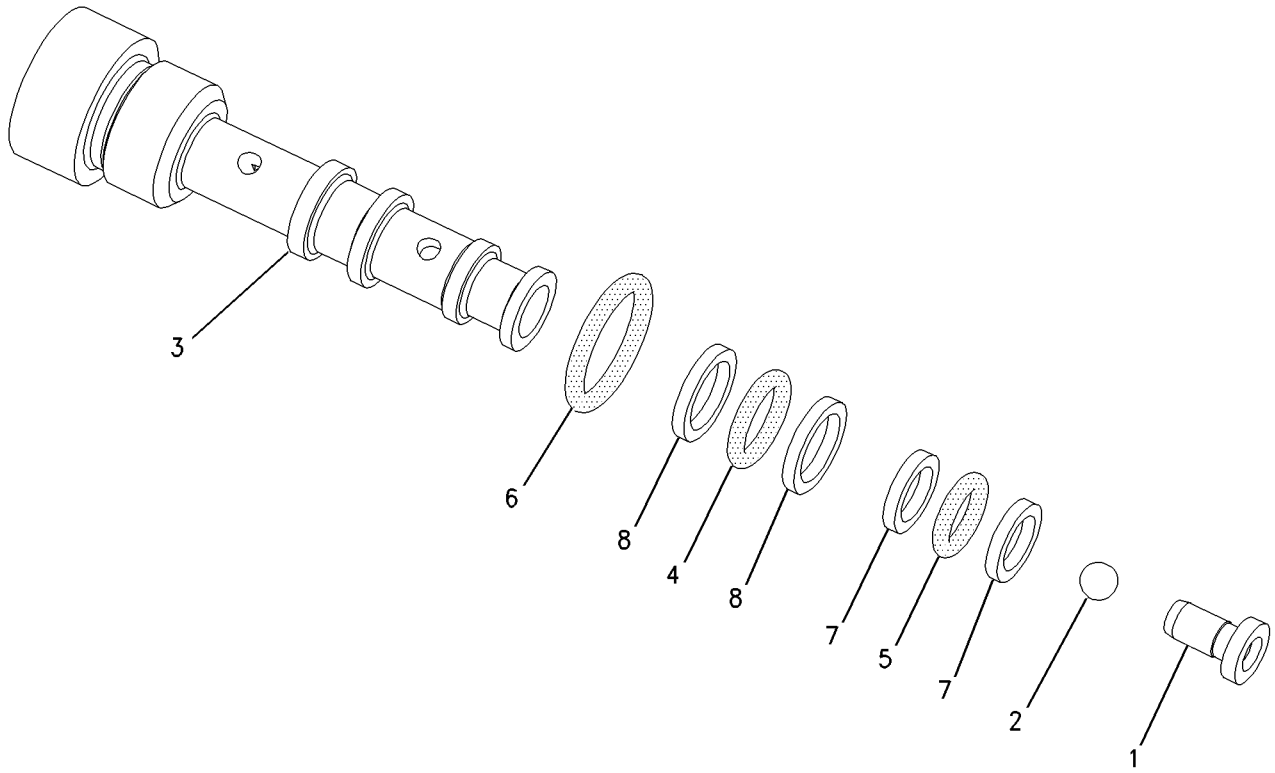

GRAPHIC #1 **<END>** g00775006

HYDRAULIC SYSTEM

149-2610 VALVE GP-SOLENOID

S/N: JJA1-UP
24 VOLT
PART OF 112-2240 MANIFOLD GP-CONTROL
AN ATTACHMENT

SMCS-5479 **i03641532**

NOTE	REF NO	GRAPHIC REF	PART NUMBER	QTY	PART NAME 1 2 3 4 5 6 (PRODUCT LEVEL)	SEE PAGE
	1	1	**149-2611**	1	CARTRIDGE AS	
		1	**8C-9987**	1	WASHER (8.3X28X2.5-MM THK)	
	2	1	**111-0343**	1	LOCKNUT (5/16-18-THD)	
	3	1	**141-6787**	1	COIL AS (24-VOLT)	
		1	**1S-9593**	2	STRAP-CABLE	
		1	**3E-3365**	1	WEDGE-RECEPTACLE LOCK (2-PIN)	
		1	**186-3735**	2	PIN-CONNECTOR (16-GA TO 18-GA)	
		1	**102-8802**	2	KIT-RECEPTACLE (2-PIN)	
					(INCLUDES RECEPTACLE AS AND WEDGE)	
	4	1	**8C-9987**	1	WASHER (8.3X28X2.5-MM THK)	
		1	**111-0343**	1	LOCKNUT (5/16-18-THD)	
					AVAILABLE REPAIR KIT(S):	
			3G-8175	1	KIT-SEAL	
					(INCLUDES O-RINGS & BACK-UP RINGS)	

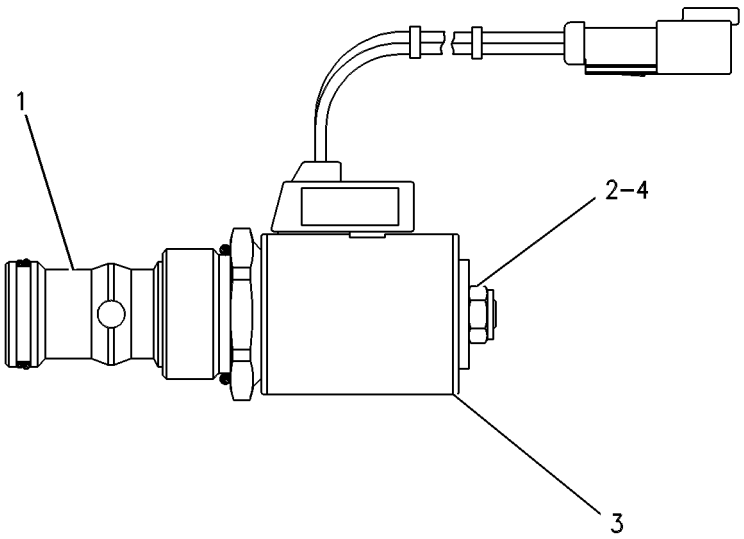

GRAPHIC #1 **<END>** g00308949

152-8346 VALVE GP-SOLENOID

S/N: JJA1-UP
24-VOLT
PART OF 164-8462 LOCK GP-CENTERSHIFT

SMCS-5479 **i01861563**

NOTE	REF NO	GRAPHIC REF	PART NUMBER	QTY	PART NAME 1 2 3 4 5 6 (PRODUCT LEVEL)	SEE PAGE
	1	1	**141-6787**	1	COIL AS (24-VOLT)	
	2	1	**102-8802**	1	KIT-RECEPTACLE (2-PIN)	
					(INCLUDES RECEPTACLE AS AND WEDGE)	
	3	1	**3E-3365**	1	WEDGE-RECEPTACLE LOCK (2-PIN)	
	4	1	**8T-8729**	2	PIN-CONNECTOR (16-GA TO 18-GA)	
	5	1	**1S-9593**	2	STRAP-CABLE	
	6	1	**152-8352**	1	SPOOL AS-VALVE	
	7	1	**111-0343**	1	LOCKNUT (5/16-18-THD)	
	8	1	**8C-9987**	1	WASHER (8.3X28X2.5-MM THK)	
					AVAILABLE REPAIR KIT(S):	
			109-3036	1	KIT-SEAL	
					(INCLUDES SEALS & RINGS)	

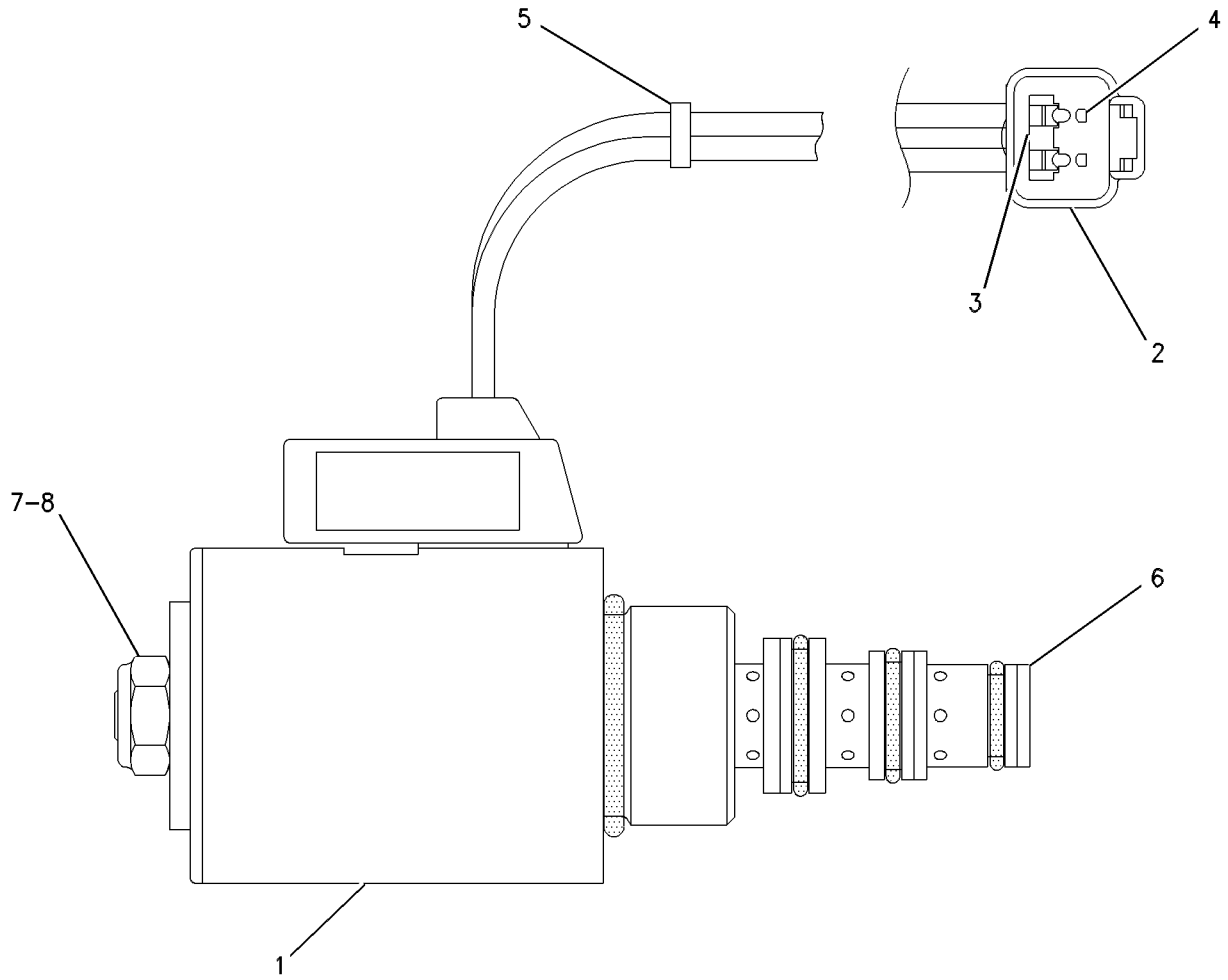

GRAPHIC #1 **<END>** g00482067

153-9360 CIRCLE GP

S/N: JJA1-UP

PART OF 338-7509 CIRCLE GP, 254-5960 MOUNTING GP-GRADE CONTROL

ALSO AN ATTACHMENT

SMCS-6152, 6154, 6155 **i02075546**

NOTE	REF NO	GRAPHIC REF	PART NUMBER	QTY	PART NAME 1 2 3 4 5 6 (PRODUCT LEVEL)	SEE PAGE
	1	1	**2G-3971**	1	BRACKET AS	
	2	1	**4D-4375**	2	LUG	
	3	1	**5T-3889**	1	BRACE	
	4	1	**5T-3890**	1	BRACE	
	5	1	**6G-2946**	2	STOP	
	7	1	**8D-9882**	2	BLOCK-FILLER	
	8	1	**8D-9886**	1	BRACE	
	9	1	**8D-9887**	1	BRACE	
	11	1	**132-1340**	1	BRACE AS	
		1	**2A-7089**	2	BEARING-SLEEVE	
	12	1	**147-6143**	1	PLATE-LH	
	13	1	**147-6144**	1	PLATE-RH	
	14	1	**153-0185**	1	BEAM-BLADE	
	15	1	**153-0187**	1	BEAM-BLADE	
AF		1	**5T-4267**		SEGMENT-CIRCLE	
					(4 TEETH) SERVICE REPAIR FOR WORN OR DAMAGED TEETH	

A-NOT PART OF THIS GROUP
F-NOT SHOWN

153-9360 CIRCLE GP *(contd.)* **i02075546**

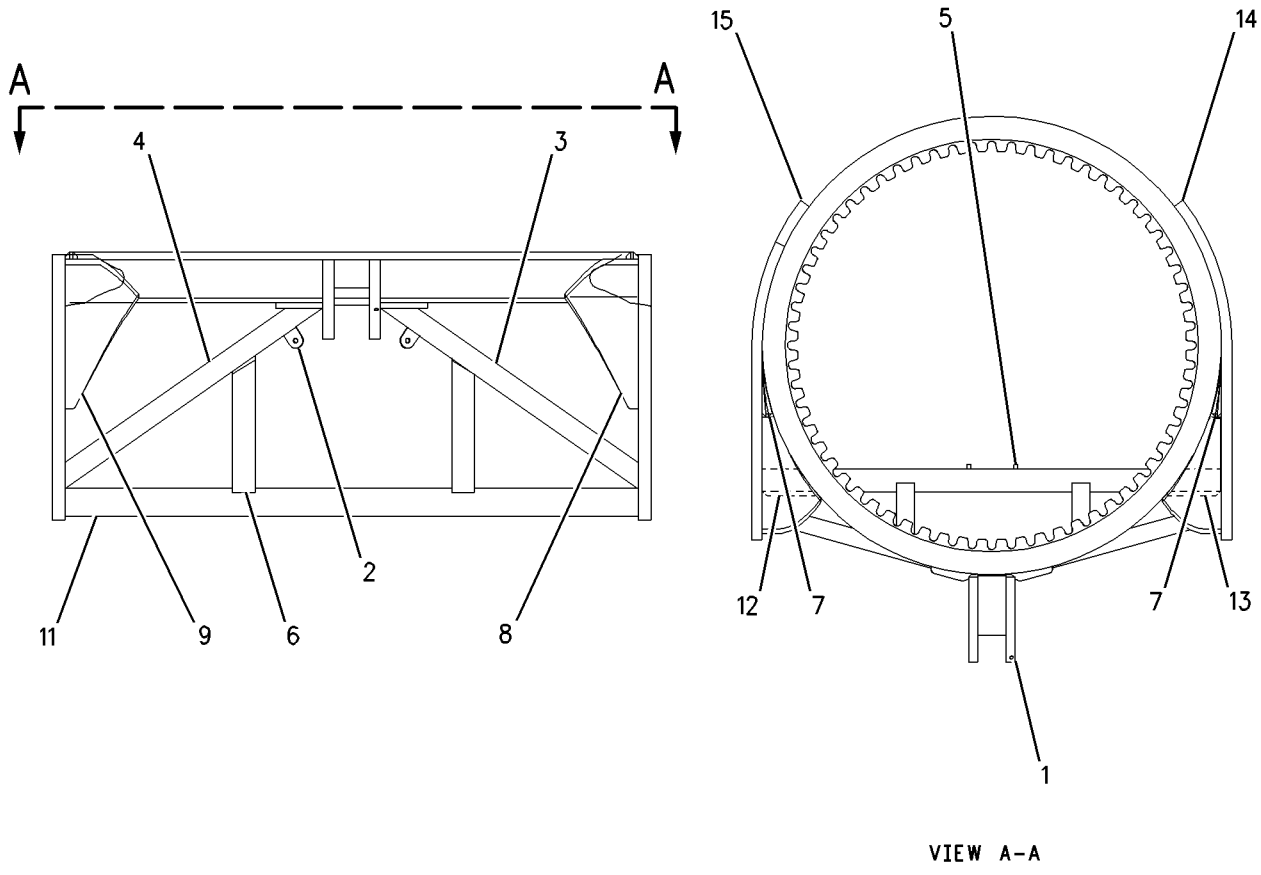

VIEW A-A

GRAPHIC #1 **<END>** g00665278

IMPLEMENTS

338-7509 CIRCLE GP

S/N: JJA1-UP

PART OF 329-3825 BLADE & TIP AR-POWER, 346-3710 GENERAL AR

ALSO AN ATTACHMENT

SMCS-6152, 6154, 6155 **i03553460**

NOTE	REF NO	GRAPHIC REF	PART NUMBER	QTY	PART NAME 1 2 3 4 5 6 (PRODUCT LEVEL)	SEE PAGE
	1	1	**2B-2673**	2	NUT-CASTLE (1-3/4-5-THD)	
B	2	1	**2G-3219**	4	SHIM (0.8-MM THK)	
B	3	1	**2G-3221**	4	SHIM (1.6-MM THK)	
B	4	1	**2K-0419**	4	WASHER (0.766X3.5X0.065-IN THK)	
	5	1	**5D-6644**	10	SHIM (0.762-MM THK)	
	6	1	**5T-8366**	4	STRIP-WEAR	
	7	1	**8D-5949**	1	BAR-SPREADER	
	8	1	**8W-1749**	10	PLATE	
	9	1	**102-4139**	8	SPACER (18.85X26.67X78-MM THK)	
	10	1	**338-7449**	1	BRACKET AS	
		1	**104-8655**	1	BEARING-SLEEVE	
	11	1	**338-7450**	1	BRACKET AS	
		1	**104-8655**	1	BEARING-SLEEVE	
	12	1	**153-3580**	1	SHAFT	
Y	13	1	**153-9360**	1	CIRCLE GP	464
	14	1	**338-7445**	1	BRACKET AS	
	15	1	**163-4720**	1	GUARD (LH)	
	16	1	**163-4721**	1	GUARD (RH)	
B	17	1	**163-6074**	2	SHIM (0.381-MM THK)	
	18	1	**178-1685**	1	STRIP-WEAR	
B	19	1	**178-1686**	1	SHIM (0.8-MM THK)	
B	20	1	**178-1688**	1	SHIM (1.8-MM THK)	
B	21	1	**178-8455**	1	SHIM (0.4-MM THK)	
	22	1	**105-2080**	4	BRACKET AS	
		1	**1F-0748**	2	NUT-WELD (1/2-13-THD)	
	23	1	**299-3443**	2	WASHER (45.25X76.2X6.35-MM THK)	
	24	1	**3B-5320**	2	PIN-COTTER	
	25	1	**7X-0334**	8	BOLT (1/2-13X5-IN)	
	26	1	**7X-0452**	4	NUT-FULL (1-1/2-6-THD)	
	27	1	**7X-0550**	8	WASHER-HARD (13.5X32X5-MM THK)	
	28	1	**7X-3392**	30	WASHER-HARD (13.5X22.5X3-MM THK)	
M	29	1	**8T-4139**	30	BOLT (M12X1.75X30-MM)	

B-USE AS REQUIRED
M-METRIC PART
Y-SEPARATE ILLUSTRATION

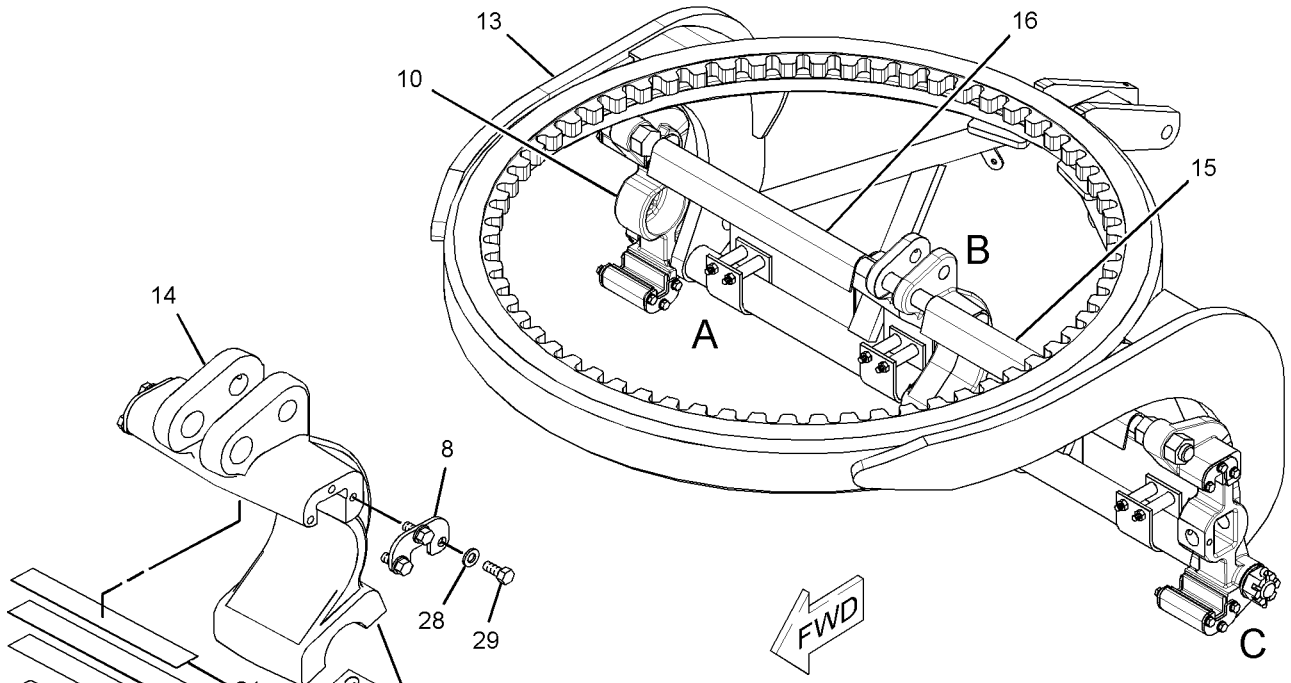

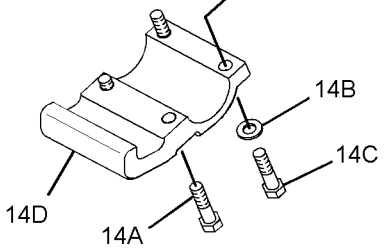

VIEW OF AREA B

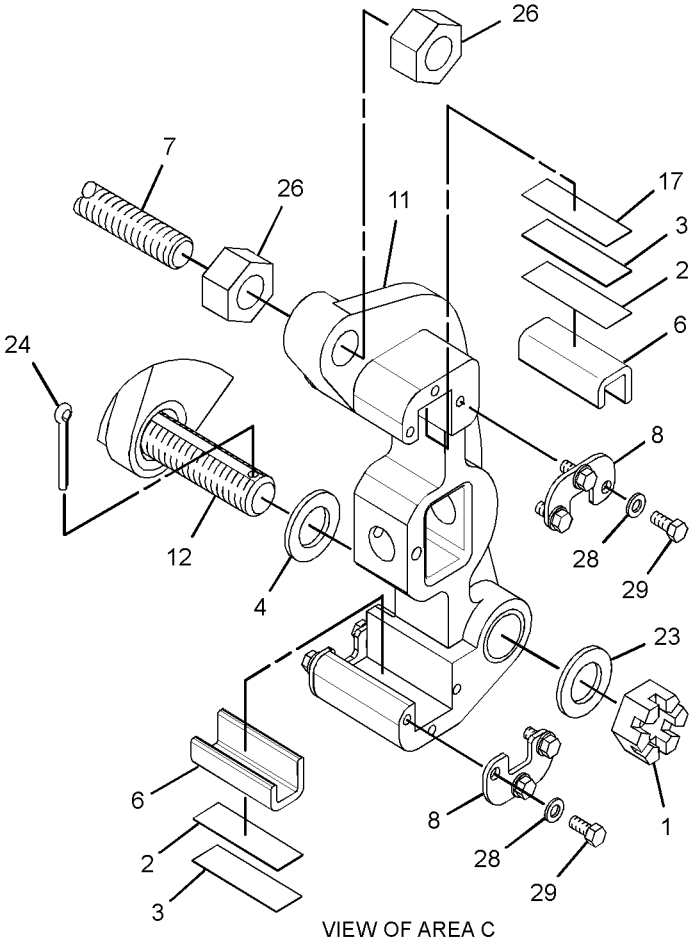

VIEW OF AREA C

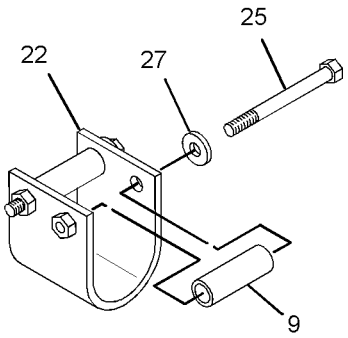

VIEW OF AREA A

GRAPHIC #1 **<END>** g01859454

IMPLEMENTS

338-7507 DRAWBAR GP

S/N: JJA1-UP

PART OF 346-3710 GENERAL AR

SMCS-6153 **i03518209**

NOTE	REF NO	GRAPHIC REF	PART NUMBER	QTY	PART NAME 1 2 3 4 5 6 (PRODUCT LEVEL)	SEE PAGE
	1	1	**3B-8489**	1	FITTING-GREASE	
B	2	1	**6G-1914**	54	SHIM (0.76-MM THK)	
B	3	1	**6G-1915**	36	SHIM (0.25-MM THK)	
	4	1	**6G-5442**	1	BALL	
	5	1	**128-9654**	11	STRIP-WEAR	
	6	1	**261-4672**	1	CAP	
	7	1	**261-4673**	1	ADAPTER	
B	8	1	**261-4674**	4	SHIM (0.8-MM THK)	
B	9	1	**261-4675**	6	SHIM (0.25-MM THK)	
B	10	1	**261-4676**	1	SHIM (0.12-MM THK)	
	11	1	**319-2228**	6	SHOE-CIRCLE GUIDE	
	12	1	**333-0960**	6	STRIP-WEAR	
	13	1	**338-7506**	1	DRAWBAR & YOKE AS	
	13A	1	**5T-6775**	2	REINFORCEMENT	
	13B	1	**8F-9836**	12	BOSS (3/8-16-THD)	
	13C	1	**178-3086**	3	STUD-BALL	
	13D	1	**8X-7956**	1	SHAFT AS	
	13E	1	**123-7707**	2	PLATE	
	13F	1	**338-7505**	1	PLATE	
M	14	1	**147-5112**	4	BOLT (M24X3X150-MM)	
	15	1	**1D-5119**	12	NUT (3/4-10-THD)	
M	16	1	**213-5007**	2	BOLT (M20X2.5X88-MM)	
	17	1	**267-3506**	4	WASHER-HARD (26X44X4-MM THK)	
	18	1	**267-3508**	4	WASHER-HARD (22X35X3.5-MM THK)	
	19	1	**283-1578**	20	WASHER-HARD (22X45X10-MM THK)	
M	20	1	**286-0742**	4	NUT (M20X2.5-THD)	
	21	1	**289-0580**	12	SETSCREW (3/4-10X2.5-IN)	
	22	1	**339-1911**	18	BOLT (M20X2.5X125-MM)	
	23	1	**5P-8291**	5	BOLT (3/4-16X2-IN)	
M	24	1	**6V-8653**	2	BOLT-SOCKET HEAD (M6X1X40-MM)	

B-USE AS REQUIRED
M-METRIC PART

338-7507 **DRAWBAR GP** *(contd.)* **i03518209**

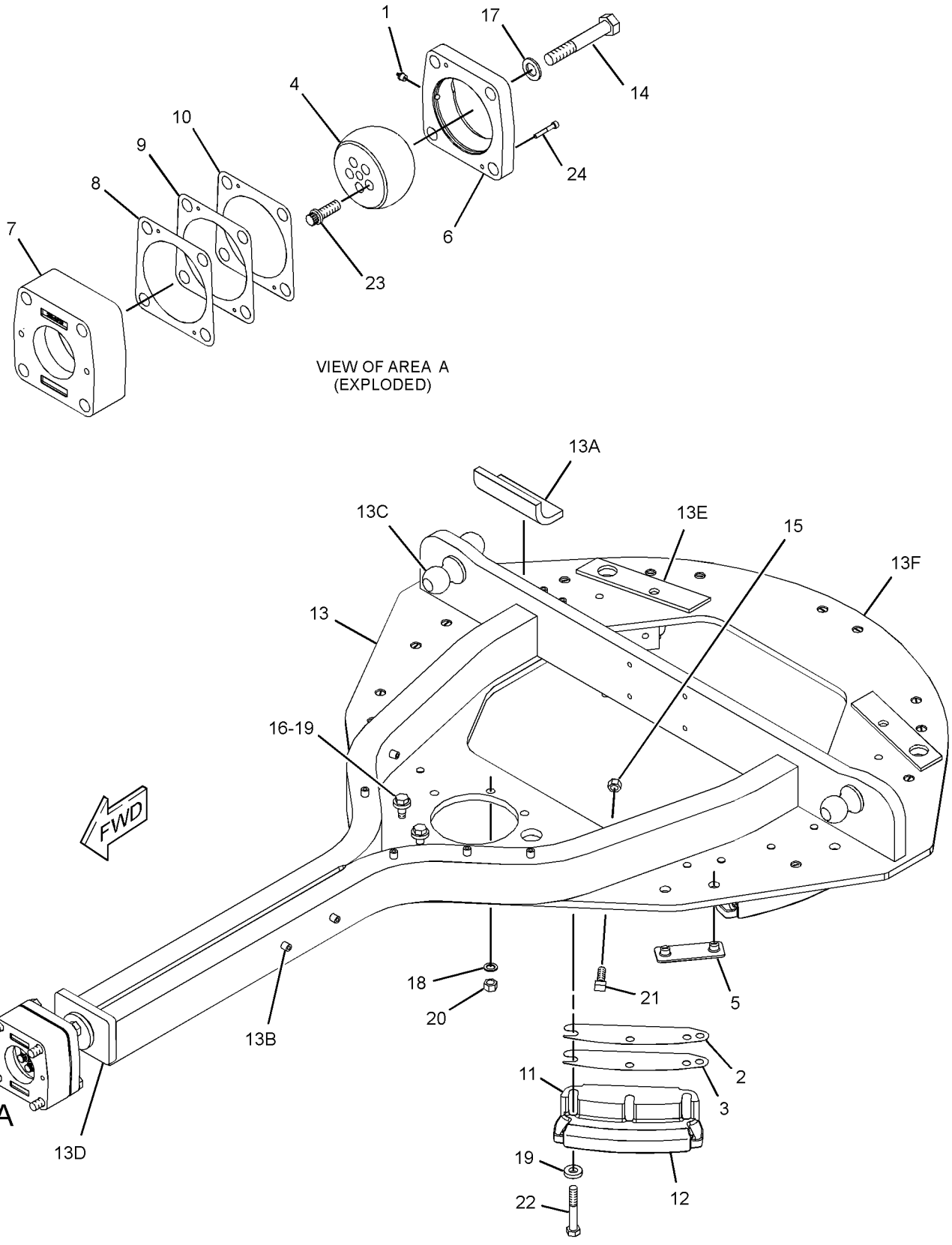

GRAPHIC #1 **<END>** g01932616

IMPLEMENTS

336-1559 PLATE GP-PUSH

S/N: JJA1-UP
PART OF 339-4971 OPTION AR-RIPPER
AN ATTACHMENT

SMCS-6077 **i03519312**

NOTE	REF NO	GRAPHIC REF	PART NUMBER	QTY	PART NAME 1 2 3 4 5 6 (PRODUCT LEVEL)	SEE PAGE
	1	1	**112-5853**	1	PLATE	
M	2	1	**166-1880**	8	BOLT (M20X2.5X75-MM)	
	3	1	**336-1561**	1	PLATE AS-PUSH	
		1	**5J-7333**	2	HOOK	
	4	1	**336-1963**	1	PLATE AS	
M		1	**8T-3490**	4	NUT-WELD (M10X1.5-THD)	
	5	1	**336-1964**	1	BRACKET AS	
	6	1	**283-1578**	8	WASHER-HARD (22X45X10-MM THK)	
	7	1	**8T-4121**	8	WASHER-HARD (11X21X2.5-MM THK)	
M	8	1	**8T-4136**	2	BOLT (M10X1.5X25-MM)	
M	9	1	**8T-4137**	6	BOLT (M10X1.5X20-MM)	
M	10	1	**8T-4139**	2	BOLT (M12X1.75X30-MM)	
	11	1	**8T-4223**	2	WASHER-HARD (13.5X25.5X3-MM THK)	
D	12	1	**5P-5923**		SEAL (0.4-M)	

D-ORDER BY THE METER
M-METRIC PART

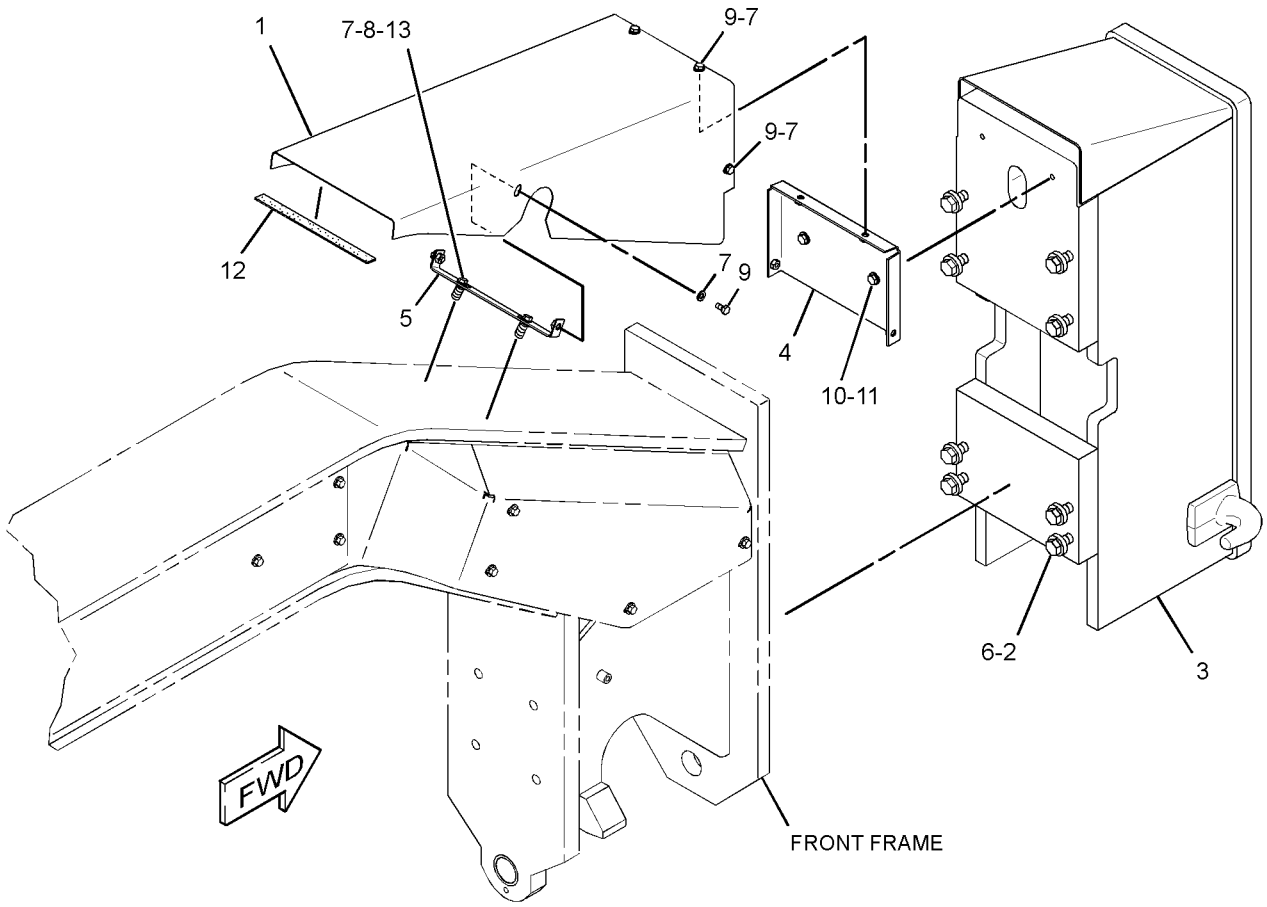

GRAPHIC #1 **<END>** g01917514

171-7186 ACCESSORY GP-CAB–HIGH PROFILE

S/N: JJA1-UP
12-VOLT
PART OF 286-4328 CONVERTER AR-ELECTRICAL
AN ATTACHMENT

SMCS-1408, 1421 **i01689402**

NOTE	REF NO	GRAPHIC REF	PART NUMBER	QTY	PART NAME 1 2 3 4 5 6 (PRODUCT LEVEL)	SEE PAGE
	1	1	**117-2311**	1	SOCKET-AUXILIARY POWER (12-VOLT)	
	2	1	**169-3264**	1	HARNESS AS-CAB	
		1	**102-8802**	1	KIT-RECEPTACLE (2-PIN) (12V POWER PORT)	
					(INCLUDES RECEPTACLE AS & WEDGE)	
M	3	1	**129-3178**	2	LOCKNUT (M6X1-THD)	
	4	1	**139-1153**	1	PLATE	
	5	1	**6P-0205**	2	SPACER (0.269X0.405X0.656-IN THK)	
	6	1	**9X-8256**	2	WASHER (6.6X12X2-MM THK)	

M-METRIC PART

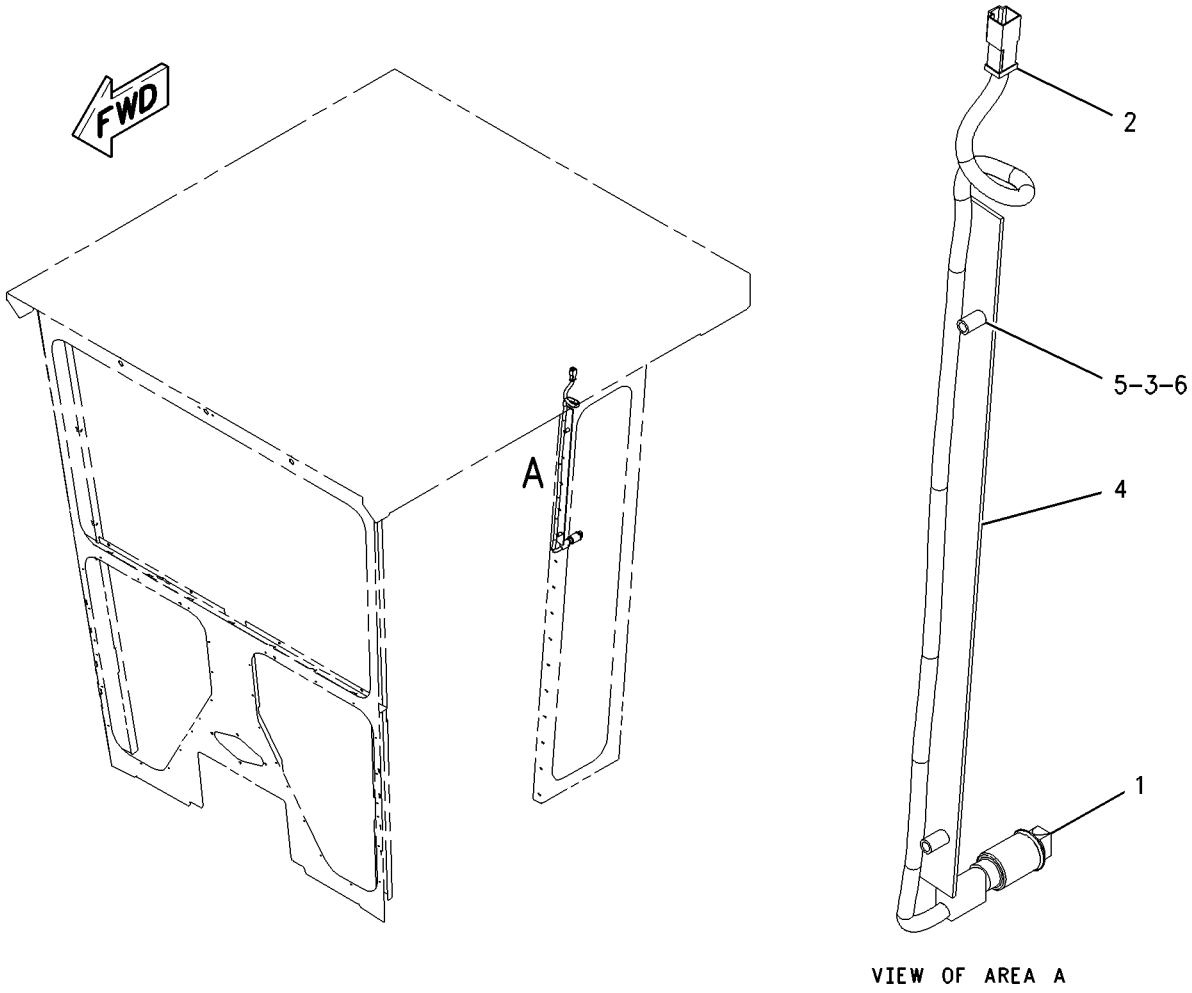

VIEW OF AREA A

GRAPHIC #1 **<END>** g00890902

OPERATOR STATION

116-2779 ADJUSTER GP-SEAT

S/N: JJA1-UP
PART OF 8Y-6852 SEAT GP-STATIC
AN ATTACHMENT

SMCS-7321 **i02847571**

NOTE	REF NO	GRAPHIC REF	PART NUMBER	QTY	PART NAME 1 2 3 4 5 6 (PRODUCT LEVEL)	SEE PAGE
	1	1	**9C-5347**	4	BOLT	
	2	1	**9V-7943**	2	SPRING	
	3	1	**116-2327**	1	SUPPORT AS	
	4	1	**9C-2177**	1	CAP	
	5	1	**6W-0590**	1	LEVER (SEAT ADJUST)	
	6	1	**3J-5696**	1	PIPE	
	7	1	**4V-7890**	1	SPRING	
	8	1	**6W-0111**	2	LINK	
	9	1	**2L-5893**	1	PIN-SPRING	
	10	1	**4V-7891**	1	LATCH AS	
	11	1	**5B-6172**	8	WASHER (9.7X19X0.8-MM THK)	
	12	1	**2K-4973**	8	LOCKNUT (3/8-16-THD)	
	13	1	**9V-3043**	1	LINK AS	
	14	1	**6W-0108**	1	LINK AS	
	15	1	**116-2016**	1	ANGLE AS (LH)	
	16	1	**116-2015**	1	ANGLE AS (RH)	
	17	1	**6W-1885**	1	CHANNEL AS	
		1	**9V-7440**	4	NUT-WELD	
	18	1	**5M-3062**	4	BOLT (3/8-16X0.75-IN)	

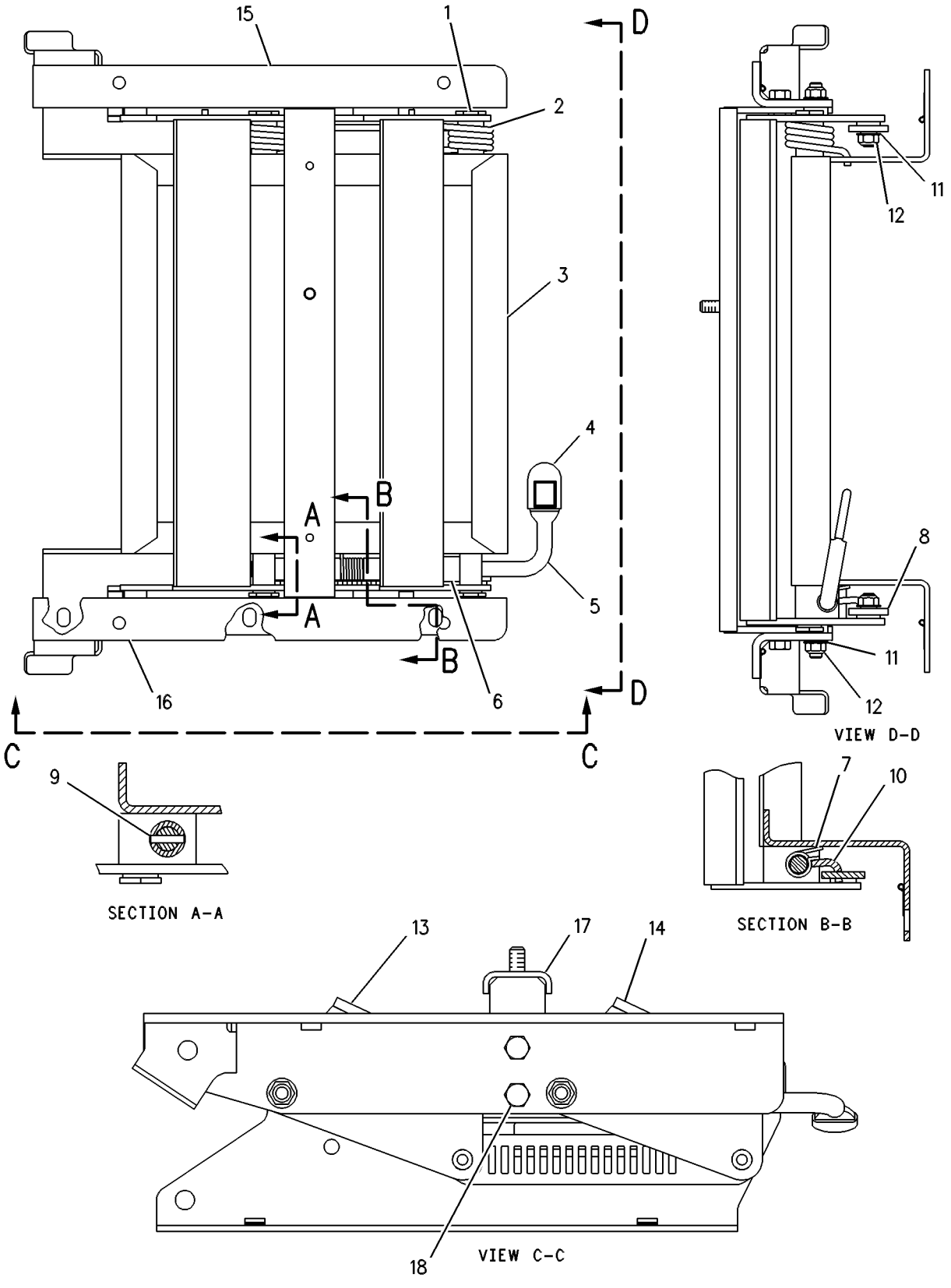

GRAPHIC #1 **<END>** g00108773

OPERATOR STATION

125-9854 ADJUSTER GP-SEAT

S/N: JJA1-UP

PART OF 125-9856 SEAT GP-STATIC

SMCS-7321 **i03438960**

NOTE	REF NO	GRAPHIC REF	PART NUMBER	QTY	PART NAME 1 2 3 4 5 6 (PRODUCT LEVEL)	SEE PAGE
	1	1	**125-9853**	1	BASE AS	
	2	1	**6W-1497**	1	SUPPORT AS	
	3	1	**6W-1496**	1	SUPPORT AS	
	4	1	**6W-1888**	1	SHEET	
	5	1	**6W-2371**	1	PLATE AS	
	6	1	**6W-3628**	2	CABLE	
	7	1	**8T-9381**	2	BOLT (7/16-20X1-IN)	
	8	1	**8S-4790**	4	SPACER (0.459X0.625X0.25-IN THK)	
	9	1	**4B-5272**	4	WASHER (12.7X31.7X2-MM THK)	
	10	1	**8R-4519**	4	LOCKNUT (7/16-20-THD)	
	11	1	**5V-5262**	2	BOLT-SHOULDER (7/16-20X1.26-IN)	
	12	1	**4L-6454**	4	BOLT (3/8-16X1-IN)	
	13	1	**5M-2894**	4	WASHER-HARD (10.2X18.5X2.5-MM THK)	

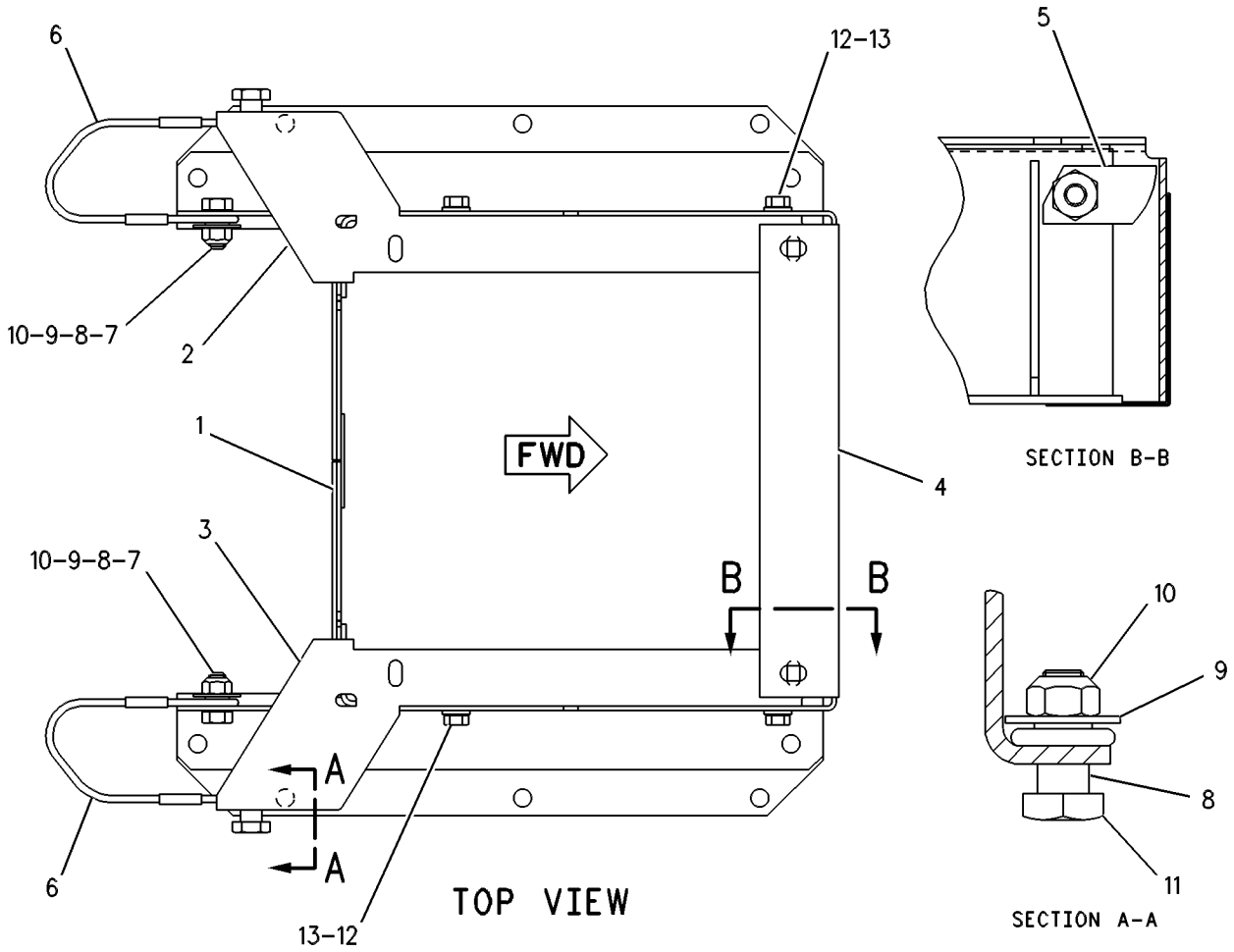

GRAPHIC #1 **<END>** g00109161

OPERATOR STATION

173-1028 ADJUSTER GP-SEAT

S/N: JJA1-UP
PART OF 301-4174 SEAT GP
AN ATTACHMENT

SMCS-7321 **i01582195**

NOTE	REF NO	GRAPHIC REF	PART NUMBER	QTY	PART NAME 1 2 3 4 5 6 (PRODUCT LEVEL)	SEE PAGE
	1	1	**4V-8256**	4	SPRING	
	2	1	**117-4492**	1	ROD	
	3	1	**136-1544**	1	LATCH AS-LH	
	4	1	**156-5545**	1	LATCH AS-RH	
	5	1	**164-4531**	1	ROD	
	6	1	**170-1112**	1	PLATE AS	
	7	1	**170-1114**	1	HANDLE (SLIDE ADJUSTMENT)	
	8	1	**170-1115**	1	HANDLE (TILT ADJUSTMENT)	
	9	1	**132-0338**	2	WASHER-PLASTIC (13X31.7X.8-MM THK)	
	10	1	**2K-4973**	2	LOCKNUT (3/8-16-THD)	
	11	1	**7X-0608**	2	WASHER-HARD (10.2X16X2-MM THK)	

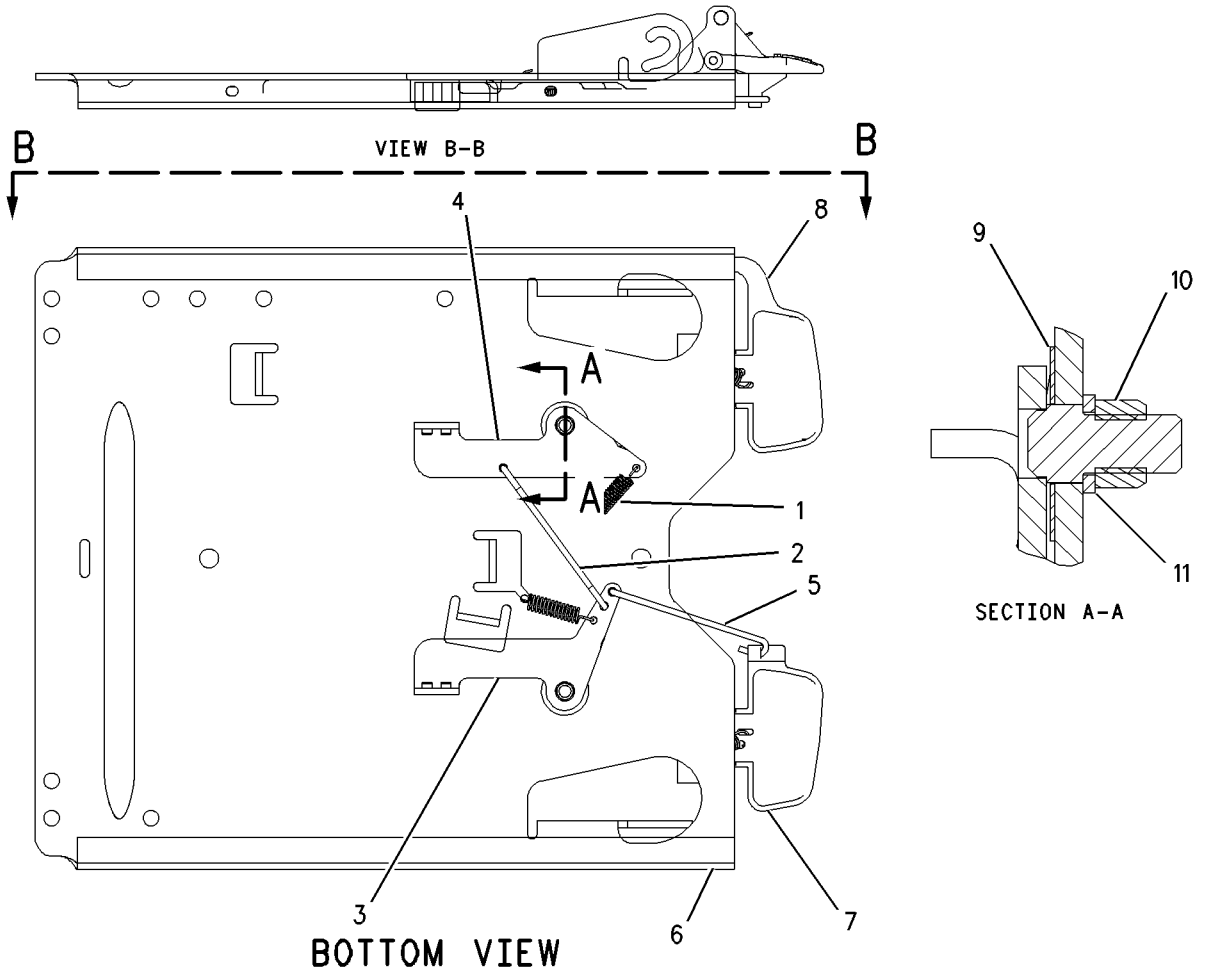

GRAPHIC #1 **<END>** g00816460

OPERATOR STATION

308-5633 AIR CONDITIONER & HEATER GP

S/N: JJA1-UP
PART OF 289-7545 AIR CONDITIONER GP
AN ATTACHMENT

SMCS-7304, 7320 **i03258804**

NOTE	REF NO	GRAPHIC REF	PART NUMBER	QTY	PART NAME 1 2 3 4 5 6 (PRODUCT LEVEL)	SEE PAGE
	1	1	**2P-4339**	1	NUT-JAM (7/16-28-THD)	
	2	1	**2V-0099**	1	KNOB-CONTROL (FAN SPEED)	
	2A	1	**2V-0099**	1	KNOB-CONTROL (TEMPERATURE CONTROL)	
	3	2	**3E-0400**	2	BLOWER AS	
					(EACH INCLUDES)	
		2	**037-4838**	1	CLAMP	
	4	1	**3E-3890**	1	FILM-CONTROL (AIR CONDITIONER, HEATER)	
	5	1	**3E-5464**	1	THERMOSTAT (HVAC) (REFRIGERANT)	
	6	2	**3S-2093**	2	STRAP-CABLE	
	7	2	**3T-3197**	1	GROMMET	
	8	2	**3T-3198**	1	GROMMET	
	9	1	**5P-7803**	2	PLUG-BUTTON	
	10	1	**6P-3236**	1	SWITCH AS-ROTARY (FAN SPEED)	
		1	**6V-8362**	5	SCREW-MACHINE (8-32X0.31-IN)	
		1	**9B-7233**	5	LOCKWASHER	
	11	1	**6T-5345**	1	BUSHING-TERMINAL	
	12	2	**6T-6708**	2	WASHER (7X28.6X4.1-MM THK)	
	13	1	**7G-4824**	1	STRAP	
	14	1	**8C-3756**	1	FILM-IDENTIFICATION (REFRIGERANT CONDENSER) (AIR CONDITIONER)	
	15	2	**8C-4586**	2	CLAMP	
	16	1	**8D-1429**	1	LAMP (24-VOLT)	
	17	1	**8E-7791**	1	STRAP	
	18	2	**8P-5141**	2	PLATE-ORIFICE	
	19	1	**8X-5536**	1	COVER	
	20	1	**8X-5538**	1	COVER AS	
M		1	**8T-3490**	4	NUT-WELD (M10X1.5-THD)	
	21	1	**8X-5540**	1	COVER	
	22	1	**8Y-6388**	4	LOUVER AS-VENT	
	23	2	**9G-1950**	1	RESISTOR	
	24	2	**9X-2185**	4	SCREW (8-15X0.44-IN)	
	25	2	**9X-2488**	4	CLAMP-HOSE	
	26	2	**9X-9653**	1	COIL AS-EVAPORATOR	
	27	1	**110-6393**	1	PLATE-INSTRUCTION (AIR CONDITIONER)	
	28	1	**123-4618**	1	COVER	
	29	1	**123-4701**	1	SEAL	
	30	2	**124-1431**	1	BRACKET	
	31	2	**124-1432**	1	HOUSING AS	
		2	**7T-1099**	1	LINK	
		2	**8P-5141**	2	PLATE-ORIFICE	
	32	2	**124-3137**	1	BRACKET	
	33	2	**124-3138**	1	SEAL	
	34	1	**124-9006**	1	SHAFT	
	35	2	**124-9007**	1	SHAFT AS	
		2	**4L-5966**	2	SETSCREW (NO 10X0.19-IN)	
	36	1	**125-0438**	1	GASKET	
	37	2	**129-4935**	1	SEAL	
	38	2	**142-4940**	1	PLATE AS	
	39	1	**174-4492**	1	COVER	
	40	2	**174-4971**	1	SUPPORT AS	
M		2	**3E-4304**	6	INSERT-THREADED (M6X1-THD)	
	41	1	**174-6353**	1	PLATE	
	42	1	**176-5507**	1	PAD	
	43	2	**177-7858**	1	HARNESS AS-HEATER & AIR COND	
	44	1	**191-0027**	1	PAD	

308-5633 AIR CONDITIONER & HEATER GP *(contd.)* i03258804

NOTE	REF NO	GRAPHIC REF	PART NUMBER	QTY	PART NAME 1 2 3 4 5 6 (PRODUCT LEVEL)	SEE PAGE
	45	2	**204-4376**	1	CAP-PROTECTIVE	
	46	2	**238-0415**	1	VALVE AS-WATER	
	47	2	**238-0417**	1	CORE AS-HEATER	
	48	2	**248-6772**	4	SCREW-MACHINE (8-16X7.75-IN)	
	49	1	**255-6261**	2	PLATE	
I	50	2	**308-5632**	1	HOSE AS	
I	51	2	**313-6224**	1	HOSE AS	
	52	2	**316-1927**	1	MOTOR AS-BLOWER (24-VOLT, A/C, HEATER)	
		2	**9W-0852**	2	PIN-CONNECTOR (14-GA)	
		2	**102-8802**	1	KIT-RECEPTACLE (2-PIN)	
					(INCLUDES RECEPTACLE AS & WEDGE)	
	53	1	**104-2091**	8	SCREW-FLAT HEAD (NO 6X0.5-IN)	
M	54	2	**129-3178**	4	LOCKNUT (M6X1-THD)	
	55	2	**130-5300**	1	CLIP	
M	56	2	**141-9784**	1	BOLT (M6X1X190-MM)	
	57	1	**3B-4501**	2	LOCKWASHER	
	58	1	**3H-2900**	1	GROMMET	
	59	1	**3S-9557**	8	SCREW-PAN HEAD (4-40X0.5-IN)	
	60	2	**4M-6582**	1	SEAL-O-RING	
M	61	2	**5C-2890**	7	NUT (M6X1-THD)	
	62	1,2	**5P-1075**	13	WASHER-HARD (10.2X22.5X3-MM THK)	
	63	2	**5P-9135**	1	GROMMET	
	64	2	**6V-1668**	2	WASHER (6.5X29.1X3-MM THK)	
M	65	2	**6V-7728**	1	BOLT (M6X1X45-MM)	
	66	1,2	**6V-8801**	13	NUT (3/8-16-THD)	
	67	1	**7T-9793**	2	VALVE-CHECK (EVAPORATOR DRAIN)	
	68	1	**7X-0591**	2	WASHER-HARD (17X29X3-MM THK)	
M	69	2	**8T-4171**	2	BOLT (M6X1X12-MM)	
	70	2	**8T-4205**	15	WASHER-HARD (7.2X14.5X2-MM THK)	
	71	1	**8T-6631**	2	SCREW-MACHINE (8-32X0.5-IN)	
	72	2	**9M-8406**	1	CLIP	
M	73	1	**9X-2040**	4	SCREW-TRUSS HEAD (M10X1.5X25-MM)	
M	74	1	**9X-2041**	5	SCREW-TRUSS HEAD (M10X1.5X20-MM)	
M	75	1	**9X-2045**	6	SCREW-TRUSS HEAD (M6X1X20-MM)	
	76	2	**9X-7381**	1	SEAL-O-RING	
	77	2	**9X-7382**	1	SEAL-O-RING	
E	78	2	**136-1953**		HOSE (17-CM EACH)	
J	79	2	**5P-0878**		SEAL (2-DM)	
D	80	2	**5P-5637**		SEAL (0.2-M)	
D	80A	2	**5P-5637**		SEAL (0.1-M)	
D	80B	2	**5P-5637**		SEAL (0.9-M)	
D	80C	2	**5P-5637**		SEAL (0.8-M)	
D	80D	2	**5P-5637**		SEAL (0.5-M EACH)	
D	80E	2	**5P-5637**		SEAL (0.2-M)	
D	80F	2	**5P-5637**		SEAL (0.4-M)	
E	81	2	**9X-2126**		SEAL (20.5-CM)	
E	81A	2	**9X-2126**		SEAL (28.5-CM)	
J	82	1	**5P-6129**		TUBE (9-DM EACH)	

D-ORDER BY THE METER
E-ORDER BY THE CENTIMETER
I-REFER TO HYDRAULIC INFORMATION SYSTEM
J-ORDER BY THE DECIMETER
M-METRIC PART

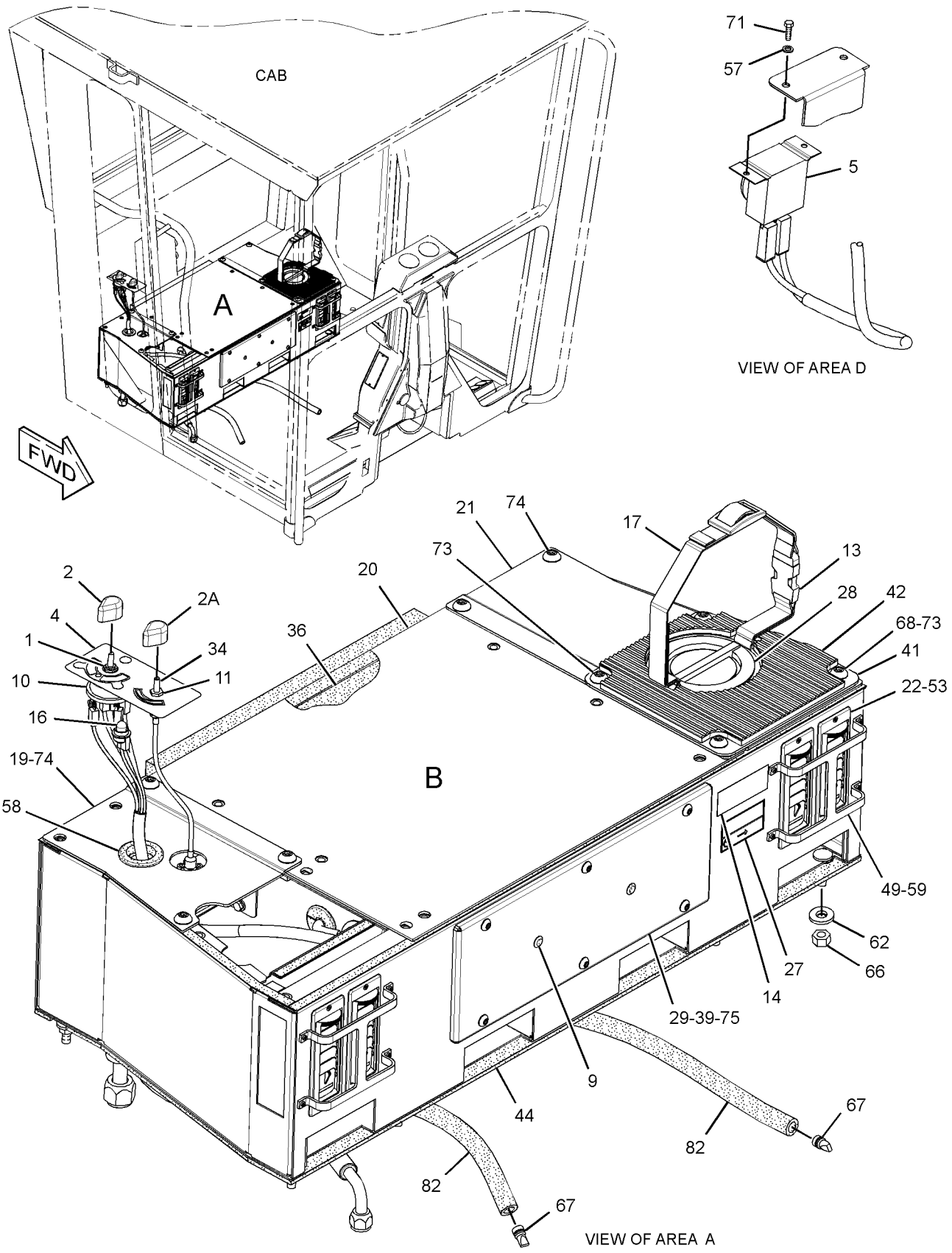

GRAPHIC #1

g01676295

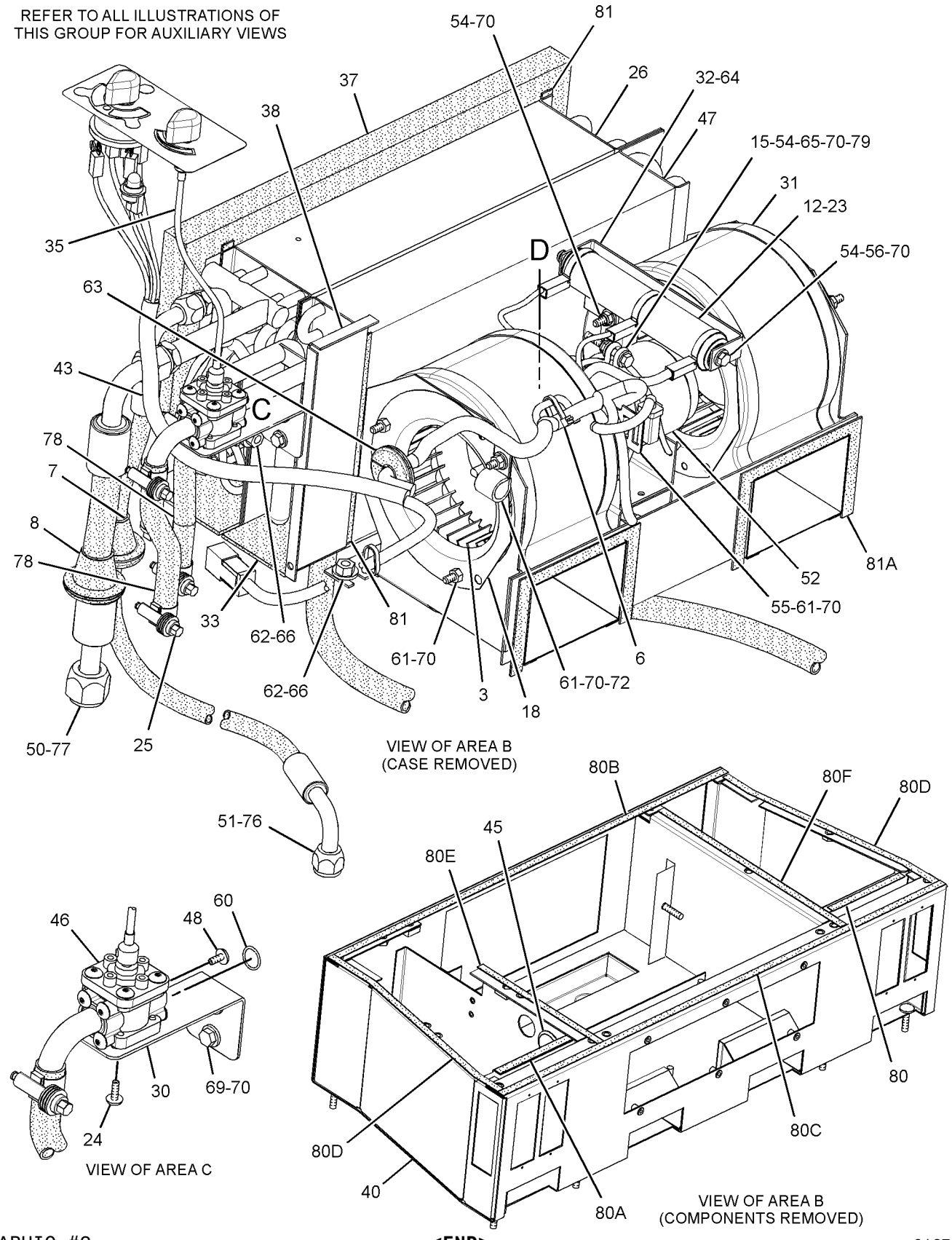

GRAPHIC #2

<END>

g01676313

OPERATOR STATION

311-2751 AIR CONDITIONER AR

S/N: JJA1-UP
PART OF 339-4964, 339-4967 OPTION AR-CAB
AN ATTACHMENT

SMCS-7320 **i03641562**

NOTE	REF NO	GRAPHIC REF	PART NUMBER	QTY	PART NAME 1 2 3 4 5 6 (PRODUCT LEVEL)	SEE PAGE
Y	1	1	*7I-5015*	1	DUCT GP-CAB AIR (AIR CONDITIONER, HEATER)	505
Y	2	1	**8X-2925**	1	FILTER GP-CAB AIR (AIR CONDITIONER)	511
Y	3	1	*177-7891*	1	DUCT & CONTROL GP (A/C, HEATER DISTRIBUTOR)	504
Y	4	1	*289-7545*	1	AIR CONDITIONER GP	481
Y	5	1	*295-4431*	1	CONDENSER & MTG GP-REFRIGERANT	488
Y	6	1	*311-0803*	1	WIRING GP-AIR CONDITIONER	184
Y	7	1	*311-2772*	1	LINES GP-AIR CONDITIONER	534
Y	8	1	*311-2773*	1	LINES GP-HEATER	536
Y	9	1	*311-2800*	1	COMPRESSOR GP-REFRIGERANT	487
	10	1	**335-6210**	1	FILM-INSTRUCTION (BELT ROUTING)	

Y-SEPARATE ILLUSTRATION

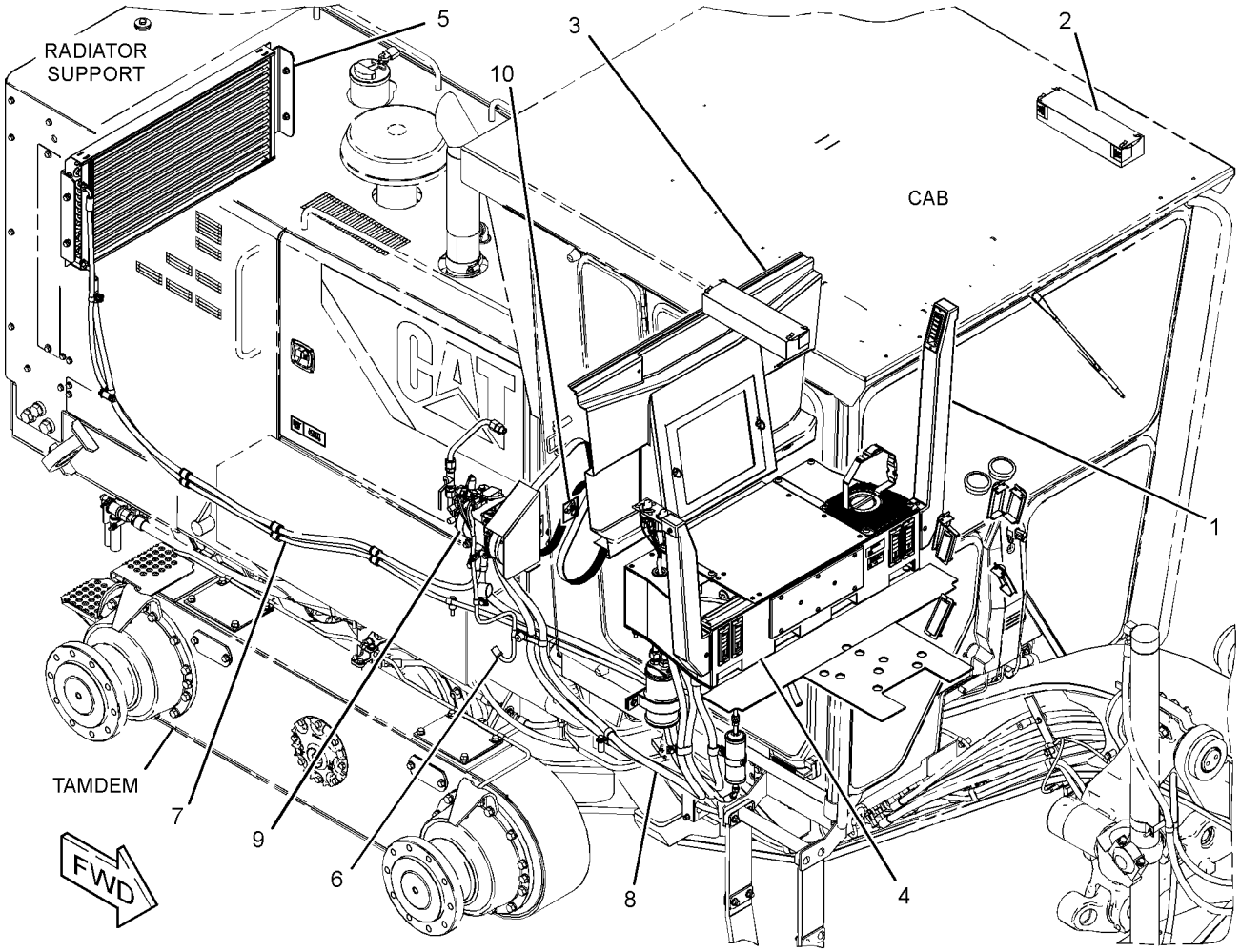

GRAPHIC #1 **<END>** g01669494

OPERATOR STATION

289-7545 AIR CONDITIONER GP

S/N: JJA1-UP
PART OF 311-2751 AIR CONDITIONER AR
AN ATTACHMENT

SMCS-7320 **i03258366**

NOTE	PART NUMBER	QTY	PART NAME 1 2 3 4 5 6 (PRODUCT LEVEL)	SEE PAGE
Y	**308-5633**	1	AIR CONDITIONER & HEATER GP	476
	5M-3062	1	BOLT (3/8-16X0.75-IN)	
	5D-1026	2	CLAMP-HOSE	
	8M-2773	2	CLIP	
	123-0872	1	PAD	
	191-5236	1	PAD	
	8T-4896	1	WASHER-HARD (10.2X18.5X2.5-MM THK)	
Y-SEPARATE ILLUSTRATION				

<END>

OPERATOR STATION

202-7666 ARMREST GP–RH

S/N: JJA1-UP
PART OF 175-1504 SEAT GP
AN ATTACHMENT

SMCS-7307 **i02947634**

NOTE	REF NO	GRAPHIC REF	PART NUMBER	QTY	PART NAME 1 2 3 4 5 6 (PRODUCT LEVEL)	SEE PAGE
	1	1	**143-1288**	1	LOCKNUT-FLANGE (3/8-16-THD)	
	2	1	**166-9914**	1	BRACKET AS	
	3	1	**219-2000**	1	PAD AS	
		1	**1F-0750**	1	NUT-WELD (3/8-16-THD)	
	4	1	**294-5042**	2	SPACER (11.1X19.5X9.67-MM THK)	
	5	1	**2K-4973**	1	LOCKNUT (3/8-16-THD)	
	6	1	**2K-6061**	1	SCREW-MACHINE (3/8-16X1.5-IN)	
	7	1	**4L-6454**	1	BOLT (3/8-16X1-IN)	
	8	1	**5S-7383**	1	BOLT (3/8-16X1.75-IN)	
	9	1	**8T-4121**	1	WASHER-HARD (11X21X2.5-MM THK)	

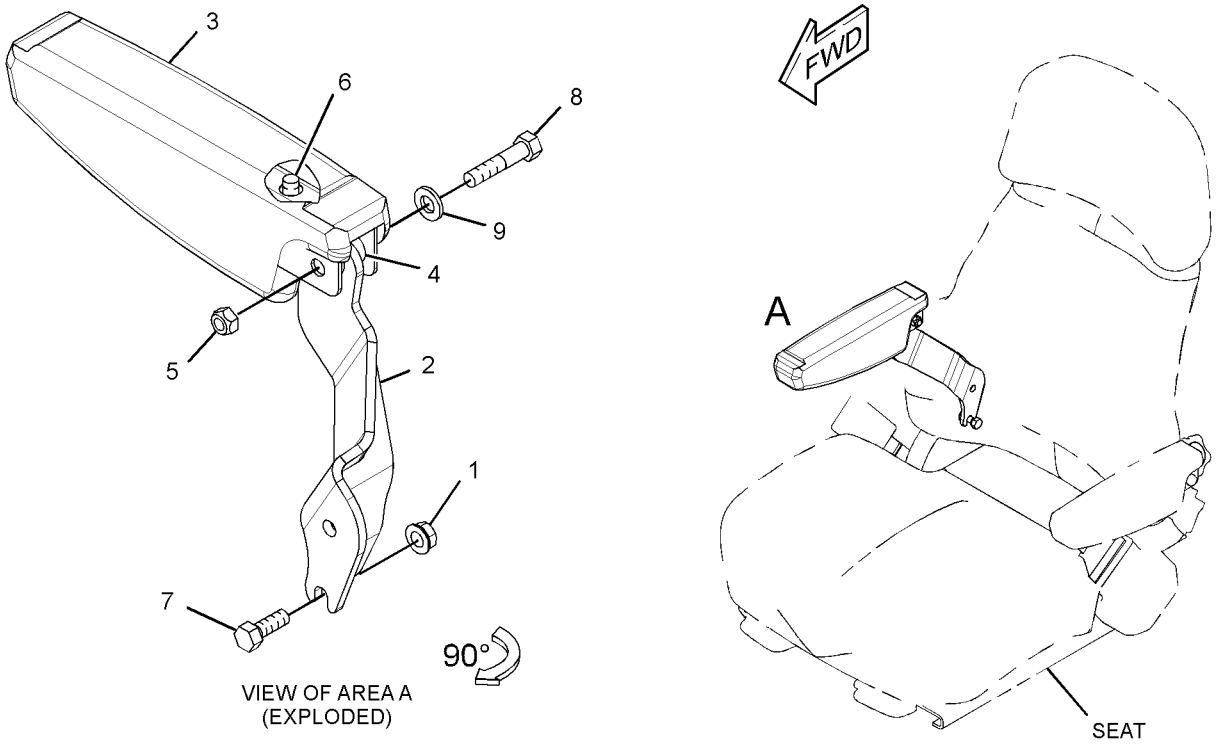

GRAPHIC #1 **<END>** g01487833

OPERATOR STATION

202-7668 ARMREST GP–LH

S/N: JJA1-UP
PART OF 175-1504 SEAT GP
AN ATTACHMENT

SMCS-7307 **i02947633**

NOTE	REF NO	GRAPHIC REF	PART NUMBER	QTY	PART NAME 1 2 3 4 5 6 (PRODUCT LEVEL)	SEE PAGE
	1	1	**143-1288**	1	LOCKNUT-FLANGE (3/8-16-THD)	
	2	1	**166-9913**	1	BRACKET AS	
	3	1	**219-2000**	1	PAD AS	
		1	**1F-0750**	1	NUT-WELD (3/8-16-THD)	
	4	1	**294-5042**	2	SPACER (11.1X19.5X9.67-MM THK)	
	5	1	**2K-4973**	1	LOCKNUT (3/8-16-THD)	
	6	1	**2K-6061**	1	SCREW-MACHINE (3/8-16X1.5-IN)	
	7	1	**4L-6454**	1	BOLT (3/8-16X1-IN)	
	8	1	**5S-7383**	1	BOLT (3/8-16X1.75-IN)	
	9	1	**8T-4121**	1	WASHER-HARD (11X21X2.5-MM THK)	

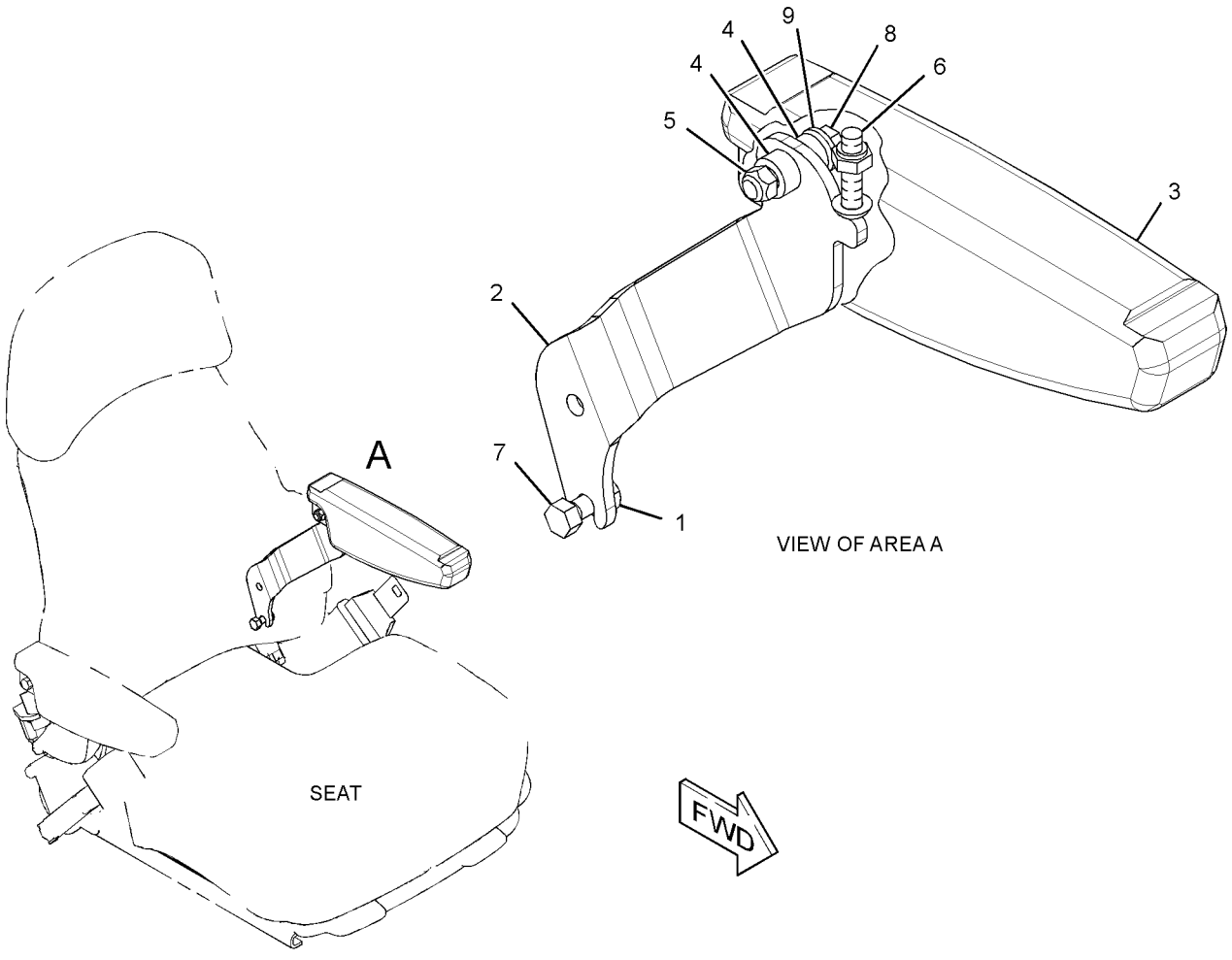

GRAPHIC #1 **<END>** g01487758

OPERATOR STATION

320-0341 CAB AR—NON ROPS/FOPS

S/N: JJA1-UP
PART OF 339-4964 OPTION AR-CAB
AN ATTACHMENT

SMCS-7301 **i03630132**

NOTE	REF NO	GRAPHIC REF	PART NUMBER	QTY	PART NAME 1 2 3 4 5 6 (PRODUCT LEVEL)	SEE PAGE
Y	1	1	*8X-2385*	1	PANEL GP-CAB (HIGH PROFILE)	549
Y	2	1	**8X-2795**	1	MIRROR GP-REAR VIEW (DUAL INSIDE)	539
Y	3	1	*125-4342*	1	WASHER GP-WINDOW (FRONT)	584
Y	4	1	*125-4344*	1	MOUNTING GP-CAB (NON-ROPS) (ENCLOSED)	545
Y	5	1	*211-4913*	1	WIPER GP-WINDOW (FRONT) (HIGH PROFILE)	589
Y	6	1	*172-5378*	1	INSULATION GP-WEATHER	525
Y	7	1	*285-3361*	1	WIRING GP-CAB	189
Y	8	1	*290-1127*	1	CAB GP (HIGH PROFILE)	485
Y	9	1	*294-8588*	1	LINER GP-CAB (HIGH PROFILE)	527
Y	10	1	*316-5237*	1	PANEL GP-INSTRUMENT (ENCLOSED)	550

Y-SEPARATE ILLUSTRATION

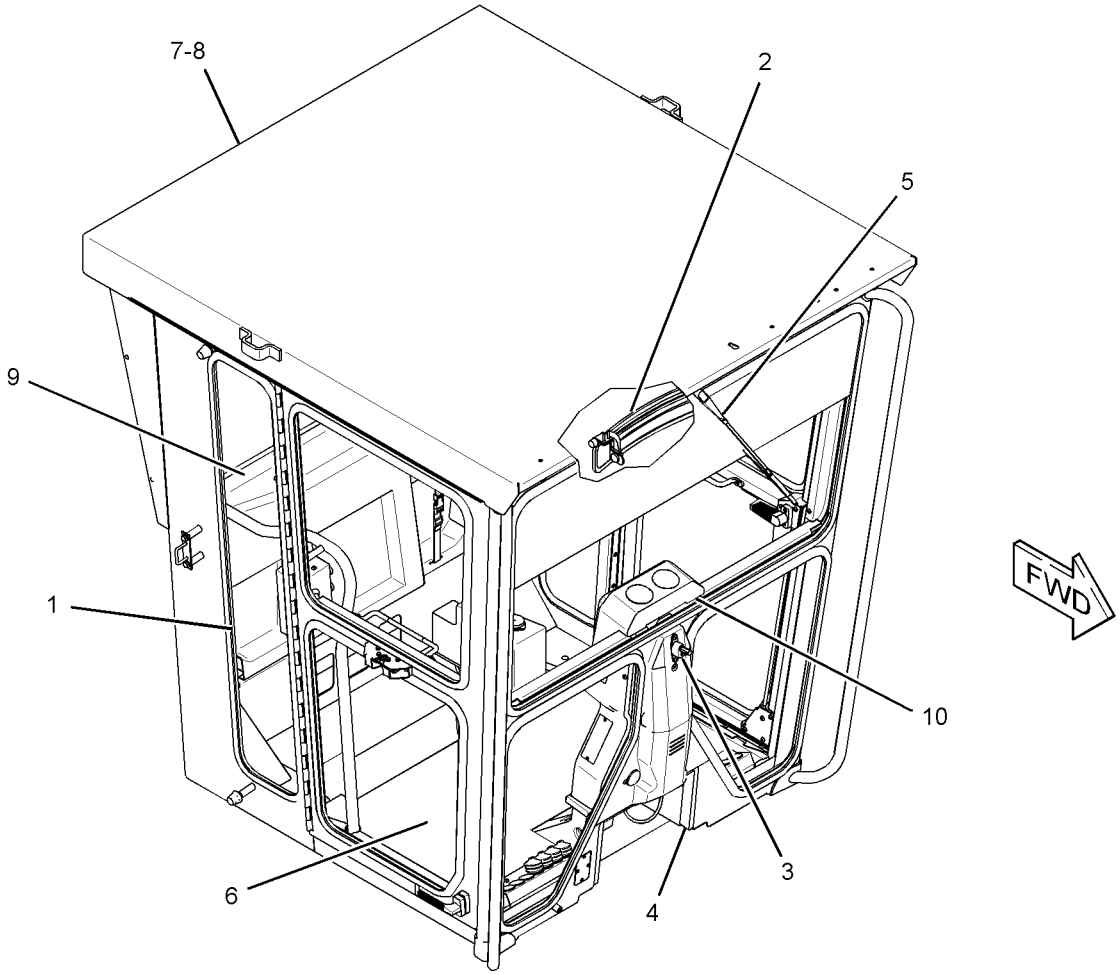

GRAPHIC #1 **<END>** g01759313

OPERATOR STATION

290-1127 CAB GP—HIGH PROFILE

S/N: JJA1-UP
PART OF 320-0341 CAB AR
AN ATTACHMENT

SMCS-7301 **i03251963**

NOTE	REF NO	GRAPHIC REF	PART NUMBER	QTY	PART NAME 1 2 3 4 5 6 (PRODUCT LEVEL)	SEE PAGE
Y	1	1	*8X-4413*	1	DOOR GP-CAB (HIGH PROFILE)	502
	2	1	**211-4908**	1	CAB AS (NON-ROPS)	

Y-SEPARATE ILLUSTRATION

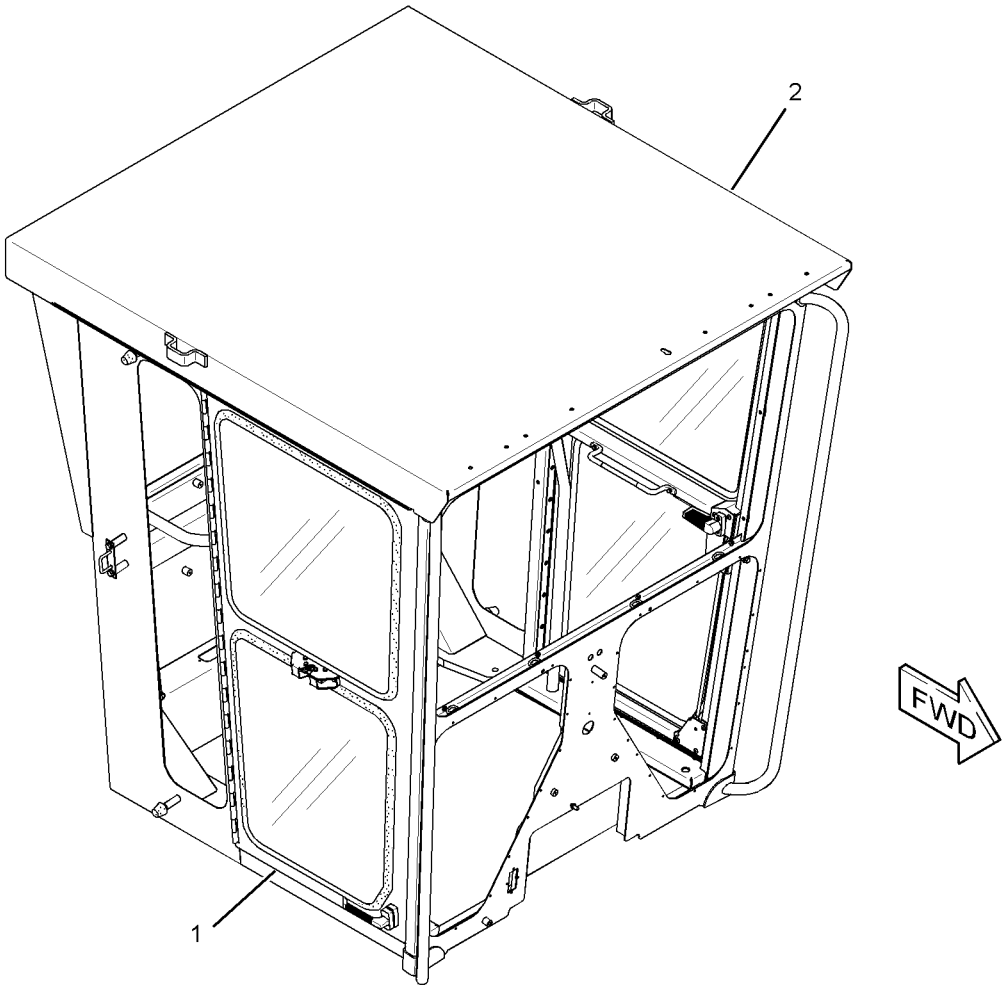

GRAPHIC #1 **<END>** g01676373

OPERATOR STATION

163-0872 COMPRESSOR GP-REFRIGERANT

S/N: JJA1-UP
PART OF 311-2800 COMPRESSOR GP-REFRIGERANT
AN ATTACHMENT

SMCS-1802 **i02997522**

NOTE	REF NO	GRAPHIC REF	PART NUMBER	QTY	PART NAME 1 2 3 4 5 6 (PRODUCT LEVEL)	SEE PAGE
	1	1	**126-1767**	2	PIN-CONNECTOR (14-GA)	
	2	1	**102-8802**	1	KIT-RECEPTACLE (2-PIN)	
					(INCLUDES RECEPTACLE AS AND WEDGE)	
	3	1	**314-4018**	1	VALVE AS (REFRIGERANT COMPRESSOR)	
	4	1	**7T-4532**	1	PLUG AS	
	5	1	**9X-7385**	2	SEAL-O-RING	

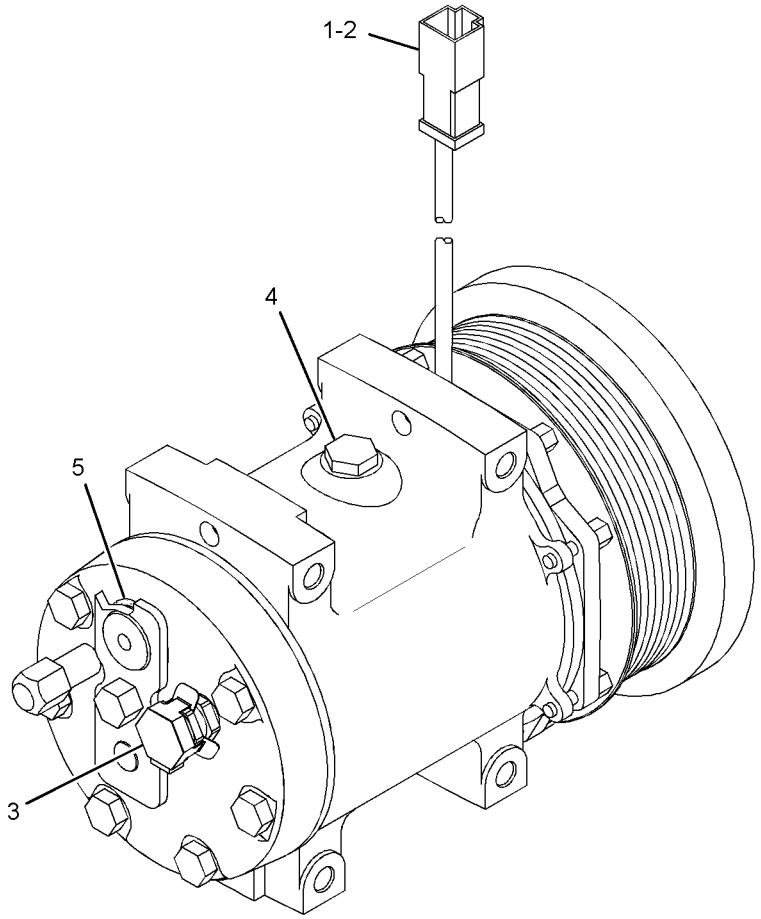

GRAPHIC #1 **<END>** g01524106

OPERATOR STATION

311-2800 COMPRESSOR GP-REFRIGERANT

S/N: JJA1-UP
PART OF 311-2751 AIR CONDITIONER AR
AN ATTACHMENT

SMCS-1802 **i03630190**

NOTE	REF NO	GRAPHIC REF	PART NUMBER	QTY	PART NAME 1 2 3 4 5 6 (PRODUCT LEVEL)	SEE PAGE
	1	1	**7W-3872**	2	SLEEVE	
Y	2	1	**163-0872**	1	COMPRESSOR GP-REFRIGERANT	486
	3	1	**185-5872**	1	BELT-SERPENTINE	
	4	1	**266-6026**	1	SUPPORT	
	5	1	**313-4130**	1	PLATE AS	
M		1	**8T-3490**	1	NUT-WELD (M10X1.5-THD)	
	6	1	**347-1264**	1	GUARD	
	7	1	**198-4776**	4	WASHER-HARD (8.8X20X8-MM THK)	
	8	1	**335-6210**	1	FILM-INSTRUCTION (BELT ROUTING)	
M	9	1	**7X-2537**	4	BOLT (M8X1.25X35-MM)	
M	10	1	**7X-2538**	3	BOLT (M8X1.25X100-MM)	
M	11	1	**7X-2539**	1	BOLT (M8X1.25X110-MM)	
	12	1	**8T-4121**	3	WASHER-HARD (11X21X2.5-MM THK)	
M	13	1	**8T-4137**	3	BOLT (M10X1.5X20-MM)	
	14	1	**8T-4224**	4	WASHER-HARD (8.8X16X2-MM THK)	

M-METRIC PART
Y-SEPARATE ILLUSTRATION

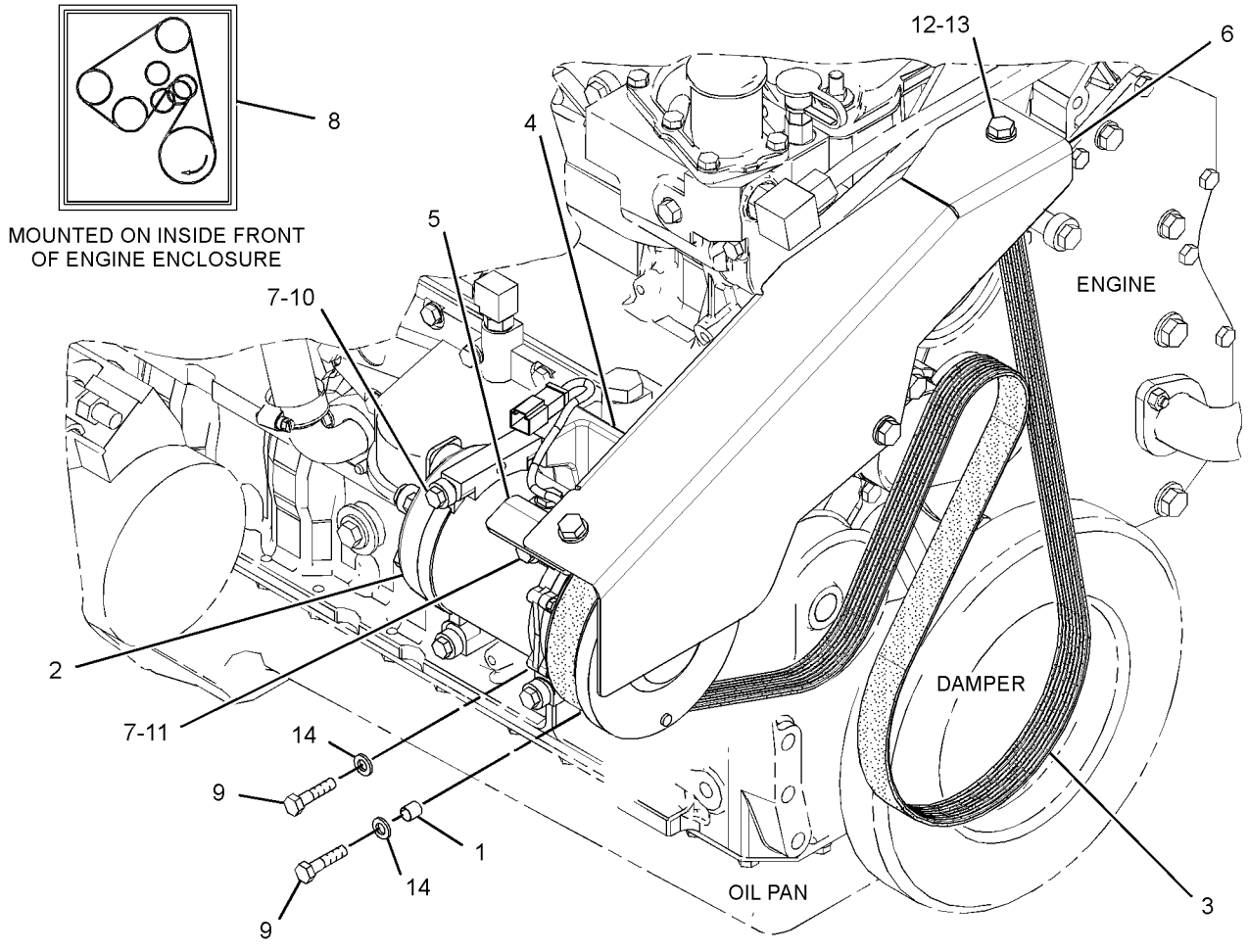

GRAPHIC #1 **<END>** g01945016

OPERATOR STATION

295-4431 CONDENSER & MTG GP-REFRIGERANT

S/N: JJA1-UP
PART OF 311-2751 AIR CONDITIONER AR
AN ATTACHMENT

SMCS-1805 **i03258484**

NOTE	REF NO	GRAPHIC REF	PART NUMBER	QTY	PART NAME 1 2 3 4 5 6 (PRODUCT LEVEL)	SEE PAGE
	1	1	**251-0982**	1	CORE AS-CONDENSER (REFRIGERANT)	
	2	1	**293-4500**	1	BRACKET	
	3	1	**303-6034**	1	BRACKET	
	4	1	**8T-4121**	16	WASHER-HARD (11X21X2.5-MM THK)	
M	5	1	**8T-4133**	8	NUT (M10X1.5-THD)	
M	6	1	**8T-4136**	4	BOLT (M10X1.5X25-MM)	
M	7	1	**8T-4195**	4	BOLT (M10X1.5X30-MM)	

M-METRIC PART

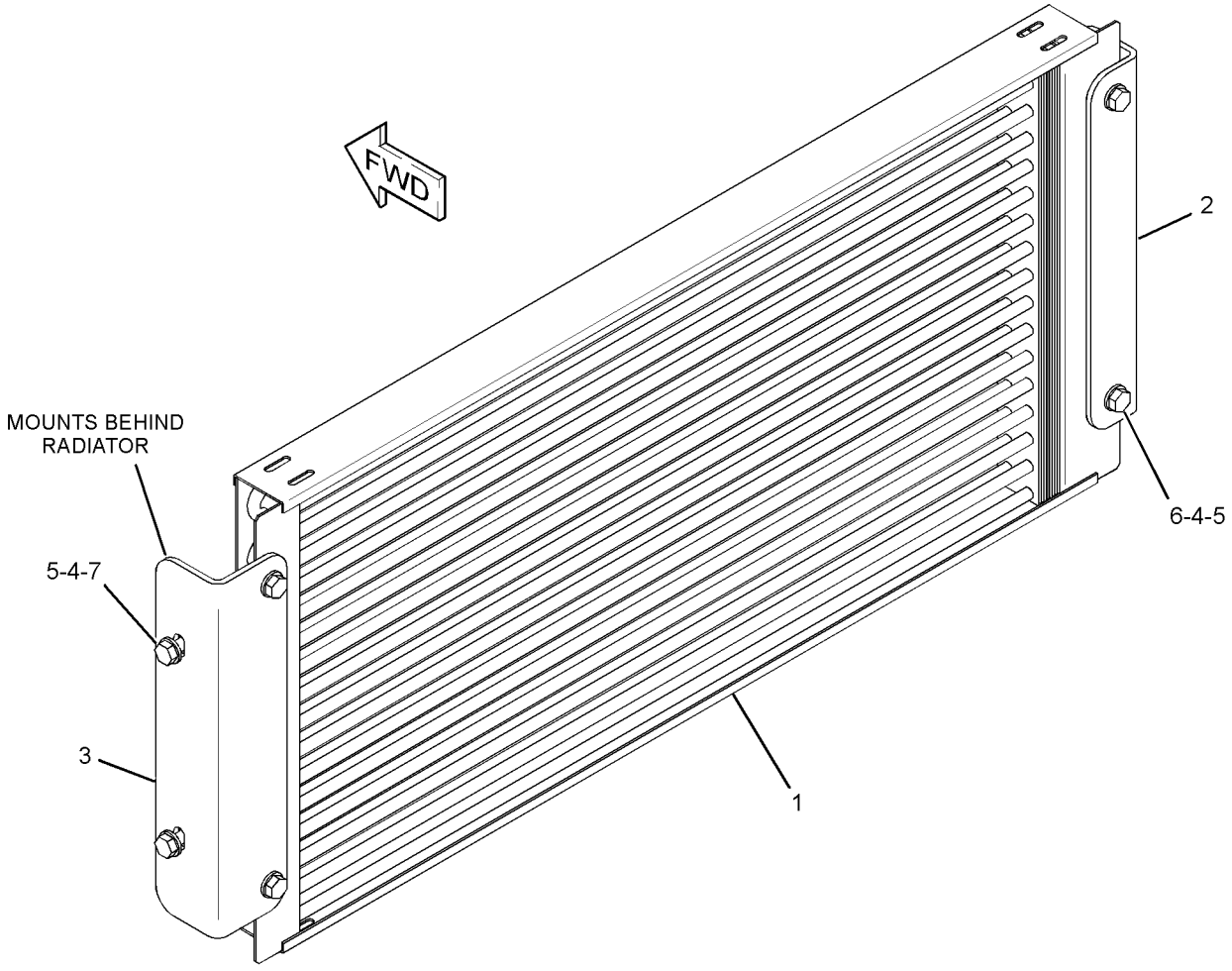

GRAPHIC #1 **<END>** g01673584

OPERATOR STATION

167-9002 CONSOLE GP-OPERATOR

S/N: JJA1-UP

PART OF 346-3710 GENERAL AR

SMCS-5258 **i03438962**

NOTE	REF NO	GRAPHIC REF	PART NUMBER	QTY	PART NAME 1 2 3 4 5 6 (PRODUCT LEVEL)	SEE PAGE
	1	1	**7M-0706**	1	KNOB (TRANSMISSION DIRECTION, SPEED)	
	2	1	**8X-4879**	2	BRACKET AS	
					(EACH INCLUDES)	
M		1	**6V-9632**	1	NUT-WELD (M6X1-THD)	
	3	1	**8X-8096**	1	FILM-COVER	
	4	1	**143-9290**	1	PLATE AS	
	5	1	**169-2621**	1	GATE AS	
	6	1	**169-3380**	1	PLATE AS	
C	7	1	**253-4019**	1	CONTROL GP-TRANSMISSION	
	8	1	**171-2122**	1	COVER	
	9	1	**172-7105**	1	FILM-PANEL (TRANSMISSION, PARKING BRAKE)	
	10	1	**172-7106**	1	FILM-PANEL (SPEED CONTROL)	
	11	1	**185-2274**	1	FILM-INFORMATION (ENGINE, HIGH IDLE, HOLD)	
	12	1	**185-2287**	1	FILM-INFORMATION (ENGINE, LOW IDLE, HOLD)	
	13	1	**187-0491**	1	COVER	
M	14	1	**9X-2041**	10	SCREW-TRUSS HEAD (M10X1.5X20-MM)	
M	15	1	**9X-2042**	2	SCREW-TRUSS HEAD (M6X1X12-MM)	
M	16	1	**9X-2043**	10	SCREW-TRUSS HEAD (M6X1X14-MM)	
M	17	1	**9X-2045**	4	SCREW-TRUSS HEAD (M6X1X20-MM)	

C-CHANGE FROM PREVIOUS TYPE
M-METRIC PART

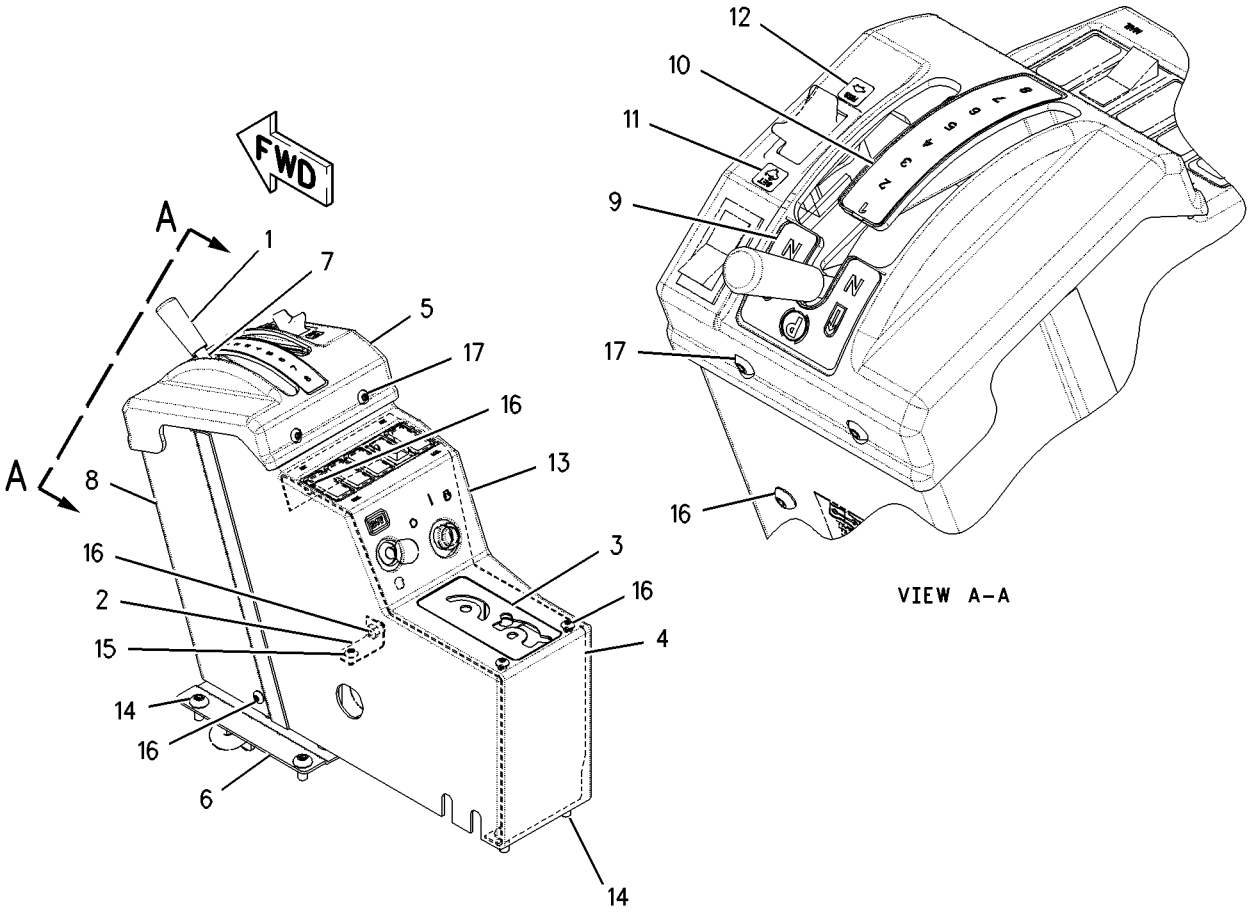

GRAPHIC #1 **<END>** g00882073

OPERATOR STATION

282-2475 CONSOLE GP-OPERATOR

S/N: JJA1-UP

PART OF 346-3710 GENERAL AR

SMCS-5258 **i03247296**

NOTE	REF NO	GRAPHIC REF	PART NUMBER	QTY	PART NAME 1 2 3 4 5 6 (PRODUCT LEVEL)	SEE PAGE
	1	1	**2G-8572**	8	WASHER-SPECIAL (10X27.81X2.54-MM THK)	
	2	1	**2G-8573**	8	CAP	
	3	1	**3Y-2806**	1	SPRING	
	4	1	**6G-2914**	1	LATCH	
	5	1	**6G-8814**	2	BRACKET	
	6	1	**6L-1962**	1	NUT-JAM (3/8-24-THD)	
	7	1	**6V-8183**	1	NUT-FULL (3/8-24-THD)	
	8	1	**7I-4890**	1	PLATE AS	
	9	1	**8C-3442**	1	SPRING-COIL	
	10	1	**8D-7960**	2	PLATE	
	11	1	**8L-7905**	2	RIVET-POP	
M	12	1	**8T-9006**	2	BOLT-SOCKET HEAD (M3X0.5X20-MM)	
	13	1	**8X-1904**	1	SPACER (20X35X26-MM THK)	
	14	1	**8X-1908**	1	PANEL	
	15	1	**8X-1913**	6	SPACER (10.5X32X19.5-MM THK)	
	16	1	**8X-1914**	1	SHAFT	
	17	1	**8X-1921**	1	HOOD	
	18	1	**8X-2160**	1	LEVER (STEERING WHEEL TILT CONTROL)	
	19	1	**8X-2161**	1	LEVER (STEERING COLUMN TILT)	
	20	1	**8X-2893**	10	NUT (M4X0.7-THD)	
	21	1	**8X-3951**	1	PANEL	
	22	1	**8X-3965**	1	RATCHET	
	23	1	**8X-5123**	1	RETAINER	
	24	1	**031-2666**	1	ROD	
	25	1	**110-6241**	1	BRACKET	
	26	1	**123-1201**	1	PLATE	
	27	1	**177-7448**	1	CHANNEL AS	
	28	1	**206-4097**	8	FASTENER	
	29	1	**206-9651**	1	PLATE	
	30	1	**236-0737**	1	CYLINDER	
	31	1	**030-8535**	1	BOLT-LOCKING (3/8-16X0.875-IN)	
	32	1	**034-1994**	1	PIN	
	33	1	**096-6166**	6	WASHER-HARD (4.5X9X1-MM THK)	
M	34	1	**174-8131**	16	SCREW-TRUSS HEAD (M4X0.7X12-MM)	
	35	1	**183-1425**	1	BASE	
	36	1	**204-6488**	1	CHANNEL AS	
	37	1	**2A-7184**	2	PLATE	
	38	1	**2K-5830**	2	BEARING AS-NEEDLE	
	39	1	**2K-7979**	13	BEARING-SLEEVE	
	40	1	**3E-9865**	1	LOCKNUT (1/4-20-THD)	
	41	1	**3F-7514**	4	PIN	
	42	1	**3K-6060**	6	LOCKNUT (3/8-16-THD)	
	43	1	**4B-4314**	1	RIVET	
M	44	1	**5C-8312**	6	NUT (M4X0.7-THD)	
	45	1	**5M-8500**	1	KNOB	
	46	1	**5P-1075**	8	WASHER-HARD (10.2X22.5X3-MM THK)	
	47	1	**5P-8167**	2	BOLT (3/8-16X0.625-IN)	
	48	1	**5S-7383**	6	BOLT (3/8-16X1.75-IN)	
	49	1	**6J-0488**	4	SCREW-BUTTON HEAD (3/8-16X0.875-IN)	
	50	1	**8D-5641**	14	BEARING	
	51	1	**8T-1174**	4	SEAL-LIP TYPE	
	52	1	**8T-2561**	11	WASHER-HARD (10.5X28.5X5-MM THK)	
M	53	1	**8T-4133**	1	NUT (M10X1.5-THD)	
M	54	1	**8T-4196**	4	BOLT (M10X1.5X35-MM)	
	55	1	**8X-1907**	1	SHAFT	
	56	1	**8X-1911**	1	PANEL	

OPERATOR STATION

282-2475 **CONSOLE GP-OPERATOR** *(contd.)* **i03247296**

NOTE	REF NO	GRAPHIC REF	PART NUMBER	QTY	PART NAME 1 2 3 4 5 6 (PRODUCT LEVEL)	SEE PAGE
	57	1	**8X-3789**	1	PANEL	
	58	1	**9M-5590**	1	BALL	
M	59	1	**9X-2042**	12	SCREW-TRUSS HEAD (M6X1X12-MM)	
D	60	1	**5P-5639**		SEAL (0.4-M)	
D	61	1	**5P-5637**		SEAL (1.2-M)	

D-ORDER BY THE METER
M-METRIC PART

282-2475 **CONSOLE GP-OPERATOR** *(contd.)* **i03247296**

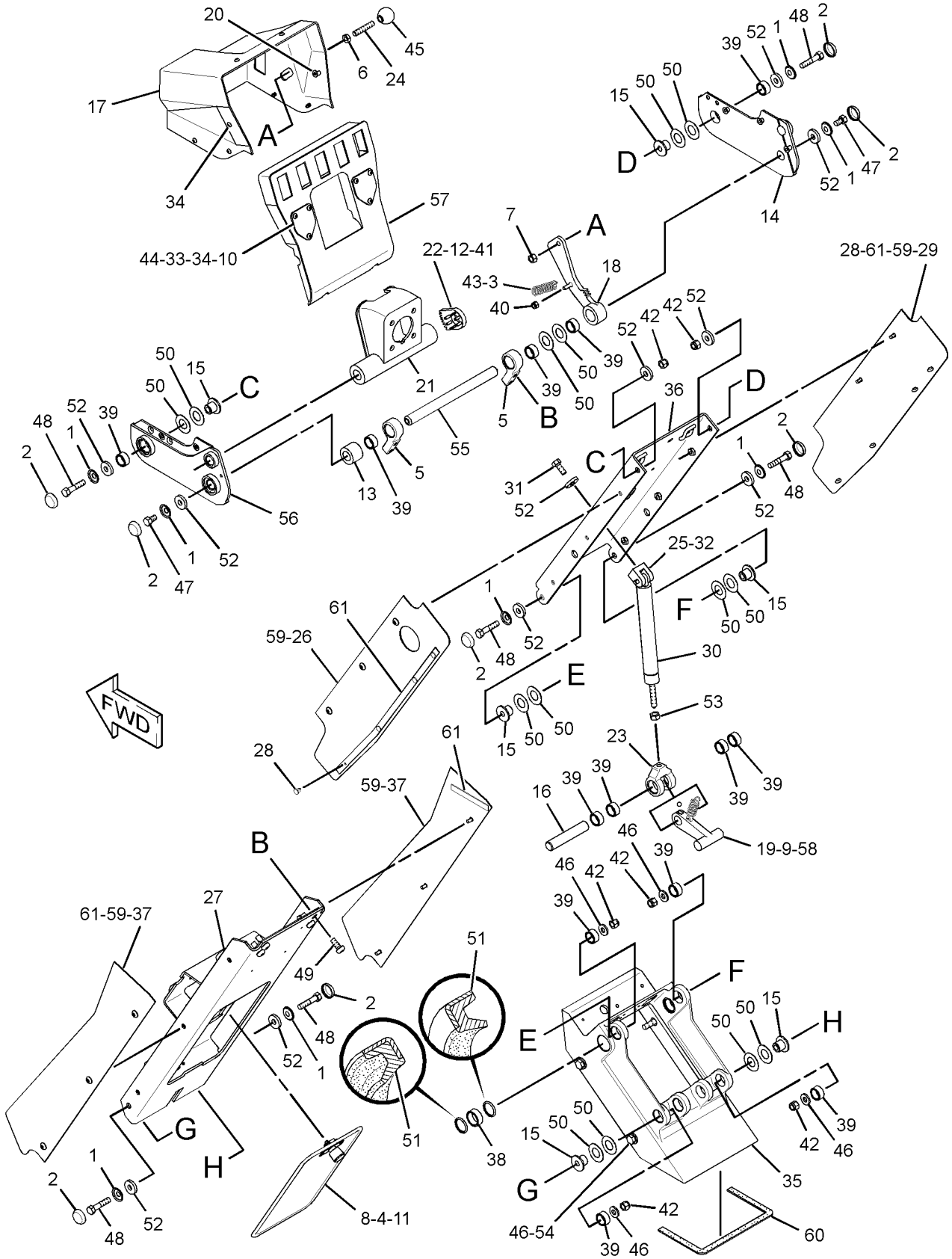

GRAPHIC #1 **<END>** g01694257

OPERATOR STATION

282-2473 CONTROL GP-CLUTCH

S/N: JJA1-UP

PART OF 346-3710 GENERAL AR

SMCS-5157 **i03247392**

NOTE	REF NO	GRAPHIC REF	PART NUMBER	QTY	PART NAME 1 2 3 4 5 6 (PRODUCT LEVEL)	SEE PAGE
	1	1	**1F-4622**	2	BEARING AS-NEEDLE	
	2	1	**5P-9209**	2	BEARING AS-NEEDLE	
	3	1	**7V-0446**	2	CLIP	
	4	1	**9J-8783**	1	SHIM (0.508-MM THK)	
	5	1	**116-5710**	1	GROMMET	
	6	1	**130-5300**	1	CLIP	
	7	1	**149-2065**	1	SPRING	
	8	1	**161-7062**	1	HOUSING	
	9	1	**161-7063**	1	SHAFT	
	10	1	**162-8218**	1	GASKET	
	11	1	**162-8219**	1	COVER	
	12	1	**169-0921**	1	ROD END-YOKE (3/8-24 LH-THD)	
	13	1	**169-0922**	1	ROD	
	14	1	**172-4211**	1	SPACER (10.5X22X50.8-MM THK)	
	15	1	**180-4027**	1	CAM	
	16	1	**180-7147**	1	LEVER	
	17	1	**190-3043**	1	BRACKET AS	
	18	1	**206-3599**	1	LEVER	
	19	1	**207-4922**	1	PEDAL-CLUTCH	
Y	20	1	**214-4863**	1	SENSOR GP-POSITION (ROTARY) (CLUTCH CONTROL)	158
	21	1	**129-3173**	1	BOLT-12 POINT HEAD (3/8-16X1.25-IN)	
M	22	1	**142-0485**	1	NUT (M10X1.5-THD)	
	23	1	**1B-0676**	1	PIN	
	24	1	**1B-8704**	1	KEY-WOODRUFF	
	25	1	**272-3089**	1	BOLT (M10X1.5X90-MM)	
	26	1	**3H-8538**	1	PIN	
	27	1	**3S-2713**	1	NUT-FULL (3/8-24-THD)	
	28	1	**4B-6060**	1	SETSCREW-SOCKET (1/4-20X0.375-IN)	
	29	1	**4J-8922**	1	ROD END-YOKE (3/8-24-THD)	
	30	1	**5P-1075**	2	WASHER-HARD (10.2X22.5X3-MM THK)	
	31	1	**6V-0894**	1	SEAL-O-RING	
M	32	1	**6V-2313**	2	BOLT (M5X0.8X30-MM)	
	33	1	**8T-0328**	2	WASHER-HARD (5.5X10X1-MM THK)	
	34	1	**8T-4121**	5	WASHER-HARD (11X21X2.5-MM THK)	
M	35	1	**8T-4133**	1	NUT (M10X1.5-THD)	
M	36	1	**8T-4136**	3	BOLT (M10X1.5X25-MM)	
M	37	1	**8T-4182**	1	BOLT (M10X1.5X45-MM)	
M	38	1	**8T-4195**	2	BOLT (M10X1.5X30-MM)	
M	39	1	**8T-4196**	2	BOLT (M10X1.5X35-MM)	
	40	1	**8T-4226**	1	WASHER-PLATED (10.5X45X3-MM THK)	
	41	1	**8T-4896**	1	WASHER-HARD (10.2X18.5X2.5-MM THK)	

M-METRIC PART
Y-SEPARATE ILLUSTRATION

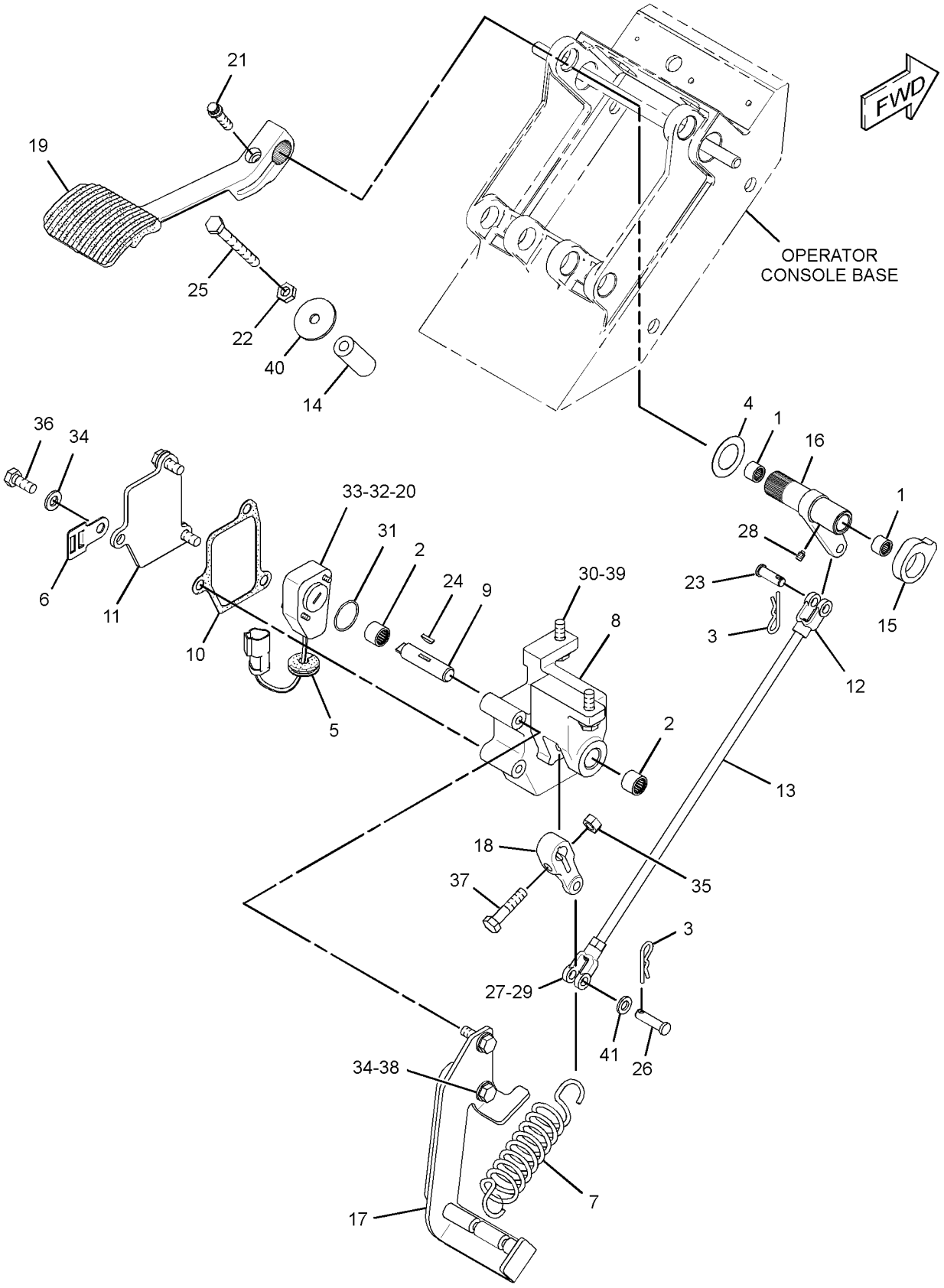

GRAPHIC #1 **<END>** g01706436

OPERATOR STATION

7I-4718 CONTROL GP-STEERING

S/N: JJA1-UP

PART OF 346-3710 GENERAL AR

SMCS-4309, 4310, 4338, 4343 **i02237701**

NOTE	REF NO	GRAPHIC REF	PART NUMBER	QTY	PART NAME 1 2 3 4 5 6 (PRODUCT LEVEL)	SEE PAGE
CJ	1	1	**222-3769**	1	PUMP GP-METERING (HMU)	
	2	1	**092-3200**	1	STEERING WHEEL	
	3	1	**144-6695**	1	NUT (13/16-20-THD)	
M	4	1	**118-9573**	4	BOLT-12 POINT HEAD (M10X1.5X35-MM)	
					AVAILABLE REPAIR KIT(S):	
J			**257-8471**	1	KIT-SEAL (HMU)	
					(INCLUDES SEALS & INSTALLATION TOOL)	

C-CHANGE FROM PREVIOUS TYPE
J-KIT MARKED J SERVICES PART MARKED J
M-METRIC PART

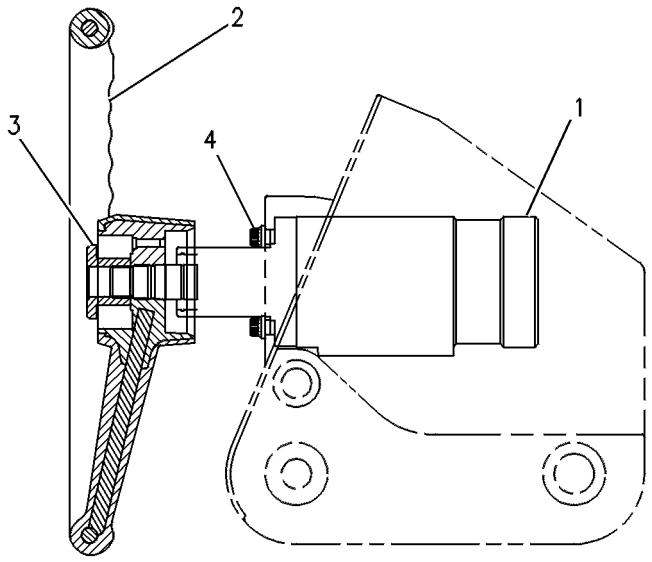

GRAPHIC #1 **<END>** g00108618

OPERATOR STATION

8X-4317 DOOR GP-CAB—HIGH PROFILE—RH

S/N: JJA1-UP
PART OF 8X-4413 DOOR GP-CAB
AN ATTACHMENT

SMCS-7308 **i02158613**

NOTE	REF NO	GRAPHIC REF	PART NUMBER	QTY	PART NAME 1 2 3 4 5 6 (PRODUCT LEVEL)	SEE PAGE
	1	1	**199-2677**	1	LINK (RELEASE)	
	2	1	**1H-3338**	1	LOCKWASHER (EXTERNAL TOOTH)	
	3	1	**5T-7486**	1	RETAINER-SPRING	
	4	2	**6D-6581**	16	RIVET-POP	
	5	1	**6V-2773**	2	PLUG	
	6	1	**6V-7636**	4	PIN AS-SPRING	
	7	2	**8X-3806**	1	HINGE	
	8	1	**8X-4243**	1	COVER (RH)	
	9	1	**8X-4262**	1	COVER (RH)	
	10	1	**8X-3938**	1	GLASS (UPPER)	
	11	1	**8X-4448**	1	GLASS (LOWER)	
	12	1	**8Y-4398**	1	LINK-CONNECTING	
	13	1	**8Y-4400**	1	LATCH AS-DOOR	
	14	1	**8Y-4401**	1	HANDLE AS (INSIDE)	
	15	2	**8Y-4619**	1	HANDLE AS (OUTSIDE)	
	16	1	**8Y-4620**	1	LINK-CONNECTING	
J	17	2	**8Y-4801**	1	LOCK AS-CYLINDER	
		2	**226-0295**	1	LOCK AS	
		2	**226-0342**	1	CAM	
M	18	1,2	**9X-2546**	4	BOLT (M6X1X20-MM)	
	19	2	**107-9641**	1	PLATE AS	
	20	2	**108-5950**	1	LATCH AS-RH	
	21	1	**108-5952**	1	LINK (RH)	
	22	1	**114-9190**	1	SEAL	
	23	1	**128-0037**	1	KNOB-BALL	
	24	1	**199-2712**	1	HANDLE	
	25	1	**199-2739**	1	DOOR AS (RH) (HIGH PROFILE)	
M		1	**6V-9632**	8	NUT-WELD (M6X1-THD)	
M		1	**8T-3490**	2	NUT-WELD (M10X1.5-THD)	
	26	2	**8T-4121**	2	WASHER-HARD (11X21X2.5-MM THK)	
M	27	2	**8T-4137**	2	BOLT (M10X1.5X20-MM)	
M	28	1	**8T-4181**	6	BOLT (M6X1X20-MM)	
M	29	1	**8X-4245**	1	BOSS (M6X1X18-MM)	
M	30	1	**9X-2042**	7	SCREW-TRUSS HEAD (M6X1X12-MM)	
	31	1	**9X-8256**	2	WASHER (6.6X12X2-MM THK)	
BD	32	1	**5P-5678**		SEAL	
M	33	2	**9X-2045**	4	SCREW-TRUSS HEAD (M6X1X20-MM)	

B-USE AS REQUIRED
D-ORDER BY THE METER
J-REQUIRES 5P8500 KEY
M-METRIC PART

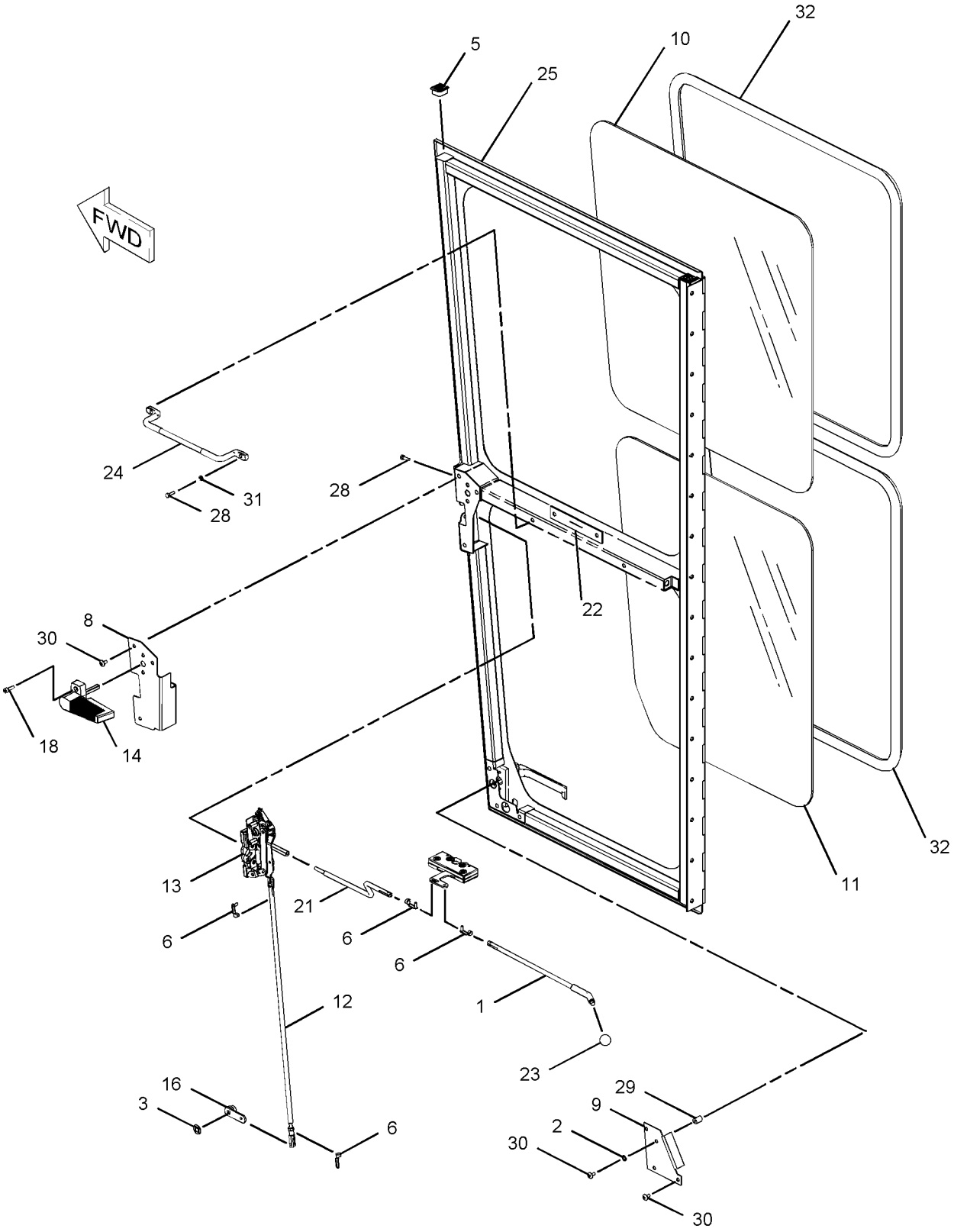

GRAPHIC #1 g01071777

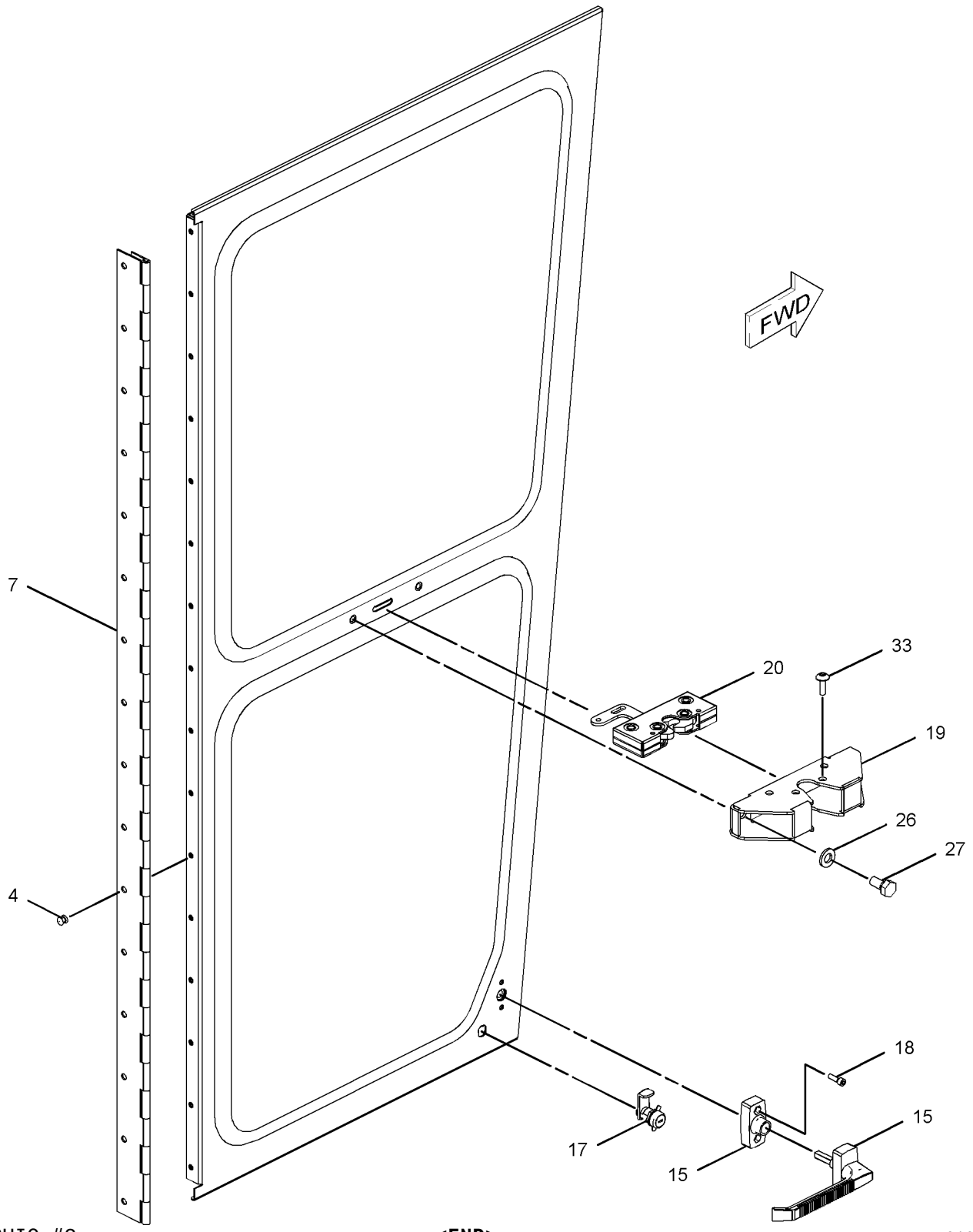

GRAPHIC #2 **<END>** g01071781

OPERATOR STATION

8X-4318 DOOR GP-CAB—HIGH PROFILE—LH

S/N: JJA1-UP
PART OF 8X-4413 DOOR GP-CAB
AN ATTACHMENT

SMCS-7308 **i02158611**

NOTE	REF NO	GRAPHIC REF	PART NUMBER	QTY	PART NAME 1 2 3 4 5 6 (PRODUCT LEVEL)	SEE PAGE
	1	1	**199-2677**	1	LINK (RELEASE)	
	2	1	**1H-3338**	1	LOCKWASHER (EXTERNAL TOOTH)	
	3	1	**5T-7486**	1	RETAINER-SPRING	
	4	1	**6D-6581**	16	RIVET-POP	
	5	1	**6V-2773**	2	PLUG	
	6	1	**6V-7636**	4	PIN AS-SPRING	
	7	1	**8X-3806**	1	HINGE	
	8	1	**8X-4244**	1	COVER (LH)	
	9	1	**8X-4263**	1	COVER (LH)	
	10	1	**8X-3938**	1	GLASS (UPPER)	
	11	1	**8X-4448**	1	GLASS (LOWER)	
	12	1	**8Y-4398**	1	LINK-CONNECTING	
	13	1	**8Y-4399**	1	LATCH AS-DOOR	
	14	1	**8Y-4401**	1	HANDLE AS (INSIDE)	
	15	1	**8Y-4619**	1	HANDLE AS (OUTSIDE)	
	16	1	**8Y-4620**	1	LINK-CONNECTING	
J	17	1	**8Y-4801**	1	LOCK AS-CYLINDER	
		1	**226-0295**	1	LOCK AS	
		1	**226-0342**	1	CAM	
M	18	1	**9X-2546**	4	BOLT (M6X1X20-MM)	
	19	1	**107-9641**	1	PLATE AS	
	20	1	**108-5949**	1	LATCH AS (LH)	
	21	1	**108-5951**	1	LINK (LH)	
	22	1	**114-9190**	1	SEAL	
	23	1	**128-0037**	1	KNOB-BALL	
	24	1	**199-2712**	1	HANDLE	
	25	1	**199-2740**	1	DOOR AS (LH) (HIGH PROFILE)	
	26	1	**8T-4121**	2	WASHER-HARD (11X21X2.5-MM THK)	
M	27	1	**8T-4137**	2	BOLT (M10X1.5X20-MM)	
M	28	1	**8T-4181**	6	BOLT (M6X1X20-MM)	
M	29	1	**8X-4245**	1	BOSS (M6X1X18-MM)	
M	30	1	**9X-2042**	7	SCREW-TRUSS HEAD (M6X1X12-MM)	
M	31	1	**9X-2045**	4	SCREW-TRUSS HEAD (M6X1X20-MM)	
	32	1	**9X-8256**	2	WASHER (6.6X12X2-MM THK)	
BD	33	1	**5P-5768**		SEAL	

B-USE AS REQUIRED
D-ORDER BY THE METER
J-REQUIRES 5P8500 KEY
M-METRIC PART

8X-4318 DOOR GP-CAB *(contd.)* **i02158611**

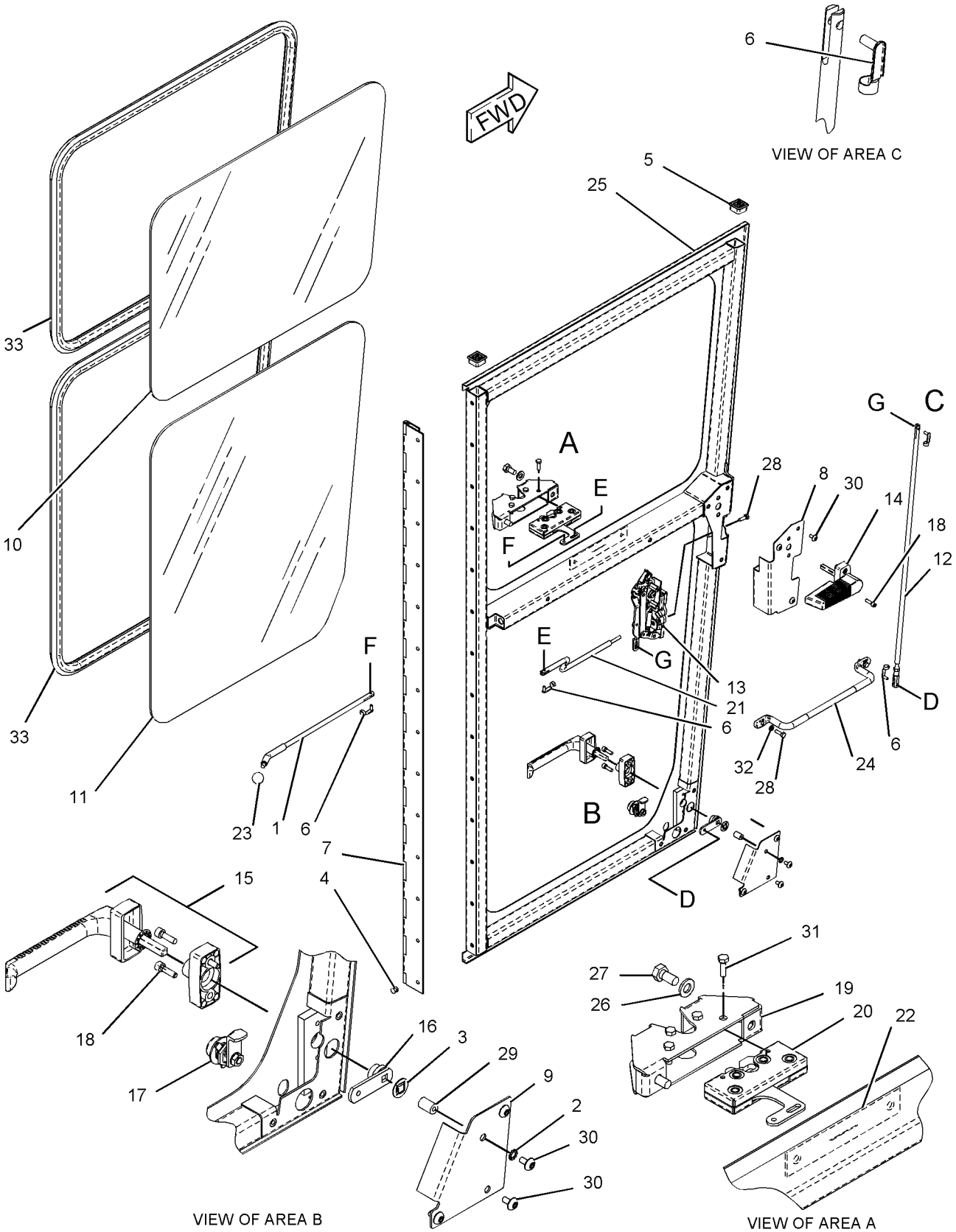

GRAPHIC #1

<END>

g01097693

OPERATOR STATION

8X-4413 DOOR GP-CAB—HIGH PROFILE

S/N: JJA1-UP
PART OF 290-1127 CAB GP, 290-0349 ROPS GP
AN ATTACHMENT

SMCS-7308 **i03479722**

NOTE	REF NO	GRAPHIC REF	PART NUMBER	QTY	PART NAME 1 2 3 4 5 6 (PRODUCT LEVEL)	SEE PAGE
	1	1	**6V-5158**	2	STRIKER AS-BODY	
Y	2	1	**8X-4317**	1	DOOR GP-CAB (RH) (HIGH PROFILE)	497
Y	3	1	**8X-4318**	1	DOOR GP-CAB (LH) (HIGH PROFILE)	500
	4	1	**106-6553**	4	BUMPER-CONICAL	
	5	1	**107-6813**	2	PLATE AS	
	6	1	**124-8843**	2	PLATE AS	
	7	1	**126-4966**	2	PLATE	
M	8	1	**129-3178**	32	LOCKNUT (M6X1-THD)	
M	9	1	**138-4054**	5	SCREW-FLAT HEAD (M6X1X45-MM)	
	10	1	**5M-3062**	4	BOLT (3/8-16X0.75-IN)	
	11	1	**5P-1075**	4	WASHER-HARD (10.2X22.5X3-MM THK)	
B	12	1	**7X-0605**	8	WASHER-HARD (13X28X1.6-MM THK)	
M	13	1	**8C-8454**	27	SCREW-MACHINE (M6X1X20-MM)	
	14	1	**8T-4121**	4	WASHER-HARD (11X21X2.5-MM THK)	
M	15	1	**8T-4133**	4	NUT (M10X1.5-THD)	
M	16	1	**8T-4195**	4	BOLT (M10X1.5X30-MM)	
M	17	1	**9X-2045**	4	SCREW-TRUSS HEAD (M6X1X20-MM)	
	18	1	**9X-8256**	32	WASHER (6.6X12X2-MM THK)	
D	19	1	**5P-5969**		SEAL (1.6-M EACH)	
E	20	1	**122-2228**		SEAL (172-CM EACH)	
E	21	1	**178-8894**		SEAL (335-CM EACH)	

B-USE AS REQUIRED
D-ORDER BY THE METER
E-ORDER BY THE CENTIMETER
M-METRIC PART
Y-SEPARATE ILLUSTRATION

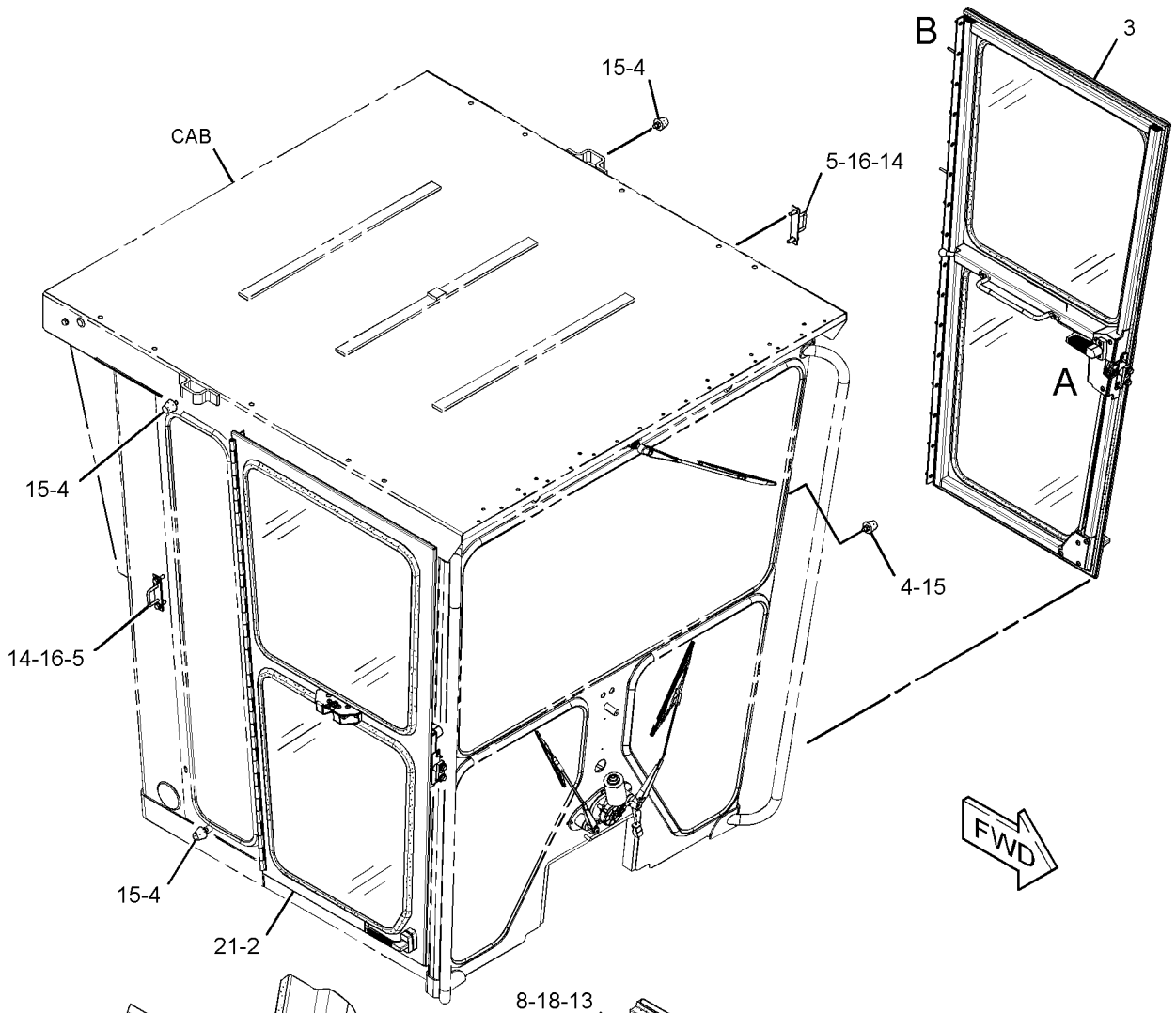

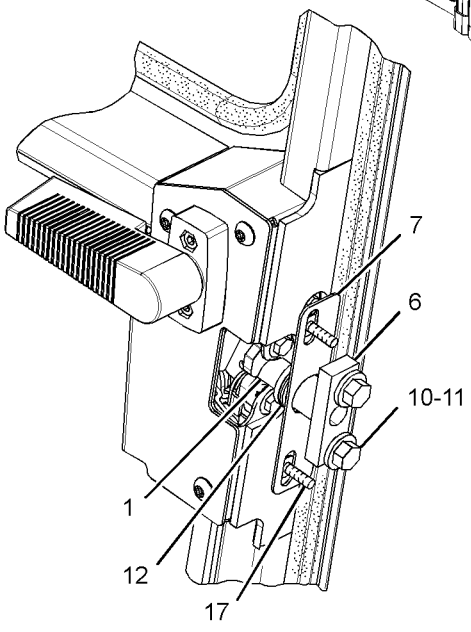

VIEW OF AREA A

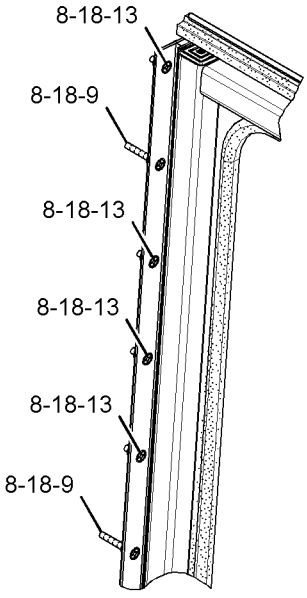

VIEW OF AREA B

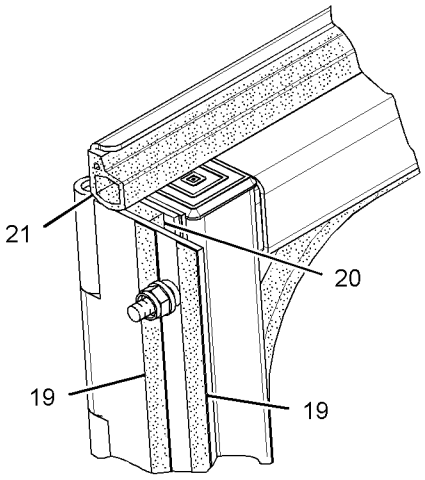

VIEW OF AREA B

GRAPHIC #1

<END>

g01563178

OPERATOR STATION

177-7891 DUCT & CONTROL GP–A/C, HEATER DISTRIBUTOR

S/N: JJA1-UP

PART OF 311-2751 AIR CONDITIONER AR

AN ATTACHMENT

SMCS-7337, 734D **i01679811**

NOTE	REF NO	GRAPHIC REF	PART NUMBER	QTY	PART NAME 1 2 3 4 5 6 (PRODUCT LEVEL)	SEE PAGE
	1	1	**8Y-6388**	6	LOUVER AS-VENT	
	2	1	**139-3595**	1	PANEL AS	
		1	**7K-4201**	2	NUT-SPEED	
		1	**8S-7566**	4	RIVET-POP	
	3	1	**164-8474**	2	LOUVER AS-VENT	
M	4	1	**9X-2043**	2	SCREW-TRUSS HEAD (M6X1X14-MM)	

M-METRIC PART

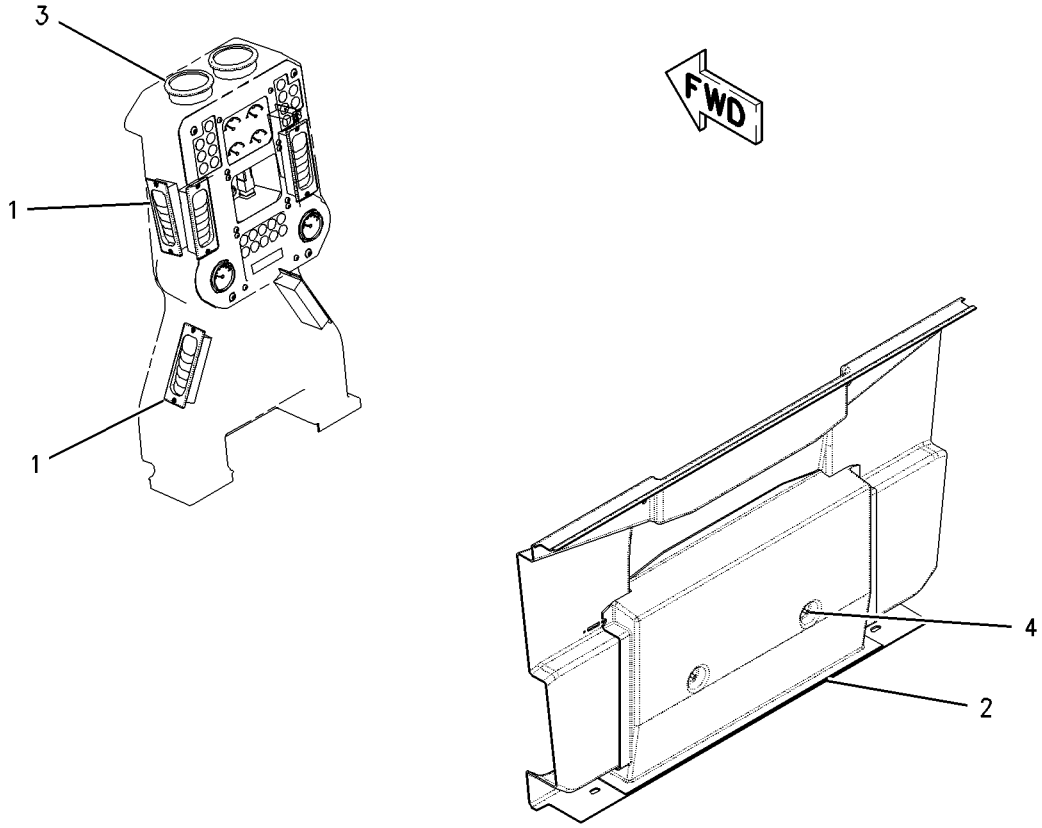

GRAPHIC #1 **<END>** g00796998

7I-5015 DUCT GP-CAB AIR—AIR CONDITIONER, HEATER

S/N: JJA1-UP

PART OF 311-2751 AIR CONDITIONER AR

AN ATTACHMENT

SMCS-734D **i00135943**

NOTE	REF NO	GRAPHIC REF	PART NUMBER	QTY	PART NAME 1 2 3 4 5 6 (PRODUCT LEVEL)	SEE PAGE
	1	1	**104-2091**	8	SCREW-FLAT HEAD (NO 6X0.5-IN)	
	2	1	**106-4496**	6	BRACKET AS	
					(EACH INCLUDES)	
M	3	1	**6V-9632**	1	NUT-WELD (M6X1-THD)	
	4	1	**8X-5102**	2	SEAL	
	5	1	**8Y-6388**	4	LOUVER AS-VENT	
	6	1	**122-8155**	1	DUCT	
	7	1	**122-8154**	1	DUCT	
M	8	1	**9X-2043**	8	SCREW-TRUSS HEAD (M6X1X14-MM)	
	9	1	**8T-4205**	2	WASHER-HARD (7.2X14.5X2-MM THK)	
M	10	1	**5C-2890**	2	NUT (M6X1-THD)	

M-METRIC PART

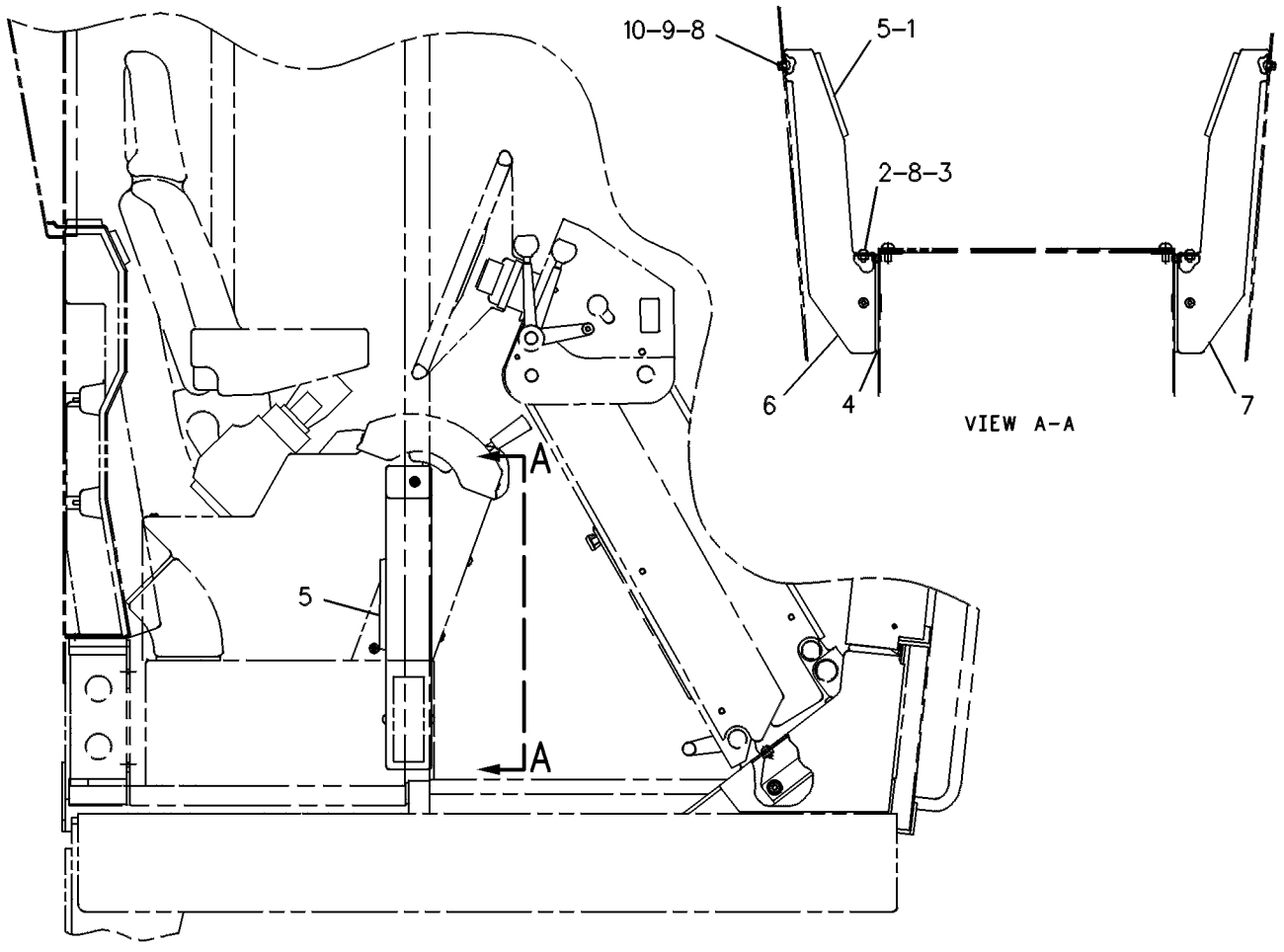

RIGHT SIDE VIEW

GRAPHIC #1 **<END>** g00108768

OPERATOR STATION

170-4820 FAN GP-CIRCULATING—DEFROSTER

S/N: JJA1-UP
24-VOLT
PART OF 286-4416 FAN GP-CIRCULATING
AN ATTACHMENT

SMCS-7316 **i02863989**

NOTE	REF NO	GRAPHIC REF	PART NUMBER	QTY	PART NAME 1 2 3 4 5 6 (PRODUCT LEVEL)	SEE PAGE
	1	1	**1M-1230**	2	NUT & LOCK AS (10-32-THD)	
	2	1	**3D-8747**	1	BRACKET	
	3	1	**3D-8748**	1	FAN AS (4-BLADE)	
	4	1	**3D-8749**	1	GUARD	
	5	1	**3T-6774**	1	GROMMET	
	6	1	**9X-9689**	1	BASE-FAN	
Y	7	1	**170-5335**	1	MOTOR GP-ELECTRIC (27-VOLTS) (CIRCULATING FAN)	151
	8	1	**1B-2713**	1	BOLT (1/4-20X1.75-IN)	
	9	1	**2D-6235**	1	LOCKNUT (1/4-20-THD)	
	10	1	**3D-8752**	1	LOCKNUT (5/16-24-THD)	
	11	1	**5P-0537**	4	WASHER-HARD (7.2X14.5X2-MM THK)	
	12	1	**6G-5987**	1	BRACKET	
	13	1	**7L-8316**	1	SETSCREW-SOCKET (10-32X2.54-IN)	
	14	1	**7T-0582**	1	BOLT	
	15	1	**9M-1974**	2	WASHER-HARD (8.8X16X2-MM THK)	

Y-SEPARATE ILLUSTRATION

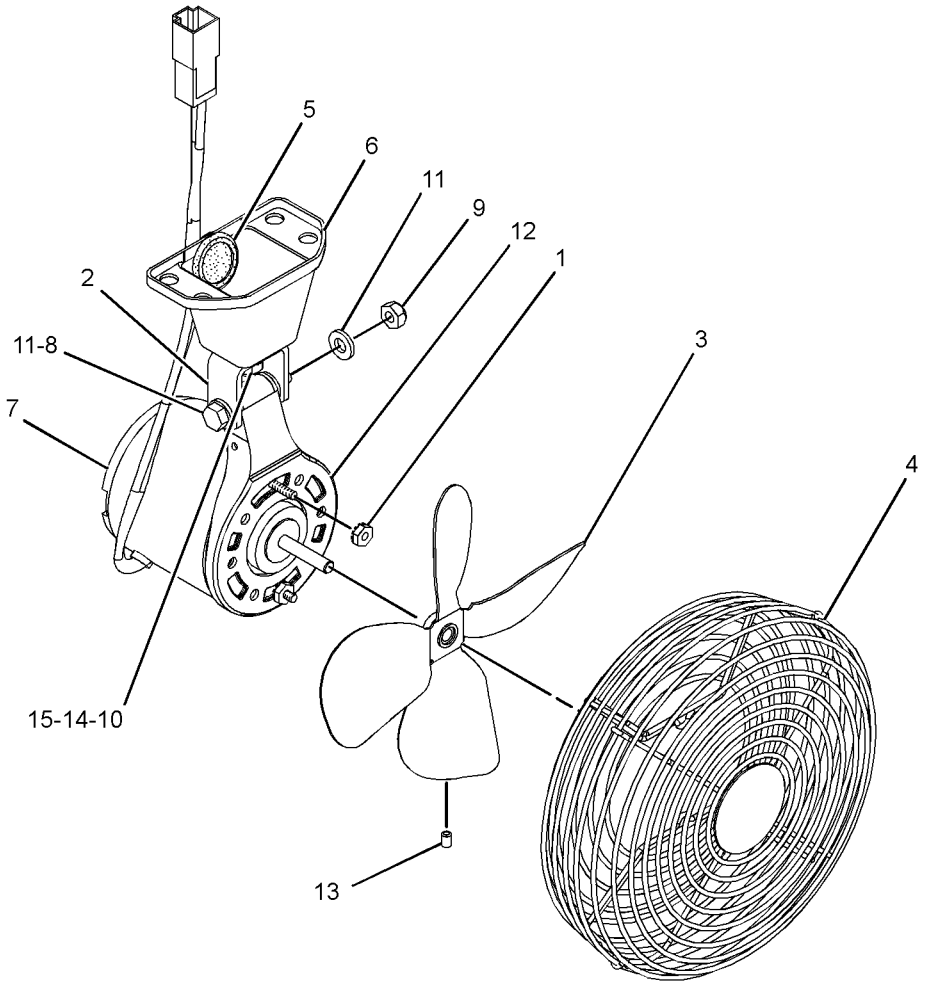

GRAPHIC #1 **<END>** g01256496

170-5334 FAN GP-CIRCULATING—FRONT DEFROSTER

S/N: JJA1-UP
24-VOLT
PART OF 286-4415 FAN GP-CIRCULATING
AN ATTACHMENT

SMCS-7316 **i03641571**

NOTE	REF NO	GRAPHIC REF	PART NUMBER	QTY	PART NAME 1 2 3 4 5 6 (PRODUCT LEVEL)	SEE PAGE
	1	1	**3D-8747**	1	BRACKET	
	2	1	**3D-8748**	1	FAN AS (4-BLADE)	
	3	1	**3D-8749**	1	GUARD	
	4	1	**3T-6774**	1	GROMMET	
	5	1	**9X-9689**	1	BASE-FAN	
	6	1	**135-1979**	1	BRACKET	
Y	7	1	**170-5335**	1	MOTOR GP-ELECTRIC (27-VOLTS) (CIRCULATING FAN)	151
	8	1	**031-4155**	1	LOCKNUT (5/16-18-THD)	
	9	1	**1B-2713**	1	BOLT (1/4-20X1.75-IN)	
	10	1	**1M-1230**	2	NUT & LOCK AS (10-32-THD)	
	11	1	**2D-6235**	1	LOCKNUT (1/4-20-THD)	
	12	1	**3D-8752**	1	LOCKNUT (5/16-24-THD)	
	13	1	**4M-0061**	1	BOLT (5/16-18X0.75-IN)	
	14	1	**5P-0537**	4	WASHER-HARD (7.2X14.5X2-MM THK)	
	15	1	**6G-5987**	1	BRACKET	
	16	1	**7L-8316**	1	SETSCREW-SOCKET (10-32X2.54-IN)	
	17	1	**7T-0582**	1	BOLT	
	18	1	**9M-1974**	3	WASHER-HARD (8.8X16X2-MM THK)	
	19	1	**9T-5241**	2	WASHER (9.53X18X1-MM THK)	

Y-SEPARATE ILLUSTRATION

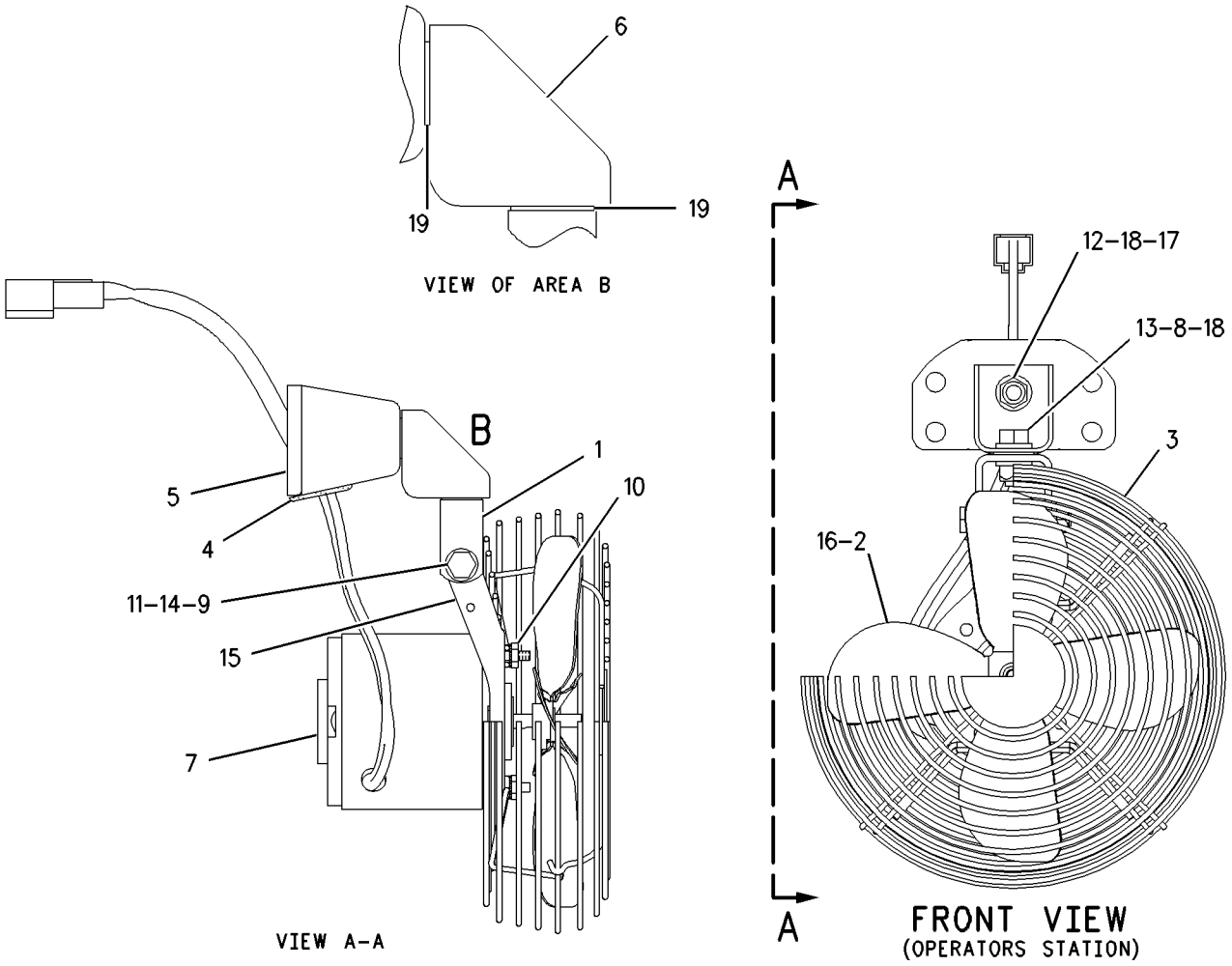

GRAPHIC #1 **<END>** g00761361

286-4415 FAN GP-CIRCULATING–FRONT DEFROSTER

S/N: JJA1-UP
PART OF 339-4968 OPTION AR-CAB
AN ATTACHMENT

SMCS-7316 **i03641614**

NOTE	REF NO	GRAPHIC REF	PART NUMBER	QTY	PART NAME 1 2 3 4 5 6 (PRODUCT LEVEL)	SEE PAGE
	1	1	**7T-4003**	1	RESISTOR	
	2	1	**9W-1442**	1	FUSE (10-AMPERE)	
Y	3	1	**170-5334**	1	FAN GP-CIRCULATING (FRONT DEFROSTER)	507
M	4	1	**9X-1046**	2	SCREW (M4X0.7X18-MM)	
	5	1	*9X-9638*	1	SWITCH AS-ROCKER (24-VOLT)	
		1	**3E-9330**	1	SWITCH AS (CIRCULATING FAN)	
		1	**3E-8821**	1	ACTUATOR	
		1	**3E-8825**	1	LAMP (24-VOLT)	

M-METRIC PART
Y-SEPARATE ILLUSTRATION

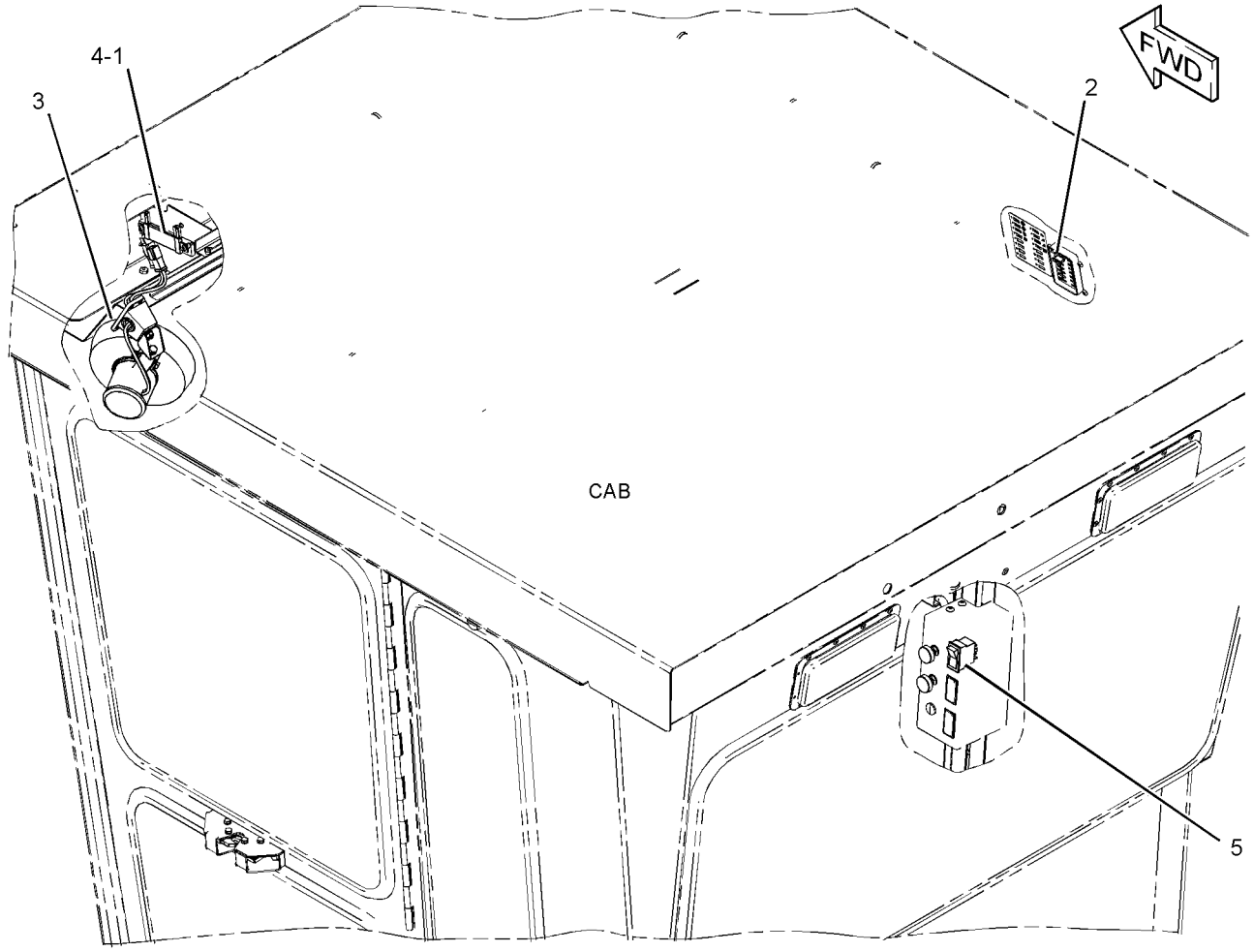

GRAPHIC #1 **<END>** g01671553

OPERATOR STATION

286-4416 FAN GP-CIRCULATING—DEFROSTER, REAR

S/N: JJA1-UP
PART OF 339-4968 OPTION AR-CAB
AN ATTACHMENT

SMCS-7316 **i03641627**

NOTE	REF NO	GRAPHIC REF	PART NUMBER	QTY	PART NAME 1 2 3 4 5 6 (PRODUCT LEVEL)	SEE PAGE
	1	1	**7T-4003**	1	RESISTOR	
	2	1	**9W-1442**	1	FUSE (10-AMPERE)	
Y	3	1	**170-4820**	1	FAN GP-CIRCULATING (DEFROSTER, REAR)	506
	4	1	**5P-8525**	1	GROMMET	
M	5	1	**9X-1046**	2	SCREW (M4X0.7X18-MM)	
M	6	1	**9X-2045**	4	SCREW-TRUSS HEAD (M6X1X20-MM)	
	7	1	*9X-9638*	1	SWITCH AS-ROCKER (24-VOLT)	
		1	**3E-8821**	1	ACTUATOR	
		1	**3E-8825**	1	LAMP (24-VOLT)	
		1	**3E-9330**	1	SWITCH AS (CIRCULATING FAN)	

M-METRIC PART
Y-SEPARATE ILLUSTRATION

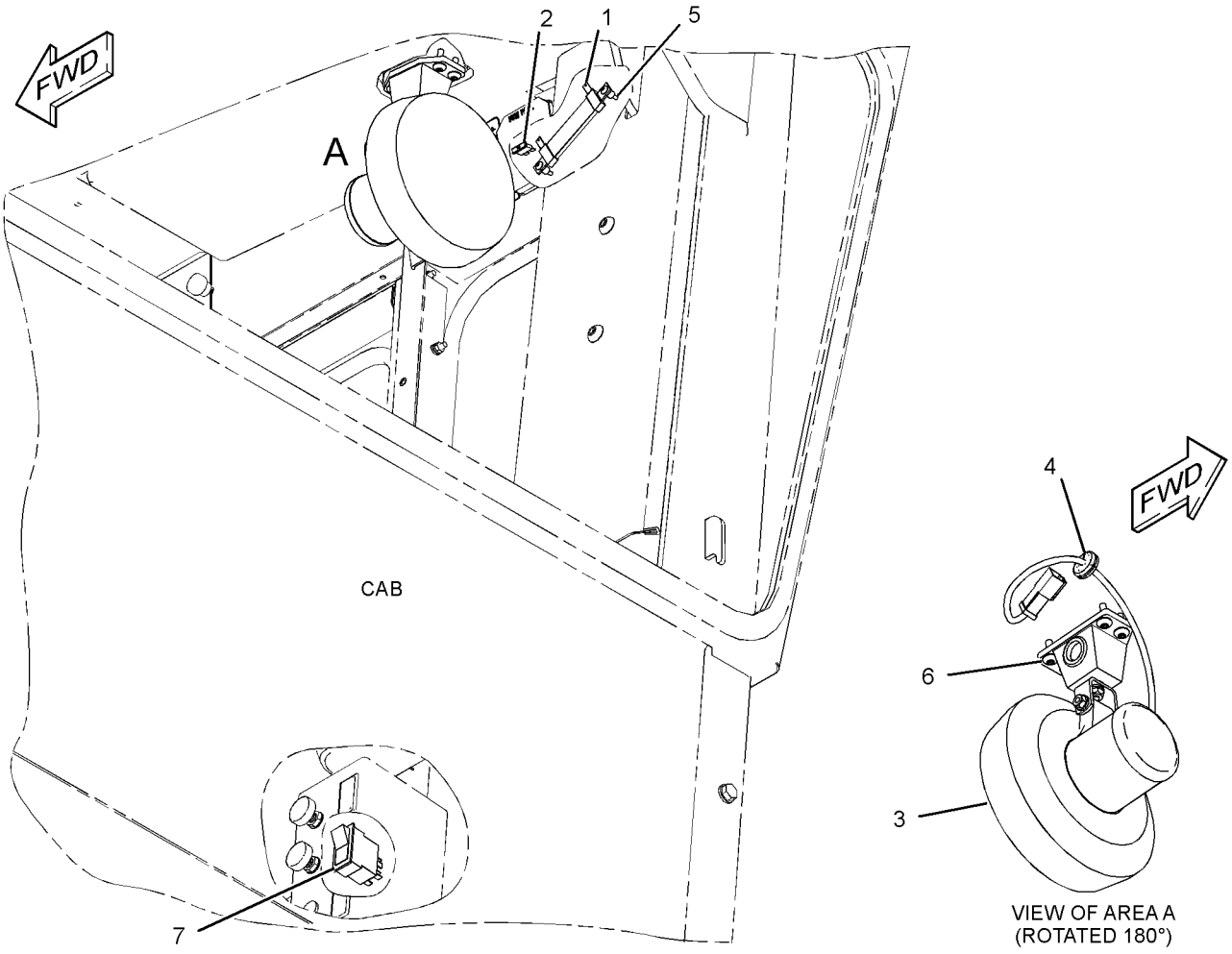

GRAPHIC #1 **<END>** g01754113

OPERATOR STATION

8X-2925 FILTER GP-CAB AIR—AIR CONDITIONER

S/N: JJA1-UP
PART OF 311-2751 AIR CONDITIONER AR
AN ATTACHMENT

SMCS-7342 **i03641635**

NOTE	REF NO	GRAPHIC REF	PART NUMBER	QTY	PART NAME 1 2 3 4 5 6 (PRODUCT LEVEL)	SEE PAGE
	1	1	**7T-7358**	1	FILTER ELEMENT AS-CAB AIR	
	2	1	**9X-8122**	1	PLATE AS	
		1	**7K-4199**	2	THUMBSCREW	
		1	**8R-1778**	1	COVER-FILTER	
		1	**131-5492**	2	RETAINER-CAPTIVE	
	3	1	**112-9555**	4	SPRING-FILTER	
	4	1	*231-4487*	2	FILTER ELEMENT AS-CAB AIR	
					(EACH INCLUDES)	
		1	**231-4486**	1	FILTER ELEMENT AS-CAB AIR	
		1	**232-1732**	1	FILTER ELEMENT AS-CAB AIR	

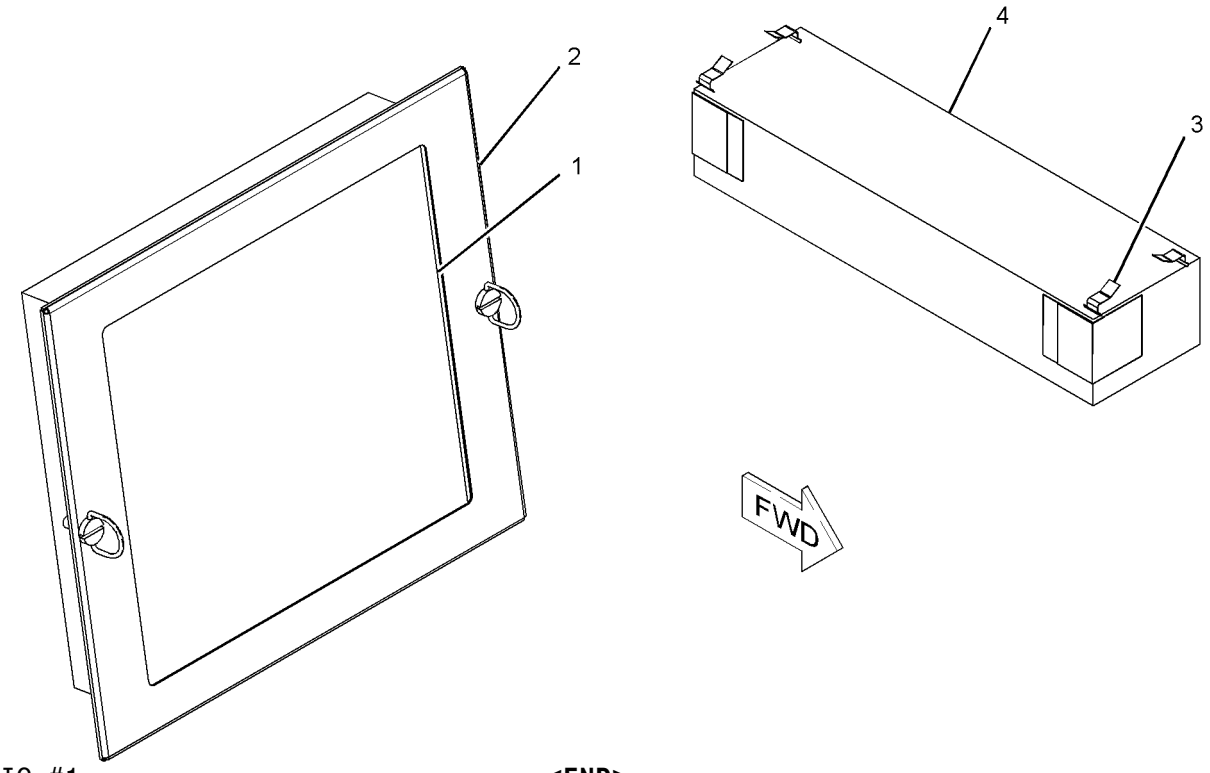

GRAPHIC #1 **<END>** g01070812

OPERATOR STATION

173-5360 HEATER & MTG GP-CAB

S/N: JJA1-UP
PART OF 311-2753 HEATER AR-CAB
AN ATTACHMENT

SMCS-7304 **i02592140**

NOTE	PART NUMBER	QTY	PART NAME 1 2 3 4 5 6 (PRODUCT LEVEL)	SEE PAGE
Y	*174-4547*	1	HEATER GP-CAB (LIGHT-DUTY)	514
	9W-1441	1	FUSE (15-AMPERE) (HEATER)	

Y-SEPARATE ILLUSTRATION

<END>

OPERATOR STATION

311-2753 HEATER AR-CAB

S/N: JJA1-UP

PART OF 339-4966 OPTION AR-CAB

AN ATTACHMENT

SMCS-7304 **i03258429**

NOTE	REF NO	GRAPHIC REF	PART NUMBER	QTY	PART NAME 1 2 3 4 5 6 (PRODUCT LEVEL)	SEE PAGE
Y	1	1	*178-8603*	1	LOUVER GP-CAB	538
Y	2	1	*311-2773*	1	LINES GP-HEATER	536
Y	3	1	*173-5360*	1	HEATER & MTG GP-CAB	512

Y-SEPARATE ILLUSTRATION

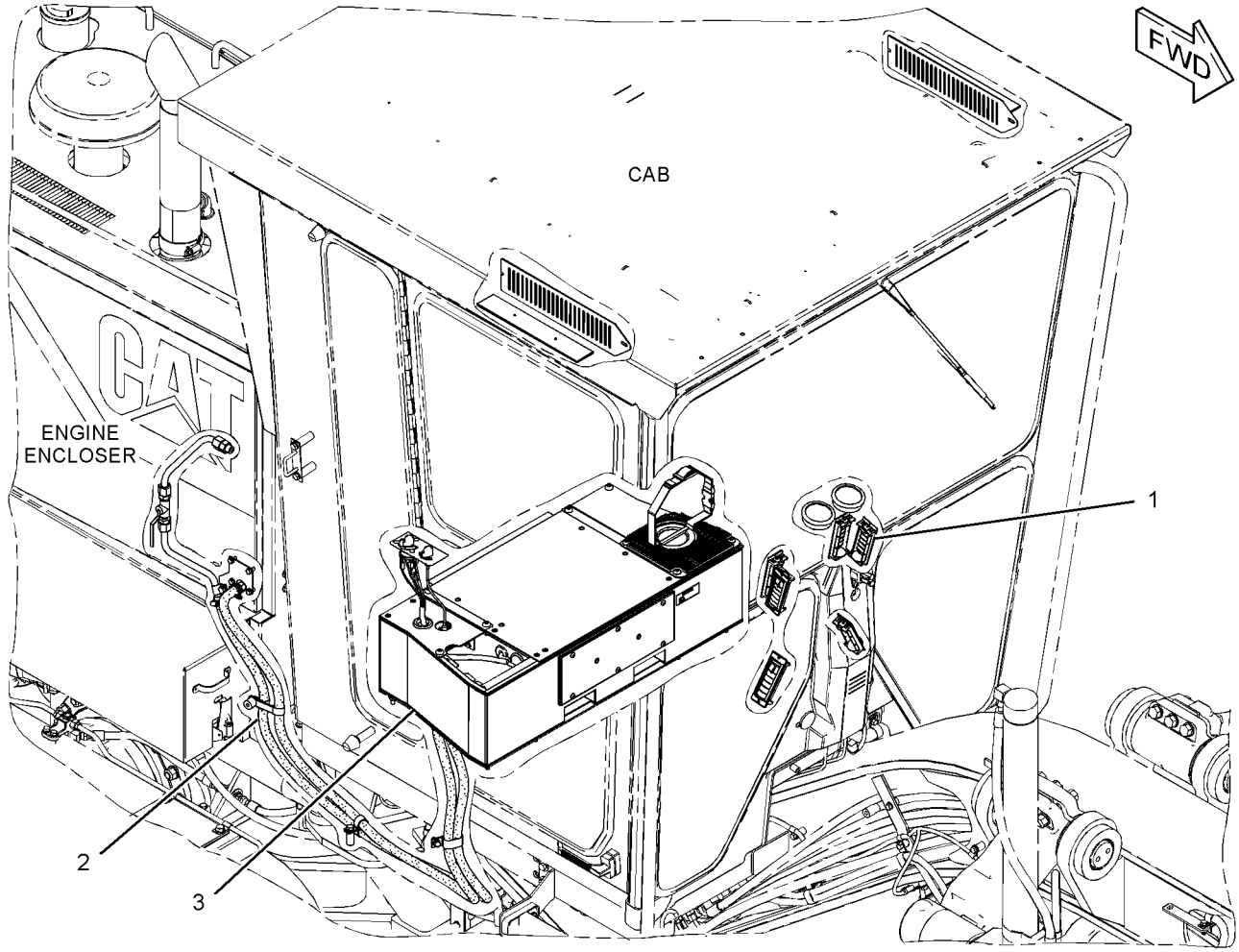

GRAPHIC #1 **<END>** g01671013

OPERATOR STATION

174-4547 HEATER GP-CAB

S/N: JJA1-UP
PART OF 173-5360 HEATER & MTG GP-CAB
AN ATTACHMENT

SMCS-7304 **i03529062**

NOTE	REF NO	GRAPHIC REF	PART NUMBER	QTY	PART NAME 1 2 3 4 5 6 (PRODUCT LEVEL)	SEE PAGE
	1	2	**2P-4339**	1	NUT-JAM (7/16-28-THD)	
	2	2	**2V-0099**	1	KNOB-CONTROL (FAN SPEED)	
	2A	2	**2V-0099**	1	KNOB-CONTROL (TEMPERATURE)	
	3	2	**3E-0400**	2	BLOWER AS	
		2	**037-4838**	1	CLAMP	
	4	2	**3E-3890**	1	FILM-CONTROL (FAN SPEED, TEMPERATURE)	
	5	2	**3H-2900**	1	GROMMET	
	6	1	**3S-2093**	1	STRAP-CABLE	
	7	1	**5P-7803**	2	PLUG-BUTTON	
	8	2	**5P-9135**	1	GROMMET	
	9	2	**6P-3236**	1	SWITCH AS-ROTARY (FAN SPEED)	
		2	**6V-8362**	5	SCREW-MACHINE (8-32X0.31-IN)	
		2	**9B-7233**	5	LOCKWASHER	
	10	2	**6T-5345**	1	BUSHING-TERMINAL	
	11	2	**6T-6708**	2	WASHER (7X28.6X4.1-MM THK)	
	12	1	**7G-4824**	1	STRAP	
	13	1	**8C-3756**	1	FILM-IDENTIFICATION (REFRIGERANT CONDENSER) (HEATER)	
	14	2	**8C-4586**	2	CLAMP	
	15	1	**8D-1429**	1	LAMP (24-VOLT)	
	16	1	**8E-7791**	1	STRAP	
	17	1	**8P-5141**	2	PLATE-ORIFICE	
	18	2	**8X-5536**	1	COVER	
	19	1	**8X-5538**	1	COVER AS	
M		1	**8T-3490**	4	NUT-WELD (M10X1.5-THD)	
	20	1	**8X-5540**	1	COVER	
	21	2	**9G-1950**	1	RESISTOR	
M	22	1,2	**9X-2041**	5	SCREW-TRUSS HEAD (M10X1.5X20-MM)	
	23	2	**9X-2185**	4	SCREW (8-15X0.44-IN)	
	24	2	**9X-2488**	4	CLAMP-HOSE	
	25	1	**123-4618**	1	COVER	
	26	1	**123-4701**	1	SEAL	
	27	2	**124-1431**	1	BRACKET	
	28	1	**124-1432**	1	HOUSING AS	
		1	**7T-1099**	1	LINK	
		1	**8P-5141**	2	PLATE-ORIFICE	
	29	2	**124-3137**	1	BRACKET	
	30	1	**124-3138**	1	SEAL	
	31	2	**124-9006**	1	SHAFT	
	32	2	**124-9007**	1	SHAFT AS	
		2	**4L-5966**	2	SETSCREW (NO 10X0.19-IN)	
	33	1	**125-0439**	1	GASKET	
	34	1	**125-0442**	1	PLATE	
	35	2	**129-4935**	1	SEAL	
	36	2	**130-5300**	1	CLIP	
	37	1	**142-4940**	1	PLATE AS	
	38	2	**316-1927**	1	MOTOR AS-BLOWER (24-VOLT, A/C, HEATER)	
		2	**9W-0852**	2	PIN-CONNECTOR (14-GA)	
		2	**102-8802**	1	KIT-RECEPTACLE (2-PIN) (INCLUDES RECEPTACLE AS & WEDGE)	
	39	1	**174-4492**	1	COVER	
	40	1	**174-6051**	1	SUPPORT AS	
	41	1	**174-6353**	1	PLATE	
	42	1	**176-5507**	1	PAD	
	43	1	**177-7858**	1	HARNESS AS-HEATER & AIR COND	

174-4547 **HEATER GP-CAB** *(contd.)* **i03529062**

NOTE	REF NO	GRAPHIC REF	PART NUMBER	QTY	PART NAME 1 2 3 4 5 6 (PRODUCT LEVEL)	SEE PAGE
		1	**3T-3157**	1	TERMINAL-BLADE (16-GA TO 20-GA)	
		1	**3T-3158**	1	SOCKET-LAMP	
		1	**3T-3159**	1	SPRING	
		1	**3T-3278**	1	BOOT	
		1	**5P-1475**	5	TERMINAL-FORK (14-GA TO 16-GA, NO. 8 SCREW)	
		1	**6D-4161**	1	CONTACT	
		1	**6T-6505**	5	HOUSING-RECEPTACLE (BLADE, POSITIVE LOCK)	
		1	**6T-6506**	6	TERMINAL (BLADE, POSITIVE LOCK)	
		1	**186-3735**	2	PIN-CONNECTOR (16-GA TO 18-GA)	
		1	**9G-3695**	1	PLUG	
		1	**9W-0844**	2	SOCKET-CONNECTOR (14-GA)	
		1	**9W-0852**	3	PIN-CONNECTOR (14-GA)	
		1	**155-2270**	2	KIT-CONNECTING PLUG (2-PIN)	
					(EACH CONNECTING KIT PLUG AS, & WEDGE)	
		1	**102-8805**	1	KIT-RECEPTACLE (6-PIN)	
					(INCLUDES RECEPTACLE AS & WEDGE)	
	44	1	**191-0027**	1	PAD	
	45	2	**204-4376**	1	CAP-PROTECTIVE	
	46	1	**238-0415**	1	VALVE AS-WATER	
	47	1	**238-0417**	1	CORE AS-HEATER	
	48	1	**248-6772**	4	SCREW-MACHINE (8-16X7.75-IN)	
M	49	2	**129-3178**	4	LOCKNUT (M6X1-THD)	
M	50	2	**141-9784**	1	BOLT (M6X1X190-MM)	
	51	1	**4M-6582**	1	SEAL-O-RING	
M	52	1,2	**5C-2890**	7	NUT (M6X1-THD)	
	53	1	**5P-1075**	13	WASHER-HARD (10.2X22.5X3-MM THK)	
	54	2	**6V-1668**	2	WASHER (6.5X29.1X3-MM THK)	
M	55	2	**6V-7728**	1	BOLT (M6X1X45-MM)	
	56	1	**6V-8801**	13	NUT (3/8-16-THD)	
	57	2	**7X-0591**	2	WASHER-HARD (17X29X3-MM THK)	
M	58	2	**8T-4171**	2	BOLT (M6X1X12-MM)	
	59	1,2	**8T-4205**	15	WASHER-HARD (7.2X14.5X2-MM THK)	
	60	1	**9M-8406**	1	CLIP	
M	61	1	**9X-2040**	4	SCREW-TRUSS HEAD (M10X1.5X25-MM)	
M	62	1	**9X-2045**	6	SCREW-TRUSS HEAD (M6X1X20-MM)	
E	63	2	**136-1953**		HOSE (17-CM EACH)	
D	64	2	**5P-5905**		SEAL (0.1-M EACH)	
E	65	1	**9X-2126**		SEAL (32-CM)	
E	65B	2	**9X-2126**		SEAL (27.1-CM EACH)	
D	66	1	**5P-5637**		SEAL (0.8-M EACH)	
D	66A	1	**5P-5637**		SEAL (0.4-M EACH)	
D	66B	1	**5P-5637**		SEAL (0.2-M)	

D-ORDER BY THE METER
E-ORDER BY THE CENTIMETER
M-METRIC PART

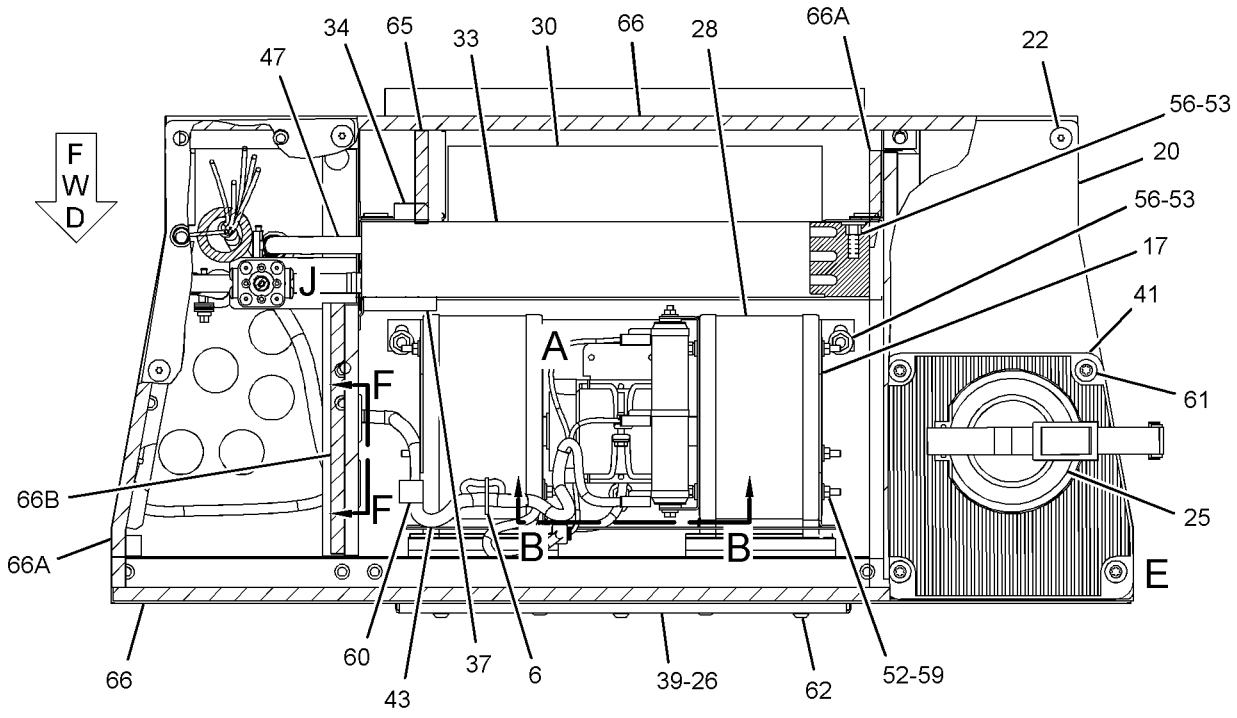

TOP VIEW

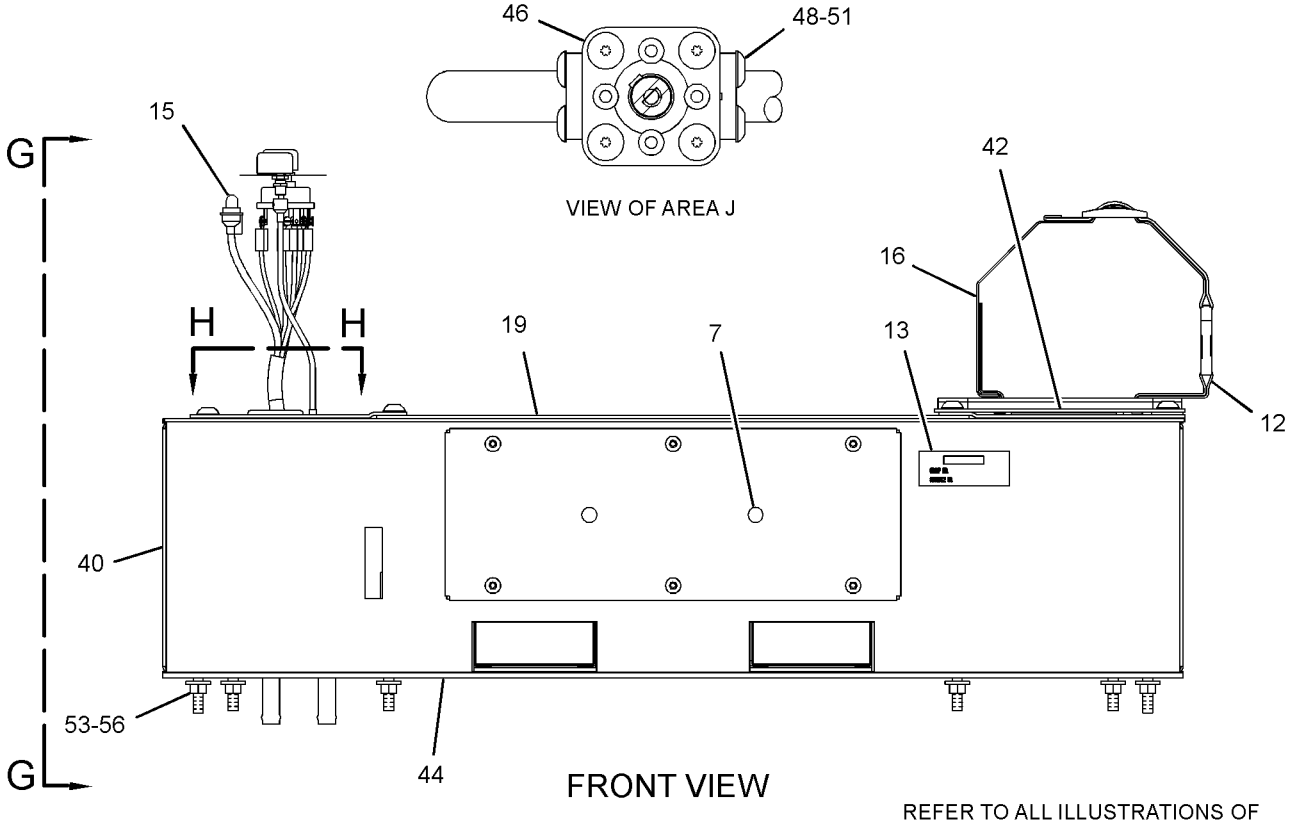

FRONT VIEW

REFER TO ALL ILLUSTRATIONS OF THIS GROUP FOR AUXILIARY VIEWS

GRAPHIC #1

g01758114

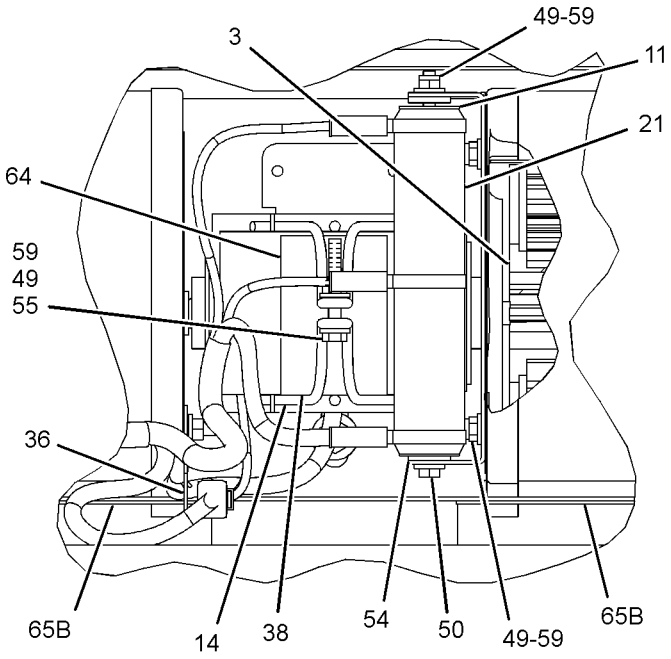

VIEW OF AREA A

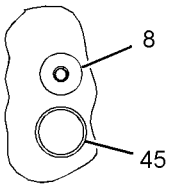

SECTION F-F

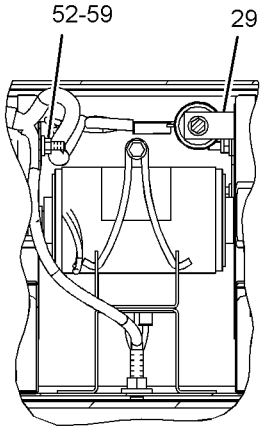

SECTION B-B

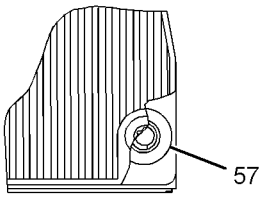

VIEW OF AREA E

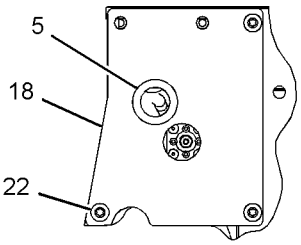

SECTION H-H

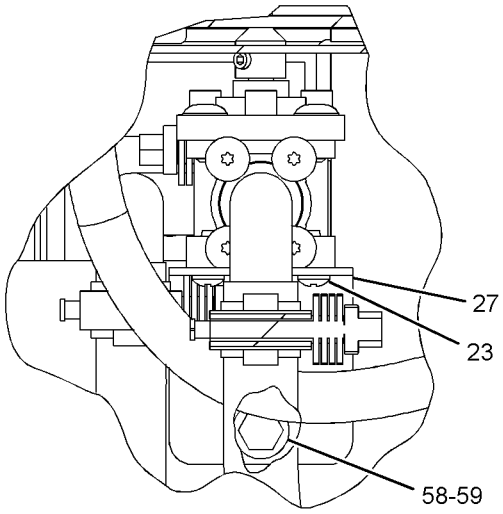

VIEW OF AREA C

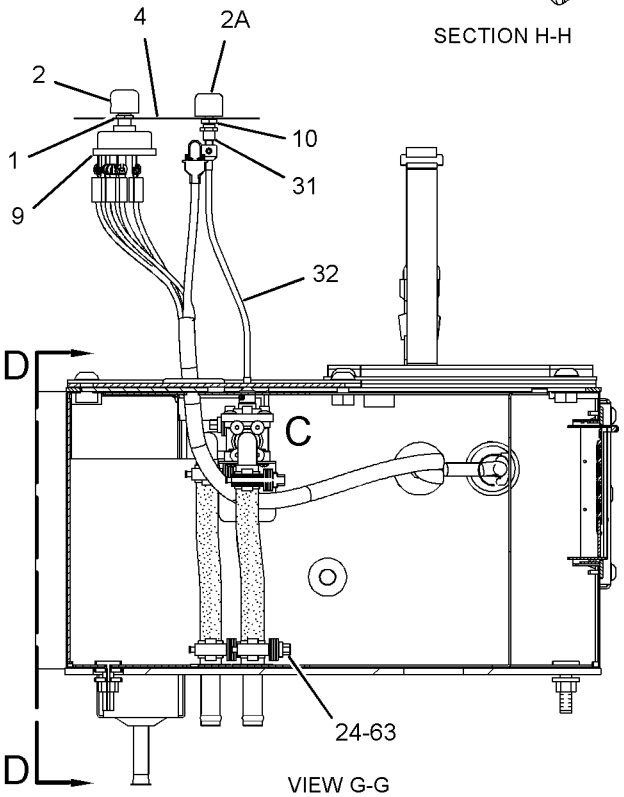

VIEW G-G

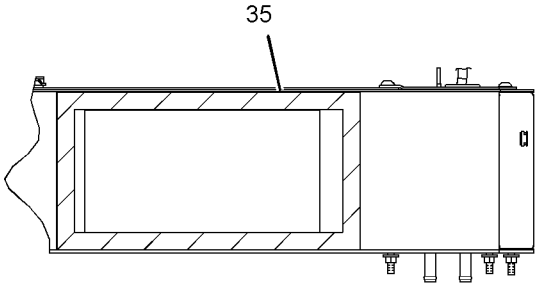

SECTION D-D

GRAPHIC #2 **<END>** g01915593

OPERATOR STATION

295-4371 HORN GP-ELECTRIC

S/N: JJA1-UP

PART OF 346-3710 GENERAL AR

SMCS-7402 **i03260122**

NOTE	REF NO	GRAPHIC REF	PART NUMBER	QTY	PART NAME 1 2 3 4 5 6 (PRODUCT LEVEL)	SEE PAGE
	1	1	**3G-1701**	1	SPRING	
	2	1	**5T-4030**	1	BRACKET	
	3	1	**7I-4696**	1	RETAINER	
	4	1	**7I-4698**	1	RING	
	5	1	**7I-4699**	1	INSULATOR	
	6	1	**009-4184**	4	SPRING-HORN	
	7	1	**009-4185**	4	BRUSH-HORN	
	8	1	**091-9071**	1	SEAL-HORN BUTTON	
	9	1	**098-7467**	1	BUTTON	
	10	1	**163-1201**	1	HORN AS (24-VOLT, LOW TONE)	
	11	1	**169-3145**	1	WIRE AS	
	12	1	**179-4814**	3	PIN	
	13	1	**8T-4121**	2	WASHER-HARD (11X21X2.5-MM THK)	
M	14	1	**8T-4133**	1	NUT (M10X1.5-THD)	
M	15	1	**8T-4195**	1	BOLT (M10X1.5X30-MM)	

M-METRIC PART

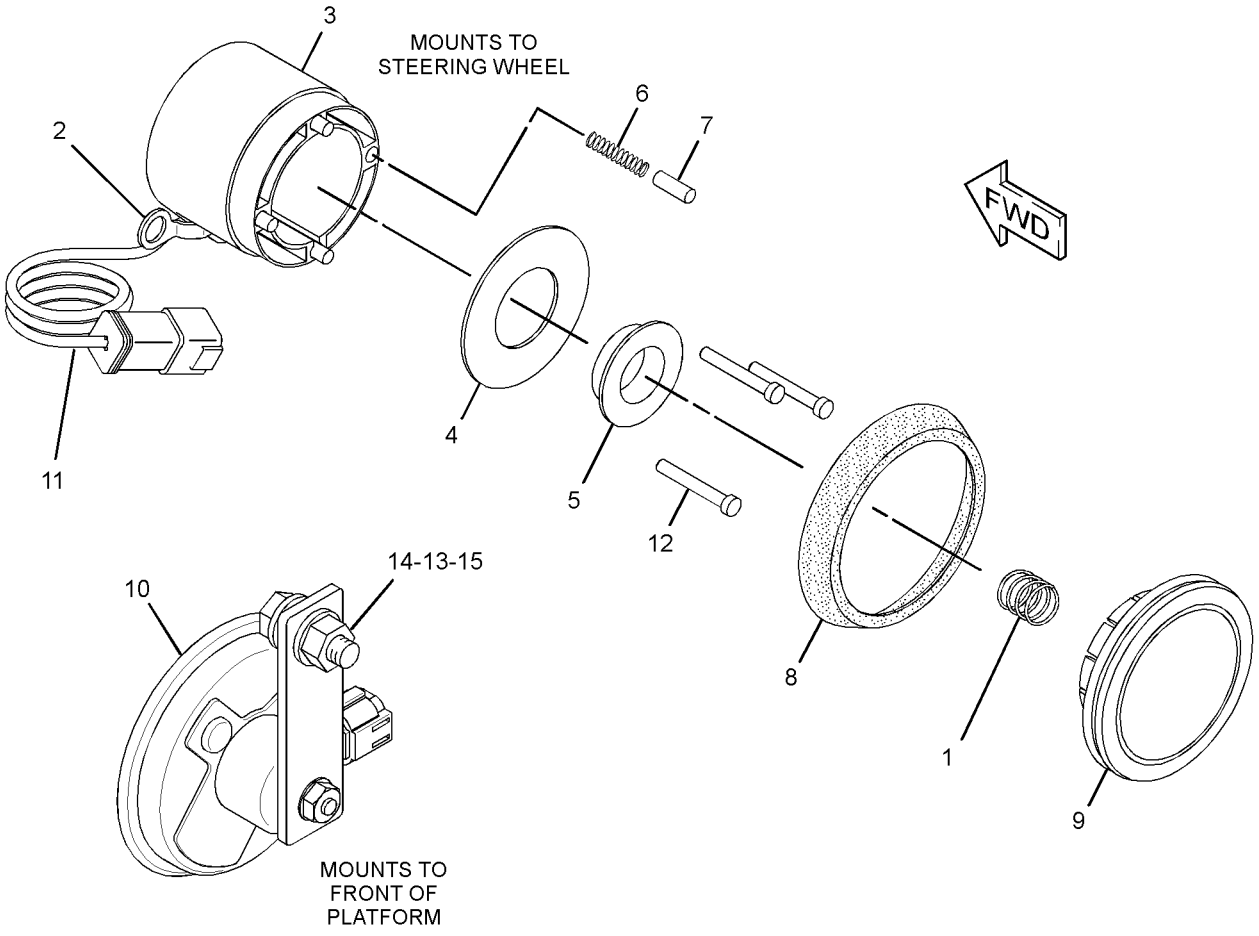

GRAPHIC #1 **<END>** g01685675

OPERATOR STATION

113-5808 HOUSING GP-SEAT SUSPENSION

S/N: JJA1-UP

PART OF 302-7458 SUSPENSION GP-SEAT

AN ATTACHMENT

SMCS-7321, 7324 **i03435560**

NOTE	REF NO	GRAPHIC REF	PART NUMBER	QTY	PART NAME 1 2 3 4 5 6 (PRODUCT LEVEL)	SEE PAGE
	1	1	**119-5026**	1	SCREW-PAN HEAD (10-16X0.63-IN)	
	2	1	**113-5807**	1	KNOB (SLIDE)	
	3	1	**113-5806**	1	ROD	
	4	1	**161-5967**	1	SHAFT	
	5	1	**8Y-6066**	1	SPRING	
	6	1	**8Y-6069**	1	ADJUSTER AS	
	7	1	**8Y-6068**	1	NUT (3/8X16-THD)	
	8	1	**113-5801**	1	HOUSING AS	
	9	1	**8Y-6047**	2	PIN	
	10	1	**2M-7819**	4	RING-RETAINING	
	11	1	**8Y-6041**	1	ARM AS	
	12	1	**8Y-6045**	1	CAM	
	13	1	**8Y-6046**	1	PIN	
	14	1	**5V-0770**	2	BOLT-CARRIAGE (1/4-20X0.74-IN)	
	15	1	**2D-6235**	2	LOCKNUT (1/4-20-THD)	
	16	1	**8S-7803**	4	RING-RETAINING	
	17	1	**7M-7219**	1	BEARING-THRUST	
	18	1	**4N-2927**	2	RACE-THRUST BEARING	
	19	1	**095-0878**	1	PIN-SPRING	
	20	1	**5P-8445**	4	RING-RETAINING	
	21	1	**4B-5059**	6	WASHER (15X29.5X2.5-MM THK)	
	22	1	**8Y-6060**	2	ROLLER	
	23	1	**1Y-7927**	1	PIN	
	24	1	**7V-5191**	2	SPACER (28X10X7.1-MM THK)	
	25	1	**5D-4822**	2	RING-RETAINING	
	26	1	**8Y-6062**	1	LINK-ACTUATOR	
	27	1	**8Y-6063**	1	LINK-ACTUATOR	
	28	1	**8Y-6064**	2	ROLLER-SLIDER	
	29	1	**113-5805**	1	KEY	
	30	1	**131-5167**	1	KNOB AS-ADJUSTMENT	
		1	**4V-7875**	1	HANDLE	
		1	**4V-7877**	1	SPRING	
		1	**6V-3259**	1	PIN-SPRING	
		1	**149-7226**	1	SCREW-PAN HEAD (10-16X0.625-IN)	
	31	1	**131-4242**	1	BOLT (3/8-16X5.18-IN) (SPECIAL)	
	32	1	**8Y-6067**	1	SPACER (10.54-MM THK)	
	33	1	**3D-2975**	2	RING-RETAINING	
	34	1	**8L-8413**	2	STRAP-CABLE	
					AVAILABLE REPAIR KIT(S):	
			100-5179	1	KIT-BUMPER (WEIGHT ADJUSTMENT)	
					(INCLUDES BUMPERS)	
			8Y-6860	1	KIT-SPRING (HEIGHT ADJUSTMENT)	
					(INCLUDES SPRINGS, SPACERS, BUSHING-GUIDES, & ROD HEIGHT ADJUSTERS)	
			8Y-6859	1	KIT-SPRING	
					(INCLUDES RING-RETAININGS, SPRINGS, & BUSHINGS)	
			108-4086	1	KIT-FOLLOWER	
					(INCLUDES PIN & FOLLOWER-CAM)	
			100-3224	1	KIT-INDICATOR (WEIGHT ADJUSTMENT)	
					(INCLUDES STRAP-CABLES, TAPE-INDICATOR, & GUIDE)	
			108-4087	1	KIT-FOLLOWER	
					(INCLUDES PIN & FOLLOWER-CAM)	

113-5808 **HOUSING GP-SEAT SUSPENSION** *(contd.)* **i03435560**

NOTE	REF NO	GRAPHIC REF	PART NUMBER	QTY	PART NAME 1 2 3 4 5 6 (PRODUCT LEVEL)	SEE PAGE
			108-4103	1	KIT-BEARING	
					(INCLUDES ROLLER ASSEMBLIES)	

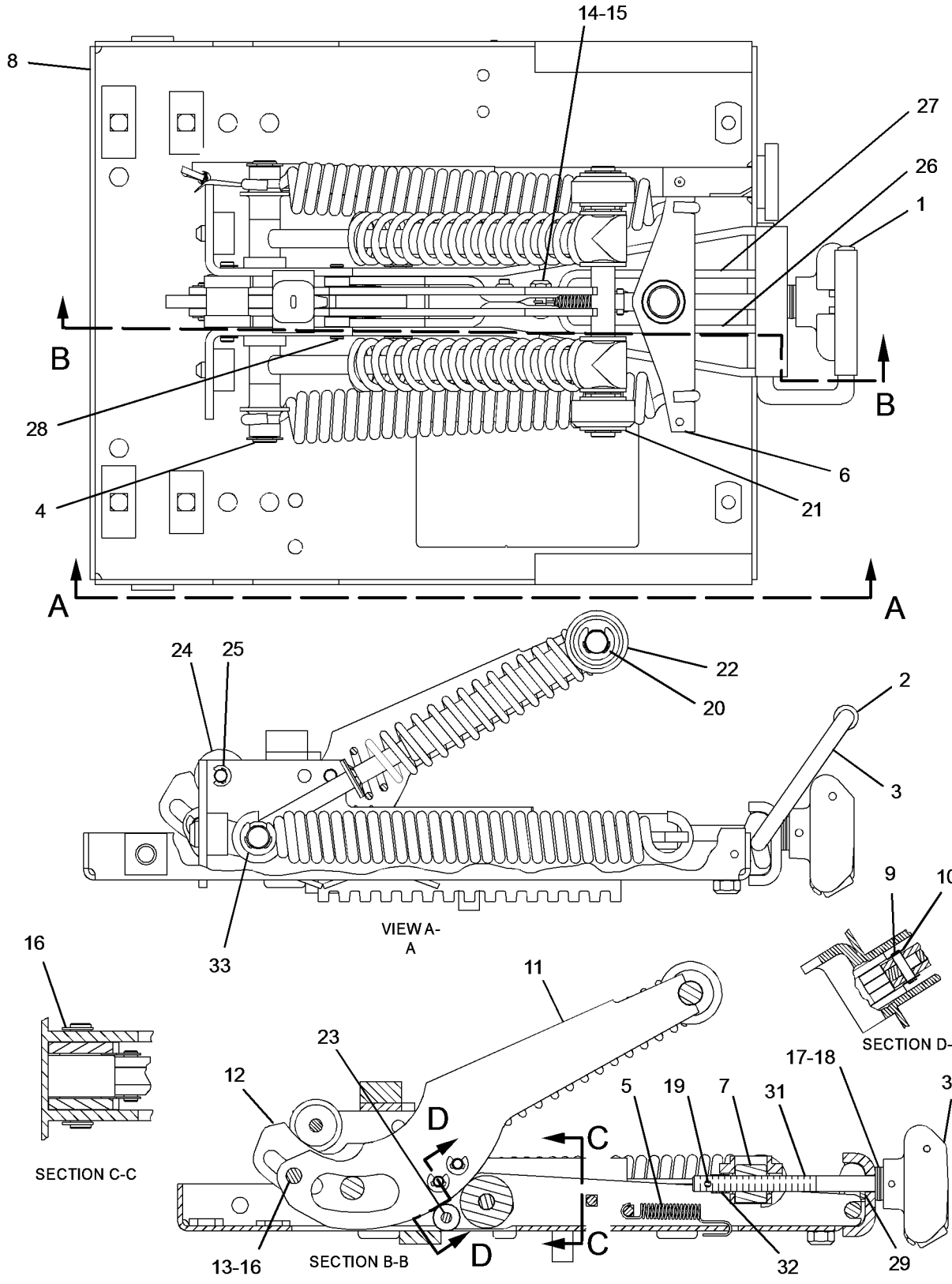

GRAPHIC #1 **<END>** g01786054

OPERATOR STATION

315-5327 INDICATOR GP-LEVEL

S/N: JJA1-UP

PART OF 339-4964, 339-4965, 339-4966, 339-4967 OPTION AR-CAB

AN ATTACHMENT

SMCS-7857 **i03546569**

NOTE	REF NO	GRAPHIC REF	PART NUMBER	QTY	PART NAME 1 2 3 4 5 6 (PRODUCT LEVEL)	SEE PAGE
	1	1	**224-3969**	1	INDICATOR-LEVEL	

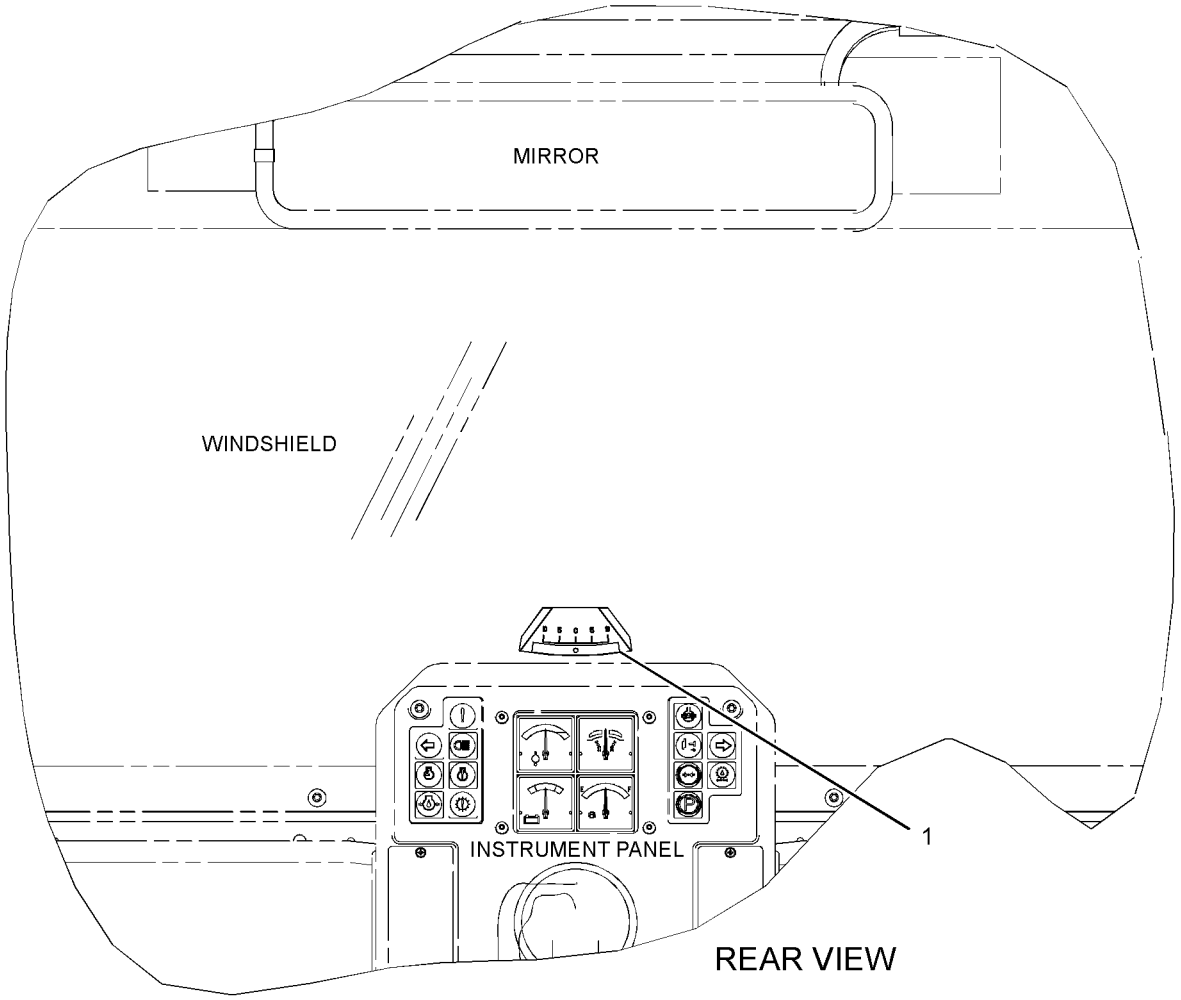

GRAPHIC #1 **<END>** g01702033

OPERATOR STATION

295-7991 INSTALLATION AR-RADIO

S/N: JJA1-UP

PART OF 340-1191 OPTION AR-CAB

AN ATTACHMENT

SMCS-7338 **i03641645**

NOTE	PART NUMBER	QTY	PART NAME 1 2 3 4 5 6 (PRODUCT LEVEL)	SEE PAGE
Y	*286-4330*	1	CONVERTER GP-ELECTRICAL (RADIO)	121
Y	*293-6529*	1	INSTALLATION GP-RADIO	524

Y-SEPARATE ILLUSTRATION

<END>

OPERATOR STATION

293-6529 INSTALLATION GP-RADIO

S/N: JJA1-UP

PART OF 295-7991 INSTALLATION AR-RADIO

AN ATTACHMENT

SMCS-7338 **i03255428**

NOTE	REF NO	GRAPHIC REF	PART NUMBER	QTY	PART NAME 1 2 3 4 5 6 (PRODUCT LEVEL)	SEE PAGE
	1	1	**2A-6684**	1	BRACKET	
	2	1	**2G-8767**	1	WASHER (10.5X60X3-MM THK)	
	3	1	**3S-2093**	1	STRAP-CABLE	
	4	1	**6T-7695**	2	SPEAKER AS-RADIO	
	5	1	**8X-9884**	1	BRACKET AS	
	6	1	**9U-8263**	1	COVER	
	7	1	**9W-3072**	1	ANTENNA AS	
	8	1	**293-7533**	1	CABLE AS	
	9	1	**5P-8525**	1	GROMMET	
	10	1	**6V-5834**	3	SCREW-HEAD (10-14X0.75-IN)	
	11	1	**8T-4121**	2	WASHER-HARD (11X21X2.5-MM THK)	
M	12	1	**8T-4137**	2	BOLT (M10X1.5X20-MM)	

M-METRIC PART

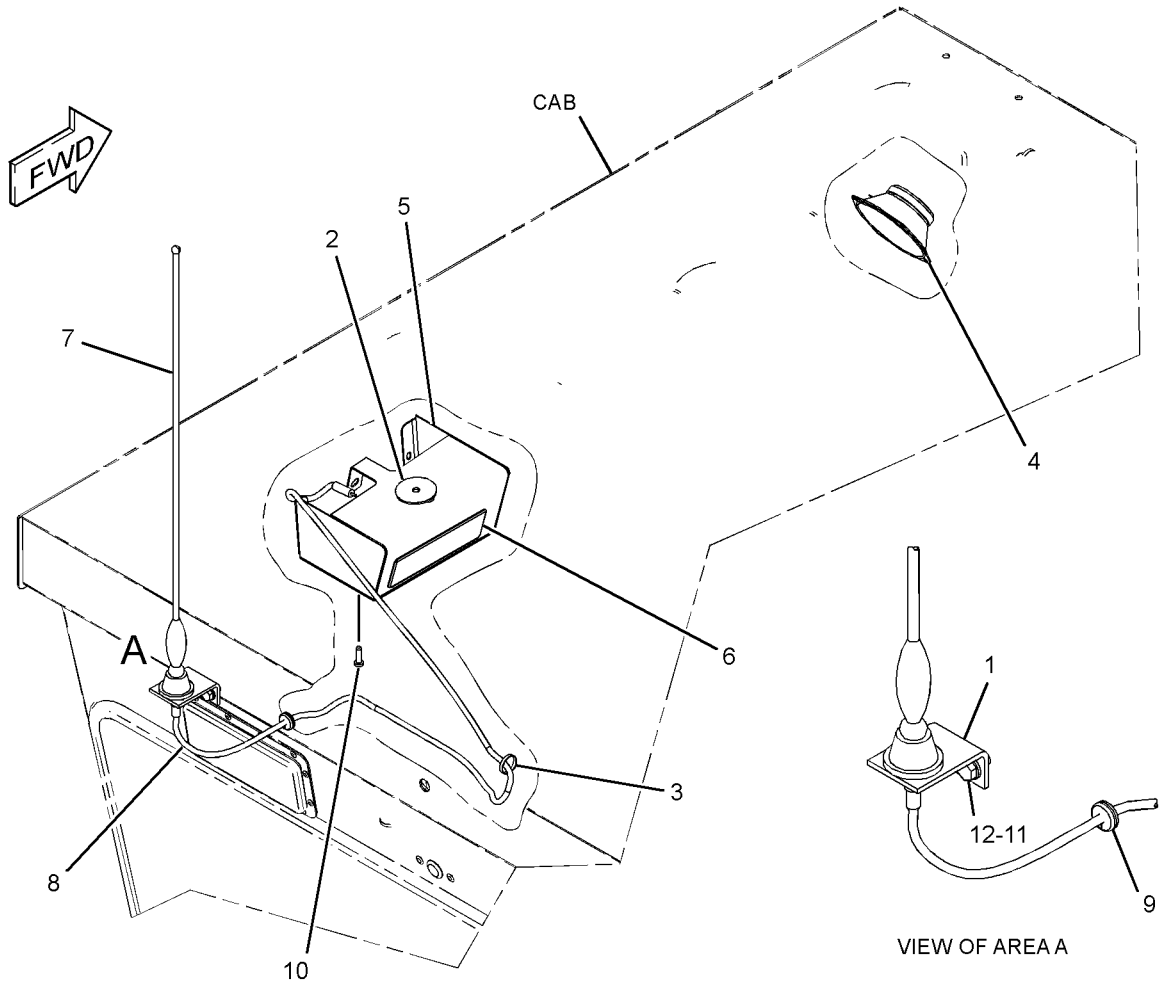

GRAPHIC #1 **<END>** g01687773

OPERATOR STATION

172-5378 INSULATION GP-WEATHER

S/N: JJA1-UP
PART OF 320-0341 CAB AR, 320-0342 ROPS AR
AN ATTACHMENT

SMCS-7329 **i03435582**

NOTE	REF NO	GRAPHIC REF	PART NUMBER	QTY	PART NAME 1 2 3 4 5 6 (PRODUCT LEVEL)	SEE PAGE
	1	1	**8X-2226**	2	PLATE	
	2	1	**8X-2913**	2	COVER AS	
					(EACH INCLUDES)	
M		1	**6V-9632**	2	NUT-WELD (M6X1-THD)	
B	3	1	**8X-8055**	6	PLUG	
	4	1	**8X-8351**	2	PLATE AS	
	5	1	**8W-6061**	1	FLOOR MAT (CAB)	
	6	1	**171-6165**	2	DUCT	
	7	1	**178-4190**	2	SEAL	
	8	1	**179-2138**	2	SEAL	
	9	1	**179-2139**	1	FOAM (RH)	
	10	1	**179-2140**	1	FOAM (LH)	
	11	1	**4M-5281**	4	BOLT (1/4-20X0.75-IN)	
	12	1	**5P-4115**	4	WASHER-HARD (7.2X19X2-MM THK)	
M	13	1	**9X-2043**	14	SCREW-TRUSS HEAD (M6X1X14-MM)	
BD	14	1	**5P-6882**		SEAL	
BD	15	1	**5P-5969**		SEAL	
	16	1	**112-9164**	8	BOOT	

B-USE AS REQUIRED
D-ORDER BY THE METER
M-METRIC PART

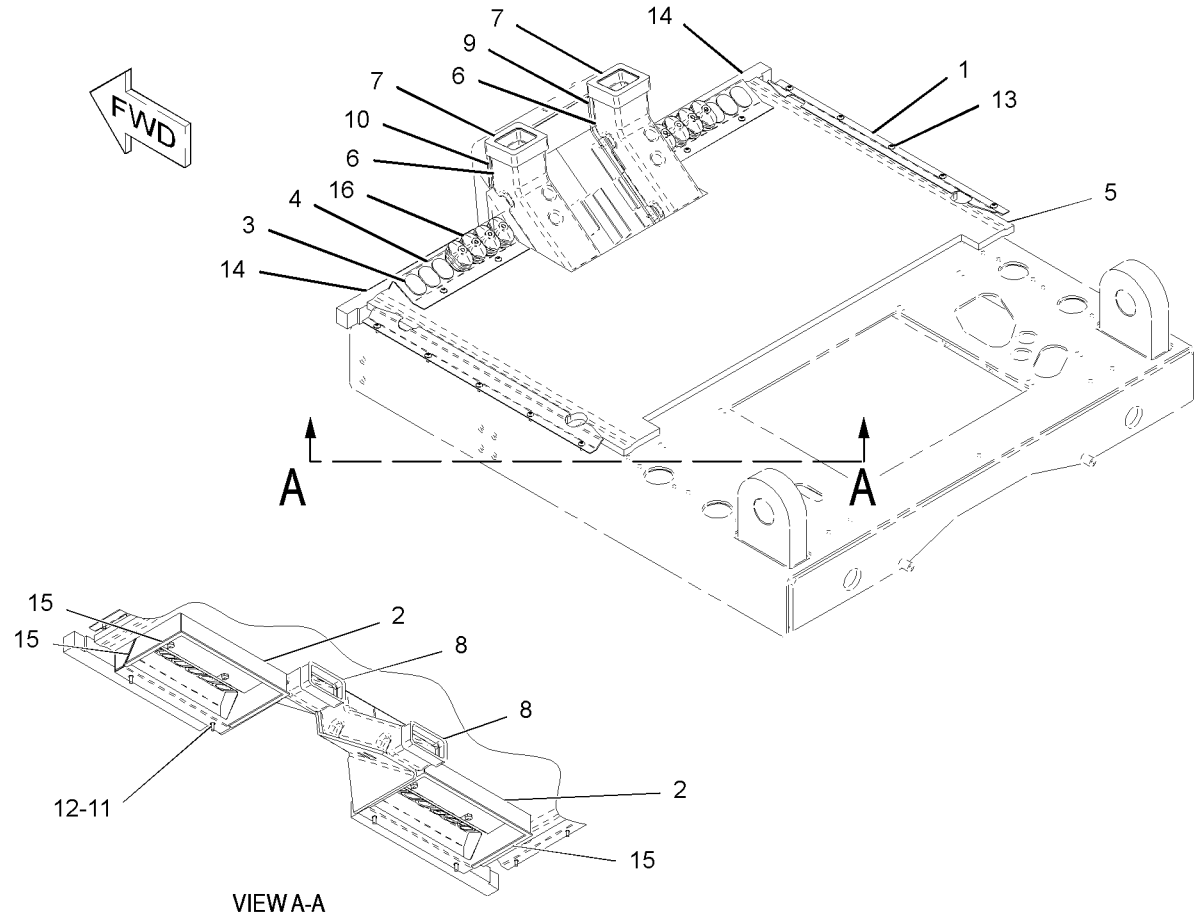

GRAPHIC #1 **<END>** g01786093

OPERATOR STATION

294-8588 LINER GP-CAB—ENCLOSED, HIGH PROFILE

S/N: JJA1-UP
PART OF 320-0341 CAB AR
AN ATTACHMENT

SMCS-7329 **i03501765**

NOTE	REF NO	GRAPHIC REF	PART NUMBER	QTY	PART NAME 1 2 3 4 5 6 (PRODUCT LEVEL)	SEE PAGE
	1	1	**3G-3265**	22	RIVET	
D	2	1	**5P-5969**		SEAL (2-M)	
	3	1	**5P-7803**	2	PLUG-BUTTON	
	4	1	**6G-2395**	2	DOOR GP (AIR VENTED)	
					(EACH INCLUDES)	
		1	**6G-7222**	2	ROLLER	
	5	1	**6G-2396**	2	GASKET	
	6	1	**6V-0292**	1	PLUG	
	7	1	**6V-3928**	3	PLUG-BUTTON	
	8	1	**8X-7845**	2	COVER	
	9	1	**8X-8790**	1	PLATE	
	10	1	**107-5014**	4	KNOB	
	11	1	**125-4388**	1	INSULATION	
	12	1	**125-4389**	1	INSULATION	
	13	1	**125-5520**	1	PANEL AS-CAB	
M		1	**6V-9632**	4	NUT-WELD (M6X1-THD)	
	14	1	**125-6483**	1	PLATE	
	15	1	**125-9584**	1	INSULATION	
	16	1	**197-8611**	1	COVER (RH)	
	17	1	**197-8624**	1	COVER (LH)	
	18	1	**294-8587**	1	COVER	
M		1	**6V-9632**	4	NUT-WELD (M6X1-THD)	
	19	1	**303-6203**	1	COVER (LH)	
M	20	1	**099-0492**	2	LOCKNUT (M6X1-THD)	
	21	1	**6G-5214**	5	WASHER (7.5X40X3-MM THK)	
	22	1	**6P-0205**	2	SPACER (0.269X0.405X0.656-IN THK)	
M	23	1	**9X-2043**	20	SCREW-TRUSS HEAD (M6X1X14-MM)	
M	24	1	**9X-2045**	7	SCREW-TRUSS HEAD (M6X1X20-MM)	
	25	1	**9X-8256**	2	WASHER (6.6X12X2-MM THK)	

D-ORDER BY THE METER
M-METRIC PART

294-8588 **LINER GP-CAB** *(contd.)* **i03501765**

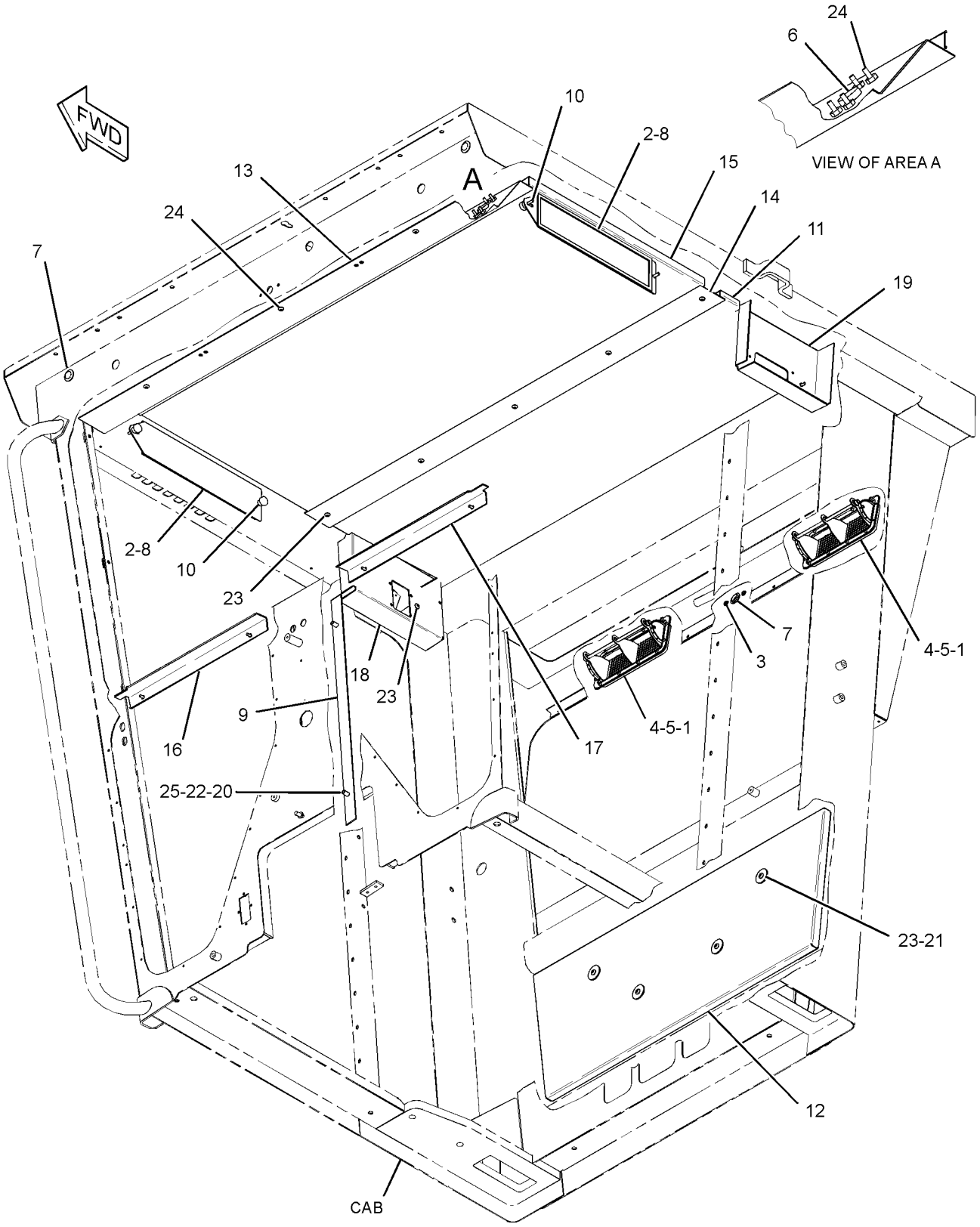

GRAPHIC #1 **<END>** g01757658

OPERATOR STATION

337-7998 LINER GP-CAB—ENCLOSED, HIGH PROFILE

S/N: JJA1-UP
PART OF 320-0342 ROPS AR
AN ATTACHMENT

SMCS-7329 **i03471060**

NOTE	REF NO	GRAPHIC REF	PART NUMBER	QTY	PART NAME 1 2 3 4 5 6 (PRODUCT LEVEL)	SEE PAGE
	1	1	**2G-8572**	2	WASHER-SPECIAL (10X27.81X2.54-MM THK)	
	2	1	**2G-8573**	2	CAP	
	3	1	**2G-8767**	1	WASHER (10.5X60X3-MM THK)	
	4	1,3	**3G-3265**	24	RIVET	
	5	1	**5P-5454**	1	ASHTRAY	
	6	1	**5P-5824**	1	HOLDER	
	7	1	**5P-7803**	2	PLUG-BUTTON	
	8	1,3	**6G-2395**	2	DOOR GP (AIR VENTED)	
					(EACH INCLUDES)	
		1,3	**6G-7222**	2	ROLLER	
	9	1,3	**6G-2396**	2	GASKET	
	10	3	**6G-2751**	4	HINGE	
	11	3	**6G-2914**	2	LATCH	
	12	2	**6K-3273**	4	RIVET-POP	
	13	1	**6P-0205**	3	SPACER (0.269X0.405X0.656-IN THK)	
	14	3	**6V-0292**	1	PLUG	
	15	1,3	**6V-3928**	5	PLUG-BUTTON	
	16	2	**6V-8928**	1	HOOK-COAT	
	17	2	**7G-4824**	1	STRAP	
	18	2	**8E-7791**	1	STRAP	
	19	1	**8F-0492**	1	SPACER (0.531X1.125X0.625-IN THK)	
	20	2	**8T-5401**	5	PLUG-BUTTON	
	21	1	**8X-5414**	1	PLATE	
	22	1	**8X-6999**	1	INSULATION	
	23	2	**8X-7845**	2	COVER	
	24	3	**9N-1995**	20	RIVET-POP	
	25	3	**101-3055**	2	COVER-SPEAKER	
	26	2	**107-5014**	4	KNOB (AIR FILTER)	
	27	3	**109-2804**	2	DOOR	
	28	1	**115-6807**	1	PLATE	
	29	2	**115-9923**	1	COVER (LH)	
	30	3	**118-2558**	1	PANEL	
	31	3	**122-8795**	2	PLATE	
	32	2	**137-6783**	1	HOLDER	
	33	1	**137-8065**	1	COVER	
	34	2	**138-7026**	1	PLATE	
	35	1	**138-9910**	1	PLATE AS	
	36	1	**139-1118**	1	PLATE	
	37	1	**139-3593**	1	PANEL	
	38	1,2	**144-4107**	6	FASTENER	
	39	1	**172-1239**	1	COVER (RH)	
	40	1	**174-4140**	1	PANEL	
	41	1	**179-2176**	1	COVER	
	42	2	**179-2179**	1	PLATE AS	
	43	1	**197-8611**	1	COVER (RH)	
	44	1,2	**197-8624**	1	COVER (LH)	
	45	2	**197-8629**	1	COVER (RH)	
	46	1	**197-8630**	1	COVER (LH)	
	47	3	**200-8623**	8	NUT-RETAINER	
	48	1	**251-7350**	1	PLATE	
	49	3	**103-9425**	8	SCREW-MACHINE (8-32X1-IN)	
M	50	1	**129-3178**	3	LOCKNUT (M6X1-THD)	
	51	2	**131-6009**	2	PIN	
M	52	1	**225-3109**	4	SCREW-TRUSS HEAD (M4X0.7X14-MM)	
	53	1	**5P-4115**	2	WASHER-HARD (7.2X19X2-MM THK)	

337-7998 **LINER GP-CAB** ***(contd.)*** **i03471060**

NOTE	REF NO	GRAPHIC REF	PART NUMBER	QTY	PART NAME 1 2 3 4 5 6 (PRODUCT LEVEL)	SEE PAGE
	54	1,3	**8T-4121**	1	WASHER-HARD (11X21X2.5-MM THK)	
M	55	1,2	**8T-4137**	4	BOLT (M10X1.5X20-MM)	
M	56	1	**8T-4182**	2	BOLT (M10X1.5X45-MM)	
M	57	3	**8T-4195**	1	BOLT (M10X1.5X30-MM)	
	58	2	**9R-2620**	1	PLUG	
M	59	1,2	**9X-2041**	4	SCREW-TRUSS HEAD (M10X1.5X20-MM)	
M	60	1,2,3	**9X-2043**	33	SCREW-TRUSS HEAD (M6X1X14-MM)	
M	61	1,2,3	**9X-2045**	6	SCREW-TRUSS HEAD (M6X1X20-MM)	
M	62	3	**9X-2046**	4	SCREW-TRUSS HEAD (M6X1X35-MM)	
	63	1	**9X-8256**	3	WASHER (6.6X12X2-MM THK)	
D	64	1,2	**8T-3426**		CHANNEL-TRIM (0.8-M EACH)	
D	64A	1	**8T-3426**		CHANNEL-TRIM (1.5-M)	
D	65	1,2	**6V-0505**		SEAL (0.03-M EACH)	
D	66	2	**5P-5969**		SEAL (1-M EACH)	
D	67	1,2	**6V-5163**		SEAL (1.4-M)	
D	67A	1	**6V-5163**		SEAL (1.3-M)	

D-ORDER BY THE METER
M-METRIC PART

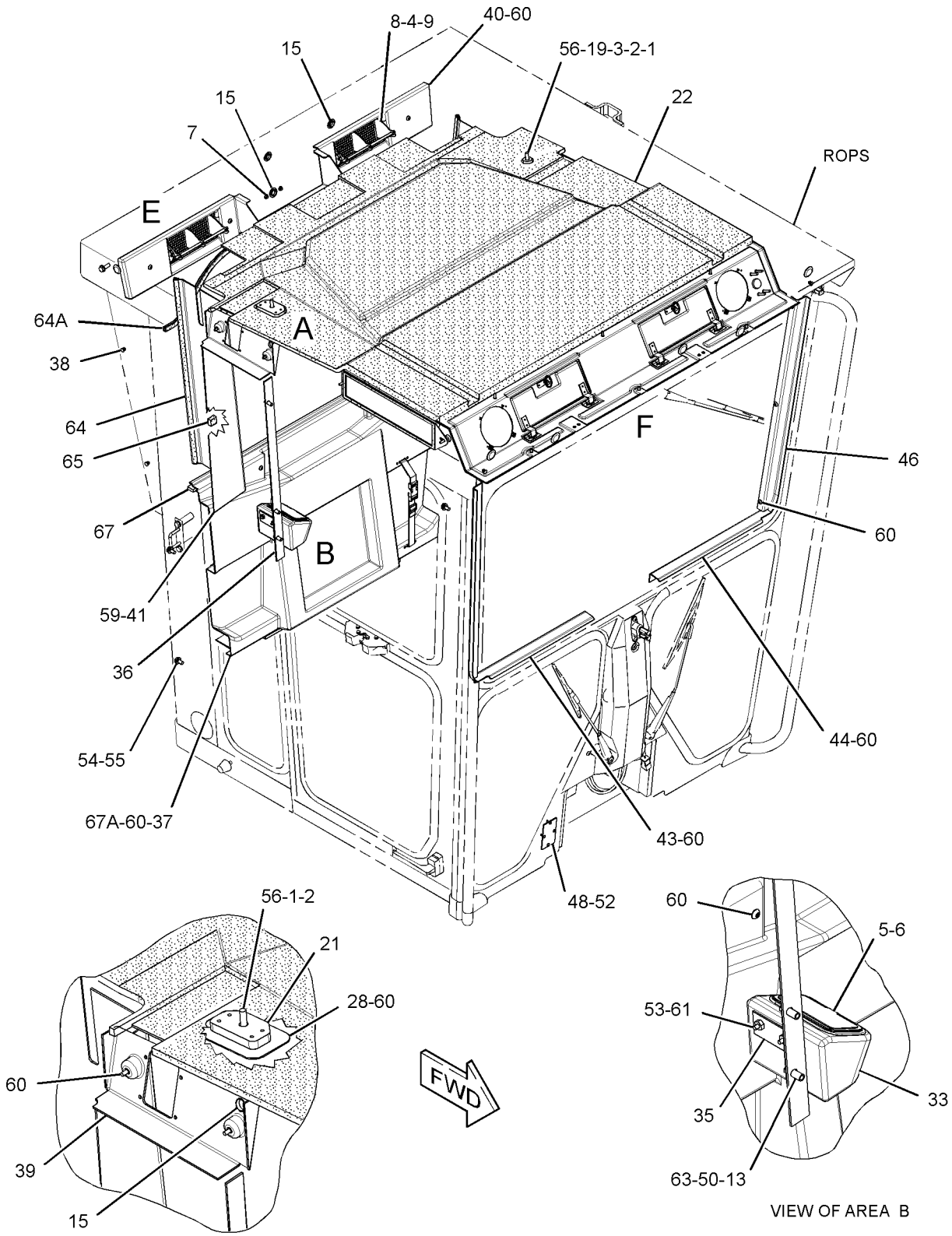

VIEW OF AREA A

VIEW OF AREA B

REFER TO ALL ILLUSTRATIONS OF THIS GROUP FOR AUXILIARY VIEWS

GRAPHIC #1

g01945182

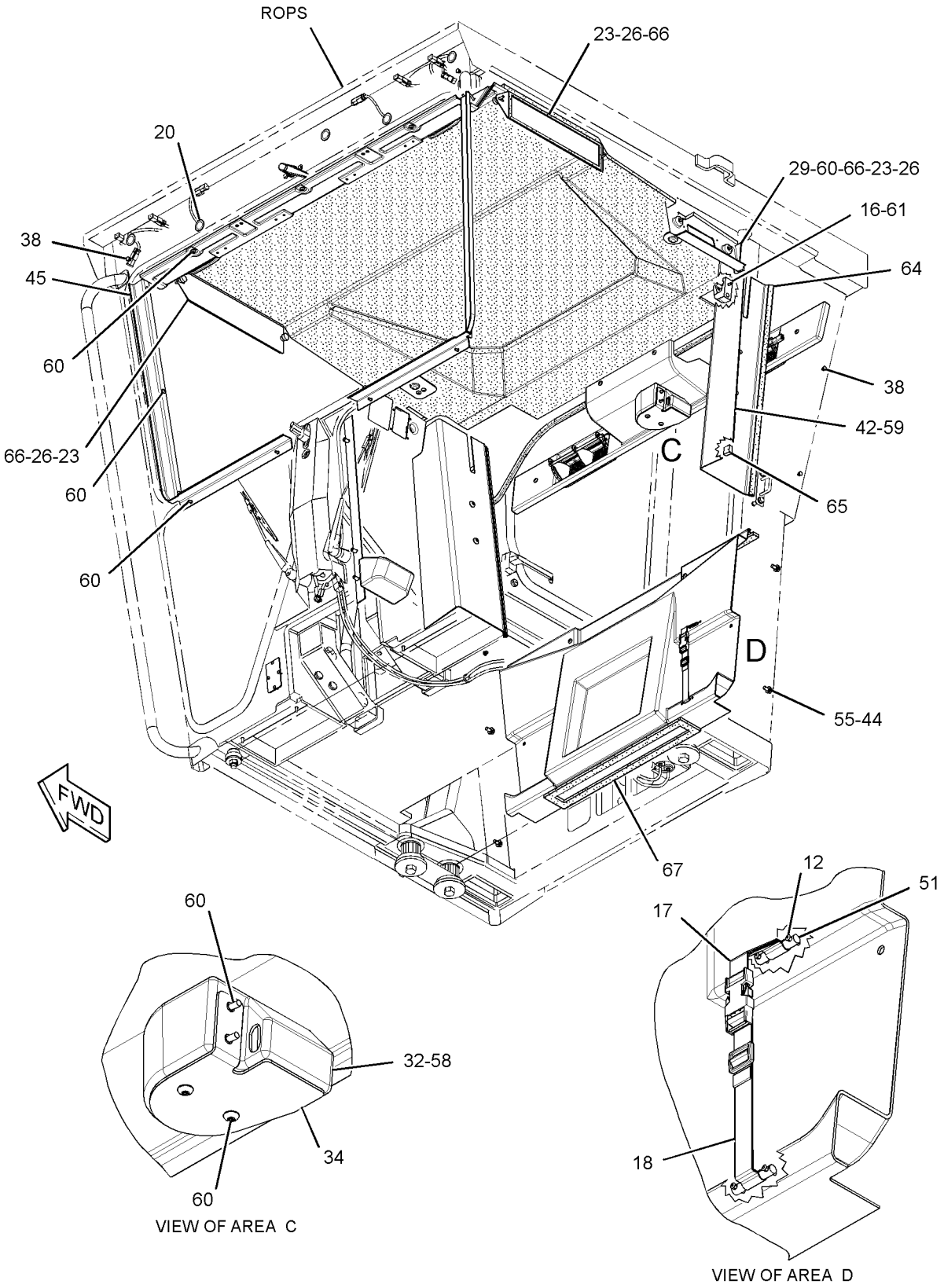

GRAPHIC #2

g01945398

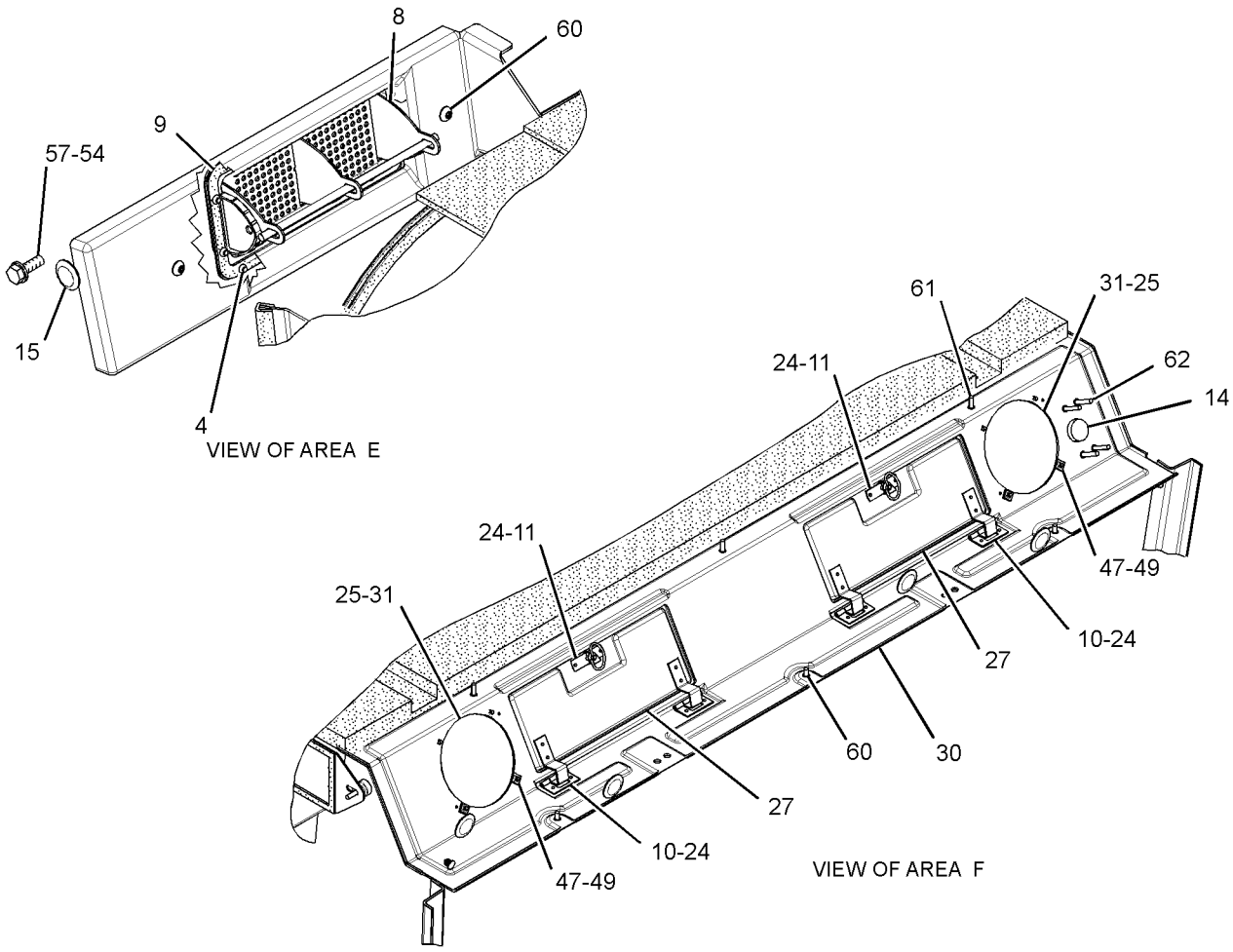

GRAPHIC #3 **<END>** g01945399

OPERATOR STATION

311-2772 LINES GP-AIR CONDITIONER

S/N: JJA1-UP
PART OF 311-2751 AIR CONDITIONER AR
AN ATTACHMENT

SMCS-1808, 7320 **i03643748**

NOTE	REF NO	GRAPHIC REF	PART NUMBER	QTY	PART NAME 1 2 3 4 5 6 (PRODUCT LEVEL)	SEE PAGE
	1	1	**1P-6356**	1	PLATE	
	2	1	**8W-8527**	3	SLEEVE	
	3	1	**8W-8528**	3	SLEEVE	
	4	1	**9G-7101**	1	SPACER (10.5X20X30-MM THK)	
	5	1	**114-5333**	1	SWITCH AS-PRESSURE (REFRIGERANT, HIGH, LOW)	
		1	**102-8802**	1	KIT-RECEPTACLE (2-PIN)	
					(INCLUDES RECEPTACLE AS & WEDGE)	
		1	**186-3735**	2	PIN-CONNECTOR (16-GA TO 18-GA)	
E		1	**9X-1386**		SLEEVE (25-CM)	
	6	1	**149-6371**	1	SWITCH AS-PRESSURE (REFRIGERANT, LOW SIDE)	
		1	**102-8802**	1	KIT-RECEPTACLE (2-PIN)	
					(INCLUDES RECEPTACLE AS & WEDGE)	
		1	**186-3735**	2	PIN-CONNECTOR (16-GA TO 18-GA)	
	7	1	**217-7742**	1	GROMMET	
	8	1	**257-3227**	1	RECEIVER AS	
		1	**189-1707**	1	ORIFICE AS-AIR CONDITIONER	
	9	1	**274-5909**	1	ACCUMULATOR-REFRIGERANT	
I	10	1	**313-4127**	1	HOSE AS	
	11	1	**313-4131**	1	TUBE AS	
	12	1	**313-4132**	1	TUBE AS	
I	13	1	**313-5530**	1	HOSE AS	
I	14	1	**333-8326**	1	HOSE AS	
	15	1	**067-2551**	1	CLIP	
M	16	1	**085-8091**	1	BOLT (M10X1.5X55-MM)	
	17	1	**132-7551**	1	SPACER (11X19X6-MM THK)	
	18	1	**4B-0418**	1	CLIP	
	19	1	**4B-9302**	1	CLIP	
	20	1	**4D-7735**	1	CLIP	
	21	1	**4K-8864**	3	CLIP	
	22	1	**4L-6454**	1	BOLT (3/8-16X1-IN)	
	23	1	**4S-1962**	1	CLIP	
	24	1	**5P-1075**	3	WASHER-HARD (10.2X22.5X3-MM THK)	
	25	1	**7X-7910**	1	CLIP (SLOT)	
	26	1	**7X-7911**	1	CLIP (TAB)	
	27	1	**8M-2773**	1	CLIP	
	28	1	**8S-6109**	1	CLIP (SLOT)	
	29	1	**8S-6110**	1	CLIP (TAB)	
	30	1	**8T-4121**	7	WASHER-HARD (11X21X2.5-MM THK)	
M	31	1	**8T-4133**	3	NUT (M10X1.5-THD)	
M	32	1	**8T-4136**	1	BOLT (M10X1.5X25-MM)	
M	33	1	**8T-4195**	1	BOLT (M10X1.5X30-MM)	
M	34	1	**8T-6466**	1	BOLT (M10X1.5X60-MM)	
	35	1	**9B-7237**	1	BOLT (3/8-16X1.25-IN)	
	36	1	**9X-7380**	1	SEAL-O-RING	
	37	1	**9X-7381**	4	SEAL-O-RING	
	38	1	**9X-7382**	1	SEAL-O-RING	
	39	1	**9X-7383**	1	SEAL-O-RING	
	40	1	**9X-7385**	2	SEAL-O-RING	
	41	1	**2K-5232**	1	SPACER (0.406X0.75X1.81-IN THK)	
M	42	1	**8T-5005**	1	BOLT (M10X1.5X70-MM)	

E-ORDER BY THE CENTIMETER
I-REFER TO HYDRAULIC INFORMATION SYSTEM
M-METRIC PART

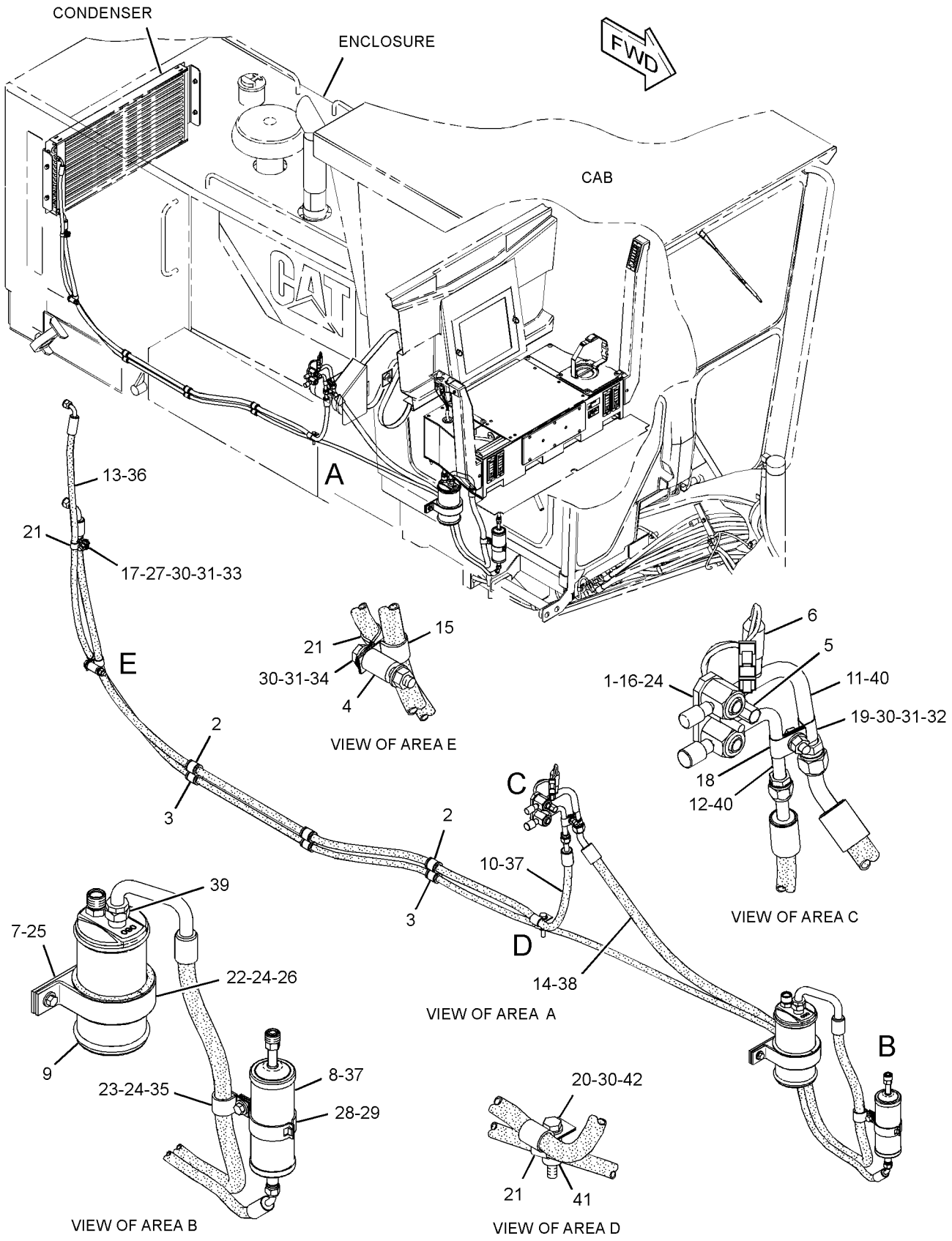

GRAPHIC #1 **<END>** g01768793

OPERATOR STATION

311-2773 LINES GP-HEATER

S/N: JJA1-UP
PART OF 311-2751 AIR CONDITIONER AR, 311-2753 HEATER AR-CAB
CANNOT BE USED WITH 108-1105 SCARIFIER AR
AN ATTACHMENT

SMCS-1812, 7304 **i03412780**

NOTE	REF NO	GRAPHIC REF	PART NUMBER	QTY	PART NAME 1 2 3 4 5 6 (PRODUCT LEVEL)	SEE PAGE
	1	1	**2H-1743**	1	CLIP	
	2	1	**5D-1026**	4	CLAMP-HOSE	
	3	1	*161-9916*	1	ADAPTER AS	
		1	**2M-9780**	1	SEAL-O-RING	
		1	**6V-7420**	1	ADAPTER	
	4	1	*170-0967*	1	ELBOW AS	
		1	**3K-0360**	1	SEAL-O-RING	
		1	**5P-4906**	1	ELBOW	
	5	1	**313-6546**	1	TUBE AS	
	6	1	**313-6547**	1	TUBE AS	
	7	1	*150-3037*	1	ELBOW AS	
		1	**3K-0360**	1	SEAL-O-RING	
		1	**7J-9108**	1	SEAL-O-RING	
		1	**8T-2530**	1	ELBOW	
	8	1	*208-0423*	2	CONNECTOR AS	
					(EACH INCLUDES)	
		1	**136-7226**	1	SEAL-O-RING	
		1	**150-7158**	1	CONNECTOR	
	9	1	**223-5916**	1	VALVE AS-MANUAL	
	10	1	**3S-8665**	1	CLIP	
	11	1	**5M-3062**	1	BOLT (3/8-16X0.75-IN)	
	12	1	**6D-1641**	1	CLIP	
	13	1	**8D-9671**	1	CLIP	
	14	1	**8T-4121**	1	WASHER-HARD (11X21X2.5-MM THK)	
M	15	1	**8T-4136**	1	BOLT (M10X1.5X25-MM)	
	16	1	**8T-4896**	1	WASHER-HARD (10.2X18.5X2.5-MM THK)	
E	18	1	**5P-0767**		HOSE (223-CM)	
E	18A	1	**5P-0767**		HOSE (228-CM)	

E-ORDER BY THE CENTIMETER
M-METRIC PART

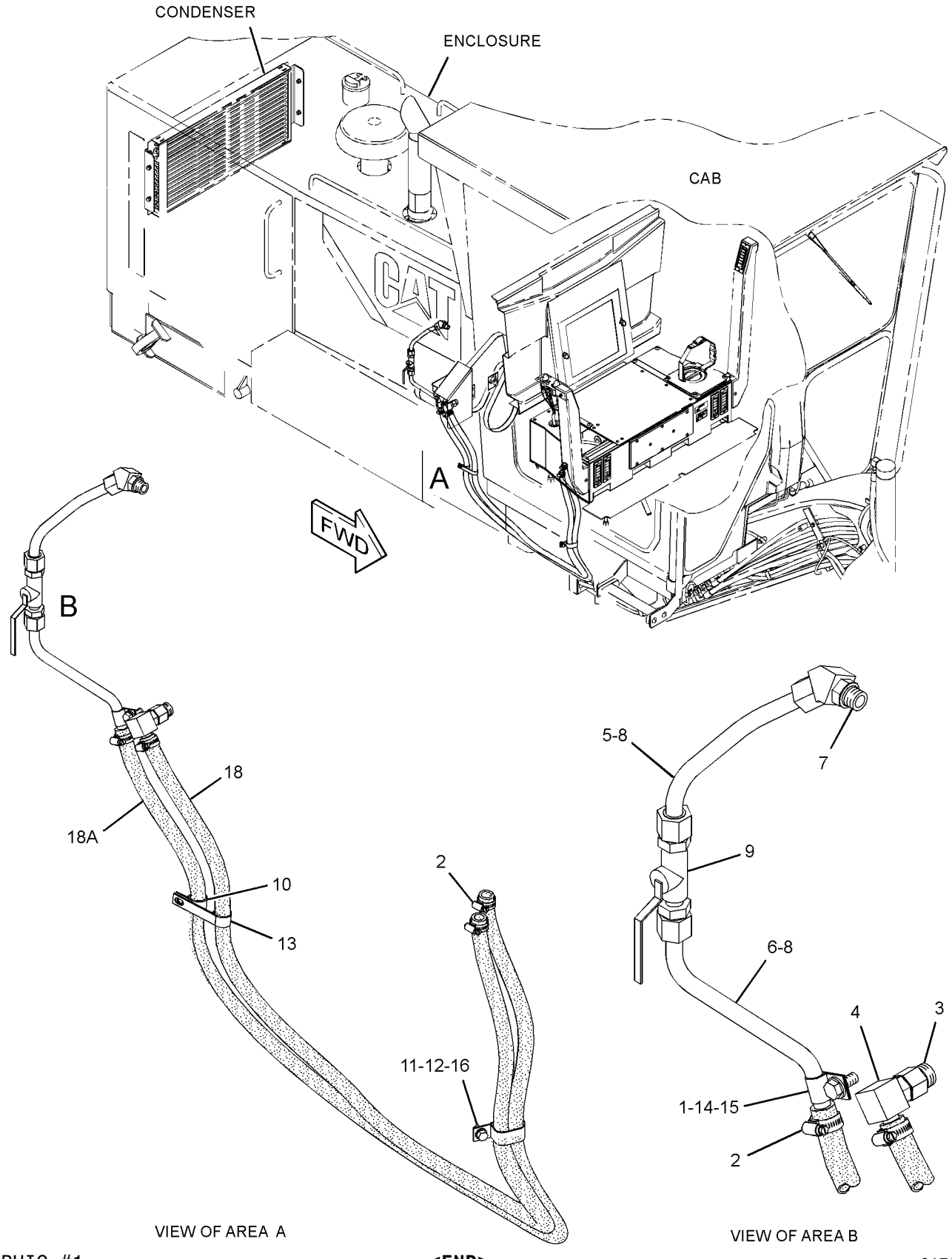

GRAPHIC #1 **<END>** g01768875

OPERATOR STATION

178-8603 LOUVER GP-CAB

S/N: JJA1-UP
PART OF 311-2753 HEATER AR-CAB
AN ATTACHMENT

SMCS-7301 **i01778669**

NOTE	REF NO	GRAPHIC REF	PART NUMBER	QTY	PART NAME 1 2 3 4 5 6 (PRODUCT LEVEL)	SEE PAGE
	1	1	**8Y-6388**	6	LOUVER AS-VENT	
	2	1	**164-8474**	2	LOUVER AS-VENT	
	3	1	**126-1135**	2	PLATE	
	4	1	**126-1136**	2	PLATE	
	5	1	**6V-2687**	4	SCREW-PAN HEAD (10-24X1-IN)	
BD	6	1	**5P-5969**		SEAL	

B-USE AS REQUIRED
D-ORDER BY THE METER

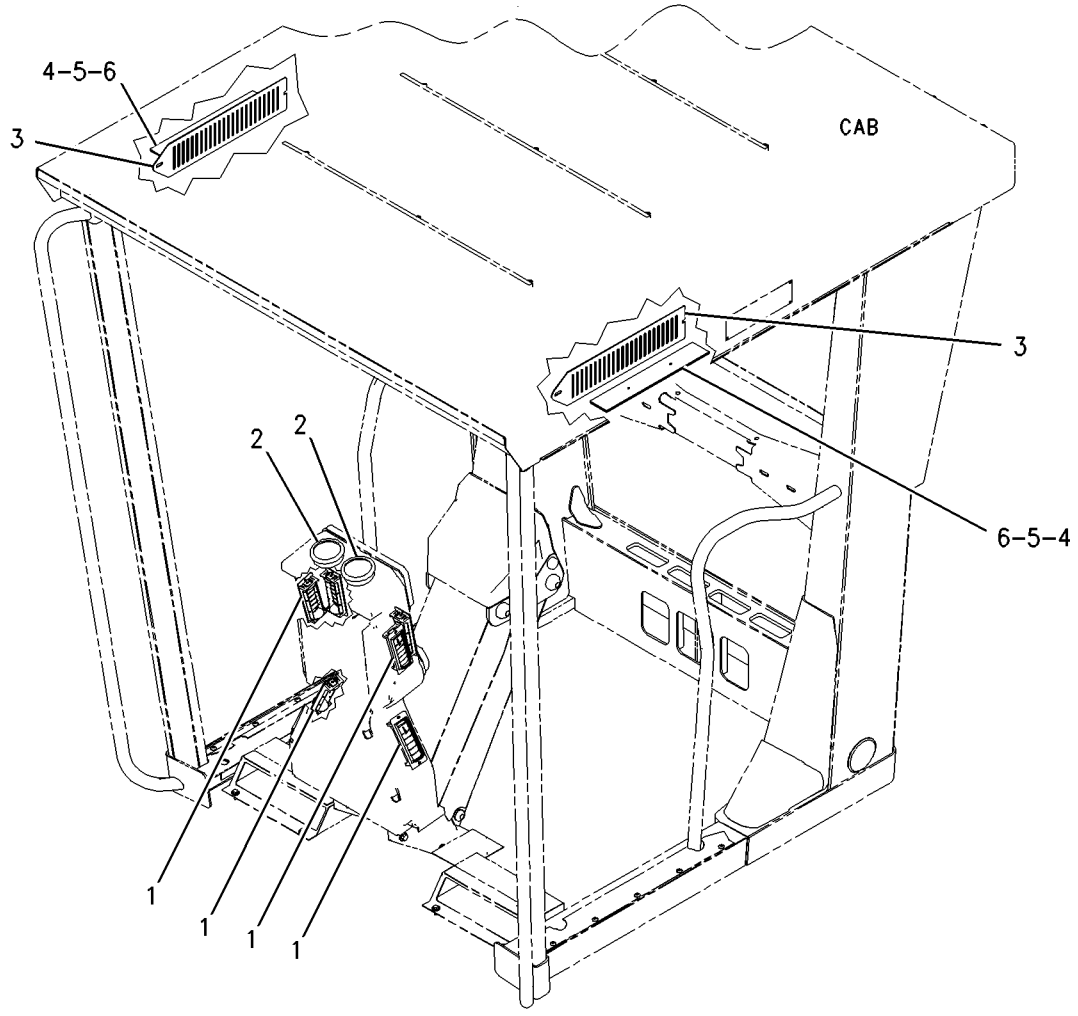

GRAPHIC #1 **<END>** g00940703

OPERATOR STATION

8X-2795 MIRROR GP-REAR VIEW—DUAL INSIDE

S/N: JJA1-UP

PART OF 320-0341 CAB AR, 284-5397 ROPS GP

AN ATTACHMENT

SMCS-7319 **i02585443**

NOTE	REF NO	GRAPHIC REF	PART NUMBER	QTY	PART NAME 1 2 3 4 5 6 (PRODUCT LEVEL)	SEE PAGE
	1	1	**8Y-4512**	1	MIRROR	
	2	1	**2G-8241**	2	CLAMP	
M	3	1	**9X-2046**	4	SCREW-TRUSS HEAD (M6X1X35-MM)	
	4	1	**2G-8572**	2	WASHER-SPECIAL (10X27.81X2.54-MM THK)	
	5	1	**2G-8573**	2	CAP	
	6	1	**2G-8242**	2	ARM	
	7	1	**5P-1075**	2	WASHER-HARD (10.2X22.5X3-MM THK)	
	8	1	**8H-1728**	2	NUT-ACORN (3/8-16-THD)	
	9	1	**5S-7379**	2	BOLT (3/8-16X0.875-IN)	
	10	1	**1P-2378**	2	CAP	

M-METRIC PART

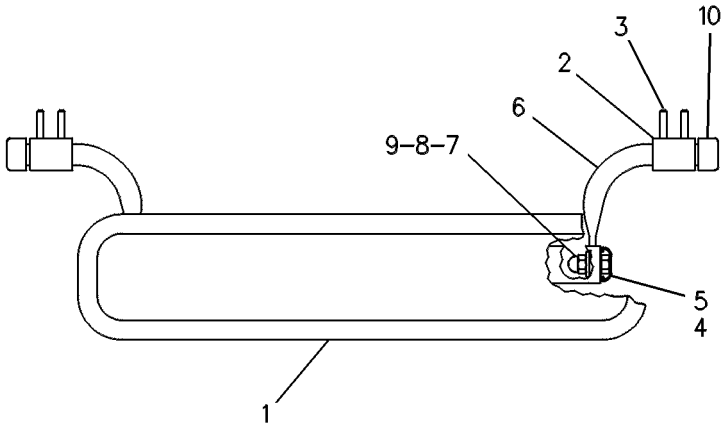

GRAPHIC #1 **<END>** g00084778

OPERATOR STATION

123-4358 MIRROR GP-REAR VIEW—EXTERIOR, HEATED

S/N: JJA1-UP

PART OF 339-4964, 339-4965, 339-4966, 339-4967 OPTION AR-CAB

AN ATTACHMENT

SMCS-7319 **i00130904**

NOTE	REF NO	GRAPHIC REF	PART NUMBER	QTY	PART NAME 1 2 3 4 5 6 (PRODUCT LEVEL)	SEE PAGE
M	1	1	**8T-4133**	8	NUT (M10X1.5-THD)	
M	2	1	**8T-4137**	8	BOLT (M10X1.5X20-MM)	
	3	1	**8T-4121**	24	WASHER-HARD (11X21X2.5-MM THK)	
	4	1	**6G-8831**	4	CLAMP	
	5	1	**5P-6871**	2	MIRROR	
	6	1	**113-8218**	2	ARM	
	7	1	**123-4586**	4	BLOCK	
	8	1	**123-4587**	4	BRACKET	
M	9	1	**8T-4182**	8	BOLT (M10X1.5X45-MM)	
M	10	1	**8T-4195**	4	BOLT (M10X1.5X30-MM)	
M	11	1	**6V-7744**	4	LOCKNUT (M10X1.5-THD)	
	12	1	**9C-5928**	4	SPACER (10X19X5.15-MM THK)	

M-METRIC PART

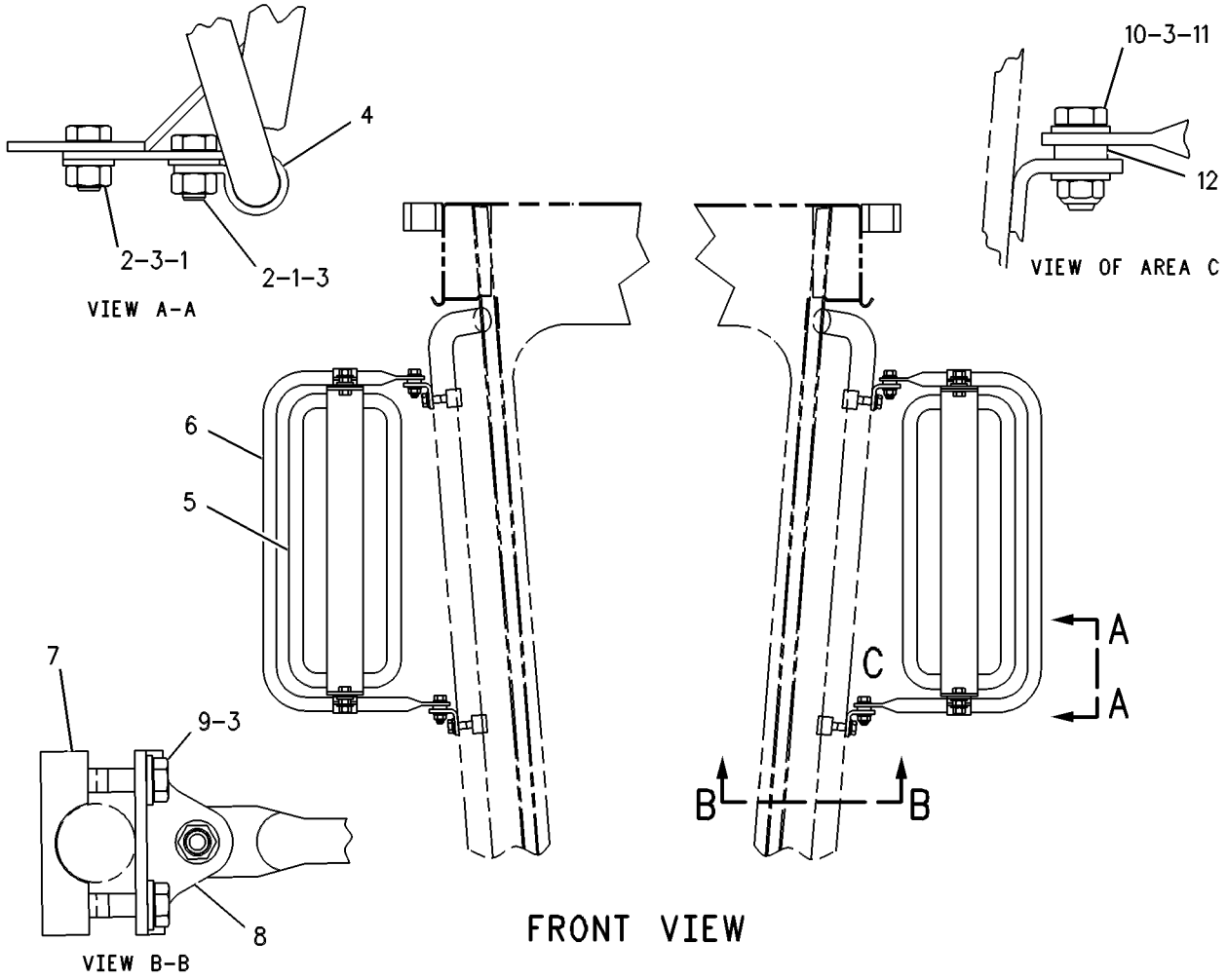

GRAPHIC #1 **<END>** g00109253

OPERATOR STATION

197-2066 MIRROR GP-REAR VIEW—DUAL INTERIOR

S/N: JJA1-UP
EUROPEAN MARKET
PART OF 340-1191 OPTION AR-CAB
AN ATTACHMENT

SMCS-7319 **i02304669**

NOTE	REF NO	GRAPHIC REF	PART NUMBER	QTY	PART NAME 1 2 3 4 5 6 (PRODUCT LEVEL)	SEE PAGE
	1	1	**1P-2378**	4	CAP	
	2	1	**2G-8241**	2	CLAMP	
	3	1	**232-6114**	2	MIRROR AS (RH, LH)	
					(EACH INCLUDES)	
		1	**203-0780**	1	MIRROR	
M	4	1	**9X-2046**	4	SCREW-TRUSS HEAD (M6X1X35-MM)	

M-METRIC PART

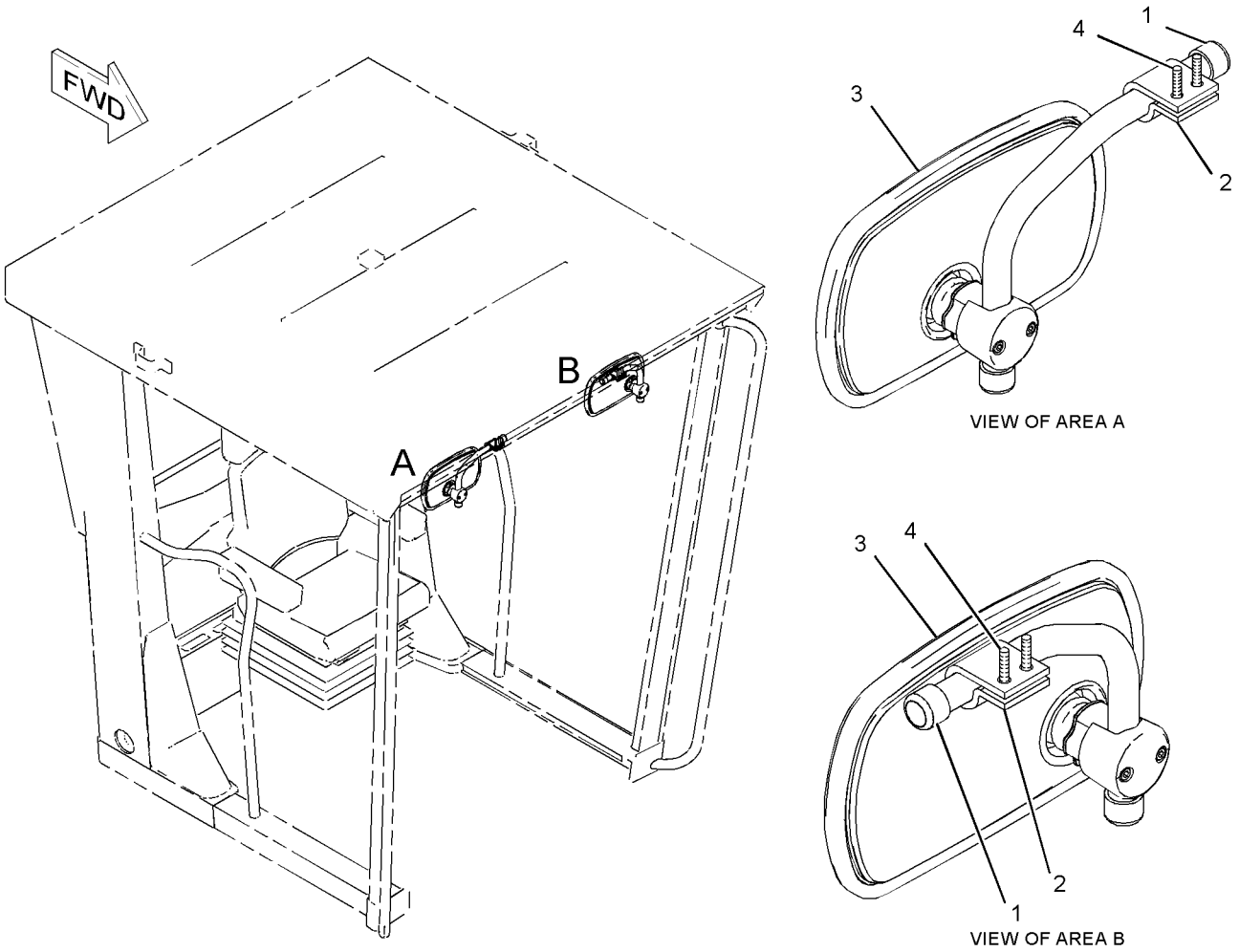

GRAPHIC #1 **<END>** g01118616

OPERATOR STATION

287-3260 MODULE GP-QUAD GAUGE

S/N: JJA1-UP
24-VOLT
PART OF 316-5237, 316-5238 PANEL GP-INSTRUMENT
ALSO AN ATTACHMENT

SMCS-7451, 7490 **i03246295**

NOTE	REF NO	GRAPHIC REF	PART NUMBER	QTY	PART NAME 1 2 3 4 5 6 (PRODUCT LEVEL)	SEE PAGE
	1	1	**9X-4284**	1	INDICATOR AS-COOLANT TEMP	
	2	1	**180-3833**	1	VOLTMETER GP	
	3	1	**180-3834**	1	INDICATOR AS-ARTICULATION	
	4	1	**180-3836**	1	INDICATOR AS-FUEL LEVEL	
	5	1	**186-3735**	6	PIN-CONNECTOR (16-GA TO 18-GA)	
	6	1	**102-8805**	1	KIT-RECEPTACLE (6-PIN)	
					(INCLUDES RECEPTACLE AS & WEDGE)	
F			**8M-6176**	2	LAMP (12-VOLT)	
					AVAILABLE REPAIR KIT(S):	
			116-4686	1	KIT-GAUGE CLUSTER BEZEL (QUAD GAUGE MODULE)	
					(INCLUDES BEZEL AS, PIPE, SEAL & SCREWS)	

F-NOT SHOWN

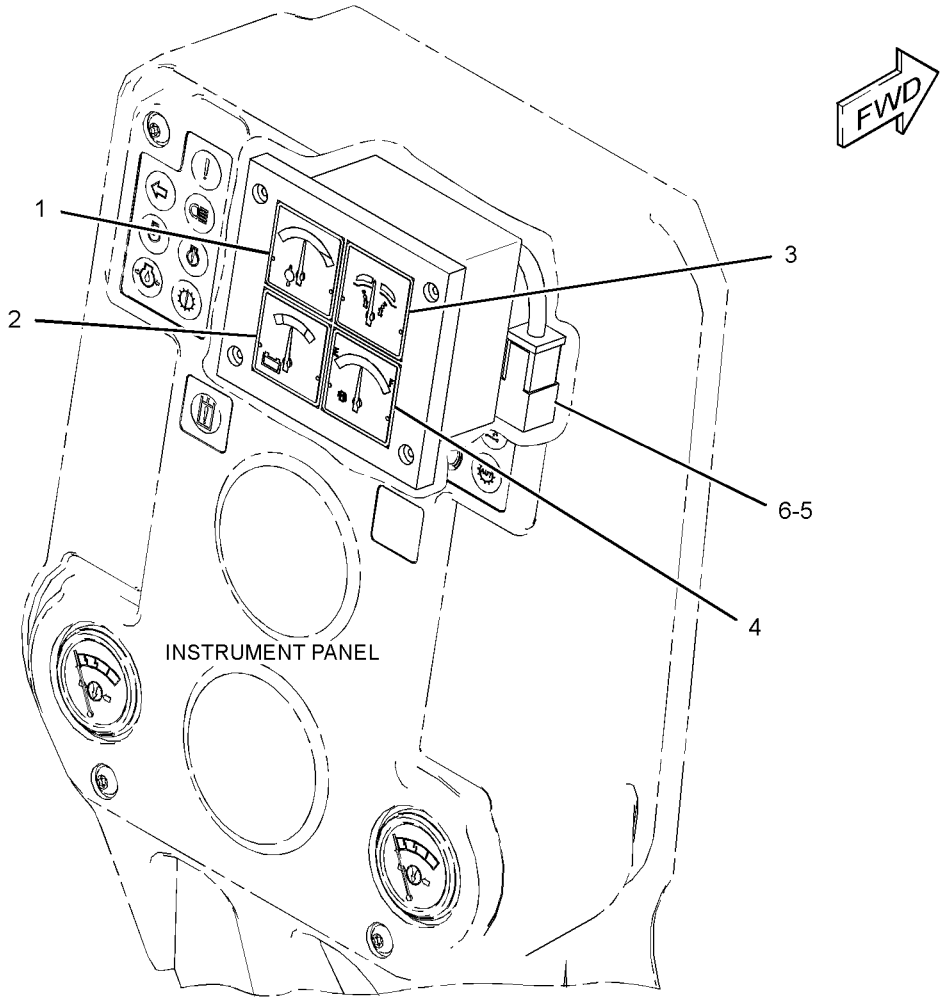

GRAPHIC #1

<END>

g01701214

OPERATOR STATION

293-4153 MODULE GP-SPEEDOMETER & TACH

S/N: JJA1-UP

PART OF 339-4966, 339-4967 OPTION AR-CAB

AN ATTACHMENT

SMCS-7451, 7462, 7463, 7490 **i03538289**

NOTE	REF NO	GRAPHIC REF	PART NUMBER	QTY	PART NAME 1 2 3 4 5 6 (PRODUCT LEVEL)	SEE PAGE
	1	1	**274-8068**	1	MODULE GP-INTERFACE	
	2	1	**336-6608**	1	INDICATOR (SPEED)	
		1	**4B-2043**	2	NUT (8-32-THD)	
		1	**9B-7233**	2	LOCKWASHER	
	3	1	**293-4495**	1	PLATE	
	4	1	**335-8961**	1	HARNESS AS-WIRING	
		1	**186-3736**	6	SOCKET-CONNECTOR (16-GA TO 18-GA)	
		1	**8T-8737**	6	PLUG-SEAL	
		1	**9X-3402**	6	SOCKET-CONNECTOR (16-GA TO 18-GA)	
E		1	**125-7874**		TUBE-HEAT SHRINK (5.72-MM DIA) (20-CM)	
		1	**155-2274**	3	KIT-CONNECTING PLUG (6-PIN)	
					(INCLUDES PLUG AS,WEDGE & INTERFACE SEAL)	
	5	1	**336-6609**	1	INDICATOR (ENGINE RPM)	
		1	**4B-2043**	2	NUT (8-32-THD)	
		1	**9B-7233**	2	LOCKWASHER	
	6	1	**4B-4863**	2	WASHER (4.7X11X1.2-MM THK)	
M	7	1	**5C-8312**	2	NUT (M4X0.7-THD)	
M	8	1	**6V-9493**	2	SCREW-MACHINE (M4X0.7X45-MM)	
	9	1	**7K-1181**	1	STRAP-CABLE	

E-ORDER BY THE CENTIMETER
M-METRIC PART

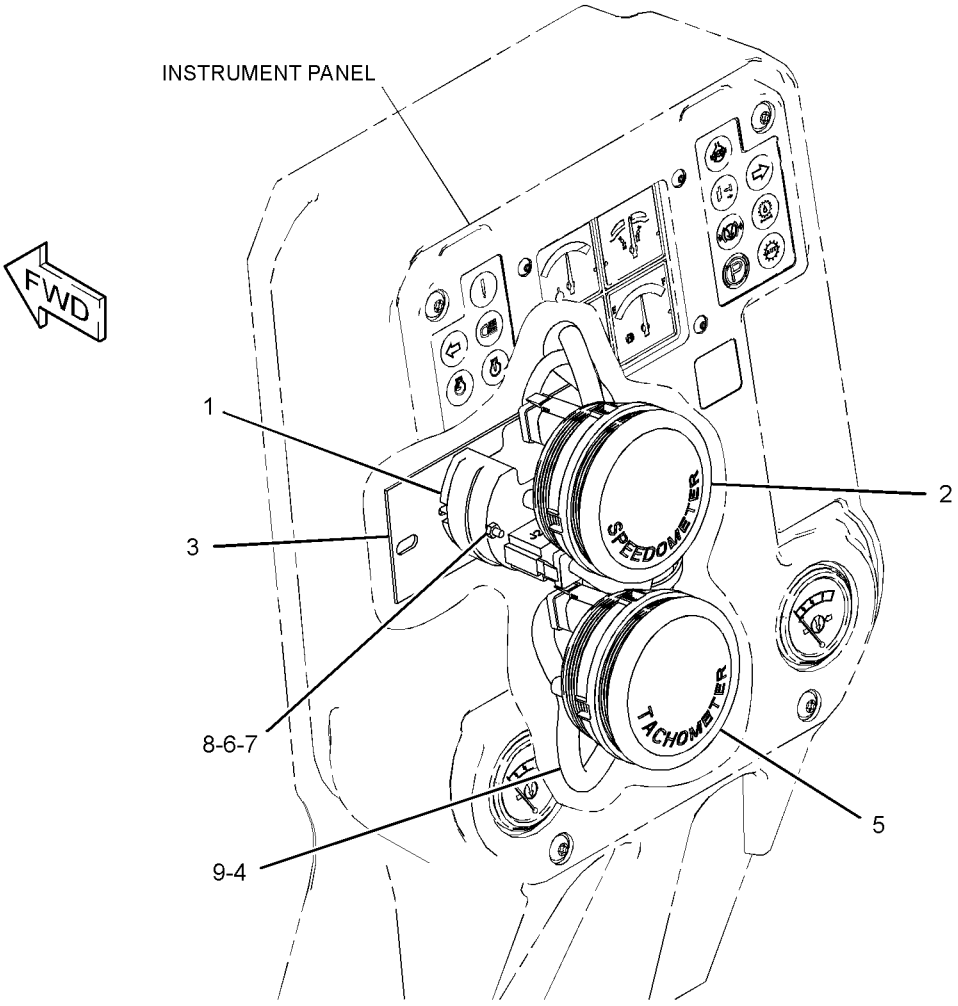

GRAPHIC #1 **<END>** g01756375

OPERATOR STATION

125-4344 MOUNTING GP-CAB—NON-ROPS, ENCLOSED

S/N: JJA1-UP
PART OF 320-0341 CAB AR
AN ATTACHMENT

SMCS-7266, 7301 **i02327863**

NOTE	REF NO	GRAPHIC REF	PART NUMBER	QTY	PART NAME 1 2 3 4 5 6 (PRODUCT LEVEL)	SEE PAGE
	1	1	**103-5515**	1	PAD-RH	
	2	1	**103-5516**	1	PAD-LH	
	3	1	**103-4953**	4	MOUNTING	
	4	1	**7X-0375**	4	BOLT (3/4-10X5-IN)	
	5	1	**8X-0674**	4	WASHER (22X100X10-MM THK)	
	6	1	**3V-9244**	2	WASHER (16.5X50X5-MM THK)	
	7	1	**4K-0367**	2	NUT-FULL (5/8-11-THD)	
	8	1	**7X-0354**	2	BOLT (5/8-11X4.5-IN)	
	9	1	**8T-4122**	2	WASHER-HARD (17X32X3.5-MM THK)	
	10	1	**8X-6131**	2	SEAL	
	11	1	**164-2465**	2	PAD	
	12	1	**9D-1589**	2	MOUNTING	
	13	1	**2G-7098**	2	PAD	
	14	1	**2G-7097**	1	PAD	
E	15	1	**123-6806**		SEAL (87-CM)	

E-ORDER BY THE CENTIMETER

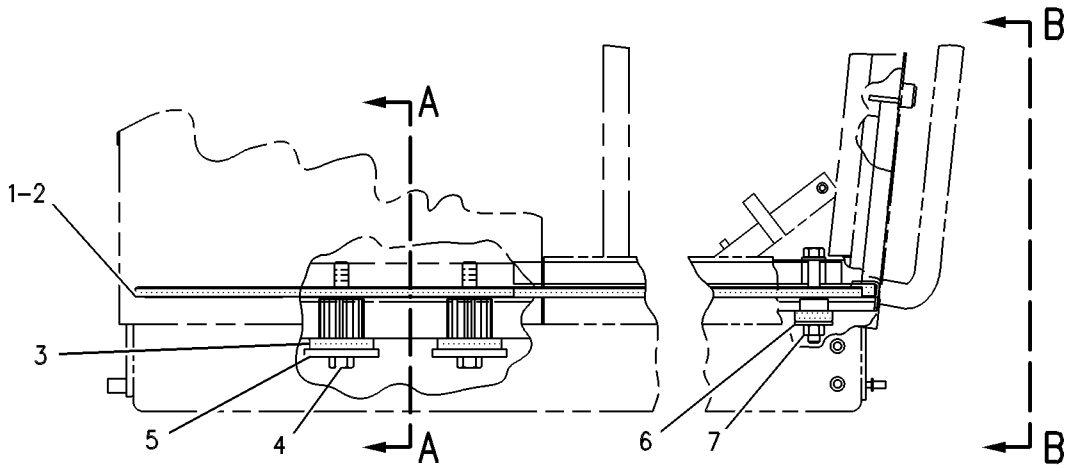

RIGHT SIDE VIEW

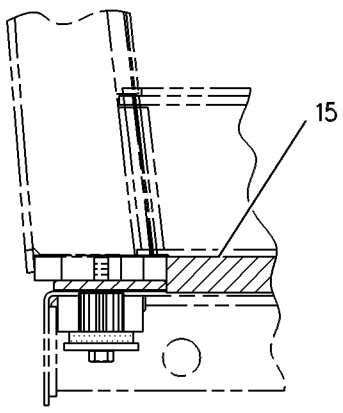

SECTION A-A

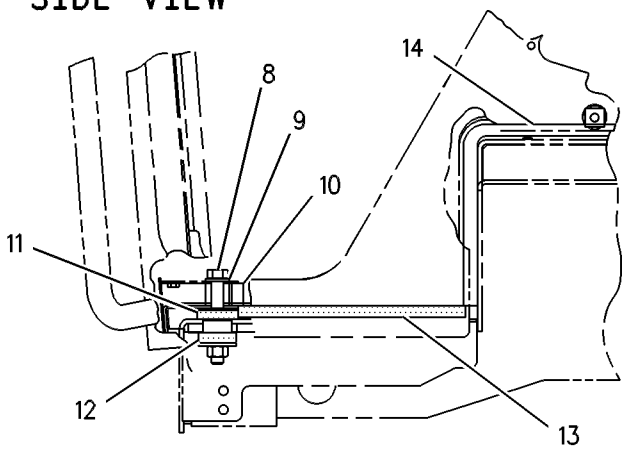

VIEW B-B

GRAPHIC #1 **<END>** g00109328

OPERATOR STATION

2A-6985 MOUNTING GP-ROPS—ENCLOSED

S/N: JJA1-UP
PART OF 320-0342 ROPS AR
AN ATTACHMENT

SMCS-7266 **i01938112**

NOTE	REF NO	GRAPHIC REF	PART NUMBER	QTY	PART NAME 1 2 3 4 5 6 (PRODUCT LEVEL)	SEE PAGE
	1	1	**3E-4048**	2	CAP-PLUG	
	2	1	**103-5515**	1	PAD-RH	
	3	1	**103-5516**	1	PAD-LH	
	4	1	**103-4953**	4	MOUNTING	
	5	1	**7X-0375**	4	BOLT (3/4-10X5-IN)	
	6	1	**8X-0674**	4	WASHER (22X100X10-MM THK)	
	7	1	**3V-9244**	2	WASHER (16.5X50X5-MM THK)	
	8	1	**4K-0367**	2	NUT-FULL (5/8-11-THD)	
	9	1	**7X-0354**	2	BOLT (5/8-11X4.5-IN)	
	10	1	**8T-4122**	4	WASHER-HARD (17X32X3.5-MM THK)	
	11	1	**8X-6131**	2	SEAL	
	12	1	**164-2465**	2	PAD	
	13	1	**9D-1589**	2	MOUNTING	
	14	1	**2G-7098**	2	PAD	
	15	1	**2G-7097**	1	PAD	
	16	1	**103-4771**	2	PIN AS	
	17	1	**030-8535**	2	BOLT-LOCKING (3/8-16X0.875-IN)	
	18	1	**8T-4896**	2	WASHER-HARD (10.2X18.5X2.5-MM THK)	
B	19	1	**166-1999**	2	SHIM (2.28-MM THK)	
BE	20	1	**123-6806**		SEAL (87-CM)	
B	21	1	**166-1997**	2	SHIM (1.2-MM THK)	

B-USE AS REQUIRED
E-ORDER BY THE CENTIMETER

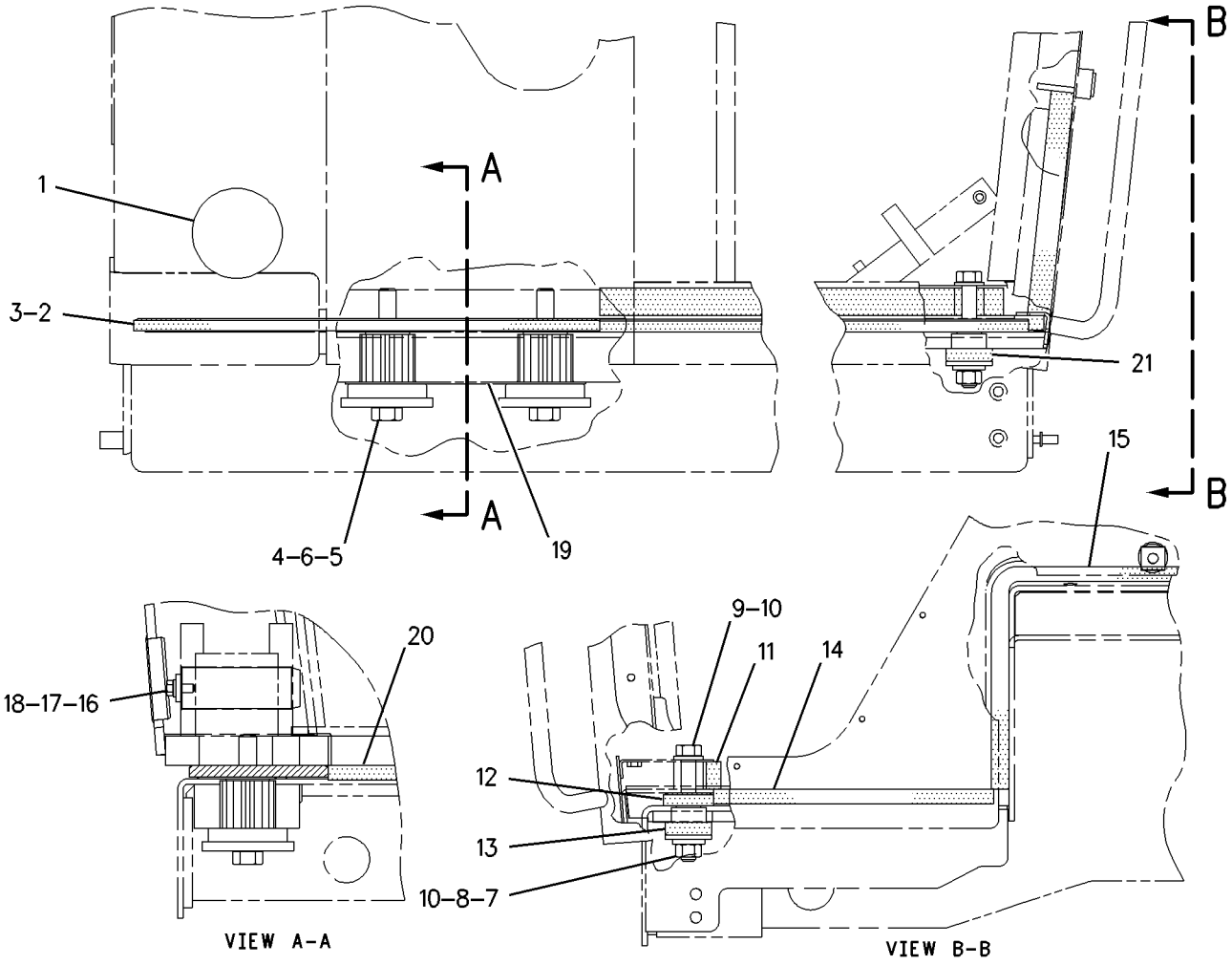

GRAPHIC #1 **<END>** g00752004

OPERATOR STATION

301-4173 PAN GP-BACKREST

S/N: JJA1-UP
PART OF 301-4174 SEAT GP
AN ATTACHMENT

SMCS-7312 **i02947678**

NOTE	REF NO	GRAPHIC REF	PART NUMBER	QTY	PART NAME 1 2 3 4 5 6 (PRODUCT LEVEL)	SEE PAGE
	1	1	**164-4883**	1	KNOB-LUMBAR	
	2	1	**250-4628**	3	PLUG	
	3	1	**292-6099**	1	CUSHION AS-BACK	
	4	1	*299-2277*	1	PAN GP-BACKREST	
		1	**4K-9429**	2	RIVET-POP	
		1	**136-1543**	1	PLATE AS-LUMBAR	
		1	**261-5694**	1	PAN AS-BACKREST	
	5	1	**5P-0537**	2	WASHER-HARD (7.2X14.5X2-MM THK)	
	6	1	**6V-8969**	2	SCREW-BUTTON HEAD (1/4-20X0.5-IN)	
	7	1	**8T-7566**	1	PIN-SPRING	

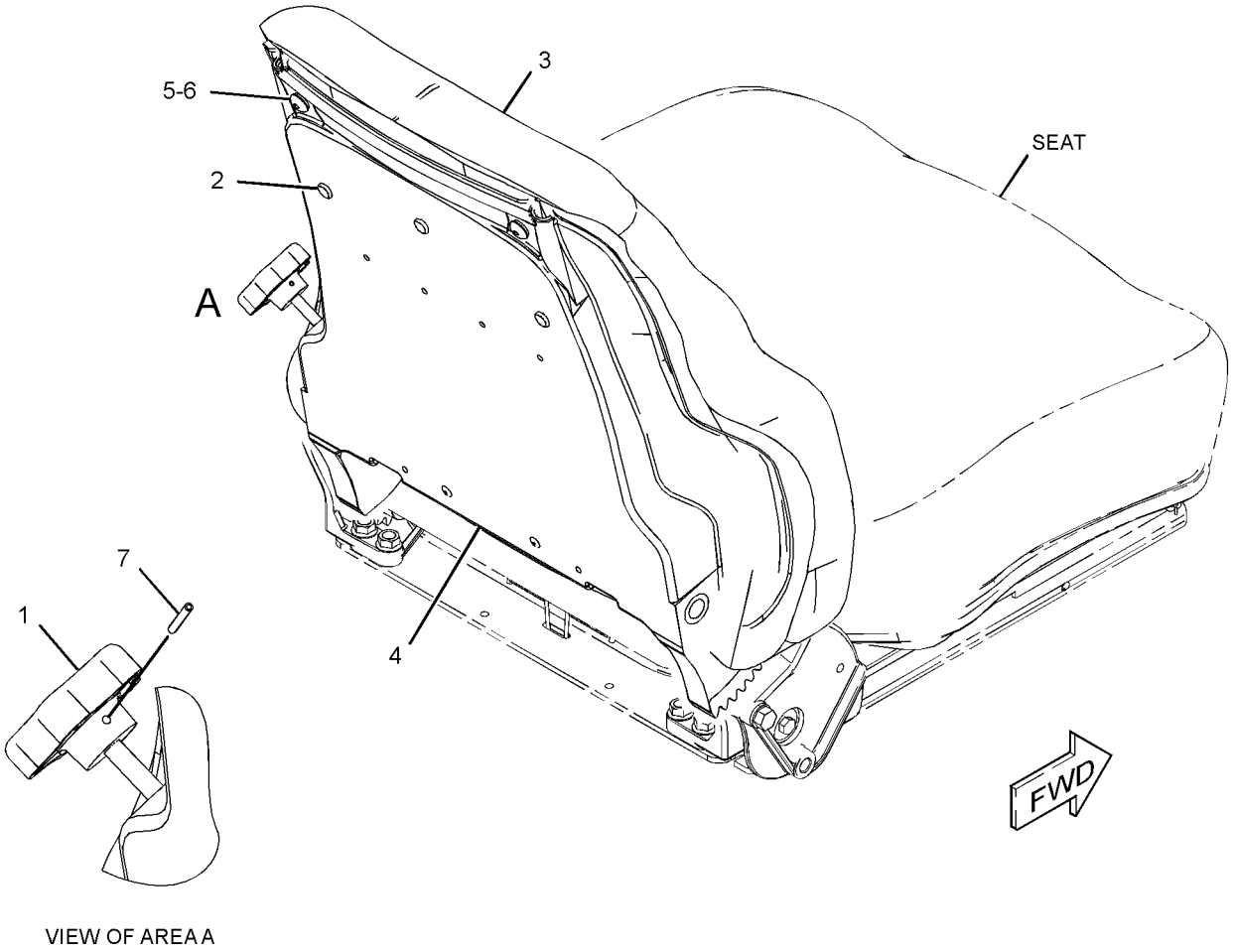

VIEW OF AREA A

GRAPHIC #1 **<END>** g01417150

OPERATOR STATION

8X-2385 PANEL GP-CAB—HIGH PROFILE

S/N: JJA1-UP
PART OF 320-0341 CAB AR, 320-0342 ROPS AR
AN ATTACHMENT

SMCS-7301 **i03484460**

NOTE	REF NO	GRAPHIC REF	PART NUMBER	QTY	PART NAME 1 2 3 4 5 6 (PRODUCT LEVEL)	SEE PAGE
	1	1	**115-6806**	2	GLASS (SIDE)	
	2	1	**8X-2228**	1	GLASS-FRONT	
D	3	1	**5P-5768**		SEAL (11.9-M)	
	4	1	**102-9372**	1	GLASS (REAR)	
	5	1	**149-3409**	2	GLASS (LOWER FRONT)	
E	6	1	**3E-9413**		SEAL (963-CM)	
	7	1	**166-2830**	1	FILM (SUN VISOR)	

D-ORDER BY THE METER
E-ORDER BY THE CENTIMETER

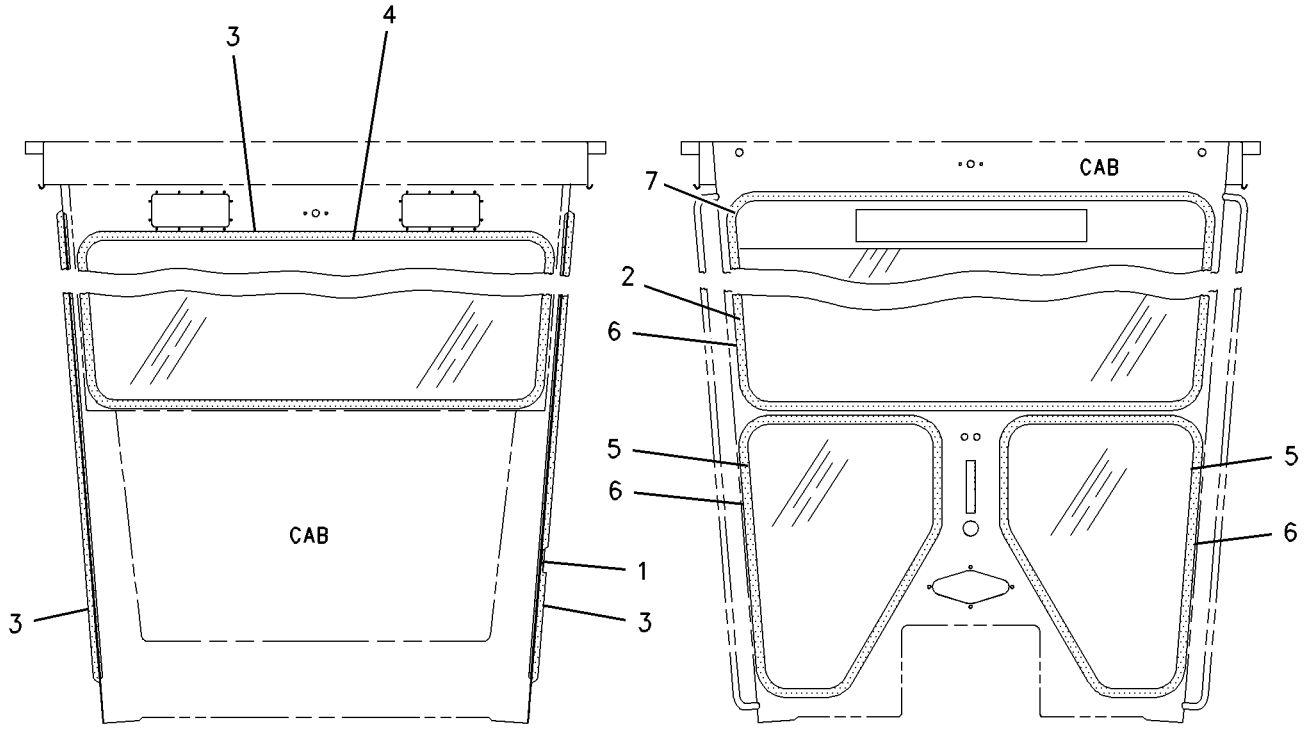

REAR VIEW FRONT VIEW

GRAPHIC #1 **<END>** g00693201

OPERATOR STATION

316-5237 PANEL GP-INSTRUMENT—ENCLOSED

S/N: JJA1-UP
PART OF 320-0341 CAB AR, 320-0342 ROPS AR
AN ATTACHMENT

SMCS-7450, 7451 **i03434760**

NOTE	REF NO	GRAPHIC REF	PART NUMBER	QTY	PART NAME 1 2 3 4 5 6 (PRODUCT LEVEL)	SEE PAGE
	1	1	**5D-0269**	2	ELBOW	
	2	1	**5K-7577**	2	HOSE AS	
	3	1	**9M-8662**	2	COUPLING	
	4	1	**107-1983**	4	LAMP (24-VOLT)	
	5	1	**115-1748**	11	LAMP (24-VOLT, 3-WATT)	
	6	1	**117-9966**	2	PLUG	
	7	1	**122-7045**	6	COVER	
	8	1	**122-8146**	2	PLATE AS	
					(EACH INCLUDES)	
M		1	**6V-9632**	2	NUT-WELD (M6X1-THD)	
	9	1	**196-4150**	1	PANEL	
	10	1	**202-1138**	4	ELBOW	
Y	11	1	**287-3260**	1	MODULE GP-QUAD GAUGE	542
	13	1	**288-5756**	1	FILM-PANEL (LH) (INSTRUMENT CLUSTER)	
	14	1	**288-5757**	1	FILM-PANEL (RH) (INSTRUMENT CLUSTER)	
	16	1	**304-6958**	2	GAUGE GP-AIR PRESSURE (BRAKE)	
					(EACH INCLUDES)	
		1	**4B-2049**	2	NUT (10-32-THD)	
		1	**8F-1434**	2	LOCKWASHER	
	17	1	**335-9387**	1	HARNESS AS-PANEL	
	18	1	**096-6166**	4	WASHER-HARD (4.5X9X1-MM THK)	
	19	1	**104-2091**	12	SCREW-FLAT HEAD (NO 6X0.5-IN)	
	20	1	**134-2540**	1	RESISTOR AS (3-PIN)	
M	22	1	**213-7315**	4	SCREW-TRUSS HEAD (M4X0.7X25-MM)	
	23	1	**2H-3922**	2	LOCKWASHER	
	24	1	**310-1640**	1	FILM-IDENTIFICATION (HYDRAULIC SYSTEM MALFUNCTION) (INSTRUMENT CLUSTER)	
	25	1	**310-3568**	1	FILM-CONSOLE (BLANK) (INSTRUMENT CLUSTER)	
M	26	1	**3E-8020**	10	SCREW-TRUSS HEAD (M6X1X25-MM)	
M	27	1	**5C-8312**	4	NUT (M4X0.7-THD)	
	28	1	**9S-4968**	4	SLEEVE	
M	29	1	**9X-2043**	4	SCREW-TRUSS HEAD (M6X1X14-MM)	

M-METRIC PART
Y-SEPARATE ILLUSTRATION

316-5237 **PANEL GP-INSTRUMENT** *(contd.)* **i03434760**

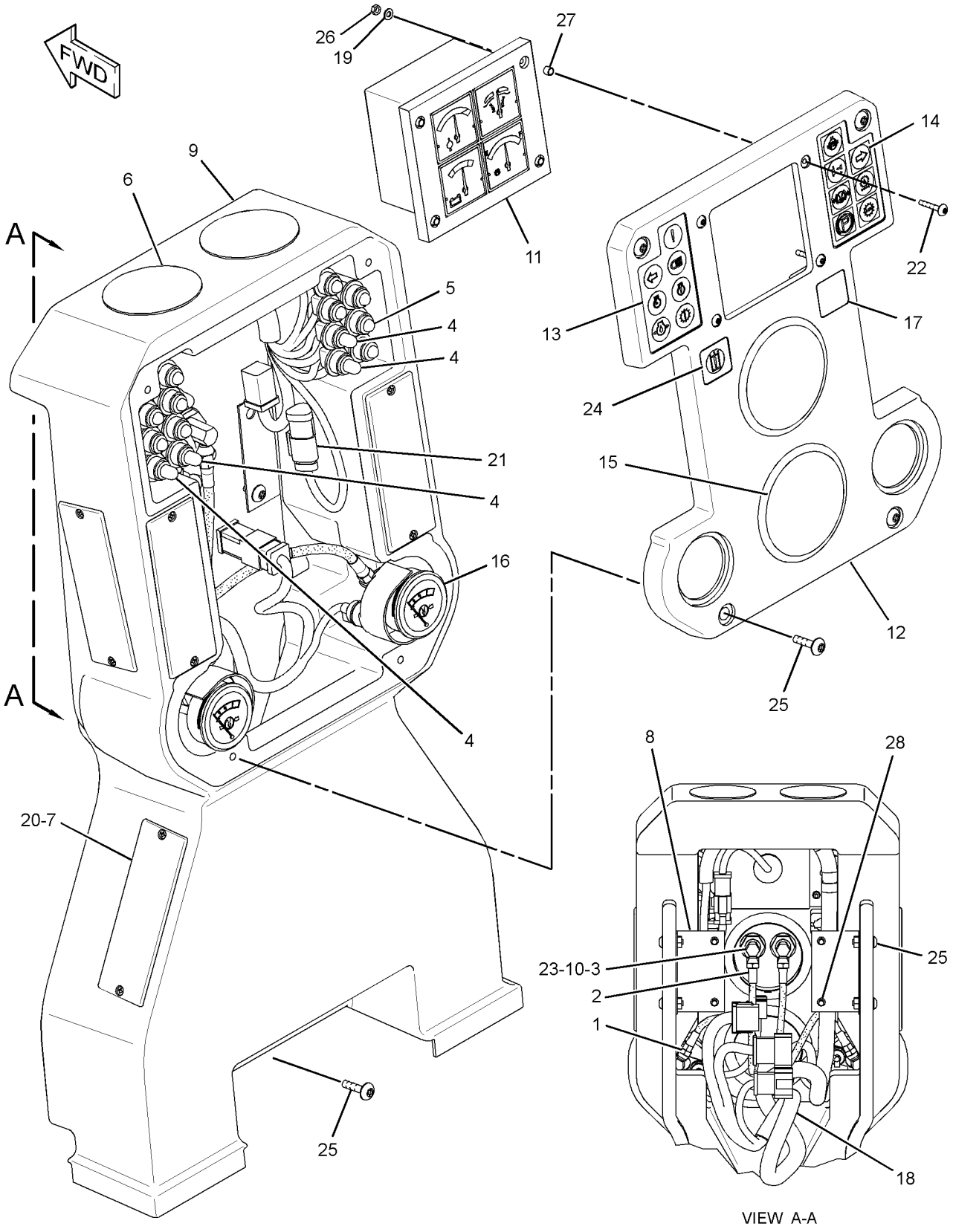

GRAPHIC #1 **<END>** g01786073

OPERATOR STATION

316-5238 PANEL GP-INSTRUMENT–OPEN

S/N: JJA1-UP

PART OF 346-3710 GENERAL AR

SMCS-7450, 7451 **i03636750**

NOTE	REF NO	GRAPHIC REF	PART NUMBER	QTY	PART NAME 1 2 3 4 5 6 (PRODUCT LEVEL)	SEE PAGE
	1	1	**5D-0269**	2	ELBOW	
	2	1	**107-1983**	4	LAMP (24-VOLT)	
	3	1	**115-1748**	10	LAMP (24-VOLT, 3-WATT)	
Y	4	1	**287-3260**	1	MODULE GP-QUAD GAUGE	542
	9	1	**304-6958**	2	GAUGE GP-AIR PRESSURE	
					(EACH INCLUDES)	
		1	**4B-2049**	2	NUT (10-32-THD)	
		1	**8F-1434**	2	LOCKWASHER	
	11	1	**335-9387**	1	HARNESS AS-PANEL	
	12	1	**096-6166**	4	WASHER-HARD (4.5X9X1-MM THK)	
	13	1	**134-2540**	1	RESISTOR AS (3-PIN)	
M	14	1	**213-7315**	4	SCREW-TRUSS HEAD (M4X0.7X25-MM)	
M	16	1	**3E-8020**	4	SCREW-TRUSS HEAD (M6X1X25-MM)	
M	17	1	**5C-8312**	4	NUT (M4X0.7-THD)	
	18	1	**9S-4968**	4	SLEEVE	

M-METRIC PART
Y-SEPARATE ILLUSTRATION

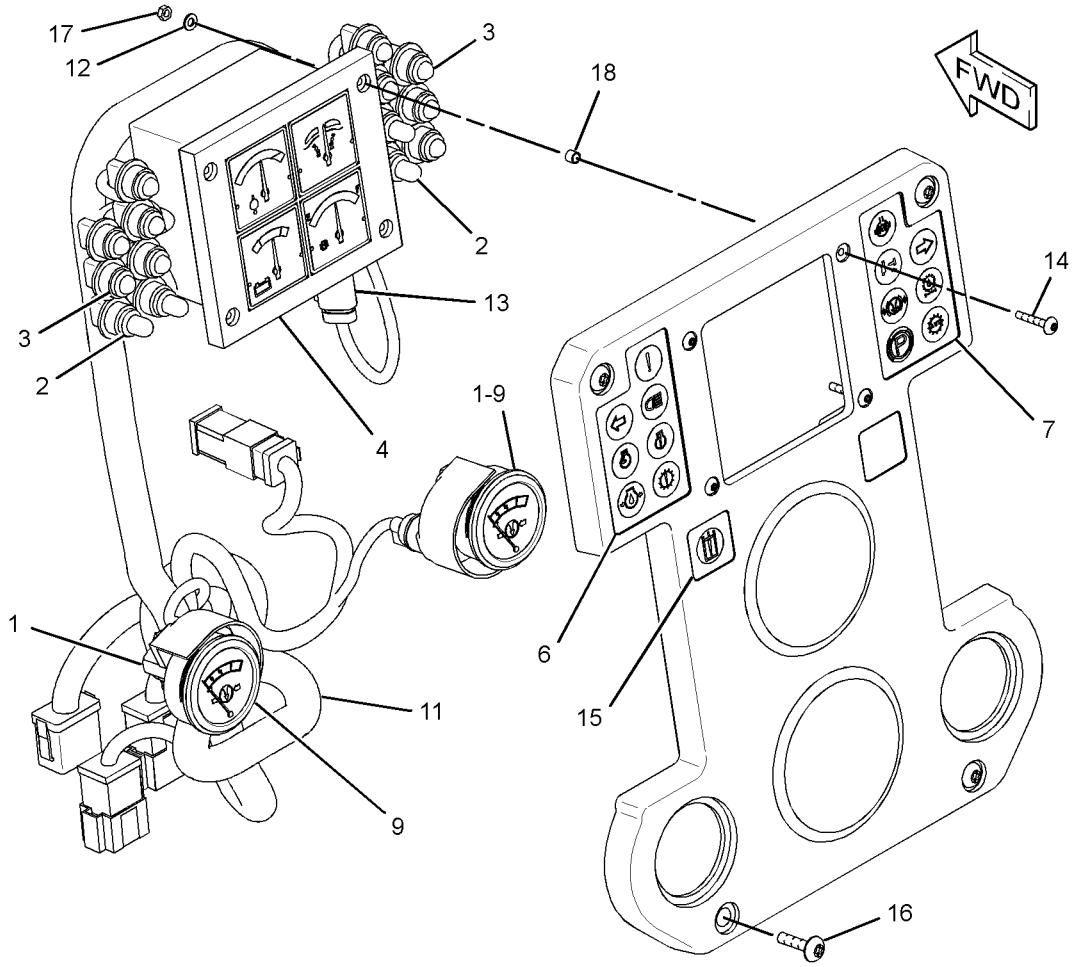

GRAPHIC #1 **<END>** g01846973

OPERATOR STATION

210-2270 RECLINER GP-SEAT

S/N: JJA1-UP
PART OF 301-4174 SEAT GP
AN ATTACHMENT

SMCS-7312 **i03643750**

NOTE	REF NO	GRAPHIC REF	PART NUMBER	QTY	PART NAME 1 2 3 4 5 6 (PRODUCT LEVEL)	SEE PAGE
	1	1	**177-1862**	1	BRACKET (SEAT BELT)	
	2	1	**210-2262**	1	BRACKET AS (LH)	
	3	1	**210-2263**	1	BRACKET AS (RH)	
	4	1	**210-2266**	1	GEAR-LOCK (14-TEETH)	
	5	1	**293-2911**	1	SHAFT AS	
		1	**2L-5893**	2	PIN-SPRING	
		1	**170-8590**	1	SPRING	
	6	1	**217-7933**	1	LATCH	
	7	1	**236-5197**	1	SPRING	
	8	1	**031-0214**	1	BOLT-LOCKING (1/4-20X0.5-IN)	
	9	1	**101-2867**	1	WASHER-HARD (7.2X25X2-MM THK)	
	10	1	**4M-6425**	1	BOLT (5/16-18X1-IN)	
	11	1	**5M-2894**	1	WASHER-HARD (10.2X18.5X2.5-MM THK)	
	12	1	**5S-7383**	1	BOLT (3/8-16X1.75-IN)	
	13	1	**8T-4224**	1	WASHER-HARD (8.8X16X2-MM THK)	

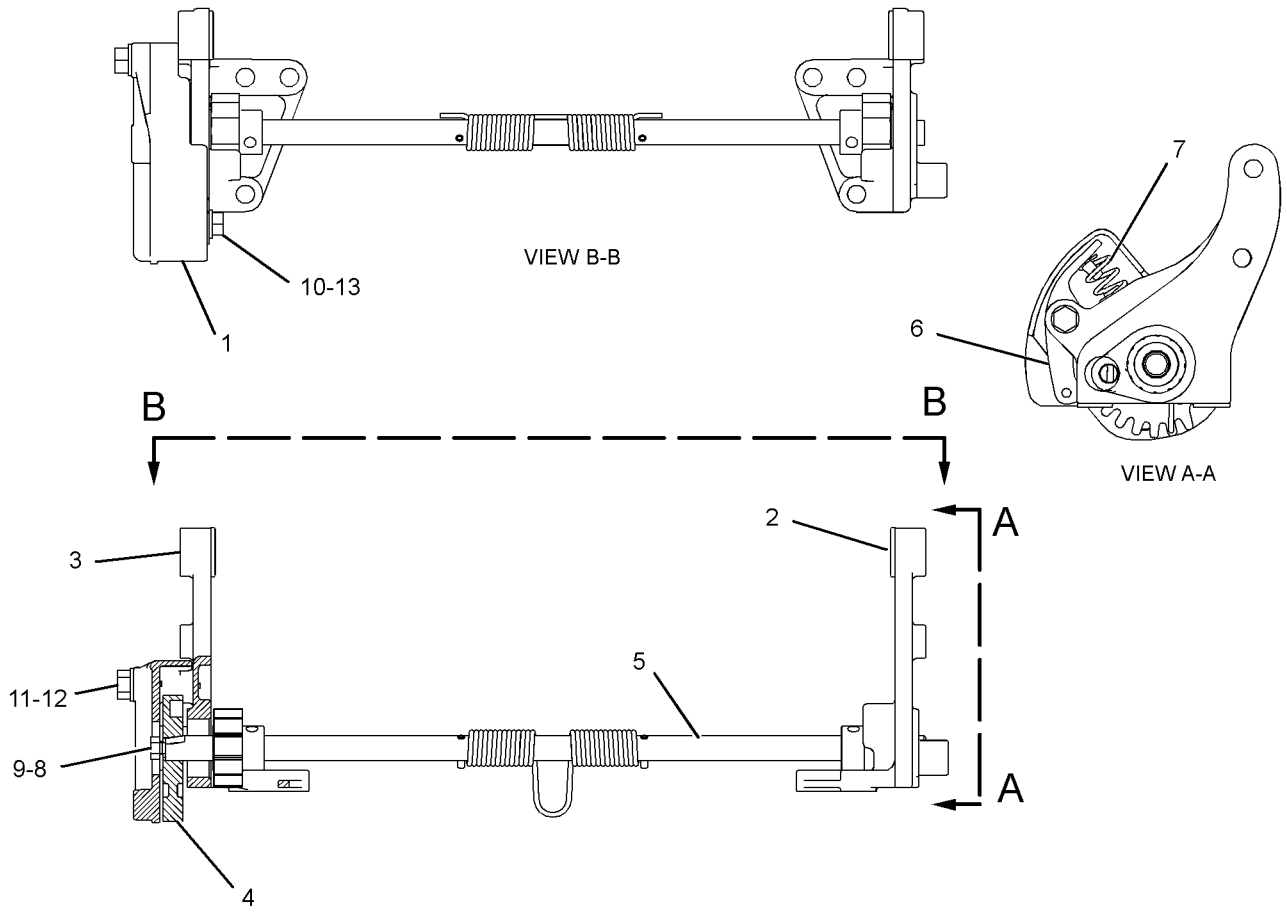

GRAPHIC #1 **<END>** g01296294

OPERATOR STATION

284-5400 ROPS AR—HIGH PROFILE, OPEN

S/N: JJA1-UP

AN ATTACHMENT

SMCS-7177, 7323 **i03643749**

NOTE	REF NO	GRAPHIC REF	PART NUMBER	QTY	PART NAME 1 2 3 4 5 6 (PRODUCT LEVEL)	SEE PAGE
Y	1	1	*284-5397*	1	ROPS GP (HIGH PROFILE, OPEN)	557
Y	2	1	*290-1148*	1	GUARD GP-PLATFORM	296

Y-SEPARATE ILLUSTRATION

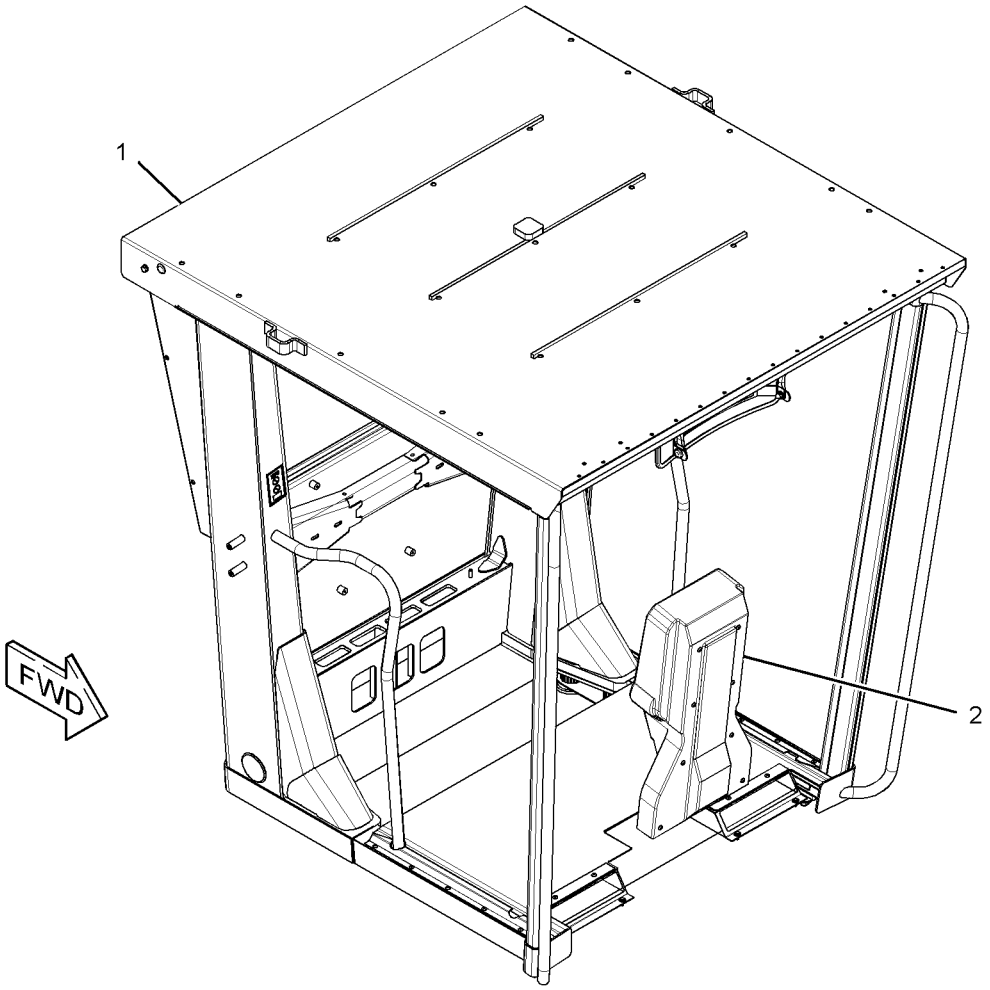

GRAPHIC #1 **<END>** g01664733

OPERATOR STATION

320-0342 ROPS AR—ENCLOSED, HIGH PROFILE

S/N: JJA1-UP

PART OF 339-4965, 339-4966, 339-4967 OPTION AR-CAB

AN ATTACHMENT

SMCS-7177, 7323 **i03641661**

NOTE	REF NO	GRAPHIC REF	PART NUMBER	QTY	PART NAME 1 2 3 4 5 6 (PRODUCT LEVEL)	SEE PAGE
Y	1	1	*2A-6985*	1	MOUNTING GP-ROPS (ENCLOSED)	546
Y	3	1	*8X-2385*	1	PANEL GP-CAB (HIGH PROFILE)	549
Y	4	1	*8X-9675*	1	WASHER GP-WINDOW (FRONT)	581
Y	5	1	*172-5378*	1	INSULATION GP-WEATHER	525
Y	6	1	*172-6831*	1	WIPER GP-WINDOW (FRONT) (HIGH PROFILE)	587
	7	1	**219-0302**	2	FILM-WARNING (NO WELD, NO DRILL, READ OMM)	
Y	8	1	*285-3361*	1	WIRING GP-CAB	189
Y	9	1	*290-0349*	1	ROPS GP (ENCLOSED)	559
Y	10	1	*316-5237*	1	PANEL GP-INSTRUMENT (ENCLOSED)	550
	11	1	**323-8857**	1	FILM-CERTIFICATION (OPS, READ OMM)	
Y	12	1	*337-7998*	1	LINER GP-CAB (ENCLOSED, HIGH PROFILE)	529

Y-SEPARATE ILLUSTRATION

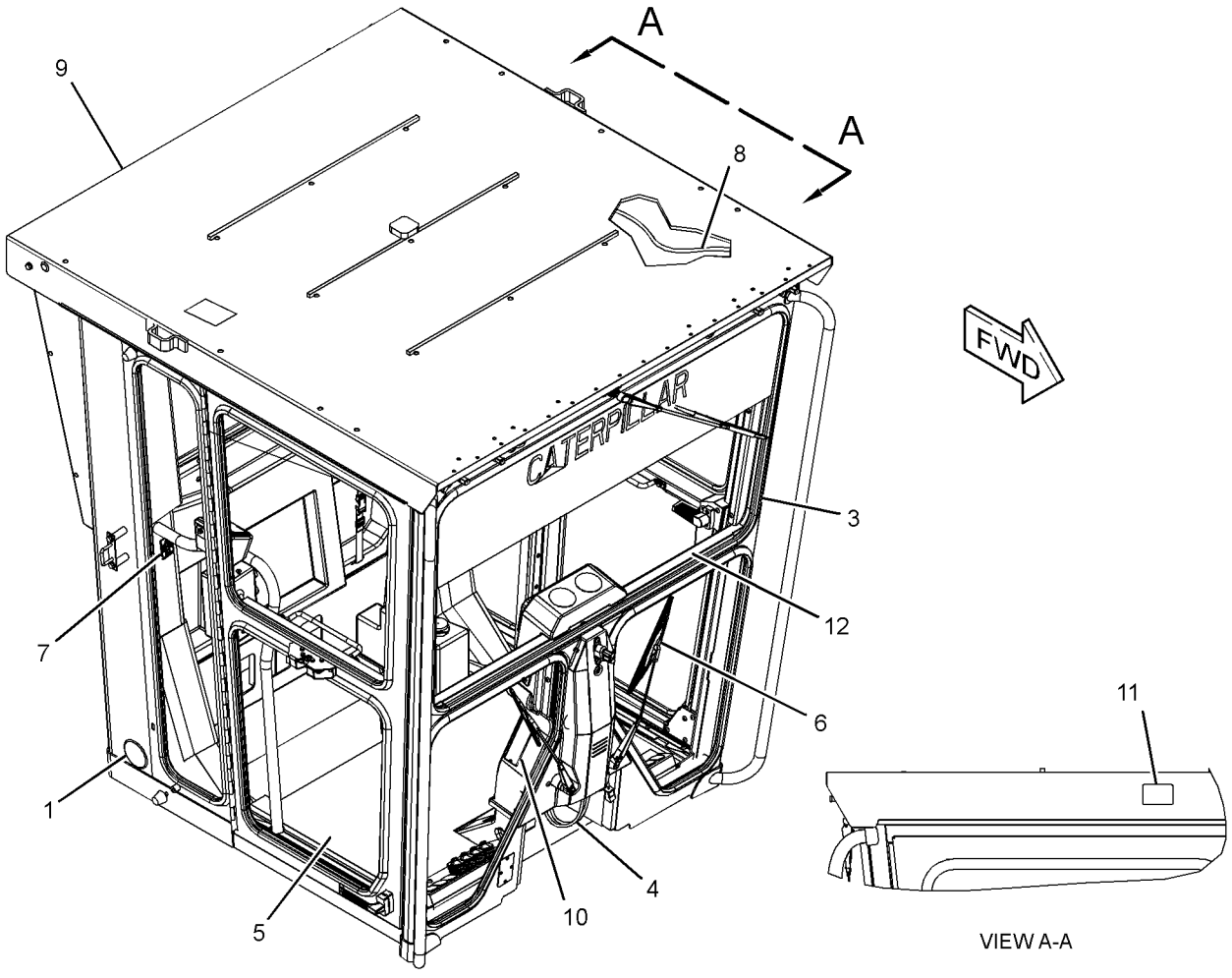

GRAPHIC #1 **<END>** g01936873

OPERATOR STATION

117-4698 ROPS GP—HIGH PROFILE, OPEN

S/N: JJA1-UP
PART OF 284-5397 ROPS GP
AN ATTACHMENT

SMCS-7177, 7323 **i03096184**

NOTE	PART NUMBER	QTY	PART NAME 1 2 3 4 5 6 (PRODUCT LEVEL)	SEE PAGE
	180-4656	1	PLATE GP-CERTIFICATION	
	4B-4158	4	SCREW-DRIVE (NO 4X0.25-IN)	
	156-6312	1	PLATE-WARNING (ROPS, FOPS, OPS, READ OMM)	

<END>

173-6756 ROPS GP—HIGH PROFILE

S/N: JJA1-UP
PART OF 290-0349 ROPS GP
AN ATTACHMENT

SMCS-7177, 7323 **i03192986**

NOTE	PART NUMBER	QTY	PART NAME 1 2 3 4 5 6 (PRODUCT LEVEL)	SEE PAGE
	180-4656	1	PLATE GP-CERTIFICATION	
	156-6312	1	PLATE-WARNING (ROPS, FOPS, OPS, READ OMM)	
			(ON LH SIDE OF ROOF PANEL)	
	4B-4158	4	SCREW-DRIVE (NO 4X0.25-IN)	

<END>

OPERATOR STATION

284-5397 ROPS GP—HIGH PROFILE, OPEN

S/N: JJA1-UP
PART OF 284-5400 ROPS AR
AN ATTACHMENT

SMCS-7177, 7323 **i03641791**

NOTE	REF NO	GRAPHIC REF	PART NUMBER	QTY	PART NAME 1 2 3 4 5 6 (PRODUCT LEVEL)	SEE PAGE
	1	1	**3E-4048**	2	CAP-PLUG	
	2	1	**3G-3265**	24	RIVET	
	3	1	**144-4107**	9	FASTENER	
	5	1	**5P-7803**	2	PLUG-BUTTON	
	6	1	**6G-2395**	2	DOOR GP (AIR VENTED)	
					(EACH INCLUDES)	
		1	**6G-7222**	2	ROLLER	
	7	1	**6G-2396**	2	GASKET	
	8	1	**6V-3928**	4	PLUG-BUTTON	
Y	9	1	**8X-2795**	1	MIRROR GP-REAR VIEW (DUAL INSIDE)	539
	10	1	**9D-1589**	2	MOUNTING	
	11	1	**102-9372**	1	GLASS (REAR)	
	12	1	**103-4771**	2	PIN AS	
	13	1	**103-4953**	4	MOUNTING	
	14	1	**103-5515**	1	PAD-RH	
	15	1	**103-5516**	1	PAD-LH	
Y	16	1	**117-4698**	1	ROPS GP (HIGH PROFILE, OPEN)	556
	17	1	**164-2465**	2	PAD	
B	18	1	**166-1997**	2	SHIM (1.2-MM THK)	
B	19	1	**166-1999**	2	SHIM (2.28-MM THK)	
	20	1	**219-0302**	2	FILM-WARNING (NO WELD, NO DRILL, READ OMM)	
	21	1	**323-8857**	1	FILM-CERTIFICATION (OPS, READ OMM)	
	22	1	**030-8535**	2	BOLT-LOCKING (3/8-16X0.875-IN)	
	23	1	**3V-9244**	2	WASHER (16.5X50X5-MM THK)	
	24	1	**4K-0367**	2	NUT-FULL (5/8-11-THD)	
	25	1	**7X-0354**	2	BOLT (5/8-11X4.5-IN)	
	26	1	**7X-0375**	4	BOLT (3/4-10X5-IN)	
	27	1	**8T-4122**	4	WASHER-HARD (17X32X3.5-MM THK)	
	28	1	**8T-4896**	2	WASHER-HARD (10.2X18.5X2.5-MM THK)	
	29	1	**8X-0674**	4	WASHER (22X100X10-MM THK)	
D	30	1	**5P-5768**		SEAL (4.3-M)	

B-USE AS REQUIRED
D-ORDER BY THE METER
Y-SEPARATE ILLUSTRATION

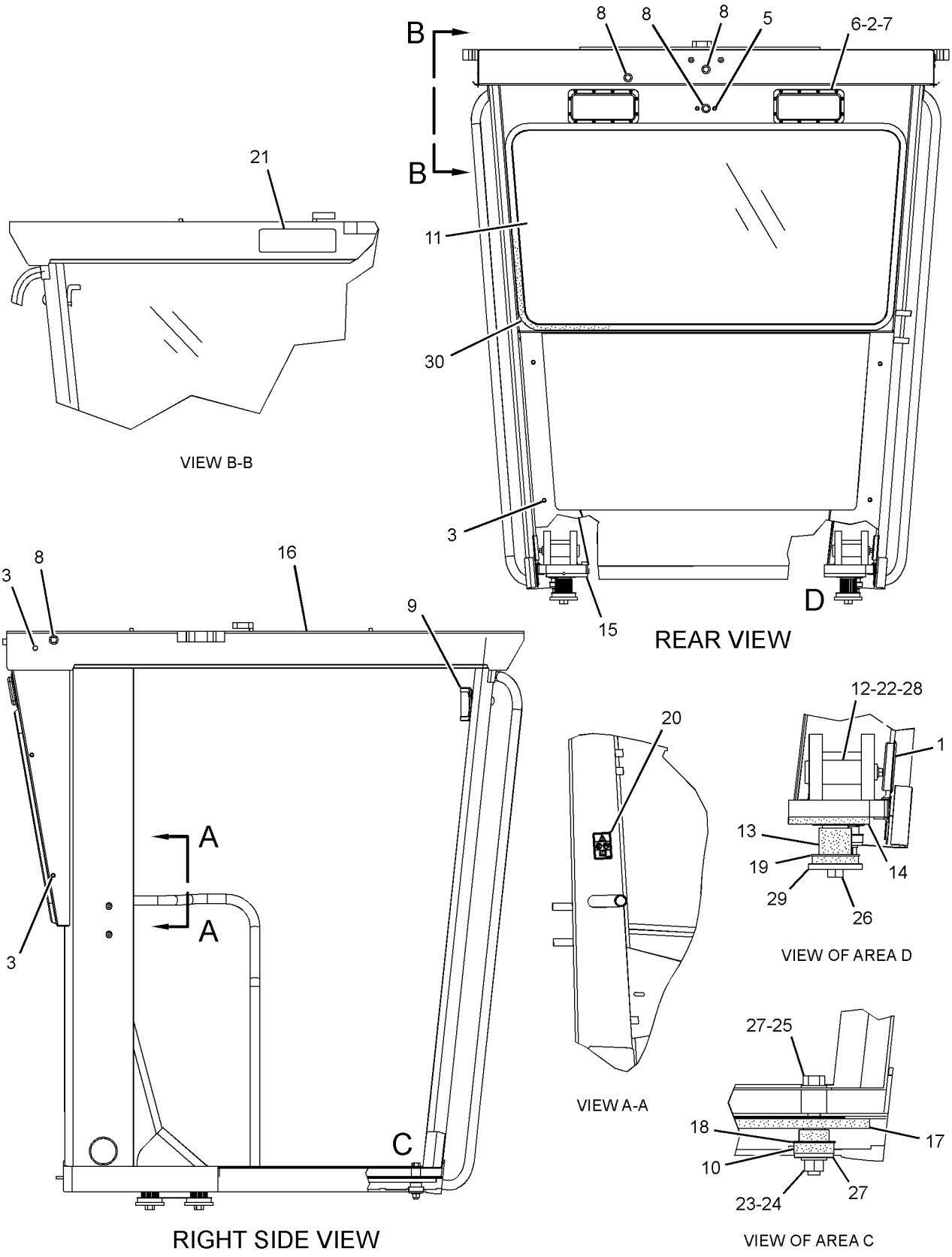

GRAPHIC #1 **<END>** g01940735

OPERATOR STATION

290-0349 ROPS GP–ENCLOSED

S/N: JJA1-UP
PART OF 320-0342 ROPS AR
AN ATTACHMENT

SMCS-7177, 7323 **i03641793**

NOTE	REF NO	GRAPHIC REF	PART NUMBER	QTY	PART NAME 1 2 3 4 5 6 (PRODUCT LEVEL)	SEE PAGE
Y	1	1	*8X-4413*	1	DOOR GP-CAB (HIGH PROFILE)	502
Y	2	1	**173-6756**	1	ROPS GP (HIGH PROFILE)	556

Y-SEPARATE ILLUSTRATION

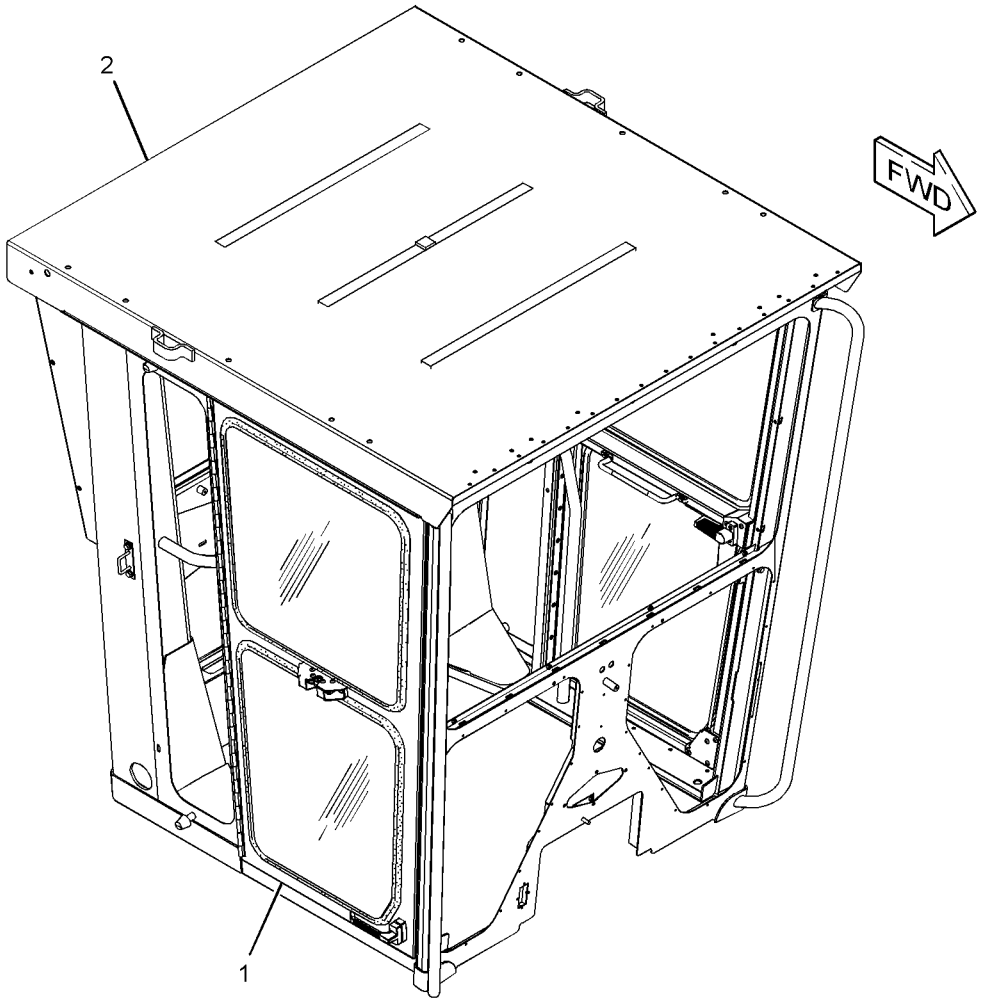

GRAPHIC #1 **<END>** g01763834

OPERATOR STATION

139-4612 SCREEN GP-SUN–REAR

S/N: JJA1-UP
PART OF 339-4968 OPTION AR-CAB
AN ATTACHMENT

SMCS-7165 **i02200406**

NOTE	REF NO	GRAPHIC REF	PART NUMBER	QTY	PART NAME 1 2 3 4 5 6 (PRODUCT LEVEL)	SEE PAGE
BJ	1	1	**6V-5164**		SEAL	
	2	1	**137-5503**	1	SCREEN GP-SUN	
	3	1	**139-4605**	1	PLATE AS	
M		1	**6V-9632**	4	NUT-WELD (M6X1-THD)	
M	4	1	**5C-9553**	4	BOLT (M6X1X16-MM)	
	5	1	**9X-8256**	4	WASHER (6.6X12X2-MM THK)	

B-USE AS REQUIRED
J-SOLD BY THE DECIMETER
M-METRIC PART

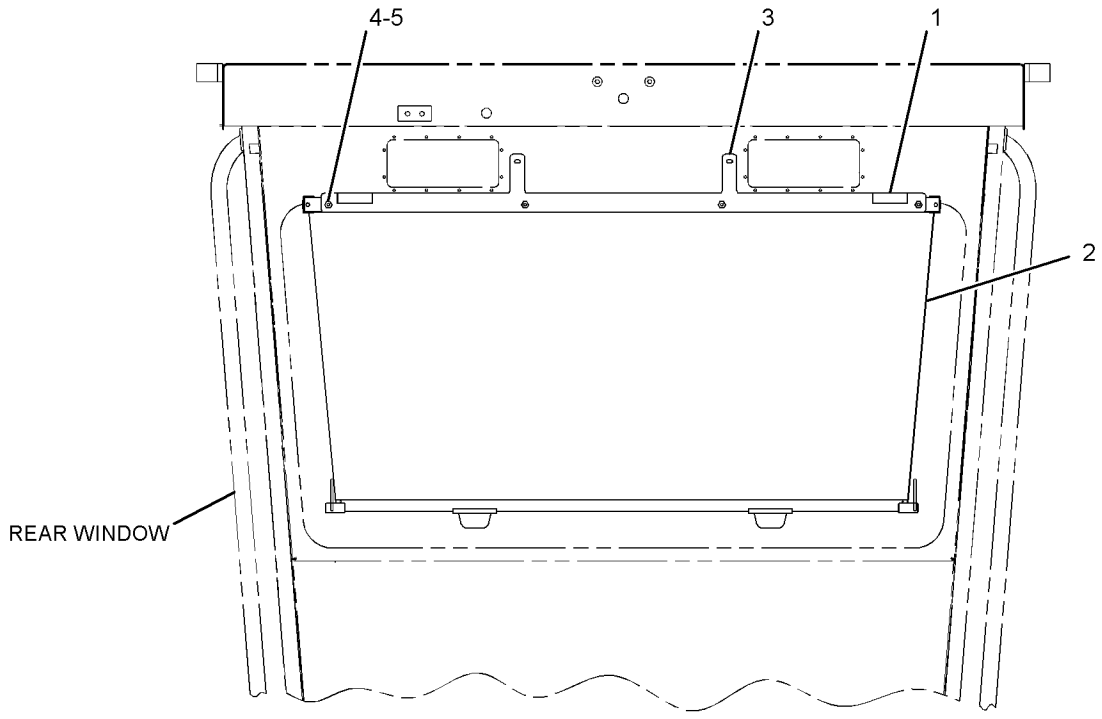

REAR VIEW

GRAPHIC #1 **<END>** g01070840

OPERATOR STATION

116-1965 SEAT BELT GP–RETRACTABLE

S/N: JJA1-UP
PART OF 126-2747 SEAT GP
AN ATTACHMENT

SMCS-7327 **i03182243**

NOTE	REF NO	GRAPHIC REF	PART NUMBER	QTY	PART NAME 1 2 3 4 5 6 (PRODUCT LEVEL)	SEE PAGE
	1	1	**1A-4350**	1	BOLT (7/16-20X1.75-IN)	
	2	1	**4D-6432**	1	LOCKNUT (7/16-20-THD)	
	3	1	**8S-0934**	2	LOCKNUT-FLANGE (7/16-20-THD)	
	4	1	**8T-9381**	1	BOLT (7/16-20X1-IN)	

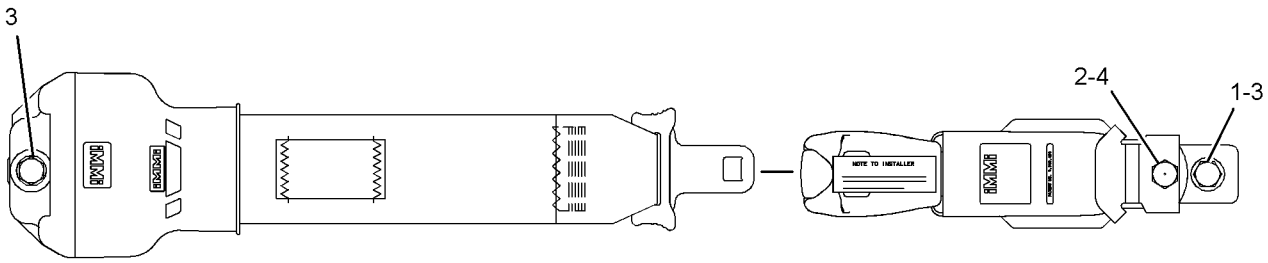

GRAPHIC #1 **<END>** g01286454

OPERATOR STATION

222-0345 SEAT BELT GP–RETRACTABLE

S/N: JJA1-UP
PART OF 175-1504 SEAT GP
AN ATTACHMENT

SMCS-7327 **i02947636**

NOTE	REF NO	GRAPHIC REF	PART NUMBER	QTY	PART NAME 1 2 3 4 5 6 (PRODUCT LEVEL)	SEE PAGE
					(NO SERVICED PARTS)	

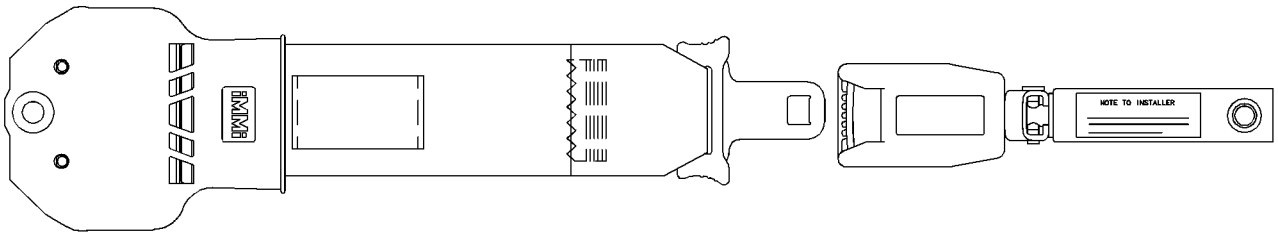

GRAPHIC #1 **<END>** g01196135

OPERATOR STATION

8Y-4005 SEAT GP—VINYL

S/N: JJA1-UP
PART OF 8Y-6852 SEAT GP-STATIC
AN ATTACHMENT

SMCS-7312 **i02845646**

NOTE	REF NO	GRAPHIC REF	PART NUMBER	QTY	PART NAME 1 2 3 4 5 6 (PRODUCT LEVEL)	SEE PAGE
BE	1	1	**7X-7877**		STRIP-EDGING	
	2	1	**8R-2057**	1	CUSHION AS-SEAT	
	3	1	**8R-2054**	1	CUSHION AS-BACK	
	4	1	**6W-1895**	1	BAR	
	5	1	**6W-1890**	1	BAR AS	
	6	1	**9C-1587**	1	LEVER	
	7	1	**8T-9043**	4	BOLT (5/16-18X0.875-IN)	
	8	1	**033-4843**	4	NUT (5/16-18-THD)	
	9	1	**6W-9693**	2	ADJUSTER AS	
	10	1	**6W-2373**	1	SPRING	
	11	1	**119-0036**	4	SCREW-FLAT HEAD (5/16-18X0.875-IN)	
	12	1	**9V-7437**	1	SHELL AS	
	13	1	**9S-2544**	4	SCREW-HEX HEAD (8-32X11.13-MM)	
	14	1	**6W-5757**	1	CLIP	
	15	1	**6W-3309**	1	HOLDER	
	16	1	**8T-7565**	7	RIVET-POP	
	17	1	**5P-7957**	1	LANYARD	
	18	1	**6W-5740**	1	CAP	
	19	1	**5B-6172**	4	WASHER (9.7X19X0.8-MM THK)	
	20	1	**7X-7739**	4	WASHER (9.7X25.4 X4-MM THK)	

B-USE AS REQUIRED
E-ORDER BY THE CENTIMETER

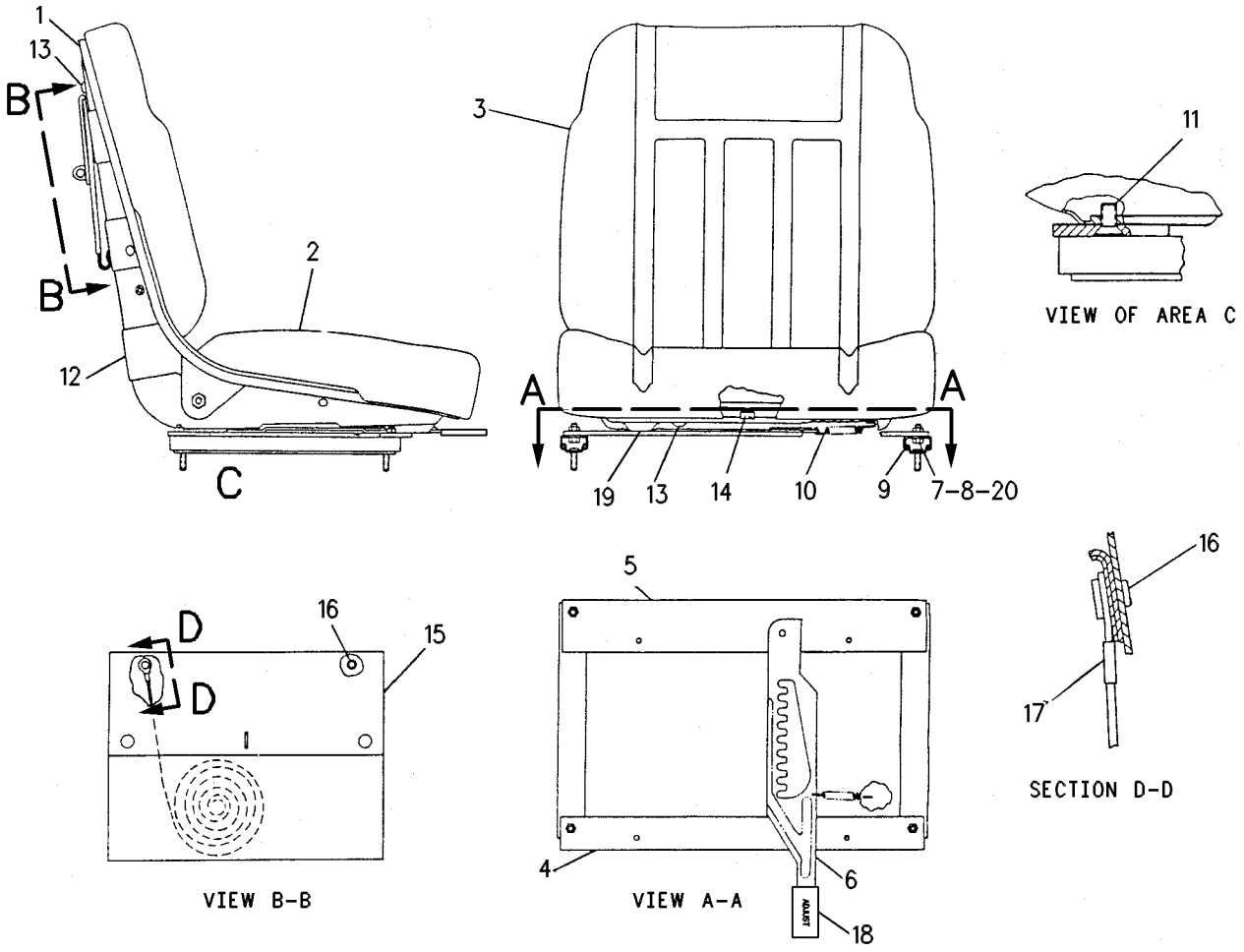

GRAPHIC #1 **<END>** g00109668

OPERATOR STATION

113-4254 SEAT GP–VINYL

S/N: JJA1-UP

PART OF 346-3710 GENERAL AR

SMCS-7312 **i03469942**

NOTE	PART NUMBER	QTY	PART NAME 1 2 3 4 5 6 (PRODUCT LEVEL)	SEE PAGE
	246-2641	1	PADLOCK GP	
	5P-8500	1	KEY	
	8Y-4030	1	SEAT BELT GP (ADJUSTABLE, 3-IN)	
Y	*125-9856*	1	SEAT GP-STATIC	573
M	**9X-2041**	6	SCREW-TRUSS HEAD (M10X1.5X20-MM)	

M-METRIC PART
Y-SEPARATE ILLUSTRATION

<END>

OPERATOR STATION

125-9855 SEAT GP

S/N: JJA1-UP

PART OF 125-9856 SEAT GP-STATIC

SMCS-7312 **i00131050**

NOTE	REF NO	GRAPHIC REF	PART NUMBER	QTY	PART NAME 1 2 3 4 5 6 (PRODUCT LEVEL)	SEE PAGE
	1	1	**6W-5757**	1	CLIP	
	2	1	**1F-1599**	2	RIVET-HEAD	
	3	1	**9V-8788**	1	ROD	
	4	1	**8V-3208**	1	LEVER	
	5	1	**8R-2054**	1	CUSHION AS-BACK	
	6	1	**8R-2057**	1	CUSHION AS-SEAT	
	7	1	**033-4121**	4	BOLT (5/16-18X0.625-IN)	
	8	1	**9V-7437**	1	SHELL AS	
		1	**9V-7440**	4	NUT-WELD	
BE	9	1	**7X-7877**		STRIP-EDGING	
	10	1	**9S-2544**	4	SCREW-HEX HEAD (8-32X11.13-MM)	
	11	1	**6W-3309**	1	HOLDER	
	12	1	**8T-7565**	7	RIVET-POP	
	13	1	**5P-7957**	1	LANYARD	
	14	1	**9V-8789**	2	ADJUSTER AS	

B-USE AS REQUIRED
E-ORDER BY THE CENTIMETER

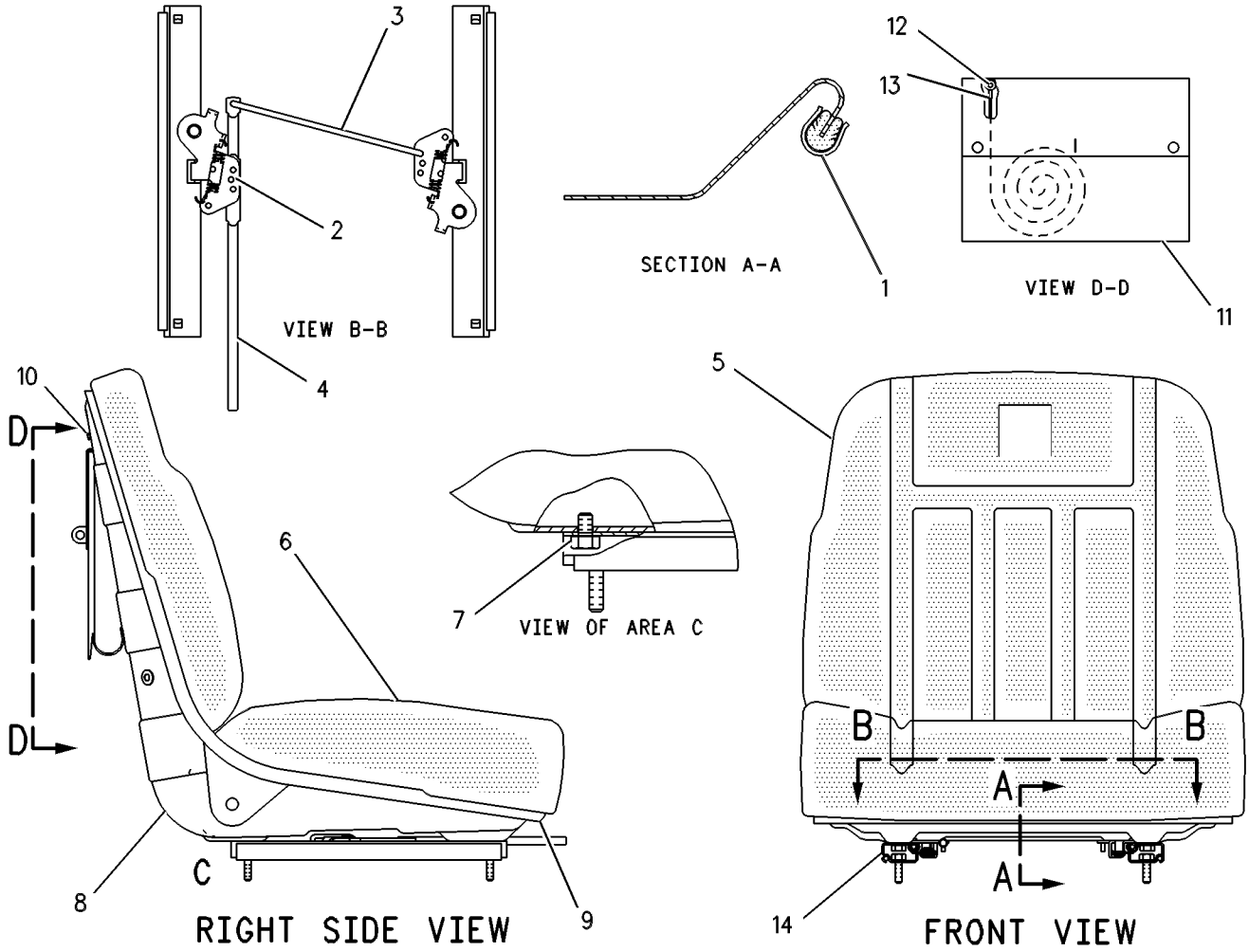

GRAPHIC #1 **<END>** g00109164

OPERATOR STATION

126-2747 SEAT GP–VINYL

S/N: JJA1-UP

PART OF 339-4964, 339-4965, 339-4966, 339-4967 OPTION AR-CAB

AN ATTACHMENT

SMCS-7312 **i03480373**

NOTE	PART NUMBER	QTY	PART NAME 1 2 3 4 5 6 (PRODUCT LEVEL)	SEE PAGE
	246-2641	1	PADLOCK GP	
A	**5P-8500**	1	KEY	
M	**9X-2041**	6	SCREW-TRUSS HEAD (M10X1.5X20-MM)	
Y	**116-1965**	1	SEAT BELT GP (RETRACTABLE)	561
Y	**8Y-6852**	1	SEAT GP-STATIC (VINYL)	571

A-NOT PART OF THIS GROUP
M-METRIC PART
Y-SEPARATE ILLUSTRATION

<END>

OPERATOR STATION

175-1504 SEAT GP–CLOTH

S/N: JJA1-UP
PART OF 302-8814 SEAT GP-SUSPENSION
AN ATTACHMENT

SMCS-7312 **i02947579**

NOTE	REF NO	GRAPHIC REF	PART NUMBER	QTY	PART NAME 1 2 3 4 5 6 (PRODUCT LEVEL)	SEE PAGE
	1	1	**173-3084**	1	EXTENSION GP-BACKREST	
	2	1	**177-4937**	1	SPACER (11.7X19.8X20.3-MM THK)	
Y	3	1	**202-7666**	1	ARMREST GP (RH)	482
Y	4	1	**202-7668**	1	ARMREST GP (LH)	483
Y	5	1	**222-0345**	1	SEAT BELT GP (RETRACTABLE)	562
Y	6	1	**301-4174**	1	SEAT GP (CLOTH)	569
	7	1	**0T-0244**	1	BOLT (7/16-20X1.25-IN)	
	8	1	**205-6388**	1	BOLT (7/16-20X1.75-IN)	

Y-SEPARATE ILLUSTRATION

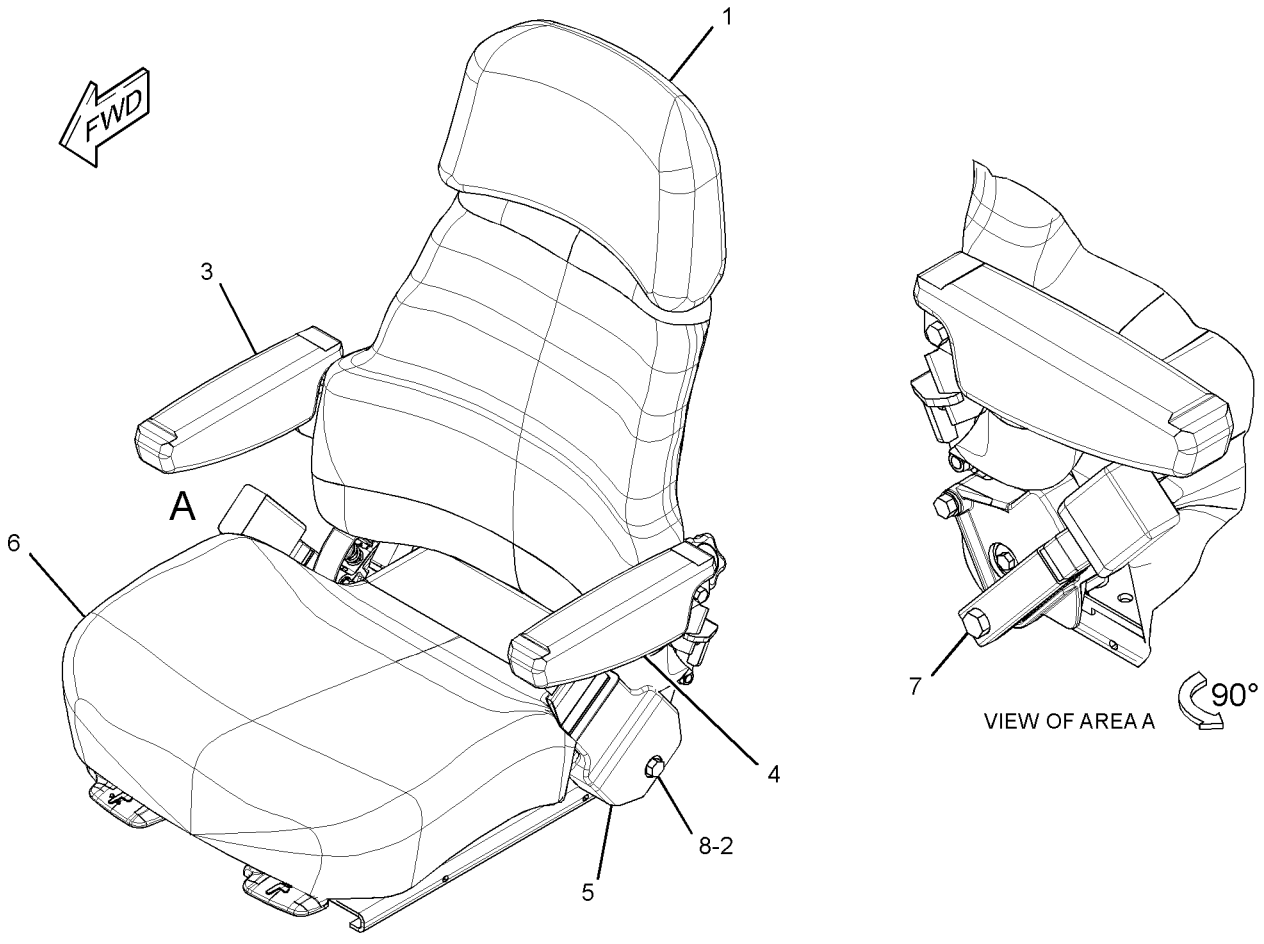

GRAPHIC #1 **<END>** g01415163

OPERATOR STATION

301-4174 SEAT GP–CLOTH

S/N: JJA1-UP
PART OF 175-1504 SEAT GP
AN ATTACHMENT

SMCS-7312 **i02947637**

NOTE	REF NO	GRAPHIC REF	PART NUMBER	QTY	PART NAME 1 2 3 4 5 6 (PRODUCT LEVEL)	SEE PAGE
	1	1	**143-1288**	8	LOCKNUT-FLANGE (3/8-16-THD)	
	2	1	**171-1230**	6	SCREW-BUTTON HEAD (3/8-16X1-IN)	
	3	1	**171-6682**	1	BAR	
	4	1	**172-2416**	2	PIN	
	5	1	**172-6581**	1	PAN AS	
		1	**6K-3273**	5	RIVET-POP	
		1	**169-1025**	1	CUSHION AS	
Y	6	1	*173-1028*	1	ADJUSTER GP-SEAT	475
	7	1	**177-1863**	2	BOLT-PIVOT (3/8-16X2.89-IN)	
	8	1	**184-2298**	1	ROD	
	9	1	**184-2299**	4	WASHER (7X25.4X2.54-MM THK)	
Y	10	1	*210-2270*	1	RECLINER GP-SEAT	553
	11	1	**294-5042**	2	SPACER (11.1X19.5X9.67-MM THK)	
Y	12	1	*301-4173*	1	PAN GP-BACKREST	548
	13	1	**095-0843**	2	PIN-COTTER	
	14	1	**5V-1496**	2	RETAINER	
	15	1	**6V-7646**	2	WASHER-HARD (7.2X25X2-MM THK)	
	16	1	**8T-0328**	1	WASHER-HARD (5.5X10X1-MM THK)	
	17	1	**8T-4205**	1	WASHER-HARD (7.2X14.5X2-MM THK)	

Y-SEPARATE ILLUSTRATION

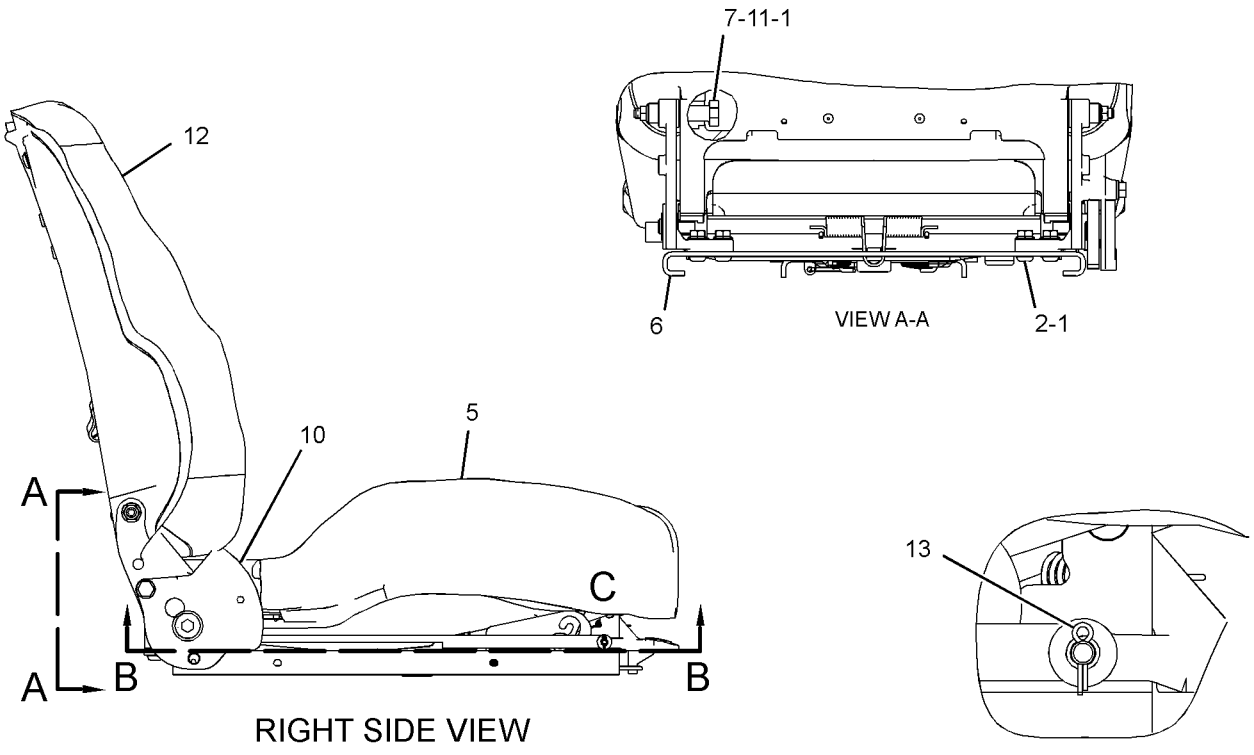

GRAPHIC #1 **<END>** g01416932

OPERATOR STATION

8Y-6852 SEAT GP-STATIC—VINYL

S/N: JJA1-UP
PART OF 126-2747 SEAT GP
AN ATTACHMENT

SMCS-7312 **i03182148**

NOTE	REF NO	GRAPHIC REF	PART NUMBER	QTY	PART NAME 1 2 3 4 5 6 (PRODUCT LEVEL)	SEE PAGE
Y	1	1	**116-2779**	1	ADJUSTER GP-SEAT (VINYL)	472
Y	2	1	**8Y-4005**	1	SEAT GP (VINYL)	563
	3	1	**9L-9814**	4	LOCKNUT	
	4	1	**8S-4790**	2	SPACER (0.459X0.625X0.25-IN THK)	
	5	1	**119-6194**	1	BOOT AS	
	6	1	**089-7968**	2	WASHER (13X27.5X2.5-MM THK)	
	7	1	**8R-4519**	2	LOCKNUT (7/16-20-THD)	
	8	1	**6W-3628**	2	CABLE	
	9	1	**5M-2894**	4	WASHER-HARD (10.2X18.5X2.5-MM THK)	
	10	1	**9V-7446**	1	ARMREST AS (RH)	
		1	**2K-4973**	1	LOCKNUT (3/8-16-THD)	
		1	**2K-6061**	1	SCREW-MACHINE (3/8-16X1.5-IN)	
		1	**5S-7383**	1	BOLT (3/8-16X1.75-IN)	
		1	**8Y-6277**	2	SPACER (10.5X28.6X10-MM THK)	
		1	**9V-7447**	1	PAD AS	
		1	**1F-0750**	1	NUT-WELD (3/8-16-THD)	
		1	**9V-7453**	1	BRACKET (RH)	
	11	1	**9V-7454**	1	ARMREST AS (LH)	
		1	**2K-4973**	1	LOCKNUT (3/8-16-THD)	
		1	**2K-6061**	1	SCREW-MACHINE (3/8-16X1.5-IN)	
		1	**5S-7383**	1	BOLT (3/8-16X1.75-IN)	
		1	**8Y-6277**	2	SPACER (10.5X28.6X10-MM THK)	
		1	**9V-7447**	1	PAD AS	
		1	**1F-0750**	1	NUT-WELD (3/8-16-THD)	
		1	**9V-7458**	1	BRACKET (LH)	
	12	1	**8T-9381**	2	BOLT (7/16-20X1-IN)	
M	13	1	**9X-8276**	4	BOLT (3/8-16X0.75-MM)	

M-METRIC PART
Y-SEPARATE ILLUSTRATION

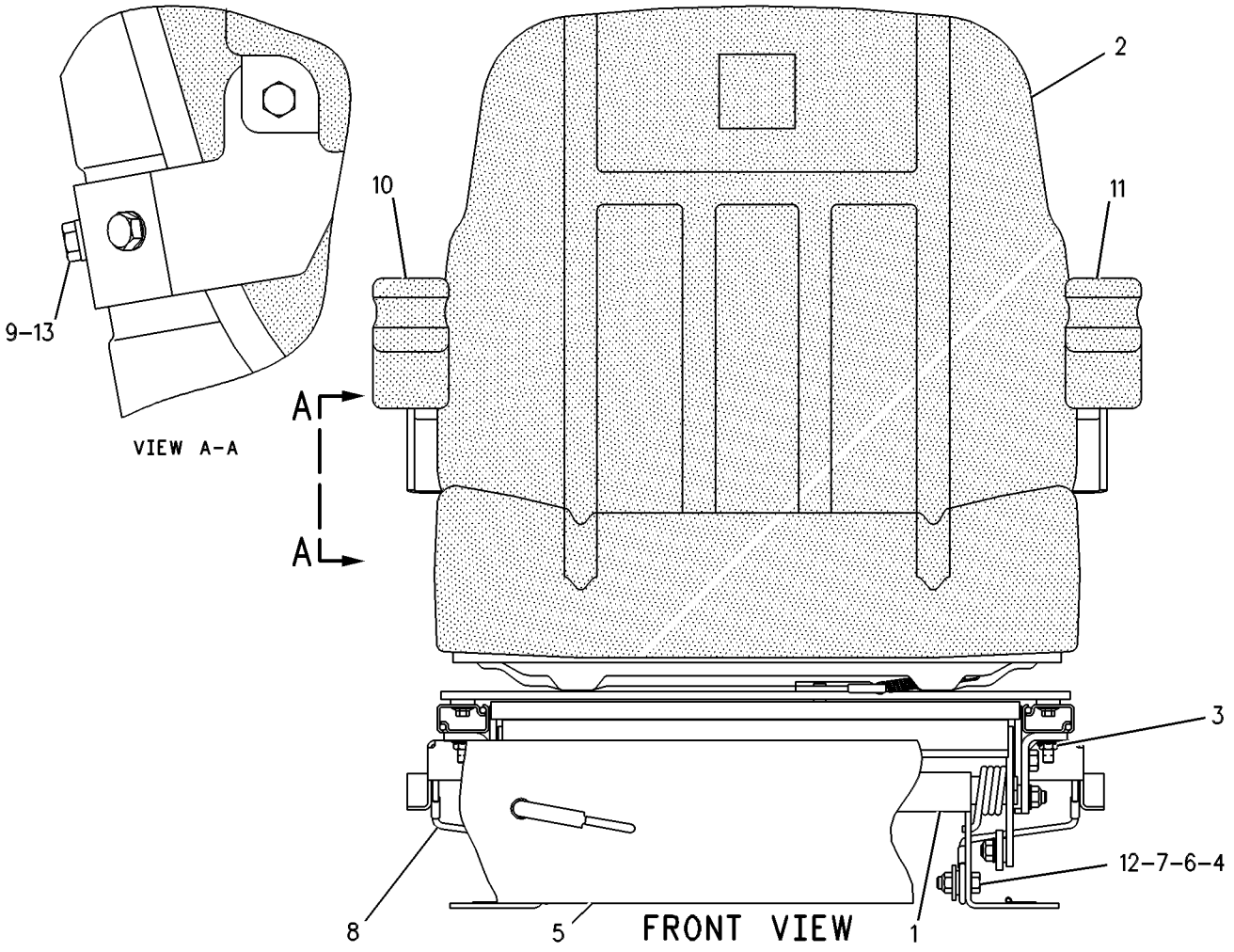

GRAPHIC #1 **<END>** g00109321

OPERATOR STATION

125-9856 SEAT GP-STATIC

S/N: JJA1-UP

PART OF 113-4254 SEAT GP

SMCS-7312 **i00131056**

NOTE	REF NO	GRAPHIC REF	PART NUMBER	QTY	PART NAME 1 2 3 4 5 6 (PRODUCT LEVEL)	SEE PAGE
Y	1	1	**125-9855**	1	SEAT GP	566
Y	2	1	**125-9854**	1	ADJUSTER GP-SEAT	474
	3	1	**031-4155**	4	LOCKNUT (5/16-18 THD)	
	4	1	**8T-4224**	4	WASHER-HARD (2MM THK)	

Y-SEPARATE ILLUSTRATION

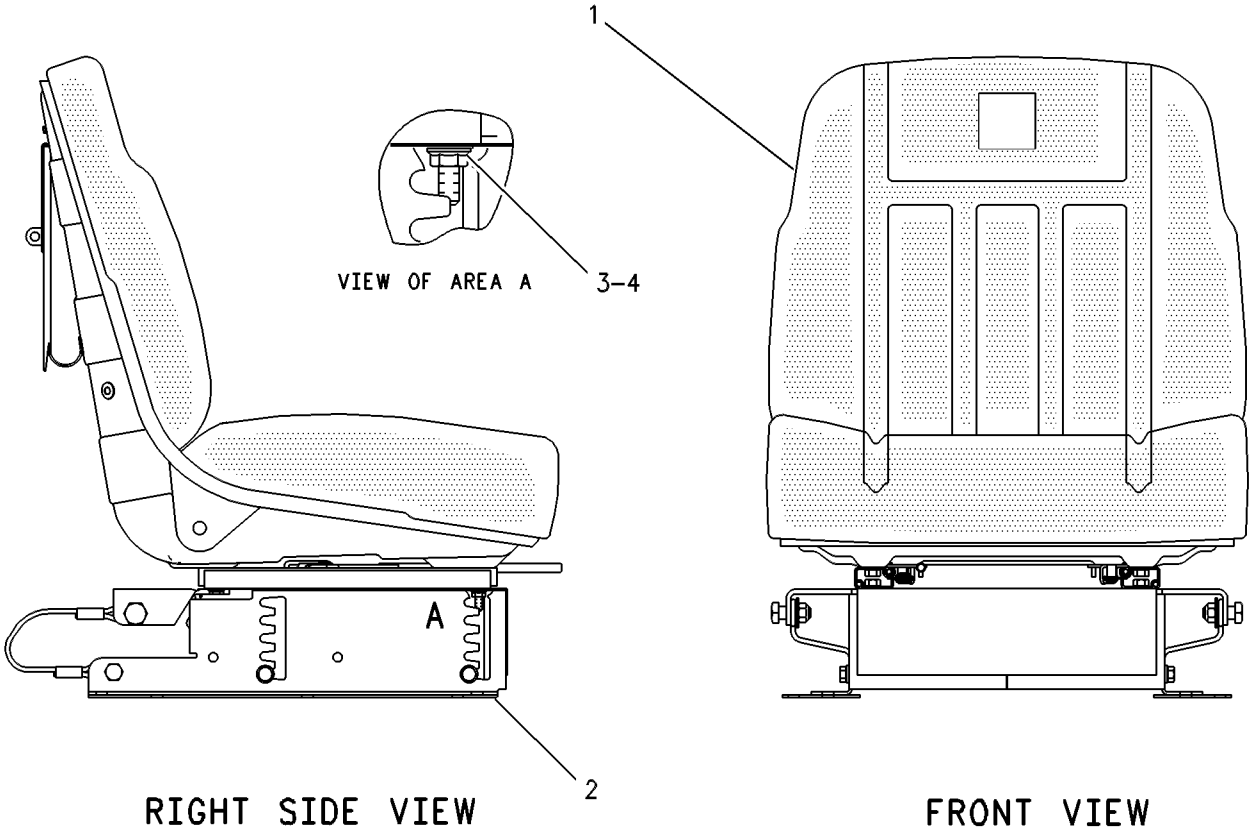

GRAPHIC #1 **<END>** g00109154

OPERATOR STATION

302-8814 SEAT GP-SUSPENSION—CLOTH

S/N: JJA1-UP
PART OF 322-8548 SEAT GP-SUSPENSION
AN ATTACHMENT

SMCS-7312 **i02946650**

NOTE	REF NO	GRAPHIC REF	PART NUMBER	QTY	PART NAME 1 2 3 4 5 6 (PRODUCT LEVEL)	SEE PAGE
J	1	1	**161-9289**	4	BLOCK-SLIDER	
J	2	1	**173-5787**	4	SETSCREW (1/4-20-THD)	
Y	3	1	**175-1504**	1	SEAT GP (CLOTH)	568
J	4	1	**203-7703**	2	WASHER-HARD (10.2X22.22X2.38-MM THK)	
Y	5	1	**302-7458**	1	SUSPENSION GP-SEAT	578
J	6	1	**4F-4879**	1	BOLT (3/8-16X0.5-IN)	
					AVAILABLE REPAIR KIT(S):	
J			**173-7035**	1	KIT-SLIDER BLOCK (SUSPENSION SEAT)	
					(INCLUDES BOLT, BLOCK-SLIDERS, SETSCREWS, & WASHERS)	

J-(KIT MARKED J SERVICES PART(S) MARKED J)
Y-SEPARATE ILLUSTRATION

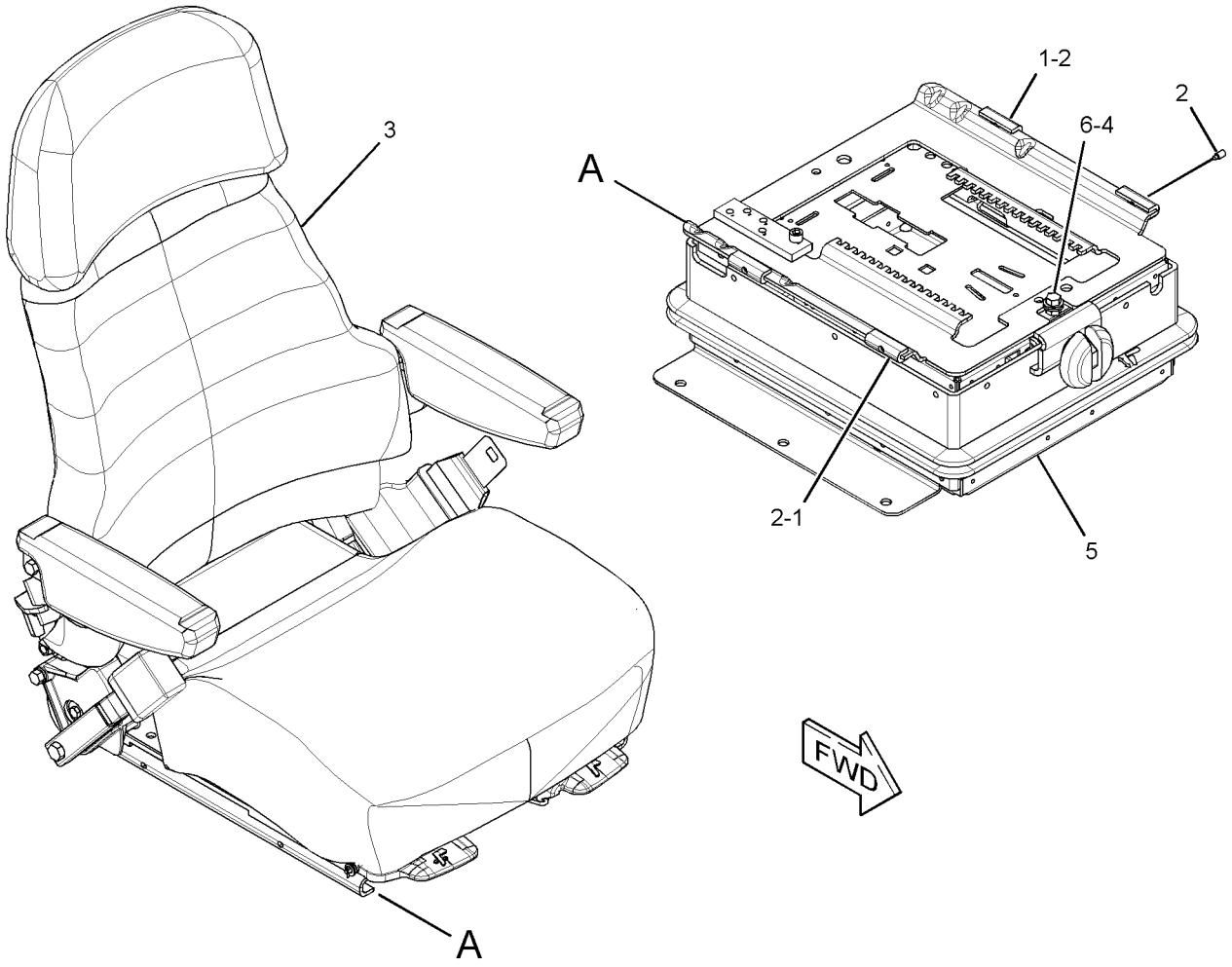

GRAPHIC #1 **<END>** g01451371

OPERATOR STATION

322-8548 SEAT GP-SUSPENSION—CLOTH

S/N: JJA1-UP
AN ATTACHMENT

SMCS-7312 **i03641797**

NOTE	REF NO	GRAPHIC REF	PART NUMBER	QTY	PART NAME 1 2 3 4 5 6 (PRODUCT LEVEL)	SEE PAGE
	1	1	**5P-7957**	1	LANYARD	
	2	1	**9M-5732**	4	RIVET-POP	
	3	1	**173-2052**	1	RETAINER	
	4	1	**178-7907**	1	HOLDER	
Y	5	1	**302-8814**	1	SEAT GP-SUSPENSION (CLOTH)	574
	6	1	**4B-4863**	4	WASHER (4.7X11X1.2-MM THK)	
M	7	1	**9X-2041**	6	SCREW-TRUSS HEAD (M10X1.5X20-MM)	

M-METRIC PART
Y-SEPARATE ILLUSTRATION

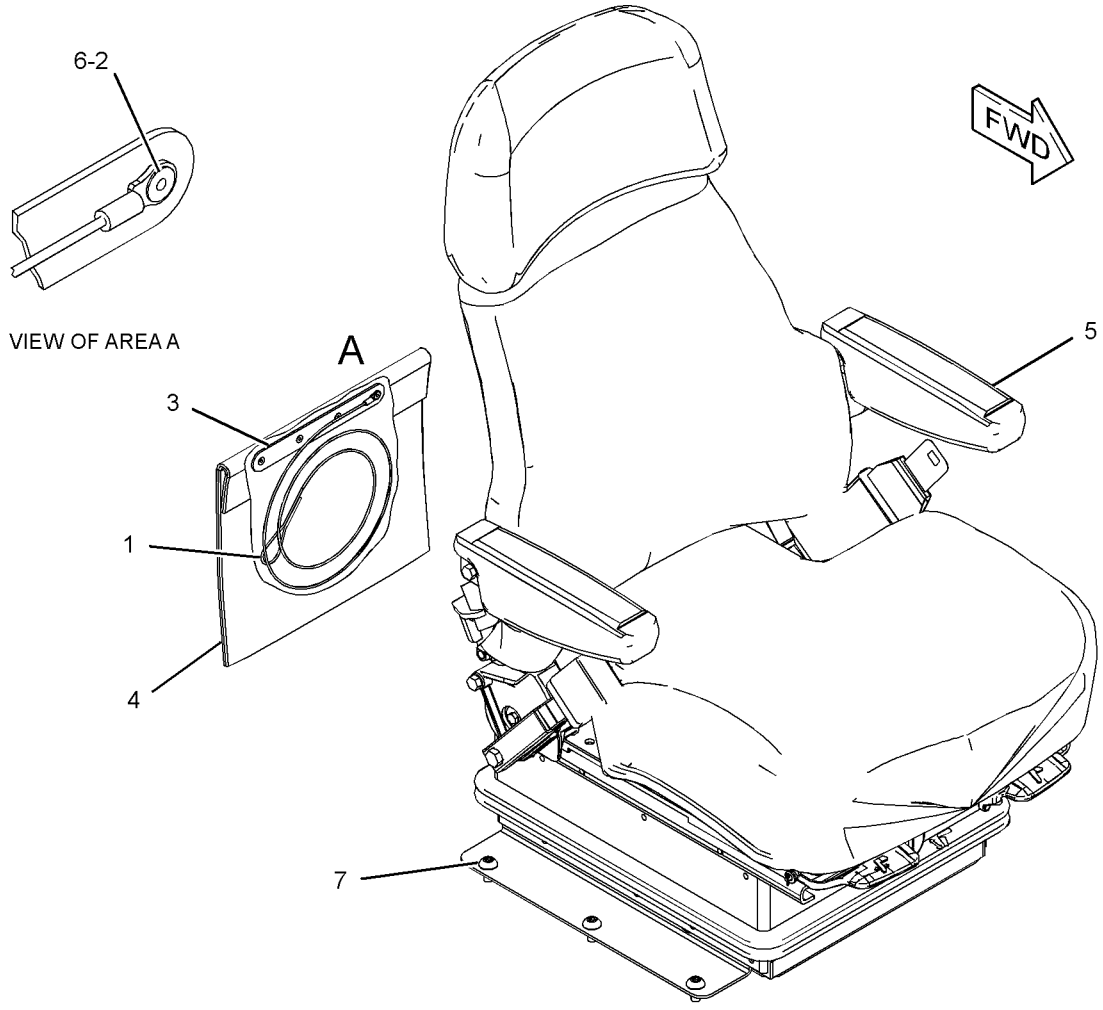

GRAPHIC #1 **<END>** g01662814

OPERATOR STATION

174-4546 SUPPORT GP-SEAT

S/N: JJA1-UP

PART OF 346-3710 GENERAL AR

SMCS-7321 **i01674709**

NOTE	REF NO	GRAPHIC REF	PART NUMBER	QTY	PART NAME 1 2 3 4 5 6 (PRODUCT LEVEL)	SEE PAGE
	1	1	**5P-7803**	2	PLUG-BUTTON	
	2	1	**7G-4824**	1	STRAP	
	4	1	**8E-7791**	1	STRAP	
	5	1	**8X-5536**	1	COVER	
	6	1	**8X-5538**	1	COVER AS	
M		1	**8T-3490**	4	NUT-WELD (M10X1.5-THD)	
	7	1	**8X-5540**	1	COVER	
	8	1	**123-4618**	1	COVER	
	9	1	**123-4701**	1	SEAL	
	10	1	**174-4492**	1	COVER	
	11	1	**174-6051**	1	SUPPORT AS	
		1	**5P-1075**	8	WASHER-HARD (10.2X22.5X3-MM THK)	
M		1	**6V-9632**	6	NUT-WELD (M6X1-THD)	
M		1	**8T-3490**	13	NUT-WELD (M10X1.5-THD)	
M		1	**9T-6001**	2	BOSS (M10X1.5-THD)	
		1	**123-8408**	2	TUBE AS	
	12	1	**174-6353**	1	PLATE	
	13	1	**176-5507**	1	PAD	
	14	1	**191-0027**	1	PAD	
	15	1	**5P-1075**	8	WASHER-HARD (10.2X22.5X3-MM THK)	
	16	1	**6V-8801**	8	NUT (3/8-16-THD)	
	17	1	**7X-0591**	2	WASHER-HARD (17X29X3-MM THK)	
M	18	1	**9X-2040**	4	SCREW-TRUSS HEAD (M10X1.5X25-MM)	
M	19	1	**9X-2041**	5	SCREW-TRUSS HEAD (M10X1.5X20-MM)	
M	20	1	**9X-2045**	6	SCREW-TRUSS HEAD (M6X1X20-MM)	

M-METRIC PART

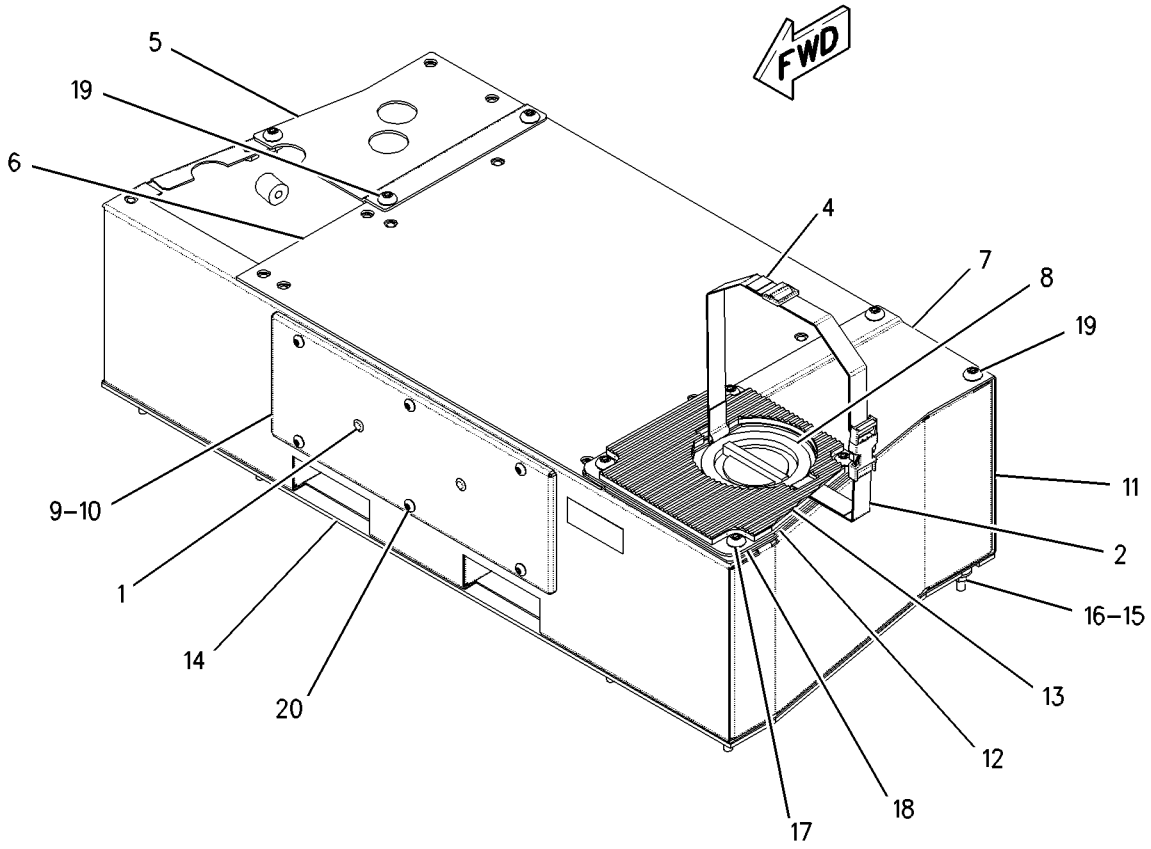

GRAPHIC #1 **<END>** g00865561

OPERATOR STATION

302-7458 SUSPENSION GP-SEAT

S/N: JJA1-UP
PART OF 302-8814 SEAT GP-SUSPENSION
AN ATTACHMENT

SMCS-7324 **i02947098**

NOTE	REF NO	GRAPHIC REF	PART NUMBER	QTY	PART NAME 1 2 3 4 5 6 (PRODUCT LEVEL)	SEE PAGE
	1	1	**2K-4973**	2	LOCKNUT (3/8-16-THD)	
	2	1	**4V-7884**	2	BEARING	
	3	1	**4V-8577**	4	BEARING	
	4	1	**5V-1497**	1	RETAINER	
	5	1	**124-0507**	1	ABSORBER AS-SHOCK	
	6	1	**8Y-6012**	1	ARM AS-SUSPENSION	
Y	7	1	**113-5808**	1	HOUSING GP-SEAT SUSPENSION	519
	8	1	**8Y-6024**	2	SHAFT AS	
J	9	1	**101-0003**	20	FASTENER	
J	10	1	**166-6781**	6	FASTENER	
J	11	1	**163-1146**	3	FASTENER	
	12	1	**145-0326**	1	FILM-INSTRUCTION (SEAT ADJUSTMENT)	
	13	1	**169-7380**	1	BOLT-SOCKET HEAD (3/8-16X0.375-IN)	
J	14	1	**197-7689**	3	FASTENER	
					AVAILABLE REPAIR KIT(S):	
J			**8Y-5944**	1	KIT-SUSPENSION BOOT (SEAT)	
					(INCLUDES BOOT, RETAINERS, & FASTENERS)	
			101-4194	1	BELT-TETHER (SUSPENSION SEAT)	
					(INCLUDES BELTS)	
			101-4195	1	KIT-SUSPENSION ROLLER (SUSPENSION SEAT)	
					(INCLUDES ROLLERS)	

J-(KIT MARKED J SERVICES PART(S) MARKED J)
Y-SEPARATE ILLUSTRATION

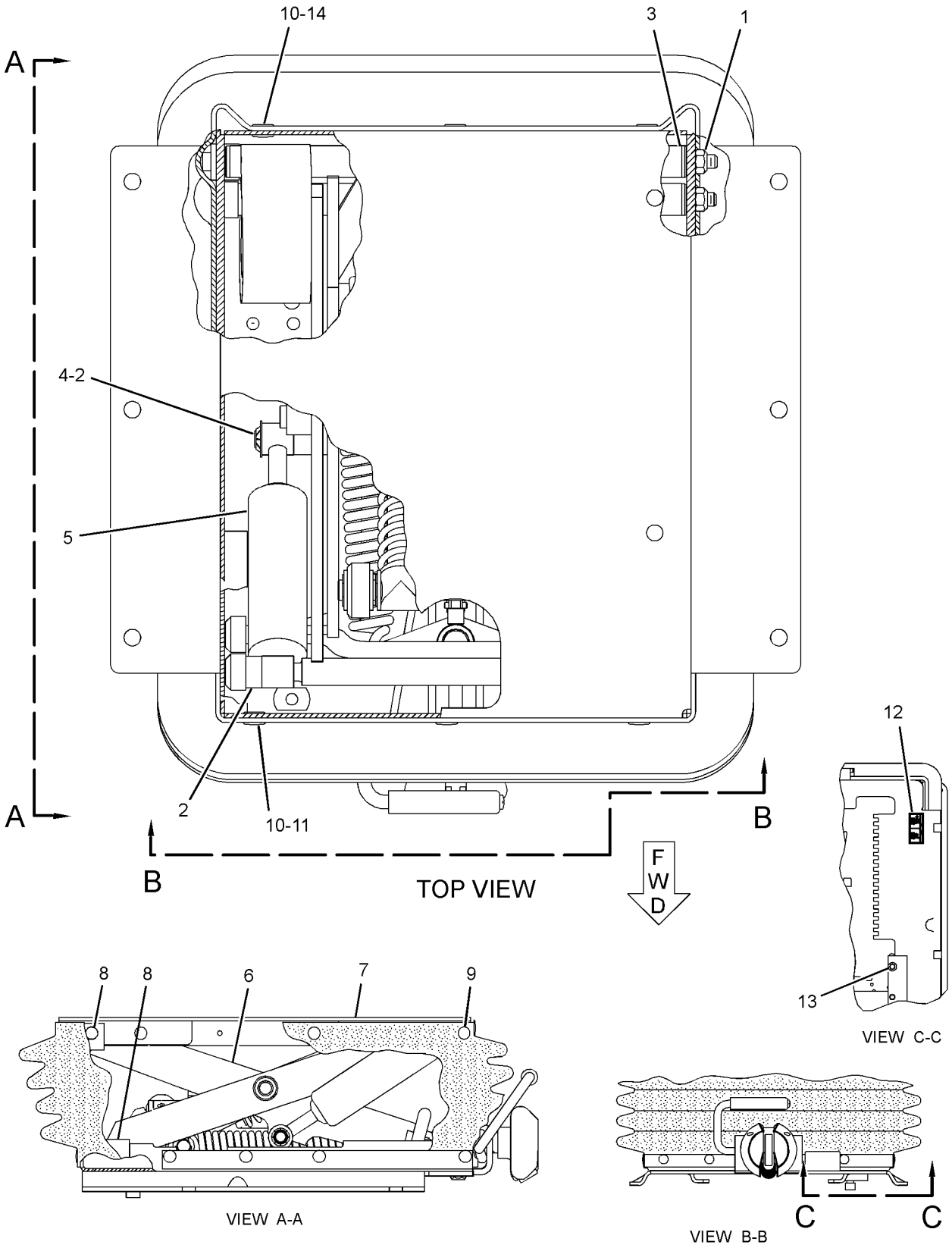

GRAPHIC #1 **<END>** g01453634

OPERATOR STATION

8X-2650 VALVE GP-AIR CONTROL

S/N: JJA1-UP

PART OF 283-3499 CONTROL GP-SERVICE BRAKE

SMCS-3123, 3272, 4265, 4282, 5506 **i02200392**

NOTE	REF NO	GRAPHIC REF	PART NUMBER	QTY	PART NAME 1 2 3 4 5 6 (PRODUCT LEVEL)	SEE PAGE
	1	1	**8X-2646**	1	LEVER AS	
	2	1	**9D-8121**	1	ROLLER	
	3	1	**3B-4607**	1	PIN-COTTER	
		1	**7B-9323**	1	PIN	
	4	1	**5D-3636**	1	BOOT	
	5	1	**2R-0719**	1	PLUNGER	
	6	1	**125-5321**	3	BOLT	
	7	1	**2R-0694**	1	PLATE-BRAKE VALVE	
	8	1	**2R-0724**	1	BUTTON-STOP	
	9	1	**2D-6006**	1	PIN	
	10	1	**3B-4610**	1	PIN-COTTER	
J	11	1	**8W-5651**	1	VALVE GP-CONTROL (AIR)	
		1	**5D-0768**	1	SPRING	
					AVAILABLE REPAIR KIT(S):	
J			**2G-6285**	1	KIT-AIR CONTROL VALVE	
					(INCLUDES SPRINGS, INLET & EXHAUST VALVES,O-RINGS, BOOT,SCREW,	
					LOCKNUT & FILTER)	

J-KIT MARKED J IS AVAILABLE FOR PART MARKED J

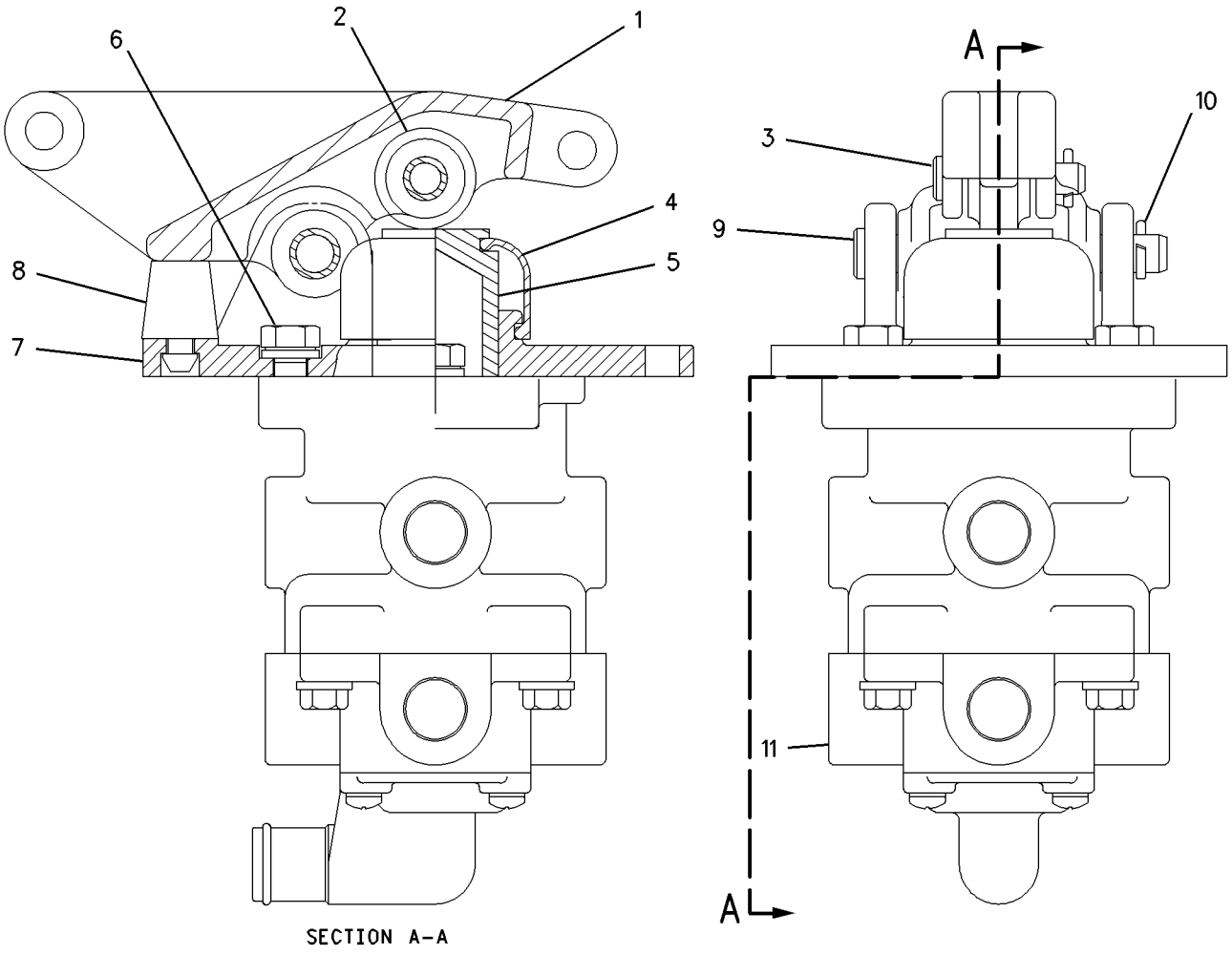

GRAPHIC #1 **<END>** g00688575

OPERATOR STATION

8X-9675 WASHER GP-WINDOW—FRONT

S/N: JJA1-UP
PART OF 320-0342 ROPS AR
AN ATTACHMENT

SMCS-7306 **i03524723**

NOTE	REF NO	GRAPHIC REF	PART NUMBER	QTY	PART NAME 1 2 3 4 5 6 (PRODUCT LEVEL)	SEE PAGE
E	1	1	**144-0195**		HOSE (250-CM EACH)	
E	1A	1	**144-0195**		HOSE (40-CM EACH)	
	2	1	**8W-0935**	1	GASKET	
	3	1	**8W-0934**	1	BRACKET	
	4	1	**9P-2369**	1	JET AS-WASHER	
		1	**8Y-4408**	1	NOZZLE AS-JET	
	5	1	**8T-2901**	1	NOZZLE AS	
		1	**8Y-4409**	1	NOZZLE AS-JET	
M	7	1	**5C-2890**	2	NUT (M6X1-THD)	
	8	1	**5P-4115**	2	WASHER-HARD (7.2X19X2-MM THK)	
	9	1	**3S-2093**	3	STRAP-CABLE	
	10	1	**102-3645**	1	COVER	
M	11	1	**9X-2045**	5	SCREW-TRUSS HEAD (M6X1X20-MM)	
	12	1	**4D-7388**	2	CLIP	
	13	1	**5M-3062**	1	BOLT (3/8-16X0.75-IN)	
	14	1	**8T-4896**	2	WASHER-HARD (10.2X18.5X2.5-MM THK)	
	15	1	**7T-8891**	2	PUMP AS-WASHER	
	16	1	**8X-9405**	1	RESERVOIR AS	
	17	1	**261-3345**	2	CONNECTOR	
	18	1	**6W-5698**	2	GROMMET	
	19	1	**7T-1961**	1	CAP	
	20	1	**8X-1135**	1	GASKET	
	21	1	**8X-9349**	1	PAD	
	22	1	**107-4865**	1	PAD	
	24	1	**4L-6454**	1	BOLT (3/8-16X1-IN)	
	25	1	**6V-8801**	1	NUT (3/8-16-THD)	
	26	1	**7G-4326**	1	PLATE	

E-ORDER BY THE CENTIMETER
M-METRIC PART

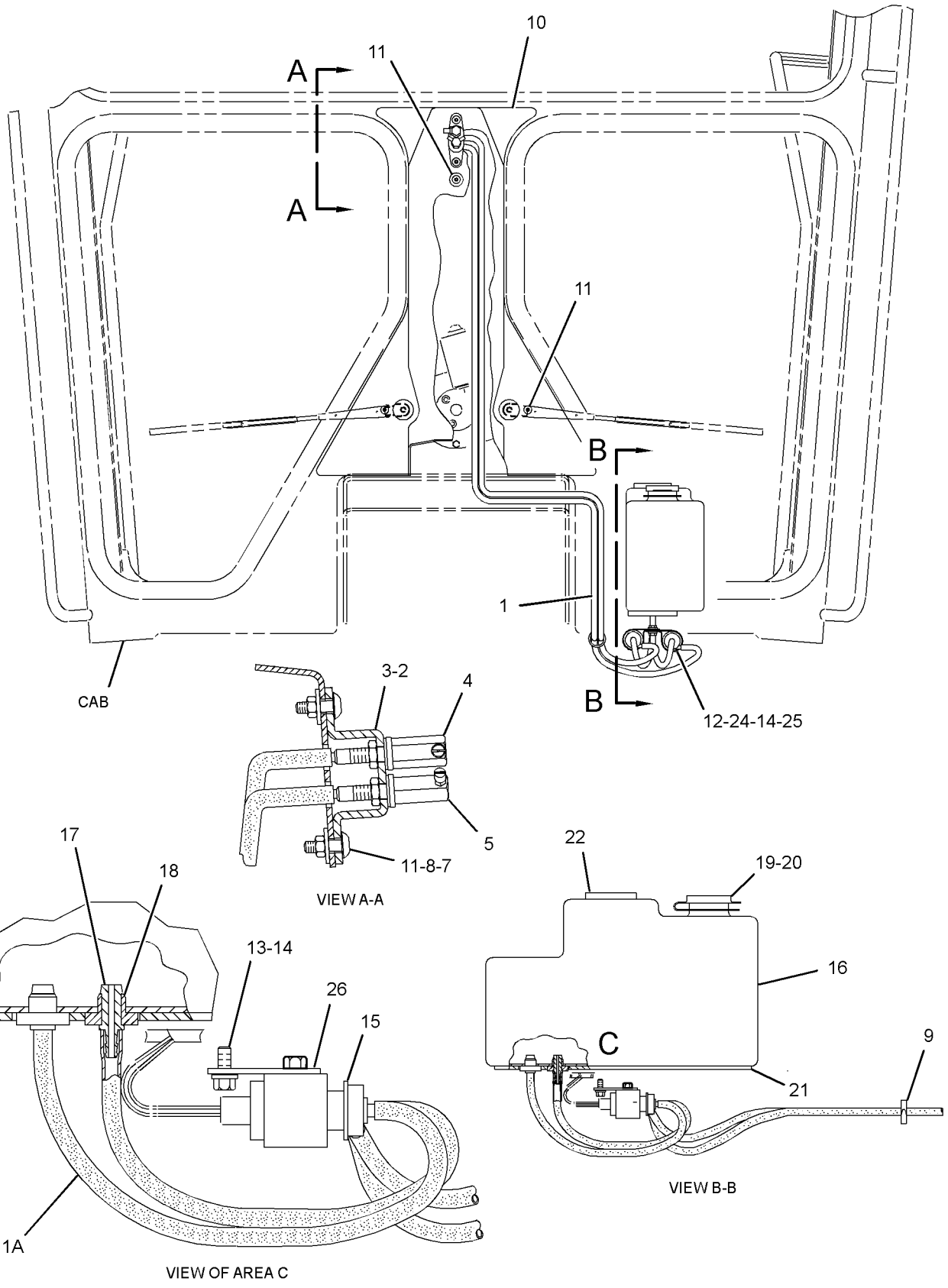

GRAPHIC #1 **<END>** g01852313

8X-9680 WASHER GP-WINDOW–REAR

S/N: JJA1-UP
PART OF 298-2426 WIPER AR-WINDOW
AN ATTACHMENT

SMCS-7306 **i02380619**

NOTE	REF NO	GRAPHIC REF	PART NUMBER	QTY	PART NAME 1 2 3 4 5 6 (PRODUCT LEVEL)	SEE PAGE
	1	1	**3V-3816**	1	NOZZLE AS	
	2	1	**7T-8891**	1	PUMP AS-WASHER	
	3	1	**4D-7388**	1	CLIP	
	4	1	**4D-7794**	4	CLIP	
	5	1	**5P-8167**	2	BOLT (3/8-16X0.625-IN)	
	6	1	**6K-9632**	1	TEE	
	7	1	**8T-4121**	3	WASHER-HARD (11X21X2.5-MM THK)	
M	8	1	**8T-4191**	3	BOLT (M10X1.5X16-MM)	
	9	1	**8T-4896**	2	WASHER-HARD (10.2X18.5X2.5-MM THK)	
E	10	1	**144-0195**		HOSE (188-CM)	
E	10A	1	**144-0195**		HOSE (20-CM)	
E	10B	1	**144-0195**		HOSE (10-CM)	

E-ORDER BY THE CENTIMETER
M-METRIC PART

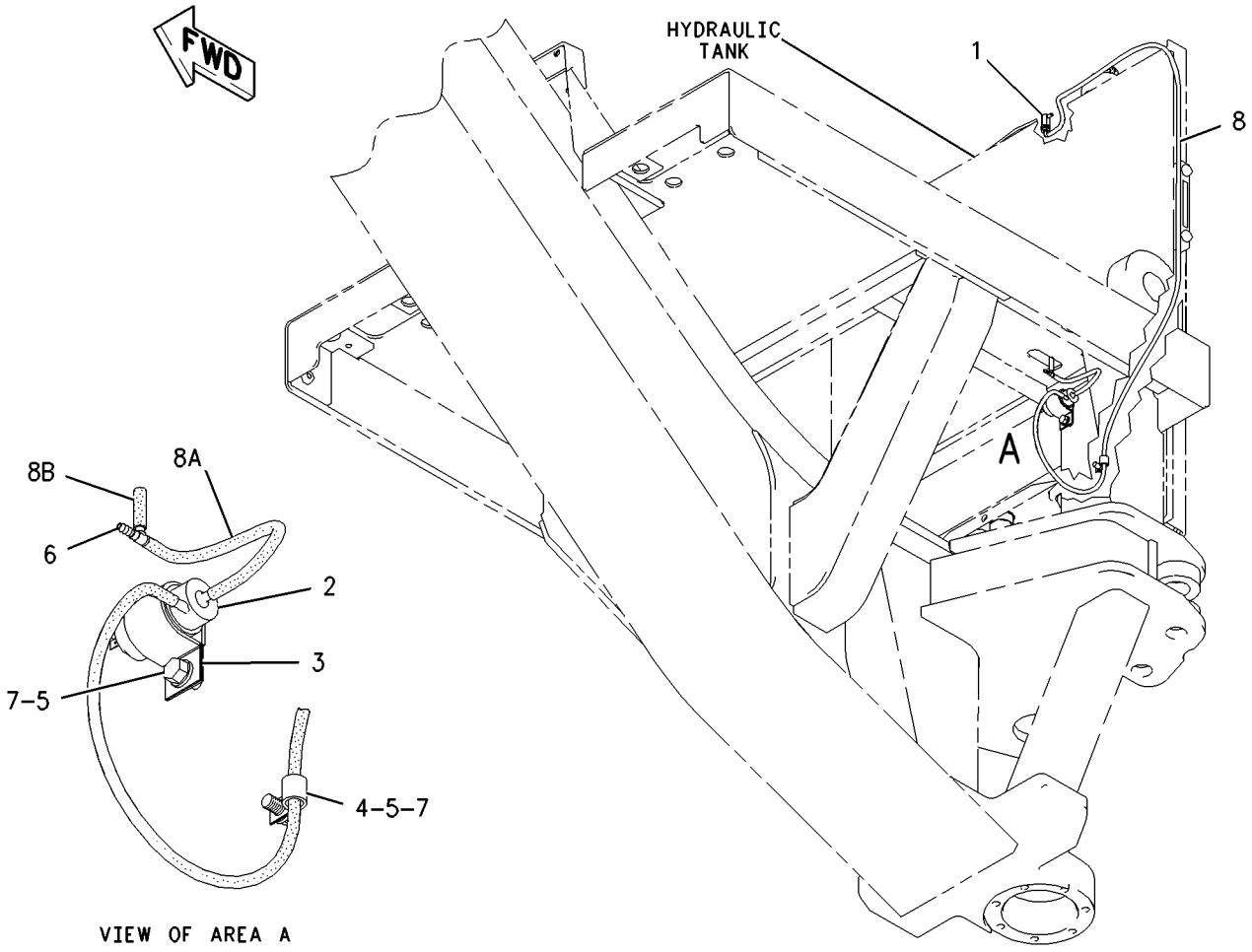

GRAPHIC #1 **<END>** g00898012

OPERATOR STATION

125-4342 WASHER GP-WINDOW—FRONT

S/N: JJA1-UP
PART OF 320-0341 CAB AR
AN ATTACHMENT

SMCS-7306 **i03558966**

NOTE	REF NO	GRAPHIC REF	PART NUMBER	QTY	PART NAME 1 2 3 4 5 6 (PRODUCT LEVEL)	SEE PAGE
	1	1	**8X-9405**	1	RESERVOIR AS	
		1	**6W-5698**	2	GROMMET	
		1	**7T-1961**	1	CAP	
		1	**8X-1135**	1	GASKET	
		1	**261-3345**	2	CONNECTOR	
		1	**8X-9349**	1	PAD (RECTANGULAR)	
		1	**107-4865**	1	PAD (ROUND)	
	2	1	**8W-0935**	1	GASKET	
	3	1	**8W-0934**	1	BRACKET	
	4	1	**9P-2369**	1	JET AS-WASHER	
		1	**8Y-4408**	1	NOZZLE AS-JET	
M	5	1	**9X-2042**	2	SCREW-TRUSS HEAD (M6X1X12-MM)	
M	6	1	**5C-2890**	2	NUT (M6X1-THD)	
	7	1	**5P-4115**	2	WASHER-HARD (7.2X19X2-MM THK)	
	8	1	**3S-2093**	3	STRAP-CABLE	
	9	1	**102-3645**	1	COVER	
M	10	1	**9X-2045**	3	SCREW-TRUSS HEAD (M6X1X20-MM)	
	11	1	**4D-7388**	1	CLIP	
	12	1	**5M-3062**	1	BOLT (3/8-16X0.75-IN)	
	13	1	**6K-9632**	1	TEE	
	14	1	**7T-8891**	1	PUMP AS-WASHER	
E	15	1	**144-0195**		HOSE (30-CM)	
E	15A	1	**144-0195**		HOSE (10-CM EACH)	
E	15B	1	**144-0195**		HOSE (220-CM)	
	16	1	**6V-6467**	2	PLUG	
	17	1	**8T-4896**	1	WASHER-HARD (10.2X18.5X2.5-MM THK)	

E-ORDER BY THE CENTIMETER
M-METRIC PART

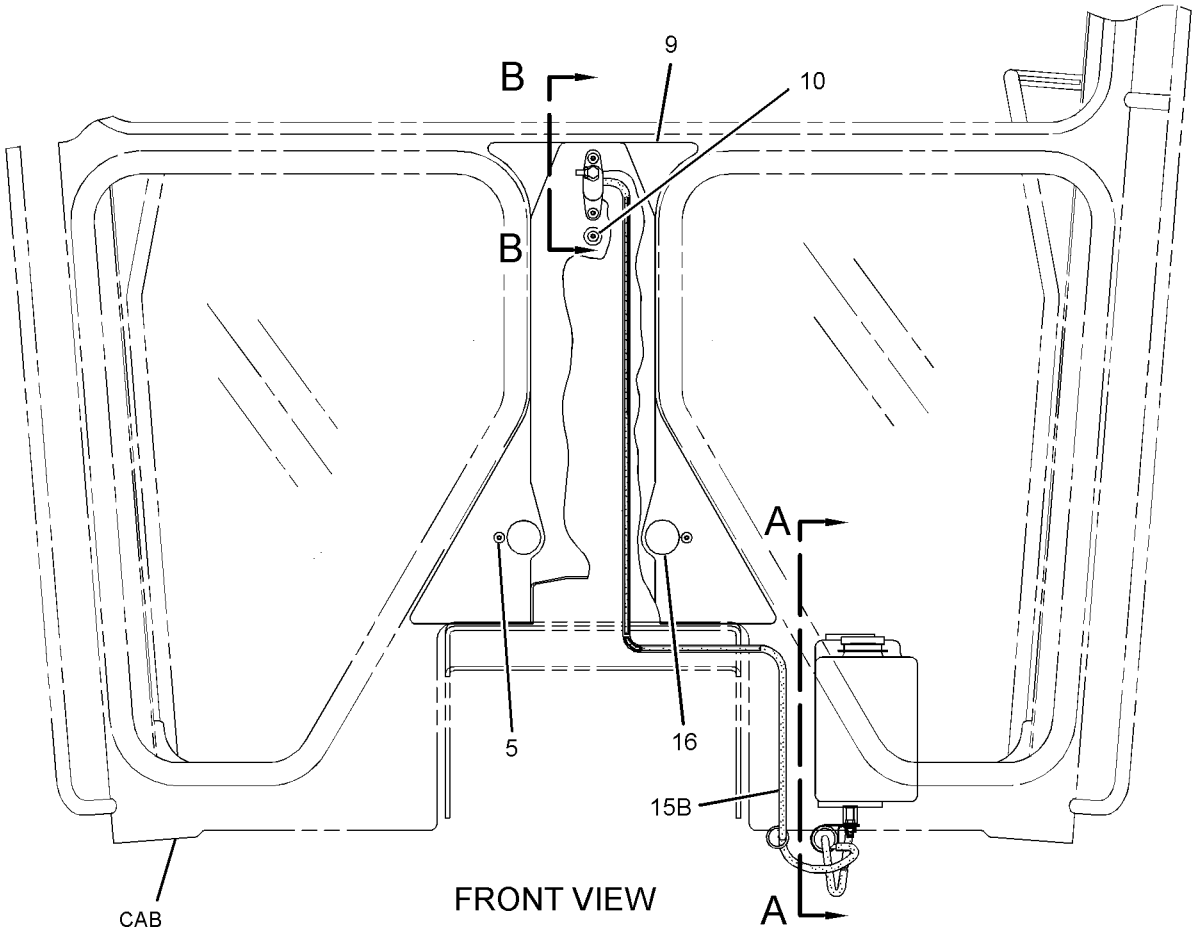

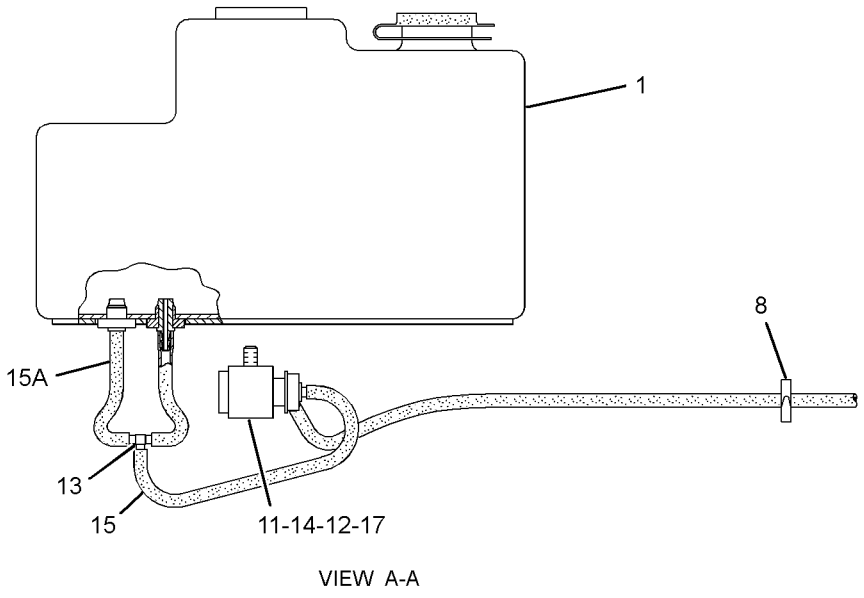

VIEW A-A

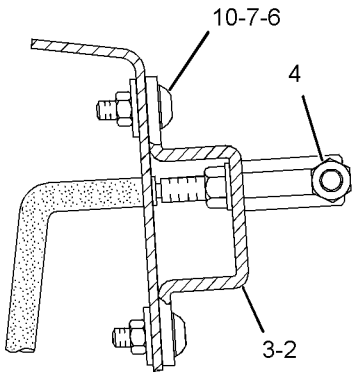

SECTION B-B

GRAPHIC #1 **<END>** g01859953

OPERATOR STATION

298-2426 WIPER AR-WINDOW—REAR

S/N: JJA1-UP
PART OF 339-4968 OPTION AR-CAB
FOR USE WITH ENCLOSED CAB HIGH PROFILE
AN ATTACHMENT

SMCS-7305, 7306 **i03251442**

NOTE	REF NO	GRAPHIC REF	PART NUMBER	QTY	PART NAME 1 2 3 4 5 6 (PRODUCT LEVEL)	SEE PAGE
Y	1	1	*8X-9680*	1	WASHER GP-WINDOW (REAR)	583
Y	2	1	*286-4823*	1	WIPER GP-WINDOW (REAR) (HIGH PROFILE)	590
					PARTS SHOWN IN GRAPHIC(S) WITHOUT A REFERENCE NUMBER ARE NOT SERVICED SEPARATELY	

Y-SEPARATE ILLUSTRATION

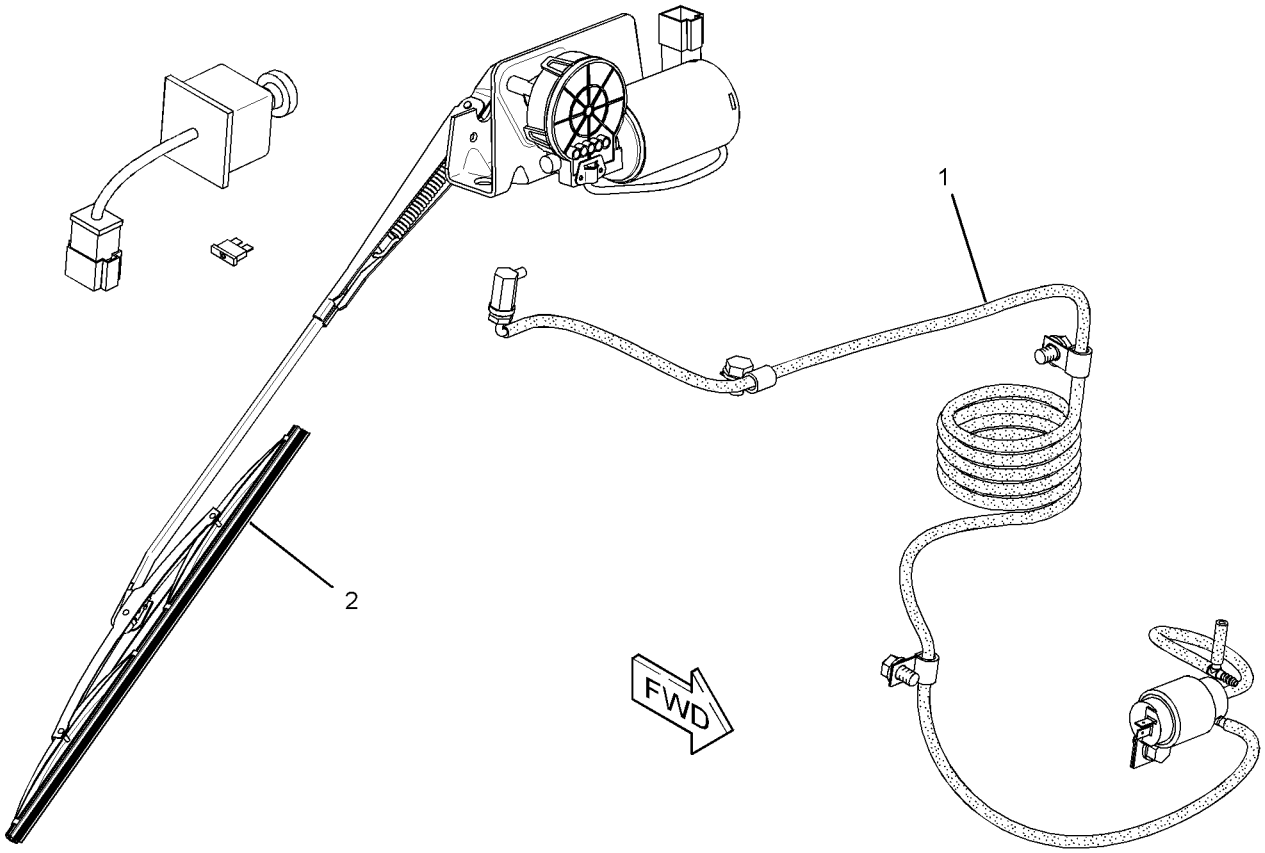

GRAPHIC #1 **<END>** g01685233

OPERATOR STATION

172-6831 WIPER GP-WINDOW—FRONT—HIGH PROFILE

S/N: JJA1-UP
PART OF 320-0342 ROPS AR
AN ATTACHMENT

SMCS-7305 **i02558327**

NOTE	REF NO	GRAPHIC REF	PART NUMBER	QTY	PART NAME 1 2 3 4 5 6 (PRODUCT LEVEL)	SEE PAGE
	1	1	**2A-6926**	1	LEVER AS	
	2	1	**2A-6928**	1	LINK	
	3	1	**2A-6929**	1	LINK	
C	4	1	**135-0611**	1	MOTOR GP-WINDOW WIPER (24-VOLT, 2-SPEED) (FRONT, LOWER)	
		1	**8T-8737**	1	PLUG-SEAL	
		1	**186-3735**	5	PIN-CONNECTOR (16-GA TO 18-GA)	
		1	**102-8805**	1	KIT-RECEPTACLE (6-PIN)	
					(INCLUDES RECEPTACLE AS & WEDGE)	
B	5	1	**4B-4283**	2	WASHER (20.6X37.5X3.5-MM THK)	
	6	1	**6V-5853**	1	BLADE AS-WIPER (450-MM) (FRONT)	
	7	1	**6V-6888**	1	WASHER-SPRING	
M	8	1	**6V-6889**	1	NUT (M8X1.25-THD)	
	9	1	**6V-8259**	1	ARM AS-WIPER (UPPER)	
	10	1	**8X-2556**	1	FLANGE	
	11	1	**8X-2663**	1	GASKET	
C	12	1	**203-1124**	1	MOTOR GP-WINDOW WIPER (24-VOLT) (FRONT UPPER)	
		1	**3F-9556**	1	LOCKWASHER	
M		1	**5C-7261**	1	NUT (M8X1.25-THD)	
		1	**135-0611**	1	MOTOR GP-WINDOW WIPER (24-VOLT, 2-SPEED)	
		1	**8T-8737**	1	PLUG-SEAL	
		1	**186-3735**	5	PIN-CONNECTOR (16-GA TO 18-GA)	
		1	**102-8805**	1	KIT-RECEPTACLE (6-PIN)	
					(INCLUDES RECEPTACLE AS & WEDGE)	
		1	**206-5823**	1	CAP	
	13	1	**123-4354**	2	ARM-WINDOW WIPER (LOWER)	
	14	1	**123-4355**	2	BLADE AS-WIPER (300-MM) (FRONT, LOWER)	
	15	1	**125-7003**	1	SHAFT AS	
		1	**3F-9556**	1	LOCKWASHER	
M		1	**5C-7261**	1	NUT (M8X1.25-THD)	
		1	**206-5823**	1	CAP	
	16	1	**125-7004**	1	SHAFT AS	
		1	**3F-9556**	1	LOCKWASHER	
M		1	**5C-7261**	1	NUT (M8X1.25-THD)	
		1	**206-5823**	1	CAP	
M	17	1	**5C-7423**	3	SCREW (M6X1X16-MM)	
	18	1	**5P-4115**	2	WASHER-HARD (7.2X19X2-MM THK)	
CM	19	1	**8T-4171**	2	BOLT (M6X1X12-MM)	
M	20	1	**8T-4138**	2	BOLT (M6X1X20-MM)	

B-USE AS REQUIRED
C-CHANGE FROM PREVIOUS TYPE
M-METRIC PART

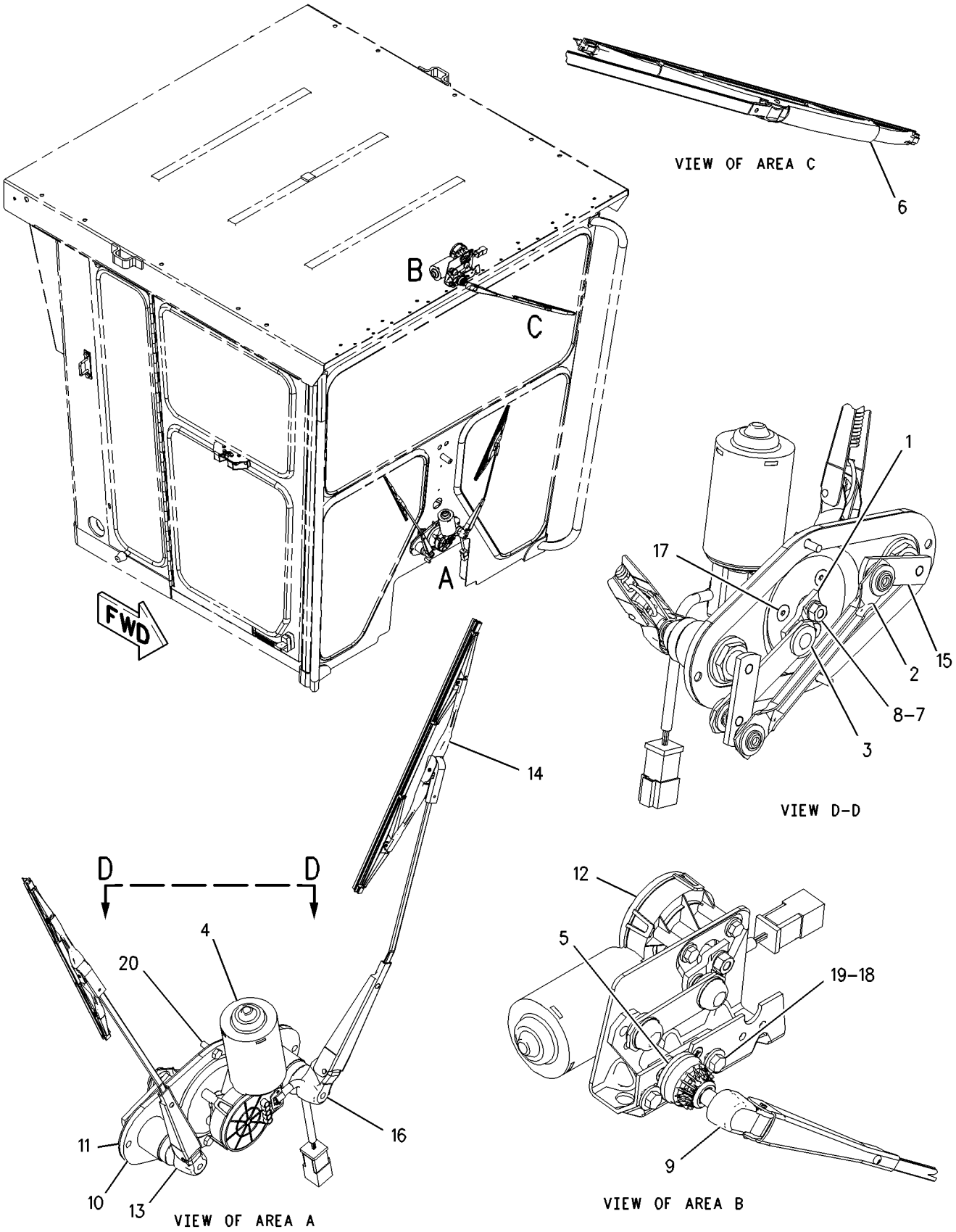

GRAPHIC #1 **<END>** g00913478

211-4913 WIPER GP-WINDOW—FRONT—HIGH PROFILE

S/N: JJA1-UP
PART OF 320-0341 CAB AR
AN ATTACHMENT

SMCS-7305 **i02426669**

NOTE	REF NO	GRAPHIC REF	PART NUMBER	QTY	PART NAME 1 2 3 4 5 6 (PRODUCT LEVEL)	SEE PAGE
	1	1	**203-1124**	1	MOTOR GP-WINDOW WIPER (FRONT)	
		1	**3F-9556**	1	LOCKWASHER	
M		1	**5C-7261**	1	NUT (M8X1.25-THD)	
		1	**135-0611**	1	MOTOR GP-WINDOW WIPER (24-VOLT, 2-SPEED)	
		1	**8T-8737**	1	PLUG-SEAL	
		1	**186-3735**	5	PIN-CONNECTOR (16-GA TO 18-GA)	
		1	**102-8805**	1	KIT-RECEPTACLE (6-PIN)	
					(INCLUDES RECEPTACLE AS & WEDGE)	
		1	**206-5823**	1	CAP	
M	2	1	**8T-4171**	2	BOLT (M6X1X12-MM)	
	3	1	**5P-4115**	2	WASHER-HARD (7.2X19X2-MM THK)	
	4	1	**6V-8259**	1	ARM AS-WIPER (FRONT)	
	5	1	**6V-5853**	1	BLADE AS-WIPER (450-MM) (FRONT)	
	6	1	**4B-4283**	2	WASHER (20.6X37.5X3.5-MM THK)	

M-METRIC PART

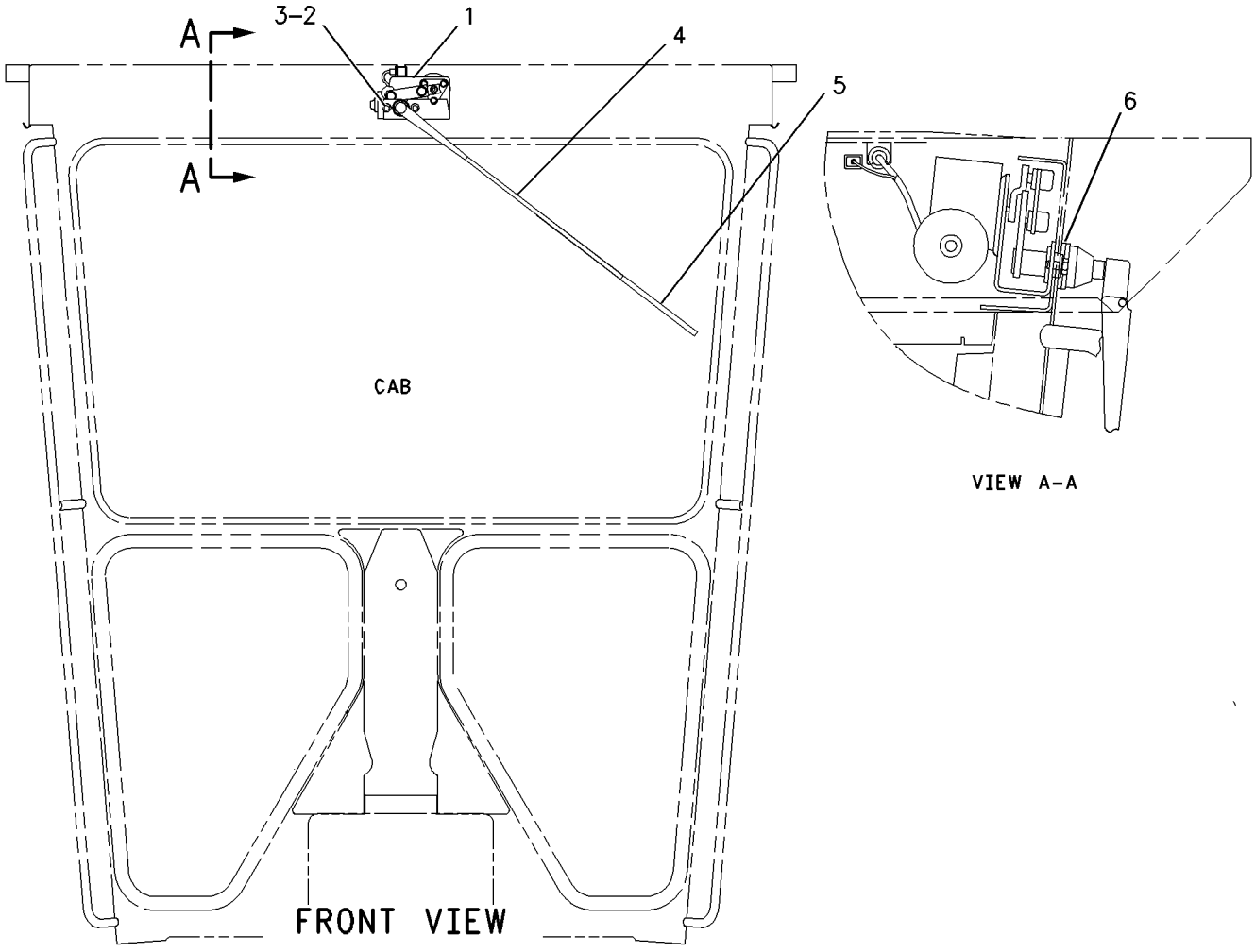

GRAPHIC #1 **<END>** g00949975

OPERATOR STATION

286-4823 WIPER GP-WINDOW—REAR

S/N: JJA1-UP
HIGH PROFILE
PART OF 298-2426 WIPER AR-WINDOW
AN ATTACHMENT

SMCS-7305 **i03251443**

NOTE	REF NO	GRAPHIC REF	PART NUMBER	QTY	PART NAME 1 2 3 4 5 6 (PRODUCT LEVEL)	SEE PAGE
B	1	1	**4B-4283**	2	WASHER (20.6X37.5X3.5-MM THK)	
	2	1	**6V-5853**	1	BLADE AS-WIPER (450-MM)	
	3	1	**6V-8258**	1	ARM AS-WIPER	
	4	1	**9W-1442**	1	FUSE (10-AMPERE)	
	5	1	**110-7885**	1	KNOB AS-WIPER SWITCH	
		1	**014-0816**	1	SETSCREW (8-32X0.5-IN)	
	6	1	**203-1124**	1	MOTOR GP-WINDOW WIPER (24-VOLT) (REAR)	
		1	**3F-9556**	1	LOCKWASHER	
M		1	**5C-7261**	1	NUT (M8X1.25-THD)	
		1	**135-0611**	1	MOTOR GP-WINDOW WIPER (24-VOLT, 2-SPEED) (REAR)	
		1	**8T-8737**	1	PLUG-SEAL	
		1	**186-3735**	5	PIN-CONNECTOR (16-GA TO 18-GA)	
		1	**102-8805**	1	KIT-RECEPTACLE (6-PIN)	
					(INCLUDES RECEPTACLE AS & WEDGE)	
		1	**206-5823**	1	CAP	
Y	7	1	**275-7741**	1	SWITCH GP-WIPER (24-VOLT, INTERMITTENT) (REAR)	181
	8	1	**5P-4115**	2	WASHER-HARD (7.2X19X2-MM THK)	
M	9	1	**8T-4171**	2	BOLT (M6X1X12-MM)	

B-USE AS REQUIRED
M-METRIC PART
Y-SEPARATE ILLUSTRATION

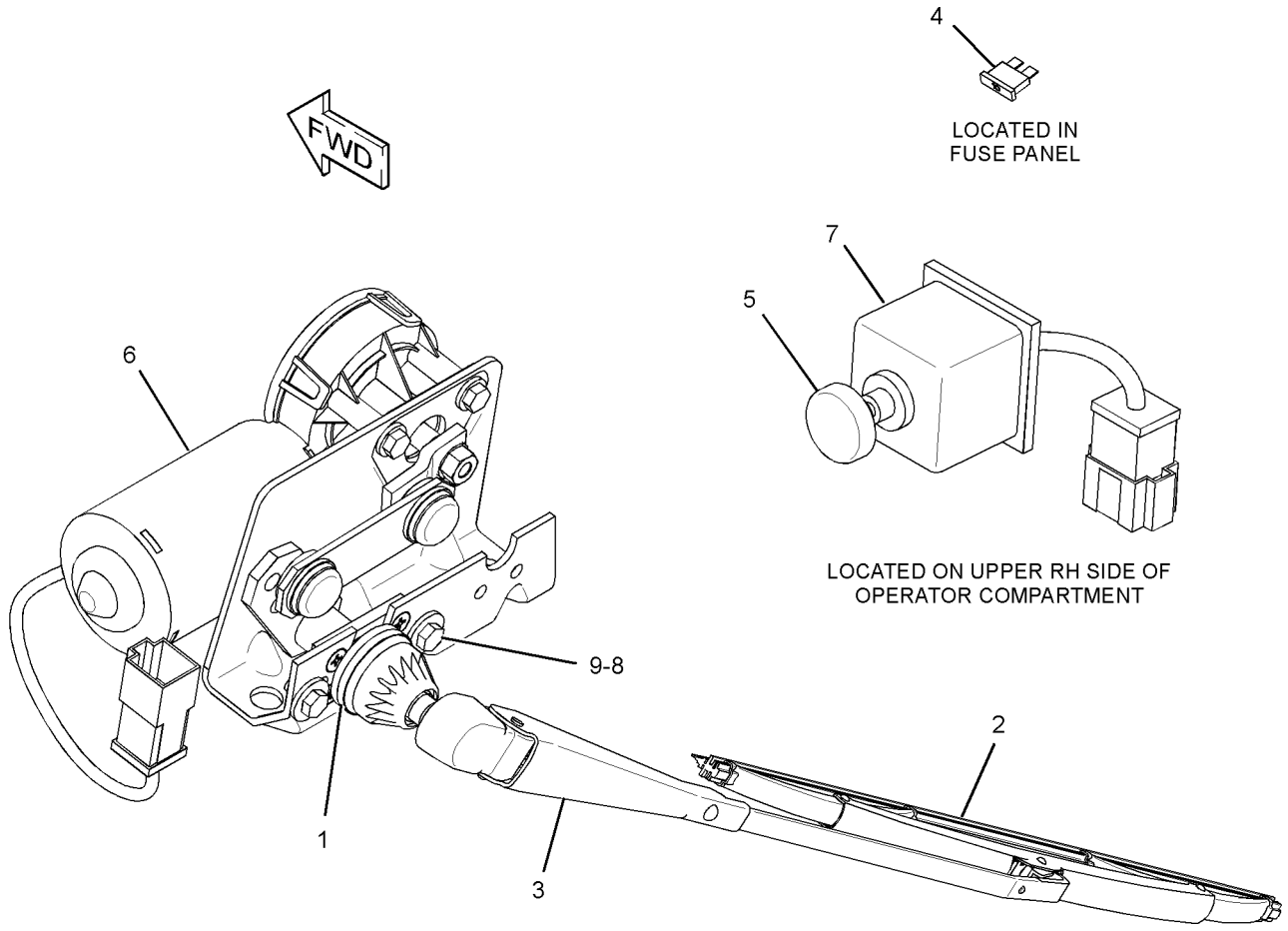

GRAPHIC #1 **<END>** g01694314

OPERATOR STATION

286-4825 WIPER GP-WINDOW—FRONT

S/N: JJA1-UP

PART OF 339-4964, 339-4965, 339-4966, 339-4967 OPTION AR-CAB

AN ATTACHMENT

SMCS-7305 **i03261487**

NOTE	REF NO	GRAPHIC REF	PART NUMBER	QTY	PART NAME 1 2 3 4 5 6 (PRODUCT LEVEL)	SEE PAGE
Y	1	1	**275-7764**	2	SWITCH GP-WIPER (24-VOLT, INTERMITTENT) (FRONT WIPER)	182

Y-SEPARATE ILLUSTRATION

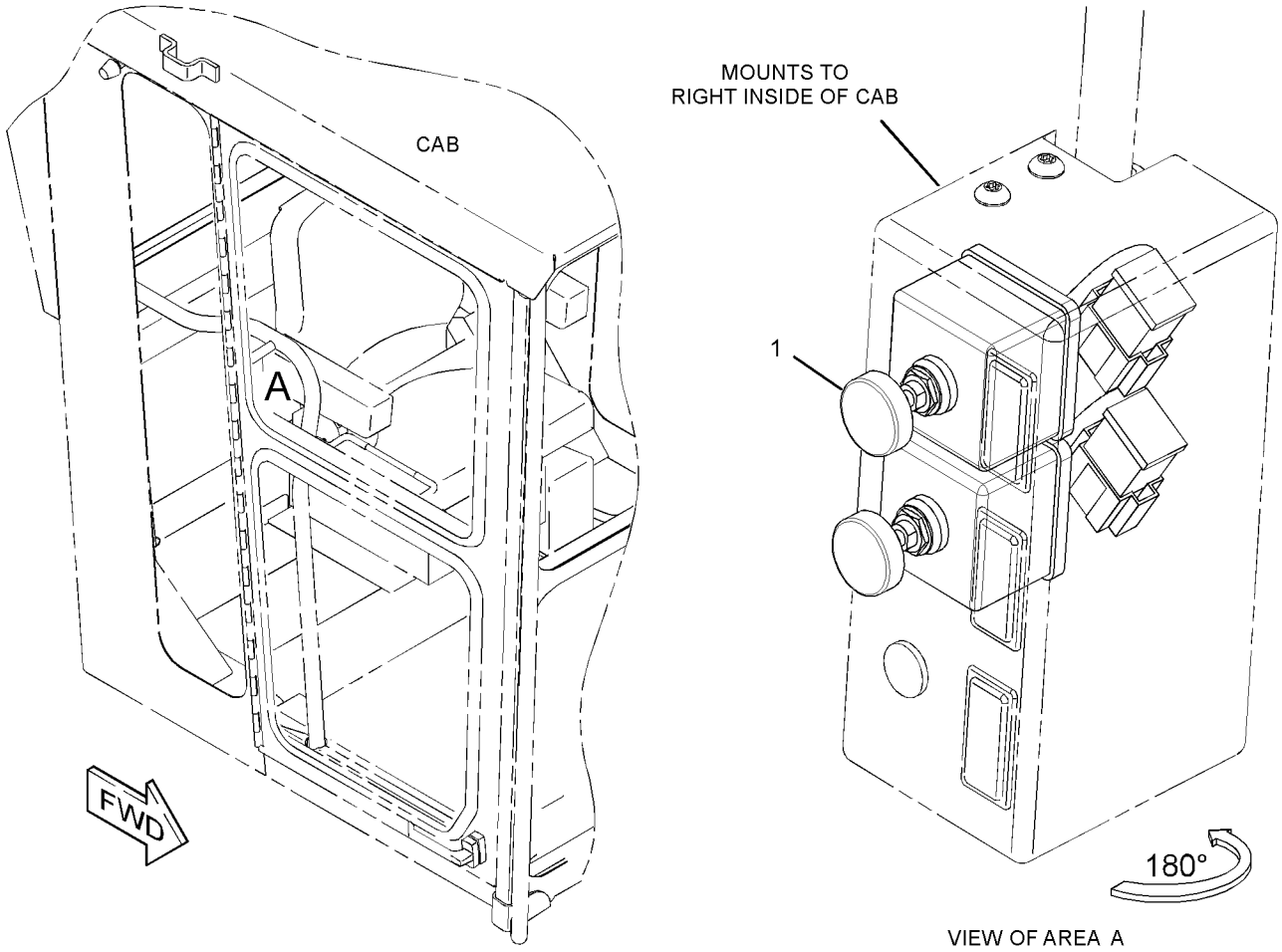

GRAPHIC #1 **<END>** g01681013

WORK TOOLS

107-3398 BIT GP-END

S/N: JJA1-UP
PART OF 339-4978 OPTION AR-WORK TOOL
AN ATTACHMENT

SMCS-6804 **i03287221**

NOTE	REF NO	GRAPHIC REF	PART NUMBER	QTY	PART NAME 1 2 3 4 5 6 (PRODUCT LEVEL)	SEE PAGE
	1	1	**6Y-2805**	2	BIT-END	
	2	1	**1J-6762**	10	BOLT-PLOW (3/4-10X3-IN)	
	3	1	**5F-8933**	6	BOLT-PLOW (3/4-10X3.75-IN)	

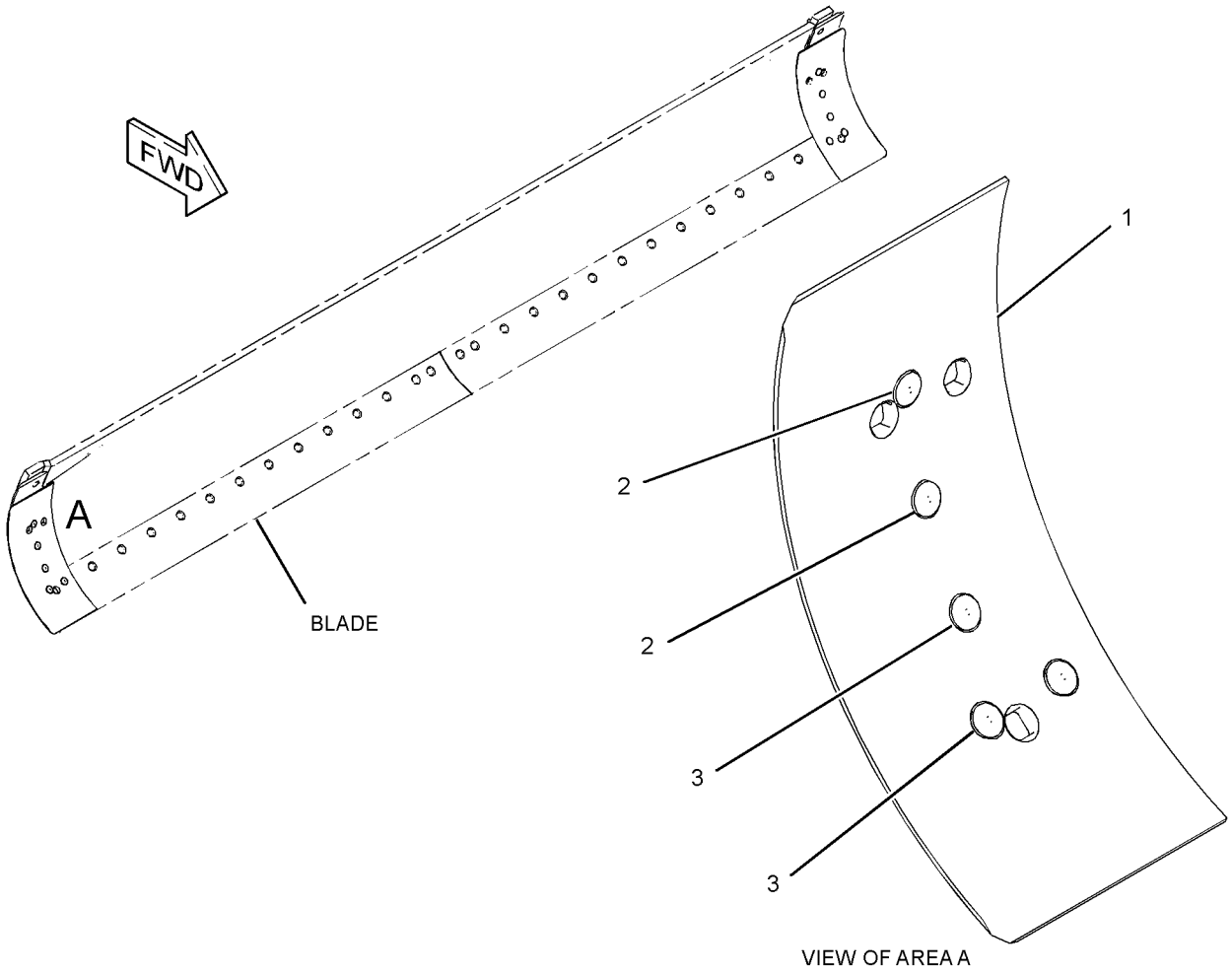

GRAPHIC #1 **<END>** g01682214

WORK TOOLS

329-3825 BLADE & TIP AR-POWER

S/N: JJA1-UP
CANNOT BE USED WITH 329-3827—PAGE 594
AN ATTACHMENT

SMCS-6151 **i03553443**

NOTE	PART NUMBER	QTY	PART NAME 1 2 3 4 5 6 (PRODUCT LEVEL)	SEE PAGE
Y	*320-9924*	1	BLADE GP	596
Y	*338-7509*	1	CIRCLE GP	466
Y	*8X-1943*	1	CYLINDER & MTG GP-BLADE TIP	331
Y	*112-7463*	1	CYLINDER & MTG GP-SIDESHIFT	334
Y	*106-4787*	1	LINES GP-HYDRAULIC	358

Y-SEPARATE ILLUSTRATION

<END>

329-3827 BLADE & TIP AR-POWER

S/N: JJA1-UP
PART OF 339-4978 OPTION AR-WORK TOOL
CANNOT BE USED WITH 329-3825—PAGE 594
AN ATTACHMENT

SMCS-6151 **i03632822**

NOTE	PART NUMBER	QTY	PART NAME 1 2 3 4 5 6 (PRODUCT LEVEL)	SEE PAGE
Y	*320-7431*	1	BLADE GP	595

Y-SEPARATE ILLUSTRATION

<END>

WORK TOOLS

320-7431 BLADE GP

S/N: JJA1-UP
14-FT
PART OF 329-3827 BLADE & TIP AR-POWER
AN ATTACHMENT

SMCS-6151 **i03288501**

NOTE	REF NO	GRAPHIC REF	PART NUMBER	QTY	PART NAME 1 2 3 4 5 6 (PRODUCT LEVEL)	SEE PAGE
	1	1	**9J-3658**	2	EDGE-CUTTING	
	2	1	**320-2746**	1	MOLDBOARD AS	
		1	**112-1814**	2	RAIL-MOLDBOARD	
	3	1	**2J-3506**	40	NUT-FULL (3/4-10-THD)	
	4	1	**5J-4773**	40	BOLT-PLOW (3/4-10X2.5-IN)	
	5	1	**8E-5529**	2	BIT-END	

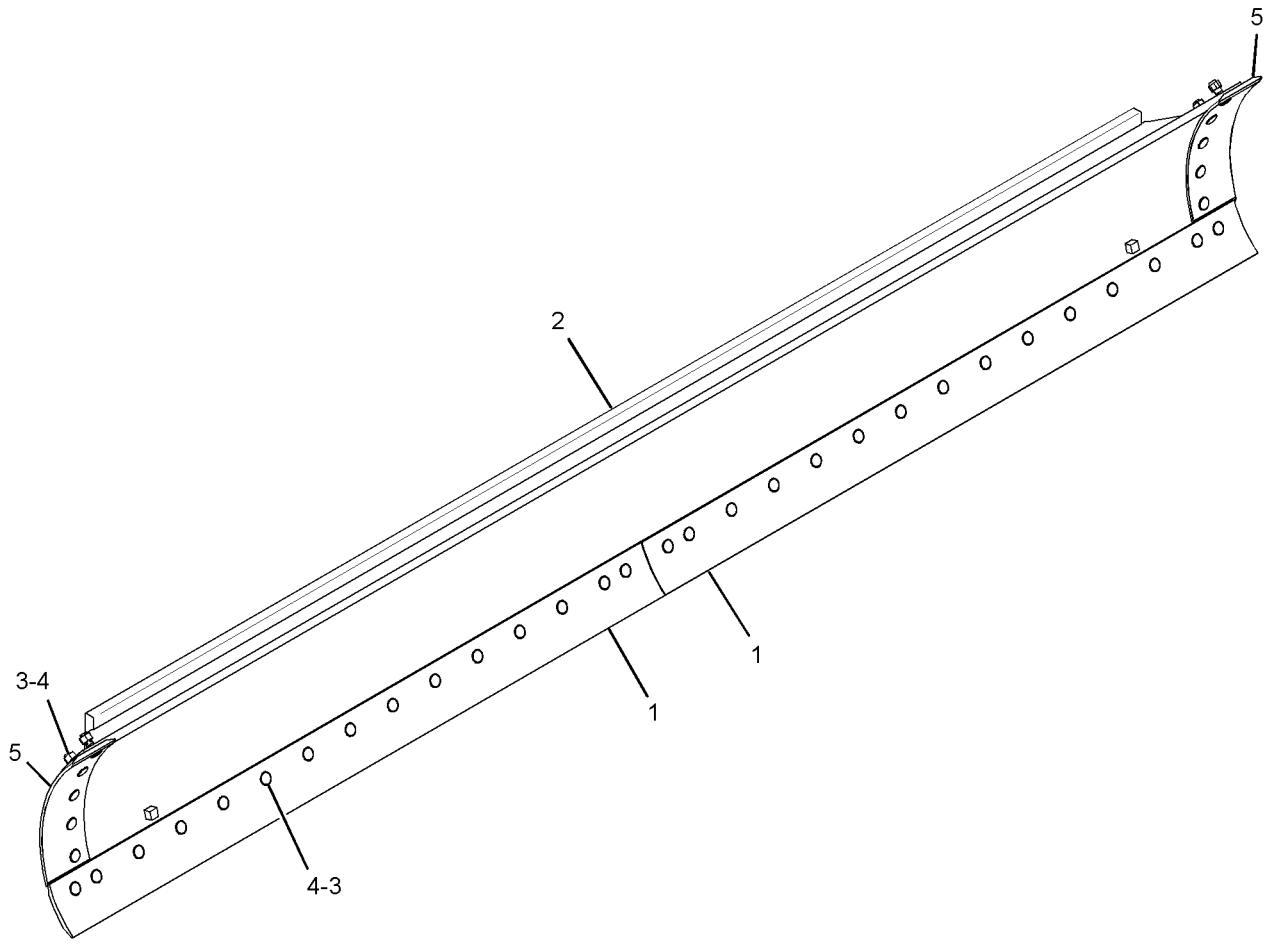

GRAPHIC #1 **<END>** g01698113

WORK TOOLS

320-9924 BLADE GP

S/N: JJA1-UP
12-FT
PART OF 329-3825 BLADE & TIP AR-POWER, 346-3710 GENERAL AR
ALSO AN ATTACHMENT

SMCS-6151 **i03257564**

NOTE	REF NO	GRAPHIC REF	PART NUMBER	QTY	PART NAME 1 2 3 4 5 6 (PRODUCT LEVEL)	SEE PAGE
	1	1	**9J-3657**	2	EDGE-CUTTING	
	2	1	**320-2749**	1	MOLDBOARD AS	
		1	**112-1813**	1	RAIL-MOLDBOARD	
	3	1	**2J-3506**	36	NUT-FULL (3/4-10-THD)	
	4	1	**5J-4773**	36	BOLT-PLOW (3/4-10X2.5-IN)	
	5	1	**8E-5529**	2	BIT-END	

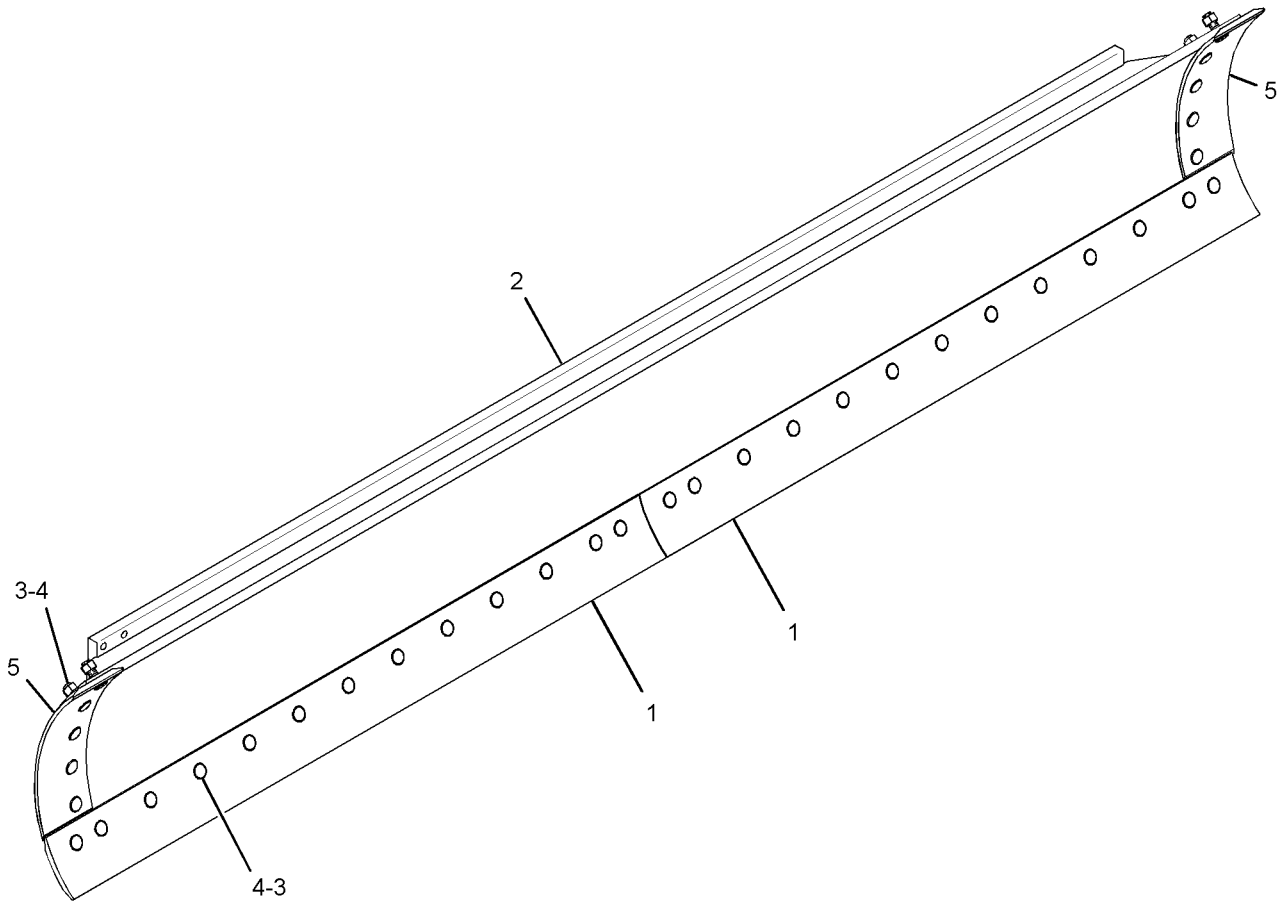

GRAPHIC #1 **<END>** g01698078

WORK TOOLS

347-8846 BLADE GP-BULLDOZER—FRONT

S/N: JJA1-UP
PART OF 339-4973 OPTION AR-WORK TOOL
AN ATTACHMENT

SMCS-6060 **i03628549**

NOTE	REF NO	GRAPHIC REF	PART NUMBER	QTY	PART NAME 1 2 3 4 5 6 (PRODUCT LEVEL)	SEE PAGE
	1	1	**2K-2306**	2	LINK	
	2	1	**3B-8489**	2	FITTING-GREASE	
	3	1	**3B-8491**	8	FITTING-GREASE	
	4	1	**4T-3010**	2	EDGE-CUTTING	
	5	1	**7P-1577**	8	PIN AS	
	6	1	**136-1711**	2	PIN AS	
	7	1	**169-4088**	1	LINK AS	
	8	1	**169-4089**	1	EDGE-CUTTING	
	9	1	**169-4090**	1	PLATE AS	
	10	1	**169-4092**	1	MOLDBOARD AS	
	11	1	**247-4412**	1	PLATE AS	
	12	1	**283-1578**	24	WASHER-HARD (22X45X10-MM THK)	
Y	13	1	**314-9338**	1	CYLINDER GP-HYDRAULIC (BULLDOZER LIFT, PLOW)	600
	14	1	**2J-3506**	17	NUT-FULL (3/4-10-THD)	
M	15	1	**4F-7827**	17	BOLT-PLOW (3/4-10X2.25-IN)	
	16	1	**5M-6214**	4	PLUG-PIPE	
B	17	1	**5V-6454**	18	WASHER (52X120X1.6-MM THK)	
B	18	1	**5V-6455**	20	WASHER (52X120X3-MM THK)	
	19	1	**7G-8839**	10	SPACER (13.5X57X6-MM THK)	
M	20	1	**7X-2553**	8	BOLT (M16X2X40-MM)	
M	21	1	**7X-2565**	12	BOLT (M20X2.5X100-MM)	
M	22	1	**8T-4131**	12	NUT (M20X2.5-THD)	
M	23	1	**8T-4139**	10	BOLT (M12X1.75X30-MM)	
	24	1	**9X-8257**	8	WASHER (17.5X30X3.5-MM THK)	

B-USE AS REQUIRED
M-METRIC PART
Y-SEPARATE ILLUSTRATION

347-8846 **BLADE GP-BULLDOZER** *(contd.)* **i03628549**

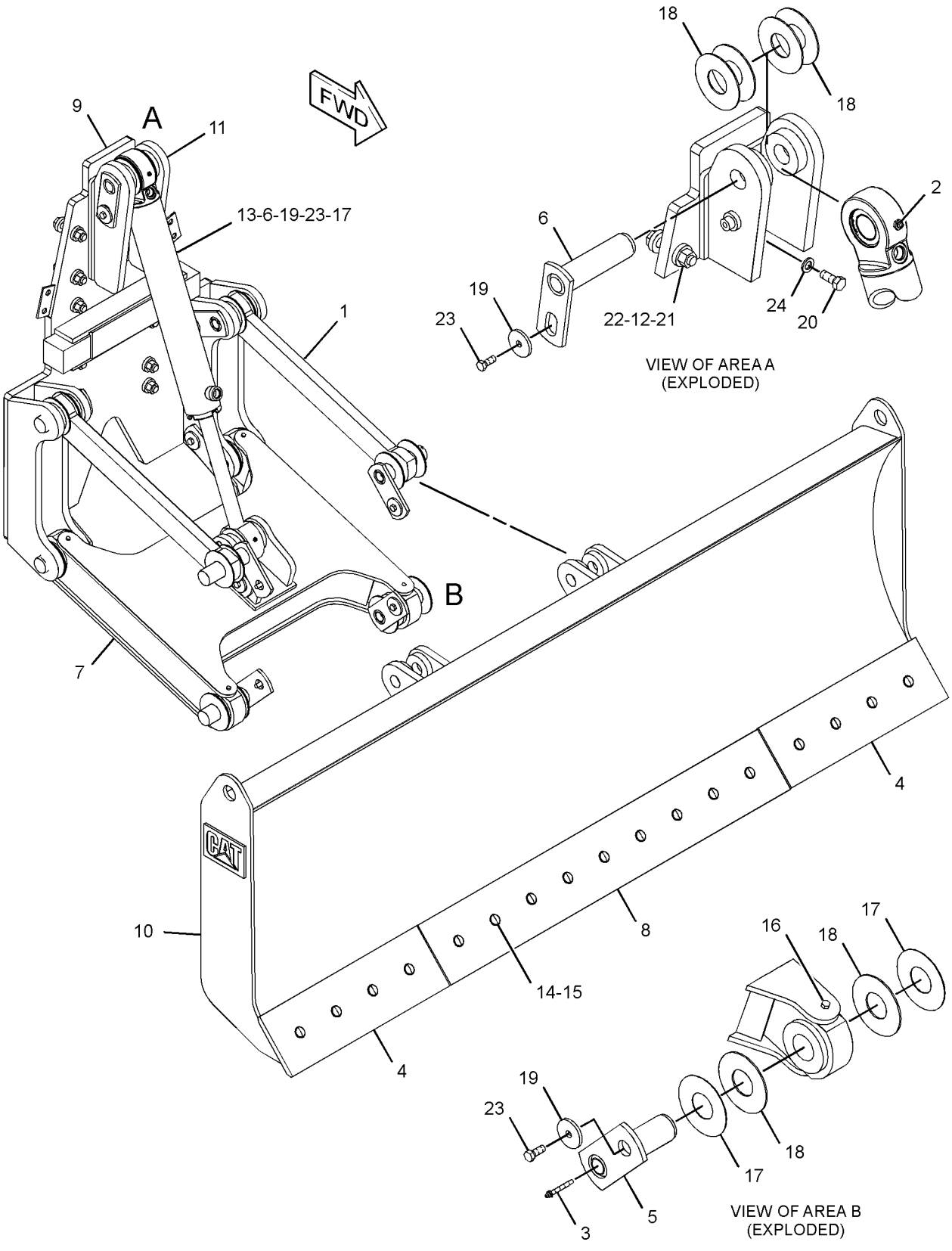

GRAPHIC #1 **<END>** g01936696

WORK TOOLS

339-7733 BRACKET GP-SCARIFIER

S/N: JJA1-UP
PART OF 340-5009 SCARIFIER AR
AN ATTACHMENT

SMCS-6162 **i03519000**

NOTE	REF NO	GRAPHIC REF	PART NUMBER	QTY	PART NAME 1 2 3 4 5 6 (PRODUCT LEVEL)	SEE PAGE
	1	1	**8W-0681**	1	PLATE	
	2	1	**8W-0684**	1	BRACKET AS	

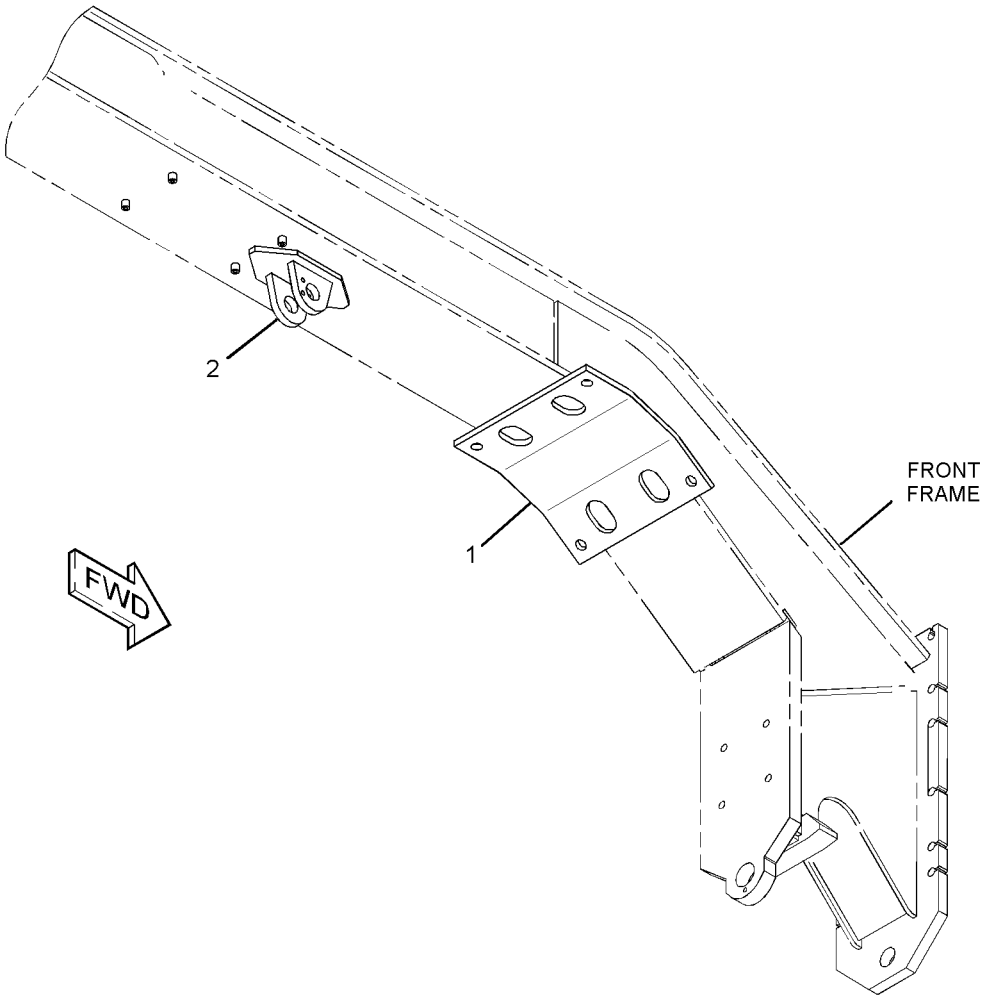

GRAPHIC #1 **<END>** g01893678

WORK TOOLS

314-9338 CYLINDER GP-HYDRAULIC

S/N: JJA1-UP
88.9-MM (3.5-IN) BORE X 549-MM (21.6-IN) STROKE
PART OF 347-8846 BLADE GP-BULLDOZER
AN ATTACHMENT

SMCS-7562 **i03200421**

NOTE	REF NO	GRAPHIC REF	PART NUMBER	QTY	PART NAME 1 2 3 4 5 6 (PRODUCT LEVEL)	SEE PAGE
R	1	1	**163-0325**	1	CYLINDER AS	
	2	1	**163-0326**	1	PISTON	
R	3	1	**163-0327**	1	ROD AS	
		1	**1K-6985**	2	RING-RETAINING	
		1	**9M-1328**	1	BEARING	
	4	1	**314-9339**	1	HEAD	
M	5	1	**173-9779**	1	BOLT (M24X3X80-MM)	
J	6	1	**175-7898**	1	SEAL-O-RING	
J	7	1	**308-1880**	1	SEAL-WIPER	
J	8	1	**308-1883**	1	SEAL AS	
J	9	1	**308-1884**	1	SEAL AS	
J	10	1	**4J-9224**	1	RING-BACKUP	
J	11	1	**4T-6907**	1	RING-WEAR	
J	12	1	**4T-8054**	1	SEAL AS	
	13	1	**6V-8237**	1	WASHER (26X44X4-MM THK)	
J	14	1	**7J-9885**	1	RING-WEAR	
					AVAILABLE REPAIR KIT(S):	
J			**326-0503**	1	KIT-SEAL	

J-KIT MARKED J SERVICES PARTS MARKED J
M-METRIC PART
R-REMFG PART MAY BE AVAILABLE

314-9338 CYLINDER GP-HYDRAULIC *(contd.)* i03200421

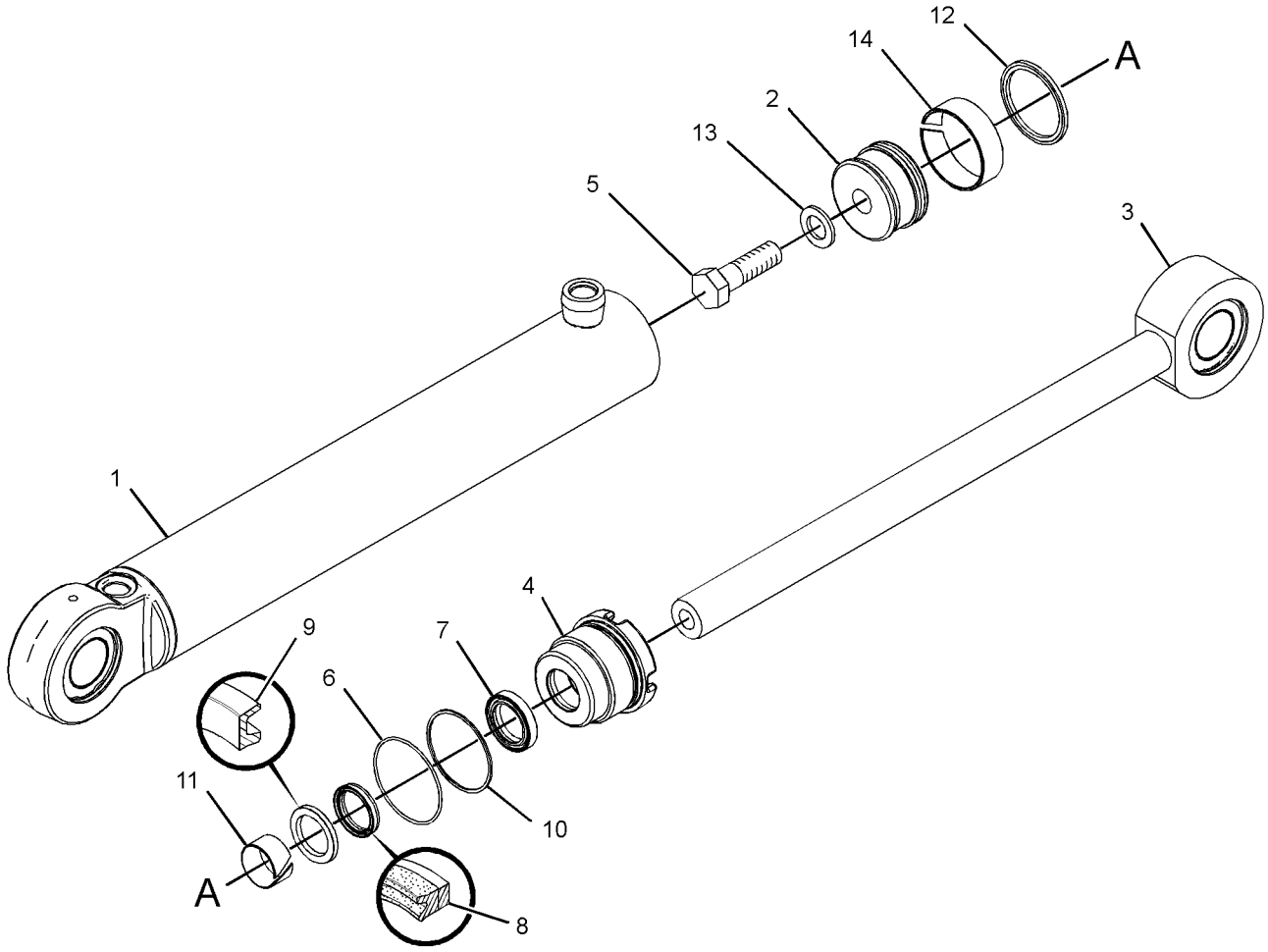

GRAPHIC #1 **<END>** g01518744

WORK TOOLS

282-0506 EDGE GP-CUTTING

S/N: JJA1-UP
14-FT
PART OF 339-4978 OPTION AR-WORK TOOL
AN ATTACHMENT

SMCS-6801 **i03258796**

NOTE	REF NO	GRAPHIC REF	PART NUMBER	QTY	PART NAME 1 2 3 4 5 6 (PRODUCT LEVEL)	SEE PAGE
	1	1	**7D-1577**	2	EDGE-CUTTING	

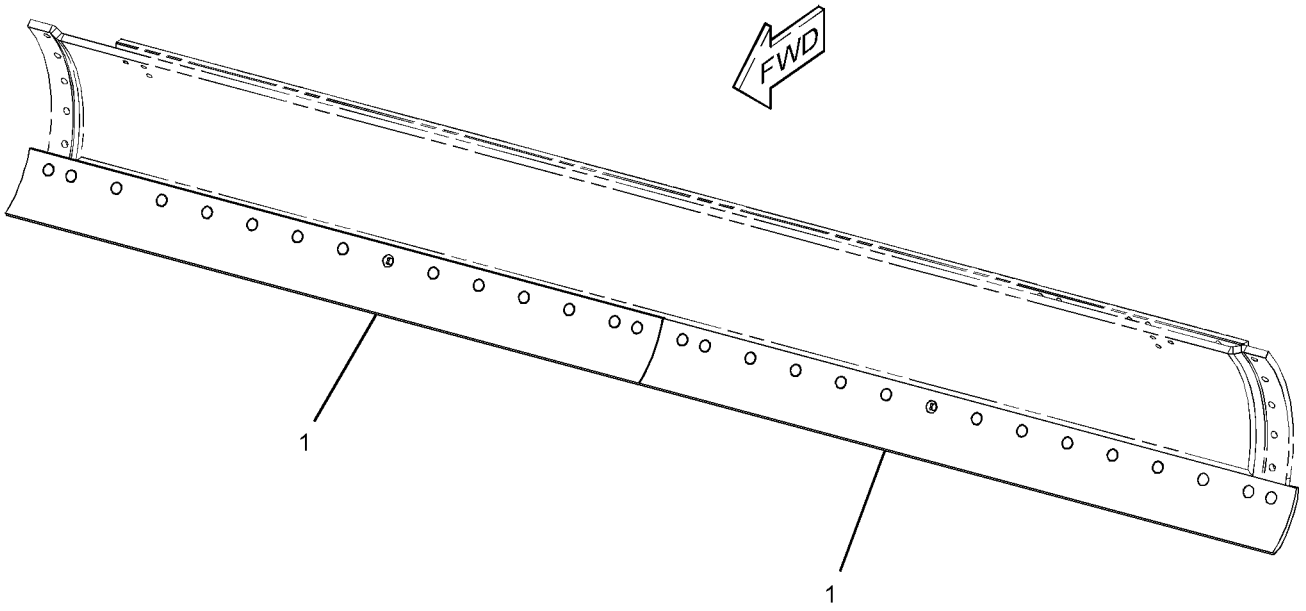

GRAPHIC #1 **<END>** g01667376

WORK TOOLS

261-8536 LIFT GP-BLADE

S/N: JJA1-UP

PART OF 346-3710 GENERAL AR

SMCS-6151 **i02780365**

NOTE	REF NO	GRAPHIC REF	PART NUMBER	QTY	PART NAME 1 2 3 4 5 6 (PRODUCT LEVEL)	SEE PAGE
	1	1	**7D-8875**	4	WASHER-THRUST	
	2	1	**7D-8878**	4	WASHER-THRUST	
B	3	1	**7D-8879**	8	SHIM (0.127-MM THK)	
B	4	1	**7D-8881**	6	SHIM (0.254-MM THK)	
B	5	1	**7D-8882**	2	SHIM (0.508-MM THK)	
B	6	2	**8D-4336**	2	WASHER-THRUST (3.02X5.75X0.08-MM THK)	
	7	2	**8X-5106**	1	STUD-BALL	
	8	1	**8X-5107**	1	PIN	
	9	1	**8X-5109**	1	BAR AS	
		1	**8X-5108**	2	BEARING-SLEEVE	
		1	**124-5836**	5	BUSHING	
B	10	2	**123-8187**	2	WASHER-THRUST (76.6X146X1-MM THK)	
M	11	2	**201-8034**	6	BOLT (M20X2.5X120-MM)	
	12	1	**259-2627**	4	BOLT	
	13	2	**259-4483**	2	PIN	
	14	2	**259-4492**	2	LOCK	
	15	1	**261-8537**	1	ARM AS (LH)	
		1	**7D-8889**	1	BEARING (76.35-MM ID)	
		1	**8D-8168**	1	BEARING (63.65-MM ID)	
	16	1	**261-8538**	1	ARM AS (RH)	
		1	**7D-8889**	1	BEARING (76.35-MM ID)	
		1	**8D-8168**	1	BEARING (63.65-MM ID)	
	17	1	**261-8541**	2	YOKE AS	
					(EACH INCLUDES)	
		1	**2G-8233**	1	RING	
	18	1	**261-8543**	2	RETAINER	
	19	2	**261-8545**	1	PLATE	
	20	2	**261-8547**	2	LOCK	
M	21	2	**288-0735**	1	BOLT (M12X1.75X60-MM)	
M	22	1,2	**112-3926**	4	BOLT (M20X2.5X110-MM)	
	23	1,2	**267-3508**	16	WASHER-HARD (22X35X3.5-MM THK)	
	24	1,2	**279-6632**	5	WASHER (13.5X25.5X3-MM THK)	
M	25	2	**286-0742**	6	NUT (M20X2.5-THD)	
	26	1,2	**3P-1461**	4	SEAL-LIP TYPE	
	27	1	**5F-0149**	2	SEAL-O-RING	
	28	1	**7D-8876**	2	WASHER-THRUST	
	29	1	**7D-8877**	2	WASHER-THRUST	
	30	1	**7D-8883**	2	SEAL	
	31	1	**7D-8884**	2	SEAL	
	32	1	**7H-2444**	2	SEAL	

B-USE AS REQUIRED
M-METRIC PART

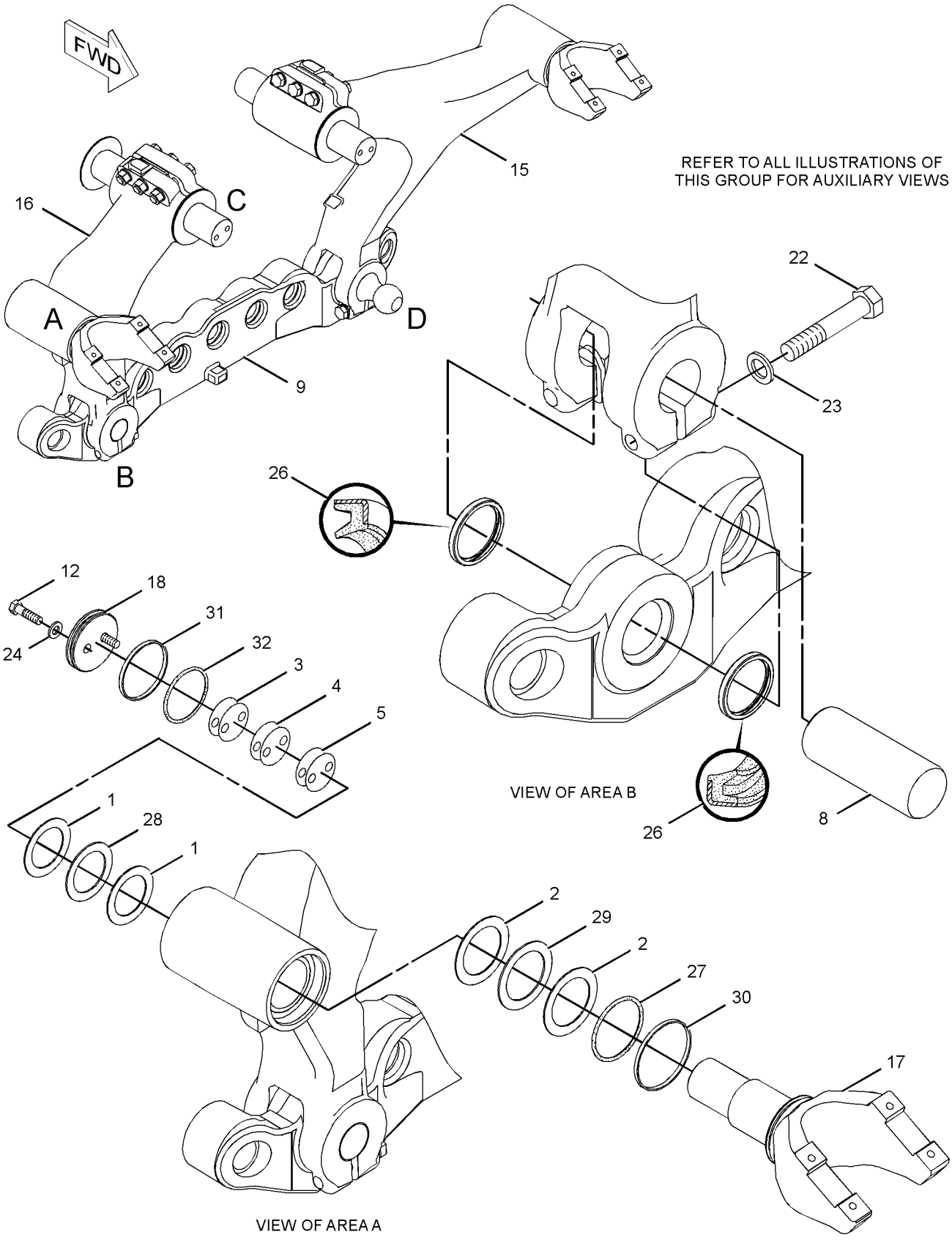

GRAPHIC #1

g01342938

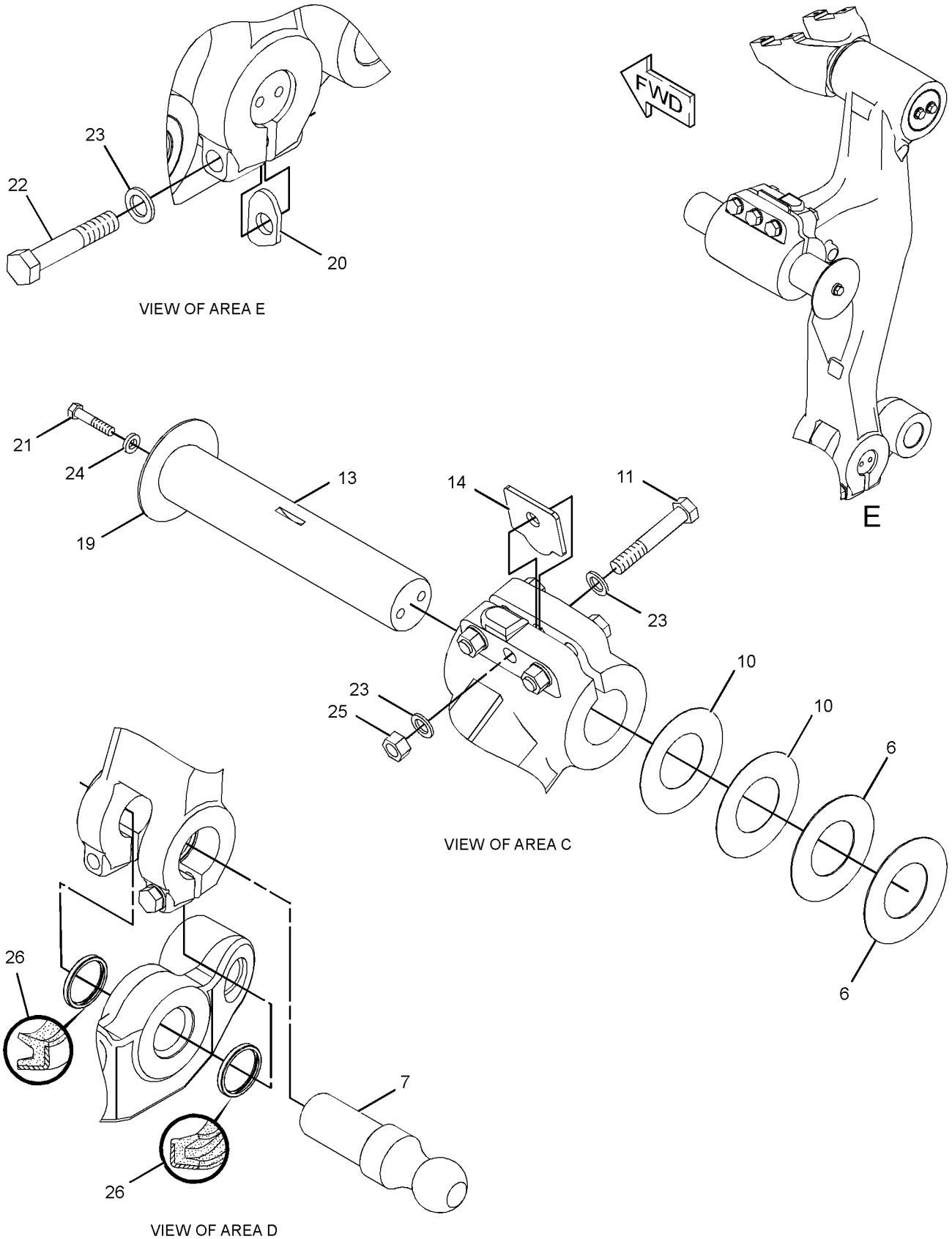

GRAPHIC #2 **<END>** g01342940

WORK TOOLS

289-7597 MOUNTING GP-RIPPER

S/N: JJA1-UP
PART OF 285-4183 RIPPER AR
AN ATTACHMENT

SMCS-6324 **i03265589**

NOTE	REF NO	GRAPHIC REF	PART NUMBER	QTY	PART NAME 1 2 3 4 5 6 (PRODUCT LEVEL)	SEE PAGE
	1	1	**3W-7254**	2	SPACER (47X80X20-MM THK)	
	2	1	**3W-7256**	2	SPACER (47X80X16-MM THK)	
	3	1	**6P-5647**	2	BOSS	
	4	1	**8E-6130**	2	LINK AS	
	5	1	**104-4523**	2	CAM AS	
	6	1	**333-1963**	1	PLATE AS	
	7	1	**109-6776**	2	PIN	
M	8	1	**129-3180**	2	LOCKNUT (M12X1.75-THD)	
	9	1	**267-3506**	10	WASHER-HARD (26X44X4-MM THK)	
M	10	1	**7X-2543**	2	BOLT (M10X1.5X120-MM)	
M	11	1	**8T-0389**	4	LOCKNUT (M10X1.5-THD)	
M	12	1	**8T-5041**	2	BOLT (M12X1.75X120-MM)	
M	13	1	**8T-6685**	2	BOLT (M10X1.5X110-MM)	
	14	1	**9W-7469**	2	PIN	
	15	1	**9W-7470**	2	PIN	
M	16	1	**9X-2615**	10	BOLT (M24X3X60-MM)	

M-METRIC PART

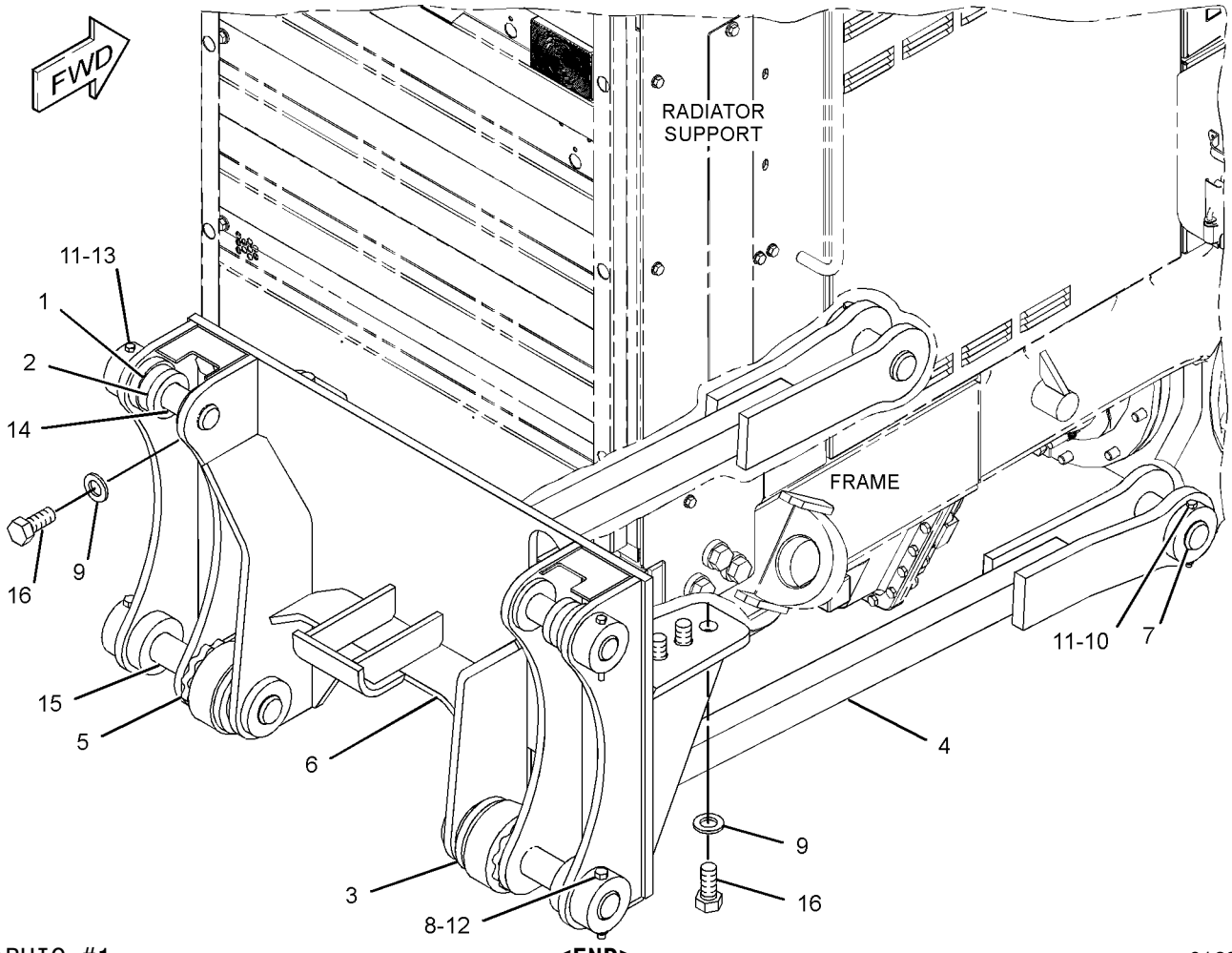

GRAPHIC #1 **<END>** g01698813

285-4183 RIPPER AR

S/N: JJA1-UP

PART OF 339-4971 OPTION AR-RIPPER, 339-4973, 339-4974 OPTION AR-WORK TOOL AN ATTACHMENT

SMCS-6325 **i03274161**

NOTE	REF NO	GRAPHIC REF	PART NUMBER	QTY	PART NAME 1 2 3 4 5 6 (PRODUCT LEVEL)	SEE PAGE
Y	1	1	*8J-7024*	1	RIPPER GP	608
Y	2	1	**113-7754**	1	CYLINDER GP-RIPPER	342
Y	3	1	*174-2339*	1	LINES GP-RIPPER	374
Y	4	1	*289-7597*	1	MOUNTING GP-RIPPER	606

Y-SEPARATE ILLUSTRATION

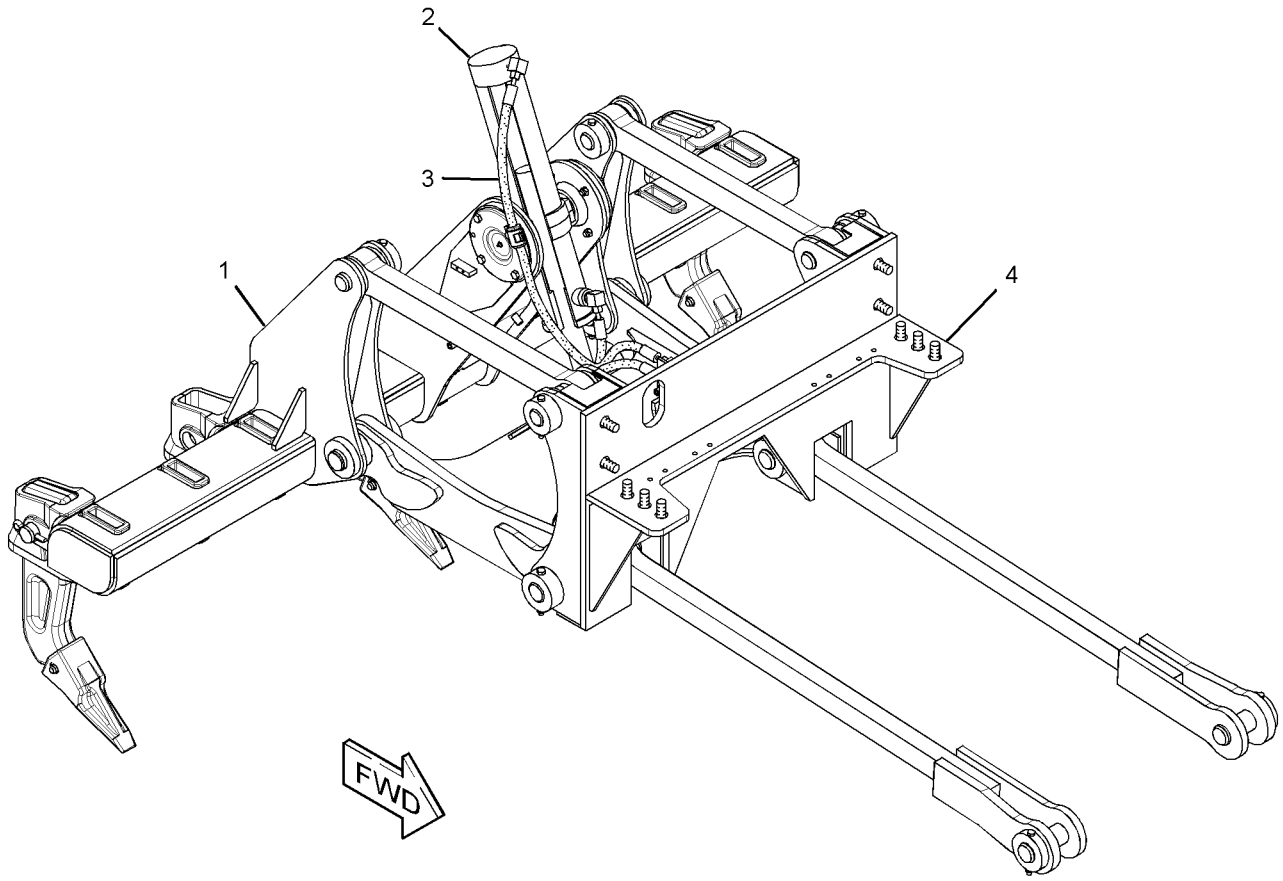

GRAPHIC #1 **<END>** g01683334

WORK TOOLS

8J-7024 RIPPER GP

S/N: JJA1-UP
3-TEETH
PART OF 285-4183 RIPPER AR
AN ATTACHMENT

SMCS-6325 **i03643756**

NOTE	REF NO	GRAPHIC REF	PART NUMBER	QTY	PART NAME 1 2 3 4 5 6 (PRODUCT LEVEL)	SEE PAGE
	2	1	**2K-0120**	1	PIN	
	3	1	**2K-0703**	1	BAR	
	4	1	**3B-8489**	3	FITTING-GREASE (RIPPER CYLINDER BEARING)	
	5	1	**4K-3004**	2	BEARING-TRUNNION SUPPLEMENTARY	
	6	1	**4K-3150**	2	PIN	
	7	1	**190-5386**	2	FILM-REFLECTOR (ROUND RED REFLECTIVE)	
Y	8	1	*8J-1434*	3	TOOTH GP-RIPPER	614
	9	1	**9J-0096**	2	LINK AS-UPPER	
					(EACH INCLUDES)	
	9A	1	**3G-2581**	2	BEARING	
	10	1	**9W-3155**	1	CARRIAGE AS	
	11	1	**187-0953**	1	LINK AS-LOWER	
	11A	1	**3G-2579**	4	BEARING	
	12	1	**1K-6872**	10	LOCKNUT (1/2-13-THD)	
	13	1	**2D-0626**	8	SEAL	
	14	1	**2K-4973**	2	LOCKNUT (3/8-16-THD)	
	15	1	**5P-2228**	2	BOLT (1/2-13X1-IN)	
	16	1	**5P-2424**	8	BOLT (1/2-13X2.25-IN)	
	17	1	**7K-9203**	8	SEAL-LIP TYPE	
	18	1	**7X-0333**	2	BOLT (1/2-13X4.75-IN)	
	19	1	**8J-7008**	2	PIN	
	20	1	**8T-9378**	2	BOLT (3/8-16X4-IN)	

Y-SEPARATE ILLUSTRATION

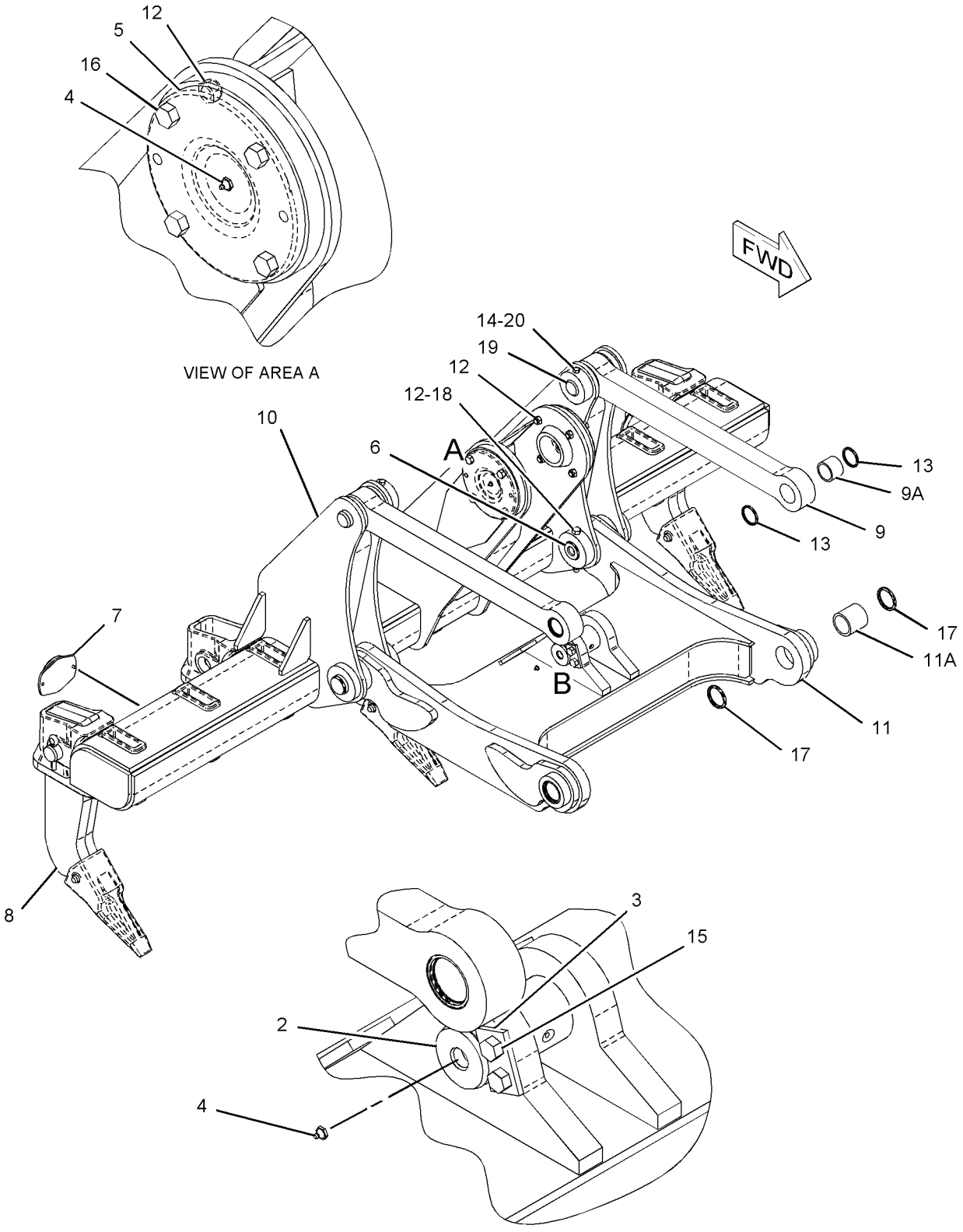

GRAPHIC #1

<END>

g01068995

WORK TOOLS

340-5009 SCARIFIER AR—VEE TYPE

S/N: JJA1-UP

PART OF 339-4972 OPTION AR-WORK TOOL

AN ATTACHMENT

SMCS-6162, 6325, 6811 **i03518965**

NOTE	PART NUMBER	QTY	PART NAME 1 2 3 4 5 6 (PRODUCT LEVEL)	SEE PAGE
Y	*339-7733*	1	BRACKET GP-SCARIFIER	599
Y	*8W-2913*	1	CYLINDER & MTG GP-SCARIFIER	333
Y	*8X-6070*	1	LINES GP-HYDRAULIC (SCARIFIER)	356
Y	*310-9428*	1	SCARIFIER GP (VEE TYPE)	611

Y-SEPARATE ILLUSTRATION

<END>

WORK TOOLS

310-9428 SCARIFIER GP—VEE TYPE

S/N: JJA1-UP

PART OF 340-5009 SCARIFIER AR

AN ATTACHMENT

SMCS-6162, 6325, 6811 **i03317223**

NOTE	REF NO	GRAPHIC REF	PART NUMBER	QTY	PART NAME 1 2 3 4 5 6 (PRODUCT LEVEL)	SEE PAGE
	1	1	**7X-0386**	2	BOLT (7/8-9X3.5-IN)	
	3	1	**2G-4332**	1	BLOCK AS-SCARIFIER	
		1	**7D-8825**	11	SPACER	
		1	**7D-8826**	11	SPACER	
	4	1	**6K-3632**	4	LOCKNUT (1-8-THD)	
	5	1	**3B-8489**	4	FITTING-GREASE	
	6	1	**7X-0450**	4	NUT-FULL (1-1/8-7-THD)	
	7	1	**4D-6086**	2	KEY	
	8	1	**5B-0577**	2	COLLAR	
	9	1	**5D-8159**	2	PIN AS	
	10	1	**5K-1458**	11	GROMMET	
	11	1	**5K-1459**	11	LOCK PIN	
	12	1	**6B-3260**	1	TOOL	
	13	1	**6F-6992**	4	CAP-BALL SOCKET	
	14	1	**6Y-5230**	11	TOOTH-SCARIFIER	
	15	1	**7D-2196**	2	SLEEVE AS-LINK	
					(EACH INCLUDES)	
		1	**7D-2136**	1	SOCKET-BALL	
B	16	1	**7F-1327**	32	SHIM (0.03-IN THK)	
	17	1	**8D-1268**	2	ARM AS-LIFT	
					(EACH INCLUDES)	
		1	**7D-8245**	1	STUD-BALL	
	18	1	**7X-0443**	4	BOLT (1-8X5.5-IN)	
	19	1	**7X-0423**	4	BOLT (1-1/8-7X4.5-IN)	
	20	1	**8W-0663**	2	BRACKET AS	
					(EACH INCLUDES)	
		1	**3B-8489**	1	FITTING-GREASE	
		1	**107-8374**	2	BEARING	
	21	1	**8X-6075**	1	BOLSTER AS	
	22	1	**9D-5516**	2	LINK AS-LIFT	
					(EACH INCLUDES)	
		1	**7D-2135**	1	SOCKET-BALL	
	23	1	**107-8375**	1	SHAFT AS	
	24	1	**118-7880**	1	DRAWBAR AS	
		1	**2G-7728**	2	COLLAR	
		1	**8W-5597**	1	STUD-BALL	
	25	1	**118-7881**	1	DRAWBAR AS	
		1	**2G-7728**	2	COLLAR	
		1	**8W-5597**	1	STUD-BALL	
	26	1	**195-7218**	11	SHANK	
B	27	1	**198-9811**	16	SPACER (83X145X3-MM THK)	
B	28	1	**198-9812**	3	SPACER (83X145X2-MM THK)	
	29	1	**8T-8924**	8	BOLT (3/4-10X2.5-IN)	
	30	1	**8C-8842**	4	BOLT (3/4-10X4-IN)	
	31	1	**6V-8188**	2	NUT (1/2-13-THD)	
	32	1	**330-6877**	1	SHAFT	
	33	1	**6V-8182**	4	NUT (3/4-10-THD)	
	34	1	**282-0882**	4	WASHER-HARD (33X56X6-MM THK)	
	35	1	**5D-8161**	2	PIN	
	36	1	**8T-4223**	2	WASHER-HARD (13.5X25.5X3-MM THK)	
	37	1	**8T-4994**	8	WASHER-HARD (20X36.5X3.5-MM THK)	
	38	1	**8T-5361**	8	WASHER-HARD (28X49X5-MM THK)	
	39	1	**6K-0545**	6	LOCKNUT (7/8X19-THD)	
	40	1	**7X-0390**	4	BOLT (7/8-9X5-IN)	
	41	1	**8C-6913**	4	WASHER-HARD (24X41.5X4-MM THK)	

310-9428 **SCARIFIER GP** *(contd.)* **i03317223**

NOTE	REF NO	GRAPHIC REF	PART NUMBER	QTY	PART NAME 1 2 3 4 5 6 (PRODUCT LEVEL)	SEE PAGE
	42	1	**198-4782**	8	WASHER-HARD (26X47X12-MM THK)	
	43	1	**7X-0328**	2	BOLT (1/2-13X3.5-IN)	

B-USE AS REQUIRED

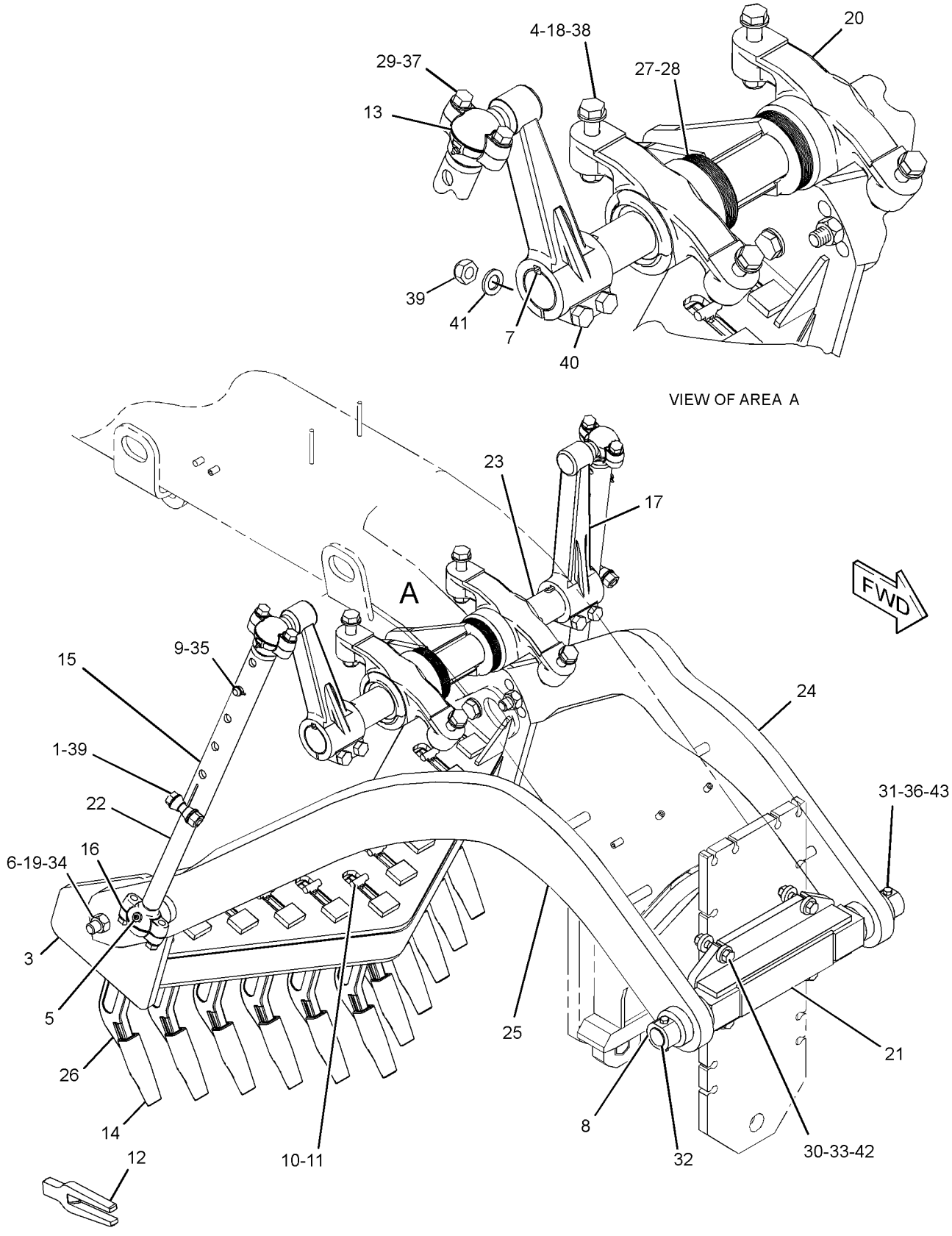

GRAPHIC #1 **<END>** g01753714

WORK TOOLS

8J-1434 TOOTH GP-RIPPER

S/N: JJA1-UP
PART OF 8J-7024 RIPPER GP
AN ATTACHMENT

SMCS-6808 **i02761493**

NOTE	REF NO	GRAPHIC REF	PART NUMBER	QTY	PART NAME 1 2 3 4 5 6 (PRODUCT LEVEL)	SEE PAGE
	1	1	**3B-5325**	2	PIN-COTTER	
	2	1	**2K-6413**	1	PIN	
	3	1	**9J-6586**	1	SHANK	
	4	1	**136-8308**	1	PIN	
	5	1	**6Y-0309**	1	TIP-RIPPER (PENETRATION)	
	6	1	**114-0359**	1	RETAINER AS	

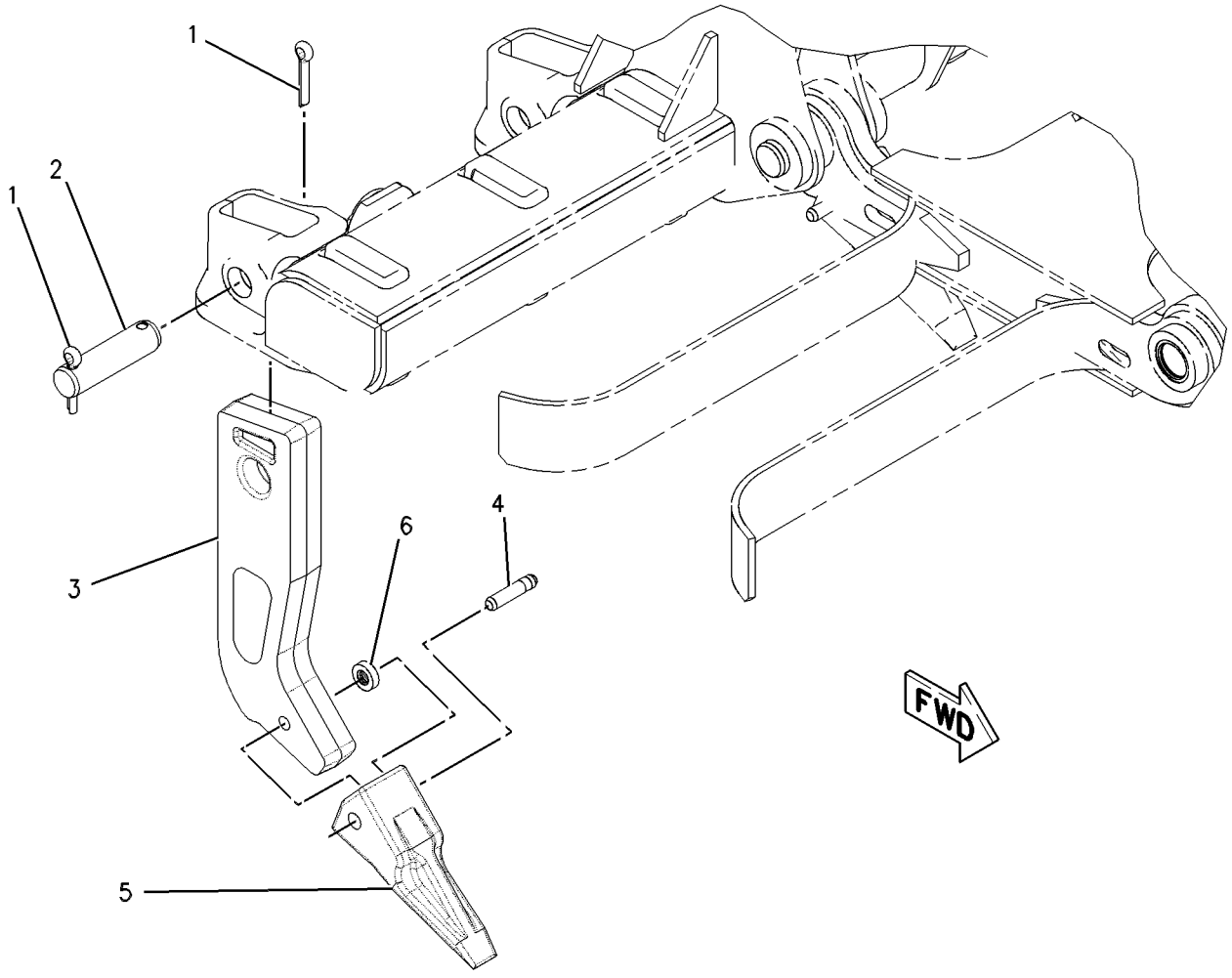

GRAPHIC #1 **<END>** g00632727

WORK TOOLS

4K-3330 TOOTH GP-SCARIFIER

S/N: JJA1-UP
9 TEETH
AN ATTACHMENT

SMCS-6807 **i01723061**

NOTE	REF NO	GRAPHIC REF	PART NUMBER	QTY	PART NAME 1 2 3 4 5 6 (PRODUCT LEVEL)	SEE PAGE
	1	1	**5K-1459**	9	LOCK PIN	
	2	1	**5K-1458**	9	GROMMET	
	3	1	**195-7218**	9	SHANK	
	4	1	**6Y-5230**	9	TOOTH-SCARIFIER	
F			**6B-3260**	1	TOOL	

F-NOT SHOWN

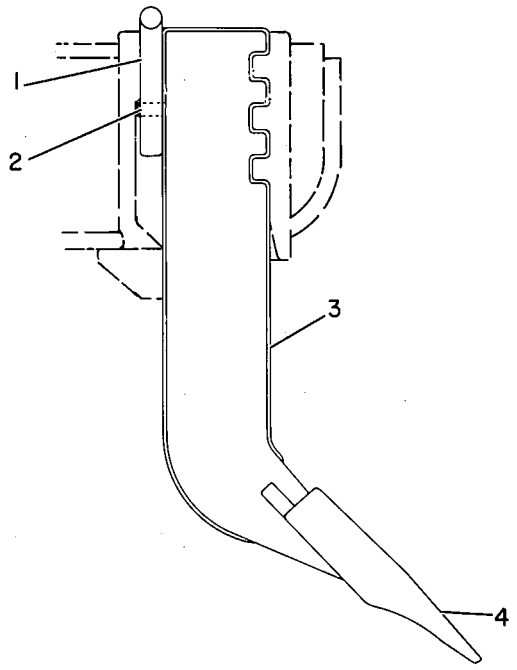

GRAPHIC #1 **<END>** g00108148

SERVICE EQUIPMENT AND SUPPLIES

111-1719 BOX GP-TOOL

S/N: JJA1-UP

PART OF 346-3710 GENERAL AR

SMCS-7259 **i03503263**

NOTE	REF NO	GRAPHIC REF	PART NUMBER	QTY	PART NAME 1 2 3 4 5 6 (PRODUCT LEVEL)	SEE PAGE
	1	1	**129-7249**	1	TOOL BOX	
	2	1	**246-2641**	1	PADLOCK GP (TOOL BOX)	
		1	**5P-8500**	1	KEY	
	3	1	**5K-9107**	4	BOLT-LOCKING (3/8-16X0.75-IN)	
	4	1	**5P-1075**	4	WASHER-HARD (10.2X22.5X3-MM THK)	

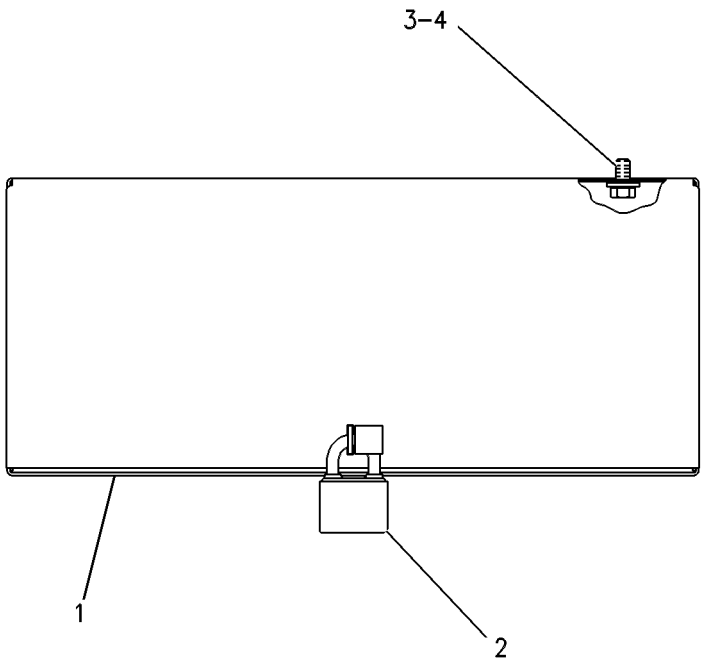

GRAPHIC #1 **<END>** g00109173

SERVICE EQUIPMENT AND SUPPLIES

302-4191 FILM GP

S/N: JJA1-UP

PART OF 302-4194 PLATE & FILM GP

SMCS-0375, 7000, 7405, 7557 **i03518464**

NOTE	REF NO	GRAPHIC REF	PART NUMBER	QTY	PART NAME 1 2 3 4 5 6 (PRODUCT LEVEL)	SEE PAGE
	1	1	**253-0861**	2	FILM-INFORMATION (CAT POWER, ACERT TECHNOLOGY)	
	2	1	**280-1480**	1	FILM-IDENTIFICATION (CATERPILLAR)	
	3	1	**296-6764**	1	FILM-IDENTIFICATION (CAT, RH)	
	4	1	**296-6765**	1	FILM-IDENTIFICATION (CAT, LH)	
	5	1	**296-6769**	2	FILM-IDENTIFICATION (VHP 165)	
	6	1	**302-1330**	2	FILM-IDENTIFICATION (12K)	

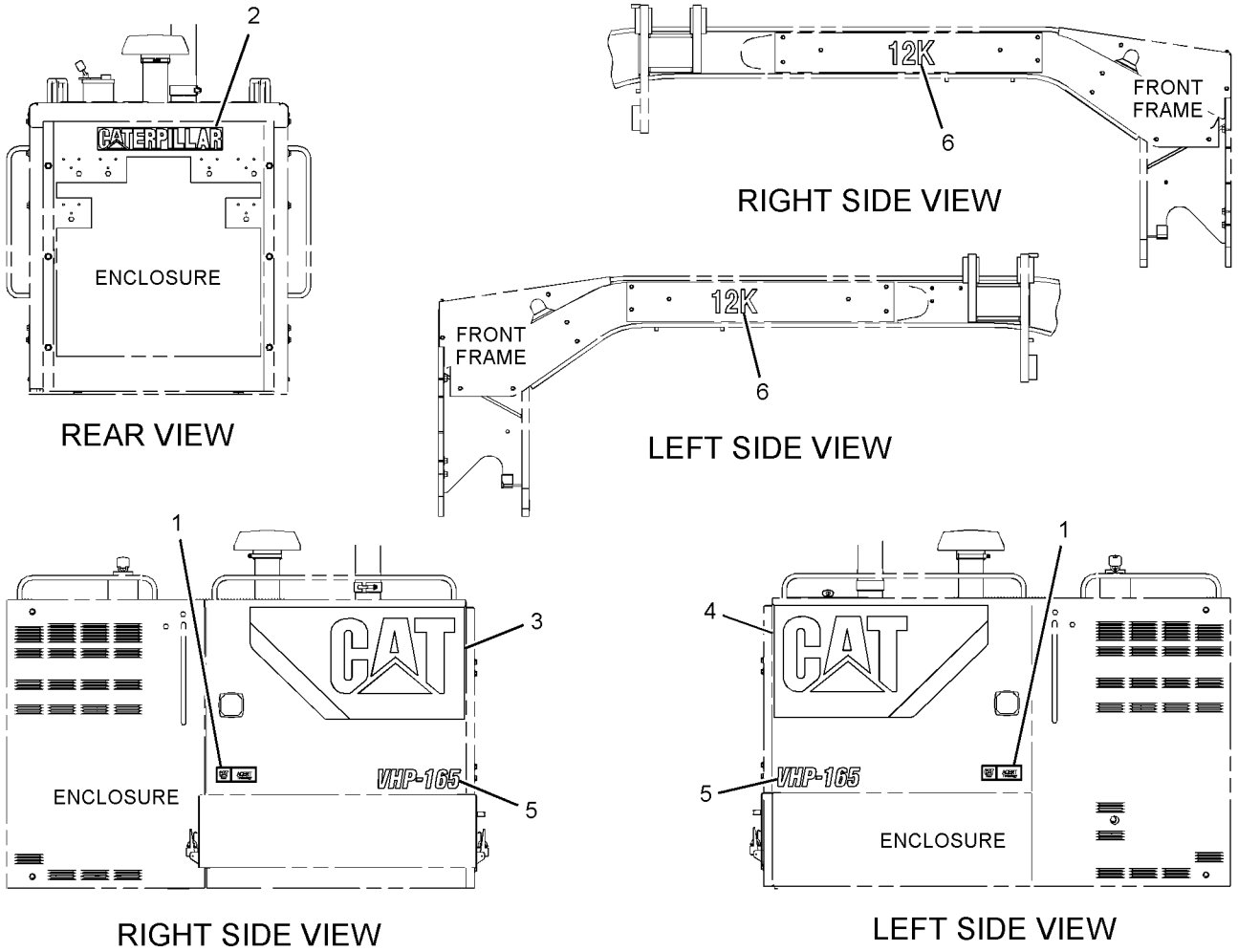

GRAPHIC #1 **<END>** g01923494

SERVICE EQUIPMENT AND SUPPLIES

302-4194 PLATE & FILM GP

S/N: JJA1-UP

PART OF 346-3710 GENERAL AR

SMCS-7405, 7557 **i03518462**

NOTE	REF NO	GRAPHIC REF	PART NUMBER	QTY	PART NAME 1 2 3 4 5 6 (PRODUCT LEVEL)	SEE PAGE
	1	1	**3E-1552**	1	FILM-INSTRUCTION (TRANSMISSION FILTER)	
	2	3	**5P-1174**	1	FILM-IDENTIFICATION (TRANSMISSION OIL FILL CAP)	
	3	3	**5P-1175**	1	FILM-IDENTIFICATION (ENGINE OIL FILL)	
	4	1	**8C-5897**	1	FILM-IDENTIFICATION (SIGHT GAUGE)	
	5	1	**125-2209**	1	FILM-IDENTIFICATION (BLADE CENTERSHIFT)	
	6	1	**129-7679**	1	FILM-INSTRUCTION (ENGINE OIL DRAIN)	
	7	3	**129-7680**	1	FILM-INSTRUCTION (HYDRAULIC TANK OIL DRAIN)	
	8	1	**134-7258**	1	FILM-INFORMATION (EXTENDED LIFE COOLANT,READ OMM)	
	10	1	**220-3634**	1	FILM-IDENTIFICATION (DRAIN, ENGINE COOLANT)	
	11	2	**221-8045**	1	FILM-WARNING (SEAT BELT, INTERNATIONAL)	
	12	2	**224-0554**	1	FILM-WARNING (UNIVERSAL, READ OMM, INTL)	
	13	1	**225-0312**	2	FILM-WARNING (JUMP START, READ OMM)	
	14	1	**225-4150**	1	PLATE-SERVICE INFORMATION (MACHINE)	
	15	1	**225-4257**	1	FILM-WARNING (HOT FLUID UNDER PRESS, INTL)	
	16	3	**226-1240**	2	FILM-WARNING (CRUSH HAZARD, STAY BACK, INTL)	
	17	3	**226-1274**	1	FILM-WARNING (CRUSH HAZARD, READ OMM, INTL)	
	18	2	**230-4477**	1	FILM-WARNING (NO STEP)	
	21	3	**239-4991**	1	FILM-WARNING (HIGH PRESSURE CYLINDER)	
	22	1	**239-6989**	1	PLATE-SERIAL NUMBER (MACHINE)	
	23	1	**248-5245**	2	FILM-INFORMATION (LIFT EYE, TIE-DOWN LOCATION)	
	25	1	**249-8575**	1	FILM-WARNING (NO DRILL, WELD, READ OMM)	
	26	1	**252-2156**	2	FILM-INSTRUCTION (LIFT EYE LOCATION)	
	27	2	**252-2157**	2	FILM-INFORMATION (TIE-DOWN)	
	28	3	**254-6136**	2	FILM-INSTRUCTION (AIR TANK, DRAIN)	
	29	1,3	**281-0547**	4	FILM-WARNING (FAN, READ OMM)	
	30	3	**286-1089**	1	FILM-INFORMATION (FLUID LEVEL)	
	31	3	**293-3824**	1	FILM-IDENTIFICATION (ARTICULATION LOCK)	
	33	1	*301-0046*	1	FILM	
Y	34	1	*302-4191*	1	FILM GP	617
	35	3	**329-5707**	1	FILM-IDENTIFICATION (OIL GRADE, READ OMM)	
	36	3	**331-3892**	1	FILM-INSTRUCTION (WASHER FILL)	
	37	1	**336-0057**	1	FILM-INSTRUCTION (ALTERNATOR BELT MOUNTING)	
AF			**4W-1413**	1	PLATE-SERIAL NUMBER (ENGINE)	
					(ON THE RH SIDE OF CYLINDER BLOCK, APPROXIMATELY 110-MM DOWN FROM TOP OF BLOCK TO THE TOP OF THE PLATE AND	
					110-MM FROM THE REAR FACE OF THE BLOCK TO THE REAR EDGE OF PLATE)	

A-NOT PART OF THIS GROUP
F-NOT SHOWN
Y-SEPARATE ILLUSTRATION

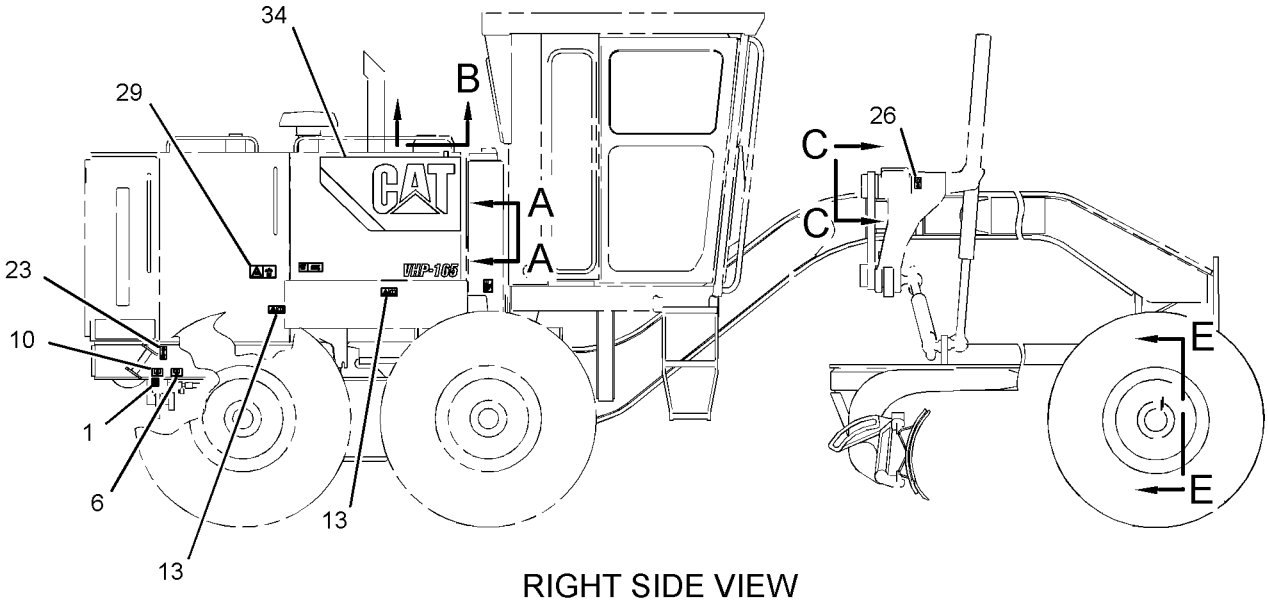

RIGHT SIDE VIEW

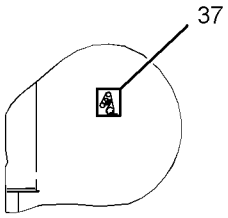

VIEW A-A

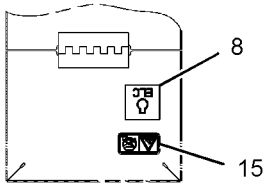

VIEW B

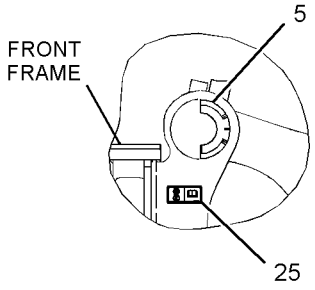

VIEW C-C

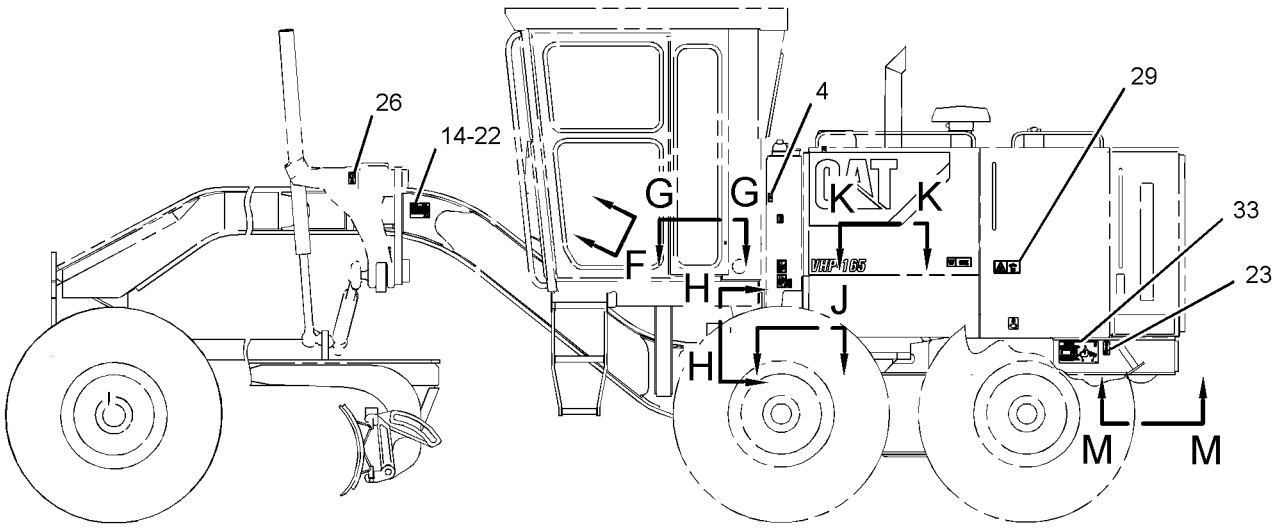

LEFT SIDE VIEW

REFER TO ALL ILLUSTRATIONS OF
THIS GROUP FOR AUXILIARY VIEWS

GRAPHIC #1 g01946059

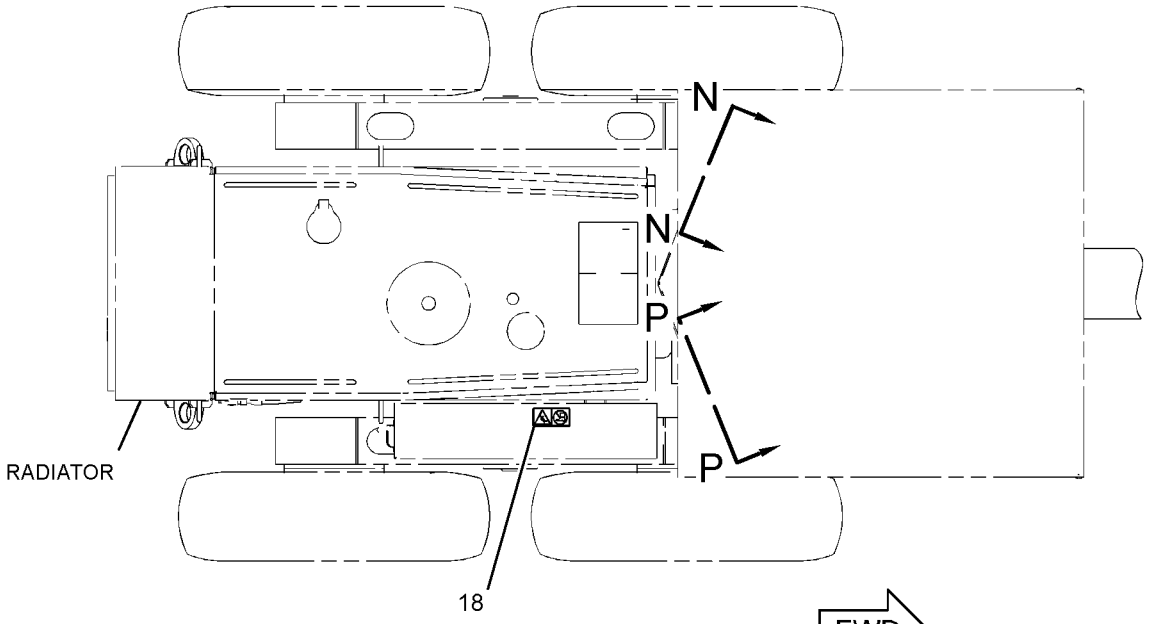

TOP VIEW

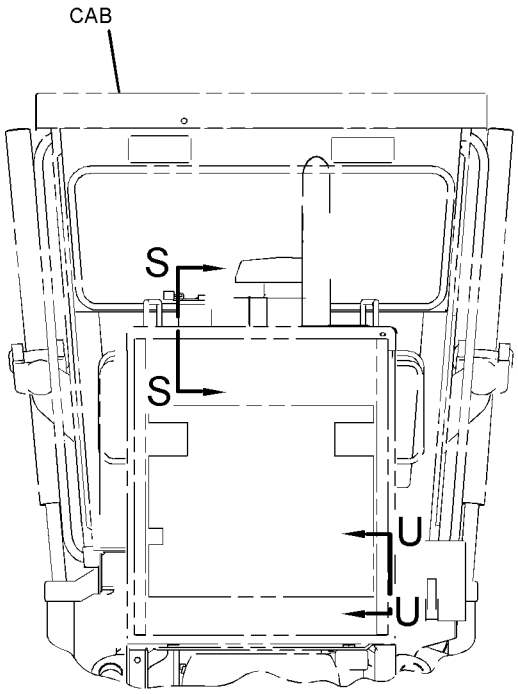

REAR VIEW

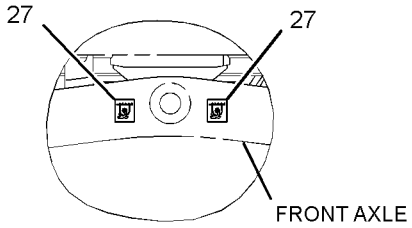

VIEW E-E

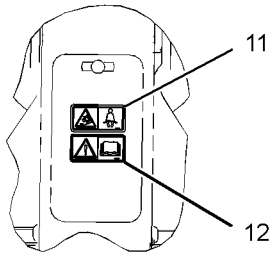

VIEW F

REFER TO ALL ILLUSTRATIONS OF
THIS GROUP FOR AUXILIARY VIEWS

GRAPHIC #2

g01946062

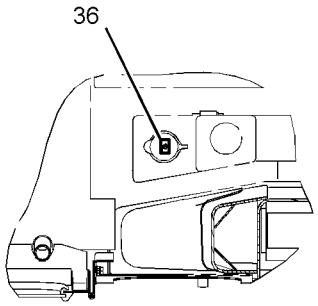

VIEW G-G

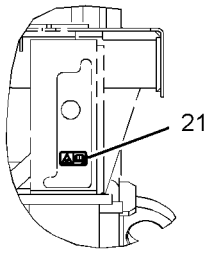

VIEW H-H

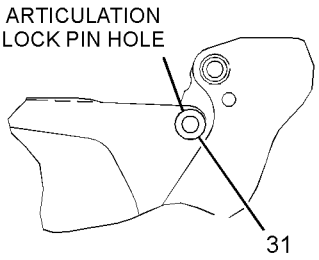

VIEW J

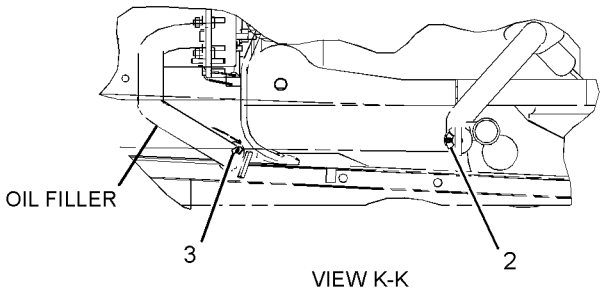

VIEW K-K

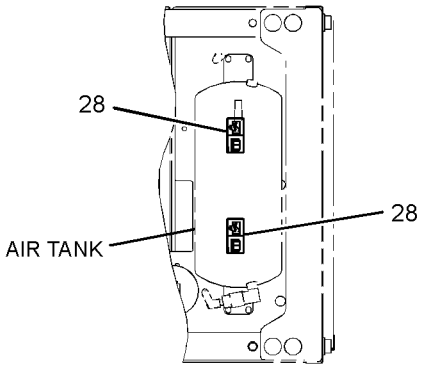

VIEW M-M

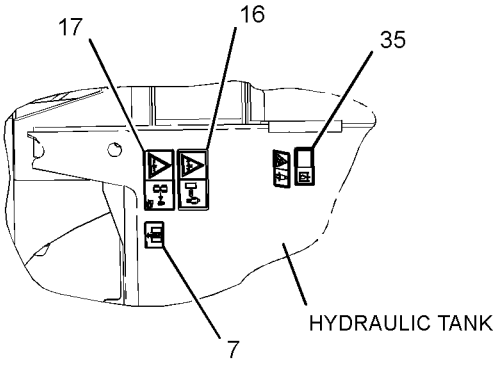

VIEW N-N

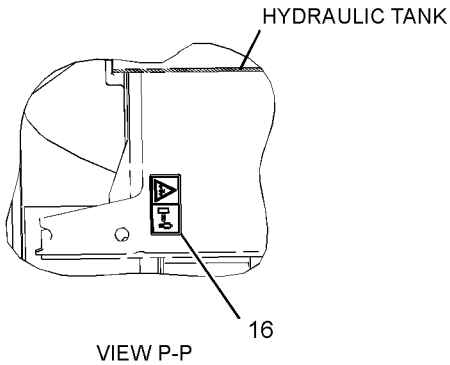

VIEW P-P

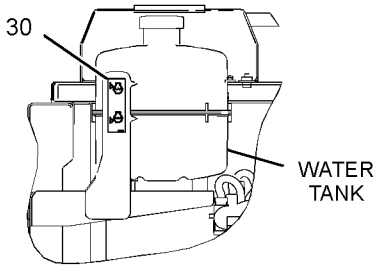

VIEW S-S

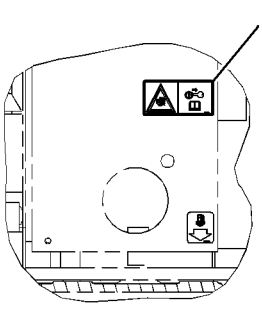

VIEW T-T

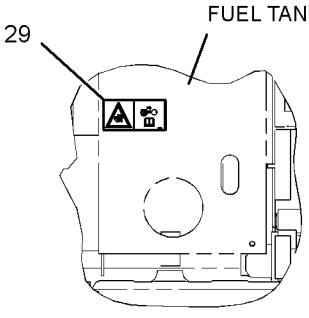

VIEW U-U

GRAPHIC #3 **<END>** g01946067

MEMORANDA

PART NUMBER INDEX

Part	Page
0	
0L-0478	393
0L-1026	254
0S-1566	309
0S-1571	393
0S-1579	257
0S-1585	351
0S-1592	277
	336
0S-1604	253
0S-1756	237
0T-0244	568
0V-0375	277
1	
1A-1415	351
1A-4350	561
1B-0676	92
	313
	494
1B-2713	506
	507
1B-3057	9
1B-4038	351
1B-4046	351
1B-4367	301
1B-5174	218
	351
1B-8704	92
	494
1B-8705	13
	20
1B-8737	386
1D-4627	277
1D-4689	302
1D-5119	468
1D-5120	386
1F-0748	400
	403
	406
	408
	410
	466
1F-0750	292
	482
	483
	571
1F-1599	566
1F-4622	313
	494
1F-5339	280
1F-7567	97
1F-7958	351
1H-0337	421
1H-1023	311
1H-3244	107
	212
1H-3338	497
	500
1H-3937	387
1H-7339	351
1H-7724	313
1H-8306	105
1H-8720	370
1J-2860	237
1J-4757	237
1J-6762	202
	593
1J-9671	76
	327
	421
1K-6870	202
1K-6872	302
	334
	608
1K-6985	600
1L-0509	245
1L-2279	314
1L-5072	397
1M-1230	506
	507
1M-3780	249
1M-4095	254
1M-6119	111
1M-6120	111
1M-6718	461
1N-5999	28
	345
	347
1P-0810	113
	114
	185
1P-2378	539
	541
1P-2636	237
1P-2662	237
1P-3700	395
1P-4577	245
1P-4578	245
1P-4693	241
	309
1P-4694	241
1P-6356	534
1P-6872	387
1P-7009	73
	114
	202
1P-7115	320
1P-7521	307
1R-0762	97
1R-0774	397
1R-1807	58
1S-0994	61
	79
	314
	359
	363
	375
1S-2342	197
1S-2563	49
1S-3618	374
1S-7251	113
1S-7252	111
	113
	114
1S-9110	241
1S-9593	265
	266
	462
	463
1T-0738	234
	267
1U-3998	345
	347
1U-8846	15
	39
	40
	85
	86
	217
1V-1984	207
1V-7368	123
1W-2431	89
1W-2715	27
1W-8407	22
1Y-7927	519
2	
2A-1162	39
	207
2A-3211	458
	459
	460
2A-3398	284
2A-4429	27
2A-6684	524
2A-6926	587
2A-6928	587
2A-6929	587
2A-6938	255
2A-6985	▶546
	555
2A-7081	358
2A-7089	464
2A-7184	491
2B-0858	351
2B-0941	356
	358
	362
2B-0947	239
2B-2673	466
2B-3147	255
2B-3148	255
2B-9373	249
2D-0193	313
2D-0626	608
2D-2507	275
	276
2D-2508	275
	276
2D-2509	275
	276
2D-2511	275
2D-2565	275
2D-2654	273
2D-4202	397
2D-6006	580
2D-6235	506
	507
	519
2D-6642	41
	237
	239
2D-7325	313
2D-8009	249
2D-8154	351
2D-8652	340
2F-8057	301
	335
2F-8509	389
2G-0478	351
2G-0617	143
	147
2G-0659	143
	147
2G-0988	143
	147
2G-1034	320
2G-3219	466
2G-3221	466
2G-3865	277
2G-3967	331
2G-3971	464
2G-4332	611
2G-5493	358
	362
2G-5667	277
	336
2G-5673	277
2G-6285	580
2G-6337	309
2G-6595	276
2G-6695	351
2G-6740	400
	404
	408
	410
2G-6747	400
	404
	406
	408
	410
2G-6748	400
	404
	406
	408
	411
2G-6749	400
	404
	406
	408
	411
2G-6751	400
	404
	406
	408
	411
2G-6752	400
	404
	406
	408
	411
2G-6753	400
	404
2G-6754	400

▶ **PRIMARY REFERENCE**

PART NUMBER INDEX

Part	Page
	403
2G-6755	400
	404
	406
	408
	411
2G-6756	400
	404
	406
	408
	411
2G-6757	400
	404
	406
	408
	411
2G-7097	545
	546
2G-7098	545
	546
2G-7728	611
2G-8233	603
2G-8241	539
	541
2G-8242	539
2G-8572	491
	529
	539
2G-8573	491
	529
	539
2G-8609	336
2G-8615	277
2G-8624	277
2G-8626	277
2G-8631	277
	349
2G-8633	277
2G-8741	277
2G-8742	277
2G-8767	113
	524
	529
2G-8768	277
2G-8777	277
2G-9098	330
	332
2G-9103	330
	332
2G-9791	255
2H-1743	536
2H-3740	277
2H-3786	335
2H-3920	181
	189
2H-3922	177
	550
2H-3928	395
2H-3931	379
2H-3940	320
2H-5001	237
2H-6489	217
2H-6490	254
2H-9091	320
2H-9247	351
2J-0157	217
2J-3505	277
2J-3506	241
	595
	596
	597
2J-6089	457
	458
	459
	460
2J-6274	307
2J-7761	397
2J-8163	277
2K-0120	608
2K-0419	466
2K-0420	329
2K-0703	608
2K-1738	228
2K-2306	597
2K-4821	107
2K-4973	472
	475
	482
	483
	571
	578
	608
2K-5106	237
2K-5109	237
2K-5232	534
2K-5830	491
2K-6061	482
	483
	571
2K-6413	614
2K-6830	342
2K-7979	491
2K-8199	423
	425
	427
	429
	431
	433
	435
	437
	439
	441
	443
	445
	447
2L-3331	313
2L-5893	472
	553
2L-6267	92
2M-4453	76
2M-4779	325
2M-6471	24
2M-7819	519
2M-9780	9
	24
	28
	58
	76
	96
	217
	255
	307
	358
	421
	536
2N-9421	92
2P-1279	457
	458
	459
	460
2P-2537	58
2P-4339	476
	514
2P-4358	11
2R-0694	580
2R-0719	580
2R-0724	580
2R-1600	284
2R-6806	99
2S-2053	59
2S-2923	320
2S-3029	217
2S-3440	318
2S-4078	369
	421
2S-5100	397
2S-7010	73
2T-2991	9
2V-0099	476
	514
2V-1771	111
	114
2V-4331	298
2V-8259	192
2W-0027	48
2W-6544	15
2W-6546	14
2W-7213	24
2W-7381	30
2W-8147	20
2Y-3812	202
2Y-5829	54
	62
	3
3B-4501	477
3B-4607	580
3B-4610	397
	580
3B-4615	286
3B-4618	277
	335
3B-4628	359
3B-4647	334
3B-5320	466
3B-5325	614
3B-5329	331
3B-6769	300
3B-6772	318
3B-7721	314
3B-7733	300
3B-7740	292
3B-8485	330
3B-8489	277
	300
	336
	468
	597
	608
	611
3B-8491	597
3B-8822	311
3B-8921	223
	226
3C-6969	212
3D-2239	275
3D-2824	9
	39
	50
	76
	176
	235
	245
	354
	366
	369
	370
	373
	421
3D-2975	519
3D-2981	255
3D-4245	259
	262
3D-6509	239
3D-6689	257
3D-7587	320
3D-8317	262
3D-8747	506
	507
3D-8748	506
	507
3D-8749	506
	507
3D-8752	506
	507
3D-8884	311
3D-8913	314
	320
3E-0109	189
	192
	212
3E-0400	476
	514
3E-1552	618
3E-2026	197
3E-3213	37
3E-3365	176
	265
	462
	463
3E-3371	158
	159
3E-3389	189
3E-3636	197
3E-3890	476
	514
3E-4048	546

PART NUMBER INDEX

Part	Page	Part	Page	Part	Page	Part	Page
	557		101		460		452
3E-4302	387	3E-9413	549		461		456
	389	3E-9865	491	3J-3679	76		536
3E-4304	476	3F-1547	397		421	3K-0986	253
3E-4307	241	3F-7514	491	3J-5390	78	3K-2889	301
3E-4352	59	3F-9556	107		309	3K-3257	175
	156		400		318	3K-6060	314
3E-5169	207		403	3J-5696	472		397
3E-5239	141		406	3J-6956	267		491
	185		408	3J-7354	9	3K-6113	415
	192		410		39		417
	196		587		71	3K-6116	259
	207		589		83	3K-8280	314
3E-5464	476		590		96	3K-8460	156
3E-6328	▶106	3G-0361	397		156	3K-9520	143
	192	3G-1701	518		232		147
3E-6389	▶131	3G-2579	608		244	3L-8187	212
	189	3G-2581	608		262	3P-0337	226
3E-6477	212	3G-3265	527		307	3P-0647	167
3E-6909	320		529		369	3P-1156	60
3E-7401	73		557		376		67
3E-7417	387	3G-3726	454		381	3P-1461	330
	389		455		383		603
3E-8005	234	3G-6659	300		421	3P-1932	58
3E-8006	267	3G-8175	462		456	3P-2404	202
3E-8017	91	3G-9190	280	3J-8500	392	3P-3839	294
3E-8020	550	3H-2900	477	3K-0196	253		296
	552		514	3K-0360	9	3P-9498	421
3E-8700	▶169	3H-5552	24		11	3R-2437	421
	218	3H-7654	53		51	3R-9322	286
3E-8763	188	3H-8538	494		71	3S-0004	249
	212	3J-1907	9		73	3S-0391	313
	215		11		76	3S-2093	96
3E-8766	143		28		79		123
3E-8772	146		46		85		143
	147		62		96		154
	178		64		97		189
3E-8782	143		73		217		192
3E-8784	215		83		255		194
3E-8812	188		86		356		212
3E-8815	146		96		358		214
3E-8817	192		97		359		362
3E-8821	509		99		362		376
	510		173		365		476
3E-8825	143		185		369		514
	146		197		374		524
	147		217		375		581
	178		232		376		584
	188		259		387	3S-2713	313
	192		262		403		494
	212		267		410	3S-6049	113
	215		367		421	3S-6050	111
	232		369		423		114
	509		370		425	3S-7023	339
	510		376		427		341
3E-9317	147		404		429		342
	178		411		431	3S-8664	114
3E-9319	212		421		433		314
3E-9323	212		423		435		367
3E-9326	147		449		437	3S-8665	536
	178		454		439	3S-9557	477
3E-9327	192		455		441	3T-0050	313
3E-9330	509		457		443	3T-0849	391
	510		458		445	3T-3157	515
3E-9412	53		459		447	3T-3158	515

▶ **PRIMARY REFERENCE**

PART NUMBER INDEX

Part	Page
3T-3159	515
3T-3197	476
3T-3198	476
3T-3278	515
3T-4377	254
3T-5760	114
3T-5763	286
3T-6774	506
	507
3T-6848	374
3T-8236	421
3T-9549	216
3V-0613	286
3V-2431	100
3V-3816	583
3V-9244	545
	546
	557
3W-7254	606
3W-7256	606
3Y-2806	491
3Y-2888	173
4	
4B-0418	534
4B-1281	212
4B-2043	543
4B-2049	550
	552
4B-2913	397
4B-4158	556
4B-4274	207
	212
4B-4283	587
	589
	590
4B-4314	491
4B-4863	543
	575
4B-5059	519
4B-5272	474
4B-6060	314
	494
4B-7270	309
4B-9302	534
4B-9880	262
4C-9612	14
	47
4D-0577	314
	320
4D-0582	314
4D-1212	212
4D-1322	267
4D-2297	423
	454
	455
	457
	458
	459
	460
4D-2560	320
4D-2886	374
4D-3704	241
	277
	309
	336
4D-4064	92
4D-4375	464
4D-5292	237
4D-5497	309
4D-6086	611
4D-6432	561
4D-6585	311
4D-6695	241
	267
4D-6885	314
4D-7388	73
	79
	197
	314
	320
	581
	583
	584
4D-7733	318
	320
	367
4D-7735	314
	534
4D-7794	83
	147
	186
	192
	197
	202
	207
	300
	399
	583
4D-8123	207
4D-8128	280
4D-8148	284
4D-9986	423
	425
	427
	429
	431
	433
	435
	437
	439
	441
	443
	445
	447
4E-2392	376
4F-2294	179
4F-4097	389
4F-4879	574
4F-5695	26
4F-7389	245
4F-7390	307
4F-7827	597
4F-7952	126
	251
4F-9029	64
4F-9653	100
	351
4H-6112	255
4H-6147	311
	320
4H-6520	237
4H-6996	351
4H-9105	307
4J-0520	245
4J-0521	370
4J-0522	245
4J-0524	76
4J-2506	232
	259
	262
4J-5468	356
	358
	362
	376
4J-5477	9
	232
	369
	376
	421
4J-7533	259
	262
	381
	383
	413
	414
	415
	416
	417
	419
	420
	421
	423
	425
	427
	429
	431
	433
	435
	437
	439
	441
	443
	445
	447
4J-8922	314
	494
4J-9224	349
	600
4J-9225	340
	345
	347
4J-9964	395
4K-0367	545
	546
	557
4K-1388	9
	421
4K-2039	259
	262
4K-3004	608
4K-3150	608
4K-3330	▶615
4K-4879	276
4K-4881	274
4K-6781	298
4K-7463	298
4K-7464	298
4K-8302	202
4K-8603	217
4K-8659	298
4K-8864	147
	197
	202
	207
	232
	311
	320
	534
4K-9097	286
4K-9429	548
4L-5966	476
	514
4L-6454	147
	192
	197
	363
	374
	377
	474
	482
	483
	534
	581
4L-6459	188
	401
	404
4M-0061	507
4M-1751	259
	262
4M-2381	262
4M-5281	525
4M-6107	228
	230
4M-6108	217
4M-6425	314
	553
4M-6582	477
	515
4M-6921	397
4N-2927	519
4N-5091	325
4P-4369	59
4P-5918	15
	86
	194
4P-7048	320
4P-7581	192
	218
4P-8134	194
	197
	232
4S-1936	207
	320
4S-1962	202
	207
	232
	311

▶ **PRIMARY REFERENCE**

PART NUMBER INDEX

Part	Page
	534
4S-4455	207
	318
	367
4S-5719	97
	185
4S-5780	109
4S-5838	307
4S-5879	234
	309
4S-7529	311
4S-7606	311
	320
4T-1700	456
4T-1860	421
	▶461
4T-3010	597
4T-4509	456
4T-4935	421
	▶452
4T-4942	452
4T-5074	456
4T-5613	339
	341
	342
	349
4T-6780	340
4T-6907	337
	338
	343
	344
	600
4T-7571	452
4T-8050	285
4T-8054	349
	379
	600
4V-0015	298
4V-7875	519
4V-7877	519
4V-7884	578
4V-7890	472
4V-7891	472
4V-8256	475
4V-8577	578
4V-9803	302
4V-9804	302
4V-9809	302
4W-0253	75
4W-1203	32
4W-1204	32
4W-1413	618
4W-2026	16
4W-2042	32
4W-2232	60
4W-3462	7
	▶14
4W-7592	75
4Y-9652	15
4Z-6189	419
	420
	▶423

5

Part	Page
5A-3604	11
5B-0577	611
5B-0841	239
5B-1866	54
5B-6172	472
	563
5B-9318	350
	423
	425
	427
	429
	431
	433
	435
	437
	439
	441
	443
	445
	447
5C-2890	83
	141
	147
	149
	150
	178
	192
	205
	212
	286
	314
	320
	477
	505
	515
	581
	584
5C-6565	293
	318
5C-7261	15
	17
	125
	202
	587
	589
	590
5C-7423	228
	230
	587
5C-8312	189
	212
	491
	543
	550
	552
5C-9553	186
	192
	196
	202
	212
	286
	560
5D-0269	550
	552
5D-0353	241
	243
	277
5D-0768	580
5D-1026	73
	79
	105
	245
	481
	536
5D-1911	397
5D-2645	358
	362
5D-3636	580
5D-4822	519
5D-4988	362
5D-6644	466
5D-8159	611
5D-8161	611
5D-9629	280
	303
5D-9844	237
5E-8769	11
5F-0149	603
5F-0304	39
5F-5434	320
5F-8000	252
5F-8933	593
5F-9144	259
	262
	263
5H-4778	311
	314
5H-4909	351
5H-7826	300
5H-8848	373
5H-8985	223
	226
	228
	230
5I-4376	73
5J-1036	259
	262
5J-1086	307
5J-1246	395
5J-4773	595
	596
5J-5402	342
5J-7010	340
5J-7333	470
5K-0871	298
5K-0983	298
5K-0984	298
5K-0987	298
5K-0988	298
5K-0989	298
5K-0991	298
5K-1094	311
5K-1458	611
	615
5K-1459	611
	615
5K-2408	311
5K-5129	277
	309
	351
5K-5288	277
	309
	351
5K-5552	331
5K-7577	550
5K-8451	318
5K-8454	351
5K-9090	245
	369
5K-9107	616
5K-9238	313
5L-2030	237
5L-2031	237
5L-3244	87
5L-4507	186
5L-7200	147
	178
5M-2057	421
5M-2894	237
	241
	474
	553
	571
5M-3062	61
	128
	143
	147
	192
	197
	202
	285
	290
	314
	327
	472
	481
	502
	536
	581
	584
5M-3724	192
5M-6200	217
5M-6213	311
	314
5M-6214	597
5M-8500	491
5P-0537	259
	262
	506
	507
	548
5P-0599	362
5P-0721	105
5P-0765	246
5P-0767	73
	314
	536
5P-0878	477
5P-1046	73
5P-1075	92
	97
	245
	277

▶ **PRIMARY REFERENCE**

PART NUMBER INDEX

Part	Page
	285
	290
	293
	294
	296
	359
	363
	374
	377
	400
	404
	406
	408
	411
	477
	491
	494
	502
	515
	534
	539
	576
	616
5P-1076	92
	109
	277
	302
	400
	404
	406
	408
	411
5P-1174	618
5P-1175	618
5P-1251	79
5P-1295	369
5P-1475	515
5P-2228	333
	608
5P-2230	83
5P-2424	400
	404
	406
	408
	411
	608
5P-2503	237
5P-2566	277
	395
5P-3454	113
	185
5P-3490	241
5P-3863	217
	252
5P-3924	217
5P-4115	212
	294
	296
	525
	529
	581
	584
	587
	589
	590
5P-4116	31
	83
	97
	173
5P-4135	202
5P-4295	114
5P-4401	318
5P-4424	318
5P-4483	217
5P-4536	90
5P-4868	369
5P-4906	536
5P-4961	73
5P-5454	529
5P-5623	141
5P-5630	173
5P-5637	477
	492
	515
5P-5639	492
5P-5678	497
5P-5689	113
5P-5768	500
	549
	557
5P-5813	237
5P-5824	529
5P-5905	515
5P-5923	470
5P-5931	359
	363
5P-5969	290
	502
	525
	527
	530
	538
5P-6129	477
5P-6871	540
5P-6882	525
5P-7213	253
5P-7462	97
5P-7463	97
5P-7464	97
5P-7465	97
5P-7803	476
	514
	527
	529
	557
	576
5P-7814	156
5P-7815	216
5P-7854	318
	377
5P-7957	563
	566
	575
5P-7958	2
5P-8167	146
	188
	207
	290
	491
	583
5P-8196	58
5P-8244	309
5P-8245	16
	36
	37
	239
	255
	336
	351
5P-8247	23
	107
	237
	239
5P-8248	237
	241
5P-8291	468
5P-8309	78
	303
5P-8347	71
5P-8439	286
5P-8445	519
5P-8500	2
	105
	282
	399
	565
	567
	616
5P-8525	510
	524
5P-8842	277
	336
5P-8843	277
5P-8874	96
5P-8890	277
5P-8998	320
5P-9085	202
	207
	294
	296
5P-9118	309
5P-9135	477
	514
5P-9209	92
	494
5P-9299	218
5P-9436	235
5P-9617	71
5P-9810	354
5P-9938	245
5R-4787	386
5S-4246	128
	192
5S-4385	249
5S-7349	107
5S-7379	146
	202
	277
	293
	335
	351
	359
	363
	539
5S-7382	285
5S-7383	320
	359
	363
	482
	483
	491
	553
	571
5S-9062	32
5T-0906	277
5T-1362	393
5T-3889	464
5T-3890	464
5T-4030	518
5T-4267	464
5T-5295	334
5T-6775	152
	468
5T-7129	241
5T-7486	497
	500
5T-8285	311
	313
5T-8366	466
5T-8417	334
5T-9313	147
5T-9903	376
5T-9986	358
5V-0770	519
5V-1496	569
5V-1497	578
5V-5262	474
5V-6454	597
5V-6455	597
	6
6A-3591	320
6B-0933	400
	403
	406
	408
	410
6B-3260	611
	615
6B-4540	192
6B-5072	255
6B-6684	253
6C-3240	298
6C-3241	298
6C-3285	298
6D-0580	232
6D-1004	11
6D-1432	311
6D-1641	536
6D-3033	202
6D-3479	207
6D-4161	515
6D-4244	202
	207
	212
	354
	359
	363

► **PRIMARY REFERENCE**

PART NUMBER INDEX

Part	Page
	377
6D-4246	111
	114
	197
	208
6D-4247	356
	375
6D-4636	197
	208
6D-6581	497
	500
6D-7889	11
6E-0775	342
6E-1131	339
	341
6E-1343	332
	▶339
6E-1344	339
6E-1346	339
6E-1436	389
6E-1560	329
	▶337
6E-1561	337
6E-1835	452
6E-1923	421
6E-1924	421
6E-1925	421
6E-1926	369
6E-3007	423
	425
	427
	429
	431
	433
	435
	437
	439
	441
	443
	445
	447
6E-3013	435
	447
6E-3019	423
	425
	427
	429
	431
	433
	435
	437
	439
	441
	447
6E-3028	413
	415
	419
	420
	▶425
6E-3029	413
	415
	419
	420
	▶427
6E-3030	413
	415
	419
	▶429
6E-3031	415
	420
	▶431
6E-3033	443
	447
	▶453
6E-3034	414
	416
	417
	▶433
6E-3035	414
	416
	417
	▶435
6E-3036	414
	416
	417
	▶437
6E-3037	417
	▶439
6E-3043	431
	439
6E-3044	425
	427
	429
	431
	433
	435
	437
	439
	441
	443
	445
	447
6E-3058	437
6E-3136	386
	▶387
6E-3137	373
	▶389
6E-4090	337
	338
6E-4224	387
	389
6E-4228	449
6E-4230	449
6E-4502	423
	425
	427
	429
	431
	433
	435
	437
	439
	441
	443
	445
	447
6E-4599	423
	433
	441
	447
6E-4703	421
	▶454
6E-4704	453
	▶455
6E-4940	340
6E-4974	349
6E-5047	255
6E-5153	423
	425
	427
	429
	431
	433
	435
	437
	439
	441
	443
	445
	447
6E-5200	456
6E-6140	449
6E-6141	449
6E-6142	449
6E-6419	449
6E-6420	449
6E-6571	387
	▶391
6E-6594	387
6E-6596	387
6E-6597	387
6E-6599	387
6E-6600	387
6E-6601	387
6E-6602	387
6E-6604	391
6E-6605	391
6F-0698	237
6F-3930	275
	276
6F-4855	259
	262
6F-6992	611
6F-7045	177
6F-7062	50
6G-0417	298
6G-0905	309
6G-1631	222
6G-1633	222
6G-1755	1
	▶222
6G-1914	468
6G-1915	468
6G-2256	113
6G-2263	113
6G-2395	527
	529
	557
6G-2396	527
	529
	557
6G-2751	529
6G-2914	491
	529
6G-2946	464
6G-3206	241
6G-3212	241
6G-3378	309
6G-4701	237
6G-4703	237
6G-5214	527
6G-5442	468
6G-5534	351
6G-5537	351
6G-5538	351
6G-5539	351
6G-5542	351
6G-5548	351
6G-5979	258
	265
6G-5987	506
	507
6G-6122	351
6G-7187	333
	336
6G-7222	527
	529
	557
6G-8814	491
6G-8831	540
6H-0211	334
6H-1717	336
	351
6H-9691	311
6I-1418	197
6I-8642	217
6I-8911	228
6I-8912	223
	226
	228
	230
6I-9395	267
6I-9502	223
	226
	228
	230
6J-0488	491
6J-1972	337
	338
	339
	341
	343
	344
6J-2797	342
6J-5731	337
	338
	339
	341
	343
	344
6J-5733	337
	338
	339
	341
	343
	344
6J-6439	452
6K-0545	611
6K-3273	529
	569
6K-3632	611
6K-4076	290
6K-6826	313
6K-8178	73
	114
	202
	370

▶ **PRIMARY REFERENCE**

PART NUMBER INDEX

Part	Page	Part	Page	Part	Page	Part	Page
	377		17		234	6V-8185	212
6K-9632	583		35		267	6V-8186	400
	584		58	6V-5218	35		403
6L-1650	217		194	6V-5219	64		406
6L-1962	400	6V-2369	113		252		408
	403		185	6V-5223	71		410
	406	6V-2480	192	6V-5230	421	6V-8187	185
	408	6V-2610	318	6V-5324	461	6V-8188	109
	410	6V-2686	173	6V-5556	456		114
	491	6V-2687	294	6V-5645	189		400
6L-5652	318		296	6V-5683	259		404
	320		538	6V-5686	351		406
6M-5062	327	6V-2722	113	6V-5696	16		408
6M-9537	313		114		53		411
6P-0205	471	6V-2773	497	6V-5698	15		611
	527		500	6V-5815	66	6V-8189	107
	529	6V-3250	71	6V-5834	524		286
6P-3236	476	6V-3259	519	6V-5839	11		314
	514	6V-3265	145		17	6V-8212	217
6P-5647	606		197		29	6V-8214	296
6R-7669	369		208		30		387
6S-6251	78	6V-3538	14		60	6V-8237	337
6T-3631	207		22		62		338
6T-3632	207	6V-3668	307		66		343
6T-3633	207	6V-3834	387		101		600
6T-5345	476	6V-3918	40		175	6V-8258	590
	514		75		236	6V-8259	587
6T-6505	515		234		307		589
6T-6506	515	6V-3928	527	6V-5842	39	6V-8336	36
6T-6708	476		529		307		389
	514		557	6V-5843	38	6V-8337	35
6T-7695	524	6V-3940	13	6V-5853	587		387
6V-0292	527		14		589		389
	529		48		590	6V-8362	476
6V-0505	530		60	6V-6467	584		514
6V-0683	97		71	6V-6578	189	6V-8367	73
6V-0852	232		156	6V-6609	71	6V-8369	181
	267		217		172		189
	369	6V-3965	232	6V-6703	118	6V-8376	212
	421		245	6V-6888	587	6V-8378	207
6V-0894	494		267	6V-6889	587	6V-8397	62
6V-1228	314		370	6V-6893	208		73
6V-1230	79		421	6V-7357	186		96
6V-1249	97	6V-4245	314		314		97
6V-1668	477	6V-4248	60	6V-7420	536		232
	515		62	6V-7555	185		356
6V-1720	218		217	6V-7636	497		358
6V-1819	223	6V-4283	185		500		359
	226	6V-4589	180	6V-7646	569		362
	228	6V-4604	70	6V-7673	387		363
	230		303		389		365
6V-1820	11	6V-5048	28	6V-7688	105		366
	217		156	6V-7699	186		367
	251		162	6V-7728	477		374
6V-1889	197		163		515		375
	202	6V-5049	104	6V-7732	296		403
	208		156	6V-7744	540		404
	245		161	6V-7981	30		410
	285	6V-5050	216		101		411
6V-1911	253	6V-5158	502		217	6V-8398	9
6V-1970	2	6V-5163	530	6V-8004	32		76
6V-2235	73	6V-5164	560	6V-8149	16		96
6V-2313	92	6V-5192	392	6V-8182	202		354
	494	6V-5217	40		611		358
6V-2317	15		217	6V-8183	491		362

PART NUMBER INDEX

Part	Page
	369
	376
	403
	410
	421
6V-8523	73
6V-8624	358
6V-8625	9
	96
	358
	362
	369
	376
6V-8627	9
	232
	369
6V-8628	9
	232
6V-8633	354
6V-8634	356
	358
	362
	365
	403
	410
6V-8635	245
6V-8636	62
	96
	100
	367
6V-8637	245
	369
6V-8638	96
6V-8639	9
	358
	376
6V-8647	232
	369
	376
	421
6V-8653	468
6V-8716	245
6V-8723	356
	359
	362
	374
	375
6V-8724	62
	97
	367
6V-8730	96
6V-8765	386
6V-8801	92
	147
	188
	189
	192
	197
	202
	208
	285
	314
	320
	325
	359
6V-8837	389
6V-8918	314
6V-8928	529
6V-8950	128
6V-8969	548
6V-8987	366
6V-9002	376
6V-9004	370
6V-9007	9
	369
	373
6V-9008	245
6V-9027	71
6V-9168	366
6V-9326	128
6V-9343	366
6V-9493	543
6V-9632	202
	286
	294
	296
	489
	497
	505
	525
	527
	550
	560
	576
6V-9746	9
	245
	369
	370
	373
	376
6V-9748	32
6V-9835	369
6V-9836	363
	404
	411
6V-9837	354
	376
6V-9849	376
6V-9850	367
6V-9851	354
6V-9875	369
6V-9876	358
	362
6W-0108	472
6W-0111	472
6W-0590	472
6W-1496	474
6W-1497	474
6W-1885	472
6W-1888	474
6W-1890	563
6W-1895	563
6W-2371	474
6W-2373	563
6W-3309	563
	566
6W-3628	474
	571
6W-5698	581
	584
6W-5740	563
6W-5757	563
	566
6W-5817	313
6W-6672	114
6W-9693	563
6Y-0309	614
6Y-0590	254
6Y-0591	254
6Y-0976	230
6Y-0982	223
6Y-1000	223
6Y-1007	217
6Y-1114	223
	226
	230
6Y-1115	223
	226
	228
	230
6Y-1116	228
6Y-1119	228
	230
6Y-1870	254
6Y-1878	223
6Y-1887	223
	226
	230
6Y-1888	230
6Y-1890	226
6Y-1891	223
	230
6Y-1895	223
	230
6Y-2300	▶254
	256
6Y-2303	▶223
	256
6Y-2307	230
6Y-2312	223
	226
6Y-2419	223
6Y-2425	223
	226
6Y-2428	226
6Y-2429	226
6Y-2584	267
6Y-2805	593
6Y-2932	384
6Y-2933	384
6Y-2934	384
6Y-2935	384
6Y-3849	307
6Y-3850	307
6Y-3852	307
6Y-3860	252
6Y-3861	252
6Y-4280	389
6Y-4638	259
	263
6Y-5010	249
6Y-5230	611
	615
6Y-5352	307
6Y-7916	309
6Y-7953	351
6Y-7954	239
6Y-7981	226
6Y-8764	▶249
	251
6Y-8765	▶251
	256
6Y-9763	217
6Y-9960	44
	7
7B-3028	249
7B-9323	580
7C-0111	48
7C-1493	58
7C-4354	192
	197
	208
7C-6921	320
7C-6976	48
7C-6977	48
7C-7431	91
7C-7980	20
7C-8365	▶32
	33
7C-8366	32
7C-8369	32
7C-8370	32
7C-8634	32
7D-0035	241
7D-0215	318
7D-1195	397
7D-1553	184
7D-1577	602
7D-2135	611
7D-2136	611
7D-2196	611
7D-4903	320
7D-5252	275
	276
7D-6567	255
7D-7233	208
	317
	320
7D-7496	292
7D-7889	241
7D-8185	239
7D-8225	239
7D-8226	239
7D-8245	611
7D-8347	237
7D-8354	309
7D-8362	309
7D-8434	309
7D-8436	309
7D-8437	309

▶ **PRIMARY REFERENCE**

PART NUMBER INDEX

Part	Page
7D-8439	309
7D-8440	1
	▶309
7D-8441	309
7D-8636	277
7D-8637	277
7D-8643	277
7D-8825	611
7D-8826	611
7D-8875	603
7D-8876	603
7D-8877	603
7D-8878	603
7D-8879	603
7D-8881	603
7D-8882	603
7D-8883	603
7D-8884	603
7D-8889	603
7D-8983	351
7D-8984	351
7D-9267	393
7E-0759	71
7E-2968	23
7E-3372	33
7E-4761	73
7E-6794	41
7E-7589	52
7E-7590	7
	▶52
7E-7779	27
7F-0192	92
7F-1327	611
7F-8268	251
7F-9311	320
7G-0437	307
7G-1060	207
7G-4326	581
7G-4822	223
	226
	228
	230
7G-4824	476
	514
	529
	576
7G-4998	216
7G-5453	263
7G-7053	145
	192
7G-8839	597
7H-1447	397
7H-2423	345
	347
7H-2444	603
7H-3641	400
	403
	406
	408
	410
7I-4610	2
	▶300
7I-4696	518
7I-4698	518
7I-4699	518
7I-4718	1
	▶496
7I-4890	491
7I-4949	286
7I-4959	286
7I-4979	286
7I-4981	286
7I-5015	480
	▶505
7I-5405	377
7I-5412	374
7J-0204	28
	345
7J-8611	73
	243
7J-9108	536
7J-9885	349
	600
7J-9933	423
	425
	427
	429
	431
	433
	435
	437
	439
	441
	443
	445
	447
	452
7K-1181	111
	113
	128
	141
	145
	146
	147
	184
	185
	188
	196
	197
	202
	205
	208
	218
	369
	543
7K-4199	511
7K-4201	504
7K-6117	329
7K-9202	329
	333
7K-9203	608
7L-0811	207
7L-6326	83
7L-8316	506
	507
7L-9061	387
	389
7M-0706	489
7M-7219	519
7M-7410	314
7M-8485	217
	218
	245
	259
	262
	263
7M-9918	90
7N-0718	▶177
	185
7N-2059	173
7N-3718	197
	208
7N-5274	111
	114
7N-5683	22
7N-5876	192
7N-9801	183
7N-9943	131
7P-1577	597
7S-0530	62
7S-4571	241
7S-6369	86
7T-0020	131
7T-0570	259
	262
7T-0582	506
	507
7T-1099	128
	202
	476
	514
7T-1159	232
7T-1961	581
	584
7T-4003	509
	510
7T-4515	266
7T-4532	486
7T-4897	223
	226
	228
	230
7T-6496	217
7T-6799	192
7T-7358	511
7T-8272	387
7T-8273	387
7T-8891	581
	583
	584
7T-9302	182
	189
7T-9755	389
7T-9793	477
7V-0446	92
	313
	494
7V-5191	519
7W-3872	15
	487
7W-5095	37
7W-5340	60
7W-9737	65
7W-9738	65
7W-9740	65
7W-9930	65
7W-9943	207
7X-0288	363
7X-0289	354
	356
	363
	377
7X-0325	109
	399
7X-0328	612
7X-0331	298
7X-0333	325
	608
7X-0334	466
7X-0339	109
7X-0342	246
7X-0346	109
	329
	379
7X-0350	379
7X-0354	545
	546
	557
7X-0375	545
	546
	557
7X-0386	611
7X-0390	611
7X-0423	611
7X-0443	611
7X-0448	109
7X-0450	611
7X-0452	466
7X-0510	43
7X-0550	202
	287
	466
7X-0578	320
7X-0579	97
	202
7X-0591	477
	515
	576
7X-0599	126
7X-0605	502
7X-0608	475
7X-0613	197
7X-0618	287
7X-0619	203
7X-0818	33
	197
7X-0838	232
7X-0871	376
7X-1387	286
7X-2537	62
	487
7X-2538	487
7X-2539	97
	487
7X-2543	606
7X-2546	78
	413
	414
	415

▶ **PRIMARY REFERENCE**

PART NUMBER INDEX

Part	Page
	416
	417
	419
	420
7X-2552	87
	246
7X-2553	33
	597
7X-2565	597
7X-2566	105
7X-2575	283
	303
7X-3392	466
7X-4736	311
7X-4743	192
7X-4776	421
7X-6315	118
	122
7X-7700	105
7X-7729	61
	78
	141
	287
	303
	314
	320
7X-7731	277
7X-7739	563
7X-7877	189
	563
	566
7X-7910	534
7X-7911	534
7X-7961	37
7Y-0589	203

8

Part	Page
8B-1615	243
8C-0563	26
8C-2926	249
8C-3290	44
8C-3309	369
8C-3398	286
8C-3425	43
	386
8C-3442	491
8C-3445	58
8C-3446	58
	376
8C-3447	246
8C-3451	377
8C-3681	79
8C-3756	476
	514
8C-4586	476
	514
8C-4984	234
8C-5608	128
8C-5897	618
8C-5917	111
	113
8C-6162	380
8C-6354	192
8C-6512	381
	383
8C-6712	83
	376
8C-6857	203
8C-6913	611
8C-6959	97
8C-6965	259
	262
8C-7508	212
8C-8422	186
8C-8431	83
8C-8454	502
8C-8842	611
8C-9987	265
	462
	463
8D-1268	611
8D-1429	476
	514
8D-2429	335
8D-2638	335
8D-2811	277
	335
8D-3508	280
8D-3540	241
8D-3591	241
8D-3743	241
8D-3786	286
8D-3791	290
8D-3885	241
8D-3886	241
8D-3902	241
8D-4064	239
8D-4282	239
8D-4291	239
8D-4336	603
8D-4766	329
8D-5054	351
8D-5632	400
	403
	406
	408
	410
8D-5633	400
	403
	406
	408
	410
8D-5634	400
	403
	406
	408
	410
8D-5636	400
	403
	406
	408
	410
8D-5637	400
	403
	406
	408
	410
8D-5640	400
8D-5641	400
	403
	406
	408
	410
8D-5949	466
8D-6687	331
8D-7026	313
8D-7086	329
	333
8D-7225	333
8D-7423	351
8D-7424	351
8D-7425	351
8D-7426	351
8D-7678	331
8D-7960	491
8D-7996	330
8D-8168	603
8D-8197	237
8D-9092	359
8D-9159	290
8D-9671	208
	536
8D-9784	237
8D-9882	464
8D-9886	464
8D-9887	464
8E-1133	217
8E-1143	262
8E-1161	226
8E-1263	228
	230
8E-1913	226
8E-5529	595
	596
8E-5734	223
	226
	230
8E-5736	226
8E-5742	223
	226
	228
	230
8E-6130	606
8E-6570	262
8E-7713	263
8E-7714	262
8E-7791	476
	514
	529
	576
8E-8319	223
	226
	228
	230
8E-9316	▶226
	256
8E-9474	267
8E-9893	262
8E-9894	259
	262
8E-9895	259
	262
8E-9896	259
	262
8E-9897	262
8F-0492	529
8F-1434	207
	491
	550
	552
8F-1974	197
8F-3469	223
	226
	228
	230
8F-4102	331
8F-6230	267
8F-6437	400
	404
	406
	408
	411
8F-7219	394
8F-9836	152
	468
8H-1728	539
8H-2046	57
8H-5244	54
8H-5303	177
8H-5306	177
8I-1362	318
8J-0112	340
8J-1256	128
8J-1434	608
	▶614
8J-2331	395
8J-6384	341
8J-6815	421
8J-7008	608
8J-7024	607
	▶608
8J-9910	342
8J-9911	342
8K-0530	292
8L-2786	170
	171
8L-5008	320
8L-6005	313
8L-6521	212
8L-7905	491
8L-8413	519
8L-8598	400
	403
	406
	408
	410
8M-2769	246
8M-2770	128
	143
	184
	197
8M-2773	73
	197
	203

▶ **PRIMARY REFERENCE**

PART NUMBER INDEX

Part	Page	Part	Page	Part	Page	Part	Page
	208		494		61		534
	367		569		69		536
	481	8T-0336	351		73		540
	534	8T-0355	252		79		583
8M-3175	421	8T-0372	307		81	8T-4122	109
8M-3368	320		387		83		298
8M-3837	284		389		87		329
8M-4295	226	8T-0389	114		92		379
8M-4437	423		132		97		545
	425		133		111		546
	427		134		114		557
	429		135		128	8T-4123	44
	433		606		132		105
	435	8T-0639	214		133		203
	437		234		134	8T-4131	597
	439	8T-0643	17		135	8T-4133	73
	441	8T-0644	76		141		78
	443	8T-0667	344		143		79
	445	8T-1117	79		146		81
	447	8T-1159	100		149		83
8M-4438	232	8T-1174	491		175		92
8M-5860	26	8T-1683	362		184		114
8M-6176	542		375		186		141
8M-6521	217	8T-1687	358		192		143
8M-8489	249		362		197		146
8N-1725	113		403		203		184
8N-2694	83		410		208		186
8P-5141	476	8T-1698	384		217		197
	514	8T-2275	397		232		203
8R-1778	511	8T-2353	156		235		208
8R-2054	563	8T-2501	120		246		218
	566		121		293		232
8R-2057	563		232		294		235
	566		311		296		287
8R-4519	474		359		303		311
	571		363		311		314
8S-0934	561	8T-2502	359		314		317
8S-0948	114	8T-2530	536		317		318
8S-4790	474	8T-2561	287		318		320
	571		491		320		367
8S-5383	109	8T-2901	581		367		370
8S-6109	534	8T-3282	29		370		377
8S-6110	534		340		375		488
8S-7566	504		345		377		491
8S-7803	519		347		397		494
8S-9092	241	8T-3426	530		399		502
8S-9129	217	8T-3490	70		400		518
	252		79		404		534
8S-9130	217		185		406		540
	252		286		408	8T-4136	42
8T-0076	356		318		411		44
	358		470		419		79
	362		476		420		83
	365		487		470		87
8T-0081	96		497		482		92
8T-0100	17		514		483		143
	34		576		487		173
	53	8T-3612	202		488		186
8T-0226	39	8T-3653	43		494		197
8T-0276	58	8T-3666	30		497		232
8T-0285	120	8T-4121	9		500		287
	121		31		502		293
8T-0292	86		33		518		303
8T-0293	50		42		524		314
8T-0328	92		44		530		318

► **PRIMARY REFERENCE**

PART NUMBER INDEX

Part	Page	Part	Page	Part	Page	Part	Page
	320		587		89		293
	367	8T-4139	97		114		294
	370		466		145		298
	377		470		197		302
	400		597		208		318
	404	8T-4167	44		232		325
	406	8T-4171	477		235		333
	408		515		287		359
	411		587		303		370
	470		589		311		379
	488		590		317		395
	494	8T-4172	31		318		399
	534	8T-4176	294		320		470
	536	8T-4178	314		367		611
8T-4137	73	8T-4179	114		397	8T-4224	11
	79	8T-4181	497		400		17
	83		500		404		18
	97	8T-4182	92		406		33
	111		320		408		62
	114		494		411		107
	128		530		488		125
	141		540		494		141
	149	8T-4183	287		502		173
	184		292		518		203
	186		294		530		205
	192		302		534		235
	197	8T-4185	9		540		246
	203		33	8T-4196	31		287
	208		314		33		314
	217	8T-4186	314		44		318
	287		320		79		423
	294		375		81		425
	296		413		89		427
	303		414		92		429
	311		415		97		431
	314	8T-4189	97		114		433
	318		235		186		435
	367		423		246		437
	370		425		303		439
	375		427		491		441
	377		429		494		443
	470		431	8T-4198	114		445
	487		433	8T-4200	173		447
	497		435	8T-4205	107		487
	500		437		147		553
	524		439		149		573
	530		441		150	8T-4226	81
	540		443		178		92
8T-4138	83		445		185		208
	128		447		186		314
	186	8T-4191	44		208		494
	294		83		477	8T-4244	143
	423		111		505		147
	425		175		515		203
	427		203		569		287
	429		399	8T-4223	9		294
	431		583		97	8T-4647	197
	433	8T-4192	126		109	8T-4648	359
	435		293		114	8T-4750	387
	437	8T-4194	78		143		389
	439		282		147	8T-4835	203
	441		287		203		298
	443	8T-4195	69		259	8T-4895	78
	445		79		262	8T-4896	120
	447		87		292		121

► **PRIMARY REFERENCE**

PART NUMBER INDEX

Part	Page
	123
	128
	143
	146
	147
	188
	189
	192
	197
	203
	208
	232
	243
	246
	290
	311
	314
	320
	325
	335
	351
	354
	356
	359
	363
	377
	415
	417
	481
	494
	536
	546
	557
	581
	583
	584
8T-4908	33
	44
	79
	246
8T-4910	287
	386
8T-4956	370
8T-4970	141
8T-4971	212
8T-4983	245
8T-4994	359
	386
	611
8T-5005	534
8T-5030	249
8T-5039	389
8T-5041	606
8T-5082	376
8T-5361	283
	611
8T-5401	529
8T-5412	143
	147
8T-5429	369
8T-5436	217
8T-5439	292
8T-6381	44
8T-6430	44
	292
8T-6466	81
	114
	246
	318
	534
8T-6468	255
8T-6472	309
8T-6473	309
8T-6631	477
8T-6685	606
8T-6757	321
8T-6765	217
8T-6868	9
	370
8T-6869	97
	203
	431
	439
8T-6871	329
8T-6876	96
8T-6912	78
8T-6974	321
8T-7008	359
8T-7044	88
8T-7547	318
8T-7565	563
	566
8T-7566	548
8T-7876	387
	389
8T-7950	29
8T-7971	293
	386
8T-8442	53
	259
	262
8T-8729	463
8T-8737	123
	154
	181
	185
	189
	205
	543
	587
	589
	590
8T-8827	113
8T-8883	237
8T-8915	285
8T-8917	379
8T-8924	611
8T-8987	421
8T-9006	491
8T-9041	97
	404
	411
8T-9043	400
	404
	406
	408
	411
	563
8T-9056	314
8T-9364	208
8T-9378	359
	363
	608
8T-9381	474
	561
	571
8T-9389	386
8T-9391	334
8T-9655	96
	116
	197
	202
8T-9658	203
8T-9757	111
	113
8V-3208	566
8W-0220	363
8W-0225	376
8W-0302	362
8W-0456	400
	403
8W-0663	611
8W-0681	599
8W-0684	599
8W-0934	581
	584
8W-0935	581
	584
8W-1592	253
8W-1749	466
8W-2290	1
	▶335
8W-2308	241
8W-2737	1
	▶336
8W-2842	330
8W-2913	▶333
	610
8W-3902	294
8W-4141	241
8W-4142	241
8W-4193	358
8W-4194	358
8W-4368	1
	▶241
8W-4652	277
8W-4653	277
8W-5111	237
8W-5279	237
8W-5293	277
8W-5394	2
	▶253
8W-5597	611
8W-5651	580
8W-6061	525
8W-6476	278
8W-6497	278
8W-6626	292
8W-6627	292
8W-7915	320
8W-8124	309
8W-8317	241
8W-8412	292
8W-8496	320
8W-8527	207
	313
	367
	375
	534
8W-8528	311
	320
	534
8W-8575	320
8W-8903	313
8W-8909	114
	208
8W-9566	273
8W-9594	274
8X-0674	545
	546
	557
8X-1032	302
8X-1135	581
	584
8X-1805	109
8X-1853	120
	121
8X-1904	491
8X-1907	491
8X-1908	491
8X-1911	491
8X-1913	491
8X-1914	491
8X-1921	491
8X-1943	1
	▶331
	594
8X-1944	1
	▶332
8X-1947	1
	▶330
8X-2160	491
8X-2161	491
8X-2226	296
	525
8X-2228	549
8X-2308	237
8X-2385	484
	▶549
	555
8X-2528	239
8X-2534	237
8X-2556	587
8X-2646	580
8X-2650	313
	▶580
8X-2663	587
8X-2680	313
8X-2795	484
	▶539
	557
8X-2893	491
8X-2913	294
	296
	525
8X-2925	480
	▶511
8X-3261	92
8X-3434	277
8X-3435	278

▶ **PRIMARY REFERENCE**

PART NUMBER INDEX

Part	Page
8X-3749	379
8X-3789	492
8X-3806	497
	500
8X-3938	497
	500
8X-3951	491
8X-3965	491
8X-4243	497
8X-4244	500
8X-4245	497
	500
8X-4262	497
8X-4263	500
8X-4277	400
	403
	406
	408
	410
8X-4317	▶497
	502
8X-4318	▶500
	502
8X-4413	485
	▶502
	559
8X-4448	497
	500
8X-4641	239
8X-4741	330
	332
8X-4879	489
8X-5005	253
	▶257
8X-5102	505
8X-5106	603
8X-5107	603
8X-5108	603
8X-5109	603
8X-5121	245
8X-5123	491
8X-5147	280
8X-5153	147
	178
8X-5154	147
	178
8X-5155	287
8X-5160	311
8X-5414	529
8X-5489	208
	232
8X-5498	406
8X-5499	400
	403
	408
	410
8X-5536	476
	514
	576
8X-5538	476
	514
	576
8X-5540	476
	514
	576
8X-6070	▶356
	610
8X-6075	611
8X-6131	545
	546
8X-6296	147
	178
8X-6419	294
8X-6475	294
	296
8X-6999	529
8X-7317	246
8X-7603	313
8X-7845	527
	529
8X-7951	152
8X-7956	152
	468
8X-8055	525
8X-8096	489
8X-8351	525
8X-8377	241
8X-8450	313
	314
8X-8505	294
	296
8X-8790	527
8X-8813	373
8X-8916	245
8X-9349	581
	584
8X-9405	581
	584
8X-9464	294
8X-9675	555
	▶581
8X-9680	▶583
	586
8X-9884	524
8Y-4005	▶563
	571
8Y-4030	565
8Y-4398	497
	500
8Y-4399	500
8Y-4400	497
8Y-4401	497
	500
8Y-4408	581
	584
8Y-4409	581
8Y-4512	539
8Y-4619	497
	500
8Y-4620	497
	500
8Y-4801	497
	500
8Y-5944	578
8Y-6012	578
8Y-6024	578
8Y-6041	519
8Y-6045	519
8Y-6046	519
8Y-6047	519
8Y-6060	519
8Y-6062	519
8Y-6063	519
8Y-6064	519
8Y-6066	519
8Y-6067	519
8Y-6068	519
8Y-6069	519
8Y-6277	571
8Y-6388	476
	504
	505
	538
8Y-6852	567
	▶571
8Y-6859	519
8Y-6860	519
9B-0143	237
9B-7233	147
	178
	212
	476
	514
	543
9B-7237	314
	359
	363
	406
	408
	411
	534
9C-1587	563
9C-2177	472
9C-5344	185
	245
9C-5347	472
9C-5928	540
9C-8895	153
9C-9467	17
	246
9D-0953	354
	358
	376
9D-1491	351
9D-1541	207
9D-1589	545
	546
	557
9D-3075	309
9D-3311	290
9D-3523	277
9D-3767	303
9D-3768	149
9D-5196	280
9D-5516	611
9D-5567	280
9D-5659	280
9D-6164	280
9D-6584	290
	379
9D-6589	290
9D-6663	320
9D-7047	309
9D-8121	580
9D-9257	290
9D-9797	277
9F-2247	241
9F-5644	177
9F-6705	421
9G-0003	111
	113
9G-0004	111
	113
9G-1307	149
9G-1950	476
	514
9G-2758	185
9G-2991	237
9G-3695	515
9G-4336	113
9G-4343	185
9G-5127	243
9G-5211	277
9G-7101	534
9G-7132	259
	262
9G-8140	313
9G-8909	111
	114
9G-9154	232
9H-6454	397
9J-0096	608
9J-0403	435
	439
	443
	445
	447
9J-0404	435
	439
	443
	445
	447
9J-1979	397
9J-3047	397
9J-3657	596
9J-3658	595
9J-4963	384
9J-5498	309
9J-6586	614
9J-8783	313
	494
9K-7951	275
	276
9L-1566	146
	197
	202
9L-3560	318
9L-6331	197
9L-6770	107
9L-9068	267
9L-9814	571
9M-0402	321
9M-1328	600
9M-1853	400
	403
	406

9

▶ **PRIMARY REFERENCE**

PART NUMBER INDEX

Part	Page
	408
	410
9M-1974	14
	15
	35
	40
	53
	58
	60
	71
	75
	86
	116
	194
	506
	507
9M-2042	217
9M-2092	277
9M-2904	59
9M-4335	307
9M-4594	320
9M-4972	208
	370
	377
9M-5590	492
9M-5732	575
9M-7394	397
9M-8406	143
	203
	311
	317
	318
	321
	367
	477
	515
9M-8662	550
9N-0869	34
	57
	116
9N-1995	529
9N-4155	249
9N-4156	249
9N-4158	249
9N-4159	249
9N-4161	249
9N-4162	249
9N-4163	249
9N-4498	262
9N-4500	262
9N-6152	307
9P-0356	257
9P-2369	581
	584
9P-2553	212
9P-7121	105
9P-9150	234
	267
9R-1183	358
9R-2613	128
9R-2620	192
	530
9R-2672	128
9R-8870	362
9S-1240	109
9S-2544	563
	566
9S-4167	96
9S-4180	413
	414
	415
	416
	417
	419
	420
9S-4181	218
9S-4182	39
	71
	244
	307
9S-4183	39
	421
9S-4185	11
	71
	387
9S-4189	421
9S-4190	255
	389
9S-4191	11
	64
	97
	156
	244
	245
	267
	449
9S-4968	550
	552
9S-7706	313
9S-8001	381
	383
	421
9S-8002	28
	156
	262
	421
9S-8003	76
	381
	383
	421
9S-8004	28
	46
	86
	99
	101
	217
	244
	259
	262
9S-8005	51
	71
	76
	85
	217
	423
	425
	427
	429
	431
	433
	435
	437
	439
	441
	443
	445
	447
9S-8006	24
	28
	76
	96
	217
9S-8008	50
	216
9S-8009	421
9S-9334	26
	28
9T-1633	387
9T-1636	387
	389
9T-1652	387
	389
9T-1699	387
	389
9T-1710	387
	389
9T-1857	449
9T-2186	449
9T-2197	387
9T-2388	345
	347
9T-2452	338
9T-2457	340
9T-2482	344
9T-3133	342
9T-3727	345
	347
9T-4211	343
	344
9T-4213	337
	338
9T-5241	507
9T-5934	421
9T-5935	421
9T-5957	369
	▶421
9T-6001	576
9T-7750	449
9T-7754	391
9T-7755	391
9T-7756	391
9T-7757	391
9T-7759	391
9T-7761	391
9T-7765	392
9T-7767	392
9T-7769	392
9T-7771	392
9T-7773	392
9T-7774	392
9T-7775	389
9T-8051	384
9T-8053	384
9T-8054	384
9T-8056	384
9T-8058	384
9T-8059	384
9T-8061	384
9T-8063	384
9T-8065	384
9T-8067	384
9T-8069	384
9T-8070	384
9T-8784	329
	▶338
9T-8958	342
9T-9040	349
9T-9071	384
9T-9072	384
9U-8067	259
	262
9U-8068	259
	262
9U-8069	259
	262
9U-8263	524
9U-8620	259
	262
9U-8668	262
9U-8669	262
9U-8815	228
	230
9U-9282	259
	262
9U-9316	259
	262
9U-9595	262
9U-9995	228
9V-3043	472
9V-7437	563
	566
9V-7440	472
	566
9V-7446	571
9V-7447	571
9V-7453	571
9V-7454	571
9V-7458	571
9V-7943	472
9V-8788	566
9V-8789	566
9W-0844	515
9W-0852	151
	477
	514
	515
9W-0898	262
9W-1441	146
	147
	178
	189
	212
	512
9W-1442	120
	121
	143
	147
	178
	212
	306

▶ **PRIMARY REFERENCE**

PART NUMBER INDEX

Part	Page
	509
	510
	590
9W-1454	217
9W-2029	228
	230
9W-3072	524
9W-3155	608
9W-4430	307
9W-4431	307
9W-4452	307
9W-4453	307
9W-5132	256
	►307
9W-5134	►252
	256
9W-6465	217
9W-6467	226
9W-6582	44
9W-6584	44
9W-7038	217
9W-7385	44
9W-7388	44
9W-7410	262
9W-7412	259
	263
9W-7469	606
9W-7470	606
9W-9371	228
	230
9W-9905	223
	226
	228
	230
9W-9920	44
9X-0261	96
9X-0262	156
9X-1046	189
	212
	509
	510
9X-1054	185
	205
9X-1386	534
9X-1813	141
	160
	164
	166
	168
	169
	176
	180
	207
9X-2040	477
	515
	576
9X-2041	477
	489
	514
	530
	565
	567
	575
	576
9X-2042	189
	212
	489
	492
	497
	500
	584
9X-2043	147
	178
	294
	296
	489
	504
	505
	525
	527
	530
	550
9X-2045	477
	489
	497
	500
	502
	510
	515
	527
	530
	576
	581
	584
9X-2046	530
	539
	541
9X-2099	17
	62
9X-2125	290
	294
9X-2126	477
	515
9X-2133	79
9X-2185	476
	514
9X-2205	105
9X-2305	65
9X-2480	123
	128
9X-2488	476
	514
9X-2493	97
9X-2546	497
	500
9X-2615	606
9X-3068	130
9X-3401	159
	166
	180
9X-3402	543
9X-3463	132
	133
	134
	135
9X-4244	132
	133
	134
	135
9X-4284	542
9X-4493	130
9X-4609	217
9X-6165	128
9X-6395	452
	456
9X-6772	232
9X-7380	534
9X-7381	477
	534
9X-7382	477
	534
9X-7383	534
9X-7384	259
9X-7385	486
	534
9X-7680	449
9X-7712	26
	28
9X-7737	180
9X-7743	307
9X-8122	511
9X-8250	314
	377
9X-8256	83
	128
	141
	186
	192
	196
	203
	208
	212
	287
	314
	321
	471
	497
	500
	502
	527
	530
	560
9X-8257	33
	87
	246
	597
9X-8276	571
9X-8399	349
9X-8403	156
9X-8600	105
9X-8606	313
9X-8880	237
9X-8916	23
9X-9365	145
9X-9629	188
9X-9632	146
9X-9634	192
9X-9638	509
	510
9X-9653	476
9X-9689	506
	507
9X-9896	128

0

Part	Page
000-7246	245
002-1212	389
002-6453	255
	320
004-5933	320
004-9040	387
005-7898	245
005-8639	345
	347
006-6586	105
006-8663	387
	389
009-0008	92
009-2069	391
009-4184	518
009-4185	518
014-0816	182
	189
	590
030-0060	277
030-0061	277
030-7962	96
030-8535	237
	241
	491
	546
	557
031-0214	553
031-2666	491
031-4155	507
	573
033-4121	566
033-4843	563
033-6027	56
	389
	449
033-6033	61
033-6036	387
	389
	449
033-8248	62
	79
	96
	146
	188
	202
034-1994	491
034-3557	237
037-4838	476
	514
061-9455	17
067-2551	202
	534
069-4269	76
085-8091	534
086-0507	397
089-7968	571
090-8247	128
091-0081	113
091-8792	376
091-9071	518
092-3200	496
095-0843	569

► **PRIMARY REFERENCE**

PART NUMBER INDEX

Part	Page
095-0878	519
095-0888	387
	389
095-1207	259
	263
096-6166	120
	121
	189
	197
	212
	491
	550
	552
098-7467	518
099-0492	527
099-3649	18
	83
1	
100-3224	519
100-3401	389
100-3402	389
100-3403	389
100-3404	389
100-3405	389
100-3407	389
100-3408	389
100-3409	389
100-3410	392
100-3411	392
100-3412	389
	▶392
100-3413	389
100-3415	389
100-3416	389
	▶394
100-4336	362
	375
100-5041	205
100-5179	519
100-6021	421
	▶456
100-6551	39
101-0003	578
101-0509	413
	414
	415
	416
	417
	419
	420
101-0852	118
101-1148	423
	425
	441
101-1149	427
101-1154	429
101-1155	433
101-1970	423
	425
	427
	429
	431
	445
	447
101-1971	423
	425
	427
	429
	431
	433
	435
	437
	439
	441
	443
	445
	447
101-1973	423
	425
	427
	429
	431
	433
	435
	437
	439
	441
	443
	445
	447
101-1974	350
101-1975	350
101-1978	423
	425
	427
	429
	433
	435
	437
	439
	441
	443
101-1980	431
	439
101-1982	435
	439
	441
	443
101-1983	423
	425
	427
	429
	431
	435
	439
	441
	443
	445
	447
101-1984	423
	425
	427
	429
	431
	435
	437
	439
	441
	443
	445
	447
101-2457	400
	403
	406
	408
	410
101-2458	400
	403
	406
	408
	410
101-2480	423
	425
	427
	429
	431
	433
	435
	437
	439
	441
	443
	445
	447
101-2867	553
101-3055	529
101-3128	116
101-4194	578
101-4195	578
101-7402	370
101-9346	413
	414
	416
	419
101-9754	259
	263
102-2384	387
102-2385	387
102-2386	387
102-3645	581
	584
102-3659	369
102-4139	466
102-4577	437
102-5881	223
	226
	230
102-6238	413
	415
	419
	420
102-7412	423
	425
	427
	429
	431
	433
	435
	437
	439
	441
	443
	445
102-7423	350
102-8385	414
	416
	417
102-8801	185
	205
	214
102-8802	106
	130
	138
	141
	151
	166
	168
	176
	183
	185
	197
	205
	207
	265
	266
	462
	463
	471
	477
	486
	514
	534
102-8803	131
	136
	137
	139
	158
	159
	185
	207
102-8804	123
	184
	185
	192
	197
102-8805	515
	542
	587
	589
	590
102-8806	154
	181
	189
102-9372	549
	557
102-9861	215
103-1592	147
103-1597	400
	403
103-4771	546
	557
103-4953	545
	546
	557
103-5304	128
103-5515	545

▶ **PRIMARY REFERENCE**

PART NUMBER INDEX

Part	Page	Part	Page	Part	Page	Part	Page
	546	107-3398	6	109-2804	529	112-9555	511
	557		▶593	109-3036	463	113-0981	376
103-5516	545	107-4865	581	109-3204	387	113-0999	366
	546		584	109-3207	95	113-4254	2
	557	107-5014	527	109-4582	239		▶565
103-5678	147		529	109-4583	239	113-5801	519
	178	107-6813	502	109-6776	606	113-5805	519
103-9125	277	107-7604	24	110-2985	1	113-5806	519
103-9425	529	107-7694	13		▶362	113-5807	519
104-2091	477	107-7708	20	110-3003	362	113-5808	▶519
	505	107-8140	362	110-3326	313		578
	550	107-8141	362	110-4213	275	113-6069	38
104-3122	387	107-8142	362	110-4214	275	113-7745	218
	389	107-8143	358	110-5161	267	113-7754	▶342
	▶449	107-8144	358	110-6241	491		607
104-3124	387	107-8147	362	110-6393	476	113-7755	342
	389	107-8148	362	110-7618	15	113-7756	342
104-3947	266	107-8149	358	110-7885	590	113-8218	540
104-4286	369	107-8150	358	110-7887	192	113-8457	286
104-4523	606		362	111-0343	265	113-9048	245
104-7419	400	107-8374	611		462	114-0025	5
	403	107-8375	611		463		▶365
	406	107-9579	33	111-1719	1	114-0027	365
	408	107-9641	497		▶616	114-0359	614
	410		500	111-3945	290	114-5333	534
104-7429	400	108-0358	147	111-4871	202	114-6635	457
	403		178	111-5754	457		458
	406	108-0706	354	111-8233	423		459
	408	108-0714	376		425		460
	410	108-1610	358		427	114-9190	497
104-7740	400		362		429		500
	403		376		433	114-9281	197
	406	108-2187	423		435	115-0541	379
	408		425		437	115-1748	201
	410		427		441		550
104-8655	466		429		443		552
105-2080	466		431		445	115-3072	294
105-3196	351		433		447		296
	▶384		435	111-8234	431	115-4072	38
106-3658	435		437		439	115-4219	38
	443		439	111-9110	327	115-4223	71
	445		441	112-1813	596	115-6806	549
	447		443	112-1814	595	115-6807	529
106-3659	423		445	112-2240	354	115-9923	529
	425		447		▶380	116-1965	▶561
	427	108-2949	113	112-3199	356		567
	429	108-3129	263	112-3200	356	116-2015	472
	433	108-3612	17	112-3837	375	116-2016	472
	435	108-4086	519	112-3926	603	116-2327	472
	437	108-4087	519	112-4159	386	116-2779	▶472
	441	108-4103	520	112-4834	311		571
106-3660	431	108-4816	449	112-5282	58	116-4556	7
	439	108-4916	▶350	112-5361	1		▶36
106-4496	505		431		▶329	116-4686	542
106-4787	1		439	112-5575	334	116-5710	92
	▶358	108-5157	456		▶344		494
	594	108-5751	228	112-5853	470	117-2311	471
106-6553	502	108-5949	500	112-6174	189	117-3437	75
106-7390	453	108-5950	497	112-6175	212	117-3643	8
	▶457	108-5951	500	112-7462	334		▶67
107-0545	416	108-5952	497	112-7463	1	117-4492	475
	417	108-6523	259		▶334	117-4698	▶556
	▶441		262		594		557
107-1983	550	109-0361	207	112-9035	344	117-9683	369
	552	109-1144	451	112-9164	525	117-9966	550

▶ **PRIMARY REFERENCE**

PART NUMBER INDEX

Part	Page
118-0424	245
118-1727	7
	▶16
118-2558	529
118-7880	611
118-7881	611
118-9573	175
	496
119-0036	563
119-3025	75
119-3662	205
119-5026	519
119-6194	571
119-6723	83
121-3307	78
	81
121-9242	336
	▶349
121-9245	349
122-2228	502
122-7045	550
122-8146	550
122-8154	505
122-8155	505
122-8795	529
122-9764	70
123-0872	481
123-1076	349
123-1201	491
123-1373	114
123-3688	207
123-3689	207
123-3692	207
123-3695	207
123-3698	302
123-3699	302
123-3793	341
123-4003	237
123-4354	587
123-4355	587
123-4358	2
	3
	▶540
123-4511	86
123-4586	540
123-4587	540
123-4618	476
	514
	576
123-4701	476
	514
	576
123-5847	143
123-5861	232
123-6661	456
123-6806	545
	546
123-7707	468
123-8187	603
123-8408	576
124-0507	578
124-1431	476
	514
124-1432	476
	514
124-1479	320
124-1839	447
124-1840	443
	445
124-2528	173
124-2883	414
	416
	▶443
124-2884	413
	419
	▶445
124-2885	419
	420
	▶447
124-3109	61
124-3137	476
	514
124-3138	476
	514
124-3240	298
124-3325	406
	408
	▶413
124-3327	406
	▶414
124-3329	400
	408
	▶416
124-3385	443
	445
	447
124-5836	603
124-6258	61
124-7792	31
124-8843	502
124-8949	296
124-9006	476
	514
124-9007	476
	514
124-9633	185
125-0438	476
125-0439	514
125-0442	514
125-2209	618
125-4342	484
	▶584
125-4344	484
	▶545
125-4388	527
125-4389	527
125-5321	580
125-5520	527
125-6483	527
125-7003	587
125-7004	587
125-7874	185
	205
	543
125-7875	185
	205
125-8797	184
125-9584	527
125-9853	474
125-9854	▶474
	573
125-9855	▶566
	573
125-9856	565
	▶573
126-1135	538
126-1136	538
126-1757	17
126-1767	159
	486
126-2729	237
126-2747	2
	3
	▶567
126-4966	502
126-5466	71
126-7574	122
127-1647	9
	76
127-9323	318
128-0037	497
	500
128-9654	468
129-1170	75
129-2381	241
129-3173	92
	313
	494
129-3178	128
	471
	477
	502
	515
	529
129-3180	606
129-4935	476
	514
129-5049	285
129-7249	616
129-7632	449
129-7679	618
129-7680	618
130-0229	244
130-2792	208
130-3595	277
130-5300	92
	123
	141
	147
	149
	150
	184
	185
	188
	192
	197
	202
	205
	207
	232
	477
	494
	514
130-5770	451
130-9041	335
	▶345
130-9042	335
	▶347
130-9044	345
130-9045	347
131-1478	113
131-1481	113
131-1488	113
131-3736	335
131-3737	301
131-3738	301
131-3739	301
131-3740	277
	▶301
131-3919	223
	226
	230
131-4242	519
131-4428	277
131-5167	519
131-5171	189
131-5492	511
131-6009	529
131-7191	331
	▶340
131-7194	340
131-7195	340
131-8350	421
	▶451
131-8777	458
	459
	460
132-0338	475
132-1143	301
	335
132-1144	301
132-1340	464
132-4928	341
132-4929	330
	▶341
132-5789	184
	185
	196
	207
132-7551	534
132-8487	202
132-9625	228
132-9628	230
132-9630	223
132-9633	223
132-9635	226
133-3260	207
133-4995	29
133-6379	53
134-0165	286
134-0744	354
134-0746	354
134-0747	358
	362
134-1080	1
	▶277
134-1081	277
134-2540	207

▶ **PRIMARY REFERENCE**

PART NUMBER INDEX

Part	Page	Part	Page	Part	Page	Part	Page
	550		417	144-0195	581		365
	552		419		583		403
134-2730	175		420		584		410
134-4126	118	137-6783	529	144-2161	290	148-8323	369
	122	137-8065	529	144-4107	529	148-8327	245
134-4483	27	137-9410	143		557		369
134-7258	618		147	144-6695	496	148-8328	354
134-8221	419	138-3252	29	144-7620	290	148-8335	245
	420	138-4054	502	145-0162	20	148-8336	96
135-0426	▶136	138-7026	529	145-0164	20		367
	205	138-7198	54	145-0168	20	148-8339	245
135-0427	▶137	138-8402	54	145-0170	20	148-8340	9
	147	138-8403	54	145-0326	578		358
	149	138-9868	54	145-1849	9		376
135-0450	362	138-9910	529	145-2901	31	148-8345	96
135-0451	358	139-0532	394	145-5968	290	148-8347	9
135-0452	358	139-1118	529	145-5969	290		369
135-0453	362	139-1153	471	145-7376	54		373
135-0611	587	139-2116	207	145-7385	54	148-8351	376
	589	139-2119	232	145-7390	27	148-8354	376
	590	139-2120	232	145-8039	218	148-8357	245
135-1979	507	139-3593	529	146-0705	400	148-8358	358
135-2141	7	139-3595	504		403	148-8363	358
	▶49	139-4081	▶41		406		362
135-2543	113		53		408	148-8364	9
	185	139-4084	41		410		96
135-3894	294	139-4605	560	146-1842	277		358
135-7123	327	139-4612	4		278		362
135-9819	9		▶560	146-1843	277		369
	16	139-8472	433		278		376
135-9941	232		437	146-7453	61	148-8365	96
136-0822	17		441	146-8121	9	148-8367	367
136-1543	548		▶458	147-0385	146	148-8368	9
136-1544	475	139-8474	445		188		232
136-1711	597		▶459		202		369
136-1953	477	139-9476	41		207	148-8369	9
	515	140-6188	27	147-3310	309		232
136-4183	38	140-9670	27	147-3400	277	148-8370	354
136-6330	376	141-6343	92	147-5088	75	148-8374	356
136-6331	376	141-6787	462	147-5112	468		358
136-7226	536		463	147-6143	464		362
136-8308	614	141-9661	397	147-6144	464		374
137-1602	90	141-9784	477	147-6603	461		375
137-4515	400		515	147-6604	461	148-8378	62
	403	142-0350	265	147-6605	461		367
	406	142-0485	92	147-8211	27	148-8381	369
	408		494	147-8214	27	148-8383	362
	410	142-1767	267	147-8218	26		375
137-4516	400	142-4940	476	147-8220	27	148-8395	51
	403		514	148-1925	217		71
	406	142-5787	379	148-2516	258		76
	408	142-6167	271	148-2592	345		217
	410	142-6174	270		347		423
137-5503	560	142-6183	270	148-2593	339		425
137-6645	171		271		341		427
	172	142-7289	29	148-2903	95		429
137-6715	27	143-1288	482	148-7027	367		431
137-6717	54		483	148-7906	435		433
137-6718	27		569	148-8307	96		435
137-6719	416	143-4654	57	148-8316	232		437
	417	143-4792	282		369		439
137-6720	413	143-5373	218		376		441
	414	143-7356	298	148-8318	356	148-8407	267
	415	143-9290	489		358	148-8408	39
	416	143-9392	116		362		421

▶ **PRIMARY REFERENCE**

PART NUMBER INDEX

Part	Page
148-8433	363
148-8444	354
	376
149-2065	494
149-2610	380
	▶462
149-2611	462
149-3409	549
149-5240	95
149-6371	534
149-7226	519
149-7738	369
150-1280	344
150-3028	366
150-3037	536
150-3058	83
150-4868	376
150-5968	369
150-7158	536
150-7955	271
151-4957	212
151-9849	354
152-3952	75
152-6824	123
152-6825	123
152-8346	379
	▶463
152-8352	463
153-0185	464
153-0187	464
153-1794	7
	▶85
153-1818	410
153-2446	313
153-3580	466
153-5710	111
153-6237	370
153-8467	54
153-8470	54
153-9360	153
	▶464
	466
154-0896	42
154-2687	237
154-2688	237
	▶239
154-2689	239
154-2692	239
154-3064	258
	▶265
154-6306	267
154-6307	267
154-6309	259
154-6579	345
	347
154-7172	259
154-7175	260
154-7176	260
154-7177	260
154-9023	71
154-9025	73
155-2260	160
	164
	169
	205
155-2270	179
	185
	205
	214
	515
155-2271	185
155-2274	543
155-2276	164
155-2283	239
155-3624	39
	244
155-6258	9
	76
156-4000	369
156-4281	232
156-5545	475
156-5970	324
156-6312	556
157-0670	71
	73
158-6072	90
159-0303	7
	▶50
159-0308	228
	230
159-0927	228
	230
159-8049	111
	113
159-8050	111
	113
	114
160-5131	71
160-6382	189
	294
	296
160-8499	286
161-1703	161
161-1704	163
161-1705	162
161-3932	212
161-4423	282
161-5967	519
161-6713	228
	230
161-6963	90
161-7055	262
161-7062	92
	494
161-7063	494
161-9289	574
161-9916	536
162-0177	86
	99
	217
	259
	262
162-3148	59
162-6448	345
	347
162-7449	325
162-7450	325
	▶327
162-7451	▶325
	326
162-8068	7
	▶51
162-8218	92
	494
162-8219	92
	494
163-0325	600
163-0326	600
163-0327	600
163-0872	▶486
	487
163-1146	578
163-1201	518
163-2478	27
163-4195	358
	362
163-4720	466
163-4721	466
163-6074	466
164-0210	57
164-2108	259
	324
164-2465	545
	546
	557
164-4180	218
164-4531	475
164-4883	548
164-5562	73
164-5567	232
	245
	267
164-5570	96
164-5586	376
164-5590	376
164-5605	356
	358
	362
	365
164-5608	358
	362
	403
	410
164-5619	76
	96
	217
164-6867	99
164-7556	132
	133
	134
	135
164-7577	▶176
	216
164-8462	2
	▶379
164-8474	504
	538
165-2510	333
	▶343
165-4446	8
	▶40
165-4927	9
165-7014	369
165-9928	232
166-1776	17
166-1781	17
166-1880	470
166-1997	546
	557
166-1999	546
	557
166-2830	549
166-2905	47
166-3336	326
	▶354
166-6781	578
166-9913	483
166-9914	482
167-0566	260
167-1801	387
167-1802	387
167-2186	340
	345
	347
167-2190	337
	338
	343
	344
167-2195	339
	341
	342
	349
167-2294	340
	345
	347
167-2300	337
	338
	343
	344
167-2304	339
	341
	342
	349
167-2307	379
167-2452	337
167-7504	189
167-7505	189
167-8121	30
167-9002	1
	▶489
167-9524	259
168-2288	46
168-7224	48
168-8248	189
168-8683	92
168-8758	325
168-9108	343
168-9110	343
169-0921	92
	313
	494
169-0922	92
	494
169-1025	569
169-1548	237
169-1549	239
169-2621	489
169-3104	95
169-3145	518
169-3264	471

▶ **PRIMARY REFERENCE**

PART NUMBER INDEX

Part	Page	Part	Page	Part	Page	Part	Page
169-3380	489	172-6876	345	174-8131	212	180-3833	542
169-4088	597		347		491	180-3834	542
169-4089	597	172-7105	489	174-9529	44	180-3836	542
169-4090	597	172-7106	489	174-9570	▶94	180-4027	313
169-4092	597	172-8641	189		103		494
169-5414	192	172-9316	189	174-9692	202	180-4028	212
	197	172-9367	30	175-1504	▶568	180-4643	119
	202	172-9389	117		574		▶120
	294		▶118	175-3644	369	180-4656	556
	296	173-0143	48	175-3676	47	180-7033	212
169-5861	156	173-1007	395	175-3893	259	180-7147	313
169-5862	83	173-1008	395	175-7895	340		494
	376	173-1009	395		345	180-7344	43
169-7380	578	173-1028	▶475		347	180-9324	▶214
169-7443	184		569	175-7896	337		234
169-7487	46	173-2052	575		338	180-9327	259
169-8586	95	173-3064	147		339	180-9340	160
169-8598	95		178		341	180-9933	232
169-8938	189	173-3084	568		343	183-1425	491
170-0271	96	173-3993	421		344	183-2136	192
170-0493	327	173-5360	▶512	175-7898	349	183-2151	192
170-0503	327		513		600	183-3399	62
170-0967	536	173-5549	54	175-7900	342		100
170-1112	475	173-5787	574	176-2945	313	183-3406	97
170-1114	475	173-6756	▶556	176-5507	476		156
170-1115	475		559		514	183-4365	54
170-4820	▶506	173-7035	574		576	183-6774	259
	510	173-7223	96	177-0581	87	183-6775	259
170-5334	▶507	173-9683	339	177-1713	313	183-6845	7
	509		341	177-1862	553		▶88
170-5335	▶151		342	177-1863	569	183-6854	88
	506		349	177-2215	207	183-6856	88
	507	173-9685	340	177-4118	286	183-7263	156
170-8590	553		345	177-4119	286		262
171-1230	569		347	177-4120	286		421
171-2122	489	173-9779	337	177-4493	▶117	184-1130	▶259
171-2212	185		338		197		267
171-5349	166		343	177-4937	568	184-2298	569
	168		600	177-7448	491	184-2299	569
171-5672	▶130	174-2339	▶374	177-7858	476	184-2420	73
	141		607		514	184-2509	73
171-6165	525	174-3705	232	177-7891	480	184-9843	337
171-6466	354		▶258		▶504		338
171-6467	376	174-4140	529	178-1685	466		343
171-6682	569	174-4181	78	178-1686	466		344
171-6729	96	174-4492	476	178-1688	466	185-0008	311
171-7091	228		514	178-3086	468		▶324
171-7095	230		576	178-3695	245	185-1122	313
171-7186	119	174-4546	2	178-4190	525	185-2197	192
	▶471		▶576	178-7907	575	185-2274	489
172-0165	92	174-4547	512	178-8455	466	185-2287	489
172-1239	529		▶514	178-8603	513	185-2638	107
172-2416	569	174-4971	476		▶538	185-2639	107
172-4211	92	174-5907	128	178-8894	502	185-2644	107
	313		197	178-9962	367	185-2645	107
	494		232	179-1298	259	185-2647	107
172-5378	484		317	179-1549	143	185-2648	107
	▶525		318	179-1550	143	185-2650	107
	555		370		147	185-2651	107
172-6298	88	174-6051	514	179-2138	525	185-2653	107
172-6555	189		576	179-2139	525	185-2654	107
172-6581	569	174-6353	476	179-2140	525	185-2655	107
172-6831	555		514	179-2176	529	185-2658	107
	▶587		576	179-2179	529	185-5872	487
172-6833	207	174-6819	239	179-4814	518	186-1526	259

▶ **PRIMARY REFERENCE**

PART NUMBER INDEX

Part	Page	Part	Page	Part	Page	Part	Page
	262	191-0027	476		▶194	203-2391	305
	▶266		515	198-3611	44	203-2423	305
186-3223	185		576	198-4768	241	203-3337	313
186-3735	106	191-0461	8	198-4776	44	203-3340	313
	123		▶100		79	203-3341	313
	130	191-0522	56		487	203-3342	313
	131	191-0523	▶56	198-4777	44	203-3768	88
	136		100		79	203-3769	85
	137	191-1782	96		89	203-3940	431
	138	191-1783	96		97	203-5957	307
	139	191-3645	318	198-4778	282	203-5958	307
	141	191-5236	481	198-4780	379	203-7703	574
	158	191-5293	290	198-4782	303	204-4376	477
	168	191-5973	241		612		515
	176	191-6241	46	198-5438	313	204-6488	491
	181	191-9256	217	198-5439	313	204-8000	185
	183	192-1298	97	198-5440	313	205-0626	107
	184	192-7238	370	198-7379	302	205-1280	100
	185	192-7357	44	198-7380	302	205-1320	38
	189	193-2550	▶166	198-7657	234	205-1321	8
	192		207	198-8588	294		▶38
	197	193-6996	▶46		296	205-4285	120
	205		47	198-9811	611		121
	207	193-6998	7	198-9812	611	205-6388	568
	265		▶47	199-2677	497	205-7187	320
	266	193-7416	149		500	205-7299	318
	462	194-4046	113	199-2712	497		320
	515	194-5127	30		500	205-8839	214
	534	194-5128	7	199-2739	497	205-8847	214
	542		▶30	199-2740	500	206-1345	194
	587	194-5226	164	199-3368	▶138	206-3599	92
	589	194-5227	164		150		494
	590	194-6722	▶160	199-4317	11	206-3600	92
186-3736	169		185	199-7891	107	206-4097	491
	179	195-0321	48	199-8436	107	206-4228	7
	185	195-7218	611				▶71
	205		615			206-4669	61
	543	196-4150	550			206-5122	403
187-0491	489	196-7268	192				410
187-0953	608	196-9519	20	200-3967	294	206-5123	403
187-1008	207	197-0416	86		296		410
187-6279	7	197-2066	4	200-4495	38	206-5823	587
	▶62		▶541	200-4497	▶65		589
187-6294	62	197-4977	217		66		590
187-7738	153	197-5210	7	200-7929	241	206-9651	491
188-9390	327		▶39	200-8623	529	207-4922	494
188-9644	202	197-7689	578	201-0387	218	207-4924	313
189-0108	185	197-8393	156	201-2184	334	207-4927	92
189-0189	265		▶161	201-8034	603	207-6034	214
189-1707	534	197-8394	156	201-9774	58	208-0423	536
189-8772	88		▶162	202-1138	550	208-4617	113
	245	197-8419	62	202-6611	133	208-6054	73
189-8777	65	197-8611	527		135	208-7782	120
190-1684	217		529	202-6614	132		121
190-1688	2	197-8624	527		134	209-4578	87
	▶255		529	202-7666	▶482	210-1747	156
190-1690	255	197-8629	529		568		▶163
190-1691	255	197-8630	529	202-7668	▶483	210-2262	553
190-3043	494	197-8820	▶107		568	210-2263	553
190-3850	327		109	203-0780	541	210-2266	553
190-4375	313	197-9353	48	203-1124	587	210-2270	▶553
190-5386	608	197-9354	48		589		569
190-8970	103	197-9386	48		590	210-3321	15
190-8977	96	198-2713	194	203-2389	305	210-5590	8
	▶103	198-2714	7	203-2390	305		▶20

2

▶ PRIMARY REFERENCE

PART NUMBER INDEX

Part	Page	Part	Page	Part	Page	Part	Page
210-5592	8		28		347		256
	▶48	219-5847	▶28	226-8696	64	235-4765	143
210-7722	88		29	226-9622	259	235-5527	54
210-9246	62	219-5849	8	227-1200	26	235-5528	53
211-4908	485		▶29	227-5904	101		▶54
211-4913	484	220-1194	7	227-5942	71	235-8200	7
	▶589		▶59	228-4766	31		▶154
211-9274	44	220-1209	31	228-5009	212	235-9651	102
211-9275	44	220-3634	618	228-7103	61	236-0737	491
212-2270	8	220-4125	83	228-8510	59	236-1927	153
	▶66	220-8678	94	229-5010	439	236-2356	202
212-3706	100	221-3494	62	229-5153	20	236-4413	▶75
212-4174	61		100	229-5154	20		76
212-4288	13	221-3676	431	229-5155	20	236-4420	75
212-4289	8		439	229-5156	20	236-4421	75
	▶13	221-4482	8	229-8841	7	236-4545	173
212-4893	20		▶22		▶15	236-5197	553
212-5081	82	221-8045	618	229-8844	34	236-6220	156
212-6933	73	221-9361	11	229-9382	339		▶165
213-0064	96	222-0345	▶562		341	236-6221	156
213-3193	48		568		342		▶167
213-5007	468	222-1185	54		349	236-7724	241
213-7315	550	222-1186	54	230-4011	180	236-8826	202
	552	222-3769	496	230-4477	618	237-5176	71
213-9100	141	222-4737	413	231-3539	338	237-8063	7
213-9842	214		415		343		▶64
214-1982	397		417		344	237-9822	7
214-1983	2		419	231-4486	511		▶42
	▶399		420	231-4487	511	238-0415	477
214-1984	▶397	222-5893	15	231-5251	285		515
	399	222-5915	71	232-0343	99	238-0417	477
214-4863	▶158	222-5917	194		▶104		515
	494	222-5946	7	232-1732	511	238-2698	48
214-7566	58		▶57	232-1754	53	239-0583	14
214-7567	165	222-7774	431	232-3717	8	239-1134	173
214-7568	62		439		▶53		▶183
	97		▶460	232-6114	541	239-4991	618
	100	223-0580	395	233-0891	116	239-5030	97
	101	223-4296	127	233-7655	67	239-6989	618
	232	223-5916	536	234-4323	▶132	239-9893	▶381
	244	224-0554	618		143		417
	245	224-0807	83		145	239-9894	▶383
215-3005	▶305	224-3247	13		146		415
	318	224-3969	522		147		420
215-7066	73	224-4536	▶164	234-4324	▶133	241-4194	173
215-7067	73		165		147	241-5645	17
216-5586	24	224-5912	285	234-4325	▶134	241-5889	381
217-2661	397	224-6638	48		146		383
217-4369	320	225-0312	618		149	241-6185	235
217-5213	26	225-3109	529	234-4326	▶135	241-8368	▶179
217-7742	534	225-4150	618		149		185
217-7933	553	225-4257	618	234-5013	96	241-8534	69
217-9060	71	225-5222	9		▶170	242-3360	90
218-2971	305	226-0295	497	234-6666	266	242-3864	58
218-3339	226		500	234-7730	132	242-7417	235
218-4406	241	226-0342	497		133	242-9245	314
219-0302	555		500		134	243-3250	202
	557	226-1240	285		135	243-5063	81
219-0314	83		618	234-7731	132	244-2585	403
219-2000	482	226-1274	618		133		410
	483	226-2870	397		134	244-2589	403
219-3309	53	226-2871	397		135		410
219-5844	▶26	226-6621	217	235-2412	▶228	244-2592	410
	27	226-8202	340		256	244-2594	403
219-5846	▶27		345	235-2413	▶230	244-2596	410

▶ **PRIMARY REFERENCE**

PART NUMBER INDEX

Part	Page	Part	Page	Part	Page	Part	Page
244-2598	403	252-0102	▶273	259-2627	603		603
244-3168	116		275	259-4483	603	267-4743	67
244-3712	244	252-0104	▶274	259-4492	603	267-5212	11
	245		276	260-6501	395	268-1530	96
244-4500	34	252-0106	270	260-6502	358	268-1531	96
244-5880	202		271		▶395	268-1835	▶95
245-3259	40		▶275	260-7647	▶110		102
245-3930	285	252-0108	270		202	268-1839	8
245-3933	285		271	260-8630	62		▶102
245-4630	167		▶275	260-8631	62	269-8788	62
245-6375	82	252-0111	271	260-9133	318	269-9322	152
245-6376	82		▶276	260-9171	97	270-3277	373
245-6796	18	252-0112	270	261-3345	581	270-5320	94
245-7339	52		272		584	271-5658	20
246-2641	105		▶276	261-4672	468	271-8090	11
	282	252-0114	▶271	261-4673	468	272-0388	18
	399	252-0118	▶272	261-4674	468	272-1956	88
	565	252-0670	269	261-4675	468	272-3089	92
	567		▶270	261-4676	468		494
	616	252-0671	▶269	261-5694	548	274-1704	303
246-2822	369	252-0730	269	261-8536	1	274-5909	534
246-4561	369		▶270		▶603	274-6719	96
246-4611	83	252-0731	▶269	261-8537	603	274-7395	156
246-4615	82	252-2156	618	261-8538	603		▶171
246-6036	62	252-2157	618	261-8541	603	274-7396	156
246-6561	123	252-5709	123	261-8543	603		▶172
246-6562	123		▶201	261-8545	603	274-8068	543
246-8630	126	252-7947	269	261-8547	603	275-0572	286
246-9345	7		▶270	261-8553	351	275-0595	7
	▶116	252-7948	▶269	261-9367	90		▶17
246-9353	154	252-8213	60	262-1421	▶122	275-1253	96
247-1876	14	253-0861	617		127		▶180
247-4412	597	253-2111	185	263-1786	31	275-3634	173
247-6449	123	253-2589	7	263-3774	▶23	275-6535	1
	▶152		▶60		24		▶256
247-6457	201	253-2697	▶122	263-6914	73	275-7741	▶181
247-8602	87		123	263-8948	127		182
247-8629	228	253-4019	489	263-9088	127		590
	230	253-4347	311		▶155	275-7764	▶182
247-9711	228	253-4677	1	263-9657	423		592
	230		▶351	264-3762	▶82	275-8387	7
247-9730	82	253-4678	351		83		▶37
248-1377	255	254-0095	8	264-4297	171	275-9638	381
248-2886	230		▶101		172		383
248-5245	618	254-5960	123	264-7029	180	276-7462	33
248-6772	477		▶153	265-5007	73	277-1873	207
	515	254-6136	618	265-5287	223	277-4837	79
249-1054	369	254-6802	87	265-7402	17	277-6430	217
249-3251	381	254-7948	269	265-9125	241	277-6432	217
	383		▶271	266-1467	92	277-6433	▶217
249-8575	618	254-7964	▶269		▶159		256
250-0544	410	255-5284	116	266-1598	383	278-0642	218
	▶415	255-6261	477	266-1599	381	279-6631	330
250-0550	403	256-5308	78		383	279-6632	330
	410	256-6453	170	266-1600	381		370
	▶417	256-6803	127	266-4360	236		603
250-2984	83	256-6804	127	266-6026	487	279-8138	5
250-4628	548	257-3227	534	266-6793	245		▶366
251-0982	488	257-8471	496	266-7650	73	280-1480	617
251-2382	153	257-9363	127	266-7651	73	281-0547	618
251-2383	202	258-0733	173	266-8568	70	281-3160	▶262
251-3227	79	258-4524	91	267-3506	468		267
251-7350	529	258-8723	7		606	281-3163	234
252-0098	275		▶34	267-3507	248		▶267
252-0100	276	259-0017	73	267-3508	468	281-3165	▶234

▶ **PRIMARY REFERENCE**

PART NUMBER INDEX

Part	Page
	256
281-5641	1
	▶235
282-0506	6
	▶602
282-0882	611
282-2469	1
	▶294
282-2472	1
	▶92
282-2473	1
	▶494
282-2475	1
	▶491
282-4350	241
283-0644	290
283-1099	236
283-1578	468
	470
	597
283-3499	1
	▶313
284-0815	381
	383
284-0824	1
	▶69
284-3045	381
	383
284-5343	2
	▶197
284-5346	2
	▶192
284-5347	2
	▶212
284-5348	2
	▶205
284-5352	▶188
	326
284-5353	140
	▶147
284-5354	140
	▶143
284-5355	140
	▶149
284-5358	4
	5
	▶111
284-5362	1
	▶145
284-5363	140
	▶150
284-5376	1
	▶146
284-5378	1
	▶283
284-5379	283
284-5394	1
	▶141
284-5397	554
	▶557
284-5400	▶554
284-5771	1
	▶311
284-7774	83
285-3361	▶189
	484
	555
285-4154	6
	▶326
285-4183	5
	6
	▶607
285-6570	245
285-9066	31
286-0742	468
	603
286-1089	618
286-2631	351
286-4328	4
	▶119
286-4330	▶121
	523
286-4415	4
	▶509
286-4416	4
	▶510
286-4823	586
	▶590
286-4825	2
	3
	▶592
287-1690	11
287-3260	▶542
	550
	552
288-0735	603
288-1347	11
288-5508	202
288-5509	202
288-5756	550
288-5757	550
289-0580	468
289-7545	480
	▶481
289-7597	▶606
	607
289-9354	185
289-9726	274
290-0349	555
	▶559
290-1127	484
	▶485
290-1148	▶296
	554
290-1505	273
290-5792	▶168
	218
291-1400	122
291-1401	122
291-5475	▶122
	215
292-4772	320
292-5315	1
	▶290
292-6099	548
293-0648	2
	▶367
293-2911	553
293-3824	618
293-4153	3
	▶543
293-4277	235
293-4285	245
293-4495	543
293-4500	488
293-6529	523
	▶524
293-7533	524
294-1136	33
294-1137	33
294-3542	123
	▶202
294-4619	286
294-4621	286
294-5042	482
	483
	569
294-8545	▶140
294-8546	▶140
294-8587	527
294-8588	484
	▶527
294-8620	104
294-8641	140
	▶178
295-1138	111
295-1139	113
295-1834	212
295-1835	212
295-2933	2
	▶302
295-3839	286
295-4371	1
	▶518
295-4431	480
	▶488
295-6180	286
295-6224	286
295-7991	4
	▶523
295-8089	282
295-8090	1
	▶282
295-8091	282
295-8278	6
	▶215
296-1252	286
296-6764	617
296-6765	617
296-6769	617
297-1140	197
297-1546	97
297-5355	7
	▶156
297-6867	7
	▶125
297-6979	379
297-8049	113
297-8448	4
	▶123
297-8449	123
	▶280
298-2426	4
	▶586
298-6359	290
298-8895	1
	▶293
298-8898	293
299-2277	548
299-3427	334
299-3436	330
	332
299-3439	330
	332
299-3443	466
299-5543	2
	▶386
299-5544	2
	▶369
299-5545	386
299-7700	393
299-8249	293
299-8251	293
299-8306	303
299-8307	2
	▶303
299-8311	68
	▶81
299-8318	303
299-9478	303
	3
300-1377	306
300-2688	393
300-6152	113
300-6496	111
300-7933	58
301-0046	618
301-2237	4
	6
	▶373
301-2322	370
301-3118	266
301-3170	318
301-4173	▶548
	569
301-4174	568
	▶569
301-4376	2
	▶376
301-4378	376
301-4379	376
301-4380	376
301-6395	313
301-6398	313
301-6664	113
301-9593	293
302-1330	617
302-3908	314
	318
302-4191	▶617
	618
302-4194	2
	▶618
302-5210	128
302-5211	128
302-5212	128
302-5428	127

▶ **PRIMARY REFERENCE**

PART NUMBER INDEX

Part	Page	Part	Page	Part	Page	Part	Page
	▶128	308-1883	600	311-2766	2	313-9542	83
302-5429	▶127	308-1884	600		▶79	314-4018	486
302-7139	328	308-5632	477	311-2770	1	314-6148	9
	▶375	308-5633	▶476		▶96		▶11
302-7458	574		481	311-2771	4	314-7646	324
	▶578	308-6403	207		5	314-7803	122
302-8814	▶574	309-1876	262		▶173	314-7946	113
	575	309-1877	259	311-2772	480	314-9338	597
303-5996	303		262		▶534		▶600
303-5998	303	309-1878	263	311-2773	480	314-9339	600
303-5999	303	309-2995	259		513	314-9370	2
303-6003	▶70		262		▶536		▶320
	303	309-2996	259	311-2800	480	315-4118	1
303-6008	235		263		▶487		▶243
303-6009	70	310-1640	550	311-3025	73	315-4150	9
303-6010	70	310-3568	550	311-3026	73	315-5327	2
303-6011	70	310-5881	1	311-3542	7		3
303-6012	70		▶68		▶43		▶522
303-6013	303	310-5882	68	311-4907	83	315-5378	2
303-6014	303		▶78	311-4908	83		▶245
303-6015	303	310-5883	78	311-4959	87	315-5668	245
303-6017	303	310-5884	78	311-6573	113	315-6148	243
303-6032	245	310-6437	2	311-7049	96	315-9792	245
303-6034	488		▶44	311-7210	37	316-1927	477
303-6037	70	310-6459	1	311-8138	1		514
303-6203	527		▶83		▶284	316-4351	96
304-4924	18	310-6469	1	311-8139	284	316-4806	89
304-5687	110		▶61	311-8756	96	316-5237	484
304-5794	141	310-6472	2	311-9296	185		▶550
304-5880	145		▶89	312-0377	113		555
304-6573	286	310-9247	18	312-0378	113	316-5238	2
304-6958	550	310-9428	610	312-0379	113		▶552
	552		▶611	312-3542	89	316-5743	286
304-7252	286	311-0274	2	312-5109	105	316-6682	44
304-7415	286		▶73	312-8319	286	316-6686	44
304-7417	286	311-0514	2	312-8434	87	316-6688	245
304-7418	286		▶393	312-8526	286	316-6689	79
304-7419	286	311-0794	2	312-8528	286	316-6819	311
305-0038	111		▶207	312-8529	286	316-8363	1
305-6155	269	311-0795	1	312-8530	286		▶232
	▶271		▶113	313-2484	286	316-8381	313
305-6159	▶269	311-0801	4	313-2656	1	317-1529	79
305-8141	22		5		▶9	317-1533	96
	▶24		▶196	313-2762	9	317-1534	303
307-1735	7	311-0802	2	313-3967	7	317-1537	303
	▶18		▶185		▶99	317-1538	81
307-1738	18	311-0803	▶184	313-4127	534	317-3164	113
307-1958	351		480	313-4130	487	317-3165	113
307-1959	351	311-0864	1	313-4131	534	317-3166	113
307-1960	351		▶87	313-4132	534	317-3168	113
307-1961	351	311-2737	4	313-4181	313	317-5601	81
307-1962	351		▶306	313-4374	286	317-7250	286
307-6192	11	311-2738	306	313-4384	7	317-7375	311
307-6200	11		▶317		▶31	317-8063	61
307-6205	11	311-2739	317	313-4670	202	317-8382	184
307-6209	11		▶318	313-5530	534	318-2063	113
307-6241	313	311-2741	1	313-6096	83	318-2064	114
307-6242	313		▶286	313-6098	87	318-2076	7
307-6243	313	311-2749	2	313-6100	9		▶76
307-6260	226		▶105	313-6224	477	318-8124	369
307-7500	313	311-2751	2	313-6546	536	319-0607	101
307-7501	313		3	313-6547	536	319-2228	468
307-7502	313		▶480	313-6976	367	319-6698	370
308-0291	207	311-2753	3	313-6977	232	320-0341	2
308-1880	600		▶513	313-7755	184		▶484

PART NUMBER INDEX

Part	Page
320-0342	3
	▶555
320-0924	303
320-2746	595
320-2749	596
320-7431	594
	▶595
320-8203	197
320-9924	1
	594
	▶596
321-5967	244
321-8638	101
321-8711	126
322-0245	7
	▶86
322-0246	7
	▶35
322-7341	207
322-8548	▶575
323-0327	202
323-5592	202
323-8674	351
323-8675	351
323-8857	555
	557
323-8936	7
	▶58
324-3364	202
324-3366	202
325-6423	423
	425
	427
	429
	431
	433
	437
	441
325-9710	1
	▶7
326-0503	600
326-0610	286
326-0612	286
326-1644	94
326-3120	207
327-0560	202
327-0561	202
328-3496	73
328-3655	244
	245
329-3825	▶594
329-3827	6
	▶594
329-5707	618
330-3408	155
330-3409	122
330-3410	122
330-6877	611
330-9360	7
	▶8
330-9439	8
331-1102	202
331-3892	618
332-1544	4
	▶126
332-7657	185
333-0960	468
333-1963	606
333-6436	▶244
	245
333-8326	534
333-9308	▶216
	244
334-0575	207
334-0576	207
334-0577	207
334-0578	207
334-2679	216
334-2680	216
334-5268	320
334-5270	320
334-5760	5
	6
	▶292
334-6872	196
334-7633	205
334-8049	▶139
334-9745	197
335-0806	185
335-1894	192
335-1895	192
335-2383	122
335-6122	89
335-6123	89
335-6210	480
	487
335-8402	146
	188
335-8961	543
335-9387	550
	552
336-0057	618
336-0959	143
	147
336-0960	143
336-0961	147
336-1559	5
	▶470
336-1561	470
336-1963	470
336-1964	470
336-4754	286
336-4756	286
336-5530	123
	▶285
336-6608	543
336-6609	543
336-9456	202
337-0732	2
	▶248
337-2233	44
337-3357	1
	▶236
337-7998	▶529
	555
338-1878	▶90
	91
338-5276	1
	▶298
338-5871	1
	▶33
338-7445	466
338-7449	466
338-7450	466
338-7505	468
338-7506	468
338-7507	1
	▶468
338-7509	1
	▶466
	594
338-8423	212
338-8484	248
339-1911	468
339-4964	▶2
339-4965	▶3
339-4966	▶3
339-4967	▶3
339-4968	▶4
339-4969	▶4
339-4970	▶5
339-4971	▶5
339-4972	▶5
339-4973	▶5
339-4974	▶6
339-4977	▶6
339-4978	▶6
339-5406	175
339-7733	▶599
	610
340-1191	▶4
340-1812	8
	▶91
340-2602	▶270
340-2614	270
	▶271
340-3688	284
340-4515	237
340-4517	237
340-5009	5
	▶610
340-5472	433
	437
341-3192	146
341-5000	31
341-6220	400
	▶419
341-6226	403
	▶420
341-6675	▶400
341-8565	▶403
342-0724	320
342-0725	320
342-1547	317
342-1548	318
342-2154	2
	▶406
342-2640	328
	▶408
342-4977	15
343-6218	328
	▶410
343-6219	▶328
343-6222	▶328
344-6167	141
344-9192	318
344-9564	185
345-0635	79
345-7649	1
	▶109
346-3597	1
	▶237
346-3710	▶1
347-1264	487
347-7898	7
	▶175
347-8846	5
	▶597
349-2488	▶4

▶ **PRIMARY REFERENCE**

MEMORANDA



© 2009 CATERPILLAR
ALL RIGHTS
RESERVED

CAT, CATERPILLAR, THEIR RESPECTIVE LOGOS, “CATERPILLAR YELLOW” AND THE POWER EDGE TRADE DRESS, AS WELL AS CORPORATE AND PRODUCT IDENTITY USED HEREIN, ARE TRADEMARKS OF CATERPILLAR AND MAY NOT BE USED WITHOUT PERMISSION.

PRINTED IN
U.S.A.