RUTHZIL TRATOR COMERCIAL DE PEÇAS LTDA 11 97083-6812 ROLANDO

FEVEREIRO 2007

TM 5-3805-261-23P

TECHNICAL MANUAL

130G 130GNS 130GS

FIELD MAINTENANCE
(UNIT AND DIRECT SUPPORT MAINTENANCE)
REPAIR PARTS AND SPECIAL TOOLS LISTS (RPSTL)
ALSO INCLUDES SUSTAINMENT MAINTENANCE
(GENERAL SUPPORT AND DEPOT MAINTENANCE)

CATERPILLAR

FOR

GRADER, ROAD, MOTORIZED, DIESEL ENGINE DRIVEN (DED), HEAVY, COMMERCIAL CONSTRUCTION EQUIPMENT (CCE)

(NSN 3805-01-150-4795) CATERPILLAR MODEL 130G (EIC: EHF)

TYPE I, NONSECTIONALIZED

(NSN 3805-01-126-7894) CATERPILLAR MODEL 130GNS (EIC: EHN)
(NSN 3805-01-252-0128) CATERPILLAR MODEL 130GNSCE (EIC: EJJ)

TYPE II, SECTIONALIZED

(NSN 3805-01-126-7895) CATERPILLAR MODEL 130GS (EIC: EHP)
(NSN 3805-01-251-8252) CATERPILLAR MODEL 130GSCE (EIC: EJH)

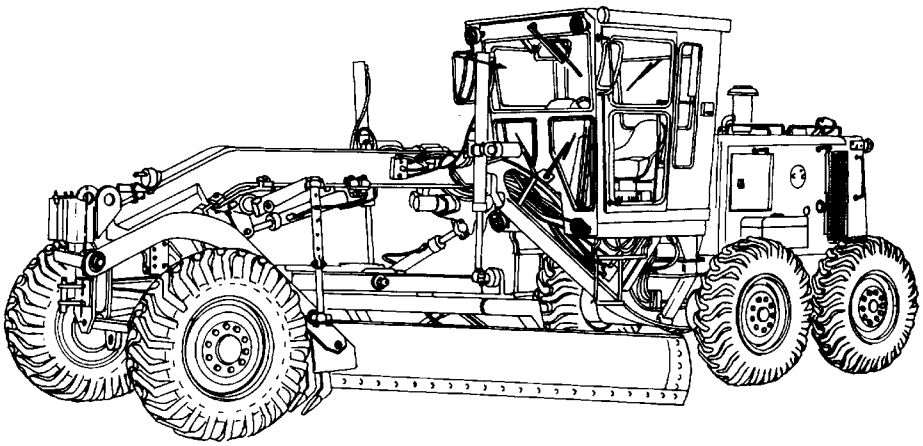

SUPERSEDURE NOTICE - This manual supersedes TM 5-3805-261-24P, dated 19 August 1993, and TM 5-3805-263-14&P-4, dated 14 April 1989.

DISTRIBUTION STATEMENT A - Approved for public release; distribution is unlimited.

HEADQUARTERS, DEPARTMENT OF THE ARMY

FEBRUARY 2007

LIST OF EFFECTIVE PAGES

Original 28 February 2007

TOTAL NUMBER OF PAGES IN THIS PUBLICATION IS 794 CONSISTING OF THE FOLLOWING:

Page No.	*Change No.
Cover (Back Blank)	0
A/(B Blank)	0
i thru xii	0
1 thru 7	0
Figure 1 thru Figure 301	0
I-1 thru I-199	0

* Zero in this column indicates an original page or work package.

TECHNICAL MANUAL
TM 5-3805-261-23P

HEADQUARTERS
DEPARTMENT OF THE ARMY
Washington, D.C., 28 February 2007

FIELD MAINTENANCE
(UNIT AND DIRECT SUPPORT MAINTENANCE)
REPAIR PARTS AND SPECIAL TOOLS LISTS (RPSTL)
(GENERAL SUPPORT AND DEPOT MAINTENANCE)

GRADER, ROAD, MOTORIZED
DIESEL ENGINE DRIVEN (DED), HEAVY,
COMMERCIAL CONSTRUCTION EQUIPMENT (CCE)
(NSN 3805-01-150-4795) CATERPILLAR MODEL 130G (EIC: EHF)

TYPE I, NONSECTIONALIZED
(NSN 3805-01-126-7894) CATERPILLAR MODEL 130GNS (EIC: EHN)
(NSN 3805-01-252-0128) CATERPILLAR MODEL 130GNSCE (EIC: EJJ)

TYPE II, SECTIONALIZED
(NSN 3805-01-126-7895) CATERPILLAR MODEL 130GS (EIC: EHP)
(NSN 3805-01-251-8252) CATERPILLAR MODEL 130GSCE (EIC: EJH)
Current as of 29 July 2005

REPORTING ERRORS AND RECOMMENDING IMPROVEMENTS

You can help improve this publication. If you find any mistakes or if you know of a way to improve the procedures, please let us know. Submit your DA Form 2028 (*Recommended Changes to Publications and Blank Forms),* through the Internet, on the Army Electronic Product Support (AEPS) website. The Internet address is https://aeps.ria.army.mil/. The DA Form 2028 is located under the Public Applications section in the AEPS Public Home Page. Fill out the form and click on SUBMIT. Using this form on the AEPS will enable us to respond quicker to your comments and better manage the DA Form 2028 program. You may also mail, fax or e-mail your letter or DA Form 2028 direct to: AMSTA-LC-LPIT/TECH PUBS, TACOM-RI, 1 Rock Island Arsenal, Rock Island, IL 61299-7630. The e-mail address is: ROCK-TACOM-TECH-PUBS@conus.army.mil. The fax number is DSN 793-0726 or Commercial (309) 782-0726.

SUPERSEDURE NOTICE - This manual supersedes TM 5-3805-261-24P, dated 19 August 1993, and TM 5-3805-263-14&P-4, dated 14 April 1989.

DISTRIBUTION STATEMENT A - Approved for public release; distribution is unlimited.

TABLE OF CONTENTS

		Illus/ Fig	Page
WP 0001 00 Introduction			
WP 0002 00 Repair Parts List			
GROUP 01	ENGINE		
0100	ENGINE ASSEMBLY		1-1
	ENGINE AND MOUNTING	1	1-1
0101	CRANKCASE, BLOCK, CYLINDER HEAD		2-1
	ENGINE FRONT COVERS AND MOUNTING	2	2-1
	CYLINDER BLOCK ASSEMBLY	3	3-1
	CYLINDER BLOCK HEAD ASSEMBLY	4	4-1
0102	CRANKSHAFT		5-1
	CRANKSHAFT ASSEMBLY	5	5-1
	BALANCER SHAFT ASSEMBLY	6	6-1
0103	FLYWHEEL ASSEMBLY		7-1
	FLYWHEEL ASSEMBLY AND MOUNTING	7	7-1
0104	PISTONS AND CONNECTING RODS		8-1
	PISTON AND CONNECTING ROD	8	8-1
0105	VALVES, CAMSHAFTS AND TIMING SYSTEM		9-1
	CAMSHAFT ASSEMBLY AND MOUNTING	9	9-1
	VALVE MECHANISM ASSEMBLY	10	10-1
	VALVE COVER AND MOUNTING	11	11-1
0106	ENGINE LUBRICATION SYSTEM		12-1
	VALVE COVER BREATHER AND MOUNTING	12	12-1
	ENGINE OIL PAN AND MOUNTING	13	13-1
	ENGINE OIL LEVEL GAGE, FILLER, AND MOUNTING	14	14-1
	ENGINE OIL LINES, OIL PUMP GEARS, AND MOUNTING	15	15-1
	ENGINE OIL PUMP ASSEMBLY	16	16-1
	ENGINE OIL FILTER LINES AND MOUNTING	17	17-1
	ENGINE OIL FILTER	18	18-1
	ENGINE OIL COOLER AND MOUNTING	19	19-1
	ENGINE OIL SAMPLING LINES AND VALVE	20	20-1
0108	MANIFOLDS		21-1
	ENGINE EXHAUST MANIFOLD AND MOUNTING	21	21-1
0109	ACCESSORY DRIVING MECHANISMS		22-1
	TACHOMETER DRIVE	22	22-1
0127	LUBRICATING SYSTEM		23-1
	TURBOCHARGER OIL LINES AND FITTINGS	23	23-1
GROUP 03	FUEL SYSTEM		
0301	CARBURETOR, FUEL INJECTOR		24-1
	FUEL INJECTOR FUEL LINES AND FUEL INJECTOR PUMP MOUNTING	24	24-1
	FUEL INJECTOR NOZZLE ASSEMBLY	25	25-1

TABLE OF CONTENTS (Con't)

		Illus/ Fig	Page
0302	FUEL PUMPS		26-1
	FUEL TRANSFER PUMP ASSEMBLY	26	26-1
	FUEL PUMP DRIVE GEARS	27	27-1
	GOVERNOR AND FUEL INJECTION PUMP ASSEMBLY	28	28-1
	GOVERNOR REAR HOUSING COVERS AND MOUNTING	29	29-1
	GOVERNOR REAR HOUSING	30	30-1
	GOVERNOR CENTER HOUSING	31	31-1
	FUEL INJECTION PUMP ASSEMBLY	32	32-1
0304	AIR CLEANER		33-1
	AIR CLEANER AND MOUNTING	33	33-1
	DUST INJECTOR AND MOUNTING	34	34-
0305	SUPERCHARGER, BLOWER, TURBOCHARGER OR ALTITUDE COMPENSATOR		35-1
	TURBOCHARGER AIR LINES AND MOUNTING	35	35-1
	TURBOCHARGER ASSEMBLY AND MOUNTING	36	36-1
0306	TANKS, LINES, FITTINGS, HEADERS		37-1
	FUEL TANK ASSEMBLY AND MOUNTING	37	37-1
	FUEL LINES AND FITTINGS	38	38-1
	SECONDARY FILTER FUEL LINES, FITTINGS, AND MOUNTING	39	39-1
0308	ENGINE SPEED GOVERNOR AND CONTROLS		40-1
	REAR GOVERNOR CONTROLS	40	40-1
	FRONT GOVERNOR CONTROLS	41	41-1
0309	FUEL FILTERS		42-1
	PRIMARY FUEL FILTER, FUEL PRIMING PUMP, AND MOUNTING	42	42-1
	SECONDARY FUEL FILTER AND MOUNTING	43	43-1
0311	ENGINE STARTING AIDS		44-1
	ETHER STARTING AND MOUNTING	44	44-1
GROUP 04	EXHAUST SYSTEM		
0401	MUFFLER AND PIPES		45-1
	EXHAUST MUFFLER AND MOUNTING	45	45-1
GROUP 05	COOLING SYSTEM		
0501	RADIATOR, EVAPORATIVE COOLER, OR HEAT EXCHANGER		46-1
	RADIATOR AND MOUNTING	46	46-1
	RADIATOR SHIELDS AND MOUNTING	47	47-1
	RADIATOR GUARDS AND MOUNTING	48	48-1
0503	WATER MANIFOLD, HEADERS, THERMOSTATS, AND HOUSING GASKET		49-1
	WATER LINES AND MOUNTING	49	49-1
0504	WATER PUMP		50-1
	WATER PUMP ASSEMBLY AND MOUNTING	50	50-1

TABLE OF CONTENTS (Con't)

		Illus/ Fig	Page
0505	FAN ASSEMBLY		51-1
	FAN AND FAN DRIVE	51	51-1
	FAN DRIVE PULLEY AND MOUNTING	52	52-1
GROUP 06	ELECTRICAL SYSTEM		
0601	GENERATOR, ALTERNATOR		53-1
	ALTERNATOR MOUNTING, PULLEY, AND DRIVE BELTS	53	53-1
	ALTERNATOR (DELCO)	54	54-1
	ALTERNATOR (BOSCH)	55	55-1
0603	STARTING MOTOR		56-1
	STARTER MOTOR MOUNTING	56	56-1
	STARTING MOTOR (DELCO)	57	57-1
	STARTING MOTOR (PRESTOLITE)	58	58-1
	STARTING MOTOR SOLENOID (PRESTOLITE)	59	59-1
	STARTING MOTOR (BOSCH)	60	60-1
0607	INSTRUMENT OR ENGINE CONTROL PANEL		61-1
	MONITORING SYSTEM CONTROL PANEL	61	61-1
	STEERING CONSOLE PANEL	62	62-1
	OPERATOR'S PANEL	63	63-1
	HOURMETER AND PANEL LAMP	64	64-1
0608	MISCELLANEOUS ITEMS		65-1
	CAB SWITCH PANEL	65	65-1
	VEHICLE LIGHT SWITCH AND MOUNTING	66	66-1
	FUSE BOX, FUSES, AND MOUNTING	67	67-1
	CAB FUSE BLOCK, FUSE, AND MOUNTING	68	68-1
	DOMELIGHT TOGGLE SWITCH AND MOUNTING	69	69-1
	DIMMER RESISTOR ASSEMBLY, DOMELIGHT	70	70-1
	DIMMER SWITCH AND MOUNTING	71	71-1
	SUPPLEMENTAL STEERING PUMP VALVE SWITCH AND PRESSURE SWITCH	72	72-1
	SUPPLEMENTAL STEERING MAGNETIC SWITCH, ELECTRIC MOTOR, AND MOUNTING	73	73-1
	SUPPLEMENTAL STEERING GOVERNOR SWITCH AND MOUNTING	74	74-1
	SUPPLEMENTAL STEERING AND REMOTE STARTING ELECTRONIC CONTROL AND MOUNTING	75	75-1
	BLADE FLOAT LIMIT SWITCHES AND MOUNTING	76	76-1
	SLAVE RECEPTACLE AND CABLES	77	77-1
0609	LIGHTS		78-1
	VEHICLE FRONT AND REAR FLOODLIGHT MOUNTINGS	78	78-1
	VEHICLE FRONT AND REAR FLOODLIGHT	79	79-1
	VEHICLE FRONT TURN SIGNAL LIGHTS AND MOUNTING	80	80-1
	VEHICLE REAR TURN SIGNAL LIGHTS, REAR BRAKE LIGHTS, AND MOUNTING	81	81-1
	BLACKOUT DRIVING LIGHT ASSEMBLY	82	82-1
	BLACKOUT STOPLIGHT-TAILLIGHT AND MOUNTING, REAR	83	83-1
	VEHICLE HEADLIGHT AND MOUNTING	84	84-1
	DOMELIGHT AND MOUNTING	85	85-1

TABLE OF CONTENTS (Con't)

		Illus/ Fig	Page
0610	SENDING UNITS AND WARNING SWITCHES		86-1
	FUEL PRESSURE SWITCH	86	86-1
	ETHER START TEMPERATURE SWITCH AND COOLANT TEMPERATURE SWITCH	87	87-1
	ENGINE OIL PRESSURE SWITCH AND HOURMETER SWITCH	88	88-1
	HYDRAULIC OIL TEMPERATURE SWITCH	89	89-1
	AIR PRESSURE SWITCH AND STOPLIGHT/BLACKOUT LIGHT SWITCH	90	90-1
0611	HORN, SIREN		91-1
	HORN BUTTON ASSEMBLY AND MOUNTING	91	91-1
	ELECTRIC HORN AND MOUNTING	92	92-1
	BACKUP WARNING ALARM AND MOUNTING	93	93-1
	BACKUP WARNING ALARM SWITCH AND MOUNTING	94	94-1
	MONITOR WARNING ALARM AND MOUNTING	95	95-1
0612	BATTERIES, STORAGE		96-1
	BATTERY BOX ASSEMBLY AND MOUNTING	96	96-1
	BATTERY HOLD-DOWN AND MOUNTING	97	97-1
	BATTERY AND CABLES	98	98-1
0613	HULL OR CHASSIS WIRING HARNESS		99-1
	MAIN WIRING HARNESS AND MOUNTING, FRONT	99	99-1
	MAIN WIRING HARNESS AND MOUNTING, REAR	100	100-1
	MAIN WIRING HARNESS AND MOUNTING, CAB	101	101-1
	MAIN WIRING HARNESS AND MOUNTING, ENGINE	102	102-1
	CAB MAIN WIRING HARNESS AND MOUNTING, UPPER	103	103-1
	CAB MAIN WIRING HARNESS AND MOUNTING, LOWER	104	104-1
	MONITOR MAIN HARNESS	105	105-1
	MAIN BLACKOUT LIGHT WIRING HARNESS AND MOUNTING	106	106-1
	VEHICLE FRONT BLACKOUT LIGHT WIRING HARNESS AND MOUNTING	107	107-1
	VEHICLE REAR BLACKOUT LIGHT WIRING HARNESS AND MOUNTING	108	108-1
	REAR TURN SIGNAL LIGHT AND BACKUP WARNING ALARM WIRING HARNESS AND MOUNTING	109	109-1
	VEHICLE REAR FLOODLIGHT LEAD AND MOUNTING	110	110-1
	VEHICLE FRONT FLOODLIGHT LEAD	111	111-1
	VEHICLE TURN SIGNAL LIGHT FUSE LEAD	112	112-1
	DOMELIGHT SWITCH WIRING HARNESS	113	113-1
	DOMELIGHT RESISTOR WIRING HARNESS AND MOUNTING	114	114-1
	VEHICLE REAR WINDOW WIPER WIRING HARNESS	115	115-1
	VEHICLE FRONT WINDOW DEFROSTER FAN LEAD	116	116-1
	VEHICLE REAR WINDOW DEFROSTER FAN LEAD	117	117-1
	HEATER WIRING HARNESS	118	118-1
	VEHICLE HORN WIRING HARNESS	119	119-1
	SUPPLEMENTAL STEERING MAIN WIRING HARNESS AND MOUNTING	120	120-1
	SUPPLEMENTAL STEERING GOVERNOR SWITCH AND DUMP VALVE WIRING HARNESS	121	121-1
	SUPPLEMENTAL STEERING PUMP WIRING HARNESSES AND MOUNTING	122	122-1
	BLADE FLOAT VALVE WIRING HARNESS	123	123-1
	LEFT-HAND BLADE FLOAT WIRING HARNESS	124	124-1
	RIGHT-HAND BLADE FLOAT WIRING HARNESS	125	125-1
	DIFFERENTIAL LOCK CONTROL LEAD	126	126-1
	MONITORING SYSTEM JUMPER WIRE ASSEMBLY	127	127-1
	AIR PRESSURE SWITCH LEAD	128	128-1
	STARTING MOTOR LEAD	129	129-1
	ALTERNATOR GROUND LEAD AND MOUNTING	130	130-1
	DISCONNECT SWITCH CABLE	131	131-1
	RADIO INTERFERENCE SUPPRESSION	132	132-1

TABLE OF CONTENTS (Con't)

		Illus/ Fig	Page
GROUP 07	TRANSMISSION		
0705	TRANSMISSION SHIFTING COMPONENTS		133-1
	TRANSMISSION CLUTCH CONTROL	133	133-1
	TRANSMISSION CONTROL LEVER	134	134-1
	TRANSMISSION CONTROLS	135	135-1
0710	TRANSMISSION ASSEMBLY AND ASSOCIATED PARTS		136-1
	TRANSMISSION	136	136-1
	PLANETARY GROUP, OUTER	137	137-1
	PLANETARY GROUP, CENTER	138	138-1
	PLANETARY GROUP, INNER	139	139-1
	TRANSMISSION FORWARD AND REVERSE CLUTCH SHAFT	140	140-1
	TRANSMISSION IDLER SHAFT	141	141-1
	TRANSMISSION CASE AND COVER	142	142-1
	TRANSMISSION UPPER SECTION	143	143-1
	TRANSMISSION LOWER SECTION	144	144-1
0714	SERVO UNIT		145-1
	TRANSMISSION CONTROL VALVE AND MOUNTING	145	145-1
	TRANSMISSION PILOT VALVE COVER	146	146-1
	TRANSMISSION PILOT VALVE	147	147-1
	TRANSMISSION DIRECTIONAL AND PRESSURE CONTROL VALVE	148	148-1
	TRANSMISSION SELECTOR AND DIFFERENTIAL CONTROL VALVE	149	149-1
	TRANSMISSION SELECTOR AND MODULATING VALVE	150	150-1
	TRANSMISSION CONTROL RELIEF VALVE	151	151-1
0719	REDUCTION OR TRANSFER GEARS, SHAFTS, AND BEARINGS		152-1
	TRANSMISSION-TO-ENGINE ADAPTOR	152	152-1
0721	COOLERS, PUMPS, MOTORS		153-1
	TRANSMISSION OIL FILLER AND OIL LEVEL GAGE	153	153-1
	TRANSMISSION OIL LINES AND FITTINGS	154	154-1
	TRANSMISSION OIL PUMP	155	155-1
	TRANSMISSION OIL FILTER AND MOUNTING	156	156-1
	TRANSMISSION OIL COOLER LINES AND FITTINGS	157	157-1
	TRANSMISSION OIL COOLER ASSEMBLY	158	158-1
	TRANSMISSION OIL SAMPLING LINES AND VALVE	159	159-1
GROUP 10	FRONT AXLE		
1000	FRONT AXLE ASSEMBLY		160-1
	DRAG LINK AND SPINDLE ASSEMBLY	160	160-1
	FRONT STEERING AXLE ASSEMBLY	161	161-1
1004	STEERING AND LEANING WHEEL MECHANISM		162-1
	LEANING WHEEL CYLINDER ASSEMBLY	162	162-1
GROUP 11	REAR AXLE		
1100	REAR AXLE ASSEMBLY		163-1
	DIFFERENTIAL CARRIER	163	163-1
	DIFFERENTIAL AND BEVEL GEAR	164	164-1
	DIFFERENTIAL ASSEMBLY	165	165-1

TABLE OF CONTENTS (Con't)

		Illus/ Fig	Page
1103	PLANETARY OR FINAL DRIVE		166-1
	FINAL DRIVE ASSEMBLY	166	166-1
1105	TANDEM DRIVE ASSEMBLY		167-1
	TANDEM DRIVE AND MOUNTING	167	167-1
	TANDEM DRIVE CHAIN ASSEMBLY	168	168-1
1124	STEERING BRAKES, DIFFERENTIAL, AND PLANETARY DRIVE		169-1
	DIFFERENTIAL LOCK CONTROL	169	169-1
GROUP 12	BRAKES		
1201	HANDBRAKES		170-1
	PARKING BRAKE CONTROL HANDLE	170	170-1
	PARKING BRAKE ACTUATOR ASSEMBLY	171	171-1
	PARKING BRAKE AIR CONTROL VALVE	172	172-1
	PARKING BRAKE QUICK-RELEASE VALVE	173	173-1
1202	SERVICE BRAKES		174-1
	SERVICE BRAKES	174	174-1
1206	MECHANICAL BRAKE SYSTEM		175-1
	BRAKE PEDAL AND MOUNTING	175	175-1
1208	AIRBRAKE SYSTEM		176-1
	AIRBRAKE LINES AND FITTINGS-TO-BRAKE CONTROL VALVE	176	176-1
	AIRBRAKE LINES, FITTINGS, AND MOUNTINGS	177	177-1
	AIRBRAKE LINES AND FITTINGS	178	178-1
	BRAKE CONTROL VALVE	179	179-1
	AIR TANK, LINES, FITTINGS, AND MOUNTING	180	180-1
1209	AIR COMPRESSOR ASSEMBLY		181-1
	AIR COMPRESSOR ASSEMBLY	181	181-1
	AIR COMPRESSOR GOVERNOR ASSEMBLY	182	182-1
	AIR COMPRESSOR AND GOVERNOR LINES AND FITTINGS	183	183-1
	AIR COMPRESSOR COOLING AND LUBRICATION LINES AND FITTINGS	184	184-1
GROUP 13	WHEELS AND TRACKS		
1311	WHEEL ASSEMBLY		185-1
	WHEEL ASSEMBLY AND MOUNTING	185	185-1
1313	TIRES, TUBES, TIRE CHAINS	186	186-1
	TIRE	186	186-1
GROUP 14	STEERING		
1410	HYDRAULIC PUMP OR FLUID MOTOR ASSEMBLY		187-1
	STEERING CONTROL PUMP AND STEERING WHEEL	187	187-1
	SUPPLEMENTAL STEERING PUMP AND MOUNTING	188	188-1
1411	HOSES, LINES, FITTINGS		189-1
	STEERING CONTROL PUMP-TO-STEERING VALVES LINES AND FITTINGS	189	189-1
	SUPPLEMENTAL STEERING LINES AND FITTINGS	190	190-1
	STEERING VALVES-TO-STEERING CYLINDERS LINES AND FITTINGS	191	191-1

TABLE OF CONTENTS (Con't)

		Illus/ Fig	Page
1412	HYDRAULIC OR AIR CYLINDERS		192-1
	STEERING CYLINDERS AND MOUNTING	192	192-1
1414	STEERING SYSTEM VALVES		193-1
	SUPPLEMENTAL STEERING CHECK VALVE	193	193-1
	STEERING VALVE AND MOUNTING	194	194-1
	STEERING CONTROL RELIEF VALVES	195	195-1
	STEERING CONTROL LINEAR VALVES	196	196-1
	STEERING CONTROL UNLOADER VALVE	197	197-1
1415	REMOTE CONTROL DEVICES		
	REMOTE CONTROL GROUP (PART 1 OF 2)	197A	197A-1
	REMOTE CONTROL GROUP (PART 2 OF 2)	197B	197B-1
GROUP 15	FRAME, TOWING ATTACHMENTS, DRAWBARS, AND ARTICULATION SYSTEMS		
1501	FRAME ASSEMBLY		198-1
	FRONT FRAME ASSEMBLY	198	198-1
	REAR FRAME AND CASE ASSEMBLY	199	199-1
	STEP ASSEMBLY	200	200-1
1503	PINTLES AND TOWING ATTACHMENTS		201-1
	FRONT TOW HOOK ASSEMBLY AND MOUNTING	201	201-1
	ARTICULATION HITCH	202	202-1
GROUP 18	BODY, CAB, HOOD, AND HULL		
1801	BODY, CAB, HOOD, AND HULL ASSEMBLIES		203-1
	OPERATOR'S CONSOLE	203	203-1
	STEERING CONSOLE PANEL SUPPORT	204	204-1
	STEERING CONSOLE SUPPORT	205	205-1
	STEERING CONSOLE SUPPORT (SERIAL NO. 7GB00546 AND UP)	206	206-1
	CAB SOUND SUPPRESSION LINER AND MOUNTING	207	207-1
	CAB INSULATION AND MOUNTING	208	208-1
	GAGES VANDALISM GUARD AND MOUNTING	209	209-1
	HYDRAULIC DRIVE SHIELD AND MOUNTING	210	210-1
	CAB ROLLOVER PROTECTION	211	211-1
	CAB ROLLOVER PROTECTION, WINDSHIELDS	212	212-1
	CAB ROLLOVER PROTECTION, LOWER FRONT WINDOW ASSEMBLY	213	213-1
	CAB ROLLOVER PROTECTION, DOOR ASSEMBLY	214	214-1
	CAB ROLLOVER PROTECTION, DOOR PANELS AND HANDLE	215	215-1
	HOOD ASSEMBLY AND MOUNTING	216	216-1
	ENGINE LEFT SIDE PANELS, COVERS, AND MOUNTING	217	217-1
	ENGINE RIGHT SIDE PANELS, COVERS, AND MOUNTING	218	218-1
1806	UPHOLSTERY, SEATS, AND CARPETS		219-1
	SEAT ASSEMBLY AND MOUNTING	219	219-1
1808	STOWAGE RACKS, BOXES, STRAPS, CARRYING CASES, CABLE REELS, HOSE REELS, ETC.		220-1
	TOOL BOX AND MOUNTING	220	220-1
	SCARIFIER SHANKS AND TIPS STOWAGE BOX	221	221-1

TABLE OF CONTENTS (Con't)

		Illus/ Fig	Page
GROUP 21	BUMPERS, GUARDS, AND MARINE FENDERS		
2101	BUMPERS, BRACKETS, GUARDS, AND PROTECTIVE DEVICES		222-1
	REAR BUMPER AND MOUNTING	222	222-1
GROUP 22	BODY, CHASSIS, AND HULL ACCESSORY ITEMS		
2202	ACCESSORY ITEMS		223-1
	FRONT LOWER WINDSHIELD WIPER	223	223-1
	FRONT UPPER WINDSHIELD WIPER	224	224-1
	REAR WINDSHIELD WIPER	225	225-1
	WINDSHIELD WASHER RESERVOIR, PUMP, AND MOUNTING	226	226-1
	FRONT WINDSHIELD DEFROSTER FAN MOUNTING	227	227-1
	REAR WINDSHIELD DEFROSTER FAN MOUNTING	228	228-1
	FRONT AND REAR WINDSHIELD DEFROSTER FAN ASSEMBLY	229	229-1
	VEHICLE MIRRORS AND MOUNTING	230	230-1
	HEATER LINES AND FITTINGS	231	231-1
	HEATER ASSEMBLY	232	232-1
2210	DATA PLATES AND INSTRUCTION HOLDERS		233-1
	DATA PLATES	233	233-1
	LUBRICATION AND WARNING PLATES	234	234-1
GROUP 24	HYDRAULIC AND FLUID SYSTEMS		
2401	PUMP AND MOTOR		235-1
	HYDRAULIC PUMP ASSEMBLY AND MOUNTING	235	235-1
	HYDRAULIC ROTARY PUMP ASSEMBLY	236	236-1
	HYDRAULIC AXIAL PUMP ASSEMBLY	237	237-1
	AXIAL PUMP ACCESS COVER ASSEMBLY	238	238-1
	HYDRAULIC PUMP HEAD GROUP ASSEMBLY	239	239-1
	SERVO PUMP VALVE ASSEMBLY	240	240-1
	PRESSURE CARTRIDGE ASSEMBLY	241	241-1
	HYDRAULIC PUMP DRIVE	242	242-1
	CIRCLE DRIVE HYDRAULIC PUMP	243	243-1
	CIRCLE DRIVE HYDRAULIC PUMP MOTOR ASSEMBLY	244	244-1
2402	MANIFOLD AND/OR CONTROL VALVES		245-1
	LEFT-HAND CONTROL VALVE GROUP AND MOUNTING	245	245-1
	RIGHT-HAND CONTROL VALVE GROUP AND MOUNTING	246	246-1
	SCARIFIER AND BLADE LIFT CONTROL VALVE ASSEMBLY	247	247-1
	WHEEL LEAN AND CENTERSHIFT VALVE ASSEMBLY	248	248-1
	ARTICULATION CONTROL VALVE ASSEMBLY	249	249-1
	CIRCLE DRIVE CONTROL VALVE ASSEMBLY	250	250-1
	SIDESHIFT CONTROL VALVE ASSEMBLY	251	251-1
	BLADE TIP CONTROL VALVE ASSEMBLY	252	252-1
	HYDRAULIC PUMP RELIEF VALVE ASSEMBLY AND MOUNTING	253	253-1
	CIRCLE DRIVE AND LEANING WHEEL CHECK VALVE ASSEMBLY AND MOUNTING	254	254-1
	LEFT-HAND BLADE LIFT CHECK AND RELIEF VALVE ASSEMBLY AND MOUNTING	255	255-1
	POWER BLADE AND BLADE TIP CHECK AND RELIEF VALVE ASSEMBLY AND MOUNTING	256	256-1
	SCARIFIER CHECK AND RELIEF VALVE ASSEMBLY AND MOUNTING	257	257-1
	RIGHT-HAND BLADE LIFT AND ARTICULATION CHECK VALVE MOUNTING	258	258-1
	CENTERSHIFT CHECK VALVE MOUNTING	259	259-1
	RIGHT-HAND BLADE LIFT, ARTICULATION, AND CENTERSHIFT CHECK VALVE ASSEMBLY	260	260-1

TABLE OF CONTENTS (Con't)

		Illus/ Fig	Page
	BLADE FLOAT CHECK VALVE AND MOUNTING	261	261-1
	BLADE FLOAT PILOT VALVE AND MOUNTING	262	262-1
2403	HYDRAULIC CONTROLS AND/OR MANUAL CONTROLS		263-1
	HYDRAULIC CONTROL LEVERS AND LINKAGE	263	263-1
2406	STRAINERS, FILTERS, LINES, AND FITTINGS, ETC.		264-1
	BLADE FLOAT HYDRAULIC LINES AND FITTINGS	264	264-1
	BLADE LIFT HYDRAULIC LINES AND FITTINGS	265	265-1
	BLADE TIP HYDRAULIC LINES AND FITTINGS	266	266-1
	CIRCLE DRIVE HYDRAULIC LINES AND FITTINGS	267	267-1
	CENTERSHIFT HYDRAULIC LINES AND FITTINGS	268	268-1
	SCARIFIER HYDRAULIC LINES AND FITTINGS	269	269-1
	POWER BLADE HYDRAULIC LINES AND FITTINGS	270	270-1
	LEANING WHEEL HYDRAULIC LINES AND FITTINGS	271	271-1
	ARTICULATION HYDRAULIC LINES AND FITTINGS	272	272-1
	CONTROL VALVE LINES AND FITTINGS	273	273-1
	JUNCTION BLOCK LINES AND FITTINGS	274	274-1
	HYDRAULIC TANK LINES AND FITTINGS	275	275-1
	HYDRAULIC OIL COOLER ASSEMBLY AND MOUNTING	276	276-1
2407	HYDRAULIC CYLINDERS		277-1
	BLADE SIDESHIFT HYDRAULIC CYLINDER ASSEMBLY AND MOUNTING	277	277-1
	BLADE LIFT HYDRAULIC CYLINDER ASSEMBLY AND MOUNTING	278	278-1
	BLADE TIP HYDRAULIC CYLINDER ASSEMBLY AND MOUNTING	279	279-1
	ARTICULATION HYDRAULIC CYLINDER ASSEMBLY AND MOUNTING	280	280-1
	SCARIFIER HYDRAULIC CYLINDER ASSEMBLY AND MOUNTING	281	281-1
	CENTERSHIFT HYDRAULIC CYLINDER ASSEMBLY AND MOUNTING	282	282-1
2408	LIQUID TANKS OR RESERVOIRS		283-1
	HYDRAULIC TANK ASSEMBLY MOUNTING	283	283-1
	HYDRAULIC TANK ACCESS COVERS	284	284-1
	HYDRAULIC TANK ASSEMBLY	285	285-1
GROUP 47	GAGES (NON-ELECTRICAL), WEIGHING AND MEASURING DEVICES		
4702	GAGES, MOUNTING, LINES, AND FITTINGS		286-1
	AIR TANK-TO-PRESSURE GAGES, LINES, AND FITTINGS	286	286-1
	AIR PRESSURE AND TEMPERATURE INDICATOR GAGES AND MOUNTING	287	287-1
	AIR CLEANER INDICATOR AND MOUNTING	288	288-1
	ARTICULATION INDICATOR, MOUNTING, LINES, AND FITTINGS	289	289-1
GROUP 74	CRANES, SHOVELS, AND EARTHMOVING EQUIPMENT COMPONENTS		
7435	MOLDBOARD ASSEMBLY		290-1
	BLADE ASSEMBLY	290	290-1
7436	LIFT ARMS AND PIVOT ASSEMBLIES		291-1
	BLADE LIFT ARM ASSEMBLIES	291	291-1
7438	CIRCLE AND DRAWBAR ASSEMBLY		292-1
	DRAWBAR ASSEMBLY	292	292-1
	CIRCLE ASSEMBLY	293	293-1

TABLE OF CONTENTS (Con't)

		Illus/ Fig	Page
7439	CIRCLE REVERSE DRAWBAR SIDESHIFT AND LIFT MECHANISM		294-1
	CENTERSHIFT LOCK VALVE ASSEMBLY	294	294-1
	CENTERSHIFT LOCK ASSEMBLY	295	295-1
	CENTERSHIFT LOCK AND LOCK VALVE LINES AND FITTINGS	296	296-1
	CIRCLE DRIVE SWIVEL ASSEMBLY	297	297-1
7440	SCARIFIER ASSEMBLY		298-1
	SCARIFIER ASSEMBLY	298	298-1
7441	SCARIFIER ACTUATING		299-1
	SCARIFIER ACTUATING ASSEMBLY	299	299-1
GROUP 94	REPAIR KITS		
9401	REPAIR KITS		KITS-1
	REPAIR KITS	KITS-1	KITS-1
GROUP 95	GENERAL USE STANDARDIZED PARTS		
9501	BULK MATERIAL		BULK-1
	BULK MATERIAL	BULK	BULK-1
WP 0003 00 Special Tools List			
GROUP 26	TOOLS AND TEST EQUIPMENT		
2604	SPECIAL TOOLS		300-1
	UNIT SPECIAL TOOLS	300	300-1
	DIRECT SUPPORT SPECIAL TOOLS	301	301-1
WP 0004 00 Cross-Reference Indexes			
	NATIONAL STOCK NUMBER INDEX		I-1
	PART NUMBER INDEX		I-62

FIELD MAINTENANCE (UNIT AND DIRECT SUPPORT MAINTENANCE) REPAIR PARTS AND SPECIAL TOOLS LISTS (RPSTL) INCLUDING (SUSTAINMENT MAINTENANCE REPAIR PARTS) INTRODUCTION 0001 00

SCOPE

This RPSTL lists and authorizes spares and repair parts; special tools; special test, measurement, and diagnostic equipment (TMDE); and other special support equipment required for performance of Field and Sustainment level maintenance of the Grader, Road: Heavy, Diesel Engine Driven. The 130G model is covered in this manual. Unless otherwise noted, the illustrations and corresponding parts listing applies to both models. It authorizes the requisitioning, issue, and disposition of spares, repair parts, and special tools as indicated by the source, maintenance, and recoverability (SMR) codes.

GENERAL

In addition to the Introduction work package, this RPSTL is divided into the following work packages:

a. **Repair Parts Lists Work Package.** Work package containing lists of spares and repair parts authorized by this RPSTL for use in the performance of maintenance. This work package also includes parts which must be removed for replacement of the authorized parts. Parts lists are composed of functional groups in ascending alphanumeric sequence, with the parts in each group listed in ascending figure and item number sequence. Sending units, brackets, filters, and bolts are listed with the component they mount on. Bulk materials are listed by item name in FIG. BULK at the end of the work package. Repair parts kits are listed separately in their own functional group. Items listed are shown on the associated illustrations.

b. **Special Tools List Work Package.** Work package containing lists of special tools, special TMDE, and special support equipment authorized by this RPSTL [as indicated by Basis of Issue (BOI) information in the DESCRIPTION AND USABLE ON CODE (UOC) column]. Tools that are components of common tool sets and/or Class VII are listed.

c. **Cross-Reference Indexes Work Package.** There are two cross-reference indexes in this RPSTL: National Stock Number Index and Part Number Index.

EXPLANATION OF COLUMNS IN THE REPAIR PARTS LISTS AND SPECIAL TOOLS LIST WORK PACKAGES

a. **Item No. (Column 1).** Indicates the number used to identify items called out in the illustration.

b. **SMR Code (Column 2).** The SMR code containing supply/requisitioning information, maintenance level authorization criteria, and disposition instruction, as shown in the following breakout:

SOURCE CODE	MAINTENANCE CODE		RECOVERABILITY CODE
XXxxx	xxXXx		xxxxX
1st two positions	3rd position	4th position	5th position
How you get an item.	Who can install, replace or use the item.	Who can do complete repair* on the item.	Who determines disposition action on an unserviceable item.

* *Complete Repair:* Maintenance capacity, capability, and authority to perform all corrective maintenance tasks of the *"Repair"* function in a use/user environment in order to restore serviceability to a failed item.

EXPLANATION OF COLUMNS IN THE REPAIR PARTS LISTS AND SPECIAL TOOLS LIST WORK PACKAGES - CONTINUED

(1) **Source Code.** The source code tells you how to get an item needed for maintenance, repair, or overhaul of an end item/equipment. Explanations of source codes follow:

Code	Application/Explanation
PA PB PC PD PE PF PG	Stocked items; use the applicable NSN to request/requisition items with these source codes. They are authorized to the maintenance category indicated by the code entered in the third position of the SMR code. *Items coded PC are subject to deterioration.*
KD KF KB	Items with these codes are not to be requested/requisitioned individually. They are part of a kit which is authorized to the maintenance level indicated in the third position of the SMR code. The complete kit must be requisitioned and applied.
MO - Made at Unit/ AVUM level MF - Made at DS/AVIM Level MH - Made at GS Level ML - Made at SRA MD - Made at Depot	Items with these codes are not to be requested/requisitioned individually. They must be made from bulk materiel which is identified by the part number in the DESCRIPTION AND USABLE ON CODE (UOC) column and listed in the bulk materiel group work package of the RPSTL. If the item is authorized to you by the third position of the SMR code, but the source code indicates it is made at a higher level, order the item from the higher level of maintenance.
AO-Assembled by Unit/ AVUM level AF-Assembled by DS/ AVIM level AH-Assembled by GS level AL-Assembled by SRA AD-Assembled by Depot	Items with these codes are not to be requested/requisitioned individually. The parts that make up the assembled item must be requisitioned or fabricated and assembled at the level of maintenance indicated by the source code. If the third position of the SMR code authorizes you to replace the item, but the source code indicates the item is assembled at a higher level, order the item from the higher level of maintenance.
XA	Do not requisition an "XA" coded item. Order the next higher assembly. (Refer to NOTE below).
XB	If an item is not available from salvage, order it using the CAGEC and P/N.
XC	Installation drawings, diagrams, instruction sheets, field service drawings; identified by manufacturer's P/N.
XD	Item is not stocked. Order an XD-coded item through normal supply channels using the CAGEC and P/N given, if no NSN is available.

NOTE

Cannibalization of controlled exchange, when authorized, may be used as a source of supply for items with the above source codes, except for those source coded "XA" or those aircraft support items restricted by requirements of AR 750-1.

EXPLANATION OF COLUMNS IN THE REPAIR PARTS LISTS AND SPECIAL TOOLS LIST WORK PACKAGES - CONTINUED

(2) **Maintenance Code.** Maintenance codes tell you the level(s) of maintenance authorized to use and repair support items. The maintenance codes are entered in the third and fourth positions of the SMR code as follows:

(a) Third Position. The maintenance code entered in the third position tells you the lowest maintenance level authorized to remove, replace, and use an item. The maintenance code entered in the third position will indicate authorization to one of the following levels of maintenance:

Code	Application/Explanation
C	Crew or Operator maintenance done within Field/AVUM maintenance.
O	Unit Level/AVUM maintenance can remove, replace, and use the item.
F	Direct Support/AVIM maintenance can remove, replace, and use the item.
H	General Support maintenance can remove, replace, and use the item.
L	Specialized Repair Activity (SRA) can remove, replace, and use the item.
D	Depot Maintenance can remove, replace, and use the item.

(b) Fourth Position. The maintenance code entered in the fourth position tells you whether or not the item is to be repaired and identifies the lowest maintenance level with the capability to do complete repair (perform all authorized repair functions).

NOTE

Some limited repair may be done on the item at a lower level of maintenance, if authorized by the Maintenance Allocation Chart (MAC) and SMR codes.

Code	Application/Explanation
O	Unit/AVUM is the lowest level that can do complete repair of the item.
F	Direct Support/AVIM is the lowest level that can do complete repair of the item.
H	General Support is the lowest level that can do complete repair of the item.
L	Specialized Repair Activity (SRA) is the lowest level that can do complete repair of the item.
D	Depot is the lowest level that can do complete repair of the item.
Z	Nonreparable. No repair is authorized.
B	No repair is authorized. No parts or special tools are authorized for the maintenance of a “B”-coded item. However, the item may be reconditioned by adjusting, lubricating, etc., at the user level.

EXPLANATION OF COLUMNS IN THE REPAIR PARTS LISTS AND SPECIAL TOOLS LIST WORK PACKAGES - CONTINUED

(3) **Recoverability Code.** Recoverability codes are assigned to items to indicate the disposition action on unserviceable items. The recoverability code is entered in the fifth position of the SMR code as follows:

Code	Application/Explanation
Z	Nonreparable item. When unserviceable, condemn and dispose of the item at the level of maintenance shown in the third position of the SMR code.
O	Reparable item. When uneconomically reparable, condemn and dispose of the item at the Unit level maintenance.
F	Reparable item. When uneconomically reparable, condemn and dispose of the item at Direct Support level.
H	Reparable item. When uneconomically reparable, condemn and dispose of the item at General Support level.
D	Reparable item. When beyond lower level repair capability, return to depot. Condemnation and disposal of item are not authorized below depot level.
L	Reparable item. Condemnation and disposal of item not authorized below Specialized Repair Activity (SRA).
A	Item requires special handling or condemnation procedures because of specific reasons (e.g., precious metal content, high dollar value, critical material, or hazardous material). Refer to appropriate manuals/directives for specific instructions.

c. **NSN - (Column 3).** The NSN for the item is listed in this column.

d. **CAGEC (Column 4).** The Commercial and Government Entity Code (CAGEC) is a five-digit code which is used to identify the manufacturer, distributor, or Government agency/activity that supplies the item.

e. **PART NUMBER (Column 5).** Indicates the primary number used by the manufacturer (individual, company, firm, corporation, or Government activity), which controls the design and characteristics of the item by means of its engineering drawings, specifications, standards, and inspection requirements to identify an item or range of items.

NOTE

When you use an NSN to requisition an item, the item you receive may have a different part number from the part ordered.

f. **DESCRIPTION AND USABLE ON CODE (UOC) (Column 6).** This column includes the following information:

(1) The Federal item name and, when required, a minimum description to identify the item.

(2) P/Ns of bulk materials are referenced in this column in the line entry to be manufactured or fabricated.

(3) Hardness Critical Item (HCI). A support item that provides the equipment with special protection from electromagnetic pulse (EMP) damage during a nuclear attack.

(4) The statement END OF FIGURE appears just below the last item description in column (6) for a given figure in both the repair parts list and special tools list work packages.

EXPLANATION OF COLUMNS IN THE REPAIR PARTS LISTS AND SPECIAL TOOLS LIST WORK PACKAGES - CONTINUED

g. **QTY (Column 7).** The QTY (quantity per figure) column indicates the quantity of the item used in the breakout shown on the illustration/figure, which is prepared for a functional group, subfunctional group, group or an assembly. A "V" appearing in this column in lieu of a quantity indicates that the quantity is variable and the quantity may vary from application to application.

EXPLANATION OF CROSS-REFERENCE INDEXES WORK PACKAGE FORMAT AND COLUMNS

a. **National Stock Number (NSN) Index Work Package.**

(1) **STOCK NUMBER Column.** This column lists the NSN by National Item Identification Number (NIIN) sequence. The NIIN consists of the last nine digits of the NSN (i.e., NSN 5305-01-674-1467). When using this column to locate an item, ignore the first four digits of the NSN. However, the complete NSN should be used when ordering items by stock number.

(2) **FIG. Column.** This column lists the number of the figure where the item is identified/located. The figures are in numerical order in WP 0002 00 and WP 0003 00.

(3) **ITEM Column.** The item number identifies the item associated with the figure listed in the adjacent FIG. column. This item is also identified by the NSN listed on the same line.

b. **Part Number (P/N) Index Work Package.** Part numbers in this index are listed in ascending alphanumeric sequence (i.e., vertical arrangement of letter and number combination which places the first letter or digit of each group in order A through Z, followed by the numbers 0 through 9 and each following letter or digit in like order).

(1) **PART NUMBER Column.** Indicates the P/N assigned to the item.

(2) **FIG. Column.** This column lists the number of the figure where the item is identified/located in the repair parts list and special tools list work packages.

(3) **ITEM Column.** The item number is the number assigned to the item as it appears in the figure referenced in the adjacent figure number column.

SPECIAL INFORMATION

a. **Remanufactured Parts, Core Values and Dealer Exchange Items.**

(1) Remanufactured parts and/or direct dealer parts exchange are available for select Caterpillar supported items. The user has the option to:

(a) Procure a new part through the normal ordering channels.

(b) Exchange a part through a local Caterpillar dealer and receive a *core value credit towards a new part.*

(c) Exchange a part through a local Caterpillar dealer and receive a *core value credit towards a remanufactured part.*

(2) Extended nomenclature in the DESCRIPTION column identifies those items that are dealer exchange/reman parts (i.e., *DEALER EXCHANGE ITEM, PN OR-9608* or *DEALER EXCHANGE*). If a part is not listed as a dealer exchange item, order it through traditional supply channels.

(3) The core value/exchange is a unit-to-Caterpillar dealer direct transaction. To receive the core value, you must return the part to the local Caterpillar dealer. You will receive a core value (credit) for the returned item. When you buy a new or remanufactured part, the core value credit is automatically calculated for your transaction and deducted from the total price. You can complete this transaction using your IMPAC card.

SPECIAL INFORMATION - CONTINUED

b. ***Cancelled and Replaced By* Part Numbers.** Caterpillar implements a *Modernization through Spares* program for its equipment through the use of *cancelled and replaced by* part numbers. If the part number you ordered has been cancelled and replaced by a new part, the new part will be automatically shipped to you. Install this new part; DO NOT return it.

c. **Usable On Code (UOC).** The UOC appears in the lower left corner of the DESCRIPTION column heading. Usable on codes are shown as "UOC:" in the Description Column (justified left) on the first line under the applicable item/nomenclature. Uncoded items are applicable to all models. Identification of the UOC's used in the RPSTL are:

Code	Used On
AF9	Grader, Road, Motorized, 130GNSCE
AGM	Grader, Road, Hvy, Sec, 130GS
AGN	Grader, Road, Hvy, Sec-Non, 130GNS
AGP	Grader, Road, Motor, 6W, ArtI, 130G
FIO	Grader, Road, Motorized, 130GSCE

d. **Fabrication Instructions.** Bulk materiels required to manufacture items are listed in the Bulk Materiel functional group of this RPSTL. Part numbers for bulk materiel are also referenced in the Description Column of the line item entry for the item to be manufactured/fabricated. Detailed fabrication instructions for items source coded to be manufactured or fabricated are found in TM 5-3805-261-23.

e. **Index Numbers.** Items which have the word BULK in the figure column will have an index number shown in the item number column. This index number is a cross-reference between the NSN/P/N Index work package and the bulk materiel list in the repair parts list work package.

f. **Associated Publications.** The publication(s) listed below pertain to the Grader, Road: Heavy, Diesel Engine Driven and its components:

Publication	Short Title
TM 5-3805-261-10	Operator's Manual for Grader, Road: Heavy, Diesel Engine Driven
TM 5-3805-261-23	Field Maintenance Manual for Grader, Road: Heavy, Diesel Engine Driven

HOW TO LOCATE REPAIR PARTS

a. **When National Stock Number is Known:**

(1) **First.** If you have the NSN, look in the STOCK NUMBER column of the NSN index work package. The NSN is arranged in NIIN sequence. Note the figure and item number next to the NSN.

(2) **Second.** Turn to the figure and locate the item number. Verify that the item is the one you are looking for.

b. **When Part Number is Known.**

(1) **First.** If you have the P/N and not the NSN, look in the PART NUMBER column of the P/N index work package. Identify the figure and item number.

(2) **Second.** Look up the item on the figure in the applicable repair parts list work package.

ABBREVIATIONS

For standard abbreviations see ASME Y14.38-1999, *Abbreviations and Acronyms*.

Abbreviations	Explanation
NIIN	National Item Identification Number (consists of the last 9 digits of the NSN)
RPSTL	Repair Parts and Special Tools Lists
SMR	Source, Maintenance, and Recoverability Code
TMDE	Test, Measurement, and Diagnostic Equipment

END OF WORK PACKAGE

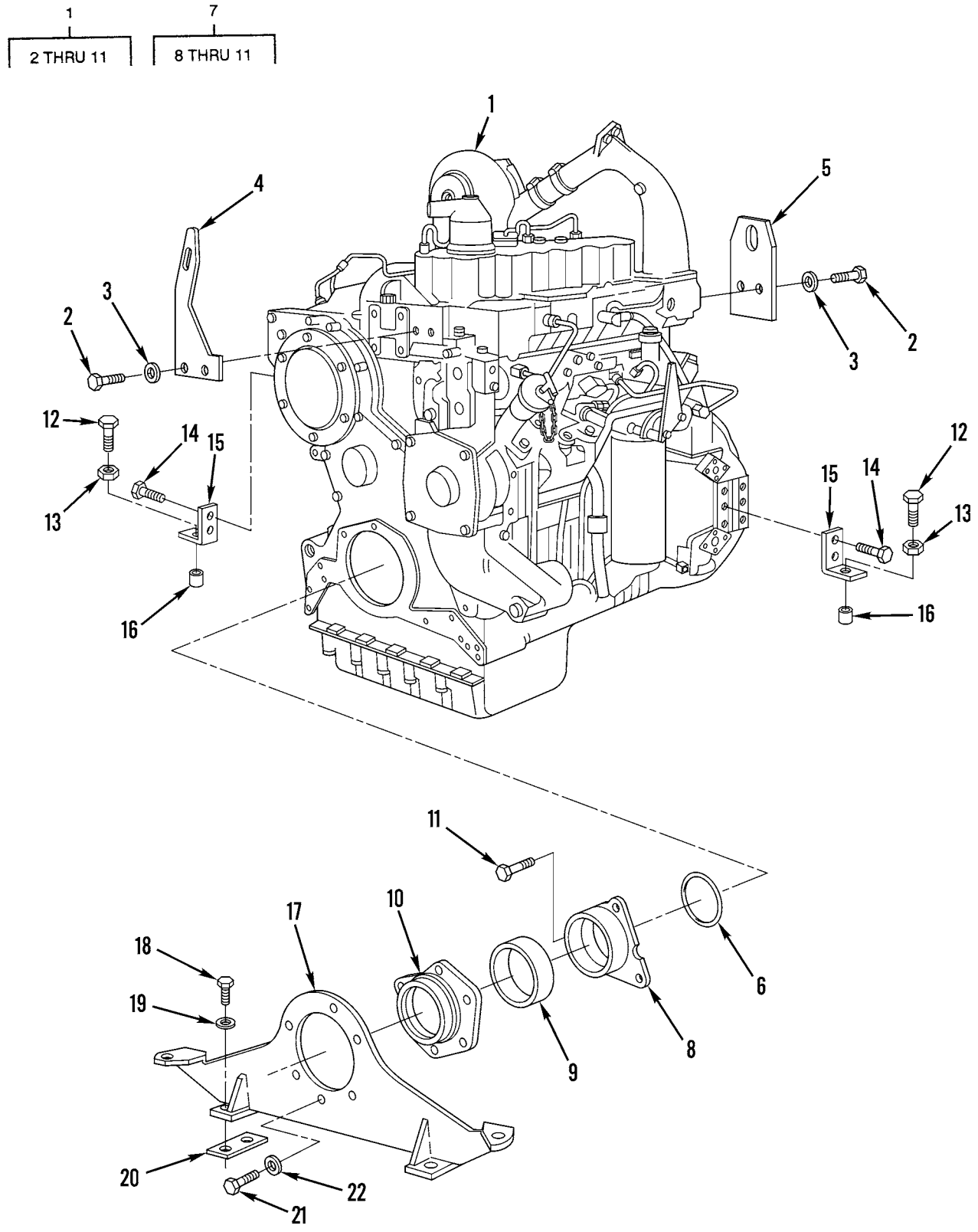

Figure 1. Engine and Mounting

(1) ITEM NO	(2) SMR CODE	(3) NSN	(4) CAGEC	(5) PART NUMBER	(6) DESCRIPTION AND USABLE ON CODES(UOC)	(7) QTY
					GROUP 01 ENGINE	
					GROUP 0100 ENGINE ASSEMBLY	
					FIG. 1 ENGINE AND MOUNTING	
1	PGFHD	2815011887440	11083	5R7277	ENGINE,DIESEL.....	1
					UOC:AGN,AGP,F10	
2	PFOZZ	5305007215322	96906	MS35307-462	.SCREW,CAP,HEXAGON H.....	4
3	PFOZZ	5310011073590	11083	8D5054	.WASHER,FLAT.....	4
4	XDOZZ		11083	4W8652	.PLATE,MOUNTING.....	1
5	PFOZZ	5365011575068	11083	8N8721	.SPACER,PLATE.....	1
6	PFFZZ	5331010686104	11083	2P1692	.O-RING PART OF KIT P/N 6V2248.....	1
7	PFFZZ	2510011472252	11083	1W1219	.TRUNNION ASSEMBLY.....	1
8	XAFZZ	2815011259998	11083	8N0081	..TRUNNION.....	1
9	PCFZZ	5330011552584	11083	2P1487	..PACKING,PREFORMED.....	1
10	XAFZZ		11083	1W1217	..SUPPORT.....	1
11	PFFZZ	5306002685798	11083	0L1329	..BOLT,MACHINE.....	3
12	PFFZZ	5305011520589	11083	8H6508	SCREW,CAP,HEXAGON H.....	2
13	PFFZZ	5310002089485	11083	1D5118	NUT,PLAIN,HEXAGON.....	2
14	PFFZZ	5306004240086	11083	7B3235	BOLT,MACHINE.....	4
15	PFFZZ	5340011511088	11083	6N6689	BRACKET,ANGLE.....	2
16	PAFZA	5315010551727	11083	4L3395	DOWEL.....	2
17	PFFZZ	2510011472251	11083	8N5600	SUPPORT ASSEMBLY,CH.....	1
18	PFFZZ	5306004550460	11083	8S9092	BOLT,MACHINE.....	4
19	PFFZZ	5310000455001	96906	MS35340-50	WASHER,LOCK.....	4
20	PAFZZ	5365004240179	11083	7B5530	SHIM 0.032 IN. THICK.....	V
20	PAFZZ	5365004240306	11083	7B9677	SPACER,PLATE 0.065 IN. THICK.....	V
20	PFFZZ	5365004240180	11083	7B5531	SHIM 0.014 IN. THICK.....	V
21	PFFZZ	5306011279361	11083	0S1585	BOLT,MACHINE.....	6
22	PFFZZ	5310008095997	96906	MS27183-17	WASHER,FLAT.....	6

END OF FIGURE

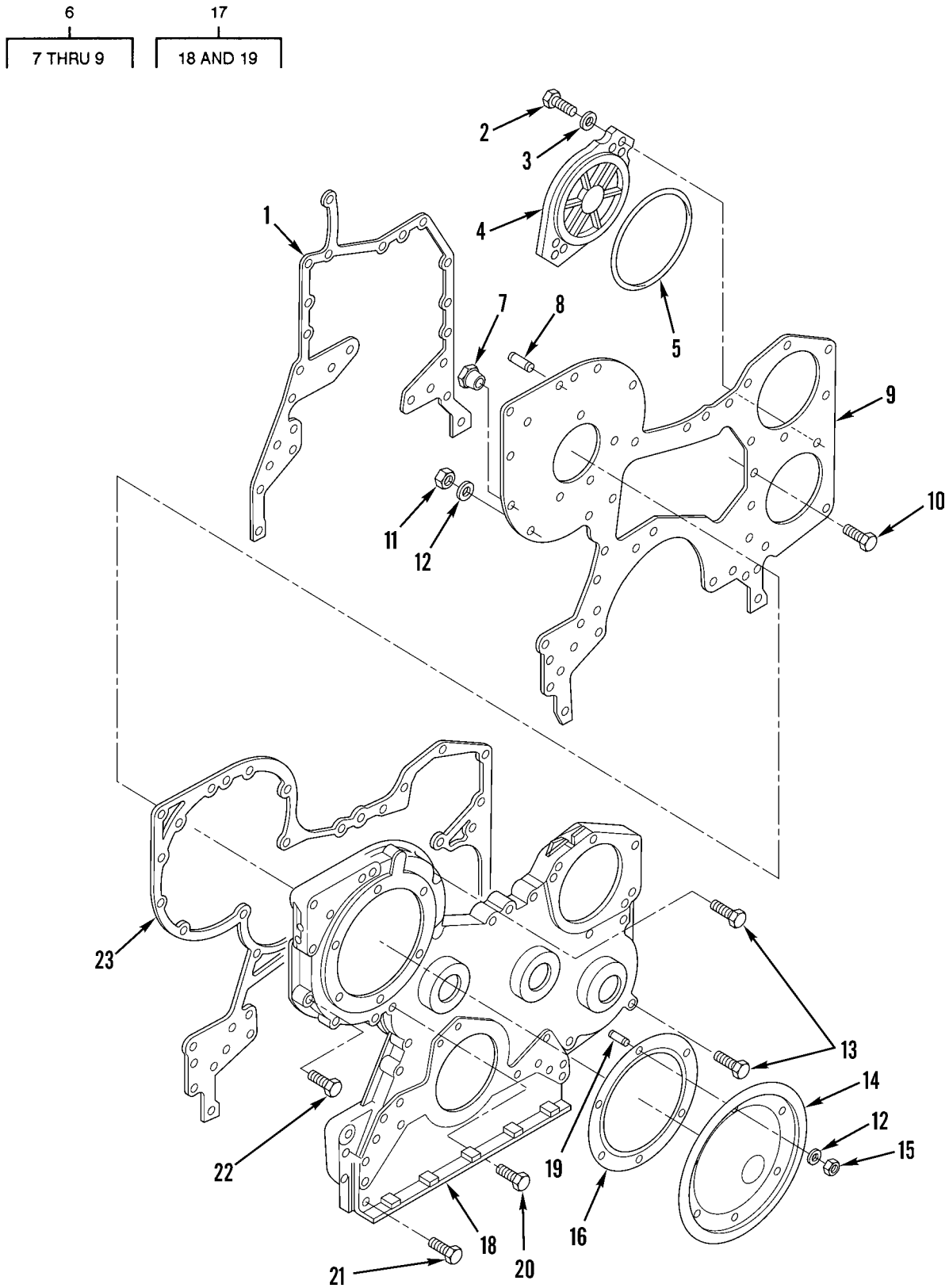

Figure 2. Engine Front Covers and Mounting

(5) ITEM NO	SMR CODE	(6) NSN	CAGEC	PART NUMBER	(7) DESCRIPTION AND USABLE ON CODES(UOC)	QTY
					GROUP 0101 CRANKCASE, BLOCK, CYLINDER HEAD FIG. 2 ENGINE FRONT COVERS AND MOUNTING	
1	PAHZZ	5330011284137	11083	8N0110	GASKET PART OF KIT P/N 6V2248.....	1
2	PFHZZ	5305007247221	80204	B1821BH063C175N	SCREW,CAP,HEXAGON H..... UOC:AF9,AGP,F10	2
3	PFHZZ	5310010954631	11083	5P8247	WASHER,FLAT.....	2
4	PFHZZ	5340011509807	11083	7N8374	COVER,ACCESS.....	1
5	PAHZZ	5331006635709	11083	5F3106	O-RING PART OF KIT P/N 6V2248.....	1
6	PFHZZ	2815011255544	11083	6N9060	PLATE ASSEMBLY,FRON..... UOC:AGM,AGN	1
6	XDHZZ	5340011615640	11083	1W7816	PLATE ASSEMBLY..... UOC:AF9,AGP,F10	1
7	PFHZZ	4730009247886	11083	5M6214	.PLUG,PIPE..... UOC:AF9,AGP,F10	1
8	PFHZZ	5307005873434	11083	6H0192	.STUD,PLAIN..... UOC:AF9,AGP,F10	3
9	PFHZZ	2815011774792	11083	1W7110	.PLATE,COVER..... UOC:AF9,AGP,F10	1
10	PFHZZ	5306006906976	03038	LH90725-59	BOLT,MACHINE.....	6
11	PFHZZ	5310014297859	11083	6V8801	NUT,PLAIN,HEXAGON.....	7
12	PFHZZ	5310001174788	11083	5M2894	WASHER,FLAT.....	7
13	PFHZZ	5306004238393	11083	1C2251	BOLT,MACHINE.....	2
14	PFHZZ	5340011477948	11083	9N5769	COVER,ACCESS.....	1
15	PFHZZ	5310007257382	96906	MS35690-624	NUT,PLAIN,HEXAGON.....	6
16	PAHZZ	5330010937888	11083	6N7887	GASKET PART OF KIT P/N 6V2248.....	1
17	PFHZZ	2815011259819	11083	6I0923	HOUSING ASSEMBLY,FR.....	1
18	XAHZZ		11083	8N0535	.HOUSING,FRONT.....	1
19	PFHZZ	5307013511404	11083	9X2485	.STUD,PLAIN.....	6
20	PFHZZ	5306002851368	11083	0L1143	BOLT,MACHINE 2.50 IN. LG.....	5
21	PFHZZ	5306006982150	11083	0L2070	BOLT,MACHINE 2.25 IN. LG.....	13
22	PFHZZ	2910003099473	11083	0T0573	CAPSCREW,FUEL PUMP 2.75 IN. LG.....	1
23	PAHZZ	5330011554283	11083	1W3900	GASKET PART OF KIT P/N 6V2248.....	1

END OF FIGURE

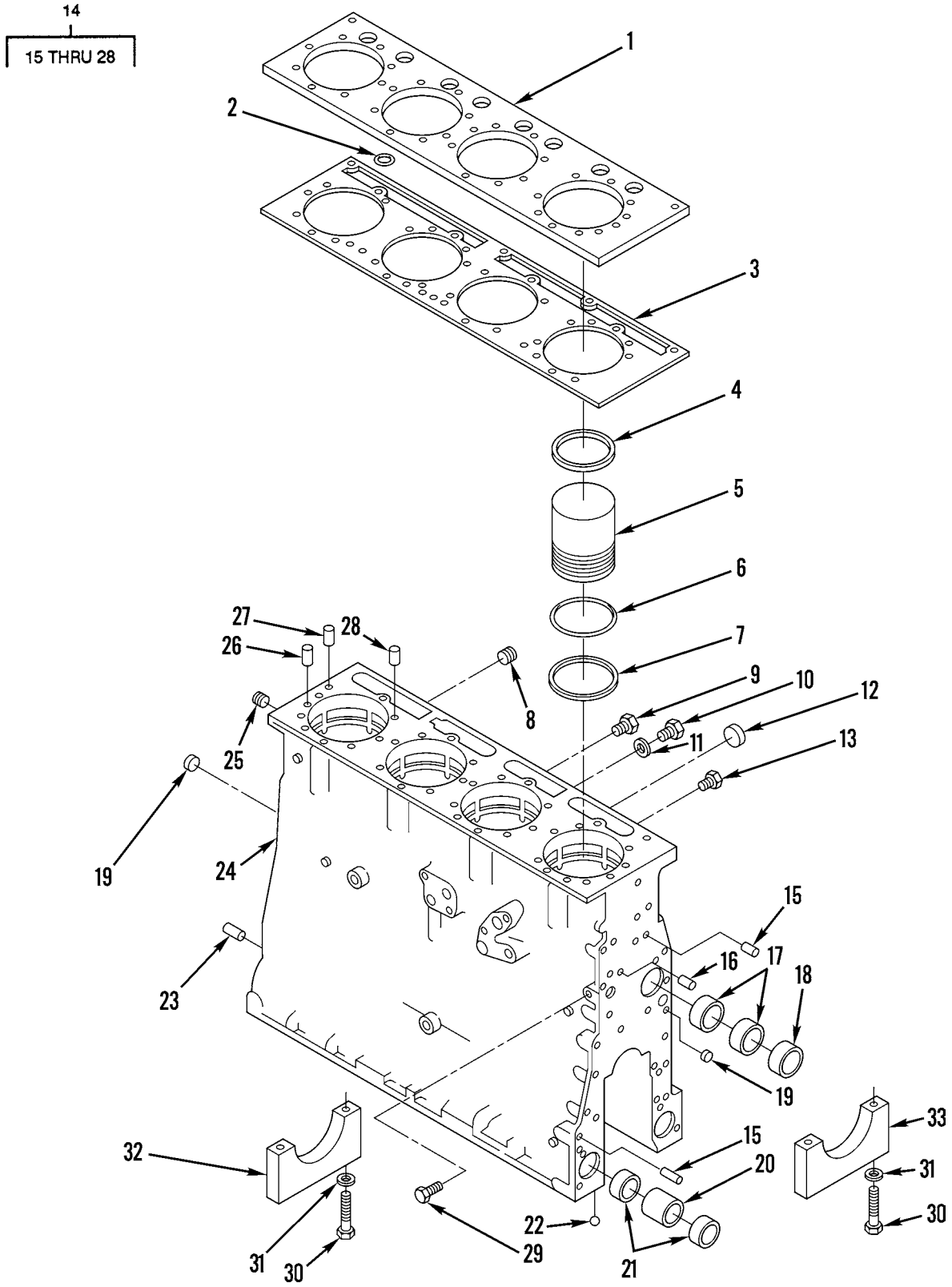

Figure 3. Cylinder Block Assembly

(1) ITEM NO	(2) SMR CODE	(3) NSN	(4) CAGEC	(5) PART NUMBER	(6) DESCRIPTION AND USABLE ON CODES(UOC)	(7) QTY
					GROUP 0101 CRANKCASE, BLOCK, CYLINDER HEAD	
					FIG. 3 CYLINDER BLOCK ASSEMBLY	
1	PFFZZ	2990011295915	11083	7N8021	PLATE,BLOCK.....	1
2	PAHZZ	5331001044371	11083	3S5496	O-RING.....	1
3	PAFZZ	5330011295916	11083	7W7544	GASKET PLATE PART OF KIT P/N 6V2934.	1
4	PFFZZ	5330011773855	11083	2W6134	GASKET PART OF KIT P/N 5P8768..... UOC:AF9,AGP,F10	4
5	PAHZZ	2815000244596	11083	1105800	CYLINDER SLEEVE.....	4
6	PAHZZ	5330004942764	11083	5S6670	PACKING,PREFORMED PART OF KIT P/N 5P8768.....	12
7	XDHZZ		11083	5P4174	INSERTION TOOL,SEAT..... UOC:AF9,AGP,F10	1
8	PFHZZ	4730002782965	96906	MS27769-3	PLUG,PIPE.....	1
9	PFHZZ	4730004606725	11083	3J5389	PLUG,PIPE..... UOC:AF9,AGN,AGP	2
10	PFHZZ	5365009385568	11083	8M9307	PLUG,MACHINE THREAD.....	1
11	PAHZZ	5310003627988	11083	6F7062	WASHER,FLAT.....	1
12	PAHZZ	5340010294590	11083	9L7657	PLUG,EXPANSION.....	1
13	PFHZZ	4730000892515	11083	5M6213	PLUG,PIPE.....	2
14	PBHHH	2815011494016	11083	1N3574	ENGINE BLOCK,DIESEL.....	1
15	PFHZZ	5315004576897	11083	8B6349	.PIN,STRAIGHT,HEADLE.....	2
16	PFHZZ	5307004194067	11083	0T0101	.STUD,PLAIN.....	1
17	PAHZZ	3120008938317	11083	7M4046	.BEARING,SLEEVE.....	2
18	PAHZZ	3120011281114	11083	8N4110	.BEARING,SLEEVE.....	1
19	PFHZZ	5340002765832	11083	4B3938	.PLUG,EXPANSION.....	1
20	PAHZZ	3120000089102	11083	9Y2992	.BEARING,SLEEVE.....	2
21	PAHZZ	3120013462091	11083	9Y2991	.BEARING,SLEEVE.....	4
22	PAHZZ	3110000119935	11083	4B9782	.BALL,BEARING.....	5
23	PFHZZ	5315002522959	11083	2A3798	.PIN,STRAIGHT,HEADLE.....	2
24	XAHZZ		11083	1N3564	.BLOCK.....	1
25	PAHZZ	4730004999837	62983	7077	.PLUG,PIPE..... UOC:AF9,AGP,F10	1
26	PFHZZ	5315011321188	11083	8K1207	.PIN,STRAIGHT,HEADLE.....	1
27	PFHZZ	5315011074226	11083	5B7652	.PIN,STRAIGHT,HEADLE.....	2
28	PFHZZ	2990011036817	11083	1S9540	.DOWEL.....	1
29	PFHZZ	4730009247886	11083	5M6214	PLUG,PIPE.....	1
30	PFHZZ	5306004504026	58312	7S3224-00	BOLT,MACHINE.....	10
31	PFHZZ	5310004317244	11083	2S5658	WASHER,FLAT.....	10
32	PAHZZ	3040011495043	11083	6N8003	CLAMP,HUB.....	4
33	PFHZZ	3040011495043	11083	6N8003	CLAMP,HUB..... UOC:AF9,AGP,F10	1

END OF FIGURE

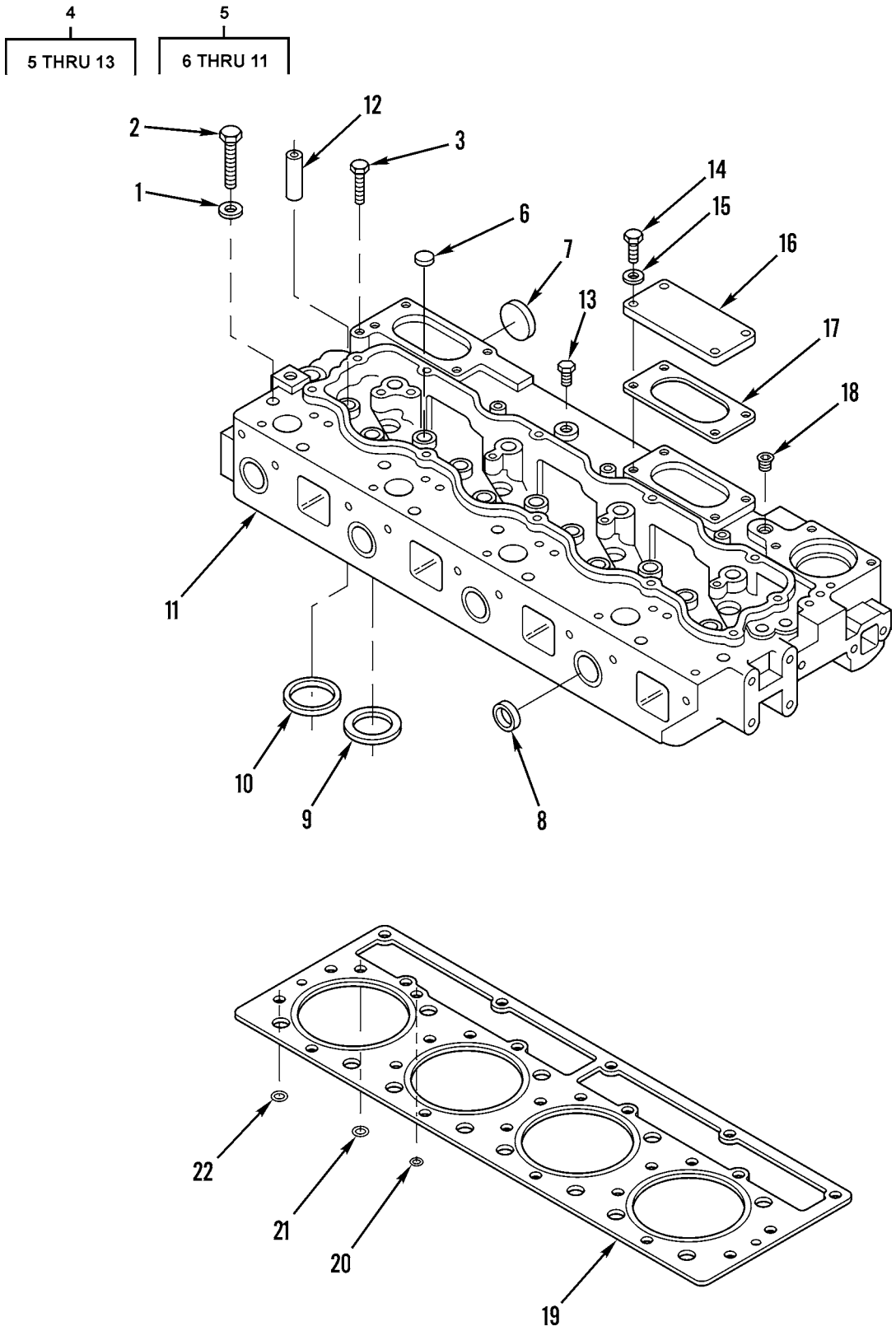

Figure 4. Cylinder Block Head Assembly

(1) ITEM NO	(2) SMR CODE	(3) NSN	(4) CAGEC	(5) PART NUMBER	(6) DESCRIPTION AND USABLE ON CODES(UOC)	(7) QTY
					GROUP 0101 CRANKCASE, BLOCK, CYLINDER HEAD FIG. 4 CYLINDER BLOCK HEAD ASSEMBLY	
1	PFFZZ	5310004982964	11083	2S0736	WASHER.....	17
2	PFFZZ	5306008146559	11083	1D4595	BOLT,MACHINE.....	14
3	PFFZZ	5305009640503	80204	B1821BH038C500N	SCREW,CAP,HEXAGON H.....	5
4	PAFZZ	2815011404222	11083	1N4304	CYLINDER HEAD,DIESE.....	1
5	XAHHH		11083	7N7110	.HEAD ASSEMBLY.....	1
6	PAHZZ	5340002299294	11083	3B0623	..PLUG,EXPANSION.....	4
7	PFHZZ	5365004492597	11083	3S8313	..PLUG,MACHINE THREAD.....	3
8	PFHZZ	5340011524541	11083	3P1896	..PLUG,EXPANSION.....	8
9	PAHZZ	2815011597706	11083	1070265	..INSERT,ENGINE VALVE.....	4
10	PFHZZ	5310011300611	11083	1070268	..WASHER,RECESSED.....	4
11	XAHZZ		11083	2W3244	..HEAD,CYLINDER.....	1
12	PAHZZ	4820014860910	11083	1487425	.GUIDE,VALVE STEM.....	8
13	PFHZZ	4730000892515	11083	5M6213	.PLUG,PIPE.....	4
14	PFHZZ	5306002604508	11083	0S1594	BOLT,MACHINE.....	4
15	PFHZZ	5310001174788	11083	5M2894	WASHER,FLAT.....	4
16	PFHZZ	5340004078369	11083	1P6367	COVER,ACCESS.....	1
17	PFHZZ	5330007607367	58312	5S6735-00	GASKET PART OF KIT P/N 6V2934 PART OF KIT P/N 6V2525.....	1
18	PFHZZ	4730002783383	15235	PLG1	PLUG,PIPE.....	3
19	PFFZZ	5330011292545	11083	7N8022	GASKET.....	1
20	PFFZZ	5331001044371	11083	3S5496	O-RING PART OF KIT P/N 6V2934 PART OF KIT P/N 6V2525.....	1
21	PAFZZ	5330011284130	11083	7N8018	SEAL,PLAIN PART OF KIT P/N 6V2934 PART OF KIT P/N 6V2525.....	12
22	PAFZZ	5330013324074	11083	9Y1798	SEAL,PLAIN PART OF KIT P/N 6V2934 PART OF KIT P/N 6V2525.....	12

END OF FIGURE

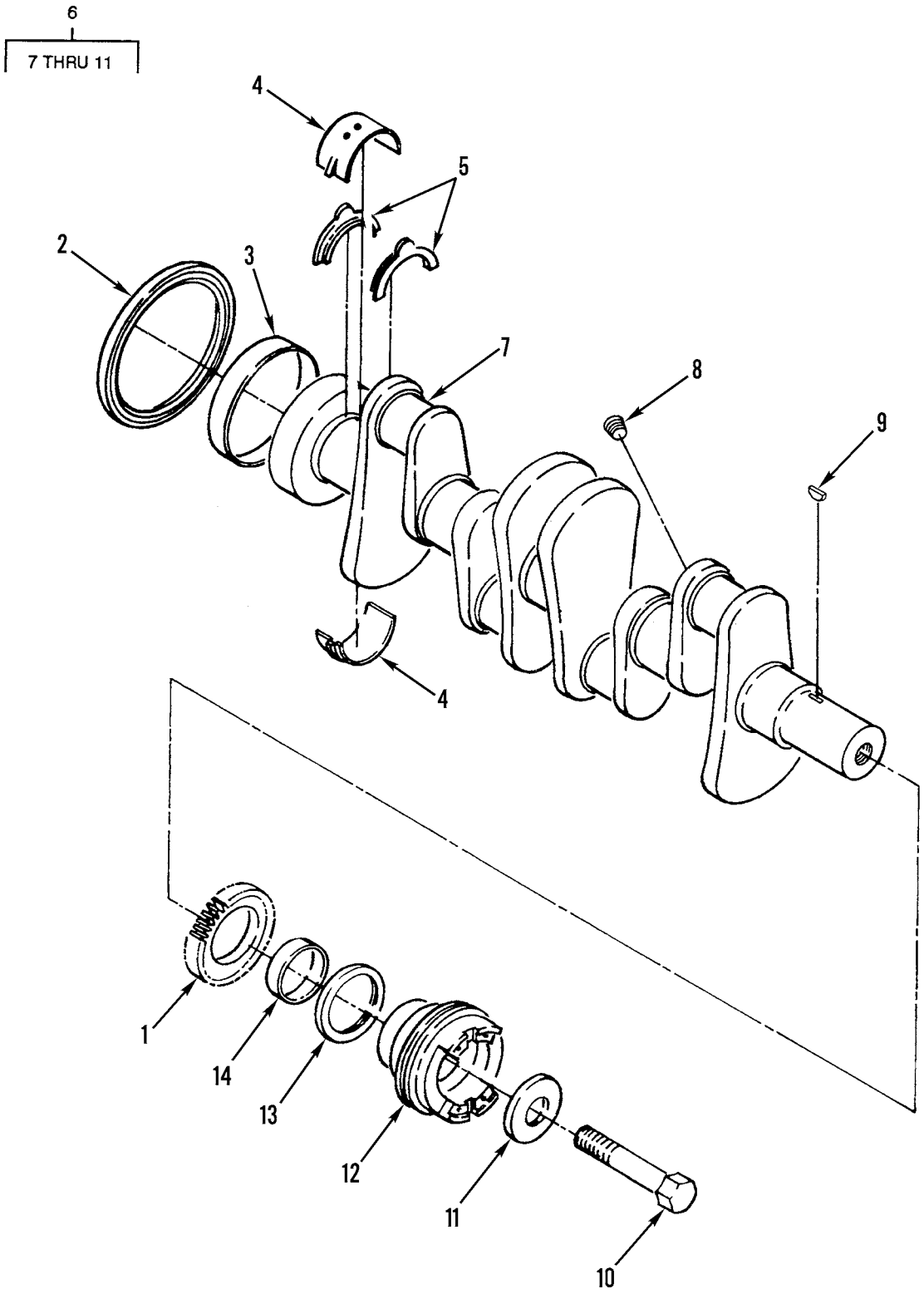

Figure 5. Crankshaft Assembly

(1) ITEM NO	(2) SMR CODE	(3) NSN	(4) CAGEC	(5) PART NUMBER	(6) DESCRIPTION AND USABLE ON CODES(UOC)	(7) QTY
					GROUP 0102 CRANKSHAFT FIG. 5 CRANKSHAFT ASSEMBLY	
1	PFHZZ	3020011483798	11083	1W4405	GEAR,HELICAL.....	1
2	KFHZZ	5330010327315	11083	953111	SEAL,PLAIN ENCASED PART OF KIT P/N 1383069 PART OF KIT P/N 4W0452.....	1
3	PFHZZ	3120003974451	11083	2P3858	SLEEVE.....	1
4	PFHZZ	3120012025894	11083	2323233	BEARING HALF,SLEEVE.....	5
5	PFHZZ	2815011192241	11083	1003652	PLATE,THRUST.....	2
6	PFHHH	2815010689848	11083	4N7692	CRANKSHAFT,ENGINE.....	1
7	XAHZZ		11083	4N7694	.CRANKSHAFT.....	1
8	PFHZZ	4730000444688	89346	50410DA	.PLUG,PIPE.....	4
9	PFHZZ	5315006165522	11083	1B8708	.KEY,WOODRUFF.....	1
10	PFHZZ	5306004265835	11083	7B5163	.BOLT,MACHINE.....	1
11	PFHZZ	5310007576531	58312	5S9948-00	.WASHER,FLAT.....	1
12	PFHZZ	3040011478019	11083	7W5697	HUB,BODY.....	1
13	PAHZZ	5330000366825	11083	4P2609	SEAL,PLAIN ENCASED.....	1
14	PFHZZ	3120003944276	11083	2P3859	SLEEVE.....	1

END OF FIGURE

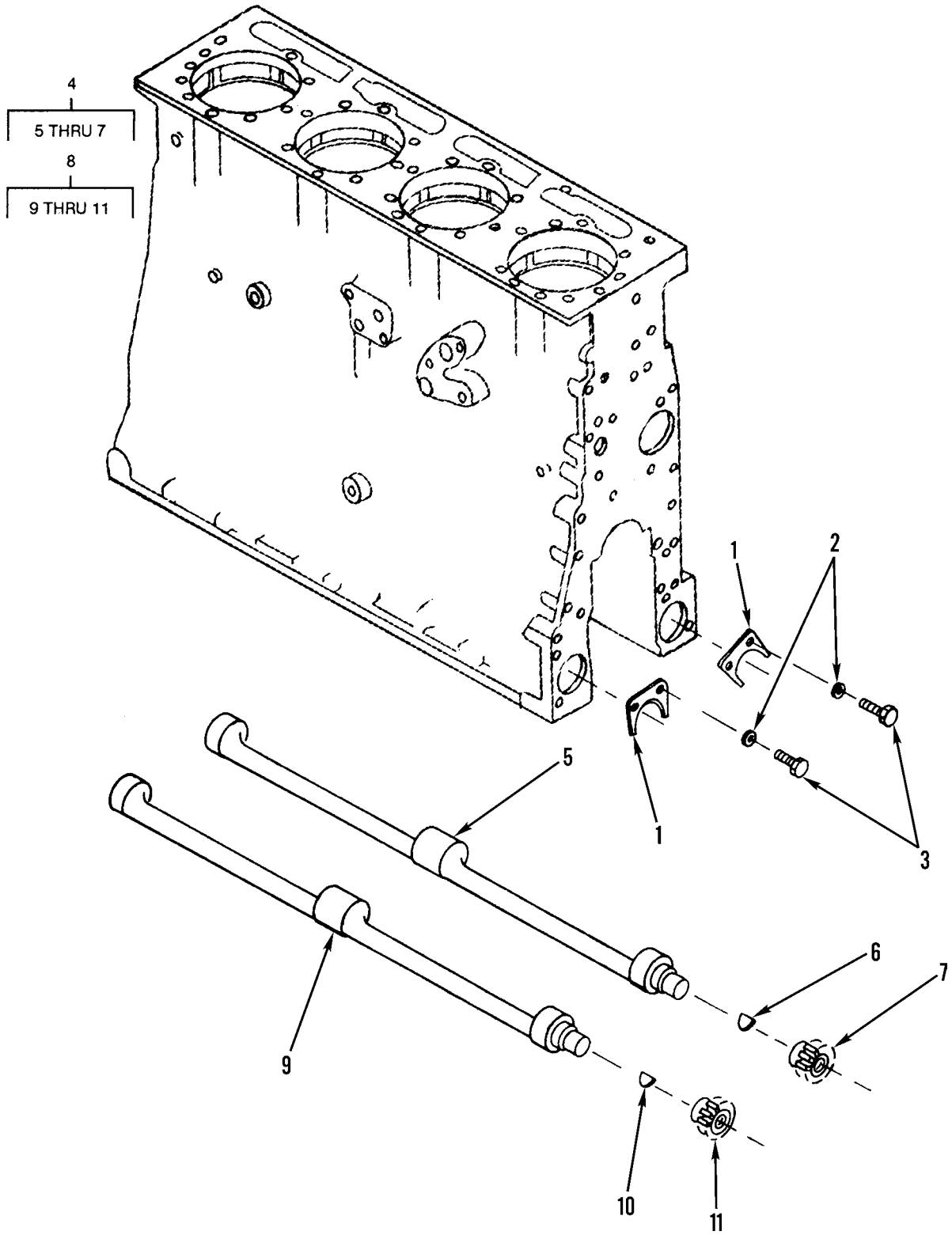

Figure 6. Balancer Shaft Assembly

(1) ITEM NO	(2) SMR CODE	(3) NSN	(4) CAGEC	(5) PART NUMBER	(6) DESCRIPTION AND USABLE ON CODES(UOC)	(7) QTY
					GROUP 0102 CRANKSHAFT	
					FIG. 6 BALANCER SHAFT ASSEMBLY	
1	PFHZZ	3805009155430	11083	4S6417	PLATE	2
2	PFHZZ	5310001174788	11083	5M2894	WASHER,FLAT	4
3	PFHZZ	5306006906976	03038	LH90725-59	BOLT,MACHINE	4
4	XDHZZ		11083	1W2870	GEARSHAFT,HELICAL RIGHT HAND	1
5	XAHZZ		11083	1W2869	.SHAFT UOC:AF9,AGP,F10	1
6	XBHZZ		11083	4H9699	.KEY,WOODRUFF	2
7	PAHZZ	3020012083259	11083	1P1722	.GEAR,HELICAL UOC:AF9,AGP,F10	1
8	XDHZZ		11083	1W2871	GEARSHAFT,HELICAL LEFT HAND	1
9	XAHZZ		11083	1W2869	.SHAFT UOC:AF9,AGP,F10	1
10	XBHZZ		11083	4H9699	.KEY,WOODRUFF UOC:AF9,AGP,F10	1
11	XAHZZ		11083	1W1721	.GEAR UOC:AF9,AGP,F10	1

END OF FIGURE

5
6 AND 7

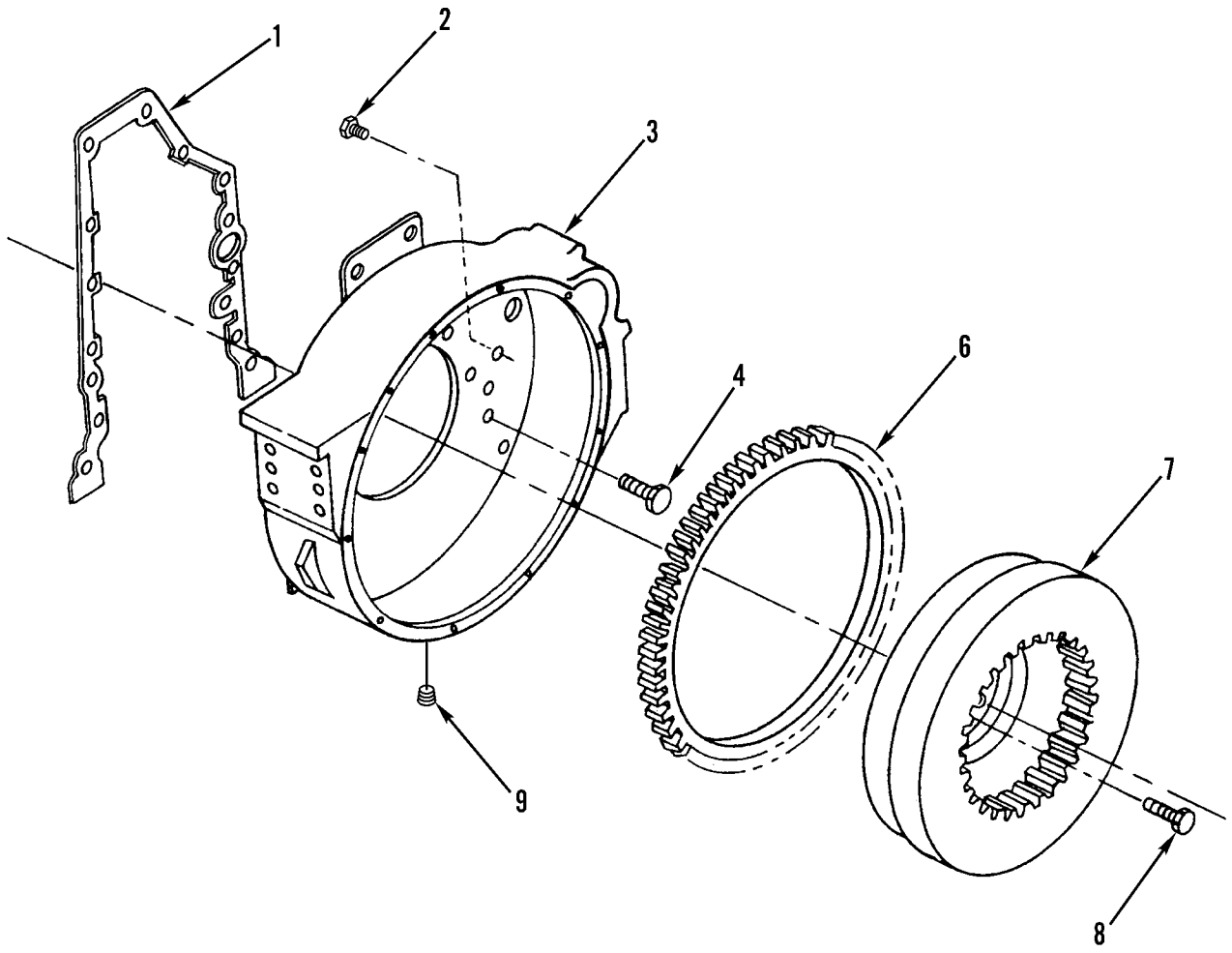

Figure 7. Flywheel Assembly and Mounting

(1) ITEM NO	(2) SMR CODE	(3) NSN	(4) CAGEC	(5) PART NUMBER	(6) DESCRIPTION AND USABLE ON CODES(UOC)	(7) QTY
					GROUP 0103 FLYWHEEL ASSEMBLY FIG. 7 FLYWHEEL ASSEMBLY AND MOUNTING	
1	PAFZZ	5330000743600	11083	9H5921	GASKET PART OF KIT P/N 1383069.....	1
2	PFFZZ	4730000892515	11083	5M6213	PLUG,PIPE.....	1
3	PFFZZ	2815015264221	11083	7W9322	HOUSING,FLYWHEEL..... UOC:AF9,AGP,F10	1
4	PFFZZ	5306002638978	11083	0S1587	BOLT,MACHINE.....	13
5	PAFHH	2815011774818	11083	7W9310	FLYWHEEL,ENGINE..... UOC:AF9,AGP,F10	1
6	PFHZZ	3020011479352	11083	7N9145	.GEAR,SPUR.....	1
7	XAHZZ		11083	1W8010	.FLYWHEEL..... UOC:AF9,AGP,F10	1
8	PFFZZ	5305007262551	96906	MS90727-164	SCREW,CAP,HEXAGON H.....	9
9	PFFZZ	4730002783383	15235	PLG1	PLUG,PIPE.....	1

END OF FIGURE

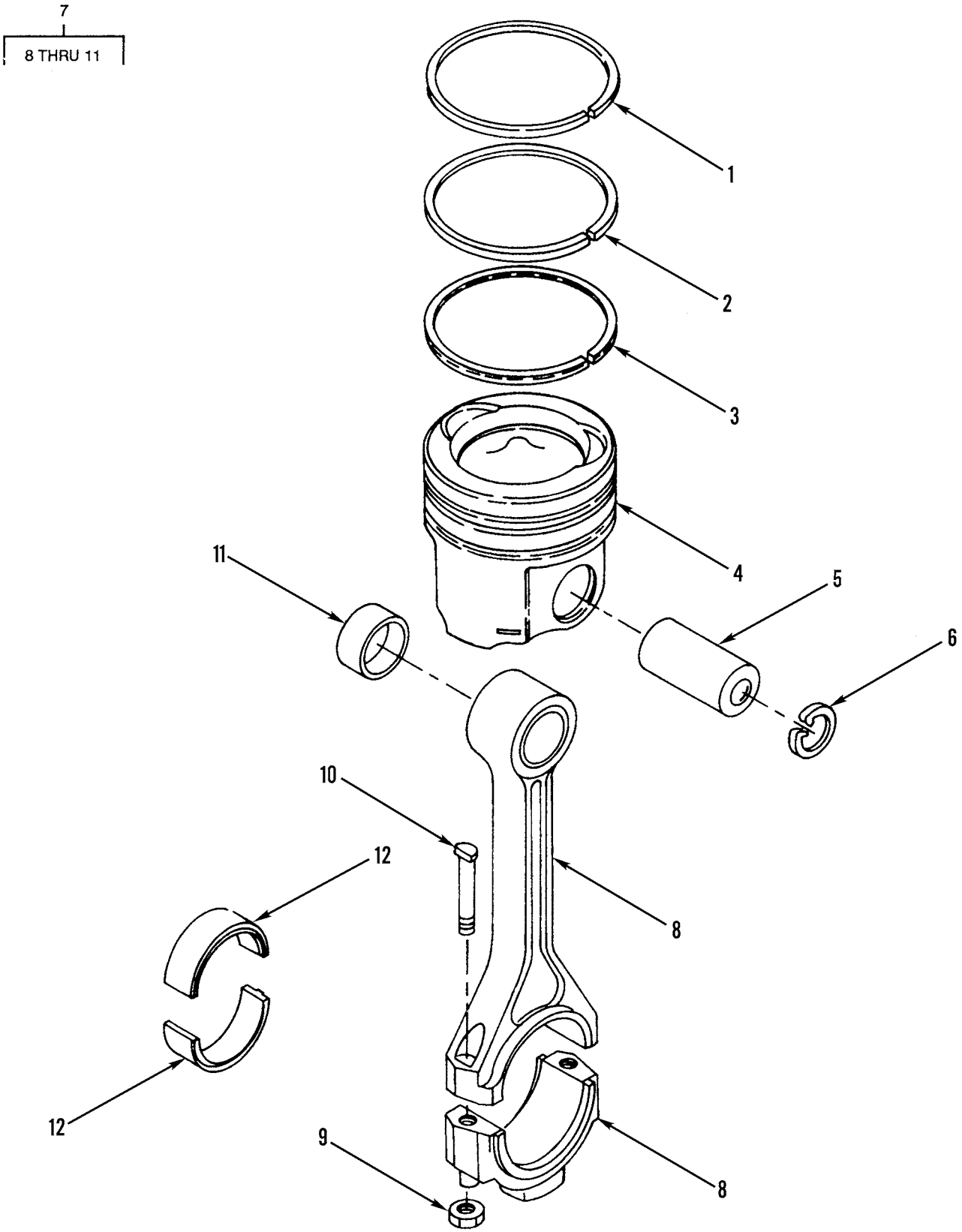

Figure 8. Piston and Connecting Rod

(1) ITEM NO	(2) SMR CODE	(3) NSN	(4) CAGEC	(5) PART NUMBER	(6) DESCRIPTION AND USABLE ON CODES(UOC)	(7) QTY
					GROUP 0104 PISTONS AND CONNECTING RODS	
					FIG. 8 PISTON AND CONNECTING ROD	
1	PAHZZ	2815011482595	11083	9S3029	RING,PISTON PART OF KIT P/N 2W6091..	4
2	PAHZZ	2815005183561	55883	IPD5S6750	RING,PISTON PART OF KIT P/N 2W6091..	4
3	PAHZZ	2815011541242	11083	7E6047	RING,PISTON PART OF KIT P/N 2W6091..	4
4	PAHZZ	2815011531615	11083	1290358	PISTON,INTERNAL COM.....	4
5	PFHZZ	2815011165920	11083	7N9805	PIN,PISTON.....	4
6	PFHZZ	5325001183056	11083	1S9543	RING,RETAINING.....	8
7	PAHZZ	2815004872840	11083	8N1721	CONNECTING ROD,PIST.....	4
8	XAHZZ	3040012533471	11083	8N1720	.ROD,PISTON,LINEAR A.....	1
9	PFHZZ	5310005579389	58312	5S6348-00	.NUT,PLAIN,SINGLE BA.....	2
10	PFHZZ	5306004970342	11083	1P9956	.BOLT,SHOULDER.....	2
11	PAHZZ	3120011309116	11083	8N1849	.BEARING,SLEEVE.....	1
12	PFHZZ	3120012100859	11083	4W5739	BEARING,SLEEVE.....	4

END OF FIGURE

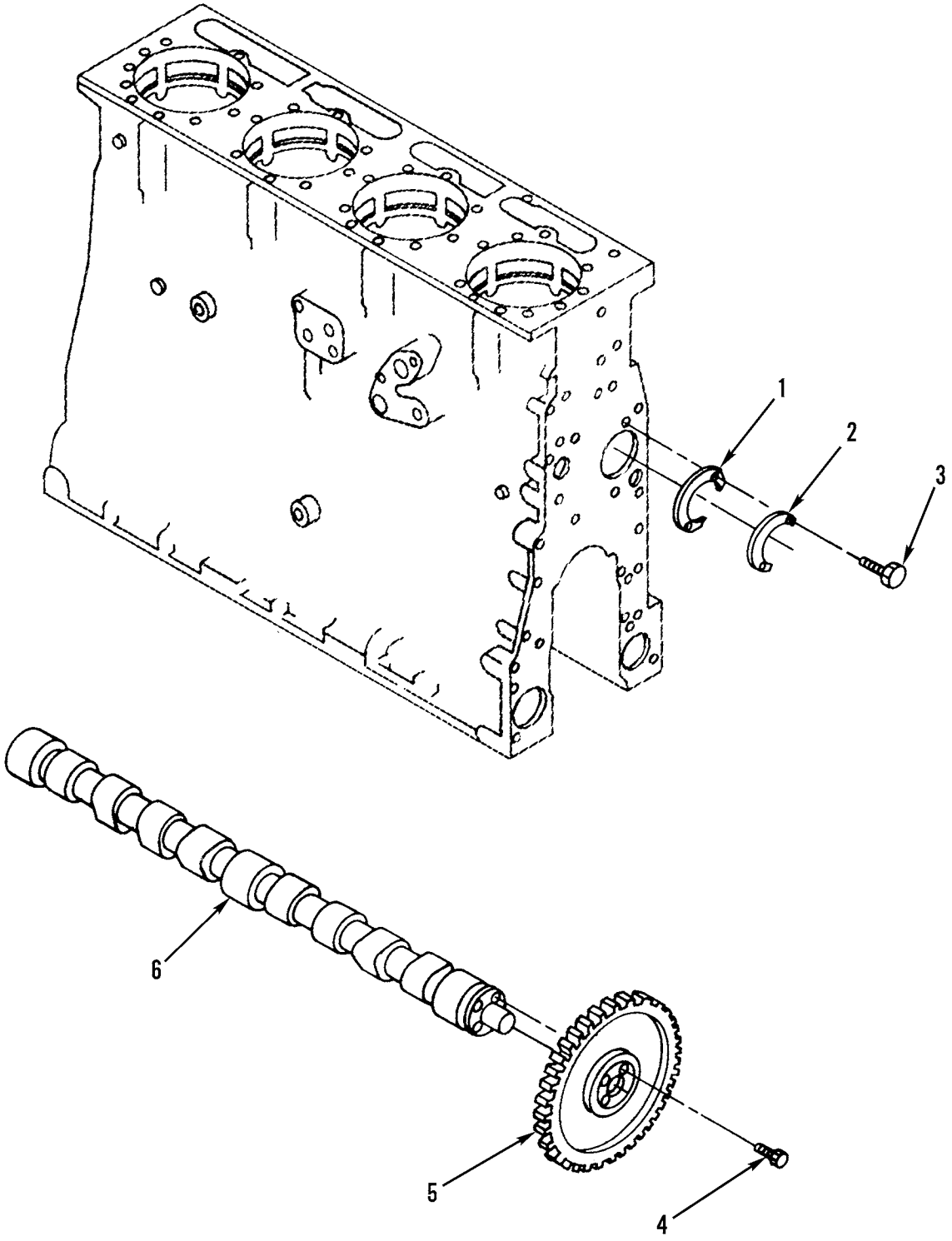

Figure 9. Camshaft Assembly and Mounting

(1) ITEM NO	(2) SMR CODE	(3) NSN	(4) CAGEC	(5) PART NUMBER	(6) DESCRIPTION AND USABLE ON CODES(UOC)	(7) QTY
					GROUP 0105 VALVES, CAMSHAFTS, AND TIMING SYSTEM FIG. 9 CAMSHAFT ASSEMBLY AND MOUNTING	
1	PAHZZ	5310004982967	58312	7S2204-00	WASHER,CAMSHAFT.....	1
2	PFHZZ	5310005579391	58312	8S1491-00	NUT,SPECIAL PART OF KIT P/N 6V2248..	1
3	PFHZZ	5305002528919	11083	0S0509	SCREW,CAP,HEXAGON H.....	2
4	PFHZZ	5306004262939	11083	0S1748	BOLT,MACHINE.....	4
5	XDHZZ		11083	1W4402	GEAR,HELICAL.....	1
6	PFHZZ	2815011546905	11083	1W1231	CAMSHAFT,ENGINE..... UOC:AF9,AGP,F10	1

END OF FIGURE

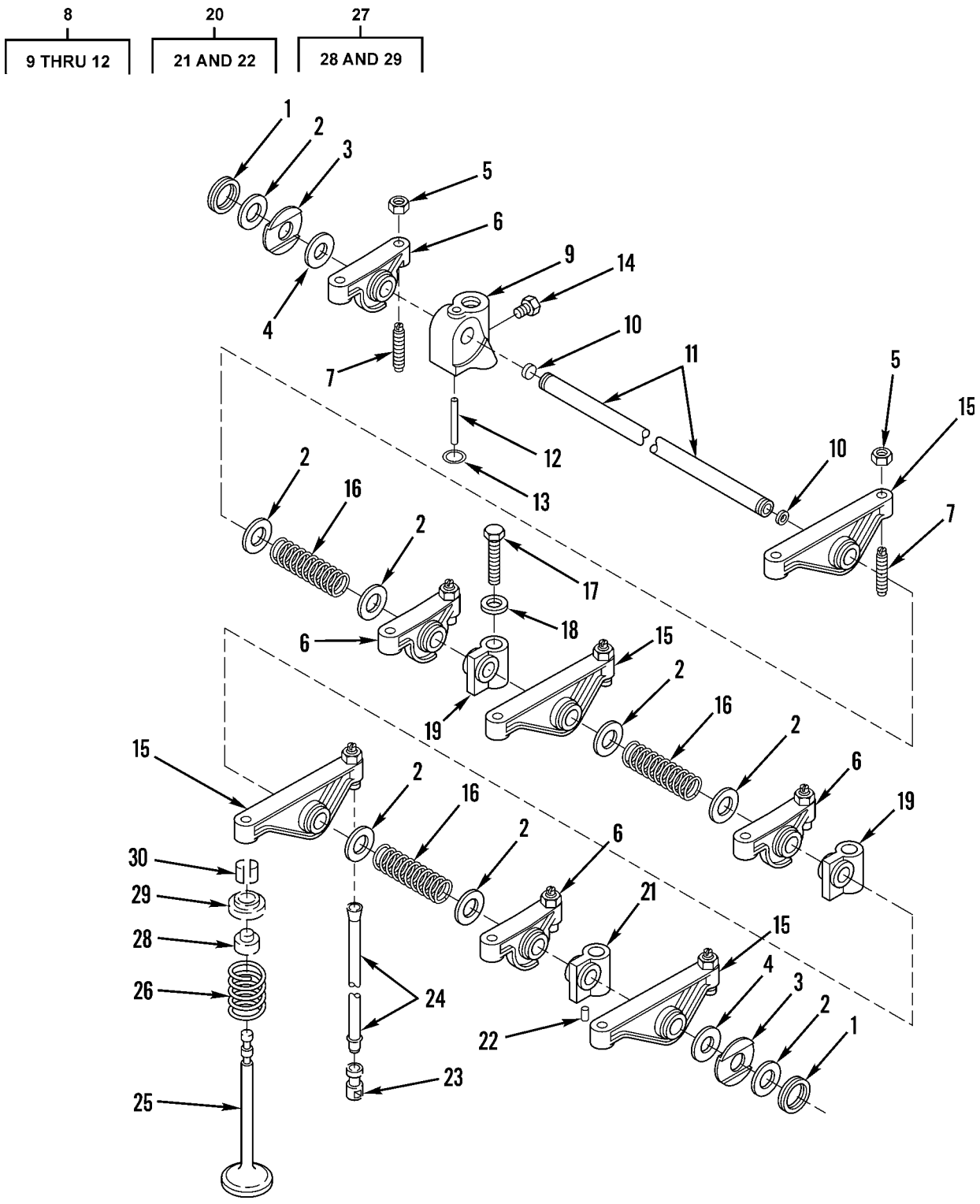

Figure 10. Valve Mechanism Assembly

(1) ITEM NO	(2) SMR CODE	(3) NSN	(4) CAGEC	(5) PART NUMBER	(6) DESCRIPTION AND USABLE ON CODES(UOC)	(7) QTY
					GROUP 0105 VALVES, CAMSHAFTS, AND TIMING SYSTEM FIG. 10 VALVE MECHANISM ASSEMBLY	
1	PFFZZ	5325009213208	80756	RST-68	RING,RETAINING.....	2
2	PFFZZ	5310009998286	11083	9H1110	WASHER,FLAT.....	8
3	PAFZZ	5310009998287	11083	9H1112	WASHER,SPRING TENSI.....	2
4	PAFZZ	5310006782152	19207	9093668	WASHER,FLAT.....	2
5	PFFZZ	5310007257382	96906	MS35690-624	NUT,PLAIN,HEXAGON.....	8
6	PFFZZ	2815014260619	11083	8N3327	ROCKER ARM,ENGINE P.....	4
7	PFFZZ	2815004571615	11083	5S5917	SCREW,ADJUSTING,VAL.....	8
8	AFFFF		11083	8N3313	SHAFT ASSEMBLY,ROCK.....	1
9	PAFZZ	5342011295917	11083	7N8015	.BRACKET,ROCKER ARM.....	1
10	PFFZZ	5340002299287	11083	0L1026	.PLUG,EXPANSION.....	1
11	XDFZZ		11083	8N3312	.SHAFT.....	1
12	PFFZZ	5315007607421	11083	5M4606	.PIN,STRAIGHT,HEADLE.....	2
13	PAFZZ	5331009236958	11083	8M4448	O-RING PART OF KIT P/N 6V2934.....	1
14	PFOZZ	4730011033727	11083	3K8460	PLUG,PIPE.....	1
15	PFFZZ	2815011269995	11083	8N3325	ROCKER ARM,ENGINE P.....	4
16	PAFZZ	5360002493504	11083	4B4910	SPRING,HELICAL,COMP.....	3
17	PAFZZ	5305004015261	58312	1B7709-00	SCREW,CAP,HEXAGON H.....	1
18	PFFZZ	5310004982964	11083	2S0736	WASHER.....	1
19	PFFZZ	5340002398226	11083	5S5879	BRACKET,ANGLE.....	2
20	PFFZZ	2815002114462	11083	8S1499	BRACKET ASSEMBLY,RO.....	1
21	PFFZZ	3040011659635	11083	8S1498	.BRACKET,EYE,NONROTA.....	1
22	PFFZZ	5315005325746	11083	1L5072	.PIN,STRAIGHT,HEADLE.....	1
23	PAFZZ	2815004509341	11083	7S3161	TAPPET,ENGINE POPPE.....	8
24	PAFZZ	2815004873123	11083	5S5918	PUSH ROD,ENGINE POP.....	8
25	PAFZZ	2815011431409	11083	1007861	VALVE,POPPET,ENGINE.....	4
25	PAFZZ	2815011862371	11083	1007860	VALVE,POPPET,ENGINE..... UOC:AF9,AGP,F10	4
26	PAFZZ	5360005196605	58312	7S7144-00	SPRING,HELICAL,COMP.....	8
27	PAFZZ	2815011464526	11083	1W5300	ROTOCOIL ASSY.....	8
28	PAFZZ	2815011834649	11083	6N7174	.ROTOR,ENGINE POPPET.....	1
29	PAFZZ	2815004859418	11083	5S5874	.ROTOR,ENGINE POPPET.....	1
30	PAFZZ	2805002883650	11083	2A4429	LOCK,VALVE SPRING R.....	16

END OF FIGURE

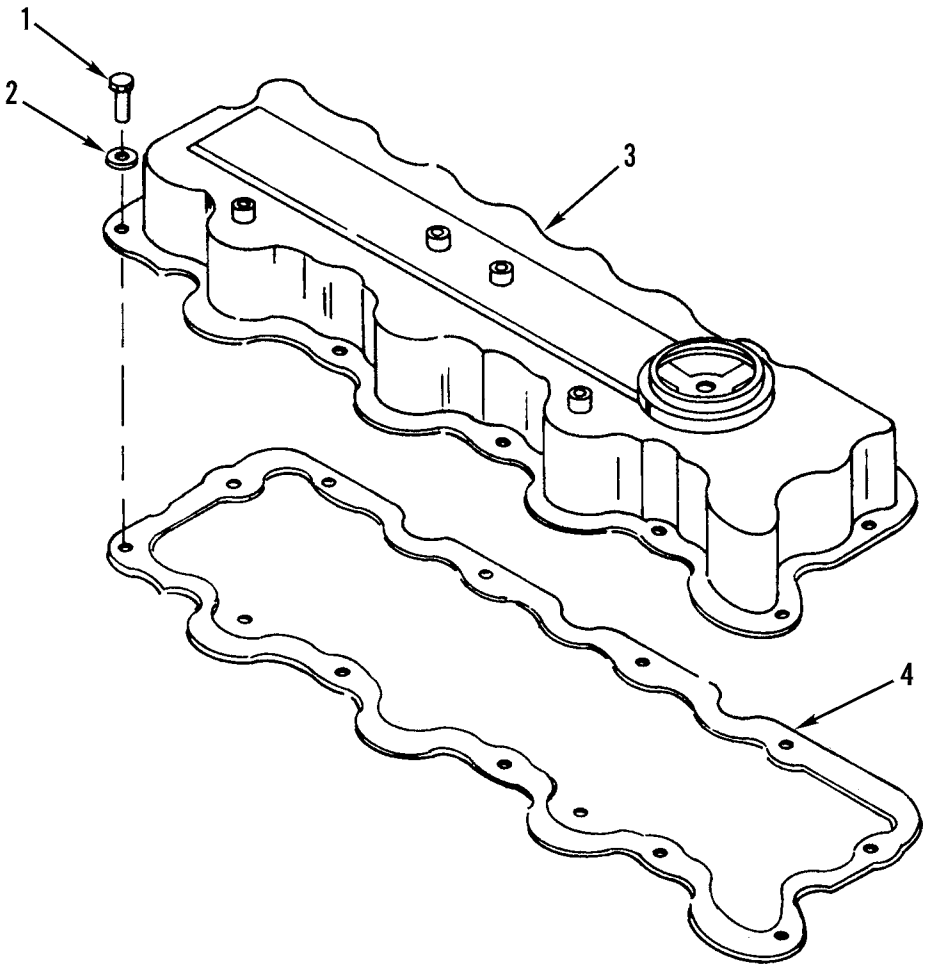

Figure 11. Valve Cover and Mounting

(1) ITEM NO	(2) SMR CODE	(3) NSN	(4) CAGEC	(5) PART NUMBER	(6) DESCRIPTION AND USABLE ON CODES(UOC)	(7) QTY
					GROUP 0105 VALVES, CAMSHAFTS, AND TIMING SYSTEM FIG. 11 VALVE COVER AND MOUNTING	
1	PFOZZ	5306002264825	80204	B1821BH031C075N	BOLT,MACHINE.....	11
2	PFOZZ	5310004079566	96906	MS35338-45	WASHER,LOCK.....	11
3	PFOZZ	2815011774815	11083	2W1084	COVER,ENGINE POPPET.....	1
4	PAOZZ	5330004378752	11083	8S1606	GASKET PART OF KIT P/N 6V2934.....	1

END OF FIGURE

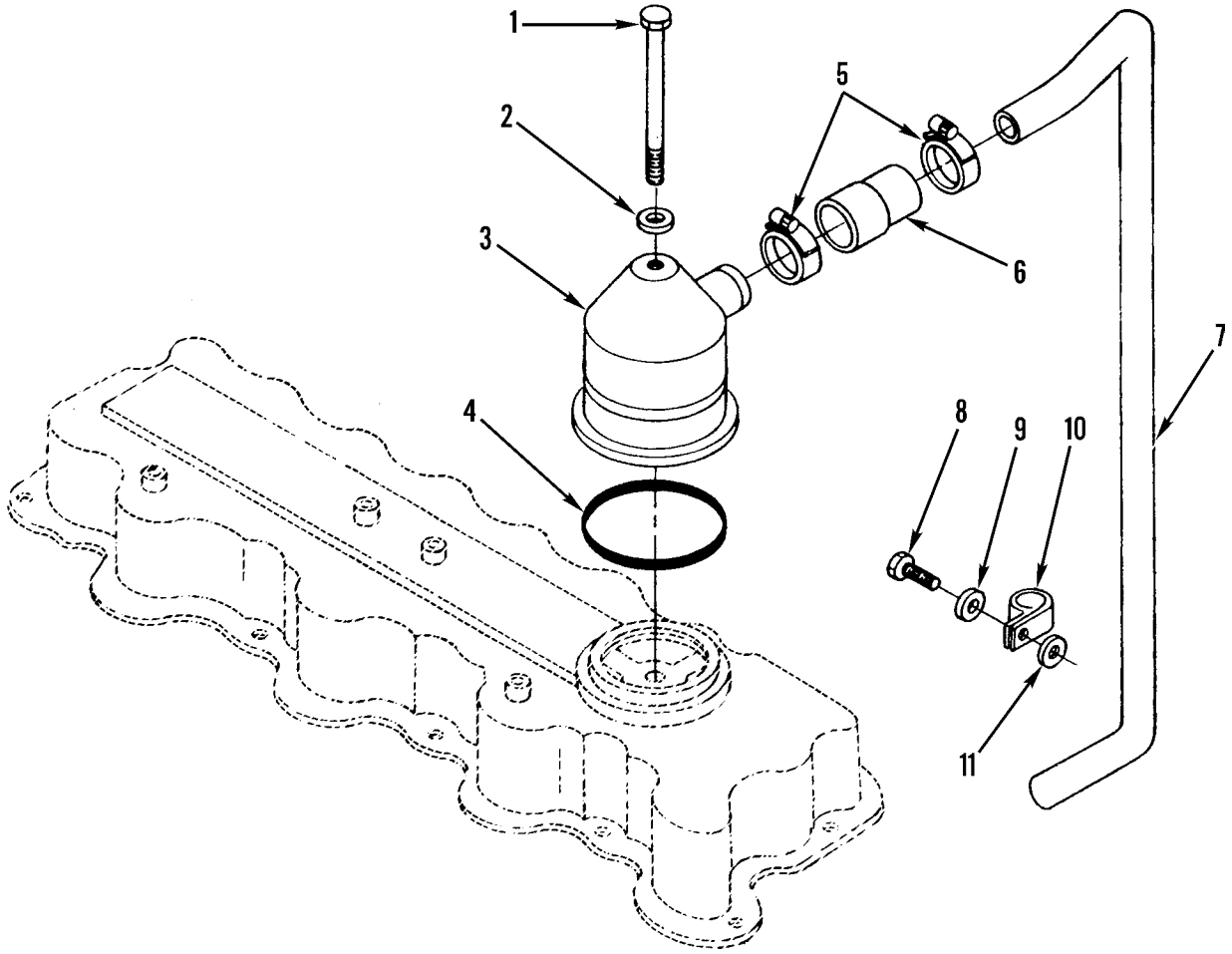

Figure 12. Valve Cover Breather and Mounting

(1) ITEM NO	(2) SMR CODE	(3) NSN	(4) CAGEC	(5) PART NUMBER	(6) DESCRIPTION AND USABLE ON CODES(UOC)	(7) QTY
					GROUP 0106 ENGINE LUBRICATION SYSTEM FIG. 12 VALVE COVER BREATHER AND MOUNTING	
1	PFOZZ	5306004725282	11083	3H3243	BOLT,MACHINE.....	1
2	PFOZZ	5310002059982	96906	MS15795-512	WASHER,FLAT.....	1
3	PAOZZ	2815001928768	18265	BAS02-0048	BREATHER.....	1
4	PCOZZ	5330008288639	11083	4L9564	PACKING,PREFORMED PART OF KIT P/N 6V2525.....	1
5	PFOZZ	4730009083193	96906	MS35842-12	CLAMP,HOSE.....	2
6	PFOZZ	4720011518127	11083	1N4102	HOSE,PREFORMED.....	1
7	PFOZZ	4710011476389	11083	1N3824	TUBE,BENT,METALLIC.....	1
8	PFOZZ	5305010156841	11083	0S1591	SCREW.....	1
9	PFOZZ	5310001174788	11083	5M2894	WASHER,FLAT.....	1
10	PFOZZ	5340010990109	11083	5D4204	CLAMP,LOOP.....	1
11	PFOZZ	5310011201443	19207	7335538	WASHER,FLAT.....	1

END OF FIGURE

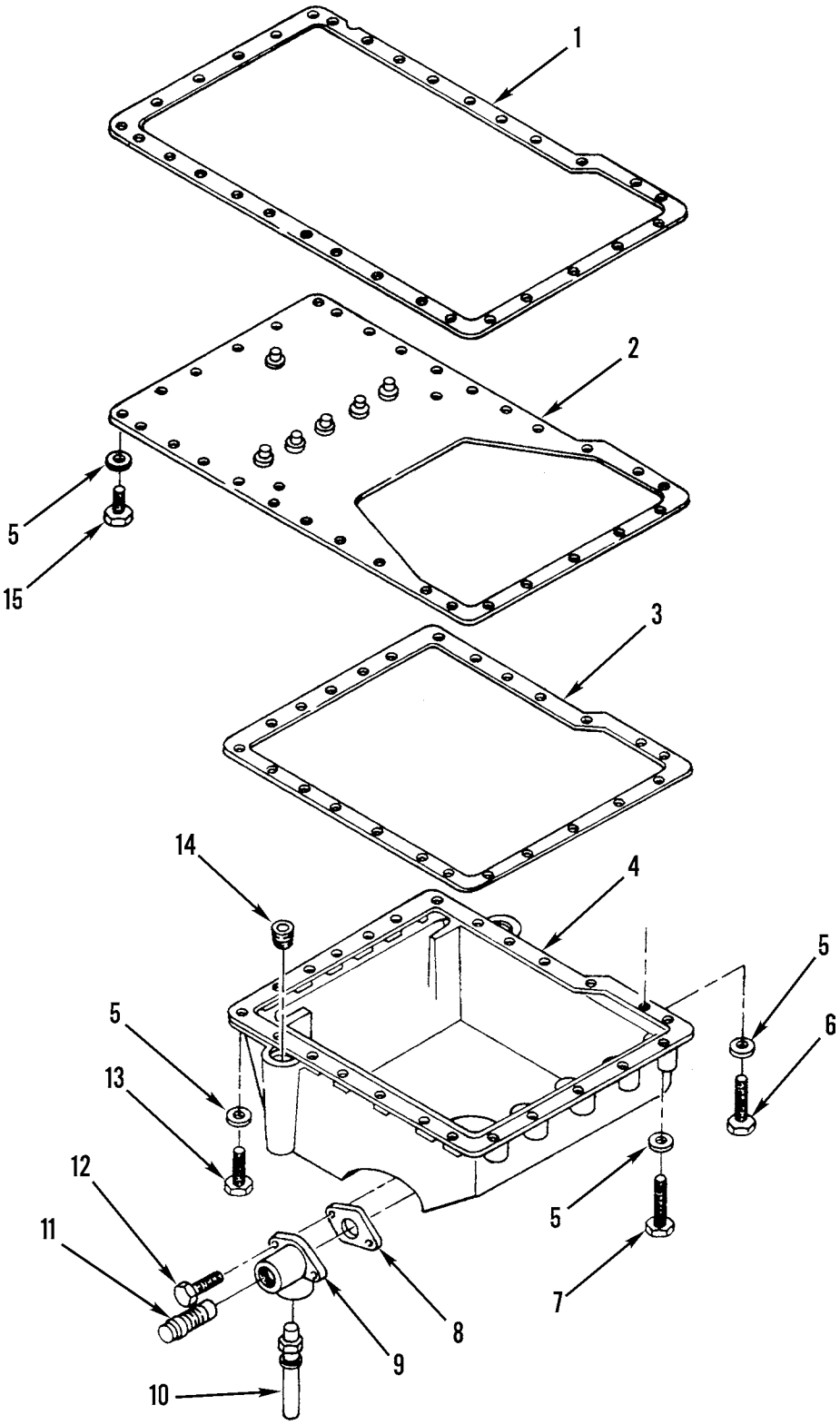

Figure 13. Engine Oil Pan and Mounting

(1) ITEM NO	(2) SMR CODE	(3) NSN	(4) CAGEC	(5) PART NUMBER	(6) DESCRIPTION AND USABLE ON CODES(UOC)	(7) QTY
					GROUP 0106 ENGINE LUBRICATION SYSTEM	
					FIG. 13 ENGINE OIL PAN AND MOUNTING	
1	PAFZZ	5330000089181	11083	5S6045	GASKET PART OF KIT P/N 6V2935..... UOC:AF9,AGP,F10	1
2	PFFZZ	2815011472253	11083	2P2351	PLATE ASSEMBLY,OIL.....	1
3	PAFZZ	5330010690992	11083	8S1963	GASKET PART OF KIT P/N 6V2935..... UOC:AF9,AGP,F10	1
4	PFFZZ	2815011774809	11083	1N3524	OIL PAN..... UOC:AF9,AGP,F10	1
5	PFFZZ	5310001174788	11083	5M2894	WASHER,FLAT.....	36
6	PFFZZ	5306002851368	11083	0L1143	BOLT,MACHINE.....	1
7	PFFZZ	2910003099473	11083	0T0573	CAPSCREW,FUEL PUMP.....	6
8	PFFZZ	5330011519294	11083	8N6854	GASKET PART OF KIT P/N 6V2935.....	1
9	PFFZZ	4730011620112	11083	8N6849	ELBOW,FLANGE TO PIP.....	1
10	PAOZZ	4720010993711	11083	2P0698	HOSE ASSEMBLY,NONME.....	1
11	PFOZZ	5365011596679	11083	5N8780	PLUG,MACHINE THREAD.....	1
12	PFFZZ	5306011954681	11083	3B1915	BOLT.....	2
13	PFFZZ	5305010156841	11083	0S1591	SCREW.....	17
14	PFFZZ	4730002783383	15235	PLG1	PLUG,PIPE.....	1
15	PFFZZ	5306002604508	11083	0S1594	BOLT,MACHINE.....	12

END OF FIGURE

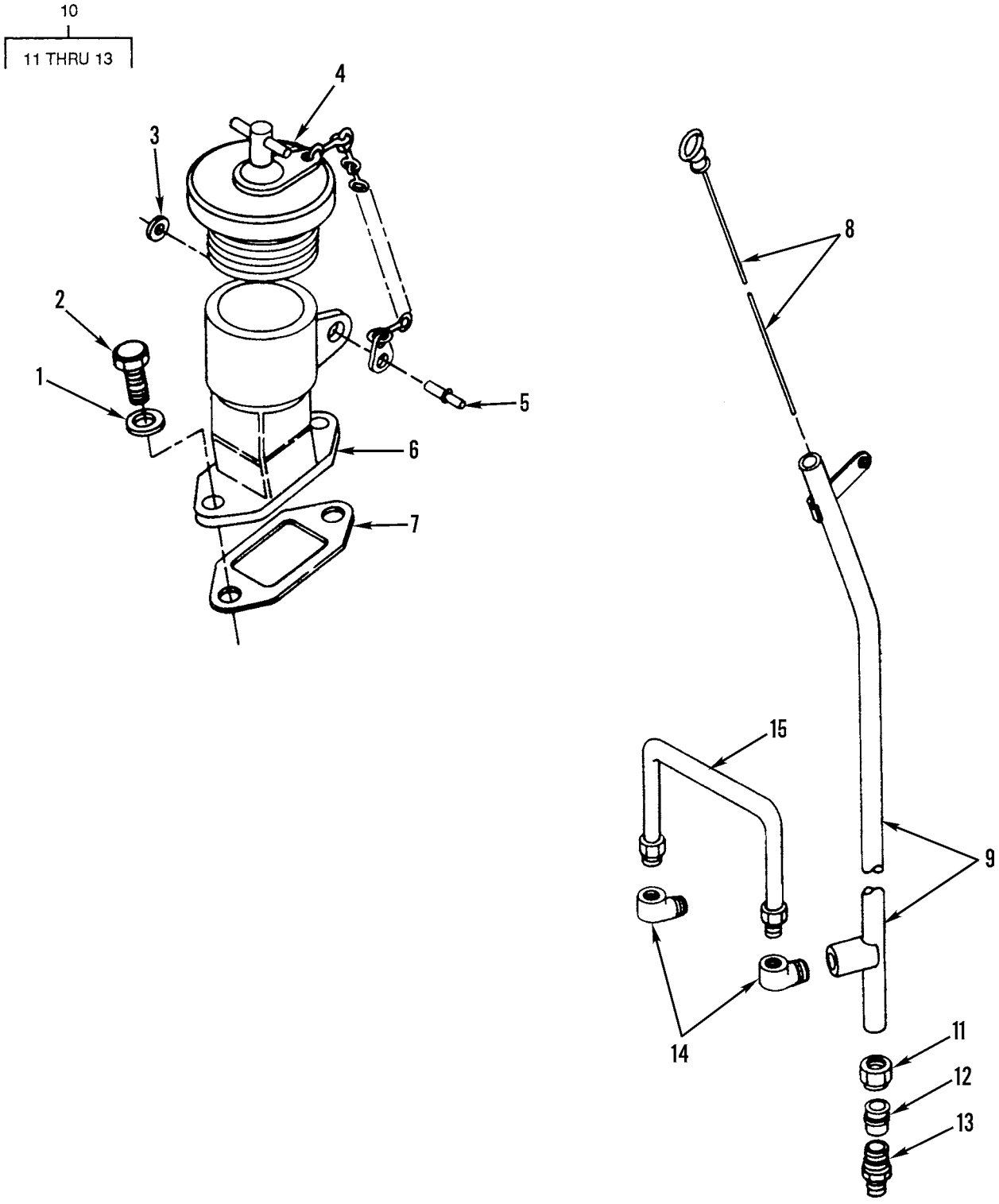

Figure 14. Engine Oil Level Gage, Filler, and Mounting

(1) ITEM NO	(2) SMR CODE	(3) NSN	(4) CAGEC	(5) PART NUMBER	(6) DESCRIPTION AND USABLE ON CODES(UOC)	(7) QTY
					GROUP 0106 ENGINE LUBRICATION SYSTEM FIG. 14 ENGINE OIL LEVEL GAGE, FILLER, AND MOUNTING	
1	PFFZZ	5310001174788	11083	5M2894	WASHER,FLAT.....	2
2	PFFZZ	5306004238194	11083	1A2029	BOLT,MACHINE.....	2
3	PFFZZ	5310011518350	11083	2A3211	WASHER,FLAT.....	1
4	PFOZZ	2590010665286	01943	40733	CAP ASSEMBLY,OIL.....	1
5	PAFZZ	5320008503241	07707	SD66BS	RIVET,BLIND.....	1
6	PFFZZ	2590011489537	11083	2P2719	FILLER NECK.....	1
7	PFFZZ	5330010675727	11083	2P2720	GASKET PART OF KIT P/N 6V2248.....	1
8	PFOZZ	6680001395274	11083	5S8115	GAGE ROD,LIQUID LEV.....	1
9	PFFZZ	2590011489536	11083	2P2547	FILLER NECK.....	1
10	PAFZZ	4730004018098	11083	8S1326	ADAPTER,STRAIGHT,PI.....	1
11	PFFZZ	4730010487874	79470	1461X8	.NUT,TUBE COUPLING.....	1
12	PAFZZ	4730011780773	11083	5P4443	.SLEEVE,COMPRESSION,.....	1
13	XDFZZ		93061	2592-00011	.ADAPTER,STRAIGHT,PI.....	1
14	PAFZZ	4730010599435	11083	5K9243	ELBOW,PIPE TO TUBE.....	2
15	PAFZZ	4710010689728	11083	2P2697	TUBE A.....	1

END OF FIGURE

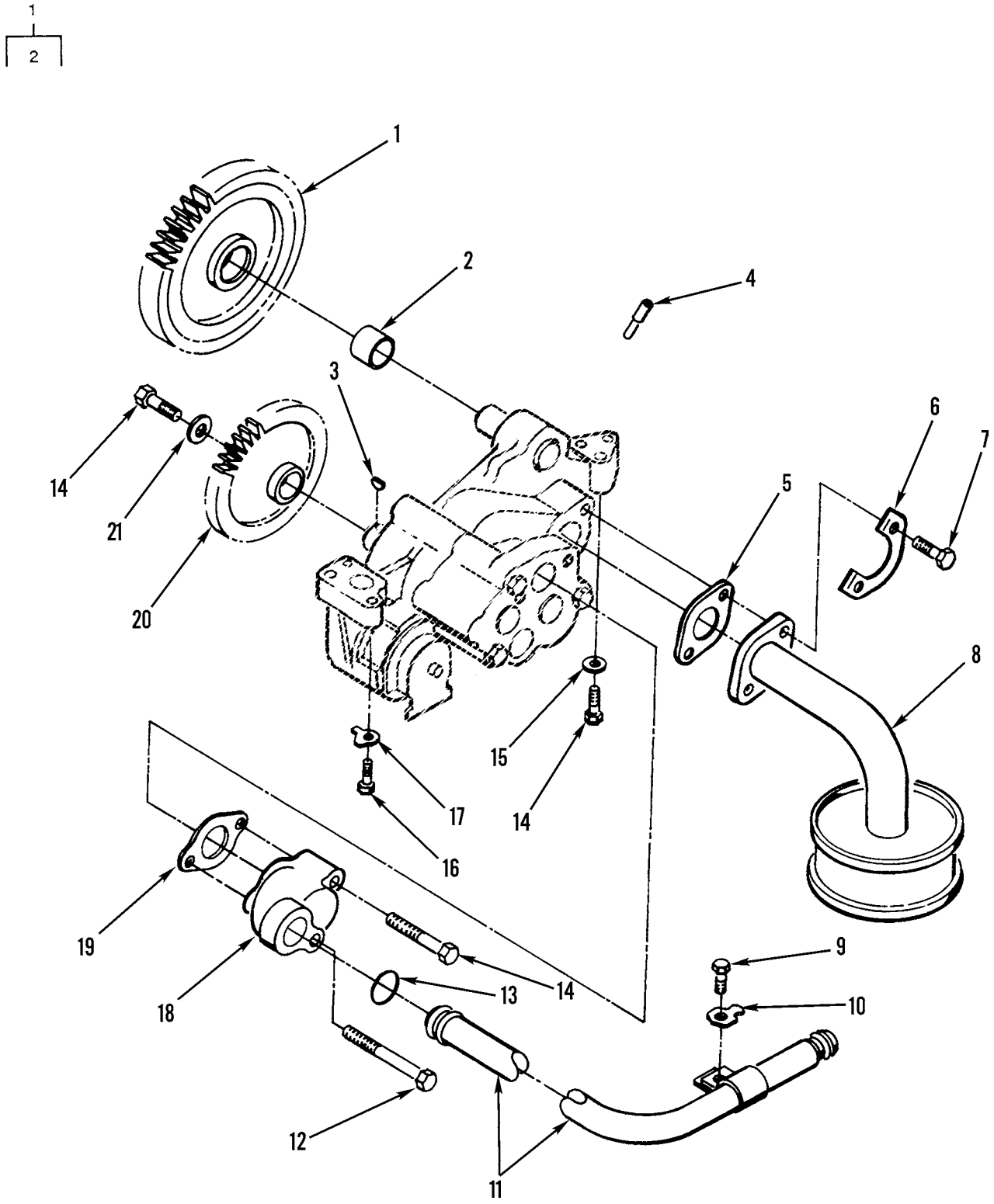

Figure 15. Engine Oil Lines, Oil Pump Gears, and Mounting

(1) ITEM NO	(2) SMR CODE	(3) NSN	(4) CAGEC	(5) PART NUMBER	(6) DESCRIPTION AND USABLE ON CODES(UOC)	(7) QTY
					GROUP 0106 ENGINE LUBRICATION SYSTEM FIG. 15 ENGINE OIL LINES, OIL PUMP GEARS, AND MOUNTING	
1	PFHZZ	3020012541227	11083	1960223	GEAR,SPUR.....	1
2	PAHZZ	3120010662505	11083	1969988	.BEARING,SLEEVE.....	1
3	PFFZZ	5315009447035	11083	8M5599	KEY,WOODRUFF.....	1
4	PFHZZ	4730008503812	11083	2S1541	RESTRICTOR,FLUID FL.....	4
5	PFFZZ	5330005578489	11083	8M0904	GASKET PART OF KIT P/N 6V2935.....	1
6	PAFZZ	5342004941996	11083	8S8874	LOCKING PLATE NUT PART OF KIT P/N 6V2935.....	1
7	PFFZZ	5306002604508	11083	0S1594	BOLT,MACHINE.....	2
8	PFFZZ	6350011324022	11083	2P1776	BELL.....	1
9	PFFZZ	5305011654290	60038	S-265-D	SCREW,CAP,HEXAGON H.....	1
10	PFFZZ	2930003652152	11083	0L0364	LOCK PLATE PART OF KIT P/N 6V2935...	1
11	PFFZZ	4710014151609	11083	9Y7589	TUBE ASSEMBLY,METAL.....	1
12	PFFZZ	5306004262932	11083	0S1619	BOLT,MACHINE.....	1
13	PAFZZ	5330008474351	11083	9M4849	SEAL,RING PART OF KIT P/N 6V2935 PART OF KIT P/N 6V2934 PART OF KIT P/N 6V2525.....	1
14	PFFZZ	5306010949106	11083	0S1590	BOLT,MACHINE.....	4
15	PFFZZ	5310001174788	11083	5M2894	WASHER,FLAT.....	2
16	PFFZZ	5306011954681	11083	3B1915	BOLT.....	2
17	PAFZZ	5310009228691	11083	8M7587	L0CK PART OF KIT P/N 6V2935.....	2
18	PFFZZ	4730011264892	11083	4N5353	ELBOW,FLANGE.....	1
19	PFFZZ	5330010675729	11083	2P8746	GASKET PART OF KIT P/N 6V2935.....	1
20	PFFZZ	3020012539282	11083	7W0507	GEAR,HELICAL.....	1
21	PFFZZ	5310010512300	11083	1P7346	WASHER.....	1

END OF FIGURE

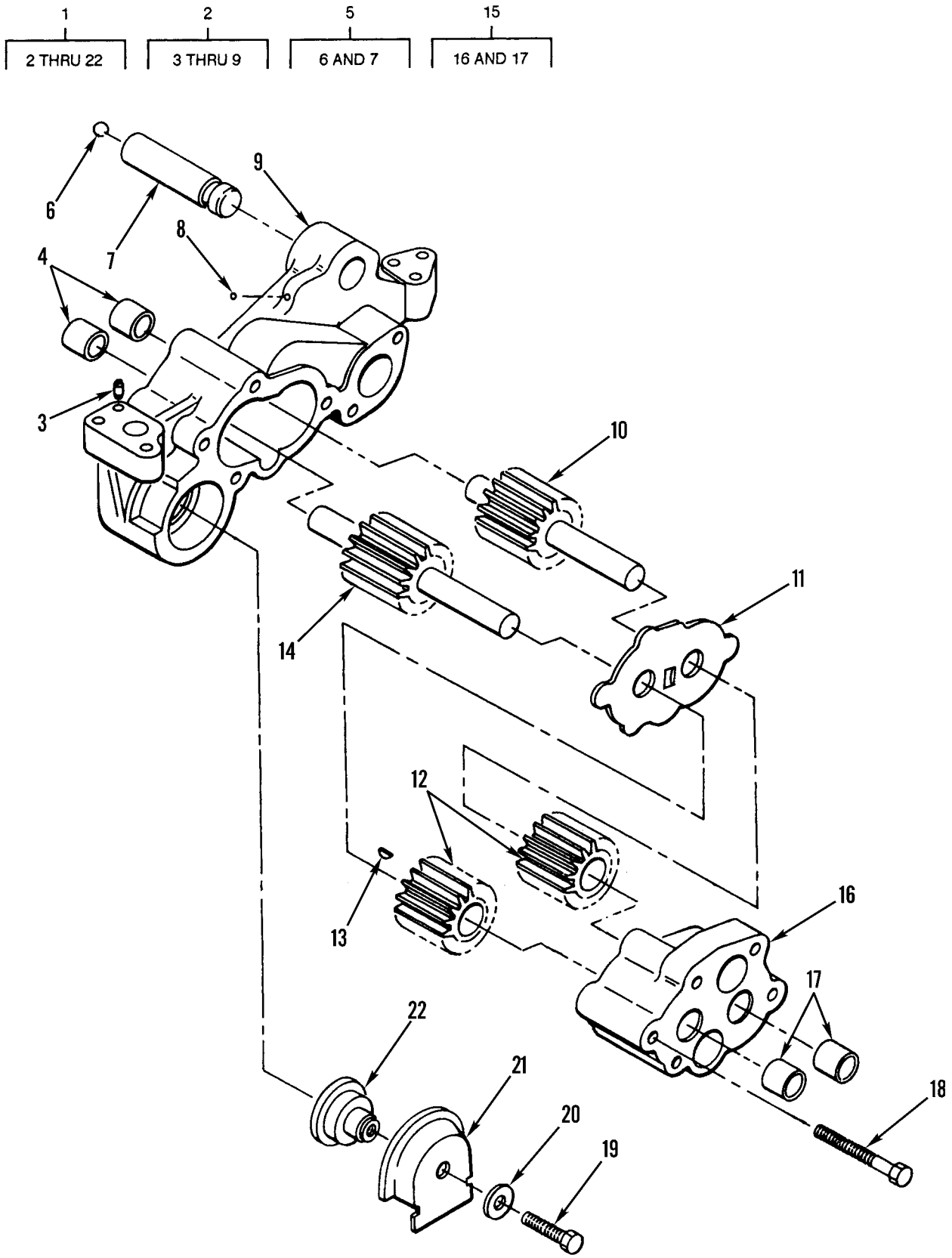

Figure 16. Engine Oil Pump Assembly

(1) ITEM NO	(2) SMR CODE	(3) NSN	(4) CAGEC	(5) PART NUMBER	(6) DESCRIPTION AND USABLE ON CODES(UOC)	(7) QTY
					GROUP 0106 ENGINE LUBRICATION SYSTEM	
					FIG. 16 ENGINE OIL PUMP ASSEMBLY	
1	PAFHZ	2815010112686	11083	6I1346	OIL PUMP ASSEMBLY,E REPLACES PUMP 4P4020.....	1
1	XBFHZ	2815010112686	11083	6I1346	OIL PUMP ASSEMBLY,E.....	1
2	PFHHZ	2990012533454	11083	4W2322	.HOUSING,OIL PUMP AS.....	1
3	PFHZZ	5315003638794	11083	1F1006	..PIN,STRAIGHT,HEADLE.....	1
4	PFHZZ	3120004408463	01212	AT20	..BEARING,SLEEVE.....	2
5	PFHZZ	3040010675649	11083	2P1170	..SHAFT,STRAIGHT.....	1
6	PFHZZ	3110000119935	11083	4B9782	...BALL,BEARING.....	1
7	XAHZZ		11083	2P1169	...SHAFT,OIL PUMP.....	1
8	PFHZZ	3110009491438	11083	4B9880	..BALL,BEARING.....	1
9	XAHZZ		11083	8N8635	..BODY,OIL PUMP.....	1
10	PFHZZ	2815004706352	11083	8S0493	.SHAFT ASSEMBLY,OIL.....	1
11	PFHZZ	5365010690882	11083	2P1781	.SPACER.....	1
12	PAHZZ	3020004606696	11083	6N1036	.GEAR,SPUR.....	2
13	PFHZZ	5315006165521	96906	MS35756-13	.KEY,WOODRUFF.....	1
14	PFHZZ	3040010675675	11083	2P6245	.SHAFT,STRAIGHT USE WITH PUMP 4P4020.....	1
14	PFHZZ	3040014970540	11083	6I1345	.GEAR AND SHAFT ASSE USE WITH PUMP 6I1346.....	1
15	PFHZZ	4320012536286	11083	4W2321	.HOUSING,LIQUID PUMP.....	1
16	XAHZZ		11083	4N4054	..HOUSING,LIQUID PUMP.....	1
17	XAHZZ	3120004408463	01212	AT20	..BEARING,SLEEVE.....	2
18	PFHZZ	5305002528906	11083	0T0065	.SCREW.....	2
19	PFHZZ	5306002264833	80204	B1821BH031C200N	.BOLT,MACHINE.....	1
20	PFHZZ	5310000814219	96906	MS27183-12	.WASHER,FLAT.....	1
21	PFHZZ	5340011487396	11083	4N3732	.COVER,ACCESS.....	1
22	PFHZZ	2815010681729	11083	4P3546	.VALVE,OIL PUMP.....	1

END OF FIGURE

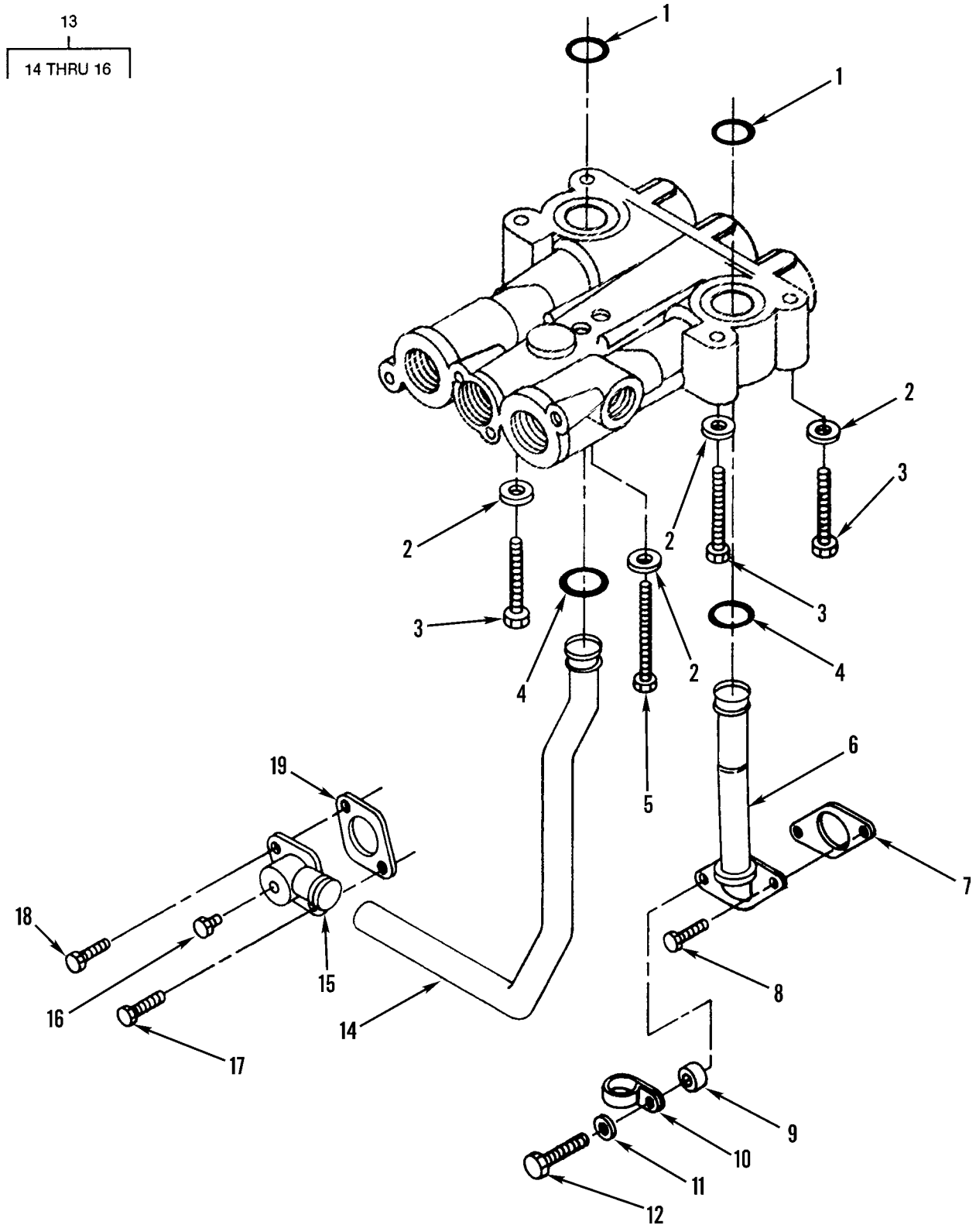

Figure 17. Engine Oil Filter Lines and Mounting

(1) ITEM NO	(2) SMR CODE	(3) NSN	(4) CAGEC	(5) PART NUMBER	(6) DESCRIPTION AND USABLE ON CODES(UOC)	(7) QTY
					GROUP 0106 ENGINE LUBRICATION SYSTEM FIG. 17 ENGINE OIL FILTER LINES AND MOUNTING	
1	PFFZZ	5331009138878	11083	8M4432	O-RING	2
2	PFFZZ	5310000814219	96906	MS27183-12	WASHER,FLAT	6
3	PFFZZ	5306001757468	11083	1H5514	BOLT,MACHINE	3
4	PAFZZ	5330008474351	11083	9M4849	SEAL,RING	2
5	PFFZZ	5306011581154	96906	MS18154-41	BOLT,MACHINE	1
6	PFFZZ	4710011284741	11083	8N7315	TUBE ASSEMBLY,METAL	1
7	PFOZZ	5330002977228	11083	2L3308	GASKET	1
8	PFOZZ	5306002604508	11083	0S1594	BOLT,MACHINE	1
9	PFOZZ	5310011461218	11083	1L5081	WASHER,FLAT	1
10	PFOZZ	5340010614018	11083	3P2404	CLAMP,LOOP	1
11	PFOZZ	5310001174788	11083	5M2894	WASHER,FLAT	1
12	PFOZZ	5305010269518	11083	0S1571	SCREW,CAP,HEXAGON H	1
13	PFFZZ	4710011295674	11083	8N7318	TUBE ASSEMBLY,METAL	1
14	XAFZZ		11083	3N7613	.TUBE	1
15	XAFZZ		11083	8N7316	.ELBOW	1
16	PFOZZ	4730000892515	11083	5M6213	.PLUG,PIPE	1
17	PFOZZ	5306006982150	11083	0L2070	BOLT,MACHINE	1
18	PFOZZ	5306004238194	11083	1A2029	BOLT,MACHINE	1
19	PFOZZ	5330009206922	11083	2M5407	GASKET	1

END OF FIGURE

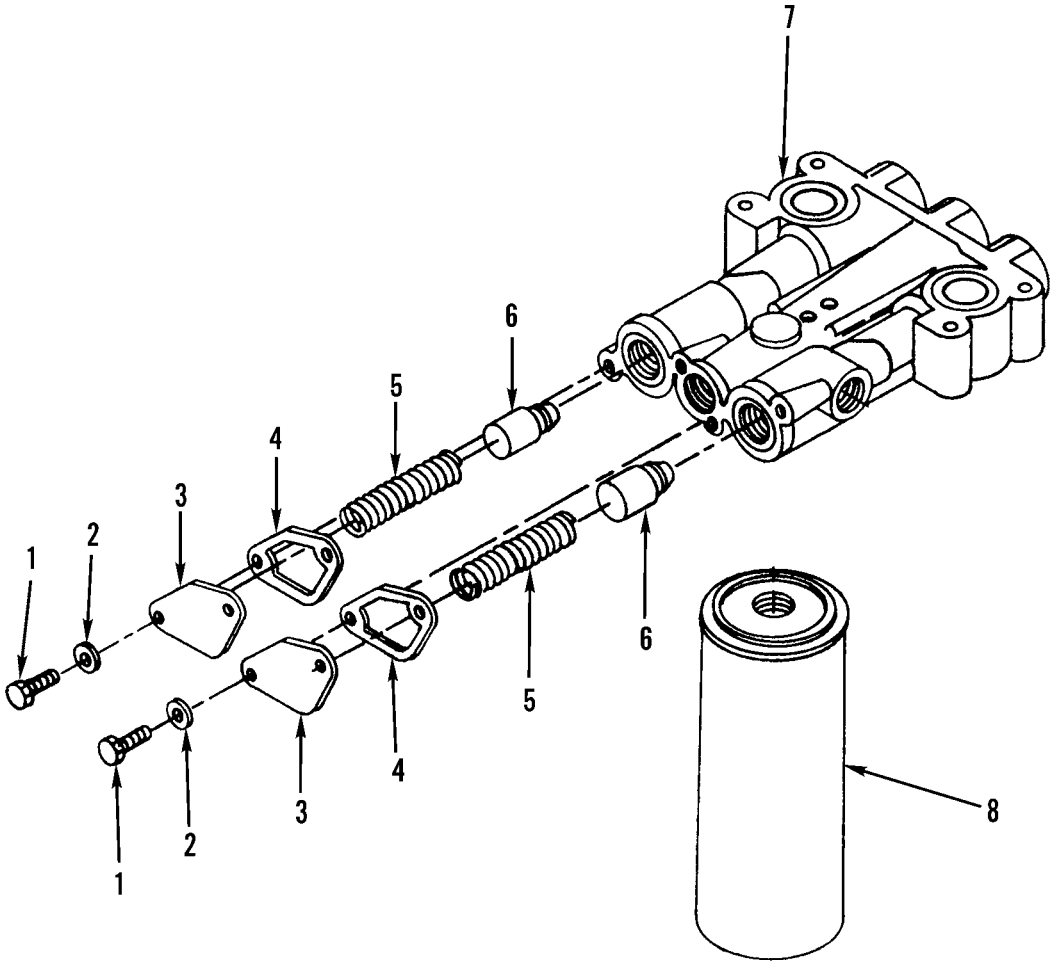

Figure 18. Engine Oil Filter

(1) ITEM NO	(2) SMR CODE	(3) NSN	(4) CAGEC	(5) PART NUMBER	(6) DESCRIPTION AND USABLE ON CODES(UOC)	(7) QTY
					GROUP 0106 ENGINE LUBRICATION SYSTEM	
					FIG. 18 ENGINE OIL FILTER	
1	PFOZZ	5306011169622	11083	0869934	BOLT,MACHINE.....	4
2	PFOZZ	5310000814219	96906	MS27183-12	WASHER,FLAT.....	4
3	PFOZZ	5340011476397	11083	8N6986	COVER,ACCESS.....	2
4	PFOZZ	5330011519295	11083	8N6985	GASKET.....	2
5	PAFZZ	5360009508251	11083	8M3182	SPRING,HELICAL,COMP.....	2
6	PFFZZ	5340004999648	11083	1P1367	PLUNGER,DETENT.....	2
7	PAFZZ	2940012535590	11083	2W6681	HEAD,FLUID FILTER.....	1
8	PAOZZ	2940015131518	11083	1R0739	FILTER ELEMENT,FLUI.....	1

END OF FIGURE

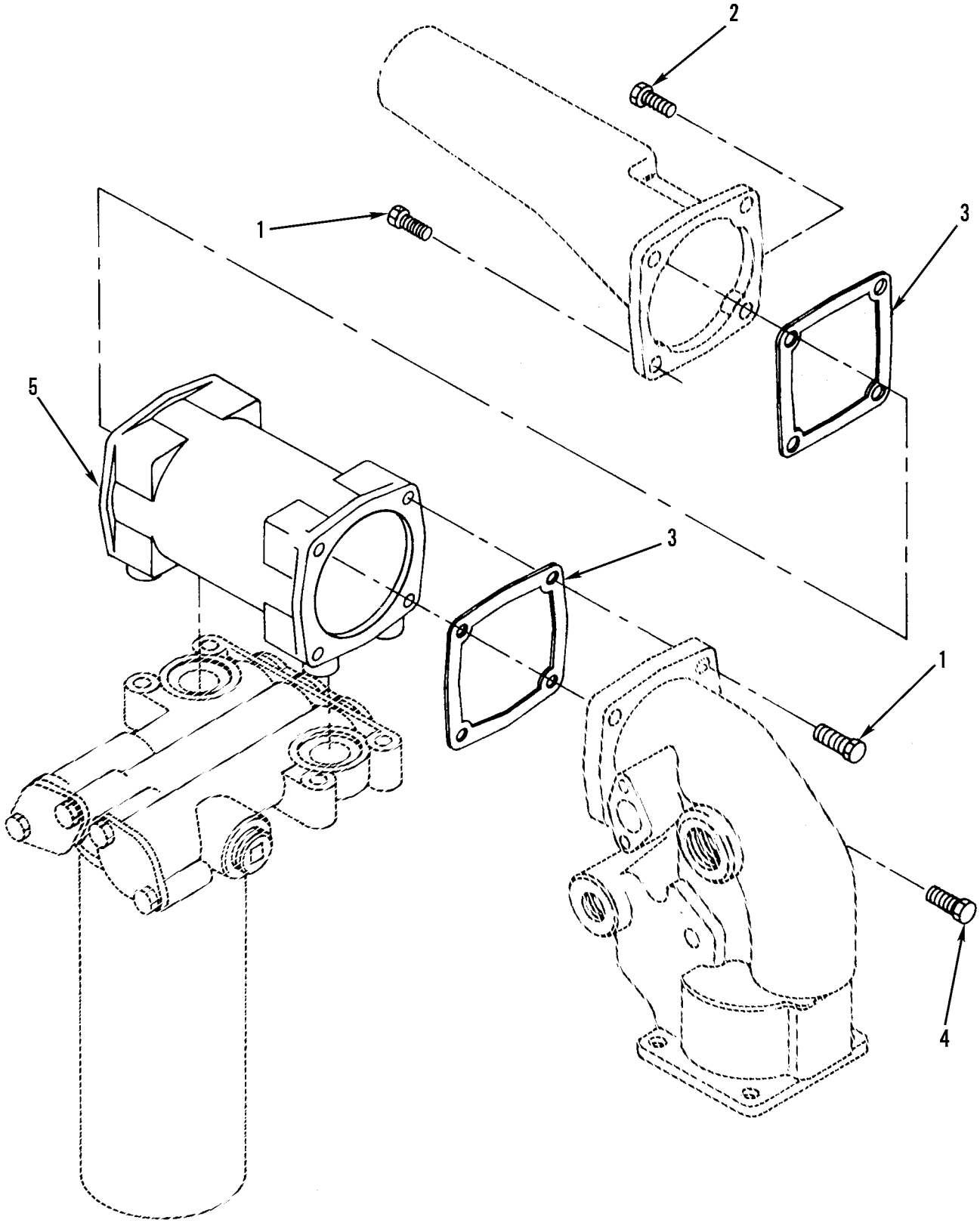

Figure 19. Engine Oil Cooler and Mounting

(1) ITEM NO	(2) SMR CODE	(3) NSN	(4) CAGEC	(5) PART NUMBER	(6) DESCRIPTION AND USABLE ON CODES(UOC)	(7) QTY
					GROUP 0106 ENGINE LUBRICAITON SYSTEM FIG. 19 ENGINE OIL COOLER AND MOUNTING	
1	PFFZZ	5306006982150	11083	0L2070	BOLT,MACHINE.....	1
2	PFFZZ	5306004238194	11083	1A2029	BOLT,MACHINE.....	6
3	PAFZZ	5330005578494	11083	5S6051	GASKET.....	2
4	PFFZZ	5306010977874	11083	1T0765	BOLT,MACHINE.....	1
5	PFFZZ	2930004571616	11083	7N0165	CORE ASSEMBLY,FLUID.....	1

END OF FIGURE

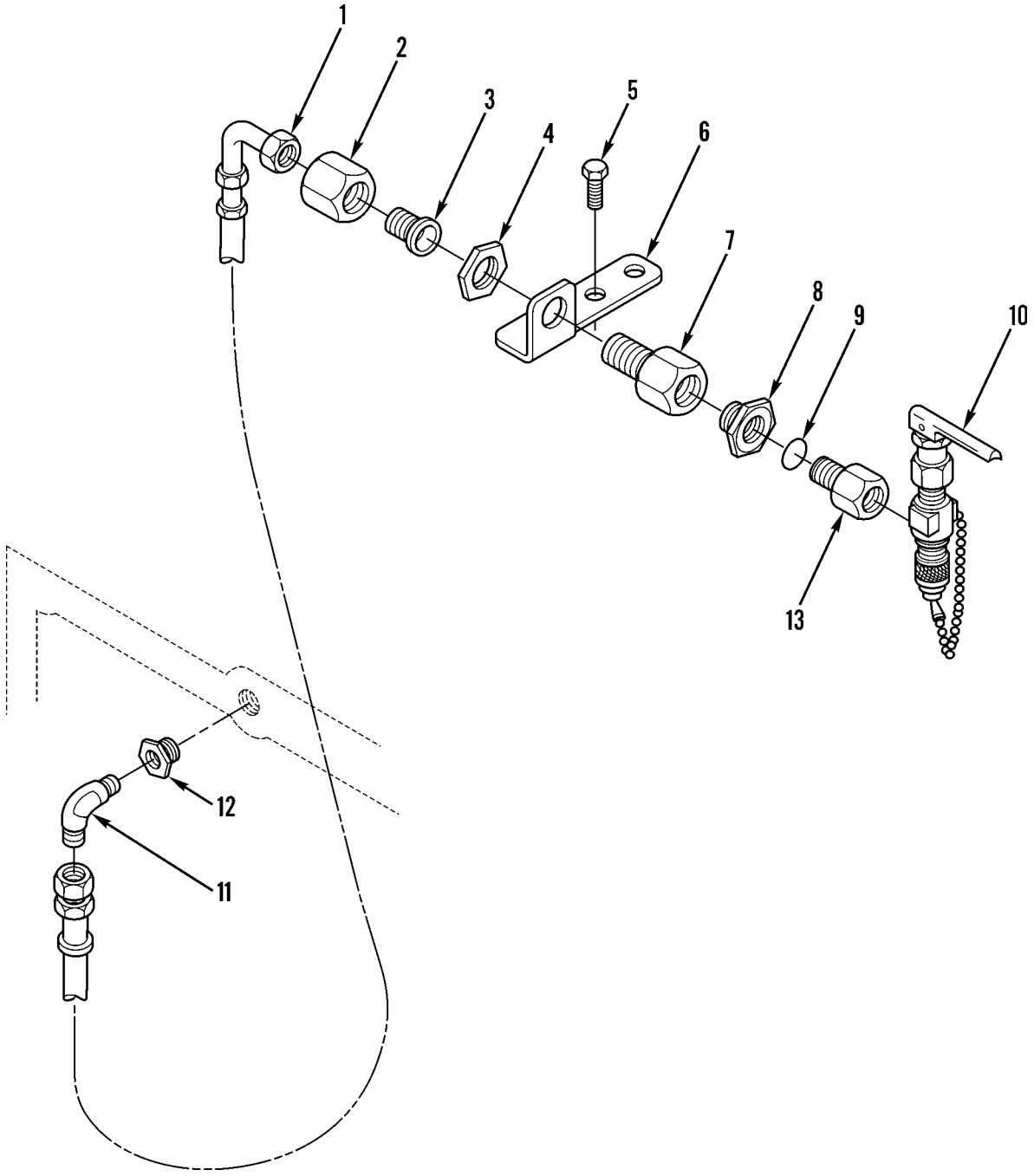

Figure 20. Engine Oil Sampling Lines and Valve

(1) ITEM NO	(2) SMR CODE	(3) NSN	(4) CAGEC	(5) PART NUMBER	(6) DESCRIPTION AND USABLE ON CODES(UOC)	(7) QTY
					GROUP 0106 ENGINE LUBRICATION SYSTEM FIG. 20 ENGINE OIL SAMPLING LINES AND VALVE	
1	PAOZZ	4720011967180	11083	9G9501	HOSE ASSEMBLY,NONME.....	1
2	PFOZZ	4730007621239	96906	MS51531B8	NUT,TUBE COUPLING.....	1
3	PFOZZ	4730006763075	96906	MS51534A8-4	REDUCER,TUBE.....	1
4	PFOZZ	5310008124283	30780	8WLNS	NUT,PLAIN,HEXAGON.....	1
5	PFOZZ	5305000680511	80204	B1821BH038C125N	SCREW,CAP,HEXAGON H.....	2
6	PAOZZ	5340012361850	11083	5R7181	BRACKET,ANGLE.....	1
7	PAOZZ	4730011967172	11083	6V2376	ADAPTER,STRAIGHT,PI.....	1
8	PFOZZ	4730011522666	11083	5R5304	ADAPTER,STRAIGHT,PI.....	1
9	XDOZZ	5331010491292	02697	3-904N552-90	O-RING.....	1
10	PFOZZ	4820012029608	91816	HV50-2-R	VALVE,SAMPLING,HYDR..... UOC:AF9,AGM,AGN,F10	1
10	PFOZZ	4820010730080	19207	11669424	COCK,DRAIN..... UOC:AGM,AGP	1
11	PAOZZ	4730004035404	30076	14500	ELBOW,PIPE TO TUBE.....	1
12	PAOZZ	4730011592998	11083	2H5547	BUSHING,PIPE.....	1
13	PFOZA	4730001218299	07421	425-100-003	ADAPTER,STRAIGHT,PI.....	1

END OF FIGURE

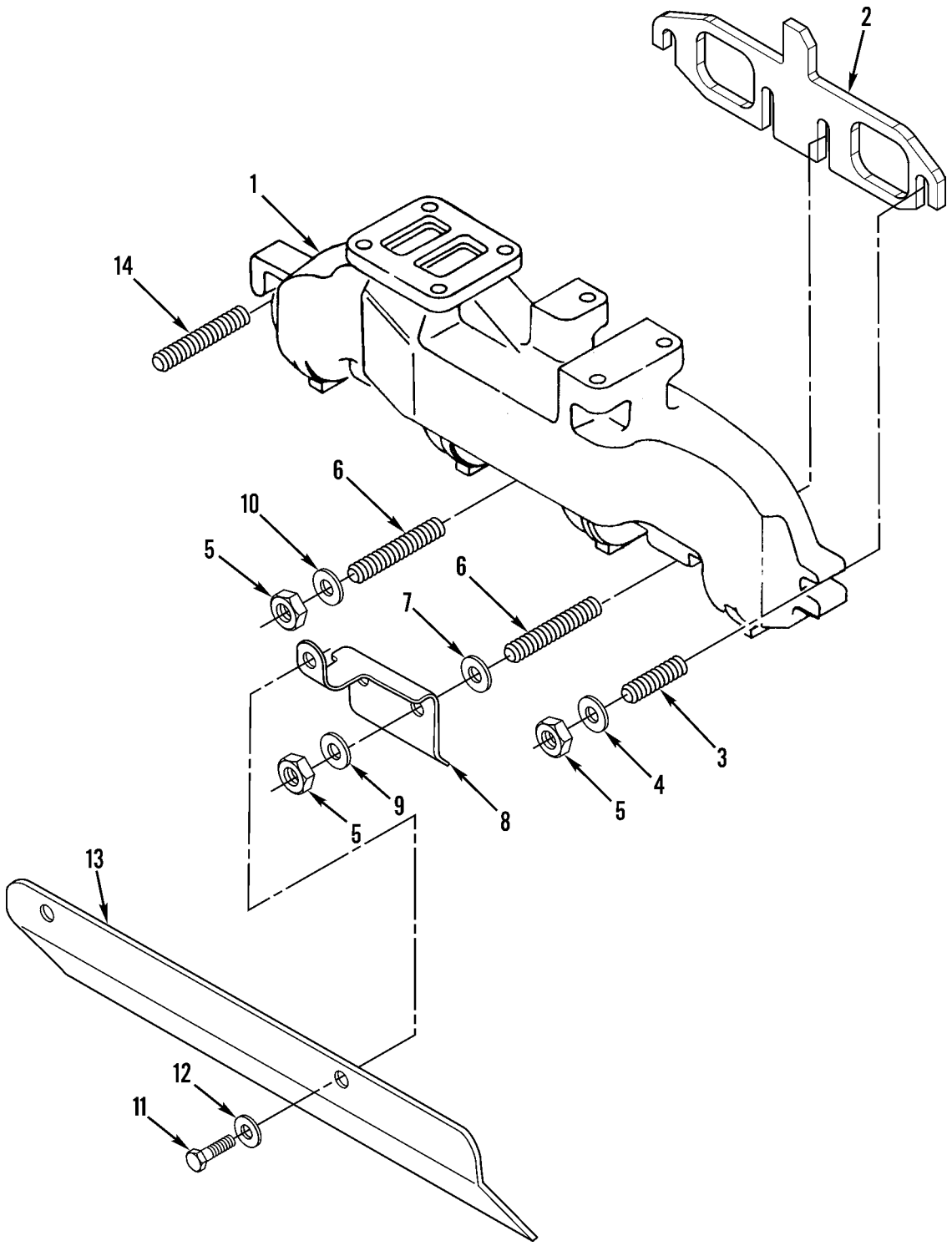

Figure 21. Engine Exhaust Manifold and Mounting

(1) ITEM NO	(2) SMR CODE	(3) NSN	(4) CAGEC	(5) PART NUMBER	(6) DESCRIPTION AND USABLE ON CODES(UOC)	(7) QTY
					GROUP 0108 MANIFOLDS FIG. 21 ENGINE EXHAUST MANIFOLD AND MOUNTING	
1	PFFZZ	2815010941957	11083	1P1216	MANIFOLD,EXHAUST.....	1
2	PFFZZ	5330013324089	11083	9Y1979	GASKET PART OF KIT P/N 6V2934..... UOC:AF9,AGP	2
3	PFFZZ	5307004116559	11083	8M1871	STUD,PLAIN..... UOC:AF9,AGP,F10	1
4	PFFZZ	5310009998288	11083	9M6527	WASHER,FLAT.....	1
5	PFFZZ	5310004988409	11083	1B5355	NUT,PLAIN,HEXAGON.....	8
6	PFFZZ	5307004980804	11083	7S6719	STUD.....	3
7	PFFZZ	5310010618633	11083	9L9132	WASHER..... UOC:AF9,AGP,F10	4
8	PFFZZ	5340011775936	11083	2W6601	BRACKET,DOUBLE ANGL..... UOC:AF9,AGP,F10	2
9	PFFZZ	5310001174788	11083	5M2894	WASHER,FLAT.....	4
10	PFFZZ	5310009871294	19200	10910174-16	WASHER,FLAT.....	3
11	PFFZZ	5305000712506	80204	B1821BH025C050N	SCREW,CAP,HEXAGON H..... UOC:AF9,AGP,F10	2
12	PFFZZ	5310010980634	78189	WD23875	WASHER,SPRING TENSI..... UOC:AF9,AGP,F10	2
13	PFFZZ	2815011548081	11083	2W6599	HEAT SHIELD,DIESEL..... UOC:AF9,AGP,F10	2
14	PFFZZ	5307009436167	11083	9M3296	STUD,CONTINUOUS THR..... UOC:AF9,AGP,F10	4

END OF FIGURE

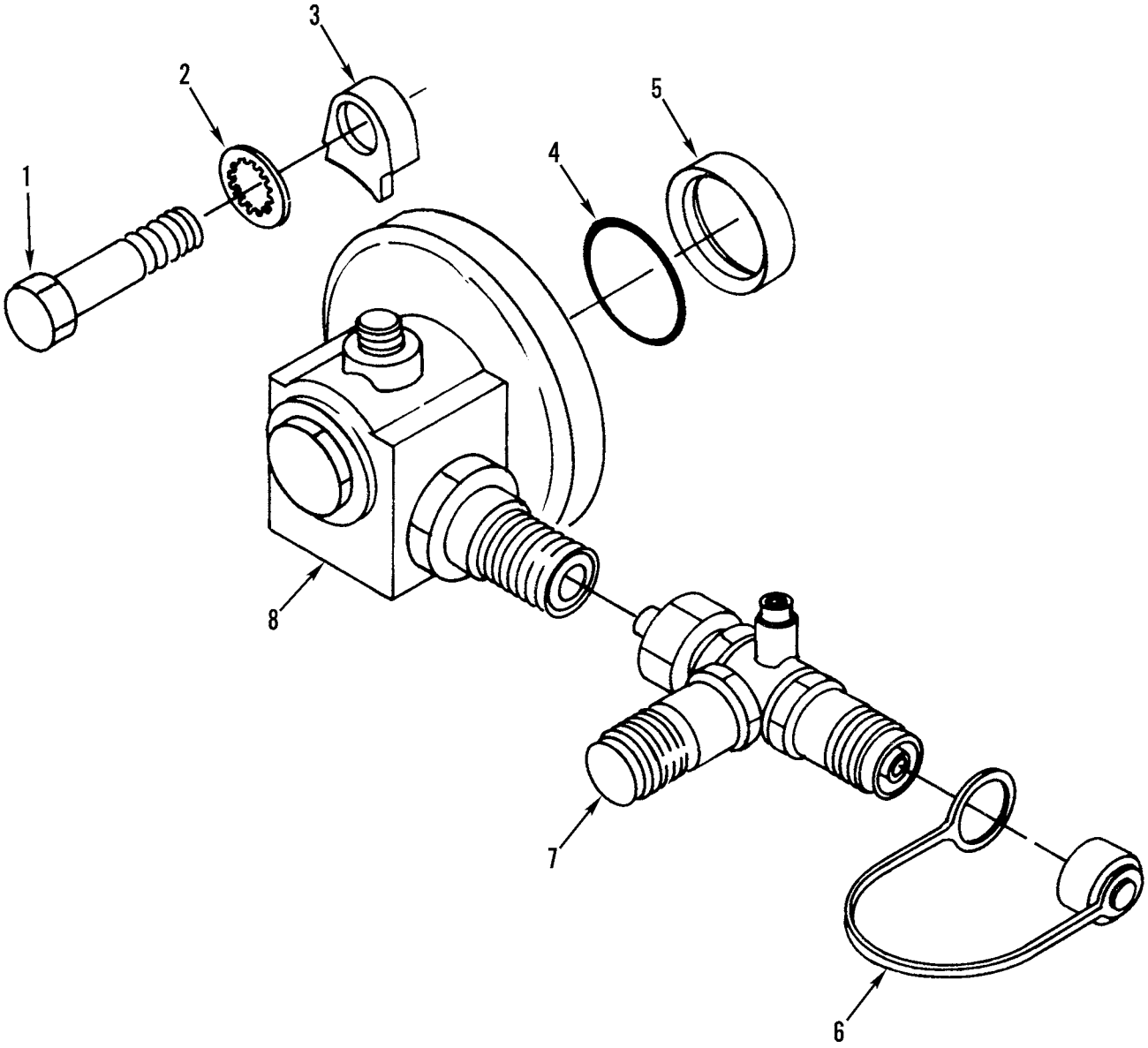

Figure 22. Tachometer Drive

(1) ITEM NO	(2) SMR CODE	(3) NSN	(4) CAGEC	(5) PART NUMBER	(6) DESCRIPTION AND USABLE ON CODES(UOC)	(7) QTY
					GROUP 0109 ACCESSORY DRIVING MECHANISMS FIG. 22 TACHOMETER DRIVE	
1	PFFZZ	5306002264828	80204	B1821BH031C113N	BOLT,MACHINE..... UOC:AF9,AGP,F10	2
2	PFFZZ	5310001670721	96906	MS35333-41	WASHER,LOCK..... UOC:AF9,AGP,F10	2
3	PAFZZ	5340002614042	11083	9S3032	CLAMP,SYNCHRO..... UOC:AF9,AGP,F10	2
4	PFFZZ	5331006136522	11083	4M8303	O-RING PART OF KIT P/N 3E8905..... UOC:AF9,AGP,F10	1
5	PAFZZ	5330011023252	11083	5P9294	SEAL,PLAIN ENCASED..... UOC:AF9,AGP,F10	1
6	PFFZZ	5340012699343	11083	4W5235	CAP,PROTECTIVE,DUST..... UOC:AF9,AGP,F10	2
7	PFFZZ	6680011794546	56252	AD2H23MA16	ADAPTER,SPEEDOMETER..... UOC:AF9,AGP,F10	1
8	PFFZZ	2815010534542	11083	2P6228	ADAPTER ASSEMBLY..... UOC:AF9,AGP,F10	1

END OF FIGURE

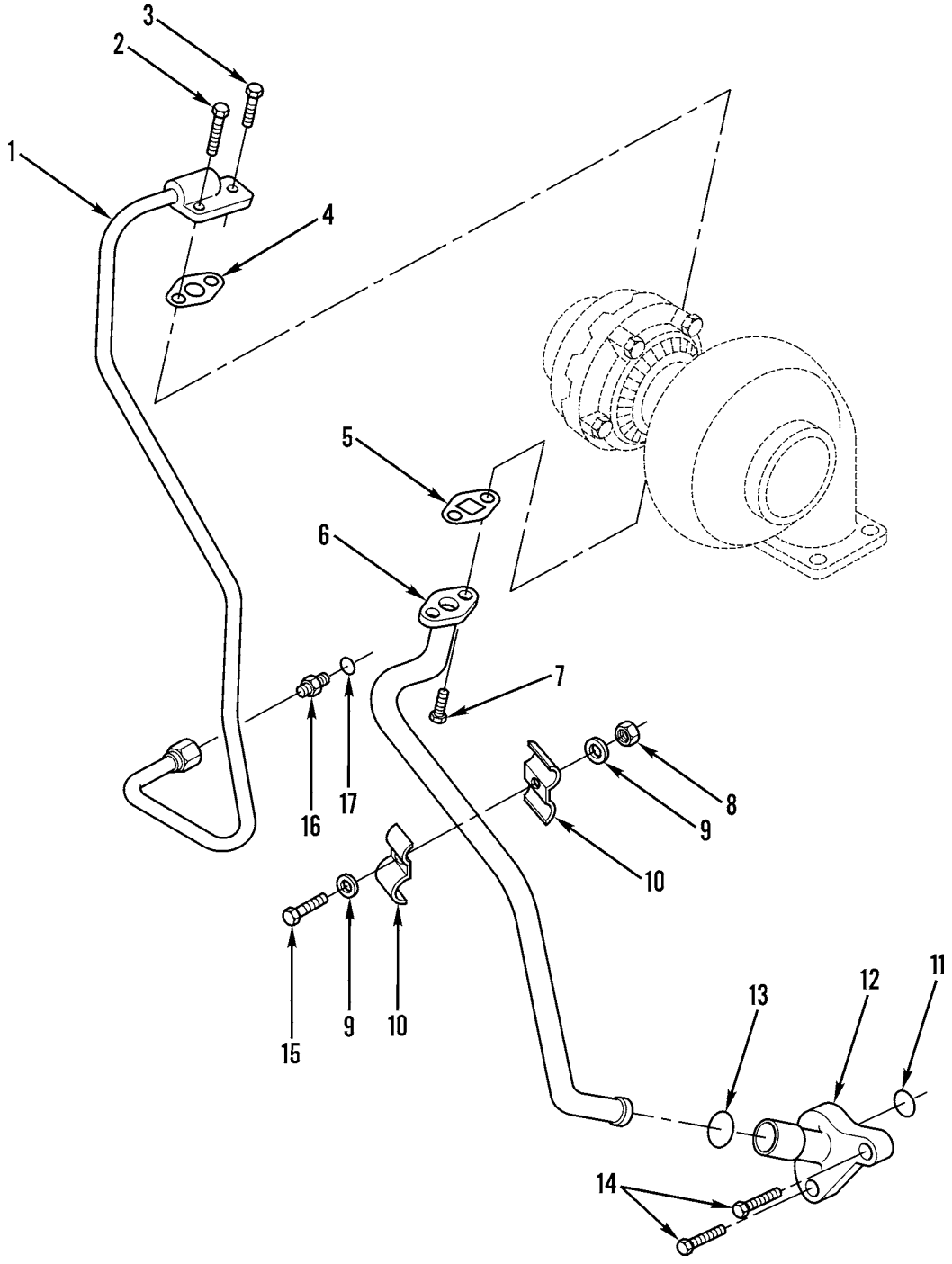

Figure 23. Turbocharger Oil Lines and Fittings

(1) ITEM NO	(2) SMR CODE	(3) NSN	(4) CAGEC	(5) PART NUMBER	(6) DESCRIPTION AND USABLE ON CODES(UOC)	(7) QTY
					GROUP 0127 LUBRICATING SYSTEM FIG. 23 TURBOCHARGER OIL LINES AND FITTINGS	
1	PFFZZ	4710010687132	11083	6N6122	TUBE A..... UOC:AGM,AGN	1
1	PFFZZ	4710011816787	11083	7W1058	TUBE ASSEMBLY,METAL..... UOC:AF9,AGP,F10	1
2	PFFZZ	5306002264832	80204	B1821BH031C175N	BOLT,MACHINE..... UOC:AGM,AGN	2
2	PFFZZ	5306002721804	11083	1B2790	BOLT,MACHINE..... UOC:AF9,AGP,F10	1
3	PFFZZ	5306002264828	80204	B1821BH031C113N	BOLT,MACHINE..... UOC:AF9,AGP,F10	1
4	PFFZZ	5330002482176	11083	7B5932	GASKET PART OF KIT P/N 6V2934..... UOC:AGM,AGN	1
4	PFFZZ	5330009318048	11083	1S6595	GASKET PART OF KIT P/N 6V2525..... UOC:AF9,AGP,F10	1
5	PFFZZ	5330010675724	11083	1P1255	GASKET PART OF KIT P/N 6V2934.....	1
6	PFFZZ	4710011036624	11083	6N6120	TUBE ASSEMBLY,METAL..... UOC:AGM,AGN	1
6	PFFZZ	4710011816788	11083	7W1056	TUBE ASSEMBLY,METAL..... UOC:AF9,AGP,F10	1
7	PFFZZ	5306004238194	11083	1A2029	BOLT,MACHINE..... UOC:AF9,AGP,F10	2
8	PFFZZ	5310010951526	11083	4M5280	NUT,PLAIN,HEXAGON..... UOC:AF9,AGP,F10	1
9	PFFZZ	5310000814219	96906	MS27183-12	WASHER,FLAT.....	2
10	PFFZZ	5340011687289	11083	6N6033	STRAP,RETAINING.....	2
11	PAFZZ	5331009138872	02697	2-216S1199-70	O-RING..... UOC:AF9,AGP,F10	1
12	PAFZZ	4730011527717	11083	1W5633	ELBOW,FLANGE TO PIP..... UOC:AF9,AGP,F10	1
13	PAFZZ	5330008474351	11083	9M4849	SEAL,RING.....	1
14	PFFZZ	5305010156841	11083	0S1591	SCREW.....	1
15	PFFZZ	5306002264825	80204	B1821BH031C075N	BOLT,MACHINE..... UOC:AF9,AGP,F10	1
16	PFFZZ	4730011600130	00624	2021-6-8S	ADAPTER,STRAIGHT,PI..... UOC:AF9,AGM,AGN	1
16	XDFZZ		11083	8M0505	ADAPTER,STRAIGHT,TU..... UOC:AF9,AGP,F10	1
17	PAFZZ	5331009486482	11083	3K0360	O-RING..... UOC:AF9,AGP,F10	1

END OF FIGURE

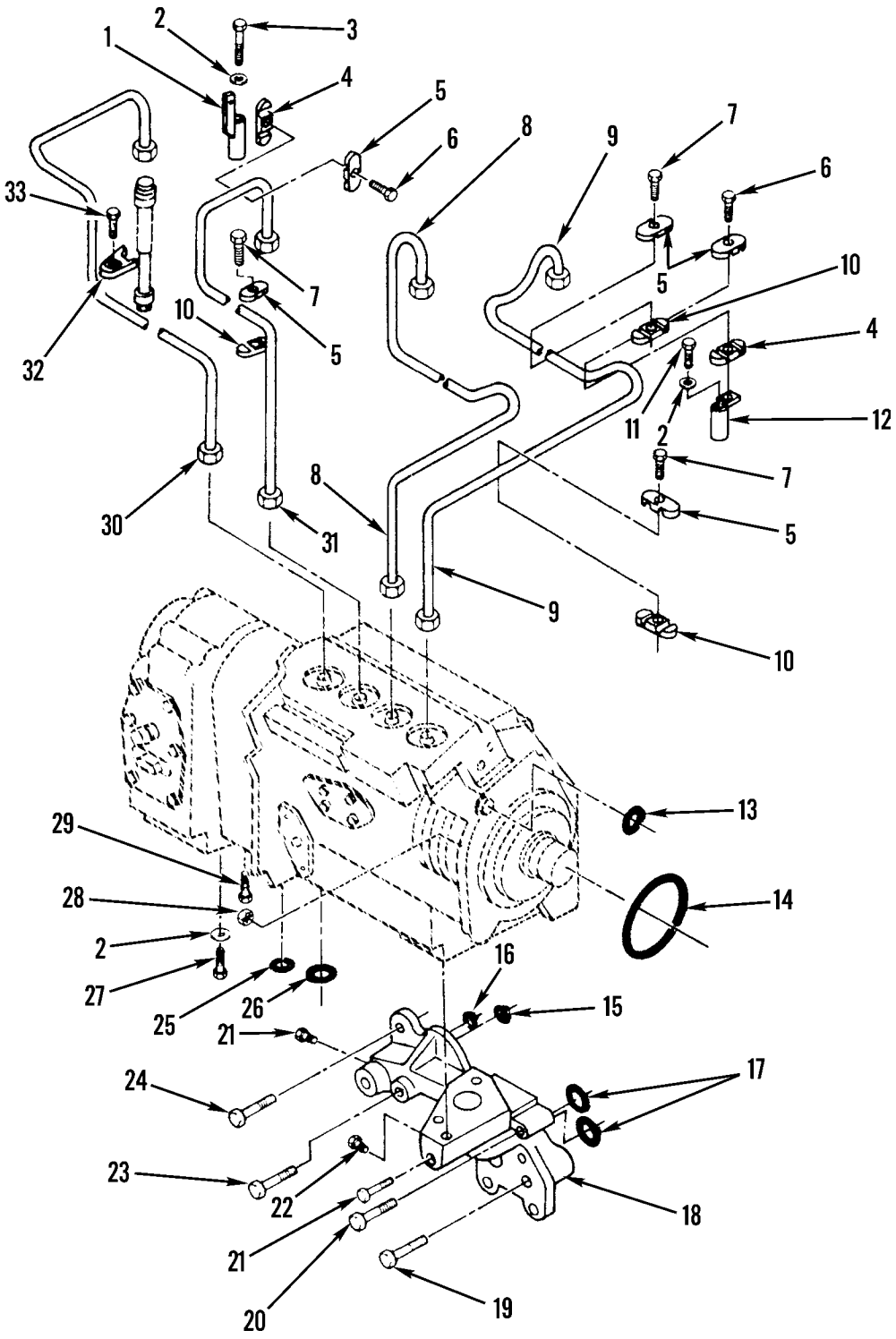

Figure 24. Fuel Injector Fuel Lines and Fuel Injector Pump Mounting (Sheet 1 of 2)

36

37 THRU 39

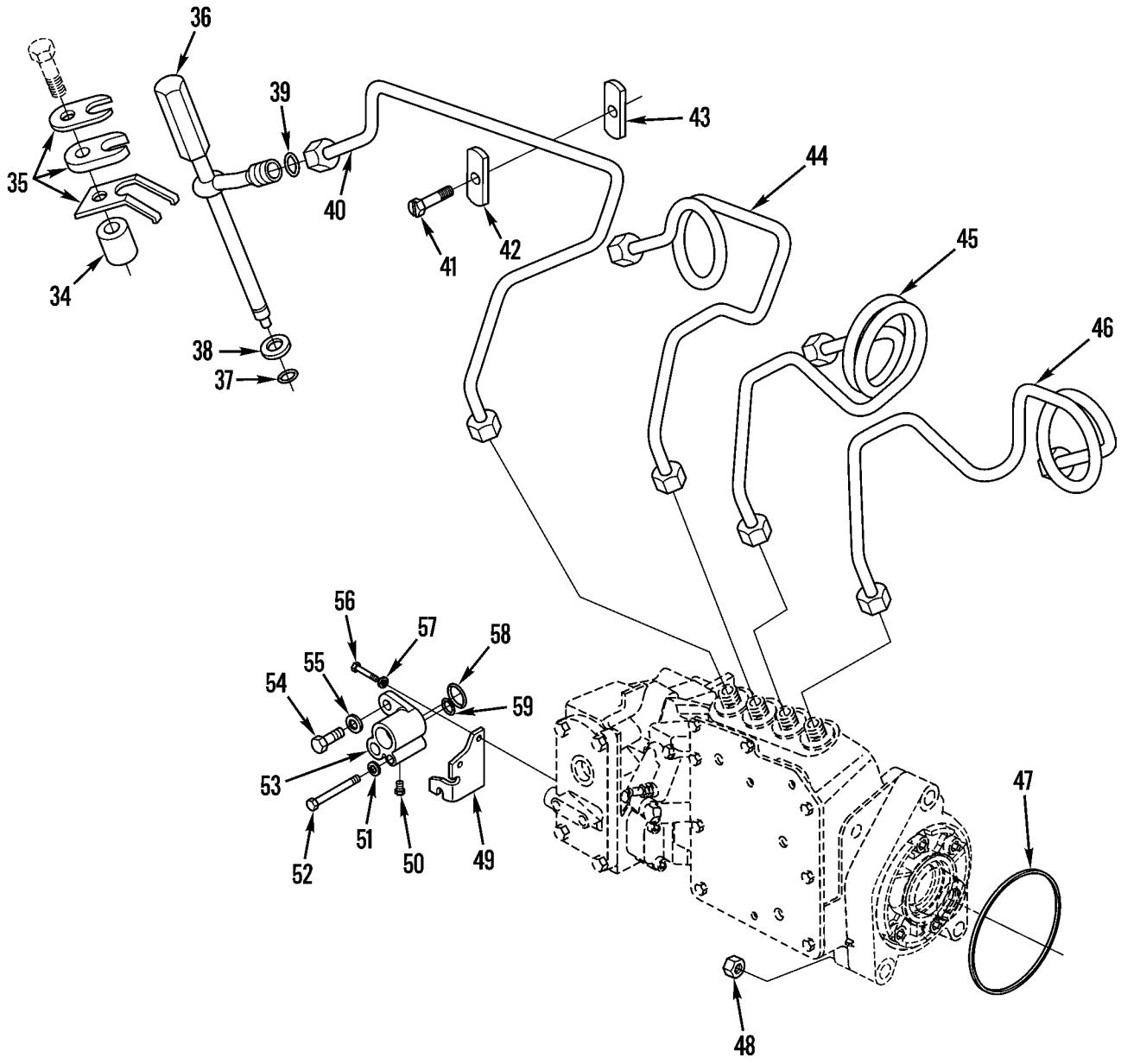

Figure 24. Fuel Injector Fuel Lines and Fuel Injector Pump Mounting (Sheet 2 of 2)

(1) ITEM NO	(2) SMR CODE	(3) NSN	(4) CAGEC	(5) PART NUMBER	(6) DESCRIPTION AND USABLE ON CODES(UOC)	(7) QTY
					GROUP 03 FUEL SYSTEM GROUP 0301 CARBURETOR, FUEL INJECTOR FIG. 24 FUEL INJECTOR FUEL LINES AND FUEL INJECTOR PUMP MOUNTING	
1	PFFZZ	5340011720726	11083	6C0756	BRACKET..... UOC:AF9,AGP,F10	1
2	PFFZZ	5310001174788	11083	5M2894	WASHER,FLAT..... UOC:AF9,AGP,F10	3
3	PFFZZ	5306004262974	11083	T0065	BOLT,MACHINE..... UOC:AF9,AGP,F10	1
4	PFFZZ	5340011538957	11083	1W9167	CLAMP..... UOC:AF9,AGP,F10	2
5	PAFZZ	5340011555289	11083	1W9168	CLAMPBLOCK..... UOC:AF9,AGP,F10	6
6	PFFZZ	5342010701592	11083	9N3388	LOCK..... UOC:AF9,AGP,F10	2
7	PFFZZ	5305011073526	11083	5P4939	SCREW,MACHINE..... UOC:AF9,AGP,F10	4
8	PFFZZ	4710012172817	11083	4P9962	TUBE ASSEMBLY,METAL..... UOC:AF9,AGP,F10	1
9	PFFZZ	4710011552400	11083	4P9961	TUBE ASSEMBLY,METAL..... UOC:AF9,AGP,F10	1
10	PAFZZ	5340011557869	11083	1W9169	CLAMPBLOCK..... UOC:AF9,AGP,F10	4
11	PFFZZ	5305010269518	11083	0S1571	SCREW,CAP,HEXAGON H..... UOC:AF9,AGP,F10	1
12	PFFZZ	5340011720727	11083	2W0845	BRACKET..... UOC:AF9,AGP,F10	1
13	PFFZZ	5330011831504	11083	6V6921	PACKING,PREFORMED PART OF KIT P/N 3E8905..... UOC:AF9,AGP,F10	1
14	PCFZZ	5331002917192	09990	2-241N951-75	O-RING PART OF KIT P/N 6V2248 PART OF KIT P/N 3E8905..... UOC:AF9,AGP,F10	1
15	PFFZZ	5331009995504	11083	8M4446	O-RING..... UOC:AF9,AGP,F10	1
16	PFFZZ	5330004921790	11083	8M4438	PACKING,PREFORMED..... UOC:AF9,AGP,F10	1
17	PAFZZ	5331009138872	02697	2-216S1199-70	O-RING..... UOC:AF9,AGP,F10	2
18	XDFZZ		11083	8N1329	SUPPORT..... UOC:AF9,AGP,F10	1
19	PFFZZ	5306011645441	11083	6M9149	BOLT,MACHINE..... UOC:AF9,AGP,F10	1
20	PFFZZ	5306010949106	11083	0S1590	BOLT,MACHINE..... UOC:AF9,AGP,F10	1
21	PFFZZ	4730000892515	11083	5M6213	PLUG,PIPE..... UOC:AF9,AGP,F10	2
22	PFFZZ	4730004275121	01276	2082-6B	PLUG,PIPE..... UOC:AF9,AGP,F10	1
23	PFFZZ	5306004262932	11083	0S1619	BOLT,MACHINE.....	1

(1) ITEM NO	(2) SMR CODE	(3) NSN	(4) CAGEC	(5) PART NUMBER	(6) DESCRIPTION AND USABLE ON CODES(UOC)	(7) QTY
					UOC:AF9,AGP,F10	
24	PFFZZ	5306008744001	11083	6H1717	BOLT,MACHINE.....	1
					UOC:AF9,AGP,F10	
25	PCFZZ	5331006334535	11083	2H3932	O-RING.....	1
					UOC:AF9,AGP,F10	
26	PCFZZ	5331003396224	11083	5F7054	O-RING.....	1
					UOC:AF9,AGP,F10	
27	PFFZZ	2910003099473	11083	0T0573	CAPSCREW,FUEL PUMP.....	1
					UOC:AF9,AGP,F10	
28	PFFZZ	5310007257382	96906	MS35690-624	NUT,PLAIN,HEXAGON.....	3
					UOC:AF9,AGP,F10	
29	PFFZZ	5306002634038	11083	2A4639	BOLT,MACHINE.....	1
					UOC:AF9,AGP,F10	
30	PFFZZ	4710011531648	11083	4P9964	TUBE ASSEMBLY,METAL.....	1
					UOC:AF9,AGP,F10	
31	PFFZZ	4710014203887	11083	4P9963	TUBE ASSEMBLY,METAL.....	1
					UOC:AF9,AGP,F10	
32	PAFZZ	5342011841068	11083	8N5132	BRACKET,FUEL INJECT.....	4
					UOC:AF9,AGP,F10	
33	PFFZZ	5306002537879	11083	1T0416	BOLT,MACHINE.....	4
					UOC:AF9,AGP,F10	
34	PFFZZ	5365001755049	11083	9L8388	SPACER,SLEEVE.....	4
					UOC:AGM,AGN	
35	PFFZZ	5340011548437	84760	22999	CLAMP ASSEMBLY.....	4
					UOC:AGM,AGN	
36	PFFZZ	2910011434403	11083	7N0449	NOZZLE,FUEL INJECTI.....	4
					UOC:AGM,AGN	
37	PFFZZ	3120010769278	11083	9L9098	.SLEEVE,METERING FUE.....	1
					UOC:AGM,AGN	
38	PFFZZ	5310000220666	84760	16168	.WASHER,FLAT.....	1
					UOC:AGM,AGN	
39	PFFZZ	5331009206924	11083	1H1023	.O-RING.....	1
					UOC:AGM,AGN	
40	PFFZZ	4710011432951	11083	8N4224	TUBE ASSEMBLY,METAL.....	1
					UOC:AGM,AGN	
41	PFFZZ	5305005319800	79960	T318S301	SCREW,ASSEMBLED WAS.....	4
					UOC:AGM,AGN	
42	PFFZZ	5342011161312	11083	6N6403	CLAMPBLOCK.....	4
					UOC:AGM,AGN	
43	PFFZZ	5342011163799	11083	6N6404	CLAMPBLOCK.....	4
					UOC:AGM,AGN	
44	PFFZZ	4710011418694	11083	8N4223	TUBE ASSEMBLY,METAL.....	1
					UOC:AGM,AGN	
45	PFFZZ	4710011432950	11083	8N4222	TUBE ASSEMBLY,METAL.....	1
					UOC:AGM,AGN	
46	PFFZZ	4710011434447	11083	1W8641	TUBE ASSEMBLY,METAL.....	1
					UOC:AGM,AGN	
47	PCFZZ	5331002917192	09990	2-241N951-75	O-RING PART OF KIT P/N 5P9419.....	1
					UOC:AGM,AGN	
48	PFFZZ	5310007257382	96906	MS35690-624	NUT,PLAIN,HEXAGON.....	3
					UOC:AGM,AGN	
49	PFFZZ	5340011501544	11083	6N3760	BRACKET,ANGLE.....	1

(1) ITEM NO	(2) SMR CODE	(3) NSN	(4) CAGEC	(5) PART NUMBER	(6) DESCRIPTION AND USABLE ON CODES(UOC)	(7) QTY
					UOC:AGM,AGN	
50	PFFZZ	4730009247886	11083	5M6214	PLUG,PIPE.....	1
					UOC:AGM,AGN	
51	PFFZZ	5310001174788	11083	5M2894	WASHER,FLAT.....	1
					UOC:AGM,AGN	
52	PFFZZ	5306004262865	11083	0L-1352	BOLT,MACHINE.....	1
					UOC:AGM,AGN	
53	PFFZZ	2990011473004	11083	4N4021	ADAPTER,TURBO OIL L.....	1
					UOC:AGM,AGN	
54	PFFZZ	5306004240086	11083	7B3235	BOLT,MACHINE.....	1
					UOC:AGM,AGN	
55	PFFZZ	5310008095997	96906	MS27183-17	WASHER,FLAT.....	1
					UOC:AGM,AGN	
56	PFFZZ	5306002533376	11083	2A5546	BOLT,MACHINE.....	2
					UOC:AGM,AGN	
57	PFFZZ	5310010512360	11083	5P537	WASHER.....	2
					UOC:AGM,AGN	
58	PFFZZ	5331009138872	02697	2-216S1199-70	O-RING PART OF KIT P/N 5P9419.....	1
					UOC:AGM,AGN	
59	PFFZZ	5330008902235	11083	8M5253	SEAL,RING PART OF KIT P/N 5P9419....	1
					UOC:AGM,AGN	

END OF FIGURE

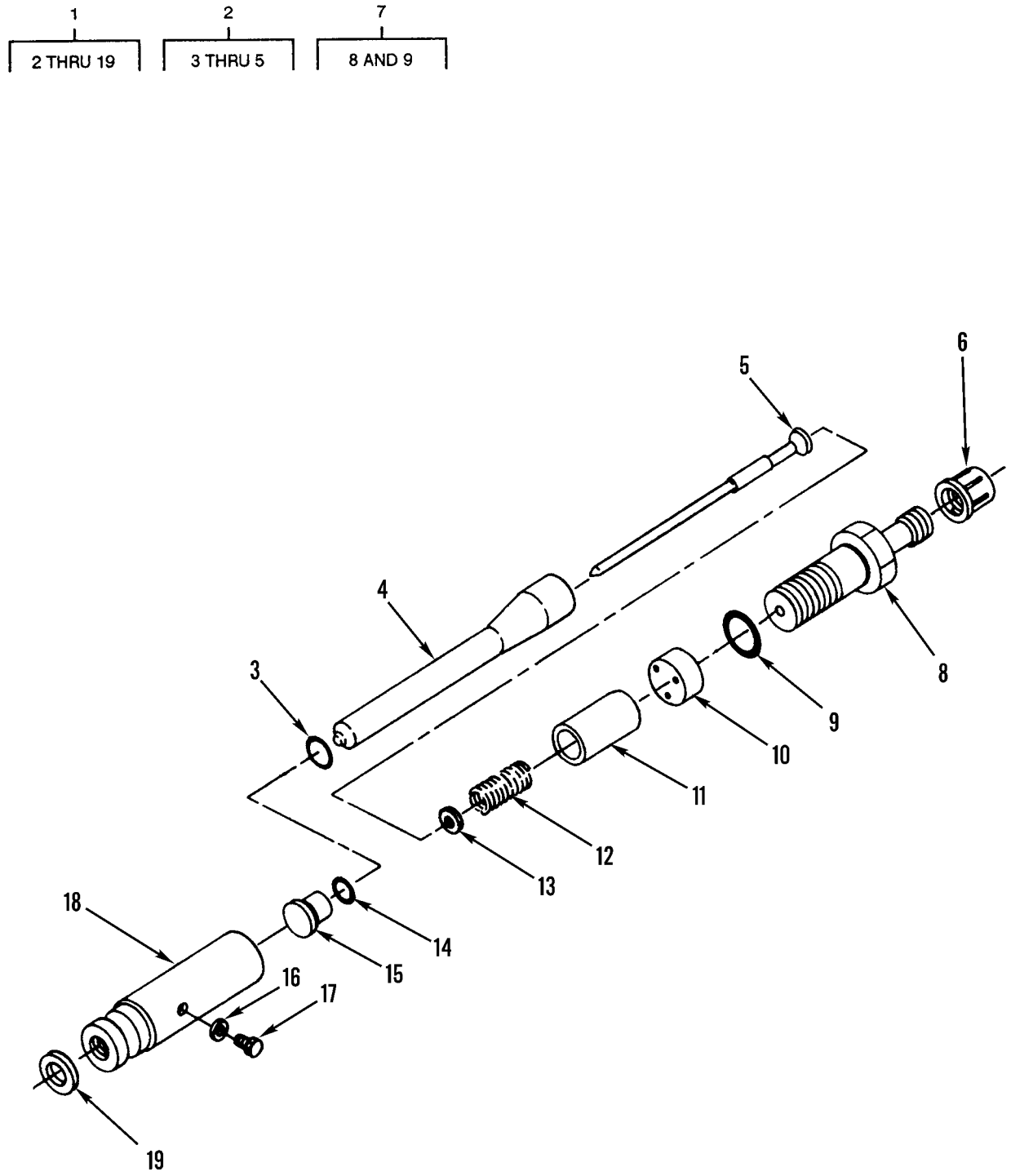

Figure 25. Fuel Injector Nozzle Assembly

(1) ITEM NO	(2) SMR CODE	(3) NSN	(4) CAGEC	(5) PART NUMBER	(6) DESCRIPTION AND USABLE ON CODES(UOC)	(7) QTY
					GROUP 0301 CARBURETOR, FUEL INJECTOR FIG. 25 FUEL INJECTOR NOZZLE ASSEMBLY	
1	PAFFZ	2910011699758	11083	8N7005	NOZZLE,FUEL INJECTI..... UOC:AF9,AGP,F10	4
2	AFFZZ		11083	1W8790	.NOZZLE,FUEL INJECTI..... UOC:AF9,AGP,F10	1
3	PCFZZ	5331011602077	09990	2-013N951-75	..O-RING PART OF KIT P/N 3E8905..... UOC:AF9,AGP,F10	1
4	PAFZZ	2910011699758	11083	8N7005	..NOZZLE,FUEL INJECTI..... UOC:AF9,AGP,F10	1
5	XAFZZ		11083	1W3994	..CHECK,DIRECT INJ..... UOC:AF9,AGP,F10	1
6	PFFZZ	5340003927334	11083	5F2807	.CAP,PROTECTIVE,DUST..... UOC:AF9,AGP,F10	1
7	XAFZZ		11083	1677490	.NOZZLE,FUEL INJECTI..... UOC:AF9,AGP,F10	1
8	XAFZZ		11083	1W6053	..ADAPTER,FUEL VALVE..... UOC:AF9,AGP,F10	1
9	PCFZZ	5331000312558	11083	1S8947	..O-RING..... UOC:AF9,AGP,F10	1
10	XAFZZ		11083	1W3986	.STOP,DIRECT INJ..... UOC:AF9,AGP,F10	1
11	XAFZZ	4730012891316	11083	1W3989	.SLEEVE,FITTING..... UOC:AF9,AGP,F10	1
12	XAFZZ		11083	1W3987	.SPRING,DIRECT INJ..... UOC:AF9,AGP,F10	1
13	XAFZZ		11083	1W3985	.SPACER,DIR INJ..... UOC:AF9,AGP,F10	1
14	PAFZZ	5365000220665	84760	16389	.SPACER,SLEEVE..... UOC:AF9,AGP,F10	1
15	PAFZZ	5340002723548	99017	EC-6	.CAP-PLUG,PROTECTIVE..... UOC:AF9,AGP,F10	1
16	PFFZZ	5330006029471	83259	600-001-6	.PACKING WITH RETAIN PART OF KIT P/N 3E8905..... UOC:AF9,AGP,F10	1
17	PFFZZ	5305013511333	11083	9X2836	.SCREW,CAP,SOCKET HE..... UOC:AF9,AGP,F10	1
18	XAFZZ		11083	1W3990	.SHELL DIRECT..... UOC:AF9,AGP,F10	1
19	PFFZZ	5310012572208	11083	7W4486	.WASHER,FLAT PART OF KIT P/N 3E8905. UOC:AF9,AGP,F10	1

END OF FIGURE

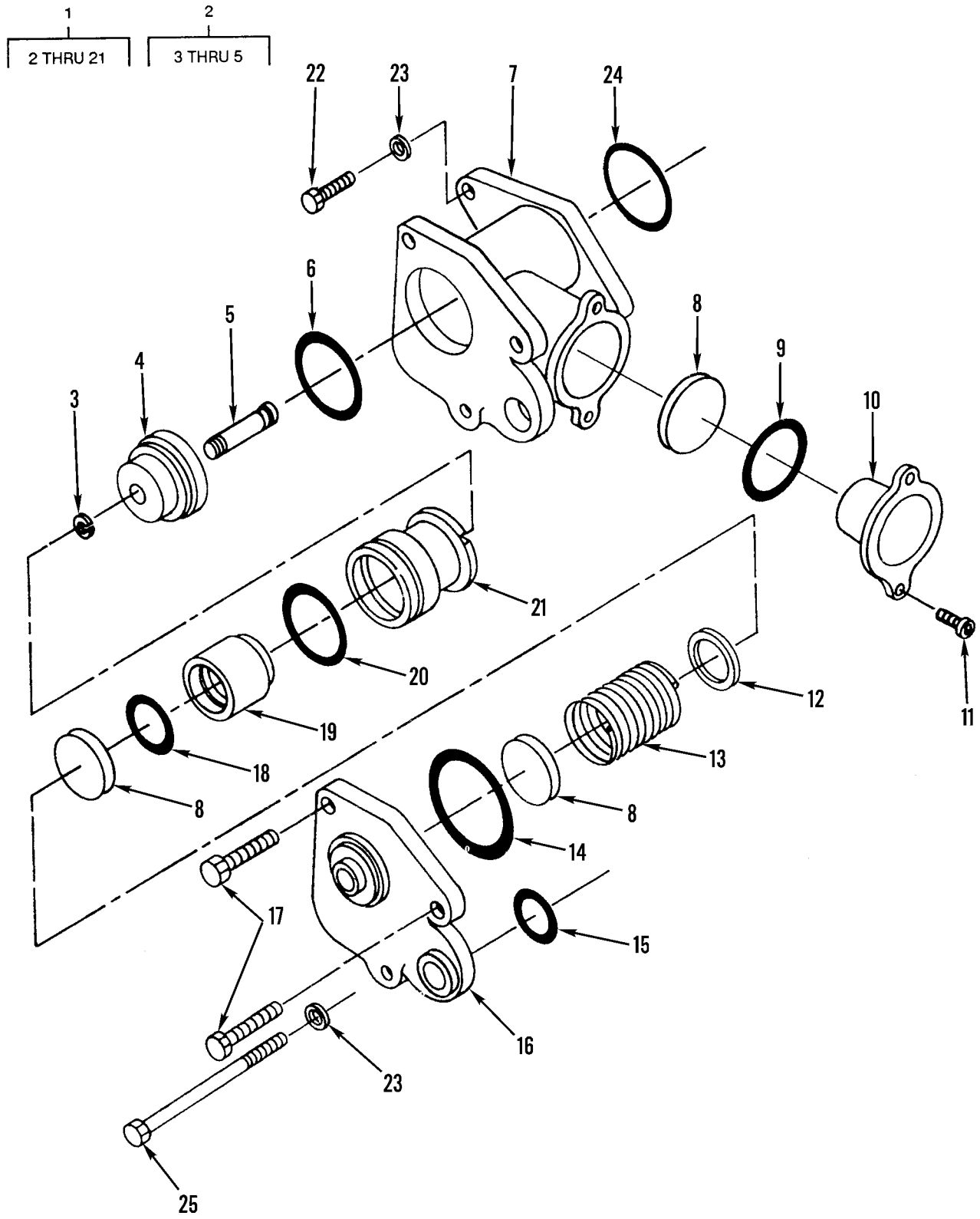

Figure 26. Fuel Transfer Pump Assembly

(1) ITEM NO	(2) SMR CODE	(3) NSN	(4) CAGEC	(5) PART NUMBER	(6) DESCRIPTION AND USABLE ON CODES(UOC)	(7) QTY
					GROUP 0302 FUEL PUMPS FIG. 26 FUEL TRANSFER PUMP ASSEMBLY	
1	PAFFZ	4320011633545	11083	1W1695	PUMP,RECIPROCATING..... UOC:AF9,AGP,F10	1
2	PAFZZ	2910011789780	11083	1W5912	.TAPPET ASSEMBLY..... UOC:AF9,AGP,F10	1
3	PFFZZ	5325011548559	11083	7N8821	..RING,RETAINING..... UOC:AF9,AGP,F10	1
4	XAFZZ		11083	1W1694	..GUIDE..... UOC:AF9,AGP,F10	1
5	XAFZZ		11083	1W1693	..TAPPET..... UOC:AF9,AGP,F10	1
6	PFFZZ	5331004942763	11083	6J2419	.O-RING PART OF KIT P/N 3E8905..... UOC:AF9,AGP,F10	1
7	PFFZZ	3040011789827	11083	1W1698	.HOUSING,MECHANICAL..... UOC:AF9,AGP,F10	1
8	PAFZZ	2910011811931	71425	RD700	.VALVE ASSEMBLY,FUEL..... UOC:AF9,AGP,F10	3
9	PCFZZ	5331009448281	11083	3D2824	.O-RING PART OF KIT P/N 3E8905..... UOC:AF9,AGP,F10	1
10	PFFZZ	5340011816629	11083	8N2640	.COVER,ACCESS..... UOC:AF9,AGP,F10	1
11	PFFZZ	5305011808690	11083	6D8498	.SCREW,CAP,SOCKET HE..... UOC:AF9,AGP,F10	2
12	PFFZZ	5310011823071	11083	8N2637	.WASHER,FLAT..... UOC:AF9,AGP,F10	1
13	PAFZZ	5360012701351	11083	7W0134	.SPRING,HELICAL,COMP..... UOC:AF9,AGP,F10	1
14	PFFZZ	5330007308003	11083	3D2898	.PACKING,PREFORMED PART OF KIT P/N 3E8905..... UOC:AF9,AGP,F10	1
15	PCFZZ	5331003106575	11083	6F6672	.O-RING PART OF KIT P/N 3E8905..... UOC:AF9,AGP,F10	1
16	PFFZZ	2910011802987	11083	1W1699	.COVER,FUEL TRANSFER..... UOC:AF9,AGP,F10	1
17	PFFZZ	5306002611153	11083	0S1615	.BOLT,MACHINE..... UOC:AF9,AGP,F10	2
18	PCFZZ	5331010211906	05842	30205030	.O-RING..... UOC:AF9,AGP,F10	1
19	PAFZZ	2910011788858	11083	1W1669	.PISTON,FUEL PUMP..... UOC:AF9,AGP,F10	1
20	PCFZZ	5331002651097	99167	AF934-117	.O-RING PART OF KIT P/N 3E8905..... UOC:AF9,AGP,F10	1
21	PAFZZ	3120011854724	11083	8N2641	.BEARING,SLEEVE..... UOC:AF9,AGP,F10	1
22	PFFZZ	5305000712505	80204	B1821BH025C088N	SCREW,CAP,HEXAGON H..... UOC:AF9,AGP,F10	1
23	PFFZZ	5310000814219	96906	MS27183-12	WASHER,FLAT..... UOC:AF9,AGP,F10	2
24	PCFZZ	5331009138119	11083	4J8997	O-RING PART OF KIT P/N 3E8905..... UOC:AF9,AGP,F10	1

(1) ITEM NO	(2) SMR CODE	(3) NSN	(4) CAGEC	(5) PART NUMBER	(6) DESCRIPTION AND USABLE ON CODES(UOC)	(7) QTY
25	PFFZZ	5306008657377	12436	540247-563	BOLT,MACHINE..... UOC:AF9,AGP,F10	1

END OF FIGURE

3

4 AND 5

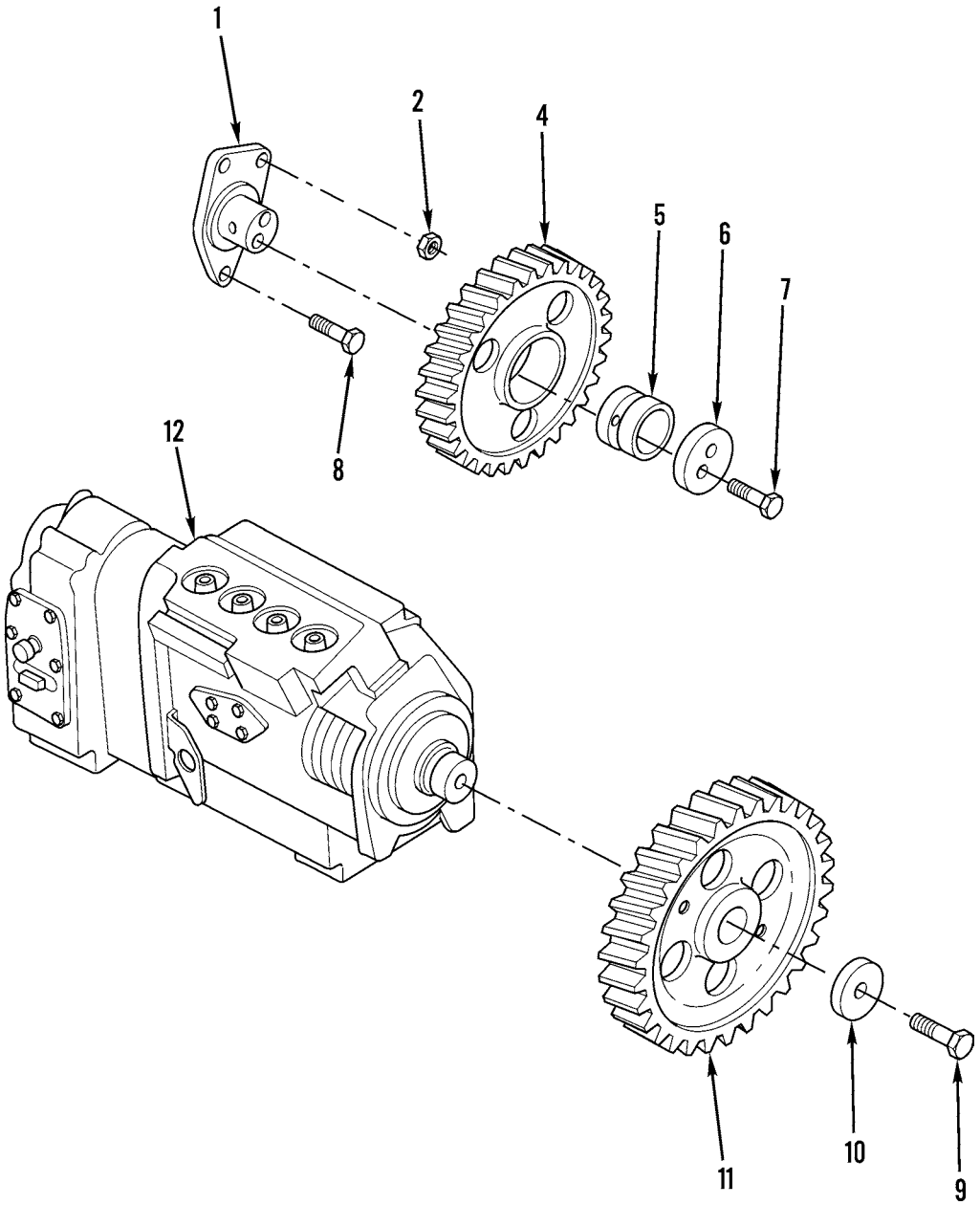

Figure 27. Fuel Pump Drive Gears

(1) ITEM NO	(2) SMR CODE	(3) NSN	(4) CAGEC	(5) PART NUMBER	(6) DESCRIPTION AND USABLE ON CODES(UOC)	(7) QTY
					GROUP 0302 FUEL PUMPS	
					FIG. 27 FUEL PUMP DRIVE GEARS	
1	PFHZZ	3040011255536	11083	1059772	SHAFT,IDLER.....	1
2	PFHZZ	5310009752075	96906	MS35691-21	NUT,PLAIN,HEXAGON.....	1
3	PFHHH	3020015218058	11083	1960028	GEAR, HELICAL REPLACES 7N4791.....	1
3	XBHHH		11083	7N4791	GEAR,HELICAL.....	1
4	XAHZZ		11083	7N3524	.GEAR FUEL PUMP.....	1
5	PFHZZ	3120004394878	11083	5S7630	.BEARING,SLEEVE USE WITH 7N4791....	1
5	PFHZZ	3120015034984	11083	1950302	.BEARING,SLEEVE USE WITH 1960028...	1
6	PFHZZ	2815011255535	11083	8N4960	PLATE,THRUST.....	1
7	PFHZZ	5306011169622	11083	0S1618	BOLT,MACHINE.....	2
8	PFHZZ	5306002637301	11083	0L1351	BOLT,MACHINE.....	2
9	PFFZZ	5306002637303	11083	S1603	BOLT,MACHINE.....	1
					UOC:AGM,AGN	
9	PFFZZ	5305011670298	11083	7N2602	SCREW,CAP,HEXAGON H.....	1
					UOC:AF9,AGP,F10	
10	PFFZZ	5310010239757	11083	4N3371	WASHER,FLAT.....	1
					UOC:AGM,AGN	
10	PFFZZ	5310011576813	11083	7N2994	WASHER,SHOULDERED.....	1
					UOC:AF9,AGP,F10	
11	PFFZZ	3020011268956	11083	7N3536	GEAR,HELICAL.....	1
					UOC:AGM,AGN	
11	PFFZZ	3020012539281	11083	7W0508	GEAR,HELICAL.....	1
					UOC:AF9,AGP,F10	
12	PFFHD	2910011394900	11083	7N2178	PUMP GOV FUEL INJ.....	1
					UOC:AGM,AGN	
12	PFFHF	2910011774793	11083	2W0517	PUMP,FUEL,METERING.....	1
					UOC:AF9,AGP,F10	

END OF FIGURE

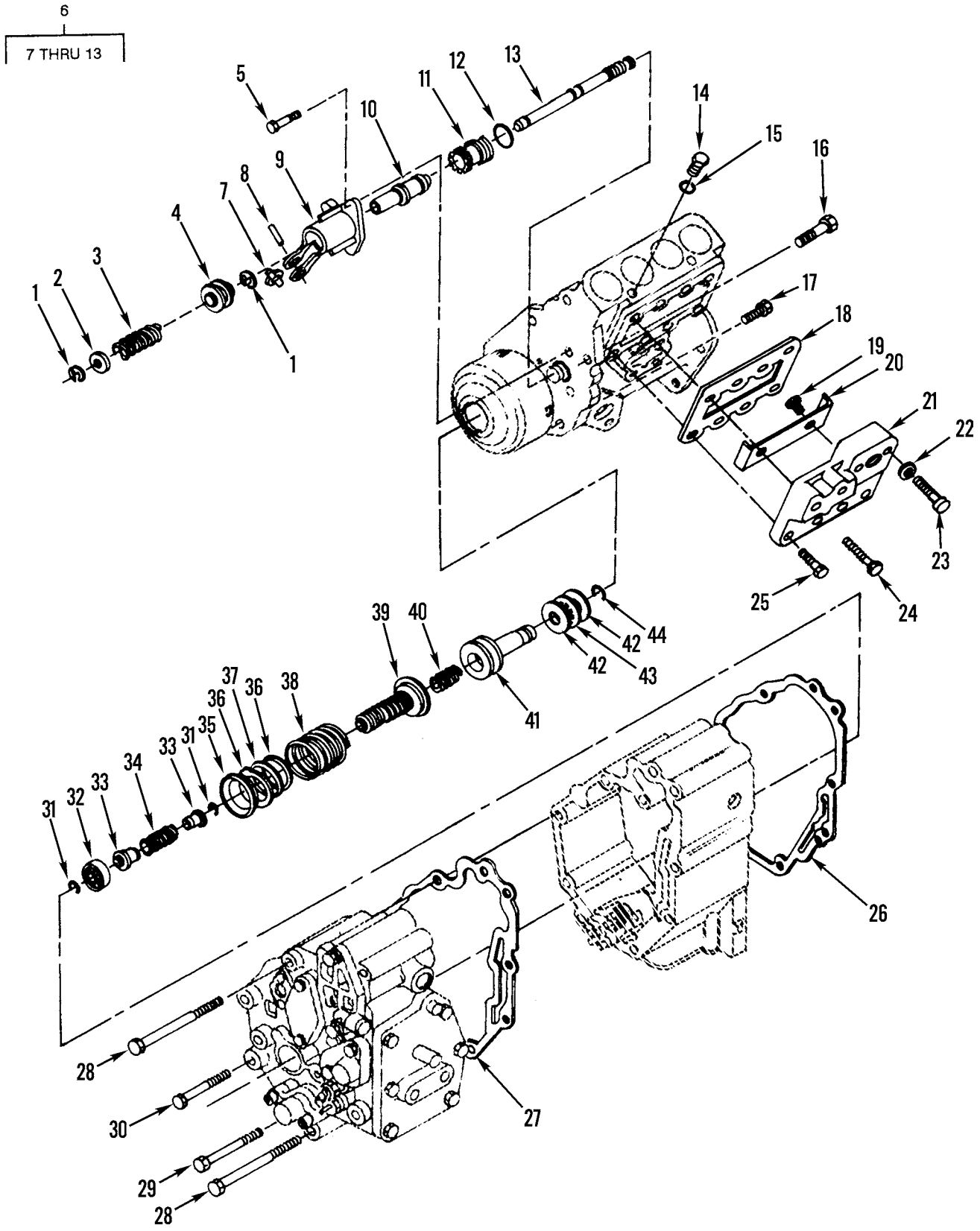

Figure 28. Governor and Fuel Injection Pump Assembly (Sheet 1 of 3)

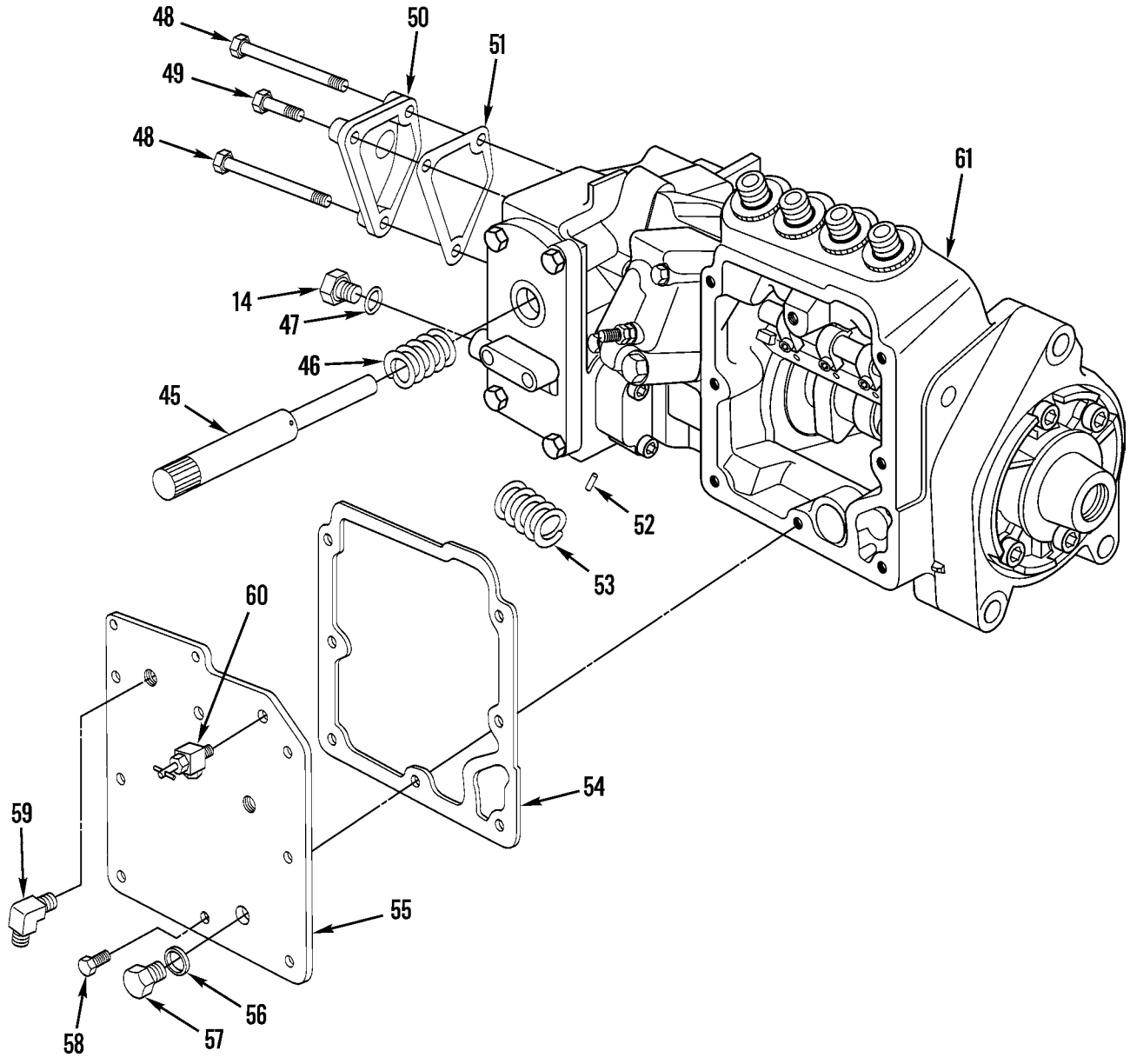

Figure 28. Governor and Fuel Injection Pump Assembly (Sheet 2 of 3)

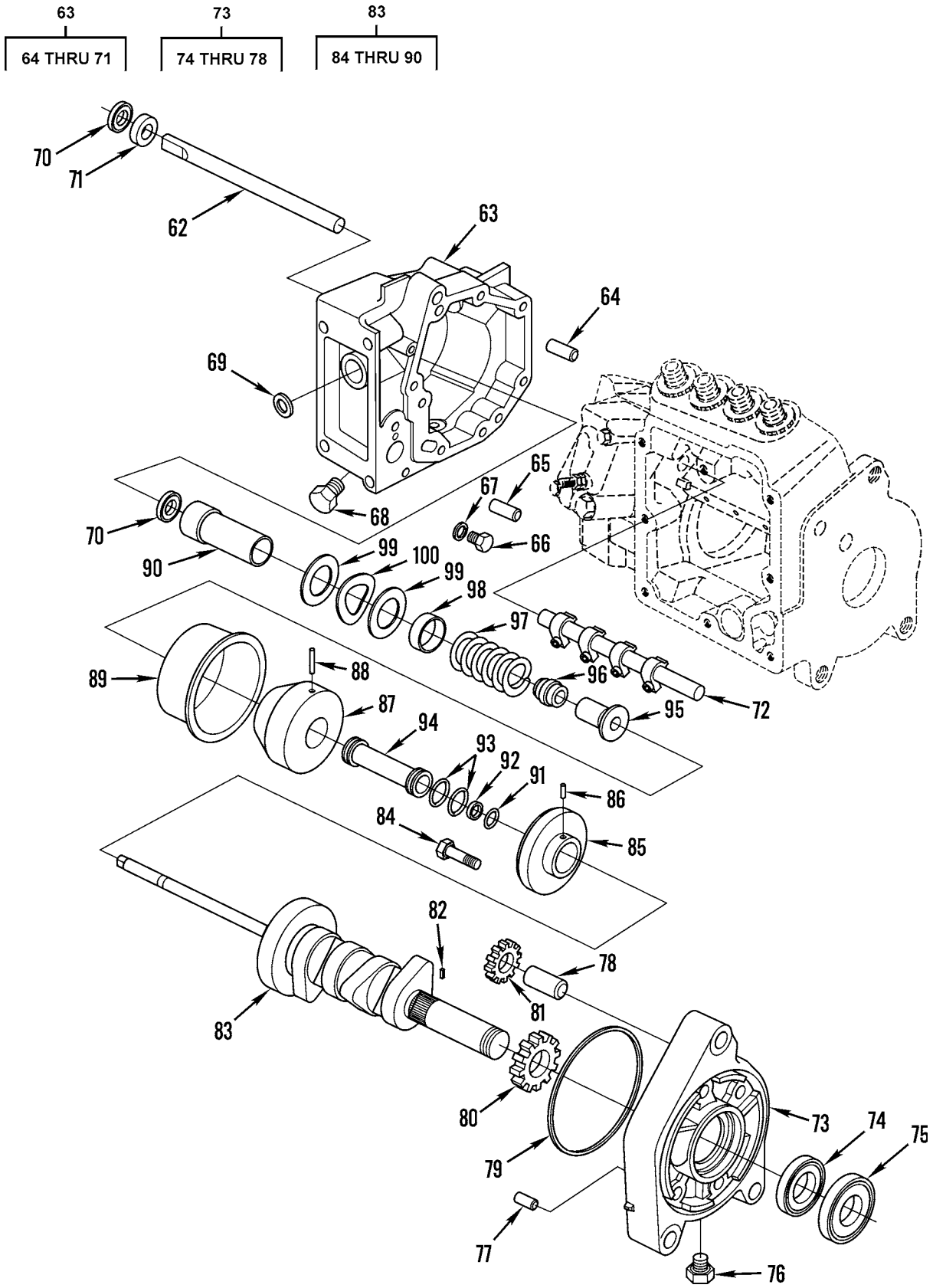

Figure 28. Governor and Fuel Injection Pump Assembly (Sheet 3 of 3)

(1) ITEM NO	(2) SMR CODE	(3) NSN	(4) CAGEC	(5) PART NUMBER	(6) DESCRIPTION AND USABLE ON CODES(UOC)	(7) QTY
					GROUP 0302 FUEL PUMPS FIG. 28 GOVERNOR AND FUEL INJECTION PUMP ASSEMBLY	
1	PFHZZ	5325007217680	96906	MS16633-1025	.RING,RETAINING..... UOC:AF9,AGP,F10	1
2	PAHZZ	2910011515705	11083	1N3802	.RETAINER,HELICAL CO..... UOC:AF9,AGP,F10	1
3	PAHZZ	5360011552628	11083	2W2216	.SPRING,HELICAL,COMP..... UOC:AF9,AGP,F10	1
4	PAHZZ	2910011497901	11083	1N3800	.SLEEVE,RACK CONTROL..... UOC:AF9,AGP,F10	1
5	PFHZZ	5306010951238	78640	310216	.BOLT,MACHINE..... UOC:AF9,AGP,F10	3
6	PFHHF	2910011497902	11083	8N2507	.PISTON ASSEMBLY,GOV..... UOC:AF9,AGP,F10	1
7	XDHZZ		11083	7N7271	..LEVER,SLEEVE CONTRO..... UOC:AF9,AGP,F10	1
8	PFHZZ	3110001980510	60380	Q-8321	..ROLLER,BEARING..... UOC:AF9,AGP,F10	1
9	PFHZZ	2990012539491	11083	8N2507 AND 7C0791	..CYLINDER,GOVERNOR S..... UOC:AF9,AGP,F10	1
10	PFHZZ	2990011835956	11083	1W4098	..PISTON,GOVERNOR CON..... UOC:AF9,AGP,F10	1
11	PFHZZ	2990012539490	11083	7W0250	..SLEEVE,GOVERNOR PIS..... UOC:AF9,AGP,F10	1
12	PFHZZ	5331011024354	11083	7R7491	..O-RING PART OF KIT P/N 3E8905..... UOC:AF9,AGP,F10	1
13	XDHZZ		11083	8N2505	..SLIDE,DIRECTIONAL C..... UOC:AF9,AGP,F10	1
14	PFHZZ	5365004114584	11083	9S4191	.PLUG,MACHINE THREAD..... UOC:AF9,AGP,F10	1
15	PCHZZ	5331008013354	25184	906-737-70	.O-RING..... UOC:AF9,AGP,F10	1
16	PFHZZ	5306010691382	11083	6B4198	.BOLT..... UOC:AF9,AGP,F10	2
17	PFHZZ	5305002253843	80204	B1821BH025C100N	.SCREW,CAP,HEXAGON H..... UOC:AF9,AGP,F10	1
18	PFHZZ	5330011573416	11083	1503725	.GASKET PART OF KIT P/N 3E8905..... UOC:AF9,AGP,F10	1
19	PFHZZ	5305000712506	80204	B1821BH025C050N	.SCREW,CAP,HEXAGON H..... UOC:AF9,AGP,F10	2
20	PAHZZ	4320011538370	11083	8N5783	.DEFLECTOR,DIRT AND..... UOC:AF9,AGP,F10	1
21	PAHZZ	2910011805547	11083	7N9521	.COVER,FUEL GALLERY..... UOC:AF9,AGP,F10	1
22	PFHZZ	5310008094058	96906	MS27183-10	.WASHER,FLAT..... UOC:AF9,AGP,F10	2
23	PFHZZ	5306004238313	11083	1B2713	.BOLT,MACHINE..... UOC:AF9,AGP,F10	2
24	PFHZZ	5306008575672	77445	466473	.BOLT,MACHINE..... UOC:AF9,AGP,F10	2

(1) ITEM NO	(2) SMR CODE	(3) NSN	(4) CAGEC	(5) PART NUMBER	(6) DESCRIPTION AND USABLE ON CODES(UOC)	(7) QTY
25	PFHZZ	5305000712505	80204	B1821BH025C088N	.SCREW,CAP,HEXAGON H..... UOC:AF9,AGP,F10	4
26	PFHZZ	5330011573415	11083	1503726	.GASKET PART OF KIT P/N 3E8905..... UOC:AF9,AGP,F10	1
27	PAHZZ	5330011615518	11083	1503730	.GASKET PART OF KIT P/N 3E8905..... UOC:AF9,AGP,F10	1
28	XDHZZ		11083	4N1761	.SCREW,CAP,HEXAGON H..... UOC:AF9,AGP,F10	4
29	PFHZZ	5306004169180	11083	2S7383	.BOLT,MACHINE..... UOC:AF9,AGP,F10	1
30	PFHZZ	5306002984235	28839	24829	.BOLT,MACHINE..... UOC:AF9,AGP,F10	2
31	PFHZZ	5325011548559	11083	7N8821	.RING,RETAINING..... UOC:AF9,AGP,F10	3
32	PAHZZ	3130011746048	11083	4N0432	.BEARING UNIT,BALL..... UOC:AF9,AGP,F10	1
33	PAHZZ	5365011548503	11083	7N7270	.SPACER,SLEEVE..... UOC:AF9,AGP,F10	2
34	PAHZZ	5360008586273	11083	3K5733	.SPRING,HELICAL,COMP..... UOC:AF9,AGP,F10	1
35	PAHZZ	5340010664744	11083	6N3504	.SEAT,HELICAL COMPRE..... UOC:AF9,AGP,F10	1
36	PFHZZ	5310001879796	58312	2N0828-00	.WASHER,SPRING TENSI..... UOC:AF9,AGP,F10	2
37	PFHZZ	5310010534777	11083	2P9556	.WASHER..... UOC:AF9,AGP,F10	1
38	PFHZZ	5360001729967	11083	8L9790	.SPRING,HELICAL,COMP..... UOC:AF9,AGP,F10	1
39	PFHZZ	2910011500921	11083	8N2503	.DASHPOT ASSEMBLY,GO..... UOC:AF9,AGP,F10	1
40	PAHZZ	5360011552629	11083	7N7267	.SPRING,HELICAL,COMP..... UOC:AF9,AGP,F10	1
41	PAHZZ	2990012539489	11083	4W6868	.RISER,GOVERNOR..... UOC:AF9,AGP,F10	1
42	PAHZZ	3110011551756	60380	JD-53502	.SEAT,BEARING..... UOC:AF9,AGP,F10	2
43	PAHZZ	3110006294111	11083	7M7219	.RETAINER AND ROLLER..... UOC:AF9,AGP,F10	1
44	PFHZZ	5325010243727	11083	4N2953	.RING,RETAINING..... UOC:AF9,AGP,F10	1
45	PFHZZ	2530010675667	11083	4N4320	.SHAFT A..... UOC:AGM,AGN	1
46	PFHZZ	5360010675668	11083	4N4366	.SPRING..... UOC:AGM,AGN	1
47	PCHZZ	5331008013354	25184	906-737-70	.O-RING..... UOC:AF9,AGM,AGN	1
48	PFHZZ	5306005435567	80205	MS16208-19	.BOLT,MACHINE..... UOC:AF9,AGM,AGN	2
49	PFHZZ	5305002253843	80204	B1821BH025C100N	.SCREW,CAP,HEXAGON H..... UOC:AF9,AGM,AGN	1
50	PFHZZ	5340011494421	11083	4N0053	.COVER,ACCESS..... UOC:AGM,AGN	1

(1) ITEM NO	(2) SMR CODE	(3) NSN	(4) CAGEC	(5) PART NUMBER	(6) DESCRIPTION AND USABLE ON CODES(UOC)	(7) QTY
51	PFHZZ	5330014145932	11083	4N0159NON-ASBESTOS	.GASKET PART OF KIT P/N 5P9419..... UOC:AGM,AGN	1
52	PFHZZ	5315011081232	11083	4N443	.PIN,STRAIGHT,HEADLE..... UOC:AGM,AGN	1
53	PFHZZ	5360010946117	11083	4N4224	.SPRING,HELICAL,COMP..... UOC:AGM,AGN	1
54	PFHZZ	5330010687343	11083	4N9056	.GASKET PART OF KIT P/N 5P9419..... UOC:AGM,AGN	1
55	PFHZZ	5340011505997	11083	7N2057	.COVER,ACCESS..... UOC:AGM,AGN	1
56	PFHZZ	5330011485891	59556	K-500-EN-0431	.SEAL PART OF KIT P/N 5P9419..... UOC:AF9,AGM,AGN	1
57	PFHZZ	5365010672179	11083	9S4180	.PLUG,MACHINE THREAD..... UOC:AGM,AGN	1
58	PFHZZ	5306002611153	11083	S1615	.BOLT,MACHINE..... UOC:AF9,AGM,AGN	8
59	PFHZZ	4820010534586	11083	4N1828	.VALVE,CHECK..... UOC:AGM,AGN	1
60	PFHZZ	4820003913782	11083	6D0238	.COCK,SHUTOFF,SCREW..... UOC:AGM,AGN	1
61	XDFHH		11083	7N1731	.GOVERNOR AND PUMP A..... UOC:AGM,AGN	1
62	PFHZZ	3040010678011	11083	4N0927	.SHAFT,STRAIGHT..... UOC:AGM,AGN	1
63	PFFHH	3040011794393	11083	6N5324	.HOUSING,MECHANICAL..... UOC:AGM,AGN	1
64	PFHZZ	5315010689711	11083	4N2333	..PIN..... UOC:AGM,AGN	1
65	PFHZZ	5315004067278	11083	8S6814	..PIN,STRAIGHT,HEADLE..... UOC:AGM,AGN	1
66	PFHZZ	5365010672179	11083	9S4180	..PLUG,MACHINE THREAD..... UOC:AGM,AGN	1
67	PFHZZ	5330011485891	59556	K-500-EN-0431	..SEAL PART OF KIT P/N 5P9419..... UOC:AGM,AGN	1
68	PFHZZ	4730011064024	11083	4N5050	..PLUG,PIPE..... UOC:AGM,AGN	1
69	PFHZZ	5330004982913	11083	2W4037	..SEAL,PLAIN ENCASED PART OF KIT P/N 5P9419..... UOC:AGM,AGN	1
70	PFHZZ	5330011074168	11083	4N0260	..SEAL,PLAIN ENCASED PART OF KIT P/N 5P9419..... UOC:AGM,AGN	2
71	PFHZZ	3110010689716	11083	6N2578	..BEARING..... UOC:AF9,AGM,AGN	1
72	PFHZA	3040010689707	11083	4N0507	.SHAFT,STRAIGHT..... UOC:AGM,AGN	1
73	PFHZZ	2910011473000	11083	9L6863	.HOUSING,FUEL PUMP..... UOC:AGM,AGN	1
74	PFHZZ	5330010619382	11083	4N0636	..SEAL PART OF KIT P/N 5P9419..... UOC:AGM,AGN	1
75	PFHZZ	5330010619380	11083	4N1584	..SEAL PART OF KIT P/N 5P9419..... UOC:AGM,AGN	1

(1) ITEM NO	(2) SMR CODE	(3) NSN	(4) CAGEC	(5) PART NUMBER	(6) DESCRIPTION AND USABLE ON CODES(UOC)	(7) QTY
76	PFHZZ	4730011064024	11083	4N5050	..PLUG,PIPE..... UOC:AGM,AGN	1
77	PFHZZ	5315004067278	11083	8S6814	..PIN,STRAIGHT,HEADLE..... UOC:AGM,AGN	1
78	PFHZZ	5315009998416	11083	8H9804	..PIN,STRAIGHT,HEADLE..... UOC:AGM,AGN	1
79	PFHZZ	5331009450494	11083	5M6509	.O-RING PART OF KIT P/N 5P9419..... UOC:AGM,AGN	1
80	PFHZZ	3020010689706	11083	4N0429	.GEAR,DRIVE MOTION..... UOC:AGM,AGN	1
81	PFHZZ	3020010689705	11083	4N0406	.GEAR,SPUR..... UOC:AGM,AGN	1
82	PFHZZ	5315010689780	11083	4N3779	.KEY..... UOC:AGM,AGN	1
83	AHHHD	2815011828753	11083	7N1773	.CAMSHAFT ASSEMBLY..... UOC:AGM,AGN	1
84	PFHZZ	5305001450809	80205	NAS1352-4LE16	..SCREW,CAP,SOCKET HE..... UOC:AGM,AGN	3
85	PFHZZ	3040011482816	11083	8N2663	..HOUSING,FUEL,INJECT..... UOC:AGM,AGN	1
86	PFHZZ	5315010678066	11083	4N9019	..DOWEL..... UOC:AGM,AGN	1
87	XDHZZ		11083	4N0425	..WEIGHT,CONTROL..... UOC:AGM,AGN	3
88	PFHZZ	5315011060333	11083	4N511	..PIN,STRAIGHT,HEADLE..... UOC:AGM,AGN	3
89	PFHZZ	4730010687122	11083	4N1723	..SHIELD..... UOC:AGM,AGN	1
90	PFHZZ	3040011471360	11083	4N9018	..SHAFT,STRAIGHT..... UOC:AGM,AGN	1
91	PFHZZ	5325010243727	11083	4N2953	.RING,RETAINING..... UOC:AGM,AGN	1
92	PFHZZ	3110006294111	11083	7M7219	.RETAINER AND ROLLER..... UOC:AGM,AGN	1
93	PFHZZ	3110011551756	60380	JD-53502	.SEAT,BEARING..... UOC:AGM,AGN	2
94	PFHZZ	2910010241510	11083	4N434	.RISER,GOVERNOR..... UOC:AGM,AGN	1
95	PFHZZ	5342010937394	11083	6N4655	.DASHPOT..... UOC:AGM,AGN	1
96	PFHZZ	2990011495010	59556	K-500-EN-0472	..SPOOL,FUEL INJECTIO..... UOC:AF9,AGM,AGN	1
97	XDHZZ		11083	6N6662	.SPRING,HELICAL,COMP..... UOC:AGM,AGN	1
98	XDHZZ		11083	6N7451	.SEAT,HELICAL COMPRE..... UOC:AGM,AGN	1
99	PFHZZ	5365010943237	11083	6N2957	.SHIM..... UOC:AGM,AGN	2
100	PFHZZ	5310010948702	11083	6N2956	.WASHER,SPRING TENSI..... UOC:AGM,AGN	1

END OF FIGURE

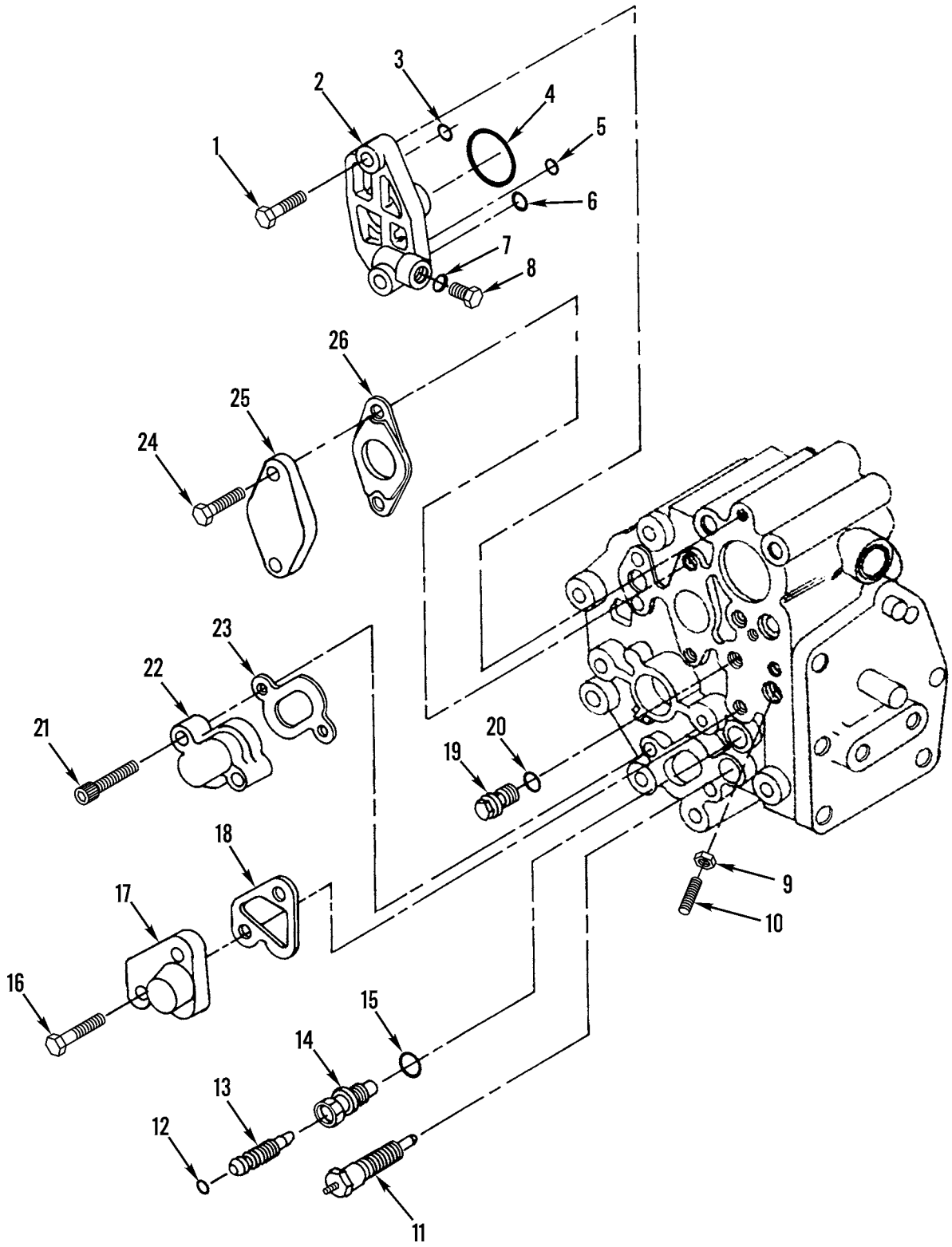

Figure 29. Governor Rear Housing Covers and Mounting (Sheet 1 of 2)

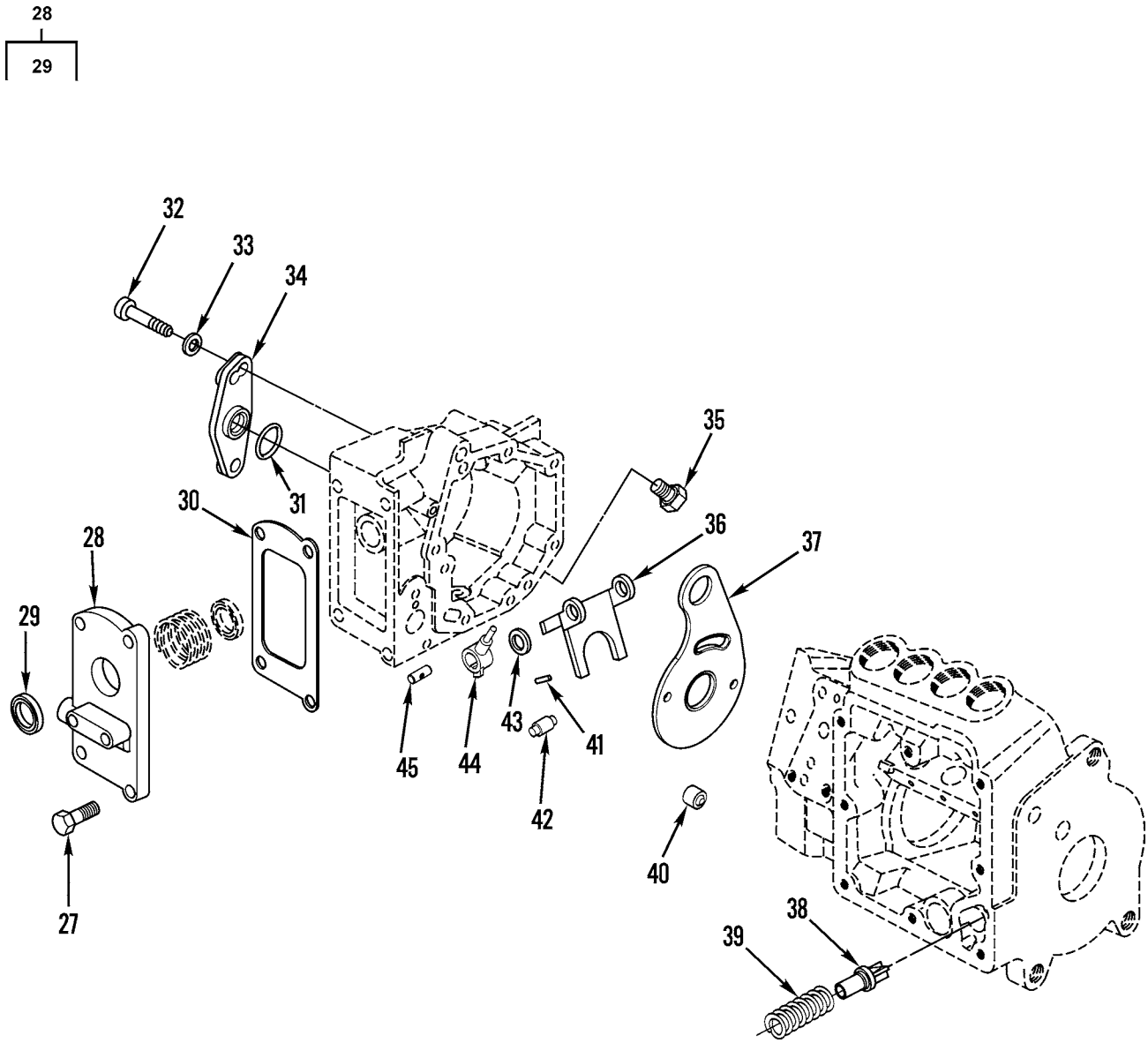

Figure 29. Governor Rear Housing Covers and Mounting (Sheet 2 of 2)

(1) ITEM NO	(2) SMR CODE	(3) NSN	(4) CAGEC	(5) PART NUMBER	(6) DESCRIPTION AND USABLE ON CODES(UOC)	(7) QTY
					GROUP 0302 FUEL PUMPS FIG. 29 GOVERNOR REAR HOUSING COVERS AND MOUNTING	
1	PFHZZ	5305002253843	80204	B1821BH025C100N	.SCREW,CAP,HEXAGON H..... UOC:AF9,AGP,F10	2
2	PFHZZ	2910011811930	11083	8N3799	.COVER,FUEL RATIO..... UOC:AF9,AGP,F10	1
3	PFHZZ	5330011036782	11083	8J8343	.SEAL PART OF KIT P/N 3E8905..... UOC:AF9,AGP,F10	1
4	PFHZZ	5331001232727	11083	8M8515	.O-RING PART OF KIT P/N 3E8905..... UOC:AF9,AGP,F10	1
5	PFHZZ	5331001660988	81349	M83248/1-013	.O-RING PART OF KIT P/N 3E8905..... UOC:AF9,AGP,F10	1
6	PCHZZ	5331009017196	81343	AS3582-015	.O-RING..... UOC:AF9,AGP,F10	1
7	PFHZZ	5330011485891	59556	K-500-EN-0431	.SEAL..... UOC:AF9,AGP,F10	1
8	PFHZZ	5365010672179	11083	9S4180	.PLUG,MACHINE THREAD..... UOC:AF9,AGP,F10	1
9	XDHZZ		11083	7N8775	.NUT,SLEEVE..... UOC:AF9,AGP,F10	1
10	PFHZZ	5305011601980	11083	7N2594	.SETSCREW..... UOC:AF9,AGP,F10	1
11	PAHZZ	2910010664752	11083	3P0009	.INSULATOR..... UOC:AF9,AGP,F10	1
12	PCHZZ	5331009528007	11083	6H9691	.O-RING PART OF KIT P/N 3E8905..... UOC:AF9,AGP,F10	1
13	XDHZZ		11083	4N5484	.STEM,NEEDLE VALVE..... UOC:AF9,AGP,F10	1
14	PFHZZ	4820011590891	11083	4N5485	.BODY,VALVE..... UOC:AF9,AGP,F10	1
15	PCHZZ	5331005913112	11083	5F9144	.O-RING PART OF KIT P/N 3E8905..... UOC:AF9,AGP,F10	1
16	PFHZZ	5305011602007	11083	5B7040	.SCREW,CAP,HEXAGON H..... UOC:AF9,AGP,F10	2
17	PFHZZ	5340011549589	11083	8N3259	.COVER,ACCESS..... UOC:AF9,AGP,F10	1
18	PFHZZ	5330013760802	11083	6I2003	.GASKET PART OF KIT P/N 3E8905..... UOC:AF9,AGP,F10	1
19	PFHZZ	5365011544379	11083	1W6523	.PLUG,MACHINE THREAD..... UOC:AF9,AGP,F10	1
20	XDHZZ	5331010491292	02697	3-904N552-90	.O-RING PART OF KIT P/N 3E8905..... UOC:AF9,AGP,F10	1
21	PFHZZ	5305010689719	11083	1P2497	.SCREW..... UOC:AF9,AGP,F10	2
22	PFHZZ	5340011512578	11083	8N3258	.COVER,ACCESS..... UOC:AF9,AGP,F10	1
23	PFHZZ	5330013760803	11083	6I2004	.GASKET PART OF KIT P/N 3E8905..... UOC:AF9,AGP,F10	1
24	PFHZZ	5305000712505	80204	B1821BH025C088N	.SCREW,CAP,HEXAGON H..... UOC:AF9,AGP,F10	2

(1) ITEM NO	(2) SMR CODE	(3) NSN	(4) CAGEC	(5) PART NUMBER	(6) DESCRIPTION AND USABLE ON CODES(UOC)	(7) QTY
25	PFHZZ	5340011925824	11083	2W5448	.COVER,ACCESS..... UOC:AF9,AGP,F10	1
26	PFHZZ	5330013760784	11083	6I2002	.GASKET PART OF KIT P/N 3E8905..... UOC:AF9,AGP,F10	1
27	PFHZZ	5305002253843	80204	B1821BH025C100N	.SCREW,CAP,HEXAGON H..... UOC:AGM,AGN	4
28	PFHZZ	2910011471376	11083	4N0687	.COVER ASSEMBLY,THRO..... UOC:AGM,AGN	1
29	PAFZZ	5330011554519	11083	5P9419	..GASKET AND SEAL SET PART OF KIT P/N 5P9419..... UOC:AGM,AGN	1
30	PAHZZ	5330010689824	11083	4N0402	.GASKET PART OF KIT P/N 5P9419..... UOC:AGM,AGN	1
31	PFHZZ	5331006136522	11083	4M8303	.O-RING..... UOC:AGM,AGN	1
32	PFHZZ	5306002611153	11083	0S1615	.BOLT,MACHINE..... UOC:AGM,AGN	2
33	PFHZZ	5310010512360	11083	5P537	.WASHER..... UOC:AGM,AGN	2
34	PFHZZ	5340011569918	11083	8N8082	.COVER,ACCESS..... UOC:AGM,AGN	1
35	PFHZZ	5365004193254	11083	2S7905	.PLUG,MACHINE THREAD..... UOC:AGM,AGN	1
36	PFHZZ	3040010687123	11083	4N1881	.LEVER..... UOC:AGM,AGN	1
37	PFHZZ	2990011033684	11083	6N5482	.PLATE,PUMP..... UOC:AGM,AGN	2
38	PFHZZ	2910010241512	11083	4N1767	.VALVE,FUEL BYPASS..... UOC:AGM,AGN	1
39	PFHZZ	5360010239435	11083	4N605	.SPRING,HELICAL,COMP..... UOC:AGM,AGN	1
40	PFHZZ	5315010691414	11083	4N8179	.PIN..... UOC:AGM,AGN	1
41	PFHZZ	3110011191128	60380	Q-8322	.ROLLER,BEARING..... UOC:AGM,AGN	1
42	PFHZZ	3040011475481	11083	4N0444	.SHAFT,SHOULDERED..... UOC:AGM,AGN	2
43	PFHZZ	5310010157776	99551	648626	.WASHER,FLAT..... UOC:AGM,AGN	1
44	PFHZZ	3040011078262	11083	4N448	.LEVER,MANUAL CONTRO..... UOC:AGM,AGN	1
45	PFHZZ	5315010689758	11083	9S8601	.PIN..... UOC:AGM,AGN	1

END OF FIGURE

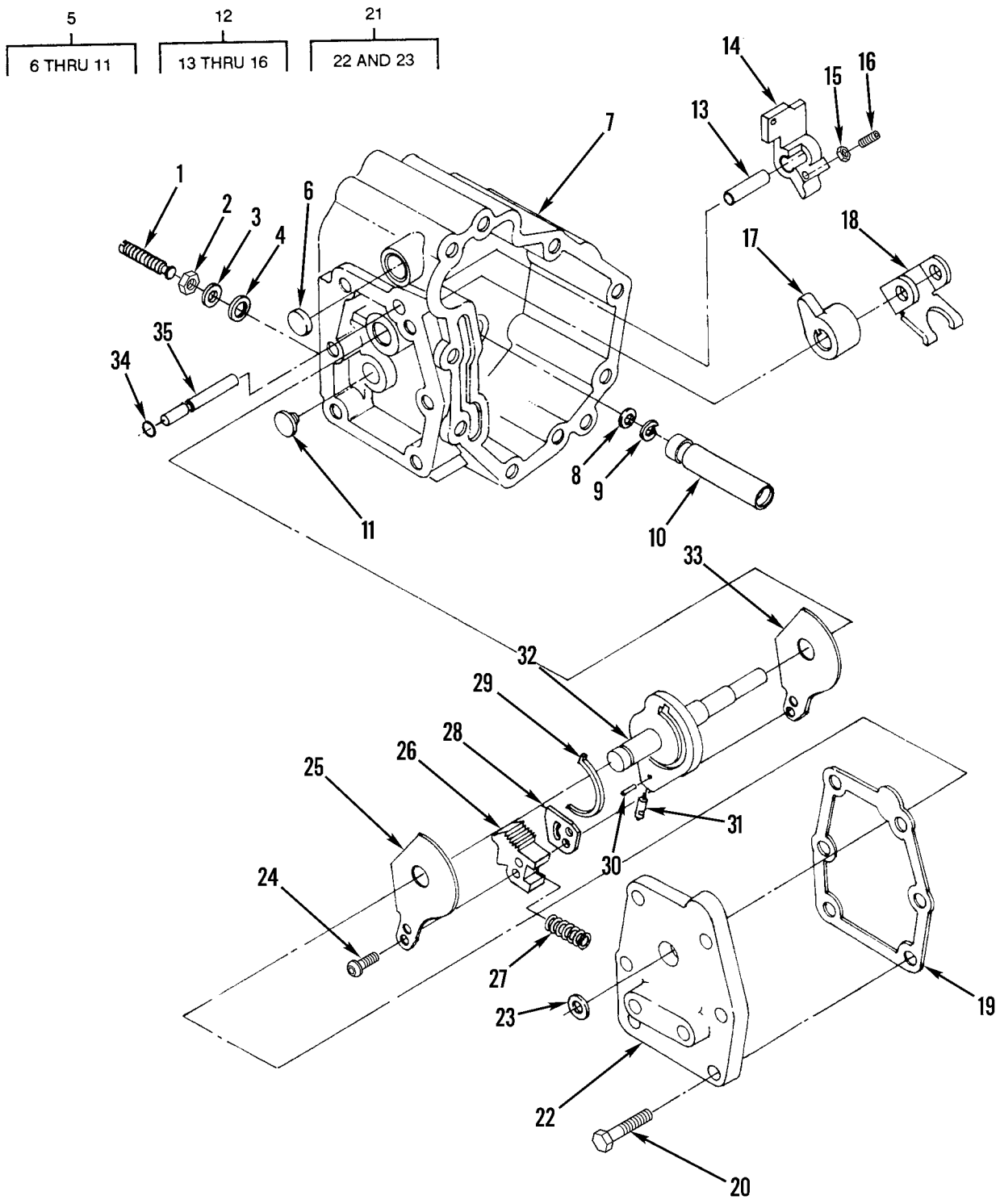

Figure 30. Governor Rear Housing (Sheet 1 of 2)

38
39 THRU 46

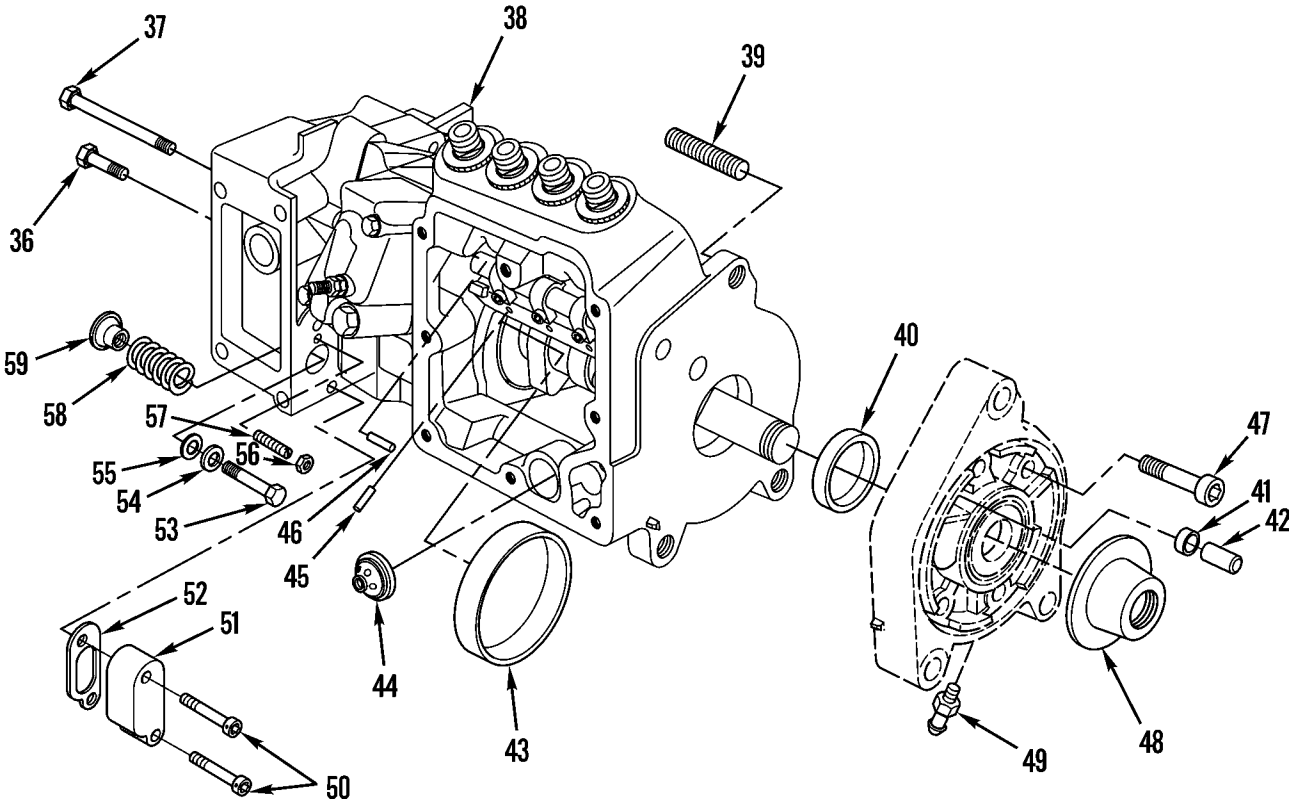

Figure 30. Governor Rear Housing (Sheet 2 of 2)

(1) ITEM NO	(2) SMR CODE	(3) NSN	(4) CAGEC	(5) PART NUMBER	(6) DESCRIPTION AND USABLE ON CODES(UOC)	(7) QTY
					GROUP 0302 FUEL PUMPS FIG. 30 GOVERNOR REAR HOUSING	
1	XDHZZ		11083	2W9996	.IDLER SCREW,GOVERNO..... UOC:AF9,AGP,F10	1
2	PFHZZ	5310010687065	11083	5B3180	.NUT..... UOC:AF9,AGP,F10	1
3	PFHZZ	5310000814219	96906	MS27183-12	.WASHER,FLAT..... UOC:AF9,AGP,F10	1
4	PFHZZ	5330001110688	83259	7500-5-16	.PACKING WITH RETAIN..... UOC:AF9,AGP,F10	1
5	PFHHF	2910011500426	11083	8N2501	.HOUSING,GOVERNOR,DI..... UOC:AF9,AGP,F10	1
6	PFHZZ	5340003541147	15434	10365-62	..PLUG,EXPANSION..... UOC:AF9,AGP,F10	1
7	XAHZZ		11083	8N2500	..HOUSING..... UOC:AF9,AGP,F10	1
8	PAHZZ	5330011074168	11083	4N0260	..SEAL,PLAIN ENCASED PART OF KIT P/N 3E8905..... UOC:AF9,AGP,F10	1
9	PAHZZ	5325006873379	96906	MS16625-1062	..RING,RETAINING..... UOC:AF9,AGP,F10	1
10	PAHZZ	2910011500427	11083	8N2499	..GUIDE,SPRING,GOVERN..... UOC:AF9,AGP,F10	1
11	PFHZZ	2910000332200	70040	5622759	..VALVE ASSEMBLY,FUEL..... UOC:AF9,AGP,F10	1
12	PAHZZ	3040012544974	11083	4W5734	.LEVER,MANUAL CONTRO..... UOC:AF9,AGP,F10	1
13	XAHZZ	5365012857775	11083	1W1015	..SPACER,SLEEVE..... UOC:AF9,AGP,F10	1
14	XDHZZ		11083	2W5375	..LEVER,REMOTE CONTRO..... UOC:AF9,AGP,F10	1
15	XDHZZ	5310013527423	11083	8L5832	..NUT,PLAIN,HEXAGON..... UOC:AF9,AGP,F10	1
16	PFHZZ	5305011875879	11083	6V6835	..SETSCREW..... UOC:AF9,AGP,F10	1
17	PFHZZ	2910011503758	11083	8N3168	.LEVER,THROTTLE..... UOC:AF9,AGP,F10	1
18	PAHZZ	3040011512660	11083	2W6102	.LEVER,REMOTE CONTRO..... UOC:AF9,AGP,F10	1
19	PFHZZ	5330011572016	11083	1503728	.GASKET PART OF KIT P/N 3E8905..... UOC:AF9,AGP,F10	1
20	PFHZZ	5305000712505	80204	B1821BH025C088N	.SCREW,CAP,HEXAGON H..... UOC:AF9,AGP,F10	6
21	PFHHZ	2910011497900	11083	7N8780	.COVER ASSEMBLY,GOVE..... UOC:AF9,AGP,F10	1
22	XAHZZ		11083	7N8781	..COVER..... UOC:AF9,AGP,F10	1
23	PCHZZ	5330012701752	11083	1389507	..SEAL,PLAIN PART OF KIT P/N 3E8905. UOC:AF9,AGP,F10	1
24	PFHZZ	5305012170676	11083	6V8137	.SCREW,CAP,SOCKET HE..... UOC:AF9,AGP,F10	2

(1) ITEM NO	(2) SMR CODE	(3) NSN	(4) CAGEC	(5) PART NUMBER	(6) DESCRIPTION AND USABLE ON CODES(UOC)	(7) QTY
25	PFHZZ	2910011788857	11083	2W9305	.PLATE,THROTTLE..... UOC:AF9,AGP,F10	2
26	PAHZZ	2530012134627	11083	7W2000	.DETENT PLATE..... UOC:AF9,AGP,F10	1
27	PAHZZ	5360012082214	11083	2W7400	.SPRING,HELICAL,COMP..... UOC:AF9,AGP,F10	1
28	XDHZZ		11083	7W1318	.PLATE,INJECTOR FUEL..... UOC:AF9,AGP,F10	1
29	PFHZZ	5340011847662	11083	2W9657	.CLIP,SPRING TENSION..... UOC:AF9,AGP,F10	1
30	PAHZZ	3110001980464	60380	Q8292	.ROLLER,BEARING..... UOC:AF9,AGP,F10	1
31	XDHZZ	5315011620426	11083	7N2176	.PIN,SHOULDER,HEADLE..... UOC:AF9,AGP,F10	1
32	PFHZZ	3040011541249	11083	8N3088	.SHAFT,SHOULDERED..... UOC:AF9,AGP,F10	1
33	PAHZZ	3040012134544	11083	7W1321	.CAM,CONTROL..... UOC:AF9,AGP,F10	1
34	PFHZZ	5325011548559	11083	7N8821	.RING,RETAINING..... UOC:AF9,AGP,F10	1
35	PFHZZ	5315011628741	11083	7N8785	.PIN,GROOVED,HEADLES..... UOC:AF9,AGP,F10	1
36	PFHZZ	5306012500897	11083	3B8695	.BOLT,MACHINE..... UOC:AGM,AGN	1
37	PFHZZ	5305000712514	80204	B1821BH025C275N	.SCREW,CAP,HEXAGON H..... UOC:AGM,AGN	1
38	PFHZZ	3040011764100	11083	8N1569	.HOUSING,MECHANICAL..... UOC:AGM,AGN	1
39	PFHZZ	5307011033673	11083	4N5481	..STUD,PLAIN..... UOC:AGM,AGN	1
40	PFHZZ	3110010620950	11083	7W6335	..BEARING..... UOC:AGM,AGN	1
41	PAHZZ	5330008437194	11083	2D6392	..GASKET PART OF KIT P/N 5P9419..... UOC:AGM,AGN	1
42	PAHZZ	5315010691410	11083	4N1826	..DOWEL..... UOC:AGM,AGN	1
43	PFHZZ	3120011654358	11083	8N0628	..BEARING,SLEEVE..... UOC:AGM,AGN	1
44	PFHZZ	2910013515952	11083	7E5346	..VALVE,FUEL SYSTEM..... UOC:AGM,AGN	1
45	PFHZZ	5315005822466	11083	8N0984	..PIN,SPRING..... UOC:AGM,AGN	4
46	PFHZZ	5315010689711	11083	4N2333	..PIN..... UOC:AGM,AGN	1
47	PFHZZ	5305010537366	11083	5J5314	.SCREW,CAP,SOCKET HE..... UOC:AGM,AGN	4
48	PFHZZ	4730010687124	11083	4N2954	.SLEEVE..... UOC:AGM,AGN	1
49	PFHZZ	4730010238633	11083	1P4001	.ADAPTER,STRAIGHT,PI..... UOC:AGM,AGN	1
50	PFHZZ	5305010689719	11083	1P2497	.SCREW..... UOC:AGM,AGN	2

(1) ITEM NO	(2) SMR CODE	(3) NSN	(4) CAGEC	(5) PART NUMBER	(6) DESCRIPTION AND USABLE ON CODES(UOC)	(7) QTY
51	PFHZZ	2910011473001	11083	4N5578	.COVER,IDLE SCREW..... UOC:AGM,AGN	1
52	PAHZZ	5330011073603	11083	4N0049	.GASKET PART OF KIT P/N 5P9419..... UOC:AGM,AGN	1
53	PFHZZ	5306010690877	11083	1P9925	.BOLT..... UOC:AGM,AGN	2
54	PFHZZ	5310010641494	11083	6N7523	.WASHER,FLAT..... UOC:AGM,AGN	2
55	PAHZZ	5330010387345	11083	4N0594	.GASKET PART OF KIT P/N 5P9419..... UOC:AGM,AGN	1
56	PFHZZ	5310010687065	11083	5B3180	.NUT..... UOC:AGM,AGN	1
57	PFHZZ	5305010689704	11083	4N0054	.SCREW..... UOC:AGM,AGN	1
58	PFHZZ	5360010687181	11083	9S8632	.SPRING..... UOC:AGM,AGN	1
59	PFHZZ	4310010689775	11083	4N0116	.GUIDE..... UOC:AGM,AGN	1

END OF FIGURE

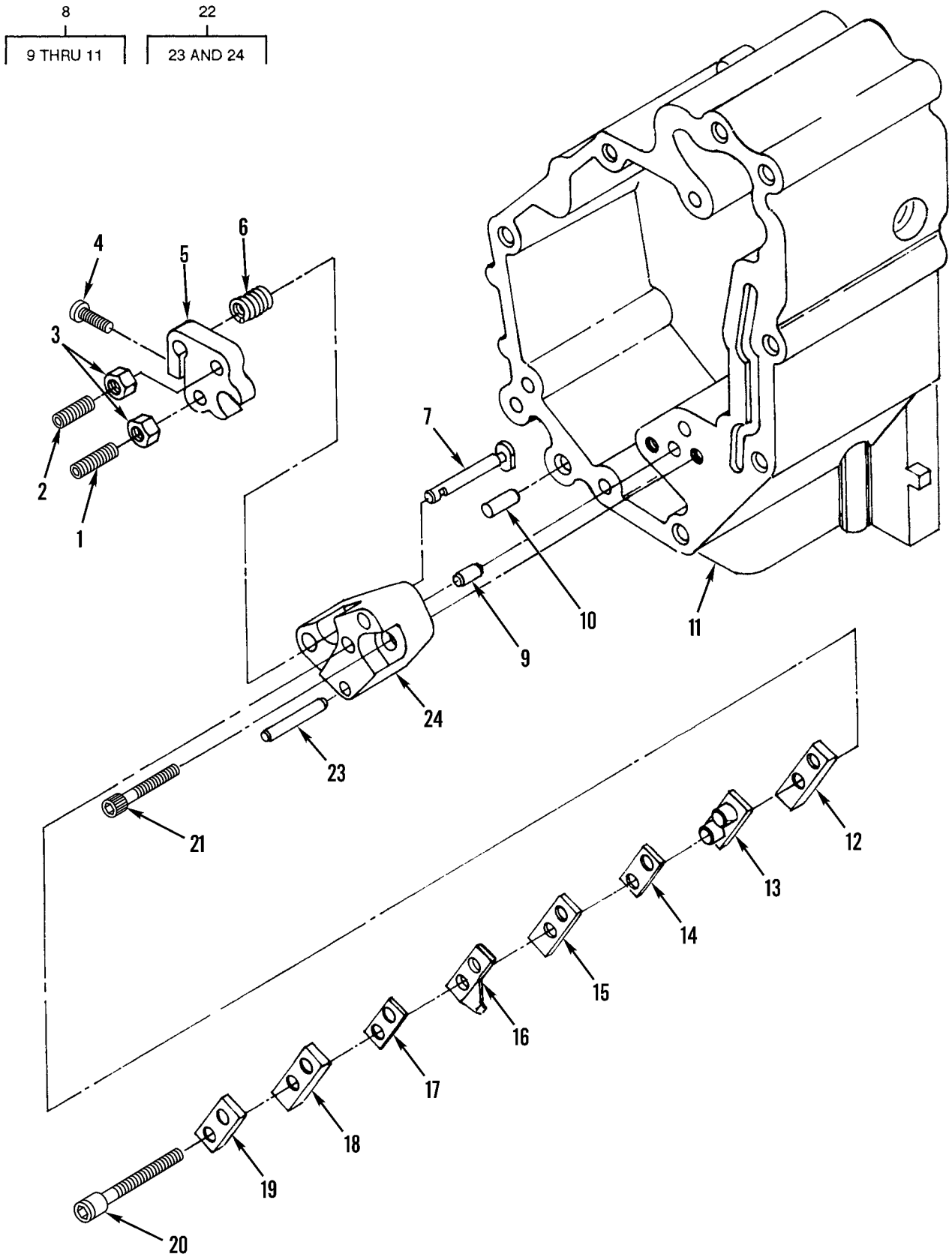

Figure 31. Governor Center Housing (Sheet 1 of 2)

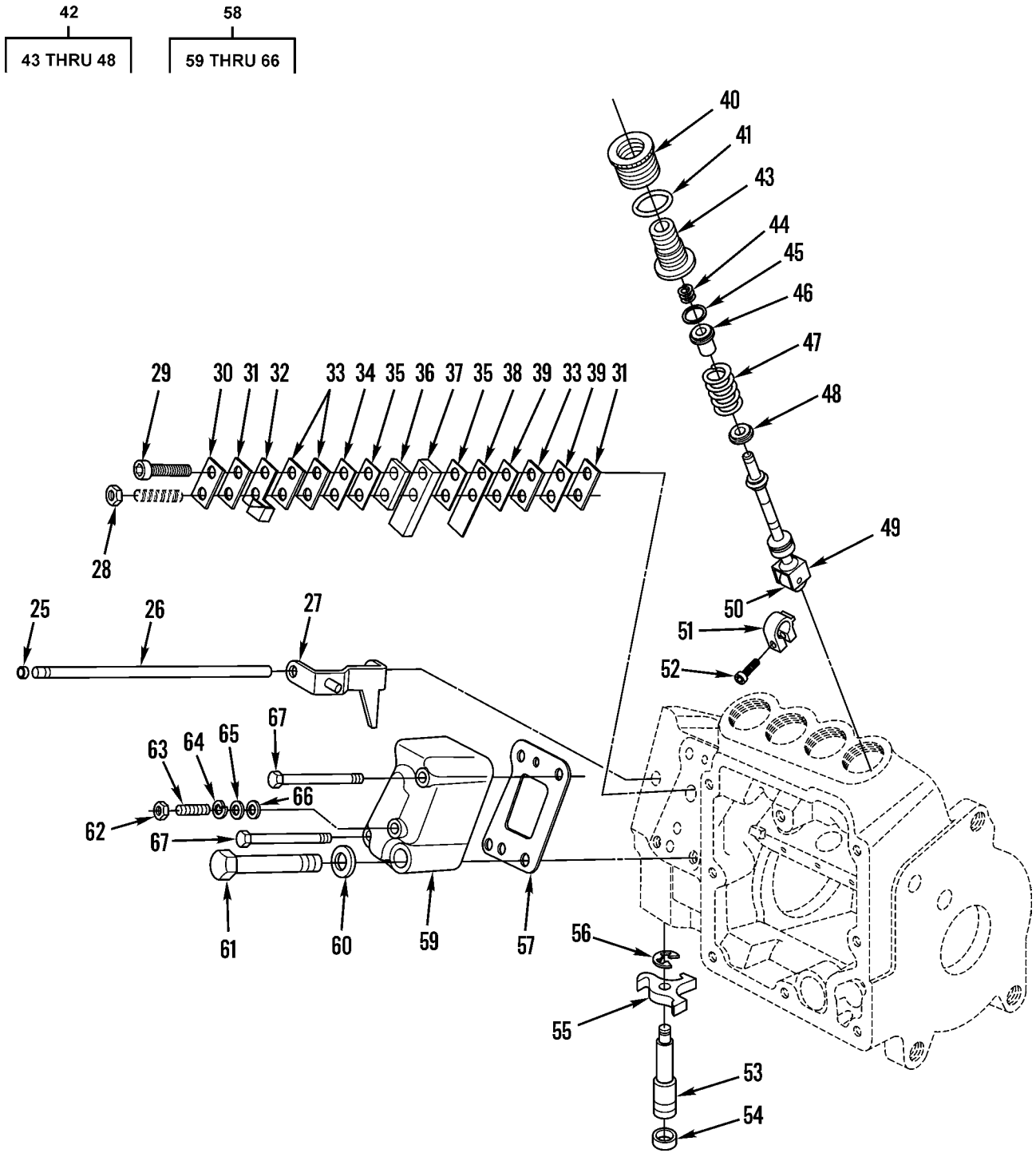

Figure 31. Governor Center Housing (Sheet 2 of 2)

(1) ITEM NO	(2) SMR CODE	(3) NSN	(4) CAGEC	(5) PART NUMBER	(6) DESCRIPTION AND USABLE ON CODES(UOC)	(7) QTY
					GROUP 0302 FUEL PUMPS FIG. 31 GOVERNOR CENTER HOUSING	
1	PFHZZ	5305011576802	11083	5H6552	.SETSCREW..... UOC:AF9,AGP,F10	1
2	PFHZZ	5305011575626	11083	7N5334	.SETSCREW..... UOC:AF9,AGP,F10	1
3	PFHZZ	5310006371058	66289	PD115	.NUT,PLAIN,HEXAGON..... UOC:AF9,AGP,F10	2
4	PFHZZ	5305009789370	96906	MS16997-32	.SCREW,CAP,SOCKET HE..... UOC:AF9,AGP,F10	1
5	PAHZZ	3040011515646	11083	8N3256	.COLLAR,LOAD STOP..... UOC:AF9,AGP,F10	1
6	PAHZZ	5360011568931	11083	1W4243	.SPRING,HELICAL,COMP..... UOC:AF9,AGP,F10	1
7	PFHZZ	5315012594153	11083	8N2488	.PIN,GROOVED,HEADED..... UOC:AF9,AGP,F10	1
8	XDHZZ		11083	8N2495	.HOUSING,GOVERNOR,DI..... UOC:AF9,AGP,F10	1
9	PAHZA	5315003639248	11083	4F6024	..PIN,STRAIGHT,HEADLE..... UOC:AF9,AGP,F10	2
10	PFHZZ	5315004067278	11083	8S6814	..PIN,STRAIGHT,HEADLE..... UOC:AF9,AGP,F10	4
11	XAHZZ		11083	8N2494	..HOUSING..... UOC:AF9,AGP,F10	1
12	PAHZZ	5365011552642	11083	8N7735	.SPACER,PLATE..... UOC:AF9,AGP,F10	1
13	XDHZZ		58312	1P6452-00	.INSULATOR,BUSHING..... UOC:AF9,AGP,F10	1
14	PAHZZ	5365011037157	11083	9L9347	.SHIM..... UOC:AF9,AGP,F10	1
15	PAHZZ	5365011541689	11083	8N7519	.SPACER,PLATE..... UOC:AF9,AGP,F10	1
16	PAHZZ	5340011587850	11083	8N3090	.BRACKET,DOUBLE ANGL..... UOC:AF9,AGP,F10	1
17	PAHZZ	5365011555316	72658	8000	.SPACER,PLATE..... UOC:AF9,AGP,F10	1
18	PAHZZ	5365011544399	11083	7N7282	.SPACER,PLATE..... UOC:AF9,AGP,F10	1
19	PAHZZ	2910001160407	11083	8M9062	.RETAINER,TORQUE SPR..... UOC:AF9,AGP,F10	1
20	PFHZZ	5305004765308	11083	8H0707	.SCREW,CAP,SOCKET HE..... UOC:AF9,AGP,F10	2
21	PFHZZ	5305011074621	11083	6L5897	.SCREW,CAP,SOCKET HE..... UOC:AF9,AGP,F10	2
22	XDHZZ		11083	2W6104	.BLOCK ASSEMBLY,GOVE..... UOC:AF9,AGP,F10	1
23	PFHZZ	5315011823486	60380	QA-54783	..PIN,STRAIGHT,HEADLE..... UOC:AF9,AGP,F10	1
24	XAHZZ	2990012539492	11083	8N3257	..BLOCK,LOAD STOP..... UOC:AF9,AGP,F10	1
25	PCHZZ	5331002920577	81343	MS28775-007	.O-RING PART OF KIT P/N 5P9419.....	1

(1) ITEM NO	(2) SMR CODE	(3) NSN	(4) CAGEC	(5) PART NUMBER	(6) DESCRIPTION AND USABLE ON CODES(UOC)	(7) QTY
					UOC:AGM,AGN	
26	PFHZZ	3040010689709	11083	4N0528	.SHAFT,STRAIGHT.....	1
					UOC:AGM,AGN	
27	XDHZZ		11083	1287347	.LEVER,REMOTE CONTRO.....	1
					UOC:AGM,AGN	
28	PFHZZ	5310000050779	11083	4L6458	.NUT,PLAIN,HEXAGON.....	1
					UOC:AGM,AGN	
29	PFHZZ	5305010244773	11083	4L7124	.SCREW,CAP,SOCKET HE.....	1
					UOC:AGM,AGN	
30	PFHZZ	5365001160408	11083	8M9064	.SPACER,PLATE.....	1
					UOC:AGM,AGN	
31	PFHZZ	5970002137747	11083	1P6452	.INSULATOR,BUSHING.....	2
					UOC:AGM,AGN	
32	PFHZZ	2910010242869	11083	4N3882	.CONTACT,LOAD STOP.....	1
					UOC:AGM,AGN	
33	PFHZZ	5365011037156	11083	9L7235	.SHIM.....	3
					UOC:AGM,AGN	
34	PFHZZ	5365002053664	11083	8L8601	.SHIM.....	6
					UOC:AGM,AGN	
35	PFHZZ	5365011037157	11083	9L9347	.SHIM.....	2
					UOC:AGM,AGN	
36	PFHZZ	5365011471450	11083	4N9098	.SPACER,PLATE.....	1
					UOC:AGM,AGN	
37	XDHZZ		11083	1P6453	.SPACER,PLATE.....	1
					UOC:AGM,AGN	
38	PFHZZ	2910001257471	11083	9L5176	.TORQUE SPRING,GOVER.....	1
					UOC:AGM,AGN	
39	PFHZZ	5365011604721	11083	4N7777	.SHIM.....	2
					UOC:AGM,AGN	
40	PFHZZ	3120010223955	11083	4N218	.BUSHING,BONNET.....	4
					UOC:AGM,AGN	
41	PCHZZ	5331003106575	11083	6F6672	.O-RING PART OF KIT P/N 5P9419.....	4
					UOC:AGM,AGN	
42	PFHZZ	2910010240939	11083	6N7527	.PLUNGER ASSEMBLY,FU.....	4
					UOC:AGM,AGN	
43	PFHZZ	4820011465933	11083	8N1417	..CAP,VALVE.....	1
					UOC:AGM,AGN	
44	PFHZZ	5360011480305	11083	8N1415	..SPRING,HELICAL,COMP.....	1
					UOC:AGM,AGN	
45	PFHZZ	5365010245118	11083	4N224	..RING,SPECIAL.....	1
					UOC:AGM,AGN	
46	PFHZZ	4820011471309	11083	8N1414	..VALVE,CHECK.....	1
					UOC:AGM,AGN	
47	PFHZZ	5360011059599	11083	9N5862	..SPRING,HELICAL,COMP.....	1
					UOC:AGM,AGN	
48	PFHZZ	5310010620380	11083	4N2728	..WASHER,FLAT.....	1
					UOC:AGM,AGN	
49	PFHZZ	2910011053610	11083	6N6794	.LIFTER,FUEL PUMP PL.....	4
					UOC:AGM,AGN	
50	PFHZZ	2910010242868	11083	4N2685	.ROLLER,FUEL PUMP.....	4
					UOC:AGM,AGN	
51	PFHZZ	3040013464173	11083	9N5820	.COLLAR,SHAFT.....	4

(1) ITEM NO	(2) SMR CODE	(3) NSN	(4) CAGEC	(5) PART NUMBER	(6) DESCRIPTION AND USABLE ON CODES(UOC)	(7) QTY
					UOC:AGM,AGN	
52	PFHZZ	5305010244774	11083	2N2658	.SCREW,CAP,SOCKET HE.....	4
					UOC:AGM,AGN	
53	PFHZZ	5315011073758	11083	4N523	.PIN,SHOULDER,HEADLE.....	1
					UOC:AF9,AGM,AGN	
54	PAFZZ	5330011554519	11083	5P9419	.GASKET AND SEAL SET PART OF KIT P/N 5P9419.....	1
					UOC:AGM,AGN	
55	XDHZZ		11083	4N0445	.LEVER.....	1
					UOC:AGM,AGN	
56	PFHZZ	5325002633831	24821	120079-001	.RING,RETAINING.....	1
					UOC:AGM,AGN	
57	PAHZZ	5330015209804	11083	1660368	.GASKET PART OF KIT P/N 5P9419.....	1
					UOC:AGM,AGN	
58	PFHZH	2910011408212	11083	1656474	.HOUSING,FUEL PUMP.....	1
					UOC:AGM,AGN	
59	PFHZZ	5340015209812	11083	1656475	..COVER, ACCESS.....	1
					UOC:AGM,AGN	
60	PAHZZ	5330006136500	11083	1J9671	..PACKING,PREFORMED PART OF KIT P/N 5P9419.....	1
					UOC:AGM,AGN	
61	PFHZZ	5306010247524	11083	2P3200	..BOLT,MACHINE.....	1
					UOC:AGM,AGN	
62	PFHZZ	5310007543384	18876	9024483	..NUT,PLAIN,HEXAGON.....	1
					UOC:AGM,AGN	
63	PFHZZ	5305010254359	11083	6N412	..SCREW,MACHINE.....	1
					UOC:AGM,AGN	
64	PFHZZ	5310000453299	96906	MS35338-42	..WASHER,LOCK.....	1
					UOC:AGM,AGN	
65	PFHZZ	5310006824425	85480	NW8-3756	..WASHER,FLAT.....	1
					UOC:AGM,AGN	
66	XDHZA		11083	8F1326	..WASHER,FLAT.....	1
					UOC:AGM,AGN	
67	PFHZZ	5305000047245	58312	2M5471-00	.SCREW,CAP,HEXAGON H.....	2
					UOC:AGM,AGN	

END OF FIGURE

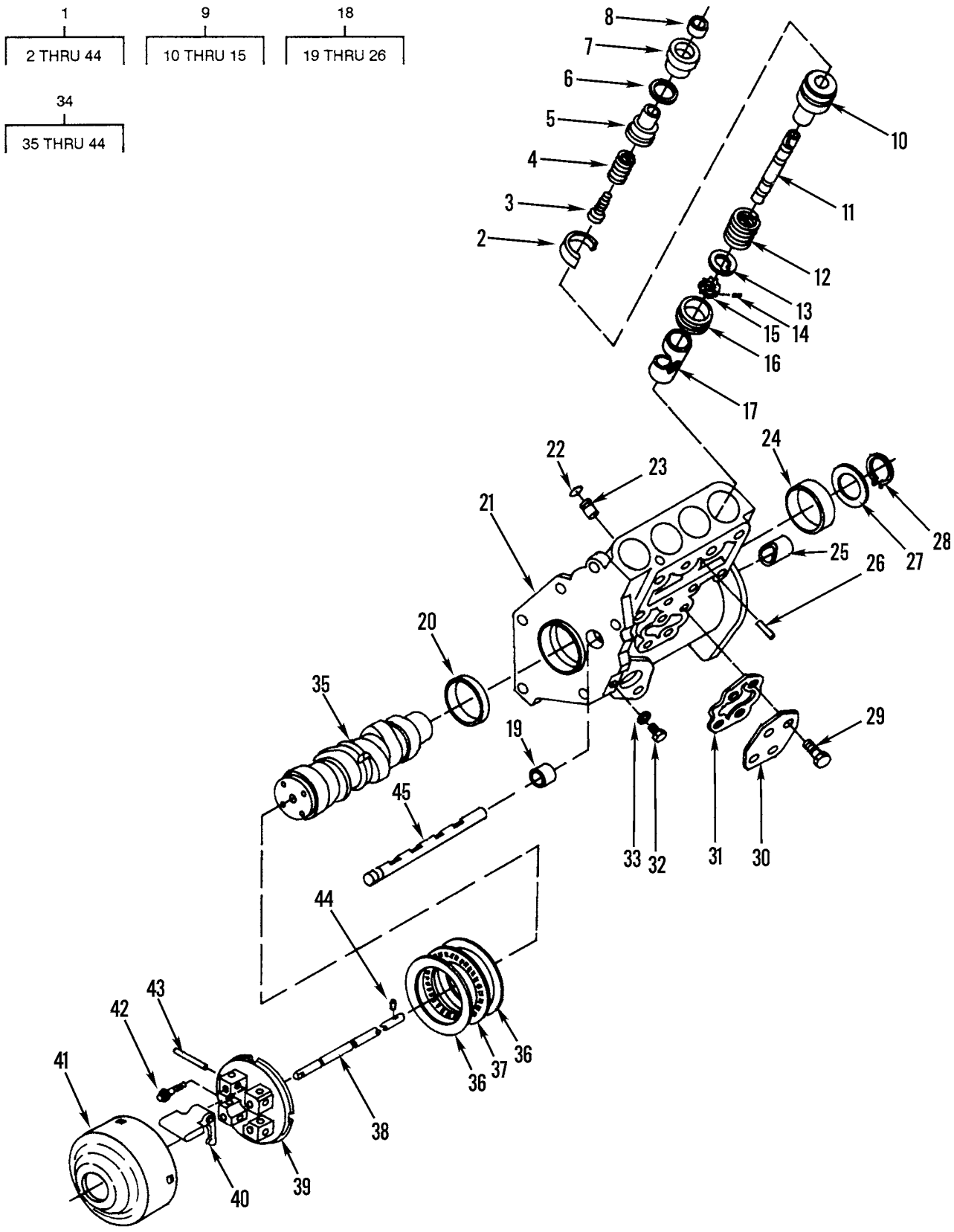

Figure 32. Fuel Injection Pump Assembly

(1) ITEM NO	(2) SMR CODE	(3) NSN	(4) CAGEC	(5) PART NUMBER	(6) DESCRIPTION AND USABLE ON CODES(UOC)	(7) QTY
					GROUP 0302 FUEL PUMPS FIG. 32 FUEL INJECTION PUMP ASSEMBLY	
1	PBHHF	2910011527834	11083	2W0263	.PUMP,FUEL,METERING..... UOC:AF9,AGP,F10	1
2	PFHZZ	5325012574598	11083	7W1927	..RING,RETAINING..... UOC:AF9,AGP,F10	1
3	PAHZZ	4820011471309	11083	8N1414	..VALVE,CHECK..... UOC:AF9,AGP,F10	1
4	PAHZZ	5360011480305	11083	8N1415	..SPRING,HELICAL,COMP..... UOC:AF9,AGP,F10	1
5	PAHZZ	2910011550278	11083	8N2516	..BONNET,VALVE,FUEL T..... UOC:AF9,AGP,F10	1
6	PFHZZ	5330013482720	11083	1148718	..PACKING,PREFORMED PART OF KIT P/N 3E8905..... UOC:AF9,AGP,F10	4
7	PAHZZ	5325011602506	11083	8N5117	..INSERT,SCREW THREAD..... UOC:AF9,AGP,F10	4
8	PAHZZ	5330008586277	11083	8H9204	..FELT,MECHANICAL,PRE..... UOC:AF9,AGP,F10	4
9	PAHZZ	2910011550279	11083	1W6541	..PLUNGER AND BARREL,..... UOC:AF9,AGP,F10	4
10	XAHZZ		11083	7N7169	...BARREL,FUEL PUMP..... UOC:AF9,AGP,F10	1
11	XAHZZ		11083	1W6540	...PLUNGER,FUEL PUMP..... UOC:AF9,AGP,F10	1
12	PAHZZ	5360011823644	11083	7N1067	...SPRING,HELICAL,COMP..... UOC:AF9,AGP,F10	1
13	PFHZZ	5340012594234	11083	7W2808	...SEAT,HELICAL COMPRE..... UOC:AF9,AGP,F10	1
14	PFHZZ	5305011080649	11083	8H9299	...SCREW,CAP,SOCKET HE..... UOC:AF9,AGP,F10	1
15	XAHZZ		11083	7N1068	...GEAR..... UOC:AF9,AGP,F10	1
16	PAHZZ	5365011586377	11083	4W6869	..SPACER,RING..... UOC:AF9,AGP,F10	4
17	PAHZZ	2910011794098	11083	4P9832	..LIFTER ASSEMBLY,FUE..... UOC:AF9,AGP,F10	4
18	PFHHF	2910011746182	11083	1W3486	..HOUSING,FUEL PUMP..... UOC:AF9,AGP,F10	1
19	PAHZZ	3120008514696	11083	1S1953	...BEARING,SLEEVE..... UOC:AF9,AGP,F10	1
20	XDHZZ	3120011612639	11083	8N2518	...BEARING,SLEEVE..... UOC:AF9,AGP,F10	1
21	XAHZZ		11083	8N2498	...HOUSING FUEL PUMP..... UOC:AF9,AGP,F10	1
22	PADZZ	5330010622852	11083	3H0442	...RING SEAL..... UOC:AF9,AGP,F10	4
23	PFDZZ	5315011604636	11083	8N3731	...PIN,GROOVED,HEADED..... UOC:AF9,AGP,F10	4
24	PAHZZ	3120011644512	11083	7N7970	...BEARING,SLEEVE..... UOC:AF9,AGP,F10	1

(1) ITEM NO	(2) SMR CODE	(3) NSN	(4) CAGEC	(5) PART NUMBER	(6) DESCRIPTION AND USABLE ON CODES(UOC)	(7) QTY
25	PAHZZ	3120011563801	11083	1W3285	...BEARING,SLEEVE..... UOC:AF9,AGP,F10	1
26	XDHZZ	5365011625782	11083	7N7969	...SPACER,SLEEVE..... UOC:AF9,AGP,F10	4
27	PAHZZ	3120011625786	11083	8N2487	..BEARING,WASHER,THRU..... UOC:AF9,AGP,F10	1
28	PFHZZ	5325012879026	96906	MS16628-1143	..RING,RETAINING..... UOC:AF9,AGP,F10	1
29	PFHZZ	5306002611153	11083	0S1615	..BOLT,MACHINE..... UOC:AF9,AGP,F10	4
30	PFHZZ	5340011810789	11083	7N1047	..COVER,ACCESS..... UOC:AF9,AGP,F10	1
31	PFHZZ	5330011586283	11083	1503724	..GASKET PART OF KIT P/N 3E8905..... UOC:AF9,AGP,F10	1
32	PFHZZ	5365010672179	11083	9S4180	..PLUG,MACHINE THREAD.....	2
33	PFHZZ	5330011485891	59556	K-500-EN-0431	..SEAL PART OF KIT P/N 3E8905..... UOC:AF9,AGP,F10	2
34	XDHHH		11083	2W0262	..CAMSHAFT ASSEMBLY,F..... UOC:AF9,AGP,F10	1
35	PAHZZ	2910011774794	11083	2W0261	...CAMSHAFT,FUEL PUMP..... UOC:AF9,AGP,F10	1
36	PFHZZ	3110011812425	11083	7N7166	...RING,BEARING,OUTER..... UOC:AF9,AGP,F10	2
37	PAHZZ	3110008201466	11083	7L3326	...RETAINER AND ROLLER..... UOC:AF9,AGP,F10	1
38	XDHZZ	3040011529216	11083	8N2510	...SHAFT,STRAIGHT..... UOC:AF9,AGP,F10	1
39	PFHZZ	2990011550277	11083	8N2511	...CARRIER WEIGHT,GOVE..... UOC:AF9,AGP,F10	1
40	PFHZZ	2910011550370	11083	7N7264	...BELL CRANK..... UOC:AF9,AGP,F10	4
41	PFHZZ	2910011550276	11083	7N7265	...SHIELD,CARRIER FUEL..... UOC:AF9,AGP,F10	1
42	PFHZZ	5306011574848	11083	5P9087	...BOLT,MACHINE..... UOC:AF9,AGP,F10	4
43	XBHZZ		21335	Q13367	...ROLLER,BEARING..... UOC:AF9,AGP,F10	4
44	PFHZZ	5315010678066	11083	4N9019	...DOWEL..... UOC:AF9,AGP,F10	1
45	PAHZZ	2910011709230	11083	1W3485	.RACK,FUEL PUMP..... UOC:AF9,AGP,F10	1

END OF FIGURE

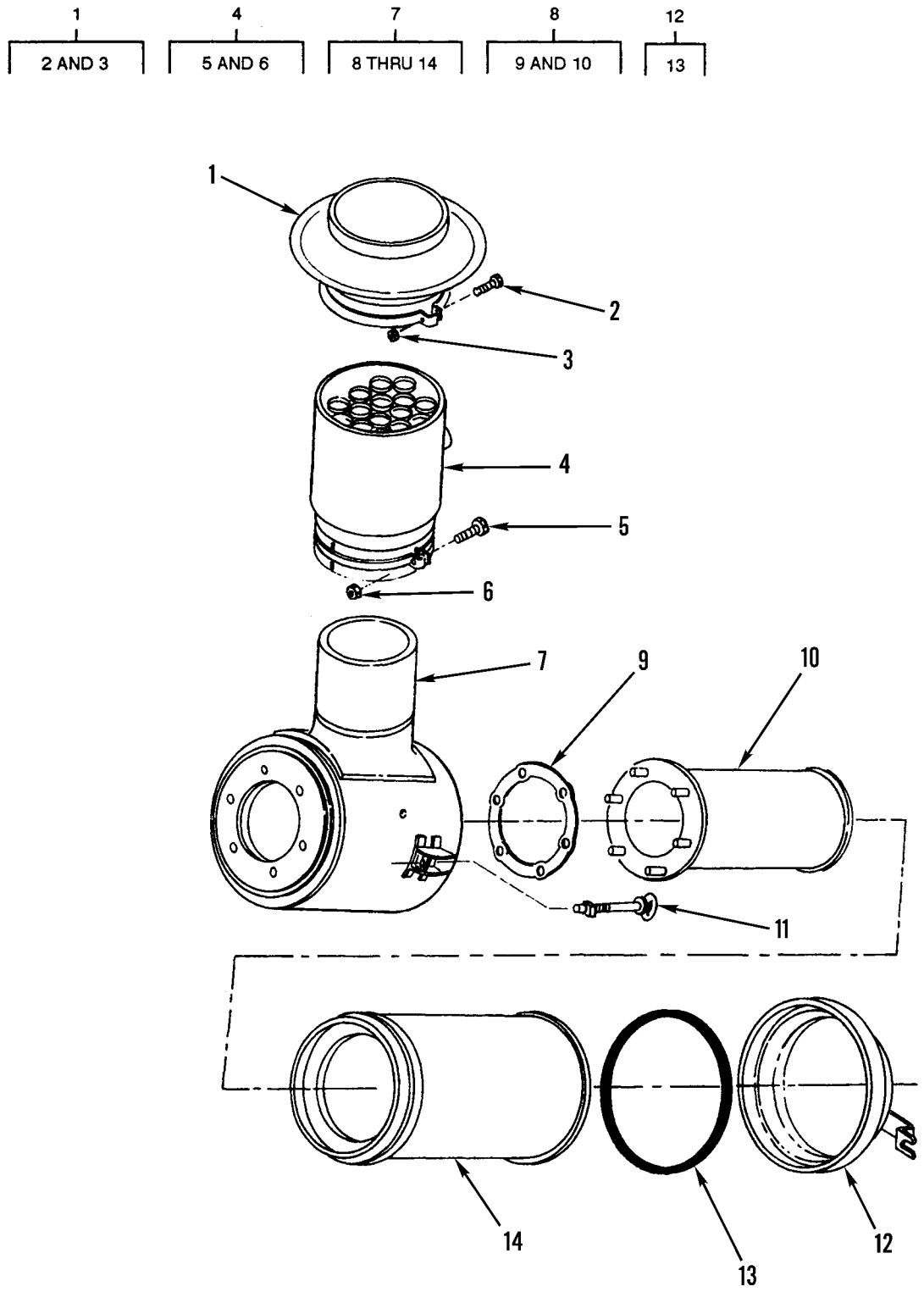

Figure 33. Air Cleaner and Mounting

(1) ITEM NO	(2) SMR CODE	(3) NSN	(4) CAGEC	(5) PART NUMBER	(6) DESCRIPTION AND USABLE ON CODES(UOC)	(7) QTY
					GROUP 0304 AIR CLEANER	
					FIG. 33 AIR CLEANER AND MOUNTING	
1	PAOZZ	2940004276413	18265	GAH00-0657	HOOD ASSEMBLY,AIR,P.....	1
2	PFOZZ	5306008097138	11083	7F0192	.BOLT,MACHINE.....	1
3	PFOZZ	5310014297859	11083	6V8801	.NUT,PLAIN,HEXAGON.....	1
4	PAOZZ	2940011516375	18265	PSH00-0679	AIR CLEANER,INTAKE.....	1
5	PFOZZ	5306008097138	11083	7F0192	.BOLT,MACHINE.....	1
6	PFOZZ	5310014297859	11083	6V8801	.NUT,PLAIN,HEXAGON.....	1
7	PFOZZ	2940011481478	18265	EGB11-0026	AIR CLEANER,INTAKE.....	1
8	PAOBZ	2940008588179	18265	KYX00-0460	.FILTER ELEMENT,INTA.....	1
9	PFOZZ	5330009239945	11083	4M1485	..GASKET.....	1
10	PAOZZ	2940008588179	11083	2S1285	..FILTER ELEMENT,INTA.....	1
11	PFOZZ	5306011531362	18265	P10-2533	.BOLT,EYE.....	2
12	PAOZZ	2940009234154	18265	P10-2926	.CUP ASSEMBLY,AIR CL.....	1
13	PFOZZ	5331011812424	18265	P10-2927	..O-RING.....	1
14	PAOBZ	2940008588178	11083	7W5389	.FILTER ELEMENT,INTA.....	1

END OF FIGURE

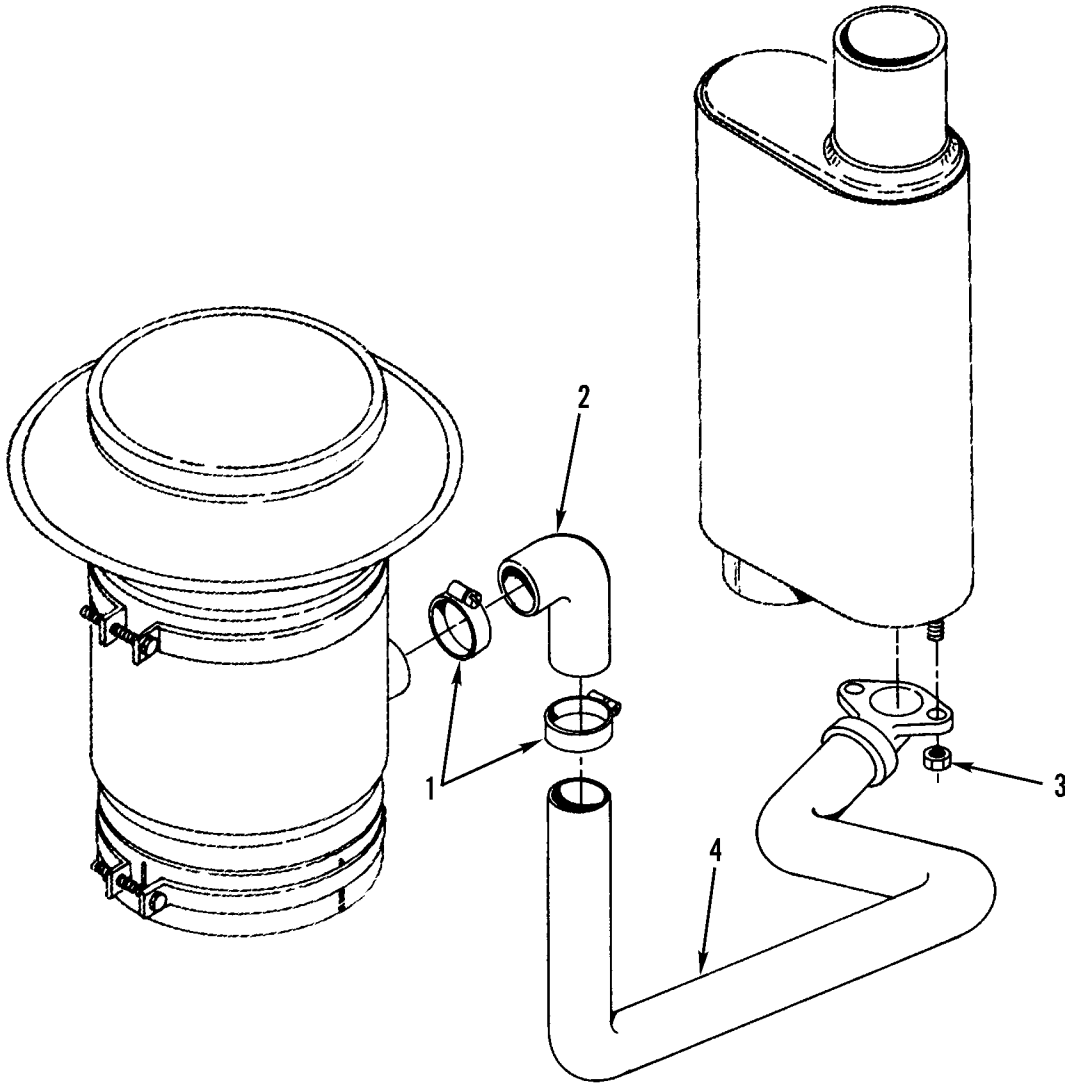

Figure 34. Dust Ejector and Mounting

(1) ITEM NO	(2) SMR CODE	(3) NSN	(4) CAGEC	(5) PART NUMBER	(6) DESCRIPTION AND USABLE ON CODES(UOC)	(7) QTY
					GROUP 0304 AIR CLEANER	
					FIG. 34 DUST EJECTOR AND MOUNTING	
1	PFOZZ	4730010534687	11083	5P0597	CLAMP,HOSE.....	2
2	PAOZZ	4720004449840	5R127	20065	HOSE,PREFORMED.....	1
3	PFOZZ	5310004988409	11083	1B5355	NUT,PLAIN,HEXAGON.....	2
4	PFOZZ	4710011783202	11083	3P0080	TUBE ASSEMBLY,METAL.....	1

END OF FIGURE

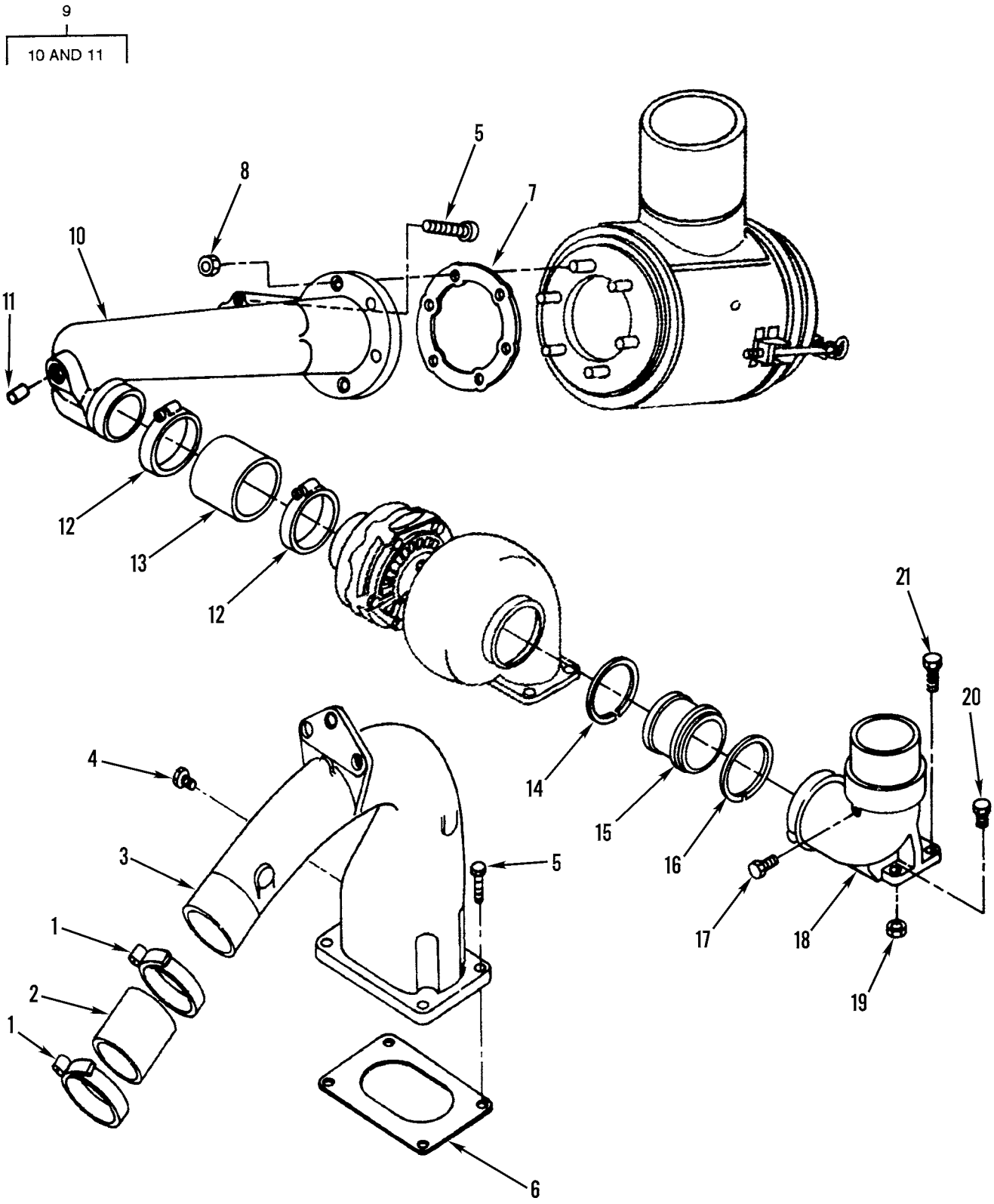

Figure 35. Turbocharger Air Lines and Mounting

(1) ITEM NO	(2) SMR CODE	(3) NSN	(4) CAGEC	(5) PART NUMBER	(6) DESCRIPTION AND USABLE ON CODES(UOC)	(7) QTY
					GROUP 0305 SUPERCHARGER, BLOWER, TURBOCHARGER, OR ALTITUDE COMPENSATOR FIG. 35 TURBOCHARGER AIR LINES AND MOUNTING	
1	PFOZZ	4730010534687	55883	IPD5P597	CLAMP,HOSE	2
2	PAOZZ	4720010675672	16632	1007-16-14	HOSE,AIR DUCT	1
3	PFOZZ	2990011640087	11083	3P0084	PIPE,EXHAUST	1
4	PFOZZ	4730009247886	11083	5M6214	PLUG,PIPE	1
5	PFOZZ	5306004238194	11083	1A2029	BOLT,MACHINE	7
6	PFOZZ	5330007607367	58312	5S6735-00	GASKET	1
7	PFOZZ	5330009239945	11083	4M1485	GASKET	1
8	PFOZZ	5310014297859	11083	6V8801	NUT,PLAIN,HEXAGON	6
9	PFOZZ	2940011746181	11083	3P0089	PIPE ASSEMBLY,AIR C	1
10	XAOZZ		11083	7N4356	.PIPE	1
11	PAOBZ	4730000847543	18265	P10-0128	.STRAINER ELEMENT,SE	1
12	PFOZZ	4730010595352	66295	UT412-212	CLAMP,HOSE	2
13	PAOZZ	4720004213854	11083	5P1263	HOSE,NONMETALLIC	1
14	PAOZZ	5330010941895	11083	6N0009	SEAL RING,METAL	1
15	PFOZZ	2990010941914	11083	6N1553	COUPLING,TURBOCHARG	1
16	PAOZZ	5330010952299	11083	6N1558	SEAL RING,METAL	1
17	PFOZZ	4730000112578	96906	MS14314-2X	PLUG,PIPE	1
18	PFOZZ	4730010941915	11083	3P0114	ELBOW,ENGINE EXHAUS	1
19	PFOZZ	5310004988409	11083	1B5355	NUT,PLAIN,HEXAGON	3
20	PFOZZ	5306010949106	11083	0S1590	BOLT,MACHINE	2
21	PFOZZ	5305010269518	11083	0S1571	SCREW,CAP,HEXAGON H	1

END OF FIGURE

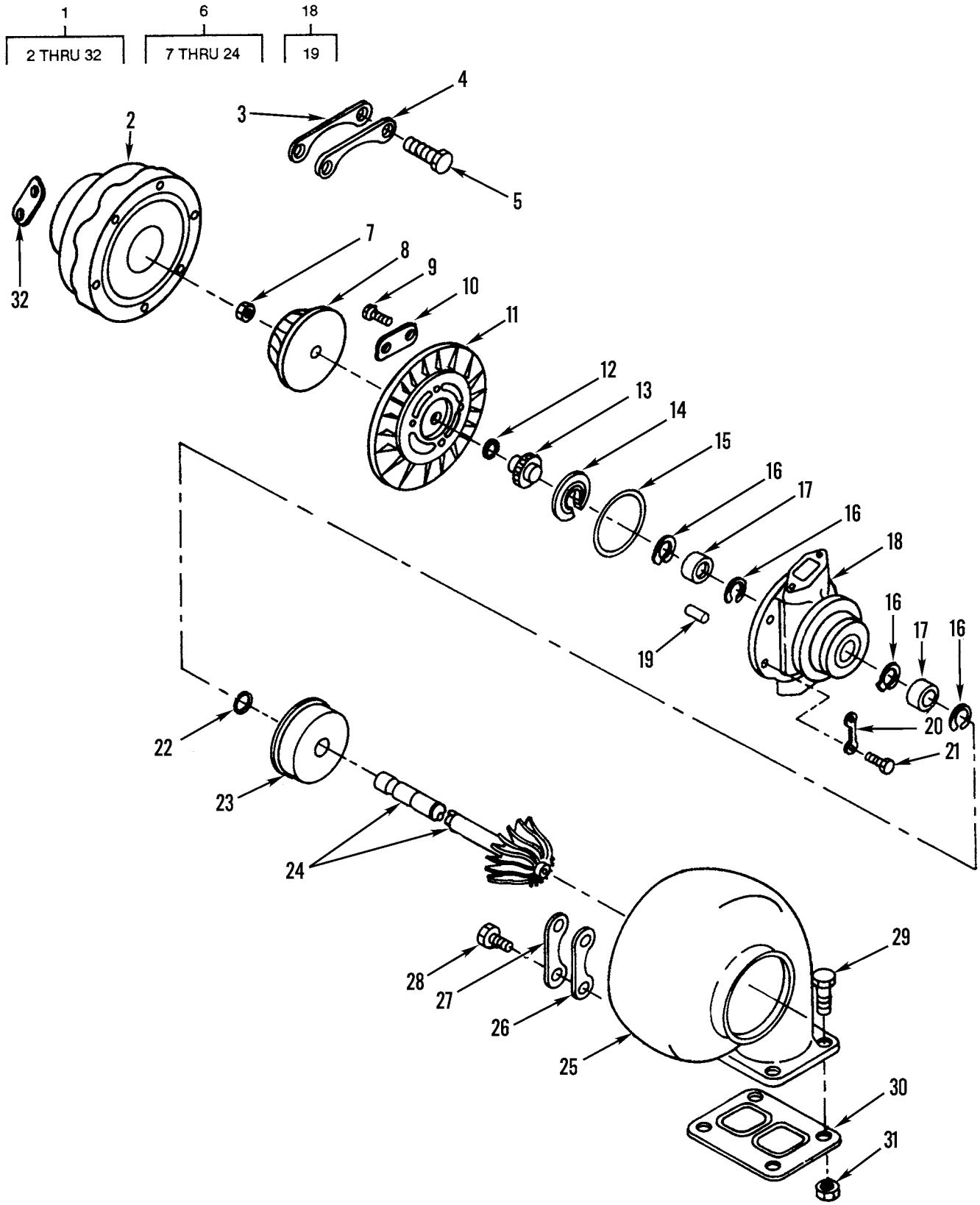

Figure 36. Turbocharger Assembly and Mounting

(1) ITEM NO	(2) SMR CODE	(3) NSN	(4) CAGEC	(5) PART NUMBER	(6) DESCRIPTION AND USABLE ON CODES(UOC)	(7) QTY
					GROUP 0305 SUPERCHARGER, BLOWER, TURBOCHARGER, OR ALTITUDE COMPENSATOR FIG. 36 TURBOCHARGER ASSEMBLY AND MOUNTING	
1	PFFHH	2815011791980	08179	409410-5006	TURBO,SUPERCHARGER.....	1
2	PFHZZ	2815010689784	11083	4N6862	.HOUSING.....	1
3	PFHZZ	4730010675669	08179	407875	.CLAMP,HOSE,SPECIAL-.....	3
4	PFHZZ	5342010686089	08179	407876	.LOCKPLATE.....	3
5	PFHZZ	5306002264823	80204	B1821BH031C056N	.BOLT,MACHINE.....	6
6	PFHZZ	2815010689783	08179	408077-152	.CARTRIDGE.....	1
7	PFHZZ	5310011684484	08179	400544	..NUT,PLAIN,EXTENDED PART OF KIT P/N 2W0716.....	1
8	PFHZZ	2950011565253	08179	409179-18	..WHEEL,COMPRESSOR.....	1
9	PFHZZ	5305001519899	11083	2F0808	..SCREW.....	2
10	PFHZZ	9905011751555	08179	409532	..PLATE,IDENTIFICATIO.....	1
11	PFHZZ	2950011565254	11083	4N6863	..BACKPLATE,TURBOCHAR.....	1
12	PFHZZ	5330009303254	08179	403818-0	..SEAL RING,METAL PART OF KIT P/N 2W0716.....	1
13	PAHZZ	3040004329745	70210	406906	..COLLAR,THRUST.....	1
14	PAHZZ	3120011600377	08179	406907	..BEARING,WASHER,THRU.....	1
15	PFHZZ	5365010205721	08179	400424-0	..SPACER,RING PART OF KIT P/N 2W0716	1
16	PFHZZ	5325012150221	97464	4000-62	..RING,RETAINING.....	4
17	PFHZZ	3120002366553	92679	615749C1	..BEARING,SLEEVE.....	2
18	PFHZZ	2950011563913	08179	407285-18	..HOUSING,TURBOCHARGE.....	1
19	PFHZZ	5315001738417	11083	4M6646	...PIN,GROOVED,HEADLES.....	2
20	PFHZZ	5340011670321	70210	407684	..LOCKING PLATE,NUT A PART OF KIT P/N 2W0716.....	2
21	PFHZZ	5305000687837	80204	B1821BH025C063N	..SCREW,CAP,HEXAGON H.....	4
22	PFHZZ	2990011567875	99193	408049-11	..RING,PISTON PART OF KIT P/N 2W0716	1
23	PFHZZ	2840011563914	08179	409299	..CASE,DIFFUSER,TURBO.....	1
24	PFHZZ	2990011891742	08179	410188-21	..SHAFT AND WHEEL ASS.....	1
25	PFHZZ	3040011860927	08179	408667-22	.HOUSING,MECHANICAL.....	1
26	PFHZZ	4730010675671	08179	406908-1	.CLAMP,HOSE,SPECIAL-.....	3
27	PFHZZ	5342010686100	08179	406909	.LOCKPLATE.....	3
28	PFHZZ	5306011464525	11083	6V2489	.BOLT.....	6
29	PFFZZ	5305010156841	11083	0S1591	.SCREW.....	4
30	PFFZZ	5330015180631	11083	1P0451	.GASKET.....	1
31	PFFZZ	5310004988409	11083	1B5355	.NUT,PLAIN,HEXAGON.....	4
32	PFHZZ	9905011757150	11083	1W4795	.PLATE,IDENTIFICATIO.....	1

END OF FIGURE

6

7 THRU 13

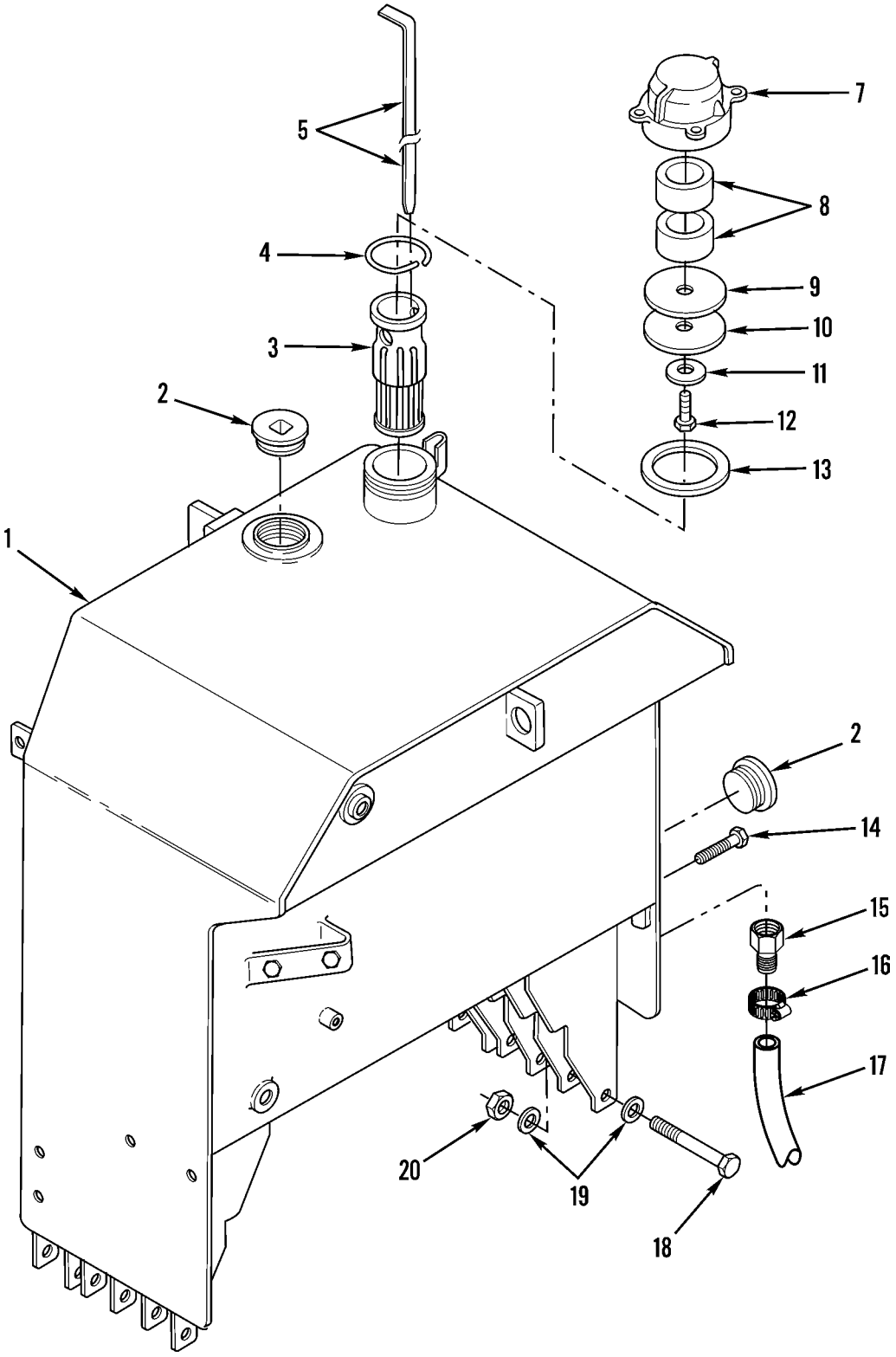

Figure 37. Fuel Tank Assembly and Mounting

(1) ITEM NO	(2) SMR CODE	(3) NSN	(4) CAGEC	(5) PART NUMBER	(6) DESCRIPTION AND USABLE ON CODES(UOC)	(7) QTY
					GROUP 0306 TANKS, LINES, FITTINGS, HEADERS FIG. 37 FUEL TANK ASSEMBLY AND MOUNTING	
1	PFFFF	2910011410911	11083	5T4788	TANK,FUEL,ENGINE.....	1
2	PFOZZ	4730000110667	11083	4H9027	PLUG,PIPE.....	2
3	PFOZZ	2910011647906	11083	9P7121	FILTER ELEMENT,FLUI.....	1
4	PFOZZ	5325009508281	11083	8H3497	RING,RETAINING.....	1
5	PFOZZ	6680010976328	11083	7D9247	GAGE ROD,LIQUID LEV.....	1
6	PFOZZ	2590013773892	11083	7T2036	CAP,FILLER OPENING.....	1
7	PFOZZ	2590011769517	11083	8P0408	.CAP,FILLER OPENING.....	1
8	PAOZZ	2910003675238	11083	4B5949	.FILTER ELEMENT,FLUI.....	2
9	PFOZZ	5330001438713	11083	4B5423	.GASKET.....	1
10	PFOZZ	2910011595883	11083	3F4134	.BAFFLE,FUEL TANK CA.....	1
11	PFOZZ	5310000809422	60532	WAS125	.WASHER,FLAT.....	1
12	PFOZZ	5305004754440	11083	3H8389	.SCREW,FUEL TANK FIL.....	1
13	PFOZZ	5330003639866	11083	2A1763	.GASKET.....	1
14	PFOZZ	2910008626825	11083	1H8306	SCREW FUEL TANK.....	1
15	PFOZZ	4730007825582	30327	KF04-04PS	ADAPTER,STRAIGHT,PI.....	1
16	PFOZZ	4730009083195	58536	AA52506-F	CLAMP,HOSE.....	1
17	MOOZZ		30327	44-PP-16	TUBING,NONMETALLIC MAKE FROM P/N 44-PP, CUT TO 16 INCHES.....	1
18	PFOZZ	5306004262937	11083	0S1627	BOLT,MACHINE.....	3
19	PFOZZ	5310011022477	11083	5P8248	WASHER,FLAT.....	6
20	PFOZZ	5310009785406	11083	2J3506	NUT,PLAIN,HEXAGON.....	3
					END OF FIGURE	

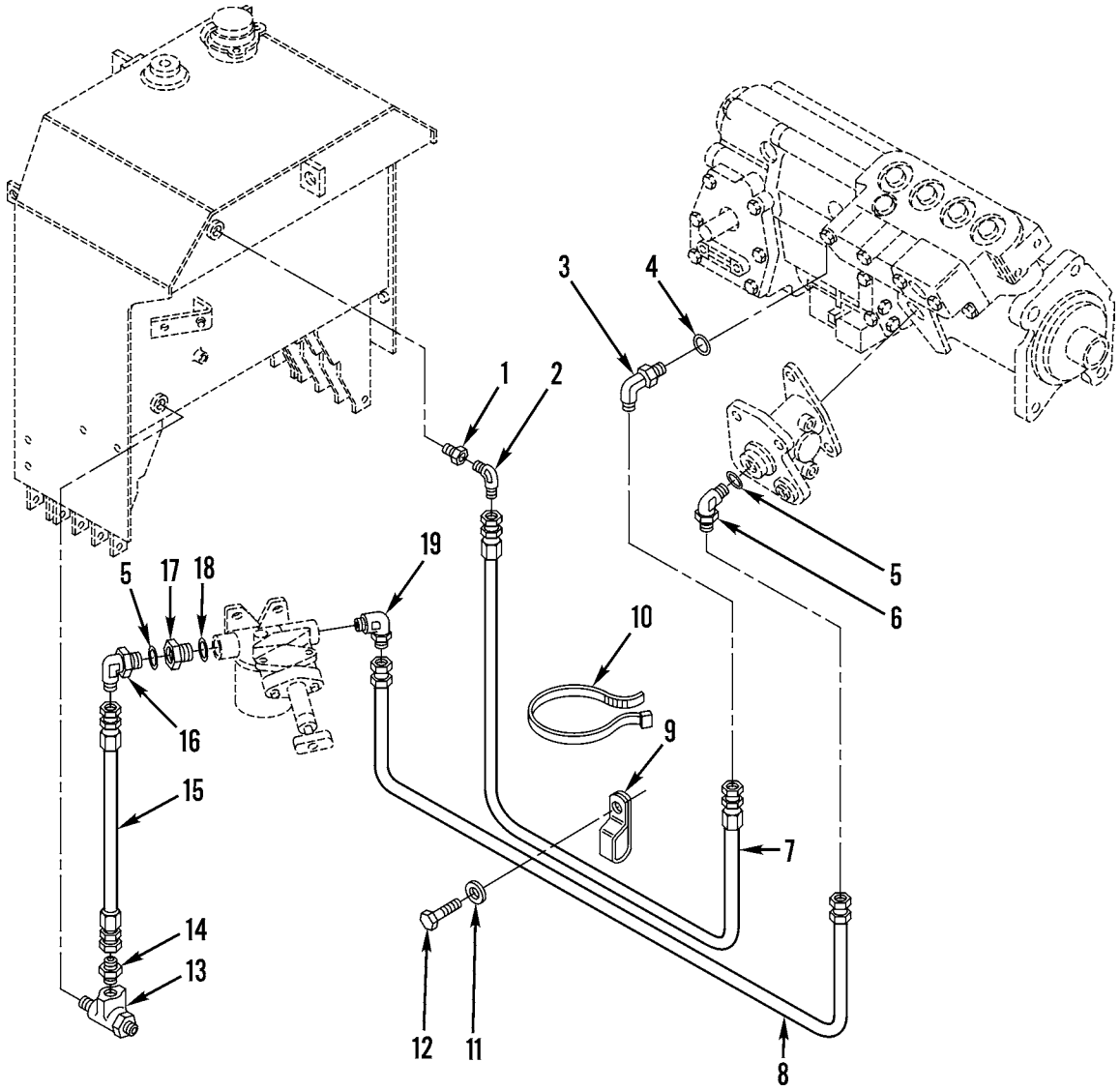

Figure 38. Fuel Lines and Fittings (Sheet 1 of 3)

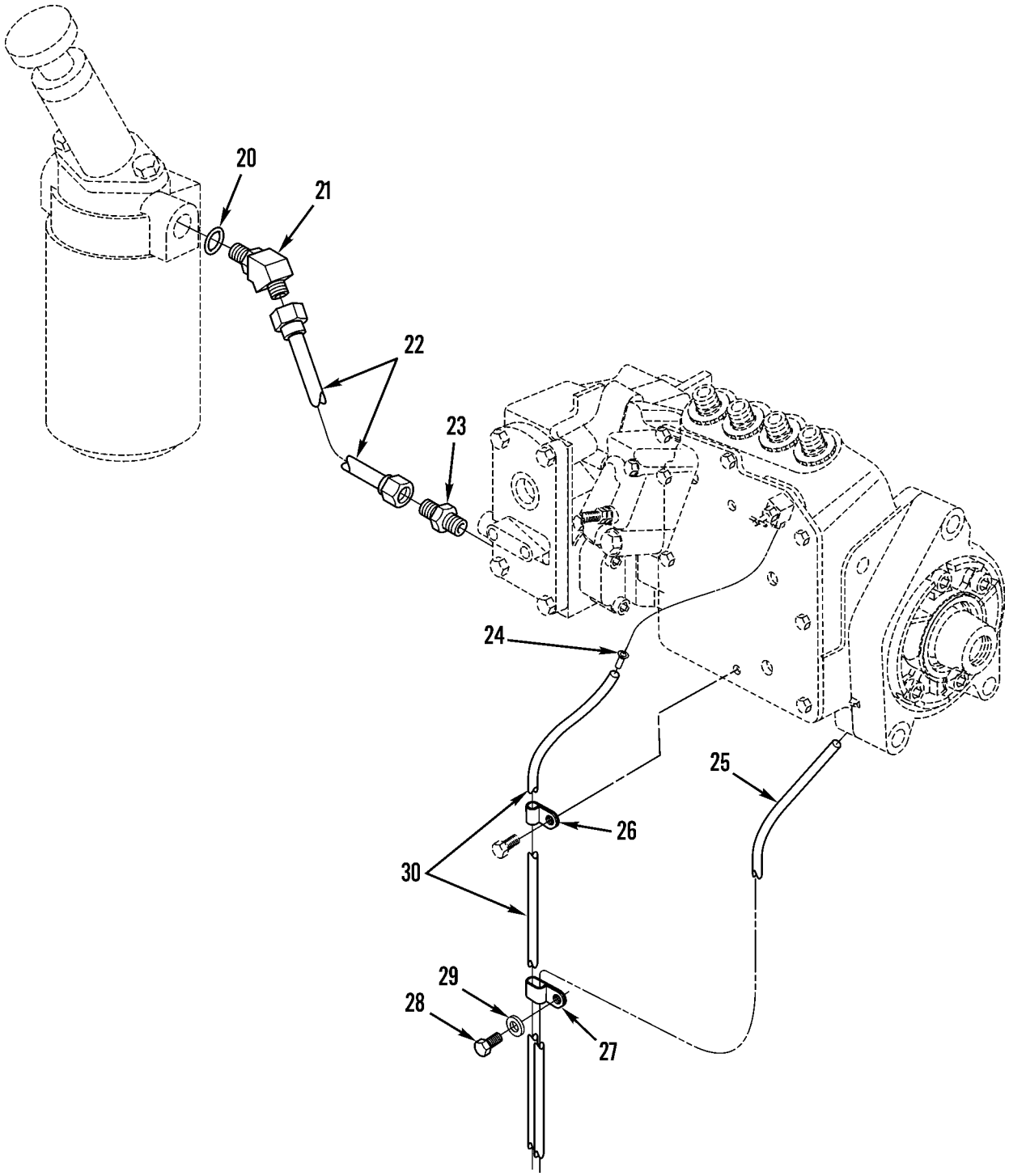

Figure 38. Fuel Lines and Fittings (Sheet 2 of 3)

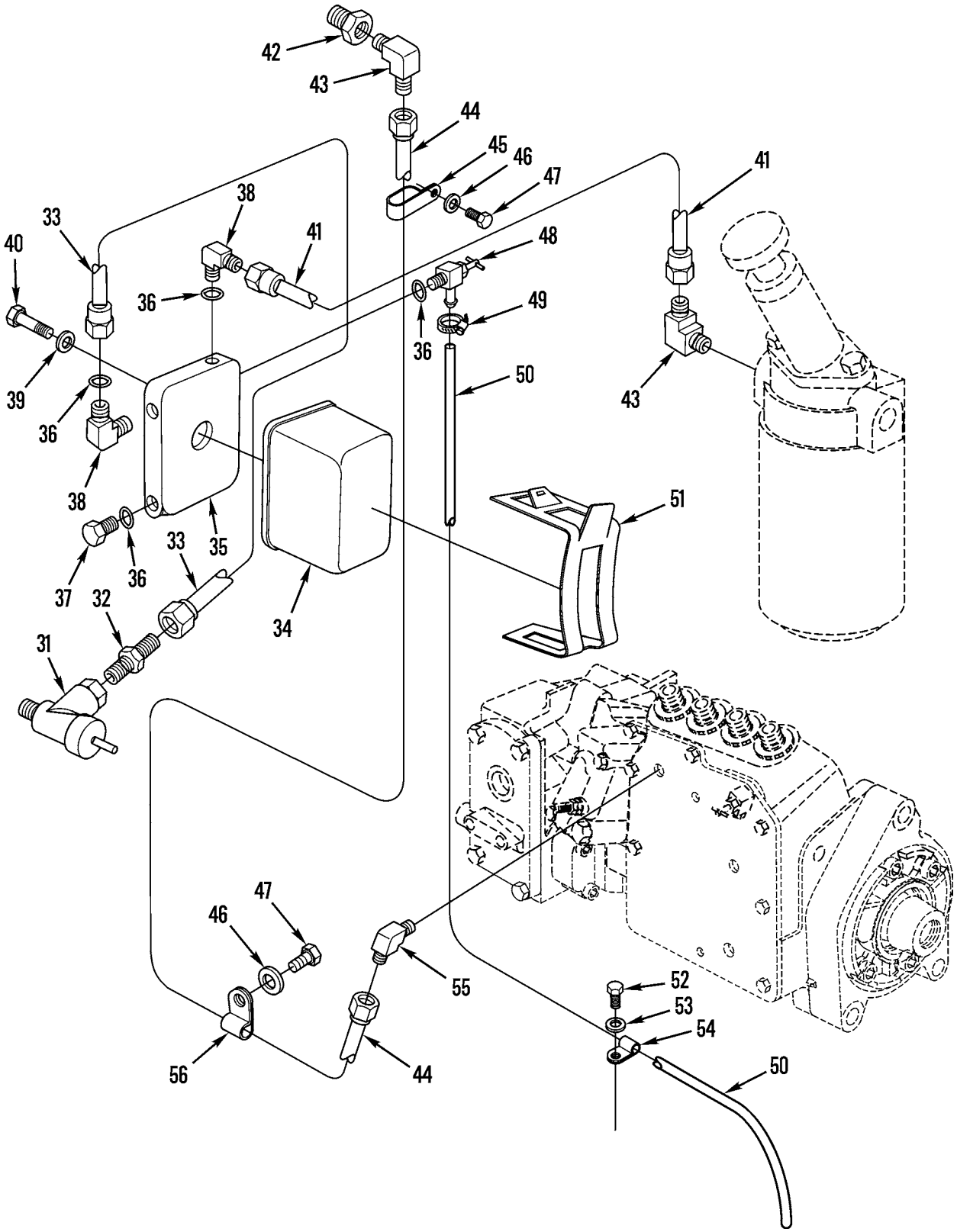

Figure 38. Fuel Lines and Fittings (Sheet 3 of 3)

(1) ITEM NO	(2) SMR CODE	(3) NSN	(4) CAGEC	(5) PART NUMBER	(6) DESCRIPTION AND USABLE ON CODES(UOC)	(7) QTY
					GROUP 0306 TANKS, LINES, FITTINGS, HEADERS FIG. 38 FUEL LINES AND FITTINGS	
1	PAOZZ	4730005807417	01276	2081-8-4S	BUSHING,PIPE..... UOC:AF9,AGP,F10	1
2	PAOZZ	4730008778997	96906	MS51504A4-4	ELBOW,PIPE TO TUBE..... UOC:AF9,AGP,F10	1
3	PAOZZ	4730014293246	11083	0307946	ELBOW,TUBE..... UOC:AF9,AGP,F10	1
4	PCOZZ	5331010491292	02697	3-904N552-90	O-RING PART OF KIT P/N 3E8905..... UOC:AF9,AGP,F10	1
5	PCOZZ	5331008013354	25184	906-737-70	O-RING PART OF KIT P/N 3E8905..... UOC:AF9,AGP,F10	2
6	PAOZZ	4730001433941	96906	MS51527A6	ELBOW,TUBE TO BOSS..... UOC:AF9,AGP,F10	1
7	PFOZZ	4720010937328	11083	2G4505	HOSE ASSEMBLY,NONME..... UOC:AF9,AGP,F10	1
8	PAOZZ	4720011993840	11083	2T0676	HOSE ASSEMBLY,NONME..... UOC:AF9,AGP,F10	1
9	PFOZZ	5340004264644	11083	4D6466	CLAMP,LOOP..... UOC:AF9,AGP,F10	1
10	PAOZZ	2920010589099	11083	3S2093	STRAP..... UOC:AF9,AGP,F10	1
11	PFOZZ	5310010948810	78189	3320-14-01	WASHER,SQUARE CONE SERIAL NUMBER 7GB00001 THRU 7GB00692..... UOC:AF9,AGP,F10	2
11	PFOZZ	5310001174788	11083	9Y2695	WASHER,FLAT SERIAL NUMBER 7GB00693 AND UP..... UOC:AF9,AGP,F10	2
12	PFOZZ	5306002637301	11083	0L1351	BOLT,MACHINE..... UOC:AF9,AGP,F10	2
13	PAOZZ	4820009489962	11083	2S5100	VALVE ASSEMBLY.....	1
14	PFOZZ	4730002890382	11083	7D5363	ADAPTER,STRAIGHT,PI SERIAL NUMBER 7GB00693 AND UP..... UOC:AF9,AGP,F10	1
14	PAOZZ	4730011517955	11083	0019440	COUPLING,TUBE SERIAL NUMBER 7GB00001 THRU 7GB00692..... UOC:AF9,AGP,F10	1
15	PFOZZ	4720010937330	11083	2G6943	HOSE ASSEMBLY,NONME SERIAL NUMBER 7GB00001 THRU 7GB00692..... UOC:AF9,AGP,F10	1
15	PFOZZ		11083	8N7140	HOSE ASSEMBLY..... UOC:AF9,AGP,F10	1
16	PAOZZ	4730012424510	30780	4-6 C5BXS	ELBOW,TUBE TO BOSS SERIAL NUMBER 7GB00001 THRU 7GB00692..... UOC:AF9,AGP,F10	1
16	PFOZZ	4730014710277	11083	0054362	ELBOW,QUICK DISCONN USE ON SERIAL NUMBER 7GB00693 AND UP..... UOC:AF9,AGP,F10	1
17	PFOZZ	4730009330727	30780	8-6-F5G5-S	REDUCER,BOSS..... UOC:AF9,AGP,F10	1

(1) ITEM NO	(2) SMR CODE	(3) NSN	(4) CAGEC	(5) PART NUMBER	(6) DESCRIPTION AND USABLE ON CODES(UOC)	(7) QTY
18	PAOZZ	5331009486482	11083	3K0360	O-RING PART OF KIT P/N 3E8905..... UOC:AF9,AGP,F10	1
19	PAOZZ	4730010518745	11083	6K9194	ELBOW,TUBE..... UOC:AF9,AGP,F10	1
20	PAOZZ	5331013336444	11083	3J1907	O-RING PART OF KIT P/N 5P9419..... UOC:AGM,AGN	2
21	PAOZZ	4730010512312	78640	307942	ELBOW,TUBE TO BOSS..... UOC:AGM,AGN	1
22	PFOZZ	4710010936885	11083	4N3551	TUBE ASSEMBLY,METAL..... UOC:AGM,AGN	1
23	PAOZZ	4730004919576	96906	MS51525A6	ADAPTER,STRAIGHT,TU..... UOC:AGM,AGN	1
24	PAOZZ	2910010621354	11083	7K8332	INSERT,FUEL INJECTI..... UOC:AGM,AGN	1
25	MOOZZ		11083	5P6011-15.7	TUBING,NONMETALLIC MAKE FROM P/N 5P6011..... UOC:AGM,AGN	1
26	PAOZZ	5340002827519	96906	MS21333-34	CLAMP,LOOP..... UOC:AGM,AGN	1
27	PAOZZ	5340010979213	30966	BDT-413	CLAMP,LOOP..... UOC:AGM,AGN	1
28	PAOZZ	5306008148967	11083	2H3755	BOLT,MACHINE..... UOC:AGM,AGN	1
29	PAOZZ	5310004324064	11083	9M1974	WASHER,FLAT..... UOC:AGM,AGN	1
30	MOOZZ		11083	5P6011-23.6	TUBING,NONMETALLIC MAKE FROM P/N 5P6011..... UOC:AGM,AGN	1
31	PAOZZ	4820009489962	11083	2S5100	VALVE ASSEMBLY..... UOC:AGM,AGN	1
32	PAOZZ		11083	0019440	CONNECTOR..... UOC:AGM,AGN	1
33	PAOZA	4720010937329	11083	2G4507	HOSE ASSEMBLY,NONME..... UOC:AGM,AGN	1
34	PAOZZ	4730011495082	11083	8N9803	STRAINER ELEMENT,SE..... UOC:AGM,AGN	1
35	PAOZZ	4330011775446	11083	8N9801	SEPARATOR,WATER,LIQ..... UOC:AGM,AGN	1
36	PAOZZ	5330006136500	11083	1J9671	PACKING,PREFORMED..... UOC:AGM,AGN	5
37	PAOZZ	4730011033727	11083	3K8460	PLUG,PIPE..... UOC:AGM,AGN	1
38	PAOZZ	4730010625202	11083	3N1294	ELBOW,TUBE..... UOC:AGM,AGN	2
39	PAOZZ	5310001174788	11083	5M2894	WASHER,FLAT..... UOC:AGM,AGN	2
40	PAOZZ	5306002604508	11083	S1594	BOLT,MACHINE..... UOC:AGM,AGN	2
41	PAOZZ	4720010937330	11083	2G6943	HOSE ASSEMBLY,NONME..... UOC:AGM,AGN	1
42	PAOZZ	4730005807417	01276	2081-8-4S	BUSHING,PIPE..... UOC:AGM,AGN	1

(1) ITEM NO	(2) SMR CODE	(3) NSN	(4) CAGEC	(5) PART NUMBER	(6) DESCRIPTION AND USABLE ON CODES(UOC)	(7) QTY
43	PAOZZ	4730008778997	96906	MS51504A4-4	ELBOW,PIPE TO TUBE..... UOC:AGM,AGN	2
44	PAOZZ	4720010937328	11083	2G4505	HOSE ASSEMBLY,NONME..... UOC:AGM,AGN	1
45	PAOZZ	5340004264644	11083	4D6466	CLAMP,LOOP..... UOC:AGM,AGN	1
46	PAOZZ	5310010948810	78189	3320-14-01	WASHER,SQUARE CONE..... UOC:AGM,AGN	2
47	PAOZZ	5306002637301	11083	0L1351	BOLT,MACHINE..... UOC:AGM,AGN	2
48	PAOZZ	4820011675453	11083	6V2611	VALVE,ANGLE..... UOC:AGM,AGN	2
49	PAOZZ	5342010630674	11083	1P4278	CLAMP..... UOC:AGM,AGN	1
50	MOOZZ		11083	5P1442-65	HOSE,NONMETALLIC MAKE FROM P/N 5P1442..... UOC:AGM,AGN	1
51	PAOZZ	5340011495988	59556	K-500-EN-0551-1	CLAMP..... UOC:AGM,AGN	1
52	PAOZZ	5306002264825	11083	0S1617	BOLT,MACHINE..... UOC:AGM,AGN	1
53	PAOZZ	5310010955910	11083	5P4116	WASHER,SQUARE CONE..... UOC:AGM,AGN	1
54	PAOZZ	5342010643819	11083	9M8406	CLIP..... UOC:AGM,AGN	1
55	PAOZZ	4820010534586	79470	131-05004	VALVE,CHECK..... UOC:AGM,AGN	1
56	PAOZZ	5340010599345	11083	6D3479	CLIP..... UOC:AGM,AGN	1

END OF FIGURE

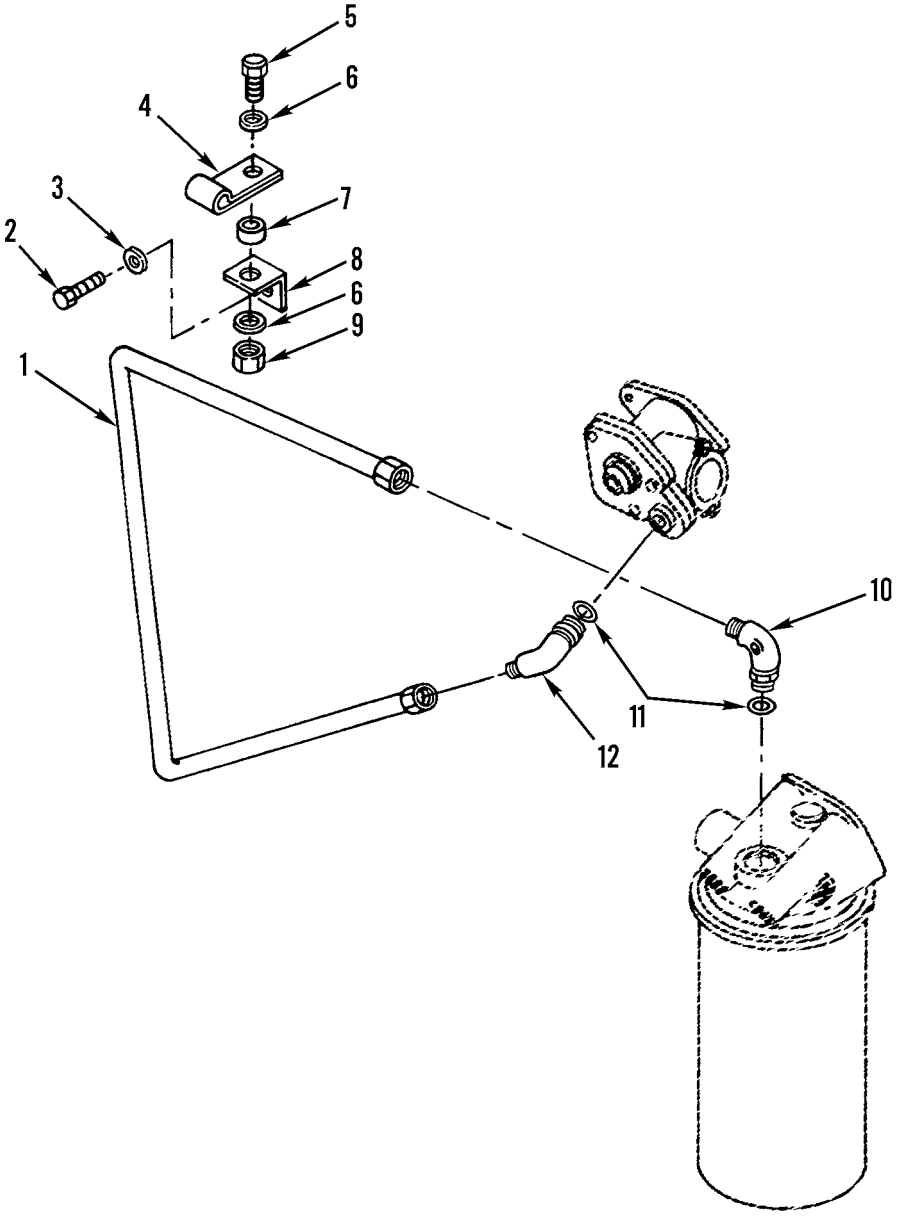

Figure 39. Secondary Filter Fuel Lines, Fittings, and Mounting

(1) ITEM NO	(2) SMR CODE	(3) NSN	(4) CAGEC	(5) PART NUMBER	(6) DESCRIPTION AND USABLE ON CODES(UOC)	(7) QTY
					GROUP 0306 TANKS, LINES, FITTINGS, HEADERS FIG. 39 SECONDARY FILTER FUEL LINES, FITTINGS, AND MOUNTING	
1	PAFZZ	4710012191210	11083	2W7230	TUBE ASSEMBLY,METAL..... UOC:AF9,AGP,F10	1
2	PFFZZ	5306011068225	11083	1D4533	BOLT,MACHINE..... UOC:AF9,AGP,F10	1
3	PFFZZ	5310010512360	11083	5P0537	WASHER..... UOC:AF9,AGP,F10	1
4	PFFZZ	5340002827505	96906	MS21333-57	CLAMP,LOOP..... UOC:AF9,AGP,F10	1
5	PFFZZ	5306004238194	11083	1A2029	BOLT,MACHINE..... UOC:AF9,AGP,F10	1
6	PFFZZ	5310001174788	11083	5M2894	WASHER,FLAT..... UOC:AF9,AGP,F10	2
7	XBFZZ		11083	6B0933	SPACER,SLEEVE..... UOC:AF9,AGP,F10	1
8	PAFZZ	5340011817508	11083	8M1953	BRACKET,ANGLE..... UOC:AF9,AGP,F10	1
9	PFFZZ	5310014297859	11083	6V8801	NUT,PLAIN,HEXAGON..... UOC:AF9,AGP,F10	1
10	PAFZZ	4730011693724	11083	5P4289	ELBOW,TUBE TO BOSS..... UOC:AF9,AGP,F10	1
11	PCOZZ	5331008013354	25184	906-737-70	O-RING PART OF KIT P/N 3E8905..... UOC:AF9,AGP,F10	2
12	PAFZZ	4730001433941	96906	MS51527A6	ELBOW,TUBE TO BOSS..... UOC:AF9,AGP,F10	1

END OF FIGURE

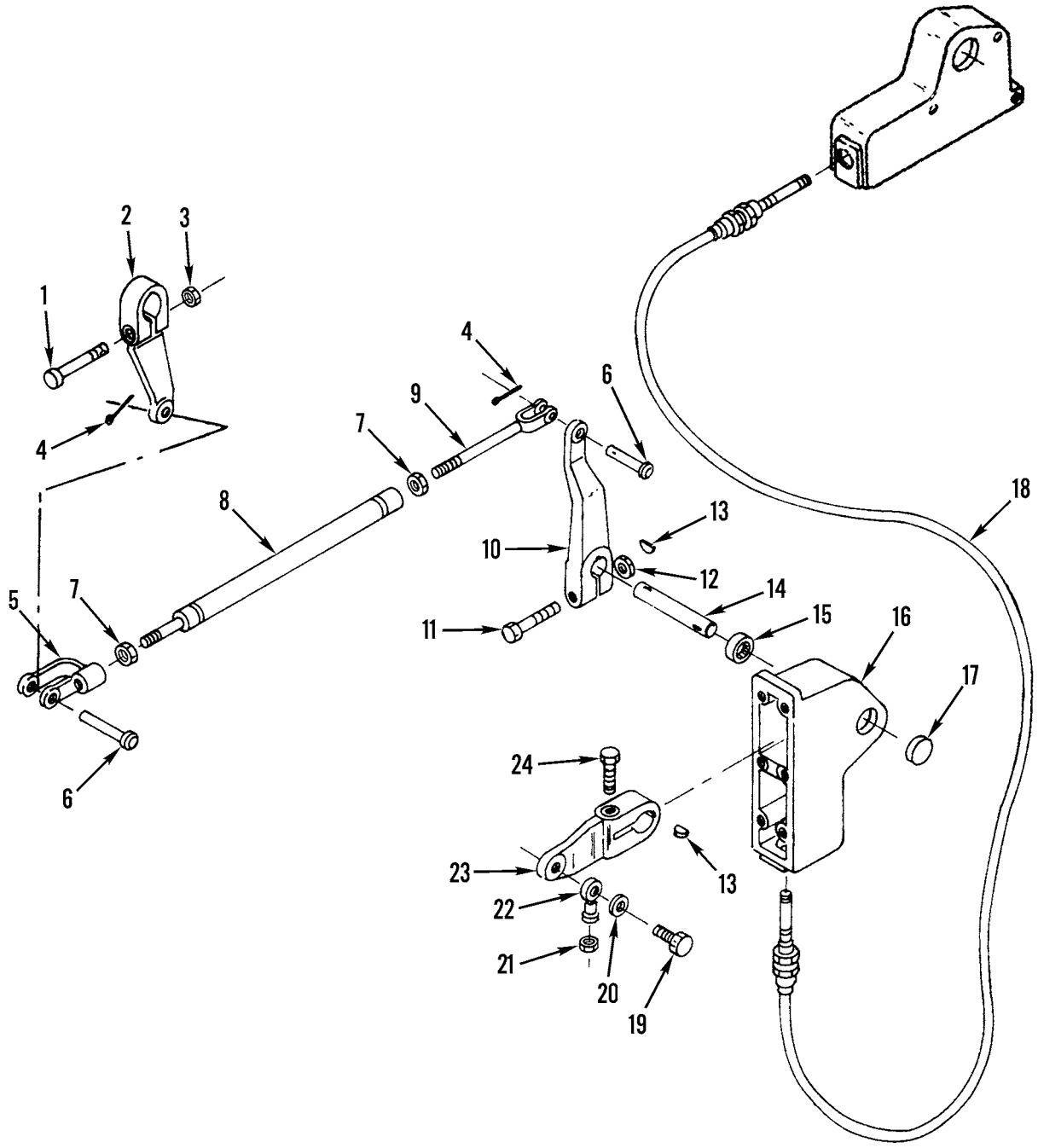

Figure 40. Rear Governor Controls

(1) ITEM NO	(2) SMR CODE	(3) NSN	(4) CAGEC	(5) PART NUMBER	(6) DESCRIPTION AND USABLE ON CODES(UOC)	(7) QTY
					GROUP 0308 ENGINE SPEED GOVERNOR AND CONTROLS FIG. 40 REAR GOVERNOR CONTROLS	
1	PFFZZ	5306002533376	11083	2A5546	BOLT,MACHINE.....	1
2	PFFZZ	2910010588070	11083	1S5927	LEVER.....	1
3	PFOZZ	5310000426376	31159	JM56	NUT,PLAIN,HEXAGON.....	1
4	PFFZZ	5315004317315	11083	3B4615	PIN,COTTER.....	2
5	PFFZZ	5340004113926	11083	1F5403	CLEVIS,ROD END..... UOC:AF9,AGP,F10	1
6	PFFZZ	5315002726760	11083	1B0676	PIN,STRAIGHT,HEADED.....	2
7	PFFZZ	5310009752075	96906	MS35691-21	NUT,PLAIN,HEXAGON.....	2
8	PFFZZ	2990000035933	11083	8W4780	LINK ASSEMBLY,THROT..... UOC:AGM,AGN	1
8	XBFZZ		11083	2Y6674	RETAINER,HELICAL CO..... UOC:AF9,AGP,F10	1
9	PFFZZ	2530010691391	11083	1J8490	ROD CONTROL..... UOC:AGM,AGN	1
9	PFFZZ	5340000095728	11083	5H4630	CLEVIS,ROD END..... UOC:AF9,AGP,F10	1
10	PFFZZ	3040011467966	11083	9D1969	LEVER,REMOTE CONTRO..... UOC:AGM,AGN	1
10	XDFZZ		11083	5H0745	LEVER,REMOTE CONTRO..... UOC:AF9,AGP,F10	1
11	PFFZZ	5306004238194	11083	1A2029	BOLT,MACHINE..... UOC:AGM,AGN	1
11	PFFZZ	5305010156841	11083	0S1591	SCREW..... UOC:AF9,AGP	1
12	PFFZZ	5310014297859	11083	6V8801	NUT,PLAIN,HEXAGON..... UOC:AF9,AGP	1
13	PFFZZ	5315006165526	96906	MS35756-8	KEY,WOODRUFF.....	2
14	PFFZZ	3040015218043	11083	9D1972	SHAFT, STRAIGHT..... UOC:AGM,AGN	1
14	PFFZZ	3040011789709	11083	5T3476	SHAFT,STRAIGHT..... UOC:AF9,AGP,F10	1
15	PAFZZ	3110010659108	11083	7K2135	BEARING.....	1
16	XDFZZ		11083	8D9973	HOUSING.....	1
17	PAFZZ	3110011668143	11083	4J2667	BEARING.....	1
18	PAFZZ	2990010940700	11083	9D1611	CONTROL ASSEMBLY,PU..... UOC:AF9,AGN,AGP	1
19	PFFZZ	5306002264826	80204	B1821BH031C088N	BOLT,MACHINE.....	1
20	PFFZZ	5310001670721	96906	MS35333-41	WASHER,LOCK.....	1
21	PFFZZ	5310004238288	11083	1A8285	NUT,PLAIN,HEXAGON.....	1
22	PAFZZ	3120001826865	11083	7H3641	BEARING,PLAIN,ROD E.....	1
23	PAOZZ	2530010660490	11083	9D0194	LEVER.....	1
24	PFOZZ	5305000680511	80204	B1821BH038C125N	SCREW,CAP,HEXAGON H.....	2

END OF FIGURE

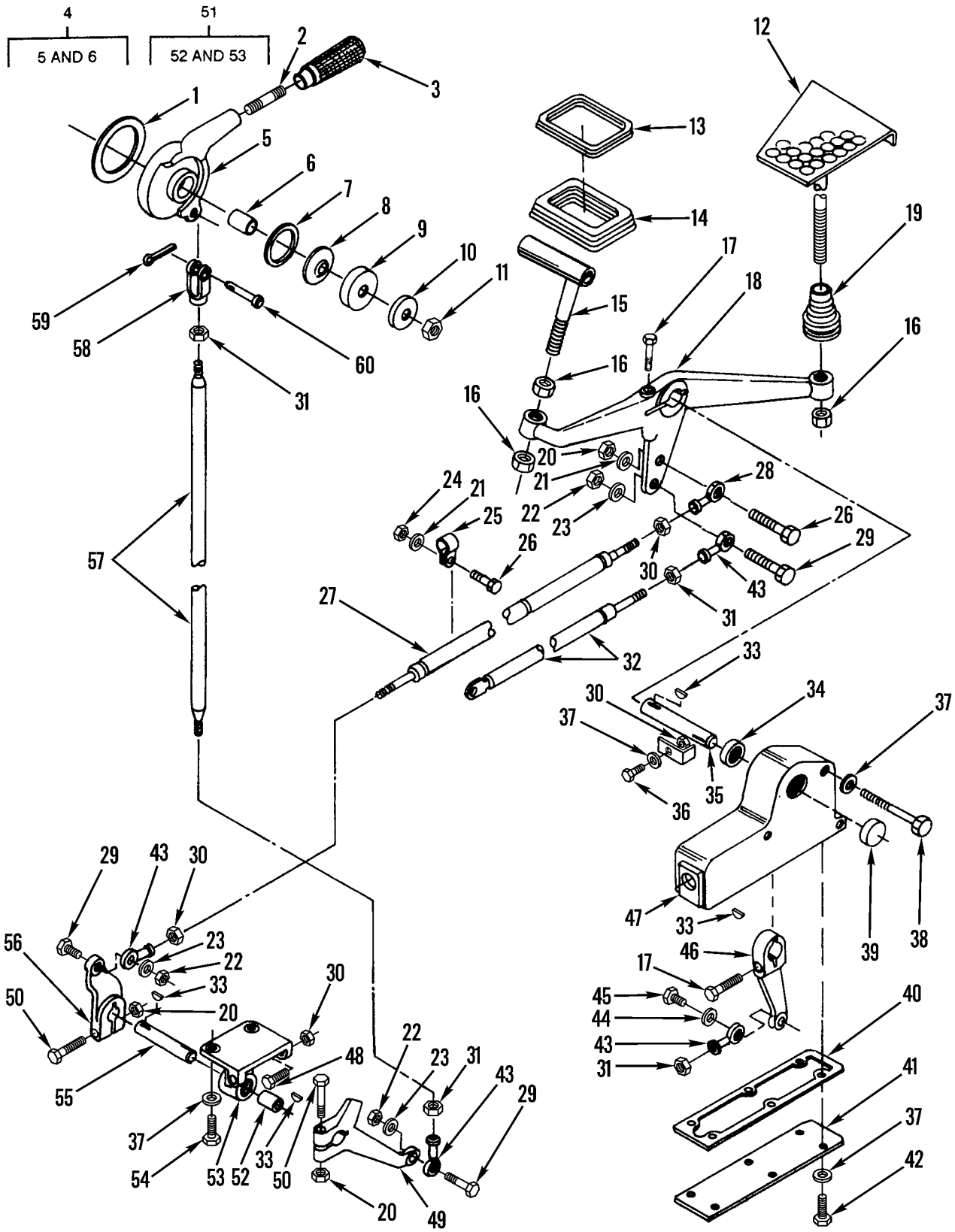

Figure 41. Front Governor Controls (Sheet 1 of 2)

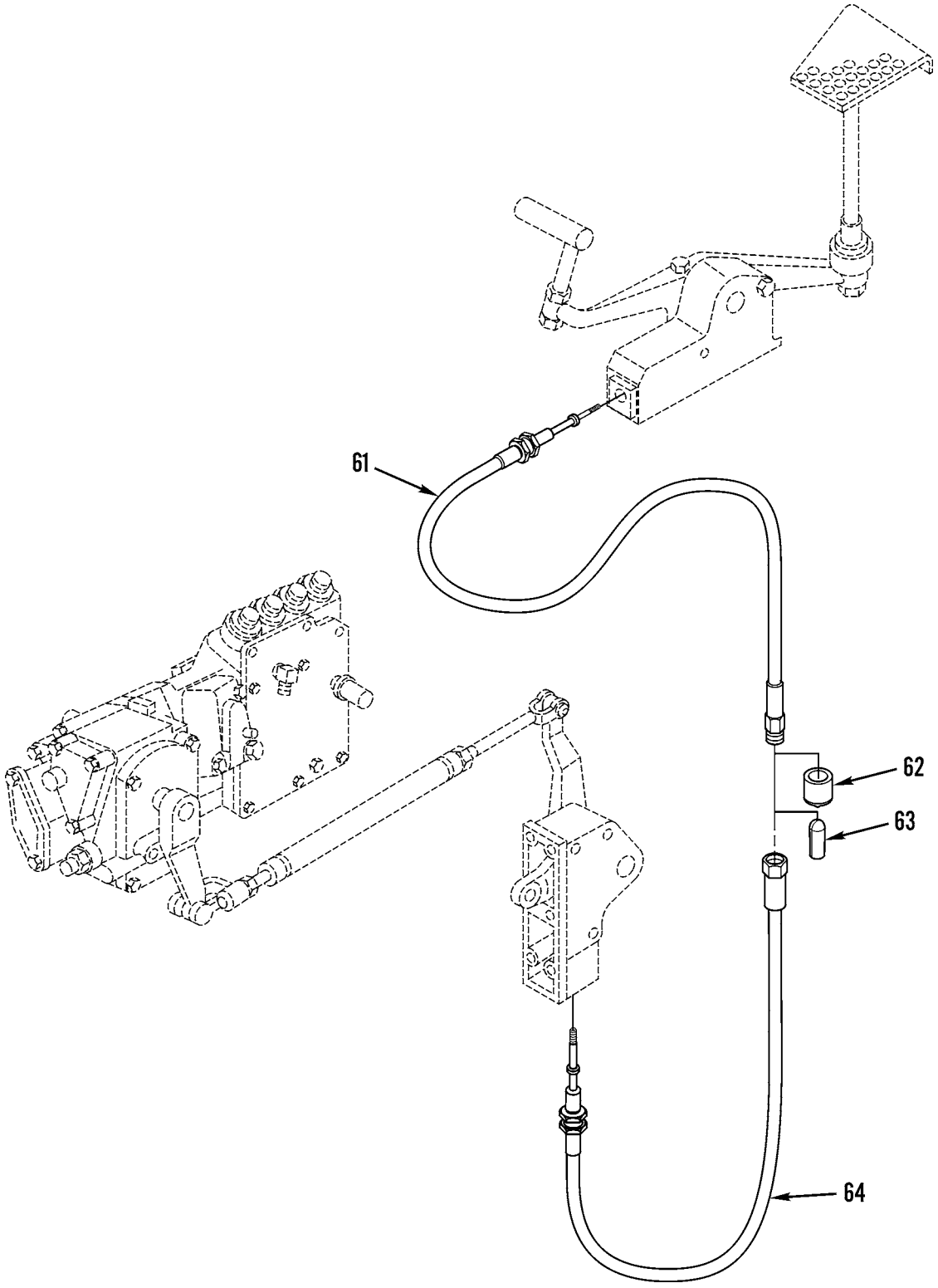

Figure 41. Front Governor Controls (Sheet 2 of 2)

(1) ITEM NO	(2) SMR CODE	(3) NSN	(4) CAGEC	(5) PART NUMBER	(6) DESCRIPTION AND USABLE ON CODES(UOC)	(7) QTY
					GROUP 0308 ENGINE SPEED GOVERNOR AND CONTROLS	
					FIG. 41 FRONT GOVERNOR CONTROLS	
1	PFFZZ	3040013127281	11083	6Y7966	LINING,FRICTION.....	1
2	PFFZZ	5307002366711	11083	4H9304	STUD,PLAIN.....	1
3	PFFZZ	2520003627883	11083	0L0829	HANDLE,CLUTCH LEVER.....	1
4	AFFZZ	5340011422862	11083	6G3505	LEVER,MANUAL CONTRO.....	1
5	PFFZZ		11083	6G3504	.HANDLE.....	1
6	PFFZZ	3120005554553	11083	4F8686	.BEARING,SLEEVE.....	1
7	PFFZZ	5310010660503	11083	4J6580	WASHER.....	1
8	PFFZZ	5310001748647	11083	5D0998	WASHER,SPRING TENSI.....	6
9	PFFZZ	5310011480249	11083	0L0821	WASHER,RECESSED.....	1
10	PFFZZ	5310003082227	11083	4B5273	WASHER,FLAT.....	1
11	PFFZZ	5310010660508	11083	2K0564	NUT.....	1
12	PFFZZ	2540011468908	11083	8X6935	PEDAL,CONTROL.....	1
13	PFFZZ	8140011846877	11083	6G1956	PAD,CUSHIONING.....	1
14	PAFZZ	9390010962252	11083	8W3342	BELLOWS,PROTECTION.....	1
15	PFFZZ	2910001038876	11083	4H2186	TREADLE ASSEMBLY,GO.....	1
16	PFFZZ	5310001787700	11083	3H3680	NUT,PLAIN,HEXAGON.....	3
17	PFOZZ	5305000680511	80204	B1821BH038C125N	SCREW,CAP,HEXAGON H.....	1
18	PFFZZ	3040012142580	11083	8W0317	LEVER,REMOTE CONTRO.....	1
					UOC:AF9,AGP,F10	
18	PFFZZ	2530010659093	11083	8D7081	LEVER.....	1
					UOC:AGM,AGN	
19	PAFZZ	9390010947076	11083	6G0233	BELLOWS,PROTECTION.....	1
20	PFOZZ	5310014297859	11083	6V8801	NUT,PLAIN,HEXAGON.....	3
21	PFFZZ	5310001174788	11083	5M2894	WASHER,FLAT.....	2
					UOC:AF9,AGP,F10	
21	PFFZZ	5310001174788	11083	5M2894	WASHER,FLAT.....	1
					UOC:AGM,AGN	
22	PFFZZ	5310008807744	96906	MS51967-5	NUT,PLAIN,HEXAGON.....	3
					UOC:AF9,AGP,F10	
22	PFFZZ	5310008807744	96906	MS51967-5	NUT,PLAIN,HEXAGON.....	2
					UOC:AGM,AGN	
23	PFFZZ	5310000814219	96906	MS27183-12	WASHER,FLAT.....	3
					UOC:AF9,AGP,F10	
23	PFFZZ	5310000814219	96906	MS27183-12	WASHER,FLAT.....	2
					UOC:AGM,AGN	
24	PFFZZ	5310010588071	11083	2K4973	LOCKNUT.....	1
					UOC:AF9,AGP,F10	
25	PFFZZ	5340012156299	11083	8T1760	CLAMP,LOOP.....	1
					UOC:AF9,AGP,F10	
26	PFOZZ	5306011954681	11083	3B1915	BOLT.....	2
					UOC:AF9,AGP,F10	
26	PFOZZ	5306011954681	11083	3B1915	BOLT.....	1
					UOC:AGM,AGN	
27	PAFZZ	3040013338241	11083	8W3589	SHAFT ASSEMBLY,SHOU.....	1
					UOC:AF9,AGP,F10	
27	XDFZZ		11083	9D8129	SHAFT ASSEMBLY,SHOU.....	1
					UOC:AGM,AGN	
28	PAFZZ	3120000143507	02695	FR6-15	BEARING,PLAIN,ROD E.....	2

(1) ITEM NO	(2) SMR CODE	(3) NSN	(4) CAGEC	(5) PART NUMBER	(6) DESCRIPTION AND USABLE ON CODES(UOC)	(7) QTY
29	PFFZZ	5306002264828	80204	B1821BH031C113N	BOLT,MACHINE..... UOC:AF9,AGP,F10	3
29	PFFZZ	5306002264828	80204	B1821BH031C113N	BOLT,MACHINE..... UOC:AGM,AGN	2
30	PFOZZ	5310008512682	96906	MS35691-17	NUT,PLAIN,HEXAGON.....	5
31	PFFZZ	5310004238288	11083	1A8285	NUT,PLAIN,HEXAGON..... UOC:AF9,AGP,F10	5
31	PFFZZ	5310004238288	11083	1A8285	NUT,PLAIN,HEXAGON..... UOC:AGM,AGN	4
32	PAFZZ	3040012141291	11083	8W0328	CYLINDER,ACTUATING,..... UOC:AF9,AGP,F10	1
33	PFFZZ	5315006165526	80205	MS35756-8	KEY,WOODRUFF.....	1
34	PAFZZ	3110010659108	11083	7K2135	BEARING.....	1
35	PFFZZ	2530010660572	11083	8D5119	SHAFT.....	1
36	PFFZZ	5306008530324	11083	2D2285	BOLT,MACHINE.....	1
37	PFFZZ	5310010948810	78189	3320-14-01	WASHER,SQUARE CONE.....	11
38	PFFZZ	5305002528906	11083	0T0065	SCREW.....	3
39	PAFZZ	3110011668143	11083	4J2667	BEARING.....	1
40	PFFZZ	5330010660675	11083	8D9974	GASKET.....	1
41	PFFZZ	2530010660487	11083	8D9969	COVER.....	1
42	PFFZZ	5306002604508	11083	0S1594	BOLT,MACHINE.....	6
43	PFFZZ	3120001826865	11083	7H3641	BEARING,PLAIN,ROD E..... UOC:AF9,AGP,F10	4
43	PFFZZ	3120001826865	11083	7H3641	BEARING,PLAIN,ROD E..... UOC:AGM,AGN	3
44	PFFZZ	5310001670721	96906	MS35333-41	WASHER,LOCK.....	1
45	PFFZZ	5306002264826	80204	B1821BH031C088N	BOLT,MACHINE.....	1
46	PFFZZ	2530010660489	11083	9D0145	LEVER.....	1
47	XDFZZ		11083	8D9973	HOUSING.....	1
48	PFFZZ	5305010660529	11083	0V0196	CAP,SCREW.....	2
49	PFFZZ	2530010659089	11083	8D5996	LEVER.....	1
50	PFOZZ	5305010156841	11083	0S1591	SCREW.....	2
51	AFFZZ	3805011700837	11083	8D6174	BRACKET,EYE,ROTATIN.....	1
52	PAFZZ	3120004582005	11083	7H1051	.BEARING,SLEEVE.....	1
53	PFFZZ		11083	8D6173	.BRACKET.....	1
54	PFFZZ	5306002637301	11083	0L1351	BOLT,MACHINE.....	2
55	PFOZZ	2530010660574	11083	8D5126	SHAFT.....	1
56	PFFZZ	3040012142579	11083	4D2498	LEVER,REMOTE CONTRO.....	1
57	PFFZZ	3040011467967	11083	4V0627	CONNECTING LINK,RIG.....	1
58	PFFZZ	2530010659067	11083	3D9609	END.....	1
59	PFOZZ	5315008392326	96906	MS24665-281	PIN,COTTER.....	1
60	PFOZZ	5315007540848	96906	MS35810-3	PIN,STRAIGHT,HEADED.....	1
61	PAOZZ	2590011698762	11083	5R6837	CONTROL ASSEMBLY,PU..... UOC:AGM,F10	1
62	PAOZZ		11083	5R6221	PLUG,END SEAL,ELECT..... UOC:AGM,F10	1
63	PAOZZ	5340011863757	15819	625-2-701-89	CAP,PROTECTIVE,DUST..... UOC:AGM,F10	3
64	PAOZZ	2590011695402	11083	5R6838	CONTROL ASSEMBLY,PU..... UOC:AGM,F10	1

END OF FIGURE

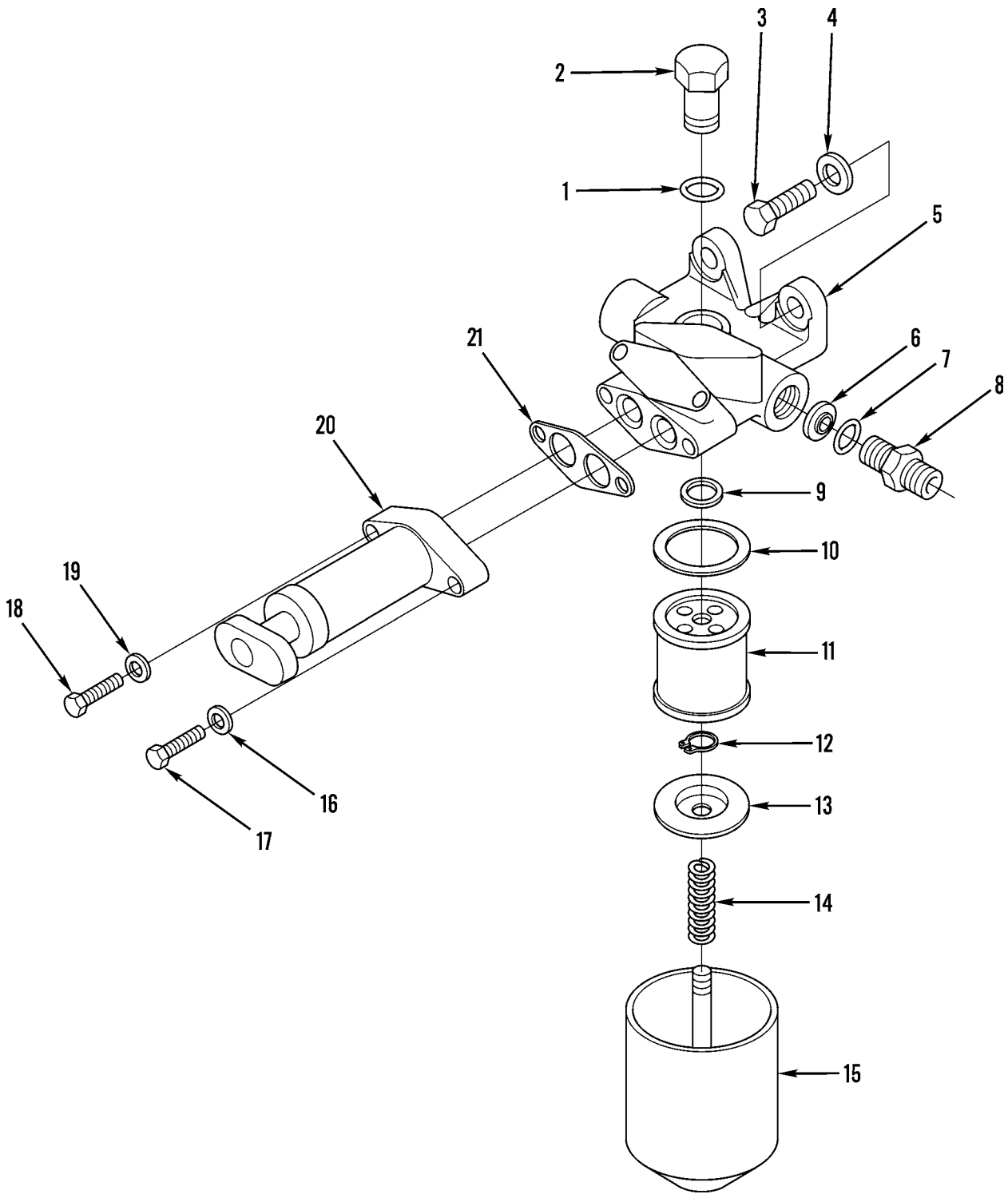

Figure 42. Primary Fuel Filter, Fuel Priming Pump, and Mounting (Sheet 1 of 2)

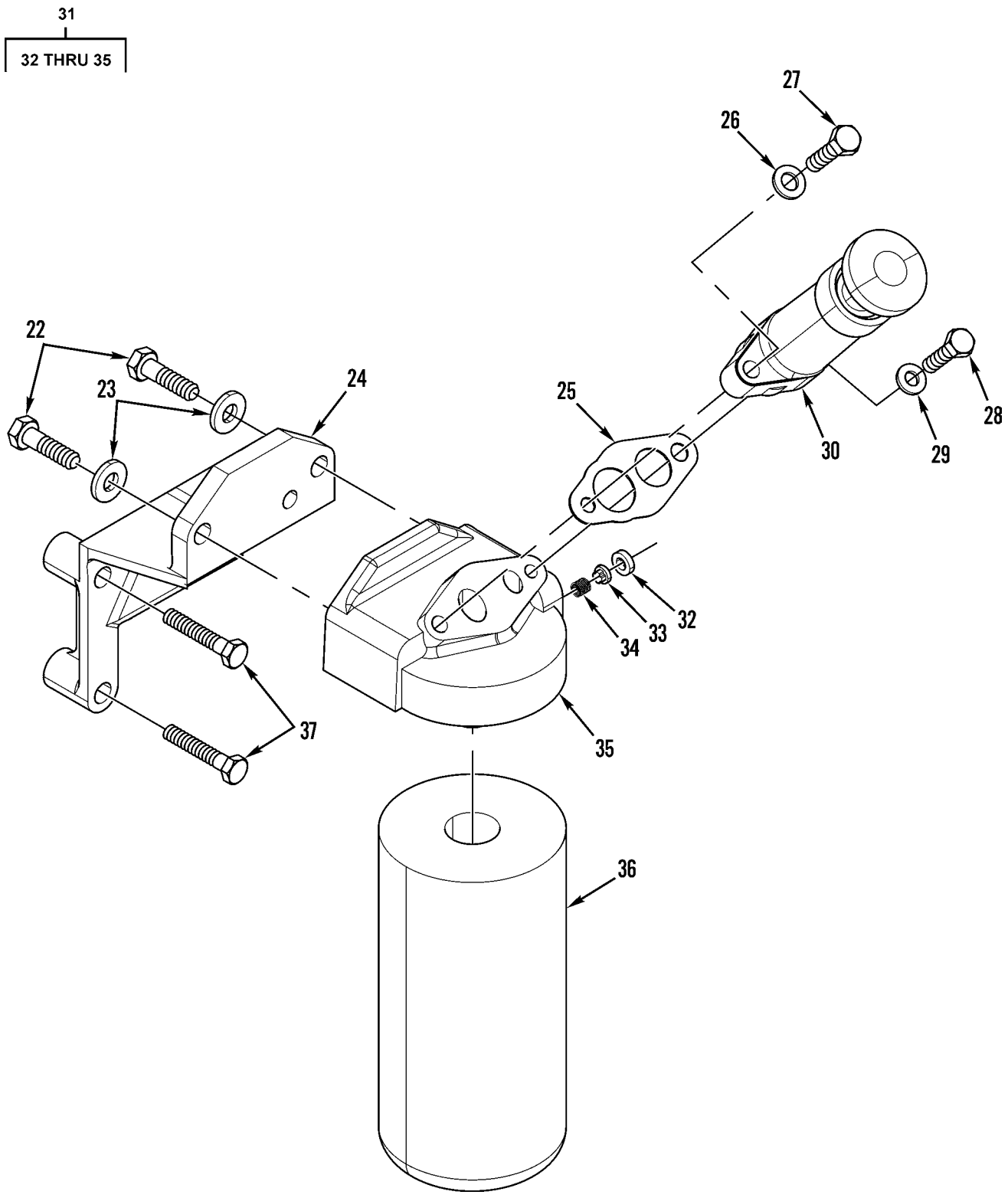

Figure 42. Primary Fuel Filter, Fuel Priming Pump, and Mounting (Sheet 2 of 2)

(1) ITEM NO	(2) SMR CODE	(3) NSN	(4) CAGEC	(5) PART NUMBER	(6) DESCRIPTION AND USABLE ON CODES(UOC)	(7) QTY
					GROUP 0309 FUEL FILTERS FIG. 42 PRIMARY FUEL FILTER, FUEL PRIMING PUMP, AND MOUNTING	
1	PFFZZ	5330008588224	11083	2J0157	PACKING,PREFORMED PART OF KIT P/N 3E8905..... UOC:AF9,AGP,F10	1
2	PAFZZ	5310008828876	11083	8H2807	NUT,SLEEVE..... UOC:AF9,AGP,F10	1
3	PFFZZ	5306011591513	11083	0T0055	BOLT,MACHINE..... UOC:AF9,AGP,F10	1
3	PFFZZ	5306004238194	11083	1A2029	BOLT,MACHINE..... UOC:AF9,AGP,F10	1
4	PFFZZ	5310001174788	11083	5M2894	WASHER,FLAT..... UOC:AF9,AGP,F10	2
5	PAFZZ	4320011554162	11083	8N6199	HOUSING,LIQUID PUMP..... UOC:AF9,AGP,F10	1
6	PAFZZ	2910000332200	70040	5622759	VALVE ASSEMBLY,FUEL..... UOC:AF9,AGP,F10	1
7	PFOZZ	5331001675174	81349	M83248/2-910	O-RING PART OF KIT P/N 3E8905..... UOC:AF9,AGP,F10	1
8	PAOZZ	4730010589100	11083	0308194	ADAPTER,STRAIGHT,TU..... UOC:AF9,AGP,F10	1
9	PFFZZ	5325004938125	96906	MS16626-1062	RING,RETAINING..... UOC:AF9,AGP,F10	1
10	PFOZZ	5330005854284	11083	8H2778	GASKET PART OF KIT P/N 3E8905..... UOC:AF9,AGP,F10	1
11	PAOZZ	2910009893388	11083	9M2341	FILTER ELEMENT,FLUI..... UOC:AF9,AGP,F10	1
12	PFOZZ	5325007151152	96906	MS16624-1037	RING,RETAINING..... UOC:AF9,AGP,F10	1
13	PAOZZ	5340009993230	11083	7H9678	SEAT,HELICAL COMPRE..... UOC:AF9,AGP,F10	1
14	PAOZZ	5360001160448	11083	7S9323	SPRING,HELICAL,COMP..... UOC:AF9,AGP,F10	1
15	PAOZZ	2910001163227	11083	8H2810	FILTER BODY,FLUID..... UOC:AF9,AGP,F10	1
16	PFFZZ	5310010512360	11083	5P0537	WASHER..... UOC:AF9,AGP,F10	1
17	PFFZZ	5306004238784	11083	7B2742	BOLT,MACHINE..... UOC:AF9,AGP,F10	1
18	PFFZZ	5306002721804	11083	1B2790	BOLT,MACHINE..... UOC:AF9,AGP,F10	1
19	PFFZZ	5310000814219	96906	MS27183-12	WASHER,FLAT..... UOC:AF9,AGP,F10	1
20	PAFZZ	2910010211845	11083	1052508	PUMP,ENGINE PRIMING..... UOC:AF9,AGP,F10	1
21	PFFZZ	5330010244862	11083	1P0436	GASKET PART OF KIT P/N 3E8905..... UOC:AF9,AGP,F10	1
22	PFFZZ	5306012858875	11083	8T2502	BOLT,MACHINE..... UOC:AGM,AGN	2
23	PFFZZ	5310010948810	78189	3320-14-01	WASHER,SQUARE CONE.....	2

(1) ITEM NO	(2) SMR CODE	(3) NSN	(4) CAGEC	(5) PART NUMBER	(6) DESCRIPTION AND USABLE ON CODES(UOC)	(7) QTY
					UOC:AGM,AGN	
24	PFFZZ	2910011557936	11083	7C3595	SUPPORT,FUEL FILTER.....	1
					UOC:AGM,AGN	
25	PFFZZ	5330010244862	11083	1P0436	GASKET PART OF KIT P/N 5P9419.....	1
					UOC:AGM,AGN	
26	PFFZZ	5310013598806	11083	8T4224	WASHER,FLAT.....	1
					UOC:AGM,AGN	
27	PFFZZ	5305014714125	11083	8C6561	SCREW,CAP,HEXAGON H.....	1
					UOC:AGM,AGN	
28	PFFZZ	5306014389852	11083	7X2501	BOLT,MACHINE.....	1
					UOC:AGM,AGN	
29	PFFZZ	5310008412576	96906	MS25440-4	WASHER,FLAT.....	1
					UOC:AGM,AGN	
30	PFFZZ	2910010211845	11083	1052508	PUMP,ENGINE PRIMING.....	1
					UOC:AGM,AGN	
31	PFFZZ	2940011422642	11083	4N3302	FILTER BODY,FLUID.....	1
					UOC:AGM,AGN	
32	PFFZZ	4820011045111	11083	4N3298	.SEAT,VALVE.....	1
					UOC:AGM,AGN	
33	PFFZZ	4820011052265	11083	4N3297	.DISK,VALVE.....	1
					UOC:AGM,AGN	
34	PFFZZ	5360011073891	11083	4N3296	.SPRING,HELICAL,COMP.....	1
					UOC:AGM,AGN	
35	PFFZZ	2910011422643	11083	4N3295	.FILTER ASSEMBLY,FLU.....	1
					UOC:AGM,AGN	
36	PAOZZ	2910014449487	11083	1R0750	FILTER,FLUID.....	1
					UOC:AGM,AGN	
37	PFFZZ	5305010269518	11083	0S1571	SCREW,CAP,HEXAGON H.....	2
					UOC:AGM,AGN	

END OF FIGURE

2
3 THRU 6

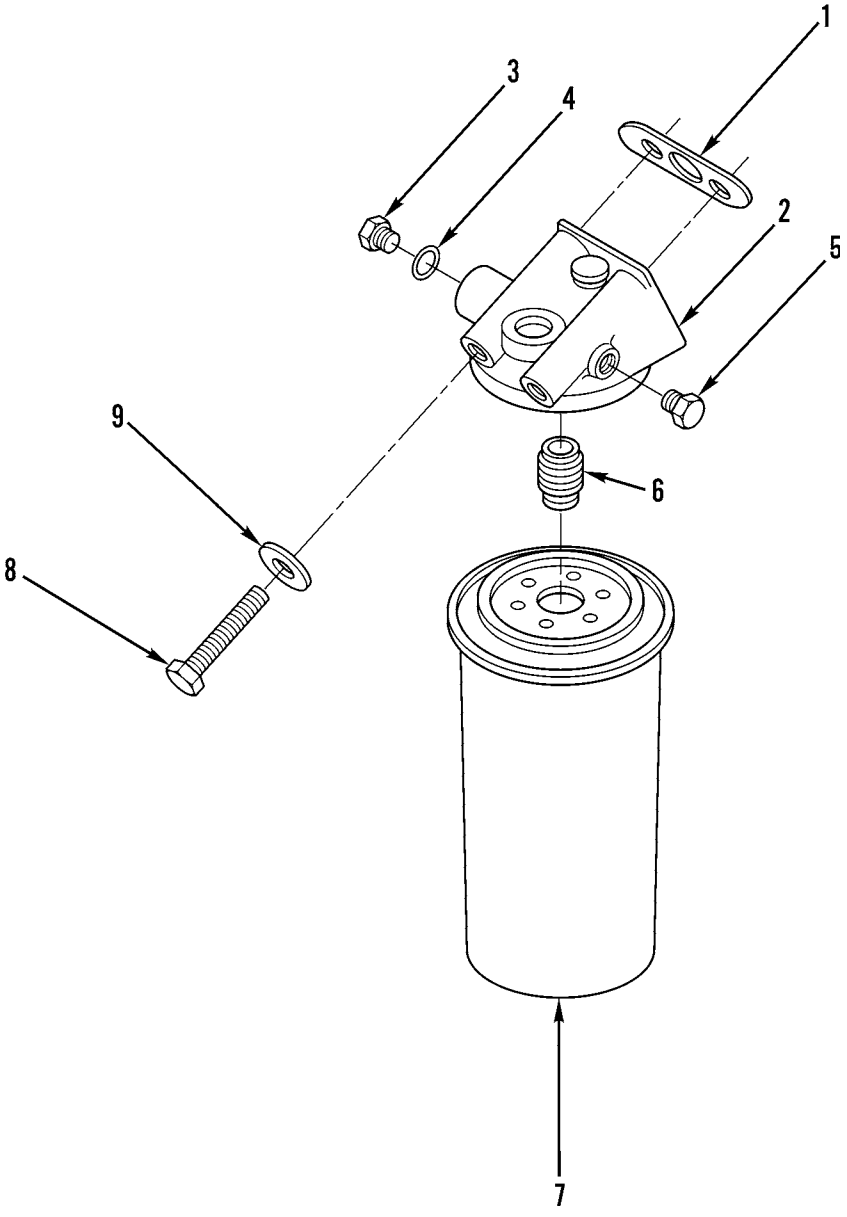

Figure 43. Secondary Fuel Filter and Mounting

(1) ITEM NO	(2) SMR CODE	(3) NSN	(4) CAGEC	(5) PART NUMBER	(6) DESCRIPTION AND USABLE ON CODES(UOC)	(7) QTY
					GROUP 0309 FUEL FILTERS FIG. 43 SECONDARY FUEL FILTER AND MOUNTING	
1	PFFZZ	5330011586284	11083	7N9520	GASKET PART OF KIT P/N 3E8905..... UOC:AF9,AGP,F10	1
2	PFFZZ	2910011555195	11083	7N9519	HEAD,FLUID FILTER..... UOC:AF9,AGP,F10	1
3	PFFZZ	5365004114584	11083	9S4191	.PLUG,MACHINE THREAD..... UOC:AF9,AGP,F10	1
4	PCFZZ	5331008013354	25184	906-737-70	.O-RING PART OF KIT P/N 3E8905..... UOC:AF9,AGP,F10	1
5	PFFZZ	4730009247886	11083	5M6214	.PLUG,PIPE..... UOC:AF9,AGP,F10	1
6	PFFZZ	5307010512364	11083	9S4167	.STUD,PLAIN..... UOC:AF9,AGP,F10	1
7	PAFZZ	2910014449487	11083	1R0750	FILTER,FLUID.....	1
8	PFFZZ	5306010691382	11083	6B4198	BOLT..... UOC:AF9,AGP,F10	2
9	PFFZZ	5310010512360	11083	5P0537	WASHER..... UOC:AF9,AGP,F10	2
					END OF FIGURE	

3
4

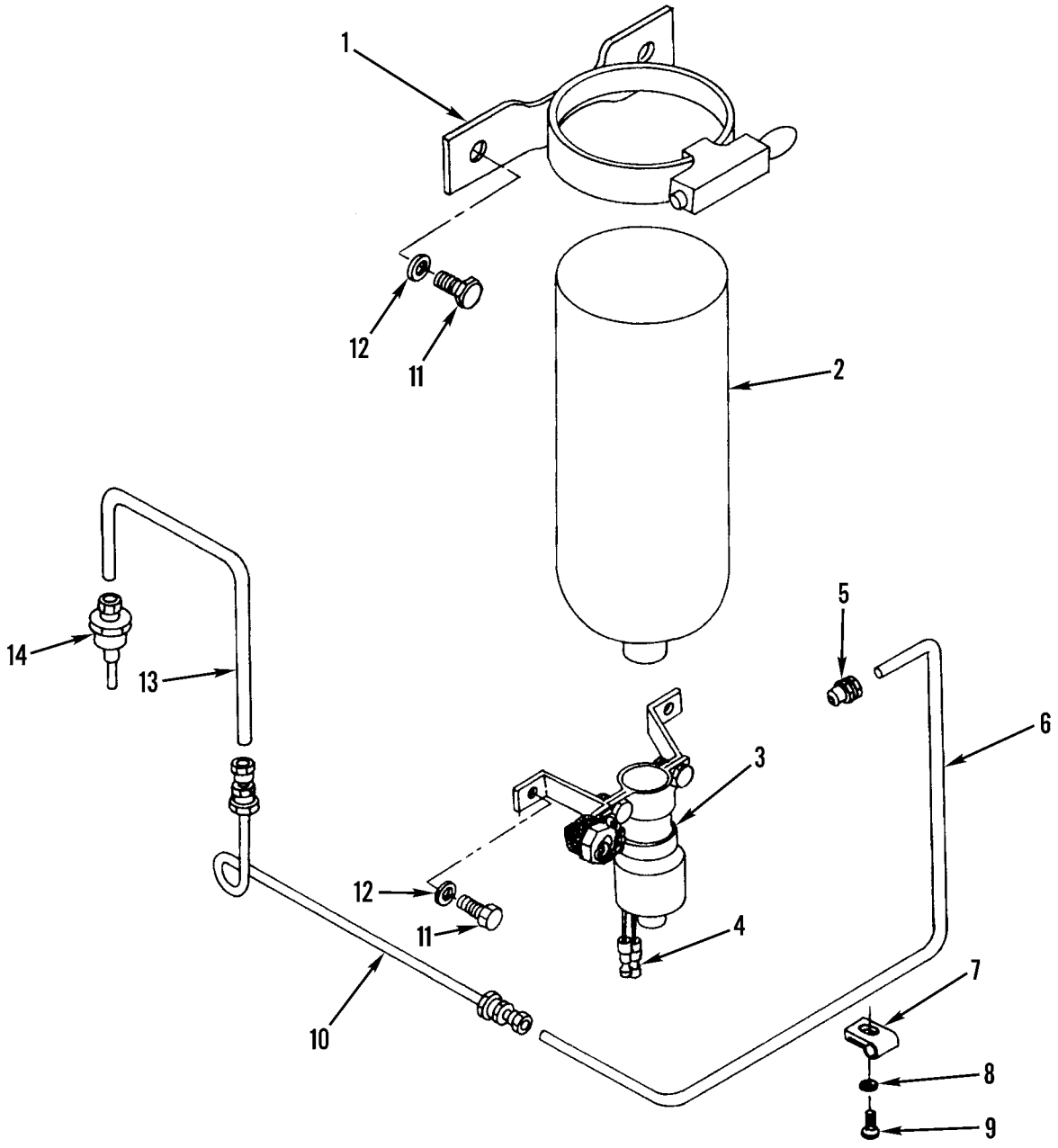

Figure 44. Ether Starting and Mounting

(1) ITEM NO	(2) SMR CODE	(3) NSN	(4) CAGEC	(5) PART NUMBER	(6) DESCRIPTION AND USABLE ON CODES(UOC)	(7) QTY
					GROUP 0311 ENGINE STARTING AIDS FIG. 44 ETHER STARTING AND MOUNTING	
1	PFOZZ	5340010882385	53203	300 450	CLAMP,LOOP.....	1
2	PAOZZ	2910006469727	78280	LP-535-1	CYLINDER,ENGINE STA.....	1
3	PFOZZ	2910011497860	61112	QS5-2CT	VALVE,ENGINE START.....	1
4	PAOZZ	5940002910085	16428	724105	.TERMINAL,QUICK DISC.....	2
5	PFOZZ	4730002891243	79470	681X2	ADAPTER,STRAIGHT,PI.....	1
6	PFOZZ	4720011033700	11083	5P5630	TUBING,NONMETALLIC MAKE FROM 79 INCHES OF 5P5630.....	1
7	PFOZZ	5340004481795	75272	COV-0413	CLAMP,LOOP.....	4
8	PFOZZ	5310001174788	11083	5M2894	WASHER,FLAT.....	3
9	PFOZZ	5305002528919	11083	0S0509	SCREW,CAP,HEXAGON H.....	2
10	PFOZZ	4720011525806	11083	9G6736	TUBING ASSEMBLY,NON.....	1
11	PFOZZ	5306008148967	11083	2H3755	BOLT,MACHINE.....	4
12	PFOZZ	5310001670721	96906	MS35333-41	WASHER,LOCK.....	4
13	PFOZZ	4710011515979	11083	2G8963	TUBE,BENT,METALLIC.....	1
14	PFOZA	4920011407569	61112	QA5-1TC	ATOMIZER,START AID.....	1

END OF FIGURE

5
6

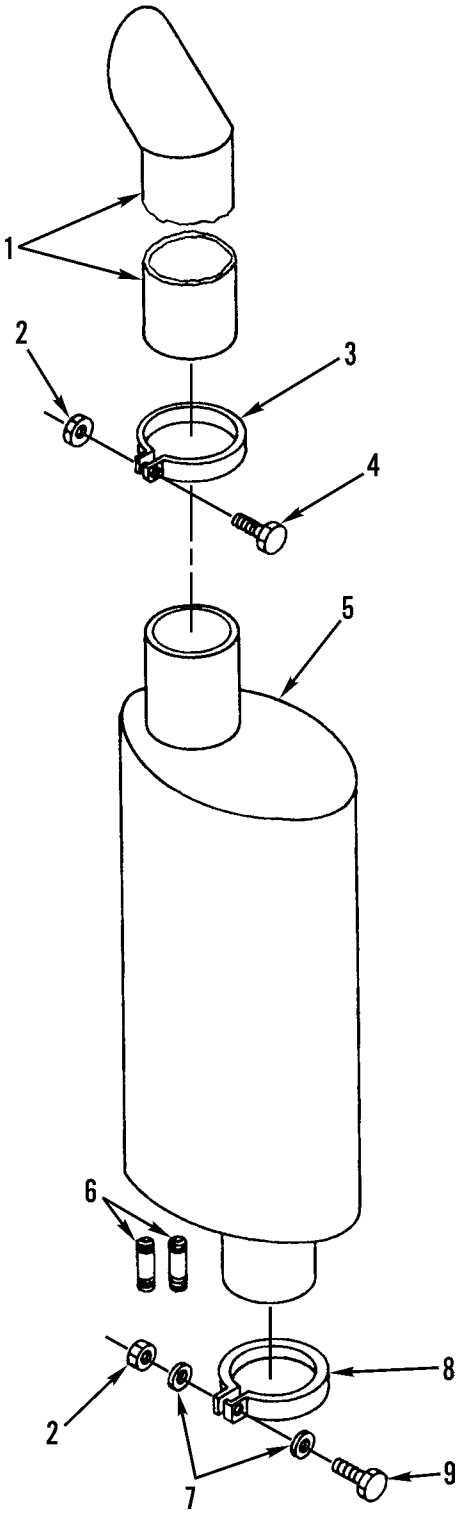

Figure 45. Exhaust Muffler and Mounting

(1) ITEM NO	(2) SMR CODE	(3) NSN	(4) CAGEC	(5) PART NUMBER	(6) DESCRIPTION AND USABLE ON CODES(UOC)	(7) QTY
					GROUP 04 EXHAUST SYSTEM	
					GROUP 0401 MUFFLER AND PIPES	
					FIG. 45 EXHAUST MUFFLER AND MOUNTING	
1	PAOZZ	2990010939236	18265	AEM00-1164	PIPE,EXHAUST.....	1
2	PFOZZ	5310004988409	11083	1B5355	NUT,PLAIN,HEXAGON.....	1
3	PAOZZ	5340004264816	11083	7S8735	CLAMP,LOOP.....	1
4	PFOZZ	5306010512309	11083	2P3205	BOLT.....	1
5	PAOZZ	2990010217587	18265	MJM08-0047	MUFFLER,INTAKE.....	1
6	PFOZZ	5307002748196	11083	0S0532	.STUD,PLAIN.....	2
7	PFOZZ	5310001174788	11083	5M2894	WASHER,FLAT.....	2
8	PFOZZ	5340003527779	11083	4F4974	CLAMP,LOOP.....	1
9	PFOZZ	5306010949106	11083	0S1590	BOLT,MACHINE.....	1

END OF FIGURE

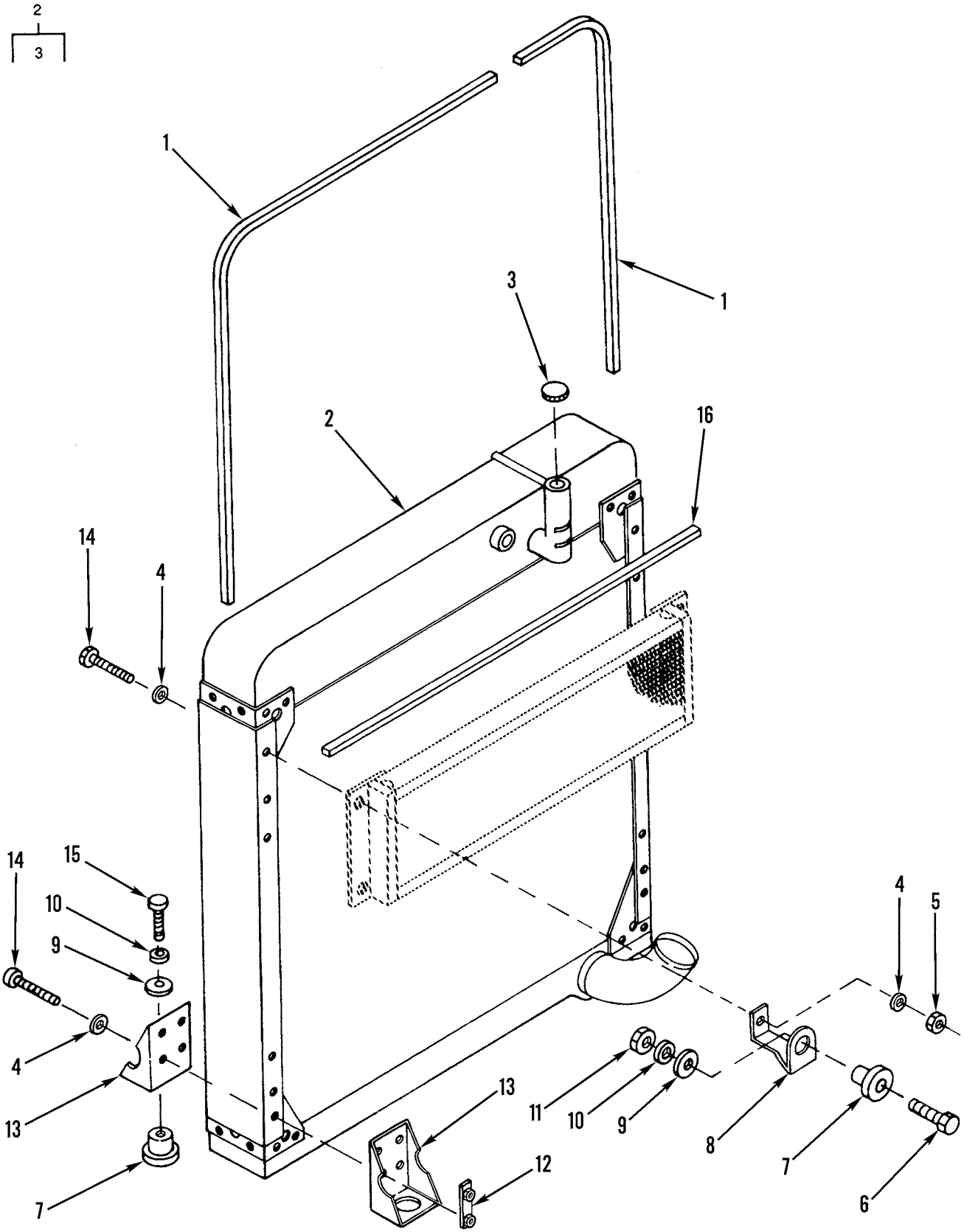

Figure 46. Radiator and Mounting

(1) ITEM NO	(2) SMR CODE	(3) NSN	(4) CAGEC	(5) PART NUMBER	(6) DESCRIPTION AND USABLE ON CODES(UOC)	(7) QTY
					GROUP 05 COOLING SYSTEM	
					GROUP 0501 RADIATOR, EVAPORATIVE COOLER, OR HEAT EXCHANGER	
					FIG. 46 RADIATOR AND MOUNTING	
1	MOOZZ		11083	5P9909-109	SEAL MAKE FROM P/N 5P9909.....	20
2	PAOFF	2930011412847	11083	8N0073	RADIATOR,ENGINE COO.....	1
3	PAOZZ	2930011106440	1GT86	G-13584	.CAP,FILLER OPENING.....	1
4	PFOZZ	5310010948810	78189	3320-14-01	WASHER,SQUARE CONE.....	8
5	PFOZZ	5310014297859	11083	6V8801	NUT,PLAIN,HEXAGON.....	2
6	PFOZZ	5306004550459	11083	9S1366	BOLT,MACHINE.....	2
7	XDOZZ		76005	J-6256-10	MOUNT,RESILIENT.....	6
8	PFOZZ	5340011487562	11083	2P0226	STRAP,RETAINING.....	2
9	PFOZZ	5310001555049	11083	2J7258	WASHER,FLAT.....	6
10	PFOZZ	5310004317239	11083	2M0849	WASHER,FLAT.....	6
11	PFOZZ	5310007680318	96906	MS51967-14	NUT,PLAIN,HEXAGON.....	2
12	PAOZZ	5310011461169	11083	8N7837	NUT.....	2
13	PFOZZ	5340011478216	11083	2P5190	BRACKET,ANGLE.....	4
14	PFOZZ	5305010953292	11083	7F3425	SCREW,CAP,HEXAGON H.....	6
15	PFOZZ	5306002736357	11083	1A1460	BOLT,MACHINE.....	4
16	MOOZZ		11083	5P9909-36	SEAL MAKE FROM SEAL P/N 5P9909.....	1

END OF FIGURE

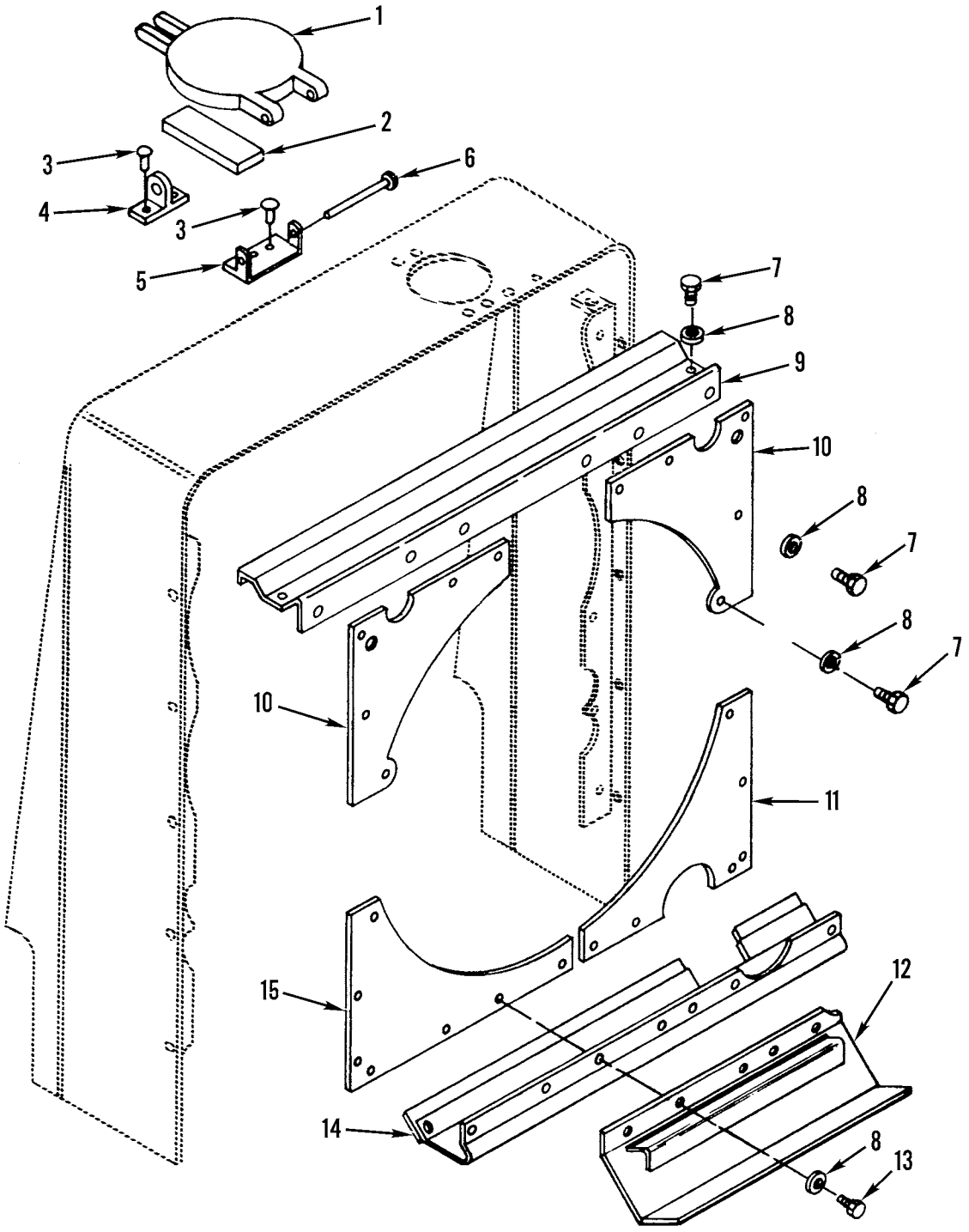

Figure 47. Radiator Shields and Mounting

(1) ITEM NO	(2) SMR CODE	(3) NSN	(4) CAGEC	(5) PART NUMBER	(6) DESCRIPTION AND USABLE ON CODES(UOC)	(7) QTY
					GROUP 0501 RADIATOR, EVAPORATIVE COOLER, OR HEAT EXCHANGER FIG. 47 RADIATOR SHIELDS AND MOUNTING	
1	PFOZZ	5342013165818	11083	9D5267	CAP,FILLER OPENING..... UOC:AF9,AGP,F10	1
2	PAOZZ	2590011816773	11083	9D5317	PAD,CUSHIONING..... UOC:AF9,AGP,F10	1
3	PFOZZ	5320008503241	07707	SD66BS	RIVET,BLIND..... UOC:AF9,AGP,F10	5
4	PFOZZ	2590011824466	11083	9D5264	PLATE ASSEMBLY,RADI..... UOC:AF9,AGP,F10	1
5	PAOZZ	5340011946639	11083	9D5266	STRAP,RETAINING..... UOC:AF9,AGP,F10	1
6	PAOZZ	5320011831510	11083	8F0964	RIVET,SOLID..... UOC:AF9,AGP,F10	1
7	PFOZZ	5306002637301	11083	0L1351	BOLT,MACHINE.....	20
8	PFOZZ	5310010948810	78189	3320-14-01	WASHER,SQUARE CONE..... UOC:AF9,AGP,F10	1
9	PFFZZ	2930011475533	11083	2W0117	BAFFLE,AIRFLOW,RADI.....	1
10	PFOZZ	2930011474182	11083	2W0116	SHIELD,FAN,ENGINE C.....	2
11	PFFZZ	3805011471409	11083	2P0408	GUARD,MECHANICAL DR.....	1
12	PAOZZ	3020011479299	11083	6G7449	GUARD,MECHANICAL DR..... UOC:AGM,AGN	1
12	PFOZZ	2590011832574	11083	5R6923	BEZEL,AUTOMOTIVE TR..... UOC:AF9,AGP,F10	1
13	PFOZZ	5306004238194	11083	1A2029	BOLT,MACHINE.....	5
14	PFFZZ	2930011493805	11083	2P0440	BAFFLE ASSEMBLY,RAD.....	1
15	XDOZZ		11083	3P0115	GUARD,MECHANICAL DR.....	1

END OF FIGURE

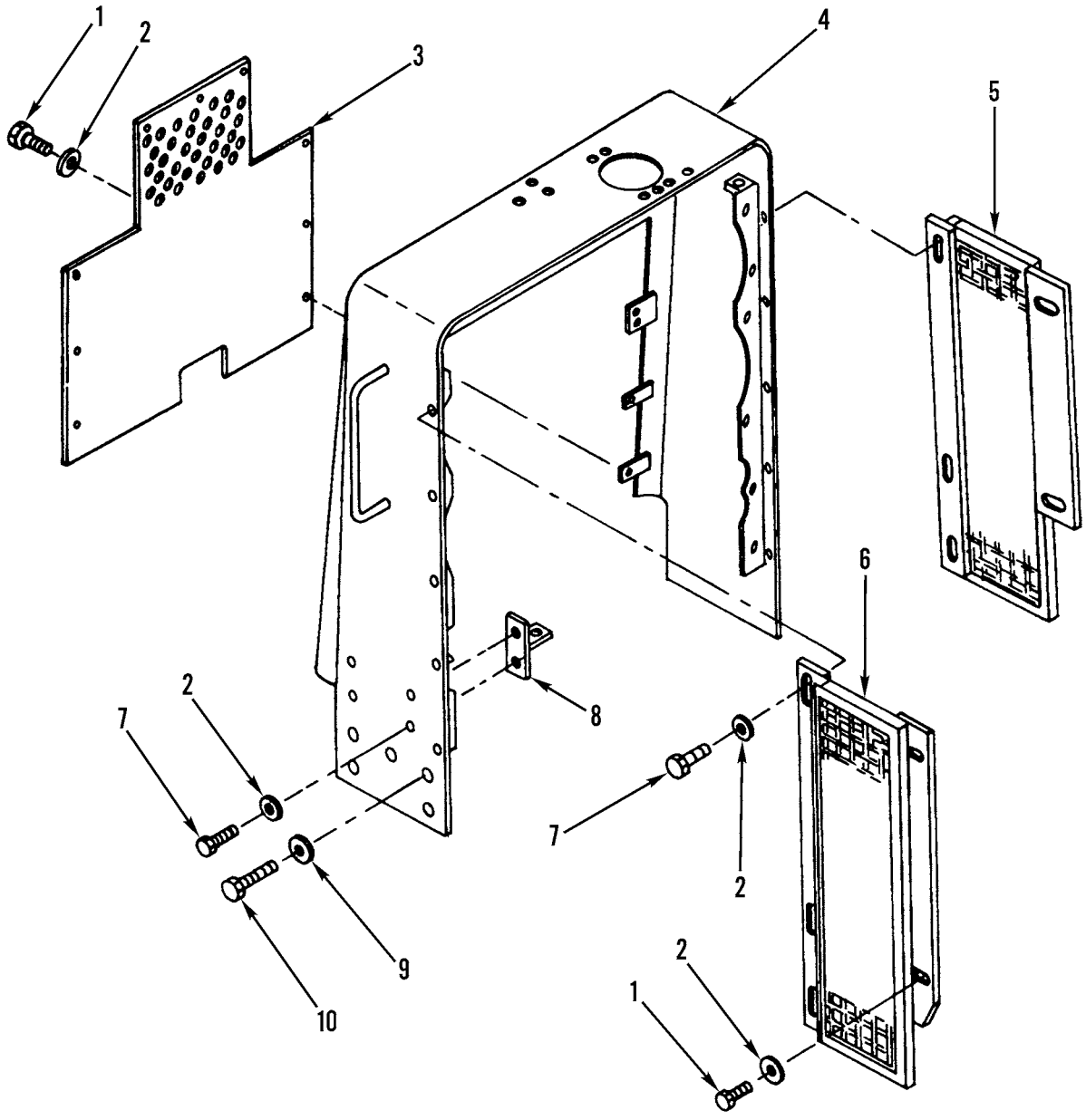

Figure 48. Radiator Guards and Mounting

(1) ITEM NO	(2) SMR CODE	(3) NSN	(4) CAGEC	(5) PART NUMBER	(6) DESCRIPTION AND USABLE ON CODES(UOC)	(7) QTY
					GROUP 0501 RADIATOR, EVAPORATIVE COOLER, OR HEAT EXCHANGER	
					FIG. 48 RADIATOR GUARDS AND MOUNTING	
1	PFOZZ	5306002637301	11083	0L1351	BOLT,MACHINE.....	13
2	PFOZZ	5310010948810	78189	3320-14-01	WASHER,SQUARE CONE.....	31
3	PFOZZ	5340011509809	11083	6G3691	COVER,ACCESS.....	1
4	PFOZZ	2930011471377	11083	6G3690	SUPPORT ASSEMBLY.....	1
					UOC:AF9,AGM,AGN	
4	PFOZZ	2510011832614	11083	5R6391	SUPPORT ASSEMBLY.....	1
					UOC:AF9,AGP,F10	
5	PFOZZ	2540011474184	11083	8D3502	SCREEN ASSEMBLY,RAD.....	1
6	PFOZZ	2540011474183	11083	8D3501	SCREEN ASSEMBLY,RAD.....	1
7	PFOZZ	5305002528919	11083	0S0509	SCREW,CAP,HEXAGON H.....	18
8	PAOZZ	5340011478217	11083	8D1220	BRACKET,ANGLE.....	4
9	PFOZZ	5310010951249	11083	7D1649	WASHER,FLAT.....	10
10	PFOZZ	5306008744001	11083	6H1717	BOLT,MACHINE.....	10

END OF FIGURE

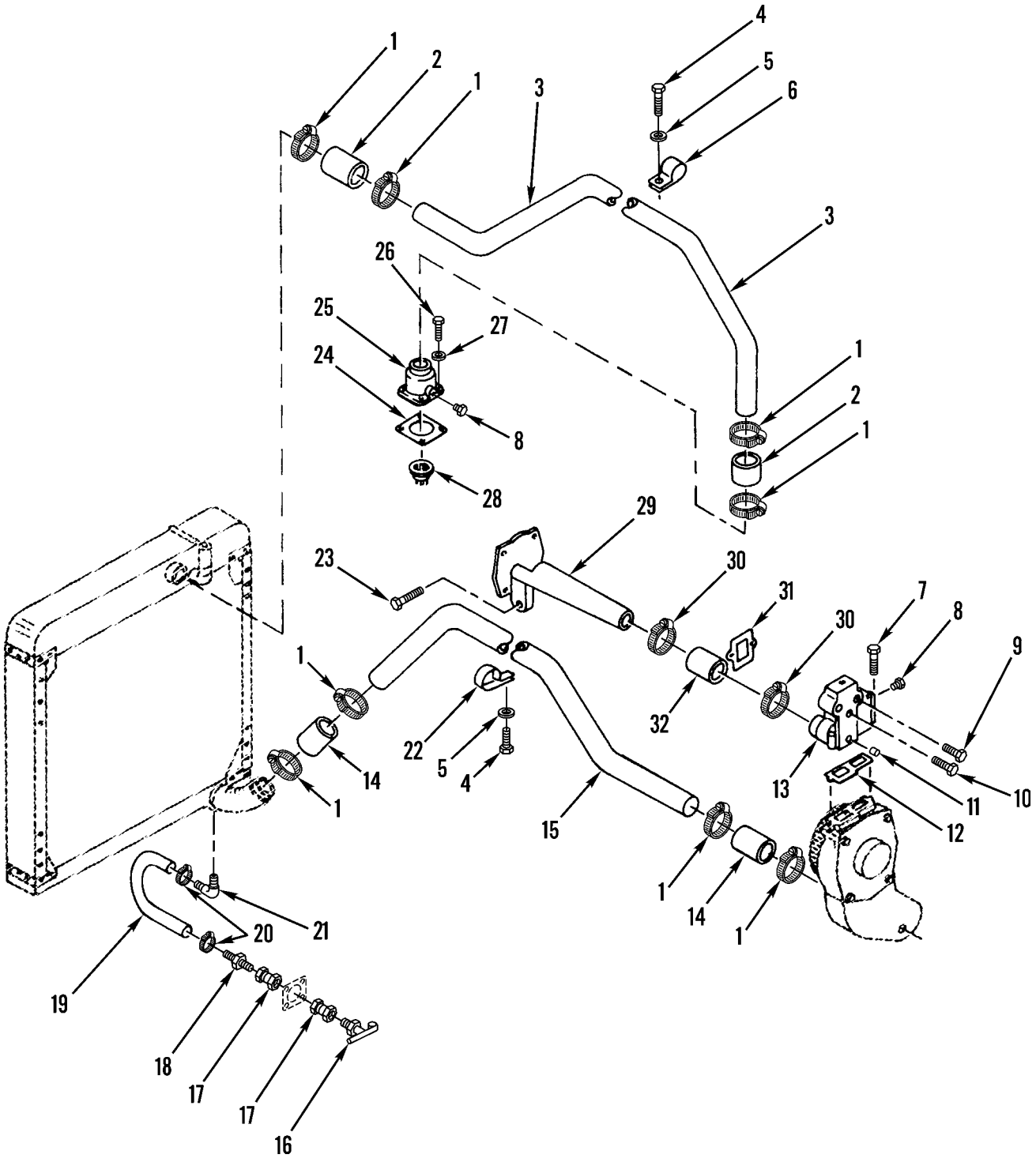

Figure 49. Water Lines and Mounting

(1) ITEM NO	(2) SMR CODE	(3) NSN	(4) CAGEC	(5) PART NUMBER	(6) DESCRIPTION AND USABLE ON CODES(UOC)	(7) QTY
					GROUP 0503 WATER MANIFOLD, HEADERS, THERMOSTATS, AND HOUSING GASKET FIG. 49 WATER LINES AND MOUNTING	
1	PFOZZ	4730010595352	66295	UT412-212	CLAMP,HOSE.....	8
2	MOOZZ		11083	5P1262-4 IN	HOSE MAKE FROM HOSE P/N 5P1260.....	2
3	PFOZZ	4710011498461	11083	8D4994	TUBE,BENT,METALLIC.....	1
4	PFOZZ	5306002604508	11083	0S1594	BOLT,MACHINE.....	2
5	PFOZZ	5310010948810	78189	3320-14-01	WASHER,SQUARE CONE.....	2
6	PAOZZ	5340011528210	11083	2S7010	CLAMP,LOOP.....	1
7	PFOZZ	5306004262932	11083	0S1619	BOLT,MACHINE.....	2
8	PFOZZ	4730000892515	11083	5M6213	PLUG,PIPE.....	3
9	PFOZZ	5305002528906	11083	0T0065	SCREW.....	1
10	PFOZZ	5306010949106	11083	0S1590	BOLT,MACHINE.....	1
11	PFOZZ	4730001223969	11083	1B5174	PLUG,PIPE.....	3
12	PFOZZ	5330011278574	11083	7N0200	GASKET PART OF KIT P/N 6V2934 PART OF KIT P/N 6V2525 PART OF KIT P/N 2084836.....	1
13	PFOZZ	2930011496719	11083	1N3958	WATER OUTLET,ENGINE.....	1
14	MOOZZ		11083	5P1265-4.5 IN	HOSE,NONMETALLIC MAKE FROM HOSE P/N 5P1265.....	2
15	PFOZZ	4710011482662	11083	2G6384	TUBE,BENT,METALLIC.....	1
16	PFOZZ	4820002769041	96906	MS35782-6	COCK,DRAIN.....	1
17	PAOZZ	4730005111677	04285	P-18240	COUPLING,PIPE.....	1
18	PAOZZ	4730006225756	30327	KF10-06PS	ADAPTER,STRAIGHT,PI.....	1
19	PFOZZ	4720011498949	11083	6G2007	HOSE,PREFORMED.....	1
20	PFOZZ	4730008776298	81646	6710	CLAMP,HOSE.....	2
21	PFOZZ	4730010980132	79470	1599	ELBOW,PIPE TO HOSE.....	1
22	PFOZZ	5340011530891	11083	8D8259	CLAMP,LOOP.....	1
23	PFOZZ	5305000680511	80204	B1821BH038C125N	SCREW,CAP,HEXAGON H.....	1
24	PFOZZ	5330010948058	11083	7N0944	GASKET PART OF KIT P/N 6V2934 PART OF KIT P/N 6V2525.....	1
25	PFOZZ	3040011476465	11083	1W6810	HOUSING,MECHANICAL.....	1
26	PFOZZ	5306004238194	11083	1A2029	BOLT,MACHINE.....	4
27	PFOZZ	5310001174788	11083	5M2894	WASHER,FLAT.....	4
28	PAOZZ	6620010081893	78493	4A308-21	THERMOSTAT,FLOW CON.....	1
29	XDOZZ		11083	2P2511	HOUSING,MECHANICAL.....	1
30	PFOZZ	4730011067246	08484	HTM350	CLAMP,HOSE.....	2
31	PFOZZ	5330010675728	11083	2P6132	GASKET PART OF KIT P/N 6V2934 PART OF KIT P/N 6V2525 PART OF KIT P/N 2084836.....	1
32	MOOZZ		11083	5P1260-3.15 IN	HOSE,NONMETALLIC MAKE FROM HOSE P/N 5P1260.....	1

END OF FIGURE

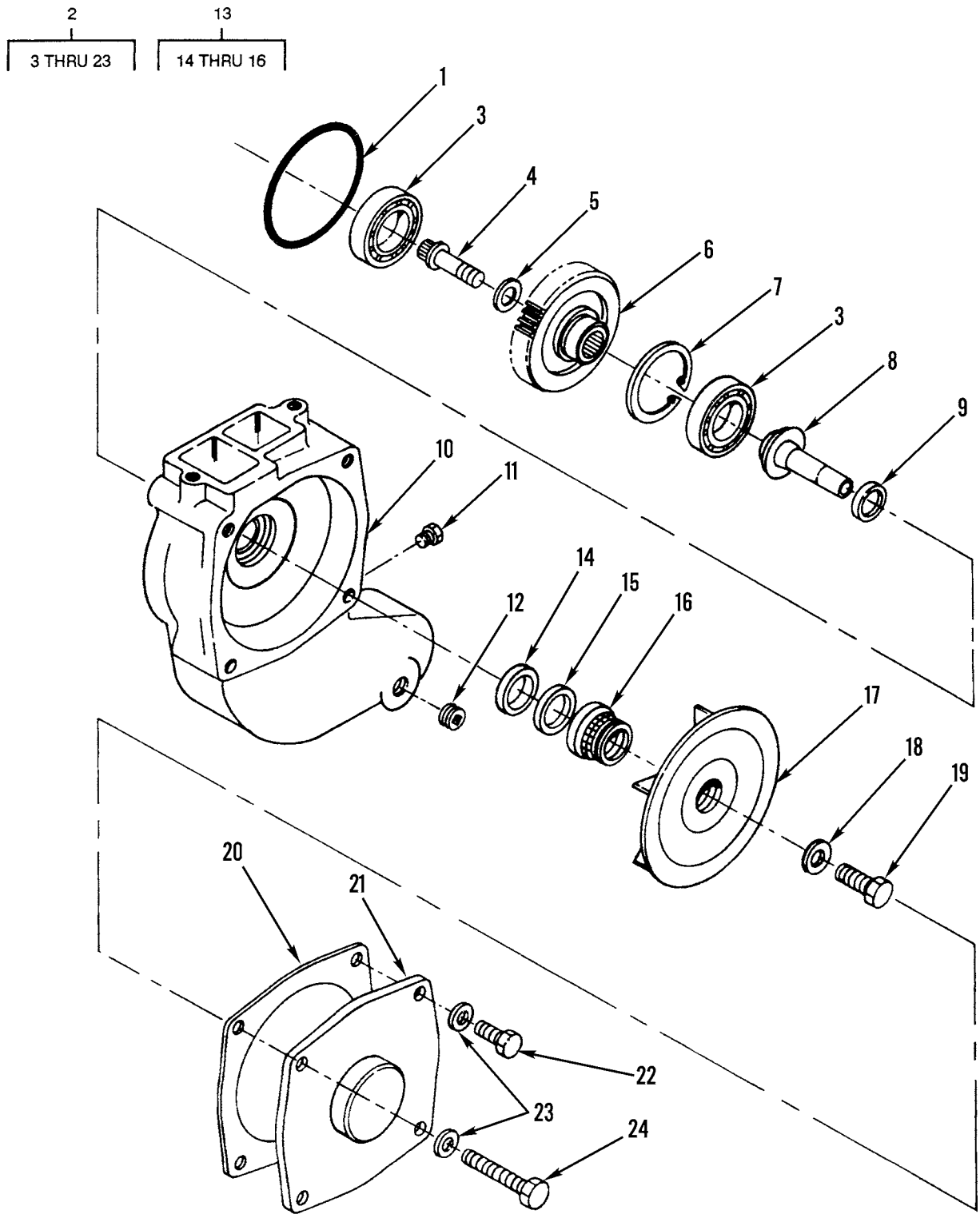

Figure 50. Water Pump Assembly and Mounting

(1) ITEM NO	(2) SMR CODE	(3) NSN	(4) CAGEC	(5) PART NUMBER	(6) DESCRIPTION AND USABLE ON CODES(UOC)	(7) QTY
					GROUP 0504 WATER PUMP FIG. 50 WATER PUMP ASSEMBLY AND MOUNTING	
1	PFOZZ	5331006635709	11083	5F3106	O-RING PART OF KIT P/N 2084836.....	1
2	PAOFF	2930011774795	11083	1727772	PUMP,COOLING SYSTEM..... UOC:AF9,AGP,F10	1
3	PAFZZ	3110005545302	12128	W55	.BEARING,BALL,ANNULA.....	2
4	PFFZZ	5306011799434	11083	6K3771	.BOLT,MACHINE..... UOC:AF9,AGP,F10	1
5	PFFZZ	5310011494410	11083	3K6113	.WASHER,FLAT..... UOC:AF9,AGP,F10	1
6	PFFZZ	3020011789843	11083	2W7678	.GEAR,HELICAL..... UOC:AF9,AGP,F10	1
7	PFFZZ	5325005986232	96906	MS16625-1315	.RING,RETAINING.....	1
8	PFFZZ	3040011780698	11083	2W7255	.SHAFT,SHOULDERED..... UOC:AF9,AGP,F10	1
9	PAFZZ	5330011574864	11083	6V3988	.SEAL,PLAIN ENCASED.....	1
10	PFFZZ	4320011476460	11083	1543947	.HOUSING,LIQUID PUMP.....	1
11	PFFZZ	4730000892515	11083	5M6213	.PLUG,PIPE.....	1
12	PFFZZ	4730001223969	11083	1B5174	.PLUG,PIPE.....	1
13	PFFZZ	5330010978142	11083	1067150	.PACKING,PREFORMED.....	1
14	PFFZZ	5330004317137	11083	8S8821	..PACKING,PREFORMED.....	1
15	PFFZZ	5365004328183	11083	8S7762	..RING.....	1
16	XAFZZ		71724	CF-SP39691-REVH	..SEAL ASSEMBLY.....	1
17	PFFZZ	4320014759634	11083	1725189	.IMPELLER,PUMP,CENTR.....	1
18	PFFZZ	5310009998288	11083	9M6527	.WASHER,FLAT.....	1
19	PFFZZ	5306002286835	11083	4L6454	.BOLT,MACHINE.....	1
20	PAFZZ	5330011322201	11083	8N5928	.GASKET.....	1
21	PFFZZ	5340011517395	11083	8N5929	.COVER,ACCESS.....	1
22	PFFZZ	5306002637301	11083	0L1351	.BOLT,MACHINE.....	2
23	PFFZZ	5310001174788	11083	5M2894	.WASHER,FLAT.....	3
24	PFFZZ	5306011591513	11083	0T0055	BOLT,MACHINE.....	2

END OF FIGURE

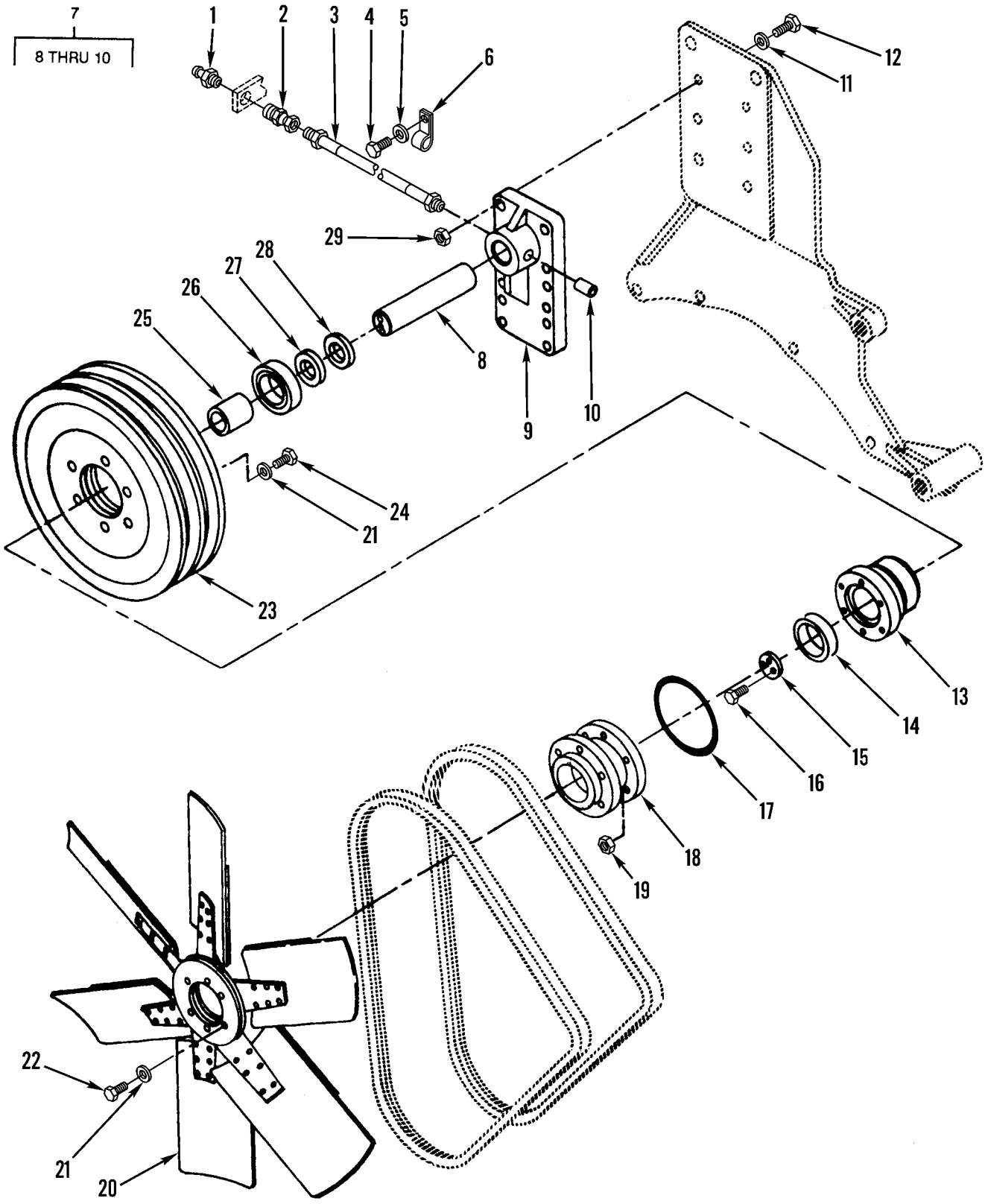

Figure 51. Fan and Fan Drive

(1) ITEM NO	(2) SMR CODE	(3) NSN	(4) CAGEC	(5) PART NUMBER	(6) DESCRIPTION AND USABLE ON CODES(UOC)	(7) QTY
					GROUP 0505 FAN ASSEMBLY FIG. 51 FAN AND FAN DRIVE	
1	PFOZZ	4730000504208	96906	MS15003-1	FITTING,LUBRICATION.....	1
2	PAOZZ	4730011517957	11083	2R1922	COUPLING,PIPE.....	1
3	PFOZZ	4720011481456	11083	5K7577	HOSE ASSEMBLY,NONME.....	1
4	PFOZZ	5305002528919	11083	0S0509	SCREW,CAP,HEXAGON H.....	1
5	PFOZZ	5310010948810	78189	3320-14-01	WASHER,SQUARE CONE.....	1
6	PFOZZ	5340004264646	11083	4D8123	CLAMP,LOOP.....	1
7	PFFZZ	5340011489802	11083	1P9945	BRACKET,MOUNTING.....	1
8	PFFZZ	3040011476412	11083	1P9946	.SHAFT,STRAIGHT.....	1
9	PFFZZ	5340011489803	11083	1P9899	.BRACKET.....	1
10	PFFZZ	5315003627367	11083	5B5812	.PIN,STRAIGHT,HEADLE.....	1
11	PFFZZ	5310008095997	96906	MS27183-17	WASHER,FLAT.....	6
12	PFFZZ	5306002736357	11083	1A1460	BOLT,MACHINE.....	6
13	PFFZZ	2930010508012	11083	2P1757	HUB,FAN CLUTCH.....	1
14	PAFZZ	3110005555207	6X081	ALA156A128P49	BEARING,BALL,ANNULA.....	1
15	PAFZZ	5365004982962	11083	5S7264	SPACER,PLATE.....	1
16	PFFZZ	5306011604498	11083	6V4626	BOLT,SELF-LOCKING.....	2
17	PFOZZ	5331008626861	09990	2-338N951-75	O-RING PART OF KIT P/N 6V2248.....	1
18	XDOZZ		11083	2P6086	FAN ADAPTER.....	1
19	PFOZZ	5310014297859	11083	6V8801	NUT,PLAIN,HEXAGON.....	6
20	PFOZZ	2930010937336	53591	B915706	IMPELLER,FAN,AXIAL.....	1
21	PFOZZ	5310001174788	11083	5M2894	WASHER,FLAT.....	6
22	PFOZZ	5305000680511	80204	B1821BH038C125N	SCREW,CAP,HEXAGON H.....	6
23	PFOZZ	3020011481484	11083	7N0619	PULLEY,GROOVE.....	1
24	PFOZZ	2910003099473	11083	0T0573	CAPSCREW,FUEL PUMP.....	6
25	PFFZZ	5365011470083	11083	8N5305	SPACER,SLEEVE.....	1
26	PFFZZ	3110005165490	11083	8H9789	BEARING,BALL,ANNULA.....	1
27	PAFZZ	5330004982905	11083	5S2106	SEAL,PLAIN ENCASED PART OF KIT P/N 6V2248.....	1
28	PFFZZ	5365004982920	11083	5S9062	SPACER.....	1
29	PFFZZ	5310007680318	96906	MS51967-14	NUT,PLAIN,HEXAGON.....	6

END OF FIGURE

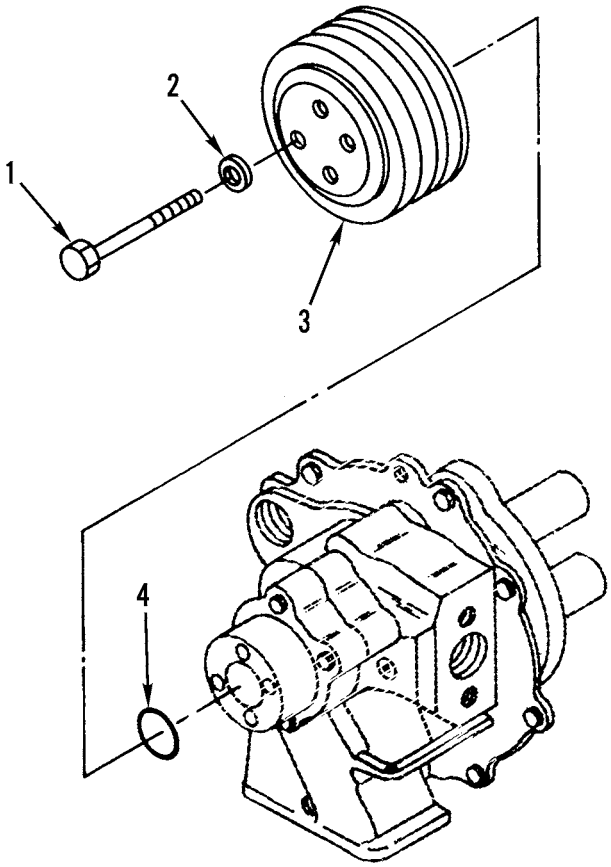

Figure 52. Fan Drive Pulley and Mounting

(1) ITEM NO	(2) SMR CODE	(3) NSN	(4) CAGEC	(5) PART NUMBER	(6) DESCRIPTION AND USABLE ON CODES(UOC)	(7) QTY
					GROUP 0505 FAN ASSEMBLY FIG. 52 FAN DRIVE PULLEY AND MOUNTING	
1	PFOZZ	5305002528919	11083	0S0509	SCREW,CAP,HEXAGON H.....	4
2	PFOZZ	5310001174788	11083	5M2894	WASHER,FLAT.....	6
3	PFOZZ	3020011488335	11083	3P0165	PULLEY,GROOVE.....	1
4	PCOZZ	5331005277748	11083	4F7952	O-RING PART OF KIT P/N 6V2248.....	1

END OF FIGURE

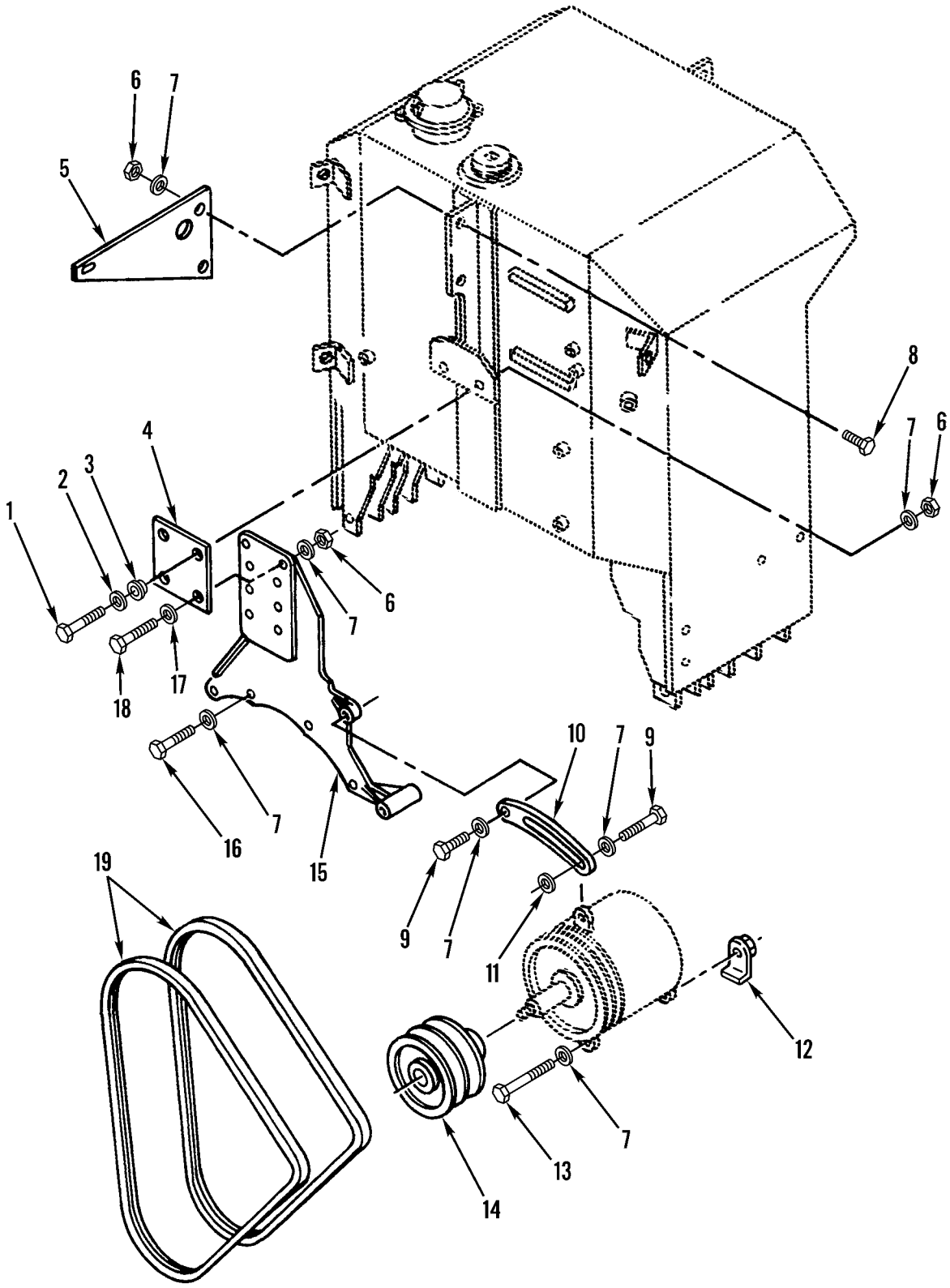

Figure 53. Alternator Mounting, Pulley, and Drive Belts

(1) ITEM NO	(2) SMR CODE	(3) NSN	(4) CAGEC	(5) PART NUMBER	(6) DESCRIPTION AND USABLE ON CODES(UOC)	(7) QTY
					GROUP 06 ELECTRICAL SYSTEM GROUP 0601 GENERATOR, ALTERNATOR FIG. 53 ALTERNATOR MOUNTING, PULLEY, AND DRIVE BELTS	
1	PFOZZ	5306004550459	11083	9S1366	BOLT,MACHINE.....	2
2	PFOZZ	5310010942893	11083	1B4287	WASHER,FLAT.....	2
3	XDOZZ		76005	J-6256-10	MOUNT,RESILIENT.....	2
4	XDOZZ		11083	2G3223	SPACER,PLATE.....	1
5	PFOZZ	2930011504923	11083	2G3199	PLATE.....	1
6	PFOZZ	5310007680318	96906	MS51967-14	NUT,PLAIN,HEXAGON.....	7
7	PFOZZ	5310008095997	96906	MS27183-17	WASHER,FLAT.....	14
8	PFOZZ	5306004240086	11083	7B3235	BOLT,MACHINE.....	3
9	PFOZZ	5306004238117	11083	0S1595	BOLT,MACHINE.....	2
10	XBOZZ		11083	8S4183	ARM,ADJUSTING,BELT..... UOC:AF9,AGP,F10	1
11	PFOZZ	5310004042422	11083	0T0883	WASHER,FLAT..... UOC:AF9,AGP,F10	1
12	PFFZZ	5310002537918	11083	9S1240	NUT,PLAIN,PLATE.....	1
13	PFFZZ	5306000085943	11083	9H8260	BOLT,MACHINE.....	1
14	XBOZZ		11083	9S6129	PULLEY.....	1
15	PFOZZ	2920011474276	11083	6G9951	BRACKET,ENGINE ACCE.....	1
16	PFOZZ	5306002736357	11083	1A1460	BOLT,MACHINE.....	4
17	PFOZZ	5310001931076	11083	2S1654	WASHER,FLAT.....	2
18	PFOZZ	5306002638978	11083	0S1587	BOLT,MACHINE.....	2
19	PAOZZ	3030006772368	81300	4-3309-2	BELTS,V,MATCHED SET.....	1

END OF FIGURE

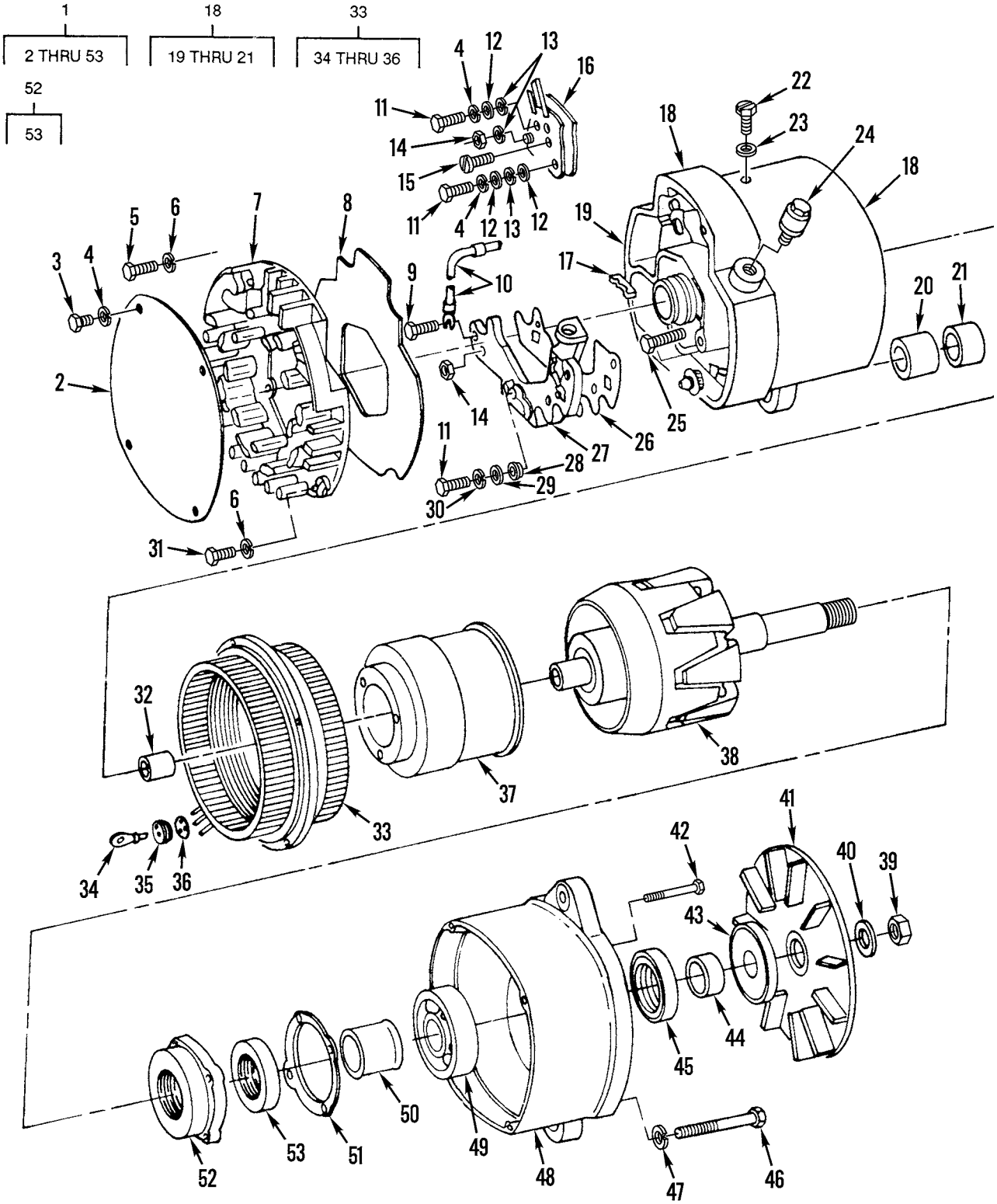

Figure 54. Alternator (DELCO)

(1) ITEM NO	(2) SMR CODE	(3) NSN	(4) CAGEC	(5) PART NUMBER	(6) DESCRIPTION AND USABLE ON CODES(UOC)	(7) QTY
					GROUP 0601 GENERATOR, ALTERNATOR	
					FIG. 54 ALTERNATOR (DELCO)	
1	PAOFZ	2920002317270	11083	1005047	GENERATOR,ENGINE AC.....	1
2	PAFZZ	2920010534745	16764	1969001	.PLATE.....	1
3	PFFZZ	5305000904256	11083	9S2544	.SCREW.....	4
4	PFFZZ	5310010660689	11083	8H0878	.WASHER,LOCK.....	6
5	XDFZZ		16764	1969493	.SCREW TAPPING.....	2
6	PFFZZ	5310000453296	96906	MS35338-43	.WASHER,LOCK.....	7
7	PAFZZ	2920010534744	16764	1969000	.COVER.....	1
8	PFFZZ	5330004293570	16764	1970395	.GASKET.....	1
9	PFFZZ	5305004328422	16764	1968998	.SCREW TAPPING.....	1
10	PAFZZ	2920004842799	16764	1968988	.LEAD,IGNITION,ENGIN.....	1
11	PAFZZ	5305010534758	11083	9S9830	.SCREW.....	6
12	XDFZZ		11083	8F1326	.WASHER,FLAT.....	3
13	PFFZZ	5310005590070	96906	MS35333-38	.WASHER,LOCK.....	3
14	PFFZZ	5310010455588	11568	M925A	.NUT,PLAIN,HEXAGON.....	4
15	PFFZZ	5305000904274	16764	1961570	.SCREW.....	1
16	PAFZZ	6110010992917	16764	1892824	.REGULATOR,VOLTAGE.....	1
17	PAFZZ	5325000313336	16764	1968996	.GROMMET,NONMETALLIC.....	1
18	PAFZZ	6150011958726	16764	1892960	.HOUSING,ELECTRICAL.....	1
19	PAFZZ	5340011674216	16764	1876813	..CAP-PLUG,PROTECTIVE.....	1
20	PAFZZ	3120004328120	16764	1968990	..BUSHING,SLEEVE.....	1
21	PAFZZ	3110010998007	11083	5P3418	..BEARING,ROLLER,NEED.....	1
22	XDOZZ		16764	9427129	.SCREW.....	1
23	PFOZZ	5310005825965	96906	MS35338-44	.WASHER,LOCK.....	1
24	PFOZZ	5325000263776	16764	1969002	.STUD ASSEMBLY,TURNL.....	1
25	PAFZZ	5342010701592	11083	9N3388	.LOCK.....	3
26	PAFZZ	5970000019382	16764	1968930	.INSULATOR,PLATE.....	1
27	PFFZZ	2920004276421	16764	1971670	.PARTS KIT,ENGINE GE PART OF KIT P/N 1971675 PART OF KIT P/N 1971672....	1
28	PAFZZ	5970004035912	16764	1959389	.INSULATOR,BUSHING.....	4
29	PFFZZ	5310004328001	11083	4B4863	.WASHER,FLAT.....	4
30	PFFZZ	5310004073548	16764	1847933	.WASHER,LOCK.....	4
31	PFFZZ	5305000904147	11083	9S2437	.SCREW.....	5
32	PAFZZ	3110010980000	11083	5P3419	.RING,BEARING,INNER.....	1
33	PAFZZ	2920000107340	16764	1971465	.STATOR,ENGINE GENER.....	1
34	XDFZZ		16764	1969671	..TERMINAL,LUG.....	3
35	PFFZZ	5325000313337	16764	1968900	..GROMMET,NONMETALLIC.....	1
36	PAFZZ	5970000019381	16764	1968901	..INSULATOR,DISK.....	1
37	PAFZZ	5950007587793	16764	1969133	.COIL,ELECTRICAL.....	1
38	PAFZZ	2920002317385	16764	1968904	.ROTOR,GENERATOR.....	1
39	PFOZZ	5310009445896	16764	9418881	.NUT,SELF-LOCKING,HE.....	1
40	PFOZZ	5310002624715	16764	1905406	.WASHER,FLAT.....	1
41	PAFZZ	2930010994405	16764	1969481	.IMPELLER,FAN,AXIAL.....	1
42	PFFZZ	5305011635702	16764	1968994	.SCREW,CAP,HEXAGON H.....	4
43	PAFZZ	2920010534743	16764	1968891	.SLINGER.....	1
44	PAFZZ	2920010534782	16764	1968890	.COLLAR.....	1
45	PAFZZ	5330002376928	16764	1958509	.SEAL,PLAIN ENCASED.....	1
46	PFFZZ	5305011635701	16764	1968991	.SCREW,CAP,HEXAGON H.....	4
47	PFFZZ	5310008528266	11083	3B4502	.WASHER,LOCK.....	4
48	PAFZZ	2920010534541	16764	1852726	.FRAME.....	1

(1) ITEM NO	(2) SMR CODE	(3) NSN	(4) CAGEC	(5) PART NUMBER	(6) DESCRIPTION AND USABLE ON CODES(UOC)	(7) QTY
49	PAFZZ	3110001448519	11083	2F5721	.BEARING,BALL,ANNULA.....	1
50	PAFZZ	3040010534746	16764	1968885	.COLLAR,SHAFT.....	1
51	PFFZZ	5330004293724	16764	1968884	.GASKET.....	1
52	PAFZZ	5330010534747	16764	1970407	.KIT,HEAT SINK.....	1
53	PFFZZ	5330002376928	16764	1958509	..SEAL,PLAIN ENCASED.....	1

END OF FIGURE

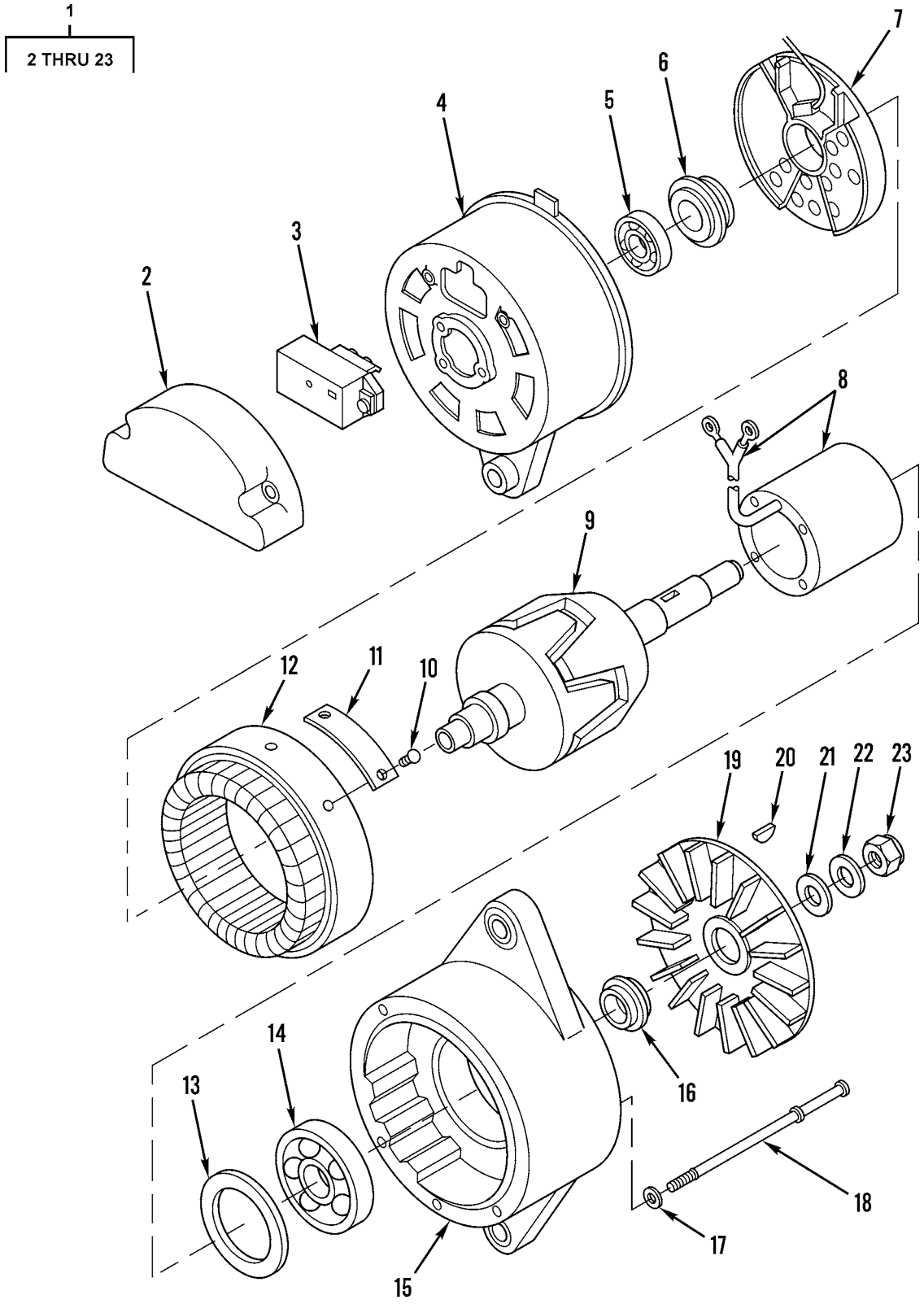

Figure 55. Alternator (BOSCH)

(1) ITEM NO	(2) SMR CODE	(3) NSN	(4) CAGEC	(5) PART NUMBER	(6) DESCRIPTION AND USABLE ON CODES(UOC)	(7) QTY
					GROUP 0601 GENERATOR, ALTERNATOR	
					FIG. 55 ALTERNATOR (BOSCH)	
1	PAOFF	6115011847432	53867	0 122 469 002	GENERATOR,ALTERNATI.....	1
2	PFFZZ	2920011786536	53867	1 125 500 024	.COVER,ALTERNATOR.....	1
3	PAFZZ	2920011778505	53867	1 197 011 000	.REGULATOR,ENGINE GE.....	1
4	XDFZZ		53867	1 125 885 031	.END BELL,ELECTRICAL.....	1
5	PAFZZ	3110011795935	53867	1 900 910 024	.BEARING,ROLLER,CYLI.....	1
6	PFFZZ	5330011783728	01843	1 120 222 001	.RETAINER,PACKING.....	1
7	PAFZZ	5961011748652	53867	1 127 320 503	.RECTIFIER,SEMICONDU.....	1
8	PFFZZ	2920011877193	53867	1 124 210 003	.WINDING,GENERATOR F.....	1
9	PFFZZ	2920011780499	01843	1 124 035 017	.ROTOR,GENERATOR.....	1
10	PFFZZ	5305002535609	80205	MS21318-13	.SCREW,DRIVE.....	2
11	PFFZZ	9905011803839	11083	3T5962	.PLATE,IDENTIFICATIO.....	1
12	PFFZZ	2920011762965	53867	1125045116	.STATOR,ENGINE GENER.....	1
13	PFFZZ	5365011748876	53867	1 120 200 023	.SPACER,RING.....	1
14	PAFZZ	3110011774667	01843	1129900009	.BEARING,BALL,ANNULA.....	1
15	PFFZZ	2920011778565	53867	1125825021	.END BELL,ELECTRICAL.....	1
16	PFFZZ	5310011750630	53867	1 120 220 007	.WASHER,SHOULDERED.....	1
17	PAFZZ	5310011161212	62983	471060	.WASHER,FLAT.....	4
18	PFFZZ	5305013524223	11083	9X6001	.SCREW,CAP,SOCKET HE.....	4
19	PFFZZ	4140011762818	53867	1 126 610 061	.IMPELLER,FAN,CENTRI.....	1
20	PFFZZ	5315006165525	80205	MS35756-9	.KEY,WOODRUFF.....	1
21	PFFZZ	5310002624715	16764	1905406	.WASHER,FLAT.....	1
22	PFFZZ	5310010954631	11083	5P8247	.WASHER,FLAT.....	1
23	PFFZZ	5310009445896	24617	12337822	.NUT,SELF-LOCKING,HE.....	1

END OF FIGURE

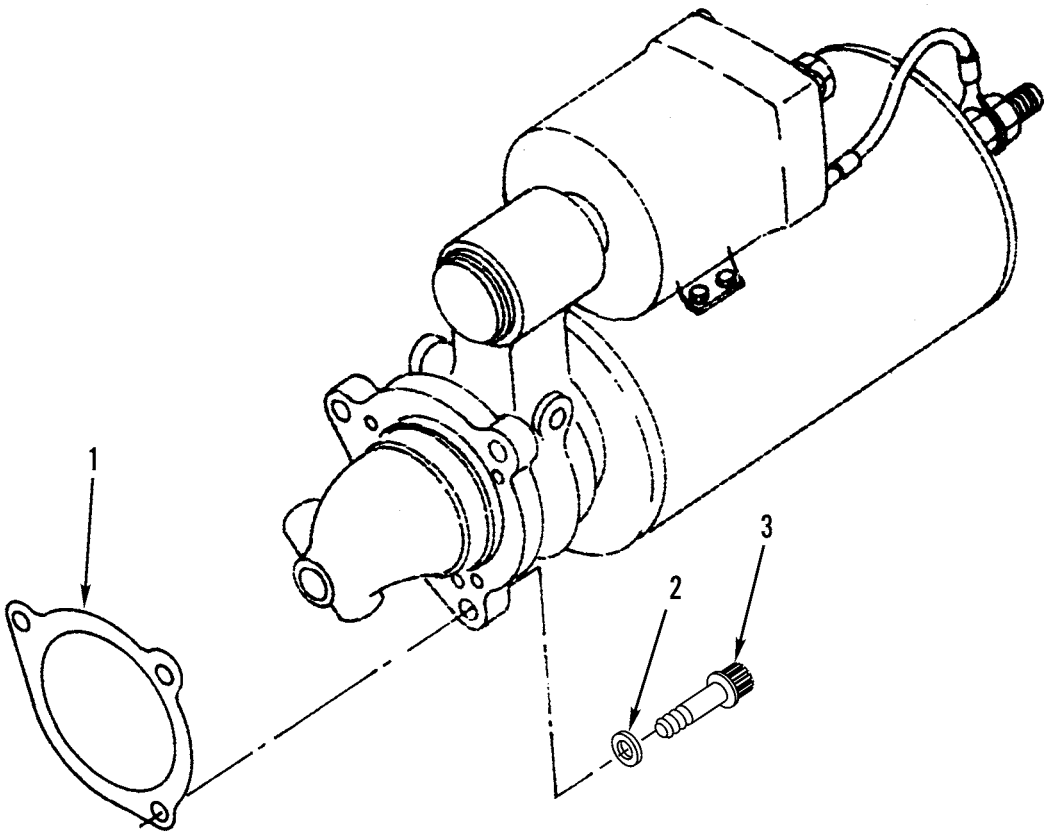

Figure 56. Starting Motor Mounting

(1) ITEM NO	(2) SMR CODE	(3) NSN	(4) CAGEC	(5) PART NUMBER	(6) DESCRIPTION AND USABLE ON CODES(UOC)	(7) QTY
					GROUP 0603 STARTING MOTOR FIG. 56 STARTING MOTOR MOUNTING	
1	PFOZZ	5330013984225	11083	4H7869NON-ASBEST OS	GASKET.....	1
2	PFFZZ	5310011073590	11083	8D5054	WASHER,FLAT.....	3
3	PFFZZ	5306010951486	11083	7J8902	BOLT,MACHINE.....	3

END OF FIGURE

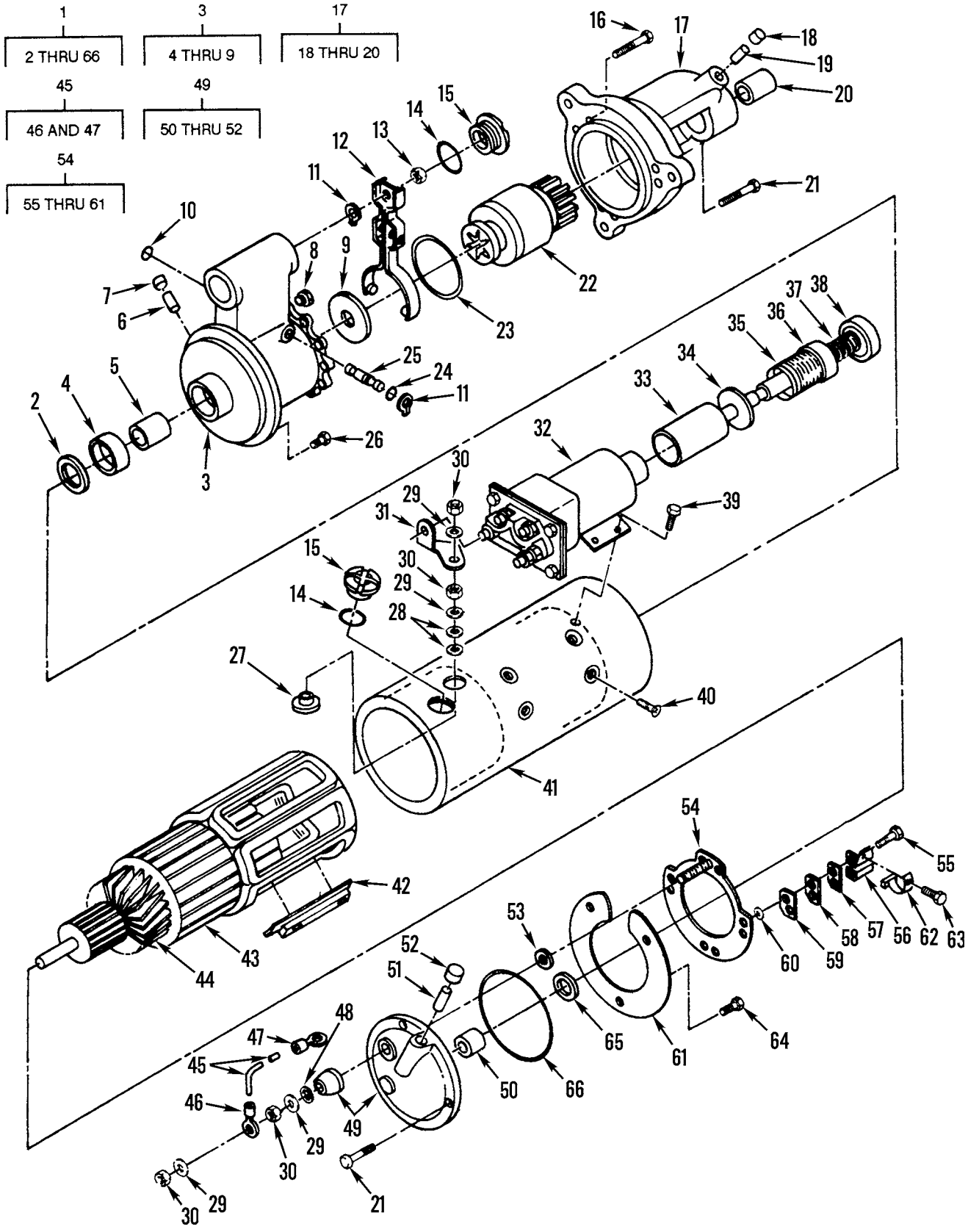

Figure 57. Starting Motor (DELCO)

(1) ITEM NO	(2) SMR CODE	(3) NSN	(4) CAGEC	(5) PART NUMBER	(6) DESCRIPTION AND USABLE ON CODES(UOC)	(7) QTY
					GROUP 0603 STARTING MOTOR	
					FIG. 57 STARTING MOTOR (DELCO)	
1	PAOFF	2920011448803	1LW55	1990453	STARTER,ENGINE,ELEC.....	1
1	PAOFA	2920011448803	1LW55	1990453	STARTER,ENGINE,ELEC.....	1
2	PFFZZ	5310009992527	16764	1936466	.WASHER.....	1
3	PFFZZ	2920008212943	16764	1979534	.HOUSING ASSEMBLY,LE.....	1
4	PAFZZ	5330009727644	11083	2F6678	..SEAL,STARTER.....	1
5	PFFZZ	3120011015089	89346	1894637	..BEARING,SLEEVE.....	1
6	PFFZZ	9390011123500	1LW55	1978754	..WICK.....	1
7	PFFZZ	5340011153548	16764	1978756	..CAP,PROTECTIVE,DUST.....	1
8	PFFZZ	5342011324704	16764	1964402	..PLUG.....	1
9	PFFZZ	5310002977319	16764	1911644	..WASHER,FLAT.....	1
10	PFFZZ	5331009206924	11083	1H1023	.O-RING.....	1
11	PFFZZ	5325007151152	96906	MS16624-1037	.RING,RETAINING.....	2
12	PFFZZ	6110007577187	16764	1945484	.LEVER ASSEMBLY.....	1
13	PFFZZ	5310006603381	96906	MS21083N5	.NUT,SELF-LOCKING,HE.....	1
14	PFFZZ	5330009140703	16764	1964857	.GASKET.....	3
15	PFFZZ	5365007539528	16764	1945356	.PLUG,MACHINE THREAD.....	3
16	PFFZZ	5306007835188	16764	1948537	.BOLT,INTERNAL WRENC.....	1
17	PFFFF	2920011387045	16764	1957846	.STARTER HOUSING,ENG.....	1
18	PFFZZ	5340011153548	10988	A47889	..CAP,PROTECTIVE,DUST.....	1
19	PFFZZ	9390011123500	1LW55	1978754	..WICK.....	1
20	PFFZZ	3120008286852	16764	1894635	..BUSHING,SLEEVE.....	1
21	PFFZZ	5306007835183	16764	1948536	.BOLT,INTERNAL WRENC.....	5
22	PFFZZ	2920011122687	72850	EP480411	.DRIVE,ENGINE,ELECTR.....	1
23	PFFZZ	5330009764695	16764	1945476	.PACKING,PREFORMED.....	1
24	PFFZZ	5330008437194	11083	2D6392	.GASKET.....	1
25	PAFZZ	3040000344216	16764	1948529	.SHAFT,SHOULDERED.....	1
26	PFFZZ	5306005509129	16764	1914869	.BOLT,MACHINE.....	9
27	PFFZZ	5365007158065	11083	3L3380	.BUSHING,STARTER MOT.....	1
28	PFFZZ	5310007195470	16764	1922457	.WASHER,FLAT.....	2
29	PFFZZ	5310009307013	11083	4B4280	.WASHER,FLAT.....	4
30	PFFZZ	5310001787700	11083	3H3680	.NUT,PLAIN,HEXAGON.....	4
31	PAFZZ	2920008438211	16764	1945468	.CONNECTOR,TERMINAL.....	1
32	PAFZZ	5945011131811	16764	1115559	.SOLENOID,ELECTRICAL.....	1
33	PFFZZ	2920008222287	16764	1948522	.PLUNGER,SOLENOID.....	1
34	PFFZZ	5310000622051	16764	1948519	.WASHER,FLAT.....	1
35	PAFZZ	9390008391864	16764	801077	.BELLOWS,PROTECTION.....	1
36	PFFZZ	5310008222236	16764	1948520	.WASHER,RECESSED.....	1
37	PAFZZ	5360008120196	16764	1948521	.SPRING,HELICAL,COMP.....	1
38	PFFZZ	5310008222241	16764	1948526	.WASHER,RECESSED.....	1
39	PFFZZ	5306008848787	96906	MS35355-64	.BOLT,MACHINE.....	4
40	PFFZZ	5305004505937	11862	1968396	.SCREW,MACHINE.....	8
41	PAFZZ	5970000345015	16764	1955990	.INSULATOR,PLATE.....	1
42	PFFZZ	2920009992526	16764	1934478	.POLE,SHOE.....	4
43	PFFZZ	5950011305209	16764	1974929	.COIL,ELECTRICAL.....	1
44	PFFZZ	2920000153058	16764	1945500	.ARMATURE,MOTOR.....	1
45	XDFZZ	6150011651191	11083	3T3422	.LEAD,ELECTRICAL.....	1
46	PFFZZ	5940001434794	96906	MS25036-112	..TERMINAL,LUG.....	1
47	PFFZZ	5940010590873	11083	2L8071	..TERMINAL,LUG.....	1
48	PFFZZ	5310001941483	96906	MS35333-44	.WASHER,LOCK.....	1

(1) ITEM NO	(2) SMR CODE	(3) NSN	(4) CAGEC	(5) PART NUMBER	(6) DESCRIPTION AND USABLE ON CODES(UOC)	(7) QTY
49	PFFZZ	2920000347342	16764	1945515	.END BELL,ELECTRICAL.....	1
50	PFFZZ	3120010853039	16764	1894636	..BEARING,SLEEVE.....	1
51	PFFZZ	9390011123500	1LW55	1978754	..WICK.....	1
52	PFFZZ	5340011153548	10988	A47889	..CAP,PROTECTIVE,DUST.....	1
53	PFFZZ	5310007348959	16764	1913084	.WASHER,FLAT.....	2
54	PFFZZ	5977011144948	16764	1979387	.PLATE BRUSH.....	1
55	XBFZZ	5305011407963	16764	1867431	..SCREW,ASSEMBLED WAS.....	8
56	PFFZZ	5977011373419	16764	1979390	..HOLDER,BRUSH.....	1
57	PFFZZ	5977004234900	7X677	1979388	..PLATE,SPACING,BRUSH.....	2
58	PFFZZ	5970011373420	16764	1979389	..PLATE,INSULATOR HOL.....	2
59	PFFZZ	5970009185568	16764	1965093	..INSULATOR,PLATE.....	2
60	PFFZZ	5310002914498	16764	1913080	..WASHER,FLAT.....	4
61	PFFZZ	5970011317929	16764	1867434	..INSULATOR,DISK.....	1
62	PAFZZ	5977011132899	18783	M-1852883	.BRUSH,ELECTRICAL CO.....	4
63	PFFZZ	5305004328422	16764	1968998	.SCREW TAPPING.....	6
64	PFFZZ	5305002186387	16764	1847807	.SCREW,MACHINE.....	3
65	PFFZZ	5310010157776	99551	648626	.WASHER,FLAT.....	1
66	PFFZZ	5330008389188	11083	4M0189	.SEAL,SPECIAL.....	1

END OF FIGURE

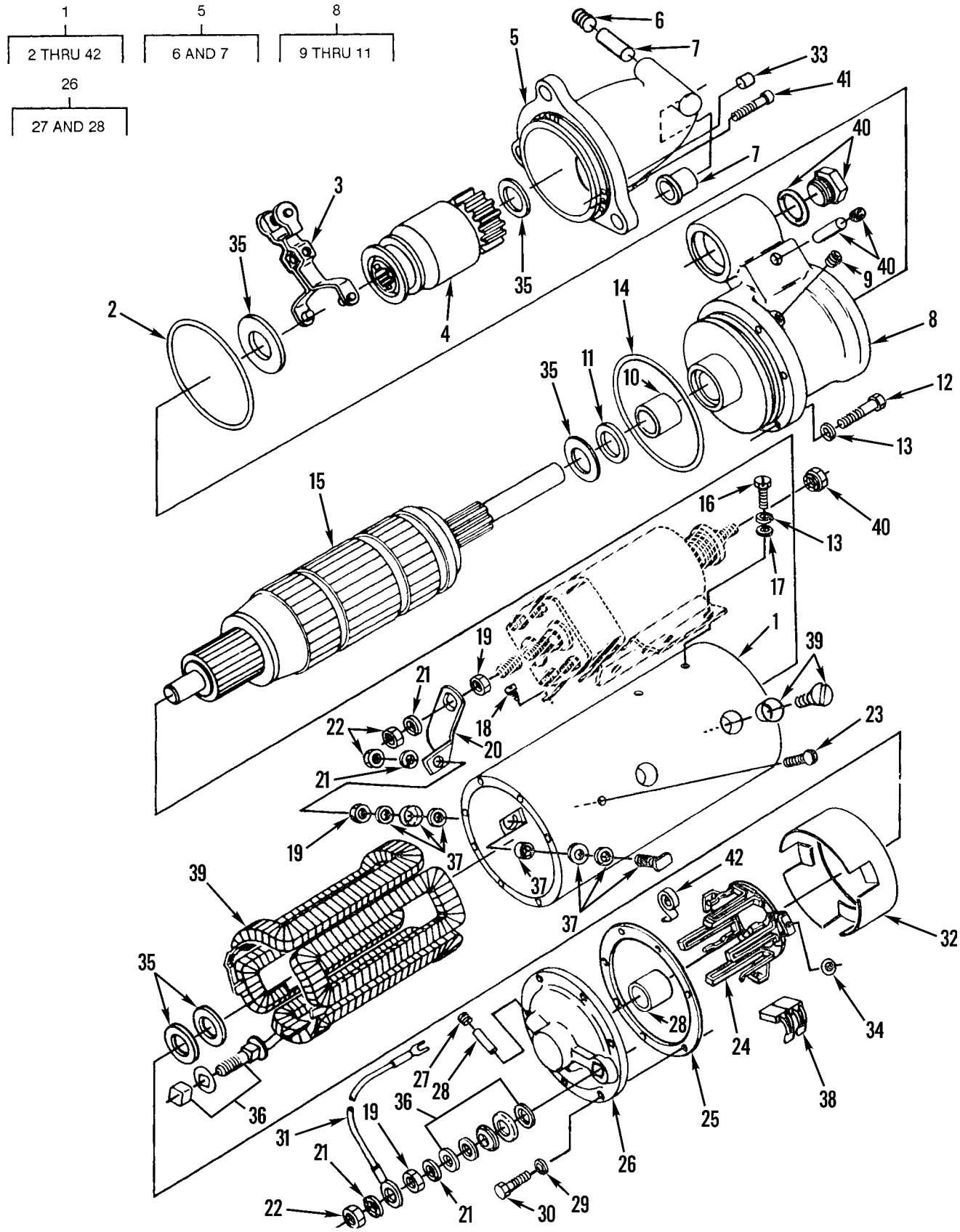

Figure 58. Starting Motor (PRESTOLITE)

(1) ITEM NO	(2) SMR CODE	(3) NSN	(4) CAGEC	(5) PART NUMBER	(6) DESCRIPTION AND USABLE ON CODES(UOC)	(7) QTY
					GROUP 0603 STARTING MOTOR	
					FIG. 58 STARTING MOTOR (PRESTOLITE)	
1	PAOFO	2920004835127	53867	0 001 420 003	STARTER,ENGINE,ELEC.....	1
2	PCFZZ	5331005801216	11083	2H3931	.O-RING.....	1
3	PFFZZ	3010010686996	19728	MEU-2042-B	.SHIFTER FORK,NONVEH.....	1
4	PFFZZ	2920011841123	72850	EP480425	.DRIVE,ENGINE,ELECTR.....	1
5	PAFZZ	2920011841055	19728	PS-1459 AS	.HOUSING ASSEMBLY,ST.....	1
6	PFFZZ	4730000444688	89346	50410DA	..PLUG,PIPE.....	1
7	PAFZZ	2920009367122	68505	P90-989	..PARTS KIT,BEARING.....	1
8	XDFZZ		68505	MES-2116S	.HOUSING A.....	1
9	PFFZZ	4730002783397	38151	E-4850-1	..PLUG,PIPE.....	1
10	PFFZZ	3120004256467	96906	MS17795-128	..BEARING,SLEEVE.....	1
11	PAFZZ	5330009666614	71791	173036	..SEAL,PLAIN ENCASED.....	1
12	PFFZZ	5306000680514	80204	B1821BH025F088N	.BOLT,MACHINE.....	7
13	PFFZZ	5310005825965	96906	MS35338-44	.WASHER,LOCK.....	11
14	PAFZZ	5330008389188	11083	4M0189	.SEAL,SPECIAL.....	1
15	PFFZZ	2920010934035	37929	RAS5712N	.ARMATURE,STARTER-GE.....	1
16	PFFZZ	5306005503023	16764	1930611	.BOLT,MACHINE.....	4
17	PFFZZ	5310005794542	43999	2W1-16-15-32	.WASHER,FLAT.....	4
18	PFFZZ	5305004837758	80205	NAS1096-3-5	.SCREW,MACHINE.....	2
19	PFFZZ	5310001787700	11083	3H3680	.NUT,PLAIN,HEXAGON.....	4
20	PFFZZ	6150010988914	19720	MFJ-115	.BUS,CONDUCTOR.....	1
21	PFFZZ	5310005845272	96906	MS35338-48	.WASHER,LOCK.....	8
22	PFFZZ	5310007680318	96906	MS51967-14	.NUT,PLAIN,HEXAGON.....	4
23	PFFZZ	5305002988437	11083	4B1220	.SCREW,MACHINE.....	3
24	PFFZZ	5977011810135	11083	2P8822	.HOLDER ASSEMBLY,ELE.....	1
25	PFFZZ	5330001380251	19728	MES-95	.GASKET.....	1
26	PAFZZ	2920011844687	68505	MFY-1002MS	.END BELL,ELECTRICAL.....	1
27	PFFZZ	4730002783397	38151	E-4850-1	..PLUG,PIPE.....	1
28	PAFZZ	3120010685968	11083	1P7832	..PARTS KIT,BEARING R.....	1
29	PFFZZ	5310008528266	11083	3B4502	.WASHER,LOCK.....	4
30	PFFZZ	5306010618635	11083	9L9850	.BOLT.....	4
31	PFFZZ	6150012125772	24975	MES-120	.LEAD,ELECTRICAL.....	1
32	XDFZZ		19728	MES-111 BS	.PARTS KIT,ELECTRICA.....	1
33	PAFZZ	2920002236256	19728	MFY-34S	.PLUG SET,STARTING M.....	1
34	PFFZZ	5330004933876	11083	8S4680	.PACKING,PREFORMED.....	1
35	PFFZZ	3120001380241	68505	P90-809	.WASHER THRUST.....	1
36	PAFZZ	2920010934009	68505	90-2274	.PARTS KIT,ENGINE GE.....	1
37	PAFZZ	5940011036803	19728	P90-2205	.TERMINAL KIT.....	1
38	PAFZZ	5977012165341	24975	MFJ-2012DS	.BRUSH SET,ELECTRICA.....	1
39	PAFZZ	2920010687140	68505	MES-1005AS	.KIT,FIELD COIL.....	1
40	PAFZZ	2920010687139	68505	P90-2206	.KIT YOKE AD.....	1
41	PAFZZ	2920010687138	68505	P90-2207	.KIT-SCREW MOUNT.....	1
42	PAFZZ	5977000443000	90031	570-416-11	.SPRING SET,BRUSH.....	1

END OF FIGURE

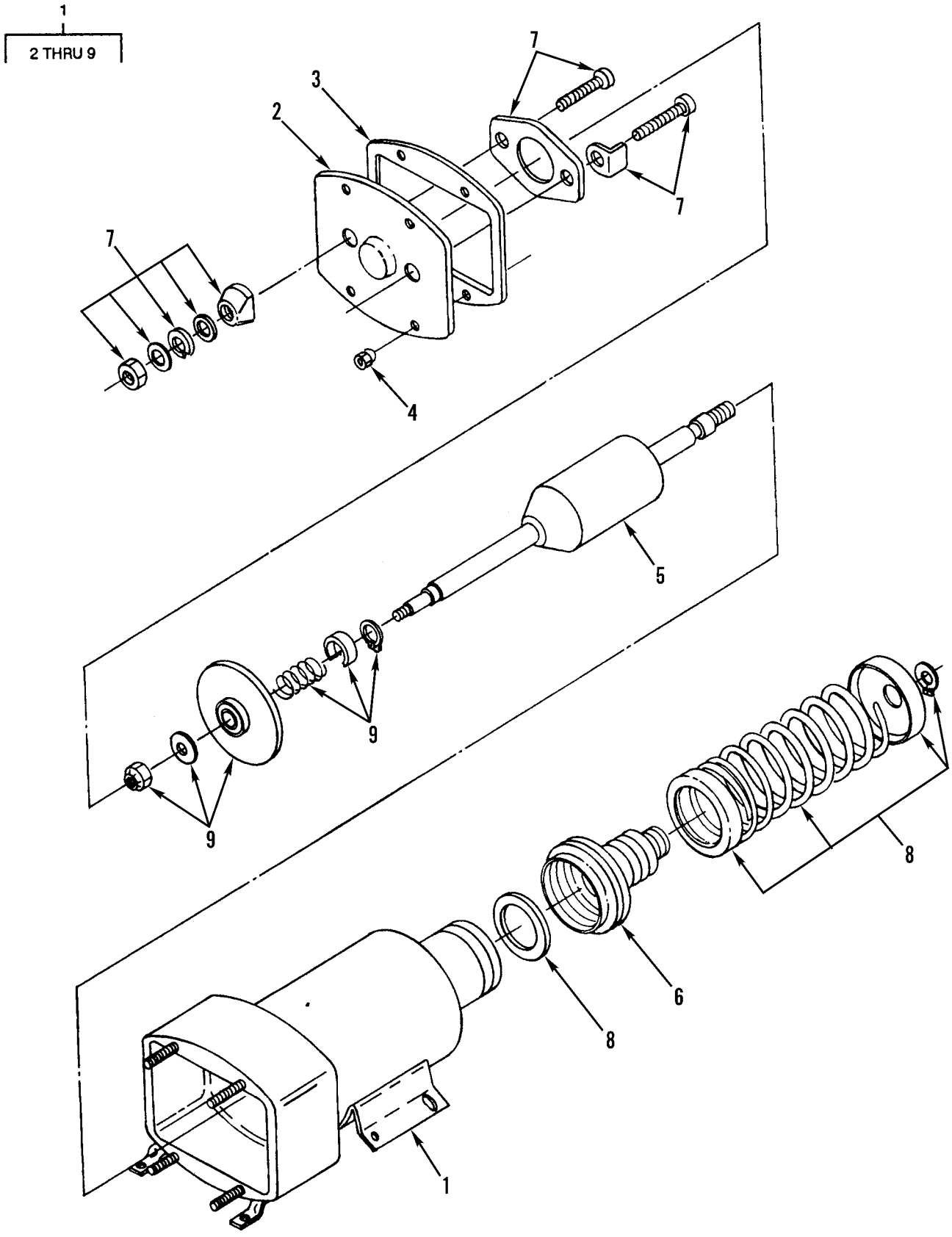

Figure 59. Starting Motor Solenoid (PRESTOLITE)

(1) ITEM NO	(2) SMR CODE	(3) NSN	(4) CAGEC	(5) PART NUMBER	(6) DESCRIPTION AND USABLE ON CODES(UOC)	(7) QTY
					GROUP 0603 STARTING MOTOR FIG. 59 STARTING MOTOR SOLENOID (PRESTOLITE)	
1	PAFZZ	5945011844275	68505	SAT4107	.SOLENOID,ELECTRICAL.....	1
2	PFFZZ	2920010687177	19728	SAT-1004-E	..COVER ASSEMBLY.....	1
3	PFFZZ	5330001930850	19728	SAT-32	..GASKET.....	1
4	PFFZZ	5310008120408	16764	1948656	..NUT,PLAIN,ASSEMBLED.....	4
5	PFFZZ	2920011841054	68505	SAV-1008A	..CORE ASSEMBLY,SOLEN.....	1
6	PAFZZ	2815000743523	11083	8S1523	..CHAMBER,PRECOMBUSTI.....	1
7	PAFZZ	2920011849491	68505	90-2563	..PARTS KIT,TERMINAL,.....	1
8	PAFZZ	2920009367121	68505	P90-816	..PARTS KIT,CORE,SOLE.....	1
9	PAFZZ	2920010687182	68505	90-2225	..PARTS KIT,ENGINE GE.....	1

END OF FIGURE

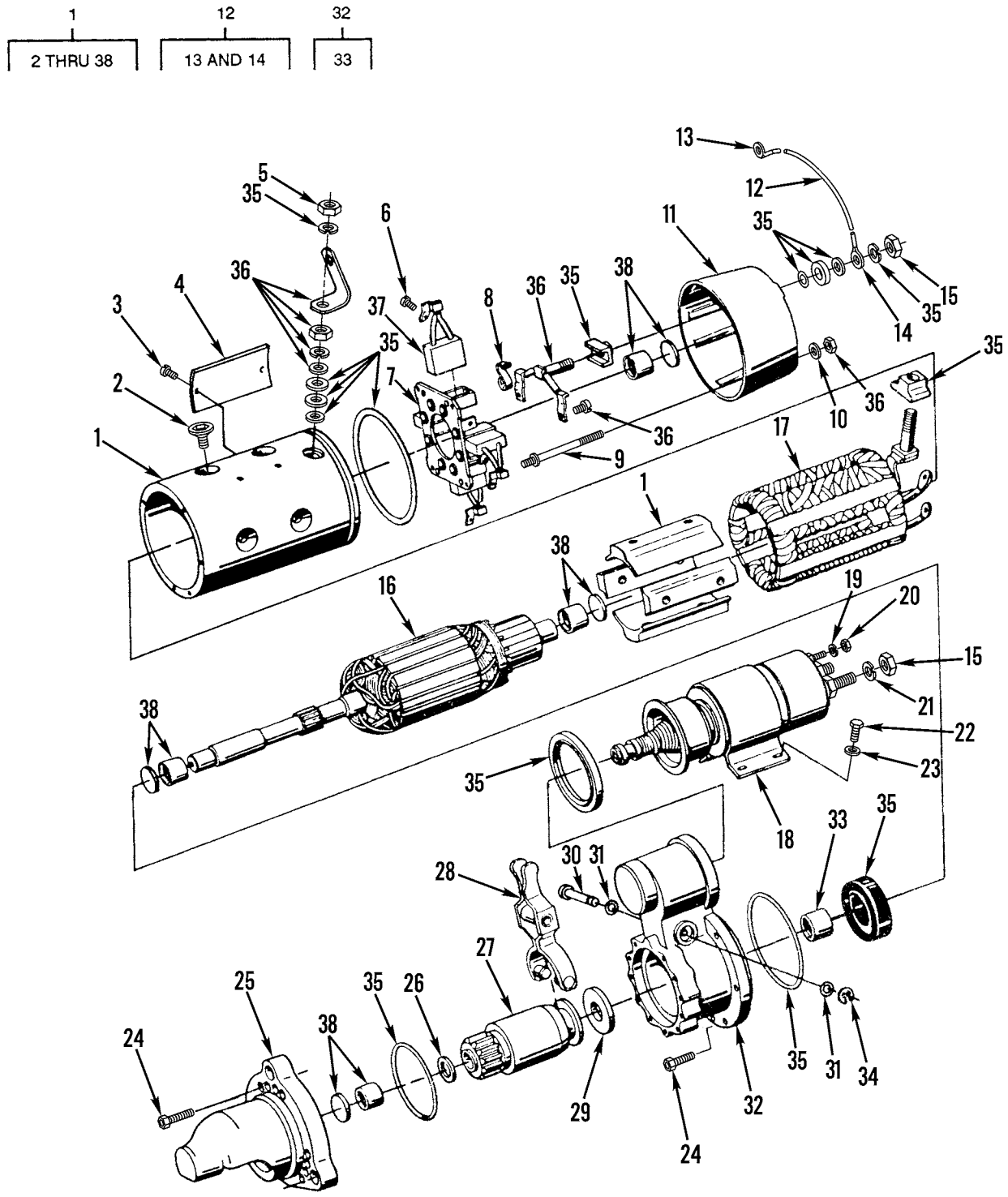

Figure 60. Starting Motor (BOSCH)

(1) ITEM NO	(2) SMR CODE	(3) NSN	(4) CAGEC	(5) PART NUMBER	(6) DESCRIPTION AND USABLE ON CODES(UOC)	(7) QTY
					GROUP 0603 STARTING MOTOR FIG. 60 STARTING MOTOR (BOSCH)	
1	PAOFF	2920004835127	53867	0 001 420 003	STARTER,ENGINE,ELEC.....	1
2	PAFZZ	5305011867132	53867	Z-2 910 871 287	.SCREW,MACHINE.....	8
3	PFFZZ	5305002535609	96906	MS21318-13	.SCREW,DRIVE.....	2
4	PFFZZ	9905011803839	11083	3T5962	.PLATE,IDENTIFICATIO.....	1
5	XDFZZ		53867	Z-2 915 011 011	.NUT,PLAIN,HEXAGON.....	1
6	PAFZZ	5305011867138	53867	2 003 433 000	.SETSCREW.....	4
7	PFFZZ	5977011977647	53867	2 004 336 051	.HOLDER ASSEMBLY,ELE.....	1
8	PAFZZ	5360011888022	11083	3T0858	.SPRING,SPIRAL,TORSI.....	4
9	PFFZZ	5307011869387	53867	2 003 526 040	.STUD,SHOULDERED.....	4
10	XBFZZ		62983	570672	.NUT,SELF-LOCKING,HE.....	4
11	PFFZZ	5340011883175	53867	2 007 010 062	.COVER,ACCESS.....	1
12	PFFZZ	5995011849403	11083	3T4716	.LEAD,ELECTRICAL.....	1
13	PFFZZ	5940001434777	81343	SAE-AS25036-157	..TERMINAL,LUG.....	1
14	PFFZZ	5940010590873	11083	2L8071	..TERMINAL,LUG.....	1
15	PFFZZ	5310007680318	96906	MS51967-14	.NUT,PLAIN,HEXAGON.....	3
16	PFFZZ	2920011872378	53867	2 004 005 003	.ARMATURE,MOTOR.....	1
17	PFFZZ	2920011877027	53867	2 004 115 013	.COIL ASSEMBLY,FIELD.....	1
18	PAFZZ	5945011872075	11083	3T0868	.SOLENOID,ELECTRICAL.....	1
19	PFFZZ	5310008528266	11083	3B4502	.WASHER,LOCK.....	1
20	PFFZZ	5310006371058	66289	PD115	.NUT,PLAIN,HEXAGON.....	1
21	PFFZZ	5310005845272	96906	MS35338-48	.WASHER,LOCK.....	2
22	PAFZZ	5305011867144	53867	2 914 551 012	.SCREW,CAP,HEXAGON H.....	4
23	PFFZZ	5310011763998	11083	4B4674	.WASHER,FLAT.....	4
24	PFFZZ	5305011860641	11083	3T0849	.SCREW,CAP,SOCKET HE.....	12
25	XDFZZ		53867	2 007 010 056	.HOUSING,ENGINE DRIV.....	1
26	PFFZZ	5310011893799	53867	2 000 101 042	.WASHER,FLAT.....	1
27	PFFZZ	2920010687126	72850	EP480410	.DRIVE ASSEMBLY PART OF KIT P/N 5702745.....	1
28	PAFZZ	2520011872523	53867	2 001 933 005	.SHIFTER FORK,VEHICU.....	1
29	PFFZZ	2920011896614	53867	2 000 112 007	.PLATE,BRAKE,GENERAT.....	1
30	PFFZZ	2520012433565	53867	2 007 010 064-Z	.PARTS KIT,TRANSMISS.....	1
31	PCFZZ	5331012067332	11083	5P6458	.O-RING.....	2
32	PFFZZ	2920011883268	53867	2 005 825 180	.HOUSING,ENGINE DRIV.....	1
33	XDFZZ	3110011881742	11083	3T0842	..BEARING,ROLLER,NEED.....	1
34	PFFZZ	5325008037314	96906	MS16624-1027	.RING,RETAINING.....	1
35	PAFZZ	5330011982030	53867	2 007 010 053	.SEAL KIT.....	1
36	PAFZZ	5340012090567	53867	2 007 011 057	.HARDWARE KIT,ELECTR.....	1
37	PAFZZ	5977011863595	53867	2 007 014 067	.BRUSH SET,ELECTRICA.....	1
38	XDFZZ		53867	2 007 010 055	.PARTS KIT,BEARING R.....	1

END OF FIGURE

2
3 THRU 13

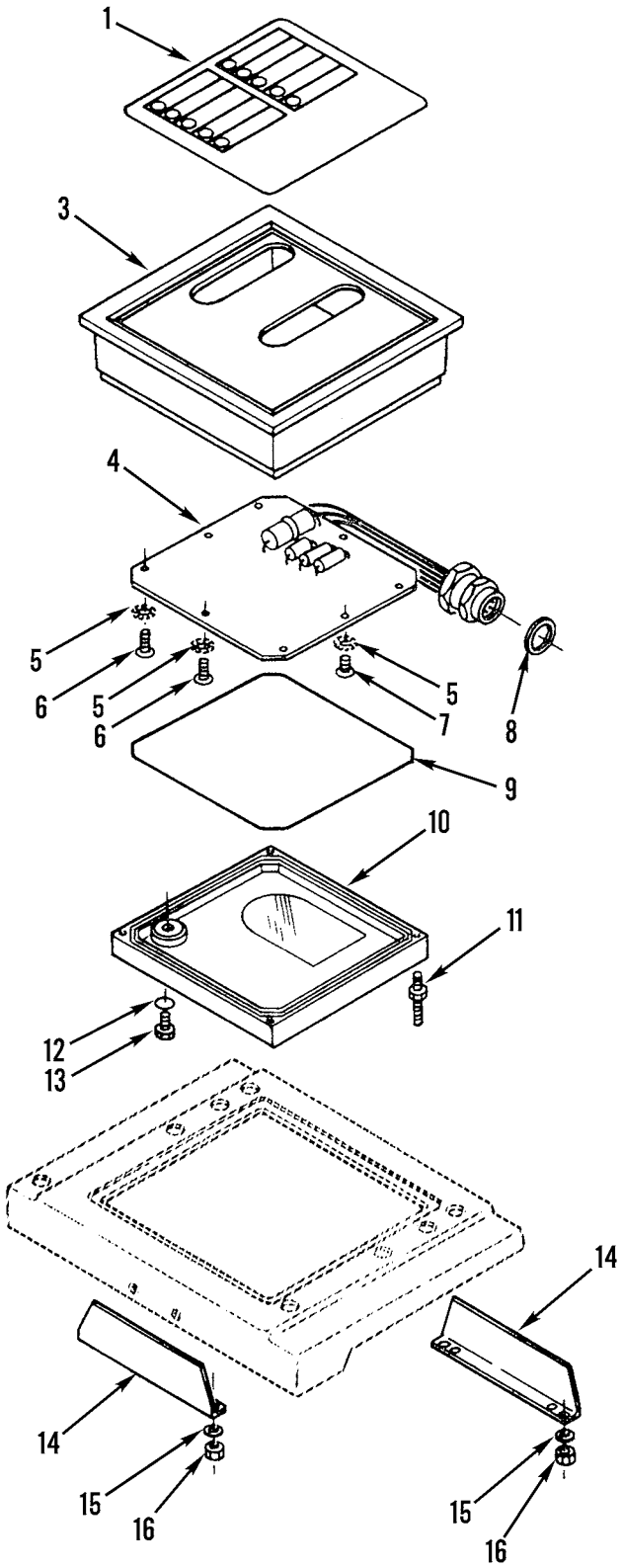

Figure 61. Monitoring System Control Panel

(1) ITEM NO	(2) SMR CODE	(3) NSN	(4) CAGEC	(5) PART NUMBER	(6) DESCRIPTION AND USABLE ON CODES(UOC)	(7) QTY
					GROUP 0607 INSTRUMENT OR ENGINE CONTROL PANEL FIG. 61 MONITORING SYSTEM CONTROL PANEL	
1	XBOZZ		11083	6V8474	PLATE,IDENTIFICATIO.....	1
2	PAOZZ	2990011655141	11083	1719822	MONITER,ELECTRONIC.....	1
3	XAFZZ		11083	3T9157	.HOUSING ASSY.....	1
4	XAFZZ	5998011920240	11083	3T8618	.CIRCUIT CARD ASSEMB.....	1
5	PFFZZ	5310010907021	11083	5H6555	.WASHER,KEY.....	9
6	PFFZZ	5305011852069	11083	5S7348	.SCREW,MACHINE.....	2
7	PAFZZ	5305011770859	11083	4B1218	.SCREW,MACHINE.....	7
8	XAFZZ		11083	6V2694	.WASHER,SEAL.....	1
9	XDFZZ		11083	2S4071	.PACKING,PREFORMED.....	4
10	XAFZZ		11083	3T9109	.COVER.....	1
11	XAFZZ		11083	9P6411	.STUD BOLT.....	1
12	XDFZZ	5331010491292	02697	3-904N552-90	.O-RING.....	1
13	XDFZZ	5365000786248	11083	9S8002	.PLUG,MACHINE THREAD.....	1
14	PFOZZ	5340011557741	11083	5T8949	BRACKET,ANGLE.....	2
15	PFOZZ	5310010512360	11083	5P0537	WASHER.....	4
16	PFOZZ	5310009050762	96906	MS51967-3	NUT,PLAIN,HEXAGON.....	4

END OF FIGURE

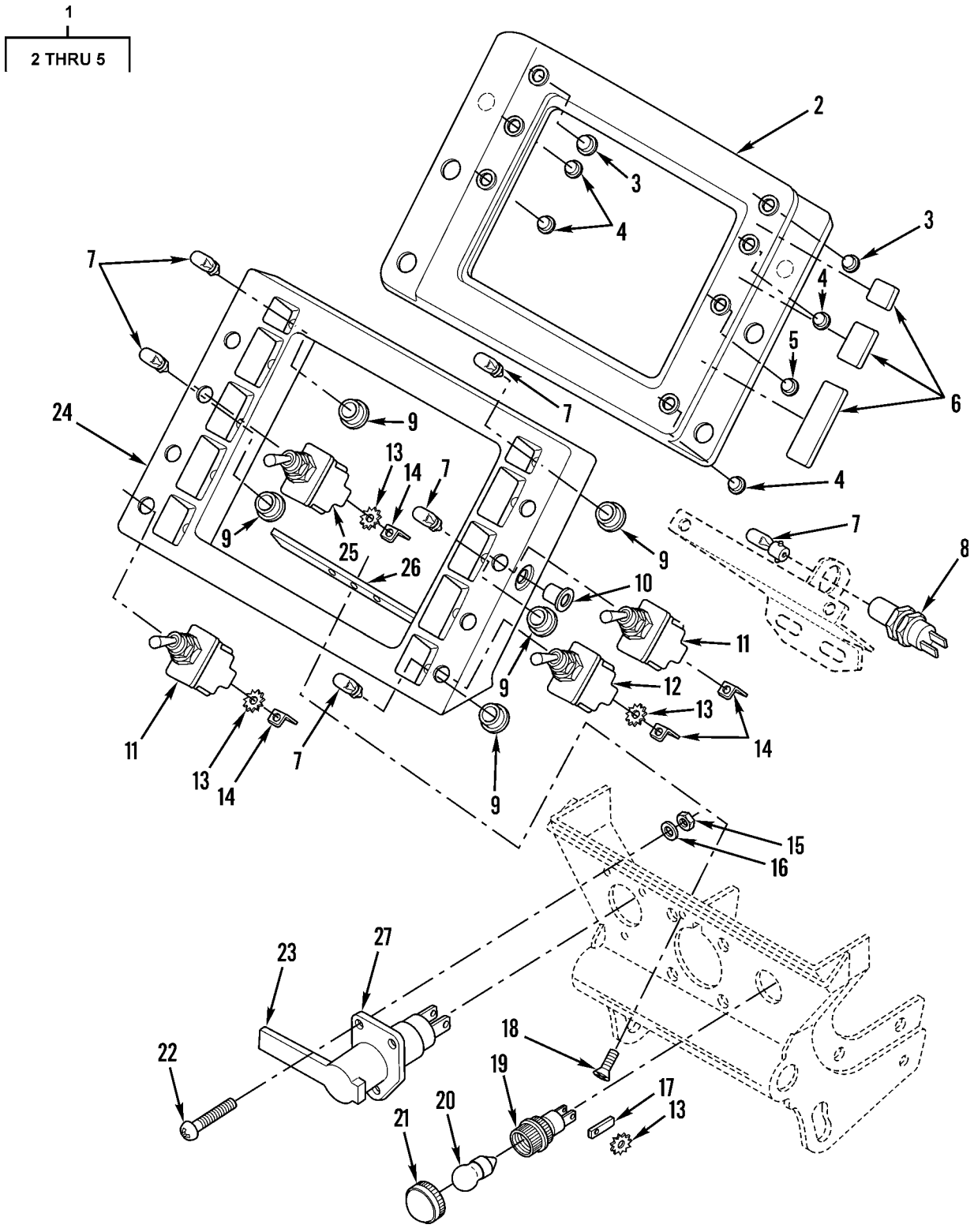

Figure 62. Steering Console Panel

(1) ITEM NO	(2) SMR CODE	(3) NSN	(4) CAGEC	(5) PART NUMBER	(6) DESCRIPTION AND USABLE ON CODES(UOC)	(7) QTY
					GROUP 0607 INSTRUMENT OR ENGINE CONTROL PANEL FIG. 62 STEERING CONSOLE PANEL	
1	PFOZZ	5340011756908	11083	5T2346	COVER,ACCESS..... UOC:AF9,AGN,AGP,F10	1
1	PAOZZ		11083	5R7031	COVER,ACCESS..... UOC:AGM,F10	1
2	XAOZZ		11083	5T2347	.COVER..... UOC:AF9,AGN,AGP,F10	1
3	PFOZZ	6220011670515	83330	4700-803-0372-00	.LENS,LIGHT..... UOC:AF9,AGN,AGP,F10	2
4	PFOZZ	6220011670516	72619	4700-803-0373-00	.LENS,LIGHT..... UOC:AF9,AGN,AGP,F10	4
5	PFOZZ	6220011670514	83330	4700-803-0371-00	.LENS,LIGHT..... UOC:AF9,AGN,AGP,F10	1
6	MFOZZ		11083	5P5926-4	M SEAL STK MAKE FROM SEAL P/N 5P5926.....	1
7	PAFZZ	6240004193185	96906	MS25231-1873	LAMP,INCANDESCENT.....	1
8	PAOZZ	6210011489022	83330	21-5710-2937-804	LIGHT,PANEL.....	1
9	PFOZZ	6220011525339	32498	1183-1	HOUSING,LIGHT.....	5
10	PAOZZ	4730011820743	11083	9D0608	NUT,UNION.....	4
11	PFOZZ	5930006831626	11083	7N8001	SWITCH,TOGGLE.....	2
12	PFFZZ	5930006831628	96906	MS24523-22	SWITCH,TOGGLE.....	1
13	PFOZZ	5310002090788	96906	MS35335-30	WASHER,LOCK.....	8
14	PAOZZ	5940011063258	59678	11022209	TERMINAL,QUICK DISC.....	8
15	PFOZZ	5310006371058	66289	PD115	NUT,PLAIN,HEXAGON.....	3
16	PFOZZ	5310005967691	96906	MS35335-32	WASHER,LOCK.....	3
17	PAOZZ	5940011483547	70611	3000M96M	TERMINAL,QUICK DISC.....	2
18	PFOZZ	5305010631423	11083	4B1282	SCREW.....	3
19	PFOZZ	6210011494171	83330	80-3206-05-303	LIGHT,INDICATOR.....	1
20	PAOZZ	6240006430738	73331	624	LAMP,INCANDESCENT.....	1
21	PAOZZ	6210011489034	83330	80-1211-303	LENS,LIGHT.....	1
22	PFOZZ	5305009931848	96906	MS35207-265	SCREW,MACHINE.....	3
23	PAOZZ	6220013869131	11083	9G5590	HANDLE,SIGNAL LIGHT.....	1
24	PFOZZ	5895011928449	11083	5T7459	PANEL,INDICATOR.....	1
25	PFOZZ	5930012775185	11083	7N2353	SWITCH,LIQUID LEVEL..... UOC:AGP	1
26	PFOZZ	3805011741269	11083	6G6809	PLATE,CONSOLE,PANEL.....	1
27	PFOZZ	6220010937946	11083	1733064	CONTROL,DIRECTIONAL.....	1

END OF FIGURE

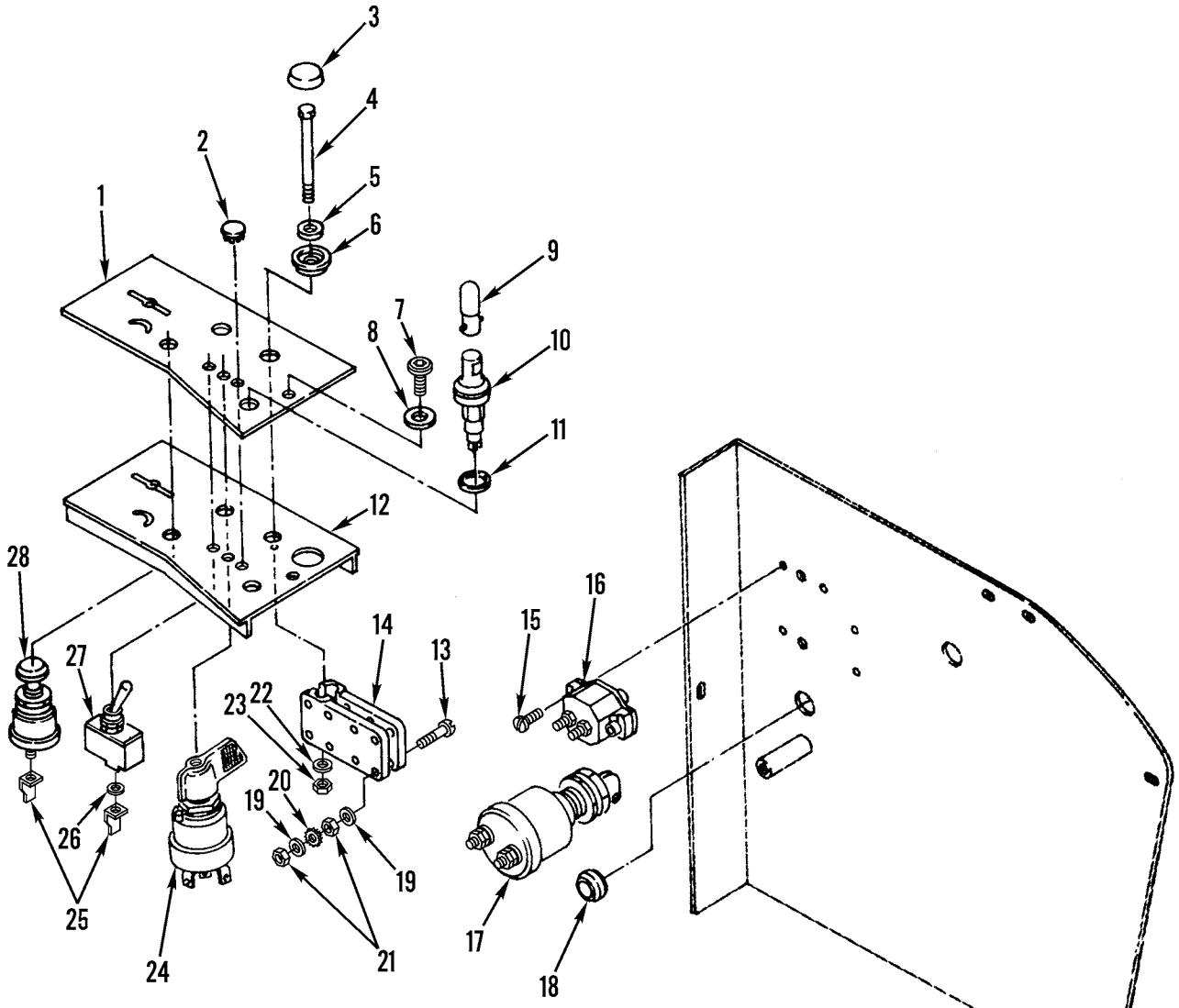

Figure 63. Operator's Panel

(1) ITEM NO	(2) SMR CODE	(3) NSN	(4) CAGEC	(5) PART NUMBER	(6) DESCRIPTION AND USABLE ON CODES(UOC)	(7) QTY
					GROUP 0607 INSTRUMENT OR ENGINE CONTROL PANEL FIG. 63 OPERATOR'S PANEL	
1	XDOZZ		11083	6G5413	PLATE,INSTRUCTION.....	1
2	PFOZZ	5340002708552	61864	BS-51338	BUTTON,PLUG..... UOC:AF9,AGP,F10	1
3	PFOZZ	5340011720371	99017	RH20	CAP,PROTECTIVE,DUST..... UOC:AF9,AGP,F10	1
4	PFOZZ	5305000712514	80204	B1821BH025C275N	SCREW,CAP,HEXAGON H..... UOC:AF9,AGP,F10	1
5	PFOZZ	5310010980634	78189	WD23875	WASHER,SPRING TENSI..... UOC:AF9,AGP,F10	1
6	PFOZZ	5310010953348	95760	RHW205	WASHER,SHOULDERED..... UOC:AF9,AGP,F10	1
7	PFOZZ	5305012857714	11083	6J0488	SCREW,CAP,SOCKET HE..... UOC:AF9,AGP,F10	1
8	PFOZZ	5310010948810	78189	3320-14-01	WASHER,SQUARE CONE..... UOC:AF9,AGP,F10	1
9	PAOZZ	6240001433173	80204	1820	LAMP,INCANDESCENT..... UOC:AF9,AGP,F10	1
10	PAOZZ	6210011489022	83330	21-5710-2937-804	LIGHT,PANEL..... UOC:AF9,AGP,F10	1
11	PAOZZ	5365011524550	11083	6G7134	SPACER,RING..... UOC:AF9,AGP,F10	1
12	XDOZZ		11083	6G5415	COVER,ACCESS..... UOC:AF9,AGP,F10	1
13	PFOZZ	5305011722001	11083	3K8106	SCREW,CAP,HEXAGON H..... UOC:AF9,AGP,F10	4
14	PFOZZ	5365011801120	11083	5R6884	SPACER,PLATE..... UOC:AF9,AGP,F10	2
15	PFOZZ	5305000050896	11083	5M6668	SCREW,MACHINE..... UOC:AF9,AGP,F10	2
16	PAOZZ	5925000080548	14859	7851-13-60I	CIRCUIT BREAKER..... UOC:AF9,AGP,F10	1
17	XDOZZ		13445	75900-09	SWITCH,LOCK,IGNITIO..... UOC:AF9,AGP	1
18	PAOZZ	5325008991272	11083	2D0388	GROMMET,NONMETALLIC..... UOC:AF9,AGP,F10	1
19	PFOZZ	5310004328001	11083	4B4863	WASHER,FLAT..... UOC:AF9,AGP,F10	8
20	PFOZZ	5310005967693	77926	A02157-104	WASHER,LOCK..... UOC:AF9,AGP,F10	4
21	PFOZZ	5310010455588	11568	M925A	NUT,PLAIN,HEXAGON..... UOC:AF9,AGP,F10	8
22	PFOZZ	5310010512360	11083	5P0537	WASHER..... UOC:AF9,AGP,F10	1
23	PFOZZ	5310008497021	80205	NAS1408A4	NUT,SELF-LOCKING,HE..... UOC:AF9,AGP,F10	1
24	PAOZZ	5930012022506	11083	7N4160	SWITCH,ROTARY..... UOC:AF9,AGP,F10	1
25	PFOZZ	5940011063258	59678	11022209	TERMINAL,QUICK DISC.....	6

(1) ITEM NO	(2) SMR CODE	(3) NSN	(4) CAGEC	(5) PART NUMBER	(6) DESCRIPTION AND USABLE ON CODES(UOC)	(7) QTY
26	PFOZZ	5310002090788	77926	A02157-103	WASHER,LOCK.....	4
27	PAOZZ	5930011761699	11083	8D2676	SWITCH,TOGGLE.....	2
28	PFOZZ	5930011681025	11083	3T0306	SWITCH,PUSH.....	1

END OF FIGURE

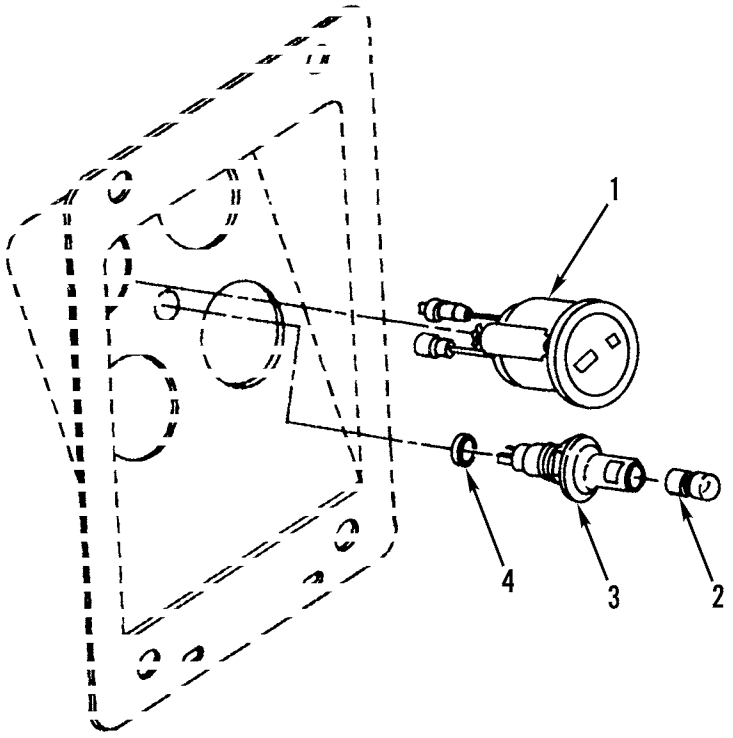

Figure 64. Hourmeter and Panel Lamp

(1) ITEM NO	(2) SMR CODE	(3) NSN	(4) CAGEC	(5) PART NUMBER	(6) DESCRIPTION AND USABLE ON CODES(UOC)	(7) QTY
					GROUP 0607 INSTRUMENT OR ENGINE CONTROL PANEL FIG. 64 HOURMETER AND PANEL LAMP	
1	PAOZZ	6625012587462	11083	9W1490	PARTS KIT,ELECTRONI.....	1
2	PAOZZ	6240001433173	88204	1820	LAMP,INCANDESCENT.....	2
3	PAOZZ	6210011489022	83330	21-5710-2937-804	LIGHT,PANEL.....	2
4	PAOZZ	5365011524550	11083	6G7134	SPACER,RING.....	2

END OF FIGURE

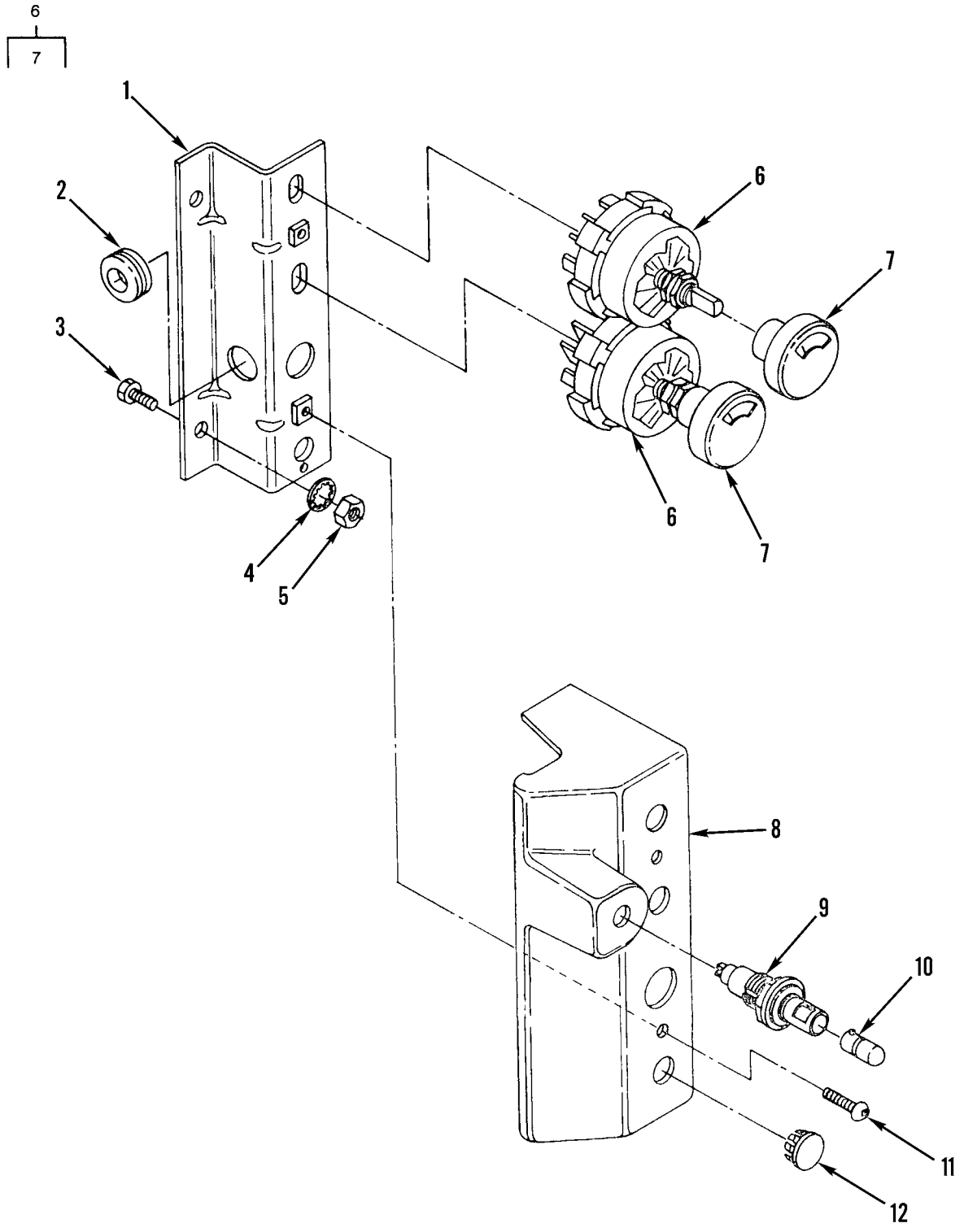

Figure 65. Cab Switch Panel

(1) ITEM NO	(2) SMR CODE	(3) NSN	(4) CAGEC	(5) PART NUMBER	(6) DESCRIPTION AND USABLE ON CODES(UOC)	(7) QTY
					GROUP 0608 MISCELLANEOUS ITEMS FIG. 65 CAB SWITCH PANEL	
1	PFOZZ	5340011847660	11083	6G5769	BRACKET,DOUBLE ANGL..... UOC:AGP	1
2	PAOZZ	5325001384664	11083	2S9727	GROMMET..... UOC:AGP	1
3	XDOZZ	5306010955685	11083	5K0906	BOLT,MACHINE..... UOC:AGP	2
4	PFOZZ	5310005146674	96906	MS35335-34	WASHER,LOCK..... UOC:AGP	2
5	PFOZZ	5310010951526	11083	4M5280	NUT,PLAIN,HEXAGON..... UOC:AGP	2
6	PFOZZ	5930011186366	11083	1V7362	SWITCH,ROTARY SERIAL NUMBER 7GB00001 THRU 7GB00464 & 74V00001 AND UP..... UOC:AGP	2
6	PFOZZ	5930014290940	11083	3T6655	SWITCH,ROTARY SERIAL NUMBER 7GB00465 AND UP.....	2
7	PFOZZ	5355011821684	24956	0110520KN27WC	.KNOB SERIAL NUMBER 7GB00001 THRU 7GB00464 & 74V00001 AND UP..... UOC:AGP	1
7	PFOZZ	3010014303425	11083	7T9302	.DRIVE UNIT,ANGLE SERIAL NUMBER 7GB00465 AND UP.....	1
8	PFOZZ	6110011780753	11083	6G5768	PANEL,POWER DISTRIB..... UOC:AGP	1
9	PFOZZ	6210011489022	83330	21-5710-2937-804	LIGHT,PANEL..... UOC:AGP	1
10	PAOZZ	6240001433173	80204	1820	LAMP,INCANDESCENT..... UOC:AGP	1
11	PFOZZ	5305011601995	11083	4V6981	SCREW,CAP,SOCKET HE..... UOC:AGP	2
12	PFOZZ	5340011854959	52854	207-320401-00	BUTTON,PLUG..... UOC:AGP	1

END OF FIGURE

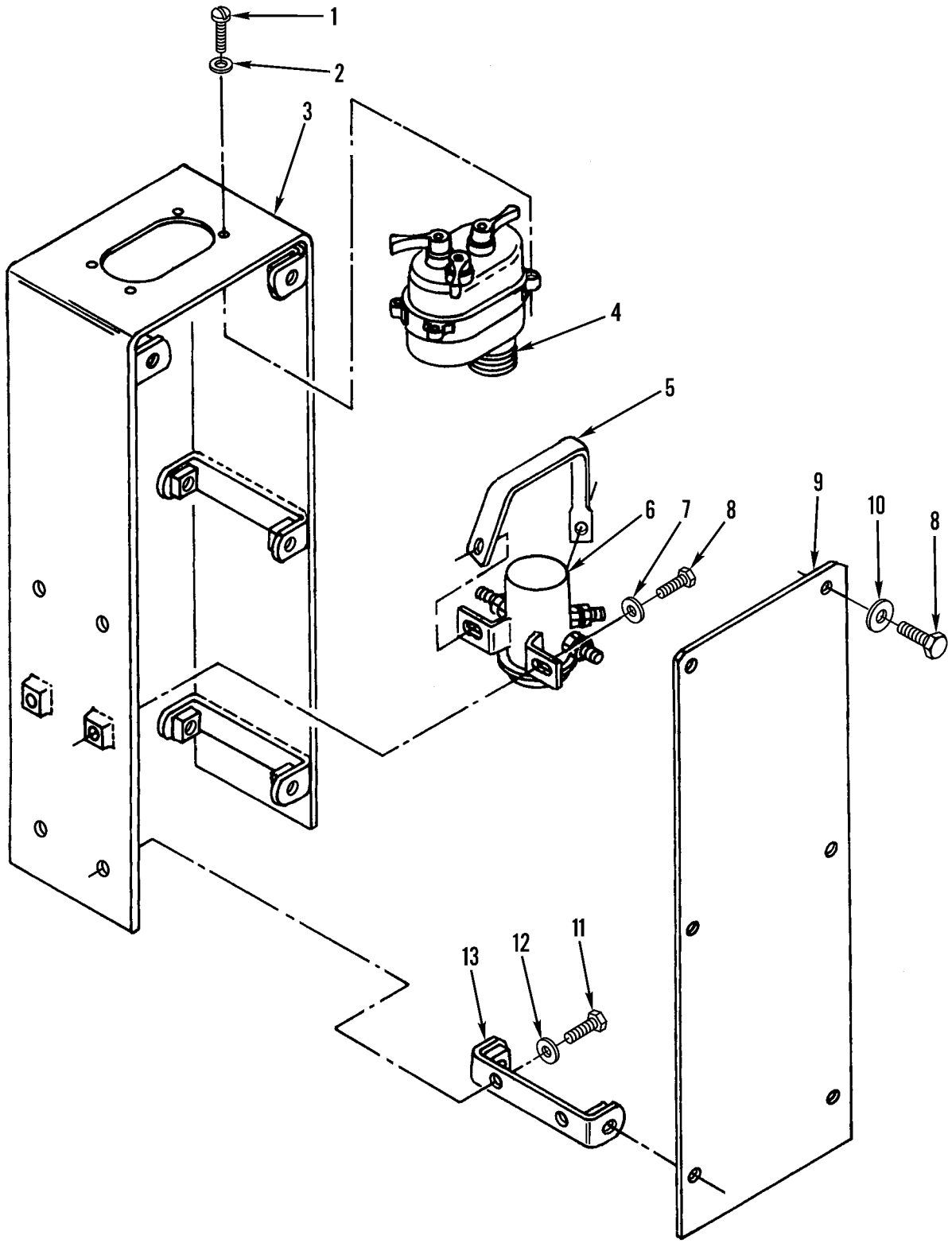

Figure 66. Vehicle Light Switch and Mounting

(1) ITEM NO	(2) SMR CODE	(3) NSN	(4) CAGEC	(5) PART NUMBER	(6) DESCRIPTION AND USABLE ON CODES(UOC)	(7) QTY
					GROUP 0608 MISCELLANEOUS ITEMS FIG. 66 VEHICLE LIGHT SWITCH AND MOUNTING	
1	PFOZZ	5305009897434	96906	MS35207-263	SCREW,MACHINE.....	4
2	PFOZZ	5310001435722	04998	WA1248	WASHER,FLAT.....	4
3	PFOZZ	5340011846683	11083	5R6870	STRAP,RETAINING.....	1
4	PAOZZ	5930003078856	96906	MS51113-1	SWITCH ASSEMBLY.....	1
5	PAOZZ	2920002462735	11083	4H8310	LEAD,IGNITION,ENGIN.....	1
6	PAOZZ	5930010630682	11083	3P4358	SWITCH.....	1
7	PFOZZ	5310010512360	11083	5P0537	WASHER.....	2
8	PFOZZ	5305000712506	80204	B1821BH025C050N	SCREW,CAP,HEXAGON H.....	14
9	PFOZZ	2590011774797	11083	5R6882	PLATE,BODY.....	2
10	PFOZZ	5310010980634	78189	WD23875	WASHER,SPRING TENSI.....	12
11	PFOZZ	5305007175460	11083	5S7379	SCREW,CAP,HEXAGON H.....	4
12	PFOZZ	5310010948810	78189	3320-14-01	WASHER,SQUARE CONE.....	4
13	PFOZZ	5340011861819	11083	5R6872	STRAP,RETAINING.....	2

END OF FIGURE

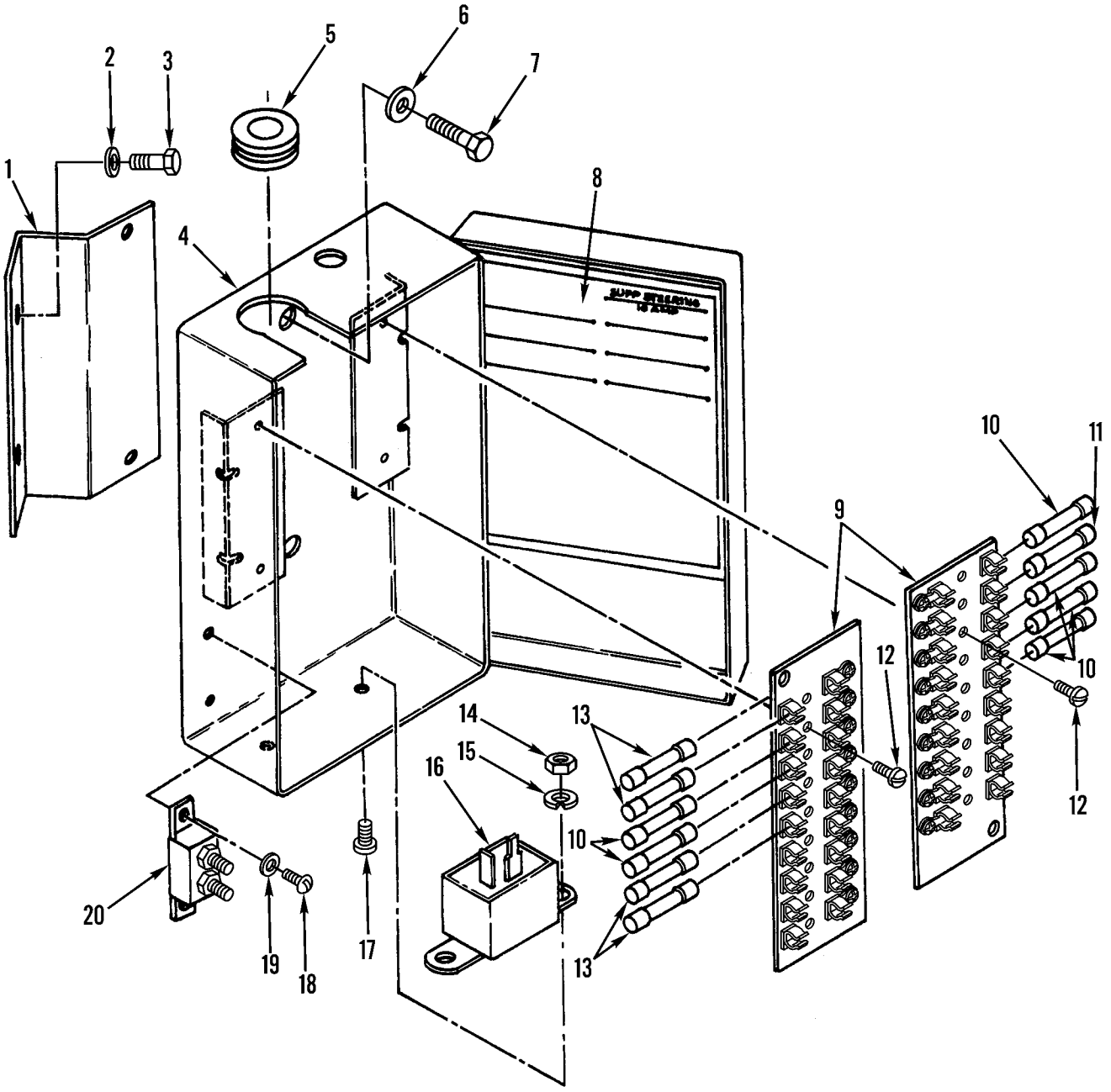

Figure 67. Fuse Box, Fuses, and Mounting

(1) ITEM NO	(2) SMR CODE	(3) NSN	(4) CAGEC	(5) PART NUMBER	(6) DESCRIPTION AND USABLE ON CODES(UOC)	(7) QTY
					GROUP 0608 MISCELLANEOUS ITEMS FIG. 67 FUSE BOX, FUSES, AND MOUNTING	
1	XDOZZ		11083	6G5289	BRACKET,ANGLE.....	1
2	PFOZZ	5310001174788	11083	5M2894	WASHER,FLAT.....	2
3	PFOZZ	5305007215492	80204	B1821BH038C063N	SCREW,CAP,HEXAGON H.....	2
4	PFOZZ	5975011765620	11083	5R6904	JUNCTION BOX..... UOC:AF9,AGP,F10	1
5	PAOZZ	5325012365099	11083	0532171	GROMMET,NONMETALLIC.....	1
6	PFOZZ	5310006276128	96906	MS35335-35	WASHER,LOCK.....	2
7	PFOZZ	5306001580697	11083	5M3062	BOLT,MACHINE.....	2
8	PFOZZ	7690011743678	11083	5R6883	MARKER,IDENTIFICATI..... UOC:AF9,AGP,F10	1
9	PAOZZ	5920011493063	11083	9G0747	FUSEHOLDER,BLOCK.....	2
10	PAOZA	5920002433787	81349	F03A250V10AS	FUSE,CARTRIDGE.....	6
11	XDOZZ	5920002846787	81349	F02A250V5A	FUSE,CARTRIDGE.....	1
12	PFOZZ	5305010979389	11083	2N3475	SCREW,MACHINE.....	4
13	PAOZZ	5920000120151	81349	F02A32V15A	FUSE,CARTRIDGE.....	4
14	PFOZZ	5310006371058	66289	PD115	NUT,PLAIN,HEXAGON.....	2
15	PFOZZ	5310005967691	96906	MS35335-32	WASHER,LOCK.....	2
16	PAOZZ	5945010944116	11083	8D6946	FLASHER,THERMAL.....	1
17	PFOZZ	5305009897434	96906	MS35207-263	SCREW,MACHINE.....	2
18	PFOZZ	5305002988437	11083	4B1220	SCREW,MACHINE.....	2
19	PFOZZ	5310010660689	11083	8H0878	WASHER,LOCK.....	2
20	PAOZZ	5925001188035	11083	4K5124	CIRCUIT BREAKER.....	1

END OF FIGURE

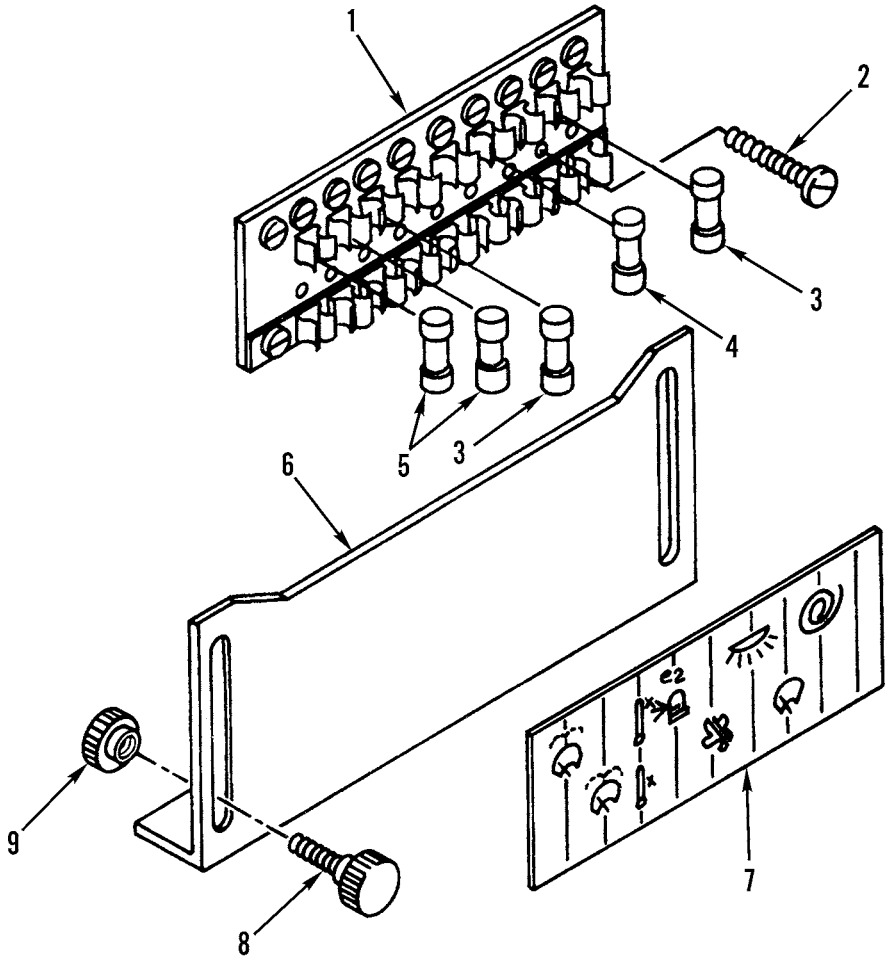

Figure 68. Cab Fuse Block, Fuse, and Mounting

(1) ITEM NO	(2) SMR CODE	(3) NSN	(4) CAGEC	(5) PART NUMBER	(6) DESCRIPTION AND USABLE ON CODES(UOC)	(7) QTY
					GROUP 0608 MISCELLANEOUS ITEMS FIG. 68 CAB FUSE BLOCK, FUSE, AND MOUNTING	
1	PAOZZ	5920011493063	11083	9G0747	FUSEHOLDER,BLOCK..... UOC:AGP	1
2	PAOZZ	5305010534554	11083	0324000	SCREW..... UOC:AGP	2
3	PAOZZ	5920000120151	81349	F02A32V15A	FUSE,CARTRIDGE..... UOC:AGP	2
4	XDOZZ	5920002846787	81349	F02A250V5A	FUSE,CARTRIDGE..... UOC:AGP	1
5	PAOZZ	5920010635769	11083	9K1896	FUSE..... UOC:AGP	2
6	PFOZZ	5340011773906	11083	6G2826	COVER,ACCESS..... UOC:AGP	1
7	PCOZZ	7690011990001	11083	6V0799	MARKER,IDENTIFICATI..... UOC:AGP	1
8	PFOZZ	5355011869348	11083	6G3016	KNOB..... UOC:AGP	2
9	PFOZZ	5310000614650	96906	MS51943-31	NUT,SELF-LOCKING,HE..... UOC:AGP	2

END OF FIGURE

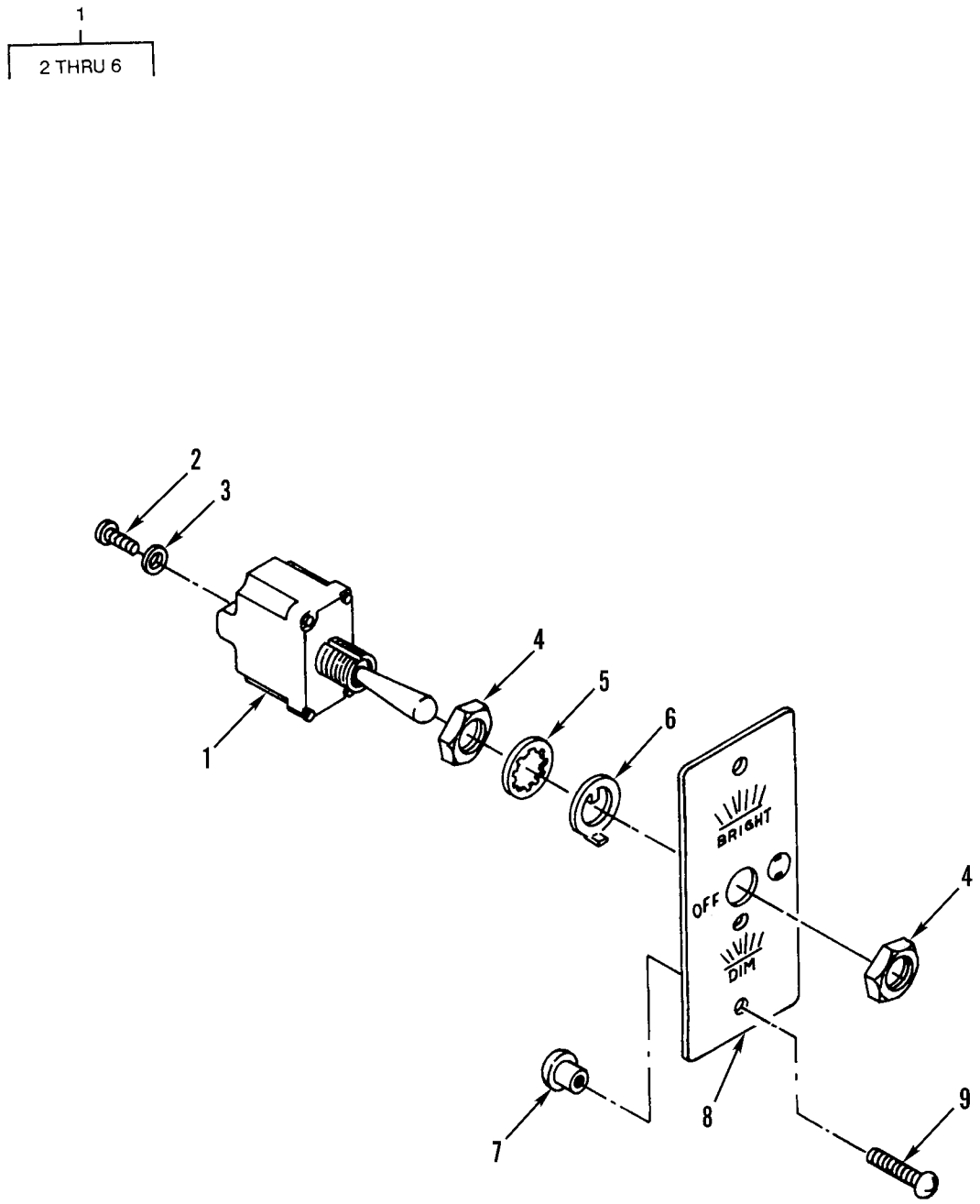

Figure 69. Domelight Toggle Switch and Mounting

(1) ITEM NO	(2) SMR CODE	(3) NSN	(4) CAGEC	(5) PART NUMBER	(6) DESCRIPTION AND USABLE ON CODES(UOC)	(7) QTY
					GROUP 0608 MISCELLANEOUS ITEMS FIG. 69 DOMELIGHT TOGGLE SWITCH AND MOUNTING	
1	PFOZZ	5930006814727	96906	MS24523-21	SWITCH,TOGGLE..... UOC:AGP	1
2	PFOZZ	5305011690687	11083	6V8374	.SCREW,MACHINE..... UOC:AGP	3
3	PFOZZ	5310001877070	77900	1206-00	.WASHER,LOCK..... UOC:AGP	3
4	PFOZZ	5310011061139	81640	15-966-6	.NUT,PLAIN,HEXAGON..... UOC:AGP	2
5	PFOZZ	5310009055454	55841	16-886	.WASHER,LOCK..... UOC:AGP	1
6	PFOZZ	5310005684447	81640	29-761	.WASHER,KEY..... UOC:AGP	1
7	PFOZZ	4730011820743	11083	9D0608	NUT,UNION..... UOC:AGP	2
8	PFOZZ	9905011793145	11083	5R6851	PLATE,IDENTIFICATIO..... UOC:AGP	1
9	PFOZZ	5305011978355	11083	0684208	SCREW,MACHINE..... UOC:AGP	2

END OF FIGURE

1	5
2 THRU 9	6 THRU 8

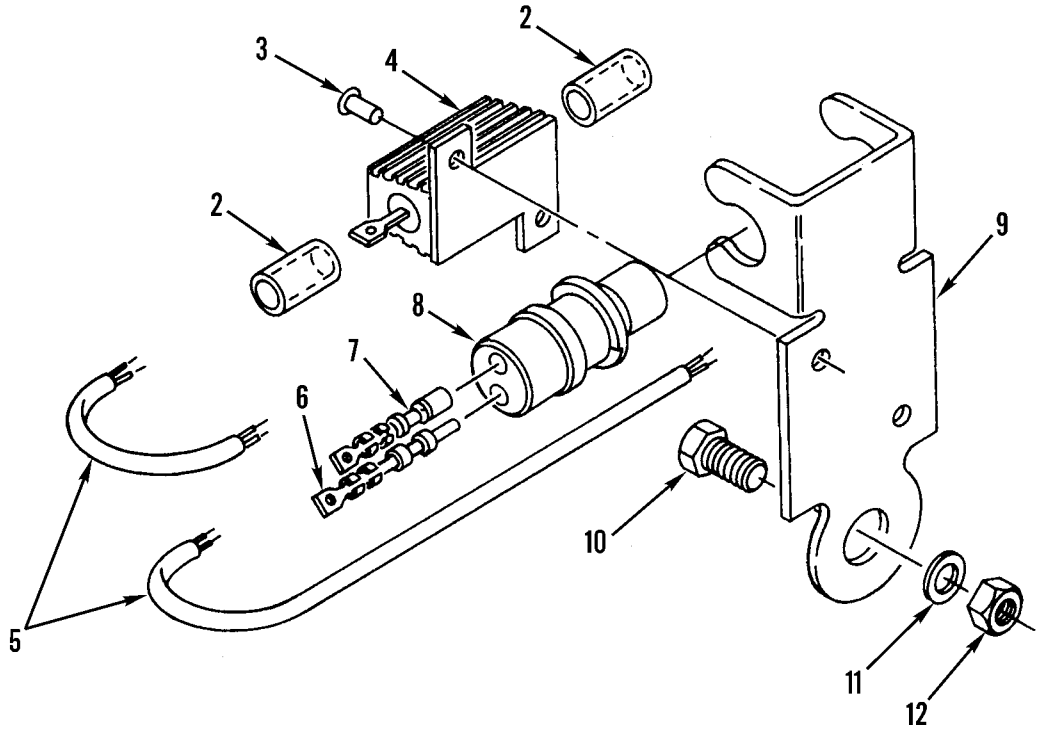

Figure 70. Dimmer Resistor Assembly, Domelight

(1) ITEM NO	(2) SMR CODE	(3) NSN	(4) CAGEC	(5) PART NUMBER	(6) DESCRIPTION AND USABLE ON CODES(UOC)	(7) QTY
					GROUP 0608 MISCELLANEOUS ITEMS FIG. 70 DIMMER RESISTOR ASSEMBLY, DOMELIGHT	
1	PFOZZ	5905012025953	11083	3T3123	RESISTOR,FIXED,WIRE..... UOC:AGP	1
2	MOOZZ	5970013007305	11083	5P6008	.INSULATION SLEEVING MAKE FROM INSULATION SLEEVING P/N 5P6008..... UOC:AGP	2
3	PAOZZ	5320011795920	11083	4B4305	.RIVET,SOLID..... UOC:AGP	2
4	XAOZZ		11083	3T3271	.RESISTOR..... UOC:AGP	1
5	PFOZZ	5995011773919	11083	3T3270	.LEAD ASSEMBLY,ELECT..... UOC:AGP	1
6	PFOZZ	5999011566314	71468	110238-0195	..PIN,GROOVED,HEADLES..... UOC:AGP	1
7	PFOZZ	5999011508808	11083	7N7779	..CONTACT,ELECTRICAL..... UOC:AGP	1
8	PFOZZ	5935011508323	11083	7N9737	..CONNECTOR BODY,PLUG..... UOC:AGP	1
9	PAOZZ	5340011846079	11083	3T3272	.CLIP-CLEVIS,ROD RET..... UOC:AGP	1
10	PFOZZ	5306001580697	11083	5M3062	BOLT,MACHINE..... UOC:AGP	1
11	PFOZZ	5310010948810	78189	3320-14-01	WASHER,SQUARE CONE..... UOC:AGP	1
12	PFOZZ	5310014297859	11083	6V8801	NUT,PLAIN,HEXAGON..... UOC:AGP	1

END OF FIGURE

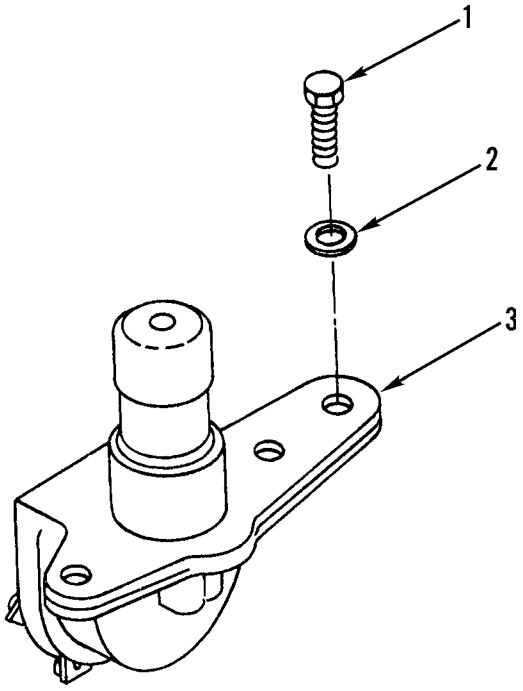

Figure 71. Dimmer Switch and Mounting

(1) ITEM NO	(2) SMR CODE	(3) NSN	(4) CAGEC	(5) PART NUMBER	(6) DESCRIPTION AND USABLE ON CODES(UOC)	(7) QTY
					GROUP 0608 MISCELLANEOUS ITEMS	
					FIG. 71 DIMMER SWITCH AND MOUNTING	
1	PFOZZ	5305010683156	06853	238117	SCREW,SPECIAL.....	2
2	PFOZZ	5310010512360	11083	5P0537	WASHER.....	2
3	PAOZZ	2590008104288	13445	7784	SWITCH,BEAM SELECTI.....	1

END OF FIGURE

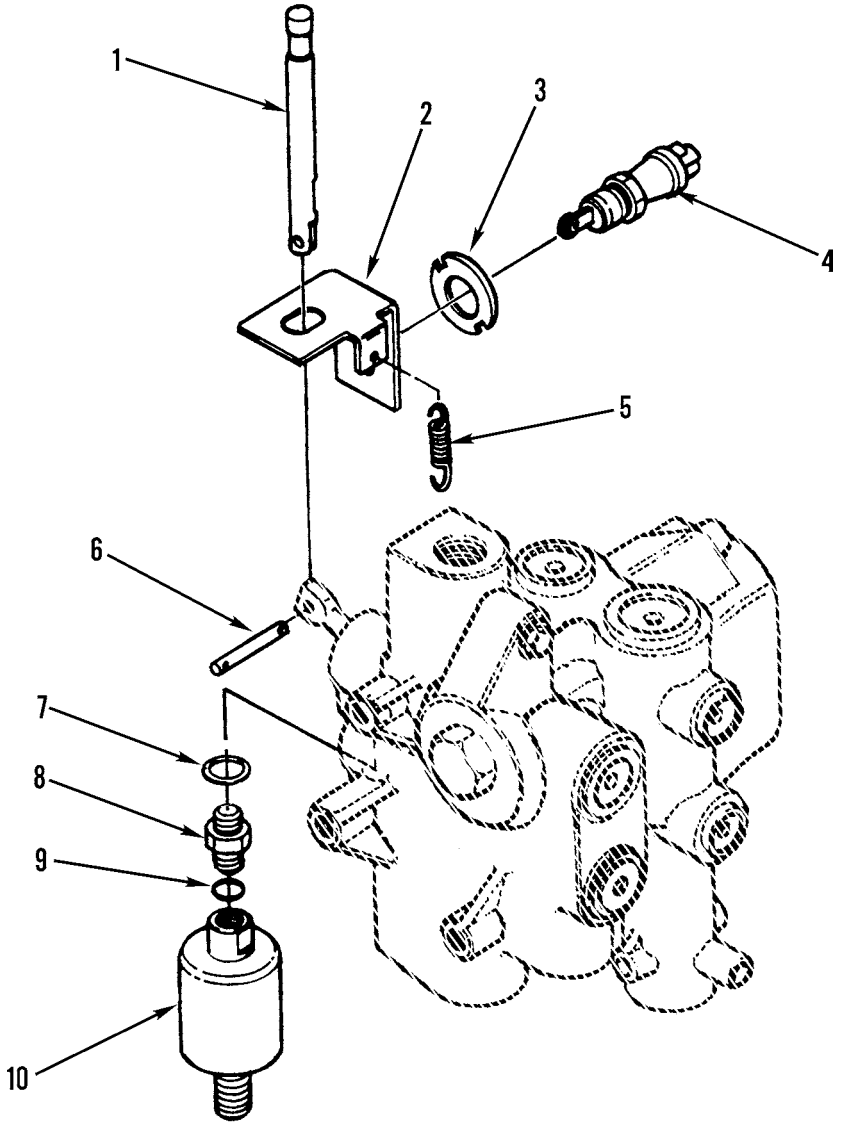

Figure 72. Supplemental Steering Pump Valve Switch and Pressure Switch

(1) ITEM NO	(2) SMR CODE	(3) NSN	(4) CAGEC	(5) PART NUMBER	(6) DESCRIPTION AND USABLE ON CODES(UOC)	(7) QTY
					GROUP 0608 MISCELLANEOUS ITEMS FIG. 72 SUPPLEMENTAL STEERING PUMP VALVE SWITCH AND PRESSURE SWITCH	
1	XDFZZ		11083	6G7487	CLEVIS,ROD END.....	1
2	PFFZZ	5930011956141	11083	6G9322	BRACKET,ELECTRICAL.....	1
3	PFFZZ	5310011736679	11083	5T2329	WASHER,KEYWAY.....	1
4	PFFZZ	5930011761531	11083	1296466	SWITCH,SENSITIVE.....	1
5	PAFZZ	5360004238464	11083	1F5198	SPRING,HELICAL,EXTE.....	1
6	PFFZZ	5315005841352	11083	7H0627	PIN,STRAIGHT,HEADLE.....	1
7	PCOZZ	5331008013354	25184	906-737-70	O-RING.....	1
8	PFFZZ	4730002581864	96906	MS51525B4-6	ADAPTER,STRAIGHT,TU.....	1
9	XDFZZ	5331010491292	02697	3-904N552-90	O-RING.....	1
10	PFFZZ	5930011708991	11083	3T4197	SWITCH,PRESSURE.....	1

END OF FIGURE

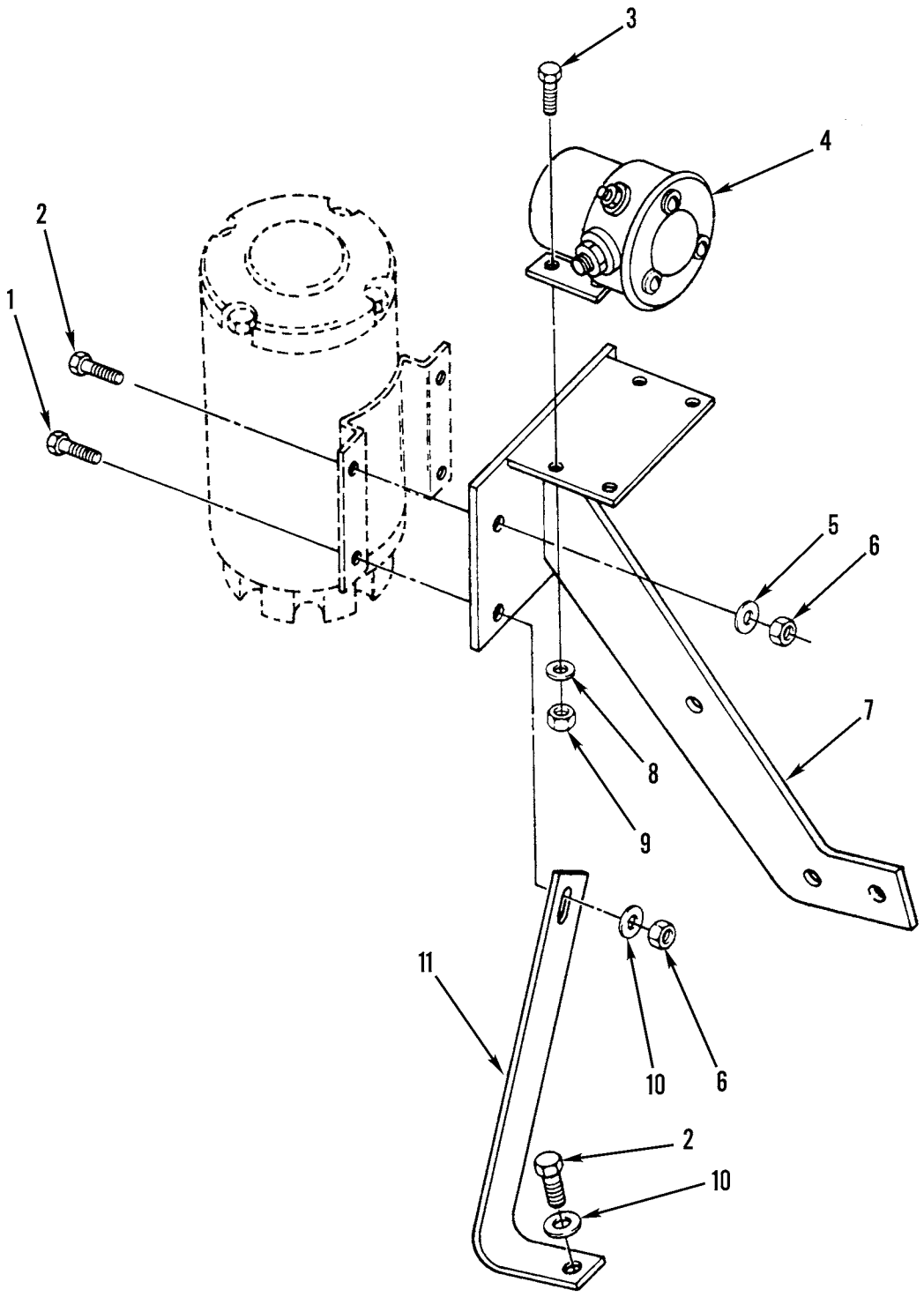

Figure 73. Supplemental Steering Magnetic Switch, Electric Motor, and Mounting

(1) ITEM NO	(2) SMR CODE	(3) NSN	(4) CAGEC	(5) PART NUMBER	(6) DESCRIPTION AND USABLE ON CODES(UOC)	(7) QTY
					GROUP 0608 MISCELLANEOUS ITEMS FIG. 73 SUPPLEMENTAL STEERING MAGNETIC SWITCH, ELECTRIC MOTOR, AND MOUNTING	
1	PFFZZ	5306011954681	11083	3B1915	BOLT	1
2	PFFZZ	5305000680511	80204	B1821BH038C125N	SCREW,CAP,HEXAGON H	4
3	PFFZZ	5305000712505	80204	B1821BH025C088N	SCREW,CAP,HEXAGON H	4
4	PFOZZ	5945007408238	16764	1119866	RELAY,ELECTROMAGNET	1
5	PFFZZ	5310001174788	11083	5M2894	WASHER,FLAT	3
6	PFFZZ	5310014297859	11083	6V8801	NUT,PLAIN,HEXAGON	4
7	PFFZZ	5342011761162	11083	6G7658	BRACKET	1
8	PFFZZ	5310010512360	11083	5P0537	WASHER	4
9	PFFZZ	5310000050779	11083	4L6458	NUT,PLAIN,HEXAGON	3
10	PFFZZ	5310010618633	11083	9L9132	WASHER	2
11	PAFZZ	5340011756899	11083	5T2598	BRACKET,DOUBLE ANGL	1

END OF FIGURE

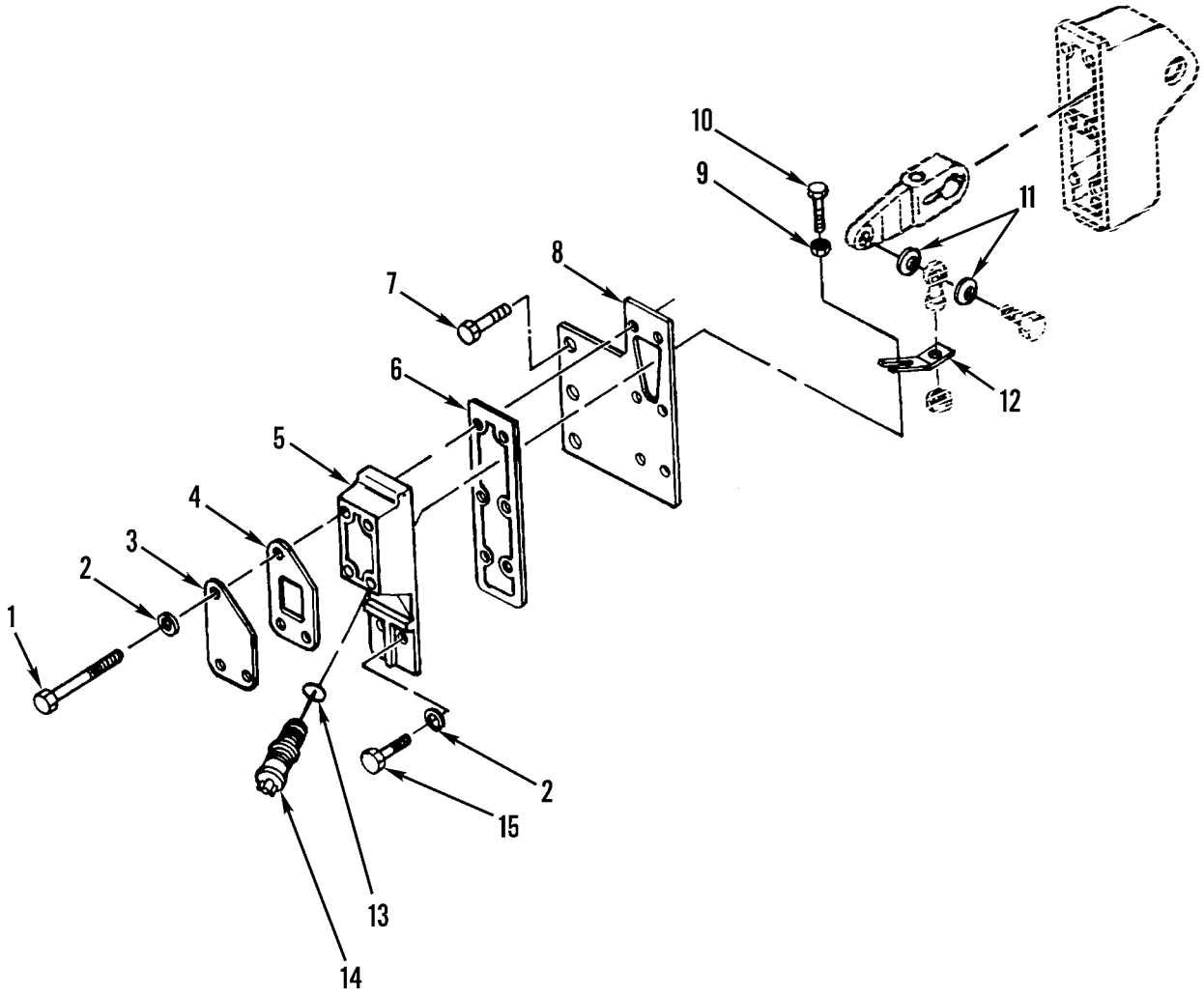

Figure 74. Supplemental Steering Governor Switch and Mounting

(1) ITEM NO	(2) SMR CODE	(3) NSN	(4) CAGEC	(5) PART NUMBER	(6) DESCRIPTION AND USABLE ON CODES(UOC)	(7) QTY
					GROUP 0608 MISCELLANEOUS ITEMS FIG. 74 SUPPLEMENTAL STEERING GOVERNOR SWITCH AND MOUNTING	
1	PFFZZ	5306004262932	11083	0S1619	BOLT,MACHINE.....	4
2	PFFZZ	5310001174788	11083	5M2894	WASHER,FLAT.....	6
3	PAFZZ	5340011748314	11083	5T4058	COVER,ACCESS.....	1
4	PFFZZ	5330011703755	11083	5T4057	GASKET.....	1
5	PFFZZ	3040011691982	11083	5T4055	HOUSING,MECHANICAL.....	1
6	PFOZZ	5330010660675	11083	8D9974	GASKET.....	1
7	PFFZZ	5306002851368	11083	0L1143	BOLT,MACHINE.....	3
8	PAOZZ	5340011774686	11083	5T5220	COVER,ACCESS.....	1
9	PFFZZ	5310010687065	11083	5B3180	NUT.....	1
10	PFFZZ	5305011768117	11083	7N1514	SCREW,CAP,HEXAGON H.....	1
11	PFOZZ	5310008940660	11083	4M6921	WASHER,SPRING TENSI.....	2
12	PFFZZ	3805011755265	11083	5T4056	LEVER,MANUAL CONTRO.....	1
13	PFFZZ	5331009486482	11083	3K0360	O-RING.....	1
14	PFFZZ	5930011761532	11083	3T3132	SWITCH,SENSITIVE.....	1
15	PFFZZ	5306011954681	11083	3B1915	BOLT.....	2

END OF FIGURE

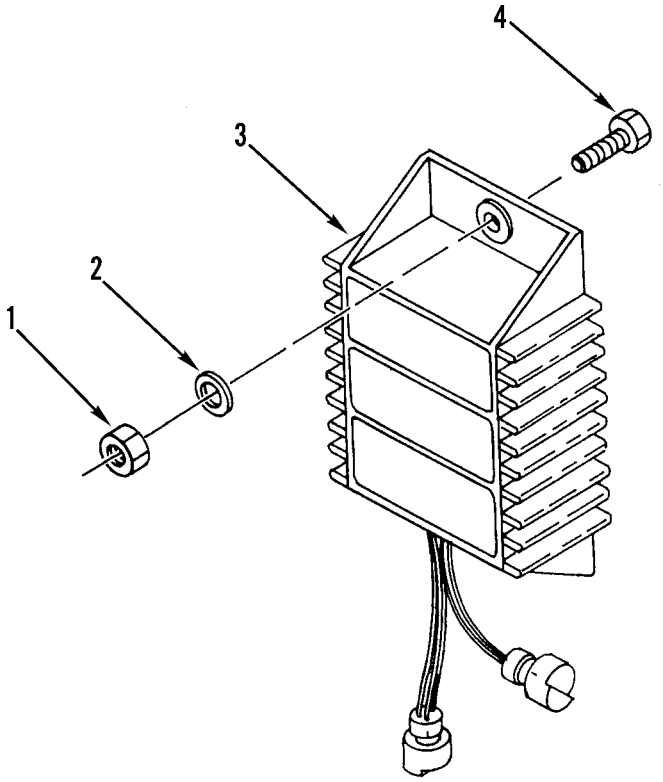

Figure 75. Supplemental Steering and Remote Starting Electronic Control and Mounting (Sheet 1 of 2)

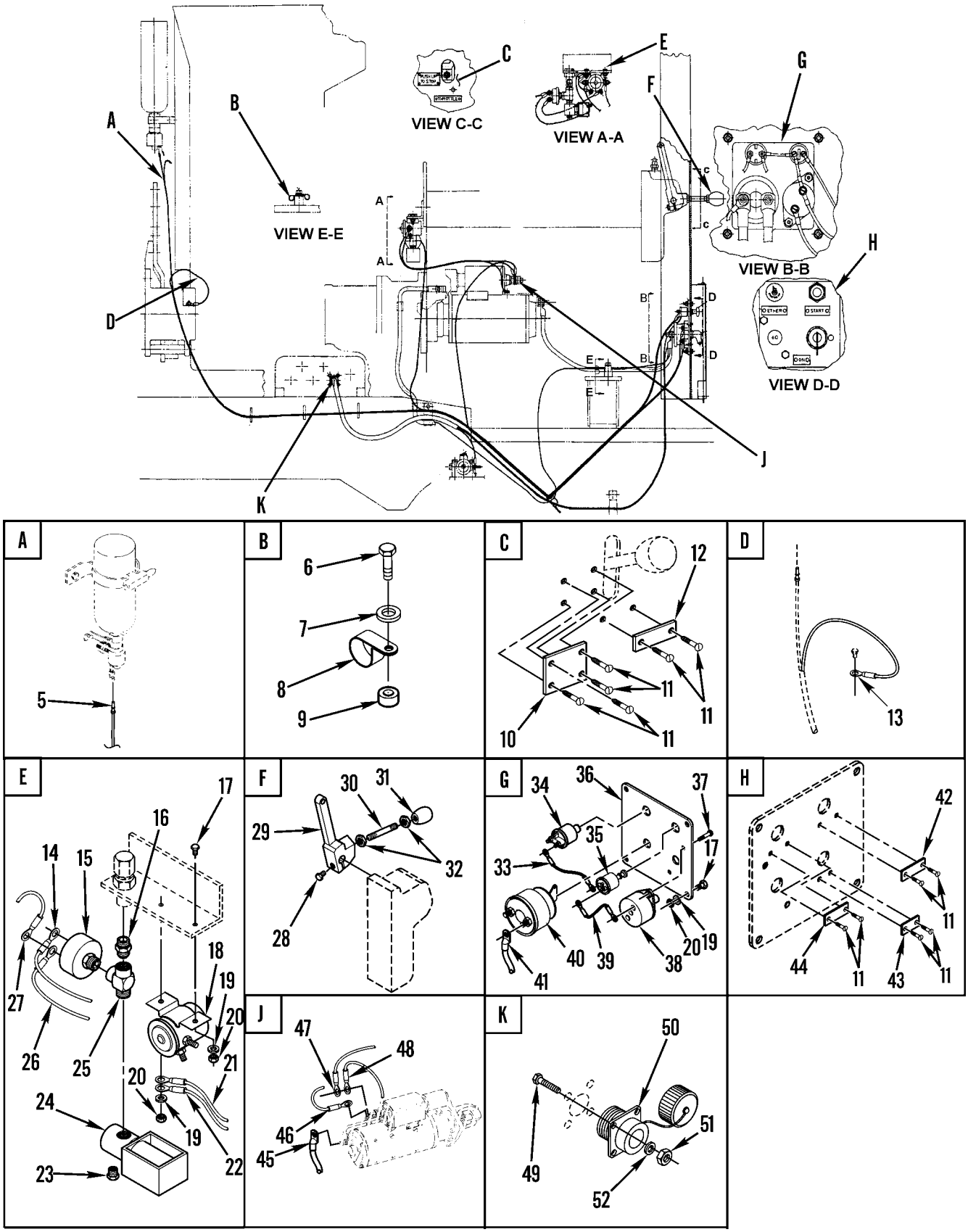

Figure 75. Supplemental Steering and Remote Starting Electronic Control and Mounting (Sheet 2 of 2)

(1) ITEM NO	(2) SMR CODE	(3) NSN	(4) CAGEC	(5) PART NUMBER	(6) DESCRIPTION AND USABLE ON CODES(UOC)	(7) QTY
					GROUP 0608 MISCELLANEOUS ITEMS FIG. 75 SUPPLEMENTAL STEERING AND REMOTE STARTING ELECTRONIC CONTROL AND MOUNTING	
1	PFFZZ	5310014297859	11083	6V8801	NUT,PLAIN,HEXAGON..... UOC:AF9,AGM,F10	2
2	PFFZZ	5310010948810	78189	3320-14-01	WASHER,SQUARE CONE..... UOC:AF9,AGM,F10	2
3	PFFZZ	2920011734199	11083	3E5184	CONTROL,ELECTRONIC..... UOC:AF9,AGM,F10	1
4	PFFZZ	5306002637301	11083	0L1351	BOLT,MACHINE..... UOC:AF9,AGM,F10	2
5	PAOZZ	5995012921624	11083	5R7044	WIRING HARNESS,BRAN..... UOC:AF9,AGM,F10	1
6	PAOZZ	5305000712506	80204	B1821BH025C050N	SCREW,CAP,HEXAGON H..... UOC:AF9,F10	1
7	PAOZZ	5310008412576	96906	MS25440-4	WASHER,FLAT..... UOC:F10	1
8	PAOZZ	5342010643819	11083	9M8406	CLIP..... UOC:F10	2
9	PAOZZ	4730012924350	11083	3Y7829	COUPLING,TUBE..... UOC:AF9,F10	1
10	PAOZZ	9905012952489	11083	5R8344	PLATE,INSTRUCTION..... UOC:F10	1
10	PAOZZ		11083	5R6844	FILM,INSTRUCTION..... UOC:AGM	1
11	PAOZZ	5305002535615	80205	MS21318-21	SCREW,DRIVE..... UOC:AF9,F10	4
12	PAOZZ	9905012952487	11083	5R8345	PLATE,IDENTIFICATIO..... UOC:F10	1
13	PAOZZ	6150012967935	11083	5R7042	LEAD,ELECTRICAL..... UOC:AF9,AGM,F10	1
14	PAOZZ	6150012966119	11083	5R7052	LEAD,ELECTRICAL..... UOC:AF9,AGM,F10	1
15	PAOZZ	5930001178078	70040	1508811	SWITCH,PRESSURE..... UOC:AF9,AGM,F10	1
16	PAOZZ	4730011620102	11083	5P8998	NIPPLE,PIPE..... UOC:AGM,F10	3
17	PAOZZ	5305000712505	80204	B1821BH025C088N	SCREW,CAP,HEXAGON H..... UOC:AF9,AGM,F10	6
18	PAOZZ	5930010630682	11083	3P4358	SWITCH..... UOC:AF9,AGM,F10	1
19	PAOZZ	5310010512360	11083	5P0537	WASHER..... UOC:AGM,F10	2
20	PAOZZ	5310011841992	11083	9S8750	NUT,PLAIN,HEXAGON..... UOC:AGM,F10	6
21	PAOZZ	6150012967936	11083	5R7049	LEAD,ELECTRICAL..... UOC:AF9,AGM,F10	1
22	PAOZZ	6150012966117	11083	5R7053	LEAD,ELECTRICAL..... UOC:AF9,AGM,F10	1
23	PAOZA	5340010693233	11083	1P2943	PLUG,VENT..... UOC:AGM,F10	1
24	PAOZZ	4810010949956	11083	2G5694	VALVE,SOLENOID..... UOC:AF9,AGM,F10	1
25	PAOZZ	4730001776166	30780	02R01-4-4	TEE,PIPE.....	1

(1) ITEM NO	(2) SMR CODE	(3) NSN	(4) CAGEC	(5) PART NUMBER	(6) DESCRIPTION AND USABLE ON CODES(UOC)	(7) QTY
					UOC:AGM,F10	
26	PAOZZ	6150012966118	11083	5R7054	LEAD,ELECTRICAL.....	1
					UOC:AF9,AGM,F10	
27	PAOZZ	5995011791562	11083	8K5489	LEAD,ELECTRICAL.....	1
					UOC:AF9,AGM,F10	
28	PAOZZ	5306004263949	11083	0S1588	BOLT,MACHINE.....	1
					UOC:AGM,F10	
29	PAOZZ	3040012947273	11083	5R8408	LEVER,REMOTE CONTRO.....	1
					UOC:F10	
29	PAOZZ		11083	5R6845	BELL CRANK.....	1
					UOC:AF9,AGM	
30	PAOZZ	5307011910322	11083	5R6850	STUD,PLAIN.....	1
					UOC:AF9,AGM,F10	
31	PAOZZ		11083	0691430	KNOB.....	1
					UOC:AGM,F10	
32	PAOZZ	5310001787700	11083	3H3680	NUT,PLAIN,HEXAGON.....	2
					UOC:AF9,AGM,F10	
33	PAOZZ	6150012967937	11083	5R7040	LEAD,ELECTRICAL.....	1
					UOC:AF9,AGM,F10	
34	PAOZZ		11083	3T3947	SWITCH.....	1
					UOC:AGM,F10	
35	PAOZZ	5930011681025	11083	3T0306	SWITCH,PUSH.....	1
					UOC:AF9,AGM,F10	
36	PAOZZ	5340011684532	11083	5R6885	COVER,ACCESS.....	1
					UOC:AF9,AGM,F10	
37	PAOZZ	5305012929547	11083	4B1240	SCREW,MACHINE.....	2
					UOC:AF9,AGM,F10	
38	PAOZZ	5925014981823	11083	1712208	CIRCUIT BREAKER.....	1
					UOC:AGM,F10	
39	PAOZZ	6150013012239	11083	5R7041	LEAD,ELECTRICAL.....	1
					UOC:AF9,AGM,F10	
40	PAOZZ	2920007757691	11083	7N0718	SWITCH,LOCK,IGNITIO.....	1
					UOC:AGM,F10	
41	PAOZZ	6150012966121	11083	5R8532	LEAD,ELECTRICAL.....	1
					UOC:F10	
42	PAOZZ	9905012954596	11083	5R8342	PLATE,INSTRUCTION.....	1
					UOC:F10	
43	PAOZZ	9905012954889	11083	5R8341	PLATE,IDENTIFICATIO.....	1
					UOC:F10	
44	PAOZZ	9905012952490	11083	5R8346	PLATE,INSTRUCTION.....	1
					UOC:F10	
45	PAOZZ	6150012966120	11083	5R8531	LEAD,ELECTRICAL.....	1
					UOC:F10	
46	PAOZZ	6150012967158	11083	5R7050	LEAD,ELECTRICAL.....	1
					UOC:AF9,AGM,F10	
47	PAOZZ	6150012967157	11083	5R7051	LEAD,ELECTRICAL.....	1
					UOC:AF9,AGM,F10	
48	PAOZZ	6150012967159	11083	5R7043	LEAD,ELECTRICAL.....	1
					UOC:AF9,AGM,F10	
49	PAOZZ	5305000089216	11083	2S6251	SCREW,MACHINE.....	4
					UOC:AF9,AGM,F10	
50	PAOZZ	5995011827197	55101	63600	WIRING HARNESS,BRAN.....	1

(1) ITEM NO	(2) SMR CODE	(3) NSN	(4) CAGEC	(5) PART NUMBER	(6) DESCRIPTION AND USABLE ON CODES(UOC)	(7) QTY
					UOC:AF9,AGM,F10	
51	PAOZZ	5310011635805	11083	6B4540	NUT,PLAIN,HEXAGON.....	4
					UOC:AF9,AGM,F10	
52	PFOZZ	5310001937577	96906	MS35333-36	WASHER,LOCK.....	4
					UOC:AF9,AGM,F10	

END OF FIGURE

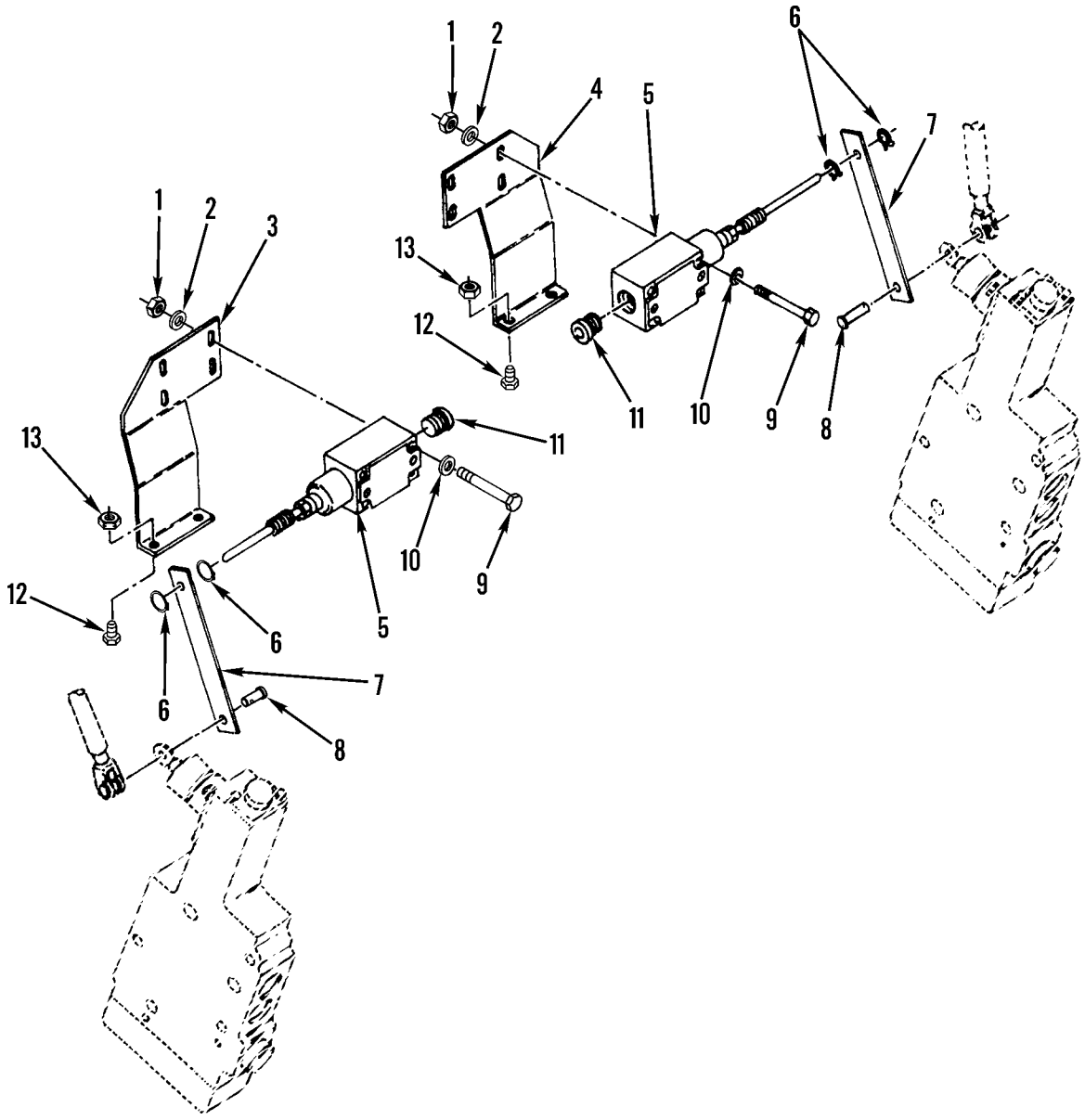

Figure 76. Blade Float Limit Switches and Mounting

(1) ITEM NO	(2) SMR CODE	(3) NSN	(4) CAGEC	(5) PART NUMBER	(6) DESCRIPTION AND USABLE ON CODES(UOC)	(7) QTY
					GROUP 0608 MISCELLANEOUS ITEMS FIG. 76 BLADE FLOAT LIMIT SWITCHES AND MOUNTING	
1	PFOZZ	5310000110634	11083	4B2047	NUT,PLAIN,SQUARE..... UOC:AGP	4
2	PFOZZ	5310001435722	04998	WA1248	WASHER,FLAT..... UOC:AGP	4
3	PFOZZ	2510011787057	11083	5T5086	BRACKET,LEFT HAND..... UOC:AGP	1
4	PFOZZ	2510011787056	11083	5T5085	BRACKET,BODY..... UOC:AGP	1
5	PAOZA	5930011761700	01121	802T-WS	SWITCH,SENSITIVE..... UOC:AGP	2
6	PFOZZ	5325007151152	96906	MS16624-1037	RING,RETAINING..... UOC:AGP	4
7	PFOZZ	5365011846694	11083	5T1707	SPACER,PLATE..... UOC:AGP	2
8	PFOZZ	5315002765750	11083	6J2256	PIN,STRAIGHT,HEADED..... UOC:AGP	2
9	PFOZZ	5305000509237	96906	MS51957-71	SCREW,MACHINE..... UOC:AGP	4
10	PFOZZ	5310005967691	96906	MS35335-32	WASHER,LOCK..... UOC:AGP	4
11	PCOZZ	5325011779833	11083	6G2367	GROMMET,NONMETALLIC..... UOC:AGP	2
12	PFOZZ	5305002253843	80204	B1821BH025C100N	SCREW,CAP,HEXAGON H..... UOC:AGP	4
13	PFOZZ	5310000050779	11083	4L6458	NUT,PLAIN,HEXAGON..... UOC:AGP	4

END OF FIGURE

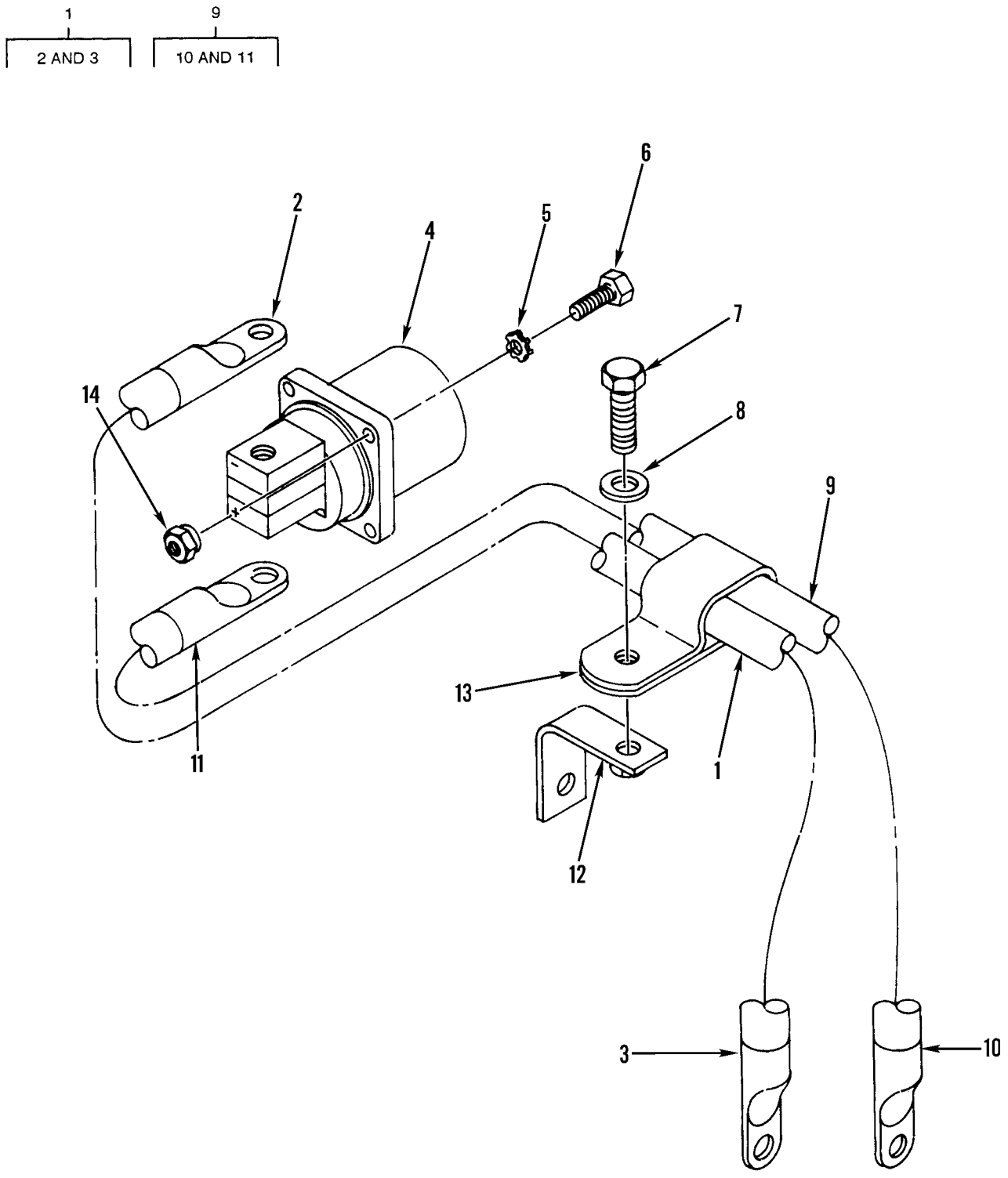

Figure 77. Slave Receptacle and Cables

(1) ITEM NO	(2) SMR CODE	(3) NSN	(4) CAGEC	(5) PART NUMBER	(6) DESCRIPTION AND USABLE ON CODES(UOC)	(7) QTY
					GROUP 0608 MISCELLANEOUS ITEMS	
					FIG. 77 SLAVE RECEPTACLE AND CABLES	
1	PAOZZ	6150011553538	11083	5V7079	LEAD,ELECTRICAL.....	1
2	PFOZZ	2920010660593	11083	1S7252	.TERMINAL.....	1
3	PFOZZ	5940010589090	11083	1S7251	.TERMINAL,LUG.....	1
4	PFOZZ	5935010979974	19207	11674728	CONNECTOR,RECEPTACL.....	1
5	PFOZZ	5310005967691	96906	MS35335-32	WASHER,LOCK.....	4
6	PFOZZ	5305000763714	08179	400405	SCREW,CAP,HEXAGON H.....	4
7	PFOZZ	5305002528919	11083	0S0509	SCREW,CAP,HEXAGON H.....	1
8	PFOZZ	5310001174788	11083	5M2894	WASHER,FLAT.....	1
9	PFOZZ	6150012145751	11083	5R4525	LEAD,ELECTRICAL.....	1
10	PFOZZ	5940010589090	11083	1S7251	.TERMINAL,LUG.....	1
11	PFOZZ	2920010660593	11083	1S7252	.TERMINAL.....	1
12	PFOZZ	5340012032608	11083	9G4918	BRACKET,ANGLE.....	1
13	PFOZZ	5340010589143	11083	5K8451	CLIP.....	1
14	PFOZZ	4730014713774	11083	0310249	LOCKNUT,PIPE.....	4

END OF FIGURE

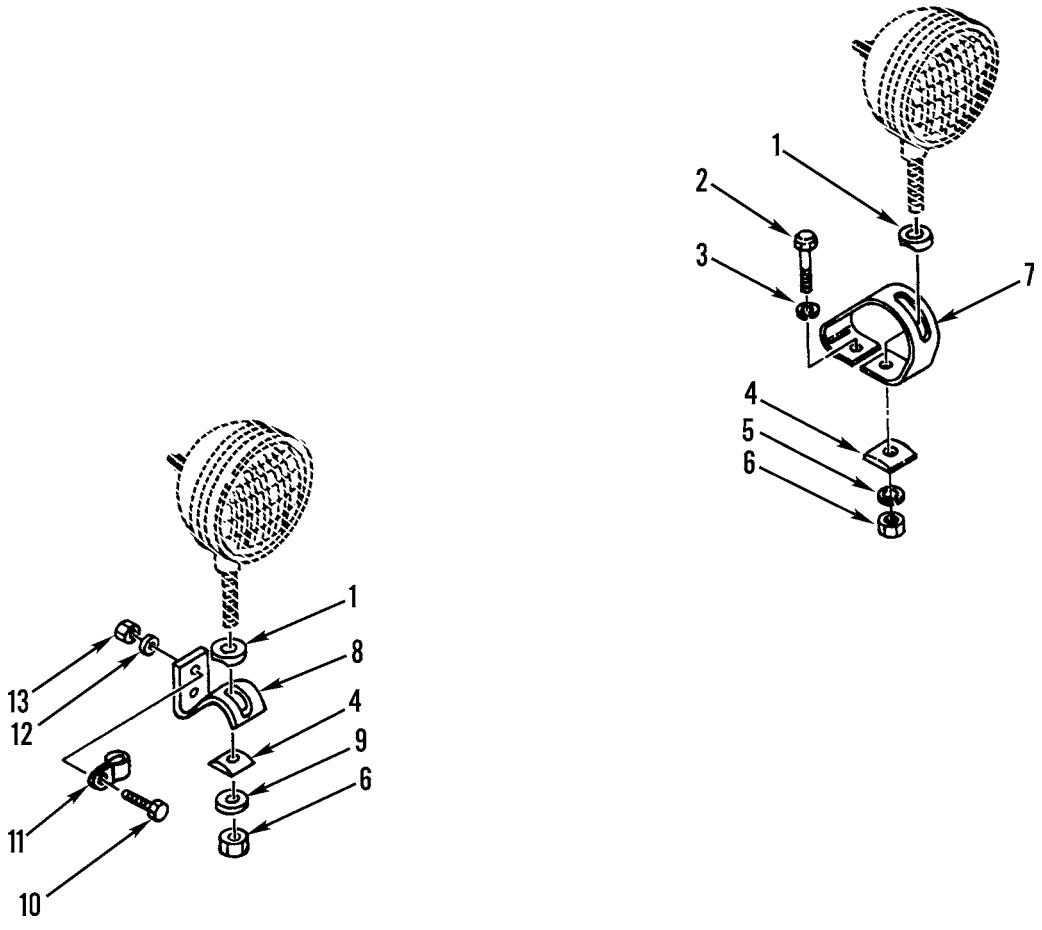

Figure 78. Vehicle Front and Rear Floodlight Mountings

(1) ITEM NO	(2) SMR CODE	(3) NSN	(4) CAGEC	(5) PART NUMBER	(6) DESCRIPTION AND USABLE ON CODES(UOC)	(7) QTY
					GROUP 0609 LIGHTS FIG. 78 VEHICLE FRONT AND REAR FLOODLIGHT MOUNTINGS	
1	PAOZZ	5365010632978	11083	3D7854	SPACER,NYLON	3
2	PFOZZ	5306002637301	11083	0L1351	BOLT,MACHINE	2
3	PFOZZ	5310010948810	78189	3320-14-01	WASHER,SQUARE CONE	2
4	PAOZZ	5365010590914	11083	6D2256	SPACER	3
5	PFOZZ	5310007576194	11083	5D3184	WASHER,LOCK	1
6	PFOZZ	2530004399264	11083	5D3183	NUT,WHEEL	3
7	PFOZZ	5340011501279	11083	8D1992	BRACKET,SPECIAL	1
8	PFOZZ	5340011501278	11083	8W2686	BRACKET,ANGLE	2
9	PFOZZ	5310010954631	11083	5P8247	WASHER,FLAT	2
10	PFOZZ	5306002604508	11083	0S1594	BOLT,MACHINE	4
11	PFOZZ	5340004264803	11083	8M2772	CLAMP,LOOP	2
12	PFOZZ	5310001174788	11083	5M2894	WASHER,FLAT	4
13	PFOZZ	5310014297859	11083	6V8801	NUT,PLAIN,HEXAGON	4

END OF FIGURE

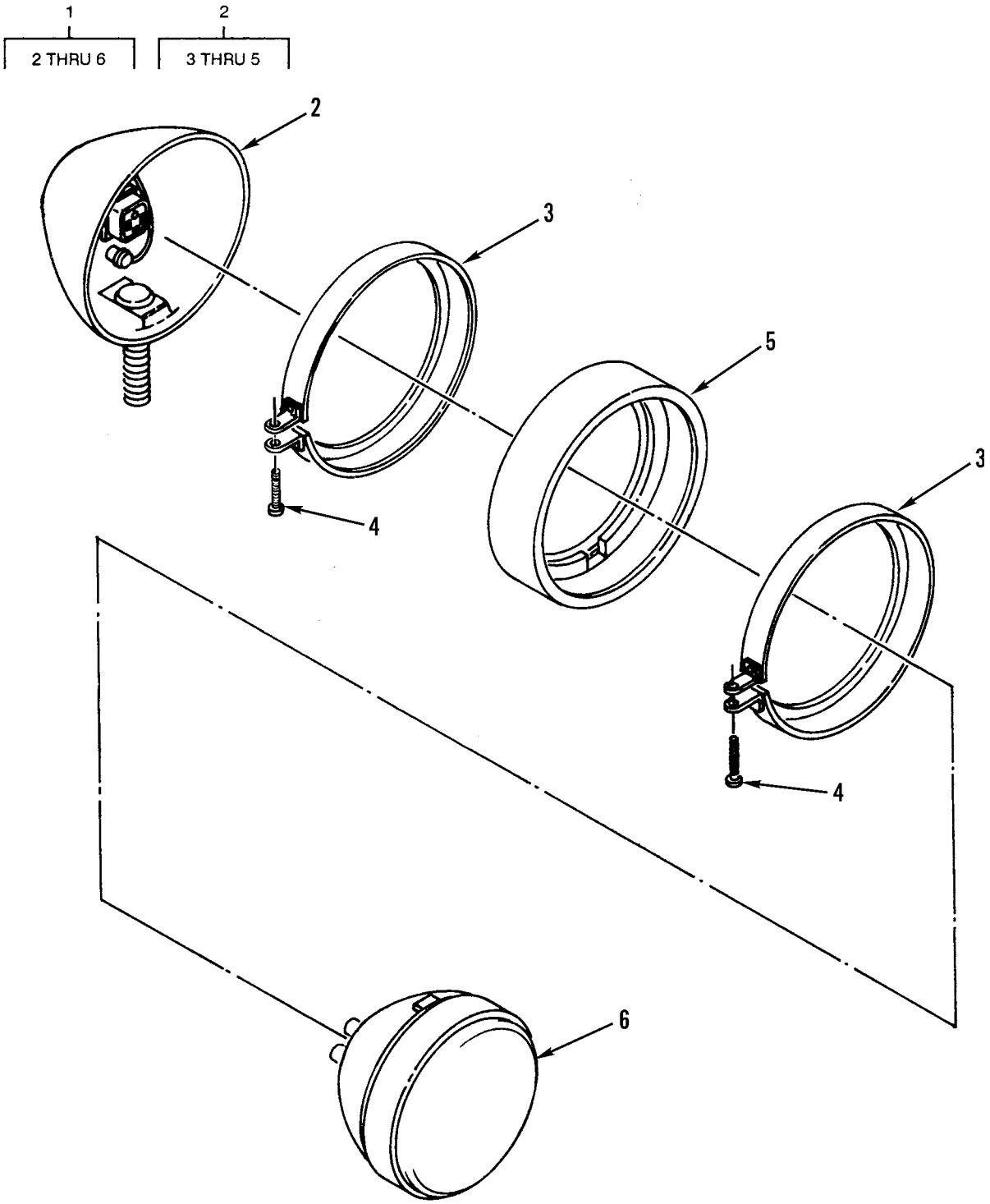

Figure 79. Vehicle Front and Rear Floodlight

(1) ITEM NO	(2) SMR CODE	(3) NSN	(4) CAGEC	(5) PART NUMBER	(6) DESCRIPTION AND USABLE ON CODES(UOC)	(7) QTY
					GROUP 0609 LIGHTS FIG. 79 VEHICLE FRONT AND REAR FLOODLIGHT	
1	PAOZZ	6220009534652	74400	M2875	FLOODLIGHT,ELECTRIC.....	3
2	PFOZZ	6220010375622	11083	2P2541	.HOUSING,LIGHT.....	1
3	PFOZZ	6220008328774	73331	921472	..RETAINER,LENS.....	2
4	PFOZZ	5305000050896	11083	5M6668	..SCREW,MACHINE.....	2
5	PFOZZ	6220007568787	93331	5949719	..RETAINER,LENS.....	1
6	PAOZZ	6240006430687	96906	MS17165-4578	.LAMP,INCANDESCENT.....	1

END OF FIGURE

1
2 THRU 4

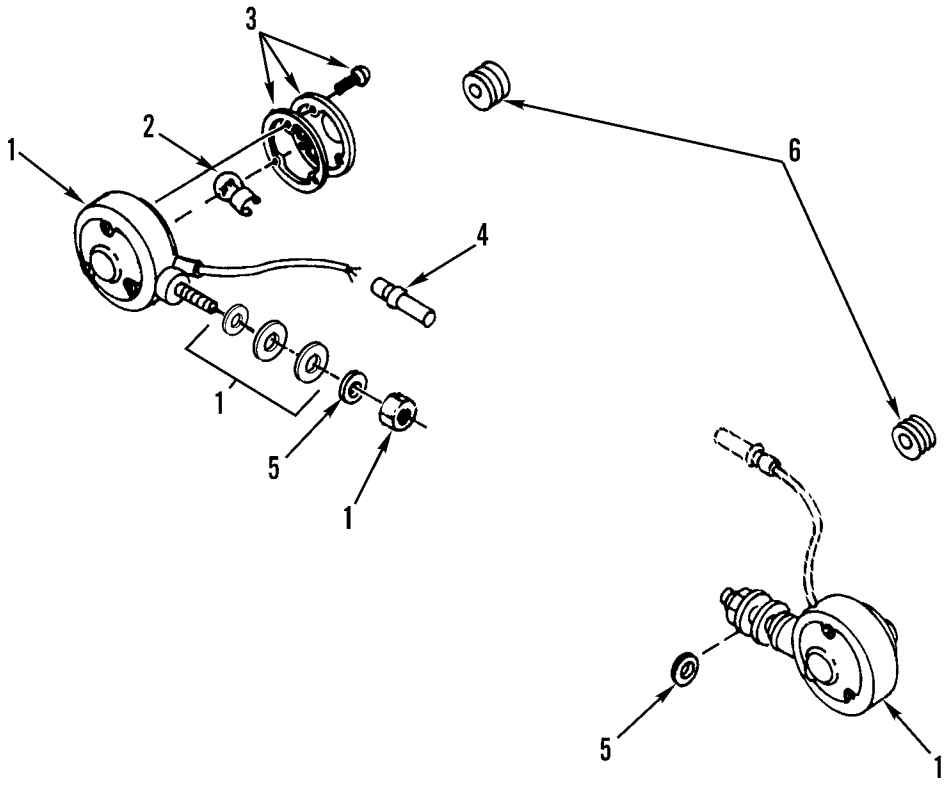

Figure 80. Vehicle Front Turn Signal Lights and Mounting

(1) ITEM NO	(2) SMR CODE	(3) NSN	(4) CAGEC	(5) PART NUMBER	(6) DESCRIPTION AND USABLE ON CODES(UOC)	(7) QTY
					GROUP 0609 LIGHTS FIG. 80 VEHICLE FRONT TURN SIGNAL LIGHTS AND MOUNTING	
1	PAOZZ	6220006073477	75175	753-2835	DIRECTIONAL LIGHT,V..... UOC:AF9,F10	2
2	PAOZZ	6240000446914	96906	MS35478-1683	.LAMP,INCANDESCENT..... UOC:AF9,F10	1
3	PAOZZ	6220000883521	77977	9021A	.LENS,LIGHT..... UOC:AF9,F10	1
4	PFOZZ	5940002910085	79550	300-2863	.TERMINAL,QUICK DISC..... UOC:AF9,F10	1
5	PFOZZ	5310002095116	96906	MS35335-37	WASHER,LOCK..... UOC:AF9,F10	2
6	PAOZZ	5325010946106	11083	5H9743	GROMMET,NONMETALLIC..... UOC:AF9,F10	2
					END OF FIGURE	

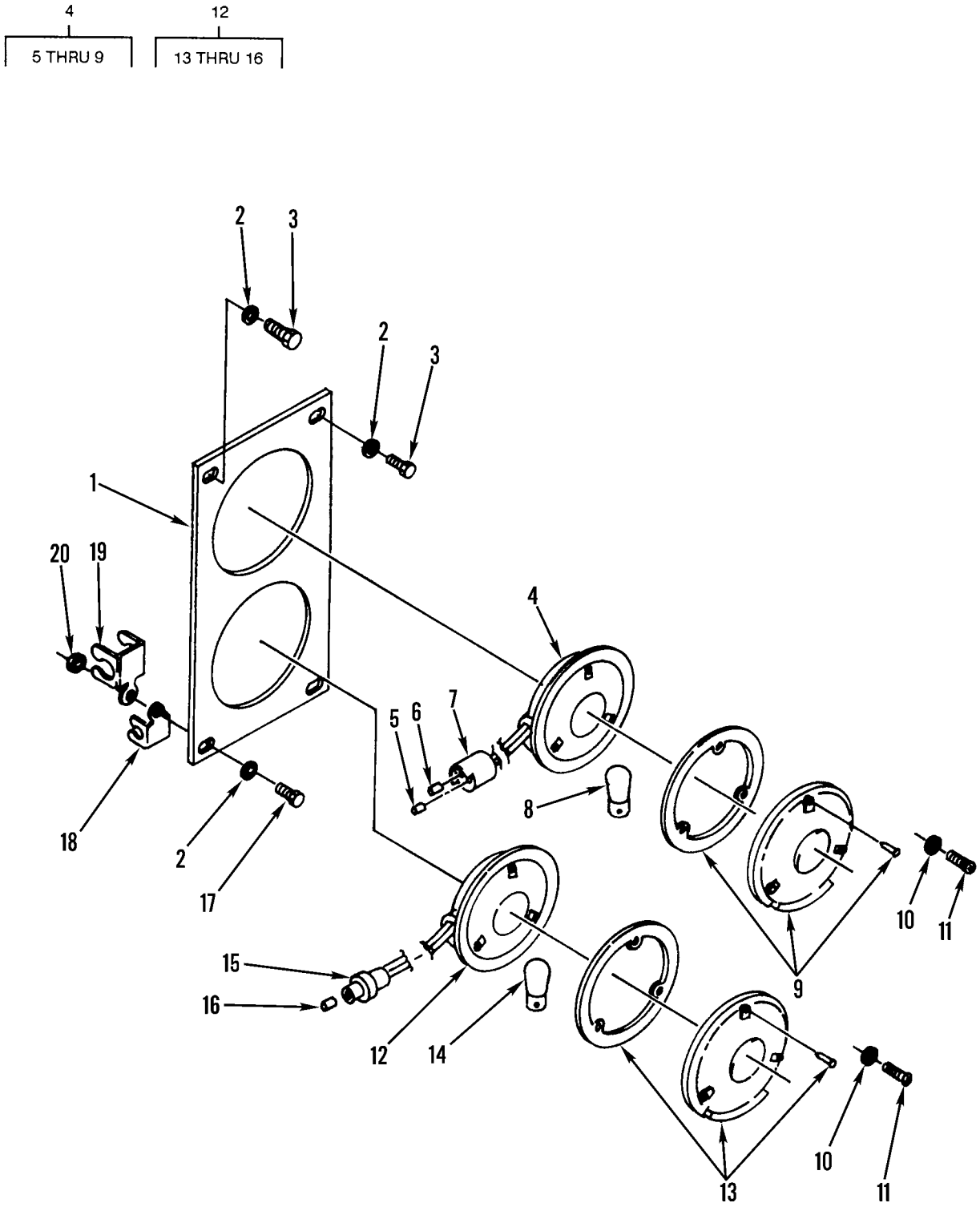

Figure 81. Vehicle Rear Turn Signal Lights, Rear Brake Lights, and Mounting

(1) ITEM NO	(2) SMR CODE	(3) NSN	(4) CAGEC	(5) PART NUMBER	(6) DESCRIPTION AND USABLE ON CODES(UOC)	(7) QTY
					GROUP 0609 LIGHTS FIG. 81 VEHICLE REAR TURN SIGNAL LIGHTS, REAR BRAKE LIGHTS, AND MOUNTING	
1	PFOZZ	5340011499717	11083	6G7021	BRACKET,SPECIAL..... UOC:AF9,F10	2
2	PFOZZ	5310001174788	11083	5M2894	WASHER,FLAT.....	6
3	PFOZZ	5306002637301	11083	0L1351	BOLT,MACHINE..... UOC:AF9,F10	2
4	XDOZZ	6220011500648	11083	9G4358	STOP LIGHT-TAILLIGH..... UOC:AF9,F10	2
5	PAOZZ	5999011508808	11083	7N7779	.CONTACT,ELECTRICAL..... UOC:AF9,F10	1
6	PFOZZ	5999011566314	71468	110238-0195	.PIN,GROOVED,HEADLES..... UOC:AF9,F10	1
7	PAOZZ	5935011495165	11083	7N9738	.CONNECTOR BODY,PLUG..... UOC:AF9,F10	7
8	PAOZZ	6240008773405	08108	1662	.LAMP,INCANDESCENT..... UOC:AF9,F10	1
9	PAOZZ	6220011041122	75175	3916-061	.LENS,LIGHT..... UOC:AF9,F10	1
10	PFOZZ	5310005967691	96906	MS35335-32	WASHER,LOCK..... UOC:AF9,F10	12
11	PFOZZ	5305011522589	11083	6V2687	SCREW,TAPPING..... UOC:AF9,F10	12
12	PAOZZ	6220011517037	82445	3632AY102-24V	DIRECTIONAL LIGHT,V..... UOC:AF9,F10	2
13	PAOZZ	6220000883521	65439	3811-015	.LENS,LIGHT..... UOC:AF9,F10	1
14	PAOZZ	6240000446914	96906	MS35478-1683	.LAMP,INCANDESCENT..... UOC:AF9,F10	2
15	PAOZZ	5935011496997	11083	7N7778	.CONNECTOR BODY,PLUG..... UOC:AF9,F10	1
16	PFOZZ	5999011566314	71468	110238-0195	.PIN,GROOVED,HEADLES..... UOC:AF9,F10	1
17	PFOZZ	5305000680511	80204	B1821BH038C125N	SCREW,CAP,HEXAGON H..... UOC:AF9,F10	2
18	PAOZZ	5340011666874	11083	3T0051	STRAP,RETAINING..... UOC:AF9,F10	2
19	PAOZZ	5340011519964	11083	9G9150	STRAP,RETAINING..... UOC:AF9,F10	2
20	PFOZZ	5310011831237	11083	9S8752	NUT,PLAIN,HEXAGON..... UOC:AF9,F10	2

END OF FIGURE

3

4 THRU 11

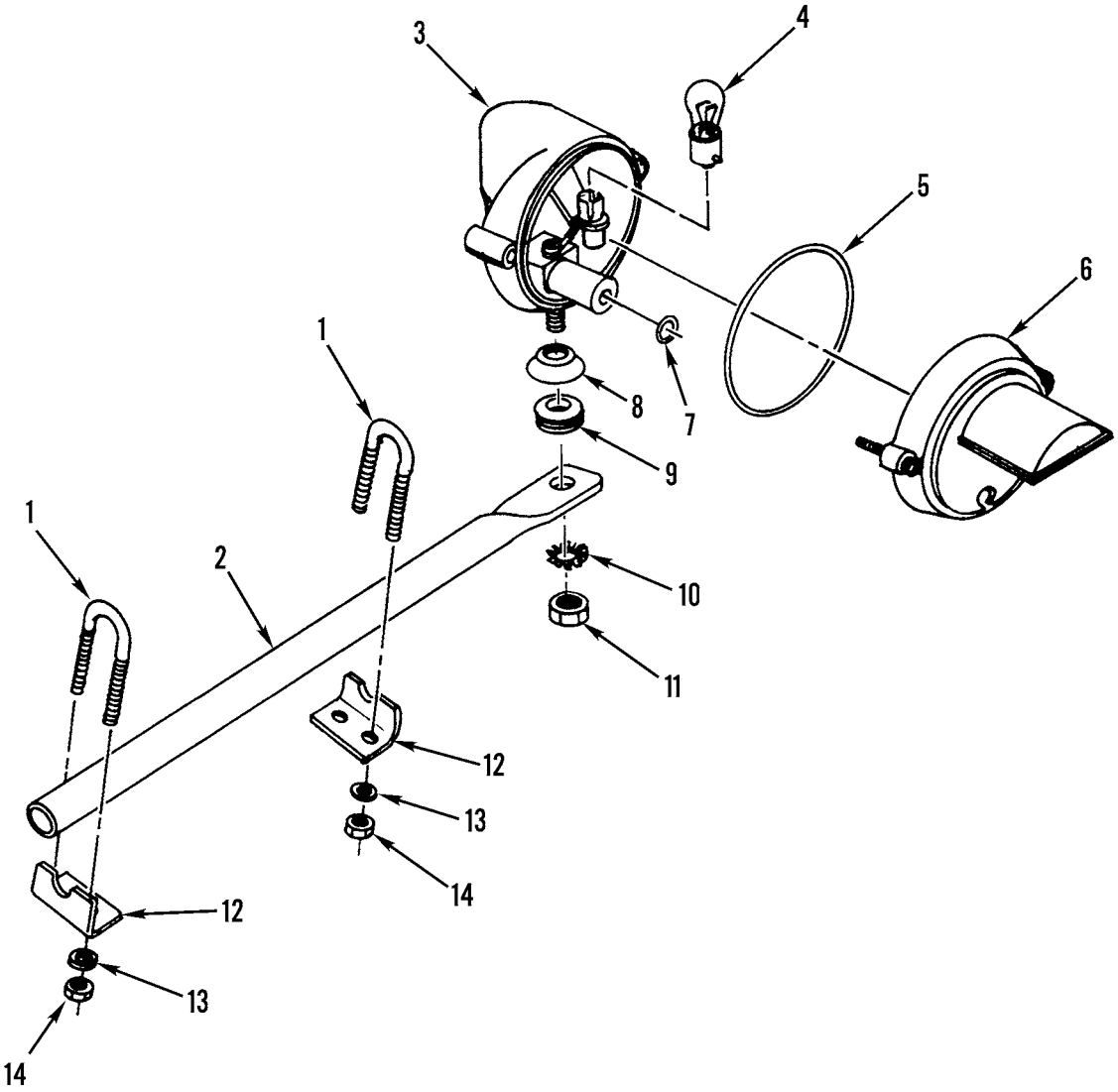

Figure 82. Blackout Driving Light Assembly

(1) ITEM NO	(2) SMR CODE	(3) NSN	(4) CAGEC	(5) PART NUMBER	(6) DESCRIPTION AND USABLE ON CODES(UOC)	(7) QTY
					GROUP 0609 LIGHTS FIG. 82 BLACKOUT DRIVING LIGHT ASSEMBLY	
1	PFOZZ	5306011792844	11083	5R6861	BOLT,U.....	2
2	PAOZZ	2510011824468	11083	5R6860	ARM,SUPPORT.....	1
3	PAOZZ	6220014961925	19207	11668932	HEADLIGHT.....	1
4	PAOZZ	6240000446914	96906	MS35478-1683	.LAMP,INCANDESCENT.....	1
5	PFOZZ	5330010370663	5A910	DC8211	.GASKET.....	1
6	PFOZZ	6220011280087	5A910	DC8217	.DOOR,BLACKOUT LAMP.....	1
7	PAOZZ	5330010766172	34904	DC8226	.GASKET.....	1
8	PFOZZ	5310011002067	19207	11668979	.WASHER,LOCK.....	1
9	PFOZZ	5310003502655	19207	5294507	.WASHER,FINISHING.....	1
10	PFOZZ	5310000611258	96906	MS45904-76	.WASHER,LOCK.....	1
11	PFOZZ	5310014297859	11083	6V8801	.NUT,PLAIN,HEXAGON.....	1
12	PFOZZ	5340011852127	11083	5R6862	BRACKET,ANGLE.....	2
13	PFOZZ	5310001174788	11083	5M2894	WASHER,FLAT.....	4
14	PFOZZ	5310014297859	11083	6V8801	NUT,PLAIN,HEXAGON.....	4

END OF FIGURE

1	9
2 THRU 11	10 AND 11

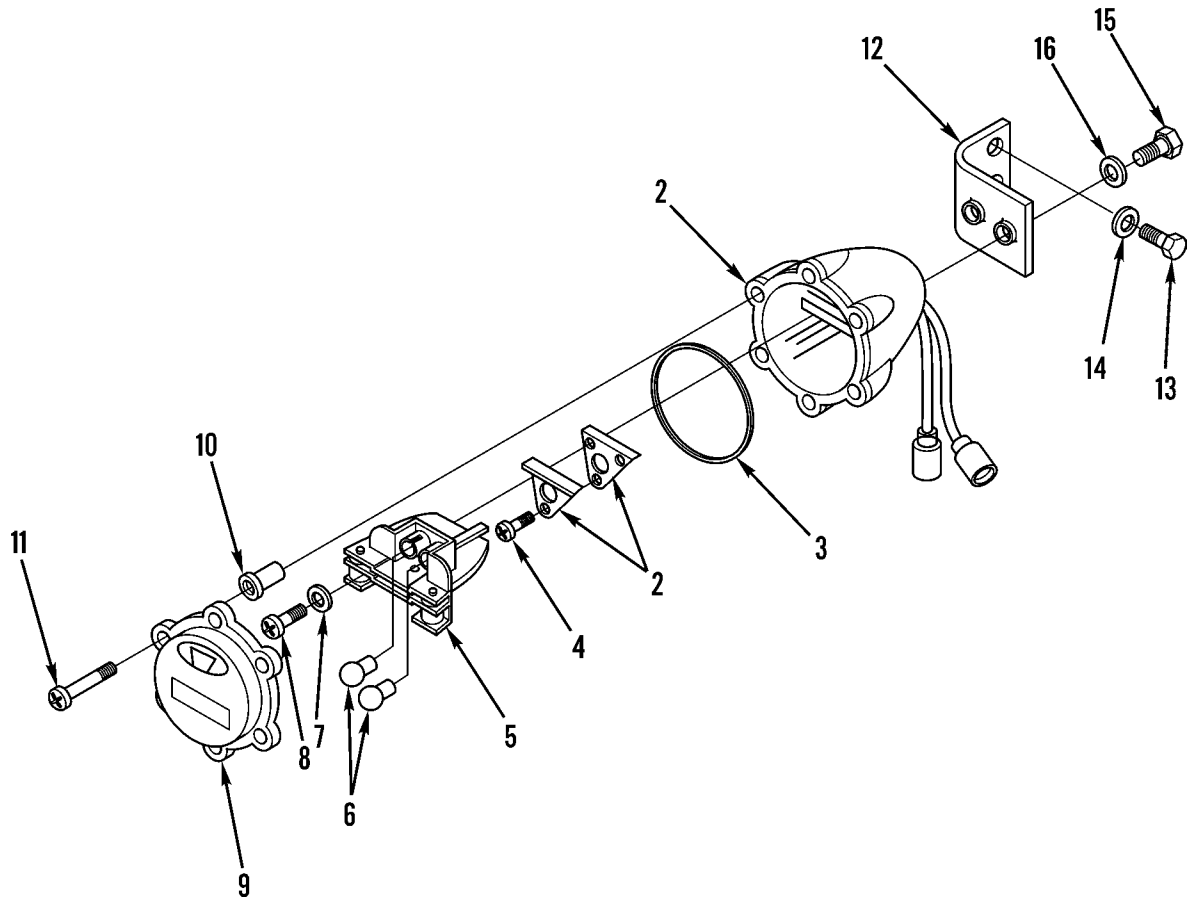

Figure 83. Blackout Stoplight-Taillight and Mounting, Rear (Sheet 1 of 2)

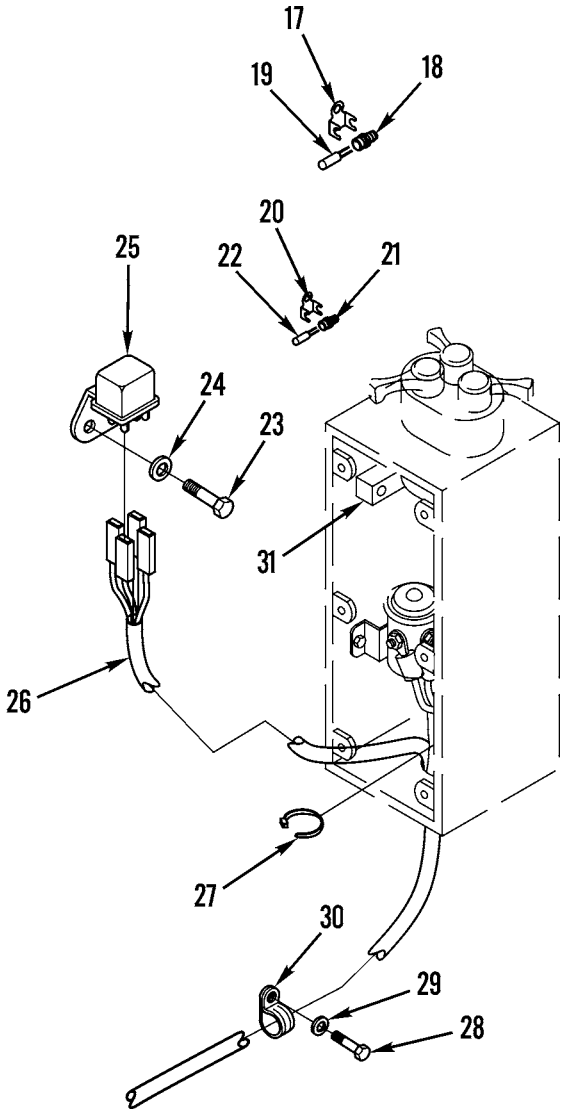

Figure 83. Blackout Stoplight-Taillight and Mounting, Rear (Sheet 2 of 2)

(1) ITEM NO	(2) SMR CODE	(3) NSN	(4) CAGEC	(5) PART NUMBER	(6) DESCRIPTION AND USABLE ON CODES(UOC)	(7) QTY
					GROUP 0609 LIGHTS	
					FIG. 83 BLACKOUT STOPLIGHT-TAILLIGHT AND MOUNTING, REAR	
1	PAOZZ	6220006695623	96906	MS51329-1	STOP LIGHT-TAILLIGH.....	2
2	PFOZZ	6220005000437	96906	MS53047-1	.LIGHT,PARKING.....	1
3	PFOZZ	5331002977106	19207	7320658	.O-RING.....	1
4	PFOZZ	5305009846191	80205	MS35206-243	.SCREW,MACHINE.....	3
5	XDOZZ		19207	8378662	.LAMPHOLDER ASSEMBLY ASSEMBLY.....	1
6	PAOZZ	6240000190877	11083	3H2691	.LAMP,INCANDESCENT.....	2
7	PFOZZ	5310000453299	96906	MS35338-42	.WASHER,LOCK.....	2
8	PFOZZ	5305008893002	96906	MS35206-242	.SCREW,MACHINE.....	2
9	PAOZZ	6220007526018	19207	7526018	.RETAINER,LENS.....	1
10	PFOZZ	5340007320642	19207	7320642	..CLIP,RETAINING.....	6
11	PFOZZ	5305007375694	19207	7320641	..SCREW,MACHINE.....	6
12	PFOZZ	5340011847653	11083	5R6895	BRACKET,ANGLE.....	2
13	PFOZZ	5305002528919	11083	0S0509	SCREW,CAP,HEXAGON H.....	4
14	PFOZZ	5310001174788	11083	5M2894	WASHER,FLAT.....	4
15	PFOZZ	5306002286835	11083	4L6454	BOLT,MACHINE.....	4
16	PFOZZ	5310006276128	96906	MS35335-35	WASHER,LOCK.....	4
17	PAOZZ	5340011722011	11083	3T0050	STRAP,RETAINING..... UOC:AF9,AGM,AGN,F10	1
18	PAOZZ	5935011567789	11083	9G3667	CONNECTOR BODY,PLUG..... UOC:AF9,AGM,AGN,F10	1
19	PAOZZ	5935011522677	11083	9G3695	PLUG,END SEAL,ELECT..... UOC:AF9,AGM,AGN,F10	14
20	PAOZZ	5340011519964	11083	9G9150	STRAP,RETAINING..... UOC:AF9,AGM,AGN,F10	3
21	PAOZZ	5935015146260	11083	7N8205	CONNECTOR,PLUG,ELEC..... UOC:AF9,AGM,AGN,F10	1
22	PAOZZ	4730012924350	11083	3Y7829	COUPLING,TUBE..... UOC:AF9,AGM,AGN,F10	1
23	PAOZZ	5305000712506	80204	B1821BH025C050N	SCREW,CAP,HEXAGON H..... UOC:AF9,AGM,AGN,F10	1
24	PAOZZ	5310008412576	96906	MS25440-4	WASHER,FLAT..... UOC:AF9,AGM,AGN,F10	3
25	PAOZZ	5945014681267	11083	3E5239	RELAY,ELECTROMAGNET..... UOC:AF9,AGM,AGN,F10	1
26	PAOZZ		11083	2165383	WIRING HARNESS..... UOC:AF9,AGM,AGN,F10	1
27	PAOZZ	2920010589099	11083	3S2093	STRAP..... UOC:AF9,AGM,AGN,F10	1
28	PAOZZ	5305010953965	11083	5P8167	SCREW,CAP,HEXAGON H..... UOC:AF9,AGM,AGN,F10	1
29	PAOZZ	5310010618633	11083	9L9132	WASHER..... UOC:AF9,AGM,AGN,F10	1
30	PAOZZ	5340011591186	11083	7N3718	CLAMP,LOOP..... UOC:AF9,AGM,AGN,F10	1
31	PAOZZ	5340012931046	11083	2T2570	PLATE,MENDING..... UOC:AF9,AGM,AGN,F10	1

END OF FIGURE

4	5
5 THRU 9	6 THRU 9

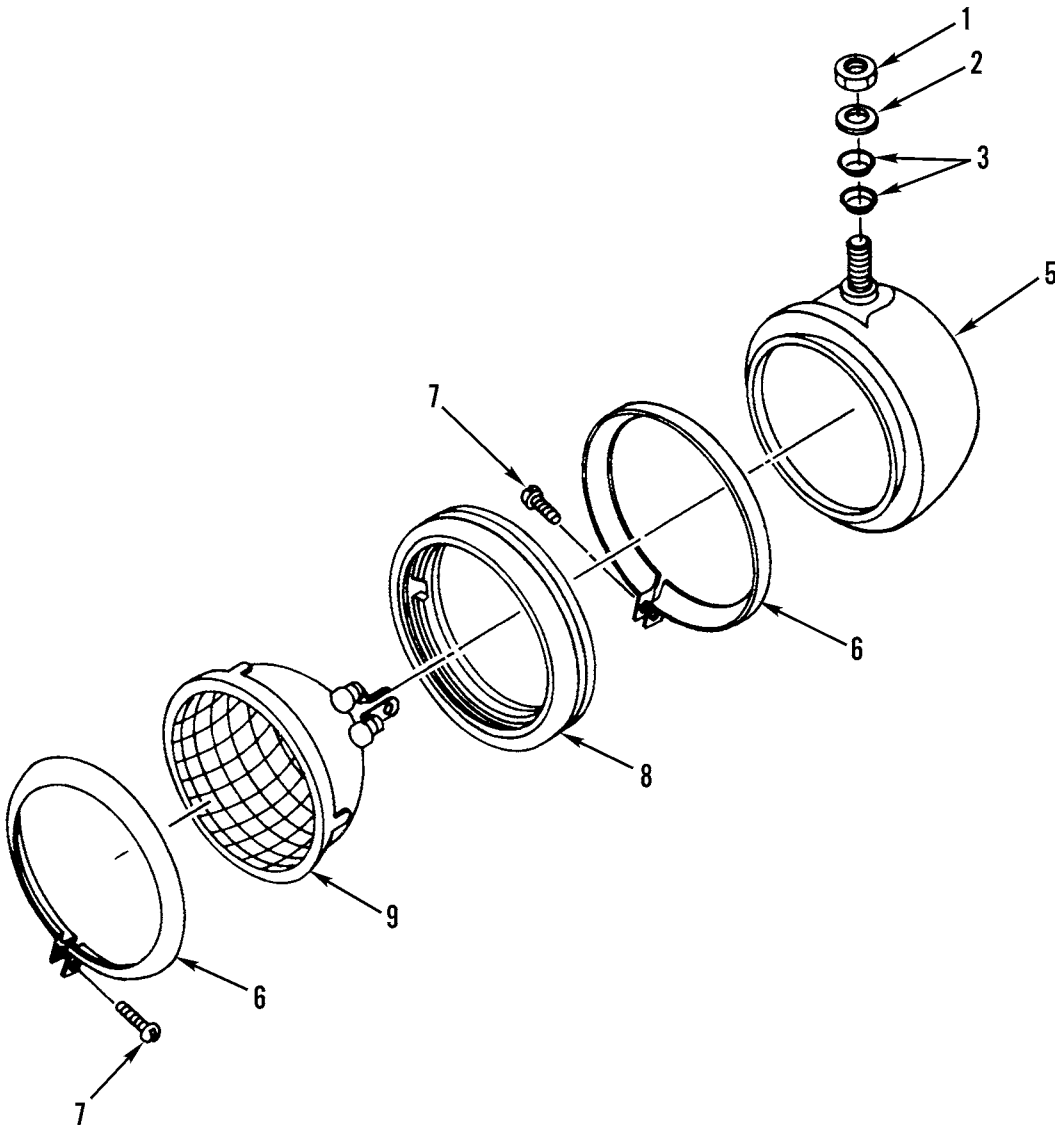

Figure 84. Vehicle Headlight and Mounting

(1) ITEM NO	(2) SMR CODE	(3) NSN	(4) CAGEC	(5) PART NUMBER	(6) DESCRIPTION AND USABLE ON CODES(UOC)	(7) QTY
					GROUP 0609 LIGHTS FIG. 84 VEHICLE HEADLIGHT AND MOUNTING	
1	PFOZZ	2530004399264	11083	5D3183	NUT,WHEEL.....	2
2	PFOZZ	5310010954631	11083	5P8247	WASHER,FLAT.....	2
3	PFOZZ	5310005075727	11083	2B8352	WASHER,SPRING TENSI.....	4
4	PAOZZ	6220004024477	11083	1M6052	HEADLIGHT.....	2
5	PFOZZ	6220011487953	73331	5937086	.HOUSING,LIGHT.....	1
6	PFOZZ	6220007568787	93331	5949719	..RETAINER,LENS.....	1
7	PFOZZ	5305000050896	11083	5M6668	..SCREW,MACHINE.....	2
8	PFOZZ	6220008328774	73331	921472	..RETAINER,LENS.....	1
9	PAOZZ	6240005190264	11083	1M5899	..LAMP,INCANDESCENT.....	1
					END OF FIGURE	

1
2 THRU 4

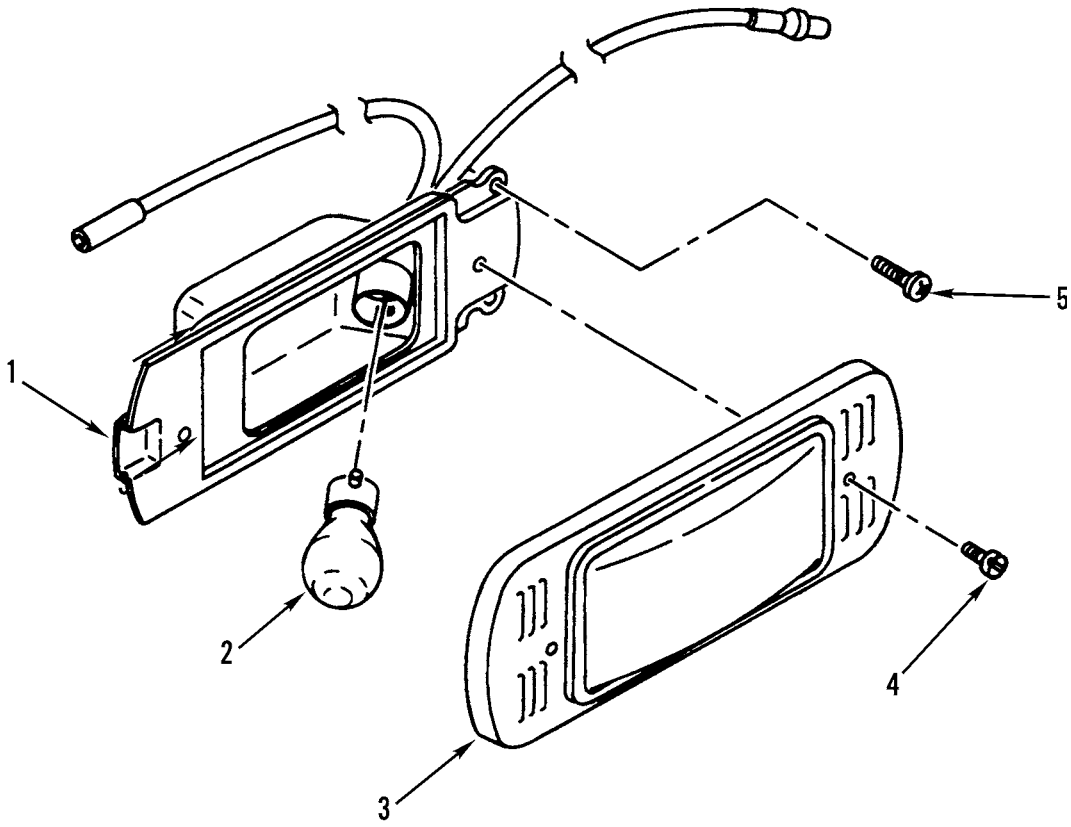

Figure 85. Domelight and Mounting

(1) ITEM NO	(2) SMR CODE	(3) NSN	(4) CAGEC	(5) PART NUMBER	(6) DESCRIPTION AND USABLE ON CODES(UOC)	(7) QTY
					GROUP 0609 LIGHTS FIG. 85 DOMELIGHT AND MOUNTING	
1	PFOZZ	6220012046988	11083	7X6398	LIGHT,DOME..... UOC:AGP	1
2	PAOZZ	6240005193399	08806	2232	.LAMP,INCANDESCENT..... UOC:AGP	1
3	XAOZZ		11083	7N8305	.LIGHT,DOME..... UOC:AGP	1
4	PFOZZ	5305000546667	96906	MS51957-42	.SCREW,MACHINE..... UOC:AGP	2
5	PFOZZ	5305011522589	11083	6V2687	SCREW,TAPPING..... UOC:AGP	3
					END OF FIGURE	

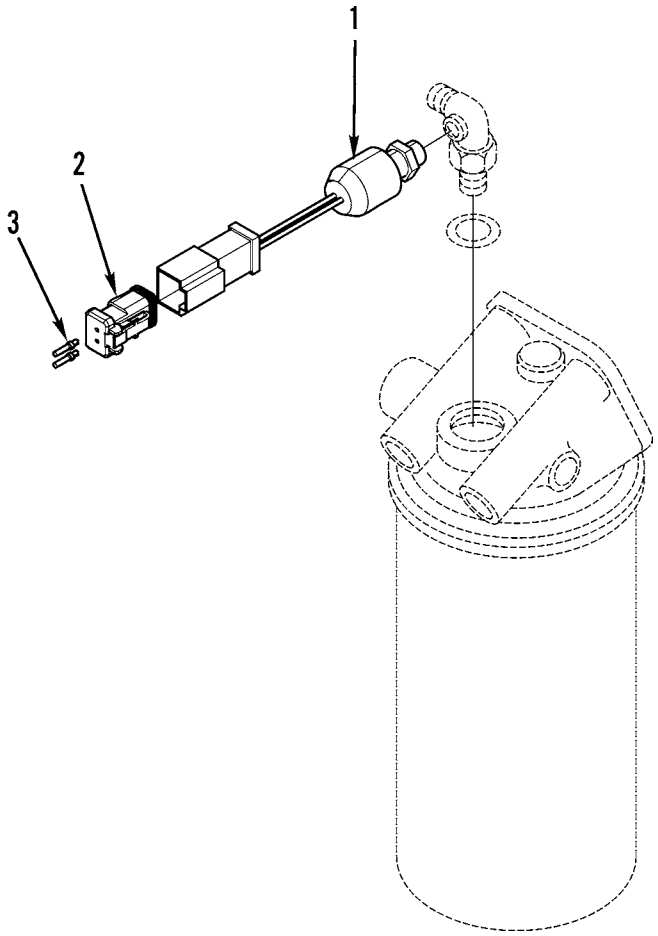

Figure 86. Fuel Pressure Switch

(1) ITEM NO	(2) SMR CODE	(3) NSN	(4) CAGEC	(5) PART NUMBER	(6) DESCRIPTION AND USABLE ON CODES(UOC)	(7) QTY
					GROUP 0610 SENDING UNITS AND WARNING SWITCHES	
					FIG. 86 FUEL PRESSURE SWITCH	
1	PAOZZ	5930015248205	11083	1127951	SWITCH,PRESSURE.....	1
2	PAOZZ	5930014777177	11083	1552270	PLUG,ELECTRICAL.....	1
3	PAOZZ	5935014290888	11083	1863736	CONNECTOR,PLUG,ELEC.....	2

END OF FIGURE

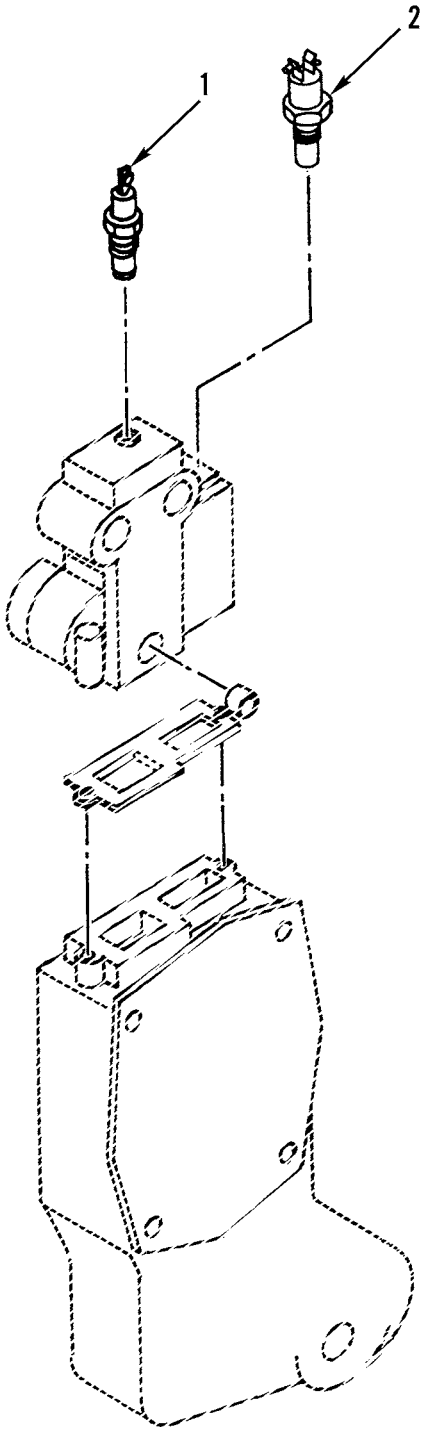

Figure 87. Ether Start Temperature Switch and Coolant Temperature Switch

(1) ITEM NO	(2) SMR CODE	(3) NSN	(4) CAGEC	(5) PART NUMBER	(6) DESCRIPTION AND USABLE ON CODES(UOC)	(7) QTY
					GROUP 0610 SENDING UNITS AND WARNING SWITCHES FIG. 87 ETHER START TEMPERATURE SWITCH AND COOLANT TEMPERATURE SWITCH	
1	PFOZZ	5930014970562	11083	2033220	SWITCH,THERMOSTATIC.....	1
2	PAOZZ	5930011514769	77625	5100-006-126-043 3	SWITCH,THERMOSTATIC.....	1

END OF FIGURE

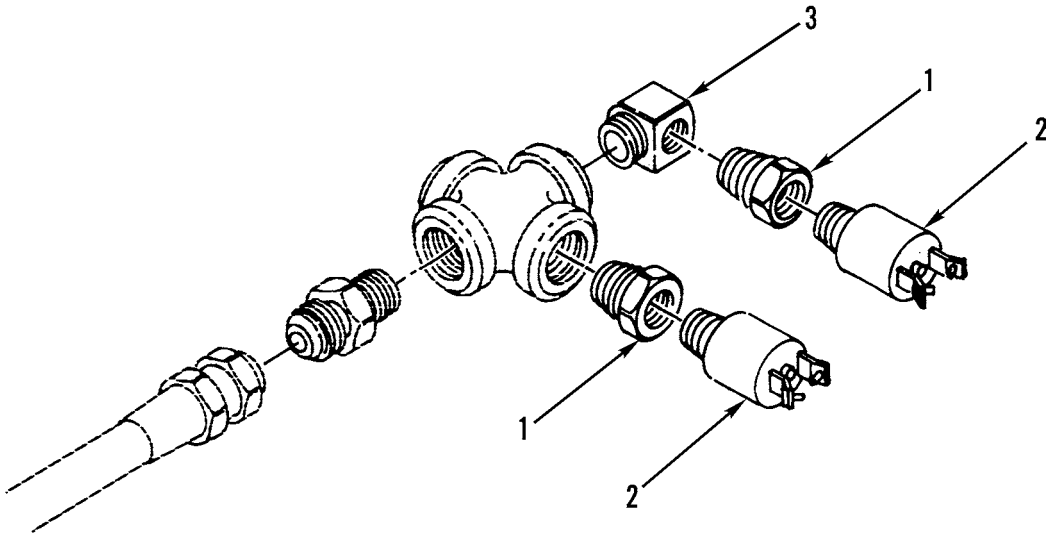

Figure 88. Engine Oil Pressure Switch and Hourmeter Switch

(1) ITEM NO	(2) SMR CODE	(3) NSN	(4) CAGEC	(5) PART NUMBER	(6) DESCRIPTION AND USABLE ON CODES(UOC)	(7) QTY
					GROUP 0610 SENDING UNITS AND WARNING SWITCHES FIG. 88 ENGINE OIL PRESSURE SWITCH AND HOURMETER SWITCH	
1	PAOZZ	4730002779386	0AHP5	166D1	BUSHING,PIPE.....	2
2	PAOZZ	5930013467728	11083	7T0988	SWITCH,PRESSURE.....	2
3	PAOZZ	4730007780218	11083	7F9311	ELBOW,PIPE.....	1

END OF FIGURE

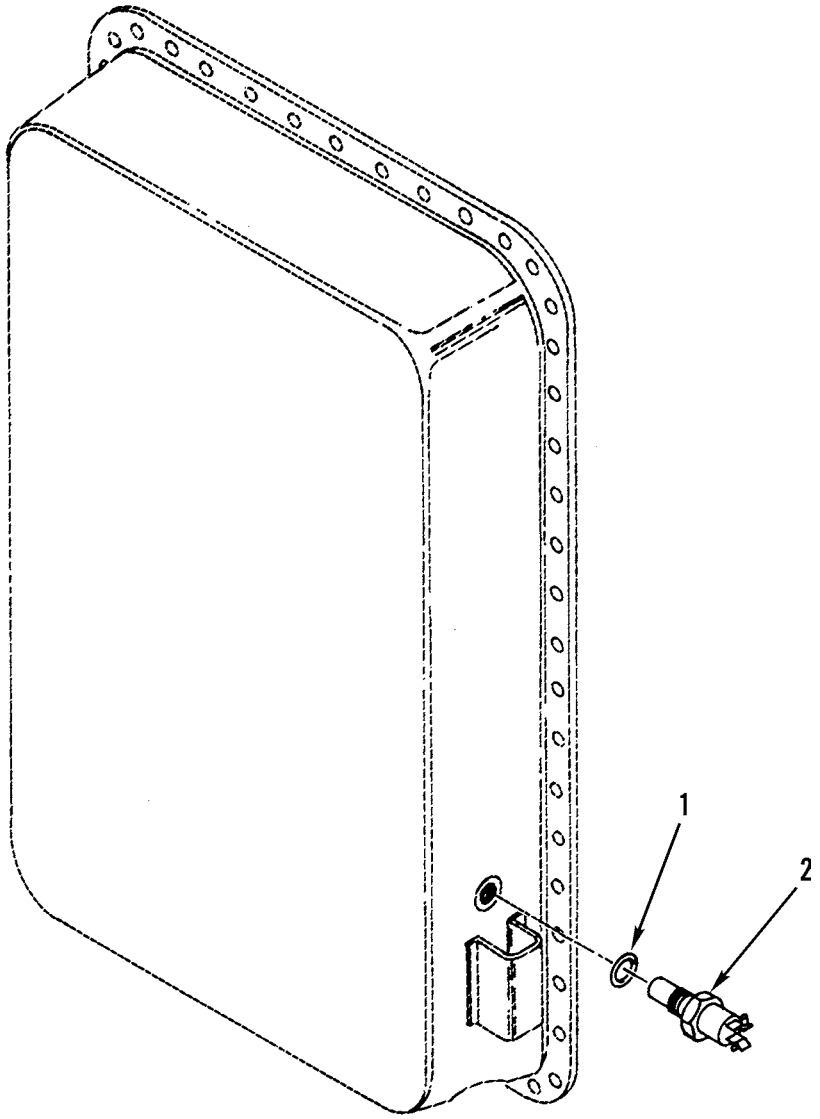

Figure 89. Hydraulic Oil Temperature Switch

(1) ITEM NO	(2) SMR CODE	(3) NSN	(4) CAGEC	(5) PART NUMBER	(6) DESCRIPTION AND USABLE ON CODES(UOC)	(7) QTY
					GROUP 0610 SENDING UNITS AND WARNING SWITCHES FIG. 89 HYDRAULIC OIL TEMPERATURE SWITCH	
1	PAOZZ	5331009486482	11083	3K0360	O-RING.....	1
2	PFOZZ	5930011651823	11083	3T0190	SWITCH,THERMOSTATIC.....	1

END OF FIGURE

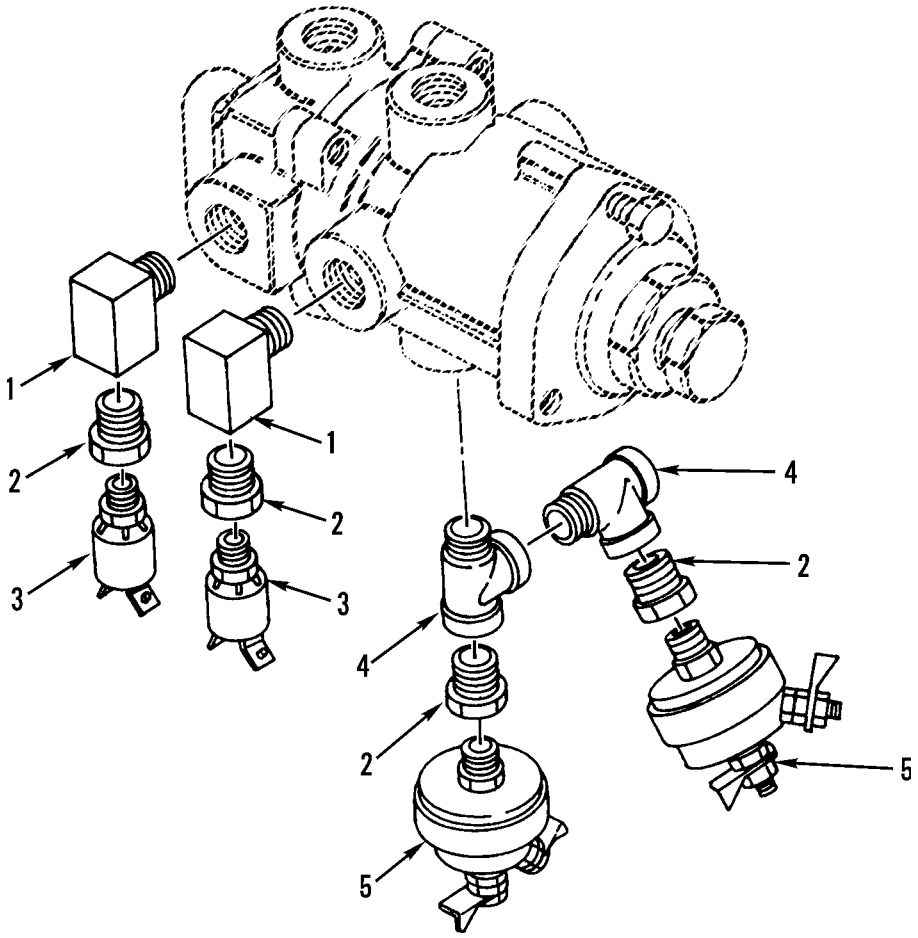

Figure 90. Air Pressure Switch and Stoplight/Blackout Light Switch

(1) ITEM NO	(2) SMR CODE	(3) NSN	(4) CAGEC	(5) PART NUMBER	(6) DESCRIPTION AND USABLE ON CODES(UOC)	(7) QTY
					GROUP 0610 SENDING UNITS AND WARNING SWITCHES FIG. 90 AIR PRESSURE SWITCH AND STOPLIGHT/BLACKOUT LIGHT SWITCH	
1	PFFZZ	4730002784822	79470	3400X6	ELBOW,PIPE.....	2
2	PFOZZ	4730001930869	19422	BM11352-77	BUSHING,PIPE.....	4
3	PAOZZ	5930011514768	11083	9G8009	SWITCH,PRESSURE.....	2
4	PAOZZ	4730004697797	93061	2225P-6	TEE,PIPE.....	2
5	PAOZZ	5930006336116	06853	226262	SWITCH,PRESSURE.....	2

END OF FIGURE

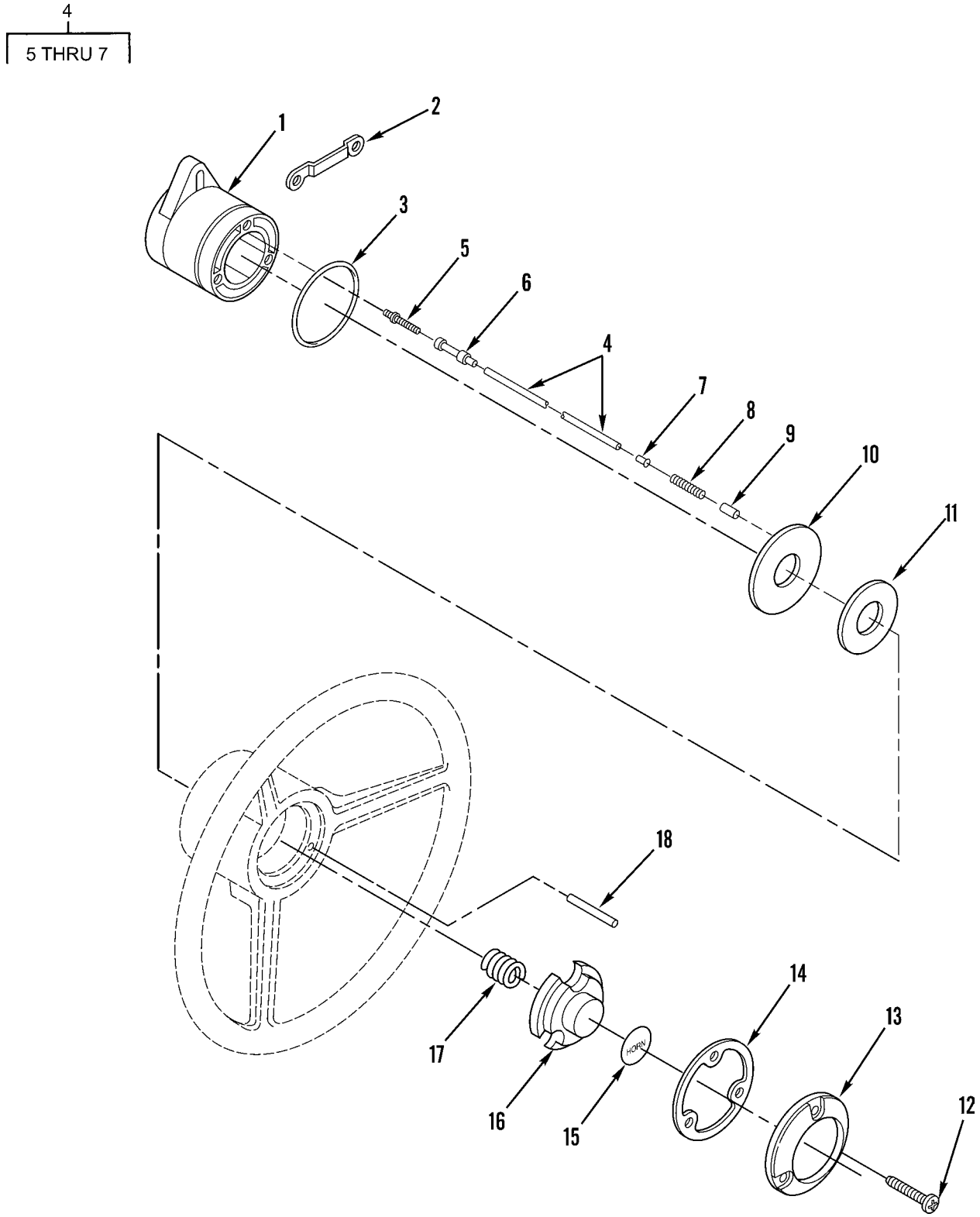

Figure 91. Horn Button Assembly and Mounting

(1) ITEM NO	(2) SMR CODE	(3) NSN	(4) CAGEC	(5) PART NUMBER	(6) DESCRIPTION AND USABLE ON CODES(UOC)	(7) QTY
					GROUP 0611 HORN, SIREN FIG. 91 HORN BUTTON ASSEMBLY AND MOUNTING	
1	PFOZZ	5999011514443	11083	6G5244	RETAINER,ELECTRICAL.....	1
2	PFOZZ	5340011499730	11083	5T4030	STRAP,RETAINING.....	1
3	PAOZZ	5330011541463	11083	6G5243	PACKING,PREFORMED.....	1
4	PAOZZ	5995011516311	11083	6G3236	LEAD,ELECTRICAL.....	1
5	PFOZZ	5999011566314	71468	110238-0195	.PIN,GROOVED,HEADLES.....	1
6	PAOZZ	5935011496997	11083	7N7778	.CONNECTOR BODY,PLUG.....	1
7	PAOZZ	5999011194109	11083	6D4161	.CONTACT,ELECTRICAL.....	1
8	PAOZZ	5360011680023	11083	0094184	SPRING,HELICAL,COMP.....	4
9	PAOZZ	5977011494166	68256	SK3515	BRUSH,ELECTRICAL CO.....	4
10	PAOZZ	5975011680647	11083	6G3237	RING,ELECTRICAL BON.....	1
11	PFOZZ	5970011498472	11083	6G3242	INSULATOR,BUSHING.....	1
12	PFOZZ	5305011516090	11083	6V5834	SCREW,TAPPING.....	3
13	PAOZZ	2590011513788	11083	6G3244	RETAINER,HORN BUTTO.....	1
14	PFOZZ	5330011554395	11083	6G3241	GASKET.....	1
15	PCOZZ	7690011466911	11083	6V3345	MARKER,IDENTIFICATI.....	1
16	PAOZZ	2530011513787	11083	6G3274	COVER,HORN BUTTON.....	1
17	PAOZZ	5360003590925	14892	374151	SPRING,HELICAL,COMP.....	1
18	PFOZZ	5315011487542	11083	6G3239	PIN,STRAIGHT,HEADLE.....	1

END OF FIGURE

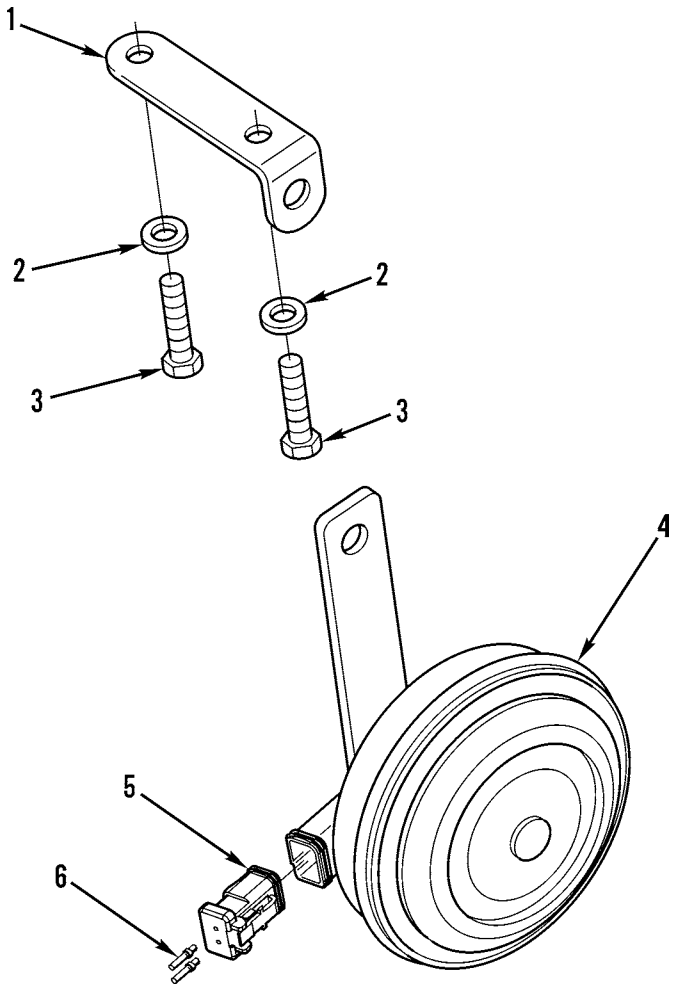

Figure 92. Electric Horn and Mounting

(1) ITEM NO	(2) SMR CODE	(3) NSN	(4) CAGEC	(5) PART NUMBER	(6) DESCRIPTION AND USABLE ON CODES(UOC)	(7) QTY
					GROUP 0611 HORN, SIREN	
					FIG. 92 ELECTRIC HORN AND MOUNTING	
1	PFOZZ	5340015209681	11083	1757056	BRACKET, ANGLE.....	1
2	PFOZZ	5310000814219	96906	MS27183-12	WASHER,FLAT.....	2
3	PFOZZ	5306002264826	80204	B1821BH031C088N	BOLT,MACHINE.....	2
4	PAOZZ	2590001356277	11083	1631201	HORN,TRACTOR.....	1
5	PFOZZ	5930014777177	11083	1552270	PLUG,ELECTRICAL.....	1
6	PAOZZ	5935014290888	11083	1863736	CONNECTOR,PLUG,ELEC.....	2

END OF FIGURE

3
4 THRU 7

5
6 AND 7

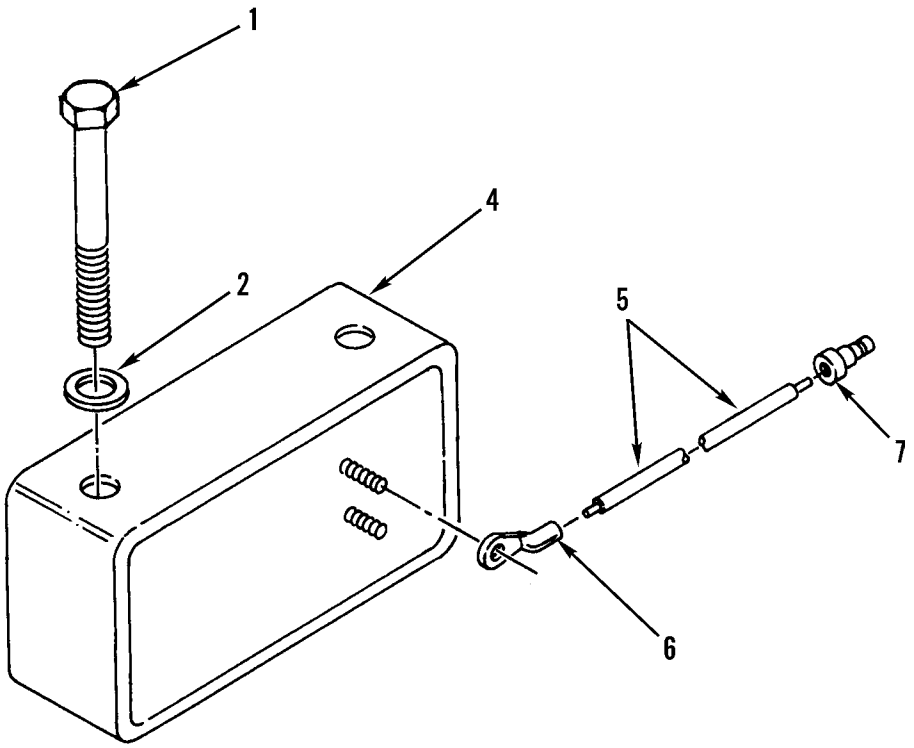

Figure 93. Backup Warning Alarm and Mounting

(1) ITEM NO	(2) SMR CODE	(3) NSN	(4) CAGEC	(5) PART NUMBER	(6) DESCRIPTION AND USABLE ON CODES(UOC)	(7) QTY
					GROUP 0611 HORN, SIREN FIG. 93 BACKUP WARNING ALARM AND MOUNTING	
1	PFOZZ	5305010956337	11083	2H9889	SCREW,CAP,HEXAGON H.....	2
2	PFOZZ	5310001174788	11083	5M2894	WASHER,FLAT.....	2
3	AOOOZ		11083	8P8845	HORN,ELECTRICAL.....	1
4	PFOZZ	6350011555993	57013	MODEL 112	.ALARM,BACK-UP,VEHIC.....	1
5	PAOZZ	5995011516312	11083	9G9019	.LEAD,ELECTRICAL.....	2
6	PFOZZ	5940001434774	96906	MS25036-153	..TERMINAL,LUG.....	1
7	PAOZZ	5940002910085	16428	724105	..TERMINAL,QUICK DISC.....	1

END OF FIGURE

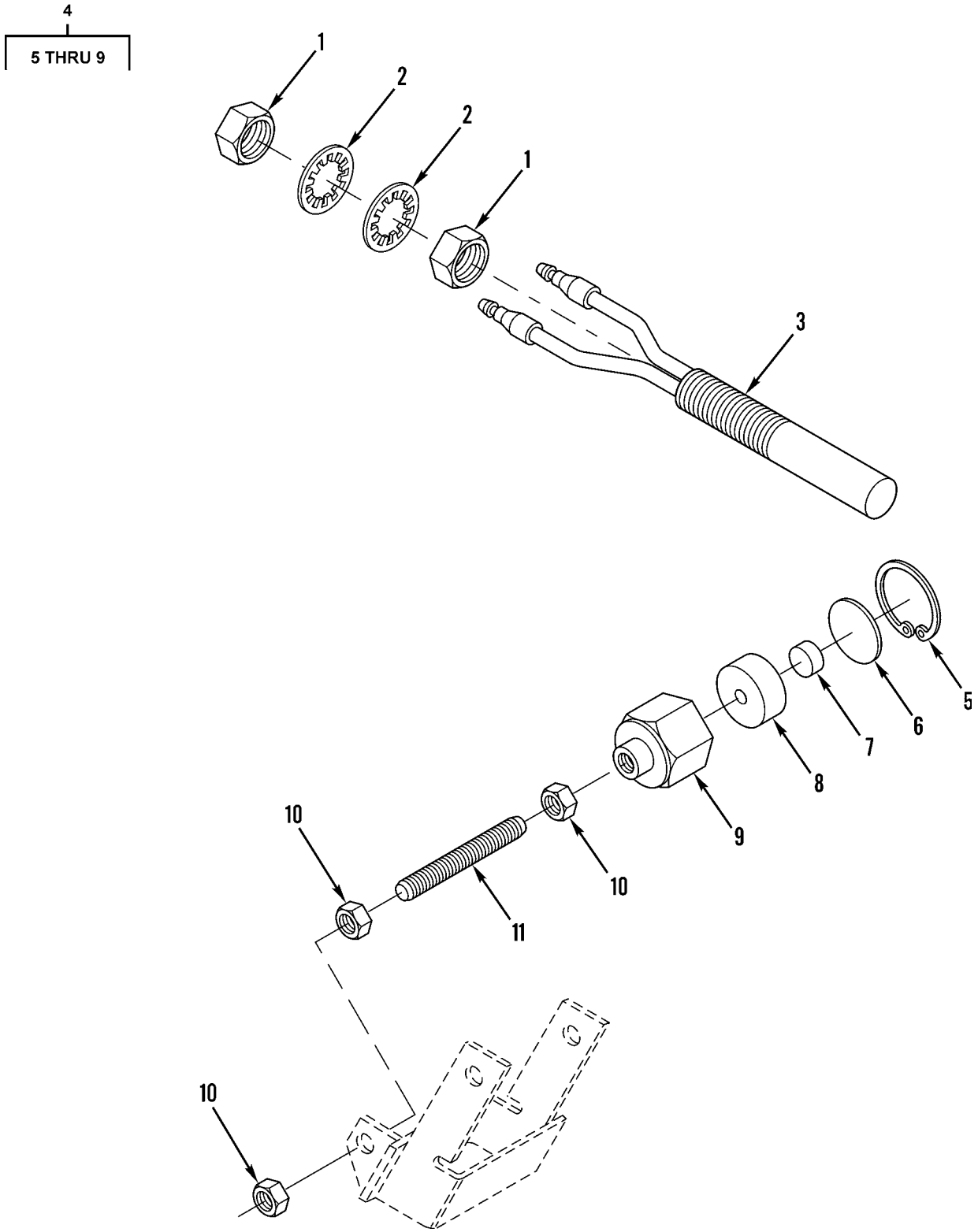

Figure 94. Backup Warning Alarm Switch and Mounting

(1) ITEM NO	(2) SMR CODE	(3) NSN	(4) CAGEC	(5) PART NUMBER	(6) DESCRIPTION AND USABLE ON CODES(UOC)	(7) QTY
					GROUP 0611 HORN, SIREN FIG. 94 BACKUP WARNING ALARM SWITCH AND MOUNTING	
1	PFOZZ	5310010523924	11083	5B2183	NUT	2
2	PFOZZ	5310002091510	96906	MS35333-45	WASHER,LOCK UOC:AF9,AGP,F10	2
3	PAOZZ	5930010590930	11083	3P8990	SWITCH ASSEMBLY	1
4	PAOZZ	2920010637834	11083	8D5578	MAGNET ASSY	1
5	PFOZZ	5325008049739	96906	MS16625-1087	.RING,RETAINING	1
6	PFOZZ	5340011767495	11083	6D9705	.DISK,SOLID,PLAIN	1
7	PFOZZ	5999011923294	11083	6D9704	.MAGNET,PERMANENT	1
8	PAOZZ	2940011525584	11083	6D9677	.FILTER ELEMENT,FLUI	1
9	XAOZZ		11083	7D1681	.HOLDER MAGNET	1
10	PFOZZ	5310008512682	96906	MS35691-17	NUT,PLAIN,HEXAGON	3
11	PFOZZ	5307001183133	11083	1J8668	STUD,CONTINUOUS THR	1

END OF FIGURE

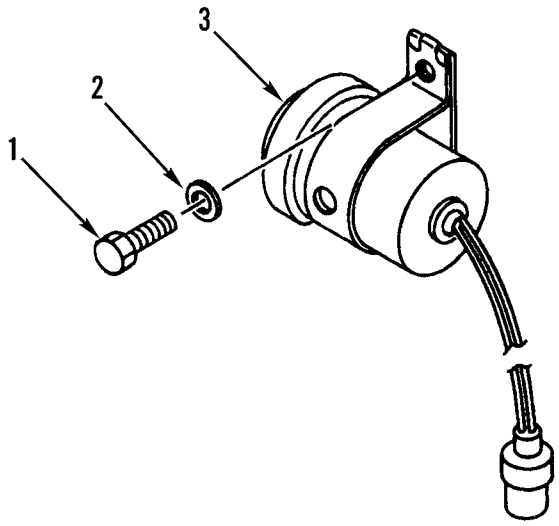

Figure 95. Monitor Warning Alarm and Mounting

(1) ITEM NO	(2) SMR CODE	(3) NSN	(4) CAGEC	(5) PART NUMBER	(6) DESCRIPTION AND USABLE ON CODES(UOC)	(7) QTY
					GROUP 0611 HORN, SIREN FIG. 95 MONITOR WARNING ALARM AND MOUNTING	
1	PFOZZ	5306002264823	80204	B1821BH031C056N	BOLT,MACHINE..... UOC:AF9,AGP,F10	1
2	PFOZZ	5310000814219	96906	MS27183-12	WASHER,FLAT..... UOC:AF9,AGP,F10	1
3	PAOZZ	6350011915035	11083	9G9813	HORN,ELECTRICAL.....	1

END OF FIGURE

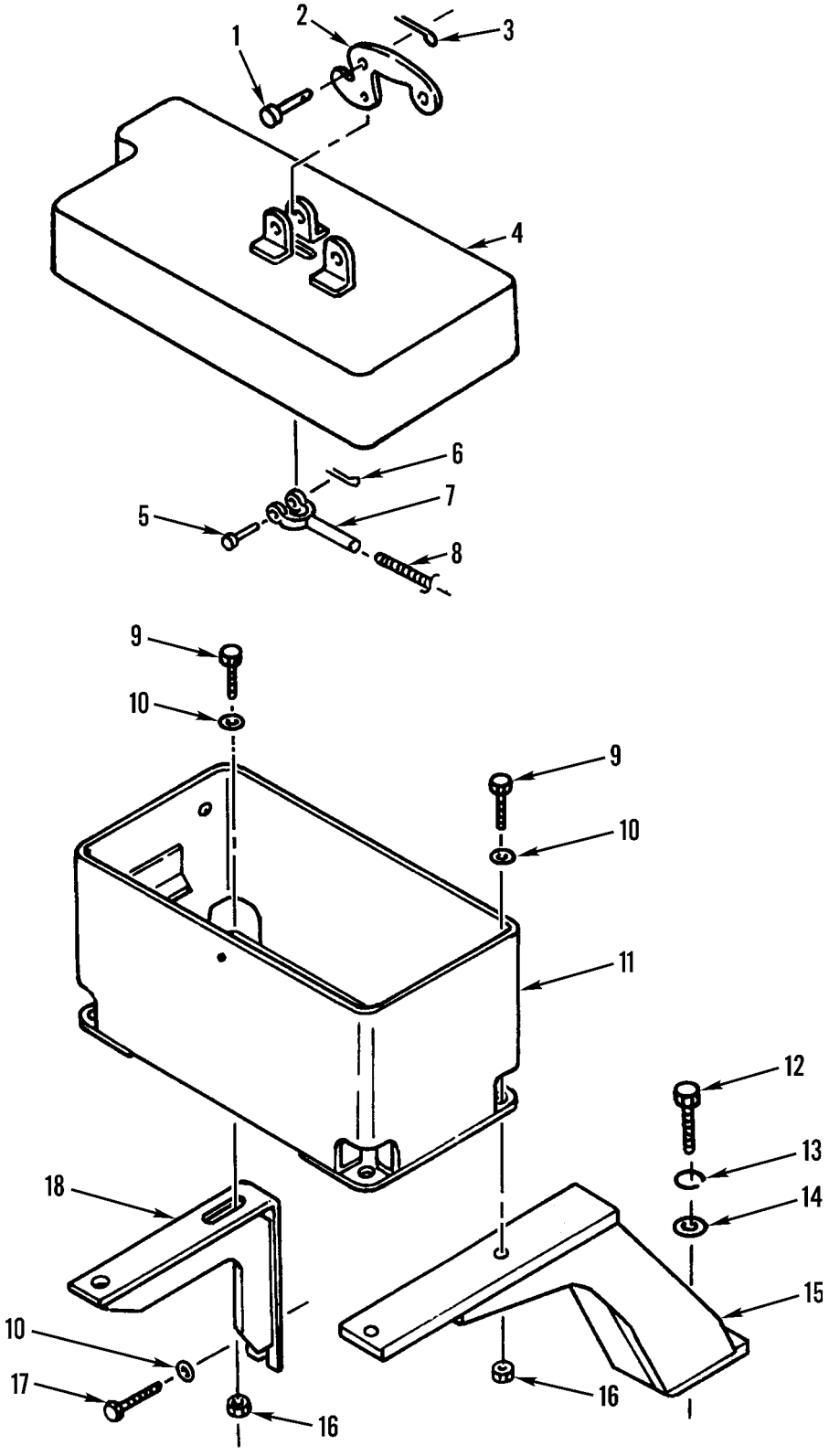

Figure 96. Battery Box Assembly and Mounting

(1) ITEM NO	(2) SMR CODE	(3) NSN	(4) CAGEC	(5) PART NUMBER	(6) DESCRIPTION AND USABLE ON CODES(UOC)	(7) QTY
					GROUP 0612 BATTERIES, STORAGE FIG. 96 BATTERY BOX ASSEMBLY AND MOUNTING	
1	PFOZZ	5315003636577	11083	2B2938	PIN	2
2	PFOZZ	2510010630635	11083	1H7365	HANDLE	2
3	PFOZZ	5315008395822	96906	MS24665-353	PIN,COTTER	2
4	PFOZZ	6160011748425	11083	9M0737	COVER,BATTERY BOX	2
5	PFOZZ	5315006192962	11083	1J4384	PIN,STRAIGHT,HEADED	2
6	PFOZZ	5315004317315	11083	3B4615	PIN,COTTER	2
7	PFOZZ	2510010630636	11083	1H7366	ROD	2
8	PFOZZ	5360000761478	11083	1B9920	SPRING,HELICAL,COMP	2
9	PFOZZ	5306004240086	11083	7B3235	BOLT,MACHINE	8
10	PFOZZ	5310010976720	11083	5P1076	WASHER,SHOULDERED A	12
11	PFOZZ	6160011666589	11083	2G3382	BATTERY BOX	2
12	PFOZZ	5306002755012	11083	0S1566	BOLT,MACHINE	4
13	PFOZZ	5310000455001	96906	MS35340-50	WASHER,LOCK	4
14	PFOZZ	5310001097638	15434	S658	WASHER,FLAT	4
15	XAOZZ		11083	2G1516	BRACKET A	2
16	PFOZZ	5310007680318	96906	MS51967-14	NUT,PLAIN,HEXAGON	8
17	PFOZZ	5306004238117	11083	0S1595	BOLT,MACHINE	4
18	PFOZZ	5340011715319	11083	2G1514	BRACKET,ANGLE	2

END OF FIGURE

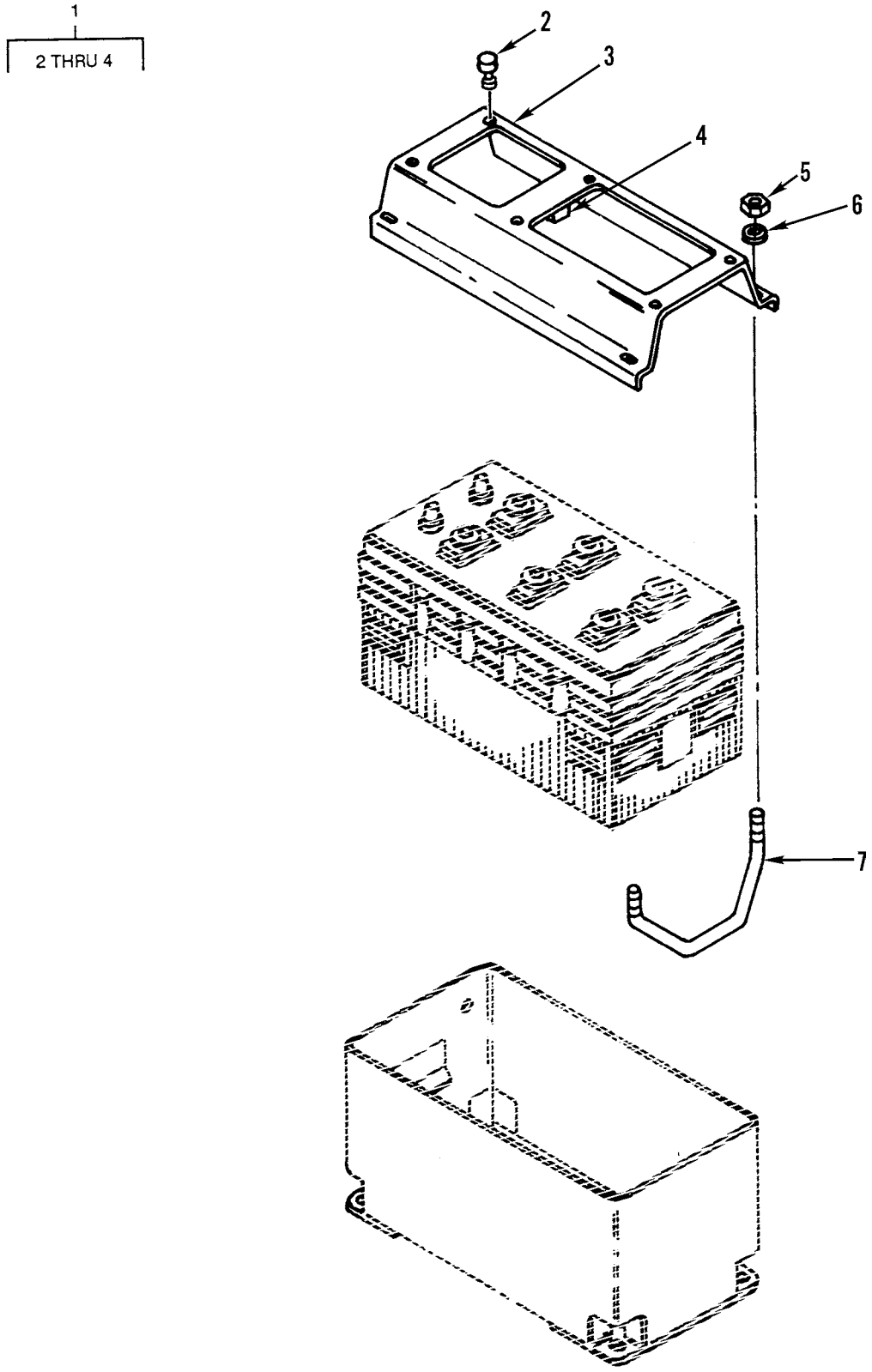

Figure 97. Battery Hold-Down and Mounting

(1) ITEM NO	(2) SMR CODE	(3) NSN	(4) CAGEC	(5) PART NUMBER	(6) DESCRIPTION AND USABLE ON CODES(UOC)	(7) QTY
					GROUP 0612 BATTERIES, STORAGE FIG. 97 BATTERY HOLD-DOWN AND MOUNTING	
1	PFOZZ	6160011464437	11083	1S8230	RETAINER,BATTERY.....	2
2	PAOZZ	5340002099263	70485	1422	.BUMPER,NONMETALLIC.....	6
3	XAOZZ		11083	1S8229	.HOLD DOWN,BATTERY.....	1
4	XAOZZ		11083	1K4363	.BAR.....	1
5	PFOZZ	5310010588071	11083	2K4973	LOCKNUT.....	8
6	PFOZZ	5310001174788	11083	5M2894	WASHER,FLAT.....	8
7	PFOZZ	5306004970376	11083	2S1686	BOLT,SPECIAL.....	4
					END OF FIGURE	

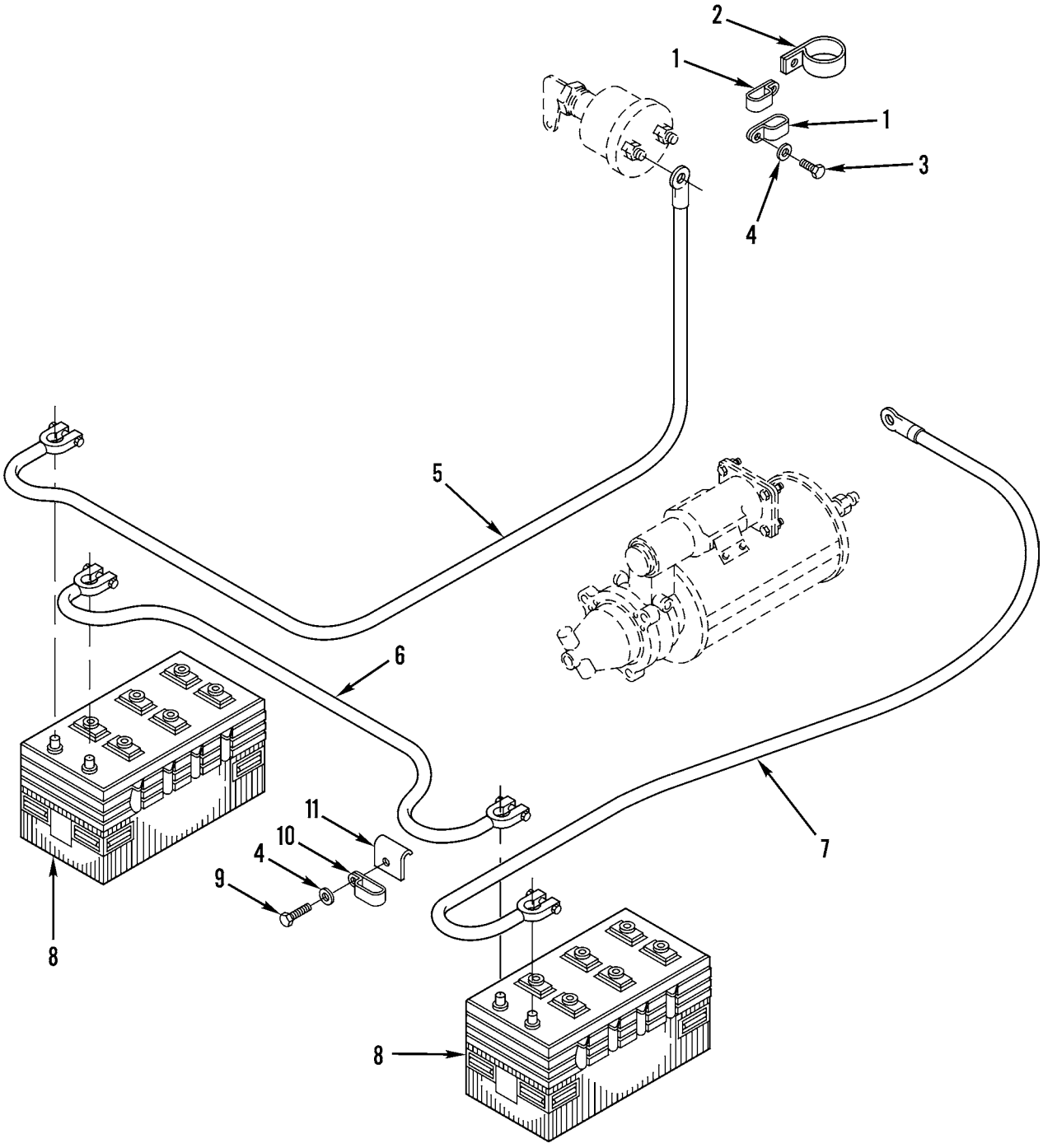

Figure 98. Battery and Cables

(1) ITEM NO	(2) SMR CODE	(3) NSN	(4) CAGEC	(5) PART NUMBER	(6) DESCRIPTION AND USABLE ON CODES(UOC)	(7) QTY
					GROUP 0612 BATTERIES, STORAGE FIG. 98 BATTERY AND CABLES	
1	PFOZZ	5342010643819	11083	9M8406	CLIP.....	2
2	PFOZZ	5340011494428	11083	5P7854	CLAMP,LOOP.....	1
3	PFOZZ	5306002604508	11083	0S1594	BOLT,MACHINE.....	3
4	PFOZZ	5310001174788	11083	5M2894	WASHER,FLAT.....	14
5	PAOZZ	6150010972001	11083	5D7760	LEAD,STORAGE BATTER.....	2
6	PAOZZ	2590011441568	11083	2G6365	LEAD,ELECTRICAL.....	1
7	PAOZZ	6150011441567	11083	2G5836	LEAD,ELECTRICAL.....	1
8	XDOFA		11083	9X9720	BATTERY,STORAGE.....	2
8	PCOFZ	6140015051940	11083	153-5700	BATTERY,STORAGE MAINTENANCE FREE, SEALED (DO NOT MIX WITH MAINTENACE TYPE BATTERIES.).....	2
9	PFOZZ	5305002528919	11083	0S0509	SCREW,CAP,HEXAGON H.....	5
10	PFOZZ	5999010939472	11083	4K6177	CLIP,ELECTRICAL.....	2
11	PAOZZ	2540011827218	11083	2G8279	GUARD,MECHANICAL DR.....	2

END OF FIGURE

1
FIGURE 99
THRU
FIGURE 102

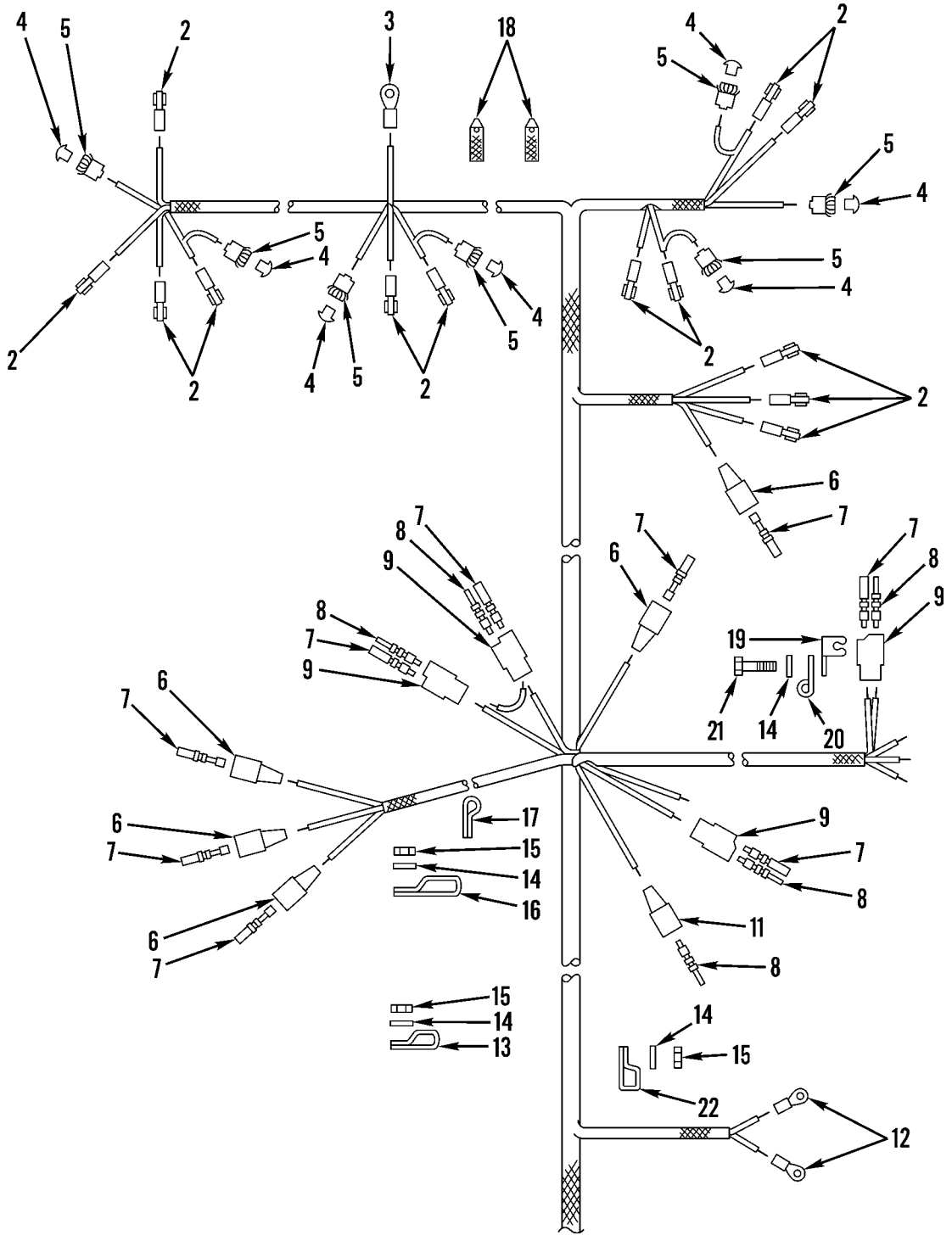

Figure 99. Main Wiring Harness and Mounting, Front (Sheet 1 of 2)

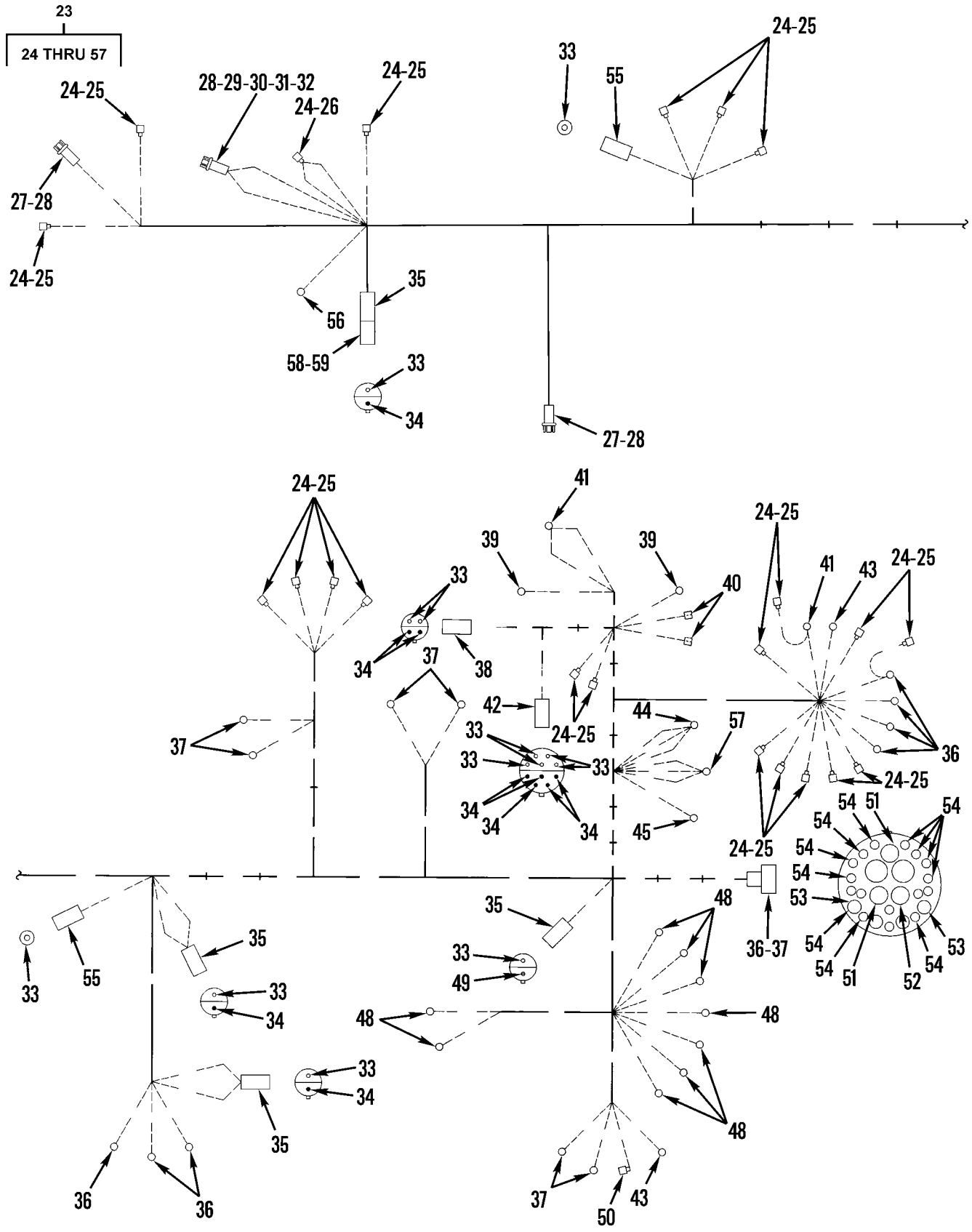

Figure 99. Main Wiring Harness and Mounting, Front (Sheet 2 of 2)

(1) ITEM NO	(2) SMR CODE	(3) NSN	(4) CAGEC	(5) PART NUMBER	(6) DESCRIPTION AND USABLE ON CODES(UOC)	(7) QTY
					GROUP 0613 HULL OR CHASSIS WIRING HARNESS FIG. 99 MAIN WIRING HARNESS AND MOUNTING, FRONT	
1	PFFZZ	5995011774828	11083	5R6903	WIRING HARNESS,BRAN..... UOC:AGP	1
2	PAFZZ	5940010589112	11083	5P4571	.TERMINAL,QUICK DISC..... UOC:AGP	13
3	PFFZZ	5940010534521	11083	2L8077	.TERMINAL..... UOC:AGP	1
4	PAFZZ	5999011194109	11083	6D4161	.CONTACT,ELECTRICAL..... UOC:AGP	7
5	PAFZZ	6250011466909	77060	2984323	.LAMPHOLDER..... UOC:AGP	7
6	PAFZZ	5935011539319	71468	120-1833-000	.CONNECTOR,PLUG,ELEC..... UOC:AGP	5
7	PAFZZ	5999011508808	11083	7N7779	.CONTACT,ELECTRICAL..... UOC:AGP	9
8	PFFZZ	5999011566314	71468	110238-0195	.PIN,GROOVED,HEADLES..... UOC:AGP	5
9	PAFZZ	5935011495165	11083	7N9738	.CONNECTOR BODY,PLUG..... UOC:AGP	4
10	PFFZZ	5940001434774	96906	MS25036-153	.TERMINAL,LUG..... UOC:AGP	3
11	PAFZZ	5935011496997	11083	7N7778	.CONNECTOR BODY,PLUG..... UOC:AGP	1
12	PFFZZ	5940001434780	96906	MS25036-108	.TERMINAL,LUG..... UOC:AGP	2
13	PFOZZ	5940001152684	96906	MS20659-118	TERMINAL,LUG..... UOC:AGP	1
14	PFOZZ	5310001174788	11083	5M2894	WASHER,FLAT..... UOC:AGP	4
15	PFOZZ	5310011831237	11083	9S8752	NUT,PLAIN,HEXAGON..... UOC:AGP	3
16	PFOZZ	5342010647512	11083	6D1641	CLIP..... UOC:AGP	1
17	PFOZZ	5340004264656	11083	4D7794	CLAMP,LOOP..... UOC:AGP	1
18	PAOZZ	2920010589099	11083	3S2093	STRAP..... UOC:AGP	2
19	PFOZZ	5340004264793	99953	140583	CLAMP,LOOP..... UOC:AGP	1
20	PAOZZ	5340011519964	11083	9G9150	STRAP,RETAINING..... UOC:AGP	1
21	PFOZZ	5305002528919	11083	0S0509	SCREW,CAP,HEXAGON H..... UOC:AGP	1
22	PFOZZ	5340011494427	11083	9M4995	CLAMP,LOOP..... UOC:AGP	1
23	PAFFF	5995012926789	11083	5R8147	WIRING HARNESS,BRAN..... UOC:AF9,AGM,AGN,F10	1
24	PFFZZ	5935014735590	11083	6T6505	.SHELL,ELECTRICAL CO.....	22

(1) ITEM NO	(2) SMR CODE	(3) NSN	(4) CAGEC	(5) PART NUMBER	(6) DESCRIPTION AND USABLE ON CODES(UOC)	(7) QTY
					UOC:AF9,AGM,AGN,F10	
25	PFFZZ	5935014735578	11083	6T6506	.SHELL,ELECTRICAL CO.....	21
					UOC:AF9,AGM,AGN,F10	
26	PFFZZ	5940012925097	00779	63325-1	.TERMINAL,QUICK DISC.....	1
					UOC:AF9,AGM,AGN,F10	
27	PFFZZ	6250011466909	77060	2984323	.LAMPHOLDER.....	2
					UOC:AF9,AGM,AGN,F10	
28	PFFZZ	5999011194109	11083	6D4161	.CONTACT,ELECTRICAL.....	3
					UOC:AF9,AGM,AGN,F10	
29	PFFZZ	5940013076079	77060	2989637-L	.TERMINAL,QUICK DISC.....	1
					UOC:AF9,AGM,AGN,F10	
30	PFFZZ	6250013068254	77060	2989641	.LAMPHOLDER.....	1
					UOC:AF9,AGM,AGN,F10	
31	PFFZZ	5360013092667	77060	2962243	.SPRING,HELICAL,COMP.....	1
					UOC:AF9,AGM,AGN,F10	
32	PFFZZ	5975013050776	32498	1218	.BOOT,DUST AND MOIST.....	1
					UOC:AF9,AGM,AGN,F10	
33	PFFZZ	5999011508808	11083	7N7779	.CONTACT,ELECTRICAL.....	13
					UOC:AF9,AGM,AGN,F10	
34	PFFZZ	5999011566314	71468	110238-0195	.PIN,GROOVED,HEADLES.....	10
					UOC:AF9,AGM,AGN,F10	
35	PFFZZ	5935011495165	11083	7N9738	.CONNECTOR BODY,PLUG.....	4
					UOC:AF9,AGM,AGN,F10	
36	PFFZZ	5940001434774	96906	MS25036-153	.TERMINAL,LUG.....	7
					UOC:AF9,AGM,AGN,F10	
37	PFFZZ	5940001434780	96906	MS25036-108	.TERMINAL,LUG.....	6
					UOC:AF9,AGM,AGN,F10	
38	PFFZZ	5999014303231	11083	7N8204	.HOUSING,ELECTRONIC.....	1
					UOC:AF9,AGM,AGN,F10	
39	PFFZZ	5940001435284	81343	AS25036-115	.TERMINAL,LUG.....	2
					UOC:AF9,AGM,AGN,F10	
40	PFFZZ	5935010977239	79550	17510	.CONNECTOR,PLUG,ELEC.....	2
					UOC:AF9,AGM,AGN,F10	
41	PFFZZ	5940001141310	96906	MS25036-119	.TERMINAL,LUG.....	2
					UOC:AF9,AGM,AGN,F10	
42	PFFZZ	5935014389739	11083	9G3673	.CONNECTOR,PLUG,ELEC.....	1
					UOC:AF9,AGM,AGN,F10	
43	PFFZZ	5940001434794	96906	MS25036-112	.TERMINAL,LUG.....	2
					UOC:AF9,AGM,AGN,F10	
44	PFFZZ	5940001139826	96906	MS25036-114	.TERMINAL,LUG.....	1
					UOC:AF9,AGM,AGN,F10	
45	PFFZZ	5940001434793	96906	MS25036-110	.TERMINAL,LUG.....	1
					UOC:AF9,AGM,AGN,F10	
46	PFFZZ	5935011555545	71468	VE26R32-25SL	.CONNECTOR BODY,PLUG.....	1
					UOC:AF9,AGM,AGN,F10	
47	PFFZZ	5935015023942	11083	8N1521	.SHELL,ELECTRICAL,CO.....	1
					UOC:AF9,AGM,AGN,F10	
48	PFFZZ	5940010870285	00779	53245-1	.TERMINAL,LUG.....	9
					UOC:AF9,AGM,AGN,F10	
49	PFFZZ	5935011522677	11083	9G3695	.PLUG,END SEAL,ELECT.....	1
					UOC:AF9,AGM,AGN,F10	
50	PFFZZ	2920015219952	11083	1306797	.LEAD, IGNITION, ENG.....	1

(1) ITEM NO	(2) SMR CODE	(3) NSN	(4) CAGEC	(5) PART NUMBER	(6) DESCRIPTION AND USABLE ON CODES(UOC)	(7) QTY
					UOC:AF9,AGM,AGN,F10	
51	PFFZZ	5999012865845	11083	8N1545	.CONTACT,ELECTRICAL.....	2
					UOC:AF9,AGM,AGN,F10	
52	PFFZZ	5999011592400	71468	031-1298-000	.CONTACT,ELECTRICAL.....	1
					UOC:AF9,AGM,AGN,F10	
53	XDFZZ		71468	031-1300-000	.CONTACT,ELECTRICAL.....	2
					UOC:AF9,AGM,AGN,F10	
54	PFFZA	5935014665755	11139	4062-001-16141	.JACK,TIP.....	10
					UOC:AF9,AGM,AGN,F10	
55	PFFZZ	5935011539319	71468	120-1833-000	.CONNECTOR,PLUG,ELEC.....	2
					UOC:AF9,AGM,AGN,F10	
56	PFFZZ	5940010534521	11083	2L8077	.TERMINAL.....	1
					UOC:AF9,AGM,AGN,F10	
57	PFFZZ	5940005574345	96906	MS25036-118	.TERMINAL,LUG.....	1
					UOC:AF9,AGM,AGN,F10	
58	PFFZZ	5961013043340	11083	5R8815	SEMICONDUCTOR DEVIC.....	1
					UOC:AF9,AGM,AGN,F10	
59	PFFZZ	5342012708588	45152	2AA855	CLIP,SPECIAL.....	1
					UOC:AF9,AGM,AGN,F10	

END OF FIGURE

1
FIGURE 99
THRU
FIGURE 102

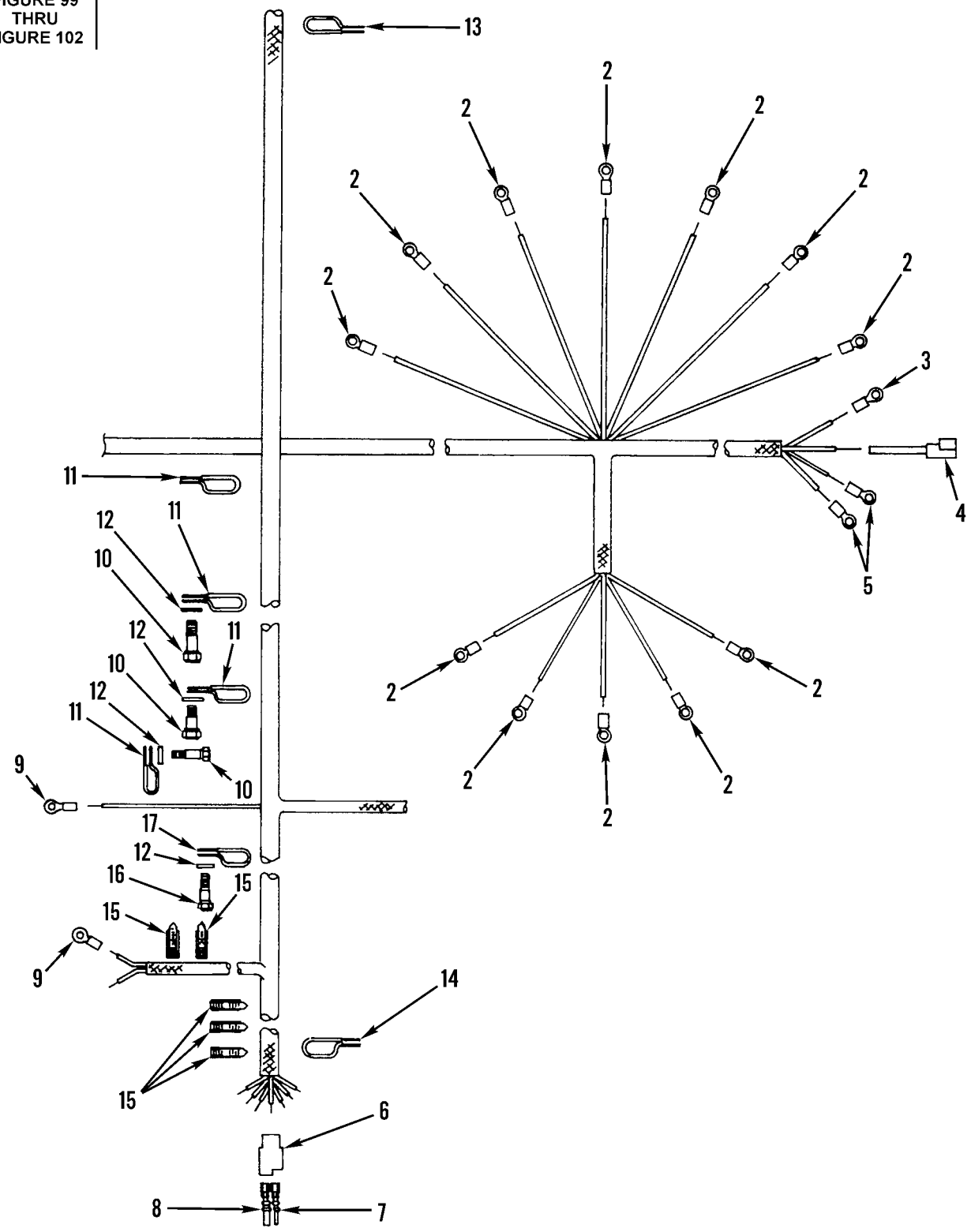

Figure 100. Main Wiring Harness and Mounting, Rear (Sheet 1 of 2)

18

19 THRU 37

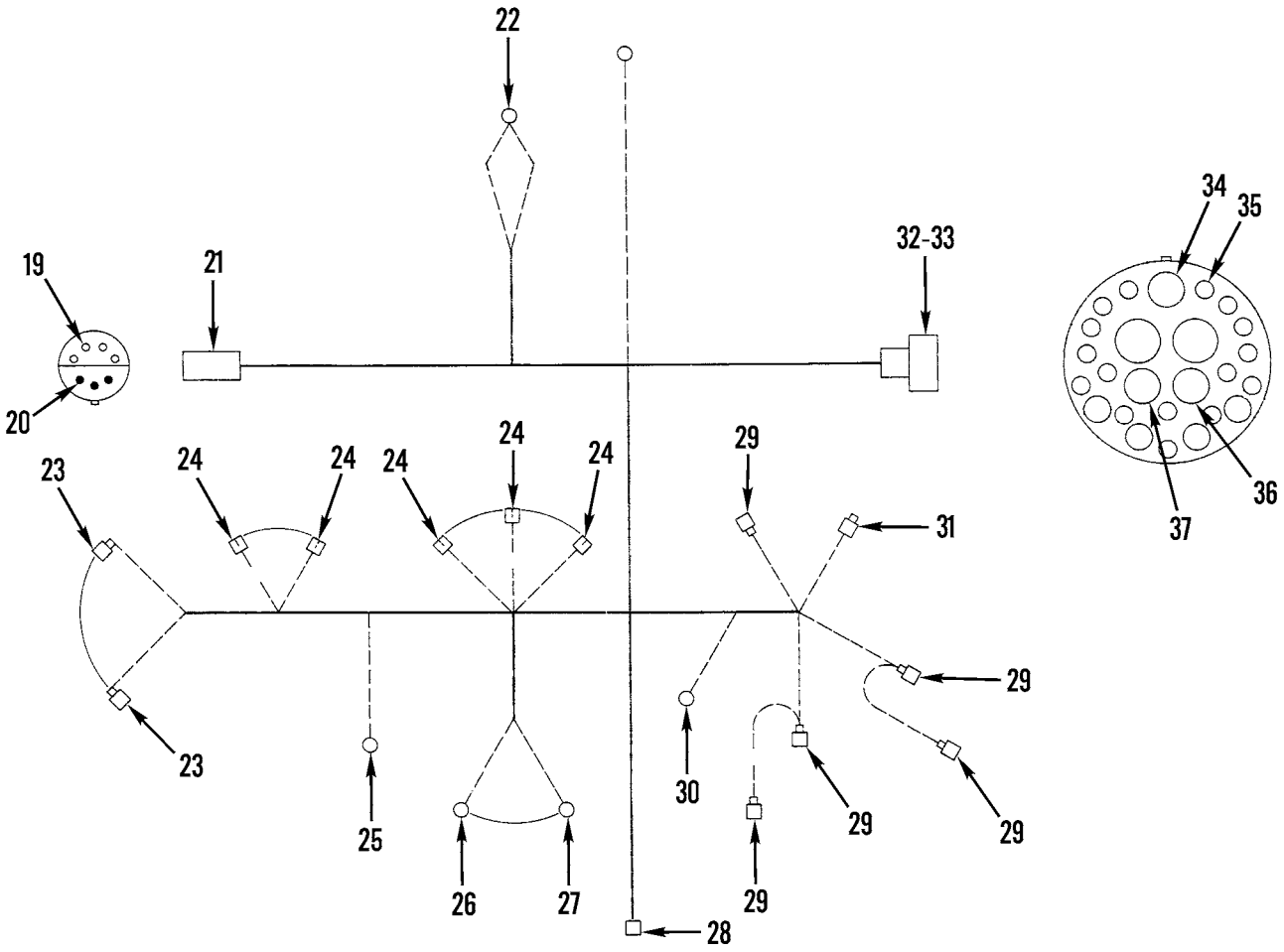

Figure 100. Main Wiring Harness and Mounting, Rear (Sheet 2 of 2)

(1) ITEM NO	(2) SMR CODE	(3) NSN	(4) CAGEC	(5) PART NUMBER	(6) DESCRIPTION AND USABLE ON CODES(UOC)	(7) QTY
					GROUP 0613 HULL OR CHASSIS WIRING HARNESS FIG. 100 MAIN WIRING HARNESS AND MOUNTING, REAR	
1	PFFZZ	5995011774828	11083	5R6903	WIRING HARNESS,BRAN..... UOC:AGP	1
2	PFFZZ	5940010870285	00779	53245-1	.TERMINAL,LUG..... UOC:AGP	12
3	PFFZZ	5940001434794	96906	MS25036-112	.TERMINAL,LUG..... UOC:AGP	1
4	PAFZZ	5995011516315	11083	3T5433	.LEAD,ELECTRICAL..... UOC:AGP	1
5	PFFZZ	5940001434780	96906	MS25036-108	.TERMINAL,LUG..... UOC:AGP	2
6	XDFZZ	5935011557718	11083	9G3676	.CONNECTOR,PLUG,ELEC..... UOC:AGP	1
7	PFFZZ	5999011566314	71468	110238-0195	.PIN,GROOVED,HEADLES..... UOC:AGP	1
8	PAFZZ	5999011508808	11083	7N7779	.CONTACT,ELECTRICAL..... UOC:AGP	1
9	PFFZZ	5940001434774	96906	MS25036-153	.TERMINAL,LUG..... UOC:AGP	2
10	PFOZZ	5305007215492	80204	B1821BH038C063N	SCREW,CAP,HEXAGON H..... UOC:AGP	1
11	PFOZZ	5342010632989	11083	4D6463	CLIP..... UOC:AGP	3
12	PFOZZ	5310001174788	11083	5M2894	WASHER,FLAT..... UOC:AGP	4
13	PFOZZ	5342010647512	11083	6D1641	CLIP..... UOC:AGP	1
14	PFOZZ	5340004264793	99953	140583	CLAMP,LOOP..... UOC:AGP	1
15	PAOZZ	2920010589099	11083	3S2093	STRAP..... UOC:AGP	5
16	PFOZZ	5306002637301	11083	0L1351	BOLT,MACHINE..... UOC:AGP	1
17	PFOZZ	5940001152684	96906	MS20659-118	TERMINAL,LUG..... UOC:AGP	1
18	PFFZZ	5995012950072	11083	5R5303	WIRING HARNESS,BRAN..... UOC:AF9,AGM,AGN,F10	1
19	PFFZZ	5999011508808	11083	7N7779	.CONTACT,ELECTRICAL..... UOC:AF9,AGM,AGN,F10	4
20	PFFZZ	5999011566314	71468	110238-0195	.PIN,GROOVED,HEADLES..... UOC:AF9,AGM,AGN,F10	3
21	PFFZZ	5935011557718	11083	9G3676	.CONNECTOR,PLUG,ELEC..... UOC:AF9,AGM,AGN,F10	1
22	PFFZZ	5940001434774	96906	MS25036-153	.TERMINAL,LUG..... UOC:AF9,AGM,AGN,F10	2
23	PFFZZ	2920015219952	11083	1306797	.LEAD, IGNITION, ENG..... UOC:AF9,AGM,AGN,F10	2
24	PFFZZ	5935010977239	79550	17510	.CONNECTOR,PLUG,ELEC.....	5

(1) ITEM NO	(2) SMR CODE	(3) NSN	(4) CAGEC	(5) PART NUMBER	(6) DESCRIPTION AND USABLE ON CODES(UOC)	(7) QTY
					UOC:AF9,AGM,AGN,F10	
25	PFFZZ	5940002260490	00779	322008	.TERMINAL,LUG.....	1
					UOC:AF9,AGM,AGN,F10	
26	PFFZZ	5940001188836	11083	2L8054	.TERMINAL,LUG.....	1
					UOC:AF9,AGM,AGN,F10	
27	PFFZZ	5940001434794	96906	MS25036-112	.TERMINAL,LUG.....	1
					UOC:AF9,AGM,AGN,F10	
28	PFFZZ	5995011494967	11083	5P6271	.LEAD,ELECTRICAL.....	1
					UOC:AF9,AGM,AGN,F10	
29	PFFZZ	5940010589112	11083	5P4571	.TERMINAL,QUICK DISC.....	5
					UOC:AF9,AGM,AGN,F10	
30	PFFZZ	5940001434793	96906	MS25036-110	.TERMINAL,LUG.....	1
					UOC:AF9,AGM,AGN,F10	
31	PFFZZ	5940010589133	11083	4S1988	.TERMINAL.....	1
					UOC:AF9,AGM,AGN,F10	
32	PFFZZ	5935011589078	71468	VE27R32-25PL	.CONNECTOR BODY,RECE.....	1
					UOC:AF9,AGM,AGN,F10	
33	PFFZZ	5935015023942	11083	8N1521	.SHELL,ELECTRICAL,CO.....	1
					UOC:AF9,AGM,AGN,F10	
34	PFFZZ	5999015268494	11083	8N1544	.CONTACT, ELECTRICAL.....	2
					UOC:AF9,AGM,AGN,F10	
35	PFFZZ	5999011542345	71468	030-2271-000	.CONTACT,ELECTRICAL.....	10
					UOC:AF9,AGM,AGN,F10	
36	PFFZZ	5999011935735	71468	030-2272-000	.CONTACT,ELECTRICAL.....	2
					UOC:AF9,AGM,AGN,F10	
37	PFFZZ	5999011577719	71468	031-1296-000	.CONTACT,ELECTRICAL.....	1
					UOC:AF9,AGM,AGN,F10	

END OF FIGURE

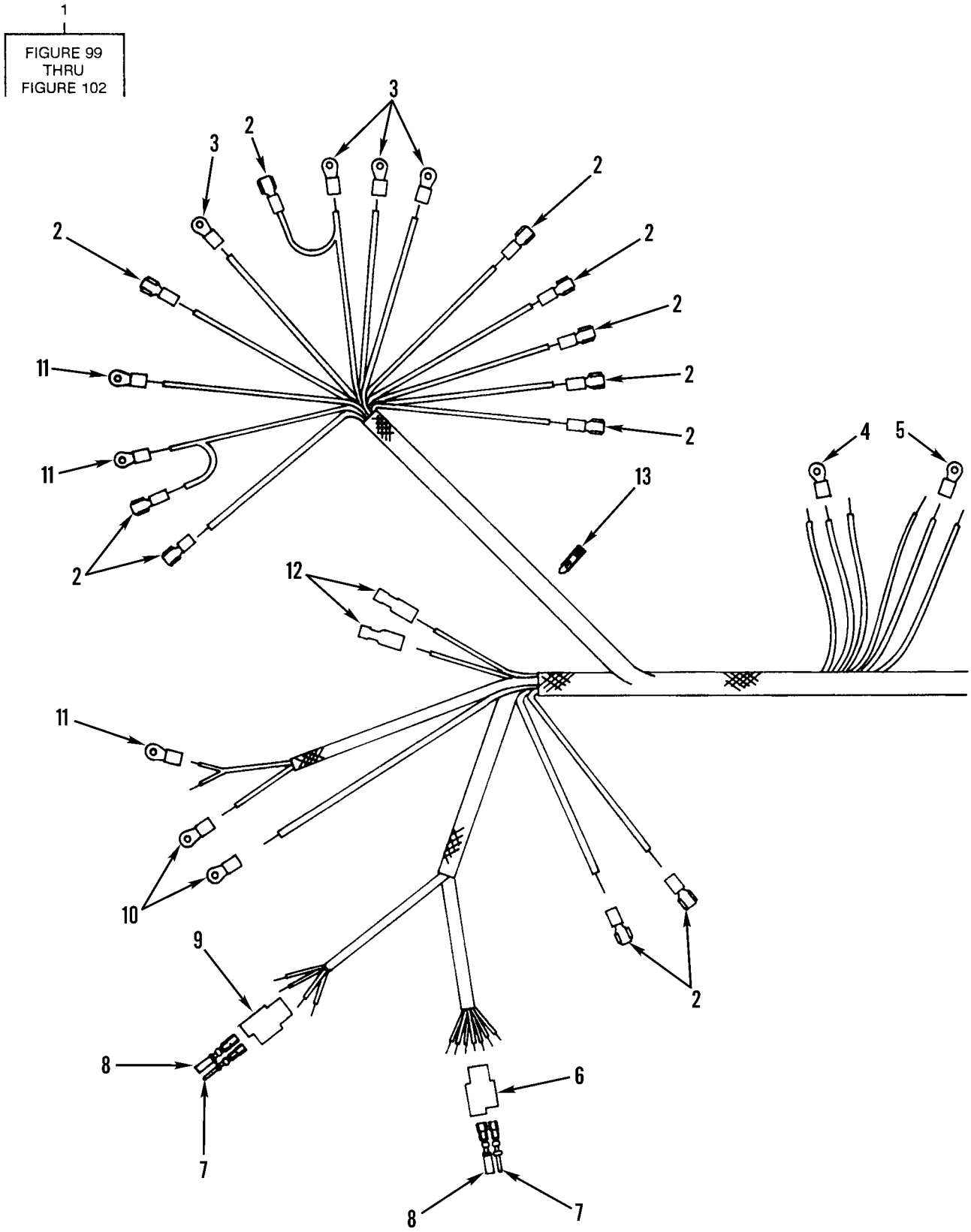

Figure 101. Main Wiring Harness and Mounting, Cab

(1) ITEM NO	(2) SMR CODE	(3) NSN	(4) CAGEC	(5) PART NUMBER	(6) DESCRIPTION AND USABLE ON CODES(UOC)	(7) QTY
					GROUP 0613 HULL OR CHASSIS WIRING HARNESS FIG. 101 MAIN WIRING HARNESS AND MOUNTING, CAB	
1	PFFZZ	5995011774828	11083	5R6903	WIRING HARNESS,BRAN..... UOC:AGP	1
2	PAFZZ	5940010589112	11083	5P4571	.TERMINAL,QUICK DISC..... UOC:AGP	11
3	PFFZZ	5940001434774	96906	MS25036-153	.TERMINAL,LUG..... UOC:AGP	4
4	PFFZZ	5940001139826	11083	2L8069	.TERMINAL,LUG..... UOC:AGP	1
5	PFFZZ	5940005574345	96906	MS25036-118	.TERMINAL,LUG..... UOC:AGP	1
6	PAFZZ	5935011538291	71468	120-1870-000	.CONNECTOR,PLUG,ELEC..... UOC:AGP	1
7	PFFZZ	5999011566314	71468	110238-0195	.PIN,GROOVED,HEADLES..... UOC:AGP	2
8	PAFZZ	5999011508808	11083	7N7779	.CONTACT,ELECTRICAL..... UOC:AGP	2
9	PFFZZ	5935011546233	71468	120-1806-000	.CONNECTOR,PLUG,ELEC..... UOC:AGP	1
10	PFFZZ	5940001435284	96906	MS25036-115	.TERMINAL,LUG..... UOC:AGP	2
11	PFFZZ	5940001434794	96906	MS25036-112	.TERMINAL,LUG..... UOC:AGP	3
12	PAFZZ	5940010973578	11083	6N9587	.TERMINAL,QUICK DISC..... UOC:AGP	2
13	PAOZZ	2920010589099	11083	3S2093	STRAP..... UOC:AGP	1

END OF FIGURE

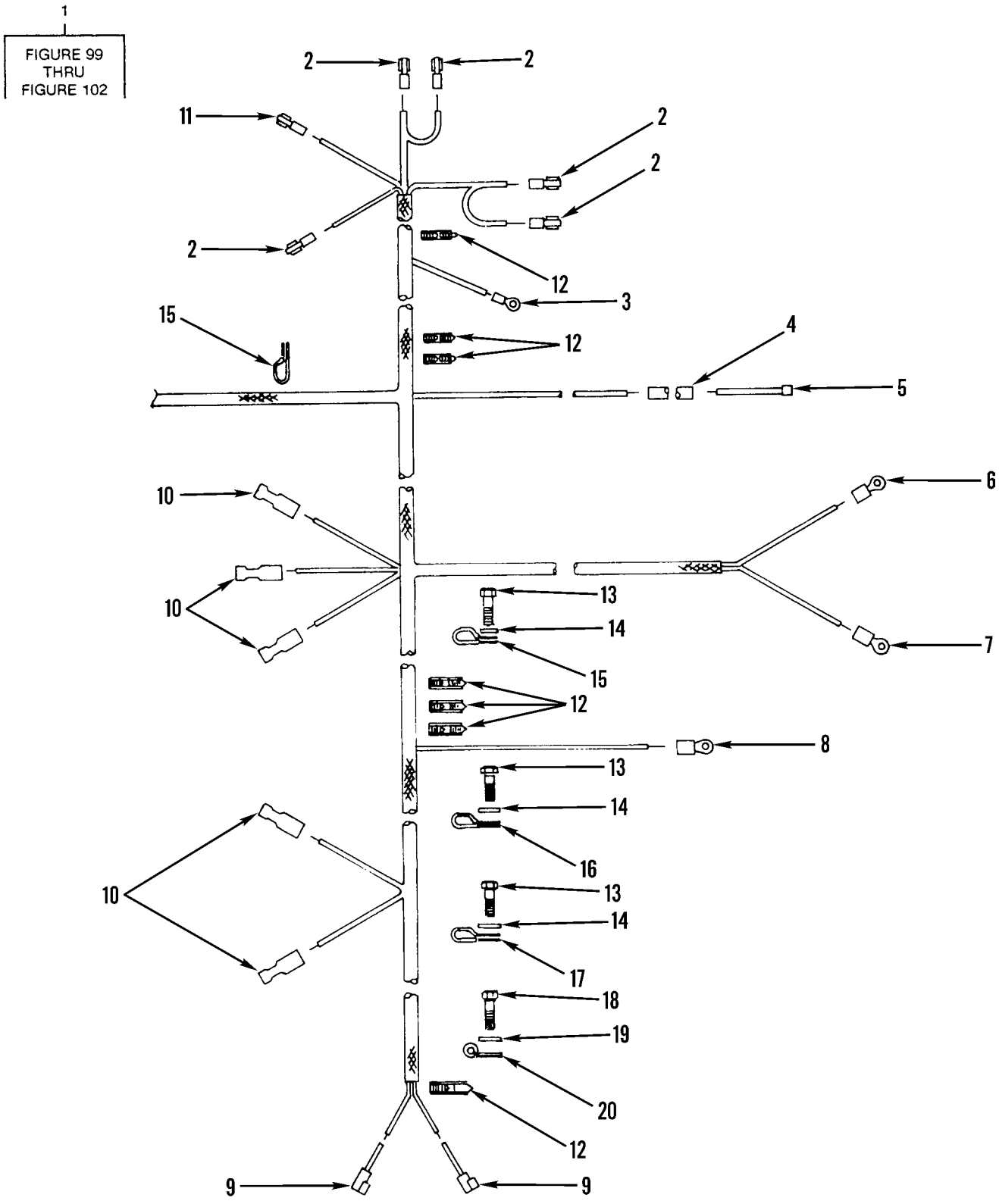

Figure 102. Main Wiring Harness and Mounting, Engine

(1) ITEM NO	(2) SMR CODE	(3) NSN	(4) CAGEC	(5) PART NUMBER	(6) DESCRIPTION AND USABLE ON CODES(UOC)	(7) QTY
					0613 HULL OR CHASSIS WIRING HARNESS FIG. 102 MAIN WIRING HARNESS AND MOUNTING, ENGINE	
1	PFFZZ	5995011774828	11083	5R6903	WIRING HARNESS,BRAN..... UOC:AGP	1
2	PAFZZ	5940010589112	11083	5P4571	.TERMINAL,QUICK DISC..... UOC:AGP	5
3	PFFZZ	5940001434793	96906	MS25036-110	.TERMINAL,LUG..... UOC:AGP	1
4	MFFZZ	5640012021771	11083	6V2689	.INSULATION SLEEVING MAKE FROM INSULATION SLEEVING P/N 6V2689..... UOC:AGP	1
5	XDFZZ	5995011494967	11083	5P6271	.LEAD,ELECTRICAL..... UOC:AGP	1
6	PFFZZ	5940001434794	96906	MS25036-112	.TERMINAL,LUG..... UOC:AGP	1
7	PFFZZ	5940001141305	96906	MS25036-116	.TERMINAL,LUG..... UOC:AGP	1
8	PFFZZ	5940002260490	11083	3T4692	.TERMINAL,LUG..... UOC:AGP	1
9	PAFZZ	5995011516315	11083	3T5433	.LEAD,ELECTRICAL..... UOC:AGP	2
10	PAFZZ	5940010973578	11083	6N9587	.TERMINAL,QUICK DISC..... UOC:AGP	5
11	PAFZZ	5940010589133	11083	4S1988	.TERMINAL..... UOC:AGP	1
12	PAOZZ	2920010589099	11083	3S2093	STRAP..... UOC:AGP	7
13	PFOZZ	5305002528919	11083	0S0509	SCREW,CAP,HEXAGON H..... UOC:AGP	3
14	PFOZZ	5310001174788	11083	5M2894	WASHER,FLAT..... UOC:AGP	3
15	PFOZZ	5940001152684	96906	MS20659-118	TERMINAL,LUG..... UOC:AGP	2
16	PFOZZ	5340011494427	11083	9M4995	CLAMP,LOOP..... UOC:AGP	1
17	PFOZZ	5340004264793	99953	140583	CLAMP,LOOP..... UOC:AGP	1
18	PFOZZ	5306014682844	1F125	0302135	BOLT,MACHINE..... UOC:AGP	1
19	PFOZZ	5310000814219	96906	MS27183-12	WASHER,FLAT..... UOC:AGP	1
20	PFOZZ	5340004264656	11083	4D7794	CLAMP,LOOP..... UOC:AGP	1

END OF FIGURE

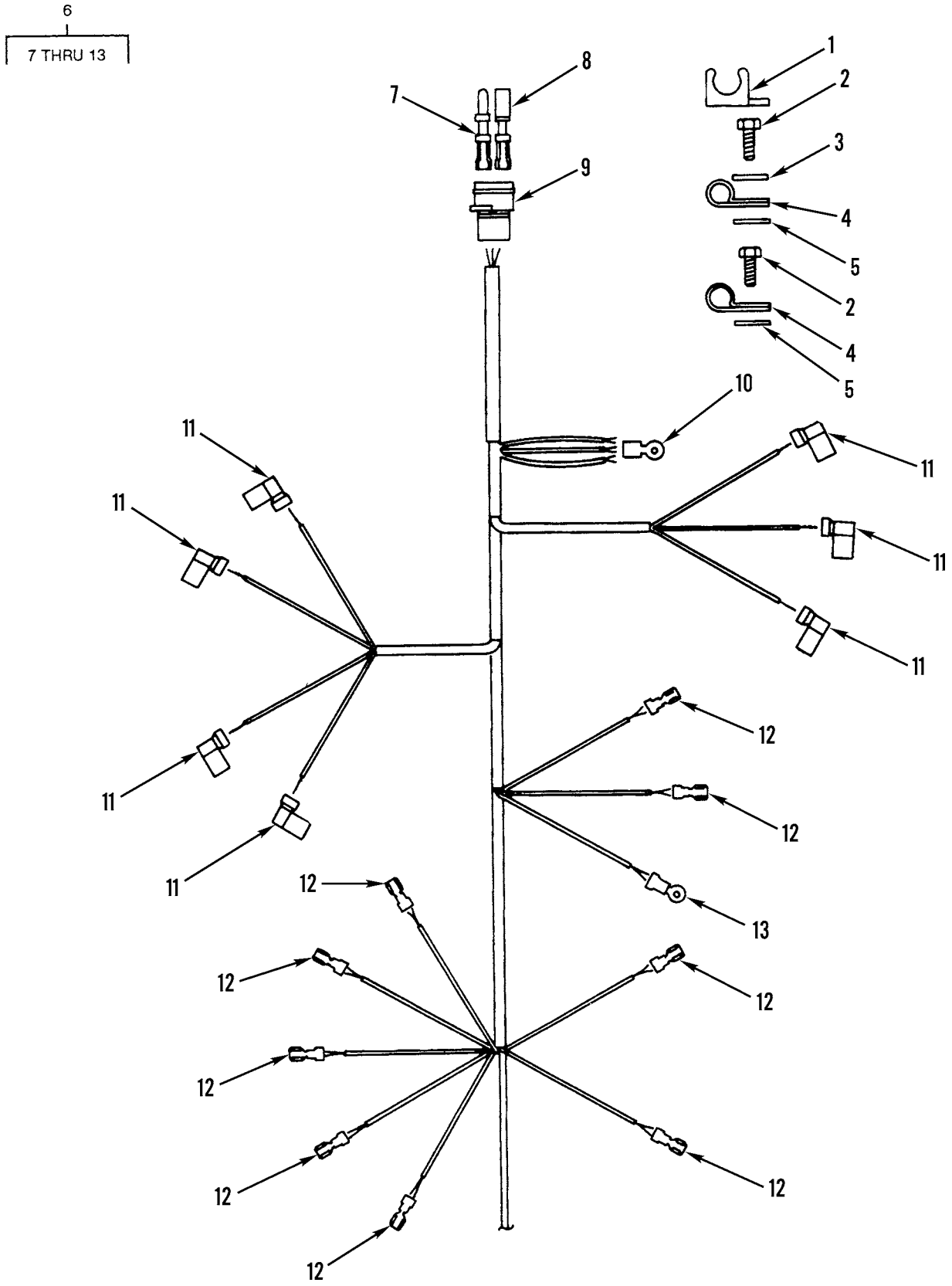

Figure 103. Cab Main Wiring Harness and Mounting, Upper (Sheet 1 of 2)

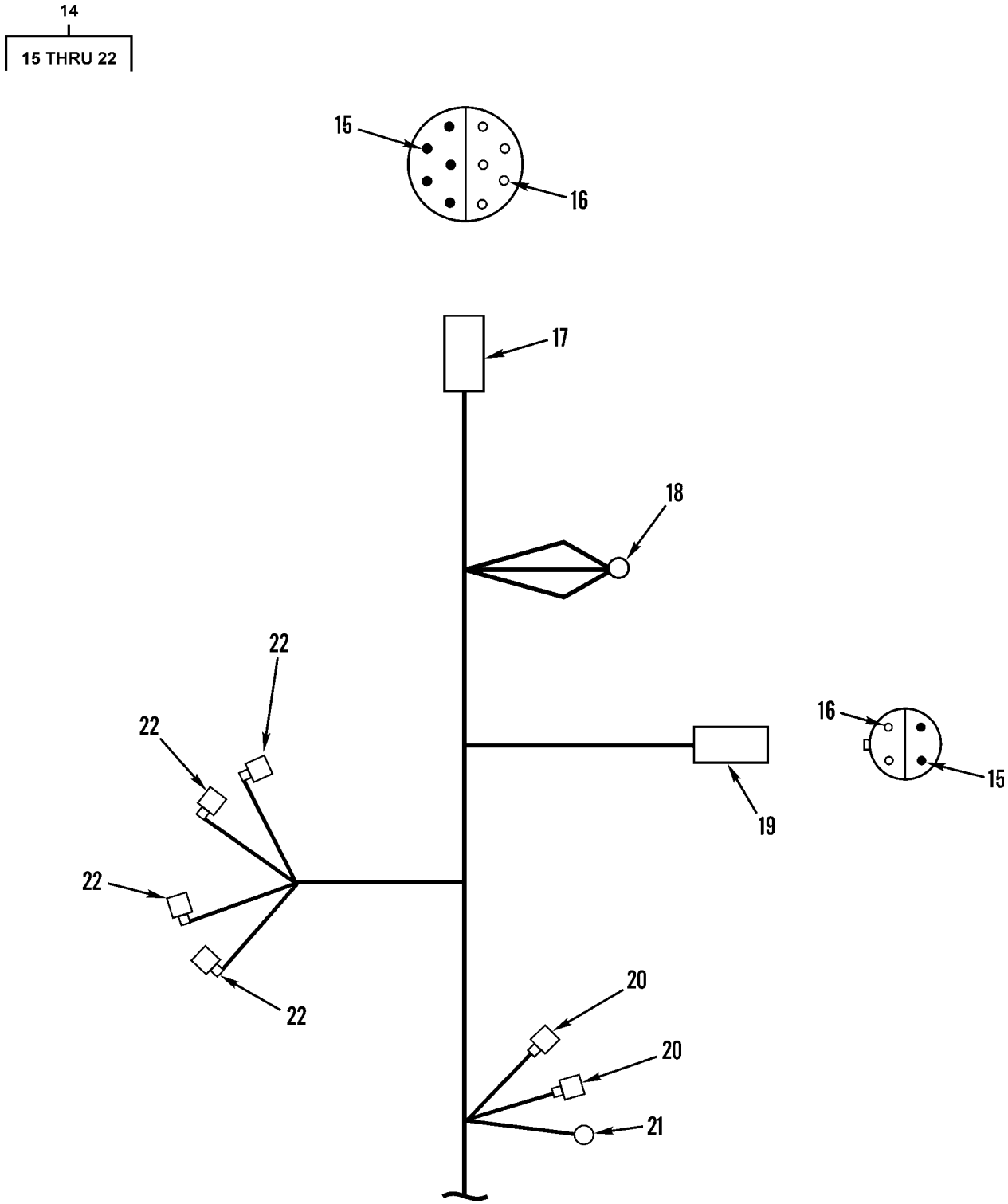

Figure 103. Cab Main Wiring Harness and Mounting, Upper (Sheet 2 of 2)

(1) ITEM NO	(2) SMR CODE	(3) NSN	(4) CAGEC	(5) PART NUMBER	(6) DESCRIPTION AND USABLE ON CODES(UOC)	(7) QTY
					GROUP 0613 HULL OR CHASSIS WIRING HARNESS FIG. 103 CAB MAIN WIRING HARNESS AND MOUNTING, UPPER	
1	PAOZZ	5340011722011	11083	3T0050	STRAP,RETAINING..... UOC:AGP	1
2	PFOZZ	5305010964550	11083	4M5283	SCREW,CAP,HEXAGON H..... UOC:AGP	2
3	PFOZZ	5310002090786	78189	1114-00	WASHER,LOCK..... UOC:AGP	1
4	PFOZZ	5342010634236	11083	8J1256	CLIP..... UOC:AGP	2
5	PFOZZ	5310008094058	96906	MS27183-10	WASHER,FLAT..... UOC:AGP	2
6	PFOZZ	5995011787127	11083	5R6905	WIRING HARNESS,BRAN SERIAL NUMBER 7GB00001 THRU 7GB00464 & 74V00001 AND UP..... UOC:AGP	1
7	PFOZZ	5999011566314	71468	110238-0195	.PIN,GROOVED,HEADLES SERIAL NUMBER 7GB00001 THRU 7GB00464 & 74V00001 AND UP..... UOC:AGP	5
8	PFOZZ	5999011508808	11083	7N7779	.CONTACT,ELECTRICAL SERIAL NUMBER 7GB00001 THRU 7GB00464 & 74V00001 AND UP..... UOC:AGP	5
9	PFOZZ	5935011567789	11083	9G3667	.CONNECTOR BODY,PLUG SERIAL NUMBER 7GB00001 THRU 7GB00464 & 74V00001 AND UP..... UOC:AGP	1
10	PFOZZ	5940001141305	96906	MS25036-116	.TERMINAL,LUG SERIAL NUMBER 7GB00001 THRU 7GB00464 & 74V00001 AND UP..... UOC:AGP	1
11	PAOZZ	5940010681879	56501	RB-2577F	.TERMINAL,QUICK DISC SERIAL NUMBER 7GB00001 THRU 7GB00464 & 74V00001 AND UP..... UOC:AGP	7
12	PAOZZ	5940010589112	11083	5P4571	.TERMINAL,QUICK DISC SERIAL NUMBER 7GB00001 THRU 7GB00464 & 74V00001 AND UP..... UOC:AGP	9
13	PFOZZ	5940001434774	96906	MS25036-153	.TERMINAL,LUG SERIAL NUMBER 7GB00001 THRU 7GB00464 & 74V00001 AND UP..... UOC:AGP	1
14	PFOOO		11083	5T7662	WIRING HARNESS,BRAN SERIAL NUMBER 7GB00465 AND UP..... UOC:AF9,AGP,F10	1
15	PFOZZ	5999011566314	71468	110238-0195	.PIN,GROOVED,HEADLES..... UOC:AF9,AGN,AGP,F10	7

(1) ITEM NO	(2) SMR CODE	(3) NSN	(4) CAGEC	(5) PART NUMBER	(6) DESCRIPTION AND USABLE ON CODES(UOC)	(7) QTY
16	PFOZZ	5999011508808	11083	7N7779	.CONTACT,ELECTRICAL SERIAL NUMBER 7GB00465 AND UP..... UOC:AF9,AGP,F10	7
17	PFOZZ	5935011567789	11083	9G3667	.CONNECTOR BODY,PLUG SERIAL NUMBER 7GB00465 AND UP..... UOC:AF9,AGP,F10	1
18	PFOZZ	5940005574344	11083	2L8050	.TERMINAL,LUG SERIAL NUMBER 7GB00465 AND UP..... UOC:AF9,AGP,F10	1
19	PFOZZ	5935011526814	71468	120-1809-000	.CONNECTOR BODY,PLUG SERIAL NUMBER 7GB00465 AND UP..... UOC:AF9,AGP,F10	1
20	PFOZZ	5995010989330	11083	7K4475	.LEAD,ELECTRICAL SERIAL NUMBER 7GB00465 AND UP..... UOC:AF9,AGP,F10	2
21	PFOZZ	5940001434774	96906	MS25036-153	TERMINAL,LUG.....	1
22	PFOZZ	5940010681879	56501	RB-2577F	.TERMINAL,QUICK DISC SERIAL NUMBER 7GB00465 AND UP..... UOC:AF9,AGP,F10	4

END OF FIGURE

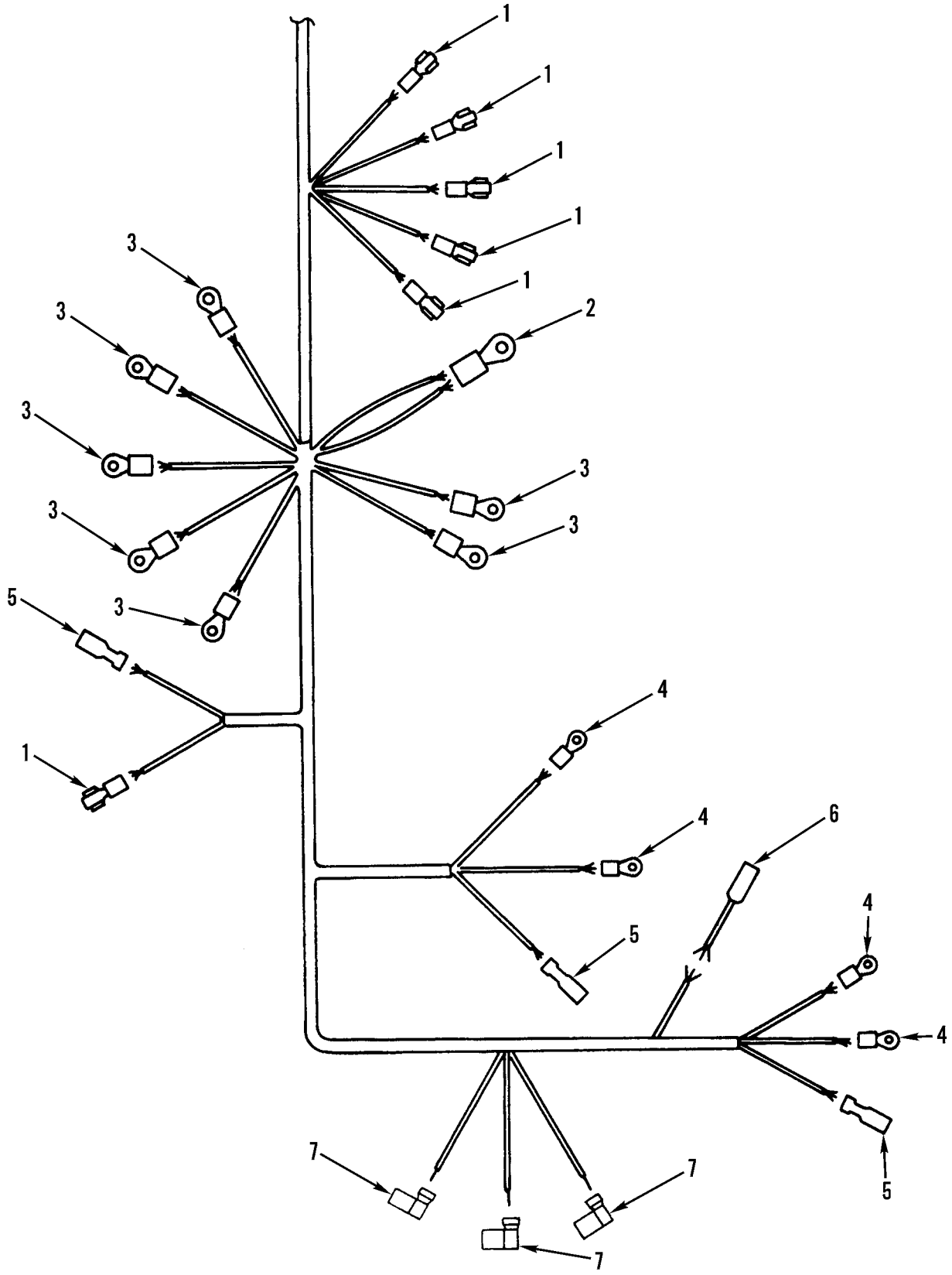

Figure 104. Cab Main Wiring Harness and Mounting, Lower (Sheet 1 of 2)

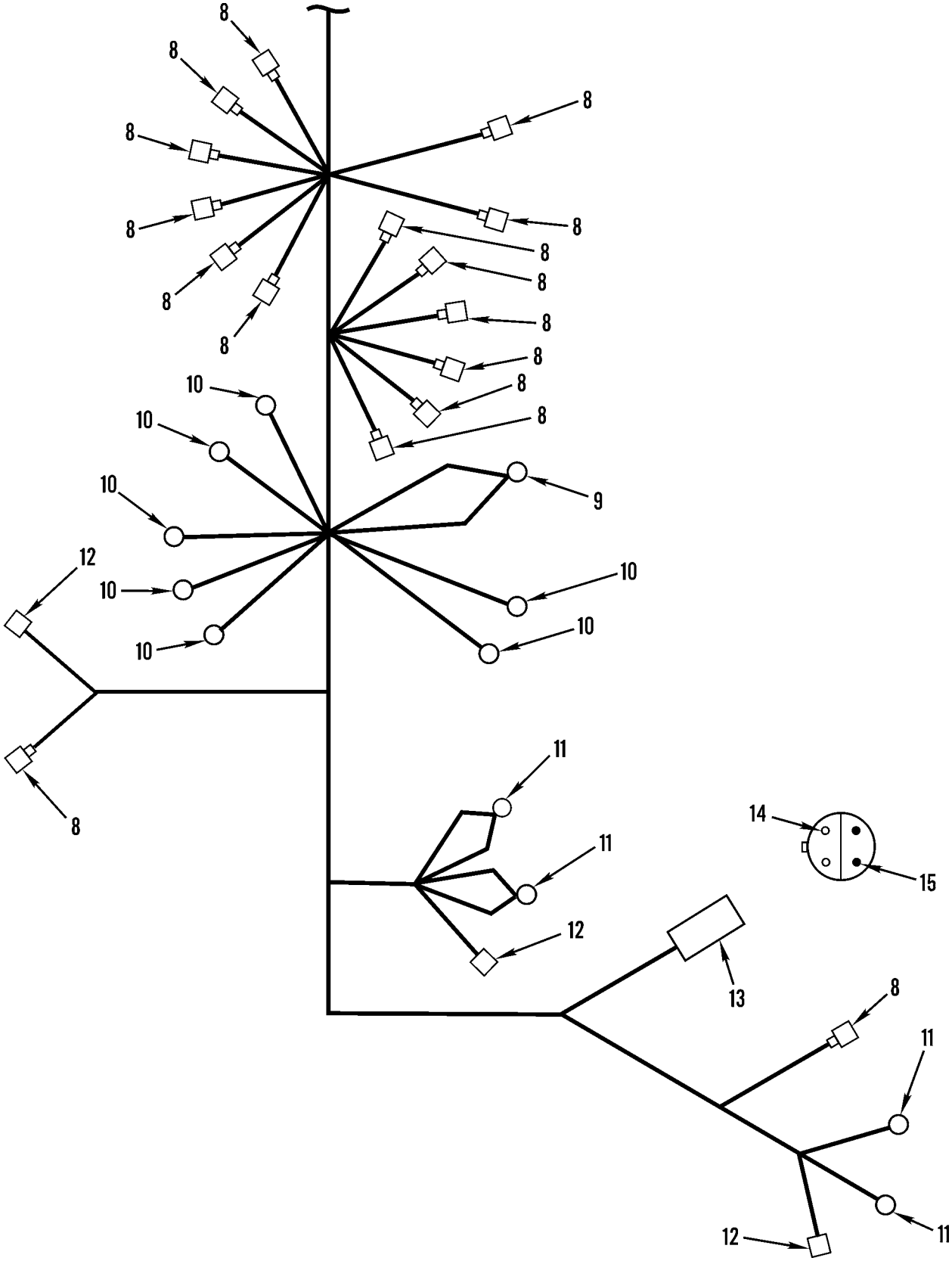

Figure 104. Cab Main Wiring Harness and Mounting, Lower (Sheet 2 of 2)

(1) ITEM NO	(2) SMR CODE	(3) NSN	(4) CAGEC	(5) PART NUMBER	(6) DESCRIPTION AND USABLE ON CODES(UOC)	(7) QTY
					GROUP 0613 HULL OR CHASSIS WIRING HARNESS FIG. 104 CAB MAIN WIRING HARNESS AND MOUNTING, LOWER	
1	PAOZZ	5940010589112	11083	5P4571	.TERMINAL,QUICK DISC SERIAL NUMBER 7GB00001 THRU 7GB00464 & 74V00001 AND UP..... UOC:AGP	6
2	PFOZZ	5940001434794	96906	MS25036-112	.TERMINAL,LUG SERIAL NUMBER 7GB00001 THRU 7GB00464 & 74V00001 AND UP..... UOC:AGP	1
3	PFOZZ	5940010870285	00779	53245-1	.TERMINAL,LUG SERIAL NUMBER 7GB00001 THRU 7GB00464 & 74V00001 AND UP..... UOC:AGP	7
4	PFOZZ	5940001434774	96906	MS25036-153	.TERMINAL,LUG SERIAL NUMBER 7GB00001 THRU 7GB00464 & 74V00001 AND UP..... UOC:AGP	4
5	PAOZZ	5940010973578	11083	6N9587	.TERMINAL,QUICK DISC SERIAL NUMBER 7GB00001 THRU 7GB00464 & 74V00001 AND UP..... UOC:AGP	3
6	PAOZZ	5995010989330	11083	7K4475	.LEAD,ELECTRICAL SERIAL NUMBER 7GB00001 THRU 7GB00464 & 74V00001 AND UP..... UOC:AGP	1
7	PAOZZ	5940010681879	56501	RB-2577F	.TERMINAL,QUICK DISC SERIAL NUMBER 7GB00001 THRU 7GB00464 & 74V00001 AND UP..... UOC:AGP	3
8	PAOZZ	5995010989330	11083	7K4475	.LEAD,ELECTRICAL..... UOC:AF9,AGP,F10	16
9	PFOZZ	5940001434794	96906	MS25036-112	.TERMINAL,LUG..... UOC:AF9,AGM,AGP,F10	1
10	PAOZZ	5940010870285	06383	PV14-10LFC	.TERMINAL,LUG..... UOC:AF9,AGP,F10	7
11	PAOZZ	5940001434774	96906	MS25036-153	.TERMINAL,LUG..... UOC:AF9,AGM,AGP,F10	4
12	PFOZZ	5940010973578	11083	6N9587	.TERMINAL,QUICK DISC..... UOC:AF9,AGM,AGP,F10	3
13	PFOZZ	5935011526814	71468	120-1809-000	.CONNECTOR BODY,PLUG..... UOC:AF9,AGP,F10	1
14	PFOZZ	5999011508808	11083	7N7779	.CONTACT,ELECTRICAL..... UOC:AF9,AGP,F10	2
15	PFOZZ	5999011566314	71468	110238-0195	.PIN,GROOVED,HEADLES..... UOC:AF9,AGP,F10	2

END OF FIGURE

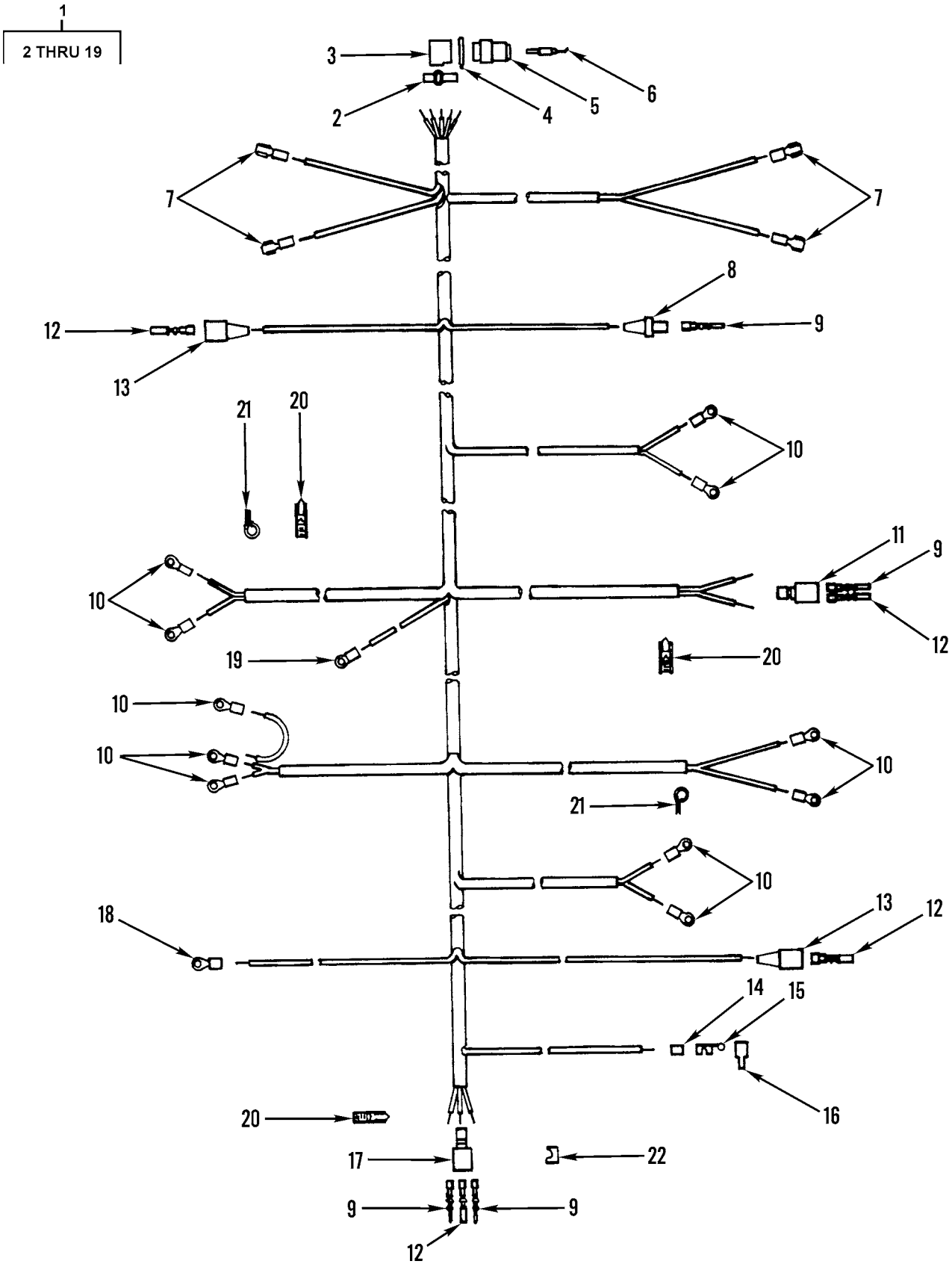

Figure 105. Monitor Main Harness (Sheet 1 of 3)

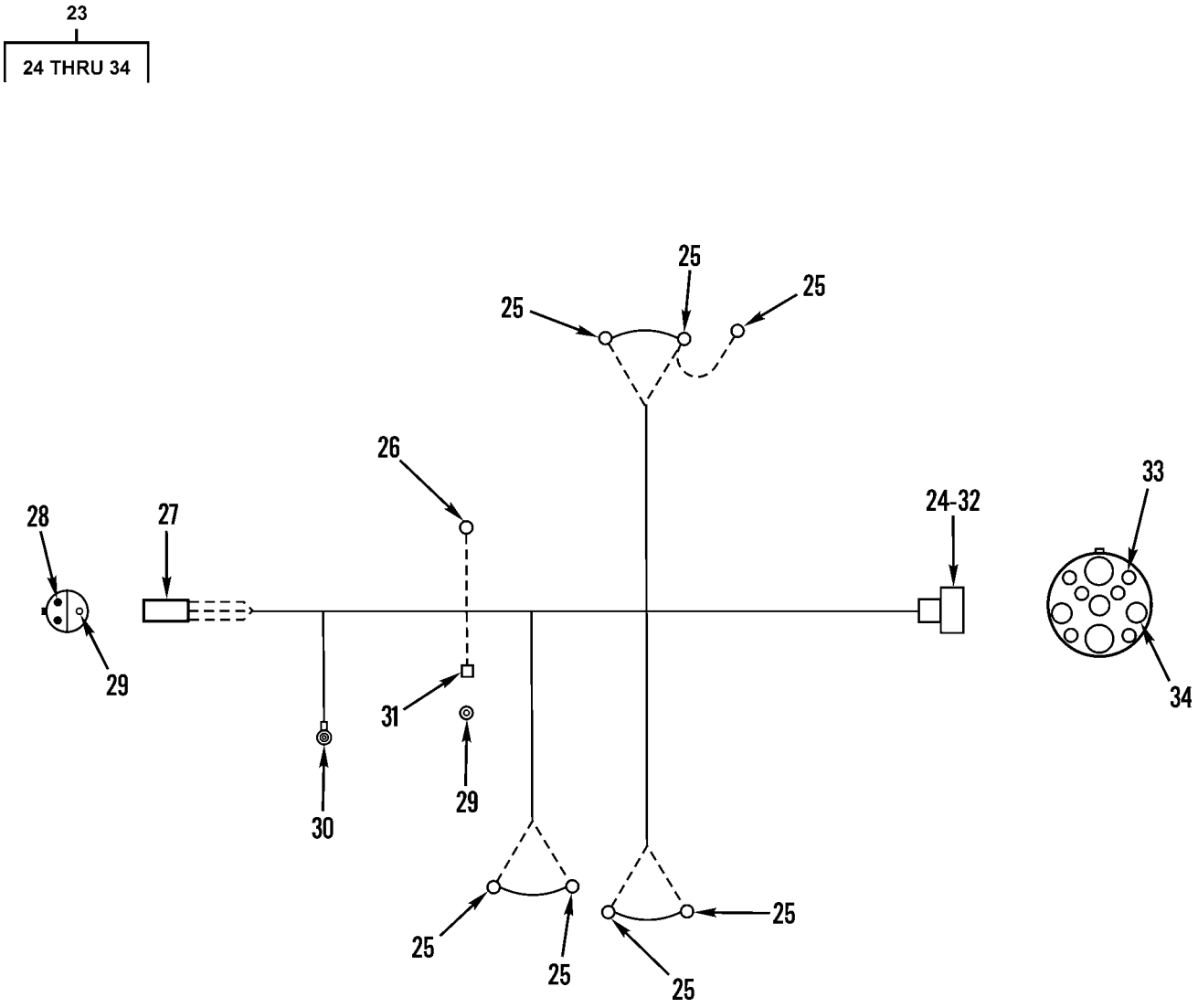

Figure 105. Monitor Main Harness (Sheet 2 of 3)

35

36 THRU 51

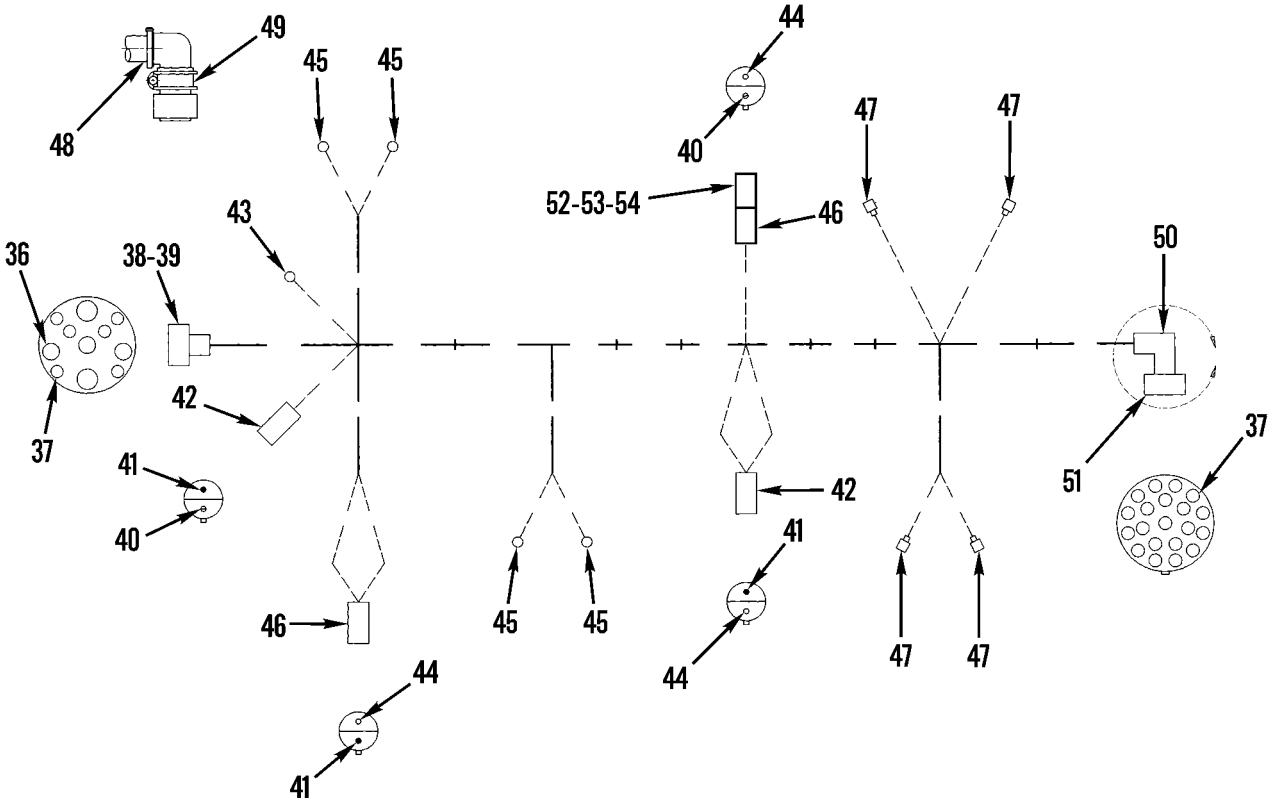

Figure 105. Monitor Main Harness (Sheet 3 of 3)

(1) ITEM NO	(2) SMR CODE	(3) NSN	(4) CAGEC	(5) PART NUMBER	(6) DESCRIPTION AND USABLE ON CODES(UOC)	(7) QTY
					GROUP 0613 HULL OR CHASSIS WIRING HARNESS. FIG. 105 MONITOR MAIN HARNESS	
1	PFFZZ	5995011774829	11083	6G5267	WIRING HARNESS,BRAN..... UOC:AF9,AGP	1
2	PAFZZ	5975001338687	96906	MS3367-5-0	.STRAP,TIEDOWN,ELECT..... UOC:AF9,AGP	1
3	XDFZZ		11083	3T3454	.ENDBELL,HARNESS..... UOC:AF9,AGP	1
4	PFFZZ	4730012012085	81646	6320	.CLAMP,HOSE..... UOC:AF9,AGP	1
5	XDFZZ		71468	VE26R24-20SL	.CONNECTOR BODY,PLUG..... UOC:AF9,AGP	1
6	XDFZZ	5999011662748	71468	031-1301-000	.CONTACT,ELECTRICAL..... UOC:AF9,AGP	19
7	PAFZZ	5940010589112	11083	5P4571	.TERMINAL,QUICK DISC..... UOC:AGP,F10	4
8	PAFZZ	5935011496997	11083	7N7778	.CONNECTOR BODY,PLUG..... UOC:AF9,AGP	1
9	PFFZZ	5999011566314	71468	110238-0195	.PIN,GROOVED,HEADLES..... UOC:AF9,AGP	4
10	PFFZZ	5940001434774	96906	MS25036-153	.TERMINAL,LUG..... UOC:AF9,AGP	11
11	PAFZZ	5935011495165	11083	7N9738	.CONNECTOR BODY,PLUG..... UOC:AF9,AGP	1
12	PFFZZ	5999011508808	11083	7N7779	.CONTACT,ELECTRICAL..... UOC:AF9,AGP	4
13	PAFZZ	5935011539319	71468	120-1833-000	.CONNECTOR,PLUG,ELEC..... UOC:AF9,AGP	2
14	XBFZZ	5325011073893	79550	15784	.RING,RETAINING..... UOC:AF9,AGP	1
15	PAFZZ	5940013360054	79550	15791	.TERMINAL,QUICK DISC..... UOC:AF9,AGP	1
16	PFFZZ	5940014392605	11083	9X4997	.TERMINAL,LUG..... UOC:AGP,F10	1
17	PFFZZ	5935011539320	71468	120-1805-000	.CONNECTOR,PLUG,ELEC..... UOC:AF9,AGP	1
18	PFFZZ	5940010590873	11083	2L8071	.TERMINAL,LUG..... UOC:AF9,AGP	1
19	PFFZZ	5940010870285	00779	53245-1	.TERMINAL,LUG..... UOC:AF9,AGP	1
20	PAOZZ	2920010589099	11083	3S2093	STRAP..... UOC:AF9,AGP	10
21	PFOZZ	5340004264803	11083	8M2772	CLAMP,LOOP..... UOC:AF9,AGP	4
22	PAOZZ	5340011600446	11083	9G9152	STRAP,RETAINING..... UOC:AF9,AGP	1
23	PFFFZ	5995012945962	11083	5R5300	WIRING HARNESS,BRAN..... UOC:AF9,AGM,AGN,F10	1
24	PFFZZ	5935012932036	71468	VE27R24-11PL	.CONNECTOR BODY,RECE..... UOC:AF9,AGM,AGN,F10	1

(1) ITEM NO	(2) SMR CODE	(3) NSN	(4) CAGEC	(5) PART NUMBER	(6) DESCRIPTION AND USABLE ON CODES(UOC)	(7) QTY
25	PFFZZ	5940001434774	96906	MS25036-153	.TERMINAL,LUG..... UOC:AF9,AGM,AGN,F10	7
26	PFFZZ	5940010590873	11083	2L8071	.TERMINAL,LUG..... UOC:AF9,AGM,AGN,F10	1
27	PFFZZ	5935011539320	71468	120-1805-000	.CONNECTOR,PLUG,ELEC..... UOC:AF9,AGM,AGN,F10	1
28	PFFZZ	5999011566314	71468	110238-0195	.PIN,GROOVED,HEADLES..... UOC:AF9,AGM,AGN,F10	2
29	PFFZZ	5999011508808	11083	7N7779	.CONTACT,ELECTRICAL..... UOC:AF9,AGM,AGN,F10	2
30	PFFZZ	5940014392605	11083	9X4997	.TERMINAL,LUG..... UOC:AF9,AGM,AGN,F10	1
31	PFFZZ	5935011539319	71468	120-1833-000	.CONNECTOR,PLUG,ELEC..... UOC:AF9,AGM,AGN,F10	1
32	XDFZZ		71468	057-0891-000	.CLAMP,CABLE,ELECTRI..... UOC:AF9,AGM,AGN,F10	1
33	PFFZA	5935014665378	11139	4060-001-16141	.PLUG,TIP..... UOC:AF9,AGM,AGN,F10	6
34	PFFZZ	5999011935735	71468	030-2272-000	.CONTACT,ELECTRICAL..... UOC:AF9,AGM,AGN,F10	1
35	PFFFZ	5995012960444	11083	5R8149	WIRING HARNESS,BRAN..... UOC:AF9,AGM,AGN,F10	1
36	XDFZZ		71468	031-1300-000	.CONTACT,ELECTRICAL..... UOC:AF9,AGM,AGN,F10	1
37	PFFZA	5935014665755	11139	4062-001-16141	.JACK,TIP..... UOC:AF9,AGM,AGN,F10	25
38	PFFZZ	5935011557738	71468	VE26R24-11SL	.CONNECTOR BODY,PLUG..... UOC:AF9,AGM,AGN,F10	1
39	XDFZZ		71468	057-0891-000	.CLAMP,CABLE,ELECTRI..... UOC:AF9,AGM,AGN,F10	1
40	PFFZZ	5935011522677	11083	9G3695	.PLUG,END SEAL,ELECT..... UOC:AF9,AGM,AGN,F10	2
41	PFFZZ	5999011566314	71468	110238-0195	.PIN,GROOVED,HEADLES..... UOC:AF9,AGM,AGN,F10	3
42	PFFZZ	5935011508323	71468	120-1807-000	.CONNECTOR BODY,PLUG..... UOC:AF9,AGM,AGN,F10	2
43	PFFZZ	5940010870285	00779	53245-1	.TERMINAL,LUG..... UOC:AF9,AGM,AGN,F10	1
44	PFFZZ	5999011508808	11083	7N7779	.CONTACT,ELECTRICAL..... UOC:AF9,AGM,AGN,F10	3
45	PFFZZ	5940001434774	96906	MS25036-153	.TERMINAL,LUG..... UOC:AF9,AGM,AGN,F10	4
46	PFFZZ	5935011495165	11083	7N9738	.CONNECTOR BODY,PLUG..... UOC:AF9,AGM,AGN,F10	2
47	PFFZZ	5940010589112	11083	5P4571	.TERMINAL,QUICK DISC..... UOC:AF9,AGM,AGN,F10	4
48	PFFZZ	5975001338687	96906	MS3367-5-0	.STRAP,TIEDOWN,ELECT..... UOC:AF9,AGM,AGN,F10	1
49	PFFZZ	4730012012085	81646	6320	.CLAMP,HOSE..... UOC:AF9,AGM,AGN,F10	1
50	PFFZZ	5975015297923	11083	3T3454	.BEND, ELECTRICAL CO..... UOC:AF9,AGM,AGN,F10	1

(1) ITEM NO	(2) SMR CODE	(3) NSN	(4) CAGEC	(5) PART NUMBER	(6) DESCRIPTION AND USABLE ON CODES(UOC)	(7) QTY
51	PFFZZ	5935011552513	71468	VE26R24-20SL	.CONNECTOR BODY,PLUG..... UOC:AF9,AGM,AGN,F10	1
52	PFFZZ	5342012708588	45152	2AA855	CLIP,SPECIAL..... UOC:AF9,AGM,AGN,F10	2
53	PFFZZ	5935011508323	71468	120-1807-000	CONNECTOR BODY,PLUG..... UOC:AF9,AGM,AGN,F10	1
54	PFFZZ	5935011522677	11083	9G3695	PLUG,END SEAL,ELECT..... UOC:AF9,AGM,AGN,F10	2

END OF FIGURE

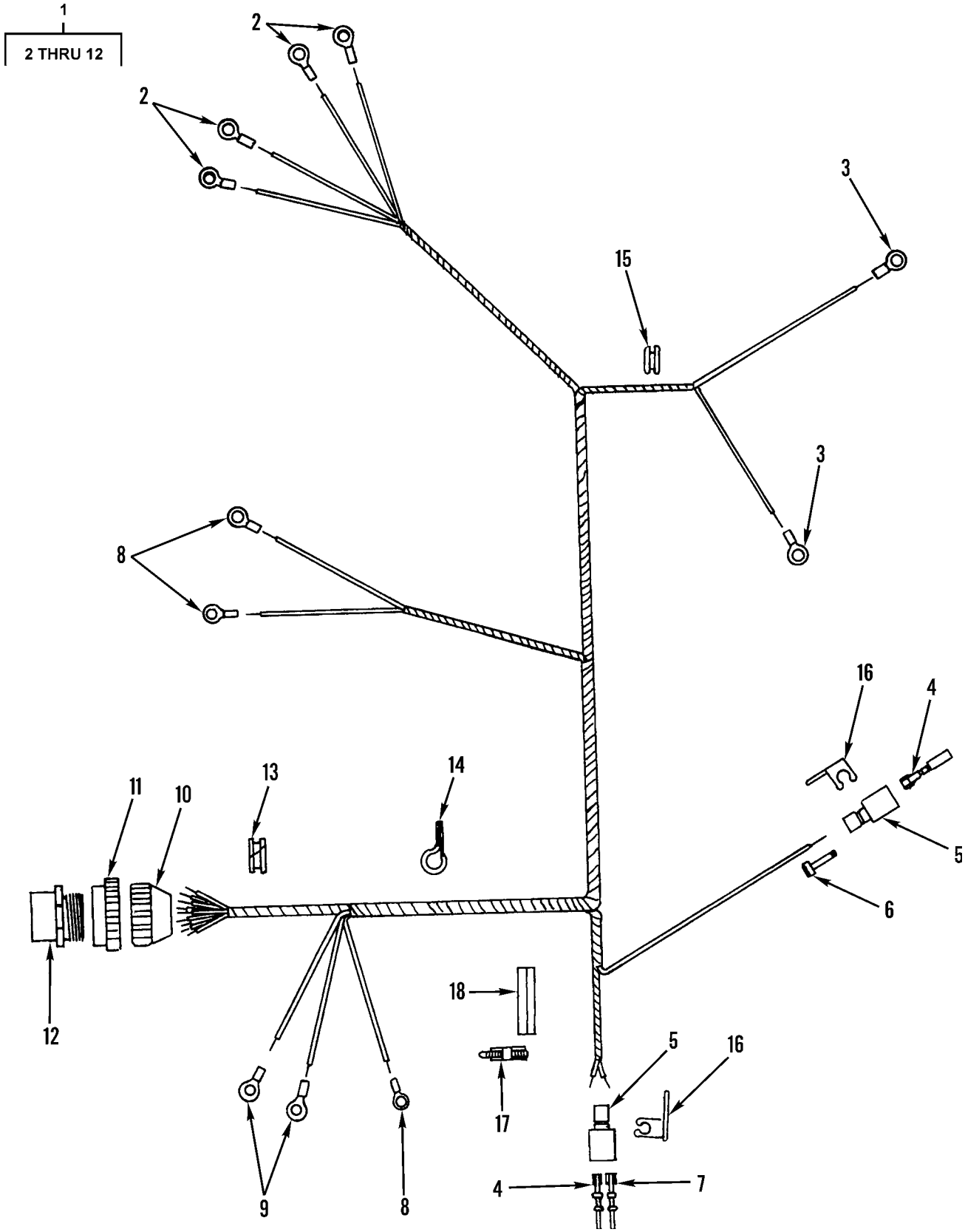

Figure 106. Main Blackout Light Wiring Harness and Mounting (Sheet 1 of 3)

19

20 THRU 23

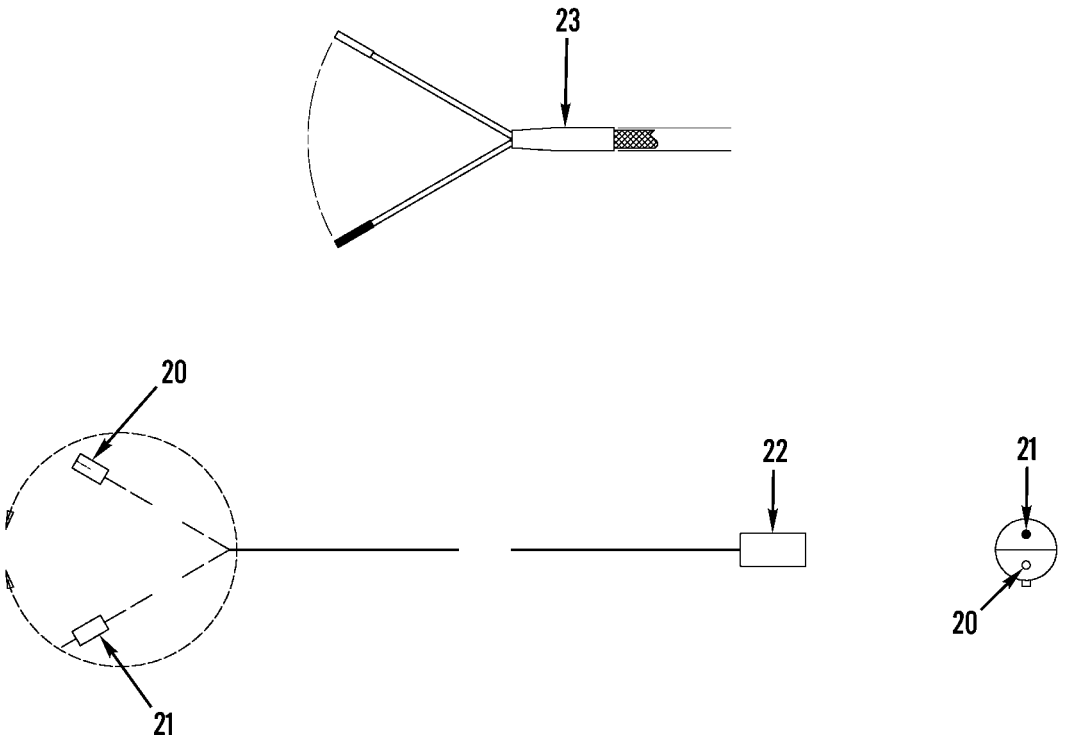

Figure 106. Main Blackout Light Wiring Harness and Mounting (Sheet 2 of 3)

24

25 THRU 35

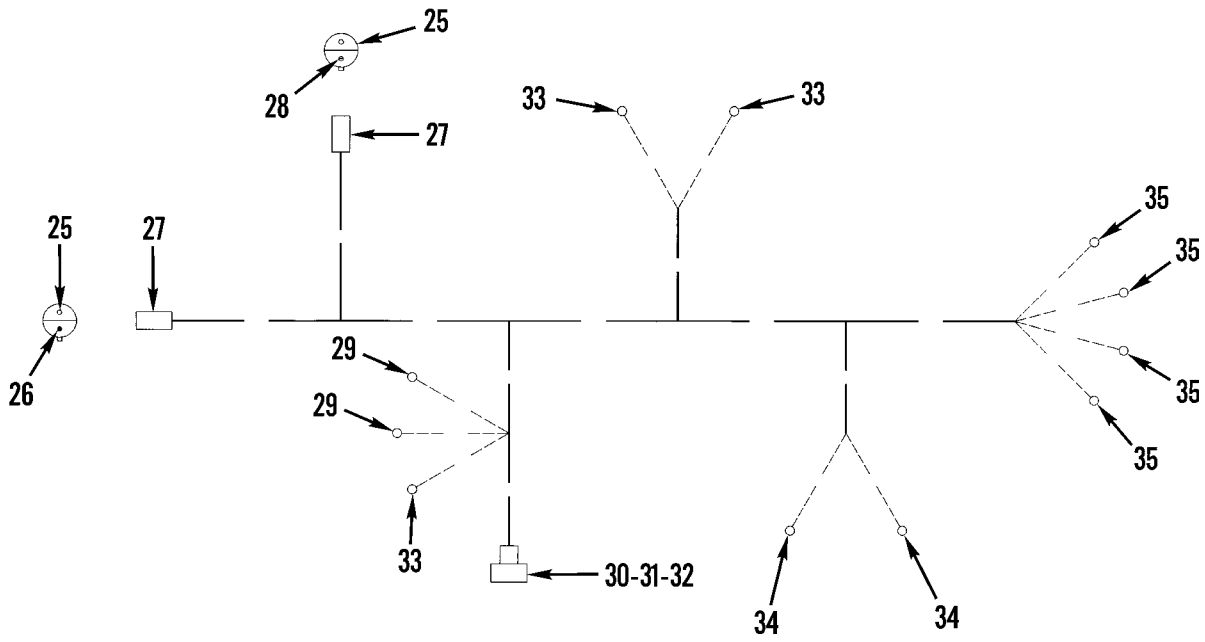

Figure 106. Main Blackout Light Wiring Harness and Mounting (Sheet 3 of 3)

(1) ITEM NO	(2) SMR CODE	(3) NSN	(4) CAGEC	(5) PART NUMBER	(6) DESCRIPTION AND USABLE ON CODES(UOC)	(7) QTY
					GROUP 0613 HULL OR CHASSIS WIRING HARNESS. FIG. 106 MAIN BLACKOUT LIGHT WIRING HARNESS AND MOUNTING	
1	PAOZZ	5995011774824	11083	5R6887	WIRING HARNESS,BRAN..... UOC:AF9,AGP	1
2	PFOZZ	5940001434774	96906	MS25036-153	.TERMINAL,LUG..... UOC:AF9,AGP	4
3	PFOZZ	5940001434794	96906	MS25036-112	.TERMINAL,LUG..... UOC:AF9,AGP	2
4	PFOZZ	5999011508808	11083	7N7779	.CONTACT,ELECTRICAL..... UOC:AF9,AGP	2
5	PAOZZ	5935011495165	11083	7N9738	.CONNECTOR BODY,PLUG..... UOC:AF9,AGP	2
6	PAOZZ	5935011522677	11083	9G3695	.PLUG,END SEAL,ELECT..... UOC:AF9,AGP	1
7	PFOZZ	5999011566314	71468	110238-0195	.PIN,GROOVED,HEADLES..... UOC:AF9,AGP	1
8	PFOZZ	5940001434780	96906	MS25036-108	.TERMINAL,LUG..... UOC:AF9,AGP	3
9	PFOZZ	5940001139826	96906	MS25036-114	.TERMINAL,LUG..... UOC:AF9,AGP	2
10	PFOZZ	5310003936685	77820	60-37005-281	.NUT,PLAIN,KNURLED..... UOC:AF9,AGP	1
11	PAOZZ	5975007716634	77820	60-40459-28	.NUT,COUPLING,ELECTR..... UOC:AF9,AGP	1
12	PAOZZ	5935006862599	77060	2973714	.CONNECTOR,PLUG,ELEC..... UOC:AF9,AGP	1
13	PAOZZ	5325012030184	11083	6P6641	GROMMET,NONMETALLIC.....	1
14	PFOZZ	5340004264793	99953	140583	CLAMP,LOOP.....	1
15	PCOZZ	5325011861318	11083	9G5687	GROMMET,NONMETALLIC.....	1
16	PAOZZ	5340011519964	11083	9G9150	STRAP,RETAINING.....	2
17	PAOZZ	2920010589099	11083	3S2093	STRAP.....	7
18	PAOZZ	5365011598889	11083	5V2823	BUSHING,NONMETALLIC.....	2
19	PFOZZ	5995012960445	11083	5R8534	WIRING HARNESS,BRAN..... UOC:AF9,AGM,AGN,F10	1
20	PAOZZ	5999011508808	11083	7N7779	.CONTACT,ELECTRICAL..... UOC:AF9,AGM,AGN,F10	2
21	PAOZZ	5999011566314	71468	110238-0195	.CONTACT,ELECTRICAL..... UOC:AF9,AGM,AGN,F10	2
22	PFOZZ	5935011495165	11083	7N9738	.CONNECTOR BODY,PLUG..... UOC:AF9,AGM,AGN,F10	1
23	MOOZZ		11083	5P6009-10	.HEAT SINK TUBE MAKE FROM P/N 5P6009..... UOC:AF9,AGM,AGN,F10	1
24	PAOZZ	5995012949731	11083	5R8533	WIRING HARNESS,BRAN..... UOC:AF9,AGM,AGN,F10	1
25	PAOZZ	5999011508808	11083	7N7779	.CONTACT,ELECTRICAL..... UOC:AF9,AGM,AGN,F10	2
26	PAOZZ	5999011566314	71468	110238-0195	.CONTACT,ELECTRICAL..... UOC:AF9,AGM,AGN,F10	1

(1) ITEM NO	(2) SMR CODE	(3) NSN	(4) CAGEC	(5) PART NUMBER	(6) DESCRIPTION AND USABLE ON CODES(UOC)	(7) QTY
27	PFOZZ	5935011495165	11083	7N9738	.CONNECTOR BODY,PLUG..... UOC:AF9,AGM,AGN,F10	2
28	PFFZZ	5935011522677	11083	9G3695	.PLUG,END SEAL,ELECT..... UOC:AF9,AGM,AGN,F10	1
29	PAOZZ	5940001139826	11083	2L8069	.TERMINAL,LUG..... UOC:AF9,AGM,AGN,F10	2
30	PAOZZ	5935006862599	19207	8724258	.CONNECTOR,PLUG,ELEC..... UOC:AF9,AGM,AGN,F10	1
31	PAOZZ	5975007716634	77820	60-40459-28	.NUT,COUPLING,ELECTR..... UOC:AF9,AGM,AGN,F10	1
32	PAOZZ	5310003936685	19207	7723309	.NUT,PLAIN,KNURLED..... UOC:AF9,AGM,AGN,F10	1
33	PAOZZ	5940001434780	96906	MS25036-108	.TERMINAL,LUG..... UOC:AF9,AGM,AGN,F10	3
34	PAOZZ	5940001434794	96906	MS25036-112	.TERMINAL,LUG..... UOC:AF9,AGM,AGN,F10	2
35	PFFZZ	5940001434774	96906	MS25036-153	.TERMINAL,LUG..... UOC:AF9,AGM,AGN,F10	4

END OF FIGURE

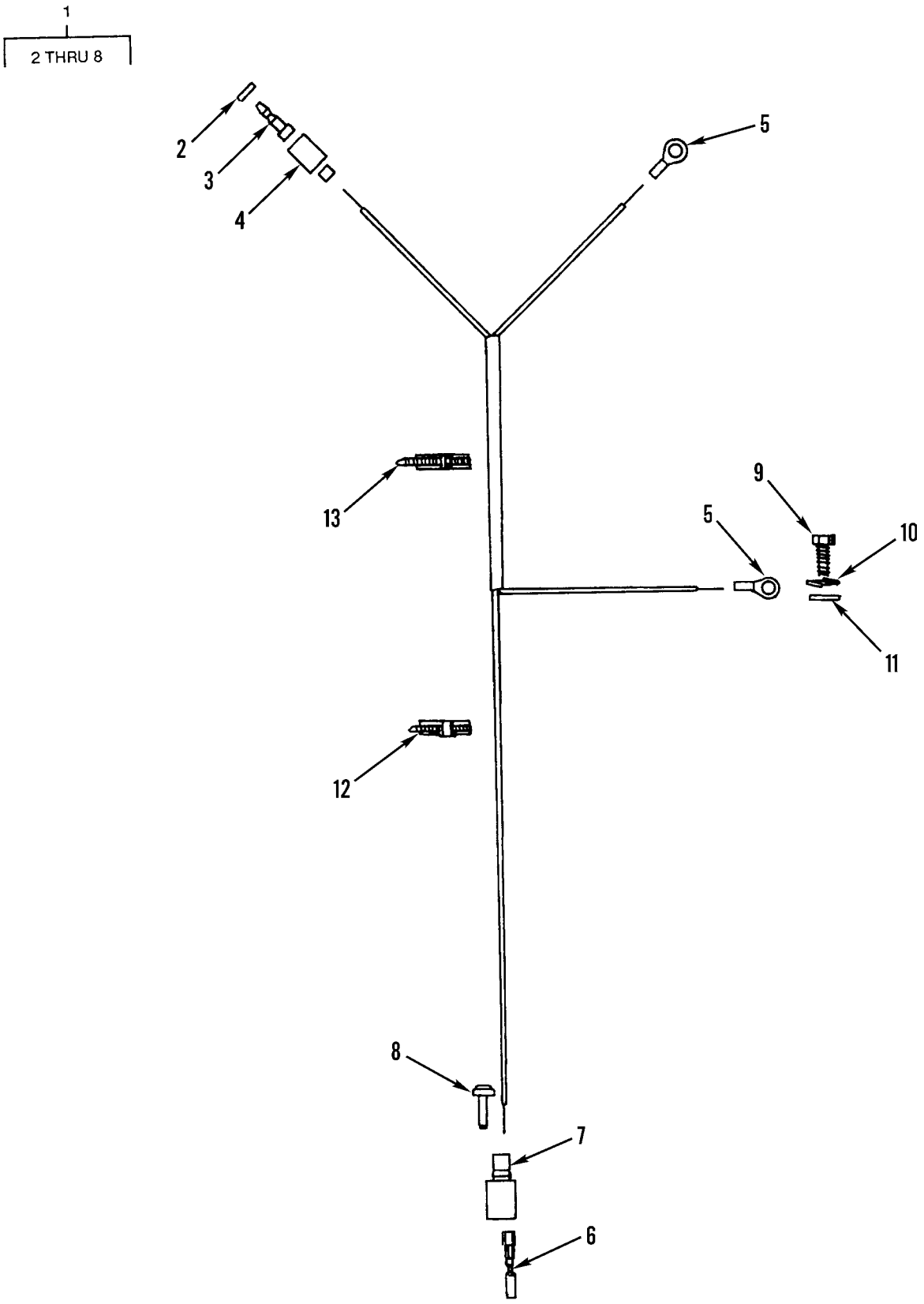

Figure 107. Vehicle Front Blackout Light Wiring Harness and Mounting

(1) ITEM NO	(2) SMR CODE	(3) NSN	(4) CAGEC	(5) PART NUMBER	(6) DESCRIPTION AND USABLE ON CODES(UOC)	(7) QTY
					GROUP 0613 HULL OR CHASSIS WIRING HARNESS FIG. 107 VEHICLE FRONT BLACKOUT LIGHT WIRING HARNESS AND MOUNTING	
1	PFOZZ	5995011774825	11083	5R6902	WIRING HARNESS,BRAN.....	1
2	PFOZZ	5310006560067	77060	2965892	.WASHER,SLOTTED.....	1
3	PFOZA	5999009263144	96906	MS27148-3	.CONTACT,ELECTRICAL.....	1
4	PAOZZ	5935006915591	97403	13207E6498-2	.SHELL,ELECTRICAL CO.....	1
5	PFOZZ	5940001434780	96906	MS25036-108	.TERMINAL,LUG.....	2
6	PFOZZ	5999011566314	71468	110238-0195	.PIN,GROOVED,HEADLES.....	1
7	PFOZZ	5935011508323	11083	7N9737	.CONNECTOR BODY,PLUG.....	1
8	PAOZZ	5935011522677	11083	9G3695	.PLUG,END SEAL,ELECT.....	1
9	PFOZZ	5305002528919	11083	0S0509	SCREW,CAP,HEXAGON H.....	1
10	PFOZZ	5310006276128	96906	MS35335-35	WASHER,LOCK.....	1
11	PFOZZ	5310001174788	11083	5M2894	WASHER,FLAT.....	1
12	PAOZZ	2920010589099	11083	3S2093	STRAP.....	7
13	PFOZZ	2815010534712	11083	7K1181	STRAP.....	1

END OF FIGURE

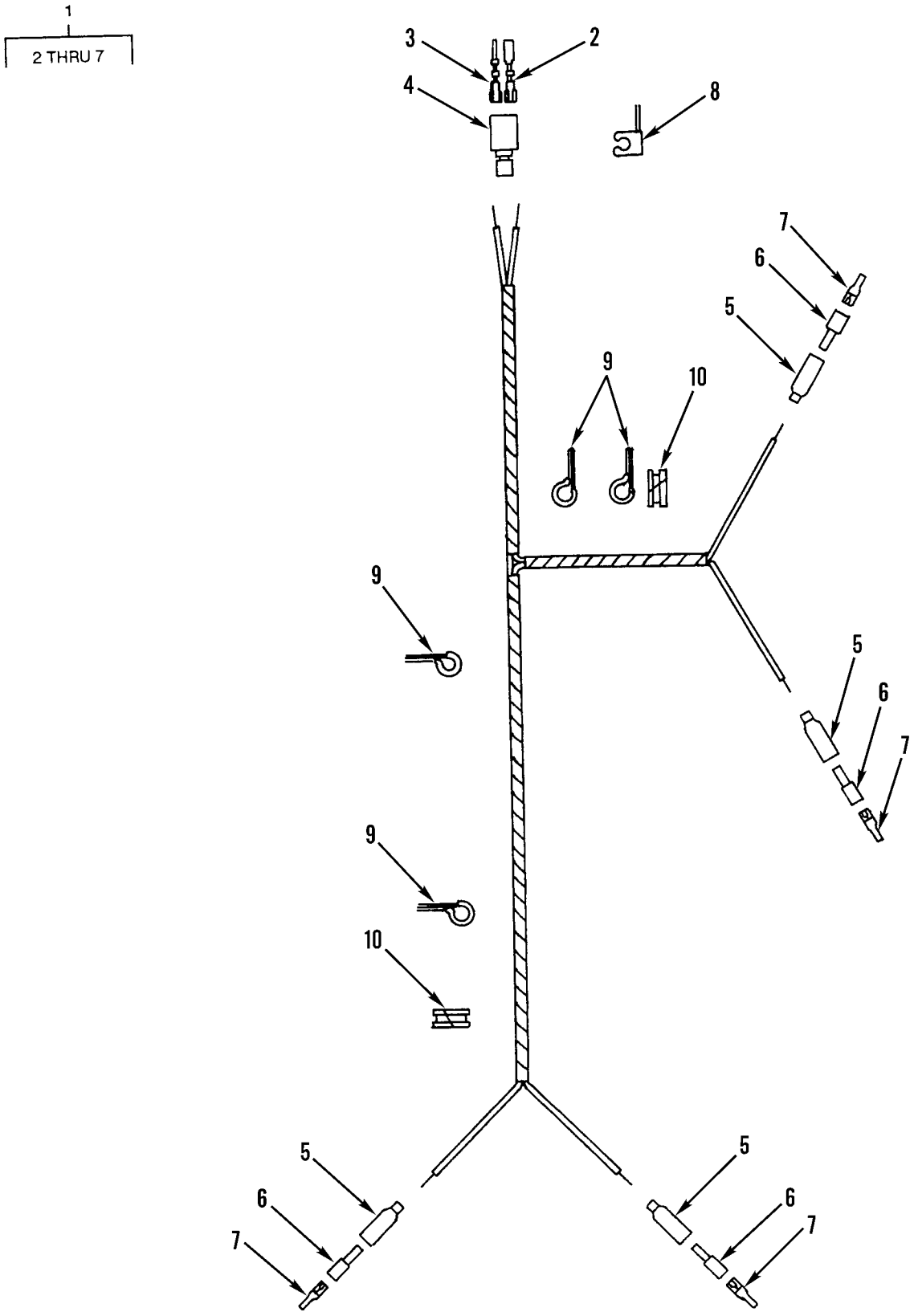

Figure 108. Vehicle Rear Blackout Light Wiring Harness and Mounting

(1) ITEM NO	(2) SMR CODE	(3) NSN	(4) CAGEC	(5) PART NUMBER	(6) DESCRIPTION AND USABLE ON CODES(UOC)	(7) QTY
					GROUP 0613 HULL OR CHASSIS WIRING HARNESS. FIG. 108 VEHICLE REAR BLACKOUT LIGHT WIRING HARNESS AND MOUNTING	
1	PAOZZ	5995011774826	11083	5R6888	WIRING HARNESS,BRAN.....	1
2	PFOZZ	5999011508808	11083	7N7779	.CONTACT,ELECTRICAL.....	1
3	PFOZZ	5999011566314	71468	110238-0195	.PIN,GROOVED,HEADLES.....	1
4	PFOZZ	5935011508323	11083	7N9737	.CONNECTOR BODY,PLUG.....	1
5	PFOZZ	5975006605962	77060	2969608	.CABLE NIPPLE,ELECTR.....	4
6	PAOZZ	5970008338562	19207	8338562	.INSULATOR,BUSHING.....	4
7	PFOZA	5940001441533	77060	2965638	.TERMINAL,QUICK DISC.....	4
8	PAOZZ	5340011519964	11083	9G9150	STRAP,RETAINING.....	1
9	PFOZZ	5340004264656	11083	4D7794	CLAMP,LOOP.....	1
10	PAOZZ	5325010887468	91265	3134	GROMMET,NONMETALLIC.....	2
					END OF FIGURE	

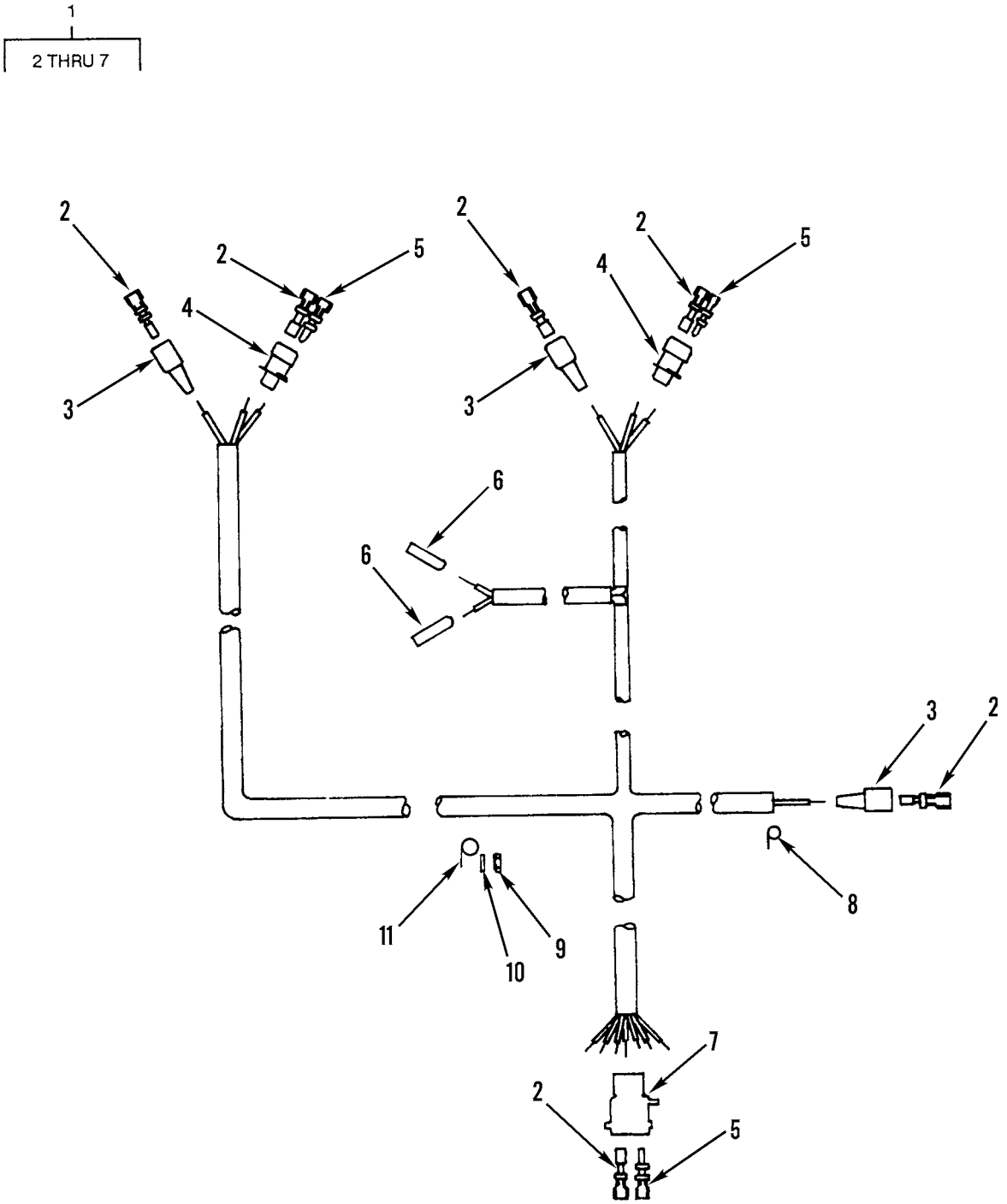

Figure 109. Rear Turn Signal Light and Backup Warning Alarm Wiring Harness and Mounting

(1) ITEM NO	(2) SMR CODE	(3) NSN	(4) CAGEC	(5) PART NUMBER	(6) DESCRIPTION AND USABLE ON CODES(UOC)	(7) QTY
					GROUP 0613 HULL OR CHASSIS WIRING HARNESS FIG. 109 REAR TURN SIGNAL LIGHT AND BACKUP WARNING ALARM WIRING HARNESS AND MOUNTING	
1	PAOZZ	2920011774830	11083	6G3472	WIRING HARNESS,BRAN.....	1
2	PFOZZ	5999011508808	11083	7N7779	.CONTACT,ELECTRICAL.....	8
3	PFOZZ	5935011539319	71468	120-1833-000	.CONNECTOR,PLUG,ELEC.....	3
4	PFOZZ	5935011508323	71468	120-1807-000	.CONNECTOR BODY,PLUG.....	2
5	PFOZZ	5999011566314	71468	110238-0195	.PIN,GROOVED,HEADLES.....	6
6	PFOZZ	5940010973578	11083	6N9587	.TERMINAL,QUICK DISC.....	2
7	PFOZZ	5935011537519	71468	120-1873-000	.CONNECTOR,PLUG,ELEC.....	1
8	PFOZZ	5340004264803	11083	8M2772	CLAMP,LOOP.....	1
9	PFOZZ	5310011831237	11083	9S8752	NUT,PLAIN,HEXAGON.....	3
10	PFOZZ	5310001174788	11083	5M2894	WASHER,FLAT.....	3
11	PFOZZ	5340004264793	99953	140583	CLAMP,LOOP.....	3

END OF FIGURE

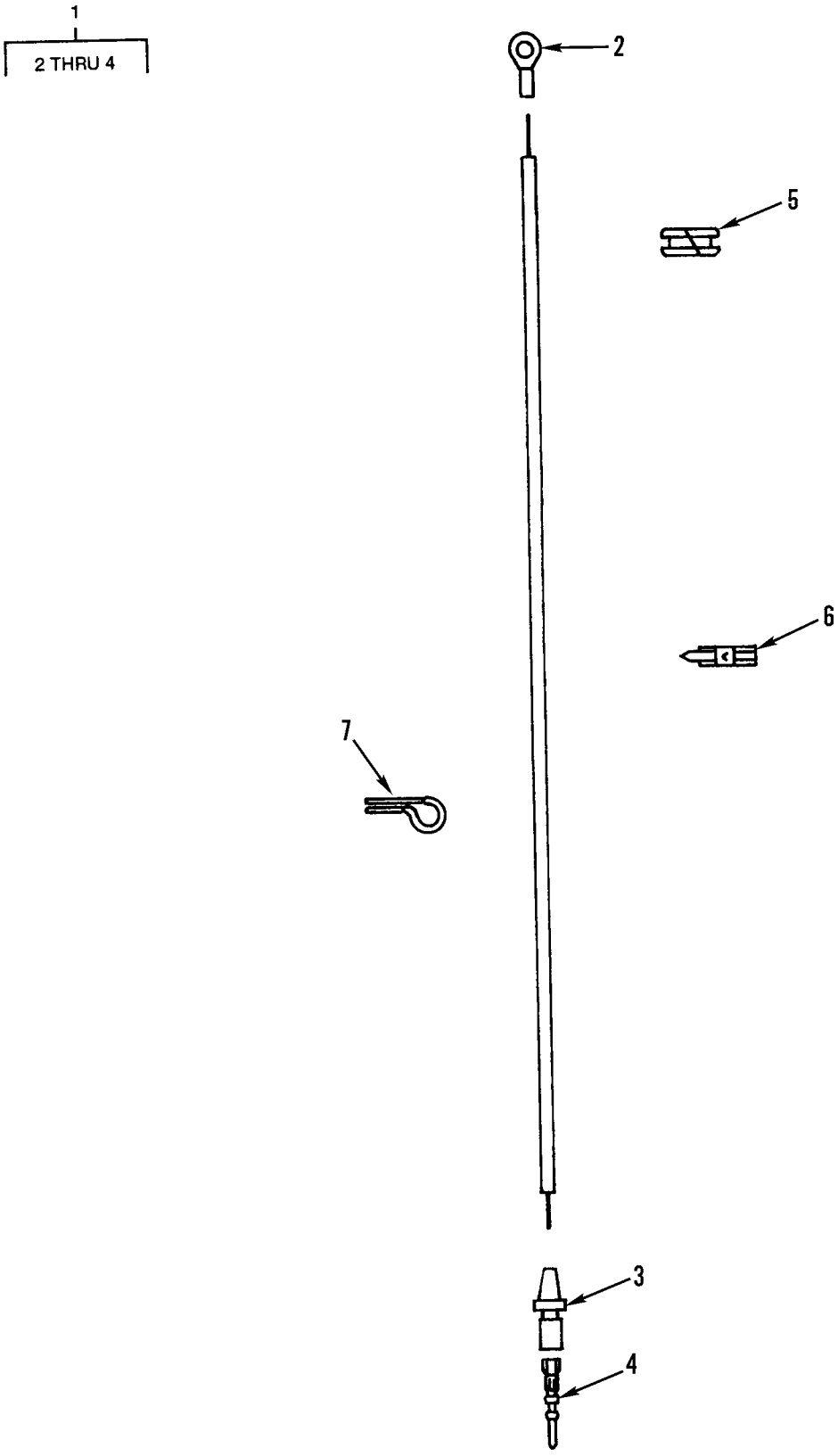

Figure 110. Vehicle Rear Floodlight Lead and Mounting

(1) ITEM NO	(2) SMR CODE	(3) NSN	(4) CAGEC	(5) PART NUMBER	(6) DESCRIPTION AND USABLE ON CODES(UOC)	(7) QTY
					GROUP 0613 HULL OR CHASSIS WIRING HARNESS FIG. 110 VEHICLE REAR FLOODLIGHT LEAD AND MOUNTING	
1	PAOZZ	5995011523050	11083	6G7335	CABLE ASSEMBLY,SPEC..... UOC:AGP	1
2	PFOZZ	5940001434774	96906	MS25036-153	.TERMINAL,LUG..... UOC:AGP	1
3	PAOZZ	5935011496997	11083	7N7778	.CONNECTOR BODY,PLUG..... UOC:AGP	1
4	PFOZZ	5999011566314	71468	110238-0195	.PIN,GROOVED,HEADLES..... UOC:AGP	1
5	PAOZZ	5325002858363	96906	MS35489-45	GROMMET,NONMETALLIC..... UOC:AGP	1
6	PAOZZ	2920010589099	11083	3S2093	STRAP..... UOC:AGP	1
7	PFOZZ	5340004264803	11083	8M2772	CLAMP,LOOP..... UOC:AGP	4

END OF FIGURE

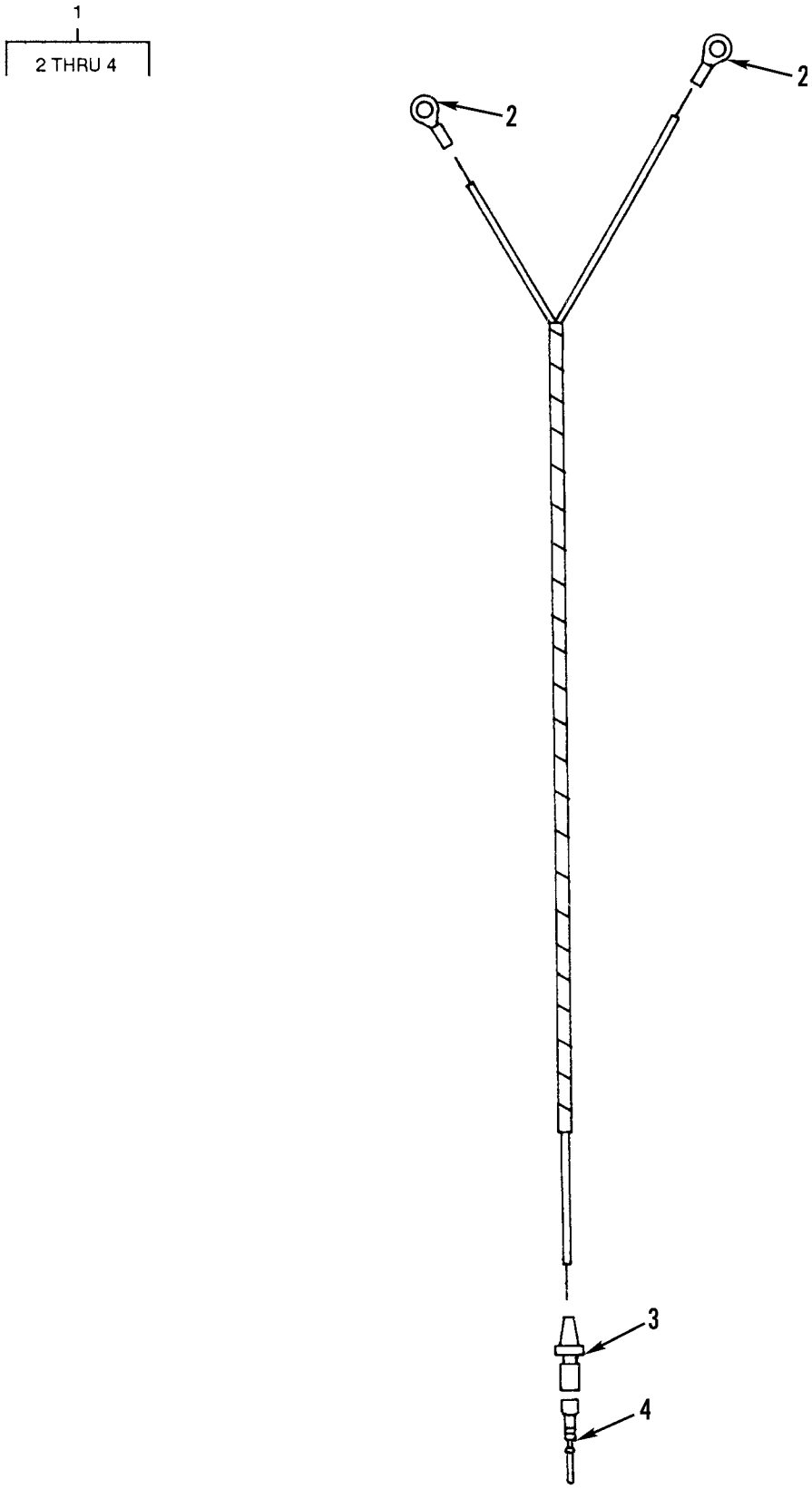

Figure 111. Vehicle Front Floodlight Lead

(1) ITEM NO	(2) SMR CODE	(3) NSN	(4) CAGEC	(5) PART NUMBER	(6) DESCRIPTION AND USABLE ON CODES(UOC)	(7) QTY
					GROUP 0613 HULL OR CHASSIS WIRING HARNESS	
					FIG. 111 VEHICLE FRONT FLOODLIGHT LEAD	
1	PAOZZ	6150011513932	11083	6G5901	CABLE ASSEMBLY,SPEC.....	1
2	PFOZZ	5940001434774	96906	MS25036-153	.TERMINAL,LUG.....	2
3	PAOZZ	5935011496997	11083	7N7778	.CONNECTOR BODY,PLUG.....	1
4	PFOZZ	5999011566314	71468	110238-0195	.PIN,GROOVED,HEADLES.....	1

END OF FIGURE

1
2 AND 3

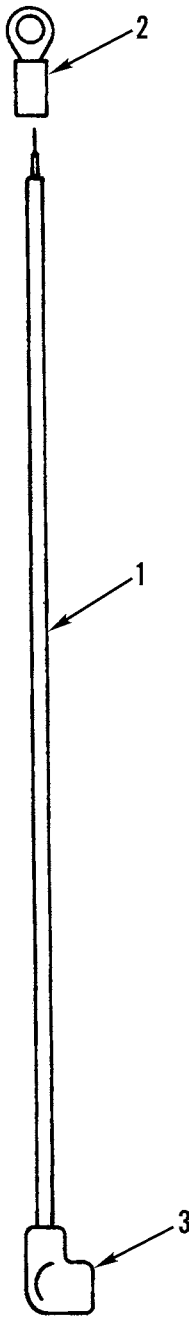

Figure 112. Vehicle Turn Signal Light Fuse Lead

(1) ITEM NO	(2) SMR CODE	(3) NSN	(4) CAGEC	(5) PART NUMBER	(6) DESCRIPTION AND USABLE ON CODES(UOC)	(7) QTY
					GROUP 0613 HULL OR CHASSIS WIRING HARNESS	
					FIG. 112 VEHICLE TURN SIGNAL LIGHT FUSE LEAD	
1	PFOZZ	5995011520014	11083	6G6123	LEAD,ELECTRICAL.....	1
2	PFOZZ	5940001434780	96906	MS25036-108	.TERMINAL,LUG.....	1
3	PAOZZ	5995011516315	11083	3T5433	.LEAD,ELECTRICAL.....	1

END OF FIGURE

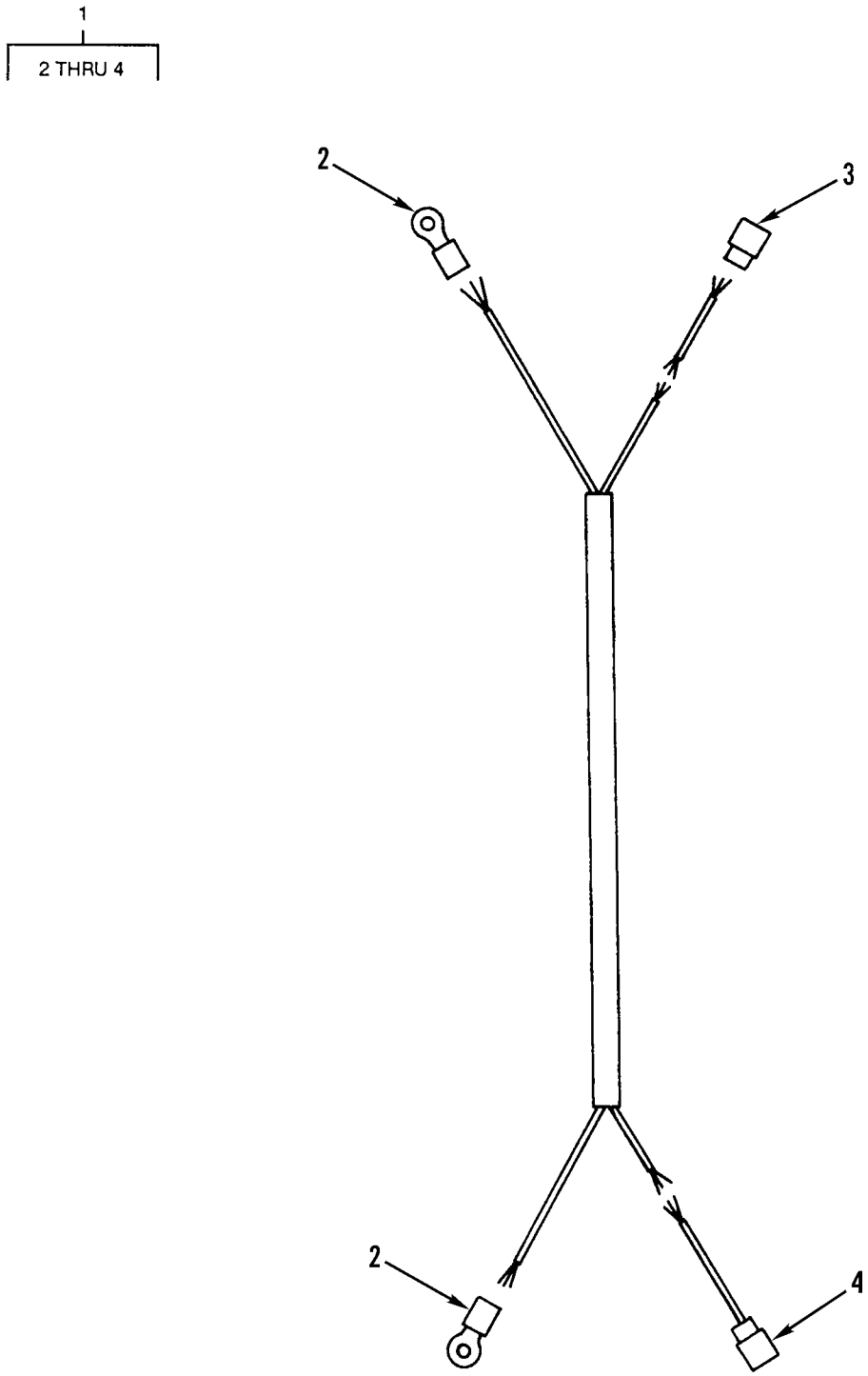

Figure 113. Domelight Switch Wiring Harness

(1) ITEM NO	(2) SMR CODE	(3) NSN	(4) CAGEC	(5) PART NUMBER	(6) DESCRIPTION AND USABLE ON CODES(UOC)	(7) QTY
					GROUP 0613 HULL OR CHASSIS WIRING HARNESS	
					FIG. 113 DOMELIGHT SWITCH WIRING HARNESS	
1	PFOZZ	2590011774827	11083	5R6877	WIRING HARNESS,BRAN..... UOC:AGP	1
2	PFOZZ	5940010870285	00779	53245-1	.TERMINAL,LUG..... UOC:AGP	2
3	PAOZZ	5995010989330	11083	7K4475	.LEAD,ELECTRICAL..... UOC:AGP	1
4	PAOZZ	5940011210365	79550	11851	.TERMINAL,QUICK DISC..... UOC:AGP	1

END OF FIGURE

1
2 THRU 7

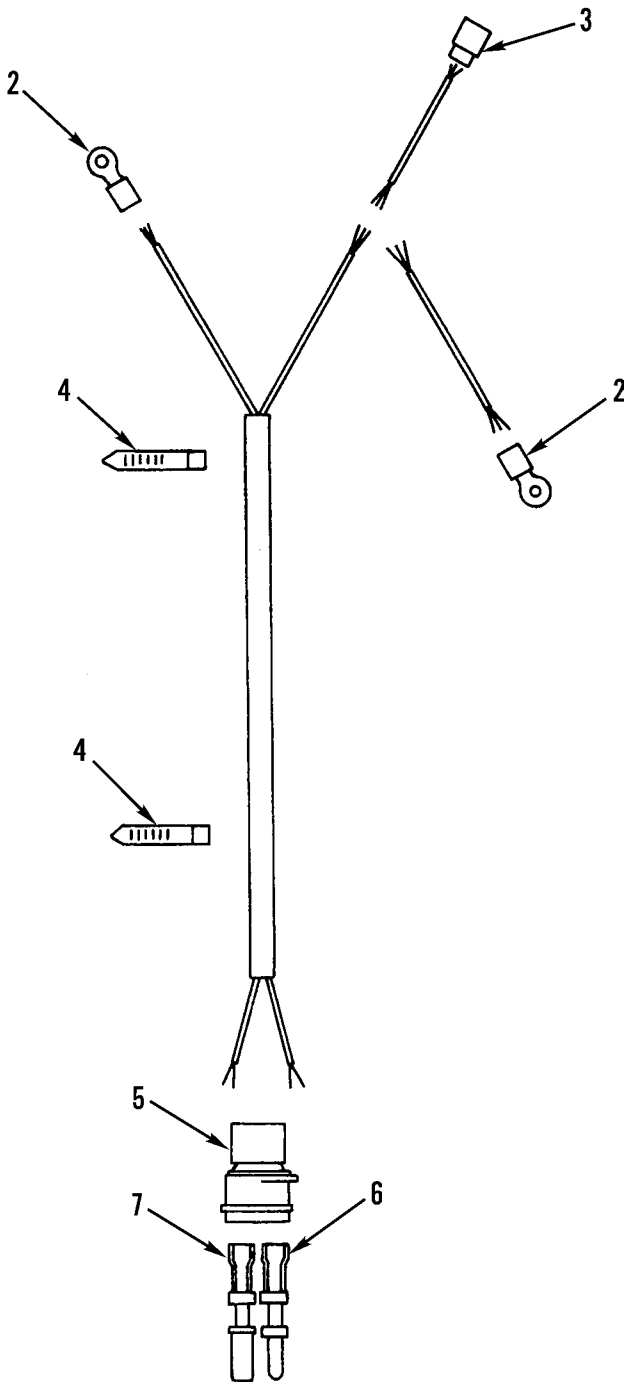

Figure 114. Domelight Resistor Wiring Harness and Mounting

(1) ITEM NO	(2) SMR CODE	(3) NSN	(4) CAGEC	(5) PART NUMBER	(6) DESCRIPTION AND USABLE ON CODES(UOC)	(7) QTY
					GROUP 0613 HULL OR CHASSIS WIRING HARNESS FIG. 114 DOMELIGHT RESISTOR WIRING HARNESS AND MOUNTING	
1	PFOZZ	5995011827198	11083	5R6878	WIRING HARNESS,BRAN..... UOC:AGP	1
2	PFOZZ	5940010870285	00779	53245-1	.TERMINAL,LUG..... UOC:AGP	2
3	PAOZZ	5995010989330	11083	7K4475	.LEAD,ELECTRICAL..... UOC:AGP	1
4	PAOZZ	5340011602464	11083	1S9593	.STRAP,LINE SUPPORTI..... UOC:AGP	2
5	PFOZZ	5935011495165	11083	7N9738	.CONNECTOR BODY,PLUG..... UOC:AGP	1
6	PFOZZ	5999011566314	71468	110238-0195	.PIN,GROOVED,HEADLES..... UOC:AGP	1
7	PFOZZ	5999011508808	11083	7N7779	.CONTACT,ELECTRICAL..... UOC:AGP	1

END OF FIGURE

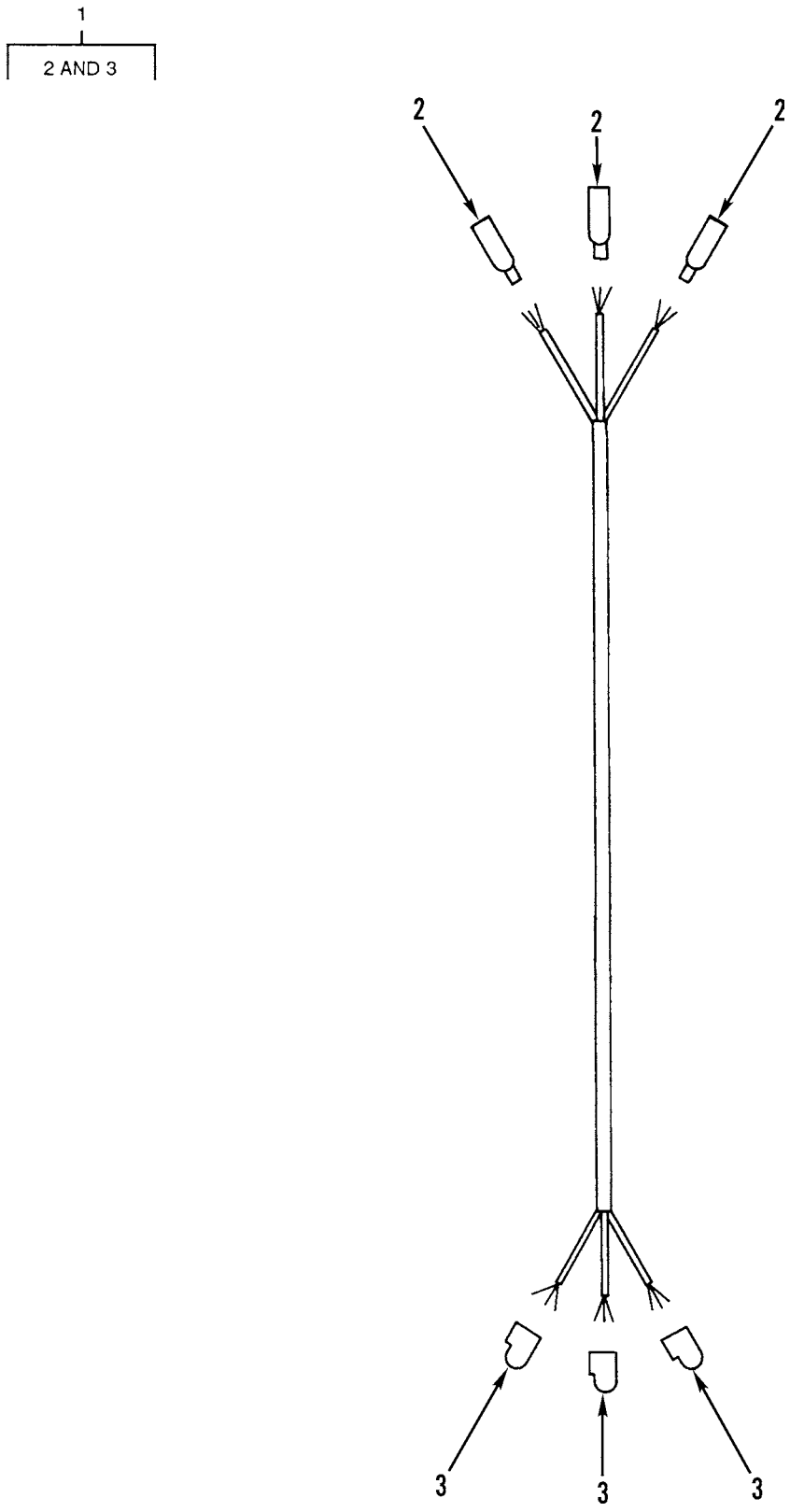

Figure 115. Vehicle Rear Window Wiper Wiring Harness

(1) ITEM NO	(2) SMR CODE	(3) NSN	(4) CAGEC	(5) PART NUMBER	(6) DESCRIPTION AND USABLE ON CODES(UOC)	(7) QTY
					GROUP 0613 HULL OR CHASSIS WIRING HARNESS FIG. 115 VEHICLE REAR WINDOW WIPER WIRING HARNESS	
1	PFOZZ	5995011816732	11083	9G9315	WIRING HARNESS,BRAN SERIAL NO. 7GB00464 AND BELOW..... UOC:AGP	1
2	PAOZZ	5995010989330	11083	7K4475	.LEAD,ELECTRICAL..... UOC:AGP	3
3	PAOZZ	5940010681879	56501	RB-2577F	.TERMINAL,QUICK DISC..... UOC:AGP	3

END OF FIGURE

1
2 AND 3

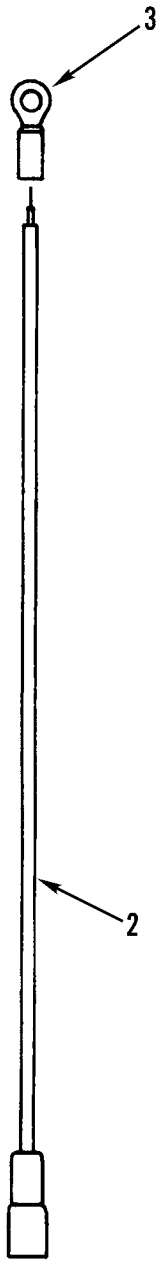

Figure 116. Vehicle Front Window Defroster Fan Lead

(1) ITEM NO	(2) SMR CODE	(3) NSN	(4) CAGEC	(5) PART NUMBER	(6) DESCRIPTION AND USABLE ON CODES(UOC)	(7) QTY
					GROUP 0613 HULL OR CHASSIS WIRING HARNESS FIG. 116 VEHICLE FRONT WINDOW DEFROSTER FAN LEAD	
1	PFOZZ	5995011789832	11083	5R6869	WIRING HARNESS,BRAN..... UOC:AGP	1
2	PAOZZ	5940011210365	79550	11851	.TERMINAL,QUICK DISC..... UOC:AGP	1
3	PFOZZ	5940010870285	00779	53245-1	.TERMINAL,LUG..... UOC:AGP	1

END OF FIGURE



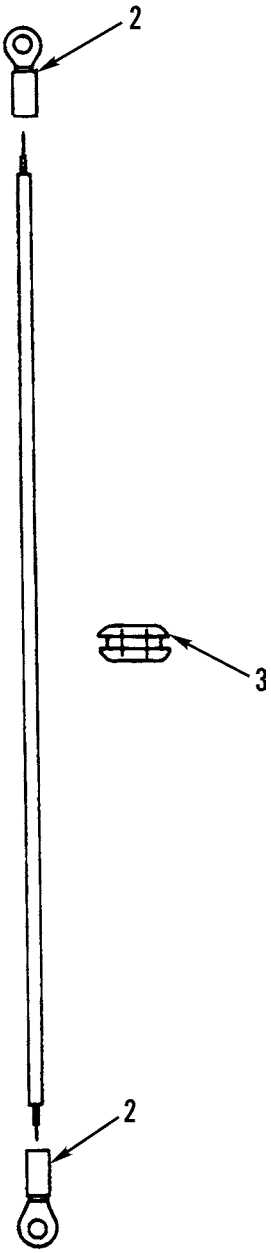

Figure 117. Vehicle Rear Window Defroster Fan Lead

(1) ITEM NO	(2) SMR CODE	(3) NSN	(4) CAGEC	(5) PART NUMBER	(6) DESCRIPTION AND USABLE ON CODES(UOC)	(7) QTY
					GROUP 0613 HULL OR CHASSIS WIRING HARNESS FIG. 117 VEHICLE REAR WINDOW DEFROSTER FAN LEAD	
1	PFOZZ	5995011780676	11083	6G5607	LEAD,ELECTRICAL..... UOC:AGP	1
2	PFOZZ	5940010870285	00779	53245-1	.TERMINAL,LUG..... UOC:AGP	2
3	PAOZZ	5325010590871	91265	2485	GROMMET,NONMETALLIC..... UOC:AGP	1

END OF FIGURE

1
2 THRU 7

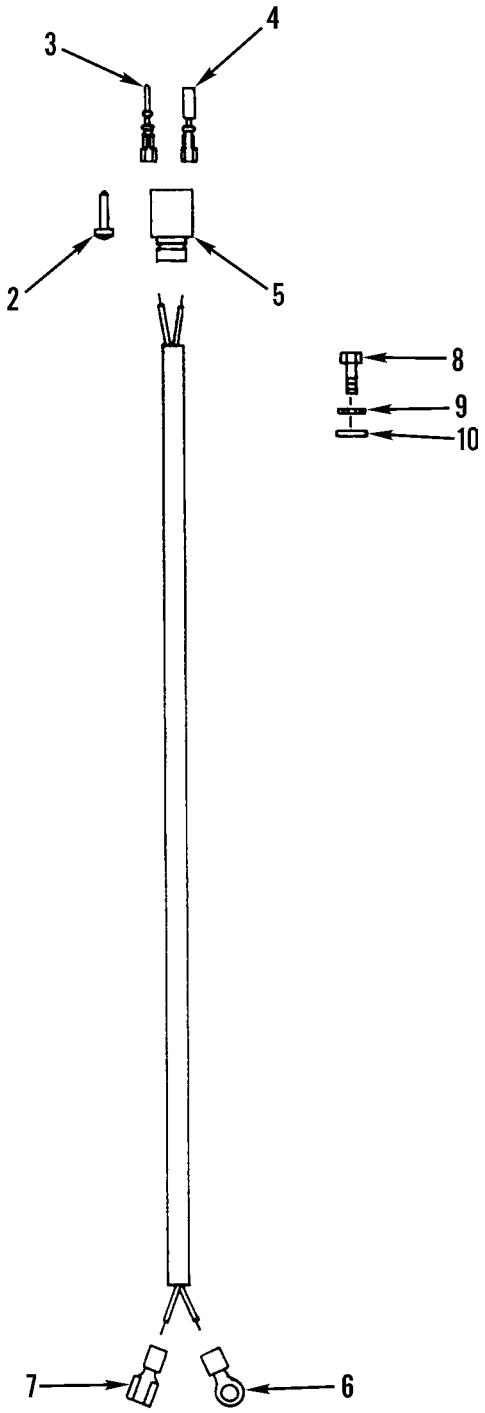

Figure 118. Heater Wiring Harness

(1) ITEM NO	(2) SMR CODE	(3) NSN	(4) CAGEC	(5) PART NUMBER	(6) DESCRIPTION AND USABLE ON CODES(UOC)	(7) QTY
					GROUP 0613 HULL OR CHASSIS WIRING HARNESS	
					FIG. 118 HEATER WIRING HARNESS	
1	PFOZZ	5995011787128	11083	5T1929	WIRING HARNESS,BRAN..... UOC:AGP	1
2	PFOZZ	5935011522677	11083	9G3695	.PLUG,END SEAL,ELECT..... UOC:AGP	2
3	PFOZZ	5999011508808	11083	7N7779	.CONTACT,ELECTRICAL..... UOC:AGP	1
4	PFOZZ	5999011566314	71468	110238-0195	.PIN,GROOVED,HEADLES..... UOC:AGP	1
5	PFOZZ	5935011526814	71468	120-1809-000	.CONNECTOR BODY,PLUG..... UOC:AGP	1
6	PFOZZ	5940001434793	96906	MS25036-110	.TERMINAL,LUG..... UOC:AGP	1
7	PAOZZ	5940010589112	11083	5P4571	.TERMINAL,QUICK DISC..... UOC:AGP	1
8	XDOZZ	5306010955685	11083	5K0906	BOLT,MACHINE..... UOC:AGP	1
9	PFOZZ	5310005146674	96906	MS35335-34	WASHER,LOCK..... UOC:AGP	1
10	PFOZZ	5310010955910	11083	5P4116	WASHER,SQUARE CONE..... UOC:AGP	1

END OF FIGURE

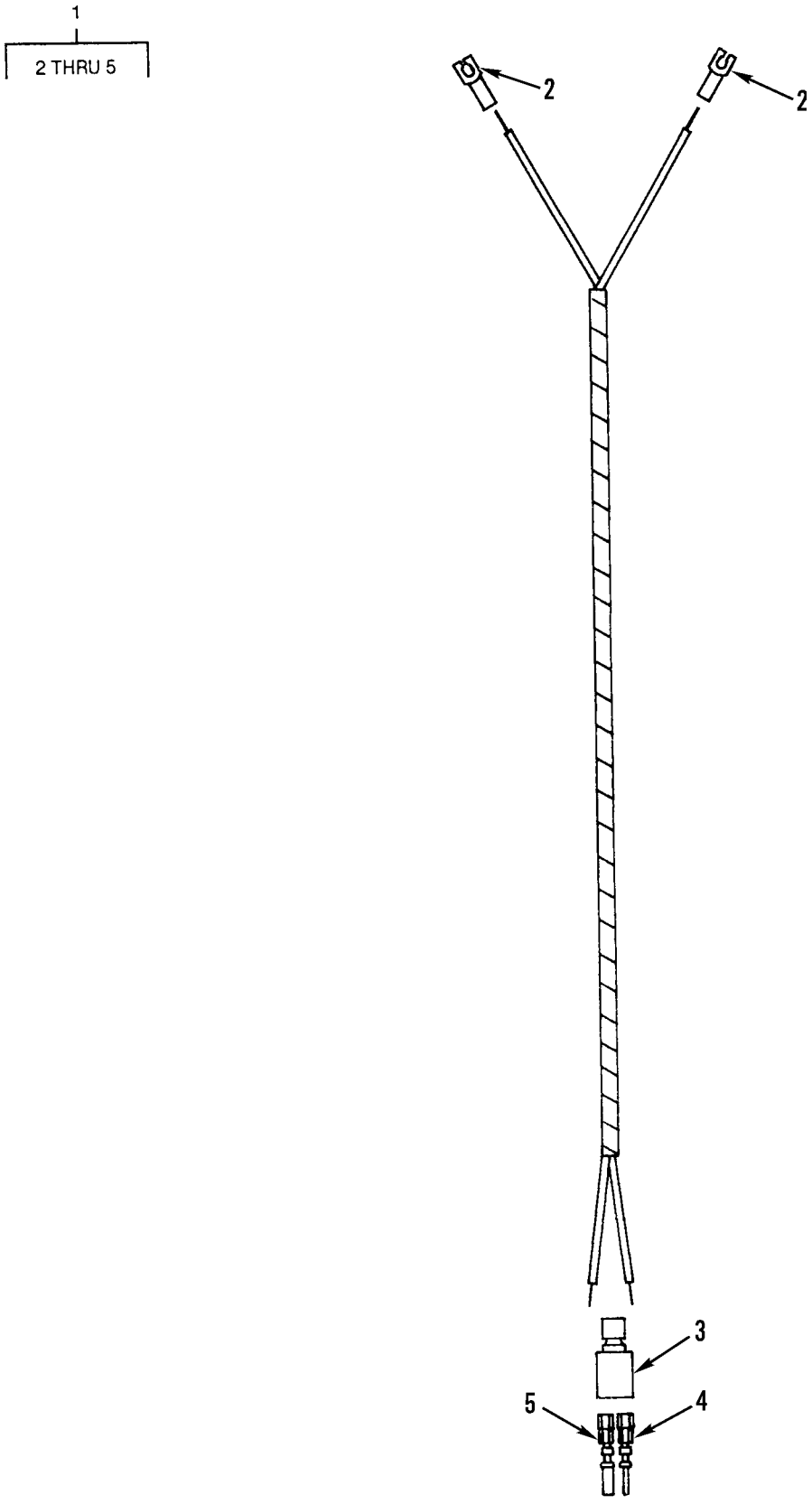

Figure 119. Vehicle Horn Wiring Harness

(1) ITEM NO	(2) SMR CODE	(3) NSN	(4) CAGEC	(5) PART NUMBER	(6) DESCRIPTION AND USABLE ON CODES(UOC)	(7) QTY
					GROUP 0613 HULL OR CHASSIS WIRING HARNESS	
					FIG. 119 VEHICLE HORN WIRING HARNESS	
1	PAOZZ	5995011513936	11083	6G6141	WIRING HARNESS,BRAN.....	1
2	PAOZZ	5940013034978	11083	5P1475	.TERMINAL,LUG.....	2
3	PFOZZ	5935011508323	11083	7N9737	.CONNECTOR BODY,PLUG.....	1
4	PFOZZ	5999011566314	71468	110238-0195	.PIN,GROOVED,HEADLES.....	1
5	PAOZZ	5999011508808	11083	7N7779	.CONTACT,ELECTRICAL.....	1

END OF FIGURE

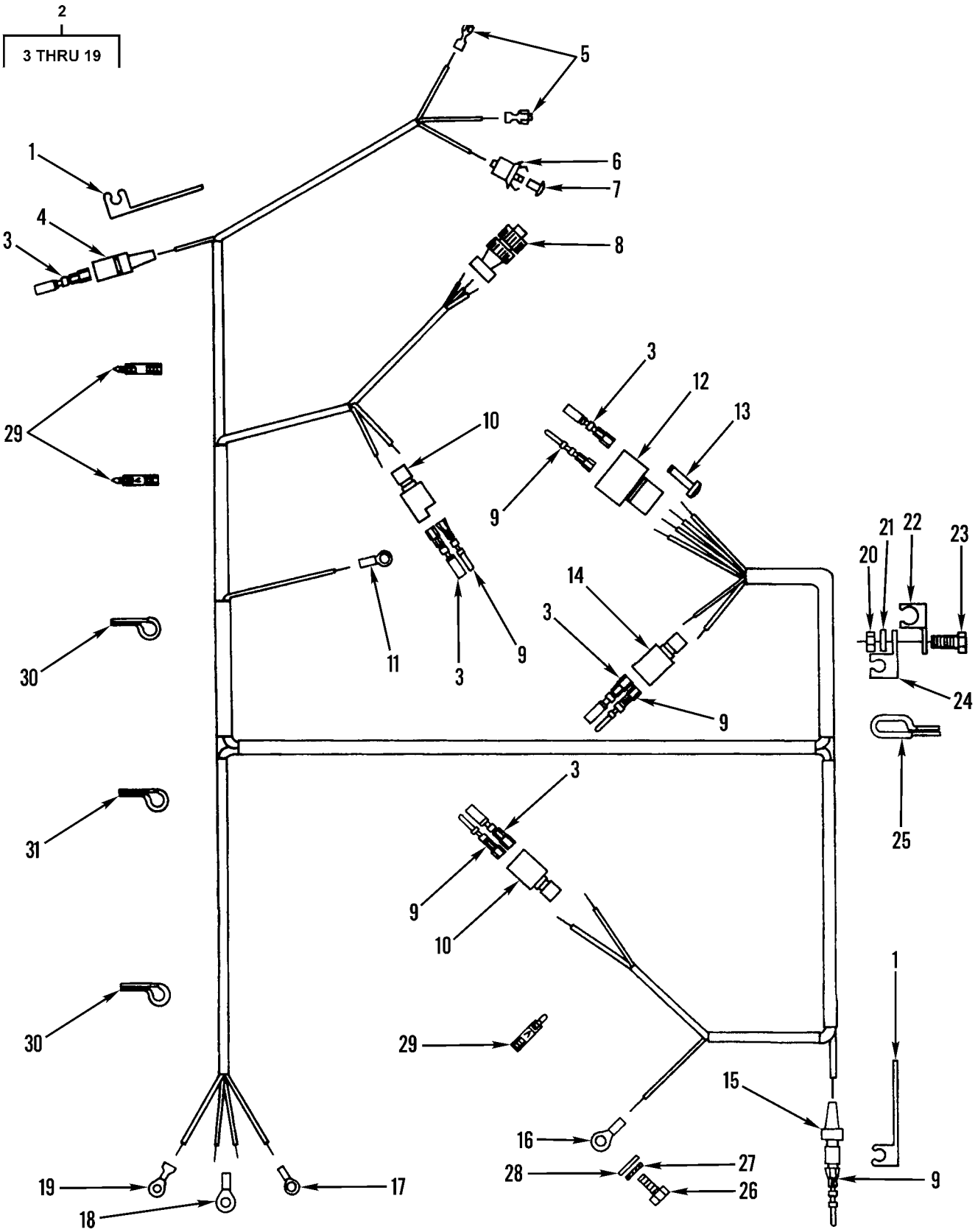

Figure 120. Supplemental Steering Main Wiring Harness and Mounting (Sheet 1 of 3)

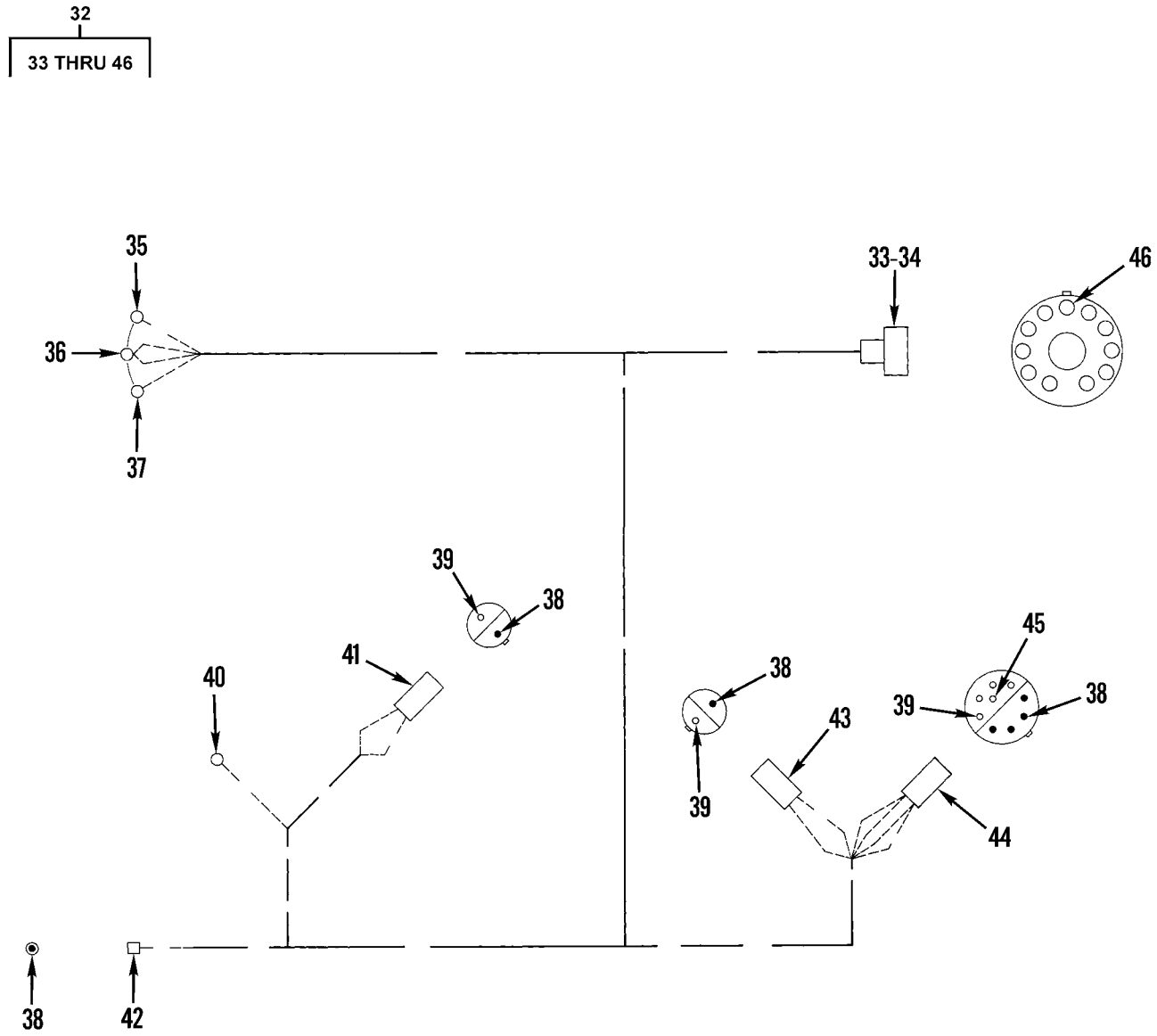

Figure 120. Supplemental Steering Main Wiring Harness and Mounting (Sheet 2 of 3)

47

48 THRU 60

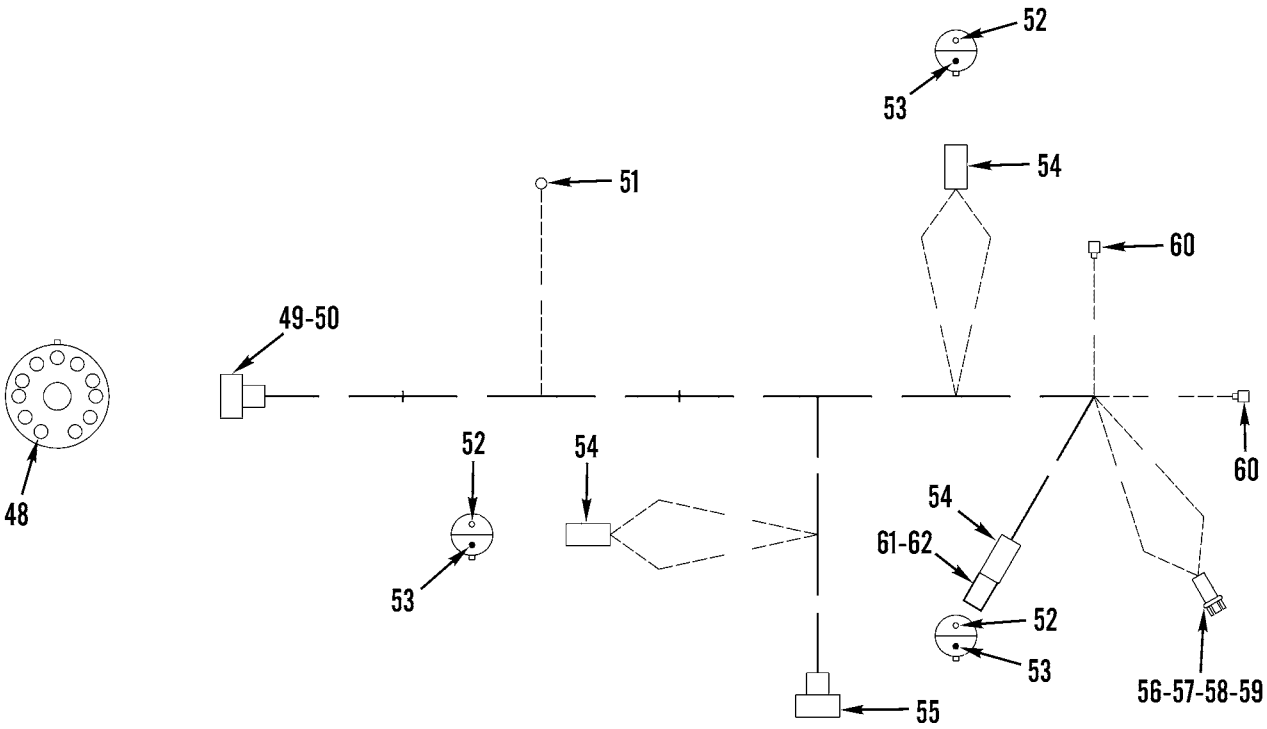

Figure 120. Supplemental Steering Main Wiring Harness and Mounting (Sheet 3 of 3)

(1) ITEM NO	(2) SMR CODE	(3) NSN	(4) CAGEC	(5) PART NUMBER	(6) DESCRIPTION AND USABLE ON CODES(UOC)	(7) QTY
					GROUP 0613 HULL OR CHASSIS WIRING HARNESS FIG. 120 SUPPLEMENTAL STEERING MAIN WIRING HARNESS AND MOUNTING	
1	XDOZZ		11083	3T3049	CLIP,ELECTRICAL.....	2
2	PFFZZ	5995011769596	11083	5T2340	WIRING HARNESS,BRAN..... UOC:AGP	1
3	PAOZZ	5999011508808	11083	7N7779	.CONTACT,ELECTRICAL..... UOC:AGP	9
4	PAFZZ	5935011539319	71468	120-1833-000	.CONNECTOR,PLUG,ELEC..... UOC:AGP	1
5	PAFZZ	5940010589112	11083	5P4571	.TERMINAL,QUICK DISC..... UOC:AGP	2
6	PAFZZ	6250011466909	77060	2984323	.LAMPHOLDER..... UOC:AGP	1
7	PAFZZ	5999011194109	11083	6D4161	.CONTACT,ELECTRICAL..... UOC:AGP	1
8	XDFZA		96906	MS3106F10SL3S	.CONNECTOR,PLUG,ELEC..... UOC:AGP	1
9	PFOZZ	5999011566314	71468	030-2196-001	.PIN,GROOVED,HEADLES..... UOC:AGP	8
10	PAFZZ	5935011495165	11083	7N9738	.CONNECTOR BODY,PLUG..... UOC:AGP	2
11	PFFZZ	5940010870285	00779	53245-1	.TERMINAL,LUG..... UOC:AGP	1
12	PAFZZ	5935011557391	71468	120-1868-000	.INSERT,ELECTRICAL C..... UOC:AGP	1
13	PAFZZ	5935011522677	11083	9G3695	.PLUG,END SEAL,ELECT..... UOC:AGP	1
14	PFFZZ	5935011508323	11083	7N9737	.CONNECTOR BODY,PLUG..... UOC:AGP	1
15	PAFZZ	5935011496997	11083	7N7778	.CONNECTOR BODY,PLUG..... UOC:AGP	1
16	PFFZZ	5940001139826	96906	MS25036-114	.TERMINAL,LUG..... UOC:AGP	1
17	PFFZZ	5940001434780	96906	MS25036-108	.TERMINAL,LUG..... UOC:AGP	1
18	PFFZZ	5940001434794	96906	MS25036-112	.TERMINAL,LUG..... UOC:AGP	1
19	PFFZZ	5940001434793	96906	MS25036-110	.TERMINAL,LUG..... UOC:AGP	1
20	PFFZZ	5310014297859	11083	6V8801	NUT,PLAIN,HEXAGON.....	1
21	PFOZZ	5310001174788	11083	5M2894	WASHER,FLAT.....	1
22	PAOZZ	5340011722011	11083	3T0050	STRAP,RETAINING.....	1
23	PFOZZ	5306002637301	11083	0L1351	BOLT,MACHINE.....	1
24	PAOZZ	5340011519964	11083	9G9150	STRAP,RETAINING.....	1
25	PFOZZ	5340004264644	11083	4D6466	CLAMP,LOOP.....	3
26	PFOZZ	5306002264825	80204	B1821BH031C075N	BOLT,MACHINE.....	1
27	PFOZZ	5310005146674	96906	MS35335-34	WASHER,LOCK.....	1
28	PFOZZ	5310000814219	96906	MS27183-12	WASHER,FLAT.....	1
29	PAOZZ	2920010589099	11083	3S2093	STRAP.....	6

(1) ITEM NO	(2) SMR CODE	(3) NSN	(4) CAGEC	(5) PART NUMBER	(6) DESCRIPTION AND USABLE ON CODES(UOC)	(7) QTY
30	PFOZZ	5340004264793	99953	140583	CLAMP,LOOP.....	2
31	PFOZZ	5342010643819	11083	9M8406	CLIP.....	1
32	PAOOO	5995012945963	11083	5R5310	WIRING HARNESS,BRAN..... UOC:AF9,AGM,AGN,F10	1
33	PFOZZ	5935011570576	11083	8N1530	.CONNECTOR BODY,RECE..... UOC:AF9,AGM,AGN,F10	1
34	XDOZZ		71468	057-0891-000	.CLAMP,CABLE,ELECTRI..... UOC:AF9,AGM,AGN,F10	1
35	PFFZZ	5940001434793	96906	MS25036-110	.TERMINAL,LUG..... UOC:AF9,AGM,AGN,F10	1
36	PAOZZ	5940001434794	96906	MS25036-112	.TERMINAL,LUG..... UOC:AF9,AGM,AGN,F10	1
37	PFOZZ	5940001434780	96906	MS25036-108	.TERMINAL,LUG..... UOC:AF9,AGM,AGN,F10	1
38	PAOZZ	5999011566314	71468	110238-0195	.CONTACT,ELECTRICAL..... UOC:AF9,AGM,AGN,F10	7
39	PAOZZ	5999011508808	11083	7N7779	.CONTACT,ELECTRICAL..... UOC:AF9,AGM,AGN,F10	6
40	PAOZZ	5940001139826	11083	2L8069	.TERMINAL,LUG..... UOC:AF9,AGM,AGN,F10	1
41	PFOZZ	5935011495165	11083	7N9738	.CONNECTOR BODY,PLUG..... UOC:AF9,AGM,AGN,F10	1
42	PFOZZ	5935011496997	11083	7N7778	.CONNECTOR BODY,PLUG..... UOC:AF9,AGM,AGN,F10	1
43	PFOZZ	5935011508323	71468	120-1807-000	.CONNECTOR BODY,PLUG..... UOC:AF9,AGM,AGN,F10	1
44	PFOZZ	5935011538291	71468	120-1870-000	.CONNECTOR,PLUG,ELEC..... UOC:AF9,AGM,AGN,F10	1
45	PFOZZ	5935011522677	11083	9G3695	.PLUG,END SEAL,ELECT..... UOC:AF9,AGM,AGN,F10	1
46	PFOZA	5935014665378	11139	4060-001-16141	.PLUG,TIP..... UOC:AF9,AGM,AGN,F10	7
47	PAFZZ	5995012941703	11083	5R8148	WIRING HARNESS,BRAN..... UOC:AF9,AGM,AGN,F10	1
48	PFOZA	5935014665755	11139	4062-001-16141	.JACK,TIP..... UOC:AF9,AGM,AGN,F10	7
50	XDOZZ		71468	057-0891-000	.CLAMP,CABLE,ELECTRI..... UOC:AF9,AGM,AGN,F10	1
51	PAOZZ	5940010870285	00779	53245-1	.TERMINAL,LUG..... UOC:AF9,AGM,AGN,F10	1
52	PAOZZ	5999011508808	11083	7N7779	.CONTACT,ELECTRICAL..... UOC:AF9,AGM,AGN,F10	3
53	PAOZZ	5999011566314	71468	110238-0195	.CONTACT,ELECTRICAL..... UOC:AF9,AGM,AGN,F10	3
54	PFOZZ	5935011495165	11083	7N9738	.CONNECTOR BODY,PLUG..... UOC:AF9,AGM,AGN,F10	3
55	PFOZZ	5935005347553	96906	MS3456W10SL3S	.CONNECTOR,PLUG,ELEC..... UOC:AF9,AGM,AGN,F10	1
56	PFOZZ	6250012937612	13445	65700	.LAMPHOLDER..... UOC:AF9,AGM,AGN,F10	1
57	PFOZZ	5999011194109	11083	6D4161	.CONTACT,ELECTRICAL..... UOC:AF9,AGM,AGN,F10	1

(1) ITEM NO	(2) SMR CODE	(3) NSN	(4) CAGEC	(5) PART NUMBER	(6) DESCRIPTION AND USABLE ON CODES(UOC)	(7) QTY
58	PFOZZ	3120011607617	11083	6D4162	.BUSHING,SLEEVE..... UOC:AF9,AGM,AGN,F10	1
59	PFOZZ	5360011753557	13445	2561-4	.SPRING,HELICAL,COMP..... UOC:AF9,AGM,AGN,F10	1
60	PFOZZ	5940009260085	98410	BB-2141	.TERMINAL,QUICK DISC..... UOC:AF9,AGM,AGN,F10	2
61	PFOZZ	5961013043340	11083	5R8815	SEMICONDUCTOR DEVIC..... UOC:AF9,AGM,AGN,F10	1
62	PFOZZ	5342012708588	45152	2AA855	CLIP,SPECIAL..... UOC:AF9,AGM,AGN,F10	1

END OF FIGURE

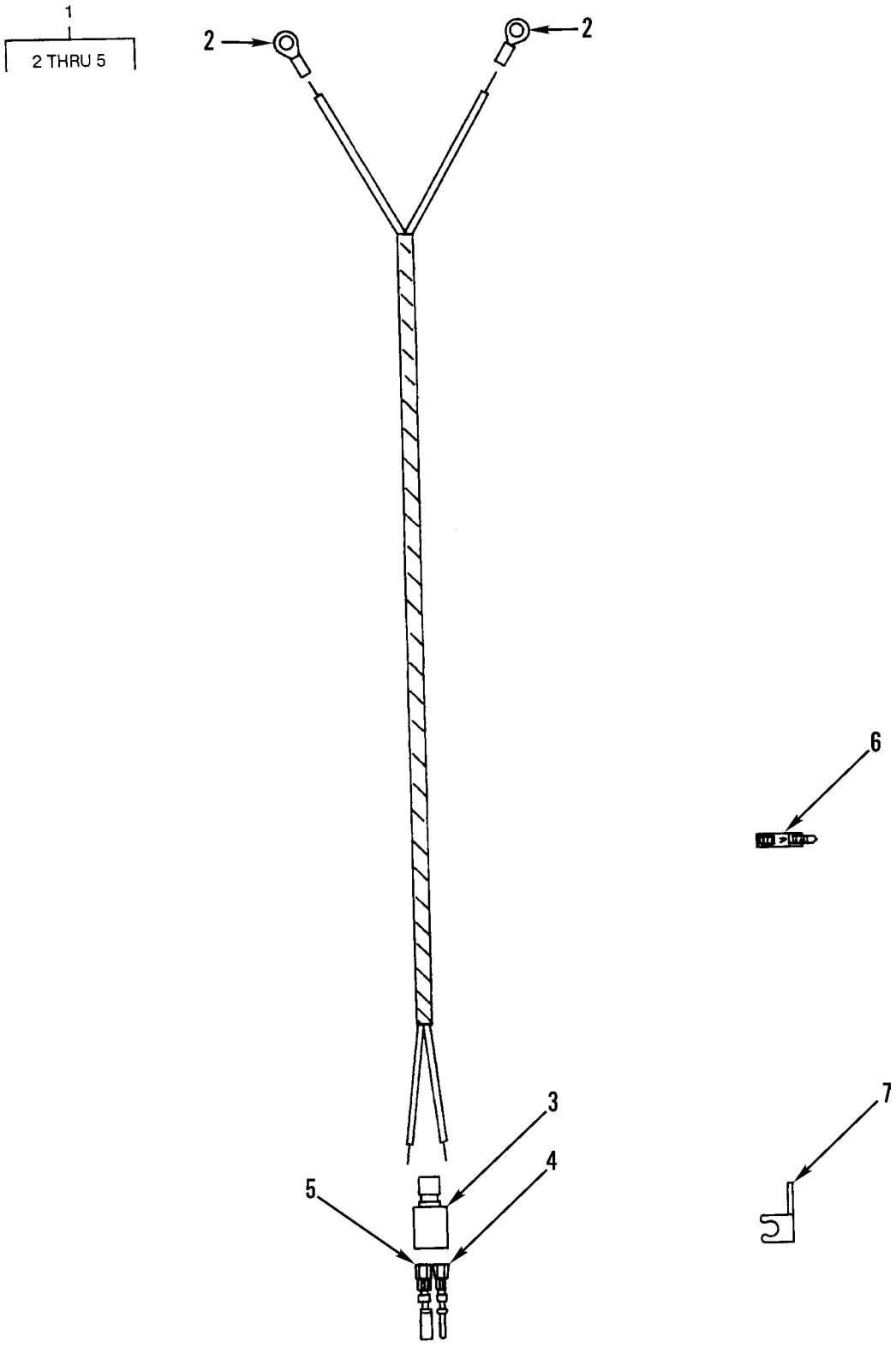

Figure 121. Supplemental Steering Governor Switch and Dump Valve Wiring Harness

(1) ITEM NO	(2) SMR CODE	(3) NSN	(4) CAGEC	(5) PART NUMBER	(6) DESCRIPTION AND USABLE ON CODES(UOC)	(7) QTY
					GROUP 0613 HULL OR CHASSIS WIRING HARNESS FIG. 121 SUPPLEMENTAL STEERING GOVERNOR SWITCH AND DUMP VALVE WIRING HARNESS	
1	PFFZZ	5995011769597	11083	5T2343	WIRING HARNESS,BRAN.....	2
2	PFFZZ	5940001434780	96906	MS25036-108	.TERMINAL,LUG.....	4
3	PFFZZ	5935011508323	11083	7N9737	.CONNECTOR BODY,PLUG.....	2
4	PFFZZ	5999011566314	71468	110238-0195	.PIN,GROOVED,HEADLES.....	2
5	PAFZZ	5999011508808	11083	7N7779	.CONTACT,ELECTRICAL.....	2
6	PAOZZ	2920010589099	11083	3S2093	STRAP.....	2
7	PFOZZ	5999012620436	11083	3T3048	CLIP,ELECTRICAL.....	2

END OF FIGURE

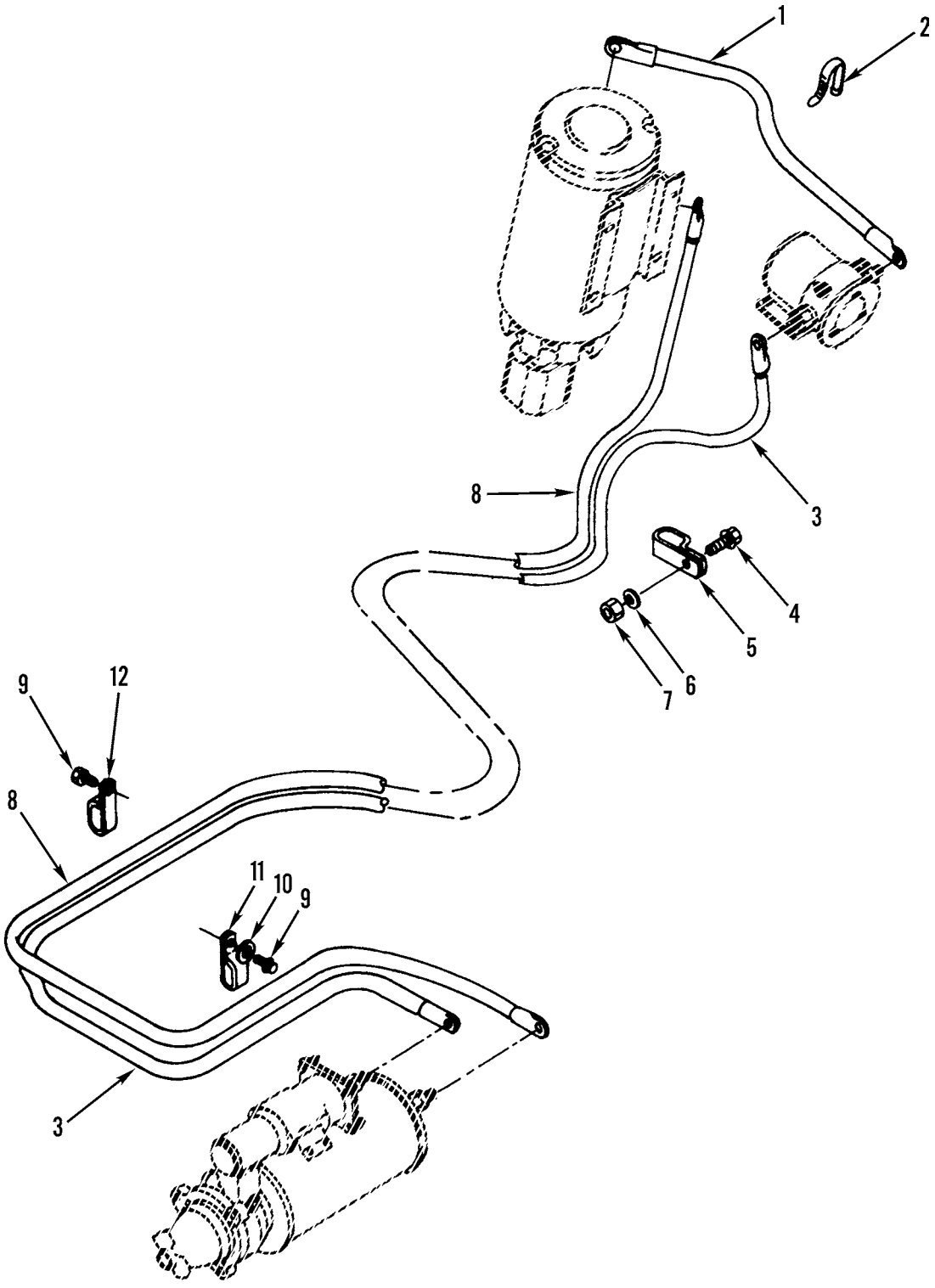

Figure 122. Supplemental Steering Pump Wiring Harnesses and Mounting

(1) ITEM NO	(2) SMR CODE	(3) NSN	(4) CAGEC	(5) PART NUMBER	(6) DESCRIPTION AND USABLE ON CODES(UOC)	(7) QTY
					GROUP 0613 HULL OR CHASSIS WIRING HARNESS	
					FIG. 122 SUPPLEMENTAL STEERING PUMP WIRING HARNESSES AND MOUNTING	
1	PAOZZ	2920011780675	11083	4M4644	CABLE ASSEMBLY,SPEC.....	1
2	PAOZZ	2920010589099	11083	3S2093	STRAP.....	1
3	PAOFF	5995011816642	11083	9D6153	LEAD,ELECTRICAL.....	1
4	PFOZZ	5305000680511	80204	B1821BH038C125N	SCREW,CAP,HEXAGON H.....	1
5	PFOZZ	5940001152684	96906	MS20659-118	TERMINAL,LUG.....	1
6	PFFZZ	5310001174788	11083	5M2894	WASHER,FLAT.....	1
7	PFFZZ	5310014297859	11083	6V8801	NUT,PLAIN,HEXAGON.....	1
8	PAOZZ	6150011905341	11083	5D3940	LEAD,ELECTRICAL.....	1
9	PFOZZ	5306002264826	80204	B1821BH031C088N	BOLT,MACHINE.....	2
10	PFOZZ	5310000814219	96906	MS27183-12	WASHER,FLAT.....	1
11	PFOZZ	5340011810880	11083	2R1939	CLAMP,LOOP.....	1
12	PFFZZ	5340011494427	11083	9M4995	CLAMP,LOOP.....	1

END OF FIGURE

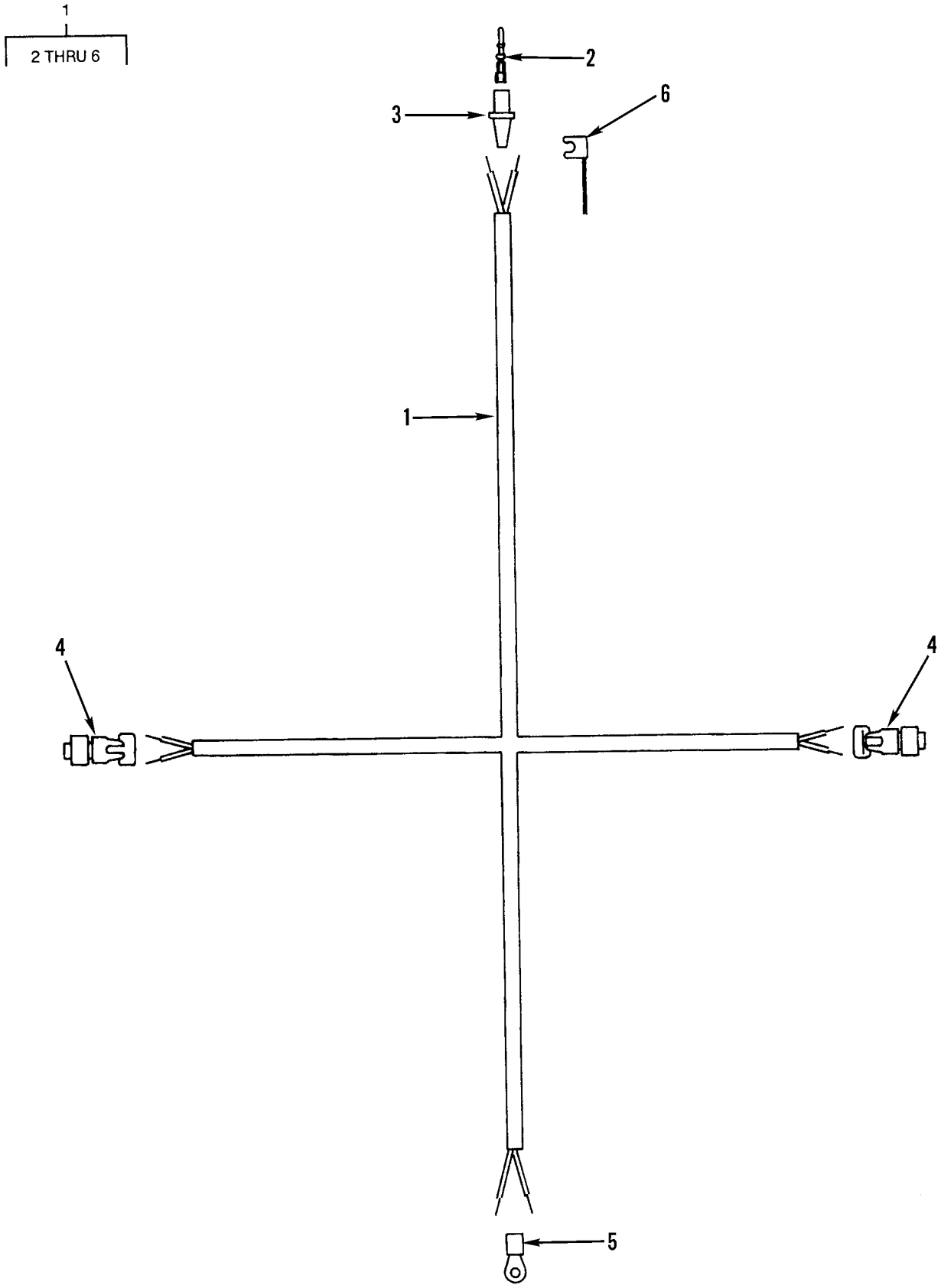

Figure 123. Blade Float Valve Wiring Harness

(1) ITEM NO	(2) SMR CODE	(3) NSN	(4) CAGEC	(5) PART NUMBER	(6) DESCRIPTION AND USABLE ON CODES(UOC)	(7) QTY
					GROUP 0613 HULL OR CHASSIS WIRING HARNESS FIG. 123 BLADE FLOAT VALVE WIRING HARNESS	
1	PFOZZ	5995011788534	11083	6G5581	WIRING HARNESS,BRAN..... UOC:AGP	1
2	PFOZZ	5999011566314	71468	110238-0195	.PIN,GROOVED,HEADLES..... UOC:AGP	1
3	PFOZZ	5935011496997	11083	7N7778	.CONNECTOR BODY,PLUG..... UOC:AGP	1
4	PFOZA	5935005096194	96906	MS3456W10SL4S	.CONNECTOR,PLUG,ELEC..... UOC:AGP	2
5	PFOZZ	5940001434793	96906	MS25036-110	.TERMINAL,LUG..... UOC:AGP	1
6	XDOZZ		11083	3T3049	.CLIP,ELECTRICAL..... UOC:AGP	1

END OF FIGURE

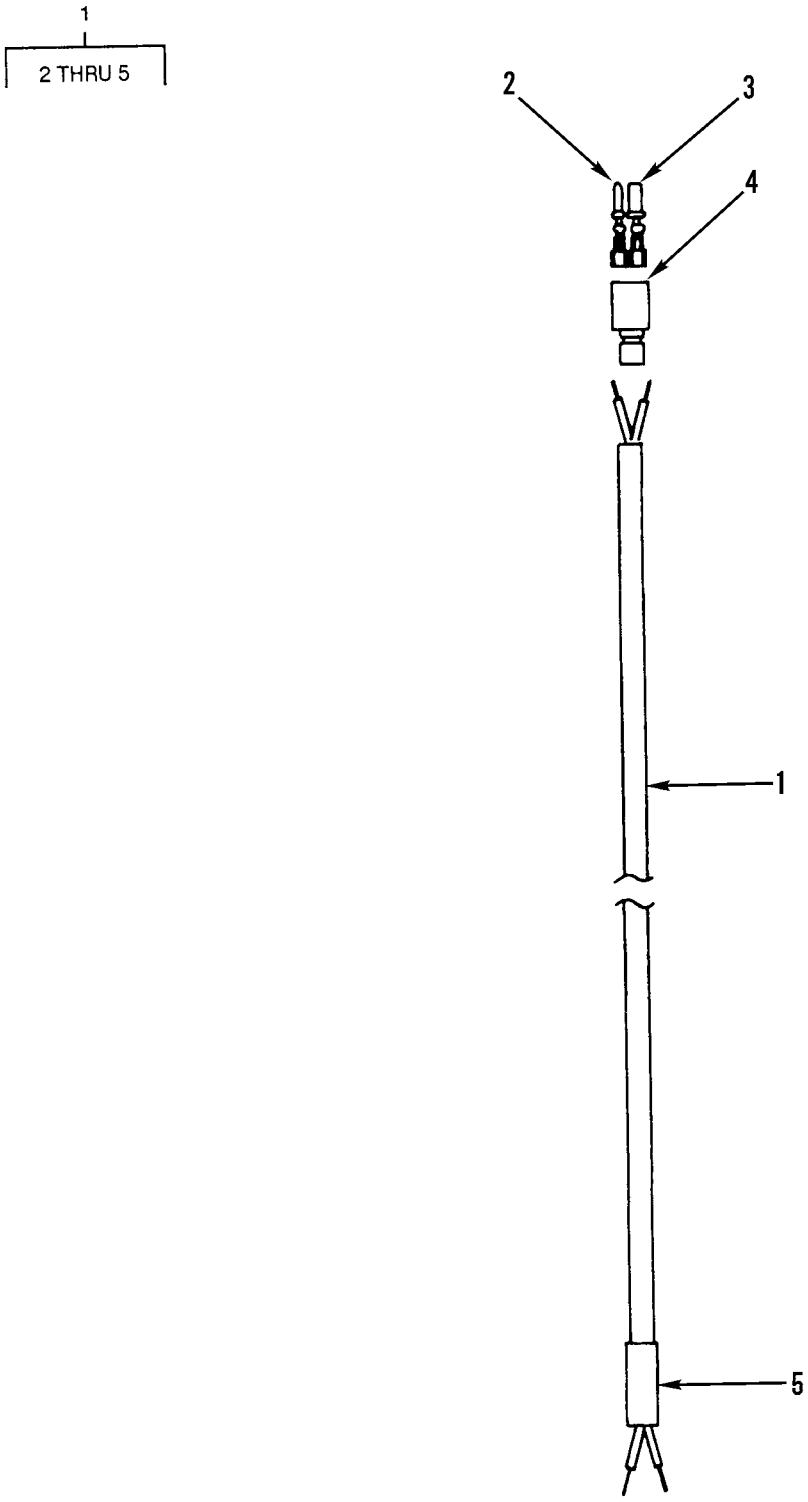

Figure 124. Left-Hand Blade Float Wiring Harness

(1) ITEM NO	(2) SMR CODE	(3) NSN	(4) CAGEC	(5) PART NUMBER	(6) DESCRIPTION AND USABLE ON CODES(UOC)	(7) QTY
					GROUP 0613 HULL OR CHASSIS WIRING HARNESS FIG. 124 LEFT-HAND BLADE FLOAT WIRING HARNESS	
1	PFOZZ	5995011787126	11083	5T5183	WIRING HARNESS,BRAN..... UOC:AGP	1
2	PFOZZ	5999011566314	71468	110238-0195	.PIN,GROOVED,HEADLES..... UOC:AGP	1
3	PFOZZ	5999011508808	11083	7N7779	.CONTACT,ELECTRICAL..... UOC:AGP	1
4	PFOZZ	5935011508323	11083	7N9737	.CONNECTOR BODY,PLUG..... UOC:AGP	1
5	MOOZZ		11083	5P1083	.TUBE MAKE FROM INSULATION SLEEVING P/N 5P6009..... UOC:AGP	1
					END OF FIGURE	

1
2 THRU 5

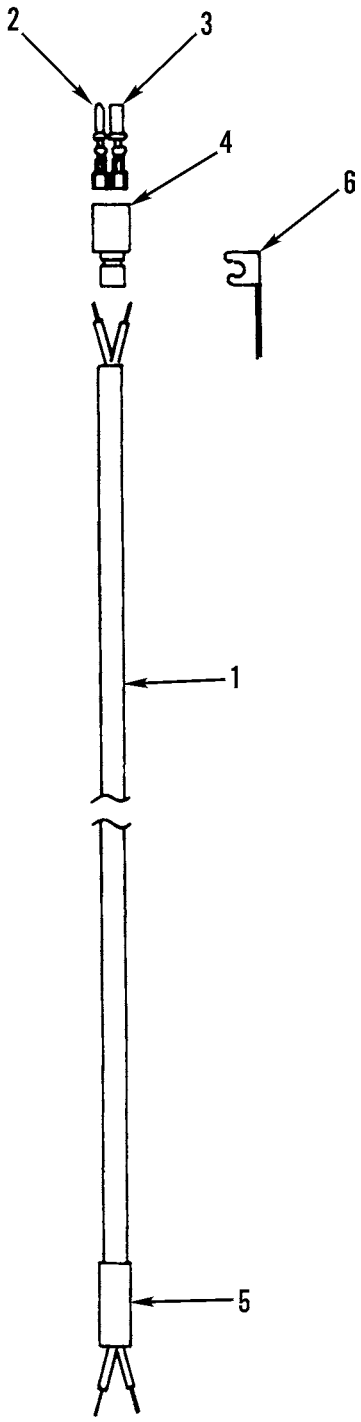

Figure 125. Right-Hand Blade Float Wiring Harness

(1) ITEM NO	(2) SMR CODE	(3) NSN	(4) CAGEC	(5) PART NUMBER	(6) DESCRIPTION AND USABLE ON CODES(UOC)	(7) QTY
					GROUP 0613 HULL OR CHASSIS WIRING HARNESS FIG. 125 RIGHT-HAND BLADE FLOAT WIRING HARNESS	
1	PFOZZ	5995011924606	11083	5T5182	WIRING HARNESS,BRAN..... UOC:AGP	1
2	PFOZZ	5999011566314	71468	110238-0195	.PIN,GROOVED,HEADLES..... UOC:AGP	1
3	PFOZZ	5999011508808	11083	7N7779	.CONTACT,ELECTRICAL..... UOC:AGP	1
4	PFOZZ	5935011508323	11083	7N9737	.CONNECTOR BODY,PLUG..... UOC:AGP	1
5	MOOZZ		11083	5P1038	.TUBE MAKE FROM INSULATION SLEEVING P/N 5P6009..... UOC:AGP	1
6	PFOZZ	5999012620436	11083	3T3048	CLIP,ELECTRICAL..... UOC:AGP	1

END OF FIGURE

1
2 AND 3

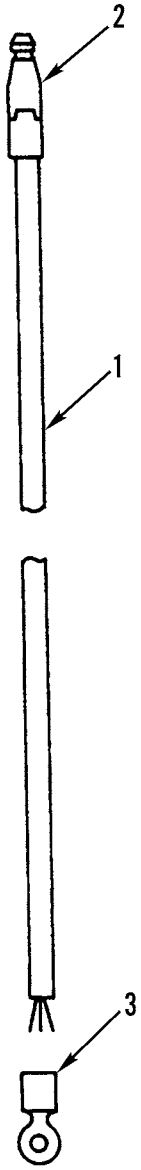

Figure 126. Differential Lock Control Lead

(1) ITEM NO	(2) SMR CODE	(3) NSN	(4) CAGEC	(5) PART NUMBER	(6) DESCRIPTION AND USABLE ON CODES(UOC)	(7) QTY
					GROUP 0613 HULL OR CHASSIS WIRING HARNESS	
					FIG. 126 DIFFERENTIAL LOCK CONTROL LEAD	
1	PFFZZ	5995010946412	11083	2G8931	LEAD,ELECTRICAL.....	1
2	PFOZZ	5940001434774	96906	MS25036-153	.TERMINAL,LUG.....	1
3	PAOZZ	5940002910085	81774	R5302P1	.TERMINAL,QUICK DISC.....	1

END OF FIGURE

1
2 THRU 4

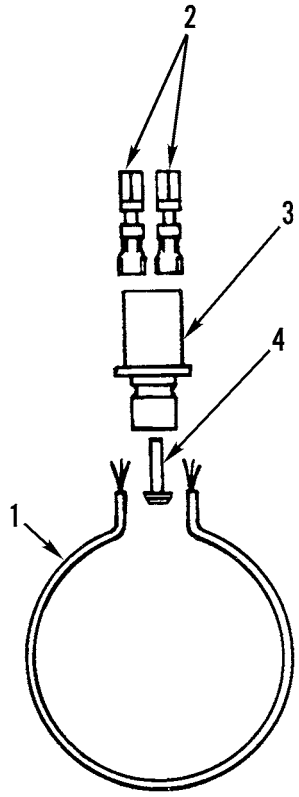

Figure 127. Monitoring System Jumper Wire Assembly

(1) ITEM NO	(2) SMR CODE	(3) NSN	(4) CAGEC	(5) PART NUMBER	(6) DESCRIPTION AND USABLE ON CODES(UOC)	(7) QTY
					GROUP 0613 HULL OR CHASSIS WIRING HARNESS	
					FIG. 127 MONITORING SYSTEM JUMPER WIRE ASSEMBLY	
1	PAOZZ	6150012686579	11083	5T7086	LEAD,ELECTRICAL.....	1
2	PFOZZ	5999011508808	11083	7N7779	.CONTACT,ELECTRICAL.....	2
3	PAOZZ	5935011508322	11083	7N7782	.CONNECTOR BODY,PLUG.....	1
4	PAOZZ	5935011522677	11083	9G3695	.PLUG,END SEAL,ELECT.....	1

END OF FIGURE

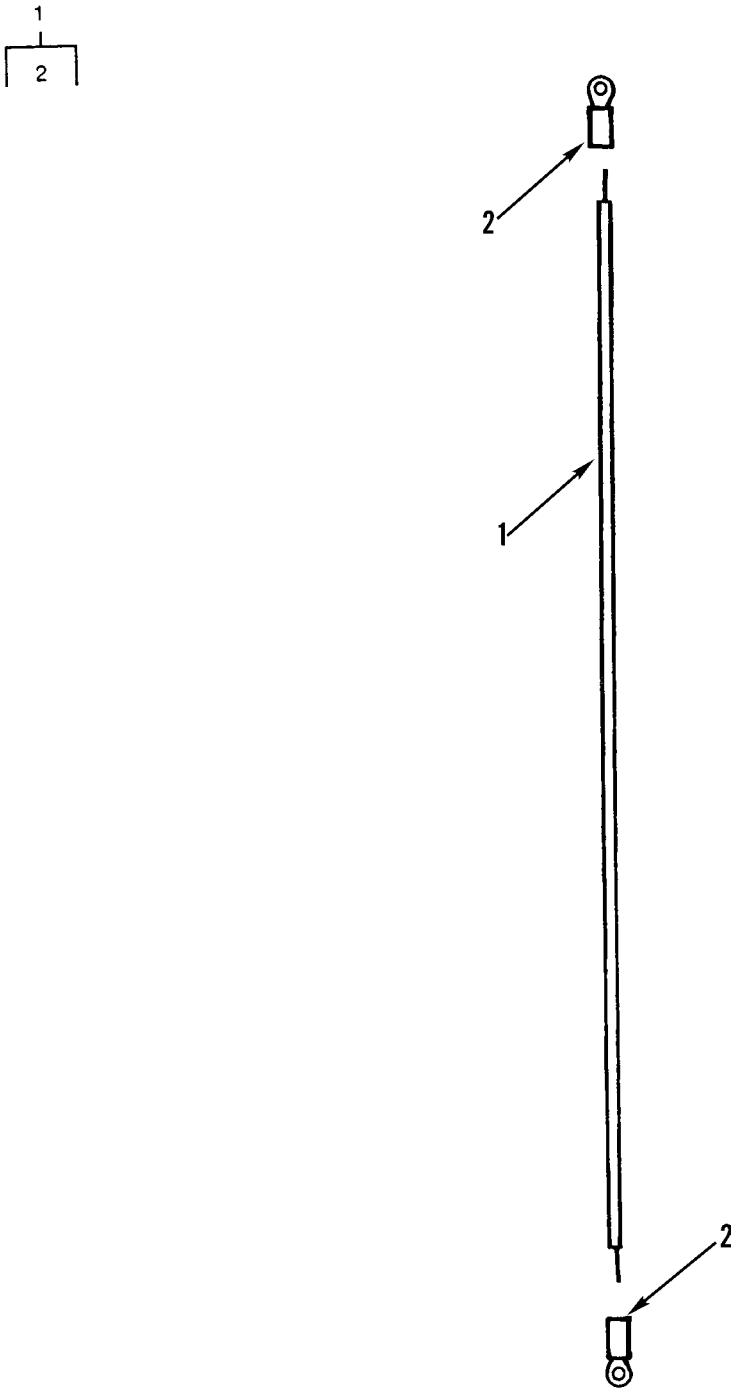

Figure 128. Air Pressure Switch Lead

(1) ITEM NO	(2) SMR CODE	(3) NSN	(4) CAGEC	(5) PART NUMBER	(6) DESCRIPTION AND USABLE ON CODES(UOC)	(7) QTY
					GROUP 0613 HULL OR CHASSIS WIRING HARNESS	
					FIG. 128 AIR PRESSURE SWITCH LEAD	
1	PAFZZ	5995011516310	11083	6G6109	LEAD,ELECTRICAL.....	1
2	PFFZZ	5940001434774	96906	MS25036-153	.TERMINAL,LUG.....	2

END OF FIGURE

1
2 AND 3

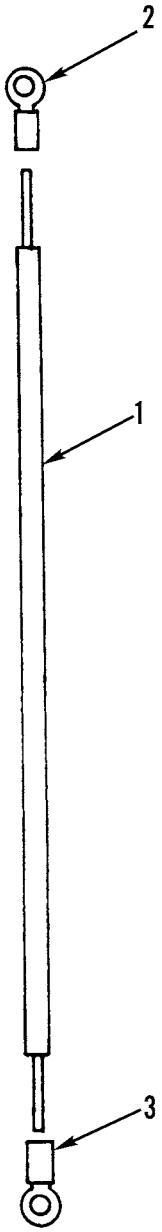

Figure 129. Starting Motor Lead

(1) ITEM NO	(2) SMR CODE	(3) NSN	(4) CAGEC	(5) PART NUMBER	(6) DESCRIPTION AND USABLE ON CODES(UOC)	(7) QTY
					GROUP 0613 HULL OR CHASSIS WIRING HARNESS	
					FIG. 129 STARTING MOTOR LEAD	
1	PFOZZ	5995009309107	11083	9F4337	LEAD,ELECTRICAL.....	1
2	PFFZZ	5940001188836	11083	2L8054	.TERMINAL,LUG.....	1
3	PFFZZ	5940001138190	96906	MS25036-122	.TERMINAL,LUG.....	1

END OF FIGURE

1
2 AND 3

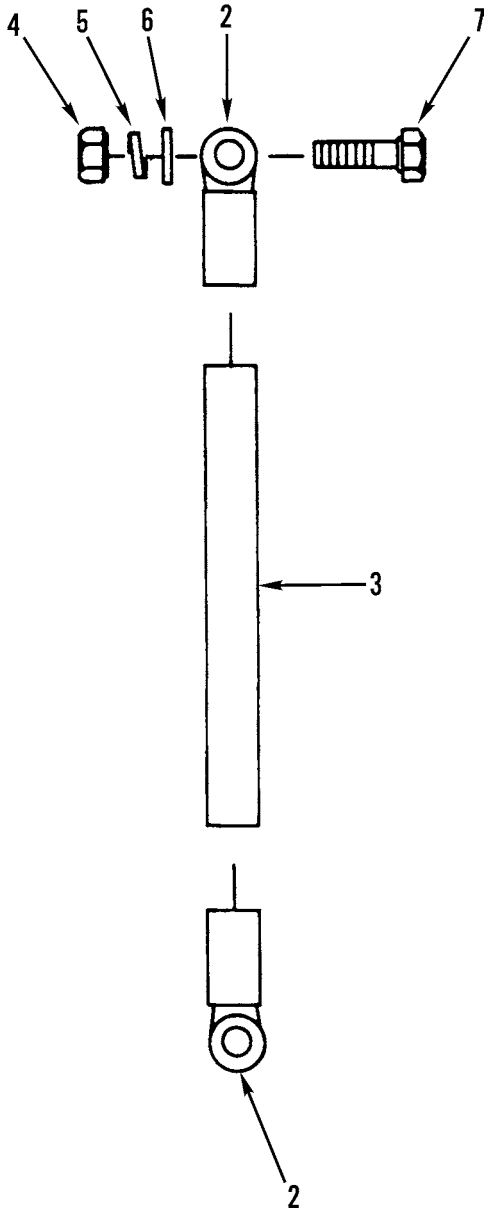

Figure 130. Alternator Ground Lead and Mounting

(1) ITEM NO	(2) SMR CODE	(3) NSN	(4) CAGEC	(5) PART NUMBER	(6) DESCRIPTION AND USABLE ON CODES(UOC)	(7) QTY
					GROUP 0613 HULL OR CHASSIS WIRING HARNESS	
					FIG. 130 ALTERNATOR GROUND LEAD AND MOUNTING	
1	PAOZZ	2920011849404	11083	8W2991	LEAD,IGNITION,ENGIN.....	1
2	PFOZZ	5940001434777	81343	MS25036-157	.TERMINAL,LUG.....	2
3	MOOZZ		11083	5P5622-11.4	.WIRE MAKE FROM WIRE P/N M16878/3BMG0.....	1
4	PFOZZ	5310009050762	96906	MS51967-3	NUT,PLAIN,HEXAGON.....	1
5	PFOZZ	5310002090786	78189	1114-00	WASHER,LOCK.....	1
6	PFOZZ	5310010512360	11083	5P0537	WASHER.....	1
7	PFOZZ	5305002253843	80204	B1821BH025C100N	SCREW,CAP,HEXAGON H.....	1

END OF FIGURE

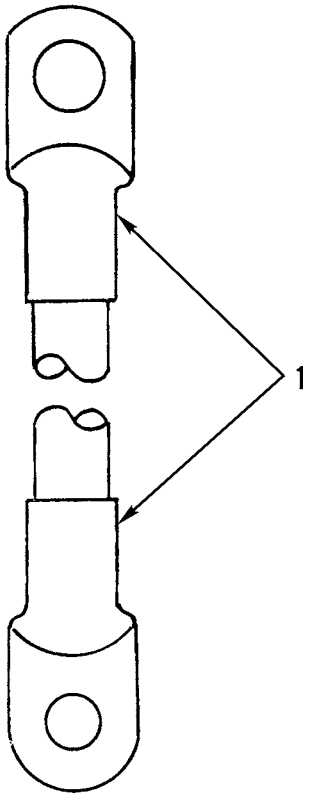

Figure 131. Disconnect Switch Cable

(1) ITEM NO	(2) SMR CODE	(3) NSN	(4) CAGEC	(5) PART NUMBER	(6) DESCRIPTION AND USABLE ON CODES(UOC)	(7) QTY
					GROUP 0613 HULL OR CHASSIS WIRING HARNESS FIG. 131 DISCONNECT SWITCH CABLE	
1	PAOZZ	5995011525087	11083	9D3822	CABLE ASSEMBLY,SPEC..... UOC:AF9,AGN,AGP	1

END OF FIGURE

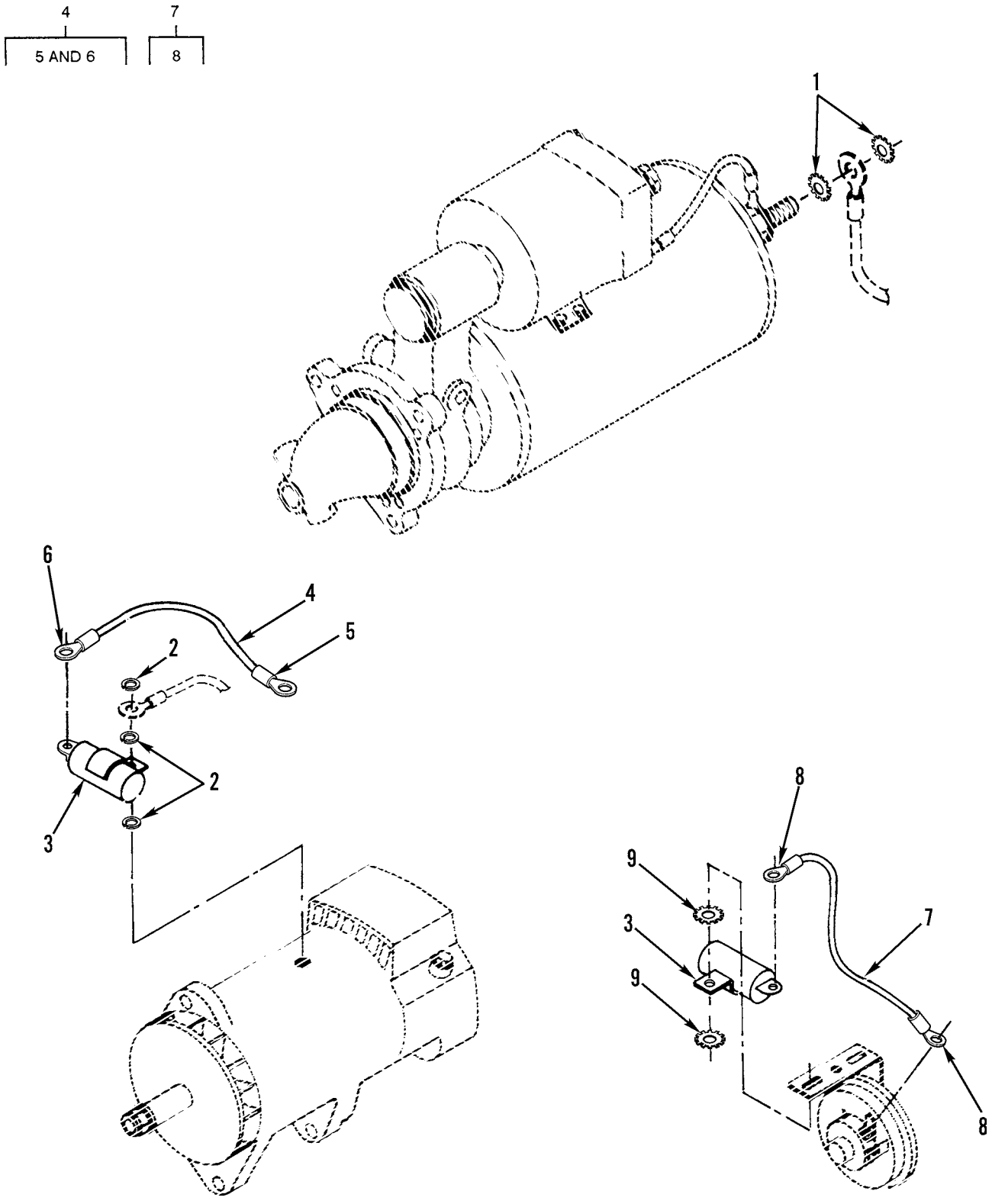

Figure 132. Radio Interference Suppression

(1) ITEM NO	(2) SMR CODE	(3) NSN	(4) CAGEC	(5) PART NUMBER	(6) DESCRIPTION AND USABLE ON CODES(UOC)	(7) QTY
					GROUP 0613 HULL OR CHASSIS WIRING HARNESS FIG. 132 RADIO INTERFERENCE SUPPRESSION	
1	PFOZZ	5310002095116	96906	MS35335-37	WASHER,LOCK.....	4
2	PFOZZ	5310002090786	78189	1114-00	WASHER,LOCK.....	3
3	PAOZZ	5910011805443	0AFL4	5359-50	CAPACITOR,FIXED,ELE.....	2
4	PFOZZ	5995011603599	11083	5R4686	LEAD,ELECTRICAL MAKE FROM WIRE P/N M16878/3BMG0.....	1
5	PFOZZ	5940010590873	11083	2L8071	.TERMINAL,LUG.....	1
6	PFOZZ	5940001434775	81343	MS25036-156	.TERMINAL,LUG.....	1
7	MOOZZ		11083	5R4687	WIRE ASSY MAKE FROM WIRE P/N M16878/3BMG0.....	1
8	PFOZZ	5940001434775	81343	MS25036-156	.TERMINAL,LUG.....	2
9	PFOZZ	5310005146674	96906	MS35335-34	WASHER,LOCK.....	2

END OF FIGURE

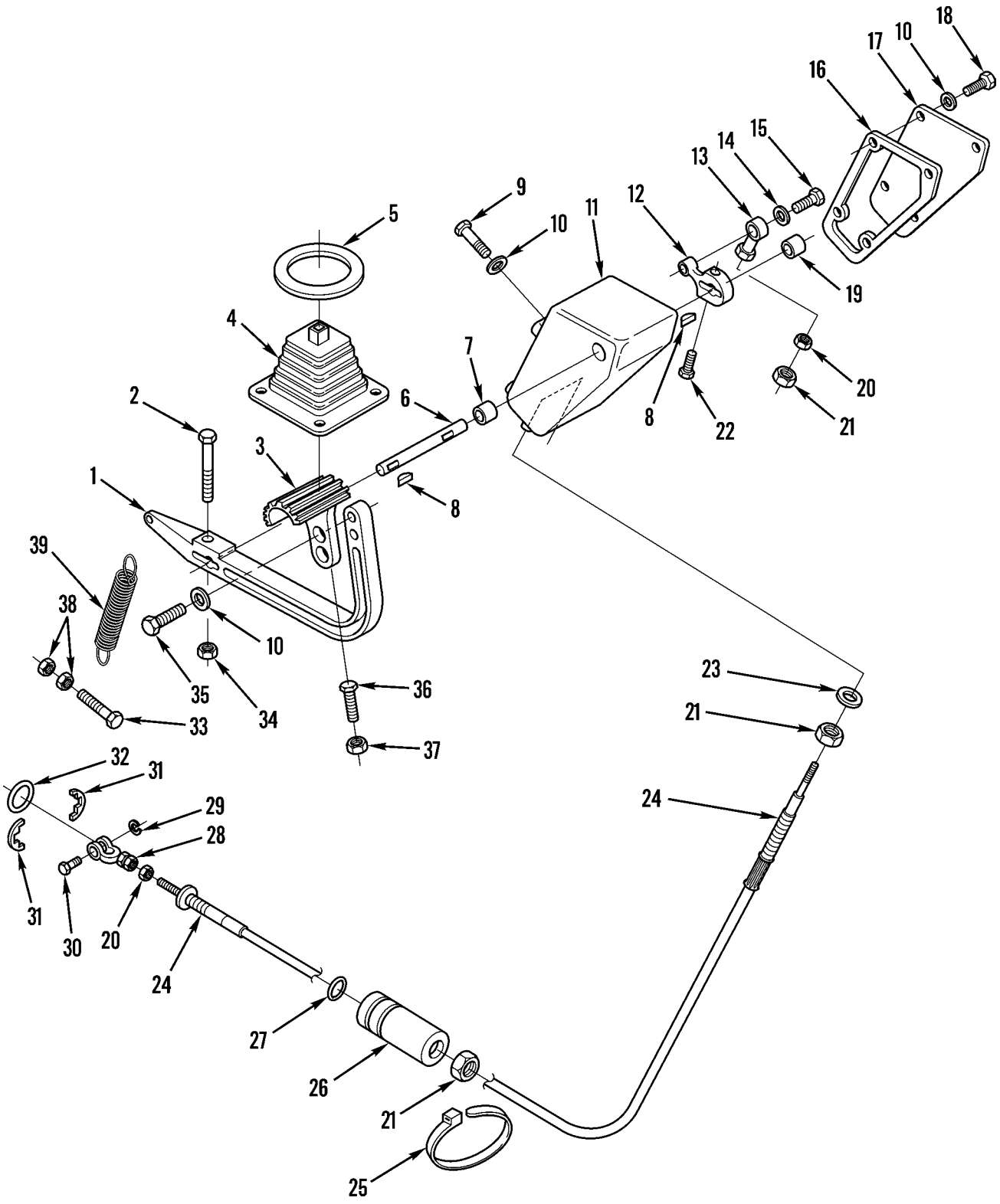

Figure 133. Transmission Clutch Control

(1) ITEM NO	(2) SMR CODE	(3) NSN	(4) CAGEC	(5) PART NUMBER	(6) DESCRIPTION AND USABLE ON CODES(UOC)	(7) QTY
					GROUP 07 TRANSMISSION GROUP 0705 TRANSMISSION SHIFTING COMPONENTS FIG. 133 TRANSMISSION CLUTCH CONTROL	
1	PFOZZ	3040011503940	11083	6G5058	LEVER,REMOTE CONTRO.....	1
2	PFOZZ	5305010269518	11083	0S1571	SCREW,CAP,HEXAGON H.....	1
3	PAOZZ	2540011853189	11083	8X6932	PEDAL,CONTROL.....	1
4	PAOZZ	2530011730252	11083	6G4969	BOOT,VEHICULAR COMP.....	1
5	PAOZZ	3120010951268	11083	7D8875	BEARING,WASHER,THRU.....	1
6	PFOZZ	3040010659079	11083	7D9316	SHAFT,STRAIGHT.....	1
7	PAOZZ	3110010659108	11083	7K2135	BEARING.....	1
8	PFOZZ	5315006165526	96906	MS35756-8	KEY,WOODRUFF.....	2
9	PFOZZ	5306004238194	11083	1A2029	BOLT,MACHINE.....	4
10	PFOZZ	5310001174788	11083	5M2894	WASHER,FLAT.....	10
11	PFOZZ	2530011527777	11083	9D0669	HOUSING,CONTROL GRO.....	1
12	XDOZZ		11083	9D0001	LEVER,REMOTE CONTRO.....	1
13	PAOZZ	2520010660510	11083	6L7751	ROD,END.....	1
14	PFOZZ	5310005501130	96906	MS35333-40	WASHER,LOCK.....	1
15	PFOZZ	5305000712505	80204	B1821BH025C088N	SCREW,CAP,HEXAGON H.....	1
16	PAOZZ	5330011539313	11083	9D0699	GASKET.....	1
17	PFOZZ	5340011559900	11083	9D0698	COVER,ACCESS.....	1
18	PFOZZ	5305002528919	11083	0S0509	SCREW,CAP,HEXAGON H.....	4
19	PFOZZ	3110009021675	60380	M-1081-OH	BEARING,ROLLER,NEED.....	1
20	PFOZZ	5310006602649	96906	MS35690-424	NUT,PLAIN,HEXAGON.....	2
21	PFOZZ	5310008913405	96906	MS35691-54	NUT,PLAIN,HEXAGON.....	3
					UOC:AF9,AGN,AGP	
22	PFOZZ	5306011954681	11083	3B1915	BOLT.....	1
23	PFOZZ	5310005434385	96906	MS35333-46	WASHER,LOCK.....	1
24	PFOZZ	2590010943201	5S058	56-3361-2123	CONTROL ASSEMBLY,PU.....	1
					UOC:AF9,AGN,AGP	
25	PAOZZ	2815010534712	11083	7K1181	STRAP.....	1
26	PAOZZ	2530010659088	11083	8D5296	COUPLING.....	1
					UOC:AF9,AGN,AGP	
27	PFOZZ	5331010660673	11083	1P8116	O-RING.....	1
28	PAOZZ	3040010660581	11083	9D5506	CONNECTING LINK,RIG.....	1
29	PFOZZ	5325007217680	96906	MS16633-1025	RING,RETAINING.....	1
30	PFOZZ	5315010659087	11083	8D5295	PIN.....	1
31	XDOZZ		96906	MS90708-1125	RING,RETAINING.....	2
32	PFOZZ	5331003934054	11083	3D2992	O-RING.....	1
33	PFOZZ	5305002253843	80204	B1821BH025C100N	SCREW,CAP,HEXAGON H.....	1
34	PFOZZ	5310014297859	11083	6V8801	NUT,PLAIN,HEXAGON.....	1
35	PFOZZ	5305010156841	11083	0S1591	SCREW.....	2
36	PFOZZ	5305010947379	11083	4B3611	SETSCREW.....	1
37	PFOZZ	5310008512682	96906	MS35691-17	NUT,PLAIN,HEXAGON.....	1
38	PFOZZ	5310000426376	31159	JM56	NUT,PLAIN,HEXAGON.....	2
39	PAOZZ	5360010660579	11083	9D2641	SPRING.....	1

END OF FIGURE

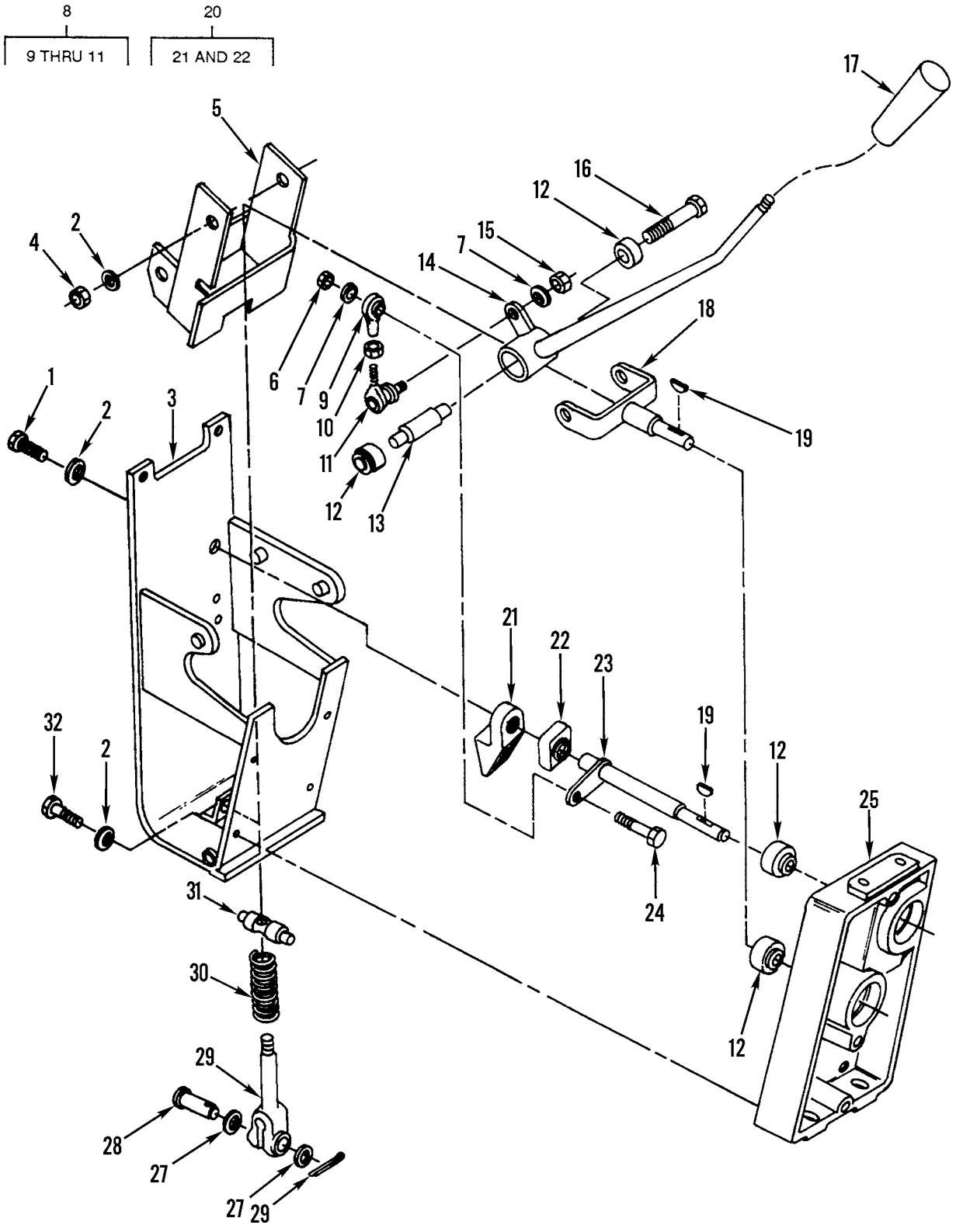

Figure 134. Transmission Control Lever

(1) ITEM NO	(2) SMR CODE	(3) NSN	(4) CAGEC	(5) PART NUMBER	(6) DESCRIPTION AND USABLE ON CODES(UOC)	(7) QTY
					GROUP 0705 TRANSMISSION SHIFTING COMPONENTS FIG. 134 TRANSMISSION CONTROL LEVER	
1	PFOZZ	5305007175460	11083	5S7379	SCREW,CAP,HEXAGON H.....	2
2	PFOZZ	5310010948810	78189	3320-14-01	WASHER,SQUARE CONE.....	7
3	PFOZZ	2520011546654	11083	9D9961	SUPPORT ASSEMBLY TR.....	1
4	PFOZZ	5310014297859	11083	6V8801	NUT,PLAIN,HEXAGON.....	1
5	PFOZZ	5340011565492	11083	9D0795	BRACKET ASSEMBLY.....	1
6	PFOZZ	5310010687065	11083	5B3180	NUT.....	1
7	PFOZZ	5310010955910	11083	5P4116	WASHER,SQUARE CONE.....	2
8	XBOZZ		11083	7D9369	CONNECTING LINK,RIG.....	1
9	PFOZZ	3120001826865	73134	HF5CEI	.BEARING,PLAIN,ROD E.....	1
10	PFOZZ	5310014135909	11083	6V8186	.NUT,PLAIN,HEXAGON.....	1
11	PAOZZ	3120011843825	11083	6V9164	.BEARING,PLAIN,ROD E.....	1
12	PFOZZ	3110010660466	21335	RAL012NPP	BEARING,BALL,ANNULA.....	4
13	PFOZZ	2520010660468	11083	7D9327	SHAFT.....	1
14	PFOZZ	2520010660478	11083	8D5387	LEVER.....	1
15	PFOZZ	5310014135909	11083	6V8186	NUT,PLAIN,HEXAGON.....	1
16	PFOZZ	5306004262974	11083	T0065	SCREW.....	1
17	PFOZZ	5355008914401	11083	7M0706	KNOB.....	1
18	PFOZZ	2520010660480	11083	8D5450	SHAFT ASSEMBLY.....	1
19	PFOZZ	5315006165526	80205	MS35756-8	KEY,WOODRUFF.....	2
20	PFOZZ	3120004469863	21335	EA28899	BEARING,PLAIN,SELF-.....	1
21	XAOZZ		11083	9D0002	.BRACKET.....	1
22	PFOZZ	3120004469863	21335	EA28899	.BEARING,PLAIN,SELF-.....	1
23	PFOZZ	2520010660479	11083	8D5440	SHAFT ASSEMBLY.....	1
24	PFOZZ	5306002264829	80204	B1821BH031C125N	BOLT,MACHINE.....	1
25	XDOZZ		11083	2G3149	HOUSING,MECHANICAL.....	1
26	PFOZZ	5315004317315	11083	3B4615	PIN,COTTER.....	1
27	PFOZZ	5310000806004	96906	MS27183-14	WASHER,FLAT.....	2
28	PFOZZ	5315002726760	11083	1B0676	PIN,STRAIGHT,HEADED.....	1
29	PFOZZ	2510010630636	11083	1H7366	ROD.....	1
30	PFOZZ	5360010634209	11083	4J7490	SPRING.....	1
31	PFOZZ	5315010660498	11083	9D8903	PIN.....	1
32	PFOZZ	5306002286835	11083	4L6454	BOLT,MACHINE.....	4

END OF FIGURE

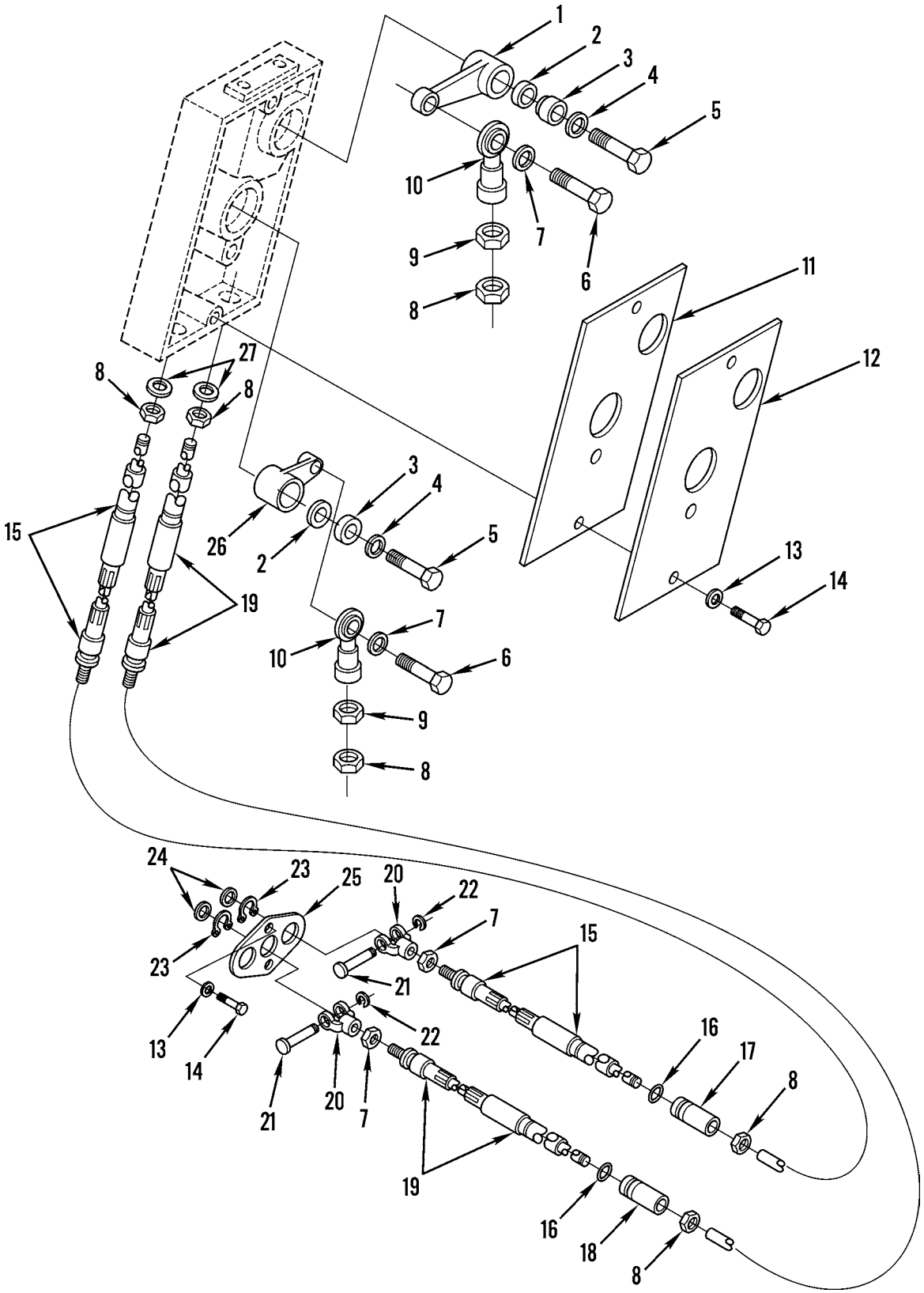

Figure 135. Transmission Controls (Sheet 1 of 2)

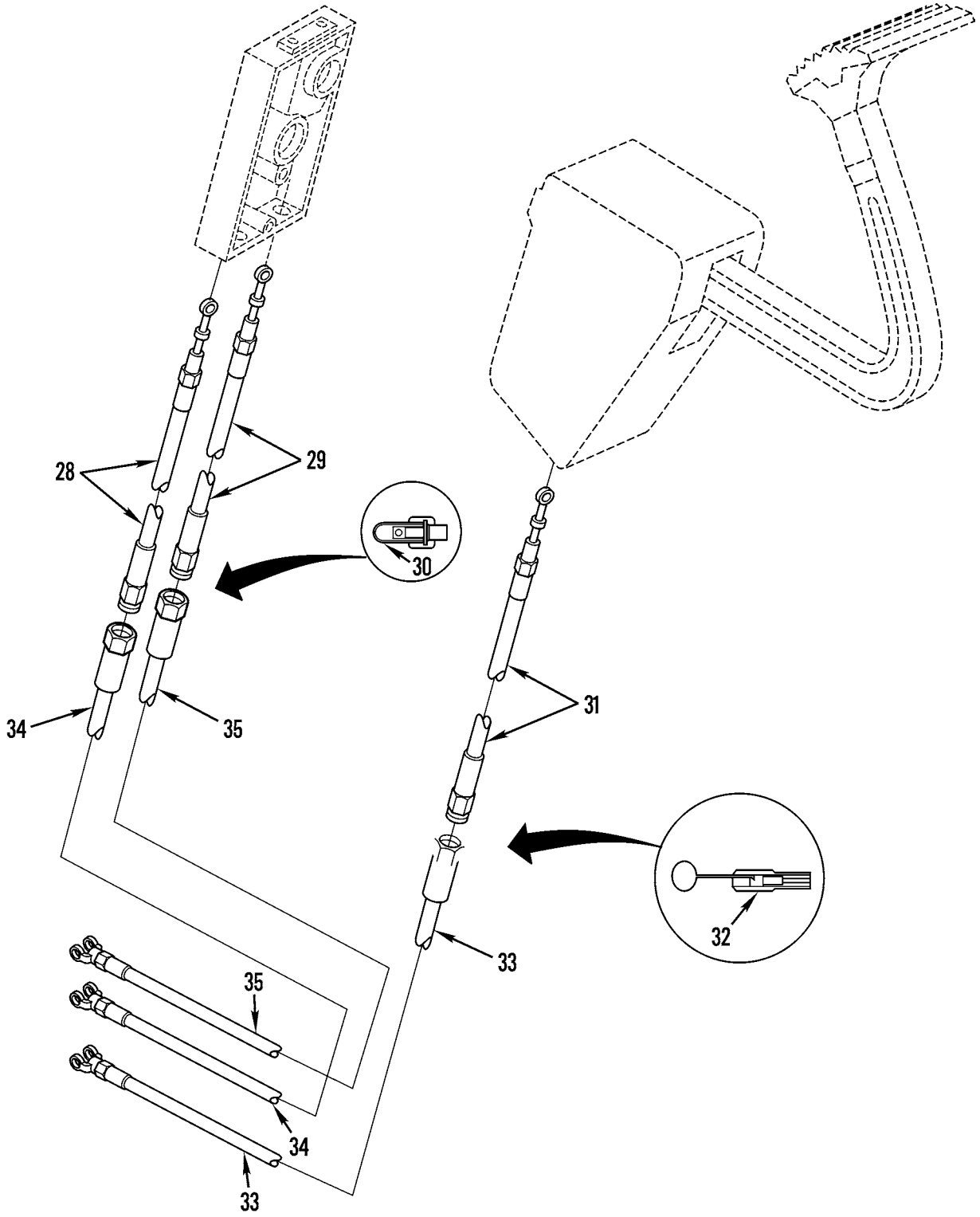

Figure 135. Transmission Controls (Sheet 2 of 2)

(1) ITEM NO	(2) SMR CODE	(3) NSN	(4) CAGEC	(5) PART NUMBER	(6) DESCRIPTION AND USABLE ON CODES(UOC)	(7) QTY
					GROUP 0705 TRANSMISSION SHIFTING COMPONENTS FIG. 135 TRANSMISSION CONTROLS	
1	PFOZZ	2520010660467	11083	7D9304	LEVER	1
2	PFOZA	5325005313970	80756	RRT162CDM9	RING,RETAINING	2
3	PFOZZ	3110010660466	21335	RAL012NPP	BEARING,BALL,ANNULA	2
4	PFOZZ	5310009998288	11083	9M6527	WASHER,FLAT	2
5	PFOZZ	5306002264829	80204	B1821BH031C125N	BOLT,MACHINE	2
6	PFOZZ	5306002093217	11083	6D2928	BOLT,MACHINE	2
7	PFOZZ	5310005501130	96906	MS35333-40	WASHER,LOCK	2
8	PFOZZ	5310008913405	96906	MS35691-54	NUT,PLAIN,HEXAGON UOC:AF9,AGN,AGP	6
9	PFOZZ	5310006602649	96906	MS35690-424	NUT,PLAIN,HEXAGON	4
10	PFOZZ	2520010660510	11083	6L7751	ROD,END	2
11	PAOZA	5330010660676	11083	9D5331	GASKET	1
12	PFOZZ	2520010660477	11083	8D5366	COVER	1
13	PFOZZ	5310010948810	78189	3320-14-01	WASHER,SQUARE CONE	5
14	PAOZZ	5306002286835	11083	4L6454	BOLT,MACHINE	5
15	PFOZZ	3040010945350	5S058	56-3363-2113	CONTROL ASSEMBLY,PU UOC:AF9,AGN,AGP	1
16	PFOZZ	5331010660673	11083	1P8116	O-RING	2
17	XDOZZ		11083	8D5297	COUPLING UOC:AF9,AGN,AGP	1
18	PFOZZ	2530010659088	11083	8D5296	COUPLING UOC:AF9,AGN,AGP	1
19	PFOZZ	2590010943201	5S058	56-3361-2123	CONTROL ASSEMBLY,PU UOC:AF9,AGN,AGP	1
20	PFOZZ	3040010660581	11083	9D5506	CONNECTING LINK,RIG	2
21	PFOZZ	5315010659087	11083	8D5295	PIN	2
22	PFOZZ	5325007217680	96906	MS16633-1025	RING,RETAINING	2
23	XDOZZ		96906	MS90708-1125	RING,RETAINING	4
24	PFOZZ	5331003934054	11083	3D2992	O-RING	2
25	XDOZZ		11083	8D5284	PLATE,RETAINING,SHA	1
26	PFOZZ	2520010660465	11083	7D0087	LEVER	1
27	PFOZZ	5310005434385	96906	MS35333-46	WASHER,LOCK	2
28	PAOZZ	2590011695401	11083	5R6835	CONTROL ASSEMBLY,PU UOC:AGM,F10	1
29	PAOZZ	2590011698761	11083	5R6842	CONTROL ASSEMBLY,PU UOC:AGM,F10	1
30	PAOZZ		11083	5R6221	PLUG,END SEAL,ELECT UOC:AGM,F10	1
31	PAOZZ	2590011687621	11083	5R6840	CONTROL ASSEMBLY,PU UOC:AGM,F10	1
32	PAOZZ	2520012014146	11083	5R7047	EXTRACTOR ASSEMBLY, UOC:AGM,F10	1
33	PAOZZ	2590012012490	5S058	56-3234-2060	CONTROL ASSEMBLY,PU UOC:AGM,F10	1
34	PAOZZ		11083	5R6841	CONTROL ASSEMBLY,PU UOC:AGM,F10	1
35	PAOZZ	2590011692885	11083	5R6836	CONTROL ASSEMBLY,PU UOC:AGM,F10	1

END OF FIGURE

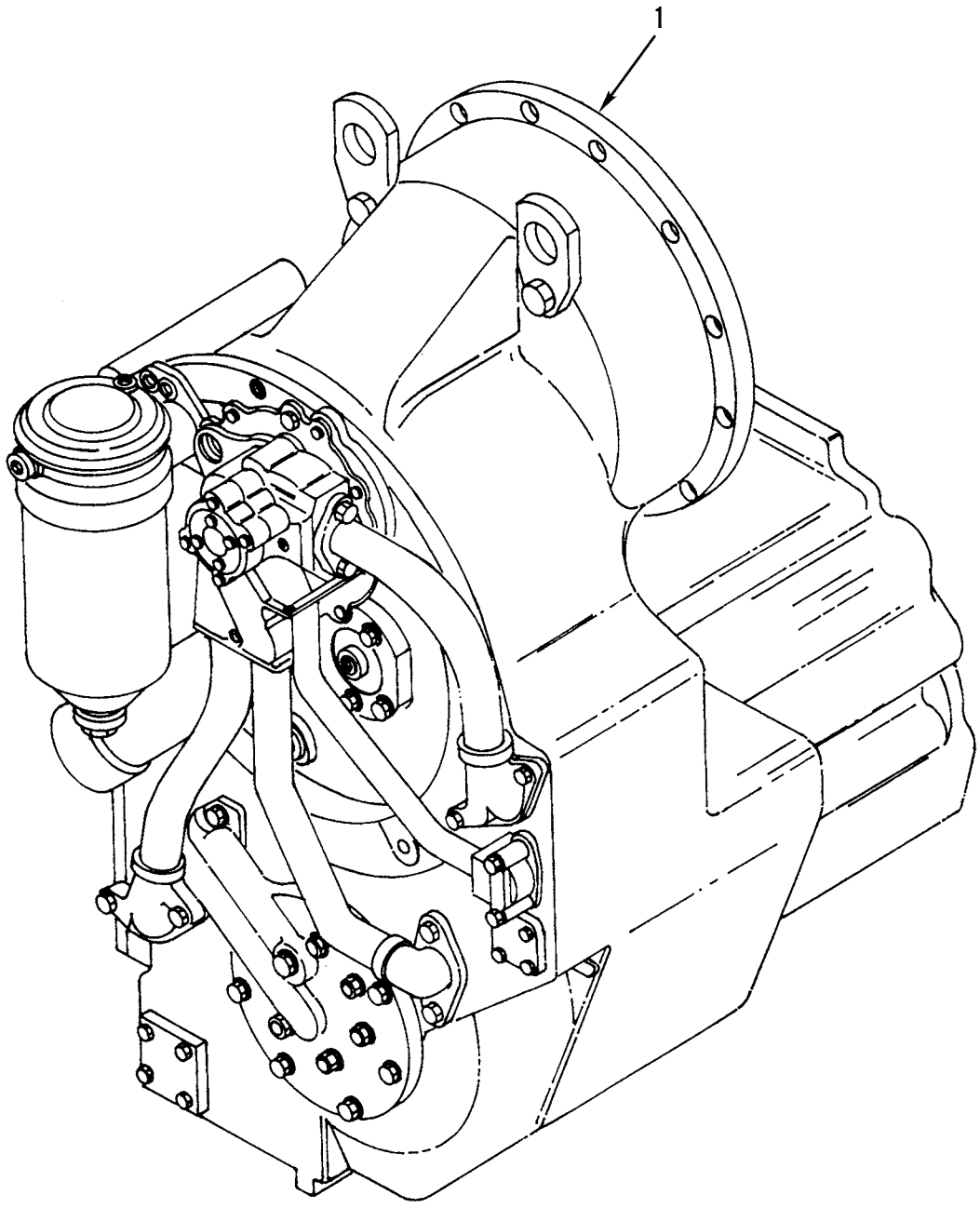

Figure 136. Transmission

(1) ITEM NO	(2) SMR CODE	(3) NSN	(4) CAGEC	(5) PART NUMBER	(6) DESCRIPTION AND USABLE ON CODES(UOC)	(7) QTY
					GROUP 0710 TRANSMISSION ASSEMBLY AND ASSOCIATED PARTS FIG. 136 TRANSMISSION	
1	PGFHD	2520011527143	11083	5R6192	TRANSMISSION,HYDRAU.....	1

END OF FIGURE

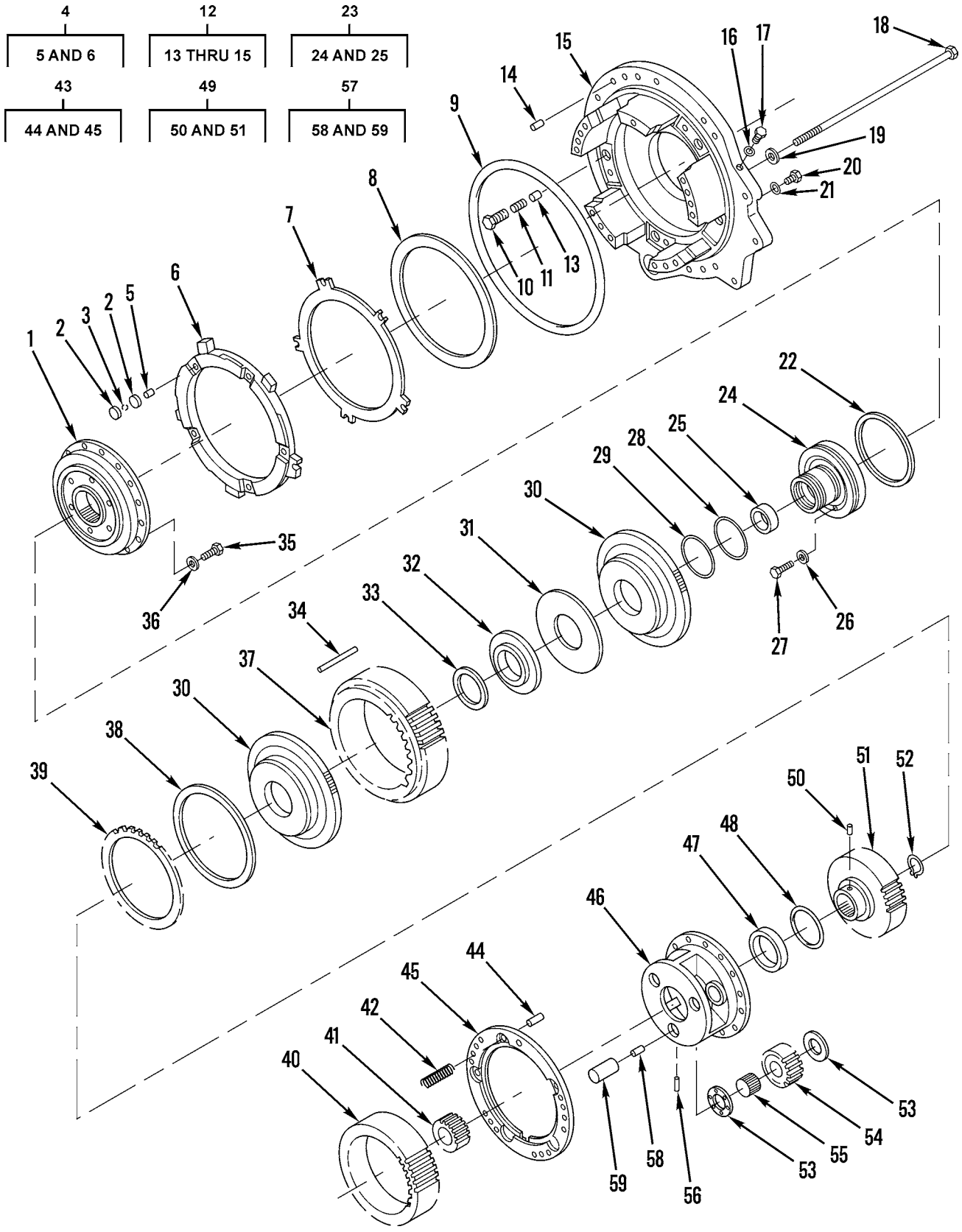

Figure 137. Planetary Group, Outer

(1) ITEM NO	(2) SMR CODE	(3) NSN	(4) CAGEC	(5) PART NUMBER	(6) DESCRIPTION AND USABLE ON CODES(UOC)	(7) QTY
					GROUP 0710 TRANSMISSION ASSEMBLY AND ASSOCIATED PARTS FIG. 137 PLANETARY GROUP, OUTER	
1	PFHZZ	3040011816777	11083	9P8452	HUB,BODY	1
2	PFHZZ	5325010665293	11083	3P0860	INSERT,SCREW THREAD	10
3	PFHZZ	2520010681109	11083	5F6199	BALL	5
4	PFHZZ	2520011513980	11083	3P5349	CLUTCH HALF,POSITIV	1
5	PFHZZ	5315010690755	11083	5H8985	.PIN	5
6	XAHZZ		11083	3P0831	.PISTON	1
7	PFHZZ	2520011036812	11083	8P1656	PLATE,CLUTCH	1
8	PFHZZ	3010011505434	11083	6Y2027	DISK,CLUTCH	1
9	PCHZZ	5331000813139	11083	4D1577	O-RING	1
10	PFHZZ	2520010664638	11083	3P1601	PLUNGER	4
11	PFHZZ	5360005986759	11083	2B2254	SPRING,HELICAL,COMP	4
12	XDHZZ		11083	3P0318	HOUSING ASSEMBLY,TR	1
13	PFHZZ	5315011511103	11083	2K6921	.PIN,STRAIGHT,HEADLE	4
14	PFHZZ	5315011511102	11083	3F3442	.PIN,STRAIGHT,HEADLE	1
15	XAHZZ		11083	3P0319	.HOUSING	1
16	PCHZZ	5331008013354	25184	906-737-70	O-RING	1
17	PFHZZ	5365010249868	30780	6HP5N-SS	PLUG,MACHINE THREAD	1
18	PFHZZ	5306004134750	11083	1M8657	BOLT,MACHINE	12
19	PFHZZ	5310004317239	11083	2M0849	WASHER,FLAT	12
20	PFHZZ	5365010318183	30780	8HP5N-S	PLUG,MACHINE THREAD	1
21	PAHZZ	5331009486482	11083	3K0360	O-RING	1
22	PFHZA	2520010664758	11083	3P0814	RING	1
23	PFHZZ	3130011877592	11083	9P8455	BEARING UNIT,PLAIN UOC:AF9,AGP,F10	1
24	XAHZZ		11083	9P8453	.CAGE	1
25	PFHZZ	3120010944416	11083	9P6264	.BEARING,SLEEVE	1
26	PFHZZ	5310000814219	96906	MS27183-12	WASHER,FLAT	6
27	PFHZZ	5306004550467	11083	1T0414	BOLT,MACHINE	6
28	PFHZA	5330010219878	11083	3P0815	SEAL	1
29	PFHZA	2520010664755	11083	3P0800	RING	1
30	PFHZZ	2520011478015	11083	7T9647	CLUTCH HALF,POSITIV	1
31	PFHZA	5360010665292	11083	3P0817	SPRING	3
32	XDHZZ		11083	3P0787	WASHER,SHOULDERED A	1
33	PFHZZ	5325007639328	80756	RST-275	RING,RETAINING	1
34	PFHZZ	5315011511101	11083	3P1681	PIN,STRAIGHT,HEADLE	1
35	PFHZZ	5306008146565	11083	0S1608	BOLT,MACHINE	16
36	PFHZZ	5310001174788	11083	5M2894	WASHER,FLAT	16
37	PFHZZ	3020011832385	11083	9P8454	GEAR CLUSTER,INTERN	1
38	PFHZZ	3010011493472	11083	8P8682	DISK,CLUTCH	4
39	PFHZZ	2520011493462	11083	3P0801	CLUTCH ASSEMBLY,FRI	4
40	PFHZZ	3020010952090	11083	8P5961	GEAR,INTERNAL	1
41	PFHZZ	3020010937408	11083	8P5959	GEAR,SPUR	1
42	PFHZZ	5360008947275	11083	9H5537	SPRING,HELICAL,COMP	10
43	PFHZZ	2520011491854	11083	3P5210	HOUSING ASSEMBLY,TR	1
44	PFHZZ	5315010690755	11083	5H8985	.PIN	5
45	XAHZZ		11083	3P0832	.HOUSING	1
46	XDHZZ		11083	9P8451	HOUSING,MECHANICAL	1
47	PFHZZ	3110010949954	11083	8E3962	BEARING,BALL,ANNULA	1

(1) ITEM NO	(2) SMR CODE	(3) NSN	(4) CAGEC	(5) PART NUMBER	(6) DESCRIPTION AND USABLE ON CODES(UOC)	(7) QTY
48	PFHZZ	5325010958663	80756	RRT393	RING,RETAINING.....	1
49	XDHZZ		11083	3P0785	HUB,BODY.....	1
50	XDHZZ		11083	8S3426	.DOWEL.....	1
51	XAHZZ		11083	3P0314	.HUB,CLUTCH.....	1
52	PFHZZ	5325005140362	96906	MS16624-1196	RING,RETAINING.....	1
53	PFHZZ	3120011861302	11083	8E8304	BEARING,WASHER,THRU.....	6
54	PFHZZ	3020010943108	11083	7G3452	GEAR,SPUR.....	3
55	PFHZZ	3110002397702	11083	5M6126	RETAINER AND ROLLER.....	3
56	PFHZZ	5315010597198	11083	3S2708	PIN.....	1
57	PFHZZ	3040011489427	11083	7S8631	SHAFT,STRAIGHT.....	1
58	XDHZZ	2520010690889	11083	3S0036	.PLUG.....	1
59	XAHZZ		11083	7S8582	.SHAFT,PLANET.....	1

END OF FIGURE

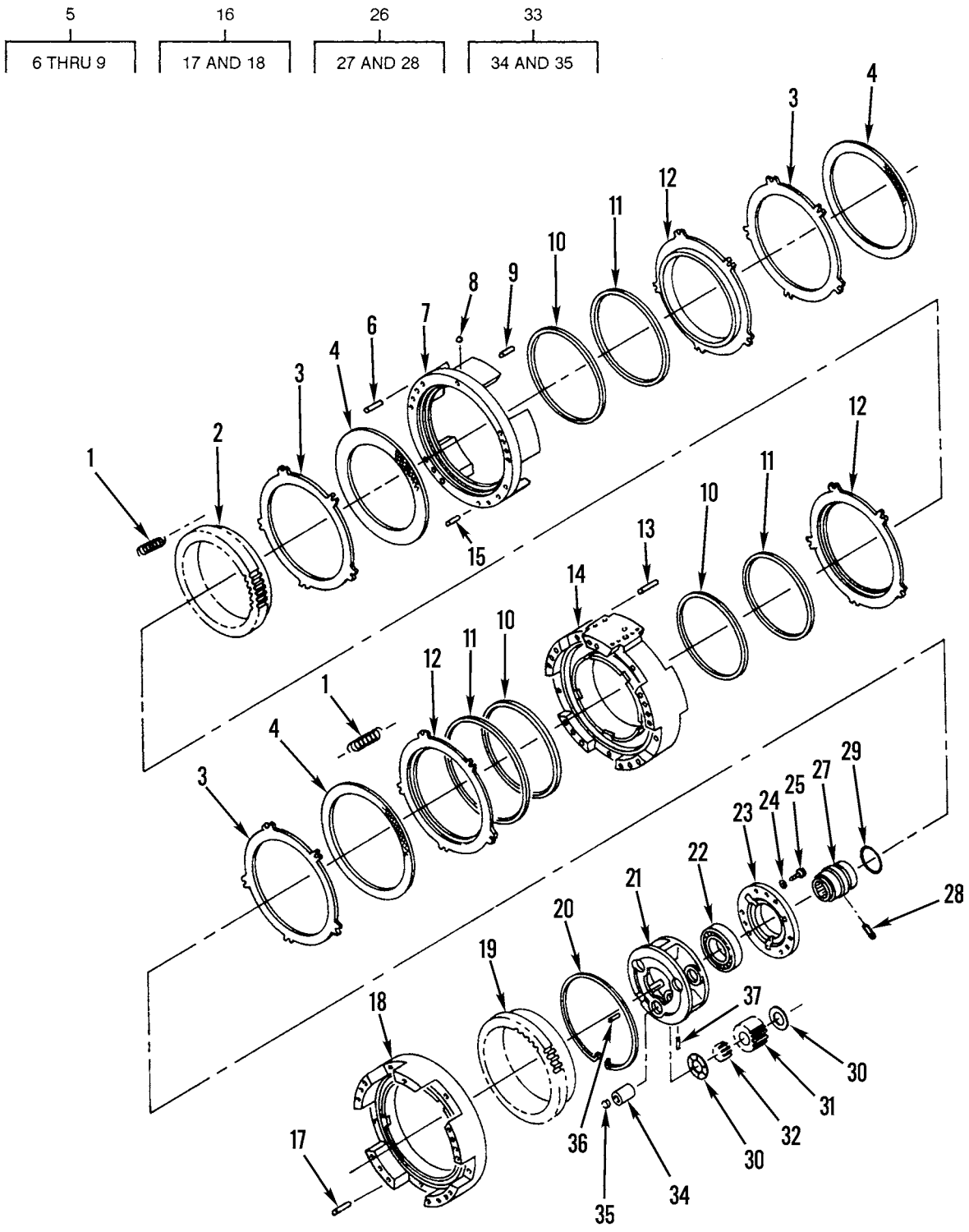

Figure 138. Planetary Group, Center

(1) ITEM NO	(2) SMR CODE	(3) NSN	(4) CAGEC	(5) PART NUMBER	(6) DESCRIPTION AND USABLE ON CODES(UOC)	(7) QTY
					GROUP 0710 TRANSMISSION ASSEMBLY AND ASSOCIATED PARTS FIG. 138 PLANETARY GROUP, CENTER	
1	PFHZZ	5360010691433	11083	2S5816	SPRING	20
2	PAHZZ	3020010669186	11083	2P4433	GEAR	1
3	PFHZZ	2520011036812	11083	8P1656	PLATE,CLUTCH	3
4	PFHZZ	3010011505434	11083	6Y2027	DISK,CLUTCH	3
5	PFHZZ	2520011493341	11083	3P0312	HOUSING ASSEMBLY,TR	1
6	PAHZZ	5315010625209	11083	5M7937	.PIN	2
7	XAHZZ		11083	3P0313	.HOUSING	1
8	PFHZZ	3110009491438	11083	4B9880	.BALL,BEARING	1
9	PFHZZ	5315011524258	11083	5F4250	.PIN,STRAIGHT,HEADLE	2
10	PFHZZ	5330010675552	11083	2P4511	RING SEAL	3
11	PAHZA	5330010661420	11083	1P9216	RING SEAL	3
12	PFHZZ	2520010675551	11083	2P4510	PISTON	3
13	PFHZZ	5315002460403	11083	1M3150	PIN,STRAIGHT,HEADLE	5
14	XDHZZ		11083	2P4367	HOUSING CLUTCH	1
15	PFHZZ	5365010327272	11083	9M4355	BUSHING,TAPERED	12
16	XDHZZ		11083	2P4364	HOUSING ASSEMBLY,TR	1
17	PAHZZ	5315010625209	11083	5M7937	.PIN	4
18	XAHZZ		11083	2P4362	.HOUSING,CLUTCH #3	1
19	PAHZZ	3020010945264	11083	2P4432	GEAR,INTERNAL	1
20	PFHZZ	5325004193212	11083	5M7878	RING,RETAINING	1
21	XDHZZ		11083	3P0306	GEAR,SPUR	1
22	PFHZZ	3110010225378	21335	9113KGD5	BEARING,BALL,ANNULA	1
23	XDHZZ		11083	3P0309	HOUSING,MECHANICAL	1
24	PFHZZ	5310001174788	11083	5M2894	WASHER,FLAT	6
25	PFHZZ	5306002637301	11083	0L1351	BOLT,MACHINE	6
26	XDHZZ		11083	3P0307	HOUSING,MECHANICAL	1
27	XAHZZ		11083	3P0308	.CAGE,BEARING	1
28	XDHZZ		11083	8S3426	.DOWEL	1
29	PFHZZ	5330010950035	11083	3K1432	SEAL RING,METAL	1
30	PFHZZ	3120011861302	11083	8E8304	BEARING,WASHER,THRU	6
31	PAHZA	3020010950208	11083	7G3461	GEAR,SPUR	3
32	PFHZZ	3110009458401	11083	5M2054	RETAINER AND ROLLER	3
33	PAHZZ	3040011489428	11083	3P0726	SHAFT,STRAIGHT	3
34	XAHZZ		11083	3S9964	.SHAFT PLANET	1
35	PFHZZ	5340007373635	19207	7373635	.PLUG,EXPANSION	1
36	PFHZZ	5315008443964	96906	MS16562-47	PIN,SPRING	1
37	PFHZZ	5306008146565	11083	0S1608	BOLT,MACHINE	1

END OF FIGURE

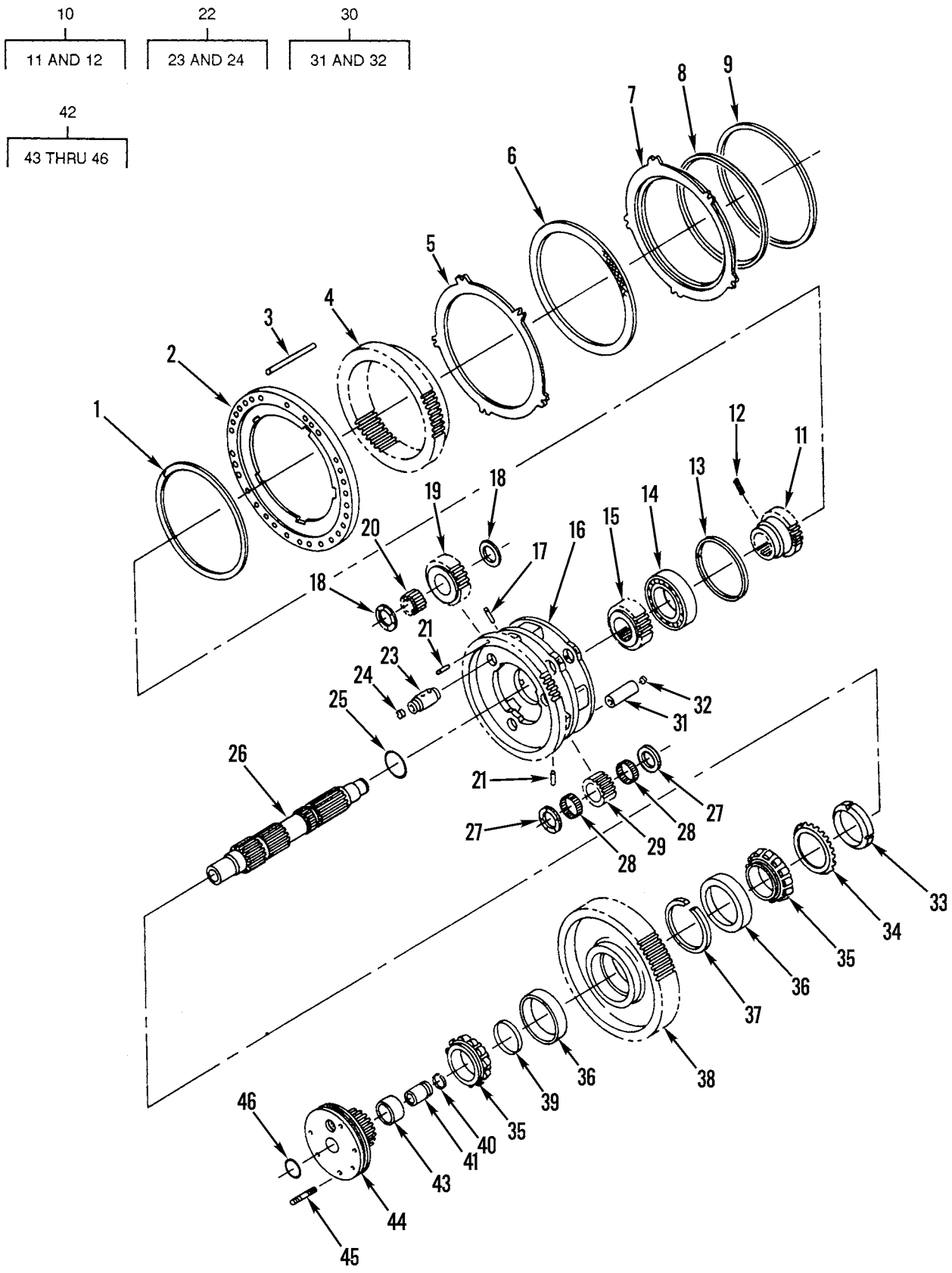

Figure 139. Planetary Group, Inner

(1) ITEM NO	(2) SMR CODE	(3) NSN	(4) CAGEC	(5) PART NUMBER	(6) DESCRIPTION AND USABLE ON CODES(UOC)	(7) QTY
					GROUP 0710 TRANSMISSION ASSEMBLY AND ASSOCIATED PARTS FIG. 139 PLANETARY GROUP, INNER	
1	PFHZZ	2520010675546	11083	2P4435	PLATE	1
2	PFHZZ	5325008120645	80756	RR-900	RING,RETAINING	1
3	PFHZZ	5315011511101	11083	3P1681	PIN,STRAIGHT,HEADLE	1
4	PAHZZ	3020010669186	11083	2P4433	GEAR	1
5	PFHZZ	2520011036812	11083	8P1656	PLATE,CLUTCH	1
6	PFHZZ	3010011505434	11083	6Y2027	DISK,CLUTCH	1
7	PFHZZ	2520010675551	11083	2P4510	PISTON	1
8	PFHZZ	5330010675552	11083	2P4511	RING SEAL	1
9	PAHZA	5330010661420	11083	1P9216	RING SEAL	1
10	XDHZZ		11083	3P3713	GEAR ASSEMBLY	1
11	XAHZZ		11083	3P0305	.GEAR,SUN	1
12	XDHZZ		11083	8S3426	.DOWEL	1
13	PFHZZ	5325008532384	80756	RRT-500	RING,RETAINING	1
14	PFHZZ	3110010225380	11083	3P0953	BEARING	1
15	PFHZZ	3020010944590	11083	3P0304	GEAR,SPUR	1
16	PFHZZ	3040011491887	11083	3P0298	GEARSHAFT,SPUR	1
17	PFHZZ	5315010597198	11083	3S2708	PIN	1
18	PFHZZ	3120011861302	11083	8E8304	BEARING,WASHER,THRU	6
19	PFHZZ	3110009210011	11083	5M5018	BEARING,ROLLER,JOUR	3
20	XDHZZ		11083	7G3451	GEAR,SPUR	3
21	PFHZZ	5315008443964	80205	MS16562-47	PIN,SPRING	2
22	XDHZZ		11083	3P0297	SHAFT,STRAIGHT	1
23	XDHZZ		11083	2S4899	.PIN,STRAIGHT,HEADLE	1
24	PFHZZ	5340007373635	19207	7373635	.PLUG,EXPANSION	1
25	PFHZZ	5330011009046	11083	1P9252	SEAL,RING	1
26	PFHZZ	2520014684331	11083	1267130	SHAFT ASSEMBLY,SPEC	14
27	PFHZZ	3120010955803	11083	8E8299	BEARING,WASHER,THRU	6
28	PFHZZ	3110008627671	60380	BNE25730	BEARING,ROLLER,JOUR	6
29	XDHZZ		11083	7G3450	GEAR,SPUR	3
30	XDHZZ		19207	11634481	SHAFT,STRAIGHT	3
31	XDHZZ		11083	5S7944	.SHAFT,STRAIGHT	1
32	PFHZZ	5340007373635	19207	7373635	.PLUG,EXPANSION	1
33	PFHZZ	5310010537474	11083	4H7859	NUT,LOCK	1
34	PFHZZ	5310004845739	11083	1B6161	WASHER,KEY	1
35	PAHZZ	2520010675620	11083	1P2662	CONE	2
36	PAHZZ	2520010675619	11083	1P2636	CUP	2
37	PFHZZ	5325010942430	11083	1P9646	RING,RETAINING	1
38	PFHZZ	3020010945263	11083	3P0296	GEAR,HELICAL	1
39	PFHZZ	5365011568947	11083	1P9645	SPACER,RING	1
40	PAHZZ	5330011519296	11083	8P0492	RETAINER,PACKING	5
41	PFHZZ	3120010953374	11083	9P4857	BUSHING,SLEEVE	5
42	PAHZZ	3130011517375	11083	9P4859	HOUSING,BEARING UNI	1
43	PAHZZ	3120010944416	11083	9P6264	.BEARING,SLEEVE	1
44	XAHZZ		11083	9P4858	.CAGE	1
45	PFHZZ	5307004656789	11083	2M4779	.STUD,PLAIN	6
46	PCHZZ	5331007568795	11083	5H3252	.O-RING	1

END OF FIGURE

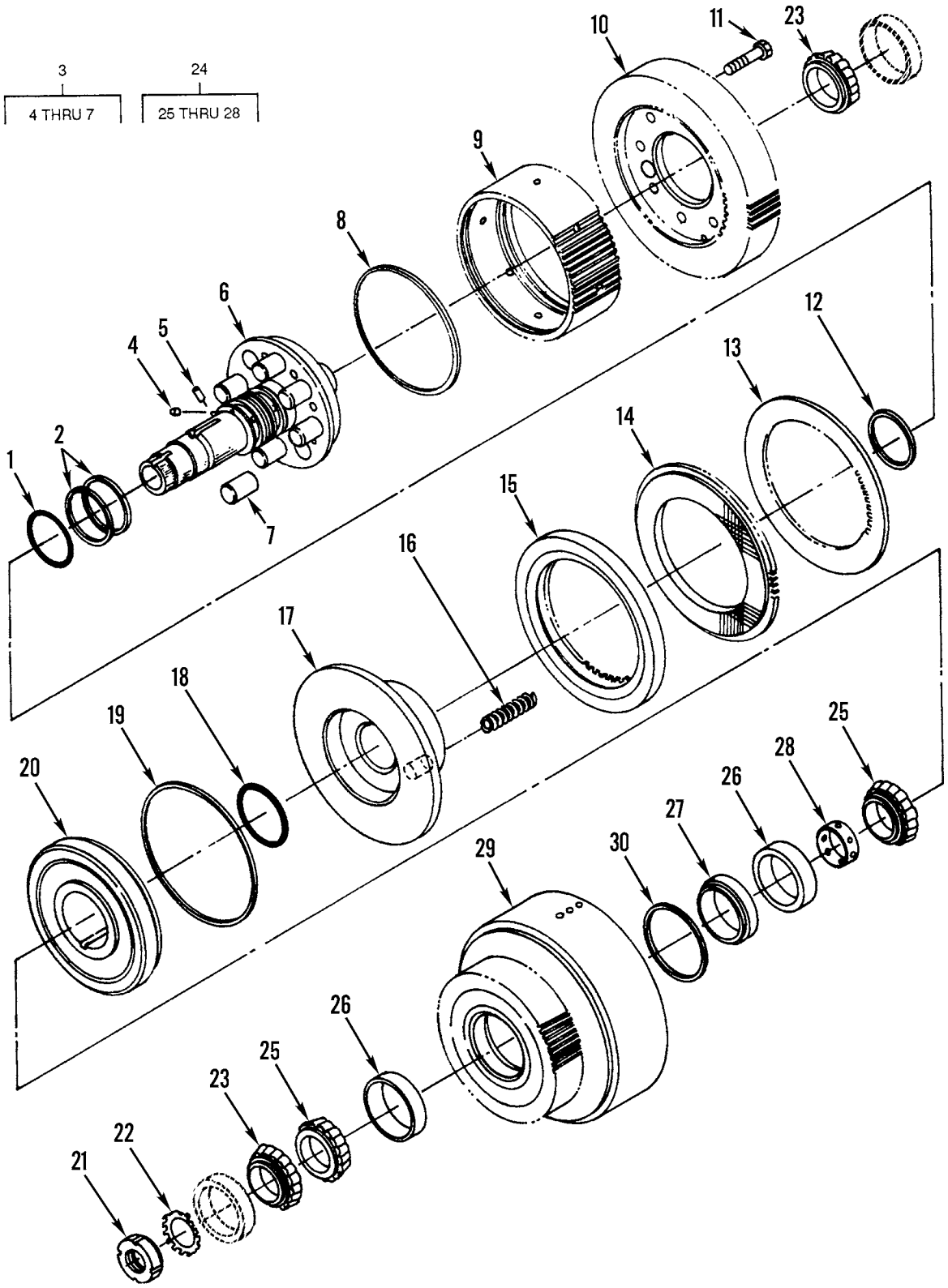

Figure 140. Transmission Forward and Reverse Clutch Shaft

(1) ITEM NO	(2) SMR CODE	(3) NSN	(4) CAGEC	(5) PART NUMBER	(6) DESCRIPTION AND USABLE ON CODES(UOC)	(7) QTY
					GROUP 0710 TRANSMISSION ASSEMBLY AND ASSOCIATED PARTS FIG. 140 TRANSMISSION FORWARD AND REVERSE CLUTCH SHAFT	
1	PAHZZ	5330010221806	11083	3P5859	SEAL	2
2	PAHZA	5330009445000	11083	1T0234	SEAL RING,METAL	4
3	XDHHH		11083	3P5737	SHAFT,SHOULDERED	2
4	PAHZZ	5340011558881	11083	3P7009	.CAP-PLUG,PROTECTIVE	1
5	PAHZA	5315009998417	11083	8H9208	.PIN,STRAIGHT,HEADLE	1
6	XAHZZ		11083	3P3610	.SHAFT	1
7	XDHZZ		11083	1S9292	.PIN,STRAIGHT,HEADLE	2
8	PFHZZ	5330010943660	11083	3P5726	PACKING,PREFORMED	2
9	PAHZZ	2520011513422	11083	3P5360	HUB,CLUTCH,HYDRAULI	2
10	PFHZZ	3020010965743	11083	3P0341	GEAR,HELICAL	1
10	PFHZZ	3020010946990	11083	3P0342	GEAR,HELICAL	1
11	PFHZZ	5306002638949	11083	4F8965	BOLT,MACHINE	16
12	PFHZZ	5330010940368	11083	3P5728	PACKING,PREFORMED	2
13	PFHZZ	3010010944648	11083	3P0337	DISK,CLUTCH	12
14	PFHZZ	3010010941959	11083	6Y7981	DISK,CLUTCH	12
15	PFHZZ	3020011525213	11083	3P0335	GEAR,INTERNAL	2
16	PAHZA	5360010943211	11083	1S8478	SPRING,HELICAL,COMP	12
17	PFHZZ	3040011513438	11083	3P5359	PISTON,LINEAR ACTUA	2
18	PFHZZ	5330007308003	11083	3D2898	PACKING,PREFORMED	2
19	PFHZZ	5330010938485	11083	2P1068	PACKING,PREFORMED	2
20	XDHZZ		11083	9W4137	PLATE,PISTON REACTI	2
21	PFHZZ	5310001380260	11083	2H3777	NUT,PLAIN,ROUND	2
22	PFHZZ	5310001860966	96906	MS19070-071	WASHER,KEY	2
23	PAHZZ	3110001000743	11083	1B3953	CONE AND ROLLERS,TA	4
24	PAHZZ	3110010221814	60038	LM501349LM501310 ASSEMBLY90016	BEARING,ROLLER,TAPE	2
25	XAHZZ	3110007276901	08162	LM501349	.CONE AND ROLLERS,TA	2
26	XAHZZ	3110006781862	98016	LM501310	.CUP,TAPERED ROLLER	2
27	XAHZZ		60038	LM501310EA	.CUP,TAPERED ROLLER	1
28	XAHZZ		60038	LM501349XW	.SPACER,CONE	1
29	PFHZZ	2520011512638	11083	3P0329	DRUM AND GEAR ASSEM	2
30	PAHZA	5325009726825	80756	RRT287	RING,RETAINING	2

END OF FIGURE

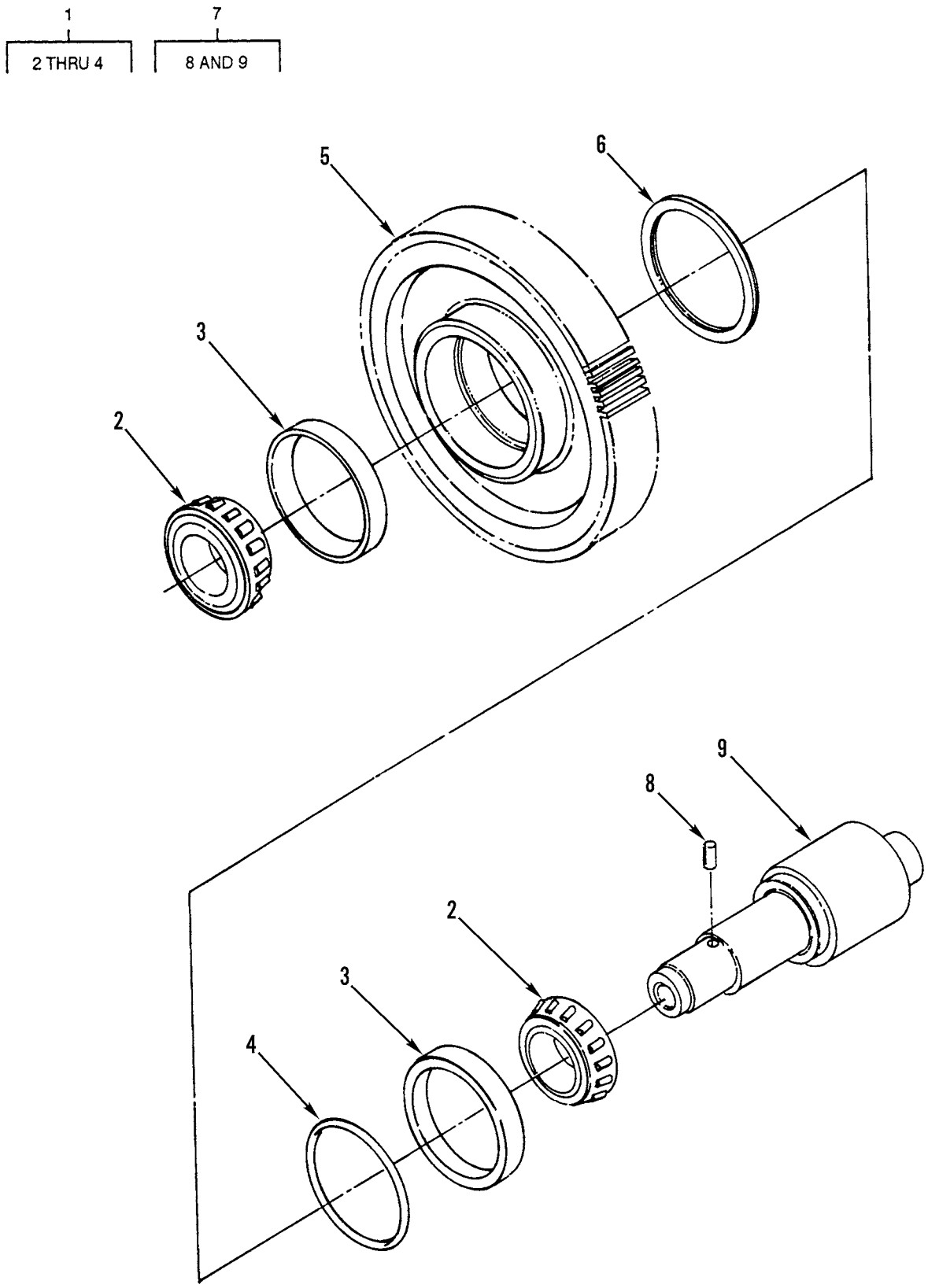

Figure 141. Transmission Idler Shaft

(1) ITEM NO	(2) SMR CODE	(3) NSN	(4) CAGEC	(5) PART NUMBER	(6) DESCRIPTION AND USABLE ON CODES(UOC)	(7) QTY
					GROUP 0710 TRANSMISSION ASSEMBLY AND ASSOCIATED PARTS FIG. 141 TRANSMISSION IDLER SHAFT	
1	PAHZZ	3110010978104	11083	7S8576	BEARING,ROLLER,TAPE.....	1
2	XAHZZ	3110001003119	60038	3780	.CONE AND ROLLERS,TA.....	2
3	XAHZZ		60038	3730	.CUP,TAPERED ROLLER.....	2
4	XAHZZ		60038	K426900R	.SPACER CONE.....	1
5	PFHZZ	3020010947530	11083	3P0343	GEAR,HELICAL.....	1
6	PFHZZ	5325010942429	11083	5K4068	RING,RETAINING.....	1
7	XDHZZ		11083	3P0754	SHAFT,SHOULDERED.....	1
8	PFHZZ	2520010664723	11083	8M6521	.DOWEL.....	1
9	XAHZZ		11083	3P0344	.SHAFT,IDLER.....	1

END OF FIGURE

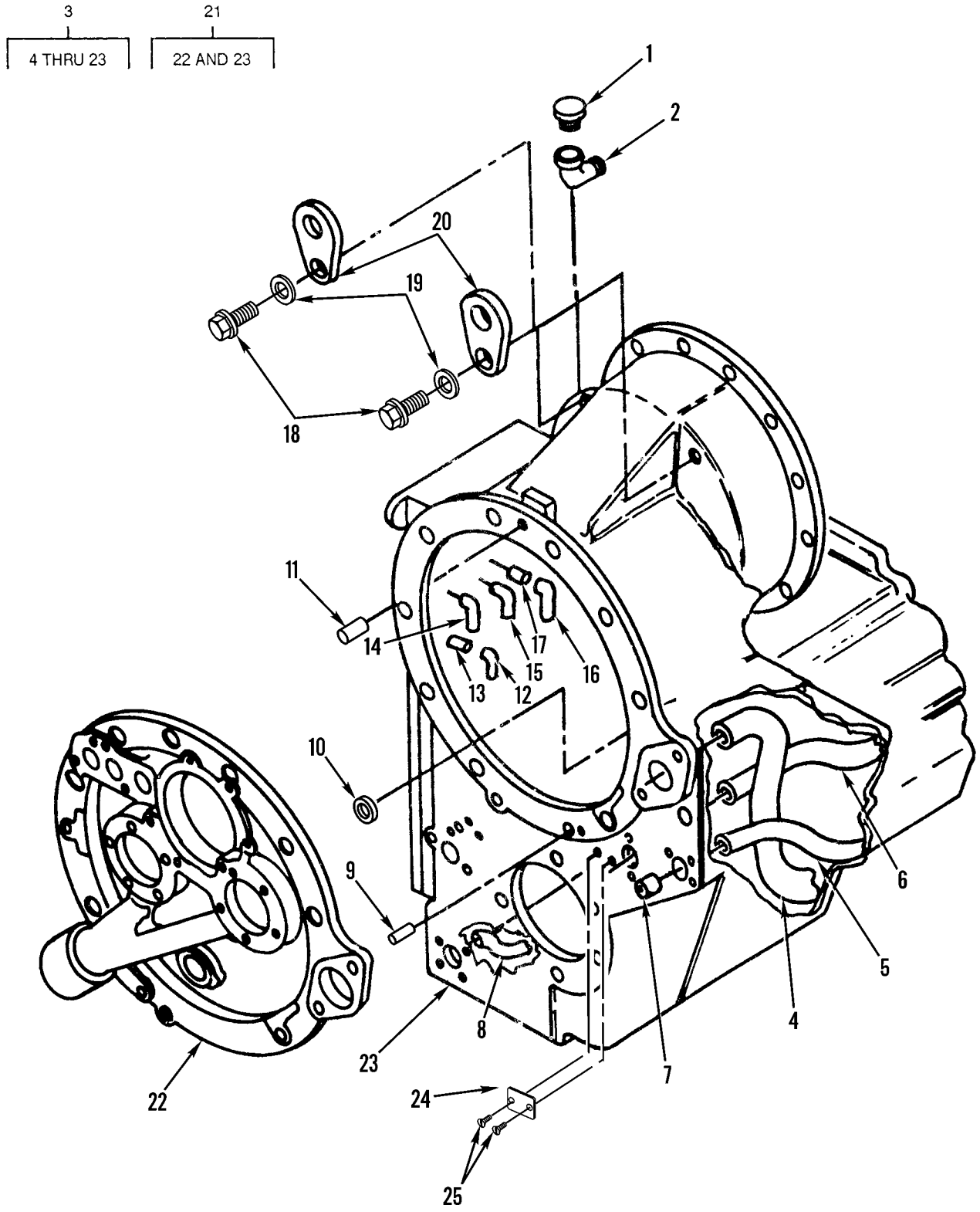

Figure 142. Transmission Case and Cover

(1) ITEM NO	(2) SMR CODE	(3) NSN	(4) CAGEC	(5) PART NUMBER	(6) DESCRIPTION AND USABLE ON CODES(UOC)	(7) QTY
					GROUUP 0710 TRANSMISSION ASSEMBLY AND ASSOCIATED PARTS FIG. 142 TRANSMISSION CASE AND COVER	
1	PAOZZ	2520011640077	11083	9G5127	BREATHER	1
2	PFHZZ	4730002469215	11083	3B6553	ELBOW,PIPE	1
3	PFHZZ	2520011513421	11083	2P9203	CASE TRANSMISSION A	1
4	PFHZZ	4710011528328	11083	3P0857	.TUBE,BENT,METALLIC	1
5	XDHZZ		11083	3P1694	.TUBE,BENT,METALLIC	1
6	XDHZZ		11083	3P0855	.TUBE,BENT,METALLIC	1
7	PFHZZ	5365011520615	11083	3P2355	.SPACER,SLEEVE	1
8	XDHZZ		11083	3P0858	.TUBE,BENT,METALLIC	1
9	PFHZZ	5315004238085	11083	0L2061	.PIN,STRAIGHT,HEADLE	2
10	PAHZZ	5340011544149	11083	5S0385	.PLUG,EXPANSION	1
11	PFHZZ	5315001930919	11083	9M4007	.PIN,STRAIGHT,HEADLE	2
12	XDHZZ		11083	3P0853	.TUBE,BENT,METALLIC	1
13	PFHZZ	5365011520615	11083	2P5780	.SPACER,SLEEVE	2
14	XDHZZ		11083	3P0851	.TUBE,BENT,METALLIC	1
15	PAHZZ	4710011517866	11083	3P0852	.TUBE,BENT,METALLIC	1
16	XDHZZ		11083	3P0854	.TUBE,BENT,METALLIC	1
17	PFHZZ	5365011604024	11083	1P8594	.SPACER,SLEEVE	6
18	PFHZZ	5305007247221	80204	B1821BH063C175N	.SCREW,CAP,HEXAGON H	2
19	PFHZZ	5310000455001	96906	MS35340-50	.WASHER,LOCK	2
20	PFHZZ	5306010680039	11083	1P8654	.EYE-LIFTING	2
21	XAHZZ		11083	2P9202	.CASE	1
22	XAHZZ		11083	2P9200	..COVER,XMSN CASE	1
23	XAHZZ		11083	2P9201	..CASE,XMSN	1
24	XDHZZ		11083	6V1720	PLATE,IDENTIFICATIO	1
25	PFHZZ	5305007083823	11083	7B3028	SCREW,DRIVE	2

END OF FIGURE

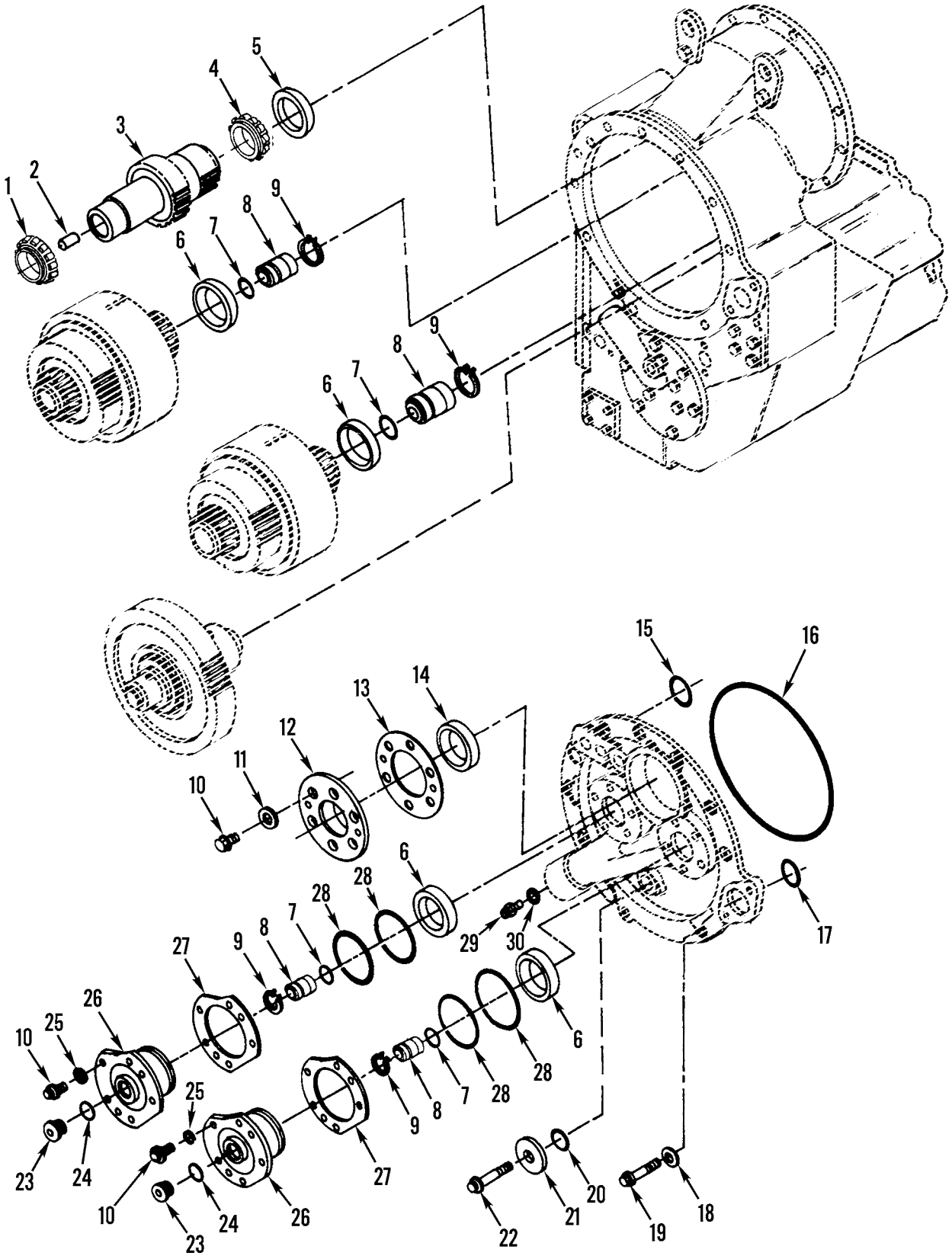

Figure 143. Transmission Upper Section

(1) ITEM NO	(2) SMR CODE	(3) NSN	(4) CAGEC	(5) PART NUMBER	(6) DESCRIPTION AND USABLE ON CODES(UOC)	(7) QTY
					GROUP 0710 TRANSMISSION ASSEMBLY AND ASSOCIATED PARTS FIG. 143 TRANSMISSION UPPER SECTION	
1	PAHZZ	3110009385084	01212	JLM104948	CONE AND ROLLERS,TA.....	1
2	XBHZZ	5365011009045	11083	4B9530	SPACER,SLEEVE.....	1
3	PAHZA	3040010946428	11083	3P0323	GEARSHAFT,HELICAL.....	1
4	PAHZZ	2520010675620	11083	1P2662	CONE.....	1
5	PAHZZ	2520010675619	11083	1P2636	CUP.....	1
6	PAHZZ	3110001000359	11083	8J6322	CUP,TAPERED ROLLER.....	4
7	PFHZZ	5330011519296	11083	8P0492	RETAINER,PACKING.....	4
8	PFHZZ	3120010953374	11083	9P4857	BUSHING,SLEEVE.....	4
9	PFHZZ	2520010669196	96906	MS16624-98	RING.....	4
10	PFHZZ	5306004238194	11083	1A2029	BOLT,MACHINE.....	16
11	PFHZZ	5310001174788	11083	5M2894	WASHER,FLAT.....	6
12	PFHZZ	3110011554582	11083	3P0321	PLATE,RETAINING,BEA.....	1
13	PAHZZ	5365010675678	11083	3P0322	SHIM PACK.....	1
14	PAHZZ	3110001913923	01212	JLM104910	CUP,TAPERED ROLLER.....	1
15	PFHZZ	5331001186559	11083	4F9029	O-RING.....	5
16	PFHZZ	5330010678071	11083	2R0098	SEAL-O-RING.....	1
17	PFHZZ	5331005598786	09990	2-227N951-75	O-RING.....	1
18	PFHZZ	5310005845272	96906	MS35338-48	WASHER,LOCK.....	8
19	PFHZZ	5306011279361	11083	0S1585	BOLT,MACHINE.....	8
20	PCHZZ	5331010938484	11083	5M7423	O-RING.....	1
21	PFHZZ	5310002511488	11083	4S5824	WASHER,FLAT.....	1
22	PFHZZ	5305011075161	11083	0L2315	SCREW,CAP,HEXAGON H.....	1
23	PFHZZ	5365010318183	30780	8HP5N-S	PLUG,MACHINE THREAD.....	2
24	PFHZZ	5331009486482	11083	3K0360	O-RING.....	2
25	PFHZZ	5310006379541	96906	MS35338-46	WASHER,LOCK.....	10
26	PFHZZ	3130011544037	11083	3P0326	HOUSING,BEARING UNI.....	2
27	PFHZZ	5365011554518	11083	3P0327	SHIM SET.....	2
28	PCHZZ	5331002917192	09990	2-241N951-75	O-RING.....	4
29	PFHZZ	5365004520344	11083	9S8009	PLUG,MACHINE THREAD.....	2
30	PAHZZ	5331010886106	81349	M83248/2-914	O-RING.....	2

END OF FIGURE

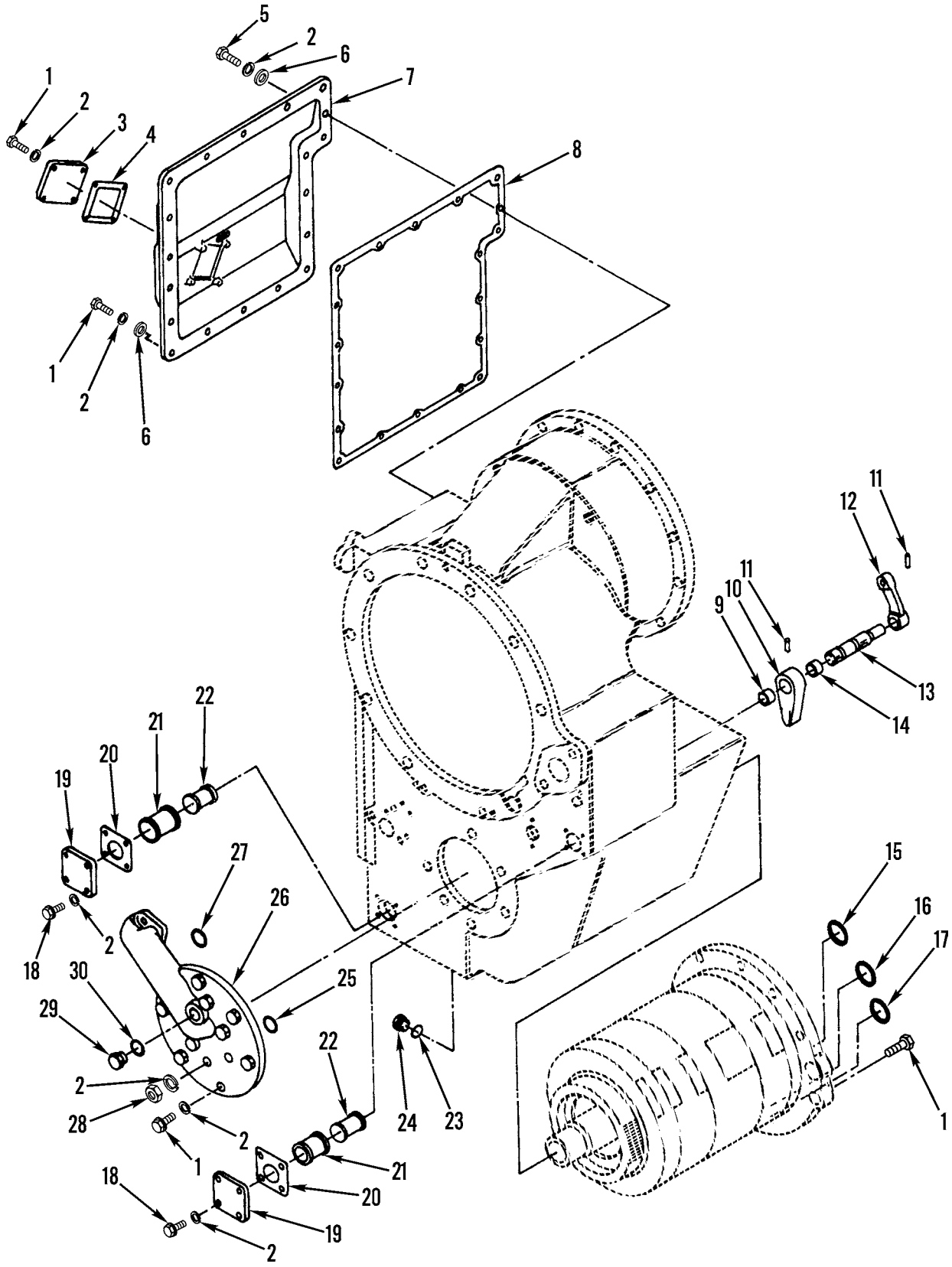

Figure 144. Transmission Lower Section

(1) ITEM NO	(2) SMR CODE	(3) NSN	(4) CAGEC	(5) PART NUMBER	(6) DESCRIPTION AND USABLE ON CODES(UOC)	(7) QTY
					GROUP 0710 TRANSMISSION ASSEMBLY AND ASSOCIATED PARTS FIG. 144 TRANSMISSION LOWER SECTION	
1	PFHZZ	5305000680511	80204	B1821BH038C125N	SCREW,CAP,HEXAGON H.....	33
2	PFHZZ	5310006379541	96906	MS35338-46	WASHER,LOCK.....	46
3	PAHZZ	5340011725535	11083	2N0822	COVER,ACCESS.....	1
4	PFHZZ	5330010219052	11083	3P6061	GASKET.....	1
5	PFHZZ	5305010156841	11083	0S1591	SCREW.....	1
6	PFHZZ	5310000806004	96906	MS27183-14	WASHER,FLAT.....	19
7	PAHZZ	5340011513306	11083	2P9325	COVER,ACCESS.....	1
8	PFHZZ	5330010219051	11083	2P9326	GASKET.....	1
9	PAHZZ	3110010675616	11083	2N7609	BEARING.....	1
10	PAHZZ	2520010667706	11083	3P3426	LEVER.....	1
11	PFHZZ	5315010685889	11083	3K4897	PIN.....	2
12	PFHZZ	3040011513994	11083	3P6159	LEVER,REMOTE CONTRO.....	1
13	PFHZZ	2520010667705	11083	3P3424	SHAFT.....	1
14	PAHZZ	3110010669172	11083	1035962	BEARING.....	1
15	PCHZZ	5331005277748	11083	4F7952	O-RING.....	1
16	PCHZZ	5331002456767	99193	S9413-215	O-RING.....	1
17	PAHZZ	5331005598786	09990	2-227N951-75	O-RING.....	1
18	PFHZZ	5306002604508	11083	0S1594	BOLT,MACHINE.....	8
19	PFHZZ	5340011555275	11083	4H5440	COVER,ACCESS.....	2
20	PFHZZ	5330004333790	11083	3S7781	GASKET.....	2
21	PAHZZ	4730011597840	11083	8S9130	STRAINER ELEMENT,SE.....	2
22	PAHZZ	4330010667713	11083	8S9129	FILTER,FLUID.....	2
23	PFHZZ	5330002391792	79150	2165	GASKET.....	1
24	PFHZZ	5365004265507	11083	6B5262	PLUG,MACHINE THREAD.....	1
25	PCHZZ	5331005931192	11083	3H0107	O-RING.....	3
26	PFHZZ	5340011512579	11083	3P0320	COVER,ACCESS.....	1
27	PAHZZ	5331008650404	62983	154022	O-RING.....	1
28	PFHZZ	5310014297859	11083	6V8801	NUT,PLAIN,HEXAGON.....	6
29	PFHZZ	5365004114584	11083	9S4191	PLUG,MACHINE THREAD.....	1
30	PCHZZ	5331008013354	25184	906-737-70	O-RING.....	1

END OF FIGURE

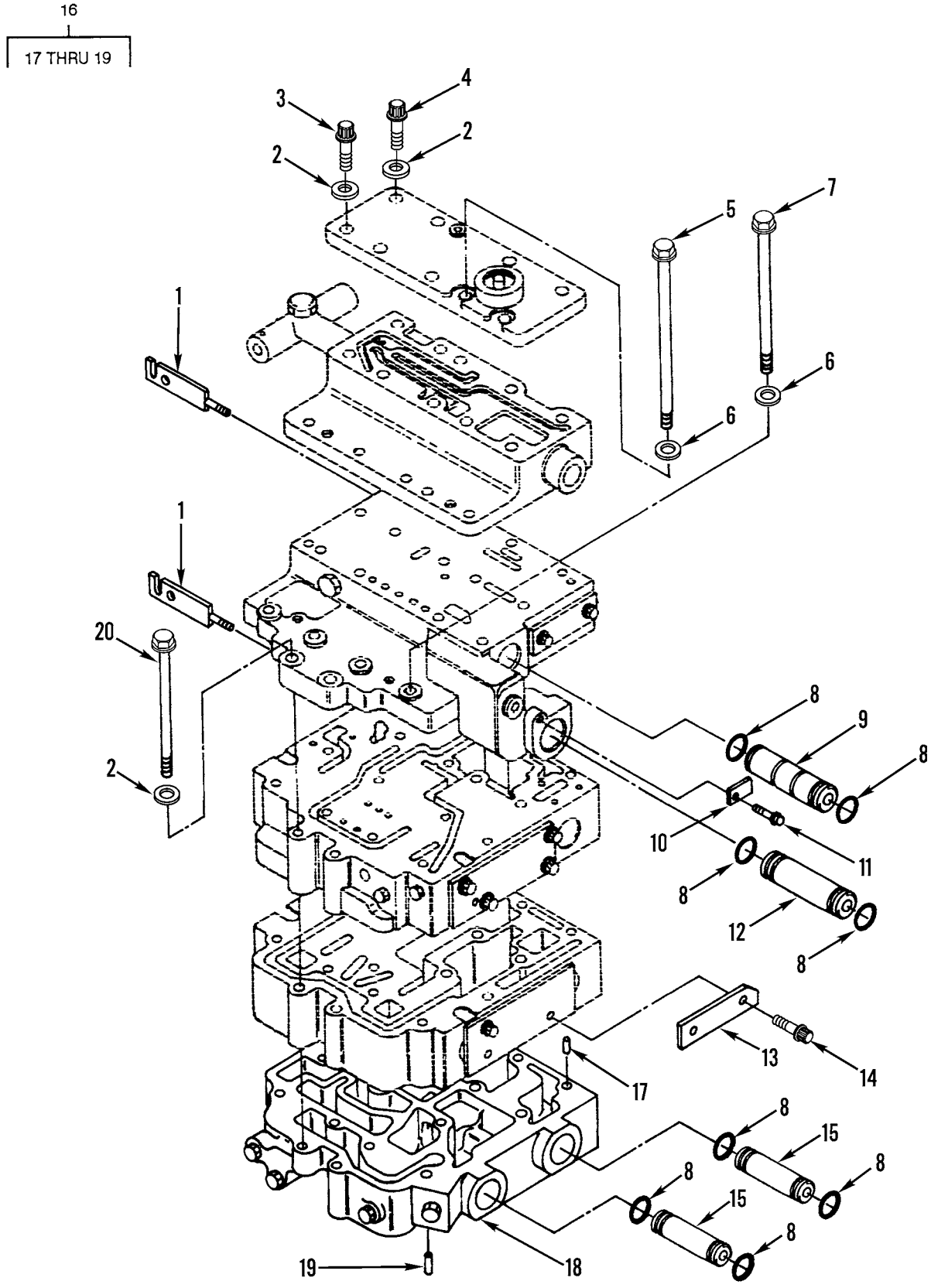

Figure 145. Transmission Control Valve and Mounting

(1) ITEM NO	(2) SMR CODE	(3) NSN	(4) CAGEC	(5) PART NUMBER	(6) DESCRIPTION AND USABLE ON CODES(UOC)	(7) QTY
					GROUP 0714 SERVO UNIT FIG. 145 TRANSMISSION CONTROL VALVE AND MOUNTING	
1	PFFZZ	5340011602370	11083	6P5095	CONNECTOR,ROD END.....	2
2	PFHZZ	5310000814219	96906	MS27183-12	WASHER,FLAT.....	16
3	PAHZZ	5306004550461	11083	4S5845	BOLT,MACHINE.....	4
4	PFHZZ	5305011652400	11083	3P0208	SCREW,CAP,HEXAGON H.....	8
5	PFFZZ	5306000085974	11083	5F6044	BOLT,MACHINE.....	2
6	PFFZZ	5310001174788	11083	5M2894	WASHER,FLAT.....	4
7	PFFZZ	5306004265058	11083	4F0411	BOLT,MACHINE.....	2
8	PFFZZ	5331006136522	11083	4M8303	O-RING.....	8
9	PFFZZ	5365011554458	11083	3P0868	SPACER,SLEEVE.....	1
10	PAFZZ	2520010661443	11083	3P2781	PLATE.....	1
11	PFFZZ	5306002537879	11083	1T0416	BOLT,MACHINE.....	1
12	PFFZZ	5365011568760	11083	3P0869	SPACER,SLEEVE.....	1
13	PAFZZ	2520010661442	11083	3P2777	PLATE.....	1
14	PFFZZ	5306010599566	11083	6L4783	BOLT,MACHINE.....	2
15	PFFZZ	3120011566477	11083	3P0870	BUSHING,SLEEVE.....	2
16	PAHZZ	2590010661444	11083	3P2870	MANIFOLD ASSEMBLY.....	1
17	PFHZZ	5315007607425	11083	8M8489	.PIN,HOLLOW.....	2
18	XAHZZ		11083	3P0865	.MANIFOLD.....	1
19	PAHZZ	5315011497833	11083	9M6803	.PIN,STRAIGHT,HEADLE.....	2
20	PFHZZ	5306010853661	11083	9M4289	BOLT,MACHINE.....	4

END OF FIGURE

1
2 THRU 7

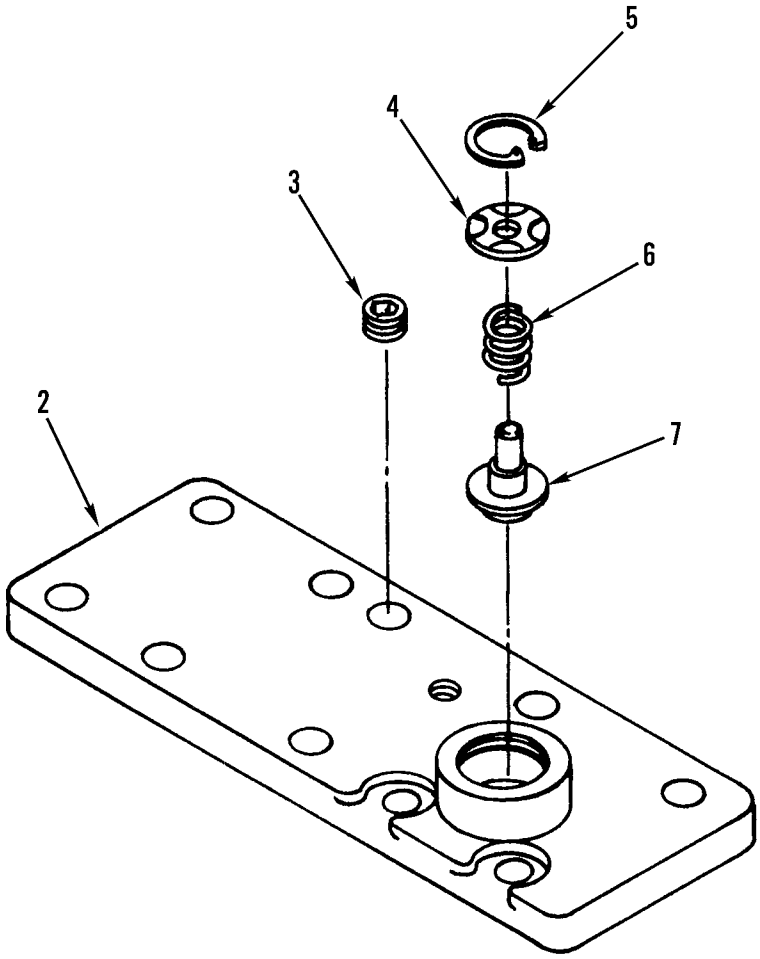

Figure 146. Transmission Pilot Valve Cover

(1) ITEM NO	(2) SMR CODE	(3) NSN	(4) CAGEC	(5) PART NUMBER	(6) DESCRIPTION AND USABLE ON CODES(UOC)	(7) QTY
					GROUP 0714 SERVO UNIT FIG. 146 TRANSMISSION PILOT VALVE COVER	
1	XDHZZ		11083	3P0864	COVER ASSEMBLY,TRAN.....	1
2	XAHZZ		11083	3P2438	.COVER.....	1
3	PFHZZ	4730000444688	89346	50410DA	.PLUG,PIPE.....	1
4	PFHZZ	5310011567713	11083	3P0867	.WASHER,FLAT.....	1
5	PFHZZ	5325008072636	96906	MS16625-1100	.RING,RETAINING.....	1
6	XDHZZ		11083	3J6956	.SPRING,HELICAL,COMP.....	1
7	XDHZZ		11083	3P0866	.DISK,VALVE.....	1

END OF FIGURE

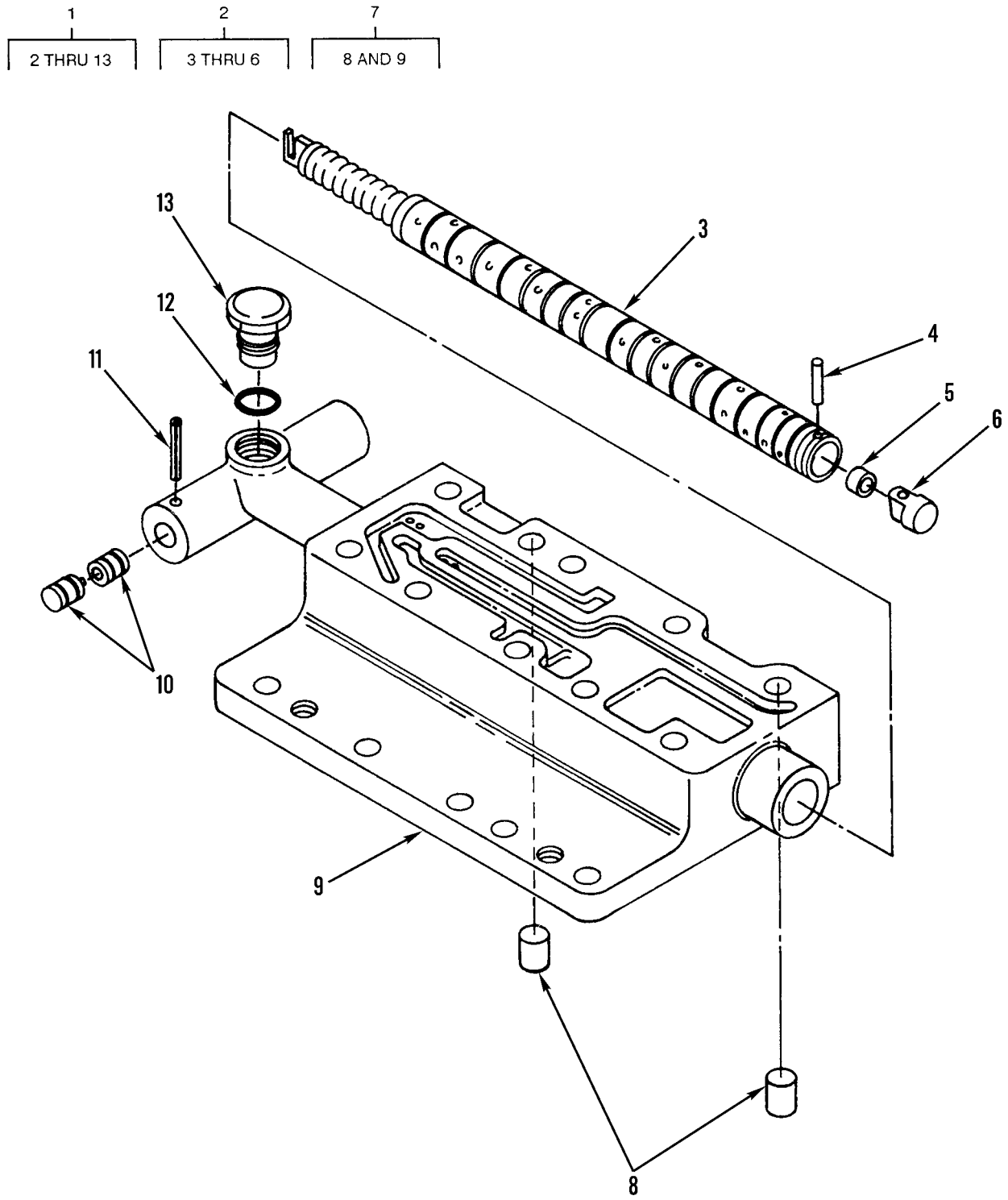

Figure 147. Transmission Pilot Valve

(1) ITEM NO	(2) SMR CODE	(3) NSN	(4) CAGEC	(5) PART NUMBER	(6) DESCRIPTION AND USABLE ON CODES(UOC)	(7) QTY
					GROUP 0714 SERVO UNIT	
					FIG. 147 TRANSMISSION PILOT VALVE	
1	PFHHH	4820013336075	11083	3P0842	VALVE,LINEAR,DIRECT.....	1
2	XDHZZ		11083	2P7030	.SLEEVE,DIRECTIONAL.....	1
3	XAHZZ		11083	2P4525	..SPOOL.....	1
4	PFHZZ	5315005296952	11083	6H2948	..PIN.....	1
5	PFHZZ	5340007373635	19207	7373635	..PLUG,EXPANSION.....	1
6	XDHZZ		11083	2P4503	..PLUG.....	1
7	XAHZZ		11083	3P8067	.BODY ASSY.....	1
8	PFHZZ	5315007607425	11083	8M8489	..PIN,HOLLOW.....	2
9	XAHZZ		11083	3P1797	..BODY,SELECTOR SPEED.....	1
10	PAHZZ	2590010661455	11083	7S4607	.DETENT ASSEMBLY.....	2
11	PFHZZ	5315010661406	11083	2H6265	.PIN.....	1
12	PFHZZ	5331009486482	11083	3K0360	.O-RING.....	1
13	PAHZZ	2590010661445	11083	3P4362	.STOP.....	1

END OF FIGURE

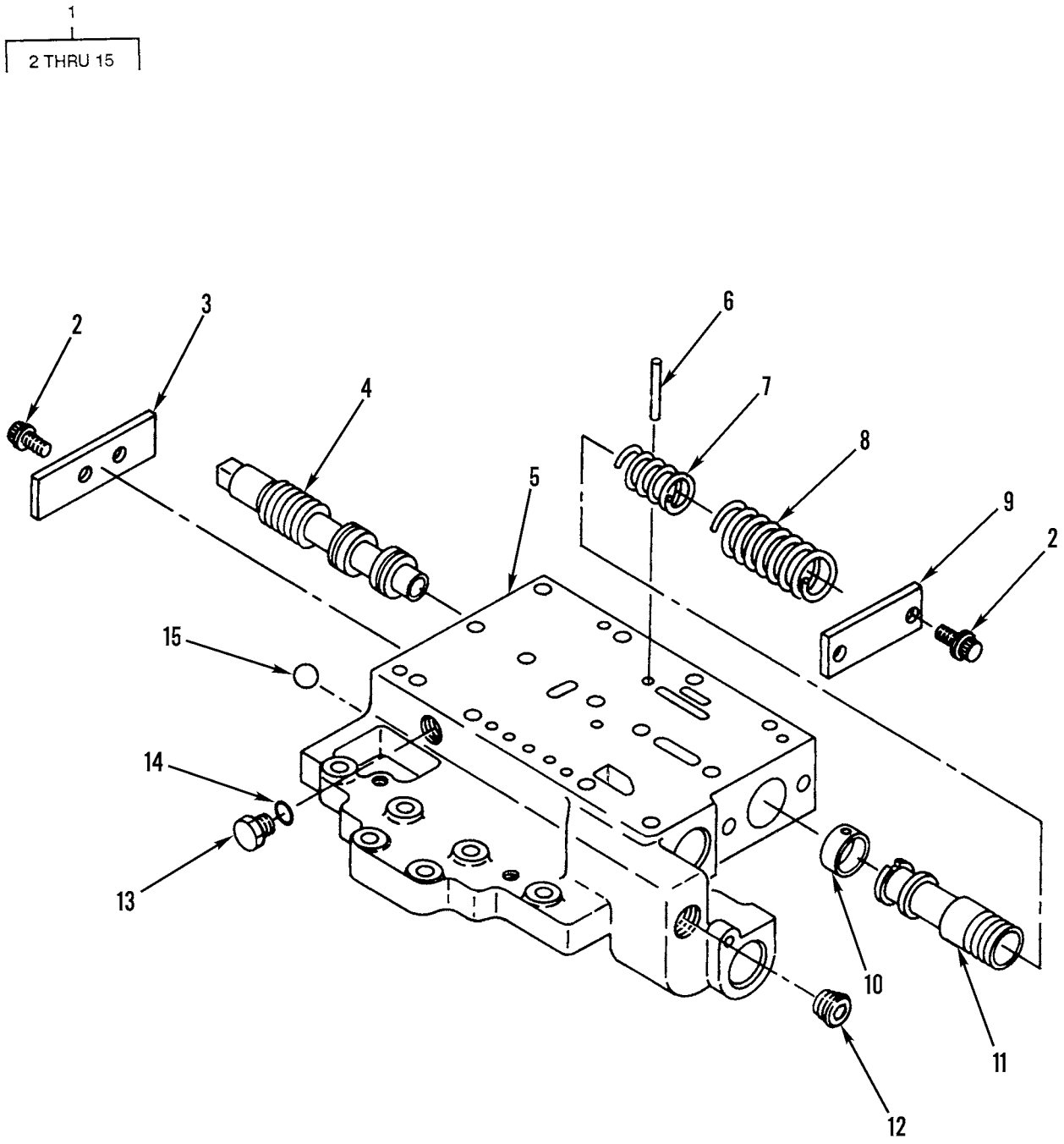

Figure 148. Transmission Directional and Pressure Control Valve

(1) ITEM NO	(2) SMR CODE	(3) NSN	(4) CAGEC	(5) PART NUMBER	(6) DESCRIPTION AND USABLE ON CODES(UOC)	(7) QTY
					GROUP 0714 SERVO UNIT FIG. 148 TRANSMISSION DIRECTIONAL AND PRESSURE CONTROL VALVE	
1	PFHHH	2590010661435	11083	2P5814	VALVE GROUP.....	1
2	PFHZZ	5306002537879	11083	1T0416	.BOLT,MACHINE.....	4
3	PFHZZ	2590010661441	11083	3P2706	.PLATE.....	1
4	PAHZZ	2590010661421	11083	1P9685	.SPOOL.....	1
5	XAHZZ		11083	3P2363	.BODY.....	1
6	PFHZZ	5315010647516	11083	8H5244	.DOWEL.....	1
7	PAHZA	5360010669187	11083	2P5701	.SPRING.....	1
8	PFHZZ	5360010661432	11083	2P5700	.SPRING.....	1
9	PAHZZ	2590010661433	11083	2P5803	.PLATE.....	1
10	PFHZZ	2520010599410	11083	5S7906	.STOP.....	1
11	PAHZZ	2590010661429	11083	2P4529	.SPOOL.....	1
12	PFHZZ	4730002783383	15235	PLG1	.PLUG,PIPE.....	1
13	PFHZZ	5365004114584	11083	9S4191	.PLUG,MACHINE THREAD.....	1
14	PCHZZ	5331008013354	25184	906-737-70	.O-RING.....	1
15	PFHZZ	3110000119935	11083	4B9782	.BALL,BEARING.....	1

END OF FIGURE

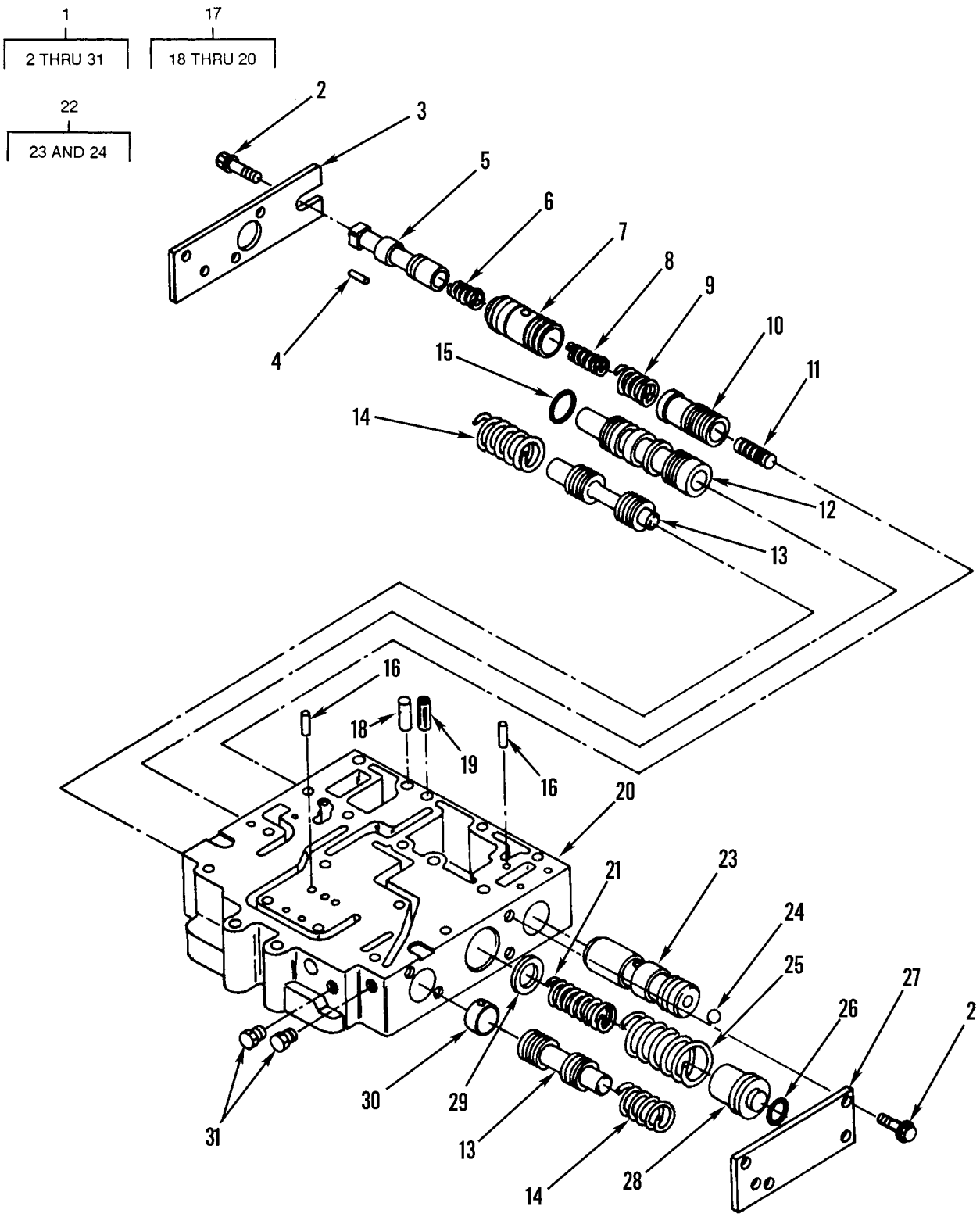

Figure 149. Transmission Selector and Differential Control Valve

(1) ITEM NO	(2) SMR CODE	(3) NSN	(4) CAGEC	(5) PART NUMBER	(6) DESCRIPTION AND USABLE ON CODES(UOC)	(7) QTY
					GROUP 0714 SERVO UNIT FIG. 149 TRANSMISSION SELECTOR AND DIFFERENTIAL CONTROL VALVE	
1	PAHHH	2520011853123	11083	8P1100	VALVE BODY ASSEMBLY.....	1
2	PFHZZ	5306002537879	11083	1T0416	.BOLT,MACHINE.....	7
3	PFHZZ	5342010682768	11083	2P4504	.COVER.....	1
4	PFHZZ	5315010627137	11083	3H1118	.PIN,SPRING.....	1
5	XDHZZ		11083	3T2543	.SLIDE,DIRECTIONAL C.....	1
6	PFHZZ	5360010661450	11083	3P8042	.SPRING.....	1
7	XDHZZ		11083	3T2542	.SLEEVE,DIRECTIONAL.....	1
8	PAHZA	5360010951833	11083	2P4547	.SPRING,HELICAL,COMP.....	1
9	PFHZZ	5360011005378	11083	3P0812	.SPRING,HELICAL,COMP.....	1
10	XDHZZ		11083	8P1096	.PISTON,VALVE.....	1
11	PFHZZ	2520010599381	11083	2M1168	.SLUG.....	1
12	PAHZZ	4810004321944	11083	1P0561	.SLIDE,DIRECTIONAL C.....	1
13	XDHZZ		11083	2P4486	.SLIDE,DIRECTIONAL C.....	2
14	PAHZA	5360010661427	11083	2P4501	.SPRING.....	2
15	PCHZZ	5331009293499	11083	3D4245	.O-RING.....	1
16	PFHZZ	5315010647516	11083	8H5244	.DOWEL.....	2
17	PAHZZ	2520011488160	11083	8P1098	.BODY ASSEMBLY,TRANS.....	1
18	PFHZZ	5315007607425	11083	8M8489	..PIN,HOLLOW.....	4
19	XDHZZ		11083	6P3223	..SLEEVE,DIRECTIONAL.....	8
20	XAHZZ		11083	8P1099	..BODY.....	1
21	PAHZA	5360010661454	11083	3S9949	.SPRING.....	1
22	PAHZZ	2590010661449	11083	3P7834	.STOP ASSEMBLY.....	1
23	PAHZZ	2590010661424	11083	2P4484	..STOP.....	1
24	PFHZZ	3110009491438	11083	4B9880	..BALL,BEARING.....	1
25	PAHZA	5360010661446	11083	3P6669	.SPRING.....	1
26	PCHZZ	5331006334535	11083	2H3932	.O-RING.....	1
27	PFHZZ	5342010682769	11083	2P4507	.COVER.....	1
28	XDHZZ		11083	2P4506	.PLUG.....	1
29	PFHZZ	5310010953330	11083	3S9951	.WASHER,FLAT.....	1
30	PFHZZ	2520010599410	11083	5S7906	.STOP.....	1
31	PFHZZ	4730009247886	11083	5M6214	.PLUG,PIPE.....	3
					END OF FIGURE	

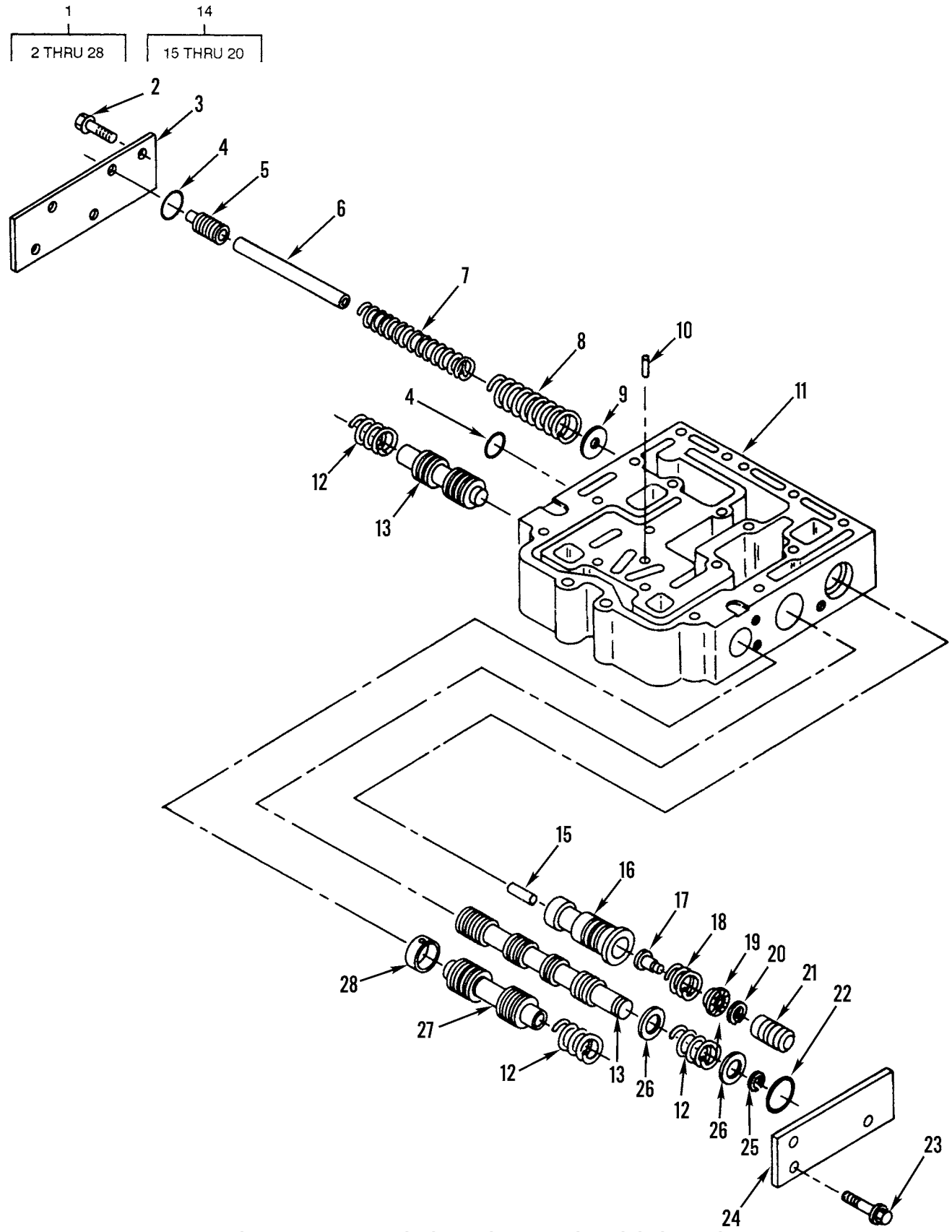

Figure 150. Transmission Selector and Modulating Valve

(1) ITEM NO	(2) SMR CODE	(3) NSN	(4) CAGEC	(5) PART NUMBER	(6) DESCRIPTION AND USABLE ON CODES(UOC)	(7) QTY
					GROUP 0714 SERVO UNIT FIG. 150 TRANSMISSION SELECTOR AND MODULATING VALVE	
1	XDHHH		11083	2P5816	VALVE GROUP.....	1
2	PFFZZ	5306002537879	11083	1T0416	.BOLT,MACHINE.....	5
3	PAHZZ	2590010668451	11083	2P4502	.COVER.....	1
4	PCHZZ	5331009293499	11083	3D4245	.O-RING.....	2
5	XDHZZ		11083	2P4396	.PISTON.....	1
6	PFHZZ	5365010668448	11083	2P4397	.SPACER.....	1
7	PFHZA	5360010958227	11083	2P4499	.SPRING,HELICAL,COMP.....	1
8	PFHZZ	5360010668450	11083	2P4500	.SPRING.....	1
9	PFHZZ	5310010958406	11083	7M1396	.WASHER,FLAT.....	V
9	PFHZZ	5310007653237	73734	97410	.WASHER,FLAT.....	V
9	PFHZZ	5365009481600	11083	5M3492	.SPACER.....	V
10	PFHZZ	5315010647516	11083	8H5244	.DOWEL.....	1
11	XAHZZ		11083	3P1786	.BODY.....	1
12	PAHZA	5360010661427	11083	2P4501	.SPRING.....	3
13	PAHZZ	2590010668446	11083	2P4372	.SPOOL.....	1
14	PAHZZ	2590010668460	11083	6P4700	.SPOOL ASSEMBLY.....	1
15	PFHZZ	5315010544325	11083	5M8009	..PIN,ENGINE,VEHICULA.....	4
16	XAHZZ		11083	6P4699	..SPOOL.....	1
17	PFHZZ	2520002374603	11083	1S2121	..PLUNGER,RETARDER CO.....	4
18	PFHZZ	5360009508041	11083	4M2381	..SPRING,SPECIAL.....	4
19	PFHZZ	2520010608624	11083	1S1636	..RETAINER.....	4
20	PFHZZ	5325008049743	96906	MS16625-1050	..RING,RETAINING.....	4
21	XDHZA	3110010599335	11083	5M2504	.BEARING.....	4
22	PAHZZ	5331008650404	11083	6F6673	.O-RING.....	1
23	PFHZZ	5306010599566	11083	6L4783	.BOLT,MACHINE.....	1
24	PAHZZ	2590010668455	11083	3P1798	.COVER.....	1
25	PFHZZ	5325004938125	96906	MS16626-1062	.RING,RETAINING.....	1
26	PAHZA	5310010668452	11083	2P9186	.WASHER.....	2
27	XDHZZ		11083	2P4486	.SLIDE,DIRECTIONAL C.....	2
28	PFHZZ	2520010599410	11083	5S7906	.STOP.....	1

END OF FIGURE

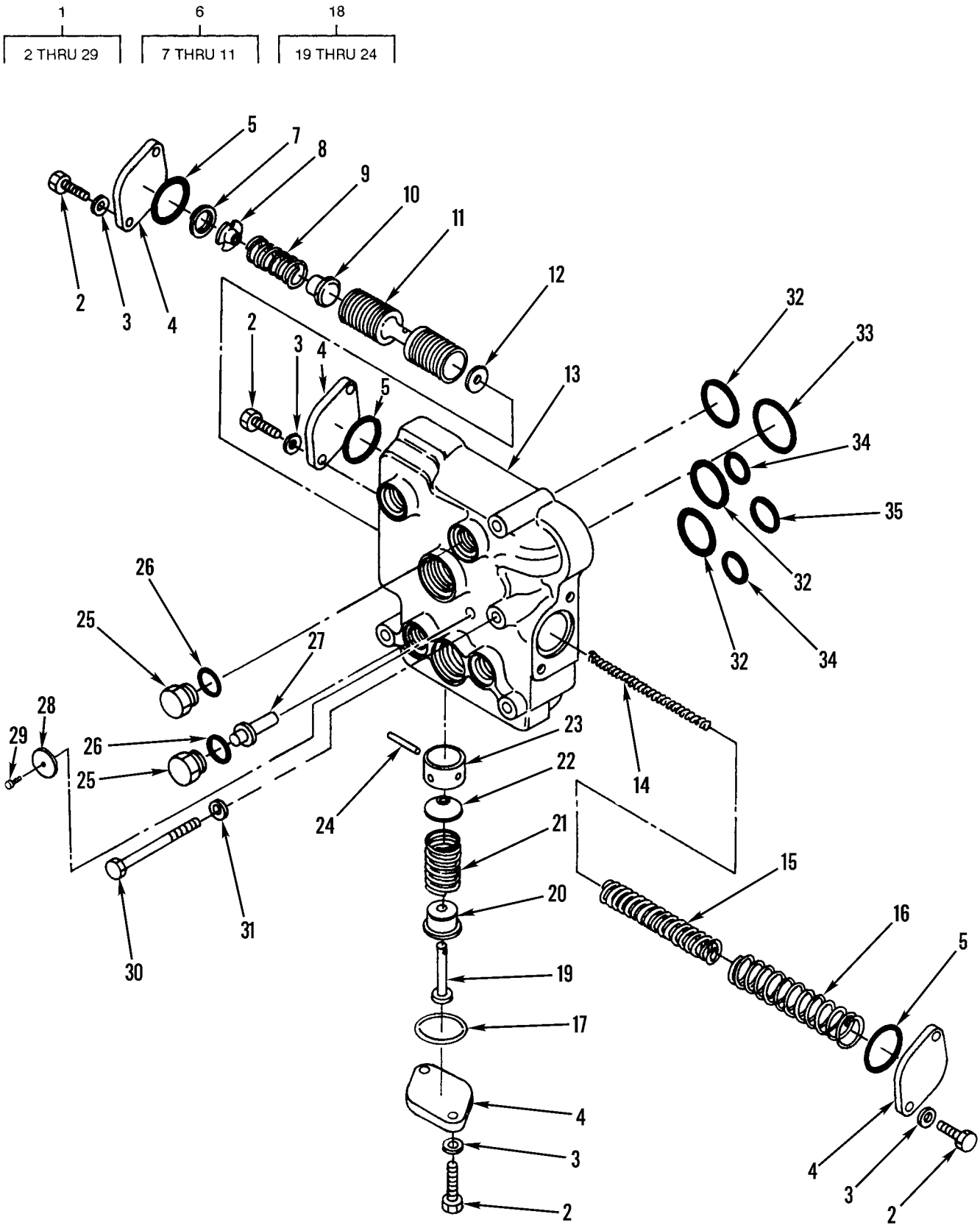

Figure 151. Transmission Control Relief Valve

(1) ITEM NO	(2) SMR CODE	(3) NSN	(4) CAGEC	(5) PART NUMBER	(6) DESCRIPTION AND USABLE ON CODES(UOC)	(7) QTY
					GROUP 0714 SERVO UNIT FIG. 151 TRANSMISSION CONTROL RELIEF VALVE	
1	AHHHH		11083	2P5811	VALVE,CONTROL,TRANS WHEN REPLACING VALVE USE 7T1188.....	1
1	PFHHH		11083	7T1188	VALVE, SOLENOID.....	1
2	PFHZZ	5306004238194	11083	1A2029	.BOLT,MACHINE.....	10
3	PFHZZ	5310006379541	96906	MS35338-46	.WASHER,LOCK.....	10
4	PAHZZ	5340011528205	11083	2M1656	.COVER,ACCESS.....	5
5	PAHZZ	5331008650404	62983	154022	.O-RING.....	3
6	PFHZZ	4820004321732	11083	1P0562	.SLIDE,DIRECTIONAL C.....	1
7	PFHZZ	5325007217485	80756	RR75CK	..RING,RETAINING.....	1
8	PFHZZ	3110004469692	11083	8M2537	..RETAINER.....	1
9	PFHZZ	5360009320761	11083	5M9548	..SPRING,HELICAL,COMP.....	1
10	XDHZZ		11083	9M4313	..POPPET.....	1
11	PFHZZ	4820010599398	11083	4S5982	..VALVE,FLOW CONTROL.....	1
12	PFHZZ	5310010958406	11083	7M1396	.WASHER,FLAT.....	1
12	PFHZZ	5310007653237	73734	97410	.WASHER,FLAT.....	1
12	PFHZZ	5365009481600	11083	5M3492	.SPACER.....	4
13	XAHZZ		11083	7T1185	.BODY USE WITH P/N 7T1188.....	1
13	XAHZZ		11083	3P2694	.BODY USE ON 2P5811.....	1
14	PFHZA	5360010661452	11083	2S1413	.SPRING.....	1
15	XDHZZ		11083	8P2893	.SPRING,HELICAL,COMP.....	1
16	PFHZZ	5360010661431	11083	2P5677	.SPRING.....	1
17	PCHZZ	5331005931193	11083	3H1461	.O-RING.....	2
18	XBHZZ		11083	2P4548	.VALVE A.....	2
19	PFHZZ	5315011552618	11083	1P5274	..PIN,STRAIGHT,HEADED.....	1
20	PAHZZ	5330011531385	11083	3P8006	..RETAINER,PACKING.....	1
21	XDHZA		11083	3P7685	..SPRING,HELICAL,COMP.....	1
22	PFHZZ	2530012986163	11083	9L0672	..VALVE,SAFETY RELIEF.....	1
23	XDHZZ		11083	3P7686	..COLLAR,SHAFT.....	1
24	XDHZZ		11083	3H1156	..PIN,STRAIGHT,HEADLE.....	1
25	PFHZZ	5365004114584	11083	9S4191	.PLUG,MACHINE THREAD.....	4
26	PCHZZ	5331008013354	25184	906-737-70	.O-RING.....	4
27	PAHZA	5315010963211	11083	6P4917	.PIN,SHOULDER,HEADLE.....	2
28	PFHZZ	9905011604374	11083	3P4566	.PLATE,IDENTIFICATIO USE ON 2P5811.	1
28	PFHZZ	9905015240115	11083	7T1187	.PLATE, INDENTIFICAT USE WITH P/N 7T1188.....	1
29	PFHZZ	5305007083823	11083	7B3028	.SCREW,DRIVE.....	1
30	PFFZZ	5305008798351	96906	MS35307-371	SCREW,CAP,HEXAGON H.....	4
31	PFFZZ	5310006379541	96906	MS35338-46	WASHER,LOCK.....	4
32	PCFZZ	5331006334535	11083	2H3932	O-RING.....	3
33	PFFZZ	5331008650404	62983	154022	O-RING.....	1
34	PFFZZ	5330008588224	11083	2J0157	PACKING,PREFORMED.....	2
35	PCFZZ	5331003396224	11083	5F7054	O-RING.....	1

END OF FIGURE

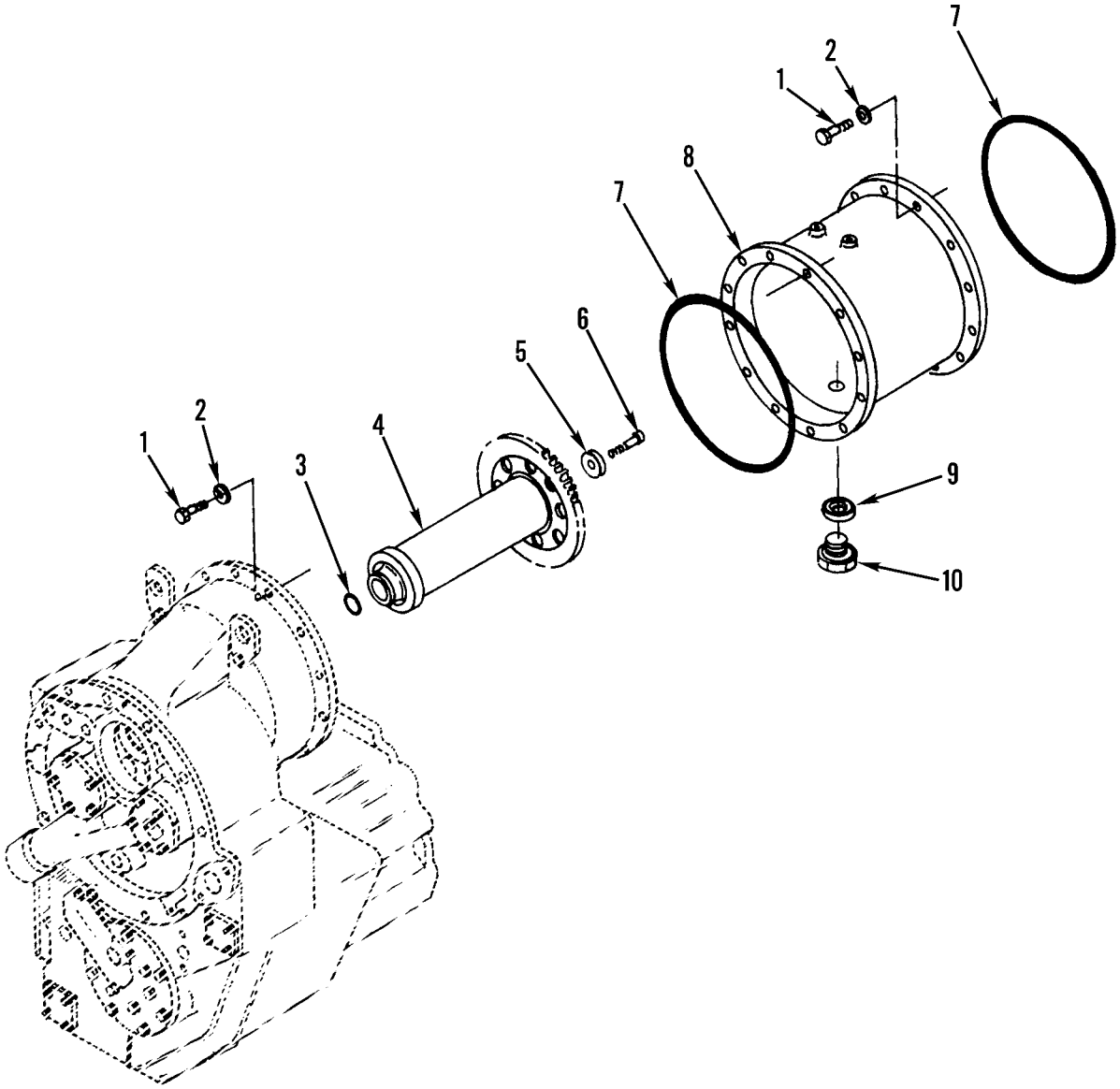

Figure 152. Transmission-To-Engine Adaptor

(1) ITEM NO	(2) SMR CODE	(3) NSN	(4) CAGEC	(5) PART NUMBER	(6) DESCRIPTION AND USABLE ON CODES(UOC)	(7) QTY
					GROUP 0719 REDUCTI0N OR TRANSFER GEARS, SHAFTS, AND BEARINGS FIG. 152 TRANSMISSION-TO-ENGINE ADAPTER	
1	PFFZZ	5306011954681	11083	3B1915	BOLT	24
2	PFFZZ	5310006379541	96906	MS35338-46	WASHER,LOCK	24
3	PFFZZ	5331005064457	11083	8F6711	O-RING	1
4	PAFHH	3040011527181	11083	3P8362	GEARSHAFT,SPUR	1
5	PFFZZ	5310002511488	11083	4S5824	WASHER,FLAT	1
6	PFFZZ	5305007195238	96906	MS90727-115	SCREW,CAP,HEXAGON H	1
7	PFFZZ	5331009454465	11083	5M6200	O-RING	2
8	PFFZZ	3040011829075	11083	9D3561	HOUSING,MECHANICAL	1
9	PFFZZ	5330005995887	11083	2A3398	GASKET	1
10	PFFZZ	5365004265507	11083	6B5262	PLUG,MACHINE THREAD	1

END OF FIGURE

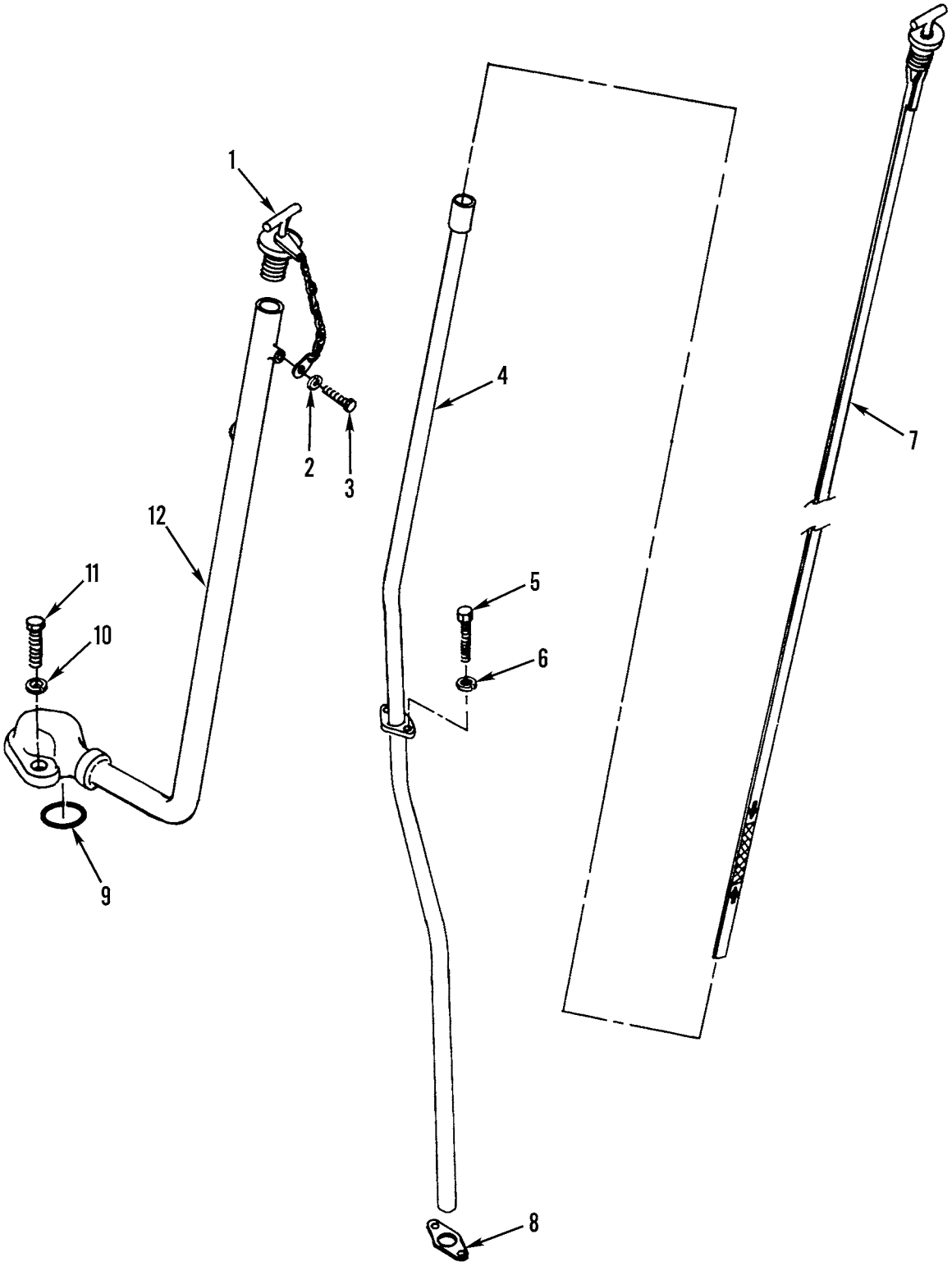

Figure 153. Transmission Oil Filler and Oil Level Gage

(1) ITEM NO	(2) SMR CODE	(3) NSN	(4) CAGEC	(5) PART NUMBER	(6) DESCRIPTION AND USABLE ON CODES(UOC)	(7) QTY
					GROUP 0721 COOLERS, PUMPS, MOTORS FIG. 153 TRANSMISSION OIL FILLER AND OIL LEVEL GAGE	
1	PAFZZ	2940010530179	01943	41460	CAP ASSEMBLY.....	1
2	PFFZZ	5310005825965	96906	MS35338-44	WASHER,LOCK.....	1
3	PFFZZ	5305000712508	80204	B1821BH025C038N	SCREW,CAP,HEXAGON H.....	1
4	XDFZZ		11083	2G7331	TUBE,BENT,METALLIC.....	1
5	PFFZZ	5305001726356	11083	5D0353	SCREW,CAP,HEXAGON H.....	2
6	PFFZZ	5310006379541	96906	MS35338-46	WASHER,LOCK.....	2
7	PAFZZ	6680010938881	0U276	40970	GAGE ROD,LIQUID LEV.....	1
8	PFFZZ	5330003638989	11083	5F3181	GASKET.....	1
9	PFFZZ	5331005598786	09990	2-227N951-75	O-RING.....	1
10	PFFZZ	5310005845272	96906	MS35338-48	WASHER,LOCK.....	2
11	PFFZZ	5306004240086	11083	7B3235	BOLT,MACHINE.....	2
12	XDFZZ		11083	2G7335	TUBE ASSEMBLY,METAL.....	1

END OF FIGURE

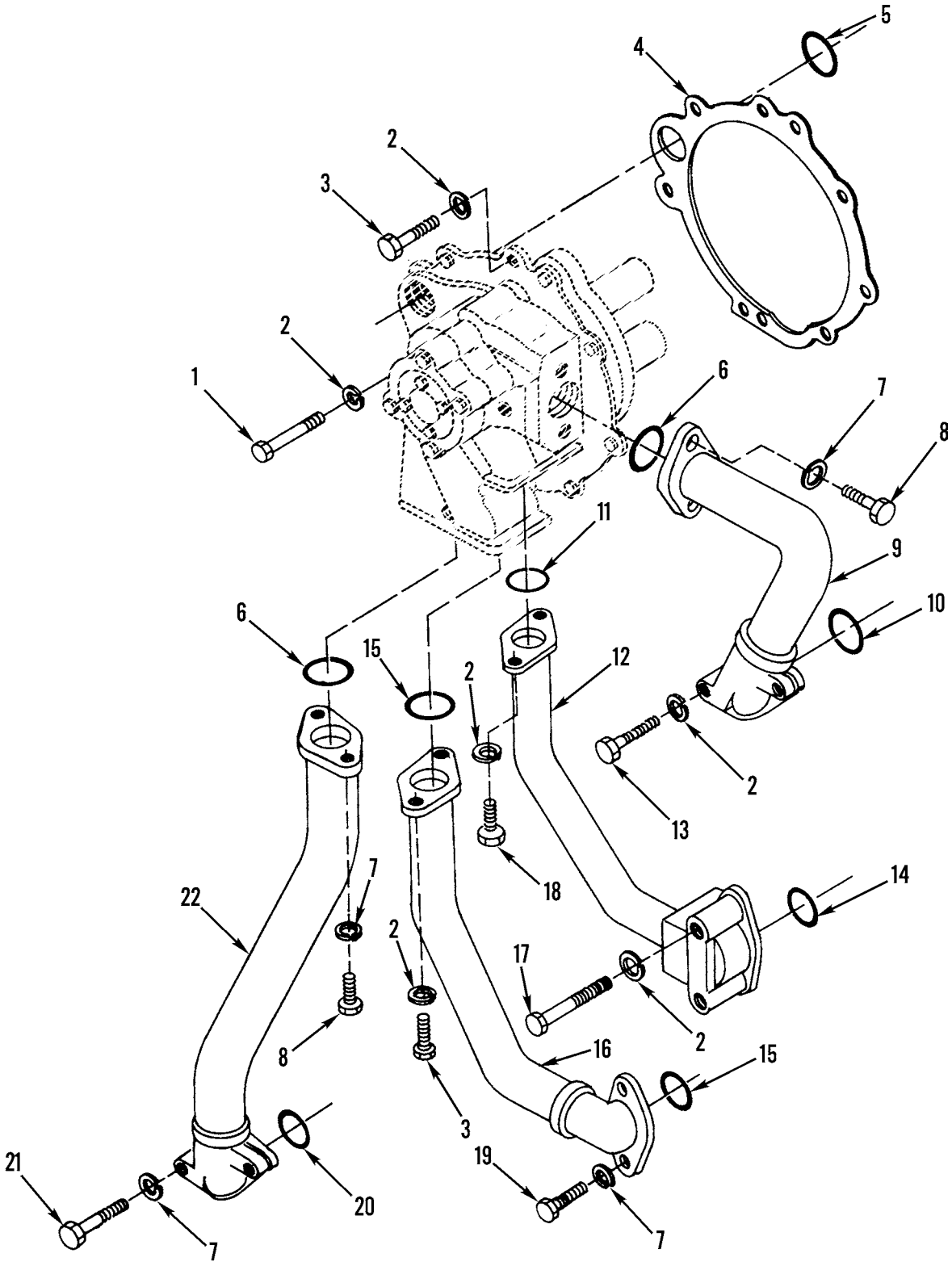

Figure 154. Transmission Oil Lines and Fittings

(1) ITEM NO	(2) SMR CODE	(3) NSN	(4) CAGEC	(5) PART NUMBER	(6) DESCRIPTION AND USABLE ON CODES(UOC)	(7) QTY
					GROUP 0721 COOLERS, PUMPS, MOTORS FIG. 154 TRANSMISSION OIL LINES AND FITTINGS	
1	PFFZZ	5306004705543	11083	8S9191	BOLT,MACHINE.....	2
2	PFFZZ	5310006379541	96906	MS35338-46	WASHER,LOCK.....	15
3	PFFZZ	5306004238194	11083	1A2029	BOLT,MACHINE.....	7
4	PFFZZ	5330011598576	11083	3P0884	GASKET.....	1
5	PAFZZ	5331008650404	11083	6F6673	O-RING.....	1
6	PFFZZ	5331008067027	82366	AM2003	O-RING.....	2
7	PFFZZ	5310005845272	96906	MS35338-48	WASHER,LOCK.....	8
8	PFFZZ	5306002638978	11083	0S1587	BOLT,MACHINE.....	4
9	PBFZZ	4710011500973	11083	3P0846	TUBE ASSEMBLY,METAL.....	1
10	PFFZZ	5331005598786	09990	2-227N951-75	O-RING.....	1
11	PCFZZ	5331008507586	11083	5H2767	O-RING.....	1
12	PFFZZ	4710011500974	11083	3P2447	TUBE ASSEMBLY,METAL.....	1
13	PFFZZ	5305002528906	11083	0T0065	SCREW.....	2
14	PCFZZ	5331005931193	11083	3H1461	O-RING.....	1
15	PCFZZ	5331005277748	11083	4F7952	O-RING.....	2
16	PFFZZ	4710011500975	11083	3P0848	TUBE ASSEMBLY,METAL.....	1
17	PFFZZ	5305008798351	96906	MS35307-371	SCREW,CAP,HEXAGON H.....	2
18	PFFZZ	5305000680511	80204	B1821BH038C125N	SCREW,CAP,HEXAGON H.....	2
19	PFFZZ	5306004240086	11083	7B3235	BOLT,MACHINE.....	2
20	PFFZZ	5331005277939	81343	AS3578-225	O-RING.....	1
21	PFFZZ	5306004262922	11083	0S1573	BOLT,MACHINE.....	2
22	PFFZZ	4710011500976	11083	8P1256	TUBE ASSEMBLY,METAL.....	1

END OF FIGURE

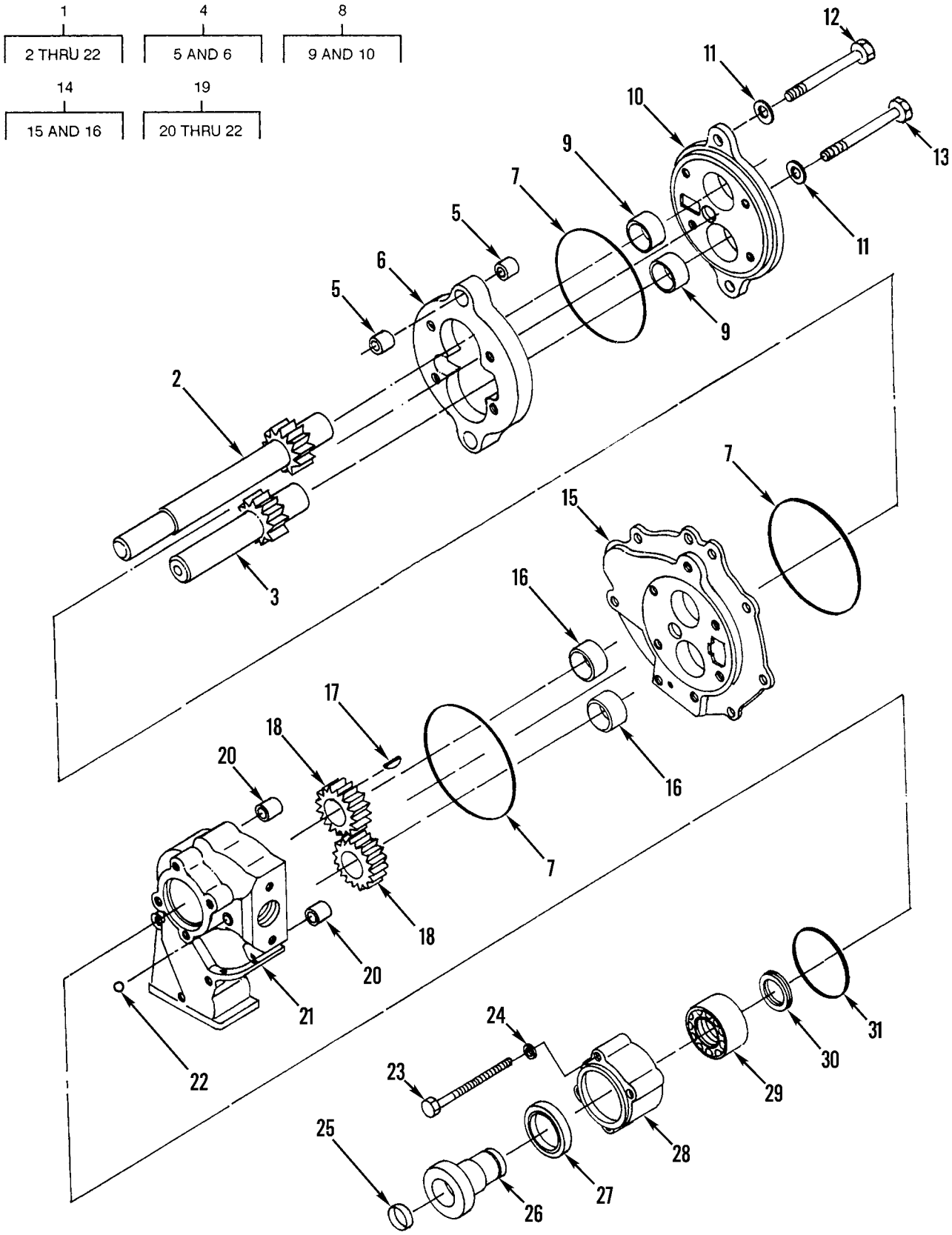

Figure 155. Transmission Oil Pump

(1) ITEM NO	(2) SMR CODE	(3) NSN	(4) CAGEC	(5) PART NUMBER	(6) DESCRIPTION AND USABLE ON CODES(UOC)	(7) QTY
					GROUP 0721 COOLERS, PUMPS, MOTORS	
					FIG. 155 TRANSMISSION OIL PUMP	
1	PFHHH	4320010951449	11083	3P0891	PUMP,ROTARY	1
2	XDHZZ		11083	3P0877	.GEAR,SPUR	1
3	XDHZZ		11083	3P0881	.GEARSHAFT,SPUR	1
4	PAHZZ	4320012751691	11083	9M2210	.HOUSING,LIQUID PUMP	1
					UOC:AF9,AGP	
5	PFHZZ	5315007607425	11083	8M8489	..PIN,HOLLOW	4
6	XDHZZ		11083	9M2209	..HOUSING,MECHANICAL	1
7	PFHZZ	5331009145310	11083	8M5007	.O-RING	3
8	PFHZZ	5340011476714	11083	2S5838	.COVER,ACCESS	1
9	PFHZZ	3120008984700	11083	1M3780	..BEARING,SLEEVE	2
10	XAHZZ		11083	2S5837	..COVER,OIL PUMP	1
11	PAHZA	5310004135144	11083	3S0004	.WASHER,FLAT	6
12	PFHZZ	5305002528906	11083	0T0065	.SCREW	2
13	PFHZZ	5306004262932	11083	0S1619	.BOLT,MACHINE	4
14	PFHZZ	4320011491234	11083	3P0890	.HOUSING,LIQUID PUMP	1
15	XAHZZ		11083	3P0871	..MANIFOLD	1
16	PFHZZ	3120008984700	11083	1M3780	..BEARING,SLEEVE	2
17	PFHZZ	5315006165530	96906	MS35756-15	.KEY,WOODRUFF	1
18	PFHZZ	3020011496768	11083	3P3690	.GEAR,SPUR	2
19	XDHZZ		11083	3P0883	.HOUSING,LIQUID PUMP	1
20	PFHZZ	5315007607425	11083	8M8489	..PIN,HOLLOW	2
21	XAHZZ		11083	3P0882	..MANIFOLD,OIL PUMP	1
22	PFHZZ	3110009491438	11083	4B9880	..BALL,BEARING	1
23	PFHZZ	5306006982150	11083	0L2070	BOLT,MACHINE	4
24	PFHZZ	5310001174788	11083	5M2894	WASHER,FLAT	4
25	PFHZZ	5340008192027	11083	5H4279	PLUG,EXPANSION	1
26	XDHZZ		11083	2P5769	COUPLING HALF,SHAFT	1
27	PFHZZ	5330010677997	11083	2H3843	SEAL	1
28	XDHZZ		11083	2P5766	HOUSING,BEARING UNI	1
29	PFHZZ	3110010664696	11083	1B5675	BEARING	1
30	PFHZZ	5325004036449	80756	RST-177S	RING,RETAINING	1
31	PCHZZ	5331005801216	11083	2H3931	O-RING	1

END OF FIGURE

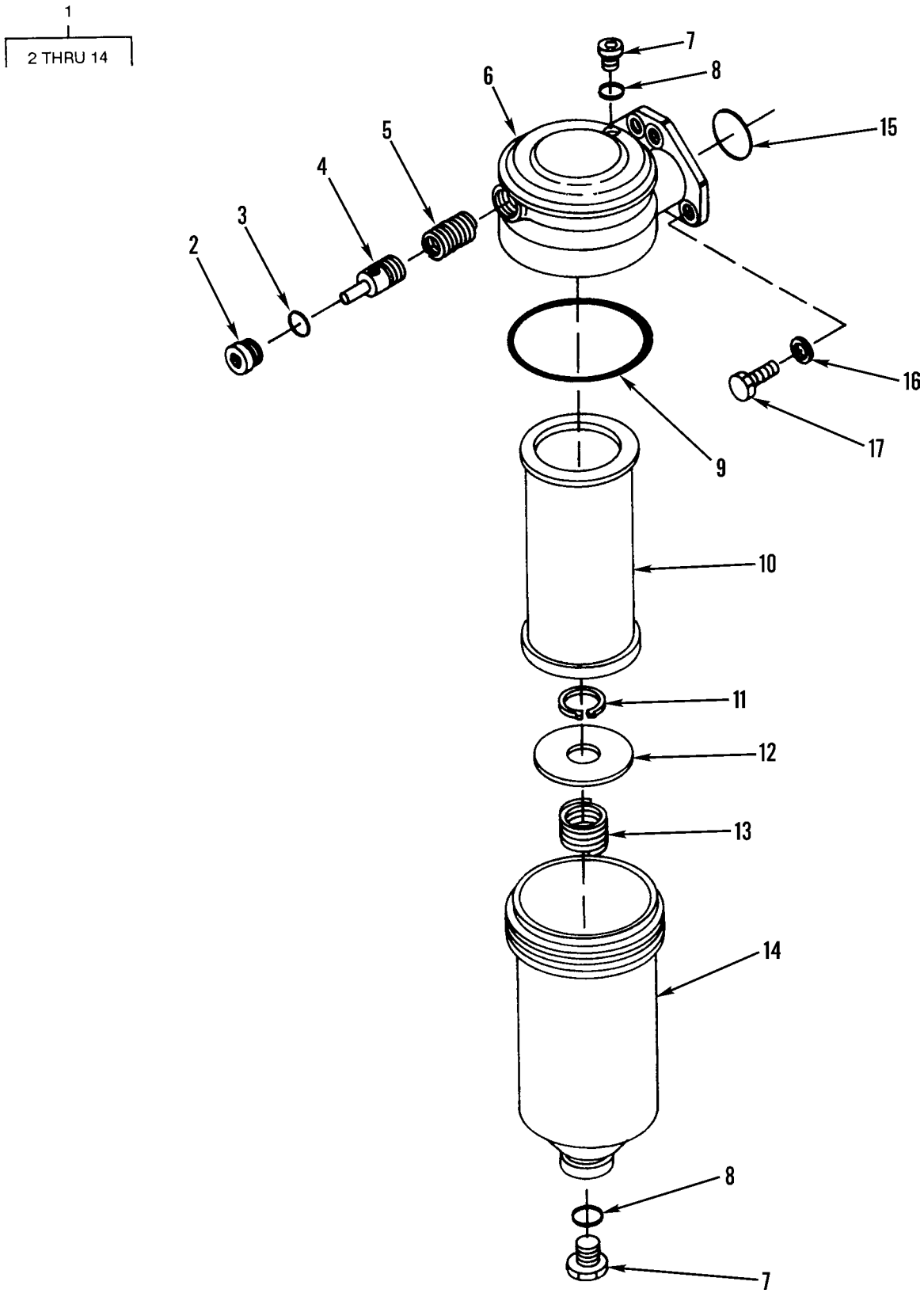

Figure 156. Transmission Oil Filter and Mounting

(1) ITEM NO	(2) SMR CODE	(3) NSN	(4) CAGEC	(5) PART NUMBER	(6) DESCRIPTION AND USABLE ON CODES(UOC)	(7) QTY
					GROUP 0721 COOLERS, PUMPS, MOTORS FIG. 156 TRANSMISSION OIL FILTER AND MOUNTING	
1	PFOZZ	2520010946514	11083	6P2091	FILTER,FLUID.....	1
2	PFOZZ	5365004069320	83259	12HP5ONS	.PLUG,MACHINE THREAD.....	1
3	PCOZZ	5331009448281	11083	3D2824	.O-RING.....	1
4	XDOZZ		11083	3T0688	.SLIDE,DIRECTIONAL C.....	1
5	PFOZZ	5360010951834	11083	9M1986	.SPRING,HELICAL,COMP.....	1
6	PFOZZ	3040011491236	11083	6P2090	.HOUSING,MECHANICAL.....	1
7	PFOZZ	5365004114584	11083	9S4191	.PLUG,MACHINE THREAD.....	2
8	PAOZZ	5331008013354	25184	906-737-70	.O-RING.....	2
9	PAOZZ	5330010219880	11083	2S8439	.SEAL.....	1
10	PAOZZ	2910007403593	11083	1R0719	.FILTER ELEMENT,FLUI.....	1
11	PFOZZ	5325008037303	96906	MS16624-1075	.RING,RETAINING.....	1
12	PFOZZ	5330004982907	11083	7S6745	.RETAINER,PACKING.....	1
13	XDOZZ		11083	3S8652	.SPRING,HELICAL,COMP.....	1
14	PFOZZ	2940011503865	11083	3P0887	.FILTER BODY,FLUID.....	1
15	PCOZZ	5331005840263	81343	MS28775-218	O-RING.....	2
16	PFFZZ	5310006379541	96906	MS35338-46	WASHER,LOCK.....	4
17	PFFZZ	5306002604508	11083	0S1594	BOLT,MACHINE.....	4

END OF FIGURE

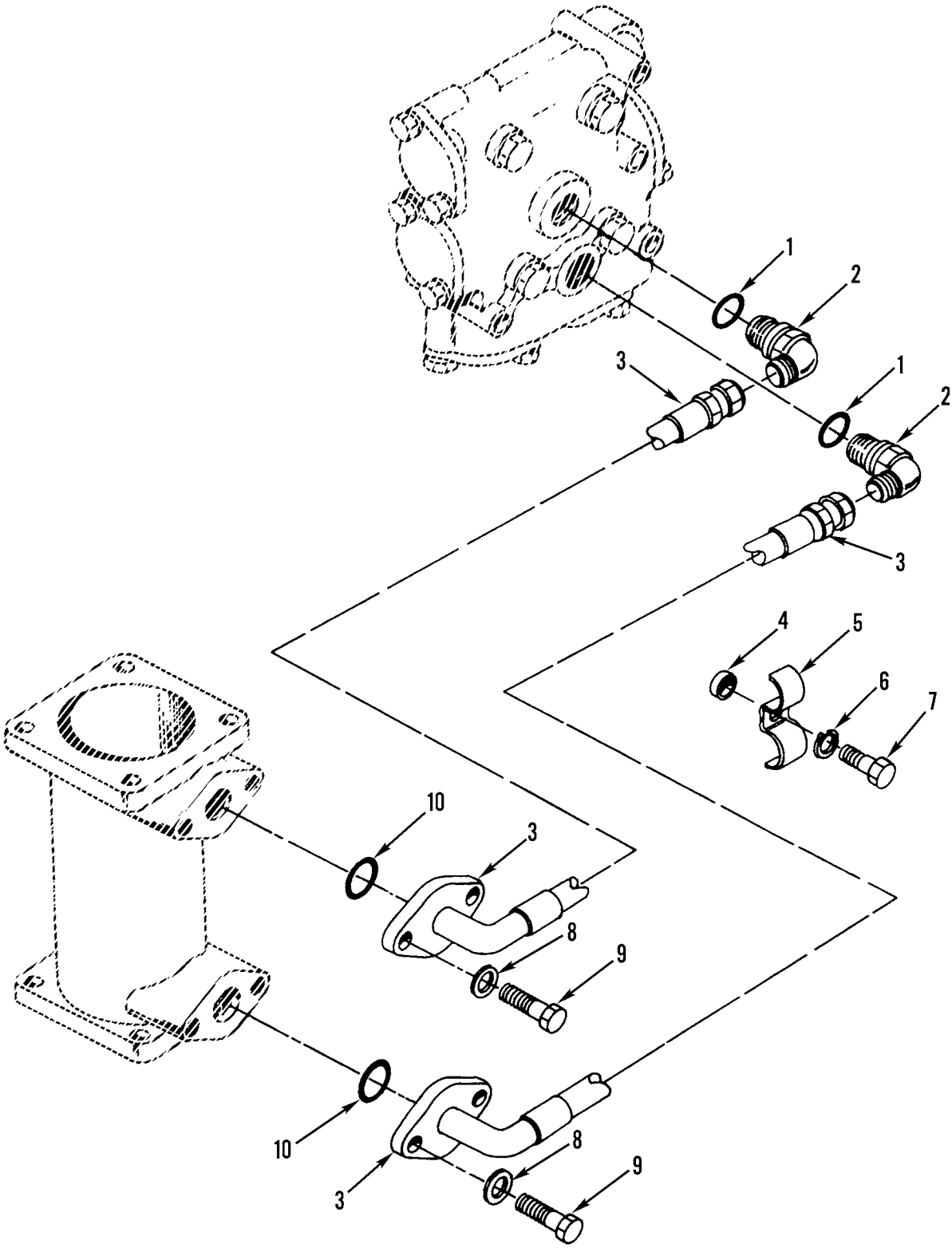

Figure 157. Transmission Oil Cooler Lines and Fittings

(1) ITEM NO	(2) SMR CODE	(3) NSN	(4) CAGEC	(5) PART NUMBER	(6) DESCRIPTION AND USABLE ON CODES(UOC)	(7) QTY
					GROUP 0721 COOLERS, PUMPS, MOTORS FIG. 157 TRANSMISSION OIL COOLER LINES AND FITTINGS	
1	PCFZZ	5331009448281	11083	3D2824	O-RING	4
2	PFFZZ	4730010634224	11083	0307950	ELBOW,TUBE TO BOSS	4
3	PAFZZ	4720011522667	11083	5T2918	HOSE ASSEMBLY,NONME	2
4	PFFZZ	5365004240479	11083	8B8679	SPACER,SLEEVE	1
5	PFFZZ	5340011495446	11083	6D9392	STRAP,RETAINING	1
6	PFFZZ	5310006379541	96906	MS35338-46	WASHER,LOCK	1
7	PFFZZ	5305000680511	80204	B1821BH038C125N	SCREW,CAP,HEXAGON H	1
8	PFFZZ	5310001174788	11083	5M2894	WASHER,FLAT	4
9	PFOZZ	2910003099473	11083	0T0573	CAPSCREW,FUEL PUMP	4
10	PFFZZ	5331010176535	81349	M83248/2-214	O-RING	2

END OF FIGURE

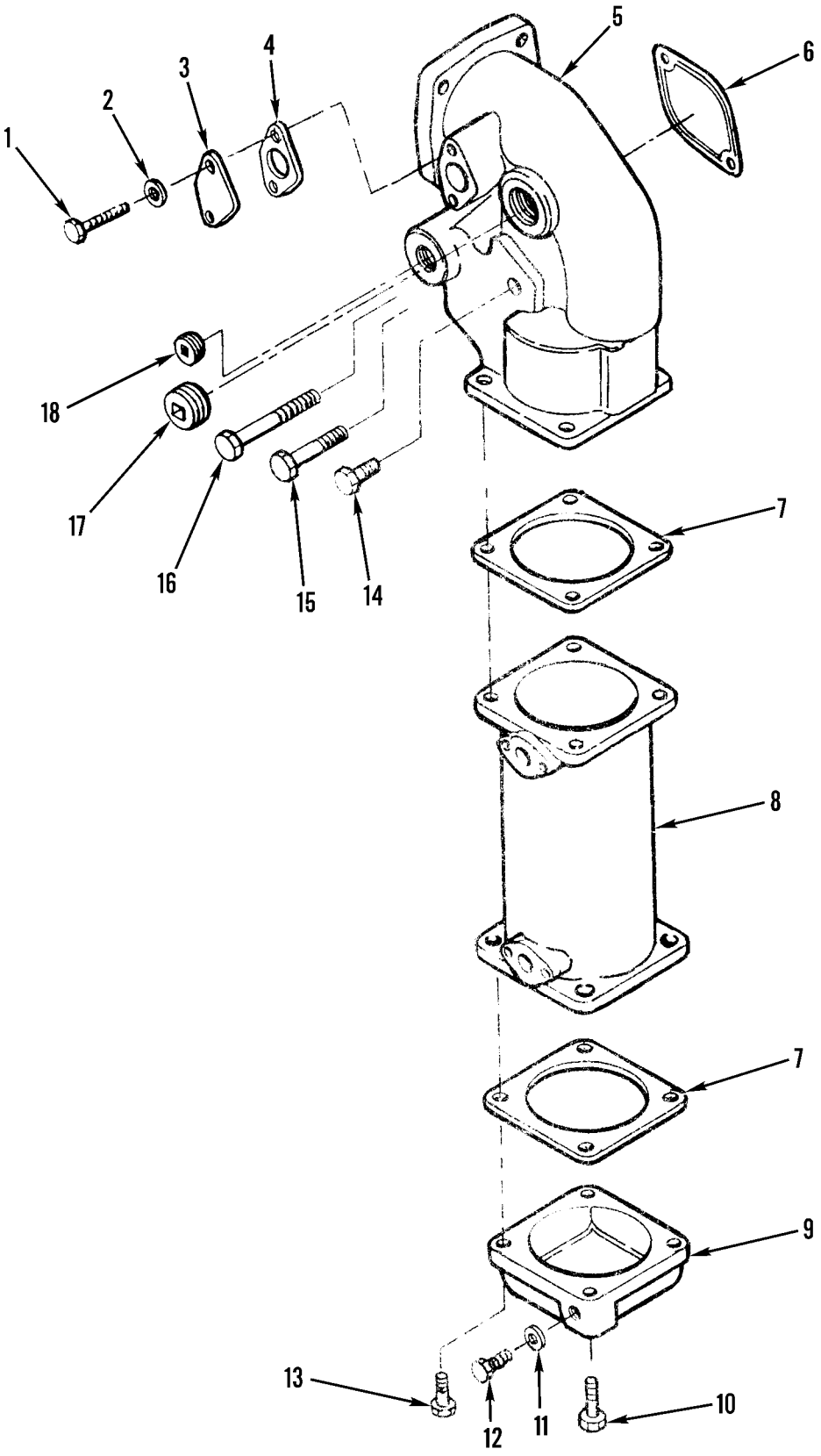

Figure 158. Transmission Oil Cooler Assembly

(1) ITEM NO	(2) SMR CODE	(3) NSN	(4) CAGEC	(5) PART NUMBER	(6) DESCRIPTION AND USABLE ON CODES(UOC)	(7) QTY
					GROUP 0721 COOLERS, PUMPS, MOTORS FIG. 158 TRANSMISSION OIL COOLER ASSEMBLY	
1	PFFZZ	5306002264825	80204	B1821BH031C075N	BOLT,MACHINE.....	2
2	PFFZZ	5310000814219	96906	MS27183-12	WASHER,FLAT.....	2
3	PFFZZ	5340011074130	11083	4N3840	COVER,ACCESS.....	1
4	PFFZZ	5330010639839	11083	4N3841	GASKET.....	1
5	XDFZZ		11083	6N0125	HOUSING,OIL COOLER,.....	1
6	PFFZZ	5330011603989	11083	2W4561	GASKET.....	1
7	PFFZZ	5330009236986	11083	2M4108	GASKET.....	2
8	PAFZZ	2930010933600	11083	7N0128	CORE ASSEMBLY,OIL C.....	1
9	PAFZZ	5340011546111	11083	5S7607	COVER,ACCESS.....	1
10	PFFZZ	5306010949106	11083	0S1590	BOLT,MACHINE.....	1
11	PFFZZ	5310003627988	11083	6F7062	WASHER,FLAT.....	1
12	PFFZZ	5365009385568	11083	8M9307	PLUG,MACHINE THREAD.....	1
13	PFFZZ	5306002604508	11083	0S1594	BOLT,MACHINE.....	7
14	PFFZZ	4730004275121	01276	2082-6B	PLUG,PIPE.....	1
15	PFOZZ	5305010156841	11083	0S1591	SCREW.....	1
16	PFFZZ	5305008798351	96906	MS35307-371	SCREW,CAP,HEXAGON H.....	1
17	PFFZZ	4730002633122	11083	3B0551	PLUG,PIPE.....	1
18	PFFZZ	4730001223969	11083	1B5174	PLUG,PIPE.....	1

END OF FIGURE

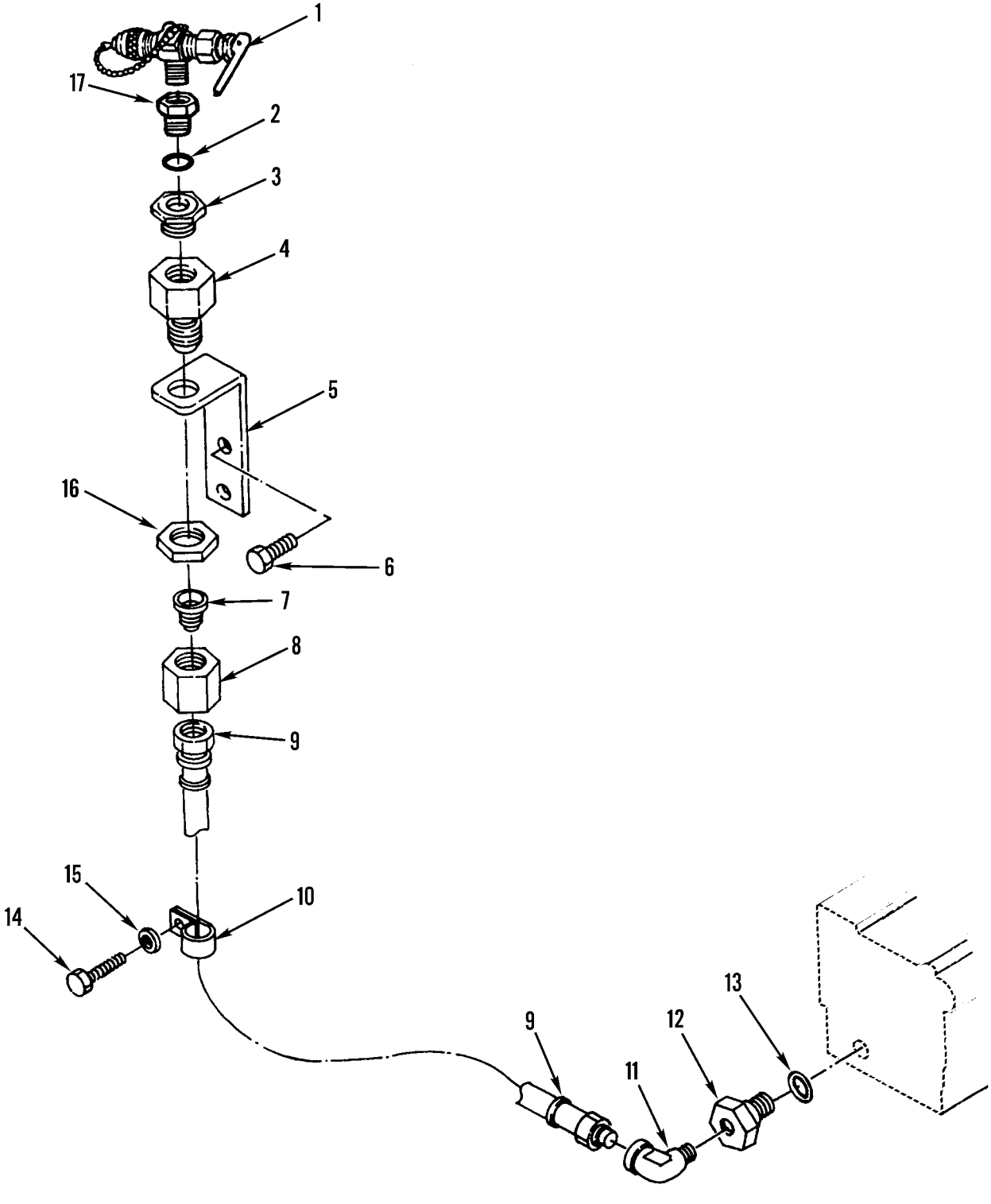

Figure 159. Transmission Oil Sampling Lines and Valve

(1) ITEM NO	(2) SMR CODE	(3) NSN	(4) CAGEC	(5) PART NUMBER	(6) DESCRIPTION AND USABLE ON CODES(UOC)	(7) QTY
					GROUP 0721 COOLERS, PUMPS, MOTORS FIG. 159 TRANSMISSION OIL SAMPLING LINES AND VALVE	
1	PAOZZ	4820010730080	19207	11669424	COCK,DRAIN.....	1
2	XDOZZ	5331010491292	02697	3-904N552-90	O-RING.....	1
3	PAOZZ	4730011522666	11083	5R5304	ADAPTER,STRAIGHT,PI.....	1
4	PAOZZ	4730011967172	11083	6V2376	ADAPTER,STRAIGHT,PI.....	1
5	PFOZZ	5340012044791	11083	5R7180	BRACKET,ANGLE.....	1
6	PFOZZ	5306011169622	11083	0869934	BOLT,MACHINE.....	2
7	PFOZZ	4730006763075	96906	MS51534A8-4	REDUCER,TUBE.....	1
8	PFOZZ	4730007621239	96906	MS51531B8	NUT,TUBE COUPLING.....	1
9	PAOZZ	4720012008646	11083	3N7268	HOSE ASSEMBLY,NONME.....	1
10	PFOZZ	5340011845460	11083	4K8864	CLAMP,LOOP.....	1
11	PAOZZ	4730012003127	11083	6V4245	ELBOW,PIPE.....	1
12	PAOZZ	4730011918728	30780	6-1/4 F50G-S	ADAPTER,STRAIGHT,PI.....	1
13	PCOZZ	5331008013354	25184	906-737-70	O-RING.....	1
14	PFOZZ	5306002264825	80204	B1821BH031C075N	BOLT,MACHINE.....	1
15	PFOZZ	5310000814219	96906	MS27183-12	WASHER,FLAT.....	1
16	PFOZZ	5310008124283	30780	8WLNS	NUT,PLAIN,HEXAGON.....	1
17	PFOZA	4730001218299	07421	425-100-003	ADAPTER,STRAIGHT,PI W/O-RING.....	1

END OF FIGURE

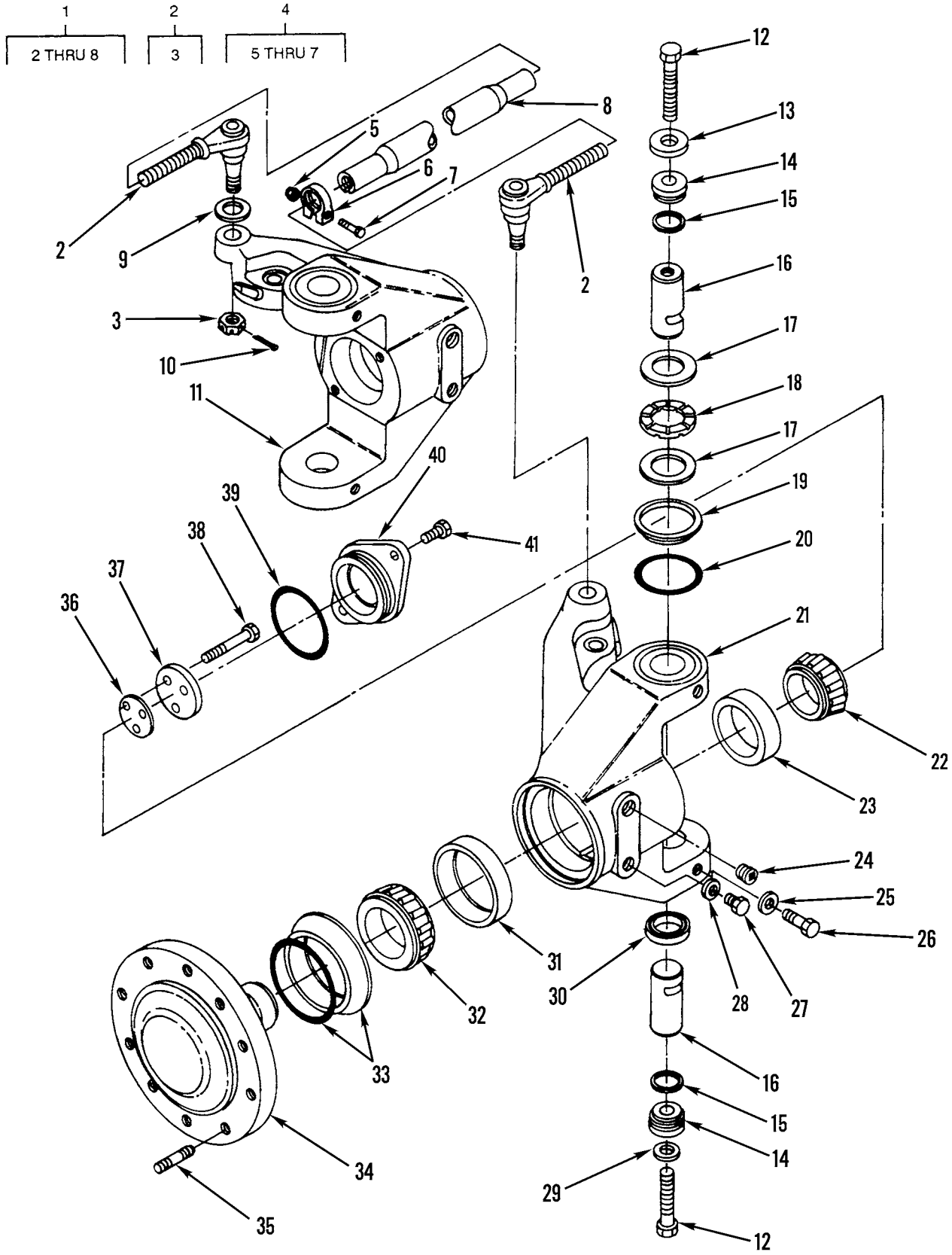

Figure 160. Drag Link and Spindle Assembly

(1) ITEM NO	(2) SMR CODE	(3) NSN	(4) CAGEC	(5) PART NUMBER	(6) DESCRIPTION AND USABLE ON CODES(UOC)	(7) QTY
					GROUP 10 FRONT AXLE GROUP 1000 FRONT AXLE ASSEMBLY FIG. 160 DRAG LINK AND SPINDLE ASSEMBLY	
1	PFHHH	2530011692731	31033	L-24-VT-4016-A-1 1	DRAG LINK,STEERING.....	1
2	PFHZZ	2530010989714	98349	L-24-LV-4014-A-1 1	.TIE ROD END,STEERIN.....	1
2	PFHZZ	2530010984682	98349	L-24-LV-4016-A-1 2	.TIE ROD END,STEERIN.....	1
3	PFHZZ	5310011703769	11083	2F8057	..NUT,SELF-LOCKING,HE..... UOC:AF9,AGP,F10	2
4	XAHHH		11083	9D6519	.CLAMP ASSY..... UOC:AF9,AGP,F10	2
5	PFHZZ	5310010665275	11083	3K2889	..NUT.....	2
6	PFHZZ	5340010963476	59875	L-24-CP-8	..CLAMP,LOOP.....	2
7	PFHZZ	5306004263209	11083	1B4367	..BOLT,MACHINE.....	4
8	PFHZZ	2530011000936	98349	L-18-RT-663	.TIE ROD,STEERING.....	1
9	PFHZZ	5310010953327	11083	8D2811	WASHER,FLAT.....	2
10	PFHZZ	5315000120123	96906	MS24665-355	PIN,COTTER.....	2
11	XDHZZ		11083	8W4653	SPINDLE,WHEEL,NONDR.....	1
12	PFHZZ	5306010955695	11083	5P8081	BOLT,SELF-LOCKING.....	4
13	PFHZZ	5310010949907	11083	2G8742	WASHER,FLAT.....	2
14	PFHZZ	2530010952075	11083	2G8739	RETAINER.....	4
15	PAHZZ	5330010955849	11083	2G8741	SEAL RING,METAL.....	4
16	PFHZZ	5340010956838	11083	2G8629	POST,ELECTRICAL-MEC.....	4
17	PFHZZ	3120010967027	11083	2G8615	BEARING,WASHER,THRU.....	4
18	PFHZZ	3120010967403	11083	2G8626	BEARING,WASHER,THRU.....	2
19	PAHZZ	5330010950034	11083	2G8777	RING,WIPER.....	4
20	PFHZZ	5331009321053	11083	9M2092	O-RING.....	4
21	XDHZZ		11083	8W4652	HOUSING,SPINDLE.....	1
22	PAHZZ	3110010249815	11083	7D8636	CONE AND ROLLERS,TA.....	2
23	PAHZZ	3110010248523	60038	JM714210	CUP,TAPERED ROLLER.....	2
24	PFHZZ	4730001223969	11083	1B5174	PLUG,PIPE.....	2
25	PFHZZ	5310010948810	78189	3320-14-01	WASHER,SQUARE CONE.....	8
26	PFHZZ	5305010269518	11083	0S1571	SCREW,CAP,HEXAGON H.....	4
27	PFHZZ	5365009385568	11083	8M9307	PLUG,MACHINE THREAD..... UOC:AF9,AGP,F10	2
28	PFHZZ	5310007686822	00742	71112A	WASHER,FLAT.....	2
29	PFHZZ	5310004191363	10832	S115	WASHER,FLAT.....	2
30	PAHZZ	5330010951252	11083	5P8890	SEAL,PLAIN ENCASED.....	2
31	PAHZZ	3110014376096	11083	0300060	CUP,TAPERED ROLLER.....	2
32	PAHZZ	3110014376097	11083	0300061	CONE,TAPERED ROLLER.....	2
33	PAHZZ	5330010537373	11083	5K5288	SEAL.....	2
34	XDHZZ	2530011527836	11083	1473400	SPINDLE,WHEEL,DRIVI.....	2
35	PFHZZ	5307011591175	11083	6V4250	STUD,PLAIN.....	20
36	PFHZZ	5365010951304	11083	2G3865	SHIM.....	2
37	PFHZZ	3110010981877	11083	7D8643	PLATE,RETAINING,BEA.....	2
38	PFHZZ	5306002685798	11083	0L1329	BOLT,MACHINE.....	6
39	PFHZZ	5331009508217	11083	2J8163	O-RING.....	2
40	XDHZZ		11083	5T0906	COVER,ACCESS.....	2

(1) ITEM NO	(2) SMR CODE	(3) NSN	(4) CAGEC	(5) PART NUMBER	(6) DESCRIPTION AND USABLE ON CODES(UOC)	(7) QTY
41	PFHZZ	5306006906976	03038	LH90725-59	BOLT,MACHINE.....	4

END OF FIGURE

7	16	27	34
8 THRU 10	17 THRU 19	28 AND 29	35 THRU 37

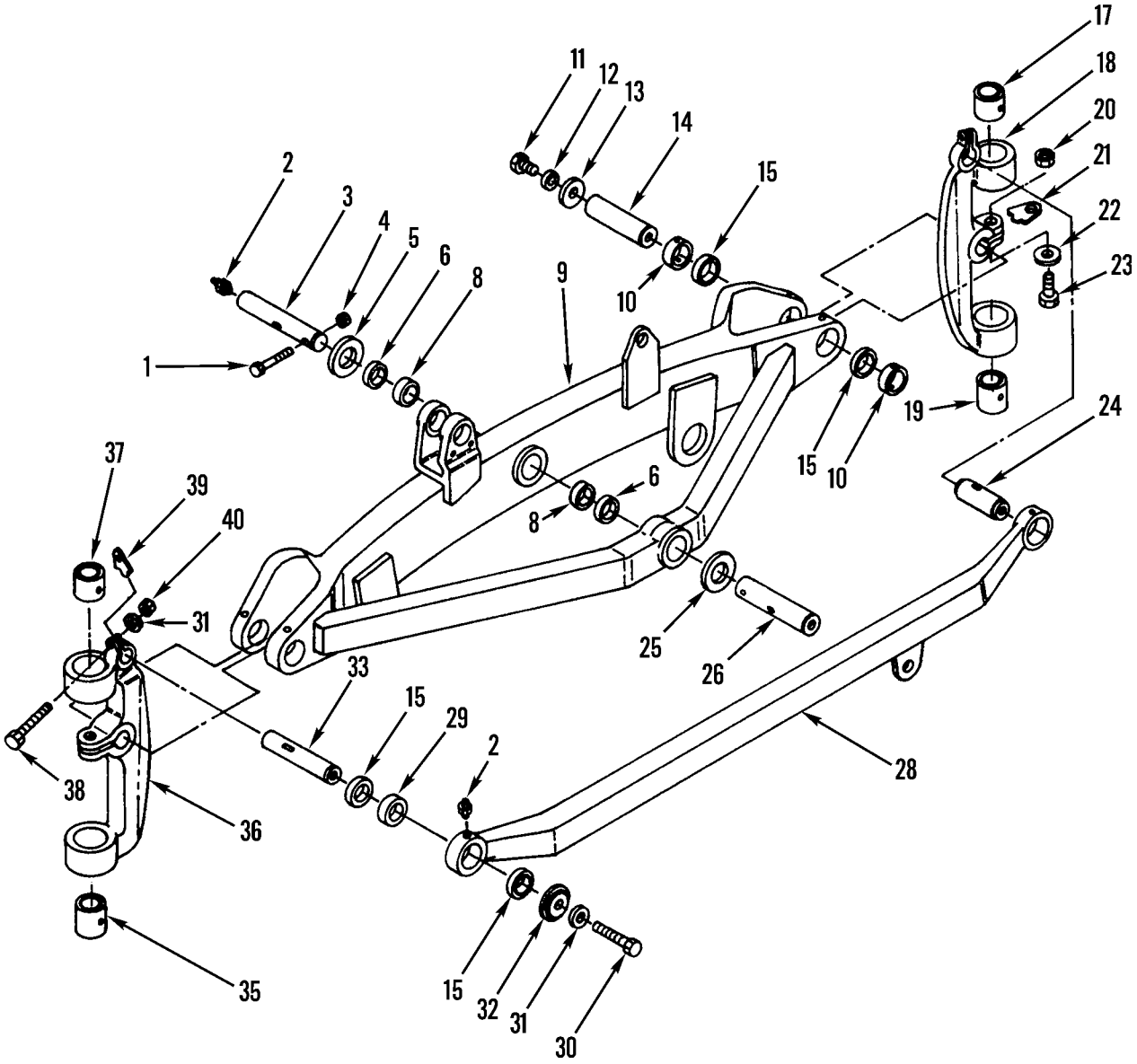

Figure 161. Front Steering Axle Assembly

(1) ITEM NO	(2) SMR CODE	(3) NSN	(4) CAGEC	(5) PART NUMBER	(6) DESCRIPTION AND USABLE ON CODES(UOC)	(7) QTY
					GROUP 1000 FRONT AXLE ASSEMBLY FIG. 161 FRONT STEERING AXLE ASSEMBLY	
1	PFHZZ	5305002528906	11083	0T0065	SCREW	2
2	PFHZZ	4730000504208	96906	MS15003-1	FITTING,LUBRICATION	12
3	PFHZZ	3040010997354	11083	2G8617	SHAFT,STRAIGHT	1
4	PFHZZ	5310010588071	11083	2K4973	LOCKNUT	2
5	PFHZZ	5310010953328	11083	9D3523	WASHER,FLAT	2
6	PAHZZ	5330010948703	11083	5P8843	SEAL,PLAIN ENCASED	4
7	XDHZZ		11083	5R6362	AXLE ASSEMBLY,VEHIC UOC:AF9,AGP,F10	1
8	PAHZZ	3120010979506	11083	2G8608	.BEARING,SLEEVE	4
9	PFHHH	2530011853876	11083	8W6471	.AXLE ASSEMBLY,VEHIC UOC:AF9,AGP,F10	1
10	PAHZZ	3120010955789	11083	2G8631	.BEARING,SLEEVE	4
11	PFHZZ	5306002637301	11083	0L1351	BOLT,MACHINE	4
12	PFHZZ	5310010948810	78189	3320-14-01	WASHER,SQUARE CONE	4
13	PFHZZ	5310010949908	11083	2G8768	WASHER,FLAT	4
14	PFHZZ	5340011005373	11083	2G8633	POST,ELECTRICAL-MEC	2
15	PAHZZ	5330010951251	11083	5P8842	SEAL,PLAIN ENCASED	8
16	XDHZZ	2530011681396	11083	8X3434	ARM,STEERING GEAR	1
17	PAHZZ	3120011009049	11083	2G7387	.BEARING,SLEEVE	1
18	XAHZZ	2530011681396	11083	2G8570	.ARM,STEERING GEAR	1
19	PAHZZ	3120011009047	11083	2G7388	.BEARING,SLEEVE	1
20	PFHZZ	5310009192242	11083	2J3505	NUT,PLAIN,HEXAGON	2
21	PAHZZ	3805010951693	11083	9D2754	INSERT	2
22	PFHZZ	5310009499296	78500	1229T1554	WASHER,FLAT	2
23	PFHZZ	5305009299442	11083	1D4629	SCREW,CAP,HEXAGON H	2
24	PFHZZ	5340010967215	11083	2G8625	POST,ELECTRICAL-MEC	1
25	PFHZZ	5310009826571	96906	MS27183-36	WASHER,FLAT	1
26	PFHZZ	5315010963207	11083	2G8621	PIN,STRAIGHT,HEADLE	1
27	PFHZZ	2530011830022	11083	2G8602	BAR ASSEMBLY,STEERI UOC:AF9,AGP,F10	1
28	PFHZZ	3040011513996	11083	2G8599	.CONNECTING LINK,RIG	1
29	PFHZZ	3120010953372	11083	2G8624	.BEARING,SLEEVE	2
30	PFHZZ	5306004238116	89926	281047	BOLT,MACHINE	2
31	PFHZZ	5310001397030	11083	4D3704	WASHER,FLAT	4
32	PFHZZ	2530010953504	11083	2G5667	RETAINER,MOUNTING C	2
33	PFHZZ	5315010978386	11083	2G8613	PIN,STRAIGHT,HEADLE	1
34	XAHHH		11083	2G8727	ARM ASSY	1
35	PAHZZ	3120011009047	11083	2G7388	.BEARING,SLEEVE	1
36	PAHZZ	2530011684341	11083	8X3435	.ARM,FRONT AXLE	1
37	PAHZZ	3120011009049	11083	2G7387	.BEARING,SLEEVE	1
38	PFHZZ	5306004263209	11083	4W5918	BOLT,MACHINE UOC:AF9,AGP,F10	2
39	PFHZZ	2530010952074	11083	4D0925	LOCK,FRONT AXLE	2
40	PFHZZ	5310007638920	96906	MS51967-20	NUT,PLAIN,HEXAGON	2

END OF FIGURE

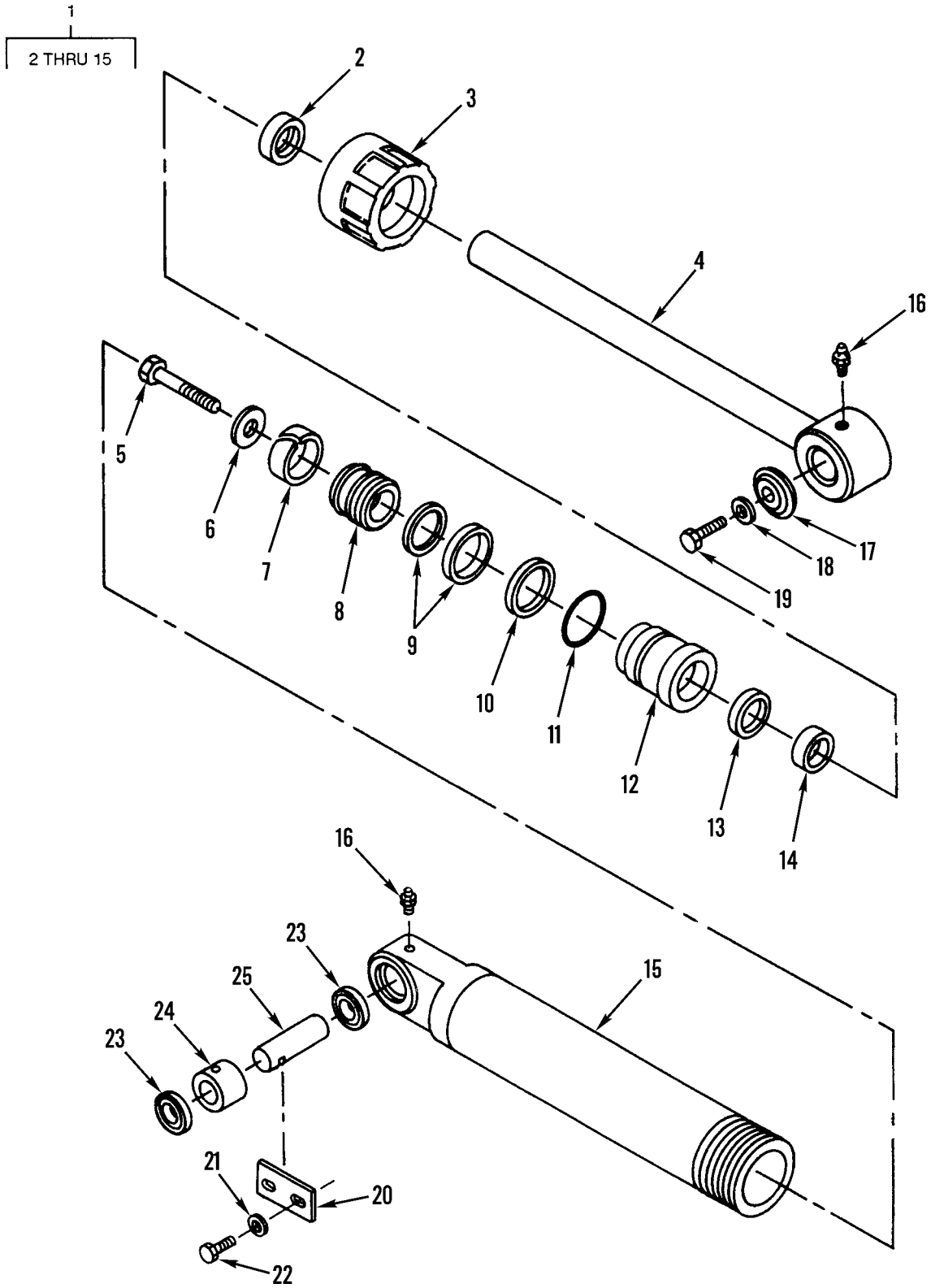

Figure 162. Leaning Wheel Cylinder Assembly

(1) ITEM NO	(2) SMR CODE	(3) NSN	(4) CAGEC	(5) PART NUMBER	(6) DESCRIPTION AND USABLE ON CODES(UOC)	(7) QTY
					GROUP 1004 STEERING AND LEANING WHEEL MECHANISM FIG. 162 LEANING WHEEL CYLINDER ASSEMBLY	
1	PFFHH	3040010964424	11083	3G4752	CYLINDER ASSEMBLY,A.....	1
2	PAHZZ	5330011843545	11083	9J4037	.SEAL,PLAIN ENCASED..... UOC:AF9,AGP,F10	1
3	PFHZZ	3040011588473	11083	7J9887	.COLLAR,SHAFT.....	1
4	PFHZZ	3040011513995	11083	3G4761	.CONNECTING LINK,RIG.....	1
5	PFHZZ	5306011558647	11083	7J5639	.BOLT,SELF-LOCKING.....	1
6	PFHZZ	5310010660506	11083	8J7415	.WASHER.....	1
7	PAHZZ	5365010480984	11083	7J9885	.RING USE WITH 7J9888.....	1
7	PAHZZ	5330013640500	11083	4T6780	.RETAINER,PACKING USE WITH P/N 9T7346.....	1
8	XDHZZ		11083	7J9886	.PISTON,LINEAR ACTUA.....	1
9	PAHZZ	5330001185519	11083	4T8054	.SEAL ASSEMBLY.....	1
10	PAHZZ	5365010470826	11083	4J9224	.RING,BACK UP USE WITH 7J9888.....	1
10	PAHZZ	5325015209748	11083	0068663	.RING, RETAINING USE WITH P/N 9T7346.....	1
11	PCHZZ	5331005801216	11083	2H3931	.O-RING.....	1
12	XDHZZ		11083	7J9888	.CAP,LINEAR ACTUATIN WHEN REPLACING, USE 9T7346,0068663, AND 4T6780.....	1
12	XDHZZ		11083	9T7346	.CAP,LINEAR ACTUATIN REPLACES P/N 7J9888.....	1
13	PAHZZ	5330004318882	11083	6J9733	.GASKET.....	1
14	PAHZZ	5330011869495	11083	9J4038	.SEAL ASSEMBLY..... UOC:AF9,AGP,F10	1
15	PFHZZ	3040011564851	11083	3G4754	.HOUSING ASSEMBLY,CY.....	1
16	PFHZZ	4730000504208	96906	MS15003-1	FITTING,LUBRICATION.....	2
17	PFHZZ	2530010953504	11083	2G5667	RETAINER,MOUNTING C.....	1
18	PFHZZ	5310001397030	11083	4D3704	WASHER,FLAT.....	1
19	PFHZZ	5306004238116	89926	281047	BOLT,MACHINE.....	1
20	PAHZZ	5365011569765	11083	6G7187	SPACER,PLATE.....	1
21	PFHZZ	5310008095997	96906	MS27183-17	WASHER,FLAT.....	2
22	PFHZZ	5306008744001	11083	6H1717	BOLT,MACHINE.....	2
23	PAHZZ	5330010951251	11083	5P8842	SEAL,PLAIN ENCASED.....	4
24	PAHZZ	3120010955789	11083	2G8631	BEARING,SLEEVE.....	2
25	PFHZZ	5315011638372	11083	2G8609	PIN,STRAIGHT,HEADLE.....	1

END OF FIGURE

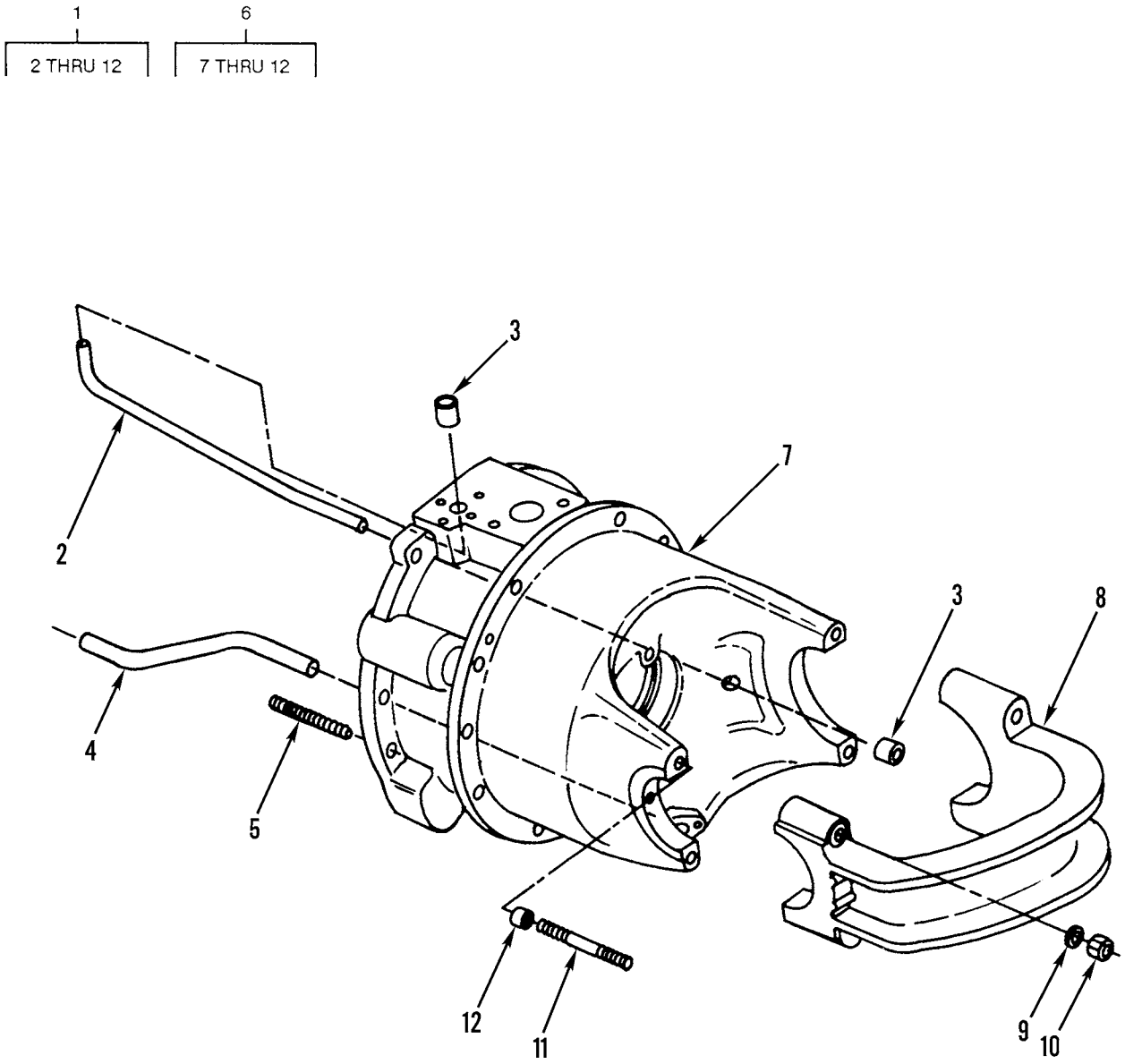

Figure 163. Differential Carrier

(1) ITEM NO	(2) SMR CODE	(3) NSN	(4) CAGEC	(5) PART NUMBER	(6) DESCRIPTION AND USABLE ON CODES(UOC)	(7) QTY
					GROUP 11 REAR AXLE	
					GROUP 1100 REAR AXLE ASSEMBLY	
					FIG. 163 DIFFERENTIAL CARRIER	
1	PFHZZ	2520011527779	11083	8D4570	CARRIER ASSEMBLY,DI.....	1
2	PAHZZ	4710011543130	11083	8D4323	.TUBE,BENT,METALLIC.....	1
3	PAHZZ	3120010963132	11083	2G1314	.BUSHING,SLEEVE.....	2
4	XDHZZ		11083	8D4556	.TUBE,BENT,METALLIC.....	4
5	PFHZZ	5307010631419	11083	3D8439	.STUD,PLAIN.....	10
6	XAHZZ		11083	8D4591	.CARRIER.....	1
7	XAHZZ		11083	8D4549	..CARRIER,DIFF.....	1
8	XAHZZ		11083	8D4221	..CAP,BEARING.....	1
9	PFHZZ	5310011022477	11083	5P8248	..WASHER,FLAT.....	4
10	PFHZZ	5310007638901	96906	MS51968-23	..NUT,PLAIN,HEXAGON.....	4
11	PFHZZ	5307011847651	11083	3D2088	..STUD,PLAIN.....	4
12	XAHZZ		11083	3M6372	..FERRULE.....	4

END OF FIGURE

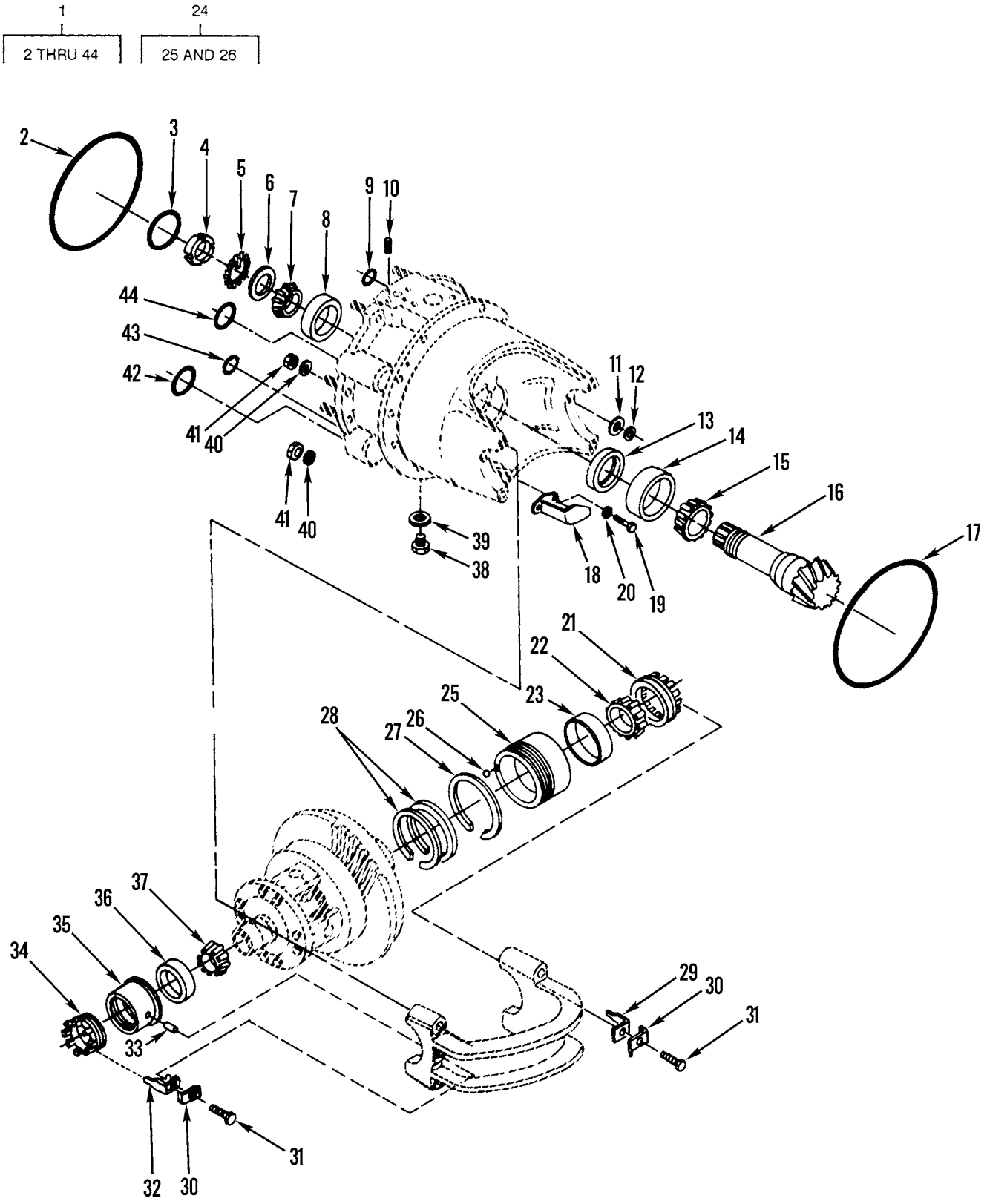

Figure 164. Differential and Bevel Gear

(1) ITEM NO	(2) SMR CODE	(3) NSN	(4) CAGEC	(5) PART NUMBER	(6) DESCRIPTION AND USABLE ON CODES(UOC)	(7) QTY
					GROUP 1100 REAR AXLE ASSEMBLY	
					FIG. 164 DIFFERENTIAL AND BEVEL GEAR	
1	AHFHH	2520011803090	11083	2G6010	DIFFERENTIAL GEAR U.....	1
2	PCHZZ	5331000813139	11083	4D1577	.O-RING.....	1
3	PAHZZ	5330010219880	11083	2S8439	.SEAL.....	1
4	PFHZZ	5310001856343	11083	5P5813	.NUT,PLAIN,ROUND.....	1
5	PFHZA	5310004252015	52676	W14	.WASHER,KEY.....	1
6	PAHZZ	5310004119017	60038	K91514	.WASHER,KEY.....	1
7	PAHZZ	3110010248521	60038	JLM813049	.CONE AND ROLLERS,TA.....	1
8	PAHZZ	3110010248522	60038	JLM813010	.CUP,TAPERED ROLLER.....	1
9	PFHZZ	5331009143320	09990	2-312S1032-70	.O-RING.....	1
10	PFHZZ	4730000444688	89346	50410DA	.PLUG,PIPE.....	1
11	XDHZZ		11083	9D8799	.RING.....	1
12	PFHZZ	5330009489771	11083	2S1914	.PACKING,PREFORMED.....	1
13	PAHZZ	5330010219882	11083	2H3911	.SEAL,PLAIN ENCASED.....	1
14	PAHZZ	3110010225456	11083	1P2697	.CUP,TAPERED ROLLER.....	1
15	PAHZZ	3110010757214	60038	JHM516849	.CONE AND ROLLERS,TA.....	1
16	PFHZZ	3040011527821	11083	1095562	.GEARSHAFT,BEVEL.....	1
17	PAHZZ	5330001376721	11083	7S4571	.SEAL,OIL.....	1
18	XDHZZ		11083	8D4561	.BRACKET ASSEMBLY,MO.....	1
19	PFHZZ	5306002637301	11083	0L1351	.BOLT,MACHINE.....	2
20	PAHZZ	5340009199389	11083	8M7640	.RETAINER,NUT AND BO.....	2
21	PAHZZ	5365011564143	11083	6G4703	.RING,EXTERNALLY THR.....	1
22	PAHZZ	3110014376097	11083	0300061	.CONE,TAPERED ROLLER.....	1
23	PAHZZ	3110014376096	11083	0300060	.CUP,TAPERED ROLLER.....	1
24	AHHZZ	2520011527675	11083	8D7682	.HUB,BODY.....	1
25	PAHZZ		11083	9D2682	..CAGE.....	1
26	PAHZZ	3110009921048	11083	2D6642	..BALL,BEARING.....	1
27	PFHZZ	5325010956866	11083	9D6115	.RING,RETAINING.....	1
28	PFHZZ	3020011527665	11083	6G6274	.GEAR,BEVEL.....	2
29	XDHZZ		11083	8D9704	.BRACKET,ANGLE.....	1
30	PAHZZ	5340010964743	11083	9D9334	.BRACKET,DOUBLE ANGL.....	2
31	PFHZZ	5305002528919	11083	0S0509	.SCREW,CAP,HEXAGON H.....	2
32	PAHZZ	5340011893838	11083	8D9784	.BRACKET,ANGLE.....	1
33	XDHZZ		11083	6F0698	.PIN,STRAIGHT,HEADLE.....	1
34	PAHZZ	5365011560016	11083	6G4701	.RING,EXTERNALLY THR.....	1
35	XDHZZ		11083	8D4313	.NUT,PLAIN,ROUND.....	1
36	PAHZZ	2520010675619	11083	1P2636	.CUP.....	1
37	PAHZZ	2520010675620	11083	1P2662	.CONE.....	1
38	PFHZZ	5365004265507	11083	6B5262	.PLUG,MACHINE THREAD.....	1
39	PFHZZ	5330002391792	79150	2165	.GASKET.....	1
40	PFHZZ	5310004317244	11083	2S5658	.WASHER,FLAT.....	21
41	PFHZZ	5310007638920	96906	MS51967-20	.NUT,PLAIN,HEXAGON.....	21
42	PFHZZ	5331005598786	09990	2-227N951-75	.O-RING.....	1
43	PCHZZ	5331002456767	99193	S9413-215	.O-RING.....	1
44	PCHZZ	5331005277748	11083	4F7952	.O-RING.....	1

END OF FIGURE

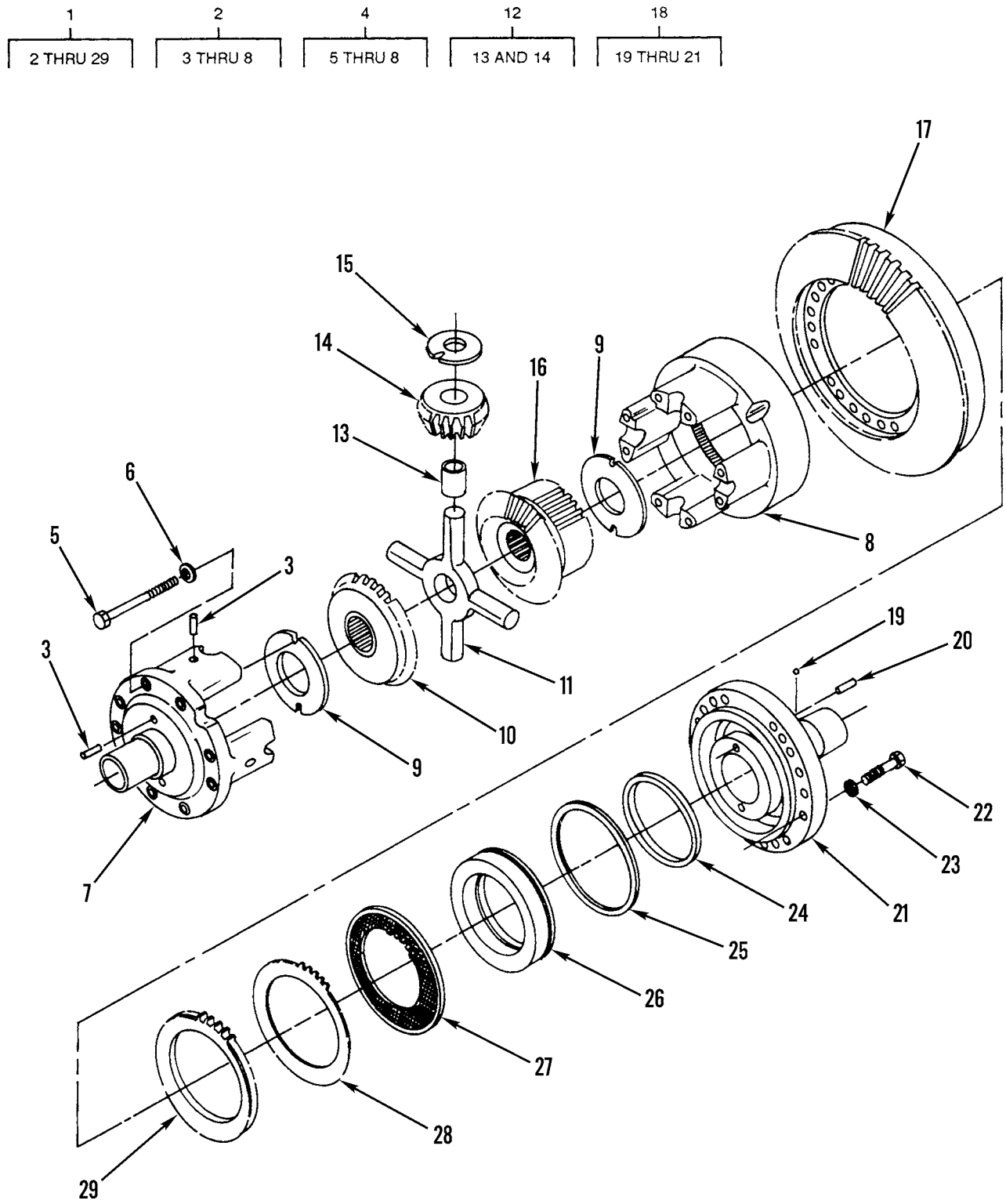

Figure 165. Differential Assembly

(1) ITEM NO	(2) SMR CODE	(3) NSN	(4) CAGEC	(5) PART NUMBER	(6) DESCRIPTION AND USABLE ON CODES(UOC)	(7) QTY
					GROUP 1100 REAR AXLE ASSEMBLY	
					FIG. 165 DIFFERENTIAL ASSEMBLY	
1	PFHHH	2520010942803	11083	2G6020	DIFFERENTIAL,DRIVIN.....	1
2	XDHZZ	3040011527682	11083	9D8972	.HOUSING,MECHANICAL.....	1
3	XDHZZ		11083	3D6509	..PIN,STRAIGHT,HEADLE.....	6
4	XAHZZ		11083	9D8971	..HOUSING ASSY.....	8
5	PAHZZ	5306011854584	11083	9F2491	...BOLT,MACHINE.....	8
6	PFHZZ	5310003750518	61510	CKE42A	...WASHER,FLAT.....	8
7	XAHZZ		11083	9D8968	...HOUSING.....	1
8	XAHZZ		11083	9D8969	...HOUSING.....	1
9	XDHZA	3120010978287	11083	8D4064	.BEARING,WASHER,THRU.....	2
10	XBHZZ		11083	8D9471	.GEAR,BEVEL.....	1
11	PFHZZ	2520011791831	11083	8D4528	.SPIDER,UNIVERSAL JO.....	1
12	PFHZZ	3805010945194	11083	8D9460	.PINION ASSEMBLY.....	4
13	PAHZZ	3120010220412	11083	1746822	..BEARING,SLEEVE.....	1
14	XAHZZ		11083	8D9473	..GEAR,BEVEL.....	1
15	PFHZZ	3120010978288	11083	8D4065	.BEARING,WASHER,THRU.....	4
16	XDHZZ		11083	8D9472	.GEAR,BEVEL.....	1
17	XDHZZ		11083	2G5768	.GEAR,BEVEL.....	1
18	PFHZZ	2520011527780	11083	8D7694	.HOUSING ASSEMBLY.....	1
19	PAHZZ	3110009921048	11083	2D6642	..BALL,BEARING.....	1
20	XDHZZ		11083	3D6509	..PIN,STRAIGHT,HEADLE.....	2
21	XAHZZ		11083	8D7693	..HOUSING.....	1
22	PFHZZ	5306004263150	11083	1A8537	.BOLT,MACHINE.....	18
23	PFHZZ	5310001397030	11083	4D3704	.WASHER,FLAT.....	18
24	PFHZZ	5330010952001	11083	7D8226	.RETAINER,PACKING.....	1
25	PFHZZ	5330010952000	11083	7D8225	.RETAINER,PACKING.....	1
26	PFHZZ	2590011567181	11083	8D4291	.PISTON RING,LINEAR.....	1
27	XDHZZ		11083	6Y7954	.DISK,CLUTCH.....	7
28	XDHZZ		11083	7D8185	.DISK,CLUTCH.....	8
29	PFHZZ	2520011783143	11083	8D4282	.DISK,CLUTCH.....	1

END OF FIGURE

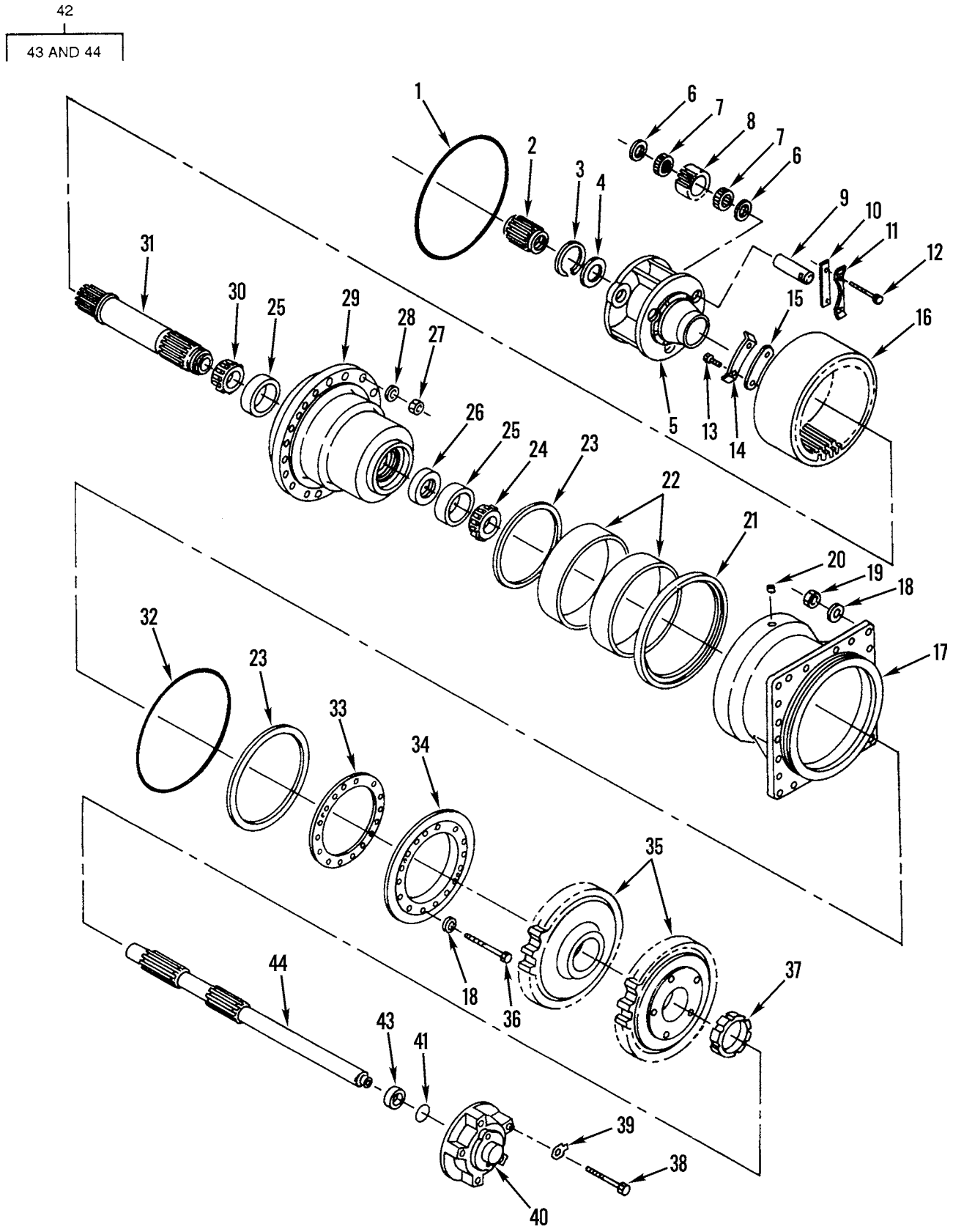

Figure 166. Final Drive Assembly

(1) ITEM NO	(2) SMR CODE	(3) NSN	(4) CAGEC	(5) PART NUMBER	(6) DESCRIPTION AND USABLE ON CODES(UOC)	(7) QTY
					GROUP 1103 PLANETARY OR FINAL DRIVE	
					FIG. 166 FINAL DRIVE ASSEMBLY	
1	PAHZZ	5330001376721	11083	7S4571	SEAL,OIL	2
2	PFHZZ	3020011505427	11083	8D3877	GEAR,SPUR	2
3	PFHZZ	5325007542190	96906	MS16625-1425	RING,RETAINING	2
4	PFHZZ	5310010954012	11083	8D3885	WASHER,FLAT	2
5	PAHZZ	2520011527781	11083	8D3591	CARRIER,PLANET	2
6	XDHZZ	5310014734438	11083	8X8377	WASHER,FLAT	12
7	PAHZZ	3110010963130	11083	1S9110	RETAINER AND ROLLER	12
8	PFHZZ	3020011527853	11083	1292381	GEAR,SPUR	6
9	XDHZZ		11083	8W2308	SHAFT,STRAIGHT	6
10	PFHZZ	5340011570952	11083	7D0028	CLAMP,LOOP	6
11	PFHZA	5310001629275	11083	1A5823	WASHER,KEY	6
12	PFHZZ	5306002604508	11083	0S1594	BOLT,MACHINE	12
13	PFHZZ	5305002528919	11083	0S0509	SCREW,CAP,HEXAGON H	16
14	PFHZZ	5310010661451	11083	2S0607	NUT,LOCK	8
15	XDHZZ		11083	7D0035	CLAMP,LOOP	8
16	PFHZZ	3020011527852	11083	7D7889	GEAR,SPUR	2
17	PFHZZ	3040011774819	11083	2007929	HOUSING,MECHANICAL UOC:AF9,AGP,F10	2
18	PFHZZ	5310001397030	11083	4D3704	WASHER,FLAT	68
19	PFHZZ	5310007638920	96906	MS51967-20	NUT,PLAIN,HEXAGON	36
20	PFHZZ	4730000444688	89346	50410DA	PLUG,PIPE UOC:AF9,AGP,F10	2
21	PAHZZ	5330011852240	11083	6V8081	SEAL,PLAIN ENCASED UOC:AF9,AGP,F10	2
22	PFHZZ	4320011789693	11083	5T7133	RING,WEARING UOC:AF9,AGP,F10	4
23	PAHZZ	3120011666920	11083	6G3206	BEARING,WASHER,THRU	4
24	PAHZZ	3110001000650	23382	9A598	CONE AND ROLLERS,TA	2
25	PAHZZ	3110003513927	60038	JM719113	CUP,TAPERED ROLLER	4
26	PAHZZ	5330010951545	11083	8D3902	SEAL,PLAIN ENCASED	2
27	PFHZZ	5310009785406	11083	2J3506	NUT,PLAIN,HEXAGON	38
28	PFHZZ	5310011022477	11083	5P8248	WASHER,FLAT UOC:AF9,AGP,F10	38
29	XDHZZ		11083	5T7129	HOUSING,MECHANICAL UOC:AF9,AGP,F10	2
30	PAHZZ	3110003579710	60038	JM719149	CONE AND ROLLERS,TA	2
31	XDHZZ		11083	8D3744	SHAFT,SHOULDERED	2
32	PFHZZ	5331009998364	09990	2-279N951-75	O-RING	2
33	PAHZZ	5365011537684	11083	6G3212	SHIM	2
34	PFHZZ	2520011555808	11083	6G1953	PLATE,RETAINING,DRI	2
35	PAHZA	3020010947073	11083	8W8317	SPROCKET WHEEL	4
36	PFHZZ	5306004550460	11083	8S9092	BOLT,MACHINE	32
37	PFHZZ	5310011570893	11083	8D3540	NUT,PLAIN,ROUND	2
38	PFHZZ	5305010156841	11083	0S1591	SCREW	10
39	PAHZZ	2930003652152	11083	0L0364	LOCK PLATE	10
40	XDHZZ		11083	8D8159	RETAINER,SPROCKET	2
41	PFHZZ	5331005801226	11083	1H9696	O-RING	2
42	PFHZZ	3040011538400	11083	8D3958	SHAFT ASSEMBLY,DRIV	2
43	XDHZZ		11083	8D3957	.BEARING,SLEEVE	2

(1) ITEM NO	(2) SMR CODE	(3) NSN	(4) CAGEC	(5) PART NUMBER	(6) DESCRIPTION AND USABLE ON CODES(UOC)	(7) QTY
44	PAHZZ		11083	8D2469	.SHAFT,AXLE,AUTOMOTI..... UOC:AF9,AGP,F10	2

END OF FIGURE

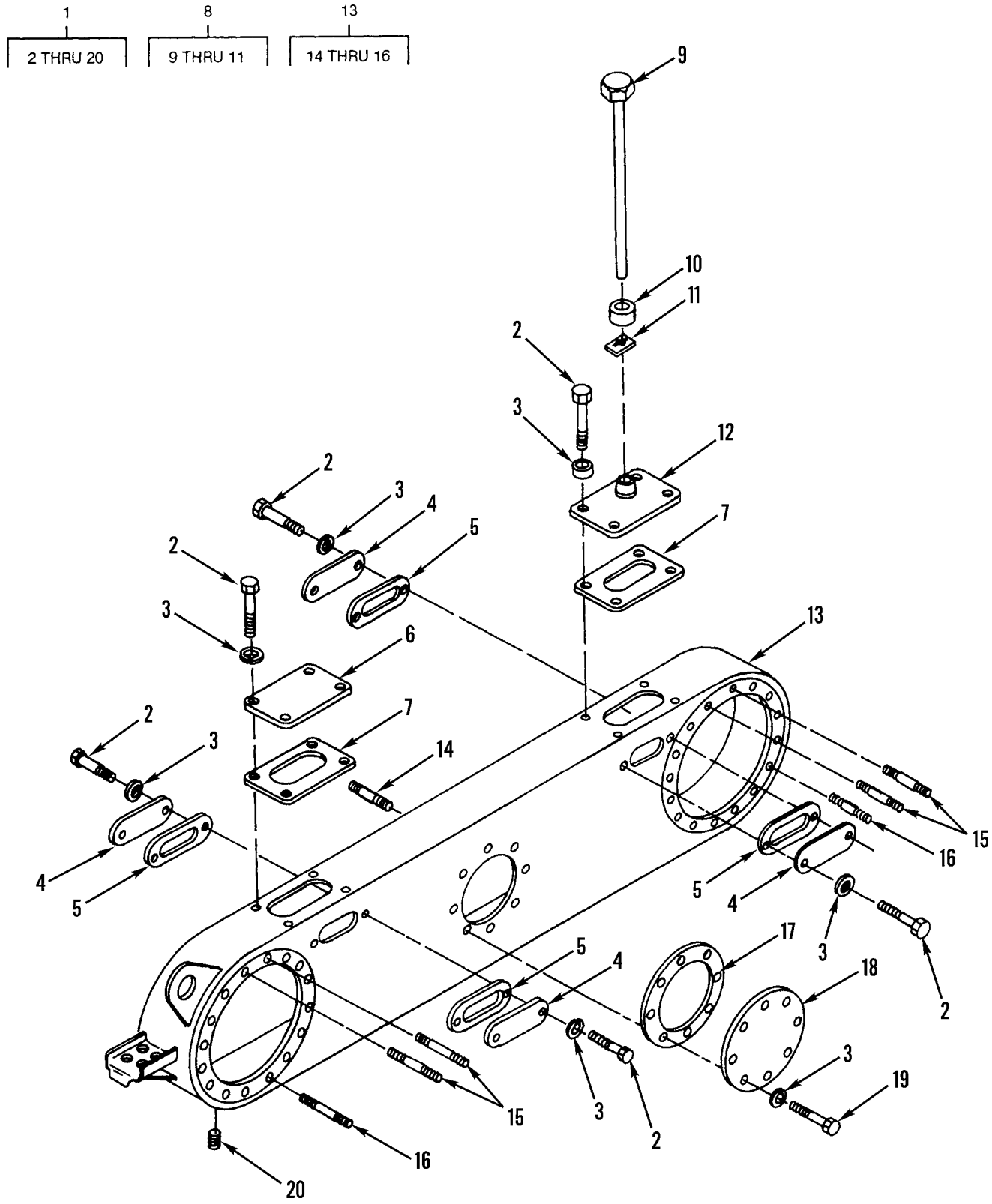

Figure 167. Tandem Drive and Mounting

(1) ITEM NO	(2) SMR CODE	(3) NSN	(4) CAGEC	(5) PART NUMBER	(6) DESCRIPTION AND USABLE ON CODES(UOC)	(7) QTY
					GROUP 1105 TANDEM DRIVE ASSEMBLY	
					FIG. 167 TANDEM DRIVE AND MOUNTING	
1	XDHHH		11083	5R4119	HOUSING,MECHANICAL.....	1
					UOC:AF9,AGP,F10	
2	PFHZZ	5306011558648	11083	5K8454	.BOLT,SELF-LOCKING.....	32
3	PFHZZ	5310008095997	96906	MS27183-17	.WASHER,FLAT.....	48
					UOC:AF9,AGP,F10	
4	PFHZZ	2530001642402	11083	2B3148	.COVER.....	8
5	PFHZZ	5330001642401	11083	2B3147	.GASKET.....	8
6	XDHZZ		11083	7D6567	.COVER,ACCESS.....	2
7	PFHZZ	5330000817076	11083	3D2981	.GASKET.....	4
8	PFHZZ	6680011504097	11083	7D9419	.GAGE ROD-BREATHER,L.....	2
9	XAHZZ		11083	7D9438	..PLUNGER ASSY.....	1
10	PAHZZ	2940011525584	11083	6D9677	..FILTER ELEMENT,FLUI.....	1
11	PFHZZ	5310004550357	78553	C9451-010-4	..PUSH ON NUT.....	1
12	PFHZZ	5340011540766	11083	7D6568	.COVER,ACCESS.....	2
13	XDHZZ		11083	5R7652	.HOUSING,MECHANICAL.....	1
					UOC:AF9,AGP,F10	
13	XDHZZ		11083	5R7653	.HOUSING,MECHANICAL.....	1
					UOC:AF9,AGP,F10	
14	XDHZZ		11083	0S0468	..STUD,PLAIN.....	36
					UOC:AF9,AGP,F10	
15	PFHZZ	5307010960510	11083	9S1398	..STUD,PLAIN.....	8
16	XDHZZ		11083	7D8266	..STUD,PLAIN.....	40
17	PFHZZ	5330010983181	11083	2G9791	.GASKET.....	2
18	PFHZZ	5340011556139	11083	7D9273	.COVER,ACCESS.....	2
19	PFHZZ	5306011563738	11083	6K7917	.BOLT,SELF-LOCKING.....	16
20	PFHZZ	4730001223969	11083	1B5174	.PLUG,PIPE.....	2

END OF FIGURE

1
2 THRU 5

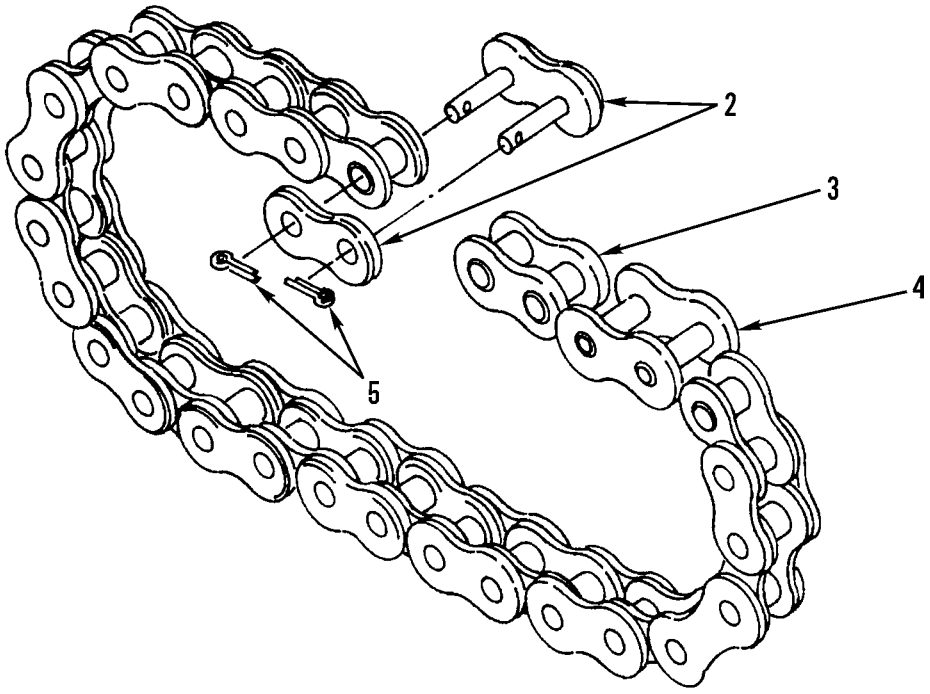

Figure 168. Tandem Drive Chain Assembly

(1) ITEM NO	(2) SMR CODE	(3) NSN	(4) CAGEC	(5) PART NUMBER	(6) DESCRIPTION AND USABLE ON CODES(UOC)	(7) QTY
					GROUP 1105 TANDEM DRIVE ASSEMBLY	
					FIG. 168 TANDEM DRIVE CHAIN ASSEMBLY	
1	PFFFZ	3020000847516	11083	6G1633	CHAIN,ROLLER.....	4
2	PFFZZ	3020011961233	11083	6G1631	.LINK,ROLLER CHAIN.....	1
3	PFFZZ	3020001926808	81733	RC160R/L	.LINK,ROLLER CHAIN.....	25
4	PFFZZ	3020011961233	84233	S160-8APX	.LINK,ROLLER CHAIN.....	24
5	PFFZZ	5315001380318	11083	1S1083	.PIN,COTTER.....	2

END OF FIGURE

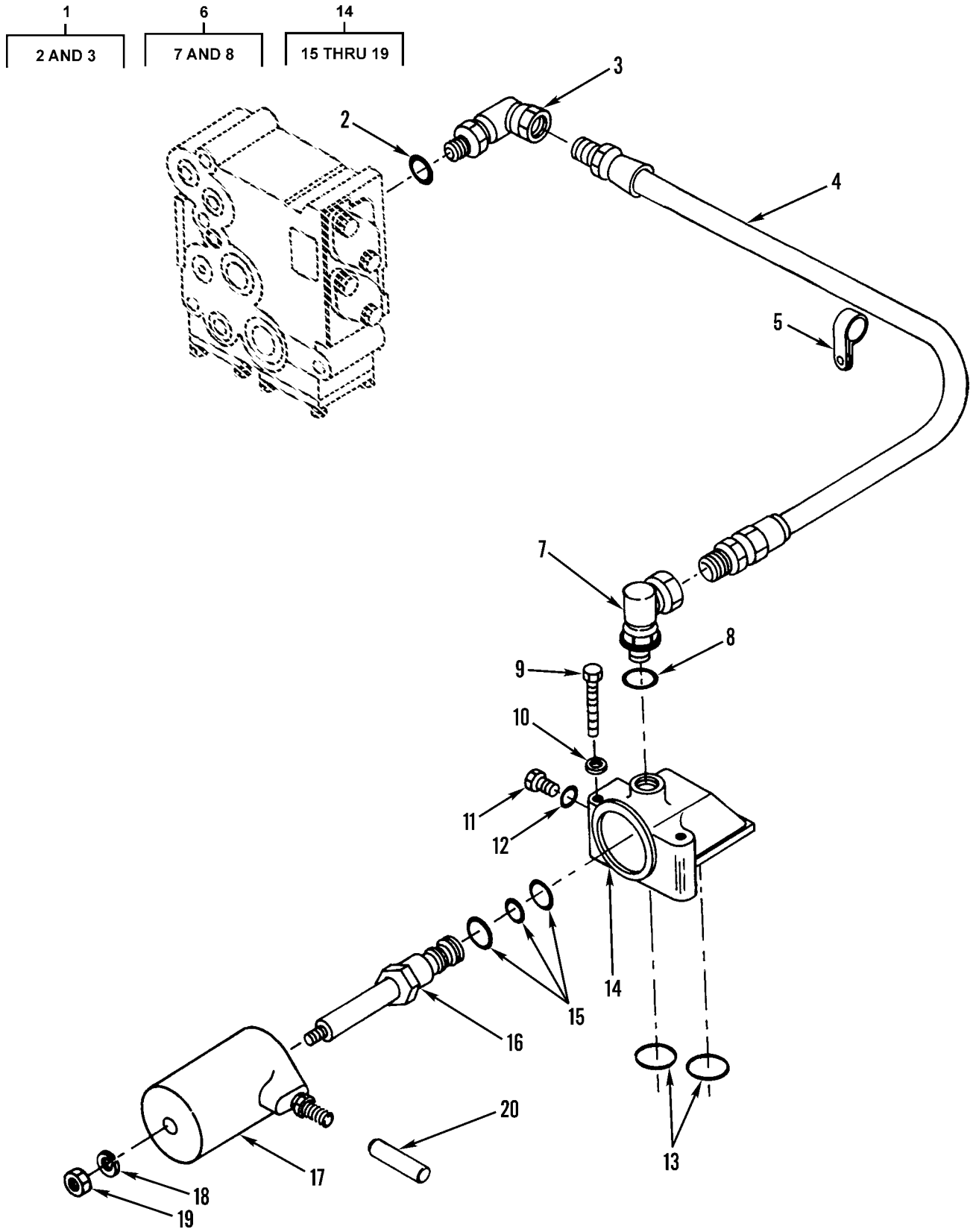

Figure 169. Differential Lock Control

(1) ITEM NO	(2) SMR CODE	(3) NSN	(4) CAGEC	(5) PART NUMBER	(6) DESCRIPTION AND USABLE ON CODES(UOC)	(7) QTY
					GROUP 1124 STEERING BRAKES, DIFFERENTIAL, AND PLANETARY DRIVE FIG. 169 DIFFERENTIAL LOCK CONTROL	
1	PAOZZ	4730004081231	80577	600-6-4C	ELBOW,PIPE TO BOSS..... UOC:AF9,AGP,F10	1
2	PCOZZ	5331008013354	25184	906-737-70	.O-RING.....	1
3	PAOZZ	4730004081231	30327	60UB-06X04	.ELBOW,PIPE TO BOSS..... UOC:AF9,AGN,AGP,F10	1
4	PAOZZ	4720010953441	04NP0	4HR-4MB-33.50	HOSE ASSEMBLY,NONME..... UOC:AF9,AGP,F10	1
5	PFOZZ	5342010643819	11083	9M8406	CLIP.....	1
6	PAOZZ	4730011554104	63906	600-4-4C	ELBOW,PIPE TO BOSS..... UOC:AF9,AGP,F10	1
7	PFOZZ	4730011554104	63906	600-4-4C	.ELBOW,PIPE TO BOSS.....	1
8	XDOZZ	5331010491292	02697	3-904N552-90	.O-RING.....	1
9	PFFZZ	5306010949106	11083	0S1590	BOLT,MACHINE.....	2
10	PFFZZ	5310001174788	11083	5M2894	WASHER,FLAT.....	2
11	PFFZZ	5365010911407	96906	MS51840-23SS	PLUG,MACHINE THREAD.....	1
12	XDFZZ	5331010491292	02697	3-904N552-90	O-RING.....	1
13	PFFZZ	5330004921790	11083	8M4438	PACKING,PREFORMED.....	2
14	PFFZZ	4810010946254	11083	7T9073	VALVE,SOLENOID.....	1
15	PFFZZ	5330011875950	99066	6015930	.PACKING ASSORTMENT,.....	1
16	PAFZZ	4820011783052	07988	6010812	.CARTRIDGE FLUID PRE.....	1
17	XBHZZ		99066	6012382	.COIL,ELECTRICAL.....	1
18	PAFZZ		11083	4B4276	.WASHER,FLAT.....	1
19	PAFZZ		11083	1045970	.RETAINER,NUT AND BO.....	1
20	PAFZZ	5340013338374	23540	212C	CAP,PROTECTIVE,DUST.....	1

END OF FIGURE

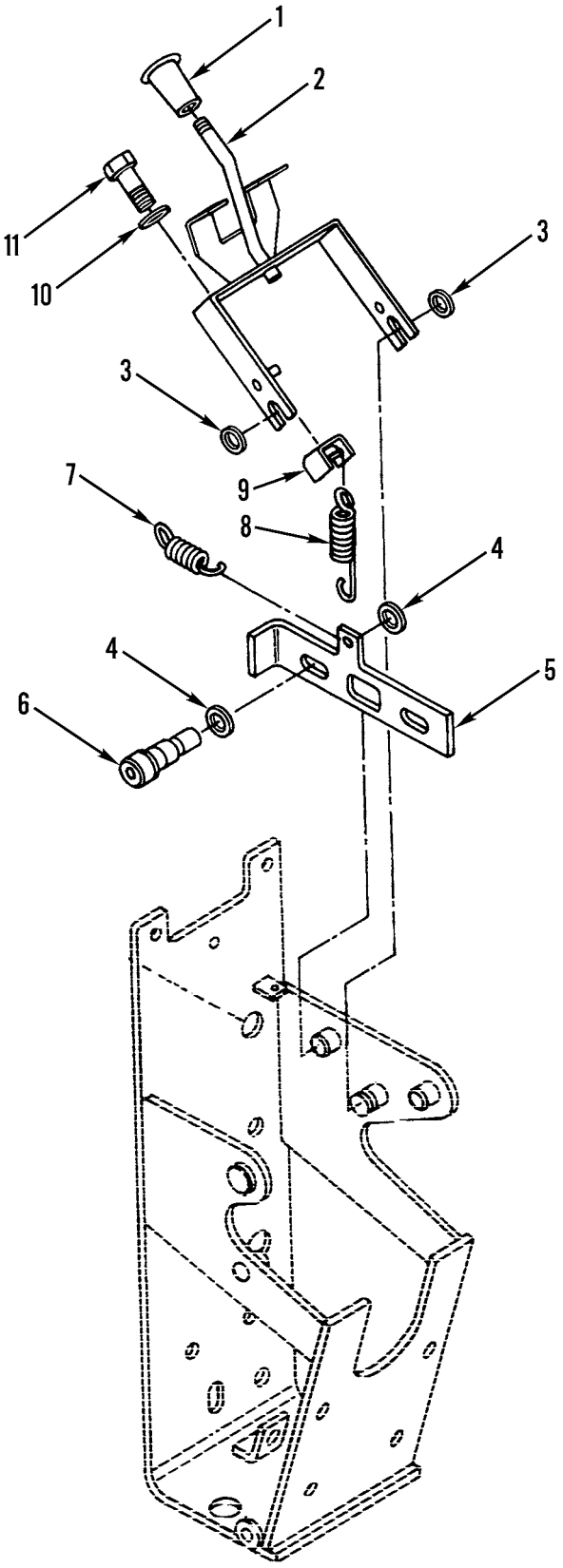

Figure 170. Parking Brake Control Handle

(1) ITEM NO	(2) SMR CODE	(3) NSN	(4) CAGEC	(5) PART NUMBER	(6) DESCRIPTION AND USABLE ON CODES(UOC)	(7) QTY
					GROUP 12 BRAKES GROUP 1201 HANDBRAKES FIG. 170 PARKING BRAKE CONTROL HANDLE	
1	PFFZZ	5355007308027	11083	2M8908	KNOB	1
2	PFFZZ	3040013342117	11083	9D0945	LEVER,MANUAL CONTRO	1
3	PFFZZ	5310004042422	52788	265079	WASHER,FLAT	2
4	PFFZZ	5310002094516	28298	M5839	WASHER,FLAT	4
5	PAFZZ	5340011565179	11083	9D0951	BRACKET,ANGLE	1
6	PAFZZ	5306010681108	11083	7D9708	BOLT	2
7	PFFZZ	5360010657155	11083	2G3765	SPRING	1
8	PAFZZ	5360011564142	11083	5F8494	SPRING,HELICAL,EXTE	1
9	PFFZZ	5340013332775	11083	9D0948	BRACKET,DOUBLE ANGL	1
10	PFFZZ	5310005957237	78189	1220-00	WASHER,LOCK	1
11	PFFZZ	5306008530324	11083	2D2285	BOLT,MACHINE	1
					END OF FIGURE	

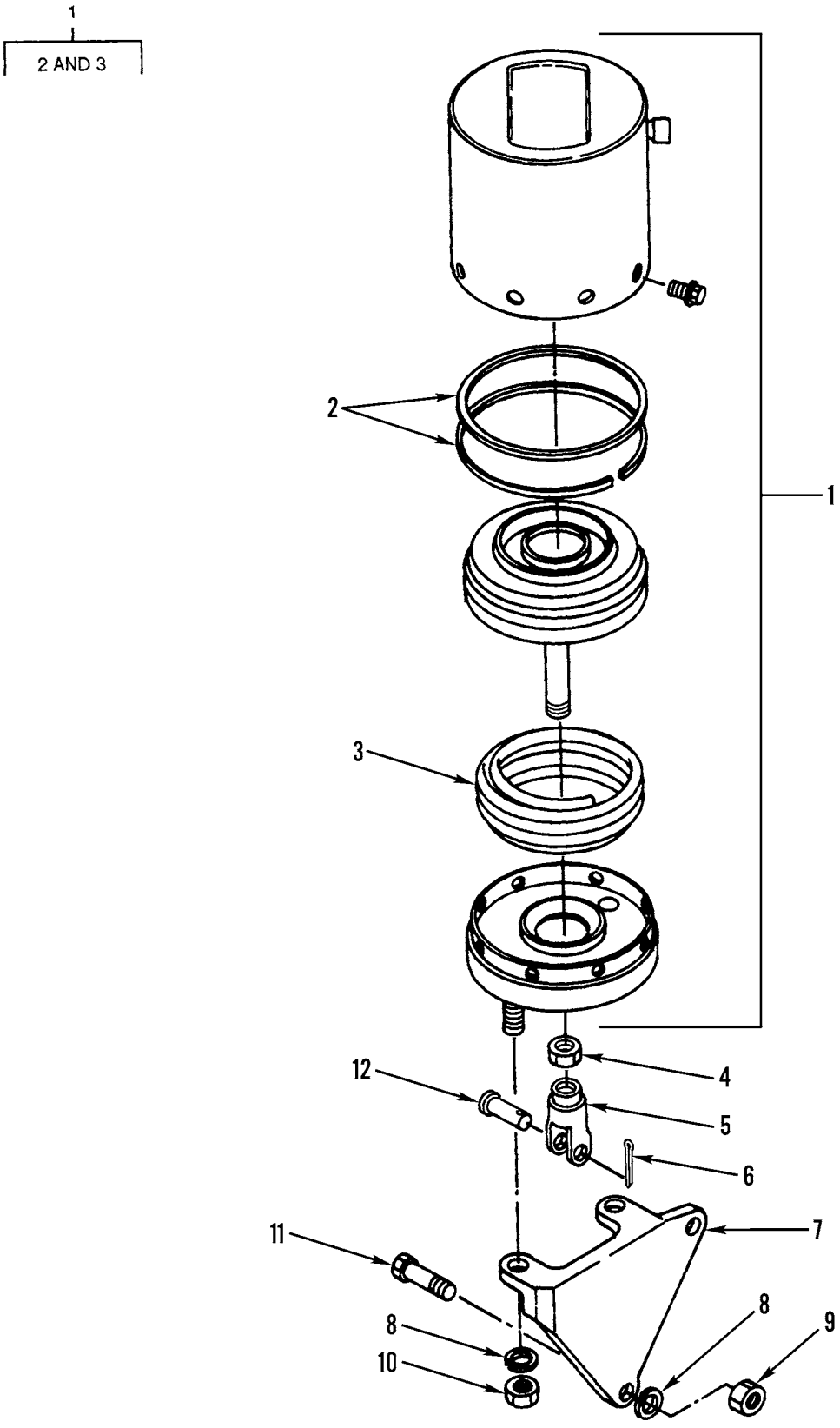

Figure 171. Parking Brake Actuator Assembly

(1) ITEM NO	(2) SMR CODE	(3) NSN	(4) CAGEC	(5) PART NUMBER	(6) DESCRIPTION AND USABLE ON CODES(UOC)	(7) QTY
					GROUP 1201 HANDBRAKES FIG. 171 PARKING BRAKE ACTUATOR ASSEMBLY	
1	PFFFF	2530011555881	98611	KSMR2PT50S45958	CHAMBER,AIR BRAKE.....	1
2	PAFZZ	4320011595843	11083	6G2527	.PARTS KIT,SEAL REPL.....	1
3	PAFZZ	5360011582181	54690	40-31295-9	.SPRING,HELICAL,COMP.....	1
4	PFFZZ	5310008913405	96906	MS35691-54	NUT,PLAIN,HEXAGON.....	1
5	PFFZA	2530010864287	29510	379390C1	YOKE,COUPLER.....	1
6	PFFZZ	5315008395822	96906	MS24665-353	PIN,COTTER.....	1
7	PAFZZ	5340013338145	11083	8D2205	BRACKET,ANGLE.....	1
8	PFFZZ	5310000455001	96906	MS35340-50	WASHER,LOCK.....	4
9	PFFZZ	5310007638920	96906	MS51967-20	NUT,PLAIN,HEXAGON.....	2
10	PFFZZ	5310007638905	96906	MS51968-20	NUT,PLAIN,HEXAGON.....	2
11	PFFZZ	5305004262936	11083	0S1625	SCREW,CAP,HEXAGON H.....	2
12	PFFZZ	5315004385089	11083	4K1540	PIN,STRAIGHT,HEADED.....	1

END OF FIGURE

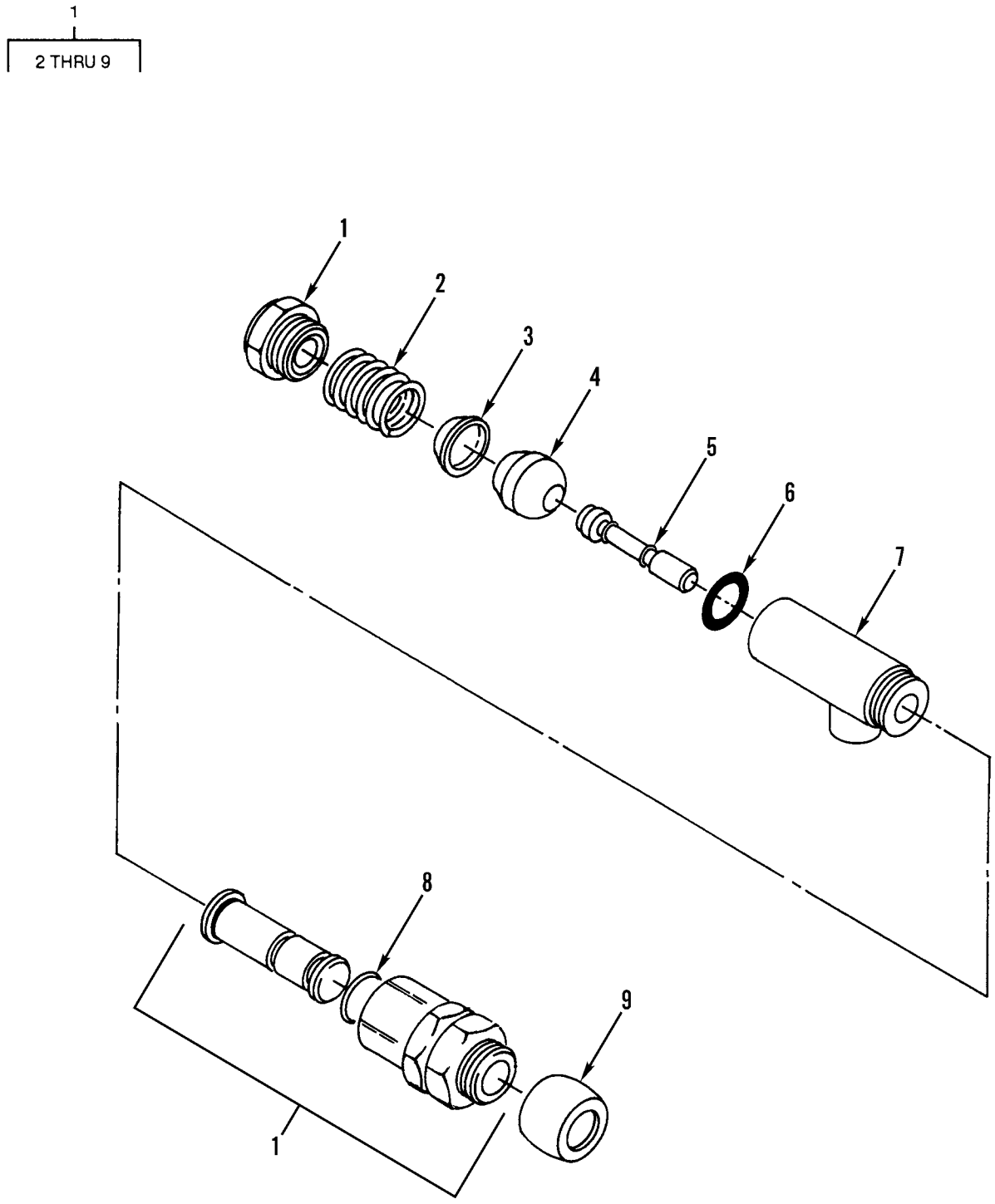

Figure 172. Parking Brake Air Control Valve

(1) ITEM NO	(2) SMR CODE	(3) NSN	(4) CAGEC	(5) PART NUMBER	(6) DESCRIPTION AND USABLE ON CODES(UOC)	(7) QTY
					GROUP 1201 HANDBRAKES	
					FIG.172 PARKING BRAKE AIR CONTROL VALVE	
1	PFFZZ	4820001664262	06853	279197	VALVE,SAFETY RELIEF.....	1
2	PFFZZ	5360009770780	06853	235729	.SPRING,HELICAL,COMP.....	1
3	PFFZZ	5360010867717	06853	238687	.SPRING SEAT.....	1
4	PFFZZ	2590010832507	06853	238686	.INLET VALVE.....	1
5	PFFZZ	4820011493783	19315	239515	.STEM,FLUID VALVE.....	1
6	PCFZZ	5331009528007	11083	6H9691	.O-RING.....	1
7	PFFZZ	2520011449236	19315	239513	.BODY,VALVE,TRANSMIS.....	1
8	PFFZZ	5331009206924	11083	1H1023	.O-RING.....	1
9	PFFZZ	2530010660567	06853	243986	.BOOT.....	1
					END OF FIGURE	

1
2 THRU 4

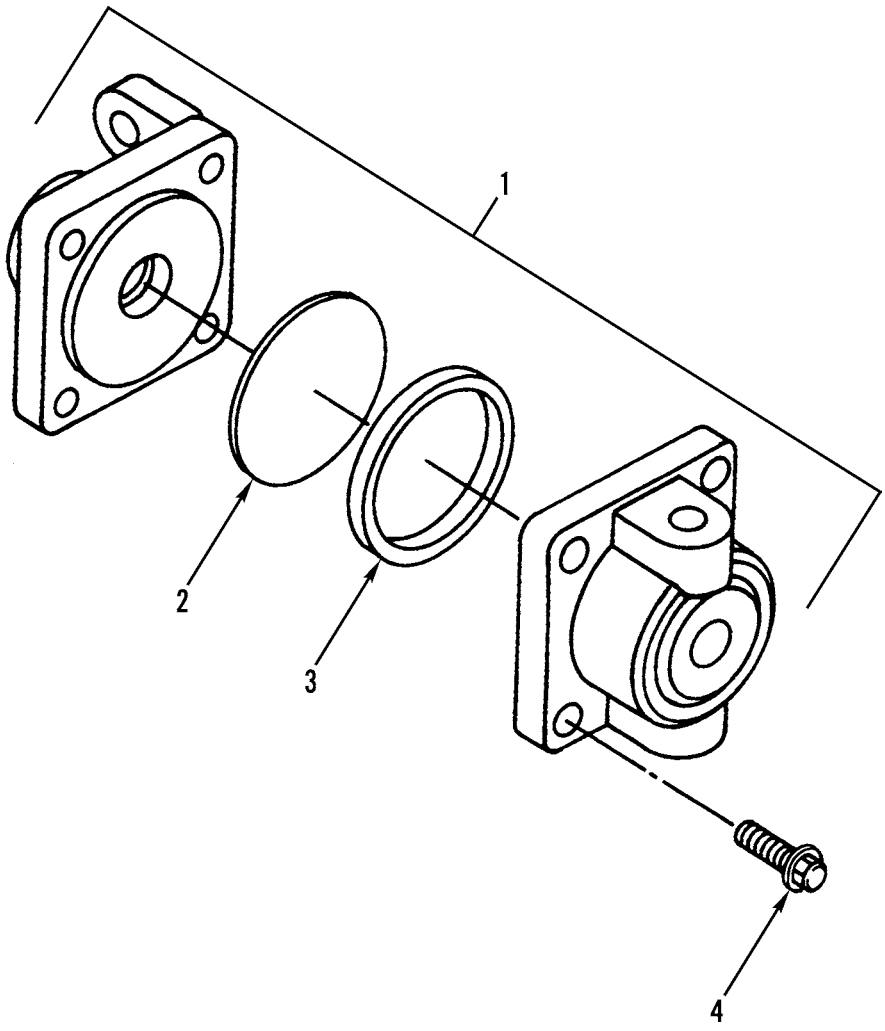

Figure 173. Parking Brake Quick-Release Valve

(1) ITEM NO	(2) SMR CODE	(3) NSN	(4) CAGEC	(5) PART NUMBER	(6) DESCRIPTION AND USABLE ON CODES(UOC)	(7) QTY
					GROUP 1201 HANDBRAKES FIG. 173 PARKING BRAKE QUICK-RELEASE VALVE	
1	PFFZZ	4820000060115	06853	229813	VALVE,DIAPHRAGM,STO.....	1
2	PFFZZ	4820009250076	06853	245835	.DIAPHRAGM,VALVE,FLA.....	1
3	PFFZZ	5330008328569	06853	242837	.PACKING,PREFORMED.....	1
4	XDFZZ		11083	4B1321	.SCREW.....	4

END OF FIGURE

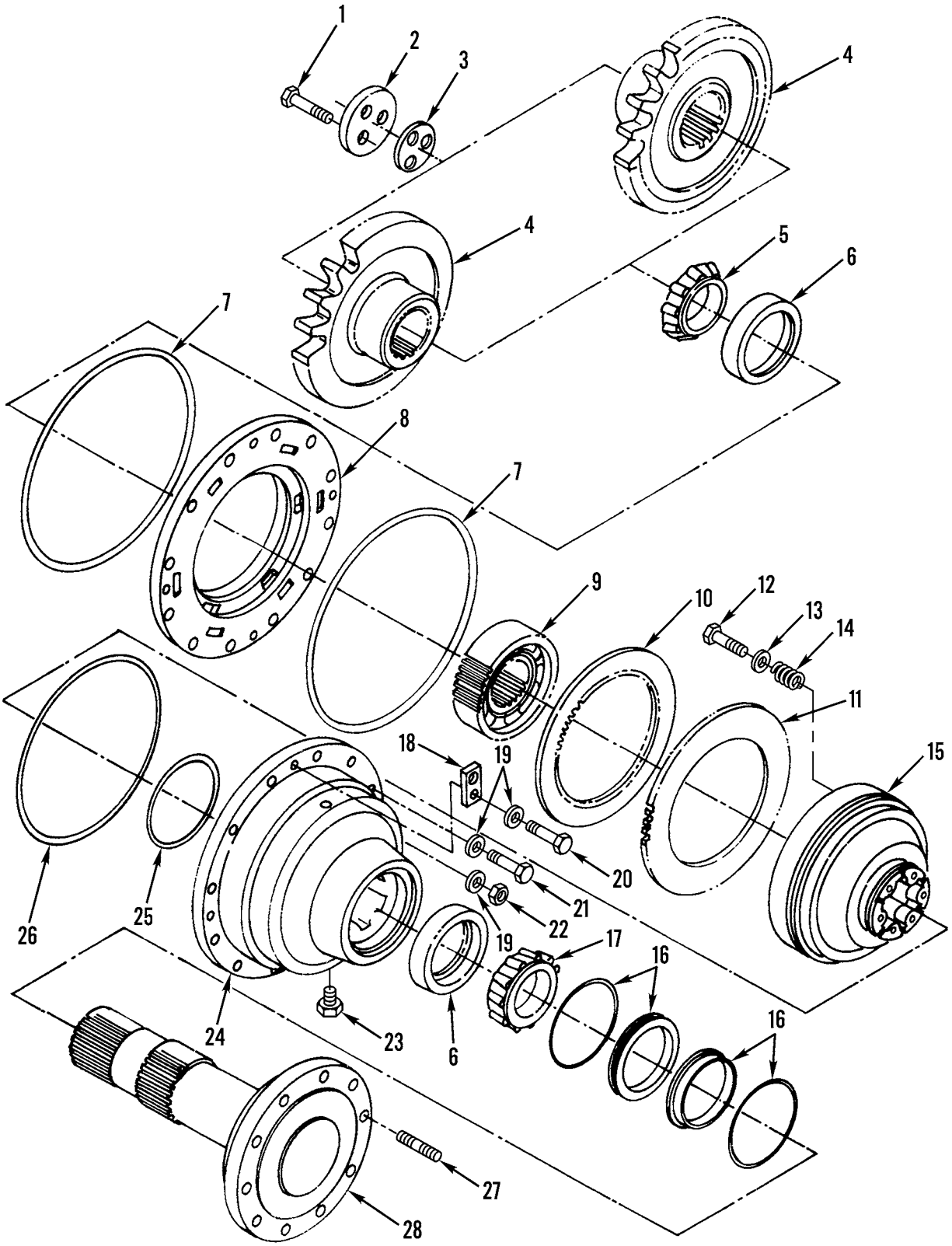

Figure 174. Service Brakes

(1) ITEM NO	(2) SMR CODE	(3) NSN	(4) CAGEC	(5) PART NUMBER	(6) DESCRIPTION AND USABLE ON CODES(UOC)	(7) QTY
					GROUP 1202 SERVICE BRAKES	
					FIG. 174 SERVICE BRAKES	
1	PFHZZ	5306011558649	11083	5P9118	BOLT,SELF-LOCKING.....	12
2	PFHZZ	5365011554622	11083	9D3075	SPACER,PLATE.....	4
3	PFHZZ	5365010660695	11083	7D8439	SHIM.....	20
3	PFHZZ	5365010660696	11083	7D8441	SHIM.....	28
3	XDHZA	5365010960667	11083	9D7047	SPACER,PLATE.....	8
4	XDHZZ		11083	8W8319	SPROCKET WHEEL.....	4
5	PFHZZ	3110001000649	11083	7D8437	CONE AND ROLLERS,TA.....	4
6	PFHZZ	3110003513927	23926	D90972	CUP,TAPERED ROLLER.....	8
7	PAHZZ	5330010219885	11083	4S5879	SEAL.....	8
8	XDHZZ		11083	7D8362	HOUSING,LIQUID PUMP.....	1
9	PFHZZ	3020011505428	11083	2G6337	GEAR,SPUR.....	4
10	PAHZA	2530010214151	11083	6Y7916	DISC ASSEMBLY,BRAKE.....	36
11	PAHZZ	2530010214491	11083	7D8434	DISC,BRAKE.....	40
12	PFHZZ	5306010977875	11083	6G0905	BOLT,MACHINE.....	24
13	PFHZZ	5310011201443	19207	7335538	WASHER,FLAT.....	24
14	PAHZZ	5360010702809	11083	9J5498	SPRING.....	24
15	PFHZZ	4310011527880	11083	6G3378	PISTON,COMPRESSOR.....	4
16	PAHZZ	5330010537373	11083	5K5288	SEAL.....	4
17	PFHZZ	3110001000647	11083	4B7270	CONE AND ROLLERS,TA.....	4
18	PFHZZ	5365011591222	11083	8D2136	SPACER,PLATE.....	4
19	PFHZZ	5310000455001	96906	MS35340-50	WASHER,LOCK.....	64
20	PFHZZ	5305007247222	80204	B1821BH063C200N	SCREW,CAP,HEXAGON H.....	4
21	PFHZZ	5306002755012	11083	0S1566	BOLT,MACHINE.....	12
22	PFHZZ	5310007638920	96906	MS51967-20	NUT,PLAIN,HEXAGON.....	48
23	PFHZZ	4730004275121	01276	2082-6B	PLUG,PIPE.....	4
24	PFHZZ		11083	8W8124	HOUSING.....	4
25	PAHZZ	5330010219884	11083	7D8436	SEAL.....	4
26	PAHZZ	5330010219883	11083	4D5497	SEAL.....	4
27	PFHZZ	5307011591175	11083	6V4250	STUD,PLAIN.....	40
28	PFHZZ	2530011527837	11083	1473310	SPINDLE,WHEEL,DRIVI.....	4

END OF FIGURE

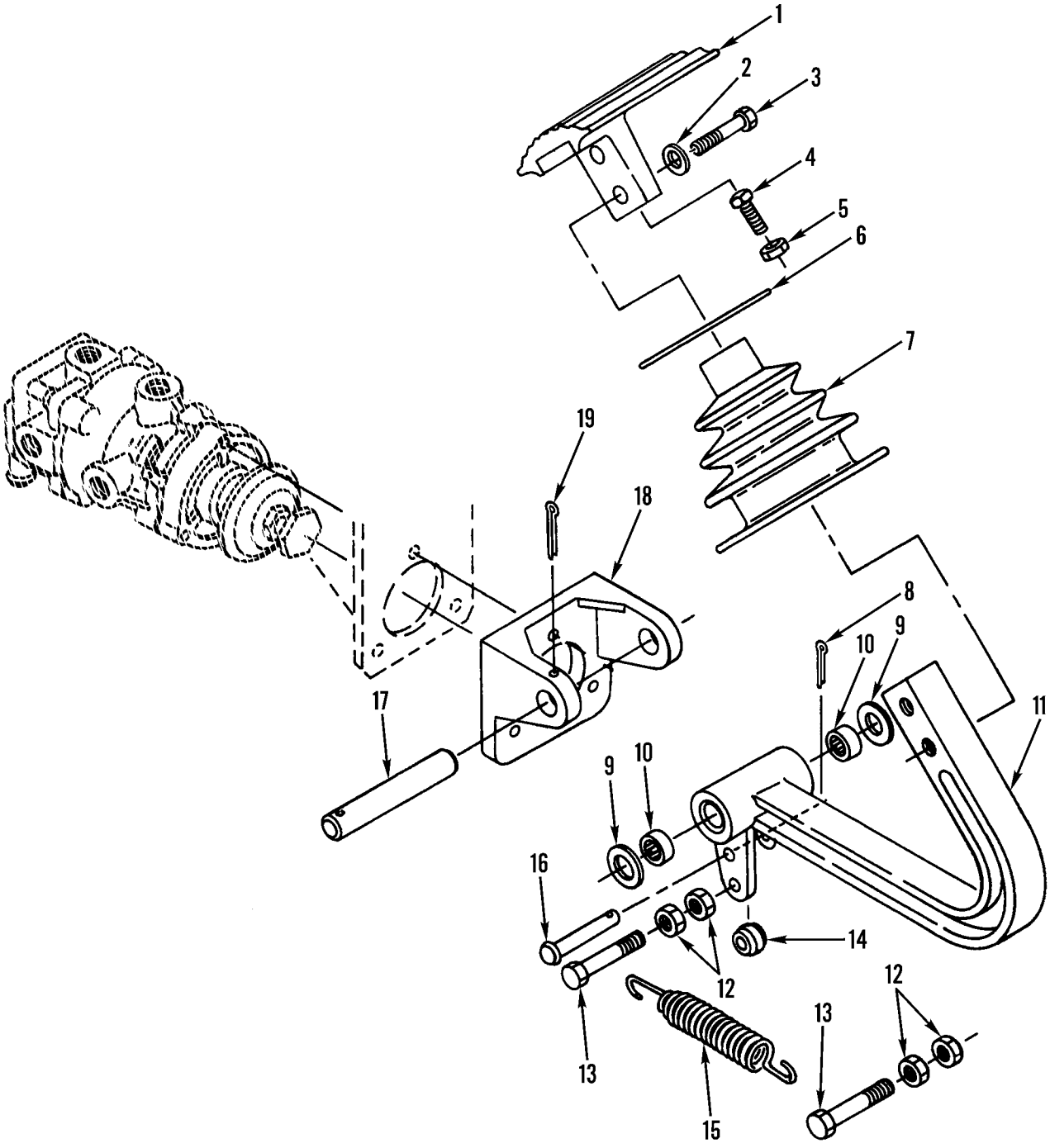

Figure 175. Brake Pedal and Mounting

(1) ITEM NO	(2) SMR CODE	(3) NSN	(4) CAGEC	(5) PART NUMBER	(6) DESCRIPTION AND USABLE ON CODES(UOC)	(7) QTY
					GROUP 1206 MECHANICAL BRAKE SYSTEM	
					FIG. 175 BRAKE PEDAL AND MOUNTING	
1	PFFZZ	2540011853189	11083	8X6932	PEDAL,CONTROL.....	1
2	PFFZZ	5310001174788	11083	5M2894	WASHER,FLAT.....	2
3	PFFZZ	5305010156841	11083	0S1591	SCREW.....	2
4	PFFZZ	5305010947379	11083	4B3611	SETSCREW.....	1
5	PFFZZ	5310008512682	96906	MS35691-17	NUT,PLAIN,HEXAGON.....	1
6	PAFZZ	3120010951268	11083	7D8875	BEARING,WASHER,THRU..... UOC:AF9,AGP,F10	1
7	PAFZZ	2530011730252	11083	6G4969	BOOT,VEHICULAR COMP..... UOC:AF9,AGP,F10	1
8	PFFZZ	5315008392326	96906	MS24665-281	PIN,COTTER.....	1
9	PFFZZ	5310004219603	11083	6B0863	WASHER,FLAT..... UOC:AF9,AGP,F10	2
10	PAFZZ	3110010659108	11083	7K2135	BEARING.....	2
11	PFFZZ		11083	8X6933	PEDAL,CONTROL.....	1
12	PFFZZ	5310009050762	96906	MS51967-3	NUT,PLAIN,HEXAGON..... UOC:AF9,AGP,F10	4
13	PFFZZ	5305002253843	80204	B1821BH025C100N	SCREW,CAP,HEXAGON H.....	2
14	PFFZZ	2530004227770	06853	211026	ROLLER.....	1
15	PFFZZ	5360010689641	11083	1D1313	SPRING.....	1
16	PFFZZ	5315010659083	11083	8D5189	PIN.....	1
17	PFFZZ	3040010659092	11083	8D6841	CONNECTING LINK,RIG.....	1
18	PFFZZ	3040013342284	11083	2G5618	BRACKET,EYE,ROTATIN.....	1
19	PFFZZ	5315000103389	11083	3B4621	PIN,COTTER.....	1

END OF FIGURE

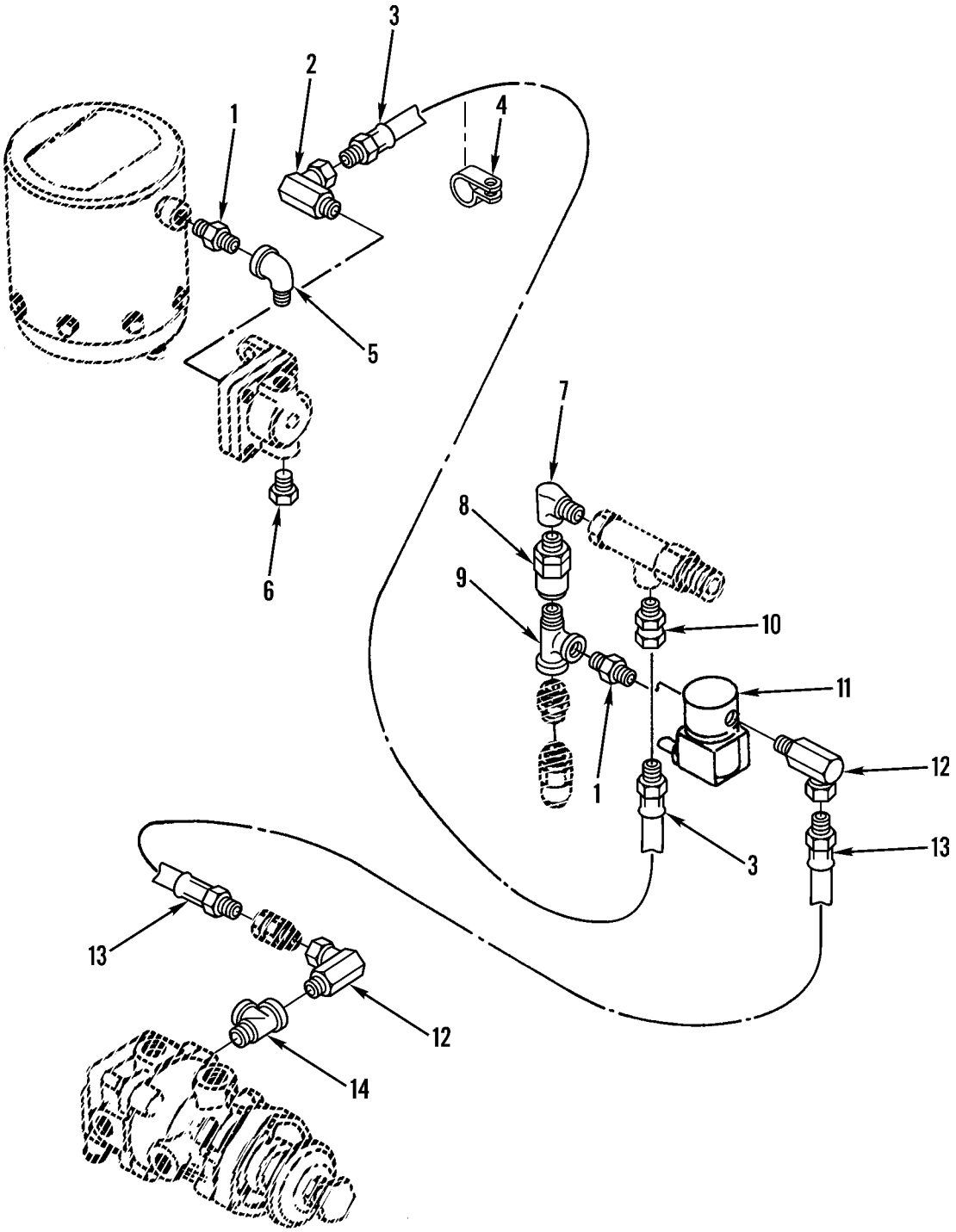

Figure 176. Airbrakes Lines and Fittings-to-Brake Control Valve

(1) ITEM NO	(2) SMR CODE	(3) NSN	(4) CAGEC	(5) PART NUMBER	(6) DESCRIPTION AND USABLE ON CODES(UOC)	(7) QTY
					GROUP 1208 AIRBRAKE SYSTEM FIG.176 AIRBRAKE LINES AND FITTINGS-TO-BRAKE CONTROL VALVE	
1	PAOZZ	4730002778289	79960	F35X8	NIPPLE,PIPE..... UOC:AF9,AGP,F10	2
2	PFFZZ	4730003531913	11083	4J3914	ELBOW,PIPE.....	1
3	PFFZZ	4720010659076	70434	4GABB-4MB-126.00	HOSE ASSEMBLY,NONME..... UOC:AF9,AGN,AGP	1
4	PFFZZ	5342010643819	11083	9M8406	CLIP.....	1
5	PFFZZ	4730000358036	27775	E0114-23	ELBOW,PIPE.....	1
6	PFFZZ	4730000892515	11083	5M6213	PLUG,PIPE.....	1
7	PFFZZ	4730002788261	93061	2202P-4-2	ELBOW,PIPE.....	1
8	XDFZZ		06853	229603	VALVE,CHECK.....	1
9	PFFZZ	4730001776166	30780	02R01-4-4	TEE,PIPE.....	1
10	PFFZZ	4730010589103	11083	4D2560	REDUCER,PIPE.....	1
11	PFFZZ	4810015148525	11083	1850008	VALVE,SOLENOID.....	1
12	PFFZZ	4730002892370	11083	5H4778	ELBOW,PIPE.....	1
13	PFFZZ	4720010660594	11083	4S7528	HOSE ASSY.....	1
14	PAFZZ	4730004697797	93061	2225P-6	TEE,PIPE.....	1

END OF FIGURE

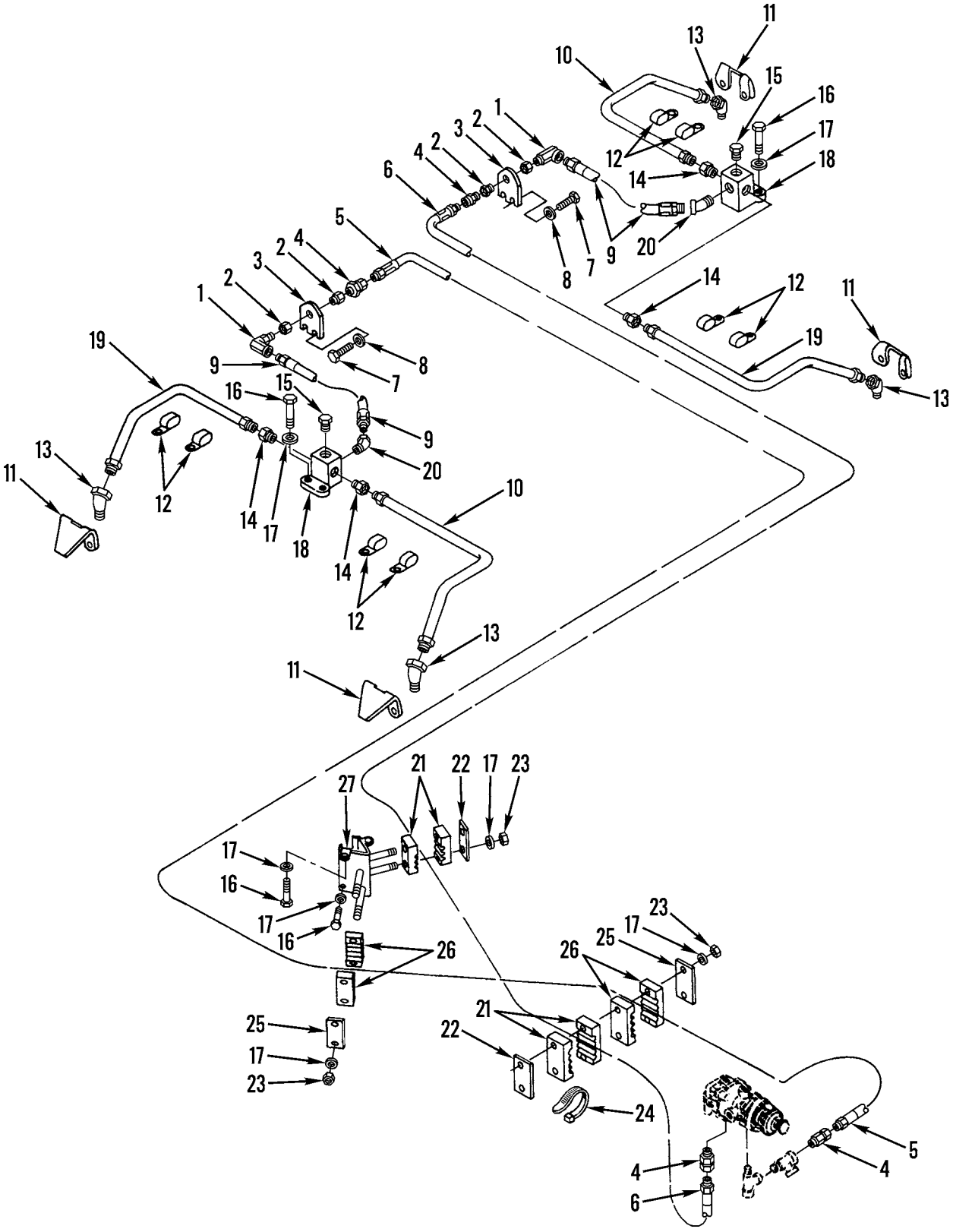

Figure 177. Airbrake Lines, Fittings, and Mountings

(1) ITEM NO	(2) SMR CODE	(3) NSN	(4) CAGEC	(5) PART NUMBER	(6) DESCRIPTION AND USABLE ON CODES(UOC)	(7) QTY
					GROUP 1208 AIRBRAKE SYSTEM FIG. 177 AIRBRAKE LINES, FITTINGS, AND MOUNTINGS	
1	PFFZZ	4730007064566	63906	6MA6UFS	ELBOW,PIPE.....	2
2	PFFZZ	4730005111677	04285	P-18240	COUPLING,PIPE.....	2
3	PFFZZ	2530011527741	11083	2G5375	PLATE,BASE..... UOC:AF9,AGN,AGP	2
4	PFFZZ	4730002345976	11083	2L3331	COUPLING,PIPE.....	4
5	PFFZZ	4720010946263	11083	4D0593	HOSE ASSEMBLY,NONME..... UOC:AF9,AGN,AGP	1
6	PAFZZ	4720010946264	70434	6GABB-6MB-105.75	HOSE ASSEMBLY,NONME..... UOC:AF9,AGN,AGP	1
7	PFFZZ	5305002528919	11083	0S0509	SCREW,CAP,HEXAGON H..... UOC:AF9,AGN,AGP	9
8	PFFZZ	5310010948810	78189	3320-14-01	WASHER,SQUARE CONE..... UOC:AF9,AGN,AGP	4
9	PFFZZ	4720010659094	11083	8D7495	HOSE ASSEMBLY,NONME.....	2
10	PAFZZ	4710010944688	11083	8D4009	TUBE ASSEMBLY,METAL.....	2
11	PFFZZ	3020011527839	11083	8D7026	GUARD,MECHANICAL DR.....	4
12	PFFZZ	5340007206213	96906	MS21333-59	CLAMP,LOOP.....	8
13	PFFZZ	4730002784720	79470	352X8	ELBOW,PIPE TO TUBE.....	4
14	PFFZZ	4730010633000	11083	5K9238	FITTING.....	4
15	PFFZZ	4730004275121	01276	2082-6B	PLUG,PIPE.....	2
16	PFFZZ	5305000680511	80204	B1821BH038C125N	SCREW,CAP,HEXAGON H.....	4
17	PFFZZ	5310001174788	11083	5M2894	WASHER,FLAT.....	15
18	PFFZZ	4730011527921	11083	6G1415	CONNECTOR,MULTIPLE,.....	2
19	PAFZZ	4710010944687	11083	8D4007	TUBE ASSEMBLY,METAL.....	2
20	PFFZZ	4730005951868	30780	3102-6-6	ELBOW,PIPE.....	2
21	PFFZZ	5340011565493	11083	6G7954	CLAMPBLOCK..... UOC:AF9,AGN,AGP	4
22	PFFZZ	2530011757095	11083	6G7972	PLATE,BASE..... UOC:AF9,AGN,AGP	1
23	PFFZZ	5310011831237	11083	9S8752	NUT,PLAIN,HEXAGON.....	8
24	PFFZZ	2920010589099	11083	3S2093	STRAP.....	1
25	PAFZZ	2530011768556	11083	8D9247	LINK,ANCHOR,BRAKE S..... UOC:AF9,AGN,AGP	2
26	PFFZZ	5340011783756	11083	5T7201	CLAMP,BLOCK,SECTION..... UOC:AF9,AGN,AGP	4
27	PFFZZ	5340013333857	11083	8D9278	BRACKET,MOUNTING..... UOC:AF9,AGN,AGP	1

END OF FIGURE

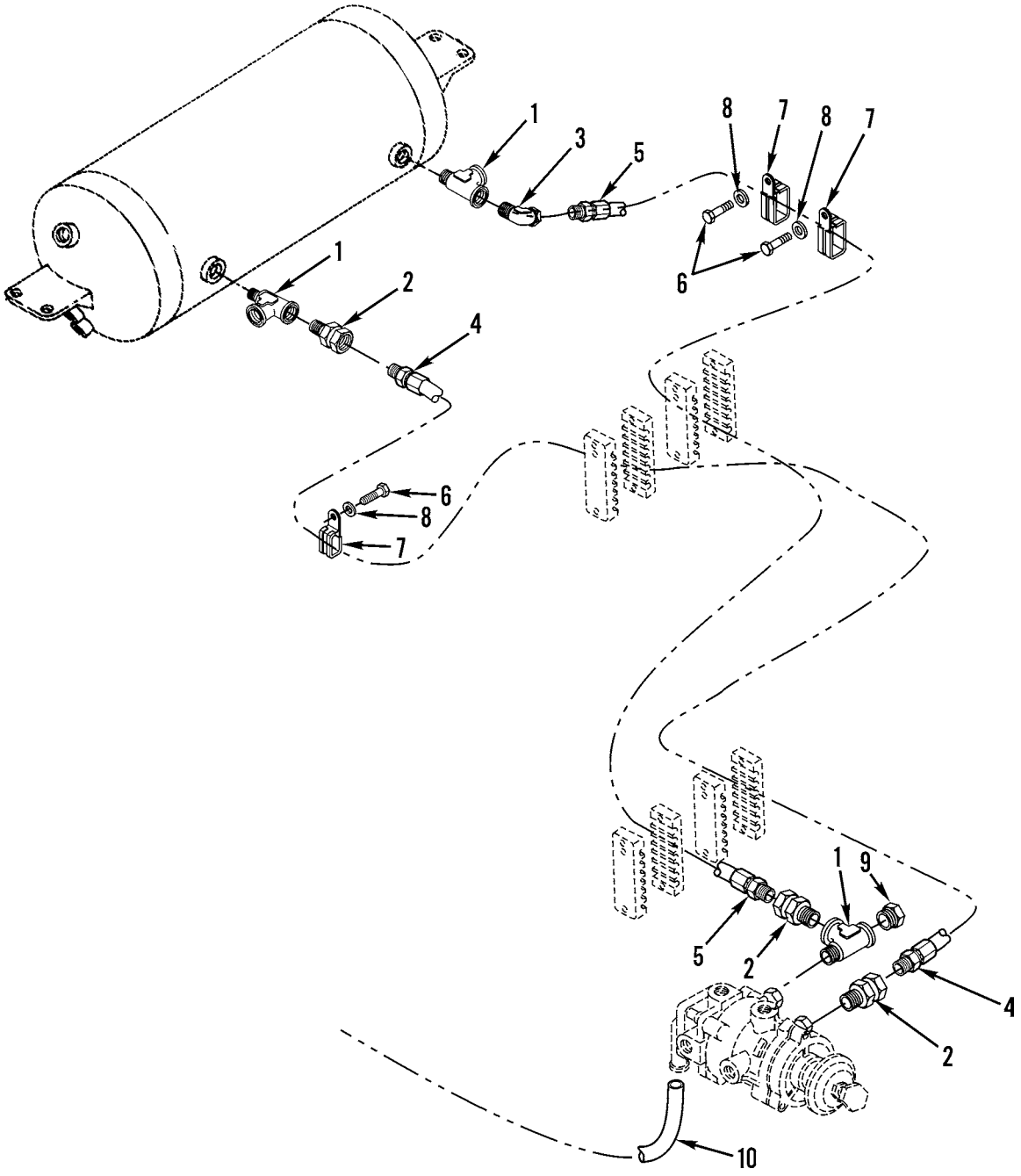

Figure 178. Airbrakes Lines and Fittings (Sheet 1 of 4)

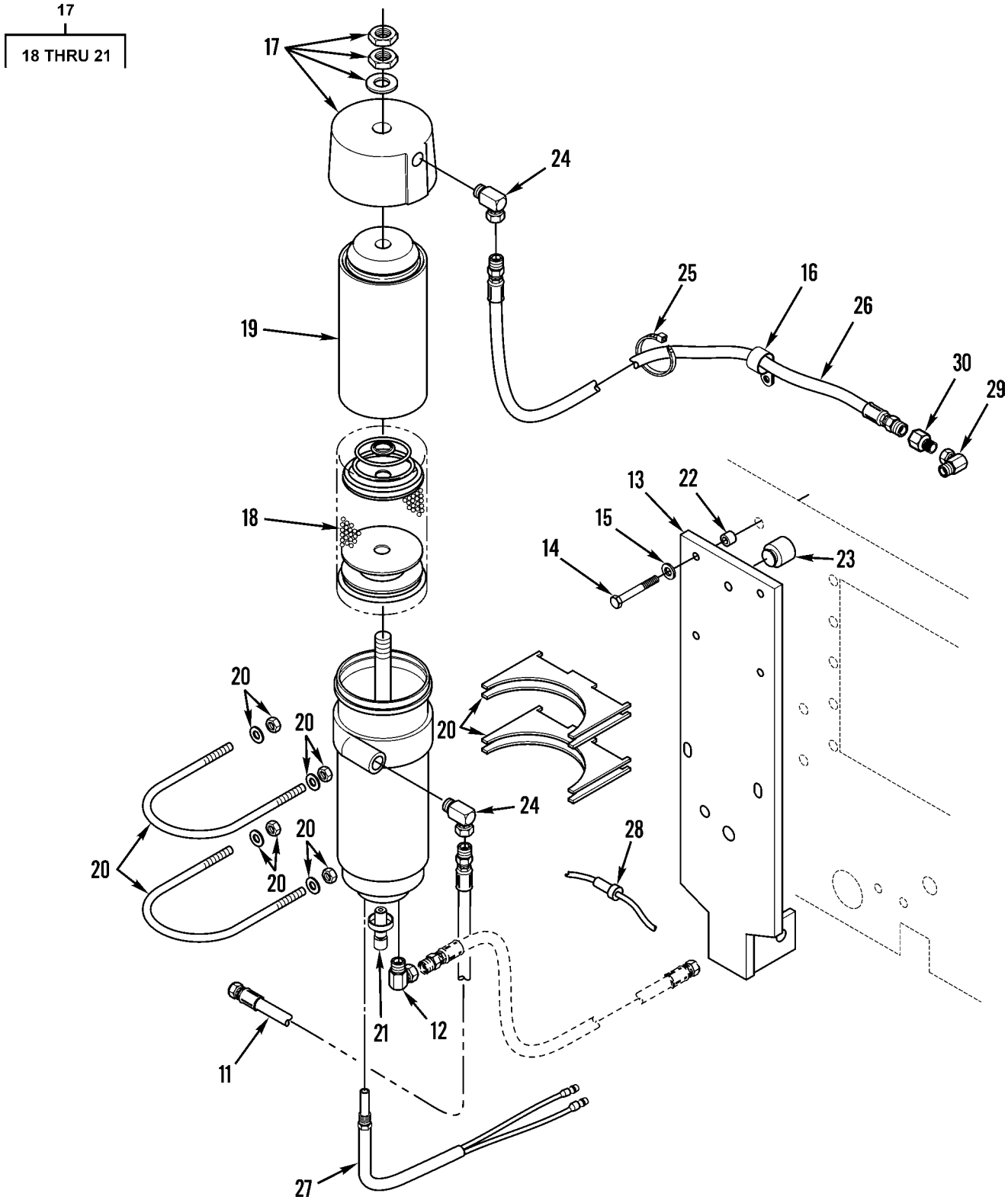

Figure 178. Airbrakes Lines and Fittings (Sheet 2 of 4)

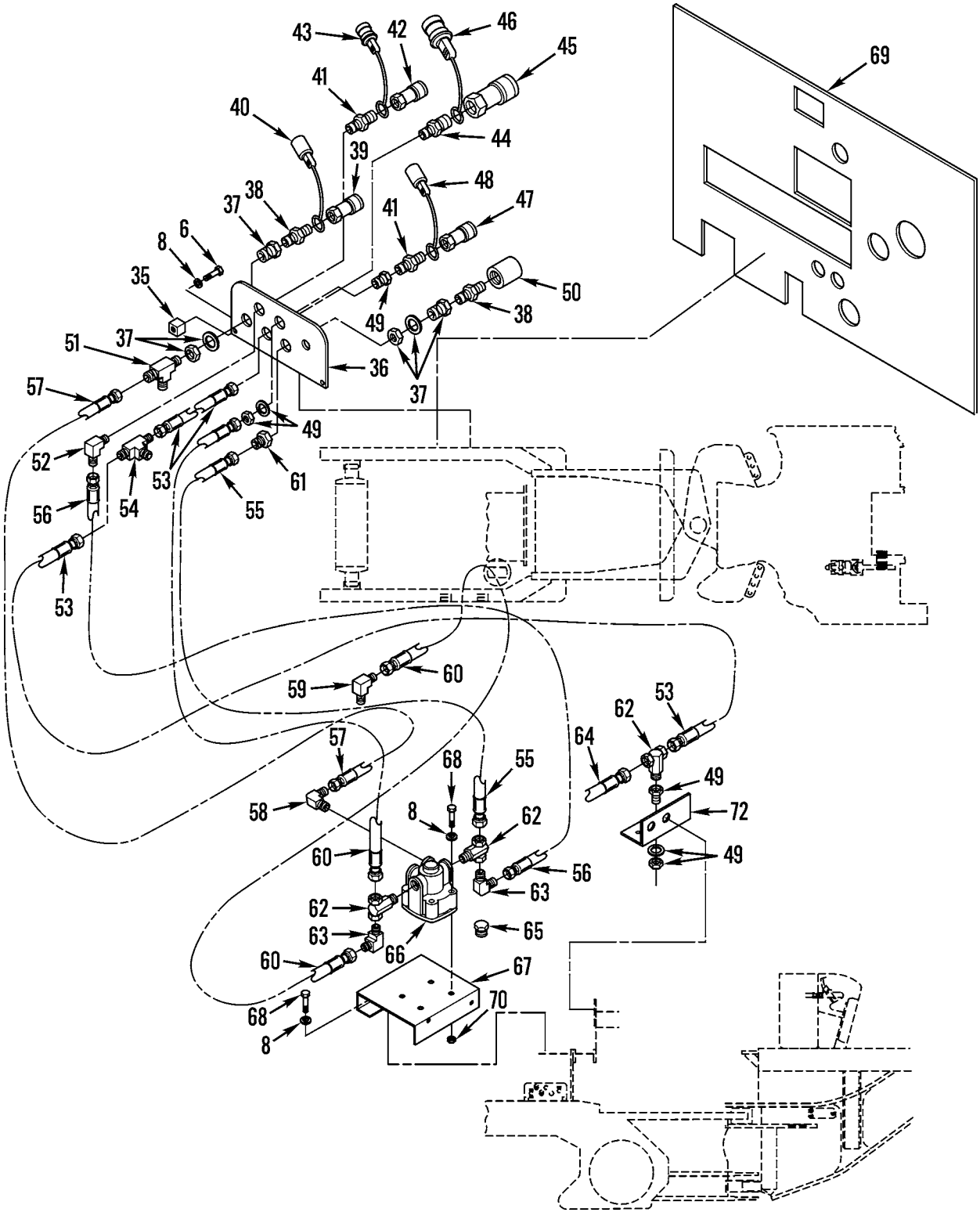

Figure 178. Airbrakes Lines and Fittings (Sheet 3 of 4)

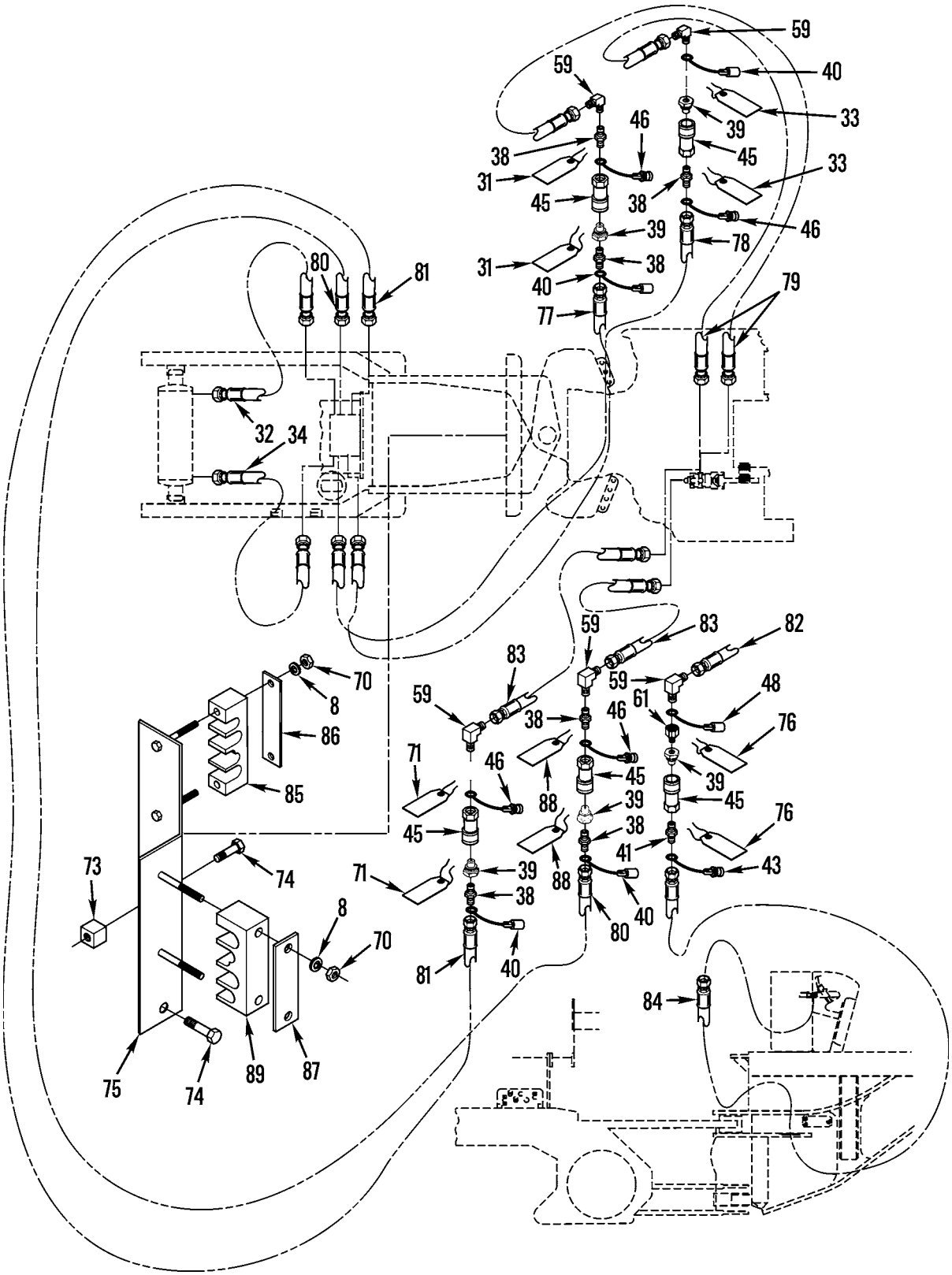

Figure 178. Airbrakes Lines and Fittings (Sheet 4 of 4)

(1) ITEM NO	(2) SMR CODE	(3) NSN	(4) CAGEC	(5) PART NUMBER	(6) DESCRIPTION AND USABLE ON CODES(UOC)	(7) QTY
					GROUP 1208 AIRBRAKE SYSTEM FIG. 178 AIRBRAKE LINES AND FITTINGS	
1	PAFZZ	4730004697797	93061	2225P-6	TEE,PIPE.....	3
2	PFFZZ	4730002345976	11083	2L3331	COUPLING,PIPE.....	3
3	PFFZZ	4730003173008	30327	60TA06X06	ELBOW,PIPE.....	1
4	PAFZZ	4720010945156	11083	6D9598	HOSE ASSEMBLY,NONME..... UOC:AF9,AGN,AGP	1
5	PAFZZ	4720010945155	70434	6GABB-6MB-132.00	HOSE ASSEMBLY,NONME..... UOC:AF9,AGN,AGP	1
6	PFFZZ	5306002604508	11083	0S1594	BOLT,MACHINE.....	4
6	PAOZZ	5306002604508	11083	0S1594	BOLT,MACHINE..... UOC:AGM,F10	2
7	PFFZZ	5340010512357	11083	5K5338	CLIP.....	4
8	PFFZZ	5310001174788	11083	5M2894	WASHER,FLAT..... UOC:AF9,AGN,AGP	4
8	PAOZZ	5310001174788	11083	5M2894	WASHER,FLAT..... UOC:AGM,F10	24
9	PFFZZ	4730001930869	19422	BM11352-77	BUSHING,PIPE..... UOC:AF9,AGP,F10	1
10	MOOZZ		11083	5P0767-17.7	HOSE MAKE FROM HOSE P/N 5P0767.....	1
11	PFOZZ	4720011840981	11083	9D0771	HOSE ASSEMBLY,NONME..... UOC:AF9,AGM,AGN,F10	1
12	PFOZZ	4730010589134	11083	4S7606	ELBOW,PIPE..... UOC:AF9,AGM,AGN,F10	1
13	PFOZZ	5340012928403	11083	5T0802	BRACKET,MOUNTING..... UOC:AF9,AGM,AGN,F10	1
14	PFOZZ	5306011767828	11083	5S7383	BOLT,MACHINE..... UOC:AF9,AGM,AGN,F10	2
15	PFOZZ	5310010948810	78189	3320-14-01	WASHER,SQUARE CONE..... UOC:AF9,AGM,AGN,F10	6
16	PFOZZ	5342010643819	11083	9M8406	CLIP..... UOC:AF9,AGM,AGN,F10	3
17	PFOZF	4440012860296	11083	8V9101	DRIER,AIR-GAS,DESIC..... UOC:AF9,AGM,AGN,F10	1
18	PAFZZ	4440011591712	06721	RN969	.PARTS KIT,DEHYDRATO..... UOC:AF9,AGM,AGN,F10	1
19	PAFZZ	4440014400480	11083	8V9257	.DRIER,AIR-GAS,DESIC..... UOC:AF9,AGM,AGN,F10	1
20	PAFZZ	4820014398561	11083	8V9174	.REPAIR KIT,VALVE..... UOC:AF9,AGM,AGN,F10	1
21	PAFZZ		11083	1528245	.CLAMP MOUNTING KIT..... UOC:AF9,AGM,AGN,F10	1
22	PFOZZ	5365012931064	11083	1V6645	SPACER,SLEEVE..... UOC:AF9,AGM,AGN,F10	2
23	PFOZZ	5340012931874	11083	2G6684	BUMPER,NONMETALLIC..... UOC:AF9,AGM,AGN,F10	1
24	PFOZZ		11083	0037030	ELBOW,PIPE..... UOC:AF9,AGM,AGN,F10	2
25	PAOZZ	2920010589099	11083	3S2093	STRAP..... UOC:AF9,AGM,AGN,F10	25

(1) ITEM NO	(2) SMR CODE	(3) NSN	(4) CAGEC	(5) PART NUMBER	(6) DESCRIPTION AND USABLE ON CODES(UOC)	(7) QTY
26	PFOZZ	4720010945157	11083	4S7562	HOSE ASSEMBLY,NONME..... UOC:AF9,AGM,AGN,F10	1
27	PFOZF	4410012860183	79221	E2AX60B	HEATING ELEMENT,ELE..... UOC:AF9,AGM,AGN,F10	1
28	PFOZA	5920002433787	81349	F03A250V10AS	FUSE,CARTRIDGE..... UOC:AF9,AGM,AGN,F10	1
29	PAOZZ	4730002784814	11083	2D1683	ELBOW,PIPE..... UOC:AF9,AGM,AGN,F10	1
30	PFOZZ	4730010589103	11083	4D2560	REDUCER,PIPE..... UOC:AF9,AGM,AGN,F10	1
31	PAOZZ	9905011722395	11083	4J6305	TAG,MARKER..... UOC:AGM,F10	2
32	PCOZZ	4720011709167	11083	2G5888	HOSE ASSEMBLY,NONME..... UOC:AGM,F10	1
33	PAOZZ		11083	4J6304	TAG,MARKER..... UOC:AGM,F10	2
34	PAOZZ		11083	5R6378	HOSE ASSEMBLY..... UOC:AGM,F10	1
35	PAOZZ	5310011993350	11083	6B3671	NUT,PLAIN,SQUARE..... UOC:AGM,F10	2
36	PAOZZ	2510011741265	11083	5R6886	PLATE,AIR LINES..... UOC:AGM,F10	1
37	PAOZZ	4730005111677	06853	217709	COUPLING,PIPE..... UOC:AGM,F10	1
38	PAOZZ	4730002783725	26952	FZ-1618	NIPPLE,PIPE..... UOC:AGM,F10	5
39	PAOZZ	4730005857507	73992	B3-K21	COUPLING HALF,QUICK..... UOC:AGM,F10	1
40	PAOZZ	5340011723737	01276	FD45-1040-06	CAP,PROTECTIVE,DUST..... UOC:AGM,F10	1
41	PAOZZ	4730011620102	11083	5P8998	NIPPLE,PIPE..... UOC:AGM,F10	3
42	PAOZZ	4730007956959	01276	FD45-1101-04-04	COUPLING HALF,QUICK..... UOC:AGM,F10	1
43	PAOZZ	5340011723738	01276	FD45-1041-04	CAP-PLUG,PROTECTIVE..... UOC:AGM,F10	1
44	PAOZZ	4730007261103	11083	5S2403	REDUCER,PIPE..... UOC:AGM,F10	1
45	PAOZZ	4730006025342	14127	H3B	COUPLING HALF,QUICK..... UOC:AGM,F10	1
46	PAOZZ	5340011722794	01276	FD45-1041-06	PLUG,PROTECTIVE,DUS..... UOC:AGM,F10	1
47	PAOZZ	4730008441838	01276	FD45-1086-04-04	COUPLING HALF,QUICK..... UOC:AGM,F10	1
48	PAOZZ	5340011723736	01276	FD45-1040-04	CAP,PROTECTIVE,DUST..... UOC:AGM,F10	1
49	PAOZZ	4730009763976	11083	9M7357	COUPLING,PIPE..... UOC:AGM,F10	3
50	PAOZZ	4730001877569	57958	C5114455-1	COUPLING,PIPE..... UOC:AGM,F10	1
51	PAOZZ	4730011789644	11083	7J5996	TEE,PIPE..... UOC:AGM,F10	1

(1) ITEM NO	(2) SMR CODE	(3) NSN	(4) CAGEC	(5) PART NUMBER	(6) DESCRIPTION AND USABLE ON CODES(UOC)	(7) QTY
52	PAOZZ	4730010589095	11083	3D7587	ELBOW,PIPE..... UOC:AGM,F10	6
53	PAOZZ	4720011883185	11083	5D7464	HOSE ASSEMBLY,NONME..... UOC:AGM,F10	2
54	PAOZZ	4730010632990	11083	4D9976	TEE,PIPE..... UOC:AGM,F10	1
55	PAOZZ	4720011844241	11083	6D9858	HOSE ASSEMBLY,NONME..... UOC:AGM,F10	1
56	PAOZZ	4720010647483	80713	4GABB-4MB-22.00	HOSE ASSEMBLY,NONME..... UOC:AGM,F10	1
57	PCOZZ	4720011810101	11083	9D2549	HOSE ASSEMBLY,NONME..... UOC:AGM,F10	1
58	PAOZZ	4730010633145	11083	3D8913	ELBOW,PIPE..... UOC:AGM,F10	6
59	PAOZZ	4730007064566	63906	6MA6UFS	ELBOW,PIPE..... UOC:AGM,F10	6
60	PAOZZ		11083	6J1154	HOSE A..... UOC:AGM,F10	2
61	PAOZZ	4730002895191	11083	4H6147	COUPLING,PIPE..... UOC:AGM,F10	2
62	PAOZZ	4730010950837	11083	3S6115	TEE,PIPE..... UOC:AGM,F10	3
63	PAOZZ	4730006706036	11083	1S0401	ELBOW,PIPE..... UOC:AGM,F10	2
64	PAOZZ	4720011862356	80713	4GABB-4MB-44.00	HOSE ASSEMBLY,NONME..... UOC:AGM,F10	2
65	PAOZZ		11083	3L1850	PLUG..... UOC:AGM,F10	2
66	PAOZZ	2530014138274	11083	8X5444	VALVE,RELAY,AIR PRE..... UOC:AGM,F10	2
67	PAOZZ	5342011945215	55101	63594	BRACKET..... UOC:AGM,F10	1
68	PAOZZ	5305002528919	11083	0S0509	SCREW,CAP,HEXAGON H..... UOC:AGM,F10	6
69	PAOZF	5342011756911	11083	6G2142	DOOR,ACCESS,WEAPON..... UOC:AGM,F10	1
70	PAOZZ	5310014297859	11083	6V8801	NUT,PLAIN,HEXAGON..... UOC:AGM,F10	8
71	PAOZZ		11083	8K2708	TAG, IDENT..... UOC:AGM,F10	2
72	PAOZZ	5340012007037	55101	63853	BRACKET,ANGLE..... UOC:AGM,F10	1
73	PAOZZ		11083	5S0214	NUT,PLAIN,SQUARE..... UOC:AGM,F10	2
74	PAOZZ	5306004262933	11083	0S1620	BOLT,MACHINE..... UOC:AGM,F10	2
75	PAOZZ	2510011824465	55101	63824	PLATE ASSEMBLY..... UOC:AGM,F10	1
76	PAOZZ		11083	8K2710	TAG,IDENT..... UOC:AGM,F10	2
77	PAOZZ	4720011834575	55101	62823	HOSE ASSEMBLY,NONME..... UOC:AGM,F10	1

(1) ITEM NO	(2) SMR CODE	(3) NSN	(4) CAGEC	(5) PART NUMBER	(6) DESCRIPTION AND USABLE ON CODES(UOC)	(7) QTY
78	PAOZZ	4720011834576	55101	62824	HOSE ASSEMBLY,NONME..... UOC:AGM,F10	1
79	PAOZZ	4720010659075	11083	7D2729	HOSE ASSEMBLY..... UOC:AGM,F10	2
80	PAOZZ	4720011789665	11083	7D3964	HOSE ASSEMBLY,NONME..... UOC:AGM,F10	1
81	PCOZZ	4720011737689	11083	5R7062	HOSE ASSEMBLY,NONME..... UOC:AGM,F10	1
82	PCOZZ	4720011677053	11083	5R6375	HOSE ASSEMBLY,NONME..... UOC:AGM,F10	1
83	PCOZZ	4720011737690	11083	5R6376	HOSE ASSEMBLY,NONME..... UOC:AGM,F10	2
84	PCOZZ	4720011738350	11083	5R6374	HOSE ASSEMBLY,NONME..... UOC:AGM,F10	1
85	PAOZZ	5340011565493	11083	6G7954	CLAMPBLOCK..... UOC:AGM,F10	2
86	PAOZZ	2530011757095	11083	6G7972	PLATE,BASE..... UOC:AGM,F10	1
87	PAOZZ	2530011768556	11083	8D9247	LINK,ANCHOR,BRAKE S..... UOC:AGM,F10	1
88	PAOZZ		11083	8K2709	TAG,MARKER..... UOC:AGM,F10	2
89	PAOZZ	5340010959491	11083	2G5617	CLAMP,BLOCK..... UOC:AGM,F10	2

END OF FIGURE

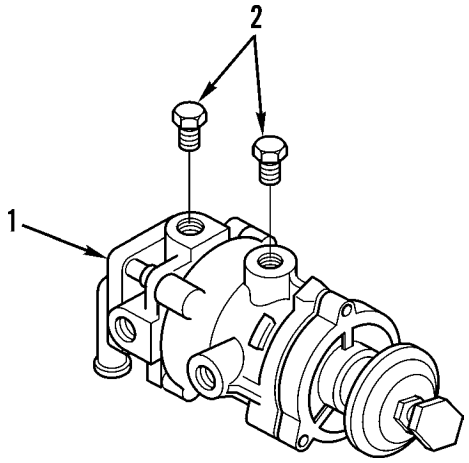

Figure 179. Brake Control Valve

(1) ITEM NO	(2) SMR CODE	(3) NSN	(4) CAGEC	(5) PART NUMBER	(6) DESCRIPTION AND USABLE ON CODES(UOC)	(7) QTY
					GROUP 1208 AIRBRAKE SYSTEM	
					FIG. 179 BRAKE CONTROL VALVE	
1	PFFZZ	2530012501903	11083	6G8425	VALVE,BRAKE,PROPORT.....	1
2	PFFZZ	4730004275121	01276	2082-6B	PLUG,PIPE.....	2

END OF FIGURE

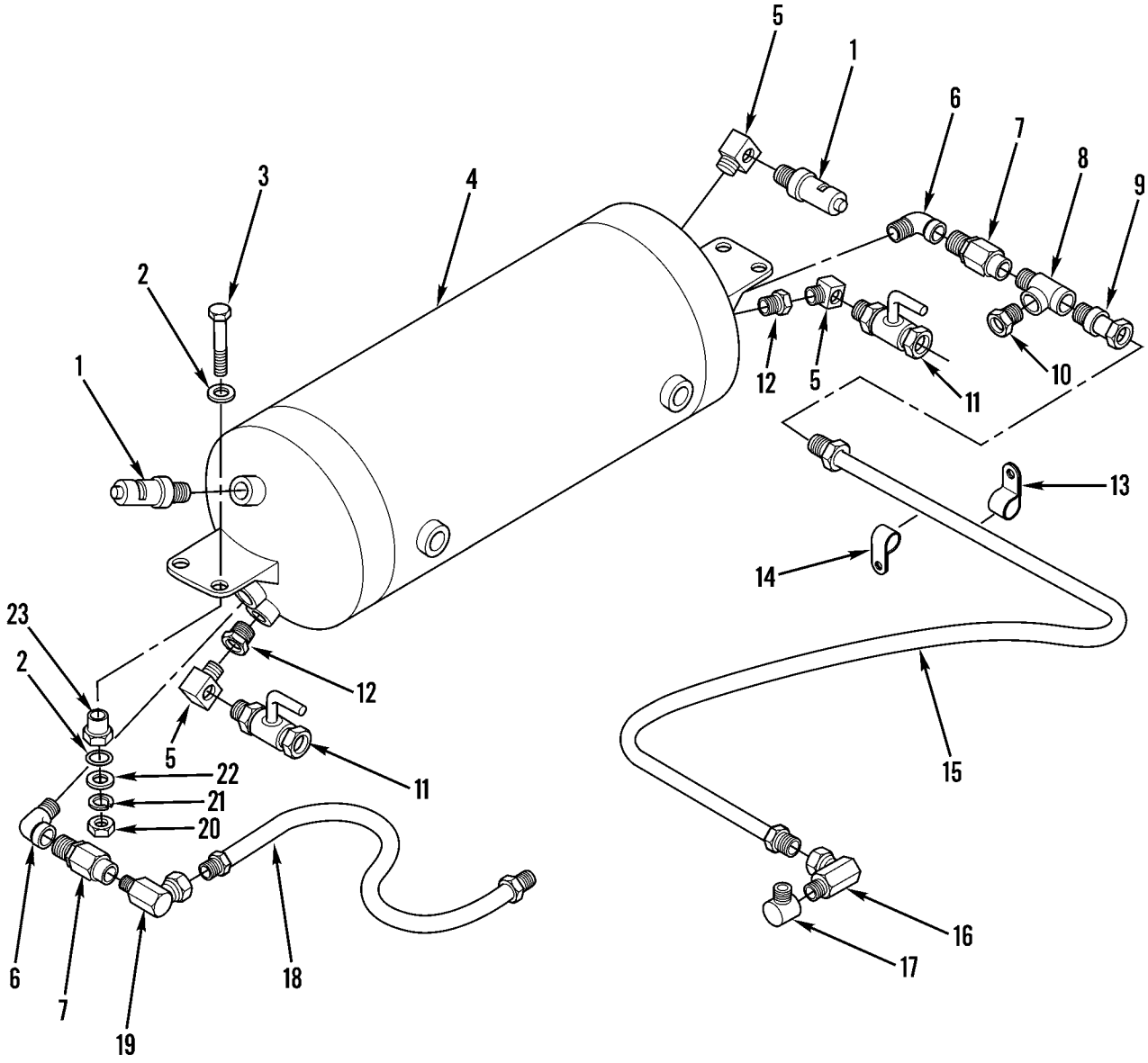

Figure 180. Air Tank, Lines, Fittings, and Mounting

(1) ITEM NO	(2) SMR CODE	(3) NSN	(4) CAGEC	(5) PART NUMBER	(6) DESCRIPTION AND USABLE ON CODES(UOC)	(7) QTY
					GROUP 1208 AIRBRAKE SYSTEM FIG. 180 AIR TANK, LINES, FITTINGS, AND MOUNTING	
1	PFFZZ	4820010660611	06853	285849	VALVE	2
2	PFFZZ	5310006984460	11083	0L1319	WASHER,FLAT	8
3	PFFZZ	5305010269518	11083	0S1571	SCREW,CAP,HEXAGON H	4
4	PFFZZ	2530011527883	06853	285830	TANK,PRESSURE	1
5	PFFZZ	4730007780218	79470	003-40054	ELBOW,PIPE	3
6	PFFZZ	4730002892357	30780	2102-8-8	ELBOW,PIPE	2
7	PFFZZ	4820007748299	06853	227717	VALVE,CHECK	2
8	PFFZZ	4730010952034	79470	3750X8	TEE,PIPE	1
9	PFFZZ	4730010633003	11083	6D6489	REDUCER,PIPE	1
10	PFFZZ	4730001930871	11083	3B7255	BUSHING,PIPE	1
11	PFFZZ	4820003517486	06853	226338	COCK,PLUG	1
12	PFFZZ	4730001930869	19422	BM11352-77	BUSHING,PIPE	2
13	PFOZZ	5340010599345	11083	6D3479	CLIP	1
14	PFFZZ	5340004264653	11083	4K8302	CLAMP,LOOP	1
15	PAFZZ	4720010955844	01276	FA5205GHG0770	HOSE ASSEMBLY,NONME	1
16	PFFZZ	4730007064566	63906	6MA6UFS	ELBOW,PIPE	1
17	PFFZZ	4730002784822	79470	3400X6	ELBOW,PIPE	1
18	PAFZZ	4720010945152	11083	9D5458	HOSE ASSEMBLY,NONME	1
19	PFFZZ	4730010633145	11083	3D8913	ELBOW,PIPE	1
20	PFFZZ	5310014297859	11083	6V8801	NUT,PLAIN,HEXAGON	4
21	PFFZZ	5310006379541	96906	MS35338-46	WASHER,LOCK	4
22	PFFZZ	5310000806004	96906	MS27183-14	WASHER,FLAT	4
23	PFFZZ	5330010625887	11083	1P7115	GROMMET ASSY	4

END OF FIGURE

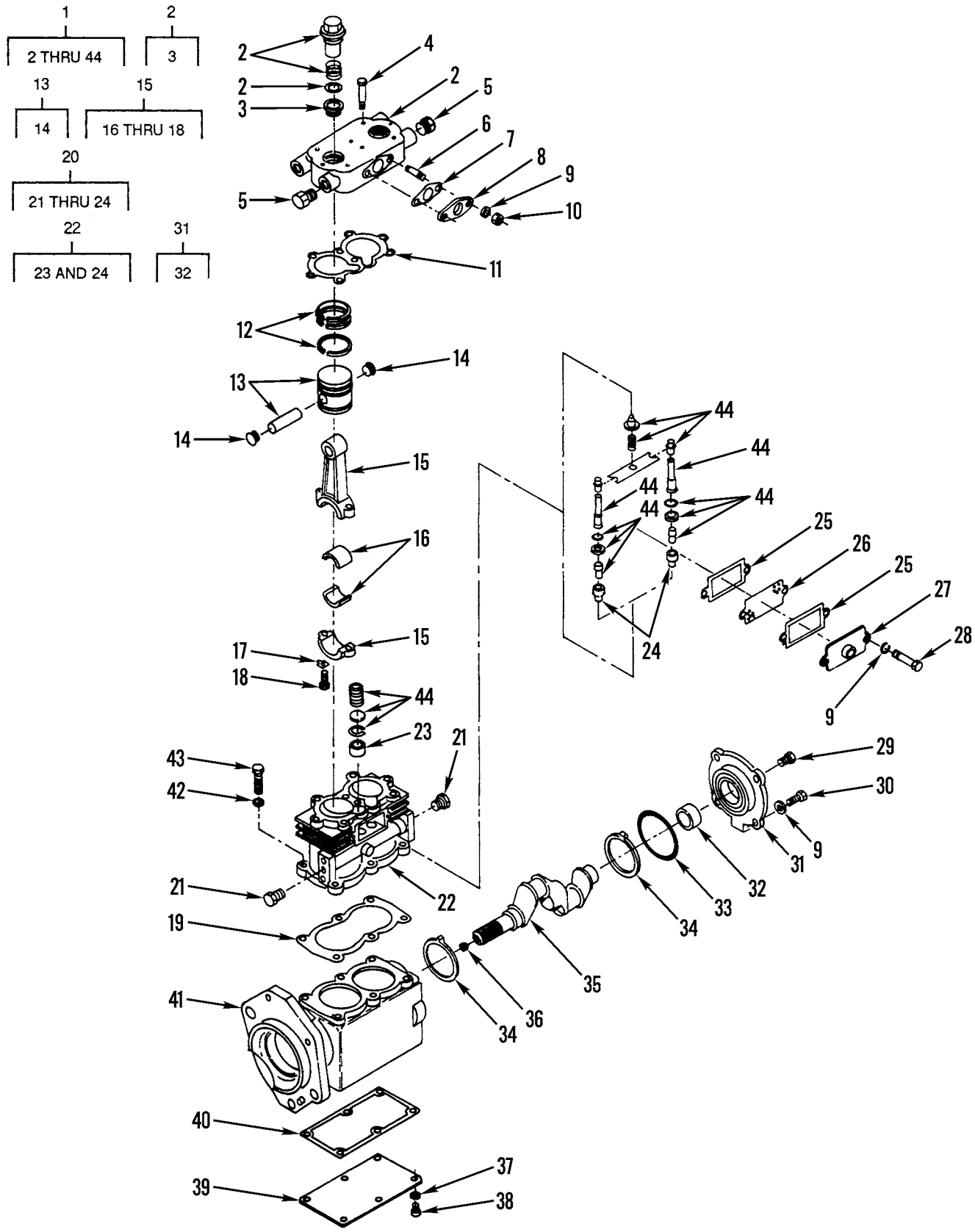

Figure 181. Air Compressor Assembly

(1) ITEM NO	(2) SMR CODE	(3) NSN	(4) CAGEC	(5) PART NUMBER	(6) DESCRIPTION AND USABLE ON CODES(UOC)	(7) QTY
					GROUP 1209 AIR COMPRESSOR ASSEMBLY	
					FIG. 181 AIR COMPRESSOR ASSEMBLY	
1	PAOFF	4310011394814	11083	1W6473	COMPRESSOR,RECIPROC.....	1
2	PAFZZ	2530008758128	06853	275335	.CYLINDER HEAD,COMPR.....	1
3	PAFZZ	4820008036235	06853	236219	..SEAT,VALVE.....	2
4	PFFZZ	5305006321659	06853	237317	.SCREW,MACHINE.....	8
5	PFFZZ	4730004275121	01276	2082-6B	.PLUG,PIPE.....	2
6	PFFZZ	5307002637293	11083	1A2850	.STUD,PLAIN.....	2
7	PFFZZ	5330009826578	11083	1S7107	.GASKET PART OF KIT P/N 1S9874.....	1
8	PFFZZ	3805010290492	11083	8S4365	.FITTING,COMPRESSOR.....	1
9	PFFZZ	5310001186420	11083	4L7318	.WASHER,LOCK.....	8
10	PFFZZ	5310001887848	11083	1B4202	.NUT,PLAIN,HEXAGON.....	2
11	PFFZZ	5330006129390	06853	236571	.GASKET PART OF KIT P/N 1S9874.....	1
12	PAFZZ	4310005621031	06853	226721	.RING SET,PISTON.....	1
13	PFFZA	4310010831999	06853	289438	.PISTON,COMPRESSOR.....	2
14	PAFZZ	2530010813213	06853	292392	..PLUG,RETAINER PIN.....	2
15	PAFZZ	2530008758071	06853	229082	.CONNECTING ROD,PIST.....	2
16	PAFZZ	3120000851905	97907	9037107	..BEARING,SLEEVE.....	1
17	PAFZZ	2815004238767	11083	2A5328	..LOCK PLATE.....	2
18	PAFZZ	5306008348450	06853	238598	..BOLT,CLOSE TOLERANC.....	2
19	PFFZZ	5330010533872	06853	GP-294240	.GASKET.....	1
20	XBFZZ		11083	8S4582	.BLOCK,COMPRESSOR.....	1
21	PFFZZ	4730000892515	11083	5M6213	..PLUG,PIPE.....	2
22	PAFZZ	4310010822263	06853	229903	..CYLINDER SLEEVE.....	1
23	PAFZZ	4820005099789	06853	236118	...SEAT,VALVE.....	2
24	PAFZZ	5365006019696	06853	238805	...BUSHING,TAPERED.....	2
25	PFFZZ	5330002977272	06853	236170	.GASKET PART OF KIT P/N 1S9874.....	2
26	PFFZZ	5340010954700	06853	238948	.COVER,ACCESS.....	1
27	PAFZZ	4730010939537	06853	241340	.FLANGE,PIPE.....	1
28	PFFZZ	5306002264826	80204	B1821BH031C088N	.BOLT,MACHINE.....	2
29	PFFZZ	4730009247886	11083	5M6214	.PLUG,PIPE.....	1
30	PFFZZ	5306010664721	11083	4M0061	.BOLT.....	4
31	PAFZZ	2815010539603	06853	275954	.COVER,COMPRESSOR.....	1
32	XAFZZ	3120007557097	06853	240580	..BEARING,SLEEVE.....	1
33	PFFZZ	5331009450494	11083	5M6509	.O-RING PART OF KIT P/N 1S9874.....	1
34	PAFZZ	3120010839181	06853	246439	.BEARING,WASHER,THRU.....	2
35	XDFZZ		06853	249766	.CRANKSHAFT,COMPRESS.....	1
36	PFFZZ	4730000444688	89346	50410DA	.PLUG,PIPE.....	1
37	PFFZZ	5310005825965	96906	MS35338-44	.WASHER,LOCK.....	6
38	PFFZZ	5306004041409	11083	4M5281	.BOLT,MACHINE.....	6
39	PFFZZ	5340013320917	11083	2S3079	.COVER,ACCESS.....	1
40	PFFZZ	5330012813791	06853	297544	.GASKET.....	1
41	PAFZZ	2530011787055	06853	285653	.HOUSING,AIR COMPRES.....	1
42	PFFZZ	5310006379541	96906	MS35338-46	.WASHER,LOCK.....	6
43	PFFZZ	5306002637301	11083	0L1351	.BOLT,MACHINE.....	6
44	KFFZZ		11083	1S9874-1	.PARTS KIT,COMPRESSO PART OF KIT P/N 1S9874.....	1

END OF FIGURE

1
2 AND 3

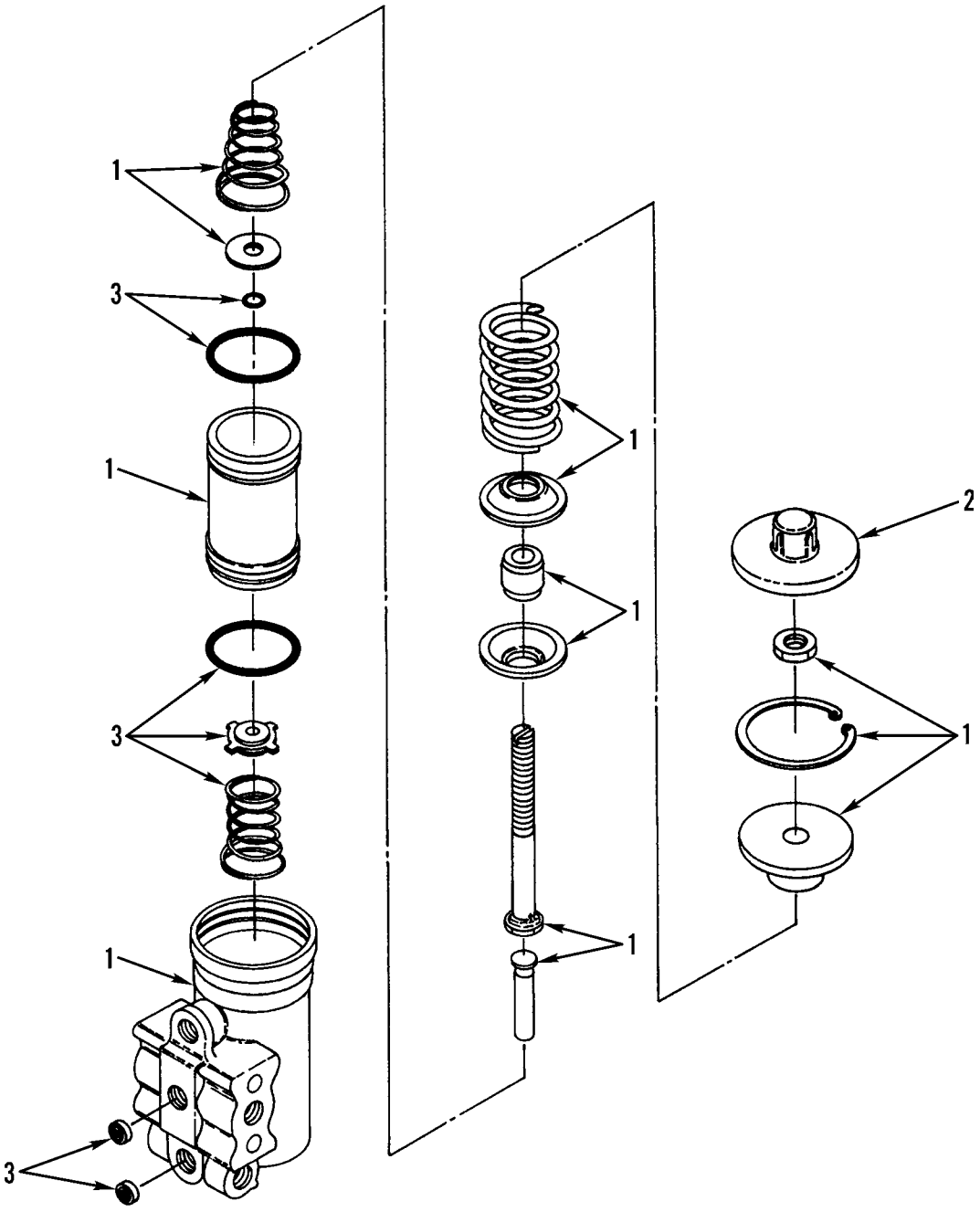

Figure 182. Air Compressor Governor Assembly

(1) ITEM NO	(2) SMR CODE	(3) NSN	(4) CAGEC	(5) PART NUMBER	(6) DESCRIPTION AND USABLE ON CODES(UOC)	(7) QTY
					GROUP 1209 AIR COMPRESSOR ASSEMBLY FIG. 182 AIR COMPRESSOR GOVERNOR ASSEMBLY	
1	PFFZZ	2530011431484	11083	7N9195	GOVERNOR ASSEMBLY,A.....	1
2	PAFZZ	5340009223522	06853	240347	.COVER,ACCESS.....	1
3	PAFZZ	4310009711910	11083	9M0402	.PARTS KIT,COMPRESSO.....	1

END OF FIGURE

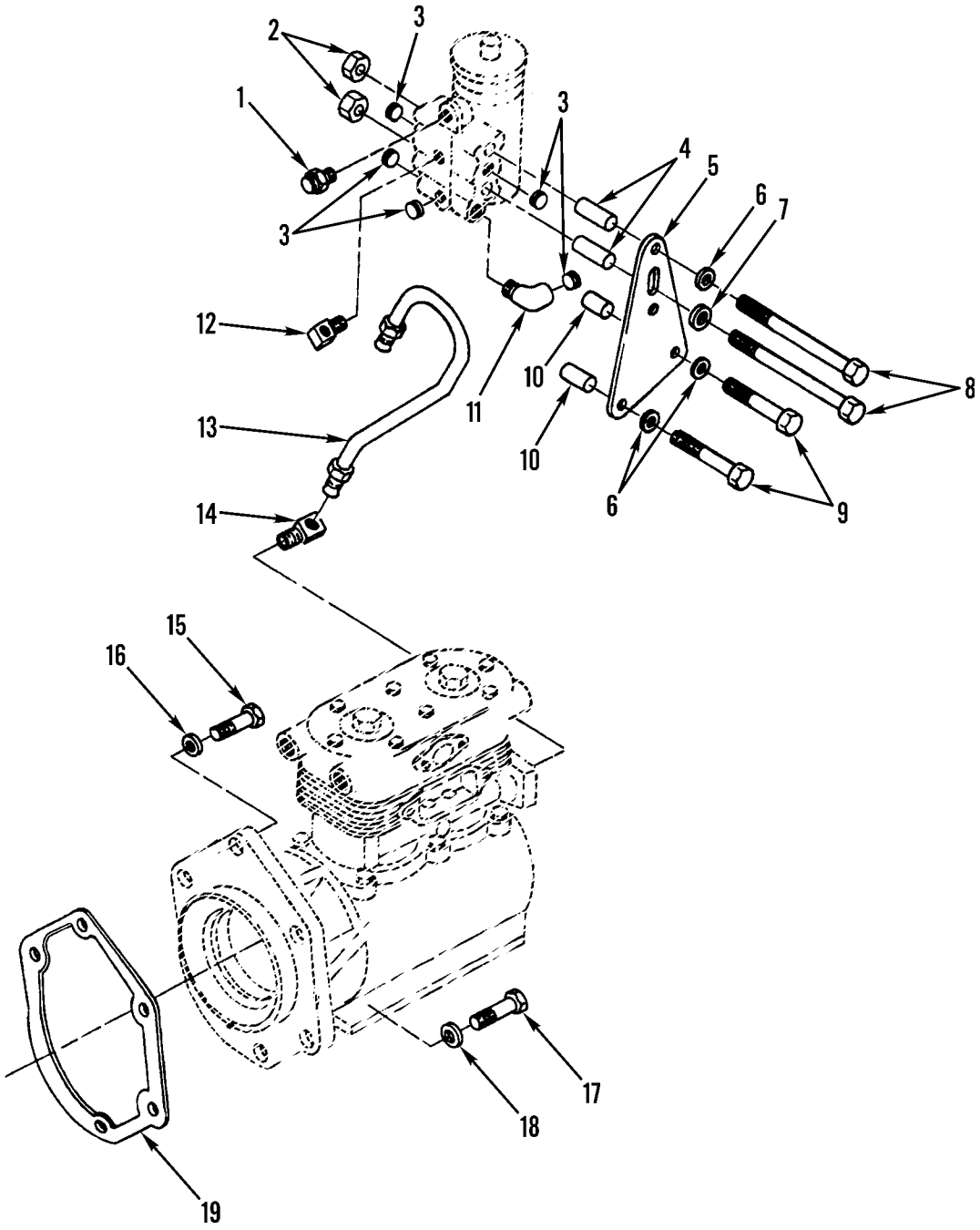

Figure 183. Air Compressor, and Governor Lines and Fittings

(1) ITEM NO	(2) SMR CODE	(3) NSN	(4) CAGEC	(5) PART NUMBER	(6) DESCRIPTION AND USABLE ON CODES(UOC)	(7) QTY
					GROUP 1209 AIR COMPRESSOR ASSEMBLY FIG. 183 AIR COMPRESSOR, AND GOVERNOR LINES AND FITTINGS	
1	PFFZZ	4820008083669	95879	G-131000	VALVE,VENT	1
2	PFFZZ	5310010951526	11083	4M5280	NUT,PLAIN,HEXAGON	2
3	PFFZZ	4730000444688	89346	50410DA	PLUG,PIPE	5
4	PAFZZ	5365011770951	11083	3H4656	SPACER,SLEEVE	2
5	PFFZZ	5365011843675	11083	2W1088	SPACER,PLATE	1
6	PFFZZ	5310000814219	96906	MS27183-12	WASHER,FLAT	3
7	PFFZZ	5310011475110	11083	9N0869	WASHER	1
8	PFFZZ	5306002264843	80204	B1821BH031C450N	BOLT,MACHINE	2
9	PFFZZ	5306002264834	80204	B1821BH031C225N	BOLT,MACHINE	2
10	PAFZZ	5365011854734	11083	7K3377	SPACER,SLEEVE	2
11	PAFZZ	4730008100059	93061	1202P-2-2	ELBOW,PIPE	1
12	PAFZZ	4730010599435	11083	5K9243	ELBOW,PIPE TO TUBE	1
13	PAFZZ	4710011789966	11083	5N9111	TUBE ASSEMBLY,METAL	1
14	PFFZZ	4730010690768	11083	5K9241	FITTING	1
15	PFOZZ	5305010156841	11083	0S1591	SCREW	3
16	PFOZZ	5310001174788	11083	5M2894	WASHER,FLAT	3
17	PFOZZ	5305007247222	80204	B1821BH063C200N	SCREW,CAP,HEXAGON H	2
18	PFOZZ	5310001397030	11083	4D3704	WASHER,FLAT	2
19	PFOZZ	5330010691478	11083	2P0220	GASKET	1

END OF FIGURE

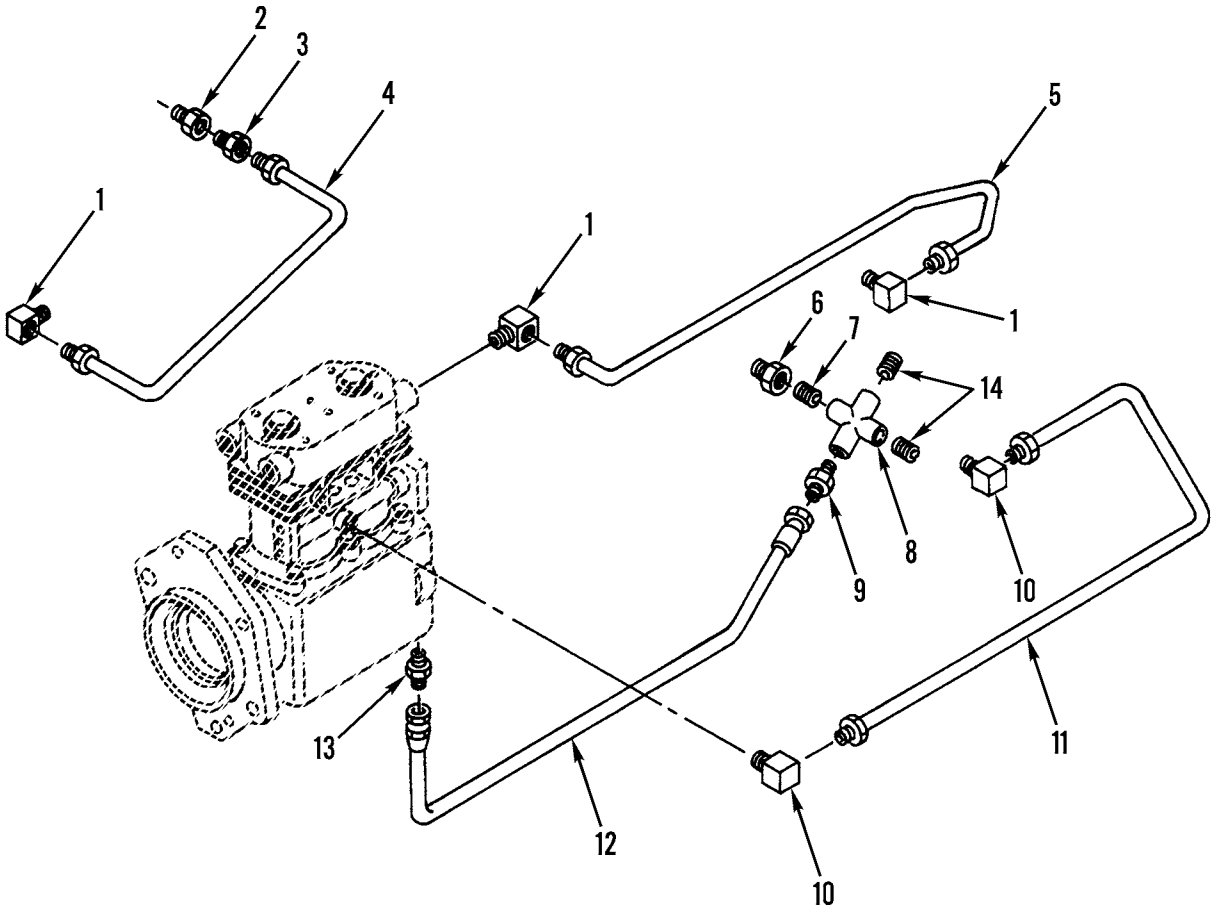

Figure 184. Air Compressor Cooling and Lubrication Lines and Fittings

(1) ITEM NO	(2) SMR CODE	(3) NSN	(4) CAGEC	(5) PART NUMBER	(6) DESCRIPTION AND USABLE ON CODES(UOC)	(7) QTY
					GROUP 1209 AIR COMPRESSOR ASSEMBLY FIG. 184 AIR COMPRESSOR COOLING AND LUBRICATION LINES AND FITTINGS	
1	PAFZZ	4730002894057	26759	101232	ELBOW,PIPE TO TUBE.....	3
2	PFFZZ	4730001930871	11083	3B7255	BUSHING,PIPE.....	1
3	PFFZZ	4730010690859	11083	5K9248	FITTING.....	2
4	PAFZZ	3110011295877	11083	2P6229	TUBE ASSY.....	1
5	PAFZZ	3110011295876	11083	2P7762	TUBE ASSY.....	1
6	PFFZZ	4730002771896	81495	S-738-16	BUSHING,PIPE.....	1
7	PAFZZ	4730001962055	96906	MS51953-25B	NIPPLE,PIPE.....	1
8	PAFZZ	4730002546373	11083	7B0192	CROSS,PIPE.....	1
9	PAFZZ	4730010579597	10988	218-444	ADAPTER,STRAIGHT,PI.....	1
10	PAFZZ	4730011434326	11083	5K9240	ELBOW,PIPE TO TUBE.....	2
11	PAFZZ	4710011432949	11083	2P7761	TUBE ASSEMBLY,METAL.....	1
12	PAFZZ	4720011431405	11083	9L5116	HOSE ASSEMBLY,NONME.....	1
13	PAFZZ	4730002890383	96906	MS51500A4	ADAPTER,STRAIGHT,PI.....	1
14	PFFZZ	4730000892515	11083	5M6213	PLUG,PIPE.....	2

END OF FIGURE

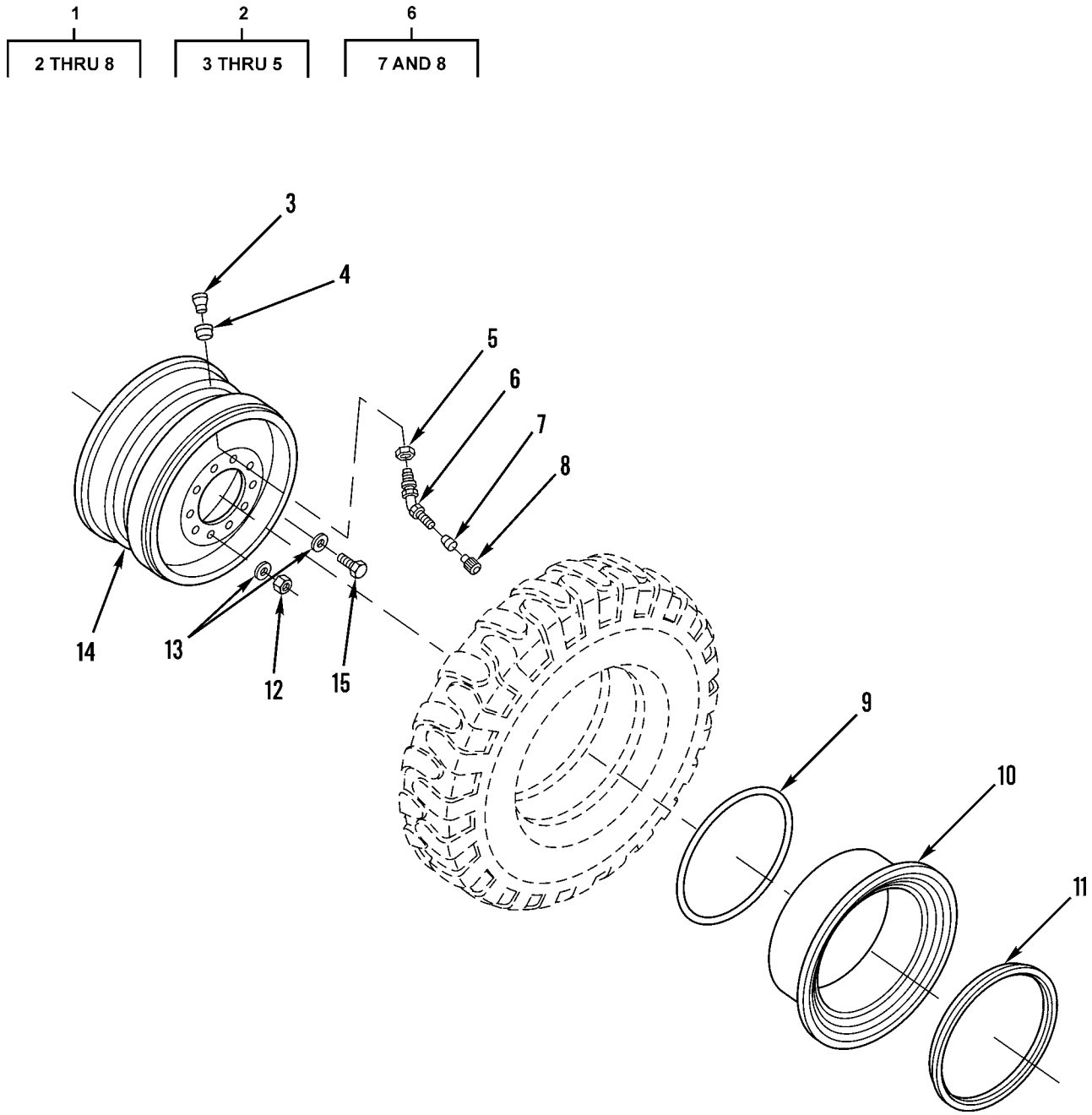

Figure 185. Wheel Assembly and Mounting

(1) ITEM NO	(2) SMR CODE	(3) NSN	(4) CAGEC	(5) PART NUMBER	(6) DESCRIPTION AND USABLE ON CODES(UOC)	(7) QTY
					GROUP 13 WHEELS AND TRACKS	
					GROUP 1311 WHEEL ASSEMBLY	
					FIG. 185 WHEEL ASSEMBLY AND MOUNTING	
1	PAOZZ	2640011033631	17875	VS-1045-2-03	VALVE,PNEUMATIC TIR.....	6
2	PAOZZ	2640009945774	17875	VS-977	.VALVE SPUD,PNEUMATI.....	1
3	PAOZZ	2640009945774	17875	VS-977-1	..VALVE SPUD,PNEUMATI.....	1
4	PAOZZ	5325010537311	17875	454	..GROMMET.....	1
5	PFOZZ	5310012715758	17875	265	..NUT,PLAIN,HEXAGON.....	1
6	XAOOO		17875	VS-1045-2-02	.STEM ASSEMBLY.....	1
7	PAOZZ	2640005372251	64441	W21666-8	..VALVE CORE.....	1
8	PAOZZ	2640006788616	81348	TYIV/CL2/TR VC7	..CAP,PNEUMATIC VALVE.....	1
9	PFOZZ	5331008154046	73842	OR224TG	O-RING.....	6
10	PAOZZ	2530008814967	20076	533047302-060	RING,SIDE,AUTOMOTIV.....	6
11	PAOZZ	2530007359029	22337	RB30475	RING,SIDE,AUTOMOTIV.....	6
12	PFOZZ	5310010362719	11083	7D8508	NUT,PLAIN,HEXAGON.....	60
13	PFOZZ	5310001918297	11083	4M6953	WASHER,FLAT.....	60
14	PAOZZ	2530011894777	11083	2G5744	WHEEL,PNEUMATIC TIR.....	6
15	PFOZZ	5306004238807	11083	2H3757	BOLT,MACHINE.....	60

END OF FIGURE



Figure 186. Tire

(1) ITEM NO	(2) SMR CODE	(3) NSN	(4) CAGEC	(5) PART NUMBER	(6) DESCRIPTION AND USABLE ON CODES(UOC)	(7) QTY
					GROUP 1313 TIRES,TUBES,TIRE CHAINS FIG. 186 TIRE	
1	PCOFH	2610005803221	81348	X/GP3/CL-G/TYBA/ 13.00-24/E	TIRE,PNEUMATIC,VEHI.....	6

END OF FIGURE

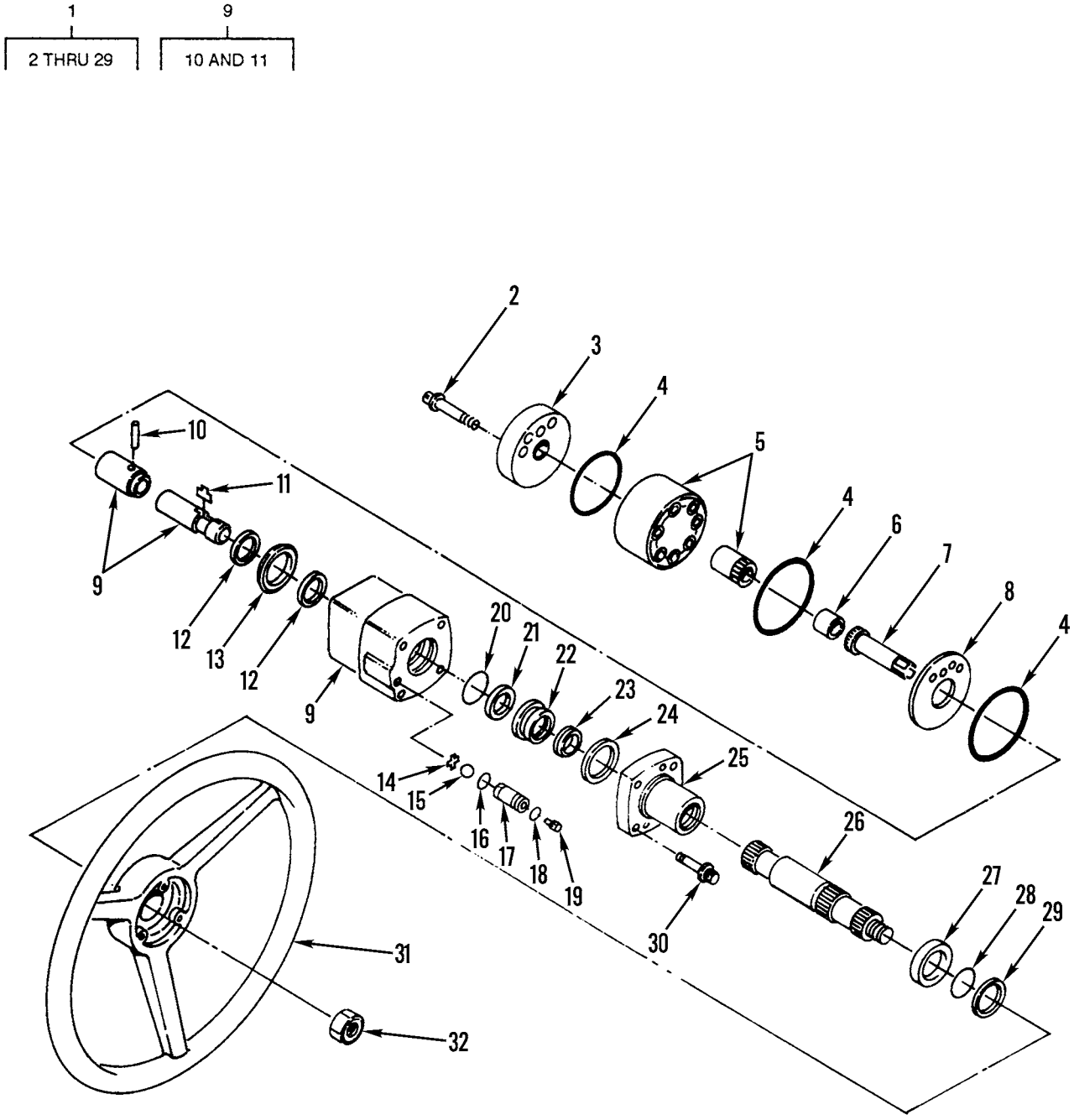

Figure 187. Steering Control Pump and Steering Wheel

(1) ITEM NO	(2) SMR CODE	(3) NSN	(4) CAGEC	(5) PART NUMBER	(6) DESCRIPTION AND USABLE ON CODES(UOC)	(7) QTY
					GROUP 14 STEERING GROUP 1410 HYDRAULIC PUMP OR FLUID MOTOR ASSEMBLY FIG. 187 STEERING CONTROL PUMP AND STEERING WHEEL	
1	XDFFF		96151	215-1001-002	VALVE,STEERING SELE.....	1
2	PFFZZ	5306010951235	11083	9J4743	.BOLT,MACHINE.....	7
3	PFFZZ	3040010812752	96151	8438	.PLATE,RETAINING,SHA.....	1
4	PCFZZ	5331010951255	11083	9J5686	.O-RING.....	3
5	XDFZZ	4320011798858	96151	8436-6	.GEAR ROTOR SET,ROTA.....	1
6	PAFZZ	5365010958676	96151	6901-11	.SPACER,SLEEVE.....	1
7	PFFZZ	3040001240880	96151	5126	.GEARSHAFT,SPUR.....	1
8	PAFZZ	5977010955206	96151	7970	.RING ASSEMBLY,ELECT.....	1
9	PFFFF	4320011798851	96151	8342	.HOUSING,LIQUID PUMP.....	1
10	PFFZZ	5315001296499	96151	15	..PIN,CENTERING.....	1
11	PAFZZ	2530007167950	96151	370	..SPRING CENTERING.....	6
12	PAFZZ	3120010877063	10988	D82804	.BEARING,WASHER,THRU.....	2
13	PAFZZ	3110010319372	11083	5L1100	.BEARING,ROLLER,NEED.....	1
14	PAFZZ	5340005989577	17875	6862	.FASTENER,FLARE LOCK.....	1
15	PAFZZ	3110011009048	96151	18001	.BALL,BEARING.....	1
16	PCFZZ	5331005913112	11083	5F9144	.O-RING.....	1
17	PAFZZ	4820010791486	96151	8318	.SEAT,VALVE.....	1
18	PFFZZ	5331009206924	11083	1H1023	.O-RING.....	1
19	PFFZZ	5305010978184	10988	D82805	.SETSCREW.....	1
20	PCFZZ	5331005277939	81343	AS3578-225	.O-RING.....	1
21	PFFZZ	5330007978389	96151	20599	.PACKING,PREFORMED.....	1
22	PAFZZ	3120010683473	96151	7443	.BUSHING,SLEEVE.....	1
23	PAFZZ	5330008541603	11083	8F5340	.SEAL,PLAIN ENCASED.....	1
24	PFFZZ	5325010853125	11671	14317	.RING,RETAINING.....	1
25	PFFZZ	4320010686066	96151	21671	.HOUSING,LIQUID PUMP.....	1
26	PFFZZ	3040011816726	96151	21332	.GEARSHAFT,SPUR.....	1
27	PAFZZ	3110004392579	24617	9418814	.BEARING,BALL,ANNULA.....	1
28	PAFZZ	5325007886043	96151	14092	.RING,RETAINING.....	1
29	PFFZZ	5325007651203	80756	RRT-137-CD	.RING,RETAINING.....	1
30	PFOZZ	5306011827662	11083	6V7692	BOLT,MACHINE..... UOC:AF9,AGP,F10	4
31	PFFZZ	2530011783167	58112	80-005	STEERING WHEEL.....	1
32	PFFZZ	5310010951524	11083	6S3065	NUT,PLAIN,HEXAGON.....	1

END OF FIGURE

1
2 THRU 7

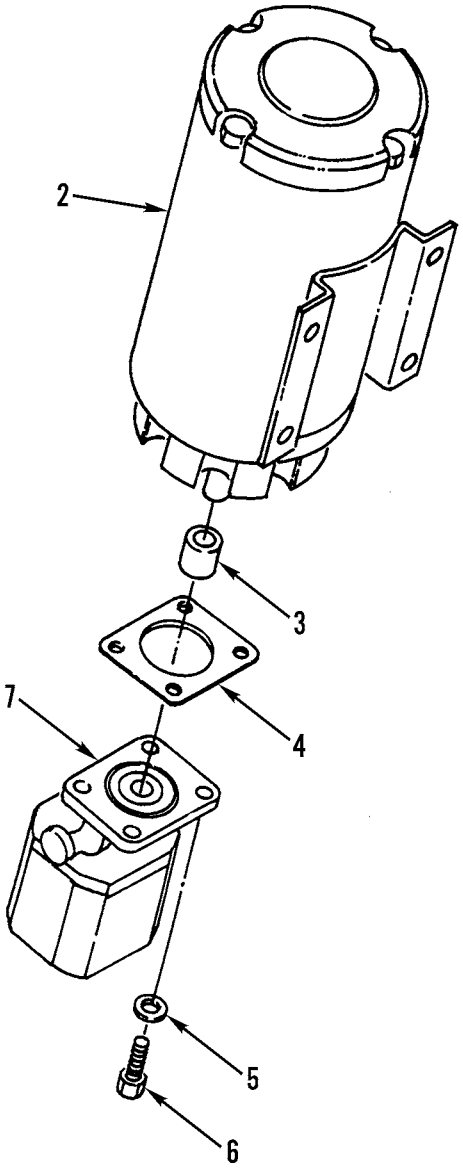

Figure 188. Supplemental Steering Pump and Mounting

(1) ITEM NO	(2) SMR CODE	(3) NSN	(4) CAGEC	(5) PART NUMBER	(6) DESCRIPTION AND USABLE ON CODES(UOC)	(7) QTY
					GROUP 1410 HYDRAULIC PUMP OR FLUID MOTOR ASSEMBLY FIG. 188 SUPPLEMENTAL STEERING PUMP AND MOUNTING	
1	PFOFF	4320011782979	70763	GC-3918-BA-1-20-1-01	PUMP UNIT,ROTARY.....	1
2	PFFZZ	6105011753076	11083	1164531	.MOTOR,DIRECT CURREN.....	1
3	PFFZZ	3010007589645	70763	GC-483	.COUPLING,SHAFT,RIGI.....	1
4	XDFZZ		70763	2260064	.GASKET.....	1
5	PFFZZ	5310004079566	96906	MS35338-45	.WASHER,LOCK.....	4
6	PFFZZ	5306002537879	11083	1T0416	.BOLT,MACHINE.....	4
7	PFFZZ	4320011783507	11083	5T2421	.HOUSING,LIQUID PUMP.....	1

END OF FIGURE

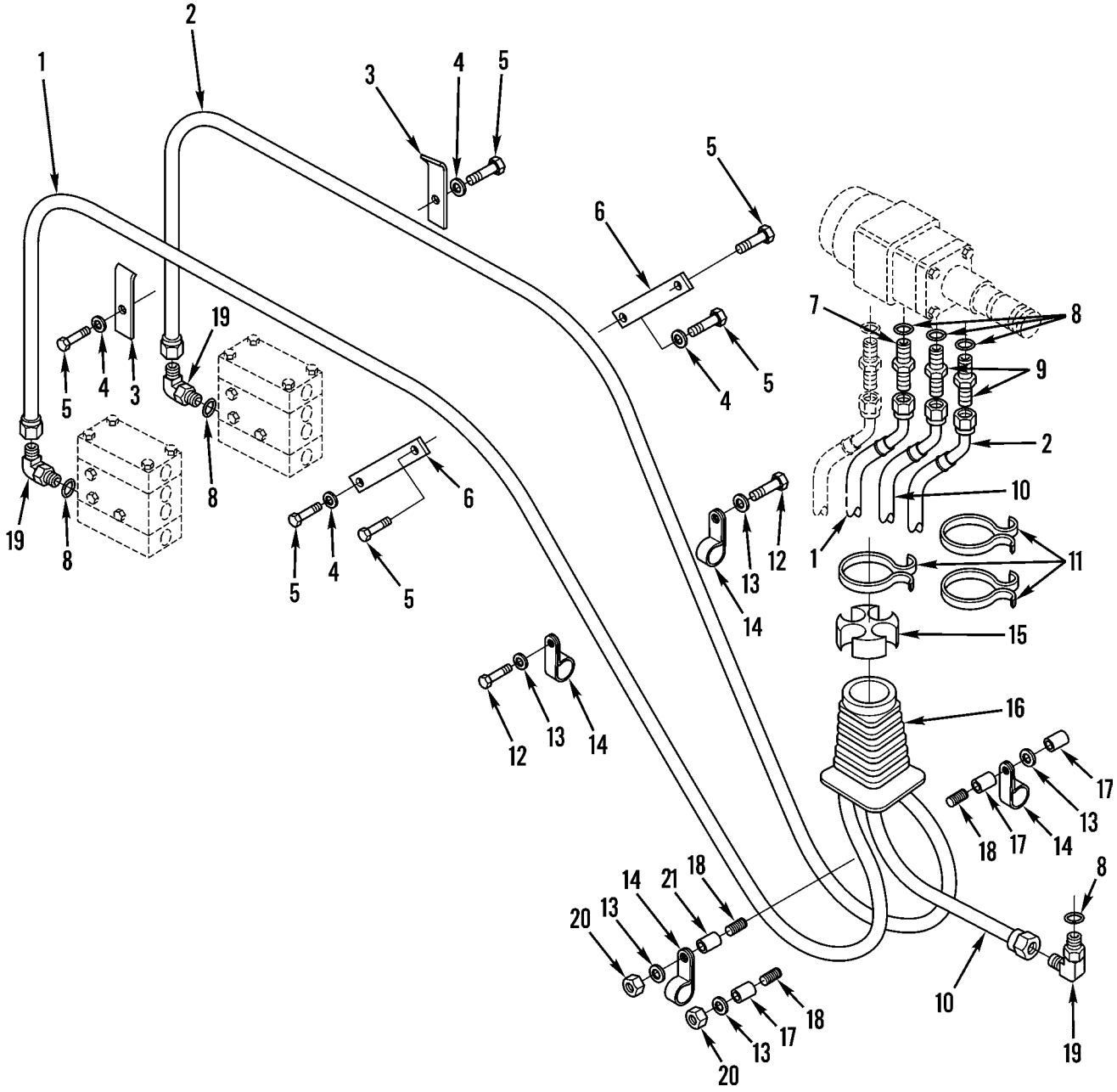

Figure 189. Steering Control Pump-to-Steering Valves Lines and Fittings (SN 7GB00001 thru 7GB01223) (Sheet 1 of 3)

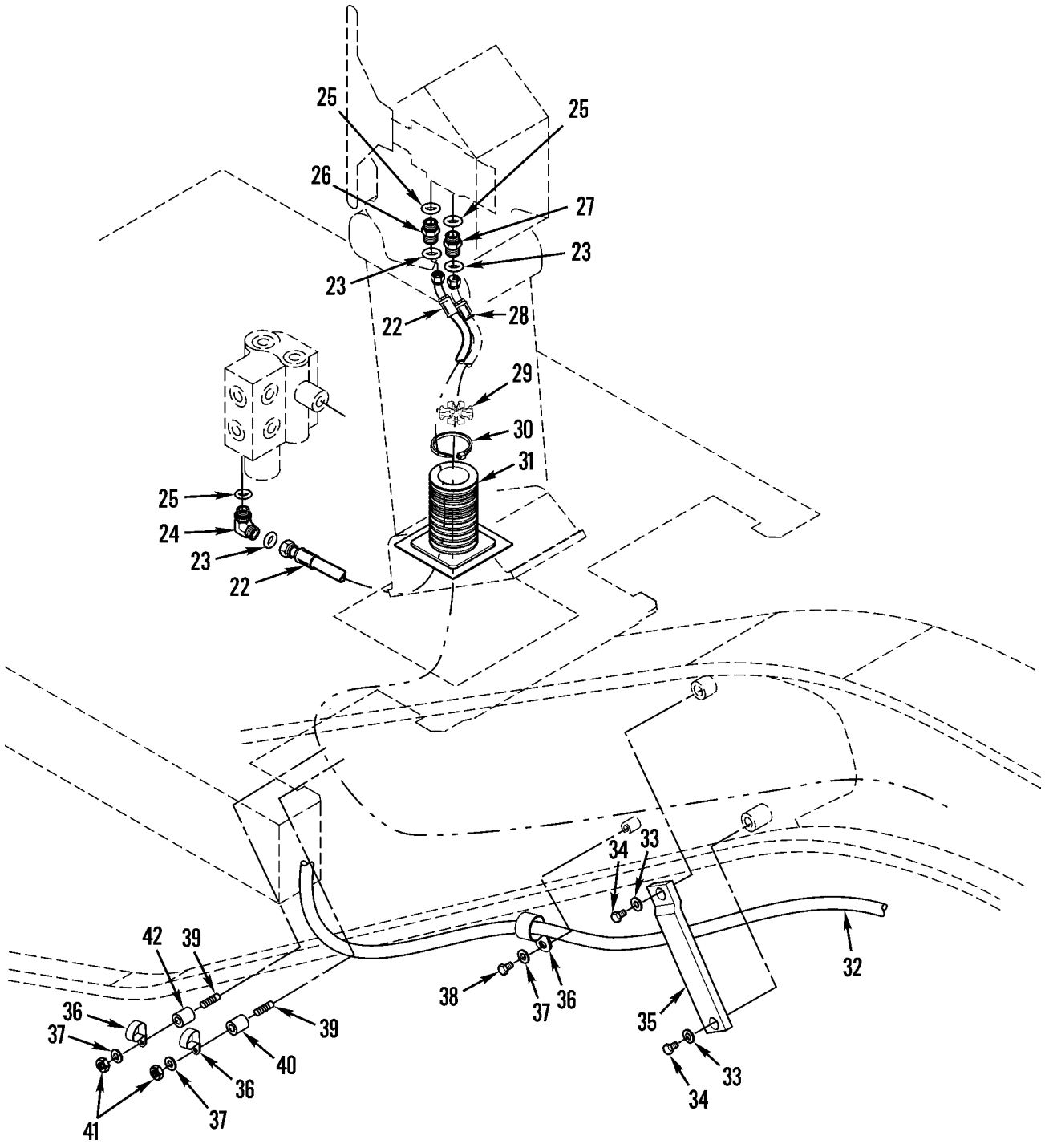

Figure 189. Steering Control Pump-to-Steering Valves Lines and Fittings (SN 7GB01224 and Up) (Sheet 2 of 3)

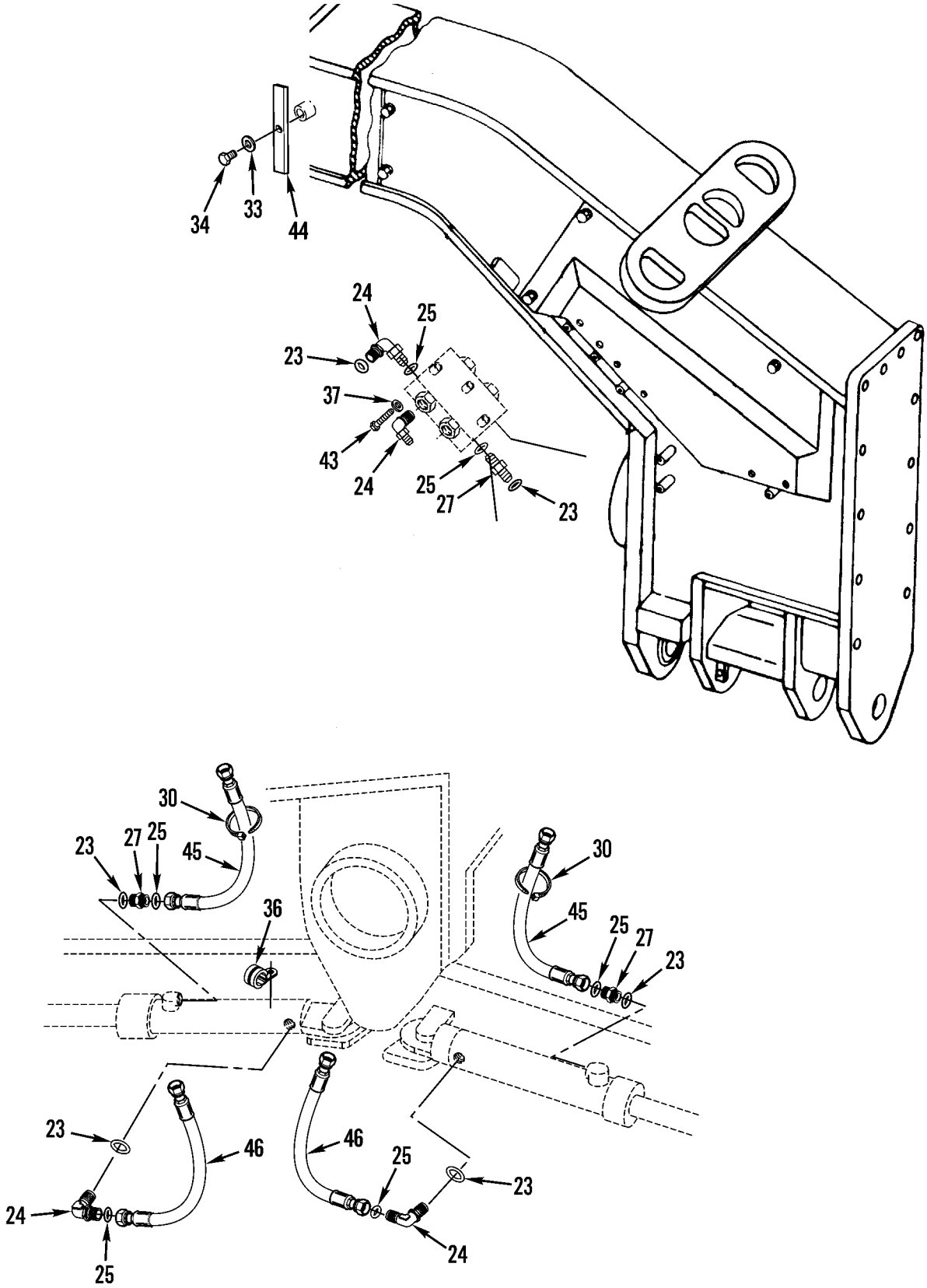

Figure 189. Steering Control Pump-to-Steering Valves Lines and Fittings (SN 7GB01224 and Up) (Sheet 3 of 3)

(1) ITEM NO	(2) SMR CODE	(3) NSN	(4) CAGEC	(5) PART NUMBER	(6) DESCRIPTION AND USABLE ON CODES(UOC)	(7) QTY
					GROUP 1411 HOSES, LINES, FITTINGS FIG. 189 STEERING CONTROL PUMP-TO-STEERING VALVES LINES AND FITTINGS	
1	PAOZZ	4720011744762	11083	6G1697	HOSE ASSEMBLY,NONME.....	1
2	PAOZZ	5340011736941	11083	6G1696	BRACKET,AIR CLEANER.....	1
3	PAOZZ	5340011756900	11083	6G1692	BRACKET,DOUBLE ANGL.....	4
4	XDOZZ		96906	MS25440-6A	WASHER,FLAT.....	7
5	PFOZZ	5306010951237	11083	6K4936	BOLT,SELF-LOCKING.....	10
6	PAOZZ	5340010956092	11083	6G1713	STRAP,RETAINING.....	2
7	PFOZZ	4730011564835	46717	AC-1-310	ADAPTER,STRAIGHT,TU..... UOC:AF9,AGN,AGP,F10	1
8	PAOZZ	5331009486482	11083	3K0360	O-RING.....	6
9	PAOZZ	4730011774705	11083	9D2673	ADAPTER,STRAIGHT,TU.....	2
10	PAOZZ	4720011761063	11083	9D5892	HOSE ASSEMBLY,NONME.....	1
11	PAOZZ	2815010534712	11083	7K1181	STRAP.....	3
12	PFOZZ	5305002528919	11083	0S0509	SCREW,CAP,HEXAGON H..... UOC:AF9,AGP,F10	2
13	PFOZZ	5310010948810	78189	3320-14-01	WASHER,SQUARE CONE.....	5
14	PFOZZ	5342010632993	11083	4S1962	CLIP.....	4
15	PAOZZ	5325010993690	11083	6G0237	GROMMET,NONMETALLIC.....	1
16	PAOZZ	9390010963473	11083	6G0208	BELLOWS,PROTECTION.....	1
17	PFOZZ	5365006507092	11083	2B0941	SPACER,SLEEVE.....	2
18	PAOZZ	5307009436167	11083	9M3296	STUD,CONTINUOUS THR..... UOC:AF9,AGP,F10	3
19	PFOZZ	4730008225609	96906	MS51527-A8	ELBOW,TUBE TO BOSS.....	3
20	PFOZZ	5310014297859	11083	6V8801	NUT,PLAIN,HEXAGON..... UOC:AF9,AGP,F10	3
21	XDOZZ		11083	9D0953	SPACER, SLEEVE.....	2
22	PAOZZ		11083	5T9724	HOSE ASSEMBLY..... UOC:AF9,AGP,F10	1
23	PCOZZ	5331005806583	11083	6V8398	O-RING..... UOC:AF9,AGP,F10	15
24	PAOZZ	4730013497772	11083	6V8625	ELBOW,TUBE TO BOSS..... UOC:AF9,AGP,F10	7
25	PAOZZ	5331009486482	11083	3K360	O-RING..... UOC:AF9,AGP,F10	15
26	PAOZZ	4730014714917	11083	8T0077	BUSHING,HOSE..... UOC:AF9,AGP,F10	2
27	PAOZZ	4730012918500	11083	6V8639	REDUCER,BOSS..... UOC:AF9,AGP,F10	6
28	PAOZZ		11083	8W0267	HOSE ASSEMBLY..... UOC:AF9,AGP,F10	1
29	PAOZZ	5325010993690	11083	6G0237	GROMMET,NONMETALLIC..... UOC:AF9,AGP,F10	1
30	PFOZZ	2815010534712	11083	7K1181	STRAP..... UOC:AF9,AGP,F10	5
31	PAOZZ	9390010963473	11083	6G0208	BELLOWS,PROTECTION..... UOC:AF9,AGP,F10	1
32	PAOZZ	4720015218813	11083	8W0269	HOSE ASSEMBLY, META..... UOC:AF9,AGP,F10	1
33	PAOZZ	5310014282756	11083	3F1417	WASHER,FLAT.....	6

(1) ITEM NO	(2) SMR CODE	(3) NSN	(4) CAGEC	(5) PART NUMBER	(6) DESCRIPTION AND USABLE ON CODES(UOC)	(7) QTY
					UOC:AF9,AGP,F10	
34	PAOZZ	5306010951237	11083	6K4936	BOLT,MACHINE.....	8
					UOC:AF9,AGP,F10	
35	PAOZZ	5340010956092	11083	6G1713	STRAP,RETAINING.....	2
					UOC:AF9,AGP,F10	
36	PAOZZ	5342010632993	11083	4S1962	CLIP.....	6
					UOC:AF9,AGP,F10	
37	PAOZZ	5310001174788	11083	9Y2695	WASHER,FLAT.....	8
					UOC:AF9,AGP,F10	
38	PFOZZ	5305002528919	11083	0S0509	SCREW,CAP,HEXAGON H.....	2
					UOC:AF9,AGP,F10	
39	PAOZZ	5307009436167	11083	9M3296	STUD,CONTINUOUS THR.....	3
					UOC:AF9,AGP,F10	
40	PAOZZ		11083	9D0953	SPACER, SLEEVE.....	1
					UOC:AF9,AGP,F10	
41	PAOZZ	5310014297859	11083	6V8801	NUT,PLAIN,HEXAGON.....	3
					UOC:AF9,AGP,F10	
42	PAOZZ	5365006507092	11083	2B0941	SPACER,SLEEVE.....	2
					UOC:AF9,AGP,F10	
43	PAOZZ	5305002528906	11083	0T0065	SCREW.....	3
					UOC:AF9,AGP,F10	
44	PAOZZ	5340011756900	11083	6G1692	BRACKET,DOUBLE ANGL.....	4
					UOC:AF9,AGP,F10	
45	PAOZZ		11083	8W0268	HOSE ASSEMBLY, META.....	2
					UOC:AF9,AGP,F10	
46	PAOZZ	4720015218798	11083	8W0266	HOSE ASSEMBLY, META.....	2
					UOC:AF9,AGP,F10	

END OF FIGURE

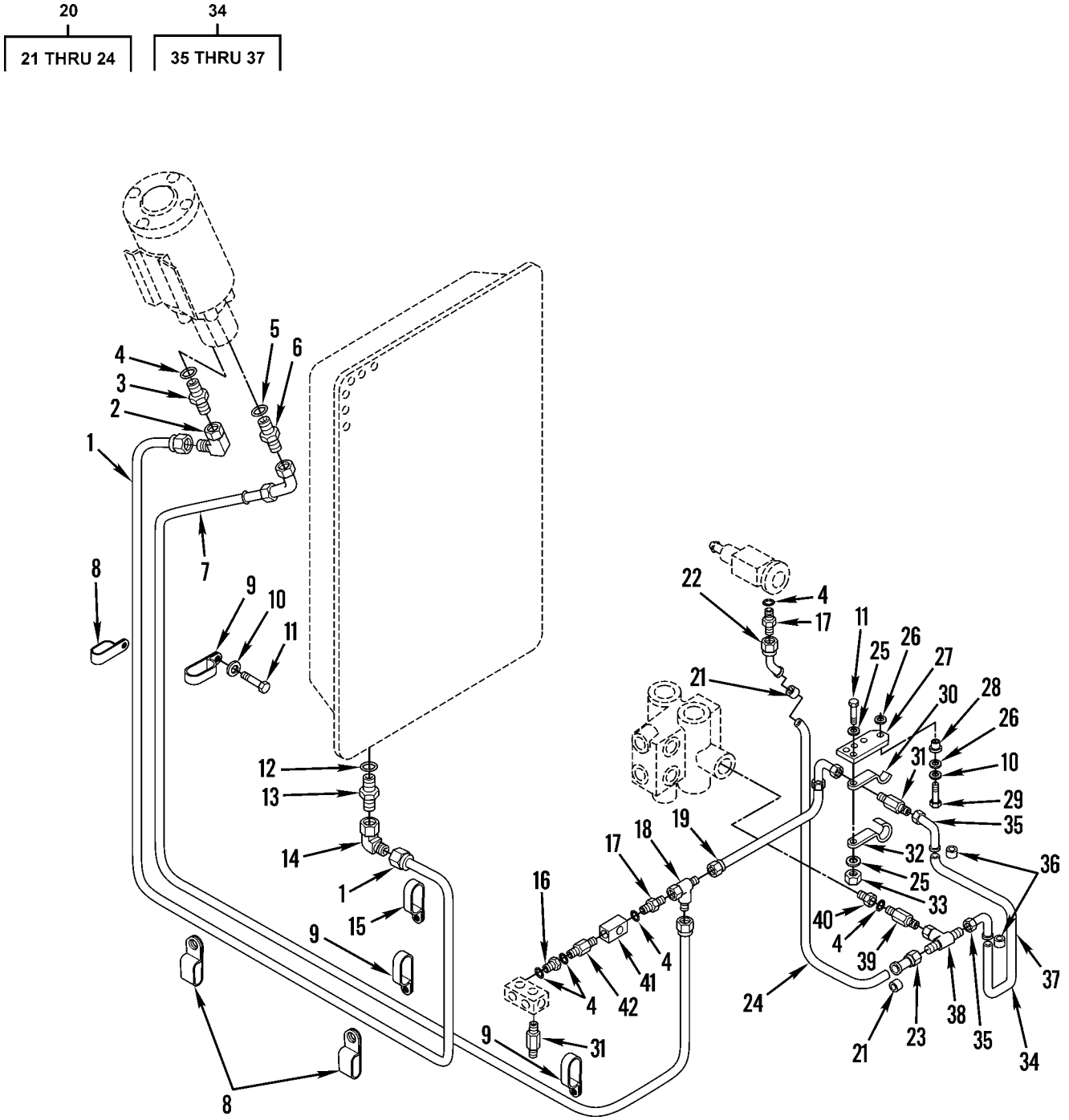

Figure 190. Supplemental Steering Lines and Fittings (SN 7GB00001 thru 7GB01223 and SN 74V01965 thru 74V02006) (Sheet 1 of 6)

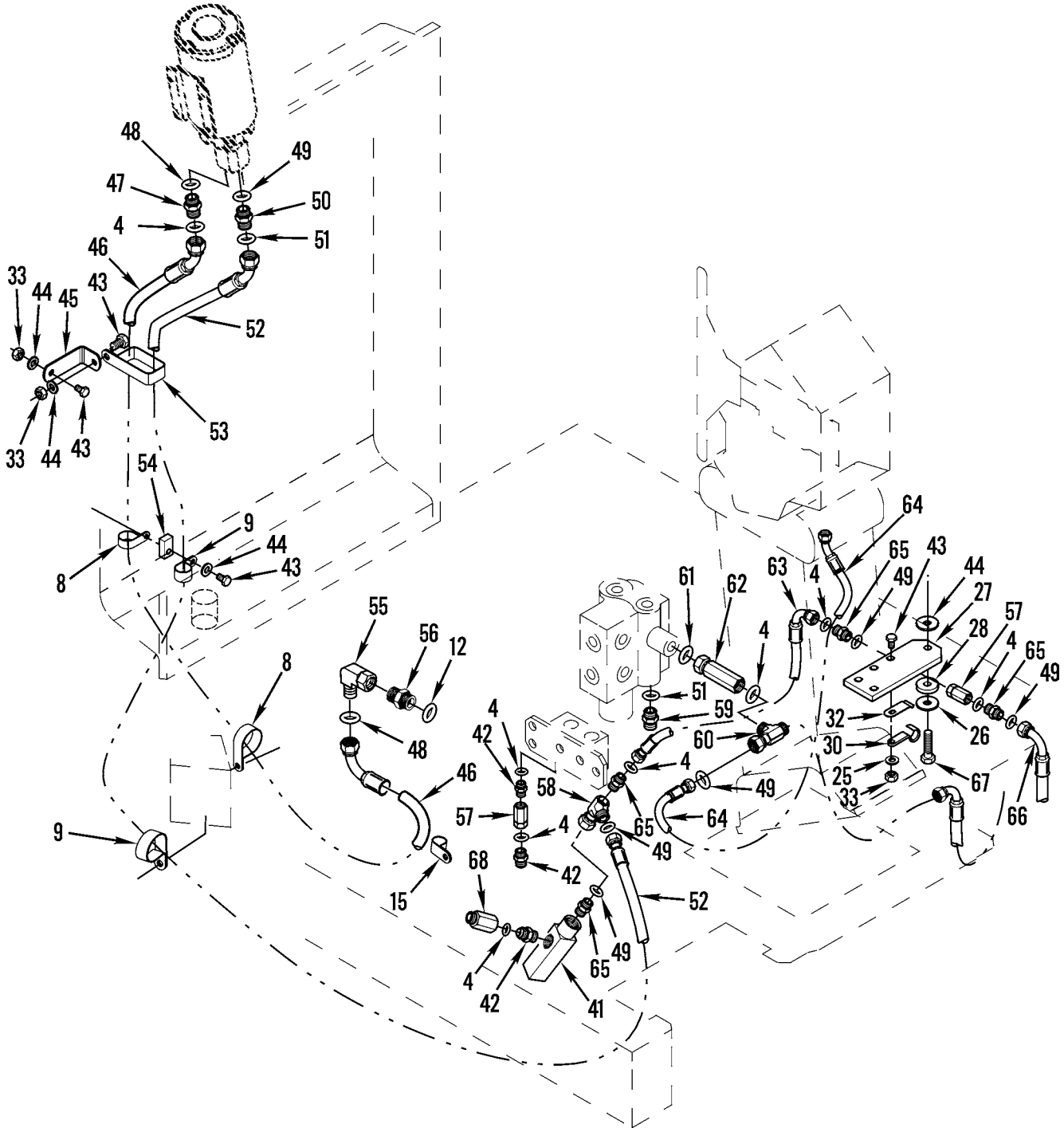

Figure 190. Supplemental Steering Lines and Fittings (SN 7GB01224 and Up) (Sheet 2 of 6)

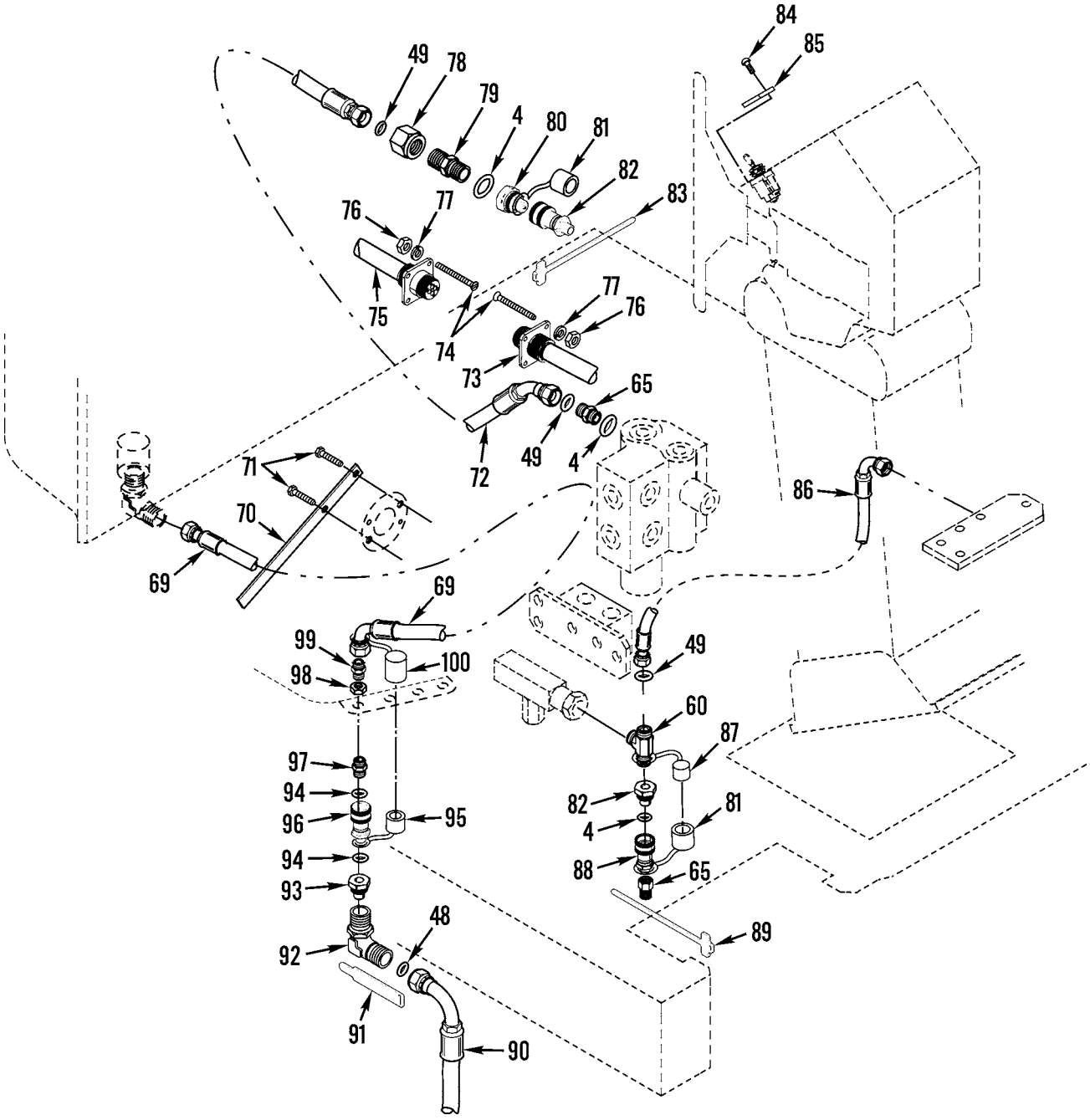

Figure 190. Supplemental Steering Lines and Fittings (SN 7GB01224 and Up) (Sheet 3 of 6)

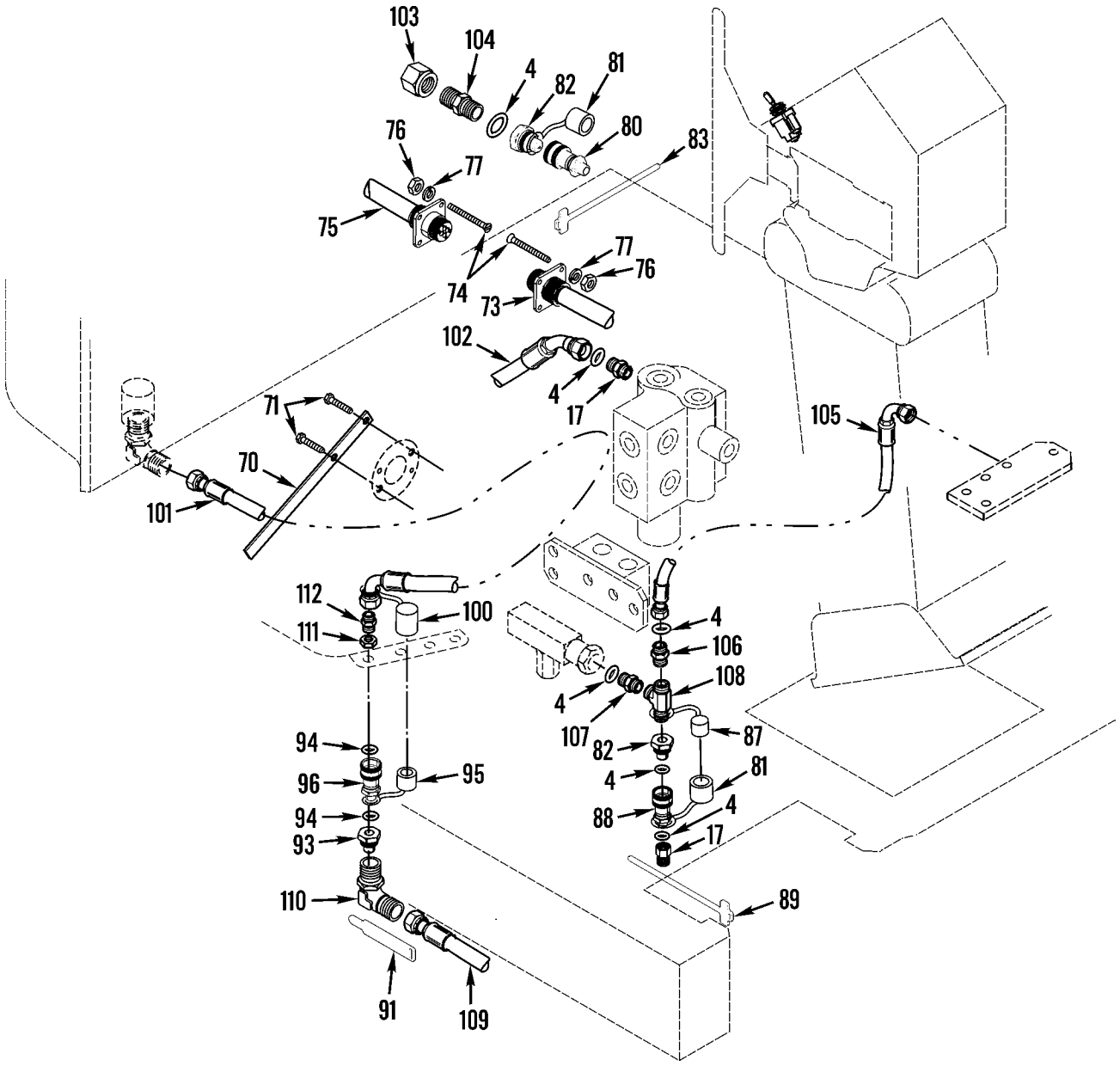

Figure 190. Supplemental Steering Lines and Fittings (Sheet 4 of 6)

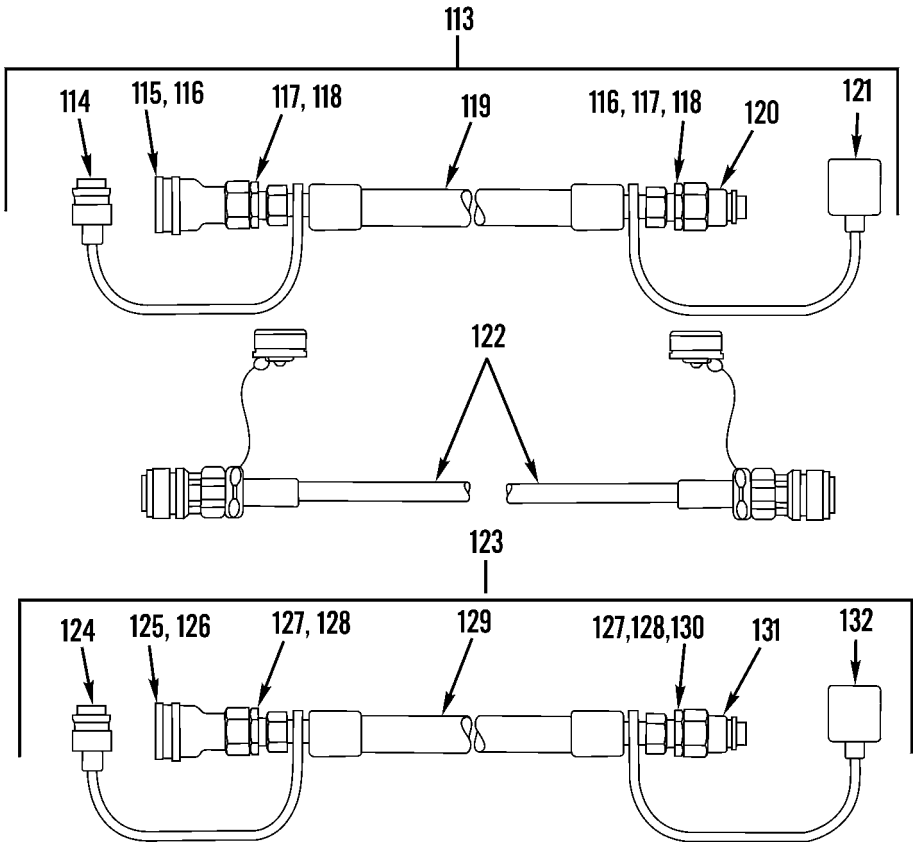

Figure 190. Supplemental Steering Lines and Fittings (Sheet 5 of 6)

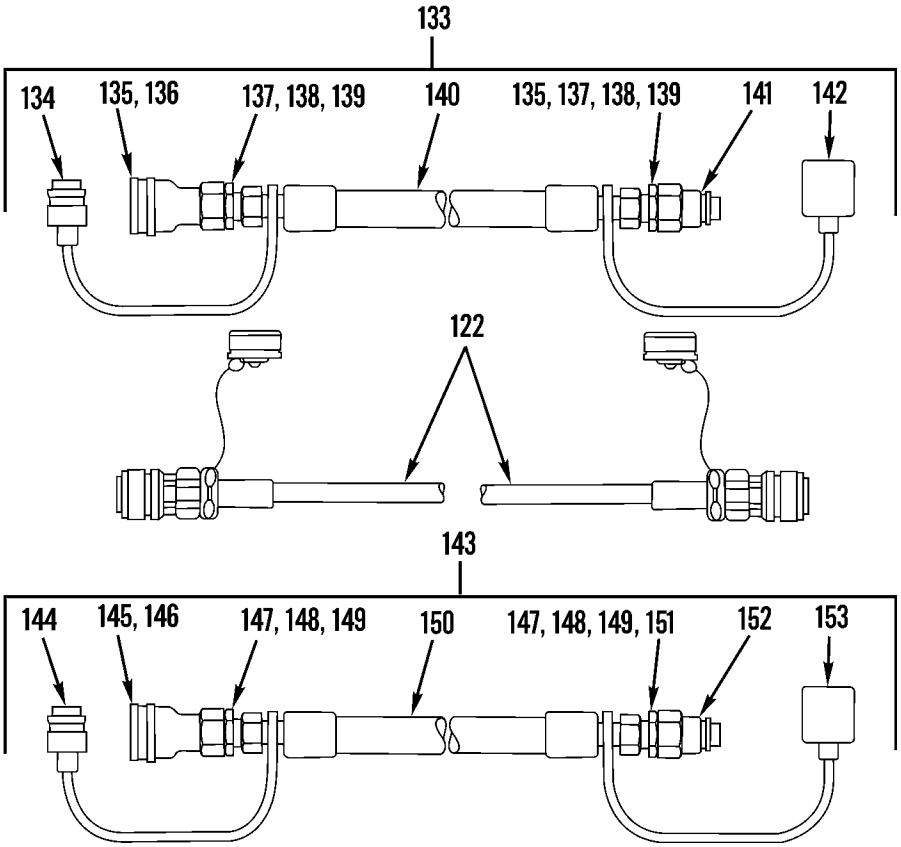

Figure 190. Supplemental Steering Lines and Fittings (SN 7GB01224 and Up) (Sheet 6 of 6)

(1) ITEM NO	(2) SMR CODE	(3) NSN	(4) CAGEC	(5) PART NUMBER	(6) DESCRIPTION AND USABLE ON CODES(UOC)	(7) QTY
					GROUP 1411 HOSES, LINES, FITTINGS FIG. 190 SUPPLEMENTAL STEERING LINES AND FITTINGS	
1	PAOZZ	4720011737691	11083	5T2358	HOSE ASSEMBLY,NONME.....	1
2	PFOZZ	4730011691945	11083	0307965	ELBOW,TUBE.....	1
3	PFOZZ	4730011734133	11083	5P2574	ADAPTER,STRAIGHT,TU.....	1
4	PAOZZ	5331009486482	11083	3K360	O-RING..... UOC:AGM	4
4	PAOZZ	5331009486482	11083	3K0360	O-RING SERIAL NUMBER 7GB01224 AND UP..... UOC:AGP	9
4	PAOZZ	5331009486482	11083	3K0360	O-RING.....	5
5	PCOZZ	5331008013354	25184	906-737-70	O-RING..... UOC:AF9,AGP,F10	1
6	PFOZZ	3805010532703	11083	8M0506	CONNECTOR.....	1
7	PAOZZ	4720011736915	11083	5T2356	HOSE ASSEMBLY,NONME.....	1
8	PAOZZ	5340011685602	11083	4S4455	CLIP,SPRING TENSION.....	3
9	PFOZZ	5342010632993	11083	4S1962	CLIP.....	3
10	PFOZZ	5310001174788	11083	5M2894	WASHER,FLAT..... UOC:AF9,AGP,F10	4
11	PFOZZ	5306002604508	11083	0S1594	BOLT,MACHINE..... UOC:AF9,AGP,F10	2
12	PFOZZ	5330009309407	11083	7M8485	SEAL,ADAPTER,MOTOR.....	1
13	PAOZZ	4730001731881	96906	MS51525A12-16	ADAPTER,STRAIGHT,TU..... UOC:AF9,AGP,F10	1
14	PFOZZ	4730001333196	96906	MS51521A12	ELBOW,TUBE.....	1
15	PAOZZ	5340011699678	11083	8D9947	CLAMP,LOOP.....	1
16	PFOZZ	4730004130219	98441	6-8-F50G5-S	REDUCER,BOSS.....	1
17	PAOZZ		11083	8M0505	ADAPTER,STRAIGHT,TU.....	2
18	PAOZZ	4730004914983	01276	203102-8-8S	TEE,TUBE.....	1
19	PAOZZ	4720011815785	11083	9D5907	HOSE ASSEMBLY,NONME..... UOC:AF9,AGP,F10	1
20	PAOZZ	4720011792476	11083	5T5191	HOSE ASSEMBLY,NONME..... UOC:AF9,AGP,F10	1
21	PAOZZ	4720010517602	11083	3S8606	.SLEEVE.....	2
22	PAOZZ	4730010637866	11083	9S9727	.ELBOW,TUBE TO HOSE.....	1
23	PAOZZ	4730010517605	11083	8S4055	.ADAPTER,STRAIGHT,TU.....	1
24	MOOZZ		11083	1650017-55	.HOSE,NONMETALLIC MAKE FROM P/N 1650017.....	1
25	PFOZZ	5310010980625	11083	6N8863	WASHER,FLAT.....	2
26	PFOZZ	5310006984460	11083	0L1319	WASHER,FLAT..... UOC:AF9,AGP,F10	6
27	XAOZZ		11083	8D9919	PLATE.....	1
28	PFOZZ	5330010625887	11083	1P7115	GROMMET ASSY..... UOC:AF9,AGP,F10	3
29	PFOZZ	5306011954681	11083	3B1915	BOLT..... UOC:AF9,AGP,F10	3
30	PFOZZ	5340011852058	11083	6K9549	STRAP,RETAINING.....	1
31	PFOZZ	4820011694643	8Z296	3CM12-8T-3-SV	VALVE,CHECK.....	2
32	PFOZZ	5340011783770	11083	6K9550	CLIP,SPRING TENSION..... UOC:AF9,AGP,F10	1

(1) ITEM NO	(2) SMR CODE	(3) NSN	(4) CAGEC	(5) PART NUMBER	(6) DESCRIPTION AND USABLE ON CODES(UOC)	(7) QTY
33	PFOZZ	5310014297859	11083	6V8801	NUT,PLAIN,HEXAGON..... UOC:AF9,AGP,F10	1
33	PAOZZ	5310014297859	11083	6V8801	NUT,PLAIN,HEXAGON SERIAL NUMBER 7GB01224 AND UP..... UOC:AF9,AGP,F10	2
34	PAOZZ	4720011792475	11083	5T5190	HOSE ASSEMBLY,NONME..... UOC:AF9,AGP,F10	1
35	PAOZZ	4730010689756	11083	8S6391	.ELBOW,TUBE TO HOSE.....	2
36	PAOZZ	4720010517602	11083	3S8606	.SLEEVE.....	2
37	MOOZZ		11083	1650017-18	.HOSE,NONMETALLIC MAKE FROM P/N 1650017.....	1
38	PAOZZ	4730004914983	01276	203102-8-8S	TEE,TUBE..... UOC:AF9,AGP,F10	1
39	PFFZZ	4820011811833	11083	4T5867	VALVE,CHECK..... UOC:AF9,AGP,F10	1
40	PAFZZ	4730011583563	30780	10-8F5G5-S	ADAPTER,STRAIGHT,TU..... UOC:AF9,AGP,F10	1
41	PFOZZ	4820011856652	11083	4T1056	VALVE,SAFETY RELIEF.....	1
42	PAOZZ	4730011697303	30780	8-F5F5-S(SPL)	NIPPLE,BOSS.....	1
43	PAOZZ	5306002286835	11083	4L6454	BOLT,MACHINE.....	3
44	PAOZZ	5310012866079	11083	8T4896	WASHER,FLAT..... UOC:AF9,AGP,F10	6
45	PAOZZ	5342010642060	11083	9L1566	SUPPORT..... UOC:AF9,AGP,F10	1
46	PAOZZ	4720015213678	11083	8W0216	HOSE, ASSEMBLY META..... UOC:AF9,AGP	1
47	PAOZZ	4730015213395	11083	6V9874	ADAPTER, STRAIGHT P..... UOC:AF9,AGP,F10	1
48	PCOZZ	5331010584030	11083	6V9746	O-RING..... UOC:AF9,AGP,F10	3
49	PCOZZ	5331005806583	77308	568-014-4200-70	O-RING..... UOC:AF9,AGP,F10	8
50	PAOZZ	4730015210430	11083	8T5050	ADAPTER, STRAIGHT P..... UOC:AF9,AGP,F10	1
51	PFHZZ		11083	3E8905	GASKET AND PREFORME PART OF KIT P/N 3E8905..... UOC:AF9,AGP,F10	2
52	PAOZZ	4720015246961	11083	8W0215	HOSE, ASSY METALLIC..... UOC:AF9,AGP,F10	1
53	PAOZZ	5325014144843	11083	9D1829	FASTENER,SPRING TEN..... UOC:AF9,AGP,F10	1
54	PAOZZ	5365015209680	11083	2B9828	SPACER, STRAIGHT..... UOC:AF9,AGP,F10	1
55	PAOZZ	4730014714407	11083	6V9853	ELBOW,SWIVEL FLANGE..... UOC:AF9,AGP,F10	1
56	PAOZZ	3120014713789	11083	6V8716	BUSHING,SLEEVE..... UOC:AF9,AGP,F10	1
57	PAOZZ	4820015207398	11083	9T0886	VALVE, CHECK..... UOC:AF9,AGP,F10	2
58	PAOZZ	4730014714239	11083	6V9837	TEE,TUBE..... UOC:AF9,AGP,F10	1
59	PAOZZ	4730002581864	96906	MS51525B4-6	ADAPTER,STRAIGHT,TU.....	1

(1) ITEM NO	(2) SMR CODE	(3) NSN	(4) CAGEC	(5) PART NUMBER	(6) DESCRIPTION AND USABLE ON CODES(UOC)	(7) QTY
					UOC:AF9,AGP,F10	
60	PAOZZ	4730012697900	01276	FF1861T-0808S	TEE,TUBE TO BOSS.....	1
					UOC:AF9,AGP,F10	
61	PAOZZ	5330009390687	11083	2M9780	PACKING,PREFORMED.....	1
					UOC:AF9,AGP,F10	
62	PAOZZ	4820015207407	11083	9T0885	VALVE, CHECK.....	1
					UOC:AF9,AGP,F10	
63	PAOZZ	4720015213396	11083	5T9881	HOSE ASSY, METALLIC.....	1
					UOC:AF9,AGP,F10	
64	PAOZZ	4720015218810	11083	5T9903	HOSE ASSY, METALLIC.....	1
					UOC:AF9,AGP,F10	
65	PAOZZ	4730012918500	11083	6V8639	REDUCER,BOSS.....	2
					UOC:F10	
65	PAOZZ	4730012918500	11083	6V8639	REDUCER,BOSS SERIAL NUMBER 7GB01224 AND UP.....	4
					UOC:AF9,AGP,F10	
66	PAOZA	4720015207939	11083	5T9902	HOSE ASSY, METALLIC.....	1
					UOC:AF9,AGP,F10	
67	PAOZZ	5306012853987	11083	5S7382	BOLT,MACHINE.....	3
					UOC:AF9,AGP,F10	
68	PAOZZ	4730012306610	30780	6-8-F5G5-S	REDUCER,BOSS.....	1
					UOC:AF9,AGP,F10	
69	PAOZZ		11083	5R8403	HOSE ASSY.....	1
					UOC:F10	
70	PAOZZ	5340012931047	11083	5R7075	PLATE,MENDING.....	1
					UOC:AGM,F10	
71	PAOZZ	5306000635001	11083	1A2209	BOLT,MACHINE.....	2
					UOC:AGM,F10	
72	PAOZZ	4720015217418	11083	5R8405	HOSE ASSEMBLY, META.....	1
					UOC:F10	
73	PAOZZ	2920011741193	11083	5R6926	LEAD,IGNITION,ENGIN.....	1
					UOC:AGM,F10	
74	PAOZZ	5305008892999	96906	MS35206-217	SCREW,MACHINE.....	8
					UOC:AGM,F10	
75	PAOZZ	5995011741194	11083	5R6924	LEAD,ELECTRICAL.....	1
					UOC:AGM,F10	
76	PAOZZ	5310011635805	11083	6B4540	NUT,PLAIN,HEXAGON.....	8
					UOC:AGM,F10	
77	PAOZZ	5310004341347	11083	6B4542	WASHER,LOCK.....	8
					UOC:AGM,F10	
78	PAOZZ	5310012932892	11083	6V9169	NUT,PLAIN,HEXAGON.....	1
					UOC:F10	
79	PAOZZ	4730012918496	11083	6V8995	ADAPTER,STRAIGHT,TU.....	1
					UOC:F10	
80	PAOZZ	4730012928206	11083	7X3164	ADAPTER,STRAIGHT,TU.....	2
					UOC:F10	
81	PAOZZ	5340000713836	01276	5657-10	CAP,PROTECTIVE,DUST.....	2
					UOC:AGM,F10	
82	PAOZZ	4730004396020	01276	5610-8-10S	COUPLING HALF,QUICK.....	2
					UOC:F10	
83	PAOZZ	9905011821902	11083	8K2706	BAND,MARKER.....	1
					UOC:AGM,F10	

(1) ITEM NO	(2) SMR CODE	(3) NSN	(4) CAGEC	(5) PART NUMBER	(6) DESCRIPTION AND USABLE ON CODES(UOC)	(7) QTY
84	PAOZZ	5305002535615	80205	MS21318-21	SCREW,DRIVE..... UOC:AF9,AGM,AGN,F10	4
85	PAOZZ	9905012952486	11083	5R8343	PLATE,IDENTIFICATIO..... UOC:F10	1
86	PAOZZ	4720015217421	11083	5R8402	HOSE ASSEMBLY, META..... UOC:F10	1
87	PAOZZ	4730011285831	01276	5659-10	PLUG,QUICK DISCONNE..... UOC:AGM,F10	1
88	PAOZZ	4730002268127	01276	5608-8-10S	COUPLING HALF,QUICK..... UOC:AGM,F10	1
89	PAOZZ		11083	0680592	TAG, MARKER..... UOC:AGM,F10	2
90	PAOZZ	4720015217425	11083	5R8404	HOSE ASSEMBLY, META..... UOC:F10	1
91	PAOZZ	9905011712860	11083	3V9538	TAG,MARKER..... UOC:AGM	2
92	PAOZZ	4730012918498	11083	6V9007	ELBOW,TUBE TO BOSS..... UOC:F10	1
93	PAOZZ	4730011746163	01276	5608-12-12S	COUPLING HALF,QUICK..... UOC:AGM,F10	1
94	PCOZZ	5331009448281	11083	3D2824	O-RING..... UOC:AGM,AGP,F10	2
95	PAOZZ	5340010131040	01276	5659-12	PLUG,PROTECTIVE,DUS..... UOC:AGM,F10	1
96	PAOZZ	4730012424573	01276	5610-12-12S	COUPLING HALF,QUICK..... UOC:AGM,F10	2
97	PAOZZ	4730012918497	11083	7X3166	ADAPTER,STRAIGHT,TU..... UOC:F10	1
98	PAOZZ	5310012928365	11083	2P1293	NUT,SELF-LOCKING,HE..... UOC:F10	1
99	PAOZZ	4730012918495	11083	6V8997	ADAPTER,STRAIGHT,TU..... UOC:F10	1
100	PAOZZ	5340000713834	01276	5657-12	CAP,PROTECTIVE,DUST..... UOC:AGM,F10	1
101	PAOZZ		11083	5R6323	HOSE ASSY..... UOC:AGM,F10	1
102	PAOZZ		11083	5R6326	HOSE ASSY..... UOC:AGM,F10	1
103	PFOZZ	4730011439017	30780	8WLN-C	LOCKNUT,TUBE FITTIN..... UOC:AGM,F10	1
104	PAOZZ	4730011795396	11083	2P1281	NIPPLE,TUBE..... UOC:AGM,F10	1
105	PAOZZ		11083	5R6325	HOSE ASSY..... UOC:AF9,AGM,F10	1
106	PAOZZ	4730009330727	30780	8-6-F5G5-S	REDUCER,BOSS..... UOC:AF9,AGP,F10	1
107	PAOZZ	4730002759432	01276	226601-6-8S	ADAPTER,STRAIGHT,TU..... UOC:AGM,F10	1
108	PAOZZ		11083	0307959	TEE..... UOC:AGM	1
109	PAOZZ		11083	5R6324	HOSE ASSY..... UOC:AGM,F10	1

(1) ITEM NO	(2) SMR CODE	(3) NSN	(4) CAGEC	(5) PART NUMBER	(6) DESCRIPTION AND USABLE ON CODES(UOC)	(7) QTY
110	PAOZZ	4730010634224	11083	0307950	ELBOW,TUBE TO BOSS..... UOC:AGM	1
111	PAOZZ	5310010675658	11083	6K8420	NUT..... UOC:AGM,F10	1
112	PAOZZ	4730009330816	11083	2P1283	ADAPTER,STRAIGHT,TU..... UOC:AGM,F10	1
113	PAOZZ	4720011692659	11083	5R6910	HOSE ASSEMBLY,NONME..... UOC:AGM,F10	1
114	PAOZZ	5340010131040	01276	5659-12	.PLUG,PROTECTIVE,DUS..... UOC:AGM,F10	1
115	PAOZZ	4730011746163	01276	5608-12-12S	.COUPLING HALF,QUICK..... UOC:AGM,F10	1
116	PAOZZ	9905011712860	11083	3V9538	.TAG,MARKER..... UOC:AGM	2
117	PAOZZ	4730007105571	96906	MS51525A12	.ADAPTER,STRAIGHT,TU..... UOC:AGM	2
118	PAOZZ	5331009448281	11083	3D2824	.O-RING..... UOC:AGM	2
119	PAOZZ		11083	5R6908	.HOSE ASSY..... UOC:AGM,F10	1
120	PAOZZ	4730012424573	01276	5610-12-12S	.COUPLING HALF,QUICK..... UOC:AGM	1
121	PAOZZ	5340000713834	01276	5657-12	.CAP,PROTECTIVE,DUST..... UOC:AGM,F10	1
122	PAOZZ	5995011697620	11083	5R7028	CABLE ASSEMBLY,SPEC..... UOC:AGM,F10	1
123	PAOZZ	4720011699603	11083	5R6909	HOSE ASSEMBLY,NONME..... UOC:AGM,F10	1
124	PAOZZ	4730011285831	01276	5659-10	.PLUG,QUICK DISCONNE..... UOC:AGM,F10	1
125	PAOZZ	4730002268127	01276	5608-8-10S	.COUPLING HALF,QUICK..... UOC:AGM,F10	1
126	PAOZZ	9905011821902	11083	8K2706	.BAND,MARKER..... UOC:AGM,F10	1
127	PAOZZ	4730010664586	11083	8M0505	.ADAPTER,STRAIGHT,TU..... UOC:AGM	2
128	PAOZZ	5331009486482	11083	3K360	.O-RING..... UOC:AGM	1
129	PAOZZ		11083	5R6907	.HOSE ASSY..... UOC:AGM,F10	1
130	PAOZZ		11083	0680592	.TAG, MARKER..... UOC:AGM	1
131	PAOZZ	4730004396020	01276	5610-8-10S	.COUPLING HALF,QUICK..... UOC:F10	1
132	PAOZZ	5340000713836	01276	5657-10	.CAP,PROTECTIVE,DUST..... UOC:AGM,F10	1
133	PAOOF	4720012888509	11083	5R8412	HOSE ASSEMBLY,NONME..... UOC:F10	1
134	PAOZZ	5340010131040	01276	5659-12	.PLUG,PROTECTIVE,DUS..... UOC:F10	1
135	PAOZZ	4730011746163	01276	5608-12-12S	.COUPLING HALF,QUICK..... UOC:F10	1

(1) ITEM NO	(2) SMR CODE	(3) NSN	(4) CAGEC	(5) PART NUMBER	(6) DESCRIPTION AND USABLE ON CODES(UOC)	(7) QTY
136	PAOZZ	9905011712860	11083	3V9538	.TAG,MARKER..... UOC:F10	2
137	PAOZZ	4730012918501	11083	6V8637	.REDUCER,BOSS..... UOC:F10	2
138	PCOZZ	5331009448281	11083	3D2824	.O-RING..... UOC:AGM,AGN,F10	2
139	PCOZZ	5331004008480	07988	1-018	.O-RING..... UOC:F10	2
140	PAOZZ		11083	5R8413	.HOSE ASSY..... UOC:F10	1
141	PAOZZ	4730012424573	01276	5610-12-12S	.COUPLING HALF,QUICK..... UOC:F10	1
142	PAOZZ	5340000713834	01276	5657-12	.CAP,PROTECTIVE,DUST..... UOC:AGM,F10	1
143	PAOOO		11083	5R8410	HOSE ASSEMBLY..... UOC:F10	1
144	PAOZZ	4730011285831	01276	5659-10	.PLUG,QUICK DISCONNE..... UOC:F10	1
145	PAOZZ	4730002268127	01276	5608-8-10S	.COUPLING HALF,QUICK..... UOC:F10	1
146	PAOZZ	9905011821902	11083	8K2706	.BAND,MARKER..... UOC:F10	1
147	PAOZZ	4730012918500	11083	6V8639	.REDUCER,BOSS..... UOC:F10	2
148	PAOZZ	5331009486482	11083	3K360	.O-RING..... UOC:F10	2
149	PCOZZ	5331005806583	77308	568-014-4200-70	.O-RING..... UOC:F10	2
150	PAOZZ		11083	5R8411	.HOSE ASSY..... UOC:F10	1
151	PAOZZ		11083	0680592	.TAG, MARKER..... UOC:F10	1
152	PAOZZ	4730004396020	01276	5610-8-10S	.COUPLING HALF,QUICK..... UOC:F10	1
153	PAOZZ	5340000713836	01276	5657-10	.CAP,PROTECTIVE,DUST..... UOC:AGM,F10	1

END OF FIGURE

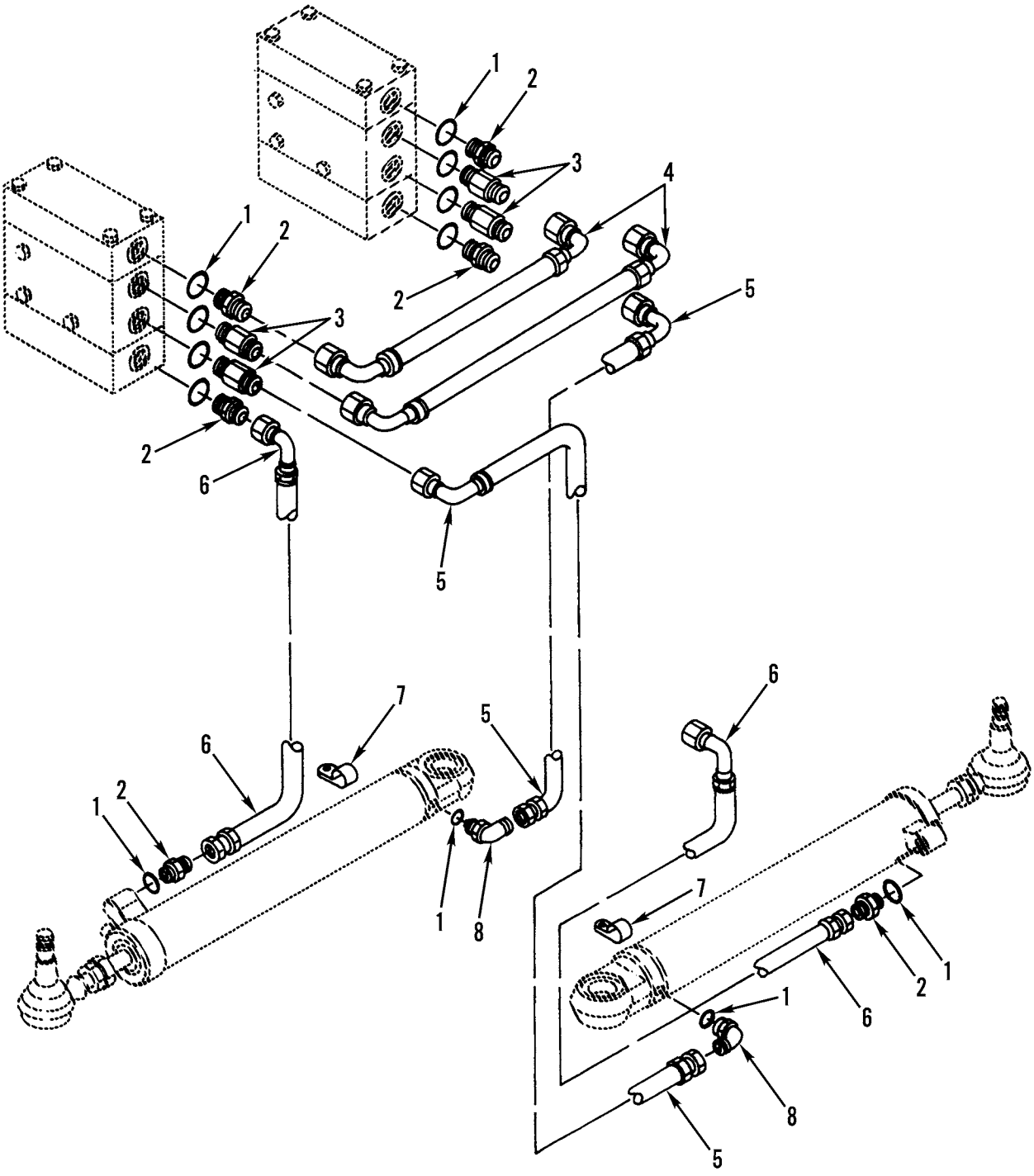

Figure 191. Steering Valves-To-Steering Cylinders Lines and Fittings

(1) ITEM NO	(2) SMR CODE	(3) NSN	(4) CAGEC	(5) PART NUMBER	(6) DESCRIPTION AND USABLE ON CODES(UOC)	(7) QTY
					GROUP 1411 HOSES, LINES, FITTINGS FIG. 191 STEERING VALVES-TO-STEERING CYLINDERS LINES AND FITTINGS	
1	PFOZZ	5331009486482	11083	3K0360	O-RING.....	12
2	PAOZZ	4730011564835	46717	AC-1-310	ADAPTER,STRAIGHT,TU.....	6
3	PFOZZ	4730011774705	11083	9D2673	ADAPTER,STRAIGHT,TU.....	4
4	PAOZZ	4720011736913	11083	6G1702	HOSE ASSEMBLY,NONME.....	2
5	PAOZZ	4720011761064	11083	9D6063	HOSE ASSEMBLY,NONME.....	2
6	PAOZZ	4720011736912	11083	6G1698	HOSE ASSEMBLY,NONME.....	2
7	PAOZZ	5342010632993	11083	4S1962	CLIP..... UOC:AF9,AGP,F10	2
8	PAOZZ	4730008225609	96906	MS51527-A8	ELBOW,TUBE TO BOSS.....	2

END OF FIGURE

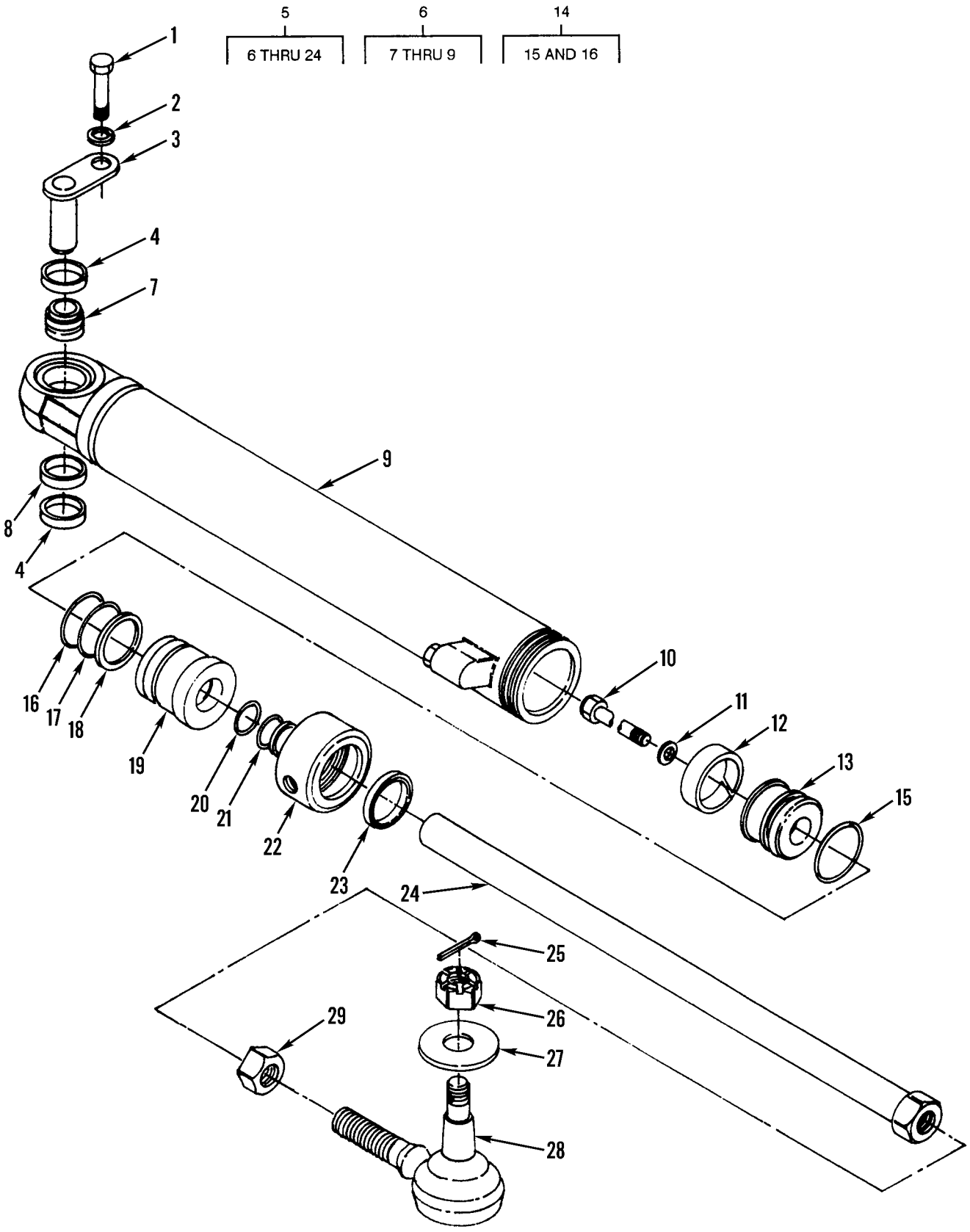

Figure 192. Steering Cylinders and Mounting

(1) ITEM NO	(2) SMR CODE	(3) NSN	(4) CAGEC	(5) PART NUMBER	(6) DESCRIPTION AND USABLE ON CODES(UOC)	(7) QTY
					GROUP 1412 HYRAULIC OR AIR CYLINDERS FIG. 192 STEERING CYLINDERS AND MOUNTING	
1	PFFZZ	5306002637301	11083	0L1351	BOLT,MACHINE.....	2
2	PFFZZ	5310006379541	96906	MS35338-46	WASHER,LOCK.....	2
3	PFFZZ	5315011725635	11083	8D2429	PIN,STRAIGHT,HEADED.....	2
4	PAFZZ	5365011692983	11083	8D2638	SPACER,SLEEVE.....	4
5	PAFFF	3040010218143	11083	3G8069	CYLINDER ASSEMBLY,A RIGHT HAND.....	1
5	PFFFF	3040010226199	11083	3G8070	CYLINDER ASSEMBLY,A LEFT HAND.....	1
6	PFFFF	3040011746206	11083	3G8071	.CYLINDER,ACTUATING, USE WITH P/N 3G8069.....	1
6	PFFFF	3040011746207	11083	3G8072	.CYLINDER ASSEMBLY,A USE WITH P/N 3G8070.....	1
7	PAFZZ	3120004971579	51588	B16-L	..BEARING,PLAIN,SELF-.....	1
8	PAFZZ	5365010951305	11083	8J6215	..SPACER,RING.....	2
9	XAFZZ		11083	3G8075	..TUBE.....	1
10	PFFZZ	5306011558647	11083	7J5639	.BOLT,SELF-LOCKING.....	1
11	PFFZZ	5310010660506	11083	8J7415	.WASHER.....	3
12	PAFZZ	3120011541482	11083	8J6212	.BUSHING,SLEEVE.....	1
13	XDFZZ		11083	3G8076	.PISTON,LINEAR ACTUA.....	1
14	PAFZZ	5330011554517	11083	8J6213	.GASKET AND PREFORME.....	1
15	XAFZZ		11083	8J6838	..RING EXPANDER.....	1
16	XAFZZ		11083	8J6839	..SEAL.....	1
17	PFFZZ	5331005064457	11083	8F6711	.O-RING.....	1
18	PFFZZ	5330011545264	11083	0303239	.RETAINER,PACKING.....	1
19	PFFZZ	4320011762943	11083	8J6221	.HEAD,HYDRAULIC MOTO.....	1
20	PAFZZ	5330015064780	11083	1672186	.GASKET.....	1
21	PAFZZ	5330011869495	11083	9J4038	.SEAL ASSEMBLY..... UOC:AF9,AGP,F10	1
22	PFFZZ	3040011762939	11083	8J6222	.CAP,LINEAR ACTUATIN.....	1
23	PFFZZ	5330011843545	11083	9J4037	.SEAL,PLAIN ENCASED..... UOC:AF9,AGP,F10	1
24	PFFZZ	3040011723025	11083	3G8427	.CONNECTING LINK,RIG.....	1
25	PFFZZ	5315000120123	96906	MS24665-355	PIN,COTTER.....	2
26	PFFZZ	5310011703769	11083	2F8057	NUT,SELF-LOCKING,HE.....	1
27	PFFZZ	5310010953327	11083	8D2811	WASHER,FLAT.....	2
28	PFFZZ	2530011774887	98349	L-24-LV-4089-A-1 1	TIE ROD END,STEERIN.....	2
29	PFFZZ	5310010537312	11083	2H3786	NUT.....	2

END OF FIGURE



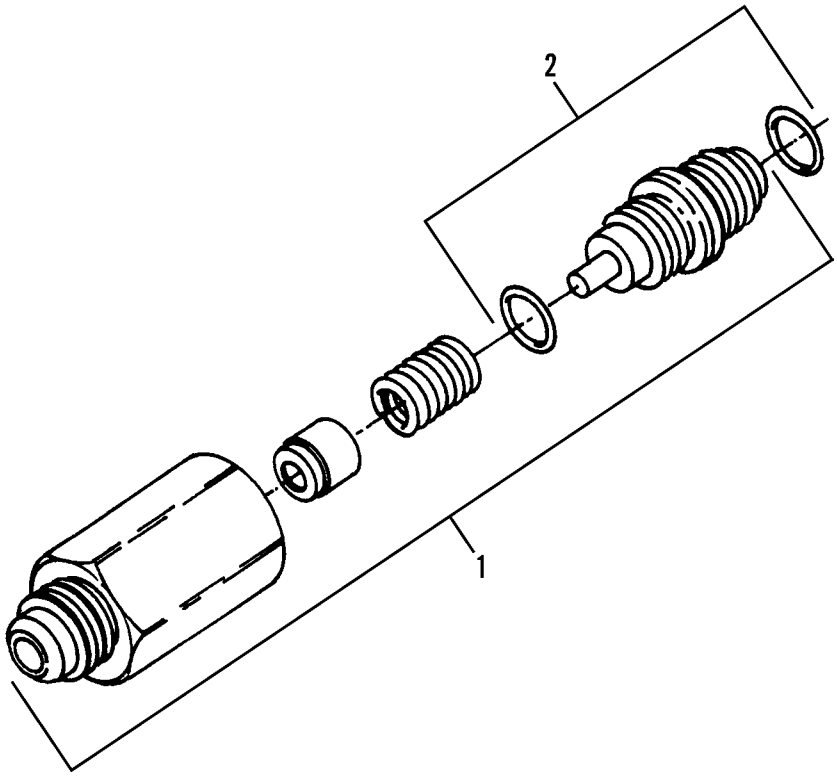

Figure 193. Supplemental Steering Check Valve

(1) ITEM NO	(2) SMR CODE	(3) NSN	(4) CAGEC	(5) PART NUMBER	(6) DESCRIPTION AND USABLE ON CODES(UOC)	(7) QTY
					GROUP 1414 STEERING SYSTEM VALVES FIG. 193 SUPPLEMENTAL STEERING CHECK VALVE	
1	XAFZZ		96259	3CM12-8T-3SVWNS	VALVE..... UOC:AF9,AGP,F10	2
2	PAFZZ	5331009486482	11083	3K0360	.O-RING..... UOC:AF9,AGP,F10	2

END OF FIGURE

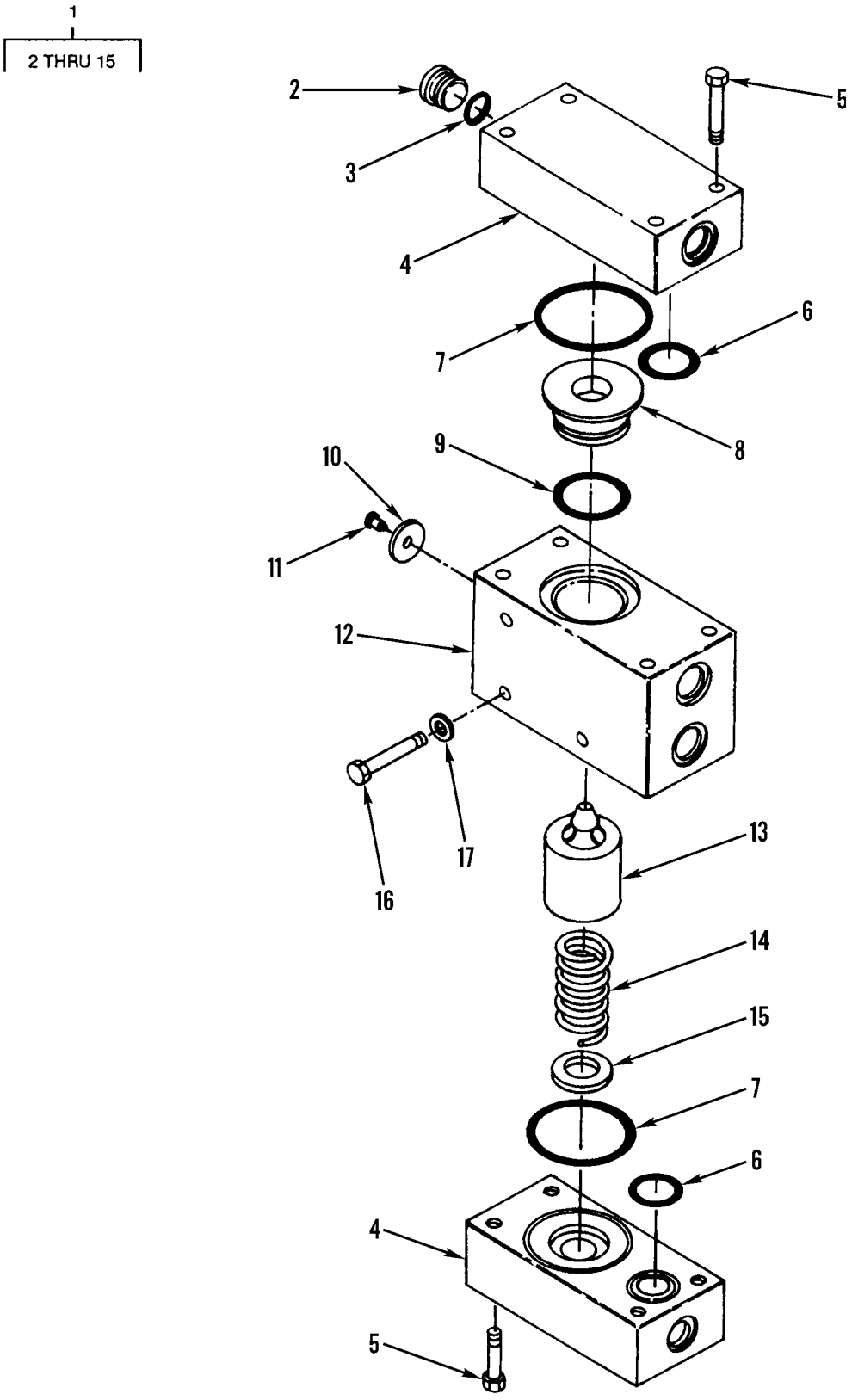

Figure 194. Steering Valve and Mounting
(SN 7GB0001 thru 7GB01223 and 74V01965 thru 74V02006) (Sheet 1 of 2)

18

19 THRU 29

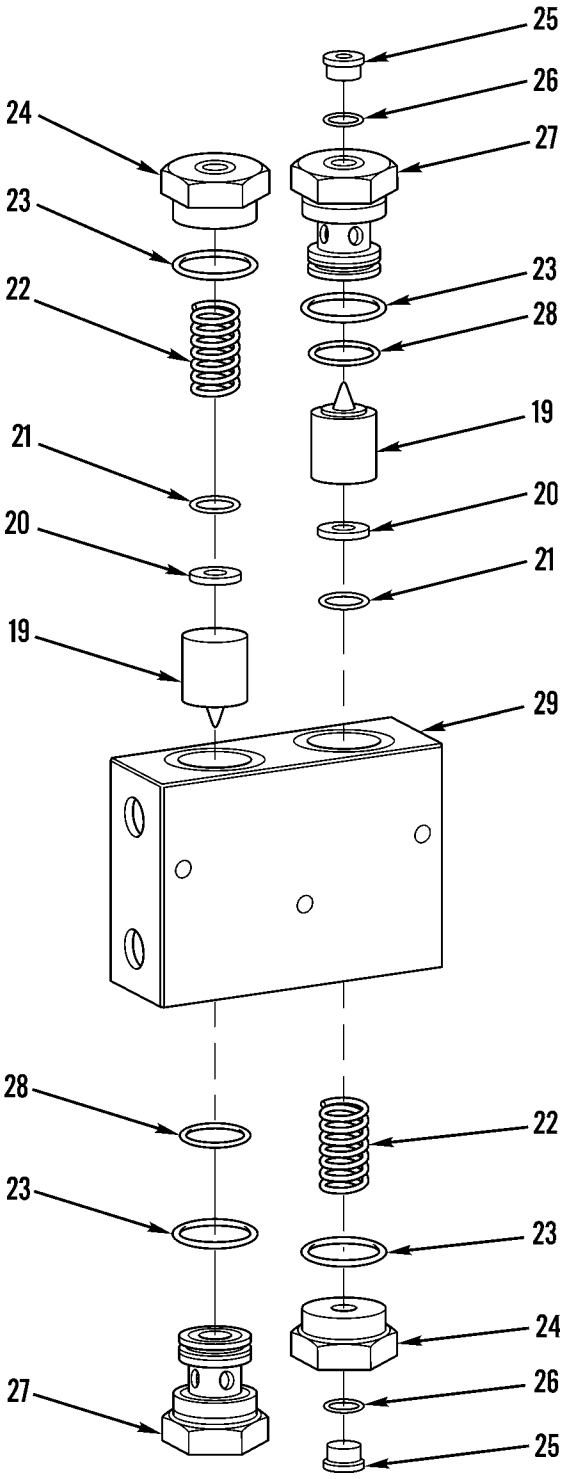

Figure 194. Steering Valve and Mounting (SN 7GB01224 and Up) (Sheet 2 of 2)

(1) ITEM NO	(2) SMR CODE	(3) NSN	(4) CAGEC	(5) PART NUMBER	(6) DESCRIPTION AND USABLE ON CODES(UOC)	(7) QTY
					GROUP 1414 STEERING SYSTEM VALVES FIG. 194 STEERING VALVE AND MOUNTING	
1	PFFZZ	4820011691966	11083	3G7448	VALVE GROUP,RELIEF.....	2
2	PFHZZ	5365010318183	30780	8HP5N-S	.PLUG,MACHINE THREAD.....	1
3	PFHZZ	5331009486482	11083	3K0360	.O-RING.....	1
4	XDHZZ		11083	3G7446	.HEAD,VALVE.....	2
5	PFHZZ	5306004550459	11083	9S1366	.BOLT,MACHINE.....	8
6	PFHZZ	5331010176535	81349	M83248/2-214	.O-RING.....	2
7	PCHZZ	5331009145820	11083	4J0527	.O-RING.....	2
8	PAHZZ	4820011674405	11083	3G7445	.SEAT,VALVE.....	1
9	PCHZZ	5331009136143	11083	4J0519	.O-RING.....	1
10	XDHZZ		11083	3G8593	.PLATE,IDENTIFICATIO.....	1
11	PFHZZ	5305002535615	96906	MS21318-21	.SCREW,DRIVE.....	1
12	XDHZZ		11083	3G7447	.BODY,VALVE,RELIEF.....	1
13	PFHZZ	4820011677979	11083	3G7444	.DISK,VALVE.....	1
14	PAHZZ	5360011727160	11083	5J9631	.SPRING,HELICAL,COMP.....	1
15	XDHZZ	5365011740910	11083	5J4857	.SHIM .01 IN.....	15
15	PAHZZ	5365012026803	11083	3G8592	.SHIM .005 IN.....	1
16	PFOZZ	5306004262974	11083	T0065	BOLT,MACHINE.....	6
17	PFOZZ	5310010948810	78189	3320-14-01	WASHER,SQUARE CONE.....	6
18	PFOHZ		11083	4T9340	VALVE, SAFETY RELIE..... UOC:AF9,AGP,F10	1
19	PFHZZ	4820011677979	11083	3G7444	.DISK,VALVE..... UOC:AF9,AGP,F10	2
20	PFHZZ	5365012026803	11083	3G8592	.SHIM..... UOC:AF9,AGP,F10	2
21	PFHZZ	5365011740910	11083	5J4857	.SHIM..... UOC:AF9,AGP,F10	30
22	PFHZZ	5360011727160	11083	5J9631	.SPRING,HELICAL,COMP..... UOC:AF9,AGP,F10	2
23	PFHZZ	5331010976618	11083	1N6002	.O-RING..... UOC:AF9,AGP,F10	4
24	PFHZZ	5331014735985	11083	5P3903	.O-RING..... UOC:AF9,AGP,F10	2
25	PFHZZ	5365010318183	30780	8HP5N-S	.PLUG,MACHINE THREAD..... UOC:AF9,AGP,F10	2
26	PFHZZ	5331009486482	11083	3K360	.O-RING..... UOC:AF9,AGP,F10	2
27	PFHZZ		11083	4T9336	.SEAT..... UOC:AF9,AGP,F10	2
28	PFHZZ	5331014392544	11083	4J0521	.O-RING..... UOC:AF9,AGP,F10	2
29	PFHZZ		11083	4T9337	.BODY,VALVE,RELIEF..... UOC:AF9,AGP,F10	1

END OF FIGURE

6

7 THRU 14

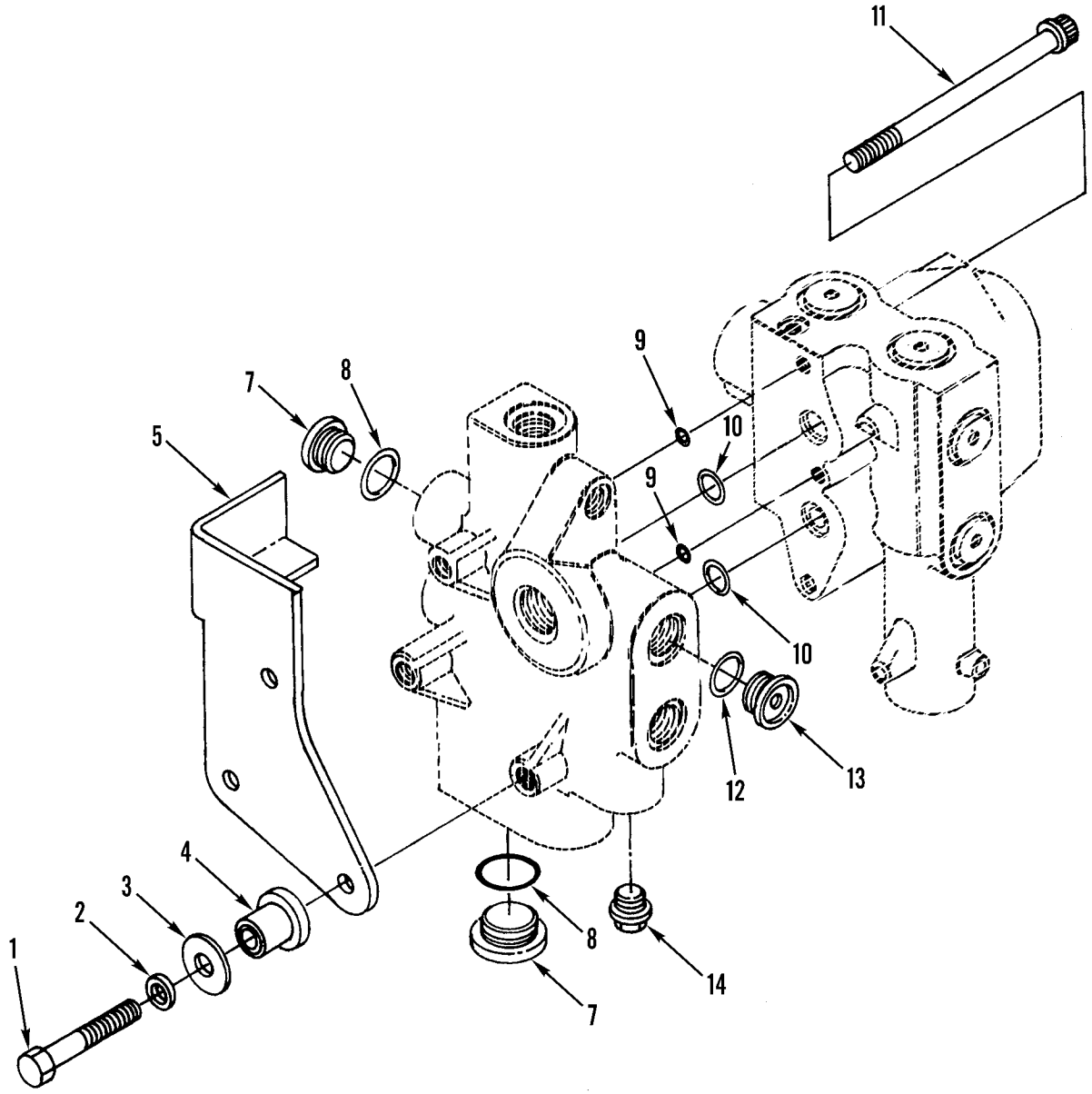

Figure 195. Steering Control Relief Valves

(1) ITEM NO	(2) SMR CODE	(3) NSN	(4) CAGEC	(5) PART NUMBER	(6) DESCRIPTION AND USABLE ON CODES(UOC)	(7) QTY
					GROUP 1414 STEERING SYSTEM VALVES FIG. 195 STEERING CONTROL RELIEF VALVES	
1	PFOZZ	5306002604512	11083	T0319	BOLT,MACHINE.....	3
2	PFOZZ	5310010978955	11083	5P8244	WASHER,FLAT..... UOC:AF9,AGP,F10	3
3	XDOZZ		11083	8D7185	WASHER.....	3
4	PFOZZ	5342008937055	76005	J-6642-1	MOUNT,RESILIENT,WEA.....	3
5	PAOZZ	5340011689270	11083	9D6361	BRACKET,ANGLE.....	1
6	PFFHH	4820011720465	11083	4T3090	VALVE,RELIEF,PRESSU.....	1
7	PFHZZ	5365010318183	30780	8HP5N-S	.PLUG,MACHINE THREAD.....	2
8	PFHZZ	5331009486482	11083	3K0360	.O-RING.....	2
9	PAHZZ	5330010648247	11083	6J3134	.SEAL.....	2
10	PCHZZ	5331009136143	11083	4J0519	.O-RING.....	2
11	PAHZZ	5306010951236	11083	5P3628	.BOLT,MACHINE.....	3
12	PCHZZ	5331009448281	11083	3D2824	.O-RING.....	1
13	PFHZZ	4730010643790	11083	9S8008	.PLUG.....	1
14	PFHZZ	5365011852777	71536	812	.PLUG,MACHINE THREAD.....	1

END OF FIGURE

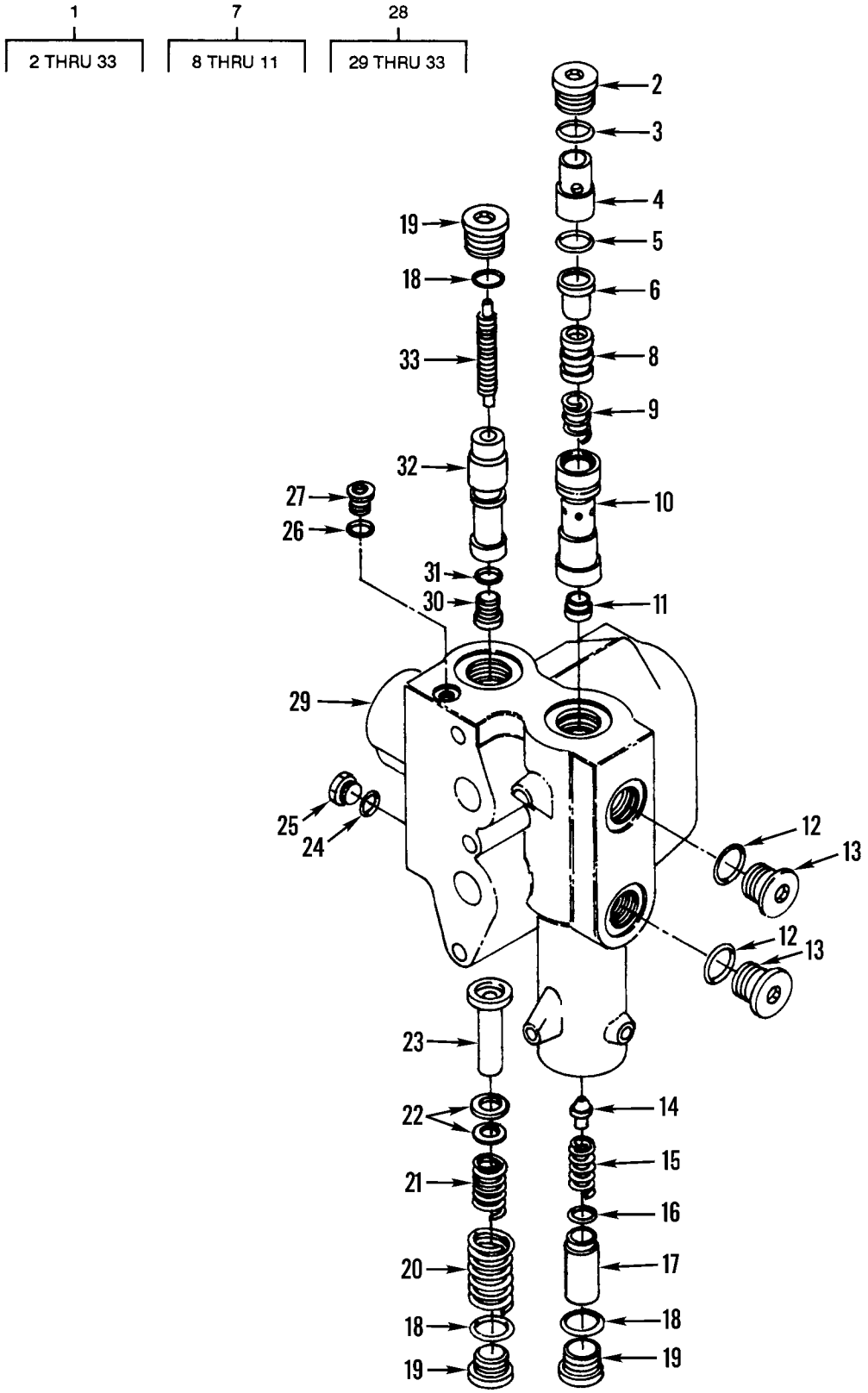

Figure 196. Steering Control Linear Valves

(1) ITEM NO	(2) SMR CODE	(3) NSN	(4) CAGEC	(5) PART NUMBER	(6) DESCRIPTION AND USABLE ON CODES(UOC)	(7) QTY
					GROUP 1414 STEERING SYSTEM VALVES FIG. 196 STEERING CONTROL LINEAR VALVES	
1	PFHZZ	4820011720511	11083	4T3089	.VALVE,LINEAR,DIRECT.....	1
2	PFHZZ	5365011661573	79470	7231 X16Y	..PLUG,MACHINE THREAD.....	1
3	PAHZZ	5330009309407	11083	7M8485	..SEAL,ADAPTER,MOTOR.....	1
4	PAHZZ	5365010955011	11083	8J6714	..SPACER,SLEEVE.....	1
5	PFHZZ	5331009486924	11083	4J8996	..O-RING.....	1
6	XDHZZ		11083	8J6708	..SPACER,SLEEVE.....	1
7	PAHZA	4810010661410	11083	8J6752	..VALVE ASSEMBLY.....	1
8	XAHZZ		11083	6J6854	...VALVE.....	1
9	PAHZZ	5360011703737	11083	6J6858	...SPRING,HELICAL,COMP.....	1
10	XAHZZ		11083	8J6716	...BODY.....	1
11	XAHZZ		11083	9J0803	...SEAT.....	1
12	PFHZZ	5331009486482	11083	3K0360	..O-RING.....	2
13	PFHZZ	5365010318183	30780	8HP5N-S	..PLUG,MACHINE THREAD.....	2
14	PFHZZ	4820010647461	11083	8J0331	..VALVE,FLOW CONTROL.....	1
15	XDHZZ		11083	2J6089	..SPRING,HELICAL,COMP.....	1
16	PAHZZ	5365009440863	11083	3J7473	..SHIM .005.....	7
16	PAHZZ	5340009490311	11083	3J7470	..DISK,SOLID,PLAIN .048.....	3
17	PAHZA	4810010667682	11083	8J6707	..RETAINER.....	1
18	PCHZZ	5331009448281	11083	3D2824	..O-RING.....	3
19	PFHZZ	4730010643790	11083	9S8008	..PLUG.....	3
20	PAHZZ	5360010667680	11083	8J6703	..SPRING.....	1
21	PAHZZ	5360010667681	11083	8J6704	..SPRING.....	1
22	PAHZA	4730010499781	11083	4L1468	..SEAL,CONICAL,FLARED.....	2
22	XDHZZ		11083	8J6709	..SHIM.....	5
23	PFHZZ	2530010950930	11083	8J6710	..STOP,COMBINATION VA.....	1
24	XDHZZ	5331010491292	02697	3-904N552-90	..O-RING.....	1
25	PFHZZ	5365010911407	96906	MS51840-23SS	..PLUG,MACHINE THREAD.....	1
26	PFHZZ	5330011485891	59556	K-500-EN-0431	..SEAL.....	1
27	PFHZZ	5365011242945	30780	2HP5N-S	..PLUG,MACHINE THREAD.....	1
28	XDHHH		11083	9J6458	..VALVE ASSEMBLY.....	1
29	XAHZZ		11083	8J6344	...BODY.....	1
30	PFHZZ	5365011242945	30780	2HP5N-S	...PLUG,MACHINE THREAD.....	1
31	PAHZZ	5330011485891	59556	K-500-EN-0431	...SEAL.....	1
32	XAHZZ		11083	8J6712	...STEM.....	1
33	XAHZZ		11083	8J6706	...PISTON.....	1

END OF FIGURE

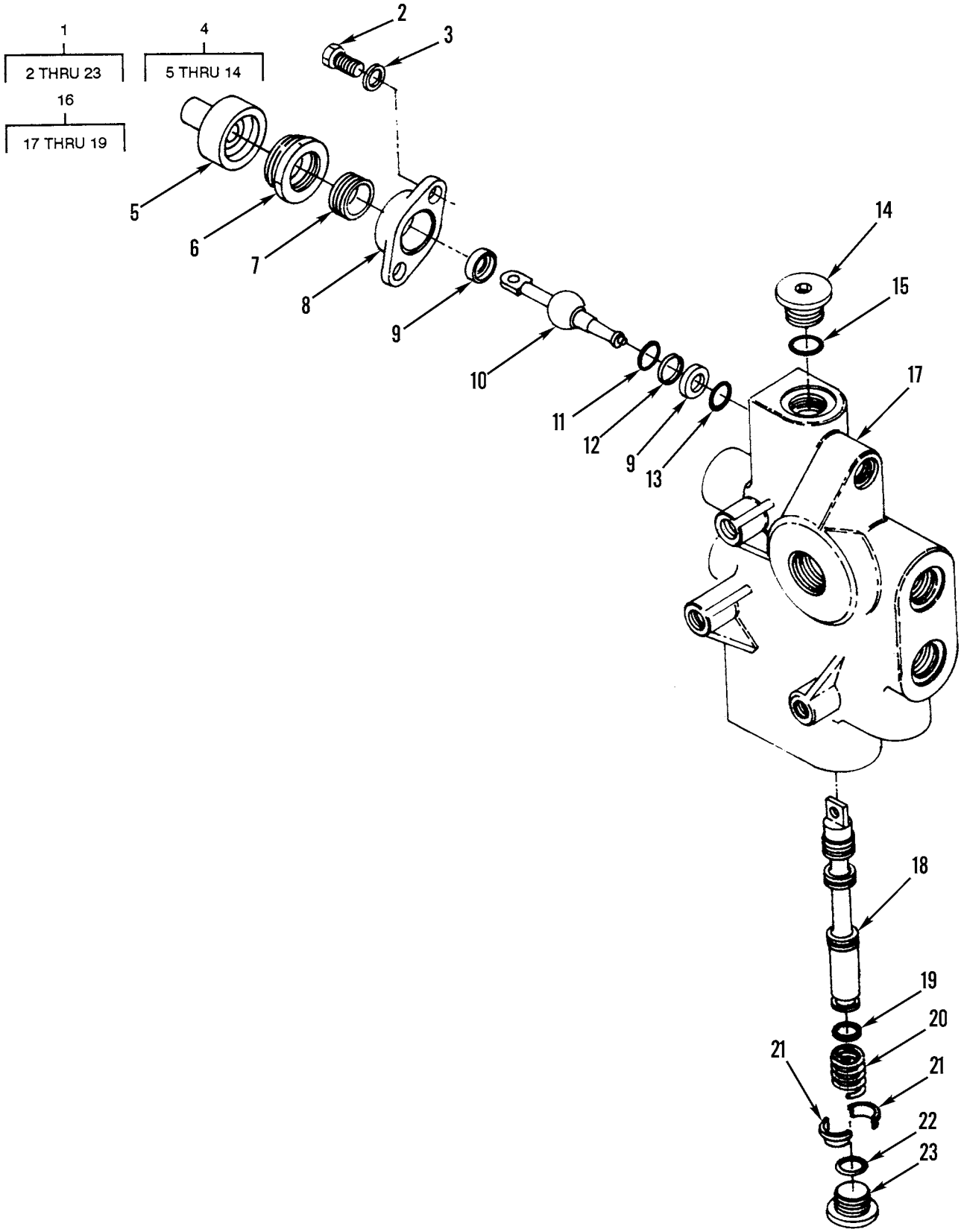

Figure 197. Steering Control Unloader Valve

(1) ITEM NO	(2) SMR CODE	(3) NSN	(4) CAGEC	(5) PART NUMBER	(6) DESCRIPTION AND USABLE ON CODES(UOC)	(7) QTY
					GROUP 1414 STEERING SYSTEM VALVES FIG. 197 STEERING CONTROL UNLOADER VALVE	
1	PFHHH	4810010661411	11083	9J1762	.VALVE ASSEMBLY.....	1
2	PFHZZ	5306002611153	11083	0S1615	..BOLT,MACHINE.....	2
3	PFHZZ	5310010512360	11083	5P0537	..WASHER.....	2
4	PFFZZ	3040011679211	11083	1U4661	..LEVER,MANUAL CONTRO.....	1
5	XAHZZ	5342010648251	11083	8J1623	...BOOT.....	1
6	PFHZZ	5310010953508	11083	8J1622	...NUT,SPECIAL.....	1
7	PFHZZ	5365010964287	11083	8J1621	...RING,EXTERNALLY THR.....	1
8	PAHZZ	5310011750616	11083	1U3389	...NUT,PLAIN,PLATE.....	1
9	PFHZZ	3110010648250	11083	8J1620	...BEARING.....	2
10	PFHZZ	2590010648249	11083	8J1616	...LEVER.....	1
11	PCHZZ	5331005917543	11083	7F8607	...O-RING.....	1
12	PFHZZ	5330004028718	97820	S12562-116	...SEAL.....	1
13	PCHZZ	5331009293499	11083	3D4245	...O-RING.....	1
14	PFHZZ	5365011242945	30780	2HP5N-S	...PLUG,MACHINE THREAD.....	1
15	PCHZZ	5331009448281	11083	3D2824	..O-RING.....	1
16	XDHZZ		11083	9J1761	..VALVE,LINEAR,DIRECT.....	1
17	XAHZZ		11083	9J1284	...BODY UNLOADER VALVE.....	1
18	XAHZZ		11083	9J2088	...STEM.....	1
19	PAHZZ	5310011843544	11083	3G4146	...WASHER,FLAT.....	1
20	XDHZZ		11083	2J0075	..SPRING.....	1
21	PAHZZ	3120010978115	11083	8J6114	..BUSHING,SLEEVE.....	2
22	PAHZZ	5331010886106	81349	M83248/2-914	..O-RING.....	1
23	PFHZZ	5365004520344	11083	9S8009	..PLUG,MACHINE THREAD.....	1

END OF FIGURE

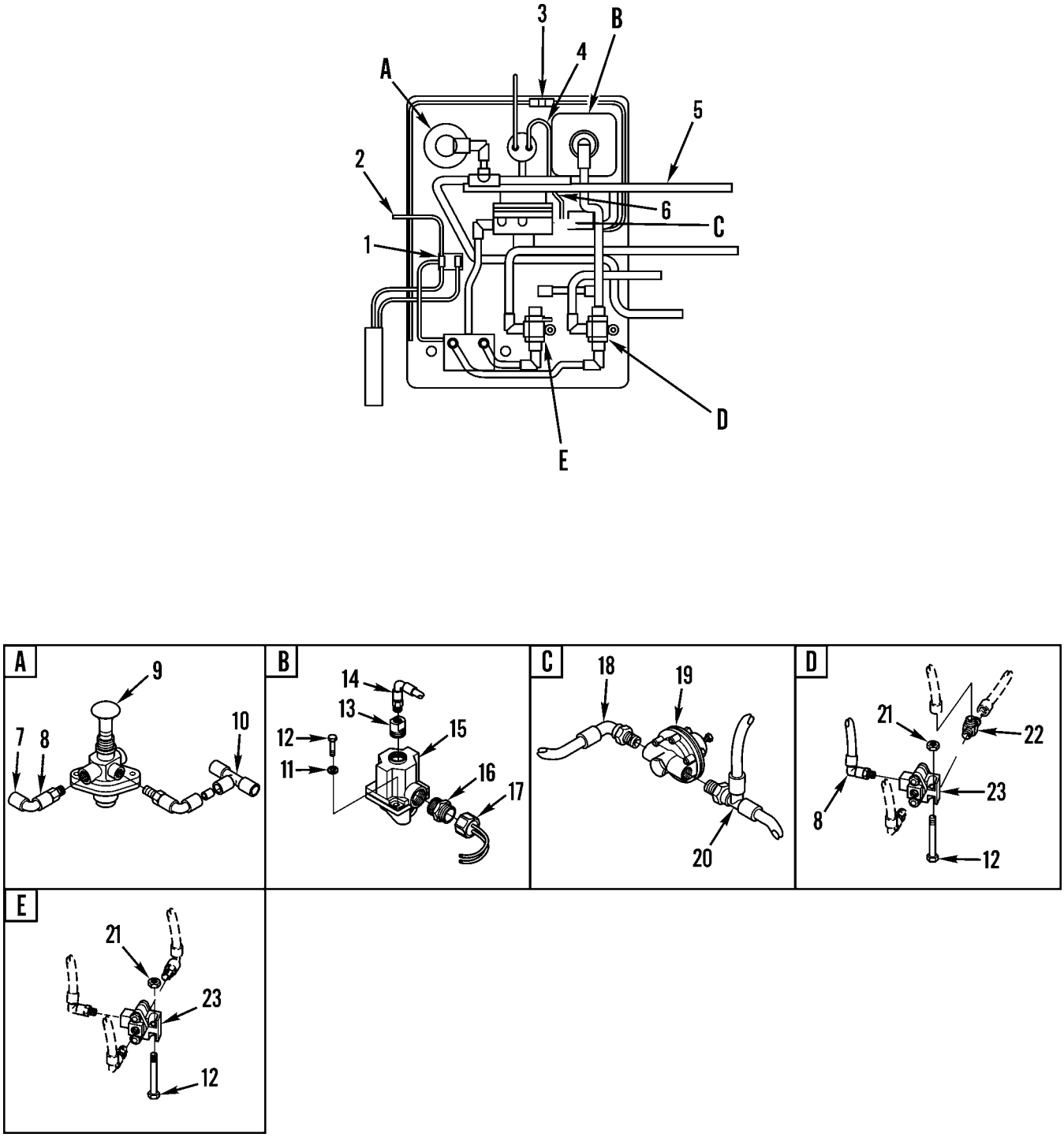

Figure 197A. Remote Control Group (Part 1 of 2)

(1) ITEM NO	(2) SMR CODE	(3) NSN	(4) CAGEC	(5) PART NUMBER	(6) DESCRIPTION AND USABLE ON CODES(UOC)	(7) QTY
					GROUP 1415 REMOTE CONTROL DEVICES FIG. 197A REMOTE CONTROL GROUP (PART 1 OF 2)	
1	PAOZZ	5940010870285	00779	53245-1	TERMINAL,LUG..... UOC:AGM,F10	1
2	PAOZZ		11083	2V4114	WIRE A..... UOC:AGM,F10	2
3	PAOZZ	6145010690746	11083	4K6693	WIRE A..... UOC:AGM,F10	1
4	PAOZZ	5940010791375	81349	M7928/5-4	SPLICE,CONDUCTOR..... UOC:AGM,F10	1
5	MOOZZ		11083	5P6011-13.8	TUBING,NONMETALLIC MAKE FROM P/N 5P6011..... UOC:AGM,F10	1
6	PAOZZ	5940010534521	11083	2L8077	TERMINAL..... UOC:AGM,F10	1
7	PFOZZ	4730000444688	89346	50410DA	PLUG,PIPE..... UOC:AGM,F10	1
8	PFOZZ	4730011135283	58755	31095611	ELBOW,PIPE TO TUBE..... UOC:AGM,F10	7
9	PAOZZ	2530011860871	06853	289862	VALVE,RELAY,AIR PRE..... UOC:AGM,F10	1
10	PFOZZ	4730011111752	58755	3104-56-00	TEE,TUBE..... UOC:AGM,F10	1
11	PAOZZ	5310010512360	11083	5P0537	WASHER..... UOC:AGM,F10	2
12	PAOZZ	5306002611153	11083	0S1615	BOLT,MACHINE..... UOC:AGM,F10	4
13	PAOZZ	4730011111383	58755	31155611	ADAPTER,STRAIGHT,PI..... UOC:AGM,F10	1
14	PAOZZ	4730002784814	95019	35-102-17	ELBOW,PIPE..... UOC:AGM,F10	1
15	PAOZZ	4810011744086	11083	5R6609	VALVE,SOLENOID..... UOC:AGM,F10	1
16	PAOZZ	4730011686404	58755	31155614	ADAPTER,STRAIGHT,PI..... UOC:AGM,F10	5
17	PAOZZ		11083	5D5569	CONDUIT ASSEMBLY,ME..... UOC:AGM,F10	1
18	PAOZZ	4730011150863	58755	31095614	SWIVEL JOINT,PIPE..... UOC:AGM,F10	1
19	PAOZZ	4820011677954	11331	WM-43-B1	VALVE,REGULATING,FL..... UOC:AGM,F10	1
20	PAOZZ	4730011714962	58755	31035614	TEE,PIPE TO TUBE..... UOC:AGM,F10	1
21	PAOZZ	5310011602034	11083	2D6235	NUT,SELF-LOCKING,HE..... UOC:AGM,F10	2
22	PAOZZ	4730011681912	58755	31035611	TEE,PIPE TO TUBE..... UOC:AGM,F10	1
23	PAOZZ	4820011689520	11331	WM-412-A	VALVE,SHUTTLE..... UOC:AGM,F10	2

END OF FIGURE

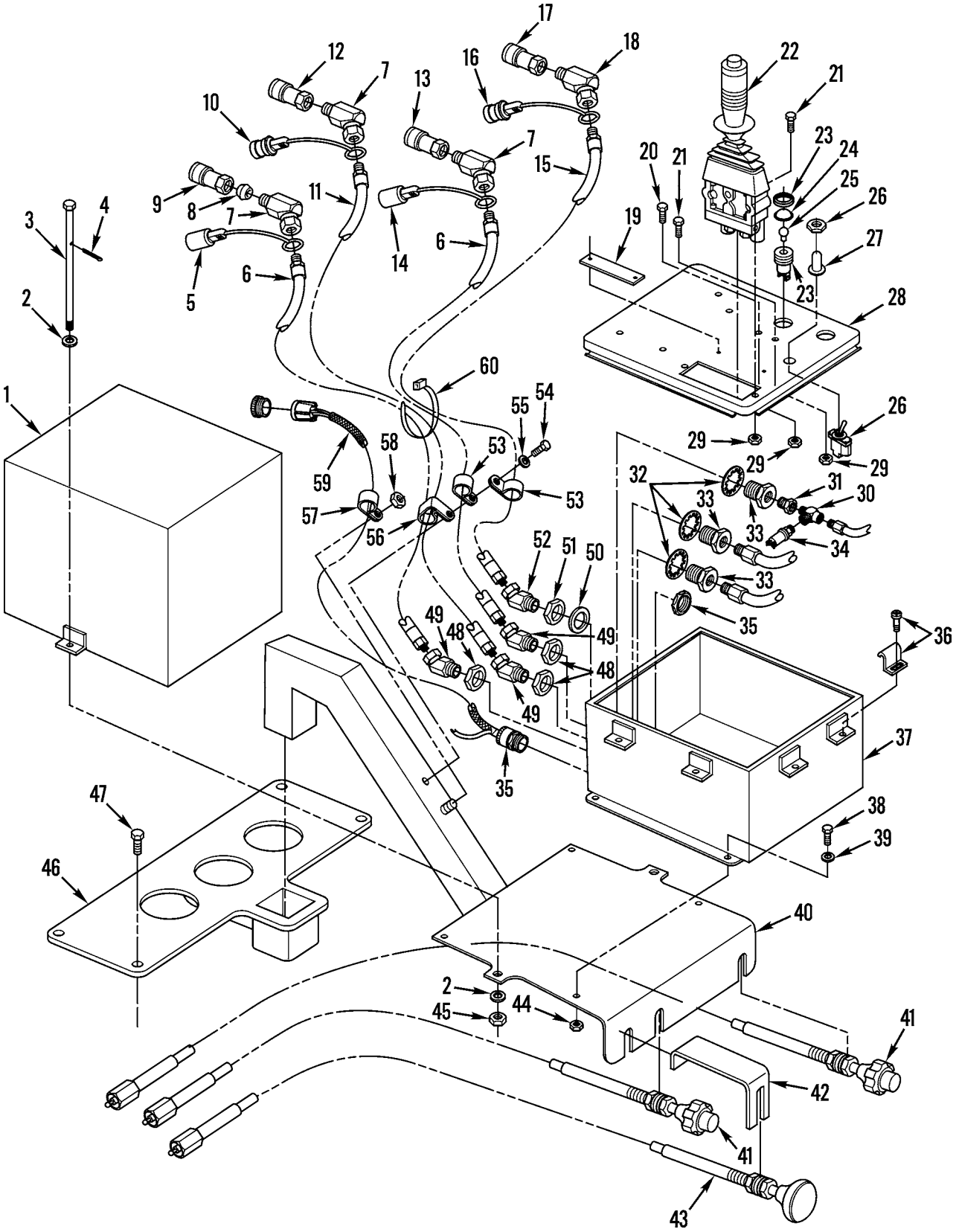

Figure 197B. Remote Control Group (Part 2 of 2)

(1) ITEM NO	(2) SMR CODE	(3) NSN	(4) CAGEC	(5) PART NUMBER	(6) DESCRIPTION AND USABLE ON CODES(UOC)	(7) QTY
					GROUP 1415 REMOTE CONTROL DEVICES FIG. 197B REMOTE CONTROL GROUP (PART 2 OF 2)	
1	PAOZZ	5340011742507	11083	5R7025	COVER..... UOC:AGM,F10	1
2	PAOZZ	5310004324064	11083	9M1974	WASHER,FLAT..... UOC:AGM,F10	8
3	PAOZZ	5306011753621	11083	5R7038	BOLT,MACHINE..... UOC:AGM,F10	2
4	PAOZZ		11083	3B4612	PIN,COTTER..... UOC:AGM,F10	2
5	PAOZZ	5340011723737	01276	FD45-1040-06	CAP,PROTECTIVE,DUST..... UOC:AGM,F10	1
6	PAOZZ	4720011862356	04NP0	4GABB-4MB-44.00	HOSE ASSEMBLY,NONME..... UOC:AGM,F10	2
7	PAOZZ	4730010589095	11083	3D7587	ELBOW,PIPE..... UOC:AGM,F10	3
8	PAOZZ	3120011033645	11083	1H7724	BUSHING..... UOC:AGM,F10	1
9	PAOZZ	4730005857507	11083	5R5725	COUPLING HALF,QUICK..... UOC:AGM,F10	1
10	PAOZZ	5340011723738	01276	FD45-1041-04	CAP-PLUG,PROTECTIVE..... UOC:AGM,F10	2
11	PAOZZ	4720010659066	11083	3D8935	HOSE ASSEMBLY,NONME..... UOC:AGM,F10	1
12	PAOZZ	4730007956959	01276	FD45-1101-04-04	COUPLING HALF,QUICK..... UOC:AGM,F10	1
13	PAOZZ	4730008441838	01276	FD45-1086-04-04	COUPLING HALF,QUICK..... UOC:AGM,F10	1
14	PAOZZ	5340011723736	01276	FD45-1040-04	CAP,PROTECTIVE,DUST..... UOC:AGM,F10	1
15	PAOZZ	4720011844208	11083	7D6282	HOSE ASSEMBLY,NONME..... UOC:AGM,F10	1
16	PAOZZ	5340011722794	01276	FD45-1041-06	PLUG,PROTECTIVE,DUS..... UOC:AGM,F10	1
17	PAOZZ	4730006025342	14127	H3B	COUPLING HALF,QUICK..... UOC:AGM,F10	1
18	PAOZZ	4730003173008	11083	4D0582	ELBOW,PIPE..... UOC:AGM,F10	1
19	PAOZZ		11083	5R6844	FILM,INSTRUCTION..... UOC:AGM,F10	1
20	PAOZZ	5305002253843	80204	B1821BH025C100N	SCREW,CAP,HEXAGON H..... UOC:AGM,F10	1
21	PAOZZ	5306002611153	11083	0S1615	BOLT,MACHINE..... UOC:AGM,F10	3
22	PAOZZ		11083	5R7024	VALVE,REGULATING,FL..... UOC:AGM,F10	1
23	PAOZZ	6210011494171	83330	80-3206-05-303	LIGHT,INDICATOR..... UOC:AGM,F10	1
24	PAOZZ	6210011489034	83330	80-1211-303	LENS,LIGHT..... UOC:AGM,F10	1

(1) ITEM NO	(2) SMR CODE	(3) NSN	(4) CAGEC	(5) PART NUMBER	(6) DESCRIPTION AND USABLE ON CODES(UOC)	(7) QTY
25	PAOZZ	6240006430738	24446	GE624	LAMP,INCANDESCENT..... UOC:AGM,F10	1
26	PAOZZ	5930011761699	11083	8D2676	SWITCH,TOGGLE..... UOC:AGM,F10	1
27	PAOZZ	2530010611351	13445	81264	BOOT,VEHICULAR COMP..... UOC:AGM,F10	1
28	PAOZZ	5340011698313	11083	5R6891	COVER,ACCESS..... UOC:AGM,F10	1
29	PAOZZ	5310011602034	11083	2D6235	NUT,SELF-LOCKING,HE..... UOC:AGM,F10	4
30	PAOZZ	4730001776166	30780	02R01-4-4	TEE,PIPE..... UOC:AGM,F10	1
31	PAOZZ	3120011033645	11083	1H7724	BUSHING..... UOC:AGM,F10	2
32	PAOZZ	5310014255451	11083	6V7607	WASHER,FLAT..... UOC:AGM,F10	6
33	PAOZZ	4730011686404	58755	31155614	ADAPTER,STRAIGHT,PI..... UOC:AGM,F10	3
34	PAOZZ	5930011273583	11083	7N1062	SWITCH,ELECTRICAL..... UOC:AGM,F10	1
35	PAOZZ	5975010297710	56501	2632	BOX CONNECTOR,ELECT..... UOC:AGM,F10	1
36	PAOZZ	5340011754283	00843	L17SS	CLAMP,SYNCHRO..... UOC:AGM,F10	8
37	PAOZZ	2540011694895	11083	5R6893	BOX,ACCESSORIES STO..... UOC:AGM,F10	1
38	PAOZZ	5306008148967	11083	2H3755	BOLT,MACHINE..... UOC:AGM,F10	4
39	PAOZZ	5310004324064	11083	9M1974	WASHER,FLAT..... UOC:AGM,F10	4
40	PAOZZ	3805011965286	11083	5R6832	SUPPORT ASSEMBLY..... UOC:AGM,F10	1
41	PAOZZ	2590011691990	11083	5R6898	CONTROL ASSEMBLY,PU..... UOC:AGM,F10	2
42	PAOZZ	5340011962831	11083	5R6875	HINGE,ACCESS DOOR..... UOC:AGM,F10	1
43	PAOZZ	3040012068566	5S058	56-3248-2022	CONTROL ASSEMBLY,PU..... UOC:AGM,F10	1
44	PAOZZ	5310011635545	11083	5S0003	NUT..... UOC:AGM,F10	4
45	PAOZZ	5310011635545	11083	5S0003	NUT..... UOC:AGM,F10	4
46	PAOZZ	3040011682777	11083	5R6395	BRACKET,EYE,NONROTA..... UOC:AGM,F10	1
47	PAOZZ	5306011279361	11083	0S1585	BOLT,MACHINE..... UOC:AGM,F10	4
48	PAOZZ	4730009763976	11083	9M7357	COUPLING,PIPE..... UOC:AGM,F10	3
49	PAOZZ	4730010589095	11083	3D7587	ELBOW,PIPE..... UOC:AGM,F10	3
50	PAOZZ	5310013081455	11083	5P8839	WASHER,FLAT..... UOC:AGM,F10	1

(1) ITEM NO	(2) SMR CODE	(3) NSN	(4) CAGEC	(5) PART NUMBER	(6) DESCRIPTION AND USABLE ON CODES(UOC)	(7) QTY
51	PAOZZ	4730010516765	11083	2M1908	FITTING..... UOC:AGM,F10	1
52	PAOZZ	4730003173008	11083	4D0582	ELBOW,PIPE..... UOC:AGM,F10	1
53	PAOZZ	5342010643819	11083	9M8406	CLIP..... UOC:AGM,F10	3
54	PAOZZ	5306007412518	19207	7412518	BOLT,MACHINE..... UOC:AGM,F10	1
55	PAOZZ	5310001174788	11083	5M2894	WASHER,FLAT..... UOC:AGM,F10	2
56	PAOZZ	5340010538024	11083	6D4246	CLIP..... UOC:AGM,F10	1
57	PAOZZ	5340004264656	11083	4D7794	CLAMP,LOOP..... UOC:AGM,F10	1
58	PAOZZ	5310014297859	11083	6V8801	NUT,PLAIN,HEXAGON..... UOC:AGM,F10	1
59	PAOZZ	5995011827196	55101	63586	WIRING HARNESS,BRAN..... UOC:AGM,F10	1
60	PAOZZ	2920010589099	11083	3S2093	STRAP..... UOC:AGM,F10	2

END OF FIGURE

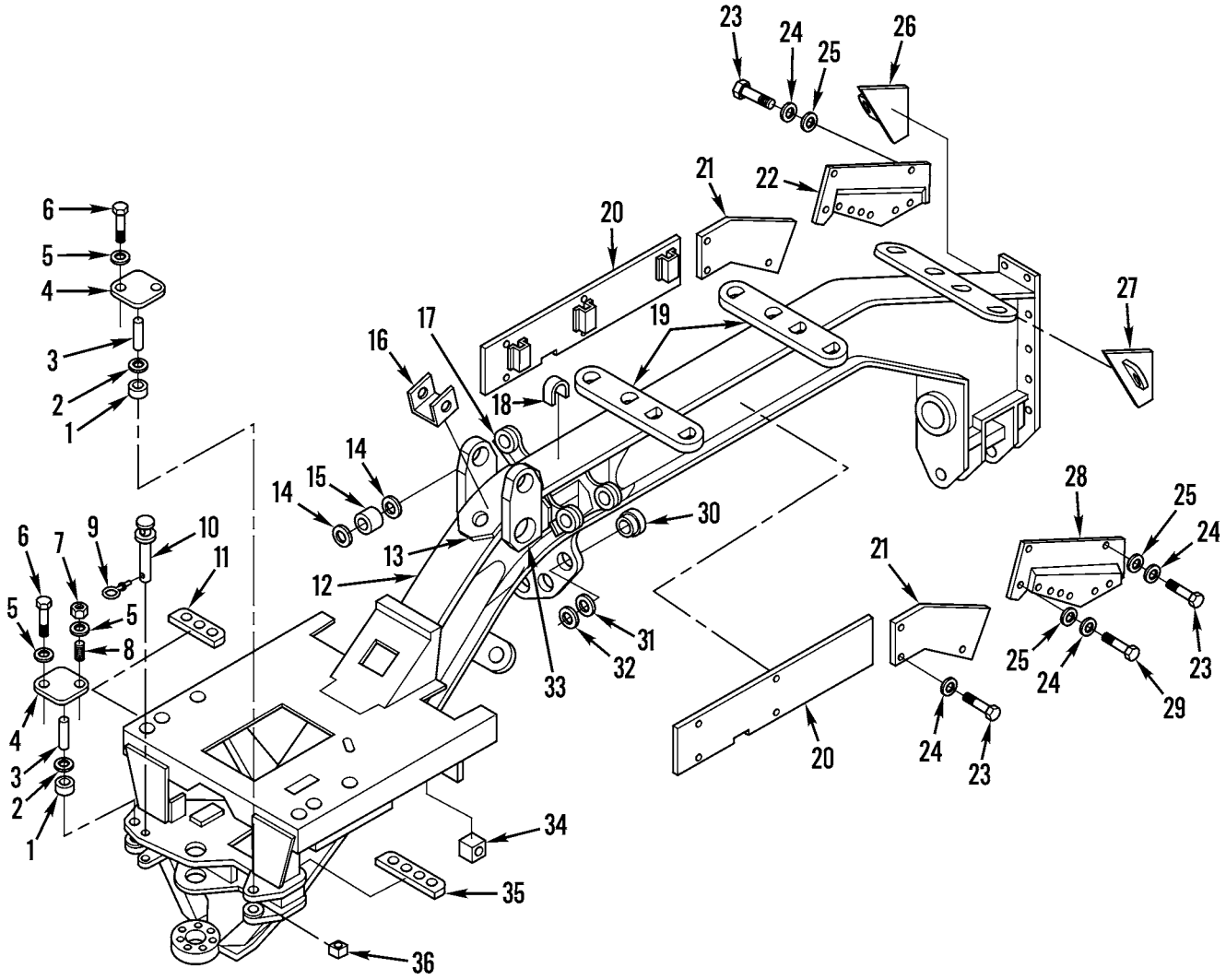

Figure 198. Front Frame Assembly

(1) ITEM NO	(2) SMR CODE	(3) NSN	(4) CAGEC	(5) PART NUMBER	(6) DESCRIPTION AND USABLE ON CODES(UOC)	(7) QTY
					GROUP 15 FRAME, TOWING ATTACHMENTS, DRAWBARS, AND ARTICULATION SYSTEMS GROUP 1501 FRAME ASSEMBLY FIG. 198 FRONT FRAME ASSEMBLY	
1	PAOZZ	3120010955788	11083	8D7086	BEARING,SLEEVE..... UOC:AGM,F10	4
2	PAOZZ	5330010674682	11083	7K9202	SEAL..... UOC:AGM,F10	8
3	PAOZZ	5315011869448	55101	62538	PIN,STRAIGHT,HEADLE..... UOC:AGM,F10	2
4	PAOZZ	5340011840013	55101	62537	COVER,ACCESS..... UOC:AGM,F10	4
5	PAOZZ	5310001174788	11083	5M2894	WASHER,FLAT..... UOC:AGM,F10	8
6	PAOZZ	5306000635001	11083	1A2209	BOLT,MACHINE..... UOC:AGM,F10	6
7	PAOZZ	5310010588071	11083	2K4973	LOCKNUT..... UOC:AGM,F10	2
8	PAOZZ	5307010626108	11083	3L5549	STUD,PLAIN..... UOC:AGM,F10	2
9	PFFZZ	5315011694464	11083	9D9257	PIN,SHOULDER,HEADLE.....	1
10	PAFZZ	3930007599738	99984	7618	PIN ASSEMBLY..... UOC:AGM,AGN,AGP,F10	1
10	PFFZZ	5315010664552	11083	8D3791	PIN..... UOC:AF9,AGM,AGN,F10	1
11	PAOZZ		11083	5R8465	PLATE ASSEMBLY..... UOC:AGM,F10	1
12	PFFHH	2510011787058	11083	5R7569	FRAME ASSEMBLY,FRON.....	1
13	PBFZZ	5340011684502	11083	5R5346	BRACKET,ANGLE..... UOC:AF9,AGM,AGN,F10	1
14	PAFZZ	5330010657152	11083	9D6585	SEAL.....	8
15	PAFZZ	3120010955791	11083	8D8168	BEARING,SLEEVE.....	4
16	PAOZZ	5340011868654	55101	64160	BRACKET,ANGLE..... UOC:AGM,F10	4
17	PBFZZ	5340011703800	11083	5R5349	BRACKET,ANGLE..... UOC:AF9,AGM,AGN,F10	1
18	PAOZZ	5340011861820	55101	64162	STRAP,RETAINING..... UOC:AGM,F10	2
19	PBFZZ		11083	5R5318	BRACKET,EYE,NONROTA..... UOC:AF9,AGM,AGN,F10	4
20	PAFZZ	5340011704712	11083	2G8715	COVER.....	2
21	PFFZZ	2590011677204	11083	9D8838	BEZEL,AUTOMOTIVE TR.....	2
22	PFFZZ	9330011674448	11083	6G1285	MOLDING,PLASTIC.....	1
23	PFFZZ	5305002528919	11083	0S0509	SCREW,CAP,HEXAGON H.....	15
24	PFFZZ	5310001174788	11083	5M2894	WASHER,FLAT.....	19
25	PFFZZ	5310010954636	11083	7K4743	WASHER,RECESSED.....	7
26	PAOZZ	3805011738408	11083	5R6334	PLATE ASSEMBLY,FRAM..... UOC:AGM,F10	1
27	PAOZZ	5340012365011	11083	5R6333	PAD EYE..... UOC:AGM,F10	1
28	PFFZZ	9330011679196	11083	6G1284	MOLDING,PLASTIC.....	1

(1) ITEM NO	(2) SMR CODE	(3) NSN	(4) CAGEC	(5) PART NUMBER	(6) DESCRIPTION AND USABLE ON CODES(UOC)	(7) QTY
29	PFFZZ	5306002604508	11083	0S1594	BOLT,MACHINE.....	4
30	PAFZZ	3120010954064	11083	9D1377	BUSHING,SLEEVE.....	5
31	PFFZZ	5310010966980	11083	9D1376	WASHER,FLAT .025.....	15
31	PAFZZ	5365010956109	11083	9D1374	SHIM .015.....	20
32	PFFZZ	5325011838687	72800	1313-2	RING,RETAINING.....	5
33	PBFZZ	5340011703801	11083	5R5348	BRACKET,ANGLE.....	1
					UOC:AF9,AGM,AGN,F10	
34	PAOZZ		11083	8V6808	NUT,PLAIN,SQUARE.....	1
					UOC:AGM,F10	
35	PAOZZ	2510011824464	55101	62815	PLATE ASSEMBLY.....	1
					UOC:AGM,F10	
36	PAOZZ	5310011854657	55101	4460	NUT,PLAIN,SQUARE.....	6
					UOC:AGM,F10	

END OF FIGURE

1

2 THRU 6

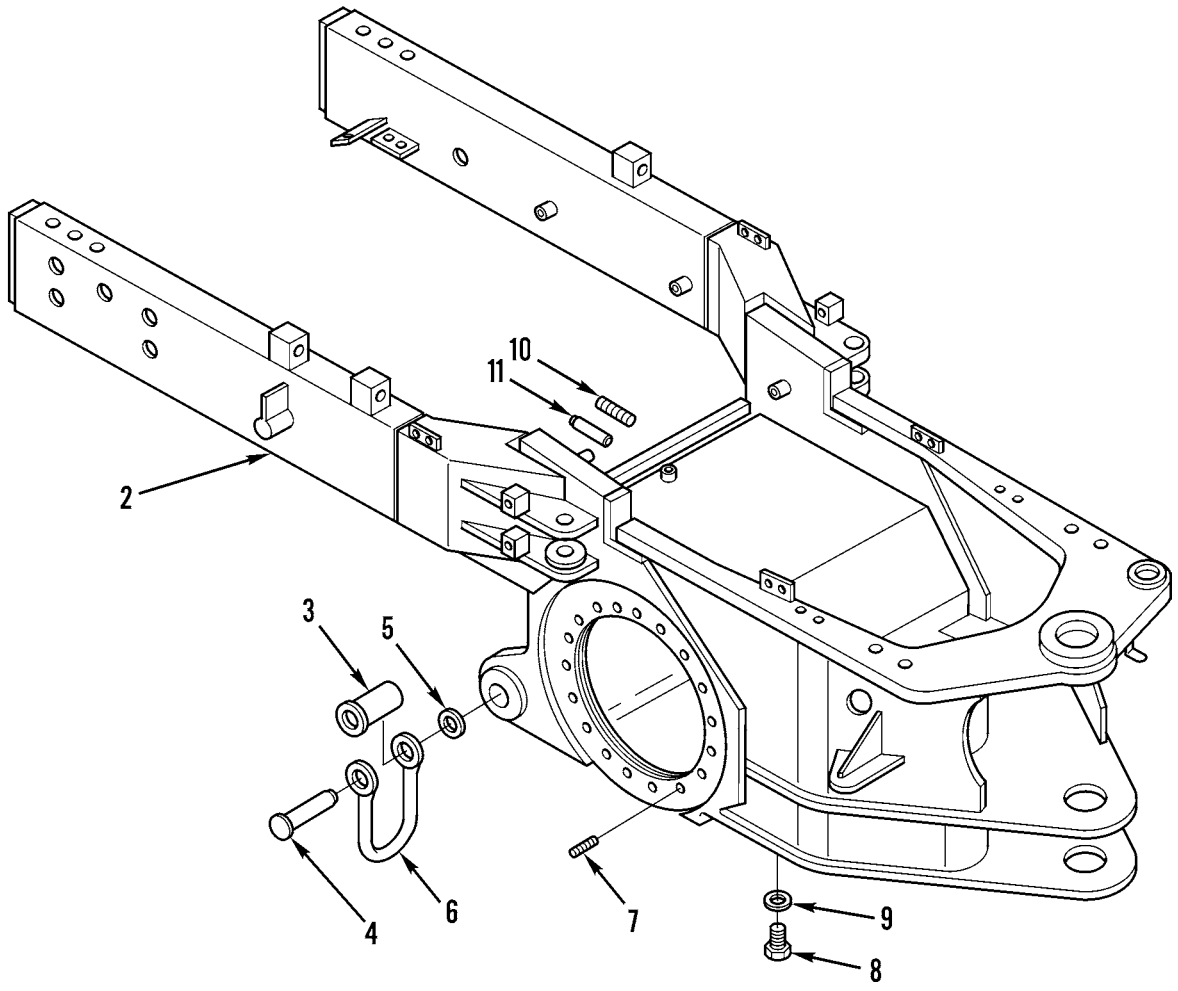

Figure 199. Rear Frame and Case Assembly

(1) ITEM NO	(2) SMR CODE	(3) NSN	(4) CAGEC	(5) PART NUMBER	(6) DESCRIPTION AND USABLE ON CODES(UOC)	(7) QTY
					GROUP 1501 FRAME ASSEMBLY FIG. 199 REAR FRAME AND CASE ASSEMBLY	
1	PAHZZ	3040011787121	11083	5R6361	HOUSING,MECHANICAL.....	1
2	XDHZZ		11083	2G9707	.CASE ASSEMBLY,FRAME.....	1
3	PAHZZ	3120011786041	11083	5R5355	.BUSHING,SLEEVE.....	2
4	PAHZZ	5315011779863	11083	5R5356	.PIN,STRAIGHT,HEADED.....	2
5	XDHZZ		11083	7B7744	.WASHER,FLAT.....	2
6	PFHZZ	4030011845839	11083	5R5354	.SHACKLE.....	2
7	PAHZZ	5307000082234	11083	2R1600	STUD,CONTINUOUS THR.....	38
8	PFHZZ	5365004265507	11083	6B5262	PLUG,MACHINE THREAD.....	1
9	PFHZZ	5330002391792	79150	2165	GASKET.....	1
10	PAHZZ	5325010796770	11083	2D8822	STUD,POSITIVE LOCK.....	11
11	PFHZZ	5315010599434	11083	4D8148	DOWEL.....	1

END OF FIGURE

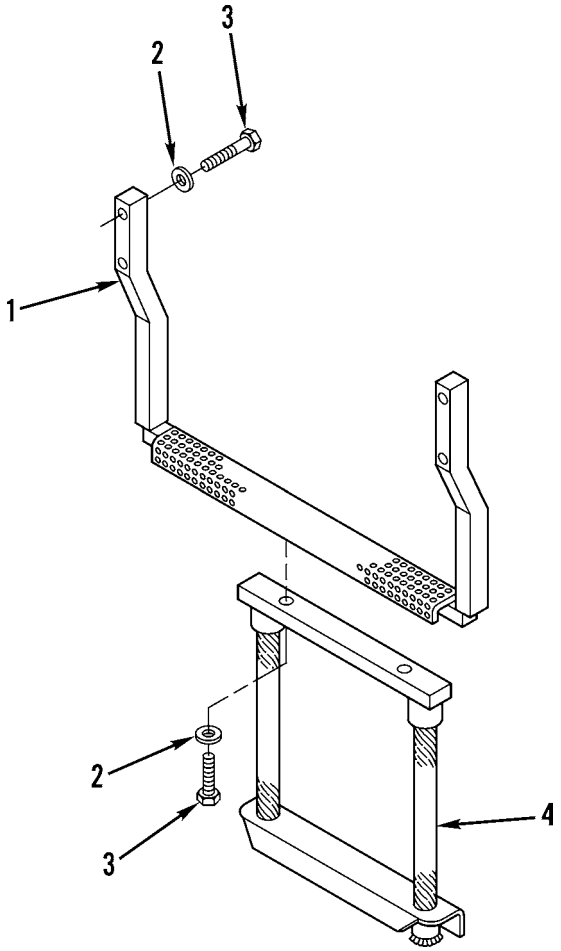

Figure 200. Step Assembly (Sheet 1 of 2)

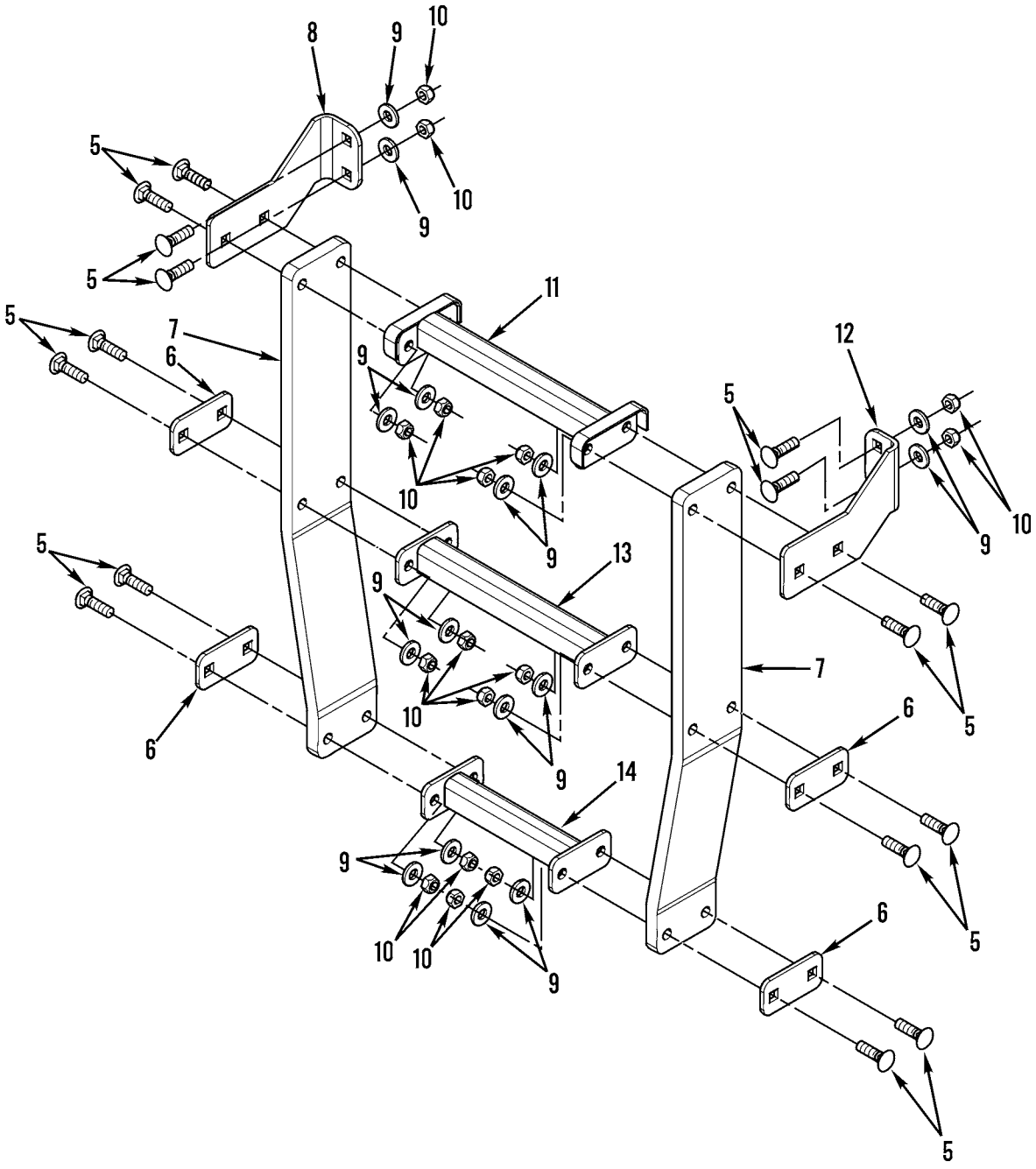

Figure 200. Step Assembly (Sheet 2 of 2)

(1) ITEM NO	(2) SMR CODE	(3) NSN	(4) CAGEC	(5) PART NUMBER	(6) DESCRIPTION AND USABLE ON CODES(UOC)	(7) QTY
					GROUP 1501 FRAME ASSEMBLY FIG. 200 STEP ASSEMBLY	
1	PFOZZ	2540012306863	11083	8W4389	LADDER,VEHICLE BOAR USED ON SERIAL NUMBERS 7GB00631 AND UP..... UOC:AF9,AGP,F10	1
1	PFOZZ	2540011789946	16236	CS-2540-SV-0714	LADDER,VEHICLE BOAR USED ON SERIAL NUMBERS 7GB00001 THRU 7GB00630..... UOC:AF9,AGP,F10	2
2	PFOZZ	5310008095997	96906	MS27183-17	WASHER,FLAT..... UOC:AF9,AGP,F10	12
3	PFOZZ	5306011279361	11083	0S1585	BOLT,MACHINE..... UOC:AF9,AGP,F10	12
4	PFOZZ	2540011677099	11083	9D1274	STEP ASSEMBLY USED ON SERIAL NUMBERS 7GB00001 THRU 7GB00630 USE WITH P/N CS-2540-SV-0714..... UOC:AF9,AGP,F10	2
4	PFOZZ	2540012330165	11083	5T7616	LADDER,VEHICLE BOAR USED ON SERIAL NUMBERS 7GB00631 ND UP USE WITH P/N 8W4389..... UOC:AF9,AGP,F10	1
5	PFOZZ		11083	1D4689	BOLT,MACHINE AFTER REBUILD.....	16
6	PFOZZ	5340014741483	11083	4V9804	BRACKET,MOUNTING AFTER REBUILD.....	4
7	PFOZZ		11083	8X1032	BELT AFTER REBUILD.....	2
8	PFOZZ		11083	8X1031	PLATE AFTER REBUILD.....	1
9	PFOZZ	5310010976720	11083	5P1076	WASHER,SHOULDERED A.....	16
10	PFOZZ	5310000443339	19207	443339	NUT,SELF-LOCKING,HE AFTER REBUILD..	16
11	PFOZZ		11083	8W7388	STEP ASSEMBLY AFTER REBUILD.....	1
12	PFOZZ		11083	8X1033	PLATE AFTER REBUILD.....	1
13	PFOZZ	5340014741486	11083	4V9810	BRACKET,MOUNTING AFTER REBUILD.....	1
14	PFOZZ		11083	4V9809	STEP ASSEMBLY AFTER REBUILD.....	1

END OF FIGURE

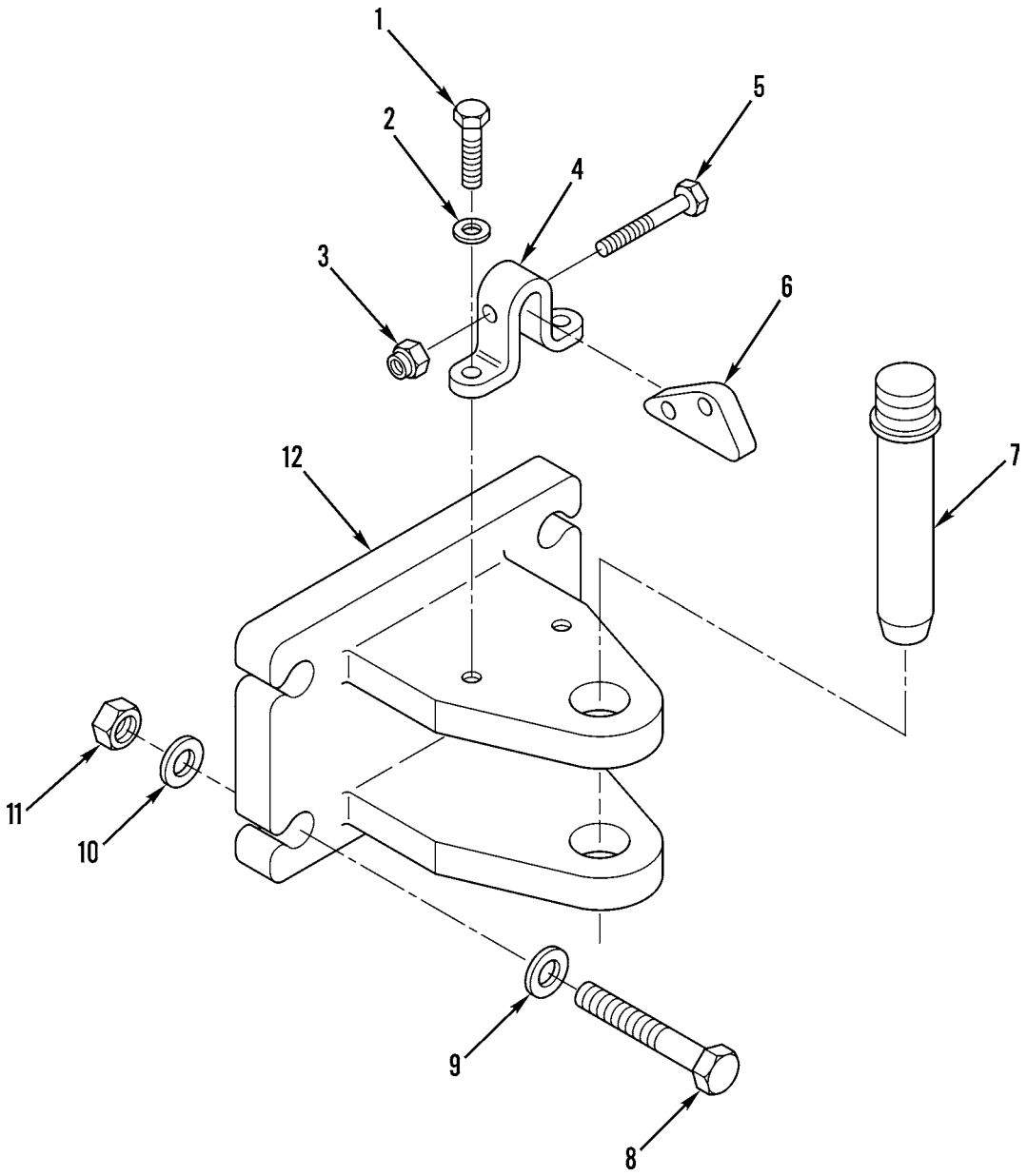

Figure 201. Front Tow Hook Assembly and Mounting

(1) ITEM NO	(2) SMR CODE	(3) NSN	(4) CAGEC	(5) PART NUMBER	(6) DESCRIPTION AND USABLE ON CODES(UOC)	(7) QTY
					GROUP 1503 PINTLES AND TOWING ATTACHMENTS FIG. 201 FRONT TOW HOOK ASSEMBLY AND MOUNTING	
1	PFOZZ	5306002604508	11083	0S1594	BOLT,MACHINE..... UOC:AF9,AGP,F10	2
2	PFOZZ	5310006379541	96906	MS35338-46	WASHER,LOCK..... UOC:AF9,AGP,F10	2
3	PFOZZ	5310009445896	24617	12337822	NUT,SELF-LOCKING,HE..... UOC:AF9,AGP,F10	1
4	PFOZZ	2590011877025	11083	4M4649	PLATE,LOCK,DRAWBAR..... UOC:AF9,AGP,F10	1
5	XDOZZ		11083	0S1577	BOLT,MACHINE..... UOC:AF9,AGP,F10	1
6	PAOZZ	2510001765600	11083	7B0863	LATCH..... UOC:AF9,AGP,F10	1
7	PFOZZ	5315004266042	11083	7F9547	PIN,SHOULDER,HEADLE..... UOC:AF9,AGP,F10	1
8	PFOZZ	5306004263403	11083	1D4609	BOLT,MACHINE..... UOC:AF9,AGP,F10	4
9	PFOZZ	5310004191363	11083	2S0115	WASHER,FLAT..... UOC:AF9,AGP,F10	4
10	PFOZZ	5310011664420	11083	6V2360	WASHER,FLAT..... UOC:AF9,AGP,F10	4
11	PFOZZ	5310007638921	96906	MS51967-23	NUT,PLAIN,HEXAGON..... UOC:AF9,AGP,F10	4
12	PFOZZ	2510011775422	11083	5R5305	BRACKET,EYE,NONROTA..... UOC:AF9,AGP,F10	1
					END OF FIGURE	

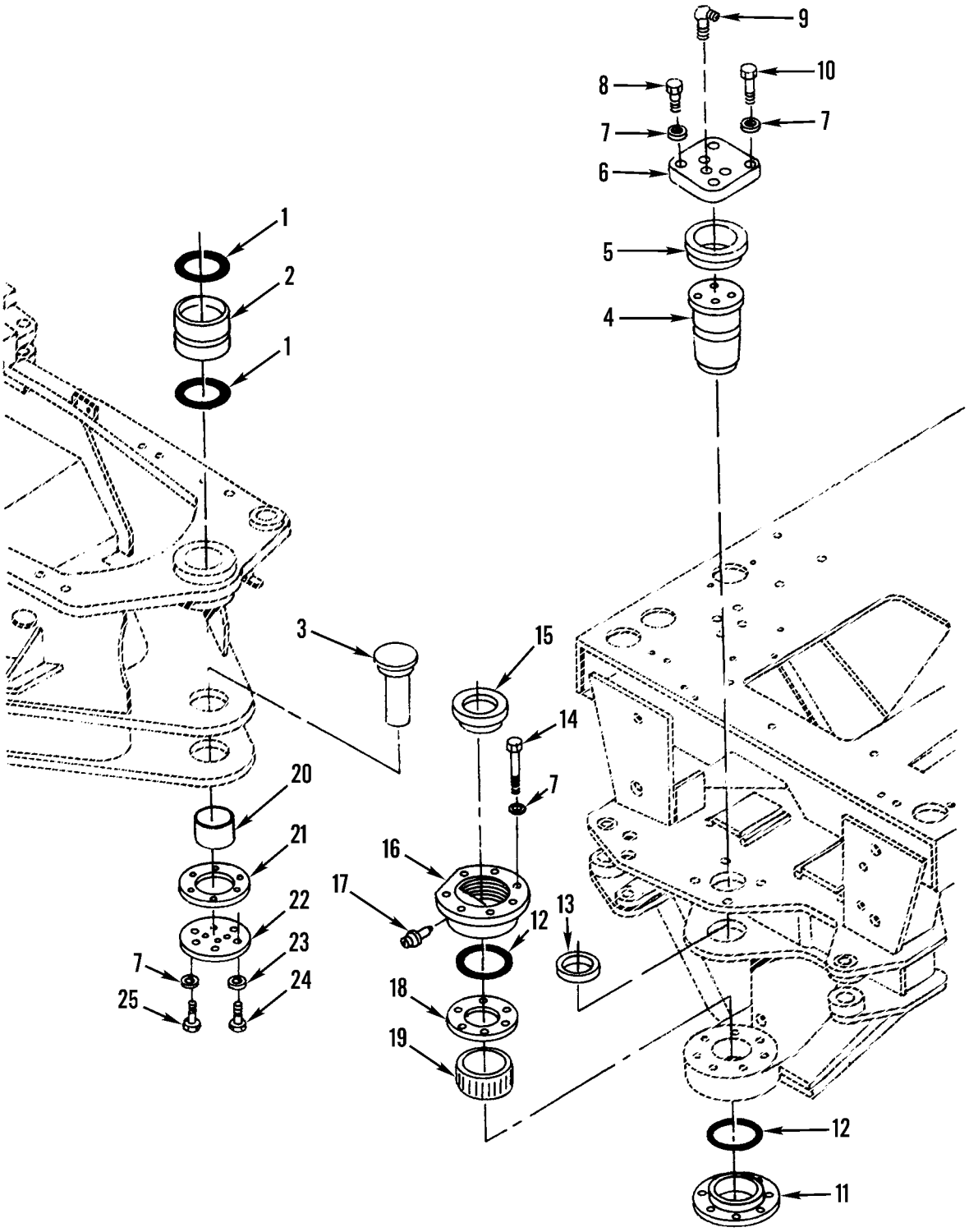

Figure 202. Articulation Hitch (Sheet 1 of 2)

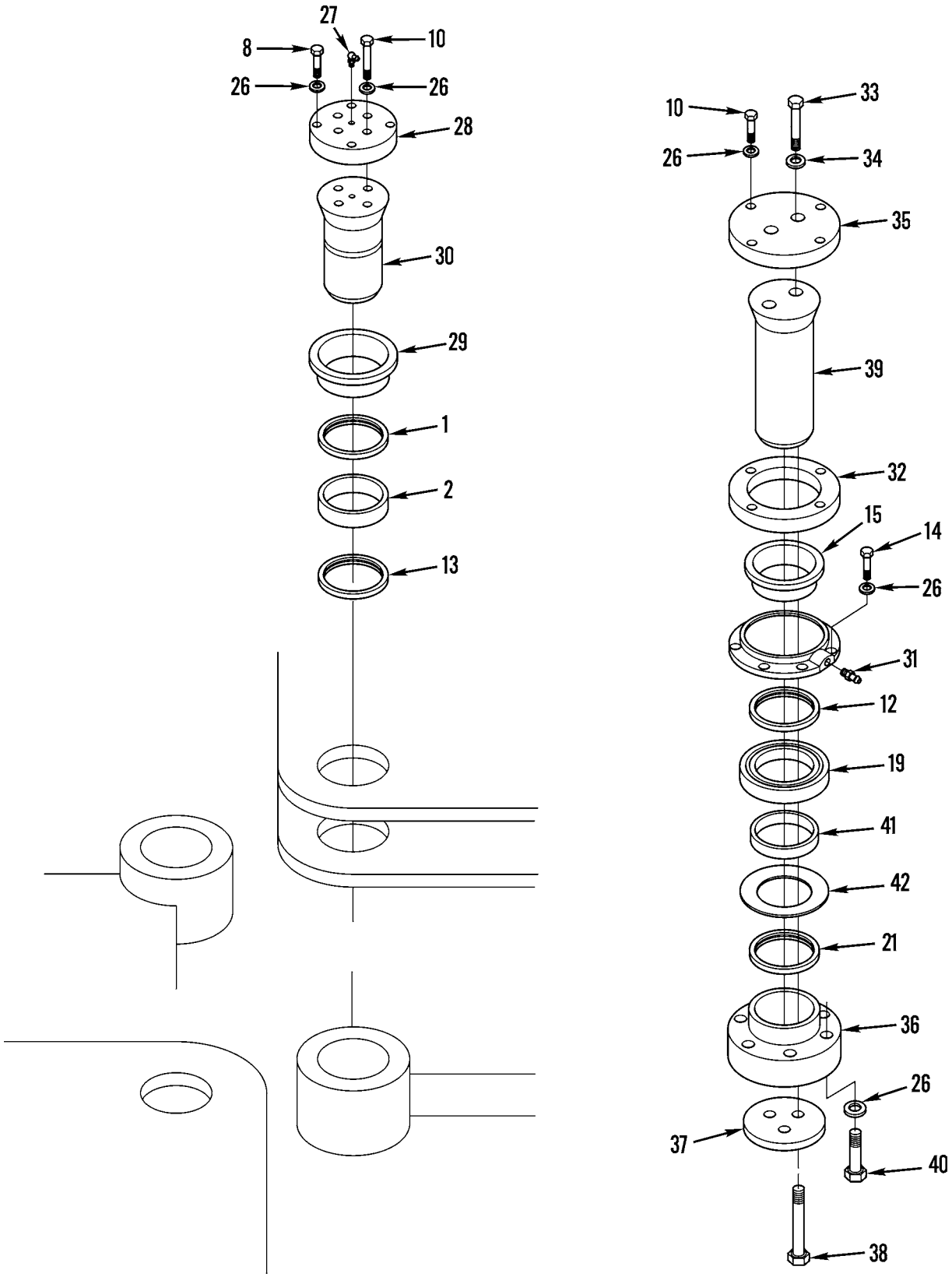

Figure 202. Articulation Hitch (Sheet 2 of 2)

(1) ITEM NO	(2) SMR CODE	(3) NSN	(4) CAGEC	(5) PART NUMBER	(6) DESCRIPTION AND USABLE ON CODES(UOC)	(7) QTY
					GROUP 1503 PINTLES AND TOWING ATTACHMENTS FIG. 202 ARTICULATION HITCH	
1	PAFZZ	5330009314533	11083	4K7463	SEAL,PLAIN ENCASED.....	2
2	XBFZZ		11083	4K8659	BEARING.....	1
3	PFFZZ	3040014381386	11083	5K0871	AXLE,STRAIGHT..... UOC:AF9,AGN,AGP	1
4	PFFZZ	5315011698340	11083	1243240	PIN,GROOVED,HEADED..... UOC:AF9,AGN,AGP	1
5	PFFZZ	2540010689795	11083	2V4331	COLLAR..... UOC:AF9,AGN,AGP	1
6	PAFZZ	5340011697288	11083	6G0417	COVER,ACCESS..... UOC:AF9,AGN,AGP	1
7	PFFZZ	5310005845272	96906	MS35338-48	WASHER,LOCK..... UOC:AF9,AGN,AGP	19
8	PFFZZ	5306002736357	11083	1A1460	BOLT,MACHINE..... UOC:AF9,AGN,AGP	4
8	PAOZZ	5306002736357	11083	1A1460	BOLT,MACHINE..... UOC:AGM,F10	1
9	PFFZZ	4730000109357	24617	109357	FITTING,LUBRICATION..... UOC:AF9,AGN,AGP	1
10	PFFZZ	5306002638978	11083	0S1587	BOLT,MACHINE.....	4
11	PFFZZ	5340014381384	11083	5K0991	PLATE,MOUNTING.....	1
12	PAFZZ	5330010675530	11083	5K0983	SEAL,PLAIN.....	2
13	PAFZZ	3110010675531	11083	5K0984	BEARING.....	1
14	PFFZZ	5306002724229	11083	1D4569	BOLT,MACHINE.....	7
15	PFFZZ	5365011757664	11083	5K0987	SPACER,SLEEVE..... UOC:AF9,AGM,AGN,AGP	2
15	PAOZZ	5365011757664	11083	5K0987	SPACER,SLEEVE..... UOC:AGM,F10	1
16	PFFZZ	5340014381383	11083	5K0989	PLATE,MOUNTING.....	1
17	PFFZZ	4730001720022	96906	MS15003-2	FITTING,LUBRICATION..... UOC:AF9,AGN,AGP	1
18	PAFZZ	5365011573677	11083	5K0988	SHIM.....	1
19	PAFZZ	3110010675532	11083	5K0985	BEARING A.....	1
20	PFFZZ	5365011706356	11083	4K6781	SPACER,SLEEVE..... UOC:AF9,AGN,AGP	1
21	PAFZZ	5365010691502	11083	4K7464	SHIM..... UOC:AF9,AGN,AGP	1
21	PAOZZ	5365010691502	11083	4K7464	SHIM..... UOC:AGM,F10	1
22	PFFZZ	5340014384224	11083	4V0015	PLATE,MOUNTING..... UOC:AF9,AGN,AGP	1
23	PFFZZ	5310000455001	96906	MS35340-50	WASHER,LOCK..... UOC:AF9,AGN,AGP	4
24	PFFZZ	5305007247221	80204	B1821BH063C175N	SCREW,CAP,HEXAGON H..... UOC:AF9,AGN,AGP	4
25	PFFZZ	5306004240086	11083	7B3235	BOLT,MACHINE..... UOC:AF9,AGN,AGP	6
26	PAOZZ	5310004317239	11083	2M0849	WASHER,FLAT..... UOC:AGM,F10	25

(1) ITEM NO	(2) SMR CODE	(3) NSN	(4) CAGEC	(5) PART NUMBER	(6) DESCRIPTION AND USABLE ON CODES(UOC)	(7) QTY
27	PAOZZ	4730002362413	58312	5B9916	FITTING,LUBRICATION..... UOC:AGM,F10	1
28	PAOZZ	5340011832271	55101	62269	COVER,ACCESS..... UOC:AGM,F10	1
29	PAFZZ	3120011863511	55101	62270	BUSHING,SLEEVE..... UOC:AGM,F10	1
30	PAOZZ	5315015217020	11083	5R5393	PIN,GROOVED,HEADLES..... UOC:AGM,F10	1
31	PAOZZ	4730001720022	11083	2D4867	FITTING,LUBRICATION..... UOC:AGM,F10	1
32	PAOZZ		11083	5R5388	PLATE,RETAINING,SHA..... UOC:AGM,F10	1
33	PAOZZ	5305007247222	80204	B1821BH063C200N	SCREW,CAP,HEXAGON H..... UOC:AGM,F10	2
34	PAOZZ	5310010954631	11083	5P8247	WASHER,FLAT..... UOC:AGM,F10	2
35	PAOZZ	5340011850638	55101	62280	COVER,ACCESS..... UOC:AGM,F10	1
36	PAOZZ	3040011852530	55101	62282	PLATE,RETAINING,SHA..... UOC:AGM,F10	1
37	PAOZZ	5310011865422	55101	62278	WASHER,KEYWAY..... UOC:AGM,F10	1
38	PAOZZ		11083	7B2725	BOLT,MACHINE..... UOC:AGM,F10	3
39	PAOZZ	5315011876323	11083	5R5394	PIN,STRAIGHT,HEADED..... UOC:AGM,F10	1
40	PAOZZ	5306014713609	11083	0310223	BOLT,MACHINE..... UOC:AGM,F10	6
41	PAFZZ	3120011861287	11083	5R5387	BEARING,SLEEVE..... UOC:AGM,F10	1
42	PAFZZ	5325011867760	80756	US-387	RING,RETAINING..... UOC:AGM,F10	1

END OF FIGURE

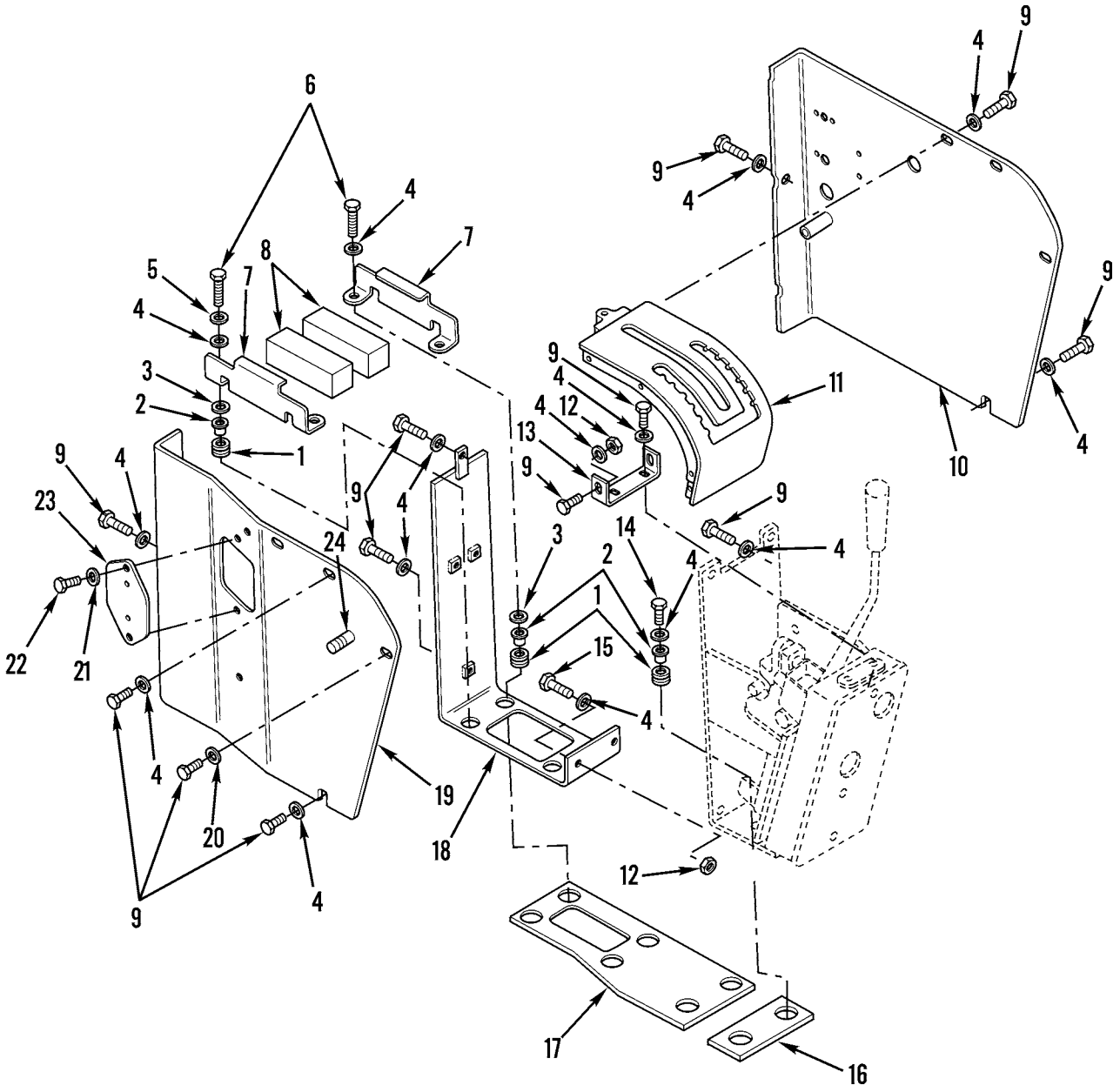

Figure 203. Operator's Console

(1) ITEM NO	(2) SMR CODE	(3) NSN	(4) CAGEC	(5) PART NUMBER	(6) DESCRIPTION AND USABLE ON CODES(UOC)	(7) QTY
					GROUP 18 BODY, CAB, HOOD, AND HULL	
					GROUP 1801 BODY, CAB, HOOD, AND HULL ASSEMBLIES	
					FIG. 203 OPERATOR'S CONSOLE	
1	PAOZZ	5325011514165	11083	2G8097	GROMMET,NONMETALLIC.....	6
2	PFOZZ	5365011554454	11083	2G8095	SPACER,SLEEVE..... UOC:AGM,AGN,AGP	6
3	PFOZZ	5310004135060	11083	3K0925	WASHER,FLAT..... UOC:AF9,AGP,F10	4
4	PFOZZ	5310010948810	78189	3320-14-01	WASHER,SQUARE CONE.....	25
5	PFOZZ	5310006276128	96906	MS35335-35	WASHER,LOCK..... UOC:AF9,AGP,F10	1
6	PFOZZ	5306011767828	11083	5S7383	BOLT,MACHINE..... UOC:AF9,AGP,F10	4
7	PAOZZ	2510011824469	11083	6G0223	BRACKET ASSEMBLY,IN..... UOC:AF9,AGP,F10	2
8	XDOZA	5330010948880	11083	6G0222	RUBBER STRIP..... UOC:AF9,AGP,F10	2
9	PFOZZ	5305007175460	11083	5S7379	SCREW,CAP,HEXAGON H..... UOC:AF9,AGP,F10	18
10	PFOZZ	5340011476712	11083	6G7895	COVER,ACCESS.....	1
11	PFOZZ	2520011491853	11083	8X7648	GATE,SHIFT SELECTOR.....	1
12	PFOZZ	5310014297859	11083	6V8801	NUT,PLAIN,HEXAGON..... UOC:AF9,AGP,F10	4
13	PAOZZ	5340011598885	11083	2G3468	STRAP,RETAINING.....	1
14	PFOZZ	5306004550462	11083	4L9337	BOLT,MACHINE..... UOC:AF9,AGP,F10	2
15	PFOZZ	5306002286835	11083	4L6454	BOLT,MACHINE..... UOC:AF9,AGP,F10	2
16	PAOZZ	5330011509797	11083	2G8307	SEAL,NONMETALLIC ST.....	1
17	PFOZZ	2590011496785	11083	2G8222	PAD,CUSHIONING.....	1
18	PFOZZ	5340011558810	11083	9D0793	SUPPORT ASSEMBLY.....	1
19	PFOZZ	2520011488159	11083	6G6802	PLATE ASSEMBLY,TRAN.....	1
20	PFOZZ	5310001174788	11083	5M2894	WASHER,FLAT.....	1
21	PFOZZ	5310010980634	78189	WD23875	WASHER,SPRING TENSI.....	2
22	PFOZZ	5305010964550	11083	4M5283	SCREW,CAP,HEXAGON H..... UOC:AF9,AGP,F10	2
23	PFOZZ	5340011476713	11083	6G6538	COVER,ACCESS.....	1
24	PFOZZ		11083	8T1721	STUD.....	1

END OF FIGURE

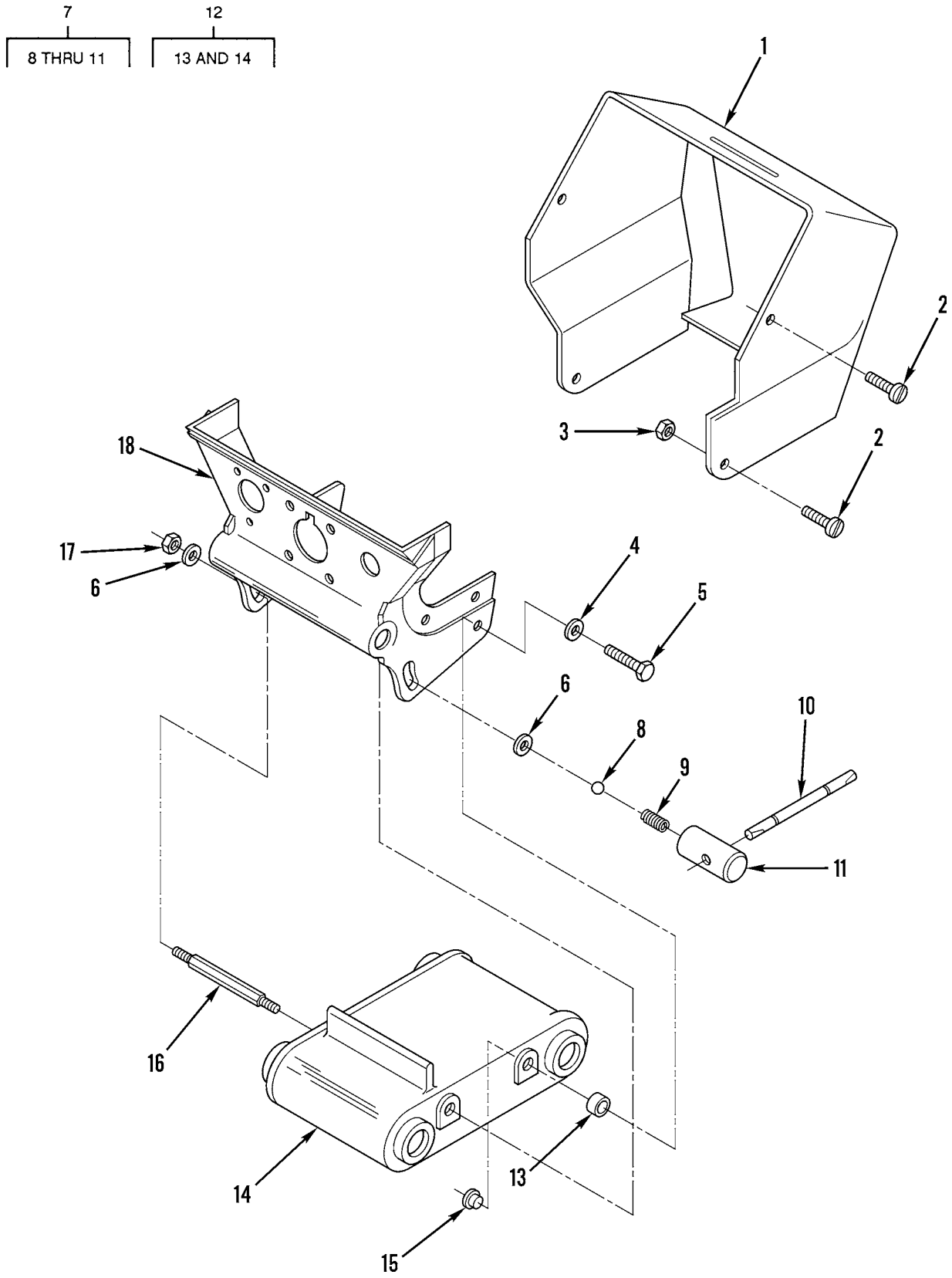

Figure 204. Steering Console Panel Support

(1) ITEM NO	(2) SMR CODE	(3) NSN	(4) CAGEC	(5) PART NUMBER	(6) DESCRIPTION AND USABLE ON CODES(UOC)	(7) QTY
					GROUP 1801 BODY, CAB, HOOD, AND HULL ASSEMBLIES FIG. 204 STEERING CONSOLE PANEL SUPPORT	
1	PFOZZ	2510011741270	11083	6G4967	PANEL,DASH,HOOD,VEH USBL EFF 7GB00001 AND SUB.....	1
2	PFOZZ	5305009931848	96906	MS35207-265	SCREW,MACHINE USBL EFF 7GB00001 AND SUB.....	6
3	PFOZZ	4730011820743	11083	9D0608	NUT,UNION USBL EFF 7GB00001 AND SUB	2
4	PFOZZ	5310000814219	96906	MS27183-12	WASHER,FLAT USBL EFF 7GB00001 AND SUB.....	2
5	PFOZZ	5306009305643	11083	1A9579	BOLT,MACHINE USBL EFF 7GB00001 AND SUB.....	2
6	PFOZZ	5310002682446	11083	4H9981	WASHER,FLAT USBL EFF 7GB00001 THRU 7GB00545.....	2
7	PFOZZ	2590011820891	11083	9D9329	HANDLE ASSEMBLY USBL EFF 7GB00001 AND SUB.....	1
8	PAFZZ	3110001006150	08484	BL2277	.BALL,BEARING USBL EFF 7GB00001 AND SUB..... UOC:AF9,AGP,F10	1
9	XDFZZ		11083	9S4169	.SPRING USBL EFF 7GB00001 AND SUB.. UOC:AF9,AGP,F10	1
10	XAFZZ		11083	9D9332	.ROD USBL EFF 7GB00001 AND SUB..... UOC:AF9,AGP,F10	1
11	XAFZZ		11083	9D9331	.BOSS USBL EFF 7GB00001 AND SUB.... UOC:AF9,AGP,F10	1
12	PFOZZ	3130011710519	11083	2G0496	BEARING UNIT,ROLLER USBL EFF 7GB00001 THRU 7GB00545.....	1
13	PFOZZ	3120009396689	11083	9M4256	.BEARING,SLEEVE USBL EFF 7GB00001 THRU 7GB00545.....	2
14	XAFZZ		11083	2G0491	.COVER USBL EFF 7GB00001 THRU 7GB00545..... UOC:AF9,AGP,F10	1
15	PAOZA	5310010660471	11083	7D9801	NUT USBL EFF 7GB00001 AND SUB.....	2
16	PFOZZ	3040011783004	11083	9D0612	SHAFT,SHOULDERED USBL EFF 7GB00001 AND SUB.....	1
17	PFOZZ	5310010588071	11083	2K4973	LOCKNUT USBL EFF 7GB00001 AND SUB..	1
18	XDOZZ		11083	6G4966	HOUSING,INDICATOR USBL EFF 7GB00001 AND SUB.....	1

END OF FIGURE

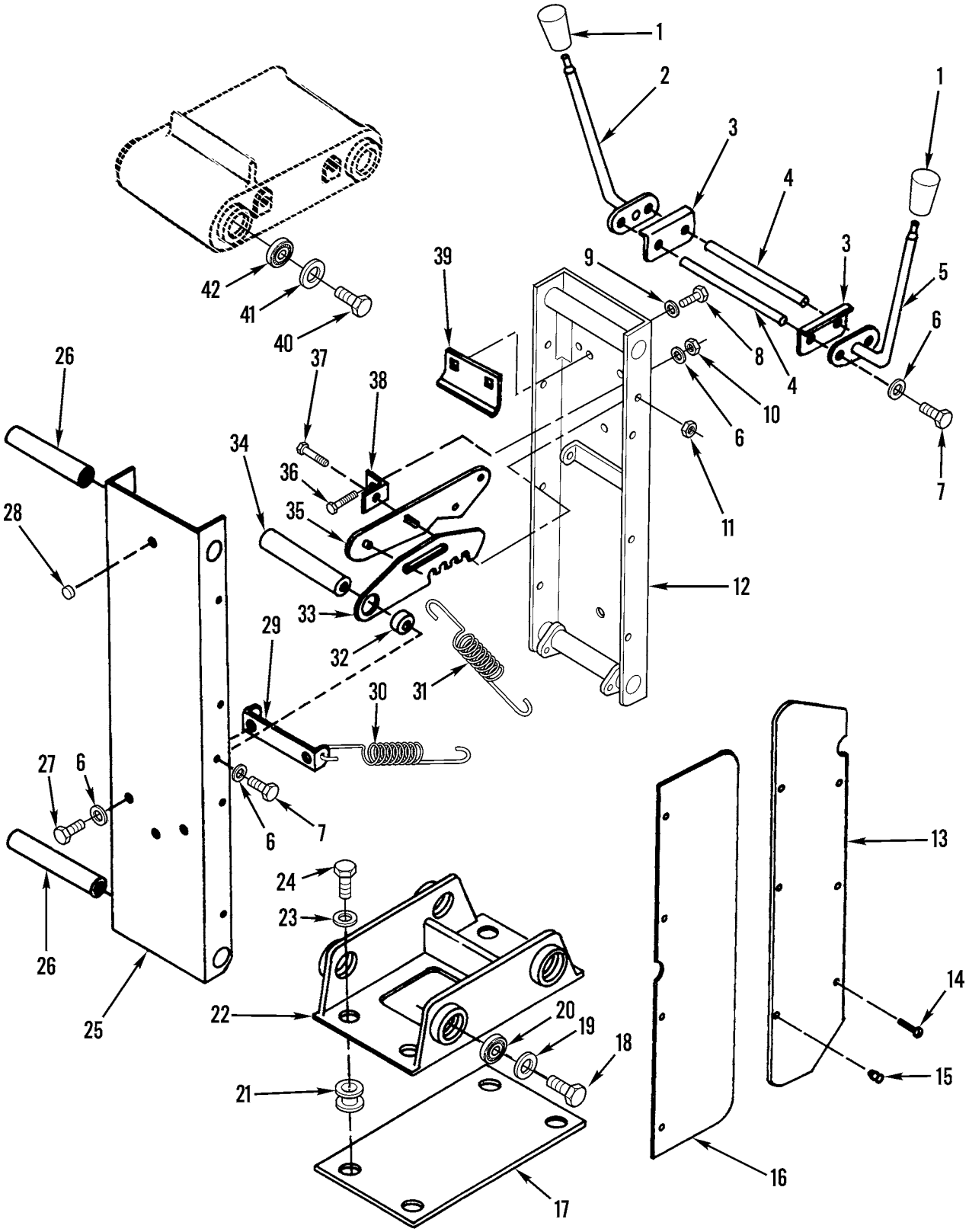

Figure 205. Steering Console Support
(SN 7GB0001 thru 7GB00545 and 74V01965 thru 74V02006)

(1) ITEM NO	(2) SMR CODE	(3) NSN	(4) CAGEC	(5) PART NUMBER	(6) DESCRIPTION AND USABLE ON CODES(UOC)	(7) QTY
					GROUP 1801 BODY, CAB, HOOD, AND HULL ASSEMBLIES FIG. 205 STEERING CONSOLE SUPPORT	
1	PFOZZ	5355008914401	11083	7M0706	KNOB USBL EFF 7GB00001 THRU 7GB01582.....	2
2	PFOZZ	2910011741267	11083	6G7599	ROD,THROTTLE CONTRO USBL EFF 7GB00001 THRU 7GB00545.....	1
3	PFOZZ	5340011699641	11083	6G4938	BRACKET,ANGLE USBL EFF 7GB00001 THRU 7GB00545.....	2
4	PFOZZ	2520010660481	11083	8D5897	SHAFT USBL EFF 7GB00001 THRU 7GB00545.....	2
5	PFOZZ	3040011761214	11083	6G7598	LEVER,MANUAL CONTRO USBL EFF 7GB00001 THRU 7GB00545.....	1
6	PFOZZ	5310001174788	11083	5M2894	WASHER,FLAT USBL EFF 7GB00001 THRU 7GB00545.....	10
7	PFOZZ	5305010269518	11083	0S1571	SCREW,CAP,HEXAGON H USBL EFF 7GB00001 THRU 7GB00545.....	6
8	PFOZZ	5305000712506	80204	B1821BH025C050N	SCREW,CAP,HEXAGON H USBL EFF 7GB00001 AND SUB.....	2
9	PFOZZ	5310010512360	11083	5P0537	WASHER USBL EFF 7GB00001 AND SUB...	2
10	PFOZZ	5310010588071	11083	2K4973	LOCKNUT USBL EFF 7GB00001 THRU 7GB00545..... UOC:AF9,AGP,F10	2
11	PFOZZ	5310005420091	11083	0314155	NUT,PLAIN,HEXAGON USBL EFF 7GB00001 THRU 7GB00545.....	2
12	PFOZZ	2510011771004	11083	6G4943	CHANNEL,INSTRUMENT USBL EFF 7GB00001 THRU 7GB00545.....	1
13	PFOZZ	5340011699640	11083	6G4944	PLATE,MENDING USBL EFF 7GB00001 AND SUB.....	2
14	PFOZZ	5305011522589	11083	6V2687	SCREW,TAPPING USBL EFF 7GB00001 AND SUB.....	14
15	PFOZZ	5315011665737	78189	N10-250100-0101	PIN,GROOVED,HEADED USBL EFF 7GB00001 AND SUB.....	6
16	PFOZZ	5340011699639	11083	6G4946	PLATE,MENDING USBL EFF 7GB00001 AND SUB.....	2
17	PAOZZ	2590011679246	11083	6G4954	PAD,CUSHIONING USBL EFF 7GB00001 AND SUB.....	1
18	PFOZZ	5305010156841	11083	0S1591	SCREW USBL EFF 7GB00001 THRU 7GB00545.....	4
19	PFOZZ	5310009998288	11083	9M6527	WASHER,FLAT USBL EFF 7GB0001 THRU 7GB00545.....	4
20	PFOZZ	3110010660466	21335	RAL012NPP	BEARING,BALL,ANNULA USBL EFF 7GB00001 THRU 7GB00545.....	4
21	PFOZZ	5325011005239	11083	2G8098	GROMMET,NONMETALLIC USBL EFF 7GB00001 AND SUB.....	4
22	PFOZZ	3805011746001	11083	6G4968	BRACKET,EYE,NONROTA USBL EFF 7GB00001 THRU 7GB00545.....	1
23	PFOZZ	5310008093079	96906	MS27183-19	WASHER,FLAT USBL EFF 7GB00001 AND SUB.....	4
24	PFOZZ	5306011863448	80204	B1821BH050C088L	BOLT,MACHINE USBL EFF 7GB00001 AND SUB.....	4

(1) ITEM NO	(2) SMR CODE	(3) NSN	(4) CAGEC	(5) PART NUMBER	(6) DESCRIPTION AND USABLE ON CODES(UOC)	(7) QTY
25	PFOZZ	2510011741268	11083	6G4942	CHANNEL ASSEMBLY USBL EFF 7GB00001 THRU 7GB00545.....	1
26	PFOZZ	3040011699694	11083	8D5896	SHAFT,STRAIGHT USBL EFF 7GB00001 AND SUB.....	4
27	PFOZZ	5306011954681	11083	3B1915	BOLT USBL EFF 7GB00001 THRU 7GB00545.....	2
28	PFOZZ	5340002708552	61864	BS51338	BUTTON,PLUG USBL EFF 7GB00001 AND SUB.....	2
29	PFOZZ	5340011704789	11083	7D9657	STRAP,RETAINING USBL EFF 7GB00001 THRU 7GB00545.....	1
30	PFOZZ	5360010660500	11083	1H2348	SPRING USBL EFF 7GB00001 THRU 7GB00545.....	2
31	PAOZZ	5360011673642	11083	8D8456	SPRING USBL EFF 7GB00001 THRU 7GB00545.....	2
32	PAOZZ	5365010956108	11083	8D5898	SPACER,SLEEVE USBL EFF 7GB00001 THRU 7GB00545.....	2
33	PFOZZ	3805011772394	11083	6G4947	PLATE USBL EFF 7GB00001 THRU 7GB00545.....	2
34	PFOZZ	3040011677074	11083	9D8852	SHAFT,STRAIGHT USBL EFF 7GB00001 THRU 7GB00545.....	1
35	PFOZZ	3805011746002	11083	6G4939	BRACKET,EYE,NONROTA USBL EFF 7GB00001 THRU 7GB00545.....	1
35	PFOZZ	3805011741271	11083	6G4941	PLATE ASSEMBLY USBL EFF 7GB00001 THRU 7GB00545.....	1
36	PFOZZ	5306011345738	96906	MS35751-68	BOLT,SQUARE NECK USBL EFF 7GB00001 THRU 7GB00545.....	2
37	PFOZZ	5305009390658	96906	MS51975-18	SCREW,SHOULDER USBL EFF 7GB00001 THRU 7GB00545.....	2
38	PFOZZ	5340011713688	11083	9D8829	BRACKET,ANGLE USBL EFF 7GB00001 THRU 7GB00545.....	2
39	PFOZZ	5340011718143	11083	7D9706	BRACKET,ANGLE USBL EFF 7GB00001 THRU 7GB00545.....	1
40	PFOZZ	5305010156841	11083	0S1591	SCREW USBL EFF 7GB00001 THRU 7GB00545.....	4
41	PFOZZ	5310009998288	11083	9M6527	WASHER,FLAT USBL EFF 7GB00001 THRU 7GB00545.....	4
42	PFOZZ	3110010660466	21335	RAL012NPP	BEARING,BALL,ANNULA USBL EFF 7GB00001 THRU 7GB00545.....	4

END OF FIGURE

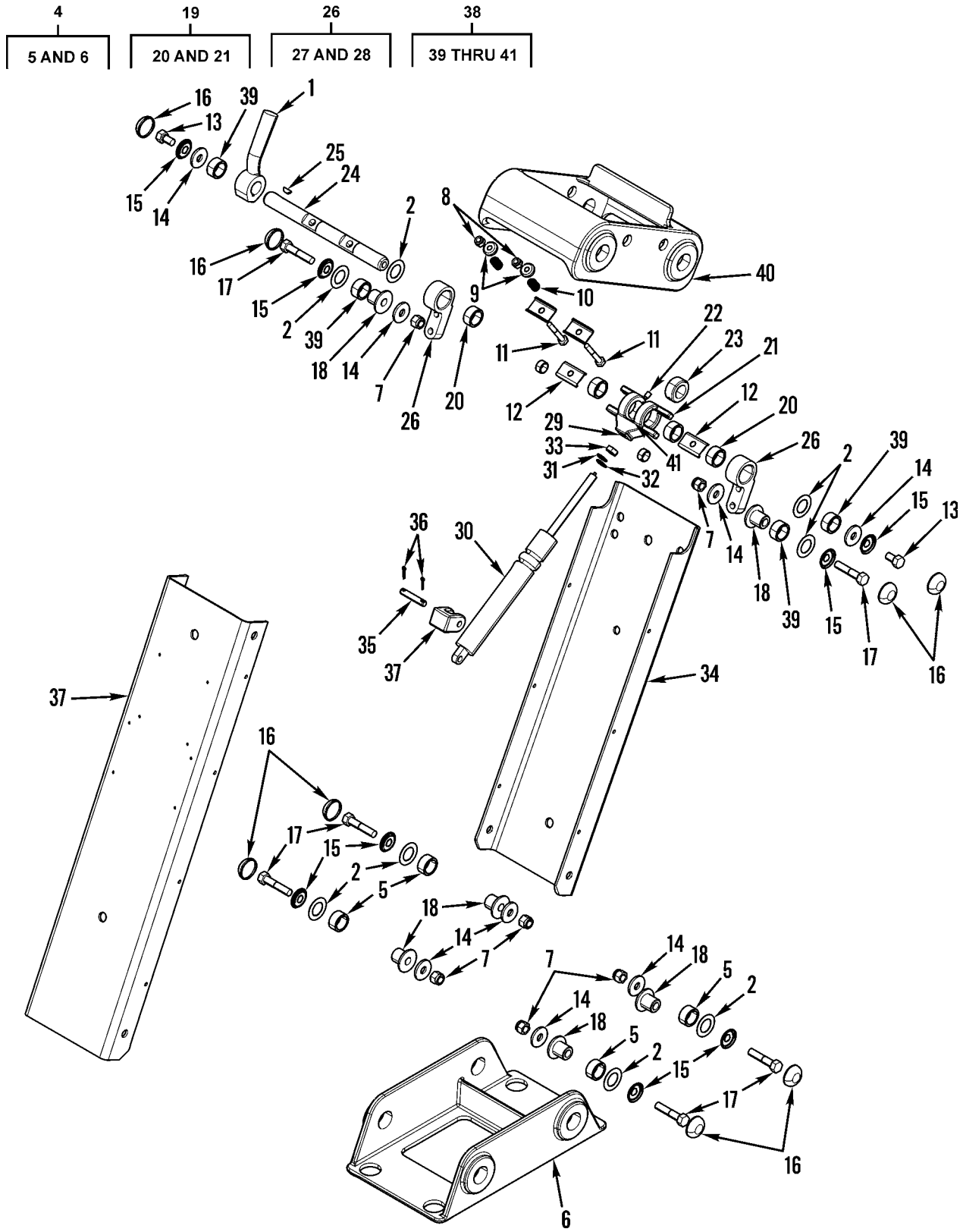

Figure 206. Steering Console Support (SN 7GB00546 and Up)

(1) ITEM NO	(2) SMR CODE	(3) NSN	(4) CAGEC	(5) PART NUMBER	(6) DESCRIPTION AND USABLE ON CODES(UOC)	(7) QTY
					GROUP 1801 BODY, CAB, HOOD, AND HULL ASSEMBLIES FIG. 206 STEERING CONSOLE SUPPORT (SERIAL NO. 7GB00546 AND UP)	
1	PFOZZ	3040013321638	11083	8W2666	LEVER,MANUAL CONTRO USBL EFF 7GB01583 AND SUB..... UOC:AF9,AGP,F10	1
2	PAOZZ	5310013334540	11083	1K7314	WASHER,FLAT USBL EFF 7GB00546 AND SUB..... UOC:AF9,AGP,F10	8
3	PFOZZ	3040013321638	11083	8W2666	LEVER,MANUAL CONTRO USBL EFF 7GB00546 THRU 7GB01582..... UOC:AF9,AGP,F10	2
4	AOOOZ	2590013329889	11083	5T4729	BASE ASSEMBLY USBL EFF 7GB00546 AND SUB..... UOC:AF9,AGP,F10	1
5	PFOZZ	3120012500924	11083	2K7979	.BEARING BLANK,SLEEV USBL EFF 7GB00546 AND SUB..... UOC:AF9,AGP,F10	4
6	PFOZZ		11083	5T2563	.BASE,CONSOLE..... UOC:AF9,AGP,F10	1
7	PFOZZ	5310005579414	72962	24-NE-066	NUT,SPECIAL USBL EFF 7GB00546 AND SUB..... UOC:AF9,AGP,F10	7
8	PFOZZ	5310012098715	11083	7H8909	NUT,SELF-LOCKING,HE USBL EFF 7GB00546 AND SUB..... UOC:AF9,AGP,F10	2
9	PFOZZ	5310012983201	11083	6P5442	WASHER,RECESSED USBL EFF 7GB00546 AND SUB..... UOC:AF9,AGP,F10	2
10	PFOZZ	5360004239986	11083	6B9549	SPRING,HELICAL,COMP USBL EFF 7GB00546 THRU 7GB01582..... UOC:AF9,AGP,F10	2
11	PFOZZ	5305000712510	11083	5P2675	SCREW,CAP,HEXAGON H USBL EFF 7GB00546 AND SUB..... UOC:AF9,AGP,F10	2
12	PFOZZ	5340013352995	11083	5T7627	BRACKET,DOUBLE ANGL USBL EFF 7GB00546 AND SUB..... UOC:AF9,AGP,F10	4
13	PFOZZ	5305007252317	80204	B1821BH038C150N	SCREW,CAP,HEXAGON H USBL EFF 7GB00546 THRU 7GB01582..... UOC:AF9,AGP,F10	2
13	PFOZZ	5305007215492	80204	B1821BH038C063N	SCREW,CAP,HEXAGON H USBL EFF 7GB01583 AND SUB..... UOC:AF9,AGP,F10	1
14	PAOZZ	5310010979416	11083	3P9900	WASHER,FLAT USBL EFF 7GB00546 AND SUB..... UOC:AF9,AGP,F10	10
15	PFOZZ	5310010953348	95760	RHW205	WASHER,SHOULDERED USBL EFF 7GB00546 AND SUB..... UOC:AF9,AGP,F10	10

(1) ITEM NO	(2) SMR CODE	(3) NSN	(4) CAGEC	(5) PART NUMBER	(6) DESCRIPTION AND USABLE ON CODES(UOC)	(7) QTY
16	PFOZZ	5340011720371	11083	2G8573	CAP,PROTECTIVE,DUST USBL EFF 7GB00546 AND SUB..... UOC:AF9,AGP,F10	8
17	PFOZZ	5306011767828	11083	5S7383	BOLT,MACHINE USBL EFF 7GB00546 AND SUB..... UOC:AF9,AGP,F10	6
18	PFOZZ	5365013334595	11083	5T7628	SPACER,SLEEVE USBL EFF 7GB00546 AND SUB..... UOC:AF9,AGP,F10	6
19	AOOOO	3130013328282	11083	5T4731	HOUSING,BEARING UNI USBL EFF 7GB00546 AND SUB..... UOC:AF9,AGP,F10	1
20	PFOZZ	3120012500924	11083	2K7979	.BEARING BLANK,SLEEV USBL EFF 7GB00546 AND SUB..... UOC:AF9,AGP,F10	2
21	PFOZZ		11083	6G8803	.RETAINER..... UOC:AF9,AGP,F10	1
22	PFOZZ	5305011577394	11083	4B6060	SETSCREW USBL EFF 7GB00546 AND SUB. UOC:AF9,AGP,F10	1
23	PFOZZ	3040013322443	11083	6G8815	COLLAR,SHAFT USBL EFF 7GB00546 AND SUB..... UOC:AF9,AGP,F10	1
24	PFOZZ	3040013321616	11083	8W2665	SHAFT,STRAIGHT USBL EFF 7GB01583 AND SUB..... UOC:AF9,AGP,F10	1
24	PFOZZ	3040013321616	11083	8W2665	SHAFT,STRAIGHT USBL EFF 7GB00546 THRU 7GB01582..... UOC:AF9,AGP,F10	1
25	PFOZZ	5315006165514	80205	MS35756-6	KEY,WOODRUFF USBL EFF 7GB00546 THRU 7GB01582..... UOC:AF9,AGP,F10	2
26	AOOOO	3040013342283	11083	5T4730	BRACKET,EYE,ROTATIN USBL EFF 7GB00546 AND SUB..... UOC:AF9,AGP,F10	2
27	PFOZZ	3120012500924	11083	2K7979	.BEARING BLANK,SLEEV USBL EFF 7GB00546 AND SUB..... UOC:AF9,AGP,F10	1
28	PFOZZ	3040013342283	11083	6G8814	.BRACKET,EYE,ROTATIN..... UOC:AF9,AGP,F10	1
29	PFOZZ	3110001151238	96906	MS19060-1016	BALL,BEARING USBL EFF 7GB00546 AND SUB..... UOC:AF9,AGP,F10	1
30	PAOZZ	2540013426814	11083	1050017	CYLINDER ASSEMBLY,R USBL EFF 7GB00546 AND SUB..... UOC:AF9,AGP,F10	1
31	PFOZZ	5310013328232	11083	8N4183	WASHER,FLAT USBL EFF 7GB00546 AND SUB..... UOC:AF9,AGP,F10	1
32	PFOZZ	5310010948810	78189	3320-14-01	WASHER,SQUARE CONE USBL EFF 7GB00546 AND SUB..... UOC:AF9,AGP,F10	1
33	PFOZZ	5310010659110	11083	6L1962	NUT USBL EFF 7GB00546 AND SUB.....	1

(1) ITEM NO	(2) SMR CODE	(3) NSN	(4) CAGEC	(5) PART NUMBER	(6) DESCRIPTION AND USABLE ON CODES(UOC)	(7) QTY
					UOC:AF9,AGP,F10	
34	PFOZZ	5340013343714	11083	6G8811	BRACKET,DOUBLE ANGL USBL EFF 7GB00546 AND SUB.....	1
					UOC:AF9,AGP,F10	
35	PFOZA	5315002456578	11083	6B6780	PIN,STRAIGHT,HEADLE USBL EFF 7GB00546 AND SUB.....	1
					UOC:AF9,AGP,F10	
36	PFOZZ	5315008392326	80205	MS24665-281	PIN,COTTER USBL EFF 7GB00546 AND SUB.....	2
					UOC:AF9,AGP,F10	
37	PAOZZ	5340013335565	11083	6G8804	BRACKET,DOUBLE ANGL USBL EFF 7GB00546 AND SUB.....	1
					UOC:AF9,AGP,F10	
38	AOOOZ	3130013327158	11083	5T2564	HOUSING,BEARING UNI USBL EFF 7GB00546 AND SUB.....	1
					UOC:AF9,AGP,F10	
39	PFOZZ	3120012500924	11083	2K7979	.BEARING BLANK,SLEEV USBL EFF 7GB00546 AND SUB.....	4
					UOC:AF9,AGP,F10	
40	PFOZZ		11083	5T2559	.COVER.....	1
					UOC:AF9,AGP,F10	
41	PFOZZ	3120009396689	11083	9M4256	.BEARING,SLEEVE.....	2
					UOC:AF9,AGP,F10	

END OF FIGURE

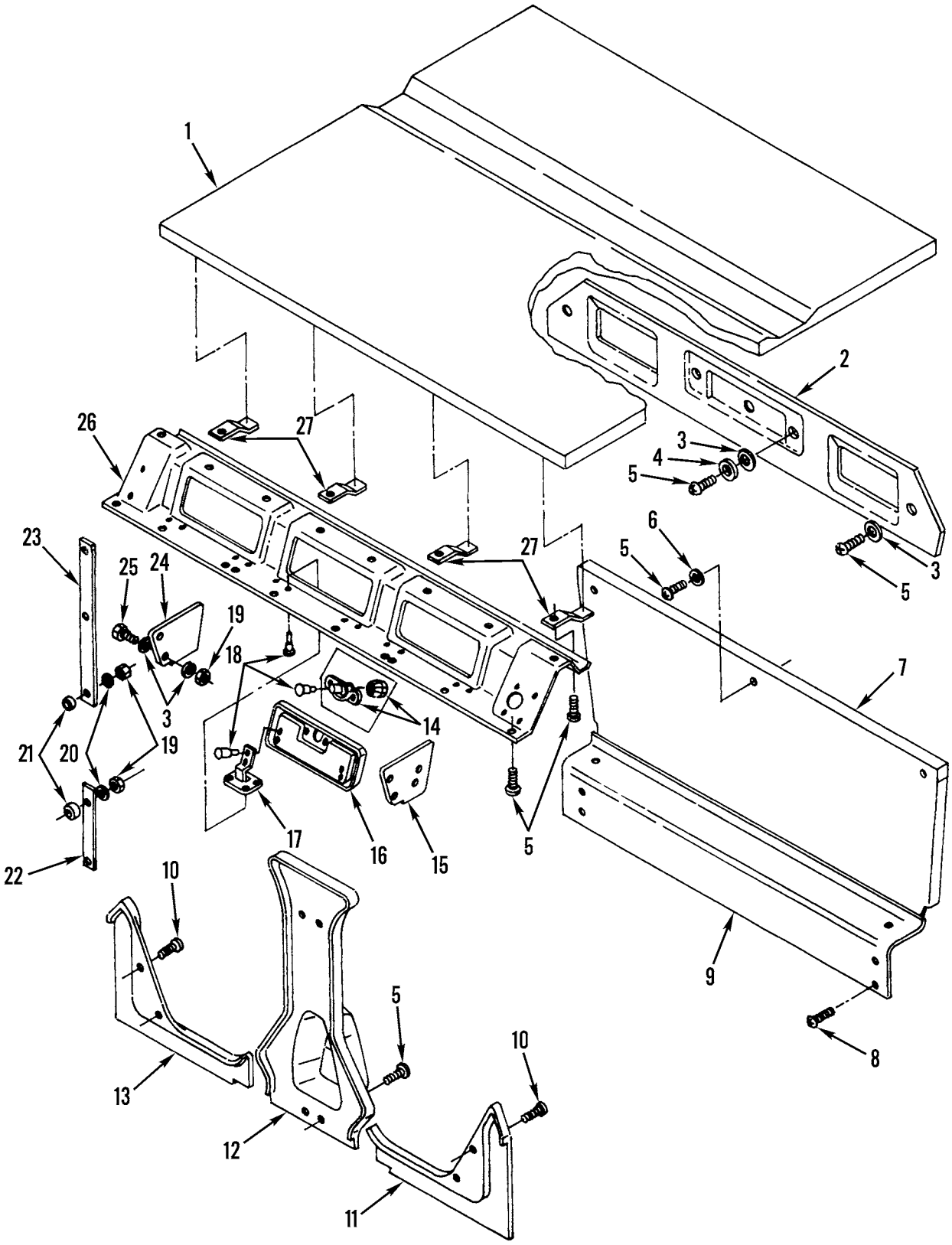

Figure 207. Cab Sound Suppression Liner and Mounting

(1) ITEM NO	(2) SMR CODE	(3) NSN	(4) CAGEC	(5) PART NUMBER	(6) DESCRIPTION AND USABLE ON CODES(UOC)	(7) QTY
					GROUP 1801 BODY, CAB, HOOD, AND HULL ASSEMBLIES FIG. 207 CAB SOUND SUPPRESSION LINER AND MOUNTING	
1	PFOZZ	2510011771777	11083	6G2925	INSULATION BLANKET,..... UOC:AGP	1
2	XDOZZ	2510012919669	11083	5T7176	PANEL,BODY,VEHICULA..... UOC:AGP	1
3	PFOZZ	5310010980634	78189	WD23875	WASHER,SPRING TENSI..... UOC:AF9,AGP	20
4	PFOZZ	5310011604543	11083	3P9901	WASHER,FLAT..... UOC:AGP	2
5	PFOZZ	5305011825249	11083	6V3884	SCREW,CAP,SOCKET HE..... UOC:AGP	31
6	XDOZZ	5310011685569	11083	6G5214	WASHER,FLAT..... UOC:AGP	3
7	PFOZZ	2540011677098	11083	6G2743	INSULATION,DOOR,VEH..... UOC:AGP	1
8	PFOZZ	5305011601995	11083	4V6981	SCREW,CAP,SOCKET HE..... UOC:AGP	6
9	PFOZZ	5340011753866	11083	6G2847	COVER,ACCESS..... UOC:AGP	1
10	XDOZA		11083	2N3478	SCREW,MACHINE..... UOC:AGP	4
11	PFOZZ	2510011788859	11083	6G2643	COVER,SCUFF PANEL LEFT HAND SIDE... UOC:AGP	1
12	PFOZZ	2510011787080	11083	6G3499	PANEL,CAB..... UOC:AGP	1
13	PAOZZ	2510011789782	11083	6G2644	COVER,SCUFF PANEL RIGHT HAND SIDE.. UOC:AGP	1
14	PAOZZ	5340011881358	75618	57-99-246-10	FASTENER,PAWL..... UOC:AGP	3
15	PFOZZ	5365011846695	11083	5R6854	SPACER,PLATE..... UOC:AGP	2
16	PFOZZ	5340011792459	11083	6G2728	DOOR,ACCESS..... UOC:AGP	3
17	PAOZZ	5340011805352	11083	6G2751	HINGE..... UOC:AGP	6
18	PAOZZ	5320009717870	90030	SD43BS	RIVET,BLIND..... UOC:AGP	30
19	PFOZZ	5310000050779	11083	4L6458	NUT,PLAIN,HEXAGON..... UOC:AGP	13
20	PFOZZ	5310008094058	96906	MS27183-10	WASHER,FLAT..... UOC:AGP	5
21	PFOZZ	5365011808779	11083	9P2553	SPACER,SLEEVE..... UOC:AGP	5
22	PAOZZ	2510011787074	11083	6G7723	PLATE,WIRING HARNES..... UOC:AGP	1
23	PFOZZ	2590011783149	11083	6G7721	BEZEL,AUTOMOTIVE TR..... UOC:AGP	1
24	PFOZZ	5365011770107	11083	6G2843	SPACER,PLATE.....	2

(1) ITEM NO	(2) SMR CODE	(3) NSN	(4) CAGEC	(5) PART NUMBER	(6) DESCRIPTION AND USABLE ON CODES(UOC)	(7) QTY
					UOC:AGP	
25	PFOZZ	5305010964550	11083	4M5283	SCREW,CAP,HEXAGON H.....	8
					UOC:AGP	
26	PFOZZ	2510011787079	11083	5R6856	PANEL,CAB,DEADING.....	1
					UOC:AGP	
27	PFOZZ	5340011910343	11083	6G2877	BRACKET,DOUBLE ANGL.....	4
					UOC:AGP	

END OF FIGURE

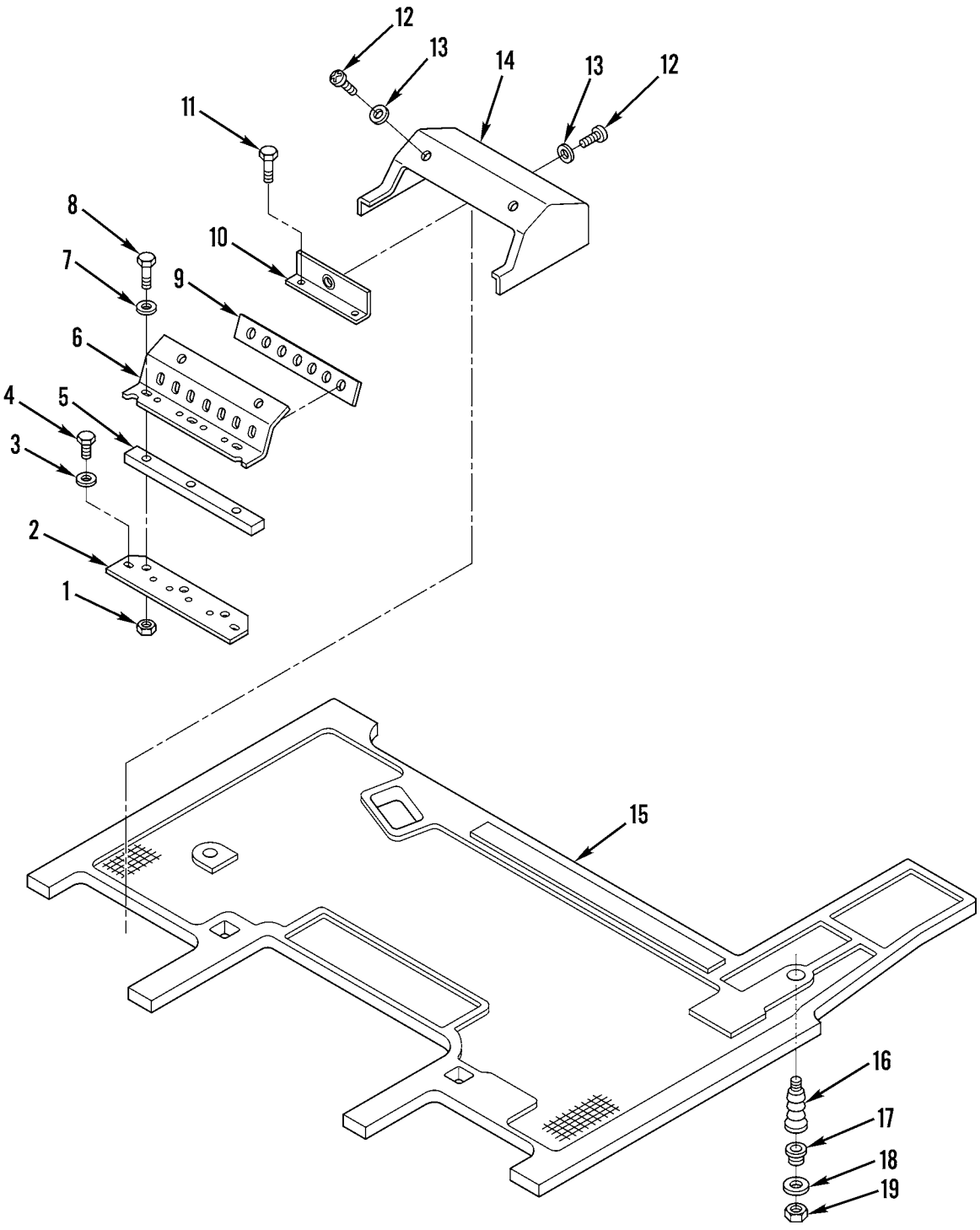

Figure 208. Cab Insulation and Mounting

(1) ITEM NO	(2) SMR CODE	(3) NSN	(4) CAGEC	(5) PART NUMBER	(6) DESCRIPTION AND USABLE ON CODES(UOC)	(7) QTY
					GROUP 1801 BODY, CAB, HOOD, AND HULL ASSEMBLIES FIG. 208 CAB INSULATION AND MOUNTING	
1	PFOZZ	5310000050779	11083	4L6458	NUT,PLAIN,HEXAGON..... UOC:AGP	6
2	PFOZZ	2510011784862	11083	6G4247	PLATE,BODY..... UOC:AGP	2
3	PFOZZ	5310000814219	96906	MS27183-12	WASHER,FLAT..... UOC:AGP	4
4	PFOZZ	5306008148967	11083	2H3755	BOLT,MACHINE..... UOC:AGP	4
5	PAOZA	5330010948709	11083	6G0203	SEAL,NONMETALLIC ST..... UOC:AGP	2
6	PAOZZ	5340011787452	11083	8W1854	BRACKET ASSY..... UOC:AGP	2
7	PFOZZ	5310008094058	96906	MS27183-10	WASHER,FLAT..... UOC:AGP	6
8	PFOZZ	5306004238784	11083	7B2742	BOLT,MACHINE..... UOC:AGP	6
9	PAOZZ	5330010948710	11083	6G0204	SEAL,NONMETALLIC ST..... UOC:AGP	2
10	PAOZZ	5340011778364	11083	5T9352	BRACKET,ANGLE..... UOC:AGP	2
11	PFOZZ	5305000712506	80204	B1821BH025C050N	SCREW,CAP,HEXAGON H..... UOC:AGP	4
12	PFOZZ	5305009897434	96906	MS35207-263	SCREW,MACHINE..... UOC:AGP	6
13	PFOZZ	5310001435722	04998	WA1248	WASHER,FLAT..... UOC:AGP	6
14	PFOZZ	2510011787073	11083	6G0207	COVER,BODY..... UOC:AGP	2
15	PFOZZ	2540011780761	11083	5T5257	MAT,FLOOR..... UOC:AGP	1
16	PAOZZ	2530005693810	11083	2F7964	BOOT,VEHICULAR COMP..... UOC:AGP	1
17	PAOZZ	5365011743274	11083	6G3099	BUSHING,MACHINE THR..... UOC:AGP	1
18	PFOZZ	5310008098541	96906	MS27183-27	WASHER,FLAT..... UOC:AGP	2
19	PFOZZ	5310011711234	11083	3B7329	NUT,PLAIN,HEXAGON..... UOC:AGP	1

END OF FIGURE

5
6 THRU 8

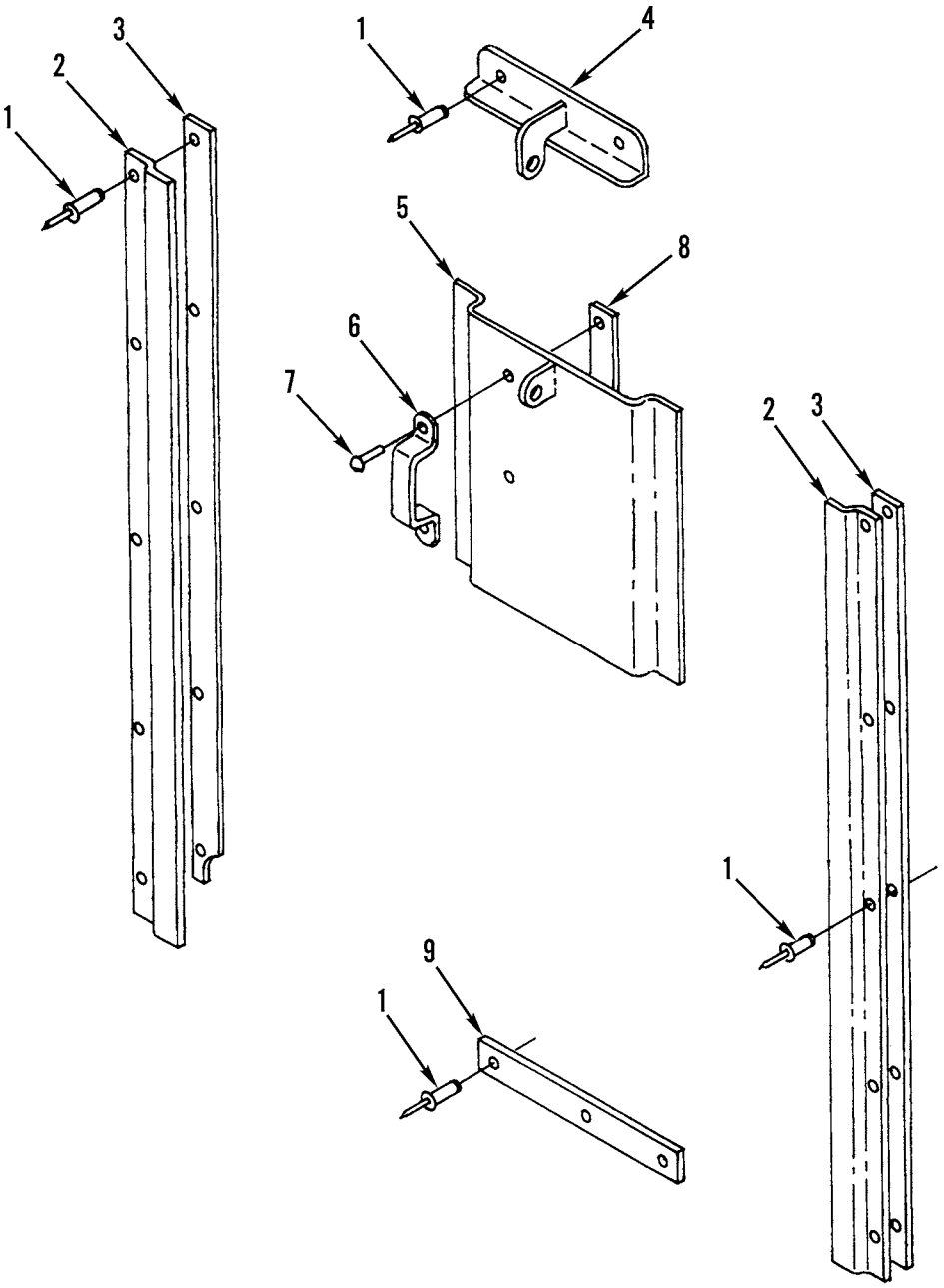

Figure 209. Gages Vandalism Guard and Mounting

(1) ITEM NO	(2) SMR CODE	(3) NSN	(4) CAGEC	(5) PART NUMBER	(6) DESCRIPTION AND USABLE ON CODES(UOC)	(7) QTY
					GROUP 1801 BODY, CAB, HOOD, AND HULL ASSEMBLIES FIG. 209 GAGES VANDALISM GUARD AND MOUNTING	
1	PFOZZ	5320008503241	07707	SD66BS	RIVET,BLIND..... UOC:AF9,AGP,F10	15
2	PAOZZ	2510011811937	11083	8W2668	PLATE..... UOC:AF9,AGP,F10	2
3	PAOZZ	5340011854710	11083	8W2669	PLATE,MENDING..... UOC:AF9,AGP,F10	2
4	PFOZZ	5340011865643	11083	9D6494	BRACKET,ANGLE..... UOC:AF9,AGP,F10	1
5	PAOZZ	5340011810856	11083	8W2671	COVER,ACCESS..... UOC:AF9,AGP,F10	1
6	PFOZZ	2420010626016	11083	6F7013	.HANDLE..... UOC:AF9,AGP,F10	1
7	PFOZZ	5320010625900	11083	4B4311	.RIVET,SOLID..... UOC:AF9,AGP,F10	2
8	PAOZZ	2510010635691	11083	3D2735	.PLATE..... UOC:AF9,AGP,F10	1
9	PAOZZ	5340011835893	11083	8W2670	PLATE,MENDING..... UOC:AF9,AGP,F10	1
					END OF FIGURE	

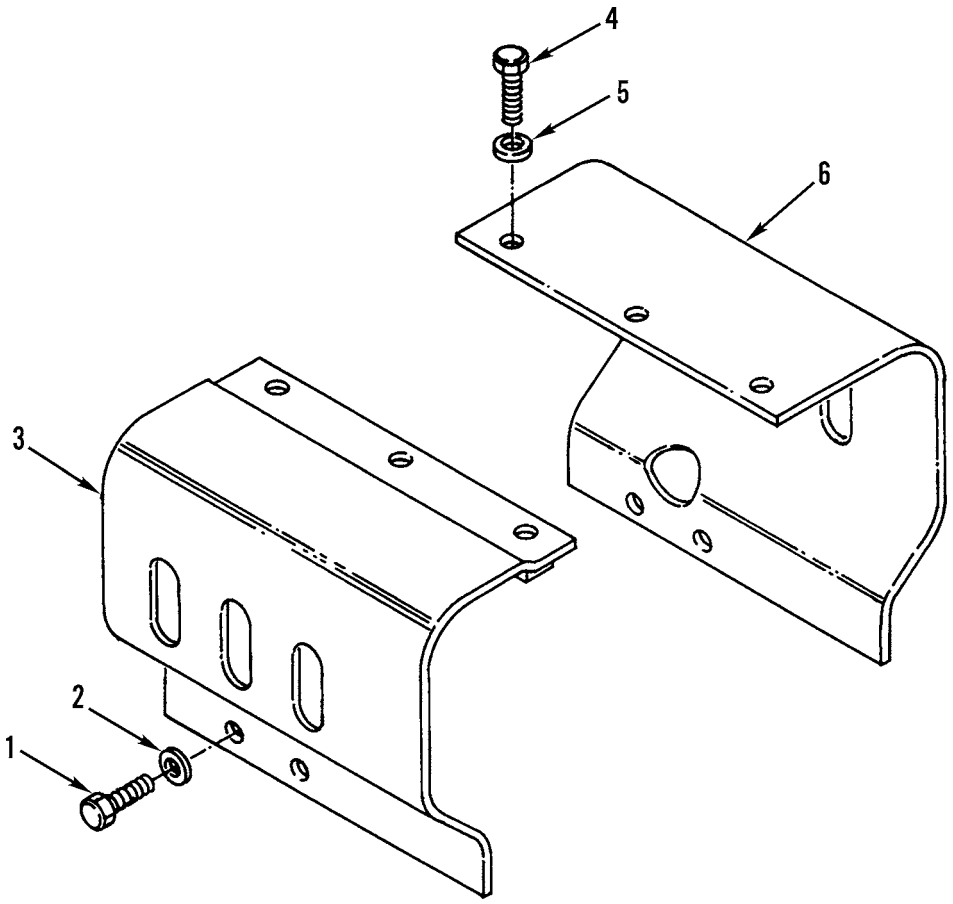

Figure 210. Hydraulic Drive Shield and Mounting

(1) ITEM NO	(2) SMR CODE	(3) NSN	(4) CAGEC	(5) PART NUMBER	(6) DESCRIPTION AND USABLE ON CODES(UOC)	(7) QTY
					GROUP 1801 BODY, CAB, HOOD, AND HULL ASSEMBLIES FIG. 210 HYDRAULIC DRIVE SHIELD AND MOUNTING	
1	PFOZZ	5306008744001	11083	6H1717	BOLT,MACHINE.....	4
2	PFOZZ	5310010976720	11083	5P1076	WASHER,SHOULDERED A.....	4
3	PFOZZ	2540011692880	11083	6G4175	SHIELD ASSEMBLY..... UOC:AF9,AGN,AGP	1
3	PAOZZ	5340011735085	11083	2G8655	BRACKET,ANGLE..... UOC:AGM,F10	1
4	PFOZZ	5306002637301	11083	0L1351	BOLT,MACHINE.....	3
5	PFOZZ	5310010948810	78189	3320-14-01	WASHER,SQUARE CONE.....	3
6	PFOZZ	2590011693779	11083	6G4177	SHIELD,DRIVE SHAFT..... UOC:AF9,AGN,AGP	1
6	PAOZZ	5340011692116	11083	2G8654	BRACKET,DOUBLE ANGL..... UOC:AGM,F10	1

END OF FIGURE

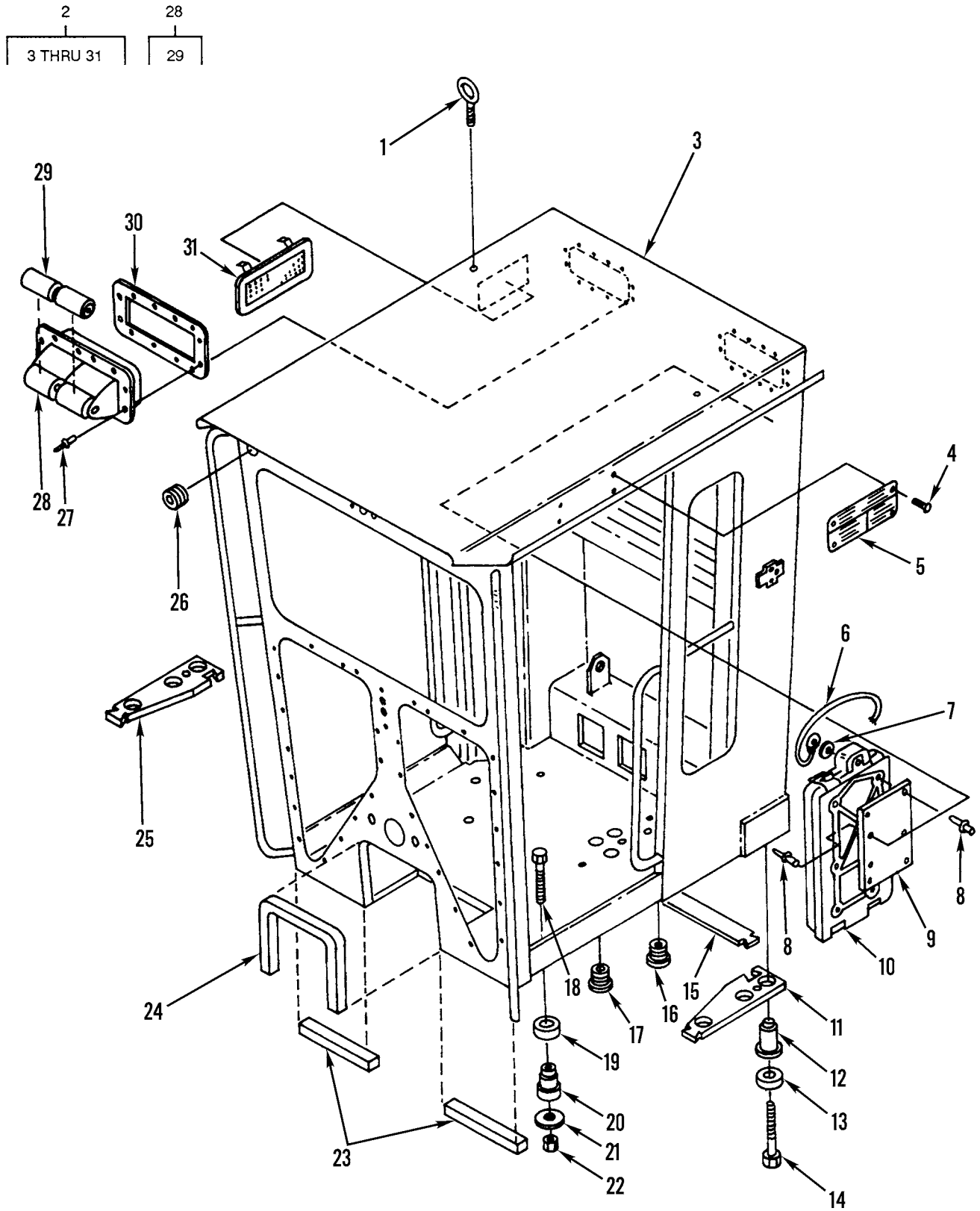

Figure 211. Cab Rollover Protection

(1) ITEM NO	(2) SMR CODE	(3) NSN	(4) CAGEC	(5) PART NUMBER	(6) DESCRIPTION AND USABLE ON CODES(UOC)	(7) QTY
					GROUP 1801 BODY, CAB, HOOD, AND HULL ASSEMBLIES FIG. 211 CAB ROLLOVER PROTECTION	
1	PFOZZ	5306011722527	11083	1P7409	BOLT,EYE..... UOC:AGP	2
2	PFOOO	2510011783050	11083	5T6683	ROLLOVER STRUCTURE,..... UOC:AGP	1
3	XDOZZ		11083	8W5811	.ROPS ASSEMBLY..... UOC:AGP	1
4	PFFZZ	5305002535615	96906	MS21318-21	.SCREW,DRIVE..... UOC:AGP	4
5	PFFZZ	9905011674250	11083	1074672	.PLATE,INSTRUCTION..... UOC:AGP	1
6	PFOZZ	4010011701460	11083	5P7957	.WIRE ROPE ASSEMBLY,..... UOC:AGP	1
7	XDOZZ	5310011087525	11083	9M2307	.WASHER,FLAT..... UOC:AGP	1
8	PFFZZ	5320010738087	54402	AD66ABSLF	.RIVET,BLIND..... UOC:AGP	7
9	PFOZZ	5340012031132	11083	5T5515	.COVER,ACCESS..... UOC:AGP	1
10	PFOZZ	2540011773913	11083	5P9796	.BOX,ACCESSORIES STO..... UOC:AGP	1
11	PFOZZ	2590011745994	11083	6G5229	.PAD,CUSHIONING..... UOC:AGP	1
12	PFOZZ	5340011993516	11083	6G5159	.MOUNT,RESILIENT..... UOC:AGP	4
13	PFOZZ	5310011748242	11083	6G6206	.WASHER,FLAT..... UOC:AGP	6
14	PFOZZ	5306004239358	11083	4B5219	.BOLT,MACHINE..... UOC:AGP	6
15	PFOZZ	3830010947513	11083	2G8642	.PAD,INSULATION..... UOC:AGP	1
16	PAOZZ	5340010955005	11083	5P9212	.PLUG,PROTECTIVE,DUS..... UOC:AGP	4
17	PAOZZ	5305011845886	11083	6P5560	.SCREW,CAP,HEXAGON H..... UOC:AGP	2
18	PFOZZ	5305007247236	80204	B1821BH063C325N	.SCREW,CAP,HEXAGON H..... UOC:AGP	2
19	PFOZZ	3830010950924	11083	1642465	.PAD,INSULATION..... UOC:AGP	2
20	PFOZZ	5342011840837	11083	9D1589	.MOUNT,RESILIENT,WEA..... UOC:AGP	2
21	PFOZZ	5310011765045	11083	0383987	.WASHER,FLAT..... UOC:AGP	2
22	PFOZZ	5310007638920	96906	MS51967-20	.NUT,PLAIN,HEXAGON..... UOC:AGP	2
23	PFOZZ	2590011778594	11083	2G7098	.PAD,CUSHIONING..... UOC:AGP	1
24	PFOZZ	2590011778593	11083	2G7097	.PAD,CUSHIONING..... UOC:AGP	1

(1) ITEM NO	(2) SMR CODE	(3) NSN	(4) CAGEC	(5) PART NUMBER	(6) DESCRIPTION AND USABLE ON CODES(UOC)	(7) QTY
25	PAOZZ	5330011965592	11083	6G5231	.GASKET..... UOC:AGP	1
26	PAOZZ	5325010946106	11083	5H9743	.GROMMET,NONMETALLIC..... UOC:AGP	2
27	PFOZZ	5320009567355	07707	AD64H	.RIVET,BLIND..... UOC:AGP	24
28	PFFZZ	5342011838714	30187	648-005	.DOOR,ACCESS..... UOC:AGP	2
29	PFFZZ	3120012032591	30187	4186	..BUSHING,SLEEVE..... UOC:AGP	2
30	PAFZZ	5330011703756	11083	6G2396	.GASKET..... UOC:AGP	2
31	PFOZZ	2540011774811	11083	6G8424	.VENTILATOR,AIR CIRC..... UOC:AGP	2

END OF FIGURE

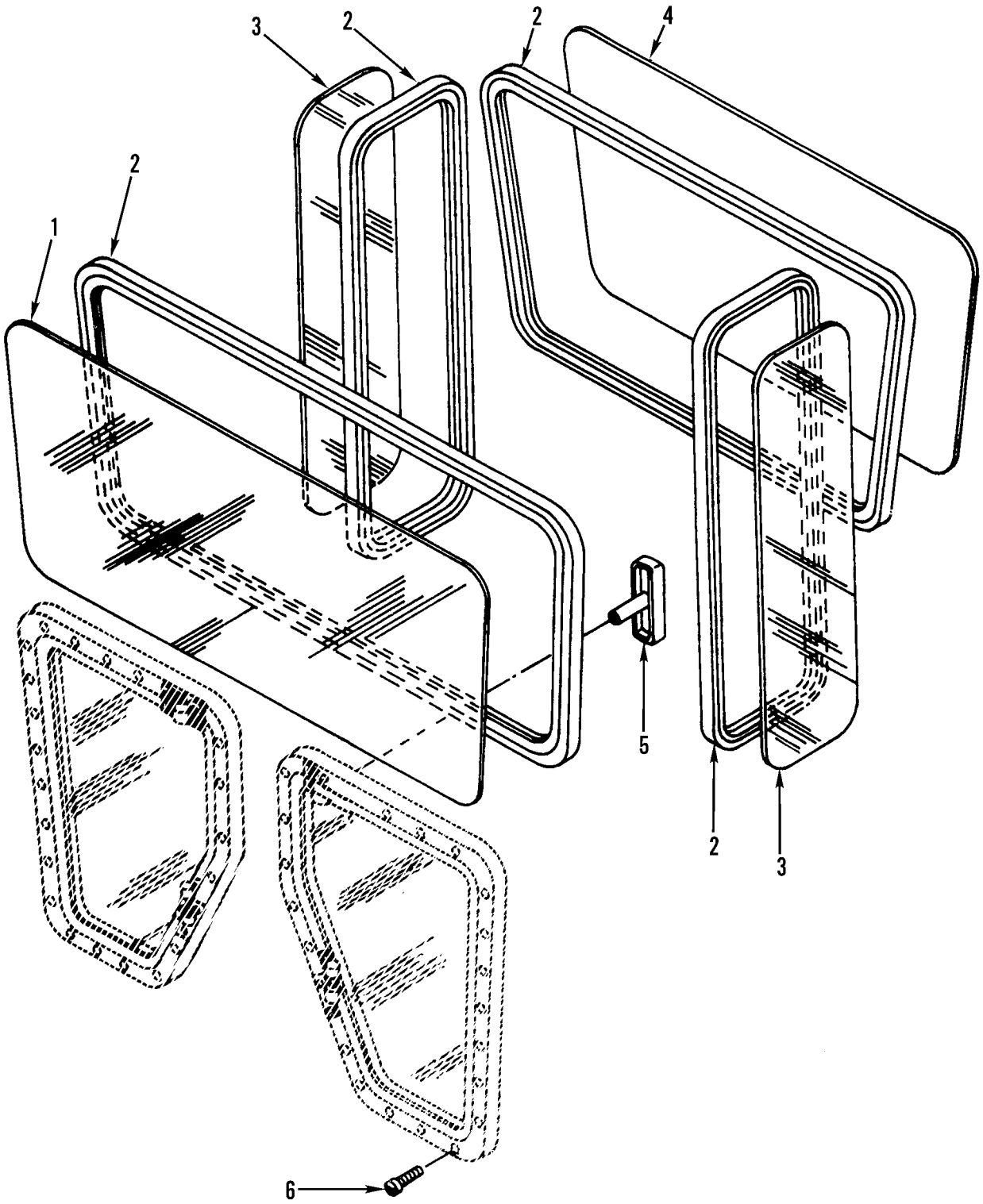

Figure 212. Cab Rollover Protection, Windshields

(1) ITEM NO	(2) SMR CODE	(3) NSN	(4) CAGEC	(5) PART NUMBER	(6) DESCRIPTION AND USABLE ON CODES(UOC)	(7) QTY
					GROUP 1801 BODY, CAB, HOOD, AND HULL ASSEMBLIES FIG. 212 CAB ROLLOVER PROTECTION, WINDSHIELDS	
1	PFFZZ	9340011800142	11083	6G2583	WINDOW,OBSERVATION..... UOC:AGP	1
2	MOOZZ		11083	5P5768-1	SEAL MAKE FROM SEAL,P/N 5P5768..... UOC:AGP	1
3	PFFZZ	9340012034499	11083	6G2581	GLASS,SAFETY,SINGLE..... UOC:AGP	2
4	PFFZZ	9340011669498	11083	6G2061	WINDOW,OBSERVATION..... UOC:AGP	1
5	PFOZZ	5340011861636	11083	5T3093	HANDLE,MANUAL CONTR..... UOC:AGP	2
6	PFOZZ	5305011808689	11083	6V1051	SCREW,CAP,SOCKET HE..... UOC:AGP	26

END OF FIGURE

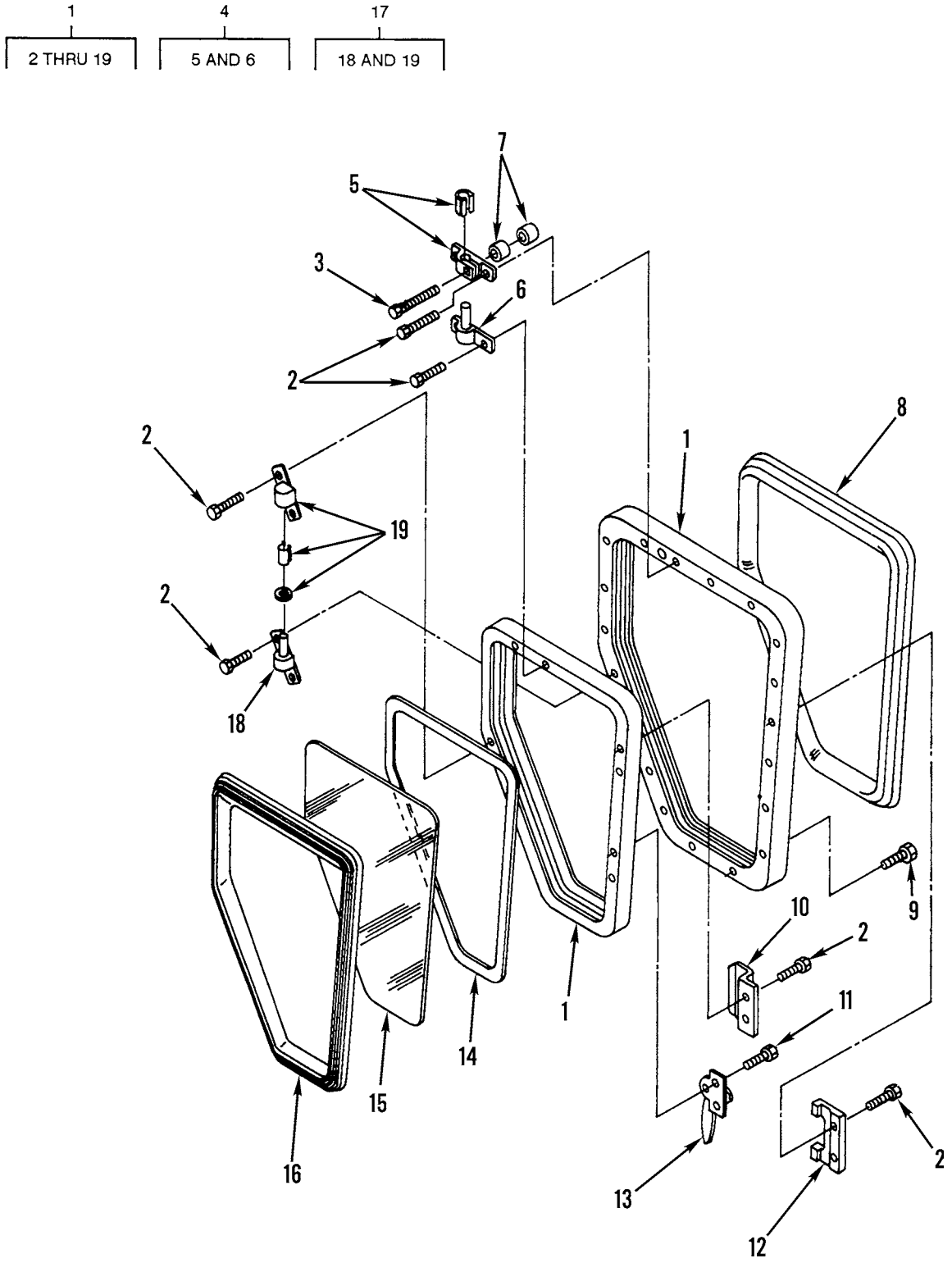

Figure 213. Cab Rollover Protection, Lower Front Window Assembly

(1) ITEM NO	(2) SMR CODE	(3) NSN	(4) CAGEC	(5) PART NUMBER	(6) DESCRIPTION AND USABLE ON CODES(UOC)	(7) QTY
					GROUP 1801 BODY, CAB, HOOD, AND HULL ASSEMBLIES FIG. 213 CAB ROLLOVER PROTECTION, LOWER FRONT WINDOW ASSEMBLY	
1	PFOZZ	2510012001036	28882	5000078L	WINDOW,VEHICULAR..... UOC:AGP	1
1	PFOZZ	2510011841963	28882	5000078R	WINDOW,VEHICULAR..... UOC:AGP	1
2	PFOZZ	5305011783694	11083	1H3340	.SCREW,CAP,SOCKET HE..... UOC:AGP	17
3	PFOZZ	5306011850574	28882	50767	.BOLT,SQUARE NECK..... UOC:AGP	1
4	PFOZZ	3040011827352	28882	90109	.BRACKET,EYE,ROTATIN..... UOC:AGP	1
4	PFOZZ	3040011843196	11083	8W1028	.BRACKET,EYE,ROTATIN..... UOC:AGP	1
5	XDOZZ	2510011826854	28882	90078	..PARTS KIT,VEHICULAR..... UOC:AGP	1
6	PFOZZ	2510011827817	28882	90071	..PIVOT LEFT..... UOC:AGP	1
6	PFOZZ	3040011843196	11083	8W1028	..BRACKET,EYE,ROTATIN RIGHT..... UOC:AGP	1
7	PFOZZ	5365012673020	28882	50766	.SPACER,SLEEVE..... UOC:AGP	2
8	PAOZZ	5330012043388	28882	60091	.SEAL,NONMETALLIC SP..... UOC:AGP	1
9	PAOZZ	5325011825734	28882	59770	.INSERT,SCREW THREAD..... UOC:AGP	34
10	PFOZZ	2540011827819	11083	5T5126	.HANDLE,PULL..... UOC:AGP	1
11	PFOZZ	5305011804735	11083	1H8456	.SCREW,MACHINE..... UOC:AGP	2
12	PFOZZ	2510011827818	28882	50726	.CATCH,WINDOW STOP..... UOC:AGP	1
13	PFOZZ	5340011842201	28882	95108	.HANDLE,MANUAL CONTR..... UOC:AGP	1
13	PFOZZ	5340011861635	28882	95107	.HANDLE,MANUAL CONTR..... UOC:AGP	1
14	PAOZZ	7510012069494	52152	4016 3/8 WIDE	.TAPE,PRESSURE SENSI..... UOC:AGP	1
15	PAOZZ	2510011827925	11083	1505105	.WINDOW,VEHICULAR..... UOC:AGP	1
16	MOOZZ		28882	Z-64165	.SEAL MAKE FROM SEAL,P/N 6V6969.... UOC:AGP	1
17	PAOZZ	2510011832615	11083	5T1959	.IDLER ASSEMBLY,WIND..... UOC:AGP	1
17	PFOZZ	2510011880206	28882	90044	.PARTS KIT,HOUSING,I..... UOC:AGP	1
18	PFOZZ	2510011842144	28882	90073	..PIVOT ASSEMBLY,IDLE..... UOC:AGP	1
18	XDOZZ		28882	90074	..PIVOT ASSEMBLY,IDLE.....	1

(1) ITEM NO	(2) SMR CODE	(3) NSN	(4) CAGEC	(5) PART NUMBER	(6) DESCRIPTION AND USABLE ON CODES(UOC)	(7) QTY
					UOC:AGP	
19	PFOZZ	2510011824470	28882	90076	..PARTS KIT,HOUSING,I.....	1
					UOC:AGP	

END OF FIGURE

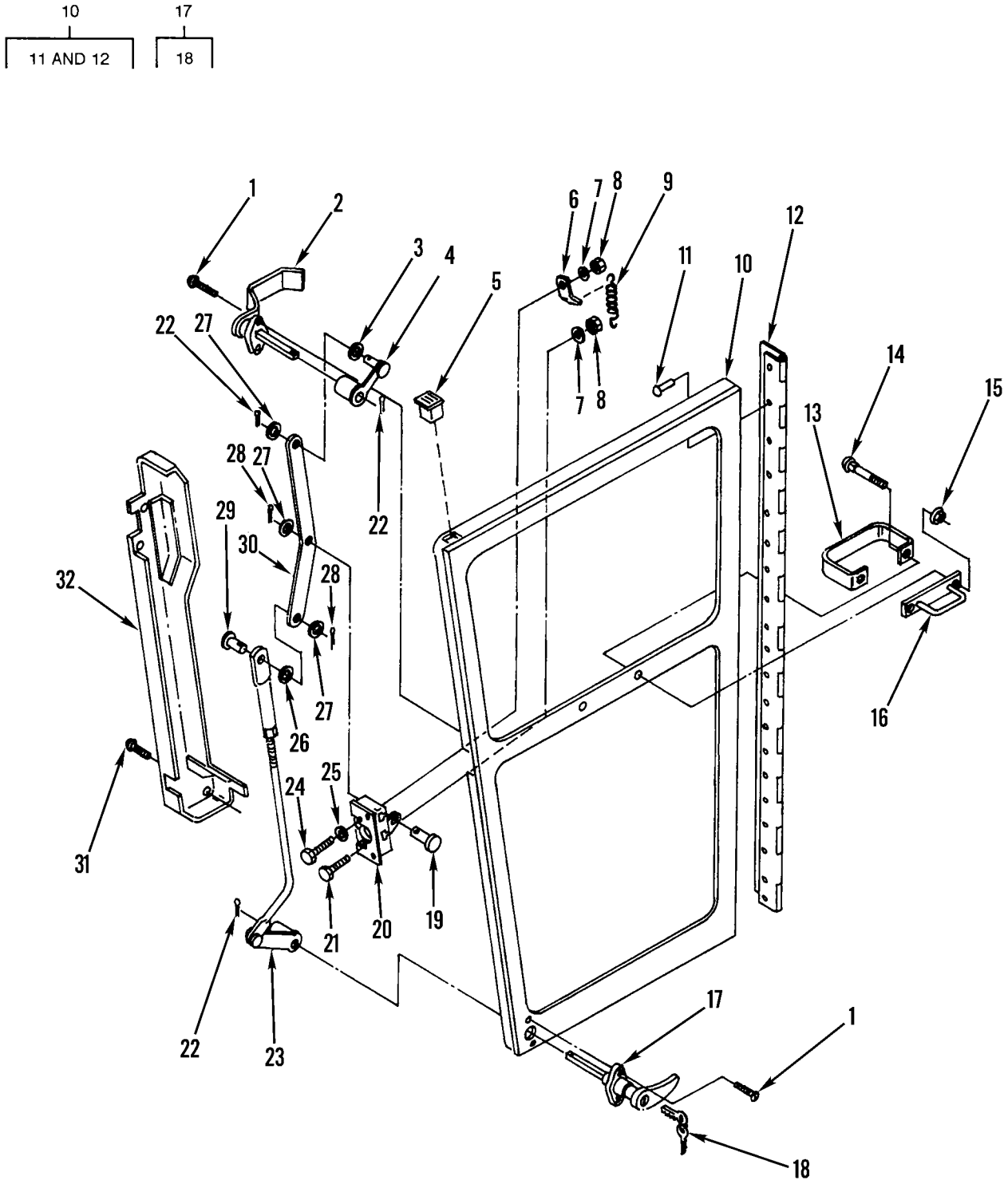

Figure 214. Cab Rollover Protection, Door Assembly

(1) ITEM NO	(2) SMR CODE	(3) NSN	(4) CAGEC	(5) PART NUMBER	(6) DESCRIPTION AND USABLE ON CODES(UOC)	(7) QTY
					GROUP 1801 BODY, CAB, HOOD, AND HULL ASSEMBLIES FIG. 214 CAB ROLLOVER PROTECTION, DOOR ASSEMBLY	
1	PFOZZ	5305004041403	11083	4B1273	SCREW,MACHINE..... UOC:AGP	8
2	PFOZZ	2540011816738	27182	210-090-2-0-0-03	HANDLE,DOOR,VEHICUL..... UOC:AGP	2
3	PFOZZ	5310010629903	11083	4L6499	WASHER..... UOC:AGP	2
4	PFOZZ	5342011815824	27182	S33-LKRXZNCT	ARM,HAND CRANK RIGHT..... UOC:AGP	1
4	PFOZZ	2540011813686	27182	S33-LKLXZNCT	ARM,BODY LEFT..... UOC:AGP	1
5	PFOZZ	5340011821869	99017	FP-204	CAP-PLUG,PROTECTIVE..... UOC:AGP	2
6	PFOZZ	2510011811935	11083	9P0441	PLATE..... UOC:AGP	2
7	PFOZZ	5310008094058	96906	MS27183-10	WASHER,FLAT..... UOC:AGP	8
8	PFOZZ	5310000050779	11083	4L6458	NUT,PLAIN,HEXAGON..... UOC:AGP	8
9	PFOZZ	5360011782193	11083	4H3521	SPRING,HELICAL,EXTE..... UOC:AGP	2
10	PFOZZ	2510011844471	11083	6G2284	DOOR,VEHICULAR RIGHT..... UOC:AGP	1
10	PFOZZ	2510011787071	11083	6G2285	DOOR,VEHICULAR LEFT..... UOC:AGP	1
11	PAOZA	5320010639029	61957	SD86BS	.RIVET,BLIND..... UOC:AGP	14
12	PFOZZ	5340011845893	11083	6G2296	.HINGE,BUTT..... UOC:AGP	1
13	PFOZZ	5340011875933	27182	220-060-1-0-0-00	HANDLE,BAIL..... UOC:AGP	2
14	PFOZZ	5306011791300	11083	3B0730	BOLT,SQUARE NECK..... UOC:AGP	4
15	PFOZZ	5310010617921	11083	9L9814	NUT..... UOC:AGP	4
16	PFOZZ	5340011811727	11083	5T9982	HANDLE,BOW..... UOC:AGP	2
17	PFOZZ	2540011815826	27182	20072-3/4	HANDLE,DOOR,VEHICUL..... UOC:AGP	2
18	PFOZZ	5342012141787	27182	PK500	.KEY,MASTER..... UOC:AGP	2
19	PFOZZ	5315011812558	11083	9P6895	PIN,STRAIGHT,HEADED..... UOC:AGP	2
20	PFOZZ	5340011831679	11083	6V6778	CATCH,CLAMPING RIGHT HAND..... UOC:AGP	1
20	PAOZZ	5340011855915	11083	6V6777	CATCH,CLAMPING LEFT HAND..... UOC:AGP	1
21	PFOZZ	5306004238784	11083	7B2742	BOLT,MACHINE.....	4

(1) ITEM NO	(2) SMR CODE	(3) NSN	(4) CAGEC	(5) PART NUMBER	(6) DESCRIPTION AND USABLE ON CODES(UOC)	(7) QTY
					UOC:AGP	
22	XDOZZ		11083	3B4609	PIN.....	6
					UOC:AGP	
23	PAOZZ	2540012032399	27182	S33CXXRXZNRC	LINK ASSEMBLY,DOOR.....	1
					UOC:AGP	
24	PFOZZ	5306004238313	11083	1B2713	BOLT,MACHINE.....	4
					UOC:AGP	
25	PFOZZ	5310011051863	11083	8M2337	WASHER,FLAT.....	4
					UOC:AGP	
26	PFOZZ	5310003628168	61208	M2048F	WASHER,FLAT.....	2
					UOC:AGP	
27	PFOZZ	5310010955730	11083	5D2751	WASHER,SPRING TENSI.....	6
					UOC:AGP	
28	PFOZZ	5315008392325	80205	MS24665-132	PIN,COTTER.....	4
					UOC:AGP	
29	PFOZZ	5315003639729	11083	6B8193	PIN,STRAIGHT,HEADED.....	2
					UOC:AGP	
30	XDOZZ		11083	6G6432	CONNECTING LINK,RIG.....	2
					UOC:AGP	
31	PFOZZ	5305011825249	11083	6V3884	SCREW,CAP,SOCKET HE.....	6
					UOC:AGP	
32	PFOZZ	2510011792563	11083	6G6688	COVER ASSEMBLY RIGHT HAND.....	1
					UOC:AGP	
32	PFOZZ	2510011787070	11083	6G6687	COVER ASSEMBLY,BODY LEFT HAND.....	1
					UOC:AGP	

END OF FIGURE

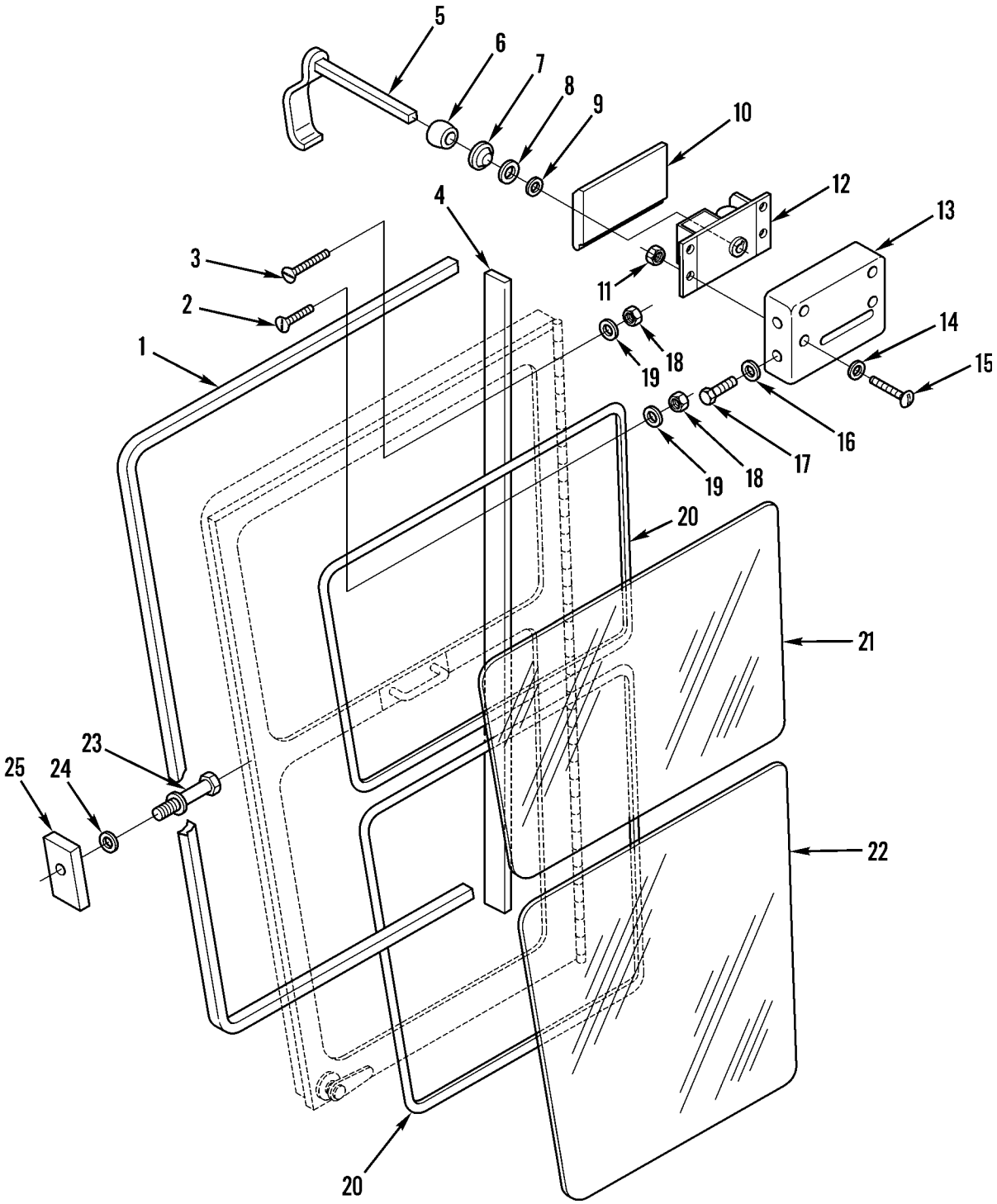

Figure 215. Cab Rollover Protection, Door Panels and Handle (Sheet 1 of 2)

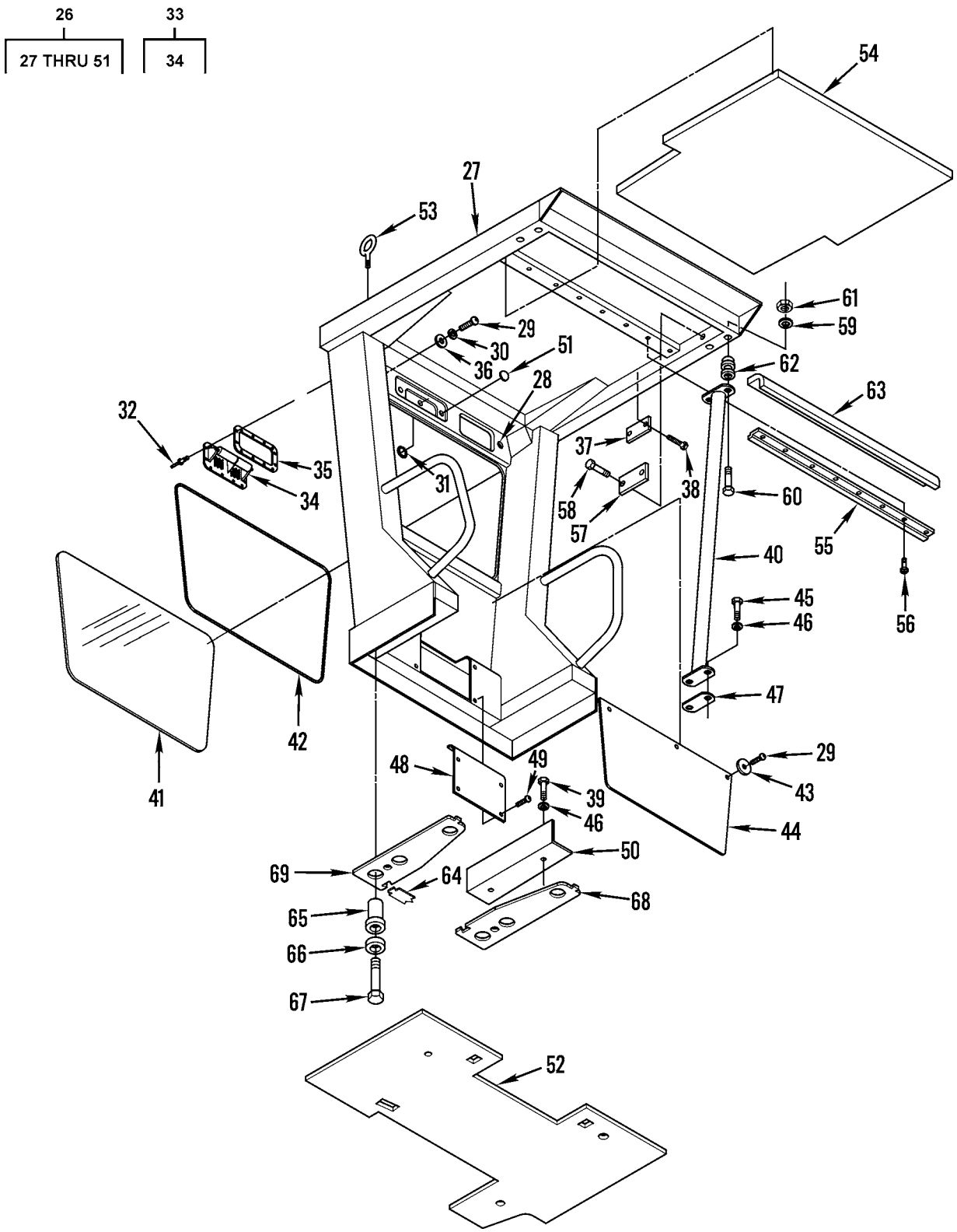

Figure 215. Cab Rollover Protection, Door Panels and Handle (Sheet 2 of 2)

(1) ITEM NO	(2) SMR CODE	(3) NSN	(4) CAGEC	(5) PART NUMBER	(6) DESCRIPTION AND USABLE ON CODES(UOC)	(7) QTY
					GROUP 1801 BODY, CAB, HOOD, AND HULL ASSEMBLIES FIG. 215 CAB ROLLOVER PROTECTION, DOOR PANELS AND HANDLE	
1	MOOZZ		11083	5P1040	SEAL MAKE FROM SEAL,P/N 5P5648..... UOC:AGP	1
2	PFOZZ	5305010631423	11083	4B1282	SCREW..... UOC:AGP	23
3	PAOZZ	5305012252091	11083	1H8294	SCREW,MACHINE..... UOC:AGP	5
4	MOOZZ		11083	6V5164	SEAL MAKE FROM SEAL,P/N 5P5648..... UOC:AGP	2
5	PFOZZ	2540011798860	11083	2G7801	HANDLE,DOOR,VEHICUL..... UOC:AGP	2
6	PFOZZ	5355011821685	11083	2G7843	KNOB..... UOC:AGP	2
7	PAOZZ	3110011809132	11083	2G7842	RETAINER,BALL..... UOC:AGP	2
8	PFOZZ	5310001174788	11083	5M2894	WASHER,FLAT..... UOC:AGP	2
9	PFOZZ	5310012244652	78553	C11914-028	PUSH ON NUT..... UOC:AGP	2
10	PFOZZ	5330011834073	11083	9D5182	SEAL,NONMETALLIC SP..... UOC:AGP	2
11	PFOZZ	5310009382013	80205	MS35649-224	NUT,PLAIN,HEXAGON..... UOC:AGP	8
12	PFOZZ	5340011815123	27182	S55AC1LXZNCT	LATCH,RIM..... UOC:AGP	1
12	PFOZZ	5340011836091	27182	S55AC1RXZNCT	LATCH,RIM..... UOC:AGP	1
13	PFOZZ	3040011810304	11083	6G1623	BRACKET,EYE,NONROTA..... UOC:AGP	2
14	PFOZZ	5310011658513	78189	1212-00	WASHER,LOCK..... UOC:AGP	8
15	PFOZZ	5305010983111	11083	4B1244	SCREW,MACHINE..... UOC:AGP	8
16	PFOZZ	5310010512360	11083	5P0537	WASHER..... UOC:AGP	8
17	PFOZZ	5305010964550	11083	4M5283	SCREW,CAP,HEXAGON H..... UOC:AGP	8
18	PFOZZ	5310009050762	96906	MS51967-3	NUT,PLAIN,HEXAGON..... UOC:AGP	28
19	PFOZZ	5310010980634	78189	WD23875	WASHER,SPRING TENSI..... UOC:AGP	5
20	MOOZZ		11083	5P5768-1	SEAL MAKE FROM SEAL,P/N 5P5768..... UOC:AGP	2
21	PFFZZ	2510011783166	11083	6G2394	WINDOW,VEHICULAR..... UOC:AGP	2
22	PFFZZ	2510011783165	11083	6G2393	WINDOW,VEHICULAR..... UOC:AGP	2
23	PFOZZ	5340011808850	11083	6V5158	STUD,FRICTION CATCH.....	2

(1) ITEM NO	(2) SMR CODE	(3) NSN	(4) CAGEC	(5) PART NUMBER	(6) DESCRIPTION AND USABLE ON CODES(UOC)	(7) QTY
					UOC:AGP	
24	PFOZZ	5310008184569	02249	1202	WASHER,FLAT.....	6
					UOC:AGP	
25	PAOZZ	5310011815043	11083	9G2858	NUT,PLAIN,RECTANGUL.....	2
					UOC:AGP	
26	PFOZZ	2590011741266	11083	6G2150	ROLL OVER GROUP.....	1
					UOC:AF9,AGM,AGN,F10	
27	PAOZZ	2510012928567	11083	8W5813	.COVER,ROLLOVER PROT.....	1
					UOC:AF9,AGM,AGN,F10	
28	PFOZZ	2510012919669	11083	5T7176	.PANEL,BODY,VEHICULA.....	1
					UOC:AF9,AGM,AGN,F10	
29	PFOZZ	5305011825249	11083	6V3884	.SCREW,CAP,SOCKET HE.....	7
					UOC:AF9,AGM,AGN,F10	
30	PFOZZ	5310011604543	11083	3P9901	.WASHER,FLAT.....	2
					UOC:AF9,AGM,AGN,F10	
31	PFOZZ	5340012931196	11083	6V3928	.PLUG,PROTECTIVE,DUS.....	1
					UOC:AF9,AGM,AGN,F10	
32	PFOZZ	5320009567355	07707	AD64H	.RIVET,BLIND.....	24
					UOC:AF9,AGM,AGN,F10	
33	PFOZZ	2540012923663	3J335	648-004	.VENTILATOR,AIR CIRC.....	2
					UOC:AF9,AGM,AGN,F10	
34	PFOZZ	3120012935384	30187	31010	..BEARING,SLEEVE.....	2
					UOC:AF9,AGM,AGN,F10	
35	PFOZZ	5330011703756	11083	6G2396	.GASKET.....	2
					UOC:AF9,AGM,AGN,F10	
36	PFOZZ	5310010980634	78189	WD23875	.WASHER,SPRING TENSI.....	4
					UOC:AF9,AGM,AGN,F10	
37	PFOZZ		11083	1074672	.PLATE.....	1
					UOC:AF9,AGM,AGN,F10	
38	PAOZZ	5305002535615	80205	MS21318-21	.SCREW,DRIVE.....	4
					UOC:AF9,AGM,AGN,F10	
39	PFOZZ	5306004238117	11083	0S1595	.BOLT,MACHINE.....	4
					UOC:AF9,AGM,AGN,F10	
40	PFOZZ	2590011692702	11083	6G2222	.SUPPORT ASSEMBLY,RO.....	2
					UOC:AF9,AGM,AGN,F10	
41	PFOZZ	9340011669498	11083	6G2061	.WINDOW,OBSERVATION.....	1
					UOC:AF9,AGM,AGN,F10	
42	MOOZZ		11083	5P5768-1	.SEAL,NONMETALLIC SP MAKE FROM SEAL,P/N 5P5768.....	1
					UOC:AF9,AGM,AGN,F10	
43	PFOZZ	5310011685569	11083	6G5214	.WASHER,FLAT.....	3
					UOC:AF9,AGM,AGN,F10	
44	PFOZZ	2540013438529	11083	5T9410	.INSULATION,THERMAL,.....	1
					UOC:AF9,AGM,AGN,F10	
45	PFOZZ	5306002638978	11083	0S1587	.BOLT,MACHINE.....	4
					UOC:AF9,AGM,AGN,F10	
46	PFOZZ	5310010980624	11083	5P8245	.WASHER,FLAT.....	8
					UOC:AF9,AGM,AGN,F10	
47	PFOZZ	5365011770108	11083	9D0424	.SPACER,PLATE.....	8
					UOC:AF9,AGM,AGN,F10	
48	PFOZZ	5340011753866	11083	6G2847	.COVER,ACCESS.....	1
					UOC:AF9,AGM,AGN,F10	

(1) ITEM NO	(2) SMR CODE	(3) NSN	(4) CAGEC	(5) PART NUMBER	(6) DESCRIPTION AND USABLE ON CODES(UOC)	(7) QTY
49	PFOZZ	5305011601995	11083	4V6981	.SCREW,CAP,SOCKET HE..... UOC:AF9,AGM,AGN,F10	6
50	PFOZZ	5340011683998	11083	8D6787	.BRACKET,ANGLE..... UOC:AF9,AGM,AGN,F10	2
51	PFOZZ	5340010991434	95760	16-400-P	.PLUG,PROTECTIVE,DUS..... UOC:AF9,AGM,AGN,F10	2
52	PFOZZ	2540012919722	11083	8X7239	MAT,FLOOR..... UOC:AF9,AGM,AGN,F10	1
53	PFOZZ	5306011722527	11083	1P7409	BOLT,EYE..... UOC:AF9,AGM,AGN,F10	2
54	PFOZZ		11083	5T9323	INSULATION BLANKET,..... UOC:AF9,AGM,AGN,F10	1
55	PFOZZ		11083	6G3315	BRACKET,DOUBLE ANGL..... UOC:AF9,AGM,AGN,F10	1
56	PFOZZ	5305011825249	11083	6V3884	SCREW,CAP,SOCKET HE..... UOC:AF9,AGM,AGN,F10	8
57	PFOZZ		11083	6G2422	COVER,ACCESS..... UOC:AF9,AGM,AGN,F10	2
58	PFOZZ	5305011522589	11083	6V2687	SCREW,TAPPING..... UOC:AF9,AGM,AGN,F10	4
59	PFOZZ	5310001931076	11083	2S1654	WASHER,FLAT..... UOC:AF9,AGM,AGN,F10	4
60	PFOZZ	5306002685798	11083	0L1329	BOLT,MACHINE..... UOC:AF9,AGM,AGN,F10	4
61	PFOZZ	5310009720479	11083	1F7958	NUT,PLAIN,HEXAGON..... UOC:AF9,AGM,AGN,F10	4
62	PFOZZ		11083	0643274	MOUNT..... UOC:AF9,AGM,AGN,F10	4
63	PFOZZ		11083	5T9409	INSULATION BLANKET,..... UOC:AF9,AGM,AGN,F10	1
64	PFOZZ	3830010947513	11083	2G8642	PAD,INSULATION..... UOC:AF9,AGM,AGN,F10	1
65	PFOZZ	3120012027624	11083	6G5159	BUSHING,SLEEVE..... UOC:AF9,AGM,AGN,F10	6
66	PFOZZ	5310011748242	11083	6G6206	WASHER,FLAT..... UOC:AF9,AGM,AGN,F10	6
67	PFOZZ	5306004239358	11083	4B5219	BOLT,MACHINE..... UOC:AF9,AGM,AGN,F10	6
68	PFOZZ	5330011965592	11083	6G5231	GASKET RIGHT SIDE..... UOC:AF9,AGM,AGN,F10	1
69	PFOZZ	2590011745994	11083	6G5229	PAD,CUSHIONING LEFT SIDE..... UOC:AF9,AGM,AGN,F10	1

END OF FIGURE

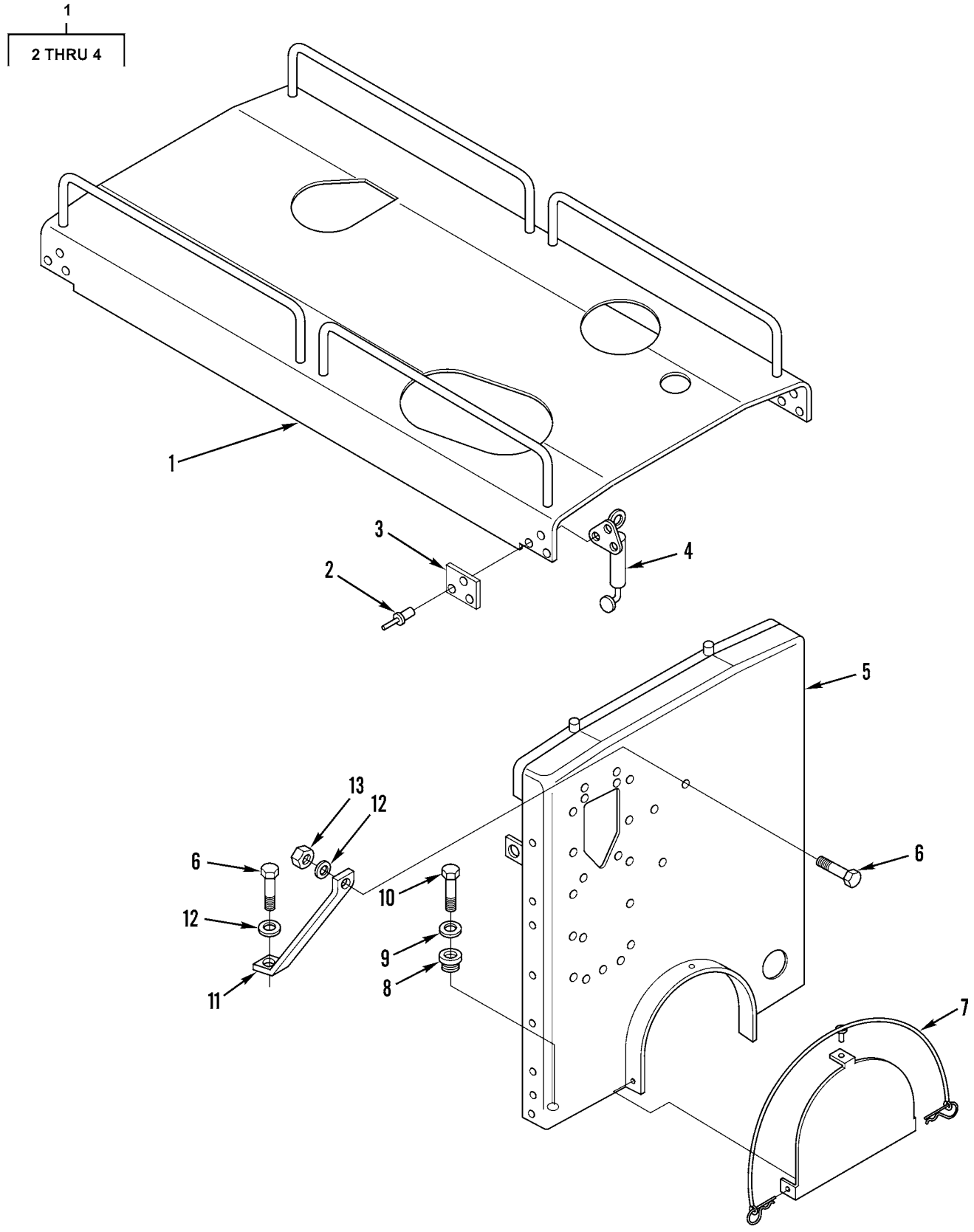

Figure 216. Hood Assembly and Mounting

(1) ITEM NO	(2) SMR CODE	(3) NSN	(4) CAGEC	(5) PART NUMBER	(6) DESCRIPTION AND USABLE ON CODES(UOC)	(7) QTY
					GROUP 1801 BODY, CAB, HOOD, AND HULL ASSEMBLIES FIG. 216 HOOD ASSEMBLY AND MOUNTING	
1	PFOOO	2510011691981	11083	6G6979	HOOD,ENGINE COMPART.....	1
2	PFOZZ	5320008503241	07707	SD66BS	.RIVET,BLIND.....	12
3	PFOZZ	2510010625891	11083	2D9335	.PLATE.....	4
4	PFOZZ	2510004238153	11083	0T0537	.LATCH ASSEMBLY,HOOD.....	4
5	PAOZZ	2510012921318	11083	5R8419	PANEL,VEHICULAR OPE..... UOC:F10	1
5	PAOZZ	5340012032618	11083	5R7069	COVER,ACCESS..... UOC:AF9,AGM	1
5	PAOZZ	2510011774800	11083	5T3170	PANEL ASSEMBLY,DASH.....	1
6	PFOZZ	5306004238117	11083	0S1595	BOLT,MACHINE.....	2
7	PAOZZ	5340011746175	11083	5R7073	STRAP ASSEMBLY..... UOC:AF9,AGM,F10	1
8	PFOZZ	5342011668112	76005	CB-1121-4	MOUNT,RESILIENT,WEA.....	2
9	PFOZZ	5310011096753	19207	12256962-1	WASHER,FLAT.....	2
10	PFOZZ	5306002736357	11083	1A1460	BOLT,MACHINE.....	2
11	PFOZZ	5340011690794	11083	7D9533	STRAP,RETAINING.....	1
12	PFOZZ	5310010976720	11083	5P1076	WASHER,SHOULDERED A.....	2
13	PFOZZ	5310007680318	96906	MS51967-14	NUT,PLAIN,HEXAGON.....	1

END OF FIGURE

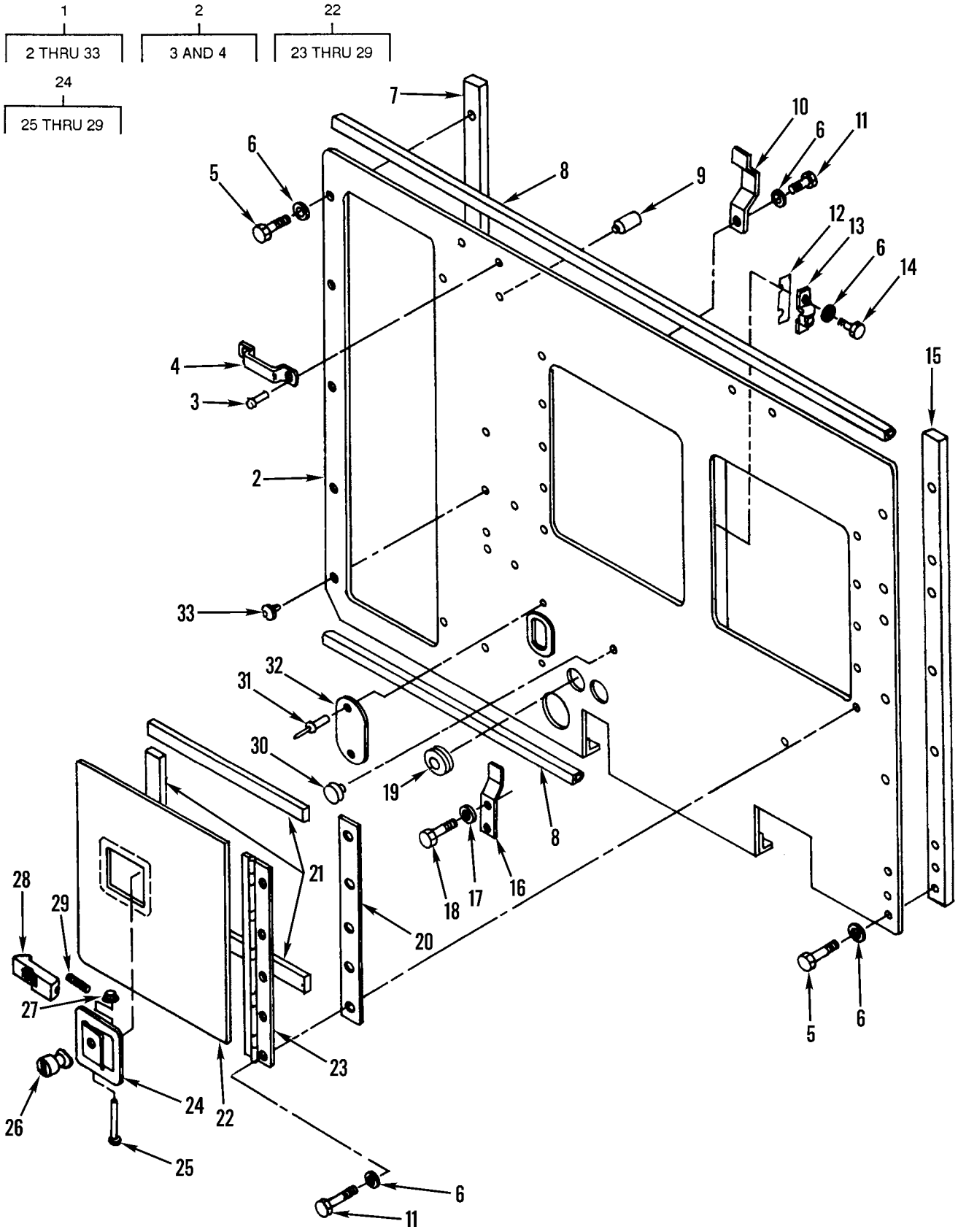

Figure 217. Engine Left Side Panels, Covers, and Mounting

(1) ITEM NO	(2) SMR CODE	(3) NSN	(4) CAGEC	(5) PART NUMBER	(6) DESCRIPTION AND USABLE ON CODES(UOC)	(7) QTY
					GROUP 1801 BODY, CAB, HOOD, AND HULL ASSEMBLIES FIG. 217 ENGINE LEFT SIDE PANELS, COVERS, AND MOUNTING	
1	PFOFF	2510011677095	11083	6G9050	DOOR,VEHICULAR.....	1
2	PFOFF	5340011742786	11083	6G2141	.DOOR,ACCESS.....	1
3	PFOZZ	5320012648505	11083	1F1599	..RIVET,SOLID.....	4
4	PFOZZ	2420010626016	11083	6F7013	..HANDLE.....	2
5	PFFZZ	5306010949106	11083	0S1590	.BOLT,MACHINE.....	12
6	PFFZZ	5310010948810	78189	3320-14-01	.WASHER,SQUARE CONE.....	18
7	PAFZZ	2510011734655	11083	5R5359	.BAR,DOOR..... UOC:AF9,F10	1
7	PFFZZ	2540011942042	11083	2G3182	.BAR,REINFORCEMENT..... UOC:AGP	1
8	MFFZZ		11083	5P5960-98.43	.SEAL,NONMETALLIC SP MAKE FROM SEAL,P/N 5P5960.....	2
9	PAFZZ	5340010951297	11083	2G1135	.BUMPER,NONMETALLIC.....	4
10	PFFZZ	5340011756710	11083	6G2145	.CLIP,RETAINING.....	1
11	PFFZZ	5306002637301	11083	0L1351	.BOLT,MACHINE.....	6
12	PAFZZ	5365010950304	11083	8K1077	.SPACER,PLATE.....	6
13	PFFZZ	5340010995807	11083	3V9562	.STRIKE,CATCH.....	2
14	PFFZZ	5306002604508	11083	0S1594	.BOLT,MACHINE.....	4
15	PAFZZ	2510011800959	11083	5R5358	.BAR,DOOR,VEHICULAR..... UOC:AF9,F10	1
15	PFFZZ	2590011929705	11083	2G3183	.BAR,SOUND SUPPRESSI..... UOC:AGP	1
16	PFFZZ	5340011695611	11083	2G7956	.BRACKET,DOUBLE ANGL.....	1
17	PFFZZ	5310010976720	11083	5P1076	.WASHER,SHOULDERED A.....	2
18	PFFZZ	5306004238117	11083	0S1595	.BOLT,MACHINE.....	2
19	PAFZZ	5325011768163	11083	2G1133	.GROMMET,NONMETALLIC.....	2
20	PAFZZ	5365011768152	11083	2G1506	.SPACER,PLATE.....	2
21	MFFZZ		11083	6V1391	.SEAL MAKE FROM SEAL,P/N 6V1392....	4
22	PFFFF	2510011677127	11083	6G8945	.DOOR,HATCH,VEHICLE.....	2
23	PFFZZ	5340011710968	11083	2G1509	..HINGE,BUTT.....	1
24	PFFFZ	5340011757764	11083	6V1535	..HANDLE,RECESS.....	1
25	PFFZZ	5315011852774	11083	2V3461	...PIN,STRAIGHT,HEADED.....	1
26	PFFZZ	2540011677096	74842	758	...LOCK,DOOR VEHICULAR.....	1
27	PFFZZ	5310009148217	77122	PS188007	...PUSH ON NUT.....	1
28	PFFZZ	5342011823943	71843	2309-4	...BOLT.....	1
29	PFFZZ	5360011778604	11083	2V3457	...SPRING,HELICAL,COMP.....	1
30	PAFZZ	5340011711098	11083	2G7382	.BUMPER,NONMETALLIC.....	2
31	PAFZZ	5320008503233	07707	SD64BS	.RIVET,BLIND.....	2
32	PFFZZ	5365011715387	11083	2G7484	.SPACER,PLATE.....	1
33	PFFZZ	5340010955004	99017	B-641	.PLUG,PROTECTIVE,DUS.....	4

END OF FIGURE

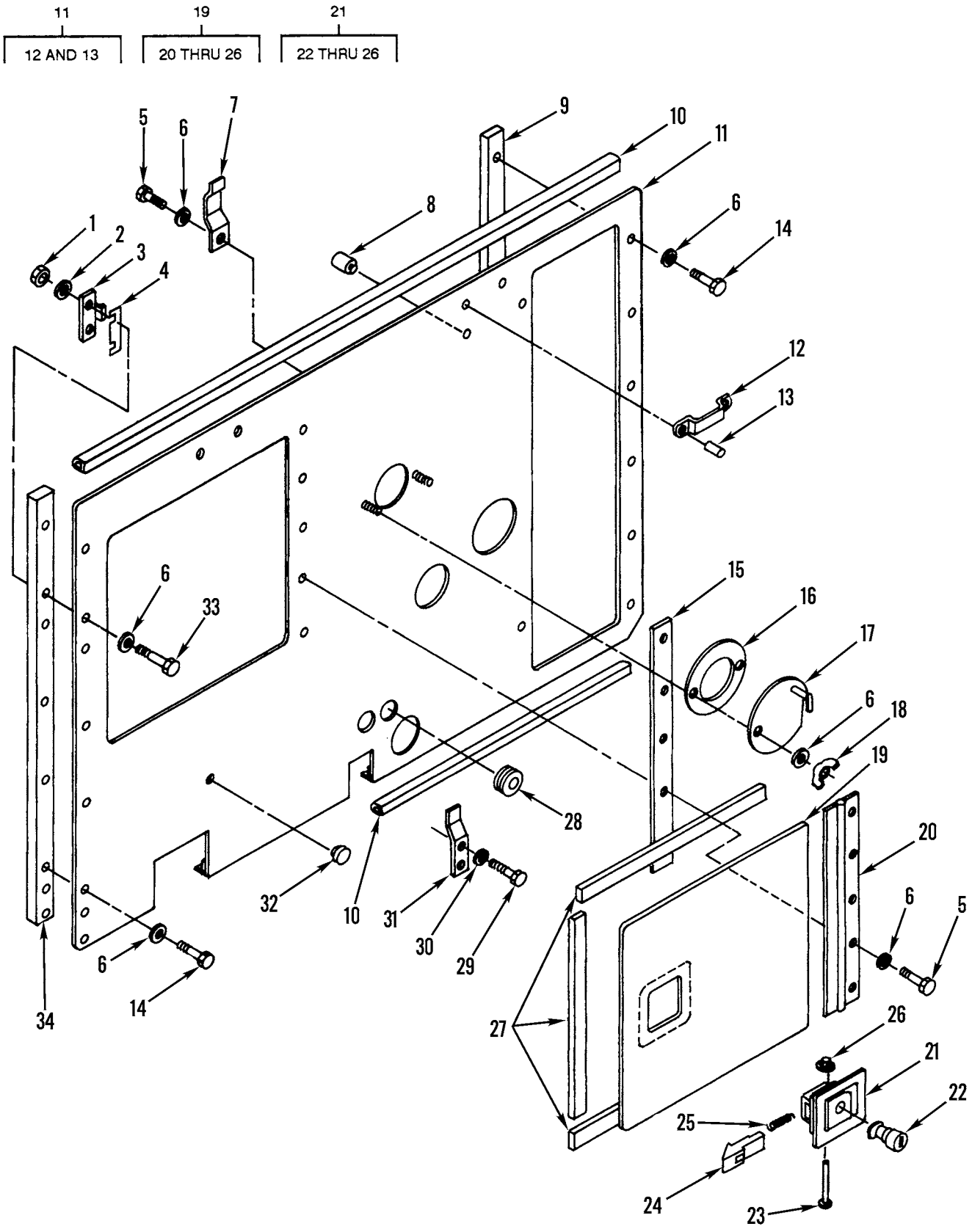

Figure 218. Engine Right Side Panels, Covers, and Mounting

(1) ITEM NO	(2) SMR CODE	(3) NSN	(4) CAGEC	(5) PART NUMBER	(6) DESCRIPTION AND USABLE ON CODES(UOC)	(7) QTY
					GROUP 1801 BODY, CAB, HOOD, AND HULL ASSEMBLIES FIG. 218 ENGINE RIGHT SIDE PANELS, COVERS, AND MOUNTING	
1	PFFZZ	5310014297859	11083	6V8801	.NUT,PLAIN,HEXAGON.....	2
2	PFFZZ	5310010618633	11083	9L9132	.WASHER.....	2
3	PFFZZ	5340011742769	11083	5T6412	.BRACKET,DOUBLE ANGL.....	1
4	PAFZZ	5365010950304	11083	8K1077	.SPACER,PLATE.....	5
5	PFFZZ	5306002637301	11083	0L1351	.BOLT,MACHINE.....	6
6	PFFZZ	5310010948810	78189	3320-14-01	.WASHER,SQUARE CONE.....	22
7	PFFZZ	5340011756710	11083	6G2145	.CLIP,RETAINING.....	1
8	PAFZZ	5340010951297	11083	2G1135	.BUMPER,NONMETALLIC.....	4
9	PAFZZ	2510011734655	11083	5R5359	.BAR,DOOR..... UOC:AF9,F10	1
9	PFFZZ	2540011942042	11083	2G3182	.BAR,REINFORCEMENT..... UOC:AGP	1
10	MFFZZ		11083	5P5960-98.43	.SEAL,NONMETALLIC MAKE FROM SEAL,P/N 5P5960.....	2
11	PFOFF	5342011756911	11083	6G2142	.DOOR,ACCESS.....	1
12	PFFZZ	2420010626016	11083	6F7013	..HANDLE.....	2
13	PFFZZ	5320012648505	11083	1F1599	..RIVET,SOLID.....	4
14	PFFZZ	5306010949106	11083	0S1590	.BOLT,MACHINE.....	12
15	PAFZZ	5365011756905	11083	2G1485	.SPACER,PLATE.....	1
16	PFFZZ	5330010946081	11083	2G1137	.GASKET.....	1
17	PFFZZ	5340011806699	11083	2G6415	.COVER,ACCESS.....	1
18	PFFZZ	5310010882490	96906	MS35425-74	.NUT,PLAIN,WING.....	2
19	PFOFF	5342011756910	11083	6G8946	.DOOR,ACCESS.....	1
20	PFFZZ	5340011733863	11083	2G1484	..HINGE,BUTT.....	1
21	PFFZZ	5340011757764	71843	2319CAT	..HANDLE,RECESS.....	1
22	PFFZZ	2540011677096	74842	758	...LOCK,DOOR VEHICULAR.....	1
23	PFFZZ	5315011852774	71843	2314-10	...PIN,STRAIGHT,HEADED.....	1
24	PFFZZ	5342011823943	71843	2309-4	...BOLT.....	1
25	PFFZZ	5360011778604	11083	2V3457	...SPRING,HELICAL,COMP.....	1
26	PFFZZ	5310009148217	77122	PS188007	...PUSH ON NUT.....	1
27	MOOZZ	5330012776101	11083	6V1392	.SEAL,SPECIAL MAKE FROM SEAL,P/N 6V1392.....	1
28	PAFZZ	5325011768163	11083	2G1133	.GROMMET,NONMETALLIC.....	2
29	PFOZZ	5306004238117	11083	0S1595	.BOLT,MACHINE.....	2
30	PFFZZ	5310010976720	11083	5P1076	.WASHER,SHOULDERED A.....	2
31	PFFZZ	5340011695611	11083	2G7956	.BRACKET,DOUBLE ANGL.....	1
32	PAFZZ	5340011711098	11083	2G7382	.BUMPER,NONMETALLIC.....	2
33	PFFZZ	5306002851368	11083	0L1143	.BOLT,MACHINE.....	2
34	PAFZZ	2510011800959	11083	5R5358	.BAR,DOOR,VEHICULAR..... UOC:AF9,F10	1
34	PFFZZ	2590011929705	11083	2G3183	.BAR,SOUND SUPPRESSI..... UOC:AGP	1

END OF FIGURE

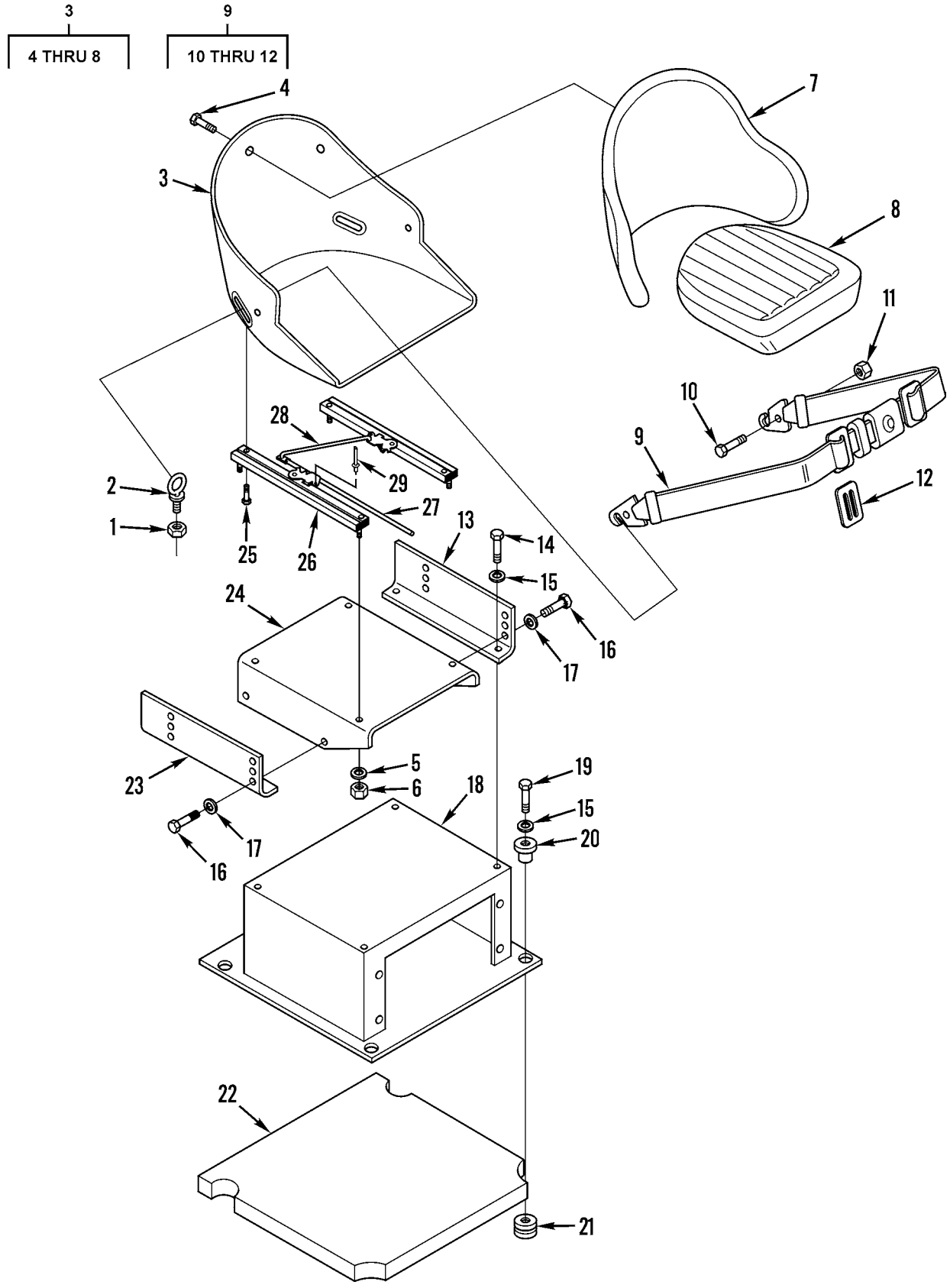

Figure 219. Seat Assembly and Mounting

(1) ITEM NO	(2) SMR CODE	(3) NSN	(4) CAGEC	(5) PART NUMBER	(6) DESCRIPTION AND USABLE ON CODES(UOC)	(7) QTY
					GROUP 1806 UPHOLSTERY, SEATS, AND CARPETS	
					FIG. 219 SEAT ASSEMBLY AND MOUNTING	
1	PFOZZ	5310008807745	96906	MS51968-11	NUT,PLAIN,HEXAGON.....	2
2	PFOZZ	5306010643842	11083	8S0933	BOLT,EYE.....	2
3	PFOOO	2540011811034	11083	9D4249	SEAT,VEHICULAR.....	1
4	PFOZZ	5306010629927	11083	9L8398	.BOLT.....	11
5	PFOZZ	5310010954016	11083	5S7384	.WASHER,LOCK.....	4
6	PFOZZ	5310010951526	11083	4M5280	.NUT,PLAIN,HEXAGON.....	4
7	PFOZZ	2540010965001	76359	D6084	.CUSHION,SEAT BACK,V.....	1
8	PFOZZ	2540010950290	76359	D4066	.CUSHION,SEAT,VEHICU.....	1
9	PFOZZ	2540010951105	29944	F04790	BELT,VEHICULAR SAFE.....	1
10	PAOZZ	5305007652121	11083	5M6755	.SCREW,CAP,HEXAGON H.....	2
					UOC:AF9,AGP,F10	
11	PFOZZ	4730014713774	11083	0310249	.LOCKNUT,PIPE.....	2
					UOC:AF9,AGP,F10	
12	PFOZZ	2540011624161	29944	10884	.BUCKLE,SEAT BELT,SA.....	2
13	PFOZZ	5340011718740	76359	C3525-1	BRACKET,ANGLE.....	1
14	PFOZZ	5306002637301	11083	0L1351	BOLT,MACHINE.....	4
15	PFOZZ	5310001174788	11083	5M2894	WASHER,FLAT.....	8
16	PFOZZ	5306004262934	11083	0S1621	BOLT,MACHINE.....	4
17	PFOZZ	5310008095997	96906	MS27183-17	WASHER,FLAT.....	4
18	PFOZZ	2540011793018	11083	5R6865	SUPPORT ASSEMBLY.....	1
					UOC:AF9,AGP,F10	
19	PFOZZ	5306011954681	11083	3B1915	BOLT.....	4
20	PFOZZ	5365010964626	11083	2G8093	SPACER,SLEEVE.....	4
21	PFOZZ	5325010991677	11083	2G8096	GROMMET,NONMETALLIC.....	4
22	PAOZZ	5330011704603	11083	6G2641	GASKET.....	1
23	PFOZZ	5340011771826	76359	C3524-1	BRACKET,ANGLE.....	1
24	PFFZZ	5340011790649	76359	C3523	BRACKET,SPECIAL.....	1
25	PFOZZ	5306012566771	11083	8T5391	BOLT,MACHINE.....	4
26	PFOZZ		11083	9V8789	ADJUSTER.....	
27	PFOZZ	3040012534664	11083	8V3208	LEVER,MANUAL CONTRO.....	
28	PFOZZ		11083	9V8188	ROD.....	
29	PFOZZ	5320012648505	11083	1F1599	RIVET,SOLID.....	2

END OF FIGURE

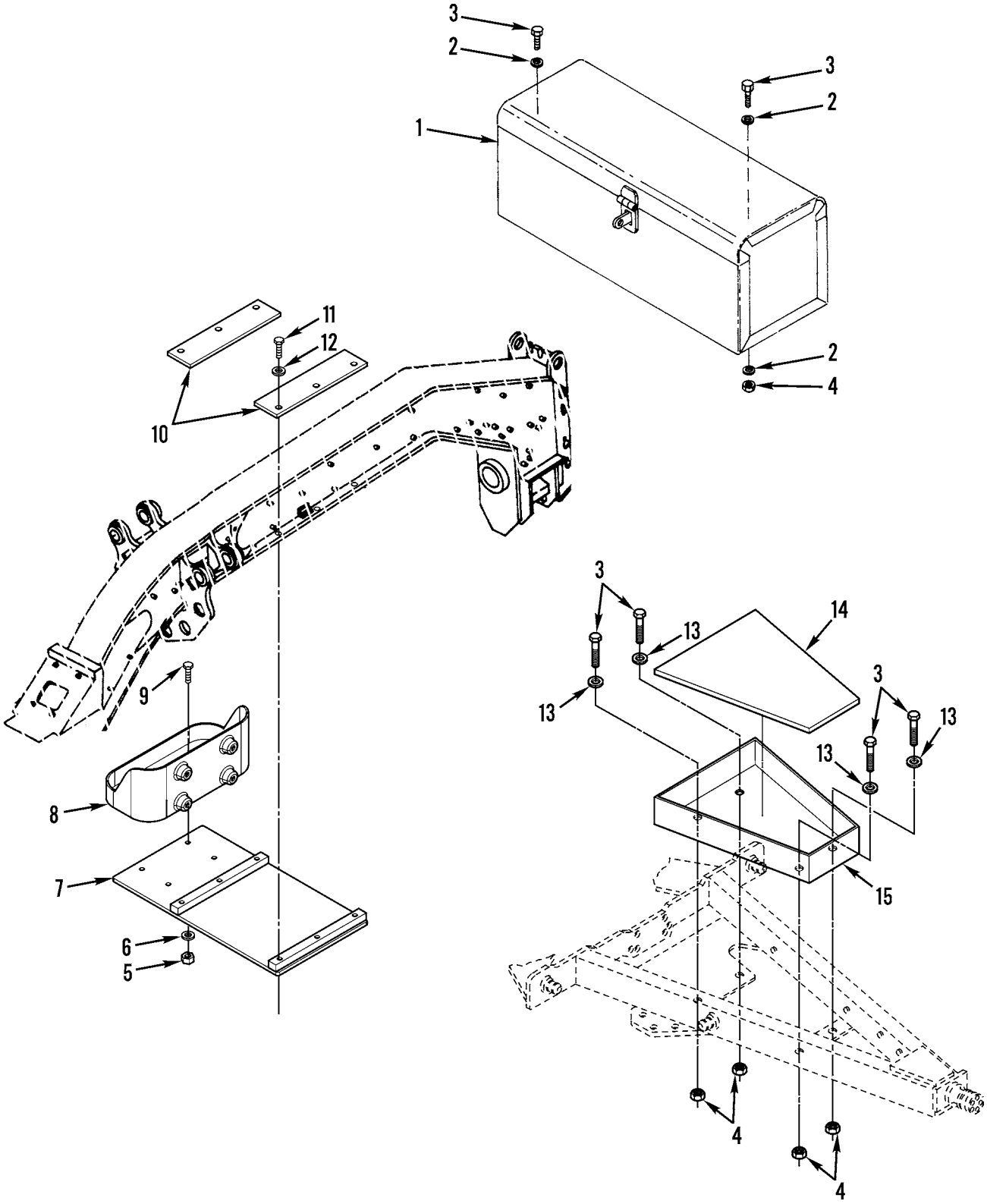

Figure 220. Tool Box and Mounting

(1) ITEM NO	(2) SMR CODE	(3) NSN	(4) CAGEC	(5) PART NUMBER	(6) DESCRIPTION AND USABLE ON CODES(UOC)	(7) QTY
					GROUP 1808 STOWAGE RACKS, BOXES, STRAPS, CARRYING CASES, CABLE REELS, HOSE REELS, ETC. FIG. 220 TOOL BOX AND MOUNTING	
1	PFOZZ	5140004264193	11083	3B3427	TOOL BOX,PORTABLE.....	1
2	PFOZZ	5310010618633	11083	9L9132	WASHER..... UOC:AF9,AGP,F10	6
3	PFOZZ	5306002286835	11083	4L6454	BOLT,MACHINE.....	4
4	PFOZZ	5310014297859	11083	6V8801	NUT,PLAIN,HEXAGON.....	2
5	PAOZZ	5310011831237	11083	9S8752	NUT,PLAIN,HEXAGON..... UOC:AF9,F10	4
6	PAOZZ	5310001174788	11083	5M2894	WASHER,FLAT..... UOC:AF9,AGM,F10	2
7	PAOZZ	5340013057705	11083	5R8944	BRACKET,MOUNTING..... UOC:AF9,F10	1
8	PFOZZ	5340013422648	11083	5R6242	BRACKET,MOUNTING..... UOC:AF9,F10	1
9	PAOZZ	5306002604508	11083	0S1594	BOLT,MACHINE..... UOC:AF9,F10	4
10	PAOZZ	5340013058606	11083	5R8936	PLATE,MENDING..... UOC:AF9,F10	2
11	PAOZZ	5306004262934	11083	0S1621	BOLT,MACHINE..... UOC:AF9,F10	6
12	PAOZZ	5310010980624	11083	5P8245	WASHER,FLAT..... UOC:AF9,F10	6
13	PFOZZ	5310010948810	11083	5P1075	WASHER,SQUARE CONE..... UOC:AGM,AGN	4
14	PAOZZ		11083	5R7039	COVER ACCESS..... UOC:AGM,F10	1
15	PAOZZ	2540011726659	11083	5R7059	BOX,ACCESSORIES STO..... UOC:AGM,F10	1

END OF FIGURE

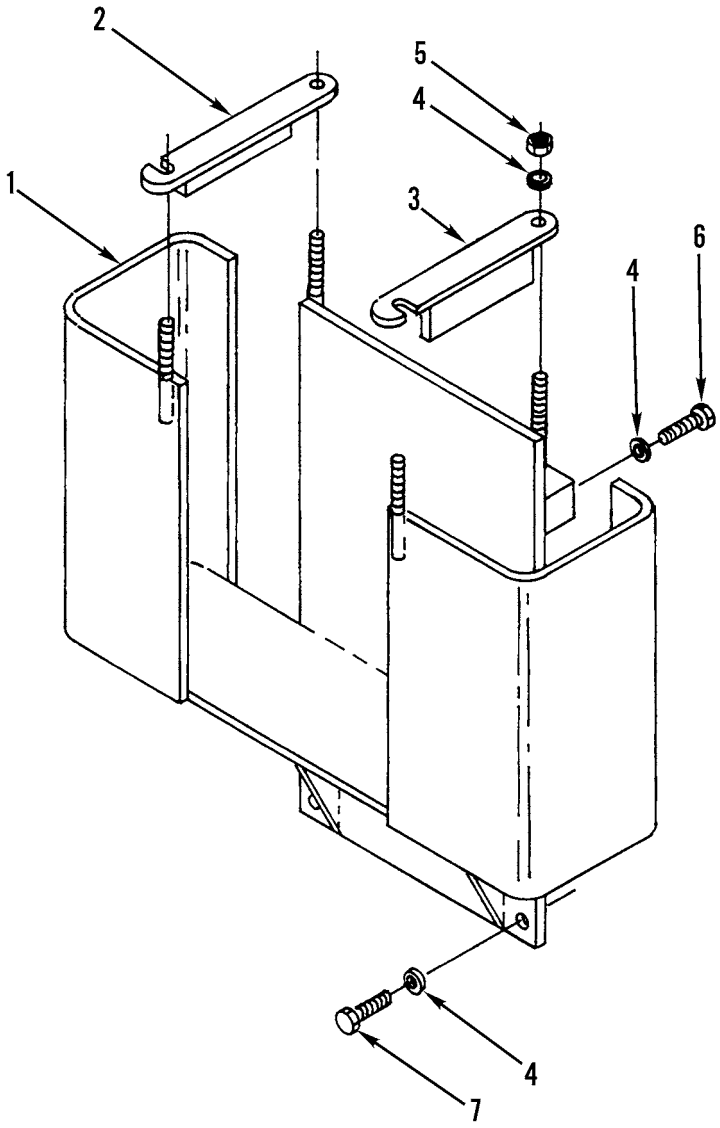

Figure 221. Scarifier Shanks and Tips Stowage Box

(1) ITEM NO	(2) SMR CODE	(3) NSN	(4) CAGEC	(5) PART NUMBER	(6) DESCRIPTION AND USABLE ON CODES(UOC)	(7) QTY
					GROUP 1808 STOWAGE RACKS, BOXES, STRAPS, CARRYING CASES, CABLE REELS, HOSE REELS, ETC. FIG. 221 SCARIFIER SHANKS AND TIPS STOWAGE BOX	
1	PFOZZ	2540011798801	11083	5R6369	BOX,ACCESSORIES STO..... UOC:AGP	1
2	PFOZZ	2590011796377	11083	5R6371	PLATE ASSEMBLY,BRAC..... UOC:AGP	1
3	PFOZZ	2590011793016	11083	5R6370	BRACKET,PLATE..... UOC:AGP	1
4	PFOZZ	5310010976720	11083	5P1076	WASHER,SHOULDERED A..... UOC:AGP	8
5	PFOZZ	5310007680318	96906	MS51967-14	NUT,PLAIN,HEXAGON..... UOC:AGP	4
6	PFOZZ	5306002736357	11083	1A1460	BOLT,MACHINE..... UOC:AGP	2
7	PFOZZ	5306004238117	11083	0S1595	BOLT,MACHINE..... UOC:AGP	2

END OF FIGURE

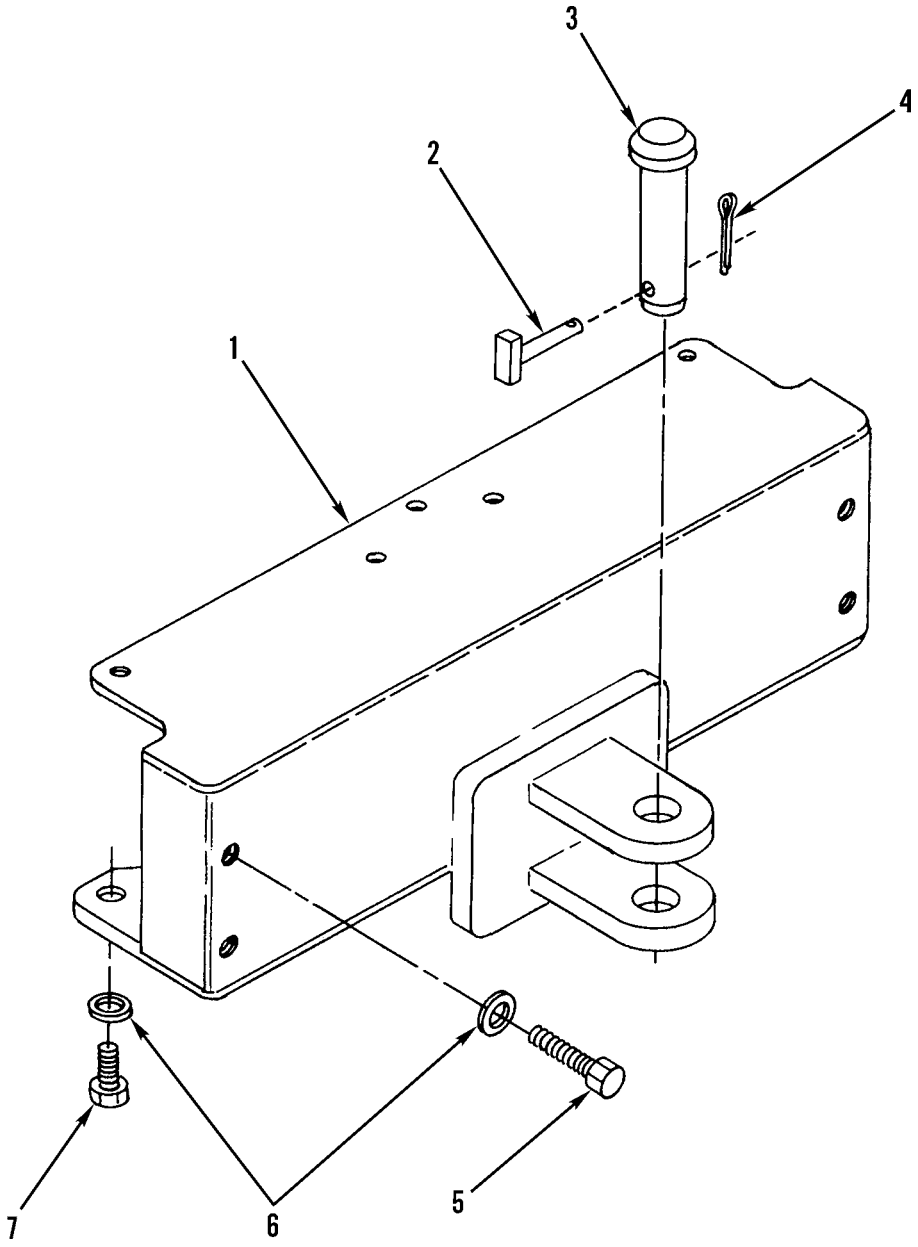

Figure 222. Rear Bumper and Mounting (Sheet 1 of 2)

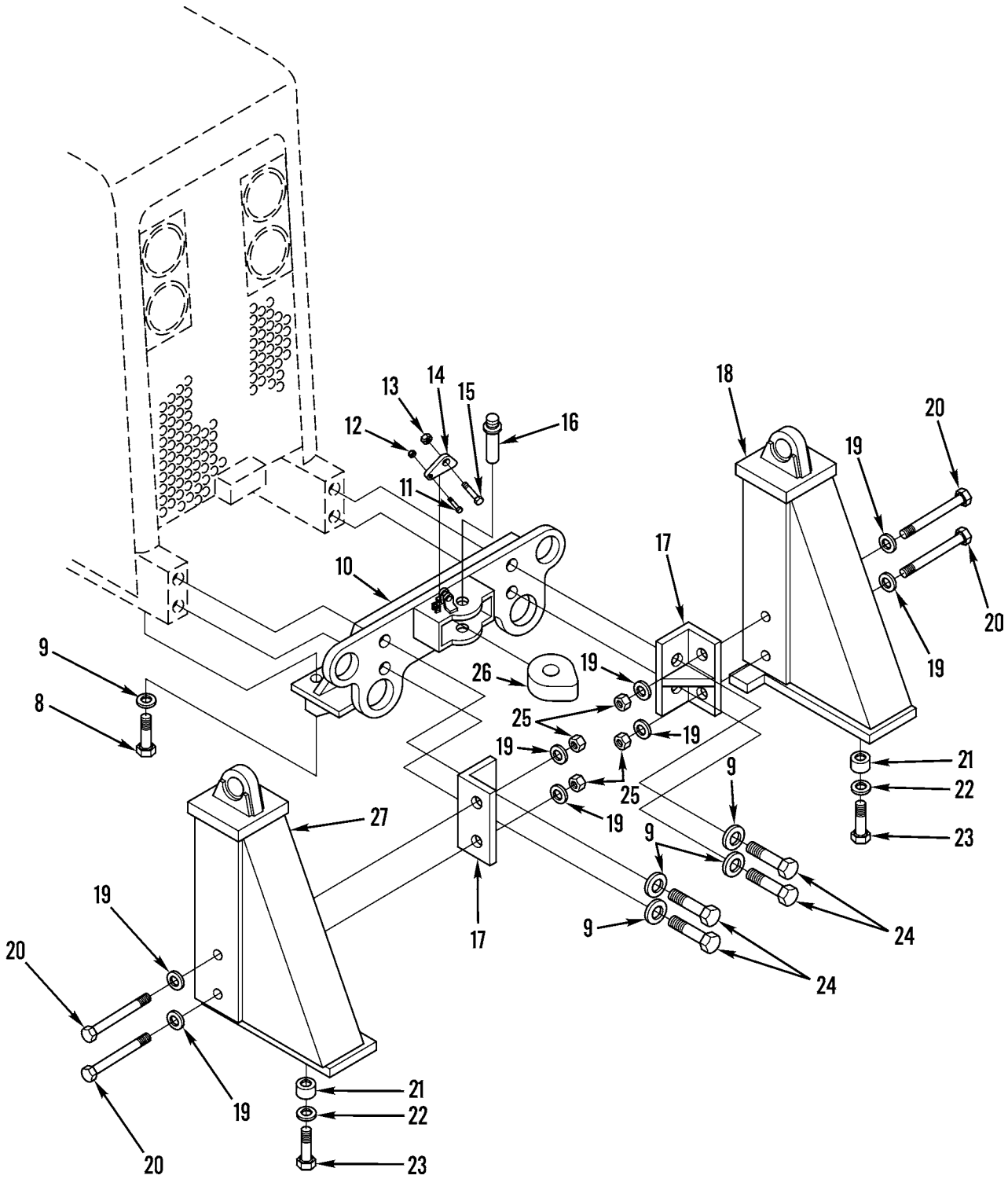

Figure 222. Rear Bumper and Mounting (Sheet 2 of 2)

(1) ITEM NO	(2) SMR CODE	(3) NSN	(4) CAGEC	(5) PART NUMBER	(6) DESCRIPTION AND USABLE ON CODES(UOC)	(7) QTY
					GROUP 21 BUMPERS, GUARDS, AND MARINE FENDERS GROUP 2101 BUMPERS, BRACKETS, GUARDS, AND PROTECTIVE DEVICES FIG. 222 REAR BUMPER AND MOUNTING	
1	PFFZZ	2540011801103	11083	6G3669	BUMPER,VEHICULAR..... UOC:AGP	1
2	PFFZZ	5315003527706	11083	4F0255	PIN,STRAIGHT,HEADED..... UOC:AGP	1
3	PFFZZ	5315002763727	11083	3F6523	PIN,STRAIGHT,HEADED..... UOC:AGP	1
4	PFFZZ	5315000590205	80205	MS24665-490	PIN,COTTER..... UOC:AGP	1
5	PFFZZ	5306002686004	11083	9S1363	BOLT,MACHINE..... UOC:AGP	4
6	PFFZZ	5310004709833	11083	3K5234	WASHER,FLAT..... UOC:AGP	8
7	PFFZZ	5305010977907	11083	0V0450	SCREW,CAP,HEXAGON H..... UOC:AGP	4
8	PFFZZ	5306011701338	11083	8S9093	BOLT,MACHINE..... UOC:AF9,AGM,AGN,F10	6
9	PFFZZ	5310000097704	11083	9M2828	WASHER,FLAT..... UOC:AF9,AGM,AGN,F10	10
10	PFFZZ	2540011677212	11083	5R5311	BUMPER,VEHICULAR..... UOC:AF9,AGM,AGN,F10	1
11	PFFZZ	5305011646340	11083	7B8167	SCREW,CAP,HEXAGON H..... UOC:AF9,AGM,AGN,F10	1
12	PFFZZ	5310011602034	11083	2D6235	NUT,SELF-LOCKING,HE..... UOC:AF9,AGM,AGN,F10	1
13	PFFZZ	5310009445896	24617	12337822	NUT,SELF-LOCKING,HE..... UOC:AF9,AGM,AGN,F10	1
14	PFFZZ	2540001014738	11083	5H2168	LATCH,DRAWBAR PIN..... UOC:AF9,AGM,AGN,F10	1
15	PFFZZ	5306002604502	11083	0S1577	BOLT,MACHINE..... UOC:AF9,AGM,AGN,F10	1
16	PFFZZ	5315010687180	11083	9S8184	PIN DRAW..... UOC:AF9,AGM,AGN,F10	1
17	PAOZZ	5340012931793	11083	5R7169	BRACKET,ANGLE..... UOC:AF9,AGM,AGN,F10	2
18	PAOZZ	2530012926765	11083	5R5341	SUPPORT ASSEMBLY L.H..... UOC:AF9,AGM,AGN,F10	1
19	PAOZZ	5310011022477	11083	5P8248	WASHER,FLAT..... UOC:AF9,AGM,AGN,F10	8
20	PAOZZ	5306000085972	11083	1D4624	BOLT,SPECIAL..... UOC:AF9,AGM,AGN,F10	4
21	PAOZZ	5365012930066	11083	5R5328	SPACER,SLEEVE..... UOC:AF9,AGM,AGN,F10	6
22	PAOZZ	5365012931061	11083	6G6158	SPACER,SLEEVE..... UOC:AF9,AGM,AGN,F10	6
23	PAOZZ	5306011191758	11083	7B8791	BOLT,MACHINE..... UOC:AF9,AGM,AGN,F10	6

(1) ITEM NO	(2) SMR CODE	(3) NSN	(4) CAGEC	(5) PART NUMBER	(6) DESCRIPTION AND USABLE ON CODES(UOC)	(7) QTY
24	PFFZZ	5305001362009	11083	8H5772	SCREW,CAP,HEXAGON H..... UOC:AF9,AGM,AGN,F10	4
25	PAOZZ	5310009785406	11083	2J3506	NUT,PLAIN,HEXAGON..... UOC:AF9,AGM,AGN,F10	4
26	PFFZZ	5340011704741	11083	5R5225	CONNECTOR,ROD END..... UOC:AF9,AGM,AGN,F10	1
27	PAOZZ	2530012933419	11083	5R5342	SUPPORT ASSY MOTOR R.H..... UOC:AF9,AGM,AGN,F10	1

END OF FIGURE

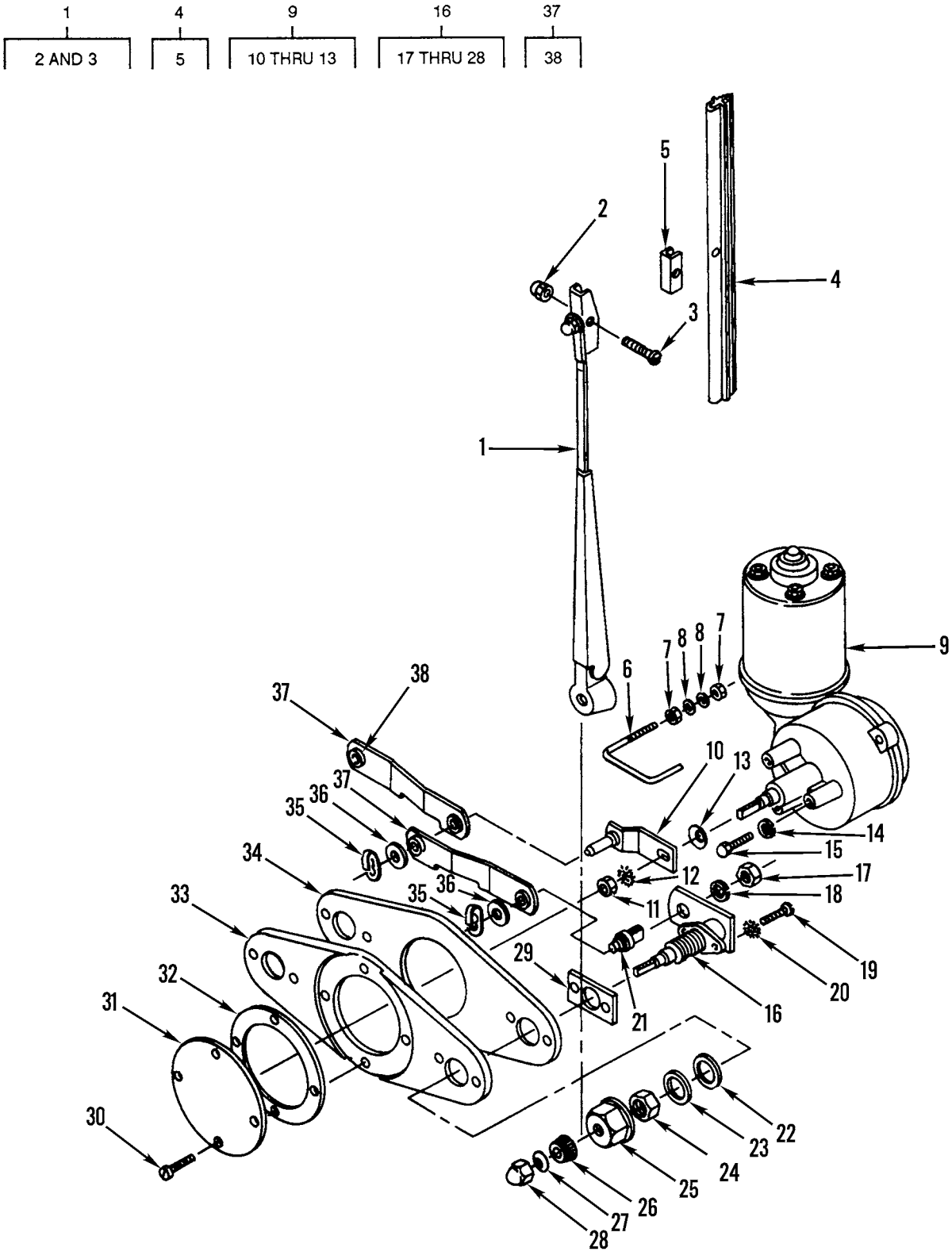

Figure 223. Front Lower Windshield Wiper

(1) ITEM NO	(2) SMR CODE	(3) NSN	(4) CAGEC	(5) PART NUMBER	(6) DESCRIPTION AND USABLE ON CODES(UOC)	(7) QTY
					GROUP 22 BODY, CHASSIS, AND HULL ACCESSORY ITEMS GROUP 2202 ACCESSORY ITEMS FIG. 223 FRONT LOWER WINDSHIELD WIPER	
1	PFOZZ	2540011815838	60703	90640-6	ARM,WINDSHIELD WIPE USE ON SERIAL NO. 7GB00464 AND BELOW..... UOC:AGP	2
1	PAOZZ	2540012224719	53867	3398100523	ARM,WINDSHIELD WIPE USE ON SERIAL NO. 7GB00465 AND ABOVE..... UOC:AGP	2
2	PFOZZ	5310005968007	39428	90631A006	.NUT,SELF-LOCKING,HE..... UOC:AGP	1
3	PFOZZ	5305010948679	11083	2A5926	.SCREW,MACHINE..... UOC:AGP	1
4	PFOZZ	2540011811002	70412	18964	BLADE,WINDSHIELD WI USE ON SERIAL NO. 7GB00464 AND BELOW..... UOC:AGP	1
4	PAOZZ	2540012212187	53867	3398110397	BLADE,WINDSHIELD WI USE ON SERIAL NO. 7GB00465 AND ABOVE..... UOC:AGP	2
5	PFOZZ	5340010629905	11083	5K5695	.CLIP,SPRING TENSION..... UOC:AGP	1
6	PFOZZ	5306011965562	11083	6G2968	BOLT,HOOK..... UOC:AGP	2
7	PFOZZ	5310009382013	96906	MS35649-224	NUT,PLAIN,HEXAGON..... UOC:AGP	4
8	PFOZZ	5310011763998	11083	4B4674	WASHER,FLAT..... UOC:AGP	4
9	PFOZZ		11083	7G8454	MOTOR,WINDSHIELD WI USE ON SERIAL NO. 7GB00464 AND BELOW..... UOC:AGP	1
9	PFOZZ	2540011788913	11083	1010744	MOTOR,WINDSHIELD WI USE ON SERIAL NO. 7GB00465 AND ABOVE..... UOC:AGP	1
10	PAOZZ	2540010953656	24956	LE721124A-1	.ARM,WINDSHIELD WIPE USE ON SERIAL NO. 7GB00464 AND BELOW..... UOC:AGP	1
11	PFOZZ	5310006602649	96906	MS35690-424	.NUT,PLAIN,HEXAGON USE ON SERIAL NO. 7GB00464 AND BELOW..... UOC:AGP	1
12	PFOZZ	5310008892528	96906	MS45904-68	.WASHER,LOCK USE ON SERIAL NO. 7GB00464 AND BELOW..... UOC:AGP	1
13	PFOZZ	5310009721588	01843	WA1793	.WASHER,SPRING TENSI..... UOC:AGP	1
14	PFOZZ	5310002090786	78189	1114-00	WASHER,LOCK..... UOC:AGP	3
15	PFOZZ	5305002678952	80204	B1821BH025F050N	SCREW,CAP,HEXAGON H USE ON SERIAL NO. 7GB00464 AND BELOW..... UOC:AGP	3

(1) ITEM NO	(2) SMR CODE	(3) NSN	(4) CAGEC	(5) PART NUMBER	(6) DESCRIPTION AND USABLE ON CODES(UOC)	(7) QTY
16	PFOOO	2540011787059	11083	6G2785	DRIVE ADAPTER,WINDS USE ON SERIAL NO. 7GB00464 AND BELOW..... UOC:AGP	2
17	PFOZZ	5310004454633	11083	9M1311	.NUT,PLAIN,HEXAGON..... UOC:AGP	1
18	PFOZZ	5310005501130	96906	MS35333-40	.WASHER,LOCK..... UOC:AGP	1
19	PFOZZ	5305000593661	96906	MS51958-65	.SCREW,MACHINE..... UOC:AGP	4
20	PFOZZ	5310005967691	96906	MS35335-32	.WASHER,LOCK..... UOC:AGP	4
21	PAOZZ	5306010627129	11083	1V3655	.BOLT,SHOULDER..... UOC:AGP	1
22	PAOZZ	5330005486119	11083	9S8016	.GASKET..... UOC:AGP	1
23	PFOZZ	5310010632983	11083	4B1550	.WASHER..... UOC:AGP	1
24	PFOZZ	5310010436821	99066	NT721021	.NUT,PLAIN,HEXAGON USE ON SERIAL NO. 7GB00464 AND BELOW..... UOC:AGP	1
25	PAOZZ	2540010627131	99066	CP721084	.CAP USE ON SERIAL NO. 7GB00464 AND BELOW..... UOC:AGP	1
26	PAOZZ	2540010627132	11083	1V3658	.DRIVE ADAPTER,WINDS..... UOC:AGP	1
27	PFOZZ	5310005957237	78189	1220-00	.WASHER,LOCK USE ON SERIAL NO. 7GB00464 AND BELOW..... UOC:AGP	1
28	PFOZZ	5310010627185	11083	8D0237	.NUT,PLAIN,CAP USE ON SERIAL NO. 7GB00464 AND BELOW..... UOC:AGP	1
29	PAOZZ	5365010956115	11083	9D5533	SPACER,PLATE..... UOC:AGP	1
30	PFOZZ	5305011783686	11083	6D3846	SCREW,CAP,SOCKET HE..... UOC:AGP	4
31	PFOZZ	5340011773907	11083	6G2822	COVER,ACCESS..... UOC:AGP	1
32	PFOZZ	5330011817906	11083	6G2846	GASKET..... UOC:AGP	1
33	PFOZZ	3040011788578	11083	6G2818	PLATE,RETAINING,SHA USE ON SERIAL NO. 7GB00464 AND BELOW..... UOC:AGP	1
34	PAOZZ	5330011835887	11083	8W2554	GASKET USE ON SERIAL NO. 7GB00464 AND BELOW..... UOC:AGP,F10	1
35	PFOZZ	5342010629902	01843	17815-29-SP27WC	CLIP,LOCK..... UOC:AGP	3
36	PAOZZ	5365010743568	11083	4D7416	SPACER..... UOC:AGP	3
37	PFOZZ	3040011774874	11083	6G2819	CONNECTING LINK,RIG USE ON SERIAL NO. 7GB00464 AND BELOW..... UOC:AGP	2

(1) ITEM NO	(2) SMR CODE	(3) NSN	(4) CAGEC	(5) PART NUMBER	(6) DESCRIPTION AND USABLE ON CODES(UOC)	(7) QTY
38	PFOZZ	3120009103716	24956	BG7275	.BUSHING,SLEEVE..... UOC:AGP	2

END OF FIGURE

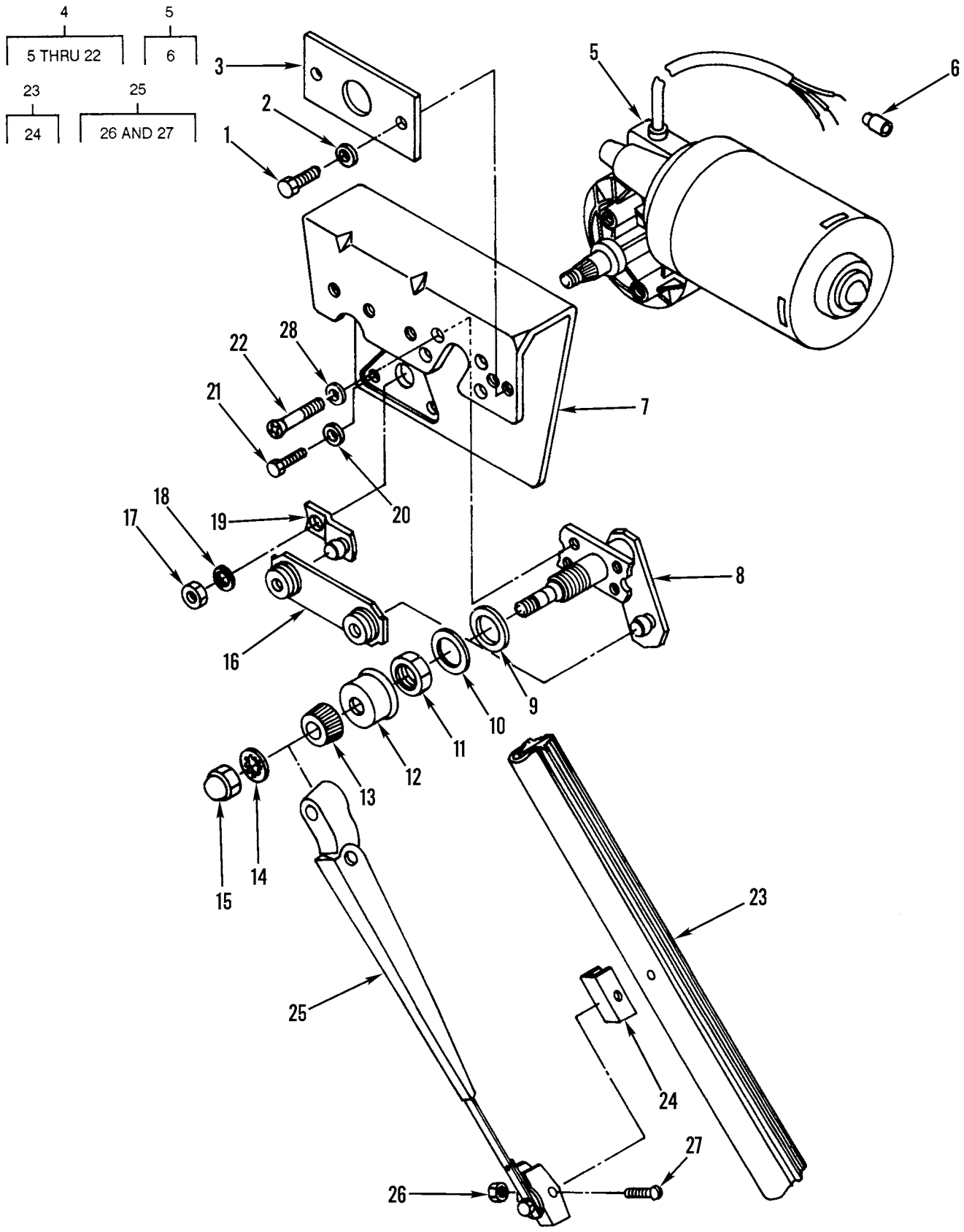

Figure 224. Front Upper Windshield Wiper

(1) ITEM NO	(2) SMR CODE	(3) NSN	(4) CAGEC	(5) PART NUMBER	(6) DESCRIPTION AND USABLE ON CODES(UOC)	(7) QTY
					GROUP 2202 ACCESSORY ITEMS FIG. 224 FRONT UPPER WINDSHIELD WIPER	
1	PFOZZ	5305002678952	80204	B1821BH025F050N	SCREW,CAP,HEXAGON H..... UOC:AGP	2
2	PFOZZ	5310002090786	78189	1114-00	WASHER,LOCK..... UOC:AGP	2
3	PFOZZ	3040011788909	11083	6G2874	PLATE,RETAINING,SHA..... UOC:AGP	1
4	PFOOO	2540011844472	53867	9 397 235 009	WIPER GROUP USE ON SERIAL NO. 7GB00464 AND BELOW..... UOC:AGP	1
5	PAOZZ	2540011856170	53867	9 397 236 006	.MOTOR,WINDSHIELD WI USE ON SERIAL NO. 7GB00464 AND BELOW..... UOC:AGP	1
6	PAOZZ	5940011129746	59730	RA2573	..TERMINAL,QUICK DISC USE ON SERIAL NO. 7GB00464 AND BELOW..... UOC:AGP	1
7	PFOZZ	5340013679156	53867	3 391 098 159	.BRACKET,DOUBLE ANGL..... UOC:AGP	1
8	PFOZZ	3040012013940	53867	B 391 441 068	.SHAFT,WINDSHIELD WI USE ON SERIAL NO. 7GB00464 AND BELOW..... UOC:AGP	1
9	PAOZZ	5330005486119	11083	9S8016	.GASKET..... UOC:AGP	1
10	PFOZZ	5310010632983	11083	4B1550	.WASHER USE ON SERIAL NO. 7GB00464 AND BELOW..... UOC:AGP	1
11	PFOZZ	5310010436821	99066	NT721021	.NUT,PLAIN,HEXAGON USE ON SERIAL NO. 7GB00464 AND BELOW..... UOC:AGP	1
12	PAOZZ	2540010627131	99066	CP721084	.CAP USE ON SERIAL NO. 7GB00464 AND BELOW..... UOC:AGP	1
13	PAOZZ	2540010627132	11083	1V3658	.DRIVE ADAPTER,WINDS..... UOC:AGP	1
14	PFOZZ	5310005957237	78189	1220-00	.WASHER,LOCK USE ON SERIAL NO. 7GB00464 AND BELOW..... UOC:AGP	1
15	PFOZZ	5310010627185	11083	8D0237	.NUT,PLAIN,CAP..... UOC:AGP	1
16	PFOZZ	3040011873326	53867	391 341 398	.CONNECTING LINK,RIG..... UOC:AGP	1
17	PFOZZ	5310011804768	11083	6V6889	.NUT,PLAIN,HEXAGON..... UOC:AGP	1
18	PFOZZ	5310011870690	53867	2 916 069 025	.WASHER,SPRING TENSI..... UOC:AGP	2
19	PFOZZ	2540011844473	53867	3 391 901 417	.CRANK ASSEMBLY,WIPE..... UOC:AGP	1
20	PFOZZ	5310010512360	11083	5P0537	.WASHER..... UOC:AGP	3

(1) ITEM NO	(2) SMR CODE	(3) NSN	(4) CAGEC	(5) PART NUMBER	(6) DESCRIPTION AND USABLE ON CODES(UOC)	(7) QTY
21	PFOZZ	5306011817849	11083	5C9553	.BOLT,MACHINE..... UOC:AGP	3
22	PFOZZ	5305011850394	11083	3C1884	.SCREW,MACHINE..... UOC:AGP	4
23	XDOZZ		70412	18972	BLADE,WINDSHIELD WI..... UOC:AGP	1
24	XAOZZ	5340010629905	70412	18920	.CLIP,SPRING TENSION..... UOC:AGP	1
25	PAOZZ	2540009220262	70412	10469	ARM,WINDSHIELD WIPE USE ON SERIAL NO. 7GB00464 AND BELOW..... UOC:AGP	1
25	PAOZZ	2540012230754	53867	3398102208	ARM,WINDSHIELD WIPE USE ON SERIAL NO. 7GB00465 AND ABOVE..... UOC:AGP	1
26	PFOZZ	5310005968007	59501	10289	.NUT,SELF-LOCKING,HE..... UOC:AGP	1
27	PFOZZ	5305010948679	11083	2A5926	.SCREW,MACHINE..... UOC:AGP	1
28	PFOZZ	5310010980634	78189	WD23875	WASHER,SPRING TENSI USE ON SERIAL NO. 7GB00465 AND ABOVE..... UOC:AGP	2

END OF FIGURE

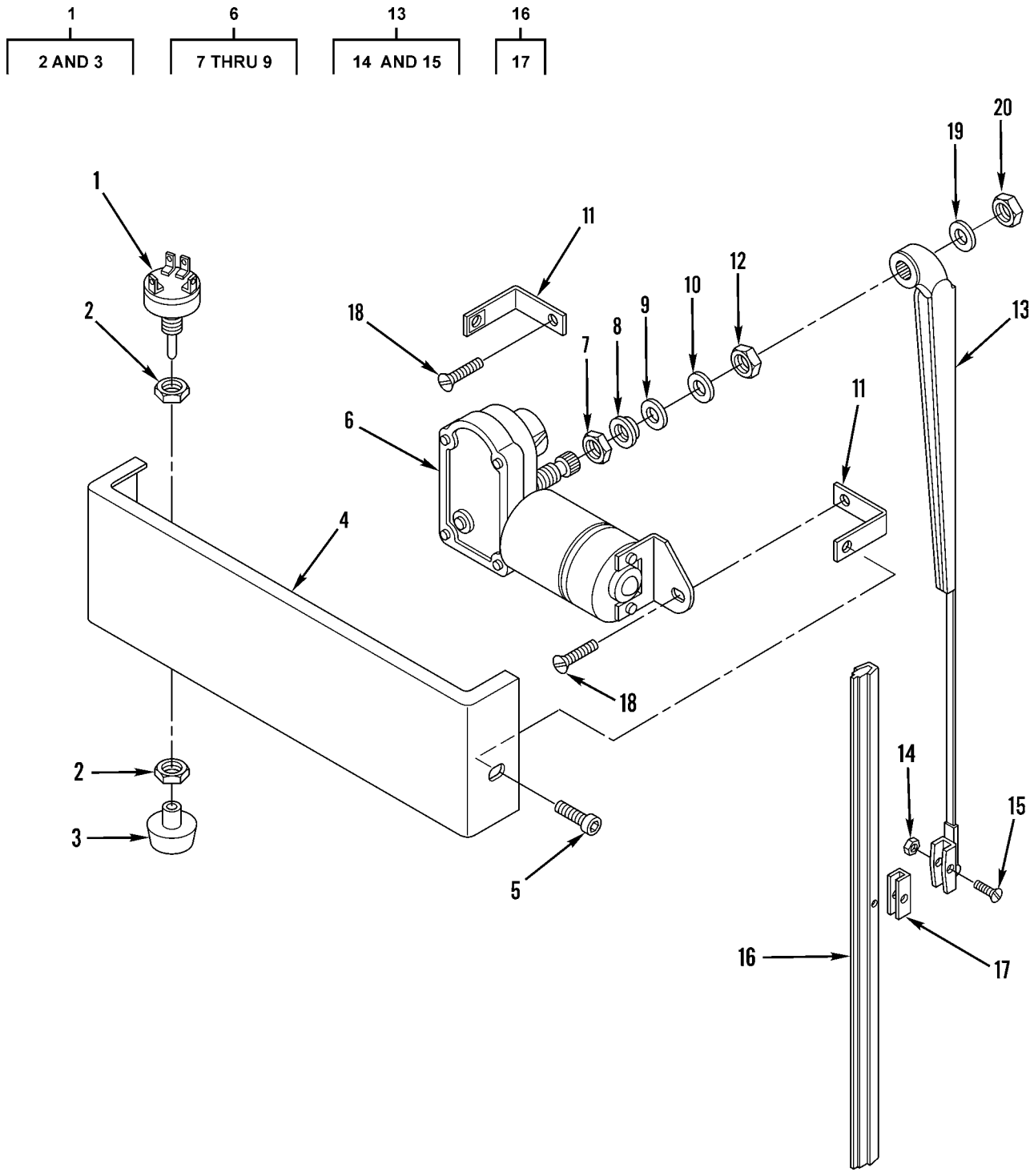

Figure 225. Rear Windshield Wiper

(1) ITEM NO	(2) SMR CODE	(3) NSN	(4) CAGEC	(5) PART NUMBER	(6) DESCRIPTION AND USABLE ON CODES(UOC)	(7) QTY
					GROUP 2202 ACCESSORY ITEMS FIG. 225 REAR WINDSHIELD WIPER	
1	PAOZZ	5930010641008	11083	0685824	SWITCH ASSEMBLY..... UOC:AGP	1
2	PFOZZ	5310010632970	11083	2P4339	.NUT..... UOC:AGP	2
3	PFOZZ	5355010951574	13445	81298-29	.KNOB..... UOC:AGP	1
4	PFOZZ	5340011827733	11083	6G2752	COVER,ACCESS USE ON SERIAL NO. 7GB00464 AND BELOW..... UOC:AGP	1
5	PFOZZ	5305011825249	11083	6V3884	SCREW,CAP,SOCKET HE..... UOC:AGP	2
6	PFOZZ	2540011788914	24956	WWF24C18-210	MOTOR,WINDSHIELD WI..... UOC:AGP	1
7	PFOZZ	5310011864582	11083	4D7468	.NUT,PLAIN,HEXAGON..... UOC:AGP	1
8	PFOZZ	5310011242054	11083	1K0502	.WASHER,FLAT..... UOC:AGP	1
9	PFOZZ	5310012062187	11083	4D7464	.WASHER,FLAT..... UOC:AGP	1
10	PFOZZ	5310001097638	15434	S658	WASHER,FLAT..... UOC:AGP	1
11	PFOZZ	2510011774799	11083	6G2748	BRACKET ASSEMBLY,WI..... UOC:AGP	2
12	PFOZZ	5310011864582	11083	4D7468	NUT,PLAIN,HEXAGON..... UOC:AGP	1
13	PFOZZ	2590010823145	11083	5P5346	ARM USE ON SERIAL NO. 7GB00464 AND BELOW..... UOC:AGP	1
14	XDOZZ		60703	82845-J	.NUT,SELF-LOCKING,CA..... UOC:AGP	1
15	PFOZZ	5305010948679	11083	2A5926	.SCREW,MACHINE..... UOC:AGP	1
16	PAOZZ	2540011883287	70412	18970	BLADE,WINDSHIELD WI USE ON SERIAL NO. 7GB00464 AND BELOW..... UOC:AGP	1
17	PFOZZ	5340010629905	11083	5K5695	.CLIP,SPRING TENSION..... UOC:AGP	1
18	PFOZZ	5305000712506	80204	B1821BH025C050N	SCREW,CAP,HEXAGON H..... UOC:AGP	2
19	PAOZZ	5310010635822	11083	9F5644	WASHER,LOCK..... UOC:AGP	1
20	PFOZZ	5310010627185	11083	8D0237	NUT,PLAIN,CAP..... UOC:AGP	1

END OF FIGURE

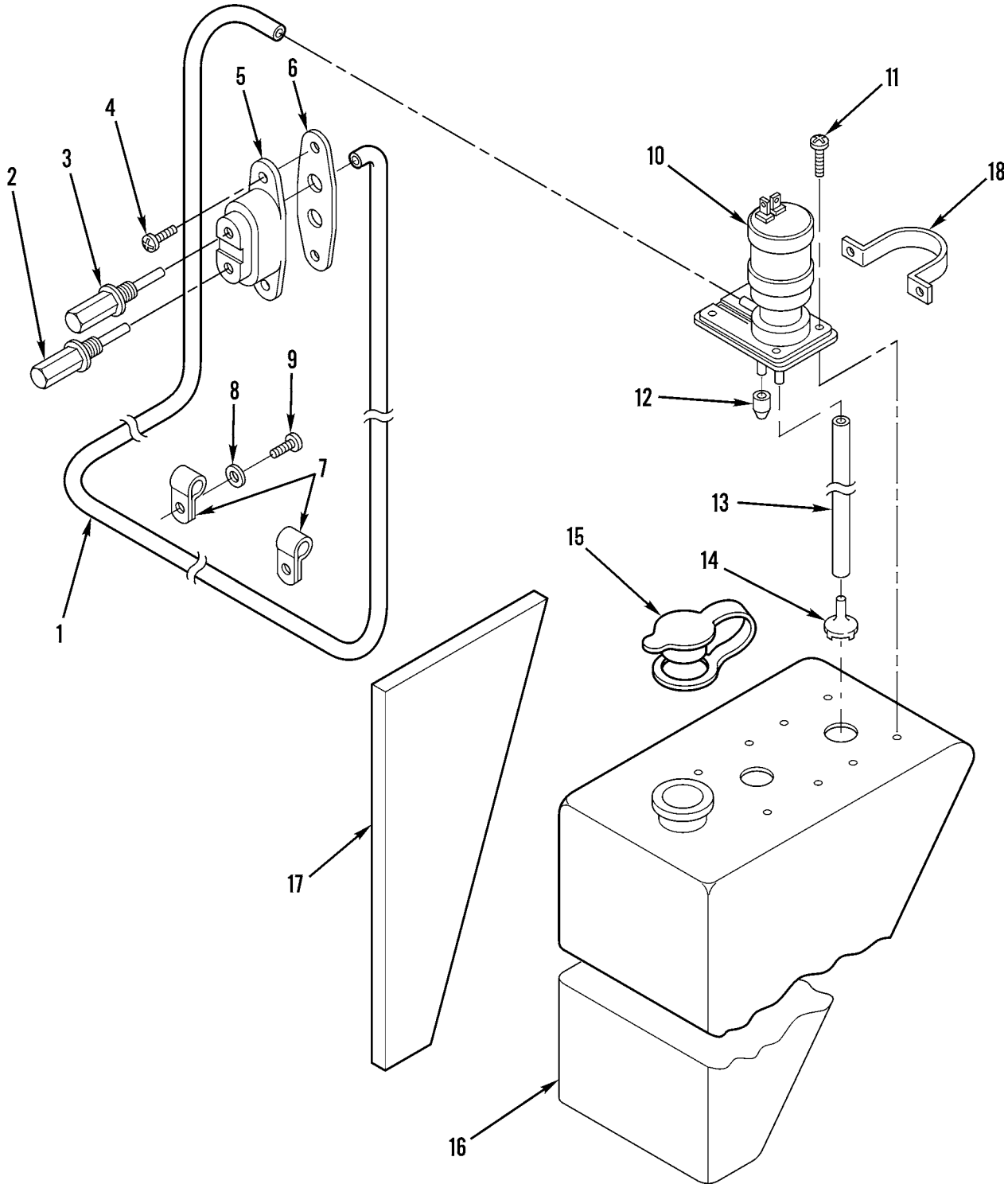

Figure 226. Windshield Washer Reservoir, Pump, and Mounting

(1) ITEM NO	(2) SMR CODE	(3) NSN	(4) CAGEC	(5) PART NUMBER	(6) DESCRIPTION AND USABLE ON CODES(UOC)	(7) QTY
					GROUP 2202 ACCESSORY ITEMS FIG. 226 WINDSHIELD WASHER RESERVOIR, PUMP, AND MOUNTING	
1	MOOZZ		24161	4040-XX	TUBING,NONMETALLIC MAKE FROM TUBING P/N 4040..... UOC:AGP	1
2	PFOZZ	2910011816728	19986	6526	NOZZLE,FUEL INJECTI..... UOC:AGP	1
3	PFOZZ	2910011811936	19986	A2067	NOZZLE,SPRAY,WINDSH..... UOC:AGP	1
4	PFOZZ	5305011805324	11083	2N3680	SCREW,CAP,SOCKET HE..... UOC:AGP	2
5	PFOZZ	2590011787075	11083	8W0934	BRACKET,VEHICULAR C..... UOC:AGP	1
6	PAOZZ	5330011853441	11083	8W0935	GASKET..... UOC:AGP	1
7	PFOZZ	5340010712047	11083	2V3216	HOOK,SUPPORT..... UOC:AGP	6
8	PFOZZ	5310001435722	04998	WA1248	WASHER,FLAT..... UOC:AGP	3
9	XDOZA		11083	2N3478	SCREW,MACHINE..... UOC:AF9,AGP	3
10	XDOZA		11083	3E5470	PUMP,WINDSHIELD WAS..... UOC:AGP	2
10	XDOZA	2540010955223	60703	91285-11	PUMP,WINDSHIELD WAS..... UOC:AGP	2
11	PFOZZ	5305010951239	11083	7K3434	SCREW,TAPPING..... UOC:AGP	8
12	PFOZZ	2910010953505	60703	88171-44	NOZZLE,WINDSHIELD W..... UOC:AGP	2
13	MOOZZ		11083	1440195-XX	HOSE,NONMETALLIC MAKE FROM TUBING P/N 4040..... UOC:AGP	2
14	PFOZZ	4730010950037	60703	87883-4	STRAINER ELEMENT,SE..... UOC:AGP	2
15	PFOZZ	2590011555062	82484	89447-8	CAP,FILLER OPENING..... UOC:AGP	1
16	PFOZZ		11083	2398397	RESERVOIR,WINDSHIEL USE WITH P/N 3E5470..... UOC:AGP	1
16	PFOZZ	2540010950925	11083	1618196	RESERVIOR,WINDSHIEL..... UOC:AGP	1
17	PFOZZ	2510010976745	11083	2G5358	PAD,RUBBER..... UOC:AGP	1
18	PFOZZ		11083	3E6088	BRACKET USE WITH P/N 3E5470..... UOC:AGP	2

END OF FIGURE

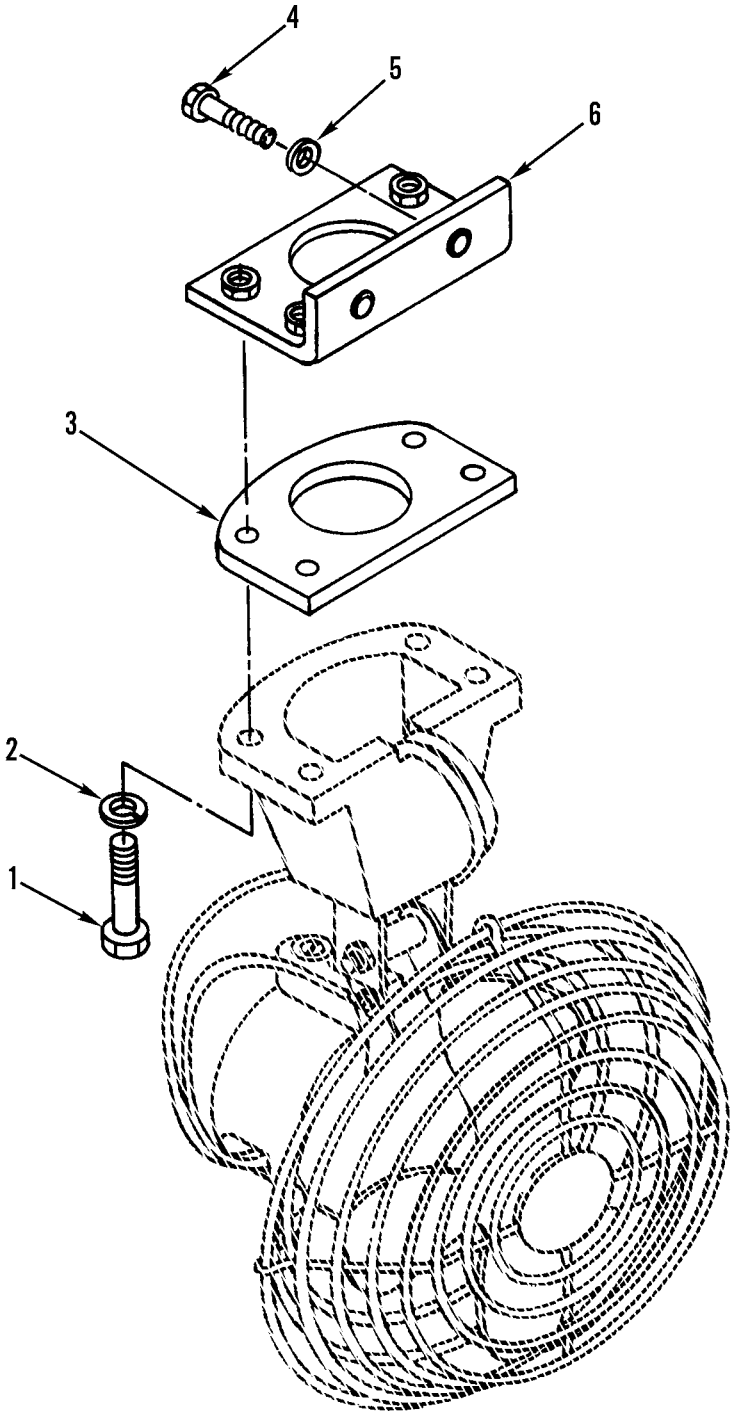

Figure 227. Front Windshield Defroster Fan Mounting

(1) ITEM NO	(2) SMR CODE	(3) NSN	(4) CAGEC	(5) PART NUMBER	(6) DESCRIPTION AND USABLE ON CODES(UOC)	(7) QTY
					GROUP 2202 ACCESSORY ITEMS FIG. 227 FRONT WINDSHIELD DEFROSTER FAN MOUNTING	
1	PFOZZ	5305010964550	11083	4M5283	SCREW,CAP,HEXAGON H..... UOC:AGP	2
2	PFOZZ	5310010980634	78189	WD23875	WASHER,SPRING TENSI..... UOC:AGP	2
3	XDOZZ	5365011769879	11083	5R6853	SPACER,SPECIAL..... UOC:AGP	1
4	PFOZZ	5305000712509	80204	B1821BH025C150N	SCREW,CAP,HEXAGON H..... UOC:AGP	4
5	PFOZZ	5310010512360	11083	5P0537	WASHER..... UOC:AGP	4
6	PFOZZ	2540011826885	11083	5R6857	BRACKET ASSEMBLY,BO..... UOC:AGP	1

END OF FIGURE

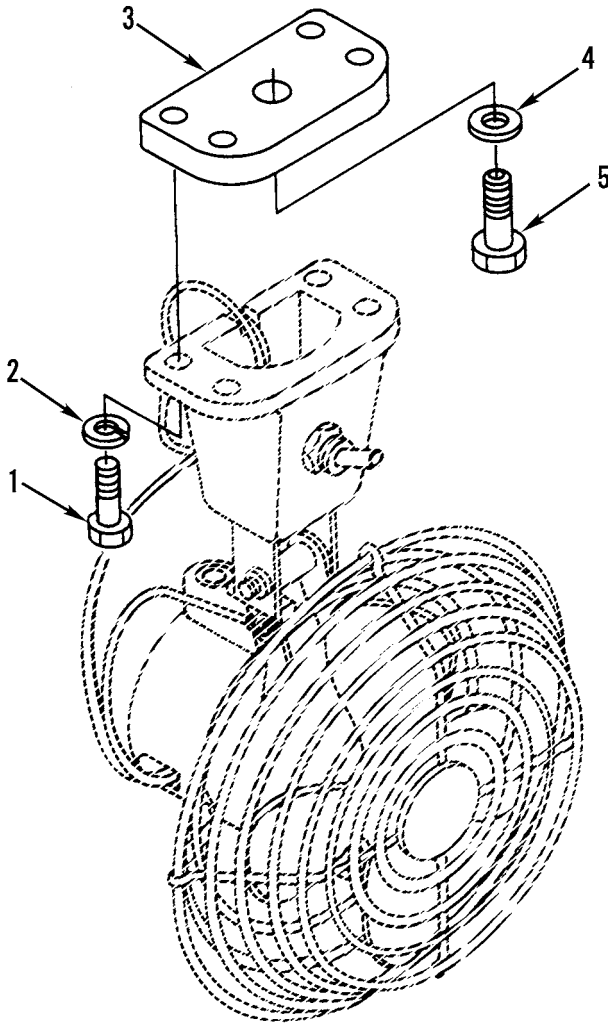

Figure 228. Rear Windshield Defroster Fan Mounting

(1) ITEM NO	(2) SMR CODE	(3) NSN	(4) CAGEC	(5) PART NUMBER	(6) DESCRIPTION AND USABLE ON CODES(UOC)	(7) QTY
					GROUP 2202 ACCESSORY ITEMS FIG. 228 REAR WINDSHIELD DEFROSTER FAN MOUNTING	
1	PFOZZ	5306010664721	11083	4M0061	BOLT..... UOC:AGP	1
2	PFOZZ	5310001670721	96906	MS35333-41	WASHER,LOCK..... UOC:AGP	1
3	XDOZZ		11083	6G5774	COVER,ACCESS..... UOC:AGP	1
4	PFOZZ	5310004042422	52788	265079	WASHER,FLAT..... UOC:AGP	1
5	PFOZZ	5306011230891	80204	B1821BH050C150L	BOLT,MACHINE..... UOC:AGP	1

END OF FIGURE

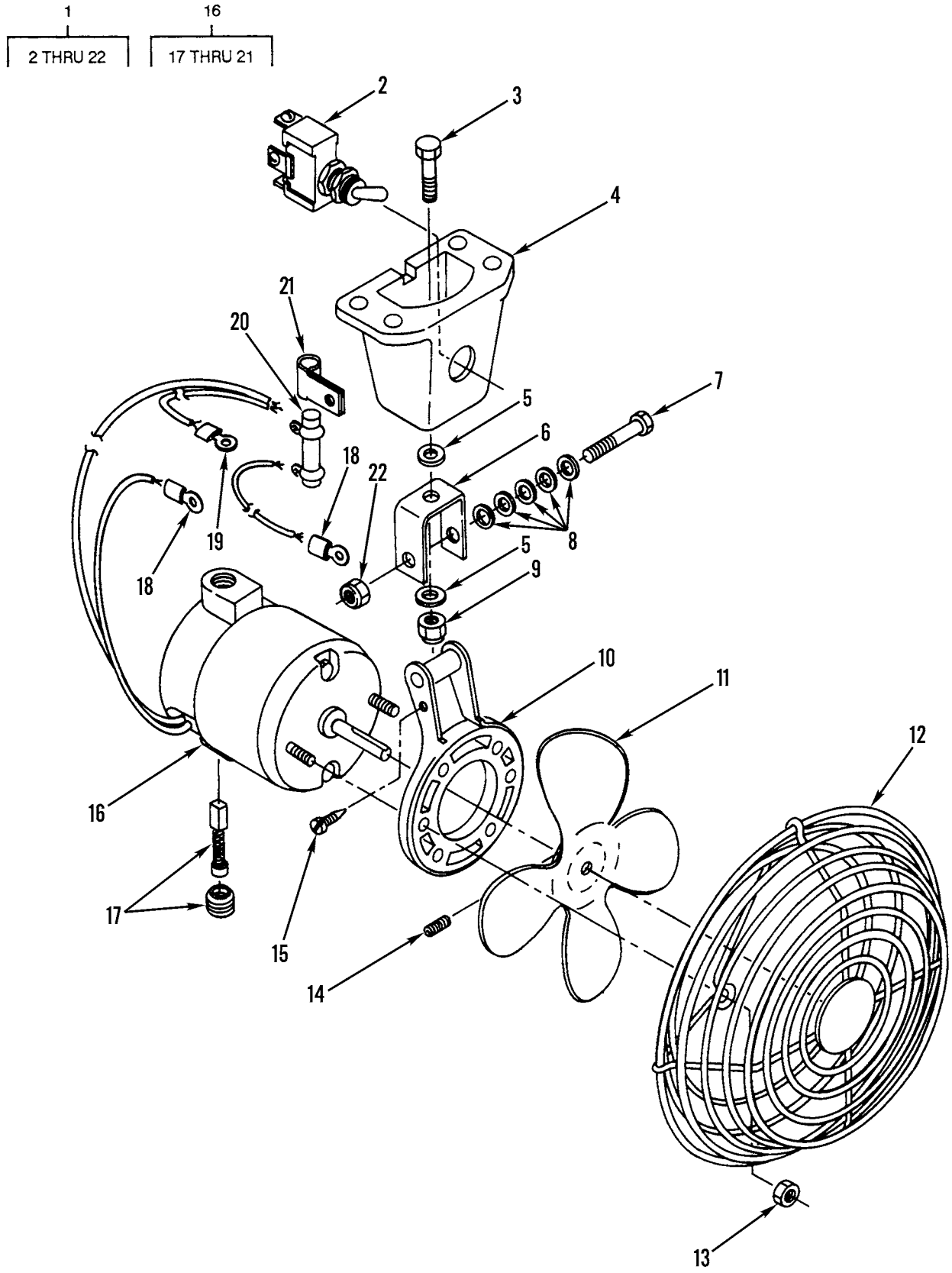

Figure 229. Front and Rear Windshield Defroster Fan Assembly

(1) ITEM NO	(2) SMR CODE	(3) NSN	(4) CAGEC	(5) PART NUMBER	(6) DESCRIPTION AND USABLE ON CODES(UOC)	(7) QTY
					GROUP 2202 ACCESSORY ITEMS FIG. 229 FRONT AND REAR WINDSHIELD DEFROSTER FAN ASSEMBLY	
1	PFOOZ	4140010974340	99688	B2-28S	FAN,CIRCULATING..... UOC:AGP	2
2	PAOZZ	5930001188034	11083	3D8754	.SWITCH,ELECTRICAL..... UOC:AGP	1
3	PFOZZ	5306002828360	11083	1A2343	.BOLT,MACHINE..... UOC:AGP	1
4	PAOZZ	2540011813685	99688	44675	.BASE,FAN,DEFROSTER..... UOC:AGP	1
5	PFOZZ	5310003628168	61208	M2048F	.WASHER,FLAT..... UOC:AGP	2
6	XDOZZ		99688	44472	.STRAP,RETAINING..... UOC:AGP	1
7	PFOZZ	5306008575672	77445	466473	.BOLT,MACHINE..... UOC:AGP	1
8	PFOZZ	5310008094058	96906	MS27183-10	.WASHER,FLAT..... UOC:AGP	5
9	PFOZZ	5310010951247	11083	3D8752	.NUT,SELF-LOCKING,HE..... UOC:AGP	1
10	PFOZZ	5342011811929	99688	44640	.BRACKET,FAN,DEFROST..... UOC:AGP	1
11	PFOZZ	4140011905493	99688	5083	.IMPELLER,FAN,AXIAL..... UOC:AGP	1
12	PFOZZ	3020011818557	99688	8195	.GUARD,MECHANICAL DR..... UOC:AGP	1
13	PFOZZ	5310011325309	11083	1M1230	.NUT,PLAIN,ASSEMBLED..... UOC:AGP	2
14	PFOZZ	5305010947378	11083	7L8316	.SETSCREW..... UOC:AGP	1
15	XDOZZ		11083	7H4543	.SCREW,TAPPING..... UOC:AGP	1
16	PAOOZ	6105010978661	18797	3363-233	.MOTOR,DIRECT CURREN..... UOC:AGP	1
17	PFOZZ	5977011810151	11083	9G0398	..BRUSH SET,ELECTRICA..... UOC:AGP	1
18	PFOZZ	5940001434780	96906	MS25036-108	..TERMINAL,LUG..... UOC:AGP	1
19	PFOZZ	5940001434774	96906	MS25036-153	..TERMINAL,LUG..... UOC:AGP	1
20	PFOZZ	5905006368357	81349	RW31V100	..RESISTOR,FIXED,WIRE..... UOC:AGP	1
21	PFOZZ	5342010634236	11083	8J1256	..CLIP..... UOC:AGP	1
22	XDOZZ		96906	MS21083F-N4	.NUT,SELF-LOCKING,HE..... UOC:AGP	1

END OF FIGURE

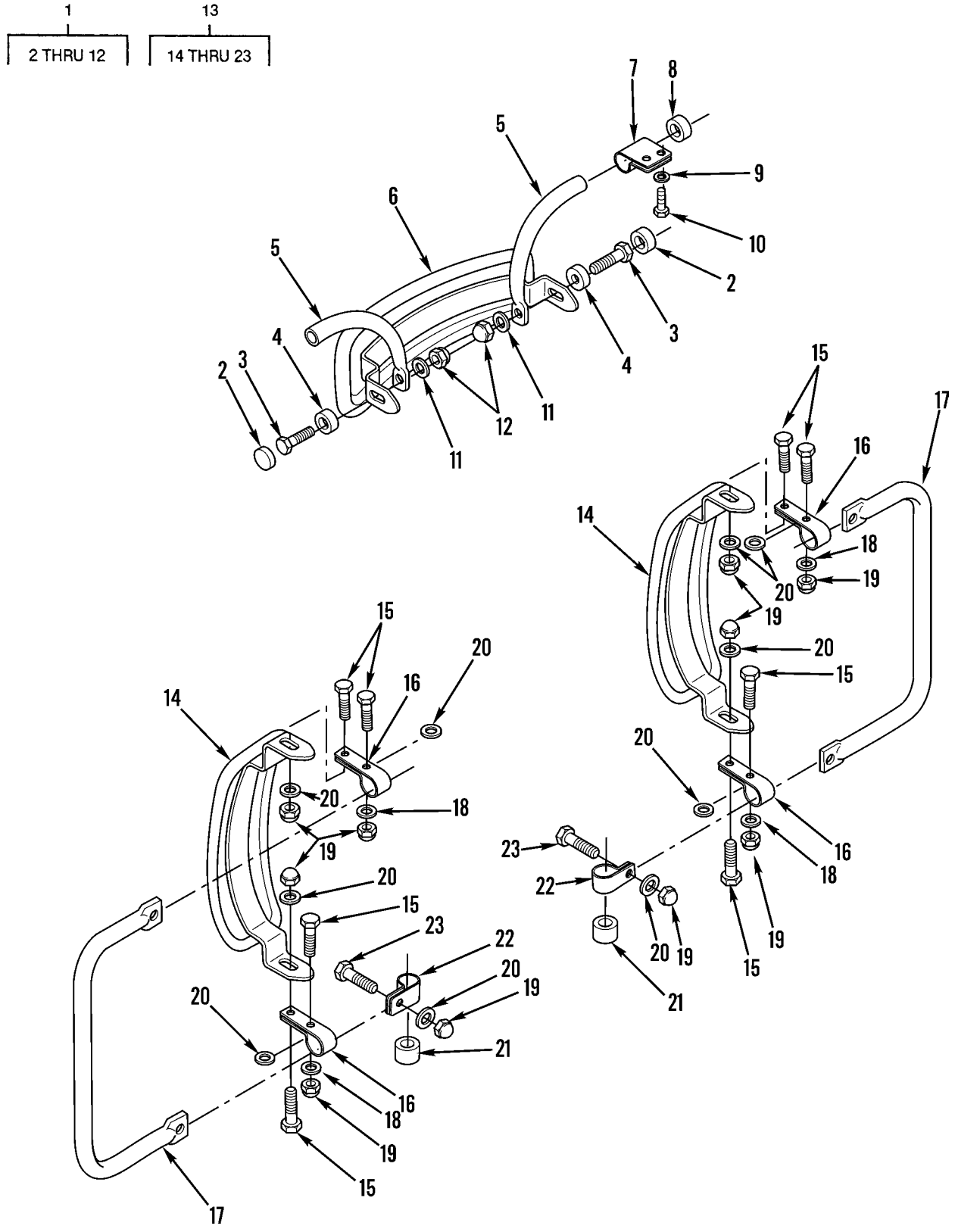

Figure 230. Vehicle Mirrors and Mounting

(1) ITEM NO	(2) SMR CODE	(3) NSN	(4) CAGEC	(5) PART NUMBER	(6) DESCRIPTION AND USABLE ON CODES(UOC)	(7) QTY
					GROUP 2202 ACCESSORY ITEMS FIG. 230 VEHICLE MIRRORS AND MOUNTING	
1	PFOZZ	2540010958665	11083	2G8245	MIRROR ASSEMBLY,REA.....	1
2	PFOZZ	5340011720371	11083	2G8573	.CAP,PROTECTIVE,DUST.....	2
3	PFOZZ	5305007175460	96906	MS35307-359	.SCREW,CAP,HEXAGON H.....	2
4	PAOZZ	5310010953348	95760	RHW205	.WASHER,SHOULDERED.....	2
5	PFOZZ	2540011778617	70082	5122	.ARM,REARVIEW MIRROR.....	2
6	PFOZZ	2540010958773	70082	2293	.MIRROR ASSEMBLY,REA.....	1
7	PAOZZ	5340010960364	70082	5121	.CLAMP,LOOP.....	2
8	XDOZZ		97111	3007-3	.CAP,DUST.....	2
9	PFOZZ	5310005501130	96906	MS35333-40	.WASHER,LOCK.....	4
10	PAOZZ	5306002093217	11083	6D2928	.BOLT,MACHINE.....	4
11	PFOZZ	5310010948810	78189	3320-14-01	.WASHER,SQUARE CONE.....	2
12	PFOZZ	5310004743798	96906	MS24679-7	.NUT,PLAIN,CAP.....	2
13	PAOOO	2540010954990	11083	1138217	MIRROR ASSEMBLY,REA..... UOC:AF9,AGP,F10	2
14	PAOZZ	2540010958773	70082	2293	.MIRROR ASSEMBLY,REA..... UOC:AF9,AGP,F10	1
15	PFOZZ	5306001580697	11083	5M3062	.BOLT,MACHINE..... UOC:AF9,AGP,F10	8
16	PFOZZ	5340011817524	70082	5620	.CLAMP,LOOP..... UOC:AF9,AGP,F10	4
17	PAOZZ	3830010941933	70082	5123	.BOW-ARM..... UOC:AF9,AGP,F10	2
18	PFOZZ	5310005957237	78189	1220-00	.WASHER,LOCK..... UOC:AF9,AGP,F10	4
19	PFOZZ	5310004743798	96906	MS24679-7	.NUT,PLAIN,CAP..... UOC:AF9,AGP,F10	12
20	PFOZZ	5310010948810	78189	3320-14-01	.WASHER,SQUARE CONE..... UOC:AF9,AGP,F10	12
21	PAOZZ	2510011778603	11083	2G8696	.TREAD,METALLIC,NONS..... UOC:AF9,AGP,F10	4
22	PFOZZ	5340012156299	11083	8T1760	.CLAMP,LOOP..... UOC:AF9,AGP,F10	4
23	PFOZZ	5306002286835	11083	4L6454	.BOLT,MACHINE..... UOC:AF9,AGP,F10	4
					END OF FIGURE	

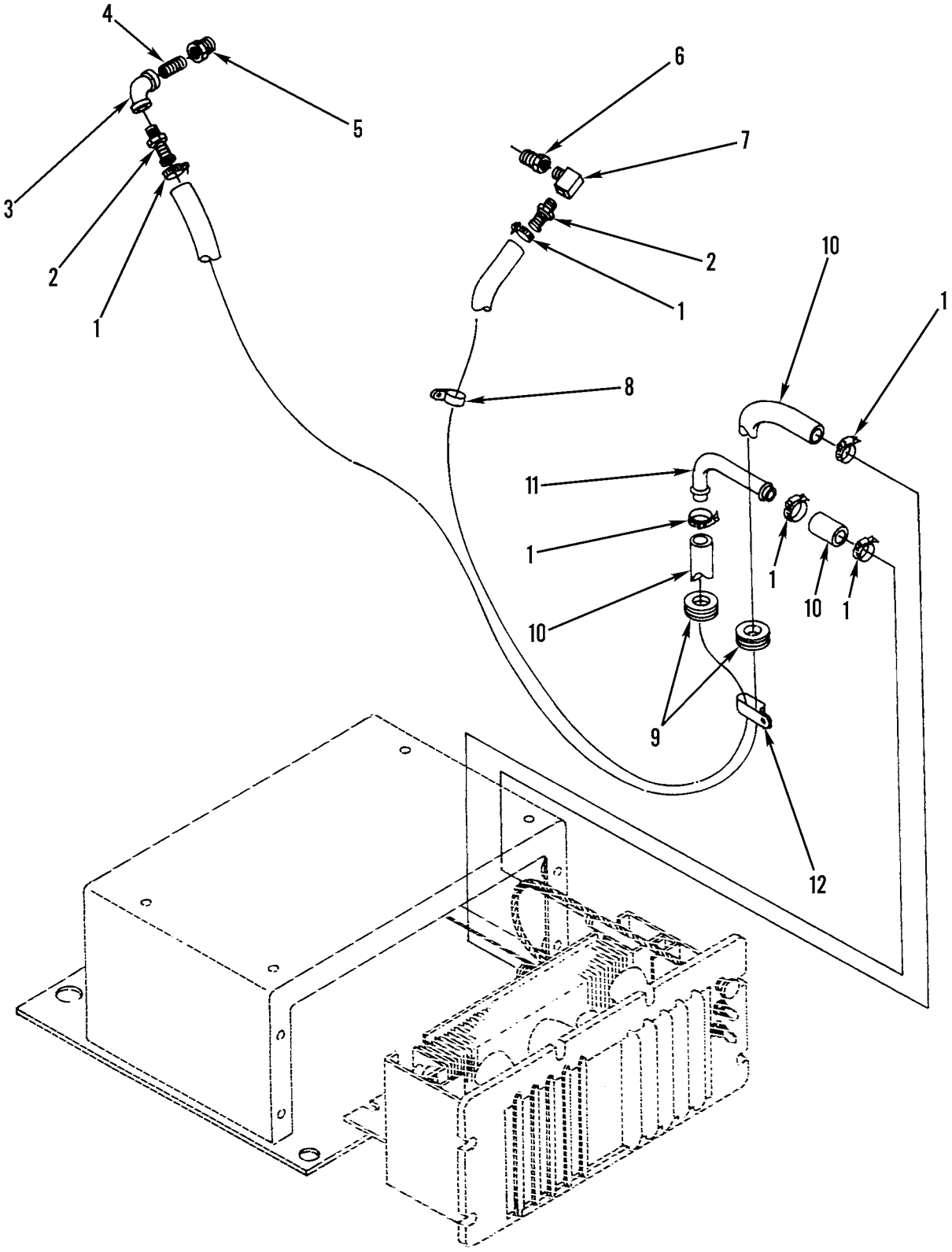

Figure 231. Heater Lines and Fittings

(1) ITEM NO	(2) SMR CODE	(3) NSN	(4) CAGEC	(5) PART NUMBER	(6) DESCRIPTION AND USABLE ON CODES(UOC)	(7) QTY
					GROUP 2202 ACCESSORY ITEMS FIG. 231 HEATER LINES AND FITTINGS	
1	PFOZZ	4730008776298	81646	6710	CLAMP,HOSE..... UOC:AGP	6
2	PFOZZ	4730006225756	30327	KF10-06PS	ADAPTER,STRAIGHT,PI..... UOC:AGP	1
3	PAOZZ	4730002491531	7X677	142365	ELBOW,PIPE..... UOC:AGP	1
4	PAOZZ	4730001881877	11083	3B7284	NIPPLE,PIPE..... UOC:AGP	1
5	PAOZZ	4730011834574	11083	5B4855	REDUCER,PIPE..... UOC:AGP	1
6	PFOZZ	4730002888546	79470	C3109X12X6	BUSHING,PIPE..... UOC:AGP	1
7	PAOZZ	4730002784822	11083	9M5501	ELBOW,PIPE..... UOC:AGP	1
8	PFOZZ	5342010632993	11083	4S1962	CLIP..... UOC:AGP	1
9	PAOZZ	5325007865487	96906	MS35489-132	GROMMET,NONMETALLIC..... UOC:AGP	2
10	MOOZZ	4720013318722	11083	6V5651	HOSE,NONMETALLIC MAKE FROM HOSE,P/N 6V5651..... UOC:AGP	1
11	PFOZZ	4710010630673	11083	1P3956	TUBE,BENT,METALLIC..... UOC:AGP	1
12	PFOZZ	5342010647512	11083	6D1641	CLIP..... UOC:AGP	1
					END OF FIGURE	

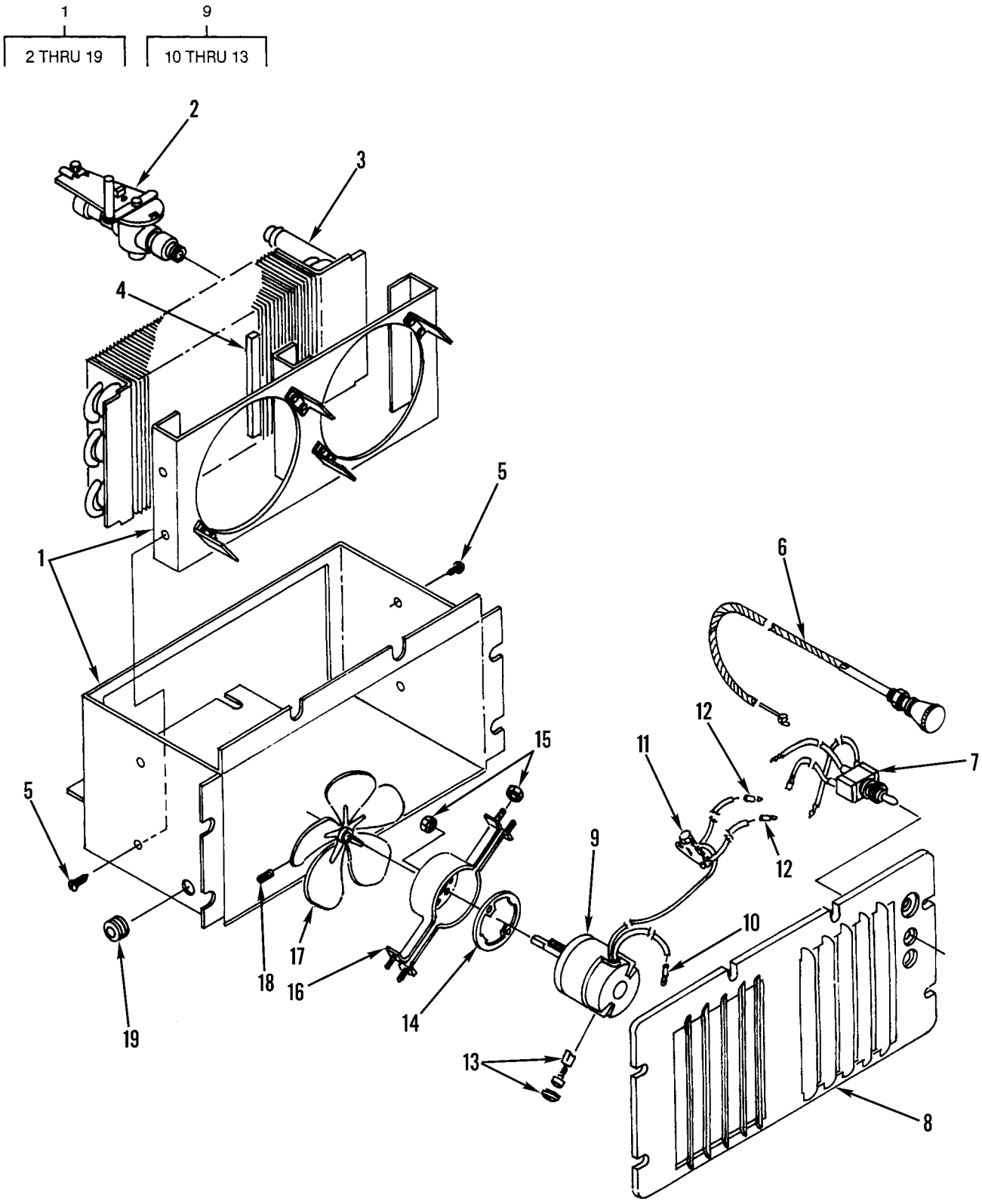

Figure 232. Heater Assembly

(1) ITEM NO	(2) SMR CODE	(3) NSN	(4) CAGEC	(5) PART NUMBER	(6) DESCRIPTION AND USABLE ON CODES(UOC)	(7) QTY
					GROUP 2202 ACCESSORY ITEMS FIG 232 HEATER ASSEMBLY	
1	PFOOO	2540010954621	99688	6805	HEATER,VEHICULAR,CO..... UOC:AGP	1
2	PFOZZ	4820010952016	99688	5686	.VALVE,PLUG..... UOC:AGP	1
3	PFOZZ	2540010993746	11083	3T2083	.CORE,HEATER..... UOC:AGP	1
4	MOOZZ		11083	5P2754	.SEAL MAKE FROM RUBBER P/N 5P5673.. UOC:AGP	1
5	XDOZZ	5305013482688	11083	4D0128	.SCREW,TAPPING..... UOC:AGP	4
6	PFOZZ	3040010956074	11083	9D7928	.CONTROL ASSEMBLY,PU..... UOC:AGP	1
7	PAOZZ	5930010950803	11083	5D5659	.SWITCH,TOGGLE..... UOC:AGP	2
8	PFOZZ	5340011834553	11083	9D7926	.COVER,ACCESS..... UOC:AGP	1
9	PFOOZ	6105010948228	11083	1741500	.MOTOR,DIRECT CURREN..... UOC:AGP	2
10	PFOZZ	5940001434780	96906	MS25036-108	..TERMINAL,LUG..... UOC:AGP	1
11	PFOZZ	5905011919741	11083	6T9254	..HOLDER,RESISTOR..... UOC:AGP	1
12	PAOZZ	5940001774356	75347	C19303	..TERMINAL,QUICK DISC..... UOC:AGP	2
13	XDOZZ	5977011810151	11083	9G0398	..BRUSH SET,ELECTRICA..... UOC:AGP	1
14	PFOZZ	5330010994985	11083	4D6624	.GASKET..... UOC:AGP	2
15	PFOZZ	5310011325309	11083	1M1230	.NUT,PLAIN,ASSEMBLED..... UOC:AGP	20
16	XDOZZ		99688	81220	.BRACKET ASSEMBLY,HE..... UOC:AGP	2
17	PFOZZ	3830010946926	99688	5114	.FAN..... UOC:AGP	2
18	PFOZZ	5305010947378	11083	7L8316	.SETSCREW..... UOC:AGP	2
19	PFOZZ	5325000086049	11083	3K8785	.GROMMET,NONMETALLIC..... UOC:AGP	1

END OF FIGURE

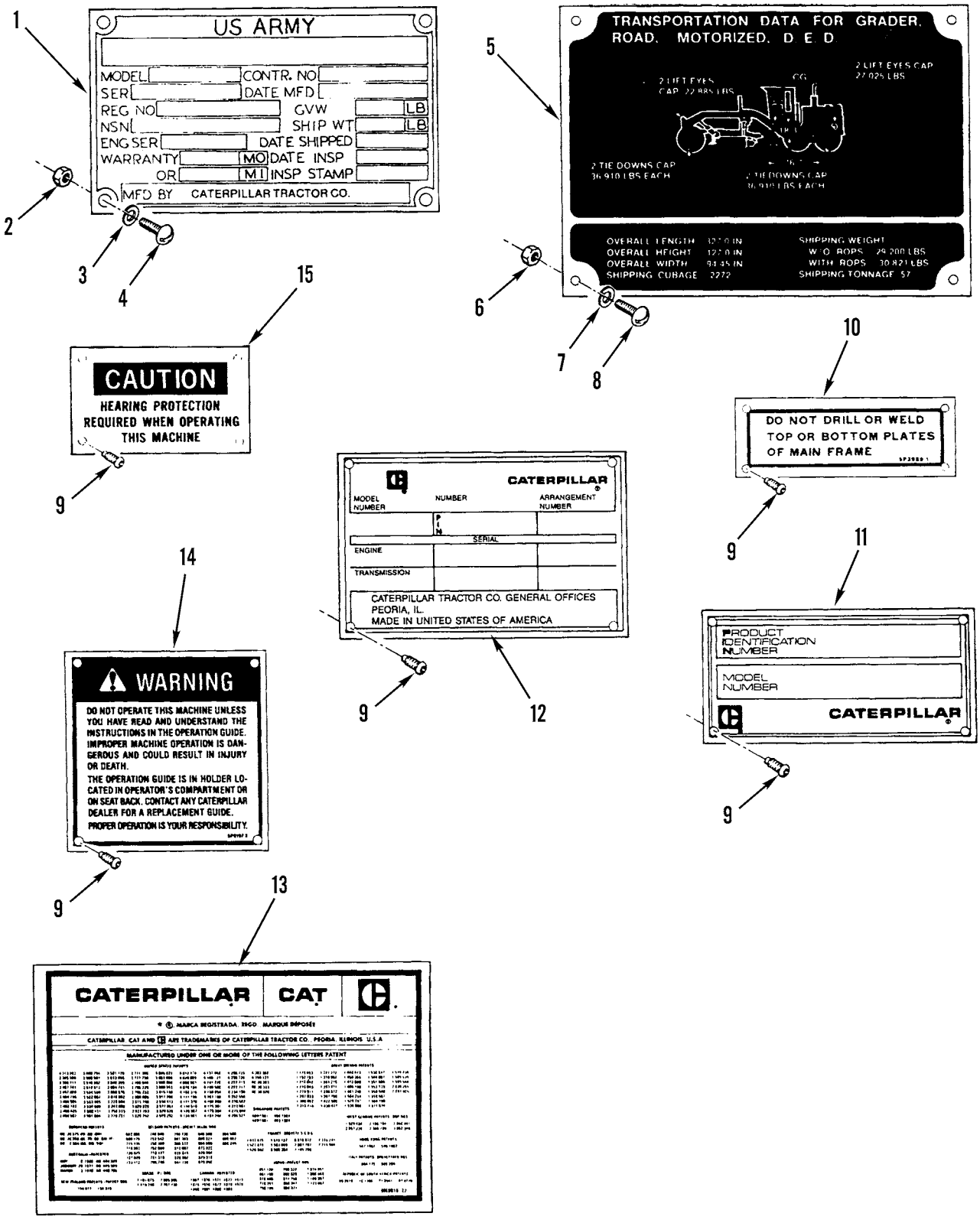

Figure 233. Data Plates

(1) ITEM NO	(2) SMR CODE	(3) NSN	(4) CAGEC	(5) PART NUMBER	(6) DESCRIPTION AND USABLE ON CODES(UOC)	(7) QTY
					GROUP 2210 DATA PLATES AND INSTRUCTION HOLDERS FIG. 233 DATA PLATES	
1	PBOZZ	9905012687580	11083	5R3413	PLATE,IDENTIFICATIO..... UOC:AGP	1
2	PFOZZ	5310010455588	11568	M925A	NUT,PLAIN,HEXAGON.....	4
3	PFOZZ	5310000453299	96906	MS35338-42	WASHER,LOCK.....	4
4	PFOZZ	5305008631627	11083	4B1221	SCREW,MACHINE.....	4
5	PFOZZ	9905012009500	11083	5R6881	PLATE,INSTRUCTION IDENTIFICATION... UOC:AF9,AGP	1
6	PFOZZ	5310011635805	11083	6B4540	NUT,PLAIN,HEXAGON.....	4
7	PFOZZ	5310004341347	11083	6B4542	WASHER,LOCK.....	4
8	PFOZZ	5305008892999	80205	MS35206-217	SCREW,MACHINE.....	4
9	PFOZZ	5305002535615	96906	MS21318-21	SCREW,DRIVE.....	20
10	XBOZZ		11083	5P3999	PLATE,INSTRUCTION.....	1
11	XBOZZ	9905014745756	11083	9X1878	PLATE,IDENTIFICATIO.....	1
12	PFOZZ	9905011766171	11083	6V9648	PLATE,IDENTIFICATIO.....	1
13	XDOZZ	7690012767196	11083	9M0016	RETAINER-BEARING.....	1
14	PFOZZ	9905011630029	11083	5P8197	PLATE,INSTRUCTION.....	1
15	PFOZZ	9905011640168	11083	5R5421	PLATE,INSTRUCTION.....	1

END OF FIGURE

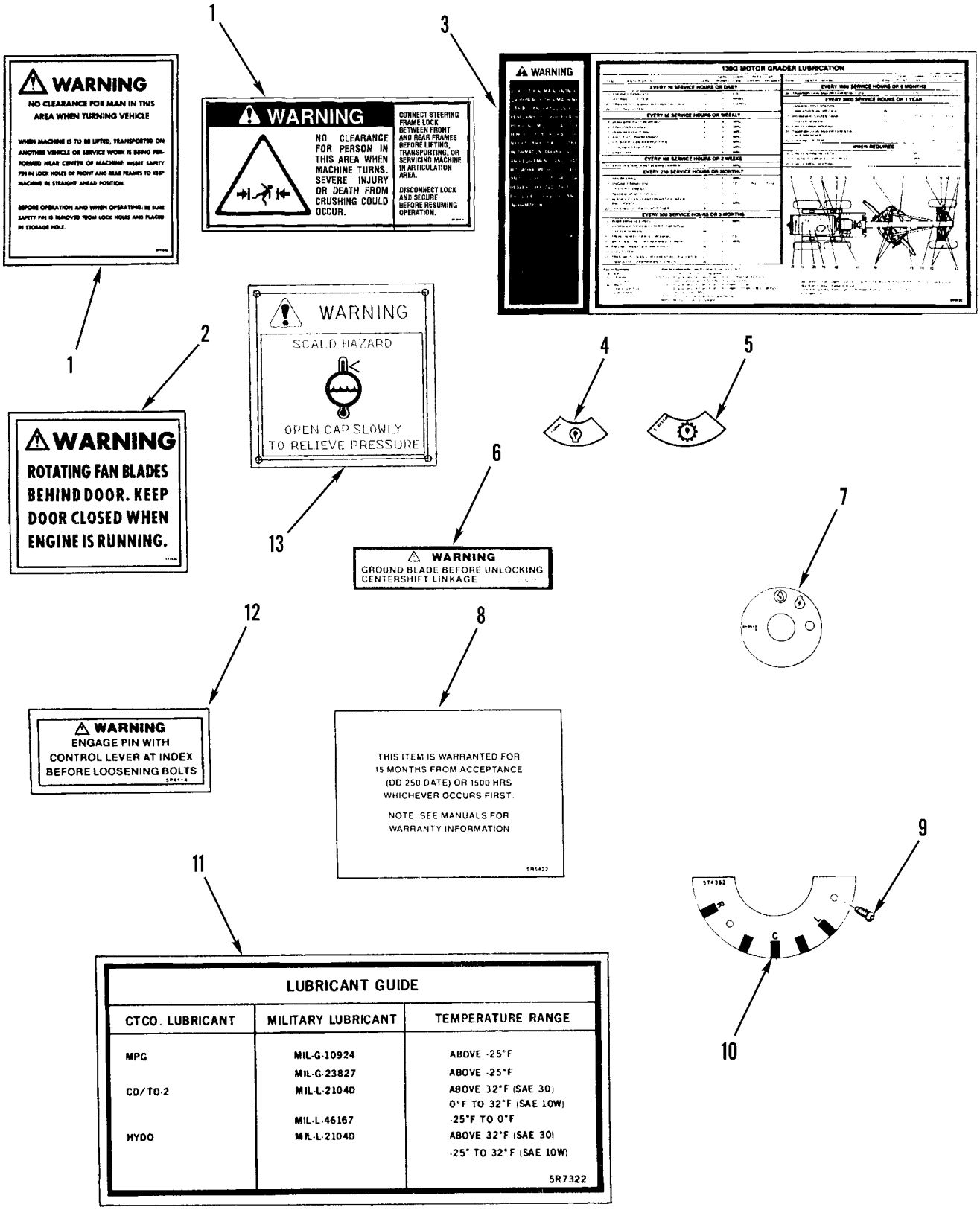

Figure 234. Lubrication and Warning Plates

(1) ITEM NO	(2) SMR CODE	(3) NSN	(4) CAGEC	(5) PART NUMBER	(6) DESCRIPTION AND USABLE ON CODES(UOC)	(7) QTY
					GROUP 2210 DATA PLATES AND INSTRUCTION HOLDERS FIG. 234 LUBRICATION AND WARNING PLATES	
1	PFOZZ	7690011743680	11083	5P1426	MARKER,IDENTIFICATI..... UOC:AGM,AGN,AGP,F10	2
1	PFOZZ	9905011630026	11083	5P7244	PLATE,INSTRUCTION..... UOC:AF9,F10	2
2	PCOZZ	7690011743679	11083	5P1436	MARKER,IDENTIFICATI..... UOC:AGM,AGN,AGP,F10	2
3	XDOZZ		11083	6V8270	MARKER,IDENTIFICATI..... UOC:AGP	1
4	PCOZZ	7690011615009	11083	5P1175	MARKER,IDENTIFICATI.....	1
5	XDOZZ		11083	5P1174	DECAL.....	1
6	PCOZZ	7690011749444	11083	5P4077	MARKER,IDENTIFICATI..... UOC:AGM,AGN,AGP,F10	1
7	PFOZZ	2920010643809	11083	8H8648	PLATE..... UOC:AGM,AGN,AGP,F10	1
8	XDOZZ		11083	5R5422	MARKER,IDENTIFICATI..... UOC:AF9,AGM,AGN,AGP	1
9	PFOZZ	5305012062164	11083	3F5535	SCREW,DRIVE.....	2
10	PFOZZ	9905011757145	11083	5T4362	PLATE,DESIGNATION.....	1
11	XBOZZ		11083	5R7322	MARKER,IDENTIFICATI.....	1
12	PFOZZ	9905011757159	11083	5P4114	PLATE,INSTRUCTION..... UOC:AGM,AGN,AGP,F10	1
13	PFOZZ	9905012893373	11083	5R8071	PLATE,INSTRUCTION..... UOC:AF9,F10	1

END OF FIGURE

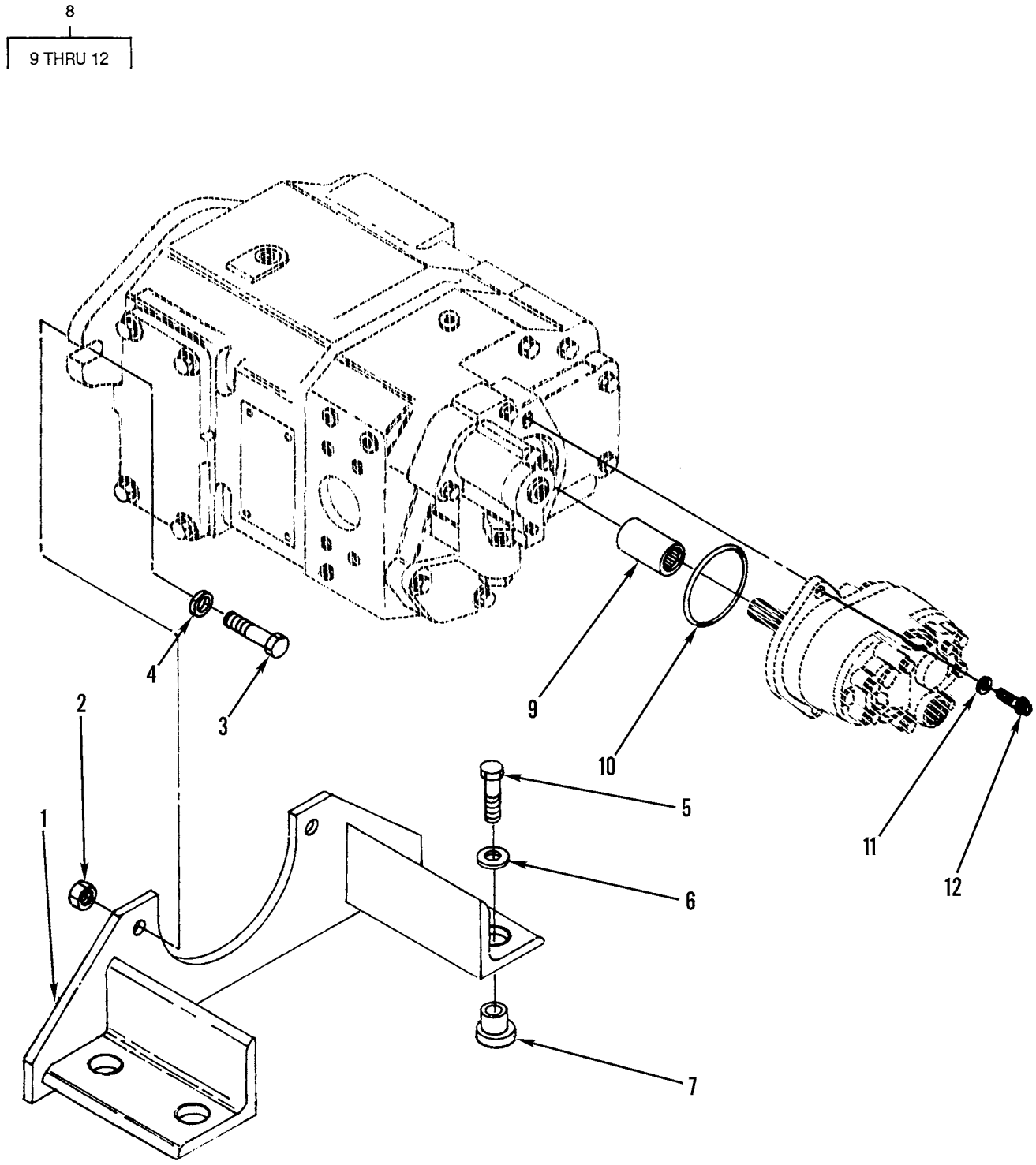

Figure 235. Hydraulic Pump Assembly and Mounting

(1) ITEM NO	(2) SMR CODE	(3) NSN	(4) CAGEC	(5) PART NUMBER	(6) DESCRIPTION AND USABLE ON CODES(UOC)	(7) QTY
					GROUP 24 HYDRAULIC AND FLUID SYSTEMS	
					GROUP 2401 PUMP AND MOTOR	
					FIG. 235 HYDRAULIC PUMP ASSEMBLY AND MOUNTING	
1	XDOZZ		11083	5T4189	BRACKET,EYE,NONROTA.....	1
2	PFOZZ	5310007638920	96906	MS51967-20	NUT,PLAIN,HEXAGON.....	2
3	PFOZZ	5305004262936	11083	0S1625	SCREW,CAP,HEXAGON H.....	2
4	PFOZZ	5310010954631	11083	5P8247	WASHER,FLAT.....	2
5	PFOZZ	5306008097134	11083	2B0947	BOLT,MACHINE.....	4
6	XDOZZ		11083	8K8517	WASHER,FLAT.....	4
7	PFOZZ	5340011451298	82372	M400-65	BUMPER,NONMETALLIC.....	4
8	PAOZZ	4320011009050	11083	8J6155	PUMP,ROTARY.....	1
9	PFFZZ	3010011689409	11083	8J5834	.COUPLING,SHAFT,RIGI.....	1
10	PFFZZ	5331011703749	11083	6V5778	.O-RING PART OF KIT P/N 3G1708.....	1
11	PFFZZ	5310006559370	96906	MS35340-47	.WASHER,LOCK.....	2
12	PFFZZ	5306011678328	11083	5P2546	.BOLT,MACHINE.....	2

END OF FIGURE

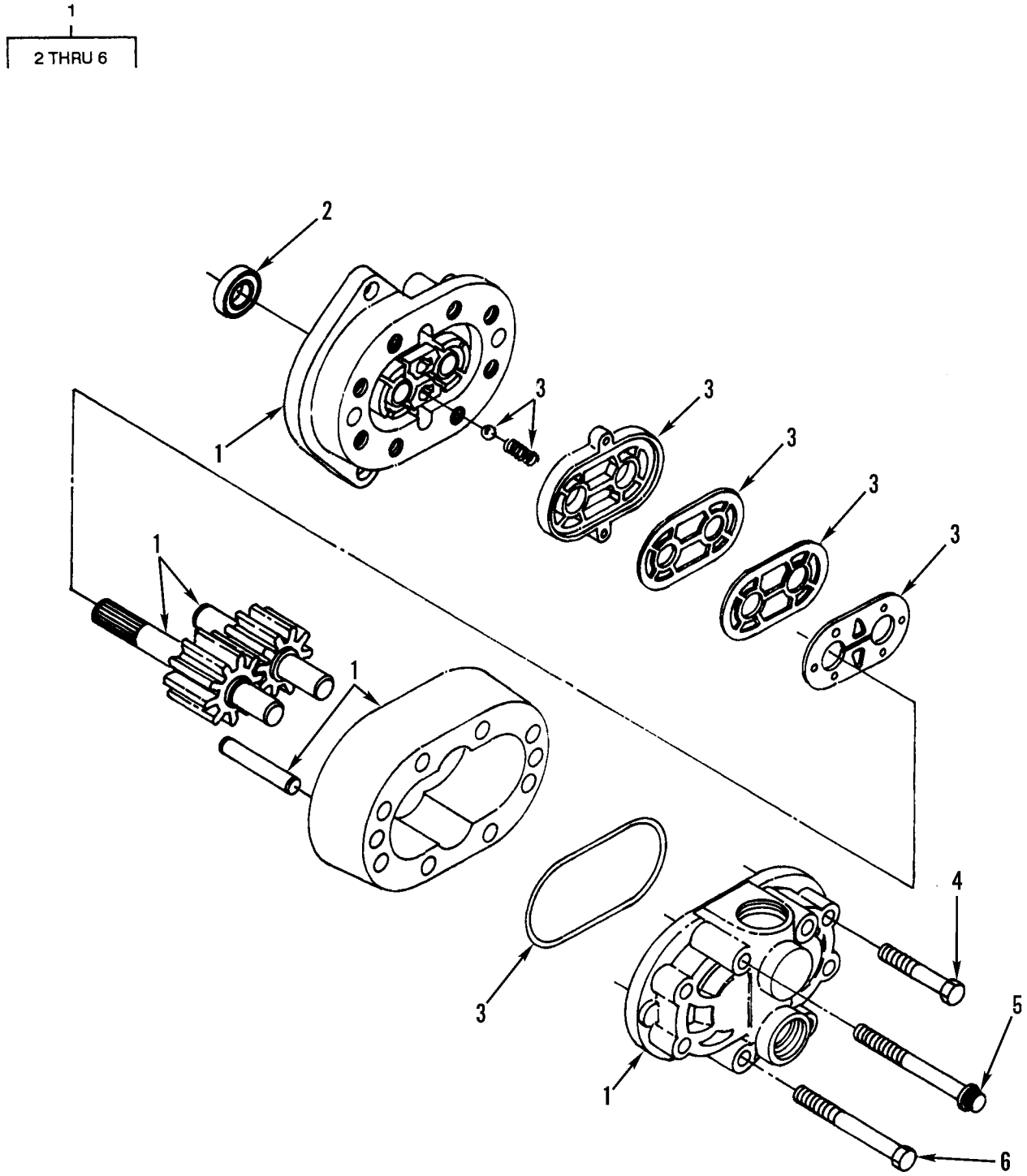

Figure 236. Hydraulic Rotary Pump Assembly

(1) ITEM NO	(2) SMR CODE	(3) NSN	(4) CAGEC	(5) PART NUMBER	(6) DESCRIPTION AND USABLE ON CODES(UOC)	(7) QTY
					GROUP 2401 PUMP AND MOTOR FIG. 236 HYDRAULIC ROTARY PUMP ASSEMBLY	
1	PFFFF	4320011696528	11083	1600196	.PUMP,ROTARY.....	1
2	PAFZZ	5330011703804	11083	0060117	..SEAL,RUBBER SPECIAL.....	1
3	PAFZZ	4320010223948	11083	0329717	..PARTS KIT,ROTARY PU.....	1
4	PFFZZ	5306002264835	80204	B1821BH031C250N	..BOLT,MACHINE.....	4
5	PFFZZ	5306010597174	11083	2S5818	..BOLT,MACHINE.....	2
6	PFFZZ	5306008019785	11083	1D4541	..BOLT,MACHINE.....	2

END OF FIGURE

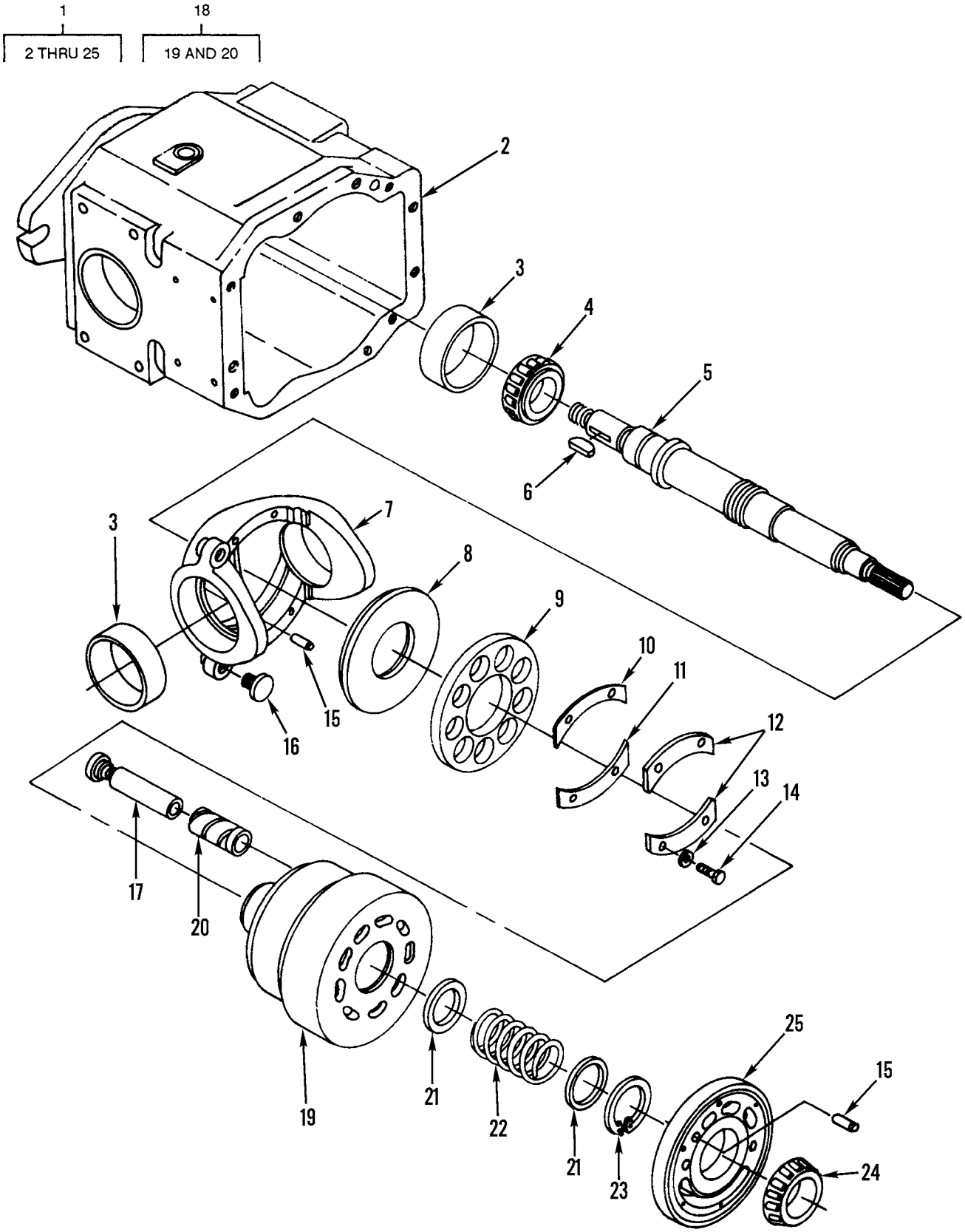

Figure 237. Hydraulic Axial Pump Assembly

(1) ITEM NO	(2) SMR CODE	(3) NSN	(4) CAGEC	(5) PART NUMBER	(6) DESCRIPTION AND USABLE ON CODES(UOC)	(7) QTY
					GROUP 2401 PUMP AND MOTOR FIG. 237 HYDRAULIC AXIAL PUMP ASSEMBLY	
1	PFFFF	4320010220546	11083	8J0498	.PUMP,AXIAL PISTONS.....	1
2	XDFZZ		11083	9J0728	..HOUSING,LIQUID PUMP.....	1
3	PAFZZ	3110001000359	11083	8J6322	..CUP,TAPERED ROLLER.....	3
4	PAFZZ	3110001000743	11083	1B3953	..CONE AND ROLLERS,TA.....	1
5	PFFZZ	3040011677959	11083	8J6296	..SHAFT,SHOULDERED.....	1
6	PFFZZ	5315006165500	11083	1B8737	..KEY,WOODRUFF.....	1
7	XDFZZ		11083	9J7138	..SWASHPLATE,PUMP.....	1
8	PFFZZ	3120011722650	11083	1U0406	..BEARING,WASHER,THRU.....	1
9	PFFZZ	5365011690807	11083	4T7022	..SPACER,PLATE.....	1
10	PAFZZ	5365010958677	11083	8J6283	..SHIM.....	6
11	XDFZZ		11083	8J6284	..SHIM.....	6
12	XBFZZ		11083	3G3156	..PLATE, BEARING.....	2
13	PFFZZ	5310010512360	11083	5P0537	..WASHER.....	4
14	PFFZZ	5306010951238	78640	310216	..BOLT,SELF-LOCKING.....	4
15	PFFZZ	5315005141616	11083	2H1190	..PIN,STRAIGHT,HEADLE.....	3
16	PAFZA	4310010987372	11083	8J6321	..STOP,SWASHPLATE,PUM.....	2
17	PAFZA	4320010951694	11083	8J2022	..PISTON ASSEMBLY.....	1
18	PFFZZ	4320011683624	11083	9J8660	..BARREL ASSEMBLY,PUM.....	1
19	XAFZZ		11083	9J5879	...BARREL.....	1
20	XAFZZ		11083	8J0158	...BEARING.....	9
21	PAFZZ	5365010951306	11083	8J6300	..SPACER,RING.....	2
22	PAFZZ	5360010951290	11083	8J6298	..SPRING,HELICAL,COMP.....	1
23	PFFZZ	5325008042784	96906	MS16625-1200	..RING,RETAINING.....	1
24	PAFZZ	3110001000719	01212	BT1779	..CONE AND ROLLERS,TA.....	1
25	PAFZZ	4320011677142	11083	9J5758	..VALVE HEAD,HYDRAULI.....	1

END OF FIGURE

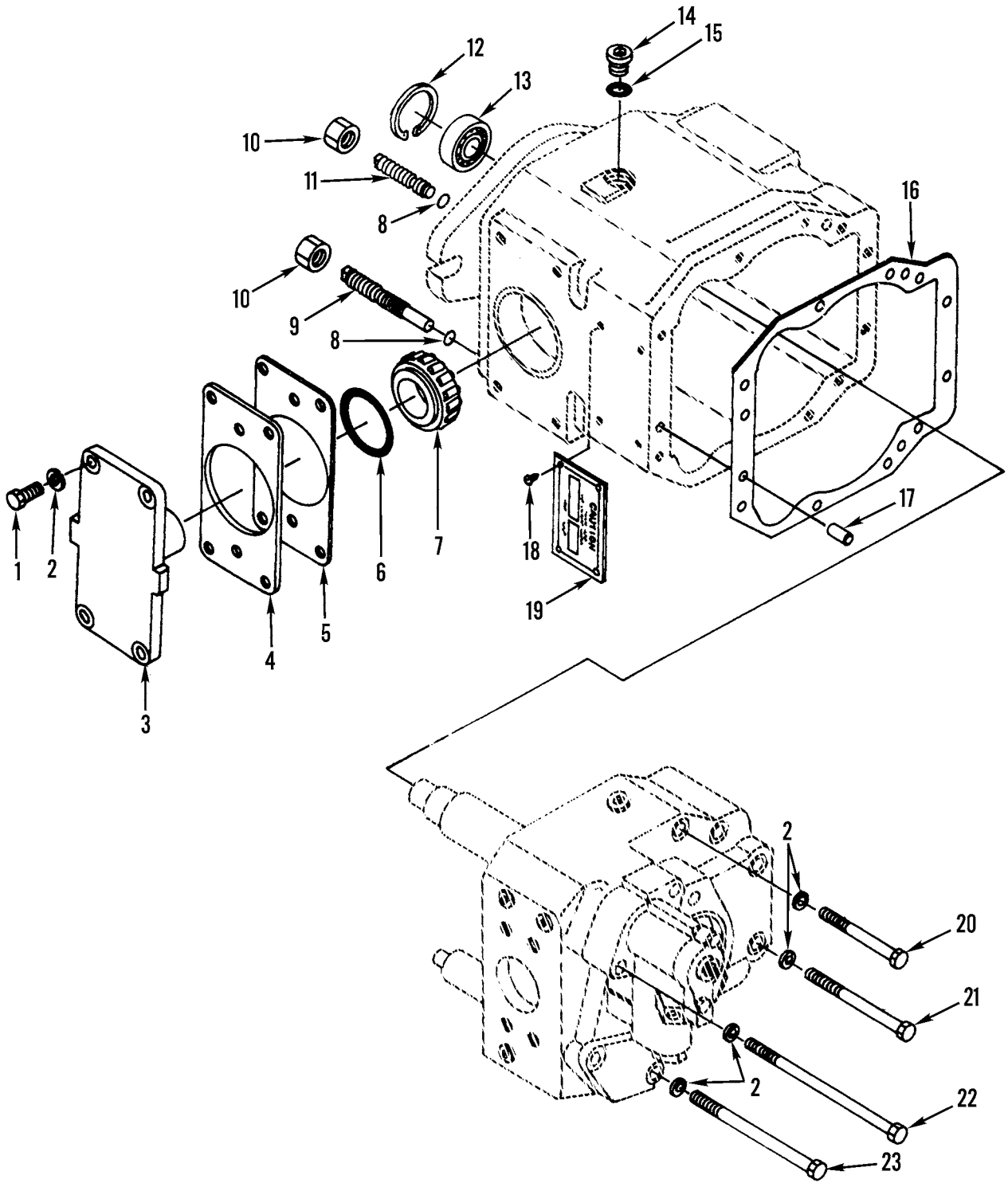

Figure 238. Axial Pump Access Cover Assembly

(1) ITEM NO	(2) SMR CODE	(3) NSN	(4) CAGEC	(5) PART NUMBER	(6) DESCRIPTION AND USABLE ON CODES(UOC)	(7) QTY
					GROUP 2401 PUMP AND MOTOR FIG. 238 AXIAL PUMP ACCESS COVER ASSEMBLY	
1	PFFZZ	5306002637301	11083	0L1351	..BOLT,MACHINE.....	8
2	PFFZZ	5310006379541	96906	MS35338-46	..WASHER,LOCK.....	18
3	PFFZZ	3130011692158	11083	8J6229	..HOUSING,BEARING UNI.....	2
4	PAFZZ	5365010958679	11083	8J6302	..SHIM.....	12
5	PAFZZ	5365010958241	11083	8J6301	..SHIM.....	3
6	PCFZZ	5331003334384	11083	1H5728	..O-RING PART OF KIT P/N 3G1708.....	2
7	PAFZZ	3110001000743	11083	1B3953	..CONE AND ROLLERS,TA.....	1
8	PCFZZ	5331002908365	09990	2-113N951-75	..O-RING PART OF KIT P/N 3G1708.....	2
9	PAFZZ	5306011009052	11083	3G6441	..BOLT.....	1
10	XDFZZ	5310000114499	11083	1D5120	..NUT,PLAIN,HEXAGON.....	3
11	PAFZZ	5306010976744	11083	9J7758	..BOLT,PUMP AND PISTO.....	1
12	PFFZZ	5325008042784	96906	MS16625-1200	..RING,RETAINING.....	1
13	PAFZZ	5330011703739	11083	8T1142	..SEAL,PLAIN PART OF KIT P/N 3G1708.	1
14	PFFZZ	5365010318183	30780	8HP5N-S	..PLUG,MACHINE THREAD.....	2
15	PFFZZ	5331009486482	11083	3K0360	..O-RING PART OF KIT P/N 3G1708.....	2
16	XDFZZ	5330011692939	11083	8J6347	..GASKET PART OF KIT P/N 3G1708.....	1
17	PFFZZ	5315011695677	11083	9F2083	..PIN,STRAIGHT,HEADLE.....	2
18	PFFZZ	5305002535615	96906	MS21318-21	..SCREW,DRIVE.....	4
19	PFFZZ	9905011675719	11083	2P9703	..PLATE,IDENTIFICATIO.....	1
20	PFFZZ	5306004262932	11083	0S1619	..BOLT,MACHINE.....	4
21	PFFZZ	5306008146565	11083	0S1608	..BOLT,MACHINE.....	2
22	XDFZZ		11083	7F3425	..SCREW,CAP,HEXAGON H.....	2
23	PFFZZ	5306006374927	11083	1A5183	..BOLT,MACHINE.....	2

END OF FIGURE

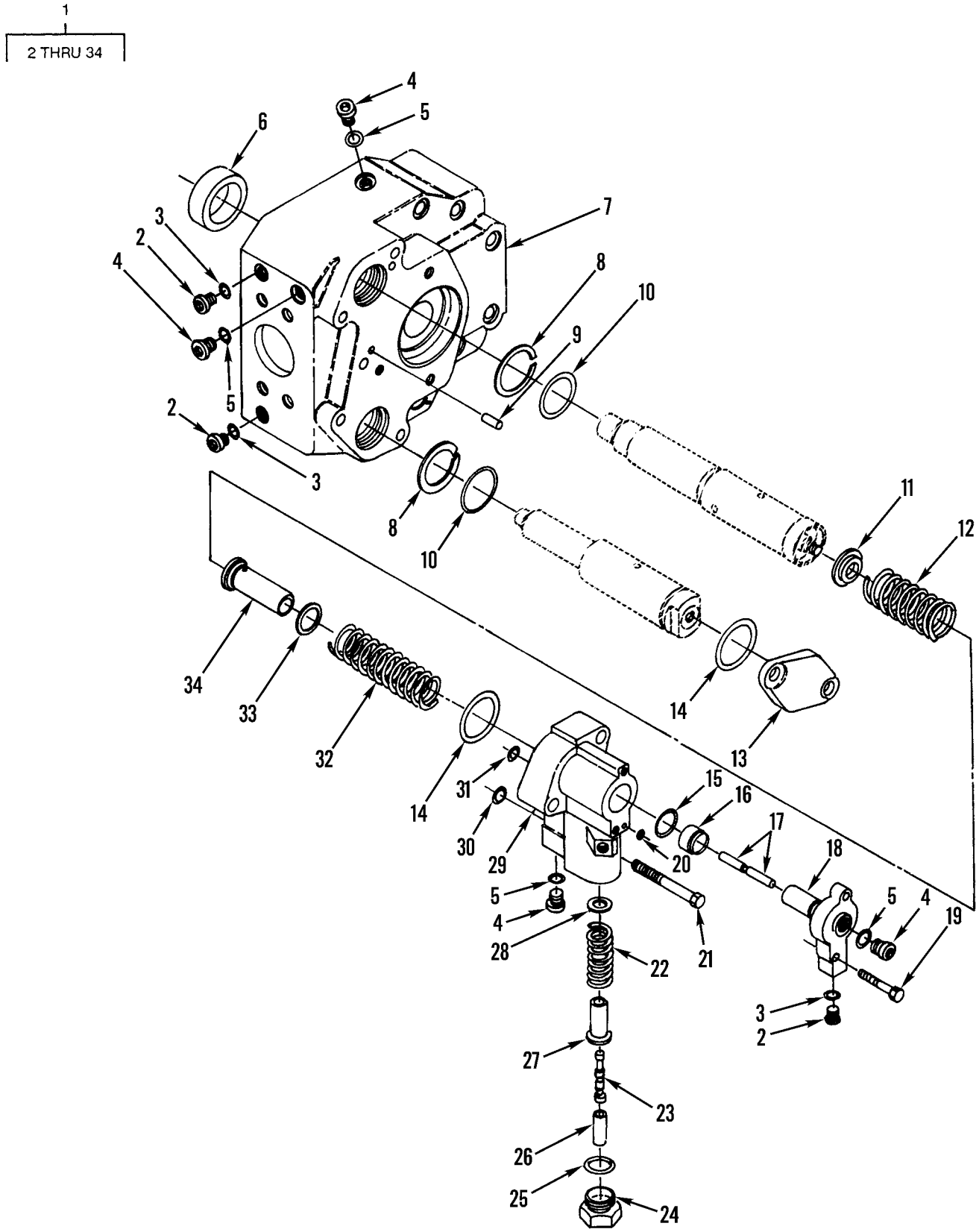

Figure 239. Hydraulic Pump Head Group Assembly

(1) ITEM NO	(2) SMR CODE	(3) NSN	(4) CAGEC	(5) PART NUMBER	(6) DESCRIPTION AND USABLE ON CODES(UOC)	(7) QTY
					GROUP 2401 PUMP AND MOTOR FIG. 239 HYDRAULIC PUMP HEAD GROUP ASSEMBLY	
1	XCOZZ		11083	8J6312	..HEAD GROUP.....	1
2	PFFZZ	5365011242945	30780	2HP5N-S	...PLUG,MACHINE THREAD.....	3
3	PFFZZ	5330011485891	59556	K-500-EN-0431	...SEAL PART OF KIT P/N 3G1708.....	3
4	XDFZZ	5365000786248	11083	9S8002	...PLUG,MACHINE THREAD.....	5
5	XDFZZ	5331010491292	02697	3-904N552-90	...O-RING PART OF KIT P/N 3G1708....	5
6	PFFZZ	3110001000349	83120	A1746	...CUP,TAPERED ROLLER.....	1
7	PFFZZ	4320011677141	11083	8J0415	...HEAD,HYDRAULIC MOTO.....	1
8	PAFZZ	5365011053100	11083	8J5472	...R1NG PART OF KIT P/N 3G1708.....	7
9	PFFZZ	5315005141616	11083	2H1190	...PIN,STRAIGHT,HEADLE.....	2
10	PAFZZ	5330011063704	11083	8J8725	...SEAL,PLAIN PART OF KIT P/N 3G1708	7
11	PAFZA	5310010966989	11083	8J2028	...WASHER,SHOULDERED A.....	1
12	PAFZZ	5360010956078	11083	8J6305	...SPRING,HELICAL,COMP.....	1
13	PAFZZ	5340011695658	11083	8J6066	...COVER,ACCESS.....	1
14	PFFZZ	5331010648275	11083	2D0598	...O-RING PART OF KIT P/N 3G1708....	2
15	PAFZZ	5331008650404	62983	154022	...O-RING PART OF KIT P/N 3G1708....	1
16	PFFZZ	5365011767430	11083	4T1636	...SPACER,SLEEVE.....	1
17	PAFZA	4320010948222	11083	8J5842	...PISTON,PUMP.....	1
18	XDFZZ		11083	4T5028	...CONNECTOR,FLUID,PUM.....	1
19	PFFZZ	5306002264829	80204	B1821BH031C125N	...BOLT,MACHINE.....	1
20	PCFZZ	5331004363369	11083	4J2506	...O-RING PART OF KIT P/N 3G1708....	1
21	PFFZZ	5306011581154	80204	B1821BH031C275D	...BOLT,MACHINE.....	1
22	PAFZA	5360010958226	11083	3G1682	...SPRING,HELICAL,COMP.....	1
23	XBFZA		11083	3G1683	...PISTON,PUMP.....	1
24	PFFZZ	5365011703731	11083	3G1278	...PLUG,MACHINE THREAD USE WITH HOUSING P/N 3G1256.....	1
24	PFFZZ	4730010643790	11083	9S8008	...PLUG USE WITH P/N 9T0297.....	1
25	PCFZZ	5331009448281	11083	3D2824	...O-RING PART OF KIT P/N 3G1708....	1
26	PAFZZ	5365011703787	11083	1P6745	...SPACER,SLEEVE.....	1
27	PAFZZ	5340010951294	11083	3G1681	...RETAINER,HELICAL CO.....	1
28	PAFZZ	5365010955019	11083	8J8462	...SHIM.....	2
29	XAFZZ		11083	3G1256	...HOUSING,LIQUID PUMP..... UOC:AGP	1
29	PFFZZ		11083	9T0297	...HOUSING,MECHANICAL USE PLUG 9S8008 WITH THIS HOUSING.....	1
30	PCFZZ	5331009145316	11083	4J5268	...O-RING PART OF KIT P/N 3G1708....	1
31	PAFZZ	5330010648247	11083	6J3134	...SEAL PART OF KIT P/N 3G1708.....	1
32	XDFZZ		11083	8J6306	...SPRING,HELICAL,COMP.....	1
33	PAFZZ	5365010955021	11083	6F8205	...SPACER,RING.....	3
34	PAFZZ	3830010944667	11083	8J6303	...RETAINER,HELICAL CO.....	1

END OF FIGURE

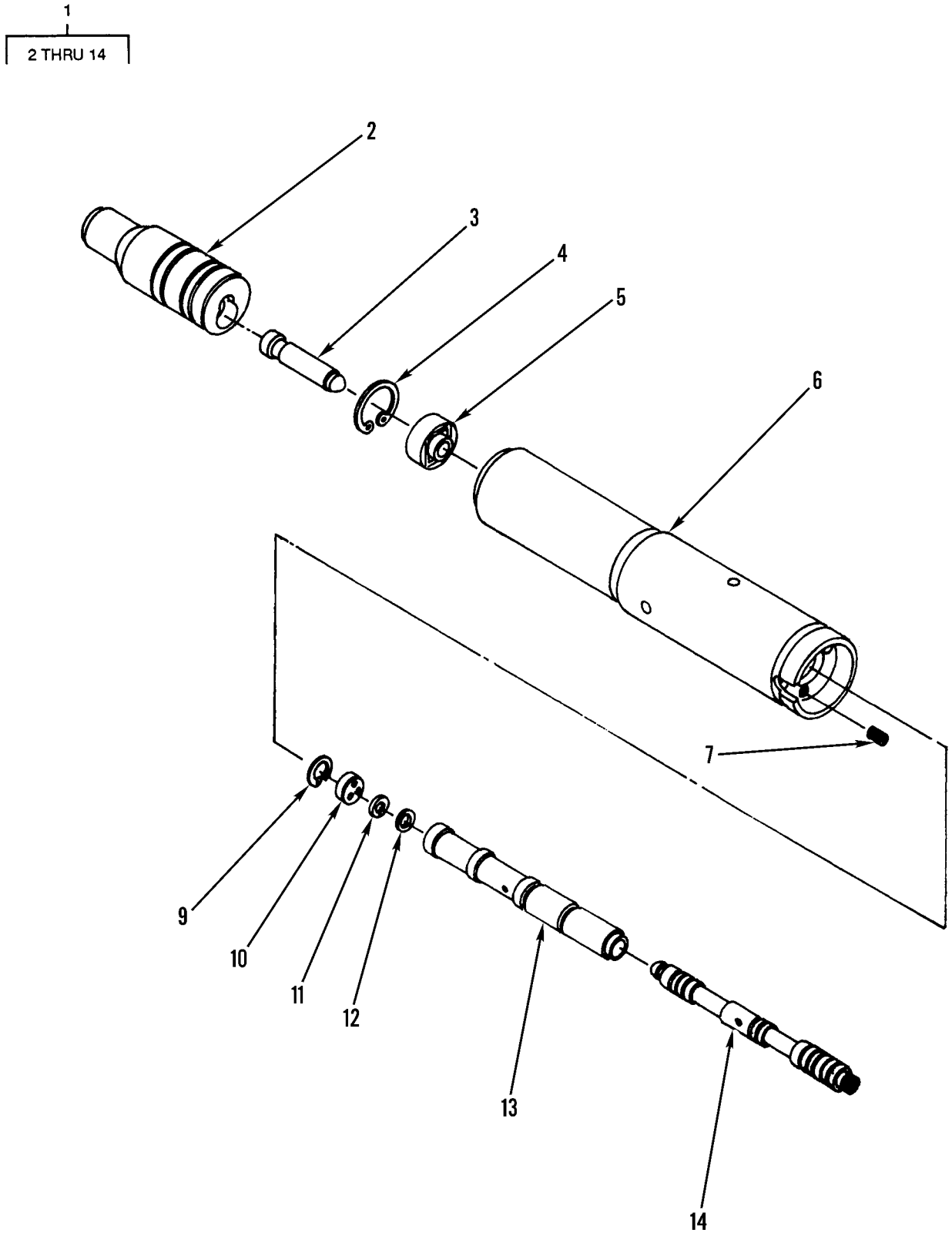

Figure 240. Servo Pump Valve Assembly

(1) ITEM NO	(2) SMR CODE	(3) NSN	(4) CAGEC	(5) PART NUMBER	(6) DESCRIPTION AND USABLE ON CODES(UOC)	(7) QTY
					GROUP 2401 PUMP AND MOTOR FIG. 240 SERVO PUMP VALVE ASSEMBLY	
1	PFFFF	4820010944490	11083	3G3921	...VALVE,SERVO,PUMP CO.....	1
2	PFFZZ	3830010952089	11083	8J4574	....PISTON,LINEAR ACTUA.....	1
3	PFFZA	4320010945254	11083	8J2032	....PISTON,PUMP.....	1
4	PFFZZ	5325008049739	96906	MS16625-1087	....RING,RETAINING.....	1
5	PFFZZ	3805010945239	11083	8J2040	....INSERT.....	1
6	PAFZZ	2520010954794	11083	8J8345	....CARTRIDGE,SERVO.....	1
7	PFFZZ	5305011706157	11083	8S3159	....SETSCREW.....	1
8	PFFZZ	3805010946924	11083	3G3929	....SLEEVE,FOLLOW UP.....	1
9	PFFZZ	5325006873379	96906	MS16625-1062	....RING,RETAINING.....	1
10	PAFZZ	5365010955027	11083	8J2027	....SPACER,PLATE.....	1
11	PFFZZ	5325010954320	79136	5560-31	....RING,RETAINING.....	1
12	PFFZZ	3805010946415	11083	3G3917	....STOP,VALVE.....	1
13	XAFZZ	3805010946924	11083	3G3919	....SLEEVE,FOLLOW UP.....	1
14	XAFZZ		11083	3G3909	....SPOOL.....	1

END OF FIGURE

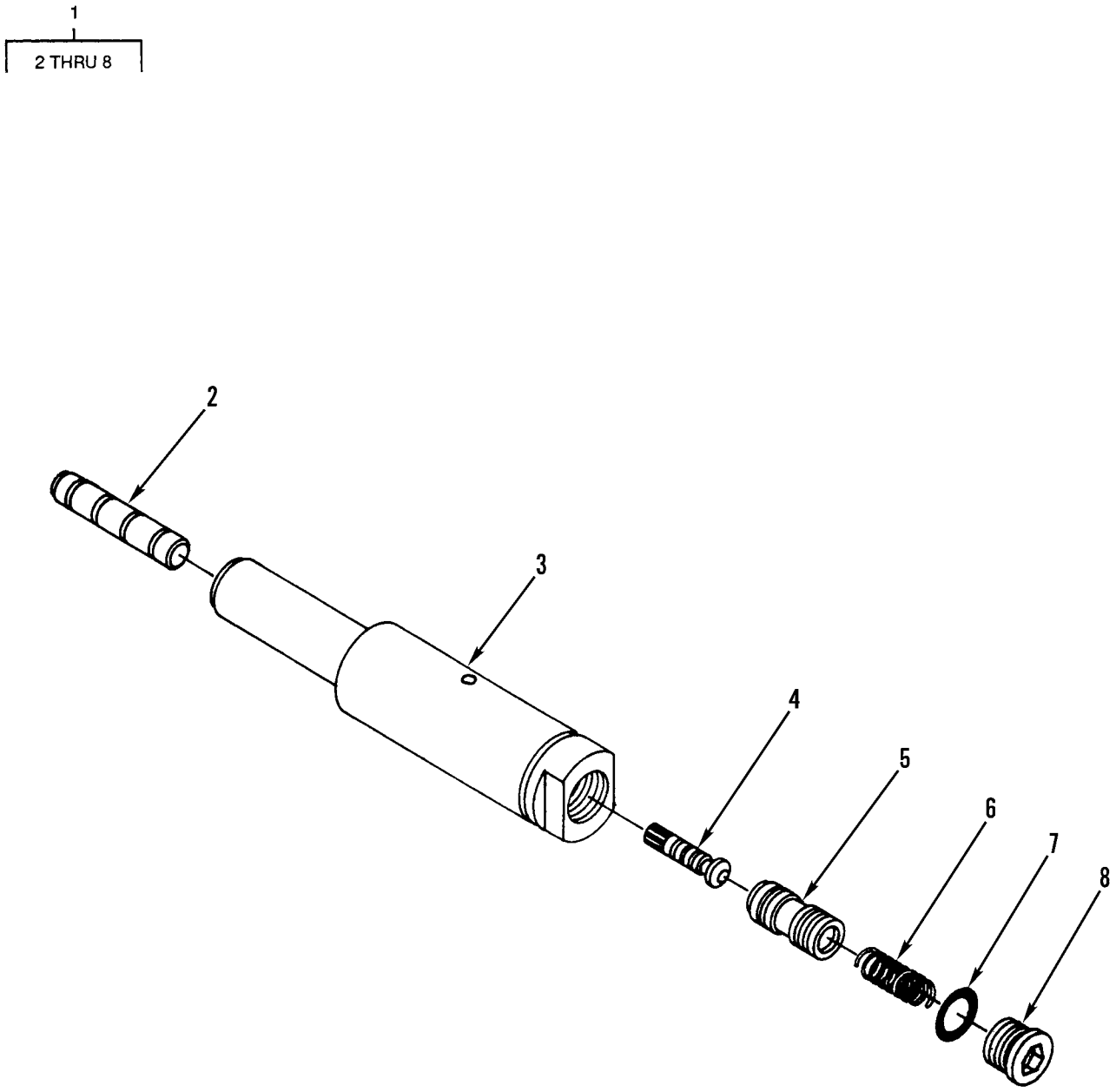

Figure 241. Pressure Cartridge Assembly

(1) ITEM NO	(2) SMR CODE	(3) NSN	(4) CAGEC	(5) PART NUMBER	(6) DESCRIPTION AND USABLE ON CODES(UOC)	(7) QTY
					GROUP 2401 PUMP AND MOTOR	
					FIG. 241 PRESSURE CARTRIDGE ASSEMBLY	
1	PAFFF	4820010943043	11083	8J6103	...CARTRIDGE,PRESSURE.....	1
2	PFFZA	4320010946432	11083	8J6100	....PISTON,PUMP.....	1
3	PFFZZ	4820011697340	11083	8J6075	....CARTRIDGE,VALVE,REL.....	1
4	XDFZZ		11083	8J2030	....PISTON,VALVE.....	1
5	PFFZZ	3830010946431	11083	8J6076	....PISTON,PUMP.....	1
6	XDFZZ		11083	9S4982	....SPRING.....	1
7	PFFZZ	5331001675174	81349	M83248/2-910	....O-RING.....	1
8	PFFZZ	5365010791624	19207	12267772	....PLUG,MACHINE THREAD.....	1
					END OF FIGURE	

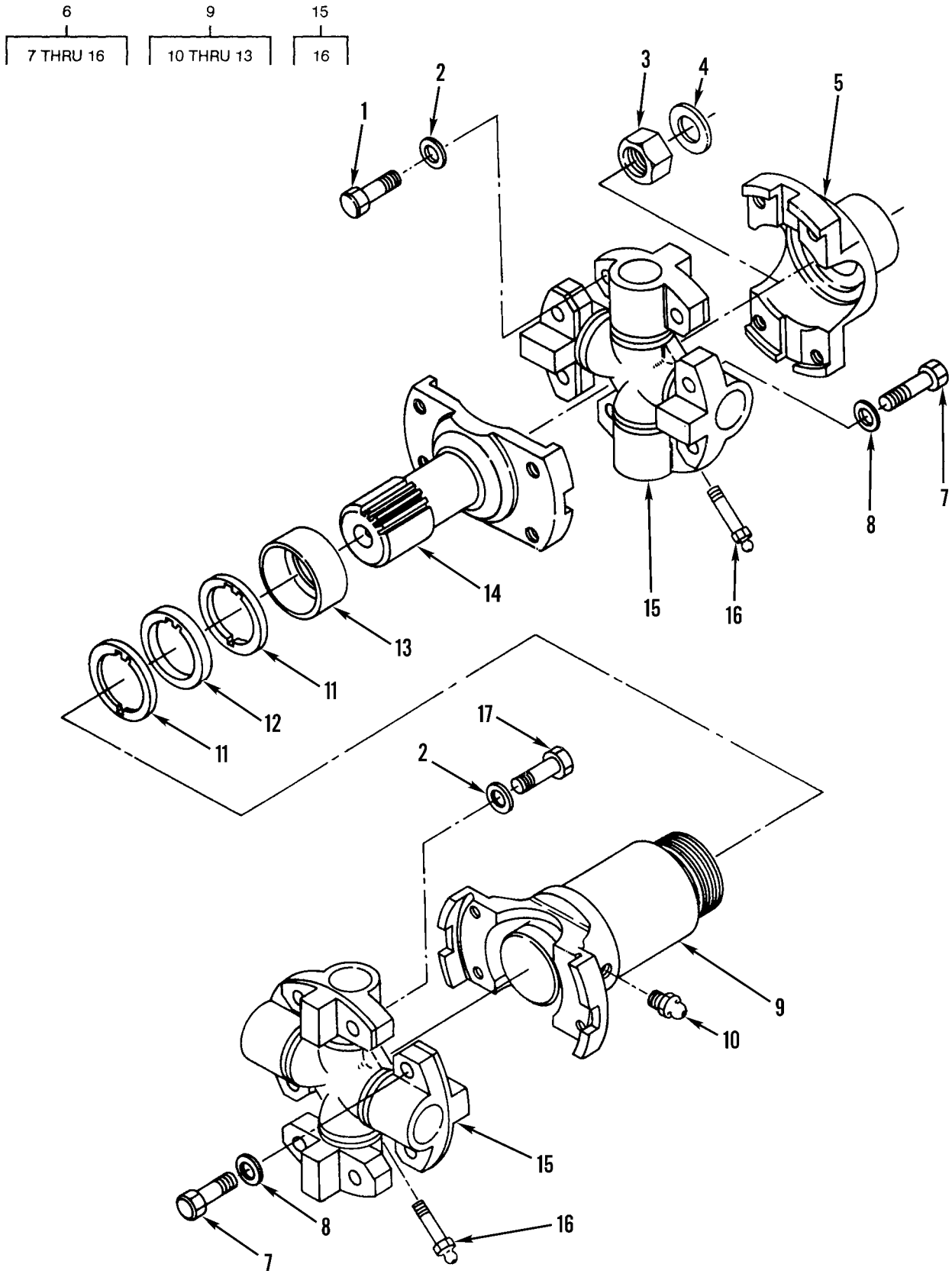

Figure 242. Hydraulic Pump Drive

(1) ITEM NO	(2) SMR CODE	(3) NSN	(4) CAGEC	(5) PART NUMBER	(6) DESCRIPTION AND USABLE ON CODES(UOC)	(7) QTY
					GROUP 2401 PUMP AND MOTOR	
					FIG. 242 HYDRAULIC PUMP DRIVE	
1	XDOZZ	5306011764831	11083	0L0478	BOLT	4
2	PFOZZ	5310011652482	11083	3V2431	WASHER,FLAT	8
3	XDOZZ	5310000114499	11083	1D5120	NUT,PLAIN,HEXAGON	1
4	PFOZZ	5310011022477	11083	5P8248	WASHER,FLAT	1
5	PFOZZ	2520011677185	77873	25147J	YOKE,UNIVERSAL JOIN	1
6	PFOZZ	2520011775419	77873	2A-24522-1	PROPELLER SHAFT	1
7	XDOZZ	5306011764831	11083	0L0478	.BOLT	8
8	PFOZZ	5310011652482	11083	3V2431	.WASHER,FLAT	8
9	PFOZZ	2520011679184	77873	6-5132	.YOKE ASSEMBLY,SLIP,	1
10	PFOZZ	4730000504203	96906	MS15001-1	..FITTING,LUBRICATION	1
11	PFOZZ	5310011949219	11083	9K2721	..WASHER,KEYWAY	2
12	PAOZZ	5330012013806	77873	29361J	..PACKING,PREFORMED	1
13	PFOZZ	4730003748191	77873	863J	..PACKING NUT	1
14	PAOZZ	2520011682007	77873	29360J	.YOKE,STUB,DRIVE SHA	1
15	PAOZZ	2520008716817	77873	114-5177	.SPIDER,UNIVERSAL JO	2
16	PFOZZ	4730004758691	95879	3014	..FITTING,LUBRICATION	1
17	PFOZZ	5306004238393	11083	1C2251	BOLT,MACHINE	4

END OF FIGURE

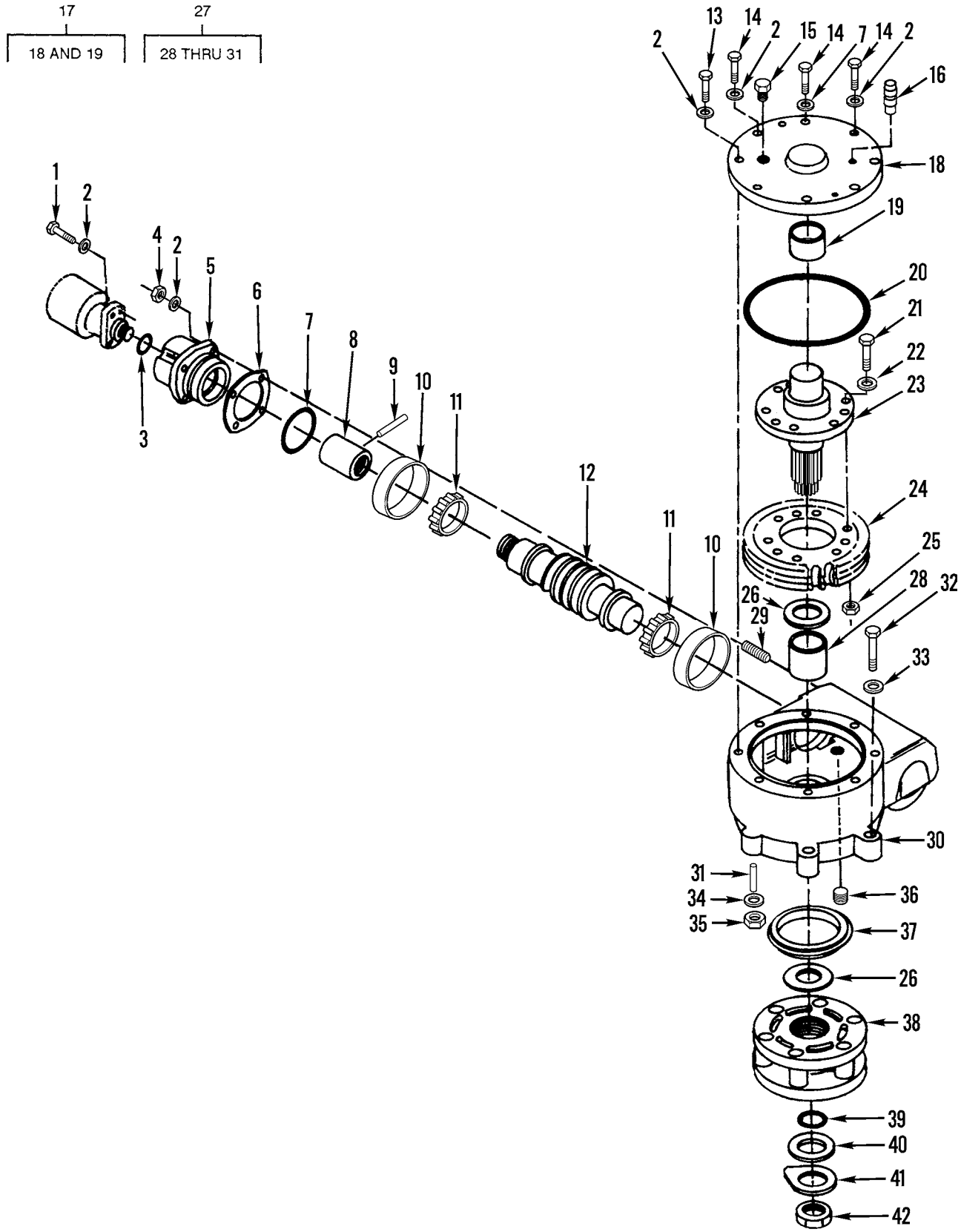

Figure 243. Circle Drive Hydraulic Pump

(1) ITEM NO	(2) SMR CODE	(3) NSN	(4) CAGEC	(5) PART NUMBER	(6) DESCRIPTION AND USABLE ON CODES(UOC)	(7) QTY
					GROUP 2401 PUMP AND MOTOR	
					FIG. 243 CIRCLE DRIVE HYDRAULIC PUMP	
1	PFFZZ	5306011279361	11083	0S1585	BOLT,MACHINE.....	4
2	PFFZZ	5310005845272	96906	MS35338-48	WASHER,LOCK.....	20
3	PFFZZ	5331005931141	11083	1H7339	O-RING.....	1
4	PFFZZ	5310007680318	96906	MS51967-14	NUT,PLAIN,HEXAGON.....	4
5	XDFZZ		11083	2G6695	HOUSING,MECHANICAL.....	1
6	PAFZZ	5365010954333	11083	7D8983	SHIM SHIM THICKNESS .005.....	10
6	PAFZZ	5365010962883	11083	7D8984	SHIM SHIM THICKNESS .007.....	6
7	PCFZZ	5331005931161	11083	2H9247	O-RING.....	1
8	PFFZZ	3010011692723	11083	9D1491	COUPLING,SHAFT,RIGI.....	1
9	PFFZZ	5315010978383	11083	4H6996	PIN,SPRING.....	1
10	PAFZZ	3110001000615	23040	B8QH4616A	CUP,TAPERED ROLLER.....	2
11	PFFZZ	3110000137758	11083	1B4046	CONE AND ROLLERS,TA.....	2
12	PFFZZ	3040011677206	11083	9D1142	WORM SHAFT.....	1
13	PFFZZ	5306008744001	11083	6H1717	BOLT,MACHINE.....	5
14	PFFZZ	5306011558648	11083	5K8454	BOLT,SELF-LOCKING.....	3
15	PFFZZ	4820008083669	95879	G-131000	VALVE,VENT.....	1
16	PAFZZ	4730001874191	81348	WW-P-471AASBCD	PLUG,PIPE.....	1
17	PFFFF	5340011689206	11083	8D7174	COVER,ACCESS.....	1
18	XAFZZ		11083	8D7172	.COVER.....	1
19	PAFZZ	3120010961325	11083	8D7173	.BEARING,SLEEVE.....	1
20	PAFZZ	5330007388622	11083	5H4909	SEAL,TORQUE CONVERT.....	1
21	PFFZZ	5305004262936	11083	5B6891	SCREW,CAP,HEXAGON H.....	9
22	PFFZZ	5310004317244	11083	2S5658	WASHER,FLAT.....	9
23	PFFZZ	3040011686421	11083	8D7427	SHAFT,SHOULDERED.....	1
24	PFFZZ	3020010954876	11083	8D5344	GEAR,WORM WHEEL.....	1
25	PFFZZ	5310009445896	24617	12337822	NUT,SELF-LOCKING,HE.....	9
26	PAFZZ	3120010963134	11083	8D7425	BEARING,WASHER,THRU.....	2
27	PFFFF	3040011734264	11083	6G1908	HOUSING,MECHANICAL.....	1
28	PAFZZ	3120010954063	11083	8D7426	.BEARING,SLEEVE.....	1
29	PAFZZ	5325009206925	11083	2D8154	.STUD,TAPER LOCK.....	4
30	XDFZZ		11083	8D9804	.HOUSING,MECHANICAL.....	1
31	PFFZZ	5307011703796	11083	4D7246	.STUD,CONTINUOUS THR.....	4
32	PFFZZ	5306004263403	11083	1D4609	BOLT,MACHINE.....	2
33	XDFZZ		11083	7M2360	WASHER,FLAT.....	2
34	PFFZZ	5310010949906	11083	5P6652	WASHER,FLAT.....	4
35	PFFZZ	5310002696340	11083	1K6870	NUT,SELF-LOCKING,HE.....	4
36	PFFZZ	4730001223969	11083	1B5174	PLUG,PIPE.....	1
37	PAFZZ	5330010537373	11083	5K5288	SEAL.....	1
38	PFFZZ	3020011706611	11083	8W5092	SPROCKET WHEEL.....	1
39	PFFZZ	5331000384327	11083	4F9653	O-RING.....	1
40	PAFZZ	5365010648238	11083	8D7424	SPACER.....	1
41	PFFZZ	5310010978953	11083	8D7423	WASHER,KEY.....	1
42	PFFZZ	5310002641874	11083	1A1415	NUT,PLAIN,HEXAGON.....	1

END OF FIGURE

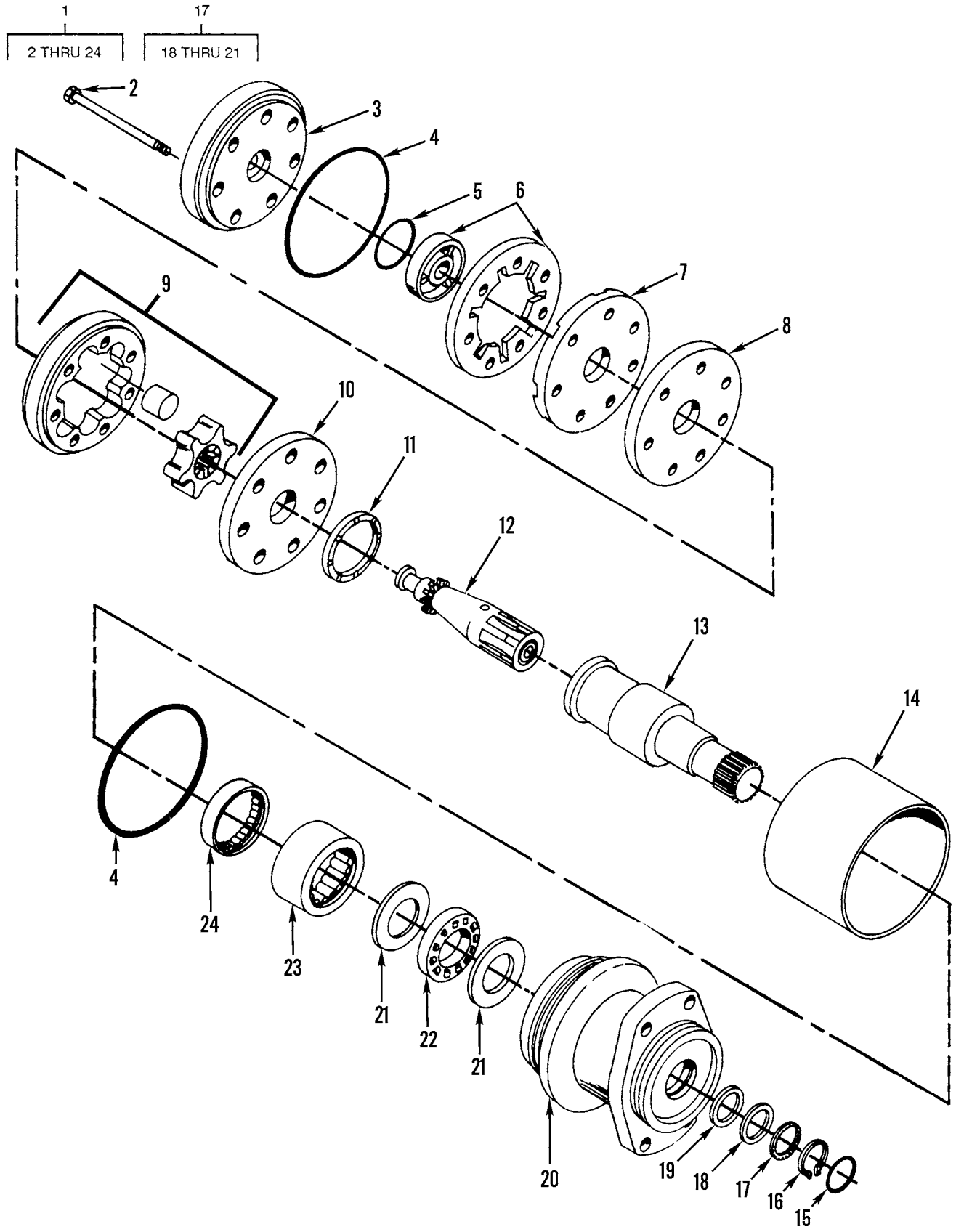

Figure 244. Circle Drive Hydraulic Pump Motor Assembly

(1) ITEM NO	(2) SMR CODE	(3) NSN	(4) CAGEC	(5) PART NUMBER	(6) DESCRIPTION AND USABLE ON CODES(UOC)	(7) QTY
					GROUP 2401 PUMP AND MOTOR FIG. 244 CIRCLE DRIVE HYDRAULIC PUMP MOTOR ASSEMBLY	
1	PFFFF	4320010954793	77640	MAE10013	MOTOR,HYDRAULIC.....	1
2	PFFZZ	5305004344718	11083	0T0513	.SCREW,CAP,HEXAGON H.....	7
3	PFFZZ	5340011697212	85105	MAE016000-A1	.COVER,ACCESS.....	1
4	PFFZZ	5330011706299	85105	032696	.RETAINER,PACKING.....	2
5	PFFZZ	5365011696842	85105	032435	.SPACER,RING.....	1
6	PFFZZ	2520011234910	77640	MAB018000-S1	.COMMUTATOR.....	1
7	PFFZZ	2520011691881	11083	3G3712	.MANIFOLD,HYDRAULIC.....	1
8	PFFZZ	5365011696730	85105	477260	.SPACER,PLATE.....	1
9	XDFZZ		11083	3G3715	.PLUG,ROTARY,VALVE.....	1
10	PFFZZ	5365011722827	85105	477259STL	.SPACER,PLATE.....	1
11	PFFZZ	3110011703841	11083	5P3243	.RETAINER AND ROLLER.....	1
12	PFFZZ	3040011700796	77640	MAE103000	.SHAFT,SHOULDERED.....	1
13	PFFZZ	3010011698759	77640	091452	.COUPLING,SHAFT,RIGI.....	1
14	PFFZZ	5365011696795	85105	099082	.SPACER,SLEEVE.....	1
15	PAFZZ	5330004922886	77640	032436	.SEAL,PLAIN ENCASED.....	1
16	PFFZZ	5325008045827	96906	MS16625-1175	.RING,RETAINING.....	1
17	PFFZZ	5365011693064	85105	028398	.SPACER,PLATE.....	1
18	PAFZZ	5310011692931	85105	029106	..WASHER,SPRING TENSI.....	1
19	PFFZZ	5330011703740	71785	032633	..SEAL,PLAIN.....	1
20	PFFZZ	3130011689210	11083	9J4971	..BEARING UNIT,ROLLER.....	1
21	PFFZZ	3110010978105	60380	JD43002	..SEAT,BEARING.....	2
22	PAFZZ	3110004809379	60380	FA41901	.RETAINER AND ROLLER.....	1
23	XDFZZ		11083	5P3241	.BEARING,ROLLER,NEED.....	1
24	PFFZZ	3110002938542	11083	5P3242	.BEARING,ROLLER,NEED.....	1

END OF FIGURE

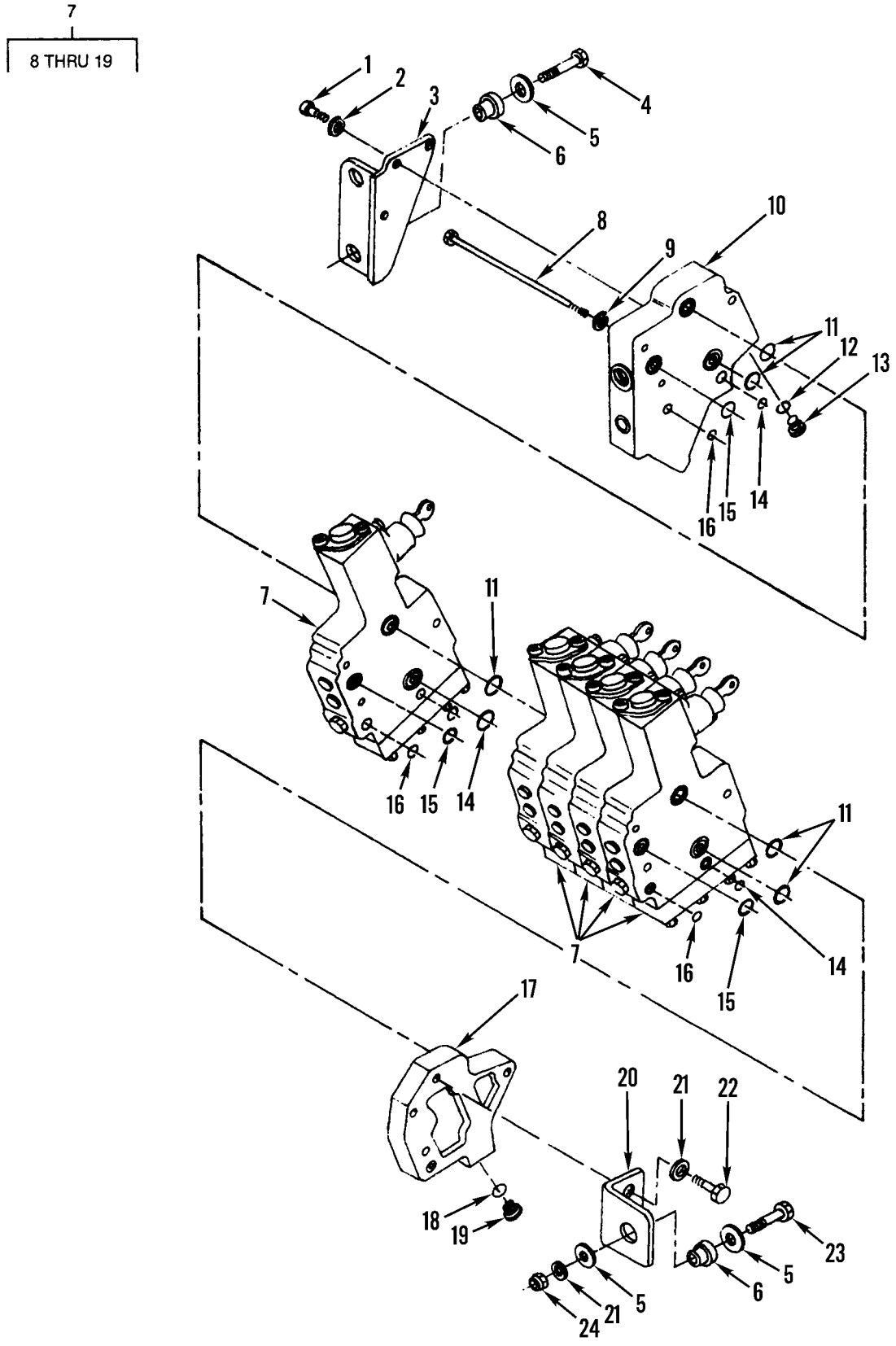

Figure 245. Left-Hand Control Valve Group and Mounting

(1) ITEM NO	(2) SMR CODE	(3) NSN	(4) CAGEC	(5) PART NUMBER	(6) DESCRIPTION AND USABLE ON CODES(UOC)	(7) QTY
					GROUP 2402 MANIFOLD AND/OR CONTROL VALVES	
					FIG. 245 LEFT-HAND CONTROL VALVE GROUP AND MOUNTING	
1	PFOZZ	5306002604508	11083	0S1594	BOLT,MACHINE.....	3
2	PFOZZ	5310010948810	78189	3320-14-01	WASHER,SQUARE CONE.....	3
3	PFOZZ	5340011689268	11083	2G5443	BRACKET,ANGLE.....	1
4	PFOZZ	5306002736357	11083	1A1460	BOLT,MACHINE.....	2
5	PFOZZ	5310011096753	19207	12256962-1	WASHER,FLAT.....	4
6	PFOZZ	5342011668112	76005	CB-1121-4	MOUNT,RESILIENT,WEA.....	3
7	PAFFF	4820011672929	11083	8J9289	VALVE,LINEAR,DIRECT.....	1
8	PFFZZ	5306010630667	11083	4H3283	.BOLT,MACHINE.....	3
9	PFFZZ	5310006379541	96906	MS35338-46	.WASHER,LOCK.....	3
10	PFFZZ	4320011679201	11083	8J5917	.HOUSING,LIQUID PUMP.....	1
11	PFFZZ	5331006136522	11083	4M8303	.O-RING.....	12
12	PFFZZ	5331009486482	11083	3K0360	.O-RING.....	1
13	PFFZZ	5365010318183	30780	8HP5N-S	.PLUG,MACHINE THREAD.....	1
14	PFFZZ	5331010648276	11083	8J1699	.O-RING.....	6
15	PCFZZ	5331004984556	11083	4J5351	.O-RING.....	6
16	PAFZZ	5330010648247	11083	6J3134	.SEAL.....	6
17	PFFZZ	4320011677974	11083	8J7267	.HOUSING,LIQUID PUMP.....	1
18	PCFZZ	5331008013354	25184	906-737-70	.O-RING.....	2
19	PFFZZ	5365010249868	30780	6HP5N-SS	.PLUG,MACHINE THREAD.....	2
20	PAFZZ	5340011815076	11083	5T5179	BRACKET,ANGLE.....	1
21	PFFZZ	5310010976720	11083	5P1076	WASHER,SHOULDERED A.....	2
22	PFOZZ	5306004238117	11083	0S1595	BOLT,MACHINE.....	1
23	PFFZZ	5306004550459	11083	9S1366	BOLT,MACHINE.....	1
24	PFFZZ	5310000443339	19207	443339	NUT,SELF-LOCKING,HE.....	1

END OF FIGURE

8
9 THRU 20

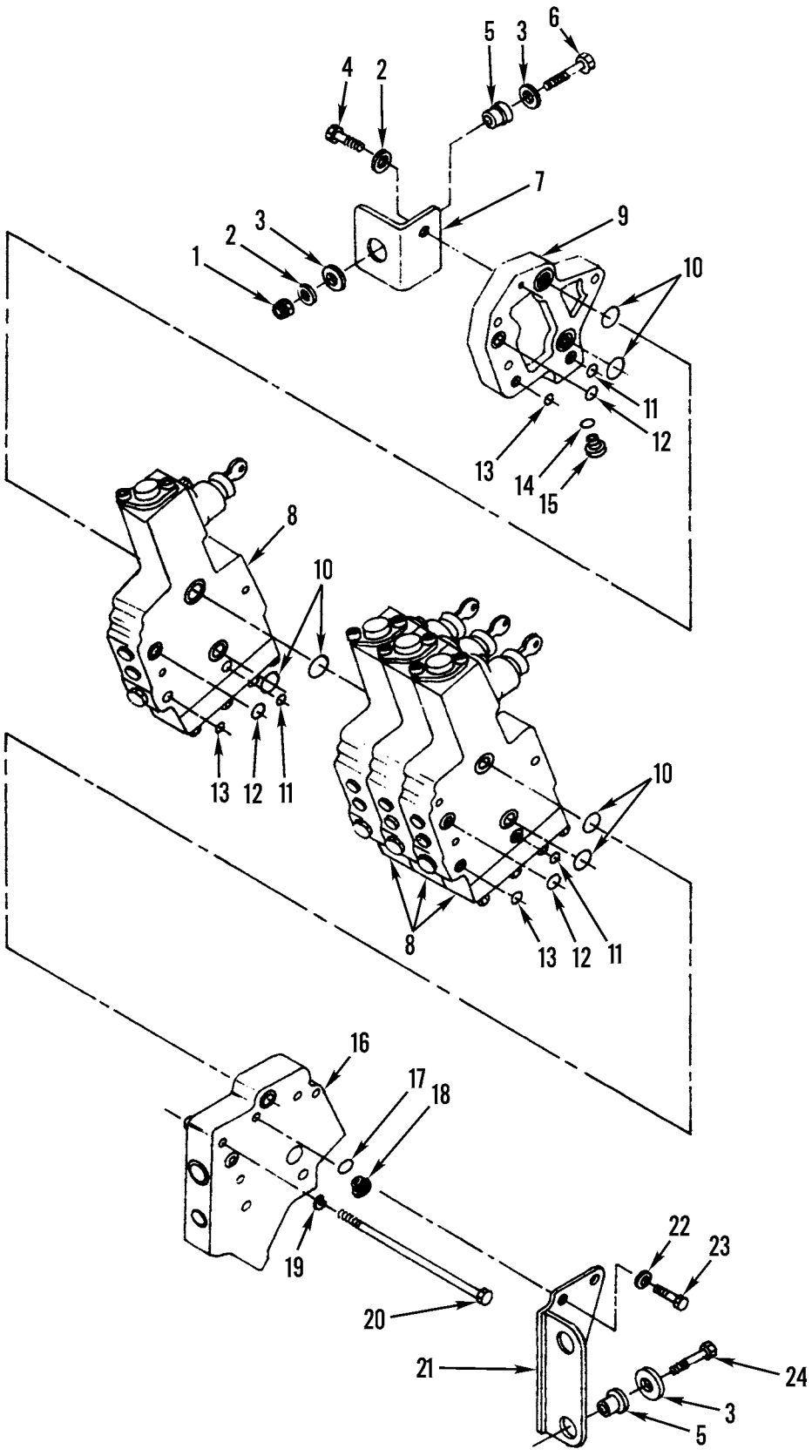

Figure 246. Right-Hand Control Valve Group and Mounting

(1) ITEM NO	(2) SMR CODE	(3) NSN	(4) CAGEC	(5) PART NUMBER	(6) DESCRIPTION AND USABLE ON CODES(UOC)	(7) QTY
					GROUP 2402 MANIFOLD AND/OR CONTROL VALVES FIG. 246 RIGHT-HAND CONTROL VALVE GROUP AND MOUNTING	
1	PFOZZ	5310000443339	19207	443339	NUT,SELF-LOCKING,HE.....	1
2	PFOZZ	5310010976720	11083	5P1076	WASHER,SHOULDERED A.....	2
3	PFOZZ	5310011096753	19207	12256962-1	WASHER,FLAT.....	4
4	PFOZZ	5306004238117	11083	0S1595	BOLT,MACHINE.....	1
5	PFOZZ	5342011668112	76005	CB-1121-4	MOUNT,RESILIENT,WEA.....	3
6	PFOZZ	5306004550459	11083	9S1366	BOLT,MACHINE.....	1
7	PAOZZ	5340011815758	11083	5T5180	BRACKET,ANGLE.....	1
8	PAFFF	4820011682083	11083	8J6172	VALVE,LINEAR,DIRECT.....	1
9	XDFZZ		11083	8J7268	.HOUSING,LIQUID PUMP.....	1
10	PFFZZ	5331006136522	11083	4M8303	.O-RING.....	10
11	PAFZZ	5330010648247	11083	6J3134	.SEAL.....	5
12	PCFZZ	5331004984556	11083	4J5351	.O-RING.....	5
13	PFFZZ	5331010648276	11083	8J1699	.O-RING..... UOC:AF9,AGP,F10	5
14	PCFZZ	5331008013354	25184	906-737-70	.O-RING.....	1
15	PFFZZ	5365010249868	30780	6HP5N-SS	.PLUG,MACHINE THREAD..... UOC:AF9,AGP,F10	1
16	PFFZZ	4320011679200	11083	8J5918	.HOUSING,LIQUID PUMP.....	1
17	PFFZZ	5331009486482	11083	3K0360	.O-RING.....	1
18	PFFZZ	5365010318183	30780	8HP5N-S	.PLUG,MACHINE THREAD.....	1
19	PFFZZ	5310006379541	96906	MS35338-46	.WASHER,LOCK.....	3
20	PFFZZ	5306010955684	11083	8F6350	.BOLT,MACHINE.....	3
21	PAOZZ	5340011689269	11083	2G5444	BRACKET,ANGLE.....	1
22	PFOZZ	5310010948810	78189	3320-14-01	WASHER,SQUARE CONE.....	3
23	PFOZZ	5306002604508	11083	0S1594	BOLT,MACHINE.....	3
24	PFOZZ	5306002736357	11083	1A1460	BOLT,MACHINE.....	2

END OF FIGURE

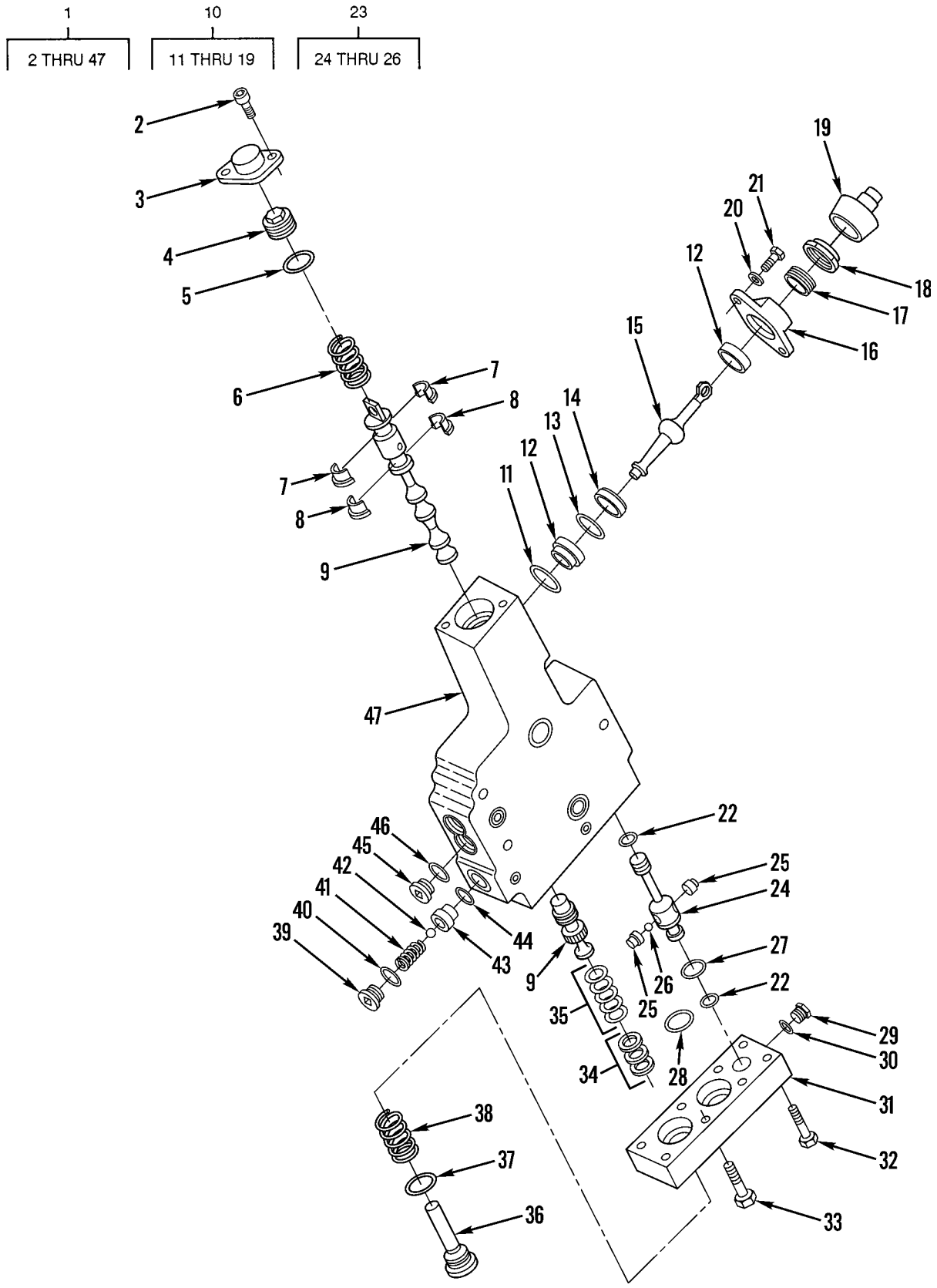

Figure 247. Scarifier and Blade Lift Control Valve Assembly

(1) ITEM NO	(2) SMR CODE	(3) NSN	(4) CAGEC	(5) PART NUMBER	(6) DESCRIPTION AND USABLE ON CODES(UOC)	(7) QTY
					GROUP 2402 MANIFOLD AND/OR CONTROL VALVES FIG. 247 SCARIFIER AND BLADE LIFT CONTROL VALVE ASSEMBLY	
1	PAFFF	4820010964417	11083	8J5961	VALVE,LINEAR,DIRECT.....	3
2	PAFZZ	5305011016024	11083	8H0708	.SCREW,CAP,SOCKET HE.....	2
3	XDFZZ		11083	8J5613	.LOCK,VALVE SPRING R.....	1
4	XDFZZ		11083	8J5612	.PLUG,TUBE FITTING,T.....	1
5	PCFZZ	5331009448281	11083	3D2824	.O-RING.....	1
6	PAFZA	5360010951831	11083	8J5882	.SPRING,HELICAL,COMP.....	1
7	XDFZZ		11083	8J1612	.RETAINER,VALVE.....	2
8	PAFZZ	3120010978115	11083	8J6114	.BUSHING,SLEEVE.....	2
9	XBFZF	4820010945261	11083	8J5884	.VALVE,LINEAR,DIRECT.....	1
10	PFFZZ	3040011679211	11083	1U4661	.LEVER,MANUAL CONTRO.....	1
11	PCFZZ	5331009293499	11083	3D4245	..O-RING.....	1
12	PFFZZ	3110010648250	11083	8J1620	..BEARING.....	2
13	PCFZZ	5331005917543	11083	7F8607	..O-RING.....	1
14	PFFZZ	5330012252088	3U024	2037-116	..SEAL,PLAIN.....	1
15	PFFZZ	2590010648249	11083	8J1616	..LEVER.....	1
16	PAFZZ	5310011750616	11083	1U3389	..NUT,PLAIN,PLATE.....	1
17	PFFZZ	5365010964287	11083	8J1621	..RING,EXTERNALLY THR.....	1
18	PFFZZ	5310010953508	11083	8J1622	..NUT,SPECIAL.....	1
19	PFFZZ	5342010648251	11083	8J1623	..BOOT.....	1
20	PFFZZ	5310010512360	11083	5P0537	.WASHER.....	2
21	PFFZZ	5306002611153	11083	0S1615	.BOLT,MACHINE.....	2
22	PAFZZ	5330010648247	11083	6J3134	.SEAL.....	2
23	PAFZZ	4810010648252	11083	8J1624	.VALVE ASSEMBLY.....	1
24	XAFZZ		11083	8J1625	..SLEEVE.....	1
25	XAFZZ		11083	8J1626	..SEAT.....	1
26	PFFZZ	3110001006149	96906	MS19059-2412	..BALL,BEARING.....	1
27	PCFZZ	5331004984556	11083	4J5351	.O-RING.....	1
28	PAFZZ	5331011442252	81349	M83248/2-118	.O-RING.....	2
29	PFFZZ	5365011242945	30780	2HP5N-S	.PLUG,MACHINE THREAD.....	1
30	PFFZZ	5330011485891	59556	K-500-EN-0431	.SEAL.....	1
31	PAFZZ	4320011686439	11083	8J1627	.HOUSING,LIQUID PUMP.....	1
32	PFFZZ	5306004041417	11083	9F7022	.BOLT,MACHINE.....	4
33	PFFZZ	5306009305643	11083	1A9579	.BOLT,MACHINE.....	4
34	XDFZZ		11083	8J6263	.WASHER,FLAT.....	3
35	PAFZZ	5365010648300	11083	8J1629	.SHIM.....	5
36	PFFZZ	5365011693007	11083	8J1628	.PLUG,MACHINE THREAD.....	1
37	PFFZZ	5331001675174	81349	M83248/2-910	.O-RING.....	1
38	XDFZZ		11083	8J1630	.SPRING,HELICAL,COMP.....	1
39	PFFZZ	4730010787837	30780	8 P5N-S	.PLUG,TUBE FITTING,T.....	1
40	PAFZZ	5331009486482	11083	3K0360	.O-RING.....	1
41	PAFZZ	5360010964996	11083	8J1632	.SPRING,HELICAL,COMP.....	1
42	PFFZZ	3110009491438	11083	4B9880	.BALL,BEARING.....	1
43	PAFZZ	4810010648259	11083	9J7157	.SEAT,VALVE.....	1
44	XDFZZ	5331010491292	02697	3-904N552-90	.O-RING.....	1
45	PFFZZ	5365010249868	30780	6HP5N-SS	.PLUG,MACHINE THREAD.....	2
46	PCFZZ	5331008013354	25184	906-737-70	.O-RING.....	2
47	XAFZZ		11083	8J5860	.BODY.....	1

END OF FIGURE

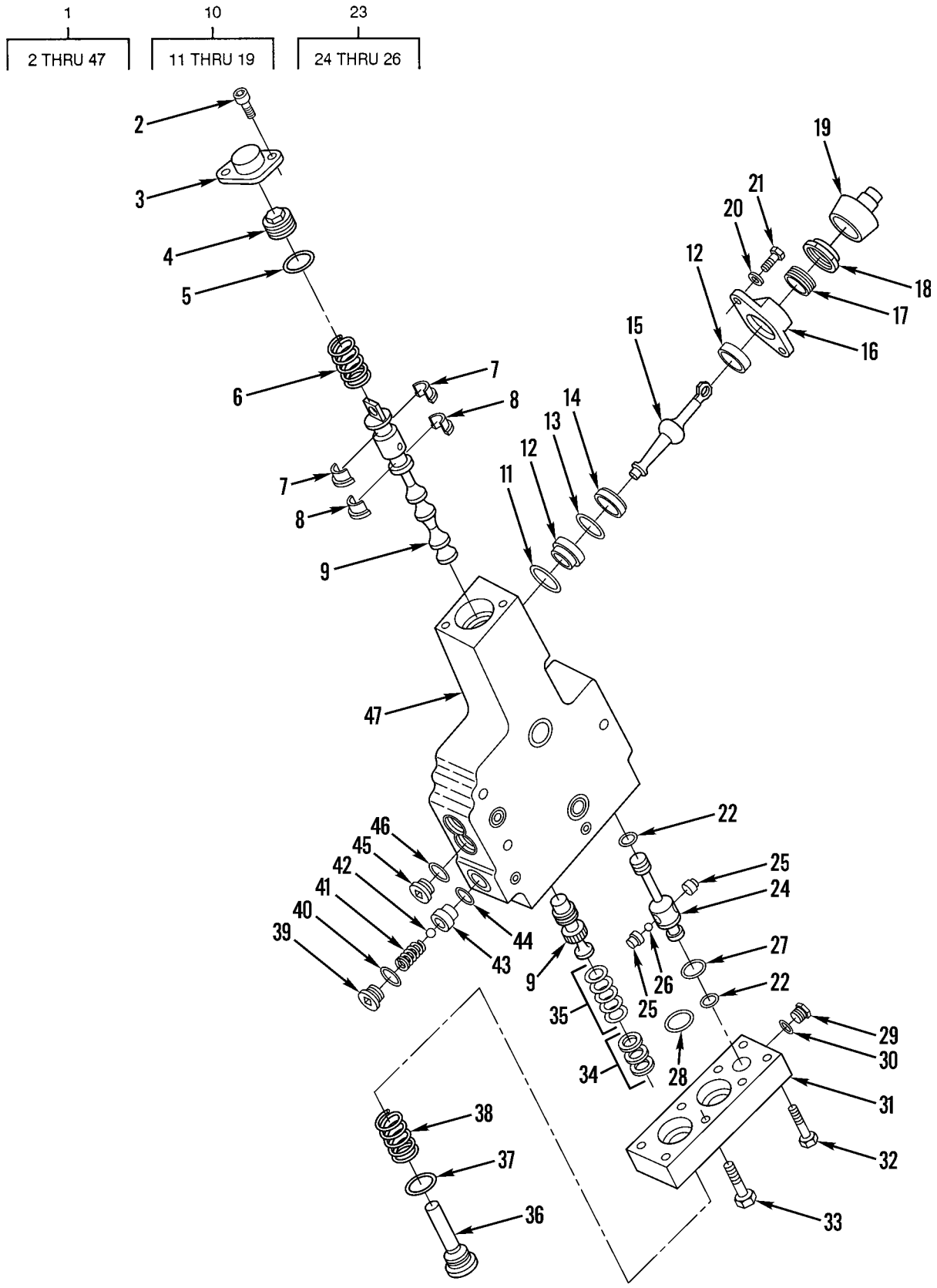

Figure 248. Wheel Lean and Centershift Valve Assembly

(1) ITEM NO	(2) SMR CODE	(3) NSN	(4) CAGEC	(5) PART NUMBER	(6) DESCRIPTION AND USABLE ON CODES(UOC)	(7) QTY
					GROUP 2402 MANIFOLD AND/OR CONTROL VALVES	
					FIG. 248 WHEEL LEAN AND CENTERSHIFT VALVE ASSEMBLY	
1	PFFFF	4820010943090	11083	8J5906	VALVE,LINEAR,DIRECT.....	2
2	PAFZZ	5305011016024	11083	8H0708	.SCREW,CAP,SOCKET HE.....	2
3	XDFZZ		11083	8J5613	.LOCK,VALVE SPRING R.....	1
4	XDFZZ		11083	8J5612	.PLUG,TUBE FITTING,T.....	1
5	PFFZZ	5331009448281	11083	3D2824	.O-RING.....	1
6	PAFZA	5360010951831	11083	8J5882	.SPRING,HELICAL,COMP.....	1
7	XDFZZ		11083	8J1612	.RETAINER,VALVE.....	2
8	PAFZZ	3120010978115	11083	8J6114	.BUSHING,SLEEVE.....	2
9	XDFZZ		11083	8J5886	.VALVE,LINEAR,DIRECT.....	1
10	PFFZZ	3040011679211	11083	1U4661	.LEVER,MANUAL CONTRO.....	1
11	PFFZZ	5331009293499	11083	3D4245	..O-RING.....	1
12	PFFZZ	3110010648250	11083	8J1620	..BEARING.....	2
13	PCFZZ	5331005917543	11083	7F8607	..O-RING.....	1
14	PFFZZ	5330012252088	3U024	2037-116	..SEAL,PLAIN.....	1
15	PFFZZ	2590010648249	11083	8J1616	..LEVER.....	1
16	PAFZZ	5310011750616	11083	1U3389	..NUT,PLAIN,PLATE.....	1
17	PFFZZ	5365010964287	11083	8J1621	..RING,EXTERNALLY THR.....	1
18	PFFZZ	5310010953508	11083	8J1622	..NUT,SPECIAL.....	1
19	PFFZZ	5342010648251	11083	8J1623	..BOOT.....	1
20	PFFZZ	5310010512360	11083	5P0537	.WASHER.....	2
21	PFFZZ	5306002611153	11083	0S1615	.BOLT,MACHINE.....	2
22	PAFZZ	5330010648247	11083	6J3134	.SEAL.....	2
23	PAFZZ	4810010648252	11083	8J1624	.VALVE ASSEMBLY.....	1
24	XAFZZ		11083	8J1625	..SLEEVE.....	1
25	XAFZZ		11083	8J1626	..SEAT.....	1
26	PFFZZ	3110001006149	96906	MS19059-2412	..BALL,BEARING.....	1
27	PAFZZ	5331004984556	11083	4J5351	.O-RING.....	1
28	PAFZZ	5331011442252	81349	M83248/2-118	.O-RING.....	2
29	PFFZZ	5365011242945	30780	2HP5N-S	.PLUG,MACHINE THREAD.....	1
30	PFFZZ	5330011485891	59556	K-500-EN-0431	.SEAL.....	1
31	PAFZZ	4320011686439	11083	8J1627	.HOUSING,LIQUID PUMP.....	1
32	PFFZZ	5306004041417	11083	9F7022	.BOLT,MACHINE.....	4
33	PFFZZ	5306009305643	11083	1A9579	.BOLT,MACHINE.....	4
34	XDFZZ		11083	8J6263	.WASHER,FLAT.....	3
35	PAFZZ	5365010648300	11083	8J1629	.SHIM.....	6
36	PFFZZ	5365011693007	11083	8J1628	.PLUG,MACHINE THREAD.....	1
37	PFFZZ	5331001675174	81349	M83248/2-910	.O-RING.....	1
38	XDFZZ		11083	8J1630	.SPRING,HELICAL,COMP.....	1
39	PFFZZ	4730010787837	98441	8 P5N-S	.PLUG,TUBE FITTING,T.....	1
40	PAFZZ	5331009486482	11083	3K0360	.O-RING.....	1
41	PAFZZ	5360010964996	11083	8J1632	.SPRING,HELICAL,COMP.....	1
42	PAFZZ	3110009491438	11083	4B9880	.BALL,BEARING.....	1
43	PAFZZ	4810010648259	11083	9J7157	.SEAT,VALVE.....	1
44	XDFZZ	5331010491292	02697	3-904N552-90	.O-RING.....	1
45	PFFZZ	5365010249868	30780	6HP5N-SS	.PLUG,MACHINE THREAD.....	2
46	PCFZZ	5331008013354	25184	906-737-70	.O-RING.....	2
47	XAFZZ		11083	8J5862	.BODY.....	1

END OF FIGURE

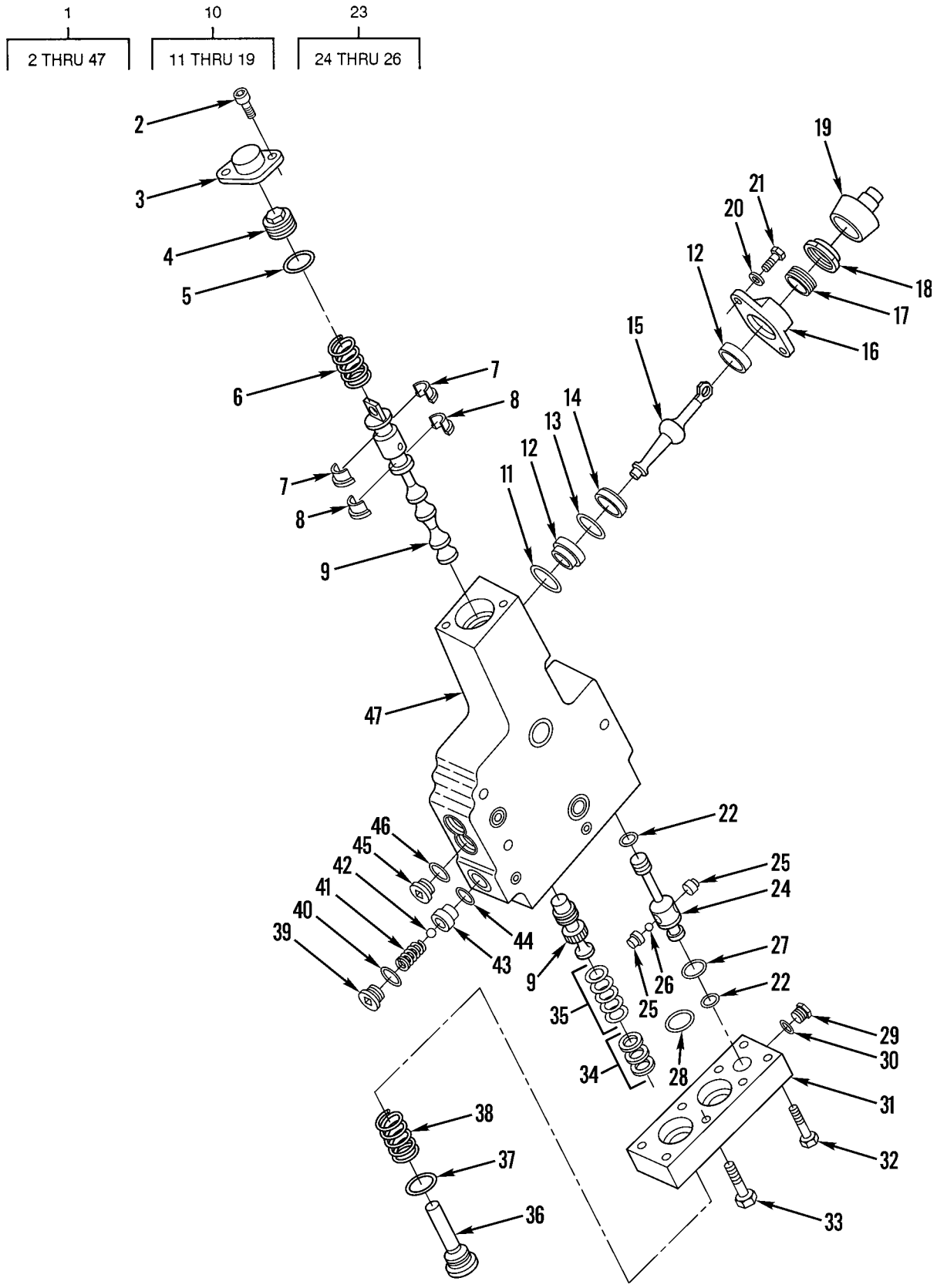

Figure 249. Articulation Control Valve Assembly

(1) ITEM NO	(2) SMR CODE	(3) NSN	(4) CAGEC	(5) PART NUMBER	(6) DESCRIPTION AND USABLE ON CODES(UOC)	(7) QTY
					GROUP 2402 MANIFOLD AND/OR CONTROL VALVES FIG. 249 ARTICULATION CONTROL VALVE ASSEMBLY	
1	PFFFF	4820010945260	11083	8J5907	VALVE,LINEAR,DIRECT.....	1
2	PAFZZ	5305011016024	11083	8H0708	.SCREW,CAP,SOCKET HE.....	2
3	XDFZZ		11083	8J5613	.LOCK,VALVE SPRING R.....	1
4	XDFZZ		11083	8J5612	.PLUG,TUBE FITTING,T.....	1
5	PCFZZ	5331009448281	11083	3D2824	.O-RING.....	1
6	PAFZA	5360010951831	11083	8J5882	.SPRING,HELICAL,COMP.....	1
7	XDFZZ		11083	8J1612	.RETAINER,VALVE.....	2
8	PAFZZ	3120010978115	11083	8J6114	.BUSHING,SLEEVE.....	2
9	XDFZZ		11083	8J5885	.VALVE GROUP.....	1
10	PFFZZ	3040011679211	11083	1U4661	.LEVER,MANUAL CONTRO.....	1
11	PCFZZ	5331009293499	11083	3D4245	..O-RING.....	1
12	PFFZZ	3110010648250	11083	8J1620	..BEARING.....	2
13	PCFZZ	5331005917543	11083	7F8607	..O-RING.....	1
14	PFFZZ	5330012252088	3U024	2037-116	..SEAL,PLAIN.....	1
15	PFFZZ	2590010648249	11083	8J1616	..LEVER.....	1
16	PAFZZ	5310011750616	11083	1U3389	..NUT,PLAIN,PLATE.....	1
17	PFFZZ	5365010964287	11083	8J1621	..RING,EXTERNALLY THR.....	1
18	PFFZZ	5310010953508	11083	8J1622	..NUT,SPECIAL.....	1
19	PFFZZ	5342010648251	11083	8J1623	..BOOT.....	1
20	PFFZZ	5310010512360	11083	5P0537	.WASHER.....	2
21	PFFZZ	5306002611153	11083	0S1615	.BOLT,MACHINE.....	2
22	PAFZZ	5330010648247	11083	6J3134	.SEAL.....	2
23	PAFZZ	4810010648252	11083	8J1624	.VALVE ASSEMBLY.....	1
24	XAFZZ		11083	8J1625	..SLEEVE.....	1
25	XAFZZ		11083	8J1626	..SEAT.....	2
26	PFFZZ	3110001006149	96906	MS19059-2412	..BALL,BEARING.....	1
27	PCFZZ	5331004984556	11083	4J5351	.O-RING.....	1
28	PAFZZ	5331011442252	81349	M83248/2-118	.O-RING.....	2
29	PFFZZ	5365011242945	30780	2HP5N-S	.PLUG,MACHINE THREAD.....	1
30	PFFZZ	5330011485891	59556	K-500-EN-0431	.SEAL.....	1
31	PAFZZ	4320011686439	11083	8J1627	.HOUSING,LIQUID PUMP.....	1
32	PFFZZ	5306004041417	11083	9F7022	.BOLT,MACHINE.....	4
33	PFFZZ	5306009305643	11083	1A9579	.BOLT,MACHINE.....	4
34	XDFZZ		11083	8J6263	.WASHER,FLAT.....	4
35	PAFZZ	5365010648300	11083	8J1629	.SHIM.....	2
36	PFFZZ	5365011693007	11083	8J1628	.PLUG,MACHINE THREAD.....	1
37	PFFZZ	5331001675174	81349	M83248/2-910	.O-RING.....	1
38	XDFZZ		11083	8J1630	.SPRING,HELICAL,COMP.....	1
39	PFFZZ	4730010787837	30780	8 P5N-S	.PLUG,TUBE FITTING,T.....	1
40	PFFZZ	5331009486482	11083	3K0360	.O-RING.....	1
41	PAFZZ	5360010964996	11083	8J1632	.SPRING,HELICAL,COMP.....	1
42	PAFZZ	3110009491438	11083	4B9880	.BALL,BEARING.....	1
43	PAFZZ	4810010648259	11083	9J7157	.SEAT,VALVE.....	1
44	XDFZZ	5331010491292	02697	3-904N552-90	.O-RING.....	1
45	PFFZZ	5365010249868	30780	6HP5N-SS	.PLUG,MACHINE THREAD.....	2
46	PCFZZ	5331008013354	25184	906-737-70	.O-RING.....	2
47	XAFZZ		11083	8J5861	.BODY.....	1

END OF FIGURE

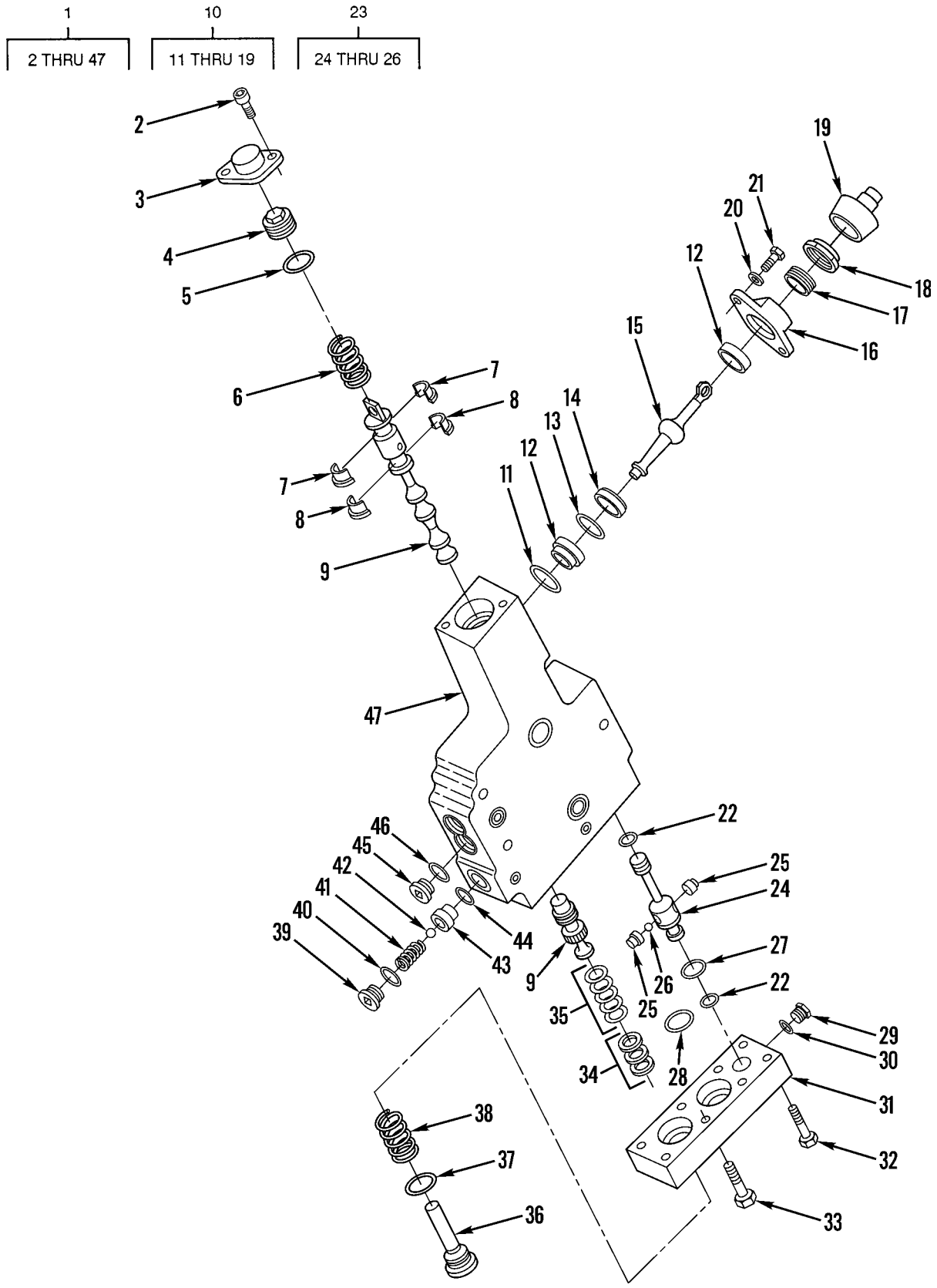

Figure 250. Circle Drive Control Valve Assembly

(1) ITEM NO	(2) SMR CODE	(3) NSN	(4) CAGEC	(5) PART NUMBER	(6) DESCRIPTION AND USABLE ON CODES(UOC)	(7) QTY
					GROUP 2402 MANIFOLD AND/OR CONTROL VALVES FIG. 250 CIRCLE DRIVE CONTROL VALVE ASSEMBLY	
1	PFFFF	4820010951032	11083	8J5903	VALVE,LINEAR,DIRECT.....	1
2	PAFZZ	5305011016024	11083	8H0708	.SCREW,CAP,SOCKET HE.....	2
3	XDFZZ		11083	8J5613	.LOCK,VALVE SPRING R.....	1
4	XDFZZ		11083	8J5612	.PLUG,TUBE FITTING,T.....	1
5	PCFZZ	5331009448281	11083	3D2824	.O-RING.....	1
6	PAFZA	5360010951831	11083	8J5882	.SPRING,HELICAL,COMP.....	1
7	XDFZZ		11083	8J1612	.RETAINER,VALVE.....	2
8	PAFZZ	3120010978115	11083	8J6114	.BUSHING,SLEEVE.....	2
9	XAFZZ	4820010664712	11083	8J8385	.VALVE,FLOW CONTROL.....	1
10	PFFZZ	3040011679211	11083	1U4661	.LEVER,MANUAL CONTRO.....	1
11	PFFZZ	5331009293499	11083	3D4245	..O-RING.....	1
12	PFFZZ	3110010648250	11083	8J1620	..BEARING.....	2
13	PCFZZ	5331005917543	11083	7F8607	..O-RING.....	1
14	PFFZZ	5330012252088	3U024	2037-116	..SEAL,PLAIN.....	1
15	PFFZZ	2590010648249	11083	8J1616	..LEVER.....	1
16	PAFZZ	5310011750616	11083	1U3389	..NUT,PLAIN,PLATE.....	1
17	PFFZZ	5365010964287	11083	8J1621	..RING,EXTERNALLY THR.....	1
18	PFFZZ	5310010953508	11083	8J1622	..NUT,SPECIAL.....	1
19	PFFZZ	5342010648251	11083	8J1623	..BOOT.....	1
20	PFFZZ	5310010512360	11083	5P0537	.WASHER.....	2
21	PFFZZ	5306002611153	11083	0S1615	.BOLT,MACHINE.....	2
22	PAFZZ	5330010648247	11083	6J3134	.SEAL.....	2
23	PAFZZ	4810010648252	11083	8J1624	.VALVE ASSEMBLY.....	1
24	XAFZZ		11083	8J1625	..SLEEVE.....	1
25	XAFZZ		11083	8J1626	..SEAT.....	2
26	PFFZZ	3110001006149	96906	MS19059-2412	..BALL,BEARING.....	1
27	PCFZZ	5331004984556	11083	4J5351	.O-RING.....	1
28	PAFZZ	5331011442252	81349	M83248/2-118	.O-RING.....	2
29	PFFZZ	5365011242945	30780	2HP5N-S	.PLUG,MACHINE THREAD.....	1
30	PFFZZ	5330011485891	59556	K-500-EN-0431	.SEAL.....	1
31	PAFZZ	4320011686439	11083	8J1627	.HOUSING,LIQUID PUMP.....	1
32	PFFZZ	5306004041417	11083	9F7022	.BOLT,MACHINE.....	4
33	PFFZZ	5306009305643	11083	1A9579	.BOLT,MACHINE.....	4
34	XDFZZ		11083	8J6263	.WASHER,FLAT.....	3
35	PAFZZ	5365010648300	11083	8J1629	.SHIM.....	1
36	PFFZZ	5365011693007	11083	8J1628	.PLUG,MACHINE THREAD.....	1
37	PFFZZ	5331001675174	81349	M83248/2-910	.O-RING.....	1
38	XDFZZ		11083	8J8384	.SPRING,HELICAL,COMP.....	1
39	PFFZZ	4730010787837	30780	8 P5N-S	.PLUG,TUBE FITTING,T.....	1
40	PAFZZ	5331009486482	11083	3K0360	.O-RING.....	1
41	PAFZZ	5360010964996	11083	8J1632	.SPRING,HELICAL,COMP.....	1
42	PFFZZ	3110009491438	11083	4B9880	.BALL,BEARING.....	1
43	PAFZZ	4810010648259	11083	9J7157	.SEAT,VALVE.....	1
44	XDFZZ	5331010491292	02697	3-904N552-90	.O-RING.....	1
45	PFFZZ	5365010249868	30780	6HP5N-SS	.PLUG,MACHINE THREAD.....	2
46	PCFZZ	5331008013354	25184	906-737-70	.O-RING.....	2
47	XAFZZ		11083	8J5861	.BODY.....	1

END OF FIGURE

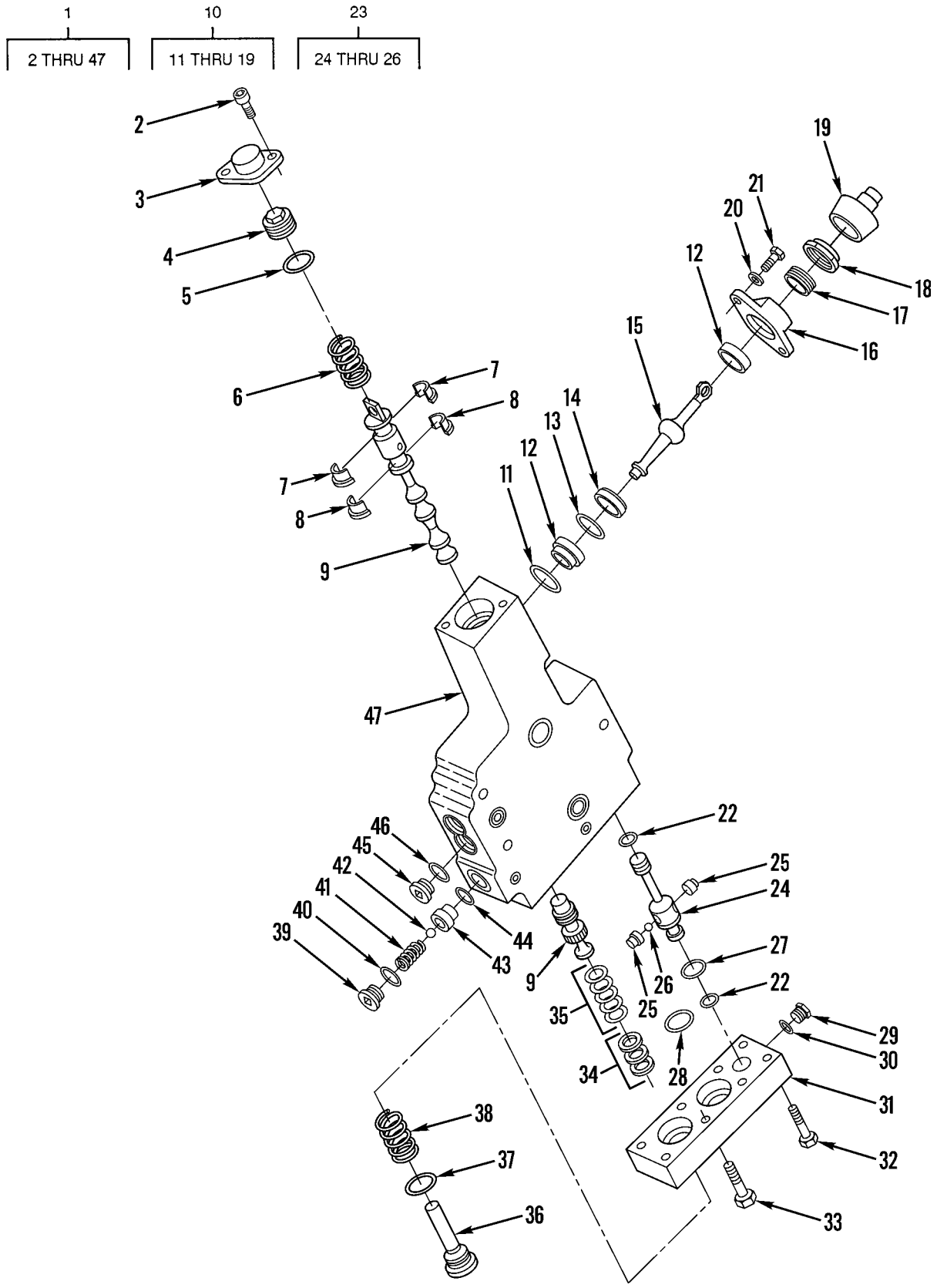

Figure 251. Sideshift Control Valve Assembly

(1) ITEM NO	(2) SMR CODE	(3) NSN	(4) CAGEC	(5) PART NUMBER	(6) DESCRIPTION AND USABLE ON CODES(UOC)	(7) QTY
					GROUP 2402 MANIFOLD AND/OR CONTROL VALVES	
					FIG. 251 SIDESHIFT CONTROL VALVE ASSEMBLY	
1	PFFFF	4820010941910	11083	8J5902	PARTS KIT,LINEAR DI.....	1
2	PAFZZ	5305011016024	11083	8H0708	.SCREW,CAP,SOCKET HE.....	2
3	XDFZZ		11083	8J5613	.LOCK,VALVE SPRING R.....	1
4	XDFZZ		11083	8J5612	.PLUG,TUBE FITTING,T.....	1
5	PCFZZ	5331009448281	11083	3D2824	.O-RING.....	1
6	PAFZA	5360010951831	11083	8J5882	.SPRING,HELICAL,COMP.....	1
7	XDFZZ		11083	8J1612	.RETAINER,VALVE.....	2
8	PAFZZ	3120010978115	11083	8J6114	.BUSHING,SLEEVE.....	2
9	XDFZZ		11083	8J5886	.VALVE,LINEAR,DIRECT.....	1
10	PFFZZ	3040011679211	11083	1U4661	.LEVER,MANUAL CONTRO.....	1
11	PCFZZ	5331009293499	11083	3D4245	..O-RING.....	1
					UOC:AF9,AGP,F10	
12	PFFZZ	3110010648250	11083	8J1620	..BEARING.....	2
13	PCFZZ	5331005917543	11083	7F8607	..O-RING.....	1
14	PFFZZ	5330012252088	3U024	2037-116	..SEAL,PLAIN.....	1
15	PFFZZ	2590010648249	11083	8J1616	..LEVER.....	1
16	PAFZZ	5310011750616	11083	1U3389	..NUT,PLAIN,PLATE.....	1
17	PFFZZ	5365010964287	11083	8J1621	..RING,EXTERNALLY THR.....	1
18	PFFZZ	5310010953508	11083	8J1622	..NUT,SPECIAL.....	1
19	PFFZZ	5342010648251	11083	8J1623	..BOOT.....	1
20	PFFZZ	5310010512360	11083	5P0537	.WASHER.....	2
21	PFFZZ	5306002611153	11083	0S1615	.BOLT,MACHINE.....	2
22	PAFZZ	5330010648247	11083	6J3134	.SEAL.....	2
23	PAFZZ	4810010648252	11083	8J1624	.VALVE ASSEMBLY.....	1
24	XAFZZ		11083	8J1625	..SLEEVE.....	1
25	XAFZZ		11083	8J1626	..SEAT.....	1
26	PFFZZ	3110001006149	96906	MS19059-2412	..BALL,BEARING.....	1
27	PCFZZ	5331004984556	11083	4J5351	.O-RING.....	1
28	PAFZZ	5331011442252	81349	M83248/2-118	.O-RING.....	2
29	PFFZZ	5365011242945	30780	2HP5N-S	.PLUG,MACHINE THREAD.....	1
30	PFFZZ	5330011485891	59556	K-500-EN-0431	.SEAL.....	1
31	PAFZZ	4320011686439	11083	8J1627	.HOUSING,LIQUID PUMP.....	1
32	PFFZZ	5306004041417	11083	9F7022	.BOLT,MACHINE.....	4
33	PFFZZ	5306009305643	11083	1A9579	.BOLT,MACHINE.....	4
34	XDFZZ		11083	8J6263	.WASHER,FLAT.....	4
35	PAFZZ	5365010648300	11083	8J1629	.SHIM.....	5
36	PFFZZ	5365011693007	11083	8J1628	.PLUG,MACHINE THREAD.....	1
37	PFFZZ	5331001675174	81349	M83248/2-910	.O-RING.....	1
38	XDFZZ		11083	8J1630	.SPRING,HELICAL,COMP.....	1
39	PFFZZ	4730010787837	30780	8 P5N-S	.PLUG,TUBE FITTING,T.....	1
40	PAFZZ	5331009486482	11083	3K0360	.O-RING.....	1
41	PAFZZ	5360010964996	11083	8J1632	.SPRING,HELICAL,COMP.....	1
42	PAFZZ	3110009491438	11083	4B9880	.BALL,BEARING.....	1
43	PAFZZ	4810010648259	11083	9J7157	.SEAT,VALVE.....	1
44	XDFZZ	5331010491292	02697	3-904N552-90	.O-RING.....	1
45	PFFZZ	5365010249868	30780	6HP5N-SS	.PLUG,MACHINE THREAD.....	2
46	PCFZZ	5331008013354	25184	906-737-70	.O-RING.....	2

(1) ITEM NO	(2) SMR CODE	(3) NSN	(4) CAGEC	(5) PART NUMBER	(6) DESCRIPTION AND USABLE ON CODES(UOC)	(7) QTY
47	XAFZZ		11083	8J5862	.BODY.....	1

END OF FIGURE

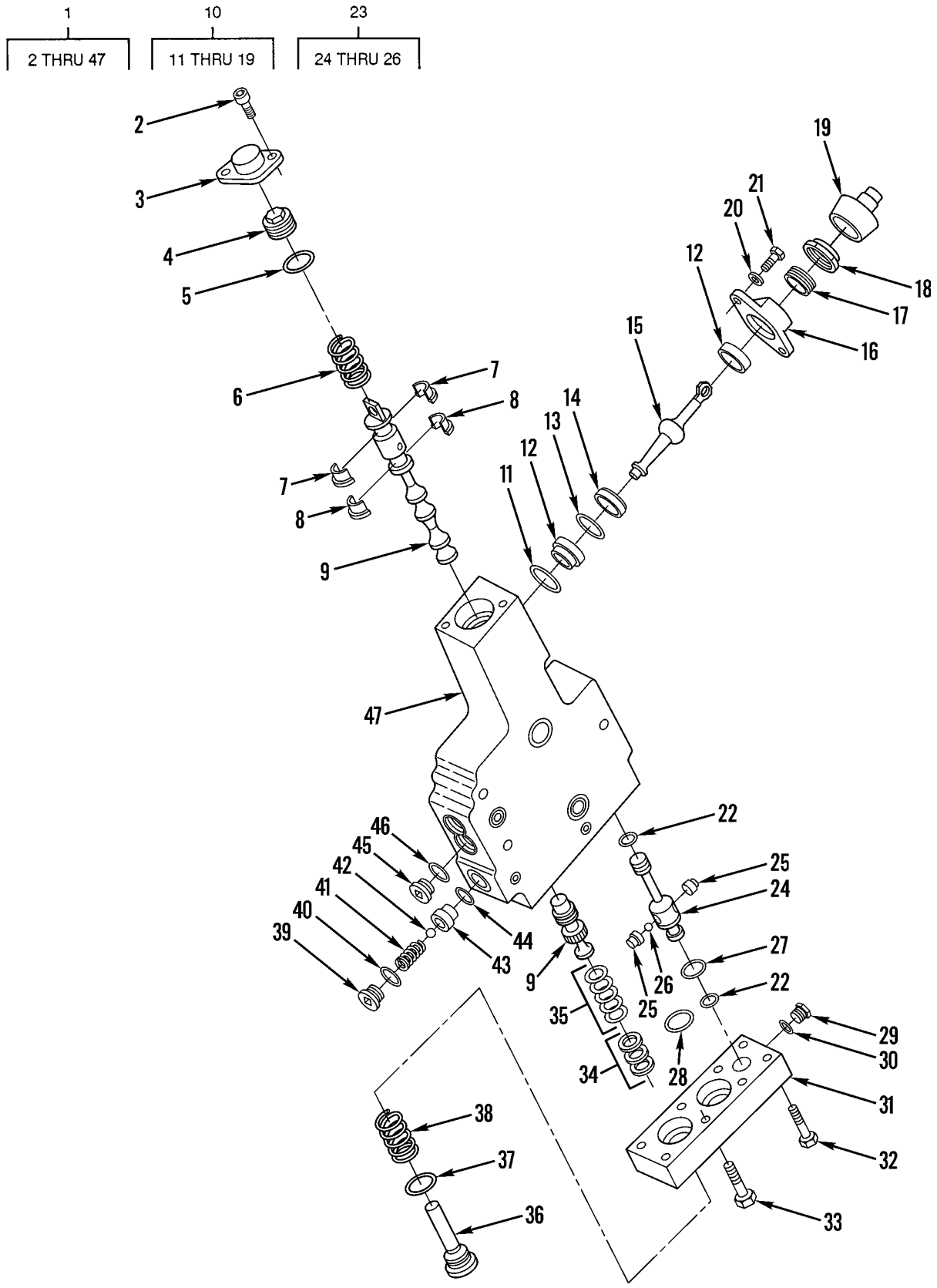

Figure 252. Blade Tip Control Valve Assembly

(1) ITEM NO	(2) SMR CODE	(3) NSN	(4) CAGEC	(5) PART NUMBER	(6) DESCRIPTION AND USABLE ON CODES(UOC)	(7) QTY
					GROUP 2402 MANIFOLD AND/OR CONTROL VALVES FIG. 252 BLADE TIP CONTROL VALVE ASSEMBLY	
1	PFFFF	4820010945261	11083	8J5908	VALVE,LINEAR,DIRECT.....	1
2	PAFZZ	5305011016024	11083	8H0708	.SCREW,CAP,SOCKET HE.....	2
3	XDFZZ		11083	8J5613	.LOCK,VALVE SPRING R.....	1
4	XDFZZ		11083	8J5612	.PLUG,TUBE FITTING,T.....	1
5	PCFZZ	5331009448281	11083	3D2824	.O-RING.....	1
6	PAFZA	5360010951831	11083	8J5882	.SPRING,HELICAL,COMP.....	1
7	XDFZZ		11083	8J1612	.RETAINER,VALVE.....	2
8	PFFZZ	3120010978115	11083	8J6114	.BUSHING,SLEEVE.....	2
9	XBFZF	4820010945261	11083	8J5884	.VALVE,LINEAR,DIRECT.....	1
10	PFFZZ	3040011679211	11083	1U4661	.LEVER,MANUAL CONTRO.....	1
11	PCFZZ	5331009293499	11083	3D4245	..O-RING.....	1
12	PAFZZ	3110010648250	11083	8J1620	..BEARING.....	2
13	PCFZZ	5331005917543	11083	7F8607	..O-RING.....	1
14	PFFZZ	5330004028718	97820	S12562-116	..SEAL.....	1
15	PFFZZ	2590010648249	11083	8J1616	..LEVER.....	1
16	PAFZZ	5310011750616	11083	1U3389	..NUT,PLAIN,PLATE.....	1
17	PAFZZ	5365010964287	11083	8J1621	..RING,EXTERNALLY THR.....	1
18	PFFZZ	5310010953508	11083	8J1622	..NUT,SPECIAL.....	1
19	PAFZZ	5342010648251	11083	8J1623	..BOOT.....	1
20	PFFZZ	5310010512360	11083	5P0537	.WASHER.....	2
21	PFFZZ	5306002611153	11083	0S1615	.BOLT,MACHINE.....	2
22	PAFZZ	5330010648247	11083	6J3134	.SEAL.....	2
23	PFFZZ	4810010648252	11083	8J1624	.VALVE ASSEMBLY.....	1
24	XAFZZ		11083	8J1625	..SLEEVE.....	1
25	XAFZZ		11083	8J1626	..SEAT.....	2
26	PFFZZ	3110001006149	19200	B271406C	..BALL,BEARING.....	1
27	PCFZZ	5331004984556	11083	4J5351	.O-RING.....	1
28	PAFZZ	5331011442252	81349	M83248/2-118	.O-RING.....	2
29	PFFZZ	5365011242945	30780	2HP5N-S	.PLUG,MACHINE THREAD.....	1
30	PAFZZ	5330011485891	59556	K-500-EN-0431	.SEAL.....	1
31	PAFZZ	4320011686439	11083	8J1627	.HOUSING,LIQUID PUMP.....	1
32	PFFZZ	5306004041417	11083	9F7022	.BOLT,MACHINE.....	4
33	PFFZZ	5306009305643	11083	1A9579	.BOLT,MACHINE.....	4
34	XDFZZ		11083	8J6263	.WASHER,FLAT.....	3
35	PAFZZ	5365010648300	11083	8J1629	.SHIM.....	5
36	PFFZZ	5365011693007	11083	8J1628	.PLUG,MACHINE THREAD.....	1
37	PFFZZ	5331001675174	81349	M83248/2-910	.O-RING.....	1
38	XDFZZ		11083	8J1630	.SPRING,HELICAL,COMP.....	1
39	PFFZZ	4730010787837	98441	8 P5N-S	.PLUG,TUBE FITTING,T.....	1
40	PAFZZ	5331009486482	11083	3K0360	.O-RING.....	1
41	PAFZZ	5360010964996	11083	8J1632	.SPRING,HELICAL,COMP.....	1
42	PFFZZ	3110009491438	11083	4B9880	.BALL,BEARING.....	1
43	PAFZZ	4810010648259	11083	9J7157	.SEAT,VALVE.....	1
44	XDFZZ	5331010491292	02697	3-904N552-90	.O-RING.....	1
45	PFFZZ	5365010249868	30780	6HP5N-SS	.PLUG,MACHINE THREAD.....	2
46	PCFZZ	5331008013354	25184	906-737-70	.O-RING.....	2
47	XAFZZ		11083	8J5860	.BODY.....	1

END OF FIGURE

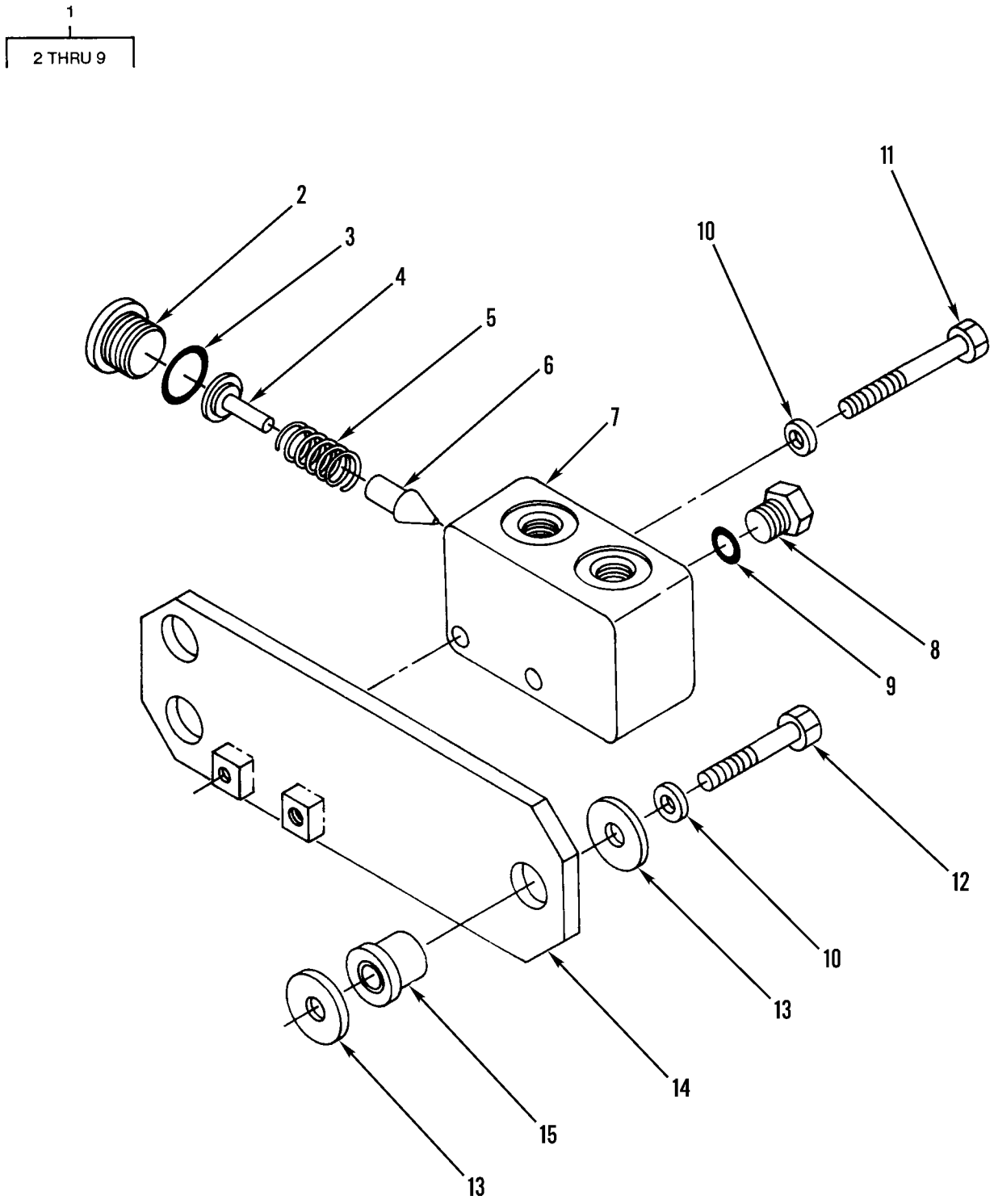

Figure 253. Hydraulic Pump Relief Valve Assembly and Mounting

(1) ITEM NO	(2) SMR CODE	(3) NSN	(4) CAGEC	(5) PART NUMBER	(6) DESCRIPTION AND USABLE ON CODES(UOC)	(7) QTY
					GROUP 2402 MANIFOLD AND/OR CONTROL VALVES FIG. 253 HYDRAULIC PUMP RELIEF VALVE ASSEMBLY AND MOUNTING	
1	PFOFF	4820010950788	11083	8J2011	VALVE,SAFETY RELIEF.....	1
2	PAFZZ	4730010643790	11083	9S8008	.PLUG.....	1
3	PCFZZ	5331009448281	11083	3D2824	.O-RING.....	1
4	XDFZZ		11083	8J2013	.RETAINER.....	1
5	PAFZZ	5360010661408	11083	7J0271	.SPRING.....	1
6	XBFZZ		11083	7J0272	.VALVE.....	1
7	XDFZZ		11083	8J2012	.HOUSING,LIQUID PUMP.....	1
8	PFFZZ	5365004114584	11083	9S4191	.PLUG,MACHINE THREAD.....	2
9	PCFZZ	5331008013354	25184	906-737-70	.O-RING.....	2
10	PFOZZ	5310001174788	11083	5M2894	WASHER,FLAT..... UOC:AF9,AGP,F10	5
11	PFOZZ	2910003099473	11083	0T0573	CAPSCREW,FUEL PUMP.....	2
12	PFOZZ	5306011954681	11083	3B1915	BOLT.....	3
13	PFOZZ	5310006984460	11083	0L1319	WASHER,FLAT.....	6
14	PFOZZ		11083	8D9918	BRACKET,EYE,NONROT.....	1
15	PAOZZ	5330010625887	11083	1P7115	GROMMET ASSY.....	3

END OF FIGURE

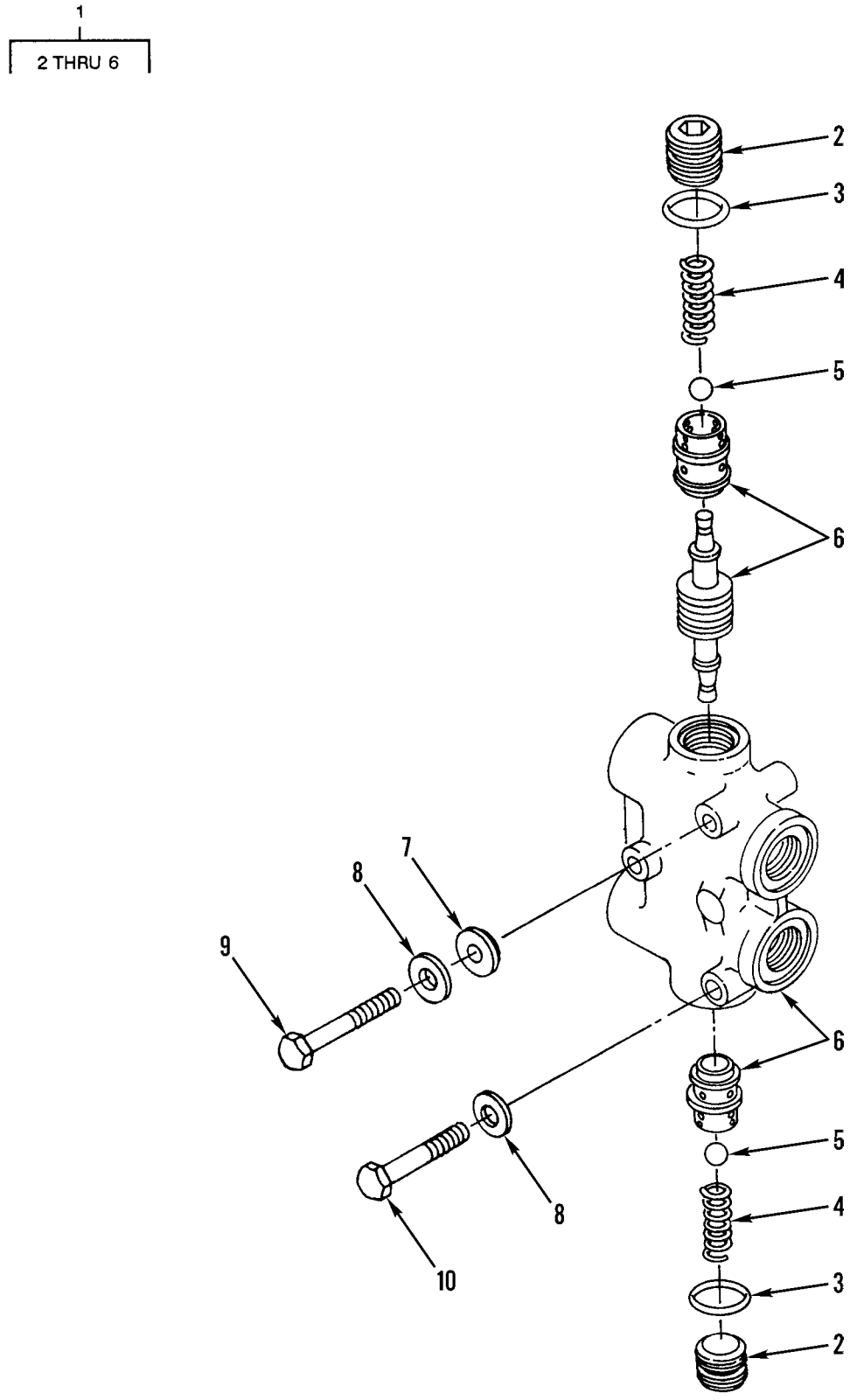

Figure 254. Circle Drive and Leaning Wheel Check Valve Assembly and Mounting

(1) ITEM NO	(2) SMR CODE	(3) NSN	(4) CAGEC	(5) PART NUMBER	(6) DESCRIPTION AND USABLE ON CODES(UOC)	(7) QTY
					GROUP 2402 MANIFOLD AND/OR CONTROL VALVES FIG. 254 CIRCLE DRIVE AND LEANING WHEEL CHECK VALVE ASSEMBLY AND MOUNTING	
1	PFFHH	4810010647465	11083	8J5913	VALVE,LINEAR,DIRECT.....	2
2	PFFZZ	5365011704684	11083	9J0404	.PLUG,MACHINE THREAD.....	2
3	PAFZZ	5331011442252	81349	M83248/2-118	.O-RING.....	2
4	XDFZZ		11083	9J0403	.SPRING.....	2
5	PAFZZ	4820010647477	11083	9J4871	.BALL.....	2
6	XAFZZ	4820010647480	11083	9J8285	.BODY,VALVE.....	1
7	XDFZZ		11083	7K4743	WASHER,RECESSED.....	4
8	PFFZZ	5310010948810	78189	3320-14-01	WASHER,SQUARE CONE.....	6
9	PFFZZ	2910003099473	11083	0T0573	CAPSCREW,FUEL PUMP.....	4
10	PFFZZ	5306002851368	11083	0L1143	BOLT,MACHINE.....	2

END OF FIGURE

1
2 THRU 16

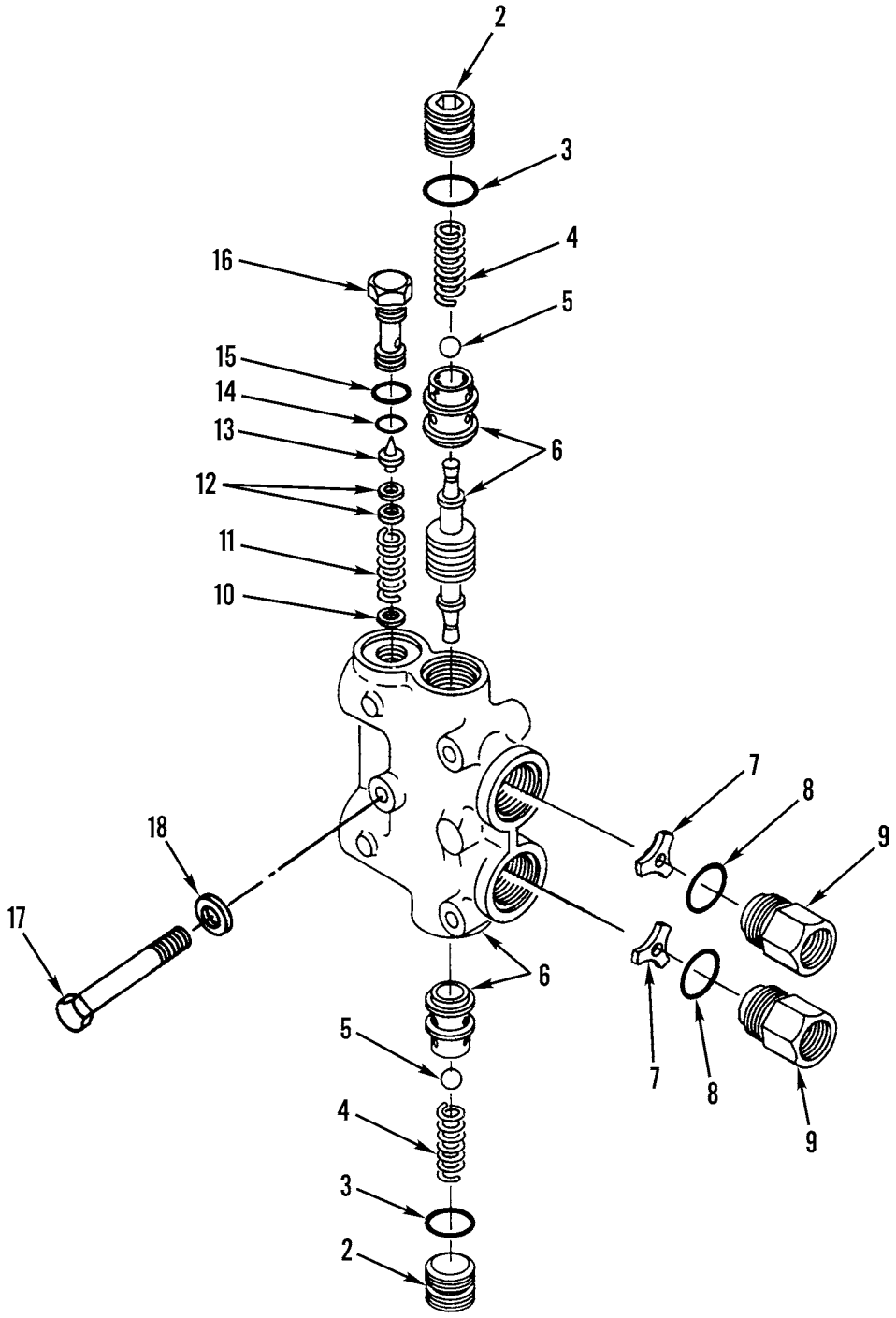

Figure 255. Left-Hand Blade Lift Check and Relief Valve Assembly and Mounting

(1) ITEM NO	(2) SMR CODE	(3) NSN	(4) CAGEC	(5) PART NUMBER	(6) DESCRIPTION AND USABLE ON CODES(UOC)	(7) QTY
					GROUP 2402 MANIFOLD AND/OR CONTROL VALVES FIG. 255 LEFT-HAND BLADE LIFT CHECK AND RELIEF VALVE ASSEMBLY AND MOUNTING	
1	PFFFF	4820010951035	11083	8J9975	VALVE,LINEAR,DIRECT.....	1
2	PFFZZ	5365011704684	11083	9J0404	.PLUG,MACHINE THREAD.....	2
3	PAFZZ	5331011442252	81349	M83248/2-118	.O-RING.....	2
4	XDFZZ		11083	9J0403	.SPRING.....	2
5	PAFZZ	4820010647477	11083	9J4871	.BALL.....	2
6	XAFZZ	4820010647479	11083	9J8274	.BODY,VALVE.....	1
7	PFFZZ	4820010950929	11083	8J9979	.CHOKE,CHECK VALVE.....	2
8	PCFZZ	5331009448281	11083	3D2824	.O-RING.....	2
9	PFFZZ	4730011681923	11083	8J5456	.COUPLING,BOSS.....	2
10	PFFZZ	5310008238804	96906	MS27183-9	.WASHER,FLAT.....	4
11	XDFZZ		11083	2J6089	.SPRING,HELICAL,COMP.....	1
12	PAFZZ	5365010647712	11083	6J8696	.SHIM.....	1
12	PAFZZ	5365010647711	11083	5J6153	.SHIM.....	4
13	PFFZZ	4820010647461	11083	8J0331	.VALVE,FLOW CONTROL.....	1
14	PFFZZ	5331001661098	81349	M83248/2-110	.O-RING.....	1
15	PFFZZ	5331009486482	11083	3K0360	.O-RING.....	1
16	XDFZZ		11083	8J9250	.VALVE,PLUG.....	1
17	PFOZZ	5306002851368	11083	0L1143	BOLT,MACHINE.....	3
18	PFOZZ	5310010948810	78189	3320-14-01	WASHER,SQUARE CONE.....	3

END OF FIGURE

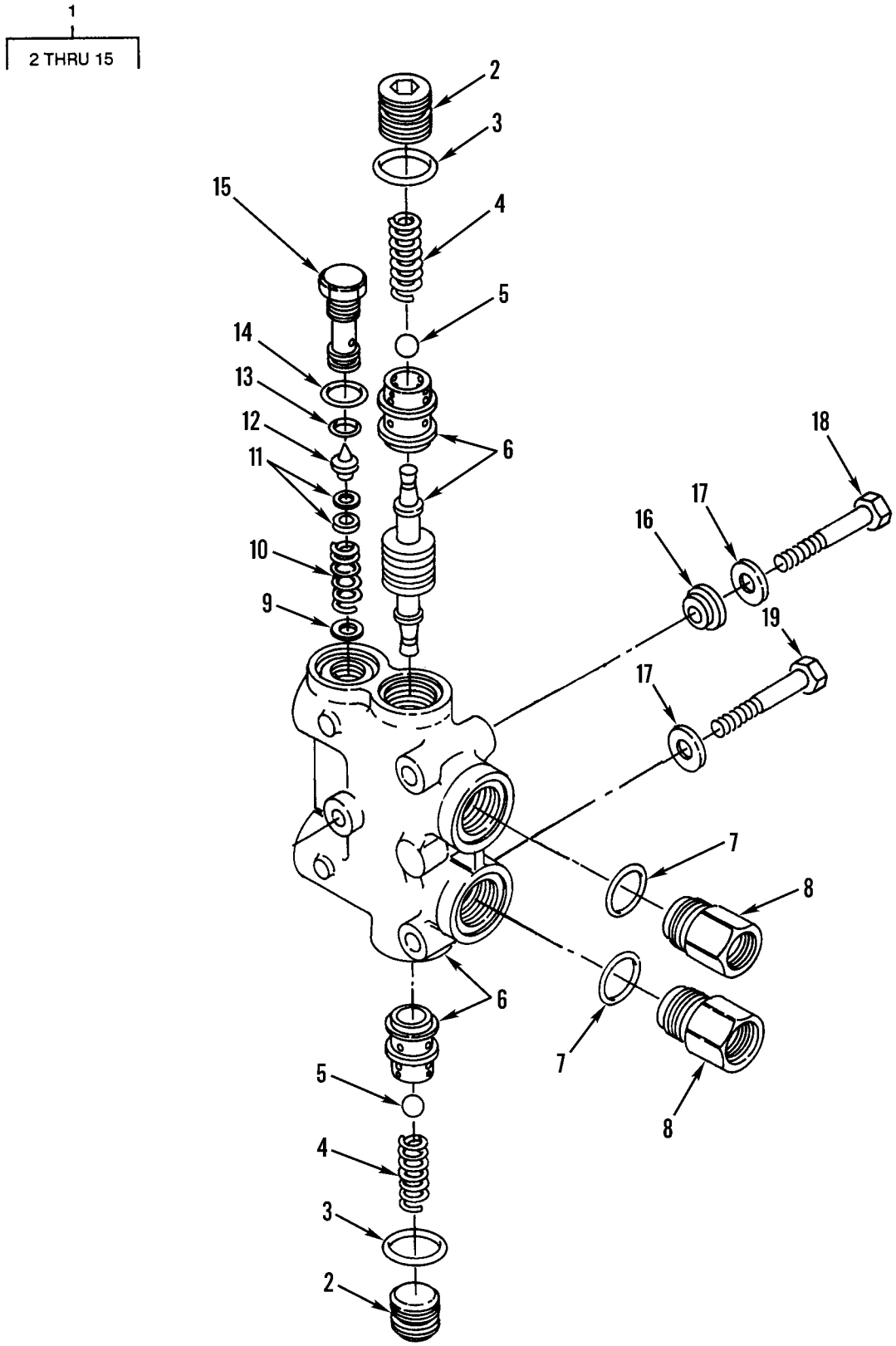

Figure 256. Power Blade and Blade Tip Check and Relief Valve Assembly and Mounting

(1) ITEM NO	(2) SMR CODE	(3) NSN	(4) CAGEC	(5) PART NUMBER	(6) DESCRIPTION AND USABLE ON CODES(UOC)	(7) QTY
					GROUP 2402 MANIFOLD AND/OR CONTROL VALVES FIG. 256 POWER BLADE AND BLADE TIP CHECK AND RELIEF VALVE ASSEMBLY AND MOUNTING	
1	PAOFF	4820010941949	11083	3G5832	VALVE,LINEAR,DIRECT.....	2
2	PFFZZ	5365011704684	11083	9J0404	.PLUG,MACHINE THREAD.....	2
3	PAFZZ	5331011442252	81349	M83248/2-118	.O-RING.....	2
4	XDFZZ		11083	9J0403	.SPRING.....	2
5	PAFZZ	4820010647477	11083	9J4871	.BALL.....	2
6	XAFZZ	4820010647479	11083	9J8274	.BODY,VALVE.....	1
7	PCFZZ	5331009448281	11083	3D2824	.O-RING.....	2
8	PFFZZ	4730011681923	11083	8J5456	.COUPLING,BOSS..... UOC:AF9,AGP,F10	2
9	PFFZZ	5310005794542	43999	2W1-16-15-32	.WASHER,FLAT.....	4
10	XDFZZ		11083	2J6089	.SPRING,HELICAL,COMP.....	1
11	PAFZZ	5365010647711	11083	5J6153	.SHIM.....	4
11	PAFZZ	5365010647712	11083	6J8696	.SHIM.....	1
12	PFFZZ	4820010647461	11083	8J0331	.VALVE,FLOW CONTROL.....	4
13	PFFZZ	5331001661098	81349	M83248/2-110	.O-RING.....	1
14	PFFZZ	5331009486482	11083	3K0360	.O-RING.....	1
15	XDFZZ		11083	8J9250	.VALVE,PLUG.....	1
16	XDOZZ		11083	7K4743	WASHER,RECESSED.....	4
17	PFOZZ	5310010948810	78189	3320-14-01	WASHER,SQUARE CONE.....	6
18	PFOZZ	2910003099473	11083	0T0573	CAPSCREW,FUEL PUMP.....	4
19	PFOZZ	5306002851368	11083	0L1143	BOLT,MACHINE.....	2

END OF FIGURE

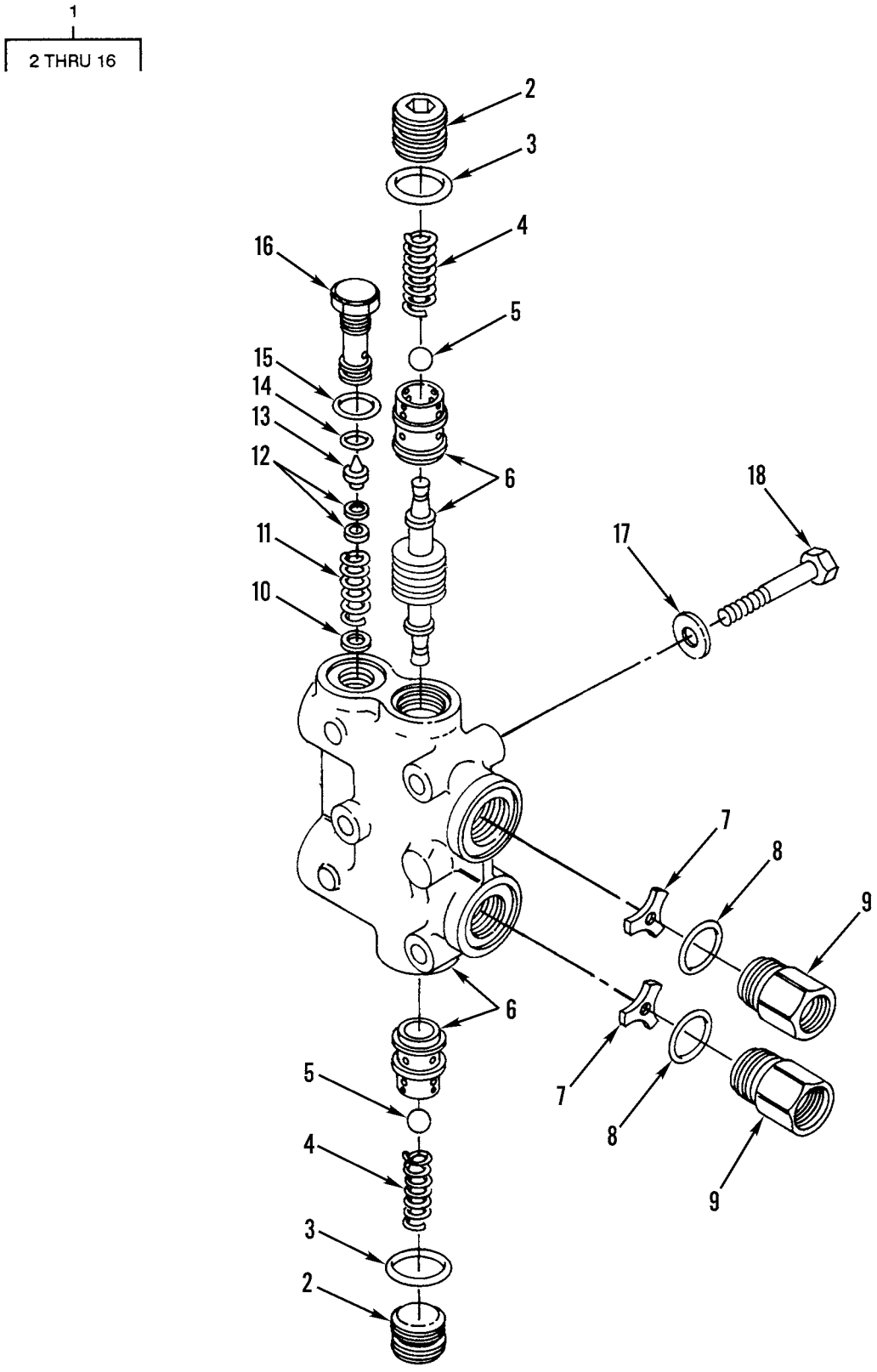

Figure 257. Scarifier Check and Relief Valve Assembly and Mounting

(1) ITEM NO	(2) SMR CODE	(3) NSN	(4) CAGEC	(5) PART NUMBER	(6) DESCRIPTION AND USABLE ON CODES(UOC)	(7) QTY
					GROUP 2402 MANIFOLD AND/OR CONTROL VALVES FIG. 257 SCARIFIER CHECK AND RELIEF VALVE ASSEMBLY AND MOUNTING	
1	PAOFF	4820010951033	11083	8J5798	VALVE,LINEAR,DIRECT.....	1
2	PFFZZ	5365011704684	11083	9J0404	.PLUG,MACHINE THREAD.....	2
3	PAFZZ	5331011442252	81349	M83248/2-118	.O-RING.....	2
4	XDFZZ		11083	9J0403	.SPRING.....	2
5	PAFZZ	4820010647477	11083	9J4871	.BALL.....	2
6	PAFZZ	4820010647479	11083	9J8274	.BODY,VALVE.....	1
7	PFFZZ	4820010950929	11083	8J9979	.CHOKE,CHECK VALVE.....	2
8	PCFZZ	5331009448281	11083	3D2824	.O-RING.....	2
9	PFFZZ	4730011681923	11083	8J5456	.COUPLING,BOSS.....	2
10	PFFZZ	5310005794542	43999	2W1-16-15-32	.WASHER,FLAT.....	3
11	PAFZZ	5360005978351	11083	4F7115	.SPRING,HELICAL,COMP.....	1
12	PAFZZ	5365010647712	11083	6J8696	.SHIM.....	1
12	PAFZZ	5365010647711	11083	5J6153	.SHIM.....	4
13	PAFZZ	4820010647461	11083	8J0331	.VALVE,FLOW CONTROL.....	1
14	PFFZZ	5331001661098	81349	M83248/2-110	.O-RING.....	1
15	PAFZZ	5331009486482	11083	3K0360	.O-RING.....	1
16	XDFZZ		11083	8J9250	.VALVE,PLUG.....	1
17	PFOZZ	5310010948810	78189	3320-14-01	WASHER,SQUARE CONE.....	3
18	PFOZZ	5306002851368	11083	0L1143	BOLT,MACHINE.....	3

END OF FIGURE

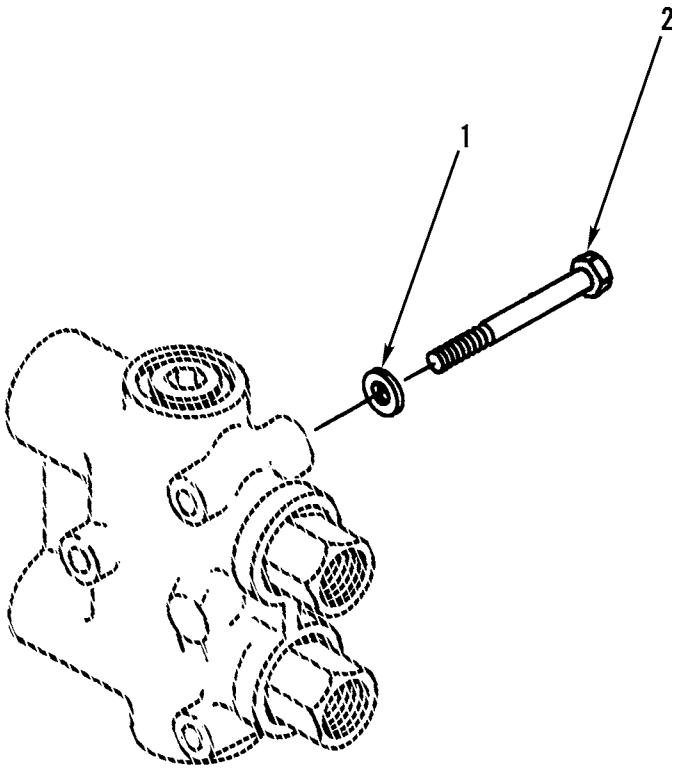

Figure 258. Right-Hand Blade Lift and Articulation Check Valve Mounting

(1) ITEM NO	(2) SMR CODE	(3) NSN	(4) CAGEC	(5) PART NUMBER	(6) DESCRIPTION AND USABLE ON CODES(UOC)	(7) QTY
					GROUP 2402 MANIFOLD AND/OR CONTROL VALVES FIG. 258 RIGHT-HAND BLADE LIFT AND ARTICULATION CHECK VALVE MOUNTING	
1	PFOZZ	5310010948810	78189	3320-14-01	WASHER,SQUARE CONE.....	6
2	PFOZZ	5306002851368	11083	0L1143	BOLT,MACHINE.....	6

END OF FIGURE

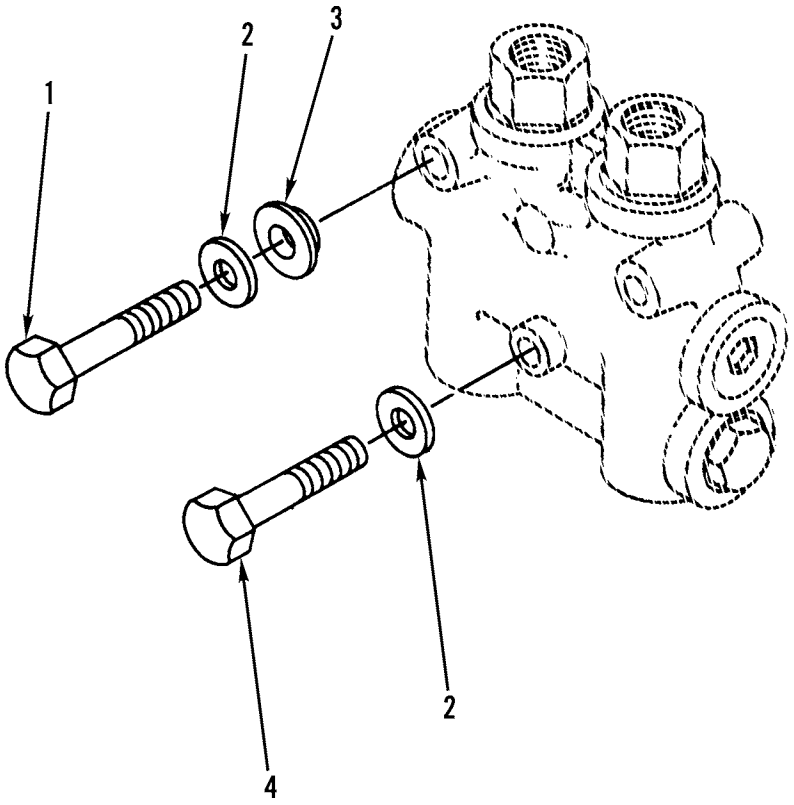

Figure 259. Centershift Check Valve Mounting

(1) ITEM NO	(2) SMR CODE	(3) NSN	(4) CAGEC	(5) PART NUMBER	(6) DESCRIPTION AND USABLE ON CODES(UOC)	(7) QTY
					GROUP 2402 MANIFOLD AND/OR CONTROL VALVES FIG. 259 CENTERSHIFT CHECK VALVE MOUNTING	
1	PFOZZ	2910003099473	11083	0T0573	CAPSCREW,FUEL PUMP.....	2
2	PFOZZ	5310010948810	78189	3320-14-01	WASHER,SQUARE CONE.....	3
3	XDOZZ		11083	7K4743	WASHER,RECESSED.....	2
4	PFOZZ	5306002851368	11083	0L1143	BOLT,MACHINE.....	1

END OF FIGURE

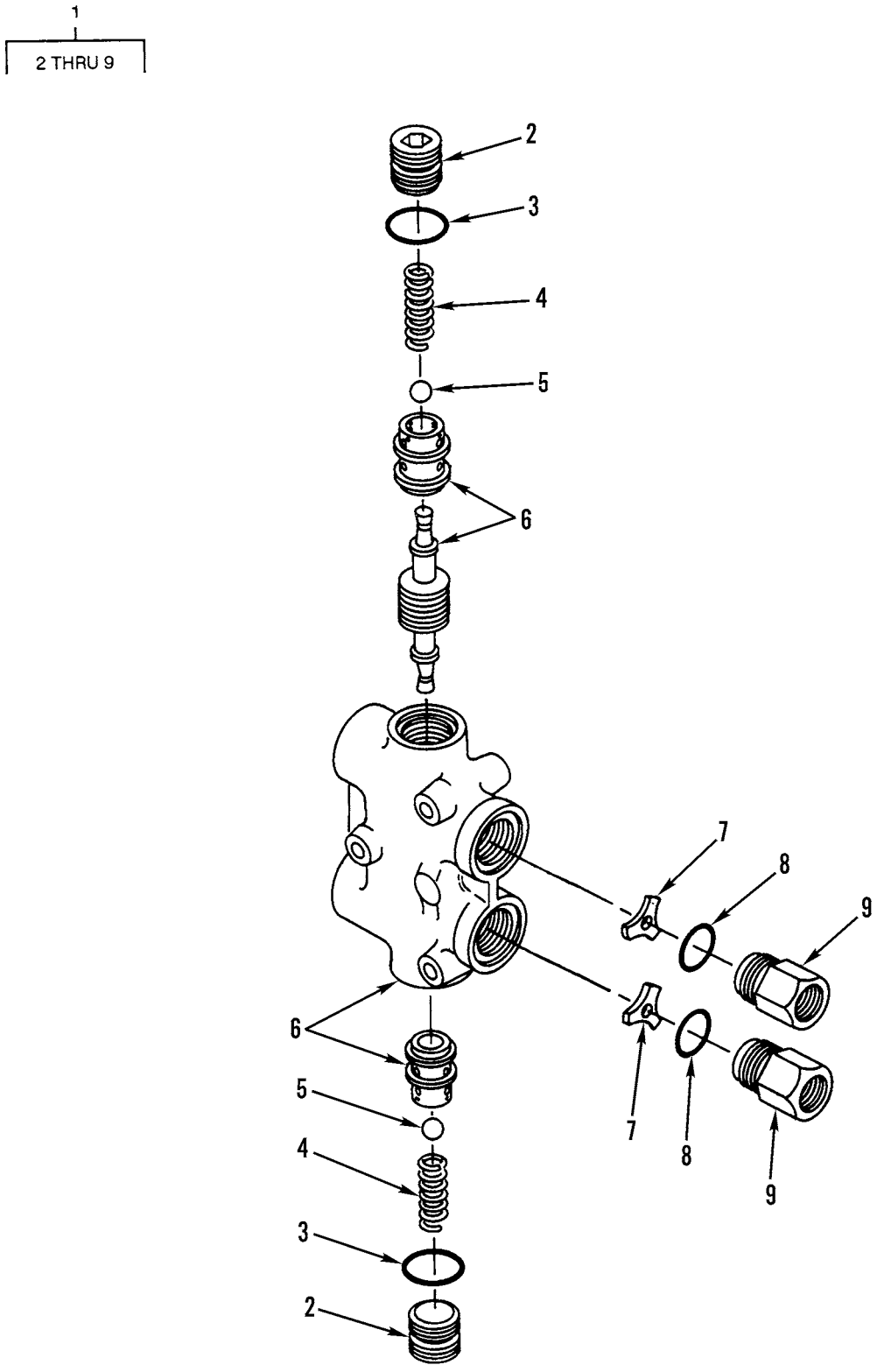

Figure 260. Right-Hand Blade Lift, Articulation, and Centershift Check Valve Assembly

(1) ITEM NO	(2) SMR CODE	(3) NSN	(4) CAGEC	(5) PART NUMBER	(6) DESCRIPTION AND USABLE ON CODES(UOC)	(7) QTY
					GROUP 2402 MANIFOLD AND/OR CONTROL VALVES FIG. 260 RIGHT-HAND BLADE LIFT, ARTICULATION, AND CENTERSHIFT CHECK VALVE ASSEMBLY	
1	PFOFF	4820010951034	11083	8J9974	VALVE,LINEAR,DIRECT.....	3
2	PFFZZ	5365011704684	11083	9J0404	.PLUG,MACHINE THREAD.....	2
3	PAFZZ	5331011442252	81349	M83248/2-118	.O-RING.....	2
4	XDFZZ		11083	9J0403	.SPRING.....	2
5	PAFZZ	4820010647477	11083	9J4871	.BALL.....	2
6	XAFZZ	4820010647478	11083	9J8253	.BODY,VALVE.....	1
7	PFFZZ	4820010950929	11083	8J9979	.CHOKE,CHECK VALVE.....	2
8	PCFZZ	5331009448281	11083	3D2824	.O-RING.....	2
9	PAFZZ	4730011681923	11083	8J5456	.COUPLING,BOSS.....	2

END OF FIGURE

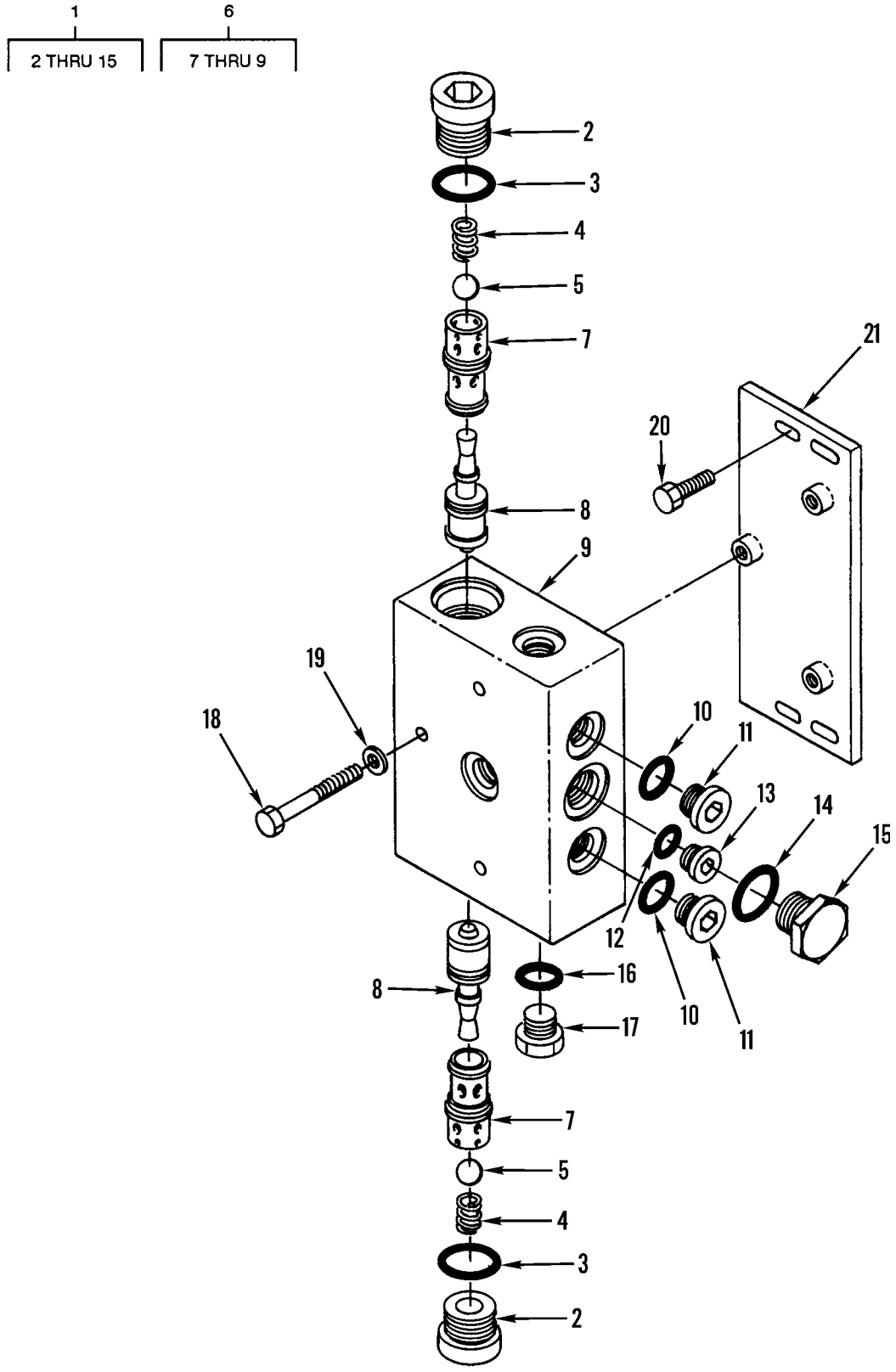

Figure 261. Blade Float Check Valve and Mounting

(1) ITEM NO	(2) SMR CODE	(3) NSN	(4) CAGEC	(5) PART NUMBER	(6) DESCRIPTION AND USABLE ON CODES(UOC)	(7) QTY
					GROUP 2402 MANIFOLD AND/OR CONTROL VALVES FIG. 261 BLADE FLOAT CHECK VALVE AND MOUNTING	
1	PFOFF	4810011830220	11083	8J5996	VALVE,LINEAR,DIRECT..... UOC:AGP	2
2	PFFZZ	5365011704684	11083	9J0404	.PLUG,MACHINE THREAD..... UOC:AGP	2
3	PAFZZ	5331011442252	81349	M83248/2-118	.O-RING..... UOC:AGP	2
4	XDFZZ		11083	9J0403	.SPRING..... UOC:AGP	2
5	PAFZZ	4820010647477	11083	9J4871	.BALL..... UOC:AGP	2
6	XAFZZ		11083	8J5995	.VALVE GROUP..... UOC:AGP	1
7	XBFZZ		11083	9J0405	..SEAT,VALVE..... UOC:AGP	2
8	XAFZZ		11083	8J8739	..PISTON..... UOC:AGP	2
9	XAFZZ		11083	3G3091	..BODY..... UOC:AGP	1
10	PAFZZ	5331009486482	11083	3K0360	.O-RING..... UOC:AGP	2
11	PFFZZ	5365010318183	30780	8HP5N-S	.PLUG,MACHINE THREAD..... UOC:AGP	2
12	PFFZZ	5330011485891	59556	K-500-EN-0431	.SEAL..... UOC:AGP	1
13	PFFZZ	5365011242945	30780	2HP5N-S	.PLUG,MACHINE THREAD..... UOC:AGP	1
14	PFFZZ	5331001675174	81349	M83248/2-910	.O-RING..... UOC:AGP	1
15	PFFZZ	2530010625318	11083	9S8006	.PLUG..... UOC:AGP	1
16	PAOZZ	5331009486482	11083	3K0360	O-RING..... UOC:AGP	2
17	PFOZZ	5365007630120	11083	9S4185	PLUG,MACHINE THREAD..... UOC:AGP	2
18	PFOZZ	5306002851368	11083	0L1143	BOLT,MACHINE..... UOC:AGP	6
19	PFOZZ	5310010948810	78189	3320-14-01	WASHER,SQUARE CONE..... UOC:AGP	6
20	PFOZZ	5306002604508	11083	0S1594	BOLT,MACHINE..... UOC:AGP	4
21	PAOZZ	2590011929704	11083	2G7558	PLATE ASSEMBLY,BLAD..... UOC:AGP	2

END OF FIGURE

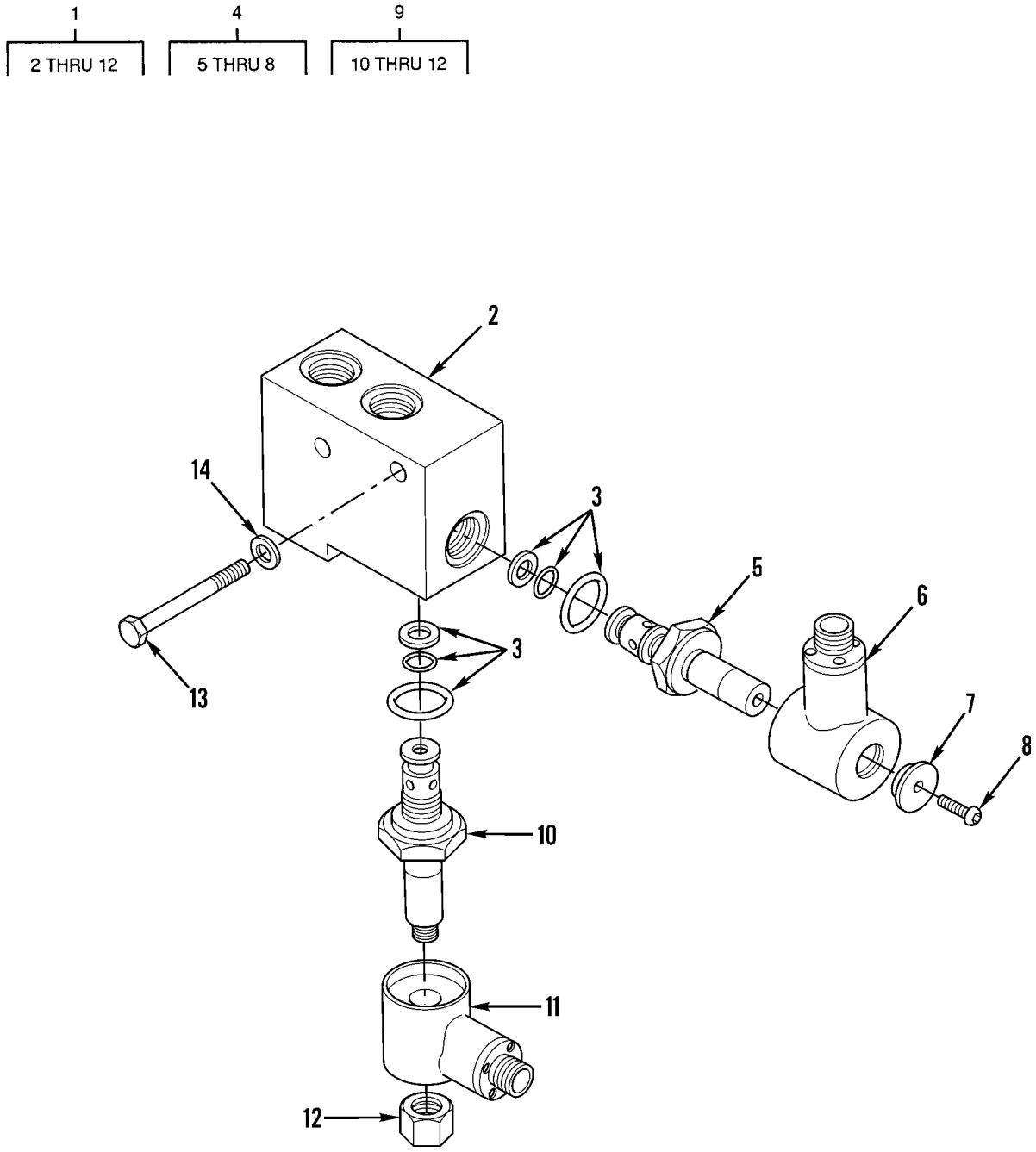

Figure 262. Blade Float Pilot Valve and Mounting

(1) ITEM NO	(2) SMR CODE	(3) NSN	(4) CAGEC	(5) PART NUMBER	(6) DESCRIPTION AND USABLE ON CODES(UOC)	(7) QTY
					GROUP 2402 MANIFOLD AND/OR CONTROL VALVES FIG. 262 BLADE FLOAT PILOT VALVE AND MOUNTING	
1	PFOZZ	4810011841040	11083	9J1299	VALVE ASSEMBLY,PILO..... UOC:AGP	1
2	XAFZZ		96259	983019	.BODY..... UOC:AGP	1
3	PAFZZ	4320011811927	8Z296	934811	.PARTS KIT,SEAL REPL..... UOC:AGP	2
4	PAFZZ	4810012200624	8Z296	7WXP2126-020	.VALVE,SOLENOID..... UOC:AGP	1
5	PFFZZ	4820012017172	8Z296	979301	..CARTRIDGE,VALVE,REG..... UOC:AGP	1
6	PFFZZ	5950011923163	11083	9J3881	..COIL,ELECTRICAL..... UOC:AGP	1
7	PFFZZ	5310012044716	8Z296	A223027	..WASHER,SHOULDERED..... UOC:AGP	1
8	PFFZZ	5305011783686	11083	6D3846	..SCREW,CAP,SOCKET HE..... UOC:AGP	1
9	PFFZZ	4810012049478	8Z296	7WXP2126-010	.VALVE,SOLENOID..... UOC:AGP	1
10	PAFZZ	4820011829244	8Z296	979304	..CARTRIDGE,VALVE..... UOC:AGP	1
11	PFFZZ	5950011923163	11083	9J3881	..COIL,ELECTRICAL..... UOC:AGP	1
12	PAFZZ	5310012043327	8Z296	262022	..NUT,PLAIN,HEXAGON..... UOC:AGP	1
13	PFOZZ	5306010949106	11083	0S1590	BOLT,MACHINE..... UOC:AGP	2
14	PFOZZ	5310001174788	11083	5M2894	WASHER,FLAT..... UOC:AGP	2

END OF FIGURE

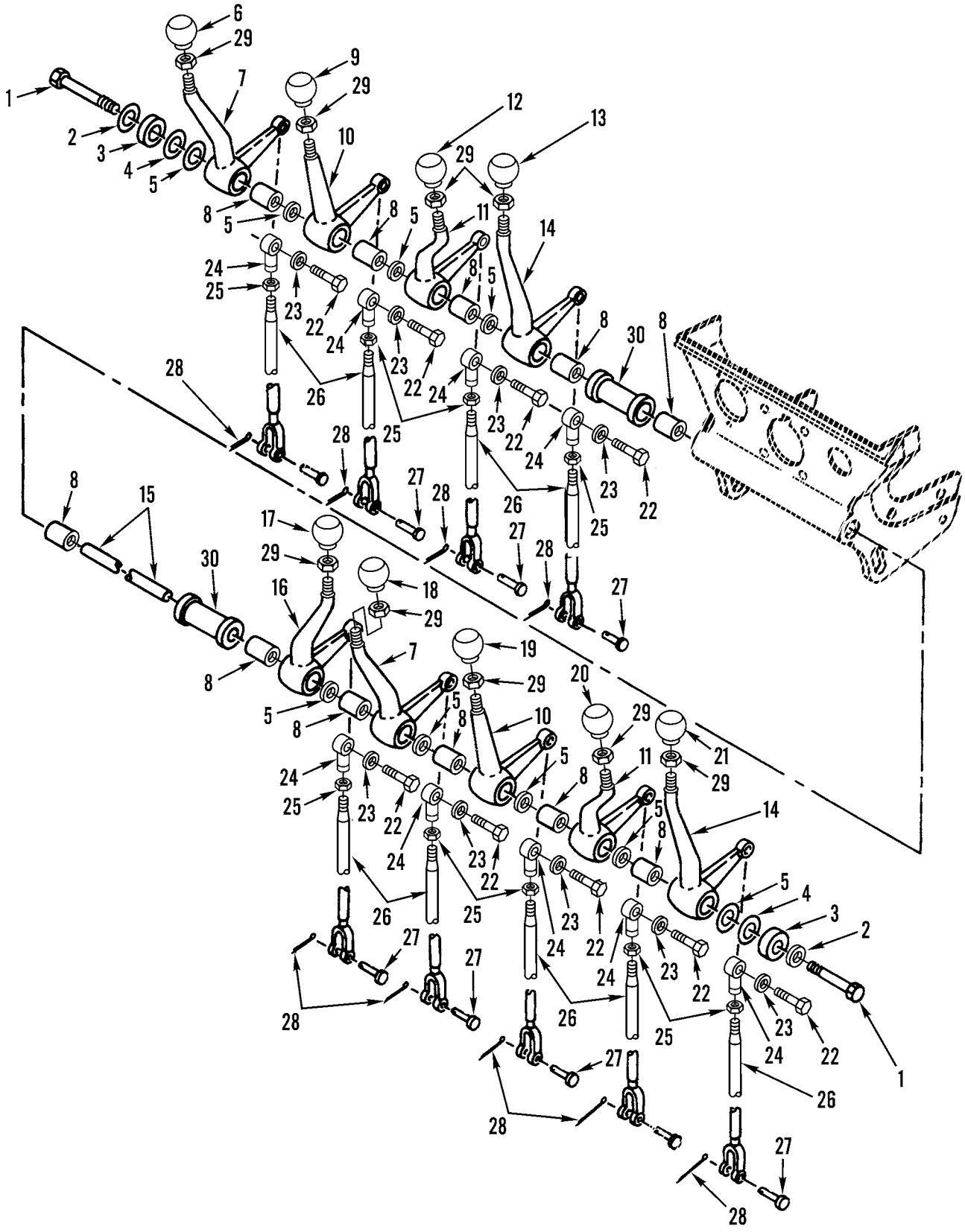

Figure 263. Hydraulic Control Levers and Linkage

(1) ITEM NO	(2) SMR CODE	(3) NSN	(4) CAGEC	(5) PART NUMBER	(6) DESCRIPTION AND USABLE ON CODES(UOC)	(7) QTY
					GROUP 2403 HYDRAULIC CONTROL AND/OR MANUAL CONTROLS FIG. 263 HYDRAULIC CONTROL LEVERS AND LINKAGE	
1	PFOZZ	5305010156841	11083	0S1591	SCREW	2
2	PFOZZ	5310000806004	96906	MS27183-14	WASHER,FLAT	2
3	PFOZZ	5310010953347	11083	8D5639	WASHER,RECESSED	2
4	PAOZZ	5365010648298	11083	8D5636	SHIM	4
4	PAOZZ	5365010648299	11083	8D5637	SHIM	4
5	PAOZZ	3110010648237	11083	8D5641	BEARING	9
6	PFOZZ	5355010951579	11083	2G6757	KNOB	1
7	PFOZZ	2520011677136	11083	8D5634	LEVER,MANUAL CONTRO	2
8	PAOZZ	3110010648236	11083	8D5640	BEARING	11
9	PFOZZ	5355010949949	11083	2G6749	KNOB	1
10	PFOZZ	2520011677137	11083	8D5633	LEVER,MANUAL CONTRO	2
11	PFOZZ	2520011677138	11083	8D5632	LEVER,MANUAL CONTRO	2
12	PFOZZ	5355010951263	11083	2G6751	KNOB	1
13	PFOZZ	5355011704622	11083	2G6747	KNOB	1
14	PFOZZ	2590011682069	11083	8D5635	LEVER,MANUAL CONTRO	2
15	PFOZZ	2590010664705	11083	9D2804AND8W0454	SHAFT	1
16	PFOZZ	2520011677139	11083	8D5631	LEVER,MANUAL CONTRO	1
17	PFOZZ	5355010951264	11083	2G6752	KNOB	1
18	PFOZZ	5355010951577	11083	2G6755	KNOB	1
19	PFOZZ	5355010951578	11083	2G6756	KNOB	1
20	PFOZZ	5355010949948	11083	2G6748	KNOB	1
21	PFOZZ	5355010951576	11083	2G6753	KNOB	1
22	PFOZZ	5306002264826	80204	B1821BH031C088N	BOLT,MACHINE	9
23	PFOZZ	5310001670721	96906	MS35333-41	WASHER,LOCK	9
24	PFOZZ	3120001826865	73134	HF5CEI	BEARING,PLAIN,ROD E	9
25	PFOZZ	5310014135909	11083	6V8186	NUT,PLAIN,HEXAGON UOC:AF9,AGP,F10	9
26	PFOZZ	5340011699513	11083	6G6513	CLEVIS,ROD END	9
27	PFOZZ	5315010990059	11083	4J5325	PIN,STRAIGHT,HEADED	7
28	PFOZZ	5315008392326	96906	MS24665-281	PIN,COTTER	9
29	PFOZZ	5310010659110	11083	6L1962	NUT	9
30	PAOZZ	5365011843735	11083	6G4936	SPACER,SLEEVE	2

END OF FIGURE

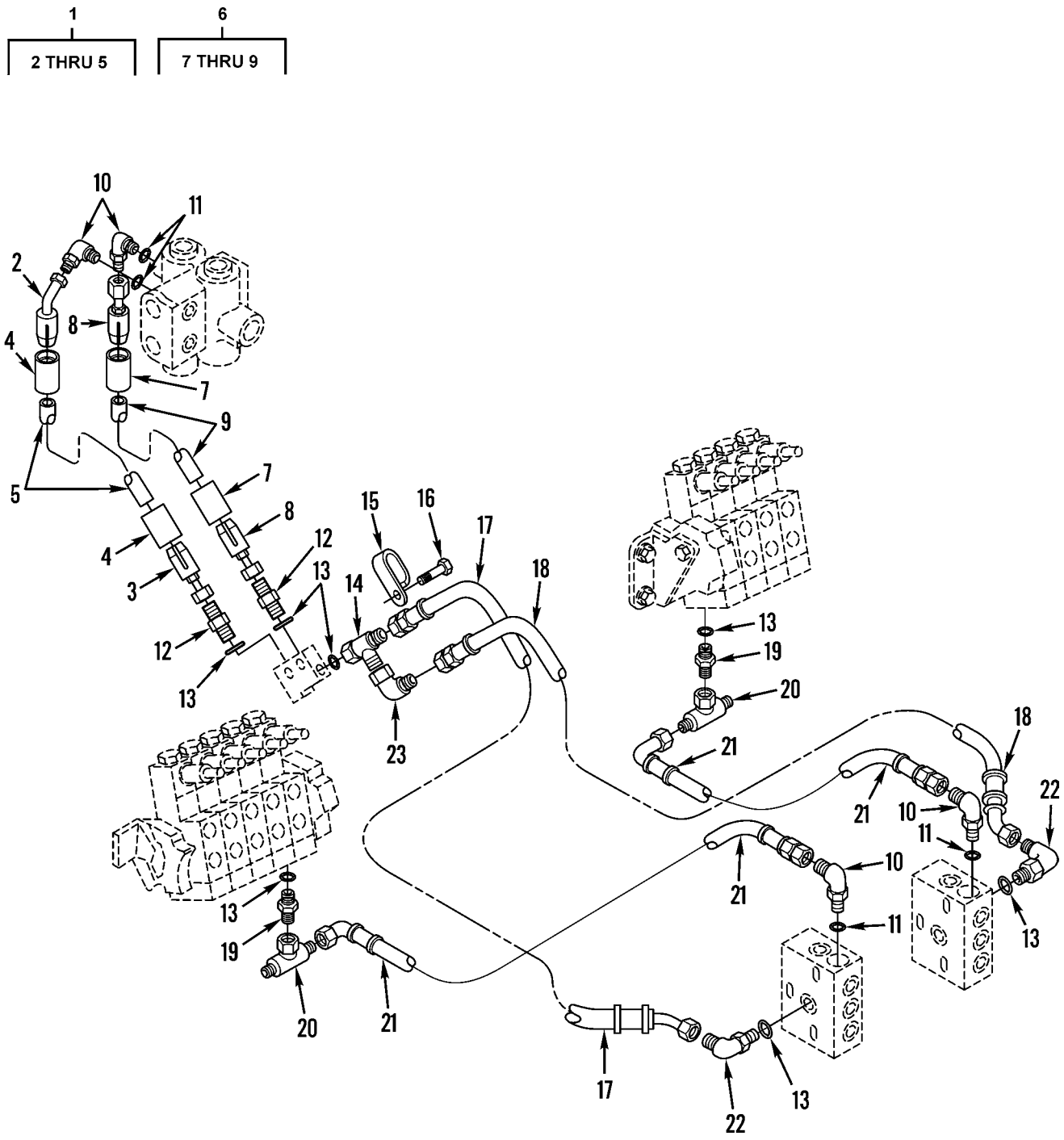

Figure 264. Blade Float Hydraulic Lines and Fittings

(1) ITEM NO	(2) SMR CODE	(3) NSN	(4) CAGEC	(5) PART NUMBER	(6) DESCRIPTION AND USABLE ON CODES(UOC)	(7) QTY
					GROUP 2406 STRAINERS, FILTERS, LINES, AND FITTINGS, ETC. FIG. 264 BLADE FLOAT HYDRAULIC LINES AND FITTINGS	
1	AOOOZ	4720011815781	11083	9D6227	HOSE ASSEMBLY,NONME..... UOC:AGP	1
2	PAOZZ	4730010950834	11083	1P9919	.ELBOW,TUBE TO HOSE..... UOC:AGP	1
3	PFOZZ	4730010947469	11083	8S6417	.ADAPTER,STRAIGHT,TU..... UOC:AGP	1
4	PAOZZ	4730010950075	11083	4S5414	.SLEEVE,HOSE CONNECT..... UOC:AGP	2
5	MOOZZ		11083	1650016-23	.HOSE,NONMETALLIC MAKE FROM P/N 1650016..... UOC:AGP	1
6	AOOOZ	4720011815780	11083	9D5972	HOSE ASSEMBLY,NONME..... UOC:AGP	1
7	PAOZZ	4730010950075	11083	4S5414	.SLEEVE,HOSE CONNECT..... UOC:AGP	2
8	PFOZZ	4730010947469	11083	8S6417	.ADAPTER,STRAIGHT,TU..... UOC:AGP	2
9	MOOZZ		11083	1650016-26	.HOSE,NONMETALLIC MAKE FROM P/N 1650016..... UOC:AGP	1
10	PAOZZ	4730014710277	11083	0054362	ELBOW,QUICK DISCONN..... UOC:AGP	4
11	PAOZZ	5331009486482	11083	3K0360	O-RING..... UOC:AGP	4
12	PAOZZ	4730004919576	96906	MS51525A6	ADAPTER,STRAIGHT,TU..... UOC:AGP	2
13	PCOZZ	5331008013354	25184	906-737-70	O-RING..... UOC:AGP	7
14	PFOZZ	4730011555059	11083	6M6853	TEE,TUBE TO BOSS..... UOC:AGP	1
15	PFOZZ	5340011736745	11083	6D4247	CLAMP,LOOP..... UOC:AGP	3
16	PFOZZ	5306002604508	11083	0S1594	BOLT,MACHINE..... UOC:AGP	1
17	PAOZZ	4720011789668	11083	2G7549	HOSE ASSEMBLY,NONME..... UOC:AGP	1
18	PAOZZ	4720011789669	11083	2G7551	HOSE ASSEMBLY,NONME..... UOC:AGP	1
19	PFOZZ	4730010667652	11083	0307936	CONNECTOR..... UOC:AGP	2
20	PFOZZ	4730010634225	11083	0530700	TEE,TUBE..... UOC:AGP	2
21	PAOZZ	4720011789667	11083	2G7548	HOSE ASSEMBLY,NONME..... UOC:AGP	2
22	PAOZZ	4730001433941	96906	MS51527A6	ELBOW,TUBE TO BOSS..... UOC:AGP	2
23	PAOZZ	4730010518745	11083	6K9194	ELBOW,TUBE..... UOC:AGP	1
					END OF FIGURE	

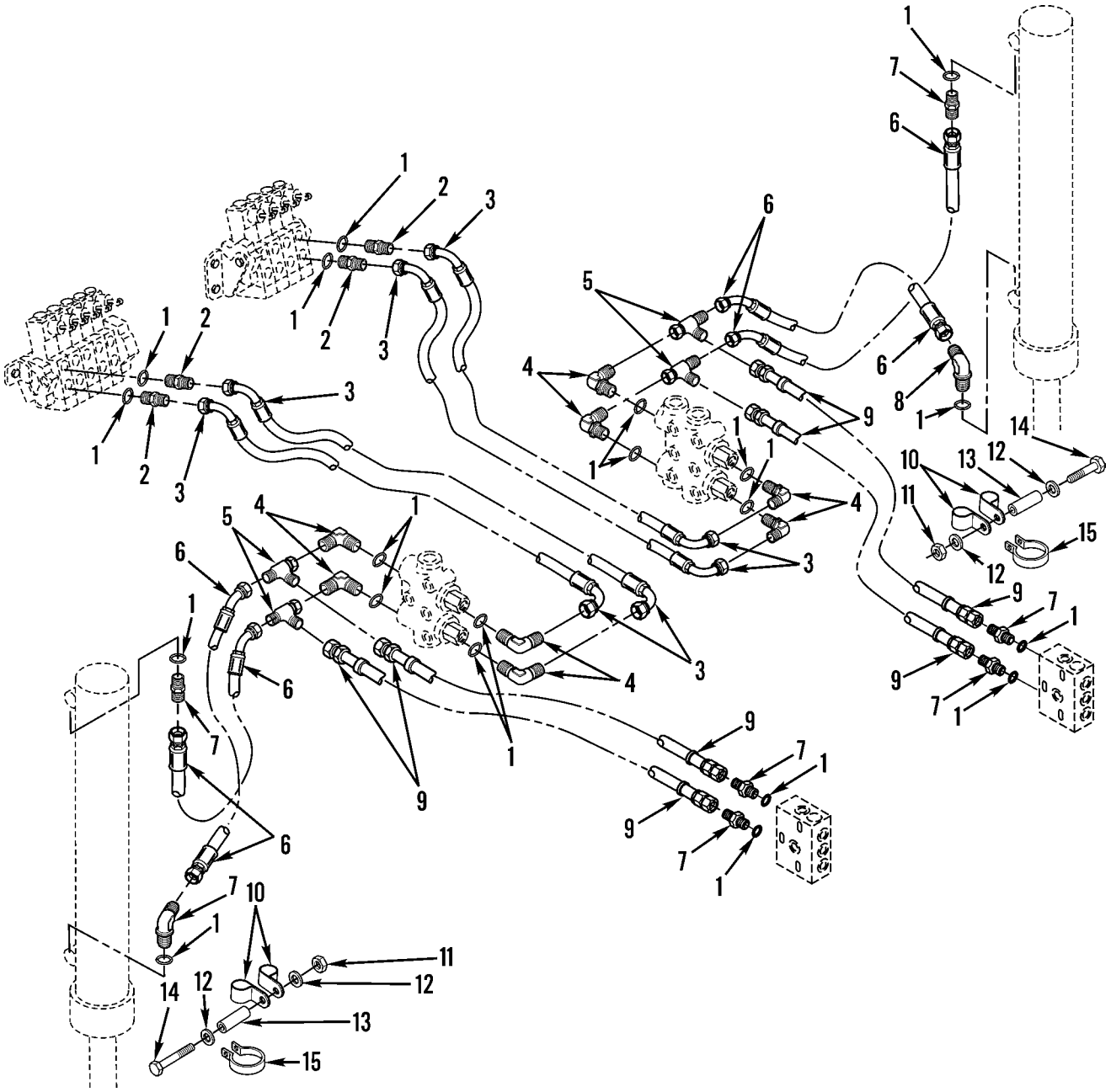

Figure 265. Blade Lift Hydraulic Lines and Fittings (SN 7GB01224 and Up) (Sheet 1 of 2)

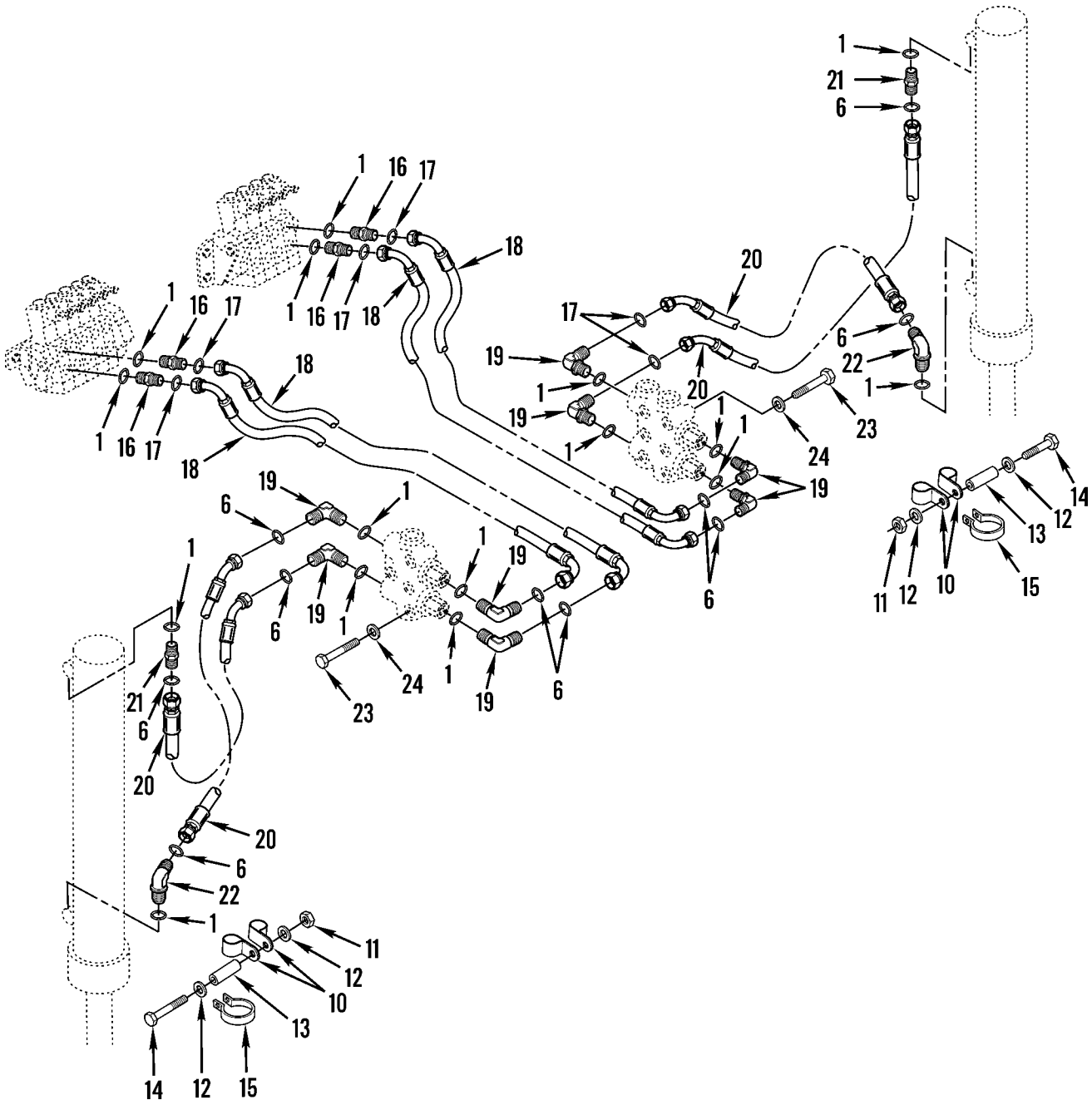

Figure 265. Blade Lift Hydraulic Lines and Fittings (SN 7GB00001 thru 7GB01223) (Sheet 2 of 2)

(1) ITEM NO	(2) SMR CODE	(3) NSN	(4) CAGEC	(5) PART NUMBER	(6) DESCRIPTION AND USABLE ON CODES(UOC)	(7) QTY
					GROUP 2406 STRAINERS, FILTERS, LINES, AND FITTINGS, ETC. FIG. 265 BLADE LIFT HYDRAULIC LINES AND FITTINGS	
1	PFOZZ	5331009486482	11083	3K0360	O-RING	20
1	PFOZZ	5331009486482	11083	3K0360	O-RING SERIAL NUMBER 7GB01224 AND UP UOC:AF9,AGP,F10	16
2	PFOZZ	4730011774706	11083	8D9088	ADAPTER,STRAIGHT,TU	4
3	PFOZZ	4720011783393	11083	9D5984	HOSE ASSEMBLY,NONME	4
4	PFOZZ	4730014710277	11083	0054362	ELBOW,QUICK DISCONN	8
5	PFOZZ	4730015144630	11083	0619258	TEE,TUBE	4
6	PFOZZ	4720011711947	11083	2G9989	HOSE ASSEMBLY,NONME	4
7	PFOZZ	4730000807040	96906	MS51525A6-8	ADAPTER,STRAIGHT,TU	6
8	PAOZZ	4730011619597	30780	6-8V5BX-S	ELBOW,TUBE TO BOSS	2
9	PAOZZ	4720011789666	11083	2G7552	HOSE ASSEMBLY,NONME	4
10	PFOZZ	5340011519308	11083	1S0994	CLAMP,LOOP	4
11	PFOZZ	5310014297859	11083	6V8801	NUT,PLAIN,HEXAGON	2
12	PFOZZ	5310000806004	96906	MS27183-14	WASHER,FLAT	4
13	PAOZZ	5365011612641	11083	3H3244	SPACER,SLEEVE	2
14	PFOZZ	5305010956337	11083	2H9889	SCREW,CAP,HEXAGON H	2
15	PFOZZ	5340011718165	11083	2G5494	CLAMP,LOOP	2
16	PFOZZ	4730015143461	11083	8T0076	ADAPTER,STRAIGHT,PI UOC:AF9,AGP,F10	4
17	PFOZZ	5331005796495	11083	6V8397	O-RING UOC:AF9,AGP,F10	16
18	PFOZZ		11083	8W0208	HOSE ASSEMBLY UOC:AF9,AGP,F10	4
19	PFOZZ	4730014299750	11083	6V8723	ELBOW,TUBE UOC:AF9,AGP,F10	8
20	PFOZZ		11083	8W0209	HOSE ASSEMBLY UOC:AF9,AGP,F10	4
21	PFOZZ	5935014379075	11083	6V8634	CONNECTOR,PLUG,ELEC UOC:AF9,AGP,F10	2
22	PFOZZ	4730014381943	11083	6V9876	ELBOW,TUBE UOC:AF9,AGP,F10	2
23	PAOZZ	5306002851368	11083	0L1143	BOLT,MACHINE UOC:AF9,AGP,F10	6
24	PFOZZ	5310010948810	78189	3320-14-01	WASHER,SQUARE CONE UOC:AF9,AGP,F10	6

END OF FIGURE

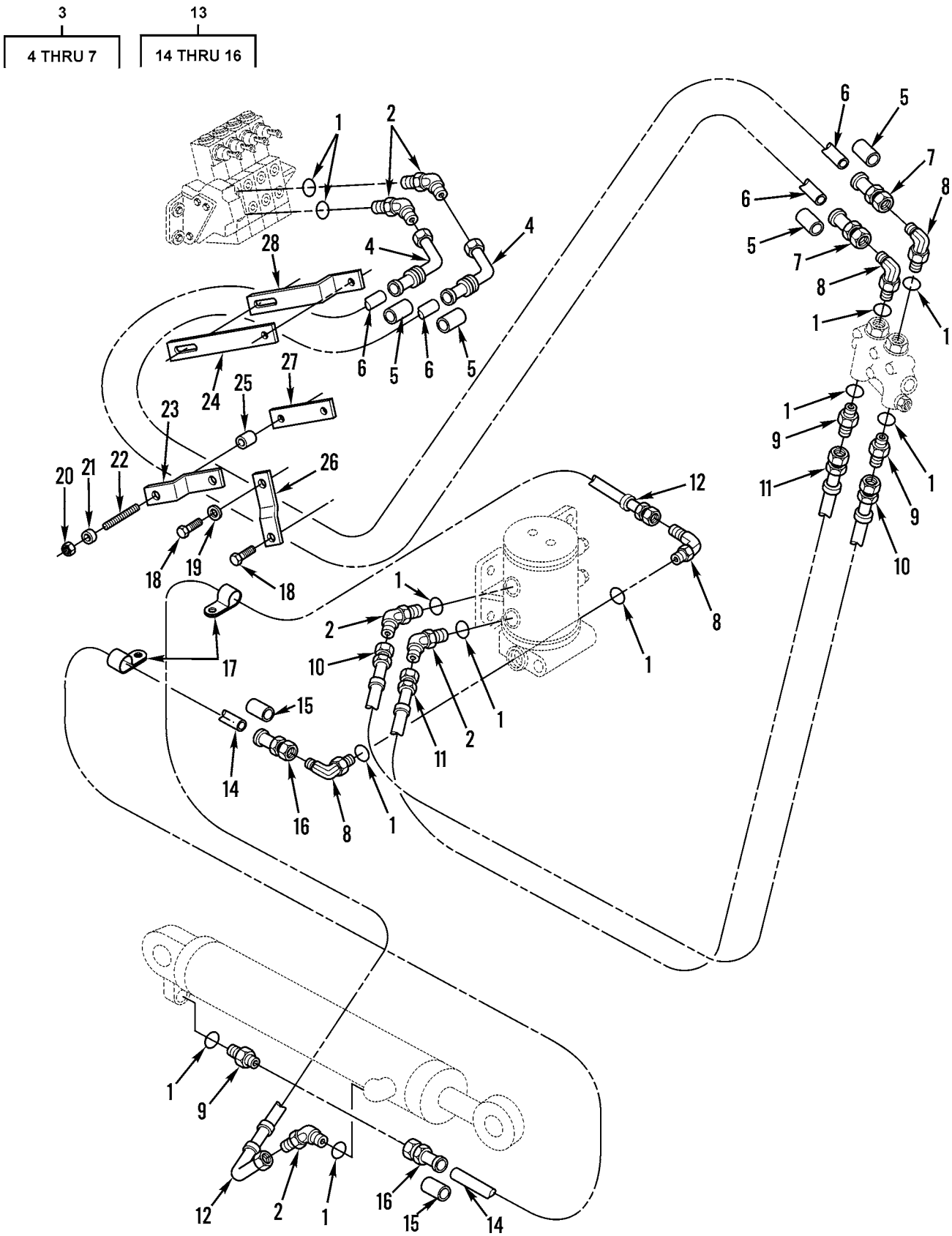

Figure 266. Blade Tip Hydraulic Lines and Fittings (SN 7GB00001 thru 7GB01223) (Sheet 1 of 2)

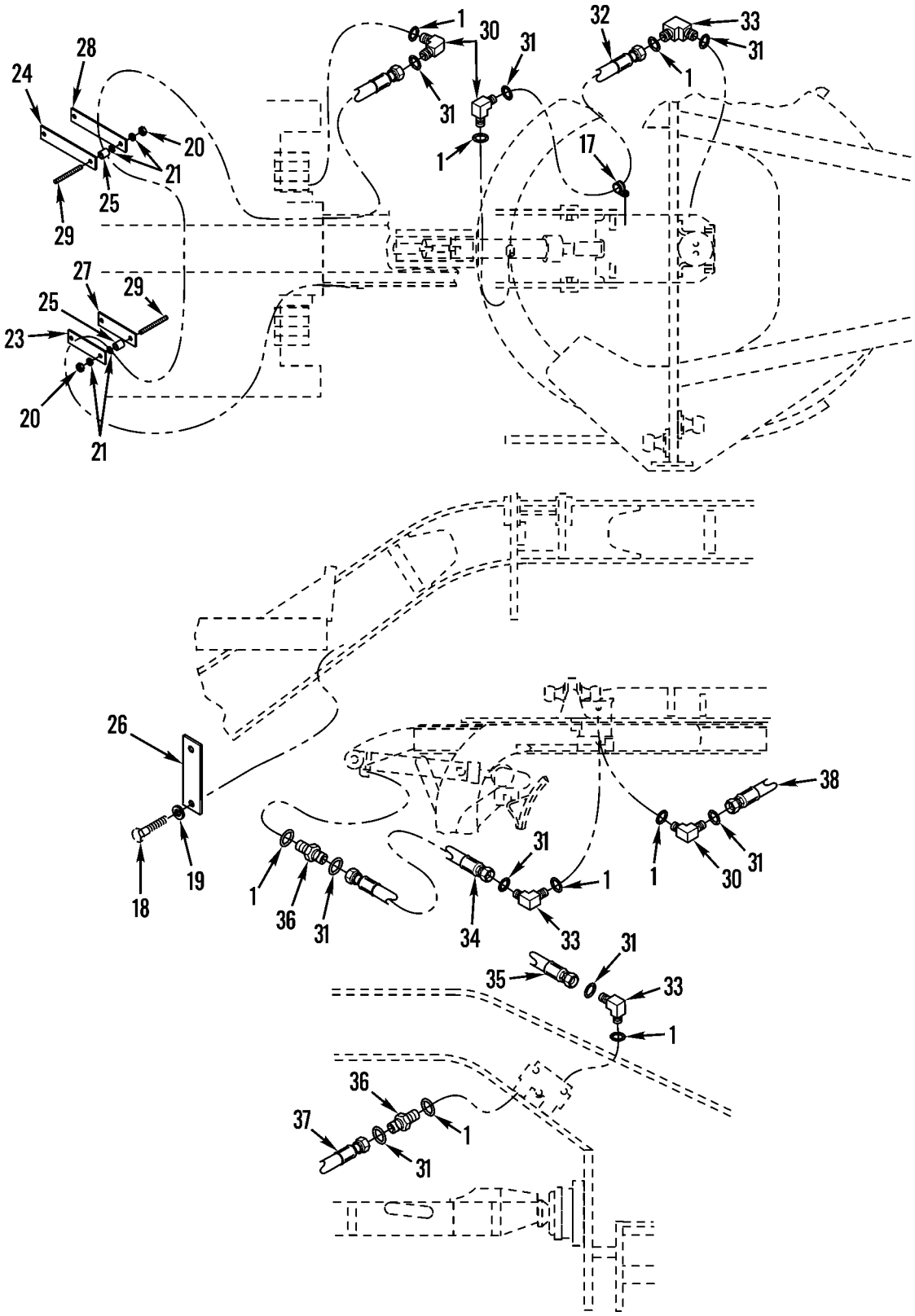

Figure 266. Blade Tip Hydraulic Lines and Fittings (SN 7GB01224 and Up) (Sheet 2 of 2)

(1) ITEM NO	(2) SMR CODE	(3) NSN	(4) CAGEC	(5) PART NUMBER	(6) DESCRIPTION AND USABLE ON CODES(UOC)	(7) QTY
					GROUP 2406 STRAINERS, FILTERS, LINES, AND FITTINGS, ETC. FIG. 266 BLADE TIP HYDRAULIC LINES AND FITTINGS	
1	PFOZZ	5331009486482	11083	3K0360	O-RING	12
2	PAOZZ	4730011619597	30780	6-8V5BX-S	ELBOW,TUBE TO BOSS	5
3	AOOOZ	4720011736918	11083	5T2461	HOSE ASSEMBLY,NONME	2
4	PFOZZ	4730010950833	11083	8S6393	.ELBOW,TUBE TO HOSE	2
5	PFOZZ	4730010950075	11083	4S5414	.SLEEVE,HOSE CONNECT	4
6	MOOZZ		11083	1650016-213	.HOSE,NONMETALLIC MAKE FROM P/N 1650016	2
7	PFOZZ	4730010947469	11083	8S6417	.ADAPTER,STRAIGHT,TU	2
8	PFOZZ	4730014710277	11083	0054362	ELBOW,QUICK DISCONN	4
9	PFOZZ	4730000807040	96906	MS51525A6-8	ADAPTER,STRAIGHT,TU	3
10	PFOZZ	4720011720588	11083	2G2558	HOSE ASSEMBLY,NONME	1
11	PFOZZ	4720011713342	11083	2G3791	HOSE ASSEMBLY,NONME	1
12	PFOZZ	4720011789676	11083	9D5970	HOSE ASSEMBLY,NONME	1
13	AOOOZ	4720011842798	11083	9D6048	HOSE ASSEMBLY,NONME	1
14	MOOZZ		11083	1650016-38	.HOSE,NONMETALLIC MAKE FROM P/N 1650016	1
15	PAOZZ	4730010950075	11083	4S5414	.SLEEVE,HOSE CONNECT	2
16	PAOZZ	4730010947469	11083	8S6417	.ADAPTER,STRAIGHT, TU	2
17	PFOZZ	5340011519308	11083	1S0994	CLAMP,LOOP	2
18	PFOZZ	5306010951237	11083	6K4936	BOLT,SELF-LOCKING	2
19	PFOZZ	5310014282756	11083	3F1417	WASHER,FLAT	1
20	PFOZZ	5310014297859	11083	6V8801	NUT,PLAIN,HEXAGON	1
21	PFOZZ	5310010948810	78189	3320-14-01	WASHER,SQUARE CONE	1
22	PFOZZ	5307009436167	11083	9M3296	STUD,CONTINUOUS THR	1
23	PAOZZ	5340010956093	11083	6G1715	STRAP,RETAINING	1
24	PFOZZ	5340011845836	11083	9D1209	PLATE,MENDING	1
25	XDOZZ		11083	9D0953	SPACER, SLEEVE	1
26	PAOZZ	5340011756901	11083	6G1714	BRACKET,DOUBLE ANGL	1
27	XDOZZ		11083	6D3386	SPACER,PLATE	1
28	PAOZZ	5340011706337	11083	6G1716	BRACKET,DOUBLE ANGL	1
29	PFOZZ	5307009005570	11083	3M0496	STUD,PLAIN UOC:AF9,AGP,F10	2
30	PFOZZ	4730014381943	11083	6V9876	ELBOW,TUBE UOC:AF9,AGP,F10	5
31	PFOZZ	5331005796495	11083	6V8397	O-RING UOC:AF9,AGP,F10	12
32	PFOZZ		11083	8W0120	HOSE ASSEMBLY UOC:AF9,AGP,F10	1
33	PFOZZ	4730014299750	11083	6V8723	ELBOW,TUBE UOC:AF9,AGP,F10	4
34	PFOZZ		11083	8W0042	HOSE ASSEMBLY UOC:AF9,AGP,F10	1
35	PFOZZ		11083	8W0163	HOSE ASSEMBLY UOC:AF9,AGP,F10	2
36	PFOZZ	5935014379075	11083	6V8634	CONNECTOR,PLUG,ELEC UOC:AF9,AGP,F10	3
37	PFOZZ	4720013439640	11083	8W0101	HOSE ASSEMBLY,METAL UOC:AF9,AGP,F10	1
38	PFOZZ		11083	8W0102	HOSE ASSEMBLY UOC:AF9,AGP,F10	1
					END OF FIGURE	

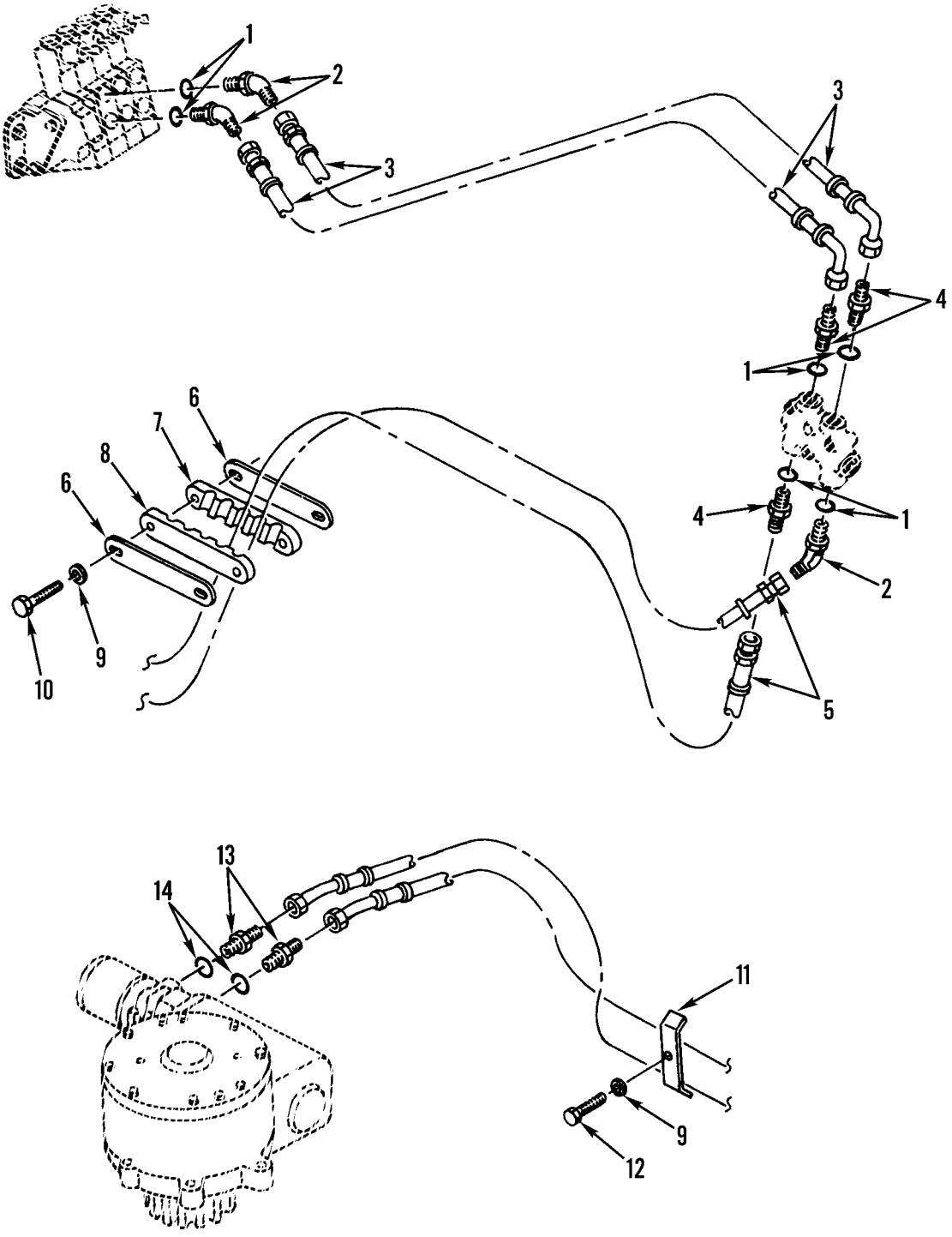

Figure 267. Circle Drive Hydraulic Lines and Fittings (SN 7GB00001 thru 7GB01223) (Sheet 1 of 2)

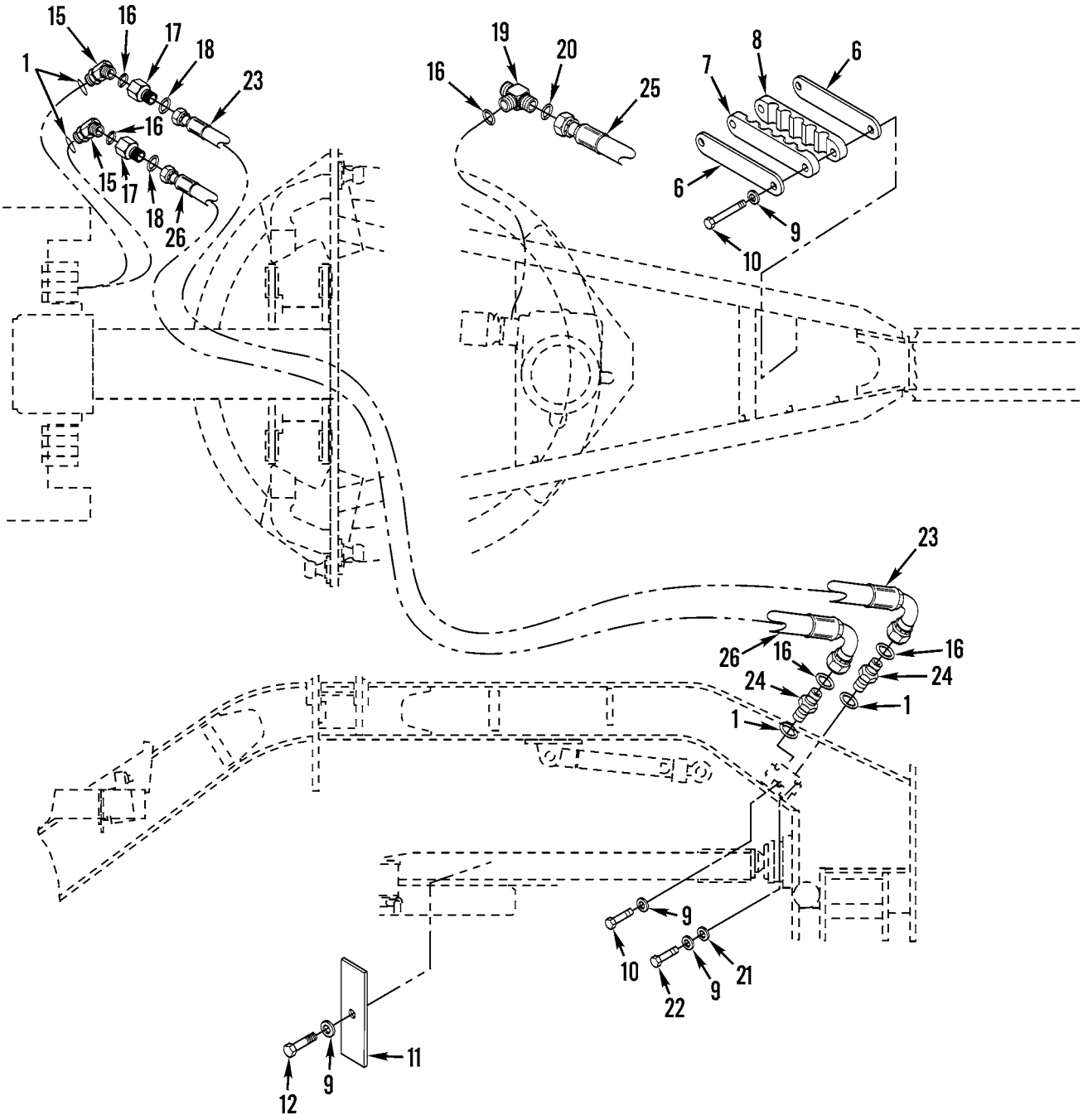

Figure 267. Circle Drive Hydraulic Lines and Fittings (SN 7GB01224 and Up)(Sheet 2 of 2)

(1) ITEM NO	(2) SMR CODE	(3) NSN	(4) CAGEC	(5) PART NUMBER	(6) DESCRIPTION AND USABLE ON CODES(UOC)	(7) QTY
					GROUP 2406 STRAINERS, FILTERS, LINES, AND FITTING, ETC. FIG. 267 CIRCLE DRIVE HYDRAULIC LINES AND FITTINGS	
1	PFFZZ	5331009486482	11083	3K0360	O-RING	6
2	PAFZZ	4730011619597	30780	6-8V5BX-S	ELBOW,TUBE TO BOSS	3
3	PAFZZ	4720011784846	11083	9D5964	HOSE ASSEMBLY,NONME	2
4	PFFZZ	4730000807040	96906	MS51525A6-8	ADAPTER,STRAIGHT,TU	3
5	PAOZZ	4720011789670	11083	2G3788	HOSE ASSEMBLY,NONME	2
6	PFFZZ	4030011697031	11083	2G2623	PLATE	2
7	PFFZZ	5340011722803	11083	2G2562	STRAP,RETAINING	1
8	PFFZZ	5340011720725	11083	2G2563	CLAMP,BLOCK,SECTION	1
9	PFOZZ	5310010948810	78189	3320-14-01	WASHER,SQUARE CONE	4
10	PFOZZ	5306002851368	11083	0L1143	BOLT,MACHINE UOC:AF9,AGP,F10	2
11	PAFZZ	5340011731375	11083	5D4988	STRAP,RETAINING	2
12	PFFZZ	5306002637301	11083	0L1351	BOLT,MACHINE	2
13	PFFZZ	4730010589100	11083	0308194	ADAPTER,STRAIGHT,TU	2
14	PFFZZ	5331001675174	81349	M83248/2-910	O-RING	2
15	PFFZA	4730013646397	11083	6V9001	ELBOW,HOSE UOC:AF9,AGP,F10	2
16	PFFZZ	5331005796495	11083	6V8397	O-RING UOC:AF9,AGP,F10	8
17	PAOZZ	4730009330727	30780	8-6-F5G5-S	REDUCER,BOSS UOC:AF9,AGP,F10	2
18	PFFZZ	5331013336444	11083	3J1907	O-RING UOC:AF9,AGP,F10	2
19	PFFZZ	4730014299759	11083	6V8715	TEE,TUBE UOC:AF9,AGP,F10	2
20	PFFZZ	5330009390687	11083	2M9780	PACKING,PREFORMED UOC:AF9,AGP,F10	2
21	PFFZZ	5310010954636	11083	7K4743	WASHER,RECESSED UOC:AF9,AGP,F10	2
22	PFFZZ	2910003099473	11083	0T0573	CAPSCREW,FUEL PUMP UOC:AF9,AGP,F10	2
23	PFFZZ		11083	8W0123	HOSE ASSEMBLY UOC:AF9,AGP,F10	1
24	PFFZZ	5935014379075	11083	6V8634	CONNECTOR,PLUG,ELEC UOC:AF9,AGP,F10	4
25	PFFZZ	4720013802953	11083	8W0214	TUBING ASSEMBLY,NON UOC:AF9,AGP,F10	2
26	PFFZZ		11083	8W0122	HOSE ASSEMBLY UOC:AF9,AGP,F10	1

END OF FIGURE

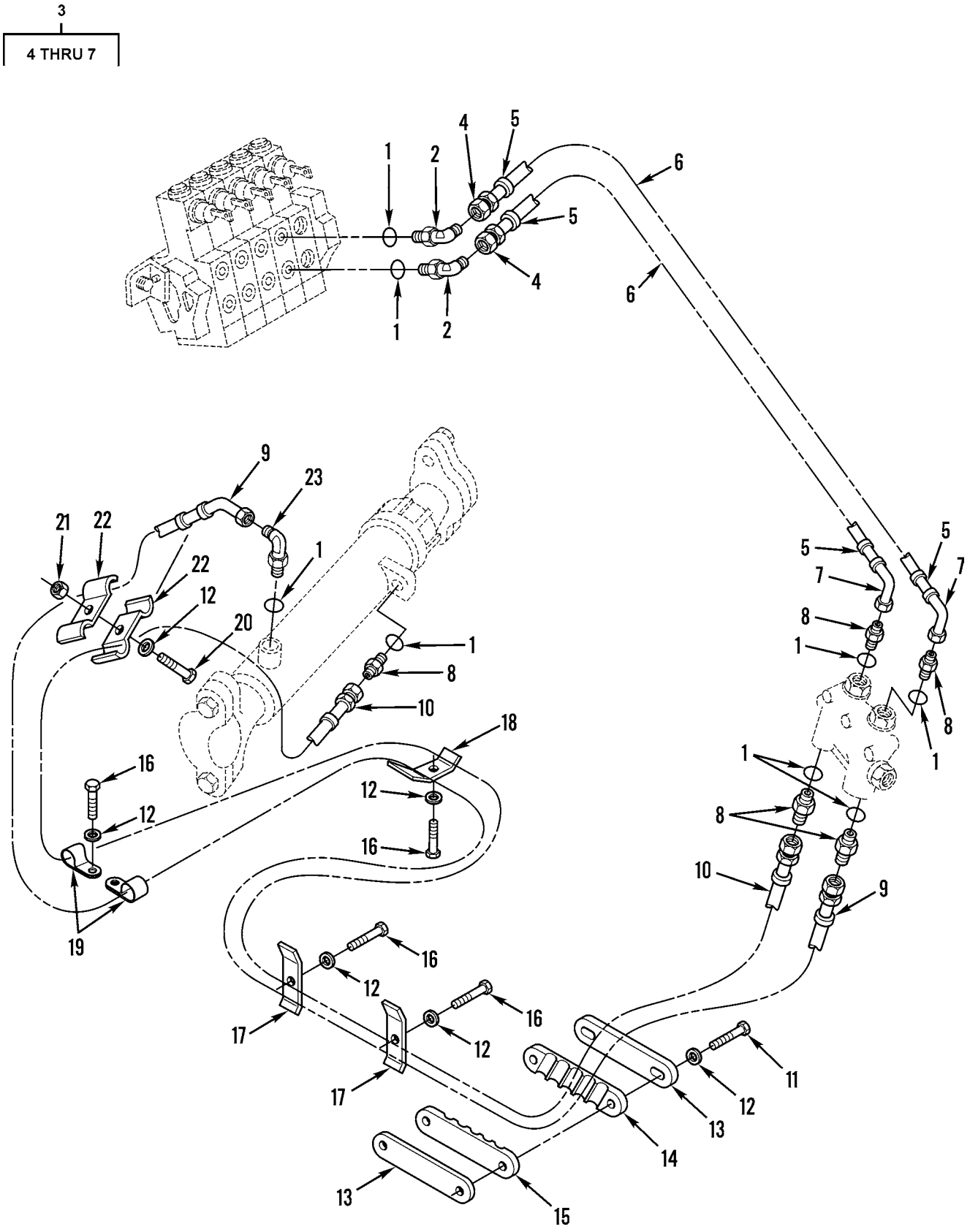

Figure 268. Centershift Hydraulic Lines and Fittings (SN 7GB00001 thru 7GB01223) (Sheet 1 of 2)

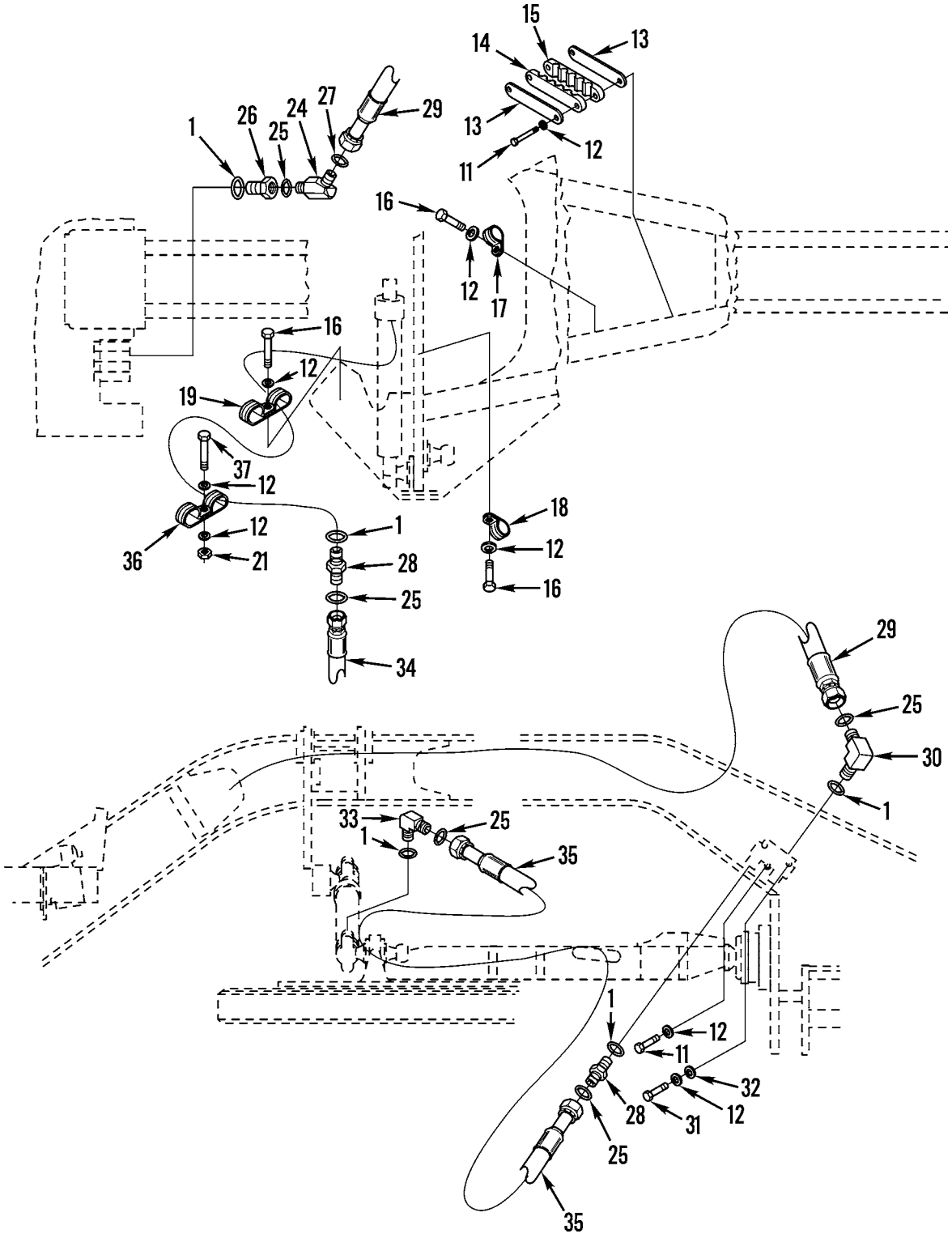

Figure 268. Centershift Hydraulic Lines and Fittings (SN 7GB01224 and Up) (Sheet 2 of 2)

(1) ITEM NO	(2) SMR CODE	(3) NSN	(4) CAGEC	(5) PART NUMBER	(6) DESCRIPTION AND USABLE ON CODES(UOC)	(7) QTY
					GROUP 2406 STRAINERS, FILTERS, LINES, AND FITTINGS, ETC. FIG. 268 CENTERSHIFT HYDRAULIC LINES AND FITTINGS	
1	PFOZZ	5331009486482	11083	3K0360	O-RING	8
2	PAOZZ	4730011619597	30780	6-8V5BX-S	ELBOW,TUBE TO BOSS	2
3	AOOOZ	4720011784840	11083	9D5960	HOSE ASSEMBLY,NONME	2
4	PFOZZ	4730010947469	11083	8S6417	.ADAPTER,STRAIGHT,TU	2
5	PFOZZ	4730010950075	11083	4S5414	.SLEEVE,HOSE CONNECT	2
6	MOOZZ		11083	1650016-154	.HOSE,NONMETALLIC MAKE FROM P/N 1650016	2
7	PFOZZ	4730010950833	11083	8S6393	.ELBOW,TUBE TO HOSE	2
8	PFOZZ	4730000807040	96906	MS51525A6-8	ADAPTER,STRAIGHT,TU	5
9	PAOZZ	4720011700790	11083	2G2553	HOSE ASSEMBLY,NONME	1
10	PAOZZ	4720011707054	11083	2G2559	HOSE ASSEMBLY,NONME	1
11	PFOZZ	5306002851368	11083	0L1143	BOLT,MACHINE	2
12	PFOZZ	5310010948810	78189	3320-14-01	WASHER,SQUARE CONE	1
13	PFOZZ	4030011697031	11083	2G2623	PLATE	2
14	PFOZZ	5340011722803	11083	2G2562	STRAP,RETAINING	1
15	PFOZZ	5340011720725	11083	2G2563	CLAMP,BLOCK,SECTION	1
16	PFOZZ	5306002637301	11083	0L1351	BOLT,MACHINE	4
17	PAOZZ	5340011731375	11083	5D4988	STRAP,RETAINING	2
18	PAOZZ	5340011731374	11083	4J5468	STRAP,RETAINING	1
19	PFOZZ	5340011519308	11083	1S0994	CLAMP,LOOP	2
20	PFOZZ	5306002604508	11083	0S1594	BOLT,MACHINE	1
21	PFOZZ	5310014297859	11083	6V8801	NUT,PLAIN,HEXAGON	1
22	PAOZZ	5340011731376	11083	4H9454	STRAP,RETAINING	2
23	PFOZZ	4730014710277	11083	0054362	ELBOW,QUICK DISCONN	1
24	PAOZA	4730013646397	11083	6V9001	ELBOW,HOSE UOC:AF9,AGP,F10	2
25	PAOZZ	5331005796495	11083	6V8397	O-RING UOC:AF9,AGP,F10	8
26	PAOZZ	4730009330727	30780	8-6-F5G5-S	REDUCER,BOSS UOC:AF9,AGP,F10	2
27	PAOZZ	5331013336444	11083	3J1907	O-RING UOC:AF9,AGP,F10	2
28	PFOZZ	5935014379075	11083	6V8634	CONNECTOR,PLUG,ELEC UOC:AF9,AGP,F10	3
29	PAOZZ		11083	8W0123	HOSE ASSEMBLY UOC:AF9,AGP,F10	2
30	PFOZZ	4730014381943	11083	6V9876	ELBOW,TUBE UOC:AF9,AGP,F10	2
31	PFOZZ	2910003099473	11083	0T0573	CAPSCREW,FUEL PUMP UOC:AF9,AGP,F10	2
32	PFOZZ	5310010954636	11083	7K4743	WASHER,RECESSED UOC:AF9,AGP,F10	2
33	PFOZZ	4730014299750	11083	6V8723	ELBOW,TUBE UOC:AF9,AGP,F10	1
34	PFOZZ		11083	8W0157	HOSE ASSEMBLY UOC:AF9,AGP,F10	1
35	PFOZZ		11083	8W0156	HOSE ASSEMBLY	1

(1) ITEM NO	(2) SMR CODE	(3) NSN	(4) CAGEC	(5) PART NUMBER	(6) DESCRIPTION AND USABLE ON CODES(UOC)	(7) QTY
					UOC:AF9,AGP,F10	
36	PFOZZ		11083	9M9130	CLAMP.....	2
					UOC:AF9,AGP,F10	
37	PFOZZ	5306004238194	11083	1A2029	BOLT,MACHINE.....	1
					UOC:AF9,AGP,F10	

END OF FIGURE

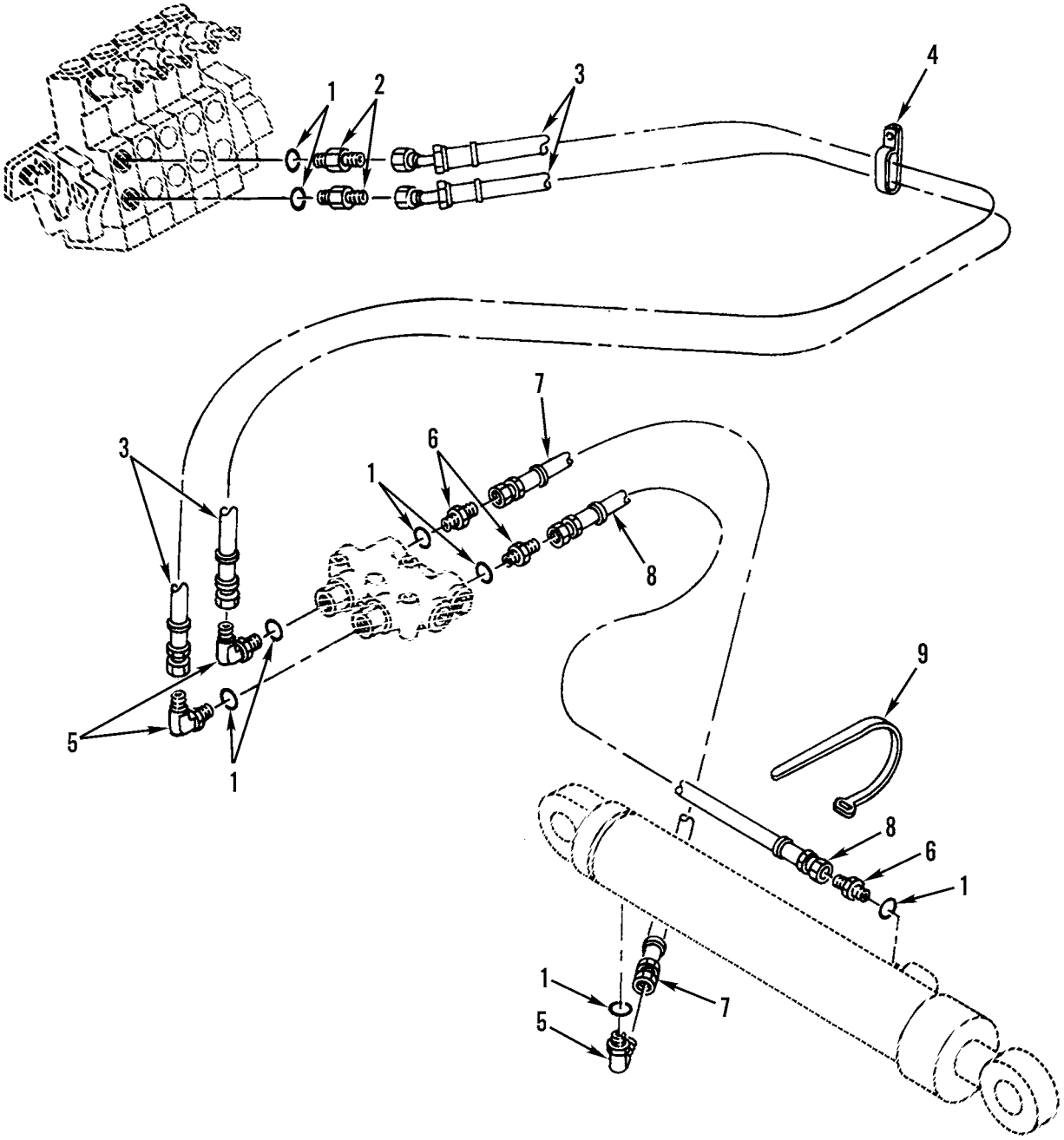

Figure 269. Scarifier Hydraulic Lines and Fittings (SN 7GB00001 thru 7GB01223) (Sheet 1 of 2)

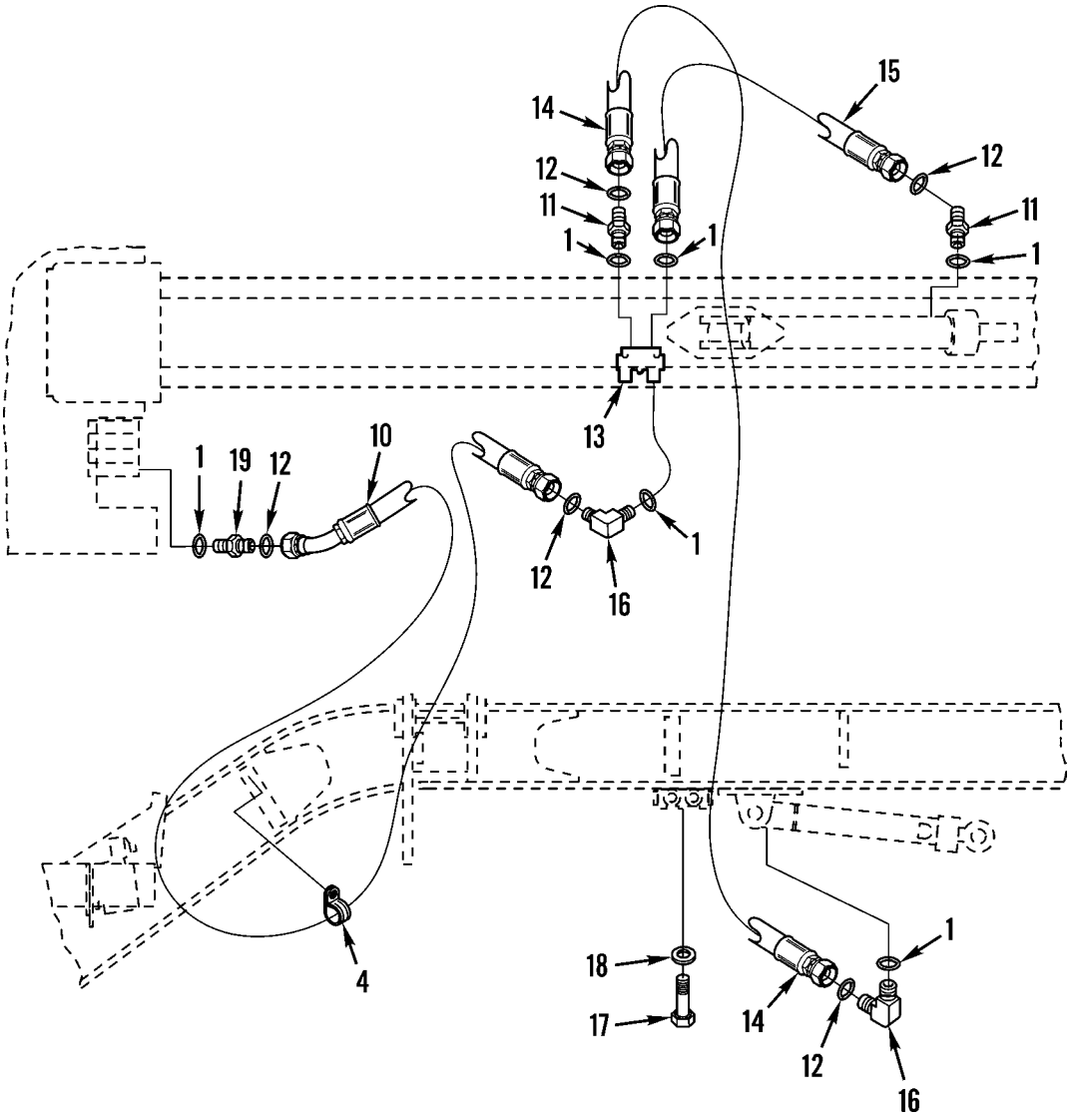

Figure 269. Scarifier Hydraulic Lines and Fittings (SN 7GB01224 and Up) (Sheet 2 of 2)

(1) ITEM NO	(2) SMR CODE	(3) NSN	(4) CAGEC	(5) PART NUMBER	(6) DESCRIPTION AND USABLE ON CODES(UOC)	(7) QTY
					GROUP 2406 STRAINERS, FILTERS, LINES, AND FITTINGS, ETC. FIG. 269 SCARIFIER HYDRAULIC LINES AND FITTINGS	
1	PAOZZ	5331009486482	11083	3K0360	O-RING	8
2	PAOZZ	4730011774706	11083	8D9088	ADAPTER,STRAIGHT,TU	2
3	PAOZZ	4720011788828	11083	2G8255	HOSE ASSEMBLY,NONME	1
4	PFOZZ	5340011736745	11083	6D4247	CLAMP,LOOP	1
5	PAOZZ	4730014710277	11083	0054362	ELBOW,QUICK DISCONN	3
6	PAOZZ	4730000807040	96906	MS51525A6-8	ADAPTER,STRAIGHT,TU	3
7	PAOZZ	4720011788827	11083	2G6532	HOSE ASSEMBLY,NONME	1
8	PAOZZ	4720011796269	11083	9D5973	HOSE ASSEMBLY,NONME	1
9	PAOZZ	2815010534712	11083	7K1181	STRAP	1
10	PAOZZ		11083	8W0185	HOSE ASSEMBLY UOC:AF9,AGP,F10	2
11	PFOZZ	5935014379075	11083	6V8634	CONNECTOR,PLUG,ELEC UOC:AF9,AGP,F10	3
12	PAOZZ	5331005796495	11083	6V8397	O-RING UOC:AF9,AGP,F10	8
13	PAOZZ		11083	9T0978	VALVE,RESTRICTOR UOC:AF9,AGP,F10	1
14	PAOZZ		11083	8W0184	HOSE ASSEMBLY UOC:AF9,AGP,F10	1
15	PAOZZ		11083	8W0119	HOSE ASSEMBLY UOC:AF9,AGP,F10	1
16	PFOZZ	4730014299750	11083	6V8723	ELBOW,TUBE UOC:AF9,AGP,F10	3
17	PAOZZ	5306002851368	11083	0L1143	BOLT,MACHINE UOC:AF9,AGP,F10	3
18	PFOZZ	5310010948810	78189	3320-14-01	WASHER,SQUARE CONE UOC:AF9,AGP,F10	3
19	PAOZZ	4730015143461	11083	8T0076	ADAPTER,STRAIGHT,PI UOC:AF9,AGP,F10	2

END OF FIGURE

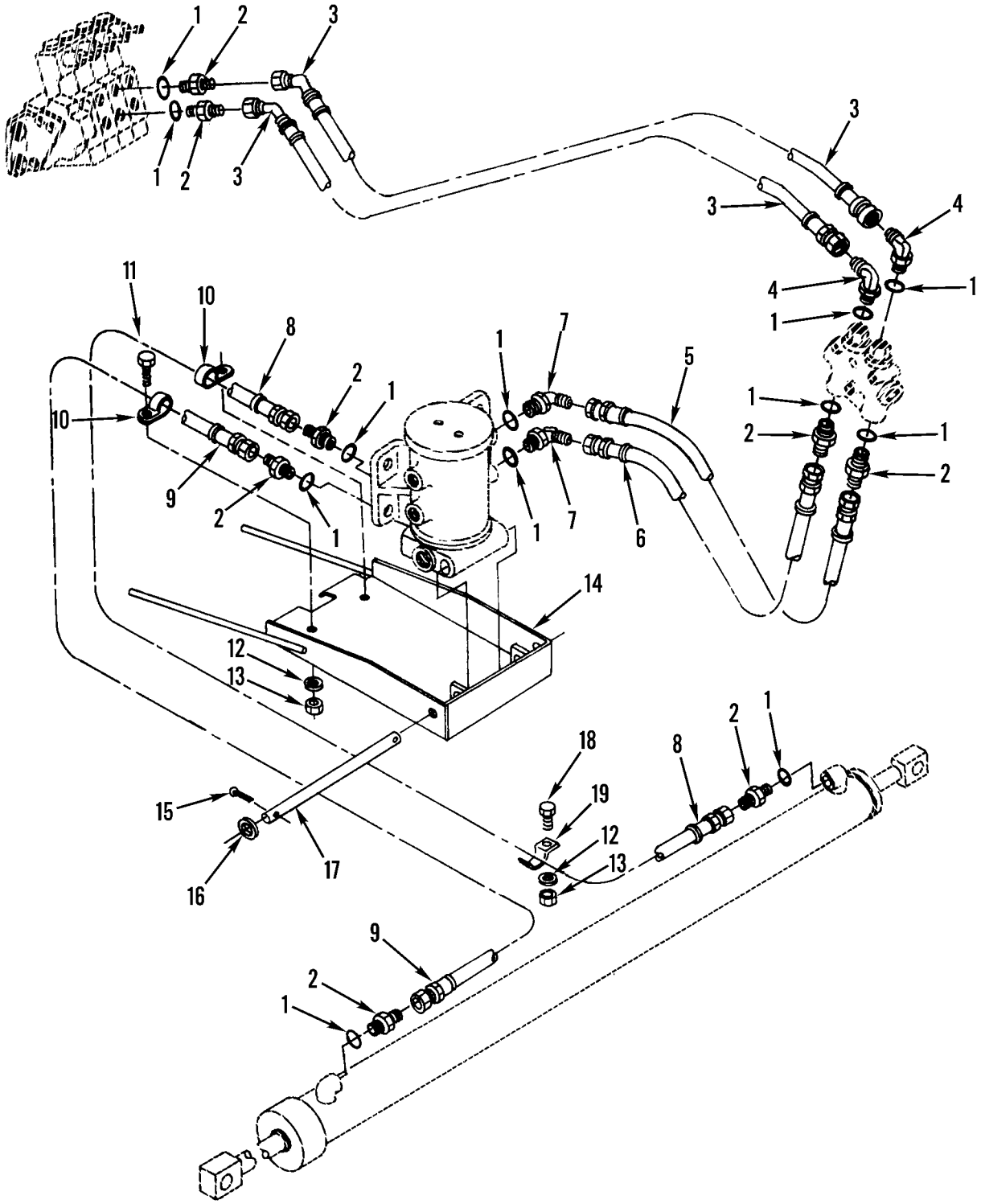

Figure 270. Power Blade Hydraulic Lines and Fittings (SN 7GB00001 thru 7GB01223) (Sheet 1 of 2)

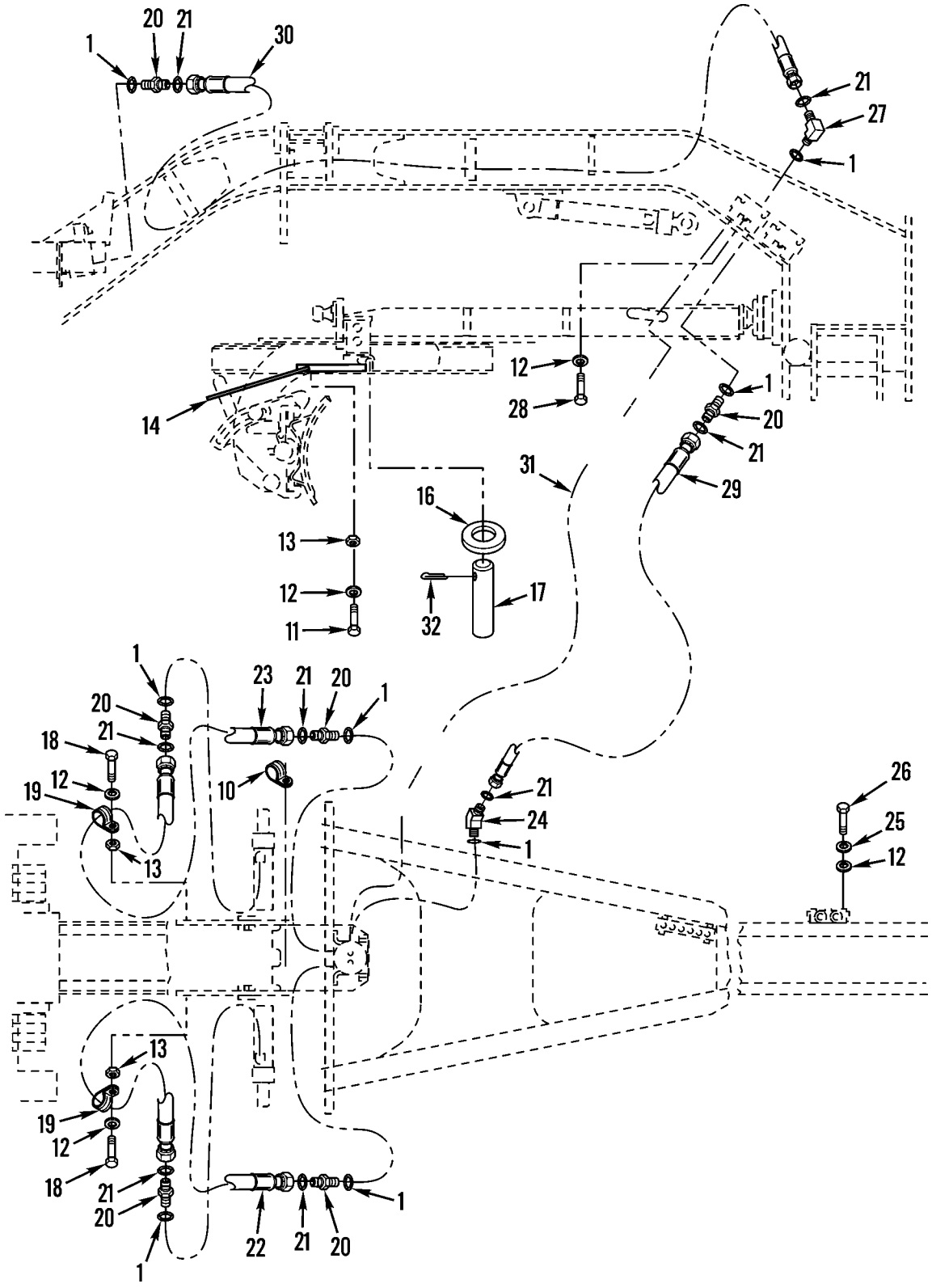

Figure 270. Power Blade Hydraulic Lines and Fittings (SN 7GB01224 and Up) (Sheet 2 of 2)

(1) ITEM NO	(2) SMR CODE	(3) NSN	(4) CAGEC	(5) PART NUMBER	(6) DESCRIPTION AND USABLE ON CODES(UOC)	(7) QTY
					GROUP 2406 STRAINERS, FILTERS, LINES, AND FITTINGS, ETC. FIG. 270 POWER BLADE HYDRAULIC LINES AND FITTINGS	
1	PAOZZ	5331009486482	11083	3K0360	O-RING	12
2	PAOZZ	4730000807040	96906	MS51525A6-8	ADAPTER,STRAIGHT,TU	8
3	PAOZZ	4720011815784	11083	9D5982	HOSE ASSEMBLY,NONME	2
4	PAOZZ	4730014710277	11083	0054362	ELBOW,QUICK DISCONN	2
5	PAOZZ	4720011720588	11083	2G2558	HOSE ASSEMBLY,NONME	1
6	PAOZZ	4720011713342	11083	2G3791	HOSE ASSEMBLY,NONME	1
7	PAOZZ	4730011619597	30780	6-8V5BX-S	ELBOW,TUBE TO BOSS	2
8	PAOZZ	4720011815782	11083	9D6068	HOSE ASSEMBLY,NONME	1
9	PAOZZ	4720011815783	11083	9D5980	HOSE ASSEMBLY,NONME	1
10	PFOZZ	5340011519308	11083	1S0994	CLAMP,LOOP	2
11	PFOZZ	5306004238194	11083	1A2029	BOLT,MACHINE	2
12	PFOZZ	5310010948810	78189	3320-14-01	WASHER,SQUARE CONE	6
13	PFOZZ	5310014297859	11083	6V8801	NUT,PLAIN,HEXAGON	4
14	PFOZZ	2510011774796	11083	2A7081	GUIDE ASSEMBLY,BODY	1
15	PFOZZ	5315001879550	80205	MS24665-419	PIN,COTTER	2
16	PFOZZ	5310011022477	11083	5P8248	WASHER,FLAT	2
17	PFOZZ	5315011057584	11083	8D9092	PIN	1
18	PFOZZ	5306002604508	11083	0S1594	BOLT,MACHINE	2
19	PFOZZ	5340011949439	11083	3K8320	STRAP,RETAINING	2
20	PFOZZ	5935014379075	11083	6V8634	CONNECTOR,PLUG,ELEC UOC:AF9,AGP,F10	8
21	PFOZZ	5331005796495	11083	6V8397	O-RING UOC:AF9,AGP,F10	12
22	PAOZZ		11083	8W0100	HOSE ASSEMBLY UOC:AF9,AGP,F10	1
23	PAOZZ		11083	8W0099	HOSE ASSEMBLY UOC:AF9,AGP,F10	1
24	PFOZZ	4730014381943	11083	6V9876	ELBOW,TUBE UOC:AF9,AGP,F10	2
25	PFOZZ	5310010954636	11083	7K4743	WASHER,RECESSED UOC:AF9,AGP,F10	2
26	PFOZZ	2910003099473	11083	0T0573	CAPSCREW,FUEL PUMP UOC:AF9,AGP,F10	2
27	PFOZZ	4730014299750	11083	6V8723	ELBOW,TUBE UOC:AF9,AGP,F10	2
28	PAOZZ	5306002851368	11083	0L1143	BOLT,MACHINE UOC:AF9,AGP,F10	1
29	PFOZZ		11083	8W0102	HOSE ASSEMBLY UOC:AF9,AGP,F10	1
30	PAOZZ		11083	8W0103	HOSE ASSEMBLY UOC:AF9,AGP,F10	2
31	PFOZZ	4720013439640	11083	8W0101	HOSE ASSEMBLY,METAL UOC:AF9,AGP,F10	1
32	PAOZZ	5315000187988	80205	MS24665-493	PIN,COTTER UOC:AF9,AGP,F10	2

END OF FIGURE

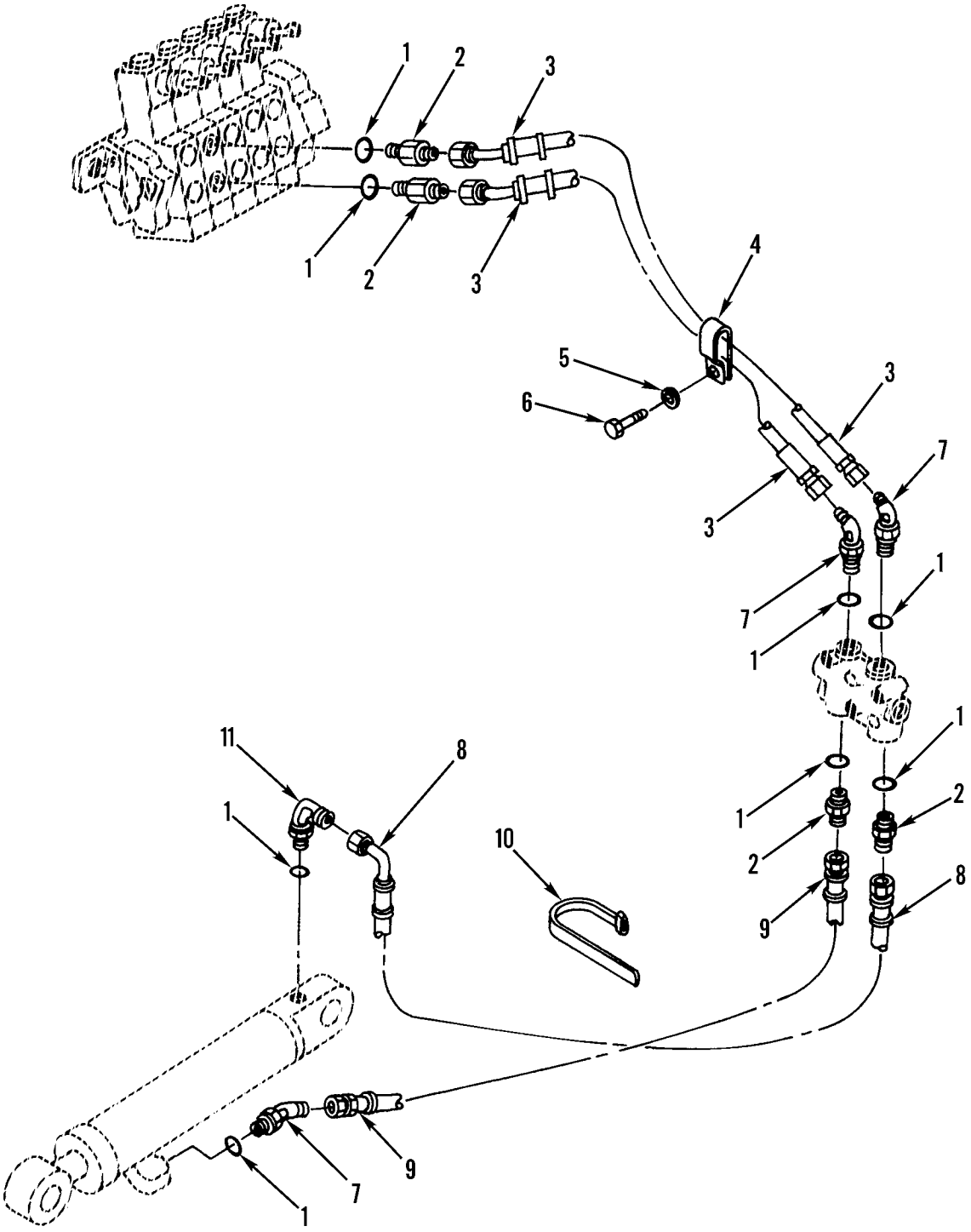

Figure 271. Leaning Wheel Hydraulic Lines and Fittings (SN 7GB00001 thru 7GB01223) (Sheet 1 of 2)

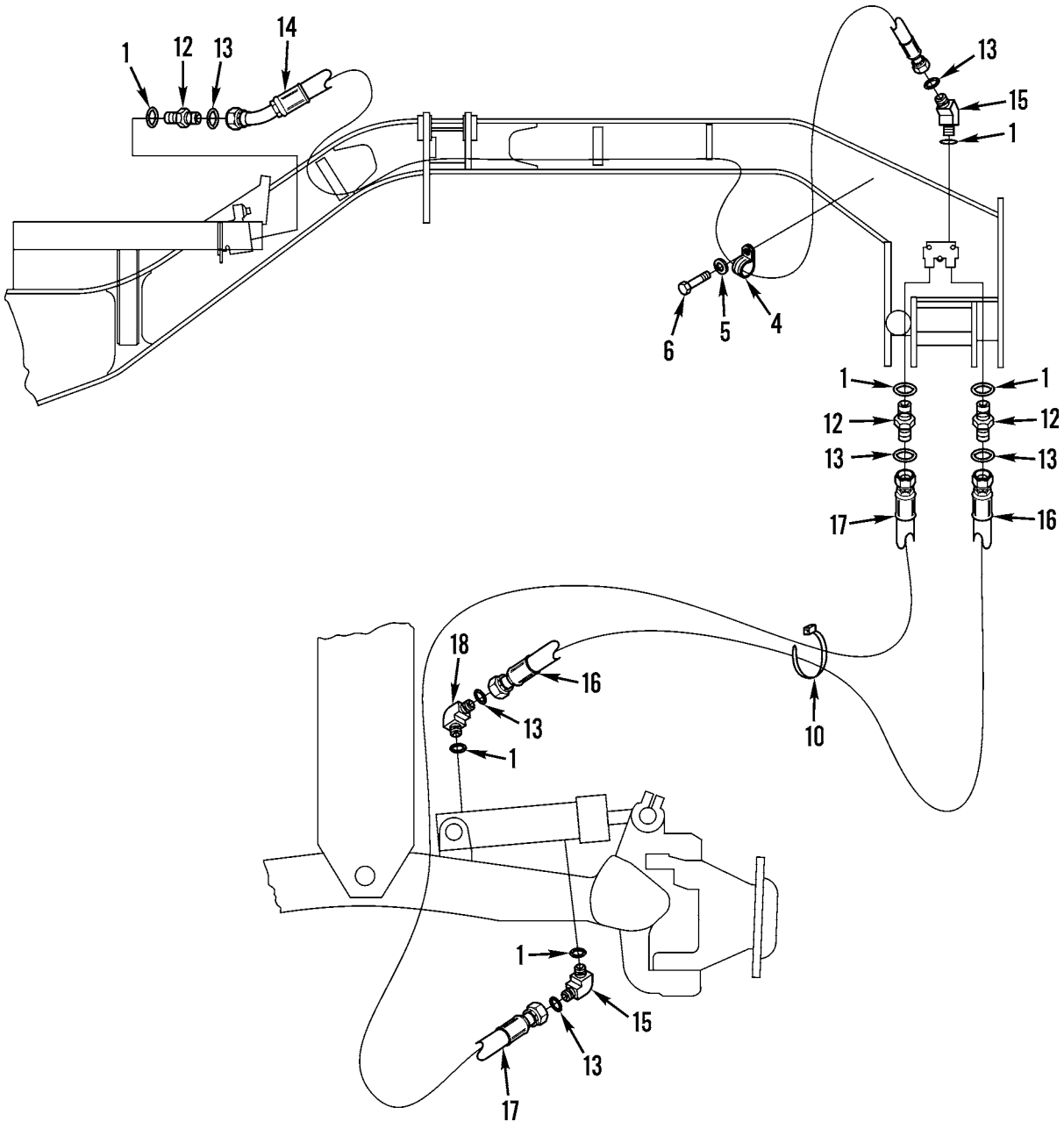

Figure 271. Leaning Wheel Hydraulic Lines and Fittings (SN 7GB01224 and Up) (Sheet 2 of 2)

(1) ITEM NO	(2) SMR CODE	(3) NSN	(4) CAGEC	(5) PART NUMBER	(6) DESCRIPTION AND USABLE ON CODES(UOC)	(7) QTY
					GROUP 2406 STRAINERS, FILTERS, LINES, AND FITTINGS, ETC. FIG. 271 LEANING WHEEL HYDRAULIC LINES AND FITTINGS	
1	PFOZZ	5331009486482	11083	3K0360	O-RING	8
2	PFOZZ	4730000807040	96906	MS51525A6-8	ADAPTER,STRAIGHT,TU	4
3	PAOZZ	4720011784839	11083	9D8488	HOSE ASSEMBLY,NONME	2
4	PFOZZ	5340011736745	11083	6D4247	CLAMP,LOOP	1
5	PFOZZ	5310010948810	78189	3320-14-01	WASHER,SQUARE CONE	1
6	PFOZZ	5306010951237	11083	6K4936	BOLT,SELF-LOCKING	1
7	PAOZZ	4730011619597	30780	6-8V5BX-S	ELBOW,TUBE TO BOSS	3
8	PAOZZ	4720011789676	11083	9D5970	HOSE ASSEMBLY,NONME	1
9	PAOZZ	4720011789675	11083	9D5857	HOSE ASSEMBLY,NONME	1
10	PAOZZ	2920010589099	11083	3S2093	STRAP	1
11	PFOZZ	4730014710277	11083	0054362	ELBOW,QUICK DISCONN	1
12	PFOZZ	5935014379075	11083	6V8634	CONNECTOR,PLUG,ELEC UOC:AF9,AGP,F10	4
13	PAOZZ	5331005796495	11083	6V8397	O-RING UOC:AF9,AGP,F10	8
14	PFOZZ		11083	8W0206	HOSE ASSEMBLY UOC:AF9,AGP,F10	2
15	PFOZZ	4730014381943	11083	6V9876	ELBOW,TUBE UOC:AF9,AGP,F10	3
16	PAOZZ		11083	8W0120	HOSE ASSEMBLY UOC:AF9,AGP,F10	1
17	PFOZZ		11083	8W0125	HOSE ASSEMBLY UOC:AF9,AGP,F10	1
18	PFOZZ	4730014299750	11083	6V8723	ELBOW,TUBE UOC:AF9,AGP,F10	1
					END OF FIGURE	

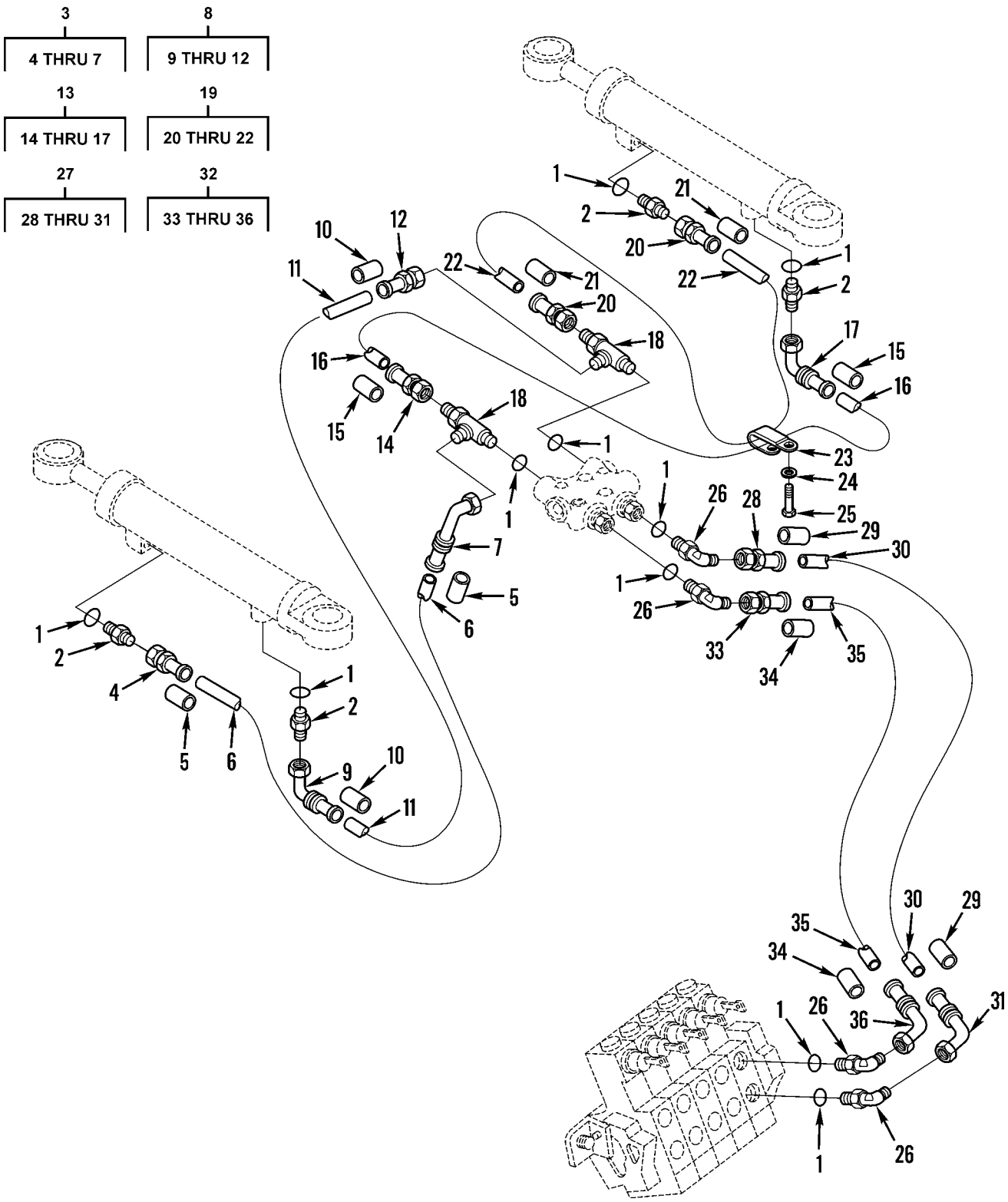

Figure 272. Articulation Hydraulic Lines and Fittings (SN 7GB00001 thru 7GB01223) (Sheet 1 of 4)

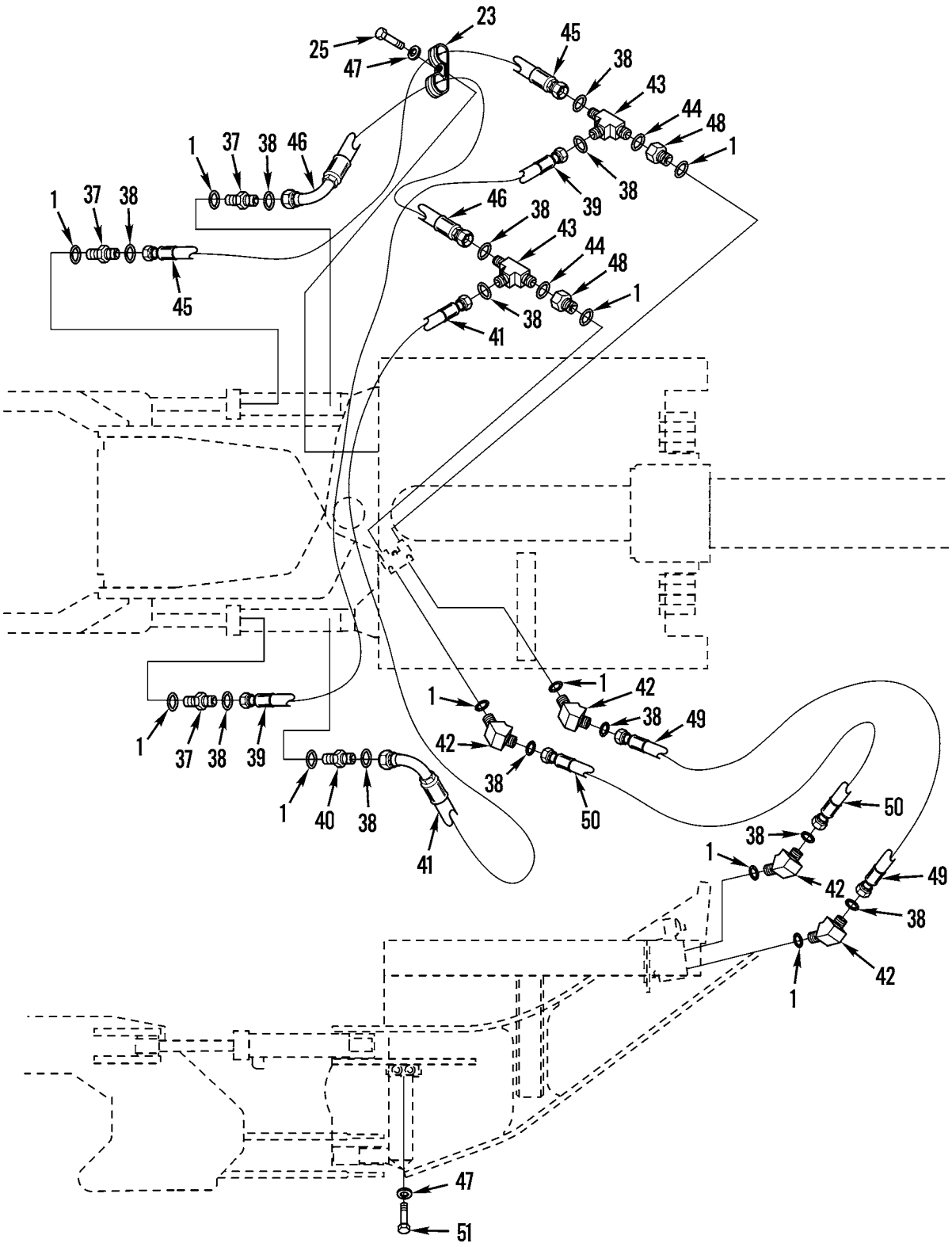

Figure 272. Articulation Hydraulic Lines and Fittings (SN 7GB01224) (Sheet 2 of 4)

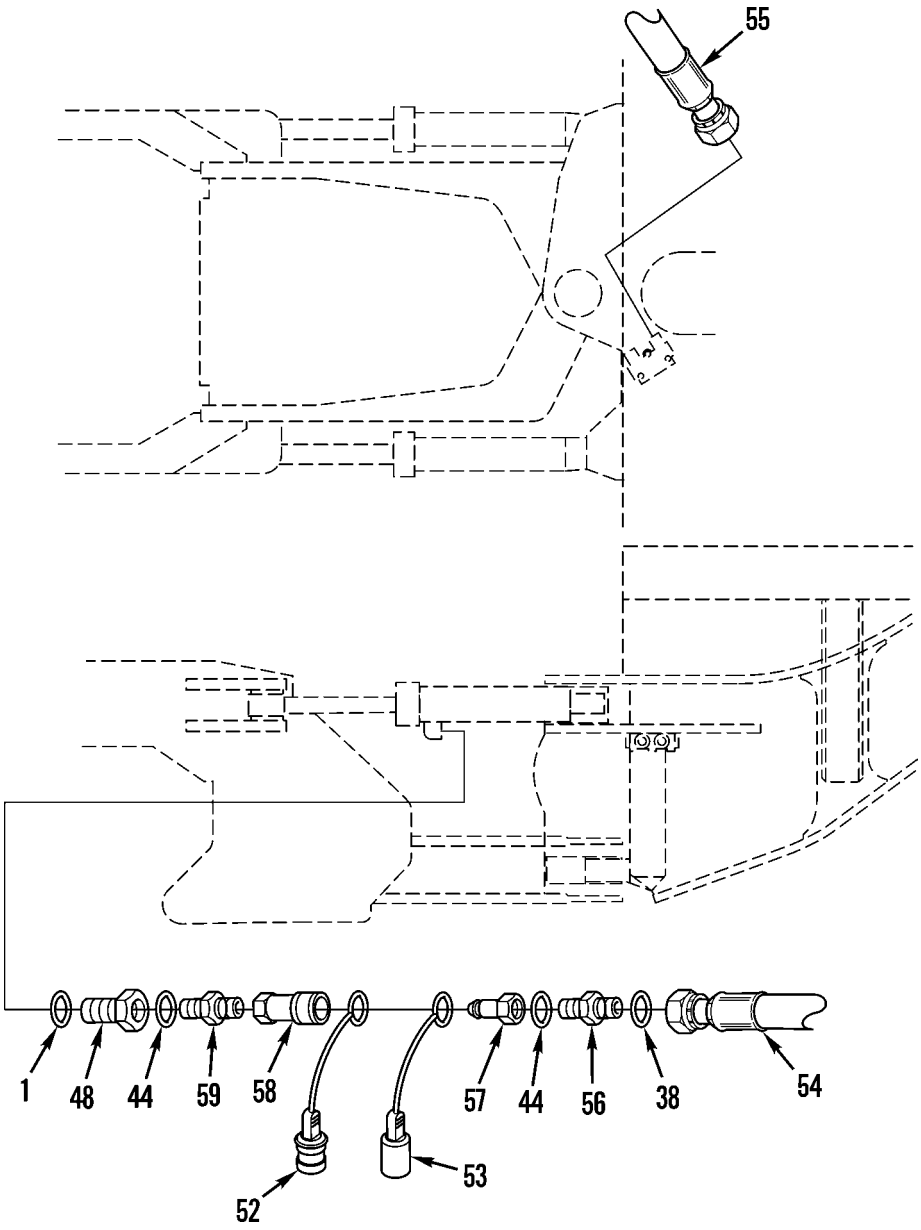

Figure 272. Articulation Hydraulic Lines and Fittings (SN 7GB01224 and up) (Sheet 3 of 4)

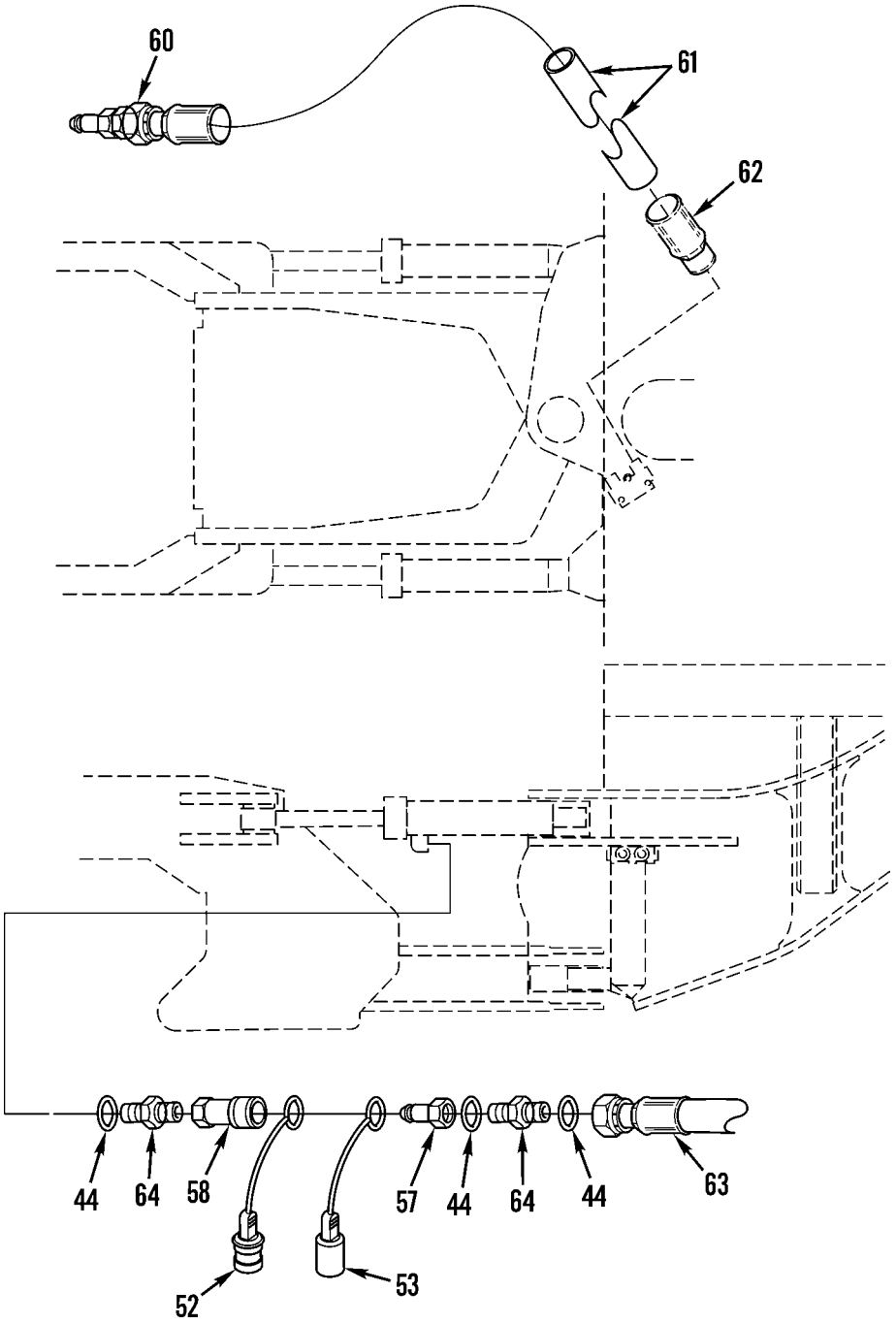

Figure 272. Articulation Hydraulic Lines and Fittings (Sheet 4 of 4)

(1) ITEM NO	(2) SMR CODE	(3) NSN	(4) CAGEC	(5) PART NUMBER	(6) DESCRIPTION AND USABLE ON CODES(UOC)	(7) QTY
					GROUP 2406 STRAINERS, FILTERS, LINES, AND FITTINGS, ETC. FIG. 272 ARTICULATION HYDRAULIC LINES AND FITTINGS	
1	PAOZZ	5331009486482	11083	3K0360	O-RING	10
2	PAOZZ	4730011564835	46717	AC-1-310	ADAPTER,STRAIGHT,TU	4
3	AOOOZ	4720012000809	11083	5T7298	HOSE ASSEMBLY,NONME	4
4	PAOZZ		11083	2P0987	.ADAPTER,STRAIGHT,TU	1
5	PAOZZ	4730010950075	11083	4S5414	.SLEEVE,HOSE CONNECT	2
6	MOOZZ		11083	1650016-20.5	.HOSE,NONMETALLIC MAKE FROM P/N 1650016	1
7	PAOZZ	4730011681908	11083	2P1458	.ELBOW,TUBE TO HOSE	1
8	AOOOZ	4720011834579	11083	5T7299	HOSE ASSEMBLY,NONME	1
9	PAOZZ	4730011838225	11083	2P1461	.ELBOW,TUBE TO HOSE	1
10	PAOZZ	4730010950075	11083	4S5414	.SLEEVE,HOSE CONNECT	2
11	MOOZZ		11083	1650016-13	.HOSE,NONMETALLIC MAKE FROM P/N 1650016	1
12	PAOZZ		11083	2P0987	.ADAPTER,STRAIGHT,TU	1
13	AOOOZ	4720011834580	11083	5T7694	HOSE ASSEMBLY,NONME	1
14	PAOZZ		11083	2P0987	.ADAPTER,STRAIGHT,TU	1
15	PAOZZ	4730010950075	11083	4S5414	.SLEEVE,HOSE CONNECT	1
16	MOOZZ		11083	1650016-24.4	.HOSE,NONMETALLIC MAKE FROM P/N 1650016	1
17	PAOZZ	4730011838225	11083	2P1461	.ELBOW,TUBE TO HOSE	1
18	PAOZZ	4730006252935	96906	MS51530B8	TEE,TUBE TO BOSS	2
19	AOOOZ	4720011834581	11083	5T5225	HOSE ASSEMBLY,NONME	1
20	PAOZZ		11083	2P0987	.ADAPTER,STRAIGHT,TU	2
21	PAOZZ	4730010950075	11083	4S5414	.SLEEVE,HOSE CONNECT	2
22	PAOZZ		11083	1650016-37	.HOSE,NONMETALLIC MAKE FROM P/N 1650016	1
23	PFOZZ	5340011736745	11083	6D4247	CLAMP,LOOP	1
24	PFOZZ	5310010948810	78189	3320-14-01	WASHER,SQUARE CONE	1
25	PFOZZ	5305007215492	80204	B1821BH038C063N	SCREW,CAP,HEXAGON H	1
26	PAOZZ	4730011619597	30780	6-8V5BX-S	ELBOW,TUBE TO BOSS	4
27	AOOOZ	4720011834577	11083	5T7693	HOSE ASSEMBLY,NONME	1
28	PAOZZ	4730010947469	11083	8S6417	.ADAPTER,STRAIGHT,TU	1
29	PAOZZ	4730010950075	11083	4S5414	.SLEEVE,HOSE CONNECT	2
30	MOOZZ		11083	1650016-52	.HOSE,NONMETALLIC MAKE FROM P/N 1650016	1
31	PFOZZ	4730010950833	11083	8S6393	.ELBOW,TUBE TO HOSE	1
32	AOOOZ	4720011834578	11083	5T7692	HOSE ASSEMBLY,NONME	1
33	PAOZZ	4730010947469	11083	8S6417	.ADAPTER,STRAIGHT,TU	1
34	PAOZZ	4730010950075	11083	4S5414	.SLEEVE,HOSE CONNECT	2
35	MOOZZ		11083	1650016-50	.HOSE,NONMETALLIC MAKE FROM P/N 1650016	1
36	PFOZZ	4730010950833	11083	8S6393	.ELBOW,TUBE TO HOSE	1
37	PAOZZ	5935014379075	11083	6V8634	CONNECTOR,PLUG,ELEC UOC:AF9,AGP	3
38	PAOZZ	5331005796495	11083	6V8397	O-RING UOC:AF9,AGP	12
39	PAOZZ		11083	8W0189	HOSE ASSEMBLY	1

(1) ITEM NO	(2) SMR CODE	(3) NSN	(4) CAGEC	(5) PART NUMBER	(6) DESCRIPTION AND USABLE ON CODES(UOC)	(7) QTY
					UOC:AF9,AGP	
40	PAOZZ	4730015143461	11083	8T0076	ADAPTER,STRAIGHT,PI.....	1
					UOC:AF9,AGP	
41	PAOZZ		11083	8W0188	HOSE ASSEMBLY.....	1
					UOC:AF9,AGP,F10	
42	PFOZZ	4730014381943	11083	6V9876	ELBOW,TUBE.....	4
					UOC:AF9,AGP,F10	
43	PAOZZ	4730014380751	11083	6V8781	TEE,TUBE.....	2
					UOC:AF9,AGP,F10	
44	PAOZZ	5331013336444	11083	3J1907	O-RING.....	2
					UOC:AF9,AGP,F10	
45	PAOZZ		11083	8W0190	HOSE ASSEMBLY.....	1
					UOC:AF9,AGP	
46	PAOZZ		11083	8W0193	HOSE ASSEMBLY.....	1
					UOC:AF9,AGP,F10	
47	PAOZZ	5310001174788	11083	5M2894	WASHER,FLAT.....	4
					UOC:AF9,AGP,F10	
48	PFOZZ	4730009330727	30780	8-6-F5G5-S	REDUCER,BOSS.....	2
					UOC:AF9,AGP,F10	
49	PAOZZ		11083	8W0191	HOSE ASSEMBLY.....	1
					UOC:AF9,AGP,F10	
50	PAOZZ		11083	8W0192	HOSE ASSEMBLY.....	1
					UOC:AF9,AGP,F10	
51	PAOZZ	5306002851368	11083	0L1143	BOLT,MACHINE.....	3
					UOC:AF9,AGP,F10	
52	PAOZZ	5340000713830	01276	5659-6	PLUG,PROTECTIVE,DUS.....	4
					UOC:AGM,F10	
53	PAOZZ	5340000713829	01276	5657-6	CAP,PROTECTIVE,DUST.....	4
					UOC:AGM,F10	
54	PAOZZ	4720012948774	11083	5R8415	HOSE ASSEMBLY,NONME.....	1
					UOC:F10	
55	PAOZZ		11083	5R8416	HOSE ASSEMBLY.....	1
					UOC:F10	
56	PAOZZ	4730012699540	11083	6V8636	ADAPTER,STRAIGHT,TU.....	4
					UOC:F10	
57	PAOZZ	4730011687544	01276	5610-6-6S	COUPLING HALF,QUICK.....	4
					UOC:AGM,F10	
58	PAOZZ	4730011677067	01276	5608-6-6S	COUPLING HALF,QUICK.....	4
					UOC:AGM,F10	
59	PAOZZ	4730012928212	11083	8T1031	NIPPLE,BOSS.....	4
					UOC:F10	
60	PFOZZ	4730010947469	11083	8S6417	ADAPTER,STRAIGHT,TU.....	2
					UOC:AF9,AGM	
61	MOOZZ		11083	1650016-34.2	HOSE,NONMETALLIC MAKE FROM P/N 1650016.....	1
					UOC:AGM	
62	PAOZZ	4730010950075	11083	4S5414	SLEEVE,HOSE CONNECT.....	2
					UOC:AGM,F10	
63	PAOZZ		11083	9D5296	HOSE ASSEMBLY.....	1
					UOC:AGM,F10	
64	PAOZZ	4730004919576	30780	6F5BXS	ADAPTER,STRAIGHT,TU.....	4
					UOC:AGM	

END OF FIGURE

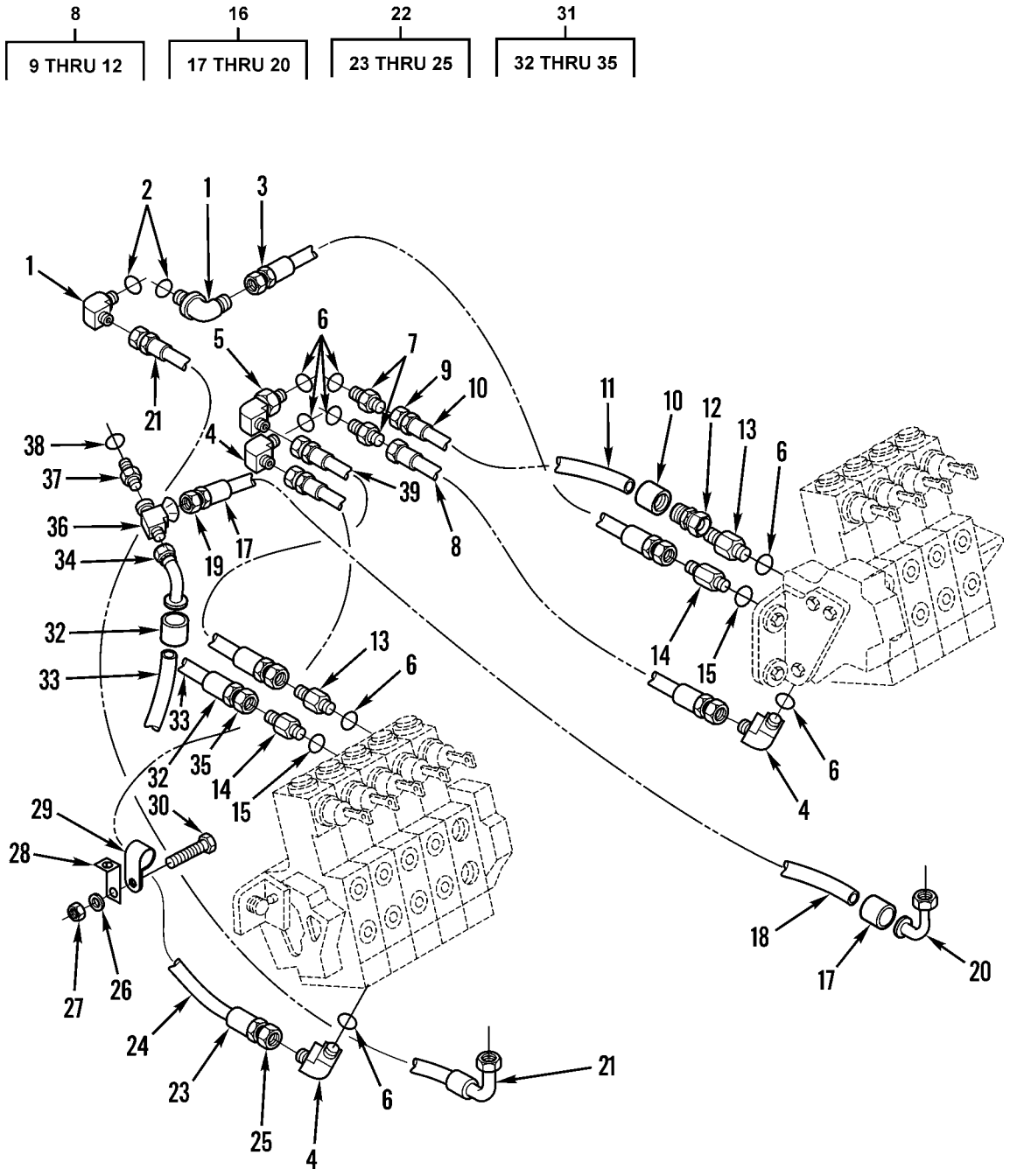

Figure 273. Control Valve Lines and Fittings (SN 7GB0001 thru 7GB01223) (Sheet 1 of 4)

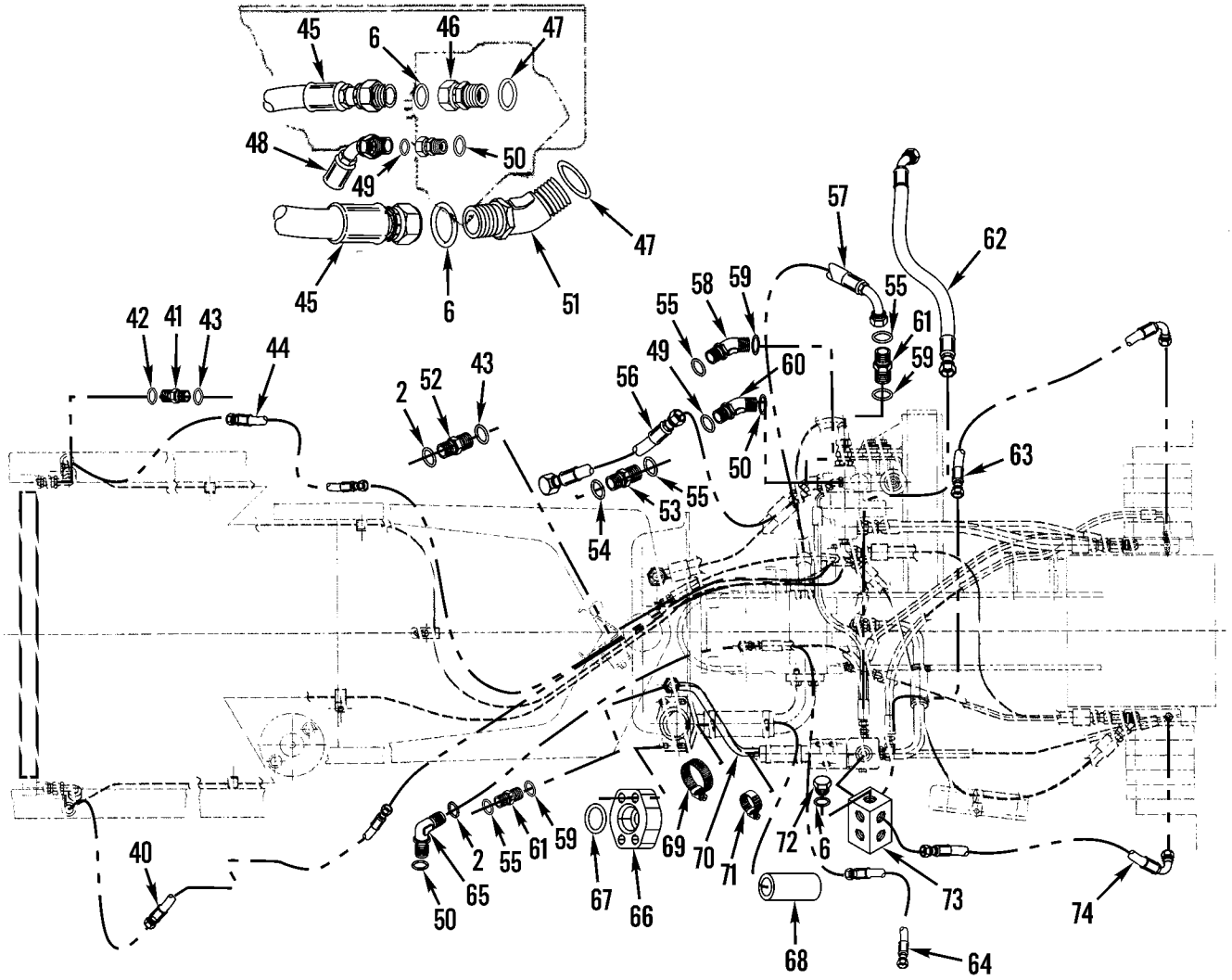

Figure 273. Control Valve Lines and Fittings (SN 7GB01224 and up) (Sheet 2 of 4)

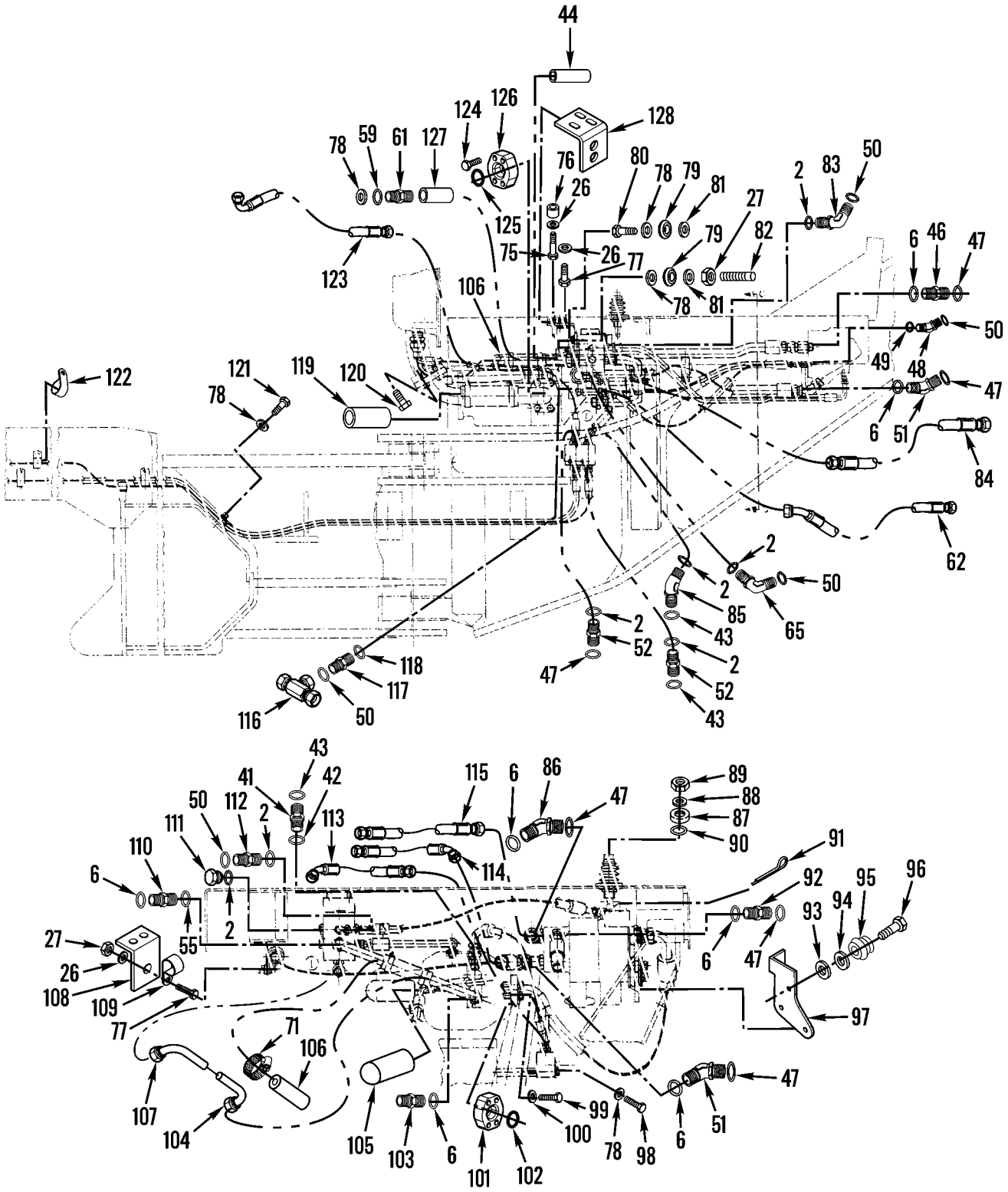

Figure 273. Control Valve Lines and Fittings (SN 7GB01224 and up) (Sheet 3 of 4)

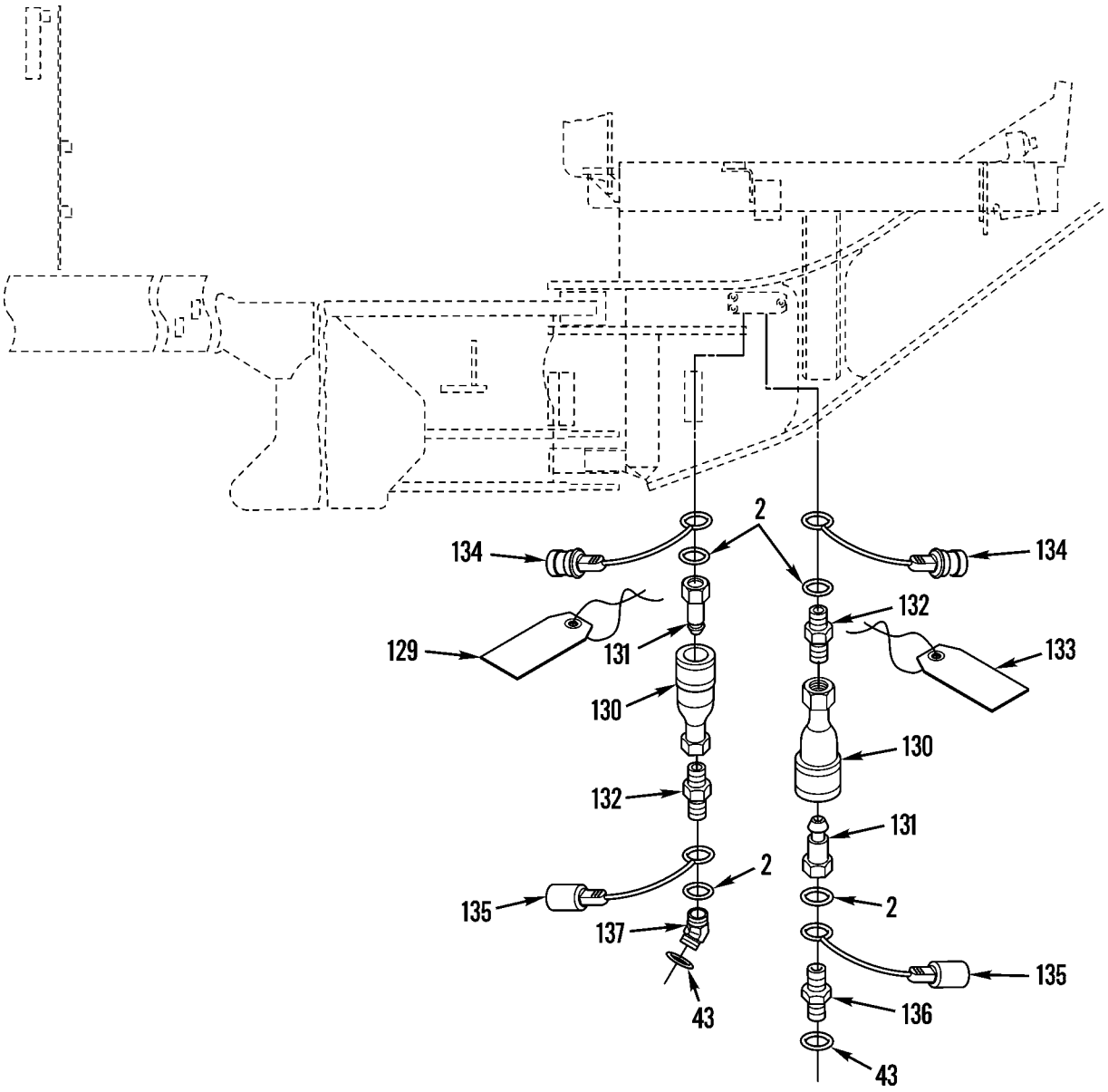

Figure 273. Control Valve Lines and Fittings (SN 7GB01224 and up) (Sheet 4 of 4)

(1) ITEM NO	(2) SMR CODE	(3) NSN	(4) CAGEC	(5) PART NUMBER	(6) DESCRIPTION AND USABLE ON CODES(UOC)	(7) QTY
					GROUP 2406 STRAINERS, FILTERS, LINES, AND FITTINGS, ETC. FIG. 273 CONTROL VALVE LINES AND FITTINGS	
1	PFOZZ	4730014710277	11083	0054362	ELBOW,QUICK DISCONN.....	2
2	PFOZZ	5331009486482	11083	3K0360	O-RING.....	2
3	PAOZZ	4720011815786	11083	9D5904	HOSE ASSEMBLY,NONME.....	1
4	PFOZZ	4730009624176	11083	0307944	ELBOW,TUBE TO BOSS.....	3
5	PFOZZ	4730010634224	11083	0307950	ELBOW,TUBE TO BOSS.....	1
6	PCOZZ	5331009448281	11083	3D2824	O-RING.....	8
7	XDOZZ		19204	8442255	ADAPTER,STRAIGHT,TU.....	2
8	AOOOZ	4720011816647	11083	9D8557	HOSE ASSEMBLY,NONME.....	2
9	PAOZZ	4730011786484	11083	6V4666	.ELBOW,TUBE TO HOSE.....	1
10	PAOZZ	5340010516767	11083	3S7166	.PLUNGER,DETENT.....	2
11	MOOZZ		11083	1650020-21.7	.HOSE,NONMETALLIC MAKE FROM P/N 1650020.....	1
12	PAOZZ	4730011789643	11083	6V4657	.ADAPTER,STRAIGHT,TU.....	1
13	XDOZZ		13174	848-FSO-12X12	ADAPTER,STRAIGHT,TU.....	2
14	PFOZZ	4730010667652	11083	0307936	CONNECTOR.....	2
15	PCOZZ	5331008013354	25184	906-737-70	O-RING.....	2
16	AOOOZ	4720011741207	11083	6G8012	HOSE ASSEMBLY,NONME.....	1
17	PAOZZ	4730010950075	11083	4S5414	.SLEEVE,HOSE CONNECT.....	2
18	MOOZZ		11083	1650016-29	.HOSE,NONMETALLIC MAKE FROM P/N 1650016.....	1
19	PAOZZ	4730010947469	11083	8S6417	.ADAPTER,STRAIGHT,TU.....	1
20	PAOZZ	4730010950834	11083	1P9919	.ELBOW,TUBE TO HOSE.....	1
21	PAOZZ	4720011784841	11083	9D5903	HOSE ASSEMBLY,NONME.....	1
22	AOOOZ	4720011736916	11083	6G1694	HOSE ASSEMBLY,NONME.....	1
23	PAOZZ	5340010516767	11083	3S7166	.PLUNGER,DETENT.....	2
24	MOOZZ		11083	1650020-42	.HOSE,NONMETALLIC MAKE FROM P/N 1650020.....	1
25	PAOZZ	4730011789643	11083	6V4657	.ADAPTER,STRAIGHT,TU.....	2
26	PFOZZ	5310010948810	78189	3320-14-01	WASHER,SQUARE CONE.....	2
27	PFOZZ	5310011831237	11083	9S8752	NUT,PLAIN,HEXAGON.....	2
28	PFOZZ	5342010642060	11083	9L1566	SUPPORT.....	1
29	PFOZZ	5340004044100	75272	COV-2113	CLAMP,LOOP.....	1
30	PFOZZ	5306002604508	11083	0S1594	BOLT,MACHINE.....	2
31	AOOOZ	4720011784842	11083	9D5992	HOSE ASSEMBLY,NONME.....	1
32	PAOZZ	4730010950075	11083	4S5414	.SLEEVE,HOSE CONNECT.....	2
33	MOOZZ		11083	1650016-21.7	.HOSE,NONMETALLIC MAKE FROM P/N 1650016.....	1
34	PAOZZ	4730010950834	11083	1P9919	.ELBOW,TUBE TO HOSE.....	1
35	PAOZZ	4730010947469	11083	8S6417	.ADAPTER,STRAIGHT,TU.....	1
36	PAOZZ	4730006185381	96906	MS51523A6	TEE,TUBE.....	1
37	PFOZZ	4730010629928	22031	6400-6-4	ADAPTER,STRAIGHT,TU.....	1
38	XDOZZ	5331010491292	02697	3-904N552-90	O-RING.....	1
39	PFOZZ	4720011736917	11083	6G1693	HOSE ASSEMBLY,NONME.....	1
40	PAOZZ		11083	8W0230	HOSE ASSEMBLY..... UOC:AF9,AGP,F10	1
41	PAOZZ	4730014714915	11083	6V8638	BUSHING,HOSE..... UOC:AF9,AGP,F10	3

(1) ITEM NO	(2) SMR CODE	(3) NSN	(4) CAGEC	(5) PART NUMBER	(6) DESCRIPTION AND USABLE ON CODES(UOC)	(7) QTY
42	PAOZZ	5330009390687	11083	2M9780	PACKING,PREFORMED..... UOC:AF9,AGP,F10	3
43	PAOZZ	5331005806583	11083	6V8398	O-RING..... UOC:AF9,AGP,F10	8
44	PAOZZ		11083	8W0231	HOSE ASSEMBLY..... UOC:AF9,AGP,F10	1
45	PAOZZ		11083	5T9886	HOSE ASSEMBLY..... UOC:AF9,AGP,F10	2
46	PAOZZ		11083	8T0078	ADAPTER,STRAIGHT,PI..... UOC:AF9,AGP,F10	2
47	PAOZZ	5331010584030	11083	6V9746	O-RING..... UOC:AF9,AGP,F10	8
48	PAOZZ	4730014751290	11083	8T0075	ELBOW,BOSS..... UOC:AF9,AGP,F10	2
49	PAOZZ	5331013336444	11083	3J1907	O-RING..... UOC:AF9,AGP,F10	3
50	PAOZZ	5331005796495	11083	6V8397	O-RING..... UOC:AF9,AGP,F10	11
51	PAOZZ	4730014380762	11083	6V9004	ELBOW,TUBE..... UOC:AF9,AGP,F10	3
52	PAOZZ	4730012918500	11083	6V8639	REDUCER,BOSS..... UOC:AF9,AGP,F10	4
53	PAOZZ	4730014732895	11083	6V9875	UNION,TUBE..... UOC:AF9,AGP,F10	1
54	PAOZZ	5331004293542	11083	2S4078	O-RING..... UOC:AF9,AGP,F10	1
55	PAOZZ	5330014381387	11083	5K9090	GASKET..... UOC:AF9,AGP,F10	5
56	PAOZZ		11083	8W0236	HOSE ASSEMBLY..... UOC:AF9,AGP,F10	1
57	PAOZZ		11083	5T9908	HOSE ASSEMBLY..... UOC:AF9,AGP,F10	1
58	PAOZZ	4730014732095	11083	6V9005	ELBOW,TUBE..... UOC:AF9,AGP,F10	1
59	PAOZZ	5330009309407	11083	7M8485	SEAL,ADAPTER,MOTOR..... UOC:AF9,AGP,F10	4
60	PAOZA	4730013646397	11083	6V9001	ELBOW,HOSE..... UOC:AF9,AGP,F10	1
61	PAOZZ	5935014379076	11083	6V8635	CONNECTOR,PLUG,ELEC..... UOC:AF9,AGP,F10	3
62	PAOZZ		11083	5T9884	HOSE ASSEMBLY..... UOC:AF9,AGP,F10	2
63	PAOZZ		11083	8W0034	HOSE ASSEMBLY..... UOC:AF9,AGP,F10	1
64	PAOZZ		11083	8W0232	HOSE ASSEMBLY..... UOC:AF9,AGP,F10	1
65	PAOZZ	4730014299750	11083	6V8723	ELBOW,TUBE..... UOC:AF9,AGP,F10	2
66	PAOZZ	5340011706646	11083	5P5061	SEAT,HELICAL COMPRE..... UOC:AF9,AGP,F10	1
67	PAOZZ	5331005931247	11083	5H8848	O-RING..... UOC:AF9,AGP,F10	1

(1) ITEM NO	(2) SMR CODE	(3) NSN	(4) CAGEC	(5) PART NUMBER	(6) DESCRIPTION AND USABLE ON CODES(UOC)	(7) QTY
68	MOOZZ		11083	5P1296-7	HOSE,NONMETALLIC MAKE FROM P/N 5P1293..... UOC:AF9,AGP,F10	1
69	PAOZZ	4730011067246	11083	5P4868	CLAMP,HOSE..... UOC:AF9,AGP,F10	2
70	PAOZZ		11083	8W0107	TUBE ASSEMBLY..... UOC:AF9,AGP,F10	1
71	PAOZZ	4730011724164	11083	5P2230	CLAMP,HOSE..... UOC:AF9,AGP,F10	4
72	PAOZZ	4730010643790	11083	9S8008	PLUG..... UOC:AF9,AGP,F10	1
73	PAOZZ	3805010946923	11083	9D6669	BLOCK JUNCTION..... UOC:AF9,AGP,F10	1
74	PAOZZ		11083	5T9883	HOSE ASSEMBLY..... UOC:AF9,AGP,F10	1
75	PAOZZ	5306010949106	11083	0S1590	BOLT,MACHINE..... UOC:AF9,AGP,F10	1
76	PAOZZ	5365011759326	11083	6G2263	SPACER,SLEEVE..... UOC:AF9,AGP,F10	1
77	PAOZZ	5306002604508	11083	0S1594	BOLT,MACHINE..... UOC:AF9,AGP,F10	3
78	PAOZZ	5310001174788	11083	9Y2695	WASHER,FLAT..... UOC:AF9,AGP,F10	6
79	PFOZZ	5330010625887	11083	1P7115	GROMMET ASSY..... UOC:AF9,AGP,F10	3
80	PAOZZ	5306011954681	11083	3B1915	BOLT..... UOC:AF9,AGP,F10	2
81	PFOZZ	5310006984460	11083	0L1319	WASHER,FLAT..... UOC:AF9,AGP,F10	3
82	PAOZZ		11083	3M0496	STUD,PLAIN..... UOC:AF9,AGP,F10	1
83	PAOZZ	4730014381943	11083	6V9876	ELBOW,TUBE..... UOC:AF9,AGP,F10	1
84	PAOZZ		11083	8W0233	HOSE ASSEMBLY..... UOC:AF9,AGP,F10	1
85	PAOZZ	4730012918499	11083	6V9002	ELBOW,TUBE TO BOSS..... UOC:AF9,F10	1
86	PAOZZ	4730012918498	11083	6V9007	ELBOW,TUBE TO BOSS..... UOC:AF9,AGP,F10	1
87	PAOZZ	5365011743274	11083	6G3099	BUSHING,MACHINE THR..... UOC:AF9,AGP,F10	1
88	PAOZZ	5310001947315	11083	4B4285	WASHER,FLAT..... UOC:AF9,AGP,F10	2
89	PAOZZ	5310011711234	11083	3B7329	NUT,PLAIN,HEXAGON..... UOC:AF9,AGP,F10	1
90	PAOZZ	2530005693810	11083	2F7964	BOOT,VEHICULAR COMP..... UOC:AF9,AGP,F10	1
91	PAOZZ	5315008392326	80205	MS24665-281	PIN,COTTER..... UOC:AF9,AGP,F10	1
92	PAOZZ	4730012918501	11083	6V8637	REDUCER,BOSS..... UOC:AF9,AGP,F10	2
93	PFOZZ	5310010978955	11083	5P8244	WASHER,FLAT.....	3

(1) ITEM NO	(2) SMR CODE	(3) NSN	(4) CAGEC	(5) PART NUMBER	(6) DESCRIPTION AND USABLE ON CODES(UOC)	(7) QTY
					UOC:AF9,AGP,F10	
94	PAOZZ	5310010661401	11083	8D7185	WASHER,FLAT.....	3
					UOC:AF9,AGP,F10	
95	PAOZZ	2590010664546	11083	8D0983	MOUNTING.....	3
					UOC:AF9,AGP,F10	
96	PAOZZ	5306002604512	11083	0T0319	BOLT,MACHINE.....	3
					UOC:AF9,AGP,F10	
97	PAOZZ	5340011689270	11083	9D6361	BRACKET,ANGLE.....	1
					UOC:AF9,AGP,F10	
98	PAOZZ	5306002851368	11083	0L1143	BOLT,MACHINE.....	2
					UOC:AF9,AGP,F10	
99	PAOZZ	5306014714506	11083	0T0772	BOLT,MACHINE.....	4
					UOC:AF9,AGP,F10	
100	PAOZZ	5310009206918	11083	4D6433	WASHER,FLAT.....	4
					UOC:AF9,AGP,F10	
101	PAOZZ	4730010515257	11083	1P4578	FLANGE,PIPE.....	2
					UOC:AF9,AGP,F10	
102	PAOZZ	5331005277748	11083	4F7952	O-RING.....	1
					UOC:AF9,AGP,F10	
103	PAOZZ	4730007105571	96906	MS51525A12	ADAPTER,STRAIGHT,TU.....	1
					UOC:AF9,AGP,F10	
104	PAOZZ	4710010664544	11083	8D0407	TUBE ASSEMBLY.....	1
					UOC:AF9,AGP,F10	
105	PAOZZ	4730004232052	73842	321FB90	ELBOW,FLANGE TO HOS.....	1
					UOC:AF9,AGP,F10	
106	PAOZZ	4720010269540	11083	5P2094	HOSE,PREFORMED.....	2
					UOC:AF9,AGP,F10	
107	PAOZZ		11083	8W0105	TUBE ASSEMBLY.....	1
					UOC:AF9,AGP,F10	
108	PAOZZ	5342010642060	11083	9L1566	SUPPORT.....	1
					UOC:AF9,AGP,F10	
109	PAOZZ	5340011685602	11083	4S4455	CLIP,SPRING TENSION.....	1
					UOC:AF9,AGP,F10	
110	PAOZZ	4730014736583	11083	6V8714	ADAPTER,STRAIGHT,TU.....	1
					UOC:AF9,AGP,F10	
111	PAOZZ		11083	9S4185	PLUG.....	2
					UOC:AF9,AGP,F10	
112	PAOZZ	5935014379075	11083	6V8634	CONNECTOR,PLUG,ELEC.....	2
					UOC:AF9,AGP,F10	
113	PAOZZ		11083	8W0234	HOSE ASSEMBLY.....	1
					UOC:AF9,AGP,F10	
114	PAOZZ		11083	8W0235	HOSE ASSEMBLY.....	1
					UOC:AF9,AGP,F10	
115	PAOZZ	4720015181269	11083	8W0237	HOSE ASSEMBLY,METAL.....	1
					UOC:AF9,AGP,F10	
116	PAOZZ	4730014380764	11083	6V9836	TEE,TUBE.....	1
					UOC:AF9,AGP,F10	
117	PAOZZ	4730015056812	11083	6V9872	COUPLING,TUBE.....	1
					UOC:AF9,AGP,F10	
118	PFHZZ		11083	3E8905	GASKET AND PREFORME PART OF KIT P/N 3E8905.....	1
					UOC:AF9,AGP,F10	

(1) ITEM NO	(2) SMR CODE	(3) NSN	(4) CAGEC	(5) PART NUMBER	(6) DESCRIPTION AND USABLE ON CODES(UOC)	(7) QTY
119	PAOZZ	4710011766786	11083	8D8866	TUBE ASSEMBLY,METAL..... UOC:AF9,AGP,F10	1
120	PAOZZ	5306002638978	11083	0S1587	BOLT,MACHINE..... UOC:AF9,AGP,F10	4
121	PAOZZ	5305007215492	11083	0T0102	SCREW,CAP,HEXAGON H..... UOC:AF9,AGP,F10	1
122	PAOZZ	5340011519308	11083	1S0994	CLAMP,LOOP..... UOC:AF9,AGP,F10	9
123	PAOZZ		11083	8W0062	HOSE ASSEMBLY..... UOC:AF9,AGP,F10	1
124	PAOZZ	5306011279361	11083	0S1585	BOLT,MACHINE..... UOC:AF9,AGP,F10	4
125	PAOZZ	5331005064457	11083	8F6711	O-RING..... UOC:AF9,AGP,F10	1
126	PAOZZ	4730011699698	11083	5P5059	FLANGE,PIPE..... UOC:AF9,AGP,F10	1
127	PAOZZ		11083	5T9875	TUBE ASSEMBLY..... UOC:AF9,AGP,F10	1
128	PAOZZ	5340011786037	11083	8D6811	BRACKET,ANGLE..... UOC:AF9,AGP,F10	1
129	PAOZZ	9905011674905	11083	4J6303	BAND,MARKER..... UOC:AGM,F10	2
130	PAOZZ		11083	5R6307	COUPLING HALF,QUICK..... UOC:AGM,F10	2
131	PAOZZ	4730004396020	01276	5610-8-10S	COUPLING HALF,QUICK..... UOC:AGM,F10	2
132	PAOZZ		11083	6V0467	ADAPTER..... UOC:AGM,F10	1
133	PAOZZ	9905011671532	11083	4J6302	BAND,MARKER..... UOC:AGM,F10	2
134	PAOZZ		11083	5R6301	PLUG..... UOC:AGM,F10	2
135	PAOZZ		11083	5R6302	CAP..... UOC:AGM,F10	2
136	PAOZZ	4730010664586	11083	8M0505	ADAPTER,STRAIGHT,TU..... UOC:AGM,F10	1
137	PAOZZ	4730011695830	11083	0307943	ELBOW,TUBE TO BOSS..... UOC:AGM,F10	1

END OF FIGURE

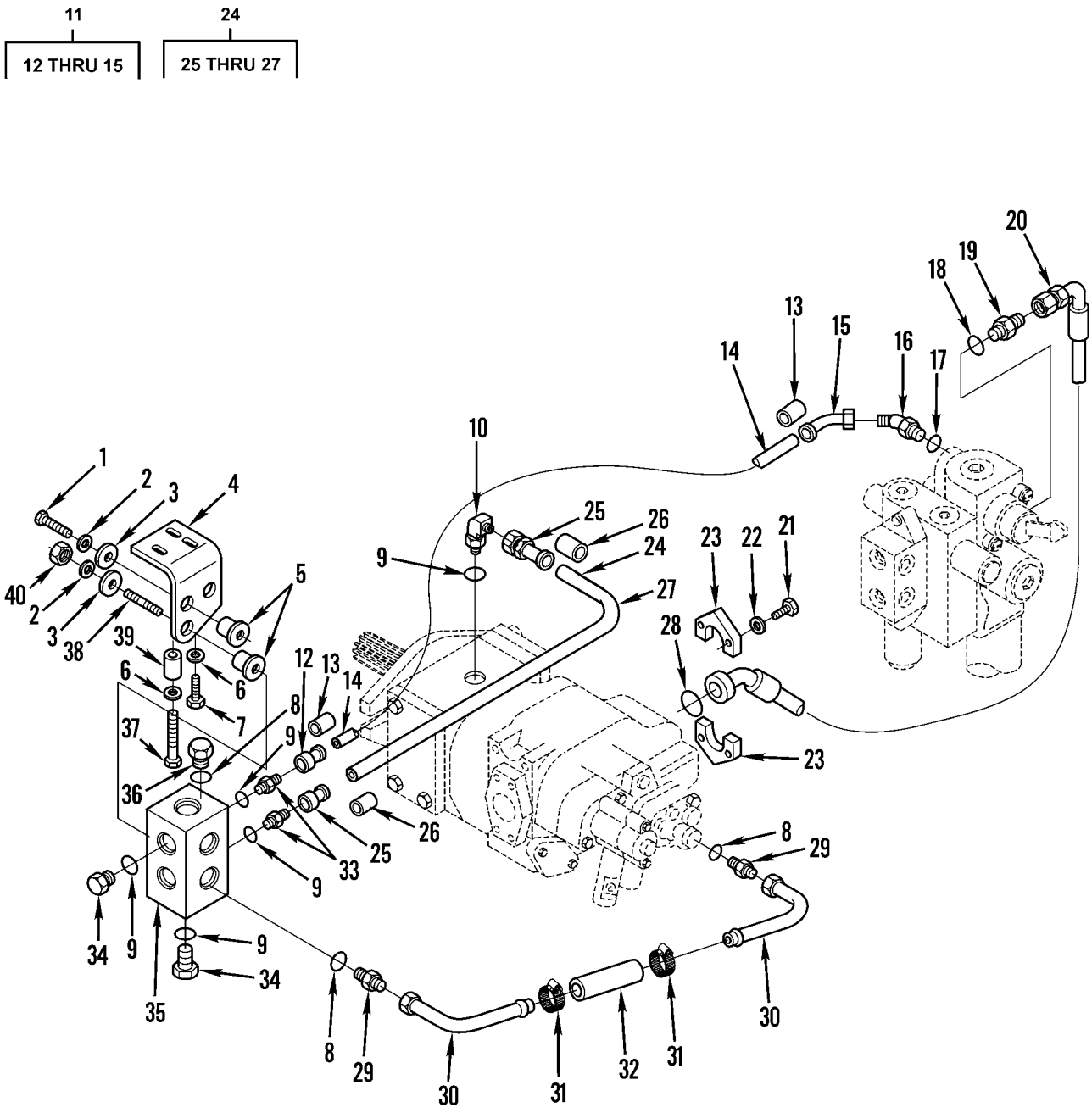

Figure 274. Junction Block Lines and Fittings (SN 7GB00001 thru 7GB01223)

(1) ITEM NO	(2) SMR CODE	(3) NSN	(4) CAGEC	(5) PART NUMBER	(6) DESCRIPTION AND USABLE ON CODES(UOC)	(7) QTY
					GROUP 2406 STRAINERS, FILTERS, LINES, AND FITTINGS, ETC. FIG. 274 JUNCTION BLOCK LINES AND FITTINGS	
1	PFOZZ	5306011954681	11083	3B1915	BOLT	5
2	PFOZZ	5310001174788	11083	5M2894	WASHER,FLAT	2
3	PAOZZ	5310006984460	11083	0L1319	WASHER,FLAT	3
4	PFOZZ	5340011786037	11083	8D6811	BRACKET,ANGLE	1
5	PAOZZ	5330010625887	11083	1P7115	GROMMET ASSY	3
6	PFOZZ	5310010948810	78189	3320-14-01	WASHER,SQUARE CONE	1
7	PFOZZ	5306002604508	11083	0S1594	BOLT,MACHINE	1
8	PCOZZ	5331009448281	11083	3D2824	O-RING	3
9	PFOZZ	5331009486482	11083	3K0360	O-RING	5
10	PFOZZ	4730014710277	11083	0054362	ELBOW,QUICK DISCONN	1
11	AOOOZ	4720011784842	11083	9D5992	HOSE ASSEMBLY,NONME	1
12	PFOZZ	4730010947469	11083	8S6417	.ADAPTER,STRAIGHT,TU	1
13	PAOZZ	4730010950075	11083	4S5414	.SLEEVE,HOSE CONNECT	2
14	MOOZZ		11083	1650016-21.7	.HOSE,NONMETALLIC MAKE FROM P/N 1650016	1
15	PAOZZ	4730010950834	11083	1P9919	.ELBOW,TUBE TO HOSE	1
16	PFOZZ	4730010512312	78640	307942	ELBOW,TUBE TO BOSS	1
17	PAOZZ	5331008013354	25184	906-737-70	O-RING	1
18	PAOZZ	5330009309407	11083	7M8485	SEAL,ADAPTER,MOTOR	1
19	PFOZZ	4730010667651	11083	0307935	ADAPTER,STRAIGHT,TU	1
20	PAOZZ	4720011784844	11083	9D5994	HOSE ASSEMBLY,NONME	1
21	PFOZZ	5305000712055	80204	B1821BH044C150N	SCREW,CAP,HEXAGON H	4
22	PFOZZ	5310005434874	80378	CVC754-664S30	WASHER,FLAT	4
23	PFOZZ	4730010515257	11083	1P4578	FLANGE,PIPE	2
24	AOOOZ	4720011784845	11083	9D5988	HOSE ASSEMBLY,NONME	1
25	PFOZZ	4730010947469	11083	8S6417	.ADAPTER,STRAIGHT,TU	2
26	PFOZZ	4730010950075	11083	4S5414	.SLEEVE,HOSE CONNECT	2
27	MOOZZ		11083	1650016-11.4	.HOSE,NONMETALLIC MAKE FROM P/N 1650016	1
28	PCOZZ	5331005277748	11083	4F7952	O-RING	1
29	XDOZZ		19204	8442255	ADAPTER,STRAIGHT,TU	2
30	PAOZZ	4710010664544	11083	8D0407	TUBE ASSEMBLY	2
31	PFOZZ	4730000054994	89346	261498R91	CLAMP,HOSE	2
32	MOOZZ		11083	7K4975-XX	HOSE,PREFORMED MAKE FROM P/N 5P2094	1
33	PFOZZ	4730000807040	96906	MS51525A6-8	ADAPTER,STRAIGHT,TU	2
34	PFOZZ	5365007630120	11083	9S4185	PLUG,MACHINE THREAD	2
35	PFOZZ	3805010946923	11083	9D6669	BLOCK JUNCTION	1
36	PFOZZ	4730010643790	11083	9S8008	PLUG	1
37	PFOZZ	5306010949106	11083	0S1590	BOLT,MACHINE	1
38	PFOZZ	5307009436167	11083	9M3296	STUD,CONTINUOUS THR	1
39	PAOZZ	5365011759326	11083	6G2263	SPACER,SLEEVE	1
40	PFOZZ	5310011831237	11083	9S8752	NUT,PLAIN,HEXAGON	1

END OF FIGURE

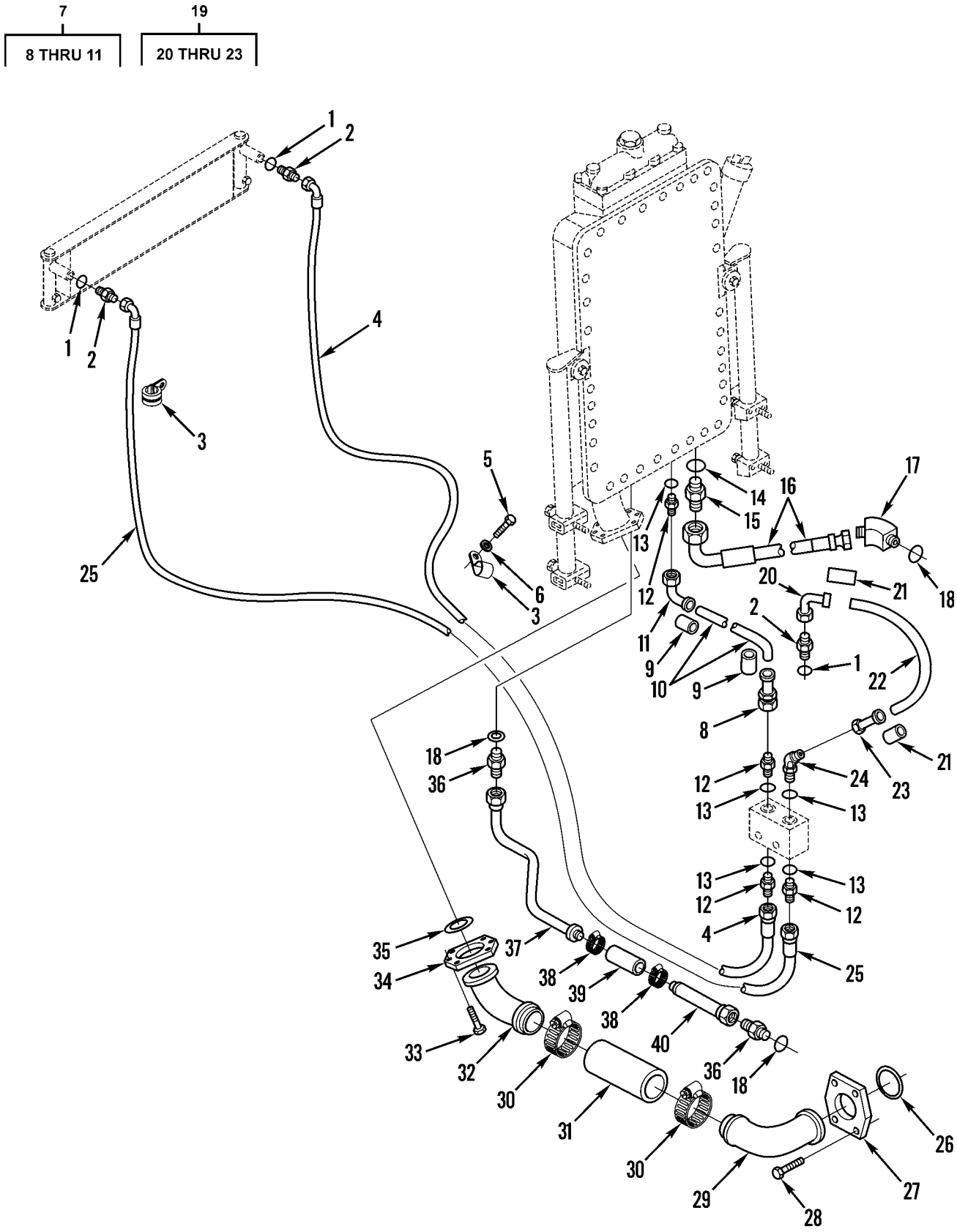

Figure 275. Hydraulic Tank Lines and Fittings (SN 7GB00001 thru 7GB01223)

(1) ITEM NO	(2) SMR CODE	(3) NSN	(4) CAGEC	(5) PART NUMBER	(6) DESCRIPTION AND USABLE ON CODES(UOC)	(7) QTY
					GROUP 2406 STRAINERS, FILTERS, LINES, AND FITTINGS, ETC. FIG. 275 HYDRAULIC TANK LINES AND FITTINGS	
1	PFOZZ	5331001675174	81349	M83248/2-910	O-RING	3
2	PFOZZ	4730010740907	96906	MS51525A8-10	ADAPTER,STRAIGHT,TU	3
3	PFOZZ	5340011519308	11083	1S0994	CLAMP,LOOP UOC:AF9,AGP,F10	9
4	PAOZZ	4720011788830	11083	5T7206	HOSE ASSEMBLY,NONME UOC:AF9,AGP,F10	1
5	PFOZZ	5305007215492	80204	B1821BH038C063N	SCREW,CAP,HEXAGON H	9
6	PFOZZ	5310001174788	11083	5M2894	WASHER,FLAT	9
7	AOOOZ	4720011792921	11083	9D5911	HOSE ASSEMBLY,NONME	1
8	PAOZZ	4730010517605	11083	8S4055	.ADAPTER,STRAIGHT,TU	1
9	PAOZZ	4720010517602	11083	3S8606	.SLEEVE	2
10	MOOZZ		11083	1650017-24	.HOSE,NONMETALLIC MAKE FROM P/N 1650017	1
11	PAOZZ	4730010689756	11083	8S6391	.ELBOW,TUBE TO HOSE	1
12	PFOZZ	4730011564835	46717	AC-1-310	ADAPTER,STRAIGHT,TU	4
13	PFOZZ	5331009486482	11083	3K0360	O-RING	5
14	PFOZZ	5331004293542	11083	2S4078	O-RING	1
15	PAOZZ	4730004672600	96906	MS51525A16-20	ADAPTER,STRAIGHT,TU	1
16	PAOZZ	4720011793793	11083	9D5993	HOSE ASSEMBLY,NONME	1
17	PFOZZ	4730009355355	96906	MS51528A16	ELBOW,TUBE TO BOSS	1
18	PAOZZ	5330009309407	11083	7M8485	SEAL,ADAPTER,MOTOR	3
19	AOOOZ	4720011789677	11083	9D6274	HOSE ASSEMBLY,NONME	1
20	PAOZZ	4730010689756	11083	8S6391	.ELBOW,TUBE TO HOSE	1
21	PAOZZ	4720010517602	11083	3S8606	.SLEEVE	2
22	MOOZZ		11083	1650017-13.4	.HOSE,NONMETALLIC MAKE FROM P/N 1650017	1
23	PAOZZ	4730010517605	11083	8S4055	.ADAPTER,STRAIGHT,TU	1
24	PFOZZ	4730011695830	11083	0307943	ELBOW,TUBE TO BOSS	1
25	PAOZZ	4720011788829	11083	5T7205	HOSE ASSEMBLY,NONME	1
26	PFOZZ	5331005064457	11083	8F6711	O-RING	1
27	PFOZZ	4730011699698	11083	5P5059	FLANGE,PIPE	1
28	PFOZZ	5306011279361	11083	0S1585	BOLT,MACHINE	4
29	PAOZZ	4730004232052	73842	321FB90	ELBOW,FLANGE TO HOS	1
30	PFOZZ	4730011067246	66295	UT362	CLAMP,HOSE	2
31	MOOZZ		11083	9H0903-XX	HOSE,NONMETALLIC MAKE FROM P/N 5P1293	1
32	PFOZZ	4710011766786	11083	8D8866	TUBE ASSEMBLY,METAL	1
33	PFOZZ	5306002638978	11083	0S1587	BOLT,MACHINE	4
34	XDOZZ	5340011706646	11083	5P5061	SEAT,HELICAL COMPRE	1
35	PCOZZ	5331005931247	11083	5H8848	O-RING	1
36	PFOZZ	4730010667651	11083	0307935	ADAPTER,STRAIGHT,TU	2
37	PFOZZ	4710011677217	11083	8D6775	TUBE ASSEMBLY,METAL	1
38	PFOZZ	4730000054994	89346	261498R91	CLAMP,HOSE	2
39	MOOZZ		11083	7K4975-5	HOSE,PREFORMED MAKE FROM P/N 5P2094	1
40	PFOZZ	4710010664557	11083	8D6774	TUBE ASSEMBLY	1

END OF FIGURE

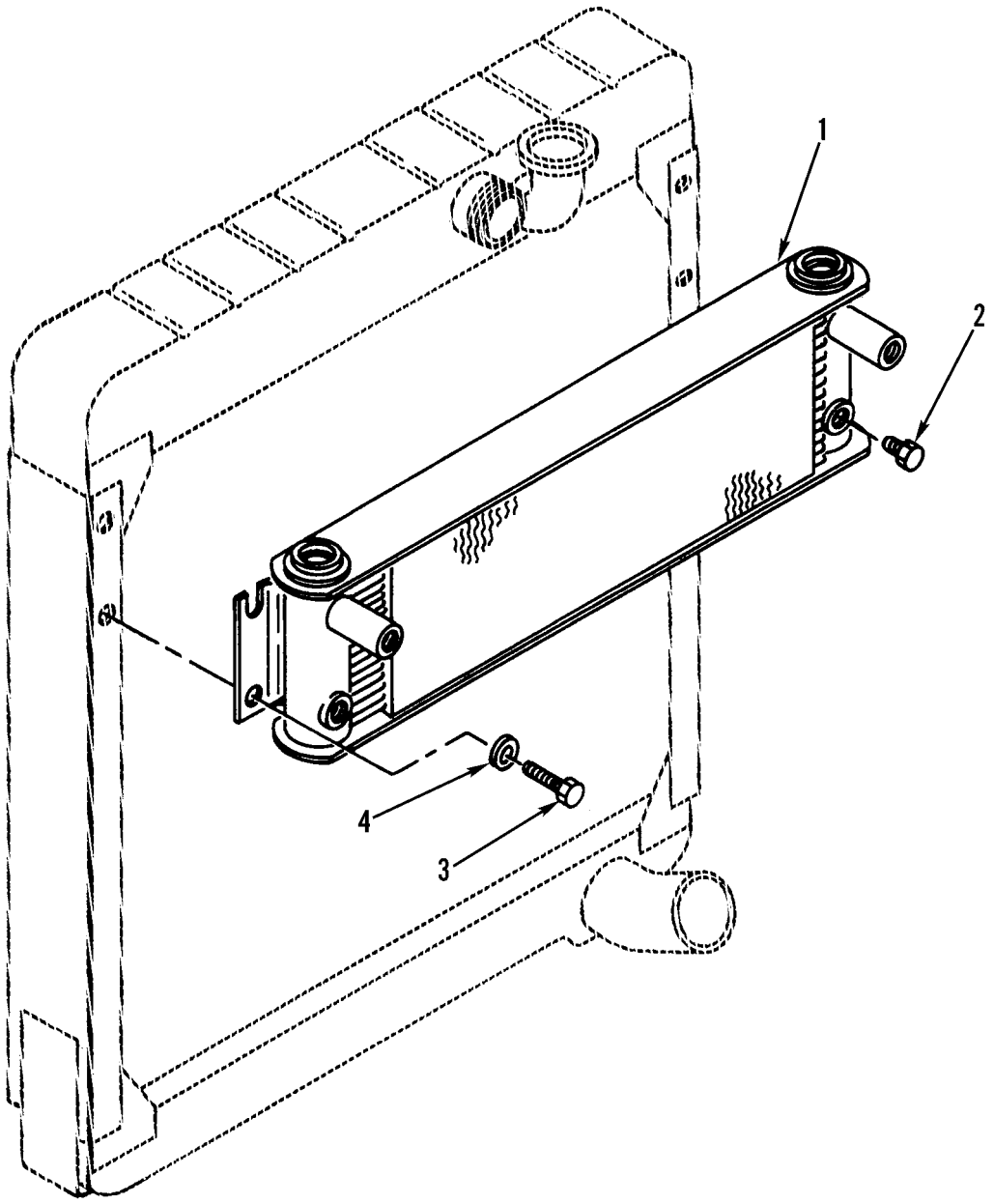

Figure 276. Hydraulic Oil Cooler Assembly and Mounting

(1) ITEM NO	(2) SMR CODE	(3) NSN	(4) CAGEC	(5) PART NUMBER	(6) DESCRIPTION AND USABLE ON CODES(UOC)	(7) QTY
					GROUP 2406 STRAINERS, FILTERS, LINES, AND FITTINGS, ETC. FIG. 276 HYDRAULIC OIL COOLER ASSEMBLY AND MOUNTING	
1	PFFZZ	2520010983978	07176	208-710	COOLER,FLUID,TRANSM.....	1
2	PFFZZ	4730004275121	01276	2082-6B	PLUG,PIPE.....	2
3	PFFZZ	5306002604508	11083	0S1594	BOLT,MACHINE.....	2
4	PFFZZ	5310009998288	11083	9M6527	WASHER,FLAT.....	2

END OF FIGURE

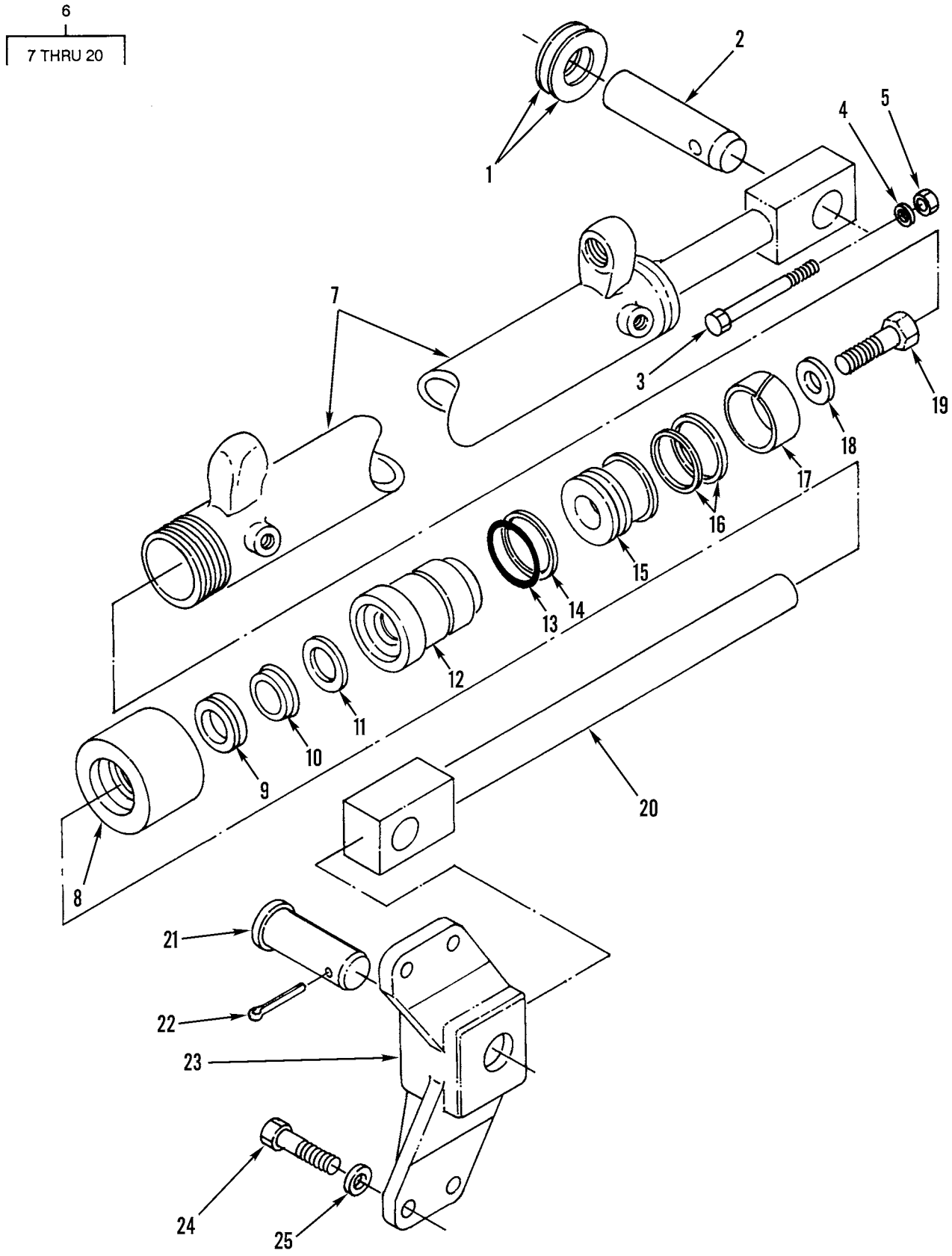

Figure 277. Blade Sideshift Hydraulic Cylinder Assembly and Mounting

(1) ITEM NO	(2) SMR CODE	(3) NSN	(4) CAGEC	(5) PART NUMBER	(6) DESCRIPTION AND USABLE ON CODES(UOC)	(7) QTY
					GROUP 2407 HYDRAULIC CYLINDERS FIG. 277 BLADE SIDESHIFT HYDRAULIC CYLINDER ASSEMBLY AND MOUNTING	
1	PFFZZ	5310010966183	11083	6H0211	WASHER,FLAT.....	2
2	PFOZZ	5315011779872	11083	5T5295	PIN,STRAIGHT,HEADLE..... UOC:AF9,AGP,F10	1
3	PFFZZ	5306004238316	11083	1B2886	BOLT,MACHINE.....	1
4	PFOZZ	5310008095997	96906	MS27183-17	WASHER,FLAT..... UOC:AF9,AGP,F10	1
5	PFFZZ	5310007680318	96906	MS51967-14	NUT,PLAIN,HEXAGON.....	1
6	PFFFF	3040010219476	11083	8J0028	CYLINDER ASSEMBLY,A.....	1
7	PAFZZ	2590011683700	11083	8J0027	.CYLINDER ASSEMBLY,A.....	1
8	PFFZZ	3040011761215	11083	8J5911	.CAP,LINEAR ACTUATIN.....	1
9	PAFZZ	5330015073339	11083	1672452	.GASKET PART OF KIT P/N 2402016.....	1
10	PAFZZ	5330015073335	11083	1672300	.GASKET PART OF KIT P/N 2402016.....	1
11	PAFZZ	5330010219891	11083	1672190	.SEAL PART OF KIT P/N 2402016.....	1
12	PFFZZ	3040011755261	11083	7J3351	.HEAD,LINEAR ACTUATI.....	1
13	PCFZZ	5331005931247	11083	5H8848	.O-RING PART OF KIT P/N 2402016.....	1
14	PAFZZ	5330001076455	11083	4J9225	.RETAINER,PACKING PART OF KIT P/N 2402016.....	1
15	PFFZZ	2590010647383	11083	7J5682	.PISTON.....	1
16	PAFZZ	5330010219889	11083	6J1972	.SEAL PART OF KIT P/N 2402016.....	1
17	PAFZZ	2590010647382	11083	6J5733	.RING PART OF KIT P/N 2402016.....	1
18	PFFZZ	5310010660506	11083	8J7415	.WASHER.....	1
19	PFFZZ	5306011558647	11083	7J5639	.BOLT,SELF-LOCKING..... UOC:AF9,AGP,F10	1
20	PFFZZ	5340011692259	11083	8J6681	.CONNECTOR,ROD END.....	1
21	PFOZZ	5315011779864	11083	5T8417	PIN,STRAIGHT,HEADED..... UOC:AF9,AGP,F10	1
22	PFOZZ	5315008464297	80205	MS24665-752	PIN,COTTER..... UOC:AF9,AGP,F10	1
23	PFOZZ	3040011682139	11083	9D9665	BRACKET,EYE,NONROTA.....	1
24	PFOZZ	5306004263605	11083	2A1538	BOLT,MACHINE.....	4
25	PFOZZ	5310011022477	11083	5P8248	WASHER,FLAT..... UOC:AF9,AGP,F10	4
					END OF FIGURE	

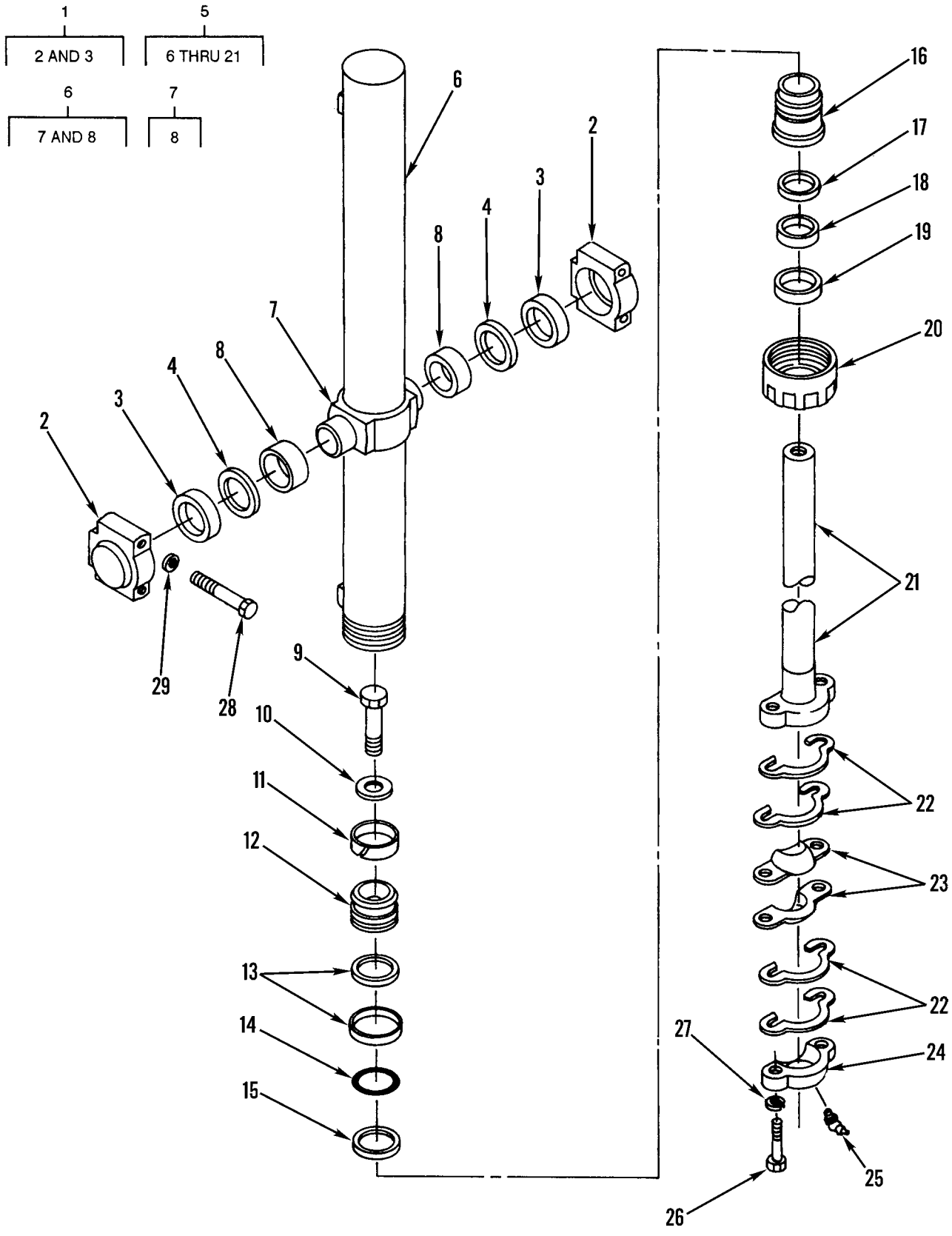

Figure 278. Blade Lift Hydraulic Cylinder Assembly and Mounting

(1) ITEM NO	(2) SMR CODE	(3) NSN	(4) CAGEC	(5) PART NUMBER	(6) DESCRIPTION AND USABLE ON CODES(UOC)	(7) QTY
					GROUP 2407 HYDRAULIC CYLINDERS FIG. 278 BLADE LIFT HYDRAULIC CYLINDER ASSEMBLY AND MOUNTING	
1	PFFZZ	3110011767820	11083	8D7998	RETAINER AND BALLS,.....	4
2	XAFZZ		11083	8D7997	.CAP.....	1
3	PFFZZ	3120011768035	11083	8D7996	.BEARING,SLEEVE.....	1
4	PAFZZ	5330010951253	11083	3P1461	SEAL,PLAIN.....	4
5	PAFFF	3830010941932	11083	3G5223	CYLINDER GROUP ASSE.....	2
6	PFFFF	3040011756484	11083	8J6381	.CYLINDER,ACTUATING,.....	1
7	XDFZZ		11083	4T0420	..TRUNNION ASSEMBLY.....	1
8	PFFZZ	3120011789255	11083	8J6384	...BEARING,SLEEVE.....	2
9	PFFZZ	5306011558647	11083	7J5639	.BOLT,SELF-LOCKING.....	1
10	PFFZZ	5310010660506	11083	8J7415	.WASHER.....	1
11	PAFZZ	3120011555268	11083	8J6371	.BUSHING,SLEEVE.....	1
12	XDFZZ		11083	8J6370	.PISTON,COMPRESSOR.....	1
13	PAFZZ	5330010219887	11083	6J0793	.SEAL.....	1
14	PAFZZ	5331005931141	11083	1H7339	.O-RING.....	1
15	PAFZZ	2590010647381	11083	6J5731	.RING.....	1
16	PFFZZ	4320011762942	11083	8J6375	.HEAD,HYDRAULIC MOTO.....	1
17	XDFZZ	5330015073334	11083	167-2195	.GASKET.....	1
18	PAFZZ	5330011812420	11083	9J1318	.SEAL,PLAIN ENCASED.....	1
19	PAFZZ	5330002921633	73680	21158-1186	.SEAL,PLAIN ENCASED.....	1
20	XDFZZ		11083	8J6377	.HUB,BODY.....	1
21	PFFZZ	2530011691978	11083	3G5485	.ROD,ALIGNING,VEHICU.....	1
22	PAFZZ	5365010951307	11083	2G9103	SPACER,PLATE.....	8
23	PFFZZ	3805010951693	11083	9D2754	INSERT.....	4
24	PFFZZ	3040011746200	11083	2G9098	CAP,LINEAR ACTUATIN.....	2
25	PFFZZ	4730001720028	96906	MS15003-4	FITTING,LUBRICATION.....	2
26	PFFZZ	5306004263408	11083	1D4628	BOLT,MACHINE.....	4
27	PFFZZ	5310006557646	23382	4317	WASHER,LOCK.....	4
28	PFFZZ	5306004262922	11083	0S1573	BOLT,MACHINE.....	8
29	PFFZZ	5310004317239	11083	2M0849	WASHER,FLAT.....	8

END OF FIGURE

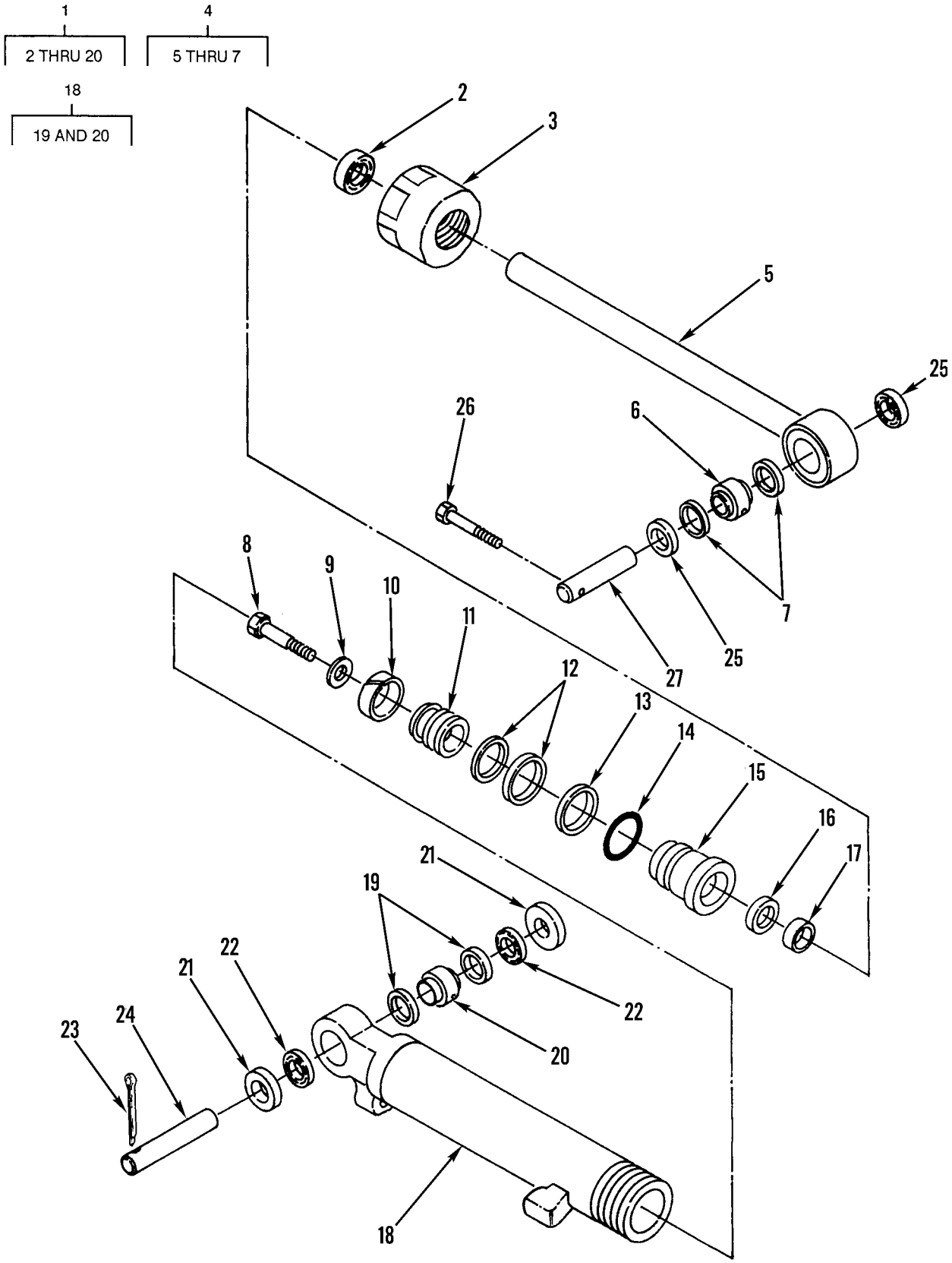

Figure 279. Blade Tip Hydraulic Cylinder Assembly and Mounting

(1) ITEM NO	(2) SMR CODE	(3) NSN	(4) CAGEC	(5) PART NUMBER	(6) DESCRIPTION AND USABLE ON CODES(UOC)	(7) QTY
					GROUP 2407 HYDRAULIC CYLINDERS FIG. 279 BLADE TIP HYDRAULIC CYLINDER ASSEMBLY AND MOUNTING	
1	PFFFF	3805010219102	11083	9J3466	CYLINDER ASSEMBLY,A.....	1
2	PFFZZ	5330011843545	11083	9J4037	.SEAL,PLAIN ENCASED.....	1
3	PFFZZ	5365011760836	11083	8J0118	.SPACER,SLEEVE.....	1
4	PFFZZ	2530011690179	11083	8J6901	.ROD,ALIGNING,VEHICU.....	1
5	XDFZZ		11083	8J6823	..CONNECTOR,ROD END.....	1
6	XDFZZ		11083	2D8652	..BEARING.....	1
7	PAFZZ	2590010647384	11083	8J3774	..RING.....	2
8	PFFZZ	5306011558647	11083	7J5639	.BOLT,SELF-LOCKING.....	1
9	PFFZZ	5310010660506	11083	8J7415	.WASHER.....	1
10	PAFZZ	4320011725781	11083	8J0112	.RING,WEARING.....	1
11	XDFZZ		11083	8J0113	.PISTON,LINEAR ACTUA.....	1
12	PAFZZ	5330010219897	11083	5J7010	.SEAL ASSY.....	1
13	PAFZZ	5330001076455	11083	4J9225	.RETAINER,PACKING.....	1
14	PCFZZ	5331003334384	11083	1H5728	.O-RING.....	1
15	PAFZZ	3040011679214	11083	8J0119	.HEAD,LINEAR ACTUATI.....	1
16	PAFZZ	5330004318882	11083	6J9733	.GASKET.....	1
17	PAFZZ	5330011869495	11083	9J4038	.SEAL ASSEMBLY.....	1
18	PFFFF	3040011691985	11083	9J3465	.CYLINDER,ACTUATING,.....	1
19	PAFZZ	2590010647384	11083	8J3774	..RING.....	2
20	XDFZZ		11083	2D8652	..BEARING.....	1
21	PAFZZ	5365011703788	11083	2G3967	SPACER,SLEEVE.....	2
22	PFFZZ	5330011782109	78640	301927	GASKET.....	2
23	PFFZZ	5315001879600	96906	MS24665-754	PIN,COTTER.....	1
24	PFFZZ	5315011703210	11083	8D7678	PIN,STRAIGHT,HEADLE.....	1
25	PAFZZ	5330010648205	11083	5F4258	SEAL.....	2
26	PFFZZ	5306004262932	11083	0S1619	BOLT,MACHINE.....	1
27	PFFZZ	5315011695678	11083	8D6687	PIN,STRAIGHT,HEADLE.....	1

END OF FIGURE

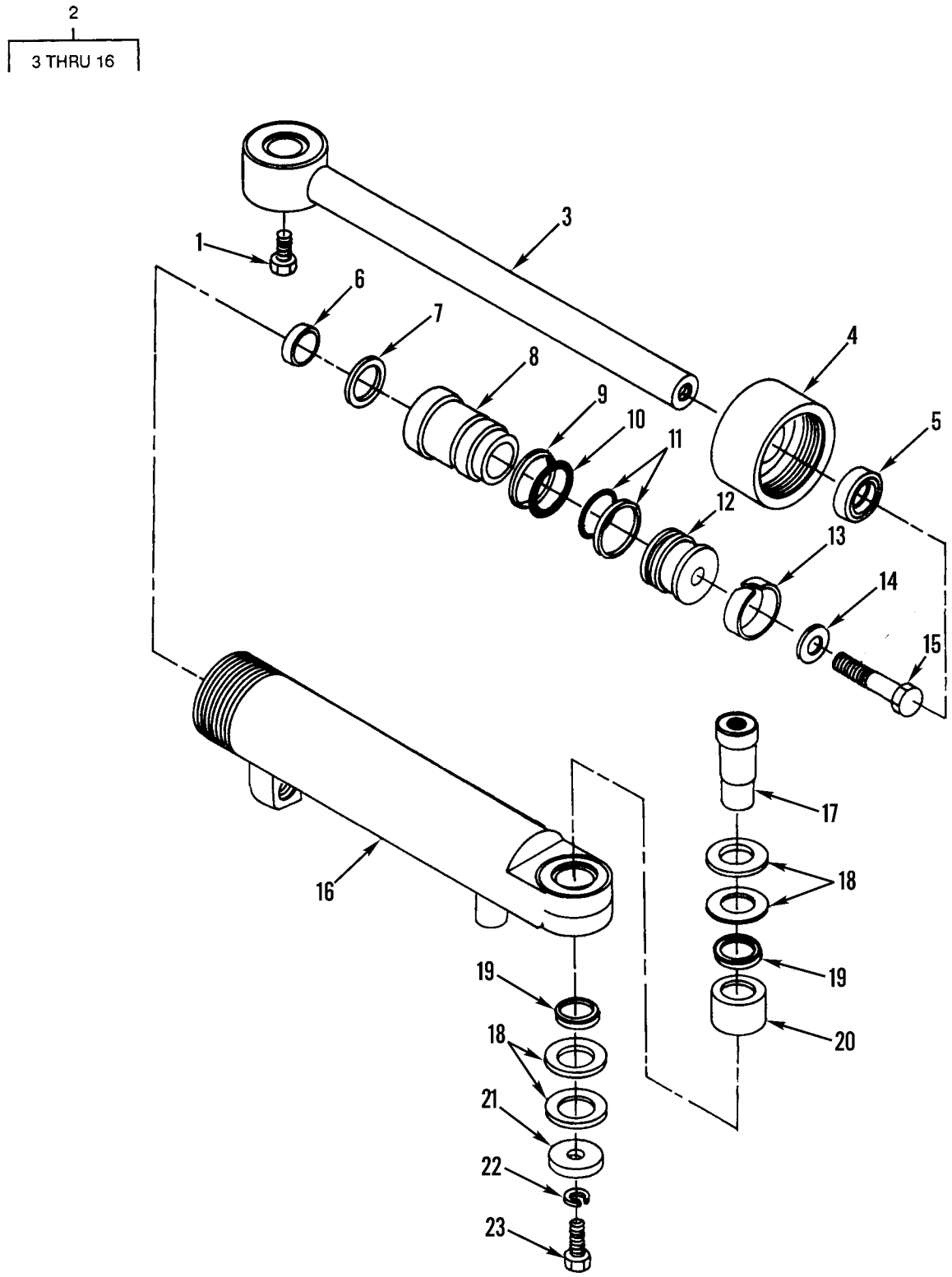

Figure 280. Articulation Hydraulic Cylinder Assembly and Mounting

(1) ITEM NO	(2) SMR CODE	(3) NSN	(4) CAGEC	(5) PART NUMBER	(6) DESCRIPTION AND USABLE ON CODES(UOC)	(7) QTY
					GROUP 2407 HYDRAULIC CYLINDERS FIG. 280 ARTICULATION HYDRAULIC CYLINDER ASSEMBLY AND MOUNTING	
1	PFFZZ	5305007247222	80204	B1821BH063C200N	SCREW,CAP,HEXAGON H.....	2
2	PFFFF	3805010219100	11083	8J0546	CYLINDER ASSEMBLY,A.....	2
3	PFFZZ	3040011756470	11083	8J6668	.ROD,PISTON,LINEAR A.....	1
4	PFFZZ	3040011761215	11083	8J5911	.CAP,LINEAR ACTUATIN.....	1
5	PAFZZ	5330015073339	11083	167-2452	.GASKET PART OF KIT P/N 2402016.....	1
6	PAFZZ	5330011881693	5F573	381-33001-330	.SEAL,PLAIN PART OF KIT P/N 2402016.	1
7	PAFZZ	5330010219891	11083	1672190	.SEAL PART OF KIT P/N 2402016.....	1
8	PAFZZ	3040011755261	11083	7J3351	.HEAD,LINEAR ACTUATI.....	1
9	PCFZZ	5331005931247	11083	5H8848	.O-RING PART OF KIT P/N 2402016.....	1
10	PAFZZ	5330001076455	11083	4J9225	.RETAINER,PACKING PART OF KIT P/N 2402016.....	1
11	PAFZZ	5330010219889	11083	6J1972	.SEAL PART OF KIT P/N 2402016.....	1
12	PFFZZ	2590010647383	11083	7J5682	.PISTON.....	1
13	PAFZZ	2590010647382	11083	6J5733	.RING PART OF KIT P/N 2402016.....	1
14	PFFZZ	5310010660506	11083	8J7415	.WASHER.....	1
15	PFFZZ	5306011558647	11083	7J5639	.BOLT,SELF-LOCKING.....	1
16	PFFZZ	3040011769603	11083	8J0545	.CYLINDER ASSEMBLY,A.....	1
17	PFFZZ	5340011692299	11083	8D4766	POST,ELECTRICAL-MEC..... UOC:AF9,AGN,AGP	4
18	PFFZZ	5310011685568	11083	2K0420	WASHER,FLAT.....	12
19	PAFZZ	5330010674682	11083	7K9202	SEAL.....	8
20	PAFZZ	3120010955788	11083	8D7086	BEARING,SLEEVE.....	4
21	PFFZZ	5310010953326	11083	7K6117	WASHER,FLAT..... UOC:AF9,AGN,AGP	4
22	PFFZZ	5310000455001	96906	MS35340-50	WASHER,LOCK..... UOC:AF9,AGN,AGP	4
23	PFFZZ	5305004262936	11083	0S1625	SCREW,CAP,HEXAGON H..... UOC:AF9,AGN,AGP	2

END OF FIGURE

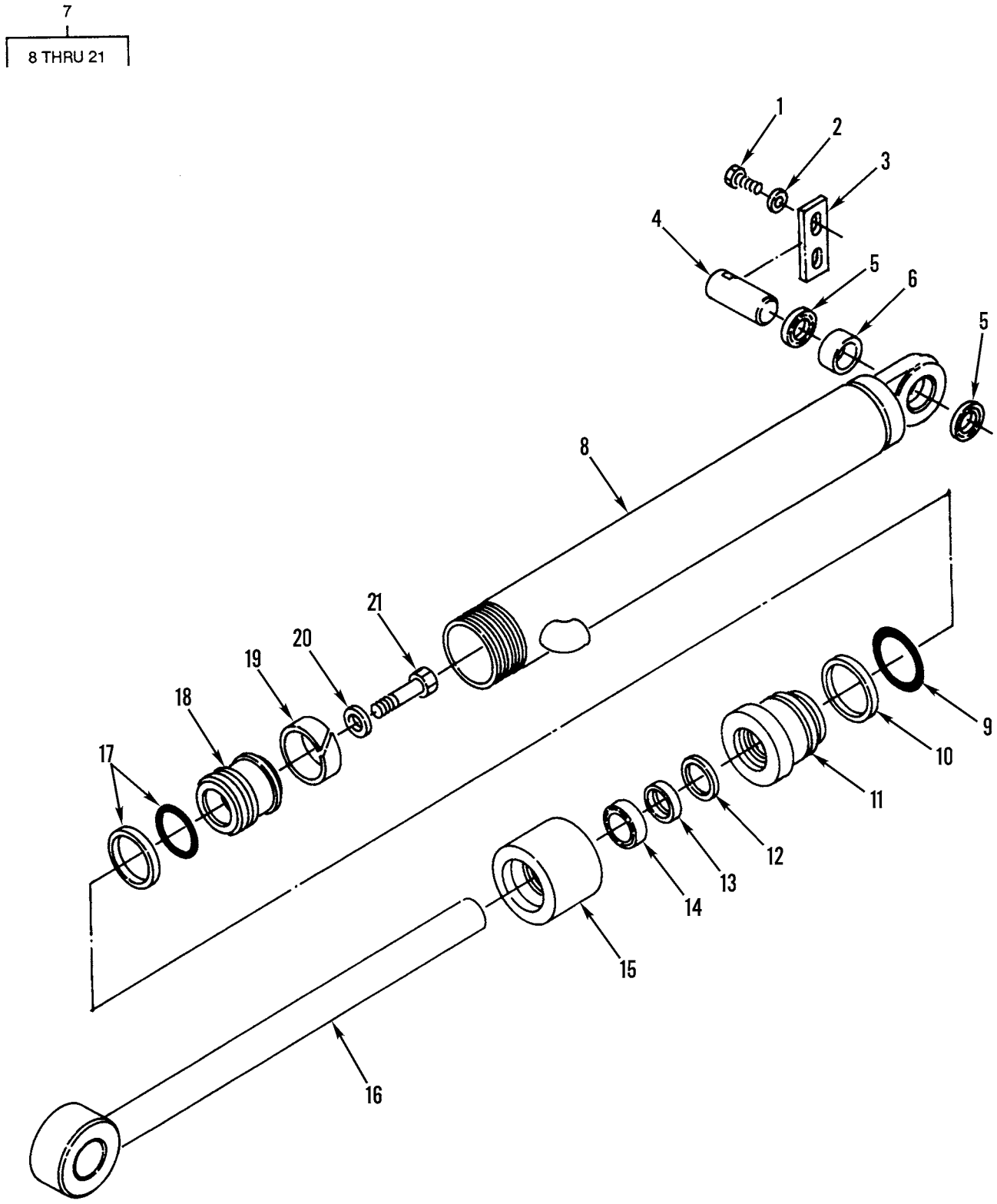

Figure 281. Scarifier Hydraulic Cylinder Assembly and Mounting

(1) ITEM NO	(2) SMR CODE	(3) NSN	(4) CAGEC	(5) PART NUMBER	(6) DESCRIPTION AND USABLE ON CODES(UOC)	(7) QTY
					GROUP 2407 HYDRAULIC CYLINDERS FIG. 281 SCARIFIER HYDRAULIC CYLINDER ASSEMBLY AND MOUNTING	
1	PFFZZ	5306004262934	11083	0S1621	BOLT,MACHINE.....	4
2	PFFZZ	5310008095997	96906	MS27183-17	WASHER,FLAT.....	4
3	PAFZZ	5365011569765	11083	6G7187	SPACER,PLATE.....	2
4	PFFZZ	5315010958486	11083	8D7225	PIN,STRAIGHT,HEADLE.....	2
5	PAFZZ	5330010674682	11083	7K9202	SEAL.....	4
6	PAFZZ	3120010955788	11083	8D7086	BEARING,SLEEVE.....	2
7	PFFFF	3895010947535	11083	3G1853	CYLINDER ASSEMBLY,A.....	1
8	PAFZZ	3040011793075	11083	3G1852	.CYLINDER,ACTUATING,.....	1
9	PCFZZ	5331005931247	11083	5H8848	.O-RING.....	1
10	PAFZZ	5330001076455	11083	4J9225	.RETAINER,PACKING.....	1
11	PFFZZ	3040011755261	11083	7J3351	.HEAD,LINEAR ACTUATI.....	1
12	PAFZZ	5330010219891	11083	1672190	.SEAL.....	1
13	PAFZZ	5330011812421	11083	8J5816	.SEAL,PLAIN ENCASED.....	1
14	PFFZZ	5330011843546	11083	8J5817	.SEAL,PLAIN ENCASED.....	1
15	PFFZZ	3040011761215	11083	8J5911	.CAP,LINEAR ACTUATIN.....	1
16	PFFZZ	5342011853335	11083	3G1849	.ROD ASSEMBLY.....	1
17	PAFZZ	5330010219889	11083	6J1972	.SEAL.....	1
18	PFFZZ	2590010647383	11083	7J5682	.PISTON.....	1
19	PAFZZ	2590010647382	11083	6J5733	.RING.....	1
20	PFFZZ	5310010660506	11083	8J7415	.WASHER.....	1
21	PFFZZ	5306011558647	11083	7J5639	.BOLT,SELF-LOCKING.....	1

END OF FIGURE

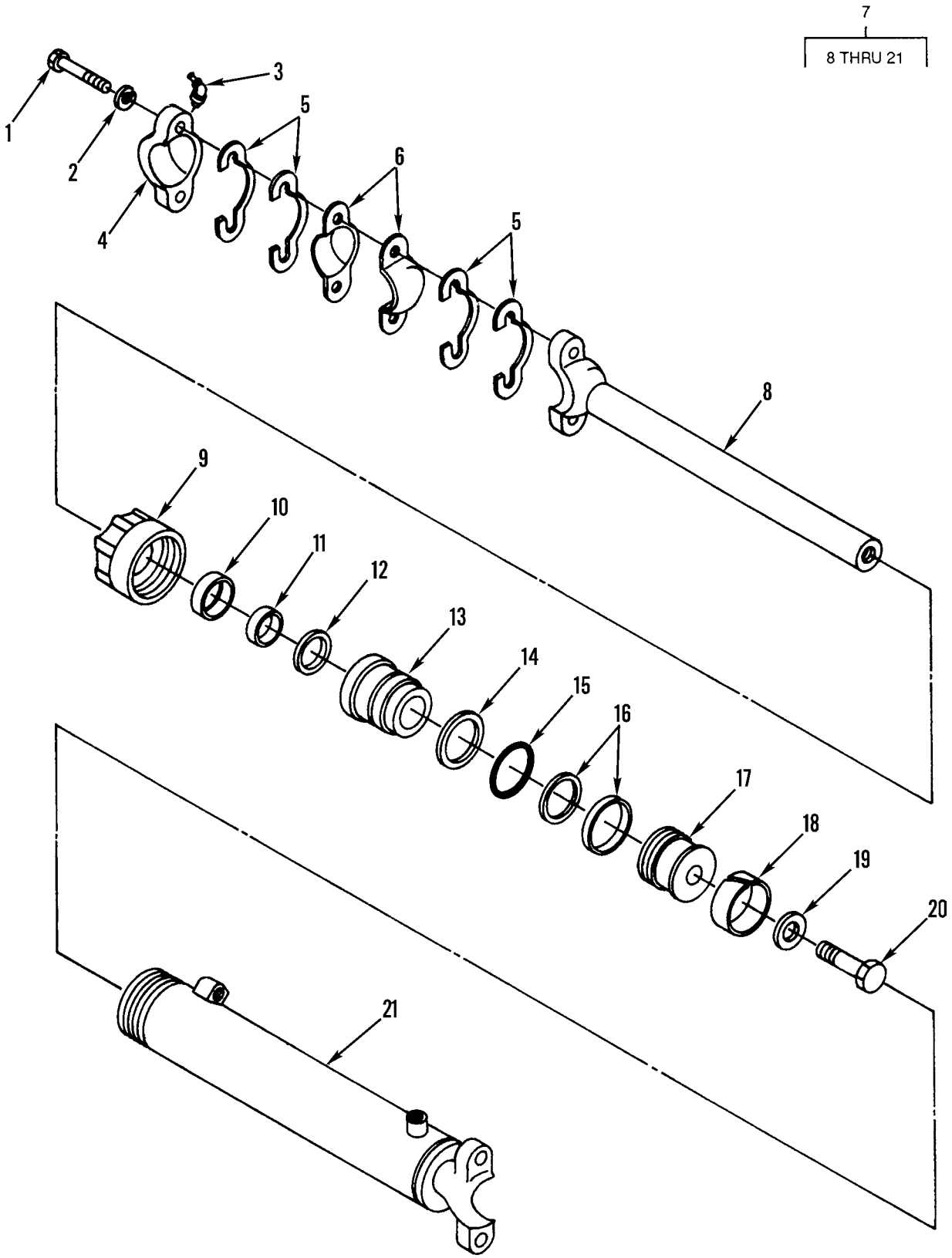

Figure 282. Centershift Hydraulic Cylinder Assembly and Mounting

(1) ITEM NO	(2) SMR CODE	(3) NSN	(4) CAGEC	(5) PART NUMBER	(6) DESCRIPTION AND USABLE ON CODES(UOC)	(7) QTY
					GROUP 2407 HYDRAULIC CYLINDERS FIG. 282 CENTERSHIFT HYDRAULIC CYLINDER ASSEMBLY AND MOUNTING	
1	PFFZZ	5306004263408	11083	1D4628	BOLT,MACHINE.....	4
2	PFFZZ	5310006557646	23382	4317	WASHER,LOCK.....	4
3	PFFZZ	4730001720028	96906	MS15003-4	FITTING,LUBRICATION.....	2
4	PFFZZ	3040011746200	11083	2G9098	CAP,LINEAR ACTUATIN.....	2
5	PAFZZ	5365010951307	11083	2G9103	SPACER,PLATE.....	8
6	PFFZZ	3805010951693	11083	9D2754	INSERT.....	4
7	PFFFF	2590010943123	11083	3G5224	CYLINDER ASSEMBLY,A.....	1
8	XDFZZ		11083	3G5486	.ROD,PISTON,LINEAR A.....	1
9	XDFZZ		11083	8J6377	.CAP,LINEAR ACTUATIN.....	1
10	PFFZZ	5330002921633	73680	21158-1186	.SEAL,PLAIN ENCASED.....	1
11	PAFZZ	5330015073336	11083	167-2304	.GASKET.....	1
12	XDFZZ	5330015073334	11083	167-2195	.GASKET.....	1
13	PFFZZ	4320011762942	11083	8J6375	.HEAD,HYDRAULIC MOTO.....	1
14	PAFZZ	2590010647381	11083	6J5731	.RING.....	1
15	PAFZZ	5331005931141	11083	1H7339	.O-RING.....	1
16	PAFZZ	5330010219887	11083	6J0793	.SEAL.....	1
17	XDFZZ		11083	8J6370	.PISTON,COMPRESSOR.....	1
18	PAFZZ	3120011555268	11083	8J6371	.BUSHING,SLEEVE.....	1
19	PFFZZ	5310010660506	11083	8J7415	.WASHER.....	1
20	PFFZZ	5306011558647	11083	7J5639	.BOLT,SELF-LOCKING.....	1
21	PFFZZ	3805011714545	11083	3G5488	.CYLINDER ASSEMBLY,A.....	1

END OF FIGURE

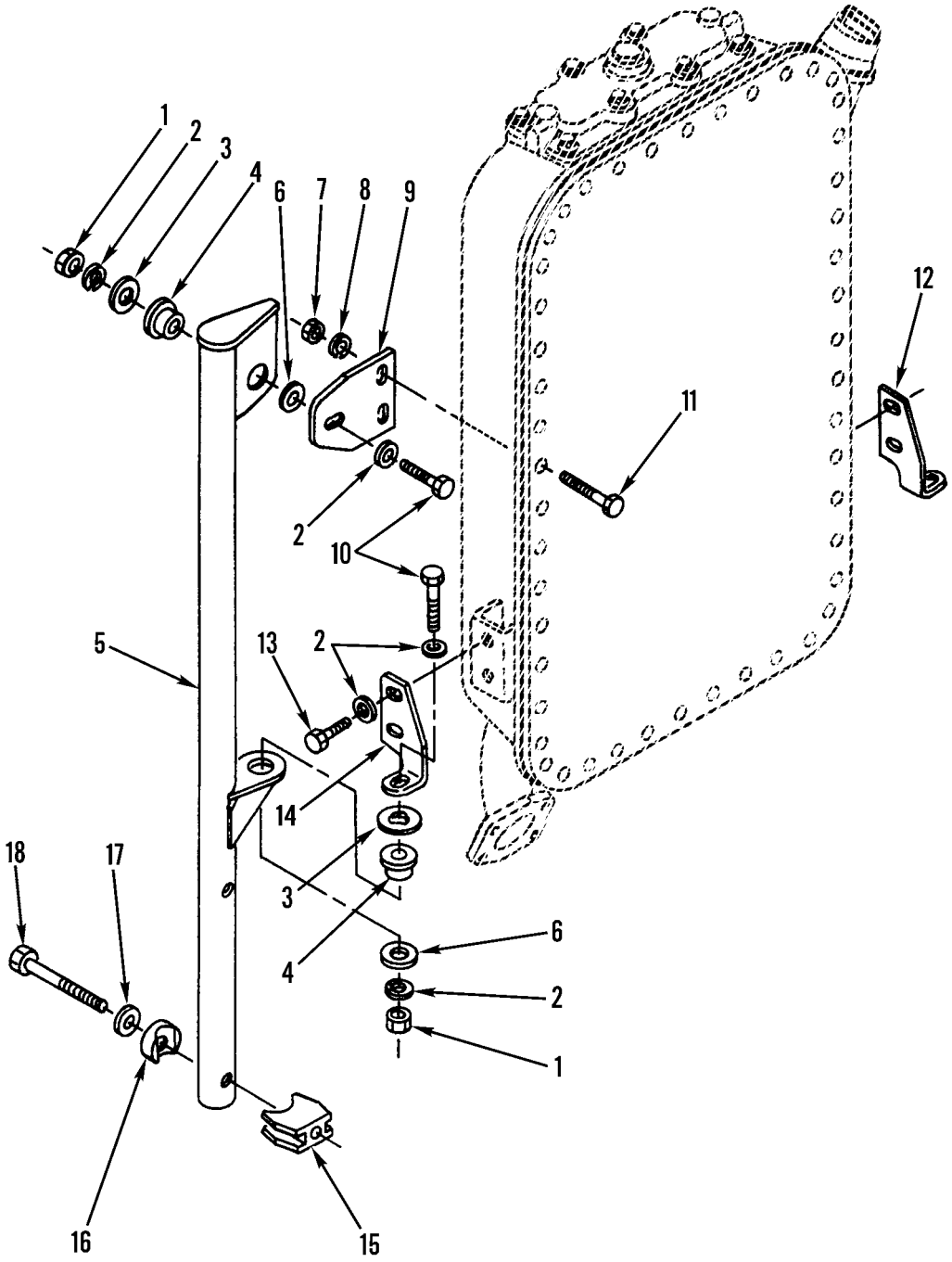

Figure 283. Hydraulic Tank Assembly Mounting

(1) ITEM NO	(2) SMR CODE	(3) NSN	(4) CAGEC	(5) PART NUMBER	(6) DESCRIPTION AND USABLE ON CODES(UOC)	(7) QTY
					GROUP 2408 LIQUID TANKS OR RESERVOIRS	
					FIG. 283 HYDRAULIC TANK ASSEMBLY MOUNTING	
1	PFFZZ	5310007680318	96906	MS51967-14	NUT,PLAIN,HEXAGON.....	4
2	PFFZZ	5310008095997	96906	MS27183-17	WASHER,FLAT.....	12
3	PFFZZ	5310010942893	11083	1B4287	WASHER,FLAT.....	4
4	XDFZZ		76005	J-6256-10	MOUNT,RESILIENT.....	4
5	PFFZZ	2590011720640	11083	2G7175	SUPPORT ASSEMBLY,OI.....	2
					UOC:AGP	
5	PFFZZ	2590011691968	11083	5R5361	SUPPORT ASSEMBLY,HY.....	2
					UOC:AF9,F10	
6	PFFZZ	5310011701359	11083	8F6437	WASHER,FLAT.....	4
7	PFFZZ	5310014297859	11083	6V8801	NUT,PLAIN,HEXAGON.....	4
8	PFFZZ	5310001174788	11083	5M2894	WASHER,FLAT.....	4
9	PFFZZ	5340011699290	11083	2G7171	PLATE,MENDING.....	2
10	PFFZZ	5306004263080	11083	1A5822	BOLT,MACHINE.....	4
11	PFFZZ	5306011706171	11083	1D4678	BOLT,SQUARE NECK.....	4
12	PFFZZ	5340011720553	11083	2G7173	BRACKET,ANGLE.....	1
13	PFFZZ	5306004238117	11083	0S1595	BOLT,MACHINE.....	4
14	PFFZZ	5340011690733	11083	2G7172	BRACKET,ANGLE.....	1
15	PAFZZ	3040011687619	11083	6G5279	BRACKET,EYE,NONROTA.....	4
16	PAFZZ	5310011692929	11083	2G8212	WASHER,SADDLE.....	4
17	PFFZZ	5310002459841	11083	8M4791	WASHER,FLAT.....	4
18	XDFZZ		81349	MIL-S-1222	SCREW,CAP,HEXAGON H.....	4

END OF FIGURE

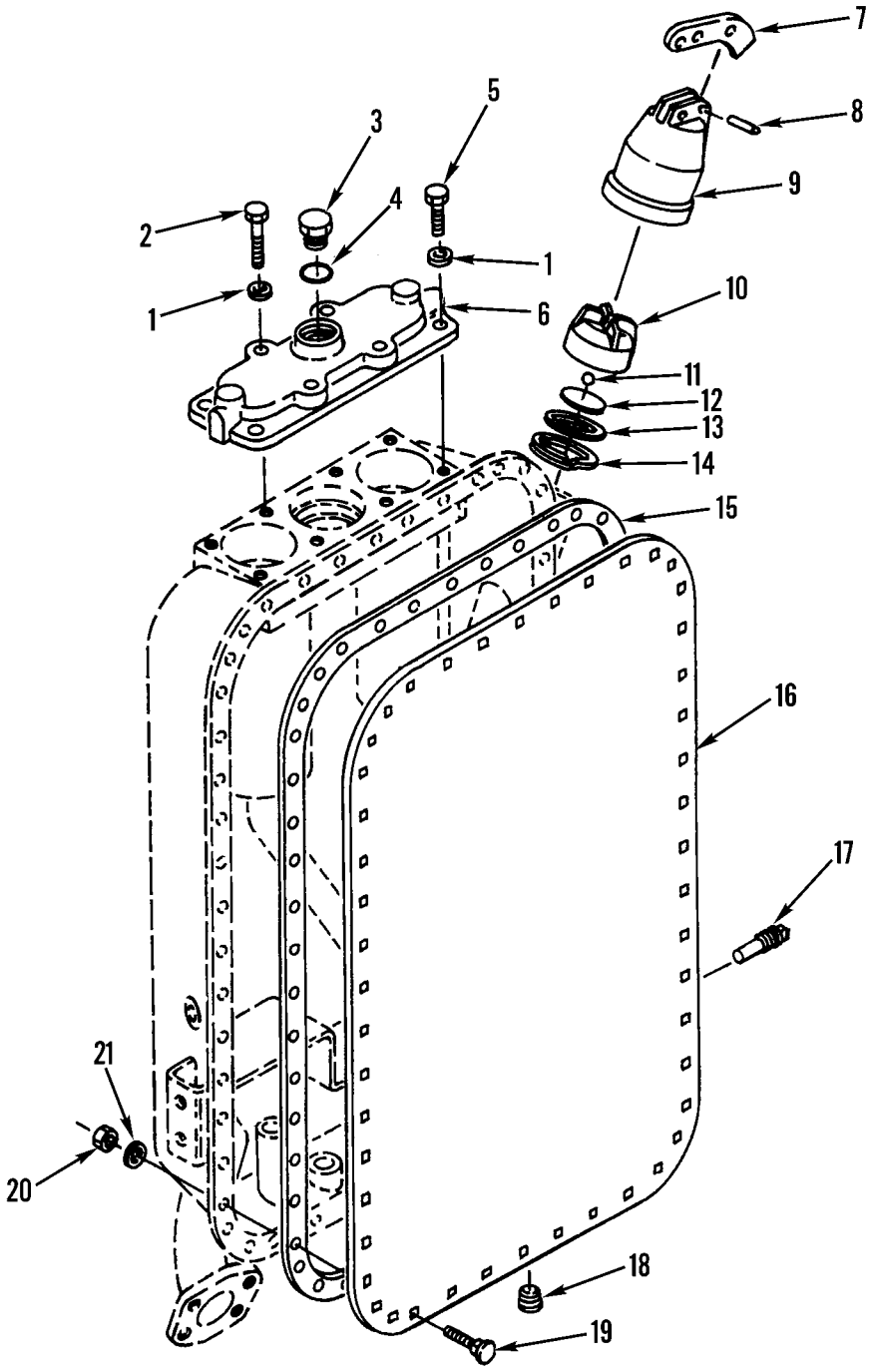

Figure 284. Hydraulic Tank Access Covers

(1) ITEM NO	(2) SMR CODE	(3) NSN	(4) CAGEC	(5) PART NUMBER	(6) DESCRIPTION AND USABLE ON CODES(UOC)	(7) QTY
					GROUP 2408 LIQUID TANKS OR RESERVOIRS	
					FIG. 284 HYDRAULIC TANK ACCESS COVERS	
1	PFFZZ	5310008095997	96906	MS27183-17	WASHER,FLAT.....	8
2	PFFZZ	5306008097134	11083	2B0947	BOLT,MACHINE.....	4
3	PFFZZ	5365004725300	11083	9S6130	PLUG,MACHINE THREAD..... UOC:AGP	1
3	PFFZZ	5365004764985	11083	9S8010	PLUG,MACHINE THREAD..... UOC:AF9,AGM,AGN,F10	1
4	PFFZZ	5331004293542	11083	2S4078	O-RING.....	1
5	PFFZZ	5306004240086	11083	7B3235	BOLT,MACHINE.....	4
6	PFFZZ	4320011679199	11083	6G5118	HOUSING,LIQUID PUMP.....	1
7	PFOZZ	2540011810999	11083	9M7394	LEVER,REMOTE CONTRO..... UOC:AF9,AGP,F10	1
8	PFOZZ	5315005325746	11083	1L5072	PIN,STRAIGHT,HEADLE..... UOC:AF9,AGP,F10	1
9	PFOZZ	2590011793017	11083	5D1911	COVER,HYDRAULIC CAP..... UOC:AF9,AGP,F10	1
10	PFFZZ	2930006358296	11083	7H1447	CAP,FILLER OPENING.....	1
11	PAFZZ	3110000119935	11083	4B9782	BALL,BEARING.....	1
12	PFFZZ	2520010288096	11083	6H5139	PLATE,PRESSURE.....	1
13	PAFZZ	5330008489950	11083	9H6454	GASKET USE WITH 5T5101.....	1
13	PAFZZ	5330011236209	11083	3G0361	GASKET USE WITH P/N 8W5713.....	1
14	PFOZZ	5325005823115	80756	RR-312	RING,RETAINING..... UOC:AF9,AGP,F10	1
15	PFFZZ	5330010660681	11083	2D5383	GASKET.....	1
16	PAFZZ	5340011700769	11083	6G5277	COVER,ACCESS.....	1
17	PFFZZ	5365003639900	11083	4B7739	PLUG,MACHINE THREAD.....	1
18	PFFZZ	4730001223969	11083	1B5174	PLUG,PIPE.....	1
19	PFFZZ	5306010951496	11083	1D4677	BOLT,SQUARE NECK.....	48
20	PFFZZ	5310014297859	11083	6V8801	NUT,PLAIN,HEXAGON.....	48
21	PFFZZ	5310001174788	11083	5M2894	WASHER,FLAT.....	48

END OF FIGURE

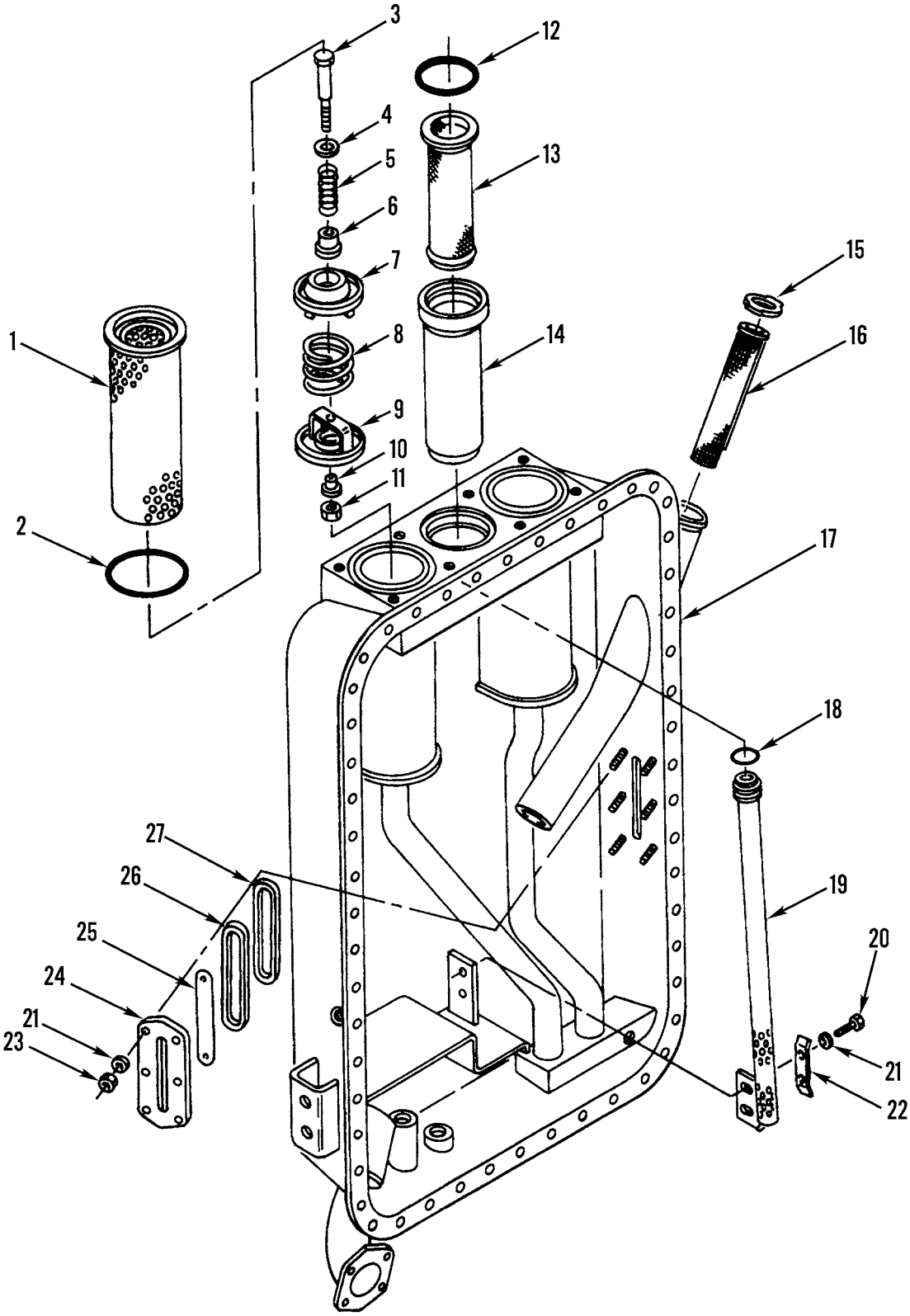

Figure 285. Hydraulic Tank Assembly

(1) ITEM NO	(2) SMR CODE	(3) NSN	(4) CAGEC	(5) PART NUMBER	(6) DESCRIPTION AND USABLE ON CODES(UOC)	(7) QTY
					GROUP 2408 LIQUID TANKS OR RESERVOIRS FIG. 285 HYDRAULIC TANK ASSEMBLY	
1	PAFZZ	2910007403593	11083	1R0719	FILTER ELEMENT,FLUI.....	2
2	PCFZZ	5331008590396	09990	2-246N951-75	O-RING.....	2
3	XDFZZ		11083	8D5388	BOLT,SHOULDER.....	2
4	XDFZZ		11083	8D5401	WASHER,RECESSED.....	2
5	PAFZZ	5360010660616	11083	6J8391	SPRING.....	2
6	XDFZZ		11083	9D8538	VALVE,CONTROL.....	2
7	XBFZZ		11083	8D4595	SEAT,VALVE.....	2
8	XDFZZ		11083	2J6133	SPRING.....	2
9	PFFZZ	2530010976758	11083	8D8372	RETAINER ASSEMBLY.....	2
10	PAFZZ	5365010950301	11083	8D5403	SPACER,SLEEVE.....	2
11	PFFZZ	5310010588071	11083	2K4973	LOCKNUT.....	2
12	PCFZZ	5331009413599	81343	AMS3209	O-RING.....	1
13	PFFZZ	4330010955850	11083	8D5489	FILTER ELEMENT,FLUI.....	1
14	PFFZZ	4710011679289	11083	9D8312	TUBE ASSEMBLY,METAL.....	1
15	PFFZZ	5325009549666	80756	RRT212C	RING,RETAINING.....	1
16	PFFZZ	2590010660614	11083	1J9575	STRAINER ASSEMBLY USE WITH 5T5101..	1
16	PFFZZ	4730011650851	11083	9J3047	STRAINER ELEMENT,SE USE WITH P/N 8W5713.....	1
17	PFFZZ		11083	8W5713	TANK,OIL,HYDRAULIC REPLACES 5T5101, MUST REPLACE STRAINER AND GASKET....	1
17	XBFZZ	2590011799962	11083	5T5101	TANK,OIL,HYDRAULIC.....	1
18	PFFZZ	5331009685388	11083	4F8824	O-RING.....	1
19	PAFZZ	4710011734696	11083	5T3885	TUBE ASSEMBLY,METAL.....	1
20	PFFZZ	5306002637301	11083	0L1351	BOLT,MACHINE.....	2
21	PFFZZ	5310001174788	11083	5M2894	WASHER,FLAT.....	8
22	PAFZZ	5340008793056	11083	3H3451	LOCKING PLATE,NUT A.....	1
23	PFFZZ	5310005579414	72962	24-NE-066	NUT,SPECIAL.....	6
24	PAFZZ	2530010626127	11083	6J1079	RETAINER.....	1
25	PFFZZ	9905011671531	11083	8D5016	PLATE,INSTRUCTION.....	1
26	PAFZZ	5325010626128	11083	6J1080	GROMMET.....	1
27	PFFZZ	9340010626129	08805	940	WINDOW,OBSERVATION.....	1

END OF FIGURE

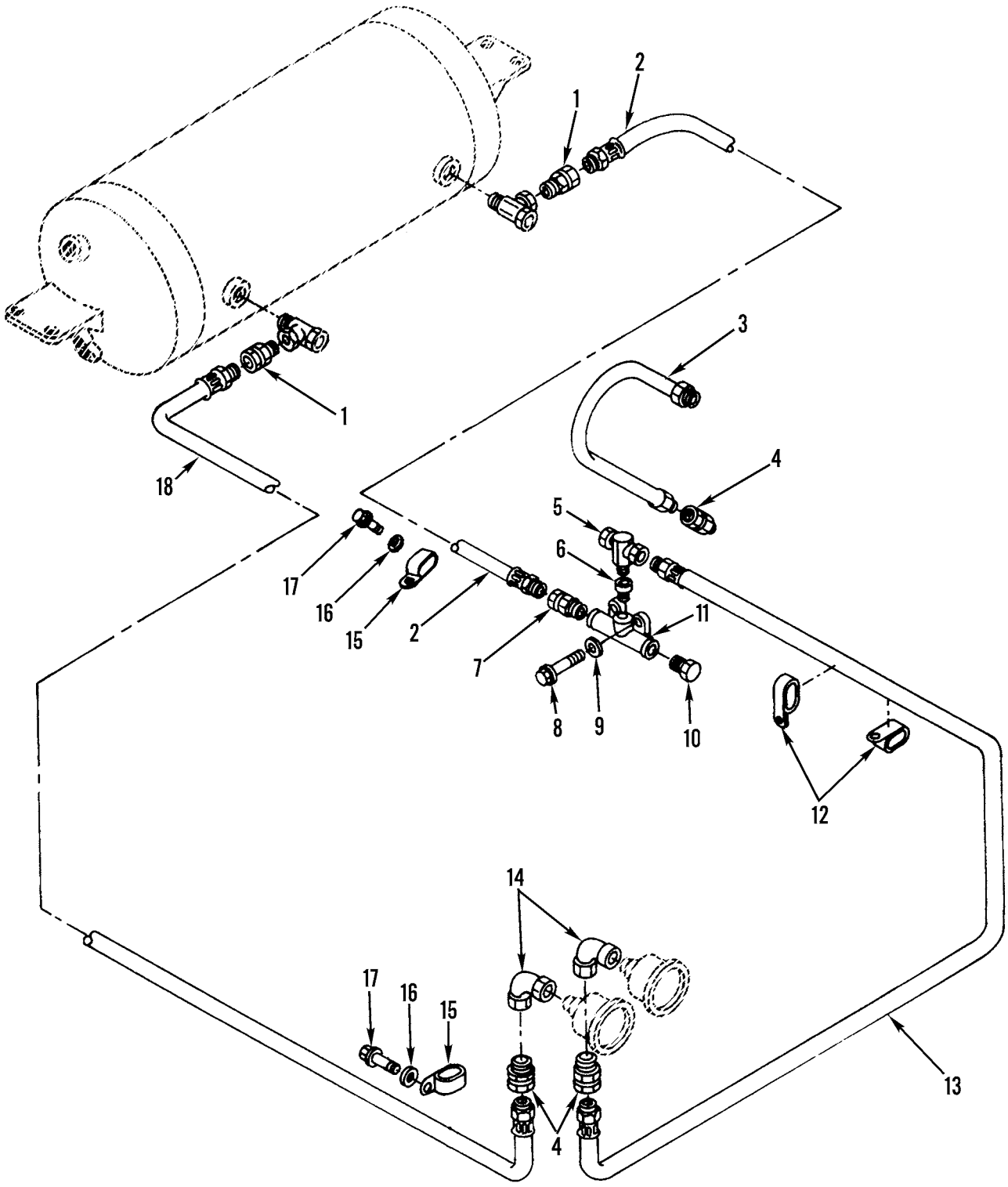

Figure 286. Air Tank-to-Pressure Gages, Lines, and Fittings

(1) ITEM NO	(2) SMR CODE	(3) NSN	(4) CAGEC	(5) PART NUMBER	(6) DESCRIPTION AND USABLE ON CODES(UOC)	(7) QTY
					GROUP 47 GAGES (NON-ELECTRICAL), WEIGHING AND MEASURING DEVICES GROUP 4702 GAGES, MOUNTINGS, LINES, AND FITTINGS FIG. 286 AIR TANK-TO-PRESSURE GAGES, LINES, AND FITTINGS	
1	PFOZZ	4730010518741	11083	2D0193	REDUCER,PIPE.....	2
2	PFOZZ	4720010945153	70434	4GABB-4MB-56.00	HOSE ASSEMBLY,NONME.....	1
3	PFOZZ	4720010633002	73842	4GABB-4MB-27.00	HOSE ASSEMBLY,NONME.....	1
4	PFOZZ	4730010589103	11083	4D2560	REDUCER,PIPE.....	3
5	PFOZZ	4730010950837	11083	3S6115	TEE,PIPE.....	1
6	PFOZZ	4730001930869	19422	BM11352-77	BUSHING,PIPE.....	5
7	PFOZZ	4730002895191	70834	A11584	COUPLING,PIPE.....	1
8	PFOZZ	5306002264825	80204	B1821BH031C075N	BOLT,MACHINE.....	2
9	PFOZZ	5310000814219	96906	MS27183-12	WASHER,FLAT.....	2
10	PFOZZ	4730000892515	11083	5M6213	PLUG,PIPE.....	1
11	PFOZZ	4730005858993	06853	231379	TEE,PIPE.....	1
12	PFOZZ	5342010643819	11083	9M8406	CLIP.....	2
13	PFOZZ	4720010945157	73842	4GABB-4MB-76.00	HOSE ASSEMBLY,NONME.....	1
14	XDOZZ		79470	C3509X2	ELBOW,PIPE.....	2
15	PFOZZ	5940001152684	96906	MS20659-118	TERMINAL,LUG..... UOC:AF9,AGP,F10	4
16	PFOZZ	5310001174788	11083	5M2894	WASHER,FLAT.....	4
17	PFOZZ	5305002528919	11083	0S0509	SCREW,CAP,HEXAGON H.....	4
18	PAOZZ	4720010944457	11083	7D4922	HOSE ASSEMBLY,NONME.....	1

END OF FIGURE

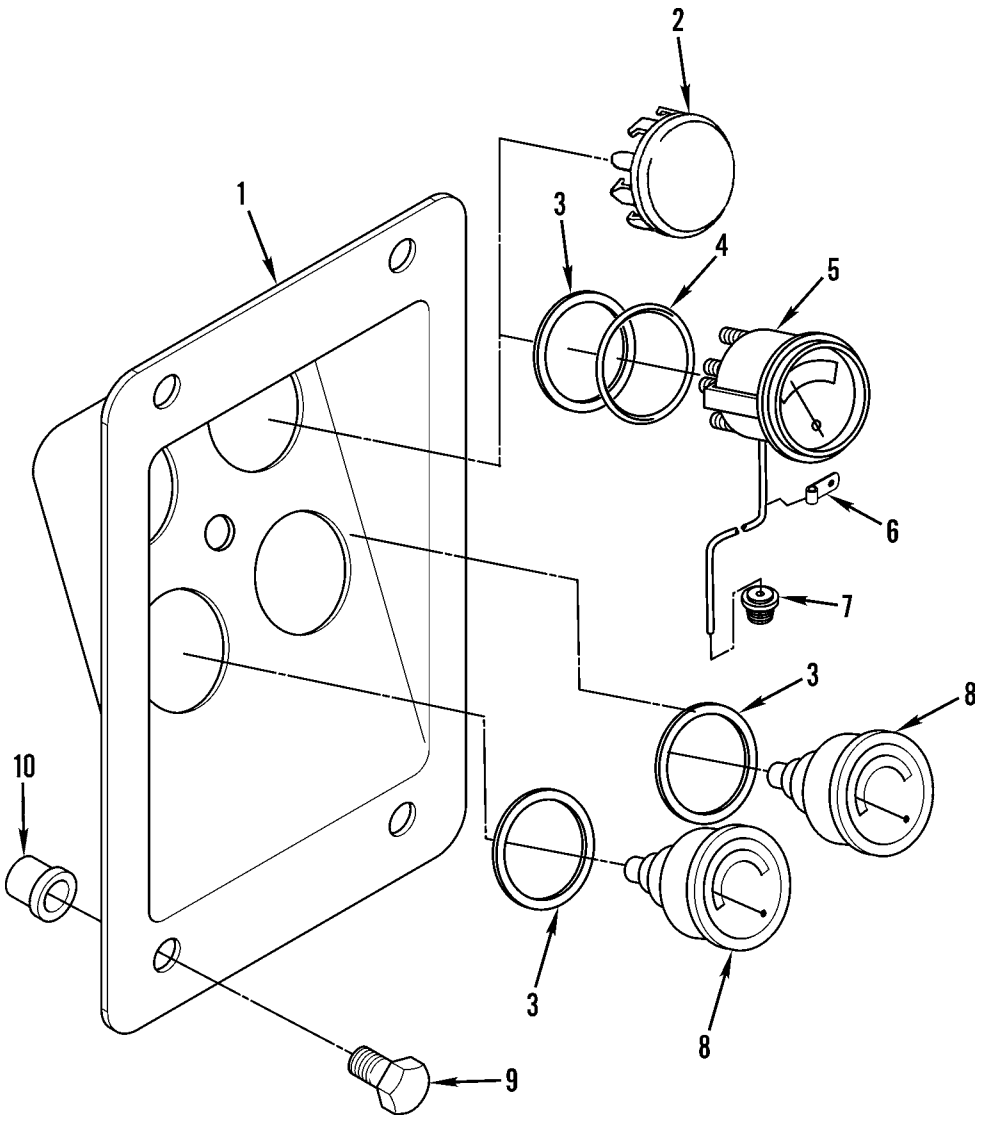

Figure 287. Air Pressure and Temperature Indicator Gages and Mounting

(1) ITEM NO	(2) SMR CODE	(3) NSN	(4) CAGEC	(5) PART NUMBER	(6) DESCRIPTION AND USABLE ON CODES(UOC)	(7) QTY
					GROUP 4702 GAGES, MOUNTINGS, LINES, AND FITTINGS FIG. 287 AIR PRESSURE AND TEMPERATURE INDICATOR GAGES AND MOUNTING	
1	PFOZZ	5975011751084	11083	8W3218	MOUNTING BASE,ELECT.....	1
2	PAOZZ	5340010902356	11083	1L6561	BUTTON,PLUG..... UOC:AGP	1
3	PFOZZ	5330011520601	11083	6V3507	PACKING,PREFORMED..... UOC:AF9,AGM,AGN,F10	3
3	PFOZZ	5330011520601	11083	6V3507	PACKING,PREFORMED..... UOC:AGP	2
4	PFOZZ		11083	0384741	RING..... UOC:AF9,AGM,AGN,F10	1
5	PFOZZ		11083	2005231	INDICATOR..... UOC:AF9,AGM,AGN,F10	1
6	PFOZZ	5342009998389	11083	4D8948	CLIP,SPECIAL..... UOC:AF9,AGM,AGN,F10	1
7	PFOZZ		11083	2143613	ADAPTER..... UOC:AF9,AGM,AGN,F10	1
8	PAOZZ	6620011580973	11083	1W0708	GAGE,PRESSURE,DIAL.....	2
9	PFOZZ	5305000712505	80204	B1821BH025C088N	SCREW,CAP,HEXAGON H.....	4
10	PFOZZ	5310002473360	11083	3D5074	NUT,SLEEVE.....	4

END OF FIGURE

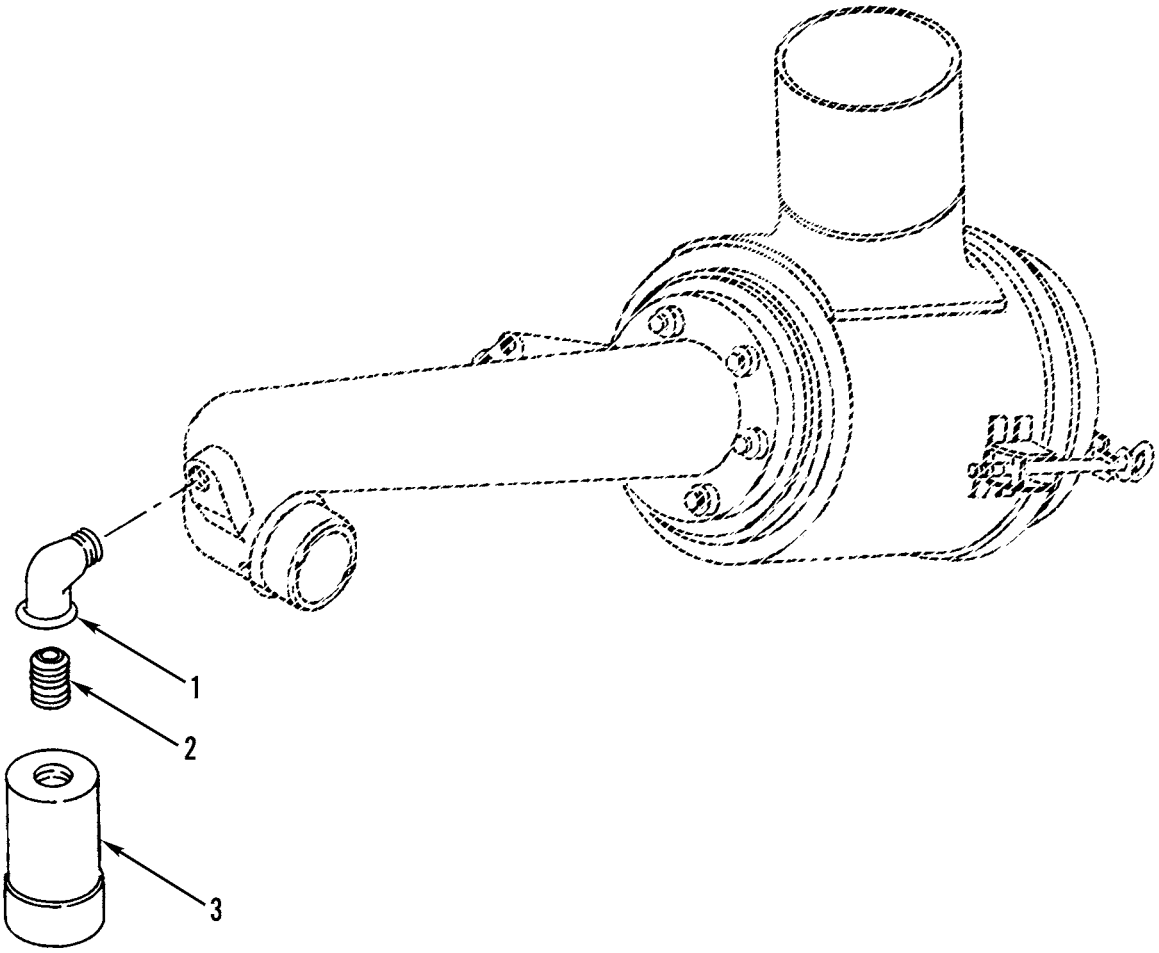

Figure 288. Air Cleaner Indicator and Mounting

(1) ITEM NO	(2) SMR CODE	(3) NSN	(4) CAGEC	(5) PART NUMBER	(6) DESCRIPTION AND USABLE ON CODES(UOC)	(7) QTY
					GROUP 4702 GAGES, MOUNTINGS, LINES, AND FITTINGS FIG. 288 AIR CLEANER INDICATOR AND MOUNTING	
1	PFOZZ	4730008100059	89346	120401	ELBOW,PIPE.....	1
2	PFOZZ	4730001962054	11083	6V1813	NIPPLE,PIPE.....	1
3	PFOZZ	2940011666834	18265	RBX00-2276	INDICATOR,FILTER WA.....	1

END OF FIGURE

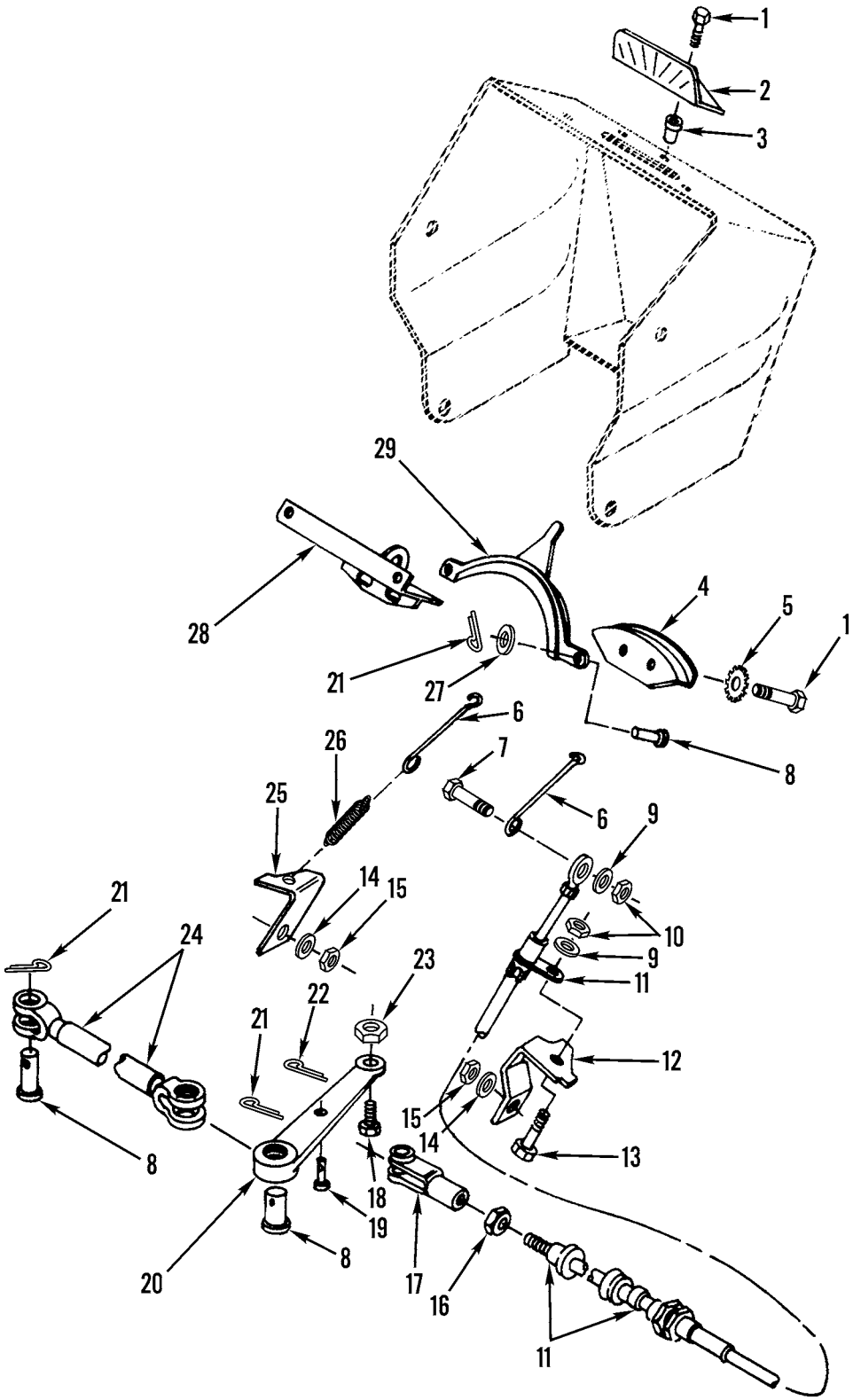

Figure 289. Articulation Indicator, Mounting, Lines, and Fittings

(1) ITEM NO	(2) SMR CODE	(3) NSN	(4) CAGEC	(5) PART NUMBER	(6) DESCRIPTION AND USABLE ON CODES(UOC)	(7) QTY
					GROUP 4702 GAGES, MOUNTINGS, LINES, AND FITTINGS FIG. 289 ARTICULATION INDICATOR, MOUNTING, LINES, AND FITTINGS	
1	PFOZZ	5305009931848	96906	MS35207-265	SCREW,MACHINE.....	4
2	PFOZZ	5355011970843	11083	6G9488	DIAL,SCALE.....	1
3	PAOZZ	4730011820743	11083	9D0608	NUT,UNION.....	2
4	PFOZZ	2590011974885	11083	6G4933	BRACKET,INDICATOR.....	1
5	PFOZZ	5310005967691	96906	MS35335-32	WASHER,LOCK.....	2
6	PFOZZ	5340011746176	11083	6G4934	LINK.....	2
7	PFOZZ	5305000712506	80204	B1821BH025C050N	SCREW,CAP,HEXAGON H.....	1
8	PFOZZ	5315010990059	11083	4J5325	PIN,STRAIGHT,HEADED.....	3
9	PFOZZ	5310010512360	11083	5P0537	WASHER.....	2
10	PFOZZ	5310000050779	11083	4L6458	NUT,PLAIN,HEXAGON..... UOC:AF9,AGP,F10	2
11	PFOZZ	2590012167765	5S058	56-1663-2031	CONTROL ASSEMBLY,PU.....	1
12	PFOZZ	5340011722801	11083	2G2968	STRAP,RETAINING.....	1
13	PFOZZ	5306002611153	11083	0S1615	BOLT,MACHINE.....	1
14	PFOZZ	5310000814219	96906	MS27183-12	WASHER,FLAT.....	2
15	PFOZZ	5310010687065	11083	5B3180	NUT.....	2
16	PFOZZ	5310006371058	66289	PD115	NUT,PLAIN,HEXAGON.....	1
17	PFOZZ	2590010664571	11083	4H2792	ROD.....	1
18	PFOZZ	5306011703768	11083	2K2882	BOLT,SHOULDER.....	1
19	PFOZZ	2590010664541	11083	6D3908	PIN.....	1
20	PFOZZ	3805011723076	11083	5T2580	LEVER,REMOTE CONTRO.....	1
21	PFOZZ	5315008392326	96906	MS24665-281	PIN,COTTER.....	3
22	PFOZZ	5315008395820	96906	MS24665-134	PIN,COTTER.....	1
23	PFOZZ	5310000443339	19207	443339	NUT,SELF-LOCKING,HE.....	1
24	PFOZZ	5342011697036	11083	8D0222	ROD ASSEMBLY.....	1
25	PFOZZ	5340011699642	11083	2G2969	BRACKET,ANGLE.....	1
26	PAOZZ	5360010664565	11083	9D1058	SPRING.....	1
27	PFOZZ	5310008094058	96906	MS27183-10	WASHER,FLAT.....	1
28	PFOZZ	5340011714005	11083	5T8951	BRACKET,DOUBLE ANGL.....	1
29	PFOZZ	5355011698502	11083	6G4951	POINTER,DIAL.....	1

END OF FIGURE

1
2 THRU 7

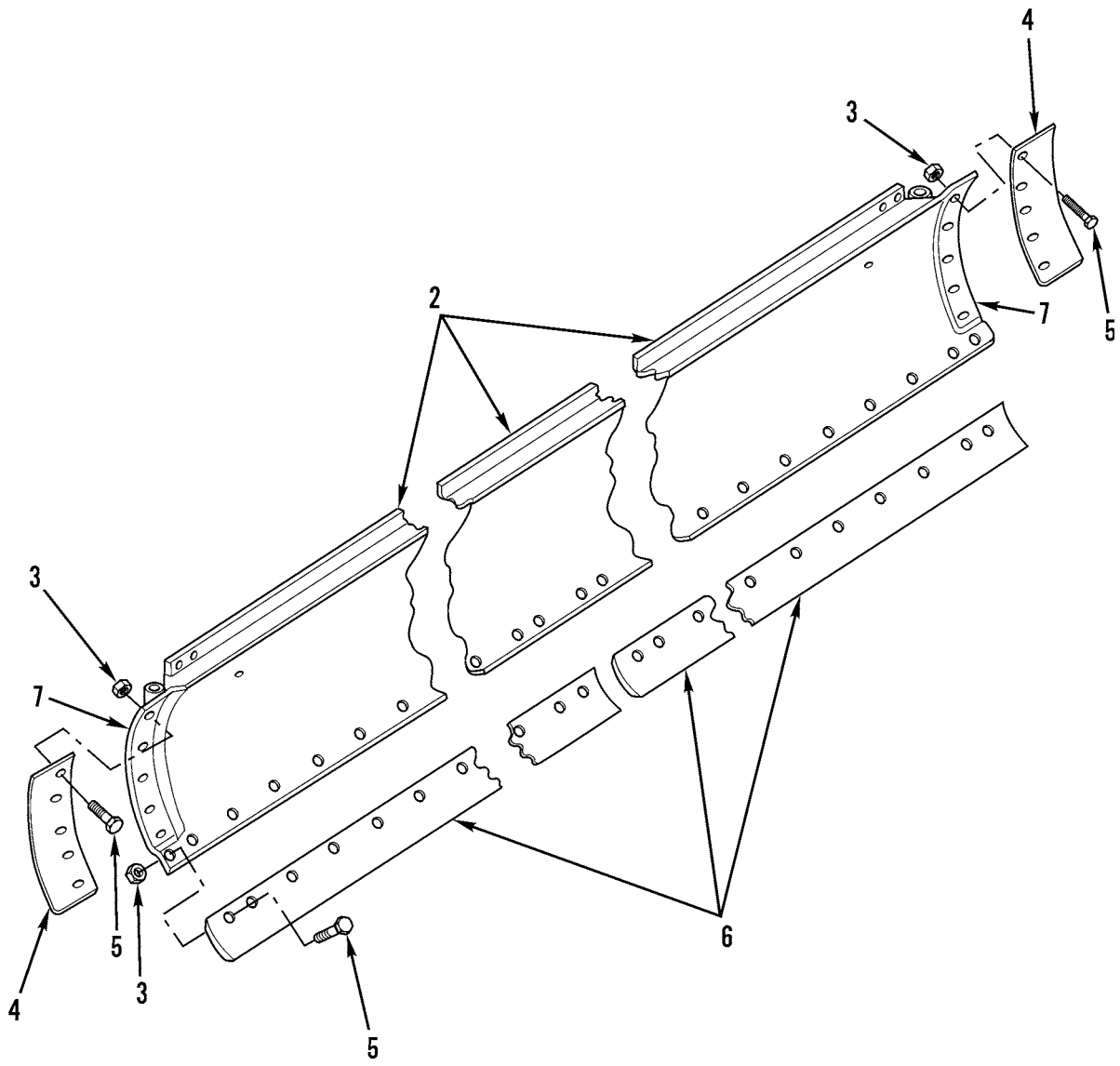

Figure 290. Blade Assembly

(1) ITEM NO	(2) SMR CODE	(3) NSN	(4) CAGEC	(5) PART NUMBER	(6) DESCRIPTION AND USABLE ON CODES(UOC)	(7) QTY
					GROUP 74 CRANES, SHOVELS, AND EARTHMOVING EQUIPMENT COMPONENTS GROUP 7435 MOLDBOARD ASSEMBLY FIG. 290 BLADE ASSEMBLY	
1	AOOOO		11083	2G6059	BLADE,ANGLEDOZER,EA..... UOC:AGM,AGN,AGP,F10	1
1	AOOOO		11083	9D0740	BLADE,ANGLEDOZER,EA..... UOC:AF9,AGP,F10	1
2	PFOZZ		11083	8W2770	.BLADE,ANGLEDOZER,EA..... UOC:AF9,AGP,F10	1
2	XAOZZ		11083	5D2219	.BLADE,ANGLEDOZER,EA REPLACED BY 8W2770..... UOC:AF9,AGP,F10	1
3	PAOZZ	5310007638920	96906	MS51967-20	.NUT,PLAIN,HEXAGON.....	36
4	PAOZZ	3805004316561	11083	7D2052	.END BIT,MOLDBOARD USE WITH 5D2219. UOC:AF9,AGP,F10	2
4	PAOZZ	3830014500402	11083	8E5531	.END BIT,MOLDBOARD.....	2
5	PAOZZ	5306002633533	11083	3F5108	.BOLT,SQUARE NECK.....	36
6	PAOZZ	3830004316560	11083	5D9553	.CUTTING EDGE,MOLDBO.....	2
7	PAOZZ	3830004596677	11083	6D1904	.CUTTING EDGE,MOLDBO USE WITH 8E5531.....	2
7	PAOZZ	2990014124631	11083	9W1768	.END BIT,SPECIAL USE WITH 7D2052... UOC:AF9,AGP,F10	2

END OF FIGURE

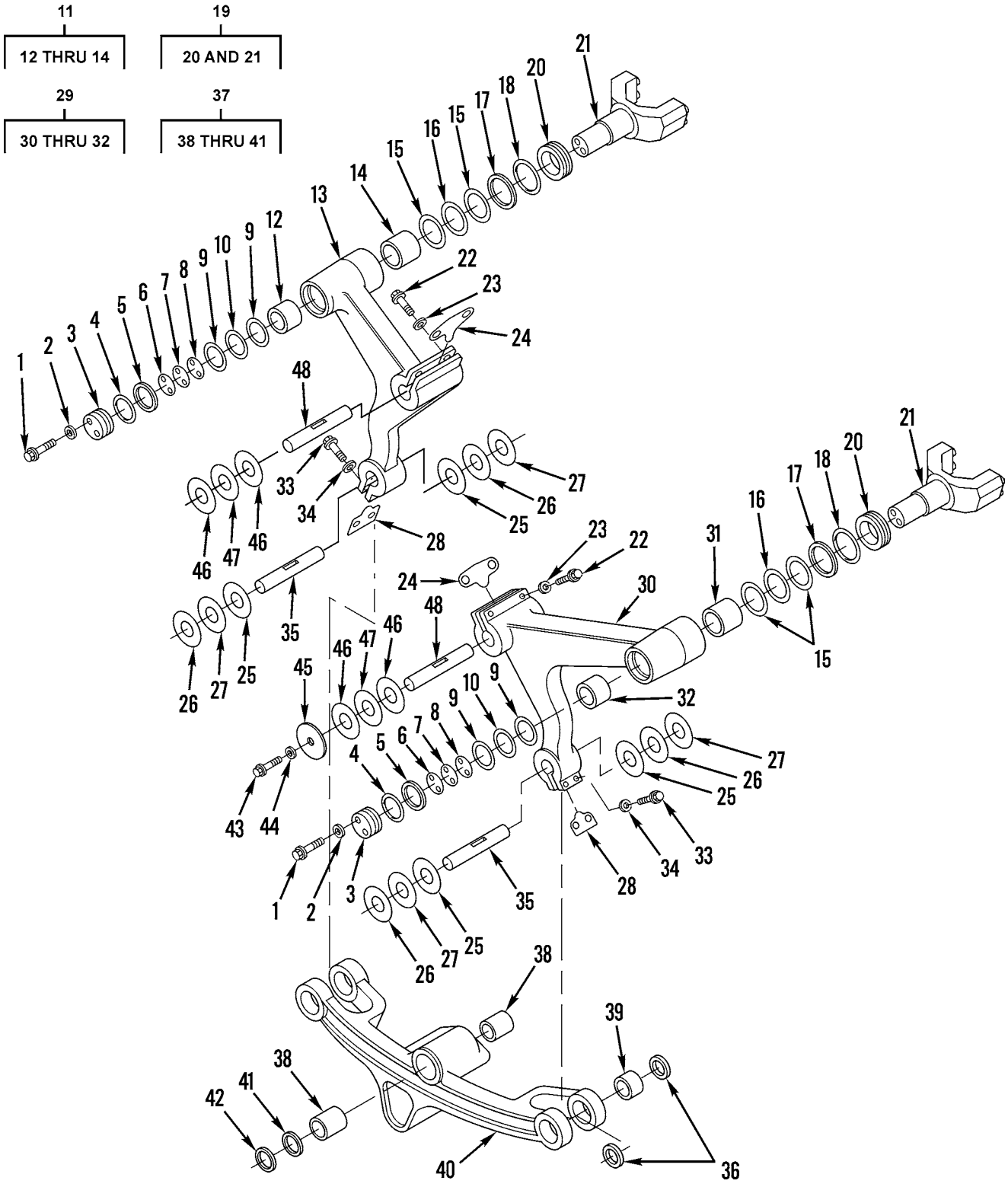

Figure 291. Blade Lift Arm Assemblies

(1) ITEM NO	(2) SMR CODE	(3) NSN	(4) CAGEC	(5) PART NUMBER	(6) DESCRIPTION AND USABLE ON CODES(UOC)	(7) QTY
					GROUP 7436 LIFT ARMS AND PIVOT ASSEMBLIES	
					FIG. 291 BLADE LIFT ARM ASSEMBLIES	
1	PFFZZ	5306002638978	11083	0S1587	BOLT,MACHINE.....	4
2	PFFZZ	5310008095997	96906	MS27183-17	WASHER,FLAT.....	4
3	PAFZZ	3040011800777	11083	7D8891	PLATE,RETAINING,SHA.....	2
4	PCFZZ	5331000743764	11083	7H2444	O-RING.....	2
5	PAFZZ	5330010951259	11083	7D8884	GASKET.....	2
6	PAFZZ	5365010951301	11083	7D8879	SHIM.....	8
7	PAFZZ	5365010958680	11083	7D8881	SHIM.....	6
8	PAFZZ	5365010958681	11083	7D8882	SPACER,PLATE.....	2
9	PAFZZ	3120010951268	11083	7D8875	BEARING,WASHER,THRU.....	4
10	PAFZZ	3120010978289	09455	LTD4058	BEARING,WASHER,THRU.....	2
11	XBOFF		11083	5T3755	BEARING,SLEEVE.....	1
12	PAFZZ	3120010955791	11083	8D8168	.BEARING,SLEEVE.....	1
13	XAFZZ		11083	5T3752	.ARM, BLADE LIFT.....	1
14	PAFZZ	3120010955786	11083	7D8889	.BEARING,SLEEVE.....	1
15	PAFZZ	3120010956458	11083	7D8878	BEARING,WASHER,THRU.....	4
16	PAFZZ	3120010999066	97613	KTN002	BEARING,WASHER,THRU.....	2
17	PFFZZ	5331008635549	11083	5F0149	O-RING.....	2
18	PAFZZ	5330010951258	11083	7D8883	GASKET.....	2
19	PFFZZ	4320011702542	11083	2G8238	YOKE,HYDRAULIC MOTO.....	2
20	PFOZZ	5310011720959	11083	2G8233	.WASHER,RECESSED.....	1
21	XAOZZ		11083	2G8229	.YOKE.....	1
22	PFFZZ	5305010902241	11083	7F5227	SCREW,CAP,HEXAGON H.....	4
23	PFOZZ	5310011022477	11083	5P8248	WASHER,FLAT.....	8
24	PAOZZ	5340011821862	11083	9D2753	LOCKING PLATE,NUT A.....	2
25	XBOZZ		11083	8D5217	BEARING,WASHER,THRU.....	10
26	PAFZZ	3120010983233	09455	LTD3272	BEARING,WASHER,THRU.....	4
27	PAOZZ	3120010958442	11083	8D5216	BEARING,WASHER,THRU.....	10
28	XDOZZ		11083	5T3754	CLAMP,SYNCHRO.....	1
29	XDOFZ		11083	8W5952	BEARING UNIT,PLAIN.....	1
					UOC:AF9,AGP,F10	
30	XAFZZ		11083	5T3751	.ARM, BLADE LIFT.....	1
					UOC:AF9,AGP,F10	
31	PAFZZ	3120010955791	11083	8D8168	.BEARING,SLEEVE.....	1
32	PAFZZ	3120010955786	11083	7D8889	.BEARING,SLEEVE.....	1
33	PAOZZ	5305004193410	11083	1D4588	SCREW.....	2
34	PFOZZ	5310010954631	11083	5P8247	WASHER,FLAT.....	4
35	PFOZZ	5315011751153	11083	8D1784	PIN,STRAIGHT,HEADLE.....	2
36	PAOZZ	5330010657151	11083	9D6583	SEAL.....	8
37	AFFFF	3805011744139	11083	8D9849	BAR ASSEMBLY.....	1
38	XDFZZ		11083	9D3311	.BEARING,SLEEVE.....	2
39	PFFZZ	3120010955787	11083	8D6629	.BEARING,SLEEVE.....	4
40	PAFZZ		11083	9D0201	.BAR ASSEMBLY.....	1
41	PFFZZ	5325010951835	81118	NAN275	.RING,RETAINING.....	1
42	PAFZZ	5330010660496	11083	9D6584	SEAL.....	1
43	PFOZZ	5306004550459	11083	9S1366	BOLT,MACHINE.....	1
44	PFFZZ	5310004317239	11083	2M0849	WASHER,FLAT.....	2
45	PFFZZ	5310011720034	11083	2G3984	WASHER,FLAT.....	2
46	XDFZA	3120010956457	11083	7D8874	BEARING,WASHER,THRU.....	8

(1) ITEM NO	(2) SMR CODE	(3) NSN	(4) CAGEC	(5) PART NUMBER	(6) DESCRIPTION AND USABLE ON CODES(UOC)	(7) QTY
47	PAFZZ	3120010990025	09455	LTD4080	BEARING,WASHER,THRU.....	4
48	XDOZZ		11083	8D4689	SHAFT,STRAIGHT.....	2

END OF FIGURE

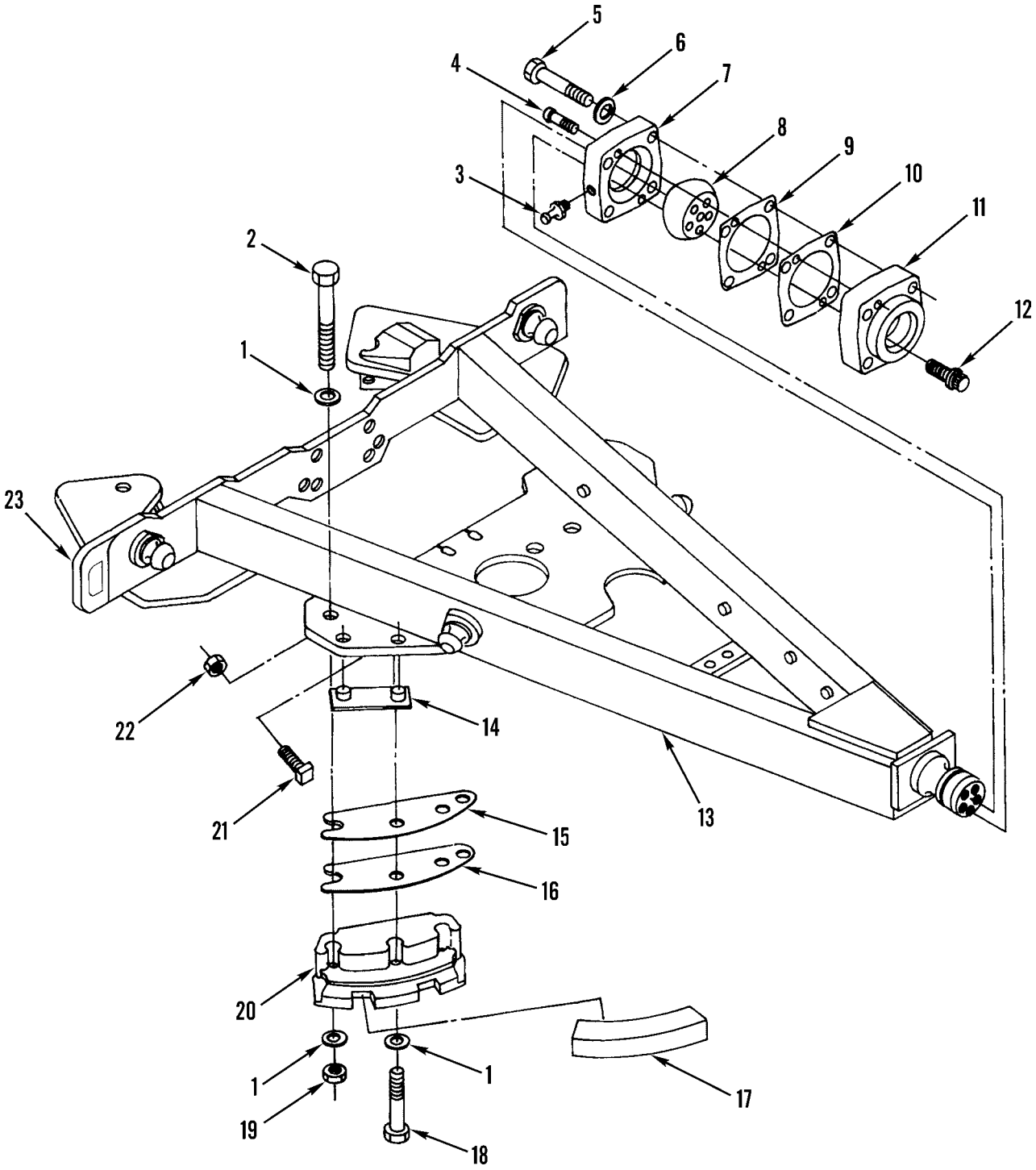

Figure 292. Drawbar Assembly

(1) ITEM NO	(2) SMR CODE	(3) NSN	(4) CAGEC	(5) PART NUMBER	(6) DESCRIPTION AND USABLE ON CODES(UOC)	(7) QTY
					GROUP 7438 CIRCLE AND DRAWBAR ASSEMBLY FIG. 292 DRAWBAR ASSEMBLY	
1	PFFZZ	5310010949906	11083	5P6652	WASHER,FLAT.....	20
2	PFFZZ	5305006701772	11083	1D4616	SCREW,CAP,HEXAGON H.....	8
3	PFOZZ	4730000504208	96906	MS15003-1	FITTING,LUBRICATION.....	1
4	XDFZZ		11083	2H3764	SCREW,CAP,SOCKET HE.....	2
5	PFFZZ	5305012770451	80204	B1821BH088C475N	SCREW,CAP,HEXAGON H.....	4
6	PFFZZ	5310009499296	78500	1229T1554	WASHER,FLAT.....	4
7	PFOZZ	2540011677094	11083	6G1919	CAP,DRAWBAR PIVOT.....	1
8	PFOZZ	2540011677116	11083	6G5442	COUPLER,DRAWBAR,BAL.....	1
9	PAFZZ	5365010951309	11083	4D3907	SPACER,PLATE.....	4
10	PAFZZ	5365010951303	11083	6D3133	SHIM.....	6
11	PFFZZ	2540011677093	11083	6G1664	ADAPTER,DRAWBAR.....	1
12	PFOZZ	5306011703724	11083	5P8291	BOLT,MACHINE.....	5
13	PFFFF	2540011824467	11083	5R7068	DRAWBAR AND YOKE AS ASSY.....	1
14	PAFZZ	2540012608357	11083	6G4524	STRIP,MOUNTING,DRAW.....	8
15	PAFZZ	5365011703812	11083	6G1914	SPACER,PLATE.....	28
16	PFFZZ	5365011703805	11083	6G1915	SHIM.....	24
17	PFFZZ	3805012808993	11083	6G4525	WEAR STRIP.....	4
18	PFFZZ	5306004369896	11083	3B6753	BOLT,MACHINE.....	4
19	PFFZZ	5310002696340	11083	1K6870	NUT,SELF-LOCKING,HE.....	8
20	PFFZZ	3040011674443	11083	6G4526	SHOE,CIRCLE GUIDE.....	4
21	PFFZZ	5305001648146	11083	4B3604	SETSCREW.....	8
22	PFFZZ	5310004114399	80064	K-6643118 PIECE 6	NUT,PLAIN,HEXAGON.....	8
23	PFOZZ		11083	5R5319	BRACKET,EYE,NONROTA..... UOC:AF9,AGM,F10	2

END OF FIGURE

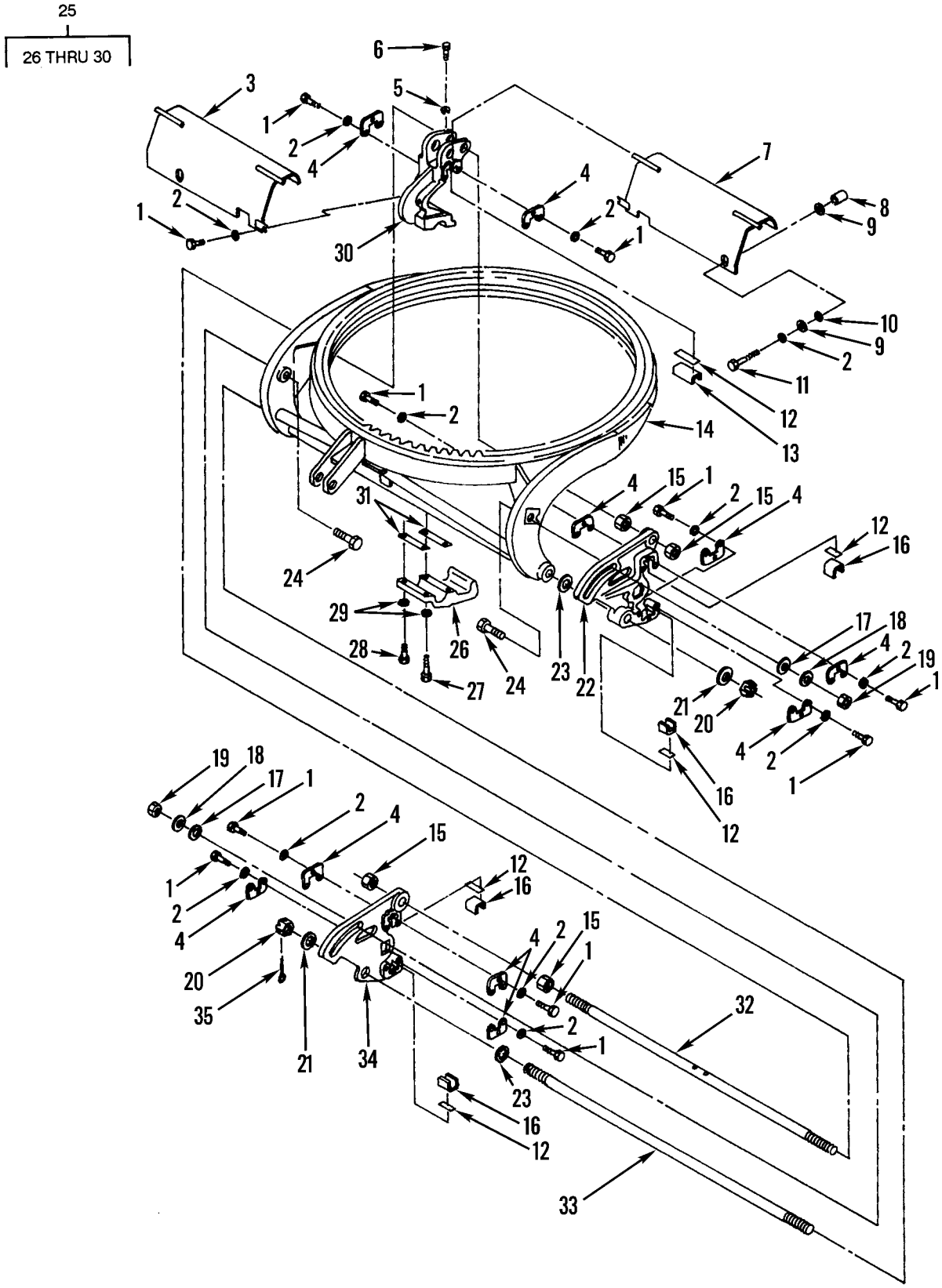

Figure 293. Circle Assembly

(1) ITEM NO	(2) SMR CODE	(3) NSN	(4) CAGEC	(5) PART NUMBER	(6) DESCRIPTION AND USABLE ON CODES(UOC)	(7) QTY
					GROUP 7438 CIRCLE AND DRAWBAR ASSEMBLY FIG. 293 CIRCLE ASSEMBLY	
1	PFOZZ	5306008744001	11083	6H1717	BOLT,MACHINE..... UOC:AF9,AGP,F10	32
2	PFOZZ	5310008095997	96906	MS27183-17	WASHER,FLAT..... UOC:AF9,AGP,F10	34
3	PAOZZ	3805011755267	11083	8D5863	GUARD,MECHANICAL DR..... UOC:AF9,AGP,F10	1
4	PAFZZ	5340011786002	11083	6D5415	PLATE,CLIP RETAINER.....	10
4	PAFZZ	2510012161097	11083	8W1749	PLATE,TIP CIRCLE..... UOC:AF9,AGP,F10	10
5	PFFZZ	5310001174788	11083	5M2894	WASHER,FLAT..... UOC:AF9,AGP,F10	2
6	PFFZZ	5306004262932	11083	0S1619	BOLT,MACHINE..... UOC:AF9,AGP,F10	2
7	PAOZZ	3805011755266	11083	8D5862	GUARD,MECHANICAL DR..... UOC:AF9,AGP,F10	1
8	PAFZZ	5365011708781	11083	1H7855	SPACER,SLEEVE..... UOC:AF9,AGP,F10	2
9	PFFZZ	5310003082227	11083	4B5273	WASHER,FLAT..... UOC:AF9,AGP,F10	6
10	PAFZZ	5365011768048	11083	8F4028	SPACER,SLEEVE..... UOC:AF9,AGP,F10	2
11	PFFZZ	5306004550459	11083	9S1366	BOLT,MACHINE..... UOC:AF9,AGP,F10	2
12	PAFZZ	5365010956116	11083	2G3221	SPACER,PLATE..... UOC:AF9,AGP,F10	5
13	PAFZZ	5365013023168	11083	5T8367	SPACER,PLATE..... UOC:AF9,AGP,F10	1
14	XBFZZ	3805011720692	11083	1539359 AND 1533 580	CIRCLE,DRAWBAR ASSE..... UOC:AF9,AGP,F10	1
14	PFFZZ		11083	1539359	CIRCLE,DRAWBAR ASSE REPLACES 6G2900	1
15	PFFZZ	5310004239698	11083	7F0482	NUT,PLAIN,HEXAGON..... UOC:AF9,AGP,F10	4
16	PAFZZ	5340012791258	11083	5T8366	BRACKET,DOUBLE ANGL..... UOC:AF9,AGP,F10	1
17	PFFZZ	5310011713633	11083	0S1822	WASHER,FLAT..... UOC:AF9,AGP,F10	2
18	PFFZZ	3120011761038	11083	7D1446	BEARING,WASHER,THRU..... UOC:AF9,AGP,F10	2
19	PFFZZ	5310010977969	11083	2B2673	NUT,PLAIN,SLOTTED,H..... UOC:AF9,AGP,F10	2
20	PFFZZ	5310010977969	11083	2B2673	NUT,PLAIN,SLOTTED,H..... UOC:AF9,AGP,F10	2
21	PFFZZ	5310002702182	11083	1D0503	WASHER,FLAT..... UOC:AF9,AGP,F10	2
22	PFFZZ	2510015224041	11083	8W4066	BRACKET,MOLDBOARD R.....	1
23	PFFZZ	5310011746043	11083	2K0419	WASHER,FLAT..... UOC:AF9,AGP,F10	4
24	PFFZZ	5306005309235	11083	2A1420	BOLT,MACHINE.....	2

(1) ITEM NO	(2) SMR CODE	(3) NSN	(4) CAGEC	(5) PART NUMBER	(6) DESCRIPTION AND USABLE ON CODES(UOC)	(7) QTY
					UOC:AF9,AGP,F10	
25	PFFZZ	2510012163094	11083	8W1751	BRACKET ASSEMBLY.....	1
					UOC:AF9,AGP,F10	
26	XAFZZ		11083	8D5908	.CAP.....	1
					UOC:AF9,AGP,F10	
27	PFFZZ	5306004263150	11083	1A8537	.BOLT,MACHINE.....	2
					UOC:AF9,AGP,F10	
28	PFFZZ	5306004550460	11083	8S9092	.BOLT,MACHINE.....	2
					UOC:AF9,AGP,F10	
29	PFFZZ	5310010954631	11083	5P8247	.WASHER,FLAT.....	4
					UOC:AF9,AGP,F10	
30	XAFZZ		11083	8W1750	.BRACKET.....	1
					UOC:AF9,AGP,F10	
31	PAFZZ	5365011737017	11083	5D6644	SPACER,PLATE.....	10
					UOC:AF9,AGP,F10	
32	PFFZZ	5306011748310	11083	8D5949	ROD,THREADED END.....	1
					UOC:AF9,AGP,F10	
33	PFFZZ	3040011722708	11083	6G2947	SHAFT,STRAIGHT USE WITH 6G2900.....	1
					UOC:AF9,AGP,F10	
33	PFFZZ		11083	1533580	SHAFT,STRAIGHT USE WITH 1539359....	1
34	PFFZZ		11083	8W4067	BRACKET,MOLDBOARD R USE WITH PLATE	1
					CAGE: 11083, PN 8W1749.....	
35	PFFZZ	5315008464297	80205	MS24665-752	PIN,COTTER.....	2
					UOC:AF9,AGP,F10	

END OF FIGURE

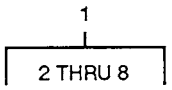

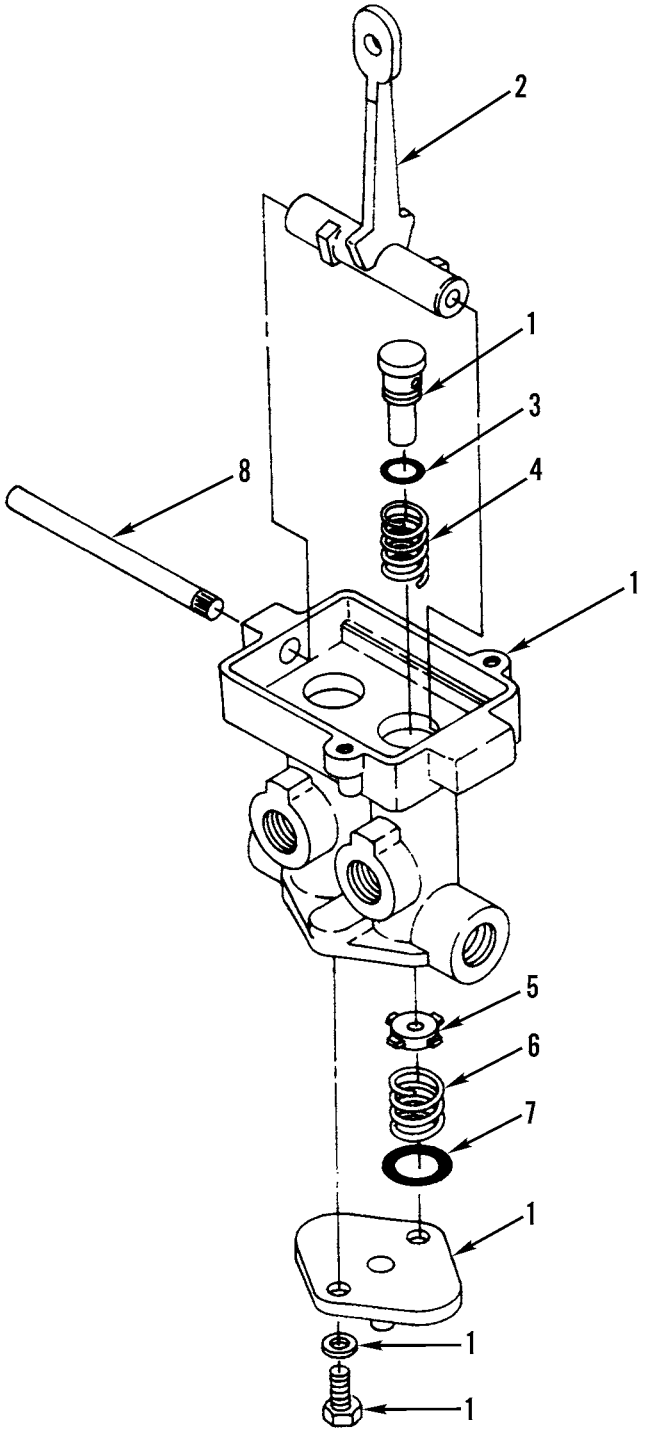

Figure 294. Centershift Lock Valve Assembly

(1) ITEM NO	(2) SMR CODE	(3) NSN	(4) CAGEC	(5) PART NUMBER	(6) DESCRIPTION AND USABLE ON CODES(UOC)	(7) QTY
					GROUP 7439 CIRCLE REVERSE DRAWBAR SIDESHIFT AND LIFT MECHANISM FIG. 294 CENTERSHIFT LOCK VALVE ASSEMBLY	
1	PAOFF	2530011871230	06853	289112	VALVE,SAFETY RELIEF.....	1
2	PFFZZ	3040011691991	11083	6G1148	.LEVER,REMOTE CONTRO.....	1
3	PCFZZ	5331005913112	11083	5F9144	.O-RING.....	2
4	PFFZZ	5360008520840	06853	234833	.SPRING,HELICAL,COMP.....	2
5	PFFZZ	2540011615140	06840	249534	.VALVE,UNLATCH,FIFTH.....	2
6	PFFZZ	5360009770780	06853	235729	.SPRING,HELICAL,COMP.....	2
7	PFFZZ	5330004705727	11083	2S4663	.GASKET.....	2
8	PFFZZ	5315011582145	06853	241547	.PIN,STRAIGHT,KNURLE.....	1

END OF FIGURE

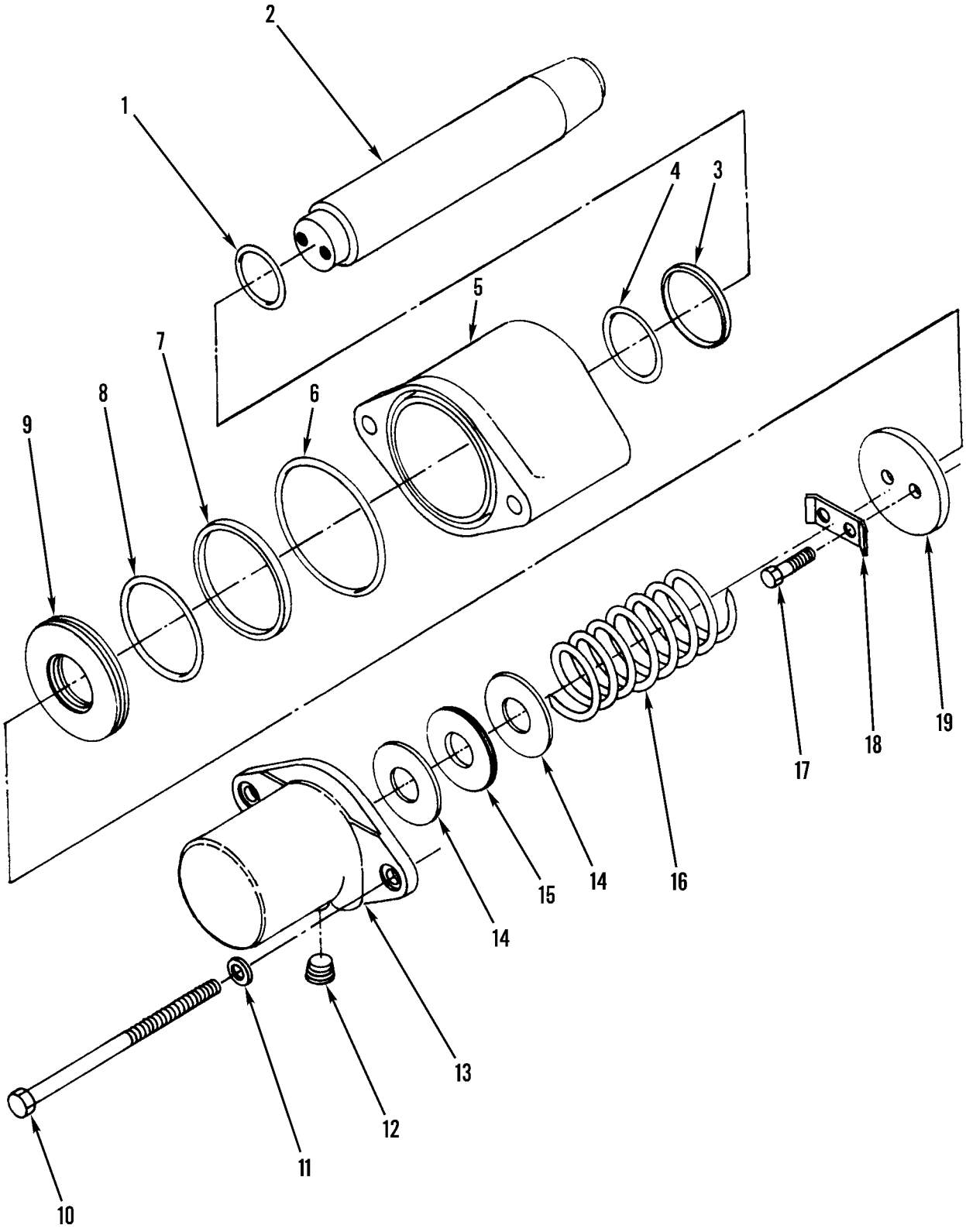

Figure 295. Centershift Lock Assembly

(1) ITEM NO	(2) SMR CODE	(3) NSN	(4) CAGEC	(5) PART NUMBER	(6) DESCRIPTION AND USABLE ON CODES(UOC)	(7) QTY
					GROUP 7439 CIRCLE REVERSE DRAWBAR SIDESHIFT AND LIFT MECHANISM FIG. 295 CENTERSHIFT LOCK ASSEMBLY	
1	PCFZZ	5331000409789	11083	6F0711	O-RING	1
2	PFFZZ	5315011698520	11083	8D9786	PIN,SHOULDER,HEADLE	1
3	PFFZZ	5330010948707	11083	8D1791	GASKET	2
4	PFFZZ	5331010951254	11083	6D7889	O-RING	2
5	PAFZZ	3040011674456	11083	9D4441	HOUSING,MECHANICAL	1
6	PCFZZ	5331005931161	11083	2H9247	O-RING	1
7	PAFZZ	5330010951257	11083	9D5064	GASKET	1
8	PFFZZ	5331008487540	11083	9F7283	O-RING	1
9	PFFZZ	3805010945195	11083	9D4447	PISTON,LOCK,GRADER,	1
10	PFFZZ	5305010951243	11083	5P1895	SCREW,CAP,HEXAGON H	2
11	PFFZZ	5310004317244	11083	2S5658	WASHER,FLAT	2
12	PFFZZ	4730002782965	96906	MS27769-3	PLUG,PIPE	1
13	PFFZZ	3040011677129	11083	9D4442	HOUSING,MECHANICAL	1
14	PAFZZ	3120010951267	11083	8D1777	BEARING,WASHER,THRU	2
15	PAFZZ	3120010987289	09455	LTD2458	BEARING,WASHER,THRU	1
16	PAFZA	5360010950286	11083	1D4753	SPRING,HELICAL,COMP	1
17	PFFZZ	5305010269518	11083	0S1571	SCREW,CAP,HEXAGON H	2
18	PFFZZ	5340004238146	11083	OTO329	LOCKING PLATE,NUT A	1
19	PFFZZ	5340011688685	11083	9D4443	COVER,ACCESS	1

END OF FIGURE

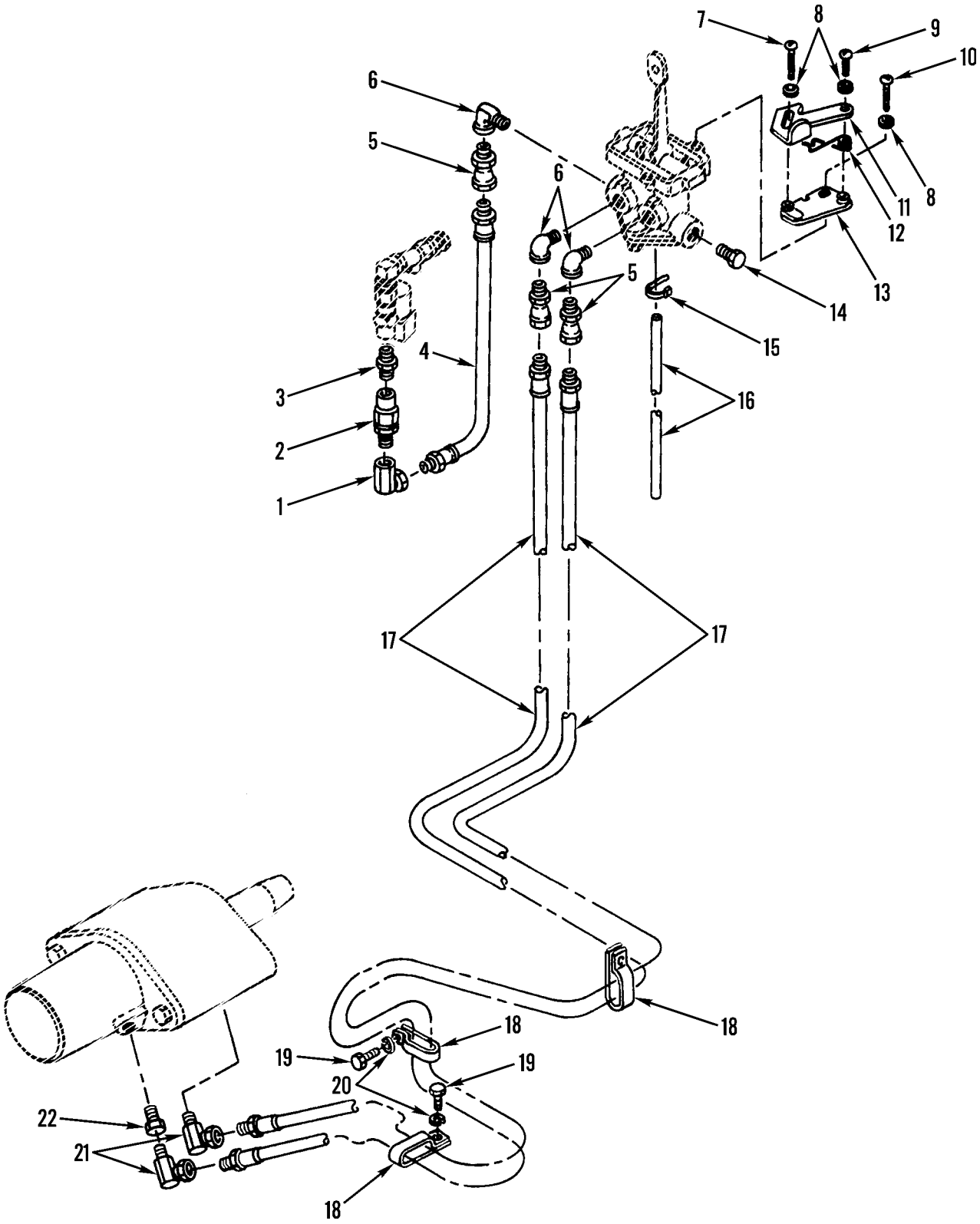

Figure 296. Centershift Lock and Lock Valve Lines and Fittings

(1) ITEM NO	(2) SMR CODE	(3) NSN	(4) CAGEC	(5) PART NUMBER	(6) DESCRIPTION AND USABLE ON CODES(UOC)	(7) QTY
					GROUP 7439 CIRCLE REVERSE DRAWBAR SIDESHIFT AND LIFT MECHANISM FIG. 296 CENTERSHIFT LOCK AND LOCK VALVE LINES AND FITTINGS	
1	PFOZZ	4730011714405	11083	4D4267	ELBOW,PIPE.....	1
2	XDOZZ		06853	229603	VALVE,CHECK.....	1
3	PFOZZ	4730002778289	90805	CD120-0724	NIPPLE,PIPE.....	1
4	PAOZZ	4720007669779	40152	564693	HOSE ASSEMBLY,NONME.....	1
5	PFOZZ	4730010589103	11083	4D2560	REDUCER,PIPE.....	3
6	PFOZZ	4730008100059	89346	120401	ELBOW,PIPE.....	3
7	PFOZZ	5305010665197	11083	4B8626	SCREW,MACHINE.....	1
8	PFOZZ	5310001435722	04998	WA1248	WASHER,FLAT.....	3
9	PFOZZ	5305000119774	11083	4B1227	SCREW,MACHINE.....	1
10	PFOZZ	5305010589101	11083	4B1232	SCREW.....	1
11	PFOZZ	5340011722627	11083	2G1537	BRACKET,ANGLE.....	1
12	PFOZZ	5360010647454	11083	2G1536	SPRING.....	1
13	PFOZZ	2590010647453	11083	2G1535	BASE.....	1
14	PFOZZ	4730009247886	11083	5M6214	PLUG,PIPE.....	1
15	PAOZZ	2920010589099	11083	3S2093	STRAP.....	3
16	MOOZZ		11083	5P5636-24	HOSE,NONMETALLIC MAKE FROM HOSE P/N 5P5636.....	1
17	PFOZZ	4720010950839	11083	7D6095	HOSE ASSEMBLY,NONME.....	2
18	PFOZZ	5340010589143	11083	5K8451	CLIP.....	5
19	PFOZZ	5305002528919	11083	0S0509	SCREW,CAP,HEXAGON H.....	2
20	PFOZZ	5310006379541	96906	MS35338-46	WASHER,LOCK.....	2
21	PFOZZ	4730002892370	11083	5H4778	ELBOW,PIPE.....	2
22	PFOZZ	4730010659111	79470	103-20013	ADAPTER,STRAIGHT,PI.....	1

END OF FIGURE

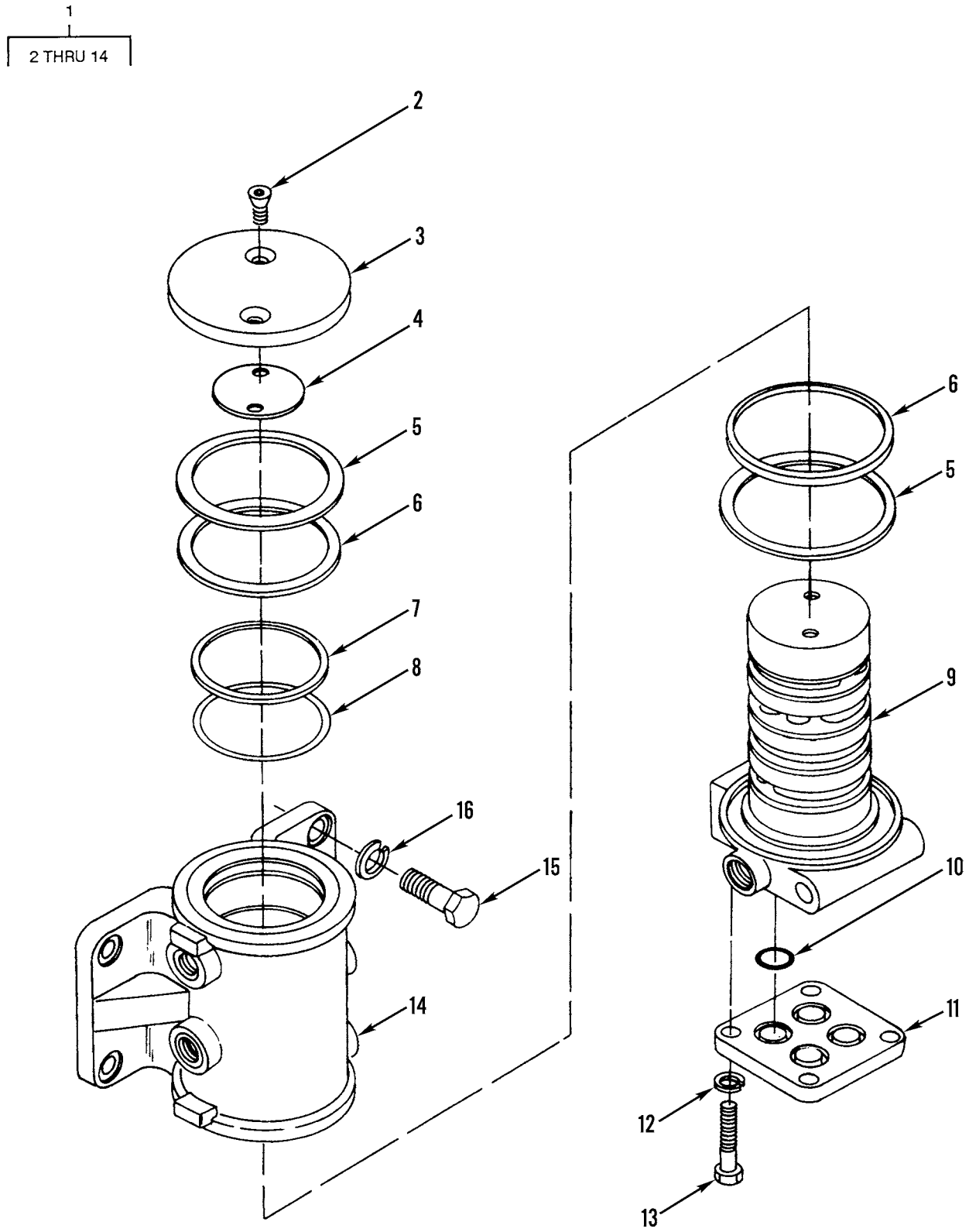

Figure 297. Circle Drive Swivel Assembly

(1) ITEM NO	(2) SMR CODE	(3) NSN	(4) CAGEC	(5) PART NUMBER	(6) DESCRIPTION AND USABLE ON CODES(UOC)	(7) QTY
					GROUP 7439 CIRCLE REVERSE DRAWBAR SIDESHIFT AND LIFT MECHANISM FIG. 297 CIRCLE DRIVE SWIVEL ASSEMBLY	
1	XBOFF	4730011834650	11083	8J0384	SWIVEL ASSEMBLY,GRA.....	1
1	PFOFF		11083	1731011	SWIVEL ASSEMBLY.....	1
2	PFFZZ	5305010955696	11083	4K1493	.SCREW,CAP,SOCKET HE USE WITH 8J0384.....	2
2	PFFZZ	5305000712069	11083	5P2566	.SCREW,CAP,HEXAGON H.....	6
3	PAFZZ	5340011835919	11083	8J0380	.COVER,ACCESS USE WITH 8J0384.....	1
3	PAFZZ		11083	1731009	.COVER,ACCESS.....	1
4	PAFZZ	5365010647710	11083	5J1246	.SHIM.....	6
5	PAFZZ	5330010647457	11083	4J9964	.SEAL.....	2
6	PAFZZ	5330010647462	11083	8J2330	.SEAL USE WITH 8J0384.....	2
6	PAFZZ		11083	1731007	.SEAL.....	2
7	PAFZZ	5330010647463	11083	8J2331	.SEAL.....	7
8	PCFZZ	5331009413599	02697	2-244C873-70	.O-RING.....	7
9	PAFZZ	2590011811934	11083	8J0386	.ROTOR BODY,SWIVEL.....	1
10	PCFZZ	5331005931192	11083	3H0107	.O-RING.....	4
11	PFFZZ	2510011811932	11083	2230580	.COVER.....	1
12	PFFZZ	5310010980624	11083	8T4223	.WASHER,FLAT.....	4
12	PFFZZ	5310005845272	96906	MS35338-48	.WASHER,LOCK USE WITH 8J0384.....	4
13	PFFZZ	5306011279361	11083	0S1585	.BOLT,MACHINE USE WITH 8J0384.....	4
14	XAFZZ	2590011811933	11083	8J0385	.BODY,SWIVEL.....	1
14	PFFZZ		11083	9T5603	.HOUSING,MECHANICAL.....	1
15	PFOZZ	5305007247222	80204	B1821BH063C200N	SCREW,CAP,HEXAGON H USE WITH 8J0384	4
15	PFOZZ	5306004263080	11083	1A5822	BOLT,MACHINE.....	4
16	PFOZZ	5310008095997	96906	MS27183-17	WASHER,FLAT.....	4
16	PFOZZ	5310000455001	96906	MS35340-50	WASHER,LOCK USE WITH 8J0384.....	4

END OF FIGURE

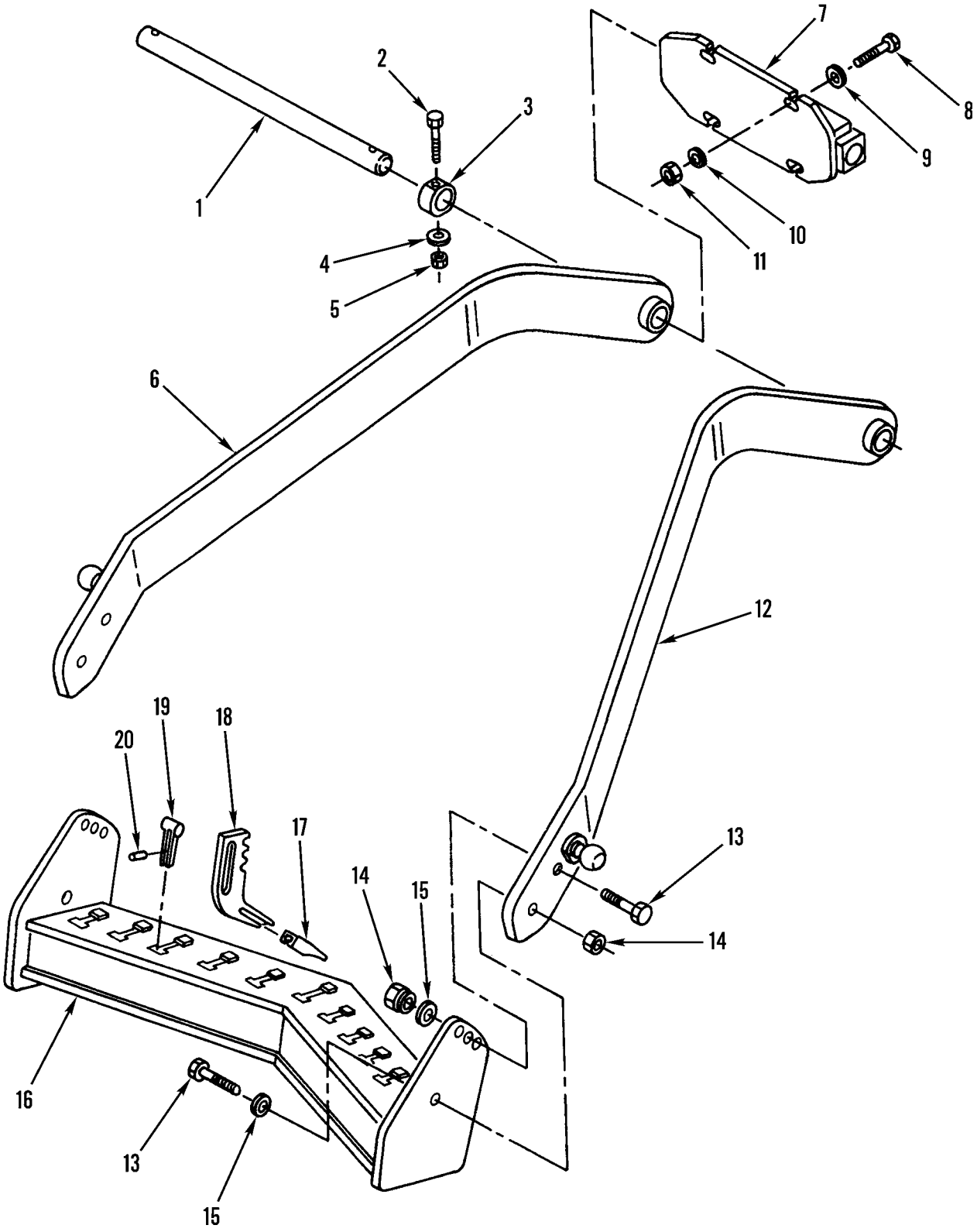

Figure 298. Scarifier Assembly

(1) ITEM NO	(2) SMR CODE	(3) NSN	(4) CAGEC	(5) PART NUMBER	(6) DESCRIPTION AND USABLE ON CODES(UOC)	(7) QTY
					GROUP 7440 SCARIFIER ASSEMBLY	
					FIG. 298 SCARIFIER ASSEMBLY	
1	XDOZZ		11083	2G7309	SHAFT,STRAIGHT.....	1
2	PFOZZ	5305011075161	11083	0L2315	SCREW,CAP,HEXAGON H.....	2
3	XDOZZ		11083	5B0577	COLLAR,SHAFT.....	2
4	PFOZZ	5310008095997	96906	MS27183-17	WASHER,FLAT.....	2
5	XDOZZ		11083	7X3374	NUT,PLAIN,HEXAGON.....	2
6	XDOZZ		11083	2G4337	DRAWBAR ASSEMBLY.....	1
7	PFOZZ		11083	2G4348	BRACKET,EYE,NONROTA.....	1
					UOC:AF9,AGM,AGN	
7	PFOZZ	3040011925939	11083	5R6393	BOLSTER ASSEMBLY.....	1
					UOC:AF9,AGP,F10	
8	PFOZZ	5306004263404	11083	1D4610	BOLT,MACHINE.....	4
9	PFOZZ	5310010953329	11083	2V0936	WASHER,FLAT.....	4
10	PFOZZ	5310011664420	11083	6V2360	WASHER,FLAT.....	1
					UOC:AF9,AGP,F10	
11	PFOZZ	5310007638921	96906	MS51967-23	NUT,PLAIN,HEXAGON.....	4
12	XDOZZ		11083	2G4338	CONNECTING LINK,RIG.....	1
13	PFOZZ	5305010954612	11083	8H4040	SCREW,CAP,HEXAGON H.....	4
14	PFOZZ	5310002326058	11083	3D4904	NUT,SELF-LOCKING,HE.....	4
15	PFOZZ	5310010951537	11083	3S1349	WASHER,FLAT.....	8
16	XDOZZ		11083	2G4332	SCARIFIER,ROAD GRAD.....	1
17	PAOZZ	3830000847481	11083	6Y5230	SHANK-TOOTH,SURFACE.....	11
18	PAOZZ	3830005324504	11083	1957218	SHANK-TOOTH,SURFACE.....	11
19	PAOZZ	5315010351353	11083	5K1459	PIN,HOLDER,TOOTH.....	11
20	PAOZZ	5365011744657	11083	5K1458	BUSHING,NONMETALLIC.....	11

END OF FIGURE

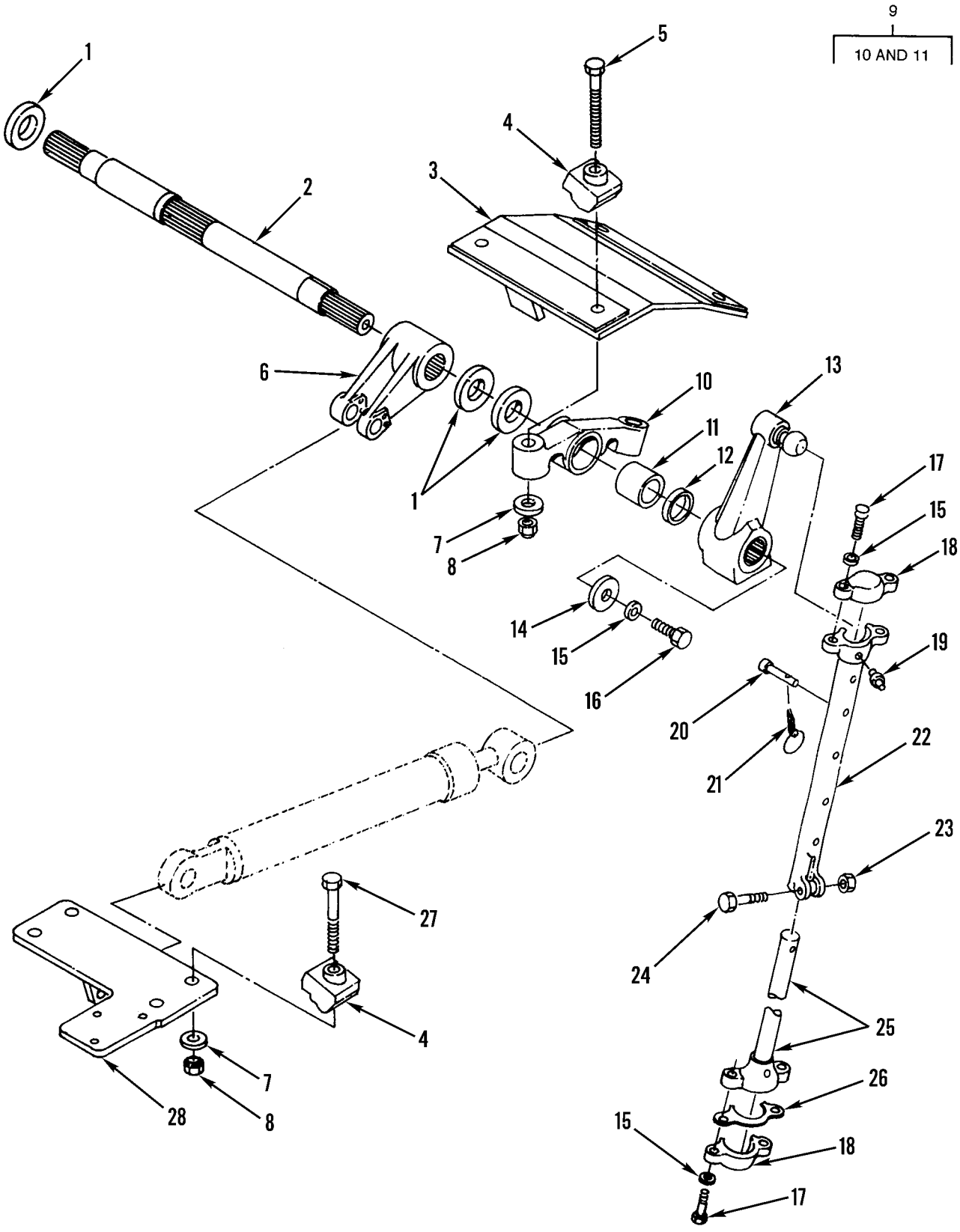

Figure 299. Scarifier Actuating Assembly

(1) ITEM NO	(2) SMR CODE	(3) NSN	(4) CAGEC	(5) PART NUMBER	(6) DESCRIPTION AND USABLE ON CODES(UOC)	(7) QTY
					GROUP 7441 SCARIFIER ACTUATING	
					FIG. 299 SCARIFIER ACTUATING ASSEMBLY	
1	PFOZZ	5310011721980	11083	8W0679	WASHER,FLAT	3
2	PFOZZ	3040011699692	11083	6G7746	SHAFT,STRAIGHT	1
3	PAOZZ	2510011741264	11083	6G1089	PLATE ASSEMBLY	1
4	XDOZZ		11083	6G3651	BLOCK,SCARIFIER	8
5	PFOZZ	5305010953964	11083	9M3742	SCREW,CAP,HEXAGON H	4
6	PFOZZ		11083	8X0557	LEVER,REMOTE CONTRO	1
7	PFOZZ	5310010951537	11083	3S1349	WASHER,FLAT	12
8	PFOZZ	5310002326058	11083	3D4904	NUT,SELF-LOCKING,HE	8
9	XDOFZ		11083	8W0663	BRACKET,EYE,ROTATIN	2
10	XAFZZ		11083	8W0664	.BRACKET	1
11	PAFZZ	3120010664562	26124	SG5581-056	.BEARING,SLEEVE	1
12	PAOZA	5330010664568	11083	9D6591	SEAL	4
13	XDOZZ		11083	8D0212	ARM ASSEMBLY,SCARIF	2
14	PAOZZ	5310010664698	11083	5D5652	WASHER	2
15	PFOZZ	5310011022477	11083	5P8248	WASHER,FLAT	10
16	PFOZZ	5306008146588	11083	0S1626	BOLT,MACHINE	2
17	PFOZZ	5306004263139	11083	1A8063	BOLT,MACHINE	8
18	PFOZZ	3805003741191	11083	6F6992	CAP,BALL JOINT	4
19	PFOZZ	4730000504208	96906	MS15003-1	FITTING,LUBRICATION	4
20	PFOZZ	5315011710748	11083	5D8161	PIN,STRAIGHT,HEADED	2
21	PFOZZ	5315010960203	99984	7637	PIN,STRAIGHT,HEADLE	2
22	PFOZZ	4820011699765	11083	7D2196	SLEEVE,DIRECTIONAL	2
23	PFOZZ	5310000761505	11083	1B4208	NUT,PLAIN,HEXAGON	2
24	PFOZZ	5305004500417	11083	1A0224	SCREW,MACHINE	2
25	PFOZZ	3805011694956	11083	9D5516	ROD,PISTON,LINEAR A	2
26	PAOZZ	5365004238104	11083	7F1327	SPACER,PLATE	32
27	PFOZZ	5305010954612	11083	8H4040	SCREW,CAP,HEXAGON H	4
28	XDOZZ		11083	2G6503	BRACKET,EYE,ROTATIN	1

END OF FIGURE

(1) ITEM NO	(2) SMR CODE	(3) NSN	(4) CAGEC	(5) PART NUMBER	(6) DESCRIPTION AND USABLE ON CODES(UOC)	(7) QTY
					GROUP 94 REPAIR KITS GROUP 9401 REPAIR KITS FIG. KITS	
	PAFZZ	4310000048267	11083	1S9874	PARTS KIT,COMPRESSO.....	1
					GASKET (1) 181-11	
					GASKET (1) 181-7	
					GASKET (2) 181-25	
					O-RING (1) 181-33	
					PARTS KIT,COMPRESSO(1) 181-44	
	PAFZZ	5961004510812	16764	1971672	SEMICONDUCTOR DEVIC.....	1
					PARTS KIT,ENGINE GE(1) 54-27	
	PAFZZ	2920004276422	16764	1971675	PARTS KIT,DIODE,ALT.....	1
					PARTS KIT,ENGINE GE(1) 54-27	
	PAHZZ	2835011554535	11083	2W0716	KIT,TURBOCHARGER.....	1
					LOCKING PLATE,NUT A(2) 36-20	
					NUT,PLAIN,EXTENDED (1) 36-7	
					RING,PISTON (1) 36-22	
					SEAL RING,METAL (1) 36-12	
					SPACER,RING (1) 36-15	
	PAHZZ	2815011957346	11083	2W6091	RING SET,PISTON.....	4
					RING,PISTON (4) 8-3	
					RING,PISTON (4) 8-1	
					RING,PISTON (4) 8-2	
	PAFZZ	5330010958509	11083	3G1708	SEAL KIT.....	1
					GASKET (1) 238-16	
					O-RING (1) 235-10	
					O-RING (2) 238-15	
					O-RING (2) 238-8	
					O-RING (2) 238-6	
					O-RING (5) 239-5	
					O-RING (2) 239-14	
					O-RING (1) 239-25	
					O-RING (1) 239-30	
					O-RING (1) 239-20	
					O-RING (1) 239-15	
					R1NG (7) 239-8	
					SEAL (3) 239-3	
					SEAL (1) 239-31	
					SEAL,PLAIN (1) 238-13	
					SEAL,PLAIN (7) 239-10	
	PAHZZ	5330011286854	11083	4W0452	SEAL ASSEMBLY PART OF KIT P/N 1383069.....	1
					SEAL,PLAIN ENCASED (1) 5-2	
	PFHZZ	5330011440406	11083	5P8768	GASKET SET.....	6
					GASKET (4) 3-4	
					PACKING,PREFORMED (12) 3-6	
	PAFZZ	5330011554519	11083	5P9419	GASKET AND SEAL SET.....	1
					UOC:AGM,AGN,AGP,F10	
					GASKET (1) 28-51	
					GASKET (1) 28-54	
					GASKET (1) 30-41	

(1) ITEM NO	(2) SMR CODE	(3) NSN	(4) CAGEC	(5) PART NUMBER	(6) DESCRIPTION AND USABLE ON CODES(UOC)	(7) QTY
					GASKET (1) 30-52	
					GASKET (1) 30-55	
					GASKET (1) 42-25	
					GASKET (1) 29-30	
					GASKET (1) 31-57	
					GASKET AND SEAL SET(1) 29-29	
					GASKET AND SEAL SET(1) 31-54	
					O-RING (1) 24-58	
					O-RING (1) 28-79	
					O-RING (4) 31-41	
					O-RING (1) 31-25	
					O-RING (1) 24-47	
					O-RING (2) 38-20	
					PACKING,PREFORMED (1) 31-60	
					SEAL (1) 28-74	
					SEAL (1) 28-75	
					SEAL (1) 28-56	
					SEAL (1) 28-67	
					SEAL,PLAIN ENCASED (1) 28-69	
					SEAL,PLAIN ENCASED (2) 28-70	
					SEAL,RING (1) 24-59	
	PAFZZ	4320012049896	11083	2084836	PARTS KIT,CENTRIFUG.....	1
					GASKET (1) 49-31	
					GASKET (1) 49-12	
					O-RING (1) 50-1	
	PAFZZ	2920000607252	19207	5702745	PARTS KIT,ELECTRICA.....	1
					DRIVE ASSEMBLY (1) 60-27	
	PAFZZ	4320012672065	11083	2402016	PARTS KIT,SEAL REPL.....	1
					GASKET (1) 280-5	
					GASKET (1) 277-9	
					GASKET (1) 277-10	
					O-RING (1) 280-9	
					O-RING (1) 277-13	
					RETAINER,PACKING (1) 280-10	
					RETAINER,PACKING (1) 277-14	
					RING (1) 280-13	
					RING (1) 277-17	
					SEAL (1) 280-11	
					SEAL (1) 280-7	
					SEAL (1) 277-16	
					SEAL (1) 277-11	
					SEAL,PLAIN (1) 280-6	
	PAHZZ	5330011616240	11083	1383069	GASKET AND SEAL SET.....	1
					GASKET (1) 7-1	
					SEAL ASSEMBLY (1) KIT-	
					SEAL,PLAIN ENCASED (1) 5-2	
	PAHZZ	5330011602349	11083	6V2248	GASKET KIT.....	1
					GASKET (1) 2-16	
					GASKET (1) 2-21	
					GASKET (1) 2-1	
					GASKET (1) 14-7	
					NUT,SPECIAL (1) 9-2	

(1) ITEM NO	(2) SMR CODE	(3) NSN	(4) CAGEC	(5) PART NUMBER	(6) DESCRIPTION AND USABLE ON CODES(UOC)			(7) QTY
					O-RING	(1)	1-6	
					O-RING	(1)	2-5	
					O-RING	(1)	51-17	
					O-RING	(1)	52-4	
					O-RING	(1)	24-14	
					SEAL,PLAIN ENCASED	(1)	51-27	
	PAFZZ	5330011179336	11083	6V2525	GASKET SET.....			1
					GASKET	(1)	4-17	
					GASKET	(1)	49-31	
					GASKET	(1)	49-12	
					GASKET	(1)	49-24	
					GASKET	(1)	23-4	
					O-RING	(1)	4-20	
					PACKING,PREFORMED	(1)	12-4	
					SEAL,PLAIN	(12)	4-22	
					SEAL,PLAIN	(12)	4-21	
					SEAL,RING	(1)	15-13	
	PAHZZ	5330011657732	11083	6V2934	GASKET KIT.....			1
					GASKET	(1)	4-17	
					GASKET	(1)	11-4	
					GASKET	(1)	23-4	
					GASKET	(1)	49-31	
					GASKET	(1)	49-12	
					GASKET	(1)	49-24	
					GASKET	(2)	21-2	
					GASKET	(1)	23-5	
					GASKET PLATE	(1)	3-3	
					O-RING	(1)	4-20	
					O-RING	(1)	10-13	
					SEAL,PLAIN	(12)	4-22	
					SEAL,PLAIN	(12)	4-21	
					SEAL,RING	(1)	15-13	
	PFHZZ	5330011600577	11083	6V2935	GASKET KIT.....			1
					GASKET	(1)	13-8	
					GASKET	(1)	15-19	
					GASKET	(1)	15-5	
					GASKET	(1)	13-1	
					GASKET	(1)	13-3	
					LOCK PLATE	(1)	15-10	
					LOCKING PLATE NUT	(1)	15-6	
					L0CK	(2)	15-17	
					SEAL,RING	(1)	15-13	

END OF FIGURE

(1) ITEM NO	(2) SMR CODE	(3) NSN	(4) CAGEC	(5) PART NUMBER	(6) DESCRIPTION AND USABLE ON CODES(UOC)	(7) QTY
					GROUP 95 GENERAL USE STANDARDIZED PARTS GROUP 9501 BULK MATERIEL FIG. BULK	
1	PAOZZ	4720013387719	11083	5P6009	HEAT SINK TUBE	V
2	PAOZA	4720010627159	11083	5P0767	HOSE	V
3	PAOZZ	4720010937331	11083	5P1442	HOSE,NONMETALLIC	V
4	PAOZZ	4720010953446	11083	5P1293	HOSE,NONMETALLIC	V
5	PAOZZ	4720011033697	11083	5P1260	HOSE,NONMETALLIC	V
6	PAOZZ	4720010948159	11083	5P5636	HOSE,NONMETALLIC	V
7	PAOZZ	4720013318722	11083	6V5651	HOSE,NONMETALLIC	V
8	PAOZZ	4720001985808	11083	1650017	HOSE,NONMETALLIC	V
9	PAOZZ	4720010664587	11083	1650016	HOSE,NONMETALLIC	V
10	PAOZZ	4720010516773	11083	1650020	HOSE,NONMETALLIC	V
11	PAOZZ	4720002316285	11083	5P1265	HOSE,PREFORMED	V
12	PAOZZ	4720010269540	11083	5P2094	HOSE,PREFORMED	V
13	PAOZZ	5970013007305	11083	5P6008	INSULATION SLEEVING	V
14	PAFZZ	5640012021771	11083	6V2689	INSULATION SLEEVING	V
15	PAOZZ	9390013367090	11083	6V6969	NONMETALLIC SPECIAL	V
16	PAFZZ	5330013338284	11083	5P9909	RUBBER STRIP	V
17	PAOZZ	5330013327547	11083	5P5926	RUBBER STRIP	V
18	PAOZZ	5330010983458	11083	5P5673	RUBBER STRIP	V
19	PAOZZ	5330012059431	11083	5P5648	SEAL SPECIAL SHAPE	V
20	PAOZZ	5330011288991	11083	5P5768	SEAL,NONMETALLIC SP	V
21	PAFZZ	5330010949144	11083	5P5960	SEAL,NONMETALLIC SP	V
22	PAOZZ	5330012776101	11083	6V1392	SEAL,SPECIAL	V
23	PAOZZ	4720011465898	24161	4040	TUBING,NONMETALLIC UOC:AGP	V
24	PAOZZ	4720012679343	30327	44-PP	TUBING,NONMETALLIC	V
25	PAOZZ	4720011033700	11083	5P5630	TUBING,NONMETALLIC	V
26	PAOZZ	4720014338805	11083	5P6011	TUBING,NONMETALLIC	V
27	PAOZZ	6145007267275	81349	M16878/3BMG0	WIRE,ELECTRICAL	V

END OF FIGURE

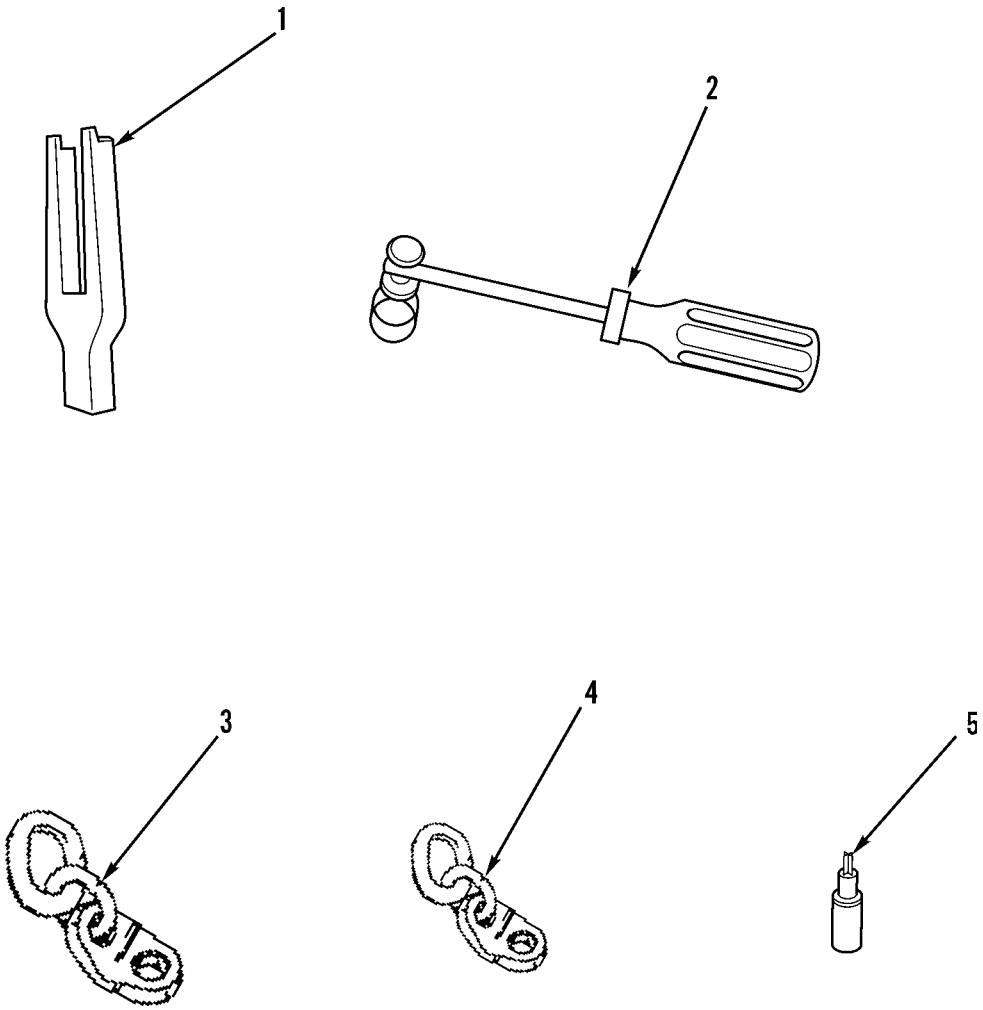

Figure 300. Unit Special Tools

(1) ITEM NO	(2) SMR CODE	(3) NSN	(4) CAGEC	(5) PART NUMBER	(6) DESCRIPTION AND USABLE ON CODES(UOC)	(7) QTY
					GROUP 26 TOOLS AND TEST EQUIPMENT	
					GROUP 2604 SPECIAL TOOLS	
					FIG. 300 UNIT SPECIAL TOOLS	
1	PEOZZ	3805004239746	11083	6B3260	TOOTH REMOVING,SCAR.....	
2	PEOZZ		11083	5H4845	INSTALLER TOOL,SEAL.....	
3	PEOZZ	5340014761734	11083	1387574	BRACKET,LINK.....	
4	PEOZZ	5120014511401	11083	1387575	BRACKET,LINK.....	
5	PEOZZ		11083	1943532	DRIVER BIT,T-15 TOR.....	

END OF FIGURE

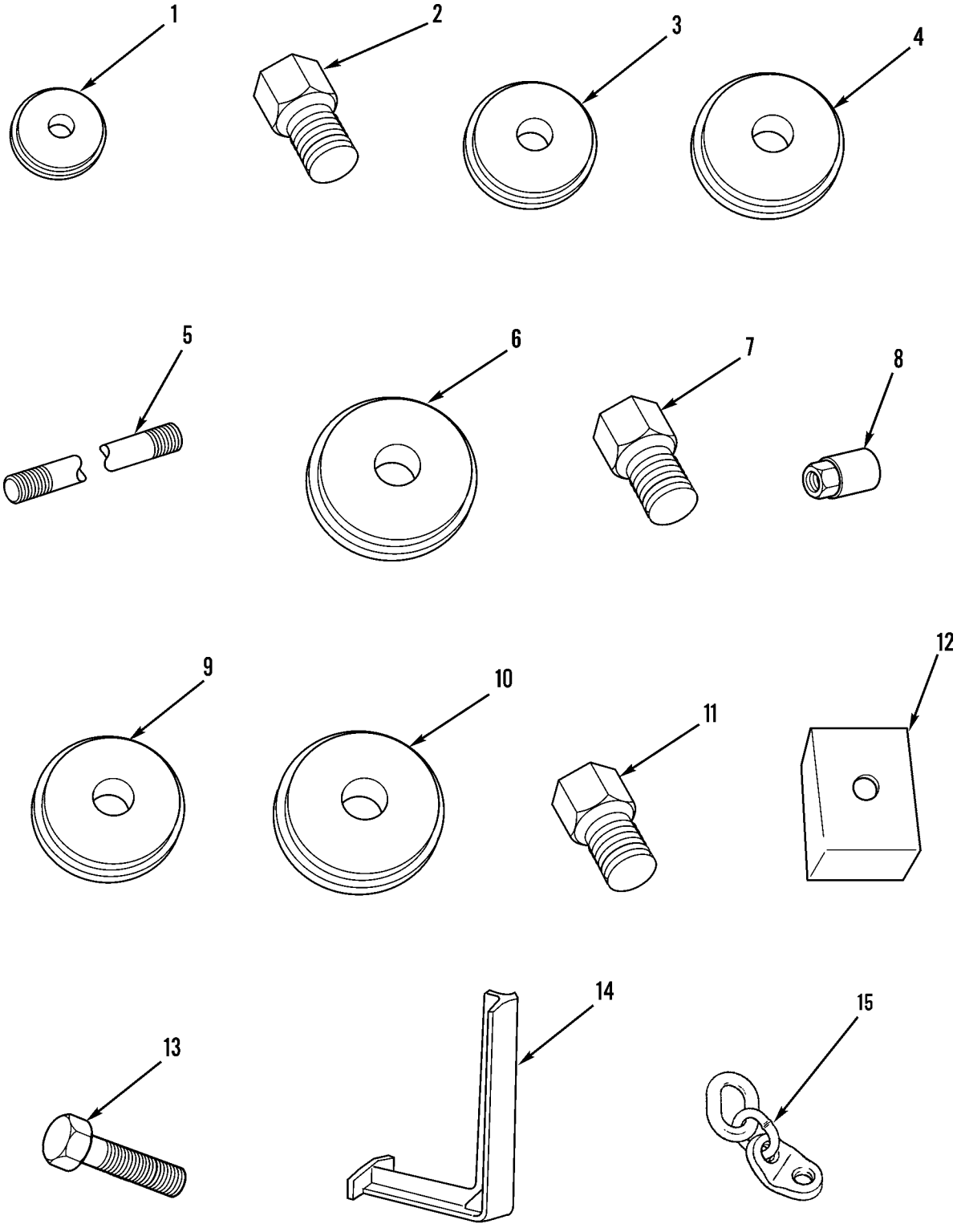

Figure 301. Direct Support Special Tools (Sheet 1 of 4)

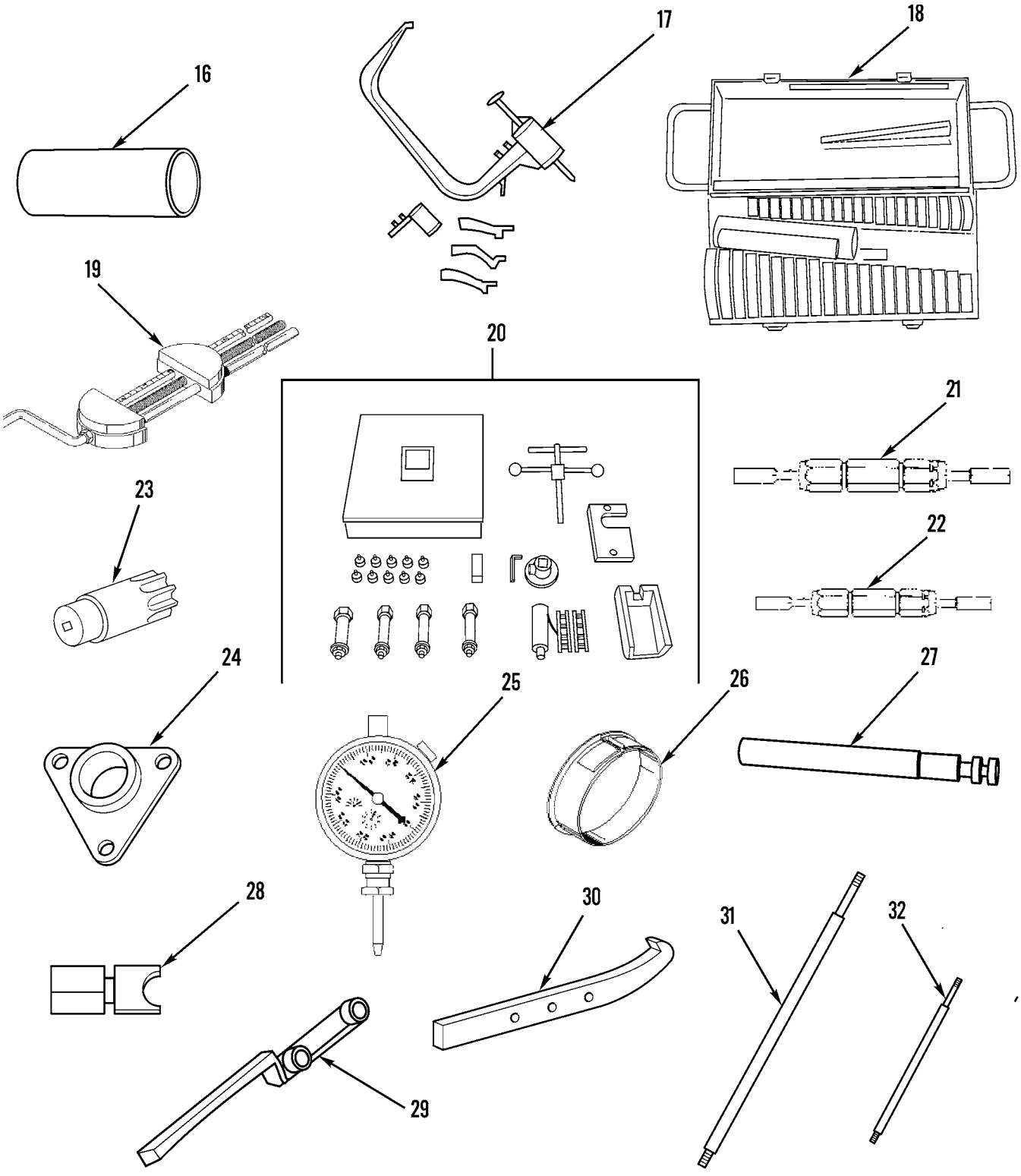

Figure 301. Direct Support Special Tools (Sheet 2 of 4)

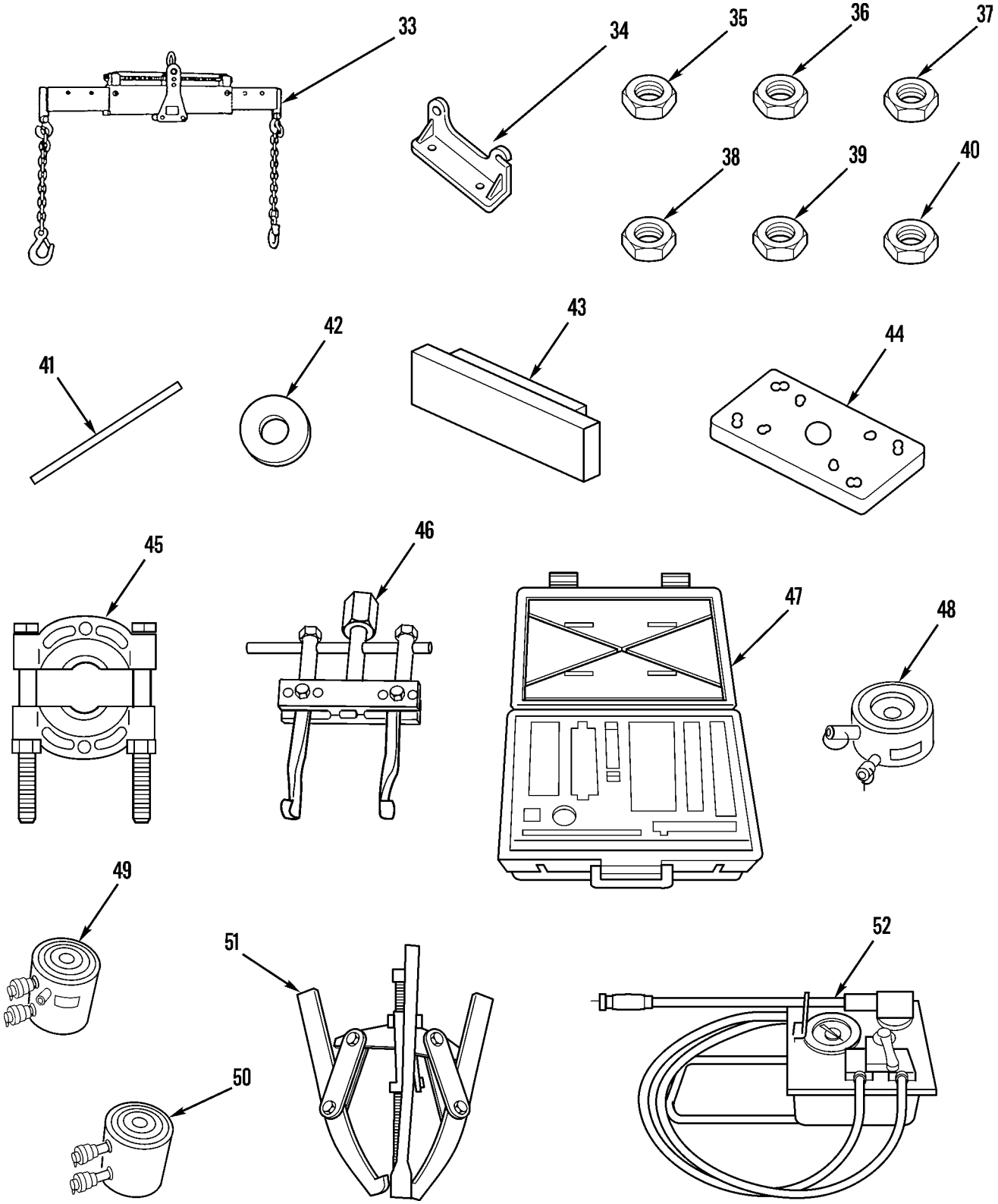

Figure 301. Direct Support Special Tools (Sheet 3 of 4)

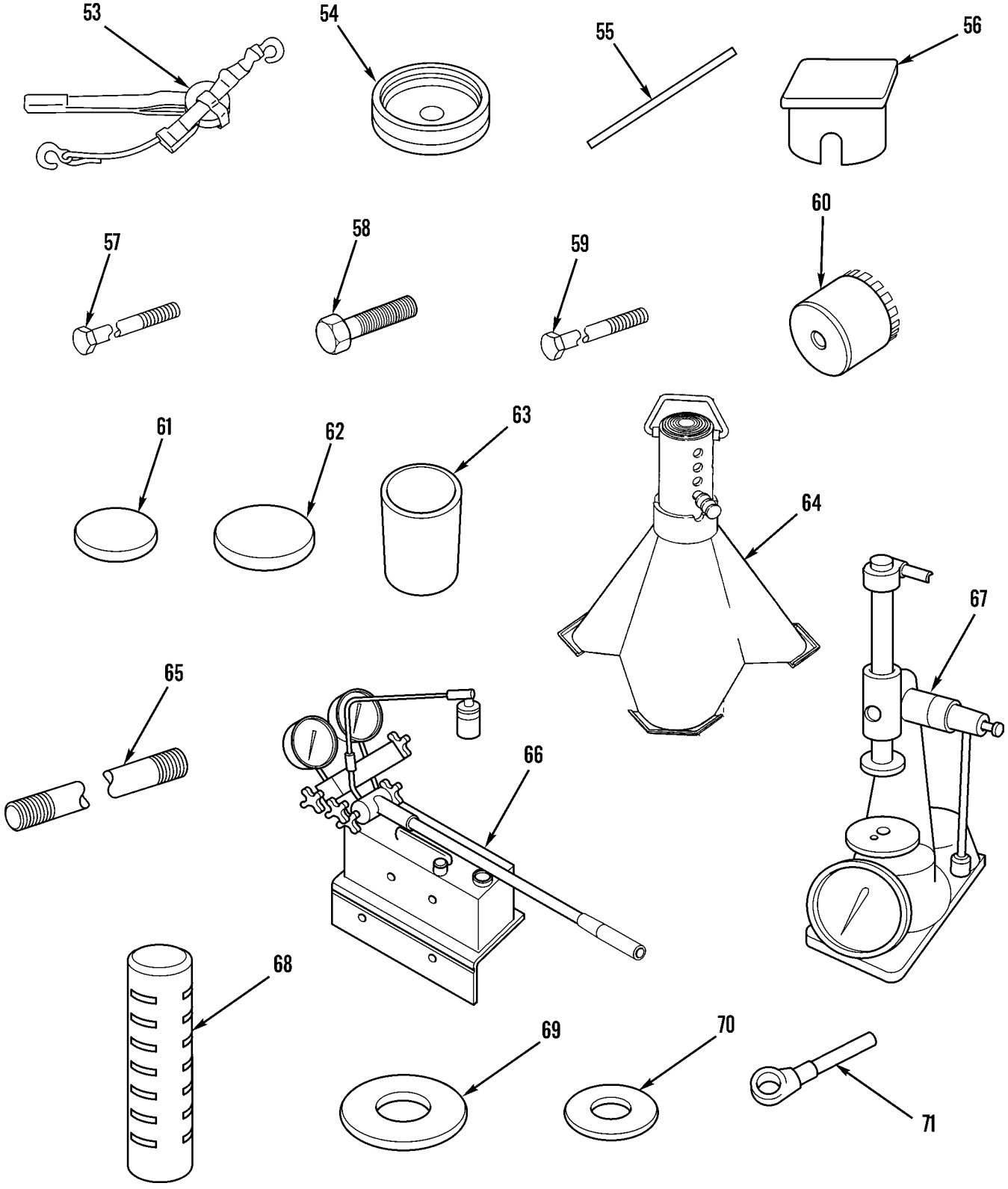

Figure 301. Direct Support Special Tools (Sheet 4 of 4)

(1) ITEM NO	(2) SMR CODE	(3) NSN	(4) CAGEC	(5) PART NUMBER	(6) DESCRIPTION AND USABLE ON CODES(UOC)	(7) QTY
					GROUP 2604 SPECIAL TOOLS FIG. 301 DIRECT SUPPORT SPECIAL TOOLS	
1	PEFZZ	5120013004502	11083	1P1832	ADAPTER,BEARING REM.....	
2	PEFZZ	5120003575181	11083	8B7555	ADAPTER,MECHANICAL.....	
3	PEFZZ	5120012868431	11083	1P1838	ADAPTER,MECHANICAL.....	
4	PEFZZ	5120012868432	11083	1P1837	ADAPTER,MECHANICAL.....	
5	PEFZZ	5120012882717	11083	5P4184	ADAPTER,MECHANICAL.....	
6	PEFZZ	5120012868435	11083	1P1835	ADAPTER,MECHANICAL.....	
7	PEFZZ	5120003169172	11083	8B7556	ADAPTER,MECHANICAL.....	
8	PEFZZ	5120013454526	11083	FT1533	ADAPTER,NOZZLE.....	
9	PEFZZ	5120012868433	11083	1P1833	ADAPTER,PULLER.....	
10	PEFZZ	5120012868434	11083	1P1834	ADAPTER,PULLER.....	
11	PEFZZ	5120012953618	11083	5F7340	ADAPTER,PULLER.....	
12	PEFZZ		11083	FT1017	BLOCK.....	
13	PEFZZ	5306004262929	11083	0S1602	BOLT,MACHINE.....	
14	PEFZZ	5340013362459	11083	FT0120	BRACKET,LIFTING.....	
15	PEFZZ	4940012682201	11083	1387573	BRACKET,LINK.....	
16	PEFZZ	5120010301625	11083	7S8858	BUSHING,DRIVER,VALV.....	
17	PEFZZ	5120003146138	11083	5S1330	COMPRESSOR,VALVE SP.....	
18	PEFZZ	5120010301626	11083	1P0510	DRIVER SET,BUSHING.....	
19	PEFZZ	5120004898167	11083	4S9181	EXPANDER ASSEMBLY.....	
20	PEFZZ	4910012963862	11083	1667441	EXTRACTOR,VALVE GRO.....	
21	PEFZZ	5220012964296	11083	6V7058	GAGE,PROFILE.....	
22	PEFZZ	5220012964297	11083	6V7068	GAGE,PROFILE.....	
23	PEFZZ	4910011370662	11083	5P7305	GEAR,ENGINE TURNING.....	
24	PEFZZ	5120011191747	11083	5P7306	HOUSING,GEAR SHAFT.....	
25	PEFZZ	5210013549255	11083	6V3075	INDICATOR,DIAL.....	
26	PEFZZ	5120011226012	11083	1U8698	INSERTER,SEAL.....	
27	PEFZZ	5120012882777	11083	5P2980	INSERTER,SEAL.....	
28	PEFZZ		11083	5P2968	JACK GROUP.....	
29	PEFZZ		11083	7S7786	LEG.....	
30	PEFZZ		11083	4S5415	LEG.....	
31	PEFZZ	5120013455328	11083	1H3109	LEG,MECHANICAL PULL.....	
32	PEFZZ	5120012759480	11083	8B7549	LEG,PULLER.....	
33	PEFZZ	3950012639513	11083	6V3145	LEVELER,LOAD.....	
34	PEFZZ	4910012868364	11083	2P5573	MAINTENANCE FIXTURE.....	
35	PEFZZ		11083	5P0637	NUT.....	
36	PEFZZ	5310004043787	11083	7H7539	NUT,PLAIN,HEXAGON.....	
37	PEFZZ	5310014836594	11083	1P0544	NUT,FASTENER.....	
38	PEFZZ		11083	5S7351	NUT.....	
39	PEFZZ	5310006566973	11083	5F7351	NUT,PLAIN,HEXAGON.....	
40	PEFZZ	5310014806692	11083	1P0543	NUT,PLAIN,ROUND.....	
41	PEFZZ	5315012702832	11083	8S7615	PIN.....	
42	PEFZZ	5120012882427	11083	5P0975	PLATE,PROTECTIVE.....	
43	PEFZZ		11083	8B7560	PLATE,STEP.....	
44	PEFZZ		11083	FT0530	PULLER.....	
45	PEFZZ	5120002886756	11083	8B7551	PULLER ATTACHMENT,B.....	
46	PEFZZ	5120002931430	11083	8B7554	PULLER ATTACHMENT,C.....	
47	PEFZZ	2910012501608	11083	6V6980	PULLER GROUP,NOZZLE.....	
48	PEFZZ	5130012940717	11083	6V3170	PULLER,HYDRAULIC.....	

(1) ITEM NO	(2) SMR CODE	(3) NSN	(4) CAGEC	(5) PART NUMBER	(6) DESCRIPTION AND USABLE ON CODES(UOC)	(7) QTY
49	PEFZZ	5130012964277	11083	6V3175	PULLER,HYDRAULIC.....	
50	PEFZZ	5130003636680	11083	6V3160	PULLER,HYDRAULIC.....	
51	PEFZZ	5120006003306	11083	1P2322	PULLER,MECHANICAL.....	
52	PEFZZ	4320003741403	11083	4C4865	PUMP,HYDRAULIC RAM,.....	
53	PEFZZ	5120012752286	11083	8S9906	RATCHET ASSEMBLY.....	
54	PEFZZ		11083	2P5498	RING INSTALLER.....	
55	PEFZZ		11083	FT1016	ROD,GUIDE.....	
56	PEFZZ	2510012648424	11083	8S8048	SADDLE.....	
57	PEFZZ		11083	8S6586	SCREW.....	
58	PEFZZ		11083	8S6585	SCREW.....	
59	PEFZZ	5305012953554	11083	5F7366	SCREW,MACHINE.....	
60	PEFZZ	5120012882545	11083	5P4204	SOCKET,SPANNER.....	
61	PEFZZ	5365013002674	11083	0L1774	SPACER,SLEEVE.....	
62	PEFZZ	5120004238162	11083	0T0774	SPACER,PULLER SCREW.....	
63	PEFZZ	5365012882658	11083	5P4197	SPACER,SLEEVE.....	
64	PEFZZ	4910012644034	11083	8S7630	STAND ASSEMBLY.....	
65	PEFZZ	5307014857432	11083	4C9634	STUD,PLAIN.....	
66	PEFZZ	4320012639716	11083	5P4150	TESTER GROUP,NOZZLE.....	
67	PEFZZ	6635011241771	11083	8S2263	TESTER,SPRING RESIL.....	
68	PEFZZ	4910012650428	11083	8S7611	TOOL,SPECIAL.....	
69	PEFZZ	5310015267006	11083	3H0467	WASHER,FLAT.....	
70	PEFZZ	5310014857439	11083	5F7353	WASHER.....	
71	PEFZZ	5120013505274	11083	8H0684	WRENCH,RATCHET.....	

END OF FIGURE

CROSS-REFERENCE INDEXES

NATIONAL STOCK NUMBER INDEX

STOCK NUMBER	FIG.	ITEM	STOCK NUMBER	FIG.	ITEM
5970-00-001-9381	54	36	5310-00-022-0666	24	38
5970-00-001-9382	54	26	2815-00-024-4596	3	5
2990-00-003-5933	40	8	5325-00-026-3776	54	24
5305-00-004-7245	31	67	5331-00-031-2558	25	9
4310-00-004-8267	KIT		5325-00-031-3336	54	17
5310-00-005-0779	31	28	5325-00-031-3337	54	35
	73	9	2910-00-033-2200	30	11
	76	13		42	6
	207	19	3040-00-034-4216	57	25
	208	1	5970-00-034-5015	57	41
	214	8	2920-00-034-7342	57	49
	289	10	4730-00-035-8036	176	5
5305-00-005-0896	63	15	5330-00-036-6825	5	13
	79	4	5331-00-038-4327	243	39
	84	7	5331-00-040-9789	295	1
4730-00-005-4994	274	31	5310-00-042-6376	40	3
	275	38		133	38
4820-00-006-0115	173	1	5977-00-044-3000	58	42
5925-00-008-0548	63	16	5310-00-044-3339	200	10
5307-00-008-2234	199	7		245	24
5306-00-008-5943	53	13		246	1
5306-00-008-5972	222	20		289	23
5306-00-008-5974	145	5	4730-00-044-4688	5	8
5325-00-008-6049	232	19		58	6
3120-00-008-9102	3	20		146	3
5330-00-008-9181	13	1		164	10
5305-00-008-9216	75	49		166	20
5340-00-009-5728	40	9		181	36
5310-00-009-7704	222	9		183	3
5315-00-010-3389	175	19		197A	7
2920-00-010-7340	54	33	6240-00-044-6914	80	2
4730-00-010-9357	202	9		81	14
5310-00-011-0634	76	1		82	4
4730-00-011-0667	37	2	5310-00-045-3296	54	6
4730-00-011-2578	35	17	5310-00-045-3299	31	64
5305-00-011-9774	296	9		83	7
3110-00-011-9935	3	22		233	3
	16	6	5310-00-045-5001	1	19
	148	15		96	13
	284	11		142	19
5315-00-012-0123	160	10		171	8
	192	25		174	19
5920-00-012-0151	67	13		202	23
	68	3		280	22
3110-00-013-7758	243	11		297	16
3120-00-014-3507	41	28	4730-00-050-4203	242	10
2920-00-015-3058	57	44	4730-00-050-4208	51	1
5315-00-018-7988	270	32		161	2
6240-00-019-0877	83	6		162	16
5365-00-022-0665	25	14		292	3

CROSS-REFERENCE INDEXES

NATIONAL STOCK NUMBER INDEX

STOCK NUMBER	FIG.	ITEM	STOCK NUMBER	FIG.	ITEM
4730-00-050-4208	299	19	5340-00-071-3830	272	52
5305-00-050-9237	76	9	5340-00-071-3834	190	100
5305-00-054-6667	85	4		190	121
5315-00-059-0205	222	4		190	142
5305-00-059-3661	223	19	5340-00-071-3836	190	81
2920-00-060-7252	KIT			190	132
5310-00-061-1258	82	10		190	153
5310-00-061-4650	68	9	2815-00-074-3523	59	6
5310-00-062-2051	57	34	5330-00-074-3600	7	1
5306-00-063-5001	190	71	5331-00-074-3764	291	4
	198	6	5360-00-076-1478	96	8
5305-00-068-0511	20	5	5310-00-076-1505	299	23
	40	24	5305-00-076-3714	77	6
	41	17	5310-00-080-6004	134	27
	49	23		144	6
	51	22		180	22
	73	2		263	2
	81	17		265	12
	122	4	4730-00-080-7040	265	7
	144	1		266	9
	154	18		267	4
	157	7		268	8
	177	16		269	6
5306-00-068-0514	58	12		270	2
5305-00-068-7837	36	21		271	2
5305-00-071-2055	274	21		274	33
5305-00-071-2069	297	2	5310-00-080-9422	37	11
5305-00-071-2505	26	22	5331-00-081-3139	137	9
	28	25		164	2
	29	24	5310-00-081-4219	16	20
	30	20		17	2
	73	3		18	2
	75	17		23	9
	133	15		26	23
	287	9		30	3
5305-00-071-2506	21	11		41	23
	28	19		41	23
	66	8		42	19
	75	6		92	2
	83	23		95	2
	205	8		102	19
	208	11		120	28
	225	18		122	10
	289	7		137	26
5305-00-071-2508	153	3		145	2
5305-00-071-2509	227	4		158	2
5305-00-071-2510	206	11		159	15
5305-00-071-2514	30	37		183	6
	63	4		204	4
5340-00-071-3829	272	53		208	3

CROSS-REFERENCE INDEXES

NATIONAL STOCK NUMBER INDEX

STOCK NUMBER	FIG.	ITEM	STOCK NUMBER	FIG.	ITEM
5310-00-081-4219	286	9	5310-00-109-7638	225	10
	289	14	5330-00-111-0688	30	4
5330-00-081-7076	167	7	5940-00-113-8190	129	3
3830-00-084-7481	298	17	5940-00-113-9826	99	44
3020-00-084-7516	168	1		101	4
4730-00-084-7543	35	11		106	9
3120-00-085-1905	181	16		106	29
6220-00-088-3521	80	3		120	16
	81	13		120	40
4730-00-089-2515	3	13	5940-00-114-1305	102	7
	4	13		103	10
	7	2	5940-00-114-1310	99	41
	17	16	3110-00-115-1238	206	29
	24	21	5940-00-115-2684	99	13
	49	8		100	17
	50	11		102	15
	176	6		122	5
	181	21		286	15
	184	14	2910-00-116-0407	31	19
	286	10	5365-00-116-0408	31	30
5305-00-090-4147	54	31	5360-00-116-0448	42	14
5305-00-090-4256	54	3	2910-00-116-3227	42	15
5305-00-090-4274	54	15	5310-00-117-4788	2	12
3110-00-100-0349	239	6		2	12
3110-00-100-0359	143	6		4	15
	237	3		6	2
3110-00-100-0615	243	10		12	9
3110-00-100-0647	174	17		13	5
3110-00-100-0649	174	5		14	1
3110-00-100-0650	166	24		15	15
3110-00-100-0719	237	24		17	11
3110-00-100-0743	140	23		21	9
	237	4		24	2
	238	7		24	51
3110-00-100-6149	247	26		38	39
	248	26		39	6
	249	26		41	21
	250	26		41	21
	251	26		42	4
	252	26		44	8
3110-00-100-6150	204	8		45	7
2540-00-101-4738	222	14		49	27
2910-00-103-8876	41	15		50	23
5331-00-104-4371	3	2		51	21
	4	20		52	2
5330-00-107-6455	277	14		67	2
	279	13		73	5
	280	10		74	2
	281	10		77	8
5310-00-109-7638	96	14		78	12

CROSS-REFERENCE INDEXES

NATIONAL STOCK NUMBER INDEX

STOCK NUMBER	FIG.	ITEM	STOCK NUMBER	FIG.	ITEM
5310-00-117-4788	81	2	5331-00-118-6559	143	15
	82	13	5930-00-118-8034	229	2
	83	14	5925-00-118-8035	67	20
	93	2	5940-00-118-8836	100	26
	97	6		129	2
	98	4	4730-00-121-8299	20	13
	99	14		159	17
	100	12	4730-00-122-3969	49	11
	102	14		50	12
	107	11		158	18
	109	10		160	24
	120	21		167	20
	122	6		243	36
	133	10		284	18
	137	36	5331-00-123-2727	29	4
	138	24	3040-00-124-0880	187	7
	143	11	2910-00-125-7471	31	38
	145	6	5315-00-129-6499	187	10
	155	24	4730-00-133-3196	190	14
	157	8	5975-00-133-8687	105	2
	169	10		105	48
	175	2	2590-00-135-6277	92	4
	177	17	5305-00-136-2009	222	24
	178	8	5330-00-137-6721	164	17
	178	8		166	1
	183	16	3120-00-138-0241	58	35
	190	10	5330-00-138-0251	58	25
	198	5	5310-00-138-0260	140	21
	198	24	5315-00-138-0318	168	5
	203	20	5325-00-138-4664	65	2
	205	6	6680-00-139-5274	14	8
	215	8	5310-00-139-7030	161	31
	219	15		162	18
	220	6		165	23
	253	10		166	18
	262	14		183	18
	272	47	6240-00-143-3173	63	9
	274	2		64	2
	275	6		65	10
	283	8	4730-00-143-3941	38	6
	284	21		39	12
	285	21		264	22
	286	16	5940-00-143-4774	93	6
	293	5		99	10
	197B	55		99	36
5930-00-117-8078	75	15		100	9
5325-00-118-3056	8	6		100	22
5307-00-118-3133	94	11		101	3
5330-00-118-5519	162	9		103	13
5310-00-118-6420	181	9		103	21

CROSS-REFERENCE INDEXES

NATIONAL STOCK NUMBER INDEX

STOCK NUMBER	FIG.	ITEM	STOCK NUMBER	FIG.	ITEM
5940-00-143-4774	104	4	5310-00-143-5722	208	13
	104	11		226	8
	105	10		296	8
	105	25	5330-00-143-8713	37	9
	105	45	5940-00-144-1533	108	7
	106	2	3110-00-144-8519	54	49
	106	35	5305-00-145-0809	28	84
	110	2	5305-00-151-9899	36	9
	111	2	5310-00-155-5049	46	9
	126	2	5306-00-158-0697	67	7
	128	2		70	10
	229	19		230	15
5940-00-143-4775	132	6	5310-00-162-9275	166	11
	132	8	5330-00-164-2401	167	5
5940-00-143-4777	130	2	2530-00-164-2402	167	4
5940-00-143-4780	99	12	5305-00-164-8146	292	21
	99	37	5331-00-166-0988	29	5
	100	5	5331-00-166-1098	255	14
	106	8		256	13
	106	33		257	14
	107	5	4820-00-166-4262	172	1
	112	2	5310-00-167-0721	22	2
	120	17		40	20
	120	37		41	44
	121	2		44	12
	229	18		228	2
	232	10		263	23
5940-00-143-4793	99	45	5331-00-167-5174	42	7
	100	30		241	7
	102	3		247	37
	118	6		248	37
	120	19		249	37
	120	35		250	37
	123	5		251	37
5940-00-143-4794	57	46		252	37
	99	43		261	14
	100	3		267	14
	100	27		275	1
	101	11	4730-00-172-0022	202	17
	102	6		202	31
	104	2	4730-00-172-0028	278	25
	104	9		282	3
	106	3	5305-00-172-6356	153	5
	106	34	5360-00-172-9967	28	38
	120	18	4730-00-173-1881	190	13
	120	36	5315-00-173-8417	36	19
5940-00-143-5284	99	39	5310-00-174-8647	41	8
	101	10	5365-00-175-5049	24	34
5310-00-143-5722	66	2	5306-00-175-7468	17	3
	76	2	2510-00-176-5600	201	6

CROSS-REFERENCE INDEXES

NATIONAL STOCK NUMBER INDEX

STOCK NUMBER	FIG.	ITEM	STOCK NUMBER	FIG.	ITEM
5940-00-177-4356	232	12	5310-00-209-0786	223	14
4730-00-177-6166	75	25		224	2
	176	9	5310-00-209-0788	62	13
	197B	30		63	26
5310-00-178-7700	41	16	5310-00-209-1510	94	2
	57	30	5306-00-209-3217	135	6
	58	19		230	10
	75	32	5310-00-209-4516	170	4
3120-00-182-6865	40	22	5310-00-209-5116	80	5
	41	43		132	1
	41	43	5340-00-209-9263	97	2
	134	9	2815-00-211-4462	10	20
	263	24	5970-00-213-7747	31	31
5310-00-185-6343	164	4	5305-00-218-6387	57	64
5310-00-186-0966	140	22	2920-00-223-6256	58	33
4730-00-187-4191	243	16	5305-00-225-3843	28	17
5310-00-187-7070	69	3		28	49
4730-00-187-7569	178	50		29	1
5315-00-187-9550	270	15		29	27
5315-00-187-9600	279	23		76	12
5310-00-187-9796	28	36		130	7
4730-00-188-1877	231	4		133	33
5310-00-188-7848	181	10		175	13
3110-00-191-3923	143	14		197B	20
5310-00-191-8297	185	13	5940-00-226-0490	100	25
3020-00-192-6808	168	3		102	8
2815-00-192-8768	12	3	5306-00-226-4823	36	5
5330-00-193-0850	59	3		95	1
4730-00-193-0869	90	2	5306-00-226-4825	11	1
	178	9		23	15
	180	12		38	52
	286	6		120	26
4730-00-193-0871	180	10		158	1
	184	2		159	14
5315-00-193-0919	142	11		286	8
5310-00-193-1076	53	17	5306-00-226-4826	40	19
	215	59		41	45
5310-00-193-7577	75	52		92	3
5310-00-194-1483	57	48		122	9
4730-00-196-2054	288	2		181	28
4730-00-196-2055	184	7		263	22
3110-00-198-0464	30	30	5306-00-226-4828	22	1
3110-00-198-0510	28	8		23	3
4720-00-198-5808	BULK	8		41	29
5365-00-205-3664	31	34		41	29
5310-00-205-9982	12	2	5306-00-226-4829	134	24
5310-00-208-9485	1	13		135	5
5310-00-209-0786	103	3		239	19
	130	5	5306-00-226-4832	23	2
	132	2	5306-00-226-4833	16	19

CROSS-REFERENCE INDEXES

NATIONAL STOCK NUMBER INDEX

STOCK NUMBER	FIG.	ITEM	STOCK NUMBER	FIG.	ITEM
5306-00-226-4834	183	9	5305-00-252-8906	16	18
5306-00-226-4835	236	4		24	3
5306-00-226-4843	183	8		41	38
4730-00-226-8127	190	88		49	9
	190	125		134	16
	190	145		154	13
5306-00-228-6835	50	19		155	12
	83	15		161	1
	134	32		189	43
	135	14		194	16
	190	43	5305-00-252-8919	9	3
	203	15		44	9
	220	3		48	7
	230	23		51	4
5340-00-229-9287	10	10		52	1
5340-00-229-9294	4	6		77	7
4720-00-231-6285	BULK	11		83	13
2920-00-231-7270	54	1		98	9
2920-00-231-7385	54	38		99	21
5310-00-232-6058	298	14		102	13
	299	8		107	9
4730-00-234-5976	177	4		133	18
	178	2		164	31
4730-00-236-2413	202	27		166	13
3120-00-236-6553	36	17		177	7
5307-00-236-6711	41	2		178	68
2520-00-237-4603	150	17		189	12
5330-00-237-6928	54	45		189	38
	54	53		198	23
5330-00-239-1792	144	23		286	17
	164	39		296	19
	199	9	5306-00-253-3376	24	56
3110-00-239-7702	137	55		40	1
5340-00-239-8226	10	19	5305-00-253-5609	55	10
5920-00-243-3787	67	10		60	3
	178	28	5305-00-253-5615	75	11
5315-00-245-6578	206	35		190	84
5331-00-245-6767	144	16		194	11
	164	43		211	4
5310-00-245-9841	283	17		215	38
5315-00-246-0403	138	13		233	9
2920-00-246-2735	66	5		238	18
4730-00-246-9215	142	2	5306-00-253-7879	24	33
5310-00-247-3360	287	10		145	11
5330-00-248-2176	23	4		148	2
4730-00-249-1531	231	3		149	2
5360-00-249-3504	10	16		150	2
5310-00-251-1488	143	21		188	6
	152	5	5310-00-253-7918	53	12
5315-00-252-2959	3	23	4730-00-254-6373	184	8

CROSS-REFERENCE INDEXES

NATIONAL STOCK NUMBER INDEX

STOCK NUMBER	FIG.	ITEM	STOCK NUMBER	FIG.	ITEM
4730-00-258-1864	72	8	5310-00-262-4715	55	21
	190	59	4730-00-263-3122	158	17
5306-00-260-4502	222	15	5306-00-263-3533	290	5
5306-00-260-4508	4	14	5325-00-263-3831	31	56
	13	15	5306-00-263-4038	24	29
	15	7	5307-00-263-7293	181	6
	17	8	5306-00-263-7301	27	8
	38	40		38	12
	41	42		38	47
	49	4		41	54
	78	10		47	7
	98	3		48	1
	144	18		50	22
	156	17		75	4
	158	13		78	2
	166	12		81	3
	178	6		100	16
	178	6		120	23
	190	11		138	25
	198	29		161	11
	201	1		164	19
	217	14		181	43
	220	9		192	1
	245	1		210	4
	246	23		217	11
	261	20		218	5
	264	16		219	14
	268	20		238	1
	270	18		267	12
	273	30		268	16
	273	77		285	20
	274	7	5306-00-263-7303	27	9
	276	3	5306-00-263-8949	140	11
5306-00-260-4512	273	96	5306-00-263-8978	7	4
5306-00-261-1153	26	17		53	18
	28	58		154	8
	29	32		202	10
	32	29		215	45
	197	2		273	120
	247	21		275	33
	248	21		291	1
	249	21	5310-00-264-1874	243	42
	250	21	5331-00-265-1097	26	20
	251	21	5305-00-267-8952	223	15
	252	21		224	1
	289	13	5310-00-268-2446	204	6
	197A	12	5306-00-268-5798	1	11
	197B	21		160	38
5340-00-261-4042	22	3		215	60
5310-00-262-4715	54	40	5306-00-268-6004	222	5

CROSS-REFERENCE INDEXES

NATIONAL STOCK NUMBER INDEX

STOCK NUMBER	FIG.	ITEM	STOCK NUMBER	FIG.	ITEM
5310-00-269-6340	243	35	5306-00-285-1368	2	20
	292	19		13	6
5310-00-270-2182	293	21		74	7
5340-00-270-8552	63	2		218	33
	205	28		254	10
5306-00-272-1804	23	2		255	17
	42	18		256	19
5340-00-272-3548	25	15		257	18
5315-00-272-6760	40	6		258	2
	134	28		259	4
5306-00-273-6357	46	15		261	18
	51	12		265	23
	53	16		267	10
	202	8		268	11
	202	8		269	17
	216	10		270	28
	221	6		272	51
	245	4		273	98
	246	24	5325-00-285-8363	110	5
5307-00-274-8196	45	6	2805-00-288-3650	10	30
5306-00-275-5012	96	12	5120-00-288-6756	301	45
	174	21	4730-00-288-8546	231	6
4730-00-275-9432	190	107	4730-00-289-0382	38	14
5315-00-276-3727	222	3	4730-00-289-0383	184	13
5315-00-276-5750	76	8	4730-00-289-1243	44	5
5340-00-276-5832	3	19	4730-00-289-2357	180	6
4820-00-276-9041	49	16	4730-00-289-2370	176	12
4730-00-277-1896	184	6		296	21
4730-00-277-8289	176	1	4730-00-289-4057	184	1
	296	3	4730-00-289-5191	178	61
4730-00-277-9386	88	1		286	7
4730-00-278-2965	3	8	5331-00-290-8365	238	8
	295	12	5940-00-291-0085	44	4
4730-00-278-3383	4	18		80	4
	7	9		93	7
	13	14		126	3
	148	12	5310-00-291-4498	57	60
4730-00-278-3397	58	9	5331-00-291-7192	24	14
	58	27		24	47
4730-00-278-3725	178	38		143	28
4730-00-278-4720	177	13	5331-00-292-0577	31	25
4730-00-278-4814	178	29	5330-00-292-1633	278	19
	197A	14		282	10
4730-00-278-4822	90	1	5120-00-293-1430	301	46
	180	17	3110-00-293-8542	244	24
	231	7	5331-00-297-7106	83	3
4730-00-278-8261	176	7	5330-00-297-7228	17	7
5340-00-282-7505	39	4	5330-00-297-7272	181	25
5340-00-282-7519	38	26	5310-00-297-7319	57	9
5306-00-282-8360	229	3	5306-00-298-4235	28	30

CROSS-REFERENCE INDEXES

NATIONAL STOCK NUMBER INDEX

STOCK NUMBER	FIG.	ITEM	STOCK NUMBER	FIG.	ITEM
5305-00-298-8437	58	23	5330-00-363-9866	37	13
	67	18	5365-00-363-9900	284	17
5930-00-307-8856	66	4	2930-00-365-2152	15	10
5310-00-308-2227	41	10		166	39
	293	9	2910-00-367-5238	37	8
2910-00-309-9473	2	20	3805-00-374-1191	299	18
	13	7	4320-00-374-1403	301	52
	24	27	4730-00-374-8191	242	13
	51	24	5310-00-375-0518	165	6
	157	9	4820-00-391-3782	28	60
	253	11	5340-00-392-7334	25	6
	254	9	5331-00-393-4054	133	32
	256	18		135	24
	259	1	5310-00-393-6685	106	10
	267	22		106	32
	268	31	3120-00-394-4276	5	14
	270	26	3120-00-397-4451	5	3
5331-00-310-6575	26	15	5331-00-400-8480	190	139
	31	41	5305-00-401-5261	10	17
5120-00-314-6138	301	17	4730-00-401-8098	14	10
4730-00-317-3008	178	3	6220-00-402-4477	84	4
	197B	18	5330-00-402-8718	197	12
	197B	52		252	14
5331-00-333-4384	238	6	4730-00-403-5404	20	11
	279	14	5970-00-403-5912	54	28
5331-00-339-6224	24	26	5325-00-403-6449	155	30
	151	35	5305-00-404-1403	214	1
5310-00-350-2655	82	9	5306-00-404-1409	181	38
3110-00-351-3927	166	25	5306-00-404-1417	247	32
	174	6		248	32
4820-00-351-7486	180	11		249	32
5315-00-352-7706	222	2		250	32
5340-00-352-7779	45	8		251	32
4730-00-353-1913	176	2		252	32
5340-00-354-1147	30	6	5310-00-404-2422	53	11
5120-00-357-5181	301	2		170	3
3110-00-357-9710	166	30		228	4
5360-00-359-0925	91	17	5310-00-404-3787	301	36
5315-00-362-7367	51	10	5340-00-404-4100	273	29
2520-00-362-7883	41	3	5315-00-406-7278	28	65
5310-00-362-7988	3	11		28	77
	158	11		31	10
5310-00-362-8168	214	26	5365-00-406-9320	156	2
	229	5	5310-00-407-3548	54	30
5315-00-363-6577	96	1	5340-00-407-8369	4	16
5130-00-363-6680	301	50	5310-00-407-9566	11	2
5315-00-363-8794	16	3		188	5
5330-00-363-8989	153	8	4730-00-408-1231	169	1
5315-00-363-9248	31	9		169	3
5315-00-363-9729	214	29	5340-00-411-3926	40	5

CROSS-REFERENCE INDEXES

NATIONAL STOCK NUMBER INDEX

STOCK NUMBER	FIG.	ITEM	STOCK NUMBER	FIG.	ITEM
5310-00-411-4399	292	22	5306-00-423-8194	40	11
5365-00-411-4584	28	14		42	3
	43	3		47	13
	144	29		49	26
	148	13		133	9
	151	25		143	10
	156	7		151	2
	253	8		154	3
5307-00-411-6559	21	3		268	37
5310-00-411-9017	164	6		270	11
4730-00-413-0219	190	16	5310-00-423-8288	40	21
5306-00-413-4750	137	18		41	31
5310-00-413-5060	203	3		41	31
5310-00-413-5144	155	11	5306-00-423-8313	28	23
5306-00-416-9180	28	29		214	24
5310-00-419-1363	160	29	5306-00-423-8316	277	3
	201	9	5306-00-423-8393	2	13
6240-00-419-3185	62	7		242	17
5325-00-419-3212	138	20	5360-00-423-8464	72	5
5365-00-419-3254	29	35	2815-00-423-8767	181	17
5305-00-419-3410	291	33	5306-00-423-8784	42	17
5307-00-419-4067	3	16		208	8
4720-00-421-3854	35	13		214	21
5310-00-421-9603	175	9	5306-00-423-8807	185	15
2530-00-422-7770	175	14	5306-00-423-9358	211	14
4730-00-423-2052	273	105		215	67
	275	29	5310-00-423-9698	293	15
5977-00-423-4900	57	57	3805-00-423-9746	300	1
5315-00-423-8085	142	9	5360-00-423-9986	206	10
5365-00-423-8104	299	26	5306-00-424-0086	1	14
5306-00-423-8116	161	30		24	54
	162	19		53	8
5306-00-423-8117	53	9		96	9
	96	17		153	11
	215	39		154	19
	216	6		202	25
	217	18		284	5
	218	29	5365-00-424-0179	1	20
	221	7	5365-00-424-0180	1	20
	245	22	5365-00-424-0306	1	20
	246	4	5365-00-424-0479	157	4
	283	13	5310-00-425-2015	164	5
5340-00-423-8146	295	18	3120-00-425-6467	58	10
2510-00-423-8153	216	4	5306-00-426-2865	24	52
5306-00-423-8194	14	2	5306-00-426-2922	154	21
	17	18		278	28
	19	2	5306-00-426-2932	15	12
	23	7		24	23
	35	5		49	7
	39	5		74	1

CROSS-REFERENCE INDEXES

NATIONAL STOCK NUMBER INDEX

STOCK NUMBER	FIG.	ITEM	STOCK NUMBER	FIG.	ITEM
5306-00-426-2932	155	13	5365-00-426-5507	144	24
	238	20		152	10
	279	26		164	38
	293	6		199	8
5306-00-426-2933	178	74	5306-00-426-5835	5	10
5306-00-426-2934	219	16	5315-00-426-6042	201	7
	220	11	4730-00-427-5121	24	22
	281	1		158	14
5305-00-426-2936	171	11		174	23
	235	3		177	15
	243	21		179	2
	280	23		181	5
5306-00-426-2937	37	18		276	2
5306-00-426-2939	9	4	2940-00-427-6413	33	1
5306-00-426-3080	283	10	2920-00-427-6421	54	27
	297	15	2920-00-427-6422	KIT	
5306-00-426-3139	299	17	5331-00-429-3542	273	54
5306-00-426-3150	165	22		275	14
	293	27		284	4
5306-00-426-3209	160	7	5330-00-429-3570	54	8
	161	38	5330-00-429-3724	54	51
5306-00-426-3403	201	8	3830-00-431-6560	290	6
	243	32	3805-00-431-6561	290	4
5306-00-426-3404	298	8	5330-00-431-7137	50	14
5306-00-426-3408	278	26	5310-00-431-7239	46	10
	282	1		137	19
5306-00-426-3605	277	24		202	26
5306-00-426-3949	75	28		278	29
5140-00-426-4193	220	1		291	44
5340-00-426-4644	38	9	5310-00-431-7244	3	31
	38	45		164	40
	120	25		243	22
5340-00-426-4646	51	6		295	11
5340-00-426-4653	180	14	5315-00-431-7315	40	4
5340-00-426-4656	99	17		96	6
	102	20		134	26
	108	9	5330-00-431-8882	162	13
	197B	57		279	16
5340-00-426-4793	99	19	4820-00-432-1732	151	6
	100	14	4810-00-432-1944	149	12
	102	17	5310-00-432-4064	38	29
	106	14		197B	2
	109	11		197B	39
	120	30	5310-00-432-8001	54	29
5340-00-426-4803	78	11		63	19
	105	21	3120-00-432-8120	54	20
	109	8	5365-00-432-8183	50	15
	110	7	5305-00-432-8422	54	9
5340-00-426-4816	45	3		57	63
5306-00-426-5058	145	7	3040-00-432-9745	36	13

CROSS-REFERENCE INDEXES

NATIONAL STOCK NUMBER INDEX

STOCK NUMBER	FIG.	ITEM	STOCK NUMBER	FIG.	ITEM
5330-00-433-3790	144	20	3020-00-460-6696	16	12
5310-00-434-1347	190	77	4730-00-460-6725	3	9
	233	7	5307-00-465-6789	139	45
5305-00-434-4718	244	2	4730-00-467-2600	275	15
5331-00-436-3369	239	20	4730-00-469-7797	90	4
5306-00-436-9896	292	18		176	14
5330-00-437-8752	11	4		178	1
5315-00-438-5089	171	12	5306-00-470-5543	154	1
3110-00-439-2579	187	27	5330-00-470-5727	294	7
3120-00-439-4878	27	5	2815-00-470-6352	16	10
4730-00-439-6020	190	82	5310-00-470-9833	222	6
	190	131	5306-00-472-5282	12	1
	190	152	5365-00-472-5300	284	3
	273	131	5120-00-473-6921	301	43
2530-00-439-9264	78	6	5310-00-474-3798	230	12
	84	1		230	19
3120-00-440-8463	16	4	5305-00-475-4440	37	12
4720-00-444-9840	34	2	4730-00-475-8691	242	16
5310-00-445-4633	223	17	5365-00-476-4985	284	3
3110-00-446-9692	151	8	5305-00-476-5308	31	20
3120-00-446-9863	134	20	3110-00-480-9379	244	22
	134	22	2920-00-483-5127	58	1
5340-00-448-1795	44	7		60	1
5365-00-449-2597	4	7	5305-00-483-7758	58	18
5305-00-450-0417	299	24	2920-00-484-2799	54	10
5306-00-450-4026	3	30	5310-00-484-5739	139	34
5305-00-450-5937	57	40	2815-00-485-9418	10	29
2815-00-450-9341	10	23	2815-00-487-2840	8	7
5961-00-451-0812	KIT		2815-00-487-3123	10	24
5365-00-452-0344	143	29	4730-00-491-4983	190	18
	197	23		190	38
5310-00-455-0357	167	11	4730-00-491-9576	38	23
5306-00-455-0459	46	6		264	12
	53	1		272	64
	194	5	5330-00-492-1790	24	16
	245	23		169	13
	246	6	5330-00-492-2886	244	15
	291	43	5330-00-493-3876	58	34
	293	11	5325-00-493-8125	42	9
5306-00-455-0460	1	18		150	25
	166	36	5342-00-494-1996	15	6
	293	28	5331-00-494-2763	26	6
5306-00-455-0461	145	3	5330-00-494-2764	3	6
5306-00-455-0462	203	14	5306-00-497-0342	8	10
5306-00-455-0467	137	27	5306-00-497-0376	97	7
2815-00-457-1615	10	7	3120-00-497-1579	192	7
2930-00-457-1616	19	5	5307-00-498-0804	21	6
5315-00-457-6897	3	15	5330-00-498-2905	51	27
3120-00-458-2005	41	52	5330-00-498-2907	156	12
3830-00-459-6677	290	7	5330-00-498-2913	28	69

CROSS-REFERENCE INDEXES

NATIONAL STOCK NUMBER INDEX

STOCK NUMBER	FIG.	ITEM	STOCK NUMBER	FIG.	ITEM
5365-00-498-2920	51	28	5331-00-527-7939	187	20
5365-00-498-2962	51	15	5315-00-529-6952	147	4
5310-00-498-2964	4	1	5306-00-530-9235	293	24
	10	18	5325-00-531-3970	135	2
5310-00-498-2967	9	1	5305-00-531-9800	24	41
5331-00-498-4556	245	15	3830-00-532-4504	298	18
	246	12	5315-00-532-5746	10	22
	247	27		284	8
	248	27	5935-00-534-7553	120	55
	249	27	2640-00-537-2251	185	7
	250	27	5310-00-542-0091	205	11
	251	27	5310-00-543-4385	133	23
	252	27		135	27
5310-00-498-8409	21	5	5310-00-543-4874	274	22
	34	3	5306-00-543-5567	28	48
	35	19	5330-00-548-6119	223	22
	36	31		224	9
	45	2	5310-00-550-1130	133	14
5340-00-499-9648	18	6		135	7
4730-00-499-9837	3	25		223	18
6220-00-500-0437	83	2		230	9
5331-00-506-4457	152	3	5306-00-550-3023	58	16
	192	17	5306-00-550-9129	57	26
	273	125	3110-00-554-5302	50	3
	275	26	3120-00-555-4553	41	6
5310-00-507-5727	84	3	3110-00-555-5207	51	14
5935-00-509-6194	123	4	5940-00-557-4344	103	18
4820-00-509-9789	181	23	5330-00-557-8489	15	5
4730-00-511-1677	49	17	5330-00-557-8494	19	3
	177	2	5310-00-557-9389	8	9
	178	37	5310-00-557-9391	9	2
5325-00-514-0362	137	52	5310-00-557-9414	206	7
5315-00-514-1616	237	15		285	23
	239	9	5310-00-559-0070	54	13
5310-00-514-6674	65	4	5331-00-559-8786	143	17
	118	9		144	17
	120	27		153	9
	132	9		154	10
3110-00-516-5490	51	26		164	42
2815-00-518-3561	8	2	4310-00-562-1031	181	12
6240-00-519-0264	84	9	5310-00-568-4447	69	6
6240-00-519-3399	85	2	2530-00-569-3810	208	16
5360-00-519-6605	10	26		273	90
5331-00-527-7748	52	4	5310-00-579-4542	58	17
	144	15		256	9
	154	15		257	10
	164	44	5331-00-579-6495	265	17
	273	102		266	31
	274	28		267	16
5331-00-527-7939	154	20		268	25

CROSS-REFERENCE INDEXES

NATIONAL STOCK NUMBER INDEX

STOCK NUMBER	FIG.	ITEM	STOCK NUMBER	FIG.	ITEM
5331-00-579-6495	269	12	5331-00-593-1161	243	7
	270	21		295	6
	271	13	5331-00-593-1192	144	25
	272	38		297	10
	273	50	5331-00-593-1193	151	17
5331-00-580-1216	58	2		154	14
	155	31	5331-00-593-1247	273	67
	162	11		275	35
5331-00-580-1226	166	41		277	13
2610-00-580-3221	186	1		280	9
5331-00-580-6583	189	23		281	9
	190	49	4730-00-595-1868	177	20
	190	149	5310-00-595-7237	170	10
	273	43		223	27
4730-00-580-7417	38	1		224	14
	38	42		230	18
5315-00-582-2466	30	45	5310-00-596-7691	62	16
5325-00-582-3115	284	14		67	15
5310-00-582-5965	54	23		76	10
	58	13		77	5
	153	2		81	10
	181	37		223	20
5331-00-584-0263	156	15		289	5
5315-00-584-1352	72	6	5310-00-596-7693	63	20
5310-00-584-5272	58	21	5310-00-596-8007	223	2
	60	21		224	26
	143	18	5360-00-597-8351	257	11
	153	10	5325-00-598-6232	50	7
	154	7	5360-00-598-6759	137	11
	202	7	5340-00-598-9577	187	14
	243	2	5330-00-599-5887	152	9
	297	12	5365-00-601-9696	181	24
5330-00-585-4284	42	10	4730-00-602-5342	178	45
4730-00-585-7507	178	39		197B	17
	197B	9	5330-00-602-9471	25	16
4730-00-585-8993	286	11	6220-00-607-3477	80	1
5307-00-587-3434	2	8	5330-00-612-9390	181	11
5331-00-591-3112	29	15	5330-00-613-6500	31	60
	187	16		38	36
	294	3	5331-00-613-6522	22	4
5331-00-591-7543	197	11		29	31
	247	13		145	8
	248	13		245	11
	249	13		246	10
	250	13	5315-00-616-5500	237	6
	251	13	5315-00-616-5514	206	25
	252	13	5315-00-616-5521	16	13
5331-00-593-1141	243	3	5315-00-616-5522	5	9
	278	14	5315-00-616-5525	55	20
	282	15	5315-00-616-5526	40	13

CROSS-REFERENCE INDEXES

NATIONAL STOCK NUMBER INDEX

STOCK NUMBER	FIG.	ITEM	STOCK NUMBER	FIG.	ITEM
5315-00-616-5526	41	33	5365-00-650-7092	189	42
	133	8	5310-00-655-7646	278	27
	134	19		282	2
5315-00-616-5530	155	17	5310-00-655-9370	235	11
4730-00-618-5381	273	36	5310-00-656-0067	107	2
5315-00-619-2962	96	5	5310-00-660-2649	133	20
4730-00-622-5756	49	18		135	9
	231	2		223	11
4730-00-625-2935	272	18	5310-00-660-3381	57	13
5310-00-627-6128	67	6	5975-00-660-5962	108	5
	83	16	5331-00-663-5709	2	5
	107	10		50	1
	203	5	6220-00-669-5623	83	1
3110-00-629-4111	28	43	5305-00-670-1772	292	2
	28	92	4730-00-670-6036	178	63
5305-00-632-1659	181	4	4730-00-676-3075	20	3
5331-00-633-4535	24	25		159	7
	149	26	3030-00-677-2368	53	19
	151	32	5310-00-678-2152	10	4
5930-00-633-6116	90	5	2640-00-678-8616	185	8
2930-00-635-8296	284	10	5930-00-681-4727	69	1
5905-00-636-8357	229	20	5310-00-682-4425	31	65
5310-00-637-1058	31	3	5930-00-683-1626	62	11
	60	20	5930-00-683-1628	62	12
	62	15	5935-00-686-2599	106	12
	67	14		106	30
	289	16	5325-00-687-3379	30	9
5306-00-637-4927	238	23		240	9
5310-00-637-9541	143	25	5306-00-690-6976	2	10
	144	2		6	3
	151	3		160	41
	151	31	5935-00-691-5591	107	4
	152	2	5306-00-698-2150	2	20
	153	6		17	17
	154	2		19	1
	156	16		155	23
	157	6	5310-00-698-4460	180	2
	180	21		190	26
	181	42		253	13
	192	2		273	81
	201	2		274	3
	238	2	4730-00-706-4566	177	1
	245	9		178	59
	246	19		180	16
	296	20	5305-00-708-3823	142	25
6240-00-643-0687	79	6		151	29
6240-00-643-0738	62	20	4730-00-710-5571	190	117
	197B	25		273	103
2910-00-646-9727	44	2	5325-00-715-1152	42	12
5365-00-650-7092	189	17		57	11

CROSS-REFERENCE INDEXES

NATIONAL STOCK NUMBER INDEX

STOCK NUMBER	FIG.	ITEM	STOCK NUMBER	FIG.	ITEM
5325-00-715-1152	76	6	2910-00-740-3593	156	10
5365-00-715-8065	57	27		285	1
2530-00-716-7950	187	11	5945-00-740-8238	73	4
5305-00-717-5460	66	11	5306-00-741-2518	197B	54
	134	1	6220-00-752-6018	83	9
	203	9	5365-00-753-9528	57	15
	230	3	5315-00-754-0848	41	60
5305-00-719-5238	152	6	5325-00-754-2190	166	3
5310-00-719-5470	57	28	5310-00-754-3384	31	62
5340-00-720-6213	177	12	6220-00-756-8787	79	5
5305-00-721-5322	1	2		84	6
5305-00-721-5492	67	3	5331-00-756-8795	139	46
	100	10	5310-00-757-6194	78	5
	206	13	5310-00-757-6531	5	11
	272	25	6110-00-757-7187	57	12
	273	121	5950-00-758-7793	54	37
	275	5	3010-00-758-9645	188	3
5325-00-721-7485	151	7	3930-00-759-9738	198	10
5325-00-721-7680	28	1	5330-00-760-7367	4	17
	133	29		35	6
	135	22	5315-00-760-7421	10	12
5305-00-724-7221	2	2	5315-00-760-7425	145	17
	142	18		147	8
	202	24		149	18
5305-00-724-7222	174	20		155	5
	183	17		155	20
	202	33	4730-00-762-1239	20	2
	280	1		159	8
	297	15	5365-00-763-0120	261	17
5305-00-724-7236	211	18		273	111
5305-00-725-2317	206	13		274	34
5310-00-725-7382	2	15	5310-00-763-8901	163	10
	10	5	5310-00-763-8905	171	10
	24	28	5310-00-763-8920	161	40
	24	48		164	41
4730-00-726-1103	178	44		166	19
5305-00-726-2551	7	8		171	9
6145-00-726-7275	BULK	27		174	22
5330-00-730-8003	26	14		211	22
	140	18		235	2
5355-00-730-8027	170	1		290	3
5340-00-732-0642	83	10	5310-00-763-8921	201	11
5310-00-734-8959	57	53		298	11
2530-00-735-9029	185	11	5325-00-763-9328	137	33
5340-00-737-3635	138	35	5325-00-765-1203	187	29
	139	24	5305-00-765-2121	219	10
	139	32	5310-00-765-3237	150	9
	147	5		151	12
5305-00-737-5694	83	11	4720-00-766-9779	296	4
5330-00-738-8622	243	20	5310-00-768-0318	46	11

CROSS-REFERENCE INDEXES

NATIONAL STOCK NUMBER INDEX

STOCK NUMBER	FIG.	ITEM	STOCK NUMBER	FIG.	ITEM
5310-00-768-0318	51	29	5331-00-801-3354	274	17
	53	6	5306-00-801-9785	236	6
	58	22	4820-00-803-6235	181	3
	60	15	5325-00-803-7303	156	11
	96	16	5325-00-803-7314	60	34
	216	13	5325-00-804-2784	237	23
	221	5		238	12
	243	4	5325-00-804-5827	244	16
	277	5	5325-00-804-9739	94	5
	283	1		240	4
5310-00-768-6822	160	28	5325-00-804-9743	150	20
5975-00-771-6634	106	11	5331-00-806-7027	154	6
	106	31	5325-00-807-2636	146	5
4820-00-774-8299	180	7	4820-00-808-3669	183	1
2920-00-775-7691	75	40		243	15
4730-00-778-0218	88	3	5310-00-809-3079	205	23
	180	5	5310-00-809-4058	28	22
4730-00-782-5582	37	15		103	5
5306-00-783-5183	57	21		207	20
5306-00-783-5188	57	16		208	7
5325-00-786-5487	231	9		214	7
5325-00-788-6043	187	28		229	8
4730-00-795-6959	178	42		289	27
	197B	12	5310-00-809-5997	1	22
5330-00-797-8389	187	21		24	55
5331-00-801-3354	28	15		51	11
	28	47		53	7
	38	5		162	21
	39	11		167	3
	43	4		200	2
	72	7		219	17
	137	16		277	4
	144	30		281	2
	148	14		283	2
	151	26		284	1
	156	8		291	2
	159	13		293	2
	169	2		297	16
	190	5		298	4
	245	18	5306-00-809-7134	235	5
	246	14		284	2
	247	46	5306-00-809-7138	33	2
	248	46		33	5
	249	46	5310-00-809-8541	208	18
	250	46	4730-00-810-0059	183	11
	251	46		288	1
	252	46		296	6
	253	9	2590-00-810-4288	71	3
	264	13	5360-00-812-0196	57	37
	273	15	5310-00-812-0408	59	4

CROSS-REFERENCE INDEXES

NATIONAL STOCK NUMBER INDEX

STOCK NUMBER	FIG.	ITEM	STOCK NUMBER	FIG.	ITEM
5325-00-812-0645	139	2	4730-00-844-1838	197B	13
5310-00-812-4283	20	4	5315-00-844-3964	138	36
	159	16		139	21
5306-00-814-6559	4	2	5315-00-846-4297	277	22
5306-00-814-6565	137	35		293	35
	138	37	5330-00-847-4351	15	13
	238	21		17	4
5306-00-814-6588	299	16		23	13
5306-00-814-8967	38	28	5331-00-848-7540	295	8
	44	11	5330-00-848-9950	284	13
	208	4	5310-00-849-7021	63	23
	197B	38	5320-00-850-3233	217	31
5331-00-815-4046	185	9	5320-00-850-3241	14	5
5310-00-818-4569	215	24		47	3
5340-00-819-2027	155	25		209	1
3110-00-820-1466	32	37		216	2
2920-00-821-2943	57	3	4730-00-850-3812	15	4
5310-00-822-2236	57	36	5331-00-850-7586	154	11
5310-00-822-2241	57	38	5310-00-851-2682	41	30
2920-00-822-2287	57	33		94	10
4730-00-822-5609	189	19		133	37
	191	8		175	5
5310-00-823-8804	255	10	3120-00-851-4696	32	19
3120-00-828-6852	57	20	5360-00-852-0840	294	4
5330-00-828-8639	12	4	5310-00-852-8266	54	47
5330-00-832-8569	173	3		58	29
6220-00-832-8774	79	3		60	19
	84	8	5306-00-853-0324	41	36
5970-00-833-8562	108	6		170	11
5306-00-834-8450	181	18	5325-00-853-2384	139	13
5330-00-838-9188	57	66	5330-00-854-1603	187	23
	58	14	5306-00-857-5672	28	24
9390-00-839-1864	57	35		229	7
5315-00-839-2325	214	28	5360-00-858-6273	28	34
5315-00-839-2326	41	59	5330-00-858-6277	32	8
	175	8	2940-00-858-8178	33	14
	206	36	2940-00-858-8179	33	8
	263	28		33	10
	273	91	5330-00-858-8224	42	1
	289	21		151	34
5315-00-839-5820	289	22	5331-00-859-0396	285	2
5315-00-839-5822	96	3	2910-00-862-6825	37	14
	171	6	5331-00-862-6861	51	17
5310-00-841-2576	42	29	3110-00-862-7671	139	28
	75	7	5305-00-863-1627	233	4
	83	24	5331-00-863-5549	291	17
5330-00-843-7194	30	41	5331-00-865-0404	144	27
	57	24		150	22
2920-00-843-8211	57	31		151	5
4730-00-844-1838	178	47		151	33

CROSS-REFERENCE INDEXES

NATIONAL STOCK NUMBER INDEX

STOCK NUMBER	FIG.	ITEM	STOCK NUMBER	FIG.	ITEM
5331-00-865-0404	154	5	5310-00-905-0762	61	16
	239	15		130	4
5306-00-865-7377	26	25		175	12
2520-00-871-6817	242	15		215	18
5306-00-874-4001	24	24	5310-00-905-5454	69	5
	48	10	4730-00-908-3193	12	5
	162	22	4730-00-908-3195	37	16
	210	1	3120-00-910-3716	223	38
	243	13	5331-00-913-6143	194	9
	293	1		195	10
2530-00-875-8071	181	15	5331-00-913-8119	26	24
2530-00-875-8128	181	2	5331-00-913-8872	23	11
6240-00-877-3405	81	8		24	17
4730-00-877-6298	49	20		24	58
	231	1	5331-00-913-8878	17	1
4730-00-877-8997	38	2	5330-00-914-0703	57	14
	38	43	5331-00-914-3320	164	9
5340-00-879-3056	285	22	5331-00-914-5310	155	7
5305-00-879-8351	151	30	5331-00-914-5316	239	30
	154	17	5331-00-914-5820	194	7
	158	16	5310-00-914-8217	217	27
5310-00-880-7744	41	22		218	26
	41	22	3805-00-915-5430	6	1
5310-00-880-7745	219	1	5970-00-918-5568	57	59
2530-00-881-4967	185	10	5310-00-919-2242	161	20
5310-00-882-8876	42	2	5340-00-919-9389	164	20
5306-00-884-8787	57	39	5330-00-920-6922	17	19
5310-00-889-2528	223	12	5331-00-920-6924	24	39
5305-00-889-2999	190	74		57	10
	233	8		172	8
5305-00-889-3002	83	8		187	18
5330-00-890-2235	24	59	5325-00-920-6925	243	29
5310-00-891-3405	133	21	3110-00-921-0011	139	19
	135	8	5325-00-921-3208	10	1
	171	4	2540-00-922-0262	224	25
5355-00-891-4401	134	17	5340-00-922-3522	182	2
	205	1	5310-00-922-8691	15	17
5342-00-893-7055	195	4	2940-00-923-4154	33	12
3120-00-893-8317	3	17	5331-00-923-6958	10	13
5310-00-894-0660	74	11	5330-00-923-6986	158	7
5360-00-894-7275	137	42	5330-00-923-9945	33	9
4730-00-897-5497	178	49		35	7
	197B	48	4730-00-924-7886	2	7
3120-00-898-4700	155	9		3	29
	155	16		24	50
5325-00-899-1272	63	18		35	4
5307-00-900-5570	266	29		43	5
	273	82		149	31
5331-00-901-7196	29	6		181	29
3110-00-902-1675	133	19		296	14

CROSS-REFERENCE INDEXES

NATIONAL STOCK NUMBER INDEX

STOCK NUMBER	FIG.	ITEM	STOCK NUMBER	FIG.	ITEM
4820-00-925-0076	173	2	5330-00-939-0687	273	42
5940-00-926-0085	120	60	3120-00-939-6689	204	13
5999-00-926-3144	107	3		206	41
5331-00-929-3499	149	15	5331-00-941-3599	285	12
	150	4		297	8
	197	13	5307-00-943-6167	21	14
	247	11		189	18
	248	11		189	39
	249	11		266	22
	250	11		274	38
	251	11	5365-00-944-0863	196	16
	252	11	5330-00-944-5000	140	2
5305-00-929-9442	161	23	5310-00-944-5896	54	39
5330-00-930-3254	36	12		55	23
5306-00-930-5643	204	5		201	3
	247	33		222	13
	248	33		243	25
	249	33	5315-00-944-7035	15	3
	250	33	5331-00-944-8281	26	9
	251	33		156	3
	252	33		157	1
5310-00-930-7013	57	29		190	94
5995-00-930-9107	129	1		190	118
5330-00-930-9407	190	12		190	138
	196	3		195	12
	273	59		196	18
	274	18		197	15
	275	18		239	25
5330-00-931-4533	202	1		247	5
5330-00-931-8048	23	4		248	5
5360-00-932-0761	151	9		249	5
5331-00-932-1053	160	20		250	5
4730-00-933-0727	38	17		251	5
	190	106		252	5
	267	17		253	3
	268	26		255	8
	272	48		256	7
4730-00-933-0816	190	112		257	8
4730-00-935-5355	275	17		260	8
2920-00-936-7121	59	8		273	6
2920-00-936-7122	58	7		274	8
5310-00-938-2013	215	11	5331-00-945-0494	28	79
	223	7		181	33
3110-00-938-5084	143	1	5331-00-945-4465	152	7
5365-00-938-5568	3	10	3110-00-945-8401	138	32
	158	12	5365-00-948-1600	150	9
	160	27		151	12
5305-00-939-0658	205	37	5331-00-948-6482	23	17
5330-00-939-0687	190	61		38	18
	267	20		74	13

CROSS-REFERENCE INDEXES

NATIONAL STOCK NUMBER INDEX

STOCK NUMBER	FIG.	ITEM	STOCK NUMBER	FIG.	ITEM
5331-00-948-6482	89	1	3110-00-949-1438	138	8
	137	21		149	24
	143	24		155	22
	147	12		247	42
	189	8		248	42
	189	25		249	42
	190	4		250	42
	190	4		251	42
	190	4		252	42
	190	128	5310-00-949-9296	161	22
	190	148		292	6
	191	1	5360-00-950-8041	150	18
	193	2	5331-00-950-8217	160	39
	194	3	5360-00-950-8251	18	5
	194	26	5325-00-950-8281	37	4
	195	8	5331-00-952-8007	29	12
	196	12		172	6
	238	15	6220-00-953-4652	79	1
	245	12	5325-00-954-9666	285	15
	246	17	5320-00-956-7355	211	27
	247	40		215	32
	248	40	4730-00-962-4176	273	4
	249	40	5305-00-964-0503	4	3
	250	40	5330-00-966-6614	58	11
	251	40	5331-00-968-5388	285	18
	252	40	4310-00-971-1910	182	3
	255	15	5320-00-971-7870	207	18
	256	14	5310-00-972-0479	215	61
	257	15	5310-00-972-1588	223	13
	261	10	5325-00-972-6825	140	30
	261	16	5330-00-972-7644	57	4
	264	11	5310-00-975-2075	27	2
	265	1		40	7
	265	1	5330-00-976-4695	57	23
	266	1	5360-00-977-0780	172	2
	267	1		294	6
	268	1	5310-00-978-5406	37	20
	269	1		166	27
	270	1		222	25
	271	1	5305-00-978-9370	31	4
	272	1	5310-00-982-6571	161	25
	273	2	5330-00-982-6578	181	7
	274	9	5305-00-984-6191	83	4
	275	13	5310-00-987-1294	21	10
5331-00-948-6924	196	5	2910-00-989-3388	42	11
5330-00-948-9771	164	12	5305-00-989-7434	66	1
4820-00-948-9962	38	13		67	17
	38	31		208	12
5340-00-949-0311	196	16	3110-00-992-1048	164	26
3110-00-949-1438	16	8		165	19

CROSS-REFERENCE INDEXES

NATIONAL STOCK NUMBER INDEX

STOCK NUMBER	FIG.	ITEM	STOCK NUMBER	FIG.	ITEM
5305-00-993-1848	62	22	2530-01-021-4491	174	11
	204	2	2990-01-021-7587	45	5
	289	1	3040-01-021-8143	192	5
2640-00-994-5774	185	2	5330-01-021-9051	144	8
	185	3	5330-01-021-9052	144	4
2920-00-999-2526	57	42	3805-01-021-9100	280	2
5310-00-999-2527	57	2	3805-01-021-9102	279	1
5340-00-999-3230	42	13	3040-01-021-9476	277	6
5331-00-999-5504	24	15	5330-01-021-9878	137	28
5310-00-999-8286	10	2	5330-01-021-9880	156	9
5310-00-999-8287	10	3		164	3
5310-00-999-8288	21	4	5330-01-021-9882	164	13
	50	18	5330-01-021-9883	174	26
	135	4	5330-01-021-9884	174	25
	205	19	5330-01-021-9885	174	7
	205	41	5330-01-021-9887	278	13
	276	4		282	16
5331-00-999-8364	166	32	5330-01-021-9889	277	16
5342-00-999-8389	287	6		280	11
5315-00-999-8416	28	78		281	17
5315-00-999-8417	140	5	5330-01-021-9891	277	11
6620-01-008-1893	49	28		280	7
2815-01-011-2686	16	1		281	12
5340-01-013-1040	190	95	5330-01-021-9897	279	12
	190	114	4320-01-022-0546	237	1
	190	134	5330-01-022-1806	140	1
5305-01-015-6841	12	8	3110-01-022-1814	140	24
	13	13	4320-01-022-3948	236	3
	23	14	3120-01-022-3955	31	40
	36	29	3110-01-022-5378	138	22
	40	11	3110-01-022-5380	139	14
	41	50	3110-01-022-5456	164	14
	133	35	3040-01-022-6199	192	5
	144	5	4730-01-023-8633	30	49
	158	15	5360-01-023-9435	29	39
	166	38	5310-01-023-9757	27	10
	175	3	2910-01-024-0939	31	42
	183	15	2910-01-024-1510	28	94
	205	18	2910-01-024-1512	29	38
	205	40	2910-01-024-2868	31	50
	263	1	2910-01-024-2869	31	32
5310-01-015-7776	29	43	5325-01-024-3727	28	44
	57	65		28	91
5331-01-017-6535	157	10	5305-01-024-4773	31	29
	194	6	5305-01-024-4774	31	52
5365-01-020-5721	36	15	5330-01-024-4862	42	21
2910-01-021-1845	42	20		42	25
	42	30	5365-01-024-5118	31	45
5331-01-021-1906	26	18	5306-01-024-7524	31	61
2530-01-021-4151	174	10	3110-01-024-8521	164	7

CROSS-REFERENCE INDEXES

NATIONAL STOCK NUMBER INDEX

STOCK NUMBER	FIG.	ITEM	STOCK NUMBER	FIG.	ITEM
3110-01-024-8522	164	8	5310-01-045-5588	63	21
3110-01-024-8523	160	23		233	2
3110-01-024-9815	160	22	5365-01-047-0826	162	10
5365-01-024-9868	137	17	5365-01-048-0984	162	7
	245	19	4730-01-048-7874	14	11
	246	15	5331-01-049-1292	38	4
	247	45	4730-01-049-9781	196	22
	248	45	2930-01-050-8012	51	13
	249	45	5310-01-051-2300	15	21
	250	45	5306-01-051-2309	45	4
	251	45	4730-01-051-2312	38	21
	252	45		274	16
5305-01-025-4359	31	63	5340-01-051-2357	178	7
5305-01-026-9518	17	12	5310-01-051-2360	24	57
	24	11		29	33
	35	21		39	3
	42	37		42	16
	133	2		43	9
	160	26		61	15
	180	3		63	22
	205	7		66	7
	295	17		71	2
4720-01-026-9540	273	106		73	8
	BULK	12		75	19
2520-01-028-8096	284	12		130	6
3805-01-029-0492	181	8		197	3
5340-01-029-4590	3	12		205	9
5975-01-029-7710	197B	35		215	16
5120-01-030-1625	301	16		224	20
5120-01-030-1626	301	18		227	5
5365-01-031-8183	137	20		237	13
	143	23		247	20
	194	2		248	20
	194	25		249	20
	195	7		250	20
	196	13		251	20
	238	14		252	20
	245	13		289	9
	246	18		197A	11
	261	11	5307-01-051-2364	43	6
3110-01-031-9372	187	13	4730-01-051-5257	273	101
5365-01-032-7272	138	15		274	23
5315-01-035-1353	298	19	4730-01-051-6765	197B	51
5310-01-036-2719	185	12	5340-01-051-6767	273	10
5330-01-037-0663	82	5		273	23
6220-01-037-5622	79	2	4720-01-051-6773	BULK	10
5330-01-038-7345	30	55	4720-01-051-7602	190	21
5310-01-043-6821	223	24		190	36
	224	11		275	9
5310-01-045-5588	54	14		275	21

CROSS-REFERENCE INDEXES

NATIONAL STOCK NUMBER INDEX

STOCK NUMBER	FIG.	ITEM	STOCK NUMBER	FIG.	ITEM
4730-01-051-7605	190	23	5310-01-058-8071	198	7
	275	8		204	17
	275	23		205	10
4730-01-051-8741	286	1		285	11
4730-01-051-8745	38	19	5940-01-058-9090	77	3
	264	23		77	10
5310-01-052-3924	94	1	4730-01-058-9095	178	52
2940-01-053-0179	153	1		197B	7
3805-01-053-2703	190	6		197B	49
5330-01-053-3872	181	19	2920-01-058-9099	38	10
5940-01-053-4521	99	3		83	27
	99	56		99	18
	197A	6		100	15
2920-01-053-4541	54	48		101	13
2815-01-053-4542	22	8		102	12
5305-01-053-4554	68	2		105	20
4820-01-053-4586	28	59		106	17
	38	55		107	12
4730-01-053-4687	34	1		110	6
	35	1		120	29
2815-01-053-4712	107	13		121	6
	133	25		122	2
	189	11		177	24
	189	30		178	25
	269	9		271	10
2920-01-053-4743	54	43		296	15
2920-01-053-4744	54	7		197B	60
2920-01-053-4745	54	2	4730-01-058-9100	42	8
3040-01-053-4746	54	50		267	13
5330-01-053-4747	54	52	5305-01-058-9101	296	10
5305-01-053-4758	54	11	4730-01-058-9103	176	10
5310-01-053-4777	28	37		178	30
2920-01-053-4782	54	44		286	4
5310-01-053-7312	192	29		296	5
5305-01-053-7366	30	47	5940-01-058-9112	99	2
5330-01-053-7373	160	33		100	29
	174	16		101	2
	243	37		102	2
5310-01-053-7474	139	33		103	12
5340-01-053-8024	197B	56		104	1
2815-01-053-9603	181	31		105	7
5315-01-054-4325	150	15		105	47
5315-01-055-1727	1	16		118	7
4730-01-057-9597	184	9		120	5
5331-01-058-4030	190	48	5940-01-058-9133	100	31
	273	47		102	11
2910-01-058-8070	40	2	4730-01-058-9134	178	12
5310-01-058-8071	41	24	5340-01-058-9143	77	13
	97	5		296	18
	161	4	5325-01-059-0871	117	3

CROSS-REFERENCE INDEXES

NATIONAL STOCK NUMBER INDEX

STOCK NUMBER	FIG.	ITEM	STOCK NUMBER	FIG.	ITEM
5940-01-059-0873	57	47	5320-01-062-5900	209	7
	60	14	2420-01-062-6016	209	6
	105	18		217	4
	105	26		218	12
	132	5	5307-01-062-6108	198	8
5365-01-059-0914	78	4	2530-01-062-6127	285	24
5930-01-059-0930	94	3	5325-01-062-6128	285	26
4730-01-059-5352	35	12	9340-01-062-6129	285	27
	49	1	5306-01-062-7129	223	21
5306-01-059-7174	236	5	2540-01-062-7131	223	25
5315-01-059-7198	137	56		224	12
	139	17	2540-01-062-7132	223	26
5340-01-059-9345	38	56		224	13
	180	13	5315-01-062-7137	149	4
2520-01-059-9381	149	11	4720-01-062-7159	BULK	2
4820-01-059-9398	151	11	5310-01-062-7185	223	28
2520-01-059-9410	148	10		224	15
	149	30		225	20
	150	28	5342-01-062-9902	223	35
5315-01-059-9434	199	11	5310-01-062-9903	214	3
4730-01-059-9435	14	14	5340-01-062-9905	223	5
	183	12		225	17
5306-01-059-9566	145	14	5306-01-062-9927	219	4
	150	23	4730-01-062-9928	273	37
2520-01-060-8624	150	19	2510-01-063-0635	96	2
2530-01-061-1351	197B	27	2510-01-063-0636	96	7
5340-01-061-4018	17	10		134	29
5310-01-061-7921	214	15	5306-01-063-0667	245	8
5310-01-061-8633	21	7	4710-01-063-0673	231	11
	73	10	5342-01-063-0674	38	49
	83	29	5930-01-063-0682	66	6
	218	2		75	18
	220	2	5307-01-063-1419	163	5
5306-01-061-8635	58	30	5305-01-063-1423	62	18
5330-01-061-9380	28	75		215	2
5330-01-061-9382	28	74	5310-01-063-2970	225	2
5310-01-062-0380	31	48	5365-01-063-2978	78	1
3110-01-062-0950	30	40	5310-01-063-2983	223	23
2910-01-062-1354	38	24		224	10
5330-01-062-2852	32	22	5342-01-063-2989	100	11
4730-01-062-5202	38	38	4730-01-063-2990	178	54
5315-01-062-5209	138	6	5342-01-063-2993	189	14
	138	17		189	36
2530-01-062-5318	261	15		190	9
5330-01-062-5887	180	23		191	7
	190	28		231	8
	253	15	4730-01-063-3000	177	14
	273	79	4720-01-063-3002	286	3
	274	5	4730-01-063-3003	180	9
2510-01-062-5891	216	3	4730-01-063-3145	178	58

CROSS-REFERENCE INDEXES

NATIONAL STOCK NUMBER INDEX

STOCK NUMBER	FIG.	ITEM	STOCK NUMBER	FIG.	ITEM
4730-01-063-3145	180	19	4820-01-064-7461	196	14
5360-01-063-4209	134	30		255	13
4730-01-063-4224	157	2		256	12
	190	110		257	13
	273	5	5330-01-064-7462	297	6
4730-01-063-4225	264	20	5330-01-064-7463	297	7
5342-01-063-4236	103	4	4810-01-064-7465	254	1
	229	21	4820-01-064-7477	254	5
2510-01-063-5691	209	8		255	5
5920-01-063-5769	68	5		256	5
5310-01-063-5822	225	19		257	5
2920-01-063-7834	94	4		260	5
4730-01-063-7866	190	22		261	5
5320-01-063-9029	214	11	4820-01-064-7479	257	6
5330-01-063-9839	158	4	4720-01-064-7483	178	56
5930-01-064-1008	225	1	5342-01-064-7512	99	16
5310-01-064-1494	30	54		100	13
5342-01-064-2060	190	45		231	12
	273	28	5315-01-064-7516	148	6
	273	108		149	16
4730-01-064-3790	195	13		150	10
	196	19	5365-01-064-7710	297	4
	239	24	5365-01-064-7711	255	12
	253	2		256	11
	273	72		257	12
	274	36	5365-01-064-7712	255	12
2920-01-064-3809	234	7		256	11
5342-01-064-3819	38	54		257	12
	75	8	5330-01-064-8205	279	25
	98	1	3110-01-064-8236	263	8
	120	31	3110-01-064-8237	263	5
	169	5	5365-01-064-8238	243	40
	176	4	5330-01-064-8247	195	9
	178	16		239	31
	286	12		245	16
	197B	53		246	11
5306-01-064-3842	219	2		247	22
2590-01-064-7381	278	15		248	22
	282	14		249	22
2590-01-064-7382	277	17		250	22
	280	13		251	22
	281	19		252	22
2590-01-064-7383	277	15	2590-01-064-8249	197	10
	280	12		247	15
	281	18		248	15
2590-01-064-7384	279	7		249	15
	279	19		250	15
2590-01-064-7453	296	13		251	15
5360-01-064-7454	296	12		252	15
5330-01-064-7457	297	5	3110-01-064-8250	197	9

CROSS-REFERENCE INDEXES

NATIONAL STOCK NUMBER INDEX

STOCK NUMBER	FIG.	ITEM	STOCK NUMBER	FIG.	ITEM
3110-01-064-8250	247	12	4720-01-065-9094	177	9
	248	12	3110-01-065-9108	40	15
	249	12		41	34
	250	12		133	7
	251	12		175	10
	252	12	5310-01-065-9110	206	33
5342-01-064-8251	247	19		263	29
	248	19	4730-01-065-9111	296	22
	249	19	2520-01-066-0465	135	26
	250	19	3110-01-066-0466	134	12
	251	19		135	3
	252	19		205	20
4810-01-064-8252	247	23		205	42
	248	23	2520-01-066-0467	135	1
	249	23	2520-01-066-0468	134	13
	250	23	5310-01-066-0471	204	15
	251	23	2520-01-066-0477	135	12
	252	23	2520-01-066-0478	134	14
4810-01-064-8259	247	43	2520-01-066-0479	134	23
	248	43	2520-01-066-0480	134	18
	249	43	2520-01-066-0481	205	4
	250	43	2530-01-066-0487	41	41
	251	43	2530-01-066-0489	41	46
	252	43	2530-01-066-0490	40	23
5331-01-064-8275	239	14	5330-01-066-0496	291	42
5331-01-064-8276	245	14	5315-01-066-0498	134	31
	246	13	5360-01-066-0500	205	30
5365-01-064-8298	263	4	5310-01-066-0503	41	7
5365-01-064-8299	263	4	5310-01-066-0506	162	6
5365-01-064-8300	247	35		192	11
	248	35		277	18
	249	35		278	10
	250	35		279	9
	251	35		280	14
	252	35		281	20
5330-01-065-7151	291	36		282	19
5330-01-065-7152	198	14	5310-01-066-0508	41	11
5360-01-065-7155	170	7	2520-01-066-0510	133	13
4720-01-065-9066	197B	11		135	10
2530-01-065-9067	41	58	5305-01-066-0529	41	48
4720-01-065-9075	178	79	2530-01-066-0567	172	9
4720-01-065-9076	176	3	2530-01-066-0572	41	35
3040-01-065-9079	133	6	2530-01-066-0574	41	55
5315-01-065-9083	175	16	5360-01-066-0579	133	39
5315-01-065-9087	133	30	3040-01-066-0581	133	28
	135	21		135	20
2530-01-065-9088	133	26	2920-01-066-0593	77	2
	135	18		77	11
2530-01-065-9089	41	49	4720-01-066-0594	176	13
3040-01-065-9092	175	17	4820-01-066-0611	180	1

CROSS-REFERENCE INDEXES

NATIONAL STOCK NUMBER INDEX

STOCK NUMBER	FIG.	ITEM	STOCK NUMBER	FIG.	ITEM
2590-01-066-0614	285	16	4730-01-066-4586	190	127
5360-01-066-0616	285	5		273	136
5331-01-066-0673	133	27	4720-01-066-4587	BULK	9
	135	16	2520-01-066-4638	137	10
5330-01-066-0675	41	40	3110-01-066-4696	155	29
	74	6	5310-01-066-4698	299	14
5330-01-066-0676	135	11	2590-01-066-4705	263	15
5330-01-066-0681	284	15	5306-01-066-4721	181	30
5310-01-066-0689	54	4		228	1
	67	19	2520-01-066-4723	141	8
5365-01-066-0695	174	3	5340-01-066-4744	28	35
5365-01-066-0696	174	3	2910-01-066-4752	29	11
5315-01-066-1406	147	11	2520-01-066-4755	137	29
5360-01-066-1408	253	5	2520-01-066-4758	137	22
4810-01-066-1410	196	7	5305-01-066-5197	296	7
4810-01-066-1411	197	1	5310-01-066-5275	160	5
5330-01-066-1420	138	11	2590-01-066-5286	14	4
	139	9	5360-01-066-5292	137	31
2590-01-066-1421	148	4	5325-01-066-5293	137	2
2590-01-066-1424	149	23	4730-01-066-7651	274	19
5360-01-066-1427	149	14		275	36
	150	12	4730-01-066-7652	264	19
2590-01-066-1429	148	11		273	14
5360-01-066-1431	151	16	5360-01-066-7680	196	20
5360-01-066-1432	148	8	5360-01-066-7681	196	21
2590-01-066-1433	148	9	4810-01-066-7682	196	17
2590-01-066-1435	148	1	2520-01-066-7705	144	13
2590-01-066-1441	148	3	2520-01-066-7706	144	10
2520-01-066-1442	145	13	4330-01-066-7713	144	22
2520-01-066-1443	145	10	2590-01-066-8446	150	13
2590-01-066-1444	145	16	5365-01-066-8448	150	6
2590-01-066-1445	147	13	5360-01-066-8450	150	8
5360-01-066-1446	149	25	2590-01-066-8451	150	3
2590-01-066-1449	149	22	5310-01-066-8452	150	26
5360-01-066-1450	149	6	2590-01-066-8455	150	24
5310-01-066-1451	166	14	2590-01-066-8460	150	14
5360-01-066-1452	151	14	3110-01-066-9172	144	14
5360-01-066-1454	149	21	3020-01-066-9186	138	2
2590-01-066-1455	147	10		139	4
3120-01-066-2505	15	2	5360-01-066-9187	148	7
2590-01-066-4541	289	19	2520-01-066-9196	143	9
4710-01-066-4544	273	104	5365-01-067-2179	28	57
	274	30		28	66
5315-01-066-4552	198	10		29	8
4710-01-066-4557	275	40		32	32
3120-01-066-4562	299	11	5330-01-067-4682	198	2
5360-01-066-4565	289	26		280	19
5330-01-066-4568	299	12		281	5
2590-01-066-4571	289	17	5330-01-067-5530	202	12
4730-01-066-4586	190	17	3110-01-067-5531	202	13

CROSS-REFERENCE INDEXES

NATIONAL STOCK NUMBER INDEX

STOCK NUMBER	FIG.	ITEM	STOCK NUMBER	FIG.	ITEM
3110-01-067-5532	202	19	5310-01-068-7065	30	2
2520-01-067-5546	139	1		30	56
2520-01-067-5551	138	12		74	9
	139	7		134	6
5330-01-067-5552	138	10		289	15
	139	8	4730-01-068-7122	28	89
3110-01-067-5616	144	9	3040-01-068-7123	29	36
2520-01-067-5619	139	36	4730-01-068-7124	30	48
	143	5	2920-01-068-7126	60	27
	164	36	4710-01-068-7132	23	1
2520-01-067-5620	139	35	2920-01-068-7138	58	41
	143	4	2920-01-068-7139	58	40
	164	37	2920-01-068-7140	58	39
3040-01-067-5649	16	5	2920-01-068-7177	59	2
5310-01-067-5658	190	111	5315-01-068-7180	222	16
2530-01-067-5667	28	45	5360-01-068-7181	30	58
5360-01-067-5668	28	46	2920-01-068-7182	59	9
4730-01-067-5669	36	3	5330-01-068-7343	28	54
4730-01-067-5671	36	26	5360-01-068-9641	175	15
4720-01-067-5672	35	2	5305-01-068-9704	30	57
3040-01-067-5675	16	14	3020-01-068-9705	28	81
5365-01-067-5678	143	13	3020-01-068-9706	28	80
5330-01-067-5724	23	5	3040-01-068-9707	28	72
5330-01-067-5727	14	7	3040-01-068-9709	31	26
5330-01-067-5728	49	31	5315-01-068-9711	28	64
5330-01-067-5729	15	19		30	46
5330-01-067-7997	155	27	3110-01-068-9716	28	71
3040-01-067-8011	28	62	5305-01-068-9719	29	21
5315-01-067-8066	28	86		30	50
	32	44	4710-01-068-9728	14	15
5330-01-067-8071	143	16	4730-01-068-9756	190	35
5306-01-068-0039	142	20		275	11
5306-01-068-1108	170	6		275	20
2520-01-068-1109	137	3	5315-01-068-9758	29	45
2815-01-068-1729	16	22	4310-01-068-9775	30	59
5940-01-068-1879	103	11	5315-01-068-9780	28	82
	103	22	2815-01-068-9783	36	6
	104	7	2815-01-068-9784	36	2
	115	3	2540-01-068-9795	202	5
5342-01-068-2768	149	3	5330-01-068-9824	29	30
5342-01-068-2769	149	27	2815-01-068-9848	5	6
5305-01-068-3156	71	1	6145-01-069-0746	197A	3
3120-01-068-3473	187	22	5315-01-069-0755	137	5
5315-01-068-5889	144	11		137	44
3120-01-068-5968	58	28	4730-01-069-0768	183	14
4320-01-068-6066	187	25	4730-01-069-0859	184	3
5342-01-068-6089	36	4	5306-01-069-0877	30	53
5342-01-068-6100	36	27	5365-01-069-0882	16	11
5331-01-068-6104	1	6	5330-01-069-0992	13	3
3010-01-068-6996	58	3	5306-01-069-1382	28	16

CROSS-REFERENCE INDEXES

NATIONAL STOCK NUMBER INDEX

STOCK NUMBER	FIG.	ITEM	STOCK NUMBER	FIG.	ITEM
5306-01-069-1382	43	8	5940-01-087-0285	116	3
2530-01-069-1391	40	9		117	2
5315-01-069-1410	30	42		120	11
5315-01-069-1414	29	40		120	51
5360-01-069-1433	138	1		197A	1
5330-01-069-1478	183	19	3120-01-087-7063	187	12
5365-01-069-1502	202	21	5340-01-088-2385	44	1
	202	21	5310-01-088-2490	218	18
5340-01-069-3233	75	23	5331-01-088-6106	143	30
5342-01-070-1592	24	6		197	22
	54	25	5325-01-088-7468	108	10
5360-01-070-2809	174	14	5305-01-090-2241	291	22
5340-01-071-2047	226	7	5340-01-090-2356	287	2
4820-01-073-0080	20	10	5310-01-090-7021	61	5
	159	1	5365-01-091-1407	169	11
5320-01-073-8087	211	8		196	25
4730-01-074-0907	275	2	2930-01-093-3600	158	8
5365-01-074-3568	223	36	2920-01-093-4009	58	36
3110-01-075-7214	164	15	2920-01-093-4035	58	15
5330-01-076-6172	82	7	4710-01-093-6885	38	22
3120-01-076-9278	24	37	4720-01-093-7328	38	7
4730-01-078-7837	247	39		38	44
	248	39	4720-01-093-7329	38	33
	249	39	4720-01-093-7330	38	15
	250	39		38	41
	251	39	4720-01-093-7331	BULK	3
	252	39	2930-01-093-7336	51	20
4820-01-079-1486	187	17	5342-01-093-7394	28	95
5365-01-079-1624	241	8	3020-01-093-7408	137	41
5325-01-079-6770	199	10	5330-01-093-7888	2	16
3040-01-081-2752	187	3	6220-01-093-7946	62	27
2530-01-081-3213	181	14	5331-01-093-8484	143	20
4310-01-082-2263	181	22	5330-01-093-8485	140	19
2590-01-082-3145	225	13	6680-01-093-8881	153	7
4310-01-083-1999	181	13	2990-01-093-9236	45	1
2590-01-083-2507	172	4	5999-01-093-9472	98	10
3120-01-083-9181	181	34	4730-01-093-9537	181	27
3120-01-085-3039	57	50	5330-01-094-0368	140	12
5325-01-085-3125	187	24	2990-01-094-0700	40	18
5306-01-085-3661	145	20	5330-01-094-1895	35	14
2530-01-086-4287	171	5	4820-01-094-1910	251	1
5360-01-086-7717	172	3	2990-01-094-1914	35	15
5940-01-087-0285	99	48	4730-01-094-1915	35	18
	100	2	3830-01-094-1932	278	5
	104	3	3830-01-094-1933	230	17
	104	10	4820-01-094-1949	256	1
	105	19	2815-01-094-1957	21	1
	105	43	3010-01-094-1959	140	14
	113	2	5325-01-094-2429	141	6
	114	2	5325-01-094-2430	139	37

CROSS-REFERENCE INDEXES

NATIONAL STOCK NUMBER INDEX

STOCK NUMBER	FIG.	ITEM	STOCK NUMBER	FIG.	ITEM
2520-01-094-2803	165	1	3805-01-094-6923	273	73
5310-01-094-2893	53	2		274	35
	283	3	3805-01-094-6924	240	8
4820-01-094-3043	241	1	3830-01-094-6926	232	17
4820-01-094-3090	248	1	3020-01-094-6990	140	10
3020-01-094-3108	137	54	3020-01-094-7073	166	35
2590-01-094-3123	282	7	9390-01-094-7076	41	19
2590-01-094-3201	133	24	5305-01-094-7378	229	14
	135	19		232	18
5360-01-094-3211	140	16	5305-01-094-7379	133	36
5365-01-094-3237	28	99		175	4
5330-01-094-3660	140	8	4730-01-094-7469	264	3
5945-01-094-4116	67	16		264	8
3120-01-094-4416	137	25		266	7
	139	43		266	16
4720-01-094-4457	286	18		268	4
4820-01-094-4490	240	1		272	28
3020-01-094-4590	139	15		272	33
3010-01-094-4648	140	13		272	60
3830-01-094-4667	239	34		273	19
4710-01-094-4687	177	19		273	35
4710-01-094-4688	177	10		274	12
4720-01-094-5152	180	18		274	25
4720-01-094-5153	286	2	3830-01-094-7513	211	15
4720-01-094-5155	178	5		215	64
4720-01-094-5156	178	4	3020-01-094-7530	141	5
4720-01-094-5157	178	26	3895-01-094-7535	281	7
	286	13	5330-01-094-8058	49	24
3805-01-094-5194	165	12	4320-01-094-8222	239	17
3805-01-094-5195	295	9	6105-01-094-8228	232	9
3805-01-094-5239	240	5	5305-01-094-8679	223	3
4320-01-094-5254	240	3		224	27
4820-01-094-5260	249	1		225	15
4820-01-094-5261	252	1	5310-01-094-8702	28	100
3020-01-094-5263	139	38	5330-01-094-8703	161	6
3020-01-094-5264	138	19	5330-01-094-8707	295	3
3040-01-094-5350	135	15	5330-01-094-8709	208	5
5330-01-094-6081	218	16	5330-01-094-8710	208	9
5325-01-094-6106	80	6	5310-01-094-8810	38	11
	211	26		38	46
5360-01-094-6117	28	53		41	37
4810-01-094-6254	169	14		42	23
4720-01-094-6263	177	5		46	4
4720-01-094-6264	177	6		47	8
5995-01-094-6412	126	1		48	2
3805-01-094-6415	240	12		49	5
3040-01-094-6428	143	3		51	5
3830-01-094-6431	241	5		63	8
4320-01-094-6432	241	2		66	12
2520-01-094-6514	156	1		70	11

CROSS-REFERENCE INDEXES

NATIONAL STOCK NUMBER INDEX

STOCK NUMBER	FIG.	ITEM	STOCK NUMBER	FIG.	ITEM
5310-01-094-8810	75	2	5310-01-094-9906	243	34
	78	3		292	1
	134	2	5310-01-094-9907	160	13
	135	13	5310-01-094-9908	161	13
	160	25	5355-01-094-9948	263	20
	161	12	5355-01-094-9949	263	9
	177	8	3110-01-094-9954	137	47
	178	15	4810-01-094-9956	75	24
	189	13	5330-01-095-0034	160	19
	194	17	5330-01-095-0035	138	29
	203	4	4730-01-095-0037	226	14
	206	32	4730-01-095-0075	264	4
	210	5		264	7
	217	6		266	5
	218	6		266	15
	220	13		268	5
	230	11		272	5
	230	20		272	10
	245	2		272	15
	246	22		272	21
	254	8		272	29
	255	18		272	34
	256	17		272	62
	257	17		273	17
	258	1		273	32
	259	2		274	13
	261	19		274	26
	265	24	3020-01-095-0208	138	31
	266	21	5360-01-095-0286	295	16
	267	9	2540-01-095-0290	219	8
	268	12	5365-01-095-0301	285	10
	269	18	5365-01-095-0304	217	12
	270	12		218	4
	271	5	4820-01-095-0788	253	1
	272	24	5930-01-095-0803	232	7
	273	26	4730-01-095-0833	266	4
	274	6		268	7
5306-01-094-9106	15	14		272	31
	24	20		272	36
	35	20	4730-01-095-0834	264	2
	45	9		273	20
	49	10		273	34
	158	10		274	15
	169	9	4730-01-095-0837	178	62
	217	5		286	5
	218	14	4720-01-095-0839	296	17
	262	13	3830-01-095-0924	211	19
	273	75	2540-01-095-0925	226	16
	274	37	4820-01-095-0929	255	7
5330-01-094-9144	BULK	21		257	7

CROSS-REFERENCE INDEXES

NATIONAL STOCK NUMBER INDEX

STOCK NUMBER	FIG.	ITEM	STOCK NUMBER	FIG.	ITEM
4820-01-095-0929	260	7	5310-01-095-1526	23	8
2530-01-095-0930	196	23		65	5
4820-01-095-1032	250	1		183	2
4820-01-095-1033	257	1		219	6
4820-01-095-1034	260	1	5310-01-095-1537	298	15
4820-01-095-1035	255	1		299	7
2540-01-095-1105	219	9	5330-01-095-1545	166	26
5306-01-095-1235	187	2	5355-01-095-1574	225	3
5306-01-095-1236	195	11	5355-01-095-1576	263	21
5306-01-095-1237	189	5	5355-01-095-1577	263	18
	189	34	5355-01-095-1578	263	19
	266	18	5355-01-095-1579	263	6
	271	6	3805-01-095-1693	161	21
5306-01-095-1238	28	5		278	23
	237	14		282	6
5305-01-095-1239	226	11	4320-01-095-1694	237	17
5305-01-095-1243	295	10	5360-01-095-1831	247	6
5310-01-095-1247	229	9		248	6
5310-01-095-1249	48	9		249	6
5330-01-095-1251	161	15		250	6
	162	23		251	6
5330-01-095-1252	160	30		252	6
5330-01-095-1253	278	4	5360-01-095-1833	149	8
5331-01-095-1254	295	4	5360-01-095-1834	156	5
5331-01-095-1255	187	4	5325-01-095-1835	291	41
5330-01-095-1257	295	7	5330-01-095-2000	165	25
5330-01-095-1258	291	18	5330-01-095-2001	165	24
5330-01-095-1259	291	5	4820-01-095-2016	232	2
5355-01-095-1263	263	12	4730-01-095-2034	180	8
5355-01-095-1264	263	17	2530-01-095-2074	161	39
3120-01-095-1267	295	14	2530-01-095-2075	160	14
3120-01-095-1268	133	5	3830-01-095-2089	240	2
	175	6	3020-01-095-2090	137	40
	291	9	5330-01-095-2299	35	16
5360-01-095-1290	237	22	5305-01-095-3292	46	14
5340-01-095-1294	239	27	5310-01-095-3326	280	21
5340-01-095-1297	217	9	5310-01-095-3327	160	9
	218	8		192	27
5365-01-095-1301	291	6	5310-01-095-3328	161	5
5365-01-095-1303	292	10	5310-01-095-3329	298	9
5365-01-095-1304	160	36	5310-01-095-3330	149	29
5365-01-095-1305	192	8	5310-01-095-3347	263	3
5365-01-095-1306	237	21	5310-01-095-3348	63	6
5365-01-095-1307	278	22		206	15
	282	5		230	4
5365-01-095-1309	292	9	3120-01-095-3372	161	29
4320-01-095-1449	155	1	3120-01-095-3374	139	41
5306-01-095-1486	56	3		143	8
5306-01-095-1496	284	19	4720-01-095-3441	169	4
5310-01-095-1524	187	32	4720-01-095-3446	BULK	4

CROSS-REFERENCE INDEXES

NATIONAL STOCK NUMBER INDEX

STOCK NUMBER	FIG.	ITEM	STOCK NUMBER	FIG.	ITEM
2530-01-095-3504	161	32	3120-01-095-5786	291	14
	162	17		291	32
2910-01-095-3505	226	12	3120-01-095-5787	291	39
5310-01-095-3508	197	6	3120-01-095-5788	198	1
	247	18		280	20
	248	18		281	6
	249	18	3120-01-095-5789	161	10
	250	18		162	24
	251	18	3120-01-095-5791	198	15
	252	18		291	12
2540-01-095-3656	223	10		291	31
5305-01-095-3964	299	5	3120-01-095-5803	139	27
5305-01-095-3965	83	28	4720-01-095-5844	180	15
5310-01-095-4012	166	4	5330-01-095-5849	160	15
5310-01-095-4016	219	5	4330-01-095-5850	285	13
3120-01-095-4063	243	28	5310-01-095-5910	38	53
3120-01-095-4064	198	30		118	10
5325-01-095-4320	240	11		134	7
5365-01-095-4333	243	6	3040-01-095-6074	232	6
5305-01-095-4612	298	13	5360-01-095-6078	239	12
	299	27	5340-01-095-6092	189	6
2540-01-095-4621	232	1		189	35
5310-01-095-4631	2	3	5340-01-095-6093	266	23
	55	22	5365-01-095-6108	205	32
	78	9	5365-01-095-6109	198	31
	84	2	5365-01-095-6115	223	29
	202	34	5365-01-095-6116	293	12
	235	4	5305-01-095-6337	93	1
	291	34		265	14
	293	29	3120-01-095-6458	291	15
5310-01-095-4636	198	25	5340-01-095-6838	160	16
	267	21	5325-01-095-6866	164	27
	268	32	5360-01-095-8226	239	22
	270	25	5360-01-095-8227	150	7
5340-01-095-4700	181	26	5365-01-095-8241	238	5
4320-01-095-4793	244	1	5310-01-095-8406	150	9
2520-01-095-4794	240	6		151	12
3020-01-095-4876	243	24	3120-01-095-8442	291	27
2540-01-095-4990	230	13	5315-01-095-8486	281	4
5340-01-095-5004	217	33	5330-01-095-8509	KIT	
5340-01-095-5005	211	16	5325-01-095-8663	137	48
5365-01-095-5011	196	4	2540-01-095-8665	230	1
5365-01-095-5019	239	28	5365-01-095-8676	187	6
5365-01-095-5021	239	33	5365-01-095-8677	237	10
5365-01-095-5027	240	10	5365-01-095-8679	238	4
5977-01-095-5206	187	8	5365-01-095-8680	291	7
5306-01-095-5684	246	20	5365-01-095-8681	291	8
5306-01-095-5695	160	12	2540-01-095-8773	230	6
5305-01-095-5696	297	2		230	14
5310-01-095-5730	214	27	5340-01-095-9491	178	89

CROSS-REFERENCE INDEXES

NATIONAL STOCK NUMBER INDEX

STOCK NUMBER	FIG.	ITEM	STOCK NUMBER	FIG.	ITEM
5315-01-096-0203	299	21	4140-01-097-4340	229	1
5340-01-096-0364	230	7	6680-01-097-6328	37	5
5307-01-096-0510	167	15	5331-01-097-6618	194	23
3120-01-096-1325	243	19	5310-01-097-6720	96	10
9390-01-096-2252	41	14		200	9
5365-01-096-2883	243	6		210	2
3110-01-096-3130	166	7		216	12
3120-01-096-3132	163	3		217	17
3120-01-096-3134	243	26		218	30
5315-01-096-3207	161	26		221	4
5315-01-096-3211	151	27		245	21
9390-01-096-3473	189	16		246	2
	189	31	5306-01-097-6744	238	11
5340-01-096-3476	160	6	2510-01-097-6745	226	17
5365-01-096-4287	197	7	2530-01-097-6758	285	9
	247	17	5935-01-097-7239	99	40
	248	17		100	24
	249	17	5306-01-097-7874	19	4
	250	17	5306-01-097-7875	174	12
	251	17	5305-01-097-7907	222	7
	252	17	5310-01-097-7969	293	19
4820-01-096-4417	247	1		293	20
3040-01-096-4424	162	1	3110-01-097-8104	141	1
5305-01-096-4550	103	2	3110-01-097-8105	244	21
	203	22	3120-01-097-8115	197	21
	207	25		247	8
	215	17		248	8
	227	1		249	8
5365-01-096-4626	219	20		250	8
5340-01-096-4743	164	30		251	8
5360-01-096-4996	247	41		252	8
	248	41	5305-01-097-8184	187	19
	249	41	3120-01-097-8288	165	15
	250	41	3120-01-097-8289	291	10
	251	41	5315-01-097-8383	243	9
	252	41	5315-01-097-8386	161	33
2540-01-096-5001	219	7	6105-01-097-8661	229	16
3020-01-096-5743	140	10	5310-01-097-8953	243	41
5310-01-096-6183	277	1	5310-01-097-8955	195	2
5310-01-096-6980	198	31		273	93
5310-01-096-6989	239	11	5340-01-097-9213	38	27
3120-01-096-7027	160	17	5305-01-097-9389	67	12
5340-01-096-7215	161	24	5310-01-097-9416	206	14
3120-01-096-7403	160	18	3120-01-097-9506	161	8
6150-01-097-2001	98	5	5935-01-097-9974	77	4
5940-01-097-3578	101	12	3110-01-098-0000	54	32
	102	10	4730-01-098-0132	49	21
	104	5	5310-01-098-0624	215	46
	104	12		220	12
	109	6		297	12

CROSS-REFERENCE INDEXES

NATIONAL STOCK NUMBER INDEX

STOCK NUMBER	FIG.	ITEM	STOCK NUMBER	FIG.	ITEM
5310-01-098-0625	190	25	3120-01-100-9047	161	19
5310-01-098-0634	21	12		161	35
	63	5	3110-01-100-9048	187	15
	66	10	3120-01-100-9049	161	17
	203	21		161	37
	207	3	4320-01-100-9050	235	8
	215	19	5306-01-100-9052	238	9
	215	36	3120-01-101-5089	57	5
	224	28	5305-01-101-6024	247	2
	227	2		248	2
3110-01-098-1877	160	37		249	2
5305-01-098-3111	215	15		250	2
5330-01-098-3181	167	17		251	2
3120-01-098-3233	291	26		252	2
5330-01-098-3458	BULK	18	5310-01-102-2477	37	19
2520-01-098-3978	276	1		163	9
2530-01-098-4682	160	2		166	28
3120-01-098-7289	295	15		222	19
4310-01-098-7372	237	16		242	4
6150-01-098-8914	58	20		270	16
5995-01-098-9330	103	20		277	25
	104	6		291	23
	104	8		299	15
	113	3	5330-01-102-3252	22	5
	114	3	5331-01-102-4354	28	12
	115	2	2640-01-103-3631	185	1
2530-01-098-9714	160	2	3120-01-103-3645	197B	8
3120-01-099-0025	291	47		197B	31
5315-01-099-0059	263	27	5307-01-103-3673	30	39
	289	8	2990-01-103-3684	29	37
5340-01-099-0109	12	10	4720-01-103-3697	BULK	5
5340-01-099-1434	215	51	4720-01-103-3700	44	6
5325-01-099-1677	219	21		BULK	25
6110-01-099-2917	54	16	4730-01-103-3727	10	14
5325-01-099-3690	189	15		38	37
	189	29	4710-01-103-6624	23	6
4720-01-099-3711	13	10	5330-01-103-6782	29	3
2540-01-099-3746	232	3	5940-01-103-6803	58	37
2930-01-099-4405	54	41	2520-01-103-6812	137	7
5330-01-099-4985	232	14		138	3
5340-01-099-5807	217	13		139	5
3040-01-099-7354	161	3	2990-01-103-6817	3	28
3110-01-099-8007	54	21	5365-01-103-7156	31	33
3120-01-099-9066	291	16	5365-01-103-7157	31	14
2530-01-100-0936	160	8		31	35
5310-01-100-2067	82	8	6220-01-104-1122	81	9
5325-01-100-5239	205	21	4820-01-104-5111	42	32
5340-01-100-5373	161	14	5310-01-105-1863	214	25
5360-01-100-5378	149	9	4820-01-105-2265	42	33
5330-01-100-9046	139	25	5365-01-105-3100	239	8

CROSS-REFERENCE INDEXES

NATIONAL STOCK NUMBER INDEX

STOCK NUMBER	FIG.	ITEM	STOCK NUMBER	FIG.	ITEM
2910-01-105-3610	31	49	5342-01-116-1312	24	42
5315-01-105-7584	270	17	5342-01-116-3799	24	43
5360-01-105-9599	31	47	2815-01-116-5920	8	5
5315-01-106-0333	28	88	5306-01-116-9622	18	1
5310-01-106-1139	69	4		27	7
5940-01-106-3258	62	14		159	6
	63	25	5330-01-117-9336	KIT	
5330-01-106-3704	239	10	5930-01-118-6366	65	6
4730-01-106-4024	28	68	3110-01-119-1128	29	41
	28	76	5306-01-119-1758	222	23
4730-01-106-7246	49	30	2815-01-119-2241	5	5
	273	69	5999-01-119-4109	91	7
	275	30		99	4
5306-01-106-8225	39	2		99	28
5305-01-107-3526	24	7		120	7
5310-01-107-3590	1	3		120	57
	56	2	5310-01-120-1443	12	11
5330-01-107-3603	30	52		174	13
5315-01-107-3758	31	53	5940-01-121-0365	113	4
5360-01-107-3891	42	34		116	2
5340-01-107-4130	158	3	5120-01-122-6012	301	26
5330-01-107-4168	28	70	5306-01-123-0891	228	5
	30	8	2520-01-123-4910	244	6
5315-01-107-4226	3	27	5120-01-123-5881	301	71
5305-01-107-4621	31	21	5330-01-123-6209	284	13
5305-01-107-5161	143	22	6635-01-124-1771	301	67
	298	2	5310-01-124-2054	225	8
3040-01-107-8262	29	44	5365-01-124-2945	196	27
5305-01-108-0649	32	14		196	30
5315-01-108-1232	28	52		197	14
5310-01-109-6753	216	9		239	2
	245	5		247	29
	246	3		248	29
2930-01-110-6440	46	3		249	29
4730-01-111-1383	197A	13		250	29
4730-01-111-1752	197A	10		251	29
2920-01-112-2687	57	22		252	29
9390-01-112-3500	57	6		261	13
	57	19	2815-01-125-5535	27	6
	57	51	3040-01-125-5536	27	1
5940-01-112-9746	224	6	2815-01-125-5544	2	6
5945-01-113-1811	57	32	2815-01-125-9819	2	17
5977-01-113-2899	57	62	4730-01-126-4892	15	18
4730-01-113-5283	197A	8	3020-01-126-8956	27	11
5977-01-114-4948	57	54	2815-01-126-9995	10	15
4730-01-115-0863	197A	18	5930-01-127-3583	197B	34
5340-01-115-3548	57	7	5330-01-127-8574	49	12
	57	18	5306-01-127-9361	1	21
	57	52		143	19
5310-01-116-1212	55	17		200	3

CROSS-REFERENCE INDEXES

NATIONAL STOCK NUMBER INDEX

STOCK NUMBER	FIG.	ITEM	STOCK NUMBER	FIG.	ITEM
5306-01-127-9361	243	1	4710-01-143-2951	24	40
	273	124	4730-01-143-4326	184	10
	275	28	2910-01-143-4403	24	36
	297	13	4710-01-143-4447	24	46
	197B	47	4730-01-143-9017	190	103
6220-01-128-0087	82	6	5330-01-144-0406	KIT	
3120-01-128-1114	3	18	6150-01-144-1567	98	7
5330-01-128-4130	4	21	2590-01-144-1568	98	6
5330-01-128-4137	2	1	5331-01-144-2252	247	28
4710-01-128-4741	17	6		248	28
4730-01-128-5831	190	87		249	28
	190	124		250	28
	190	144		251	28
5330-01-128-6854	KIT			252	28
5330-01-128-8991	BULK	20		254	3
5330-01-129-2545	4	19		255	3
4710-01-129-5674	17	13		256	3
3110-01-129-5876	184	5		257	3
3110-01-129-5877	184	4		260	3
2990-01-129-5915	3	1		261	3
5330-01-129-5916	3	3	2920-01-144-8803	57	1
5342-01-129-5917	10	9		57	1
5310-01-130-0611	4	10	2520-01-144-9236	172	7
5950-01-130-5209	57	43	5340-01-145-1298	235	7
3120-01-130-9116	8	11	5310-01-146-1169	46	12
5970-01-131-7929	57	61	5310-01-146-1218	17	9
5315-01-132-1188	3	26	6160-01-146-4437	97	1
5330-01-132-2201	50	20	5306-01-146-4525	36	28
6350-01-132-4022	15	8	2815-01-146-4526	10	27
5342-01-132-4704	57	8	4720-01-146-5898	BULK	23
5310-01-132-5309	229	13	4820-01-146-5933	31	43
	232	15	6250-01-146-6909	99	5
5306-01-134-5738	205	36		99	27
5977-01-137-3419	57	56		120	6
5970-01-137-3420	57	58	7690-01-146-6911	91	15
2920-01-138-7045	57	17	3040-01-146-7966	40	10
4310-01-139-4814	181	1	3040-01-146-7967	41	57
2910-01-139-4900	27	12	2540-01-146-8908	41	12
2815-01-140-4222	4	4	5365-01-147-0083	51	25
4920-01-140-7569	44	14	4820-01-147-1309	31	46
2910-01-140-8212	31	58		32	3
2910-01-141-0911	37	1	3040-01-147-1360	28	90
2930-01-141-2847	46	2	2910-01-147-1376	29	28
4710-01-141-8694	24	44	2930-01-147-1377	48	4
2940-01-142-2642	42	31	3805-01-147-1409	47	11
2910-01-142-2643	42	35	5365-01-147-1450	31	36
4720-01-143-1405	184	12	2510-01-147-2251	1	17
2530-01-143-1484	182	1	2510-01-147-2252	1	7
4710-01-143-2949	184	11	2815-01-147-2253	13	2
4710-01-143-2950	24	45	2910-01-147-3000	28	73

CROSS-REFERENCE INDEXES

NATIONAL STOCK NUMBER INDEX

STOCK NUMBER	FIG.	ITEM	STOCK NUMBER	FIG.	ITEM
2910-01-147-3001	30	51	5340-01-148-7562	46	8
2990-01-147-3004	24	53	6220-01-148-7953	84	5
2930-01-147-4182	47	10	2520-01-148-8159	203	19
2540-01-147-4183	48	6	2520-01-148-8160	149	17
2540-01-147-4184	48	5	3020-01-148-8335	52	3
2920-01-147-4276	53	15	6210-01-148-9022	62	8
5310-01-147-5110	183	7		63	10
3040-01-147-5481	29	42		64	3
2930-01-147-5533	47	9		65	9
4710-01-147-6389	12	7	6210-01-148-9034	62	21
5340-01-147-6397	18	3		197B	24
3040-01-147-6412	51	8	3040-01-148-9427	137	57
3040-01-147-6465	49	25	3040-01-148-9428	138	33
5340-01-147-6712	203	10	2590-01-148-9536	14	9
5340-01-147-6713	203	23	2590-01-148-9537	14	6
5340-01-147-6714	155	8	5340-01-148-9802	51	7
5340-01-147-7948	2	14	5340-01-148-9803	51	9
2520-01-147-8015	137	30	4320-01-149-1234	155	14
3040-01-147-8019	5	12	3040-01-149-1236	156	6
5340-01-147-8216	46	13	2520-01-149-1853	203	11
5340-01-147-8217	48	8	2520-01-149-1854	137	43
3020-01-147-9299	47	12	3040-01-149-1887	139	16
3020-01-147-9352	7	6	5920-01-149-3063	67	9
5310-01-148-0249	41	9		68	1
5360-01-148-0305	31	44	2520-01-149-3341	138	5
	32	4	2520-01-149-3462	137	39
4720-01-148-1456	51	3	3010-01-149-3472	137	38
2940-01-148-1478	33	7	4820-01-149-3783	172	5
3020-01-148-1484	51	23	2930-01-149-3805	47	14
2815-01-148-2595	8	1	2815-01-149-4016	3	14
4710-01-148-2662	49	15	5977-01-149-4166	91	9
3040-01-148-2816	28	85	6210-01-149-4171	62	19
5940-01-148-3547	62	17		197B	23
3020-01-148-3798	5	1	5310-01-149-4410	50	5
5330-01-148-5891	28	56	5340-01-149-4421	28	50
	28	67	5340-01-149-4427	99	22
	29	7		102	16
	32	33		122	12
	196	26	5340-01-149-4428	98	2
	196	31	5995-01-149-4967	100	28
	239	3	2990-01-149-5010	28	96
	247	30	3040-01-149-5043	3	32
	248	30		3	33
	249	30	4730-01-149-5082	38	34
	250	30	5935-01-149-5165	81	7
	251	30		99	9
	252	30		99	35
	261	12		105	11
5340-01-148-7396	16	21		105	46
5315-01-148-7542	91	18		106	5

CROSS-REFERENCE INDEXES

NATIONAL STOCK NUMBER INDEX

STOCK NUMBER	FIG.	ITEM	STOCK NUMBER	FIG.	ITEM
5935-01-149-5165	106	22	5340-01-150-5997	28	55
	106	27	5935-01-150-8322	127	3
	114	5	5935-01-150-8323	70	8
	120	10		105	42
	120	41		105	53
	120	54		107	7
5340-01-149-5446	157	5		108	4
5340-01-149-5988	38	51		109	4
2930-01-149-6719	49	13		119	3
3020-01-149-6768	155	18		120	14
2590-01-149-6785	203	17		120	43
5935-01-149-6997	81	15		121	3
	91	6		124	4
	99	11		125	4
	105	8	5999-01-150-8808	70	7
	110	3		81	5
	111	3		99	7
	120	15		99	33
	120	42		100	8
	123	3		100	19
5315-01-149-7833	145	19		101	8
2910-01-149-7860	44	3		103	8
2910-01-149-7900	30	21		103	16
2910-01-149-7901	28	4		104	14
2910-01-149-7902	28	6		105	12
4710-01-149-8461	49	3		105	29
5970-01-149-8472	91	11		105	44
4720-01-149-8949	49	19		106	4
5340-01-149-9717	81	1		106	20
5340-01-149-9730	91	2		106	25
2910-01-150-0426	30	5		108	2
2910-01-150-0427	30	10		109	2
2910-01-150-0921	28	39		114	7
4710-01-150-0973	154	9		118	3
4710-01-150-0974	154	12		119	5
4710-01-150-0975	154	16		120	3
4710-01-150-0976	154	22		120	39
5340-01-150-1278	78	8		120	52
5340-01-150-1279	78	7		121	5
5340-01-150-1544	24	49		124	3
2910-01-150-3758	30	17		125	3
2940-01-150-3865	156	14		127	2
3040-01-150-3940	133	1	5330-01-150-9797	203	16
6680-01-150-4097	167	8	5340-01-150-9807	2	4
2930-01-150-4923	53	5	5340-01-150-9809	48	3
3020-01-150-5427	166	2	5340-01-151-1088	1	15
3020-01-150-5428	174	9	5315-01-151-1101	137	34
3010-01-150-5434	137	8		139	3
	138	4	5315-01-151-1102	137	14
	139	6	5315-01-151-1103	137	13

CROSS-REFERENCE INDEXES

NATIONAL STOCK NUMBER INDEX

STOCK NUMBER	FIG.	ITEM	STOCK NUMBER	FIG.	ITEM
5340-01-151-2578	29	22	5340-01-151-9964	99	20
5340-01-151-2579	144	26		106	16
2520-01-151-2638	140	29		108	8
3040-01-151-2660	30	18		120	24
5340-01-151-3306	144	7	5995-01-152-0014	112	1
2520-01-151-3421	142	3	5305-01-152-0589	1	12
2520-01-151-3422	140	9	5330-01-152-0601	287	3
3040-01-151-3438	140	17		287	3
2530-01-151-3787	91	16	5365-01-152-0615	142	7
2590-01-151-3788	91	13		142	13
6150-01-151-3932	111	1	5305-01-152-2589	81	11
5995-01-151-3936	119	1		85	5
2520-01-151-3980	137	4		205	14
3040-01-151-3994	144	12		215	58
3040-01-151-3995	162	4	4730-01-152-2666	20	8
3040-01-151-3996	161	28		159	3
5325-01-151-4165	203	1	4720-01-152-2667	157	3
5999-01-151-4443	91	1	5935-01-152-2677	83	19
5930-01-151-4768	90	3		99	49
5930-01-151-4769	87	2		105	40
3040-01-151-5646	31	5		105	54
2910-01-151-5705	28	2		106	6
4710-01-151-5979	44	13		106	28
5305-01-151-6090	91	12		107	8
5995-01-151-6310	128	1		118	2
5995-01-151-6311	91	4		120	13
5995-01-151-6312	93	5		120	45
5995-01-151-6315	100	4		127	4
	102	9	5995-01-152-3050	110	1
	112	3	5315-01-152-4258	138	9
2940-01-151-6375	33	4	5340-01-152-4541	4	8
6220-01-151-7037	81	12	5365-01-152-4550	63	11
3130-01-151-7375	139	42		64	4
5340-01-151-7395	50	21	5995-01-152-5087	131	1
4710-01-151-7866	142	15	3020-01-152-5213	140	15
4730-01-151-7957	51	2	6220-01-152-5339	62	9
4720-01-151-8127	12	6	2940-01-152-5584	94	8
5310-01-151-8350	14	3		167	10
5330-01-151-9294	13	8	4720-01-152-5806	44	10
5330-01-151-9295	18	4	5935-01-152-6814	103	19
5330-01-151-9296	139	40		104	13
	143	7		118	5
5340-01-151-9308	265	10	2520-01-152-7143	136	1
	266	17	3040-01-152-7181	152	4
	268	19	3020-01-152-7665	164	28
	270	10	4730-01-152-7717	23	12
	273	122	2530-01-152-7741	177	3
	275	3	2530-01-152-7777	133	11
5340-01-151-9964	81	19	2520-01-152-7779	163	1
	83	20	2520-01-152-7780	165	18

CROSS-REFERENCE INDEXES

NATIONAL STOCK NUMBER INDEX

STOCK NUMBER	FIG.	ITEM	STOCK NUMBER	FIG.	ITEM
2520-01-152-7781	166	5	2815-01-154-8081	21	13
3040-01-152-7821	164	16	5340-01-154-8437	24	35
2910-01-152-7834	32	1	5365-01-154-8503	28	33
2530-01-152-7837	174	28	5325-01-154-8559	26	3
3020-01-152-7839	177	11		28	31
3020-01-152-7852	166	16		30	34
3020-01-152-7853	166	8	5340-01-154-9589	29	17
4310-01-152-7880	174	15	2910-01-155-0276	32	41
2530-01-152-7883	180	4	2990-01-155-0277	32	39
4730-01-152-7921	177	18	2910-01-155-0278	32	5
5340-01-152-8205	151	4	2910-01-155-0279	32	9
5340-01-152-8210	49	6	2910-01-155-0370	32	40
4710-01-152-8328	142	4	3110-01-155-1756	28	42
5340-01-153-0891	49	22		28	93
5306-01-153-1362	33	11	4710-01-155-2400	24	9
5330-01-153-1385	151	20	5935-01-155-2513	105	51
2815-01-153-1615	8	4	5330-01-155-2584	1	9
4710-01-153-1648	24	30	5315-01-155-2618	151	19
5935-01-153-7519	109	7	5360-01-155-2628	28	3
5365-01-153-7684	166	33	5360-01-155-2629	28	40
5935-01-153-8291	101	6	5365-01-155-2642	31	12
	120	44	6150-01-155-3538	77	1
4320-01-153-8370	28	20	4730-01-155-4104	169	6
3040-01-153-8400	166	42		169	7
5340-01-153-8957	24	4	4320-01-155-4162	42	5
5935-01-153-9319	99	6	5330-01-155-4283	2	21
	99	55	5330-01-155-4395	91	14
	105	13	5365-01-155-4454	203	2
	105	31	5365-01-155-4458	145	9
	109	3	5330-01-155-4517	192	14
	120	4	5365-01-155-4518	143	27
5935-01-153-9320	105	17	5330-01-155-4519	29	29
	105	27		31	54
5340-01-154-0766	167	12		KIT	
2815-01-154-1242	8	3	2835-01-155-4535	KIT	
3040-01-154-1249	30	32	3110-01-155-4582	143	12
5330-01-154-1463	91	3	5365-01-155-4622	174	2
3120-01-154-1482	192	12	4730-01-155-5059	264	14
5365-01-154-1689	31	15	2590-01-155-5062	226	15
5999-01-154-2345	100	35	2910-01-155-5195	43	2
4710-01-154-3130	163	2	3120-01-155-5268	278	11
3130-01-154-4037	143	26		282	18
5340-01-154-4149	142	10	5340-01-155-5275	144	19
5365-01-154-4379	29	19	5340-01-155-5289	24	5
5365-01-154-4399	31	18	5365-01-155-5316	31	17
5330-01-154-5264	192	18	5935-01-155-5545	99	46
5340-01-154-6111	158	9	2520-01-155-5808	166	34
5935-01-154-6233	101	9	2530-01-155-5881	171	1
2520-01-154-6654	134	3	6350-01-155-5993	93	4
2815-01-154-6905	9	6	5340-01-155-6139	167	18

CROSS-REFERENCE INDEXES

NATIONAL STOCK NUMBER INDEX

STOCK NUMBER	FIG.	ITEM	STOCK NUMBER	FIG.	ITEM
5935-01-155-7391	120	12	5999-01-156-6314	105	9
5935-01-155-7718	100	21		105	28
5935-01-155-7738	105	38		105	41
5340-01-155-7741	61	14		106	7
5340-01-155-7869	24	10		106	21
2910-01-155-7936	42	24		106	26
5306-01-155-8647	162	5		107	6
	192	10		108	3
	277	19		109	5
	278	9		110	4
	279	8		111	4
	280	15		114	6
	281	21		118	4
	282	20		119	4
5306-01-155-8648	167	2		120	9
	243	14		120	38
5306-01-155-8649	174	1		120	53
5340-01-155-8810	203	18		121	4
5340-01-155-8881	140	4		123	2
5340-01-155-9900	133	17		124	2
5365-01-156-0016	164	34		125	2
5306-01-156-3738	167	19	3120-01-156-6477	145	15
3120-01-156-3801	32	25	2590-01-156-7181	165	26
2950-01-156-3913	36	18	5310-01-156-7713	146	4
2840-01-156-3914	36	23	5935-01-156-7789	83	18
5360-01-156-4142	170	8		103	9
5365-01-156-4143	164	21		103	17
4730-01-156-4835	189	7	2990-01-156-7875	36	22
	191	2	5365-01-156-8760	145	12
	272	2	5360-01-156-8931	31	6
	275	12	5365-01-156-8947	139	39
3040-01-156-4851	162	15	5365-01-156-9765	162	20
5340-01-156-5179	170	5		281	3
2950-01-156-5253	36	8	5340-01-156-9918	29	34
2950-01-156-5254	36	11	5935-01-157-0576	120	33
5340-01-156-5492	134	5	5310-01-157-0893	166	37
5340-01-156-5493	177	21	5330-01-157-2016	30	19
	178	85	5330-01-157-3415	28	26
5999-01-156-6314	70	6	5330-01-157-3416	28	18
	81	6	5365-01-157-3677	202	18
	81	16	5306-01-157-4848	32	42
	91	5	5330-01-157-4864	50	9
	99	8	5365-01-157-5068	1	5
	99	34	5305-01-157-5626	31	2
	100	7	5305-01-157-6802	31	1
	100	20	5310-01-157-6813	27	10
	101	7	5305-01-157-7394	206	22
	103	7	5999-01-157-7719	100	37
	103	15	6620-01-158-0973	287	8
	104	15	5306-01-158-1154	17	5

CROSS-REFERENCE INDEXES

NATIONAL STOCK NUMBER INDEX

STOCK NUMBER	FIG.	ITEM	STOCK NUMBER	FIG.	ITEM
5306-01-158-1154	239	21	5310-01-160-4543	207	4
5315-01-158-2145	294	8		215	30
5360-01-158-2181	171	3	5315-01-160-4636	32	23
4730-01-158-3563	190	40	5365-01-160-4721	31	39
5330-01-158-6283	32	31	3120-01-160-7617	120	58
5330-01-158-6284	43	1	5365-01-161-2641	265	13
5365-01-158-6377	32	16	7690-01-161-5009	234	4
5340-01-158-7850	31	16	2540-01-161-5140	294	5
3040-01-158-8473	162	3	5330-01-161-5518	28	27
5935-01-158-9078	100	32	5330-01-161-6240	KIT	
4820-01-159-0891	29	14	4730-01-161-9597	265	8
5307-01-159-1175	160	35		266	2
	174	27		267	2
5340-01-159-1186	83	30		268	2
5365-01-159-1222	174	18		270	7
5306-01-159-1513	42	3		271	7
	50	24		272	26
4440-01-159-1712	178	18	4730-01-162-0102	75	16
5999-01-159-2400	99	52		178	41
4730-01-159-2998	20	12	4730-01-162-0112	13	9
4320-01-159-5843	171	2	2540-01-162-4161	219	12
2910-01-159-5883	37	10	3120-01-162-5786	32	27
5365-01-159-6679	13	11	5315-01-162-8741	30	35
2815-01-159-7706	4	9	9905-01-163-0026	234	1
4730-01-159-7840	144	21	9905-01-163-0029	233	14
5330-01-159-8576	154	4	4320-01-163-3545	26	1
5340-01-159-8885	203	13	5310-01-163-5545	197B	44
5365-01-159-8889	106	18		197B	45
4730-01-160-0130	23	16	5305-01-163-5701	54	46
3120-01-160-0377	36	14	5305-01-163-5702	54	42
5340-01-160-0446	105	22	5310-01-163-5805	75	51
5330-01-160-0577	KIT			190	76
5305-01-160-1980	29	10		233	6
5305-01-160-1995	65	11	5315-01-163-8372	162	25
	207	8	2520-01-164-0077	142	1
	215	49	2990-01-164-0087	35	3
5305-01-160-2007	29	16	9905-01-164-0168	233	15
5310-01-160-2034	222	12	3120-01-164-4512	32	24
	197A	21	5306-01-164-5441	24	19
	197B	29	5305-01-164-6340	222	11
5331-01-160-2077	25	3	2910-01-164-7906	37	3
5330-01-160-2349	KIT		4730-01-165-0851	285	16
5340-01-160-2370	145	1	5930-01-165-1823	89	2
5340-01-160-2464	114	4	5305-01-165-2400	145	4
5325-01-160-2506	32	7	5310-01-165-2482	242	2
5995-01-160-3599	132	4		242	8
5330-01-160-3989	158	6	5305-01-165-4290	15	9
5365-01-160-4024	142	17	3120-01-165-4358	30	43
9905-01-160-4374	151	28	2990-01-165-5141	61	2
5306-01-160-4498	51	16	5340-01-165-7648	178	34

CROSS-REFERENCE INDEXES

NATIONAL STOCK NUMBER INDEX

STOCK NUMBER	FIG.	ITEM	STOCK NUMBER	FIG.	ITEM
5330-01-165-7732	KIT		2520-01-167-7139	263	16
5310-01-165-8513	215	14	4320-01-167-7141	239	7
3040-01-165-9635	10	21	4320-01-167-7142	237	25
5365-01-166-1573	196	2	2520-01-167-7185	242	5
5310-01-166-4420	201	10	2590-01-167-7204	198	21
	298	10	3040-01-167-7206	243	12
5315-01-166-5737	205	15	2540-01-167-7212	222	10
6160-01-166-6589	96	11	4710-01-167-7217	275	37
2940-01-166-6834	288	3	4820-01-167-7954	197A	19
5340-01-166-6874	81	18	3040-01-167-7959	237	5
3120-01-166-6920	166	23	4320-01-167-7974	245	17
5342-01-166-8112	216	8	4820-01-167-7979	194	13
	245	6		194	19
	246	5	5306-01-167-8328	235	12
3110-01-166-8143	40	17	2520-01-167-9184	242	9
	41	39	9330-01-167-9196	198	28
9340-01-166-9498	212	4	4320-01-167-9199	284	6
	215	41	4320-01-167-9200	246	16
5305-01-167-0298	27	9	4320-01-167-9201	245	10
5340-01-167-0321	36	20	3040-01-167-9211	197	4
6220-01-167-0514	62	5		247	10
6220-01-167-0515	62	3		248	10
9905-01-167-1531	285	25		249	10
9905-01-167-1532	273	133		250	10
4820-01-167-2929	245	7		251	10
5360-01-167-3642	205	31		252	10
5340-01-167-4216	54	19	3040-01-167-9214	279	15
4820-01-167-4405	194	8	2590-01-167-9246	205	17
3040-01-167-4443	292	20	4710-01-167-9289	285	14
9330-01-167-4448	198	22	5360-01-168-0023	91	8
3040-01-167-4456	295	5	5975-01-168-0647	91	10
9905-01-167-4905	273	129	5930-01-168-1025	63	28
4820-01-167-5453	38	48		75	35
9905-01-167-5719	238	19	4730-01-168-1908	272	7
4720-01-167-7053	178	82	4730-01-168-1912	197A	22
4730-01-167-7067	272	58	4730-01-168-1923	255	9
3040-01-167-7074	205	34		256	8
2540-01-167-7093	292	11		257	9
2540-01-167-7094	292	7		260	9
2510-01-167-7095	217	1	2520-01-168-2007	242	14
2540-01-167-7096	217	26	2590-01-168-2069	263	14
	218	22	4820-01-168-2083	246	8
2540-01-167-7098	207	7	3040-01-168-2139	277	23
2540-01-167-7099	200	4	3040-01-168-2777	197B	46
2540-01-167-7116	292	8	4320-01-168-3624	237	18
2510-01-167-7127	217	22	2590-01-168-3700	277	7
3040-01-167-7129	295	13	5340-01-168-3998	215	50
2520-01-167-7136	263	7	2530-01-168-4341	161	36
2520-01-167-7137	263	10	5310-01-168-4484	36	7
2520-01-167-7138	263	11	5340-01-168-4502	198	13

CROSS-REFERENCE INDEXES

NATIONAL STOCK NUMBER INDEX

STOCK NUMBER	FIG.	ITEM	STOCK NUMBER	FIG.	ITEM
5340-01-168-4532	75	36	2590-01-169-2885	135	35
5310-01-168-5568	280	18	5310-01-169-2929	283	16
5310-01-168-5569	215	43	5310-01-169-2931	244	18
5340-01-168-5602	190	8	5365-01-169-2983	192	4
	273	109	5365-01-169-3007	247	36
4730-01-168-6404	197A	16		248	36
	197B	33		249	36
3040-01-168-6421	243	23		250	36
4320-01-168-6439	247	31		251	36
	248	31		252	36
	249	31	5365-01-169-3064	244	17
	250	31	4730-01-169-3724	39	10
	251	31	2590-01-169-3779	210	6
	252	31	5315-01-169-4464	198	9
5340-01-168-7289	23	10	4820-01-169-4643	190	31
4730-01-168-7544	272	57	2540-01-169-4895	197B	37
3040-01-168-7619	283	15	3805-01-169-4956	299	25
2590-01-168-7621	135	31	2590-01-169-5401	135	28
5340-01-168-8685	295	19	2590-01-169-5402	41	64
5340-01-168-9206	243	17	5340-01-169-5611	217	16
3130-01-168-9210	244	20		218	31
5340-01-168-9268	245	3	5340-01-169-5658	239	13
5340-01-168-9269	246	21	5315-01-169-5677	238	17
5340-01-168-9270	195	5	5315-01-169-5678	279	27
	273	97	4730-01-169-5830	273	137
3010-01-168-9409	235	9		275	24
4820-01-168-9520	197A	23	4320-01-169-6528	236	1
2530-01-169-0179	279	4	5365-01-169-6730	244	8
5305-01-169-0687	69	2	5365-01-169-6795	244	14
5340-01-169-0733	283	14	5365-01-169-6842	244	5
5340-01-169-0794	216	11	4030-01-169-7031	267	6
2520-01-169-1881	244	7		268	13
4730-01-169-1945	190	2	5342-01-169-7036	289	24
4820-01-169-1966	194	1	5340-01-169-7212	244	3
2590-01-169-1968	283	5	5340-01-169-7288	202	6
2530-01-169-1978	278	21	4730-01-169-7303	190	42
2510-01-169-1981	216	1	4820-01-169-7340	241	3
3040-01-169-1982	74	5	5995-01-169-7620	190	122
3040-01-169-1985	279	18	5340-01-169-8313	197B	28
2590-01-169-1990	197B	41	5315-01-169-8340	202	4
3040-01-169-1991	294	2	5355-01-169-8502	289	29
5340-01-169-2116	210	6	5315-01-169-8520	295	2
3130-01-169-2158	238	3	3010-01-169-8759	244	13
5340-01-169-2259	277	20	2590-01-169-8761	135	29
5340-01-169-2299	280	17	2590-01-169-8762	41	61
4720-01-169-2659	190	113	5340-01-169-9290	283	9
2590-01-169-2702	215	40	5340-01-169-9513	263	26
3010-01-169-2723	243	8	4720-01-169-9603	190	123
2530-01-169-2731	160	1	5340-01-169-9639	205	16
2540-01-169-2880	210	3	5340-01-169-9640	205	13

CROSS-REFERENCE INDEXES

NATIONAL STOCK NUMBER INDEX

STOCK NUMBER	FIG.	ITEM	STOCK NUMBER	FIG.	ITEM
5340-01-169-9641	205	3	5305-01-170-6157	240	7
5340-01-169-9642	289	25	5306-01-170-6171	283	11
5340-01-169-9678	190	15	5330-01-170-6299	244	4
3040-01-169-9692	299	2	5340-01-170-6337	266	28
3040-01-169-9694	205	26	5365-01-170-6356	202	20
4730-01-169-9698	273	126	3020-01-170-6611	243	38
	275	27	5340-01-170-6646	273	66
2910-01-169-9758	25	1	4720-01-170-7054	268	10
	25	4	5365-01-170-8781	293	8
4820-01-169-9765	299	22	5930-01-170-8991	72	10
5340-01-170-0769	284	16	4720-01-170-9167	178	32
4720-01-170-0790	268	9	2910-01-170-9230	32	45
3040-01-170-0796	244	12	3130-01-171-0519	204	12
5306-01-170-1338	222	8	5315-01-171-0748	299	20
5310-01-170-1359	283	6	5340-01-171-0968	217	23
4010-01-170-1460	211	6	5340-01-171-1098	217	30
4320-01-170-2542	291	19		218	32
5315-01-170-3210	279	24	5310-01-171-1234	208	19
5306-01-170-3724	292	12		273	89
5365-01-170-3731	239	24	4720-01-171-1947	265	6
5360-01-170-3737	196	9	9905-01-171-2860	190	91
5330-01-170-3739	238	13		190	116
5330-01-170-3740	244	19		190	136
5331-01-170-3749	235	10	4720-01-171-3342	266	11
5330-01-170-3755	74	4		270	6
5330-01-170-3756	211	30	5310-01-171-3633	293	17
	215	35	5340-01-171-3688	205	38
5306-01-170-3768	289	18	5340-01-171-4005	289	28
5310-01-170-3769	160	3	4730-01-171-4405	296	1
	192	26	3805-01-171-4545	282	21
5365-01-170-3787	239	26	4730-01-171-4962	197A	20
5365-01-170-3788	279	21	5340-01-171-5319	96	18
5307-01-170-3796	243	31	5365-01-171-5387	217	32
5340-01-170-3800	198	17	5340-01-171-8143	205	39
5340-01-170-3801	198	33	5340-01-171-8165	265	15
5330-01-170-3804	236	2	5340-01-171-8740	219	13
5365-01-170-3805	292	16	5310-01-172-0034	291	45
5365-01-170-3812	292	15	5340-01-172-0371	63	3
3110-01-170-3841	244	11		206	16
5330-01-170-4603	219	22		230	2
5355-01-170-4622	263	13	4820-01-172-0465	195	6
5365-01-170-4684	254	2	4820-01-172-0511	196	1
	255	2	5340-01-172-0553	283	12
	256	2	4720-01-172-0588	266	10
	257	2		270	5
	260	2	2590-01-172-0640	283	5
	261	2	5340-01-172-0725	267	8
5340-01-170-4712	198	20		268	15
5340-01-170-4741	222	26	5340-01-172-0726	24	1
5340-01-170-4789	205	29	5340-01-172-0727	24	12

CROSS-REFERENCE INDEXES

NATIONAL STOCK NUMBER INDEX

STOCK NUMBER	FIG.	ITEM	STOCK NUMBER	FIG.	ITEM
5310-01-172-0959	291	20	5340-01-173-6745	272	23
5310-01-172-1980	299	1	4720-01-173-6912	191	6
5305-01-172-2001	63	13	4720-01-173-6913	191	4
5340-01-172-2011	83	17	4720-01-173-6915	190	7
	103	1	4720-01-173-6917	273	39
	120	22	5340-01-173-6941	189	2
9905-01-172-2395	178	31	5365-01-173-7017	293	31
5306-01-172-2527	211	1	4720-01-173-7689	178	81
	215	53	4720-01-173-7690	178	83
5340-01-172-2627	296	11	4720-01-173-7691	190	1
3120-01-172-2650	237	8	4720-01-173-8350	178	84
3040-01-172-2708	293	33	3805-01-173-8408	198	26
5340-01-172-2794	178	46	5365-01-174-0910	194	21
	197B	16	2920-01-174-1193	190	73
5340-01-172-2801	289	12	5995-01-174-1194	190	75
5340-01-172-2803	267	7	2510-01-174-1264	299	3
	268	14	2510-01-174-1265	178	36
5365-01-172-2827	244	10	2590-01-174-1266	215	26
3040-01-172-3025	192	24	2910-01-174-1267	205	2
3805-01-172-3076	289	20	2510-01-174-1268	205	25
5340-01-172-3736	178	48	3805-01-174-1269	62	26
	197B	14	2510-01-174-1270	204	1
5340-01-172-3737	178	40	3805-01-174-1271	205	35
	197B	5	5340-01-174-2507	197B	1
5340-01-172-3738	178	43	5340-01-174-2769	218	3
	197B	10	5340-01-174-2786	217	2
5340-01-172-5535	144	3	5365-01-174-3274	208	17
5315-01-172-5635	192	3		273	87
4320-01-172-5781	279	10	7690-01-174-3678	67	8
2540-01-172-6659	220	15	7690-01-174-3679	234	2
5360-01-172-7160	194	14	7690-01-174-3680	234	1
	194	22	4810-01-174-4086	197A	15
2530-01-173-0252	133	4	3805-01-174-4139	291	40
	175	7	5365-01-174-4657	298	20
5340-01-173-1374	268	18	4720-01-174-4762	189	1
5340-01-173-1375	267	11	2590-01-174-5994	211	11
	268	17		215	69
5340-01-173-1376	268	22	3805-01-174-6001	205	22
5340-01-173-3863	218	20	3805-01-174-6002	205	35
4730-01-173-4133	190	3	5310-01-174-6043	293	23
2920-01-173-4199	75	3	3130-01-174-6048	28	32
3040-01-173-4264	243	27	4730-01-174-6163	190	93
2510-01-173-4655	217	7		190	115
	218	9		190	135
4710-01-173-4696	285	19	5340-01-174-6175	216	7
5340-01-173-5085	210	3	5340-01-174-6176	289	6
5310-01-173-6679	72	3	2940-01-174-6181	35	9
5340-01-173-6745	264	15	2910-01-174-6182	32	18
	269	4	3040-01-174-6200	278	24
	271	4		282	4

CROSS-REFERENCE INDEXES

NATIONAL STOCK NUMBER INDEX

STOCK NUMBER	FIG.	ITEM	STOCK NUMBER	FIG.	ITEM
3040-01-174-6206	192	6	5365-01-175-7664	202	15
3040-01-174-6207	192	6		202	15
5310-01-174-8242	211	13	5340-01-175-7764	217	24
	215	66		218	21
5306-01-174-8310	293	32	5365-01-175-9326	273	76
5340-01-174-8314	74	3		274	39
6160-01-174-8425	96	4	5365-01-176-0836	279	3
5961-01-174-8652	55	7	3120-01-176-1038	293	18
5365-01-174-8876	55	13	4720-01-176-1063	189	10
7690-01-174-9444	234	6	4720-01-176-1064	191	5
5310-01-175-0616	197	8	5342-01-176-1162	73	7
	247	16	3040-01-176-1214	205	5
	248	16	3040-01-176-1215	277	8
	249	16		280	4
	250	16		281	15
	251	16	5930-01-176-1531	72	4
	252	16	5930-01-176-1532	74	14
5310-01-175-0630	55	16	5930-01-176-1699	63	27
5975-01-175-1084	287	1		197B	26
5315-01-175-1153	291	35	5930-01-176-1700	76	5
9905-01-175-1555	36	10	4140-01-176-2818	55	19
5360-01-175-3557	120	59	3040-01-176-2939	192	22
5306-01-175-3621	197B	3	4320-01-176-2942	278	16
5340-01-175-3866	207	9		282	13
	215	48	4320-01-176-2943	192	19
5340-01-175-4283	197B	36	2920-01-176-2965	55	12
3040-01-175-5261	277	12	5310-01-176-3998	60	23
	280	8		223	8
	281	11	3040-01-176-4100	30	38
3805-01-175-5265	74	12	5310-01-176-5045	211	21
3805-01-175-5266	293	7	5975-01-176-5620	67	4
3805-01-175-5267	293	3	9905-01-176-6171	233	12
3040-01-175-6470	280	3	4710-01-176-6786	273	119
3040-01-175-6484	278	6		275	32
5340-01-175-6710	217	10	5365-01-176-7430	239	16
	218	7	5340-01-176-7495	94	6
5340-01-175-6899	73	11	3110-01-176-7820	278	1
5340-01-175-6900	189	3	5306-01-176-7828	178	14
	189	44		203	6
5340-01-175-6901	266	26		206	17
5365-01-175-6905	218	15	3120-01-176-8035	278	3
5340-01-175-6908	62	1	5365-01-176-8048	293	10
5342-01-175-6910	218	19	5305-01-176-8117	74	10
5342-01-175-6911	178	69	5365-01-176-8152	217	20
	218	11	5325-01-176-8163	217	19
2530-01-175-7095	177	22		218	28
	178	86	2530-01-176-8556	177	25
9905-01-175-7145	234	10		178	87
9905-01-175-7150	36	32	2590-01-176-9517	37	7
9905-01-175-7159	234	12	5995-01-176-9596	120	2

CROSS-REFERENCE INDEXES

NATIONAL STOCK NUMBER INDEX

STOCK NUMBER	FIG.	ITEM	STOCK NUMBER	FIG.	ITEM
5995-01-176-9597	121	1	5340-01-177-8364	208	10
3040-01-176-9603	280	16	2920-01-177-8505	55	3
5365-01-177-0107	207	24	2920-01-177-8565	55	15
5365-01-177-0108	215	47	2590-01-177-8593	211	24
5305-01-177-0859	61	7	2590-01-177-8594	211	23
5365-01-177-0951	183	4	2510-01-177-8603	230	21
2510-01-177-1004	205	12	5360-01-177-8604	217	29
2510-01-177-1777	207	1		218	25
5340-01-177-1826	219	23	2540-01-177-8617	230	5
3805-01-177-2394	205	33	5325-01-177-9833	76	11
5330-01-177-3855	3	4	5315-01-177-9863	199	4
5340-01-177-3906	68	6	5315-01-177-9864	277	21
5340-01-177-3907	223	31	5315-01-177-9872	277	2
2540-01-177-3913	211	10	2920-01-178-0499	55	9
5995-01-177-3919	70	5	2920-01-178-0675	122	1
3110-01-177-4667	55	14	5995-01-178-0676	117	1
5340-01-177-4686	74	8	3040-01-178-0698	50	8
4730-01-177-4705	189	9	6110-01-178-0753	65	8
	191	3	2540-01-178-0761	208	15
4730-01-177-4706	265	2	4730-01-178-0773	14	12
	269	2	5330-01-178-2109	279	22
2815-01-177-4792	2	9	5360-01-178-2193	214	9
2910-01-177-4793	27	12	4320-01-178-2979	188	1
2910-01-177-4794	32	35	3040-01-178-3004	204	16
2930-01-177-4795	50	2	2510-01-178-3050	211	2
2510-01-177-4796	270	14	4820-01-178-3052	169	16
2590-01-177-4797	66	9	2520-01-178-3143	165	29
2510-01-177-4799	225	11	2590-01-178-3149	207	23
2510-01-177-4800	216	5	2510-01-178-3165	215	22
2815-01-177-4809	13	4	2510-01-178-3166	215	21
2540-01-177-4811	211	31	2530-01-178-3167	187	31
2815-01-177-4815	11	3	4710-01-178-3202	34	4
2815-01-177-4818	7	5	4720-01-178-3393	265	3
3040-01-177-4819	166	17	4320-01-178-3507	188	7
5995-01-177-4824	106	1	5305-01-178-3686	223	30
5995-01-177-4825	107	1		262	8
5995-01-177-4826	108	1	5305-01-178-3694	213	2
2590-01-177-4827	113	1	5330-01-178-3728	55	6
5995-01-177-4828	99	1	5340-01-178-3756	177	26
	100	1	5340-01-178-3770	190	32
	101	1	4720-01-178-4839	271	3
	102	1	4720-01-178-4841	273	21
5995-01-177-4829	105	1	4720-01-178-4844	274	20
2920-01-177-4830	109	1	4720-01-178-4846	267	3
3040-01-177-4874	223	37	2510-01-178-4862	208	2
2530-01-177-4887	192	28	5340-01-178-6002	293	4
2520-01-177-5419	242	6	5340-01-178-6037	273	128
2510-01-177-5422	201	12		274	4
4330-01-177-5446	38	35	3120-01-178-6041	199	3
5340-01-177-5936	21	8	4730-01-178-6484	273	9

CROSS-REFERENCE INDEXES

NATIONAL STOCK NUMBER INDEX

STOCK NUMBER	FIG.	ITEM	STOCK NUMBER	FIG.	ITEM
2920-01-178-6536	55	2	2540-01-178-9946	200	1
2530-01-178-7055	181	41	4710-01-178-9966	183	13
2510-01-178-7056	76	4	5340-01-179-0649	219	24
2510-01-178-7057	76	3	5306-01-179-1300	214	14
2510-01-178-7058	198	12	5995-01-179-1562	75	27
2540-01-178-7059	223	16	2520-01-179-1831	165	11
2510-01-178-7070	214	32	2815-01-179-1980	36	1
2510-01-178-7071	214	10	5340-01-179-2459	207	16
2510-01-178-7073	208	14	4720-01-179-2475	190	34
2510-01-178-7074	207	22	4720-01-179-2476	190	20
2590-01-178-7075	226	5	2510-01-179-2563	214	32
2510-01-178-7079	207	26	5306-01-179-2844	82	1
2510-01-178-7080	207	12	2590-01-179-3016	221	3
3040-01-178-7121	199	1	2590-01-179-3017	284	9
5995-01-178-7126	124	1	2540-01-179-3018	219	18
5995-01-178-7127	103	6	3040-01-179-3075	281	8
5995-01-178-7128	118	1	9905-01-179-3145	69	8
5340-01-178-7452	208	6	4720-01-179-3793	275	16
5995-01-178-8534	123	1	2910-01-179-4098	32	17
3040-01-178-8578	223	33	3040-01-179-4393	28	63
4720-01-178-8827	269	7	6680-01-179-4546	22	7
4720-01-178-8828	269	3	4730-01-179-5396	190	104
4720-01-178-8829	275	25	5320-01-179-5920	70	3
4720-01-178-8830	275	4	3110-01-179-5935	55	5
2910-01-178-8857	30	25	4720-01-179-6269	269	8
2910-01-178-8858	26	19	2590-01-179-6377	221	2
2510-01-178-8859	207	11	2540-01-179-8801	221	1
3040-01-178-8909	224	3	4320-01-179-8851	187	9
2540-01-178-8913	223	9	2540-01-179-8860	215	5
2540-01-178-8914	225	6	5306-01-179-9434	50	4
3120-01-178-9255	278	8	9340-01-180-0142	212	1
4730-01-178-9643	273	12	3040-01-180-0777	291	3
	273	25	2510-01-180-0959	217	15
4730-01-178-9644	178	51		218	34
4720-01-178-9665	178	80	2540-01-180-1103	222	1
4720-01-178-9666	265	9	5365-01-180-1120	63	14
4720-01-178-9667	264	21	2910-01-180-2987	26	16
4720-01-178-9668	264	17	9905-01-180-3839	55	11
4720-01-178-9669	264	18		60	4
4720-01-178-9670	267	5	5305-01-180-4735	213	11
4720-01-178-9675	271	9	5310-01-180-4768	224	17
4720-01-178-9676	266	12	5305-01-180-5324	226	4
	271	8	5340-01-180-5352	207	17
4320-01-178-9693	166	22	5910-01-180-5443	132	3
3040-01-178-9709	40	14	2910-01-180-5547	28	21
2910-01-178-9780	26	2	5340-01-180-6699	218	17
2510-01-178-9782	207	13	5305-01-180-8689	212	6
3040-01-178-9827	26	7	5305-01-180-8690	26	11
5995-01-178-9832	116	1	5365-01-180-8779	207	21
3020-01-178-9843	50	6	5340-01-180-8850	215	23

CROSS-REFERENCE INDEXES

NATIONAL STOCK NUMBER INDEX

STOCK NUMBER	FIG.	ITEM	STOCK NUMBER	FIG.	ITEM
3110-01-180-9132	215	7	4710-01-181-6788	23	6
4720-01-181-0101	178	57	5340-01-181-7508	39	8
5977-01-181-0135	58	24	5340-01-181-7524	230	16
5977-01-181-0151	229	17	5306-01-181-7849	224	21
3040-01-181-0304	215	13	5330-01-181-7906	223	32
5340-01-181-0789	32	30	3020-01-181-8557	229	12
5340-01-181-0856	209	5	4730-01-182-0743	62	10
5340-01-181-0880	122	11		69	7
2540-01-181-0999	284	7		204	3
2540-01-181-1002	223	4		289	3
2540-01-181-1034	219	3	2590-01-182-0891	204	7
5340-01-181-1727	214	16	5355-01-182-1684	65	7
4820-01-181-1833	190	39	5355-01-182-1685	215	6
4320-01-181-1927	262	3	5340-01-182-1862	291	24
5342-01-181-1929	229	10	5340-01-182-1869	214	5
2910-01-181-1930	29	2	9905-01-182-1902	190	83
2910-01-181-1931	26	8		190	126
2510-01-181-1932	297	11		190	146
2590-01-181-1934	297	9	5310-01-182-3071	26	12
2510-01-181-1935	214	6	5315-01-182-3486	31	23
2910-01-181-1936	226	3	5360-01-182-3644	32	12
2510-01-181-1937	209	2	5342-01-182-3943	217	28
5330-01-181-2420	278	18		218	24
5330-01-181-2421	281	13	2510-01-182-4464	198	35
5331-01-181-2424	33	13	2510-01-182-4465	178	75
3110-01-181-2425	32	36	2590-01-182-4466	47	4
5315-01-181-2558	214	19	2540-01-182-4467	292	13
2540-01-181-3685	229	4	2510-01-182-4468	82	2
2540-01-181-3686	214	4	2510-01-182-4469	203	7
5310-01-181-5043	215	25	2510-01-182-4470	213	19
5340-01-181-5076	245	20	5305-01-182-5249	207	5
5340-01-181-5123	215	12		214	31
5340-01-181-5758	246	7		215	29
4720-01-181-5782	270	8		215	56
4720-01-181-5783	270	9		225	5
4720-01-181-5784	270	3	5325-01-182-5734	213	9
4720-01-181-5785	190	19	2540-01-182-6885	227	6
4720-01-181-5786	273	3	5995-01-182-7196	197B	59
5342-01-181-5824	214	4	5995-01-182-7197	75	50
2540-01-181-5826	214	17	5995-01-182-7198	114	1
2540-01-181-5838	223	1	2540-01-182-7218	98	11
5340-01-181-6629	26	10	3040-01-182-7352	213	4
5995-01-181-6642	122	3	5306-01-182-7662	187	30
3040-01-181-6726	187	26	5340-01-182-7733	225	4
2910-01-181-6728	226	2	2510-01-182-7817	213	6
5995-01-181-6732	115	1	2510-01-182-7818	213	12
2540-01-181-6738	214	2	2540-01-182-7819	213	10
2590-01-181-6773	47	2	2510-01-182-7925	213	15
3040-01-181-6777	137	1	3040-01-182-9075	152	8
4710-01-181-6787	23	1	4820-01-182-9244	262	10

CROSS-REFERENCE INDEXES

NATIONAL STOCK NUMBER INDEX

STOCK NUMBER	FIG.	ITEM	STOCK NUMBER	FIG.	ITEM
2530-01-183-0022	161	27	5330-01-184-3546	281	14
4810-01-183-0220	261	1	5365-01-184-3675	183	5
5310-01-183-1237	81	20	5365-01-184-3735	263	30
	99	15	3120-01-184-3825	134	11
	109	9	4720-01-184-4208	197B	15
	177	23	4720-01-184-4241	178	55
	220	5	5945-01-184-4275	59	1
	273	27	2510-01-184-4471	214	10
	274	40	2540-01-184-4472	224	4
5330-01-183-1504	24	13	2540-01-184-4473	224	19
5320-01-183-1510	47	6	2920-01-184-4687	58	26
5340-01-183-1679	214	20	5340-01-184-5460	159	10
5340-01-183-2271	202	28	5340-01-184-5836	266	24
3020-01-183-2385	137	37	4030-01-184-5839	199	6
2590-01-183-2574	47	12	5305-01-184-5886	211	17
2510-01-183-2614	48	4	5340-01-184-5893	214	12
2510-01-183-2615	213	17	5340-01-184-6079	70	9
5330-01-183-4073	215	10	5340-01-184-6683	66	3
5340-01-183-4553	232	8	5365-01-184-6694	76	7
4730-01-183-4574	231	5	5365-01-184-6695	207	15
4720-01-183-4575	178	77	8140-01-184-6877	41	13
4720-01-183-4576	178	78	6115-01-184-7432	55	1
2815-01-183-4649	10	28	5307-01-184-7651	163	11
5330-01-183-5887	223	34	5340-01-184-7653	83	12
5340-01-183-5893	209	9	5340-01-184-7660	65	1
5340-01-183-5919	297	3	5340-01-184-7662	30	29
2990-01-183-5956	28	10	5995-01-184-9403	60	12
5340-01-183-6091	215	12	2920-01-184-9404	130	1
4730-01-183-8225	272	9	2920-01-184-9491	59	7
	272	17	5305-01-185-0394	224	22
5325-01-183-8687	198	32	5306-01-185-0574	213	3
5342-01-183-8714	211	28	5340-01-185-0638	202	35
5340-01-184-0013	198	4	5340-01-185-2058	190	30
5342-01-184-0837	211	20	5305-01-185-2069	61	6
4720-01-184-0981	178	11	5340-01-185-2127	82	12
4810-01-184-1040	262	1	5330-01-185-2240	166	21
2920-01-184-1054	59	5	3040-01-185-2530	202	36
2920-01-184-1055	58	5	5315-01-185-2774	217	25
5342-01-184-1068	24	32		218	23
2920-01-184-1123	58	4	5365-01-185-2777	195	14
2510-01-184-1963	213	1	2520-01-185-3123	149	1
5310-01-184-1992	75	20	2540-01-185-3189	133	3
2510-01-184-2144	213	18		175	1
5340-01-184-2201	213	13	5342-01-185-3335	281	16
3040-01-184-3196	213	4	5330-01-185-3441	226	6
	213	6	2530-01-185-3876	161	9
5310-01-184-3544	197	19	5306-01-185-4584	165	5
5330-01-184-3545	162	2	5310-01-185-4657	198	36
	192	23	5340-01-185-4710	209	3
	279	2	3120-01-185-4724	26	21

CROSS-REFERENCE INDEXES

NATIONAL STOCK NUMBER INDEX

STOCK NUMBER	FIG.	ITEM	STOCK NUMBER	FIG.	ITEM
5365-01-185-4734	183	10	2920-01-187-7027	60	17
5340-01-185-4959	65	12	2920-01-187-7193	55	8
5340-01-185-5915	214	20	3130-01-187-7592	137	23
2540-01-185-6170	224	5	2510-01-188-0206	213	17
4820-01-185-6652	190	41	5340-01-188-1358	207	14
5305-01-186-0641	60	24	5330-01-188-1693	280	6
2530-01-186-0871	197A	9	5340-01-188-3175	60	11
3040-01-186-0927	36	25	4720-01-188-3185	178	53
3120-01-186-1287	202	41	2920-01-188-3268	60	32
3120-01-186-1302	137	53	2540-01-188-3287	225	16
	138	30	2815-01-188-7440	1	1
	139	18	5360-01-188-8022	60	8
5325-01-186-1318	106	15	2990-01-189-1742	36	24
5340-01-186-1635	213	13	5310-01-189-3799	60	26
5340-01-186-1636	212	5	5340-01-189-3838	164	32
5340-01-186-1819	66	13	2530-01-189-4777	185	14
5340-01-186-1820	198	18	2920-01-189-6614	60	29
4720-01-186-2356	178	64	6150-01-190-5341	122	8
	197B	6	4140-01-190-5493	229	11
2815-01-186-2371	10	25	5307-01-191-0322	75	30
5306-01-186-3448	205	24	5340-01-191-0343	207	27
3120-01-186-3511	202	29	6350-01-191-5035	95	3
5977-01-186-3595	60	37	4730-01-191-8728	159	12
5340-01-186-3757	41	63	5905-01-191-9741	232	11
5310-01-186-4582	225	7	5950-01-192-3163	262	6
	225	12		262	11
5310-01-186-5422	202	37	5999-01-192-3294	94	7
5340-01-186-5643	209	4	5995-01-192-4606	125	1
5305-01-186-7132	60	2	5340-01-192-5824	29	25
5305-01-186-7138	60	6	3040-01-192-5939	298	7
5305-01-186-7144	60	22	5895-01-192-8449	62	24
5325-01-186-7760	202	42	4730-01-192-9595	273	132
5340-01-186-8654	198	16	2590-01-192-9704	261	21
5355-01-186-9348	68	8	2590-01-192-9705	217	15
5307-01-186-9387	60	9		218	34
5315-01-186-9448	198	3	5999-01-193-5735	100	36
5330-01-186-9495	162	14		105	34
	192	21	2540-01-194-2042	217	7
	279	17		218	9
5310-01-187-0690	224	18	5342-01-194-5215	178	67
2530-01-187-1230	294	1	5340-01-194-6639	47	5
5945-01-187-2075	60	18	5310-01-194-9219	242	11
2920-01-187-2378	60	16	5340-01-194-9439	270	19
2520-01-187-2523	60	28	5306-01-195-4681	13	12
3040-01-187-3326	224	16		15	16
5305-01-187-5879	30	16		41	26
5340-01-187-5933	214	13		41	26
5330-01-187-5950	169	15		73	1
5315-01-187-6323	202	39		74	15
2590-01-187-7025	201	4		133	22

CROSS-REFERENCE INDEXES

NATIONAL STOCK NUMBER INDEX

STOCK NUMBER	FIG.	ITEM	STOCK NUMBER	FIG.	ITEM
5306-01-195-4681	152	1	5340-01-203-1132	211	9
	190	29	2540-01-203-2399	214	23
	205	27	3120-01-203-2591	211	29
	219	19	5340-01-203-2608	77	12
	253	12	5340-01-203-2618	216	5
	273	80	9340-01-203-4499	212	3
	274	1	5310-01-204-3327	262	12
5930-01-195-6141	72	2	5330-01-204-3388	213	8
2815-01-195-7346	KIT		5310-01-204-4716	262	7
6150-01-195-8726	54	18	5340-01-204-4791	159	5
3020-01-196-1233	168	2	6220-01-204-6988	85	1
	168	4	4810-01-204-9478	262	9
5340-01-196-2831	197B	42	4320-01-204-9896	KIT	
3805-01-196-5286	197B	40	5330-01-205-9431	BULK	19
5306-01-196-5562	223	6	5305-01-206-2164	234	9
5330-01-196-5592	211	25	5310-01-206-2187	225	9
	215	68	5331-01-206-7332	60	31
4730-01-196-7172	20	7	3040-01-206-8566	197B	43
	159	4	7510-01-206-9494	213	14
4720-01-196-7180	20	1	5360-01-208-2214	30	27
5355-01-197-0843	289	2	3020-01-208-3259	6	7
2590-01-197-4885	289	4	5340-01-209-0567	60	36
5977-01-197-7647	60	7	5310-01-209-8715	206	8
5305-01-197-8355	69	9	3120-01-210-0859	8	12
5330-01-198-2030	60	35	6150-01-212-5772	58	31
7690-01-199-0001	68	7	3040-01-213-4544	30	33
5310-01-199-3350	178	35	2530-01-213-4627	30	26
5340-01-199-3516	211	12	3040-01-214-1291	41	32
4720-01-199-3840	38	8	5342-01-214-1787	214	18
2510-01-200-1036	213	1	3040-01-214-2579	41	56
4730-01-200-3127	159	11	3040-01-214-2580	41	18
5340-01-200-7037	178	72	6150-01-214-5751	77	9
4720-01-200-8646	159	9	5325-01-215-0221	36	16
9905-01-200-9500	233	5	5340-01-215-6299	41	25
4730-01-201-2085	105	4		230	22
	105	49	2510-01-216-1097	293	4
2590-01-201-2490	135	33	2510-01-216-3094	293	25
5330-01-201-3806	242	12	5977-01-216-5341	58	38
3040-01-201-3940	224	8	2590-01-216-7765	289	11
2520-01-201-4146	135	32	5305-01-217-0676	30	24
4820-01-201-7172	262	5	4710-01-217-2817	24	8
5640-01-202-1771	BULK	14	4710-01-219-1210	39	1
5930-01-202-2506	63	24	4810-01-220-0624	262	4
3120-01-202-5894	5	4	2540-01-221-2187	223	4
5905-01-202-5953	70	1	2540-01-222-4719	223	1
5365-01-202-6803	194	15	2540-01-223-0754	224	25
	194	20	5310-01-224-4652	215	9
3120-01-202-7624	215	65	5330-01-225-2088	247	14
4820-01-202-9608	20	10		248	14
5325-01-203-0184	106	13		249	14

CROSS-REFERENCE INDEXES

NATIONAL STOCK NUMBER INDEX

STOCK NUMBER	FIG.	ITEM	STOCK NUMBER	FIG.	ITEM
5330-01-225-2088	250	14	6150-01-268-6579	127	1
	251	14	9905-01-268-7580	233	1
5305-01-225-2091	215	3	4730-01-269-7900	190	60
4730-01-230-6610	190	68	5340-01-269-9343	22	6
2540-01-230-6863	200	1	4730-01-269-9540	272	56
2540-01-233-0165	200	4	5360-01-270-1351	26	13
5340-01-236-1850	20	6	5330-01-270-1752	30	23
5340-01-236-5011	198	27	5315-01-270-2832	301	41
5325-01-236-5099	67	5	5342-01-270-8588	99	59
4730-01-242-4510	38	16		105	52
4730-01-242-4573	190	96		120	62
	190	120	5310-01-271-5758	185	5
	190	141	4320-01-275-1691	155	4
2520-01-243-3565	60	30	5120-01-275-2286	301	53
5306-01-250-0897	30	36	5120-01-275-9480	301	32
3120-01-250-0924	206	5	5305-01-277-0451	292	5
	206	20	5930-01-277-5185	62	25
	206	27	5330-01-277-6101	BULK	22
	206	39	5340-01-279-1258	293	16
2910-01-250-1608	301	47	3805-01-280-8993	292	17
2530-01-250-1903	179	1	5330-01-281-3791	181	40
2990-01-253-3454	16	2	5306-01-285-3987	190	67
3040-01-253-4664	219	27	5305-01-285-7714	63	7
2940-01-253-5590	18	7	5306-01-285-8875	42	22
4320-01-253-6286	16	15	4410-01-286-0183	178	27
3020-01-253-9281	27	11	4440-01-286-0296	178	17
3020-01-253-9282	15	20	5999-01-286-5845	99	51
2990-01-253-9489	28	41	5310-01-286-6079	190	44
2990-01-253-9490	28	11	5120-01-286-8435	301	6
2990-01-253-9491	28	9	5325-01-287-9026	32	28
3020-01-254-1227	15	1	5120-01-288-2717	301	5
3040-01-254-4974	30	12	5120-01-288-2777	301	27
5306-01-256-6771	219	25	4720-01-288-8509	190	133
5310-01-257-2208	25	19	9905-01-289-3373	234	13
5325-01-257-4598	32	2	4730-01-291-8495	190	99
6625-01-258-7462	64	1	4730-01-291-8496	190	79
5315-01-259-4153	31	7	4730-01-291-8497	190	97
5340-01-259-4234	32	13	4730-01-291-8498	190	92
2540-01-260-8357	292	14		273	86
5999-01-262-0436	121	7	4730-01-291-8499	273	85
	125	6	4730-01-291-8500	189	27
4320-01-263-9716	301	66		190	65
2510-01-264-8424	301	56		190	65
5320-01-264-8505	217	3		190	147
	218	13		273	52
	219	29	4730-01-291-8501	190	137
4910-01-265-0428	301	68		273	92
4320-01-267-2065	KIT		2510-01-291-9669	215	28
5365-01-267-3020	213	7	2540-01-291-9722	215	52
4940-01-268-2201	301	15	2510-01-292-1318	216	5

CROSS-REFERENCE INDEXES

NATIONAL STOCK NUMBER INDEX

STOCK NUMBER	FIG.	ITEM	STOCK NUMBER	FIG.	ITEM
5995-01-292-1624	75	5	6150-01-296-7158	75	46
2540-01-292-3663	215	33	6150-01-296-7159	75	48
4730-01-292-4350	75	9	6150-01-296-7935	75	13
	83	22	6150-01-296-7936	75	21
5940-01-292-5097	99	26	6150-01-296-7937	75	33
2530-01-292-6765	222	18	5310-01-298-3201	206	9
5995-01-292-6789	99	23	2530-01-298-6163	151	22
4730-01-292-8206	190	80	5365-01-300-2674	301	61
4730-01-292-8212	272	59	5120-01-300-4502	301	1
5310-01-292-8365	190	98	5970-01-300-7305	BULK	13
5340-01-292-8403	178	13	6150-01-301-2239	75	39
2510-01-292-8567	215	27	5365-01-302-3168	293	13
5305-01-292-9547	75	37	5940-01-303-4978	119	2
5365-01-293-0066	222	21	5961-01-304-3340	99	58
5340-01-293-1046	83	31		120	61
5340-01-293-1047	190	70	5975-01-305-0776	99	32
5365-01-293-1061	222	22	5340-01-305-7705	220	7
5365-01-293-1064	178	22	5340-01-305-8606	220	10
5340-01-293-1196	215	31	6250-01-306-8254	99	30
5340-01-293-1793	222	17	5940-01-307-6079	99	29
5340-01-293-1874	178	23	5310-01-308-1455	197B	50
5935-01-293-2036	105	24	5360-01-309-2667	99	31
5310-01-293-2892	190	78	3040-01-312-7281	41	1
2530-01-293-3419	222	27	5342-01-316-5818	47	1
3120-01-293-5384	215	34	4720-01-331-8722	BULK	7
6250-01-293-7612	120	56	5340-01-332-0917	181	39
5995-01-294-1703	120	47	3040-01-332-1616	206	24
5995-01-294-5962	105	23		206	24
5995-01-294-5963	120	32	3040-01-332-1638	206	1
3040-01-294-7273	75	29		206	3
4720-01-294-8774	272	54	3040-01-332-2443	206	23
5995-01-294-9731	106	24	5330-01-332-4074	4	22
5995-01-295-0072	100	18	5330-01-332-4089	21	2
9905-01-295-2486	190	85	5330-01-332-7547	BULK	17
9905-01-295-2487	75	12	5310-01-332-8232	206	31
9905-01-295-2489	75	10	5340-01-333-2775	170	9
9905-01-295-2490	75	44	5340-01-333-3857	177	27
9905-01-295-4596	75	42	5310-01-333-4540	206	2
9905-01-295-4889	75	43	5365-01-333-4595	206	18
5995-01-296-0444	105	35	5340-01-333-5565	206	37
5995-01-296-0445	106	19	5331-01-333-6444	38	20
4910-01-296-3862	301	20		267	18
5130-01-296-4277	301	49		268	27
5220-01-296-4297	301	22		272	44
6150-01-296-6117	75	22		273	49
6150-01-296-6118	75	26	5340-01-333-8145	171	7
6150-01-296-6119	75	14	3040-01-333-8241	41	27
6150-01-296-6120	75	45	5330-01-333-8284	BULK	16
6150-01-296-6121	75	41	5340-01-333-8374	169	20
6150-01-296-7157	75	47	3040-01-334-2117	170	2

CROSS-REFERENCE INDEXES

NATIONAL STOCK NUMBER INDEX

STOCK NUMBER	FIG.	ITEM	STOCK NUMBER	FIG.	ITEM
3040-01-334-2283	206	28	5310-01-428-2756	266	19
3040-01-334-2284	175	18	5935-01-429-0888	86	3
5340-01-334-3714	206	34		92	6
5340-01-335-2995	206	12	5930-01-429-0940	65	6
5940-01-336-0054	105	15	4730-01-429-3246	38	3
9390-01-336-7090	BULK	15	5310-01-429-7859	2	11
4720-01-338-7719	BULK	1		33	3
5340-01-342-2648	220	8		33	6
2540-01-342-6814	206	30		35	8
2540-01-343-8529	215	44		39	9
4720-01-343-9640	266	37		40	12
	270	31		41	20
5120-01-345-4526	301	8		46	5
5120-01-345-5328	301	31		51	19
3120-01-346-2091	3	21		70	12
3040-01-346-4173	31	51		73	6
5930-01-346-7728	88	2		75	1
5330-01-348-2720	32	6		78	13
3040-01-348-3941	198	19		82	11
4730-01-349-7772	189	24		82	14
5305-01-351-1333	25	17		120	20
5307-01-351-1404	2	19		122	7
2910-01-351-5952	30	44		133	34
5305-01-352-4223	55	18		134	4
5210-01-354-9255	301	25		144	28
5310-01-359-8806	42	26		178	70
5330-01-364-0500	162	7		180	20
4730-01-364-6397	267	15		189	20
	268	24		189	41
	273	60		190	33
5340-01-367-9156	224	7		190	33
5330-01-376-0784	29	26		203	12
5330-01-376-0802	29	18		218	1
5330-01-376-0803	29	23		220	4
2590-01-377-3892	37	6		265	11
4720-01-380-2953	267	25		266	20
6220-01-386-9131	62	23		268	21
5330-01-398-4225	56	1		270	13
2990-01-412-4631	290	7		283	7
5310-01-413-5909	134	10		284	20
	134	15		197B	58
	263	25	4730-01-429-9750	265	19
2530-01-413-8274	178	66		266	33
5325-01-414-4843	190	53		268	33
5330-01-414-5932	28	51		269	16
4710-01-415-1609	15	11		270	27
4710-01-420-3887	24	31		273	65
5310-01-425-5451	197B	32	4730-01-429-9759	267	19
2815-01-426-0619	10	6	5999-01-430-3231	99	38
5310-01-428-2756	189	33	3010-01-430-3425	65	7

CROSS-REFERENCE INDEXES

NATIONAL STOCK NUMBER INDEX

STOCK NUMBER	FIG.	ITEM	STOCK NUMBER	FIG.	ITEM
4720-01-433-8805	BULK	26	4730-01-471-0277	38	16
3110-01-437-6096	160	31		264	10
	164	23		265	4
3110-01-437-6097	160	32		266	8
	164	22		268	23
5935-01-437-9075	265	21		269	5
	266	36		270	4
	267	24		271	11
	268	28		273	1
	269	11		274	10
	270	20	5306-01-471-3609	202	40
	271	12	4730-01-471-3774	77	14
	272	37		219	11
	273	112	3120-01-471-3789	190	56
5935-01-437-9076	273	61	5305-01-471-4125	42	27
4730-01-438-0751	272	43	4730-01-471-4239	190	58
4730-01-438-0762	273	51	4730-01-471-4407	190	55
4730-01-438-0764	273	116	4730-01-471-4915	273	41
5340-01-438-1383	202	16	4730-01-471-4917	189	26
5340-01-438-1384	202	11	4730-01-473-2095	273	58
3040-01-438-1386	202	3	4730-01-473-2895	273	53
5330-01-438-1387	273	55	5935-01-473-5578	99	25
4730-01-438-1943	265	22	5935-01-473-5590	99	24
	266	30	5331-01-473-5985	194	24
	268	30	4730-01-473-6583	273	110
	270	24	5340-01-474-1483	200	6
	271	15	5340-01-474-1486	200	13
	272	42	4730-01-475-1290	273	48
	273	83	4320-01-475-9634	50	17
5340-01-438-4224	202	22	5340-01-476-1734	300	3
5935-01-438-9739	99	42	5930-01-477-7177	86	2
5306-01-438-9852	42	28		92	5
5331-01-439-2544	194	28	5310-01-483-6594	301	37
5940-01-439-2605	105	16	4820-01-486-0910	4	12
	105	30	6220-01-496-1925	82	3
4820-01-439-8561	178	20	3040-01-497-0540	16	14
4440-01-440-0480	178	19	5930-01-497-0562	87	1
5340-01-443-4703	169	19	5925-01-498-1823	75	38
2910-01-444-9487	42	36	5935-01-502-3942	99	47
	43	7		100	33
3830-01-450-0402	290	4	3120-01-503-4984	27	5
5120-01-451-1401	300	4	6140-01-505-1940	98	8
5935-01-466-5378	105	33	4730-01-505-6812	273	117
	120	46	5330-01-506-4780	192	20
5935-01-466-5755	99	54	5330-01-507-3335	277	10
	105	37	5330-01-507-3336	282	11
	120	48	5330-01-507-3339	277	9
5945-01-468-1267	83	25		280	5
5306-01-468-2844	102	18	2940-01-513-1518	18	8
2520-01-468-4331	139	26	5865-01-513-6853	99	57

CROSS-REFERENCE INDEXES

NATIONAL STOCK NUMBER INDEX

STOCK NUMBER	FIG.	ITEM	STOCK NUMBER	FIG.	ITEM
5865-01-513-6853	101	5			
4730-01-514-3461	265	16			
	272	40			
4730-01-514-4630	265	5			
5935-01-514-6260	83	21			
4810-01-514-8525	176	11			
5330-01-518-0631	36	30			
4720-01-518-1269	273	115			
4820-01-520-7398	190	57			
4820-01-520-7407	190	62			
4720-01-520-7939	190	66			
5365-01-520-9680	190	54			
5340-01-520-9681	92	1			
5325-01-520-9748	162	10			
5330-01-520-9804	31	57			
5340-01-520-9812	31	59			
4730-01-521-0430	190	50			
4730-01-521-3395	190	47			
4720-01-521-3396	190	63			
4720-01-521-3678	190	46			
5315-01-521-7020	202	30			
4720-01-521-7418	190	72			
4720-01-521-7421	190	86			
4720-01-521-7425	190	90			
3040-01-521-8043	40	14			
3020-01-521-8058	27	3			
4720-01-521-8798	189	46			
4720-01-521-8810	190	64			
4720-01-521-8813	189	32			
2920-01-521-9952	99	50			
	100	23			
2510-01-522-4041	293	22			
9905-01-524-0115	151	28			
4720-01-524-6961	190	52			
5930-01-524-8205	86	1			
2815-01-526-4221	7	3			
5310-01-526-7006	301	69			
5999-01-526-8494	100	34			
5975-01-529-7923	105	50			

CROSS-REFERENCE INDEXES

PART NUMBER INDEX

CAGEC	PART NUMBER	STOCK NUMBER	FIG.	ITEM
58536	AA52506-F	4730-00-908-3195	37	16
46717	AC-1-310	4730-01-156-4835	189	7
			191	2
			272	2
			275	12
56252	AD2H23MA16	6680-01-179-4546	22	7
07707	AD64H	5320-00-956-7355	211	27
			215	32
54402	AD66ABSLF	5320-01-073-8087	211	8
18265	AEM00-1164	2990-01-093-9236	45	1
99167	AF934-117	5331-00-265-1097	26	20
6X081	ALA156A128P49	3110-00-555-5207	51	14
81343	AMS3209	5331-00-941-3599	285	12
82366	AM2003	5331-00-806-7027	154	6
81343	AS25036-115	5940-00-143-5284	99	39
81343	AS3578-225	5331-00-527-7939	154	20
			187	20
81343	AS3582-015	5331-00-901-7196	29	6
01212	AT20	3120-00-440-8463	16	4
			16	17
77926	A02157-103	5310-00-209-0788	63	26
77926	A02157-104	5310-00-596-7693	63	20
70834	A11584	4730-00-289-5191	286	7
83120	A1746	3110-00-100-0349	239	6
19986	A2067	2910-01-181-1936	226	3
8Z296	A223027	5310-01-204-4716	262	7
10988	A47889	5340-01-115-3548	57	18
			57	52
53867	B 391 441 068	3040-01-201-3940	224	8
99017	B-641	5340-01-095-5004	217	33
18265	BAS02-0048	2815-00-192-8768	12	3
98410	BB-2141	5940-00-926-0085	120	60
30966	BDT-413	5340-01-097-9213	38	27
24956	BG7275	3120-00-910-3716	223	38
08484	BL2277	3110-00-100-6150	204	8
19422	BM11352-77	4730-00-193-0869	90	2
			178	9
			180	12
			286	6
60380	BNE25730	3110-00-862-7671	139	28
61864	BS-51338	5340-00-270-8552	63	2
61864	BS51338	5340-00-270-8552	205	28
01212	BT1779	3110-00-100-0719	237	24
51588	B16-L	3120-00-497-1579	192	7
80204	B1821BH025C038N	5305-00-071-2508	153	3
80204	B1821BH025C050N	5305-00-071-2506	21	11
			28	19
			66	8
			75	6
			83	23
			205	8

CROSS-REFERENCE INDEXES

PART NUMBER INDEX

CAGEC	PART NUMBER	STOCK NUMBER	FIG.	ITEM
80204	B1821BH025C050N	5305-00-071-2506	208	11
			225	18
			289	7
80204	B1821BH025C063N	5305-00-068-7837	36	21
80204	B1821BH025C088N	5305-00-071-2505	26	22
			28	25
			29	24
			30	20
			73	3
			75	17
			133	15
			287	9
80204	B1821BH025C100N	5305-00-225-3843	28	17
			28	49
			29	1
			29	27
			76	12
			130	7
			133	33
			175	13
			197B	20
80204	B1821BH025C150N	5305-00-071-2509	227	4
80204	B1821BH025C275N	5305-00-071-2514	30	37
			63	4
80204	B1821BH025F050N	5305-00-267-8952	223	15
			224	1
80204	B1821BH025F088N	5306-00-068-0514	58	12
80204	B1821BH031C056N	5306-00-226-4823	36	5
			95	1
80204	B1821BH031C075N	5306-00-226-4825	11	1
			23	15
			120	26
			158	1
			159	14
			286	8
80204	B1821BH031C088N	5306-00-226-4826	40	19
			41	45
			92	3
			122	9
			181	28
			263	22
80204	B1821BH031C113N	5306-00-226-4828	22	1
			23	3
			41	29
			41	29
80204	B1821BH031C125N	5306-00-226-4829	134	24
			135	5
			239	19
80204	B1821BH031C175N	5306-00-226-4832	23	2
80204	B1821BH031C200N	5306-00-226-4833	16	19
80204	B1821BH031C225N	5306-00-226-4834	183	9

CROSS-REFERENCE INDEXES

PART NUMBER INDEX

CAGEC	PART NUMBER	STOCK NUMBER	FIG.	ITEM
80204	B1821BH031C250N	5306-00-226-4835	236	4
80204	B1821BH031C275D	5306-01-158-1154	239	21
80204	B1821BH031C450N	5306-00-226-4843	183	8
80204	B1821BH038C063N	5305-00-721-5492	67	3
			100	10
			206	13
			272	25
			275	5
80204	B1821BH038C125N	5305-00-068-0511	20	5
			40	24
			41	17
			49	23
			51	22
			73	2
			81	17
			122	4
			144	1
			154	18
			157	7
			177	16
80204	B1821BH038C150N	5305-00-725-2317	206	13
80204	B1821BH038C500N	5305-00-964-0503	4	3
80204	B1821BH044C150N	5305-00-071-2055	274	21
80204	B1821BH050C088L	5306-01-186-3448	205	24
80204	B1821BH050C150L	5306-01-123-0891	228	5
80204	B1821BH063C175N	5305-00-724-7221	2	2
			142	18
			202	24
80204	B1821BH063C200N	5305-00-724-7222	174	20
			183	17
			202	33
			280	1
			297	15
80204	B1821BH063C325N	5305-00-724-7236	211	18
80204	B1821BH088C475N	5305-01-277-0451	292	5
99688	B2-28S	4140-01-097-4340	229	1
19200	B271406C	3110-00-100-6149	252	26
73992	B3-K21	4730-00-585-7507	178	39
23040	B8QH4616A	3110-00-100-0615	243	10
53591	B915706	2930-01-093-7336	51	20
76005	CB-1121-4	5342-01-166-8112	216	8
			245	6
			246	5
90805	CD120-0724	4730-00-277-8289	296	3
71724	CF-SP39691-REVH		50	16
61510	CKE42A	5310-00-375-0518	165	6
75272	COV-0413	5340-00-448-1795	44	7
75272	COV-2113	5340-00-404-4100	273	29
99066	CP721084	2540-01-062-7131	223	25
			224	12
16236	CS-2540-SV-0714	2540-01-178-9946	200	1

CROSS-REFERENCE INDEXES

PART NUMBER INDEX

CAGEC	PART NUMBER	STOCK NUMBER	FIG.	ITEM
80378	CVC754-664S30	5310-00-543-4874	274	22
78553	C11914-028	5310-01-224-4652	215	9
75347	C19303	5940-00-177-4356	232	12
79470	C3109X12X6	4730-00-288-8546	231	6
79470	C3509X2		286	14
76359	C3523	5340-01-179-0649	219	24
76359	C3524-1	5340-01-177-1826	219	23
76359	C3525-1	5340-01-171-8740	219	13
57958	C5114455-1	4730-00-187-7569	178	50
78553	C9451-010-4	5310-00-455-0357	167	11
5A910	DC8211	5330-01-037-0663	82	5
5A910	DC8217	6220-01-128-0087	82	6
34904	DC8226	5330-01-076-6172	82	7
76359	D4066	2540-01-095-0290	219	8
76359	D6084	2540-01-096-5001	219	7
10988	D82804	3120-01-087-7063	187	12
10988	D82805	5305-01-097-8184	187	19
23926	D90972	3110-00-351-3927	174	6
38151	E-4850-1	4730-00-278-3397	58	9
			58	27
21335	EA28899	3120-00-446-9863	134	20
			134	22
99017	EC-6	5340-00-272-3548	25	15
18265	EGB11-0026	2940-01-148-1478	33	7
72850	EP480410	2920-01-068-7126	60	27
72850	EP480411	2920-01-112-2687	57	22
72850	EP480425	2920-01-184-1123	58	4
27775	E0114-23	4730-00-035-8036	176	5
79221	E2AX60B	4410-01-286-0183	178	27
60380	FA41901	3110-00-480-9379	244	22
01276	FA5205GHG0770	4720-01-095-5844	180	15
01276	FD45-1040-04	5340-01-172-3736	178	48
			197B	14
01276	FD45-1040-06	5340-01-172-3737	178	40
			197B	5
01276	FD45-1041-04	5340-01-172-3738	178	43
			197B	10
01276	FD45-1041-06	5340-01-172-2794	178	46
			197B	16
01276	FD45-1086-04-04	4730-00-844-1838	178	47
			197B	13
01276	FD45-1101-04-04	4730-00-795-6959	178	42
			197B	12
01276	FF1861T-0808S	4730-01-269-7900	190	60
99017	FP-204	5340-01-182-1869	214	5
02695	FR6-15	3120-00-014-3507	41	28
11083	FT0120		301	14
11083	FT0530		301	44
11083	FT1016		301	55
11083	FT1017		301	12
11083	FT1533	5120-01-345-4526	301	8

CROSS-REFERENCE INDEXES

PART NUMBER INDEX

CAGEC	PART NUMBER	STOCK NUMBER	FIG.	ITEM
26952	FZ-1618	4730-00-278-3725	178	38
81349	F02A250V5A		67	11
			68	4
81349	F02A32V15A	5920-00-012-0151	67	13
			68	3
81349	F03A250V10AS	5920-00-243-3787	67	10
			178	28
29944	F04790	2540-01-095-1105	219	9
79960	F35X8	4730-00-277-8289	176	1
95879	G-131000	4820-00-808-3669	183	1
			243	15
1GT86	G-13584	2930-01-110-6440	46	3
18265	GAH00-0657	2940-00-427-6413	33	1
70763	GC-3918-BA-1-20-1-01	4320-01-178-2979	188	1
70763	GC-483	3010-00-758-9645	188	3
24446	GE624	6240-00-643-0738	197B	25
06853	GP-294240	5330-01-053-3872	181	19
73134	HF5CEI	3120-00-182-6865	134	9
			263	24
08484	HTM350	4730-01-106-7246	49	30
91816	HV50-2-R	4820-01-202-9608	20	10
14127	H3B	4730-00-602-5342	178	45
			197B	17
55883	IPD5P597	4730-01-053-4687	35	1
55883	IPD5S6750	2815-00-518-3561	8	2
76005	J-6256-10		46	7
			53	3
			283	4
76005	J-6642-1	5342-00-893-7055	195	4
60380	JD-53502	3110-01-155-1756	28	42
			28	93
60380	JD43002	3110-01-097-8105	244	21
60038	JHM516849	3110-01-075-7214	164	15
01212	JLM104910	3110-00-191-3923	143	14
01212	JLM104948	3110-00-938-5084	143	1
60038	JLM813010	3110-01-024-8522	164	8
60038	JLM813049	3110-01-024-8521	164	7
31159	JM56	5310-00-042-6376	40	3
			133	38
60038	JM714210	3110-01-024-8523	160	23
60038	JM719113	3110-00-351-3927	166	25
60038	JM719149	3110-00-357-9710	166	30
59556	K-500-EN-0431	5330-01-148-5891	28	56
			28	67
			29	7
			32	33
			196	26
			196	31
			239	3
			247	30

CROSS-REFERENCE INDEXES

PART NUMBER INDEX

CAGEC	PART NUMBER	STOCK NUMBER	FIG.	ITEM
59556	K-500-EN-0431	5330-01-148-5891	248	30
			249	30
			250	30
			251	30
			252	30
			261	12
59556	K-500-EN-0472	2990-01-149-5010	28	96
59556	K-500-EN-0551-1	5340-01-149-5988	38	51
80064	K-6643118 PIECE 6	5310-00-411-4399	292	22
30327	KF04-04PS	4730-00-782-5582	37	15
30327	KF10-06PS	4730-00-622-5756	49	18
			231	2
98611	KSMR2PT50S45958	2530-01-155-5881	171	1
97613	KTN002	3120-01-099-9066	291	16
18265	KYX00-0460	2940-00-858-8179	33	8
60038	K426900R		141	4
60038	K91514	5310-00-411-9017	164	6
98349	L-18-RT-663	2530-01-100-0936	160	8
59875	L-24-CP-8	5340-01-096-3476	160	6
98349	L-24-LV-4014-A-1 1	2530-01-098-9714	160	2
98349	L-24-LV-4016-A-1 2	2530-01-098-4682	160	2
98349	L-24-LV-4089-A-1 1	2530-01-177-4887	192	28
31033	L-24-VT-4016-A-1 1	2530-01-169-2731	160	1
24956	LE721124A-1	2540-01-095-3656	223	10
03038	LH90725-59	5306-00-690-6976	2	10
			6	3
			160	41
98016	LM501310		140	26
60038	LM501310EA		140	27
08162	LM501349		140	25
60038	LM501349LM501310 ASSEMBLY90016	3110-01-022-1814	140	24
60038	LM501349XW		140	28
78280	LP-535-1	2910-00-646-9727	44	2
09455	LTD2458	3120-01-098-7289	295	15
09455	LTD3272	3120-01-098-3233	291	26
09455	LTD4058	3120-01-097-8289	291	10
09455	LTD4080	3120-01-099-0025	291	47
00843	L17SS	5340-01-175-4283	197B	36
60380	M-1081-OH	3110-00-902-1675	133	19
18783	M-1852883	5977-01-113-2899	57	62
77640	MAB018000-S1	2520-01-123-4910	244	6
85105	MAE016000-A1	5340-01-169-7212	244	3
77640	MAE10013	4320-01-095-4793	244	1
77640	MAE103000	3040-01-170-0796	244	12
68505	MES-1005AS	2920-01-068-7140	58	39

CROSS-REFERENCE INDEXES

PART NUMBER INDEX

CAGEC	PART NUMBER	STOCK NUMBER	FIG.	ITEM
19728	MES-111 BS		58	32
24975	MES-120	6150-01-212-5772	58	31
68505	MES-2116S		58	8
19728	MES-95	5330-00-138-0251	58	25
19728	MEU-2042-B	3010-01-068-6996	58	3
19720	MFJ-115	6150-01-098-8914	58	20
24975	MFJ-2012DS	5977-01-216-5341	58	38
68505	MFY-1002MS	2920-01-184-4687	58	26
19728	MFY-34S	2920-00-223-6256	58	33
81349	MIL-S-1222		283	18
18265	MJM08-0047	2990-01-021-7587	45	5
57013	MODEL 112	6350-01-155-5993	93	4
96906	MS14314-2X	4730-00-011-2578	35	17
96906	MS15001-1	4730-00-050-4203	242	10
96906	MS15003-1	4730-00-050-4208	51	1
			161	2
			162	16
			292	3
			299	19
96906	MS15003-2	4730-00-172-0022	202	17
96906	MS15003-4	4730-00-172-0028	278	25
			282	3
96906	MS15795-512	5310-00-205-9982	12	2
80205	MS16208-19	5306-00-543-5567	28	48
96906	MS16562-47	5315-00-844-3964	138	36
			139	21
96906	MS16624-1027	5325-00-803-7314	60	34
96906	MS16624-1037	5325-00-715-1152	42	12
			57	11
			76	6
96906	MS16624-1075	5325-00-803-7303	156	11
96906	MS16624-1196	5325-00-514-0362	137	52
96906	MS16624-98	2520-01-066-9196	143	9
96906	MS16625-1050	5325-00-804-9743	150	20
96906	MS16625-1062	5325-00-687-3379	30	9
			240	9
96906	MS16625-1087	5325-00-804-9739	94	5
			240	4
96906	MS16625-1100	5325-00-807-2636	146	5
96906	MS16625-1175	5325-00-804-5827	244	16
96906	MS16625-1200	5325-00-804-2784	237	23
			238	12
96906	MS16625-1315	5325-00-598-6232	50	7
96906	MS16625-1425	5325-00-754-2190	166	3
96906	MS16626-1062	5325-00-493-8125	42	9
			150	25
96906	MS16628-1143	5325-01-287-9026	32	28
96906	MS16633-1025	5325-00-721-7680	28	1
			133	29
			135	22
96906	MS16997-32	5305-00-978-9370	31	4

CROSS-REFERENCE INDEXES

PART NUMBER INDEX

CAGEC	PART NUMBER	STOCK NUMBER	FIG.	ITEM
96906	MS17165-4578	6240-00-643-0687	79	6
96906	MS17795-128	3120-00-425-6467	58	10
96906	MS18154-41	5306-01-158-1154	17	5
96906	MS19059-2412	3110-00-100-6149	247	26
			248	26
			249	26
			250	26
			251	26
96906	MS19060-1016	3110-00-115-1238	206	29
96906	MS19070-071	5310-00-186-0966	140	22
96906	MS20659-118	5940-00-115-2684	99	13
			100	17
			102	15
			122	5
			286	15
96906	MS21083F-N4		229	22
96906	MS21083N5	5310-00-660-3381	57	13
80205	MS21318-13	5305-00-253-5609	55	10
			60	3
80205	MS21318-21	5305-00-253-5615	75	11
			190	84
			194	11
			211	4
			215	38
			233	9
			238	18
96906	MS21333-34	5340-00-282-7519	38	26
96906	MS21333-57	5340-00-282-7505	39	4
96906	MS21333-59	5340-00-720-6213	177	12
96906	MS24523-21	5930-00-681-4727	69	1
96906	MS24523-22	5930-00-683-1628	62	12
80205	MS24665-132	5315-00-839-2325	214	28
96906	MS24665-134	5315-00-839-5820	289	22
96906	MS24665-281	5315-00-839-2326	41	59
			175	8
			206	36
			263	28
			273	91
			289	21
96906	MS24665-353	5315-00-839-5822	96	3
			171	6
96906	MS24665-355	5315-00-012-0123	160	10
			192	25
80205	MS24665-419	5315-00-187-9550	270	15
80205	MS24665-490	5315-00-059-0205	222	4
80205	MS24665-493	5315-00-018-7988	270	32
80205	MS24665-752	5315-00-846-4297	277	22
			293	35
96906	MS24665-754	5315-00-187-9600	279	23
96906	MS24679-7	5310-00-474-3798	230	12
			230	19

CROSS-REFERENCE INDEXES

PART NUMBER INDEX

CAGEC	PART NUMBER	STOCK NUMBER	FIG.	ITEM
96906	MS25036-108	5940-00-143-4780	99	12
			99	37
			100	5
			106	8
			106	33
			107	5
			112	2
			120	17
			120	37
			121	2
			229	18
			232	10
96906	MS25036-110	5940-00-143-4793	99	45
			100	30
			102	3
			118	6
			120	19
			120	35
			123	5
96906	MS25036-112	5940-00-143-4794	57	46
			99	43
			100	3
			100	27
			101	11
			102	6
			104	2
			104	9
			106	3
			106	34
			120	18
			120	36
96906	MS25036-114	5940-00-113-9826	99	44
			106	9
			120	16
96906	MS25036-115	5940-00-143-5284	101	10
96906	MS25036-116	5940-00-114-1305	102	7
			103	10
96906	MS25036-118	5865-01-513-6853	99	57
			101	5
96906	MS25036-119	5940-00-114-1310	99	41
96906	MS25036-122	5940-00-113-8190	129	3
96906	MS25036-153	5940-00-143-4774	93	6
			99	10
			99	36
			100	9
			100	22
			101	3
			103	13
			103	21
			104	4
			104	11

CROSS-REFERENCE INDEXES

PART NUMBER INDEX

CAGEC	PART NUMBER	STOCK NUMBER	FIG.	ITEM
96906	MS25036-153	5940-00-143-4774	105	10
			105	25
			105	45
			106	2
			106	35
			110	2
			111	2
			126	2
			128	2
			229	19
81343	MS25036-156	5940-00-143-4775	132	6
			132	8
81343	MS25036-157	5940-00-143-4777	130	2
96906	MS25231-1873	6240-00-419-3185	62	7
96906	MS25440-4	5310-00-841-2576	42	29
			75	7
			83	24
96906	MS25440-6A		189	4
96906	MS27148-3	5999-00-926-3144	107	3
96906	MS27183-10	5310-00-809-4058	28	22
			103	5
			207	20
			208	7
			214	7
			229	8
			289	27
96906	MS27183-12	5310-00-081-4219	16	20
			17	2
			18	2
			23	9
			26	23
			30	3
			41	23
			41	23
			42	19
			92	2
			95	2
			102	19
			120	28
			122	10
			137	26
			145	2
			158	2
			159	15
			183	6
			204	4
			208	3
			286	9
			289	14
96906	MS27183-14	5310-00-080-6004	134	27
			144	6

CROSS-REFERENCE INDEXES

PART NUMBER INDEX

CAGEC	PART NUMBER	STOCK NUMBER	FIG.	ITEM
96906	MS27183-14	5310-00-080-6004	180	22
			263	2
			265	12
96906	MS27183-17	5310-00-809-5997	1	22
			24	55
			51	11
			53	7
			162	21
			167	3
			200	2
			219	17
			277	4
			281	2
			283	2
			284	1
			291	2
			293	2
			297	16
			298	4
96906	MS27183-19	5310-00-809-3079	205	23
96906	MS27183-27	5310-00-809-8541	208	18
96906	MS27183-36	5310-00-982-6571	161	25
96906	MS27183-9	5310-00-823-8804	255	10
96906	MS27769-3	4730-00-278-2965	3	8
			295	12
81343	MS28775-007	5331-00-292-0577	31	25
81343	MS28775-218	5331-00-584-0263	156	15
96906	MS3106F10SL3S		120	8
96906	MS3367-5-0	5975-00-133-8687	105	2
			105	48
96906	MS3456W10SL3S	5935-00-534-7553	120	55
96906	MS3456W10SL4S	5935-00-509-6194	123	4
96906	MS35206-217	5305-00-889-2999	190	74
			233	8
96906	MS35206-242	5305-00-889-3002	83	8
80205	MS35206-243	5305-00-984-6191	83	4
96906	MS35207-263	5305-00-989-7434	66	1
			67	17
			208	12
96906	MS35207-265	5305-00-993-1848	62	22
			204	2
			289	1
96906	MS35307-359	5305-00-717-5460	230	3
96906	MS35307-371	5305-00-879-8351	151	30
			154	17
			158	16
96906	MS35307-462	5305-00-721-5322	1	2
96906	MS35333-36	5310-00-193-7577	75	52
96906	MS35333-38	5310-00-559-0070	54	13
96906	MS35333-40	5310-00-550-1130	133	14
			135	7

CROSS-REFERENCE INDEXES

PART NUMBER INDEX

CAGEC	PART NUMBER	STOCK NUMBER	FIG.	ITEM
96906	MS35333-40	5310-00-550-1130	223	18
			230	9
96906	MS35333-41	5310-00-167-0721	22	2
			40	20
			41	44
			44	12
			228	2
			263	23
96906	MS35333-44	5310-00-194-1483	57	48
96906	MS35333-45	5310-00-209-1510	94	2
96906	MS35333-46	5310-00-543-4385	133	23
			135	27
96906	MS35335-30	5310-00-209-0788	62	13
96906	MS35335-32	5310-00-596-7691	62	16
			67	15
			76	10
			77	5
			81	10
			223	20
			289	5
96906	MS35335-34	5310-00-514-6674	65	4
			118	9
			120	27
			132	9
96906	MS35335-35	5310-00-627-6128	67	6
			83	16
			107	10
			203	5
96906	MS35335-37	5310-00-209-5116	80	5
			132	1
96906	MS35338-42	5310-00-045-3299	31	64
			83	7
			233	3
96906	MS35338-43	5310-00-045-3296	54	6
96906	MS35338-44	5310-00-582-5965	54	23
			58	13
			153	2
			181	37
96906	MS35338-45	5310-00-407-9566	11	2
			188	5
96906	MS35338-46	5310-00-637-9541	143	25
			144	2
			151	3
			151	31
			152	2
			153	6
			154	2
			156	16
			157	6
			180	21
			181	42

CROSS-REFERENCE INDEXES

PART NUMBER INDEX

CAGEC	PART NUMBER	STOCK NUMBER	FIG.	ITEM
96906	MS35338-46	5310-00-637-9541	192	2
			201	2
			238	2
			245	9
			246	19
			296	20
96906	MS35338-48	5310-00-584-5272	58	21
			60	21
			143	18
			153	10
			154	7
			202	7
			243	2
			297	12
96906	MS35340-47	5310-00-655-9370	235	11
96906	MS35340-50	5310-00-045-5001	1	19
			96	13
			142	19
			171	8
			174	19
			202	23
			280	22
			297	16
96906	MS35355-64	5306-00-884-8787	57	39
96906	MS35425-74	5310-01-088-2490	218	18
96906	MS35478-1683	6240-00-044-6914	80	2
			81	14
			82	4
96906	MS35489-132	5325-00-786-5487	231	9
96906	MS35489-45	5325-00-285-8363	110	5
80205	MS35649-224	5310-00-938-2013	215	11
			223	7
96906	MS35690-424	5310-00-660-2649	133	20
			135	9
			223	11
96906	MS35690-624	5310-00-725-7382	2	15
			10	5
			24	28
			24	48
96906	MS35691-17	5310-00-851-2682	41	30
			94	10
			133	37
			175	5
96906	MS35691-21	5310-00-975-2075	27	2
			40	7
96906	MS35691-54	5310-00-891-3405	133	21
			135	8
			171	4
96906	MS35751-68	5306-01-134-5738	205	36
96906	MS35756-13	5315-00-616-5521	16	13
96906	MS35756-15	5315-00-616-5530	155	17

CROSS-REFERENCE INDEXES

PART NUMBER INDEX

CAGEC	PART NUMBER	STOCK NUMBER	FIG.	ITEM
80205	MS35756-6	5315-00-616-5514	206	25
96906	MS35756-8	5315-00-616-5526	40	13
			41	33
			133	8
			134	19
80205	MS35756-9	5315-00-616-5525	55	20
96906	MS35782-6	4820-00-276-9041	49	16
96906	MS35810-3	5315-00-754-0848	41	60
96906	MS35842-12	4730-00-908-3193	12	5
96906	MS45904-68	5310-00-889-2528	223	12
96906	MS45904-76	5310-00-061-1258	82	10
96906	MS51113-1	5930-00-307-8856	66	4
96906	MS51329-1	6220-00-669-5623	83	1
96906	MS51500A4	4730-00-289-0383	184	13
96906	MS51504A4-4	4730-00-877-8997	38	2
			38	43
96906	MS51521A12	4730-00-133-3196	190	14
96906	MS51523A6	4730-00-618-5381	273	36
96906	MS51525A12	4730-00-710-5571	190	117
			273	103
96906	MS51525A12-16	4730-00-173-1881	190	13
96906	MS51525A16-20	4730-00-467-2600	275	15
96906	MS51525A6	4730-00-491-9576	38	23
			264	12
96906	MS51525A6-8	4730-00-080-7040	265	7
			266	9
			267	4
			268	8
			269	6
			270	2
			271	2
			274	33
96906	MS51525A8-10	4730-01-074-0907	275	2
96906	MS51525B4-6	4730-00-258-1864	72	8
			190	59
96906	MS51527-A8	4730-00-822-5609	189	19
			191	8
96906	MS51527A6	4730-00-143-3941	38	6
			39	12
			264	22
96906	MS51528A16	4730-00-935-5355	275	17
96906	MS51530B8	4730-00-625-2935	272	18
96906	MS51531B8	4730-00-762-1239	20	2
			159	8
96906	MS51534A8-4	4730-00-676-3075	20	3
			159	7
96906	MS51840-23SS	5365-01-091-1407	169	11
			196	25
96906	MS51943-31	5310-00-061-4650	68	9
96906	MS51953-25B	4730-00-196-2055	184	7
96906	MS51957-42	5305-00-054-6667	85	4

CROSS-REFERENCE INDEXES

PART NUMBER INDEX

CAGEC	PART NUMBER	STOCK NUMBER	FIG.	ITEM
96906	MS51957-71	5305-00-050-9237	76	9
96906	MS51958-65	5305-00-059-3661	223	19
96906	MS51967-14	5310-00-768-0318	46	11
			51	29
			53	6
			58	22
			60	15
			96	16
			216	13
			221	5
			243	4
			277	5
			283	1
96906	MS51967-20	5310-00-763-8920	161	40
			164	41
			166	19
			171	9
			174	22
			211	22
			235	2
			290	3
96906	MS51967-23	5310-00-763-8921	201	11
			298	11
96906	MS51967-3	5310-00-905-0762	61	16
			130	4
			175	12
			215	18
96906	MS51967-5	5310-00-880-7744	41	22
			41	22
96906	MS51968-11	5310-00-880-7745	219	1
96906	MS51968-20	5310-00-763-8905	171	10
96906	MS51968-23	5310-00-763-8901	163	10
96906	MS51975-18	5305-00-939-0658	205	37
96906	MS53047-1	6220-00-500-0437	83	2
96906	MS90708-1125		133	31
			135	23
96906	MS90727-115	5305-00-719-5238	152	6
96906	MS90727-164	5305-00-726-2551	7	8
81349	M16878/3BMG0	6145-00-726-7275	BULK	27
61208	M2048F	5310-00-362-8168	214	26
			229	5
74400	M2875	6220-00-953-4652	79	1
82372	M400-65	5340-01-145-1298	235	7
28298	M5839	5310-00-209-4516	170	4
81349	M7928/5-4		197A	4
81349	M83248/1-013	5331-00-166-0988	29	5
81349	M83248/2-110	5331-00-166-1098	255	14
			256	13
			257	14
81349	M83248/2-118	5331-01-144-2252	247	28
			248	28

CROSS-REFERENCE INDEXES

PART NUMBER INDEX

CAGEC	PART NUMBER	STOCK NUMBER	FIG.	ITEM
81349	M83248/2-118	5331-01-144-2252	249	28
			250	28
			251	28
			252	28
			254	3
			255	3
			256	3
			257	3
			260	3
			261	3
81349	M83248/2-214	5331-01-017-6535	157	10
			194	6
81349	M83248/2-910	5331-00-167-5174	42	7
			241	7
			247	37
			248	37
			249	37
			250	37
			251	37
			252	37
			261	14
			267	14
			275	1
81349	M83248/2-914	5331-01-088-6106	143	30
			197	22
11568	M925A	5310-01-045-5588	54	14
			63	21
			233	2
81118	NAN275	5325-01-095-1835	291	41
80205	NAS1096-3-5	5305-00-483-7758	58	18
80205	NAS1352-4LE16	5305-00-145-0809	28	84
80205	NAS1408A4	5310-00-849-7021	63	23
99066	NT721021	5310-01-043-6821	223	24
			224	11
85480	NW8-3756	5310-00-682-4425	31	65
78189	N10-250100-0101	5315-01-166-5737	205	15
73842	OR224TG	5331-00-815-4046	185	9
11083	OTO329	5340-00-423-8146	295	18
04285	P-18240	4730-00-511-1677	49	17
			177	2
66289	PD115	5310-00-637-1058	31	3
			60	20
			62	15
			67	14
			289	16
27182	PK500	5342-01-214-1787	214	18
15235	PLG1	4730-00-278-3383	4	18
			7	9
			13	14
			148	12
19728	PS-1459 AS	2920-01-184-1055	58	5

CROSS-REFERENCE INDEXES

PART NUMBER INDEX

CAGEC	PART NUMBER	STOCK NUMBER	FIG.	ITEM
18265	PSH00-0679	2940-01-151-6375	33	4
77122	PS188007	5310-00-914-8217	217	27
			218	26
06383	PV14-10LFC	5940-01-087-0285	104	10
18265	P10-0128	4730-00-084-7543	35	11
18265	P10-2533	5306-01-153-1362	33	11
18265	P10-2926	2940-00-923-4154	33	12
18265	P10-2927	5331-01-181-2424	33	13
19728	P90-2205	5940-01-103-6803	58	37
68505	P90-2206	2920-01-068-7139	58	40
68505	P90-2207	2920-01-068-7138	58	41
68505	P90-809	3120-00-138-0241	58	35
68505	P90-816	2920-00-936-7121	59	8
68505	P90-989	2920-00-936-7122	58	7
60380	Q-8321	3110-00-198-0510	28	8
60380	Q-8322	3110-01-119-1128	29	41
60380	QA-54783	5315-01-182-3486	31	23
61112	QA5-1TC	4920-01-140-7569	44	14
61112	QS5-2CT	2910-01-149-7860	44	3
21335	Q13367		32	43
60380	Q8292	3110-00-198-0464	30	30
21335	RAL012NPP	3110-01-066-0466	134	12
			135	3
			205	20
			205	42
37929	RAS5712N	2920-01-093-4035	58	15
59730	RA2573	5940-01-112-9746	224	6
56501	RB-2577F	5940-01-068-1879	103	11
			103	22
			104	7
			115	3
18265	RBX00-2276	2940-01-166-6834	288	3
22337	RB30475	2530-00-735-9029	185	11
81733	RC160R/L	3020-00-192-6808	168	3
71425	RD700	2910-01-181-1931	26	8
95760	RHW205	5310-01-095-3348	63	6
			206	15
			230	4
99017	RH20	5340-01-172-0371	63	3
06721	RN969	4440-01-159-1712	178	18
80756	RR-312	5325-00-582-3115	284	14
80756	RR-900	5325-00-812-0645	139	2
80756	RRT-137-CD	5325-00-765-1203	187	29
80756	RRT-500	5325-00-853-2384	139	13
80756	RRT162CDM9	5325-00-531-3970	135	2
80756	RRT212C	5325-00-954-9666	285	15
80756	RRT287	5325-00-972-6825	140	30
80756	RRT393	5325-01-095-8663	137	48
80756	RR75CK	5325-00-721-7485	151	7
80756	RST-177S	5325-00-403-6449	155	30
80756	RST-275	5325-00-763-9328	137	33

CROSS-REFERENCE INDEXES

PART NUMBER INDEX

CAGEC	PART NUMBER	STOCK NUMBER	FIG.	ITEM
80756	RST-68	5325-00-921-3208	10	1
81349	RW31V100	5905-00-636-8357	229	20
81774	R5302P1	5940-00-291-0085	126	3
60038	S-265-D	5305-01-165-4290	15	9
81495	S-738-16	4730-00-277-1896	184	6
81343	SAE-AS25036-157		60	13
19728	SAT-1004-E	2920-01-068-7177	59	2
19728	SAT-32	5330-00-193-0850	59	3
68505	SAT4107	5945-01-184-4275	59	1
68505	SAV-1008A	2920-01-184-1054	59	5
90030	SD43BS	5320-00-971-7870	207	18
07707	SD64BS	5320-00-850-3233	217	31
07707	SD66BS	5320-00-850-3241	14	5
			47	3
			209	1
			216	2
61957	SD86BS	5320-01-063-9029	214	11
26124	SG5581-056	3120-01-066-4562	299	11
68256	SK3515	5977-01-149-4166	91	9
10832	S115	5310-00-419-1363	160	29
97820	S12562-116	5330-00-402-8718	197	12
			252	14
11083	S1594	5306-00-260-4508	38	40
84233	S160-8APX	3020-01-196-1233	168	4
11083	S1603	5306-00-263-7303	27	9
11083	S1615	5306-00-261-1153	28	58
27182	S33-LKLXZNCT	2540-01-181-3686	214	4
27182	S33-LKRXZNCT	5342-01-181-5824	214	4
27182	S33CXXRXZNRC	2540-01-203-2399	214	23
27182	S55AC1LXZNCT	5340-01-181-5123	215	12
27182	S55AC1RXZNCT	5340-01-183-6091	215	12
15434	S658	5310-00-109-7638	96	14
			225	10
99193	S9413-215	5331-00-245-6767	144	16
			164	43
81348	TYIV/CL2/TR VC7	2640-00-678-8616	185	8
11083	T0065	5305-00-252-8906	24	3
			134	16
			194	16
11083	T0319		195	1
79960	T318S301	5305-00-531-9800	24	41
80756	US-387	5325-01-186-7760	202	42
66295	UT362	4730-01-106-7246	275	30
66295	UT412-212	4730-01-059-5352	35	12
			49	1
71468	VE26R24-11SL	5935-01-155-7738	105	38
71468	VE26R24-20SL		105	5
		5935-01-155-2513	105	51
71468	VE26R32-25SL	5935-01-155-5545	99	46
71468	VE27R24-11PL	5935-01-293-2036	105	24
71468	VE27R32-25PL	5935-01-158-9078	100	32

CROSS-REFERENCE INDEXES

PART NUMBER INDEX

CAGEC	PART NUMBER	STOCK NUMBER	FIG.	ITEM
17875	VS-1045-2-02		185	6
17875	VS-1045-2-03	2640-01-103-3631	185	1
17875	VS-977	2640-00-994-5774	185	2
17875	VS-977-1	2640-00-994-5774	185	3
60532	WAS125	5310-00-080-9422	37	11
04998	WA1248	5310-00-143-5722	66	2
			76	2
			208	13
			226	8
			296	8
01843	WA1793	5310-00-972-1588	223	13
78189	WD23875	5310-01-098-0634	21	12
			63	5
			66	10
			203	21
			207	3
			215	19
			215	36
			224	28
			227	2
11331	WM-412-A	4820-01-168-9520	197A	23
11331	WM-43-B1	4820-01-167-7954	197A	19
81348	WW-P-471AASBCD	4730-00-187-4191	243	16
24956	WWF24C18-210	2540-01-178-8914	225	6
52676	W14	5310-00-425-2015	164	5
64441	W21666-8	2640-00-537-2251	185	7
12128	W55	3110-00-554-5302	50	3
81348	X/GP3/CL-G/TYBA/ 13.00-24/E	2610-00-580-3221	186	1
53867	Z-2 910 871 287	5305-01-186-7132	60	2
53867	Z-2 915 011 011		60	5
28882	Z-64165		213	16
53867	0 001 420 003	2920-00-483-5127	58	1
			60	1
53867	0 122 469 002	6115-01-184-7432	55	1
11083	0L-1352	5306-00-426-2865	24	52
11083	0L0364	2930-00-365-2152	15	10
			166	39
11083	0L0478		242	1
			242	7
11083	0L0821	5310-01-148-0249	41	9
11083	0L0829	2520-00-362-7883	41	3
11083	0L1026	5340-00-229-9287	10	10
11083	0L1143	5306-00-285-1368	2	20
			13	6
			74	7
			218	33
			254	10
			255	17
			256	19
			257	18

CROSS-REFERENCE INDEXES

PART NUMBER INDEX

CAGEC	PART NUMBER	STOCK NUMBER	FIG.	ITEM
11083	0L1143	5306-00-285-1368	258	2
			259	4
			261	18
			265	23
			267	10
			268	11
			269	17
			270	28
			272	51
			273	98
11083	0L1319	5310-00-698-4460	180	2
			190	26
			253	13
			273	81
			274	3
11083	0L1329	5306-00-268-5798	1	11
			160	38
			215	60
11083	0L1351	5306-00-263-7301	27	8
			38	12
			38	47
			41	54
			47	7
			48	1
			50	22
			75	4
			78	2
			81	3
			100	16
			120	23
			138	25
			161	11
			164	19
			181	43
			192	1
			210	4
			217	11
			218	5
			219	14
			238	1
			267	12
			268	16
			285	20
11083	0L1774	5365-01-300-2674	301	61
11083	0L2061	5315-00-423-8085	142	9
11083	0L2070	5306-00-698-2150	2	20
			17	17
			19	1
			155	23
11083	0L2315	5305-01-107-5161	143	22
			298	2

CROSS-REFERENCE INDEXES

PART NUMBER INDEX

CAGEC	PART NUMBER	STOCK NUMBER	FIG.	ITEM
11083	0S0468		167	14
11083	0S0509	5305-00-252-8919	9	3
			44	9
			48	7
			51	4
			52	1
			77	7
			83	13
			98	9
			99	21
			102	13
			107	9
			133	18
			164	31
			166	13
			177	7
			178	68
			189	12
			189	38
			198	23
			286	17
			296	19
11083	0S0532	5307-00-274-8196	45	6
11083	0S1566	5306-00-275-5012	96	12
			174	21
11083	0S1571	5305-01-026-9518	17	12
			24	11
			35	21
			42	37
			133	2
			160	26
			180	3
			205	7
			295	17
11083	0S1573	5306-00-426-2922	154	21
			278	28
11083	0S1577		201	5
		5306-00-260-4502	222	15
11083	0S1585	5306-01-127-9361	1	21
			143	19
			200	3
			243	1
			273	124
			275	28
			297	13
			197B	47
11083	0S1587	5306-00-263-8978	7	4
			53	18
			154	8
			202	10
			215	45

CROSS-REFERENCE INDEXES

PART NUMBER INDEX

CAGEC	PART NUMBER	STOCK NUMBER	FIG.	ITEM
11083	0S1587	5306-00-263-8978	273	120
			275	33
			291	1
11083	0S1588	5306-00-426-3949	75	28
11083	0S1590	5306-01-094-9106	15	14
			24	20
			35	20
			45	9
			49	10
			158	10
			169	9
			217	5
			218	14
			262	13
			273	75
			274	37
11083	0S1591	5305-01-015-6841	12	8
			13	13
			23	14
			36	29
			40	11
			41	50
			133	35
			144	5
			158	15
			166	38
			175	3
			183	15
			205	18
			205	40
			263	1
11083	0S1594	5306-00-260-4508	4	14
			13	15
			15	7
			17	8
			41	42
			49	4
			78	10
			98	3
			144	18
			156	17
			158	13
			166	12
			178	6
			178	6
			190	11
			198	29
			201	1
			217	14
			220	9
			245	1

CROSS-REFERENCE INDEXES

PART NUMBER INDEX

CAGEC	PART NUMBER	STOCK NUMBER	FIG.	ITEM
11083	0S1594	5306-00-260-4508	246	23
			261	20
			264	16
			268	20
			270	18
			273	30
			273	77
			274	7
			276	3
11083	0S1595	5306-00-423-8117	53	9
			96	17
			215	39
			216	6
			217	18
			218	29
			221	7
			245	22
			246	4
			283	13
11083	0S1602		301	13
11083	0S1608	5306-00-814-6565	137	35
			138	37
			238	21
11083	0S1615	5306-00-261-1153	26	17
			29	32
			32	29
			197	2
			247	21
			248	21
			249	21
			250	21
			251	21
			252	21
			289	13
			197A	12
			197B	21
11083	0S1617	5306-00-226-4825	38	52
11083	0S1618	5306-01-116-9622	27	7
11083	0S1619	5306-00-426-2932	15	12
			24	23
			49	7
			74	1
			155	13
			238	20
			279	26
			293	6
11083	0S1620	5306-00-426-2933	178	74
11083	0S1621	5306-00-426-2934	219	16
			220	11
			281	1
11083	0S1625	5305-00-426-2936	171	11

CROSS-REFERENCE INDEXES

PART NUMBER INDEX

CAGEC	PART NUMBER	STOCK NUMBER	FIG.	ITEM
11083	0S1625	5305-00-426-2936	235	3
			280	23
11083	0S1626	5306-00-814-6588	299	16
11083	0S1627	5306-00-426-2937	37	18
11083	0S1748	5306-00-426-2939	9	4
11083	0S1822	5310-01-171-3633	293	17
11083	0T0055	5306-01-159-1513	42	3
			50	24
11083	0T0065	5305-00-252-8906	16	18
			41	38
			49	9
			154	13
			155	12
			161	1
			189	43
11083	0T0101	5307-00-419-4067	3	16
11083	0T0102	5305-00-721-5492	273	121
11083	0T0319	5306-00-260-4512	273	96
11083	0T0513	5305-00-434-4718	244	2
11083	0T0537	2510-00-423-8153	216	4
11083	0T0573	2910-00-309-9473	2	20
			13	7
			24	27
			51	24
			157	9
			253	11
			254	9
			256	18
			259	1
			267	22
			268	31
			270	26
11083	0T0772		273	99
11083	0T0774		301	62
11083	0T0883	5310-00-404-2422	53	11
11083	0V0196	5305-01-066-0529	41	48
11083	0V0450	5305-01-097-7907	222	7
11083	0019440		38	14
			38	32
79470	003-40054	4730-00-778-0218	180	5
11083	0037030		178	24
11083	0054362	4730-01-471-0277	38	16
			264	10
			265	4
			266	8
			268	23
			269	5
			270	4
			271	11
			273	1
			274	10

CROSS-REFERENCE INDEXES

PART NUMBER INDEX

CAGEC	PART NUMBER	STOCK NUMBER	FIG.	ITEM
11083	0060117	5330-01-170-3804	236	2
11083	0068663	5325-01-520-9748	162	10
11083	0094184	5360-01-168-0023	91	8
24956	0110520KN27WC	5355-01-182-1684	65	7
30780	02R01-4-4	4730-00-177-6166	75	25
			176	9
			197B	30
85105	028398	5365-01-169-3064	244	17
85105	029106	5310-01-169-2931	244	18
71468	030-2196-001	5999-01-156-6314	120	9
71468	030-2271-000	5999-01-154-2345	100	35
71468	030-2272-000	5999-01-193-5735	100	36
			105	34
11083	0300060	3110-01-437-6096	160	31
			164	23
11083	0300061	3110-01-437-6097	160	32
			164	22
1F125	0302135	5306-01-468-2844	102	18
11083	0303239	5330-01-154-5264	192	18
11083	0307935	4730-01-066-7651	274	19
			275	36
11083	0307936	4730-01-066-7652	264	19
			273	14
11083	0307943	4730-01-169-5830	273	137
			275	24
11083	0307944	4730-00-962-4176	273	4
11083	0307946	4730-01-429-3246	38	3
11083	0307950	4730-01-063-4224	157	2
			190	110
			273	5
11083	0307959		190	108
11083	0307965	4730-01-169-1945	190	2
11083	0308194	4730-01-058-9100	42	8
			267	13
71468	031-1296-000	5999-01-157-7719	100	37
71468	031-1298-000	5999-01-159-2400	99	52
71468	031-1300-000		99	53
			105	36
71468	031-1301-000		105	6
11083	0310223	5306-01-471-3609	202	40
11083	0310249	4730-01-471-3774	77	14
			219	11
11083	0314155	5310-00-542-0091	205	11
11083	0324000	5305-01-053-4554	68	2
85105	032435	5365-01-169-6842	244	5
77640	032436	5330-00-492-2886	244	15
71785	032633	5330-01-170-3740	244	19
85105	032696	5330-01-170-6299	244	4
11083	0329717	4320-01-022-3948	236	3
11083	0383987	5310-01-176-5045	211	21
11083	0384741		287	4

CROSS-REFERENCE INDEXES

PART NUMBER INDEX

CAGEC	PART NUMBER	STOCK NUMBER	FIG.	ITEM
11083	0530700	4730-01-063-4225	264	20
11083	0532171	5325-01-236-5099	67	5
71468	057-0891-000		105	32
			105	39
			120	34
			120	50
11083	0619258	4730-01-514-4630	265	5
11083	0643274		215	62
11083	0680592		190	89
			190	130
			190	151
11083	0684208	5305-01-197-8355	69	9
11083	0685824	5930-01-064-1008	225	1
11083	0691430		75	31
11083	0869934	5306-01-116-9622	18	1
			159	6
77640	091452	3010-01-169-8759	244	13
85105	099082	5365-01-169-6795	244	14
53867	1 120 200 023	5365-01-174-8876	55	13
53867	1 120 220 007	5310-01-175-0630	55	16
01843	1 120 222 001	5330-01-178-3728	55	6
01843	1 124 035 017	2920-01-178-0499	55	9
53867	1 124 210 003	2920-01-187-7193	55	8
53867	1 125 500 024	2920-01-178-6536	55	2
53867	1 125 885 031		55	4
53867	1 126 610 061	4140-01-176-2818	55	19
53867	1 127 320 503	5961-01-174-8652	55	7
53867	1 197 011 000	2920-01-177-8505	55	3
53867	1 900 910 024	3110-01-179-5935	55	5
07988	1-018	5331-00-400-8480	190	139
11083	1A0224	5305-00-450-0417	299	24
11083	1A1415	5310-00-264-1874	243	42
11083	1A1460	5306-00-273-6357	46	15
			51	12
			53	16
			202	8
			202	8
			216	10
			221	6
			245	4
			246	24
11083	1A2029	5306-00-423-8194	14	2
			17	18
			19	2
			23	7
			35	5
			39	5
			40	11
			42	3
			47	13
			49	26

CROSS-REFERENCE INDEXES

PART NUMBER INDEX

CAGEC	PART NUMBER	STOCK NUMBER	FIG.	ITEM
11083	1A2029	5306-00-423-8194	133	9
			143	10
			151	2
			154	3
			268	37
			270	11
11083	1A2209	5306-00-063-5001	190	71
			198	6
11083	1A2343	5306-00-282-8360	229	3
11083	1A2850	5307-00-263-7293	181	6
11083	1A5183	5306-00-637-4927	238	23
11083	1A5822	5306-00-426-3080	283	10
			297	15
11083	1A5823	5310-00-162-9275	166	11
11083	1A8063	5306-00-426-3139	299	17
11083	1A8285	5310-00-423-8288	40	21
			41	31
			41	31
11083	1A8537	5306-00-426-3150	165	22
			293	27
11083	1A9579	5306-00-930-5643	204	5
			247	33
			248	33
			249	33
			250	33
			251	33
			252	33
11083	1B0676	5315-00-272-6760	40	6
			134	28
11083	1B2713	5306-00-423-8313	28	23
			214	24
11083	1B2790	5306-00-272-1804	23	2
			42	18
11083	1B2886	5306-00-423-8316	277	3
11083	1B3953	3110-00-100-0743	140	23
			237	4
			238	7
11083	1B4046	3110-00-013-7758	243	11
11083	1B4202	5310-00-188-7848	181	10
11083	1B4208	5310-00-076-1505	299	23
11083	1B4287	5310-01-094-2893	53	2
			283	3
11083	1B4367	5306-00-426-3209	160	7
11083	1B5174	4730-00-122-3969	49	11
			50	12
			158	18
			160	24
			167	20
			243	36
			284	18
11083	1B5355	5310-00-498-8409	21	5

CROSS-REFERENCE INDEXES

PART NUMBER INDEX

CAGEC	PART NUMBER	STOCK NUMBER	FIG.	ITEM
11083	1B5355	5310-00-498-8409	34	3
			35	19
			36	31
			45	2
11083	1B5675	3110-01-066-4696	155	29
11083	1B6161	5310-00-484-5739	139	34
58312	1B7709-00	5305-00-401-5261	10	17
11083	1B8708	5315-00-616-5522	5	9
11083	1B8737	5315-00-616-5500	237	6
11083	1B9920	5360-00-076-1478	96	8
11083	1C2251	5306-00-423-8393	2	13
			242	17
11083	1D0503	5310-00-270-2182	293	21
11083	1D1313	5360-01-068-9641	175	15
11083	1D4533	5306-01-106-8225	39	2
11083	1D4541	5306-00-801-9785	236	6
11083	1D4569		202	14
11083	1D4588	5305-00-419-3410	291	33
11083	1D4595	5306-00-814-6559	4	2
11083	1D4609	5306-00-426-3403	201	8
			243	32
11083	1D4610	5306-00-426-3404	298	8
11083	1D4616	5305-00-670-1772	292	2
11083	1D4624	5306-00-008-5972	222	20
11083	1D4628	5306-00-426-3408	278	26
			282	1
11083	1D4629	5305-00-929-9442	161	23
11083	1D4677	5306-01-095-1496	284	19
11083	1D4678	5306-01-170-6171	283	11
11083	1D4689		200	5
11083	1D4753	5360-01-095-0286	295	16
11083	1D5118	5310-00-208-9485	1	13
11083	1D5120		238	10
			242	3
11083	1F1006	5315-00-363-8794	16	3
11083	1F1599	5320-01-264-8505	217	3
			218	13
			219	29
11083	1F5198	5360-00-423-8464	72	5
11083	1F5403	5340-00-411-3926	40	5
11083	1F7958	5310-00-972-0479	215	61
11083	1H1023	5331-00-920-6924	24	39
			57	10
			172	8
			187	18
11083	1H2348	5360-01-066-0500	205	30
11083	1H3109	5120-01-345-5328	301	31
11083	1H3340	5305-01-178-3694	213	2
11083	1H5514	5306-00-175-7468	17	3
11083	1H5728	5331-00-333-4384	238	6
			279	14

CROSS-REFERENCE INDEXES

PART NUMBER INDEX

CAGEC	PART NUMBER	STOCK NUMBER	FIG.	ITEM
11083	1H7339	5331-00-593-1141	243	3
			278	14
			282	15
11083	1H7365	2510-01-063-0635	96	2
11083	1H7366	2510-01-063-0636	96	7
			134	29
11083	1H7724	3120-01-103-3645	197B	8
			197B	31
11083	1H7855	5365-01-170-8781	293	8
11083	1H8294	5305-01-225-2091	215	3
11083	1H8306	2910-00-862-6825	37	14
11083	1H8456	5305-01-180-4735	213	11
11083	1H9696	5331-00-580-1226	166	41
11083	1J4384	5315-00-619-2962	96	5
11083	1J8490	2530-01-069-1391	40	9
11083	1J8668	5307-00-118-3133	94	11
11083	1J9575	2590-01-066-0614	285	16
11083	1J9671	5330-00-613-6500	31	60
			38	36
11083	1K0502	5310-01-124-2054	225	8
11083	1K4363		97	4
11083	1K6870	5310-00-269-6340	243	35
			292	19
11083	1K7314	5310-01-333-4540	206	2
11083	1L5072	5315-00-532-5746	10	22
			284	8
11083	1L5081	5310-01-146-1218	17	9
11083	1L6561	5340-01-090-2356	287	2
11083	1M1230	5310-01-132-5309	229	13
			232	15
11083	1M3150	5315-00-246-0403	138	13
11083	1M3780	3120-00-898-4700	155	9
			155	16
11083	1M5899	6240-00-519-0264	84	9
11083	1M6052	6220-00-402-4477	84	4
11083	1M8657	5306-00-413-4750	137	18
11083	1N3524	2815-01-177-4809	13	4
11083	1N3564		3	24
11083	1N3574	2815-01-149-4016	3	14
11083	1N3800	2910-01-149-7901	28	4
11083	1N3802	2910-01-151-5705	28	2
11083	1N3824	4710-01-147-6389	12	7
11083	1N3958	2930-01-149-6719	49	13
11083	1N4102	4720-01-151-8127	12	6
11083	1N4304	2815-01-140-4222	4	4
11083	1N6002	5331-01-097-6618	194	23
11083	1P0436	5330-01-024-4862	42	21
			42	25
11083	1P0451	5330-01-518-0631	36	30
11083	1P0510	5120-01-030-1626	301	18
11083	1P0543		301	40

CROSS-REFERENCE INDEXES

PART NUMBER INDEX

CAGEC	PART NUMBER	STOCK NUMBER	FIG.	ITEM
11083	1P0544	5310-01-483-6594	301	37
11083	1P0561	4810-00-432-1944	149	12
11083	1P0562	4820-00-432-1732	151	6
11083	1P1216	2815-01-094-1957	21	1
11083	1P1255	5330-01-067-5724	23	5
11083	1P1367	5340-00-499-9648	18	6
11083	1P1722	3020-01-208-3259	6	7
11083	1P1832	5120-01-300-4502	301	1
11083	1P1833		301	9
11083	1P1834		301	10
11083	1P1835	5120-01-286-8435	301	6
11083	1P1837		301	4
11083	1P1838		301	3
11083	1P2322		301	51
11083	1P2497	5305-01-068-9719	29	21
			30	50
11083	1P2636	2520-01-067-5619	139	36
			143	5
			164	36
11083	1P2662	2520-01-067-5620	139	35
			143	4
			164	37
11083	1P2697	3110-01-022-5456	164	14
11083	1P2943	5340-01-069-3233	75	23
11083	1P3956	4710-01-063-0673	231	11
11083	1P4001	4730-01-023-8633	30	49
11083	1P4278	5342-01-063-0674	38	49
11083	1P4578	4730-01-051-5257	273	101
			274	23
11083	1P5274	5315-01-155-2618	151	19
11083	1P6367	5340-00-407-8369	4	16
11083	1P6452	5970-00-213-7747	31	31
58312	1P6452-00		31	13
11083	1P6453		31	37
11083	1P6745	5365-01-170-3787	239	26
11083	1P7115	5330-01-062-5887	180	23
			190	28
			253	15
			273	79
			274	5
11083	1P7346	5310-01-051-2300	15	21
11083	1P7409	5306-01-172-2527	211	1
			215	53
11083	1P7832	3120-01-068-5968	58	28
11083	1P8116	5331-01-066-0673	133	27
			135	16
11083	1P8594	5365-01-160-4024	142	17
11083	1P8654	5306-01-068-0039	142	20
11083	1P9216	5330-01-066-1420	138	11
			139	9
11083	1P9252	5330-01-100-9046	139	25

CROSS-REFERENCE INDEXES

PART NUMBER INDEX

CAGEC	PART NUMBER	STOCK NUMBER	FIG.	ITEM
11083	1P9645	5365-01-156-8947	139	39
11083	1P9646	5325-01-094-2430	139	37
11083	1P9685	2590-01-066-1421	148	4
11083	1P9899	5340-01-148-9803	51	9
11083	1P9919	4730-01-095-0834	264	2
			273	20
			273	34
			274	15
11083	1P9925	5306-01-069-0877	30	53
11083	1P9945	5340-01-148-9802	51	7
11083	1P9946	3040-01-147-6412	51	8
11083	1P9956	5306-00-497-0342	8	10
11083	1R0719	2910-00-740-3593	156	10
			285	1
11083	1R0739	2940-01-513-1518	18	8
11083	1R0750	2910-01-444-9487	42	36
			43	7
11083	1S0401	4730-00-670-6036	178	63
11083	1S0994	5340-01-151-9308	265	10
			266	17
			268	19
			270	10
			273	122
			275	3
11083	1S1083	5315-00-138-0318	168	5
11083	1S1636	2520-01-060-8624	150	19
11083	1S1953	3120-00-851-4696	32	19
11083	1S2121	2520-00-237-4603	150	17
11083	1S5927	2910-01-058-8070	40	2
11083	1S6595	5330-00-931-8048	23	4
11083	1S7107	5330-00-982-6578	181	7
11083	1S7251	5940-01-058-9090	77	3
			77	10
11083	1S7252	2920-01-066-0593	77	2
			77	11
11083	1S8229		97	3
11083	1S8230	6160-01-146-4437	97	1
11083	1S8478	5360-01-094-3211	140	16
11083	1S8947	5331-00-031-2558	25	9
11083	1S9110	3110-01-096-3130	166	7
11083	1S9292		140	7
11083	1S9540	2990-01-103-6817	3	28
11083	1S9543	5325-00-118-3056	8	6
11083	1S9593	5340-01-160-2464	114	4
11083	1S9874	4310-00-004-8267	KIT	
11083	1S9874-1		181	44
11083	1T0234	5330-00-944-5000	140	2
11083	1T0414	5306-00-455-0467	137	27
11083	1T0416	5306-00-253-7879	24	33
			145	11
			148	2

CROSS-REFERENCE INDEXES

PART NUMBER INDEX

CAGEC	PART NUMBER	STOCK NUMBER	FIG.	ITEM
11083	1T0416	5306-00-253-7879	149	2
			150	2
			188	6
11083	1T0765	5306-01-097-7874	19	4
11083	1U0406	3120-01-172-2650	237	8
11083	1U3389	5310-01-175-0616	197	8
			247	16
			248	16
			249	16
			250	16
			251	16
			252	16
11083	1U4661	3040-01-167-9211	197	4
			247	10
			248	10
			249	10
			250	10
			251	10
			252	10
11083	1U8698	5120-01-122-6012	301	26
11083	1V3655	5306-01-062-7129	223	21
11083	1V3658	2540-01-062-7132	223	26
			224	13
11083	1V6645	5365-01-293-1064	178	22
11083	1V7362	5930-01-118-6366	65	6
11083	1W0708	6620-01-158-0973	287	8
11083	1W1015		30	13
11083	1W1217		1	10
11083	1W1219	2510-01-147-2252	1	7
11083	1W1231	2815-01-154-6905	9	6
11083	1W1669	2910-01-178-8858	26	19
11083	1W1693		26	5
11083	1W1694		26	4
11083	1W1695	4320-01-163-3545	26	1
11083	1W1698	3040-01-178-9827	26	7
11083	1W1699	2910-01-180-2987	26	16
11083	1W1721		6	11
11083	1W2869		6	5
			6	9
11083	1W2870		6	4
11083	1W2871		6	8
11083	1W3285	3120-01-156-3801	32	25
11083	1W3485	2910-01-170-9230	32	45
11083	1W3486	2910-01-174-6182	32	18
11083	1W3900	5330-01-155-4283	2	21
11083	1W3985		25	13
11083	1W3986		25	10
11083	1W3987		25	12
11083	1W3989		25	11
11083	1W3990		25	18
11083	1W3994		25	5

CROSS-REFERENCE INDEXES

PART NUMBER INDEX

CAGEC	PART NUMBER	STOCK NUMBER	FIG.	ITEM
11083	1W4098	2990-01-183-5956	28	10
11083	1W4243	5360-01-156-8931	31	6
11083	1W4402		9	5
11083	1W4405	3020-01-148-3798	5	1
11083	1W4795	9905-01-175-7150	36	32
11083	1W5300	2815-01-146-4526	10	27
11083	1W5633	4730-01-152-7717	23	12
11083	1W5912	2910-01-178-9780	26	2
11083	1W6053		25	8
11083	1W6473	4310-01-139-4814	181	1
11083	1W6523	5365-01-154-4379	29	19
11083	1W6540		32	11
11083	1W6541	2910-01-155-0279	32	9
11083	1W6810	3040-01-147-6465	49	25
11083	1W7110	2815-01-177-4792	2	9
11083	1W7816		2	6
11083	1W8010		7	7
11083	1W8641	4710-01-143-4447	24	46
11083	1W8790		25	2
11083	1W9167	5340-01-153-8957	24	4
11083	1W9168	5340-01-155-5289	24	5
11083	1W9169	5340-01-155-7869	24	10
30780	10-8F5G5-S	4730-01-158-3563	190	40
11083	1003652	2815-01-119-2241	5	5
11083	1005047	2920-00-231-7270	54	1
16632	1007-16-14	4720-01-067-5672	35	2
11083	1007860	2815-01-186-2371	10	25
11083	1007861		10	25
11083	1010744	2540-01-178-8913	223	9
26759	101232	4730-00-289-4057	184	1
59501	10289	5310-00-596-8007	224	26
79470	103-20013	4730-01-065-9111	296	22
11083	1035962	3110-01-066-9172	144	14
15434	10365-62	5340-00-354-1147	30	6
11083	1045970	5340-01-443-4703	169	19
70412	10469	2540-00-922-0262	224	25
11083	1050017	2540-01-342-6814	206	30
11083	1052508	2910-01-021-1845	42	20
			42	30
11083	1059772	3040-01-125-5536	27	1
11083	1067150		50	13
11083	1070265	2815-01-159-7706	4	9
11083	1070268	5310-01-130-0611	4	10
11083	1074672		211	5
			215	37
29944	10884	2540-01-162-4161	219	12
19200	10910174-16	5310-00-987-1294	21	10
24617	109357	4730-00-010-9357	202	9
11083	1095562	3040-01-152-7821	164	16
59678	11022209	5940-01-106-3258	62	14
			63	25

CROSS-REFERENCE INDEXES

PART NUMBER INDEX

CAGEC	PART NUMBER	STOCK NUMBER	FIG.	ITEM
71468	110238-0195	5999-01-156-6314	70	6
			81	6
			81	16
			91	5
			99	8
			99	34
			100	7
			100	20
			101	7
			103	7
			103	15
			104	15
			105	9
			105	28
			105	41
			106	7
			106	21
			106	26
			107	6
			108	3
			109	5
			110	4
			111	4
			114	6
			118	4
			119	4
			120	38
			120	53
			121	4
			123	2
			124	2
			125	2
11083	1105800	2815-00-024-4596	3	5
78189	1114-00	5310-00-209-0786	103	3
			130	5
			132	2
			223	14
			224	2
16764	1115559	5945-01-113-1811	57	32
16764	1119866	5945-00-740-8238	73	4
53867	1125045116	2920-01-176-2965	55	12
53867	1125825021	2920-01-177-8565	55	15
11083	1127951	5930-01-524-8205	86	1
01843	1129900009	3110-01-177-4667	55	14
11083	1138217	2540-01-095-4990	230	13
77873	114-5177	2520-00-871-6817	242	15
11083	1148718	5330-01-348-2720	32	6
19207	11634481		139	30
11083	1164531		188	2
19207	11668932	6220-01-496-1925	82	3
19207	11668979	5310-01-100-2067	82	8

CROSS-REFERENCE INDEXES

PART NUMBER INDEX

CAGEC	PART NUMBER	STOCK NUMBER	FIG.	ITEM
19207	11669424	4820-01-073-0080	20	10
			159	1
19207	11674728	5935-01-097-9974	77	4
32498	1183-1	6220-01-152-5339	62	9
79550	11851	5940-01-121-0365	113	4
			116	2
83259	12HP5ONS	5365-00-406-9320	156	2
71468	120-1805-000	5935-01-153-9320	105	17
			105	27
71468	120-1806-000	5935-01-154-6233	101	9
71468	120-1807-000	5935-01-150-8323	105	42
			105	53
			109	4
			120	43
71468	120-1809-000	5935-01-152-6814	103	19
			104	13
			118	5
71468	120-1833-000	5935-01-153-9319	99	6
			99	55
			105	13
			105	31
			109	3
			120	4
71468	120-1868-000	5935-01-155-7391	120	12
71468	120-1870-000	5935-01-153-8291	101	6
			120	44
71468	120-1873-000	5935-01-153-7519	109	7
24821	120079-001	5325-00-263-3831	31	56
02249	1202	5310-00-818-4569	215	24
93061	1202P-2-2	4730-00-810-0059	183	11
89346	120401	4730-00-810-0059	288	1
			296	6
77900	1206-00	5310-00-187-7070	69	3
78189	1212-00	5310-01-165-8513	215	14
32498	1218	5975-01-305-0776	99	32
78189	1220-00	5310-00-595-7237	170	10
			223	27
			224	14
			230	18
19207	12256962-1	5310-01-109-6753	216	9
			245	5
			246	3
19207	12267772	5365-01-079-1624	241	8
78500	1229T1554	5310-00-949-9296	161	22
			292	6
24617	12337822	5310-00-944-5896	55	23
			201	3
			222	13
			243	25
11083	1243240	5315-01-169-8340	202	4
11083	1267130	2520-01-468-4331	139	26

CROSS-REFERENCE INDEXES

PART NUMBER INDEX

CAGEC	PART NUMBER	STOCK NUMBER	FIG.	ITEM
11083	1287347		31	27
11083	1290358	2815-01-153-1615	8	4
11083	1292381	3020-01-152-7853	166	8
11083	1296466	5930-01-176-1531	72	4
11083	1306797	2920-01-521-9952	99	50
			100	23
79470	131-05004	4820-01-053-4586	38	55
72800	1313-2	5325-01-183-8687	198	32
97403	13207E6498-2	5935-00-691-5591	107	4
11083	1383069	5330-01-161-6240	KIT	
11083	1387573	4940-01-268-2201	301	15
11083	1387574	5340-01-476-1734	300	3
11083	1387575	5120-01-451-1401	300	4
11083	1389507	5330-01-270-1752	30	23
99953	140583	5340-00-426-4793	99	19
			100	14
			102	17
			106	14
			109	11
			120	30
96151	14092	5325-00-788-6043	187	28
70485	1422	5340-00-209-9263	97	2
7X677	142365	4730-00-249-1531	231	3
11671	14317	5325-01-085-3125	187	24
11083	1440195-XX		226	13
30076	14500	4730-00-403-5404	20	11
79470	1461X8	4730-01-048-7874	14	11
11083	1473310	2530-01-152-7837	174	28
11083	1473400		160	34
11083	1487425	4820-01-486-0910	4	12
96151	15	5315-00-129-6499	187	10
81640	15-966-6	5310-01-106-1139	69	4
11083	1503724	5330-01-158-6283	32	31
11083	1503725	5330-01-157-3416	28	18
11083	1503726	5330-01-157-3415	28	26
11083	1503728	5330-01-157-2016	30	19
11083	1503730	5330-01-161-5518	28	27
11083	1505105	2510-01-182-7925	213	15
70040	1508811	5930-00-117-8078	75	15
11083	1528245		178	21
11083	153-5700	6140-01-505-1940	98	8
11083	1533580		293	33
11083	1539359		293	14
11083	1539359 AND 1533 580		293	14
62983	154022	5331-00-865-0404	144	27
			151	5
			151	33
			239	15
11083	1543947		50	10
11083	1552270	5930-01-477-7177	86	2

CROSS-REFERENCE INDEXES

PART NUMBER INDEX

CAGEC	PART NUMBER	STOCK NUMBER	FIG.	ITEM
11083	1552270	5930-01-477-7177	92	5
79550	15784		105	14
79550	15791	5940-01-336-0054	105	15
79470	1599	4730-01-098-0132	49	21
95760	16-400-P	5340-01-099-1434	215	51
55841	16-886	5310-00-905-5454	69	5
11083	1600196	4320-01-169-6528	236	1
84760	16168	5310-00-022-0666	24	38
11083	1618196	2540-01-095-0925	226	16
11083	1631201	2590-00-135-6277	92	4
84760	16389	5365-00-022-0665	25	14
11083	1642465	3830-01-095-0924	211	19
11083	1650016	4720-01-066-4587	BULK	9
11083	1650016-11.4		274	27
11083	1650016-13		272	11
11083	1650016-154		268	6
11083	1650016-20.5		272	6
11083	1650016-21.7		273	33
			274	14
11083	1650016-213		266	6
11083	1650016-23		264	5
11083	1650016-24.4		272	16
11083	1650016-26		264	9
11083	1650016-29		273	18
11083	1650016-34.2		272	61
11083	1650016-37		272	22
11083	1650016-38		266	14
11083	1650016-50		272	35
11083	1650016-52		272	30
11083	1650017	4720-00-198-5808	BULK	8
11083	1650017-13.4		275	22
11083	1650017-18		190	37
11083	1650017-24		275	10
11083	1650017-55		190	24
11083	1650020	4720-01-051-6773	BULK	10
11083	1650020-21.7		273	11
11083	1650020-42		273	24
11083	1656474	2910-01-140-8212	31	58
11083	1656475	5340-01-520-9812	31	59
0AHP5	166D1	4730-00-277-9386	88	1
11083	1660368	5330-01-520-9804	31	57
08108	1662	6240-00-877-3405	81	8
11083	1667441	4910-01-296-3862	301	20
11083	167-2195		278	17
			282	12
11083	167-2304	5330-01-507-3336	282	11
11083	167-2452	5330-01-507-3339	280	5
11083	1672186	5330-01-506-4780	192	20
11083	1672190	5330-01-021-9891	277	11
			280	7
			281	12

CROSS-REFERENCE INDEXES

PART NUMBER INDEX

CAGEC	PART NUMBER	STOCK NUMBER	FIG.	ITEM
11083	1672300	5330-01-507-3335	277	10
11083	1672452	5330-01-507-3339	277	9
11083	1677490		25	7
11083	1712208	5925-01-498-1823	75	38
11083	1719822	2990-01-165-5141	61	2
11083	1725189	4320-01-475-9634	50	17
11083	1727772	2930-01-177-4795	50	2
71791	173036	5330-00-966-6614	58	11
11083	1731007		297	6
11083	1731009		297	3
11083	1731011		297	1
11083	1733064	6220-01-093-7946	62	27
11083	1741500	6105-01-094-8228	232	9
11083	1746822		165	13
79550	17510	5935-01-097-7239	99	40
			100	24
11083	1757056	5340-01-520-9681	92	1
01843	17815-29-SP27WC	5342-01-062-9902	223	35
96151	18001	3110-01-100-9048	187	15
80204	1820	6240-00-143-3173	63	9
			64	2
			65	10
16764	1847807	5305-00-218-6387	57	64
16764	1847933	5310-00-407-3548	54	30
11083	1850008	4810-01-514-8525	176	11
16764	1852726	2920-01-053-4541	54	48
11083	1863736	5935-01-429-0888	86	3
			92	6
16764	1867431		57	55
16764	1867434	5970-01-131-7929	57	61
16764	1876813	5340-01-167-4216	54	19
70412	18920		224	24
16764	1892824	6110-01-099-2917	54	16
16764	1892960	6150-01-195-8726	54	18
16764	1894635	3120-00-828-6852	57	20
16764	1894636	3120-01-085-3039	57	50
89346	1894637	3120-01-101-5089	57	5
70412	18964	2540-01-181-1002	223	4
70412	18970	2540-01-188-3287	225	16
70412	18972		224	23
16764	1905406	5310-00-262-4715	54	40
			55	21
16764	1911644	5310-00-297-7319	57	9
16764	1913080	5310-00-291-4498	57	60
16764	1913084	5310-00-734-8959	57	53
16764	1914869	5306-00-550-9129	57	26
16764	1922457	5310-00-719-5470	57	28
16764	1930611	5306-00-550-3023	58	16
16764	1934478	2920-00-999-2526	57	42
16764	1936466	5310-00-999-2527	57	2
11083	1943532		300	5

CROSS-REFERENCE INDEXES

PART NUMBER INDEX

CAGEC	PART NUMBER	STOCK NUMBER	FIG.	ITEM
16764	1945356	5365-00-753-9528	57	15
16764	1945468	2920-00-843-8211	57	31
16764	1945476	5330-00-976-4695	57	23
16764	1945484	6110-00-757-7187	57	12
16764	1945500	2920-00-015-3058	57	44
16764	1945515	2920-00-034-7342	57	49
16764	1948519	5310-00-062-2051	57	34
16764	1948520	5310-00-822-2236	57	36
16764	1948521	5360-00-812-0196	57	37
16764	1948522	2920-00-822-2287	57	33
16764	1948526	5310-00-822-2241	57	38
16764	1948529	3040-00-034-4216	57	25
16764	1948536	5306-00-783-5183	57	21
16764	1948537	5306-00-783-5188	57	16
16764	1948656	5310-00-812-0408	59	4
11083	1950302	3120-01-503-4984	27	5
16764	1955990	5970-00-034-5015	57	41
11083	1957218	3830-00-532-4504	298	18
16764	1957846	2920-01-138-7045	57	17
16764	1958509	5330-00-237-6928	54	45
			54	53
16764	1959389	5970-00-403-5912	54	28
11083	1960028	3020-01-521-8058	27	3
11083	1960223	3020-01-254-1227	15	1
16764	1961570	5305-00-090-4274	54	15
16764	1964402	5342-01-132-4704	57	8
16764	1964857	5330-00-914-0703	57	14
16764	1965093	5970-00-918-5568	57	59
11862	1968396	5305-00-450-5937	57	40
16764	1968884	5330-00-429-3724	54	51
16764	1968885	3040-01-053-4746	54	50
16764	1968890	2920-01-053-4782	54	44
16764	1968891	2920-01-053-4743	54	43
16764	1968900	5325-00-031-3337	54	35
16764	1968901	5970-00-001-9381	54	36
16764	1968904	2920-00-231-7385	54	38
16764	1968930	5970-00-001-9382	54	26
16764	1968988	2920-00-484-2799	54	10
16764	1968990	3120-00-432-8120	54	20
16764	1968991	5305-01-163-5701	54	46
16764	1968994	5305-01-163-5702	54	42
16764	1968996	5325-00-031-3336	54	17
16764	1968998	5305-00-432-8422	54	9
			57	63
16764	1969000	2920-01-053-4744	54	7
16764	1969001	2920-01-053-4745	54	2
16764	1969002	5325-00-026-3776	54	24
16764	1969133	5950-00-758-7793	54	37
16764	1969481	2930-01-099-4405	54	41
16764	1969493		54	5
16764	1969671		54	34

CROSS-REFERENCE INDEXES

PART NUMBER INDEX

CAGEC	PART NUMBER	STOCK NUMBER	FIG.	ITEM
11083	1969988	3120-01-066-2505	15	2
16764	1970395	5330-00-429-3570	54	8
16764	1970407	5330-01-053-4747	54	52
16764	1971465	2920-00-010-7340	54	33
16764	1971670	2920-00-427-6421	54	27
16764	1971672	5961-00-451-0812	KIT	
16764	1971675	2920-00-427-6422	KIT	
16764	1974929	5950-01-130-5209	57	43
1LW55	1978754	9390-01-112-3500	57	6
			57	19
			57	51
16764	1978756	5340-01-115-3548	57	7
16764	1979387	5977-01-114-4948	57	54
7X677	1979388	5977-00-423-4900	57	57
16764	1979389	5970-01-137-3420	57	58
16764	1979390	5977-01-137-3419	57	56
16764	1979534	2920-00-821-2943	57	3
1LW55	1990453	2920-01-144-8803	57	1
			57	1
53867	2 000 101 042	5310-01-189-3799	60	26
53867	2 000 112 007	2920-01-189-6614	60	29
53867	2 001 933 005	2520-01-187-2523	60	28
53867	2 003 433 000	5305-01-186-7138	60	6
53867	2 003 526 040	5307-01-186-9387	60	9
53867	2 004 005 003	2920-01-187-2378	60	16
53867	2 004 115 013	2920-01-187-7027	60	17
53867	2 004 336 051	5977-01-197-7647	60	7
53867	2 005 825 180	2920-01-188-3268	60	32
53867	2 007 010 053	5330-01-198-2030	60	35
53867	2 007 010 055		60	38
53867	2 007 010 056		60	25
53867	2 007 010 062	5340-01-188-3175	60	11
53867	2 007 010 064-Z	2520-01-243-3565	60	30
53867	2 007 011 057	5340-01-209-0567	60	36
53867	2 007 014 067	5977-01-186-3595	60	37
53867	2 914 551 012	5305-01-186-7144	60	22
53867	2 916 069 025	5310-01-187-0690	224	18
09990	2-013N951-75	5331-01-160-2077	25	3
09990	2-113N951-75	5331-00-290-8365	238	8
02697	2-216S1199-70	5331-00-913-8872	23	11
			24	17
			24	58
09990	2-227N951-75	5331-00-559-8786	143	17
			144	17
			153	9
			154	10
			164	42
09990	2-241N951-75	5331-00-291-7192	24	14
			24	47
			143	28
02697	2-244C873-70	5331-00-941-3599	297	8

CROSS-REFERENCE INDEXES

PART NUMBER INDEX

CAGEC	PART NUMBER	STOCK NUMBER	FIG.	ITEM
09990	2-246N951-75	5331-00-859-0396	285	2
09990	2-279N951-75	5331-00-999-8364	166	32
09990	2-312S1032-70	5331-00-914-3320	164	9
09990	2-338N951-75	5331-00-862-6861	51	17
77873	2A-24522-1	2520-01-177-5419	242	6
45152	2AA855	5342-01-270-8588	99	59
			105	52
			120	62
11083	2A1420	5306-00-530-9235	293	24
11083	2A1538	5306-00-426-3605	277	24
11083	2A1763	5330-00-363-9866	37	13
11083	2A3211	5310-01-151-8350	14	3
11083	2A3398	5330-00-599-5887	152	9
11083	2A3798	5315-00-252-2959	3	23
11083	2A4429	2805-00-288-3650	10	30
11083	2A4639	5306-00-263-4038	24	29
11083	2A5328	2815-00-423-8767	181	17
11083	2A5546	5306-00-253-3376	24	56
			40	1
11083	2A5926	5305-01-094-8679	223	3
			224	27
			225	15
11083	2A7081	2510-01-177-4796	270	14
11083	2B0941	5365-00-650-7092	189	17
			189	42
11083	2B0947	5306-00-809-7134	235	5
			284	2
11083	2B2254	5360-00-598-6759	137	11
11083	2B2673	5310-01-097-7969	293	19
			293	20
11083	2B2938	5315-00-363-6577	96	1
11083	2B3147	5330-00-164-2401	167	5
11083	2B3148	2530-00-164-2402	167	4
11083	2B8352	5310-00-507-5727	84	3
11083	2B9828	5365-01-520-9680	190	54
11083	2D0193	4730-01-051-8741	286	1
11083	2D0388	5325-00-899-1272	63	18
11083	2D0598	5331-01-064-8275	239	14
11083	2D1683	4730-00-278-4814	178	29
11083	2D2285	5306-00-853-0324	41	36
			170	11
11083	2D4867	4730-00-172-0022	202	31
11083	2D5383	5330-01-066-0681	284	15
11083	2D6235	5310-01-160-2034	222	12
			197A	21
			197B	29
11083	2D6392	5330-00-843-7194	30	41
			57	24
11083	2D6642	3110-00-992-1048	164	26
			165	19
11083	2D8154	5325-00-920-6925	243	29

CROSS-REFERENCE INDEXES

PART NUMBER INDEX

CAGEC	PART NUMBER	STOCK NUMBER	FIG.	ITEM
11083	2D8652		279	6
			279	20
11083	2D8822	5325-01-079-6770	199	10
11083	2D9335	2510-01-062-5891	216	3
11083	2F0808	5305-00-151-9899	36	9
11083	2F5721	3110-00-144-8519	54	49
11083	2F6678	5330-00-972-7644	57	4
11083	2F7964	2530-00-569-3810	208	16
			273	90
11083	2F8057	5310-01-170-3769	160	3
			192	26
11083	2G0491		204	14
11083	2G0496	3130-01-171-0519	204	12
11083	2G1133	5325-01-176-8163	217	19
			218	28
11083	2G1135	5340-01-095-1297	217	9
			218	8
11083	2G1137	5330-01-094-6081	218	16
11083	2G1314	3120-01-096-3132	163	3
11083	2G1484	5340-01-173-3863	218	20
11083	2G1485	5365-01-175-6905	218	15
11083	2G1506	5365-01-176-8152	217	20
11083	2G1509	5340-01-171-0968	217	23
11083	2G1514	5340-01-171-5319	96	18
11083	2G1516		96	15
11083	2G1535	2590-01-064-7453	296	13
11083	2G1536	5360-01-064-7454	296	12
11083	2G1537	5340-01-172-2627	296	11
11083	2G2553	4720-01-170-0790	268	9
11083	2G2558	4720-01-172-0588	266	10
			270	5
11083	2G2559	4720-01-170-7054	268	10
11083	2G2562	5340-01-172-2803	267	7
			268	14
11083	2G2563	5340-01-172-0725	267	8
			268	15
11083	2G2623	4030-01-169-7031	267	6
			268	13
11083	2G2968	5340-01-172-2801	289	12
11083	2G2969	5340-01-169-9642	289	25
11083	2G3149		134	25
11083	2G3182	2540-01-194-2042	217	7
			218	9
11083	2G3183	2590-01-192-9705	217	15
			218	34
11083	2G3199	2930-01-150-4923	53	5
11083	2G3221	5365-01-095-6116	293	12
11083	2G3223		53	4
11083	2G3382	6160-01-166-6589	96	11
11083	2G3468	5340-01-159-8885	203	13
11083	2G3765	5360-01-065-7155	170	7

CROSS-REFERENCE INDEXES

PART NUMBER INDEX

CAGEC	PART NUMBER	STOCK NUMBER	FIG.	ITEM
11083	2G3788	4720-01-178-9670	267	5
11083	2G3791	4720-01-171-3342	266	11
			270	6
11083	2G3865	5365-01-095-1304	160	36
11083	2G3967	5365-01-170-3788	279	21
11083	2G3984	5310-01-172-0034	291	45
11083	2G4332		298	16
11083	2G4337		298	6
11083	2G4338		298	12
11083	2G4348		298	7
11083	2G4505	4720-01-093-7328	38	7
			38	44
11083	2G4507	4720-01-093-7329	38	33
11083	2G5358	2510-01-097-6745	226	17
11083	2G5375	2530-01-152-7741	177	3
11083	2G5443	5340-01-168-9268	245	3
11083	2G5444	5340-01-168-9269	246	21
11083	2G5494	5340-01-171-8165	265	15
11083	2G5617	5340-01-095-9491	178	89
11083	2G5618	3040-01-334-2284	175	18
11083	2G5667	2530-01-095-3504	161	32
			162	17
11083	2G5694	4810-01-094-9956	75	24
11083	2G5744	2530-01-189-4777	185	14
11083	2G5768		165	17
11083	2G5836	6150-01-144-1567	98	7
11083	2G5888	4720-01-170-9167	178	32
11083	2G6010		164	1
11083	2G6020	2520-01-094-2803	165	1
11083	2G6059		290	1
11083	2G6337	3020-01-150-5428	174	9
11083	2G6365	2590-01-144-1568	98	6
11083	2G6384	4710-01-148-2662	49	15
11083	2G6415	5340-01-180-6699	218	17
11083	2G6503		299	28
11083	2G6532	4720-01-178-8827	269	7
11083	2G6684	5340-01-293-1874	178	23
11083	2G6695		243	5
11083	2G6747	5355-01-170-4622	263	13
11083	2G6748	5355-01-094-9948	263	20
11083	2G6749	5355-01-094-9949	263	9
11083	2G6751	5355-01-095-1263	263	12
11083	2G6752	5355-01-095-1264	263	17
11083	2G6753	5355-01-095-1576	263	21
11083	2G6755	5355-01-095-1577	263	18
11083	2G6756	5355-01-095-1578	263	19
11083	2G6757	5355-01-095-1579	263	6
11083	2G6943	4720-01-093-7330	38	15
			38	41
11083	2G7097	2590-01-177-8593	211	24
11083	2G7098	2590-01-177-8594	211	23

CROSS-REFERENCE INDEXES

PART NUMBER INDEX

CAGEC	PART NUMBER	STOCK NUMBER	FIG.	ITEM
11083	2G7171	5340-01-169-9290	283	9
11083	2G7172	5340-01-169-0733	283	14
11083	2G7173	5340-01-172-0553	283	12
11083	2G7175	2590-01-172-0640	283	5
11083	2G7309		298	1
11083	2G7331		153	4
11083	2G7335		153	12
11083	2G7382	5340-01-171-1098	217	30
			218	32
11083	2G7387	3120-01-100-9049	161	17
			161	37
11083	2G7388	3120-01-100-9047	161	19
			161	35
11083	2G7484	5365-01-171-5387	217	32
11083	2G7548	4720-01-178-9667	264	21
11083	2G7549	4720-01-178-9668	264	17
11083	2G7551	4720-01-178-9669	264	18
11083	2G7552	4720-01-178-9666	265	9
11083	2G7558	2590-01-192-9704	261	21
11083	2G7801	2540-01-179-8860	215	5
11083	2G7842	3110-01-180-9132	215	7
11083	2G7843	5355-01-182-1685	215	6
11083	2G7956	5340-01-169-5611	217	16
			218	31
11083	2G8093	5365-01-096-4626	219	20
11083	2G8095	5365-01-155-4454	203	2
11083	2G8096	5325-01-099-1677	219	21
11083	2G8097	5325-01-151-4165	203	1
11083	2G8098	5325-01-100-5239	205	21
11083	2G8212	5310-01-169-2929	283	16
11083	2G8222	2590-01-149-6785	203	17
11083	2G8229		291	21
11083	2G8233	5310-01-172-0959	291	20
11083	2G8238	4320-01-170-2542	291	19
11083	2G8245	2540-01-095-8665	230	1
11083	2G8255	4720-01-178-8828	269	3
11083	2G8279	2540-01-182-7218	98	11
11083	2G8307	5330-01-150-9797	203	16
11083	2G8570		161	18
11083	2G8573	5340-01-172-0371	206	16
			230	2
11083	2G8599	3040-01-151-3996	161	28
11083	2G8602	2530-01-183-0022	161	27
11083	2G8608	3120-01-097-9506	161	8
11083	2G8609	5315-01-163-8372	162	25
11083	2G8613	5315-01-097-8386	161	33
11083	2G8615	3120-01-096-7027	160	17
11083	2G8617	3040-01-099-7354	161	3
11083	2G8621	5315-01-096-3207	161	26
11083	2G8624	3120-01-095-3372	161	29
11083	2G8625	5340-01-096-7215	161	24

CROSS-REFERENCE INDEXES

PART NUMBER INDEX

CAGEC	PART NUMBER	STOCK NUMBER	FIG.	ITEM
11083	2G8626	3120-01-096-7403	160	18
11083	2G8629	5340-01-095-6838	160	16
11083	2G8631	3120-01-095-5789	161	10
			162	24
11083	2G8633	5340-01-100-5373	161	14
11083	2G8642	3830-01-094-7513	211	15
			215	64
11083	2G8654	5340-01-169-2116	210	6
11083	2G8655	5340-01-173-5085	210	3
11083	2G8696	2510-01-177-8603	230	21
11083	2G8715	5340-01-170-4712	198	20
11083	2G8727		161	34
11083	2G8739	2530-01-095-2075	160	14
11083	2G8741	5330-01-095-5849	160	15
11083	2G8742	5310-01-094-9907	160	13
11083	2G8768	5310-01-094-9908	161	13
11083	2G8777	5330-01-095-0034	160	19
11083	2G8931	5995-01-094-6412	126	1
11083	2G8963	4710-01-151-5979	44	13
11083	2G9098	3040-01-174-6200	278	24
			282	4
11083	2G9103	5365-01-095-1307	278	22
			282	5
11083	2G9707		199	2
11083	2G9791	5330-01-098-3181	167	17
11083	2G9989	4720-01-171-1947	265	6
30780	2HP5N-S	5365-01-124-2945	196	27
			196	30
			197	14
			239	2
			247	29
			248	29
			249	29
			250	29
			251	29
			252	29
			261	13
11083	2H1190	5315-00-514-1616	237	15
			239	9
11083	2H3755	5306-00-814-8967	38	28
			44	11
			208	4
			197B	38
11083	2H3757	5306-00-423-8807	185	15
11083	2H3764		292	4
11083	2H3777	5310-00-138-0260	140	21
11083	2H3786	5310-01-053-7312	192	29
11083	2H3843	5330-01-067-7997	155	27
11083	2H3911	5330-01-021-9882	164	13
11083	2H3931	5331-00-580-1216	58	2
			155	31

CROSS-REFERENCE INDEXES

PART NUMBER INDEX

CAGEC	PART NUMBER	STOCK NUMBER	FIG.	ITEM
11083	2H3931	5331-00-580-1216	162	11
11083	2H3932	5331-00-633-4535	24	25
			149	26
			151	32
11083	2H5547	4730-01-159-2998	20	12
11083	2H6265	5315-01-066-1406	147	11
11083	2H9247	5331-00-593-1161	243	7
			295	6
11083	2H9889	5305-01-095-6337	93	1
			265	14
11083	2J0075		197	20
11083	2J0157	5330-00-858-8224	42	1
			151	34
11083	2J3505	5310-00-919-2242	161	20
11083	2J3506	5310-00-978-5406	37	20
			166	27
			222	25
11083	2J6089		196	15
			255	11
			256	10
11083	2J6133		285	8
11083	2J7258	5310-00-155-5049	46	9
11083	2J8163	5331-00-950-8217	160	39
11083	2K0419	5310-01-174-6043	293	23
11083	2K0420	5310-01-168-5568	280	18
11083	2K0564	5310-01-066-0508	41	11
11083	2K2882	5306-01-170-3768	289	18
11083	2K4973	5310-01-058-8071	41	24
			97	5
			161	4
			198	7
			204	17
			205	10
			285	11
11083	2K6921	5315-01-151-1103	137	13
11083	2K7979	3120-01-250-0924	206	5
			206	20
			206	27
			206	39
11083	2L3308	5330-00-297-7228	17	7
11083	2L3331	4730-00-234-5976	177	4
			178	2
11083	2L8050	5940-00-557-4344	103	18
11083	2L8054	5940-00-118-8836	100	26
			129	2
11083	2L8069	5940-00-113-9826	101	4
			106	29
			120	40
11083	2L8071	5940-01-059-0873	57	47
			60	14
			105	18

CROSS-REFERENCE INDEXES

PART NUMBER INDEX

CAGEC	PART NUMBER	STOCK NUMBER	FIG.	ITEM
11083	2L8071	5940-01-059-0873	105	26
			132	5
11083	2L8077	5940-01-053-4521	99	3
			99	56
			197A	6
11083	2M0849	5310-00-431-7239	46	10
			137	19
			202	26
			278	29
			291	44
11083	2M1168	2520-01-059-9381	149	11
11083	2M1656	5340-01-152-8205	151	4
11083	2M1908	4730-01-051-6765	197B	51
11083	2M4108	5330-00-923-6986	158	7
11083	2M4779	5307-00-465-6789	139	45
11083	2M5407	5330-00-920-6922	17	19
58312	2M5471-00	5305-00-004-7245	31	67
11083	2M8908	5355-00-730-8027	170	1
11083	2M9780	5330-00-939-0687	190	61
			267	20
			273	42
11083	2N0822	5340-01-172-5535	144	3
58312	2N0828-00	5310-00-187-9796	28	36
11083	2N2658	5305-01-024-4774	31	52
11083	2N3475	5305-01-097-9389	67	12
11083	2N3478		207	10
			226	9
11083	2N3680	5305-01-180-5324	226	4
11083	2N7609	3110-01-067-5616	144	9
11083	2P0220	5330-01-069-1478	183	19
11083	2P0226	5340-01-148-7562	46	8
11083	2P0408	3805-01-147-1409	47	11
11083	2P0440	2930-01-149-3805	47	14
11083	2P0698	4720-01-099-3711	13	10
11083	2P0987		272	4
			272	12
			272	14
			272	20
11083	2P1068	5330-01-093-8485	140	19
11083	2P1169		16	7
11083	2P1170	3040-01-067-5649	16	5
11083	2P1281	4730-01-179-5396	190	104
11083	2P1283	4730-00-933-0816	190	112
11083	2P1293	5310-01-292-8365	190	98
11083	2P1458	4730-01-168-1908	272	7
11083	2P1461	4730-01-183-8225	272	9
			272	17
11083	2P1487	5330-01-155-2584	1	9
11083	2P1692	5331-01-068-6104	1	6
11083	2P1757	2930-01-050-8012	51	13
11083	2P1776	6350-01-132-4022	15	8

CROSS-REFERENCE INDEXES

PART NUMBER INDEX

CAGEC	PART NUMBER	STOCK NUMBER	FIG.	ITEM
11083	2P1781	5365-01-069-0882	16	11
11083	2P2351	2815-01-147-2253	13	2
11083	2P2511		49	29
11083	2P2541	6220-01-037-5622	79	2
11083	2P2547	2590-01-148-9536	14	9
11083	2P2697	4710-01-068-9728	14	15
11083	2P2719	2590-01-148-9537	14	6
11083	2P2720	5330-01-067-5727	14	7
11083	2P3200	5306-01-024-7524	31	61
11083	2P3205	5306-01-051-2309	45	4
11083	2P3858	3120-00-397-4451	5	3
11083	2P3859	3120-00-394-4276	5	14
11083	2P4339	5310-01-063-2970	225	2
11083	2P4362		138	18
11083	2P4364		138	16
11083	2P4367		138	14
11083	2P4372	2590-01-066-8446	150	13
11083	2P4396		150	5
11083	2P4397	5365-01-066-8448	150	6
11083	2P4432	3020-01-094-5264	138	19
11083	2P4433	3020-01-066-9186	138	2
			139	4
11083	2P4435	2520-01-067-5546	139	1
11083	2P4484	2590-01-066-1424	149	23
11083	2P4486		149	13
			150	27
11083	2P4499	5360-01-095-8227	150	7
11083	2P4500	5360-01-066-8450	150	8
11083	2P4501	5360-01-066-1427	149	14
			150	12
11083	2P4502	2590-01-066-8451	150	3
11083	2P4503		147	6
11083	2P4504	5342-01-068-2768	149	3
11083	2P4506		149	28
11083	2P4507	5342-01-068-2769	149	27
11083	2P4510	2520-01-067-5551	138	12
			139	7
11083	2P4511	5330-01-067-5552	138	10
			139	8
11083	2P4525		147	3
11083	2P4529	2590-01-066-1429	148	11
11083	2P4547	5360-01-095-1833	149	8
11083	2P4548		151	18
11083	2P5190	5340-01-147-8216	46	13
11083	2P5498		301	54
11083	2P5573		301	34
11083	2P5677	5360-01-066-1431	151	16
11083	2P5700	5360-01-066-1432	148	8
11083	2P5701	5360-01-066-9187	148	7
11083	2P5766		155	28
11083	2P5769		155	26

CROSS-REFERENCE INDEXES

PART NUMBER INDEX

CAGEC	PART NUMBER	STOCK NUMBER	FIG.	ITEM
11083	2P5780	5365-01-152-0615	142	13
11083	2P5803	2590-01-066-1433	148	9
11083	2P5811		151	1
11083	2P5814	2590-01-066-1435	148	1
11083	2P5816		150	1
11083	2P6086		51	18
11083	2P6132	5330-01-067-5728	49	31
11083	2P6228	2815-01-053-4542	22	8
11083	2P6229	3110-01-129-5877	184	4
11083	2P6245	3040-01-067-5675	16	14
11083	2P7030		147	2
11083	2P7761	4710-01-143-2949	184	11
11083	2P7762	3110-01-129-5876	184	5
11083	2P8746	5330-01-067-5729	15	19
11083	2P8822	5977-01-181-0135	58	24
11083	2P9186	5310-01-066-8452	150	26
11083	2P9200		142	22
11083	2P9201		142	23
11083	2P9202		142	21
11083	2P9203	2520-01-151-3421	142	3
11083	2P9325	5340-01-151-3306	144	7
11083	2P9326	5330-01-021-9051	144	8
11083	2P9556	5310-01-053-4777	28	37
11083	2P9703	9905-01-167-5719	238	19
11083	2R0098	5330-01-067-8071	143	16
11083	2R1600	5307-00-008-2234	199	7
11083	2R1922	4730-01-151-7957	51	2
11083	2R1939	5340-01-181-0880	122	11
11083	2S0115	5310-00-419-1363	201	9
11083	2S0607	5310-01-066-1451	166	14
11083	2S0736	5310-00-498-2964	4	1
			10	18
11083	2S1285	2940-00-858-8179	33	10
11083	2S1413	5360-01-066-1452	151	14
11083	2S1541	4730-00-850-3812	15	4
11083	2S1654	5310-00-193-1076	53	17
			215	59
11083	2S1686	5306-00-497-0376	97	7
11083	2S1914	5330-00-948-9771	164	12
11083	2S3079	5340-01-332-0917	181	39
11083	2S4071		61	9
11083	2S4078	5331-00-429-3542	273	54
			275	14
			284	4
11083	2S4663	5330-00-470-5727	294	7
11083	2S4899		139	23
11083	2S5100	4820-00-948-9962	38	13
			38	31
11083	2S5658	5310-00-431-7244	3	31
			164	40
			243	22

CROSS-REFERENCE INDEXES

PART NUMBER INDEX

CAGEC	PART NUMBER	STOCK NUMBER	FIG.	ITEM
11083	2S5658	5310-00-431-7244	295	11
11083	2S5816	5360-01-069-1433	138	1
11083	2S5818	5306-01-059-7174	236	5
11083	2S5837		155	10
11083	2S5838	5340-01-147-6714	155	8
11083	2S6251	5305-00-008-9216	75	49
11083	2S7010	5340-01-152-8210	49	6
11083	2S7383	5306-00-416-9180	28	29
11083	2S7905	5365-00-419-3254	29	35
11083	2S8439	5330-01-021-9880	156	9
			164	3
11083	2S9727	5325-00-138-4664	65	2
11083	2T0676	4720-01-199-3840	38	8
11083	2T2570	5340-01-293-1046	83	31
11083	2V0936	5310-01-095-3329	298	9
11083	2V3216	5340-01-071-2047	226	7
11083	2V3457	5360-01-177-8604	217	29
			218	25
11083	2V3461	5315-01-185-2774	217	25
11083	2V4114		197A	2
11083	2V4331	2540-01-068-9795	202	5
11083	2W0116	2930-01-147-4182	47	10
11083	2W0117	2930-01-147-5533	47	9
11083	2W0261	2910-01-177-4794	32	35
11083	2W0262		32	34
11083	2W0263	2910-01-152-7834	32	1
11083	2W0517	2910-01-177-4793	27	12
11083	2W0716	2835-01-155-4535	KIT	
11083	2W0845	5340-01-172-0727	24	12
43999	2W1-16-15-32	5310-00-579-4542	58	17
			256	9
			257	10
11083	2W1084	2815-01-177-4815	11	3
11083	2W1088	5365-01-184-3675	183	5
11083	2W2216	5360-01-155-2628	28	3
11083	2W3244		4	11
11083	2W4037	5330-00-498-2913	28	69
11083	2W4561	5330-01-160-3989	158	6
11083	2W5375		30	14
11083	2W5448	5340-01-192-5824	29	25
11083	2W6091	2815-01-195-7346	KIT	
11083	2W6102	3040-01-151-2660	30	18
11083	2W6104		31	22
11083	2W6134	5330-01-177-3855	3	4
11083	2W6599	2815-01-154-8081	21	13
11083	2W6601	5340-01-177-5936	21	8
11083	2W6681	2940-01-253-5590	18	7
11083	2W7230	4710-01-219-1210	39	1
11083	2W7255	3040-01-178-0698	50	8
11083	2W7400	5360-01-208-2214	30	27
11083	2W7678	3020-01-178-9843	50	6

CROSS-REFERENCE INDEXES

PART NUMBER INDEX

CAGEC	PART NUMBER	STOCK NUMBER	FIG.	ITEM
11083	2W9305	2910-01-178-8857	30	25
11083	2W9657	5340-01-184-7662	30	29
11083	2W9996		30	1
11083	2Y6674		40	8
11083	2005231		287	5
5R127	20065	4720-00-444-9840	34	2
27182	20072-3/4	2540-01-181-5826	214	17
11083	2007929	3040-01-177-4819	166	17
00624	2021-6-8S	4730-01-160-0130	23	16
01276	203102-8-8S	4730-00-491-4983	190	18
			190	38
11083	2033220	5930-01-497-0562	87	1
3U024	2037-116	5330-01-225-2088	247	14
			248	14
			249	14
			250	14
			251	14
96151	20599	5330-00-797-8389	187	21
52854	207-320401-00	5340-01-185-4959	65	12
07176	208-710	2520-01-098-3978	276	1
01276	2081-8-4S	4730-00-580-7417	38	1
			38	42
01276	2082-6B	4730-00-427-5121	24	22
			158	14
			174	23
			177	15
			179	2
			181	5
			276	2
11083	2084836	4320-01-204-9896	KIT	
83330	21-5710-2937-804	6210-01-148-9022	62	8
			63	10
			64	3
			65	9
27182	210-090-2-0-0-03	2540-01-181-6738	214	2
30780	2102-8-8	4730-00-289-2357	180	6
06853	211026	2530-00-422-7770	175	14
73680	21158-1186	5330-00-292-1633	278	19
			282	10
23540	212C	5340-01-333-8374	169	20
96151	21332	3040-01-181-6726	187	26
11083	2143613		287	7
96151	215-1001-002		187	1
79150	2165	5330-00-239-1792	144	23
			164	39
			199	9
11083	2165383		83	26
96151	21671	4320-01-068-6066	187	25
06853	217709	4730-00-511-1677	178	37
10988	218-444	4730-01-057-9597	184	9
27182	220-060-1-0-0-00	5340-01-187-5933	214	13

CROSS-REFERENCE INDEXES

PART NUMBER INDEX

CAGEC	PART NUMBER	STOCK NUMBER	FIG.	ITEM
93061	2202P-4-2	4730-00-278-8261	176	7
93061	2225P-6	4730-00-469-7797	90	4
			176	14
			178	1
11083	2230580	2510-01-181-1932	297	11
08806	2232	6240-00-519-3399	85	2
70763	2260064		188	4
06853	226262	5930-00-633-6116	90	5
06853	226338	4820-00-351-7486	180	11
01276	226601-6-8S	4730-00-275-9432	190	107
06853	226721	4310-00-562-1031	181	12
06853	227717	4820-00-774-8299	180	7
06853	229082	2530-00-875-8071	181	15
70082	2293	2540-01-095-8773	230	6
			230	14
06853	229603		176	8
			296	2
06853	229813	4820-00-006-0115	173	1
06853	229903	4310-01-082-2263	181	22
84760	22999	5340-01-154-8437	24	35
71843	2309-4	5342-01-182-3943	217	28
			218	24
06853	231379	4730-00-585-8993	286	11
71843	2314-10	5315-01-185-2774	218	23
71843	2319CAT	5340-01-175-7764	218	21
11083	2323233	3120-01-202-5894	5	4
06853	234833	5360-00-852-0840	294	4
06853	235729	5360-00-977-0780	172	2
			294	6
06853	236118	4820-00-509-9789	181	23
06853	236170	5330-00-297-7272	181	25
06853	236219	4820-00-803-6235	181	3
06853	236571	5330-00-612-9390	181	11
06853	237317	5305-00-632-1659	181	4
06853	238117	5305-01-068-3156	71	1
06853	238598	5306-00-834-8450	181	18
06853	238686	2590-01-083-2507	172	4
06853	238687	5360-01-086-7717	172	3
06853	238805	5365-00-601-9696	181	24
06853	238948	5340-01-095-4700	181	26
19315	239513	2520-01-144-9236	172	7
19315	239515	4820-01-149-3783	172	5
11083	2398397		226	16
72962	24-NE-066	5310-00-557-9414	206	7
			285	23
11083	2402016	4320-01-267-2065	KIT	
06853	240347	5340-00-922-3522	182	2
06853	240580		181	32
06853	241340	4730-01-093-9537	181	27
06853	241547	5315-01-158-2145	294	8
06853	242837	5330-00-832-8569	173	3

CROSS-REFERENCE INDEXES

PART NUMBER INDEX

CAGEC	PART NUMBER	STOCK NUMBER	FIG.	ITEM
06853	243986	2530-01-066-0567	172	9
06853	245835	4820-00-925-0076	173	2
06853	246439	3120-01-083-9181	181	34
28839	24829	5306-00-298-4235	28	30
91265	2485	5325-01-059-0871	117	3
06840	249534	2540-01-161-5140	294	5
06853	249766		181	35
77873	25147J	2520-01-167-7185	242	5
13445	2561-4	5360-01-175-3557	120	59
93061	2592-00011		14	13
89346	261498R91	4730-00-005-4994	274	31
			275	38
8Z296	262022	5310-01-204-3327	262	12
56501	2632	5975-01-029-7710	197B	35
17875	265	5310-01-271-5758	185	5
52788	265079	5310-00-404-2422	170	3
			228	4
06853	275335	2530-00-875-8128	181	2
06853	275954	2815-01-053-9603	181	31
06853	279197	4820-00-166-4262	172	1
89926	281047	5306-00-423-8116	161	30
			162	19
06853	285653	2530-01-178-7055	181	41
06853	285830	2530-01-152-7883	180	4
06853	285849	4820-01-066-0611	180	1
06853	289112	2530-01-187-1230	294	1
06853	289438	4310-01-083-1999	181	13
06853	289862	2530-01-186-0871	197A	9
81640	29-761	5310-00-568-4447	69	6
06853	292392	2530-01-081-3213	181	14
77873	29360J	2520-01-168-2007	242	14
77873	29361J	5330-01-201-3806	242	12
77060	2962243	5360-01-309-2667	99	31
77060	2965638	5940-00-144-1533	108	7
77060	2965892	5310-00-656-0067	107	2
77060	2969608	5975-00-660-5962	108	5
77060	2973714	5935-00-686-2599	106	12
06853	297544	5330-01-281-3791	181	40
77060	2984323	6250-01-146-6909	99	5
			99	27
			120	6
77060	2989637-L	5940-01-307-6079	99	29
77060	2989641	6250-01-306-8254	99	30
53867	3 391 098 159	5340-01-367-9156	224	7
53867	3 391 901 417	2540-01-184-4473	224	19
02697	3-904N552-90		20	9
			29	20
		5331-01-049-1292	38	4
			61	12
			72	9
			159	2

CROSS-REFERENCE INDEXES

PART NUMBER INDEX

CAGEC	PART NUMBER	STOCK NUMBER	FIG.	ITEM
02697	3-904N552-90		169	8
			169	12
			196	24
			239	5
			247	44
			248	44
			249	44
			250	44
			251	44
			252	44
			273	38
11083	3B0551	4730-00-263-3122	158	17
11083	3B0623	5340-00-229-9294	4	6
11083	3B0730	5306-01-179-1300	214	14
11083	3B1915	5306-01-195-4681	13	12
			15	16
			41	26
			41	26
			73	1
			74	15
			133	22
			152	1
			190	29
			205	27
			219	19
			253	12
			273	80
			274	1
11083	3B3427	5140-00-426-4193	220	1
11083	3B4502	5310-00-852-8266	54	47
			58	29
			60	19
11083	3B4609		214	22
11083	3B4612		197B	4
11083	3B4615	5315-00-431-7315	40	4
			96	6
			134	26
11083	3B4621	5315-00-010-3389	175	19
11083	3B6553	4730-00-246-9215	142	2
11083	3B6753	5306-00-436-9896	292	18
11083	3B7255	4730-00-193-0871	180	10
			184	2
11083	3B7284	4730-00-188-1877	231	4
11083	3B7329	5310-01-171-1234	208	19
			273	89
11083	3B8695	5306-01-250-0897	30	36
8Z296	3CM12-8T-3-SV	4820-01-169-4643	190	31
96259	3CM12-8T-3SVWNS		193	1
11083	3C1884	5305-01-185-0394	224	22
11083	3D2088	5307-01-184-7651	163	11
11083	3D2735	2510-01-063-5691	209	8

CROSS-REFERENCE INDEXES

PART NUMBER INDEX

CAGEC	PART NUMBER	STOCK NUMBER	FIG.	ITEM
11083	3D2824	5331-00-944-8281	26	9
			156	3
			157	1
			190	94
			190	118
			190	138
			195	12
			196	18
			197	15
			239	25
			247	5
			248	5
			249	5
			250	5
			251	5
			252	5
			253	3
			255	8
			256	7
			257	8
			260	8
			273	6
			274	8
11083	3D2898	5330-00-730-8003	26	14
			140	18
11083	3D2981	5330-00-081-7076	167	7
11083	3D2992	5331-00-393-4054	133	32
			135	24
11083	3D4245	5331-00-929-3499	149	15
			150	4
			197	13
			247	11
			248	11
			249	11
			250	11
			251	11
			252	11
11083	3D4904	5310-00-232-6058	298	14
			299	8
11083	3D5074	5310-00-247-3360	287	10
11083	3D6509		165	3
			165	20
11083	3D7587	4730-01-058-9095	178	52
			197B	7
			197B	49
11083	3D7854	5365-01-063-2978	78	1
11083	3D8439	5307-01-063-1419	163	5
11083	3D8752	5310-01-095-1247	229	9
11083	3D8754	5930-00-118-8034	229	2
11083	3D8913	4730-01-063-3145	178	58
			180	19

CROSS-REFERENCE INDEXES

PART NUMBER INDEX

CAGEC	PART NUMBER	STOCK NUMBER	FIG.	ITEM
11083	3D8935	4720-01-065-9066	197B	11
11083	3D9609	2530-01-065-9067	41	58
11083	3E5184	2920-01-173-4199	75	3
11083	3E5239	5945-01-468-1267	83	25
11083	3E5470		226	10
11083	3E6088		226	18
11083	3E8905		190	51
			273	118
11083	3F1417	5310-01-428-2756	189	33
			266	19
11083	3F3442	5315-01-151-1102	137	14
11083	3F4134	2910-01-159-5883	37	10
11083	3F5108	5306-00-263-3533	290	5
11083	3F5535	5305-01-206-2164	234	9
11083	3F6523	5315-00-276-3727	222	3
11083	3G0361	5330-01-123-6209	284	13
11083	3G1256		239	29
11083	3G1278	5365-01-170-3731	239	24
11083	3G1681	5340-01-095-1294	239	27
11083	3G1682	5360-01-095-8226	239	22
11083	3G1683		239	23
11083	3G1708	5330-01-095-8509	KIT	
11083	3G1849	5342-01-185-3335	281	16
11083	3G1852	3040-01-179-3075	281	8
11083	3G1853	3895-01-094-7535	281	7
11083	3G3091		261	9
11083	3G3156		237	12
11083	3G3712	2520-01-169-1881	244	7
11083	3G3715		244	9
11083	3G3909		240	14
11083	3G3917	3805-01-094-6415	240	12
11083	3G3919		240	13
11083	3G3921	4820-01-094-4490	240	1
11083	3G3929	3805-01-094-6924	240	8
11083	3G4146	5310-01-184-3544	197	19
11083	3G4752	3040-01-096-4424	162	1
11083	3G4754	3040-01-156-4851	162	15
11083	3G4761	3040-01-151-3995	162	4
11083	3G5223	3830-01-094-1932	278	5
11083	3G5224	2590-01-094-3123	282	7
11083	3G5485	2530-01-169-1978	278	21
11083	3G5486		282	8
11083	3G5488	3805-01-171-4545	282	21
11083	3G5832	4820-01-094-1949	256	1
11083	3G6441	5306-01-100-9052	238	9
11083	3G7444	4820-01-167-7979	194	13
			194	19
11083	3G7445	4820-01-167-4405	194	8
11083	3G7446		194	4
11083	3G7447		194	12
11083	3G7448	4820-01-169-1966	194	1

CROSS-REFERENCE INDEXES

PART NUMBER INDEX

CAGEC	PART NUMBER	STOCK NUMBER	FIG.	ITEM
11083	3G8069	3040-01-021-8143	192	5
11083	3G8070	3040-01-022-6199	192	5
11083	3G8071	3040-01-174-6206	192	6
11083	3G8072	3040-01-174-6207	192	6
11083	3G8075		192	9
11083	3G8076		192	13
11083	3G8427	3040-01-172-3025	192	24
11083	3G8592	5365-01-202-6803	194	15
			194	20
11083	3G8593		194	10
11083	3H0107	5331-00-593-1192	144	25
			297	10
11083	3H0442	5330-01-062-2852	32	22
11083	3H0467	5310-01-526-7006	301	69
11083	3H1118	5315-01-062-7137	149	4
11083	3H1156		151	24
11083	3H1461	5331-00-593-1193	151	17
			154	14
11083	3H2691	6240-00-019-0877	83	6
11083	3H3243	5306-00-472-5282	12	1
11083	3H3244	5365-01-161-2641	265	13
11083	3H3451	5340-00-879-3056	285	22
11083	3H3680	5310-00-178-7700	41	16
			57	30
			58	19
			75	32
11083	3H4656	5365-01-177-0951	183	4
11083	3H8389	5305-00-475-4440	37	12
11083	3J1907	5331-01-333-6444	38	20
			267	18
			268	27
			272	44
			273	49
11083	3J5389	4730-00-460-6725	3	9
11083	3J6956		146	6
11083	3J7470	5340-00-949-0311	196	16
11083	3J7473	5365-00-944-0863	196	16
11083	3K0360	5331-00-948-6482	23	17
			38	18
			74	13
			89	1
			137	21
			143	24
			147	12
			189	8
			190	4
			190	4
			191	1
			193	2
			194	3
			195	8

CROSS-REFERENCE INDEXES

PART NUMBER INDEX

CAGEC	PART NUMBER	STOCK NUMBER	FIG.	ITEM
11083	3K0360	5331-00-948-6482	196	12
			238	15
			245	12
			246	17
			247	40
			248	40
			249	40
			250	40
			251	40
			252	40
			255	15
			256	14
			257	15
			261	10
			261	16
			264	11
			265	1
			265	1
			266	1
			267	1
			268	1
			269	1
			270	1
			271	1
			272	1
			273	2
			274	9
			275	13
11083	3K0925	5310-00-413-5060	203	3
11083	3K1432	5330-01-095-0035	138	29
11083	3K2889	5310-01-066-5275	160	5
11083	3K360	5331-00-948-6482	189	25
			190	4
			190	128
			190	148
			194	26
11083	3K4897	5315-01-068-5889	144	11
11083	3K5234	5310-00-470-9833	222	6
11083	3K5733	5360-00-858-6273	28	34
11083	3K6113	5310-01-149-4410	50	5
11083	3K8106	5305-01-172-2001	63	13
11083	3K8320	5340-01-194-9439	270	19
11083	3K8460	4730-01-103-3727	10	14
			38	37
11083	3K8785	5325-00-008-6049	232	19
11083	3L1850		178	65
11083	3L3380	5365-00-715-8065	57	27
11083	3L5549	5307-01-062-6108	198	8
11083	3M0496	5307-00-900-5570	266	29
			273	82
11083	3M6372		163	12

CROSS-REFERENCE INDEXES

PART NUMBER INDEX

CAGEC	PART NUMBER	STOCK NUMBER	FIG.	ITEM
11083	3N1294	4730-01-062-5202	38	38
11083	3N7268	4720-01-200-8646	159	9
11083	3N7613		17	14
11083	3P0009	2910-01-066-4752	29	11
11083	3P0080	4710-01-178-3202	34	4
11083	3P0084	2990-01-164-0087	35	3
11083	3P0089	2940-01-174-6181	35	9
11083	3P0114	4730-01-094-1915	35	18
11083	3P0115		47	15
11083	3P0165	3020-01-148-8335	52	3
11083	3P0208	5305-01-165-2400	145	4
11083	3P0296	3020-01-094-5263	139	38
11083	3P0297		139	22
11083	3P0298	3040-01-149-1887	139	16
11083	3P0304	3020-01-094-4590	139	15
11083	3P0305		139	11
11083	3P0306		138	21
11083	3P0307		138	26
11083	3P0308		138	27
11083	3P0309		138	23
11083	3P0312	2520-01-149-3341	138	5
11083	3P0313		138	7
11083	3P0314		137	51
11083	3P0318		137	12
11083	3P0319		137	15
11083	3P0320	5340-01-151-2579	144	26
11083	3P0321	3110-01-155-4582	143	12
11083	3P0322	5365-01-067-5678	143	13
11083	3P0323	3040-01-094-6428	143	3
11083	3P0326	3130-01-154-4037	143	26
11083	3P0327	5365-01-155-4518	143	27
11083	3P0329	2520-01-151-2638	140	29
11083	3P0335	3020-01-152-5213	140	15
11083	3P0337	3010-01-094-4648	140	13
11083	3P0341	3020-01-096-5743	140	10
11083	3P0342	3020-01-094-6990	140	10
11083	3P0343	3020-01-094-7530	141	5
11083	3P0344		141	9
11083	3P0726	3040-01-148-9428	138	33
11083	3P0754		141	7
11083	3P0785		137	49
11083	3P0787		137	32
11083	3P0800	2520-01-066-4755	137	29
11083	3P0801	2520-01-149-3462	137	39
11083	3P0812	5360-01-100-5378	149	9
11083	3P0814	2520-01-066-4758	137	22
11083	3P0815	5330-01-021-9878	137	28
11083	3P0817	5360-01-066-5292	137	31
11083	3P0831		137	6
11083	3P0832		137	45
11083	3P0842		147	1

CROSS-REFERENCE INDEXES

PART NUMBER INDEX

CAGEC	PART NUMBER	STOCK NUMBER	FIG.	ITEM
11083	3P0846	4710-01-150-0973	154	9
11083	3P0848	4710-01-150-0975	154	16
11083	3P0851		142	14
11083	3P0852	4710-01-151-7866	142	15
11083	3P0853		142	12
11083	3P0854		142	16
11083	3P0855		142	6
11083	3P0857	4710-01-152-8328	142	4
11083	3P0858		142	8
11083	3P0860	5325-01-066-5293	137	2
11083	3P0864		146	1
11083	3P0865		145	18
11083	3P0866		146	7
11083	3P0867	5310-01-156-7713	146	4
11083	3P0868	5365-01-155-4458	145	9
11083	3P0869	5365-01-156-8760	145	12
11083	3P0870	3120-01-156-6477	145	15
11083	3P0871		155	15
11083	3P0877		155	2
11083	3P0881		155	3
11083	3P0882		155	21
11083	3P0883		155	19
11083	3P0884	5330-01-159-8576	154	4
11083	3P0887	2940-01-150-3865	156	14
11083	3P0890	4320-01-149-1234	155	14
11083	3P0891	4320-01-095-1449	155	1
11083	3P0953	3110-01-022-5380	139	14
11083	3P1461	5330-01-095-1253	278	4
11083	3P1601	2520-01-066-4638	137	10
11083	3P1681	5315-01-151-1101	137	34
			139	3
11083	3P1694		142	5
11083	3P1786		150	11
11083	3P1797		147	9
11083	3P1798	2590-01-066-8455	150	24
11083	3P1896	5340-01-152-4541	4	8
11083	3P2355	5365-01-152-0615	142	7
11083	3P2363		148	5
11083	3P2404	5340-01-061-4018	17	10
11083	3P2438		146	2
11083	3P2447	4710-01-150-0974	154	12
11083	3P2694		151	13
11083	3P2706	2590-01-066-1441	148	3
11083	3P2777	2520-01-066-1442	145	13
11083	3P2781	2520-01-066-1443	145	10
11083	3P2870	2590-01-066-1444	145	16
11083	3P3424	2520-01-066-7705	144	13
11083	3P3426	2520-01-066-7706	144	10
11083	3P3610		140	6
11083	3P3690	3020-01-149-6768	155	18
11083	3P3713		139	10

CROSS-REFERENCE INDEXES

PART NUMBER INDEX

CAGEC	PART NUMBER	STOCK NUMBER	FIG.	ITEM
11083	3P4358	5930-01-063-0682	66	6
			75	18
11083	3P4362	2590-01-066-1445	147	13
11083	3P4566	9905-01-160-4374	151	28
11083	3P5210	2520-01-149-1854	137	43
11083	3P5349	2520-01-151-3980	137	4
11083	3P5359	3040-01-151-3438	140	17
11083	3P5360	2520-01-151-3422	140	9
11083	3P5726	5330-01-094-3660	140	8
11083	3P5728	5330-01-094-0368	140	12
11083	3P5737		140	3
11083	3P5859	5330-01-022-1806	140	1
11083	3P6061	5330-01-021-9052	144	4
11083	3P6159	3040-01-151-3994	144	12
11083	3P6669	5360-01-066-1446	149	25
11083	3P7009	5340-01-155-8881	140	4
11083	3P7685		151	21
11083	3P7686		151	23
11083	3P7834	2590-01-066-1449	149	22
11083	3P8006	5330-01-153-1385	151	20
11083	3P8042	5360-01-066-1450	149	6
11083	3P8067		147	7
11083	3P8362	3040-01-152-7181	152	4
11083	3P8990	5930-01-059-0930	94	3
11083	3P9900	5310-01-097-9416	206	14
11083	3P9901	5310-01-160-4543	207	4
			215	30
11083	3S0004	5310-00-413-5144	155	11
11083	3S0036		137	58
11083	3S1349	5310-01-095-1537	298	15
			299	7
11083	3S2093	2920-01-058-9099	38	10
			83	27
			99	18
			100	15
			101	13
			102	12
			105	20
			106	17
			107	12
			110	6
			120	29
			121	6
			122	2
			177	24
			178	25
			271	10
			296	15
			197B	60
11083	3S2708	5315-01-059-7198	137	56
			139	17

CROSS-REFERENCE INDEXES

PART NUMBER INDEX

CAGEC	PART NUMBER	STOCK NUMBER	FIG.	ITEM
11083	3S5496	5331-00-104-4371	3	2
			4	20
11083	3S6115	4730-01-095-0837	178	62
			286	5
11083	3S7166	5340-01-051-6767	273	10
			273	23
11083	3S7781	5330-00-433-3790	144	20
11083	3S8313	5365-00-449-2597	4	7
11083	3S8606	4720-01-051-7602	190	21
			190	36
			275	9
			275	21
11083	3S8652		156	13
11083	3S9949	5360-01-066-1454	149	21
11083	3S9951	5310-01-095-3330	149	29
11083	3S9964		138	34
11083	3T0050	5340-01-172-2011	83	17
			103	1
			120	22
11083	3T0051	5340-01-166-6874	81	18
11083	3T0190	5930-01-165-1823	89	2
11083	3T0306	5930-01-168-1025	63	28
			75	35
11083	3T0688		156	4
11083	3T0842		60	33
11083	3T0849	5305-01-186-0641	60	24
11083	3T0858	5360-01-188-8022	60	8
11083	3T0868	5945-01-187-2075	60	18
11083	3T2083	2540-01-099-3746	232	3
11083	3T2542		149	7
11083	3T2543		149	5
11083	3T3048	5999-01-262-0436	121	7
			125	6
11083	3T3049		120	1
			123	6
11083	3T3123	5905-01-202-5953	70	1
11083	3T3132	5930-01-176-1532	74	14
11083	3T3270	5995-01-177-3919	70	5
11083	3T3271		70	4
11083	3T3272	5340-01-184-6079	70	9
11083	3T3422		57	45
11083	3T3454		105	3
		5975-01-529-7923	105	50
11083	3T3947		75	34
11083	3T4197	5930-01-170-8991	72	10
11083	3T4692	5940-00-226-0490	102	8
11083	3T4716	5995-01-184-9403	60	12
11083	3T5433	5995-01-151-6315	100	4
			102	9
			112	3
11083	3T5962	9905-01-180-3839	55	11

CROSS-REFERENCE INDEXES

PART NUMBER INDEX

CAGEC	PART NUMBER	STOCK NUMBER	FIG.	ITEM
11083	3T5962	9905-01-180-3839	60	4
11083	3T6655	5930-01-429-0940	65	6
11083	3T8618		61	4
11083	3T9109		61	10
11083	3T9157		61	3
11083	3V2431	5310-01-165-2482	242	2
			242	8
11083	3V9538	9905-01-171-2860	190	91
			190	116
			190	136
11083	3V9562	5340-01-099-5807	217	13
11083	3Y7829	4730-01-292-4350	75	9
			83	22
53203	300 450	5340-01-088-2385	44	1
79550	300-2863	5940-00-291-0085	80	4
70611	3000M96M	5940-01-148-3547	62	17
97111	3007-3		230	8
95879	3014	4730-00-475-8691	242	16
78640	301927	5330-01-178-2109	279	22
05842	30205030	5331-01-021-1906	26	18
78640	307942	4730-01-051-2312	38	21
			274	16
30187	31010	3120-01-293-5384	215	34
30780	3102-6-6	4730-00-595-1868	177	20
78640	310216	5306-01-095-1238	28	5
			237	14
58755	31035611	4730-01-168-1912	197A	22
58755	31035614	4730-01-171-4962	197A	20
58755	3104-56-00	4730-01-111-1752	197A	10
58755	31095611	4730-01-113-5283	197A	8
58755	31095614	4730-01-115-0863	197A	18
58755	31155611	4730-01-111-1383	197A	13
58755	31155614	4730-01-168-6404	197A	16
			197B	33
91265	3134	5325-01-088-7468	108	10
73842	321FB90	4730-00-423-2052	273	105
			275	29
00779	322008	5940-00-226-0490	100	25
78189	3320-14-01	5310-01-094-8810	38	11
			38	46
			41	37
			42	23
			46	4
			47	8
			48	2
			49	5
			51	5
			63	8
			66	12
			70	11
			75	2

CROSS-REFERENCE INDEXES

PART NUMBER INDEX

CAGEC	PART NUMBER	STOCK NUMBER	FIG.	ITEM
78189	3320-14-01	5310-01-094-8810	78	3
			134	2
			135	13
			160	25
			161	12
			177	8
			178	15
			189	13
			194	17
			203	4
			206	32
			210	5
			217	6
			218	6
			230	11
			230	20
			245	2
			246	22
			254	8
			255	18
			256	17
			257	17
			258	1
			259	2
			261	19
			265	24
			266	21
			267	9
			268	12
			269	18
			270	12
			271	5
			272	24
			273	26
			274	6
18797	3363-233	6105-01-097-8661	229	16
53867	3398100523	2540-01-222-4719	223	1
53867	3398102208	2540-01-223-0754	224	25
53867	3398110397	2540-01-221-2187	223	4
79470	3400X6	4730-00-278-4822	90	1
			180	17
95019	35-102-17	4730-00-278-4814	197A	14
79470	352X8	4730-00-278-4720	177	13
82445	3632AY102-24V	6220-01-151-7037	81	12
96151	370	2530-00-716-7950	187	11
60038	3730		141	3
14892	374151	5360-00-359-0925	91	17
79470	3750X8	4730-01-095-2034	180	8
60038	3780		141	2
29510	379390C1	2530-01-086-4287	171	5
5F573	381-33001-330	5330-01-188-1693	280	6

CROSS-REFERENCE INDEXES

PART NUMBER INDEX

CAGEC	PART NUMBER	STOCK NUMBER	FIG.	ITEM
65439	3811-015	6220-00-088-3521	81	13
53867	391 341 398	3040-01-187-3326	224	16
75175	3916-061	6220-01-104-1122	81	9
81300	4-3309-2	3030-00-677-2368	53	19
30780	4-6 C5BXS	4730-01-242-4510	38	16
78493	4A308-21	6620-01-008-1893	49	28
11083	4B1218	5305-01-177-0859	61	7
11083	4B1220	5305-00-298-8437	58	23
			67	18
11083	4B1221	5305-00-863-1627	233	4
11083	4B1227	5305-00-011-9774	296	9
11083	4B1232	5305-01-058-9101	296	10
11083	4B1240	5305-01-292-9547	75	37
11083	4B1244	5305-01-098-3111	215	15
11083	4B1273	5305-00-404-1403	214	1
11083	4B1282	5305-01-063-1423	62	18
			215	2
11083	4B1321		173	4
11083	4B1550	5310-01-063-2983	223	23
			224	10
11083	4B2047	5310-00-011-0634	76	1
11083	4B3604	5305-00-164-8146	292	21
11083	4B3611	5305-01-094-7379	133	36
			175	4
11083	4B3938	5340-00-276-5832	3	19
11083	4B4276		169	18
11083	4B4280	5310-00-930-7013	57	29
11083	4B4285		273	88
11083	4B4305	5320-01-179-5920	70	3
11083	4B4311	5320-01-062-5900	209	7
11083	4B4674	5310-01-176-3998	60	23
			223	8
11083	4B4863	5310-00-432-8001	54	29
			63	19
11083	4B4910	5360-00-249-3504	10	16
11083	4B5219	5306-00-423-9358	211	14
			215	67
11083	4B5273	5310-00-308-2227	41	10
			293	9
11083	4B5423	5330-00-143-8713	37	9
11083	4B5949	2910-00-367-5238	37	8
11083	4B6060	5305-01-157-7394	206	22
11083	4B7270	3110-00-100-0647	174	17
11083	4B7739	5365-00-363-9900	284	17
11083	4B8626	5305-01-066-5197	296	7
11083	4B9530		143	2
11083	4B9782	3110-00-011-9935	3	22
			16	6
			148	15
			284	11
11083	4B9880	3110-00-949-1438	16	8

CROSS-REFERENCE INDEXES

PART NUMBER INDEX

CAGEC	PART NUMBER	STOCK NUMBER	FIG.	ITEM
11083	4B9880	3110-00-949-1438	138	8
			149	24
			155	22
			247	42
			248	42
			249	42
			250	42
			251	42
			252	42
11083	4C4865	4320-00-374-1403	301	52
11083	4C9634		301	65
11083	4D0128		232	5
11083	4D0582	4730-00-317-3008	197B	18
			197B	52
11083	4D0593	4720-01-094-6263	177	5
11083	4D0925	2530-01-095-2074	161	39
11083	4D1577	5331-00-081-3139	137	9
			164	2
11083	4D2498	3040-01-214-2579	41	56
11083	4D2560	4730-01-058-9103	176	10
			178	30
			286	4
			296	5
11083	4D3704	5310-00-139-7030	161	31
			162	18
			165	23
			166	18
			183	18
11083	4D3907	5365-01-095-1309	292	9
11083	4D4267	4730-01-171-4405	296	1
11083	4D5497	5330-01-021-9883	174	26
11083	4D6433		273	100
11083	4D6463	5342-01-063-2989	100	11
11083	4D6466	5340-00-426-4644	38	9
			38	45
			120	25
11083	4D6624	5330-01-099-4985	232	14
11083	4D7246	5307-01-170-3796	243	31
11083	4D7416	5365-01-074-3568	223	36
11083	4D7464	5310-01-206-2187	225	9
11083	4D7468	5310-01-186-4582	225	7
			225	12
11083	4D7794	5340-00-426-4656	99	17
			102	20
			108	9
			197B	57
11083	4D8123	5340-00-426-4646	51	6
11083	4D8148	5315-01-059-9434	199	11
11083	4D8948	5342-00-999-8389	287	6
11083	4D9976	4730-01-063-2990	178	54
11083	4F0255	5315-00-352-7706	222	2

CROSS-REFERENCE INDEXES

PART NUMBER INDEX

CAGEC	PART NUMBER	STOCK NUMBER	FIG.	ITEM
11083	4F0411	5306-00-426-5058	145	7
11083	4F4974	5340-00-352-7779	45	8
11083	4F6024	5315-00-363-9248	31	9
11083	4F7115	5360-00-597-8351	257	11
11083	4F7952	5331-00-527-7748	52	4
			144	15
			154	15
			164	44
			273	102
			274	28
11083	4F8686	3120-00-555-4553	41	6
11083	4F8824	5331-00-968-5388	285	18
11083	4F8965	5306-00-263-8949	140	11
11083	4F9029	5331-00-118-6559	143	15
11083	4F9653	5331-00-038-4327	243	39
70434	4GABB-4MB-126.00	4720-01-065-9076	176	3
80713	4GABB-4MB-22.00	4720-01-064-7483	178	56
73842	4GABB-4MB-27.00	4720-01-063-3002	286	3
80713	4GABB-4MB-44.00	4720-01-186-2356	178	64
			197B	6
70434	4GABB-4MB-56.00	4720-01-094-5153	286	2
73842	4GABB-4MB-76.00	4720-01-094-5157	286	13
04NP0	4HR-4MB-33.50	4720-01-095-3441	169	4
11083	4H2186	2910-00-103-8876	41	15
11083	4H2792	2590-01-066-4571	289	17
11083	4H3283	5306-01-063-0667	245	8
11083	4H3521	5360-01-178-2193	214	9
11083	4H5440	5340-01-155-5275	144	19
11083	4H6147	4730-00-289-5191	178	61
11083	4H6996	5315-01-097-8383	243	9
11083	4H7859	5310-01-053-7474	139	33
11083	4H7869NON-ASBESTOS	5330-01-398-4225	56	1
11083	4H8310	2920-00-246-2735	66	5
11083	4H9027	4730-00-011-0667	37	2
11083	4H9304	5307-00-236-6711	41	2
11083	4H9454	5340-01-173-1376	268	22
11083	4H9699		6	6
			6	10
11083	4H9981	5310-00-268-2446	204	6
11083	4J0519	5331-00-913-6143	194	9
			195	10
11083	4J0521	5331-01-439-2544	194	28
11083	4J0527	5331-00-914-5820	194	7
11083	4J2506	5331-00-436-3369	239	20
11083	4J2667	3110-01-166-8143	40	17
			41	39
11083	4J3914	4730-00-353-1913	176	2
11083	4J5268	5331-00-914-5316	239	30
11083	4J5325	5315-01-099-0059	263	27
			289	8

CROSS-REFERENCE INDEXES

PART NUMBER INDEX

CAGEC	PART NUMBER	STOCK NUMBER	FIG.	ITEM
11083	4J5351	5331-00-498-4556	245	15
			246	12
			247	27
			248	27
			249	27
			250	27
			251	27
			252	27
11083	4J5468	5340-01-173-1374	268	18
11083	4J6302	9905-01-167-1532	273	133
11083	4J6303	9905-01-167-4905	273	129
11083	4J6304		178	33
11083	4J6305	9905-01-172-2395	178	31
11083	4J6580	5310-01-066-0503	41	7
11083	4J7490	5360-01-063-4209	134	30
11083	4J8996	5331-00-948-6924	196	5
11083	4J8997	5331-00-913-8119	26	24
11083	4J9224	5365-01-047-0826	162	10
11083	4J9225	5330-00-107-6455	277	14
			279	13
			280	10
			281	10
11083	4J9964	5330-01-064-7457	297	5
11083	4K1493	5305-01-095-5696	297	2
11083	4K1540	5315-00-438-5089	171	12
11083	4K5124	5925-00-118-8035	67	20
11083	4K6177	5999-01-093-9472	98	10
11083	4K6693	6145-01-069-0746	197A	3
11083	4K6781	5365-01-170-6356	202	20
11083	4K7463	5330-00-931-4533	202	1
11083	4K7464	5365-01-069-1502	202	21
			202	21
11083	4K8302	5340-00-426-4653	180	14
11083	4K8659		202	2
11083	4K8864	5340-01-184-5460	159	10
11083	4L1468	4730-01-049-9781	196	22
11083	4L3395	5315-01-055-1727	1	16
11083	4L6454	5306-00-228-6835	50	19
			83	15
			134	32
			135	14
			190	43
			203	15
			220	3
			230	23
11083	4L6458	5310-00-005-0779	31	28
			73	9
			76	13
			207	19
			208	1
			214	8

CROSS-REFERENCE INDEXES

PART NUMBER INDEX

CAGEC	PART NUMBER	STOCK NUMBER	FIG.	ITEM
11083	4L6458	5310-00-005-0779	289	10
11083	4L6499	5310-01-062-9903	214	3
11083	4L7124	5305-01-024-4773	31	29
11083	4L7318	5310-00-118-6420	181	9
11083	4L9337	5306-00-455-0462	203	14
11083	4L9564	5330-00-828-8639	12	4
11083	4M0061	5306-01-066-4721	181	30
			228	1
11083	4M0189	5330-00-838-9188	57	66
			58	14
11083	4M1485	5330-00-923-9945	33	9
			35	7
11083	4M2381	5360-00-950-8041	150	18
11083	4M4644	2920-01-178-0675	122	1
11083	4M4649	2590-01-187-7025	201	4
11083	4M5280	5310-01-095-1526	23	8
			65	5
			183	2
			219	6
11083	4M5281	5306-00-404-1409	181	38
11083	4M5283	5305-01-096-4550	103	2
			203	22
			207	25
			215	17
			227	1
11083	4M6646	5315-00-173-8417	36	19
11083	4M6921	5310-00-894-0660	74	11
11083	4M6953	5310-00-191-8297	185	13
11083	4M8303	5331-00-613-6522	22	4
			29	31
			145	8
			245	11
			246	10
11083	4N0049	5330-01-107-3603	30	52
11083	4N0053	5340-01-149-4421	28	50
11083	4N0054	5305-01-068-9704	30	57
11083	4N0116	4310-01-068-9775	30	59
11083	4N0159NON-ASBESTOS	5330-01-414-5932	28	51
11083	4N0260	5330-01-107-4168	28	70
			30	8
11083	4N0402	5330-01-068-9824	29	30
11083	4N0406	3020-01-068-9705	28	81
11083	4N0425		28	87
11083	4N0429	3020-01-068-9706	28	80
11083	4N0432	3130-01-174-6048	28	32
11083	4N0444	3040-01-147-5481	29	42
11083	4N0445		31	55
11083	4N0507	3040-01-068-9707	28	72
11083	4N0528	3040-01-068-9709	31	26
11083	4N0594	5330-01-038-7345	30	55

CROSS-REFERENCE INDEXES

PART NUMBER INDEX

CAGEC	PART NUMBER	STOCK NUMBER	FIG.	ITEM
11083	4N0636	5330-01-061-9382	28	74
11083	4N0687	2910-01-147-1376	29	28
11083	4N0927	3040-01-067-8011	28	62
11083	4N1584	5330-01-061-9380	28	75
11083	4N1723	4730-01-068-7122	28	89
11083	4N1761		28	28
11083	4N1767	2910-01-024-1512	29	38
11083	4N1826	5315-01-069-1410	30	42
11083	4N1828	4820-01-053-4586	28	59
11083	4N1881	3040-01-068-7123	29	36
11083	4N218	3120-01-022-3955	31	40
11083	4N224	5365-01-024-5118	31	45
11083	4N2333	5315-01-068-9711	28	64
			30	46
11083	4N2685	2910-01-024-2868	31	50
11083	4N2728	5310-01-062-0380	31	48
11083	4N2953	5325-01-024-3727	28	44
			28	91
11083	4N2954	4730-01-068-7124	30	48
11083	4N3295	2910-01-142-2643	42	35
11083	4N3296	5360-01-107-3891	42	34
11083	4N3297	4820-01-105-2265	42	33
11083	4N3298	4820-01-104-5111	42	32
11083	4N3302	2940-01-142-2642	42	31
11083	4N3371	5310-01-023-9757	27	10
11083	4N3551	4710-01-093-6885	38	22
11083	4N3732	5340-01-148-7396	16	21
11083	4N3779	5315-01-068-9780	28	82
11083	4N3840	5340-01-107-4130	158	3
11083	4N3841	5330-01-063-9839	158	4
11083	4N3882	2910-01-024-2869	31	32
11083	4N4021	2990-01-147-3004	24	53
11083	4N4054		16	16
11083	4N4224	5360-01-094-6117	28	53
11083	4N4320	2530-01-067-5667	28	45
11083	4N434	2910-01-024-1510	28	94
11083	4N4366	5360-01-067-5668	28	46
11083	4N443	5315-01-108-1232	28	52
11083	4N448	3040-01-107-8262	29	44
11083	4N5050	4730-01-106-4024	28	68
			28	76
11083	4N511	5315-01-106-0333	28	88
11083	4N523	5315-01-107-3758	31	53
11083	4N5353	4730-01-126-4892	15	18
11083	4N5481	5307-01-103-3673	30	39
11083	4N5484		29	13
11083	4N5485	4820-01-159-0891	29	14
11083	4N5578	2910-01-147-3001	30	51
11083	4N605	5360-01-023-9435	29	39
11083	4N6862	2815-01-068-9784	36	2
11083	4N6863	2950-01-156-5254	36	11

CROSS-REFERENCE INDEXES

PART NUMBER INDEX

CAGEC	PART NUMBER	STOCK NUMBER	FIG.	ITEM
11083	4N7692	2815-01-068-9848	5	6
11083	4N7694		5	7
11083	4N7777	5365-01-160-4721	31	39
11083	4N8179	5315-01-069-1414	29	40
11083	4N9018	3040-01-147-1360	28	90
11083	4N9019	5315-01-067-8066	28	86
			32	44
11083	4N9056	5330-01-068-7343	28	54
11083	4N9098	5365-01-147-1450	31	36
11083	4P2609	5330-00-036-6825	5	13
11083	4P3546	2815-01-068-1729	16	22
11083	4P9832	2910-01-179-4098	32	17
11083	4P9961	4710-01-155-2400	24	9
11083	4P9962	4710-01-217-2817	24	8
11083	4P9963	4710-01-420-3887	24	31
11083	4P9964	4710-01-153-1648	24	30
11083	4S1962	5342-01-063-2993	189	14
			189	36
			190	9
			191	7
			231	8
11083	4S1988	5940-01-058-9133	100	31
			102	11
11083	4S4455	5340-01-168-5602	190	8
			273	109
11083	4S5414	4730-01-095-0075	264	4
			264	7
			266	5
			266	15
			268	5
			272	5
			272	10
			272	15
			272	21
			272	29
			272	34
			272	62
			273	17
			273	32
			274	13
			274	26
11083	4S5415		301	30
11083	4S5824	5310-00-251-1488	143	21
			152	5
11083	4S5845	5306-00-455-0461	145	3
11083	4S5879	5330-01-021-9885	174	7
11083	4S5982	4820-01-059-9398	151	11
11083	4S6417	3805-00-915-5430	6	1
11083	4S7528	4720-01-066-0594	176	13
11083	4S7562	4720-01-094-5157	178	26
11083	4S7606	4730-01-058-9134	178	12

CROSS-REFERENCE INDEXES

PART NUMBER INDEX

CAGEC	PART NUMBER	STOCK NUMBER	FIG.	ITEM
11083	4S9181		301	19
11083	4T0420		278	7
11083	4T1056	4820-01-185-6652	190	41
11083	4T1636	5365-01-176-7430	239	16
11083	4T3089	4820-01-172-0511	196	1
11083	4T3090	4820-01-172-0465	195	6
11083	4T5028		239	18
11083	4T5867	4820-01-181-1833	190	39
11083	4T6780	5330-01-364-0500	162	7
11083	4T7022		237	9
11083	4T8054	5330-00-118-5519	162	9
11083	4T9336		194	27
11083	4T9337		194	29
11083	4T9340		194	18
11083	4V0015	5340-01-438-4224	202	22
11083	4V0627	3040-01-146-7967	41	57
11083	4V6981	5305-01-160-1995	65	11
			207	8
			215	49
11083	4V9804	5340-01-474-1483	200	6
11083	4V9809		200	14
11083	4V9810	5340-01-474-1486	200	13
11083	4W0452	5330-01-128-6854	KIT	
11083	4W2321	4320-01-253-6286	16	15
11083	4W2322	2990-01-253-3454	16	2
11083	4W5235	5340-01-269-9343	22	6
11083	4W5734	3040-01-254-4974	30	12
11083	4W5739	3120-01-210-0859	8	12
11083	4W5918	5306-00-426-3209	161	38
11083	4W6868	2990-01-253-9489	28	41
11083	4W6869	5365-01-158-6377	32	16
11083	4W8652		1	4
54690	40-31295-9	5360-01-158-2181	171	3
97464	4000-62	5325-01-215-0221	36	16
08179	400405	5305-00-076-3714	77	6
08179	400424-0	5365-01-020-5721	36	15
08179	400544	5310-01-168-4484	36	7
52152	4016 3/8 WIDE	7510-01-206-9494	213	14
08179	403818-0	5330-00-930-3254	36	12
24161	4040	4720-01-146-5898	BULK	23
24161	4040-XX		226	1
11139	4060-001-16141	5935-01-466-5378	105	33
			120	46
11139	4062-001-16141	5935-01-466-5755	99	54
			105	37
			120	48
70210	406906	3040-00-432-9745	36	13
08179	406907	3120-01-160-0377	36	14
08179	406908-1	4730-01-067-5671	36	26
08179	406909	5342-01-068-6100	36	27
08179	407285-18	2950-01-156-3913	36	18

CROSS-REFERENCE INDEXES

PART NUMBER INDEX

CAGEC	PART NUMBER	STOCK NUMBER	FIG.	ITEM
01943	40733	2590-01-066-5286	14	4
70210	407684	5340-01-167-0321	36	20
08179	407875	4730-01-067-5669	36	3
08179	407876	5342-01-068-6089	36	4
99193	408049-11	2990-01-156-7875	36	22
08179	408077-152	2815-01-068-9783	36	6
08179	408667-22	3040-01-186-0927	36	25
08179	409179-18	2950-01-156-5253	36	8
08179	409299	2840-01-156-3914	36	23
08179	409410-5006	2815-01-179-1980	36	1
08179	409532	9905-01-175-1555	36	10
0U276	40970	6680-01-093-8881	153	7
08179	410188-21	2990-01-189-1742	36	24
01943	41460	2940-01-053-0179	153	1
30187	4186	3120-01-203-2591	211	29
07421	425-100-003	4730-00-121-8299	20	13
			159	17
23382	4317	5310-00-655-7646	278	27
			282	2
30327	44-PP		BULK	24
30327	44-PP-16		37	17
19207	443339	5310-00-044-3339	200	10
			245	24
			246	1
			289	23
99688	44472		229	6
55101	4460	5310-01-185-4657	198	36
99688	44640	5342-01-181-1929	229	10
99688	44675	2540-01-181-3685	229	4
17875	454		185	4
77445	466473	5306-00-857-5672	28	24
			229	7
83330	4700-803-0371-00	6220-01-167-0514	62	5
83330	4700-803-0372-00	6220-01-167-0515	62	3
72619	4700-803-0373-00		62	4
62983	471060	5310-01-116-1212	55	17
85105	477259STL	5365-01-172-2827	244	10
85105	477260	5365-01-169-6730	244	8
11083	5B0577		298	3
11083	5B2183	5310-01-052-3924	94	1
11083	5B3180	5310-01-068-7065	30	2
			30	56
			74	9
			134	6
			289	15
11083	5B4855	4730-01-183-4574	231	5
11083	5B5812	5315-00-362-7367	51	10
11083	5B6891	5305-00-426-2936	243	21
11083	5B7040	5305-01-160-2007	29	16
11083	5B7652	5315-01-107-4226	3	27
58312	5B9916	4730-00-236-2413	202	27

CROSS-REFERENCE INDEXES

PART NUMBER INDEX

CAGEC	PART NUMBER	STOCK NUMBER	FIG.	ITEM
11083	5C9553	5306-01-181-7849	224	21
11083	5D0353	5305-00-172-6356	153	5
11083	5D0998	5310-00-174-8647	41	8
11083	5D1911	2590-01-179-3017	284	9
11083	5D2219		290	2
11083	5D2751	5310-01-095-5730	214	27
11083	5D3183	2530-00-439-9264	78	6
			84	1
11083	5D3184	5310-00-757-6194	78	5
11083	5D3940	6150-01-190-5341	122	8
11083	5D4204	5340-01-099-0109	12	10
11083	5D4988	5340-01-173-1375	267	11
			268	17
11083	5D5569		197A	17
11083	5D5652	5310-01-066-4698	299	14
11083	5D5659	5930-01-095-0803	232	7
11083	5D6644	5365-01-173-7017	293	31
11083	5D7464	4720-01-188-3185	178	53
11083	5D7760	6150-01-097-2001	98	5
11083	5D8161	5315-01-171-0748	299	20
11083	5D9553	3830-00-431-6560	290	6
11083	5F0149	5331-00-863-5549	291	17
11083	5F2807	5340-00-392-7334	25	6
11083	5F3106	5331-00-663-5709	2	5
			50	1
11083	5F3181	5330-00-363-8989	153	8
11083	5F4250	5315-01-152-4258	138	9
11083	5F4258	5330-01-064-8205	279	25
11083	5F6044	5306-00-008-5974	145	5
11083	5F6199	2520-01-068-1109	137	3
11083	5F7054	5331-00-339-6224	24	26
			151	35
11083	5F7340		301	11
11083	5F7351		301	39
11083	5F7353		301	70
11083	5F7366		301	59
11083	5F8494	5360-01-156-4142	170	8
11083	5F9144	5331-00-591-3112	29	15
			187	16
			294	3
11083	5H0745		40	10
11083	5H2168	2540-00-101-4738	222	14
11083	5H2767	5331-00-850-7586	154	11
11083	5H3252	5331-00-756-8795	139	46
11083	5H4279	5340-00-819-2027	155	25
11083	5H4630	5340-00-009-5728	40	9
11083	5H4778	4730-00-289-2370	176	12
			296	21
11083	5H4845		300	2
11083	5H4909	5330-00-738-8622	243	20
11083	5H6552	5305-01-157-6802	31	1

CROSS-REFERENCE INDEXES

PART NUMBER INDEX

CAGEC	PART NUMBER	STOCK NUMBER	FIG.	ITEM
11083	5H6555	5310-01-090-7021	61	5
11083	5H8848	5331-00-593-1247	273	67
			275	35
			277	13
			280	9
			281	9
11083	5H8985	5315-01-069-0755	137	5
			137	44
11083	5H9743	5325-01-094-6106	80	6
			211	26
11083	5J1246	5365-01-064-7710	297	4
11083	5J4857		194	15
		5365-01-174-0910	194	21
11083	5J5314	5305-01-053-7366	30	47
11083	5J6153	5365-01-064-7711	255	12
			256	11
			257	12
11083	5J7010	5330-01-021-9897	279	12
11083	5J9631	5360-01-172-7160	194	14
			194	22
11083	5K0871	3040-01-438-1386	202	3
11083	5K0906		65	3
			118	8
11083	5K0983	5330-01-067-5530	202	12
11083	5K0984	3110-01-067-5531	202	13
11083	5K0985	3110-01-067-5532	202	19
11083	5K0987	5365-01-175-7664	202	15
			202	15
11083	5K0988	5365-01-157-3677	202	18
11083	5K0989	5340-01-438-1383	202	16
11083	5K0991	5340-01-438-1384	202	11
11083	5K1458	5365-01-174-4657	298	20
11083	5K1459	5315-01-035-1353	298	19
11083	5K4068	5325-01-094-2429	141	6
11083	5K5288	5330-01-053-7373	160	33
			174	16
			243	37
11083	5K5338	5340-01-051-2357	178	7
11083	5K5695	5340-01-062-9905	223	5
			225	17
11083	5K7577	4720-01-148-1456	51	3
11083	5K8451	5340-01-058-9143	77	13
			296	18
11083	5K8454	5306-01-155-8648	167	2
			243	14
11083	5K9090	5330-01-438-1387	273	55
11083	5K9238	4730-01-063-3000	177	14
11083	5K9240	4730-01-143-4326	184	10
11083	5K9241	4730-01-069-0768	183	14
11083	5K9243	4730-01-059-9435	14	14
			183	12

CROSS-REFERENCE INDEXES

PART NUMBER INDEX

CAGEC	PART NUMBER	STOCK NUMBER	FIG.	ITEM
11083	5K9248	4730-01-069-0859	184	3
11083	5L1100	3110-01-031-9372	187	13
11083	5M2054	3110-00-945-8401	138	32
11083	5M2504		150	21
11083	5M2894	5310-00-117-4788	2	12
			2	12
			4	15
			6	2
			12	9
			13	5
			14	1
			15	15
			17	11
			21	9
			24	2
			24	51
			38	39
			39	6
			41	21
			41	21
			42	4
			44	8
			45	7
			49	27
			50	23
			51	21
			52	2
			67	2
			73	5
			74	2
			77	8
			78	12
			81	2
			82	13
			83	14
			93	2
			97	6
			98	4
			99	14
			100	12
			102	14
			107	11
			109	10
			120	21
			122	6
			133	10
			137	36
			138	24
			143	11
			145	6
			155	24

CROSS-REFERENCE INDEXES

PART NUMBER INDEX

CAGEC	PART NUMBER	STOCK NUMBER	FIG.	ITEM
11083	5M2894	5310-00-117-4788	157	8
			169	10
			175	2
			177	17
			178	8
			178	8
			183	16
			190	10
			198	5
			198	24
			203	20
			205	6
			215	8
			219	15
			220	6
			253	10
			262	14
			272	47
			274	2
			275	6
			283	8
			284	21
			285	21
			286	16
			293	5
			197B	55
11083	5M3062	5306-00-158-0697	67	7
			70	10
			230	15
11083	5M3492	5365-00-948-1600	150	9
			151	12
11083	5M4606	5315-00-760-7421	10	12
11083	5M5018	3110-00-921-0011	139	19
11083	5M6126	3110-00-239-7702	137	55
11083	5M6200	5331-00-945-4465	152	7
11083	5M6213	4730-00-089-2515	3	13
			4	13
			7	2
			17	16
			24	21
			49	8
			50	11
			176	6
			181	21
			184	14
			286	10
11083	5M6214	4730-00-924-7886	2	7
			3	29
			24	50
			35	4
			43	5

CROSS-REFERENCE INDEXES

PART NUMBER INDEX

CAGEC	PART NUMBER	STOCK NUMBER	FIG.	ITEM
11083	5M6214	4730-00-924-7886	149	31
			181	29
			296	14
11083	5M6509	5331-00-945-0494	28	79
			181	33
11083	5M6668	5305-00-005-0896	63	15
			79	4
			84	7
11083	5M6755	5305-00-765-2121	219	10
11083	5M7423	5331-01-093-8484	143	20
11083	5M7878	5325-00-419-3212	138	20
11083	5M7937	5315-01-062-5209	138	6
			138	17
11083	5M8009	5315-01-054-4325	150	15
11083	5M9548	5360-00-932-0761	151	9
11083	5N8780	5365-01-159-6679	13	11
11083	5N9111	4710-01-178-9966	183	13
11083	5P0537	5310-01-051-2360	39	3
			42	16
			43	9
			61	15
			63	22
			66	7
			71	2
			73	8
			75	19
			130	6
			197	3
			205	9
			215	16
			224	20
			227	5
			237	13
			247	20
			248	20
			249	20
			250	20
			251	20
			252	20
			289	9
			197A	11
11083	5P0597	4730-01-053-4687	34	1
11083	5P0637		301	35
11083	5P0767	4720-01-062-7159	BULK	2
11083	5P0767-17.7		178	10
11083	5P0975		301	42
11083	5P1038		125	5
11083	5P1040		215	1
11083	5P1075	5310-01-094-8810	220	13
11083	5P1076	5310-01-097-6720	96	10
			200	9

CROSS-REFERENCE INDEXES

PART NUMBER INDEX

CAGEC	PART NUMBER	STOCK NUMBER	FIG.	ITEM
11083	5P1076	5310-01-097-6720	210	2
			216	12
			217	17
			218	30
			221	4
			245	21
			246	2
11083	5P1083		124	5
11083	5P1174		234	5
11083	5P1175	7690-01-161-5009	234	4
11083	5P1260	4720-01-103-3697	BULK	5
11083	5P1260-3.15 IN		49	32
11083	5P1262-4 IN		49	2
11083	5P1263	4720-00-421-3854	35	13
11083	5P1265	4720-00-231-6285	BULK	11
11083	5P1265-4.5 IN		49	14
11083	5P1293	4720-01-095-3446	BULK	4
11083	5P1296-7		273	68
11083	5P1426	7690-01-174-3680	234	1
11083	5P1436	7690-01-174-3679	234	2
11083	5P1442	4720-01-093-7331	BULK	3
11083	5P1442-65		38	50
11083	5P1475	5940-01-303-4978	119	2
11083	5P1895	5305-01-095-1243	295	10
11083	5P2094	4720-01-026-9540	273	106
			BULK	12
11083	5P2230		273	71
11083	5P2546	5306-01-167-8328	235	12
11083	5P2566	5305-00-071-2069	297	2
11083	5P2574	4730-01-173-4133	190	3
11083	5P2675	5305-00-071-2510	206	11
11083	5P2754		232	4
11083	5P2968		301	28
11083	5P2980	5120-01-288-2777	301	27
11083	5P3241		244	23
11083	5P3242	3110-00-293-8542	244	24
11083	5P3243	3110-01-170-3841	244	11
11083	5P3418	3110-01-099-8007	54	21
11083	5P3419	3110-01-098-0000	54	32
11083	5P3628	5306-01-095-1236	195	11
11083	5P3903	5331-01-473-5985	194	24
11083	5P3999		233	10
11083	5P4077	7690-01-174-9444	234	6
11083	5P4114	9905-01-175-7159	234	12
11083	5P4116	5310-01-095-5910	38	53
			118	10
			134	7
11083	5P4150	4320-01-263-9716	301	66
11083	5P4174		3	7
11083	5P4184	5120-01-288-2717	301	5
11083	5P4197		301	63

CROSS-REFERENCE INDEXES

PART NUMBER INDEX

CAGEC	PART NUMBER	STOCK NUMBER	FIG.	ITEM
11083	5P4204		301	60
11083	5P4289	4730-01-169-3724	39	10
11083	5P4443	4730-01-178-0773	14	12
11083	5P4571	5940-01-058-9112	99	2
			100	29
			101	2
			102	2
			103	12
			104	1
			105	7
			105	47
			118	7
			120	5
11083	5P4868	4730-01-106-7246	273	69
11083	5P4939	5305-01-107-3526	24	7
11083	5P5059	4730-01-169-9698	273	126
			275	27
11083	5P5061	5340-01-170-6646	273	66
			275	34
11083	5P5346	2590-01-082-3145	225	13
11083	5P537	5310-01-051-2360	24	57
			29	33
11083	5P5622-11.4		130	3
11083	5P5630	4720-01-103-3700	44	6
			BULK	25
11083	5P5636		BULK	6
11083	5P5636-24		296	16
11083	5P5648	5330-01-205-9431	BULK	19
11083	5P5673	5330-01-098-3458	BULK	18
11083	5P5768	5330-01-128-8991	BULK	20
11083	5P5768-1		212	2
			215	20
			215	42
11083	5P5813	5310-00-185-6343	164	4
11083	5P5926	5330-01-332-7547	BULK	17
11083	5P5926-4		62	6
11083	5P5960	5330-01-094-9144	BULK	21
11083	5P5960-98.43		217	8
			218	10
11083	5P6008		70	2
		5970-01-300-7305	BULK	13
11083	5P6009	4720-01-338-7719	BULK	1
11083	5P6009-10		106	23
11083	5P6011	4720-01-433-8805	BULK	26
11083	5P6011-13.8		197A	5
11083	5P6011-15.7		38	25
11083	5P6011-23.6		38	30
11083	5P6271	5995-01-149-4967	100	28
			102	5
11083	5P6458	5331-01-206-7332	60	31
11083	5P6652	5310-01-094-9906	243	34

CROSS-REFERENCE INDEXES

PART NUMBER INDEX

CAGEC	PART NUMBER	STOCK NUMBER	FIG.	ITEM
11083	5P6652	5310-01-094-9906	292	1
11083	5P7244	9905-01-163-0026	234	1
11083	5P7305		301	23
11083	5P7306		301	24
11083	5P7854	5340-01-149-4428	98	2
11083	5P7957	4010-01-170-1460	211	6
11083	5P8081	5306-01-095-5695	160	12
11083	5P8167	5305-01-095-3965	83	28
11083	5P8197	9905-01-163-0029	233	14
11083	5P8244	5310-01-097-8955	195	2
			273	93
11083	5P8245	5310-01-098-0624	215	46
			220	12
11083	5P8247	5310-01-095-4631	2	3
			55	22
			78	9
			84	2
			202	34
			235	4
			291	34
			293	29
11083	5P8248	5310-01-102-2477	37	19
			163	9
			166	28
			222	19
			242	4
			270	16
			277	25
			291	23
			299	15
11083	5P8291	5306-01-170-3724	292	12
11083	5P8768	5330-01-144-0406	KIT	
11083	5P8839	5310-01-308-1455	197B	50
11083	5P8842	5330-01-095-1251	161	15
			162	23
11083	5P8843	5330-01-094-8703	161	6
11083	5P8890	5330-01-095-1252	160	30
11083	5P8998	4730-01-162-0102	75	16
			178	41
11083	5P9087	5306-01-157-4848	32	42
11083	5P9118	5306-01-155-8649	174	1
11083	5P9212	5340-01-095-5005	211	16
11083	5P9294	5330-01-102-3252	22	5
11083	5P9419	5330-01-155-4519	29	29
			31	54
			KIT	
11083	5P9796	2540-01-177-3913	211	10
11083	5P9909	5330-01-333-8284	BULK	16
11083	5P9909-109		46	1
11083	5P9909-36		46	16
11083	5R3413	9905-01-268-7580	233	1

CROSS-REFERENCE INDEXES

PART NUMBER INDEX

CAGEC	PART NUMBER	STOCK NUMBER	FIG.	ITEM
11083	5R4119		167	1
11083	5R4525	6150-01-214-5751	77	9
11083	5R4686	5995-01-160-3599	132	4
11083	5R4687		132	7
11083	5R5225	5340-01-170-4741	222	26
11083	5R5300	5995-01-294-5962	105	23
11083	5R5303	5995-01-295-0072	100	18
11083	5R5304	4730-01-152-2666	20	8
			159	3
11083	5R5305	2510-01-177-5422	201	12
11083	5R5310	5995-01-294-5963	120	32
11083	5R5311	2540-01-167-7212	222	10
11083	5R5318	3040-01-348-3941	198	19
11083	5R5319		292	23
11083	5R5328	5365-01-293-0066	222	21
11083	5R5341	2530-01-292-6765	222	18
11083	5R5342	2530-01-293-3419	222	27
11083	5R5346	5340-01-168-4502	198	13
11083	5R5348	5340-01-170-3801	198	33
11083	5R5349	5340-01-170-3800	198	17
11083	5R5354	4030-01-184-5839	199	6
11083	5R5355	3120-01-178-6041	199	3
11083	5R5356	5315-01-177-9863	199	4
11083	5R5358	2510-01-180-0959	217	15
			218	34
11083	5R5359	2510-01-173-4655	217	7
			218	9
11083	5R5361	2590-01-169-1968	283	5
11083	5R5387	3120-01-186-1287	202	41
11083	5R5388		202	32
11083	5R5393	5315-01-521-7020	202	30
11083	5R5394	5315-01-187-6323	202	39
11083	5R5421	9905-01-164-0168	233	15
11083	5R5422		234	8
11083	5R5725	4730-00-585-7507	197B	9
11083	5R6192	2520-01-152-7143	136	1
11083	5R6221		41	62
			135	30
11083	5R6242	5340-01-342-2648	220	8
11083	5R6301		273	134
11083	5R6302		273	135
11083	5R6307		273	130
11083	5R6323		190	101
11083	5R6324		190	109
11083	5R6325		190	105
11083	5R6326		190	102
11083	5R6333	5340-01-236-5011	198	27
11083	5R6334	3805-01-173-8408	198	26
11083	5R6361	3040-01-178-7121	199	1
11083	5R6362		161	7
11083	5R6369	2540-01-179-8801	221	1

CROSS-REFERENCE INDEXES

PART NUMBER INDEX

CAGEC	PART NUMBER	STOCK NUMBER	FIG.	ITEM
11083	5R6370	2590-01-179-3016	221	3
11083	5R6371	2590-01-179-6377	221	2
11083	5R6374	4720-01-173-8350	178	84
11083	5R6375	4720-01-167-7053	178	82
11083	5R6376	4720-01-173-7690	178	83
11083	5R6378	5340-01-165-7648	178	34
11083	5R6391	2510-01-183-2614	48	4
11083	5R6393	3040-01-192-5939	298	7
11083	5R6395	3040-01-168-2777	197B	46
11083	5R6609	4810-01-174-4086	197A	15
11083	5R6832	3805-01-196-5286	197B	40
11083	5R6835	2590-01-169-5401	135	28
11083	5R6836	2590-01-169-2885	135	35
11083	5R6837	2590-01-169-8762	41	61
11083	5R6838	2590-01-169-5402	41	64
11083	5R6840	2590-01-168-7621	135	31
11083	5R6841		135	34
11083	5R6842	2590-01-169-8761	135	29
11083	5R6844		75	10
			197B	19
11083	5R6845		75	29
11083	5R6850	5307-01-191-0322	75	30
11083	5R6851	9905-01-179-3145	69	8
11083	5R6853		227	3
11083	5R6854	5365-01-184-6695	207	15
11083	5R6856	2510-01-178-7079	207	26
11083	5R6857	2540-01-182-6885	227	6
11083	5R6860	2510-01-182-4468	82	2
11083	5R6861	5306-01-179-2844	82	1
11083	5R6862	5340-01-185-2127	82	12
11083	5R6865	2540-01-179-3018	219	18
11083	5R6869	5995-01-178-9832	116	1
11083	5R6870	5340-01-184-6683	66	3
11083	5R6872	5340-01-186-1819	66	13
11083	5R6875	5340-01-196-2831	197B	42
11083	5R6877	2590-01-177-4827	113	1
11083	5R6878	5995-01-182-7198	114	1
11083	5R6881	9905-01-200-9500	233	5
11083	5R6882	2590-01-177-4797	66	9
11083	5R6883	7690-01-174-3678	67	8
11083	5R6884	5365-01-180-1120	63	14
11083	5R6885	5340-01-168-4532	75	36
11083	5R6886	2510-01-174-1265	178	36
11083	5R6887	5995-01-177-4824	106	1
11083	5R6888	5995-01-177-4826	108	1
11083	5R6891	5340-01-169-8313	197B	28
11083	5R6893	2540-01-169-4895	197B	37
11083	5R6895	5340-01-184-7653	83	12
11083	5R6898	2590-01-169-1990	197B	41
11083	5R6902	5995-01-177-4825	107	1
11083	5R6903	5995-01-177-4828	99	1

CROSS-REFERENCE INDEXES

PART NUMBER INDEX

CAGEC	PART NUMBER	STOCK NUMBER	FIG.	ITEM
11083	5R6903	5995-01-177-4828	100	1
			101	1
			102	1
11083	5R6904	5975-01-176-5620	67	4
11083	5R6905	5995-01-178-7127	103	6
11083	5R6907		190	129
11083	5R6908		190	119
11083	5R6909	4720-01-169-9603	190	123
11083	5R6910	4720-01-169-2659	190	113
11083	5R6923	2590-01-183-2574	47	12
11083	5R6924	5995-01-174-1194	190	75
11083	5R6926	2920-01-174-1193	190	73
11083	5R7024		197B	22
11083	5R7025	5340-01-174-2507	197B	1
11083	5R7028	5995-01-169-7620	190	122
11083	5R7031		62	1
11083	5R7038	5306-01-175-3621	197B	3
11083	5R7039		220	14
11083	5R7040	6150-01-296-7937	75	33
11083	5R7041	6150-01-301-2239	75	39
11083	5R7042	6150-01-296-7935	75	13
11083	5R7043	6150-01-296-7159	75	48
11083	5R7044	5995-01-292-1624	75	5
11083	5R7047	2520-01-201-4146	135	32
11083	5R7049	6150-01-296-7936	75	21
11083	5R7050	6150-01-296-7158	75	46
11083	5R7051	6150-01-296-7157	75	47
11083	5R7052	6150-01-296-6119	75	14
11083	5R7053	6150-01-296-6117	75	22
11083	5R7054	6150-01-296-6118	75	26
11083	5R7059	2540-01-172-6659	220	15
11083	5R7062	4720-01-173-7689	178	81
11083	5R7068	2540-01-182-4467	292	13
11083	5R7069	5340-01-203-2618	216	5
11083	5R7073	5340-01-174-6175	216	7
11083	5R7075	5340-01-293-1047	190	70
11083	5R7169	5340-01-293-1793	222	17
11083	5R7180	5340-01-204-4791	159	5
11083	5R7181	5340-01-236-1850	20	6
11083	5R7277	2815-01-188-7440	1	1
11083	5R7322		234	11
11083	5R7569	2510-01-178-7058	198	12
11083	5R7652		167	13
11083	5R7653		167	13
11083	5R8071	9905-01-289-3373	234	13
11083	5R8147	5995-01-292-6789	99	23
11083	5R8148	5995-01-294-1703	120	47
11083	5R8149	5995-01-296-0444	105	35
11083	5R8341	9905-01-295-4889	75	43
11083	5R8342	9905-01-295-4596	75	42
11083	5R8343	9905-01-295-2486	190	85

CROSS-REFERENCE INDEXES

PART NUMBER INDEX

CAGEC	PART NUMBER	STOCK NUMBER	FIG.	ITEM
11083	5R8344	9905-01-295-2489	75	10
11083	5R8345	9905-01-295-2487	75	12
11083	5R8346	9905-01-295-2490	75	44
11083	5R8402	4720-01-521-7421	190	86
11083	5R8403		190	69
11083	5R8404	4720-01-521-7425	190	90
11083	5R8405	4720-01-521-7418	190	72
11083	5R8408	3040-01-294-7273	75	29
11083	5R8410		190	143
11083	5R8411		190	150
11083	5R8412	4720-01-288-8509	190	133
11083	5R8413		190	140
11083	5R8415	4720-01-294-8774	272	54
11083	5R8416		272	55
11083	5R8419	2510-01-292-1318	216	5
11083	5R8465		198	11
11083	5R8531	6150-01-296-6120	75	45
11083	5R8532	6150-01-296-6121	75	41
11083	5R8533	5995-01-294-9731	106	24
11083	5R8534	5995-01-296-0445	106	19
11083	5R8815	5961-01-304-3340	99	58
			120	61
11083	5R8936	5340-01-305-8606	220	10
11083	5R8944	5340-01-305-7705	220	7
11083	5S0003	5310-01-163-5545	197B	44
			197B	45
11083	5S0214		178	73
11083	5S0385	5340-01-154-4149	142	10
11083	5S1330	5120-00-314-6138	301	17
11083	5S2106	5330-00-498-2905	51	27
11083	5S2403	4730-00-726-1103	178	44
11083	5S5874	2815-00-485-9418	10	29
11083	5S5879	5340-00-239-8226	10	19
11083	5S5917	2815-00-457-1615	10	7
11083	5S5918	2815-00-487-3123	10	24
11083	5S6045	5330-00-008-9181	13	1
11083	5S6051	5330-00-557-8494	19	3
58312	5S6348-00	5310-00-557-9389	8	9
11083	5S6670	5330-00-494-2764	3	6
58312	5S6735-00	5330-00-760-7367	4	17
			35	6
11083	5S7264	5365-00-498-2962	51	15
11083	5S7348	5305-01-185-2069	61	6
11083	5S7351		301	38
11083	5S7379	5305-00-717-5460	66	11
			134	1
			203	9
11083	5S7382	5306-01-285-3987	190	67
11083	5S7383	5306-01-176-7828	178	14
			203	6
			206	17

CROSS-REFERENCE INDEXES

PART NUMBER INDEX

CAGEC	PART NUMBER	STOCK NUMBER	FIG.	ITEM
11083	5S7384	5310-01-095-4016	219	5
11083	5S7607	5340-01-154-6111	158	9
11083	5S7630	3120-00-439-4878	27	5
11083	5S7906	2520-01-059-9410	148	10
			149	30
			150	28
11083	5S7944		139	31
11083	5S8115	6680-00-139-5274	14	8
11083	5S9062	5365-00-498-2920	51	28
58312	5S9948-00	5310-00-757-6531	5	11
11083	5T0802	5340-01-292-8403	178	13
11083	5T0906		160	40
11083	5T1707	5365-01-184-6694	76	7
11083	5T1929	5995-01-178-7128	118	1
11083	5T1959	2510-01-183-2615	213	17
11083	5T2329	5310-01-173-6679	72	3
11083	5T2340	5995-01-176-9596	120	2
11083	5T2343	5995-01-176-9597	121	1
11083	5T2346	5340-01-175-6908	62	1
11083	5T2347		62	2
11083	5T2356	4720-01-173-6915	190	7
11083	5T2358	4720-01-173-7691	190	1
11083	5T2421	4320-01-178-3507	188	7
11083	5T2461		266	3
11083	5T2559		206	40
11083	5T2563		206	6
11083	5T2564		206	38
11083	5T2580	3805-01-172-3076	289	20
11083	5T2598	5340-01-175-6899	73	11
11083	5T2918	4720-01-152-2667	157	3
11083	5T3093	5340-01-186-1636	212	5
11083	5T3170	2510-01-177-4800	216	5
11083	5T3476	3040-01-178-9709	40	14
11083	5T3751		291	30
11083	5T3752		291	13
11083	5T3754		291	28
11083	5T3755		291	11
11083	5T3885	4710-01-173-4696	285	19
11083	5T4030	5340-01-149-9730	91	2
11083	5T4055	3040-01-169-1982	74	5
11083	5T4056	3805-01-175-5265	74	12
11083	5T4057	5330-01-170-3755	74	4
11083	5T4058	5340-01-174-8314	74	3
11083	5T4189		235	1
11083	5T4362	9905-01-175-7145	234	10
11083	5T4729		206	4
11083	5T4730		206	26
11083	5T4731		206	19
11083	5T4788	2910-01-141-0911	37	1
11083	5T5085	2510-01-178-7056	76	4
11083	5T5086	2510-01-178-7057	76	3

CROSS-REFERENCE INDEXES

PART NUMBER INDEX

CAGEC	PART NUMBER	STOCK NUMBER	FIG.	ITEM
11083	5T5101		285	17
11083	5T5126	2540-01-182-7819	213	10
11083	5T5179	5340-01-181-5076	245	20
11083	5T5180	5340-01-181-5758	246	7
11083	5T5182	5995-01-192-4606	125	1
11083	5T5183	5995-01-178-7126	124	1
11083	5T5190	4720-01-179-2475	190	34
11083	5T5191	4720-01-179-2476	190	20
11083	5T5220	5340-01-177-4686	74	8
11083	5T5225		272	19
11083	5T5257	2540-01-178-0761	208	15
11083	5T5295	5315-01-177-9872	277	2
11083	5T5515	5340-01-203-1132	211	9
11083	5T6412	5340-01-174-2769	218	3
11083	5T6683	2510-01-178-3050	211	2
11083	5T7086	6150-01-268-6579	127	1
11083	5T7129		166	29
11083	5T7133	4320-01-178-9693	166	22
11083	5T7176		207	2
		2510-01-291-9669	215	28
11083	5T7201	5340-01-178-3756	177	26
11083	5T7205	4720-01-178-8829	275	25
11083	5T7206	4720-01-178-8830	275	4
11083	5T7298		272	3
11083	5T7299		272	8
11083	5T7459	5895-01-192-8449	62	24
11083	5T7616	2540-01-233-0165	200	4
11083	5T7627	5340-01-335-2995	206	12
11083	5T7628	5365-01-333-4595	206	18
11083	5T7662		103	14
11083	5T7692		272	32
11083	5T7693		272	27
11083	5T7694		272	13
11083	5T8366	5340-01-279-1258	293	16
11083	5T8367	5365-01-302-3168	293	13
11083	5T8417	5315-01-177-9864	277	21
11083	5T8949	5340-01-155-7741	61	14
11083	5T8951	5340-01-171-4005	289	28
11083	5T9323		215	54
11083	5T9352	5340-01-177-8364	208	10
11083	5T9409		215	63
11083	5T9410	2540-01-343-8529	215	44
11083	5T9724		189	22
11083	5T9875		273	127
11083	5T9881	4720-01-521-3396	190	63
11083	5T9883		273	74
11083	5T9884		273	62
11083	5T9886		273	45
11083	5T9902	4720-01-520-7939	190	66
11083	5T9903	4720-01-521-8810	190	64
11083	5T9908		273	57

CROSS-REFERENCE INDEXES

PART NUMBER INDEX

CAGEC	PART NUMBER	STOCK NUMBER	FIG.	ITEM
11083	5T9982	5340-01-181-1727	214	16
11083	5V2823	5365-01-159-8889	106	18
11083	5V7079	6150-01-155-3538	77	1
28882	5000078L	2510-01-200-1036	213	1
28882	5000078R	2510-01-184-1963	213	1
89346	50410DA	4730-00-044-4688	5	8
			58	6
			146	3
			164	10
			166	20
			181	36
			183	3
			197A	7
28882	50726	2510-01-182-7818	213	12
28882	50766	5365-01-267-3020	213	7
28882	50767	5306-01-185-0574	213	3
99688	5083	4140-01-190-5493	229	11
77625	5100-006-126-043 3	5930-01-151-4769	87	2
99688	5114	3830-01-094-6926	232	17
70082	5121	5340-01-096-0364	230	7
70082	5122	2540-01-177-8617	230	5
70082	5123	3830-01-094-1933	230	17
96151	5126	3040-00-124-0880	187	7
19207	5294507	5310-00-350-2655	82	9
00779	53245-1	5940-01-087-0285	99	48
			100	2
			104	3
			105	19
			105	43
			113	2
			114	2
			116	3
			117	2
			120	11
			120	51
			197A	1
20076	533047302-060	2530-00-881-4967	185	10
0AFL4	5359-50	5910-01-180-5443	132	3
12436	540247-563	5306-00-865-7377	26	25
79136	5560-31	5325-01-095-4320	240	11
5S058	56-1663-2031	2590-01-216-7765	289	11
5S058	56-3234-2060	2590-01-201-2490	135	33
5S058	56-3248-2022	3040-01-206-8566	197B	43
5S058	56-3361-2123	2590-01-094-3201	133	24
			135	19
5S058	56-3363-2113	3040-01-094-5350	135	15
01276	5608-12-12S	4730-01-174-6163	190	93
			190	115
			190	135
01276	5608-6-6S	4730-01-167-7067	272	58

CROSS-REFERENCE INDEXES

PART NUMBER INDEX

CAGEC	PART NUMBER	STOCK NUMBER	FIG.	ITEM
01276	5608-8-10S	4730-00-226-8127	190	88
			190	125
			190	145
01276	5610-12-12S	4730-01-242-4573	190	96
			190	120
			190	141
01276	5610-6-6S	4730-01-168-7544	272	57
01276	5610-8-10S	4730-00-439-6020	190	82
			190	131
			190	152
			273	131
70082	5620	5340-01-181-7524	230	16
70040	5622759	2910-00-033-2200	30	11
			42	6
40152	564693	4720-00-766-9779	296	4
01276	5657-10	5340-00-071-3836	190	81
			190	132
			190	153
01276	5657-12	5340-00-071-3834	190	100
			190	121
			190	142
01276	5657-6	5340-00-071-3829	272	53
01276	5659-10	4730-01-128-5831	190	87
			190	124
			190	144
01276	5659-12	5340-01-013-1040	190	95
			190	114
			190	134
01276	5659-6	5340-00-071-3830	272	52
77308	568-014-4200-70	5331-00-580-6583	190	49
			190	149
99688	5686	4820-01-095-2016	232	2
75618	57-99-246-10	5340-01-188-1358	207	14
90031	570-416-11	5977-00-044-3000	58	42
19207	5702745	2920-00-060-7252	KIT	
62983	570672		60	10
73331	5937086	6220-01-148-7953	84	5
93331	5949719	6220-00-756-8787	79	5
			84	6
28882	59770	5325-01-182-5734	213	9
30780	6-1/4 F50G-S	4730-01-191-8728	159	12
77873	6-5132	2520-01-167-9184	242	9
30780	6-8-F5G5-S	4730-01-230-6610	190	68
98441	6-8-F50G5-S	4730-00-413-0219	190	16
30780	6-8V5BX-S	4730-01-161-9597	265	8
			266	2
			267	2
			268	2
			270	7
			271	7
			272	26

CROSS-REFERENCE INDEXES

PART NUMBER INDEX

CAGEC	PART NUMBER	STOCK NUMBER	FIG.	ITEM
11083	6B0863	5310-00-421-9603	175	9
11083	6B0933		39	7
11083	6B3260	3805-00-423-9746	300	1
11083	6B3671	5310-01-199-3350	178	35
11083	6B4198	5306-01-069-1382	28	16
			43	8
11083	6B4540	5310-01-163-5805	75	51
			190	76
			233	6
11083	6B4542	5310-00-434-1347	190	77
			233	7
11083	6B5262	5365-00-426-5507	144	24
			152	10
			164	38
			199	8
11083	6B6780	5315-00-245-6578	206	35
11083	6B8193	5315-00-363-9729	214	29
11083	6B9549	5360-00-423-9986	206	10
11083	6C0756	5340-01-172-0726	24	1
11083	6D0238	4820-00-391-3782	28	60
11083	6D1641	5342-01-064-7512	99	16
			100	13
			231	12
11083	6D1904	3830-00-459-6677	290	7
11083	6D2256	5365-01-059-0914	78	4
11083	6D2928	5306-00-209-3217	135	6
			230	10
11083	6D3133	5365-01-095-1303	292	10
11083	6D3386		266	27
11083	6D3479	5340-01-059-9345	38	56
			180	13
11083	6D3846	5305-01-178-3686	223	30
			262	8
11083	6D3908	2590-01-066-4541	289	19
11083	6D4161	5999-01-119-4109	91	7
			99	4
			99	28
			120	7
			120	57
11083	6D4162	3120-01-160-7617	120	58
11083	6D4246	5340-01-053-8024	197B	56
11083	6D4247	5340-01-173-6745	264	15
			269	4
			271	4
			272	23
11083	6D5415	5340-01-178-6002	293	4
11083	6D6489	4730-01-063-3003	180	9
11083	6D7889	5331-01-095-1254	295	4
11083	6D8498	5305-01-180-8690	26	11
11083	6D9392	5340-01-149-5446	157	5
11083	6D9598	4720-01-094-5156	178	4

CROSS-REFERENCE INDEXES

PART NUMBER INDEX

CAGEC	PART NUMBER	STOCK NUMBER	FIG.	ITEM
11083	6D9677	2940-01-152-5584	94	8
			167	10
11083	6D9704	5999-01-192-3294	94	7
11083	6D9705	5340-01-176-7495	94	6
11083	6D9858	4720-01-184-4241	178	55
11083	6F0698		164	33
11083	6F0711	5331-00-040-9789	295	1
30780	6F5BXS	4730-00-491-9576	272	64
11083	6F6672	5331-00-310-6575	26	15
			31	41
11083	6F6673	5331-00-865-0404	150	22
			154	5
11083	6F6992	3805-00-374-1191	299	18
11083	6F7013	2420-01-062-6016	209	6
			217	4
			218	12
11083	6F7062	5310-00-362-7988	3	11
			158	11
11083	6F8205	5365-01-095-5021	239	33
70434	6GABB-6MB-105.75	4720-01-094-6264	177	6
70434	6GABB-6MB-132.00	4720-01-094-5155	178	5
11083	6G0203	5330-01-094-8709	208	5
11083	6G0204	5330-01-094-8710	208	9
11083	6G0207	2510-01-178-7073	208	14
11083	6G0208	9390-01-096-3473	189	16
			189	31
11083	6G0222		203	8
11083	6G0223	2510-01-182-4469	203	7
11083	6G0233	9390-01-094-7076	41	19
11083	6G0237	5325-01-099-3690	189	15
			189	29
11083	6G0417	5340-01-169-7288	202	6
11083	6G0905	5306-01-097-7875	174	12
11083	6G1089	2510-01-174-1264	299	3
11083	6G1148	3040-01-169-1991	294	2
11083	6G1284	9330-01-167-9196	198	28
11083	6G1285	9330-01-167-4448	198	22
11083	6G1415	4730-01-152-7921	177	18
11083	6G1623	3040-01-181-0304	215	13
11083	6G1631	3020-01-196-1233	168	2
11083	6G1633	3020-00-084-7516	168	1
11083	6G1664	2540-01-167-7093	292	11
11083	6G1692	5340-01-175-6900	189	3
			189	44
11083	6G1693	4720-01-173-6917	273	39
11083	6G1694		273	22
11083	6G1696	5340-01-173-6941	189	2
11083	6G1697	4720-01-174-4762	189	1
11083	6G1698	4720-01-173-6912	191	6
11083	6G1702	4720-01-173-6913	191	4
11083	6G1713	5340-01-095-6092	189	6

CROSS-REFERENCE INDEXES

PART NUMBER INDEX

CAGEC	PART NUMBER	STOCK NUMBER	FIG.	ITEM
11083	6G1713	5340-01-095-6092	189	35
11083	6G1714	5340-01-175-6901	266	26
11083	6G1715	5340-01-095-6093	266	23
11083	6G1716	5340-01-170-6337	266	28
11083	6G1908	3040-01-173-4264	243	27
11083	6G1914	5365-01-170-3812	292	15
11083	6G1915	5365-01-170-3805	292	16
11083	6G1919	2540-01-167-7094	292	7
11083	6G1953	2520-01-155-5808	166	34
11083	6G1956	8140-01-184-6877	41	13
11083	6G2007	4720-01-149-8949	49	19
11083	6G2061	9340-01-166-9498	212	4
			215	41
11083	6G2141	5340-01-174-2786	217	2
11083	6G2142	5342-01-175-6911	178	69
			218	11
11083	6G2145	5340-01-175-6710	217	10
			218	7
11083	6G2150	2590-01-174-1266	215	26
11083	6G2222	2590-01-169-2702	215	40
11083	6G2263	5365-01-175-9326	273	76
			274	39
11083	6G2284	2510-01-184-4471	214	10
11083	6G2285	2510-01-178-7071	214	10
11083	6G2296	5340-01-184-5893	214	12
11083	6G2367	5325-01-177-9833	76	11
11083	6G2393	2510-01-178-3165	215	22
11083	6G2394	2510-01-178-3166	215	21
11083	6G2396	5330-01-170-3756	211	30
			215	35
11083	6G2422		215	57
11083	6G2527	4320-01-159-5843	171	2
11083	6G2581	9340-01-203-4499	212	3
11083	6G2583	9340-01-180-0142	212	1
11083	6G2641	5330-01-170-4603	219	22
11083	6G2643	2510-01-178-8859	207	11
11083	6G2644	2510-01-178-9782	207	13
11083	6G2728	5340-01-179-2459	207	16
11083	6G2743	2540-01-167-7098	207	7
11083	6G2748	2510-01-177-4799	225	11
11083	6G2751	5340-01-180-5352	207	17
11083	6G2752	5340-01-182-7733	225	4
11083	6G2785	2540-01-178-7059	223	16
11083	6G2818	3040-01-178-8578	223	33
11083	6G2819	3040-01-177-4874	223	37
11083	6G2822	5340-01-177-3907	223	31
11083	6G2826	5340-01-177-3906	68	6
11083	6G2843	5365-01-177-0107	207	24
11083	6G2846	5330-01-181-7906	223	32
11083	6G2847	5340-01-175-3866	207	9
			215	48

CROSS-REFERENCE INDEXES

PART NUMBER INDEX

CAGEC	PART NUMBER	STOCK NUMBER	FIG.	ITEM
11083	6G2874	3040-01-178-8909	224	3
11083	6G2877	5340-01-191-0343	207	27
11083	6G2925	2510-01-177-1777	207	1
11083	6G2947	3040-01-172-2708	293	33
11083	6G2968	5306-01-196-5562	223	6
11083	6G3016	5355-01-186-9348	68	8
11083	6G3099	5365-01-174-3274	208	17
			273	87
11083	6G3206	3120-01-166-6920	166	23
11083	6G3212	5365-01-153-7684	166	33
11083	6G3236	5995-01-151-6311	91	4
11083	6G3237	5975-01-168-0647	91	10
11083	6G3239	5315-01-148-7542	91	18
11083	6G3241	5330-01-155-4395	91	14
11083	6G3242	5970-01-149-8472	91	11
11083	6G3244	2590-01-151-3788	91	13
11083	6G3274	2530-01-151-3787	91	16
11083	6G3315		215	55
11083	6G3378	4310-01-152-7880	174	15
11083	6G3472	2920-01-177-4830	109	1
11083	6G3499	2510-01-178-7080	207	12
11083	6G3504		41	5
11083	6G3505		41	4
11083	6G3651		299	4
11083	6G3669	2540-01-180-1103	222	1
11083	6G3690	2930-01-147-1377	48	4
11083	6G3691	5340-01-150-9809	48	3
11083	6G4175	2540-01-169-2880	210	3
11083	6G4177	2590-01-169-3779	210	6
11083	6G4247	2510-01-178-4862	208	2
11083	6G4524	2540-01-260-8357	292	14
11083	6G4525	3805-01-280-8993	292	17
11083	6G4526	3040-01-167-4443	292	20
11083	6G4701	5365-01-156-0016	164	34
11083	6G4703	5365-01-156-4143	164	21
11083	6G4933	2590-01-197-4885	289	4
11083	6G4934	5340-01-174-6176	289	6
11083	6G4936	5365-01-184-3735	263	30
11083	6G4938	5340-01-169-9641	205	3
11083	6G4939	3805-01-174-6002	205	35
11083	6G4941	3805-01-174-1271	205	35
11083	6G4942	2510-01-174-1268	205	25
11083	6G4943	2510-01-177-1004	205	12
11083	6G4944	5340-01-169-9640	205	13
11083	6G4946	5340-01-169-9639	205	16
11083	6G4947	3805-01-177-2394	205	33
11083	6G4951	5355-01-169-8502	289	29
11083	6G4954	2590-01-167-9246	205	17
11083	6G4966		204	18
11083	6G4967	2510-01-174-1270	204	1
11083	6G4968	3805-01-174-6001	205	22

CROSS-REFERENCE INDEXES

PART NUMBER INDEX

CAGEC	PART NUMBER	STOCK NUMBER	FIG.	ITEM
11083	6G4969	2530-01-173-0252	133	4
			175	7
11083	6G5058	3040-01-150-3940	133	1
11083	6G5118	4320-01-167-9199	284	6
11083	6G5159	5340-01-199-3516	211	12
		3120-01-202-7624	215	65
11083	6G5214		207	6
		5310-01-168-5569	215	43
11083	6G5229	2590-01-174-5994	211	11
			215	69
11083	6G5231	5330-01-196-5592	211	25
			215	68
11083	6G5243	5330-01-154-1463	91	3
11083	6G5244	5999-01-151-4443	91	1
11083	6G5267	5995-01-177-4829	105	1
11083	6G5277	5340-01-170-0769	284	16
11083	6G5279	3040-01-168-7619	283	15
11083	6G5289		67	1
11083	6G5413		63	1
11083	6G5415		63	12
11083	6G5442	2540-01-167-7116	292	8
11083	6G5581	5995-01-178-8534	123	1
11083	6G5607	5995-01-178-0676	117	1
11083	6G5768	6110-01-178-0753	65	8
11083	6G5769	5340-01-184-7660	65	1
11083	6G5774		228	3
11083	6G5901	6150-01-151-3932	111	1
11083	6G6109	5995-01-151-6310	128	1
11083	6G6123	5995-01-152-0014	112	1
11083	6G6141	5995-01-151-3936	119	1
11083	6G6158	5365-01-293-1061	222	22
11083	6G6206	5310-01-174-8242	211	13
			215	66
11083	6G6274	3020-01-152-7665	164	28
11083	6G6432		214	30
11083	6G6513	5340-01-169-9513	263	26
11083	6G6538	5340-01-147-6713	203	23
11083	6G6687	2510-01-178-7070	214	32
11083	6G6688	2510-01-179-2563	214	32
11083	6G6802	2520-01-148-8159	203	19
11083	6G6809	3805-01-174-1269	62	26
11083	6G6979	2510-01-169-1981	216	1
11083	6G7021	5340-01-149-9717	81	1
11083	6G7134	5365-01-152-4550	63	11
			64	4
11083	6G7187	5365-01-156-9765	162	20
			281	3
11083	6G7335	5995-01-152-3050	110	1
11083	6G7449	3020-01-147-9299	47	12
11083	6G7487		72	1
11083	6G7598	3040-01-176-1214	205	5

CROSS-REFERENCE INDEXES

PART NUMBER INDEX

CAGEC	PART NUMBER	STOCK NUMBER	FIG.	ITEM
11083	6G7599	2910-01-174-1267	205	2
11083	6G7658	5342-01-176-1162	73	7
11083	6G7721	2590-01-178-3149	207	23
11083	6G7723	2510-01-178-7074	207	22
11083	6G7746	3040-01-169-9692	299	2
11083	6G7895	5340-01-147-6712	203	10
11083	6G7954	5340-01-156-5493	177	21
			178	85
11083	6G7972	2530-01-175-7095	177	22
			178	86
11083	6G8012		273	16
11083	6G8424	2540-01-177-4811	211	31
11083	6G8425	2530-01-250-1903	179	1
11083	6G8803		206	21
11083	6G8804	5340-01-333-5565	206	37
11083	6G8811	5340-01-334-3714	206	34
11083	6G8814	3040-01-334-2283	206	28
11083	6G8815	3040-01-332-2443	206	23
11083	6G8945	2510-01-167-7127	217	22
11083	6G8946	5342-01-175-6910	218	19
11083	6G9050	2510-01-167-7095	217	1
11083	6G9322	5930-01-195-6141	72	2
11083	6G9488	5355-01-197-0843	289	2
11083	6G9951	2920-01-147-4276	53	15
30780	6HP5N-SS	5365-01-024-9868	137	17
			245	19
			246	15
			247	45
			248	45
			249	45
			250	45
			251	45
			252	45
11083	6H0192	5307-00-587-3434	2	8
11083	6H0211	5310-01-096-6183	277	1
11083	6H1717	5306-00-874-4001	24	24
			48	10
			162	22
			210	1
			243	13
			293	1
11083	6H2948	5315-00-529-6952	147	4
11083	6H5139	2520-01-028-8096	284	12
11083	6H9691	5331-00-952-8007	29	12
			172	6
11083	6I0923	2815-01-125-9819	2	17
11083	6I1345	3040-01-497-0540	16	14
11083	6I1346	2815-01-011-2686	16	1
			16	1
11083	6I2002	5330-01-376-0784	29	26
11083	6I2003	5330-01-376-0802	29	18

CROSS-REFERENCE INDEXES

PART NUMBER INDEX

CAGEC	PART NUMBER	STOCK NUMBER	FIG.	ITEM
11083	6I2004	5330-01-376-0803	29	23
11083	6J0488	5305-01-285-7714	63	7
11083	6J0793	5330-01-021-9887	278	13
			282	16
11083	6J1079	2530-01-062-6127	285	24
11083	6J1080	5325-01-062-6128	285	26
11083	6J1154		178	60
11083	6J1972	5330-01-021-9889	277	16
			280	11
			281	17
11083	6J2256	5315-00-276-5750	76	8
11083	6J2419	5331-00-494-2763	26	6
11083	6J3134	5330-01-064-8247	195	9
			239	31
			245	16
			246	11
			247	22
			248	22
			249	22
			250	22
			251	22
			252	22
11083	6J5731	2590-01-064-7381	278	15
			282	14
11083	6J5733	2590-01-064-7382	277	17
			280	13
			281	19
11083	6J6854		196	8
11083	6J6858	5360-01-170-3737	196	9
11083	6J8391	5360-01-066-0616	285	5
11083	6J8696	5365-01-064-7712	255	12
			256	11
			257	12
11083	6J9733	5330-00-431-8882	162	13
			279	16
11083	6K3771	5306-01-179-9434	50	4
11083	6K4936	5306-01-095-1237	189	5
			189	34
			266	18
			271	6
11083	6K7917	5306-01-156-3738	167	19
11083	6K8420	5310-01-067-5658	190	111
11083	6K9194	4730-01-051-8745	38	19
			264	23
11083	6K9549	5340-01-185-2058	190	30
11083	6K9550	5340-01-178-3770	190	32
11083	6L1962	5310-01-065-9110	206	33
			263	29
11083	6L4783	5306-01-059-9566	145	14
			150	23
11083	6L5897	5305-01-107-4621	31	21

CROSS-REFERENCE INDEXES

PART NUMBER INDEX

CAGEC	PART NUMBER	STOCK NUMBER	FIG.	ITEM
11083	6L7751	2520-01-066-0510	133	13
			135	10
63906	6MA6UFS	4730-00-706-4566	177	1
			178	59
			180	16
11083	6M6853	4730-01-155-5059	264	14
11083	6M9149	5306-01-164-5441	24	19
11083	6N0009	5330-01-094-1895	35	14
11083	6N0125		158	5
11083	6N1036	3020-00-460-6696	16	12
11083	6N1553	2990-01-094-1914	35	15
11083	6N1558	5330-01-095-2299	35	16
11083	6N2578	3110-01-068-9716	28	71
11083	6N2956	5310-01-094-8702	28	100
11083	6N2957	5365-01-094-3237	28	99
11083	6N3504	5340-01-066-4744	28	35
11083	6N3760	5340-01-150-1544	24	49
11083	6N412	5305-01-025-4359	31	63
11083	6N4655	5342-01-093-7394	28	95
11083	6N5324	3040-01-179-4393	28	63
11083	6N5482	2990-01-103-3684	29	37
11083	6N6033	5340-01-168-7289	23	10
11083	6N6120	4710-01-103-6624	23	6
11083	6N6122	4710-01-068-7132	23	1
11083	6N6403	5342-01-116-1312	24	42
11083	6N6404	5342-01-116-3799	24	43
11083	6N6662		28	97
11083	6N6689	5340-01-151-1088	1	15
11083	6N6794	2910-01-105-3610	31	49
11083	6N7174	2815-01-183-4649	10	28
11083	6N7451		28	98
11083	6N7523	5310-01-064-1494	30	54
11083	6N7527	2910-01-024-0939	31	42
11083	6N7887	5330-01-093-7888	2	16
11083	6N8003	3040-01-149-5043	3	32
			3	33
11083	6N8863	5310-01-098-0625	190	25
11083	6N9060	2815-01-125-5544	2	6
11083	6N9587	5940-01-097-3578	101	12
			102	10
			104	5
			104	12
			109	6
11083	6P2090	3040-01-149-1236	156	6
11083	6P2091	2520-01-094-6514	156	1
11083	6P3223		149	19
11083	6P4699		150	16
11083	6P4700	2590-01-066-8460	150	14
11083	6P4917	5315-01-096-3211	151	27
11083	6P5095	5340-01-160-2370	145	1
11083	6P5442	5310-01-298-3201	206	9

CROSS-REFERENCE INDEXES

PART NUMBER INDEX

CAGEC	PART NUMBER	STOCK NUMBER	FIG.	ITEM
11083	6P5560	5305-01-184-5886	211	17
11083	6P6641	5325-01-203-0184	106	13
11083	6S3065	5310-01-095-1524	187	32
11083	6T6505	5935-01-473-5590	99	24
11083	6T6506	5935-01-473-5578	99	25
11083	6T9254	5905-01-191-9741	232	11
11083	6V0467	4730-01-192-9595	273	132
11083	6V0799	7690-01-199-0001	68	7
11083	6V1051	5305-01-180-8689	212	6
11083	6V1391		217	21
11083	6V1392		218	27
		5330-01-277-6101	BULK	22
11083	6V1535	5340-01-175-7764	217	24
11083	6V1720		142	24
11083	6V1813	4730-00-196-2054	288	2
11083	6V2248	5330-01-160-2349	KIT	
11083	6V2360	5310-01-166-4420	201	10
			298	10
11083	6V2376	4730-01-196-7172	20	7
			159	4
11083	6V2489	5306-01-146-4525	36	28
11083	6V2525	5330-01-117-9336	KIT	
11083	6V2611	4820-01-167-5453	38	48
11083	6V2687	5305-01-152-2589	81	11
			85	5
			205	14
			215	58
11083	6V2689		102	4
		5640-01-202-1771	BULK	14
11083	6V2694		61	8
11083	6V2934	5330-01-165-7732	KIT	
11083	6V2935	5330-01-160-0577	KIT	
11083	6V3075	5210-01-354-9255	301	25
11083	6V3145		301	33
11083	6V3160	5130-00-363-6680	301	50
11083	6V3170		301	48
11083	6V3175	5130-01-296-4277	301	49
11083	6V3345	7690-01-146-6911	91	15
11083	6V3507	5330-01-152-0601	287	3
			287	3
11083	6V3884	5305-01-182-5249	207	5
			214	31
			215	29
			215	56
			225	5
11083	6V3928	5340-01-293-1196	215	31
11083	6V3988	5330-01-157-4864	50	9
11083	6V4245	4730-01-200-3127	159	11
11083	6V4250	5307-01-159-1175	160	35
			174	27
11083	6V4626	5306-01-160-4498	51	16

CROSS-REFERENCE INDEXES

PART NUMBER INDEX

CAGEC	PART NUMBER	STOCK NUMBER	FIG.	ITEM
11083	6V4657	4730-01-178-9643	273	12
			273	25
11083	6V4666	4730-01-178-6484	273	9
11083	6V5158	5340-01-180-8850	215	23
11083	6V5164		215	4
11083	6V5651		231	10
		4720-01-331-8722	BULK	7
11083	6V5778	5331-01-170-3749	235	10
11083	6V5834	5305-01-151-6090	91	12
11083	6V6777	5340-01-185-5915	214	20
11083	6V6778	5340-01-183-1679	214	20
11083	6V6835	5305-01-187-5879	30	16
11083	6V6889	5310-01-180-4768	224	17
11083	6V6921	5330-01-183-1504	24	13
11083	6V6969	9390-01-336-7090	BULK	15
11083	6V6980	2910-01-250-1608	301	47
11083	6V7058		301	21
11083	6V7068	5220-01-296-4297	301	22
11083	6V7607	5310-01-425-5451	197B	32
11083	6V7692	5306-01-182-7662	187	30
11083	6V8081	5330-01-185-2240	166	21
11083	6V8137	5305-01-217-0676	30	24
11083	6V8186	5310-01-413-5909	134	10
			134	15
			263	25
11083	6V8270		234	3
11083	6V8374	5305-01-169-0687	69	2
11083	6V8397	5331-00-579-6495	265	17
			266	31
			267	16
			268	25
			269	12
			270	21
			271	13
			272	38
			273	50
11083	6V8398	5331-00-580-6583	189	23
			273	43
11083	6V8474		61	1
11083	6V8625	4730-01-349-7772	189	24
11083	6V8634	5935-01-437-9075	265	21
			266	36
			267	24
			268	28
			269	11
			270	20
			271	12
			272	37
			273	112
11083	6V8635	5935-01-437-9076	273	61
11083	6V8636	4730-01-269-9540	272	56

CROSS-REFERENCE INDEXES

PART NUMBER INDEX

CAGEC	PART NUMBER	STOCK NUMBER	FIG.	ITEM
11083	6V8637	4730-01-291-8501	190	137
			273	92
11083	6V8638	4730-01-471-4915	273	41
11083	6V8639	4730-01-291-8500	189	27
			190	65
			190	65
			190	147
			273	52
11083	6V8714	4730-01-473-6583	273	110
11083	6V8715	4730-01-429-9759	267	19
11083	6V8716	3120-01-471-3789	190	56
11083	6V8723	4730-01-429-9750	265	19
			266	33
			268	33
			269	16
			270	27
			273	65
11083	6V8781	4730-01-438-0751	272	43
11083	6V8801	5310-01-429-7859	2	11
			33	3
			33	6
			35	8
			39	9
			40	12
			41	20
			46	5
			51	19
			70	12
			73	6
			75	1
			78	13
			82	11
			82	14
			120	20
			122	7
			133	34
			134	4
			144	28
			178	70
			180	20
			189	20
			189	41
			190	33
			190	33
			203	12
			218	1
			220	4
			265	11
			266	20
			268	21
			270	13

CROSS-REFERENCE INDEXES

PART NUMBER INDEX

CAGEC	PART NUMBER	STOCK NUMBER	FIG.	ITEM
11083	6V8801	5310-01-429-7859	283	7
			284	20
			197B	58
11083	6V8995	4730-01-291-8496	190	79
11083	6V8997	4730-01-291-8495	190	99
11083	6V9001	4730-01-364-6397	267	15
			268	24
			273	60
11083	6V9002	4730-01-291-8499	273	85
11083	6V9004	4730-01-438-0762	273	51
11083	6V9005	4730-01-473-2095	273	58
11083	6V9007	4730-01-291-8498	190	92
			273	86
11083	6V9164	3120-01-184-3825	134	11
11083	6V9169	5310-01-293-2892	190	78
11083	6V9648	9905-01-176-6171	233	12
11083	6V9746	5331-01-058-4030	190	48
			273	47
11083	6V9836	4730-01-438-0764	273	116
11083	6V9837	4730-01-471-4239	190	58
11083	6V9853	4730-01-471-4407	190	55
11083	6V9872	4730-01-505-6812	273	117
11083	6V9874	4730-01-521-3395	190	47
11083	6V9875	4730-01-473-2895	273	53
11083	6V9876	4730-01-438-1943	265	22
			266	30
			268	30
			270	24
			271	15
			272	42
			273	83
11083	6Y2027	3010-01-150-5434	137	8
			138	4
			139	6
11083	6Y5230	3830-00-084-7481	298	17
11083	6Y7916	2530-01-021-4151	174	10
11083	6Y7954		165	27
11083	6Y7966	3040-01-312-7281	41	1
11083	6Y7981	3010-01-094-1959	140	14
77820	60-37005-281	5310-00-393-6685	106	10
77820	60-40459-28	5975-00-771-6634	106	11
			106	31
30327	60TA06X06	4730-00-317-3008	178	3
30327	60UB-06X04	4730-00-408-1231	169	3
83259	600-001-6	5330-00-602-9471	25	16
63906	600-4-4C	4730-01-155-4104	169	6
			169	7
80577	600-6-4C	4730-00-408-1231	169	1
28882	60091	5330-01-204-3388	213	8
07988	6010812	4820-01-178-3052	169	16
99066	6012382		169	17

CROSS-REFERENCE INDEXES

PART NUMBER INDEX

CAGEC	PART NUMBER	STOCK NUMBER	FIG.	ITEM
99066	6015930	5330-01-187-5950	169	15
92679	615749C1	3120-00-236-6553	36	17
55101	62269	5340-01-183-2271	202	28
55101	62270	3120-01-186-3511	202	29
55101	62278	5310-01-186-5422	202	37
55101	62280	5340-01-185-0638	202	35
55101	62282	3040-01-185-2530	202	36
73331	624	6240-00-643-0738	62	20
15819	625-2-701-89	5340-01-186-3757	41	63
55101	62537	5340-01-184-0013	198	4
55101	62538	5315-01-186-9448	198	3
55101	62815	2510-01-182-4464	198	35
55101	62823	4720-01-183-4575	178	77
55101	62824	4720-01-183-4576	178	78
81646	6320	4730-01-201-2085	105	4
			105	49
00779	63325-1	5940-01-292-5097	99	26
55101	63586	5995-01-182-7196	197B	59
55101	63594	5342-01-194-5215	178	67
55101	63600	5995-01-182-7197	75	50
55101	63824	2510-01-182-4465	178	75
55101	63853	5340-01-200-7037	178	72
22031	6400-6-4	4730-01-062-9928	273	37
55101	64160	5340-01-186-8654	198	16
55101	64162	5340-01-186-1820	198	18
3J335	648-004	2540-01-292-3663	215	33
30187	648-005	5342-01-183-8714	211	28
99551	648626	5310-01-015-7776	29	43
			57	65
19986	6526	2910-01-181-6728	226	2
13445	65700	6250-01-293-7612	120	56
81646	6710	4730-00-877-6298	49	20
			231	1
99688	6805	2540-01-095-4621	232	1
79470	681X2	4730-00-289-1243	44	5
17875	6862	5340-00-598-9577	187	14
96151	6901-11	5365-01-095-8676	187	6
11083	7B0192	4730-00-254-6373	184	8
11083	7B0863	2510-00-176-5600	201	6
11083	7B2725		202	38
11083	7B2742	5306-00-423-8784	42	17
			208	8
			214	21
11083	7B3028	5305-00-708-3823	142	25
			151	29
11083	7B3235	5306-00-424-0086	1	14
			24	54
			53	8
			96	9
			153	11
			154	19

CROSS-REFERENCE INDEXES

PART NUMBER INDEX

CAGEC	PART NUMBER	STOCK NUMBER	FIG.	ITEM
11083	7B3235	5306-00-424-0086	202	25
			284	5
11083	7B5163	5306-00-426-5835	5	10
11083	7B5530	5365-00-424-0179	1	20
11083	7B5531	5365-00-424-0180	1	20
11083	7B5932	5330-00-248-2176	23	4
11083	7B7744		199	5
11083	7B8167	5305-01-164-6340	222	11
11083	7B8791	5306-01-119-1758	222	23
11083	7B9677	5365-00-424-0306	1	20
11083	7C3595	2910-01-155-7936	42	24
11083	7D0028		166	10
11083	7D0035		166	15
11083	7D0087	2520-01-066-0465	135	26
11083	7D1446	3120-01-176-1038	293	18
11083	7D1649	5310-01-095-1249	48	9
11083	7D1681		94	9
11083	7D2052	3805-00-431-6561	290	4
11083	7D2196	4820-01-169-9765	299	22
11083	7D2729	4720-01-065-9075	178	79
11083	7D3964	4720-01-178-9665	178	80
11083	7D4922	4720-01-094-4457	286	18
11083	7D5363	4730-00-289-0382	38	14
11083	7D6095	4720-01-095-0839	296	17
11083	7D6282	4720-01-184-4208	197B	15
11083	7D6567		167	6
11083	7D6568	5340-01-154-0766	167	12
11083	7D7889	3020-01-152-7852	166	16
11083	7D8185		165	28
11083	7D8225	5330-01-095-2000	165	25
11083	7D8226	5330-01-095-2001	165	24
11083	7D8266		167	16
11083	7D8362		174	8
11083	7D8434	2530-01-021-4491	174	11
11083	7D8436	5330-01-021-9884	174	25
11083	7D8437	3110-00-100-0649	174	5
11083	7D8439	5365-01-066-0695	174	3
11083	7D8441	5365-01-066-0696	174	3
11083	7D8508	5310-01-036-2719	185	12
11083	7D8636	3110-01-024-9815	160	22
11083	7D8643	3110-01-098-1877	160	37
11083	7D8874		291	46
11083	7D8875	3120-01-095-1268	133	5
			175	6
			291	9
11083	7D8878	3120-01-095-6458	291	15
11083	7D8879	5365-01-095-1301	291	6
11083	7D8881	5365-01-095-8680	291	7
11083	7D8882	5365-01-095-8681	291	8
11083	7D8883	5330-01-095-1258	291	18
11083	7D8884	5330-01-095-1259	291	5

CROSS-REFERENCE INDEXES

PART NUMBER INDEX

CAGEC	PART NUMBER	STOCK NUMBER	FIG.	ITEM
11083	7D8889	3120-01-095-5786	291	14
			291	32
11083	7D8891	3040-01-180-0777	291	3
11083	7D8983	5365-01-095-4333	243	6
11083	7D8984	5365-01-096-2883	243	6
11083	7D9247	6680-01-097-6328	37	5
11083	7D9273	5340-01-155-6139	167	18
11083	7D9304	2520-01-066-0467	135	1
11083	7D9316	3040-01-065-9079	133	6
11083	7D9327	2520-01-066-0468	134	13
11083	7D9369		134	8
11083	7D9419	6680-01-150-4097	167	8
11083	7D9438		167	9
11083	7D9533	5340-01-169-0794	216	11
11083	7D9657	5340-01-170-4789	205	29
11083	7D9706	5340-01-171-8143	205	39
11083	7D9708	5306-01-068-1108	170	6
11083	7D9801	5310-01-066-0471	204	15
11083	7E5346	2910-01-351-5952	30	44
11083	7E6047	2815-01-154-1242	8	3
11083	7F0192	5306-00-809-7138	33	2
			33	5
11083	7F0482	5310-00-423-9698	293	15
11083	7F1327	5365-00-423-8104	299	26
11083	7F3425	5305-01-095-3292	46	14
			238	22
11083	7F5227	5305-01-090-2241	291	22
11083	7F8607	5331-00-591-7543	197	11
			247	13
			248	13
			249	13
			250	13
			251	13
			252	13
11083	7F9311	4730-00-778-0218	88	3
11083	7F9547	5315-00-426-6042	201	7
11083	7G3450		139	29
11083	7G3451		139	20
11083	7G3452	3020-01-094-3108	137	54
11083	7G3461	3020-01-095-0208	138	31
11083	7G8454		223	9
11083	7H0627	5315-00-584-1352	72	6
11083	7H1051	3120-00-458-2005	41	52
11083	7H1447	2930-00-635-8296	284	10
11083	7H2444	5331-00-074-3764	291	4
11083	7H3641	3120-00-182-6865	40	22
			41	43
			41	43
11083	7H4543		229	15
11083	7H7539	5310-00-404-3787	301	36
11083	7H8909	5310-01-209-8715	206	8

CROSS-REFERENCE INDEXES

PART NUMBER INDEX

CAGEC	PART NUMBER	STOCK NUMBER	FIG.	ITEM
11083	7H9678	5340-00-999-3230	42	13
11083	7J0271	5360-01-066-1408	253	5
11083	7J0272		253	6
11083	7J3351	3040-01-175-5261	277	12
			280	8
			281	11
11083	7J5639	5306-01-155-8647	162	5
			192	10
			277	19
			278	9
			279	8
			280	15
			281	21
			282	20
11083	7J5682	2590-01-064-7383	277	15
			280	12
			281	18
11083	7J5996	4730-01-178-9644	178	51
11083	7J8902	5306-01-095-1486	56	3
11083	7J9885	5365-01-048-0984	162	7
11083	7J9886		162	8
11083	7J9887	3040-01-158-8473	162	3
11083	7J9888		162	12
11083	7K1181	2815-01-053-4712	107	13
			133	25
			189	11
			189	30
			269	9
11083	7K2135	3110-01-065-9108	40	15
			41	34
			133	7
			175	10
11083	7K3377	5365-01-185-4734	183	10
11083	7K3434	5305-01-095-1239	226	11
11083	7K4475	5995-01-098-9330	103	20
			104	6
			104	8
			113	3
			114	3
			115	2
11083	7K4743	5310-01-095-4636	198	25
			254	7
			256	16
			259	3
			267	21
			268	32
			270	25
11083	7K4975-XX		274	32
11083	7K4975-5		275	39
11083	7K6117	5310-01-095-3326	280	21
11083	7K8332	2910-01-062-1354	38	24

CROSS-REFERENCE INDEXES

PART NUMBER INDEX

CAGEC	PART NUMBER	STOCK NUMBER	FIG.	ITEM
11083	7K9202	5330-01-067-4682	198	2
			280	19
			281	5
11083	7L3326	3110-00-820-1466	32	37
11083	7L8316	5305-01-094-7378	229	14
			232	18
11083	7M0706	5355-00-891-4401	134	17
			205	1
11083	7M1396	5310-01-095-8406	150	9
			151	12
11083	7M2360		243	33
11083	7M4046	3120-00-893-8317	3	17
11083	7M7219	3110-00-629-4111	28	43
			28	92
11083	7M8485	5330-00-930-9407	190	12
			196	3
			273	59
			274	18
			275	18
11083	7N0128	2930-01-093-3600	158	8
11083	7N0165	2930-00-457-1616	19	5
11083	7N0200	5330-01-127-8574	49	12
11083	7N0449	2910-01-143-4403	24	36
11083	7N0619	3020-01-148-1484	51	23
11083	7N0718	2920-00-775-7691	75	40
11083	7N0944	5330-01-094-8058	49	24
11083	7N1047	5340-01-181-0789	32	30
11083	7N1062	5930-01-127-3583	197B	34
11083	7N1067	5360-01-182-3644	32	12
11083	7N1068		32	15
11083	7N1514	5305-01-176-8117	74	10
11083	7N1731		28	61
11083	7N1773		28	83
11083	7N2057	5340-01-150-5997	28	55
11083	7N2176		30	31
11083	7N2178	2910-01-139-4900	27	12
11083	7N2353	5930-01-277-5185	62	25
11083	7N2594	5305-01-160-1980	29	10
11083	7N2602	5305-01-167-0298	27	9
11083	7N2994	5310-01-157-6813	27	10
11083	7N3524		27	4
11083	7N3536	3020-01-126-8956	27	11
11083	7N3718	5340-01-159-1186	83	30
11083	7N4160	5930-01-202-2506	63	24
11083	7N4356		35	10
11083	7N4791		27	3
11083	7N5334	5305-01-157-5626	31	2
11083	7N7110		4	5
11083	7N7166	3110-01-181-2425	32	36
11083	7N7169		32	10
11083	7N7264	2910-01-155-0370	32	40

CROSS-REFERENCE INDEXES

PART NUMBER INDEX

CAGEC	PART NUMBER	STOCK NUMBER	FIG.	ITEM
11083	7N7265	2910-01-155-0276	32	41
11083	7N7267	5360-01-155-2629	28	40
11083	7N7270	5365-01-154-8503	28	33
11083	7N7271		28	7
11083	7N7282	5365-01-154-4399	31	18
11083	7N7778	5935-01-149-6997	81	15
			91	6
			99	11
			105	8
			110	3
			111	3
			120	15
			120	42
			123	3
11083	7N7779	5999-01-150-8808	70	7
			81	5
			99	7
			99	33
			100	8
			100	19
			101	8
			103	8
			103	16
			104	14
			105	12
			105	29
			105	44
			106	4
			106	20
			106	25
			108	2
			109	2
			114	7
			118	3
			119	5
			120	3
			120	39
			120	52
			121	5
			124	3
			125	3
			127	2
11083	7N7782	5935-01-150-8322	127	3
11083	7N7969		32	26
11083	7N7970	3120-01-164-4512	32	24
11083	7N8001	5930-00-683-1626	62	11
11083	7N8015	5342-01-129-5917	10	9
11083	7N8018	5330-01-128-4130	4	21
11083	7N8021	2990-01-129-5915	3	1
11083	7N8022	5330-01-129-2545	4	19
11083	7N8204	5999-01-430-3231	99	38

CROSS-REFERENCE INDEXES

PART NUMBER INDEX

CAGEC	PART NUMBER	STOCK NUMBER	FIG.	ITEM
11083	7N8205	5935-01-514-6260	83	21
11083	7N8305		85	3
11083	7N8374	5340-01-150-9807	2	4
11083	7N8775		29	9
11083	7N8780	2910-01-149-7900	30	21
11083	7N8781		30	22
11083	7N8785	5315-01-162-8741	30	35
11083	7N8821	5325-01-154-8559	26	3
			28	31
			30	34
11083	7N9145	3020-01-147-9352	7	6
11083	7N9195	2530-01-143-1484	182	1
11083	7N9519	2910-01-155-5195	43	2
11083	7N9520	5330-01-158-6284	43	1
11083	7N9521	2910-01-180-5547	28	21
11083	7N9737	5935-01-150-8323	70	8
			107	7
			108	4
			119	3
			120	14
			121	3
			124	4
			125	4
11083	7N9738	5935-01-149-5165	81	7
			99	9
			99	35
			105	11
			105	46
			106	5
			106	22
			106	27
			114	5
			120	10
			120	41
			120	54
11083	7N9805	2815-01-116-5920	8	5
11083	7R7491	5331-01-102-4354	28	12
58312	7S2204-00	5310-00-498-2967	9	1
11083	7S3161	2815-00-450-9341	10	23
58312	7S3224-00	5306-00-450-4026	3	30
11083	7S4571	5330-00-137-6721	164	17
			166	1
11083	7S4607	2590-01-066-1455	147	10
11083	7S6719	5307-00-498-0804	21	6
11083	7S6745	5330-00-498-2907	156	12
58312	7S7144-00	5360-00-519-6605	10	26
11083	7S7786		301	29
11083	7S8576	3110-01-097-8104	141	1
11083	7S8582		137	59
11083	7S8631	3040-01-148-9427	137	57
11083	7S8735	5340-00-426-4816	45	3

CROSS-REFERENCE INDEXES

PART NUMBER INDEX

CAGEC	PART NUMBER	STOCK NUMBER	FIG.	ITEM
11083	7S8858	5120-01-030-1625	301	16
11083	7S9323	5360-00-116-0448	42	14
11083	7T0988	5930-01-346-7728	88	2
11083	7T1185		151	13
11083	7T1187	9905-01-524-0115	151	28
11083	7T1188		151	1
11083	7T2036	2590-01-377-3892	37	6
11083	7T9073	4810-01-094-6254	169	14
11083	7T9302	3010-01-430-3425	65	7
11083	7T9647	2520-01-147-8015	137	30
8Z296	7WXP2126-010	4810-01-204-9478	262	9
8Z296	7WXP2126-020	4810-01-220-0624	262	4
11083	7W0134	5360-01-270-1351	26	13
11083	7W0250	2990-01-253-9490	28	11
11083	7W0507	3020-01-253-9282	15	20
11083	7W0508	3020-01-253-9281	27	11
11083	7W1056	4710-01-181-6788	23	6
11083	7W1058	4710-01-181-6787	23	1
11083	7W1318		30	28
11083	7W1321	3040-01-213-4544	30	33
11083	7W1927	5325-01-257-4598	32	2
11083	7W2000	2530-01-213-4627	30	26
11083	7W2808	5340-01-259-4234	32	13
11083	7W4486	5310-01-257-2208	25	19
11083	7W5389	2940-00-858-8178	33	14
11083	7W5697	3040-01-147-8019	5	12
11083	7W6335	3110-01-062-0950	30	40
11083	7W7544	5330-01-129-5916	3	3
11083	7W9310	2815-01-177-4818	7	5
11083	7W9322	2815-01-526-4221	7	3
11083	7X2501	5306-01-438-9852	42	28
11083	7X3164	4730-01-292-8206	190	80
11083	7X3166	4730-01-291-8497	190	97
11083	7X3374		298	5
11083	7X6398	6220-01-204-6988	85	1
62983	7077	4730-00-499-9837	3	25
00742	71112A	5310-00-768-6822	160	28
79470	7231 X16Y	5365-01-166-1573	196	2
16428	724105	5940-00-291-0085	44	4
			93	7
19207	7320641	5305-00-737-5694	83	11
19207	7320642	5340-00-732-0642	83	10
19207	7320658	5331-00-297-7106	83	3
19207	7335538	5310-01-120-1443	12	11
			174	13
19207	7373635	5340-00-737-3635	138	35
			139	24
			139	32
			147	5
19207	7412518	5306-00-741-2518	197B	54
96151	7443	3120-01-068-3473	187	22

CROSS-REFERENCE INDEXES

PART NUMBER INDEX

CAGEC	PART NUMBER	STOCK NUMBER	FIG.	ITEM
83259	7500-5-16	5330-00-111-0688	30	4
19207	7526018	6220-00-752-6018	83	9
75175	753-2835	6220-00-607-3477	80	1
74842	758	2540-01-167-7096	217	26
			218	22
13445	75900-09		63	17
99984	7618	3930-00-759-9738	198	10
99984	7637	5315-01-096-0203	299	21
19207	7723309	5310-00-393-6685	106	32
13445	7784	2590-00-810-4288	71	3
14859	7851-13-60I	5925-00-008-0548	63	16
96151	7970	5977-01-095-5206	187	8
30780	8 P5N-S	4730-01-078-7837	247	39
			248	39
			249	39
			250	39
			251	39
			252	39
30780	8-F5F5-S(SPL)	4730-01-169-7303	190	42
30780	8-6-F5G5-S	4730-00-933-0727	38	17
			190	106
			267	17
			268	26
			272	48
11083	8B6349	5315-00-457-6897	3	15
11083	8B7549	5120-01-275-9480	301	32
11083	8B7551	5120-00-288-6756	301	45
11083	8B7554	5120-00-293-1430	301	46
11083	8B7555	5120-00-357-5181	301	2
11083	8B7556		301	7
11083	8B7560	5120-00-473-6921	301	43
11083	8B8679	5365-00-424-0479	157	4
11083	8C6561	5305-01-471-4125	42	27
11083	8D0212		299	13
11083	8D0222	5342-01-169-7036	289	24
11083	8D0237	5310-01-062-7185	223	28
			224	15
			225	20
11083	8D0407	4710-01-066-4544	273	104
			274	30
11083	8D0983		273	95
11083	8D1220	5340-01-147-8217	48	8
11083	8D1777	3120-01-095-1267	295	14
11083	8D1784	5315-01-175-1153	291	35
11083	8D1791	5330-01-094-8707	295	3
11083	8D1992	5340-01-150-1279	78	7
11083	8D2136	5365-01-159-1222	174	18
11083	8D2205	5340-01-333-8145	171	7
11083	8D2429	5315-01-172-5635	192	3
11083	8D2469		166	44
11083	8D2638	5365-01-169-2983	192	4

CROSS-REFERENCE INDEXES

PART NUMBER INDEX

CAGEC	PART NUMBER	STOCK NUMBER	FIG.	ITEM
11083	8D2676	5930-01-176-1699	63	27
			197B	26
11083	8D2811	5310-01-095-3327	160	9
			192	27
11083	8D3501	2540-01-147-4183	48	6
11083	8D3502	2540-01-147-4184	48	5
11083	8D3540	5310-01-157-0893	166	37
11083	8D3591	2520-01-152-7781	166	5
11083	8D3744		166	31
11083	8D3791	5315-01-066-4552	198	10
11083	8D3877	3020-01-150-5427	166	2
11083	8D3885	5310-01-095-4012	166	4
11083	8D3902	5330-01-095-1545	166	26
11083	8D3957		166	43
11083	8D3958	3040-01-153-8400	166	42
11083	8D4007	4710-01-094-4687	177	19
11083	8D4009	4710-01-094-4688	177	10
11083	8D4064		165	9
11083	8D4065	3120-01-097-8288	165	15
11083	8D4221		163	8
11083	8D4282	2520-01-178-3143	165	29
11083	8D4291	2590-01-156-7181	165	26
11083	8D4313		164	35
11083	8D4323	4710-01-154-3130	163	2
11083	8D4528	2520-01-179-1831	165	11
11083	8D4549		163	7
11083	8D4556		163	4
11083	8D4561		164	18
11083	8D4570	2520-01-152-7779	163	1
11083	8D4591		163	6
11083	8D4595		285	7
11083	8D4689		291	48
11083	8D4766	5340-01-169-2299	280	17
11083	8D4994	4710-01-149-8461	49	3
11083	8D5016	9905-01-167-1531	285	25
11083	8D5054	5310-01-107-3590	1	3
			56	2
11083	8D5119	2530-01-066-0572	41	35
11083	8D5126	2530-01-066-0574	41	55
11083	8D5189	5315-01-065-9083	175	16
11083	8D5216	3120-01-095-8442	291	27
11083	8D5217		291	25
11083	8D5284		135	25
11083	8D5295	5315-01-065-9087	133	30
			135	21
11083	8D5296	2530-01-065-9088	133	26
			135	18
11083	8D5297		135	17
11083	8D5344	3020-01-095-4876	243	24
11083	8D5366	2520-01-066-0477	135	12
11083	8D5387	2520-01-066-0478	134	14

CROSS-REFERENCE INDEXES

PART NUMBER INDEX

CAGEC	PART NUMBER	STOCK NUMBER	FIG.	ITEM
11083	8D5388		285	3
11083	8D5401		285	4
11083	8D5403	5365-01-095-0301	285	10
11083	8D5440	2520-01-066-0479	134	23
11083	8D5450	2520-01-066-0480	134	18
11083	8D5489	4330-01-095-5850	285	13
11083	8D5578	2920-01-063-7834	94	4
11083	8D5631	2520-01-167-7139	263	16
11083	8D5632	2520-01-167-7138	263	11
11083	8D5633	2520-01-167-7137	263	10
11083	8D5634	2520-01-167-7136	263	7
11083	8D5635	2590-01-168-2069	263	14
11083	8D5636	5365-01-064-8298	263	4
11083	8D5637	5365-01-064-8299	263	4
11083	8D5639	5310-01-095-3347	263	3
11083	8D5640	3110-01-064-8236	263	8
11083	8D5641	3110-01-064-8237	263	5
11083	8D5862	3805-01-175-5266	293	7
11083	8D5863	3805-01-175-5267	293	3
11083	8D5896	3040-01-169-9694	205	26
11083	8D5897	2520-01-066-0481	205	4
11083	8D5898	5365-01-095-6108	205	32
11083	8D5908		293	26
11083	8D5949	5306-01-174-8310	293	32
11083	8D5996	2530-01-065-9089	41	49
11083	8D6173		41	53
11083	8D6174		41	51
11083	8D6629	3120-01-095-5787	291	39
11083	8D6687	5315-01-169-5678	279	27
11083	8D6774	4710-01-066-4557	275	40
11083	8D6775	4710-01-167-7217	275	37
11083	8D6787	5340-01-168-3998	215	50
11083	8D6811	5340-01-178-6037	273	128
			274	4
11083	8D6841	3040-01-065-9092	175	17
11083	8D6946	5945-01-094-4116	67	16
11083	8D7026	3020-01-152-7839	177	11
11083	8D7081		41	18
11083	8D7086	3120-01-095-5788	198	1
			280	20
			281	6
11083	8D7172		243	18
11083	8D7173	3120-01-096-1325	243	19
11083	8D7174	5340-01-168-9206	243	17
11083	8D7185		195	3
			273	94
11083	8D7225	5315-01-095-8486	281	4
11083	8D7423	5310-01-097-8953	243	41
11083	8D7424	5365-01-064-8238	243	40
11083	8D7425	3120-01-096-3134	243	26
11083	8D7426	3120-01-095-4063	243	28

CROSS-REFERENCE INDEXES

PART NUMBER INDEX

CAGEC	PART NUMBER	STOCK NUMBER	FIG.	ITEM
11083	8D7427	3040-01-168-6421	243	23
11083	8D7495	4720-01-065-9094	177	9
11083	8D7678	5315-01-170-3210	279	24
11083	8D7682		164	24
11083	8D7693		165	21
11083	8D7694	2520-01-152-7780	165	18
11083	8D7996	3120-01-176-8035	278	3
11083	8D7997		278	2
11083	8D7998	3110-01-176-7820	278	1
11083	8D8159		166	40
11083	8D8168	3120-01-095-5791	198	15
			291	12
			291	31
11083	8D8259	5340-01-153-0891	49	22
11083	8D8372	2530-01-097-6758	285	9
11083	8D8456	5360-01-167-3642	205	31
11083	8D8866	4710-01-176-6786	273	119
			275	32
11083	8D9088	4730-01-177-4706	265	2
			269	2
11083	8D9092	5315-01-105-7584	270	17
11083	8D9247	2530-01-176-8556	177	25
			178	87
11083	8D9278	5340-01-333-3857	177	27
11083	8D9460	3805-01-094-5194	165	12
11083	8D9471		165	10
11083	8D9472		165	16
11083	8D9473		165	14
11083	8D9704		164	29
11083	8D9784	5340-01-189-3838	164	32
11083	8D9786	5315-01-169-8520	295	2
11083	8D9804		243	30
11083	8D9849		291	37
11083	8D9918		253	14
11083	8D9919		190	27
11083	8D9947	5340-01-169-9678	190	15
11083	8D9969	2530-01-066-0487	41	41
11083	8D9973		40	16
			41	47
11083	8D9974	5330-01-066-0675	41	40
			74	6
11083	8E3962	3110-01-094-9954	137	47
11083	8E5531	3830-01-450-0402	290	4
11083	8E8299	3120-01-095-5803	139	27
11083	8E8304	3120-01-186-1302	137	53
			138	30
			139	18
11083	8F0964	5320-01-183-1510	47	6
11083	8F1326		31	66
			54	12
11083	8F4028	5365-01-176-8048	293	10

CROSS-REFERENCE INDEXES

PART NUMBER INDEX

CAGEC	PART NUMBER	STOCK NUMBER	FIG.	ITEM
11083	8F5340	5330-00-854-1603	187	23
11083	8F6350	5306-01-095-5684	246	20
11083	8F6437	5310-01-170-1359	283	6
11083	8F6711	5331-00-506-4457	152	3
			192	17
			273	125
			275	26
30780	8HP5N-S	5365-01-031-8183	137	20
			143	23
			194	2
			194	25
			195	7
			196	13
			238	14
			245	13
			246	18
			261	11
11083	8H0684	5120-01-123-5881	301	71
11083	8H0707	5305-00-476-5308	31	20
11083	8H0708	5305-01-101-6024	247	2
			248	2
			249	2
			250	2
			251	2
			252	2
11083	8H0878	5310-01-066-0689	54	4
			67	19
11083	8H2778	5330-00-585-4284	42	10
11083	8H2807	5310-00-882-8876	42	2
11083	8H2810	2910-00-116-3227	42	15
11083	8H3497	5325-00-950-8281	37	4
11083	8H4040	5305-01-095-4612	298	13
			299	27
11083	8H5244	5315-01-064-7516	148	6
			149	16
			150	10
11083	8H5772	5305-00-136-2009	222	24
11083	8H6508	5305-01-152-0589	1	12
11083	8H8648	2920-01-064-3809	234	7
11083	8H9204	5330-00-858-6277	32	8
11083	8H9208	5315-00-999-8417	140	5
11083	8H9299	5305-01-108-0649	32	14
11083	8H9789	3110-00-516-5490	51	26
11083	8H9804	5315-00-999-8416	28	78
11083	8J0027	2590-01-168-3700	277	7
11083	8J0028	3040-01-021-9476	277	6
11083	8J0112	4320-01-172-5781	279	10
11083	8J0113		279	11
11083	8J0118	5365-01-176-0836	279	3
11083	8J0119	3040-01-167-9214	279	15
11083	8J0158		237	20

CROSS-REFERENCE INDEXES

PART NUMBER INDEX

CAGEC	PART NUMBER	STOCK NUMBER	FIG.	ITEM
11083	8J0331	4820-01-064-7461	196	14
			255	13
			256	12
			257	13
11083	8J0380	5340-01-183-5919	297	3
11083	8J0384		297	1
11083	8J0385		297	14
11083	8J0386	2590-01-181-1934	297	9
11083	8J0415	4320-01-167-7141	239	7
11083	8J0498	4320-01-022-0546	237	1
11083	8J0545	3040-01-176-9603	280	16
11083	8J0546	3805-01-021-9100	280	2
11083	8J1256	5342-01-063-4236	103	4
			229	21
11083	8J1612		247	7
			248	7
			249	7
			250	7
			251	7
			252	7
11083	8J1616	2590-01-064-8249	197	10
			247	15
			248	15
			249	15
			250	15
			251	15
			252	15
11083	8J1620	3110-01-064-8250	197	9
			247	12
			248	12
			249	12
			250	12
			251	12
			252	12
11083	8J1621	5365-01-096-4287	197	7
			247	17
			248	17
			249	17
			250	17
			251	17
			252	17
11083	8J1622	5310-01-095-3508	197	6
			247	18
			248	18
			249	18
			250	18
			251	18
			252	18
11083	8J1623		197	5
		5342-01-064-8251	247	19
			248	19

CROSS-REFERENCE INDEXES

PART NUMBER INDEX

CAGEC	PART NUMBER	STOCK NUMBER	FIG.	ITEM
11083	8J1623	5342-01-064-8251	249	19
			250	19
			251	19
			252	19
11083	8J1624	4810-01-064-8252	247	23
			248	23
			249	23
			250	23
			251	23
			252	23
11083	8J1625		247	24
			248	24
			249	24
			250	24
			251	24
			252	24
11083	8J1626		247	25
			248	25
			249	25
			250	25
			251	25
			252	25
11083	8J1627	4320-01-168-6439	247	31
			248	31
			249	31
			250	31
			251	31
			252	31
11083	8J1628	5365-01-169-3007	247	36
			248	36
			249	36
			250	36
			251	36
			252	36
11083	8J1629	5365-01-064-8300	247	35
			248	35
			249	35
			250	35
			251	35
			252	35
11083	8J1630		247	38
			248	38
			249	38
			251	38
			252	38
11083	8J1632	5360-01-096-4996	247	41
			248	41
			249	41
			250	41
			251	41
			252	41

CROSS-REFERENCE INDEXES

PART NUMBER INDEX

CAGEC	PART NUMBER	STOCK NUMBER	FIG.	ITEM
11083	8J1699	5331-01-064-8276	245	14
			246	13
11083	8J2011	4820-01-095-0788	253	1
11083	8J2012		253	7
11083	8J2013		253	4
11083	8J2022	4320-01-095-1694	237	17
11083	8J2027	5365-01-095-5027	240	10
11083	8J2028	5310-01-096-6989	239	11
11083	8J2030		241	4
11083	8J2032	4320-01-094-5254	240	3
11083	8J2040	3805-01-094-5239	240	5
11083	8J2330	5330-01-064-7462	297	6
11083	8J2331	5330-01-064-7463	297	7
11083	8J3774	2590-01-064-7384	279	7
			279	19
11083	8J4574	3830-01-095-2089	240	2
11083	8J5456	4730-01-168-1923	255	9
			256	8
			257	9
			260	9
11083	8J5472	5365-01-105-3100	239	8
11083	8J5612		247	4
			248	4
			249	4
			250	4
			251	4
			252	4
11083	8J5613		247	3
			248	3
			249	3
			250	3
			251	3
			252	3
11083	8J5798	4820-01-095-1033	257	1
11083	8J5816	5330-01-181-2421	281	13
11083	8J5817	5330-01-184-3546	281	14
11083	8J5834	3010-01-168-9409	235	9
11083	8J5842	4320-01-094-8222	239	17
11083	8J5860		247	47
			252	47
11083	8J5861		249	47
			250	47
11083	8J5862		248	47
			251	47
11083	8J5882	5360-01-095-1831	247	6
			248	6
			249	6
			250	6
			251	6
			252	6
11083	8J5884		247	9

CROSS-REFERENCE INDEXES

PART NUMBER INDEX

CAGEC	PART NUMBER	STOCK NUMBER	FIG.	ITEM
11083	8J5884		252	9
11083	8J5885		249	9
11083	8J5886		248	9
			251	9
11083	8J5902	4820-01-094-1910	251	1
11083	8J5903	4820-01-095-1032	250	1
11083	8J5906	4820-01-094-3090	248	1
11083	8J5907	4820-01-094-5260	249	1
11083	8J5908	4820-01-094-5261	252	1
11083	8J5911	3040-01-176-1215	277	8
			280	4
			281	15
11083	8J5913	4810-01-064-7465	254	1
11083	8J5917	4320-01-167-9201	245	10
11083	8J5918	4320-01-167-9200	246	16
11083	8J5961	4820-01-096-4417	247	1
11083	8J5995		261	6
11083	8J5996	4810-01-183-0220	261	1
11083	8J6066	5340-01-169-5658	239	13
11083	8J6075	4820-01-169-7340	241	3
11083	8J6076	3830-01-094-6431	241	5
11083	8J6100	4320-01-094-6432	241	2
11083	8J6103	4820-01-094-3043	241	1
11083	8J6114	3120-01-097-8115	197	21
			247	8
			248	8
			249	8
			250	8
			251	8
			252	8
11083	8J6155	4320-01-100-9050	235	8
11083	8J6172	4820-01-168-2083	246	8
11083	8J6212	3120-01-154-1482	192	12
11083	8J6213	5330-01-155-4517	192	14
11083	8J6215	5365-01-095-1305	192	8
11083	8J6221	4320-01-176-2943	192	19
11083	8J6222	3040-01-176-2939	192	22
11083	8J6229	3130-01-169-2158	238	3
11083	8J6263		247	34
			248	34
			249	34
			250	34
			251	34
			252	34
11083	8J6283	5365-01-095-8677	237	10
11083	8J6284		237	11
11083	8J6296	3040-01-167-7959	237	5
11083	8J6298	5360-01-095-1290	237	22
11083	8J6300	5365-01-095-1306	237	21
11083	8J6301	5365-01-095-8241	238	5
11083	8J6302	5365-01-095-8679	238	4

CROSS-REFERENCE INDEXES

PART NUMBER INDEX

CAGEC	PART NUMBER	STOCK NUMBER	FIG.	ITEM
11083	8J6303	3830-01-094-4667	239	34
11083	8J6305	5360-01-095-6078	239	12
11083	8J6306		239	32
11083	8J6312		239	1
11083	8J6321	4310-01-098-7372	237	16
11083	8J6322	3110-00-100-0359	143	6
			237	3
11083	8J6344		196	29
11083	8J6347		238	16
11083	8J6370		278	12
			282	17
11083	8J6371	3120-01-155-5268	278	11
			282	18
11083	8J6375	4320-01-176-2942	278	16
			282	13
11083	8J6377		278	20
			282	9
11083	8J6381	3040-01-175-6484	278	6
11083	8J6384	3120-01-178-9255	278	8
11083	8J6668	3040-01-175-6470	280	3
11083	8J6681	5340-01-169-2259	277	20
11083	8J6703	5360-01-066-7680	196	20
11083	8J6704	5360-01-066-7681	196	21
11083	8J6706		196	33
11083	8J6707	4810-01-066-7682	196	17
11083	8J6708		196	6
11083	8J6709		196	22
11083	8J6710	2530-01-095-0930	196	23
11083	8J6712		196	32
11083	8J6714	5365-01-095-5011	196	4
11083	8J6716		196	10
11083	8J6752	4810-01-066-1410	196	7
11083	8J6823		279	5
11083	8J6838		192	15
11083	8J6839		192	16
11083	8J6901	2530-01-169-0179	279	4
11083	8J7267	4320-01-167-7974	245	17
11083	8J7268		246	9
11083	8J7415	5310-01-066-0506	162	6
			192	11
			277	18
			278	10
			279	9
			280	14
			281	20
			282	19
11083	8J8343	5330-01-103-6782	29	3
11083	8J8345	2520-01-095-4794	240	6
11083	8J8384		250	38
11083	8J8385		250	9
11083	8J8462	5365-01-095-5019	239	28

CROSS-REFERENCE INDEXES

PART NUMBER INDEX

CAGEC	PART NUMBER	STOCK NUMBER	FIG.	ITEM
11083	8J8725	5330-01-106-3704	239	10
11083	8J8739		261	8
11083	8J9250		255	16
			256	15
			257	16
11083	8J9289	4820-01-167-2929	245	7
11083	8J9974	4820-01-095-1034	260	1
11083	8J9975	4820-01-095-1035	255	1
11083	8J9979	4820-01-095-0929	255	7
			257	7
			260	7
11083	8K1077	5365-01-095-0304	217	12
			218	4
11083	8K1207	5315-01-132-1188	3	26
11083	8K2706	9905-01-182-1902	190	83
			190	126
			190	146
11083	8K2708		178	71
11083	8K2709		178	88
11083	8K2710		178	76
11083	8K5489	5995-01-179-1562	75	27
11083	8K8517		235	6
11083	8L5832		30	15
11083	8L8601	5365-00-205-3664	31	34
11083	8L9790	5360-00-172-9967	28	38
11083	8M0505		23	16
		4730-01-066-4586	190	17
			190	127
			273	136
11083	8M0506	3805-01-053-2703	190	6
11083	8M0904	5330-00-557-8489	15	5
11083	8M1871	5307-00-411-6559	21	3
11083	8M1953	5340-01-181-7508	39	8
11083	8M2337	5310-01-105-1863	214	25
11083	8M2537	3110-00-446-9692	151	8
11083	8M2772	5340-00-426-4803	78	11
			105	21
			109	8
			110	7
11083	8M3182	5360-00-950-8251	18	5
11083	8M4432	5331-00-913-8878	17	1
11083	8M4438	5330-00-492-1790	24	16
			169	13
11083	8M4446	5331-00-999-5504	24	15
11083	8M4448	5331-00-923-6958	10	13
11083	8M4791	5310-00-245-9841	283	17
11083	8M5007	5331-00-914-5310	155	7
11083	8M5253	5330-00-890-2235	24	59
11083	8M5599	5315-00-944-7035	15	3
11083	8M6521	2520-01-066-4723	141	8
11083	8M7587	5310-00-922-8691	15	17

CROSS-REFERENCE INDEXES

PART NUMBER INDEX

CAGEC	PART NUMBER	STOCK NUMBER	FIG.	ITEM
11083	8M7640	5340-00-919-9389	164	20
11083	8M8489	5315-00-760-7425	145	17
			147	8
			149	18
			155	5
			155	20
11083	8M8515	5331-00-123-2727	29	4
11083	8M9062	2910-00-116-0407	31	19
11083	8M9064	5365-00-116-0408	31	30
11083	8M9307	5365-00-938-5568	3	10
			158	12
			160	27
11083	8N0073	2930-01-141-2847	46	2
11083	8N0081		1	8
11083	8N0110	5330-01-128-4137	2	1
11083	8N0535		2	18
11083	8N0628	3120-01-165-4358	30	43
11083	8N0984	5315-00-582-2466	30	45
11083	8N1329		24	18
11083	8N1414	4820-01-147-1309	31	46
			32	3
11083	8N1415	5360-01-148-0305	31	44
			32	4
11083	8N1417	4820-01-146-5933	31	43
11083	8N1521	5935-01-502-3942	99	47
			100	33
11083	8N1530	5935-01-157-0576	120	33
11083	8N1544	5999-01-526-8494	100	34
11083	8N1545	5999-01-286-5845	99	51
11083	8N1569	3040-01-176-4100	30	38
11083	8N1720		8	8
11083	8N1721	2815-00-487-2840	8	7
11083	8N1849	3120-01-130-9116	8	11
11083	8N2487	3120-01-162-5786	32	27
11083	8N2488	5315-01-259-4153	31	7
11083	8N2494		31	11
11083	8N2495		31	8
11083	8N2498		32	21
11083	8N2499	2910-01-150-0427	30	10
11083	8N2500		30	7
11083	8N2501	2910-01-150-0426	30	5
11083	8N2503	2910-01-150-0921	28	39
11083	8N2505		28	13
11083	8N2507	2910-01-149-7902	28	6
11083	8N2507 AND 7C0791	2990-01-253-9491	28	9
11083	8N2510		32	38
11083	8N2511	2990-01-155-0277	32	39
11083	8N2516	2910-01-155-0278	32	5
11083	8N2518		32	20
11083	8N2637	5310-01-182-3071	26	12

CROSS-REFERENCE INDEXES

PART NUMBER INDEX

CAGEC	PART NUMBER	STOCK NUMBER	FIG.	ITEM
11083	8N2640	5340-01-181-6629	26	10
11083	8N2641	3120-01-185-4724	26	21
11083	8N2663	3040-01-148-2816	28	85
11083	8N3088	3040-01-154-1249	30	32
11083	8N3090	5340-01-158-7850	31	16
11083	8N3168	2910-01-150-3758	30	17
11083	8N3256	3040-01-151-5646	31	5
11083	8N3257		31	24
11083	8N3258	5340-01-151-2578	29	22
11083	8N3259	5340-01-154-9589	29	17
11083	8N3312		10	11
11083	8N3313		10	8
11083	8N3325	2815-01-126-9995	10	15
11083	8N3327	2815-01-426-0619	10	6
11083	8N3731	5315-01-160-4636	32	23
11083	8N3799	2910-01-181-1930	29	2
11083	8N4110	3120-01-128-1114	3	18
11083	8N4183	5310-01-332-8232	206	31
11083	8N4222	4710-01-143-2950	24	45
11083	8N4223	4710-01-141-8694	24	44
11083	8N4224	4710-01-143-2951	24	40
11083	8N4960	2815-01-125-5535	27	6
11083	8N5117	5325-01-160-2506	32	7
11083	8N5132	5342-01-184-1068	24	32
11083	8N5305	5365-01-147-0083	51	25
11083	8N5600	2510-01-147-2251	1	17
11083	8N5783	4320-01-153-8370	28	20
11083	8N5928	5330-01-132-2201	50	20
11083	8N5929	5340-01-151-7395	50	21
11083	8N6199	4320-01-155-4162	42	5
11083	8N6849	4730-01-162-0112	13	9
11083	8N6854	5330-01-151-9294	13	8
11083	8N6985	5330-01-151-9295	18	4
11083	8N6986	5340-01-147-6397	18	3
11083	8N7005	2910-01-169-9758	25	1
			25	4
11083	8N7140		38	15
11083	8N7315	4710-01-128-4741	17	6
11083	8N7316		17	15
11083	8N7318	4710-01-129-5674	17	13
11083	8N7519	5365-01-154-1689	31	15
11083	8N7735	5365-01-155-2642	31	12
11083	8N7837	5310-01-146-1169	46	12
11083	8N8082	5340-01-156-9918	29	34
11083	8N8635		16	9
11083	8N8721	5365-01-157-5068	1	5
11083	8N9801	4330-01-177-5446	38	35
11083	8N9803	4730-01-149-5082	38	34
11083	8P0408	2590-01-176-9517	37	7
11083	8P0492	5330-01-151-9296	139	40
			143	7

CROSS-REFERENCE INDEXES

PART NUMBER INDEX

CAGEC	PART NUMBER	STOCK NUMBER	FIG.	ITEM
11083	8P1096		149	10
11083	8P1098	2520-01-148-8160	149	17
11083	8P1099		149	20
11083	8P1100	2520-01-185-3123	149	1
11083	8P1256	4710-01-150-0976	154	22
11083	8P1656	2520-01-103-6812	137	7
			138	3
			139	5
11083	8P2893		151	15
11083	8P5959	3020-01-093-7408	137	41
11083	8P5961	3020-01-095-2090	137	40
11083	8P8682	3010-01-149-3472	137	38
11083	8P8845		93	3
11083	8S0493	2815-00-470-6352	16	10
11083	8S0933	5306-01-064-3842	219	2
11083	8S1326	4730-00-401-8098	14	10
58312	8S1491-00	5310-00-557-9391	9	2
11083	8S1498	3040-01-165-9635	10	21
11083	8S1499	2815-00-211-4462	10	20
11083	8S1523	2815-00-074-3523	59	6
11083	8S1606	5330-00-437-8752	11	4
11083	8S1963	5330-01-069-0992	13	3
11083	8S2263	6635-01-124-1771	301	67
11083	8S3159	5305-01-170-6157	240	7
11083	8S3426		137	50
			138	28
			139	12
11083	8S4055	4730-01-051-7605	190	23
			275	8
			275	23
11083	8S4183		53	10
11083	8S4365	3805-01-029-0492	181	8
11083	8S4582		181	20
11083	8S4680	5330-00-493-3876	58	34
11083	8S6391	4730-01-068-9756	190	35
			275	11
			275	20
11083	8S6393	4730-01-095-0833	266	4
			268	7
			272	31
			272	36
11083	8S6417	4730-01-094-7469	264	3
			264	8
			266	7
			266	16
			268	4
			272	28
			272	33
			272	60
			273	19
			273	35

CROSS-REFERENCE INDEXES

PART NUMBER INDEX

CAGEC	PART NUMBER	STOCK NUMBER	FIG.	ITEM
11083	8S6417	4730-01-094-7469	274	12
			274	25
11083	8S6585		301	58
11083	8S6586		301	57
11083	8S6814	5315-00-406-7278	28	65
			28	77
			31	10
11083	8S7611	4910-01-265-0428	301	68
11083	8S7615	5315-01-270-2832	301	41
11083	8S7630		301	64
11083	8S7762	5365-00-432-8183	50	15
11083	8S8048	2510-01-264-8424	301	56
11083	8S8821	5330-00-431-7137	50	14
11083	8S8874	5342-00-494-1996	15	6
11083	8S9092	5306-00-455-0460	1	18
			166	36
			293	28
11083	8S9093	5306-01-170-1338	222	8
11083	8S9129	4330-01-066-7713	144	22
11083	8S9130	4730-01-159-7840	144	21
11083	8S9191	5306-00-470-5543	154	1
11083	8S9906	5120-01-275-2286	301	53
11083	8T0075	4730-01-475-1290	273	48
11083	8T0076	4730-01-514-3461	265	16
			272	40
11083	8T0077	4730-01-471-4917	189	26
11083	8T0078		273	46
11083	8T1031	4730-01-292-8212	272	59
11083	8T1142	5330-01-170-3739	238	13
11083	8T1721		203	24
11083	8T1760	5340-01-215-6299	41	25
			230	22
11083	8T2502	5306-01-285-8875	42	22
11083	8T4223	5310-01-098-0624	297	12
11083	8T4224	5310-01-359-8806	42	26
11083	8T4896	5310-01-286-6079	190	44
11083	8T5050	4730-01-521-0430	190	50
11083	8T5391	5306-01-256-6771	219	25
11083	8V3208	3040-01-253-4664	219	27
11083	8V6808		198	34
11083	8V9101	4440-01-286-0296	178	17
11083	8V9174	4820-01-439-8561	178	20
11083	8V9257	4440-01-440-0480	178	19
30780	8WLN-C	4730-01-143-9017	190	103
30780	8WLNS	5310-00-812-4283	20	4
			159	16
11083	8W0034		273	63
11083	8W0042		266	34
11083	8W0062		273	123
11083	8W0099		270	23
11083	8W0100		270	22

CROSS-REFERENCE INDEXES

PART NUMBER INDEX

CAGEC	PART NUMBER	STOCK NUMBER	FIG.	ITEM
11083	8W0101	4720-01-343-9640	266	37
			270	31
11083	8W0102		266	38
			270	29
11083	8W0103		270	30
11083	8W0105		273	107
11083	8W0107		273	70
11083	8W0119		269	15
11083	8W0120		266	32
			271	16
11083	8W0122		267	26
11083	8W0123		267	23
			268	29
11083	8W0125		271	17
11083	8W0156		268	35
11083	8W0157		268	34
11083	8W0163		266	35
11083	8W0184		269	14
11083	8W0185		269	10
11083	8W0188		272	41
11083	8W0189		272	39
11083	8W0190		272	45
11083	8W0191		272	49
11083	8W0192		272	50
11083	8W0193		272	46
11083	8W0206		271	14
11083	8W0208		265	18
11083	8W0209		265	20
11083	8W0214	4720-01-380-2953	267	25
11083	8W0215	4720-01-524-6961	190	52
11083	8W0216	4720-01-521-3678	190	46
11083	8W0230		273	40
11083	8W0231		273	44
11083	8W0232		273	64
11083	8W0233		273	84
11083	8W0234		273	113
11083	8W0235		273	114
11083	8W0236		273	56
11083	8W0237	4720-01-518-1269	273	115
11083	8W0266	4720-01-521-8798	189	46
11083	8W0267		189	28
11083	8W0268		189	45
11083	8W0269	4720-01-521-8813	189	32
11083	8W0317	3040-01-214-2580	41	18
11083	8W0328	3040-01-214-1291	41	32
11083	8W0663		299	9
11083	8W0664		299	10
11083	8W0679	5310-01-172-1980	299	1
11083	8W0934	2590-01-178-7075	226	5
11083	8W0935	5330-01-185-3441	226	6
11083	8W1028	3040-01-184-3196	213	4

CROSS-REFERENCE INDEXES

PART NUMBER INDEX

CAGEC	PART NUMBER	STOCK NUMBER	FIG.	ITEM
11083	8W1028	3040-01-184-3196	213	6
11083	8W1749	2510-01-216-1097	293	4
11083	8W1750		293	30
11083	8W1751	2510-01-216-3094	293	25
11083	8W1854	5340-01-178-7452	208	6
11083	8W2308		166	9
11083	8W2554	5330-01-183-5887	223	34
11083	8W2665	3040-01-332-1616	206	24
			206	24
11083	8W2666	3040-01-332-1638	206	1
			206	3
11083	8W2668	2510-01-181-1937	209	2
11083	8W2669	5340-01-185-4710	209	3
11083	8W2670	5340-01-183-5893	209	9
11083	8W2671	5340-01-181-0856	209	5
11083	8W2686	5340-01-150-1278	78	8
11083	8W2770		290	2
11083	8W2991	2920-01-184-9404	130	1
11083	8W3218	5975-01-175-1084	287	1
11083	8W3342	9390-01-096-2252	41	14
11083	8W3589	3040-01-333-8241	41	27
11083	8W4066	2510-01-522-4041	293	22
11083	8W4067		293	34
11083	8W4389	2540-01-230-6863	200	1
11083	8W4652		160	21
11083	8W4653		160	11
11083	8W4780	2990-00-003-5933	40	8
11083	8W5092	3020-01-170-6611	243	38
11083	8W5713		285	17
11083	8W5811		211	3
11083	8W5813	2510-01-292-8567	215	27
11083	8W5952		291	29
11083	8W6471	2530-01-185-3876	161	9
11083	8W7388		200	11
11083	8W8124		174	24
11083	8W8317	3020-01-094-7073	166	35
11083	8W8319		174	4
11083	8X0557		299	6
11083	8X1031		200	8
11083	8X1032		200	7
11083	8X1033		200	12
11083	8X3434		161	16
11083	8X3435	2530-01-168-4341	161	36
11083	8X5444	2530-01-413-8274	178	66
11083	8X6932	2540-01-185-3189	133	3
			175	1
11083	8X6933		175	11
11083	8X6935	2540-01-146-8908	41	12
11083	8X7239	2540-01-291-9722	215	52
11083	8X7648	2520-01-149-1853	203	11
11083	8X8377		166	6

CROSS-REFERENCE INDEXES

PART NUMBER INDEX

CAGEC	PART NUMBER	STOCK NUMBER	FIG.	ITEM
58112	80-005	2530-01-178-3167	187	31
83330	80-1211-303	6210-01-148-9034	62	21
			197B	24
83330	80-3206-05-303	6210-01-149-4171	62	19
			197B	23
72658	8000	5365-01-155-5316	31	17
16764	801077	9390-00-839-1864	57	35
01121	802T-WS	5930-01-176-1700	76	5
71536	812	5365-01-185-2777	195	14
99688	81220		232	16
13445	81264	2530-01-061-1351	197B	27
13445	81298-29	5355-01-095-1574	225	3
99688	8195	3020-01-181-8557	229	12
60703	82845-J		225	14
96151	8318	4820-01-079-1486	187	17
19207	8338562	5970-00-833-8562	108	6
96151	8342	4320-01-179-8851	187	9
19207	8378662		83	5
96151	8436-6		187	5
96151	8438	3040-01-081-2752	187	3
19204	8442255		273	7
			274	29
13174	848-FSO-12X12		273	13
77873	863J	4730-00-374-8191	242	13
19207	8724258	5935-00-686-2599	106	30
60703	87883-4	4730-01-095-0037	226	14
60703	88171-44	2910-01-095-3505	226	12
82484	89447-8	2590-01-155-5062	226	15
53867	9 397 235 009	2540-01-184-4472	224	4
53867	9 397 236 006	2540-01-185-6170	224	5
23382	9A598	3110-00-100-0650	166	24
11083	9D0001		133	12
11083	9D0002		134	21
11083	9D0145	2530-01-066-0489	41	46
11083	9D0194	2530-01-066-0490	40	23
11083	9D0201	3805-01-174-4139	291	40
11083	9D0424	5365-01-177-0108	215	47
11083	9D0608	4730-01-182-0743	62	10
			69	7
			204	3
			289	3
11083	9D0612	3040-01-178-3004	204	16
11083	9D0669	2530-01-152-7777	133	11
11083	9D0698	5340-01-155-9900	133	17
11083	9D0699		133	16
11083	9D0740		290	1
11083	9D0771	4720-01-184-0981	178	11
11083	9D0793	5340-01-155-8810	203	18
11083	9D0795	5340-01-156-5492	134	5
11083	9D0945	3040-01-334-2117	170	2
11083	9D0948	5340-01-333-2775	170	9

CROSS-REFERENCE INDEXES

PART NUMBER INDEX

CAGEC	PART NUMBER	STOCK NUMBER	FIG.	ITEM
11083	9D0951	5340-01-156-5179	170	5
11083	9D0953		189	21
			189	40
			266	25
11083	9D1058	5360-01-066-4565	289	26
11083	9D1142	3040-01-167-7206	243	12
11083	9D1209	5340-01-184-5836	266	24
11083	9D1274	2540-01-167-7099	200	4
11083	9D1374	5365-01-095-6109	198	31
11083	9D1376	5310-01-096-6980	198	31
11083	9D1377	3120-01-095-4064	198	30
11083	9D1491	3010-01-169-2723	243	8
11083	9D1589	5342-01-184-0837	211	20
11083	9D1611	2990-01-094-0700	40	18
11083	9D1829	5325-01-414-4843	190	53
11083	9D1969	3040-01-146-7966	40	10
11083	9D1972	3040-01-521-8043	40	14
11083	9D2549	4720-01-181-0101	178	57
11083	9D2641	5360-01-066-0579	133	39
11083	9D2673	4730-01-177-4705	189	9
			191	3
11083	9D2682		164	25
11083	9D2753	5340-01-182-1862	291	24
11083	9D2754	3805-01-095-1693	161	21
			278	23
			282	6
11083	9D2804AND8W0454	2590-01-066-4705	263	15
11083	9D3075	5365-01-155-4622	174	2
11083	9D3311		291	38
11083	9D3523	5310-01-095-3328	161	5
11083	9D3561	3040-01-182-9075	152	8
11083	9D3822	5995-01-152-5087	131	1
11083	9D4249	2540-01-181-1034	219	3
11083	9D4441	3040-01-167-4456	295	5
11083	9D4442	3040-01-167-7129	295	13
11083	9D4443	5340-01-168-8685	295	19
11083	9D4447	3805-01-094-5195	295	9
11083	9D5064	5330-01-095-1257	295	7
11083	9D5182	5330-01-183-4073	215	10
11083	9D5264	2590-01-182-4466	47	4
11083	9D5266	5340-01-194-6639	47	5
11083	9D5267	5342-01-316-5818	47	1
11083	9D5296		272	63
11083	9D5317	2590-01-181-6773	47	2
11083	9D5331	5330-01-066-0676	135	11
11083	9D5458	4720-01-094-5152	180	18
11083	9D5506	3040-01-066-0581	133	28
			135	20
11083	9D5516	3805-01-169-4956	299	25
11083	9D5533	5365-01-095-6115	223	29
11083	9D5857	4720-01-178-9675	271	9

CROSS-REFERENCE INDEXES

PART NUMBER INDEX

CAGEC	PART NUMBER	STOCK NUMBER	FIG.	ITEM
11083	9D5892	4720-01-176-1063	189	10
11083	9D5903	4720-01-178-4841	273	21
11083	9D5904	4720-01-181-5786	273	3
11083	9D5907	4720-01-181-5785	190	19
11083	9D5911		275	7
11083	9D5960		268	3
11083	9D5964	4720-01-178-4846	267	3
11083	9D5970	4720-01-178-9676	266	12
			271	8
11083	9D5972		264	6
11083	9D5973	4720-01-179-6269	269	8
11083	9D5980	4720-01-181-5783	270	9
11083	9D5982	4720-01-181-5784	270	3
11083	9D5984	4720-01-178-3393	265	3
11083	9D5988		274	24
11083	9D5992		273	31
			274	11
11083	9D5993	4720-01-179-3793	275	16
11083	9D5994	4720-01-178-4844	274	20
11083	9D6048		266	13
11083	9D6063	4720-01-176-1064	191	5
11083	9D6068	4720-01-181-5782	270	8
11083	9D6115	5325-01-095-6866	164	27
11083	9D6153	5995-01-181-6642	122	3
11083	9D6227		264	1
11083	9D6274		275	19
11083	9D6361	5340-01-168-9270	195	5
			273	97
11083	9D6494	5340-01-186-5643	209	4
11083	9D6519		160	4
11083	9D6583	5330-01-065-7151	291	36
11083	9D6584	5330-01-066-0496	291	42
11083	9D6585	5330-01-065-7152	198	14
11083	9D6591	5330-01-066-4568	299	12
11083	9D6669	3805-01-094-6923	273	73
			274	35
11083	9D7047		174	3
11083	9D7926	5340-01-183-4553	232	8
11083	9D7928	3040-01-095-6074	232	6
11083	9D8129		41	27
11083	9D8312	4710-01-167-9289	285	14
11083	9D8488	4720-01-178-4839	271	3
11083	9D8538		285	6
11083	9D8557		273	8
11083	9D8799		164	11
11083	9D8829	5340-01-171-3688	205	38
11083	9D8838	2590-01-167-7204	198	21
11083	9D8852	3040-01-167-7074	205	34
11083	9D8903	5315-01-066-0498	134	31
11083	9D8968		165	7
11083	9D8969		165	8

CROSS-REFERENCE INDEXES

PART NUMBER INDEX

CAGEC	PART NUMBER	STOCK NUMBER	FIG.	ITEM
11083	9D8971		165	4
11083	9D8972		165	2
11083	9D9257	5315-01-169-4464	198	9
11083	9D9329	2590-01-182-0891	204	7
11083	9D9331		204	11
11083	9D9332		204	10
11083	9D9334	5340-01-096-4743	164	30
11083	9D9665	3040-01-168-2139	277	23
11083	9D9961	2520-01-154-6654	134	3
11083	9F2083	5315-01-169-5677	238	17
11083	9F2491	5306-01-185-4584	165	5
11083	9F4337	5995-00-930-9107	129	1
11083	9F5644	5310-01-063-5822	225	19
11083	9F7022	5306-00-404-1417	247	32
			248	32
			249	32
			250	32
			251	32
			252	32
11083	9F7283	5331-00-848-7540	295	8
11083	9G0398	5977-01-181-0151	229	17
			232	13
11083	9G0747	5920-01-149-3063	67	9
			68	1
11083	9G2858	5310-01-181-5043	215	25
11083	9G3667	5935-01-156-7789	83	18
			103	9
			103	17
11083	9G3673	5935-01-438-9739	99	42
11083	9G3676		100	6
		5935-01-155-7718	100	21
11083	9G3695	5935-01-152-2677	83	19
			99	49
			105	40
			105	54
			106	6
			106	28
			107	8
			118	2
			120	13
			120	45
			127	4
11083	9G4358		81	4
11083	9G4918	5340-01-203-2608	77	12
11083	9G5127	2520-01-164-0077	142	1
11083	9G5590	6220-01-386-9131	62	23
11083	9G5687	5325-01-186-1318	106	15
11083	9G6736	4720-01-152-5806	44	10
11083	9G8009	5930-01-151-4768	90	3
11083	9G9019	5995-01-151-6312	93	5
11083	9G9150	5340-01-151-9964	81	19

CROSS-REFERENCE INDEXES

PART NUMBER INDEX

CAGEC	PART NUMBER	STOCK NUMBER	FIG.	ITEM
11083	9G9150	5340-01-151-9964	83	20
			99	20
			106	16
			108	8
			120	24
11083	9G9152	5340-01-160-0446	105	22
11083	9G9315	5995-01-181-6732	115	1
11083	9G9501	4720-01-196-7180	20	1
11083	9G9813	6350-01-191-5035	95	3
11083	9H0903-XX		275	31
11083	9H1110	5310-00-999-8286	10	2
11083	9H1112	5310-00-999-8287	10	3
11083	9H5537	5360-00-894-7275	137	42
11083	9H5921	5330-00-074-3600	7	1
11083	9H6454	5330-00-848-9950	284	13
11083	9H8260	5306-00-008-5943	53	13
11083	9J0403		254	4
			255	4
			256	4
			257	4
			260	4
			261	4
11083	9J0404	5365-01-170-4684	254	2
			255	2
			256	2
			257	2
			260	2
			261	2
11083	9J0405		261	7
11083	9J0728		237	2
11083	9J0803		196	11
11083	9J1284		197	17
11083	9J1299	4810-01-184-1040	262	1
11083	9J1318	5330-01-181-2420	278	18
11083	9J1761		197	16
11083	9J1762	4810-01-066-1411	197	1
11083	9J2088		197	18
11083	9J3047	4730-01-165-0851	285	16
11083	9J3465	3040-01-169-1985	279	18
11083	9J3466	3805-01-021-9102	279	1
11083	9J3881	5950-01-192-3163	262	6
			262	11
11083	9J4037	5330-01-184-3545	162	2
			192	23
			279	2
11083	9J4038	5330-01-186-9495	162	14
			192	21
			279	17
11083	9J4743	5306-01-095-1235	187	2
11083	9J4871	4820-01-064-7477	254	5
			255	5

CROSS-REFERENCE INDEXES

PART NUMBER INDEX

CAGEC	PART NUMBER	STOCK NUMBER	FIG.	ITEM
11083	9J4871	4820-01-064-7477	256	5
			257	5
			260	5
			261	5
11083	9J4971	3130-01-168-9210	244	20
11083	9J5498	5360-01-070-2809	174	14
11083	9J5686	5331-01-095-1255	187	4
11083	9J5758	4320-01-167-7142	237	25
11083	9J5879		237	19
11083	9J6458		196	28
11083	9J7138		237	7
11083	9J7157	4810-01-064-8259	247	43
			248	43
			249	43
			250	43
			251	43
			252	43
11083	9J7758	5306-01-097-6744	238	11
11083	9J8253		260	6
11083	9J8274		255	6
			256	6
		4820-01-064-7479	257	6
11083	9J8285		254	6
11083	9J8660	4320-01-168-3624	237	18
11083	9K1896	5920-01-063-5769	68	5
11083	9K2721	5310-01-194-9219	242	11
11083	9L0672	2530-01-298-6163	151	22
11083	9L1566	5342-01-064-2060	190	45
			273	28
			273	108
11083	9L5116	4720-01-143-1405	184	12
11083	9L5176	2910-00-125-7471	31	38
11083	9L6863	2910-01-147-3000	28	73
11083	9L7235	5365-01-103-7156	31	33
11083	9L7657	5340-01-029-4590	3	12
11083	9L8388	5365-00-175-5049	24	34
11083	9L8398	5306-01-062-9927	219	4
11083	9L9098	3120-01-076-9278	24	37
11083	9L9132	5310-01-061-8633	21	7
			73	10
			83	29
			218	2
			220	2
11083	9L9347	5365-01-103-7157	31	14
			31	35
11083	9L9814	5310-01-061-7921	214	15
11083	9L9850	5306-01-061-8635	58	30
11083	9M0016		233	13
11083	9M0402	4310-00-971-1910	182	3
11083	9M0737	6160-01-174-8425	96	4
11083	9M1311	5310-00-445-4633	223	17

CROSS-REFERENCE INDEXES

PART NUMBER INDEX

CAGEC	PART NUMBER	STOCK NUMBER	FIG.	ITEM
11083	9M1974	5310-00-432-4064	38	29
			197B	2
			197B	39
11083	9M1986	5360-01-095-1834	156	5
11083	9M2092	5331-00-932-1053	160	20
11083	9M2209		155	6
11083	9M2210	4320-01-275-1691	155	4
11083	9M2307		211	7
11083	9M2341	2910-00-989-3388	42	11
11083	9M2828	5310-00-009-7704	222	9
11083	9M3296	5307-00-943-6167	21	14
			189	18
			189	39
			266	22
			274	38
11083	9M3742	5305-01-095-3964	299	5
11083	9M4007	5315-00-193-0919	142	11
11083	9M4256	3120-00-939-6689	204	13
			206	41
11083	9M4289	5306-01-085-3661	145	20
11083	9M4313		151	10
11083	9M4355	5365-01-032-7272	138	15
11083	9M4849	5330-00-847-4351	15	13
			17	4
			23	13
11083	9M4995	5340-01-149-4427	99	22
			102	16
			122	12
11083	9M5501	4730-00-278-4822	231	7
11083	9M6527	5310-00-999-8288	21	4
			50	18
			135	4
			205	19
			205	41
			276	4
11083	9M6803	5315-01-149-7833	145	19
11083	9M7357	4730-00-897-5497	178	49
			197B	48
11083	9M7394	2540-01-181-0999	284	7
11083	9M8406	5342-01-064-3819	38	54
			75	8
			98	1
			120	31
			169	5
			176	4
			178	16
			286	12
			197B	53
11083	9M9130		268	36
11083	9N0869	5310-01-147-5110	183	7
11083	9N3388	5342-01-070-1592	24	6

CROSS-REFERENCE INDEXES

PART NUMBER INDEX

CAGEC	PART NUMBER	STOCK NUMBER	FIG.	ITEM
11083	9N3388	5342-01-070-1592	54	25
11083	9N5769	5340-01-147-7948	2	14
11083	9N5820	3040-01-346-4173	31	51
11083	9N5862	5360-01-105-9599	31	47
11083	9P0441	2510-01-181-1935	214	6
11083	9P2553	5365-01-180-8779	207	21
11083	9P4857	3120-01-095-3374	139	41
			143	8
11083	9P4858		139	44
11083	9P4859	3130-01-151-7375	139	42
11083	9P6264	3120-01-094-4416	137	25
			139	43
11083	9P6411		61	11
11083	9P6895	5315-01-181-2558	214	19
11083	9P7121	2910-01-164-7906	37	3
11083	9P8451		137	46
11083	9P8452	3040-01-181-6777	137	1
11083	9P8453		137	24
11083	9P8454	3020-01-183-2385	137	37
11083	9P8455	3130-01-187-7592	137	23
11083	9S1240	5310-00-253-7918	53	12
11083	9S1363	5306-00-268-6004	222	5
11083	9S1366	5306-00-455-0459	46	6
			53	1
			194	5
			245	23
			246	6
			291	43
			293	11
11083	9S1398	5307-01-096-0510	167	15
11083	9S2437	5305-00-090-4147	54	31
11083	9S2544	5305-00-090-4256	54	3
11083	9S3029	2815-01-148-2595	8	1
11083	9S3032	5340-00-261-4042	22	3
11083	9S4167	5307-01-051-2364	43	6
11083	9S4169		204	9
11083	9S4180	5365-01-067-2179	28	57
			28	66
			29	8
			32	32
11083	9S4185	5365-00-763-0120	261	17
			273	111
			274	34
11083	9S4191	5365-00-411-4584	28	14
			43	3
			144	29
			148	13
			151	25
			156	7
			253	8
11083	9S4982		241	6

CROSS-REFERENCE INDEXES

PART NUMBER INDEX

CAGEC	PART NUMBER	STOCK NUMBER	FIG.	ITEM
11083	9S6129		53	14
11083	9S6130	5365-00-472-5300	284	3
11083	9S8002		61	13
			239	4
11083	9S8006	2530-01-062-5318	261	15
11083	9S8008	4730-01-064-3790	195	13
			196	19
			239	24
			253	2
			273	72
			274	36
11083	9S8009	5365-00-452-0344	143	29
			197	23
11083	9S8010	5365-00-476-4985	284	3
11083	9S8016	5330-00-548-6119	223	22
			224	9
11083	9S8184	5315-01-068-7180	222	16
11083	9S8601	5315-01-068-9758	29	45
11083	9S8632	5360-01-068-7181	30	58
11083	9S8750	5310-01-184-1992	75	20
11083	9S8752	5310-01-183-1237	81	20
			99	15
			109	9
			177	23
			220	5
			273	27
			274	40
11083	9S9727	4730-01-063-7866	190	22
11083	9S9830	5305-01-053-4758	54	11
11083	9T0297		239	29
11083	9T0885	4820-01-520-7407	190	62
11083	9T0886	4820-01-520-7398	190	57
11083	9T0978		269	13
11083	9T5603		297	14
11083	9T7346		162	12
11083	9V8188		219	28
11083	9V8789		219	26
11083	9W1490	6625-01-258-7462	64	1
11083	9W1768	2990-01-412-4631	290	7
11083	9W4137		140	20
11083	9X1878		233	11
11083	9X2485	5307-01-351-1404	2	19
11083	9X2836	5305-01-351-1333	25	17
11083	9X4997	5940-01-439-2605	105	16
			105	30
11083	9X6001	5305-01-352-4223	55	18
11083	9X9720		98	8
11083	9Y1798	5330-01-332-4074	4	22
11083	9Y1979	5330-01-332-4089	21	2
11083	9Y2695		38	11
			189	37

CROSS-REFERENCE INDEXES

PART NUMBER INDEX

CAGEC	PART NUMBER	STOCK NUMBER	FIG.	ITEM
11083	9Y2695		273	78
11083	9Y2991	3120-01-346-2091	3	21
11083	9Y2992	3120-00-008-9102	3	20
11083	9Y7589	4710-01-415-1609	15	11
68505	90-2225	2920-01-068-7182	59	9
68505	90-2274	2920-01-093-4009	58	36
68505	90-2563	2920-01-184-9491	59	7
28882	90044	2510-01-188-0206	213	17
28882	90071	2510-01-182-7817	213	6
28882	90073	2510-01-184-2144	213	18
28882	90074		213	18
28882	90076	2510-01-182-4470	213	19
28882	90078		213	5
28882	90109	3040-01-182-7352	213	4
77977	9021A	6220-00-088-3521	80	3
18876	9024483	5310-00-754-3384	31	62
97907	9037107	3120-00-085-1905	181	16
25184	906-737-70	5331-00-801-3354	28	15
			28	47
			38	5
			39	11
			43	4
			72	7
			137	16
			144	30
			148	14
			151	26
			156	8
			159	13
			169	2
			190	5
			245	18
			246	14
			247	46
			248	46
			249	46
			250	46
			251	46
			252	46
			253	9
			264	13
			273	15
			274	17
39428	90631A006	5310-00-596-8007	223	2
60703	90640-6	2540-01-181-5838	223	1
19207	9093668	5310-00-678-2152	10	4
21335	9113KGD5	3110-01-022-5378	138	22
60703	91285-11		226	10
73331	921472	6220-00-832-8774	79	3
			84	8
8Z296	934811	4320-01-181-1927	262	3

CROSS-REFERENCE INDEXES

PART NUMBER INDEX

CAGEC	PART NUMBER	STOCK NUMBER	FIG.	ITEM
08805	940	9340-01-062-6129	285	27
24617	9418814	3110-00-439-2579	187	27
16764	9418881	5310-00-944-5896	54	39
16764	9427129		54	22
28882	95107	5340-01-186-1635	213	13
28882	95108	5340-01-184-2201	213	13
11083	953111		5	2
73734	97410	5310-00-765-3237	150	9
			151	12
8Z296	979301	4820-01-201-7172	262	5
8Z296	979304	4820-01-182-9244	262	10
96259	983019		262	2

By Order of the Secretary of the Army:

PETER J. SCHOOMAKER
General, United States Army
Chief of Staff

Official:



JOYCE E. MORROW
Administrative Assistant to the
Secretary of the Army
0604102

Distribution:

To be distributed in accordance with the initial distribution number (IDN) 256927, requirements for TM 5-3805-261-23P.

RECOMMENDED CHANGES TO PUBLICATIONS AND BLANK FORMS For use of this form, see AR 25-30; the proponent agency is ODISC4.	Use Part II *(reverse)* for Repair Parts and Special Tool Lists (RPSTL) and Supply Catalogs/Supply Manuals (SC/SM).	DATE Date you filled out this form.
TO: *(Forward to proponent of publication or form) (Include ZIP Code)* AMSTA-LC-LPIT / TECH PUBS, TACOM-RI 1 Rock Island Arsenal Rock Island, IL 61299-7630	FROM: *(Activity and location) (Include ZIP Code)* Your mailing address	

PART I – ALL PUBLICATIONS (EXCEPT RPSTL AND SC/SM) AND BLANK FORMS

PUBLICATION/FORM NUMBER	DATE	TITLE
TM 5-3805-261-23P	28 February 2007	Grader, Road, Motorized, Diesel Engine Driven, Heavy, Commercial Construction Equipment

ITEM NO.	PAGE NO.	PARA-GRAPH	LINE NO. *	FIGURE NO.	TABLE NO.	RECOMMENDED CHANGES AND REASON (Provide exact wording of recommended changes, if possible).
	0014 00-2	4-17				POC is incorrect.

SAMPLE

**Reference to line numbers within the paragraph or subparagraph.*

TYPED NAME, GRADE OR TITLE	TELEPHONE EXCHANGE/AUTOVON, PLUS EXTENSION	SIGNATURE
Your Name		Your Signature

TO: (*Forward direct to addressee listed in publication*)	FROM: (*Activity and location) (Include ZIP Code*)	DATE
AMSTA-LC-LPIT / TECH PUBS, TACOM-RI 1 Rock Island Arsenal Rock Island, IL 61299-7630	Your address	Date you filled out this form

PART II – REPAIR PARTS AND SPECIAL TOOL LISTS AND SUPPLY CATALOGS/SUPPLY MANUALS

PUBLICATION NUMBER	DATE	TITLE
TM 5-3805-261-23P	28 February 2007	Grader, Road, Motorized, Diesel Engine Driven, Heavy, Commercial Construction Equipment

PAGE NO.	COLM NO.	LINE NO.	NATIONAL STOCK NUMBER	REFERENCE NO.	FIGURE NO.	ITEM NO.	TOTAL NO. OF MAJOR ITEMS SUPPORTED	RECOMMENDED ACTION
					50			Missing Item 2 in illustration.

PART III – REMARKS (*Any general remarks or recommendations, or suggestions for improvement of publications and blank forms. Additional blank sheets may be used if more space is needed.)*

SAMPLE

TYPED NAME, GRADE OR TITLE	TELEPHONE EXCHANGE/AUTOVON, PLUS EXTENSION	SIGNATURE
Your Name		Your Signature

USAPPC V3.00

RECOMMENDED CHANGES TO PUBLICATIONS AND BLANK FORMS For use of this form, see AR 25-30; the proponent agency is ODISC4.	Use Part II *(reverse)* for Repair Parts and Special Tool Lists (RPSTL) and Supply Catalogs/Supply Manuals (SC/SM).	DATE
TO: *(Forward to proponent of publication or form) (Include ZIP Code)* AMSTA-LC-LPIT / TECH PUBS, TACOM-RI 1 Rock Island Arsenal Rock Island, IL 61299-7630	FROM: *(Activity and location) (Include ZIP Code)*	

PART I – ALL PUBLICATIONS (EXCEPT RPSTL AND SC/SM) AND BLANK FORMS

PUBLICATION/FORM NUMBER	DATE	TITLE
TM 5-3805-261-23P	28 February 2007	Grader, Road, Motorized, Diesel Engine Driven, Heavy, Commercial Construction Equipment

ITEM NO.	PAGE NO.	PARA-GRAPH	LINE NO. *	FIGURE NO.	TABLE NO.	RECOMMENDED CHANGES AND REASON *(Provide exact wording of recommended changes, if possible).*

**Reference to line numbers within the paragraph or subparagraph.*

TYPED NAME, GRADE OR TITLE	TELEPHONE EXCHANGE/AUTOVON, PLUS EXTENSION	SIGNATURE

DA FORM 2028, FEB 74 REPLACES DA FORM 2028, 1 DEC 68, WHICH WILL BE USED. USAPPC V3.00

TO: (*Forward direct to addressee listed in publication*) AMSTA-LC-LPIT / TECH PUBS, TACOM-RI 1 Rock Island Arsenal Rock Island, IL 61299-7630	FROM: (*Activity and location) (Include ZIP Code)*	DATE

PART II – REPAIR PARTS AND SPECIAL TOOL LISTS AND SUPPLY CATALOGS/SUPPLY MANUALS

PUBLICATION NUMBER TM 5-3805-261-23P	DATE 28 February 2007	TITLE Grader, Road, Motorized, Diesel Engine Driven, Heavy, Commercial Construction Equipment

PAGE NO.	COLM NO.	LINE NO.	NATIONAL STOCK NUMBER	REFERENCE NO.	FIGURE NO.	ITEM NO.	TOTAL NO. OF MAJOR ITEMS SUPPORTED	RECOMMENDED ACTION

PART III – REMARKS (*Any general remarks or recommendations, or suggestions for improvement of publications and blank forms. Additional blank sheets may be used if more space is needed.)*

TYPED NAME, GRADE OR TITLE	TELEPHONE EXCHANGE/AUTOVON, PLUS EXTENSION	SIGNATURE

USAPPC V3.00

RECOMMENDED CHANGES TO PUBLICATIONS AND BLANK FORMS For use of this form, see AR 25-30; the proponent agency is ODISC4.	Use Part II *(reverse)* for Repair Parts and Special Tool Lists (RPSTL) and Supply Catalogs/Supply Manuals (SC/SM).	DATE
TO: *(Forward to proponent of publication or form) (Include ZIP Code)* AMSTA-LC-LPIT / TECH PUBS, TACOM-RI 1 Rock Island Arsenal Rock Island, IL 61299-7630	FROM: *(Activity and location) (Include ZIP Code)*	

PART I – ALL PUBLICATIONS (EXCEPT RPSTL AND SC/SM) AND BLANK FORMS

PUBLICATION/FORM NUMBER	DATE	TITLE
TM 5-3805-261-23P	28 February 2007	Grader, Road, Motorized, Diesel Engine Driven, Heavy, Commercial Construction Equipment

ITEM NO.	PAGE NO.	PARA-GRAPH	LINE NO. *	FIGURE NO.	TABLE NO.	RECOMMENDED CHANGES AND REASON *(Provide exact wording of recommended changes, if possible).*

**Reference to line numbers within the paragraph or subparagraph.*

TYPED NAME, GRADE OR TITLE	TELEPHONE EXCHANGE/AUTOVON, PLUS EXTENSION	SIGNATURE

TO: (*Forward direct to addressee listed in publication*) AMSTA-LC-LPIT / TECH PUBS, TACOM-RI 1 Rock Island Arsenal Rock Island, IL 61299-7630	FROM: (*Activity and location) (Include ZIP Code)*	DATE

PART II – REPAIR PARTS AND SPECIAL TOOL LISTS AND SUPPLY CATALOGS/SUPPLY MANUALS

PUBLICATION NUMBER TM 5-3805-261-23P	DATE 28 February 2007	TITLE Grader, Road, Motorized, Diesel Engine Driven, Heavy, Commercial Construction Equipment

PAGE NO.	COLM NO.	LINE NO.	NATIONAL STOCK NUMBER	REFERENCE NO.	FIGURE NO.	ITEM NO.	TOTAL NO. OF MAJOR ITEMS SUPPORTED	RECOMMENDED ACTION

PART III – REMARKS (*Any general remarks or recommendations, or suggestions for improvement of publications and blank forms. Additional blank sheets may be used if more space is needed.)*

TYPED NAME, GRADE OR TITLE	TELEPHONE EXCHANGE/AUTOVON, PLUS EXTENSION	SIGNATURE

USAPPC V3.00

PIN: 083032-000