RUTHZIL TRATOR COMERCIAL DE PEÇAS LTDA 11 97083-6812 ROLANDO

ABRIL 2006

# TM 5-3805-261-23-1

**TECHNICAL MANUAL**

# 130G 130GNS 130GS

**Unit and Direct Support Maintenance**

# CATERPILLAR

**FOR**

## GRADER, ROAD, MOTORIZED, DIESEL ENGINE DRIVEN (DED), HEAVY, COMMERCIAL CONSTRUCTION EQUIPMENT (CCE)

**(NSN 3805-01-150-4795) CATERPILLAR MODEL 130G (EIC: EHF)**

RUTHZIL TRATOR COMERCIAL DE PEÇAS LTDA 11 97083-6812 ROLANDO

## TYPE I, NONSECTIONALIZED

**(NSN 3805-01-126-7894) CATERPILLAR MODEL 130GNS (EIC: EHN)**
**(NSN 3805-01-252-0128) CATERPILLAR MODEL 130GNSCE (EIC: EJJ)**

## TYPE II, SECTIONALIZED

**(NSN 3805-01-126-7895) CATERPILLAR MODEL 130GS (EIC: EHP)**
**(NSN 3805-01-251-8252) CATERPILLAR MODEL 130GSCE (EIC: EJH)**

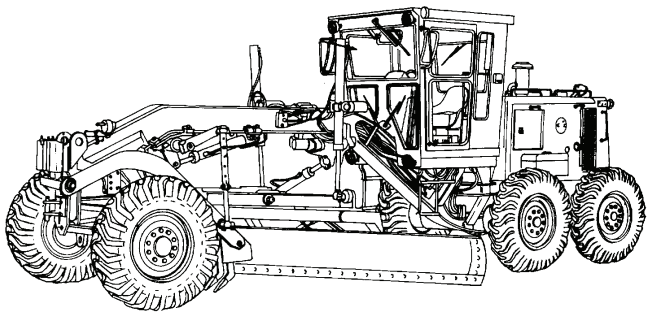

**SUPERSEDURE NOTICE** - This manual supersedes TM 5-3805-261-20, dated 30 April 1992; TM 5-3805-261-34, dated 25 April 1989, including all changes.

**DISTRIBUTION STATEMENT A** - Approved for public release; distribution is unlimited.

## HEADQUARTERS, DEPARTMENT OF THE ARMY

**APRIL 2006**

# WARNING SUMMARY

This warning summary contains general safety warnings and hazardous materials warnings that must be understood and applied during operation and maintenance of this equipment. Failure to observe these precautions could result in serious injury or death to personnel. Also included are explanations of safety and hazardous materials icons used within the technical manual.



BIOLOGICAL - abstract symbol bug shows that a material may contain bacteria or viruses that present a danger to life or health.



CHEMICAL - drops of liquid on hand shows that the material will cause burns or irritation to human skin or tissue.



EAR PROTECTION - Headphones over ears show that noise level will harm ears.



ELECTRICAL - electrical wire to arm with electricity symbol running through human body shows that shock hazard is present.



EYE PROTECTION - person with goggles shows that the material will injure the eyes.



FIRE - flame shows that a material may ignite and cause burns.



FLYING PARTICLES - arrows bouncing off face with face shield shows that particles flying through the air will harm face.



HEAVY PARTS - hand with heavy object on top shows that heavy parts can crush and harm.



HEAVY OBJECT - human figure stooping over heavy object shows physical injury potential from improper lifting technique.



HEAVY PARTS - heavy object on human figure shows that heavy parts present a danger to life or limb.



HOT AREA - hand over object radiating heat shows that part is hot and can burn.



HYDRAULIC FLUID PRESSURE - hydraulic fluid spraying human figure shows that fluid escaping under great pressure can cause injury or death to personnel.



POISON - skull and crossbones shows material is poisonous or is a danger to life.



RADIOACTIVE - identifies a material that emits radioactive energy and can injure human tissue or organs.



SLICK FLOOR - wavy line on floor with legs prone shows that slick floor presents a danger from falling.



VAPOR - human figure in a cloud shows that material vapors present a danger to life or health.

# FOR INFORMATION ON FIRST AID, REFER TO FM 4-25.11.



**WARNING**

***CARBON MONOXIDE (EXHAUST GASES) CAN KILL!***

- Carbon monoxide is a colorless, odorless, deadly poison which, when breathed, deprives the body of oxygen and causes suffocation. Exposure to air containing carbon monoxide produces symptoms of headache, dizziness, loss of muscular control, apparent drowsiness, and coma. Permanent brain damage or death can result from severe exposure.
- Carbon monoxide occurs in exhaust fumes of internal combustion engines. Carbon monoxide can become dangerously concentrated under conditions of inadequate ventilation. The following precautions must be observed to ensure safety of personnel when engine is operated.

1. DO NOT operate engine in enclosed areas.
2. DO NOT idle engine without adequate ventilation.
3. DO NOT drive machine with inspection plates or cover plates removed.
4. BE ALERT for exhaust poisoning symptoms. They are:
   - Headache
   - Dizziness
   - Sleepiness
   - Loss of muscular control
5. If you see another person with exhaust poisoning symptoms:
   - Remove person from area.
   - Expose to fresh air.
   - Keep person warm.
   - Do not permit physical exercise.
   - Administer Cardiopulmonary Resuscitation (CPR), if necessary.
   - Notify a medic.
6. BE AWARE. The field protective mask for Nuclear, Biological, and Chemical (NBC) protection will not protect you from carbon monoxide poisoning.

***The Best Defense Against Carbon Monoxide Poisoning Is Good Ventilation!***




**WARNING**

***BATTERIES***



- To avoid injury, eye protection and acid-resistant gloves must be worn when working around batteries. Do not smoke, use open flame, make sparks, or create other ignition sources around batteries. If a battery is giving off gases, it can explode and cause injury to personnel. Remove all jewelry such as rings, ID tags, watches, and bracelets. If jewelry or a tool contacts a battery terminal, a direct short will cause instant heating, damage to equipment, and injury to personnel.
- Sulfuric acid contained in batteries can cause serious burns. If battery corrosion or electrolyte makes contact with skin, eyes or clothing, take immediate action to stop the corrosive burning effects. Failure to follow these procedures may cause injury or death to personnel.

a. Eyes. Flush with cold water for no less than 15 minutes and seek medical attention immediately.

b. Skin. Flush with large amounts of cold water until all acid is removed. Seek medical attention as required.

c. Internal. If corrosion or electrolyte is ingested, drink large amounts of water or milk. Follow with milk of magnesia, beaten egg or vegetable oil. Seek medical attention immediately.

d. Clothing/Equipment. Wash area with large amounts of cold water. Neutralize acid with baking soda or household ammonia

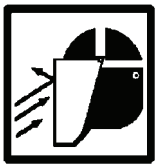

**WARNING**

***COMPRESSED AIR***

Particles blown by compressed air are hazardous. DO NOT exceed 15 psi (103 kPa) nozzle pressure when drying parts with compressed air. Use a maximum of 30 psi (207 kPa) when cleaning components. DO NOT direct compressed air against human skin. Failure to follow this warning may result in injury or death. Make sure air stream is directed away from user and other personnel in the area. To prevent injury, user must wear protective goggles or face shield.




**WARNING**

***ETHER COLD START SYSTEM***




Ether fuel is extremely flammable and toxic. DO NOT smoke and make sure you are in a well-ventilated area away from heat, open flames, or sparks. Wear eye protection. Avoid contact with skin and eyes and avoid breathing ether fumes. If fluid enters or fumes irritate the eyes, wash immediately with large quantities of clean water for 15 minutes. Seek medical attention immediately if ether is inhaled or causes eye irritation. Failure to follow this warning may cause injury or death to personnel.



**WARNING**

***FUEL HANDLING***

- DO NOT smoke or permit any open flame in area of machine while you are servicing fuel system. Be sure hose nozzle is grounded against filler tube during refueling to prevent static electricity. Failure to follow this warning may cause injury to personnel or damage to equipment.
- DO NOT perform fuel system checks, inspections, or maintenance while smoking or near fire, flames or sparks. Fuel may ignite, causing injury or death to personnel or damage to equipment.
- Operating personnel must wear fuel-resistant gloves when handling fuels. If exposed to fuel, promptly wash exposed skin and change fuel-soaked clothing. Failure to follow this warning may cause injury to personnel.



**WARNING**

***HAZARDOUS WASTE DISPOSAL***

When servicing this machine, performing maintenance, or disposing of materials such as engine coolant, hydraulic fluid, lubricants, battery acids or batteries, and CARC paint, consult your unit/local hazardous waste disposal center or safety office for local regulatory guidance. If further information is needed, please contact The Army Environmental Hotline at 1-800-872-3845.



**WARNING**

***HEARING PROTECTION***

Your hearing can be PERMANENTLY DAMAGED if you are exposed to constant high noise levels of 85 dB or greater. Hearing protection is required when operating machine or when working on machine while it is operating. Failure to wear hearing protection may cause hearing loss.



**WARNING**

***HEAVY PARTS--LESS THAN 40 LB (18 KG)***

Use extreme caution when handling heavy parts. Provide adequate support and use assistance during procedure. Failure to follow this warning may cause injury to personnel.



**WARNING**

***HEAVY PARTS--40 LB (18 KG) OR MORE***

Use extreme caution when handling heavy parts. Provide adequate support and use assistance during procedure. Ensure that any lifting device used is in good condition and of suitable load capacity. Keep clear of heavy parts supported only by lifting device. Failure to follow this warning may cause injury or death to personnel.



## WARNING



*HYDRAULIC SYSTEM*

- DO NOT disconnect or remove any hydraulic system line or fitting unless engine is shut down and hydraulic system pressure has been relieved. Tighten all connections before applying pressure. Escaping hydraulic fluid under pressure can penetrate the skin, causing injury to personnel.
- At operating temperature, hydraulic oil is hot. Allow hydraulic oil to cool before disconnecting any hydraulic lines. Failure to follow this warning may cause injury to personnel.

## WARNING

*MACHINE OPERATION*

- Use caution and maintain three-point contact at all times when mounting or dismounting machine. Do NOT use steering wheel as a handhold. Failure to follow this warning may cause injury or death to personnel.
- BE ALERT for personnel in the area while operating machine. Always check to ensure area is clear of personnel and obstructions before moving. Failure to follow this warning may cause injury or death to personnel.
- Use of seat belt while operating machine is mandatory. Fasten belt BEFORE operating machine. Trying to fasten belt during operation creates a hazardous condition. Failure to follow this warning may cause injury or death to personnel.
- DO NOT allow riders on machine. Failure to follow this warning may cause injury or death to personnel.
- NEVER leave operator compartment without applying parking brake. Failure to follow this warning may cause injury or death to personnel.
- DO NOT use parking/emergency brake to stop a moving machine under usual conditions. Only if service brakes fail, apply parking/emergency brake. Failure to follow this warning may cause injury to personnel or damage to equipment.
- Never use starting fluid or spray to aid in starting the engine, other than the on-board ether cold start system. Failure to follow this warning may cause injury or death to personnel or damage to equipment.
- Always use a ground guide when driving machine up or down ramps in preparation for highway or marine transport. Failure to use a ground guide may cause injury or death to personnel or damage to equipment.



**WARNING**

***NBC EXPOSURE***



- If NBC exposure is suspected, personnel wearing protective equipment must handle all air cleaner media. Consult your NBC Officer or NBC NCO for appropriate handling or disposal procedures.
- Refer to FM 3-3, *Chemical and Biological Contamination Avoidance,* FM 3-5, *NMC Decontamination,* FM 3-3-1, *Nuclear Contamination Avoidance.*
- NBC contaminated filters must be handled using adequate precautions and must be disposed of by trained personnel.
- Failure to follow these warnings may cause illness or death to personnel.




To order this NBC decal use:

National Stock Number (NSN) - 7690-01-114-3702
Part Number (PN) - 12296626
Commercial and Government Entity Code (CAGEC) - 19207



**WARNING**

***PRESSURIZED AIR***

- DO NOT disconnect any air system lines or fittings unless engine is shut down and air system pressure is relieved. Failure to follow this warning may cause injury to personnel.
- Always wear eye protection when disconnecting air lines. Residual air will be expelled. Failure to follow this warning may cause eye injury.



**WARNING**

***PRESSURIZED COOLING SYSTEM***



- DO NOT service cooling system unless engine has been allowed to cool down. This is a pressurized cooling system and escaping steam or hot coolant may cause serious burns.
- DO NOT remove cooling system radiator cap when engine is hot. Allow engine to cool down. Loosen cap to first stop and let any pressure out of cooling system, then remove cap. Failure to follow this warning may cause serious burns.
- Wear effective eye, glove, and skin protection when handling coolants. Failure to do so may cause injury to personnel.



**WARNING**

***SLAVE STARTING***

When slave starting machine:

- Use NATO slave cable that does NOT have loose or missing insulation.
- DO NOT proceed if suitable cable is not available.
- DO NOT use civilian-type jumper cables.
- DO NOT allow disabled and booster machines to come in contact with each other at any time during slave starting.

Failure to follow this warning may cause injury or death to personnel.





**WARNING**

***SOLVENT CLEANING COMPOUND***





Solvent cleaning compound MIL-PRF-680 Type III is an environmentally compliant and low toxic material. However, it may be irritating to the eyes and skin. Use protective gloves and goggles. Use in well-ventilated areas. Keep away from open flames and other sources of ignition. Failure to do so may cause injury or death to personnel.

**WARNING**

***TIRES***

- Operating machine with underinflated or defective tire may lead to tire failure and loss of traction or control. Failure to follow this warning may cause injury or death to personnel or damage to equipment.
- Use a self-inflating chuck and stand at tread side of tire at maximum distance allowed by inflation hose. Failure to do so may cause injury or death to personnel.



**WARNING**

***WORK SAFETY***

- Lifting cables, chains, hooks, and slings used for lifting machine must be in good condition and of suitable capacity. Failure to follow this warning may cause injury or death to personnel or damage to equipment.
- Improper use of lifting equipment and improper attachment of cables to machine may cause injury to personnel or damage to equipment. Observe all standard rules of safety.
- Hitch and steering movement can reduce clearances suddenly and cause injury to personnel. Always stop engine BEFORE working in area of hitch link.
- Ensure locking pin is installed before working on hitch area (TM 5-3805-261-10). Failure to follow this warning may cause injury to personnel.
- Configuration changes to blade cutting edge should NEVER be attempted without first securing the blade by blocking it so that it is firmly supported. Failure to follow this warning may cause injury to personnel.
- If machine is parked indoors, DO NOT run engine unless exhaust fumes are vented to the outside. Failure to follow this warning may cause injury or death to personnel due to carbon monoxide poisoning.
- Lubricating/hydraulic oils, engine coolant, fuel, and other fluids used in the performance of maintenance can be very slippery. Immediately wipe up any spills. Failure to follow this warning may cause injury to personnel.

## LIST OF EFFECTIVE PAGES/WORK PACKAGES

Date of issue for original manual is:

Original 28 April 2006

TOTAL NUMBER OF PAGES FOR FRONT AND REAR MATTER IS 19 AND TOTAL NUMBER OF WORK PACKAGES IS 273 CONSISTING OF THE FOLLOWING:

| **Page/WP No.** | ***Change No.** |
|---|---|
| Cover/(Back Blank) | 0 |
| a to j | 0 |
| A/(B Blank) | 0 |
| i to xiv | 0 |
| WP 0001 00 to WP 0273 00 | 0 |
| WP 0346 00 to WP 0352 00 | 0 |
| Index-1 to Index-24 | 0 |
| Authentication Page | 0 |
| DA Form 2028 Sample | 0 |
| DA Form 2028 | 0 |
| Metric Convsersion Chart | 0 |
| Back Cover | 0 |

* Zero in this column indicates an original page or work package.

TECHNICAL MANUAL
TM 5-3805-261-23-1

HEADQUARTERS
DEPARTMENT OF THE ARMY
Washington, D.C., 28 April 2006

# TECHNICAL MANUAL

## Unit and Direct Support Maintenance

## FOR

## GRADER, ROAD MOTORIZED, DIESEL ENGINE DRIVEN (DED), HEAVY, COMMERCIAL CONSTRUCTION EQUIPMENT (CCE) (NSN 3805-01-150-4795) CATERPILLAR MODEL 130G

### TYPE I, NONSECTIONALIZED
### (NSN 3805-01-126-7894) CATERPILLAR MODEL 130GNS (EIC: EHN)
### (NSN 3805-01-252-0128) CATERPILLAR MODEL 130GNSCE (EIC: EJJ)

### TYPE II, SECTIONALIZED
### (NSN 3805-01-126-7895) CATERPILLAR MODEL 130GS (EIC: EHP)
### (NSN 3805-01-251-8252) CATERPILLAR MODEL 130GSCE (EIC: EJH)

**REPORTING ERRORS AND RECOMMENDING IMPROVEMENTS**

You can help improve this publication. If you find any mistakes or if you know of a way to improve the procedures, please let us know. Submit your DA Form 2028 (*Recommended Changes to Equipment Technical Publications*), through the Internet, on the Army Electronic Product Support (AEPS) website. The Internet address is https://aeps.ria.army.mil/. The DA Form 2028 is located under the Public Applications section in the AEPS Public Home Page. Fill out the form and click on SUBMIT. Using this form on the AEPS will enable us to respond quicker to your comments and better manage the DA Form 2028 program. You may also mail, fax or e-mail your letter or DA Form 2028 direct to: AMSTA-LC-LMIT/TECH PUBS, TACOM-RI, 1 Rock Island Arsenal, Rock Island, IL 61299-7630. The e-mail address is: TACOM-TECH-PUBS@ria.army.mil. The fax number is DSN 793-0726 or Commercial (309) 782-0726.

**SUPERSEDURE NOTICE** - This manual supersedes TM 5-3805-261-20, dated 30 April 1992; TM 5-3805-261-34, dated 25 April 1989, including all changes.

**DISTRIBUTION STATEMENT A** - Approved for public release; distribution is unlimited.

# Table of Contents

Page Number

**VOLUME I**

Warning Summary . . . . . a
How To Use This Manual . . . . . xiii

**CHAPTER 1 GENERAL INFORMATION, EQUIPMENT DESCRIPTION, AND THEORY OF OPERATION**

WP 0001 00 General Information . . . . . 0001 00-1
WP 0002 00 Equipment Description and Data . . . . . 0002 00-1
WP 0003 00 Theory of Operation . . . . . 0003 00-1

**CHAPTER 2 TROUBLESHOOTING PROCEDURES**

WP 0004 00 Troubleshooting Introduction . . . . . 0004 00-1
WP 0005 00 Troubleshooting Symptom Index . . . . . 0005 00-1
WP 0006 00 Engine Troubleshooting Procedures . . . . . 0006 00-1
WP 0007 00 Cooling System Troubleshooting Procedures . . . . . 0007 00-1
WP 0008 00 Electrical System Troubleshooting Procedures . . . . . 0008 00-1
WP 0009 00 Transmission Troubleshooting Procedures . . . . . 0009 00-1
WP 0010 00 Brake System Troubleshooting Procedures . . . . . 0010 00-1
WP 0011 00 Steering System Troubleshooting Procedures . . . . . 0011 00-1
WP 0012 00 Hydraulic System Troubleshooting . . . . . 0012 00-1
WP 0013 00 Miscellaneous Troubleshooting Procedures . . . . . 0013 00-1
WP 0014 00 Engine STE/ICE-R Testing . . . . . 0014 00-1
WP 0015 00 Fuel STE/ICE-R testing . . . . . 0015 00-1
WP 0016 00 Charging System STE/ICE-R testing . . . . . 0016 00-1
WP 0017 00 Starting System STE/ICE-R Testing . . . . . 0017 00-1
WP 0018 00 Battery STE/ICE-R Testing . . . . . 0018 00-1

**CHAPTER 3 UNIT FIELD MAINTENANCE INSTRUCTIONS**

WP 0019 00 Service Upon Receipt . . . . . 0019 00-1
WP 0020 00 General Maintenance Instructions . . . . . 0020 00-1
WP 0021 00 Electrical General Maintenance Instructions . . . . . 0021 00-1
WP 0022 00 Preventive Maintenance Checks and Services (PMCS) Introduction . . . . . 0022 00-1
WP 0023 00 Preventive Maintenance Checks and Services (PMCS) Procedures . . . . . 0023 00-1

***Engine***

WP 0024 00 Changing Engine Oil . . . . . 0024 00-1
WP 0025 00 Oil Filter Replacement . . . . . 0025 00-1
WP 0026 00 Oil Filter Head Replacement . . . . . 0026 00-1
WP 0027 00 Oil Level Gauge Tube Assembly Replacement . . . . . 0027 00-1
WP 0028 00 Oil Filler and Cap Replacement . . . . . 0028 00-1
WP 0029 00 Engine Oil Cooler Replacement . . . . . 0029 00-1
WP 0030 00 Engine Oil Sampling Valve and Line Replacement . . . . . 0030 00-1
WP 0031 00 Valve Cover Replacement . . . . . 0031 00-1
WP 0032 00 Valve Cover Breather Replacement . . . . . 0032 00-1

# Table of Contents - Continued


| | | Page Number |
|---|---|---|
| ***Fuel System*** | | |
| WP 0033 00 | Turbocharger Oil Lines Replacement | 0033 00-1 |
| WP 0034 00 | Tachometer Drive Replacement (Models 130G, 130GSCE, and 130GNSCE) | 0034 00-1 |
| WP 0035 00 | Fuel Injection Lines Maintenance | 0035 00-1 |
| WP 0036 00 | Air Precleaner Replacement | 0036 00-1 |
| WP 0037 00 | Primary and Secondary Filter Elements Replacement | 0037 00-1 |
| WP 0038 00 | Air Cleaner Body Replacement | 0038 00-1 |
| WP 0039 00 | Turbocharger Air Lines Replacement | 0039 00-1 |
| WP 0040 00 | Turbocharger Exhaust Elbow Replacement | 0040 00-1 |
| WP 0041 00 | Fuel Tank Hoses, Lines, and Fittings Replacement (Models 130G, 130GSCE, and 130GNSCE) | 0041 00-1 |
| WP 0042 00 | Fuel Tank Hoses, Lines, and Fittings Replacement (Models 130GS and 130GNS) | 0042 00-1 |
| WP 0043 00 | Fuel Tank Cap Maintenance | 0043 00-1 |
| WP 0044 00 | Fuel Tank Maintenance | 0044 00-1 |
| WP 0045 00 | Primary Fuel Filter/Priming Pump and Mounting Maintenance (Models 130G, 130GSCE, and 130GNSCE) | 0045 00-1 |
| WP 0046 00 | Primary Fuel Filter/Priming Pump and Mounting Maintenance (Models 130GS and 130GNS) | 0046 00-1 |
| WP 0047 00 | Secondary Fuel Filter and Mounting Maintenance (Models 130G, 130GSCE, and 130GNSCE) | 0047 00-1 |
| WP 0048 00 | Secondary Fuel Filter and Mounting Maintenance (Models 130GS and 130GNS) | 0048 00-1 |
| WP 0049 00 | Ether Starting Aid Cylinder Replacement | 0049 00-1 |
| WP 0050 00 | Ether Starting Aid Assembly Replacement | 0050 00-1 |
| ***Exhaust System*** | | |
| WP 0051 00 | Muffler and Exhaust Pipe Replacement | 0051 00-1 |
| ***Cooling System*** | | |
| WP 0052 00 | Radiator and Support Replacement | 0052 00-1 |
| WP 0053 00 | Shields, Baffles, and Plate Replacement | 0053 00-1 |
| WP 0054 00 | Grille Replacement | 0054 00-1 |
| WP 0055 00 | Side Screen Doors Replacement | 0055 00-1 |
| WP 0056 00 | Cap Guard Replacement | 0056 00-1 |
| WP 0057 00 | Radiator Hoses, Lines, and Fittings Replacement | 0057 00-1 |
| WP 0058 00 | Radiator Drain Line Replacement | 0058 00-1 |
| WP 0059 00 | Temperature Regulator (Thermostat) Replacement | 0059 00-1 |
| WP 0060 00 | Water Pump Replacement | 0060 00-1 |
| WP 0061 00 | Fan Belts Maintenance | 0061 00-1 |
| WP 0062 00 | Fan Lubrication Line Replacement | 0062 00-1 |
| WP 0063 00 | Fan and Fan Drive Replacement | 0063 00-1 |
| WP 0064 00 | Transmission Oil Pump Pulley Replacement | 0064 00-1 |
| WP 0065 00 | Cooling System Servicing | 0065 00-1 |

# Table of Contents - Continued


| | | Page Number |
|---|---|---|
| ***Electrical System*** | | |
| WP 0066 00 | Alternator and Mountings Maintenance | 0066 00-1 |
| WP 0067 00 | Starting Motor Replacement | 0067 00-1 |
| WP 0068 00 | Starting Motor Relay Replacement | 0068 00-1 |
| WP 0069 00 | Electronic Monitoring System (EMS) Panel Replacement | 0069 00-1 |
| WP 0070 00 | Electronic Monitoring System (EMS) Panel Switches Replacement | 0070 00-1 |
| WP 0071 00 | Electronic Monitoring System (EMS) Function Lights Replacement | 0071 00-1 |
| WP 0072 00 | Electronic Monitoring System (EMS) Fault Light Replacement | 0072 00-1 |
| WP 0073 00 | Turn Signal Switch Replacement | 0073 00-1 |
| WP 0074 00 | Articulation Indicator Light Replacement | 0074 00-1 |
| WP 0075 00 | Electronic Monitoring System (EMS) Cover Replacement | 0075 00-1 |
| WP 0076 00 | Work Light Switches Replacement | 0076 00-1 |
| WP 0077 00 | Ether Control Switch Replacement | 0077 00-1 |
| WP 0078 00 | Control Console Light Replacement | 0078 00-1 |
| WP 0079 00 | Start Switch Replacement | 0079 00-1 |
| WP 0080 00 | Main Circuit Breaker Replacement | 0080 00-1 |
| WP 0081 00 | Battery Disconnect Switch Replacement | 0081 00-1 |
| WP 0082 00 | Operator’s Console Cover Replacement | 0082 00-1 |
| WP 0083 00 | Hourmeter Replacement | 0083 00-1 |
| WP 0084 00 | Panel Lights Replacement | 0084 00-1 |
| WP 0085 00 | Switch Panel and Mounting Replacement (CCE and Type I Machines) | 0085 00-1 |
| WP 0086 00 | Supplemental Steering Pump Valve Switch Maintenance | 0086 00-1 |
| WP 0087 00 | Supplemental Steering Hydraulic Pressure Switch Replacement | 0087 00-1 |
| WP 0088 00 | Supplemental Steering Governor Switch Maintenance | 0088 00-1 |
| WP 0089 00 | Supplemental Steering Electronic Control Replacement | 0089 00-1 |
| WP 0090 00 | Supplemental Steering Magnetic Switch Replacement | 0090 00-1 |
| WP 0091 00 | Supplemental Steering Pump and Motor Replacement | 0091 00-1 |
| WP 0092 00 | Supplemental Steering Magnetic Switch Pump Motor Mounting Replacement | 0092 00-1 |
| WP 0093 00 | Blade Float Limit Switches and Mounting Replacement (CCE Machine) | 0093 00-1 |
| WP 0094 00 | Flasher Unit Replacement | 0094 00-1 |
| WP 0095 00 | Circuit Breaker Replacement | 0095 00-1 |
| WP 0096 00 | Main Fuse Box and Mounting Replacement | 0096 00-1 |
| WP 0097 00 | Cab Fuse Box and Cover Replacement | 0097 00-1 |
| WP 0098 00 | NATO Slave Receptacle and Cables Replacement | 0098 00-1 |
| WP 0099 00 | Dome Light Switch Replacement (CCE Machine) | 0099 00-1 |
| WP 0100 00 | Dome Light Dimmer Resistor and Mounting Replacement (CCE Machine) | 0100 00-1 |
| WP 0101 00 | Vehicle Light Switch and Mounting Replacement | 0101 00-1 |
| WP 0102 00 | Blackout Lighting Magnetic Switch Replacement | 0102 00-1 |
| WP 0103 00 | Dimmer Switch Replacement | 0103 00-1 |
| WP 0104 00 | Headlights Maintenance | 0104 00-1 |
| WP 0105 00 | Front Work Lights Maintenance | 0105 00-1 |
| WP 0106 00 | Front Blackout Drive Light Maintenance | 0106 00-1 |
| WP 0107 00 | Front Turn Signal Lights Maintenance | 0107 00-1 |
| WP 0108 00 | Rear Turn Signal Lights, Stoplights, and Mounting Maintenance | 0108 00-1 |
| WP 0109 00 | Blackout Stoplights-Taillights and Mounting Maintenance | 0109 00-1 |
| WP 0110 00 | Rear Work Light Maintenance | 0110 00-1 |
| WP 0111 00 | Dome Light Maintenance (CCE Machine) | 0111 00-1 |

# Table of Contents - Continued


| | | Page Number |
|---|---|---|
| ***Electrical System - Continued*** | | |
| WP 0112 00 | Air Pressure Switches Replacement | 0112 00-1 |
| WP 0113 00 | Engine Oil Pressure and Hourmeter Switches Replacement | 0113 00-1 |
| WP 0114 00 | Coolant Temperature and Ether Start Switches Replacement | 0114 00-1 |
| WP 0115 00 | Fuel Pressure Switch Replacement | 0115 00-1 |
| WP 0116 00 | Hydraulic Oil Temperature Switch Replacement | 0116 00-1 |
| WP 0117 00 | Blackout and Service Stoplight Switches Replacement | 0117 00-1 |
| WP 0118 00 | Monitor Warning Alarm Replacement | 0118 00-1 |
| WP 0119 00 | Horn Replacement | 0119 00-1 |
| WP 0120 00 | Horn Button Assembly and Mounting Replacement | 0120 00-1 |
| WP 0121 00 | Backup Alarm Replacement | 0121 00-1 |
| WP 0122 00 | Backup Alarm Switch Maintenance | 0122 00-1 |
| WP 0123 00 | Battery Box Covers Maintenance | 0123 00-1 |
| WP 0124 00 | Battery Holddowns Replacement | 0124 00-1 |
| WP 0125 00 | Batteries and Battery Cables Replacement | 0125 00-1 |
| WP 0126 00 | Battery Boxes and Mounting Replacement | 0126 00-1 |
| WP 0127 00 | Alternator Ground Lead Replacement | 0127 00-1 |
| WP 0128 00 | Starting Motor Lead Replacement | 0128 00-1 |
| WP 0129 00 | Air Pressure Switch Lead Replacement | 0129 00-1 |
| WP 0130 00 | Electronic Monitoring System (EMS) Jumper Wire Replacement | 0130 00-1 |
| WP 0131 00 | Supplemental Steering Dump Valve Wiring Harness Replacement | 0131 00-1 |
| WP 0132 00 | Supplemental Steering Governor Switch Wiring Harness Replacement | 0132 00-1 |
| WP 0133 00 | Blade Float Pilot Valve Wiring Harness Replacement (CCE Machine) | 0133 00-1 |
| WP 0134 00 | Front Window Defroster Fan Lead Replacement (CCE Machine) | 0134 00-1 |
| WP 0135 00 | Rear Window Defroster Fan Lead Replacement (CCE Machine) | 0135 00-1 |
| WP 0136 00 | Front Work Lights Lead Replacement | 0136 00-1 |
| WP 0137 00 | Rear Work Light Lead Replacement | 0137 00-1 |
| WP 0138 00 | Turn Signal Lights Fuse Lead Replacement | 0138 00-1 |
| WP 0139 00 | Dome Light Switch Wiring Harness Replacement (CCE Machine) | 0139 00-1 |
| WP 0140 00 | Dome Light Dimmer Resistor Wiring Harness Replacement (CCE Machine) | 0140 00-1 |
| WP 0141 00 | Horn Wiring Harness Replacement | 0141 00-1 |
| WP 0142 00 | Disconnect Switch Cable Replacement | 0142 00-1 |
| WP 0143 00 | Heater Wiring Harness Replacement (CCE Machine) | 0143 00-1 |
| WP 0144 00 | Left- and Right-Hand Blade Float Harnesses Replacement (CCE Machine) | 0144 00-1 |
| WP 0145 00 | Supplemental Steering Pump Wiring Harnesses Replacement | 0145 00-1 |
| WP 0146 00 | Radio Interference Suppression Replacement (Models 130G, 130GSCE, and 130GNSCE) | 0146 00-1 |
| ***Transmission*** | | |
| WP 0147 00 | Changing Transmission and Differential Oil | 0147 00-1 |
| WP 0148 00 | Transmission Modulation Control Maintenance | 0148 00-1 |
| WP 0149 00 | Transmission Modulation Control Housing Replacement | 0149 00-1 |
| WP 0150 00 | Transmission Control Adjustment | 0150 00-1 |
| WP 0151 00 | Transmission Control Lever and Housing Replacement | 0151 00-1 |
| WP 0152 00 | Transmission Control Cables Replacement | 0152 00-1 |
| WP 0153 00 | Transmission Oil Filter and Mounting Maintenance | 0153 00-1 |
| WP 0154 00 | Transmission Oil Sampling Valve and Line Maintenance | 0154 00-1 |
| WP 0155 00 | Transmission Oil Lines Replacement | 0155 00-1 |

# Table of Contents - Continued


| | | Page Number |
|---|---|---|
| ***Front Axle*** | | |
| WP 0156 00 | Leaning Wheel Cylinder Replacement | 0156 00-1 |
| ***Brakes*** | | |
| WP 0157 00 | Parking Brake Actuator and Release Valve Replacement | 0157 00-1 |
| WP 0158 00 | Parking Brake Air Control Valve Maintenance | 0158 00-1 |
| WP 0159 00 | Parking Brake Control Replacement | 0159 00-1 |
| WP 0160 00 | Air Brake Pedal and Linkage Maintenance | 0160 00-1 |
| WP 0161 00 | Air Brake Lines Replacement | 0161 00-1 |
| WP 0162 00 | Air Brake Reservoir Replacement | 0162 00-1 |
| WP 0163 00 | Air Brake Reservoir Lines and Fittings Replacement | 0163 00-1 |
| WP 0164 00 | Air Dryer Maintenance (Types I and II Machines) | 0164 00-1 |
| WP 0165 00 | Air Compressor Governor Replacement | 0165 00-1 |
| ***Wheels*** | | |
| WP 0166 00 | Front Wheels Replacement | 0166 00-1 |
| WP 0167 00 | Rear Wheels Replacement | 0167 00-1 |
| WP 0168 00 | Tires Maintenance | 0168 00-1 |
| ***Steering*** | | |
| WP 0169 00 | Steering Hoses, Lines, and Fittings: Steering Valves to Steering Cylinders Replacement (Dual Valve Design) | 0169 00-1 |
| WP 0170 00 | Steering Hoses, Lines, and Fittings: Steering Valves to Steering Cylinders Replacement (Single Valve Design) | 0170 00-1 |
| WP 0171 00 | Steering Hoses, Lines, and Fittings: Steering Control Pump to Steering Valves Replacement (Dual Valve Design) | 0171 00-1 |
| WP 0172 00 | Steering Hoses, Lines, And Fittings: Steering Control Pump To Steering Valve Replacement (Single Valve Design) | 0172 00-1 |
| WP 0173 00 | Supplemental Steering Hoses, Lines, and Fittings Replacement | 0173 00-1 |
| WP 0174 00 | Supplemental Steering Check Valve Replacement | 0174 00-1 |
| WP 0175 00 | Remote Control Repair (Type II Machine) | 0175 00-1 |
| WP 0176 00 | Steering Cylinder Replacement | 0176 00-1 |
| ***Body, Cab, Hood, and Hull*** | | |
| WP 0177 00 | Step Assemblies Maintenance (Old Design) | 0177 00-1 |
| WP 0178 00 | Step Assemblies Maintenance (New Design) | 0178 00-1 |
| WP 0179 00 | Frame Covers Replacement | 0179 00-1 |
| WP 0180 00 | Front Tow Hook Replacement | 0180 00-1 |
| WP 0181 00 | Engine Hood Replacement | 0181 00-1 |
| WP 0182 00 | Engine Panels and Doors Maintenance | 0182 00-1 |
| WP 0183 00 | Dash Plate Replacement | 0183 00-1 |
| WP 0184 00 | ROPS Replacement (Types I and II Machines) | 0184 00-1 |
| WP 0185 00 | ROPS Accessories Replacement (CCE Machine) | 0185 00-1 |
| WP 0186 00 | Lower-Front Windows Maintenance (CCE Machine) | 0186 00-1 |
| WP 0187 00 | Cab Windows Replacement (CCE Machine) | 0187 00-1 |
| WP 0188 00 | Cab Doors and Latch Assemblies Maintenance (CCE Machine) | 0188 00-1 |
| WP 0189 00 | Cab Storage Compartment Maintenance (CCE Machine) | 0189 00-1 |
| WP 0190 00 | Cab Sound Suppression Panels (Lower-Front and Rear) Replacement (CCE Machine) | 0190 00-1 |

# Table of Contents - Continued


| | | Page Number |
|---|---|---|
| ***Body, Cab, Hood, and Hull - Continued*** | | |
| WP 0191 00 | Cab Sound Suppression Panel (Ceiling) Replacement (CCE Machine) | 0191 00-1 |
| WP 0192 00 | Cab Sound Suppression Panel (Rear) Replacement | 0192 00-1 |
| WP 0193 00 | Operator's Panel Console Replacement | 0193 00-1 |
| WP 0194 00 | Cab Insulation and Mounting Replacement (CCE Machine) | 0194 00-1 |
| WP 0195 00 | Gauge Panel Vandalism Guard Replacement | 0195 00-1 |
| WP 0196 00 | Steering Console Hood and Panel Cover Replacement | 0196 00-1 |
| WP 0197 00 | Steering Console Support Replacement (Models 130GS and 130GNS) | 0197 00-1 |
| WP 0198 00 | Steering Console Support Replacement (Models 130G, 130GSCE, and 130GNSCE) | 0198 00-1 |
| WP 0199 00 | Hydraulic Drive Protection Cover Replacement | 0199 00-1 |
| WP 0200 00 | Seat Assembly and Mounting Replacement | 0200 00-1 |
| WP 0201 00 | Seat Belt Replacement | 0201 00-1 |
| WP 0202 00 | Toolbox Replacement | 0202 00-1 |
| WP 0203 00 | Scarifier Shanks Stowage Rack Replacement (CCE Machine) | 0203 00-1 |
| ***Bumpers*** | | |
| WP 0204 00 | Rear Bumper Replacement (CCE Machine) | 0204 00-1 |
| WP 0205 00 | Rear Bumper Replacement (Models 130GSCE and 130GNSCE) | 0205 00-1 |
| ***Body, Chassis, and Hull Accessory Items*** | | |
| WP 0206 00 | Front Wiper (Lower) Maintenance (CCE Machine) | 0206 00-1 |
| WP 0207 00 | Front Wiper (Upper) Maintenance (CCE Machine) | 0207 00-1 |
| WP 0208 00 | Rear Wiper Replacement (CCE Machine) | 0208 00-1 |
| WP 0209 00 | Windshield Washer Replacement (CCE Machine) | 0209 00-1 |
| WP 0210 00 | Front and Rear Defroster Fans and Mounting Maintenance (CCE Machine) | 0210 00-1 |
| WP 0211 00 | Heater Lines and Fittings Replacement (CCE Machine) | 0211 00-1 |
| WP 0212 00 | Heater Maintenance (CCE Machine) | 0212 00-1 |
| WP 0213 00 | Inside Rearview Mirror Replacement | 0213 00-1 |
| WP 0214 00 | Outside Sideview Mirrors Replacement (Models 130G, 130GSCE, and 130GNSCE) | 0214 00-1 |
| WP 0215 00 | Data Plates and Decals Replacement | 0215 00-1 |
| ***Hydraulic System*** | | |
| WP 0216 00 | Changing Hydraulic Oil | 0216 00-1 |
| WP 0217 00 | Circle Drive Motor Assembly Replacement | 0217 00-1 |
| WP 0218 00 | Hydraulic Control Linkages Maintenance | 0218 00-1 |
| WP 0219 00 | Hydraulic Control Levers Replacement | 0219 00-1 |
| WP 0220 00 | Hydraulic Pump Junction Block and Lines Replacement | 0220 00-1 |
| WP 0221 00 | Blade Float Lines, Fittings, and Hoses Replacement (CCE Machine) | 0221 00-1 |
| WP 0222 00 | Blade Lift Lines, Fittings, and Hoses Replacement | 0222 00-1 |
| WP 0223 00 | Blade Tip Lines, Fittings, and Hoses Replacement | 0223 00-1 |
| WP 0224 00 | Leaning Wheel Hoses and Fittings Replacement | 0224 00-1 |
| WP 0225 00 | Circle Drive Motor Hoses and Fittings Replacement | 0225 00-1 |
| WP 0226 00 | Centershift Lines, Fittings, and Hoses Replacement | 0226 00-1 |
| WP 0227 00 | Articulation Lines, Fittings, and Hoses Replacement | 0227 00-1 |
| WP 0228 00 | Sideshift Lines Replacement | 0228 00-1 |
| WP 0229 00 | Scarifier Lines, Fittings, and Hoses Replacement | 0229 00-1 |
| WP 0230 00 | Hydraulic Oil Cooler Replacement | 0230 00-1 |

# Table of Contents - Continued


Page Number

*Hydraulic System - Continued*

WP 0231 00 Hydraulic Tank Filters Replacement . . . . . 0231 00-1
WP 0232 00 Hydraulic Pump Drive Maintenance . . . . . 0232 00-1
WP 0233 00 Blade Float Pilot Valve Maintenance (CCE Machine) . . . . . 0233 00-1
WP 0234 00 Blade Float Check Valve Maintenance (CCE Machine) . . . . . 0234 00-1
WP 0235 00 Right Blade Lift, Articulation, and Centershift Check Valve Maintenance . . . 0235 00-1
WP 0236 00 Left Blade Lift and Relief Valve Maintenance . . . . . 0236 00-1
WP 0237 00 Hydraulic Control Valves Replacement . . . . . 0237 00-1
WP 0238 00 Hydraulic Pump Relief Valve Maintenance . . . . . 0238 00-1
WP 0239 00 Circle Drive and Leaning Wheel Check Valve Maintenance . . . . . 0239 00-1
WP 0240 00 Sideshift Check and Relief Valve Replacement . . . . . 0240 00-1
WP 0241 00 Power Blade and Blade Tip Check and Relief Valve Maintenance . . . . . 0241 00-1
WP 0242 00 Scarifier Check and Relief Valve Maintenance . . . . . 0242 00-1
WP 0243 00 Centershift Cylinder Replacement . . . . . 0243 00-1
WP 0244 00 Blade Tip Cylinder Replacement . . . . . 0244 00-1
WP 0245 00 Blade Lift Cylinder Replacement . . . . . 0245 00-1
WP 0246 00 Articulation Cylinder Replacement . . . . . 0246 00-1
WP 0247 00 Sideshift Cylinder And Mounting Replacement . . . . . 0247 00-1
WP 0248 00 Scarifier Cylinder Replacement . . . . . 0248 00-1
WP 0249 00 Hydraulic Pump and Control Valve Lines and Fittings Replacement . . . . . 0249 00-1
WP 0250 00 Oil Cooler To Relief Valve and Hydraulic Tank Lines and Fittings Replacement . . . . . 0250 00-1

*Non-Electrical Gauges*

WP 0251 00 Air Cleaner Indicator Replacement . . . . . 0251 00-1
WP 0252 00 Air Pressure Gauges Replacement . . . . . 0252 00-1
WP 0253 00 Air Pressure Gauge To Air Tank Lines and Fittings Replacement . . . . . 0253 00-1
WP 0254 00 Temperature Gauge Replacement . . . . . 0254 00-1
WP 0255 00 Articulation Indicator Mechanism Replacement . . . . . 0255 00-1
WP 0256 00 Instrument Panel Replacement . . . . . 0256 00-1
WP 0257 00 Remote Throttle Lever Replacement (Type II Machine) . . . . . 0257 00-1
WP 0258 00 Remote Start Panel Replacement (Type II Machine) . . . . . 0258 00-1

*Earth Moving Equipment Components*

WP 0259 00 Blade (Moldboard) Assembly Replacement . . . . . 0259 00-1
WP 0260 00 Centershift Lock Assembly Replacement . . . . . 0260 00-1
WP 0261 00 Centershift Lock Control Valve Assembly Replacement . . . . . 0261 00-1
WP 0262 00 Centershift Lock and Lock Valve Lines and Fittings Replacement . . . . . 0262 00-1
WP 0263 00 Circle Drive Swivel Assembly Replacement . . . . . 0263 00-1
WP 0264 00 Scarifier Assembly Replacement . . . . . 0264 00-1
WP 0265 00 Scarifier Shanks and Teeth Replacement . . . . . 0265 00-1
WP 0266 00 Scarifier Actuating Assembly Maintenance . . . . . 0266 00-1

**CHAPTER 5 SUPPORTING INFORMATION**

WP 0346 00 References . . . . . 0346 00-1
WP 0347 00 Maintenance Allocation Chart (MAC) Introduction . . . . . 0347 00-1
WP 0348 00 Maintenance Allocation Chart (MAC) . . . . . 0348 00-1
WP 0349 00 Expendable and Durable Items List . . . . . 0349 00-1
WP 0350 00 Illustrated List of Manufactured Items . . . . . 0350 00-1

# Table of Contents - Continued


Page Number

WP 0351 00 Torque Limits . . . . . 0351 00-1
WP 0352 00 Schematic Diagrams . . . . . 0352 00-1
Index . . . . . Index-1

**VOLUME II**

**CHAPTER 4 DIRECT SUPPORT FIELD MAINTENANCE INSTRUCTIONS**

***Engine***

WP 0267 00 Engine Replacement . . . . . 0267 00-1
WP 0268 00 Engine Mounting and Trunnion Replacement . . . . . 0268 00-1
WP 0269 00 Engine Front Covers Replacement . . . . . 0269 00-1
WP 0270 00 Cylinder Block Head Assembly Maintenance . . . . . 0270 00-1
WP 0271 00 Hub Driver Replacement . . . . . 0271 00-1
WP 0272 00 Flywheel and Flywheel Housing Replacement . . . . . 0272 00-1
WP 0273 00 Rocker Arm Assembly Maintenance . . . . . 0273 00-1
WP 0274 00 Valves Maintenance . . . . . 0274 00-1
WP 0275 00 Oil Pan and Oil Pan Plates Replacement . . . . . 0275 00-1
WP 0276 00 Oil Pump And Lines Replacement . . . . . 0276 00-1
WP 0277 00 Exhaust Manifold Replacement . . . . . 0277 00-1

***Fuel System***

WP 0278 00 Fuel Injection Nozzles Maintenance . . . . . 0278 00-1
WP 0279 00 Fuel Injection Pump Replacement . . . . . 0279 00-1
WP 0280 00 Fuel Injection Pump Mounting Replacement . . . . . 0280 00-1
WP 0281 00 Fuel Transfer Pump Maintenance (Models 130G, 130GSCE, and 130GNSCE) 0281 00-1
WP 0282 00 Governor Controls Maintenance . . . . . 0282 00-1
WP 0283 00 Turbocharger Replacement . . . . . 0283 00-1

***Electrical System***

WP 0284 00 Electronic Monitoring System (EMS) Panel Repair . . . . . 0284 00-1
WP 0285 00 Rear Signal Light and Backup Alarm Wiring Harness Replacement . . . . . 0285 00-1
WP 0286 00 Main Wiring Harness Replacement . . . . . 0286 00-1
WP 0287 00 Main Blackout Light Wiring Harness Replacement . . . . . 0287 00-1
WP 0288 00 Front Blackout Light Wiring Harness Replacement . . . . . 0288 00-1
WP 0289 00 Rear Blackout Light Wiring Harness Replacement . . . . . 0289 00-1
WP 0290 00 Supplemental Steering Main Wiring Harness Replacement . . . . . 0290 00-1
WP 0291 00 Electronic Monitoring System (EMS) Main Wiring Harness Replacement . . . 0291 00-1
WP 0292 00 Cab Main Wiring Harness Replacement (CCE Machine) . . . . . 0292 00-1
WP 0293 00 Rear Wiper Wiring Harness Replacement (CCE Machine) . . . . . 0293 00-1

***Transmission***

WP 0294 00 Transmission, Adapter, and Differential Replacement . . . . . 0294 00-1
WP 0295 00 Engine-to-Transmission Adapter Replacement . . . . . 0295 00-1
WP 0296 00 Transmission Control Relief Valve Maintenance . . . . . 0296 00-1
WP 0297 00 Transmission Oil Pump Replacement . . . . . 0297 00-1
WP 0298 00 Transmission Oil Cooler Maintenance . . . . . 0298 00-1
WP 0299 00 Transmission Oil Filler and Oil Level Gauge Replacement . . . . . 0299 00-1

# Table of Contents - Continued


| | | Page Number |
|---|---|---|
| ***Front Axle*** | | |
| WP 0300 00 | Front Axle Assembly Replacement | 0300 00-1 |
| WP 0301 00 | Steering Arms and Tie Rod Maintenance | 0301 00-1 |
| WP 0302 00 | Wheel Spindle, Bearings, and Seals Replacement | 0302 00-1 |
| WP 0303 00 | Leaning Wheel Mechanism Maintenance | 0303 00-1 |
| WP 0304 00 | Leaning Wheel Cylinder Repair | 0304 00-1 |
| ***Rear Axle*** | | |
| WP 0305 00 | Differential Replacement | 0305 00-1 |
| WP 0306 00 | Differential Lock Control Valve Replacement | 0306 00-1 |
| WP 0307 00 | Drive Axles Replacement | 0307 00-1 |
| WP 0308 00 | Drive Sprockets Replacement | 0308 00-1 |
| WP 0309 00 | Final Drive Assembly Replacement | 0309 00-1 |
| WP 0310 00 | Tandem Drive Housing Assembly Maintenance | 0310 00-1 |
| WP 0311 00 | Tandem Drive Chain Assembly Replacement | 0311 00-1 |
| ***Brakes*** | | |
| WP 0312 00 | Parking Brake Actuator and Release Valve Repair | 0312 00-1 |
| WP 0313 00 | Service Brakes Maintenance | 0313 00-1 |
| WP 0314 00 | Service Brake and Wheel Spindle Housing Assembly Replacement | 0314 00-1 |
| WP 0315 00 | Remote Steer Air Valves Replacement (Type II Machine) | 0315 00-1 |
| WP 0316 00 | Air Brake Valve Replacement | 0316 00-1 |
| WP 0317 00 | Air Compressor Assembly Replacement | 0317 00-1 |
| WP 0318 00 | Air Compressor Lines and Fittings Replacement | 0318 00-1 |
| ***Steering*** | | |
| WP 0319 00 | Steering Control Pump Maintenance | 0319 00-1 |
| WP 0320 00 | Steering Cylinder Repair | 0320 00-1 |
| WP 0321 00 | Steering Valve Maintenance (Dual Valve Design) | 0321 00-1 |
| WP 0322 00 | Steering Valve Maintenance (Single Valve Design) | 0322 00-1 |
| WP 0323 00 | Combination Valve Maintenance | 0323 00-1 |
| ***Frame and Articulation Systems*** | | |
| WP 0324 00 | Frame Separation and Connection Replacement (CCE and Type I Machines) | 0324 00-1 |
| WP 0325 00 | Articulation Hitch Bearing Replacement (CCE and Type I Machines) | 0325 00-1 |
| WP 0326 00 | Articulation Hitch Bearing Replacement (Type II Machine) | 0326 00-1 |
| ***Body, Cab, Hood, and Hull*** | | |
| WP 0327 00 | ROPS Replacement (CCE Machine) | 0327 00-1 |
| WP 0328 00 | Operator’s Panel Console Base Replacement | 0328 00-1 |
| ***Hydraulic System*** | | |
| WP 0329 00 | Hydraulic Pump Assembly and Mounting Replacement | 0329 00-1 |
| WP 0330 00 | Hydraulic Pump Assembly Repair | 0330 00-1 |
| WP 0331 00 | Circle Drive Motor Repair | 0331 00-1 |
| WP 0332 00 | Hydraulic Control Valves Repair | 0332 00-1 |
| WP 0333 00 | Centershift Cylinder Repair | 0333 00-1 |
| WP 0334 00 | Blade Tip Cylinder Repair | 0334 00-1 |
| WP 0335 00 | Blade Lift Cylinder Repair | 0335 00-1 |
| WP 0336 00 | Articulation Cylinder Repair | 0336 00-1 |

# Table of Contents - Continued


Page Number

*Hydraulic System - Continued*

WP 0337 00 Sideshift Cylinder Repair . . . . . 0337 00-1
WP 0338 00 Scarifier Cylinder Repair. . . . . 0338 00-1
WP 0339 00 Hydraulic Tank and Mounting Maintenance. . . . . 0339 00-1

*Earth Moving Equipment Components*

WP 0340 00 Blade Lift Bar Assembly Maintenance . . . . . 0340 00-1
WP 0341 00 Blade Lift Arm Replacement. . . . . 0341 00-1
WP 0342 00 Drawbar Assembly Replacement . . . . . 0342 00-1
WP 0343 00 Blade Brackets Replacement. . . . . 0343 00-1
WP 0344 00 Circle Assembly Replacement . . . . . 0344 00-1
WP 0345 00 Circle Drive Swivel Assembly Repair . . . . . 0345 00-1

**CHAPTER 5 SUPPORTING INFORMATION**

WP 0346 00 References . . . . . 0346 00-1
WP 0347 00 Maintenance Allocation Chart (MAC) Introduction . . . . . 0347 00-1
WP 0348 00 Maintenance Allocation Chart (MAC) . . . . . 0348 00-1
WP 0349 00 Expendable and Durable Items List . . . . . 0349 00-1
WP 0350 00 Illustrated List of Manufactured Items . . . . . 0350 00-1
WP 0351 00 Torque Limits . . . . . 0351 00-1
WP 0352 00 Schematic Diagrams . . . . . 0352 00-1
Index . . . . . Index-1

# HOW TO USE THIS MANUAL

## NOTE

If at any time you are unsure how to use this manual or you cannot locate the information you need, notify your supervisor.

### *INTRODUCTION*

1. This manual is designed to help you perform troubleshooting and maintenance on the 130G Series Grader.
2. This manual is divided into chapters and written in work package format:
   a. Chapters divide the manual into major categories of information (e.g., *General Information, Equipment Description, and Theory of Operation; Troubleshooting Procedures; Unit Field Maintenance Instructions; Direct Support Field Maintenance Instructions; and Supporting Information).*
   b. Each Chapter is divided into work packages, which are identified by a 6-digit number (e.g., 0001 00, 0002 00, etc.) located on the upper right-hand corner of each page. The work package page number (e.g., 0001 00-1, 0001 00-2, etc.) is located centered at the bottom of each page.
   c. If a Change Package is issued to this manual, added work packages use the $5^{th}$ and $6^{th}$ digits of their number to indicate new material. For instance, work packages inserted between WP 0001 00 and WP 0002 00 are numbered WP 0001 01, WP 0001 02, etc.
3. Due to the size of this manual, it is separated into two volumes:
   a. The first volume (TM 5-3805-261-23-1) consists of Chapters 1 through 3 (through WP 0266 00).
   b. The second volume (TM 5-3805-261-23-2) contains Chapter 4.
   c. Both volumes have Chapter 5, *Supporting Information*, for reference purposes.
4. Scan through this manual to become familiar with its organization and contents before attempting to operate or maintain the equipment.

### *CONTENTS OF THIS MANUAL*

1. A *Warning Summary* is located at the beginning of this manual. Become familiar with these warnings before operating or performing troubleshooting or maintenance on the grader.
2. A *Table of Contents*, located in the front of the manual, lists all chapters and work packages in the publication.
   a. The Table of Contents also provides *Reporting Errors and Recommending Improvements* information and DA Form 2028 addresses, for the submittal of corrections to this manual.
   b. If you cannot find what you are looking for in the Table of Contents, refer to the alphabetical *Index* at the back of the manual.
3. Chapter 1, *General Information, Equipment Description, and Theory of Information*, provides general information on the manual and the equipment.
4. Chapter 2 covers *Troubleshooting Procedures*. WP 0005 00 contains a *Troubleshooting Symptom Index*. If the machine malfunctions, this index should always be consulted to locate the appropriate troubleshooting procedure. Chapter 2 also includes STE/ICE-R testing of selected machine systems.
5. Chapter 3 covers *Unit Field Maintenance Instructions*. Major areas covered are *Preventive Maintenance Checks and Services (PMCS)*, *Service Upon Receipt*, as well as instruction on maintaining components at Unit Field Maintenance level.
6. Chapter 4 covers *Direct Support Field Maintenance Instructions*.
7. Chapter 5 includes *Supporting Information: References, Maintenance Allocation Chart (MAC) Introduction; MAC; Expendable and Durable Items List; Tool Identification List; Illustrated List of Manufactured Items; Torque Limits; and Schematic Diagrams*.

### *FEATURES OF THIS MANUAL*

1. WARNINGs, CAUTIONs, NOTEs, subject headings, and other important information are highlighted in **BOLD** print as a visual aid.

**WARNING**

A WARNING indicates a hazard which may result in injury or death.

**CAUTION**

A CAUTION is a reminder of safety practices or directs attention to usage practices that may result in damage to equipment.

**NOTE**

A NOTE is a statement containing information that will make the procedures easier to perform.

2. Statements and words of particular interest may be printed in CAPITAL LETTERS to create emphasis.
3. Within a procedural step, reference may be made to another work package in this manual or to another manual. These references indicate where you should look for more complete information.

   If you are told: "Refer to *General Maintenance Instructions* (WP 0020 00)" go to Work Package 0020 00 in this manual for instructions on general maintenance.

4. Illustrations are placed after, and as close to, the procedural steps to which they apply. Callouts placed on the art may be text or numbers, or both; whichever method is easier for the soldier.
5. Numbers located at lower right corner of art (e.g., 397-001; 397-002, etc.) are art control numbers and are used for tracking purposes only. Disregard these numbers.
6. Dashed leader lines used in the Lubrication Chart (WP 0022 00) and in the PMCS illustrations (WP 0023 00) indicate that called out lubrication points are located on both sides of the equipment.
7. Unless otherwise indicated, technical instructions include metric units as well as standard units. For your reference, a *Metric Conversion Chart* is located on the inside back cover of the manual.

# CHAPTER 1
# GENERAL INFORMATION, EQUIPMENT DESCRIPTION, AND THEORY OF OPERATION

## GENERAL INFORMATION 0001 00

### *SCOPE*

1. **Type of Manual.** This manual is for use in performing Field (Unit and Direct Support) Maintenance on the 130G Series Grader.
2. **Equipment Name and Model Number.** Grader, Road, Motorized, Diesel Engine Driven (DED), Heavy, Commercial Construction Equipment (CCE), Model 130G.
3. **Purpose of Equipment.** The 130G grader is used for rough and finished grading, low and high bank sloping, flat and V-ditching, scarifying bituminous road mixes, and snow removal. Mission support role includes construction and maintenance of roads, airfields, hardstands, drainage, site preparation for pipeline, and river crossing.

### *MAINTENANCE FORMS, RECORDS, AND REPORTS*

Department of the Army forms and procedures used for the equipment will be those prescribed by PAM 738-750, *Functional User's Manual for the Army Maintenance Management System (TAMMS*), as contained in the Maintenance Management Update.

### *REPORTING EQUIPMENT IMPROVEMENT RECOMMENDATIONS (EIRS)*

If your grader needs improvement, let us know. Send us an EIR. You, the user, are the only one who can tell us what you don't like about your equipment. Let us know why you don't like the design or performance. Put it on an SF Form 368, *Product Quality Deficiency Report*. Mail it to us at: Commander, U.S. Army Tank-automotive and Armaments Command, ATTN: AMSTA-AC-NML, Rock Island, Illinois 61299-7630. We'll send you a reply.

### *CORROSION PREVENTION AND CONTROL (CPC)*

1. Corrosion Prevention and Control (CPC) of Army materiel is a continuing concern. It is important that any corrosion problems with this item be reported so that the problem can be corrected and improvements can be made to prevent the problem in future items.
2. While corrosion is typically associated with rusting of metals, it can also include deterioration of other materials, such as rubber and plastic. Unusual cracking, softening, swelling, or breaking of these materials may be a corrosion problem. If a corrosion problem is identified, it can be reported using SF Form 368*, Product Quality Deficiency Report*. Use of key words such as "corrosion," "rust," "deterioration," or "cracking" will ensure that the information is identified as a CPC problem. The form should be submitted to the address specified in PAM 738-750.

### *DESTRUCTION OF ARMY MATERIEL TO PREVENT ENEMY USE*

For destruction of Army materiel to prevent enemy use, refer to TM 750-244-3.

### *PREPARATION FOR STORAGE OR SHIPMENT*

For preparation for storage or shipment procedures, refer to TM 5-3805-261-10.

***LIST OF ABBREVIATIONS/ACRONYMS***

**NOTE**

Refer to ASME Y14.38-1999 for standard abbreviations.

| ABBREVIATION/ACRONYMS | DEFINITION |
|---|---|
| A/A | Airborne/Air Mobile |
| AAL | Additional Authorization List |
| BDC | Bottom Dead Center |
| BII | Basic Issue Items |
| CID | Cubic Inch Displacement |
| cm | Centimeter |
| CN | Can |
| COEI | Components of End Item |
| CPC | Corrosion Prevention and Control |
| EIR | Equipment Improvement Recommendation |
| EMP | Electromagnetic Pulse |
| GCWR | Gross Combination Weight Rating |
| GVWR | Gross Vehicle Weight Rating |
| ISO | International Organization for Standardization |
| kg | Kilogram |
| km | Kilometer |
| kPa | Kilopascal |
| kph | Kilometers per Hour |
| kW | Kilowatt |
| L | Liter |
| lbf | Pound-Force |
| lb-ft | Pound-Feet |
| lb-in | Pound-Inches |
| LC | Load Center |
| Lph | Liters per Hour |
| m | Meter |
| mm | Millimeter |
| N | Newton |
| NATO | North Atlantic Treaty Organization |
| NBC | Nuclear, Biological, and Chemical |
| NC | National Coarse (Threading) |
| NF | National Fine (Threading) |
| Nm | Newton Meter |
| PMCS | Preventive Maintenance Checks and Services |
| PR | Ply Rating |
| ROPS | Rollover Protective Structure |
| SLEP | Service Life Extension Program |
| SMR | Source, Maintenance, Recoverability |
| TC | Top Center (Compression Stroke) |

### *SAFETY, CARE, AND HANDLING*

1. **Threat of Nuclear, Biological, and Chemical (NBC) Contamination.**
   a. The 130G Series Grader incorporates a CARC painted exterior. Materials used in the machine are metal, rubber, plastic, fabric, and glass.
   b. In the event of NBC contamination, decontaminates for these surfaces and materials are listed in FM 3-5, *NBC Decontamination*. For decontamination procedures, refer to FM 3-7, *NBC Field Handbook*.
2. **Electromagnetic Pulse (EMP) Exposure.** Components designated as EMP susceptible may be damaged by EMP exposure. If machine is exposed to an EMP incident, verify proper operation and repair as necessary.
3. **General Safety Considerations.**
   a. Read and become familiar with all general safety warnings associated with maintenance of the grader. Refer to the *Warning Summary* at the front of this manual.
   b. Perform all maintenance, unless otherwise specified, with ALL equipment (blade and scarifier) lowered to the ground, transmission in N (Neutral) and locked, parking/emergency brake applied, engine off, and master battery disconnect switch in OFF position. If any hydraulic system line or fitting is to be disconnected, release hydraulic system pressure before proceeding (WP 0020 00).
   c. For more information on maintenance safety, refer to *General Maintenance Instructions* (WP 0020 00).

**END OF WORK PACKAGE**

## *EQUIPMENT CHARACTERISTICS, CAPABILITIES, AND FEATURES*

1. **Characteristics.**

   a. The 130G Series Grader provides the Army with the capability of rough and finished grading, low and high bank sloping, flat and V-ditching, scarifying bituminous road mixes, and snow removal. Mission support role includes construction and maintenance of roads, airfields, hardstands, drainage, site preparation for pipeline, and river crossing.

   b. The 130G Series Grader has excellent maneuverability, fast, precise blade control without drift, superior visibility, convenience, and safety with true sit-down operation.

**NOTE**

Throughout this manual, some titles, callouts, and descriptions are followed by CCE Machine, Type I Machine, and/or Type II Machine in parentheses. This indicates that the statement only applies to that specific design. If a name is not shown, the statement applies to all designs.

   c. There are five models of the 130G Series Grader. See *Model Difference Chart* in this work package. The main difference between these models is two can be sectionalized (130GS and 130GSCE) and three cannot be sectionalized (130G, 130GNS, and 130GNSCE). Sectionalization is the process of separating the machine in two halves for the purpose of air transport. Refer to TM 5-3805-261-10 for sectionalization procedures.

2. **Capabilities and Features.**

**NOTE**

Refer to *Equipment Data* at the end of this work package for machine dimensions, weights, fluid capacities, and other miscellaneous equipment data.

   a. The 130G Series Grader can be transported by trailers, rail, aircraft, or marine vessels.

   b. The following is a list of capabilities and features:

      (1) Caterpillar® 3304 turbocharged diesel engine with four in-line cylinders;

      (2) sectionalization for air transport (only with models 130GS and 130GSCE);

      (3) ether starting aid;

      (4) single lever, full powershift transmission with six forward and six reverse speeds;

      (5) Rollover Protection Structure (ROPS) or enclosed operator compartment with ROPS;

      (6) V-type, front mounted scarifier;

      (7) supplemental power steering;

      (8) differential lock control to reduce wheel slippage when high traction is required;

      (9) articulated frame and front wheel lean steering;

      (10) Electronic Monitoring System (EMS);

      (11) inching capability;

      (12) 12-foot blade with manual and hydraulic side shift; and

      (13) NATO slave receptacle.

*MODEL DIFFERENCE CHART*

**NOTE**

The following chart lists only the operational and visual differences between the five 130G Series models. Internal component differences are not shown in this chart.

| | MODELS | | | | |
|---|---|---|---|---|---|
| | CCE | TYPE I | | TYPE II | |
| | 130G | 130GNS | 130GNSCE | 130GS | 130GSCE |
| SECTIONALIZED | | | | X | X |
| NONSECTIONALIZED | X | X | X | | |
| ENCLOSED CAB | X | | | | |
| REMOTE CONTROL ATTACHMENT | | | | X | X |
| BLADE FLOAT FUNCTION | X | | | | |
| SCARIFIER SHANKS STOWAGE RACK | X | X | X | | |
| UPPER AND LOWER WINDSHIELDS | X | | | | |
| WIPERS | X | | | | |
| DEFROSTER FANS | X | | | | |
| DOME LIGHT | X | | | | |
| EXTERIOR MIRRORS | X | | | | |
| HEATER | X | | | | |
| CAB DOORS AND LATCHES | X | | | | |
| SOUND SUPPRESSION PANELS | X | | | | |
| CAB STORAGE COMPARTMENT | X | | | | |

***LOCATION AND DESCRIPTION OF MAJOR COMPONENTS***

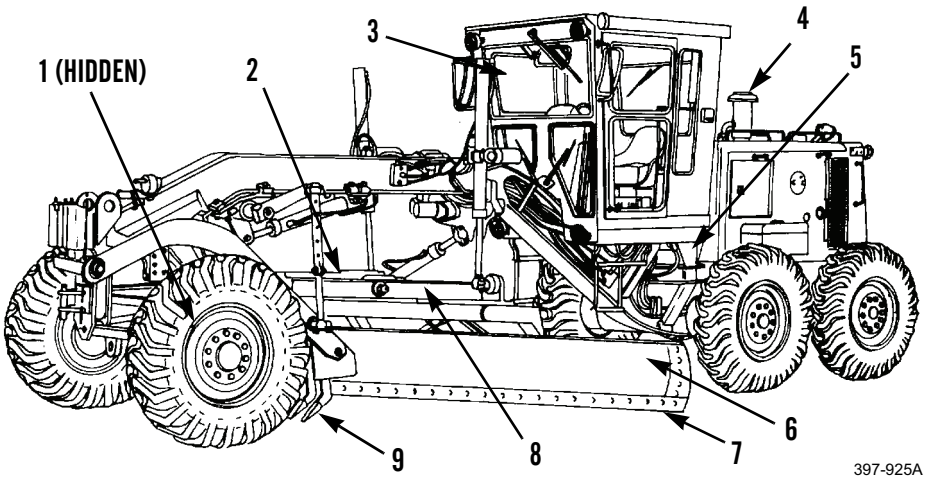


| KEY | COMPONENT | DESCRIPTION |
|---|---|---|
| 1 | Wheel Lean Lock Pin | When installed, locks wheel lean cross bar to the front axle. |
| 2 | Toolbox | Contains items listed on the Basic Issue Items (BII) list. |
| 3 | Operator Compartment (CCE Machine Shown) | Location of operator controls. Entry doors on both sides. Allows operator to be in the sitting or standing position while operating the machine. |
| 4 | Air Cleaner | Removes debris from air entering the engine. |
| 5 | Anti-Pivot Pin | Prevents the articulation joint from moving. Used during transportation. |
| 6 | Blade | Hydraulically controlled with replaceable cutting edges. |
| 7 | Cutting Edge | Replaceable edges of the blade. |
| 8 | Blade Circle | Mounting system for blade that provides 90 degrees of horizontal blade rotation in both directions. |
| 9 | Scarifier | Has eleven removable shanks used for breaking up material. |

*LOCATION AND DESCRIPTION OF MAJOR COMPONENTS - CONTINUED*

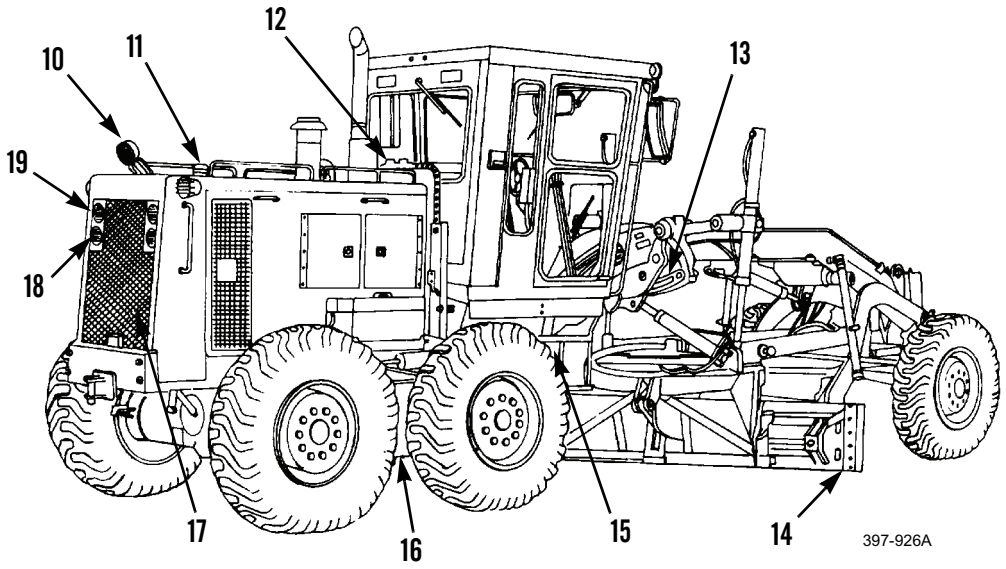


| KEY | COMPONENT | DESCRIPTION |
|---|---|---|
| 10 | Rear Work Light | Provides light toward rear of machine. |
| 11 | Fuel Tank Fill Cap | Provides a means to fill fuel tank. Contains dipstick for fuel level check. |
| 12 | Hydraulic Tank Fill Cap | Provides a means to fill hydraulic tank. |
| 13 | Centershift | Allows center point of blade to be shifted outward to either side. Provides more blade reach. |
| 14 | End Bit | Replaceable outer edges of blade. |
| 15 | Fuse Box | Provides access to fuses. |
| 16 | Tandem Housing | Houses drive gears for tandem wheels. |
| 17 | Radiator | Stores and cools engine coolant. |
| 18 | Service Stop/Taillights | Turns on with service light switch and service brake pedal. |
| 19 | Parking/Turn Signals | Serve as parking lights and flash to indicate direction machine is turning. |

*LOCATION AND DESCRIPTION OF MAJOR COMPONENTS - CONTINUED*

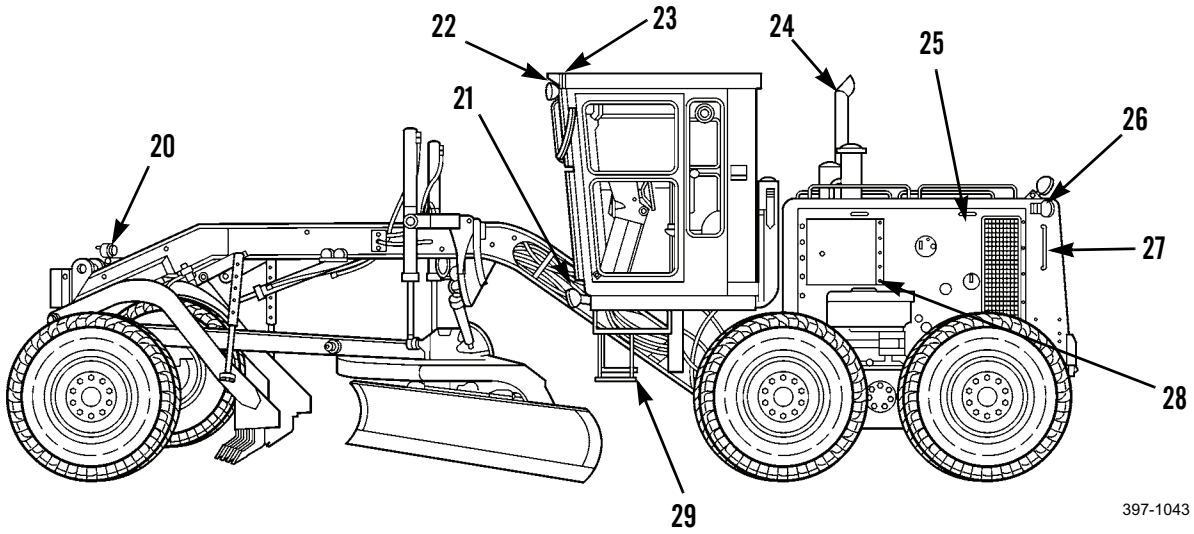


| KEY | COMPONENT | DESCRIPTION |
|---|---|---|
| 20 | Blackout Driving Light | Used when operating in blackout mode. |
| 21 | Front Work Lights | Provide light in blade area. |
| 22 | Headlights | Provide light forward of machine. |
| 23 | Cab Turn Signals | Flash to indicate direction machine is turning. |
| 24 | Exhaust | Directs exhaust fumes to rear of machine. |
| 25 | Fuel Tank | Storage tank for diesel fuel. |
| 26 | Blackout Stop and Taillights | Used when operating in blackout mode. |
| 27 | Grab Handle | Provides a hand hold. |
| 28 | Left Side Engine Door | Provides access to left side engine compartment. |
| 29 | Steps | Provides foot holds for entry to operator compartment. |

*LOCATION AND DESCRIPTION OF MAJOR COMPONENTS - CONTINUED*

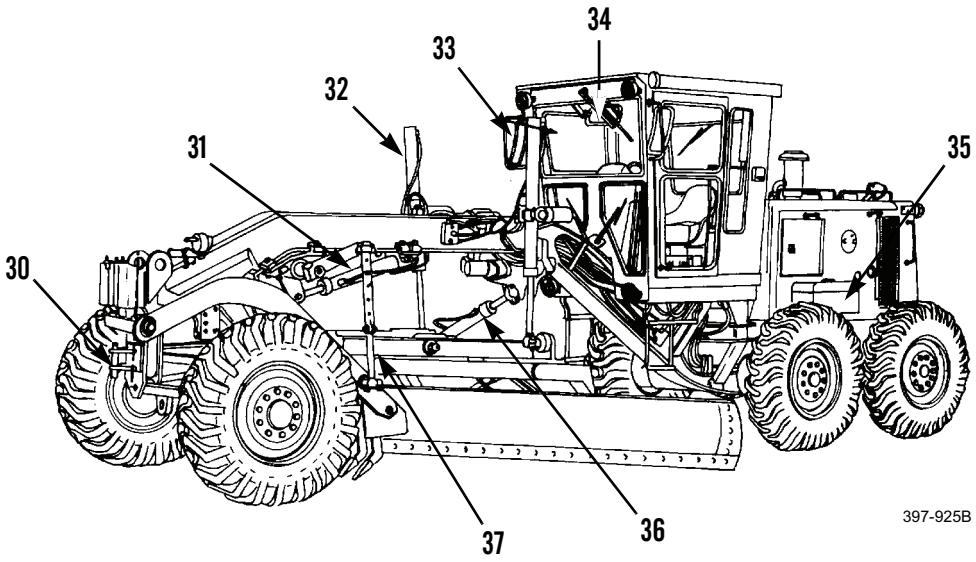


| KEY | COMPONENT | DESCRIPTION |
|---|---|---|
| 30 | Front Towing Pin | Attachment point for towing. |
| 31 | Scarifier Hydraulic Cylinder | Raises and lowers the scarifier. |
| 32 | Blade Height Hydraulic Cylinder | Raises and lowers each side of blade independently. |
| 33 | Side View Mirror | Provides view toward rear and side of machine. |
| 34 | Front Wiper (CCE Machine) | Wipes windshield. |
| 35 | Battery Box | Houses battery. |
| 36 | Blade Swing Hydraulic Cylinder | Provides side to side blade adjustment. |
| 37 | Scarifier Link Rod | Link rod with adjustable height setting. |

***LOCATION AND DESCRIPTION OF MAJOR COMPONENTS - CONTINUED***

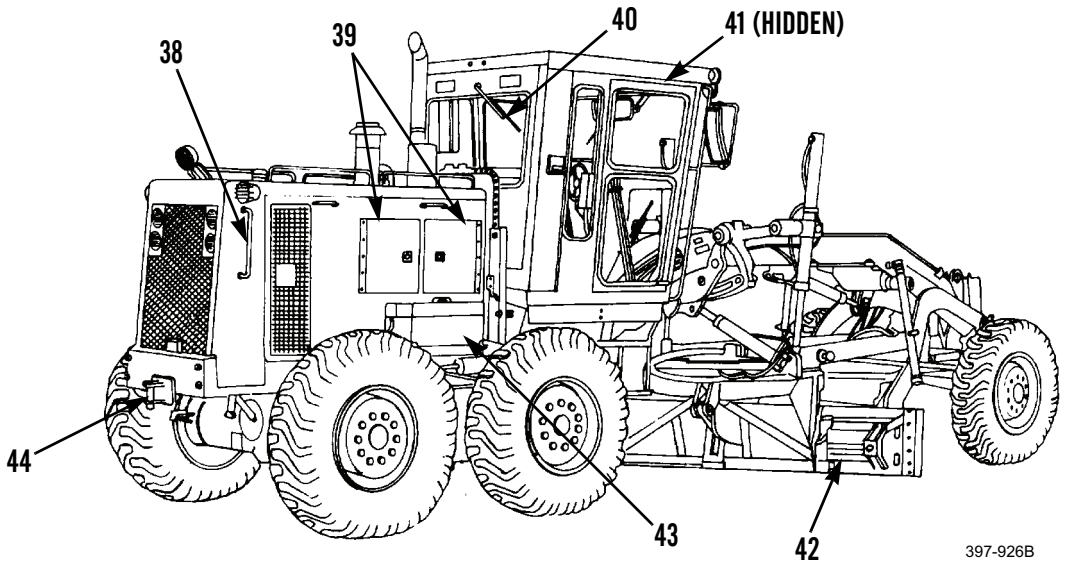


| KEY | COMPONENT | DESCRIPTION |
|---|---|---|
| 38 | Grab Handle | Provides a hand hold. |
| 39 | Right Side Engine | Provide access to right side of engine compartment. |
| 40 | Rear Wiper (CCE Machine) | Wipes rear window. |
| 41 | Cab Fuse Block | Provides access to heater, wiper, and fan fuses. |
| 42 | Blade Slide Hydraulic Cylinder | Extends and retracts blade horizontally. |
| 43 | Battery Box | Houses battery. |
| 44 | Rear Towing Pin | Attachment point for towing. |

## *EQUIPMENT DATA*

| | |
|---|---|
| Length: | |
| Overall | 27.4 ft (8.35 m) |
| Power Section (Sectionalized) | 10.5 ft (3.20 m) |
| Forward Section (Sectionalized) | 19.6 ft (5.97 m) |
| Width: | |
| Overall | 12.0 ft (3.66 m) |
| Wheel-to-Wheel (Outside) | 7.95 ft (2.42 m) |
| Wheelbase | 19.4 ft (5.91 m) |
| Height: | |
| Top of ROPS | 10.1 ft (3.1 m) |
| Top of Exhaust Stack | 10.5 ft (3.2 m) |
| Weight (GVW): | |
| CCE Machine | 31,300 lb (14,197 kg) |
| Type I Machine | 31,540 lb (14,306 kg) |
| Type II Machine | 31,870 lb (14,456 kg) |
| Maximum Travel Speed | 24.5 mph (39.4 kph) |
| Turning Width, Curb-to-Curb | 48 ft (14.6 m) |
| Engine: | |
| Manufacturer | Caterpillar Inc. |
| Model | 3304 |
| Horsepower | 135 hp (100.7 kW) |
| Engine RPM (Low Idle) | 960-980 RPM |
| Engine RPM (High Idle) | 2310-2370 RPM |
| Cylinders | 4 |
| Displacement | 425 CID (6.9 L) |
| Fuel System | Direct injection |
| Cooling System, Thermostat Completely Open | 175°F (79.4°C) |
| Transmission: | |
| Manufacturer | Caterpillar Inc. |
| Type | 6 speeds forward, 6 reverse |
| Range Selection | Single lever, direct powershift |
| Front Axle: | |
| Type | Arched bar/solid steel |
| Ground Clearance | 24 in. (610 mm) |
| Wheel Lean Angle | 18 degrees left or right |
| Rear Axles: | |
| Type | Full floating/forged steel |
| Tandem Axle Spacing | 5 ft (1.5 m) |
| Service Brakes: | |
| Type | 4 wheel oil disc,<br>Air actuated,<br>Dual circuit air system,<br>Non-adjustable |
| Parking Brakes: | |
| Type | Multiple oil disc,<br>Located in transmission case,<br>Spring engaged,<br>Air disengaged |

***EQUIPMENT DATA - CONTINUED***

| | |
|---|---|
| Tires: | |
| Type | Tubeless |
| Size | 13.00-24 (10PR) traction type |
| Inflation | 35 psi (241 kPa) |
| Steering: | |
| Type | Hydraulic, Adjustable steering console |
| Turning Radius | 24 ft (7.3 m) |
| Supplemental Steering | Electric |
| Capacities: | |
| Fuel Tank | 75 gal. (284 L) |
| Radiator | 10 gal. (38 L) |
| Engine Crankcase | 5.5 gal. (21 L) |
| Hydraulic System | 18 gal. (68 L) |
| Transmission and Final Drive | 21 gal. (79 L) |
| Tandem Housing (Each) | 17 gal. (64 L) |
| Electrical System: | |
| Batteries: | |
| Quantity | 2 |
| Voltage (Each) | 12 volts |
| System Voltage | 24 volts |
| Blade Range: | |
| Circle Centershift: | |
| Right | 20.5 in. (521 mm) |
| Left | 25.5 in. (648 mm) |
| Blade Sideshift: | |
| Manual: | |
| Right | 15 in. (381 mm) |
| Left | None |
| Hydraulic: | |
| Right | 26.5 in. (673 mm) |
| Left | 20.5 in. (521 mm) |
| Blade Lift (Maximum) | 17.25 in. (438 mm) |
| Blade Shoulder Reach (Maximum): | |
| Frame Straight | 6.125 ft (1.9 m) |
| Crab Position | 9.21 ft (2.8 m) |
| Maximum Depth of Cut | 17.75 in. (451 mm) |
| Hydraulic Blade Tip: | |
| Forward | 40 degrees |
| Rearward | 5 degrees |

**END OF WORK PACKAGE**

## THEORY OF OPERATION 0003 00

### *130G SERIES GRADER*

The 130G Series Grader is an all-purpose, medium sized, wheeled machine used for spreading and evening various types of granular material (dirt, stone, sand, etc.). Power is by a Caterpillar in-line, four-cylinder, direct-injected, turbocharged and intercooled diesel engine. Hydraulically operated implements allow blade positioning for forward or backward grading, ditch or embankment grading and snow removal. A scarifier allows loosening of compacted material prior to grading. Front leaning wheel and frame articulation provide maximum maneuverability. The CCE and Type I machines have sound-suppressing ROPS cab with insulation, heater, and windows which allows for all-weather operation.

The machine is made up of the following systems:

a. **Engine.** The turbocharged engine is an internal combustion power unit. The engine uses the heat of compression to ignite the fuel. Fuel flow and engine speed are controlled by the fuel injection pump governor and fuel injectors.

b. **Fuel System.** Fuel is drawn from the tank by a fuel transfer pump, filtered by a primary fuel filter, routed to the secondary filter and fuel injection pump and then injected through the fuel injector nozzles into the engine cylinders. Air is drawn in through dry type replaceable filter elements. A dust ejector removes incoming dust from the air and routes it out through the exhaust system.

c. **Exhaust System.** Engine combustion by-products are channeled through the exhaust manifold, muffler, and exhaust pipe. The muffler aids in quieting engine noise.

d. **Cooling System.** Provides coolant to the engine. Coolant is circulated through the engine by a gear driven water pump. Hydraulic oil cooler is located in front of the radiator. Engine and transmission oil coolers are mounted on the left side of the engine.

e. **Electrical System.** The 24-volt system with negative ground is powered by two 12-volt batteries connected in series. Alternator is mounted on the engine and is driven by a V-belt. Battery disconnect switch controls battery power to the main light switch and the starting motor. A back-up alarm is also included.

f. **Transmission.** Six speeds are provided in both forward and reverse. A transmission modulator places the transmission in neutral. Another foot pedal provides limited (slow) movement for close quarter maneuvering.

g. **Final Drive Assembly.** Axle shafts turn the planetary gears of the final drive. Final drive sprockets turn the rear wheel spindles through drive chains within the tandem axle housings.

h. **Front Axle Assembly.** A trunnion mounted solid front axle swings a maximum of 32 degrees and provides 24 in. (61 cm) of ground clearance.

i. **Rear Axle Differential and Lock Differential.** A four-wheeled tandem rear axle arrangement houses axle shafts driven by a lock-unlock equipped differential. The axle shafts turn the final drive sprocket chains through planetary reduction gears. The sprocket chains then drive the sprocket spindles and wheels.

j. **Air Brake System.**

(1) The rear four-wheel brakes are air actuated and of multiple oil disc design. They are housed within the wheel spindle housings. A pedal operated valve at the cab controls the braking air pressure. An engine driven, two cylinder air compressor supplies a two section air reservoir to provide braking pressure.

(2) The manually actuated multiple oil disc parking/emergency brake located in the transmission case is spring engaged and air disengaged. A dual circuit air system arrangement maintains one half of the service braking power in the event of a brake system circuit malfunction. If service brakes are lost, the parking/emergency brake can be applied.

k. **Wheels and Tires.** Tire and wheel assemblies are interchangeable. There are six tubeless 13.00-24 (10 PR) traction type tires.

l. **Steering.** The engine driven main hydraulic system pump powers two hydraulic steering cylinders, controlling the front wheels. An electrical supplemental steering pump is automatically actuated and supplies power for steering in the event that the main pump fails. The articulated cylinders are driven by the main hydraulic pump.

*130G GRADER - CONTINUED*

m. **Frame, Towing Attachments, Drawbars, and Articulation System.** A frame and case at the rear section of the machine serves as a mounting for the engine, rear wheels, and drive train. A front frame section serves as a mounting for the cab, earthmoving components, and front wheels. The two sections are articulated (hinged) at the center of the machine. The angle of articulation is controlled by hydraulic cylinders driven by the main hydraulic pump. There is a tow pin at each end of the machine.

n. **Cab and Hood.** A low profile ROPS (Rollover Protective Structure) cab protects operator from dust, sound, and weather. It also houses the controls and instrumentation. An engine and radiator hood with side door assemblies provides sound suppression and weather protection.

o. **Bumper.** One bumper equipped with a towing pin is located at the rear of the machine.

p. **Body, Chassis, and Hull Accessory Items.** Selected accessory items are windshield wipers, windshield washers, horn, side mirrors, defrosting fan, and heater.

q. **Hydraulic System.** A main hydraulic pump driven by the engine provides power for steering and earthmoving equipment operation. A battery powered hydraulic supplemental steering pump provides emergency steering power.

r. **Nonelectrical Gauges, Indicators, and Dipsticks:**

(1) Air Cleaner Indicator. Indicator is mounted at the right side of the engine on the air inlet pipe elbow between the air filter and the turbocharger. When it shows red, the cleaner elements need cleaning or replacing.

(2) Air Pressure Gauges. Gauges are mounted in a small instrument panel at the upper-right hand forward section of the engine hood. They indicate amount of air pressure in each section of the air tank.

(3) Articulation Indicator. Indicator is mounted at the top of the steering console. It shows how far from the straight position the frame has been pivoted.

(4) Centershift Indicator. Indicator is mounted at the right hand centershift pivot point. It guides operator in moving centershift lock pin to new position.

(5) Coolant Level Indicator. Indicator is located within the radiator coolant fill opening. It maintains coolant level between the low and full coolant level indicator marks in the filler opening.

(6) Hydraulic Reservoir Sight Gauge. Gauge is positioned half way up the left side of the hydraulic reservoir which is located directly to the rear of the cab.

(7) Tandem Housing Dipstick Assembly. Dipstick is located on top of forward ends at tandem housings.

(8) Engine Oil Dipstick Assembly. Dipstick is located at the left side of the engine.

(9) Transmission and Differential Dipstick Assembly. Dipstick is located inside of left-rear engine hood access door.

(10) Fuel Level Dipstick. Dipstick is located within the fuel fill opening.

s. **Blade.** Hydraulically controlled side shift, tip, centershift, circle and blade float with additional manually adjusted sideshift. The drawbar is attached to a ball joint at the front of the machine.

t. **Scarifier Assembly.** Assembly is located forward of the blade. It is hydraulically raised and lowered, and the drawbar attaches to the front of the machine.

***ENGINE***

1. The Caterpillar 4-stroke cycle 3304 turbocharged diesel engine has four cylinders. The direct injection Caterpillar fuel system utilizes individual nonadjustable injection pumps and valves. A dry type air cleaner has primary and secondary elements.

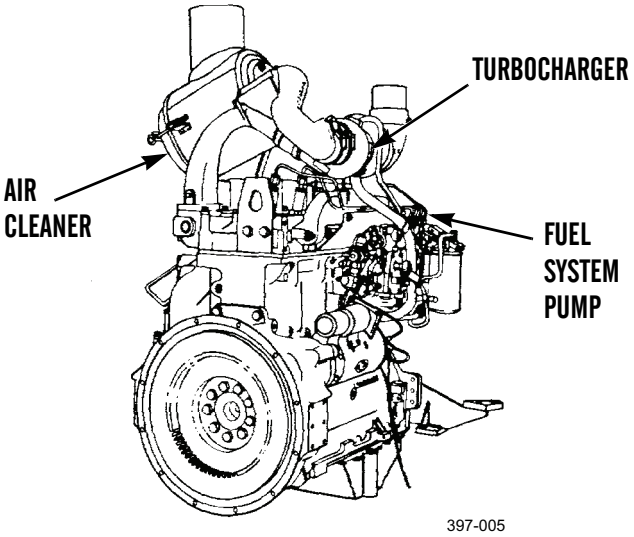


2. Pressure lubrication is with full flow filtered oil and oil cooler. An engine oil sampling valve is mounted at the left side of the engine on the intake manifold.

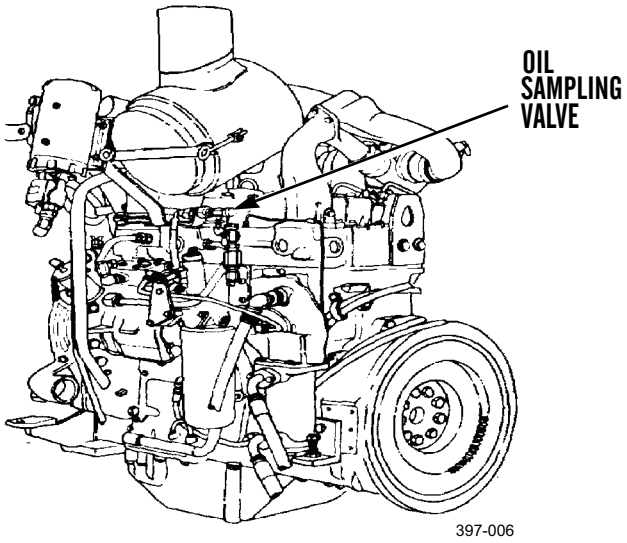


3. JP-8, or no. 1 or no. 2 fuel, may be used to power this engine.

*FUEL SYSTEM*

**NOTE**

Fuel system schematics are located in WP 0352 00.

1. **Fuel Injector Nozzles.** Four nozzles are mounted on cylinder head. Nozzles are closed end, differential pressure, hydraulically operated, and hole type.

2. **Fuel Transfer Pump.** The fuel transfer pump is mounted on the fuel injector pump at forward, right side of engine; it is cam-operated. The fuel transfer pump draws fuel from fuel tank through inline primary fuel filter and pushes it through secondary filter to the individual fuel injectors.

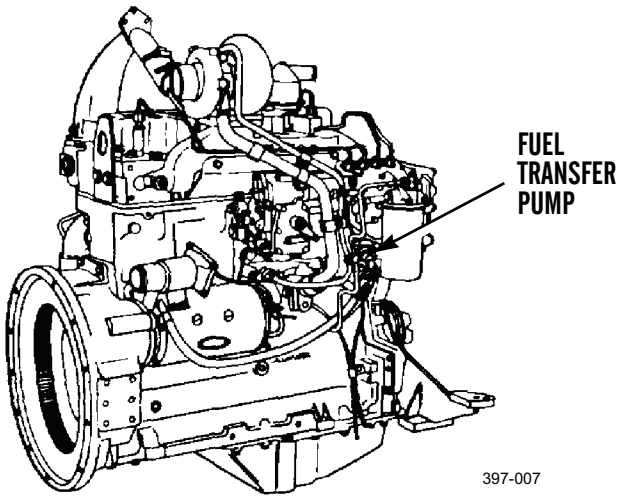


3. **Air Cleaner.** Dry type air cleaner filters air before it is applied to the inlet manifold by the turbocharger. It is mounted at top of engine and projects upward through the hood. Dust is drawn from incoming air through dust ejector line attached to exhaust system.

4. **Turbocharger.** The turbocharger is mounted on top of engine on right side. It forces incoming air under pressure into the inlet manifold to raise engine efficiency.

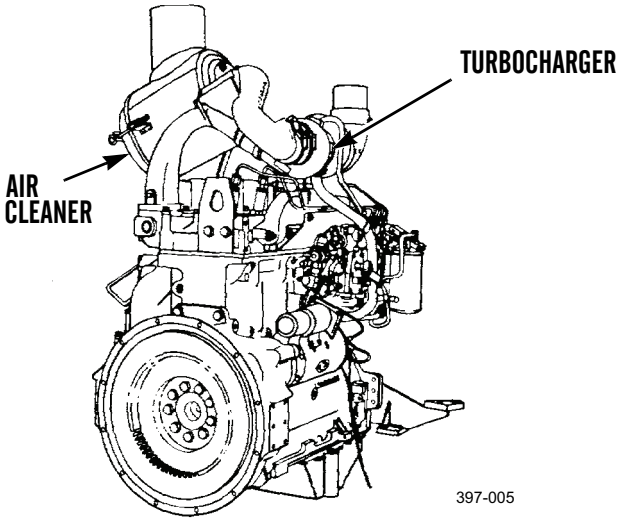


5. **Fuel Tank.** Tank has a 75 gal. (284 L) capacity. It is mounted at rear of machine between the engine and the radiator.

6. **Fuel Injector Pump.**

   a. Fuel from primary fuel filter flows to gear driven fuel injection pump. Fuel is again filtered, then metered accurately and applied to each cylinder at high pressure through fuel injector nozzles. The fuel is delivered at precisely timed intervals.

   b. The throttle control lever controls fuel metering through a cable connection. This also attaches to an accelerator pedal. The centrifugal speed regulating governor is located within the fuel injector pump housing.

### *FUEL SYSTEM - CONTINUED*

7. **Fuel Filters.** Primary fuel filter is mounted on the fuel tank. Secondary filter is mounted on the fuel injector pump housing. Primary and secondary fuel filters remove fuel impurities which may damage the fuel injector pump and/or nozzles.
8. **Fuel Strainer.** Strainer is located in fuel tank fill opening. It prevents passage of foreign material into the fuel tank.

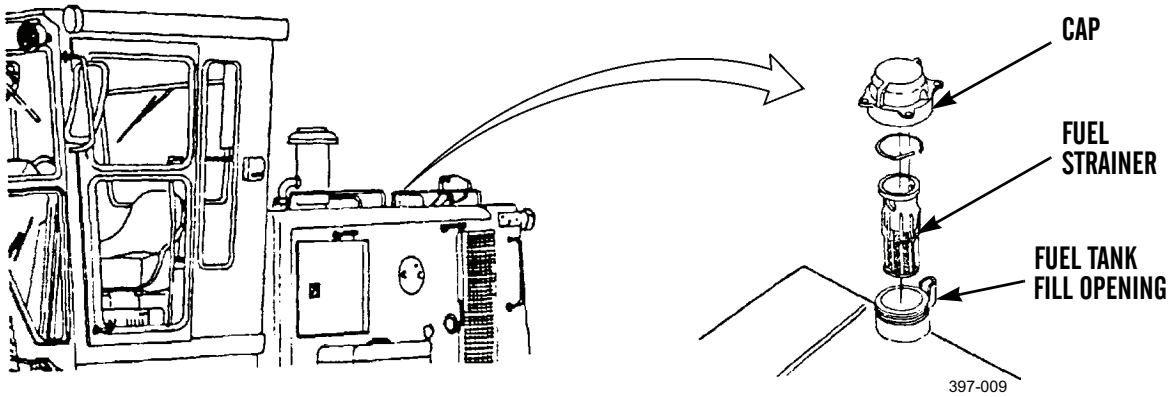


9. **Ether Aid Cold Start Kit.** The ether starting aid bottle and operator controlled electric activator are mounted on rear surface of fuel tank toward the right side of the machine. Ether is injected through a tube attached to the intake manifold. Temperature sensitive automatic closure switch mounted on water pump prevents ether aid use above 32°F (0°C).

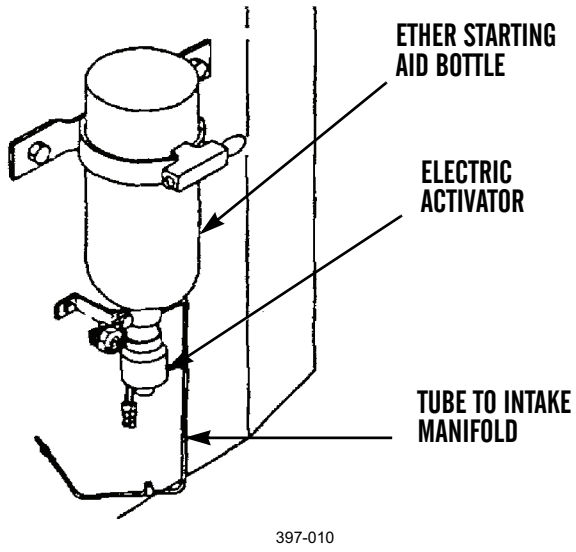

### *EXHAUST SYSTEM*

1. **Muffler.** Muffler is mounted on top of engine at turbocharger outlet and projects upward through hood. It reduces engine exhaust noise. Dust ejector line from air cleaner is attached to bottom of muffler.
2. **Exhaust Pipe.** Pipe is attached to muffler. It projects upward to carry exhaust fumes away from the machine.

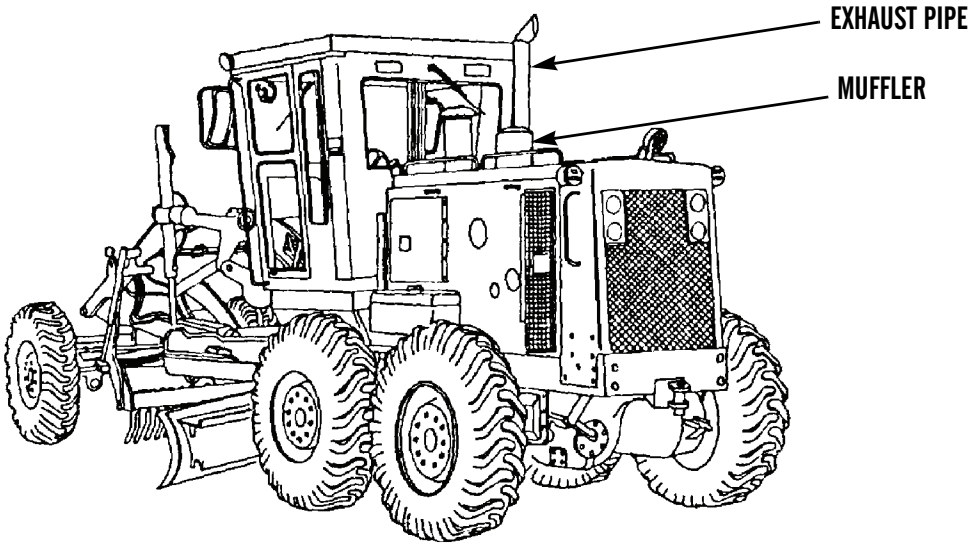


397-011

### *COOLING SYSTEM*

1. **Radiator.** Radiator is mounted at rear of machine. It transfers heat from coolant to air.
2. **Thermostat Housing.** Housing is mounted on cylinder head at left front of engine. Thermostat (water temperature regulator) inside housing opens at 175°F (79°C). Housing also serves as coolant hose connection.
3. **Water Pump.** Pump is mounted on forward left-lower section of engine, and is gear driven by engine. Water pump propels coolant through the cooling system.

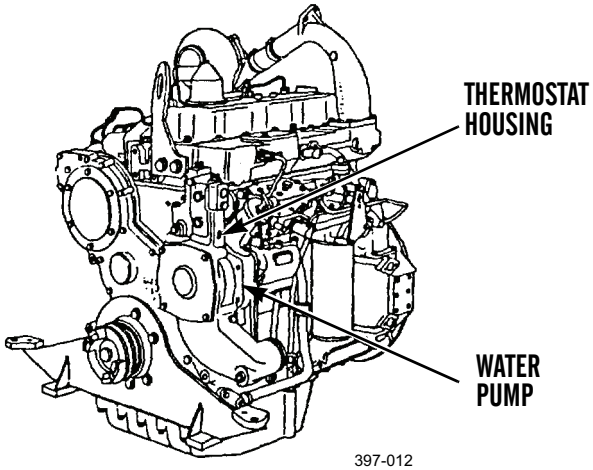


397-012

### *COOLING SYSTEM - CONTINUED*

4. **Hoses.** Upper hoses and lines route coolant from the cylinder head coolant outlet into the upper section of the radiator. Lower hoses and lines supply radiator coolant, which is pushed through the cylinder block by the water pump.
5. **Fan.** Fan is mounted on fan drive assembly located between fuel tank and radiator.
6. **Drive Belts.** Dual belts are mounted so that fan drive and alternator are driven by the transmission oil pump pulleys.

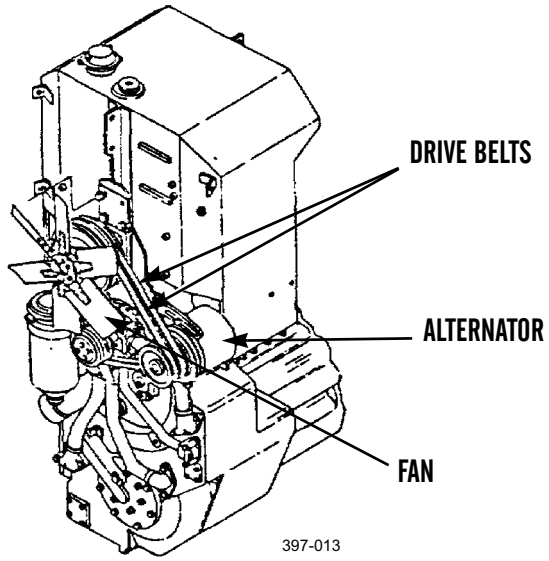


7. **Engine Oil Cooler.** Engine oil cooler is mounted horizontally along left side of engine. Engine coolant flows through the unit to remove heat from the engine oil.
8. **Transmission Oil Cooler.** This oil cooler is mounted vertically along left side of engine. Engine coolant flows through the unit to remove heat from the transmission oil.

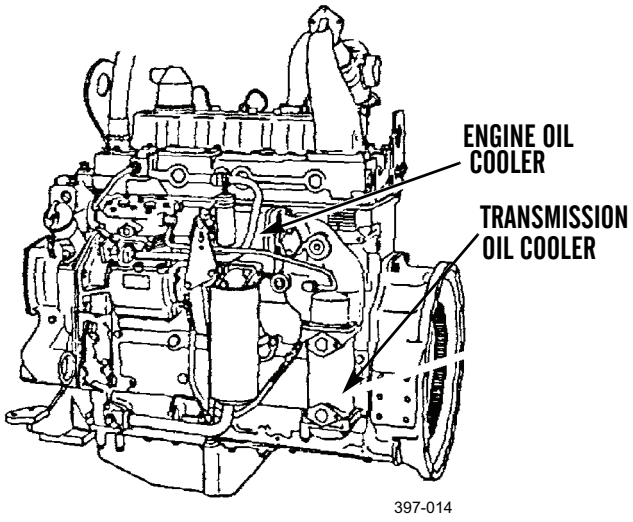

### *COOLING SYSTEM - CONTINUED*

9. **Hydraulic Oil Cooler.** This oil cooler is mounted at the upper-forward surface of the radiator. Air passing through the cooler removes heat from the hydraulic system oil before it returns to the hydraulic oil reservoir behind the cab.

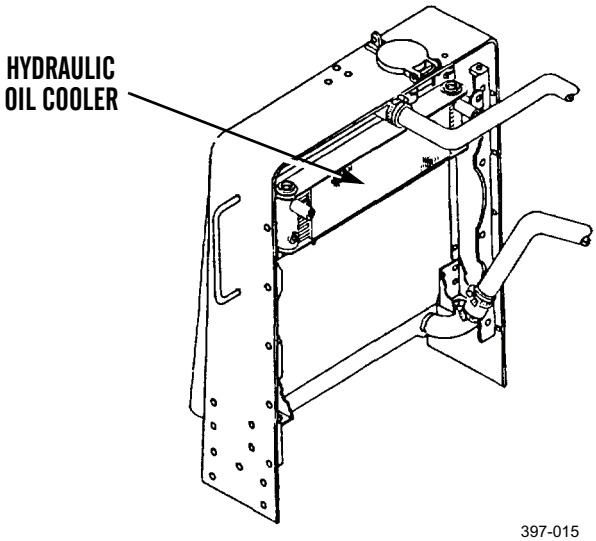


### *ELECTRICAL SYSTEM*

1. **Alternator.** The alternator has 50-ampere rating. It is belt driven by transmission oil pump pulleys. The alternator charges batteries and supplies current for additional electrical power. A voltage regulator is located behind the end cover.
2. **Drive Belts.** Belts are driven by transmission oil pump pulleys. The oil pump is driven by the engine crankshaft.

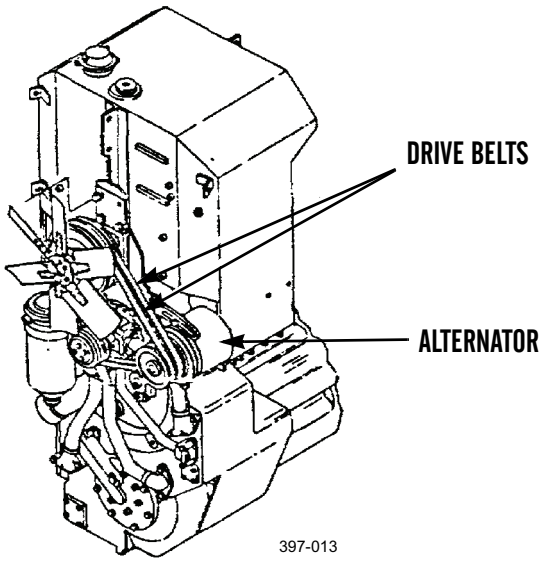

### *ELECTRICAL SYSTEM - CONTINUED*

3. **Starting Motor.** Electric motor has an overrunning clutch. Solenoid is mounted on starter with engaging mechanism enclosed in the housing.

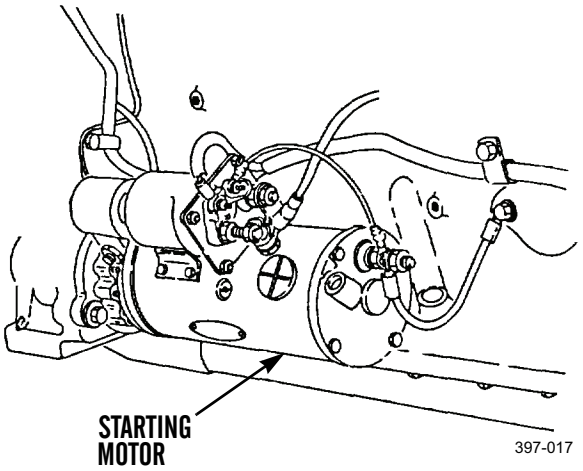

397-017

4. **Electronic Monitoring System (EMS) Panel.** EMS panel is mounted at top of steering console in cab. It contains warning and operating indicators for hydraulic, electric, and mechanical systems. EMS panel is used in place of conventional instrument panel. Refer to TM 5-3805-261-10 for further information.

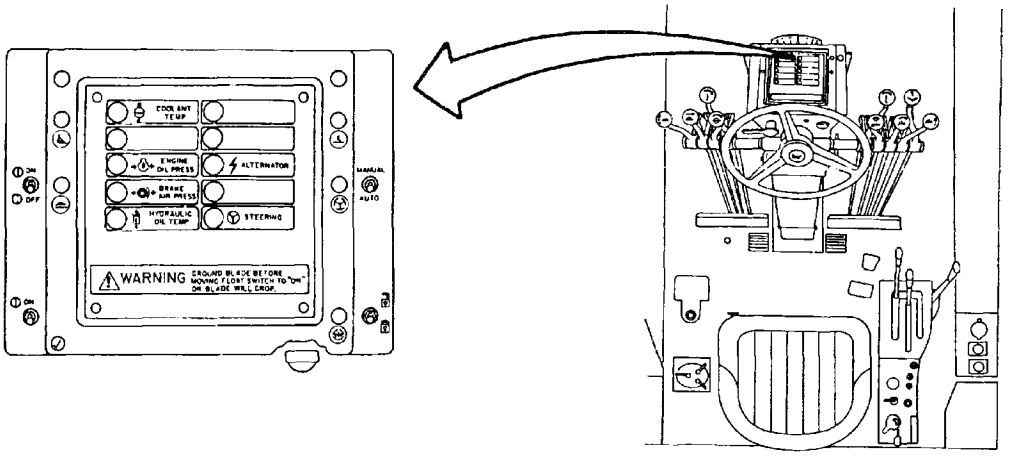

397-018

***ELECTRICAL SYSTEM - CONTINUED***

5. **Lights.**

   a. Mounted forward on the cab are two lower work lights, two upper headlights, and two turn signals. One blackout light is mounted far forward on the frame. Mounted at the rear of the engine hood are one work light, two stop and taillights, two blackout stop and taillights, and two turn signals.

   b. Front and rear work lights are controlled by individual switches mounted on the operator's panel console. Operation of other lights is controlled by a machine light switch assembly mounted at the left of the driver's seat. The headlight dimmer switch is mounted in the cab floor toward the left of the steering console. It is foot operated. Refer to TM 5-3805-261-10 for light control operation.

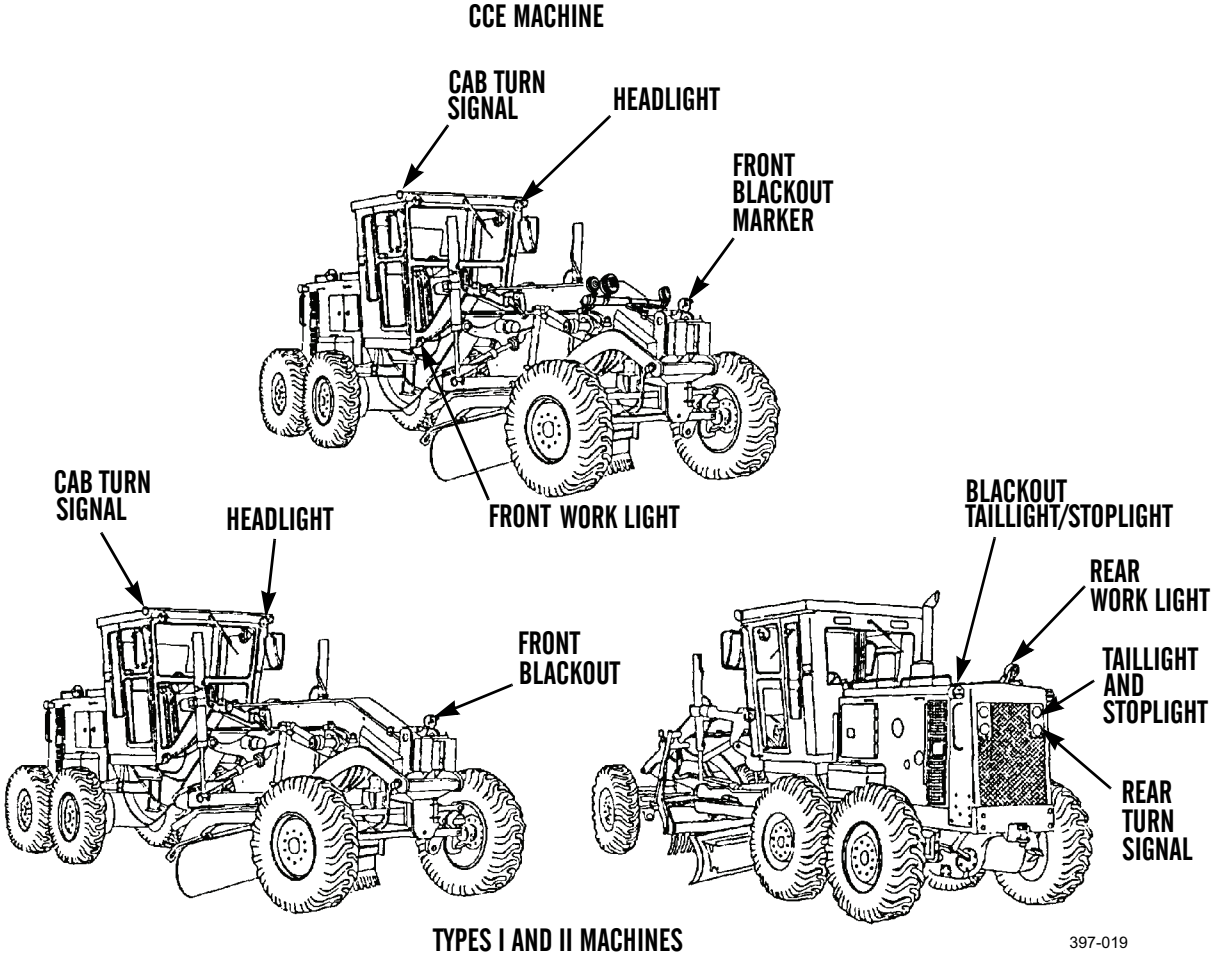

### *ELECTRICAL SYSTEM - CONTINUED*

6. **Hour Meter.** Meter is mounted at a instrument panel in right-front vertical section of engine hood assembly. It registers engine hours and is used to determine service intervals. Electrically driven by an oil pressure actuated switch.

7. **Sending Units.**

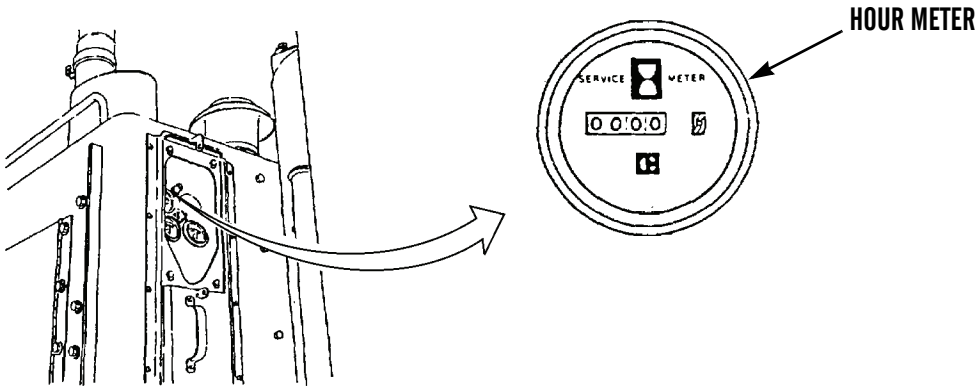


397-020

| SENDING UNIT | LOCATION |
|---|---|
| Right side brake circuit air pressure for EMS panel | Brake pedal treadle valve |
| Left side brake circuit air pressure for EMS panel | Brake pedal treadle valve |
| Stoplight switch | Brake pedal treadle valve |
| Blackout stoplight switch | Brake pedal treadle valve |

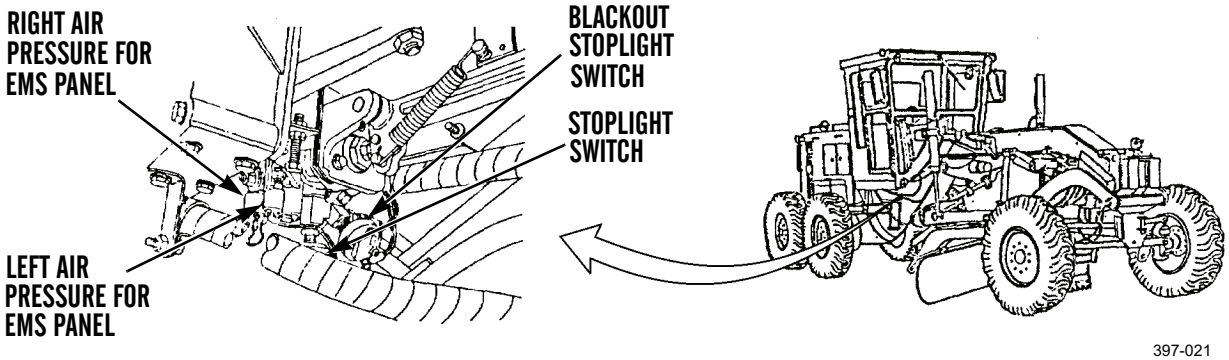


397-021

*ELECTRICAL SYSTEM - CONTINUED*

| SENDING UNIT | LOCATION |
|---|---|
| Oil pressure switch for hour meter | Left side center of engine block |
| Oil pressure switch for EMS panel | Left side center of engine block |

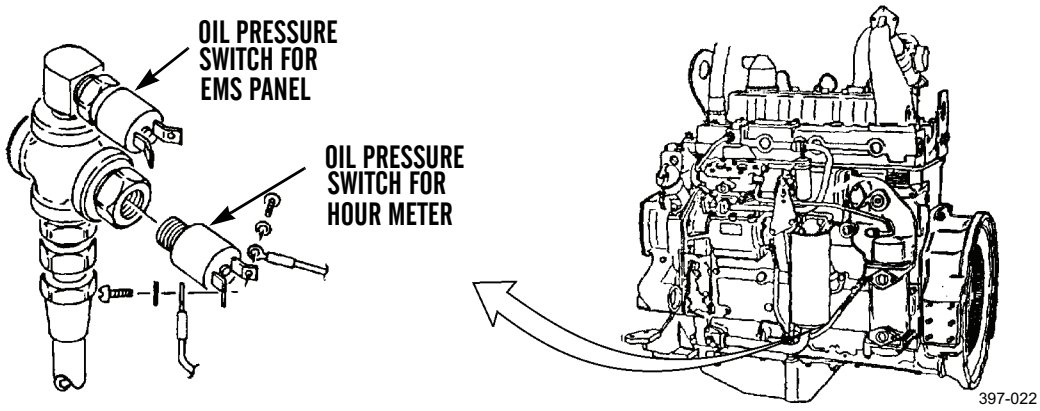


| SENDING UNIT | LOCATION |
|---|---|
| Ether starting aid temperature switch | Engine left side on water pump |
| Coolant temperature fault indicator switch | Engine left side on water pump |

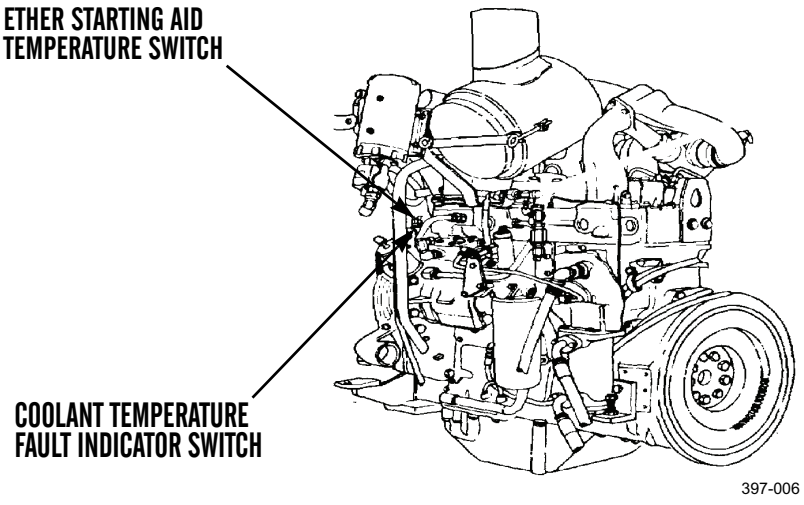

*ELECTRICAL SYSTEM - CONTINUED*

| SENDING UNIT | LOCATION |
|---|---|
| Supplemental steering sensor | Right side combination valve |

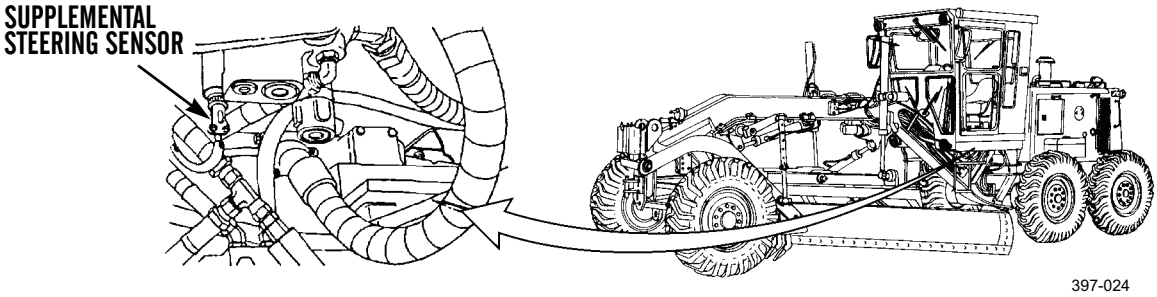


397-024

| SENDING UNIT | LOCATION |
|---|---|
| Hydraulic oil temperature switch | Right side of hydraulic reservoir |

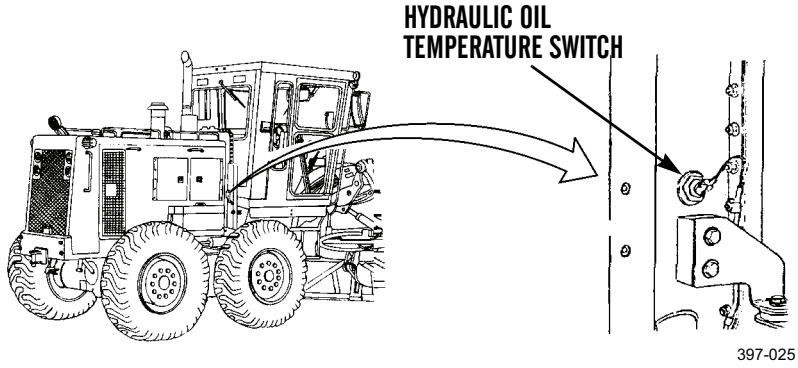


397-025

*ELECTRICAL SYSTEM - CONTINUED*

| SENDING UNIT | LOCATION |
|---|---|
| Fuel pressure switch for master fault light and alarm | Engine right front on assembly fuel filter |

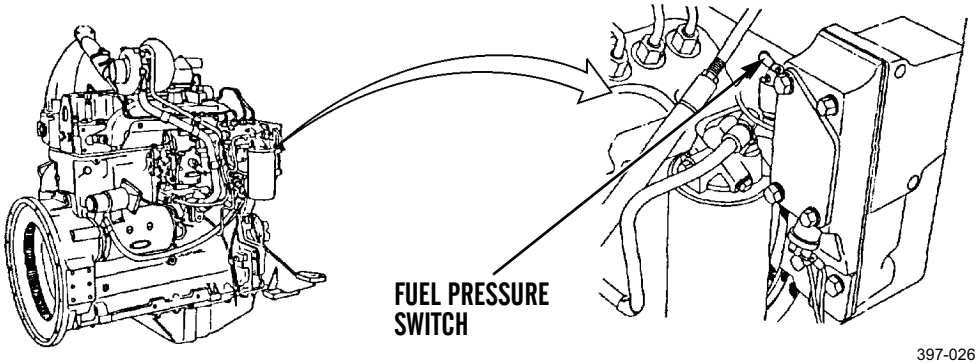


8. **Horn and Horn Switch.** 24-volt horn unit is located under the cab. Horn switch at center of steering wheel applies voltage to horn when horn button is depressed. Light switch must be on to activate horn system.

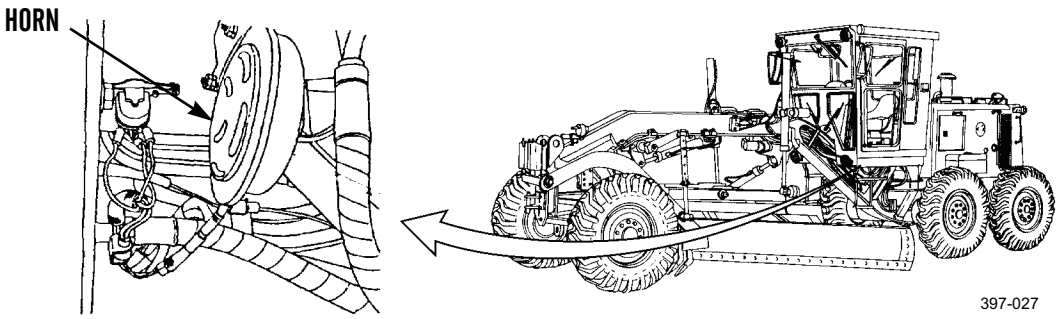

### *ELECTRICAL SYSTEM - CONTINUED*

9. **Backup Alarm.** Alarm unit is mounted on upper surface of rear bumper. Alarm is activated by a magnet when transmission is placed in reverse. Volume adjustment is mounted on the back of the alarm unit.

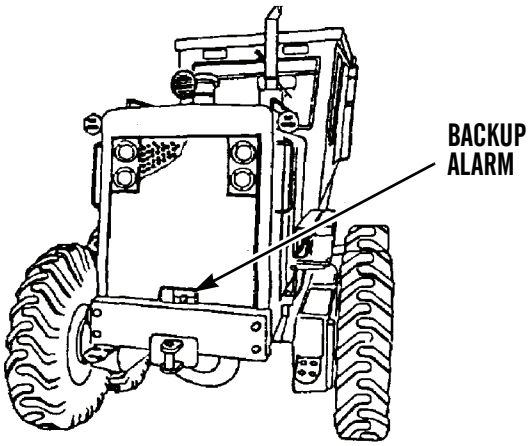

397-028

10. **Batteries.** Two 12-volt batteries are used. Battery is enclosed in a battery box. One battery box is mounted at each side of the engine hood. Batteries are connected in series to provide 24 volts of power.

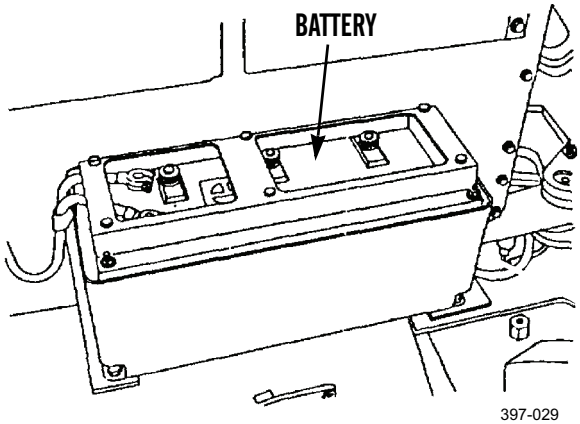

397-029

### *TRANSMISSION*

1. The transmission is attached to the rear of the engine. Engine power enters the upper (forward and reverse) section of the transmission. It is transferred to the lower (six speeds) planetary section and then forward into the differential and outward to the final drives. No torque converter is used.
2. A transmission and differential oil sampling valve is mounted vertically on the transmission oil cooler bonnet.

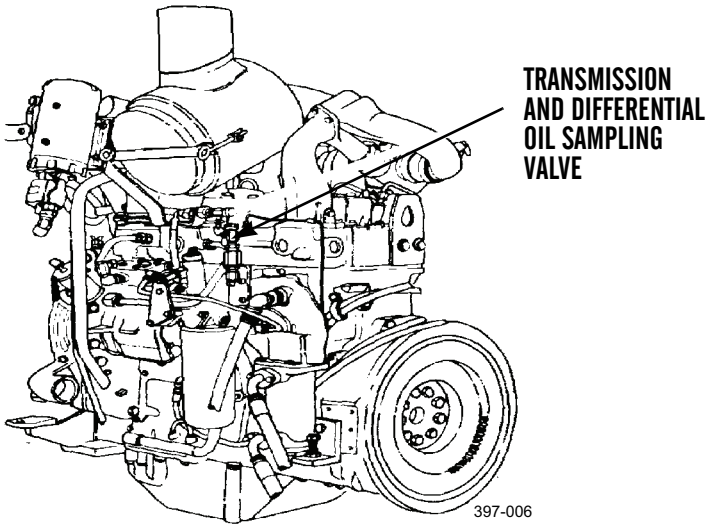


### *FINAL DRIVE ASSEMBLY*

1. The final drives are mounted at each side of the differential and provide planetary gear reduction for the chain driven sprockets and wheel spindles within the tandem housings.
2. A dipstick assembly and breather are provided at each tandem housing to check the chain and sprocket oil supply.

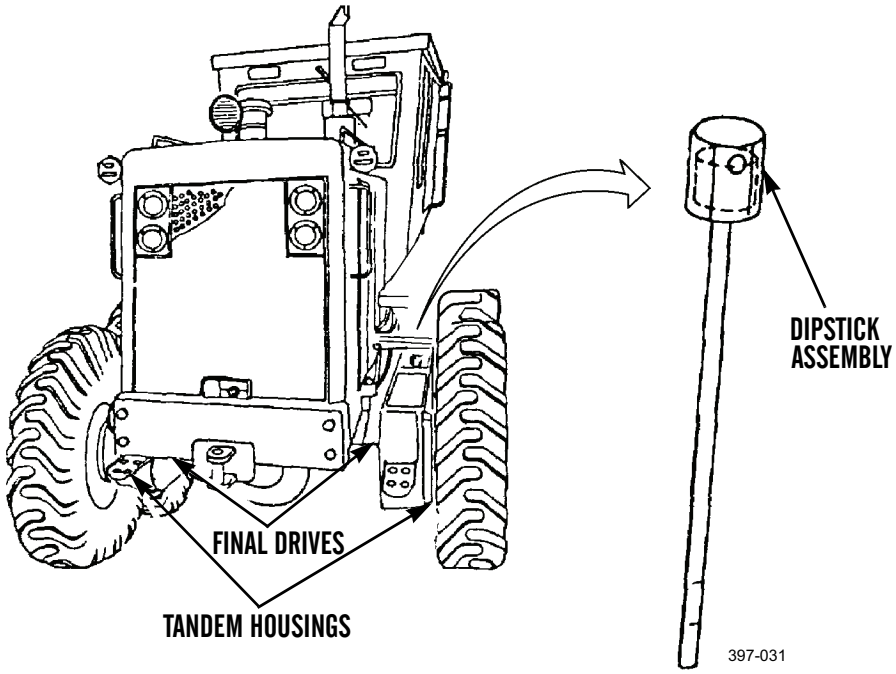

### *FRONT AXLE ASSEMBLY*

1. The front axle provides mounting for hydraulically actuated steering and leaning wheel mechanism components.
2. The front leaning wheel serves to counteract sideward pressure caused by the blade and allows for the other grading conditions.

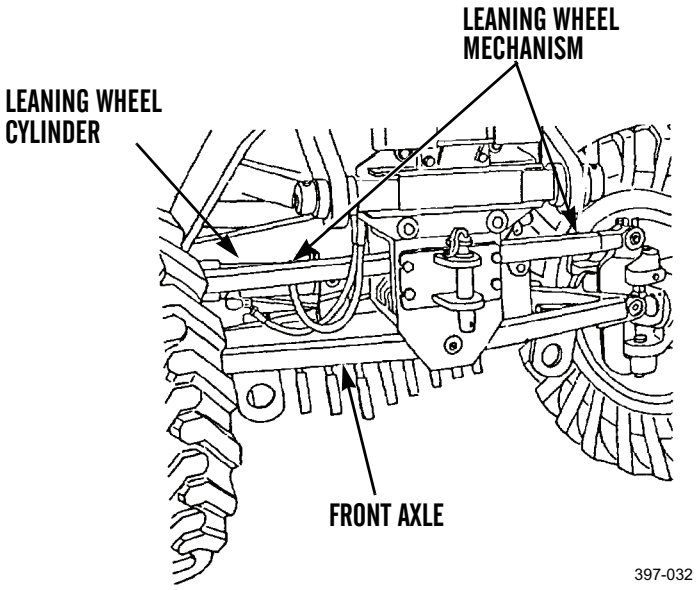


397-032

### *REAR AXLE/DIFFERENTIAL AND LOCK DIFFERENTIAL*

1. The differential is mounted to the forward lower section of the transmission. It provides gear reduction and transfers power through the final drives to the rear wheels at each side of the machine. It allows power to be transmitted equally to both sides even though the wheels on one side are moving more slowly when the machine is turning.
2. A differential lock-unlock feature includes a hydraulic valve that operates a clutch, which causes drive wheels at both sides to travel at the same speed and pull evenly to reduce slippage.

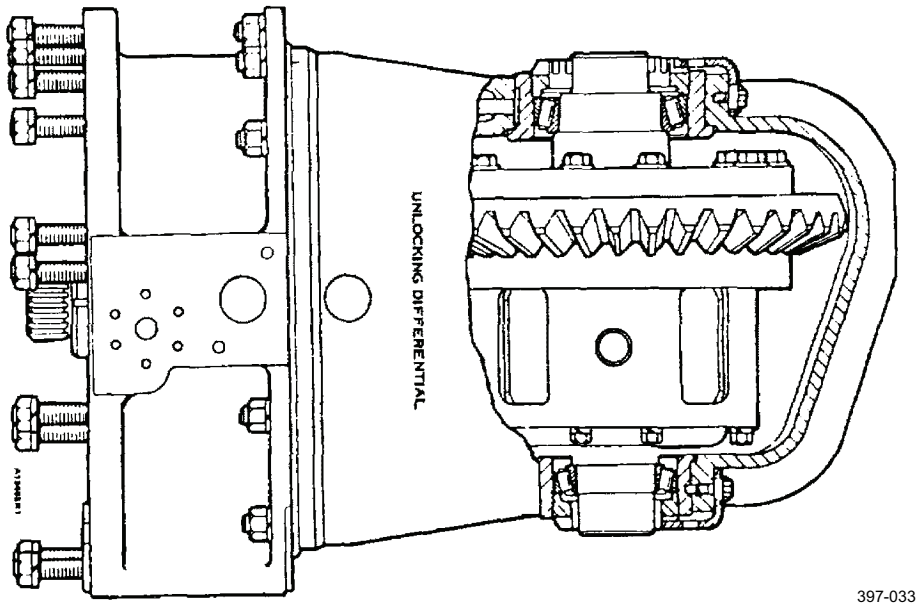


397-033

### *AIR BRAKE SYSTEM*

**NOTE**

Air brake system schematics are located in WP 0352 00.

1. **Air Compressor and Reservoir.** A gear driven, two cylinder air compressor mounted at the left forward side of the engine provides air pressure for the service brakes. A dual section air reservoir is connected by air lines and mounted under the rear of the machine. A governor controls the pressure. On Type I and Type II machines, an air dryer is mounted above the battery box on the right side.

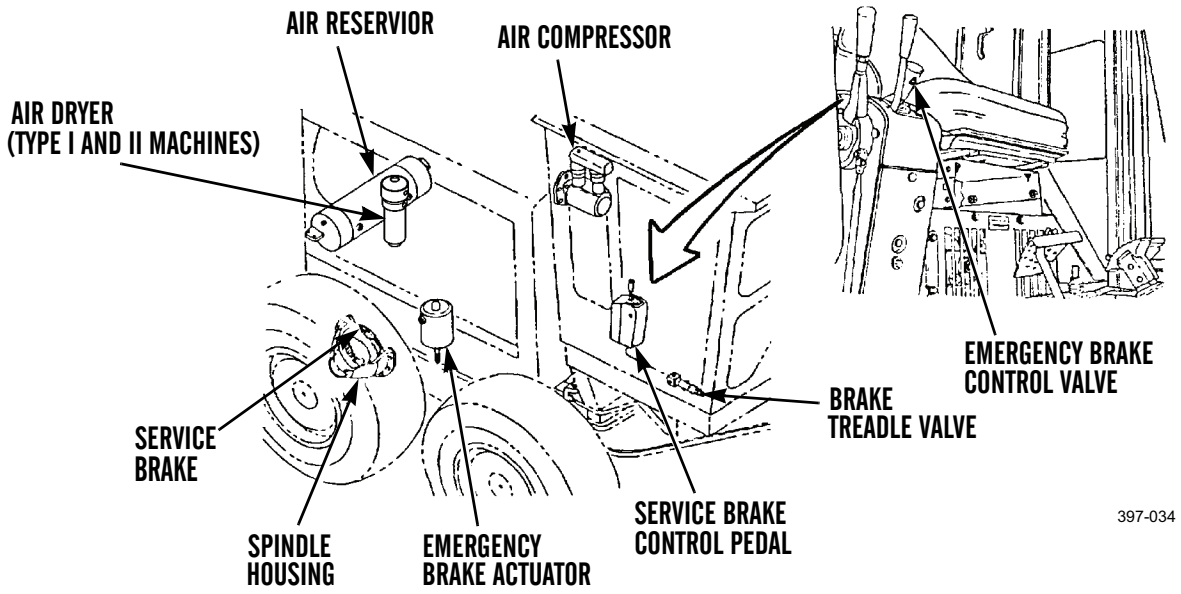


2. **Service Brakes.** A foot pedal operated air valve in the cab directs air pressure through air lines for engaging multiple oil disc brake assemblies for each wheel, within the tandem and spindle housings.

3. **Parking/Emergency Brake.** Multiple oil disc type parking/emergency brake is located in the transmission case. It is manually actuated by forward movement of red lever on transmission control console. Lever engages parking brake and activates transmission neutral lock to prevent machine movement. Brake is spring engaged and air disengaged. Brake can be used for emergency stopping if air supply fails.

4. **Emergency Braking.** Dual air system provides separate circuit at each tandem for safety. Malfunction of one circuit leaves remaining circuit with at least half of original braking capacity.

5. **Blade Centershift Lock Pin.** Though not part of the air brake system, the centershift lock pin is mentioned here because it also is operated by the air supply from the air brake system. The centershift lock pin is part of the blade system. Refer to *Blade System* in this work package for its location.

### *WHEELS AND TIRES*

The six interchangeable tire and wheel assemblies are each mounted to the wheel spindle flanges. Ten lug nuts are used to mount each wheel. Refer to WP 0002 00 for tire specifications.

### *STEERING*

1. **Steering.**

   a. An engine driven, variable displacement pump mounted under the cab provides hydraulic flow for the steering. Refer to *Hydraulic System* in the work package. The steering wheel actuates a small hydraulic pump directing oil to the two steering cylinders which steer the front wheels. An adjustable relief valve assembly is mounted at each side of the chassis above the front axle. Also, refer to *Front Axle Assembly* in this work package for location of hydraulic cylinders at front axle.

   b. When the steering wheel is not being turned, the oil in lines and cylinders cannot move and the front wheels stay in position. If the side of one of the front wheels hits a obstruction (material that will not move), the positions of the front wheels will move. The force on the side of the wheel causes an increase in the pressure of the oil in the cylinders and in one of the lines to the cylinders. When the pressure of the oil in the line gets to 1,700 psi (11,721 kPa), the relief valves opens. The high pressure oil in the line goes through the open relief valve and into the other line to the cylinders. This lets the position of the front wheels change.

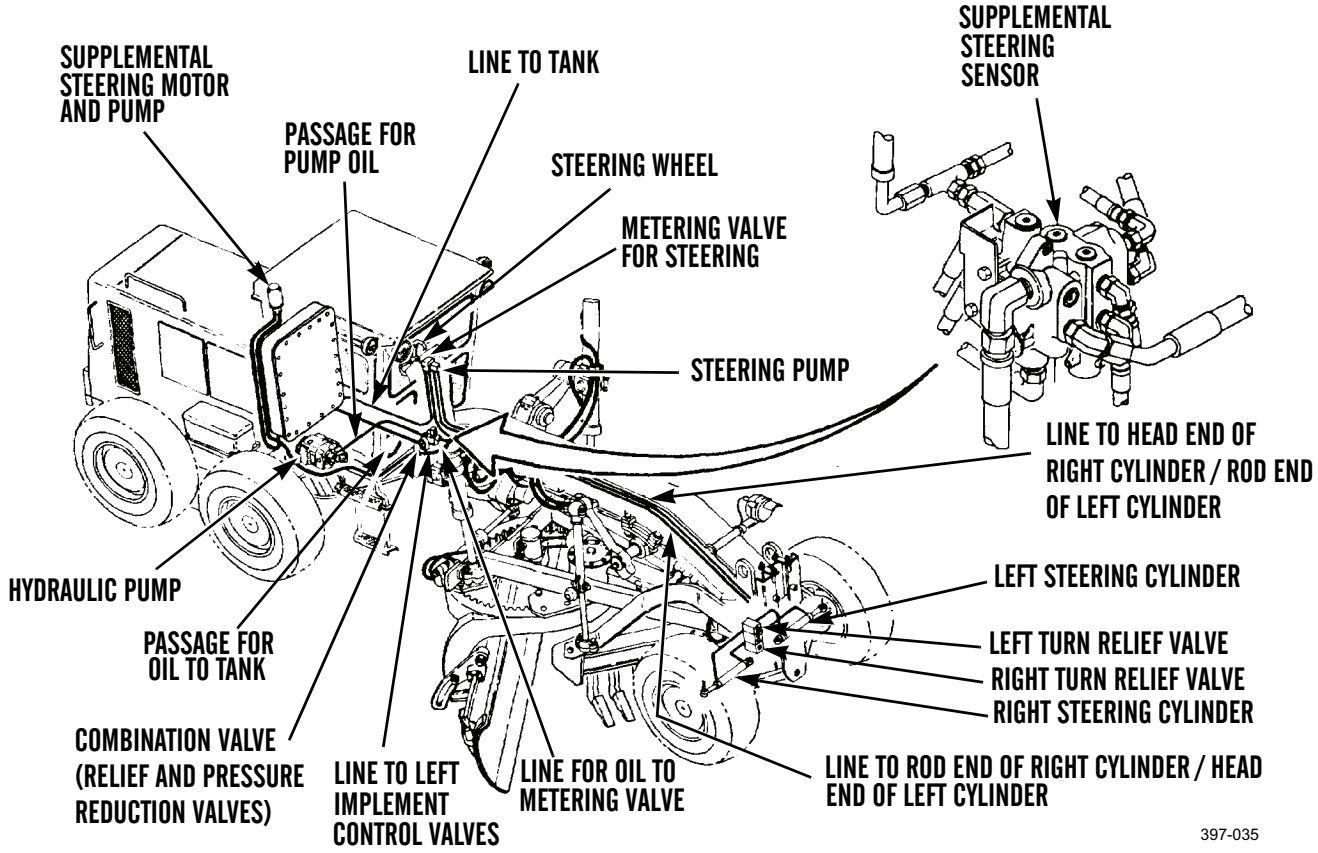


2. **Supplemental Steering.**

   a. This system provides hydraulic oil flow to the steering if the engine fails or implement hydraulic flow is lost while the machine is operating. The main components are the electrically driven motor/pump mounted in the engine compartment, and a sensor mounted on the hydraulic combination valve. Refer to *Hydraulic System* in this work package.

   b. The sensor activates the motor/pump when pressure is lost in the hydraulic system. A switch on the engine governor prevents automatic activation of the motor/pump during normal engine shutdown. A switch on the panel activates the system for testing or for use during towing.

### *FRAME, TOWING ATTACHMENTS, DRAWBARS, AND ARTICULATION SYSTEM*

1. **Front Frame Section.** The front frame section is a large welded unit built up from a heavy I-beam to serve as a mounting for the front axle, blade, scarifier, hydraulic and electrical lines, and the cab. The cab mounting end includes large hitch bushings to provide for articulation (pivoting) of the two-section frame.

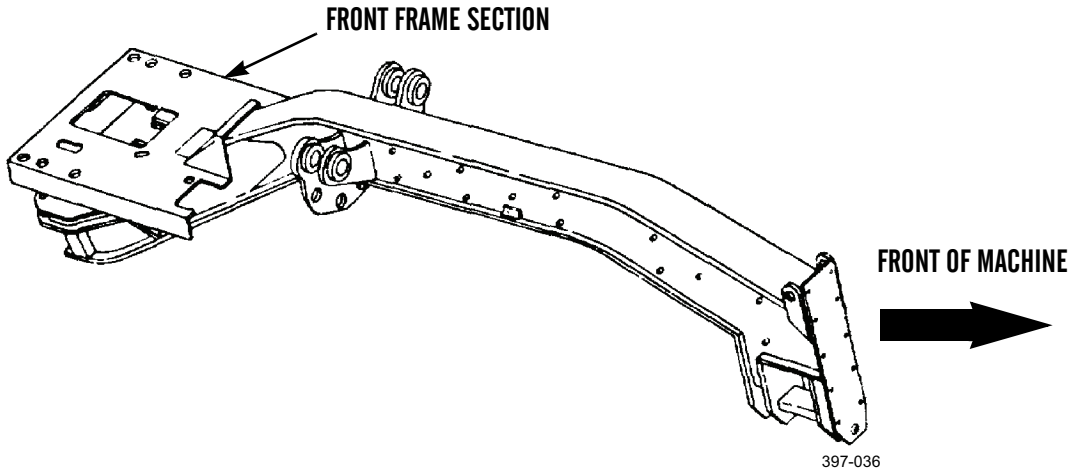


2. **Frame and Case Rear Frame Section.** This large weldment includes hitch bushings for articulation and serves as a mounting for the engine and hood, radiator and fuel tank, transmission, differential, and final drives.

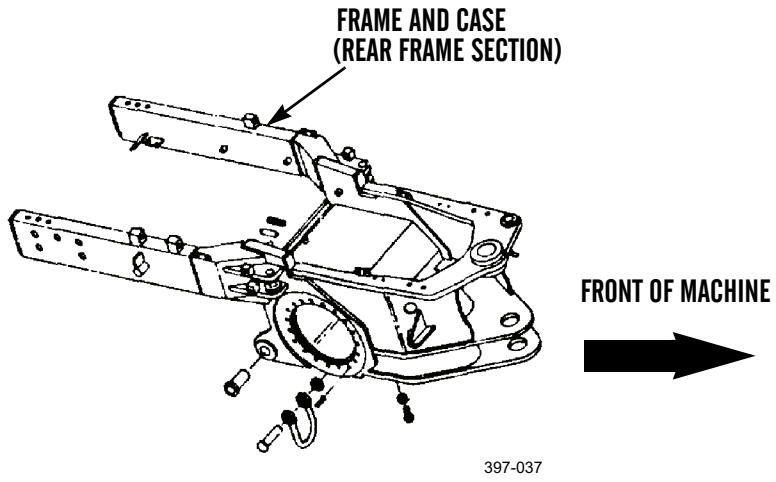

***FRAME, TOWING ATTACHMENTS, DRAWBARS, AND ARTICULATION SYSTEM - CONTINUED***

3. **Articulation System.** The front frame section and the frame and case (rear frame section) are joined (hinged) at their hitch bushings. Two hydraulic articulation cylinders and lines provide power for articulation. They are controlled from the cab. One cylinder is mounted at each side of the front frame section and extends to attach to the rear frame section to provide articulation control.

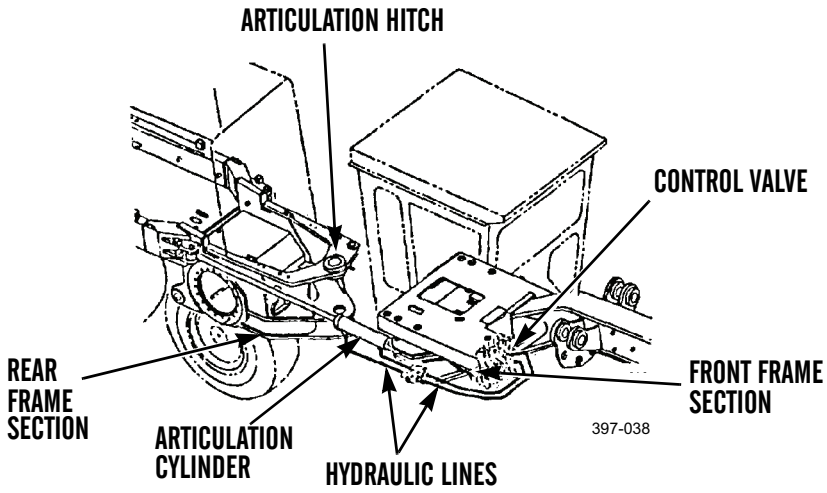


4. **Articulation Indicator.** Indicator is mounted inside the cab at the top of the steering console. A small housed cable mounted on the front frame is attached to a lever fastened to the rear frame. When the frame is articulated, the cable moves the pointer on the indicator to show the amount of articulation.

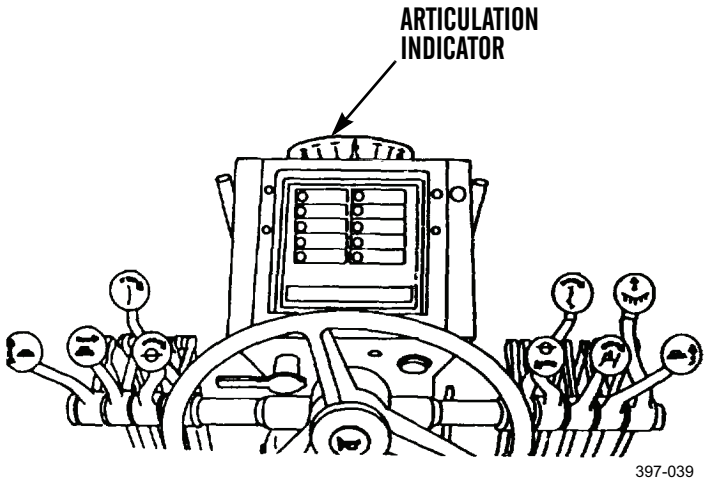

### *FRAME, TOWING ATTACHMENTS, DRAWBARS, AND ARTICULATION SYSTEM - CONTINUED*

5. **Tow Pins and Brackets.** There is one tow pin and bracket at the front of the machine and one at the rear. The rear tow pin is held in its bracket by cross pin and cotter pin at the bottom of the tow pin. The front tow pin is held in the bracket by a latch assembly at the top of the bracket. The front bracket is bolted to the frame. The rear bracket is welded to the bumper assembly.

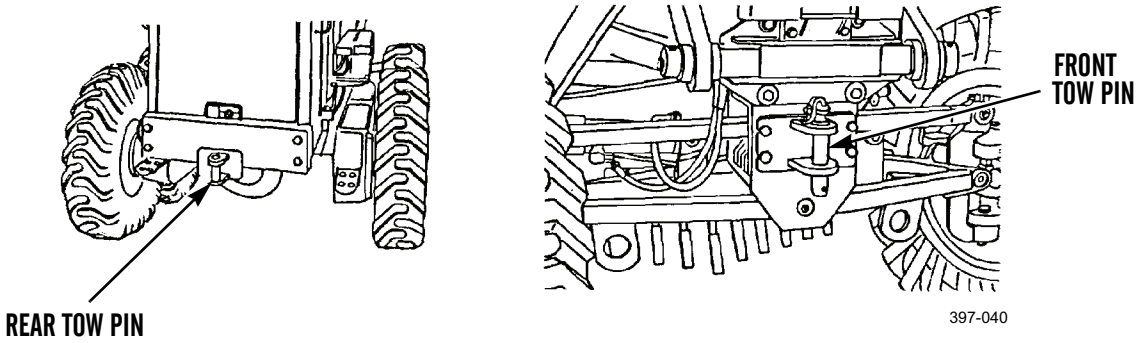


### *BODY, CAB, HOOD, AND HULL*

1. **Hood Assembly.** Serves as weather protection for engine, fuel tank, fan, and radiator. The side door assemblies provide sound suppression and vandalism protection. Door assemblies and hood are removable for easier access to engine components.
2. **ROPS Cab.** Cab protects operator and controls from weather and mechanical damage. It also provides mounting for controls, operator's seat, heater (if equipped), and various lights.

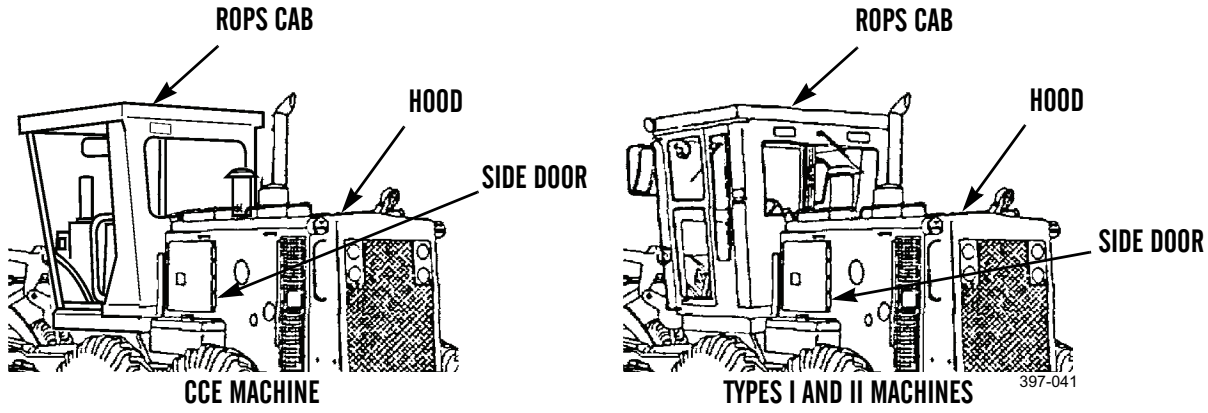

***BODY, CAB, HOOD, AND HULL - CONTINUED***

3. **Operator Console and Steering Console Assembly.** Operator console, mounted at right of seat includes transmission and operator controls. Steering console, in front of operator, includes the panel, steering wheel, and implement controls.

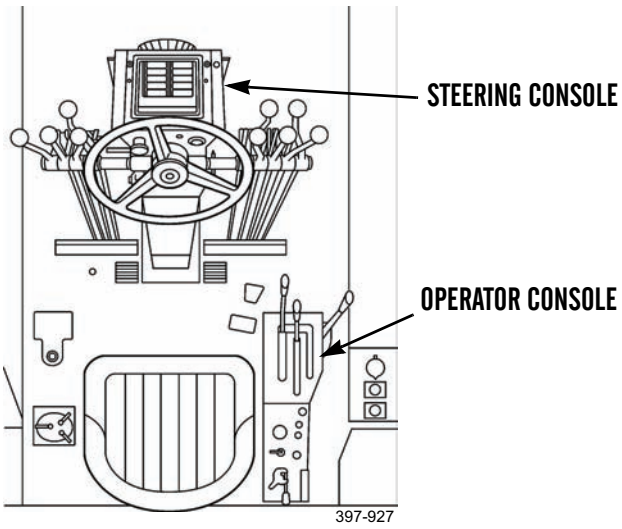


4. **Seat Assembly.** Adjustable seat includes seat belts. Seat base serves as housing for heater (if equipped). Refer to TM 5-3805-261-10 for seat adjustment procedure.

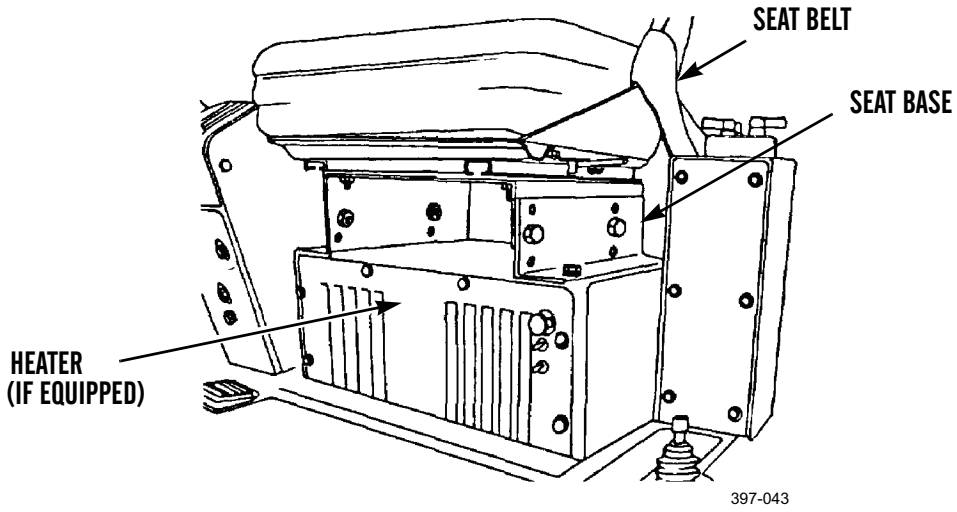

***BODY, CAB, HOOD, AND HULL - CONTINUED***

5. **Toolbox.** Toolbox is mounted directly forward of the circle drive motor. It contains scarifier shank removing tool and wheel lean lock pin.

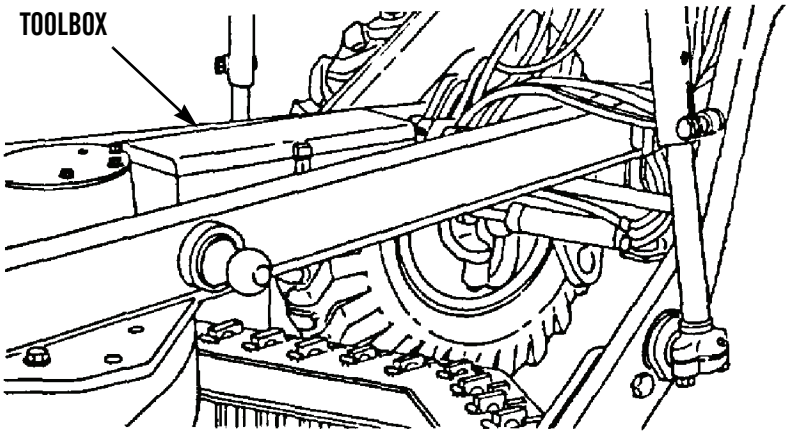

### *BODY, CHASSIS, AND HULL ACCESSORY ITEMS*

1. **Windshield Wipers (CCE and Type I Machines).** Front and rear wipers are driven by electric motors inside the cab. Control panel is located on right hand wall inside cab. Upper and lower knobs control upper and lower wipers.
2. **Windshield Washers (CCE and Type I Machines).** Washers are for front upper and lower wipers. They are actuated by pushing wiper control knobs.
3. **Rearview Mirror.** Mounted inside of cab above windshield.
4. **Sideview Mirrors (CCE and Type I Machines).** Mounted outside of cab at right and left front.
5. **Defrosting Fans (CCE and Type I Machines).** Fans are located inside cab at left front and right rear. Switches are mounted on fan motors.
6. **Heater (CCE and Type I Machines).** Heater with controls is located under seat. Heat is provided by engine coolant. Circulation is by means of an electric fan.

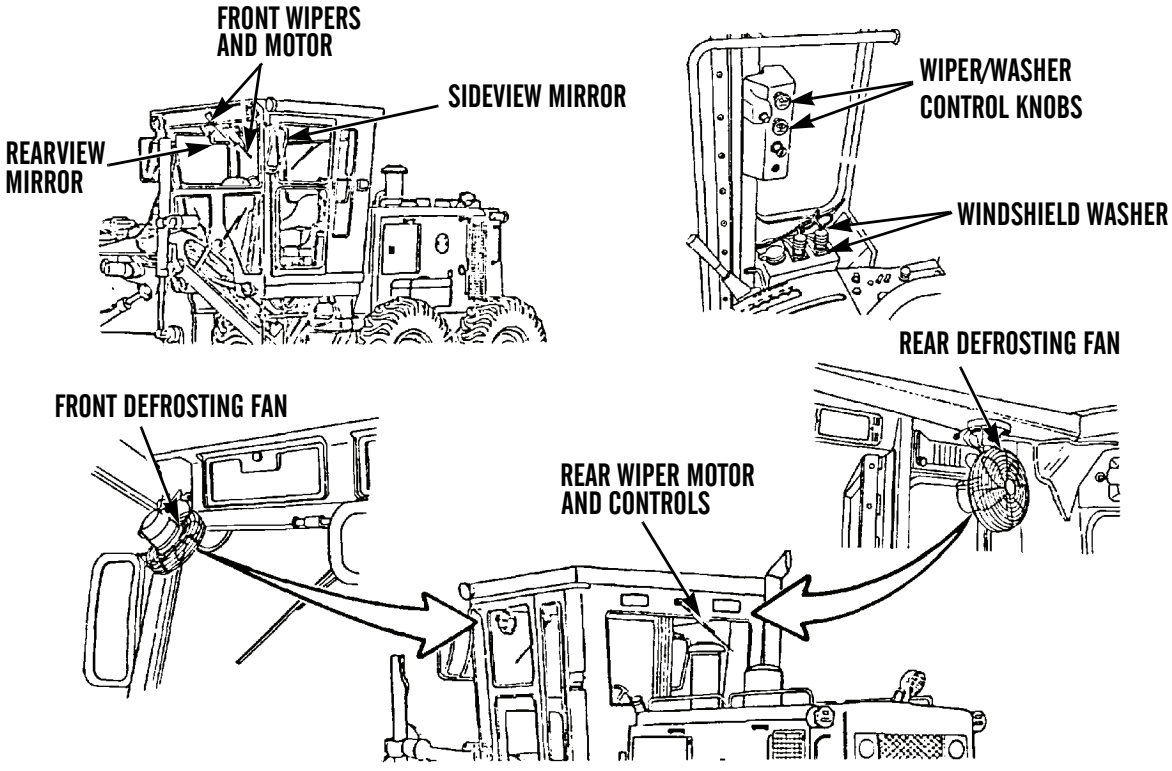


397-045

7. **Data and Instruction Plates.** Refer to TM-3805-261-10 for location.

### *HYDRAULIC SYSTEM*

**NOTE**

Hydraulic system schematics are located in WP 0352 00.

1. The hydraulic system provides a controlled flow of pressurized oil to the steering and implement circuits. It is a load sensing hydraulic system, in which the pump works only as hard as necessary to meet system demands. If there is no steering or implement demand, the pump conserves energy by reducing flow to what is needed for pump case drain (internal leakage) and pressure to a minimum standby level of approximately 430±130 psi (2,965±896 kPa). This means the pump works more efficiently and produces less heat in the hydraulic system.
2. The main parts of the system are illustrated and explained in the following paragraphs.
   a. **Hydraulic Variable Displacement Pump Assembly and Lines.** Pump is mounted under the cab. Pump shaft is driven by the engine. The variable displacement rear section draws oil from the hydraulic tank and provides oil flow for steering, articulation, wheel lean, and earthmoving components. The constant displacement front section circulates oil to the tank through the cooler, filter, and strainer.

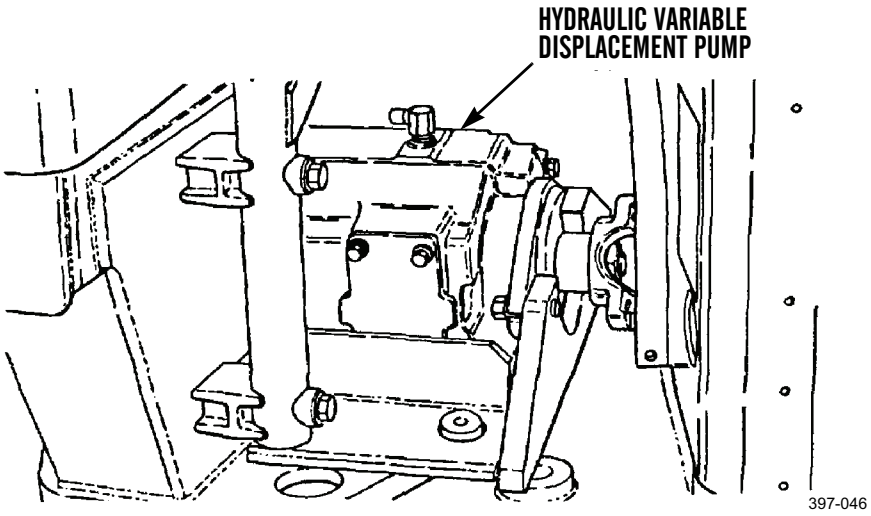


   b. **Priority Valve.** Valve is mounted under the cab, directly to the left of the variable displacement pump. Pressure oil from the pump is routed to the priority valve, which regulates the flow of oil to the implement and steering circuits. When there is a steering demand, the priority valve gives the steering circuit preference.
   c. **Combination Valve.** Valve is located at the left of the variable displacement pump. Oil from the variable displacement pump flows through the combination valve when the engine is running. It then goes to the control valves for the earthmoving components and to the steering metering valve. A hydraulic pressure unloading valve is included for cold weather starting.

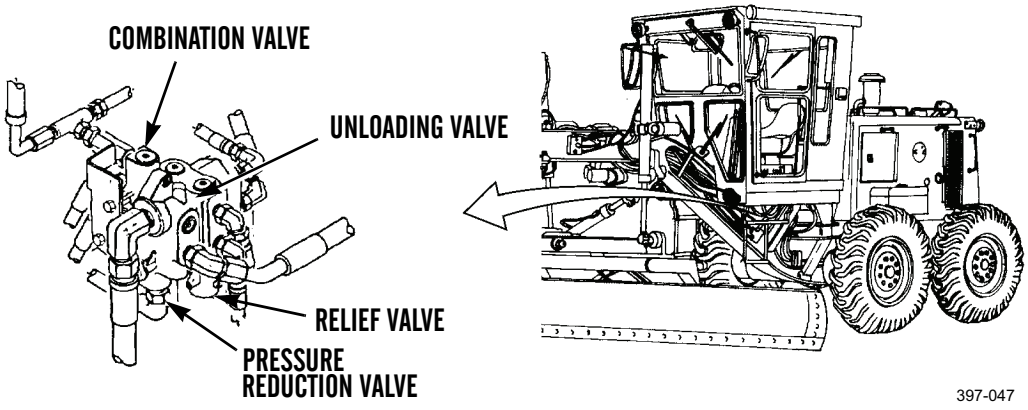

*HYDRAULIC SYSTEM - CONTINUED*

d. **Implement Control Valves.**

(1) Each of the control levers at the sides of the steering console operates a hydraulic control valve. The control valves are mounted side by side with the pump oil passages connected and with the return oil passages connected so that only one line is needed for each. Each valve controls a hydraulic cylinder or motor in the hydraulic system.

(2) The operation of each control valve is the same. The rate of oil flow from each opening in a control valve for a hydraulic cylinder is not the same. There are valves that have approximately the same rate of oil flow from each opening. The size of the orifices from valve spool to openings is one of the controls for the rate of flow. The other control is the force of the spring against the valve. The spring force is not the same in each control valve.

(3) The resolver valve allows oil with the higher pressure in either passage opening, then through the valve into the next passage. The higher pressure of the oil on the ball in the valve closes the valve passage with oil that has low pressure.

(4) The implement valve in HOLD position has pump oil at a pressure of approximately 2,150 psi (14,824 kPa) in the valve when the engine is running.

(5) When the engine is started, the pump oil in the passage goes into the next passage and then through the holes in the valve to the chamber for the valve that has no spring. The pump oil in the passage is stopped by the valve spool and there is an increase in the pressure of the oil from the pump. As the pressure of the oil gets higher, the oil pushes the valve against the force of the spring until the valve is moved to a position, in which very little pump oil can go around the valve into the passage. There is a small amount of oil leakage around the valve spool in HOLD position because of the high pressure of the oil in the passage.

(6) The location of the implement valve is lower than the oil in the tank. Tank pressure forces oil through all passages in the valve preventing air from entering the valve.

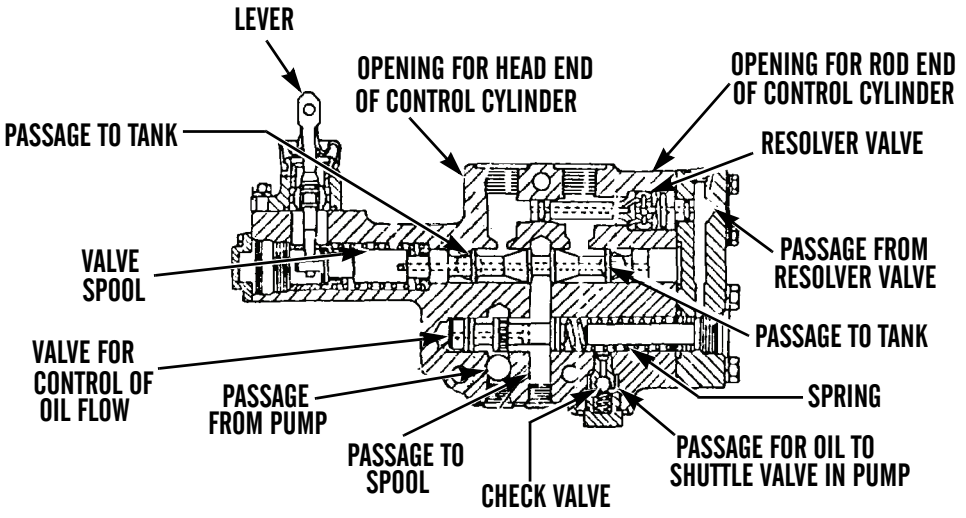

*HYDRAULIC SYSTEM - CONTINUED*

e. **Lock Check Valve.**

(1) There is a lock check valve between the control valve and the hydraulic cylinder (or motor) in each of the hydraulic systems. The purpose of each lock check valve is the same, but several designs are used because of the different system requirements.

(2) Lock check valves prevent hydraulic cylinder rods from drifting when the controls are in HOLD (neutral) position, by locking the hydraulic pressure in against ball check valves. Outlet chokes in lock check valves serve to slow down the hydraulic flow when needed. Relief valves serve to prevent overloading the system.

(a) The circle drive and leaning wheel systems use lock check valves without chokes or relief valves.

(b) The centershift, articulation, and right hand lift systems use lock check valves with chokes and without relief valves.

(c) The left hand lift system and the scarifier system use lock check valves with chokes and a relief valve.

(d) The tip and sideshift systems use lock check valves with relief valves but without chokes.

(e) When the control valve is in HOLD position, the oil in lines is stopped and the rod in the cylinder cannot move. The springs and the oil in lines keep the balls on seats. Oil in the lines is at tank pressure.

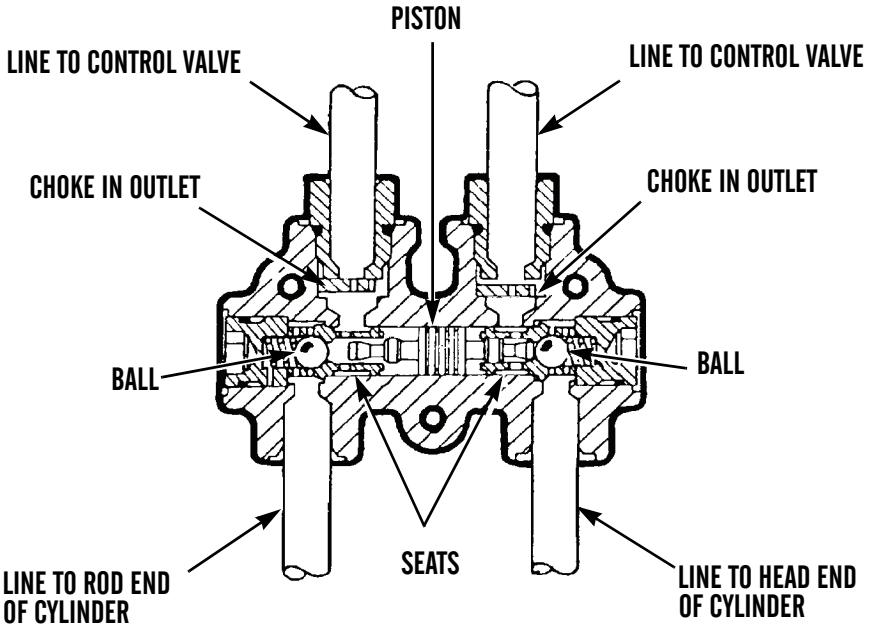

### *HYDRAULIC SYSTEM - CONTINUED*

f. **Dual Crossover Relief Valve.** Valve is located at right and left sides of the frame above the front axle. An adjustable relief valve in each valve housing controls oil flow for earthmoving components and the steering system.

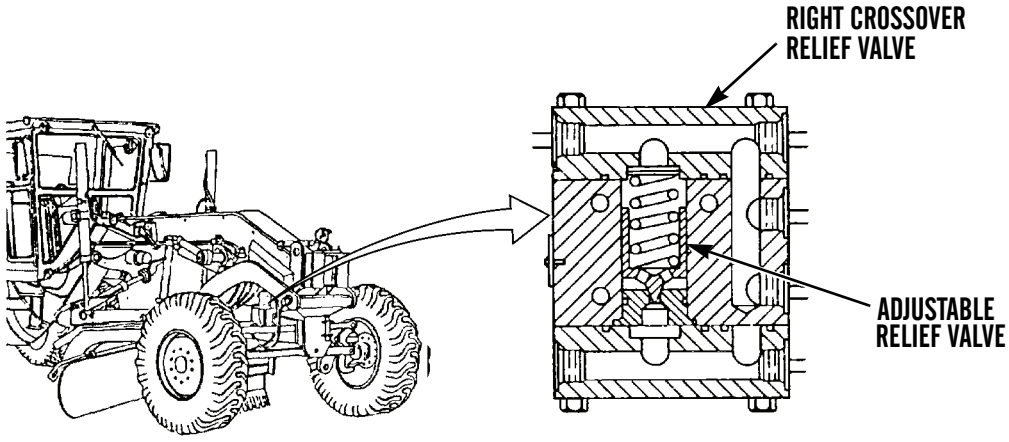


397-050

g. **Steering Wheel Pump (Valve).** The steering wheel pump (valve) is mounted at the steering console in the cab; the steering wheel is attached to the pump shaft. When the steering wheel is turned, the valve directs oil to the steering cylinders to produce the desired amount of turning at the front wheels.

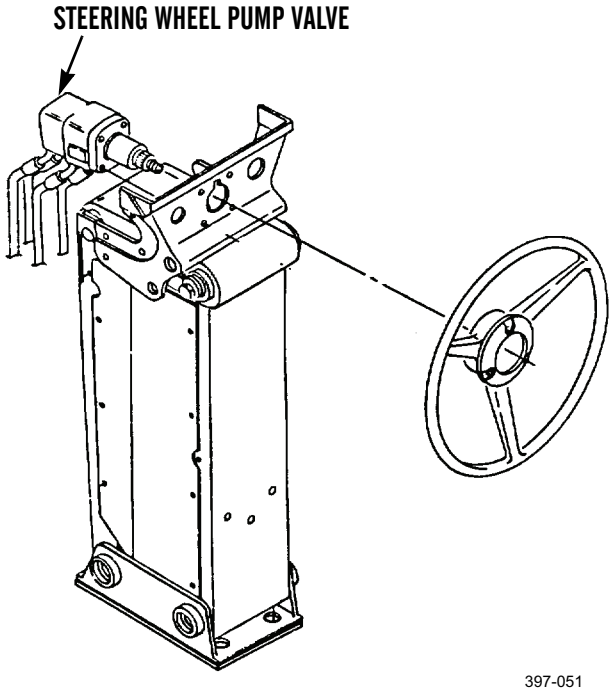


397-051

***HYDRAULIC SYSTEM - CONTINUED***

h. **Steering Cylinders.** These are mounted at the front axle. The two steering cylinders turn the front wheels. They are powered by the hydraulic system and controlled by the steering wheel pump and steering wheel.

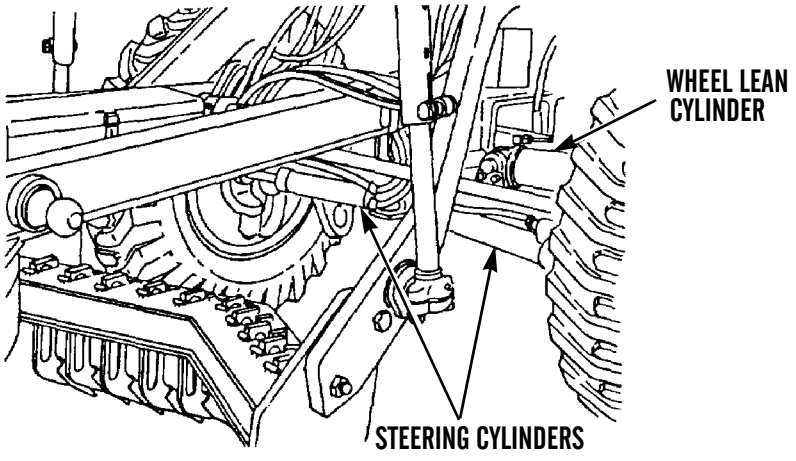


i. **Wheel Lean Cylinder.** This cylinder is mounted at the front axle on the right side. It is powered by hydraulic system and controlled by a lever in the cab. The wheel lean cylinder sets front wheels at angle to counteract blade pressure exerted sideways against the front wheels when grading or moving heavy material. Also, sets front wheel angle to prevent the front of the machine from slipping sideways and downward when the machine is moving across a slope. Refer to TM 5-3805-261-10 for further description of operation.

j. **Circle Drive Motor Assembly and Lines.** Refer to *Blade System* in this work package.

k. **Hydraulic Swivel.** Hydraulic swivel is mounted at the center of the circle assembly. The swivel allows hydraulic pressure to be transmitted to blade tip and sideshift cylinders during 360 degrees of blade circle rotation.

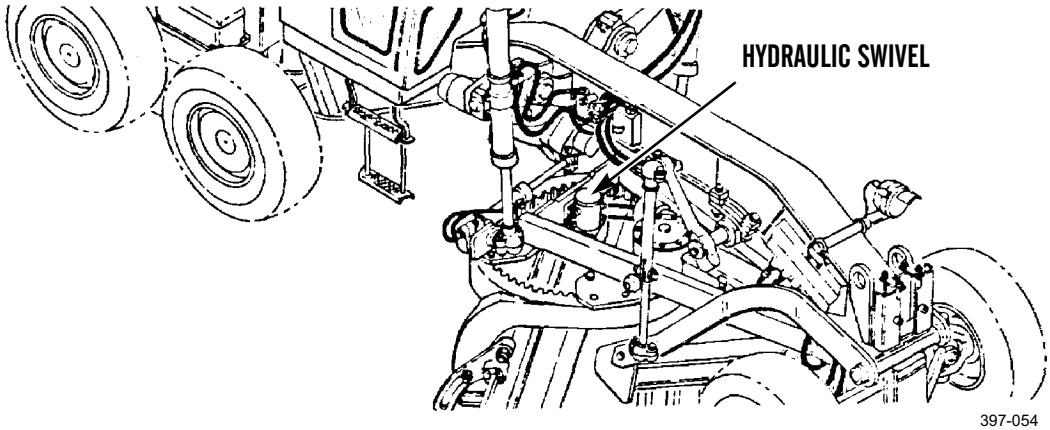


l. **Blade Control Cylinders and Lines.** Refer to *Blade System* in this work package.

m. **Scarifier Control Cylinders and Lines.** Refer to *Scarifier Assembly* in this work package.

n. **Articulation System.** Refer to *Frame, Towing Attachments, Drawbars, and Articulation System* in this work package.

### *NONELECTRICAL GAUGES, INDICATORS, AND DIPSTICKS*

1. **Air Cleaner Indicator.** Indicator is mounted on air inlet elbow. It contains a vacuum sensitive, color coded piston inside of a calibrated plastic housing. When air cleaner elements become dirty, air inlet vacuum increases and moves the piston so that red appears in an aperture on the indicator housing. This indicates that the elements need cleaning or replacing. After cleaning or replacing, indicator is reset and green appears at the aperture.

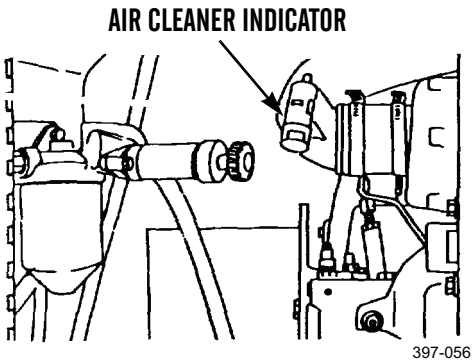


2. **Air Pressure Gauges.** Air pressure gauges are mounted in instrument panel at forward section of engine hood. Each gauge is connected by air lines to a section of the dual air tank. Each shows air pressure for one section of the air tank.

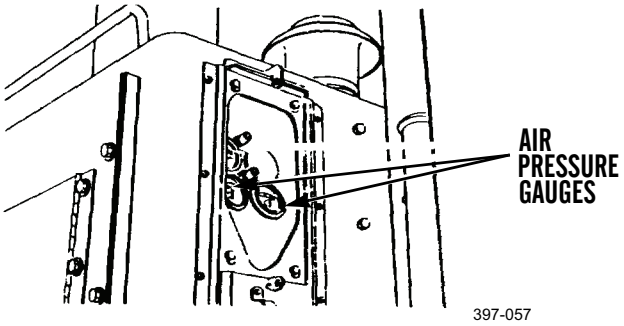


3. **Articulation Indicator.** Indicator is mounted behind steering console. It is connected by lever and cable downward through cab floor and linked to rear frame section. It registers amount of articulation (pivoting) of frame from straight (0) to half (HALF) to maximum (MAX).

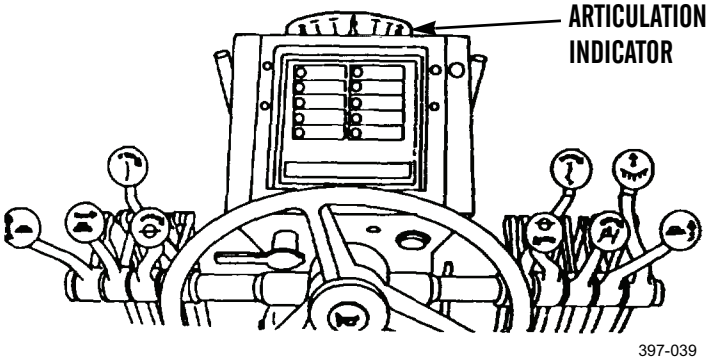

### *NONELECTRICAL GAUGES, INDICATORS, AND DIPSTICKS - CONTINUED*

4. **Centershift Indicator.** Indicator is mounted in front of cab at centershift pivot point, to right side of frame. It indicates amount of rotation of circle drive and blade from the level (center or C) grading position.

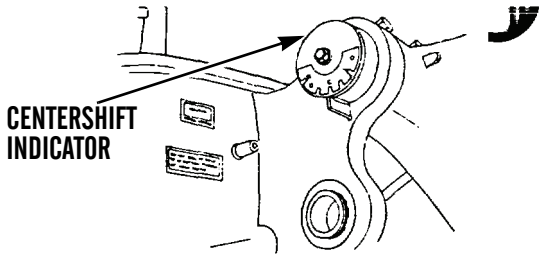


397-059

5. **Coolant Fill Level Indicators.** Raised marks can be seen in the coolant fill opening after removing the cap. The marks indicate full and low coolant levels.

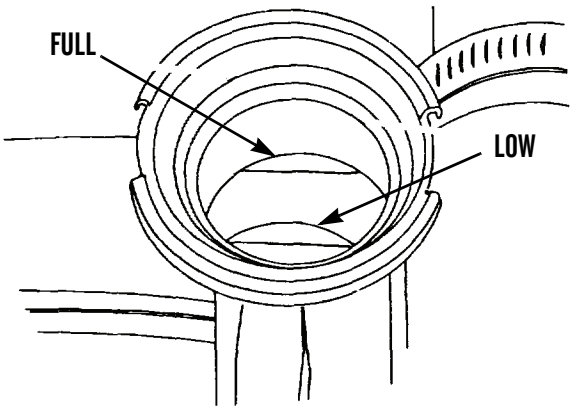


397-060

6. **Hydraulic Reservoir Sight Gauge.** Sight gauge is mounted on left side of hydraulic reservoir. Level of hydraulic oil can be seen through glass in sight gauge. The oil level is maintained between "FULL" and "ADD" with the engine off.

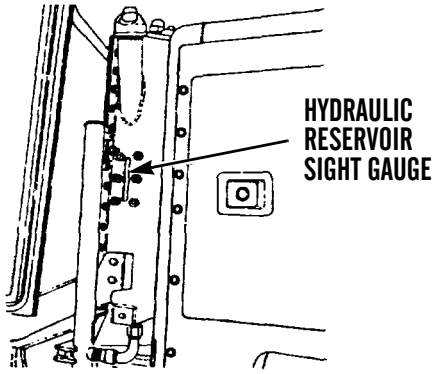


397-061

***NONELECTRICAL GAUGES, INDICATORS, AND DIPSTICKS - CONTINUED***

7. **Tandem Housing Dipstick.** Dipstick is located on top of each tandem housing toward front. Breather filter is located in hex nut handle.

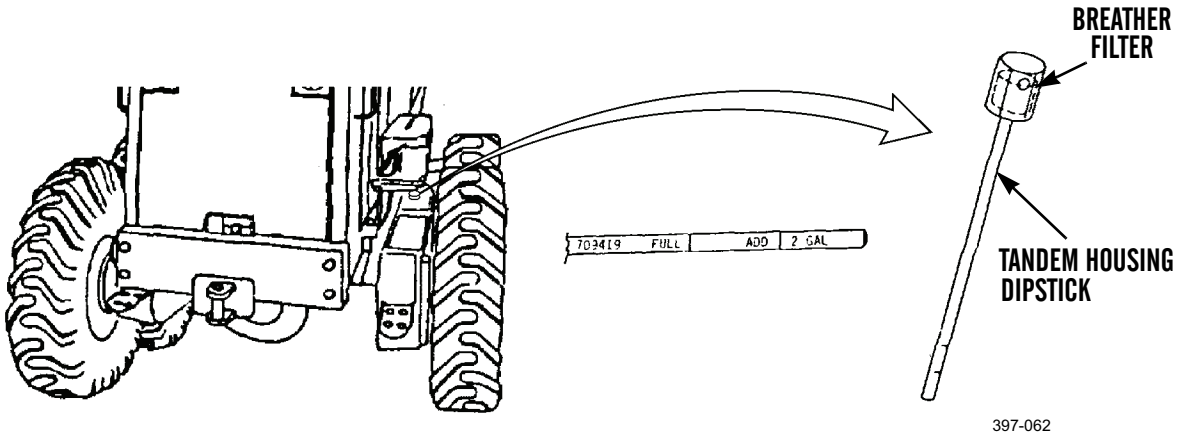


8. **Engine Oil Dipstick.** Dipstick is located next to air compressor on left side of engine.

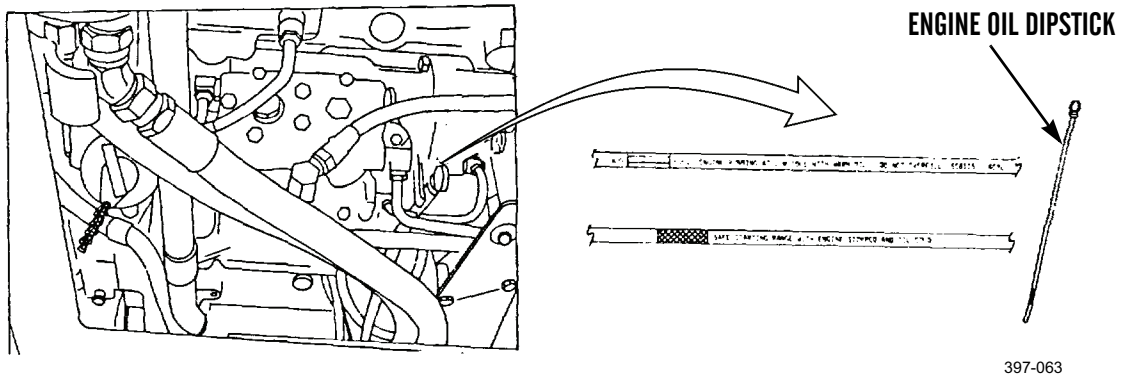


9. **Transmission and Differential Dipstick.** Dipstick is located inside of right side rear hood door assembly. Turn T-handle to the left to remove. Tightly turn T-handle to the right when repositioning to maintain seal.

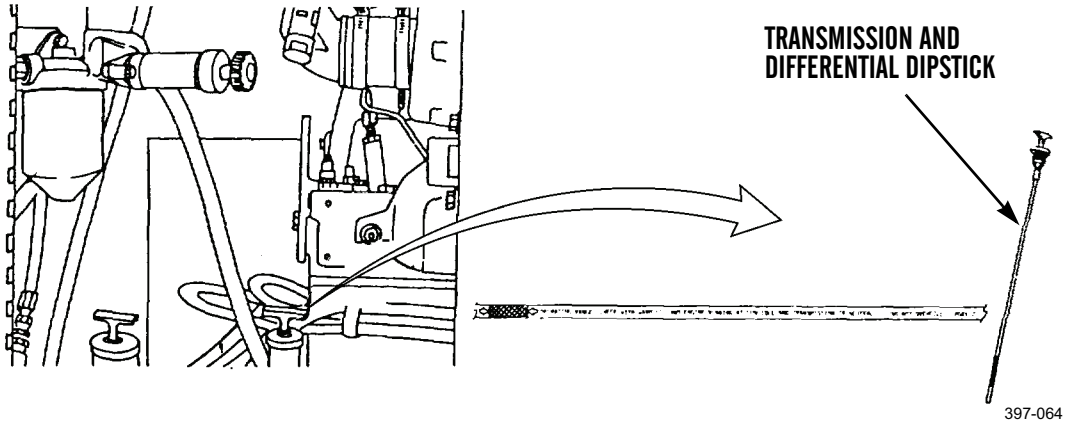

### *NONELECTRICAL GAUGES, INDICATORS, AND DIPSTICKS - CONTINUED*

10. **Fuel Level Dipstick.** Dipstick is located in fuel fill opening. Calibrations show FULL, EMPTY, and percentage of fuel in tank.

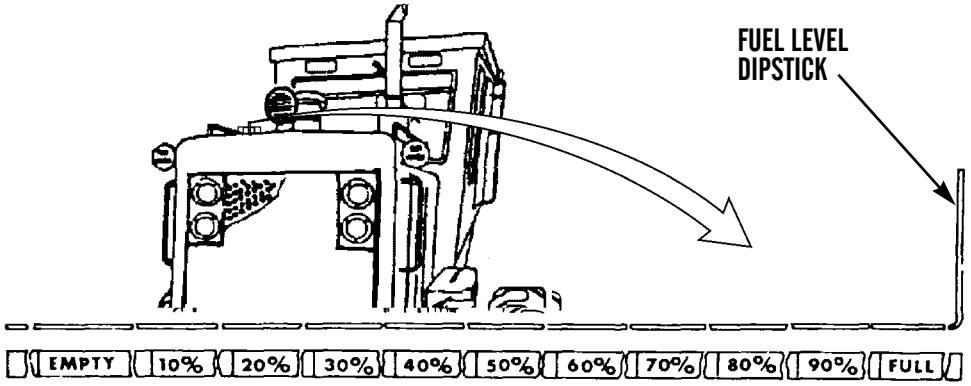


397-065

### *BLADE SYSTEM*

**NOTE**

- Refer to *Hydraulic System* in this work package for hydraulic system operation and location of hydraulic system components related to blade system operation.
- Refer to TM 5-3805-261-10 for blade operation instructions and location of blade controls.

1. The blade system uses hydraulic cylinders and a hydraulic circle drive motor to move the blade. The hydraulic system provides power for the cylinders and motor. The blade control levers are located at the sides of the steering console in the cab. The blade centershift lock is powered by pressurized air.

2. When the engine is running, the oil from the variable displacement pump goes through the relief and pressure reduction valves, through lines to the control valves for the blade system cylinders. The pressure of the oil can get as high as the pressure setting of the relief valve. When the control valves for the blade system cylinders are not being used, the pressure of the oil is 2,150 psi (14,824 kPa).

3. When the engine is running and the cylinders are not being used, the pressure of the pump oil in lines to the control valve is approximately 2,150 psi (14,824 kPa). The oil in lines and passage is open to the tank and the pressure of the oil in these lines is the same as the oil in the tank. The lock check valve stops the oil in the lines between the pressure reduction valve and the cylinder and the rod in the cylinder cannot move.

4. When the blade control valve lever for the cylinder is held in the forward position, the pump oil goes through the control valve through lines and the lock check valve into the head end of the cylinder. The oil in the head of the cylinder pushes the piston and rod out of the cylinder, which moves the blade. When more force is needed, there is an increase in the pressure of the pump oil to the head end of the cylinder. When the pressure of the pump oil goes to 1,500 psi (10,342 kPa), the oil moves the shuttle valve in the pump and the oil pressure from the pump can go to approximately 3,500 psi (24,131 kPa).

### *BLADE SYSTEM - CONTINUED*

5. The separate blade systems are:

a. **Blade Centershift Cylinder.** The cylinder is attached to the circle assembly so that the drawbar and the blade can be moved to the right or to the left.

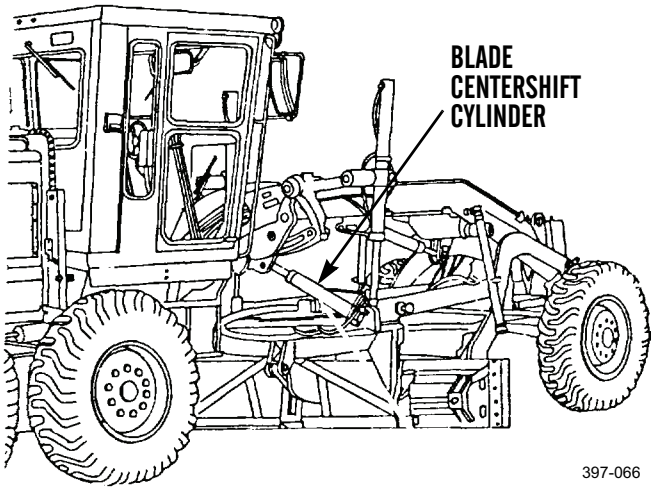

397-066

b. **Blade Centershift Lock.** This mechanical lock is mounted on the blade lift bar. The lock pin is moved by an air operated valve in the housing.

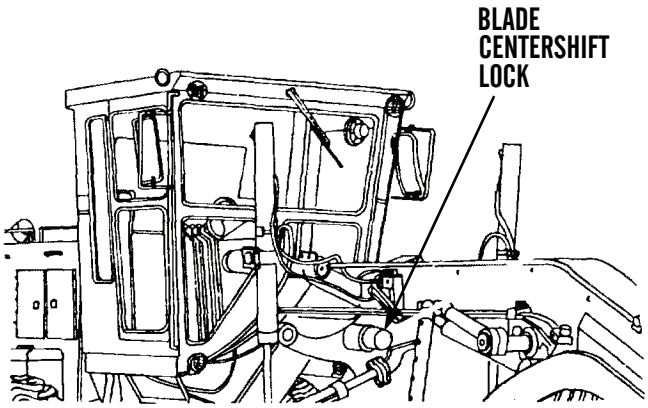

397-067

c. **Blade Tip Cylinder.** Attached to circle assembly and blade assembly so that the blade can be tipped forward or to the rear. Hydraulic oil for tip cylinder operation is sent through the hydraulic swivel.

d. **Blade Lift Cylinder.**

(1) Each cylinder is attached to a blade lift arm and the circle assembly at each side of the frame. There is a lift cylinder control lever and a right cylinder control lever in the cab.

(2) The lift cylinders are used to raise or lower the blade. They are also used to rotate the blade lift arms to set the blade angle for ditching and banking. Blade lift arms must be rotated with blade grounded and the centershift lock in the unlock position.

***BLADE SYSTEM - CONTINUED***

e. **Blade Float Hydraulic System (CCE and Type I Machines).**

(1) The purpose of this circuit is to allow blade lift cylinder rods along with the blade to move freely up and down over uneven surfaces when moving snow, gravel, and other loose materials.

(2) The system consists of a manual switch at the EMS panel, one blade float pilot valve assembly, one blade float check valve for each cylinder, and a limit switch at each of the blade lift lever linkages.

(3) When moved to the ON position, the switch at the EMS panel opens a normally closed solenoid valve and closes a normally open solenoid valve in the blade float pilot valve assembly. The opened valve sends pump pressure oil to actuate the blade float check valves. The closed valve prevents pressure oil from returning to the tank from the blade float check valves.

(4) Pistons within the blade float check valves then move check balls off their seats, which allows free movement of oil between the head and rod ends of the lift cylinders. This allows the blade to move freely up and down over uneven surfaces.

(5) The limit switches on the blade lift lever linkage allow raising and lowering of the blade lever even when the blade float system is on. If the lift lever is moved, the limit switch turns off the current to the solenoids in the blade float pilot valve. This turns off the blade float system until the lever is returned to its NEUTRAL position.

(6) When the switch at the EMS panel is moved to the OFF position, the blade float pilot valve assembly returns to normal, which now prevents free circulation of oil between upper and lower ends of the cylinders. It also allows any pressure remaining in the check valve to return to the tank.

f. **Blade Sideshift Cylinder.** Cylinder is attached to blade mounting bracket and to blade assembly. Control lever is located in control lever group mounting at side of steering console. Cylinder provides sideways movement of blade. Hydraulic oil for sideshift cylinder operation is routed through the hydraulic swivel.

g. **Blade Circle Drive Motor.** Motor is mounted on drawbar assembly so that hydraulically driven gear on motor drives the circle gear. The circle gear rotates the blade horizontally. The motor is controlled by a lever in the cab.

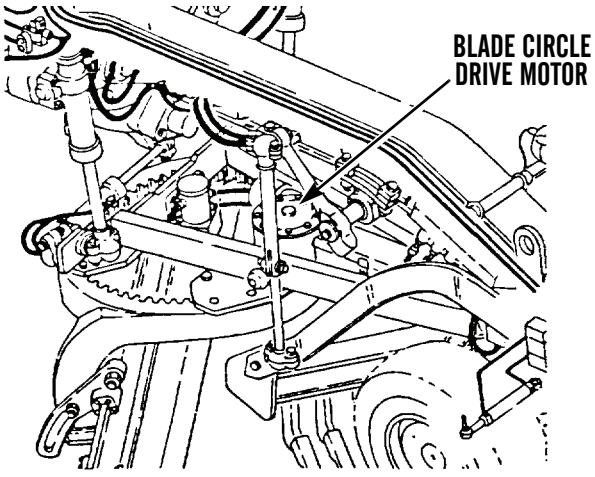


397-071

***SCARIFIER ASSEMBLY***

## NOTE

- Refer to *Hydraulic System* in this work package for hydraulic system operation and location of hydraulic system components related to scarifier assembly operation.
- Refer to TM 5-3805-261-10 for scarifier operating instructions and location of scarifier controls.

1. The scarifier assembly uses a hydraulic cylinder to move the scarifier upward or downward. The scarifier control lever is located in the lever group at the right side of the steering console in the cab.

2. When the engine is running, oil from the variable displacement pump goes through the relief and pressure reduction valves through lines, to the control valve for the scarifier cylinder. The pressure of the oil in lines can get as high as the pressure setting of the relief valve. When the control valve for the scarifier cylinder is not being used, the pressure of the oil in lines is 2,150 psi (14,824 kPa).

3. When the engine is running, and the scarifier is not being used, the pressure of the pump oil in lines to the control valve is approximately 2,150 psi (14,824 kPa). The oil in lines and passage is open to the tank and the pressure of the oil in these lines is the same as the oil in the tank. The lock check valve stops the oil in the lines between the pressure reduction valve and the cylinder and the rod in the cylinder cannot move. The pressure of the oil in lines is the same as the oil in the tank.

4. When the scarifier control valve lever is held in the LOWER position, the pump oil goes through the control valve through lines and the lock check valve into the head end of cylinder. The oil in the head of the cylinder pushes the piston and rod out of the cylinder which moves the scarifier down. When more force is needed to lower the scarifier, there is an increase in the pressure of the pump oil to the head end of cylinder. When the pressure of the pump oil goes to 1,500 psi (10,342 kPa), the oil moves the shuttle valve in the pump and the oil pressure from the pump can go to approximately 3,500 psi (24,132 kPa).

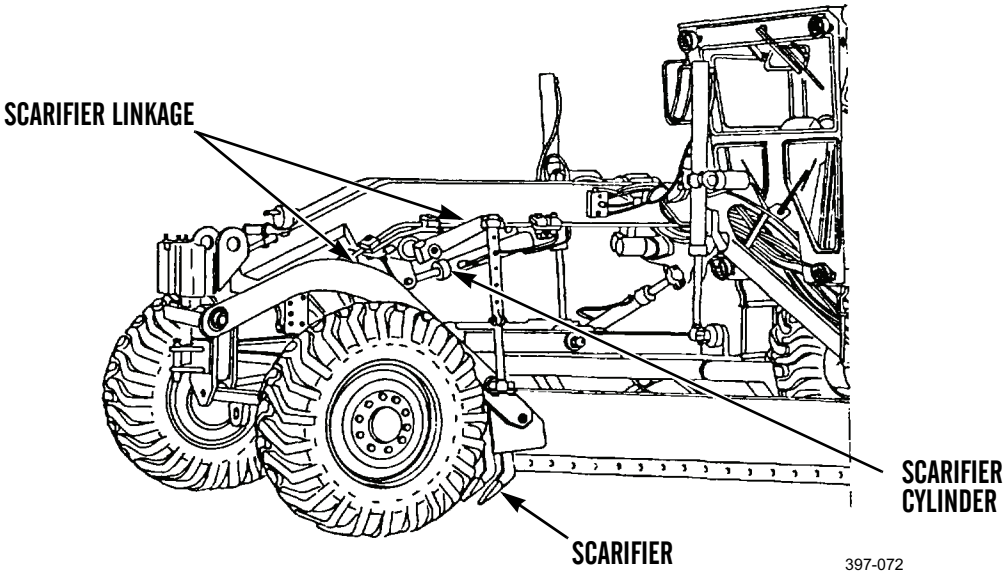


**END OF WORK PACKAGE**

# CHAPTER 2
# TROUBLESHOOTING PROCEDURES

## TROUBLESHOOTING INTRODUCTION 0004 00

### *INTRODUCTION*

1. Troubleshooting procedures in this chapter contain information you need to locate fault malfunctions on the 130G Series Grader and its components.
2. Troubleshooting procedures are located as follows:
   a. WP 0006 00 contains engine troubleshooting procedures.
   b. WP 0007 00 contains cooling system troubleshooting procedures.
   c. WP 0008 00 contains electrical system troubleshooting procedures.
   d. WP 0009 00 contains transmission troubleshooting procedures.
   e. WP 0010 00 contains brake system troubleshooting procedures.
   f. WP 0011 00 contains steering system troubleshooting procedures.
   g. WP 0012 00 contains hydraulic system troubleshooting procedures.
   h. WP 0013 00 contains miscellaneous troubleshooting procedures.
3. A *Troubleshooting Symptom Index* in WP 0005 00 is provided to aid in locating a malfunction or symptom and directs you to the appropriate troubleshooting procedure.
4. Troubleshooting procedures in this manual cannot provide all the answers or correct all malfunctions encountered. However, these procedures are an organized step-by-step approach to a problem that provide tests and inspections toward the source of the problem and its successful resolution.
5. If a malfunction is not listed in the *Troubleshooting Symptom Index* in WP 0005 00, or stated tests or inspections and corrective actions do not correct the problem, notify your supervisor.
6. Before performing troubleshooting, read and follow all safety instructions found in the Warning Summary at the front of this manual.

### *PRELIMINARY TROUBLESHOOTING PROCEDURES*

**NOTE**

Fluid leaks are classified as either Class I, Class II or Class III.

*Class I:* Seepage of fluid (as indicated by wetness or discoloration) not great enough to form drops.

*Class II:* Leakage of fluid great enough to form drops, but not enough to cause drops to drip from item being checked/inspected.

*Class III:* Leakage of fluid great enough to form drops that fall from item being checked/inspected.

1. Before starting any specific troubleshooting procedures, perform the following:
   a. Visually check for ruptured oil hoses or tubes and for Class II or Class III leaks.
   b. Check for mechanical jamming or binding caused by rocks or other foreign matter.
   c. Check fluid levels in subject area and service as required (WP 0019 00 and WP 0020 00).
2. Ensure all applicable Operator Troubleshooting has been performed before proceeding.

### *EXPLANATION OF TROUBLESHOOTING TABLE COLUMNS*

The columns in the tables in each troubleshooting work package are defined as follows:

1. **MALFUNCTION.** Indicates fault that has occurred in system/equipment.
2. **TEST OR INSPECTION.** Indicates test or inspection to be performed to isolate probable cause for fault symptom.
3. **CORRECTIVE ACTION.** Indicates procedure to correct the problem.

### *ELECTRICAL TROUBLESHOOTING GENERAL INFORMATION*

**NOTE**

Refer to *Electrical General Maintenance Instructions* (WP 0021 00) for instructions on using a multimeter to check for continuity or shorts and to perform voltage checks.

1. Analyze the symptoms and conditions and determine the most likely cause for the problem, then troubleshoot that circuit first. The more information you have concerning the problem, the easier it will be to troubleshoot.
2. Isolate to the subsystem level (in cases in which more than one subsystem is involved); next isolate the problem to a single circuit within the subsystem; then, isolate the problem to the faulty component using the *Troubleshooting Symptom Index* (WP 0005 00).
3. Frayed, broken, loose, or corroded wiring is a common source of problems in any electrical circuit. Always perform visual inspection before starting detailed troubleshooting. Observe contacts to ground in particular. Components with case grounds are especially troublesome.

**CAUTION**

When performing continuity checks, ensure the test equipment is isolated from the power source.

4. Most checks performed are voltage checks. Pay particular attention to voltages being checked in procedures. This equipment is a 24-volt system. Instructions prior to the step instruct to disconnect at test point from the potential malfunctioning component. Once the check has been made, either repair the component or go to the referenced step. If going to another step, reconnect connection or do as otherwise instructed, such as install jumper wires using jumper wire kit. When ready to make the prescribed check, apply power to the circuit (if required). An assistant may be required if the switch or power source is out of reach. Release the power function before proceeding to avoid damage to equipment.

**END OF WORK PACKAGE**

## TROUBLESHOOTING SYMPTOM INDEX 0005 00

**Malfunction/Symptom** **Troubleshooting Procedure Page**

### ENGINE


1. Engine Will Not Crank. . . . 0006 00-1
2. Engine Cranks, but Will Not Start. . . . 0006 00-1
3. Engine Starts, but Will Not Keep Running. . . . 0006 00-1
4. Engine Oil Pressure Is Low. . . . 0006 00-2
5. Engine Uses Too Much Oil. . . . 0006 00-2
6. Engine Will Not Shut Down. . . . 0006 00-2
7. Engine Knocks. . . . 0006 00-3
8. Engine Misfires, Runs Rough, or Stalls. . . . 0006 00-3
9. Not Enough Power. . . . 0006 00-4
10. Too Much Vibration. . . . 0006 00-5
11. Clicking Noise in Rocker Arm Cover. . . . 0006 00-6
12. Mechanical Noise in Engine. . . . 0006 00-6
13. Fuel Consumption Is Too High. . . . 0006 00-6
14. Loud Noise from Valves or Valve Drive Components. . . . 0006 00-6
15. Limited Rocker Arm Movement or Too Much Valve Clearance. . . . 0006 00-6
16. Valve Rotocoil or Spring Lock Is Free. . . . 0006 00-7
17. Oil at Exhaust. . . . 0006 00-7
18. Coolant in the Lubrication Oil. . . . 0006 00-7
19. Too Much Black or Gray Smoke. . . . 0006 00-7
20. Too Much White or Blue Smoke. . . . 0006 00-7
21. Transmission Oil in the Lubrication Oil . . . . 0006 00-7


### COOLING SYSTEM


1. Engine Overheats. . . . 0007 00-1
2. Engine Does Not Reach Operating Temperature. . . . 0007 00-1
3. Coolant Contaminated. . . . 0007 00-2

## TROUBLESHOOTING SYMPTOM INDEX - CONTINUED 0005 00

**Malfunction/Symptom** **Troubleshooting Procedure Page**

### ELECTRICAL SYSTEM


1. Batteries Will Not Maintain Charge. . . . 0008 00-1
2. Specific Gravity Will Not Increase to 1.240 Under Charge. . . . 0008 00-1
3. Engine Will Not Crank. . . . 0008 00-2
4. All Machine Electrical Systems Are Inoperative. . . . 0008 00-3
5. Starting Motor Is Inoperative. . . . 0008 00-4
6. Solenoid and Starting Motor Operate; Engine Cranks Slowly. . . . 0008 00-13
7. Batteries Will Not Maintain Charge. . . . 0008 00-20
8. Batteries Use Excessive Water. . . . 0008 00-20
9. Batteries Run Down in Service. . . . 0008 00-21
10. No Alternator Output. . . . 0008 00-21
11. Alternator Charge Is Too High. . . . 0008 00-22
12. All Driving, Tail, and Panel Lights Fail to Operate. . . . 0008 00-22
13. All Stop/Tail, Panel, and Articulation Lights Fail to Operate. . . . 0008 00-23
14. Headlights Fail to Operate. . . . 0008 00-23
15. Individual Light Fails to Operate. . . . 0008 00-23
16. All Turn Signal Lights and Indicators Fail to Operate. . . . 0008 00-24
17. Turn Signal Lamps Fail to Blink. . . . 0008 00-24
18. Both Floodlights Fail to Operate. . . . 0008 00-24
19. Blackout Drive Lights Fail to Operate. . . . 0008 00-24
20. Dome Light Will Not Operate (CCE Machine). . . . 0008 00-25
21. Horn Fails to Operate. . . . 0008 00-25
22. Backup Alarm Fails to Operate with Transmission in Reverse. . . . 0008 00-25
23. Console Light Does Not Operate. . . . 0008 00-26
24. Floodlight Switch Does Not Operate. . . . 0008 00-26
25. Ether Control Switch Does Not Operate. . . . 0008 00-26
26. Battery Disconnect Switch Does Not Operate. . . . 0008 00-26
27. Start Switch Does Not Operate. . . . 0008 00-26
28. Blade Float Limit Switch Does Not Operate (CCE Machine). . . . 0008 00-27
29. Air Pressure Switch Is Not Operating. . . . 0008 00-27
30. Engine Oil Pressure Switch Does Not Operate. . . . 0008 00-27
31. Coolant Temperature Switch Does Not Operate. . . . 0008 00-27
32. Fuel Pressure Switch Does Not Operate. . . . 0008 00-27
33. Hydraulic Oil Temperature Switch Does Not Operate. . . . 0008 00-27
34. Hour Meter Does Not Operate. . . . 0008 00-27
35. Windshield Wipers Do Not Operate (CCE Machine). . . . 0008 00-27
36. Panel Lamp Does Not Operate. . . . 0008 00-27
37. Engine Cranks, but Will Not Start in Cold Weather (Fuel Available). . . . 0008 00-28

## TROUBLESHOOTING SYMPTOM INDEX - CONTINUED 0005 00

**Malfunction/Symptom** **Troubleshooting Procedure Page**

### ELECTRICAL SYSTEM - CONTINUED


38. Heater Will Not Operate in High Speed or Low Speed Position (CCE Machine). . . . . 0008 00-31
39. Defrosters Will Not Operate or Will Not Operate in High Speed or Low Speed (CCE Machine). . . . . 0008 00-33
40. Windshield Wiper Will Not Operate or Will Not Operate in High Speed or Low Speed Position (CCE Machine). . . . . 0008 00-35


### TRANSMISSION


1. Transmission Does Not Operate in Any Speed or Slips in All Speeds. . . . . 0009 00-1
2. Transmission Does Not Shift. . . . . 0009 00-1
3. Transmission Engages Suddenly (Rough Shifting). . . . . 0009 00-1
4. Transmission Shifts Slow. . . . . 0009 00-2
5. Transmission Engages, but Machine Will Not Move. . . . . 0009 00-2
6. Transmission Is Hot. . . . . 0009 00-2


### BRAKE SYSTEM


1. Parking Brake Is Not Engaging Correctly. . . . . 0010 00-1
2. Parking Brake Is Not Releasing Correctly. . . . . 0010 00-1
3. Air Compressor Passes Excessive Oil, Indicated by Oil Seeping from Air Strainer. . . . . 0010 00-1
4. Noisy Compressor Operations. . . . . 0010 00-2
5. Excessive Buildup and Recovery Time. . . . . 0010 00-3
6. Compressor Fails to Unload. . . . . 0010 00-3
7. Compressor Leaks Oil. . . . . 0010 00-3
8. Compressor Constantly Cycles. . . . . 0010 00-3
9. Service Brakes Are Not Engaging Correctly. . . . . 0010 00-3
10. Service Brakes Are Not Releasing Correctly. . . . . 0010 00-4


### STEERING SYSTEM


1. Wheels Turn Slowly or Not at All When Steering Wheel Is Turned. . . . . .0011 00-1
2. Machine Has Supplemental Steering, but No Primary Steering. . . . . .0011 00-3
3. Supplemental Steering Motor Status Light Off, but Supplemental Steering Motor and Pump Runs When Engine Is Running. . . . . .0011 00-3
4. Steering Effort Is More for Supplemental Steering Than for Primary Steering. . . . . .0011 00-3

**Malfunction/Symptom** **Troubleshooting Procedure Page**

**HYDRAULIC SYSTEM**

1. All Implements Fail to Operate or Operate Slowly. . . . 0012 00-1
2. Circle Drive Operates Slowly or Fails to Operate. . . . 0012 00-1
3. Blade Float Fails to Operate Properly (CCE Machine). . . . 0012 00-1
4. Blade Lift Fails to Operate Properly. . . . 0012 00-1
5. Centershift Fails to Operate. . . . 0012 00-2
6. Blade Tip Fails to Operate. . . . 0012 00-2
7. Leaning Wheel Fails to Operate. . . . 0012 00-2
8. Side Shift Fails to Operate. . . . 0012 00-2
9. Centershift Lock Assembly Fails to Operate. . . . 0012 00-2
10. Articulation Fails to Operate Properly. . . . 0012 00-2

**MISCELLANEOUS**

1. Tires Wear Unevenly. . . . 0013 00-1
2. ROPS Is Not Secure. . . . 0013 00-1
3. Window Seals Are Defective (CCE Machine). . . . 0013 00-1
4. Door Will Not Close or Catch (CCE Machine). . . . 0013 00-1
5. Steps Bent (Old Design). . . . 0013 00-1
6. Operator’s Panel Console Moves Out of Adjustment or Does Not Lock Into Position . . . . 0013 00-2
7. All Windshield Wipers and Washers Fail to Operate (CCE Machine). . . . 0013 00-2
8. One or More Windshield Wipers Fail to Operate (CCE Machine). . . . 0013 00-3
9. Windshield Washer Fails to Operate (CCE Machine). . . . 0013 00-3
10. Front or Rear Window Defroster Does Not Operate (CCE Machine). . . . 0013 00-3
11. Heater Fans and Controls Operate, but No Heat (CCE Machine). . . . 0013 00-4
12. Both Heater Fans Fail to Operate (CCE Machine). . . . 0013 00-4
13. One Heater Fan Fails to Operate (CCE Machine). . . . 0013 00-4
14. Air Cleaner Indicator Fails to Show Air Filter Condition. . . . 0013 00-4
15. Air Pressure Gauges Fail to Operate. . . . 0013 00-4
16. Differential Lock Is Not Engaging Correctly. . . . 0013 00-4
17. Differential Lock Is Not Releasing Correctly. . . . 0013 00-5


**END OF WORK PACKAGE**

| MALFUNCTION | TEST OR INSPECTION | CORRECTIVE ACTION |
|---|---|---|
| **1. Engine Will Not Crank.** | Check electrical system. Refer to *Electrical System Troubleshooting* (WP 0008 00). | Go to Malfunction 2. |
| **2. Engine Cranks, but Will Not Start.** | 1. Check for cranking speed fast enough to start engine. Refer to *Electrical System Troubleshooting* (WP 0008 00).<br>2. Check the fuel system. Refer to *Engine Troubleshooting* (WP 0006 00). | |
| | 3. Check air cleaner for air restriction. (TM 5-3805-261-10). | 1. If dirty, clean and service air cleaner (WP 0036 00, WP 0037 00, or WP 0038 00).<br>2. Replace air cleaner (WP 0036 00, WP 0037 00, or WP 0038 00). |
| **3. Engine Starts, but Will Not Keep Running.** |   **WARNING** <br>• DO NOT smoke or permit any open flame in area of machine while you are servicing fuel system. Be sure hose nozzle is grounded against filler tube during refueling to prevent static electricity. Failure to follow this warning may cause injury to personnel or damage to equipment.<br>• DO NOT perform fuel system checks, inspections, or maintenance while smoking or near fire, flames, or sparks. Fuel may ignite, causing injury or death to personnel and damage to equipment.<br>• Operating personnel must wear fuel-resistant gloves when handling fuels. If exposed to fuel, promptly wash exposed skin and change fuel-soaked clothing. Failure to follow this warning may cause injury to personnel.<br>• Wear eye and hearing protection. Failure to follow this warning may cause injury to personnel. | |
| | 1. Check for air in fuel system lines. | Bleed injection lines (WP 0035 00). If voltage is indicated, go to Test 2. |
| | 2. Look for damaged fuel lines. | Replace defective fuel lines and bleed fuel lines (WP 0035 00, WP 0041 00, and WP 0042 00). If voltage is indicated, go to Test 3. |
| | 3. Check for clogged primary fuel filter. | |

| MALFUNCTION | TEST OR INSPECTION | CORRECTIVE ACTION |
|---|---|---|
| **3. Engine Starts, but Will Not Keep Running - Continued.** | a. Disconnect fuel line between fuel filter and fuel injection pump housing at fuel injection pump housing. | |
| | b. Place start switch in ON position and crank engine (TM 5-3805-261-10). | If fuel does not shoot out from disconnected line, replace primary fuel filter (WP 0045 00). If the problem still exists, go to Test 4. |
| | 4. Check for bad fuel (TM 5-3805-261-10). Bad fuel will have a milky-white color. | Drain bad fuel (TM 5-3805-261-10). Bleed injection lines (WP 0035 00). Replace fuel filters (WP 0045 00, WP 0046 00, and WP 0047 00). If the problem still exists, go to Test 5. |
| | 5. Check air cleaner for air restriction (TM 5-3805-261-10). | 1. If dirty, clean and service air cleaner (WP 0036 00, WP 0037 00, or WP 0038 00). |
| | | 2. Replace air cleaner (WP 0036 00, WP 0037 00, or WP 0038 00). |
| **4. Engine Oil Pressure Is Low.** | 1. Check oil dipstick for diesel fuel contamination in lubrication oil. | 1. If lubrication oil is contaminated by diesel fuel, drain and replace engine oil and filter (WP 0024 00). If the problem still exists, go to Test 2. |
| | 2. Confirm oil pressure using STE/ICE-R if available. | 2. If oil pressure is correct 14 to 87 psi (103 to 600 kPa), go to Test 3. |
| | 3. Check the oil pump suction pipe. | 1. If the oil pump suction pipe is damaged or defective, replace (WP 00276 00). |
| | | 2. Replace oil pump (WP 00276 00). |
| | | 3. Replace engine (WP 0267 00). |
| **5. Engine Uses Too Much Oil.** | 1. Check for oil leaks at the engine oil filter and oil drain plug. | If oil leaks are found at the oil filter or oil drain plug, tighten and/or replace gaskets (WP 0024 00). If the problem still exists, go to Test 2. |
| | 2. Check cylinder head valve guides. | 1. If worn, replace cylinder head (WP 0270 00). |
| | | 2. Replace engine (WP 0267 00). |
| **6. Engine Will Not Shut Down.** | Manually actuate governor control lever. Check for loose, binding, or incorrectly adjusted governor control linkage. | 1. Adjust governor control linkage (WP 0282 00). |
| | | 2. Replace governor control linkage (WP 0282 00). |

| MALFUNCTION | TEST OR INSPECTION | CORRECTIVE ACTION |
|---|---|---|
| **7. Engine Knocks.** |   **WARNING**  When opening fuel system, do not look directly at fitting. Fuel is under high pressure. Wear eye protection. Failure to follow this warning may cause injury to personnel. | |
| | Check the fuel injection nozzles. Run the engine at an RPM that causes the most noise. Loosen a fuel line nut on the injection of each cylinder one at a time, then tighten. | If loosening a fuel line nut does not make a difference, replace injection nozzle (WP 0278 00). |
| **8. Engine Misfires, Runs Rough, or Stalls.** | 1. Check for air in fuel system. | Bleed injection lines (WP 0035 00). If the problem still exists, go to Test 2. |
| | 2. Check fuel pressure with fuel pressure gauge.<br>a. Remove fuel pressure switch from fuel injection pump (WP 0115 00).<br>b. Install fuel pressure gauge.<br>c. Start engine and run at high idle. Pressure should be read at least 15 psi (103 kPa) (TM 5-3805-261-10).<br>d. If pressure is low, proceed with Tests 3 and 4. | |
| | 3. Look for damaged fuel lines. | Replace defective fuel lines and bleed fuel lines (WP 0035 00, WP 0041 00, and WP 0042 00). If the problem still exists, go to Test 4. |
| | 4. Check for clogged primary fuel filter.<br>a. Disconnect fuel line between fuel filter and fuel injection pump housing at fuel injection pump housing. | |
| | b. Place start switch in the ON position and crank engine (TM 5-3805-261-10). | If fuel does not shoot out from disconnected line, replace primary fuel filter (WP 0045 00 and WP 0046 00). If the problem still exists, go to Test 5. |
| | 5. Check fuel system timing (WP 0278 00). | Adjust fuel system timing (WP 0278 00). If the problem still exists, go to Test 6. |

| MALFUNCTION | TEST OR INSPECTION | CORRECTIVE ACTION |
|---|---|---|
| **8. Engine Misfires, Runs Rough, or Stalls. - Continued** | 6. Check engine cylinders. Loosen injection lines, one at a time to find which cylinder is misfiring. | If the problem still exists, go to Test 7. |
| | **CAUTION**<br>When fuel injection lines are loosened or tightened on fuel injection nozzles, two wrenches must be used. Nozzle must be held with wrench or damage to nozzle may result. | |
| | 7. Check the valve clearance (WP 0274 00). | If the valve clearance is not correct, service or replace (WP 0274 00). If the problem still exists, go to Test 8 |
| | 8. Check the push rods (WP 0273 00). | If a push rod is bent or broken, replace (WP 0273 00). If the problem still exists, go to Test 9. |
| | 9. Check for worn valves or valve seats (WP 0274 00). | If the valves or valve seats are worn, cylinder head should be replaced (WP 0270 00). |
| **9. Not Enough Power.** | 1. Check fuel lines and fittings for tightness and damage. | Tighten or replace lines and fittings as necessary (WP 0032 00, WP 0033 00, or WP 0034 00). If the problem still exists, go to Test 2. |
| | 2. Check the fuel pressure at the fuel injection pump housing. Fuel pressure at high idle should be 15 psi (103 kPa). | 1. If the fuel pressure is below 15 psi (103 kPa), replace fuel filter element (WP 0045 00 or WP 0046 00).<br>2. If the fuel pressure is still low, replace the fuel transfer pump (WP 0281 00).<br>3. If the fuel pressure is correct, go to Test 3. |

| MALFUNCTION | TEST OR INSPECTION | CORRECTIVE ACTION |
|---|---|---|
| **9. Not Enough Power - Continued.** |   **WARNING**  When opening fuel system, do not look directly at fitting. Fuel is under pressure. Wear eye protection. Failure to follow this warning may cause injury to personnel. | |
| | 3. Check the fuel injection nozzles. Run the engine at an RPM that causes roughness. Loosen a fuel line nut on the injection nozzle of each cylinder one at a time, then tighten (WP 0278 00). | If loosening a fuel line nut does not make a difference, replace injection nozzle (WP 0278 00). If the problem still exists, go to Test 4. |
| | 4. Check for air in fuel system. | Bleed injection lines (WP 0032 00). If the problem still exists, go to Test 5. |
| | 5. Check for bad fuel (TM 5-3805-261-10). Bad fuel will have a milky-white color. | Drain bad fuel (TM 5-3805-261-10). Bleed injection lines (WP 0032 00). Replace fuel filters (WP 0045 00, WP 0046 00, and WP 0047 00). If the problem still exists, go to Test 6. |
| | 6. Inspect air cleaner. Check to see if red "service" indicator is showing (TM 5-3805-261-10). | Replace primary element (WP 0037 00). If the problem still exists, go to Test 7. |
| | 7. Inspect turbocharger exhaust and inlet couplings for misalignment, leaks, carbon deposits, and other causes of friction. | Replace entire unit if defective (WP 0283 00). |
| **10. Too Much Vibration.** | 1. Check the pulley and vibration damper mounting, bolt and nut (WP 0271 00). | 1. If the bolt or nut holding the vibration damper pulley is loose, tighten (WP 0271 00).<br>2. If bolt and nut are tight, go to Test 2. |
| | 2. Check the pulley and vibration damper, for damage (WP 0271 00). | 1. If the pulley or vibration damper are damaged or defective, replace (WP 0271 00).<br>2. If bolt and nut are tight, go to Test 3. |
| | 3. Check the engine supports for damage or loose hardware (WP 0268 00). | If the engine mounting or hardware is loose, damaged or defective, tighten or replace (WP 0268 00). |

| MALFUNCTION | TEST OR INSPECTION | CORRECTIVE ACTION |
|---|---|---|
| **11. Clicking Noise in Rocker Arm Cover.** | 1. Check the valve springs and locks. | If the valve springs or locks are damaged or defective, replace (WP 0274 00). If the problem still exists, go to Test 2. |
| | 2. Check the lubrication in the rocker arm cover. There must be a strong flow of oil at the high RPM and a small flow at a low RPM. | 1. If the oil flow is very low, check oil pressure.<br>2. If oil pressure is low, replace engine oil pump (WP 0276 00).<br>3. If oil pressure is correct, go to Test 3. |
| | 3. Check the valve clearance. | 1. If the valve clearance is too much, adjust (WP 0273 00).<br>2. If the valve clearance is correct, go to Test 4. |
| | 4. Check the valves. | 1. If the valves are damaged or defective, replace valves (WP 0274 00).<br>2. If the valve are not damaged, replace cylinder head (WP 0270 00). |
| **12. Mechanical Noise in Engine.** | Check for connecting rod and bearing noise. | If noise is heard, replace engine (WP 0267 00). |
| **13. Fuel Consumption Is Too High.** | 1. Check the fuel injection nozzles. | If the fuel injection nozzles are damaged or defective, service or replace (WP 0278 00). If the problem still exists, go to Test 2. |
| | 2. Inspect fuel system for leaks. | Replace defective fuel lines and bleed fuel lines (WP 0035 00, WP 0041 00, and WP 0042 00). |
| **14. Loud Noise from Valves or Valve Drive Components.** | 1. Check the valve springs. | If the valve springs are damaged or defective, replace (WP 0274 00). If the problem still exists, go to Test 2. |
| | 2. Check the valves. | If the valves are damaged or defective, replace (WP 0274 00). |
| **15. Limited Rocker Arm Movement or Too Much Valve Clearance.** | 1. Check the valve clearance. | If there is too much valve clearance, adjust (WP 0274 00). If the problem still exists, go to Test 2. |
| | 2. Check the face of the rocker arms contacting valve. | If a rocker arm is worn, damaged, or defective, replace (WP 0273 00). If the problem still exists, go to Test 3. |
| | 3. Check the valve stems. | If a valve stem is worn, damaged, or defective, replace (WP 0274 00). If the problem still exists, go to Test 4. |
| | 4. Check the push rods. | If the push rods are worn, damaged, or defective, replace (WP 0273 00). If the problem still exists, go to Test 5. |

| MALFUNCTION | TEST OR INSPECTION | CORRECTIVE ACTION |
|---|---|---|
| **15. Limited Rocker Arm Movement or Too Much Valve Clearance - Continued.** | 5. Check the valve lifters. | If the valve are not moving freely, replace valve lifters (WP 0273 00).If the problem still exists, go to Test 6. |
| | 6. Check the cams on camshaft. | If the cams are worn, damaged, or defective, replace engine (WP 0267 00). |
| **16. Valve Rotocoil or Spring Lock Is Free.** | 1. Check the locks. Locks with damage can cause the valve to fall into the cylinder. | If the locks are damaged or defective, replace (WP 0274 00). If the problem still exists, go to Test 2. |
| | 2. Check the valve springs. | If the valve springs are damaged or defective, replace (WP 0274 00). |
| **17. Oil at Exhaust.** | 1. Check the turbocharger for signs of oil. | If there is oil on the turbocharger, replace. (WP 0283 00). If the problem still exists, go to Test 2. |
| | 2. Check the valve guides. | If the valve guides are worn, replace (WP 0274 00). |
| **18. Coolant in the Lubrication Oil.** | 1. Check the oil cooler for leaks and/or damage. | If the core is damaged or defective, replace (WP 0029 00). If the problem still exists, go to Test 2. |
| | 2. Check the cylinder head gasket (WP 0270 00). | 1. If the cylinder head gasket is damaged or defective, replace (WP 0270 00).<br>2. If the cylinder gasket is OK, replace engine (WP 0267 00). If the problem still exists, go to Test 3. |
| | 3. Check the seals of the cylinder liners. | If you suspect a problem with the liner seals, replace engine (WP 0267 00). |
| **19. Too Much Black or Gray Smoke.** | 1. Check the fuel injection nozzles. Refer to *Test Procedure* (WP 0278 00). | If the injection nozzle is bad, replace (WP 0278 00). If the problem still exists, go to Test 2. |
| | 2. Check the turbocharger for signs of oil. | If there is oil on the turbocharger, replace (WP 0283 00). |
| **20. Too Much White or Blue Smoke.** | Check engine oil level (TM 5-3805-2261-10). | If overfilled, lower to correct level (TM 5-3805-261-10). |
| **21. Transmission Oil in the Lubrication Oil** | 1. Check the oil levels in both the transmission and engine (WP 0023 00). | |
| | 2. If there is low transmission/high engine or high transmission/low engine oil, adjust the oil level to the proper level in both the transmission and engine (TM 5-3805-261-10). | |

| MALFUNCTION | TEST OR INSPECTION | CORRECTIVE ACTION |
|---|---|---|
| **21. Transmission Oil in the Lubrication Oil - Continued.** | 3. Run the machine and recheck the oil levels (TM 5-3805-261-10). | |
| | 4. An increase in engine oil level and simultaneous decrease in transmission oil level indicates the rear crankshaft seal and wear sleeve are defective. | Replace engine (WP 0267 00). |

**END OF WORK PACKAGE**

| MALFUNCTION | TEST OR INSPECTION | CORRECTIVE ACTION |
|---|---|---|
| |  **WARNING** <br>• DO NOT service cooling system unless engine has been allowed to cool down. This is a pressurized cooling system and escaping steam or hot coolant may cause serious burns.<br>• DO NOT remove cooling system radiator cap when engine is hot. Allow engine to cool down. Loosen cap to first stop and let any pressure out of cooling system, then remove cap. Failure to follow this warning may cause serious burns.<br>• Wear effective eye, glove, and skin protection when handling coolants. Failure to do so may cause injury to personnel. | |
| **1. Engine Overheats.** | 1. Check for restrictions to air flow. Inspect fan blades, fan shields, baffles, and plates. | Replace damaged or missing parts (WP 0053 00 and WP 0063 00). If the problem still exists, go to Test 2. |
| | 2. Check for proper belt tension and wear (WP 0061 00). | Replace belts if necessary (WP 0061 00). If the problem still exists, go to Test 3. |
| | 3. Check hoses, lines, and fittings for leakage. Tighten loose connections. | Replace hoses and clamps if necessary (WP 0057 00). If the problem still exists, go to Test 4. |
| | 4. Check for loss of pressure. | Tighten radiator cap. Replace radiator cap if necessary (WP 0065 00). If the problem still exists, go to Test 5. |
| | 5. Check for free flow of coolant through the radiator. | Flush radiator (WP 0065 00). Replace radiator if necessary (WP 0065 00). If the problem still exists, go to Test 6. |
| | 6. Inspect and test temperature regulator (WP 0059 00). | Replace temperature regulator if necessary (WP 0059 00). If the problem still exists, go to Test 7 |
| | 7. Check coolant flow from open drain outlet. | If coolant is dirty and flow is slow, replace radiator (WP 0052 00). If the problem still exists, go to Test 8. |
| | 8. Check coolant pump operation. | Replace pump if necessary (WP 0060 00). |
| **2. Engine Does Not Reach Operating Temperature.** | 1. Check condition of radiator cap. | Tighten radiator cap. Replace radiator cap if necessary (WP 0065 00). If the problem still exists, go to Test 2. |
| | 2. Inspect and test temperature regulator (WP 0059 00). | Replace temperature regulator (thermostat) if necessary (WP 0059 00). |

| MALFUNCTION | TEST OR INSPECTION | CORRECTIVE ACTION |
|---|---|---|
| **3. Coolant Contaminated.** | 1. Check engine oil for signs of coolant. | Refer to WP 0006 00, Malfunction 21. If the problem still exists, go to Test 2. |
| | 2. Check transmission oil for signs of coolant. | Refer to WP 0009 00, Malfunction 6. |

**END OF WORK PACKAGE**

.

| MALFUNCTION | TEST OR INSPECTION | CORRECTIVE ACTION |
|---|---|---|
| **1. Batteries Will Not Maintain Charge.** |  **WARNING**<br>• To avoid injury, eye protection and acid-resistant gloves must be worn when working around batteries. Do not smoke, use open flame, make sparks, or create other ignition sources around batteries. If a battery is giving off gases, it can explode and cause injury to personnel. Remove all jewelry such as rings, ID tags, watches, and bracelets. If jewelry or a tool contacts a battery terminal, a direct short will cause instant heating, damage to equipment, and injury to personnel.<br>• Sulfuric acid contained in batteries can cause serious burns. If battery corrosion or electrolyte makes contact with skin, eyes or clothing, take immediate action to stop the corrosive burning effects. Failure to follow these procedures may cause injury or death to personnel.<br>a. Eyes. Flush with cold water for no less than 15 minutes and seek medical attention immediately.<br>b. Skin. Flush with large amounts of cold water until all acid is removed. Seek medical attention as required.<br>c. Internal. If corrosion or electrolyte is ingested, drink large amounts of water or milk. Follow with milk of magnesia, beaten egg or vegetable oil. Seek medical attention immediately.<br>d. Clothing/Equipment. Wash area with large amounts of cold water. Neutralize acid with baking soda or household ammonia. | |
| | 1. Check electrolyte temperature and specific gravity (TM 9-6140-200-14). | 1. If temperature is over 120°F (49°C) and specific gravity is 1.300 or greater, batteries are being overcharged. Refer to *Malfunction 7*.<br>2. If temperature is over 120°F (49°C), but specific gravity is 1.225-1.235, recharge battery. Refer to TM 9-6140-200-14. If the problem still exists, go to Test 2. |
| | 2. Perform load test (TM 9-6140-200-14). | If batteries are defective, replace (WP 0125 00). |
| **2. Specific Gravity Will Not Increase to 1.240 Under Charge.** | Check rate of charging. Place battery on charge and ensure that cells are venting. | If specific gravity does not recover to 1.240 in 25 hours of charging, replace battery (WP 0125 00). |

| MALFUNCTION | TEST OR INSPECTION | CORRECTIVE ACTION |
|---|---|---|
| **3. Engine Will Not Crank.** | 1. Inspect batteries. | |
| | a. Visually inspect batteries for cracks, leaks, and corroded or broken terminal posts. | 1. Replace any cracked, leaking, corroded, or broken batteries or batteries with loose or broken terminal posts (WP 0125 00).<br>2. Clean corroded terminal posts. |
| | b. Check for loose, broken, or worn terminals and cables. | 1. Tighten any loose terminal or cable.<br>2. Replace any terminal or cable that is broken or worn (WP 0125 00). |
| | c. Check electrolyte level in each battery cell (TM 9-6410-200-14). | Fill each cell to fill ring with distilled water. |
| | d. Perform specific gravity test (TM 9-6410-200-14). Batteries must test 1.240 or greater, temperature corrected, and each cell in battery must test within 25 points of the others. | 1. Charge all batteries not meeting requirements and recheck specific gravity.<br>2. If 25 point variation still exists, battery is defective and must be replaced (WP 0125 00).<br>3. Tighten battery ground wire at tractor chassis ground. Tighten battery positive wire at starter solenoid. If the problem still exists, go to Test 2. |
| | **NOTE**<br>If STE/ICE-R is available, perform STE/ICE-R testing (WP 0014 00). | |
| | 2. Test batteries under load to determine adequate current capability and voltage drop during a 15 second amperage load. | |

| MALFUNCTION | TEST OR INSPECTION | CORRECTIVE ACTION |
|---|---|---|
| **3. Engine Will Not Crank - Continued.** | | |
| | 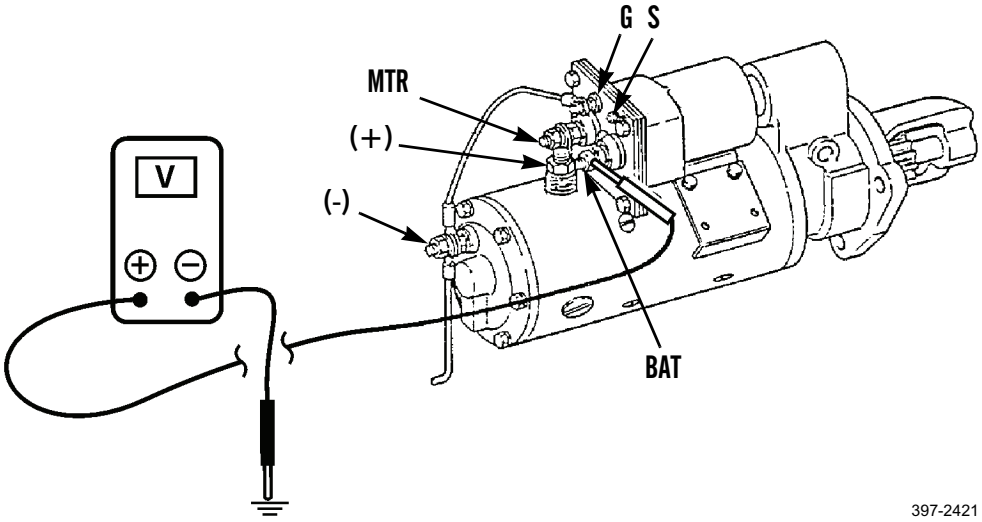 | |
| | a. Set multimeter to appropriate voltage range (WP 0021 00).<br>b. Connect meter positive lead to solenoid terminal BAT and negative lead to ground strap.<br>c. Place battery disconnect switch in the ON position. Meter should read battery voltage.<br>d. With meter still connected as above, place exterior light switch to the ON position for approximately 15 seconds. Meter reading should not be below 18 volts.<br>3. Test starting motor. Go to *Malfunction 5*. | 1. Recharge batteries if voltage reading is low (TM 9-6140-200-14). Each cell of battery must show 1.6 volts.<br>2. If voltage reading is OK, go to Test 3. |
| **4. All Machine Electrical Systems Are Inoperative.** | 1. Test battery disconnect switch for continuity.<br>a. Place battery disconnect switch in OFF position.<br>b. Disconnect negative battery cable from battery. | |

| MALFUNCTION | TEST OR INSPECTION | CORRECTIVE ACTION |
|---|---|---|
| **4. All Machine Electrical Systems Are Inoperative - Continued.** | c. Disconnect cables from battery disconnect switch (WP 0081 00). | |
| | d. Set multimeter to the appropriate ohm (Ω) range (WP 0021 00). | |
| | e. Connect meter between battery disconnect switch terminals. | |
| | f. Place battery disconnect switch in ON position. | 1. Replace battery disconnect switch if continuity is not indicated (WP 0081 00).<br>2. If continuity is indicated, go to Test 2. |
| | 2. Check connection of battery cables and condition of terminals. Check that battery is correctly connected to batteries, starter, and chassis ground. | Clean and/or reconnect battery cables if necessary. If the problem still exists, go to Test 3. |
| | 3. Inspect batteries. | Perform *Malfunction 3, Test 1*. If the problem still exists, go to Test 4. |
| | 4. If STE/ICE-R is available, perform battery STE/ICE-R Testing (WP 0014 00). | |
| **5. Starting Motor Is Inoperative.** | **NOTE**<br>If STE/ICE-R is available, perform Starting System STE/ICE-R Testing (WP 0017 00). | |
| | 1. Check starting system main circuit breaker (60A) and reset as necessary. | If circuit breaker did not require reset. If the problem still exists, go to Test 2. |
| | 2. Check starter solenoid operation. | |
| | a. Place battery disconnect switch to ON position. Turn start switch fully to the right and listen for starter solenoid to energize. | 1. If thump of starter solenoid energizing is heard, go to Step b.<br>2. If thump of solenoid is not heard, go to *Malfunction* 5, *Test 3*. |
| | b. Place battery disconnect switch to OFF position. | |
| | c. Check continuity of connector between starting motor-to-solenoid connector (WP 0021 00). | 1. If no continuity is indicated, repair the connection (WP 0021 00).<br>2. If continuity is indicated, go to Step d. |

| MALFUNCTION | TEST OR INSPECTION | CORRECTIVE ACTION |
|---|---|---|
| **5. Starting Motor Is Inoperative - Continued.** | d. Inspect and clean ground connections on back of starter and tighten nut. | If starter is still inoperative, go to Test 4. |
| | 3. Test starter circuit source voltage. | |
| | a. Place battery disconnect switch in OFF position. | |
| | b. Place multimeter to appropriate voltage range (WP 0021 00). | |
| | c. Connect multimeter positive lead to "BAT" terminal on solenoid and negative lead to chassis ground. | |
| | d. Place battery disconnect switch in ON position. | If battery voltage is indicated, go to Test 5. |
| | e. Check battery connections. | Repair or replace broken wire(s) between battery and starting motor (WP 0021 00). |
| | f. If battery disconnect switch and connections are OK, check wiring continuity. | If the problem still exists, go to Test 4. |
| | 4. Check starting motor voltage. | |
| | a. Connect meter positive lead to solenoid terminal MTR and negative lead to chassis ground. | |
| | b. Place battery disconnect switch to ON position. | |

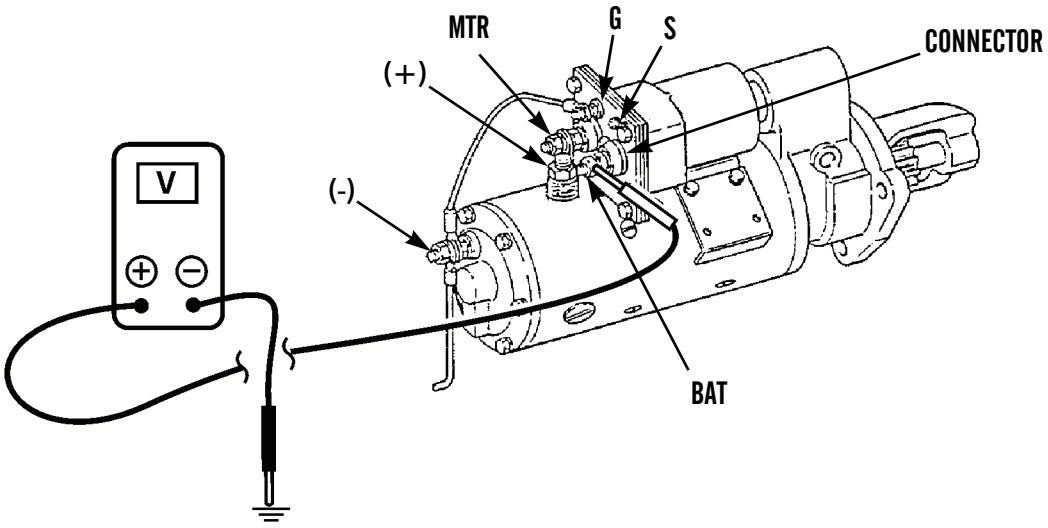

| MALFUNCTION | TEST OR INSPECTION | CORRECTIVE ACTION |
|---|---|---|
| **5. Starting Motor Is Inoperative - Continued.** | c. Momentarily turn start switch fully to the right and observe meter reading. | 1. If battery voltage is indicated, replace starting motor (WP 0067 00). |
| | 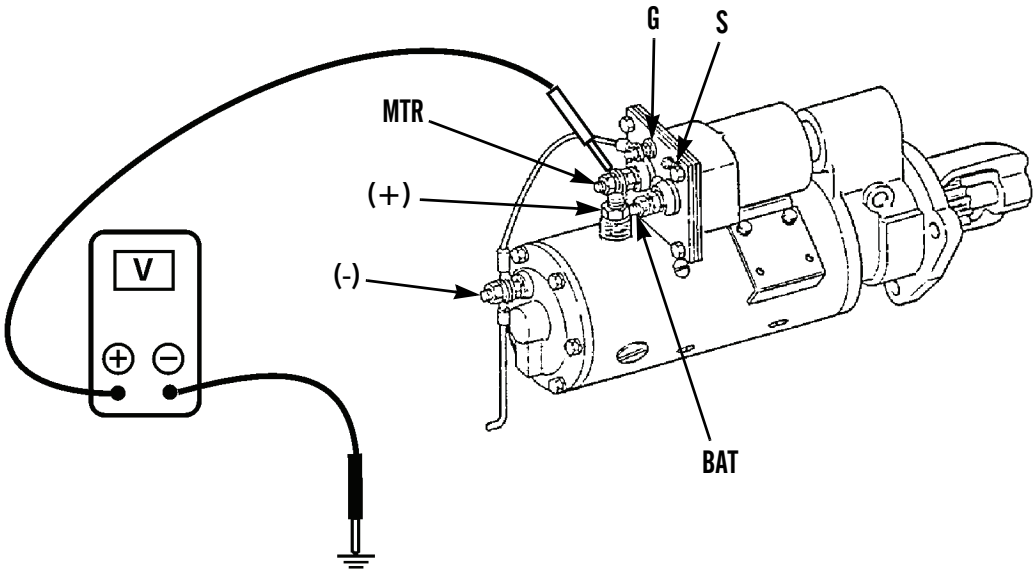<br>397-2423 | |
| | 5. Check starter relay and solenoid.<br>a. Place battery disconnect switch in OFF position.<br>b. Set multimeter to appropriate voltage range.<br>c. Connect meter positive lead to terminal S on solenoid.<br>d. Connect meter negative lead to chassis ground.<br>e. Turn battery disconnect switch to ON position. | |

| MALFUNCTION | TEST OR INSPECTION | CORRECTIVE ACTION |
|---|---|---|
| **5. Starting Motor Is Inoperative - Continued.** | f. Momentarily turn start switch fully to the right and observe meter reading. | 1. If voltage is indicated, go to Test 6.<br>2. If voltage is not indicated, go to Test 7. |
| | 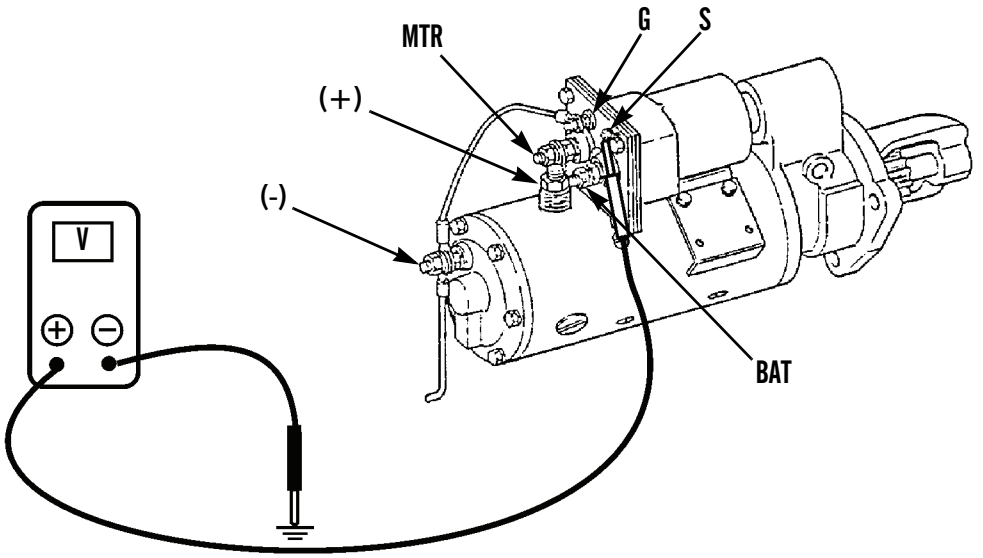<br>397-2424 | |
| | 6. Test G terminal for continuity to ground.<br>a. Place battery disconnect switch in OFF position.<br>b. Connect meter positive lead to G terminal on solenoid. | |

| MALFUNCTION | TEST OR INSPECTION | CORRECTIVE ACTION |
|---|---|---|
| **5. Starting Motor Is Inoperative - Continued.** | c. Connect meter negative lead to chassis ground and observe reading. | 1. If continuity is indicated, replace starting motor ((WP 0067 00).<br><br>2. If no continuity is indicated, repair the ground circuit (WP 0021 00). If the problem still exists, go to Test 7. |

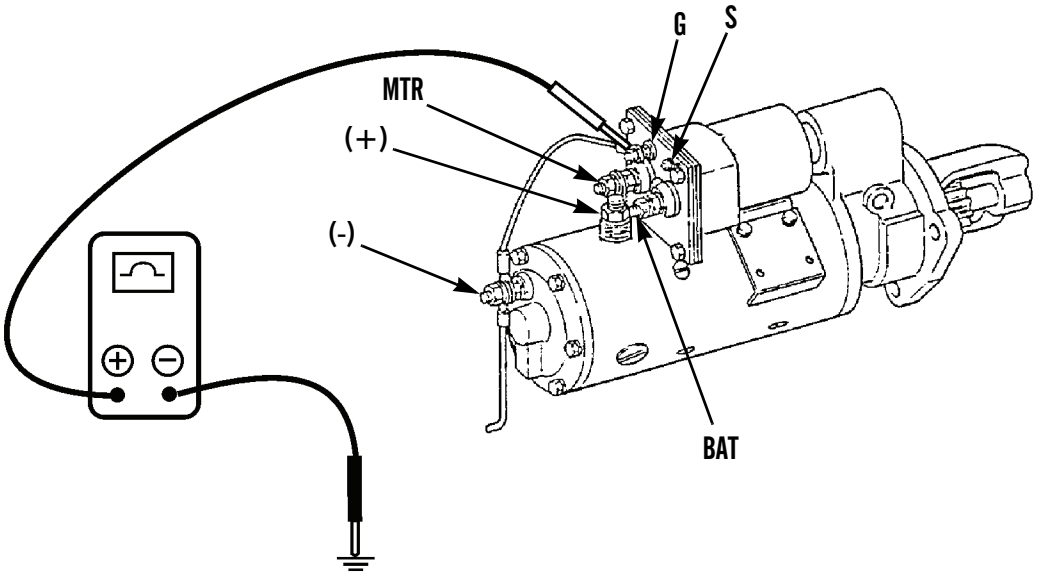


397-2425

7. Test starter relay.
   a. Place battery disconnect switch in OFF position.
   b. Set multimeter to appropriate voltage range.
   c. Connect meter positive lead to smaller gauge wire with no insulation and negative lead to chassis ground.
   d. Place battery disconnect switch to ON position.

| MALFUNCTION | TEST OR INSPECTION | CORRECTIVE ACTION |
|---|---|---|
| **5. Starting Motor Is Inoperative - Continued.** | e. Momentarily turn start switch fully to the right and observe meter. | 1. If voltage is indicated, go to Test 8.<br>2. If voltage is not indicated, place battery disconnect switch in OFF position, reconnect white wire and go to Test 11. |
| | 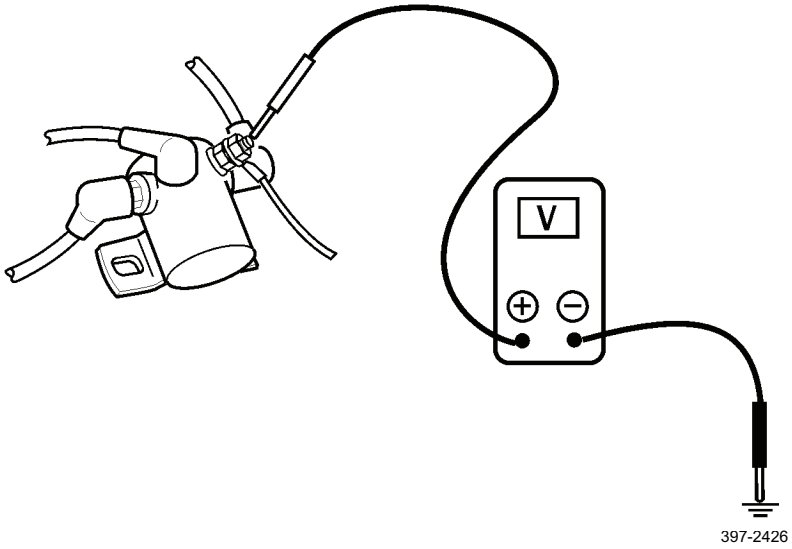<br>397-2426 | |
| | 8. Test for voltage between starter relay and chassis ground.<br>a. Place battery disconnect switch in OFF position.<br>b. Disconnect ground from starter relay.<br>c. Connect meter positive lead to ground terminal on relay (relay side).<br>d. Connect meter negative lead to chassis ground. | |

| MALFUNCTION | TEST OR INSPECTION | CORRECTIVE ACTION |
|---|---|---|
| **5. Starting Motor Is Inoperative - Continued.** | e. Place battery disconnect switch to ON position.<br>f. Momentarily turn start switch fully to the right and observe meter. | 1. If voltage is indicated, go to Test 9.<br>2. If voltage is not indicated, replace relay (WP 0068 00). If the problem still exists, go to Test 9. |

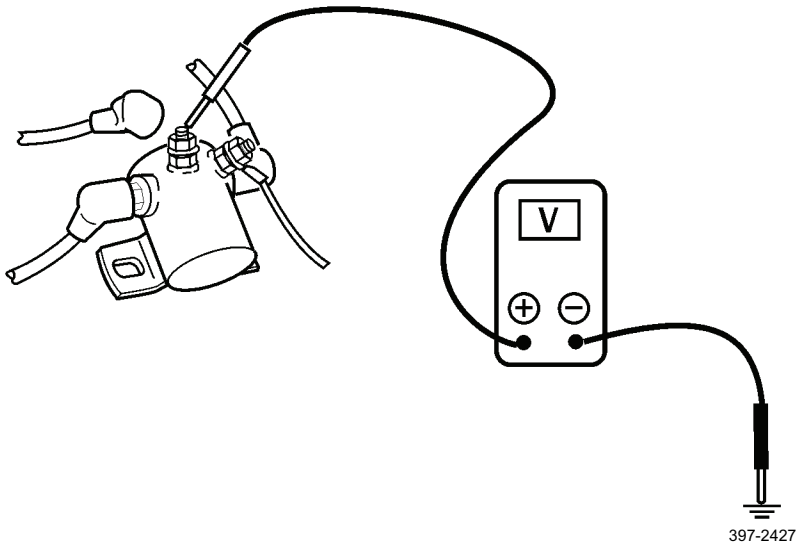

| MALFUNCTION | TEST OR INSPECTION | CORRECTIVE ACTION |
|---|---|---|
| **5. Starting Motor Is Inoperative - Continued.** | 9. Test for continuity between starter relay ground wire and chassis ground.<br>a. Place battery disconnect switch in OFF position.<br>b. Connect meter positive lead to ground wire for relay (harness side).<br>c. Connect meter negative lead to chassis ground and observe reading. | 1. If continuity is indicated, go to Test 10.<br>2. If continuity is not indicated, repair the ground (WP 0021 00). If the problem still exists, go to Test 2. |
| | 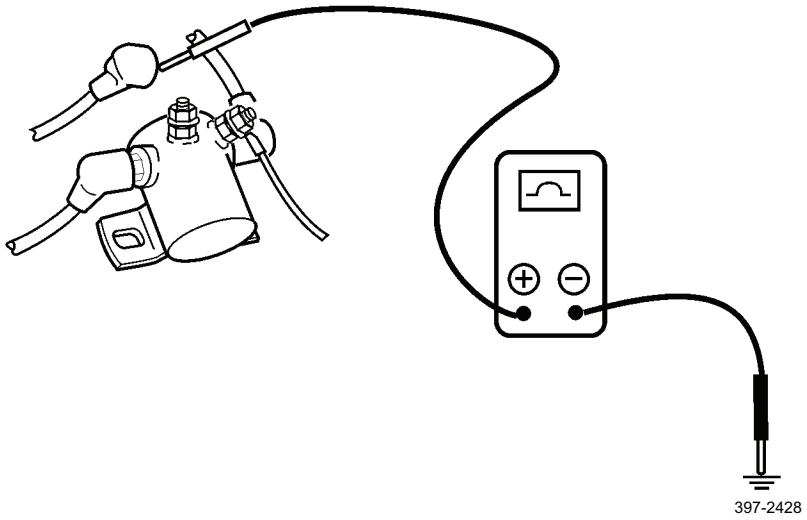<br>397-2428 | |
| | 10. Test for continuity between starter relay ground and starter solenoid.<br>a. Place battery disconnect switch in OFF position.<br>b. Disconnect both larger gauge wires from starter relay. | |

| MALFUNCTION | TEST OR INSPECTION | CORRECTIVE ACTION |
|---|---|---|
| **5. Starting Motor Is Inoperative - Continued.** | c. Connect meter leads as shown in the illustration below and measure continuity. | 1. If continuity is indicated, replace starter relay (WP 0068 00).<br>2. If continuity is not indicated, repair circuit(s) in question (WP 0021 00). If the problem still exists, go to Test 11. |

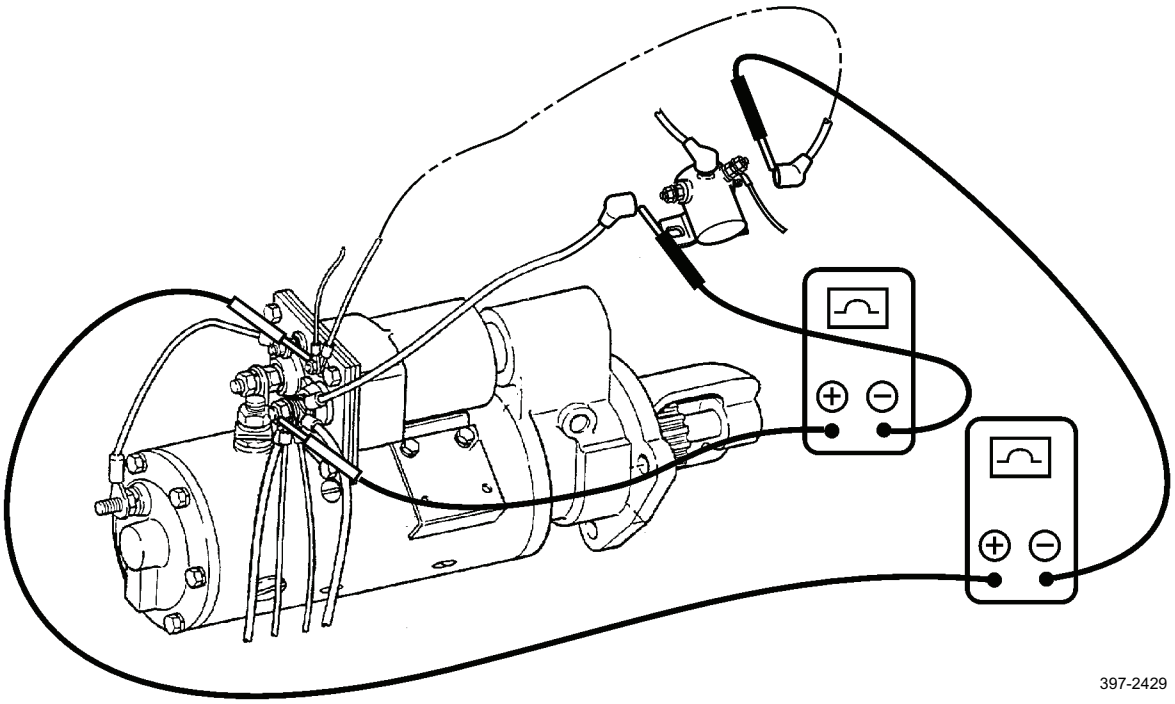

397-2429

| | | |
|---|---|---|
| | 11. Test voltage to start switch.<br>a. Place battery disconnect switch in OFF position.<br>b. Disconnect orange lead from start switch BAT terminal.<br>c. Set multimeter to appropriate voltage range.<br>d. Connect meter positive lead to orange lead (harness side) and negative lead to chassis ground. | |

| MALFUNCTION | TEST OR INSPECTION | CORRECTIVE ACTION |
|---|---|---|
| **5. Starting Motor Is Inoperative - Continued.** | e. Place battery disconnect switch to ON position and observe multimeter reading. | If voltage is indicated, go to Test 12. |
| | f. Place battery disconnect switch to OFF position and check wiring for continuity. | Repair or replace broken wire(s) (WP 0021 00). If voltage is indicated, go to Test 12. |
| | 12. Test engine start switch starter for continuity. | |
| | a. Place battery disconnect switch in OFF position. | |
| | b. Disconnect engine start switch. | |
| | c. Connect meter positive lead to terminal where orange lead connects (switch side). | |
| | d. Connect meter negative lead to terminal where white lead connects (switch side). | |
| | e. Turn start switch fully to the right. | 1. If continuity is indicated, repair open circuit between engine start switch and starter relay.<br>2. If continuity is not indicated, replace engine start switch (WP 0079 00). |
| **6. Solenoid and Starting Motor Operate; Engine Cranks Slowly.** | **NOTE**<br>If STE/ICE-R is available, perform Starting System STE/ICE-R Testing (WP 0017 00). | |
| | 1. Check batteries for overheating. | |
| | a. Crank engine for 15 seconds. | |
| | **WARNING**<br>Touch terminal connections one at a time; never touch both terminals at once. Be sure not to be grounded to the machine when checking. Failure to do so may cause serious personal injury or death. | |
| | b. Feel battery terminal connections. | If battery terminal(s) are hot, clean corroded connection(s). Tighten all loose connections at batteries, ground, and starter. If the problem still exists, go to Test 2. |
| | 2. Test specific gravity for each battery, perform *Malfunction 1, Test 1*. | If the problem still exists, go to Test 3. |
| | 3. Test starting motor voltage. | |

| MALFUNCTION | TEST OR INSPECTION | CORRECTIVE ACTION |
|---|---|---|
| **6. Solenoid and Starting Motor Operate; Engine Cranks Slowly - Continued.** | a. Set multimeter to appropriate voltage range.<br><br>b. Connect meter positive lead to positive terminal on starting motor and negative meter lead to chassis ground. | |
| | 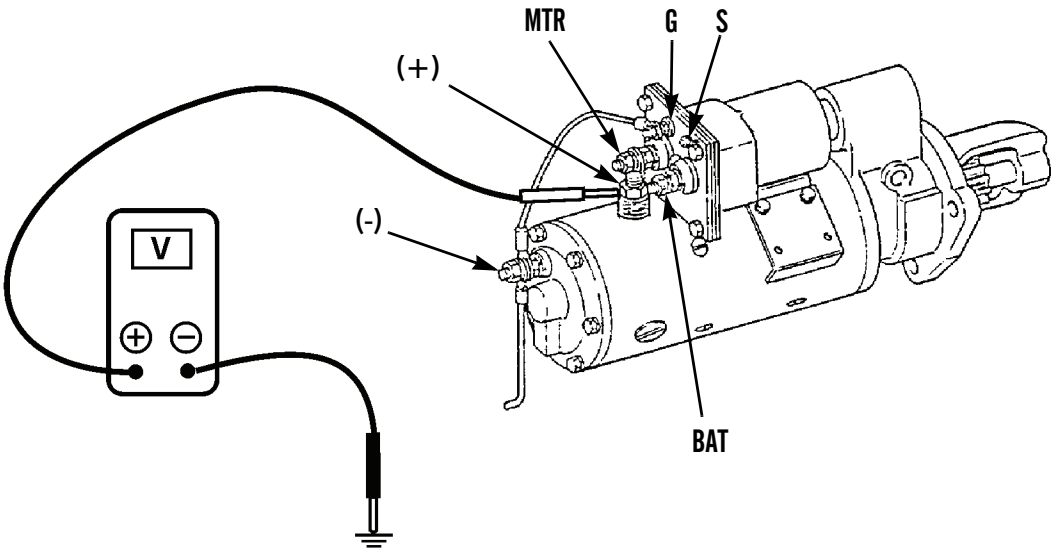<br>397-2430 | |
| | c. Crank engine and observe voltage reading on meter. Voltage should exceed 22 volts. | 1. If voltage is low, place battery disconnect switch in OFF position and clean and tighten starting motor terminal connections. If problem still exists, go to Test 4. |

| MALFUNCTION | TEST OR INSPECTION | CORRECTIVE ACTION |
|---|---|---|
| **6. Solenoid and Starting Motor Operate; Engine Cranks Slowly - Continued.** | 4. Perform voltage drop test on starting motor-to-solenoid connector.<br>a. Connect meter negative lead to positive terminal on starting motor and meter positive lead to MTR terminal on solenoid.<br>b. Crank engine and observe meter. | If voltage reading exceeds 0.1 volt, place battery disconnect switch in OFF position and clean and tighten starting motor-to-solenoid connections. Replace if broken. If the problem still exists, go to Test 5. |
| | 5. Perform voltage drop test on solenoid contactors.<br>a. Connect meter positive lead to solenoid BAT terminal and meter negative lead to solenoid MTR terminal. | |

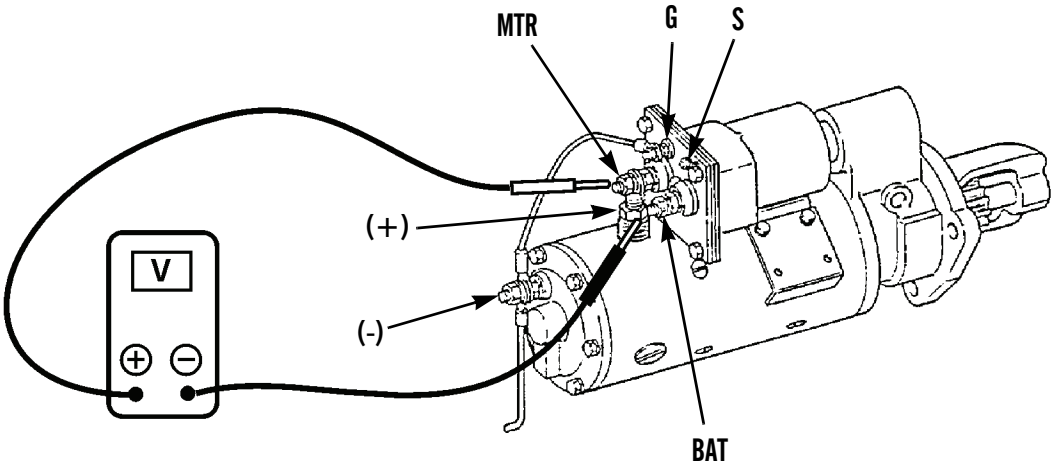


397-2431

| MALFUNCTION | TEST OR INSPECTION | CORRECTIVE ACTION |
|---|---|---|
| **6. Solenoid and Starting Motor Operate; Engine Cranks Slowly - Continued.** | b. Crank engine and observe meter. | 1. If voltage reading is 0.4 volt, replace starting motor (WP 0067 00). If malfunction still exists, go to Tests 6, 7, and 8. |
| | 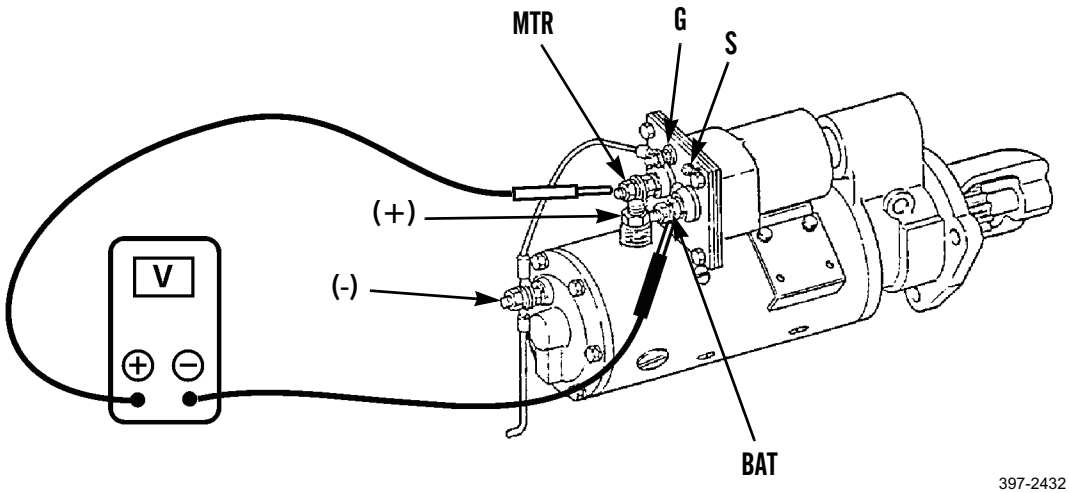 397-2432 | |
| | 6. Test negative cable voltage drop from batteries to starting motor.<br>a. Place battery disconnect switch in OFF position.<br>b. Connect meter positive lead to negative terminal on starting motor and meter negative lead to chassis ground.<br>c. Place battery disconnect switch to ON position. | |

| MALFUNCTION | TEST OR INSPECTION | CORRECTIVE ACTION |
|---|---|---|
| **6. Solenoid and Starting Motor Operate; Engine Cranks Slowly - Continued.** | d. Crank engine and observe meter. | If voltage exceeds 0.4 volt, clean and tighten cable connections at batteries, starting motor, and chassis ground points. If the problem still exists, go to Test 7. |

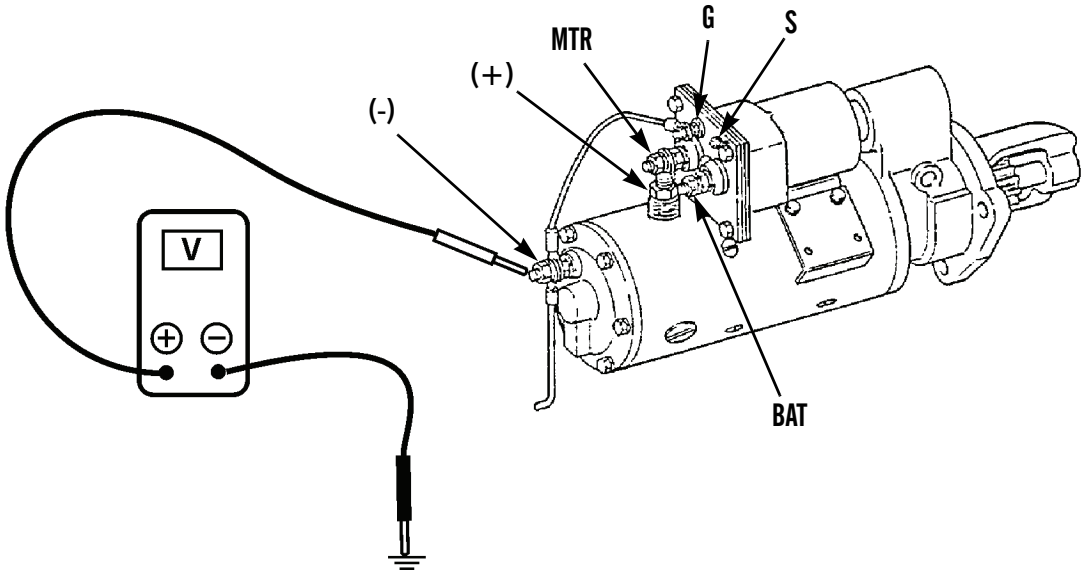


397-2433

| | | |
|---|---|---|
| | 7. Test positive cable voltage from batteries to solenoid.<br>a. Place battery disconnect switch in OFF position.<br>b. Connect meter positive lead to battery positive terminal and meter negative lead to solenoid BAT terminal.<br>c. Place battery disconnect switch to ON position. | |

| MALFUNCTION | TEST OR INSPECTION | CORRECTIVE ACTION |
|---|---|---|
| **6. Solenoid and Starting Motor Operate; Engine Cranks Slowly - Continued.** | d. Crank engine and observe meter. | If voltage exceeds 0.4 volt, clean and tighten cable connections at batteries, starting motor, and chassis ground points. If the problem still exists, go to Test 8. |

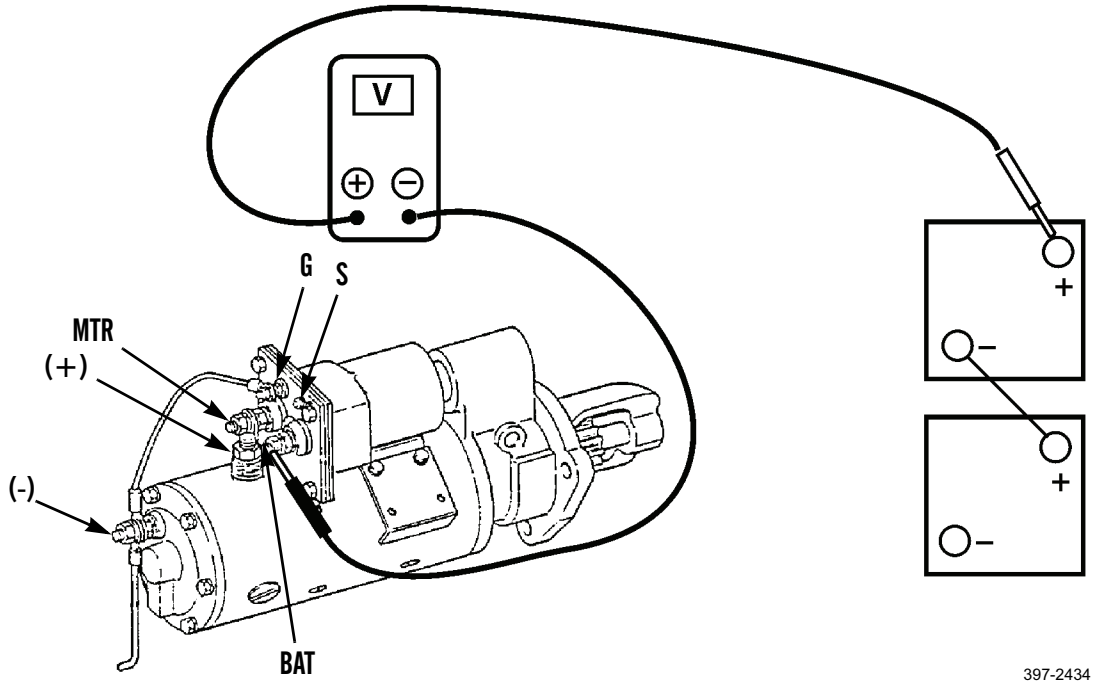


8. Test battery voltage after cranking load is applied.
   a. Set multimeter to appropriate voltage range.

| MALFUNCTION | TEST OR INSPECTION | CORRECTIVE ACTION |
|---|---|---|
| **6. Solenoid and Starting Motor Operate; Engine Cranks Slowly - Continued.** | b. Connect meter lead directly across battery terminals as shown below. | |
| | c. Push governor control lever forward past detent and crank engine for approximately 30 seconds. Observe meter reading after cranking has stopped. | 1. If voltage is not 20 volts or more, go to *Malfunction 2*.<br>2. If voltage is satisfactory, replace starting motor (WP 0067 00). |

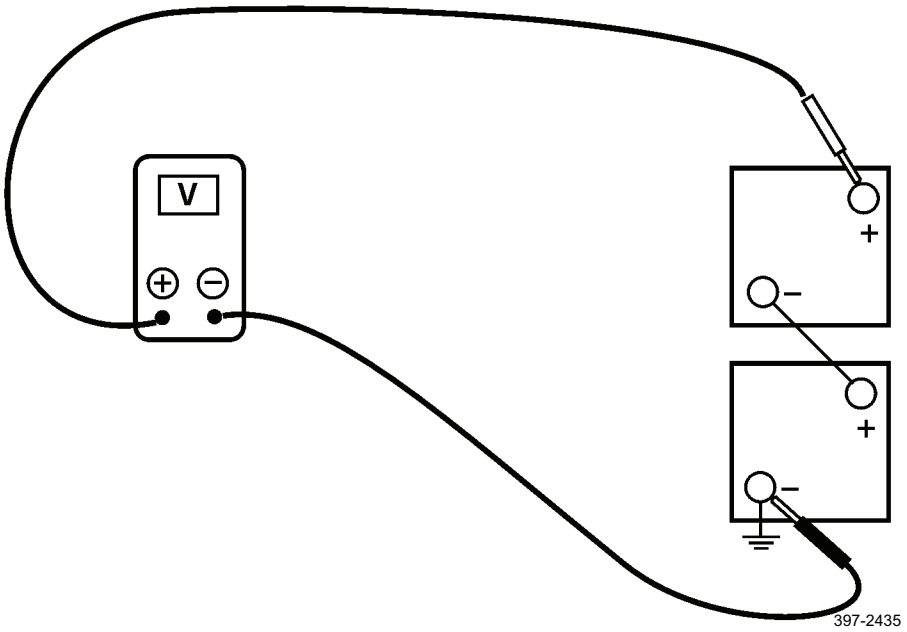

| MALFUNCTION | TEST OR INSPECTION | CORRECTIVE ACTION |
|---|---|---|
| **7. Batteries Will Not Maintain Charge.** | **NOTE**<br>If STE/ICE-R is available, perform Battery STE/ICE-R Testing (WP 0018 00). | |
| | Test charging voltage. | |
| | a. Check connections for tightness. | Tighten if necessary. |
| | b. Set multimeter to appropriate voltage range (WP 0021 00). | |
| | c. Connect multimeter directly across battery terminals as shown. | |
| | d. Start engine and allow it to stabilize. | If meter does not indicate 26.5 to 28 volts, replace alternator (WP 0066 00). |
| | 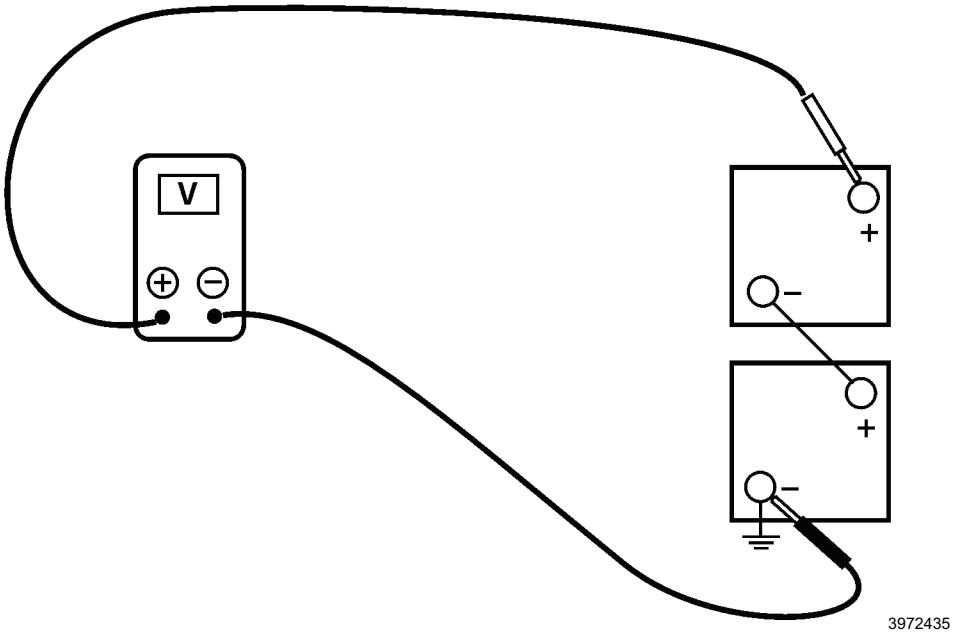<br>3972435 | |
| **8. Batteries Use Excessive Water.** | **NOTE**<br>If STE/ICE-R is available, perform Battery STE/ICE-R Testing (WP 0018 00). | |
| | 1. Visually inspect batteries for leaks. | Replace batteries as required (WP 0125 00). If the problem still exists, go to Test 2. |
| | 2. Test charging voltage. Go to *Malfunction 7*. | |

| MALFUNCTION | TEST OR INSPECTION | CORRECTIVE ACTION |
|---|---|---|
| **9. Batteries Run Down in Service.** | **NOTE**<br>If STE/ICE-R is available, perform Battery STE/ICE-R Testing (WP 0018 00). | |
| | 1. Check for loose, broken, or missing alternator belts. | 1. Adjust loose belts (WP 0061 00).<br>2. Replace broken or missing belts (WP 0061 00). If the problem still exists, go to Test 2. |
| | 2. Test charging voltage. Go to *Malfunction 7*. | |
| **10. No Alternator Output.** | **NOTE**<br>If STE/ICE-R is available, perform Test #90 (TM 9-4910-571-12&P). | |
| | 1. Check for loose, broken, or missing alternator belts. | 1. Adjust loose belts (WP 0061 00).<br>2. Replace broken or missing belts (WP 0061 00). If the problem still exists, go to Test 2. |
| | 2. Check connections for tightness. | Tighten if necessary. If the problem still exists, go to Test 3. |
| | 3. Test alternator circuit voltage.<br>a. Place battery disconnect switch in OFF position.<br>b. Set multimeter to appropriate voltage range.<br>c. Connect meter positive lead to orange lead disconnected from alternator positive terminal and meter negative lead to chassis ground. | |

| MALFUNCTION | TEST OR INSPECTION | CORRECTIVE ACTION |
|---|---|---|
| **10. No Alternator Output - Continued.** | | |
| | 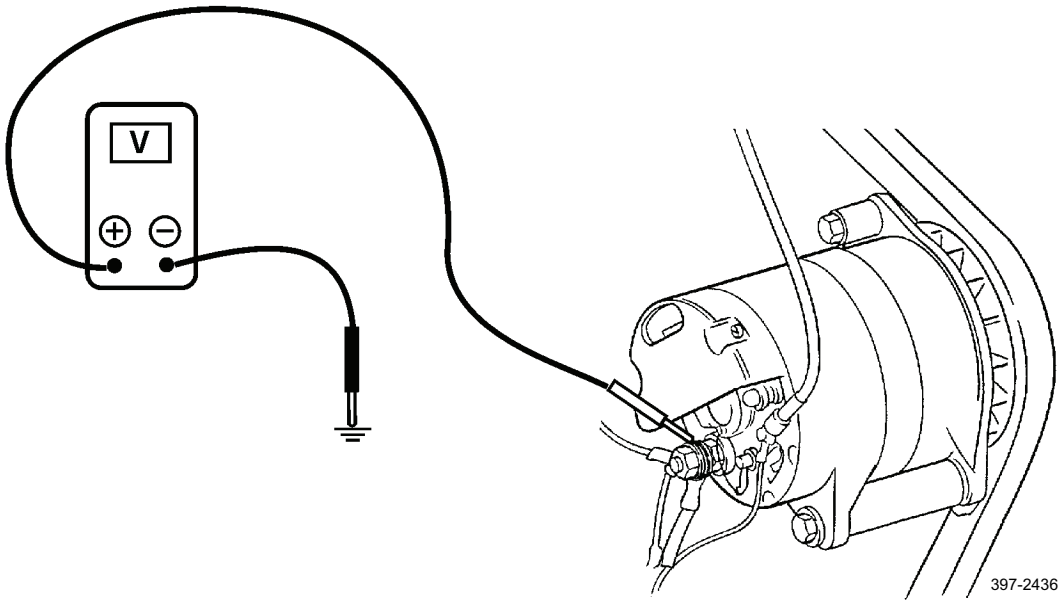 | |
| | d. Place battery disconnect switch to ON position and observe multimeter reading.<br>e. If battery voltage is indicated, place battery disconnect switch in OFF position.<br>f. Check continuity between alternator and ground. | 1. Repair or replace alternator ground (WP 0021 00).<br>2. If continuity is present, replace alternator (WP 0066 00). |
| **11. Alternator Charge Is Too High.** | **NOTE**<br>If STE/ICE-R is available, perform Test #90 (TM 9-4910-571-12&P).<br>Test charging voltage. Go to *Malfunction 10*. | If out of range, replace alternator (WP 0066 00). |
| **12. All Driving, Tail, and Panel Lights Fail to Operate.** | 1. Check main circuit breaker (60A). | 1. Reset circuit breaker.<br>2. Replace if defective. If the problem still exists, go to Test 2. |

| MALFUNCTION | TEST OR INSPECTION | CORRECTIVE ACTION |
|---|---|---|
| **12. All Driving, Tail, and Panel Lights Fail to Operate - Continued.** | 2. Check wiring harness for corrosion, cracks, and breaks at circuit breaker connection. | Repair wiring harness if damaged or defective (WP 0021 00). |
| **13. All Stop/Tail, Panel, and Articulation Lights Fail to Operate.** | 1. Check stop lights fuse (10A), and operator panel fuse (5A). | Replace fuse if blown (WP 0096 00). If the problem still exists, go to Test 2. |
| | 2. Test continuity of stop light switch. Connect multimeter to back of switch. | If multimeter indicates no reading, the circuit does not have continuity. Replace stop light switch (WP 0117 00). If the problem still exists, go to Test 3. |
| | 3. Check wiring harness for corrosion, cracks, and breaks. | Repair wiring harness if damaged or defective (WP 0021 00). Replace wiring harness if repair is not possible (WP 0285 00 or WP 0289 00). |
| **14. Headlights Fail to Operate.** | 1. Check headlight circuit breaker (15A). | Replace if defective. If the problem still exists, go to Test 2. |
| | 2. Test the continuity of the headlight switch. | If the multimeter indicates no reading, the circuit does not have continuity. Replace light switch (WP 0101 00). If the problem still exists, go to Test 3. |
| | 3. Test the continuity of the dimmer switch. Connect multimeter to back of switch. | If multimeter indicates no reading, the circuit does not have continuity. Replace dimmer switch (WP 0103 00). If the problem still exists, go to Test 4. |
| | 4. Check wiring harness for corrosion, cracks, and breaks. | Repair wiring harness if damaged or defective (WP 0021 00). Replace wiring harness if necessary (WP 0288 00). |
| **15. Individual Light Fails to Operate.** | 1. Check the bulb. | If the bulb is burned out, replace. If the problem still exists, go to Test 2. |
| | 2. Check the wiring harness. | Repair wiring harness if damaged or defective (WP 0021 00). Replace wiring harness if necessary (WP 0285 00 through WP 0289 00). If the problem still exists, go to Test 3. |
| | 3. Check individual light socket. | Replace light socket if corrosion is evident or if socket is damaged or defective. If the problem still exists, go to Test 4. |

| MALFUNCTION | TEST OR INSPECTION | CORRECTIVE ACTION |
|---|---|---|
| **15. Individual Light Fails to Operate - Continued.** | 4. Test continuity of individual light assembly. Connect multimeter to terminal at back of light. | If multimeter indicates no reading, circuit does not have continuity. Replace light assembly. If the problem still exists, go to Test 5. |
| | 5. Test continuity of wire assemblies between individual light and switch. | Repair or replace individual wire assembly as necessary. If the problem still exists, go to Test 6. |
| | 6. Test continuity of light switch. | If multimeter indicates no reading, circuit does not have continuity. Replace light switch (WP 0101 00). |
| **16. All Turn Signal Lights and Indicators Fail to Operate.** | 1. Check main circuit breaker (60A). | Reset circuit breaker. If the problem still exists, go to Test 2. |
| | 2. Check turn signal fuse (10A), and operator panel fuse (5A). | Replace fuse if blown (WP 0096 00). If the problem still exists, go to Test 3. |
| | 3. Test continuity of flasher unit. Connect multimeter to bottom of unit. | If multimeter indicates no reading, circuit does not have continuity. Replace flasher unit (WP 0094 00). If the problem still exists, go to Test 4. |
| | 4. Test continuity of turn signal switch. | If multimeter indicates no reading, circuit does not have continuity. Replace turn signal switch (WP 0073 00). |
| **17. Turn Signal Lamps Fail to Blink.** | Test continuity of flasher unit. Connect multimeter to bottom of unit. | If multimeter indicates no reading, circuit does not have continuity. Replace flasher unit (WP 0094 00). |
| **18. Both Floodlights Fail to Operate.** | 1. Check main circuit breaker (60A). | Reset circuit breaker. If the problem still exists, go to Test 2. |
| | 2. Check blade lights fuse (15A) and rear floodlights fuse (15A). | Replace fuse if blown (WP 0096 00). If the problem still exists, go to Test 3. |
| | 3. Test continuity of each floodlight assembly. Connect one multimeter lead to back of light housing and one to ground. | If multimeter indicates no reading, the circuit does not have continuity. Replace floodlight assembly (WP 0105 00 or WP 0110 00). If the problem still exists, go to Test 4. |
| | 4. Test continuity of headlight switch. Connect one multimeter lead to back of switch and one lead to ground. | If multimeter indicates no reading, circuit does not have continuity. Replace light switch assembly (WP 0101 00). |
| **19. Blackout Drive Lights Fail to Operate.** | 1. Check main circuit breaker (60A). | Reset circuit breaker. If the problem still exists, go to Test 2. |
| | 2. Check blackout drive lights circuit breaker. | Replace if defective. If the problem still exists, go to Test 3. |

| MALFUNCTION | TEST OR INSPECTION | CORRECTIVE ACTION |
|---|---|---|
| **19. Blackout Drive Lights Fail to Operate - Continued.** | 3. Test continuity of headlight switch in all blackout drive positions. Connect one multimeter lead to back of switch and one lead to ground. | If multimeter indicates no reading, circuit does not have continuity. Replace light switch assembly (WP 0101 00). |
| **20. Dome Light Will Not Operate (CCE Machine).** | 1. Check dome light bulb. | Replace dome light bulb if burned out (WP 0111 00). If the problem still exists, go to Test 2. |
| | 2. Test continuity of dome light switch. Connect multimeter to back of switch. | If multimeter indicates no reading, circuit does not have continuity. Replace dome light switch (WP 0099 00). If the problem still exists, go to Test 3. |
| | 3. Test continuity of dimmer register. Connect multimeter to back of resistor. | If multimeter indicates no reading, circuit does not have continuity. Replace dimmer resistor (WP 0100 00). |
| **21. Horn Fails to Operate.** | 1. Turn service lights on and check circuit breaker (60A). | Reset circuit breaker. If the problem still exists, go to Test 2. |
| | 2. Check horn fuse (15A). | Replace fuse if blown (WP 0096 00). If the problem still exists, go to Test 3. |
| | 3. Check horn assembly. | Replace horn assembly if damaged or defective (WP 0119 00). If the problem still exists, go to Test 4. |
| | 4. Test continuity of horn switch. Connect one multimeter lead to back of switch and one to ground. | If multimeter indicates no reading, circuit does not have continuity. Replace horn switch (WP 0120 00). If the problem still exists, go to Test 5. |
| | 5. Check horn wiring harness. | Repair horn wiring harness if cracked, broken, or corroded (WP 0021 00). Replace horn wiring harness as necessary (WP 0141 00). |
| **22. Backup Alarm Fails to Operate with Transmission in Reverse.** | 1. Turn on service lights and check backup alarm. | |
| | 2. Check main circuit breaker (60A). | Reset circuit breaker. If the problem still exists, go to Test 3. |
| | 3. Check back-up alarm fuse (15A). | Replace fuse if blown (WP 0096 00). If the problem still exists, go to Test 4. |
| | 4. Test continuity of backup alarm. Connect one multimeter lead to back of switch and one to ground. | If multimeter indicates no reading, circuit does not have continuity. Adjust or replace backup alarm switch as necessary (WP 0122 00). If the problem still exists, go to Test 5. |

| MALFUNCTION | TEST OR INSPECTION | CORRECTIVE ACTION |
|---|---|---|
| **22. Backup Alarm Fails to Operate with Transmission in Reverse - Continued.** | 5. Check wiring harness. | Repair horn wiring harness if cracked, broken, or corroded (WP 0021 00). Replace wiring harness as necessary (WP 0285 00). If the problem still exists, go to Test 6. |
| | 6. Check backup alarm. | Replace backup alarm if damaged or defective (WP 0119 00). |
| **23. Console Light Does Not Operate.** | 1. Check console lamp bulb. | Replace console lamp bulb if burned out (WP 0078 00). If the problem still exists, go to Test 2. |
| | 2. Check main circuit breaker (60A). | Reset circuit breaker. If the problem still exists, go to Test 3. |
| | 3. Test continuity of console light switch. Connect one multimeter lead to back of switch and one to ground. | If multimeter indicates no reading, circuit does not have continuity. Replace light switch (WP 0078 00). |
| **24. Floodlight Switch Does Not Operate.** | 1. Test continuity of floodlight switch. Connect one multimeter lead to switch and one to ground. | If multimeter indicates no reading, circuit does not have continuity. Replace floodlight switch (WP 0076 00). If the problem still exists, go to Test 2. |
| | 2. Test continuity of wire assemblies. Connect multimeter to each end of wire leads. | If multimeter indicates no reading, circuit does not have continuity. Replace wire leads (WP 0136 00 or WP 0137 00). |
| **25. Ether Control Switch Does Not Operate.** | 1. Test continuity of ether control switch. Connect one lead of multimeter to switch and one lead to ground. | If multimeter indicates no reading, circuit does not have continuity. Replace ether control switch (WP 0077 00). If the problem still exists, go to Test 2. |
| | 2. Test continuity of wire assemblies. Connect multimeter to each end of wire assembly. | If multimeter indicates no reading, circuit does not have continuity. Repair or replace wire assembly (WP 0021 00). |
| **26. Battery Disconnect Switch Does Not Operate.** | 1. Test continuity of disconnect switch. Connect one lead of multimeter to switch and one lead to ground. | If multimeter indicates no reading, circuit does not have continuity. Replace battery disconnect switch (WP 0081 00). If the problem still exists, go to Test 2. |
| | 2. Test continuity of wire assemblies. Connect multimeter to each end of wire assembly. | If multimeter indicates no reading, circuit does not have continuity. Repair or replace wire assembly (WP 0021 00). |
| **27. Start Switch Does Not Operate.** | 1. Test continuity of start switch. Connect one lead of multimeter to switch and one lead to ground. | If multimeter indicates no reading, circuit does not have continuity, replace start switch (WP 0079 00). If the problem still exists, go to Test 2. |
| | 2. Test continuity of wire assemblies. Connect multimeter to each end of wire assembly. | If multimeter indicates no reading, circuit does not have continuity, repair or replace wire assembly (WP 0021 00). |

| MALFUNCTION | TEST OR INSPECTION | CORRECTIVE ACTION |
|---|---|---|
| **28. Blade Float Limit Switch Does Not Operate (CCE Machine).** | 1. Check blade float fuse (10A). | Replace fuse if blown (WP 0096 00). If the problem still exists, go to Test 2. |
| | 2. Test continuity of blade float limit switch. Connect one lead of multimeter to switch and one lead to ground. | If multimeter indicates no reading, circuit does not have continuity. Replace blade float limit switch (WP 0093 00). |
| **29. Air Pressure Switch Is Not Operating.** | Check air pressure gauge for proper reading (TM 5-3805-261-10). | Replace air pressure switch if damaged or defective (WP 0112 00). |
| **30. Engine Oil Pressure Switch Does Not Operate.** | 1. Check oil level in engine (TM 5-3805-261-10). | |
| | 2. Start engine and run for several minutes. | Replace engine oil pressure switch if oil pressure is not within operating range (WP 0113 00). |
| **31. Coolant Temperature Switch Does Not Operate.** | 1. Check coolant level. | |
| | 2. Start engine and run for several minutes. | Replace coolant temperature switch if temperature is not within operating range (WP 0114 00). |
| **32. Fuel Pressure Switch Does Not Operate.** | Check fuel pressure with a pressure gauge of known accuracy installed in fuel line. | Replace fuel pressure switch if damaged or defective (WP 0115 00). |
| **33. Hydraulic Oil Temperature Switch Does Not Operate.** | Start engine and run several minutes. Operate implements until hydraulic oil temperature is at normal operating temperature. | If the temperature remains within normal range and the alarm still sounds, replace hydraulic oil temperature switch (WP 0116 00). |
| **34. Hour Meter Does Not Operate.** | 1. Test continuity of hourmeter switch. Connect one lead of multimeter to switch and one lead to ground. | If multimeter indicates no reading, circuit does not have continuity. Replace hourmeter switch (WP 0109 00). If the problem still exists, go to Test 2. |
| | 2. Test continuity of hourmeter. Connect one lead of multimeter to back of gauge and one lead to ground. | If multimeter indicates no reading, circuit does not have continuity. Replace hourmeter (WP 0083 00). |
| **35. Windshield Wipers Do Not Operate (CCE Machine).** | 1. Check windshield wiper fuse (4A). | Replace fuse if blown (WP 0097 00). If the problem still exists, go to Test 2. |
| | 2. Test continuity of windshield wiper switch. Connect one lead of multimeter to back of switch and one lead to ground. | If multimeter indicates no reading, circuit does not have continuity. Replace windshield wiper switch (WP 0085 00). |
| **36. Panel Lamp Does Not Operate.** | 1. Check lamp. | Replace lamp if defective (WP 0084 00). If the problem still exists, go to Test 2. |

| MALFUNCTION | TEST OR INSPECTION | CORRECTIVE ACTION |
|---|---|---|
| **36. Panel Lamp Does Not Operate - Continued.** | 2. Test continuity of panel lamp switch. Connect one lead of multimeter to back of switch and one lead to ground. | If multimeter indicates no reading, circuit does not have continuity, replace panel lamp switch (WP 0085 00). |
| **37. Engine Cranks, but Will Not Start in Cold Weather (Fuel Available).** | 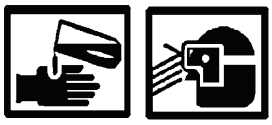 **WARNING** <br>Ether fuel is extremely flammable and toxic. DO NOT smoke and make sure you are in a well-ventilated area away from heat, open flames, or sparks. Wear eye protection. Avoid contact with skin and eyes and avoid breathing ether fumes. If fluid enters or fumes irritate the eyes, wash immediately with large quantities of clean water for 15 minutes. Seek medical attention immediately if ether is inhaled or causes eye irritation. Failure to follow this warning may cause injury or death to personnel. | |
| | 1. Check ether canister. Remove ether canister. Shake and listen for liquid splashing inside canister. | 1. If canister is empty, replace with a full one (WP 0049 00).<br>2. If canister is full, reinstall and go to Test 2. |
| | 2. Check for a blown starting aid fuse. | Replace blown fuse with same rated fuse (WP 0021 00). If the problem still exists, go to Test 3. |
| | 3. Check starting aid valve operation.<br>a. Place battery disconnect switch in OFF position.<br>b. Disconnect temperature switch lead from starting aid valve.<br>c. Connect a jumper wire between temperature switch lead on valve and chassis ground. | |

| MALFUNCTION | TEST OR INSPECTION | CORRECTIVE ACTION |
|---|---|---|
| **37. Engine Cranks, but Will Not Start in Cold Weather (Fuel Available) - Continued.** | d. Crank engine, press starting aid button, and listen for starting aid valve operation. | 1. If valve functions, go to Test 4.<br>2. If valve does not function, place battery disconnect switch in OFF position and reconnect temperature switch lead to starting aid valve. Go to Test 5. |
| | 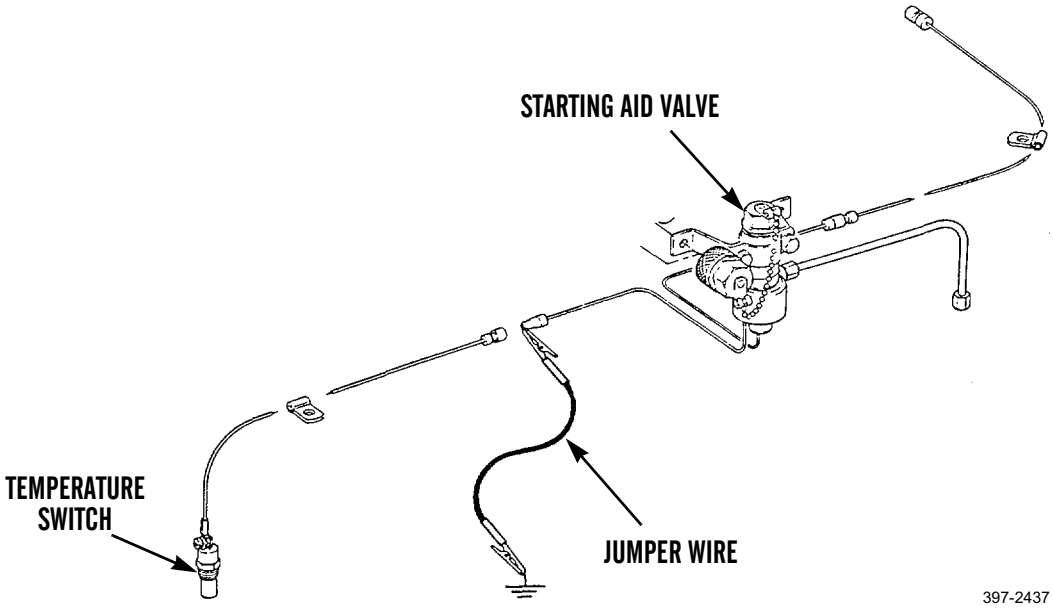 | |
| | 4. Test temperature switch wire for continuity.<br>a. Place battery disconnect switch in OFF position.<br>b. Disconnect wire between temperature switch and starting aid valve at both ends.<br>c. Set multimeter to appropriate ohm (Ω) range.<br>d. Connect meter positive lead to one end of wire.<br>e. Connect meter negative lead to other end of wire. | 1. If continuity is indicated, replace temperature switch (WP 0050 00).<br>2. If continuity is not indicated, repair open circuit in wire (WP 0021 00). If the problem still exists, go to Test 5. |

| MALFUNCTION | TEST OR INSPECTION | CORRECTIVE ACTION |
|---|---|---|
| **37. Engine Cranks, but Will Not Start in Cold Weather (Fuel Available) - Continued.** | 5. Test starting aid system voltage.<br>a. Disconnect purple starting aid switch-to-valve lead at starting aid valve.<br>b. Set multimeter to appropriate voltage range. | |

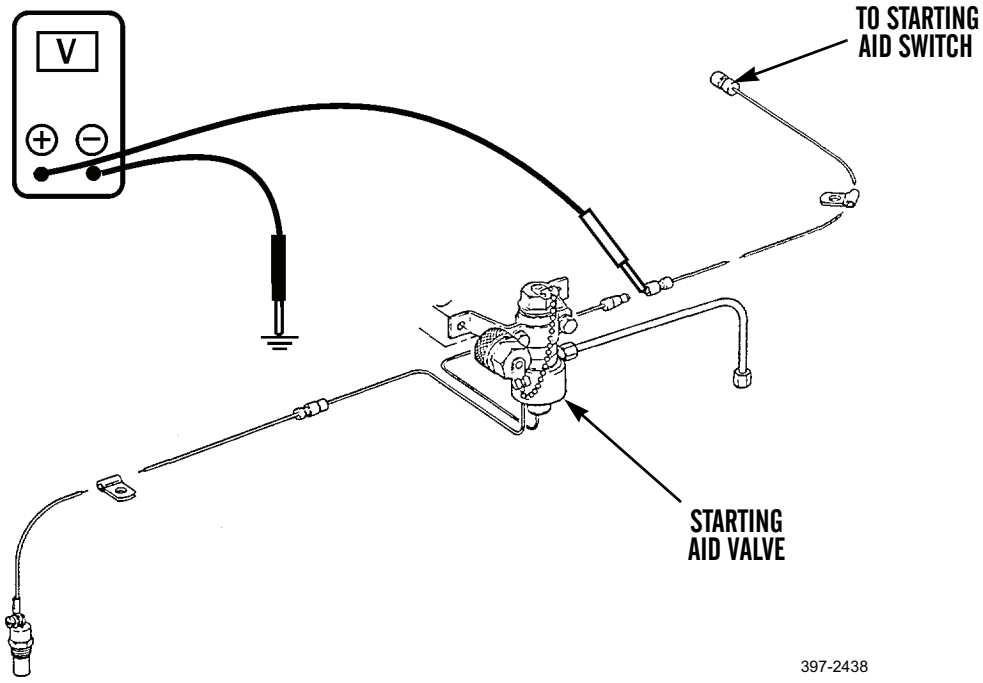

| MALFUNCTION | TEST OR INSPECTION | CORRECTIVE ACTION |
|---|---|---|
| **37. Engine Cranks, but Will Not Start in Cold Weather (Fuel Available) - Continued.** | c. Connect meter positive lead to purple disconnected wire and meter negative lead to chassis ground. | |
| | d. Crank engine, press starting aid button and observe meter. | 1. If voltage is indicated, replace starting aid valve (WP 0050 00).<br>2. If voltage is not indicated, go to Test 6. |
| | 6. Test temperature switch wire for continuity. | |
| | a. Place battery disconnect switch in OFF position. | |
| | b. Disconnect wire between starting aid switch and starting aid valve at both ends. | |
| | c. Set multimeter to appropriate ohm (Ω) range. | |
| | d. Connect meter positive lead to one end of wire. Connect meter negative lead to other end of wire. | 1. If continuity is indicated, replace starting aid switch (WP 0077 00).<br>2. If continuity is not indicated, repair open circuit in wire (WP 0021 00). |
| **38. Heater Will Not Operate or Will Not Operate in High Speed or Low Speed Position (CCE Machine).** | 1. Test heater circuit voltage. | |
| | a. Place battery disconnect switch in OFF position. | |
| | b. Check heater fuse. | 1. Replace fuse if blown (WP 0096 00).<br>2. If fuse is not blown, reinstall fuse and go to Step c. |
| | c. Disconnect heater fan motors wires. | |
| | d. Set multimeter to appropriate voltage range. | |
| | e. Connect meter negative lead to chassis ground. | |
| | f. Place battery disconnect switch in ON position. | |

| MALFUNCTION | TEST OR INSPECTION | CORRECTIVE ACTION |
|---|---|---|
| **38. Heater Will Not Operate or Will Not Operate in High Speed or Low Speed Position (CCE Machine) - Continued.** | g. Place heater switch in LOW speed position and touch meter positive lead to wires connected to switch at fan. Observe meter reading. | |
| | 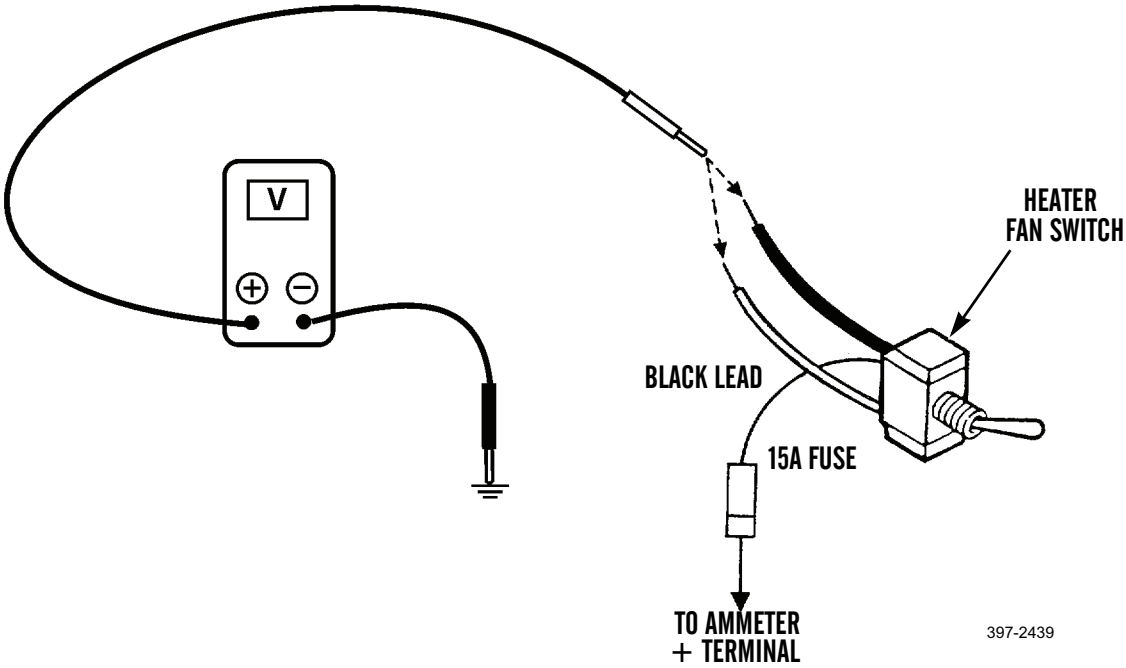 | |
| | h. Place heater switch in all HIGH speed positions and touch meter positive lead to wires connected to switch at fan. Observe meter reading. | 1. If voltage is not indicated in either Step g or h, replace heater switch (WP 0212 00).<br>2. If voltage is not indicated in both Steps g and h, go to Test 2. |
| | | 1. If voltage is indicated in both Steps g and h, replace defective fan motor(s) (WP 0212 00). Place battery disconnect switch in OFF position. Place battery disconnect switch in OFF position. If the problem still exists, go to Test 2. |
| | 2. Test heater switch for continuity.<br>a. Place battery disconnect switch in OFF position.<br>b. Completely disconnect heater switch harness.<br>c. Set multimeter to appropriate ohm (Ω) range. | |

| MALFUNCTION | TEST OR INSPECTION | CORRECTIVE ACTION |
|---|---|---|
| **38. Heater Will Not Operate or Will Not Operate in High Speed or Low Speed Position (CCE Machine) - Continued.** | d. Connect meter positive lead where black wire connects (switch side).<br>e. Connect meter negative lead to either of the other two terminals (switch side).<br>f. Toggle switch between all three positions and observe meter.<br>g. Repeat Steps d through f for the remaining terminal. | 1. If continuity is indicated in HIGH for wire and LOW for wire, but not in OFF position, repair heater circuitry (WP 0021 00).<br>2. If continuity is not indicated as stated above, replace heater switch (WP 0212 00). |
| **39. Defrosters Will Not Operate or Will Not Operate in High Speed or Low Speed (CCE Machine).** | **NOTE**<br>The following procedure is applicable for both front and rear defroster fans. | |
| | 1. Test defroster fan circuit voltage.<br>a. Place battery disconnect switch in OFF position. | |
| | b. Check defroster fan fuse. | 1. Replace fuse if blown (WP 0097 00).<br>2. If fuse is not blown, reinstall fuse and go to Step c. |
| | c. Identify high speed and low speed control wires at defroster control switch with tags or similar ID technique.<br>d. Disconnect high speed and low speed control wires from defroster switch.<br>e. Set multimeter to appropriate voltage range.<br>f. Place battery disconnect switch in ON position.<br>g. Place defroster control switch to low speed position and touch meter positive lead to switch low speed terminal. Observe meter reading. | |

| MALFUNCTION | TEST OR INSPECTION | CORRECTIVE ACTION |
|---|---|---|
| **39. Defrosters Will Not Operate or Will Not Operate in High Speed or Low Speed (CCE Machine) - Continued.** | h. Place defroster control switch to high speed position and touch meter positive lead to switch high speed terminal. Observe meter reading. | 1. If voltage is not indicated in either Step g or h, replace defroster control switch (WP 0210 00).<br>2. If voltage is not indicated in both Steps g and h, go to Test 2.<br>3. If voltage is indicated in both Steps g and h, replace defective defroster fan motor (WP 0210 00). If problem still exists, go to Test 2. |

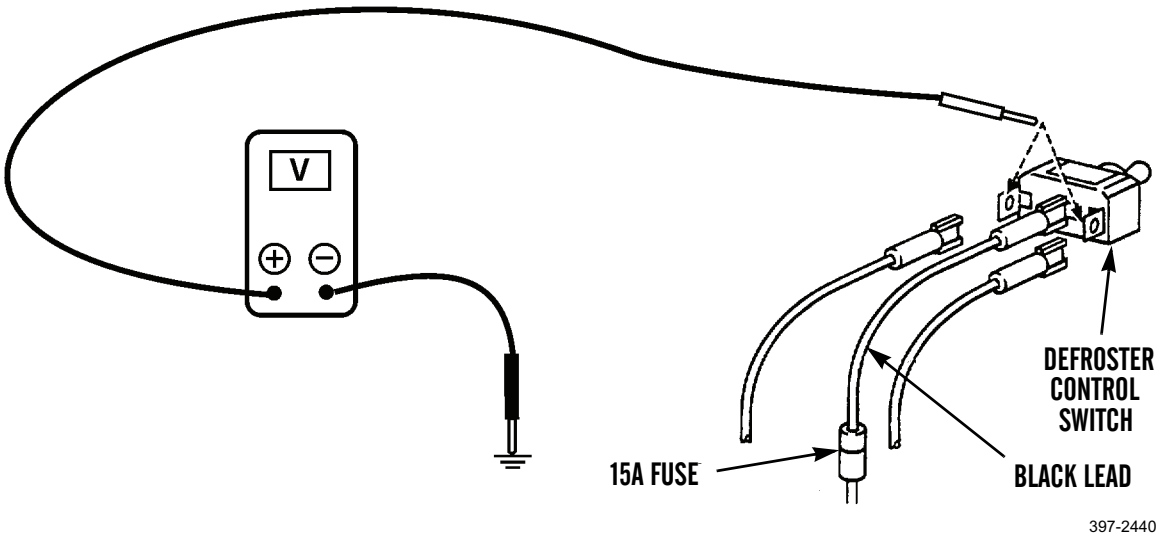


| | | |
|---|---|---|
| | 2. Test defroster switch for continuity.<br>a. Place battery disconnect switch in OFF position.<br>b. Completely disconnect defroster switch harness.<br>c. Set multimeter to appropriate ohm (Ω) range.<br>d. Connect meter positive lead to center switch terminal (switch side).<br>e. Connect meter negative lead to either of the other two terminals (switch side). | |

| MALFUNCTION | TEST OR INSPECTION | CORRECTIVE ACTION |
|---|---|---|
| **39. Defrosters Will Not Operate or Will Not Operate in High Speed or Low Speed (CCE Machine) - Continued.** | f. Toggle switch between all three positions. Observe meter reading. | |
| | g. Repeat Steps c through e for remaining terminal. | 1. If continuity is indicated in HIGH and LOW, but not in OFF position, repair defroster circuitry (WP 0021 00).<br>2. If continuity is not indicated as stated above, replace defroster switch (WP 0210 00). |
| **40. Windshield Wiper Will Not Operate or Will Not Operate in High Speed or Low Speed Position (CCE Machine).** | **NOTE**<br>The following procedure is for both front and rear windshield wiper circuits. | |
| | 1. Test wiper motor circuit voltage.<br>a. Place battery disconnect switch in OFF position. | |
| | b. Check windshield wiper fuse (4A). | 1. Replace fuse if blown (WP 0097 00).<br>2. If fuse is not blown, reinstall and go to Step c. |
| | c. Disconnect wiper motor wire connectors.<br>d. Set multimeter to appropriate voltage range.<br>e. Connect meter negative lead to chassis ground.<br>f. Place battery disconnect switch in ON position.<br>g. Place wiper switch to low speed position and touch meter positive lead to green wire. Observe meter reading. | |
| | h. Place wiper switch to high speed position and touch meter positive lead to red wire. Observe meter reading. | 1. If voltage is not indicated in either Step g or h, go to Test 2.<br>2. If voltage is indicated in both Steps g and h, go to Test 4. |

| MALFUNCTION | TEST OR INSPECTION | CORRECTIVE ACTION |
|---|---|---|
| **40. Windshield Wiper Will Not Operate or Will Not Operate in High Speed or Low Speed Position (CCE Machine) - Continued.** | 2. Test wiper switch circuitry for continuity between switch and wiper motor.<br>a. Place battery disconnect switch in OFF position.<br>b. Completely disconnect wiper switch wiring.<br>c. Set multimeter to appropriate ohm (Ω) range.<br>d. Connect meter positive lead to one end of each of the 3 wires. Connect meter negative lead to other end of each wire. Observe meter. | 1. If continuity is indicated, go to Test 3.<br>2. If continuity is not indicated, repair circuit in question (WP 0021 00). If the problem still exists, go to Test 3. |
| | 3. Test wiper switch source voltage.<br>a. Place battery disconnect switch in OFF position.<br>b. Completely disconnect wiper switch wiring.<br>c. Set multimeter to appropriate voltage range.<br>d. Connect meter positive lead to black wire. Connect meter negative lead chassis ground.<br>e. Place battery disconnect switch in ON position. Observe meter reading. | 1. If voltage is indicated, replace wiper switch (WP 0085 00).<br>2. If voltage is not indicated, repair open circuit in black wire (WP 0021 00). If the problem still exists, go to Test 4. |
| | 4. Test wiper motor ground for continuity.<br>a. Place battery disconnect switch in OFF position.<br>b. Completely disconnect wiper motor wiring.<br>c. Set multimeter to appropriate ohm (Ω) range.<br>d. Connect meter positive lead to wiper motor ground wire. Connect meter negative lead to chassis ground. | |

| MALFUNCTION | TEST OR INSPECTION | CORRECTIVE ACTION |
|---|---|---|
| **40. Windshield Wiper Will Not Operate or Will Not Operate in High Speed or Low Speed Position (CCE Machine) - Continued.** | e. Place battery disconnect switch in ON position. Observe meter. | 1. If continuity is indicated, replace wiper motor (WP 0206 00, WP 0207 00, or WP 0208 00).<br>2. If continuity is not indicated, repair wiper motor ground wire (WP 0021 00). |

**END OF WORK PACKAGE**

| MALFUNCTION | TEST OR INSPECTION | CORRECTIVE ACTION |
|---|---|---|
| **1. Transmission Does Not Operate in Any Speed or Slips in All Speeds.** | 1. Check transmission oil level (TM 5-380-261-10). | If oil level is low, fill (TM 5-3805-261-10). If the problem still exists, go to Test 2. |
| | 2. Check speed control and forward-reverse cables. Cables should be taut without any slack and all nuts and rod ends tightly secured. | 1. If linkage is loose, tighten and adjust (WP 0150 00).<br>2. If linkage is damaged or defective, replace (WP 0152 00). If the problem still exists, go to Test 3. |
| | 3. Check oil pump for signs of leaks and damage. | 1. If oil pump is damaged or defective, replace (WP 0297 00).<br>2. If oil pump is not damaged or defective, replace transmission (WP 0249 00). If the problem still exists, go to Test 4. |
| | 4. Check control relief valve. | 1. If control relief valve is not operating properly, replace (WP 0296 00).<br>2. If control relief valve is operating properly, replace transmission. (WP 0294 00). |
| **2. Transmission Does Not Shift.** | 1. Check transmission oil level (TM 5-3805-261-10). | If oil level is low, fill (TM 5-3805-261-10). If the problem still exists, go to Test 2. |
| | 2. Check the speed control and forward-reverse cables. Cables should be taut without any slack and all nuts and rod ends tightly secured. | 1. If linkage is loose, tighten and adjust (WP 0150 00).<br>2. If linkage is damaged or defective, replace (WP 0152 00). If the problem still exists, go to Test 3. |
| | 3. Check oil pump for signs of leaks and damage. | 1. If oil pump is damaged or defective, replace (WP 0297 00).<br>2. If oil pump is not damaged or defective, replace transmission (WP 0294 00). |
| **3. Transmission Engages Suddenly (Rough Shifting).** | 1. Check the speed control and forward-reverse cables. Cables should be taut without any slack and all nuts and rod ends tightly secured. | 1. If linkage is loose, tighten and adjust (WP 0150 00).<br>2. If linkage is damaged or defective, replace (WP 0152 00). If the problem still exists, go to Test 2. |

| MALFUNCTION | TEST OR INSPECTION | CORRECTIVE ACTION |
|---|---|---|
| **3. Transmission Engages Suddenly (Rough Shifting) - Continued.** | 2. Check control relief valve. | 1. If control relief valve is not operating properly, replace (WP 0296 00).<br>2. If control relief valve is operating properly, replace transmission (WP 0294 00). |
| **4. Transmission Shifts Slow.** | 1. Check the speed control and forward-reverse cables. Cables should be taut without any slack and all nuts and rod ends tightly secured. | 1. If linkage is loose, tighten and adjust (WP 0150 00).<br>2. If linkage is damaged or defective, replace (WP 0152 00). If the problem still exists, go to Test 2. |
| | 2. Check oil pump for signs of leaks and damage. | 1. If oil pump is damaged or defective, replace (WP 0297 00).<br>2. If oil pump is not damaged or defective, replace transmission (WP 0294 00). |
| **5. Transmission Engages, but Machine Will Not Move.** | 1. Check differential for signs of leaks and damage. | If differential is damaged or defective, replace (WP 0305 00). If the problem still exists, go to Test 2. |
| | 2. Check final drive planetary for signs of leaks and damage. | If you suspect a problem with final drive planetary, replace final drive (WP 0309 00). |
| **6. Transmission Is Hot.** | 1. Check transmission oil level (TM 5-3805-261-10). | If oil level is low, fill (TM 5-3805-261-10). If the problem still exists, go to Test 2. |
| | 2. Check core of oil cooler for signs of leaks and damage. | If core is not open completely or is damaged or defective, replace (WP 0298 00). |

**END OF WORK PACKAGE**

| MALFUNCTION | TEST OR INSPECTION | CORRECTIVE ACTION |
|---|---|---|
| **1. Parking Brake Is Not Engaging Correctly.** | 1. Check the clearance adjustment on parking brake control valve. | Adjust clearance on parking brake control valve if clearance is not correct (WP 0158 00). If the problem still exists, go to Test 2. |
| | 2. Check the parking brake control valve. | Replace control valve if worn, damaged, or defective (WP 0158 00). If the problem still exists, go to Test 3 |
| | 3. Check the quick release valve. | Repair or replace quick release valve if worn, damaged, or defective (WP 0312 00). If the problem still exists, go to Test 4. |
| | 4. Check parking brake actuator. | Replace parking brake actuator if damaged or defective (WP 0312 00). If the problem still exists, go to Test 5. |
| | 5. Check that adjustment of rod end on parking brake actuator does not permit too much free movement of lever on transmission. | Adjust parking brake actuator as necessary (WP 0159 00). Repair parking brake after completing steps 1 through 4, if necessary. |
| **2. Parking Brake Is Not Releasing Correctly.** | 1. Check for air pressure at supply port of control valve. | If no air pressure at supply port, troubleshoot air compressor assembly. If the problem still exists, go to Test 2. |
| | 2. Check clearance adjustment of control valve. | Adjust control valve as necessary (WP 0158 00). If the problem still exists, go to Test 3. |
| | 3. Check for wear or damage to control valve. | If control valve is worn or damaged, replace (WP 0158 00). If the problem still exists, go to Test 4. |
| | 4. Check for wear or damage to quick release valve. | If quick release valve is worn or damaged, repair (WP 0312 00). If the problem still exists, go to Test 5. |
| | 5. Check for worn or damaged parking brake actuator. | If parking brake actuator is worn or damaged, repair (WP 0312 00). If the problem still exists, go to Test 6. |
| | 6. Check adjustment of rod end of parking brake actuator to ensure that with the brake off, a small amount of free travel on lever on transmission is permitted. | If no free travel is permitted, adjust rod end (WP 0159 00). Repair parking brake after completing steps 1 through 6 as necessary. |
| **3. Air Compressor Passes Excessive Oil, Indicated by Oil Seeping from Air Strainer.** | 1. Check for restricted air intake. Check engine air cleaner assembly and compressor air inlet line for restrictions. | Remove restrictions for air intake system as necessary (WP 0038 00). If the problem still exists, go to Test 2. |

| MALFUNCTION | TEST OR INSPECTION | CORRECTIVE ACTION |
|---|---|---|
| **3. Air Compressor Passes Excessive Oil, Indicated by Oil Seeping from Air Strainer - Continued.** | 2. Check for restricted oil return line. Look for kinks, bends, and restrictions in oil return line (WP 0317 00). | If oil return line is clear, go to Test 3. |
| | 3. Check for poorly filtered inlet air. Check for dirty engine air filters. | If filters are dirty, replace (WP 0037 00). If the problem still exists, go to Test 4. |
| | 4. Check for poor compressor cooling (compressor runs hot). Check coolant lines and fittings for scales, kinks, and restrictions. | If engine coolant temperature exceeds 200°F (93°C), refer to *Cooling System Troubleshooting* (WP 0007 00). If the problem still exists, go to Test 5. |
| | 5. Check air system reservoir for build-up of dirt and water. | Drain reservoir (TM 5-3805-261-10). If the problem still exists, go to Test 6. |
| | 6. Check if air compressor runs loaded an excessive amount of time. Measure air system leakage. Start engine and let air pressure build up and stabilize. Observe air pressure gauge. System leakage should not exceed 1 psi (7 kPa) pressure drop per minute without brakes applied and 3 psi (21 kPa) pressure drop with brakes applied. If leakage is excessive, look for system leaks. | Repair system leaks as necessary (WP 0318 00). If the problem still exists, go to Test 7. |
| | 7. Check for loose end cover and cylinder block bolts. | Tighten bolts to standard torques. Repair or replace compressor after completing steps 1 through 7 as necessary (WP 0317 00). |
| **4. Noisy Compressor Operations.** | 1. Check fit of drive gear on crankshaft. If crankshaft surface or its keyway are damaged, it is an indication of loose drive gear components. | If drive gear is not installed correctly, remove and install (WP 0317 00). If the problem still exists, go to Test 2. |
| | 2. Check for worn drive gear or pulley on air compressor crankshaft. | If drive gear or pulley is worn, replace (WP 0317 00). If the problem still exists, go to Test 3. |
| | 3. Check cylinder head. | If carbon build-up is detected in cylinder head, check for proper cooling of compressor (WP 0317 00). If the problem still exists, go to Test 4. |

| MALFUNCTION | TEST OR INSPECTION | CORRECTIVE ACTION |
|---|---|---|
| **4. Noisy Compressor Operations - Continued.** | 4. Check for worn bearings. Check oil pressure and temperature. Install suitable oil pressure and temperature gauges in oil supply line. Start engine. Oil pressure should be 5 psi (34 kPa) at idle and 15 psi (103 kPa) at maximum engine RPM. | Replace bearings if worn (WP 0317 00). Repair or replace compressor after completing steps 1 through 4 as necessary (WP 0317 00). |
| **5. Excessive Buildup and Recovery Time.** | **NOTE**<br>Compressor should build up air system from 85 to 100 psi (586 to 689 kPa) in 40 seconds with engine at maximum RPM. | |
| | 1. Check for dirty engine air filters. | Replace air filters as necessary (WP 0037 00). If the problem still exists, go to Test 2. |
| | 2. Check for restricted air inlet line. | Remove restriction or replace air inlet line if kinked (WP 0318 00). If the problem still exists, go to Test 3. |
| | 3. Check for carbon build-up or restriction in compressor discharge line and discharge port. | 1. If carbon build-up is found, replace discharge line (WP 0318 00).<br>2. If no carbon build-up is found, replace compressor (WP 0317 00). |
| **6. Compressor Fails to Unload.** | Check installation and operation of governor. | If governor does not operate properly, replace (WP 0165 00). |
| **7. Compressor Leaks Oil.** | 1. Check for damaged mounting gasket. Check mounting bolt torque. | If mounting bolt torque is low, replace mounting gasket and tighten bolts to standard torque (WP 0318 00). If the problem still exists, go to Test 2. |
| | 2. Check for loose end cover and cylinder block bolts. | If bolts are tightened correctly, go to Test 3 (WP 0318 00). |
| | 3. Check for loose oil supply or return line fittings. | Tighten as necessary (WP 0318 00). If the problem still exists, go to Test 4. |
| | 4. Check for cracked crankcase, cylinder block, or end cover. | Replace compressor (WP 0318 00). |
| **8. Compressor Constantly Cycles.** | 1. Test for excessive system leakage. | Repair system leaks as necessary (WP 0161 00) and WP 0163 00). If the problem still exists, go to Test 2. |
| | 2. Check operation of governor. | If governor does not operate properly, replace (WP 0165 00). |
| **9. Service Brakes Are Not Engaging Correctly.** | 1. Check for air pressure at supply ports of control valve. | If no air pressure, TM 5- 3805-261-10), troubleshoot air compressor assembly. If the problem still exists, go to Test 2. |

| MALFUNCTION | TEST OR INSPECTION | CORRECTIVE ACTION |
|---|---|---|
| **9. Service Brakes Are Not Engaging Correctly - Continued.** | 2. Check adjustment of pedal stop to ensure it permits enough travel of brake pedal to operate brakes. | If not enough travel is permitted, adjust pedal (WP 0313 00 and WP 0160 00). If the problem still exists, go to Test 3. |
| | 3. Check adjustment of screw on plunger of air brake valve to ensure enough travel of piston in air brake valve is permitted. | If too little travel is permitted, adjust screw (WP 00316 00). If the problem still exists, go to Test 4. |
| | 4. Check for wear or damage to air brake valve. | If air brake valve is worn or damaged, replace (WP 0316 00). |
| **10. Service Brakes Are Not Releasing Correctly.** | 1. Check for missing or damaged brake pedal spring. | Replace spring if missing or damaged (WP 0160 00). If the problem still exists, go to Test 2. |
| | 2. Check adjustment of screw on plunger of control valve to ensure that screw does not stop piston from completely releasing from control valve. | If screw stops piston from releasing, adjust screw (WP 0313 00). If the problem still exists, go to Test 3. |
| | 3. Check for wear and damage to parking brake air control valve. | If control valve is worn or damaged, repair (WP 0158 00). |

**END OF WORK PACKAGE**

| MALFUNCTION | TEST OR INSPECTION | CORRECTIVE ACTION |
|---|---|---|
| **1. Wheels Turn Slowly or Not at All When Steering Wheel Is Turned.** | 1. Check steering relief valve.<br>a. Relieve hydraulic system pressure (WP 0020 00).<br>b. Remove plug and preformed packing from steering relief valve.<br>c. Install 0 to 2,500 psi (0 to 17,238 kPa) hydraulic pressure gauge.<br>d. Start engine and operate all implements until operating temperature is reached (TM 5-3805-261-10).<br>e. Increase engine speed to 1,500 RPM. Pressure gauge should read 1,800 to 1,850 psi (12,411 to 12,755 kPa). Stop engine. | 1. If pressure is within limits, go to step 2. Add shim(s) (WP 0323 00) as required to increase pressure, remove shim(s) to decrease pressure: One shim will change pressure approximately 25 psi (172 kPa).<br>2. Replace steering relief valve (WP 0323 00). |

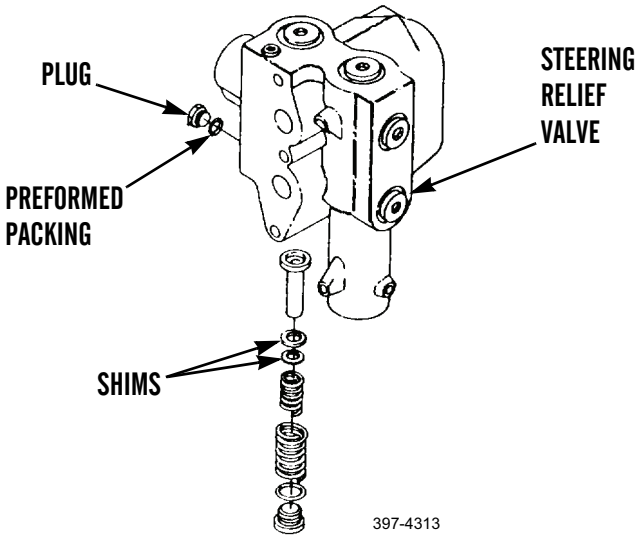

| MALFUNCTION | TEST OR INSPECTION | CORRECTIVE ACTION |
|---|---|---|
| **1. Wheels Turn Slowly or Not at All When Steering Wheel Is Turned - Continued.** | **NOTE**<br>Tests 2 and 3 are for right steering valve. Repeat tests 2 and 3 for left steering valve. | |
| | 2. Check pressure at steering valve.<br>a. Remove plug and preformed packing from relief valve.<br>b. Install 0 to 2,500 psi (0 to 17,238 kPa) hydraulic pressure gauge.<br>c. Start engine and operate all implements until operating temperature is reached.<br>d. Increase engine speed to 1,500 RPM. | |
| | e. Turn steering wheel from straight ahead position until wheels hit stops (TM 5-3805-261-10). Pressure gauge should read 1,850 to 1,900 psi (12,755 to 13,100 kPa). | 1. If pressure is too low, go to step 2. If pressure is within limits, go to step 3. If pressure is too high, relief valve is stuck closed. Repair relief valve (WP 0323 00).<br>2. Replace relief valve (WP 0323 00).<br>3. Replace steering valve (WP 0321 00 or WP 0322 00). |

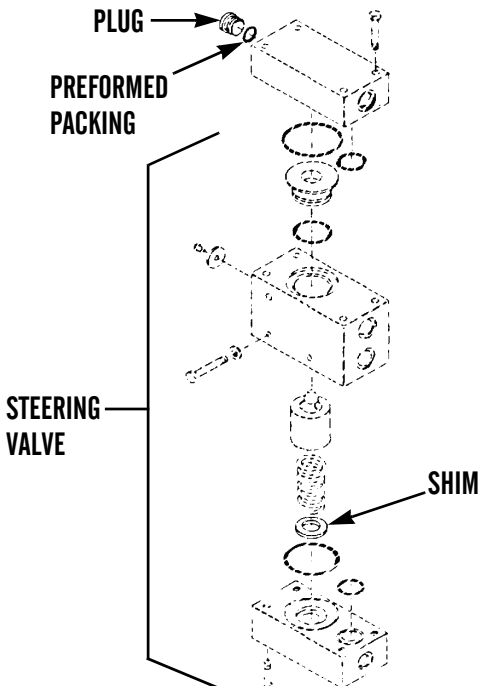


397--4314

| MALFUNCTION | TEST OR INSPECTION | CORRECTIVE ACTION |
|---|---|---|
| **1. Wheels Turn Slowly or Not at All When Steering Wheel Is Turned - Continued.** | 3. Remove steering control pump. Disassemble pump and inspect for any worn or damaged parts (WP 0319 00). | Replace any worn or damaged parts (WP 0319 00). |
| **2. Machine Has Supplemental Steering, but No Primary Steering.** | 1. Remove supplemental steering check valve mounted on steering combination valve. | |
| | 2. Inspect supplemental steering check valve for proper installation (WP 0323 00). Arrow on check valve must point toward front of machine. | If check valve was installed properly, clean or replace check valve (WP 0323 00). |
| **3. Supplemental Steering Motor Status Light Off, but Supplemental Steering Motor and Pump Runs When Engine Is Running.** | 1. Remove supplemental steering check valve mounted under left side of cab. | |
| | 2. Inspect supplemental steering check valve for proper installation (WP 0174 00). Arrow on check valve must point toward front of machine. | If check valve was installed properly, clean or replace check valve (WP 0174 00). |
| **4. Steering Effort Is More for Supplemental Steering Than for Primary Steering.** | 1. Remove supplemental steering relief valve (WP 0174 00).<br>2. Install multi-range pressure gauge in discharge port of relief valve.<br>3. Install relief valve with gauge on machine. | |
| | 4. With engine stopped, use auto/manual switch to manually operate the supplemental steering system (TM 5-3805-261-10). Pressure gauge should read 1,725 to 1,925 psi (11,893 to 13,272 kPa). | If pressure is not correct, replace supplemental relief valve (WP 0174 00). |

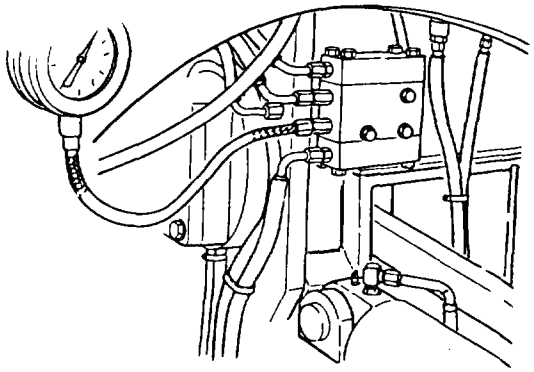

397-4315

END OF WORK PACKAGE

| MALFUNCTION | TEST OR INSPECTION | CORRECTIVE ACTION |
|---|---|---|
| **1. All Implements Fail to Operate or Operate Slowly.** | 1. Check the hydraulic hoses for leaks and loose fittings. | If a hydraulic hose fitting is loose, tighten. If a hose is damaged or defective, replace (WP 0220 00 through WP 0229 00). If the problem still exists, go to Test 2. |
| | 2. Check the hydraulic filters. | If the filters are clogged, damaged, or defective, replace (WP 0231 00). If the problem still exists, go to Test 3. |
| | 3. Check the hydraulic pump assembly. | If the hydraulic pump assembly is damaged or defective, replace (WP 0329 00). |
| **2. Circle Drive Operates Slowly or Fails to Operate.** | 1. Check the circle drive hydraulic hoses for leaks and loose fittings. | If a circle drive fitting is loose, tighten. If hose is damaged or defective, replace (WP 0225 00). If the problem still exists, go to Test 2. |
| | 2. Check hydraulic system pressures at control valve (WP 0237 00). | If the problem still exists, go to Test 3. |
| | 3. Measure circle drive operation time. Using a stop watch, measure the amount of time for one quarter revolution. | The time for one quarter revolution in either direction is 9.5 to 11.5 seconds. If the time recorded is not within the range, replace circle drive motor (WP 0217 00). |
| **3. Blade Float Fails to Operate Properly (CCE Machine).** | 1. Check the blade float hydraulic hoses for leaks and loose fittings. | If a blade float fitting is loose, tighten. If a hose is damaged or defective, replace (WP 0221 00). If the problem still exists, go to Test 2. |
| | 2. Check to see if it is one or both sides of the blade that do not float. | 1. If both sides of the blade float do not operate, replace blade float pilot valve (WP 0233 00).<br>2. If one side of the blade float does not operate, replace blade float check valve (WP 0234 00). |
| **4. Blade Lift Fails to Operate Properly.** | 1. Check the blade lift hydraulic hoses for leaks and loose fittings. | If a blade lift fitting is loose, tighten. If a hose is damaged or defective, replace (WP 0222 00). If the problem still exists, go to Test 2. |
| | 2. Measure blade lift time. Using a stop watch, measure the amount of time for the blade to be listed from the ground to the stopping point. | The time for the blade to be lifted is 0.5 to 9.5 seconds. If the time is not within range, replace hydraulic pump (WP 0329 00). If the problem still exists, go to Test 3. |
| | 3. Check blade lift cylinder for leaks and damage. | Replace if leaking or damaged (WP 0245 00). |

| MALFUNCTION | TEST OR INSPECTION | CORRECTIVE ACTION |
|---|---|---|
| **5. Centershift Fails to Operate.** | 1. Check the centershift hydraulic hoses for leaks and loose fittings. | If a centershift fitting is loose, tighten. If a hose is damaged or defective, replace (WP 0226 00). If the problem still exists, go to Test 2. |
| | 2. Check centershift cylinder for leaks and damage. | Replace if leaking or damaged (WP 0243 00). If the problem still exists, go to Test 3. |
| | 3. Check blade lift for leaks and damage. | Replace if leaking or damaged (WP 0245 00). |
| **6. Blade Tip Fails to Operate.** | If a blade tip fitting is loose, tighten. If a hose is damaged or defective, replace (WP 0223 00). | |
| **7. Leaning Wheel Fails to Operate.** | Check the leaning wheel hydraulic hoses for leaks or loose fittings. | If a leaning wheel fitting is loose, tighten. If a hose is damaged or defective, replace (WP 0224 00). |
| **8. Side Shift Fails to Operate.** | 1. Check the sideshift hydraulic hoses for leaks and loose fittings. | If a sideshift fitting is loose, tighten. If a hose is damaged or defective, replace (WP 0228 00). If the problem still exists, go to Test 2. |
| | 2. Check sideshift cylinder for leaks and damage. | Replace if leaking or damaged (WP 0247 00). |
| **9. Centershift Lock Assembly Fails to Operate.** | 1. Check the centershift lock assembly hoses for air leaks. | If the hoses are loose, tighten. If hoses are damaged or defective, replace (WP 0262 00). If the problem still exists, go to Test 2. |
| | 2. Check for air leaks at the centershift control valve. | If the centershift control valve is damaged or defective, replace (WP 0261 00). If the problem still exists, go to Test 3. |
| | 3. Check for air leaks at the centershift lock assembly. | If the centershift lock assembly is damaged or defective, replace (WP 0260 00). |
| **10. Articulation Fails to Operate Properly.** | 1. Check the articulation hoses for leaks and loose fittings. | If the hoses are loose, tighten. If hoses are damaged or defective, replace (WP 0227 00). If the problem still exists, go to Test 2. |
| | 2. Check articulation cylinder for leaks and damage. | Replace if leaking or damaged (WP 0246 00). |

**END OF WORK PACKAGE**

## MISCELLANEOUS TROUBLESHOOTING PROCEDURES 0013 00

| MALFUNCTION | TEST OR INSPECTION | CORRECTIVE ACTION |
|---|---|---|
| **1. Tires Wear Unevenly.** | 1. Check for proper tire inflation (TM 5-3805-261-10). | Inflate tires to correct pressure (TM 5-3805-261-10). If the problem still exists, go to Test 2. |
| | 2. Check lugnuts (TM 5-3805-261-10). | Tighten lugnuts (TM 5-3805-261-10). |
| **2. ROPS Is Not Secure.** | 1. Check ROPS mounting hardware. | Tighten bolts as necessary (WP 0327 00). If the problem still exists, go to Test 2. |
| | 2. Check strips on bottom of ROPS assembly. | If strips are not sealed or if they are damaged or defective, replace (WP 0185 00). |
| **3. Window Seals Are Defective (CCE Machine).** | 1. Check window seals (WP 0186 00 and WP 0187 00). | If seals are damaged or defective, replace (WP 0186 00 and WP 0187 00). If the problem still exists, go to Test 2. |
| | 2. Check windows (WP 0186 00) and WP 0187 00). | If window is cracked or broken, replace (WP 0186 00 or WP 0187 00). |
| **4. Door Will Not Close or Catch (CCE Machine).** | 1. Check for bends or dents in door assembly (WP 0188 00). | If door is damaged or defective, replace (WP 0188 00). If the problem still exists, go to Test 2. |
| | 2. Check hinges and springs (WP 0188 00). | If hinges and springs are damaged or defective, replace (WP 0188 00). |
| **5. Steps Bent (Old Design).** | Check for bent steps. | 1. If steps are bent, replace (WP 0177 00).<br>2. To prevent the problem, paint a “danger zone” on the circle reverse as follows: Raise and rotate blade so it is set for travel. Stop blade when it is a few inches from stop. Paint a black stripe on circle reverse and another on the circle frame just above and back about 8 in. (20 cm). Repeat for other side.<br>3. Another method to prevent the problem is to move the lower wire rope to rear holes. |

| MALFUNCTION | TEST OR INSPECTION | CORRECTIVE ACTION |
|---|---|---|
| **6. Operator Panel Console Moves Out of Adjustment or Does Not Lock Into Position.** | 1. If operator panel console slips out of position, adjust. | To adjust cylinder (3), screw cylinder rod into retainer assembly (1) until valve stem (5) makes contact with ball (2). Then loosen cylinder rod one complete turn and tighten jamnut (4). Cylinder can then be rotated for alignment after jamnut is tightened. If the problem still exists, go to Test 2. |
| | 2. If operator panel is spring-type and does not lock. | Reattach or replace spring (WP 0193 00). |
| **7. All Windshield Wipers and Washers Fail to Operate (CCE Machine).** | 1. Check main circuit breaker (60A). | Reset circuit breaker. If the problem still exists, go to Test 2. |
| | 2. Check windshield wiper fuse (4A). | Replace fuse if blown (WP 0097 00). If the problem still exists, go to Test 3. |

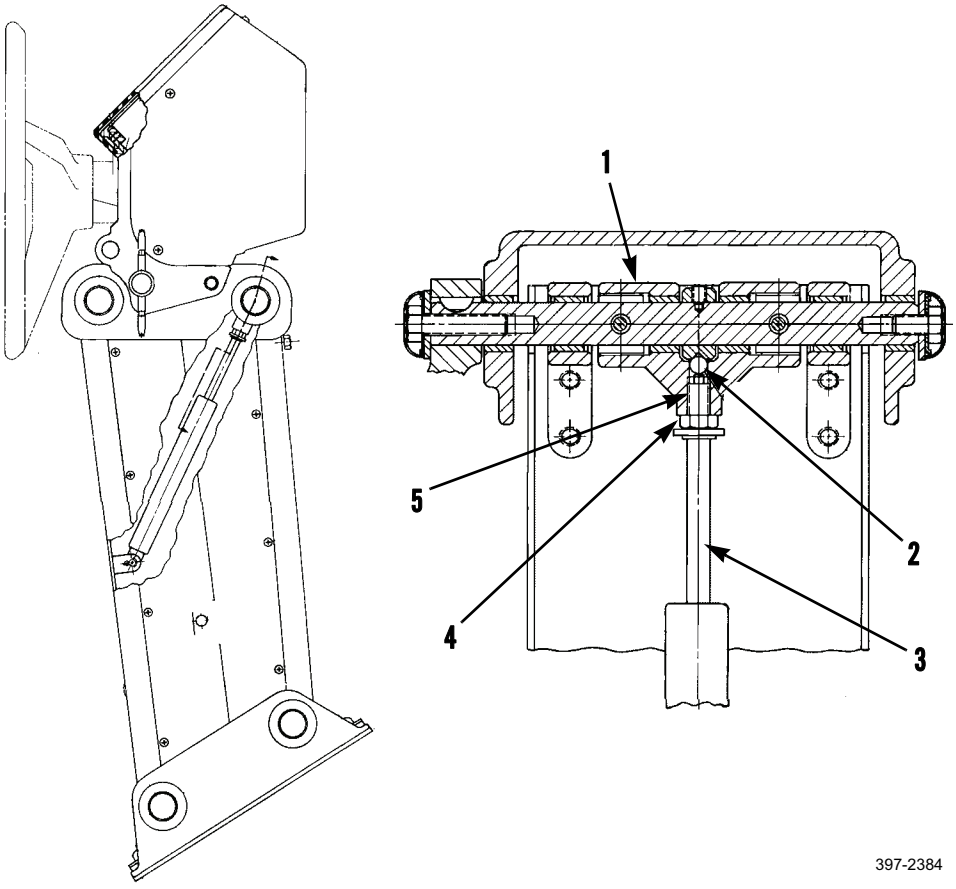

| MALFUNCTION | TEST OR INSPECTION | CORRECTIVE ACTION |
|---|---|---|
| **7. All Windshield Wipers and Washers Fail to Operate (CCE Machine) - Continued.** | 3. Test continuity of main wiring harness at rear wiper motor. Refer to *Electrical System Troubleshooting* (WP 0008 00). | Repair main wiring harness as necessary (WP 0021 00). |
| **8. One or More Windshield Wipers Fail to Operate (CCE Machine).** | 1. Check windshield wiper fuse (4A). | If fuse is blown, replace (WP 0097 00). If the problem still exists, go to Test 2. |
| | 2. Check individual wiper motors. | If wiper motor is damaged or defective, replace (WP 0206 00, WP 0207 00, or WP 0208 00). If the problem still exists, go to Test 3. |
| | 3. Test continuity of windshield wiper switch. Refer to *Electrical System Troubleshooting* (WP 0008 00). | If windshield wiper switch is damaged or defective, replace (WP 0085 00). If the problem still exists, go to Test 4. |
| | 4. Test continuity of main harness between fuse block and windshield wiper switch and between windshield wiper switch and windshield wiper motor. Refer to *Electrical System Troubleshooting* (WP 0008 00). | Repair main harness as necessary (WP 0021 00). |
| **9. Windshield Washer Fails to Operate (CCE Machine).** | 1. Check windshield washer motor. | If windshield washer motor is damaged or defective, replace (WP 0209 00). If the problem still exists, go to Test 2. |
| | 2. Test continuity of main harness between windshield wiper switch and windshield washer. Refer to *Electrical System Troubleshooting* (WP 0008 00). | Repair main harness as necessary (WP 0021 00). |
| **10. Front or Rear Window Defroster Does Not Operate (CCE Machine).** | 1. Check main circuit breaker (60A). | Reset circuit breaker. If the problem still exists, go to Test 2. |
| | 2. Check defroster fuse (10A). | If fuse is blown, replace (WP 0097 00). If the problem still exists, go to Test 3. |
| | 3. Check defroster motor. | If defroster motor is damaged or defective, replace (WP 0210 00). If the problem still exists, go to Test 4. |
| | 4. Test continuity of defroster switch. Refer to *Electrical System Troubleshooting* (WP 0008 00). | If the problem still exists, go to Test 5. |

| MALFUNCTION | TEST OR INSPECTION | CORRECTIVE ACTION |
|---|---|---|
| **10. Front or Rear Window Defroster Does Not Operate (CCE Machine) - Continued.** | 5. Test continuity of harness between defroster motor and defroster switch. Refer to *Electrical System Troubleshooting* (WP 0008 00). | Repair harness as necessary (WP 0021 00). |
| **11. Heater Fans and Controls Operate, but No Heat (CCE Machine).** | 1. Check hoses and connection to heater coil. | If hose clamps are loose, tighten. If hose is damaged or defective, replace (WP 0212 00). If the problem still exists, go to Test 2. |
| | 2. Check control valve assembly. | If control valve assembly is damaged or defective, replace (WP 0212 00). If the problem still exists, go to Test 3. |
| | 3. Check heater coil. | If coil is blocked, damaged, or defective, replace (WP 0212 00). |
| **12. Both Heater Fans Fail to Operate (CCE Machine).** | 1. Check main circuit breaker (60A). | Reset circuit breaker. If the problem still exists, go to Test 2. |
| | 2. Check heater fuse (20A). | If fuse is blown, replace (WP 0097 00). If the problem still exists, go to Test 3. |
| | 3. Test continuity of heater wiring harness between two heater motors. Refer to *Electrical System Troubleshooting* (WP 0008 00). | If heater wiring harness is damaged or defective, replace (WP 0143 00). |
| **13. One Heater Fan Fails to Operate (CCE Machine).** | 1. Check heater motor. | If motor is damaged, replace (WP 0212 00). If the problem still exists, go to Test 2. |
| | 2. Test continuity of heat switch. Refer to *Electrical System Troubleshooting* (WP 0008 00). | If switch is damaged or defective, replace (WP 0212 00). If the problem still exists, go to Test 3. |
| | 3. Test continuity of heater wiring harness between heater motor and heater switch. Refer to *Electrical System Troubleshooting* (WP 0008 00). | If heater wiring harness damaged or defective, replace (WP 0143 00). |
| **14. Air Cleaner Indicator Fails to Show Air Filter Condition.** | Check condition of air filter. | If air filter needs replacement, replace (WP 0037 00). If indicator has failed, replace (WP 0251 00). |
| **15. Air Pressure Gauges Fail to Operate.** | Check air lines with a pressure gauge of known accuracy. | If system is pressurized, replace defective air pressure gauge (WP 0252 00). |
| **16. Differential Lock Is Not Engaging Correctly.** | 1. Check control valve. | If control valve is worn, damaged, or defective, replace (WP 0306 00). If the problem still exists, go to Test 2. |

| MALFUNCTION | TEST OR INSPECTION | CORRECTIVE ACTION |
|---|---|---|
| **16. Differential Lock Is Not Engaging Correctly - Continued.** | 2. Check differential lock valve. | If lock valve is worn, damaged, or defective, replace (WP 0306 00). If the problem still exists, go to Test 3. |
| | 3. Check differential lock. | Replace lines as necessary. If the problem still exists, go to Test 4. |
| | 4. Check lines for air leaks. | Replace lines as necessary. |
| **17. Differential Lock Is Not Releasing Correctly.** | 1. Check control valve. | If control valve is worn, damaged, or defective, replace (WP 0306 00). If the problem still exists, go to Test 2. |
| | 2. Check differential lock valve. | If lock valve is worn, damaged, or defective, replace (WP 0306 00). If the problem still exists, go to Test 3. |
| | 3. Check lines for air leaks. | Replace lines as necessary. |

**END OF WORK PACKAGE**

## ENGINE STE/ICE-R TESTING 0014 00

### THIS WORK PACKAGE COVERS

TEST 10 - Engine RPM (Average) (Models 130GNS, 130GSCE, and 130GNSCE)

TEST 11 - Engine RPM (Cranking) (Models 130GNS, 130GSCE, and 130GNSCE)

TEST 50 - Engine Oil Pressure

### INITIAL SETUP

**Maintenance Level**

Unit

**Tools and Special Tools**

Tool kit, general mechanic's (Item 89, WP 0348 00)

Analyzer set, engine (Item 12, WP 0348 00)

**Materials/Parts**

Rag, wiping (Item 35, WP 0349 00)

**References**

TM 9-4910-571-12&P

**Equipment Conditions**

Machine parked on level ground (TM 5-3805-261-10)

Parking/emergency brake applied (TM 5-3805-261-10)

Implements lowered to ground (TM 5-3805-261-10)

Engine off (TM 5-3805-261-10)

Battery disconnect switch in OFF position (TM 5-3805-261-10)

### *TEST 10 - ENGINE RPM (AVERAGE) (MODELS 130GNS, 130GSCE, AND 130GNSCE)*

1. Refer to VTM General Setup and Checkout Instructions in TM 9-4910-571-12&P. Connect power cable to battery.

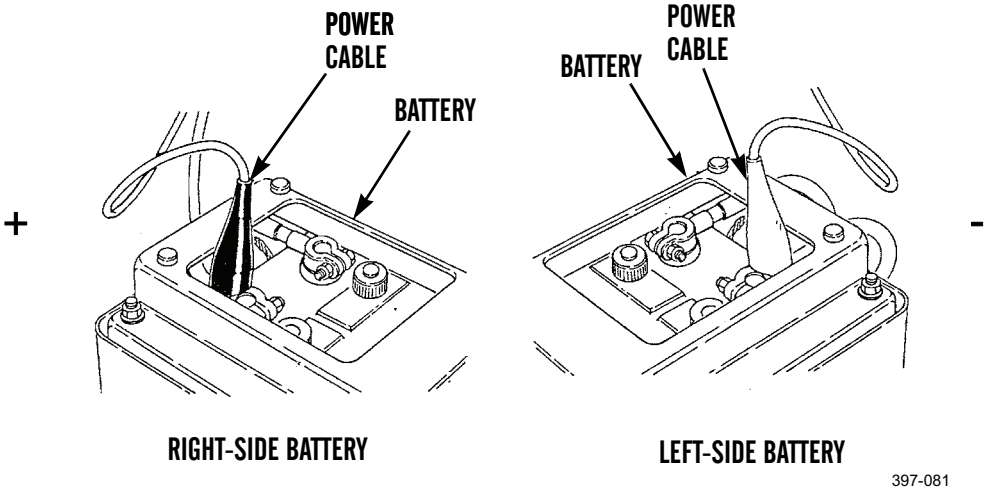

*TEST 10 - ENGINE RPM (AVERAGE) (MODELS 130GNS, 130GSCE, AND 130GNSCE) - CONTINUED*

2. Remove cap from tachometer drive.

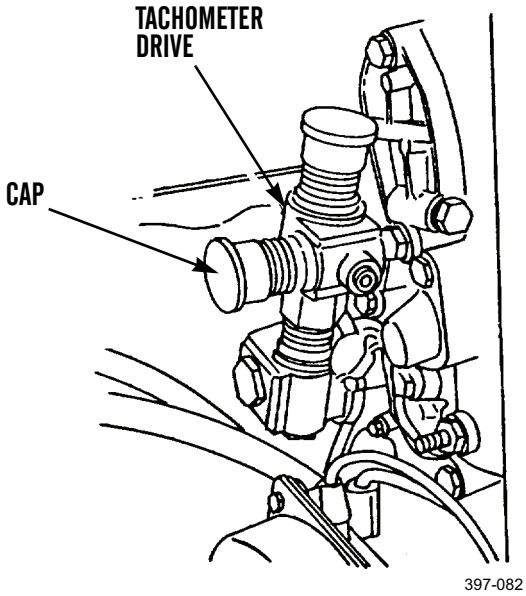


3. Install pulse tachometer and connect cable.

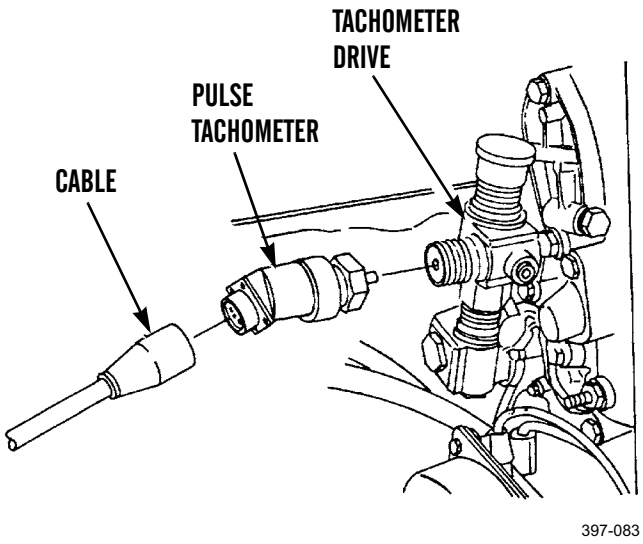


4. Perform test using procedure TEST 10 as instructed in TM 9-4910-571-12&P.
5. At low idle, engine should run at 960 to 980 RPM. At high idle, engine should run at 2,310 to 2,370 RPM.
6. Return machine to its original condition.

### *TEST 11 - ENGINE RPM (CRANKING) (MODELS 130GNS, 130GSCE, AND 130GNSCE)*

1. Refer to VTM General Setup and Checkout Instructions in TM 9-4910-571-12&P. Connect power cable to battery.

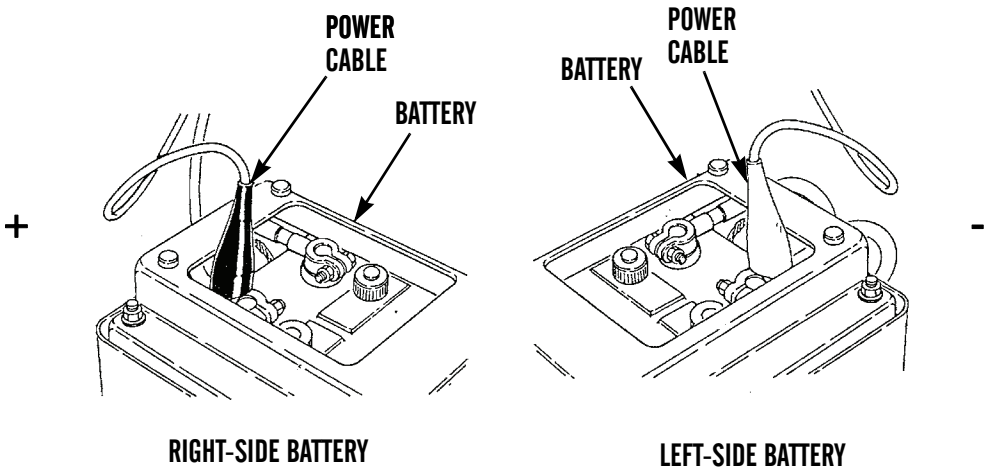


2. Remove cap from tachometer drive.
3. Install pulse tachometer and connect cable.
4. With fuel shut off, perform test using procedure TEST 10 as instructed in TM 9-4910-571-12&P.
5. Minimum cranking speed is 100 RPM.
6. Return machine to its original condition.

### *TEST 50 - ENGINE OIL PRESSURE*

1. Refer to VTM General Setup and Checkout Instructions in TM 9-4910-571-12&P. Connect power cable to battery.
2. Remove wire leads and oil pressure sender.

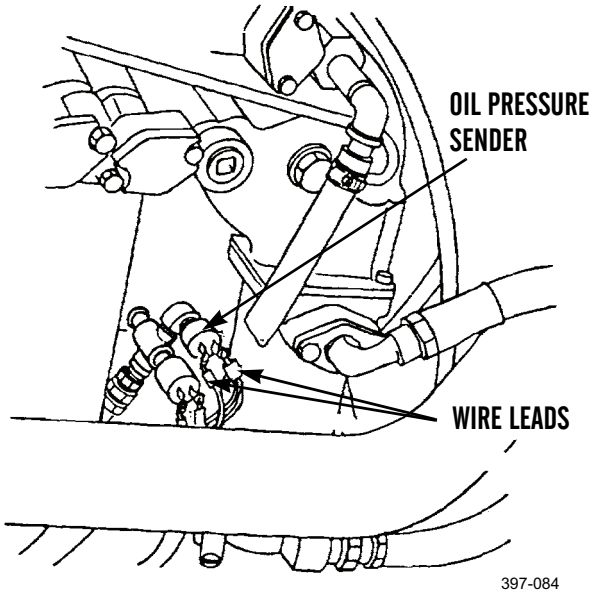

***TEST 50 - ENGINE OIL PRESSURE - CONTINUED***

3. Install reducer TK 20 and blue transducer and connect cable.

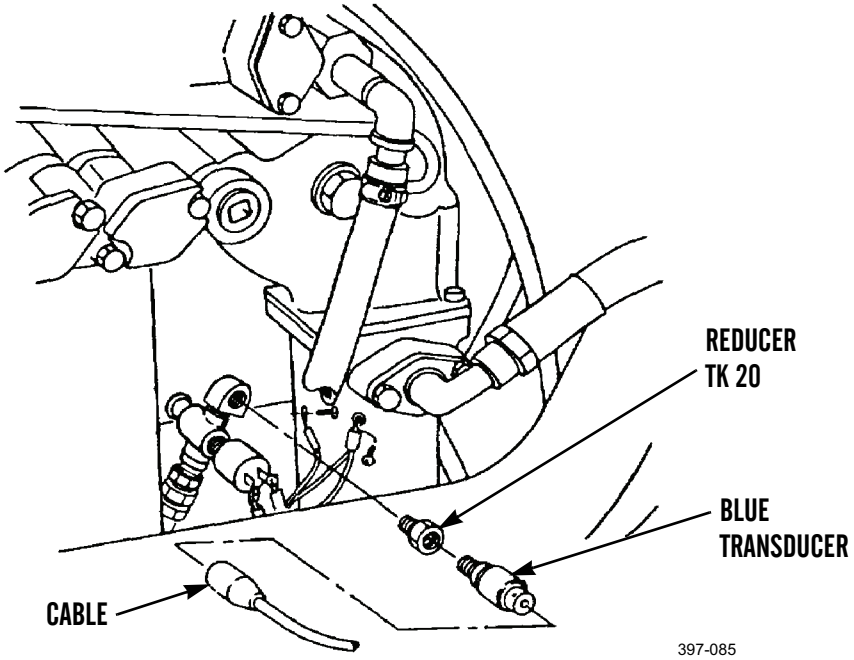


4. Perform test using procedure TEST 50 as instructed in TM 9-4910-571-12&P.
5. Engine oil pressure should read 14 to 87 psi (103 to 600 kPa).
6. Return machine to its original condition.

**END OF WORK PACKAGE**

## FUEL STE/ICE-R TESTING 0015 00

### THIS WORK PACKAGE COVERS

TEST 50 - Fuel Supply Pressure

### INITIAL SETUP

**Maintenance Level**

Unit

**Tools and Special Tools**

Tool kit, general mechanic's (Item 89, WP 0348 00)

Analyzer set, engine (Item 12, WP 0348 00)

**Materials/Parts**

Rag, wiping (Item 35, WP 0349 00)

**References**

TM 9-4910-571-12&P

**Equipment Conditions**

Machine parked on level ground (TM 5-3805-261-10)

Parking/emergency brake applied (TM 5-3805-261-10)

Implements lowered to ground (TM 5-3805-261-10)

Engine off (TM 5-3805-261-10)

Battery disconnect switch in OFF position (TM 5-3805-261-10)

### *TEST 50 - FUEL SUPPLY PRESSURE*

1. Refer to VTM General Setup and Checkout Instructions in TM 9-4910-571-12&P. Connect power cable to battery.

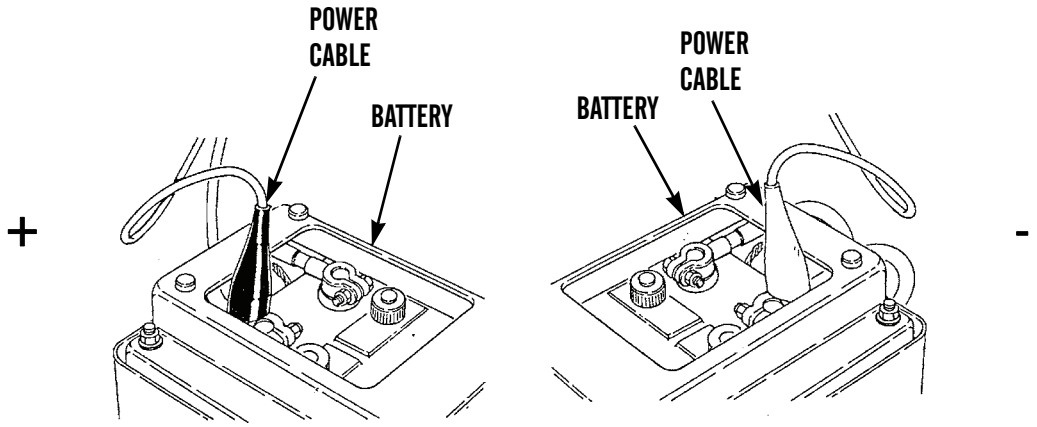

***TEST 50 - FUEL SUPPLY PRESSURE - CONTINUED***

2. Remove fuel pressure switch.

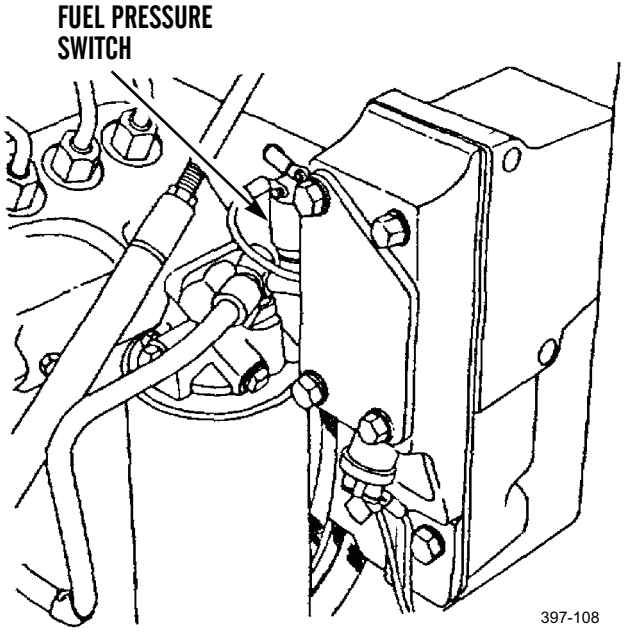


3. Install reducer item TK 20. Install blue transducer and connect cable.

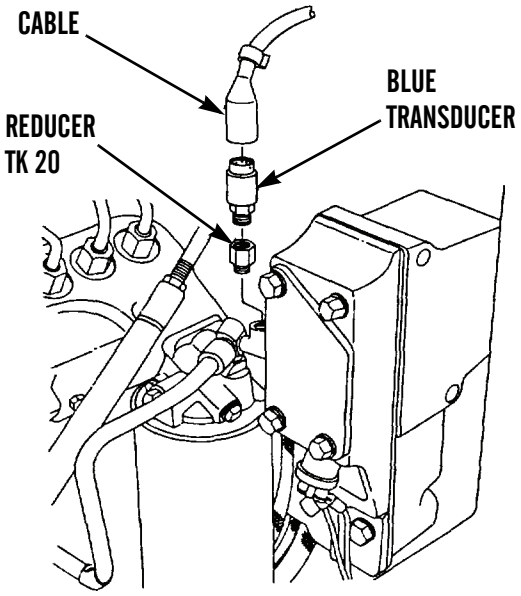


4. Perform test using procedure TEST 50 as instructed in TM 9-4910-571-12&P.
5. At high idle, fuel pressure should read 25 to 45 psi (172 to 310 kPa). Parameters for minimum fuel pressure at low idle are 15 psi (103 kPa).
6. Return machine to its original condition.

**END OF WORK PACKAGE**

## CHARGING SYSTEM STE/ICE-R TESTING 0016 00

### THIS WORK PACKAGE COVERS

TEST 89 - Alternator/Generator Output Voltage

TEST 90 - Alternator Output Current Sense

### INITIAL SETUP

**Maintenance Level**

Unit

**Tools and Special Tools**

Tool kit, general mechanic's (Item 89, WP 0348 00)

Analyzer set, engine (Item 12, WP 0348 00)

**Materials/Parts**

Rag, wiping (Item 35, WP 0349 00)

**References**

TM 9-4910-571-12&P

**Equipment Conditions**

Machine parked on level ground (TM 5-3805-261-10)

Parking/emergency brake applied (TM 5-3805-261-10)

Implements lowered to ground (TM 5-3805-261-10)

Engine off (TM 5-3805-261-10)

Battery disconnect switch in OFF position (TM 5-3805-261-10)

### *TEST 89 - ALTERNATOR/GENERATOR OUTPUT VOLTAGE*

1. Refer to VTM General Setup and Checkout Instructions in TM 9-4910-571-12&P. Connect power cable to battery.

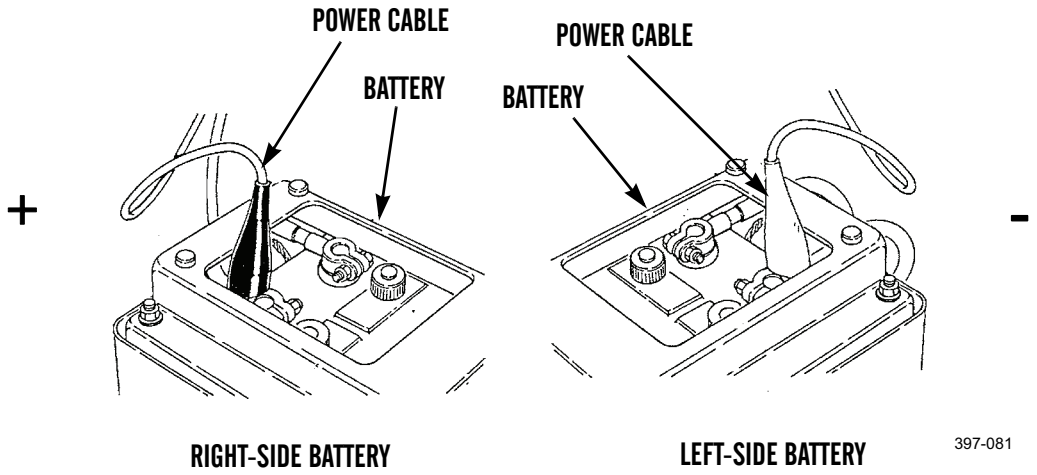

### *TEST 89 - ALTERNATOR/GENERATOR OUTPUT VOLTAGE - CONTINUED*

2. Attach red lead clip to output terminal of alternator. Ground black lead clip. Make sure that electrical connections are clean.

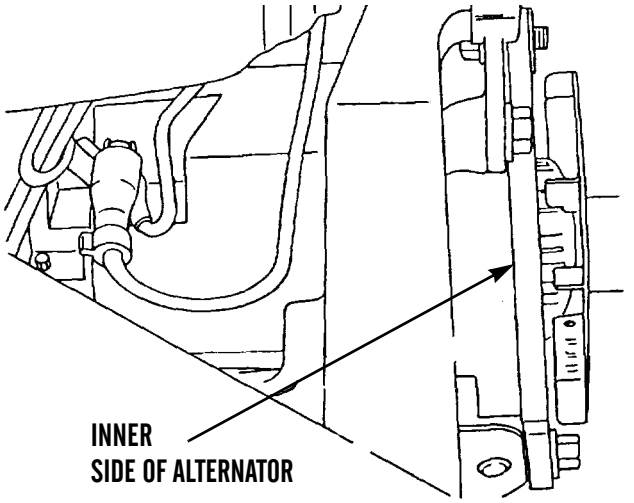


397-205

3. Perform test using procedure TEST 89 as instructed in TM 9-4910-571-12&P.
4. Voltage should be 26.5 to 28.0 volts.
5. Return machine to its original condition.

### *TEST 90 - ALTERNATOR OUTPUT CURRENT SENSE*

1. Refer to VTM General Setup and Checkout Instructions in TM 9-4910-571-12&P. Connect power cable to battery.

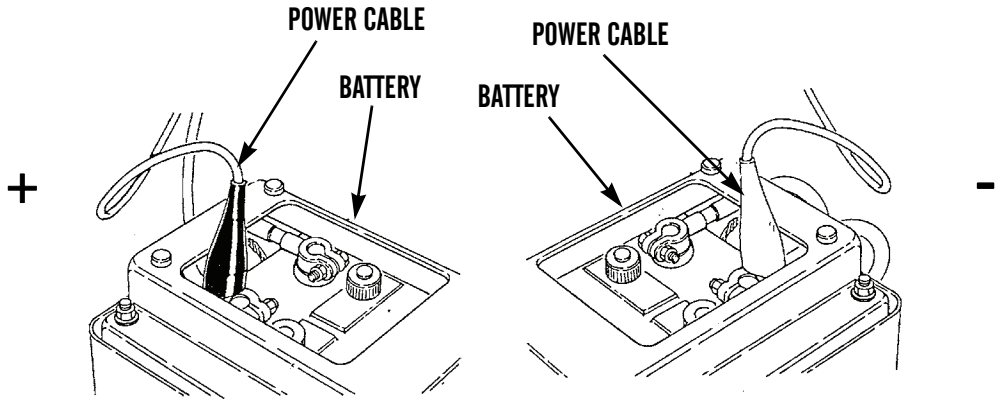


397-081

### *TEST 90 - ALTERNATOR OUTPUT CURRENT SENSE - CONTINUED*

2. Attach current probe to battery positive cable.

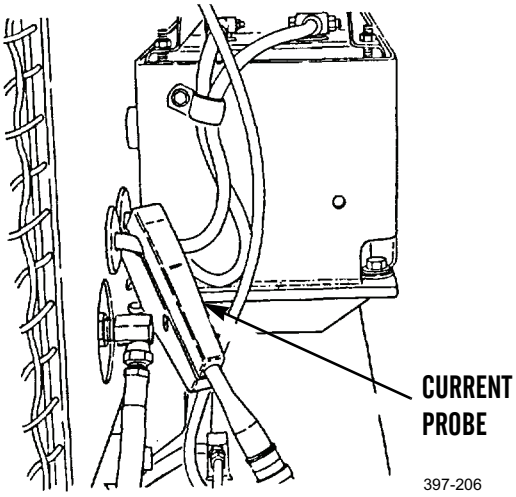


3. Perform test using procedure TEST 90 as instructed in TM 9-4910-571-12&P.
4. Crank engine without starting for 30 seconds to drain battery.
5. Start engine and test for 45 $\pm$ 2 amps.
6. Return machine to its original condition.

**END OF WORK PACKAGE**

## STARTING SYSTEM STE/ICE-R TESTING 0017 00

### THIS WORK PACKAGE COVERS

TEST 89 - Starting Motor Voltage

TEST 89 - Starter Negative Cable Voltage Drop

TEST 89 - Starter Solenoid Voltage

TEST 90 - Starter Current (Average)

TEST 74 - Starter Circuit Resistance

TEST 89 - 0-45 Volts

### INITIAL SETUP

**Maintenance Level**

Unit

**Tools and Special Tools**

Tool kit, general mechanic's (Item 89, WP 0348 00)

Analyzer set, engine (Item 12, WP 0348 00)

**Materials/Parts**

Rag, wiping (Item 35, WP 0349 00)

**References**

TM 9-4910-571-12&P

**Equipment Conditions**

Machine parked on level ground (TM 5-3805-261-10)

Parking/emergency brake applied (TM 5-3805-261-10)

Implements lowered to ground (TM 5-3805-261-10)

Engine off (TM 5-3805-261-10)

Battery disconnect switch in OFF position (TM 5-3805-261-10)

### *TEST 89 - STARTING MOTOR VOLTAGE*

1. Refer to VTM General Setup and Checkout Instructions in TM 9-4910-571-12&P. Connect power cable to battery.

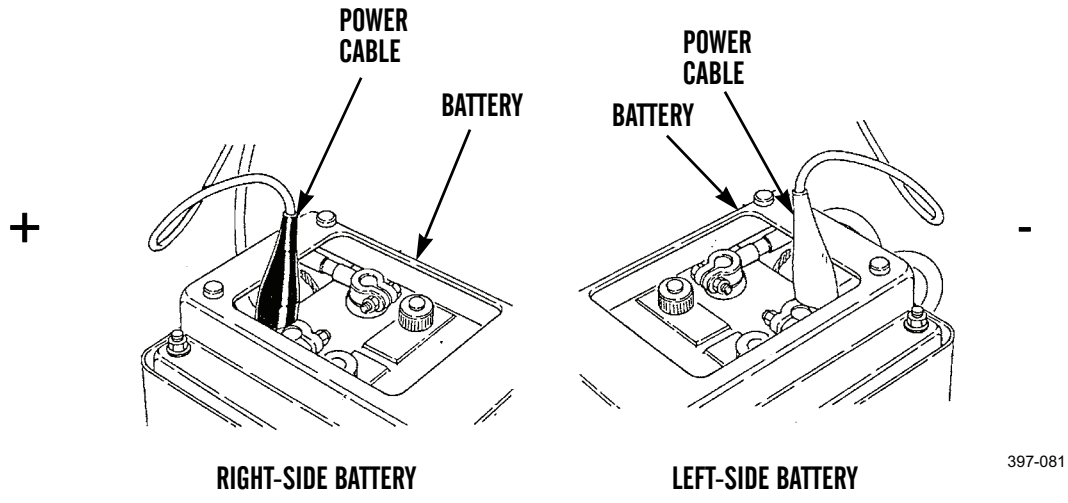

### *TEST 89 - STARTING MOTOR VOLTAGE - CONTINUED*

2. Attach red lead clip to terminal E. Attach black lead clip to battery negative terminal. Make sure that electrical connections are clean.

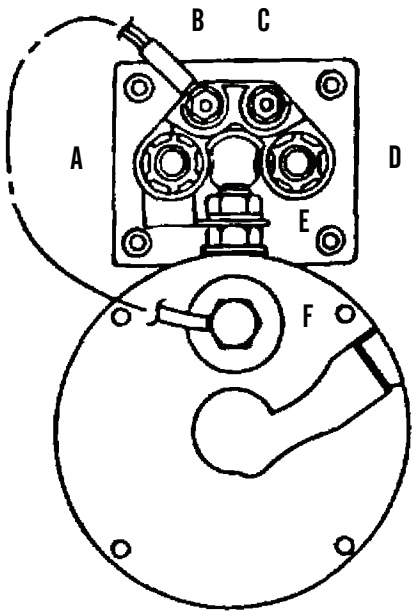


397-216

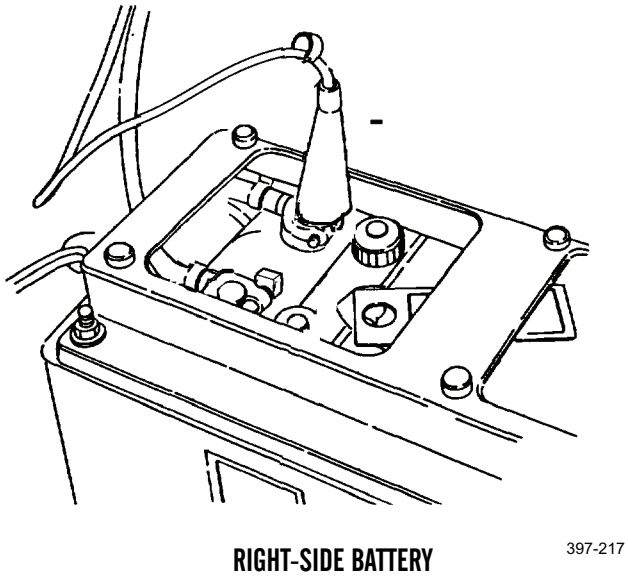


397-217

3. Perform test using procedure TEST 89 as instructed in TM 9-4910-571-12&P.
4. Starter motor voltage should be a minimum of 17 volts.

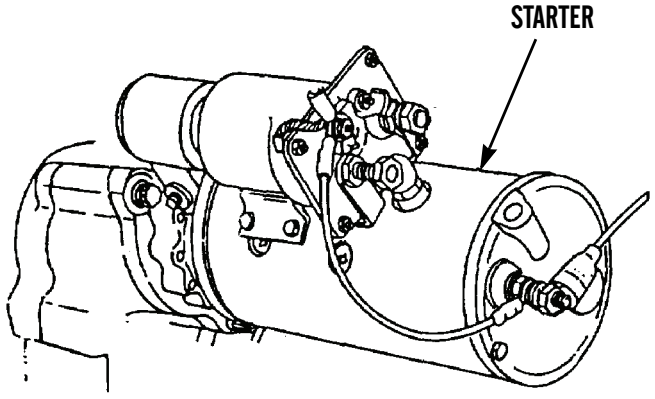


397-218

5. Return machine to its original condition.

### *TEST 89 - STARTER NEGATIVE CABLE VOLTAGE DROP*

1. Refer to VTM General Setup and Checkout Instructions in TM 9-4910-571-12&P. Connect power cable to battery.

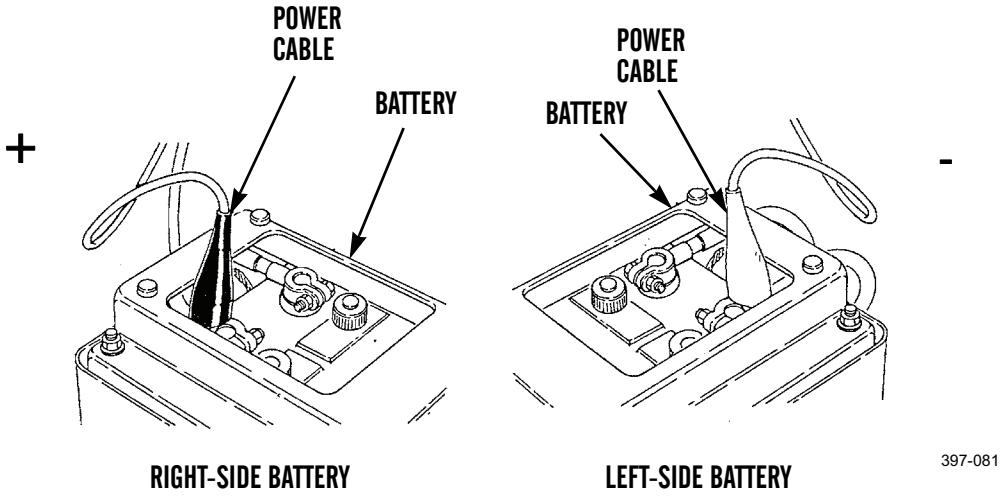


2. Attach red lead clip to ground terminal F. Attach black lead clip to battery negative terminal. Make sure that electrical contacts are clean.
3. Perform test using procedure TEST 89 as instructed in TM 9-4910-571-12&P.
4. Voltage drop should not be more than 0.1 volt.
5. Return machine to its original condition.

### *TEST 89 - STARTER SOLENOID VOLTAGE*

1. Refer to VTM General Setup and Checkout Instructions in TM 9-4910-571-12&P. Connect power cable to battery.
2. Attach red lead clip to positive terminal C on starter solenoid. Attach black lead clip to battery negative terminal. Make sure that electrical connections are clean.
3. Perform test using procedure TEST 89 as instructed in TM 9-4910-571-12&P.
4. Starter solenoid voltage should be 18 volts.
5. Return machine to its original condition.

### *TEST 90 - STARTER CURRENT (AVERAGE)*

1. Refer to VTM General Setup and Checkout Instructions in TM 9-4910-571-12&P. Connect power cable to battery.
2. Attach current probe to positive battery cable connected to starter.

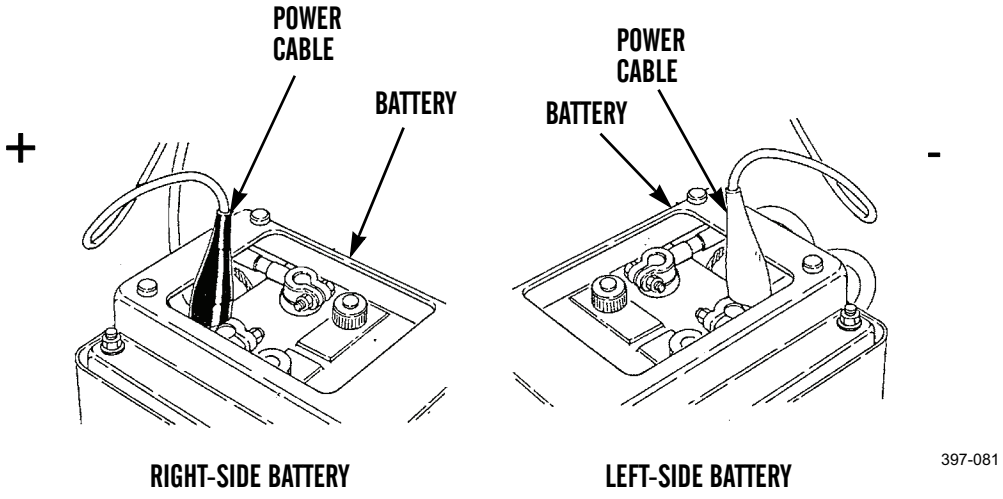


3. Perform test using procedure TEST 90 as instructed in TM 9-4910-571-12&P.
4. Starter current should be a minimum of 100 amps.
5. Return machine to its original condition.

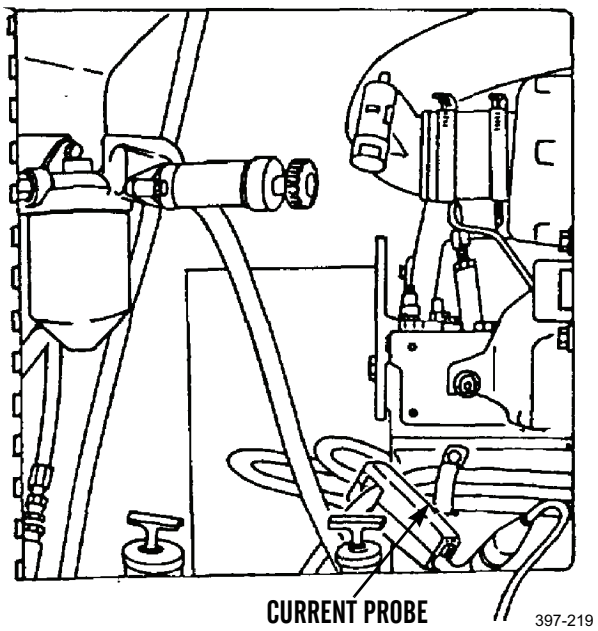


### *TEST 74 - STARTER CIRCUIT RESISTANCE*

1. Refer to VTM General Setup and Checkout Instructions in TM 9-4910-571-12&P. Connect power cable to battery.
2. Attach current probe.
3. Perform test using procedure TEST 74 as instructed in TM 9-4910-571-12&P.
4. Starter circuit resistance should be 0.8 to 2.0 millions.
5. Return machine to its original condition.

***TEST 89 - 0-45 VOLTS***

**NOTE**

TEST 89 is a general electrical test to determine voltage. In the following procedures, TEST 89 is used to read positive and negative voltage drop across various starting related connections.

1. Positive Voltage Drop.
   a. Starting Motor.
      (1) Refer to VTM General Setup and Checkout Instructions in TM 9-4910-571-12&P. Connect power cable to battery.
      (2) Attach black lead clip to terminal E. Attach red lead clip to battery positive terminal. Make sure that all electrical contacts are clean.

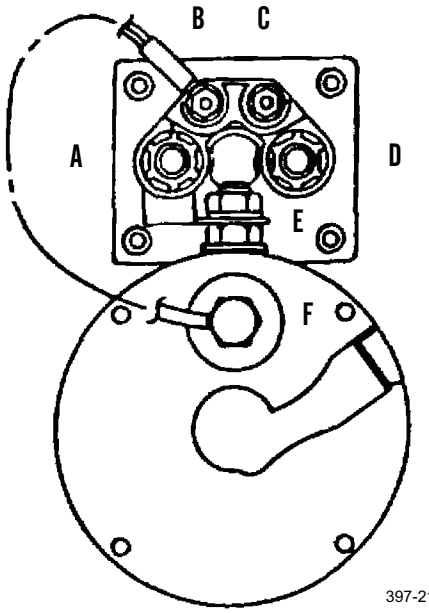

397-216

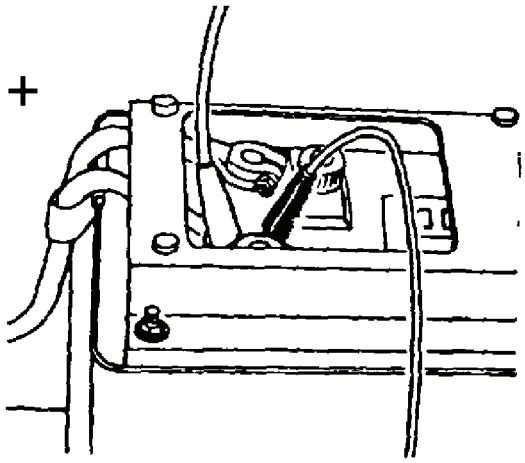

RIGHT-SIDE BATTERY
397-220

***TEST 89 - 0-45 VOLTS - CONTINUED***

(3) Perform test using procedures TEST 89 as instructed in TM 9-4910-571-12&P.

(4) Maximum voltage drop allowable is 0.1 volt.

(5) Return machine to its original condition.

b. Starter Solenoid.

(1) Refer to VTM General Setup and Checkout Instructions in TM 9-4910-571-12&P. Connect power cable to battery.

(2) Attach black lead clip to terminal C. Attach red lead clip to battery positive terminal. Make sure that all electrical contacts are clean.

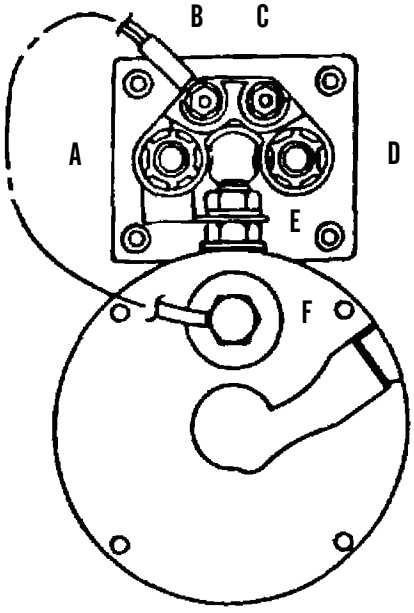


397-216

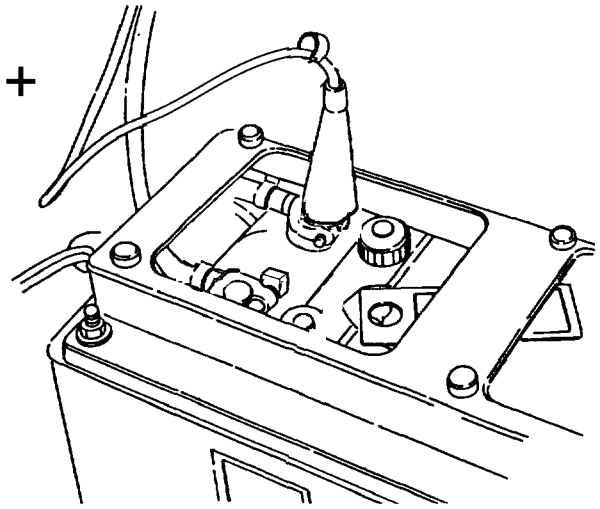


RIGHT-SIDE BATTERY

397-217

(3) Perform test using procedure TEST 89 as instructed in TM 9-4910-571-12&P.

(4) Maximum voltage drop allowable is 0.1 volt.

(5) Return machine to its original condition.

2. Negative Voltage Drop.

a. Master Disconnect Switch.

(1) Refer to VTM General Setup and Checkout Instructions in TM 9-4910-571-12&P. Connect power cable to battery.

*TEST 89 - 0-45 VOLTS - CONTINUED*

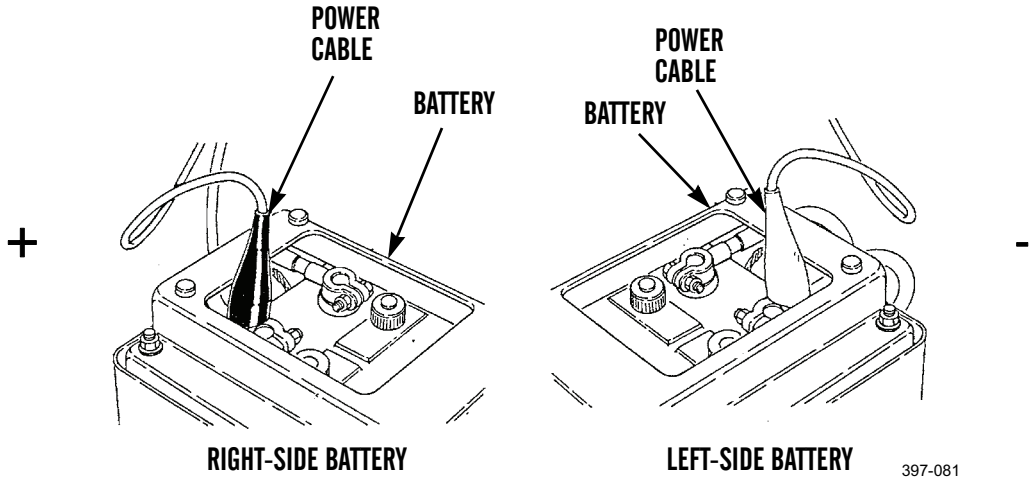


(2) Remove cover to operator panel on right side of seat to expose master disconnect switch.

(3) Attach red lead clip and black lead clip across switch.

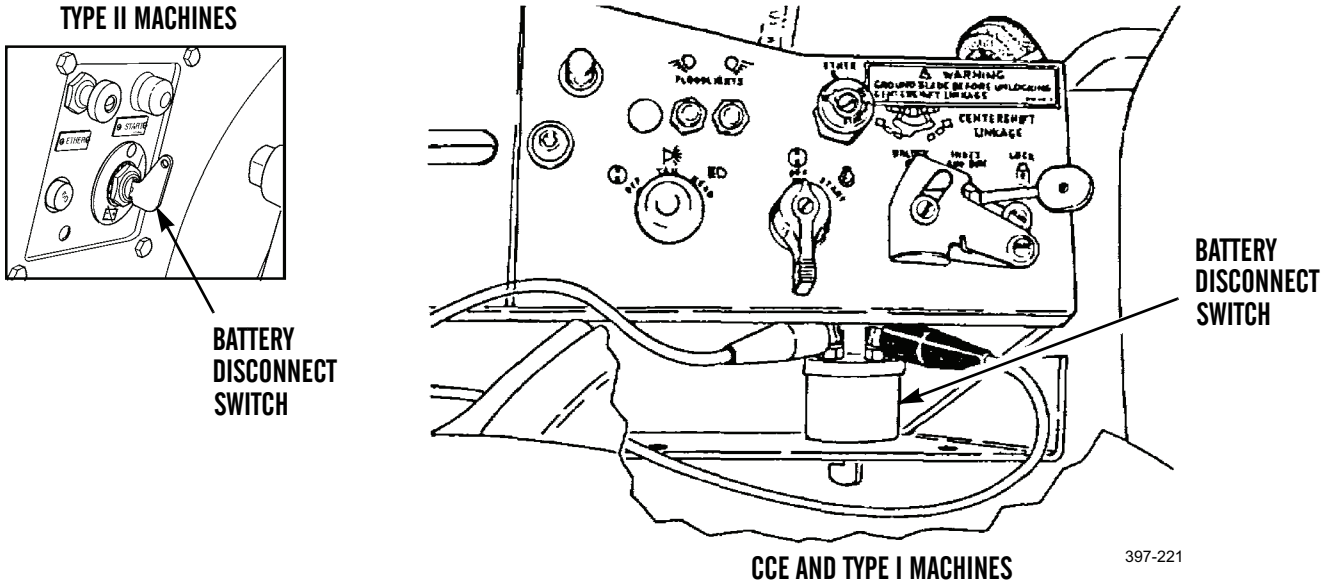

***TEST 89 - 0-45 VOLTS - CONTINUED***

(4) Perform test using procedure TEST 89 as instructed in TM 9-4910-571-12&P.

(5) Voltage drop should be no more than 1.0 volt.

(6) Return machine to its original condition.

b. Starter Ground to Frame.

(1) Refer to VTM General Setup and Checkout Instructions in TM 9-4910-571-12&P. Connect power cable to battery.

(2) Attach red lead clip to starter. Ground black lead clip to frame. Make sure that all electrical contacts are clean.

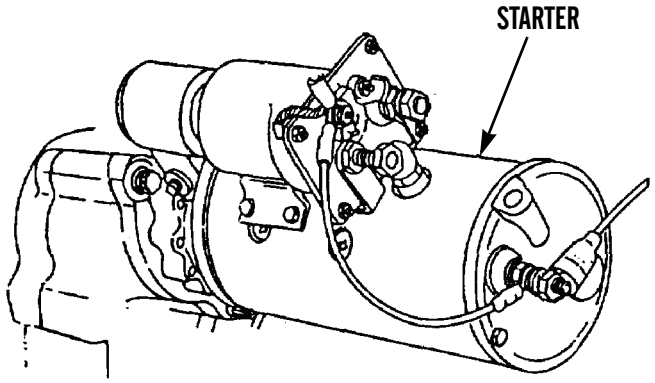


397-218

(3) Perform test using procedures TEST 89 as instructed in TM 9-4910-571-12&P.

(4) Voltage drop should be no more than 0.2 volt.

(5) Return machine to its original condition.

**END OF WORK PACKAGE**

## BATTERY STE/ICE-R TESTING 0018 00

### THIS WORK PACKAGE COVERS

TEST 67 - Battery Voltage

### INITIAL SETUP

**Maintenance Level**

Unit

**Tools and Special Tools**

Tool kit, general mechanic's (Item 89, WP 0348 00)

Analyzer set, engine (Item 12, WP 0348 00)

**Materials/Parts**

Rag, wiping (Item 35, WP 0349 00)

**References**

TM 9-4910-571-12&P

**Equipment Conditions**

Machine parked on level ground (TM 5-3805-261-10)

Parking/emergency brake applied (TM 5-3805-261-10)

Implements lowered to ground (TM 5-3805-261-10)

Engine off (TM 5-3805-261-10)

Battery disconnect switch in OFF position (TM 5-3805-261-10)

### *TEST 67- BATTERY VOLTAGE*

1. Refer to VTM General Setup and Checkout Instructions in TM 9-4910-571-12&P. Connect power cable to battery.

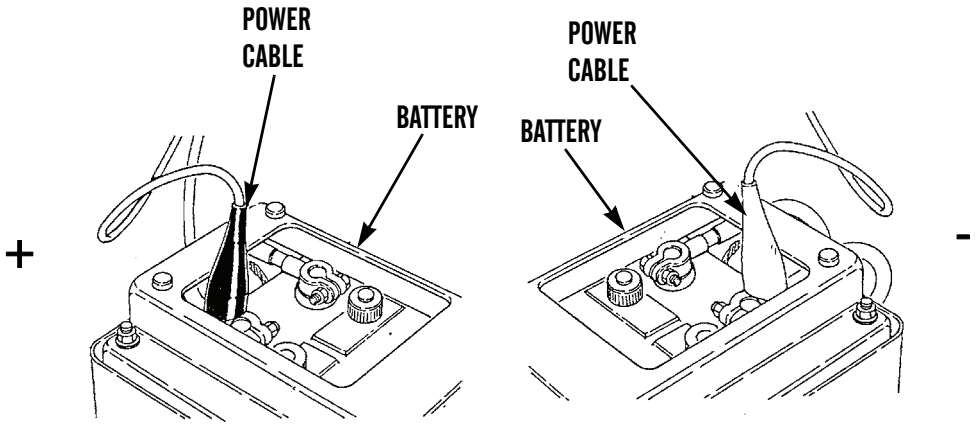

### *TEST 67 - BATTERY VOLTAGE - CONTINUED*

2. Attach lead clips. Red lead clip is on right battery positive terminal and black lead clip is on left battery negative terminal. Make sure that electrical connections are clean.

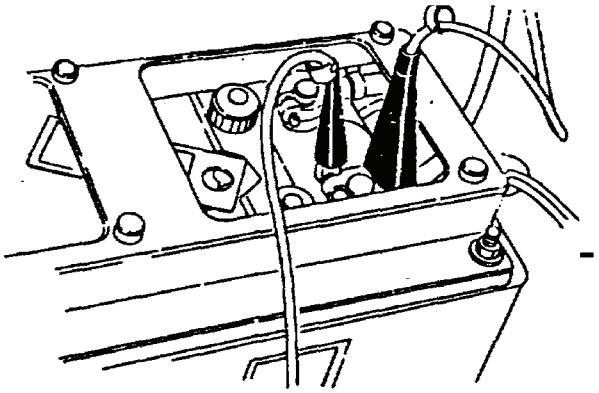


397-365

3. Perform test using procedure TEST 67 as instructed in TM 9-4910-571-12&P.
4. Battery voltage should be 18 to 24 volts. Take corrective action if necessary.
5. Return machine to its original condition.

**END OF WORK PACKAGE**

# CHAPTER 3
# UNIT MAINTENANCE INSTRUCTIONS

## SERVICE UPON RECEIPT 0019 00

### *GENERAL*

1. When a used or reconditioned 130G Series Grader is first received, determine whether it has been properly prepared for service and is in condition to perform its mission.
2. Follow the inspection and servicing instructions that follow.

### *INSPECTION INSTRUCTIONS*

1. Read and follow all precautions and instructions on DD Form 1397.
2. Remove all packing and shipping material, such as tape, tie downs, protective covers, and shipping seals. Remove tape from exhaust pipe.



**WARNING**

Solvent cleaning compound MIL-PRF-680 Type III is an environmentally compliant and low toxic material. However, it may be irritating to the eyes and skin. Use protective gloves and goggles. Use in well-ventilated areas. Keep away from open flames and other sources of ignition. Failure to follow this warning may cause injury or death to personnel.

3. Clean any exposed metal parts coated with rust preventive compound. Use solvent cleaning compound (Item 8, WP 0349 00).
4. Inspect equipment for any damage incurred during shipment. Check if equipment has been modified.
5. Check equipment against packing slip to ensure that shipment is complete. Report any discrepancies on SF Form 364.
6. Clean all external surfaces as needed. Touch up any paint scratches (TM 43-0139 and TB 43-0242).
7. Remove all Basic Issue Items (BII), Components of End Item (COEI) and Additional Authorization List (AAL) items and stow in accordance with TM 5-3805-261-10.

### *SERVICING INSTRUCTIONS*

1. Service machine in accordance with PMCS instructions in TM 5-3805-261-10 to include the monthly all systems machine exercise and PMCS instructions in this manual (WP 0022 00 and WP 0023 00). Schedule the next PMCS on DA Form 2404 or DA Form 5988-E.
2. Refer to TM 5-3805-261-10 and perform functional checks of all major machine systems to ensure machine is ready for operation. Remove all warning tags.

**END OF WORK PACKAGE**

## GENERAL MAINTENANCE INSTRUCTIONS 0020 00

### THIS WORK PACKAGE COVERS

Scope
Work Safety
Relieving Hydraulic System Pressure
General Information
Cleaning Instructions
Inspection Instructions
Repair Instructions
Lubrication Instructions
Standard Tool Requirements
Applying Torque
Tagging Instructions
Lines and Ports
Fluid Disposal

### INITIAL SETUP

**Maintenance Level**

Unit

**Tools and Special Tools**

Tool kit, general mechanic's (Item 89, WP 0348 00)
Shop equipment, common no. 1 (Item 75, WP 0348 00)

**Materials/Parts**

Cap set, protective (Item 7, WP 0349 00)
Cleaning compound, solvent (Item 8, WP 0349 00)
Detergent (Item 11, WP 0349 00)
Lubricating oil (Item 26, 27, or 30, WP 0349 00)
Rag, wiping (Item 35, WP 0349 00)

**Materials/Parts - Continued**

Tag, marker (Item 44, WP 0349 00)
Tape, duct (Item 45, WP 0349 00)

**References**

TB 43-0209
TC 9-237
TM 5-3805-261-10
TM 9-214
TM 9-247
WP 0022 00
WP 0023 00

### *SCOPE*

These general maintenance instructions contain general shop practices and specific methods you must be familiar with to properly maintain the 130G Series Grader. You should read and understand these practices and methods before starting maintenance tasks on the machine.

### *WORK SAFETY*

1. Before starting a task, think about the risks and hazards to your safety as well as others. Wear protective gear such as safety goggles or lenses, safety shoes, rubber apron, or gloves. Protect yourself against injury.
2. Observe all WARNINGs and CAUTIONs.
3. When lifting heavy parts, have someone help you. Make sure that lifting equipment is working properly, that it is suitable for the task assigned, of sufficient load capacity and is secured against slipping.
4. Always use power tools carefully.

### *WORK SAFETY - CONTINUED*

5. Before beginning a procedure, ensure that the following conditions have been observed, unless otherwise specified:
   a. Machine must be parked on level ground with parking/emergency brake applied.
   b. All machine implements must be lowered to the ground.
   c. Transmission must be in N (Neutral) and locked.
   d. Engine must be off.
   e. Components which are hot at operating temperatures (i.e., cooling, exhaust, and hydraulic systems) must cool down before they are removed.
   f. Components must, however, be at operating temperature to be tested.
   g. Battery disconnect switch must be in OFF position and/or batteries disconnected when performing electrical system maintenance.
   h. Hydraulic system pressure must be relieved before disconnecting any hydraulic system line or fitting. Refer to *Relieving Hydraulic System Pressure* in this work package.

### *RELIEVING HYDRAULIC SYSTEM PRESSURE*



**WARNING**



- Do NOT disconnect or remove any hydraulic system line or fitting unless engine is shut down and hydraulic system pressure has been relieved. Tighten all connections before applying pressure. Escaping hydraulic fluid under pressure can penetrate the skin, causing injury to personnel.
- At operating temperature hydraulic oil is hot. Allow hydraulic oil to cool before disconnecting any hydraulics. Failure to do so could result in injury.

1. Lower all machine implements to the ground.
2. Shut down engine.
3. Move all control levers through all operating positions. Return levers to HOLD position.
4. Slowly loosen hydraulic tank filler cap and allow any pressure to escape.

### *GENERAL INFORMATION*

1. Before beginning a task, find out how much repair, modification, or replacement is needed to fix the equipment as described in this manual. Sometimes the reason for equipment failure can be seen right away and complete teardown is not necessary. Disassemble the equipment only as far as necessary to repair or replace damaged or broken parts.
2. All tags and forms attached to the equipment must be checked to learn the reason for removal from service. Check all Modification Work Orders (MWOs) and Technical Bulletins (TBs) for equipment changes and updates.
3. In some cases a part may be damaged by removal. If the part appears to be good, and other parts behind it are not defective, leave it on and continue the procedure. Here are a few simple rules:
   a. Do not remove dowel pins or studs unless loose, bent, broken, or otherwise damaged.
   b. Do not pull bearings or bushings unless damaged. If you must get at parts behind them, pull out bearings or bushings carefully.
   c. Replace all gaskets, seals, preformed packings, O-rings, cotter pins, spring pins, self-locking nuts, and lockwashers.

***CLEANING INSTRUCTIONS***




- Solvent cleaning compound MIL-PRF-680 Type III is an environmentally compliant and low toxic material. However, It may be irritating to the eyes and skin. Use protective gloves and goggles. Use in well-ventilated areas. Keep away from open flames and other sources of ignition.
- Improper cleaning methods and use of unauthorized cleaning solvents may injure personnel and damage equipment. Refer to TM 9-247, Materials Used for Cleaning, Preserving, Abrading, and Cementing Ordnance Materiels and Related Materiels Including Chemicals, for correct information.
- Fire extinguishers should be placed nearby when using solvent cleaning compound.
- Cloths or rags saturated with solvent cleaning compound must be disposed of IAW authorized facilities' procedures.
- Eye shields must be worn when cleaning with a wire brush. Flying rust and metal particles may cause injury.
- Particles blown by compressed air are hazardous. DO NOT exceed 15 psi (103 kPa) nozzle pressure when drying parts with compressed air. Use a maximum of 30 psi (207 kPa) when cleaning components. DO NOT direct compressed air against human skin. Failure to follow this warning may result in injury or death. Make sure air stream is directed away from user and other personnel in the area. To prevent injury, user must wear protective goggles or face shield.

1. **General.**
   a. Cleaning instructions are the same for the majority of parts and components of the machine.
   b. The importance of cleaning must be thoroughly understood by maintenance personnel. Great care and effort are required in cleaning. Dirt and foreign material are a constant threat to satisfactory maintenance. The following should apply to all cleaning, inspection, repair and assembly operations.
      (1) Clean all parts before inspection, after repair and before assembly.
      (2) To prevent contamination, hands should be kept free of accumulation of grease, which can collect dust, dirt, or grit.
      (3) After cleaning, all parts should be covered or wrapped to protect them from dust and dirt. Parts that are subject to rust should be lightly oiled.
2. **External Engine Cleaning.**
   a. Protect all electrical equipment that could be damaged by the steam or moisture before steam cleaning.
   b. Cover all openings before steam cleaning.
   c. After cleaning, dry and apply a light coat of oil to all parts subject to rust.
   d. Clear out all tapped (threaded) holes with compressed air to remove dirt and cleaning fluid.
3. **Cleaning Disassembled Parts.**
   a. Place all disassembled parts in wire baskets for cleaning.
   b. Dry and cover all cleaned parts.
   c. Place parts on or in "racks" and hold for inspection or repair.
   d. All parts subject to rusting must be lightly oiled and wrapped.
   e. Keep all related parts and components together. Do not mix parts.

### *CLEANING INSTRUCTIONS - CONTINUED*

4. **Castings.**
   a. Clean inner and outer surfaces of castings and all areas subject to grease and oil with solvent cleaning compound.
   b. Use a stiff brush to remove sludge and gum deposits.
   c. Clear out all tapped (threaded) holes with compressed air to remove dirt and cleaning solvent.
5. **Oil Passages.** Particular attention must be given to all oil passages in castings and machined parts. Oil passages must be clean and free of any obstructions.
   a. Clean passages with wire probes to break up any sludge or gum deposits.
   b. Wash passages by flushing with solvent cleaning compound.
   c. Dry passages with compressed air.
6. **Oil Seals and Flexible Hoses.**

**CAUTION**

Washing flexible hoses and oil seals with solvent cleaning compounds or mineral spirits will cause serious damage or destroy the material.

   a. Wash flexible hoses with a mild solution of detergent and water and wipe dry.
   b. Oil seals are generally damaged during removal; cleaning will not be necessary since new seals will be used in assembly.
7. **Bearings.** Refer to TM 9-214 for complete instructions.
8. **Machined Surfaces.**
   a. Clean machined surfaces with solvent cleaning compound.
   b. Dry surfaces with compressed air.
9. **Mated Surfaces.**
   a. Remove old gasket and/or sealing compound using a wire brush and solvent cleaning compound.
   b. Lightly coat with oil and wrap all parts subject to rust before storing.
10. **Rusted Surfaces.** Clean all rusted surfaces using wire brush and crocus cloth.
11. **Oil-Bathed Internal Parts.** Wipe oil-bathed internal parts clean with a lint-free cloth.
12. **Air-Actuated Internal Parts.** Wash air-actuated internal parts clean with a lint-free cloth.
13. **Externally Exposed Parts.** Wash externally exposed parts with detergent and water. Rinse thoroughly and air dry.

### *INSPECTION INSTRUCTIONS*

1. **General.** All components and parts must be carefully checked to determine if they are serviceable for reuse, if they can be repaired or if they must be scrapped.
2. **Drilled and Tapped (Threaded) Holes.**
   a. Inspect for wear, distortion (stretching), cracks, or any other damage in or around holes.
   b. Inspect threaded areas for wear, distortion, or evidence of cross-threading.
   c. Mark all damaged areas for repair or replacement.

*INSPECTION INSTRUCTIONS - CONTINUED*

3. **Metal Lines, Flexible Lines (Hoses), and Fittings.**
   a. Inspect lines for sharp kinks, cracks, bends, or dents.
   b. Inspect flexible lines for fraying, evidence of leakage, or loose fittings or connectors.
   c. Check all fittings and connectors for thread damage. Check for hex heads that are worn or rounded by poorly fitting wrenches.
   d. Mark all damaged material for repair or replacement.
4. **Castings.**
   a. Inspect all ferrous and nonferrous castings for cracks using a magnifying glass and strong light.
   b. Particularly check areas around studs, pipe plugs, threaded inserts, and sharp corners. Replace all cracked castings.
   c. Inspect machined surfaces for nicks, burrs, or raised metal. Mark damaged areas for repair or replacement.
   d. Inspect all pipe plugs, pipe plug openings, screws, and screw openings for damaged or stripped threads.
   e. Check all gasket mating surfaces, flanges on housings, and supports for warpage with a straightedge or surface plate. Inspect mating flanges for discoloration that may indicate persistent oil leakage.
5. **Bearings.** Refer to TM 9-214 for inspection of bearings. Damaged bearings must be replaced.
6. **Studs, Bolts, and Screws.** Replace if threads are damaged, bent, loose, or stretched.
7. **Gears.**

**NOTE**

When gear teeth wear limits are not established, good judgement is required to determine if gear replacement is necessary.

   a. Inspect all gears for cracks using a magnifying glass and strong light. No cracks are permissible.
   b. Inspect gear teeth for wear, sharp fins, burrs, and galled or pitted surfaces.
   c. Check keyway slots for wear or damage. If keyways are worn, damaged, or elongated, replace gear.
8. **Bushing and Bushing Type Bearings.**
   a. Check all bushings and bushing type bearings for secure fit, evidence of overheating, wear, burrs, nicks, and out-of-round condition. Replace as necessary.
   b. Check for dirt in lubrication holes or grooves. Holes and grooves must be clean and free from damage.
9. **Oil Seals.** Oil seals are mandatory replacement items.
10. **Core Hole Expansion Plugs.** Inspect for leakage. Replace plugs when leakage is present.
11. **Machine-Tooled Parts.** Inspect for cracks, breaks, elongated holes, wear, and chips. Replace any damaged parts.
12. **Machined Surfaces.** Inspect for cracks, evidence of wear, galled, or pitted surface, burrs, nicks, and scratches.
13. **Mating Surfaces.** Inspect for remains of old gasket, seal, secure fit, pitting, and evidence of leakage.
14. **Rusted Surfaces.** Inspect for pitting, holes, and severe damage.
15. **Oil-Bathed Internal Parts.** Inspect for cracks, nicks, burrs, evidence of overheating, and wear.
16. **Internal Parts.** Inspect for cracks, nicks, burrs, evidence of overheating, and wear.
17. **Externally Exposed Parts.** Inspect for breaks, cracks, rust damage, and wear.
18. **Springs.** Inspect for broken, collapsed, and twisted coils.

### *REPAIR INSTRUCTIONS*

1. **General.**

   a. Any repair procedure peculiar to a specific part or component is covered in the work package relating to that item.

**CAUTION**

Repaired items must be thoroughly cleaned to remove metal chips and abrasives, to prevent these from entering working parts of the machine.

   b. After repair, clean all parts thoroughly to prevent dirt, metal chips, or other foreign material from entering any working parts.

2. **Castings.**

   a. Only minor repairs to machined surfaces, flanges, and gasket mating surfaces are permitted. Remove minor nicks, burrs and scratches with:

      (1) Fine mill file.

      (2) Crocus cloth dipped in solvent cleaning compound.

      (3) Lapping across a surface plate.

   b. Remachining of machined surfaces to repair damage, warpage, or uneven surfaces is not permitted. Replace castings.

   c. Repair damaged threaded pipe plug or screw threads with a tap or die. Repair oversize holes with threaded inserts.

3. **Studs.**

   a. Repair minor thread damage with a thread die.

   b. Replace studs having stripped or damaged threads as described below:

      (1) Remove using a stud remover. Back studs out slowly to avoid heat buildup and seizure that can cause stud to break off.

**CAUTION**

Refer to TC 9-237, Operator's Circular for Welding Theory and Application, to avoid damage to castings if welding method is used.

      (2) If studs break off too short to use a stud remover, use a stud extractor to remove or use "welding method": weld bar stock or a nut to stud and remove with a wrench.

      (3) Install replacement stud slowly to prevent heat buildup and snapping off.

4. **Gears.**

   a. Remove gears using pullers.

   b. Only minor repairs to gears are permitted. Remove minor nicks, burrs, or scratches on gear teeth with:

      (1) Fine mill file.

      (2) Crocus cloth dipped in solvent cleaning compound.

5. **Bushings and Bushing Type Bearings.**

   a. When bushings and bushing type bearings seize to a shaft and spin in the bore, associated parts must also be replaced.

   b. It may be necessary to heat bearings to aid in installation.

### *REPAIR INSTRUCTIONS - CONTINUED*

6. **Oil Seals.**
   a. Remove oil seals by pressing or prying out, being careful not to damage casting or adapter bore.
   b. Always install new seal in bore using proper seal installation tool.
7. **Painting.** Upon installation, restored parts must be painted in accordance with TB 43-0209.

### *LUBRICATION INSTRUCTIONS*

**NOTE**

Refer to TM 5-3805-261-10 and to Unit Maintenance PMCS (WP 0022 00 and WP 0023 00 in this manual) for detailed, illustrated instructions on proper lubrication. The following are some general practices to remember:

1. Use the correct lubricant.
2. Keep lubricants clean.
3. Clean all fittings and area around fill and drain points before lubrication.
4. Lubricate clean disassembled and new parts to prevent rust.

### *STANDARD TOOL REQUIREMENTS*

1. The following are general practices regarding the use of tools:
   a. Always use the proper tool kit and tools for the procedure being performed.
   b. Ensure that tools are clean and lubricated to reduce wear and to prevent rust.
   c. Keep track of tools. Do not be careless with them.
   d. Return tools to toolbox when finished with repair or maintenance.
   e. Return toolboxes and tools to tool storage when not in use.
   f. Inventory tools before and after each use.
2. Some maintenance tasks may require special or fabricated tools. The “Initial Setup” of the procedure will specify any special or fabricated tools needed to perform that procedure. Use these special tools only for the maintenance procedures for which they are designed or called out. If you are unfamiliar with a required tool, see your supervisor.

### *APPLYING TORQUE*

1. When tightening fasteners, use torque value as specified in *Torque Limits* (WP 0351 00).
2. If a unique torque value is required, it will be provided in the procedural step of the task.

### *TAGGING INSTRUCTIONS*

1. Use marker tags to identify all electrical wires, fuel, oil, coolant, and hydraulic lines, and any other parts which may be hard to identify or replace later. Fasten tags to parts during removal by wrapping wire fasteners around or through parts and twisting ends together. Position tags to be out of the way during cleaning, inspection, and repair. Mark tags with a pencil, pen, or marker.
2. Whenever possible, identify electrical wires with the number of the terminal or wire to which it connects. If no markings can be found, tag both wires or wire and terminal, and use the same identifying mark for both. If you cannot tag a wire because it must fit through a small hole or you cannot reach it, write down the description of the wire and the point to which it connects or draw a simple diagram on paper. Be sure to write down enough information so you will be able to properly connect the wires during assembly. If you need to identify a loose wire, look for identifying number near end of the wire, stamped on a permanent metal tag. Compare the number to wire numbers on the appropriate electrical schematic.

### *TAGGING INSTRUCTIONS - CONTINUED*

3. Identify fuel, oil, coolant, and hydraulic lines when you are taking off more than one line at the same time. Mark tags with points to which lines and hoses must be connected. If it is not obvious which end of a line goes where, tag each end of the line.
4. Identify and tag other parts as required by name and installed location.

### *LINES AND PORTS*

To keep dirt from contaminating fluid systems when removing and installing fuel, oil, coolant, and hydraulic lines, perform the following steps:

a. Clean fittings and surrounding area before disconnecting lines.
b. Cover, cap, plug, or tape lines and ports after disconnecting lines. When these are not available, use plastic bags and rubber bands, clean rags, duct tape, or other similar materials to prevent dirt from entering system.
c. Ensure that new and used parts are clean before installing.
d. Replace all removed tiedown straps.
e. Wait to remove cover, cap, plug, or tape from lines and ports until just before installing lines.

### *FLUID DISPOSAL*



**WARNING**

When servicing this machine, performing maintenance, or disposing of materials such as engine coolant, hydraulic fluid, lubricants, battery acids, or batteries, consult your unit/local hazardous waste disposal center or safety office for local regulatory guidance. If further information is needed, please contact The Army Environmental Hotline at 1-800-872-3845.

Dispose of contaminated drained fluids in accordance with the Standard Operating Procedures (SOP) of your unit.

**END OF WORK PACKAGE**

## ELECTRICAL GENERAL MAINTENANCE INSTRUCTIONS 0021 00

### THIS WORK PACKAGE COVERS

Cleaning and Inspection
Multiple-Pin Connector Identification Diagrams
Connector Repair
Sealed Connector Repair
Receptacle Connector Repair
Waterproof Connector Repair
Military Connector Repair
Ring Terminal Repair
Splicing Wires
Electrical Ground Points
Multimeter Usage
Relay Inspection and Test

### INITIAL SETUP

**Maintenance Level**

Unit

**Tools and Special Tools**

Tool kit, general mechanic's (Item 89, WP 0348 00)

Shop equipment, common no. 1 (Item 75, WP 0348 00)

Heater, gun type, electric (Item 30, WP 0348 00)

**Materials/Parts**

Cloth, abrasive (Item 9, WP 0349 00)

Detergent (Item 11, WP 0349 00)

**Materials/Parts - Continued**

Flux, soldering (Item 12, WP 0349 00)

Grease, electrically conductive (Item 18, WP 0349 00)

Insulating sleeving (Item 19, WP 0349 00)

Insulating varnish, electrical (Item 20, WP 0349 00)

Solder, lead-tin alloy (Item 42, WP 0349 00)

Tag, marker (Item 44, WP 0349 00)

**References**

WP 0020 00

**NOTE**

- Use electrically conductive grease on unprotected (exposed to weather) electrical connectors before connections are made.
- Use electrical insulating varnish on all electrical connections that are mounted outside of machine and are exposed to harsh weather and/or road spray.

### *CLEANING AND INSPECTION*

**CAUTION**

Washing electrical wires with solvent cleaning compounds or mineral spirits will cause serious damage or destroy the material.

1. Wash electrical wires with a mild solution of detergent and water and wipe dry.
2. Inspect electrical wires and repair if necessary as specified below.
3. Inspect all other components in accordance with WP 0020 00.

***MULTIPLE-PIN CONNECTOR IDENTIFICATION DIAGRAMS***

**NOTE**

The following diagrams illustrate typical multiple-pin connectors and identify pin numbers as viewed from wire side of connector.

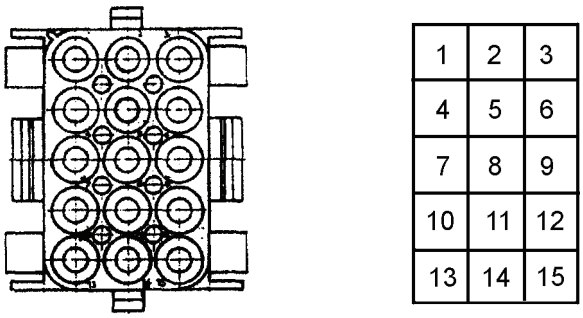


397-2409

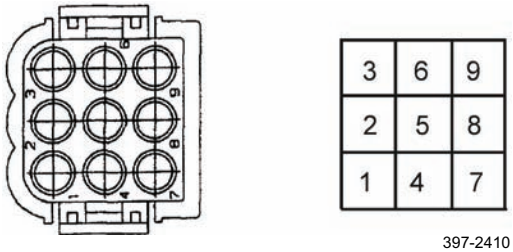


397-2410

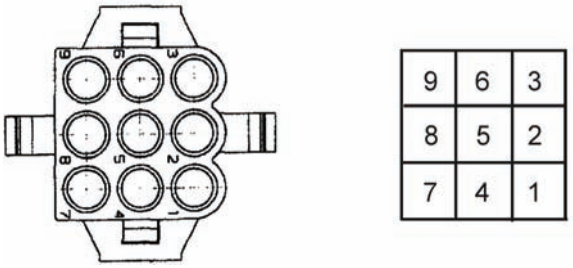


397-2411

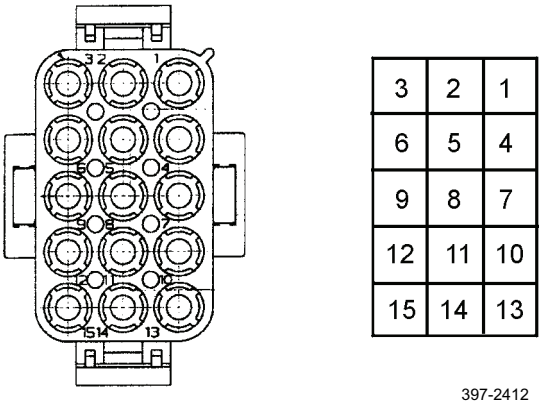


397-2412

***CONNECTOR REPAIR***

**NOTE**

- Perform the following steps for each wire of connector.
- Tag wires to aid in installation.

1. Using pin removal tool, position tool over pin (1) and push inward to retract two barbs of pin.
2. Remove wire (3) with pin (1) attached, from rear of connector (2).
3. If damaged, remove pin (1) from wire (3) by cutting through wire just behind pin.

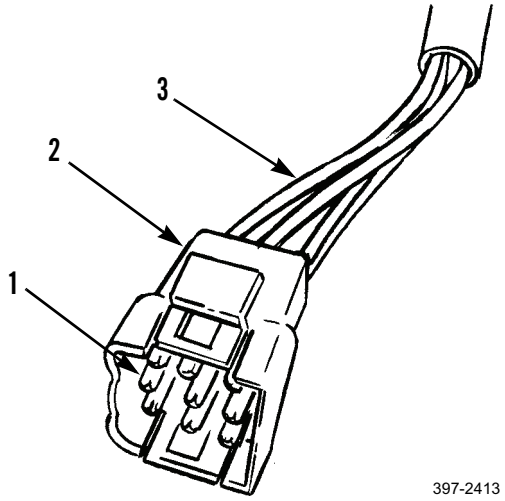


397-2413

**NOTE**

Perform steps 4 through 6 only if pin was removed.

4. Using wire stripping tool, strip insulation of wire (3) to expose proper length of metal strands (6).
5. Using crimping tool, securely crimp tabs (5) of pin (1) over metal strands (6) of wire (3).

**NOTE**

The other two tabs of pin may need to be crimped slightly in order to enter connector.

6. Using crimping tool, crimp tabs (4) at rear of pin (1) over insulation of wire (3).

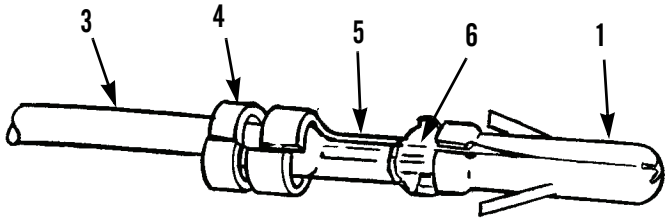


397-2414

7. Push pin (1) into rear of connector (2) until fully seated.

### *SEALED CONNECTOR REPAIR*

1. Open hinged cover (14) of connector (13) for access to rear of connector.

**NOTE**

- Perform the following steps for each wire of connector.
- Tag wires to aid in installation.

2. Using pin removal tool, position tool over pin (12) and push inward to retract two barbs of pin.
3. Remove wire (7), with pin (12) and seal (9) attached, from rear of connector (13).
4. If defective, remove pin (12) and seal (9) from wire (7) by cutting through wire just behind seal.

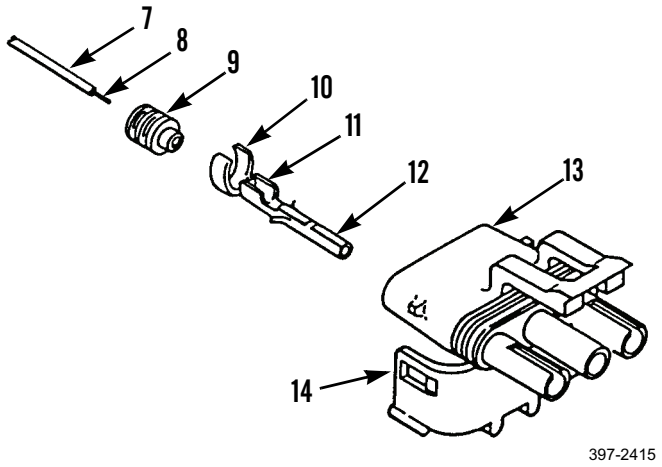

397-2415

**NOTE**

Perform steps 5 through 8 only if pin and seal were removed.

5. Position new seal (9) on wire (7).
6. Using wiring stripping tool, strip insulation of wire (7) to expose 1/8 in. (3 mm) length of metal strands (8).
7. Using crimping tool, securely crimp tabs (11) of pin (12) over metal strands (8) of wire (7).
8. Slide seal (9) next to pin (12) and crimp tabs (10) of pin over end of seal.
9. Push pin (12) into rear of connector (13) until fully seated.
10. Close hinged cover (14) of connector (13).

### *RECEPTACLE CONNECTOR REPAIR*

1. Using removal tool, insert tool into front of connector (15) and depress locking tab of receptacle (20).
2. Push wire (16), with receptacle (20) attached, through front of connector (15).
3. If defective, remove receptacle (20) from wire (16) by cutting through wire just behind receptacle.

**NOTE**

Perform steps 4 through 7 only if receptacle was removed.

4. Slide connector (15) back on wire (16).

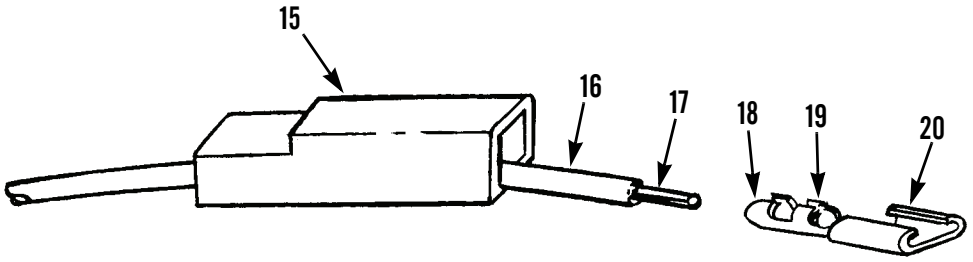


397-2416

5. Using wire stripping tool, strip insulation of wire (16) to expose ¼ in. (6 mm) length of metal strands (17).
6. Using crimping tool, securely crimp tabs (19) of receptacle (20) over metal strands (17).
7. Using crimping tool, crimp tabs (18) of receptacle (20) over insulation of wire (16).
8. Slide connector (15) forward over receptacle (20) until locking tab of receptacle snaps into place.

### *WATERPROOF CONNECTOR REPAIR*

1. Remove end cover (27) and gasket (26) from front of connector (25).
2. Remove seal (21) from rear of connector (25) and slide seal back on wire (22).

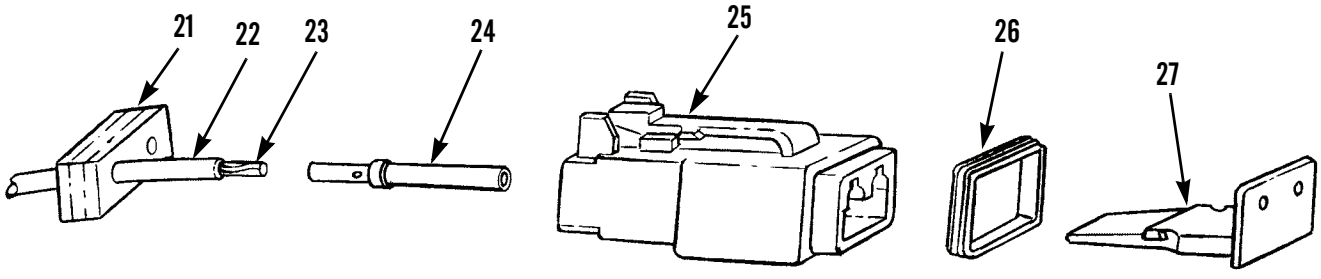


397-2417

**NOTE**

- Perform the following steps for each wire of connector.
- Tag wires to aid in installation.

3. Using pin removal tool, insert tool into front of connector (25) and depress locking tab of connector.
4. Remove wire (22) with pin (24) from rear of connector (25).
5. If defective, remove pin (24) from wire (22) by cutting through wire just behind pin.

***WATERPROOF CONNECTOR REPAIR - CONTINUED***

**NOTE**

Perform steps 6 through 9 only if pin was removed.

6. Using wire stripping tool, strip insulation of wire (22) to expose ¼ in. (6 mm) length of metal strands (23).
7. Insert metal strands (23) of wire (22) fully into rear of pin (24).
8. Using crimping tool, securely crimp pin (24) to metal strands (23) of wire (22).
9. Push pin (24) into rear of connector (25) until fully seated.
10. Install seal (21) on rear of connector (25).
11. Install gasket (26) and end cover (27) on front of connector (25).

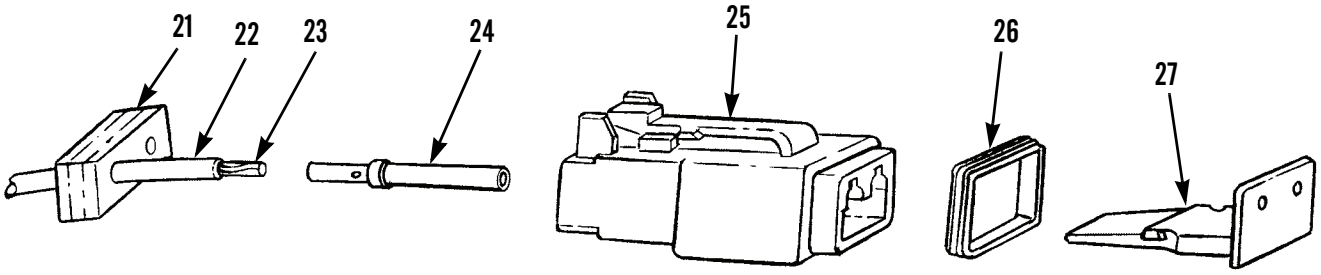


397-2417

***MILITARY CONNECTOR REPAIR***

1. Slide shell (28) back on wire (29) to expose sleeve (32).
2. Remove sleeve (32) from terminal (31) by pulling sleeve forward.
3. If defective, remove terminal (31) from wire (29) by cutting through wire just behind terminal.

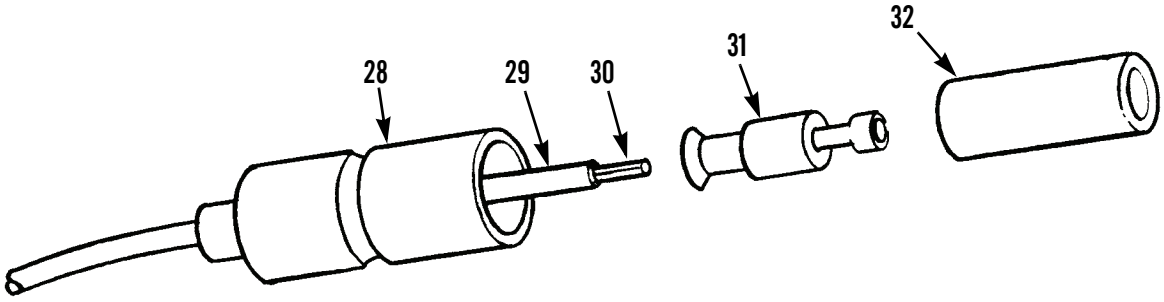


397-2418

**NOTE**

Perform steps 4 through 6 only if terminal was removed.

4. Using wire stripping tool, strip insulation of wire (29) to expose length of metal strands (30) equal to depth of terminal (31).
5. Using crimping tool, securely crimp terminal (31) to metal strands (30) of wire (29).
6. Install sleeve (32) to terminal (31) by pushing sleeve over front of terminal until fully seated.
7. Slide shell (28) up wire (29) and over sleeve (32).

### *RING TERMINAL REPAIR*

1. Remove ring terminal (38) from wire (34) by cutting through wire just behind heat shrink tubing (33).
2. Cut heat shrink tubing (33) to length sufficient to cover tabs (36 and 37) of ring terminal (38) and ¼ in. (6 mm) of wire (34).
3. Slide heat shrink tubing (33) back on wire (34).
4. Using wire stripping tool, strip insulation of wire (34) to expose proper length of metal strands (35).
5. Using crimping tool, securely crimp tabs (37) of ring terminal (38) over metal strands (35).
6. Using crimping tool, crimp tabs (36) of ring terminal (38) over insulation of wire (34).
7. Slide heat shrink tubing (33) over tabs (36 and 37) of ring terminal (38).
8. Use a heat gun to apply heat to heat shrink tubing (33) until tubing snugly conforms to ring terminal (38) and insulation of wire (34).

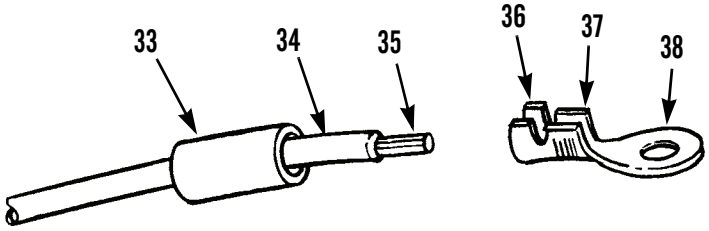


397-2419

### *SPLICING WIRES*

**NOTE**

The selection of crimping tool and type of splice connectors is optional. High-quality splice connectors can be expected to last the life of the machine.

1. Inspect each end of wire (39). Trim insulation and metal strands (40) of wire back, as necessary, to ensure integrity of wire.
2. Using wire stripping tool, strip each end of wire (39) to expose length of metal strands (40) to suit type of splice connector (41) used.

**NOTE**

Perform steps 3 and 4 at each end of splice connector.

3. Insert metal strands (40) of wire (39) fully into splice connector (41).
4. Using crimping tool, securely crimp splice connector (41) to metal strands (40) of wire (39).

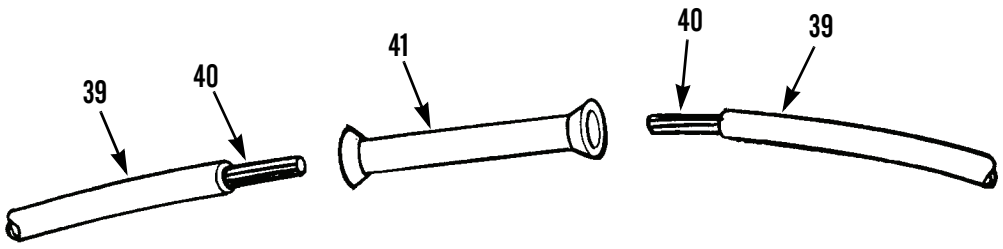


397-2420

### *ELECTRICAL GROUND POINTS*

Many electrical problems are the result of poor ground connections. Ensure that ground connections are good by performing the following steps:

Although battery disconnect switch must be ON to test electrical circuit voltage, turn battery disconnect switch to OFF before performing resistance tests or replacing parts. Failure to follow this warning may result in injury to personnel and damage to equipment.

a. Remove screw, lockwasher, nut, etc., connecting ground wire terminal to machine ground point.

b. If necessary, clean mounting hardware, wire terminal, and ground point with detergent and a scrub brush.

c. Remove any rust or corrosion from ground point with a wire brush and abrasive cloth.

d. Replace defective mounting hardware and wire terminal as necessary.

e. Install wire terminal to ground point with screw, lockwasher, nut, etc., and tighten securely.

### *MULTIMETER USAGE*

1. **General**. A multimeter is used to troubleshoot the electrical system of the machine. The multimeter ohms scale is used to test for continuity, shorts, and resistance. The multimeter voltmeter scale is used to test voltage levels at any point in the electrical system.

2. **Continuity Tests**. Continuity tests are performed to check for breaks in a circuit (such as a fuse, switch, light bulb connector, or electrical wiring).

## NOTE

If readout will not zero properly, replace batteries and repeat zeroing procedure. If readout will not zero after batteries have been replaced, notify your supervisor.

a. **Zero Multimeter**.

(1) Set multimeter to ON.

(2) Select OHMS.

(3) Select LOWEST VOLTAGE/OHMS scale.

(4) Touch black and red probes together and check for a zero indication on digital readout.

## CAUTION

Before performing a continuity test, always place battery disconnect switch in OFF position and disconnect circuit to be tested. Failure to follow this caution may damage multimeter.

b. **Testing for Continuity**.

(1) Zero multimeter.

(2) Connect black and red probes to both terminals of circuit being tested.

(3) Observe readout and interpret results as follows:

(a) If readout indicates 0 (zero), circuit is open.

(b) If readout indicates resistance, circuit has continuity.

*MULTIMETER USAGE - CONTINUED*

## CAUTION

Before performing a continuity test, always place battery disconnect switch in OFF position and disconnect circuit to be tested. Failure to follow this caution may damage multimeter.

c. **Testing for Shorts**. A short (or short circuit) occurs when two circuits that should not be connected have metal-to-metal contact with each other. A short also occurs when a circuit that should not touch ground has metal-to-metal contact with ground.

(1) Zero multimeter.

(2) Connect black probe to one pin and red probe to either ground or another pin.

(3) Observe readout and interpret results as follows:

(a) If readout indicates 0 (zero), circuits are not shorted.

(b) If readout indicates resistance, circuits are shorted or circuit is grounded, if testing to ground.

(c) If readout jumps or flickers, circuits are shorted or grounded intermittently.

## CAUTION

Before performing a continuity test, always place battery disconnect switch in OFF position and disconnect circuit to be tested. Failure to follow this caution may damage multimeter.

d. **Testing for Resistance**. Allowable resistance readings depend on circuit being tested. Refer to the particular section dealing with that circuit or component for allowable readings.

(1) Zero multimeter.

(2) Select OHMS.

(3) Select LOWEST VOLTAGE/OHMS range. If test specifies ohms range, select required range.

(4) Connect black and red probes across circuit to be tested.

(5) Observe readout and interpret results as circuit resistance.

3. **Measuring DC Voltage**.

a. Set multimeter to ON.

b. Select VOLTS.

c. Select volts DC.

d. Select LOWEST VOLTAGE/OHMS range for voltage range that is higher than volts to be measured.

e. Connect red probe to positive (+) pin and black probe to negative (-) pin.

f. Observe readout and interpret results as DC voltage in circuit being tested.

### *RELAY INSPECTION AND TEST*

1. **Inspecting Relays**.
   a. Check for bent or damaged pins.
   b. Check for burned or damaged relay case.
2. **Testing Relays**.

**NOTE**

When testing relays, always refer to the circuit diagram printed or stamped on relay case.

   a. Using a multimeter, check for continuity across relay coil.
   b. Using a multimeter, check open or closed contacts within relay.

**END OF WORK PACKAGE**

## PREVENTIVE MAINTENANCE CHECKS AND SERVICES (PMCS) INTRODUCTION 0022 00

### *GENERAL*

1. To ensure machine is ready for operation at all times, it must be lubricated and inspected on a regular basis so that defects may be found before they result in damage, equipment failure or injury.
2. The *KEY* in this work package lists the types, amounts, and temperature ranges of the lubricants required for specified intervals.
3. Lubrication Chart at the end of this work package shows all lubrication points.
4. Table 1 in WP 0023 00 contains systematic instructions on lubrications, inspections, adjustments, and corrections to be performed by Unit Maintenance to keep the machine in good operating condition and ready for its primary mission.
5. For information on Corrosion Prevention and Control (CPC), refer to WP 0001 00.

### *EXPLANATION OF TABLE ENTRIES*

1. **Item Number (Item No.) Column.** Numbers in this column are for reference. When completing DA Form 2404 or DA Form 5988-E (*Equipment Inspection and Maintenance Worksheet*), include the item number for the check/service indicating a fault. Item numbers also appear in the order you must perform checks and services for the interval listed.
2. **Interval Column.** This column tells you when you must perform the procedure in the procedure column. Intervals are based on calender dates or hours. If both calendar dates and hours are provided, perform check/service at whichever interval comes first.
   a. *Hours* procedures must be done at hour interval indicated.
   b. *Semiannual* procedures must be done once every six months.
   c. *Annual* procedures must be done once each year.
3. **Man-Hours Column.** This column indicates man-hours required to complete prescribed lubrication service.
4. **Item to Check/Service Column.** This column identifies the item to be checked or serviced.

**NOTE**

The WARNINGs and CAUTIONs appearing in your PMCS table should always be observed. WARNINGs and CAUTIONs appear before applicable procedures. These WARNINGs and CAUTIONs must be observed to prevent serious injury to yourself and others or to prevent the equipment from being damaged.

5. **Procedure Column.** This column gives the procedure you must perform to check or service the item listed in the Item to Check/Service column, to know if the equipment is ready or available for its intended mission or for operation. You must perform the procedure at the time stated in the interval column.
6. **Not Fully Mission Capable If: Column.** Information in this column tells you what fault will keep your equipment from being capable of performing its primary mission. If you perform check/service procedures that show faults listed in this column, the equipment is not mission-capable. Follow standard operating procedures for maintaining the equipment or reporting equipment failure.

***GENERAL LUBRICATION PROCEDURES***

**NOTE**

- Lubrication instructions contained in this PMCS are mandatory.
- Refer to TM 5-3805-261-10 for Operator Maintenance level lubrication.
- Dashed leader lines used in illustrations of lubrication points indicate that lubrication is required on both sides of the equipment.

1. Recommended intervals are based on normal conditions of operation, temperature, and humidity. When operating under extreme conditions, such as high or low temperatures or exposure to sand or dust, lubricants should always be changed more frequently. Lubricants that have become contaminated will be changed regardless of interval. When in doubt, notify your supervisor.



**WARNING**

When servicing this machine, performing maintenance, or disposing of materials such as engine coolant, hydraulic fluid, lubricants, battery acids or batteries, and CARC paint, consult your unit/local hazardous waste disposal center or safety office for local regulatory guidance. If further information is needed, please contact The Army Environmental Hotline at 1-800-872-3845.

2. Ensure that all fluids drained as a result of lubrication or maintenance are collected in a suitable container and disposed of in accordance with local policy and ordinances. Clean up any spills immediately.

3. Keep all lubricants in a closed container and store in a clean, dry place away from extreme heat. Keep container covers clean and do not allow dust, dirt or other foreign material to mix with lubricants. Keep all lubrication equipment clean and ready for use.

4. Maintain a good record of all lubrication performed and report any problem noted during lubrication. Refer to PAM 738-750 for maintenance forms and procedures to record and report any findings.

Solvent cleaning compound MIL-PRF-680 Type III is an environmentally compliant and low toxic material. However, it may be irritating to the eyes and skin. Use protective gloves and goggles. Use in well-ventilated areas. Keep away from open flames and other sources of ignition.

5. Keep all external parts of equipment not requiring lubrication free of lubricants. Before lubrication, wipe lubrication fittings with a clean rag (Item 35, WP 0349 00) and solvent cleaning compound (Item 8, WP 0349 00). After lubrication, wipe off excess oil or grease to prevent accumulation of foreign matter.

6. Refer to FM 9-207 for lubrication instructions in cold weather.

7. Refer to AR 70-12 for use of standardized fuels and lubricants.

8. Engine, transmission, and hydraulic system oil filters shall be changed when:

   a. they are known to be contaminated or clogged;

   b. at prescribed hardtime intervals.

### *GENERAL LUBRICATION PROCEDURES - CONTINUED*

9. For equipment under manufacturer's warranty, hardtime oil service intervals shall be followed. Intervals shall be shortened if lubricants are known to be contaminated or if operation is under adverse conditions (i.e., longer-than-usual operating hours, extended idling periods or extreme dust).

### *GENERAL PMCS PROCEDURES*

1. Always perform PMCS in the same order so it gets to be a habit. Once you've had some practice, you'll spot anything wrong in a hurry. If any deficiency is discovered, perform the appropriate troubleshooting task in Chapter 2 of this manual. If any component or system is not serviceable, or if the given service does not correct the deficiency, notify your supervisor.

2. Before performing preventive maintenance, read all the checks required for the applicable interval and prepare all tools needed to make all checks. Have several clean rags (Item 35, WP 0349 00) handy. Perform ALL inspections at the applicable interval.

   a. **Keep It Clean.** Dirt, grease, oil, and debris get in the way and may cover up a serious problem. Clean as you work and as needed. Use detergent (Item 11, WP 0349 00) and water when you clean.

   b. **Rust and Corrosion.** Check metal parts for rust, and corrosion. If any bare metal or corrosion exists, clean and apply a light coat of lubricating oil (Item 26, 27, or 28, WP 0349 00). Report it to your supervisor.

   c. **Bolts, Nuts, and Screws.** Check bolts, nuts, and screws for obvious looseness, missing, bent or broken condition. You can't try them all with a tool, but look for chipped paint, bare metal or rust around bolt heads. If you find one you think is loose, tighten it.

   d. **Welds.** Look for loose or chipped paint, rust, or gaps where parts are welded together. If you find a bad weld, report it to your supervisor.

   e. **Electric Wires and Connectors.** Look for cracked or broken insulation, bare wires, and loose or broken connectors. Tighten loose connectors and ensure that the wires are in good condition.

   f. **Hydraulic Hoses and Lines.** Look for wear, damage, and signs of leaks. Ensure that clamps and fittings are tight. Wet spots indicate leaks, but a stain around a fitting or connector can also mean a leak. If a leak comes from a loose fitting or connector, tighten it. If something is broken or worn out, correct it if authorized by the Maintenance Allocation Chart (WP 0348 00). If not authorized, notify your supervisor.

   g. **Fluid Leakage.** It is necessary for you to know how fluid leakage affects the status of your machine. The following are definitions of the types/classes of leakage you need to know to be able to determine the status of your machine. Learn and be familiar with them, and remember - when in doubt, notify your supervisor.

**Leakage Definitions for PMCS**

| | |
|---|---|
| Class I | Seepage of fluid (as indicated by wetness or discoloration) not great enough to form drops. |
| Class II | Leakage of fluid great enough to form drops, but not enough to cause drops to drip from item being checked/inspected. |
| Class III | Leakage of fluid great enough to form drops that fall from item being checked/inspected. |

## CAUTION

Operation is allowable with Class I and Class II leakage. WHEN IN DOUBT, NOTIFY YOUR SUPERVISOR. When operating with Class I or Class II leaks, check fluid levels more frequently. Class III leaks must be reported immediately to your supervisor. Failure to do this will result in damage to vehicle and/or components.

### *PMCS INITIAL SETUP*

1. **General.** This work package lists tools, materials, and personnel required for PMCS and lubrication.
2. **Tools (WP 0348 00).**
   a. Common no. 1 shop set
   b. General mechanic's tool kit
3. **Materials (WP 0349 00).**
   a. Antifreeze
   b. Cleaning compound, solvent
   c. Cloth, abrasive, emery, fine
   d. Detergent
   e. Grease, GAA
   f. Insulating varnish, electrical
   g. Lubricating oil, OE/HDO 10W/30
   h. Lubricating oil, OE/HDO 15W/40
   i. Lubricating oil, OE, HDO 30
   j. Lubricating oil, OEA
   k. Lubricating oil, GO 80W/90
   l. Lubricating oil, GO 75
   m. Lubricating oil, Molybdenum Disulfide, Silicone
   n. Rags
4. **Personnel.**
   a. Driver/Operator
   b. Unit Maintenance Mechanic

## - KEY -

| LUBRICANT/ COMPONENT | REFILL CAPACITY | EXPECTED TEMPERATURES* | | | INTERVALS |
|---|---|---|---|---|---|
| | | +6°F to +122°F (-14°C to +50°C) | -4°F to +50°F (-20°C to +10°C) | -25°F to +32°F (-4°C to 0°C) | |
| **OE/HDO Lubricating Oil, ICE, Tactical** | | | | | **H - Home S - Semi-annual A - Annual** |
| **OEA Lubricating Oil, ICE, Arctic** | | | | | |
| **Engine Crankcase** | 5 Gal. (19 L) | See Chart A | | | |
| **Transmission, Transfer and Differential Housing** | 24 Gal. (91 L) | See Chart B | | | |
| **Tandem Drive Housing (Each)** | 17 Gal. (64 L) | See Chart B | | | |
| **Hydraulic Reservoir** | 8 Gal. (30 L) | See Chart C | | | |
| **GO Lubricating Oil, Gear, Multipurpose** | | | | | |
| **Circle Drive Housing** | 2 Gal. (7 L) | All Temperatures | | | |
| **GAA Grease, Automotive and Artillery** | | | | | |
| **Hitch Steering Linkage** | | All Temperatures | | | |
| **Earth Moving Equipment** | | | | | |
| **ANTIFREEZE Ethylene Glycol, Inhibited, Heavy Duty** | | | | | |
| **Engine Radiator** | 10 Gal. (38 L) System Capacity | All Temperatures | | | |
| | | | | | |

*** For arctic operation, refer to FM 9-207.**

**Table 1. CHART A—ENGINE**

| Lubricant | EXPECTED TEMPERATURES | | | | | | | | | | | | | | | | | | | |
|---|---|---|---|---|---|---|---|---|---|---|---|---|---|---|---|---|---|---|---|---|
| °F | -70 | -60 | -50 | -40 | -30 | -20 | -10 | 0 | +10 | +20 | +30 | +40 | +50 | +60 | +70 | +80 | +90 | +100 | +120 |
| °C | -57 | -51 | -46 | -40 | -34 | -29 | -23 | -18 | -12 | -7 | -1 | +4 | +10 | +16 | +21 | +27 | +32 | +38 | +49 |
| OE/HDO | Lubricating Oil, ICE, Tactical | | | | | | | | | | | | | | | | | | |
| OEA | Lubricating Oil, ICE, Arctic | | | | | | | | | | | | | | | | | | |
| OE/HDO 15W/40 | | | | | | | | | | | | | | | | | | | |
| OE/HDO 5W/40 | | | | | | | | | | | | | | | | | | | |
| OEA | | | | | | | | | | | | | | | | | | | |

**Table 2. CHART B—TRANSMISSION**

| Lubricant | EXPECTED TEMPERATURES | | | | | | | | | | | | | | | | | | | |
|---|---|---|---|---|---|---|---|---|---|---|---|---|---|---|---|---|---|---|---|---|
| °F | -70 | -60 | -50 | -40 | -30 | -20 | -10 | 0 | +10 | +20 | +30 | +40 | +50 | +60 | +70 | +80 | +90 | +100 | +120 |
| °C | -57 | -51 | -46 | -40 | -34 | -29 | -23 | -18 | -12 | -7 | -1 | +4 | +10 | +16 | +21 | +27 | +32 | +38 | +49 |
| OE/HDO | Lubricating Oil, ICE, Tactical | | | | | | | | | | | | | | | | | | |
| OEA | Lubricating Oil, ICE, Arctic | | | | | | | | | | | | | | | | | | |
| OE/HDO 40 | | | | | | | | | | | | | | | | | | | |
| OE/HDO 30 | | | | | | | | | | | | | | | | | | | |
| OE/HDO 10* | | | | | | | | | | | | | | | | | | | |
| OEA * | | | | | | | | | | | | | | | | | | | |

*If OEA lubricant is required to meet the low expected-temperature range, OEA lubricant is to be used in lieu of OE/HDO 10 lubricant for all expected temperatures where OE/HDO 10 is specified.

**Table 3. CHART C—HYDRAULIC RESERVOIR**

| Lubricant | EXPECTED TEMPERATURES | | | | | | | | | | | | | | | | | | | |
|---|---|---|---|---|---|---|---|---|---|---|---|---|---|---|---|---|---|---|---|---|
| °F | -70 | -60 | -50 | -40 | -30 | -20 | -10 | 0 | +10 | +20 | +30 | +40 | +50 | +60 | +70 | +80 | +90 | +100 | +120 |
| °C | -57 | -51 | -46 | -40 | -34 | -29 | -23 | -18 | -12 | -7 | -1 | +4 | +10 | +16 | +21 | +27 | +32 | +38 | +49 |
| OE/HDO | Lubricating Oil, ICE, Tactical | | | | | | | | | | | | | | | | | | |
| OEA | Lubricating Oil, ICE, Arctic | | | | | | | | | | | | | | | | | | |
| 5W/40 | | | | | | | | | | | | | | | | | | | |
| OEA* | | | | | | | | | | | | | | | | | | | |

*If OEA lubricant is required to meet the low expected-temperature range, OEA lubricant is to be used in lieu of OE/HDO 10 lubricant for all expected temperatures where OE/HDO 10 is specified.

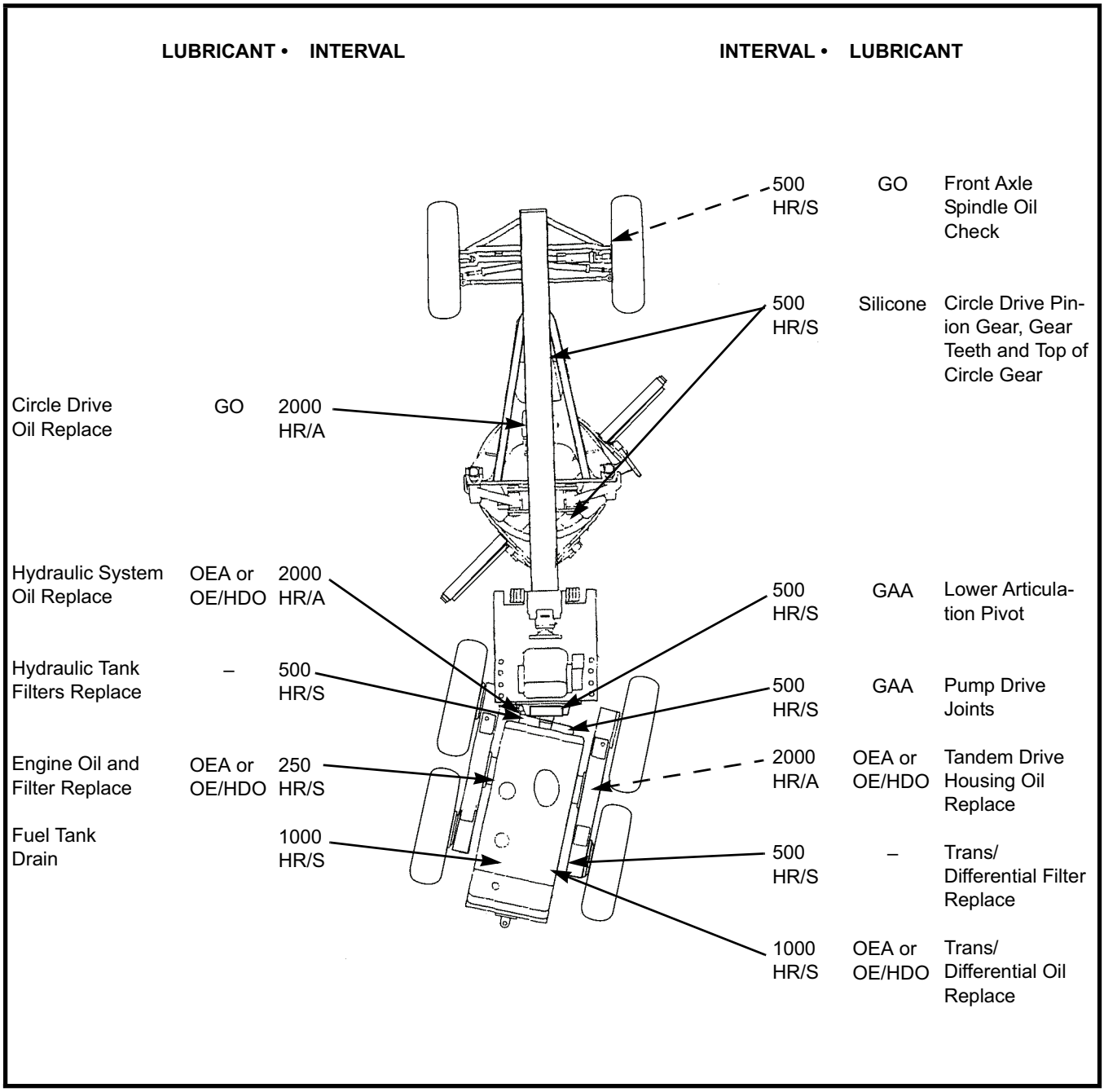


**END OF WORK PACKAGE**

.

| ITEM NO. | INTERVAL | MAN-HOURS | LOCATION ITEM TO CHECK/ SERVICE | PROCEDURE | NOT FULLY MISSION CAPABLE IF: |
|---|---|---|---|---|---|
| | | | | **NOTE**<br>• Review all WARNINGs, CAUTIONs, and NOTEs before performing PMCS and operating the machine.<br>• Perform all PMCS checks if:<br>a. You are the assigned operator but have not operated the machine since the last weekly checks.<br>b. You are operating the machine for the first time.<br>• Unless otherwise indicated, perform PMCS with machine parked on level ground, parking brake applied, transmission in N (Neutral), blade lowered to the ground, wheels blocked, and engine shut down.<br>• If leakage is detected during performance of PMCS, further investigation is required to determine location and cause of leak.<br> **WARNING**<br>Never disconnect any charging system circuit or battery when engine is running. A spark could cause an explosion from the flammable vapor mixture of hydrogen and oxygen released from the electrolyte in the battery. Failure to follow this warning could result in personnel injury. | |
| **1** | **50 Hours** | | **Batteries** | a. Check electrolyte level, specific gravity on maintainable batteries and perform battery load test on both batteries (TM 9-6140-200-14).<br>b. Clean tops of both batteries. | |
| **2** | **250 Hours** | | **Belts** | Inspect all belts for wear and looseness. Adjust or install new belts as necessary (WP 0061 00). | |
| **3** | **250 Hours or Semi-Annually** | **0.5** | **Engine Oil** | Drain and refill engine oil and install new filter (WP 0024 00). | |
| **4** | **250 Hours or Semi-Annually** | | **Brakes** | Adjust service brakes (WP 0313 00). | |

| ITEM NO. | INTERVAL | MAN-HOURS | LOCATION ITEM TO CHECK/ SERVICE | PROCEDURE | NOT FULLY MISSION CAPABLE IF: |
|---|---|---|---|---|---|
| 5 | 250 Hours or Semi-Annually | | Air Dryer (If Equipped) | Replace desiccant in air dryer (WP 0164 00). | |
| 6 | 500 Hours or Semi-Annually | | Crankcase Breather | Clean breather (WP 0032 00). | |
| 7 | 500 Hours or Semi-Annually | 1.0 | Hydraulic System | **WARNING**<br>Hot oil can cause burns. The hydraulic tank is hot and under pressure when at operating temperature. Remove the fill cap ONLY when the engine is stopped and the cap is cool enough to touch with your hand. Remove the fill cap slowly to relieve pressure.<br>a. Inspect tank for leaks, broken fittings, cracked welds, or missing parts. Repair or replace as necessary (WP 0339 00).<br>b. Clean fill strainer (WP 0216 00).<br>c. Change hydraulic tank filters (WP 0231 00). | |
| 8 | 500 Hours or Semi-Annually | 0.5 | Transmission/Differential Housing | Change filter and clean strainer. (WP 0153 00). | |
| 9 | 500 Hours or Semi-Annually | | Fuel System |  **WARNING** <br>• Do NOT perform fuel system checks, inspections or maintenance while smoking or near fire, flames or sparks. Fuel may ignite, causing damage to machine and injury or death.<br>• Operating personnel must wear fuel-resistant gloves and eye protection when handling fuels. If exposed to fuel, promptly wash exposed skin and change fuel-soaked clothing.<br>a. Disassemble, clean and inspect fuel fill cap assembly (WP 0043 00).<br>b. Clean and inspect fill tube screen (WP 0043 00).<br>c. Disassemble, clean and inspect primary fuel filter assembly (WP 0045 00). | |

| ITEM NO. | INTERVAL | MAN-HOURS | LOCATION ITEM TO CHECK/ SERVICE | PROCEDURE | NOT FULLY MISSION CAPABLE IF: |
|---|---|---|---|---|---|
| 9 (Con't) | | | | d. Replace secondary filter (WP 0047 00). | |
| 10 | 500 Hours or Semi-Annually | | Fuel/Water Separator (If Equipped) | Inspect fuel/water separator and install new element if water saturation level is at top of element.<br>a. Close fuel supply valve (5).<br>b. Drain fuel/water separator into container by opening vent valve (2) and drain valve (4).<br>c. Disconnect retaining clamp (3) remove element (1). Discard element.<br>d. Clean sealing surfaces and install new element.<br>e. Install retaining clamp (3).<br>f. Close vent valve (2) and drain valve (4).<br>g. Open fuel supply valve (5).<br>h. Bleed fuel lines (WP 0035 00). | |

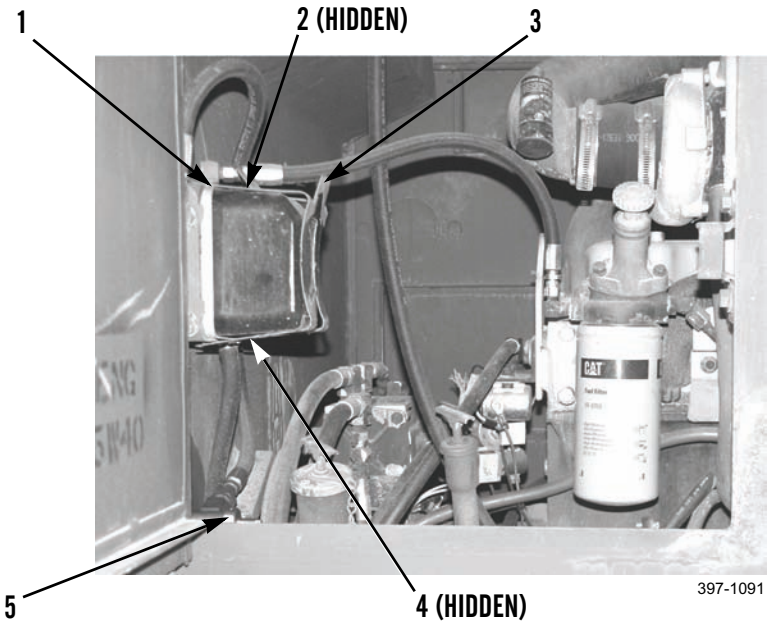

| ITEM NO. | INTERVAL | MAN-HOURS | LOCATION<br>ITEM TO CHECK/ SERVICE | PROCEDURE | NOT FULLY MISSION CAPABLE IF: |
|---|---|---|---|---|---|
| **11** | **500 Hours or Semi-Annually** | **0.2** | **Lower Articulation Pivot** | Apply GAA grease (Item 18, WP 0349 00) to lower articulation pivot grease fitting. | |

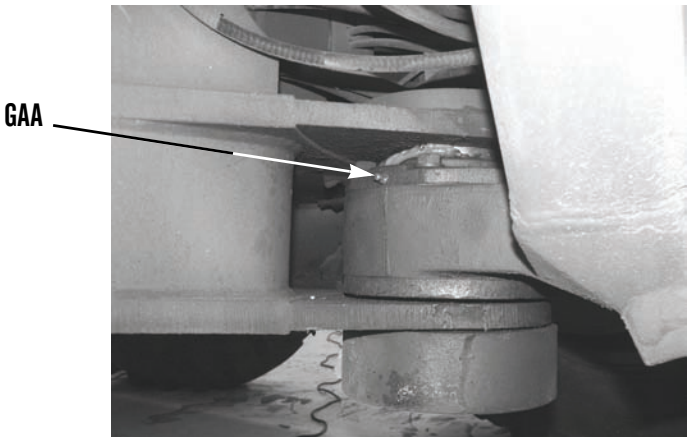


397-1092

| | | | | | |
|---|---|---|---|---|---|
| **12** | **500 Hours or Semi-Annually** | **0.2** | **Pump Drive Joints** | Apply GAA grease (Item 18, WP 0349 00) to three hydraulic pump driveshaft grease fittings. | |

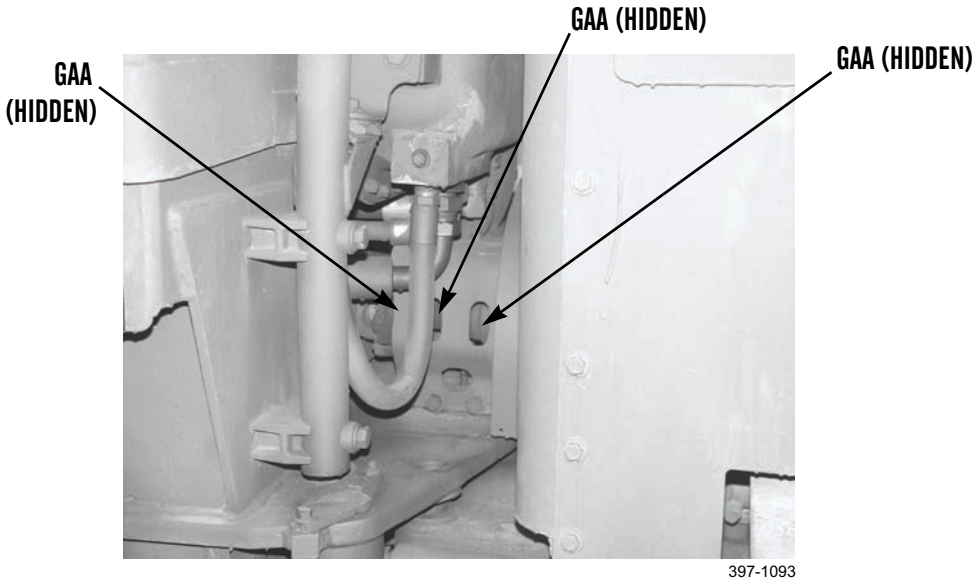


397-1093

| ITEM NO. | INTERVAL | MAN-HOURS | LOCATION ITEM TO CHECK/ SERVICE | PROCEDURE | NOT FULLY MISSION CAPABLE IF: |
|---|---|---|---|---|---|
| 13 | 500 Hours or Semi-Annually | 0.2 | Circle Drive | Apply lubricant (Item 25, WP 0349 00) to pinion gear, circle gear teeth and top of circle gear. | |

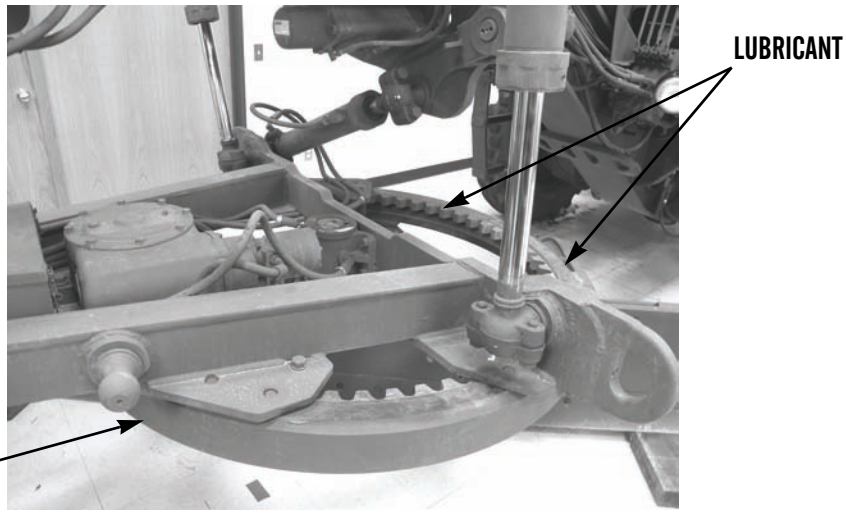


| | | | | | |
|---|---|---|---|---|---|
| 14 | 500 Hours or Semi-Annually | | Air Cleaner | a. Replace or clean elements as necessary (WP 0037 00).<br>b. Inspect and reset indicator (WP 0251 00). | |
| 15 | 500 Hours or Semi-Annually | | Fuel injection Lines And Fittings | Inspect fuel injection pump lines and fittings for looseness and leaks. Replace as necessary (WP 0041 00). | |
| 16 | 500 Hours or Semi-Annually | | Cooling Lines And Fittings | Inspect cooling lines, connections, hoses and clamps for looseness, leaks cracks, or wear (WP 0057 00). | |
| 17 | 500 Hours or Semi-Annually | | Alternator | Inspect for loose electrical connections and unusual noise or bearing play. Replace alternator as necessary (WP 0066 00). | |

**WARNING**

The cooling system is pressurized. Removal of radiator cap when machine is at normal operating temperature may result in personal injury. Wear proper protection.

| ITEM NO. | INTERVAL | MAN-HOURS | LOCATION ITEM TO CHECK/ SERVICE | PROCEDURE | NOT FULLY MISSION CAPABLE IF: |
|---|---|---|---|---|---|
| **18** | **500 Hours or Semi-Annually** | | **Starter** | Inspect for bad connection, damaged wiring, loose electrical connections or evidence of burning. Replace starting motor assembly as necessary (WP 0067 00). | |
| **19** | **500 Hours or Semi-Annually** | | **Hydraulic Control Valves** | Inspect valves and linkage. Look for bent levers and control arms and worn bushings (WP 0218 00 or WP 0332 00). | |
| **20** | **500 Hours or Semi-Annually** | | **Tandem Housing** | a. Inspect housing (2) for leaks or damage (WP 0310 00).<br>b. Clean both tandem housing breathers (1).<br>(1) Remove breather (1).<br>(2) Clean breather (WP 0020 00).<br>(3) Dry with compressed air.<br>(4) Install breather (1). | |

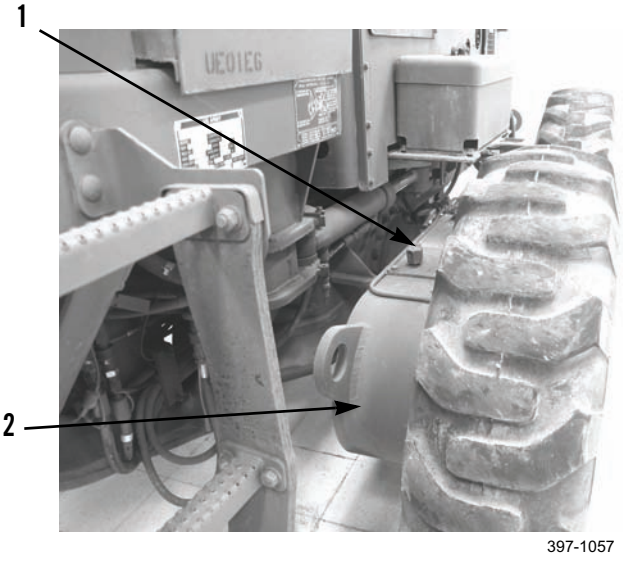

397-1057

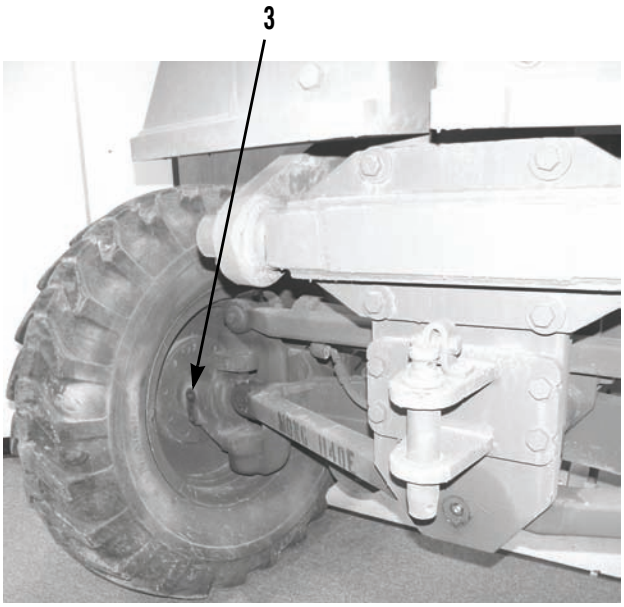

397-1096

| ITEM NO. | INTERVAL | MAN-HOURS | LOCATION / ITEM TO CHECK/ SERVICE | PROCEDURE | NOT FULLY MISSION CAPABLE IF: |
|---|---|---|---|---|---|
| 21 | 500 Hours or Semi-Annually | 0.5 | Front Axle Spindle | Check oil level in both front axle spindles.<br>a. Remove plug (3).<br>b. Oil level should be up to bottom of fill plug opening.<br>c. Add oil as necessary (Item 20 or 21, WP 0349 00).<br>d. Install plug (3). | |
| 22 | 500 Hours or Semi-Annually | | Tires | **WARNING**<br>• Explosions of air-inflated earth moving tires can be a result of heat-induced gas combustion inside the tires. The heat generated by welding or heating rim components, external fire or excessive use of brakes can result in gaseous combustion. A tire explosion is much more violent than a blowout. The explosion can propel the tire, rim and final drive components as far as 1,500 ft (460 m) or more. Both the force of the explosion and flying debris can cause injury or damage to equipment. All personnel should be aware of this danger and the actions to take to minimize the risk.<br>• Improper or misuse of inflation equipment can result in tire blowout or rim failure.<br>a. Check for adequate tread and replace if tread depth is insufficient (WP 0168 00).<br>b. Check for proper inflation of 35 psi (241 kPa) (TM 5-3805-261-10). | |
| 23 | 1000 Hours or Semi-Annually | | ROPS/FOPS | Ensure ROPS/FOPS bolts are tightened to 864 lb-ft (1,171 Nm). | |
| 24 | 1000 Hours or Semi-Annually | 0.5 | Transmission and Differential | a. Drain and refill transmission/differential oil and clean screens (WP 0147 00).<br>b. Change transmission breather (WP 0147 00). | |
| 25 | 2000 Hours or Annually | | Valve Lash Adjustment | Adjust valve lash (WP 0274 00). | |

| ITEM NO. | INTERVAL | MAN-HOURS | LOCATION ITEM TO CHECK/ SERVICE | PROCEDURE | NOT FULLY MISSION CAPABLE IF: |
|---|---|---|---|---|---|
| **26** | **2000 Hours or Annually** | **0.5** | **Tandem Drive Housings** | Drain and refill both tandem drive housings.<br>a. Remove dipstick (TM 5-3805-261-10).<br>b. Position approved container under right tandem housing. Remove drain plug (1) and allow oil to drain.<br>c. Install drain plug (1) and fill tandem housing with oil (TM 5-3805-261-10).<br>d. Repeat procedure for left tandem housing. | |
| | | | | 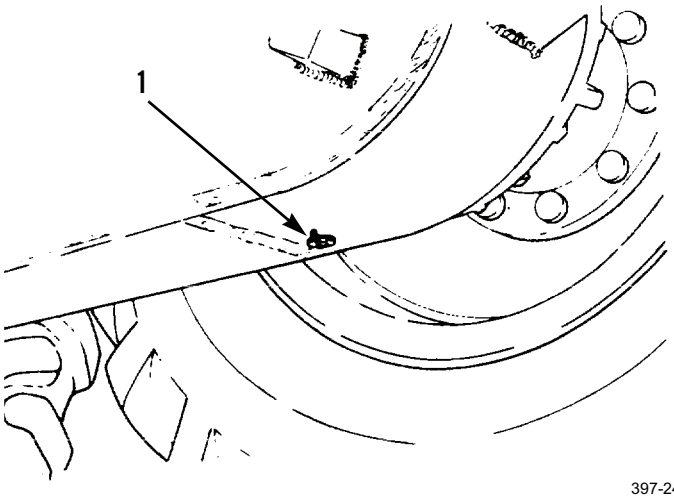<br>397-2480 | |
| **27** | **2000 Hours or Annually** | **1.0** | **Cooling System** | Drain, flush, and refill cooling system (WP 0065 00). | |
| **28** | **2000 Hours or Annually** | **1.0** | **Hydraulic Tank** | a. Drain and refill hydraulic tank (WP 0216 00).<br>b. Clean filler strainer (WP 0216 00).<br>c. Inspect hydraulic hoses.<br>d. Change filter elements (WP 0231 00). | |

| ITEM NO. | INTERVAL | MAN-HOURS | LOCATION<br>ITEM TO CHECK/ SERVICE | PROCEDURE | NOT FULLY MISSION CAPABLE IF: |
|---|---|---|---|---|---|
| **29** | **2000 Hours or Annually** | **0.5** | **Circle Drive Housing** | Drain and refill circle drive housing.<br>a. Position approved container under drain plug (1) and remove plug.<br>b. Allow oil to drain and install plug (1).<br>c. Remove plug (2) and fill circle drive housing with lubricating oil (Item 20 or 21, WP 0349 00) up to bottom of well. Install plug (2). | |

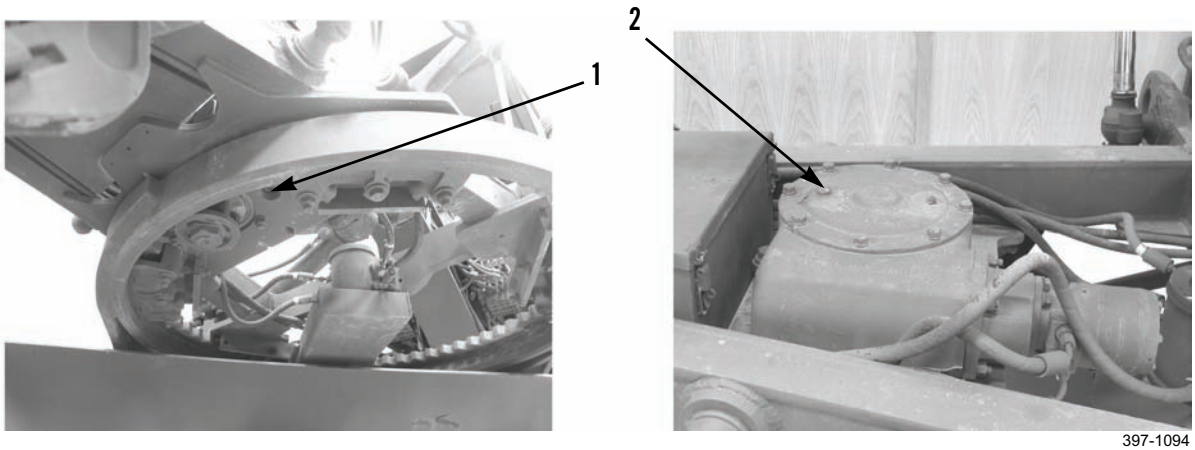

397-1094

**END OF WORK PACKAGE**

## CHANGING ENGINE OIL 0024 00

### THIS WORK PACKAGE COVERS

Draining, Cleaning and Inspection, Refilling

### INITIAL SETUP

**Maintenance Level**

Unit

**Tools and Special Tools**

Tool kit, general mechanic's (Item 89, WP 0348 00)

Shop equipment, common no. 1 (Item 75, WP 0348 00)

**Materials/Parts**

Oil, lubricating (Item 26, 27, or 30, WP 0349 00)

Rag, wiping (Item 35, WP 0349 00)

**References**

WP 0020 00

**References - Continued**

WP 0025 00

**Equipment Conditions**

Machine parked on level ground (TM 5-3805-261-10)

Parking/emergency brake applied (TM 5-3805-261-10)

Implements lowered to ground (TM 5-3805-261-10)

Engine off (TM 5-3805-261-10)

Battery disconnect switch in OFF position (TM 5-3805-261-10)

Left side engine door opened (TM 5-3805-261-10)



**WARNING**



- Exercise care when working with hot oil or components saturated with hot oil. Allow to cool before handling. Failure to follow this warning may cause injury to personnel.
- Engine oil is very slippery. Immediately wipe up any spills. Failure to follow this warning may cause injury to personnel.

### *DRAINING*

1. Position drain pan under drain valve (2).
2. Open valve (2) and allow oil to drain.
3. Close valve (2) when oil is completely drained.
4. Replace oil filter (WP 0025 00).

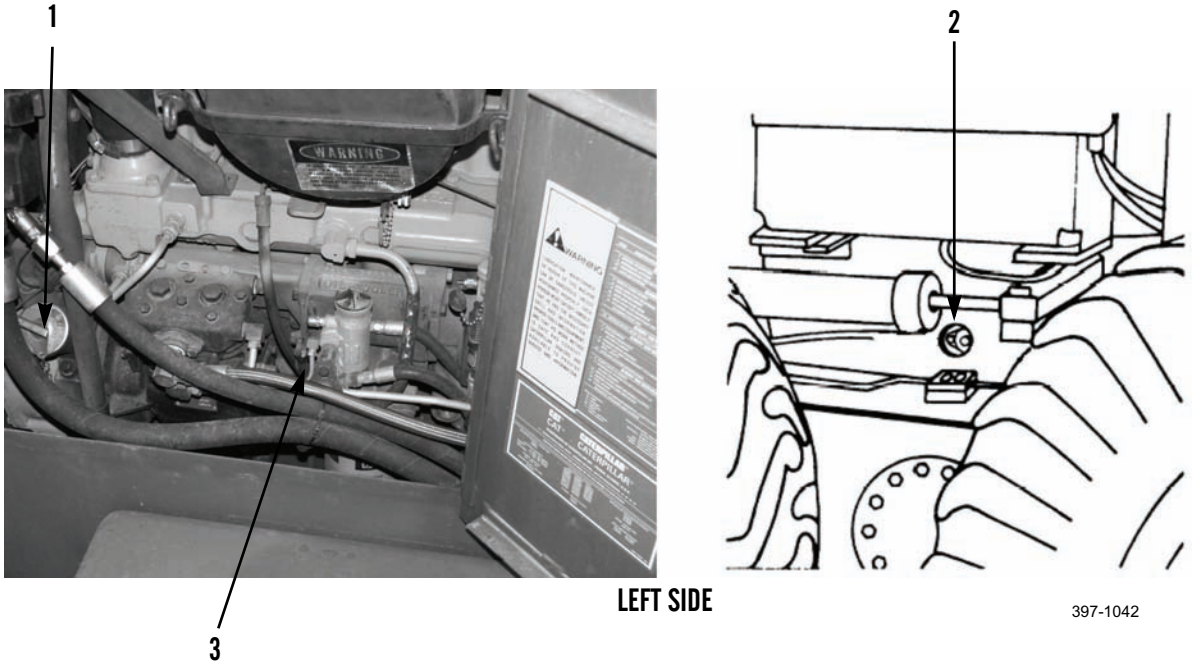


### *CLEANING AND INSPECTION*

Clean and inspect all parts in accordance with WP 0020 00.

### *REFILLING*

1. Remove oil fill cap (1) and fill crankcase with clean oil. See WP 0020 00 for crankcase capacity.
2. Check oil level on ENGINE STOPPED side of dipstick (3).
3. Install fill cap (1).
4. Turn battery disconnect switch to ON position and start engine (TM 5-3805-261-10).
5. Check engine oil level on ENGINE RUNNING side of dipstick (3) at engine low idle when engine reaches normal operating temperature.
6. If necessary, remove fill cap (1) and add oil until level is at FULL mark.
7. Install fill cap (1) and shut down engine.
8. Inspect for oil leaks.
9. Close left side engine door (TM 5-3805-261-10).

**END OF WORK PACKAGE**

## OIL FILTER REPLACEMENT 0025 00

### THIS WORK PACKAGE COVERS

Removal, Installation

### INITIAL SETUP

**Maintenance Level**

Unit

**Tools and Special Tools**

Tool kit, general mechanic's (Item 89, WP 0348 00)

Shop equipment, common no. 1 (Item 75, WP 0348 00)

**Materials/Parts**

Oil, lubricating (Item 26, 27, or 30, WP 0349 00)

Filter element

**Equipment Conditions**

Machine parked on level ground (TM 5-3805-261-10)

Parking/emergency brake applied (TM 5-3805-261-10)

Implements lowered to ground (TM 5-3805-261-10)

Engine off (TM 5-3805-261-10)

Battery disconnect switch in OFF position (TM 5-3805-261-10)

Left side engine door opened (TM 5-3805-261-10)

Oil drained from engine (WP 0024 00)

***REMOVAL***

**WARNING**

Exercise care when working with hot oil or components saturated with hot oil. Allow to cool before handling. Failure to follow this warning may result in injury to personnel.

**NOTE**

Place drain pan under filter element.

Remove and discard filter element (1) from oil filter head (3).

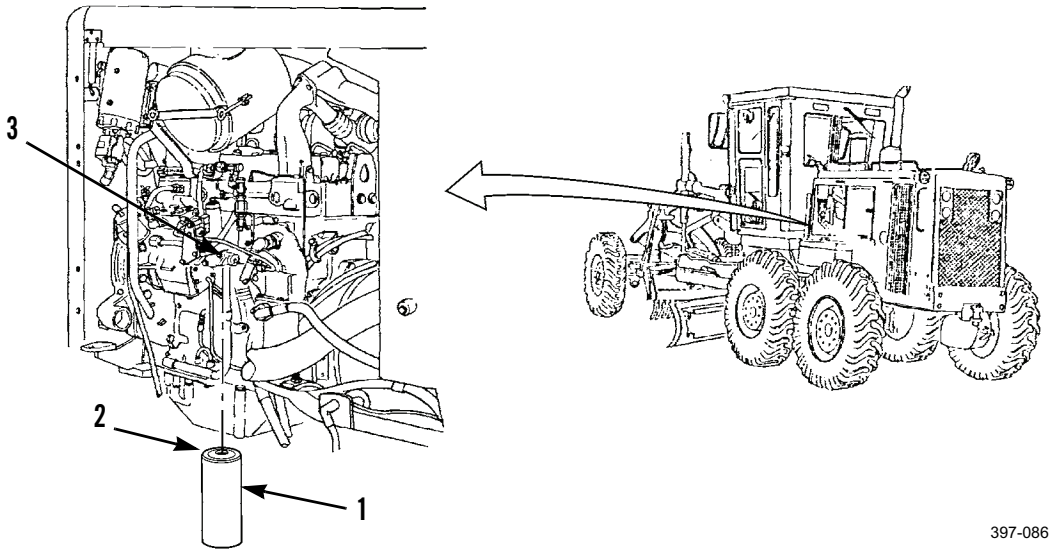


***INSTALLATION***

1. Use clean oil to lubricate new filter element (1) seal (2).
2. Install new filter element (1) to head (3). Hand tighten filter element an additional 3/4 turn after filter element makes contact with head.
3. Refill engine oil to proper level (WP 0024 00).
4. Turn battery disconnect switch to ON position and start engine (TM 5-3805-261-10).
5. Check for leaks. Stop engine. If leakage is evident, tighten filter element (1).
6. Close left side engine door (TM 5-3805-261-10).

**END OF WORK PACKAGE**

## OIL FILTER HEAD REPLACEMENT 0026 00

### THIS WORK PACKAGE COVERS

Removal, Cleaning and Inspection, Installation

### INITIAL SETUP

**Maintenance Level**

Unit

**Tools and Special Tools**

Tool kit, general mechanic's (Item 89, WP 00348 00)

**Materials/Parts**

Cap set, protective (Item 7, WP 0349 00)

Rag, wiping (Item 35, WP 0349 00)

Tag, marker (Item 44, WP 0349 00)

Gasket (4)

Packing, preformed (2)

Seal (2)

**References**

WP 0020 00

**Equipment Conditions**

Machine parked on level ground (TM 5-3805-261-10)

Parking/emergency brake applied (TM 5-3805-261-10)

Implements lowered to ground (TM 5-3805-261-10)

Engine off (TM 5-3805-261-10)

Battery disconnect switch in OFF position (TM 5-3805-261-10)

Oil drained (WP 0024 00)

Oil filter removed (WP 0025 00)

### *REMOVAL*

1. Remove bolts (4 and 8), washer (7), clamp (6), washer (5), tube assembly (2), gasket (3), and seal (1) from oil filter head (16). Discard gasket and seal.
2. Remove bolts (11 and 12), washer (10), clamp (9), tube (14), gasket (13), and seal (15). Discard gasket and seal.

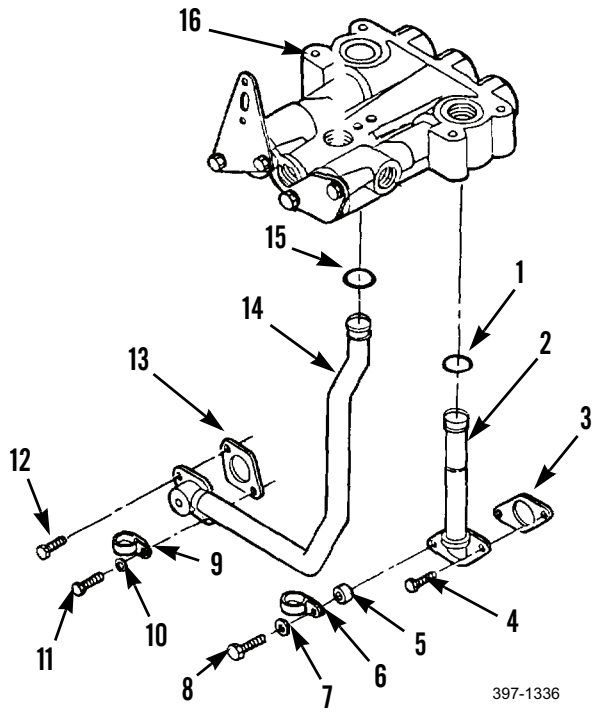

### *REMOVAL - CONTINUED*

3. Remove bolt (21), washer (22), and spacer (23).
4. Remove three bolts (19), washers (18), bolt (20), and washer (18).
5. Remove and discard two preformed packings (17).

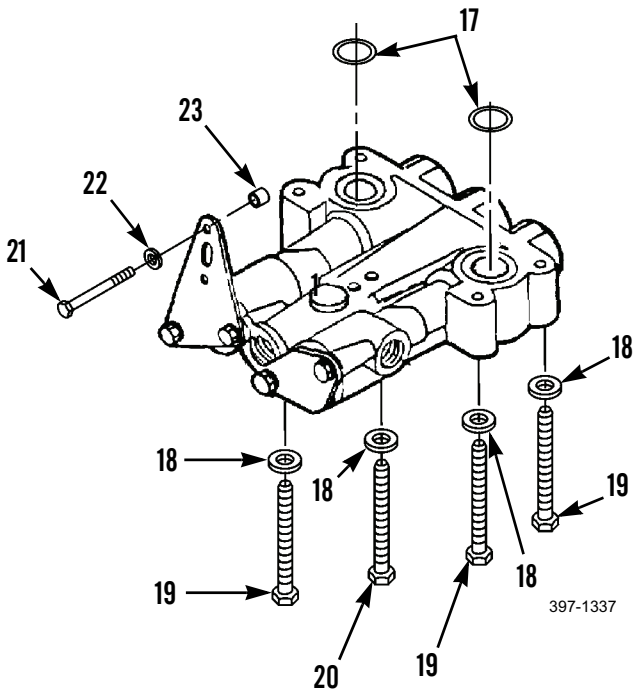


6. Remove two bolts (37), washers (36), bracket (24), and two spacers (25) from oil filter head (16).
7. Remove cover (26), gasket (27), spring (28), and plunger (29). Discard gasket.
8. Remove two bolts (35), washers (34), cover (33), gasket (32), spring (31), and plunger (30). Discard gasket.

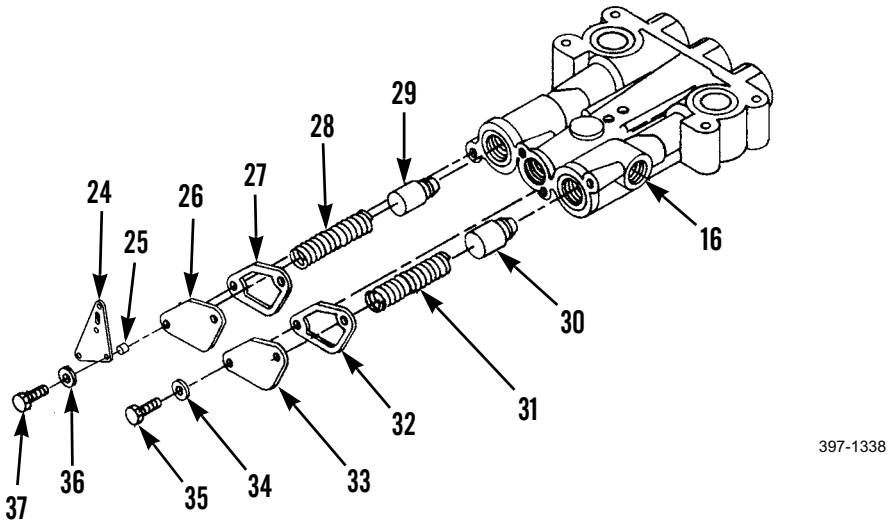


### *CLEANING AND INSPECTION*

Clean and inspect all parts in accordance with WP 0020 00.

### *INSTALLATION*

1. Install plunger (30), spring (31), new gasket (32), cover (33), two washers (34), and bolts (35) on oil filter head (16).
2. Install plunger (29), spring (28), new gasket (27), cover (26), two spacers (25), bracket (24), two washers (36), and bolts (37) on oil filter head (16).
3. Install two new preformed packings (17).
4. Install three bolts (19), washers (18), bolt (20), and washer (18).
5. Install bolt (21), washer (22), and spacer (23).
6. Install new seal (15), new gasket (13), tube (14), clamp (9), washer (10), and bolts (11 and 12).
7. Install new seal (1), new gasket (3), tube assembly (2), washer (5), clamp (6), washer (7), and bolts (4 and 8).

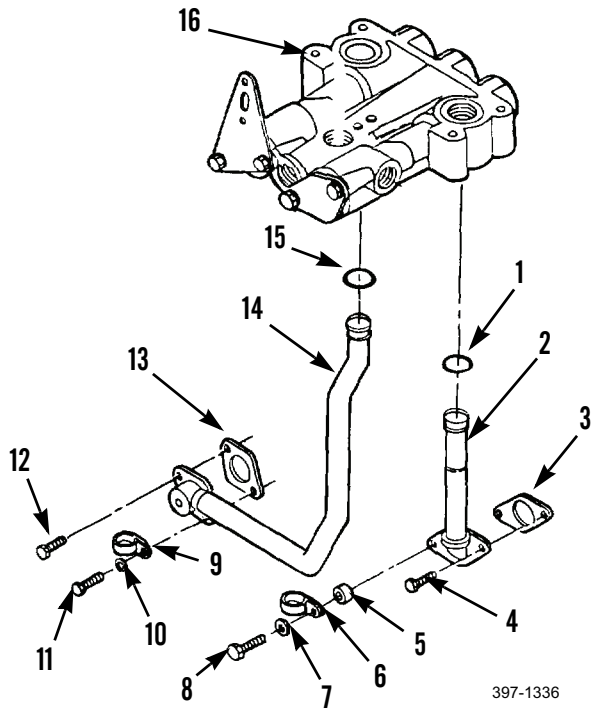


8. Install oil filter (WP 0025 00).

**END OF WORK PACKAGE**

## OIL LEVEL GAUGE TUBE ASSEMBLY REPLACEMENT 0027 00

### THIS WORK PACKAGE COVERS

Removal, Cleaning and Inspection, Installation

### INITIAL SETUP

**Maintenance Level**

Unit

**Tools and Special Tools**

Tool kit, general mechanic's (Item 89, WP 0348 00)

**Materials/Parts**

Cap set, protective (Item 7, WP 0349 00)

Rag, wiping (Item 35, WP 0349 00)

Tag, marker (Item 44, WP 0349 00)

Sleeve

**References**

WP 0020 00

**Equipment Conditions**

Machine parked on level ground (TM 5-3805-261-10)

Parking/emergency brake applied (TM 5-3805-261-10)

Implements lowered to ground (TM 5-3805-261-10)

Engine off (TM 5-3805-261-10)

Battery disconnect switch in OFF position (TM 5-3805-261-10)

Air tanks drained (TM 5-3805-261-10)

Left side engine panel removed (WP 0182 00)

### *REMOVAL*

1. Remove oil level gauge (1) from left side of engine.

**CAUTION**

Cap all hose and tube ends and plug all open oil ports to prevent contamination.

**NOTE**

Tag all hose and tube assemblies before disconnecting to aid in installation.

2. Loosen two nuts on tube assembly (2) at lower-left side of engine and remove.

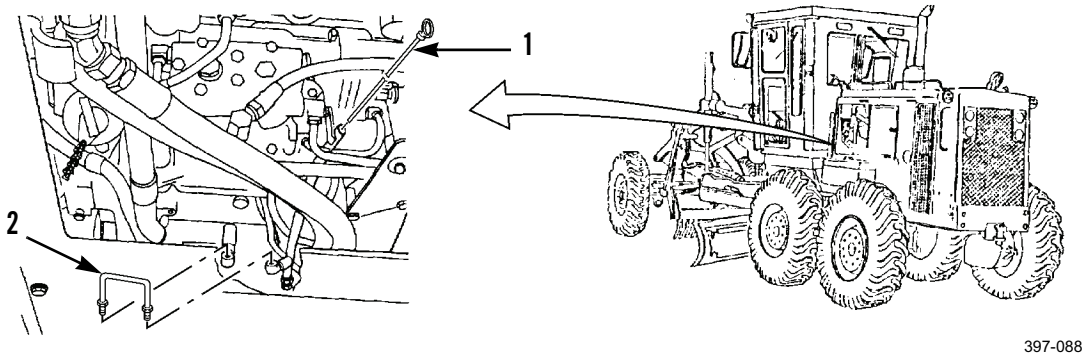


397-088

### *REMOVAL - CONTINUED*

3. Remove two elbows (4) and bolt (3).

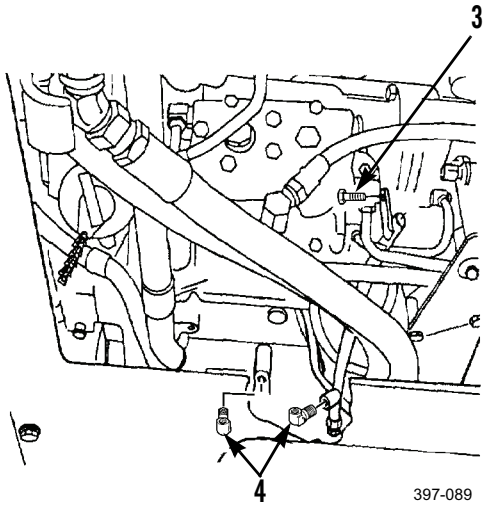


4. Disconnect air line (9).
5. Remove bolt (10) that secures clamp on air line (9).
6. Loosen nut (6) and remove tube assembly (5).

**NOTE**

Remove nut and sleeve only if inspection indicates leakage around sleeve.

7. Remove nut (6) and cut and discard sleeve (7) from tube assembly (5).
8. Remove connector (8) from cylinder block.

### *CLEANING AND INSPECTION*

Clean and inspect all parts in accordance with WP 0020 00.

### *INSTALLATION*

1. Install connector (8) in cylinder block on lower left side of engine.
2. Install new sleeve (7) and nut (6) on tube assembly (5).
3. Position tube assembly (5) on left side of engine, install bolt (3), and tighten nut (6).
4. Install bolt (10) to secure clamp on air line (9).
5. Connect air line (9).
6. Install two elbows (4).

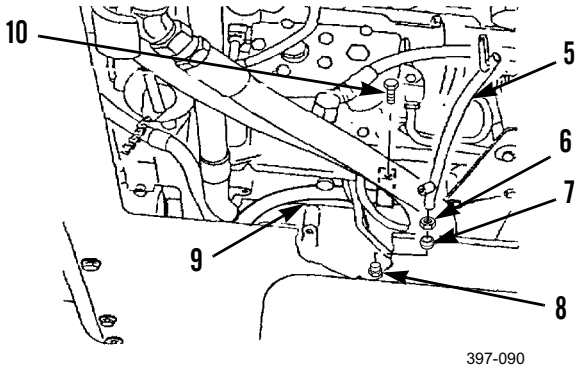

***INSTALLATION - CONTINUED***

7. Install tube assembly (2).
8. Install oil level gauge (1).

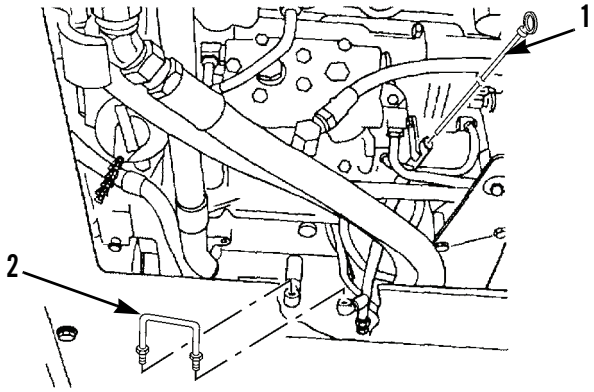

397-2016

9. Turn battery disconnect switch to ON position and start engine (TM 5-3805-261-10).
10. Check tube assemblies (2 and 5) in lower-left side of engine for leaks. Stop engine.
11. Install left side engine panel (WP 0182 00).

**END OF WORK PACKAGE**

## OIL FILLER AND CAP REPLACEMENT 0028 00

### THIS WORK PACKAGE COVERS

Removal, Cleaning and Inspection, Installation

### INITIAL SETUP

**Maintenance Level**

Unit

**Tools and Special Tools**

Tool kit, general mechanic's (Item 89, WP 0348 00)

**Materials/Parts**

Rag, wiping (Item 35, WP 0349 00)

Gasket

**References**

WP 0020 00

**Equipment Conditions**

Machine parked on level ground (TM 5-3805-261-10)

Parking/emergency brake applied (TM 5-3805-261-10)

Implements lowered to ground (TM 5-3805-261-10)

Engine off (TM 5-3805-261-10)

Battery disconnect switch in OFF position (TM 5-3805-261-10)

Left side engine door opened (TM 5-3805-261-10)

### *REMOVAL*

1. Remove bolt (2), washer (1), and clip (3) from left side of engine.

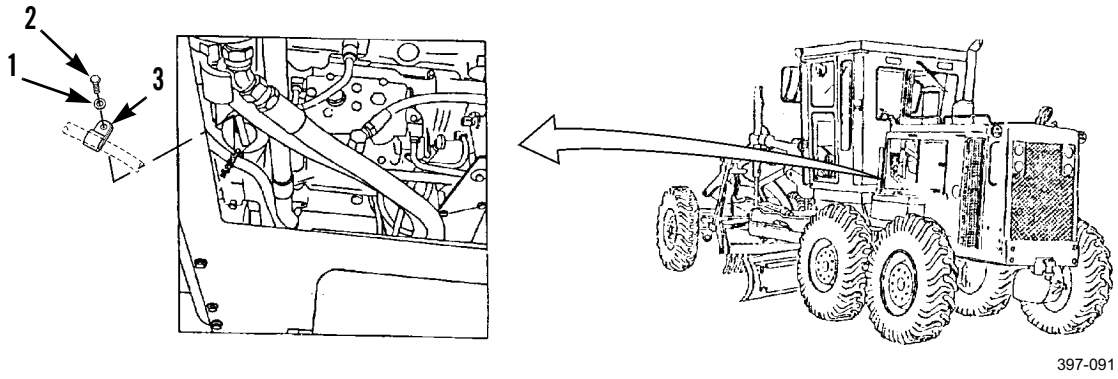


397-091

### *REMOVAL - CONTINUED*

2. Remove two bolts (5), washers (4), and filler tube and cap assembly (6) from engine front cover.
3. Remove and discard gasket (7).

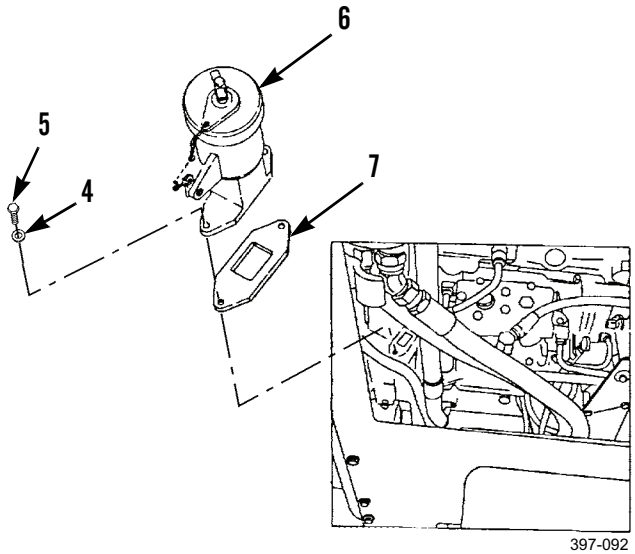


**NOTE**

Remove rivet and washer only if inspection indicates replacement is necessary.

4. If necessary, remove rivet (8) and washer (11). Discard rivet.
5. Remove cap assembly (9) from filler tube (10).

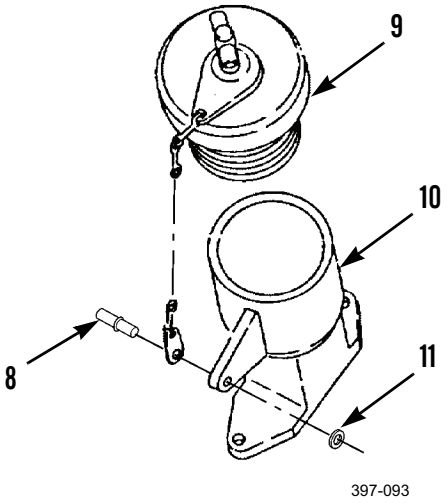


### *CLEANING AND INSPECTION*

Clean and inspect all parts in accordance with WP 0020 00.

### *INSTALLATION*

1. Install cap assembly (9) in filler tube (10).
2. If removed, install washer (11) and new rivet (8).
3. Position new gasket (7) and filler tube and cap assembly (6) on left side of engine.
4. Install two washers (4) and bolts (5).
5. Install clip (3).
6. Install washer (1) and bolt (2).

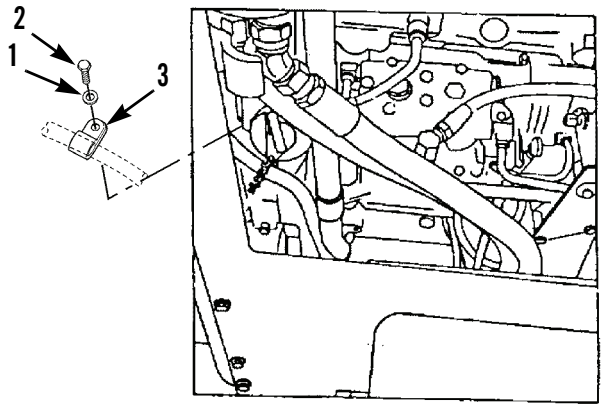

397-2017

7. Close left side engine door (TM 5-3805-261-10).

**END OF WORK PACKAGE**

## ENGINE OIL COOLER REPLACEMENT 0029 00

### THIS WORK PACKAGE COVERS

Removal, Cleaning and Inspection, Installation

### INITIAL SETUP

**Maintenance Level**

Unit

**Tools and Special Tools**

Tool kit, general mechanic's (Item 89, WP 0348 00)

**Materials/Parts**

Antifreeze (Item 5, WP 0349 00)

Rag, wiping (Item 35, WP 0349 00)

Gasket (3)

**References**

WP 0020 00

WP 0065 00

**Equipment Conditions**

Machine parked on level ground (TM 5-3805-261-10)

Parking/emergency brake applied (TM 5-3805-261-10)

Implements lowered to ground (TM 5-3805-261-10)

Engine off (TM 5-3805-261-10)

Battery disconnect switch in OFF position (TM 5-3805-261-10)

Engine oil filter head removed (WP 0026 00)

Left side engine panel removed (WP 0182 00)

### *REMOVAL*

1. Remove plug (9) on left side of engine.
2. Drain coolant from radiator (WP 0065 00).
3. Install plug (9) after coolant is completely drained.
4. Remove four bolts (2) from coolant tube (1).
5. Remove four bolts (4).
6. Remove two bolts (8) and four bolts (6) from transmission oil cooler housing (7) to remove core assembly (11).
7. Remove and discard gasket (5).
8. Remove core assembly (11) and gaskets (3 and 10). Discard gaskets.

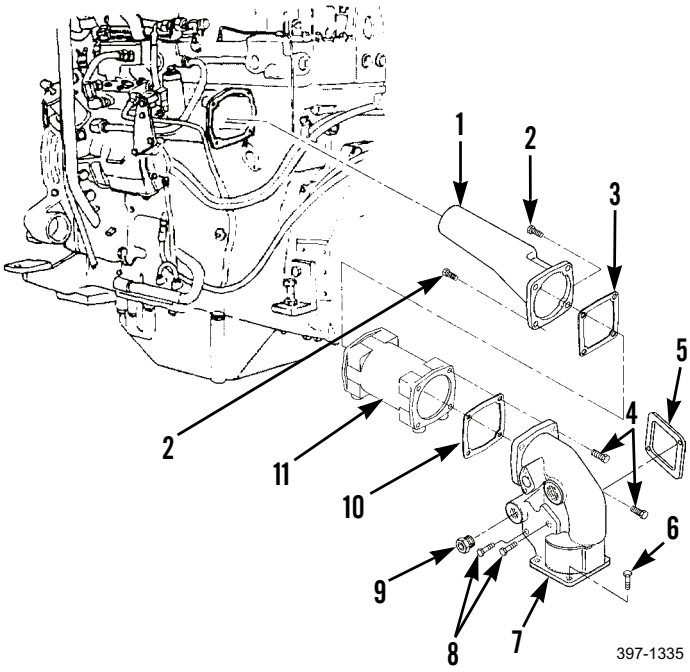

### *CLEANING AND INSPECTION*

Clean and inspect all parts in accordance with WP 0020 00.

### *INSTALLATION*

1. Position new gaskets (10 and 3) and core assembly (11) between transmission oil cooler housing (7) and coolant tube (1).
2. Install eight bolts (4 and 2).
3. Install new gasket (5).
4. Install two bolts (8) and four bolts (6) on transmission oil cooler housing (7).

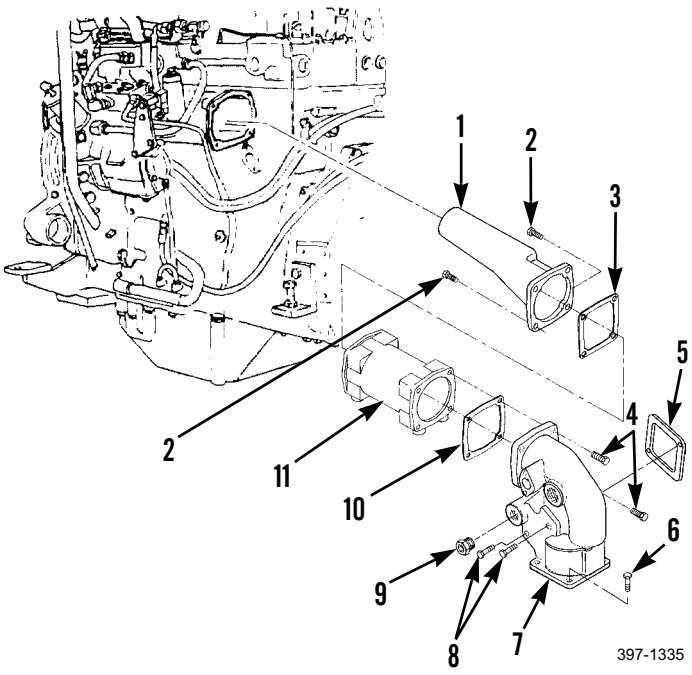


5. Fill radiator with coolant to proper level (WP 0065 00).
6. Install engine oil filter head (WP 0026 00).
7. Install left side engine panel (WP 0182 00).

**END OF WORK PACKAGE**

## ENGINE OIL SAMPLING VALVE AND LINE REPLACEMENT 0030 00

### THIS WORK PACKAGE COVERS

Removal, Cleaning and Inspection, Installation

### INITIAL SETUP

**Maintenance Level**

Unit

**Tools and Special Tools**

Tool kit, general mechanic's (Item 89, WP 0348 00)

**Materials/Parts**

Cap set, protective (Item 7, WP 0349 00)

Rag, wiping (Item 35, WP 0349 00)

Locknut

Packing, preformed

**References**

WP 0020 00

**Equipment Conditions**

Machine parked on level ground (TM 5-3805-261-10)

Parking/emergency brake applied (TM 5-3805-261-10)

Implements lowered to ground (TM 5-3805-261-10)

Engine off (TM 5-3805-261-10)

Battery disconnect switch in OFF position (TM 5-3805-261-10)

Left side engine door opened (TM 5-3805-261-10)

### *REMOVAL*

1. Remove valve (1), preformed packing (2), and adapter (3) as an assembly. Discard preformed packing.

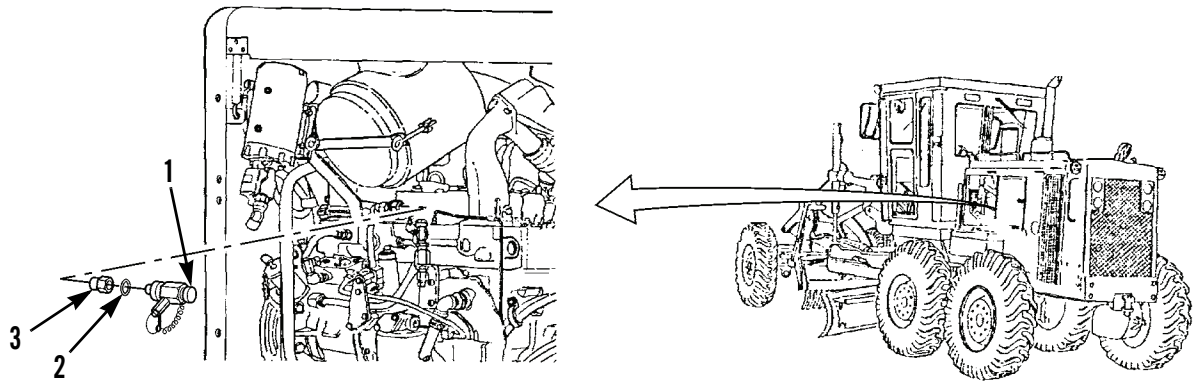


397-094

***REMOVAL - CONTINUED***

**CAUTION**

Cap all hose and tube ends and plug all open oil ports to prevent contamination.

2. Remove reducer (5), locknut (6), and connector (7) from hose assembly (8). Discard locknut.

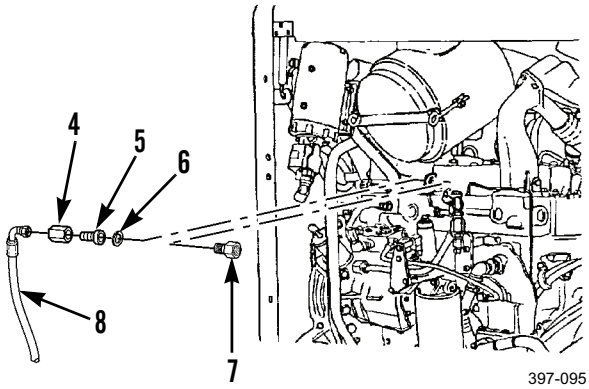

397-095

**NOTE**

Do not remove nut (4) unless inspection shows need for replacement.

3. Remove hose assembly (8), elbow (12), and bushing (11) from bottom-left side of engine.
4. Remove two bolts (9) and bracket (10) from top-left side of engine.

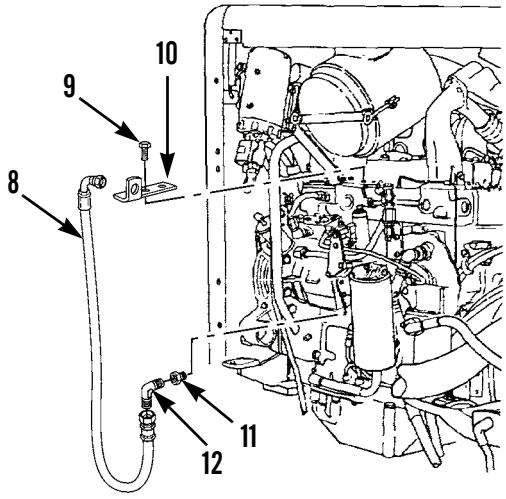

397-096

***CLEANING AND INSPECTION***

Clean and inspect all parts in accordance with WP 0020 00.

### *INSTALLATION*

1. Install bracket (10) and two bolts (9) to top-left side of engine.
2. Install bushing (11), elbow (12), and hose assembly (8) to bottom-left side of engine.
3. Install connector (7), new locknut (6), and reducer (5) to top-left side of engine.
4. Connect hose assembly (8) with nut (4) to reducer (5).
5. Install adapter (3), new preformed packing (2), and valve (1).

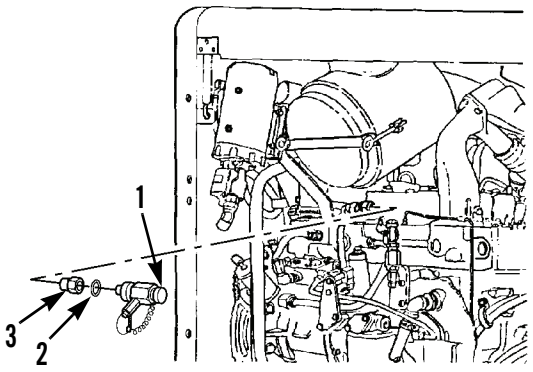

397-2018

6. Turn battery disconnect switch to ON position and start engine (TM 5-3805-261-10).
7. Check for leaks. Stop engine.
8. Close left side engine door (TM 5-3805-261-10).

**END OF WORK PACKAGE**

## VALVE COVER REPLACEMENT 0031 00

### THIS WORK PACKAGE COVERS

Removal, Cleaning and Inspection, Installation

### INITIAL SETUP

**Maintenance Level**

Unit

**Tools and Special Tools**

Tool kit, general mechanic's (Item 89, WP 0348 00)

Shop equipment, common no. 2 (Item 76, WP 0348 00)

Wrench, torque (Item 95, WP 0348 00)

**Materials/Parts**

Gasket cement (Item 16, WP 0349 00)

Rag, wiping (Item 35, WP 0349 00)

Gasket

Lockwasher (11)

**References**

WP 0020 00

**Equipment Conditions**

Machine parked on level ground (TM 5-3805-261-10)

Parking/emergency brake applied (TM 5-3805-261-10)

Implements lowered to ground (TM 5-3805-261-10)

Engine off (TM 5-3805-261-10)

Battery disconnect switch in OFF position (TM 5-3805-261-10)

Valve cover breather removed (WP 0032 00)

### *REMOVAL*

1. Remove 11 bolts (1) and lockwashers (4) from top of engine. Discard lockwashers.

**CAUTION**

Do not pry valve cover to remove. Prying valve cover can result in damage to valve cover and cylinder head.

2. Remove valve cover (2) and gasket (3) from cylinder head. Discard gasket.

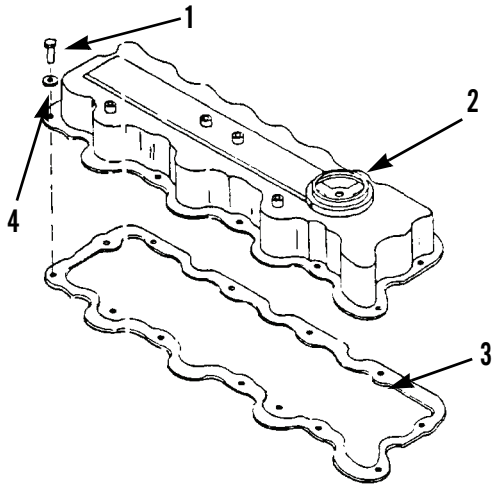


397-1328

### *CLEANING AND INSPECTION*

Clean and inspect all parts in accordance with WP 0020 00.

### *INSTALLATION*

1. Position new gasket (3) and valve cover (2) on cylinder head. Apply gasket cement to lip of valve cover where gasket makes contact. Install gasket.
2. Install 11 new lockwashers (4) and bolts (1). Tighten bolts to 96 lb-in. (11 Nm).

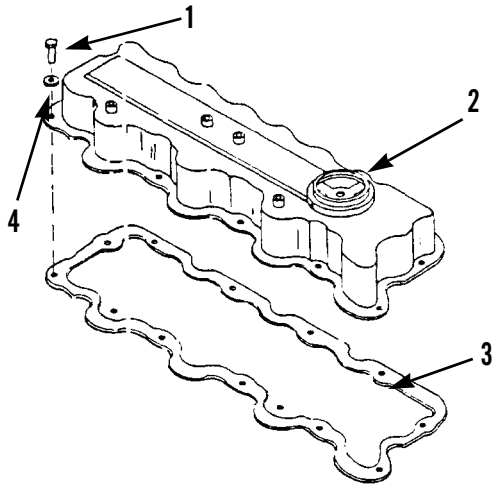


397-1328

3. Install valve cover breather (WP 0032 00).

**END OF WORK PACKAGE**

## VALVE COVER BREATHER REPLACEMENT 0032 00

### THIS WORK PACKAGE COVERS

Removal, Cleaning and Inspection, Installation

### INITIAL SETUP

**Maintenance Level**

Unit

**Tools and Special Tools**

Tool kit, general mechanic's (Item 89, WP 0348 00)

Shop equipment, common no. 2 (Item 76, WP 0348 00)

Wrench, torque (Item 95, WP 0348 00)

**Materials/Parts**

Rag, wiping (Item 35, WP 0349 00)

Packing, preformed

**References**

WP 0020 00

**Equipment Conditions**

Machine parked on level ground (TM 5-3805-261-10)

Parking/emergency brake applied (TM 5-3805-261-10)

Implements lowered to ground (TM 5-3805-261-10)

Engine off (TM 5-3805-261-10)

Battery disconnect switch in OFF position (TM 5-3805-261-10)

Left side engine door opened (TM 5-3805-261-10)

### *REMOVAL*

1. Remove bolt (5), two washers (6), and clip (7) from left side of engine.
2. Loosen two clamps (2) from top of engine.
3. Remove tube (1) from hose (3).
4. Remove two clamps (2) and hose (3) from breather (4).

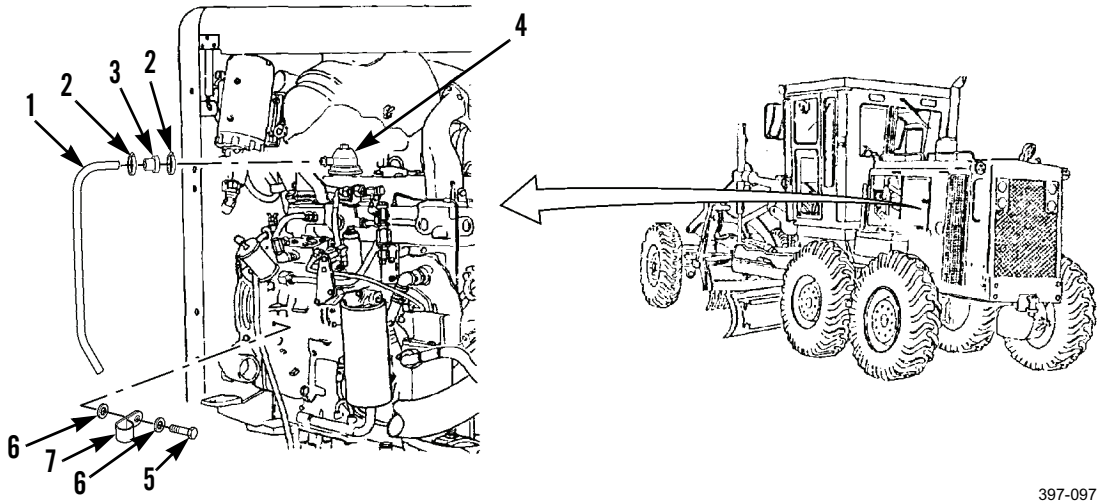


397-097

### *REMOVAL - CONTINUED*

5. Remove bolt (9), washer (8), breather (4), and preformed packing (11) from valve cover (10). Discard preformed packing.

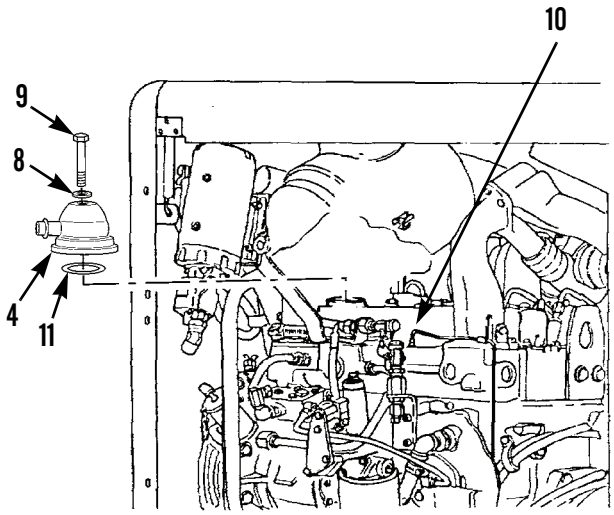


397-098

### *CLEANING AND INSPECTION*

Clean and inspect all parts in accordance with WP 0020 00.

### *INSTALLATION*

**NOTE**

Do not tighten bolt.

1. Install new preformed packing (11), breather (4), washer (8), and bolt (9) on valve cover (10).

**NOTE**

Do not tighten clamps.

2. Install two clamps (2) and hose (3) on breather (4).
3. Install tube (1) in hose (3).
4. Install clip (7), two washers (6), and bolt (5) on left side of engine.
5. Tighten two clamps (2).
6. Tighten bolt (9) to 144 lb-in. (16 Nm).

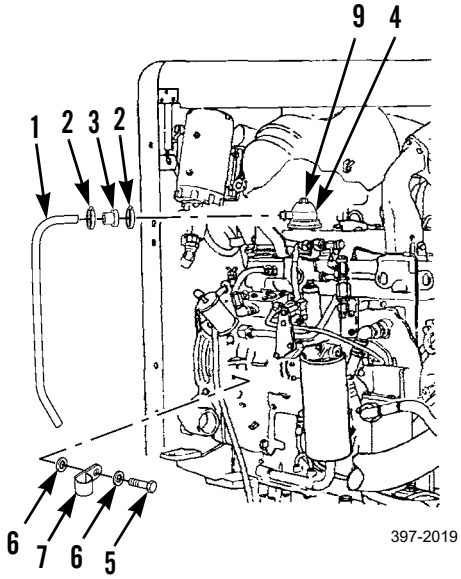


397-2019

7. Close left side engine door (TM 5-3805-261-10).

**END OF WORK PACKAGE**

## TURBOCHARGER OIL LINES REPLACEMENT 0033 00

### THIS WORK PACKAGE COVERS

Removal, Cleaning and Inspection, Installation

### INITIAL SETUP

**Maintenance Level**

Unit

**Tools and Special Tools**

Tool kit, general mechanic's (Item 89, WP 0348 00)

**Materials/Parts**

Cap set, protective (Item 7, WP 0349 00)

Lubricating oil (Item 27, WP 0349 00)

Rag, wiping (Item 35, WP 0349 00)

Tag, marker (Item 44, WP 0349 00)

Gasket (2)

Packing, preformed (3)

**References**

WP 0020 00

**Equipment Conditions**

Machine parked on level ground (TM 5-3805-261-10)

Parking/emergency brake applied (TM 5-3805-261-10)

Implements lowered to ground (TM 5-3805-261-10)

Engine off (TM 5-3805-261-10)

Battery disconnect switch in OFF position (TM 5-3805-261-10)

Right side engine panel removed (WP 0182 00)

**WARNING**

Exercise care when working with hot components. Allow to cool before handling. Failure to follow this warning may result in injury to personnel.

### *REMOVAL*

1. Remove two nuts (3), four washers (4), two bolts (6), and four clips (5) from right side of engine.
2. Remove bolts (1 and 2).

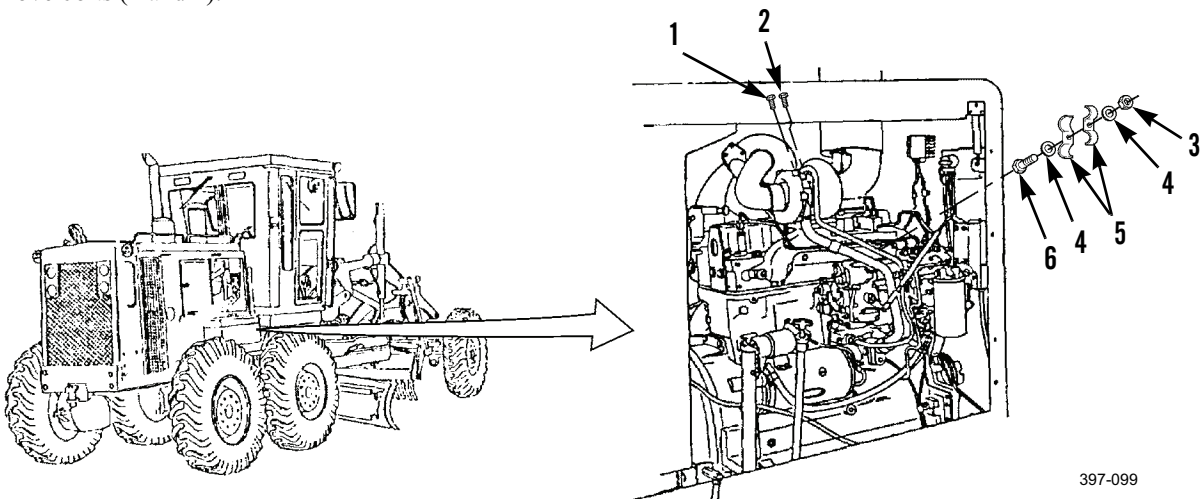

***REMOVAL - CONTINUED***

## CAUTION

Cap all tube ends and plug all open oil ports to prevent contamination.

## NOTE

Tag all tubes before disconnecting to aid in installation.

3. Disconnect tube assembly (10) nut from adapter (11) under injection pump support (8).
4. Remove tube assembly (10) and gasket (9). Discard gasket.
5. Remove adapter (11) and preformed packing (12) from injection pump support (8). Discard preformed packing.

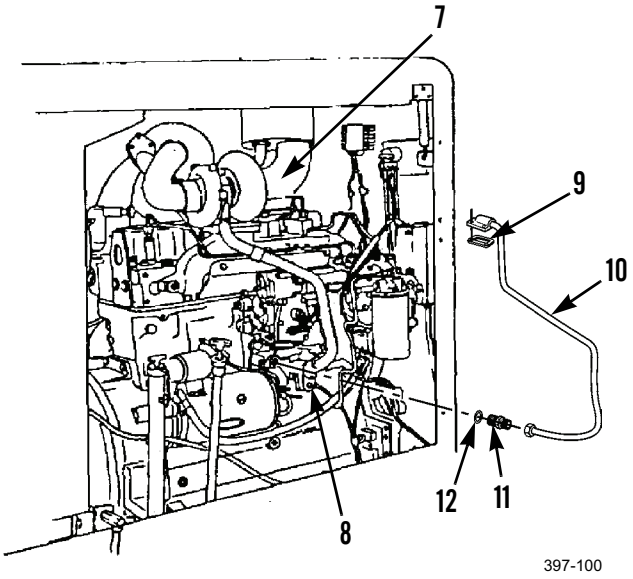


6. Remove two bolts (13) from under turbocharger (7).
7. Remove bolt (17) and elbow (18) from injection pump support (8).
8. Remove and discard preformed packing (19).
9. Remove tube assembly (15) and preformed packing (16) from elbow (18). Discard preformed packing.
10. Remove and discard gasket (14).

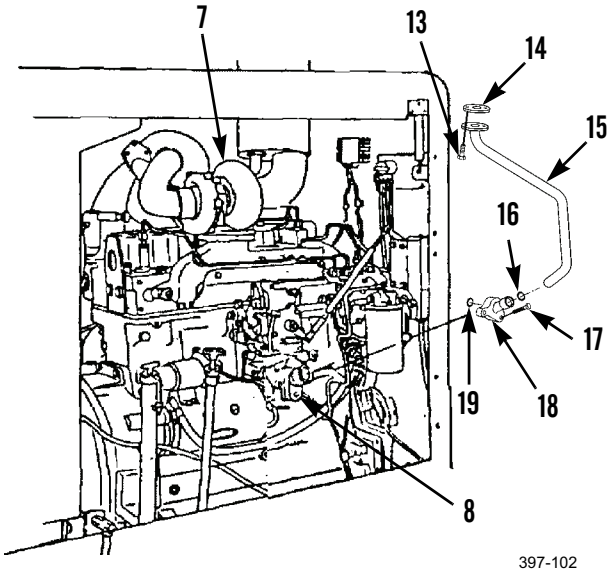

### *CLEANING AND INSPECTION*

Clean and inspect all parts in accordance with WP 0020 00.

### *INSTALLATION*

**NOTE**

Lubricate all preformed packings with clean oil before installing.

1. Install new preformed packing (19), elbow (18), and bolt (17) in injection pump support (8).
2. Install new preformed packing (16) on tube assembly (15).
3. Install tube assembly (15) in elbow (18) under turbocharger (7).
4. Install new gasket (14) between flange of tube assembly (15) and under turbocharger (7).
5. Install two bolts (13).
6. Install new preformed packing (12) and adapter (11) on injection pump support (8).

**NOTE**

Do not tighten nut.

7. Install tube assembly (10) by connecting tube assembly nut.
8. Install new gasket (9) between flange of tube assembly (10) and top of turbocharger (7).
9. Install bolts (1 and 2).
10. Tighten tube assembly nut on injection pump support (8).
11. Install four clips (5), two bolts (6), four washers (4), and two nuts (3) on right side of engine.

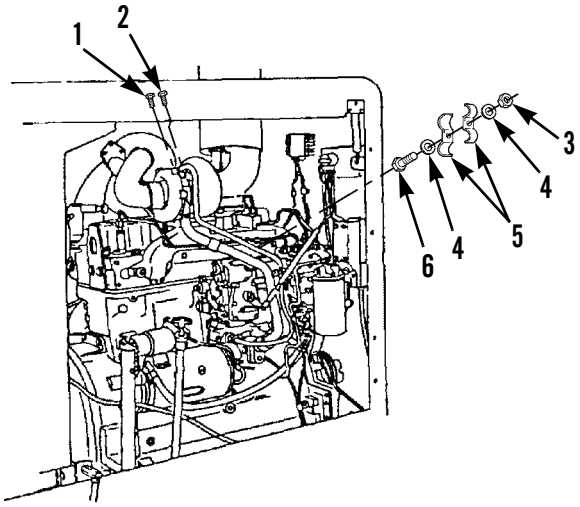


397-2020

12. Turn battery disconnect switch to ON position and start engine (TM 5-3805-261-10).
13. Check for leaks and add oil as required. Stop engine.
14. Install right side engine panel (WP 0182 00).

**END OF WORK PACKAGE**

## TACHOMETER DRIVE REPLACEMENT (MODELS 130G, 130GSCE, AND 130GNSCE) 0034 00

### THIS WORK PACKAGE COVERS

Removal, Cleaning and Inspection, Installation

### INITIAL SETUP

**Maintenance Level**

Unit

**Tools and Special Tools**

Tool kit, general mechanic's (Item 89, WP 0348 00)

**Materials/Parts**

Oil, lubricating (Item 26, 27, or 30 WP 0349 00)

Rag, wiping (Item 35, WP 0349 00)

Lockwasher

Packing, preformed

Seal

**References**

WP 0020 00

**Equipment Conditions**

Machine parked on level ground (TM 5-3805-261-10)

Parking/emergency brake applied (TM 5-3805-261-10)

Implements lowered to ground (TM 5-3805-261-10)

Engine off (TM 5-3805-261-10)

Battery disconnect switch in OFF position (TM 5-3805-261-10)

Battery cables disconnected (WP 0125 00)

### *REMOVAL*

1. Remove bolt (4), lockwasher (3), and clamp (2) from rear fuel injection pump, right side of engine. Discard lockwasher.
2. Remove tachometer drive assembly (5) from fuel injection pump rear governor housing (1).

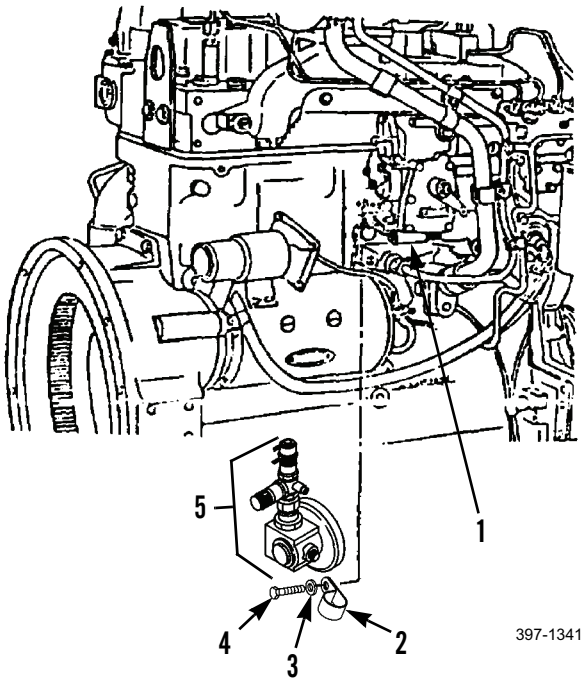

## TACHOMETER DRIVE REPLACEMENT (MODELS 130G, 130GSCE, AND 130GNSCE) - CONTINUED 0034 00

### *REMOVAL - CONTINUED*

3. Remove seal (8) and preformed packing (9) and discard.
4. Remove speedometer adapter (7) from adapter assembly (10).
5. Remove dust cap (6).

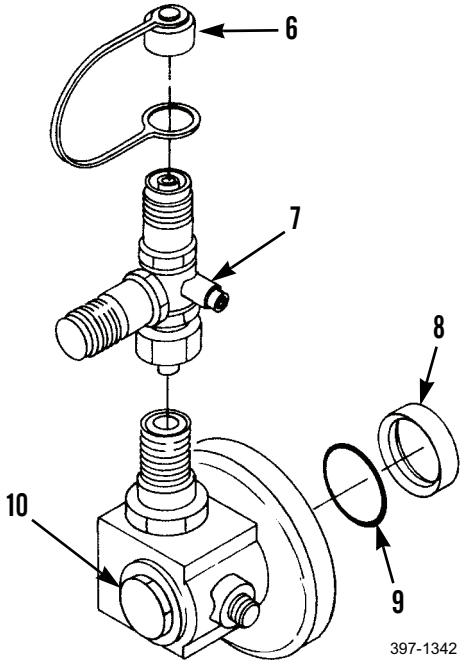


### *CLEANING AND INSPECTION*

Clean and inspect all parts in accordance with WP 0020 00.

### *INSTALLATION*

1. Install dust cap (6) on speedometer adapter (7).
2. Install speedometer adapter (7) on adapter assembly (10).
3. Install new preformed packing (9) on groove of adapter assembly (10). Apply clean oil to outer surface.
4. Install new seal (8).
5. Install tachometer drive assembly (5) on fuel injection pump rear governor housing (1). Align shaft of adapter assembly (10) with shaft in rear governor housing.
6. Install clamp (2), new lockwasher (3), and bolt (4).

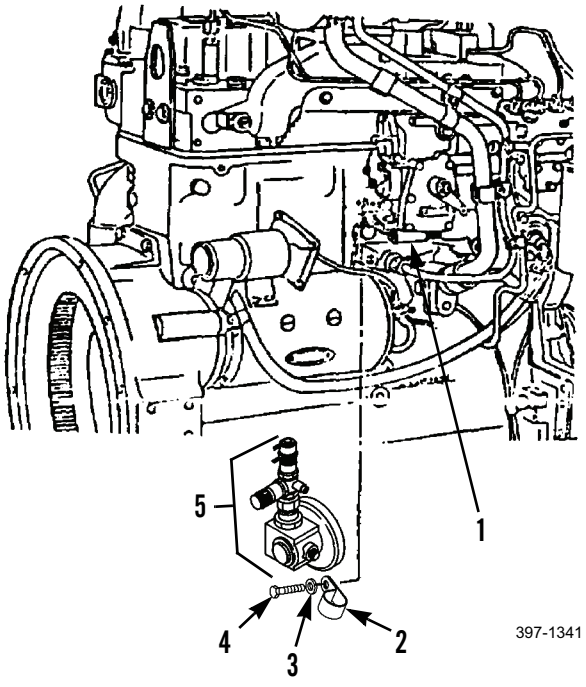


7. Connect battery cables (WP 0125 00).

**END OF WORK PACKAGE**

## FUEL INJECTION LINES MAINTENANCE 0035 00

### THIS WORK PACKAGE COVERS

Removal, Cleaning and Inspection, Installation, Bleeding

### INITIAL SETUP

**Maintenance Level**

Unit

**Tools and Special Tools**

Tool kit, general mechanic's (Item 89, WP 0348 00)

Shop equipment, common no. 2 (Item 76, WP 0348 00)

Wrench, torque (Item 95, WP 0348 00)

Driver bit, T-15 TORX (Item 21, WP 0348 00)

**Materials/Parts**

Cap set, protective (Item 7, WP 0349 00)

Rag, wiping (Item 35, WP 0349 00)

Tag, marker (Item 44, WP 0349 00)

Packing with retainer (4)

**References**

WP 0020 00

**Equipment Conditions**

Machine parked on level ground (TM 5-3805-261-10)

Parking/emergency brake applied (TM 5-3805-261-10)

Implements lowered to ground (TM 5-3805-261-10)

Engine off (TM 5-3805-261-10)

Battery disconnect switch in OFF position (TM 5-3805-261-10)

Right side engine panel removed (WP 0182 00)



**WARNING**



- DO NOT smoke or permit any open flame in area of machine while you are servicing fuel system. Be sure hose nozzle is grounded against filler tube during refueling to prevent static electricity. Failure to follow this warning may result in death or injury to personnel or damage to equipment.
- DO NOT perform fuel system checks, inspections or maintenance while smoking or near fire, flames or sparks. Fuel may ignite, causing death or injury to personnel or damage to equipment.
- Operating personnel must wear fuel-resistant gloves when handling fuel. If exposed to fuel, promptly wash exposed skin and change fuel-soaked clothing.
- Exercise care when working with hot components. Allow to cool before handling. Failure to follow this warning may result in injury to personnel.

***REMOVAL***

## CAUTION

Injection nozzles must not be allowed to turn when disconnecting injection line assemblies. Hold injection nozzle with a wrench to prevent damage to nozzles.

1. Remove two screws (2 and 7) and clamp assemblies (1 and 8) from injection line assemblies (5 and 6) on top of engine.
2. Remove screw (13) and clamp assembly (12).
3. Remove bolt (4), washer (3), and bracket (11) from cylinder head.

## CAUTION

Cap all injection nozzles, injection pump ports and injection lines to prevent contamination.

## NOTE

Tag all injection lines to aid in installation.

4. Disconnect injection line assemblies (5 and 6) from injection nozzles (10).
5. Remove injection line assemblies (5 and 6) from injection pump (9).

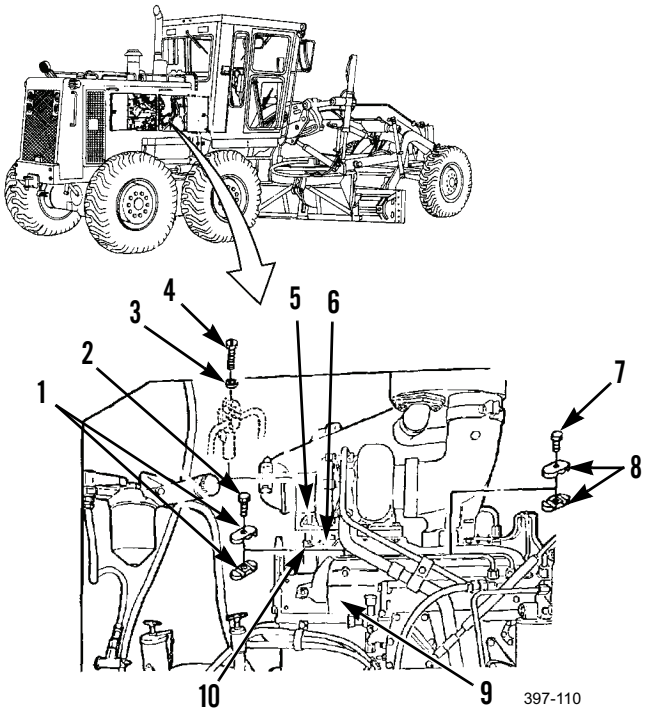

397-110

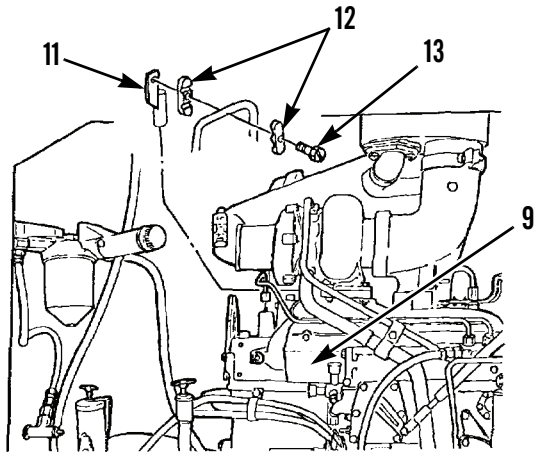

397-111

### *REMOVAL - CONTINUED*

6. Remove two screws (14) and clamp assemblies (15) from injection line assemblies (16 and 17) on top of engine.

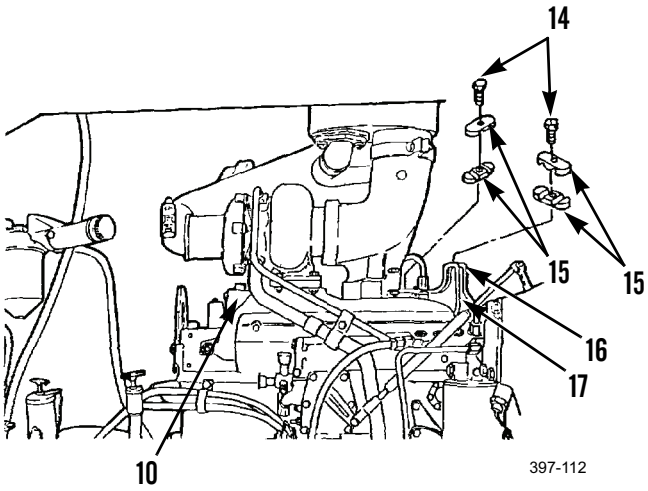


7. Remove screw (21) and clamp assembly (20) from bracket (22) and injection line assemblies (16 and 17).
8. Disconnect injection line assemblies (16 and 17) from injection nozzles (10).
9. Remove injection line assemblies (16 and 17) from injection pump.
10. Remove bolt (19), washer (18), and bracket (22) from top of engine.

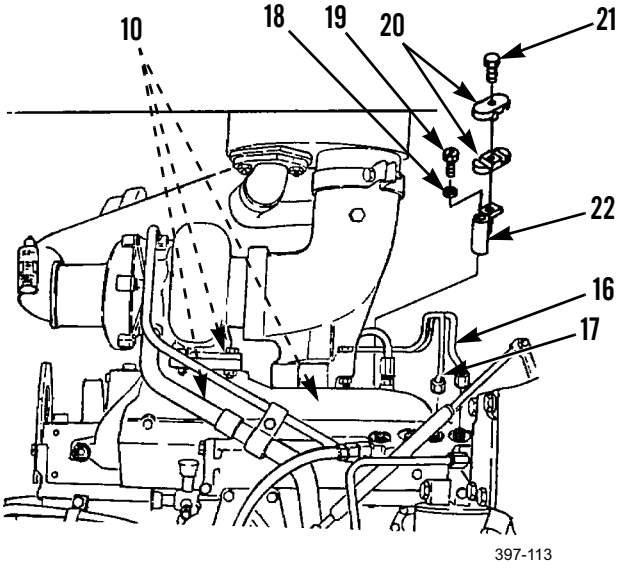


### *CLEANING AND INSPECTION*

Clean and inspect all parts in accordance with WP 0020 00.

### *INSTALLATION*

1. Install bracket (22), washer (18), and bolt (19) to top of engine.

**NOTE**

Do not tighten injection line assemblies.

2. Connect injection line assemblies (17 and 16) to injection nozzles (10) on top of engine.
3. Install clamp assembly (20) and screw (21) on injection line assemblies (17 and 16) and bracket (22). Tighten screw to 20 lb-in. (2 Nm).

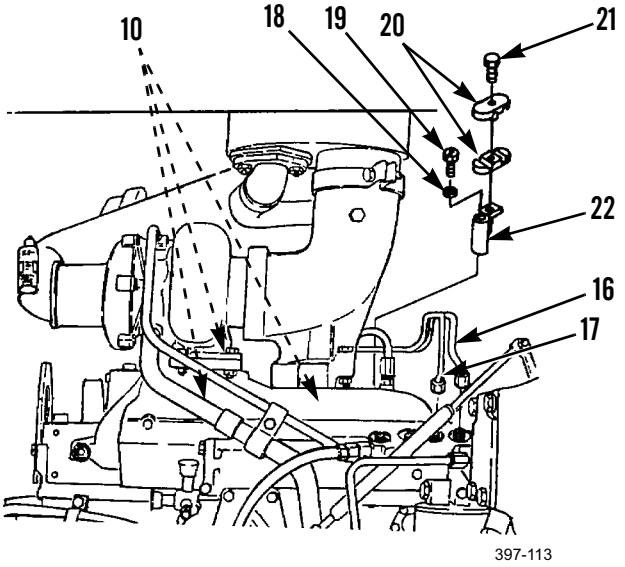


4. Install two clamp assemblies (15) and screws (14) on injection line assemblies (17 and 16). Tighten screws to 20 lb-in. (2 Nm).
5. Install injection line assemblies (17 and 16) to injection pump.
6. Tighten injection line assemblies (17 and 16) to injection nozzles (10).

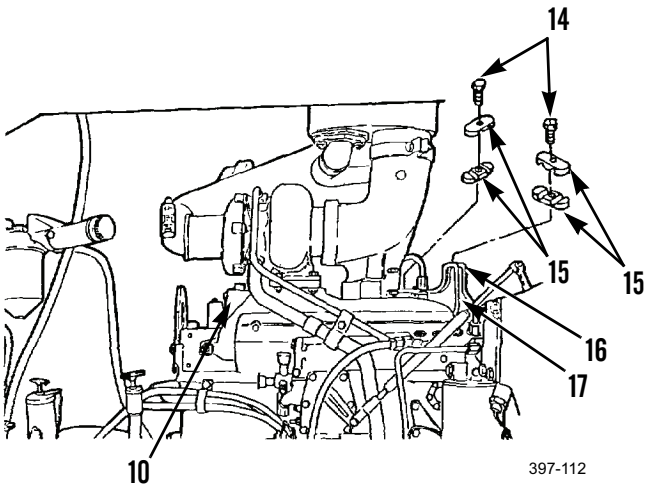

***INSTALLATION - CONTINUED***

7. Install bracket (11), clamp assembly (12), and screw (13). Tighten screw to 20 lb-in. (2 Nm).
8. Connect injection line assemblies (6 and 5) to injection nozzles (10).
9. Install washer (3) and bolt (4).
10. Install injection line assemblies (6 and 5) at injection pump (9).
11. Install two clamp assemblies (1 and 8) and screws (2 and 7) on injection line assemblies (6 and 5). Tighten screws to 20 lb-in. (2 Nm).

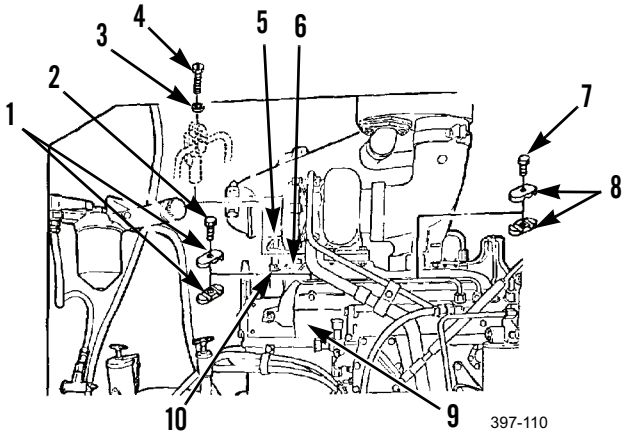

397-110

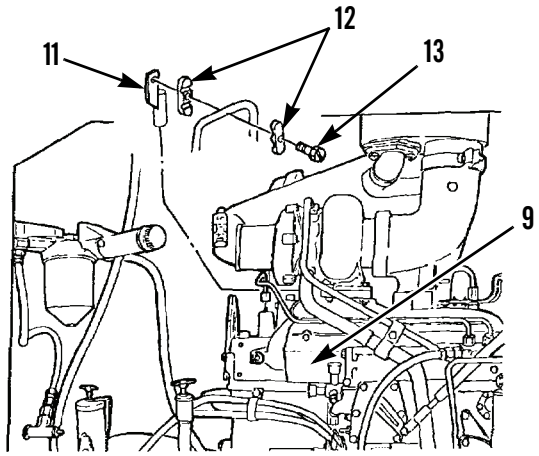

397-111

***BLEEDING***

**NOTE**

- Injection lines must be bled one at a time in order, starting with line 1.
- The bleed screw packing with retainer should be changed any time the bleed screw is loosened or removed.

1. Loosen injection line assembly (5) at injection nozzles (10).
2. Turn knob (24) on priming pump (23) to the left and pull out.
3. Pump until diesel fuel, free of air bubbles, flows from injection line assembly (5) at injection nozzles (10).
4. Tighten injection line assembly (5) at injection nozzles (10).
5. Repeat steps 1 through 4 for the other three injection line assemblies (6, 16, and 17) ensuring lines are bled in order.
6. Push in on priming pump (23) and turn knob (24) to the right to close.
7. Turn battery disconnect switch to ON position and start engine (TM 5-3805-261-10).
8. Check injection line assemblies (5, 6, 16, and 17) on right side of engine for leaks at fuel injection pump (9) and injection nozzles (10).

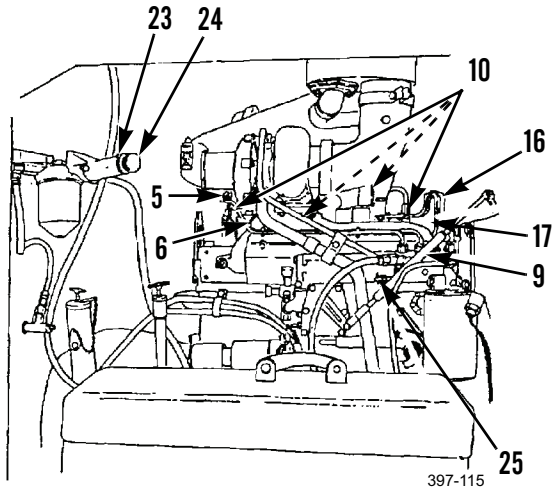


**NOTE**

If engine runs roughly after installing injection lines, perform steps 9 through 11. If not, proceed to step 12.

9. Loosen injection line assemblies (5, 6, 16, and 17) from top of engine. Hold injection nozzle with a wrench when loosening line fittings.
10. Bleed each injection line assembly one at a time by loosening fitting at injection nozzle. Repeat steps 1 through 5.
11. Tighten line connection. Repeat procedure on remaining three line connections, one at a time. Do each injection line assembly two or three times or until no air is present.
12. Install right side engine panel (WP 0182 00).

**END OF WORK PACKAGE**

## AIR PRECLEANER REPLACEMENT 0036 00

### THIS WORK PACKAGE COVERS

Removal, Cleaning and Inspection, Installation

### INITIAL SETUP

**Maintenance Level**

Unit

**Tools and Special Tools**

Tool kit, general mechanic's (Item 89, WP 0348 00)

Shop equipment, common no. 1 (Item 75, WP 0348 00)

Wrench, torque (Item 97, WP 0348 00)

**Materials/Parts**

Rag, wiping (Item 35, WP 0349 00)

**References**

FM 21-40

WP 0020 00

**Equipment Conditions**

Machine parked on level ground (TM 5-3805-261-10)

Parking/emergency brake applied (TM 5-3805-261-10)

Implements lowered to ground (TM 5-3805-261-10)

Engine off (TM 5-3805-261-10)

Battery disconnect switch in OFF position (TM 5-3805-261-10)




- If NBC exposure is suspected, personnel wearing protective equipment should handle all air cleaner media. Consult your NBC Officer or NBC NCO for appropriate handling or disposal procedures.
- NBC contaminated filters must be handled using adequate precautions (FM 21-40) and must be disposed of by trained personnel.
- Failure to follow this warning may cause illness or death.

### *REMOVAL*

1. Loosen nut (5) and bolt (3) on clamp (1).
2. Remove hood (2) and clamp (1) from body (4).

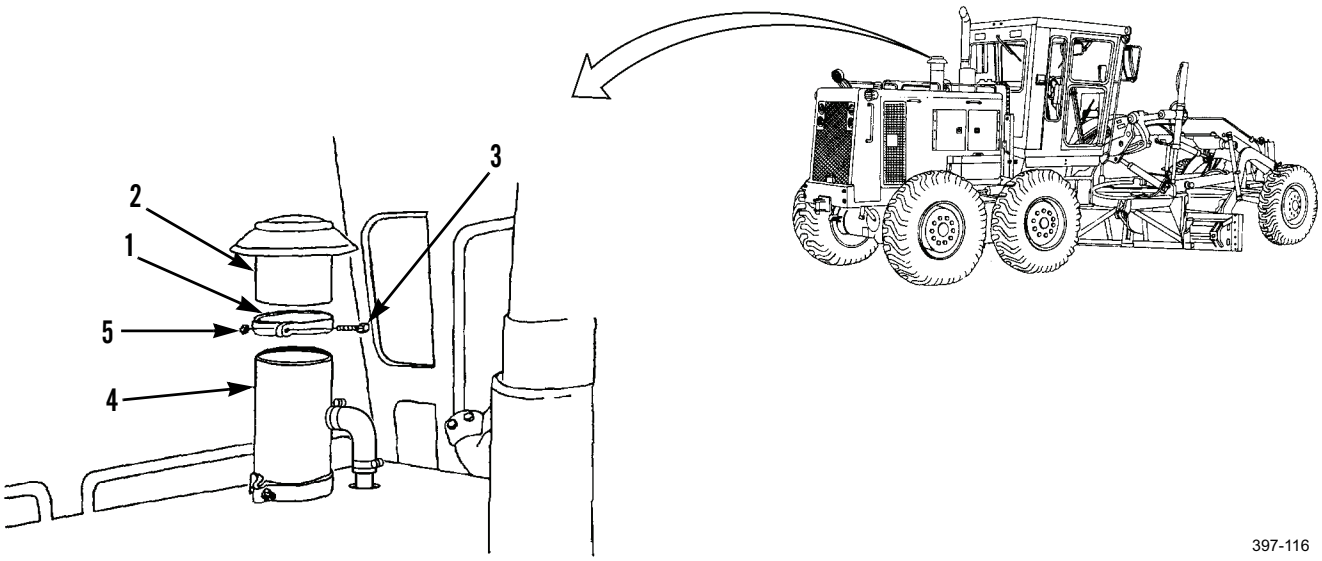


397-116

3. Loosen two clamps (6).
4. Remove two clamps (6) and hose (7) from body (4) and tube (8).
5. Loosen nut (10) and bolt (9).
6. Remove body (4) and clamp (11).

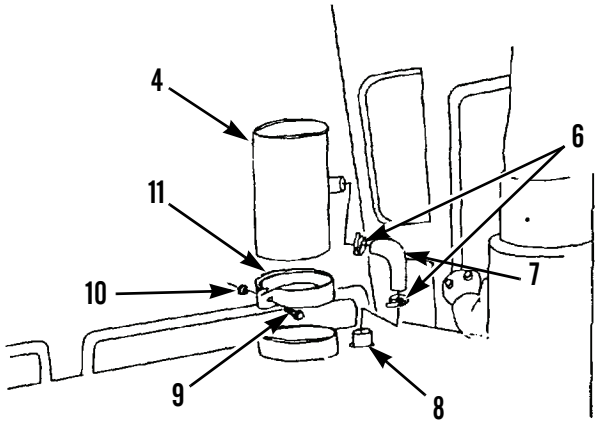


397-117

### *CLEANING AND INSPECTION*

Clean and inspect all parts in accordance with WP 0020 00.

### *INSTALLATION*

1. Install clamp (11) and body (4).
2. Install bolt (9) and nut (10) in clamp (11). Tighten to 18 lb-ft (24 Nm).
3. Install two clamps (6) and hose (7) to body (4) and tube (8).
4. Install clamp (1), hood (2), bolt (3), and nut (5) to body (4). Tighten to 18 lb-ft (24 Nm).

**END OF WORK PACKAGE**

## PRIMARY AND SECONDARY FILTER ELEMENTS REPLACEMENT 0037 00

### THIS WORK PACKAGE COVERS

Removal, Cleaning and Inspection, Installation

### INITIAL SETUP

**Maintenance Level**

Unit

**Tools and Special Tools**

Tool kit, general mechanic's (Item 89, WP 0348 00)

Shop equipment, common no. 1 (Item 75, WP 0348 00)

Wrench, torque (Item 97, WP 0348 00)

**Materials/Parts**

Rag, wiping (Item 35, WP 0349 00)

Gasket

**References**

FM 21-40

WP 0020 00

**Personnel Required**

Two

**Equipment Conditions**

Machine parked on level ground (TM 5-3805-261-10)

Parking/emergency brake applied (TM 5-3805-261-10)

Implements lowered to ground (TM 5-3805-261-10)

Engi805-261-10)

Battery disconnect switch in OFF position (TM 5-3805-261-10)

Left side engine door opened (TM 5-3805-261-10)


**WARNING**


- If NBC exposure is suspected, personnel wearing protective equipment should handle all air cleaner media. Consult your NBC Officer or NBC NCO for appropriate handling or disposal procedures.
- NBC contaminated filters must be handled using adequate precautions and must be disposed of by trained personnel.
- Failure to follow this warning may cause illness or death.

***REMOVAL***

## CAUTION

Never service air cleaner with engine running. Engine damage could result if service is performed with engine running.

1. Loosen two eyebolts (1) and remove cover (3) from air cleaner (2).
2. Inspect preformed packing (4) located inside of cover (3). Remove and discard preformed packing only if damaged.

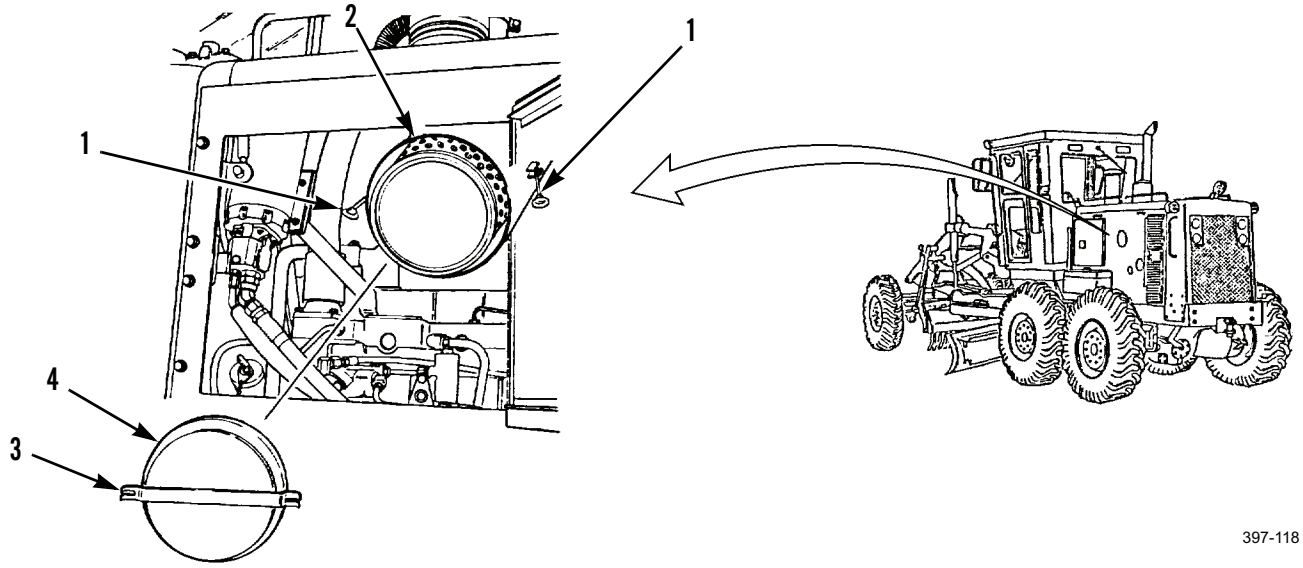


397-118

3. Remove primary filter element (8) from air cleaner (2).
4. Remove six nuts (5).

## CAUTION

If secondary filter element is difficult to remove, gasket on bottom of secondary filter element may be sticking to air cleaner housing. Ensure this area on filter housing is thoroughly cleaned prior to installation of secondary filter element to prevent an air leak past secondary filter.

## NOTE

Air cleaner is not secured after removing secondary filter element and attaching nuts.

5. Remove secondary filter element (7) and gasket (6) from air cleaner (2). Discard gasket.

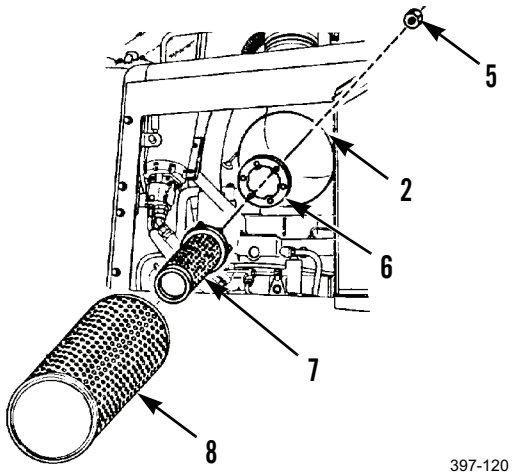


397-120

### *CLEANING AND INSPECTION*

1. Check sealing surfaces on filter elements for dirt on the “clean” side. If this is evident, problem may be a damaged filter element, incorrect element fit or the need for cleaning and/or repair of gasketed surfaces.



**WARNING**

Compressed air used for cleaning purposes must not exceed 30 psi (207 kPa). DO NOT direct compressed air against human skin. Make sure air stream is directed away from user and other personnel in the area. Wear protective goggles or face shield. Failure to follow this warning may cause injury to personnel.

**CAUTION**

To prevent damage, DO NOT clean primary filter element by bumping or tapping.

**NOTE**

- Use a light inside primary filter element to inspect filter for tears, holes or other damage before and after each cleaning process.
- Discard primary filter element if any damage is evident.

2. Direct compressed air inside primary filter element, along length of filter pleats.
3. Direct compressed air outside primary filter element, along length of filter pleats.
4. Repeat step 2.

**NOTE**

Manufacturer’s specifications call for replacement of primary filter element after six cleanings and replacement of secondary filter after three cleanings.

5. Clean and inspect all parts in accordance with WP 0020 00.

**CAUTION**

Ensure no gasket material remains on interior of air cleaner canister. If material remains, a poor seal will allow dirty air into engine.

### *INSTALLATION*

1. Install new gasket (6) and secondary filter element (7) into air cleaner (2).
2. Install six nuts (5). Tighten to 27 lb-ft (37 Nm).
3. Install primary filter element (8) in air cleaner (2).

***INSTALLATION - CONTINUED***

4. If removed, install new preformed packing (4) in cover (3).

**NOTE**

Hand tighten two eyebolts.

5. Install cover (3) on air cleaner (2) and secure with two eyebolts (1).

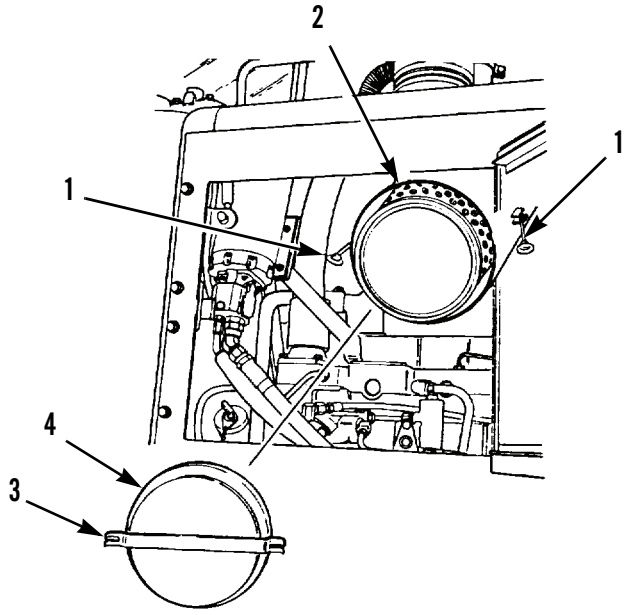


397-118

6. Reset air cleaner indicator by pushing in button on bottom of air cleaner indicator (TM 5-3805-261-10).

**NOTE**

If air cleaner indicator shows red after performing this procedure, replacement of primary and/or secondary filters may be necessary.

7. Close left side engine door (TM 5-3805-261-10).

**END OF WORK PACKAGE**

## AIR CLEANER BODY REPLACEMENT 0038 00

### THIS WORK PACKAGE COVERS

Removal, Cleaning and Inspection, Installation

### INITIAL SETUP

**Maintenance Level**

Unit

**Tools and Special Tools**

Tool kit, general mechanic's (Item 89, WP 0348 00)

**Materials/Parts**

Rag, wiping (Item 35, WP 0349 00)

Gasket

**References**

FM 21-40

WP 0020 00

**Personnel Required**

Two

**Equipment Conditions**

Machine parked on level ground (TM 5-3806-261-10)

Parking/emergency brake applied (TM 5-3806-261-10)

Implements lowered to ground (TM 5-3806-261-10)

Engine off (TM 5-3806-261-10)

Battery disconnect switch in OFF position (TM 5-3806-261-10)

Air precleaner removed (WP 0036 00)

Primary and secondary filter elements removed (WP 0037 00)



**WARNING**



- If NBC exposure is suspected, personnel wearing protective equipment should handle all air cleaner media. Consult your NBC Officer or NBC NCO for appropriate handling or disposal procedures.
- NBC contaminated filters must be handled using adequate precautions (FM 21-40) and must be disposed of by trained personnel.
- Failure to follow this warning may cause illness or death.

## AIR CLEANER BODY REPLACEMENT - CONTINUED 0038 00

### *REMOVAL*

1. Remove air cleaner body (1) and gasket (2) from pipe (3). Discard gasket.
2. Remove two nuts (4) and eyebolts (5) from air cleaner body (1).

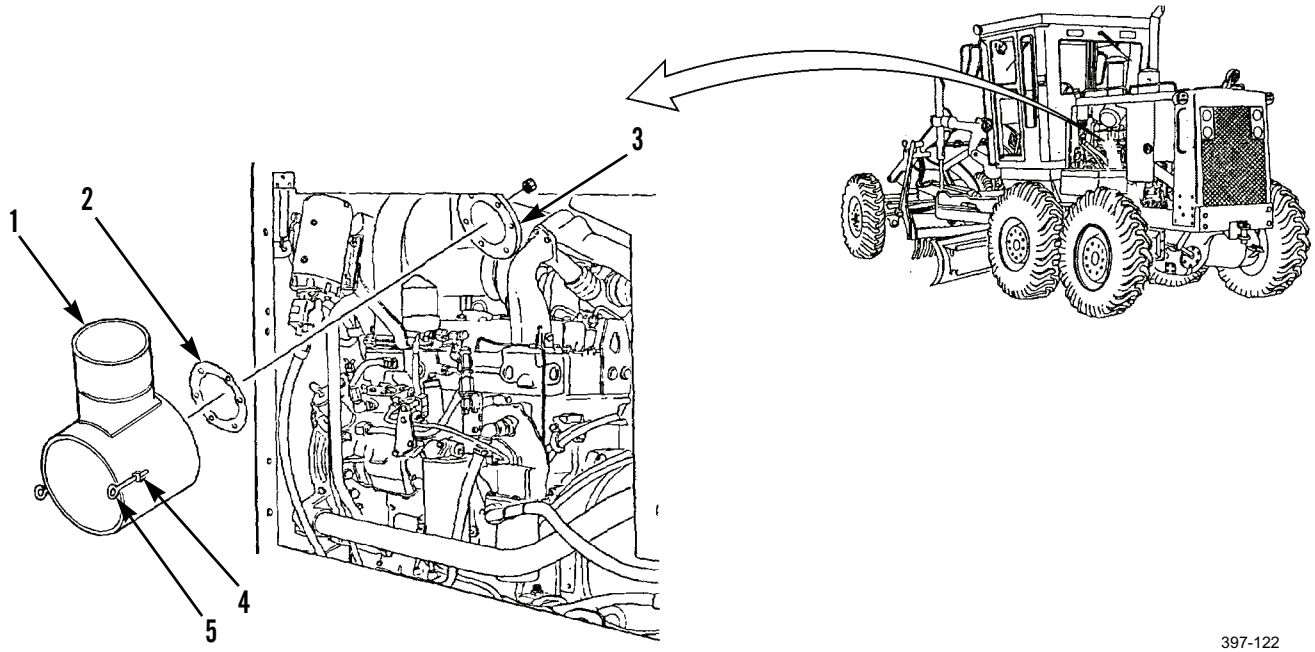


### *CLEANING AND INSPECTION*

Clean and inspect all parts in accordance with WP 0020 00.

### *INSTALLATION*

1. Install two eyebolts (5) and nuts (4) in air cleaner body (1).
2. Install new gasket (2) and air cleaner body (1) on pipe (3).
3. Install primary and secondary filter elements (WP 0037 00).
4. Install air precleaner (WP 0036 00).

**END OF WORK PACKAGE**

## TURBOCHARGER AIR LINES REPLACEMENT 0039 00

## THIS WORK PACKAGE COVERS

Removal, Cleaning and Inspection, Installation

## INITIAL SETUP

**Maintenance Level**

Unit

**Tools and Special Tools**

Tool kit, general mechanic's (Item 89, WP 0348 00)

Shop equipment, common no. 1 (Item 75, WP 0348 00)

Wrench, torque (Item 97, WP 0348 00)

Wood blocks

**Materials/Parts**

Antiseize compound (Item 6, WP 0349 00)

Rag, wiping (Item 35, WP 0349 00)

Gasket

**References**

WP 0020 00

**Equipment Conditions**

Machine parked on level ground (TM 5-3805-261-10)

Parking/emergency brake applied (TM 5-3805-261-10)

Implements lowered to ground (TM 5-3805-261-10)

Engine off (TM 5-3805-261-10)

Battery disconnect switch in OFF position (TM 5-3805-261-10)

Air cleaner indicator removed (WP 0251 00)

Left and right side engine panels removed (WP 0182 00)

## TURBOCHARGER AIR LINES REPLACEMENT - CONTINUED 0039 00

### *REMOVAL*

1. Remove bolt (3) from top-left side of engine.
2. Remove clamp (4) from pipe (10).
3. Remove three bolts (11).
4. Support air cleaner (1) using wood blocks.
5. Remove three bolts (7).
6. Loosen two clamps (5).
7. Remove pipe (10) from turbocharger (2).
8. Remove and discard gasket (8).
9. Remove two clamps (5) and hose (6).
10. Remove plug (9) from pipe (10).

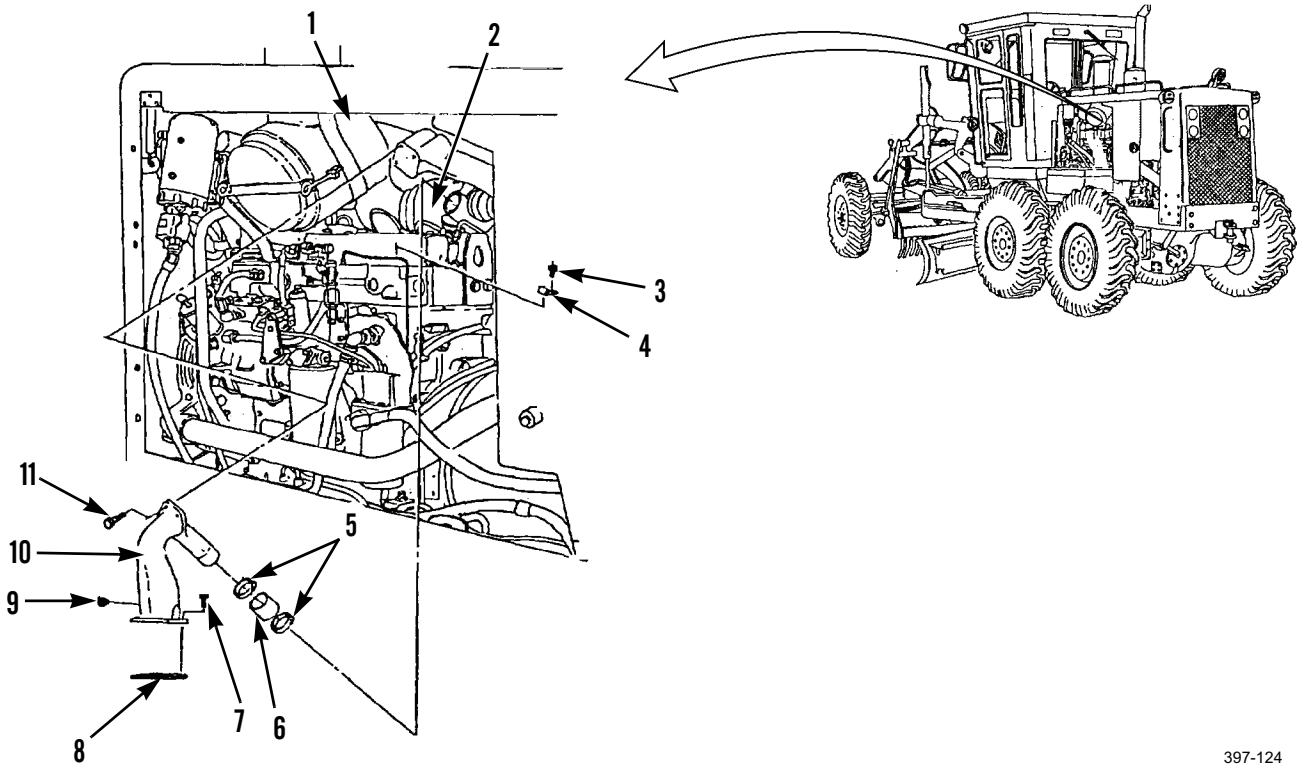

## TURBOCHARGER AIR LINES REPLACEMENT - CONTINUED 0039 00

### *REMOVAL - CONTINUED*

11. Remove six nuts (16) from air cleaner (1).
12. Loosen two clamps (13).
13. Remove elbow (15) and gasket (12) from turbocharger (2). Discard gasket.
14. Remove two clamps (13) and hose (14).

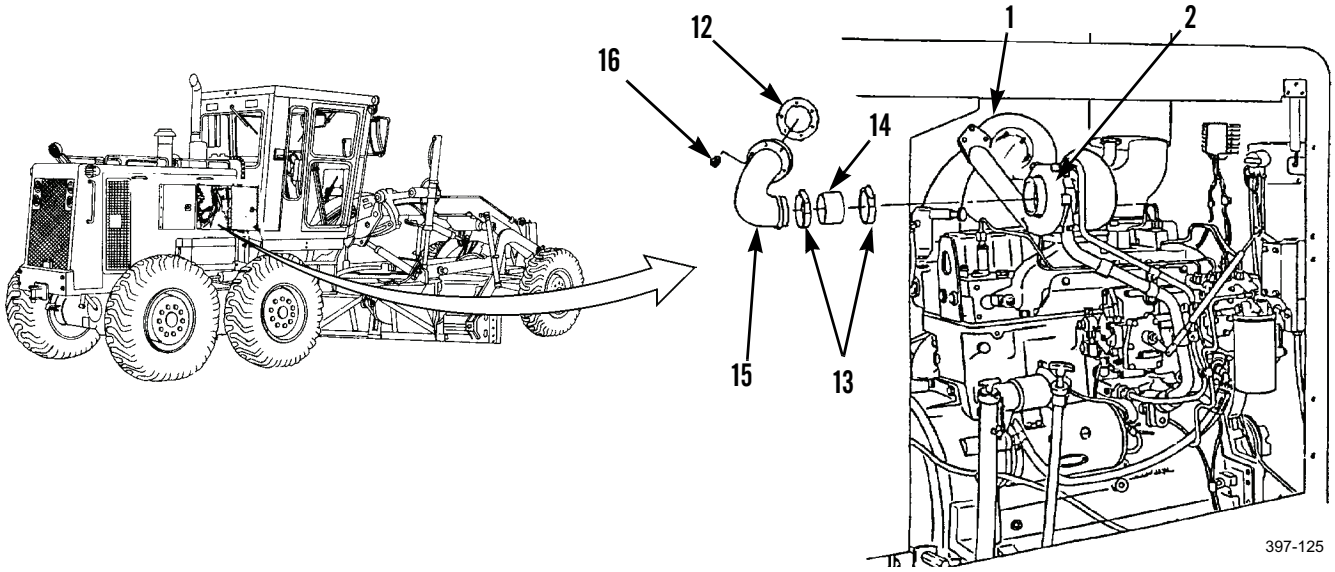


### *CLEANING AND INSPECTION*

Clean and inspect all parts in accordance with WP 0020 00.

### *INSTALLATION*

**NOTE**

Do not tighten clamps.

1. Install hose (14) and two clamps (13) on turbocharger (2).
2. Install new gasket (12) and elbow (15) on air cleaner (1).
3. Install six nuts (16). Tighten to 27 lb-ft (37 Nm).
4. Tighten two clamps (13).
5. Coat threads of plug (9) with antiseize compound and install in pipe (10).

*INSTALLATION - CONTINUED*

**NOTE**

Do not tighten clamps.

6. Install hose (6) and two clamps (5) on turbocharger (2).
7. Install new gasket (8) and pipe (10) on hose (6).
8. Install three bolts (7).
9. Install three bolts (11) on pipe (10).
10. Install clamp (4) and bolt (3) on pipe (10).
11. Tighten two clamps (5).

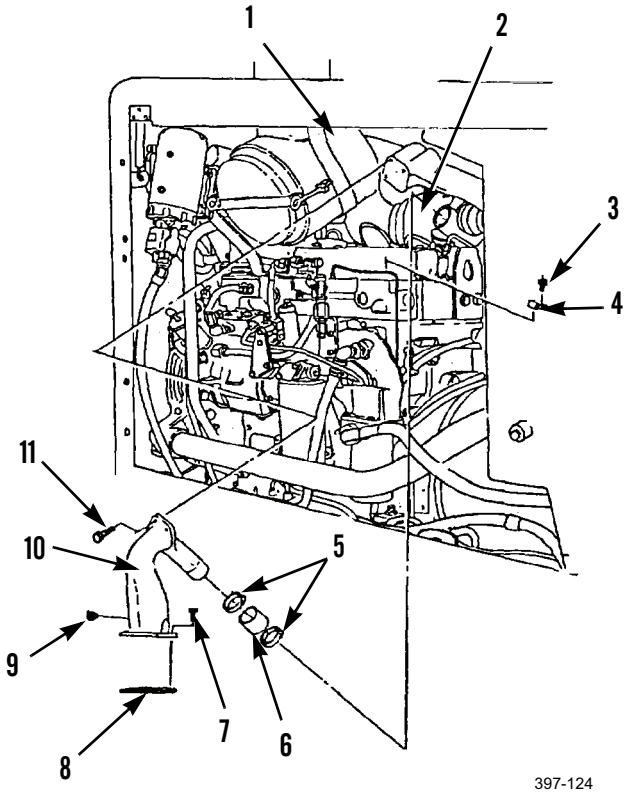


12. Install air cleaner indicator (WP 0251 00).
13. Install engine compartment side panels and doors (WP 0182 00).

**END OF WORK PACKAGE**

## TURBOCHARGER EXHAUST ELBOW REPLACEMENT 0040 00

### THIS WORK PACKAGE COVERS

Removal, Cleaning and Inspection, Installation

### INITIAL SETUP

**Maintenance Level**

Unit

**Tools and Special Tools**

Tool kit, general mechanic's (Item 89, WP 0348 00)

Shop equipment, common no. 1 (Item 75, WP 0348 00)

Wrench, torque (Item 97, WP 0348 00)

**Materials/Parts**

Antiseize compound (Item 6, WP 0349 00)

Penetrating oil (Item 32, WP 0349 00)

Rag, wiping (Item 35, WP 0349 00)

Seal (2)

**References**

WP 0020 00

**Equipment Conditions**

Machine parked on level ground (TM 5-3805-261-10)

Parking/emergency brake applied (TM 5-3805-261-10)

Implements lowered to ground (TM 5-3805-261-10)

Engine off (TM 5-3805-261-10)

Battery disconnect switch in OFF position (TM 5-3805-261-10)

Exhaust pipe and muffler removed (WP 0051 00)

Right side engine panel removed (WP 0182 00)

**NOTE**

Soak bolts with penetrating oil to aid in removal.

### *REMOVAL*

1. Remove three nuts (8), two bolts (7), and bolt (6) from upper-right side of engine.
2. Remove exhaust elbow (5) from turbocharger (1).
3. Remove seal (4), coupling (3), and seal (2) from turbocharger (1). Discard seals.

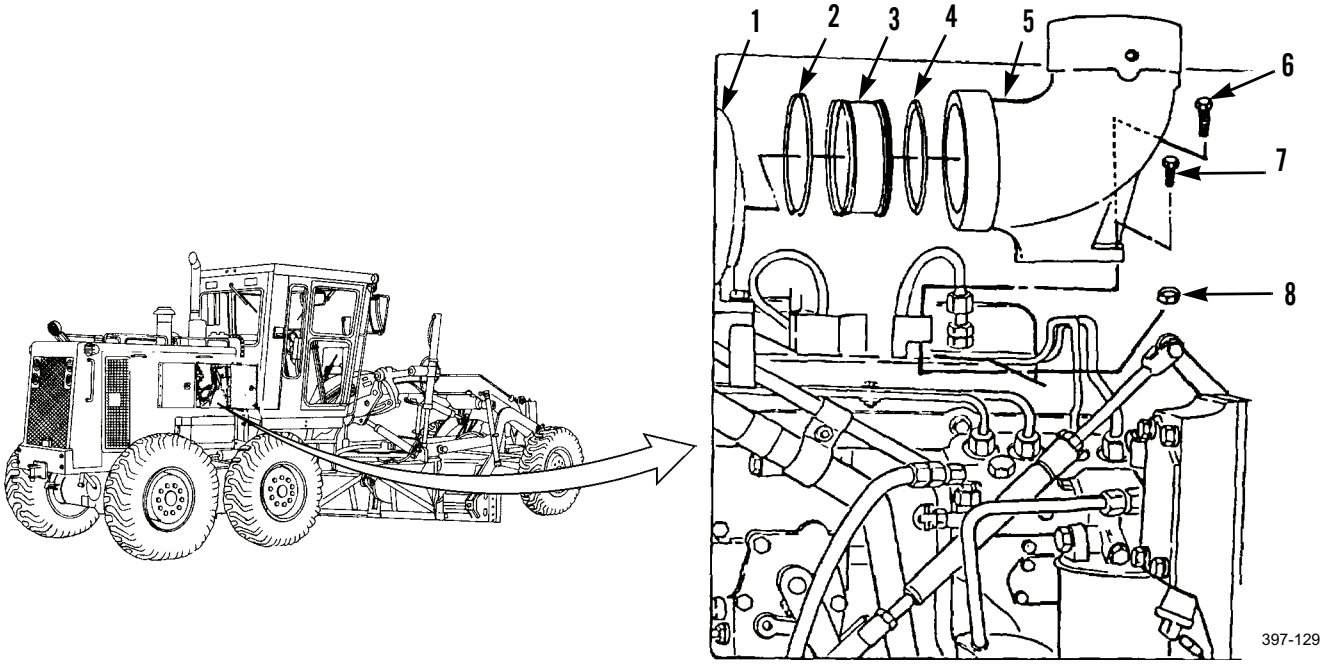

### *CLEANING AND INSPECTION*

Clean and inspect all parts in accordance with WP 0020 00.

### *INSTALLATION*

1. Install new seal (2), coupling (3), and new seal (4) on turbocharger (1).
2. Install elbow (5) on turbocharger (1).

**NOTE**

Replace bolts if damaged, bent, or stretched.

3. Coat threads of bolt (6) and two bolts (7) with anti-seize compound.
4. Install bolt (6), two bolts (7), and three nuts (8). Tighten nuts to 32 lb-ft (43 Nm).
5. Install exhaust pipe and muffler (WP 0051 00).
6. Install right side engine panel (WP 0182 00).

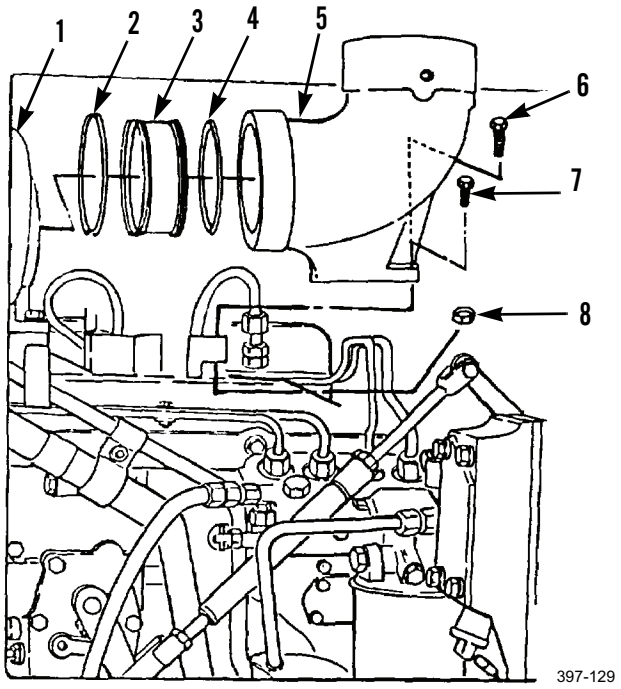


**END OF WORK PACKAGE**

## FUEL TANK HOSES, LINES, AND FITTINGS REPLACEMENT (MODELS 130G, 130GSCE, AND 130GNSCE) 0041 00

### THIS WORK PACKAGE COVERS

Removal, Cleaning and Inspection, Installation

### INITIAL SETUP

**Maintenance Level**

Unit

**Tools and Special Tools**

Tool kit, general mechanic's (Item 89, WP 0348 00)

**Materials/Parts**

Cap set, protective (Item 7, WP 0349 00)

Fuel (Item 13, 14, or 15, WP 0349 00)

Rag, wiping (Item 35, WP 0349 00)

Strap, tie (Item 43, WP 0349 00)

Tag, marker (Item 44, WP 0349 00)

Packing, preformed (5)

**References**

WP 0020 00

WP 0032 00

**Equipment Conditions**

Machine parked on level ground (TM 5-3805-261-10)

Parking/emergency brake applied (TM 5-3805-261-10)

Implements lowered to ground (TM 5-3805-261-10)

Engine off (TM 5-3805-261-10)

Battery disconnect switch in OFF position (TM 5-3805-261-10)

Fuel tank drained (WP 0044 00)

Right side engine panel removed (WP 0182 00)



**WARNING**

- DO NOT perform fuel system checks, inspections or maintenance while smoking or near fire, flames, or sparks. Fuel may ignite, causing injury or death to personnel or damage to machine.
- Operating personnel must wear fuel-resistant gloves when handling fuel. If exposed to fuel, promptly wash exposed skin and change fuel-soaked clothing.

***REMOVAL***

1. Remove nut (7), washer (6), bolt (3), washer (2), and two clips (5) from tube assembly (4).

## CAUTION

Cap hose and tube ends and plug all open fuel ports to prevent contamination.

## NOTE

Tag hose and tube assemblies before disconnecting to aid in installation.

2. Remove tube assembly (4).
3. Disconnect hose assembly (8) from elbow (1).

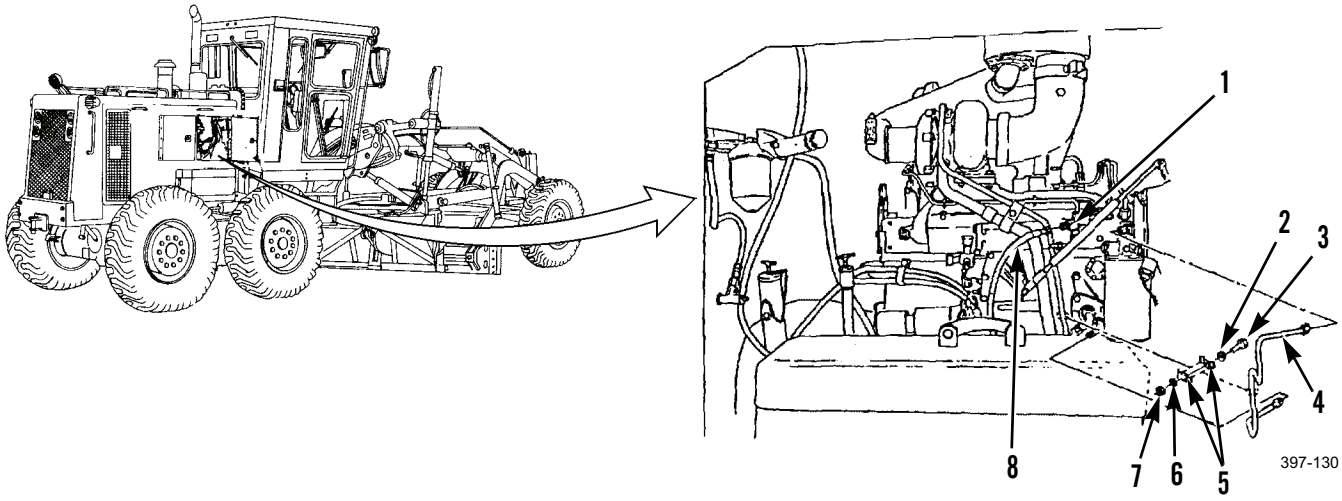


4. Remove elbow (12), preformed packing (11), elbow (9), and preformed packing (10). Discard preformed packings.
5. Disconnect hose assembly (15) from elbow (14).
6. Remove elbow (14) and preformed packing (13) from fuel transfer pump (16). Discard preformed packing.

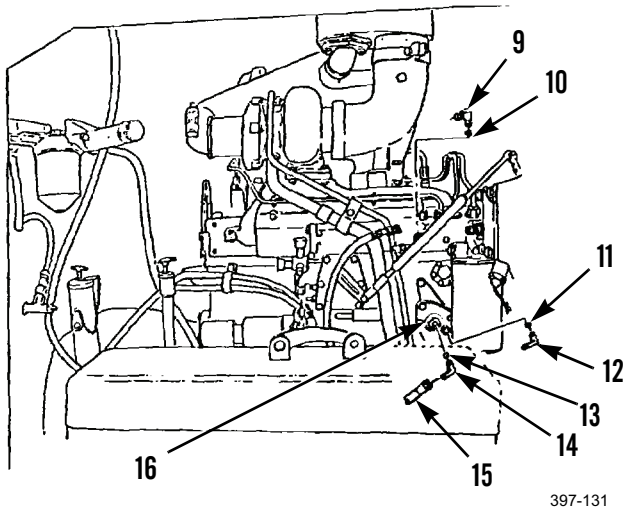

## FUEL TANK HOSES, LINES, AND FITTINGS REPLACEMENT (MODELS 130G, 130GSCE, AND 130GNSCE) - CONTINUED



### *REMOVAL - CONTINUED*

7. Remove and discard tie strap (20) from hose assemblies (8 and 21).
8. Remove bolt (19), washer (18), and clip (17) from hose assemblies (8).
9. Remove hose assembly (8) from machine.

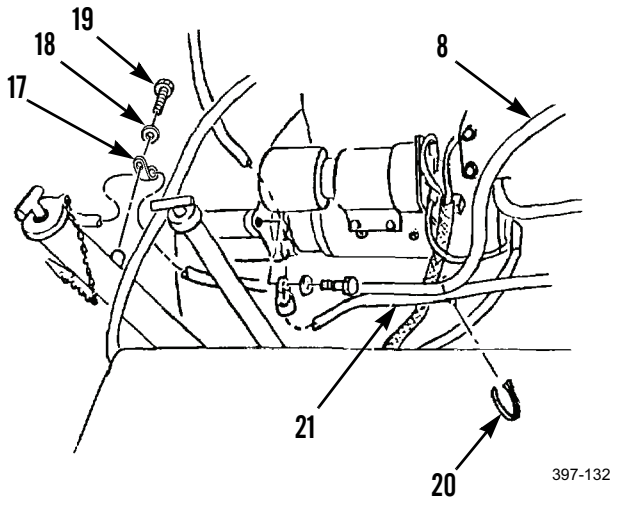


10. Remove elbow (24) and bushing (23) from fuel tank (22).
11. Remove hose assembly (21) from elbow (25).
12. Remove elbow (25).
13. Remove hose assembly (21) from machine.
14. Remove hose assembly (27) from connector (26).
15. Remove hose assembly (27) from machine.

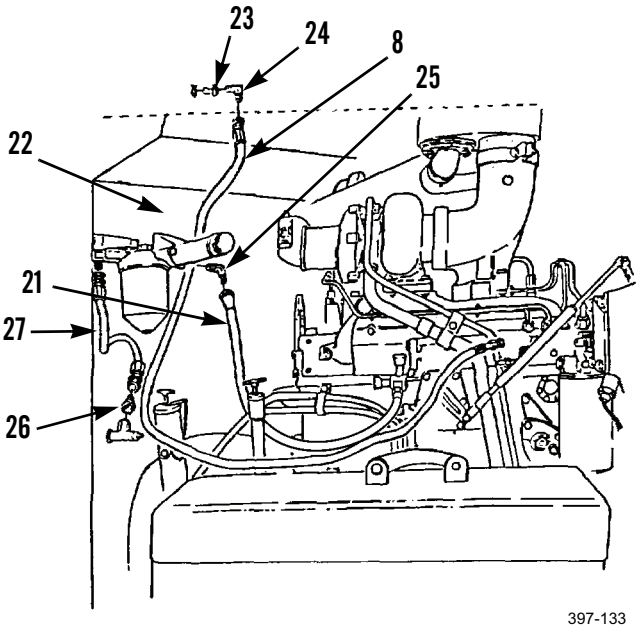

## FUEL TANK HOSES, LINES, AND FITTINGS REPLACEMENT (MODELS 130G, 130GSCE, AND 130GNSCE) - CONTINUED 0041 00

### *REMOVAL - CONTINUED*

16. Remove elbow (28), preformed packing (33), adapter (32), and preformed packing (29) from fuel filter (30). Discard preformed packings.
17. Remove valve (31) from fuel tank (22).

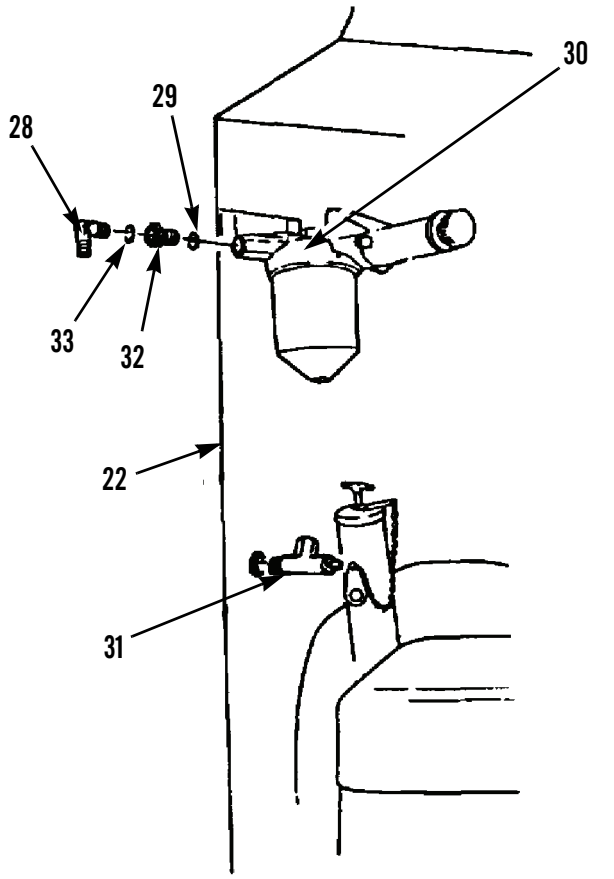

397-134

### *CLEANING AND INSPECTION*

Clean and inspect all parts in accordance with WP 0020 00.

***INSTALLATION***

1. Install valve (31) in fuel tank (22).

**NOTE**

Lubricate threaded bore in fuel filter with clean diesel fuel before installing adapter.

2. Install new preformed packing (29), adapter (32), new preformed packing (33), and elbow (28) to fuel filter (30).
3. Install connector (26).
4. Install hose assembly (27) to connector (26).
5. Install hose assembly (27) on machine.
6. Install elbow (25).
7. Install hose assembly (21) on elbow (25).
8. Install hose assembly (21) on machine.
9. Install bushing (23) and elbow (24) on fuel tank (22).
10. Install hose assembly (8).

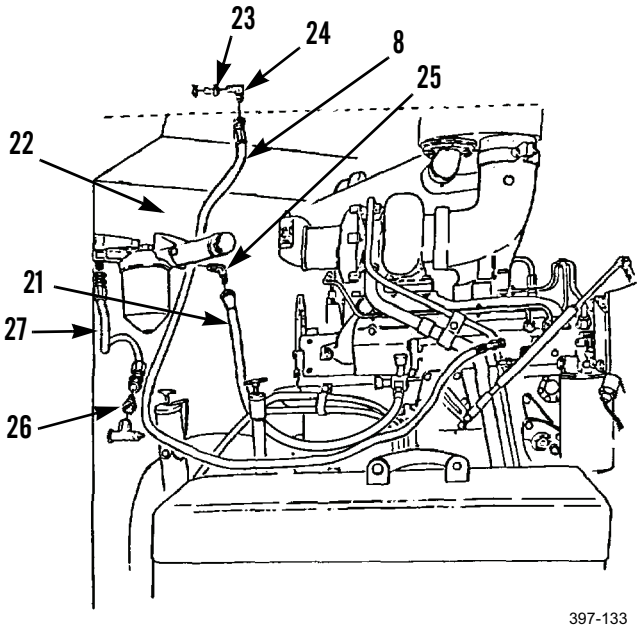

397-133

11. Install clip (17), washer (18), and bolt (19).
12. Install new tie strap (20) around hose assemblies (21 and 8).

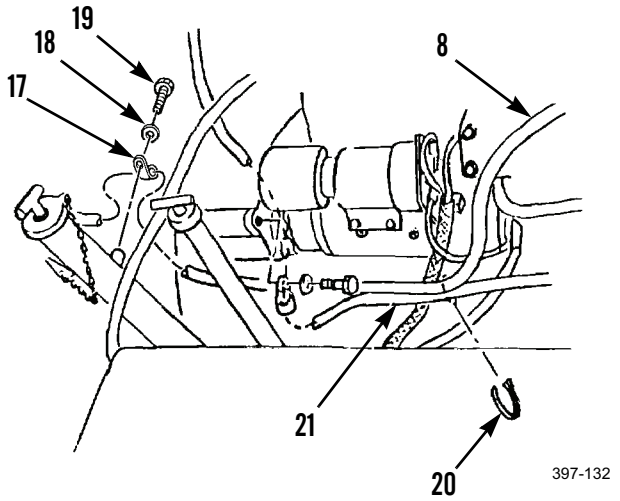

397-132

*INSTALLATION - CONTINUED*

**NOTE**

Lubricate threaded bores of fuel transfer pump with clean diesel fuel before installing elbows.

13. Install new preformed packing (13), elbow (14), new preformed packing (11), and elbow (12) on fuel transfer pump (16).

**NOTE**

Lubricate threaded bore of fuel injection pump with clean fuel before installing elbow.

14. Install new preformed packing (10) and elbow (9) on fuel injection pump (16).
15. Connect hose assembly (15) to elbow (14) on fuel transfer pump (16).

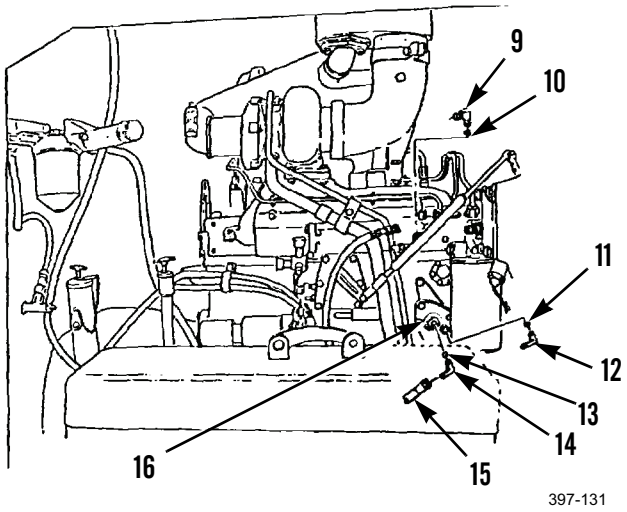


16. Connect hose assembly (8) on elbow (1).
17. Install tube assembly (4).
18. Install two clips (5), washer (2), bolt (3), washer (6), and nut (7).

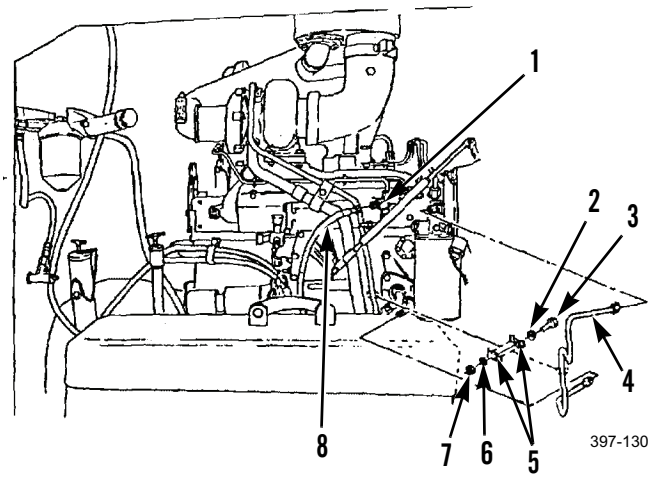


19. Fill fuel tank (WP 0044 00).
20. Bleed all lines (WP 0032 00).
21. Turn battery disconnect switch to ON position and start engine (TM 5-3805-261-10).
22. Check for leaks. Stop engine.
23. Install right side engine panel (WP 0182 00).

**END OF WORK PACKAGE**

## FUEL TANK HOSES, LINES, AND FITTINGS REPLACEMENT (MODELS 130GS AND 130GNS) 0042 00

### THIS WORK PACKAGE COVERS

Removal, Cleaning and Inspection, Installation

### INITIAL SETUP

**Maintenance Level**

Unit

**Tools and Special Tools**

Tool kit, general mechanic's (Item 89, WP 0348 00)

Shop equipment, field maintenance (Item 74, WP 0348 00)

**Materials/Parts**

Cap set, protective (Item 7, WP 0349 00)

Rag, wiping (Item 35, WP 0349 00)

Tag, marker (Item 44, WP 0349 00)

Packing, preformed (9)

**References**

WP 0020 00

WP 0025 00

**Equipment Conditions**

Machine parked on level ground (TM 5-3805-261-10)

Parking/emergency brake applied (TM 5-3805-261-10)

Implements lowered to ground (TM 5-3805-261-10)

Engine off (TM 5-3805-261-10)

Fuel tank drained (WP 0044 00)

Right side engine panel removed (WP 0182 00)

### *REMOVAL*



**WARNING**

- DO NOT smoke or permit any open flame in area of machine while you are servicing fuel system. Be sure hose nozzle is grounded against filler tube during refueling to prevent static electricity. Failure to follow this warning may cause injury to personnel or damage to equipment.
- DO NOT perform fuel system checks, inspections, or maintenance while smoking or near fire, flames, or sparks. Fuel may ignite, causing injury or death to personnel and damage to equipment.
- Operating personnel must wear fuel-resistant gloves when handling fuels. If exposed to fuel, promptly wash exposed skin and change fuel-soaked clothing. Failure to follow this warning may cause injury to personnel.
- Wear safety goggles to protect eyes when disconnecting fuel lines. If fuel makes contact with eyes or skin, flush with large amounts of cold water and seek medical aid immediately.

**CAUTION**

Cap all hose and tube ends and plug all open fuel ports to prevent contamination.

**NOTE**

Tag hose and tube assemblies before disconnecting to aid in installation.

## FUEL TANK HOSES, LINES, AND FITTINGS REPLACEMENT (MODELS 130GS AND 130GNS) - CONTINUED

0042 00

### *REMOVAL - CONTINUED*

1. Disconnect hose (3) from elbow (1).
2. Remove elbow (1) and preformed packing (2) from secondary fuel filter (4).

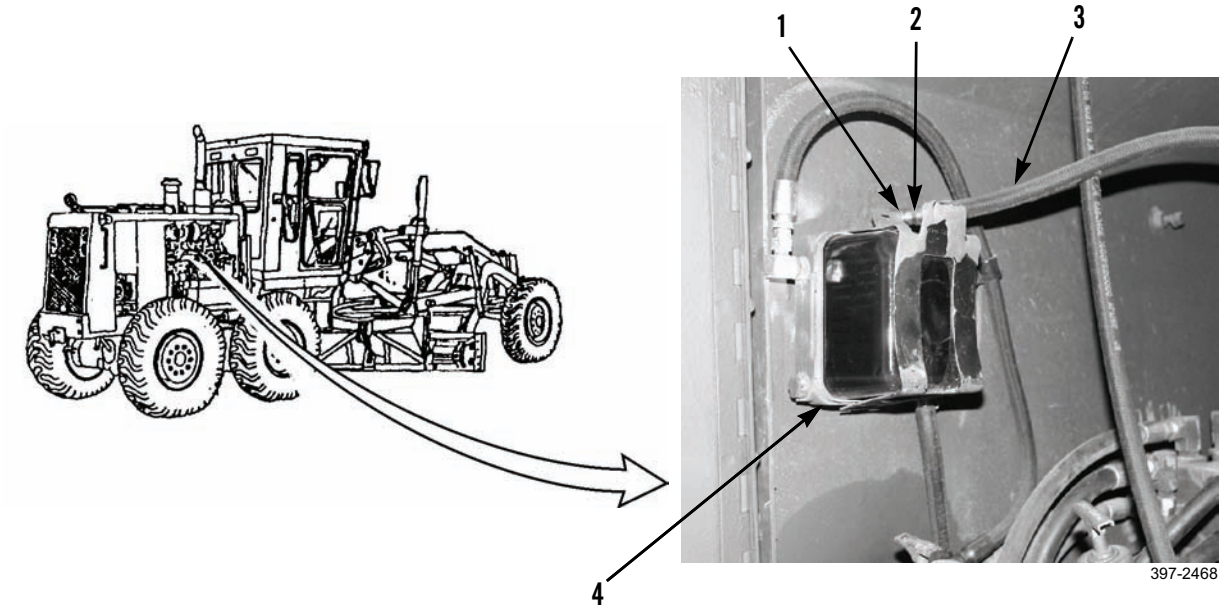


3. Disconnect hose (3) from elbow (5) and remove hose.
4. Remove elbow (5) and preformed packing (6) from primary fuel filter base (11). Discard preformed packing.
5. Disconnect tube (9) from elbow (7).
6. Remove elbow (7) and preformed packing (8) from primary fuel filter base (11). Discard preformed packing.

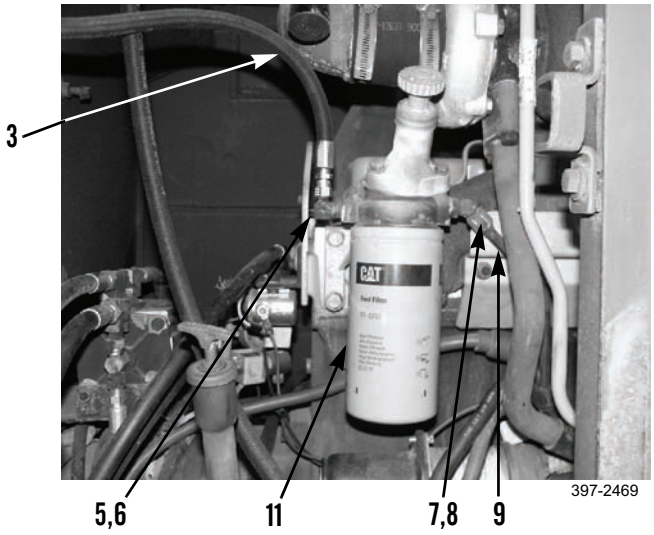

## FUEL TANK HOSES, LINES, AND FITTINGS REPLACEMENT (MODELS 130GS AND 130GNS) - CONTINUED

0042 00

### *REMOVAL - CONTINUED*

7. Disconnect tube (9) from connector (13) and remove tube.

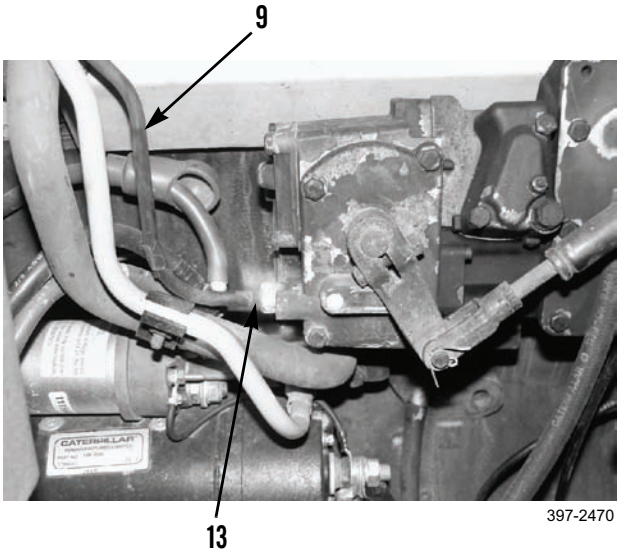


8. Disconnect hose (16) from elbow (15).
9. Remove elbow (15) from bushing (14).
10. Remove bushing (14) from fuel tank (17).

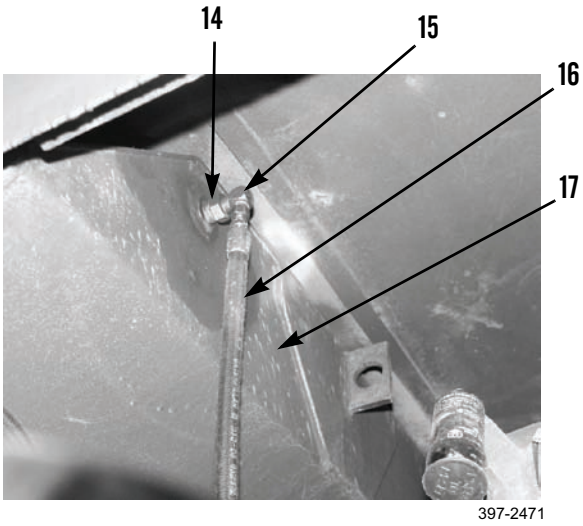

## FUEL TANK HOSES, LINES, AND FITTINGS REPLACEMENT (MODELS 130GS AND 130GNS) - CONTINUED

0042 00

### *REMOVAL - CONTINUED*

11. Disconnect hose connector (18) from elbow (19) and remove hose (16).
12. Remove elbow (19) from fuel injection pump (20).

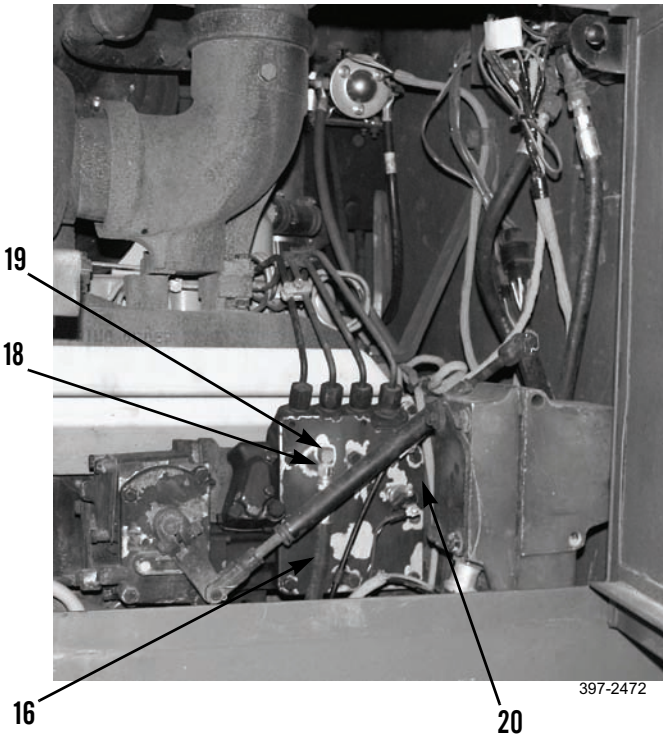


**CAUTION**

Make sure valve is closed before disconnecting hose.

13. Disconnect hose (21) and remove connector (23) from valve (22).

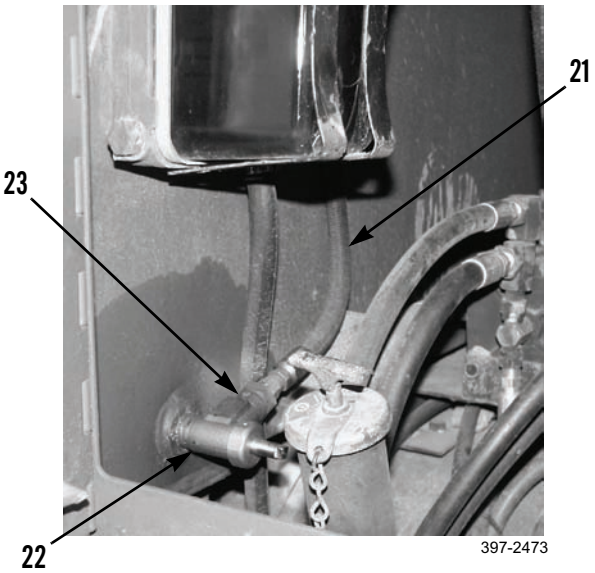

## FUEL TANK HOSES, LINES, AND FITTINGS REPLACEMENT (MODELS 130GS AND 130GNS) - CONTINUED

0042 00

### *REMOVAL - CONTINUED*

14. Remove bolt (24), washer (25), and clip (26).
15. Disconnect hose (21) from elbow (27) and remove hose.
16. Remove elbow (27) and preformed packing (28) from secondary fuel filter (4). Discard preformed packing.

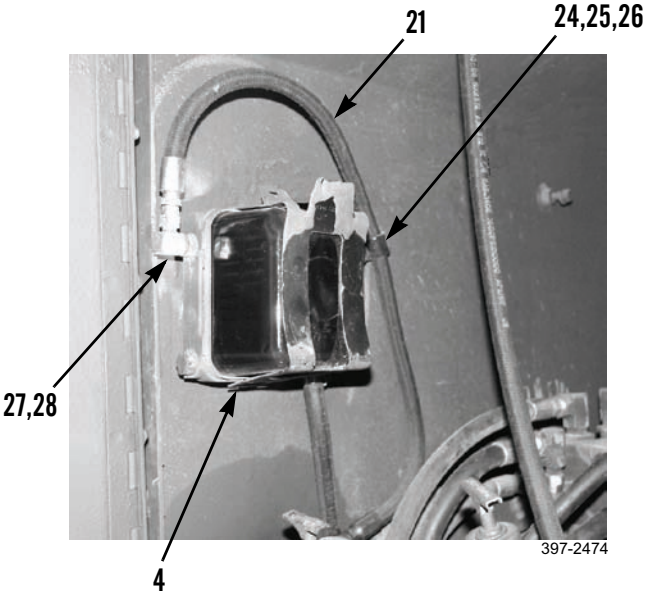


17. Loosen clamp (30) and remove hose (31) from drain valve (29) on secondary fuel filter (4).

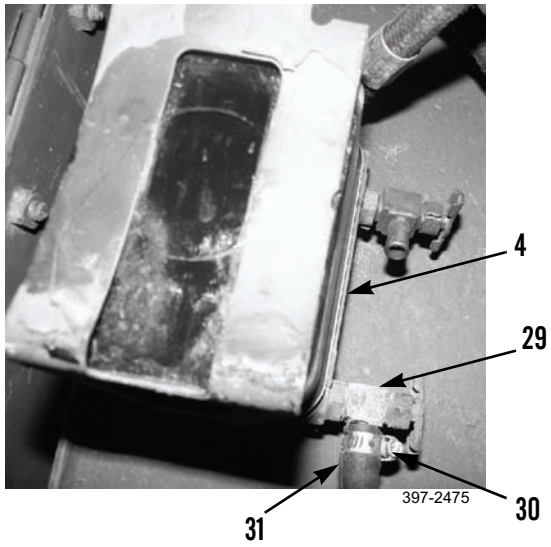


### *CLEANING AND INSPECTION*

Clean and inspect all parts in accordance with WP 0020 00.

***INSTALLATION***

**CAUTION**

Hose (31) is a drain and hangs free. Do not plug open end of hose or damage could result to equipment.

1. Install clamp (30) and hose (31) to drain valve (29) on secondary fuel filter (4).

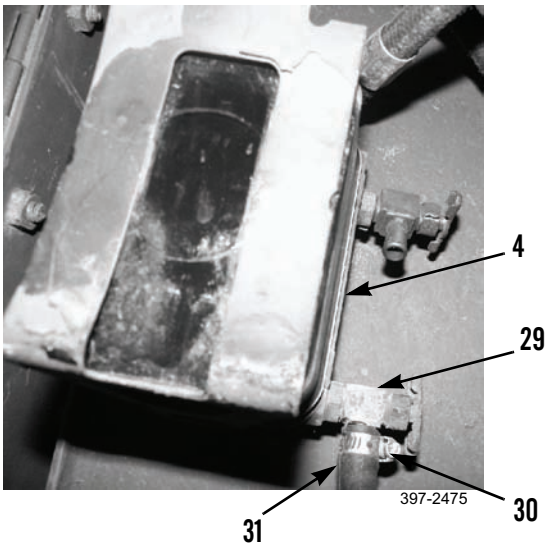


2. Install preformed packing (28), elbow (27) on secondary fuel filter (4).
3. Connect hose (21).
4. Install clip (26), washer (25), and bolt (24).

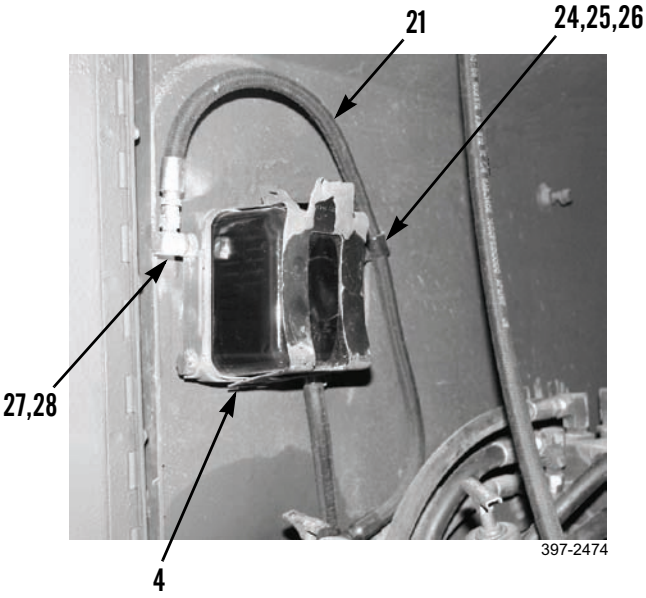

## FUEL TANK HOSES, LINES, AND FITTINGS REPLACEMENT (MODELS 130GS AND 130GNS) - CONTINUED



### *INSTALLATION - CONTINUED*

5. Install hose (21) to valve (23).

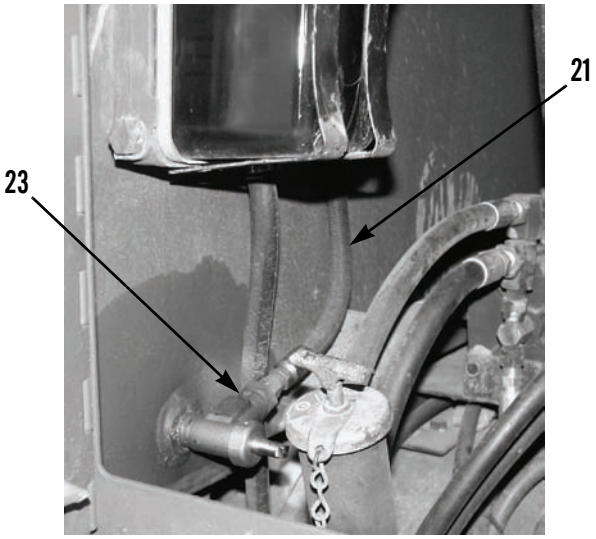

397-2473

6. Install bushing (14) to fuel tank (17).

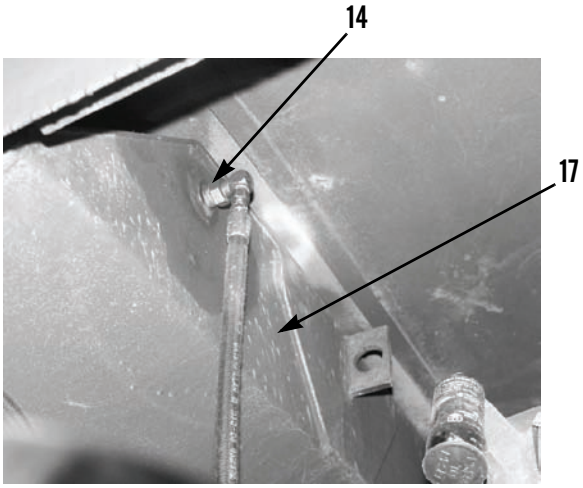

397-2471

## FUEL TANK HOSES, LINES, AND FITTINGS REPLACEMENT (MODELS 130GS AND 130GNS) - CONTINUED 0042 00

### *INSTALLATION - CONTINUED*

7. Install elbow (19) on fuel injection pump (20).
8. Connect hose (16) to elbow (19).

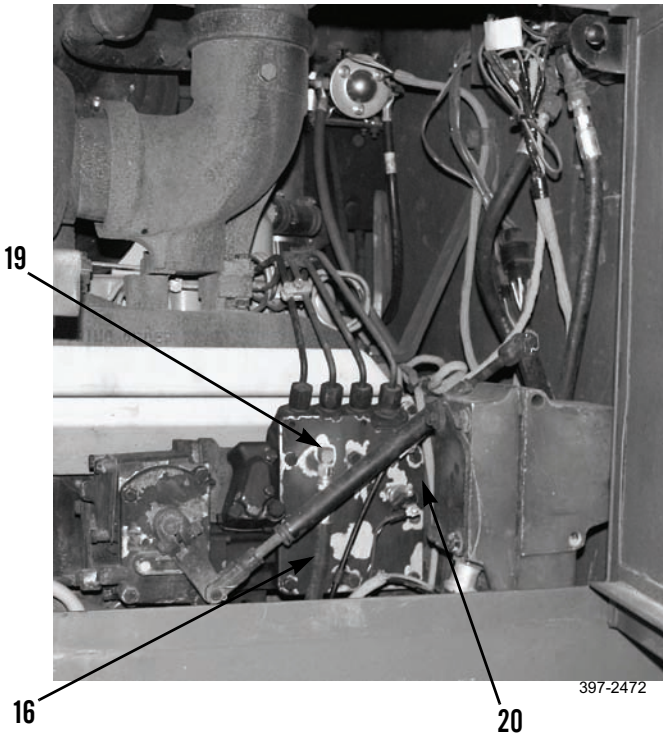


9. Install elbow (15) on bushing (14).
10. Connect hose (16) to elbow (15).

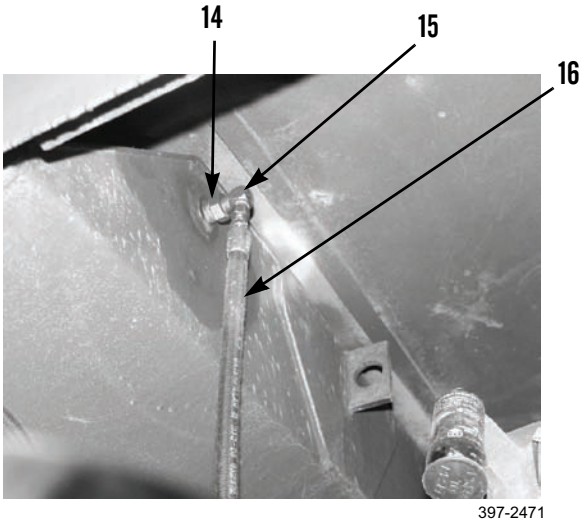

## FUEL TANK HOSES, LINES, AND FITTINGS REPLACEMENT (MODELS 130GS AND 130GNS) - CONTINUED

0042 00

### *INSTALLATION - CONTINUED*

11. Connect tube (9) to connector (13).

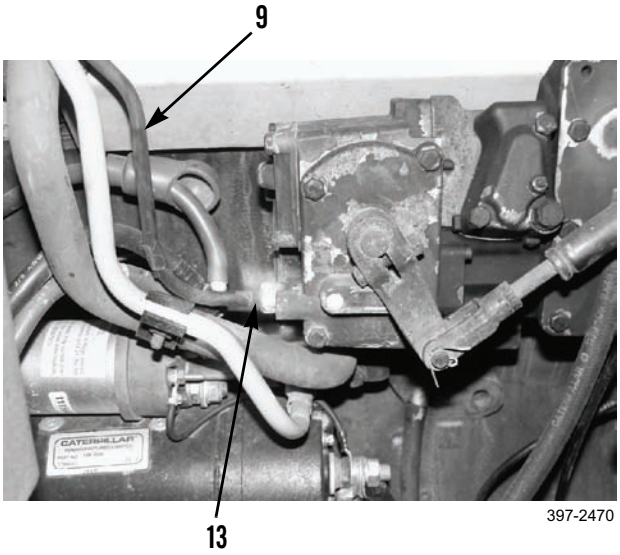


12. Install elbow (7) and new preformed packing (8) on primary fuel filter base (11).
13. Connect tube (9) to elbow (7).
14. Install new preformed packing (6) and elbow (5) on primary fuel filter base (11).
15. Connect hose (3) to elbow (5).

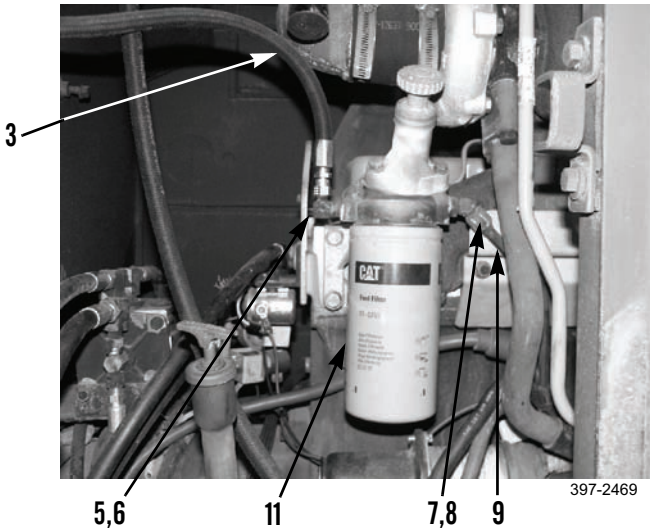

## FUEL TANK HOSES, LINES, AND FITTINGS REPLACEMENT (MODELS 130GS AND 130GNS) - CONTINUED



### *INSTALLATION - CONTINUED*

16. Install new preformed packing (2) and elbow (1) on secondary fuel filter (4).
17. Connect hose (3) to elbow (1).

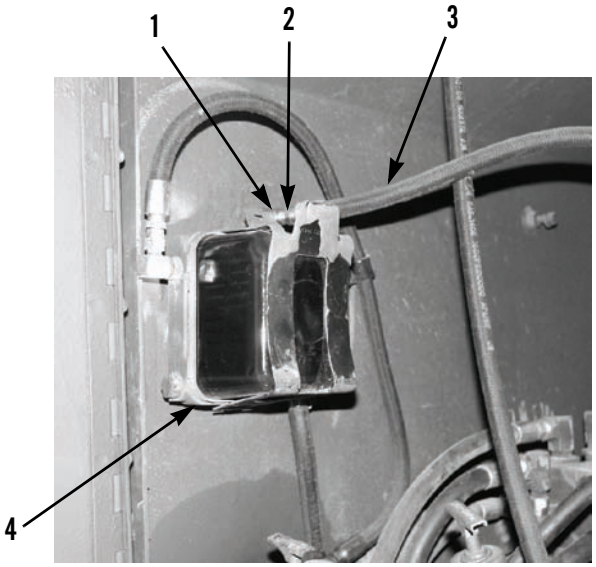

397-2468

18. Bleed all lines (WP 0025 00).
19. Fill fuel tank (TM 5-3805-261-10).
20. Open fuel intake valve (WP 0025 00).
21. Install right side engine panel (WP 0182 00).

**END OF WORK PACKAGE**

## FUEL TANK CAP MAINTENANCE 0043 00

### THIS WORK PACKAGE COVERS

Removal, Disassembly, Cleaning and Inspection, Assembly, Installation

### INITIAL SETUP

**Maintenance Level**

Unit

**Tools and Special Tools**

Tool kit, general mechanic's (Item 89, WP 0348 00)

**Materials/Parts**

Rag, wiping (Item 35, WP 0349 00)

Gasket (2)

Strainer (2)

**References**

WP 0020 00

**Equipment Conditions**

Machine parked on level ground (TM 5-3805-261-10)

Parking/emergency brake applied (TM 5-3805-261-10)

Implements lowered to ground (TM 5-3805-261-10)

Engine off (TM 5-3805-261-10)

Battery disconnect switch in OFF position (TM 5-3805-261-10)



**WARNING**

- DO NOT smoke or permit any open flame in area of machine while you are servicing fuel system. Be sure hose nozzle is grounded against filler tube during refueling to prevent static electricity. Failure to follow this warning may result in injury or death to personnel or damage to equipment.
- DO NOT perform fuel system checks, inspections or maintenance while smoking or near fire, flames or sparks. Fuel may ignite, causing injury or death to personnel or damage to equipment.
- Operating personnel must wear fuel-resistant gloves when handling fuel. If exposed to fuel, promptly wash exposed skin and change fuel-soaked clothing.

### *REMOVAL*

Remove cap assembly (1) from tank filler neck (2) on top-left rear of machine.

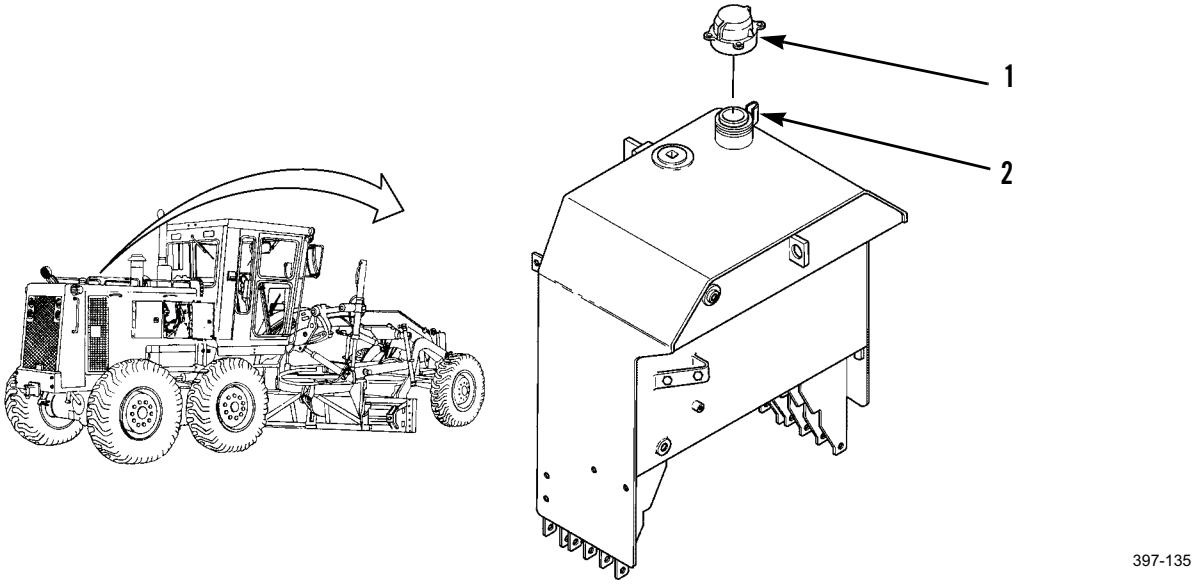


397-135

### *DISASSEMBLY*

1. Remove gasket (9) from cap (3). Discard gasket.
2. Remove screw (8) and washer (7).
3. Remove baffle (6) and gasket (5). Discard gasket.
4. Remove and discard two strainers (4).

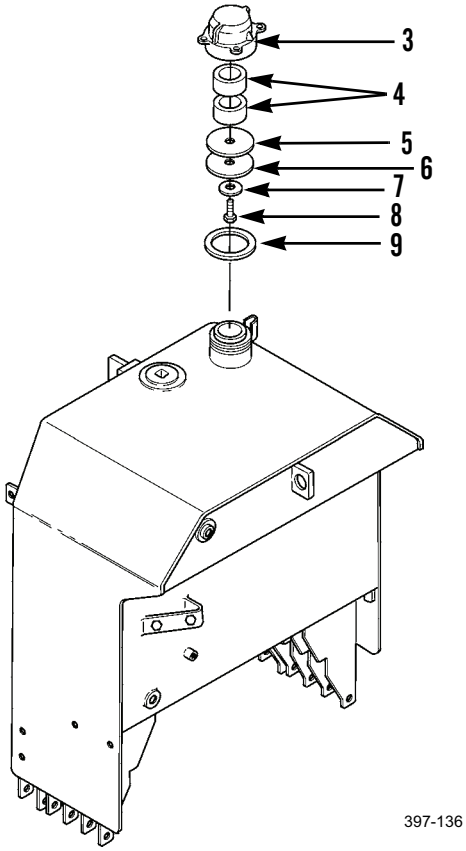


397-136

### *CLEANING AND INSPECTION*

Clean and inspect all parts in accordance with WP 0020 00.

### *ASSEMBLY*

1. Turn cap (3) upside down on level surface and install two new strainers (4).
2. Install new gasket (5) and baffle (6).
3. Install washer (7) and screw (8).
4. Install new gasket (9) inside cap (3).

### *INSTALLATION*

Install cap assembly (1) on tank filler neck (2) on top-left rear of machine.

**END OF WORK PACKAGE**

## FUEL TANK MAINTENANCE 0044 00

### THIS WORK PACKAGE COVERS

Draining, Removal, Cleaning and Inspection, Installation

### INITIAL SETUP

**Maintenance Level**

Unit

**Tools and Special Tools**

Tool kit, general mechanic's (Item 89, WP 0348 00)

Shop equipment, common no. 2 (Item 76, WP 0348 00)

Sling (Item 78, WP 0348 00)

Wrench, torque (Item 95, WP 0348 00)

Lifting device, 500-lb capacity

Wood blocks

**Materials/Parts**

Cap set, protective (Item 7, WP 0349 00)

Detergent (Item 11, WP 0349 00)

Fuel (Item 13, 14, or 15, WP 0349 00)

Rag, wiping (Item 35, WP 0349 00)

**Personnel Required**

Two

**References**

WP 0020 00

**Equipment Conditions**

Machine parked on level ground (TM 5-3805-261-10)

Parking/emergency brake applied (TM 5-3805-261-10)

Implements lowered to ground (TM 5-3805-261-10)

Engine off (TM 5-3805-261-10)

Battery disconnect switch in OFF position (TM 5-3805-261-10)

Engine hood assembly removed (WP 0181 00)

Left and right side engine panels removed (WP 0182 00)

Primary fuel filter/priming pump and mounting removed (WP 0045 00 or WP 0046 00)

Ether start aid assembly removed (WP 0050 00)

Alternator mounting removed (WP 0066 00)

Radiator drained (WP 0065 00)

Fuel tank cap removed (WP 0043 00)



**WARNING**

- DO NOT smoke or permit any open flame in area of machine while you are servicing fuel system. Be sure hose nozzle is grounded against filler tube during refueling to prevent static electricity. Failure to follow this warning may result in death or injury to personnel or damage to equipment.
- DO NOT perform fuel system checks, inspections, or maintenance while smoking or near fire, flames, or sparks. Fuel may ignite, causing injury or death to personnel or damage to equipment.
- Operating personnel must wear fuel-resistant gloves when handling fuel. If exposed to fuel, promptly wash exposed skin and change fuel-soaked clothing.

### *DRAINING*

**NOTE**

Fuel tank capacity is 75 gal. (284 L). Use suitable container to drain fuel from tank.

Position container under valve (1), open valve, and drain fuel from tank (2). Close valve.

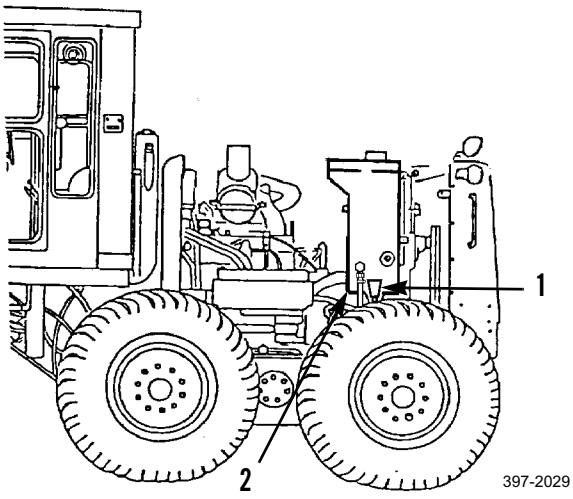


### *REMOVAL*

1. Remove plunger (4), ring (5), and strainer (6) from top-left of fuel tank (2).
2. Remove plug (3).

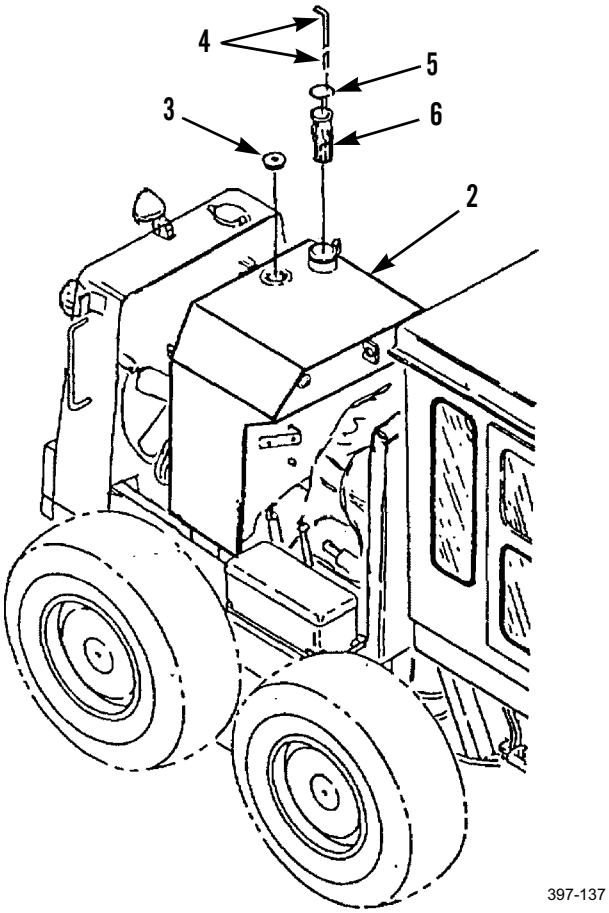

*REMOVAL - CONTINUED*

**CAUTION**

Cap all hose and tube ends to prevent contamination.

3. Disconnect hose assembly (9) in front-upper-right of fuel tank (2).
4. Remove elbow (8) and bushing (7).
5. Remove hose assembly (12) from lower-right of fuel tank (2).
6. Remove connector (11) and valve (10).

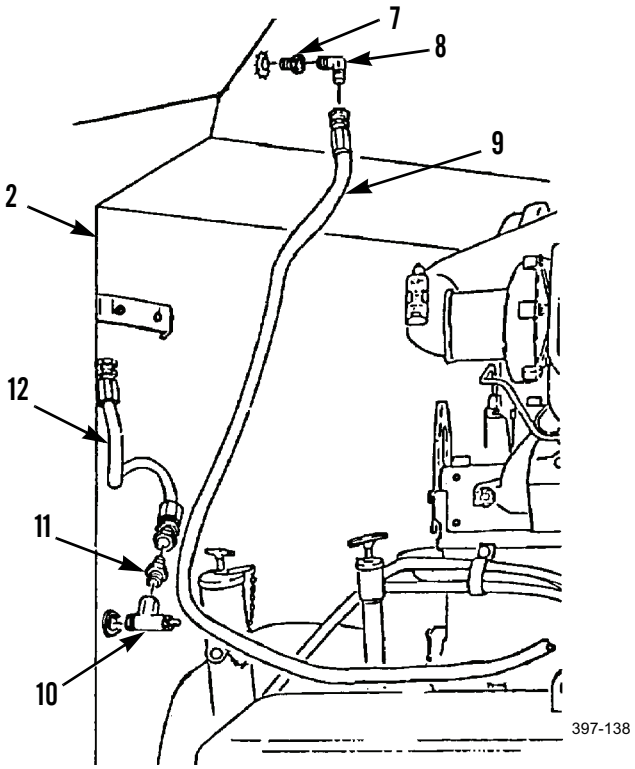


7. Remove bolt (15), washer (16), and clip (17) from tube (14) in top-left of fuel tank (2).
8. Loosen two clamps (18) in front, top-left-side of radiator (20).
9. Disconnect hose (19) by sliding off neck of radiator (20).
10. Remove two clamps (18).
11. Loosen two clamps (21) from top of engine.
12. Disconnect hose (13) by sliding off neck of temperature regulator housing.
13. Remove two clamps (21).
14. Remove tube (14) from machine.
15. Remove hoses (13 and 19) from tube (14).

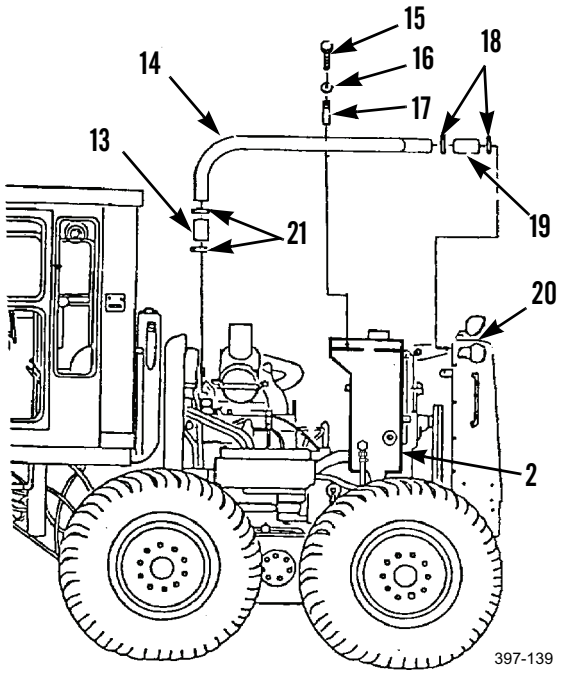

***REMOVAL - CONTINUED***

16. Remove two nuts (24), washers (23), and bolts (25) from center-top of fuel tank (2).
17. Remove nut (24), washer (23), bolt (25), and plate (22) from upper-inside of radiator support.
18. Remove bolt (27) and plug (26) from left side of fuel tank (2).
19. Loosen clamp (29) and remove hose (30), clamp, and valve (28).

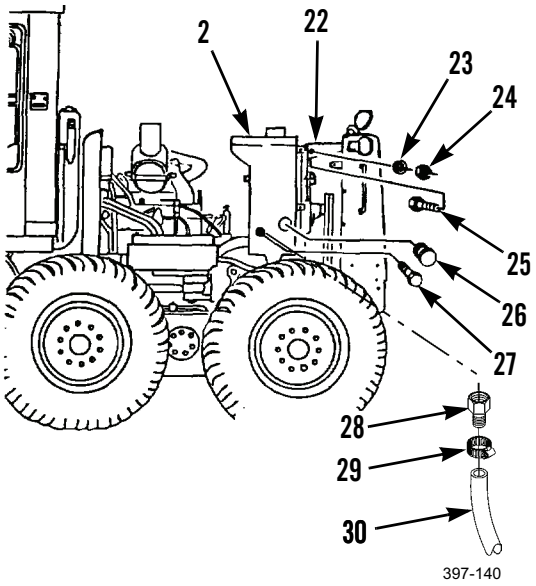

397-140



**WARNING**

Use extreme caution when handling heavy parts. Provide adequate support and use assistance during procedure. Ensure that any lifting device used is in good condition and of suitable load capacity. Keep clear of heavy parts supported only by lifting device. Failure to follow this warning may cause injury or death to personnel.

**NOTE**

Fuel tank weighs 334 lb (152 kg).

20. Attach sling to fuel tank (2). Take up slack on sling.

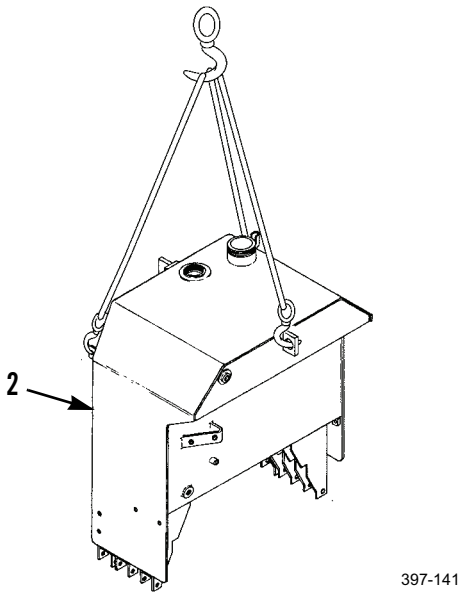

397-141

### *REMOVAL - CONTINUED*

21. Remove three nuts (33), six washers (32), and three bolts (31) from lower sides of fuel tank (2).
22. Use sling to lift fuel tank (2) up 6 in. (15 cm) and remove fuel tank from machine.
23. Support fuel tank (2) on wood blocks.

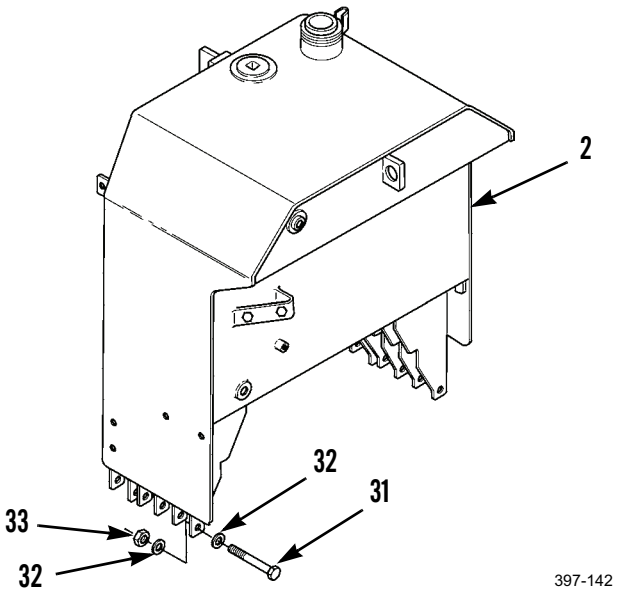


24. Remove sling.

### *CLEANING AND INSPECTION*

**WARNING**

Compressed air used for cleaning purposes must not exceed 30 psi (207 kPa). DO NOT direct compressed air against human skin. Make sure air stream is directed away from user and other personnel in the area. Wear protective goggles or face shield. Failure to follow this warning way cause injury to personnel.

1. Steam clean fuel tank. Dry thoroughly with compressed air.
2. Clean and inspect all other parts in accordance with WP 0020 00.

*INSTALLATION*



**WARNING**

Use extreme caution when handling heavy parts. Provide adequate support and use assistance during procedure. Ensure that any lifting device used is in good condition and of suitable load capacity. Keep clear of heavy parts supported only by lifting device. Failure to follow this warning may cause injury or death to personnel.

**NOTE**

Fuel tank weighs 334 lb (152 kg).

1. Attach sling to fuel tank (2) and position on machine.
2. Install fuel tank (2) on mounting, aligning mounting holes with prybar.
3. Remove sling.

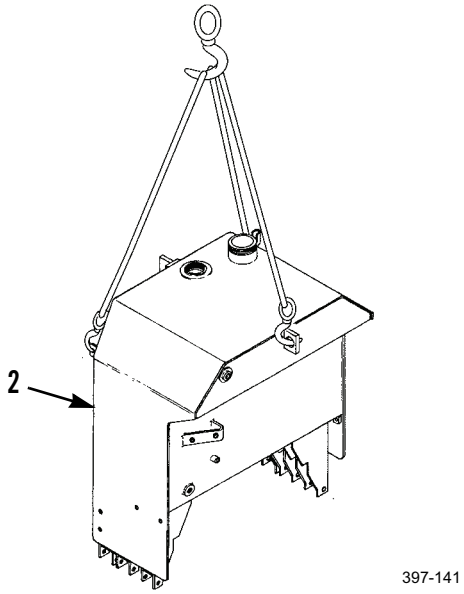


4. Install three bolts (31), six washers (32), and three nuts (33) on lower sides of fuel tank (2).

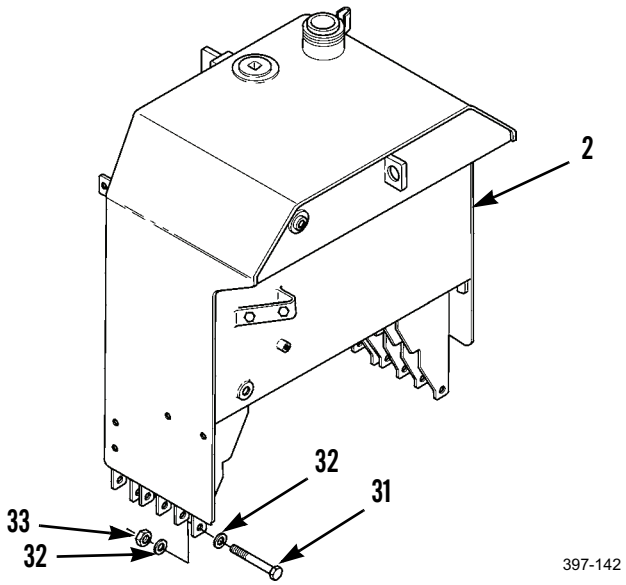

***INSTALLATION - CONTINUED***

5. Install valve (28), hose (30), and clamp (29).
6. Install plug (26) and bolt (27) on left side of fuel tank (2). Tighten bolt to 180 lb-in. (20 Nm).
7. Position plate (22) on front-upper-inside of radiator support.
8. Install bolt (25), washers (23), and nuts (24) on center-top-rear of fuel tank, securing plate (22) to fuel tank (2).
9. Install two bolts (25), washers (23), and nuts (24) on center of fuel tank (2).

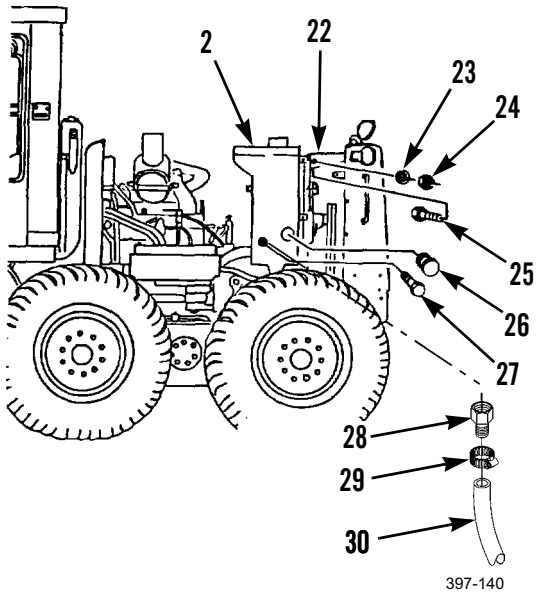

397-140

10. Install hoses (13 and 19) on tube (14) in top of engine compartment.
11. Position four clamps (18 and 21) on tube (14).
12. Install tube (14) on temperature regulator housing.
13. Install hose (13) in top of engine, sliding over temperature regulator housing.
14. Tighten two clamps (21).
15. Install hose (19) in left-top of radiator (20), sliding over neck of radiator.
16. Tighten two clamps (18).
17. Install clip (17), washer (16), and bolt (15) in left-top of engine, securing tube (14) to fuel tank (2).

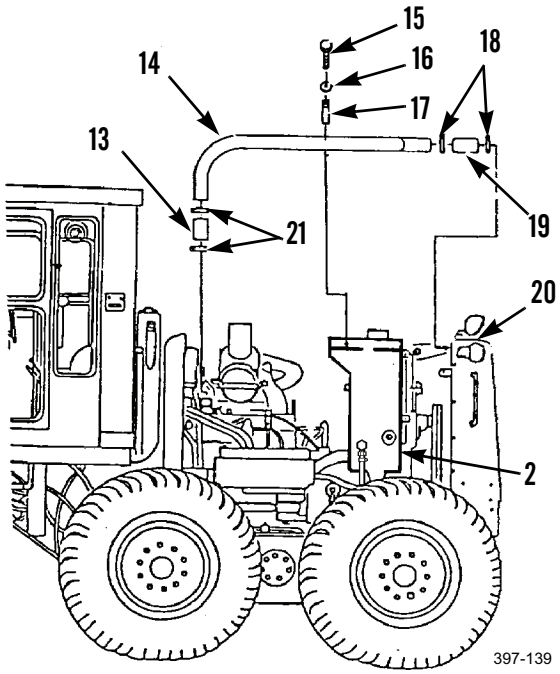

397-139

***INSTALLATION - CONTINUED***

18. Install connector (11) and valve (10) in lower-right side of fuel tank (2).
19. Connect hose assembly (12).
20. Install bushing (7) and elbow (8) in upper-right side of fuel tank (2).
21. Install hose assembly (9).

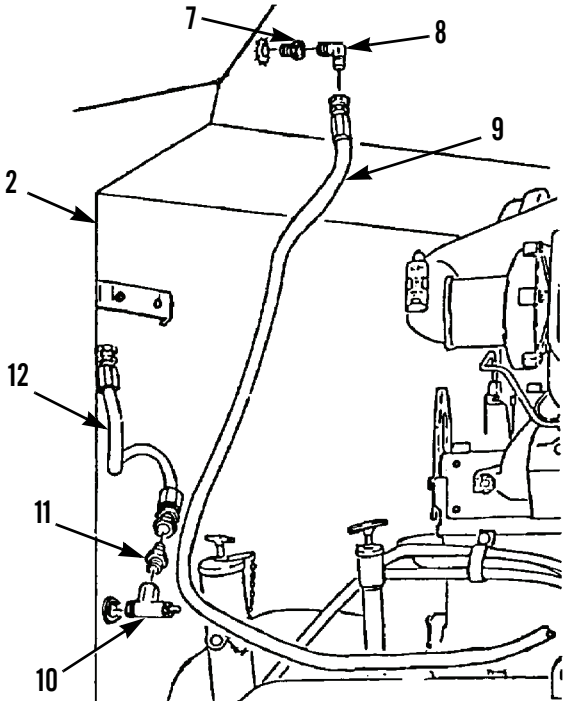

397-138

22. Install plug (3) in top of fuel tank (2).
23. Install strainer (6), ring (5), and plunger (4).

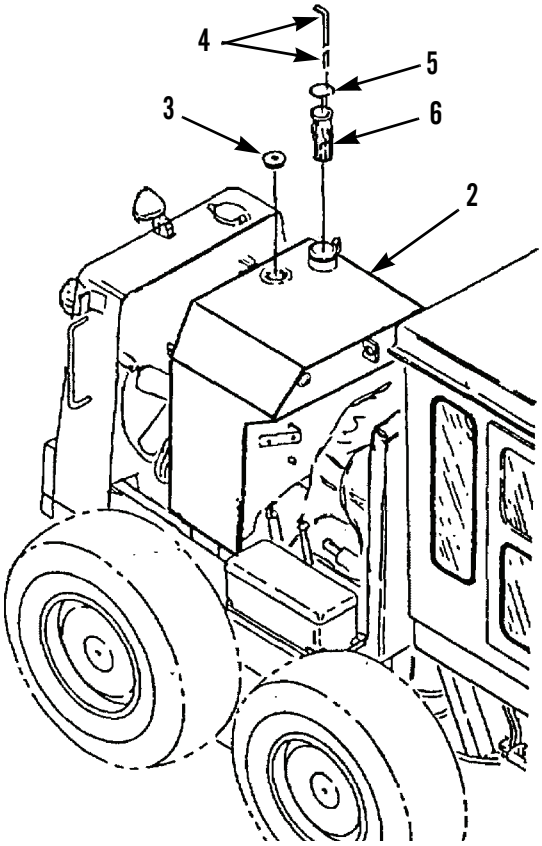

397-137

***INSTALLATION - CONTINUED***

24. Install primary fuel filter/primary pump and mounting (WP 0045 00 or WP 0046 00).
25. Install ether aid start assembly (WP 0050 00).
26. Install alternator mounting (WP 0066 00).
27. Install engine hood assembly (WP 0181 00).
28. Fill radiator (WP 0065 00).
29. Ensure drain valve (1) is closed.
30. Fill tank with fuel (TM 5-3805-261-10).
31. Install fuel tank cap (WP 0043 00).

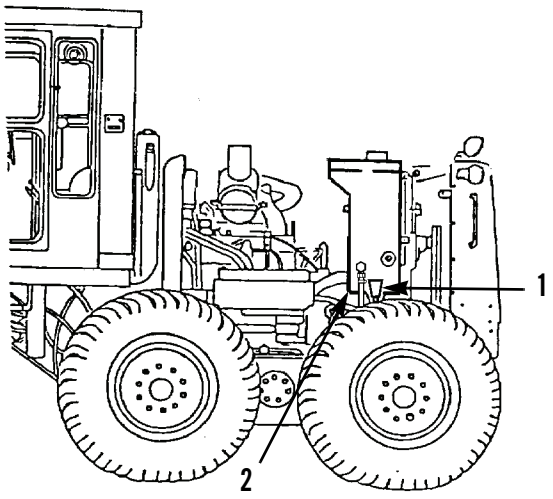

397-2029

32. Turn battery disconnect switch to ON position and start engine (TM 5-3805-261-10).
33. Check for leaks. Stop engine.
34. Install left and right engine side panels (WP 0182 00).

**END OF WORK PACKAGE**

## PRIMARY FUEL FILTER/PRIMING PUMP AND MOUNTING MAINTENANCE (MODELS 130G, 130GSCE, AND 130GNSCE) 0045 00

### THIS WORK PACKAGE COVERS

Removal, Disassembly, Cleaning and Inspection, Assembly, Installation

### INITIAL SETUP

**Maintenance Level**

Unit

**Tools and Special Tools**

Tool kit, general mechanic's (Item 89, WP 0348 00)

Shop equipment, common no. 1 (Item 75, WP 0348 00)

Wrench, torque (Item 97, WP 0348 00)

**Materials/Parts**

Cap set, protective (Item 7, WP 0349 00)

Rag, wiping (Item 35, WP 0349 00)

Filter element

Gasket (2)

Packing, preformed (4)

Ring, retaining (3)

**References**

WP 0020 00

WP 0035 00

**Equipment Conditions**

Machine parked on level ground (TM 5-3805-261-10)

Parking/emergency brake applied (TM 5-3805-261-10)

Implements lowered to ground (TM 5-3805-261-10)

Engine off (TM 5-3805-261-10)

Battery disconnect switch in OFF position (TM 5-3805-261-10)

Right side engine doors opened (TM 5-3805-261-10)



**WARNING**

- DO NOT smoke or permit any open flame in area of machine while you are servicing fuel system. Be sure hose nozzle is grounded against filler tube during refueling to prevent static electricity. Failure to follow this warning may result in injury or death to personnel or damage to equipment.
- DO NOT perform fuel system checks, inspections, or maintenance while smoking or near fire, flames, or sparks. Fuel may ignite, causing injury or death to personnel or damage to equipment.
- Operating personnel must wear fuel-resistant gloves when handling fuel. If exposed to fuel, promptly wash exposed skin and change fuel-soaked clothing.

## PRIMARY FUEL FILTER/PRIMING PUMP AND MOUNTING MAINTENANCE (MODELS 130G, 130GSCE, AND 130GNSCE) - CONTINUED 0045 00

***REMOVAL***

### NOTE

If only replacing the filter element, perform steps 1 and 2 of *Removal*, step 1 of *Disassembly*, step 8 of *Assembly,* and steps 6 through 8 of *Installation*.

1. Turn valve (11), in front-lower-right of fuel tank, to the right to shut off fuel.
2. Hold nut (3) and loosen body (10) by turning left and remove body.

### CAUTION

Cap all hose and tube ends to prevent contamination.

3. Disconnect hose assembly (9) in front of fuel tank.
4. Remove elbow (8), connector (7), preformed packing (6), and valve (5). Discard preformed packing.
5. Disconnect hose assembly (12).

### NOTE

Drain fuel left in primary fuel filter/priming pump into pan.

6. Remove two bolts (2), washers (1), and primary fuel filter/priming pump (4).
7. Remove elbow (13), two preformed packings (14), and adapter (15). Discard preformed packings.

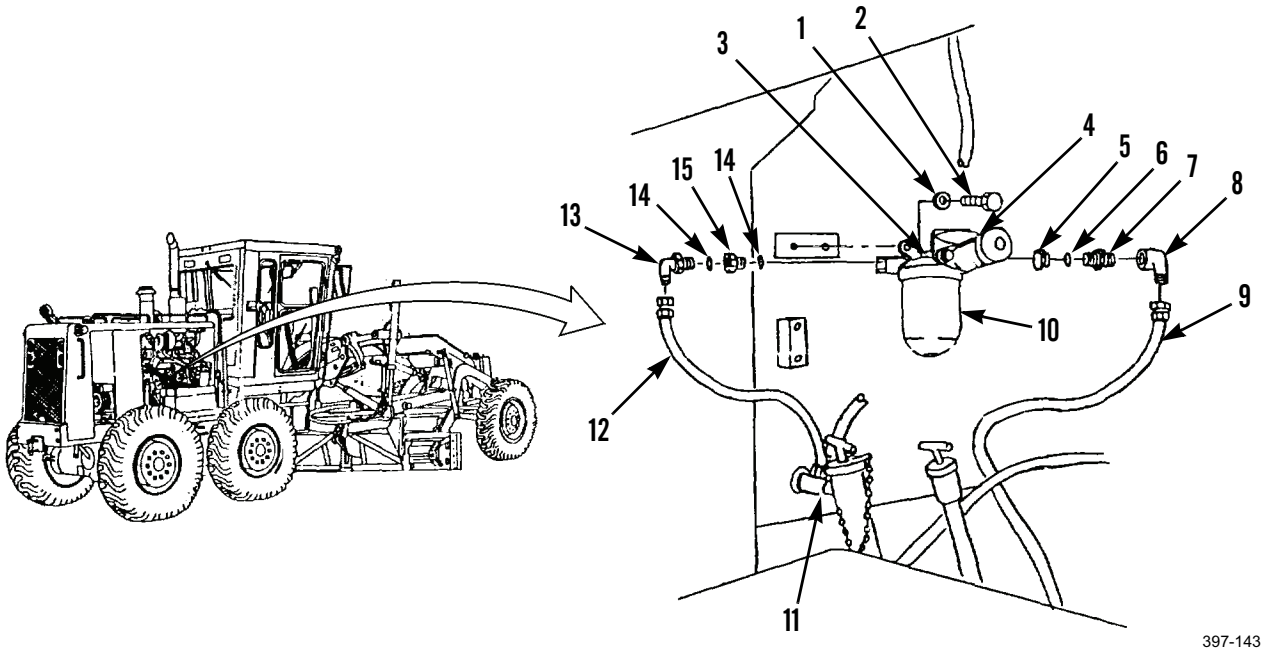

## PRIMARY FUEL FILTER/PRIMING PUMP AND MOUNTING MAINTENANCE (MODELS 130G, 130GSCE, AND 130GNSCE) - CONTINUED 0045 00

### *DISASSEMBLY*

1. Remove and discard retaining ring (16), gasket (17), and filter element (18) from body (10).
2. Compress spring (20).
3. Remove and discard retaining ring (16).
4. Remove retainer (19) and spring (20).

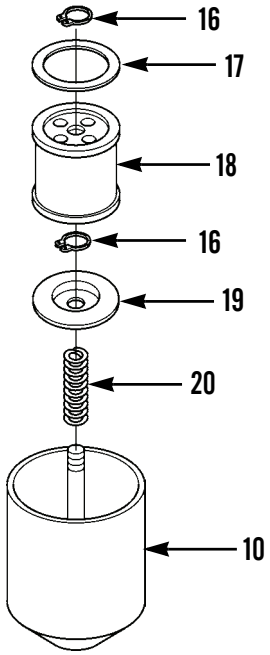

397-145

5. Remove retaining ring (23) from nut (3). Discard retaining ring.
6. Remove nut (3) and preformed packing (21). Discard preformed packing.
7. Remove two bolts (26) and washers (25).
8. Remove priming pump (27) and gasket (24) from base (22). Discard gasket.

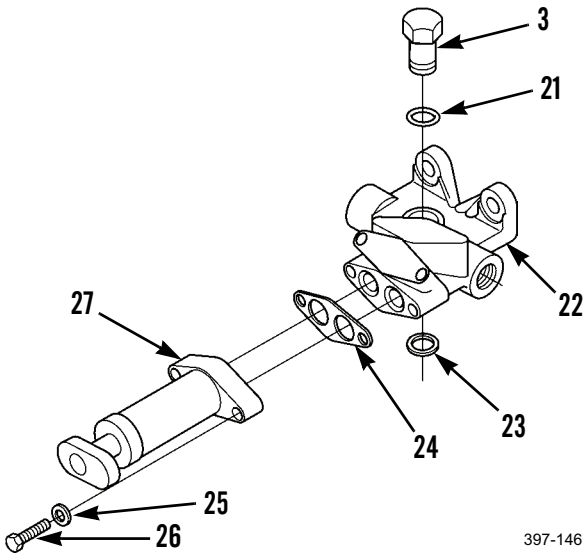

397-146

### *CLEANING AND INSPECTION*

Clean and inspect all parts in accordance with WP 0020 00.

### *ASSEMBLY*

1. Install new gasket (24) and priming pump (27) on base (22).
2. Install two washers (25) and bolts (26).
3. Install new preformed packing (21) and nut (3).
4. Install new retaining ring (23) in groove of nut (3).

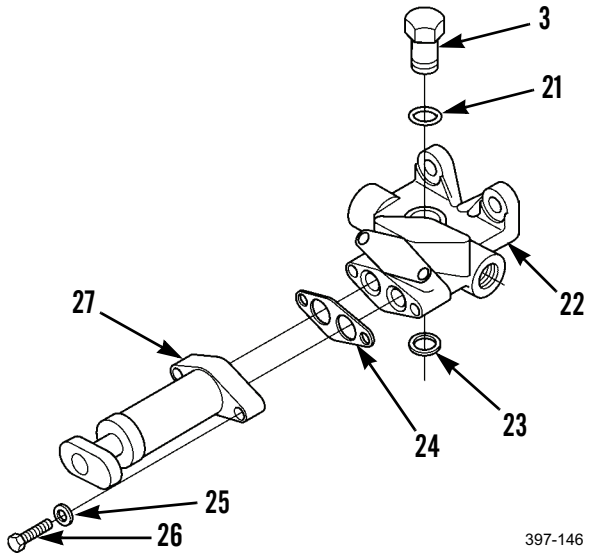


5. Install spring (20) and retainer (19) in body (10).
6. Compress spring (20).
7. Install new retaining ring (16) in groove of rod of body (10).
8. Install new filter element (18), new gasket (17), and new retaining ring (16).

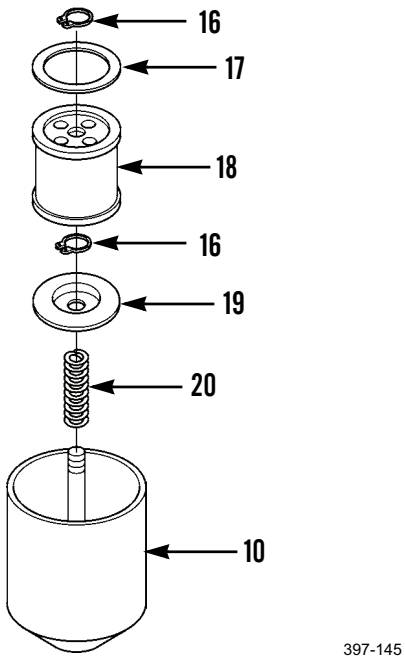

### *INSTALLATION*

1. Install adapter (15), two preformed packings (14), and elbow (13).
2. Install primary fuel filter/priming pump (4), two washers (1), and bolts (2).
3. Connect hose assembly (12).
4. Install valve (5), new preformed packing (6), connector (7), and elbow (8).
5. Connect hose assembly (9).
6. Install body (10) on primary fuel filter/priming pump (4).
7. Tighten nut (3) to 18 lb-ft (24 Nm).
8. Turn valve (11), in front-lower-right of fuel tank, to the left to open.

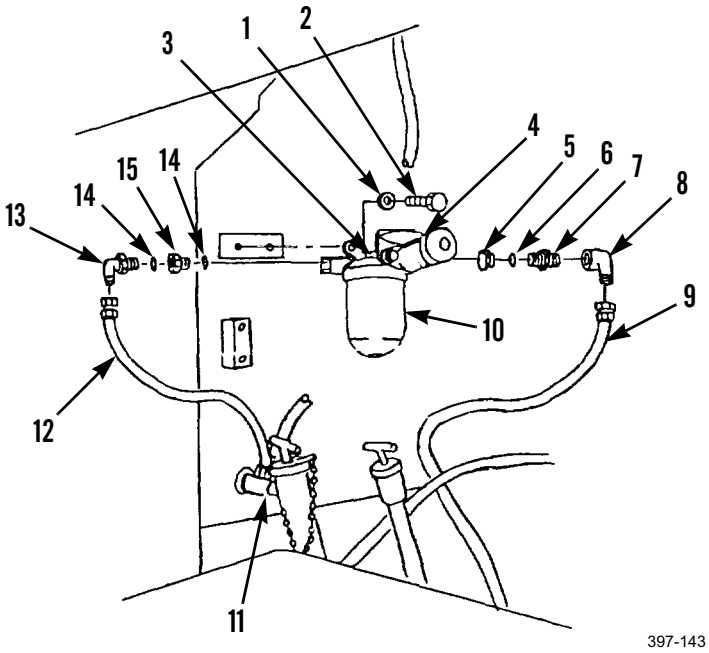


9. Bleed air from fuel line system (WP 0035 00).
10. Turn battery disconnect switch to ON position and start engine (TM 5-3805-261-10).
11. Check for leaks. Stop engine.
12. Close right side engine door (TM 5-3805-261-10).

**END OF WORK PACKAGE**

## PRIMARY FUEL FILTER/PRIMING PUMP AND MOUNTING MAINTENANCE (MODELS 130GS AND 130GNS) 0046 00

### THIS WORK PACKAGE COVERS

Removal, Disassembly, Cleaning and Inspection, Assembly, Installation

### INITIAL SETUP

**Maintenance Level**

Unit

**Tools and Special Tools**

Tool kit, general mechanic's (Item 89, WP 0348 00)

**Materials/Parts**

Cap set, protective (Item 7, WP 0349 00)

Rag, wiping (Item 35, WP 0349 00)

Filter element

Gasket

Packing, preformed (3)

**References**

WP 0020 00

WP 0035 00

**Equipment Conditions**

Machine parked on level ground (TM 5-3805-261-10)

Parking/emergency brake applied (TM 5-3805-261-10)

Implements lowered to ground (TM 5-3805-261-10)

Engine off (TM 5-3805-261-10)

Battery disconnect switch in OFF position (TM 5-3805-261-10)

Right side engine doors opened (TM 5-3805-261-10)



**WARNING**

- DO NOT smoke or permit any open flame in area of machine while you are servicing fuel system. Be sure hose nozzle is grounded against filler tube during refueling to prevent static electricity. Failure to follow this warning may result in injury or death to personnel or damage to equipment.
- DO NOT perform fuel system checks, inspections, or maintenance while smoking or near fire, flames, or sparks. Fuel may ignite, causing injury or death to personnel or damage to equipment.
- Operating personnel must wear fuel-resistant gloves when handling fuel. If exposed to fuel, promptly wash exposed skin and change fuel-soaked clothing.

***REMOVAL***

**NOTE**

If only replacing the filter element, perform steps 1 and 2 of *Removal* and Steps 7 and 8 of *Installation*.

1. Turn valve (7), in front-lower-right of fuel tank, to the right to shut off fuel.
2. Remove filter element (3) by turning left.

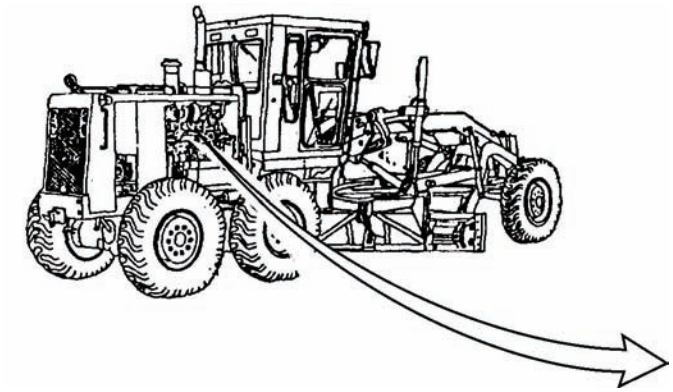

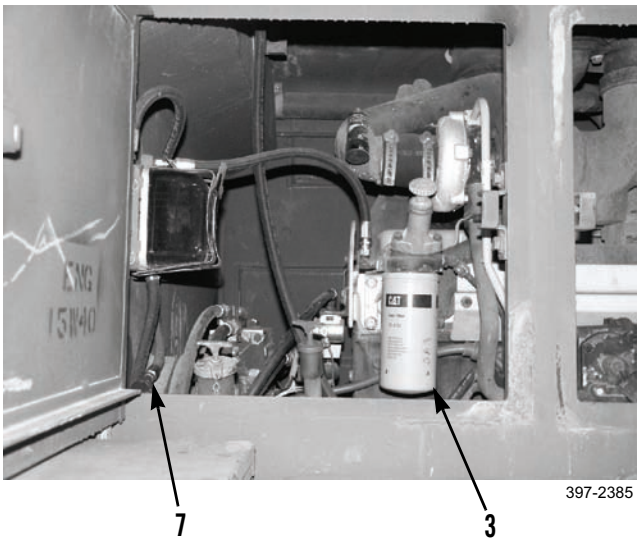


397-2385

*REMOVAL - CONTINUED*

**CAUTION**

Cap all hose assembly ends to prevent contamination.

3. Disconnect hose assembly (9) and remove elbow (10).
4. Disconnect tube assembly (15).

**NOTE**

Drain fuel left in primary fuel filter/priming pump into pan.

5. Remove elbow (16).
6. Remove two bolts (11 and 13), washers (12 and 14), and primary fuel filter/priming pump (8).

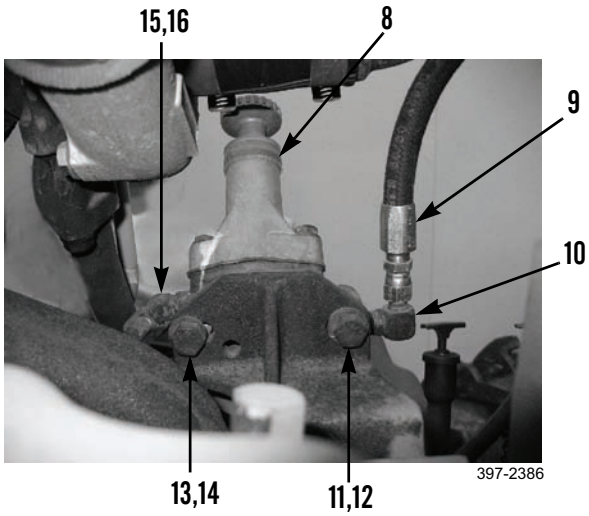


7. Remove two bolts (1 and 4) and two washers (2 and 5) and support (6).

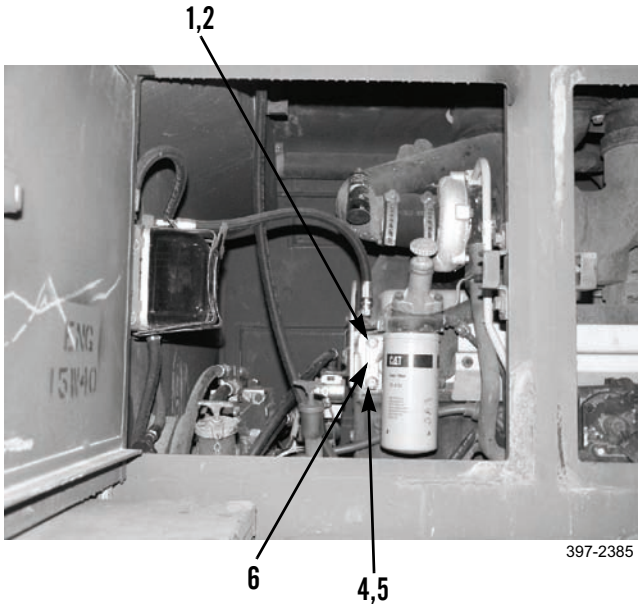

## PRIMARY FUEL FILTER/PRIMING PUMP AND MOUNTING MAINTENANCE (MODELS 130GS AND 130GNS) - CONTINUED 0046 00

### *DISASSEMBLY*

1. Remove two bolts (17) and washers (24).
2. Remove priming pump (18) and gasket (23) from base (22). Discard gasket.
3. Remove seat (19), disk (20), and spring (21) from base (22).

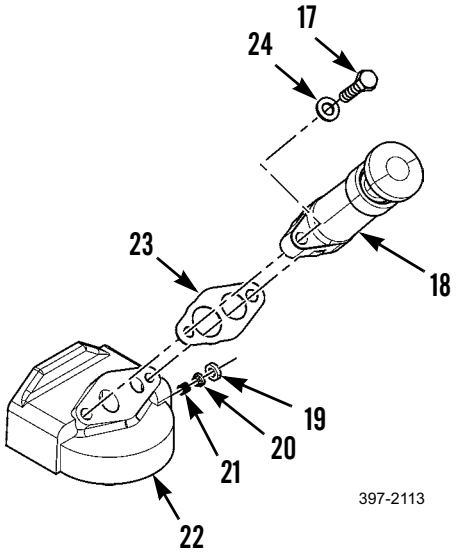


### *CLEANING AND INSPECTION*

Clean and inspect all parts in accordance with WP 0020 00.

### *ASSEMBLY*

1. Install spring (21), disk (20), and seat (19) in base (22).
2. Install new gasket (23) and priming pump (18) on base (22).
3. Install two washers (24) and bolts (17).

### *INSTALLATION*

1. Install support (6), two bolts (1 and 4), and washers (2 and 5).
2. Install elbow (16).
3. Install primary fuel filter/priming pump (8), two washers (12 and 14), and bolts (11 and 13).
4. Connect tube assembly (15).
5. Install elbow (10) and connect hose assembly (9).

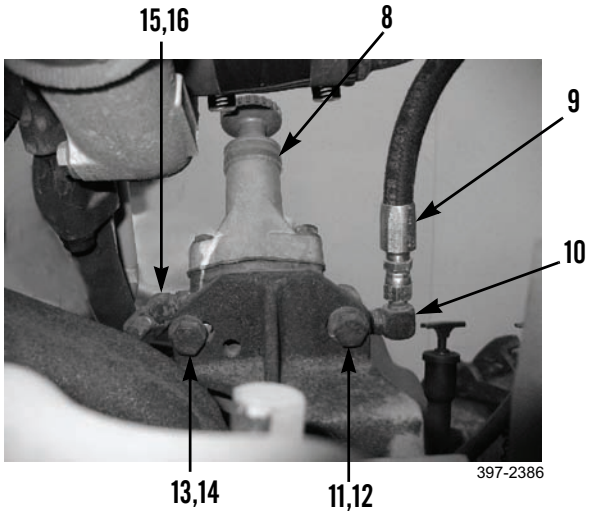

## PRIMARY FUEL FILTER/PRIMING PUMP AND MOUNTING MAINTENANCE (MODELS 130GS AND 130GNS) - CONTINUED 0046 00

### *INSTALLATION - CONTINUED*

6. Install new filter element (3) by turning right.
7. Turn valve (7), in front-lower-right of fuel tank, to the left to open.

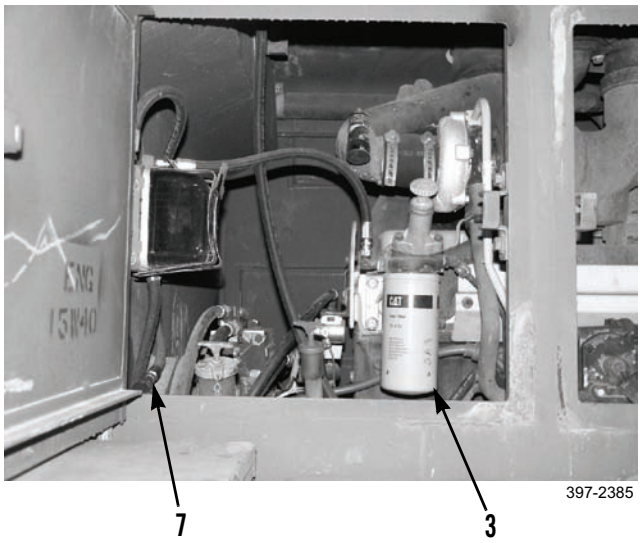

397-2385

8. Bleed air from fuel in line system (WP 0035 00).
9. Turn battery disconnect switch to ON position and start engine (TM 5-3805-261-10).
10. Check for leaks. Stop engine.
11. Close right side engine doors (TM 5-3805-261-10).

**END OF WORK PACKAGE**

## SECONDARY FUEL FILTER AND MOUNTING MAINTENANCE (MODELS 130G, 130GSCE, AND 130GNSCE) 0047 00

### THIS WORK PACKAGE COVERS

Removal, Disassembly, Cleaning and Inspection, Assembly, Installation

### INITIAL SETUP

**Maintenance Level**

Unit

**Tools and Special Tools**

Tool kit, general mechanic's (Item 89, WP 0348 00)

Shop equipment, common no. 1 (Item 75, WP 0348 00)

Wrench, torque (Item 97, WP 0348 00)

**Materials/Parts**

Cap set, protective (Item 7, WP 0349 00)

Fuel (Item 13, 14, or 15, WP 0349 00)

Rag, wiping (Item 35, WP 0349 00)

Sealing compound (Item 39, WP 0349 00)

Filter element

Gasket

Packing, preformed (2)

**References**

WP 0020 00

WP 0035 00

**Equipment Conditions**

Machine parked on level ground (TM 5-3805-261-10)

Parking/emergency brake applied (TM 5-3805-261-10)

Implements lowered to ground (TM 5-3805-261-10)

Engine off (TM 5-3805-261-10)

Battery disconnect switch in OFF position (TM 5-3805-261-10)

Fuel pressure switch removed (not necessary if just replacing filter element) (WP 0115 00)

Right side engine doors opened (TM 5-3805-261-10)



**WARNING**

- DO NOT smoke or permit any open flame in area of machine while you are servicing fuel system. Be sure hose nozzle is grounded against filler tube during refueling to prevent static electricity. Failure to follow this warning may result in death or injury to personnel or damage to equipment.
- DO NOT perform fuel system checks, inspections, or maintenance while smoking or near fire, flames, or sparks. Fuel may ignite, causing injury or death to personnel or damage to equipment.
- Operating personnel must wear fuel-resistant gloves when handling fuel. If exposed to fuel, promptly wash exposed skin and change fuel-soaked clothing.

**SECONDARY FUEL FILTER AND MOUNTING MAINTENANCE (MODELS 130G, 130GSCE, AND 130GNSCE) - CONTINUED** **0047 00**

***REMOVAL***

## NOTE

If only replacing filter element, perform steps 1 and 2 of *Removal* and step 2 of *Installation*.

1. Turn valve (4), in front-lower-right of fuel tank, to the right to shut off fuel.
2. Remove and discard filter element (5).

## CAUTION

Cap all hose and tube ends to prevent contamination.

3. Disconnect tube assembly (1) from elbow (2).
4. Remove elbow (2) and preformed packing (3) from base (6). Discard preformed packing.

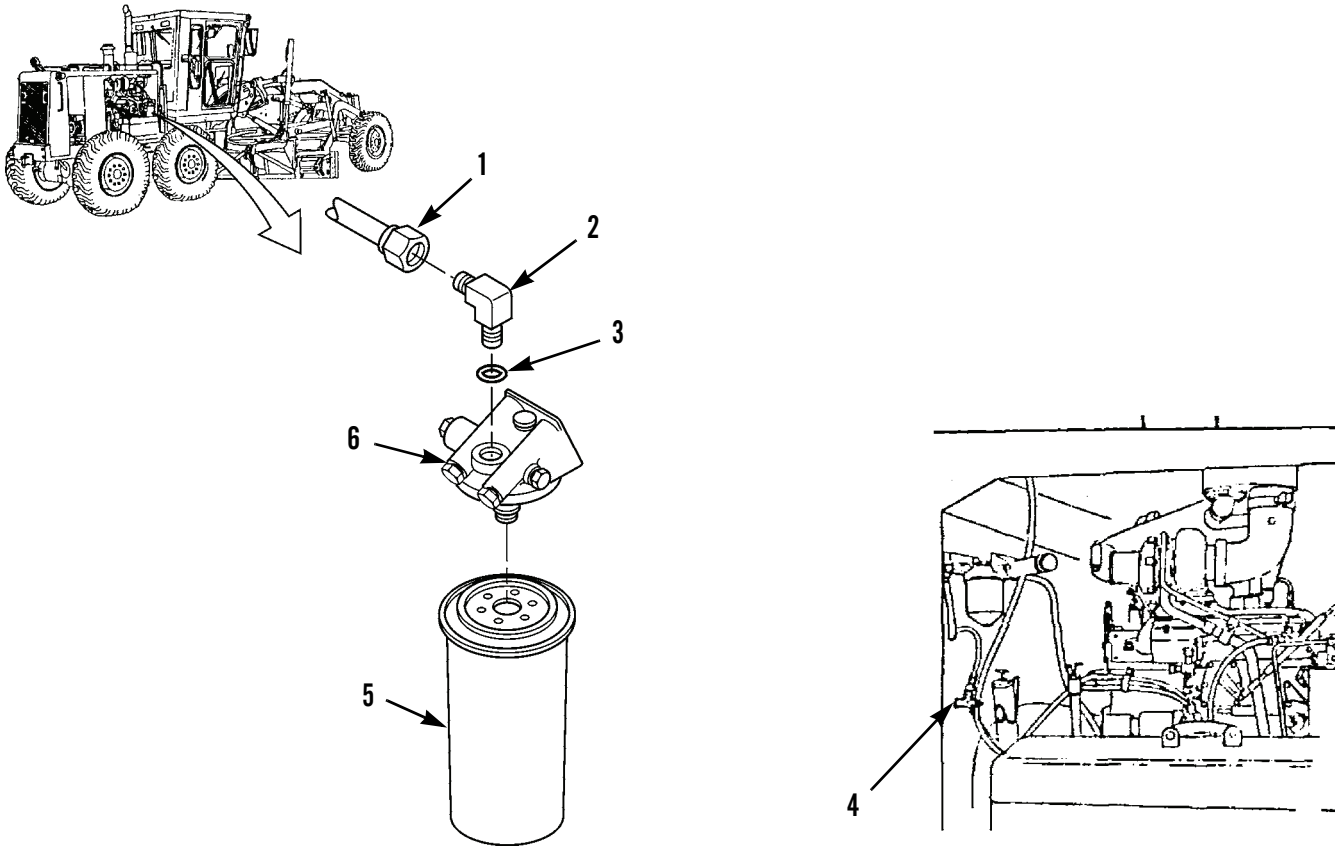


397-148

## SECONDARY FUEL FILTER AND MOUNTING MAINTENANCE (MODELS 130G, 130GSCE, AND 130GNSCE) - CONTINUED 0047 00

### *REMOVAL - CONTINUED*

5. Remove two bolts (7), washers (8), base (6), and gasket (9). Discard gasket.

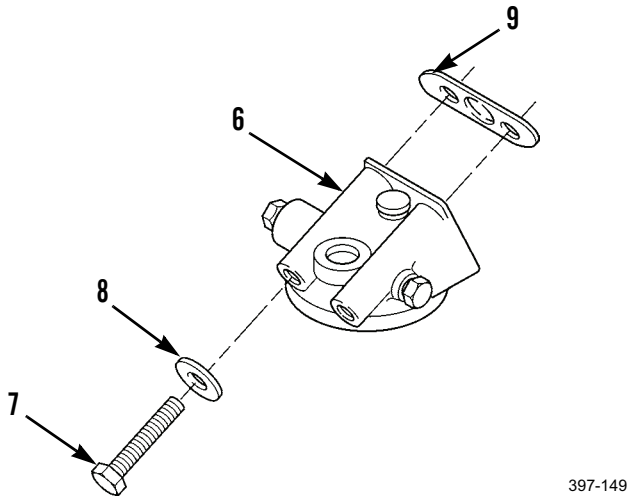


### *DISASSEMBLY*

1. Remove plug (10) and preformed packing (11) from base (6). Discard preformed packing.
2. Remove plug (12).

**NOTE**

Remove stud only if inspection indicates replacement is necessary.

3. If necessary, remove stud (13) from base (6).

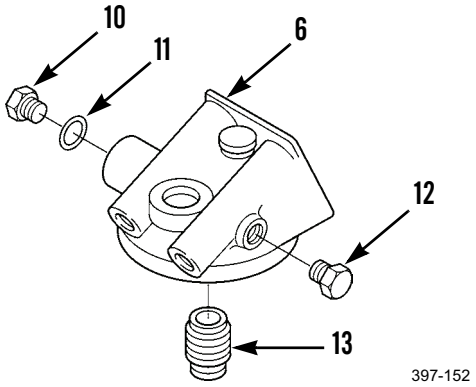


### *CLEANING AND INSPECTION*

Clean and inspect all parts in accordance with WP 0020 00.

### *ASSEMBLY*

1. If removed, coat threads of stud (13) with sealing compound and install in base (6). Tighten to 50 lb-ft (68 Nm).
2. Install plug (12).
3. Install new preformed packing (11) and plug (10) to base (6).

## SECONDARY FUEL FILTER AND MOUNTING MAINTENANCE (MODELS 130G, 130GSCE, AND 130GNSCE) - CONTINUED 0047 00

### *INSTALLATION*

1. Install new gasket (9), base (6), two washers (8), and bolts (7).

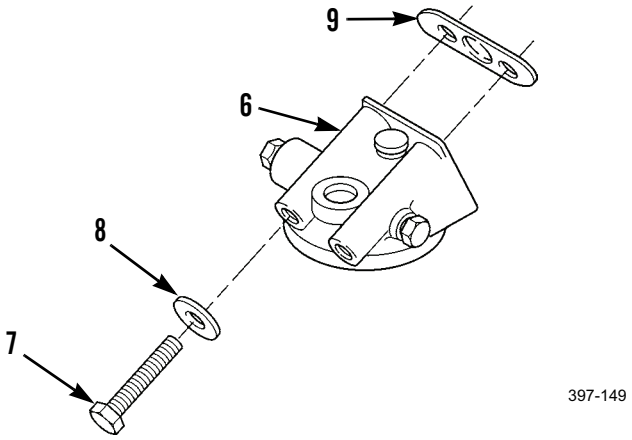


2. Lubricate seal of new filter element (5) with clean fuel and install, turning right until contact between seal of element and base (6) is made. Tighten an additional one turn.
3. Install new preformed packing (3) and elbow (2).
4. Install tube assembly (1) to elbow (2).
5. Install fuel pressure switch (WP 0115 00).

   Turn valve (4), in front-lower-right of fuel tank, left to open.

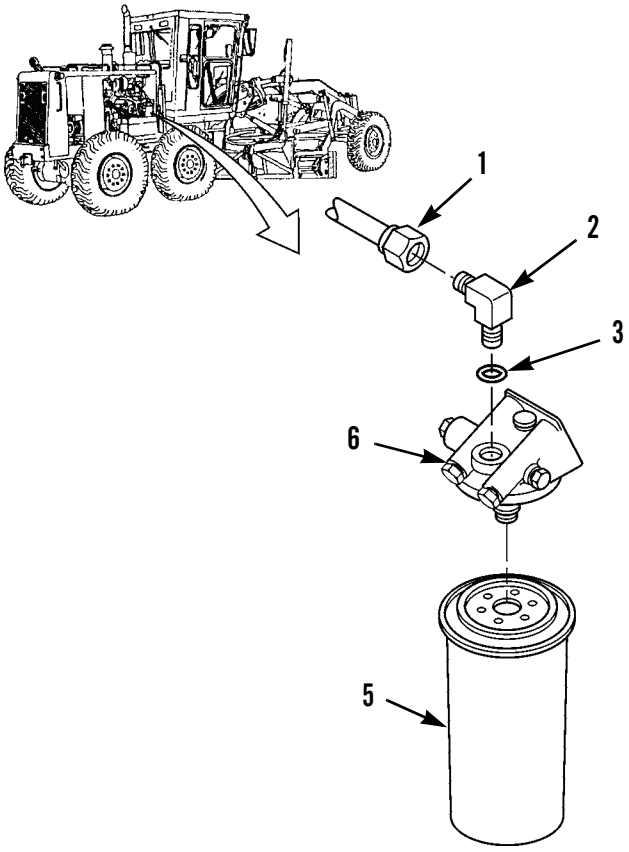


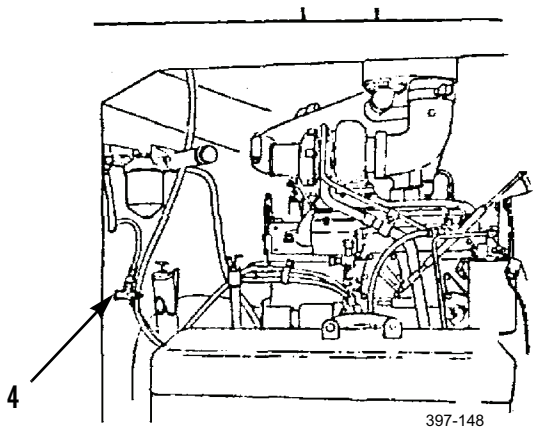

***INSTALLATION - CONTINUED***

6. Turn priming pump knob on right side of fuel tank to the left to release pump knob.
7. Pump until pressure makes knob difficult to pump.
8. Turn knob right to lock in place.
9. Turn fuel injection pump valve, on right side of engine, to the left to open, allowing air to release through hose outlet at lower part of engine. Close valve.

**NOTE**

Repeat steps 7 through 10 until fuel, flowing through drain hose, is free of all air bubbles.

10. Turn battery disconnect switch to ON position and start engine (TM 5-3805-261-10).
11. Check for leaks. Stop engine.

**NOTE**

If engine was running roughly, perform the next step. If not, proceed to step 14.

12. Bleed air from fuel injection pump lines in top of fuel injection pump (WP 0035 00).
13. Close right side engine doors (TM 5-3805-261-10).

**END OF WORK PACKAGE**

## SECONDARY FUEL FILTER AND MOUNTING MAINTENANCE (MODELS 130GS AND 130GNS) 0048 00

### THIS WORK PACKAGE COVERS

Removal, Disassembly, Cleaning and Inspection, Assembly, Installation

### INITIAL SETUP

**Maintenance Level**

Unit

**Tools and Special Tools**

Tool kit, general mechanic's (Item 89, WP 0348 00)

Shop equipment, common no. 1 (Item 75, WP 0348 00)

**Materials/Parts**

Cap set, protective (Item 7, WP 0349 00)

Fuel (Item 13, 14, or 15, WP 0349 00)

Rag, wiping (Item 35, WP 0349 00)

Sealing compound (Item 39, WP 0349 00)

Filter element

Gasket

Lockwasher (2)

**References**

WP 0020 00

WP 0035 00

WP 0042 00

**Equipment Conditions**

Machine parked on level ground (TM 5-3805-261-10)

Parking/emergency brake applied (TM 5-3805-261-10)

Implements lowered to ground (TM 5-3805-261-10)

Engine off (TM 5-3805-261-10)

Battery disconnect switch in OFF position (TM 5-3805-261-10)

Fuel pressure switch removed (not necessary if just replacing filter element) (WP 0115 00)

Right side engine doors opened (TM 5-3805-261-10)



**WARNING**

- DO NOT smoke or permit any open flame in area of machine while you are servicing fuel system. Be sure hose nozzle is grounded against filler tube during refueling to prevent static electricity. Failure to follow this warning may result in death or injury to personnel or damage to equipment.
- DO NOT perform fuel system checks, inspections, or maintenance while smoking or near fire, flames, or sparks. Fuel may ignite, causing injury or death to personnel or damage to equipment.
- Operating personnel must wear fuel-resistant gloves when handling fuel. If exposed to fuel, promptly wash exposed skin and change fuel-soaked clothing.

## SECONDARY FUEL FILTER AND MOUNTING MAINTENANCE (MODELS 130GS AND 130GNS) - CONTINUED

0048 00

### *REMOVAL*

1. Place container under drain hose (4) and open petcocks (2 and 3) and drain element (5).
2. Grasp tabs of retaining clamp (1) and squeeze together to release clamp.
3. Remove element (5).

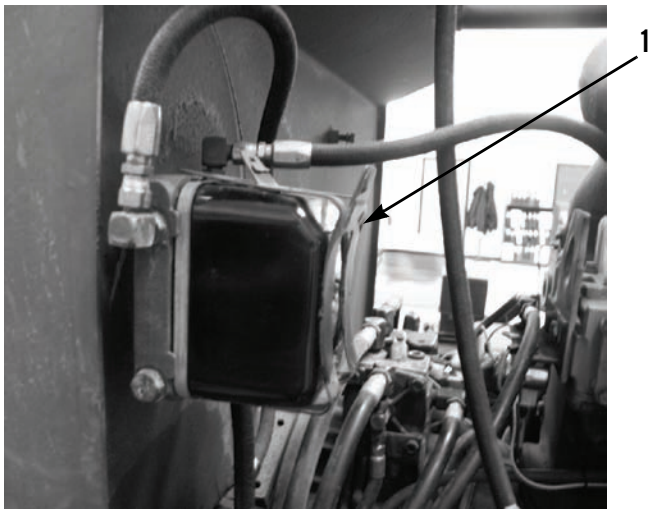


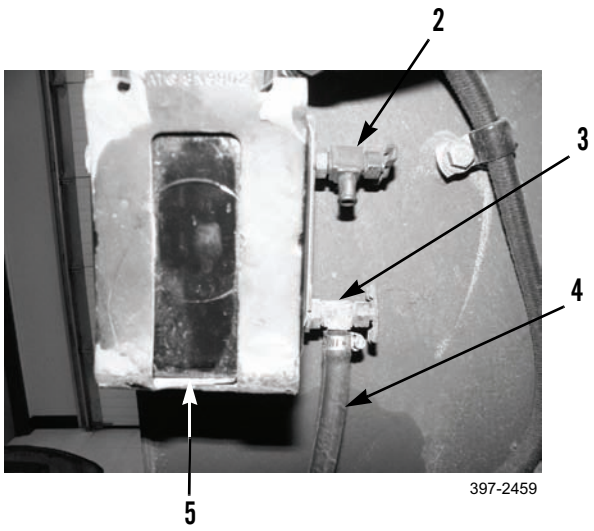


### *DISASSEMBLY*

**CAUTION**

Cap all hose and tube ends to prevent contamination.

**NOTE**

Hoses and fittings need not be removed unless mounting base requires replacement.

1. Disconnect hoses and fittings in accordance with (WP 0042 00).
2. Remove two bolts (6 and 8) and lockwashers (7 and 9) and remove mounting base (10). Discard lockwashers.

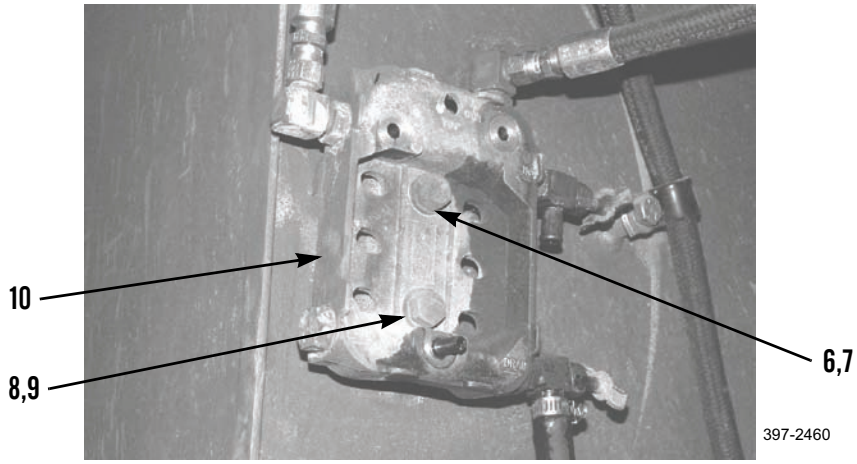

### *CLEANING AND INSPECTION*

Clean and inspect all parts in accordance with WP 0020 00.

### *ASSEMBLY*

1. Install mounting base (10) with two bolts (6 and 8) and new lockwashers (7 and 9).

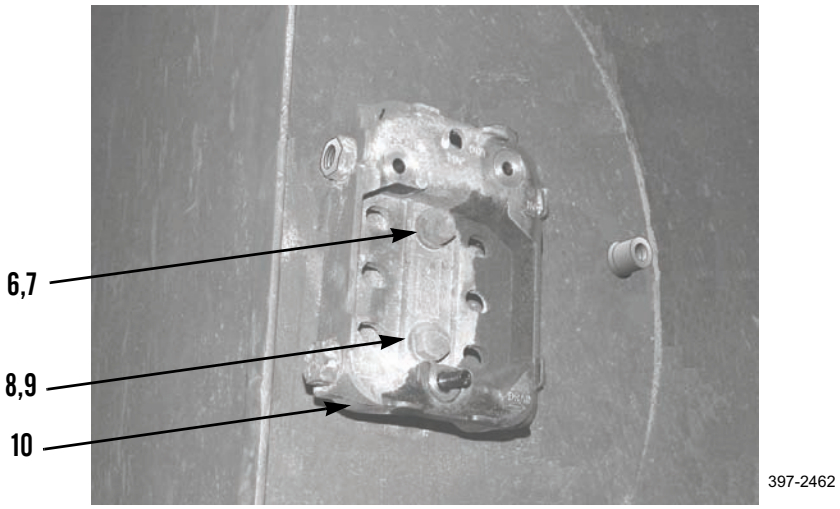


2. Install element (5) and retaining clamp (1).
3. Install fittings and connect hoses in accordance with WP 0042 00. Close lower pet cock (3).
4. Close upper petcock (2) and remove container.
5. Turn battery disconnect switch to ON position and start engine (TM 5-3805-261-10).
6. Check for leaks. Stop engine.

**NOTE**

If engine was running roughly, perform the next step. If not, proceed to step 14.

7. Bleed air from fuel injection pump lines in top of fuel injection pump (WP 0035 00).
8. Close right side engine doors (TM 5-3805-261-10).

**END OF WORK PACKAGE**

## ETHER STARTING AID CYLINDER REPLACEMENT 0049 00

### THIS WORK PACKAGE COVERS

Removal, Cleaning and Inspection, Installation

### INITIAL SETUP

**Maintenance Level**

Unit

**Tools and Special Tools**

Tool kit, general mechanic's (Item 89, WP 0348 00)

**Materials/Parts**

Rag, wiping (Item 35, WP 0349 00)

Cartridge, engine starting aid

**References**

WP 0020 00

**Equipment Conditions**

Machine parked on level ground (TM 5-3805-261-10)

Parking/emergency brake applied (TM 5-3805-261-10)

Implements lowered to ground (TM 5-3805-261-10)

Engine off (TM 5-3805-261-10)

Battery disconnect switch in OFF position (TM 5-3805-261-10)

Right side screen door opened (WP 0055 00)



**WARNING**

Ether fuel is extremely flammable and toxic. DO NOT smoke and make sure you are in a well-ventilated area away from heat, open flames, or sparks. Wear eye protection. Avoid contact with skin and eyes and avoid breathing ether fumes. If fluid enters or fumes irritate the eyes, wash immediately with large quantities of clean water for 15 minutes. Seek medical attention immediately if ether is inhaled or causes eye irritation. Failure to follow this warning may cause injury or death to personnel.

### *REMOVAL*

1. Loosen wing nut (3) and clamp (2) behind right fan guard.
2. Remove engine starting aid cartridge (1) by turning to the left. Dispose in accordance with local regulatory guidance.

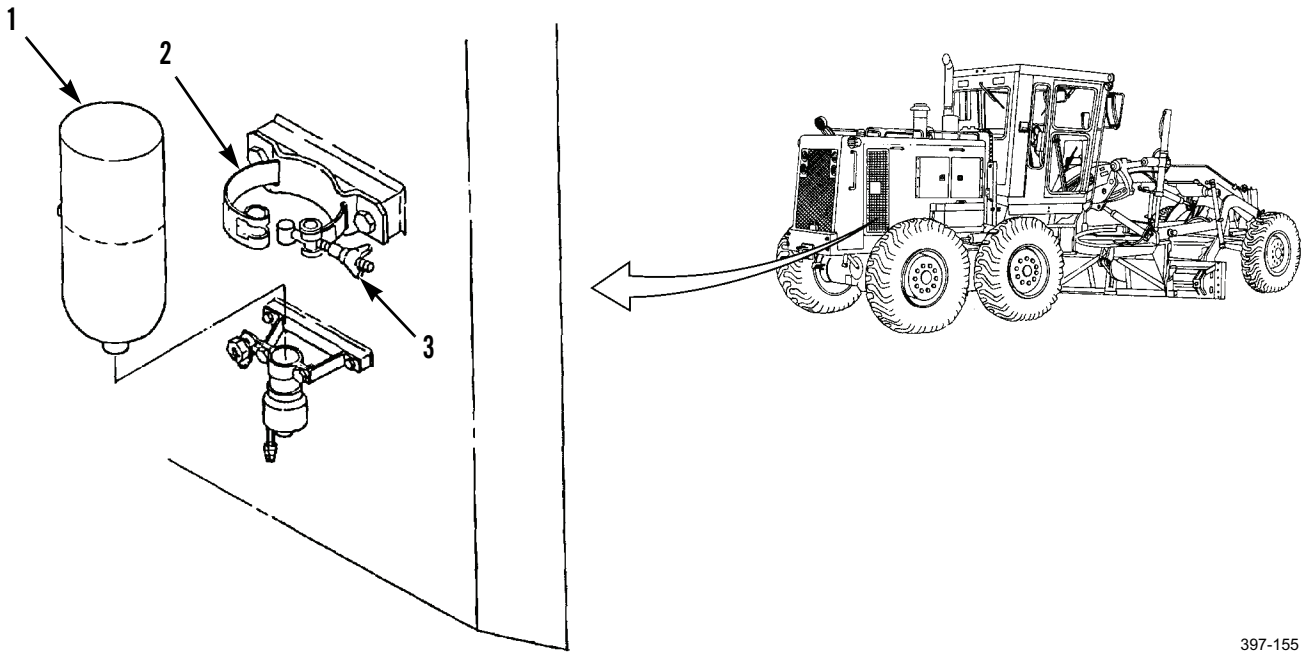


### *CLEANING AND INSPECTION*

Clean and inspect all parts in accordance with WP 0020 00.

### *INSTALLATION*

**NOTE**

Install protective cap on valve if cartridge is not to be replaced.

1. Install new engine starting aid cartridge (1) by turning to the right.
2. Tighten clamp (2) and wing nut (3).
3. Close right side screen door (WP 0055 00).

**END OF WORK PACKAGE**

## ETHER STARTING AID ASSEMBLY REPLACEMENT 0050 00

### THIS WORK PACKAGE COVERS

Removal, Cleaning and Inspection, Installation

### INITIAL SETUP

**Maintenance Level**

Unit

**Tools and Special Tools**

Tool kit, general mechanic's (Item 89, WP 0348 00)

**Materials/Parts**

Cap set, protective (Item7, WP 0349 00)

Rag, wiping (Item 35, WP 0349 00)

Tag, marker (Item 44, WP 0349 00)

**References**

WP 0020 00

**Equipment Conditions**

Machine parked on level ground (TM 5-3805-261-10)

Parking/emergency brake applied (TM 5-3805-261-10)

Implements lowered to ground (TM 5-3805-261-10)

Engine off (TM 5-3805-261-10)

Battery disconnect switch to OFF position (TM 5-3805-261-10)

Ether starting aid cylinder removed (WP 0049 00)

Right side screen door opened (WP 0055 00)



**WARNING**

Ether fuel is extremely flammable and toxic. DO NOT smoke and make sure you are in a well-ventilated area away from heat, open flames or sparks. Wear eye protection. Avoid contact with skin and eyes and avoid breathing ether fumes. If fluid enters or fumes irritate the eyes, wash immediately with large quantities of clean water for 15 minutes. Seek medical attention immediately if ether is inhaled or causes eye irritation. Failure to follow this warning may cause death or serious injury to personnel.

***REMOVAL***

1. Remove two bolts (1), washers (2), and clamp (3) in right-rear side of fuel tank (4).

**CAUTION**

Cap all tube and hose ends and plug all open ports to prevent contamination.

**NOTE**

Tag tubes and hose before disconnecting to aid in installation.

2. Disconnect harness assembly (9) from valve (11) and bolt.
3. Remove bolt (7), washer (6), and clamp (5) from tube (8).
4. Loosen connector (10) and disconnect tube (8) from valve (11).

**NOTE**

Do not remove connector from tube unless inspection shows need for replacement.

5. Remove connector (10) from tube (8).
6. Remove two bolts (12), washers (13), and valve (11).

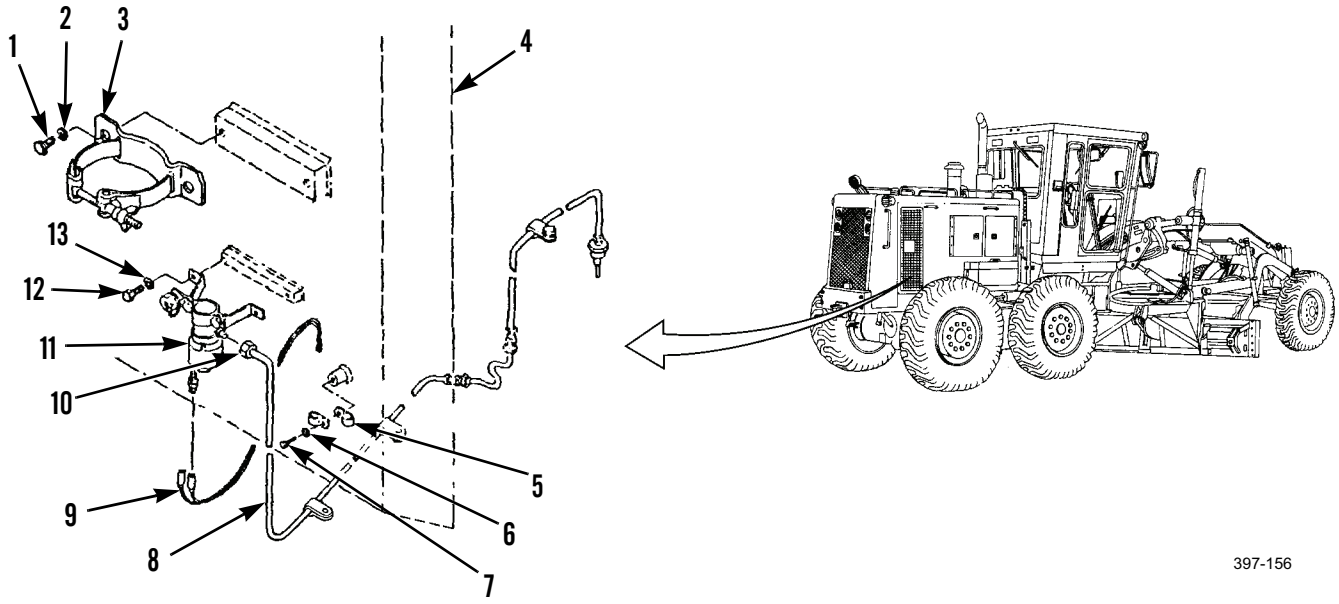

***REMOVAL - CONTINUED***

7. Remove bolt (18), washer (17), and clamp (16) from right-rear, under fuel tank (4).
8. Remove bolt (20), washer (21), and clamp (19) from left-front, under fuel tank (4).
9. Disconnect tube assembly (15) from left of engine compartment.
10. Remove tube (8).
11. Disconnect hose assembly (15) from tube (14) and remove.

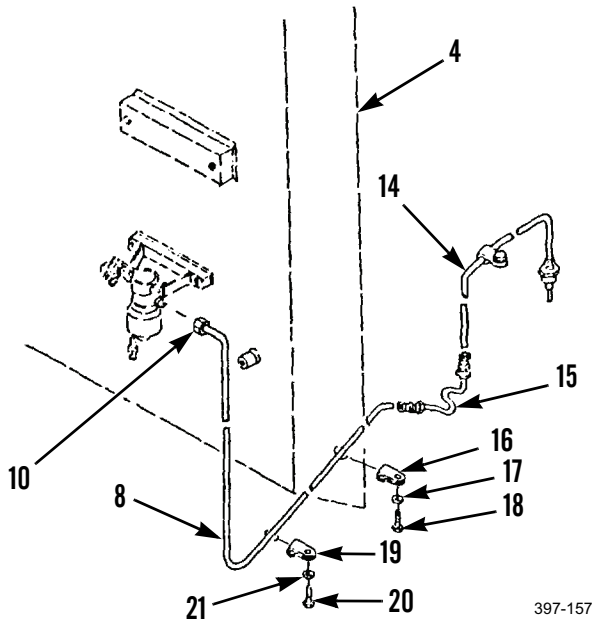


12. Remove bolt (22), washer (23), and clamp (24) from base of turbocharger air pipe on left side, top of engine.
13. Disconnect tube (14) from atomizer (25) and remove.
14. Remove atomizer (25) from intake manifold.

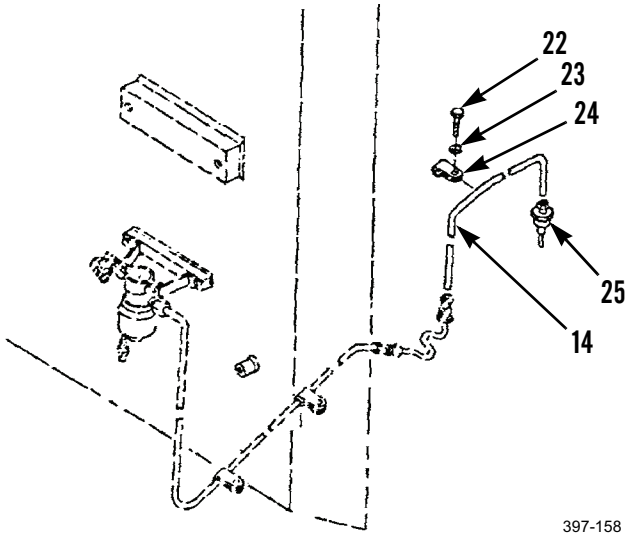

### *CLEANING AND INSPECTION*

Clean and inspect all parts in accordance with WP 0020 00.

### *INSTALLATION*

**NOTE**

When installing atomizer, note that the hex head (27) on the atomizer has a mark (26) that is in line with the orifice (28) in the atomizer. Make sure the orifice is pointed in a direction that is PARALLEL to the center-line of the engine.

1. Install atomizer (25) in intake manifold.

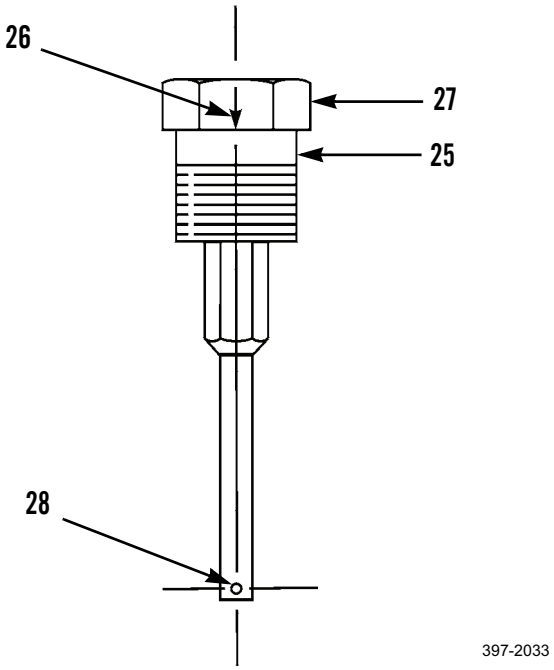


2. Connect tube (14) to atomizer (25).
3. Install clamp (24), washer (23,) and bolt (22) securing tube (14) to base of turbocharger air pipe.

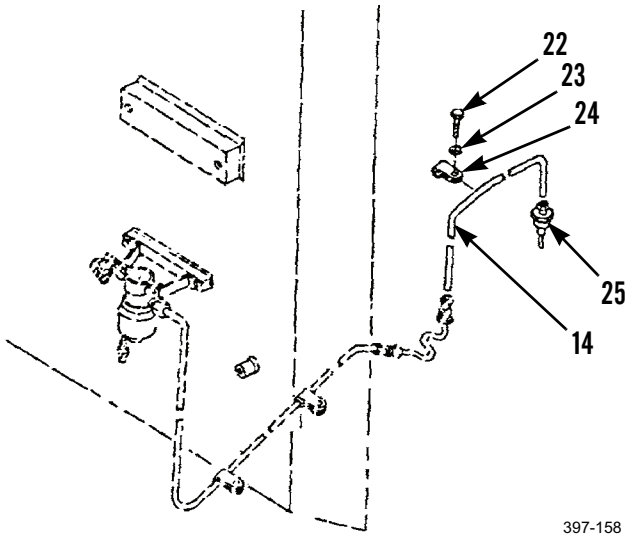

***INSTALLATION - CONTINUED***

4. Connect hose assembly (15) to tube (14) in left side of engine compartment.
5. Position tube (8) in machine and connect to hose assembly (15).
6. Install clamp (19), washer (21), and bolt (20), securing tube (8) in left-front, under fuel tank (4).
7. Install clamp (16), washer (17), and bolt (18), securing tube (8) in right-rear, under fuel tank (4).

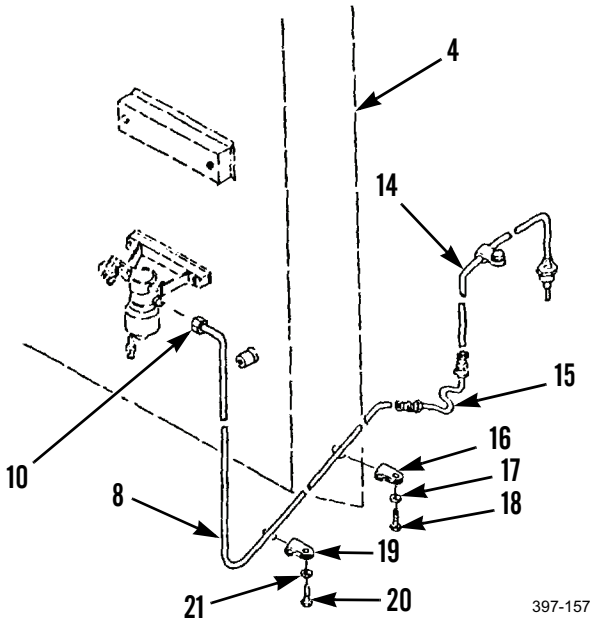


8. Install valve (11), two washers (13), and bolts (12) on right-rear of fuel tank (4).
9. If removed, install connector (10) on tube (8).
10. Install tube (8) and connector (10) on valve (11).
11. Install clamp (5), washer (6), and bolt (7), securing tube (8) to fuel tank (4).
12. Connect harness assembly (9) to valve (11) and bolt.
13. Install clamp (3), two washers (2), and bolts (1).

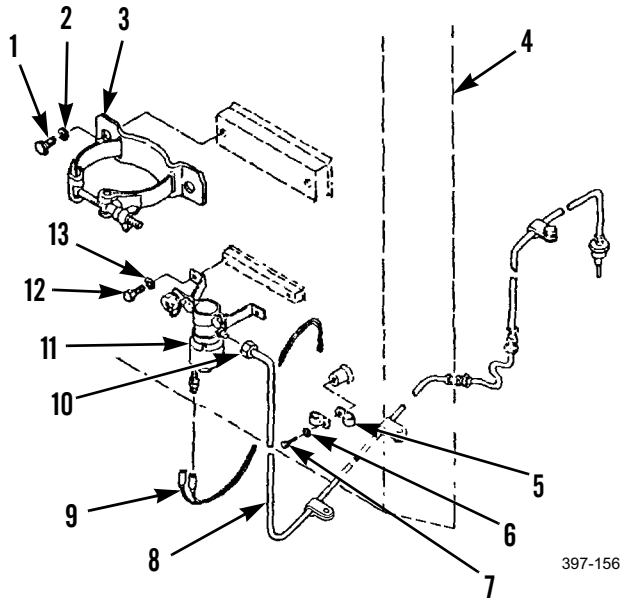


14. Install ether engine starting aid cylinder (WP 0049 00).
15. Close right side screen door (WP 0055 00).

**END OF WORK PACKAGE**

## MUFFLER AND EXHAUST PIPE REPLACEMENT 0051 00

## THIS WORK PACKAGE COVERS

Removal, Cleaning and Inspection, Installation

## INITIAL SETUP

**Maintenance Level**

Unit

**Tools and Special Tools**

Tool kit, general mechanic's (Item 89, WP 0348 00)

Shop equipment, common no. 1 (Item 75, WP 0348 00)

Wrench, torque (Item 97, WP 0348 00)

**Materials/Parts**

Antiseize compound (Item 6, WP 0349 00)

Penetrating oil (Item 32, WP 0349 00)

Rag, wiping (Item 35, WP 0349 00)

**References**

WP 0020 00

**Equipment Conditions**

Machine parked on level ground (TM 5-3805-261-10)

Parking/emergency brake applied (TM 5-3805-261-10)

Implements lowered to ground (TM 5-3805-261-10)

Engine off (TM 5-3805-261-10)

Battery disconnect switch in OFF position (TM 5-3805-261-10)

Right side engine doors opened (TM 5-3805-261-10)



**WARNING**

Ensure muffler and exhaust pipe are cool before beginning task. Failure to do so could result in serious burns.

***REMOVAL***

**NOTE**

Soak threads of bolts and studs with penetrating oil to aid in removal.

1. Remove nut (2) and bolt (3).
2. Loosen clamp (5).
3. Remove pipe (4) from muffler (1).
4. Remove clamp (5).

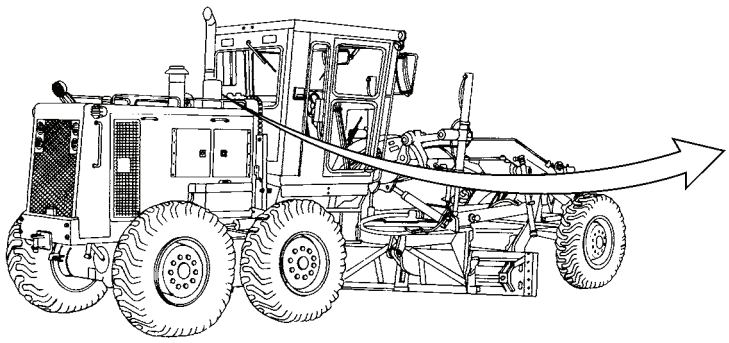

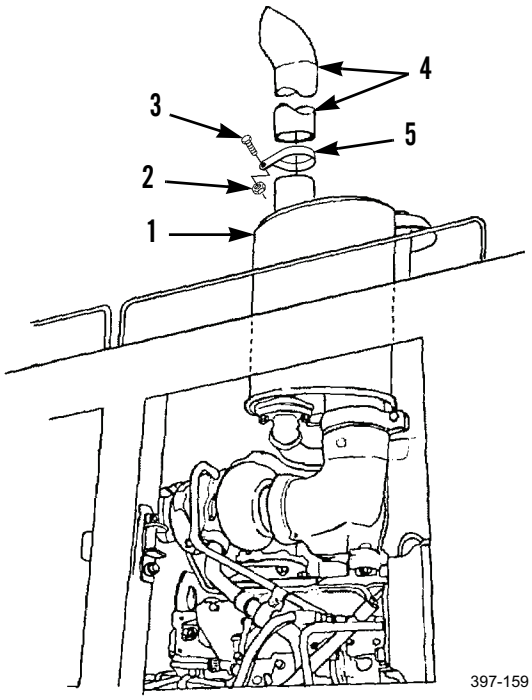

### *REMOVAL - CONTINUED*

5. Remove two nuts (14) and washers (6).
6. Remove nut (11), two washers (9), and bolt (8).
7. Loosen clamp (10).
8. Remove muffler (1) from tube assembly (12) and elbow (13).
9. Inspect two studs (7) and remove if damaged.

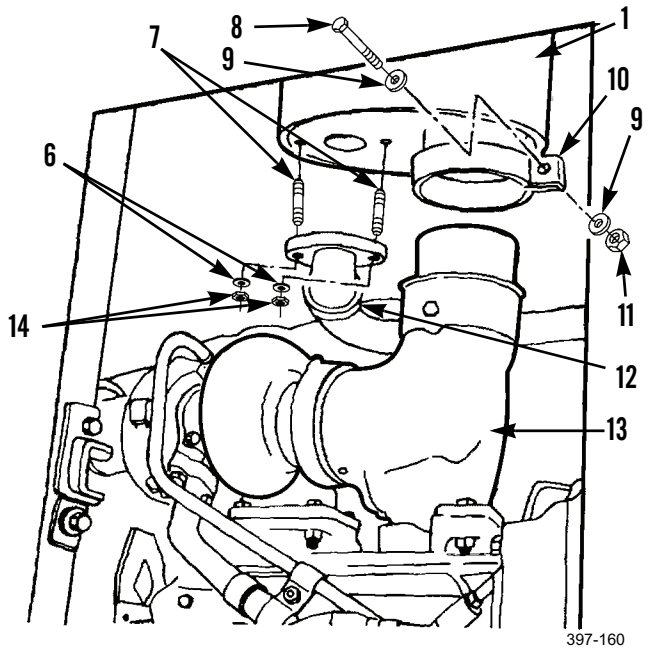


### *CLEANING AND INSPECTION*

Clean and inspect all parts in accordance with WP 0020 00.

### *INSTALLATION*

1. If removed, coat threads of two studs (7) with antiseize compound and install on muffler (1).
2. Position clamp (10) on muffler (1).
3. Position muffler (1) on elbow (13) and tube assembly (12).
4. Install bolt (8), two washers (9), and nut (11). Tighten to 20 lb-ft (27 Nm).
5. Install two washers (6) and nuts (14). Tighten to 20 lb-ft (27 Nm).
6. Position clamp (5) on pipe (4).
7. Install pipe (4) on muffler (1).
8. Install bolt (3) and nut (2). Tighten to 20 lb-ft (27 Nm).
9. Close right side engine doors (TM 5-3805-261-10).

**END OF WORK PACKAGE**

## RADIATOR AND SUPPORT REPLACEMENT 0052 00

### THIS WORK PACKAGE COVERS

Removal, Cleaning and Inspection, Installation

### INITIAL SETUP

**Maintenance Level**

Unit

**Tools and Special Tools**

Tool kit, general mechanic's (Item 89, WP 0348 00)

Bracket, link (4) (Item 16, WP 0348 00)

Sling (Item 78, WP 0348 00)

Bolt, 3/8-16 x 5-1/2 in. (4)

Lifting device, 350-lb capacity

Nut, 3/8-16 in. (4)

Wood blocks

**Materials/Parts**

Cap set, protective (Item 7, WP 0349 00)

Rag, wiping (Item 35, WP 0349 00)

**Personnel Required**

Two

**References**

WP 0020 00

**Equipment Conditions**

Machine parked on level ground (TM 5-3805-261-10)

Parking/emergency brake applied (TM 5-3805-261-10)

Implements lowered to ground (TM 5-3805-261-10)

Engine off (TM 5-3805-261-10)

Battery disconnect switch in OFF position (TM 5-3805-261-10)

Engine hood removed (WP 0181 00)

Right and left engine panels removed (WP 0182 00)

Shields, baffles, and plates removed (WP 0053 00)

Grille removed (WP 0054 00)

Vent guard removed (WP 0056 00)

Cooling system drained (WP 0065 00)

Radiator drain line removed (WP 0058 00)

Rear brake and signal lights removed (WP 0108 00)

Blackout stop/taillights removed (WP 0109 00)

Rear work light removed (WP 0110 00)

Rear bumper removed (WP 0204 00 or WP 0205 00)

***REMOVAL***



**WARNING**

- DO NOT service cooling system unless engine has been allowed to cool down. This is a pressurized cooling system and escaping steam or hot coolant may cause serious burns.
- DO NOT remove cooling system radiator cap when engine is hot. Allow engine to cool down. Loosen cap to first stop and let any pressure out of cooling system, then remove cap. Failure to follow this warning may cause serious burns.
- Wear effective eye, glove, and skin protection when handling coolants. Failure to do so may cause injury to personnel.

**CAUTION**

Cap all hose and tube ends to prevent contamination.

1. Loosen two clamps (5). Slide clamps and hose (6) back on tube (4).
2. Remove nut (7), washer (1), and bolt (3) from upper support plate (2).

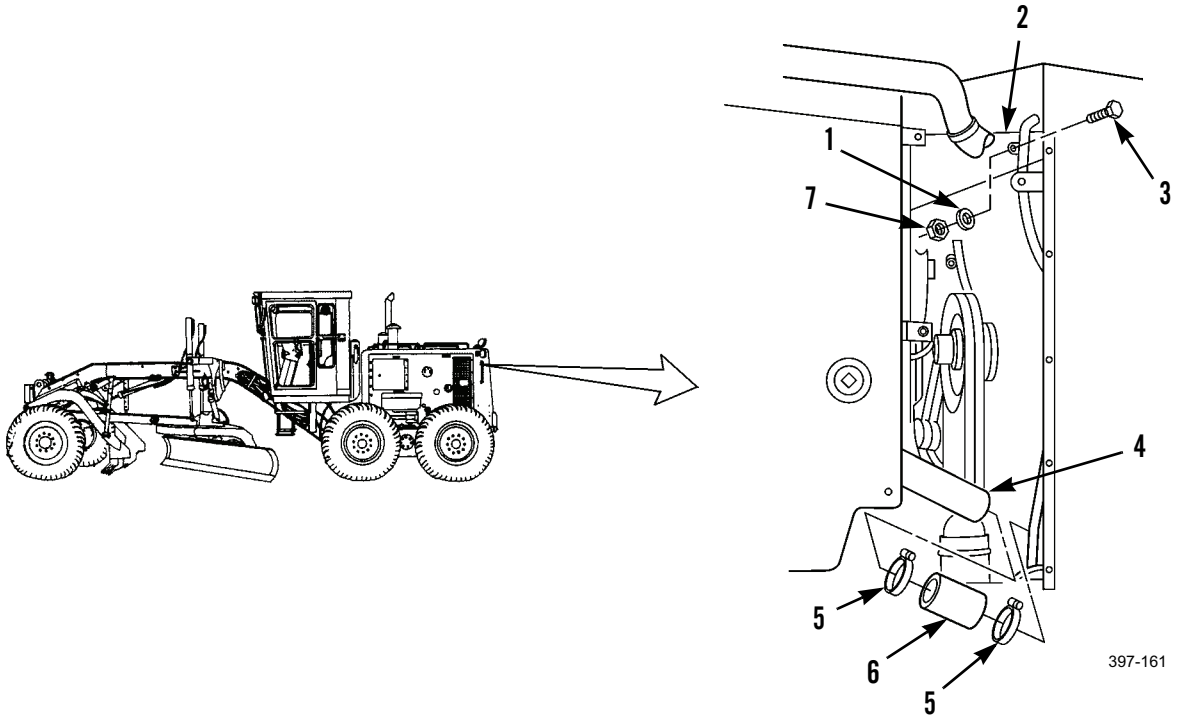

***REMOVAL - CONTINUED***

3. Loosen two clamps (8). Slide clamps and hose (15) back on tube (9).
4. Remove bolt (11), washer (10), and clamp (14) from tube (9).
5. Loosen two clamps (12). Slide clamps and hose (13) back on tube (9).
6. Remove tube (9).

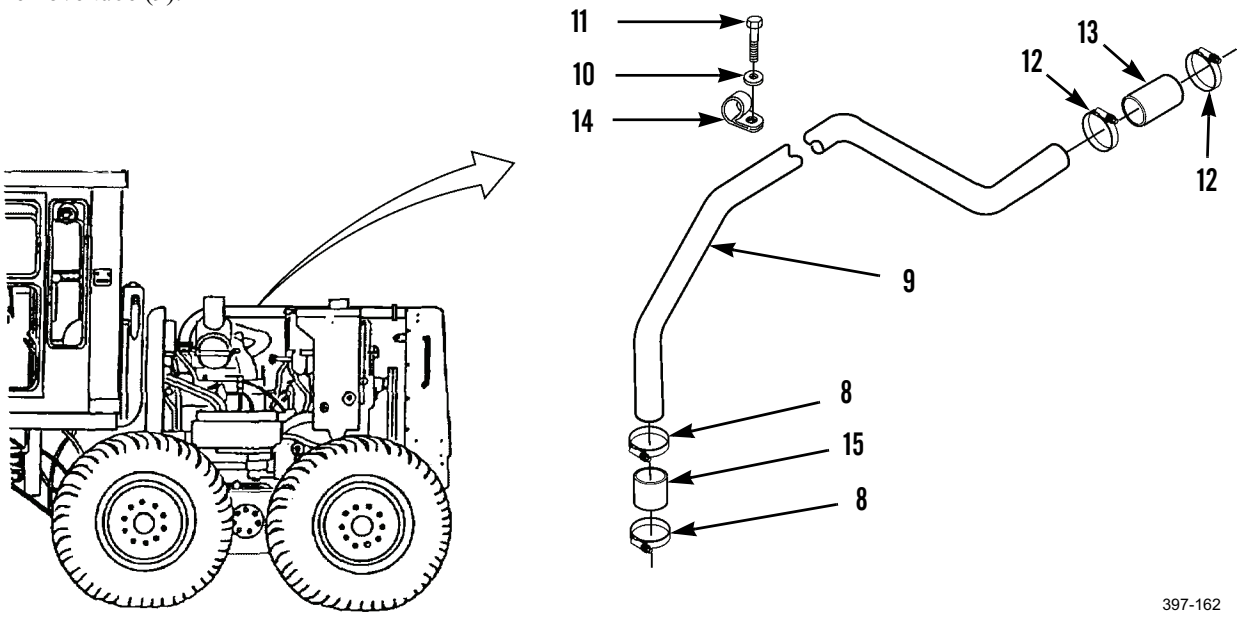


7. Remove nut (20), washer (19), bracket (18), washer (17), and bolt (16) from each side of hydraulic cooler assembly (23).
8. Support hydraulic cooler assembly (23) and remove bolt (22) and washer (21) from each side of hydraulic cooler assembly.
9. Move hydraulic cooler assembly (23) to the side.

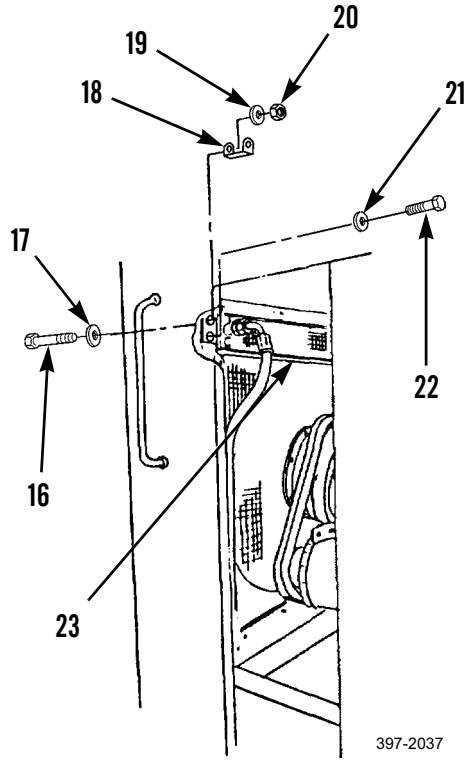

***REMOVAL - CONTINUED***



**WARNING**

Use extreme caution when handling heavy parts. Provide adequate support and use assistance during procedure. Ensure that any lifting device used is in good condition and of suitable load capacity. Keep clear of heavy parts supported only by lifting device. Failure to follow this warning may cause injury or death to personnel.

**NOTE**

Radiator and support weighs 310 lb (141 kg).

10. Attach sling to grabirons of support (24) and take up slack.
11. Remove 10 bolts (25) and washers (26).
12. Use sling to remove support (24).
13. Remove baffle (27) (WP 0053 00).

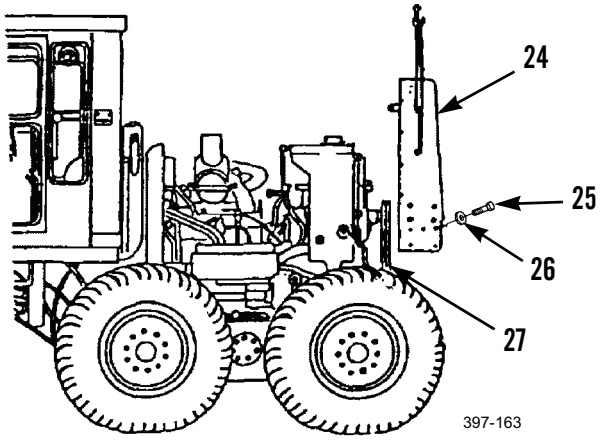


14. Remove four bolts (31) and eight washers (30).
15. Remove eight bolts (28), washers (29), four brackets (34), and mounts (33) from sides of support (24). Discard mounts if cracked, broken, distorted, or deteriorated.
16. Place support (24) on wood blocks.

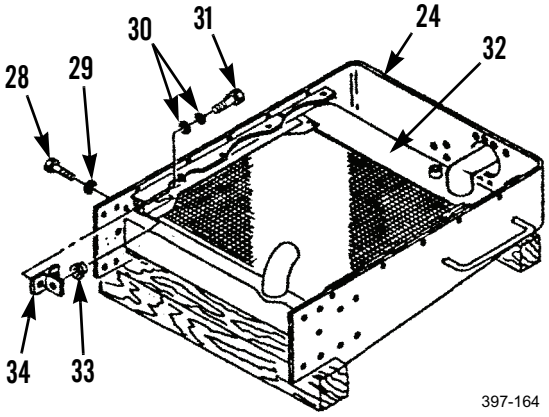

***REMOVAL - CONTINUED***

17. Remove sling.
18. Install four link brackets (37), 3/8-16 x 5 1/2 in. bolts (36), 3/8-16 in. nuts (35), and sling.

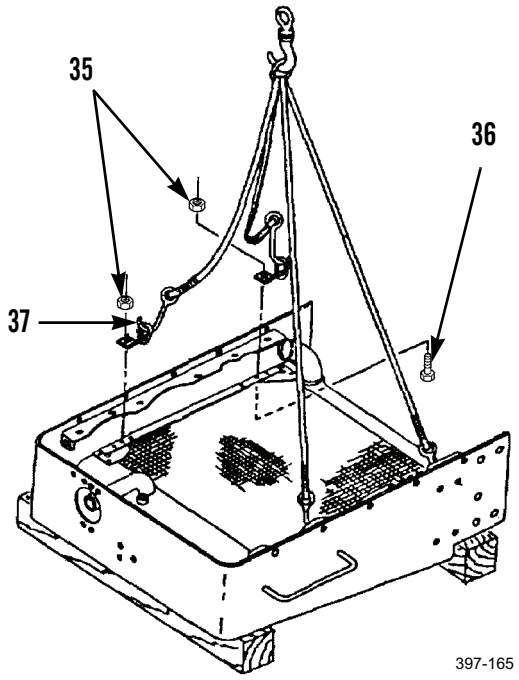




**WARNING**

Use extreme caution when handling heavy parts. Provide adequate support and use assistance during procedure. Ensure that any lifting device used is in good condition and of suitable load capacity. Keep clear of heavy parts supported only by lifting device. Failure to follow this warning may cause injury or death to personnel.

**NOTE**

Radiator weighs 135 lb (61 kg).

19. Use sling to separate support (24) and radiator (38). Slide radiator out from bottom of support.

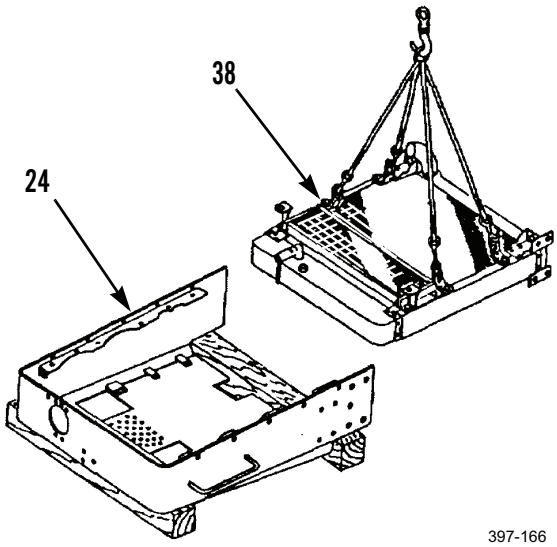

### *REMOVAL - CONTINUED*

20. Remove two nuts (43), four bolts (39), washers (40), and brackets (44).
21. Support radiator (38) on wood blocks.
22. Remove sling, four 3/8-16 in. nuts (35), 3/8-16 x 5-1/2 in. bolts (36), and link brackets (37).

**NOTE**

Remove seals only if inspection indicates replacement is necessary.

23. If necessary, remove and discard seals (41 and 42).

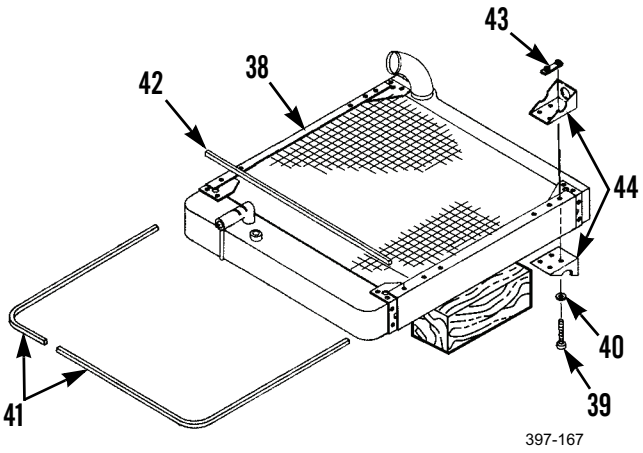


### *CLEANING AND INSPECTION*

Clean and inspect all parts in accordance with WP 0020 00.

### *INSTALLATION*

1. If removed, install new seals (42 and 41). Cut bulk seal to size. Install seal on top and sides of radiator (38).

**NOTE**

Do not cover overfill tube on top of radiator.

2. Install four link brackets (37), 3/8-16 x 5-1/2 in. bolts (36), 3/8-16 in. nuts (35), and sling.

**NOTE**

Do not tighten bolts.

3. Lift radiator (38) and install four washers (40), bolts (39), and two nuts (43).
4. Position four brackets (44).

***INSTALLATION - CONTINUED***



**WARNING**

Use extreme caution when handling heavy parts. Provide adequate support and use assistance during procedure. Ensure that any lifting device used is in good condition and of suitable load capacity. Keep clear of heavy parts supported only by lifting device. Failure to follow this warning may cause injury or death to personnel.

**NOTE**

Radiator weighs 135 lb (61 kg).

5. Use sling to carefully slide radiator (38) into support (24).
6. Remove sling, four 3/8-16 in. nuts (35), 3/8-16 x 5-1/2 in. bolts (36), and link brackets (37).

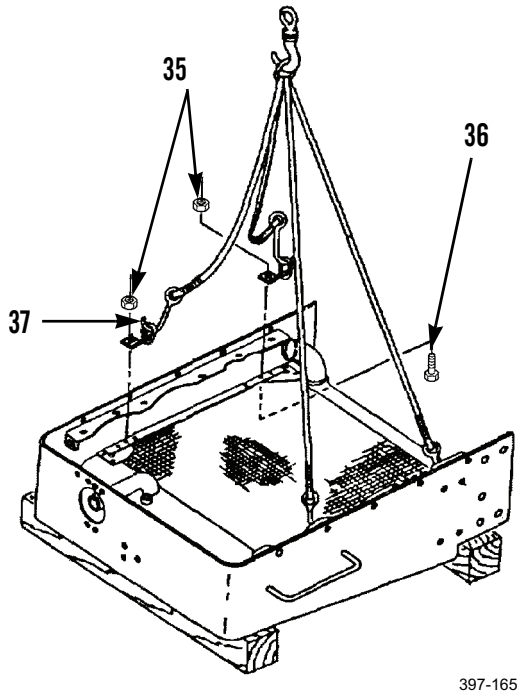


397-165

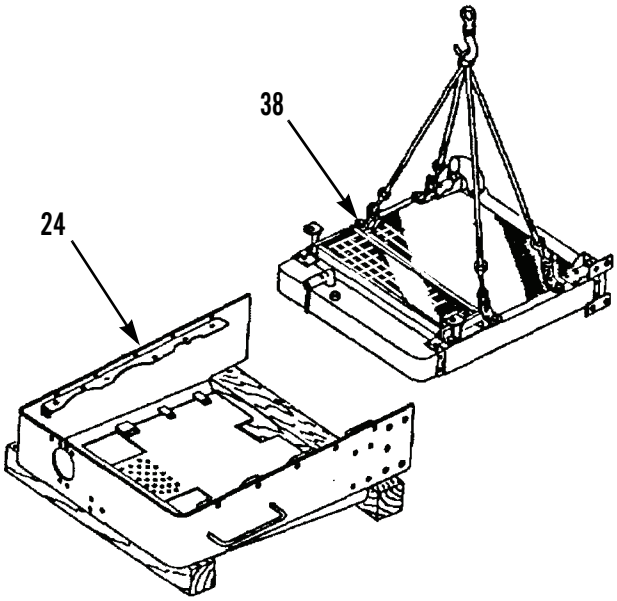


397-166

*INSTALLATION - CONTINUED*

7. Position four mounts (33) and brackets (34).

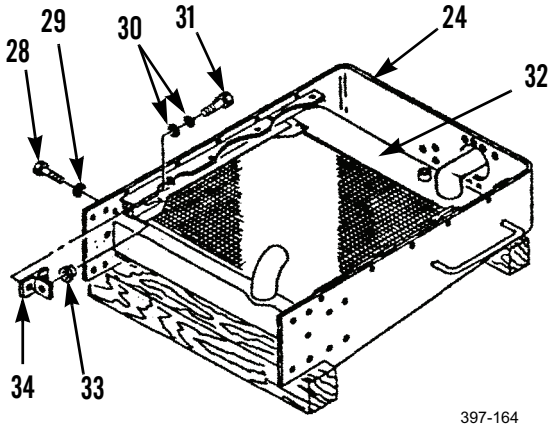


**NOTE**

Do not tighten bolts.

8. Install eight washers (29) and bolts (28).
9. Install eight washers (30), four bolts (31), and mounts (33) and secure to brackets (34).
10. Tighten eight bolts (28).
11. Install baffle (27) (WP 0053 00).



**WARNING**

Use extreme caution when handling heavy parts. Provide adequate support and use assistance during procedure. Ensure that any lifting device used is in good condition and of suitable load capacity. Keep clear of heavy parts supported only by lifting device. Failure to follow this warning may cause injury or death to personnel.

**NOTE**

Radiator and support assembly weighs 310 lb (141 kg).

12. Attach sling to left and right side of grabirons of support (24). Lift support and slowly stand on end with sling and set into position.
13. Install 10 washers (26) and bolts (25).

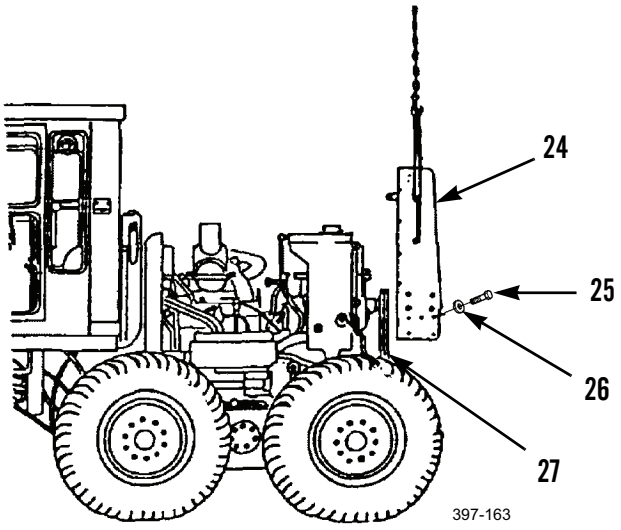

***INSTALLATION - CONTINUED***

14. Position hydraulic cooler assembly (23) and install washer (21) and bolt (22) on each side of hydraulic cooler assembly.
15. Install washer (17), bolt (16), bracket (18), washer (19), and nut (20) on each side of hydraulic cooler assembly (23).

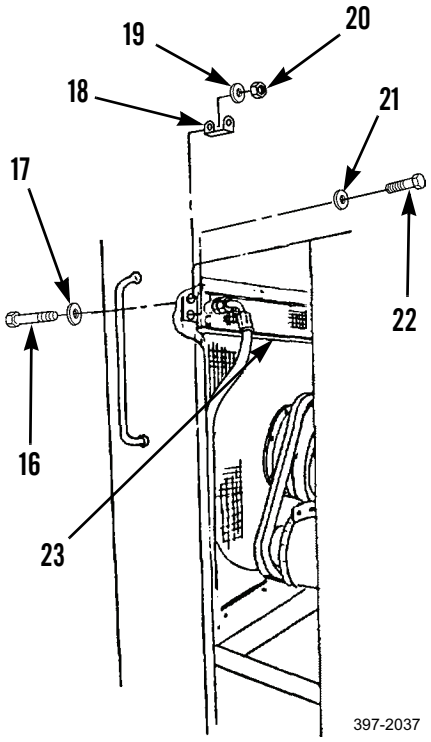


16. Position tube (9).
17. Connect hose (13), two clamps (12), and tube (9).
18. Install clamp (14), washer (10), and bolt (11) on tube (9).
19. Install hose (15), two clamps (8), and tube (9).

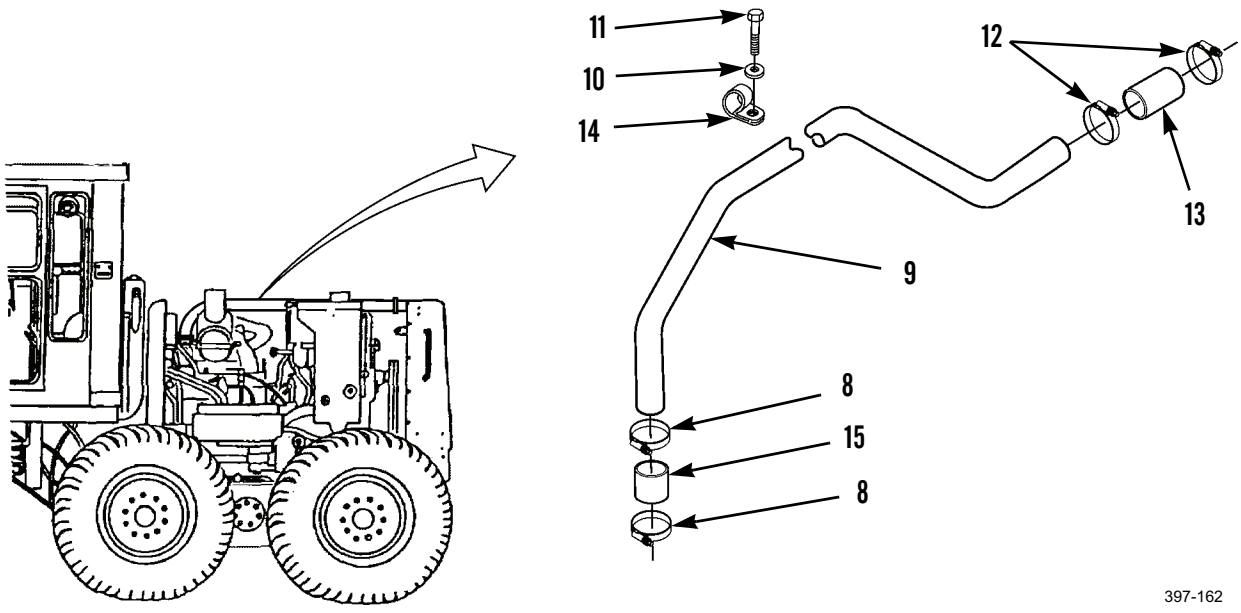

***INSTALLATION - CONTINUED***

20. Install bolt (3), washer (1), and nut (7) in upper support plate (2).
21. Install two clamps (5) on hose (6) on tube (4).

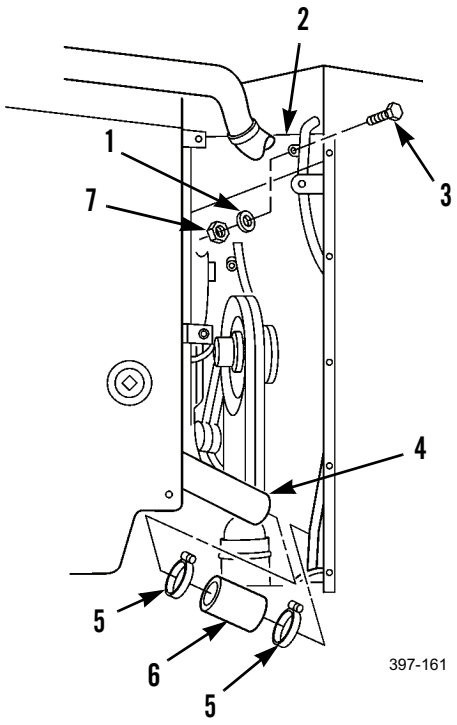


22. Tighten four bolts (39).

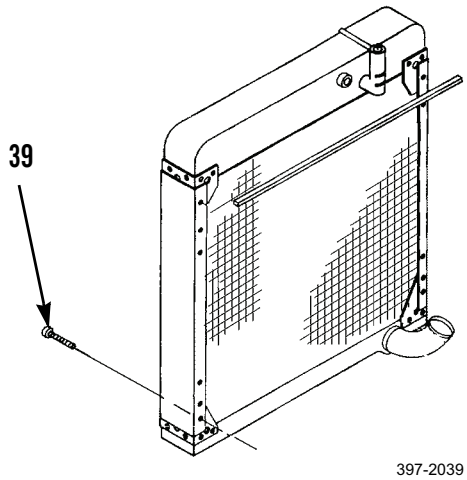

***INSTALLATION - CONTINUED***

23. Install radiator drain line (WP 0058 00).
24. Refill cooling system (WP 0065 00).
25. Turn battery disconnect switch to ON position and start engine (TM 5-3805-261-10).
26. Check for leaks. Stop engine.
27. Install rear bumper (WP 0204 00 or WP 0205 00).
28. Install rear work light (WP 0110 00).
29. Install blackout stop/taillights (WP 0109 00).
30. Install rear brake and signal lights (WP 0108 00).
31. Install vent guard (WP 0056 00).
32. Install grille (WP 0054 00).
33. Install shields, baffles, and plates (WP 0053 00).
34. Install right and left engine panels (WP 0182 00).
35. Install engine hood (WP 0181 00).

**END OF WORK PACKAGE**

## SHIELDS, BAFFLES, AND PLATE REPLACEMENT 0053 00

### THIS WORK PACKAGE COVERS

Removal, Cleaning and Inspection, Installation

### INITIAL SETUP

**Maintenance Level**

Unit

**Tools and Special Tools**

Tool kit, general mechanic's (Item 89, WP 0348 00)

**Materials/Parts**

Rag, wiping (Item 35, WP 0349 00)

**References**

WP 0020 00

**Equipment Conditions**

Machine parked on level ground (TM 5-3805-261-10)

Parking/emergency brake applied (TM 5-3805-261-10)

Implements lowered to ground (TM 5-3805-261-10)

Engine off (TM 5-3805-261-10)

Battery disconnect switch in OFF position (TM 5-3805-261-10)

Left and right side screen doors opened (WP 0055 00)

***REMOVAL***

**NOTE**

Note routing of wiring harness to aid in installation and remove as necessary.

1. Remove bolt (1), washer (2), and clamp (3) from front-upper-left of radiator and support.
2. Remove bolt (8), washer (7), and clamp (9).
3. Remove bolt (6), washer (5), and clamp (4).
4. Remove two bolts (10), washers (11), and shield (12).

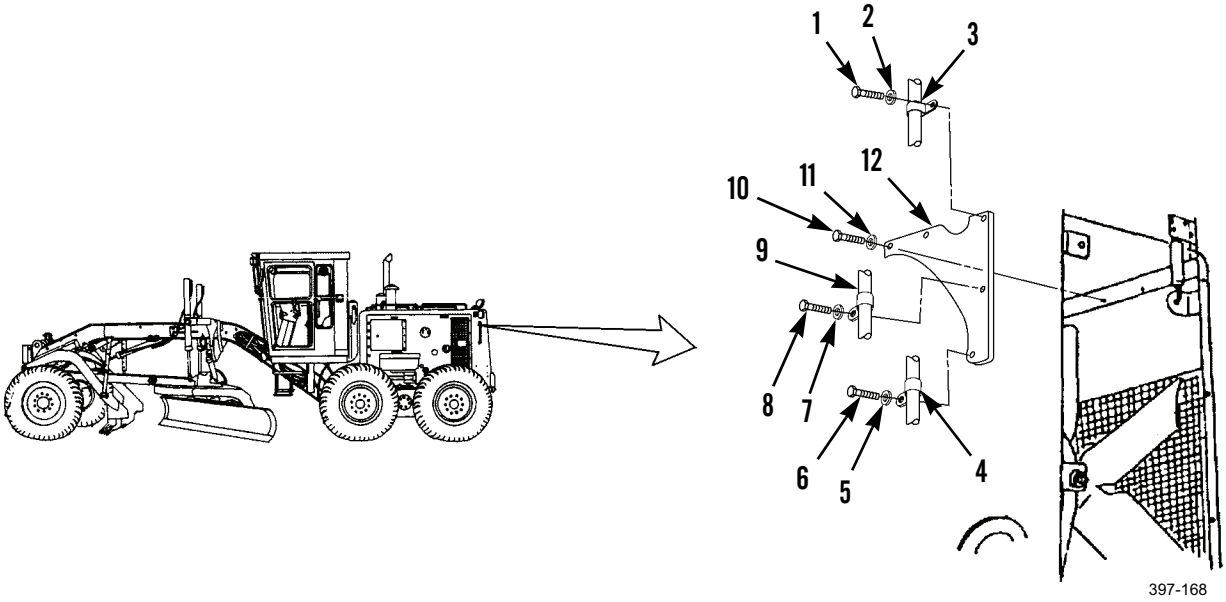

***REMOVAL - CONTINUED***

5. Remove bolt (13), washer (14), and clamp (15) from lower-left of radiator and support.
6. Remove bolt (24), washer (23), and clamp (22).
7. Remove bolt (18), washer (17), and clamp (16).
8. Remove bolt (21), washer (20), and clamp (19).

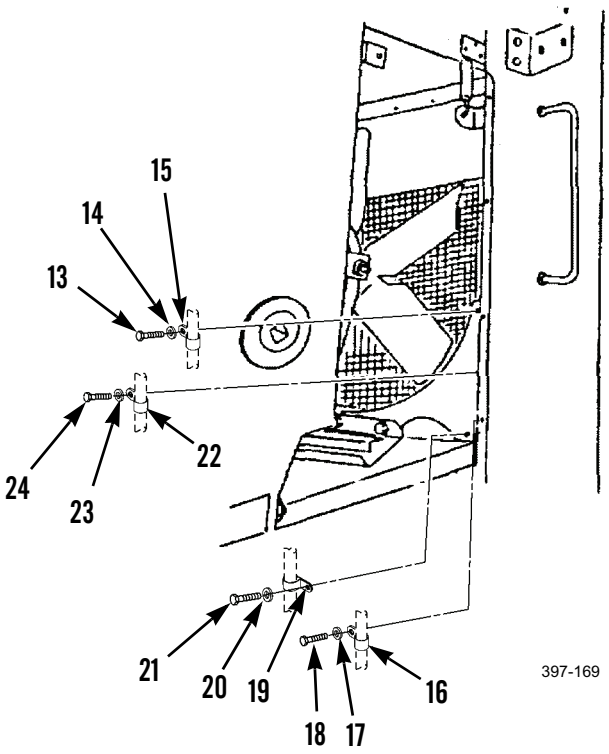


9. Remove three bolts (33), washers (32), and clamps (25) from under molding (28).
10. Remove five bolts (26), washers (27), and molding (28) from front-lower-left of radiator and support.
11. Remove bolt (29), washer (30), and shield (31).

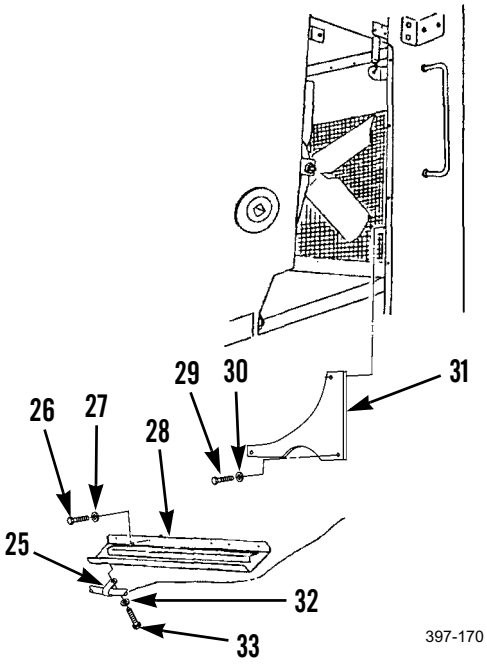

### *REMOVAL - CONTINUED*

12. Remove bolt (42), washer (43), and clamp (44) from harness assembly.
13. Remove bolt (39), washer (40), and clamp (41) from hydraulic oil cooler hose.
14. Remove three bolts (37), washers (38), and shield (45).
15. Remove bolt (34), washer (35), and baffle (36).

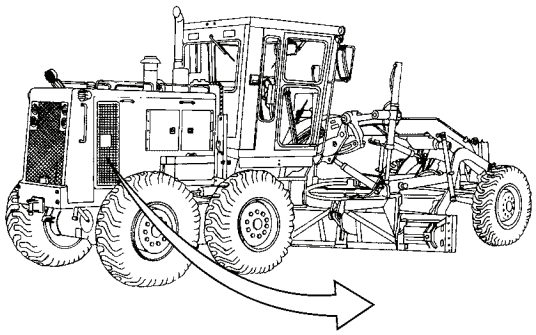

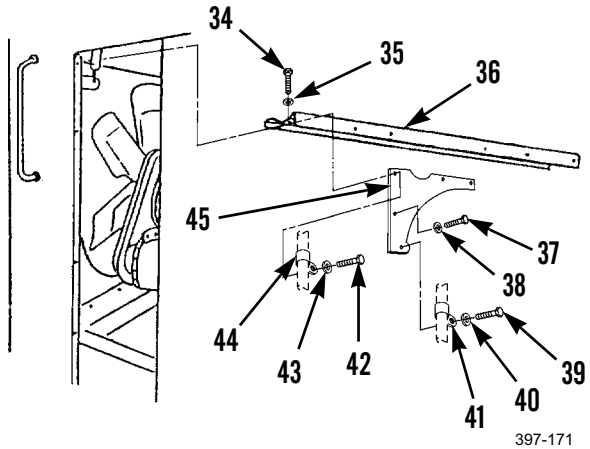


16. Remove bolt (50), washer (49), and clamp (48) from front-lower-right of radiator and support.
17. Remove bolt (53), washer (54), and clamp (55).
18. Remove two bolts (51), washers (52), shield (47), and baffle (46).

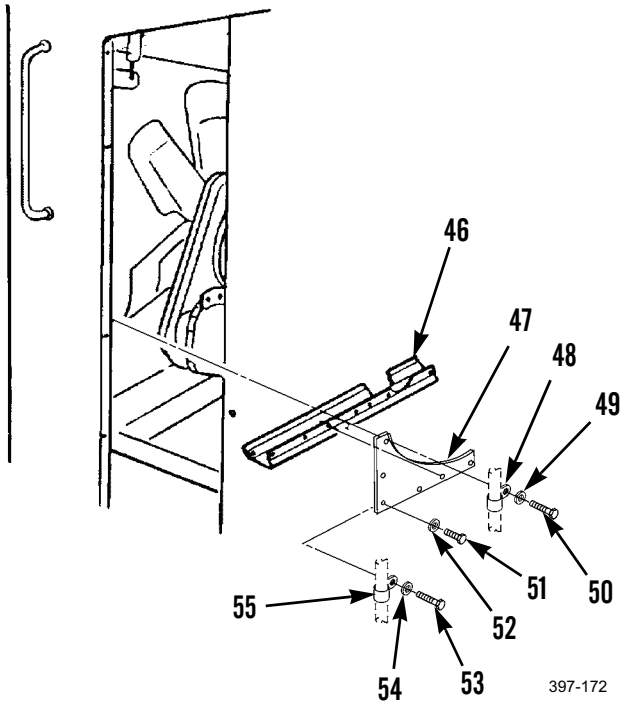


### *CLEANING AND INSPECTION*

Clean and inspect all parts in accordance with WP 0020 00.

### *INSTALLATION*

1. Position baffle (46) and shield (47) on front-lower-right side of radiator and support.

**NOTE**

Do not tighten bolts.

2. Install two washers (52) and bolts (51).
3. Install clamp (55), washer (54), and bolt (53), securing harness assembly.
4. Install clamp (48), washer (49), and bolt (50), securing hydraulic oil cooler hose.
5. Tighten two bolts (51).
6. Position baffle (36) on front-upper-right of radiator and support.
7. Install washer (35) and bolt (34) on front-upper-right of radiator and support.
8. Position shield (45).
9. Install three washers (38) and bolts (37).
10. Install clamp (41), washer (40), and bolt (39), securing hydraulic oil cooler hose.
11. Install clamp (44), washer (43), and bolt (42), securing harness assembly.
12. Position shield (31) on front-lower-left of radiator and support.
13. Install two washers (30) and bolts (29).
14. Position molding (28).
15. Install five washers (27) and bolts (26).
16. Install three clamps (25), washers (32), and bolts (33) under molding (28), securing two harness assemblies.

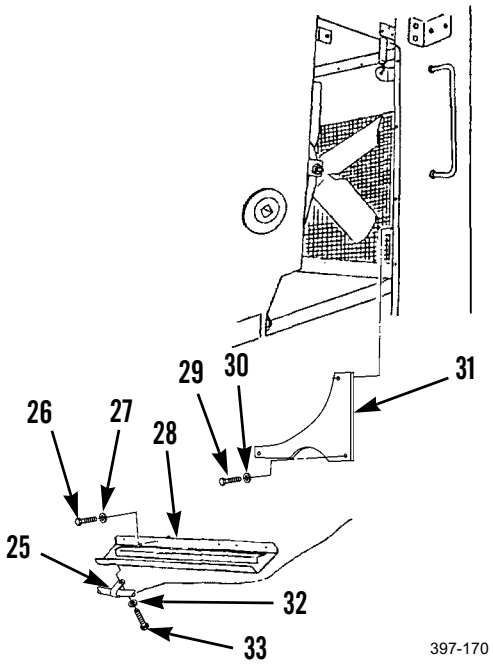

***INSTALLATION - CONTINUED***

17. Install clamp (19), washer (20), and bolt (21) on front-lower-left of radiator and support, securing harness assembly.
18. Install clamp (16), washer (17), and bolt (18), securing harness assembly.
19. Install clamp (22), washer (23), and bolt (24), securing harness assembly.
20. Install clamp (15), washer (14), and bolt (13), securing hydraulic oil cooler hose.

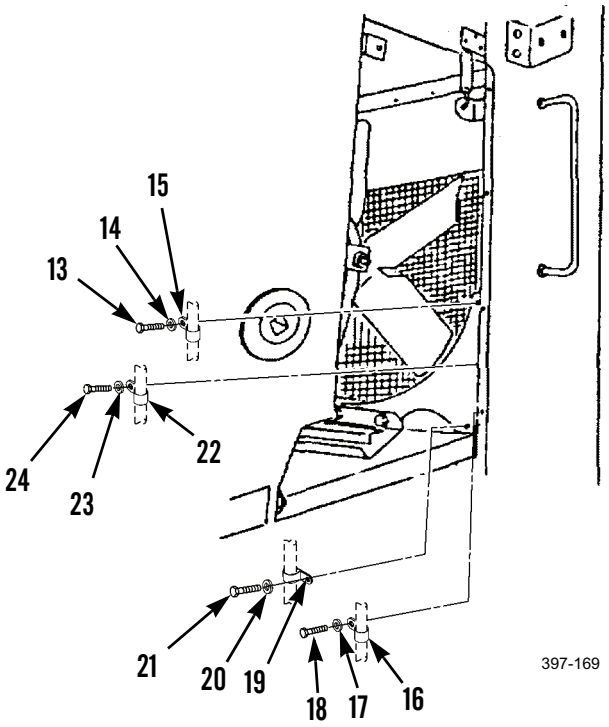


21. Position shield (12).
22. Install two washers (11) and bolts (10).
23. Install clamp (4), washer (5), and bolt (6), securing hydraulic oil cooler hose.
24. Install clamp (9), washer (7), and bolt (8), securing harness assembly.
25. Install clamp (3), washer (2), and bolt (1), securing harness assembly.
26. Close left and right side screen doors (WP 0055 00).

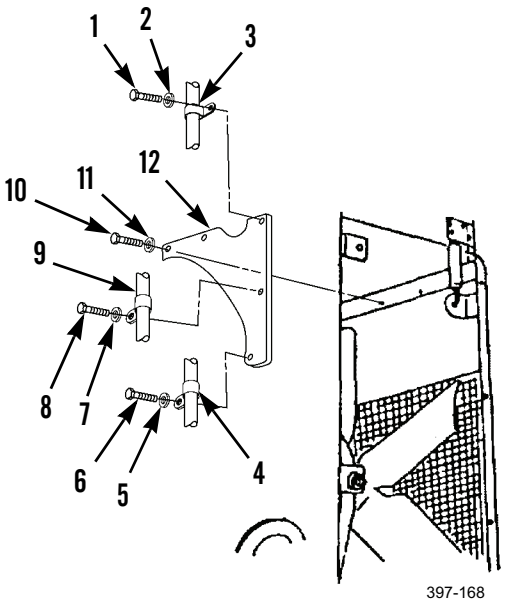


**END OF WORK PACKAGE**

## GRILLE REPLACEMENT 0054 00

### THIS WORK PACKAGE COVERS

Removal, Cleaning and Inspection, Installation

### INITIAL SETUP

**Maintenance Level**

Unit

**Tools and Special Tools**

Tool kit, general mechanic's (Item 89, WP 0348 00)

**Materials/Parts**

Rag, wiping (Item 35, WP 0349 00)

**References**

WP 0020 00

**Equipment Conditions**

Machine parked on level ground (TM 5-3805-261-10)

Parking/emergency brake applied (TM 5-3805-261-10)

Implements lowered to ground (TM 5-3805-261-10)

Engine off (TM 5-3805-261-10)

Battery disconnect switch in OFF position (TM 5-3805-261-10)

### *REMOVAL*

Remove nine bolts (4), washers (3), and grille (2) from radiator support (1).

### *CLEANING AND INSPECTION*

Clean and inspect all parts in accordance with WP 0020 00.

### *INSTALLATION*

Install grille (2), nine washers (3), and bolts (4) on radiator support (1).

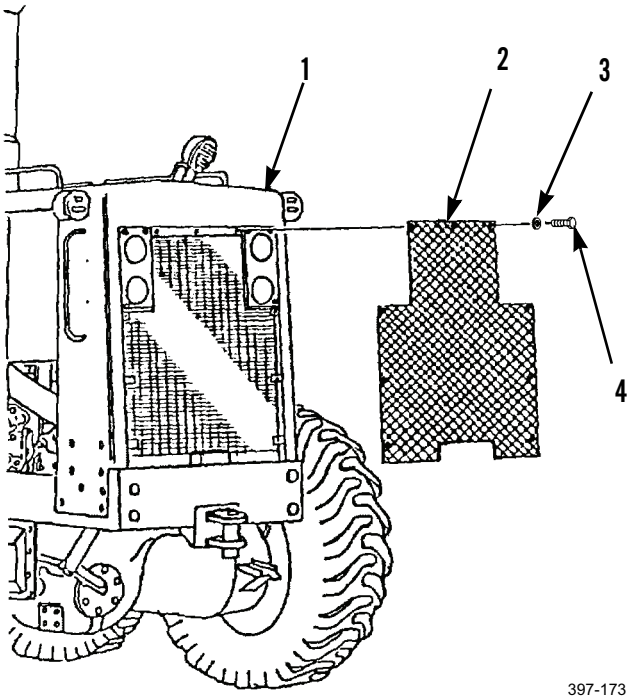


397-173

END OF WORK PACKAGE

## SIDE SCREEN DOORS REPLACEMENT 0055 00

### THIS WORK PACKAGE COVERS

Removal, Cleaning and Inspection, Installation

### INITIAL SETUP

**Maintenance Level**

Unit

**Tools and Special Tools**

Tool kit, general mechanic's (Item 89, WP 0348 00)

**Materials/Parts**

Rag, wiping (Item 35, WP 0349 00)

**References**

WP 0020 00

**Personnel Required**

Two

**Equipment Conditions**

Machine parked on level ground (TM 5-3805-261-10)

Parking/emergency brake applied (TM 5-3805-261-10)

Implements lowered to ground (TM 5-3805-261-10)

Engine off (TM 5-3805-261-10)

Battery disconnect switch in OFF position (TM 5-3805-261-10)

### *REMOVAL*

**NOTE**

This procedures covers replacement of the right side screen door. Follow these instructions for the left side screen door.

1. Remove two bolts (3) and washers (2) and open screen door (1).

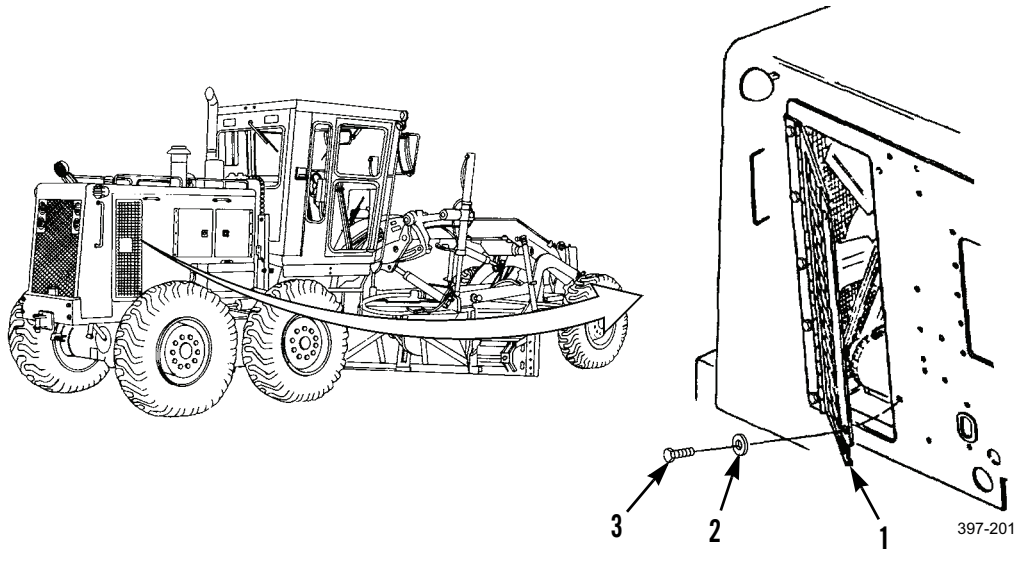

***REMOVAL - CONTINUED***

**WARNING**

Bar is heavy and will slide out when bolts are removed. Support bar to prevent injury.

2. Support screen door (1) and bar (5) and remove five bolts (6), washers (4), screen door (1), and bar.

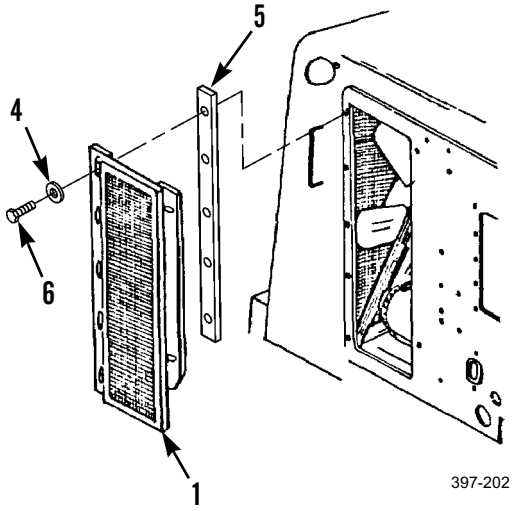


***CLEANING AND INSPECTION***

Clean and inspect all parts in accordance with WP 0020 00.

***INSTALLATION***

**NOTE**

Do not tighten bolts.

1. Install bar (5), screen door (1), five washers (4), and bolts (6).

2. Close screen door (1) and install two washers (2) and bolts (3).
3. Align screen door (1) and tighten five bolts (6) and two bolts (3).

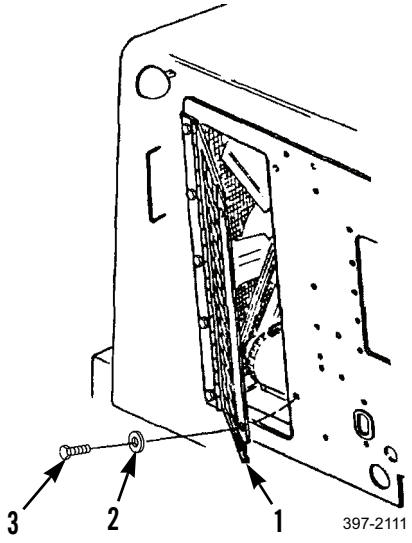


**END OF WORK PACKAGE**

## CAP GUARD REPLACEMENT 0056 00

### THIS WORK PACKAGE COVERS

Removal, Cleaning and Inspection, Installation

### INITIAL SETUP

**Maintenance Level**

Unit

**Tools and Special Tools**

Tool kit, general mechanic's (Item 89, WP 0348 00)

Shop equipment, common no. 1 (Item 75, WP 0348 00)

**Materials/Parts**

Rag, wiping (Item 35, WP 0349 00)

Rivets (6)

**References**

WP 0020 00

**Equipment Conditions**

Machine parked on level ground (TM 5-3805-261-10)

Parking/emergency brake applied (TM 5-3805-261-10)

Implements lowered to ground (TM 5-3805-261-10)

Engine off (TM 5-3805-261-10)

Battery disconnect switch in OFF position (TM 5-3805-261-10)

### *REMOVAL*

1. Remove and discard rivet (6) by drilling out from top of radiator support (8) and remove cap (4).
2. Inspect pad (3) on inside of cap (4). Remove pad and discard if torn or deteriorated.
3. Remove and discard two rivets (2) by drilling out and remove bracket (1).
4. Remove and discard three rivets (5) by drilling out and remove bracket (7).

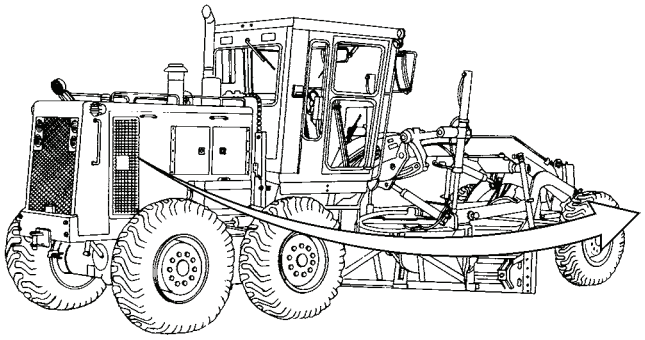

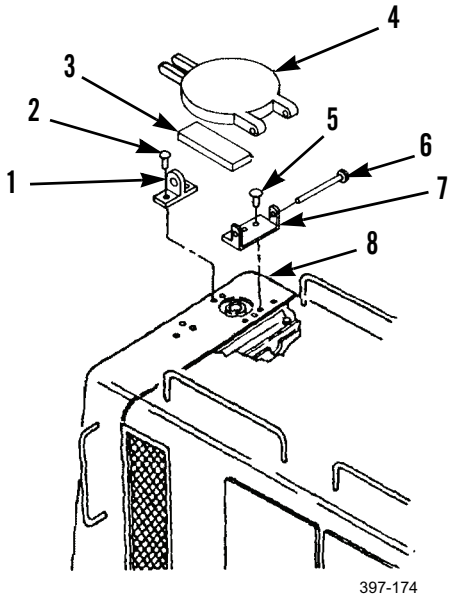


397-174

### *CLEANING AND INSPECTION*

Clean and inspect all parts in accordance with WP 0020 00.

### *INSTALLATION*

1. Position bracket (7) and install three new rivets (5).
2. Position bracket (1) and install two new rivets (2).
3. If removed, install new pad (3) on inside of cap (4).
4. Position cap (4) and install new rivet (6).

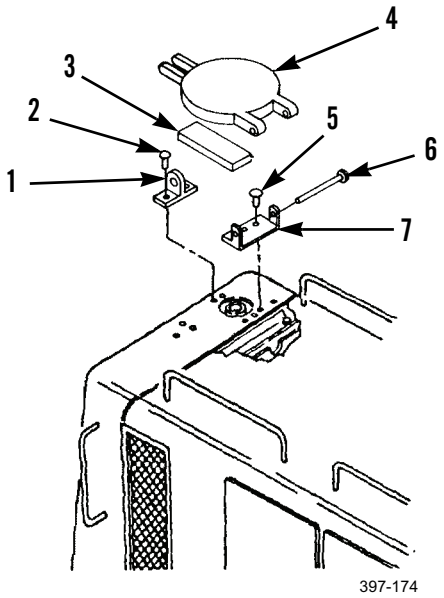


**END OF WORK PACKAGE**

## RADIATOR HOSES, LINES, AND FITTINGS REPLACEMENT 0057 00

### THIS WORK PACKAGE COVERS

Removal, Cleaning and Inspection, Installation

### INITIAL SETUP

**Maintenance Level**

Unit

**Tools and Special Tools**

Tool kit, general mechanic's (Item 89, WP 0348 00)

**Materials/Parts**

Cap set, protective (Item 7, WP 0349 00)

Rag, wiping (Item 35, WP 0349 00)

Tag, marker (Item 44, WP 0349 00)

Gasket

**References**

WP 0020 00

**Equipment Conditions**

Machine parked on level ground (TM 5-3805-261-10)

Parking/emergency brake applied (TM 5-3805-261-10)

Implements lowered to ground (TM 5-3805-261-10)

Engine off (TM 5-3805-261-10)

Battery disconnect switch in OFF position (TM 5-3805-261-10)

Engine hood removed (WP 0181 00)

Left and right side engine panels removed (WP 0182 00)

Oil level gauge removed (WP 0027 00)

Cooling system drained (WP 0065 00)



**WARNING**



- DO NOT service cooling system unless engine has been allowed to cool down. This is a pressurized cooling system and escaping steam or hot coolant may cause serious burns.
- DO NOT remove cooling system radiator cap when engine is hot. Allow engine to cool down. Loosen cap to first stop and let any pressure out of cooling system, then remove cap. Failure to follow this warning may cause serious burns.
- Wear effective eye, glove, and skin protection when handling coolants. Failure to do so may cause injury to personnel.

***REMOVAL***

## CAUTION

Cap hose and tube ends and plug open ports to prevent contamination.

## NOTE

Tag hose and tube assemblies before disconnecting to aid in installation.

1. Loosen two clamps (1). Disconnect hose (8) from temperature regulator (thermostat) housing and slide up on tube (2).
2. Remove two clamps (1).
3. Remove bolt (3), washer (4), and clamp (5) from front-upper-left of fuel tank.
4. Loosen two clamps (6). Disconnect hose (7) and slide up on tube (2).
5. Remove two clamps (6).
6. Remove tube (2) with hoses (7 and 8).
7. Remove hoses (7 and 8) from tube (2).

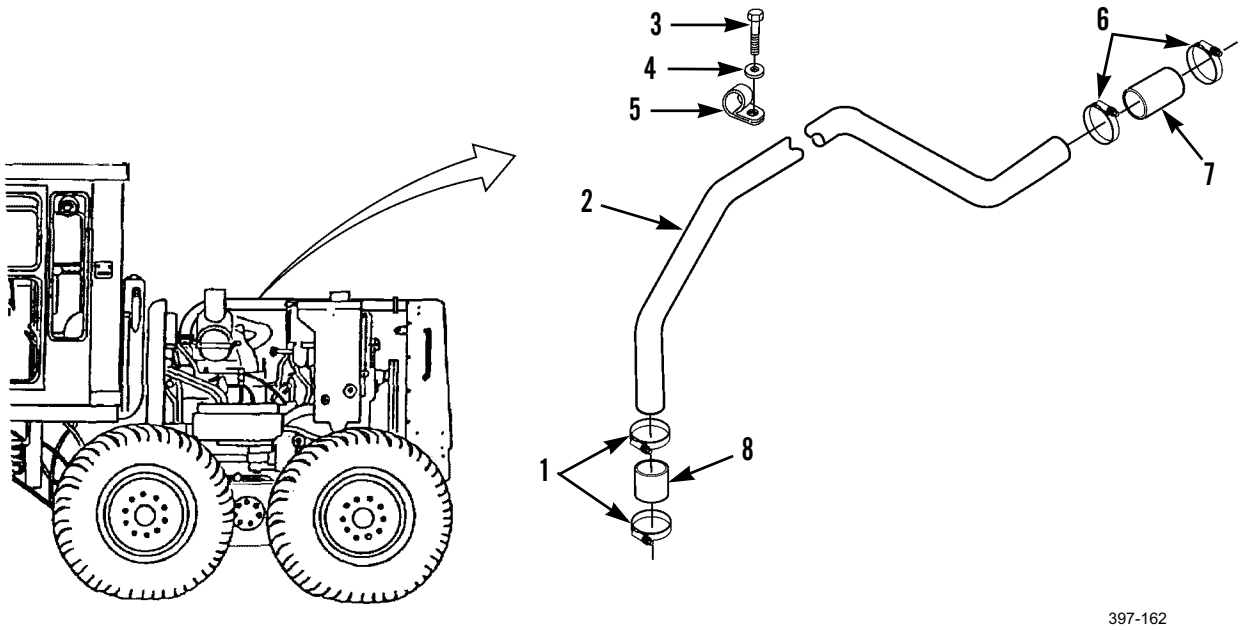

## RADIATOR HOSES, LINES, AND FITTINGS REPLACEMENT - CONTINUED 0057 00

### *REMOVAL - CONTINUED*

8. Remove bolt (11), washer (12), and clamp (13).
9. Loosen two clamps (10). Disconnect hose (9) and slide up on tube (14).
10. Remove two clamps (10).
11. Loosen two clamps (15). Disconnect hose (16) and slide up on tube (14).
12. Remove two clamps (15).

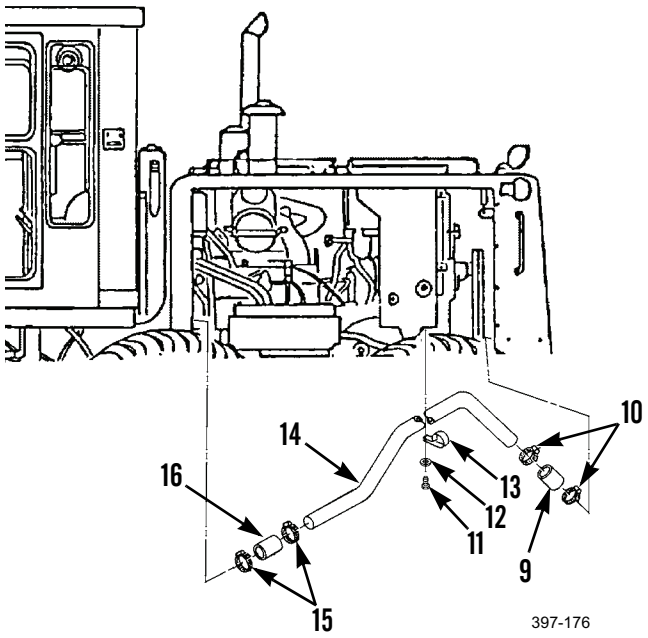


13. Remove bolt (23), clamp (24), and spacer (22) from transmission to engine adapter housing (21).
14. Remove tube (14) with hoses (9 and 16), connecting water pump to radiator.
15. Remove hoses (9 and 16) from tube (14).
16. Remove four bolts (26).
17. Separate oil gauge tube (25) from housing (18).
18. Remove bolt (20).
19. Loosen two clamps (27). Remove hose (17) from housing (18) and water pump.
20. Remove two clamps (27).
21. Remove housing (18) and gasket (19). Discard gasket.

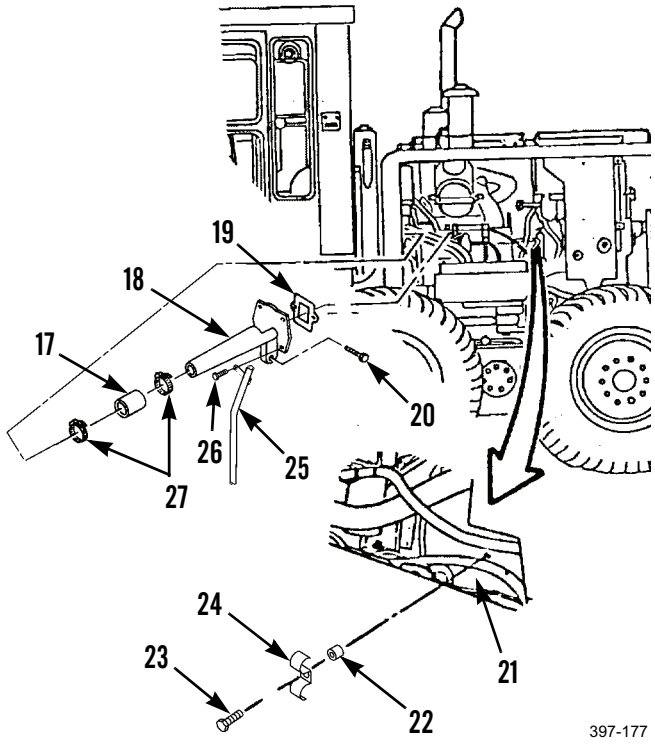

### *CLEANING AND INSPECTION*

Clean and inspect all parts in accordance with WP 0020 00.

### *INSTALLATION*

1. Install new gasket (19) and housing (18).
2. Position two clamps (27).
3. Install hose (17) on housing (18) and water pump.
4. Tighten two clamps (27).

**NOTE**

Do not tighten bolt.

5. Install bolt (20).

**NOTE**

Do not tighten bolt.

6. Install two bolts (26) in upper mounting holes of housing (18).
7. Position oil gauge tube (25).
8. Install two bolts (26) in lower mounting holes of housing (18).
9. Tighten bolt (20) and two bolts (26) in upper mounting holes of housing (18).

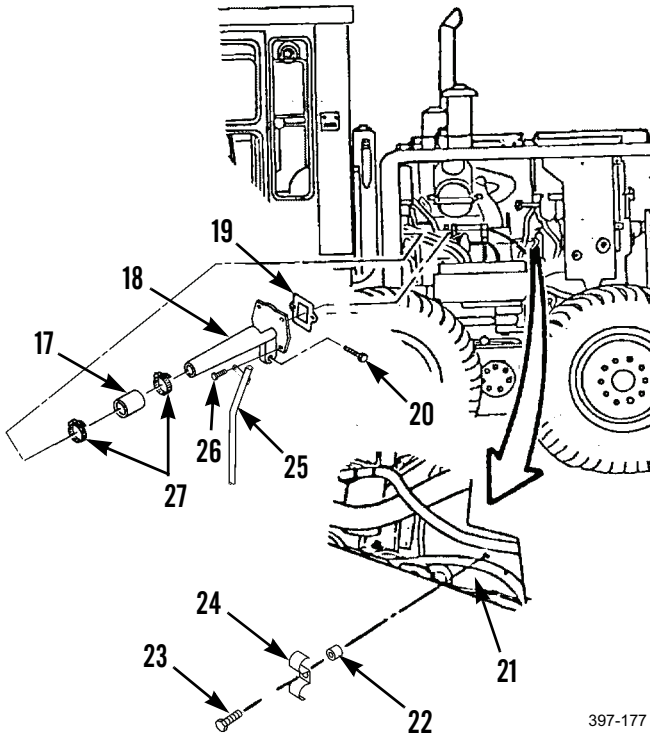


10. Install hoses (16 and 9) on tube (14).
11. Position spacer (22) and clamp (24) on engine adapter housing (21) and install bolt (23).
12. Position tube (14) with hoses (16 and 9) under fuel tank, connecting water pump to radiator.
13. Position two clamps (15).
14. Connect hose (16) to water pump.
15. Tighten two clamps (15).
16. Position two clamps (10).
17. Connect hose (9).
18. Tighten two clamps (10).
19. Install clamp (13), washer (12), and bolt (11).

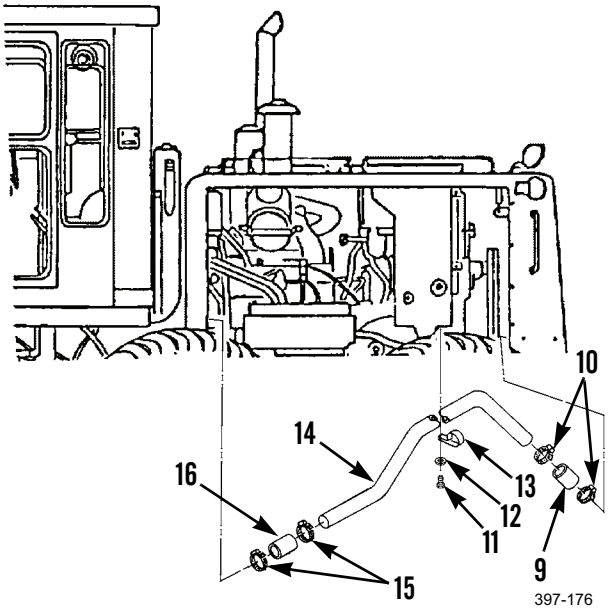

***INSTALLATION - CONTINUED***

20. Install hoses (8 and 7) on tube (2).
21. Position tube (2) with hoses (8 and 7) on top of fuel tank.
22. Position two clamps (6).
23. Connect hose (7) in upper-left side of radiator.
24. Tighten two clamps (6).
25. Position two clamps (1).
26. Connect hose (8) to temperature regulator (thermostat) housing.
27. Tighten two clamps (1).
28. Install clamp (5), washer (4), and bolt (3) in front-upper-left side of fuel tank.

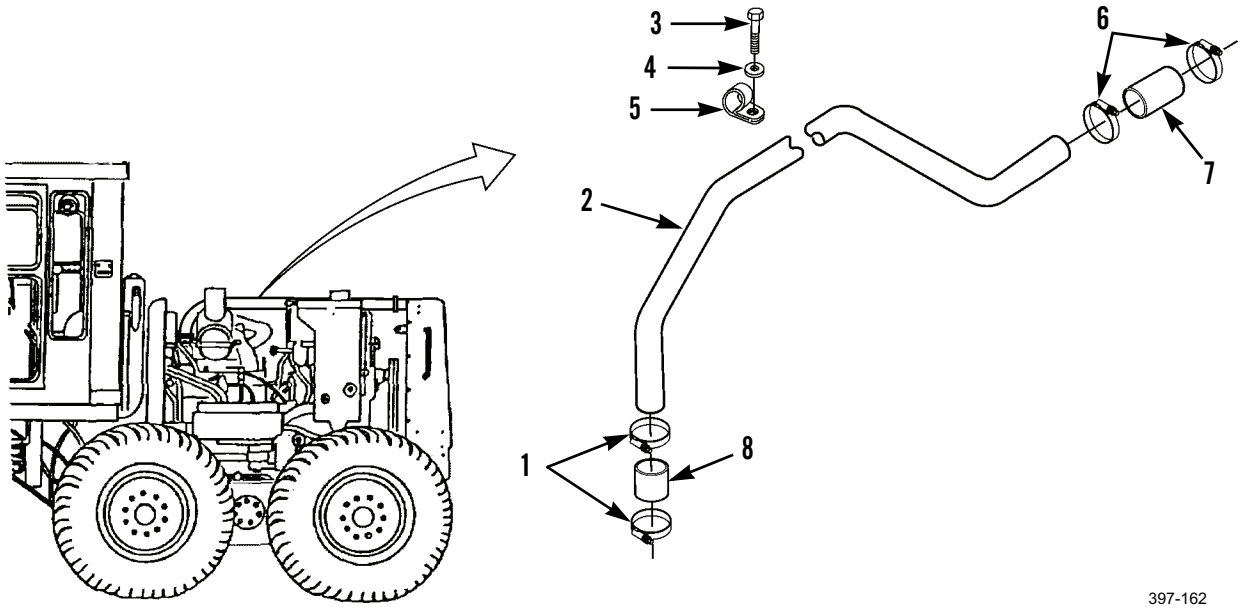


29. Refill cooling system (WP 0065 00).
30. Install oil level gauge (WP 0027 00).
31. Turn battery disconnect switch to ON position and start engine (TM 5-3805-261-10).
32. Check for leaks. Stop engine.
33. Install left and right side engine panels (WP 0182 00).
34. Install engine hood (WP 0181 00).

**END OF WORK PACKAGE**

## RADIATOR DRAIN LINE REPLACEMENT 0058 00

### THIS WORK PACKAGE COVERS

Removal, Cleaning and Inspection, Installation

### INITIAL SETUP

**Maintenance Level**

Unit

**Tools and Special Tools**

Tool kit, general mechanic's (Item 89, WP 0348 00)

**Materials/Parts**

Cap set, protective (Item 7, WP 0349 00)

Rag, wiping (Item 35, WP 0349 00)

**References**

WP 0020 00

**Equipment Conditions**

Machine parked on level ground (TM 5-3805-261-10)

Parking/emergency brake applied (TM 5-3805-261-10)

Implements lowered to ground (TM 5-3805-261-10)

Engine off (TM 5-3805-261-10)

Battery disconnect switch in OFF position (TM 5-3805-261-10)

Cooling system drained (WP 0065 00)

Rear bumper removed (WP 0204 00 or WP 0205 00)



**WARNING**



- DO NOT service cooling system unless engine has been allowed to cool down. This is a pressurized cooling system and escaping steam or hot coolant may cause serious burns.
- DO NOT remove cooling system radiator cap when engine is hot. Allow engine to cool down. Loosen cap to first stop and let any pressure out of cooling system, then remove cap. Failure to follow this warning may cause serious burns.
- Wear effective eye, glove, and skin protection when handling coolants. Failure to do so may cause injury to personnel.

### *REMOVAL*

1. Loosen two clamps (2 and 8) from hose (1).

**CAUTION**

Cap hose end to prevent contamination.

2. Disconnect hose (1) from elbow (3) and remove clamp (2).
3. Remove elbow (3).
4. Remove hose (1) and clamp (8) from adapter (7).
5. Remove drain cock (4), coupling (5) and adapter (7) from weldment (6).

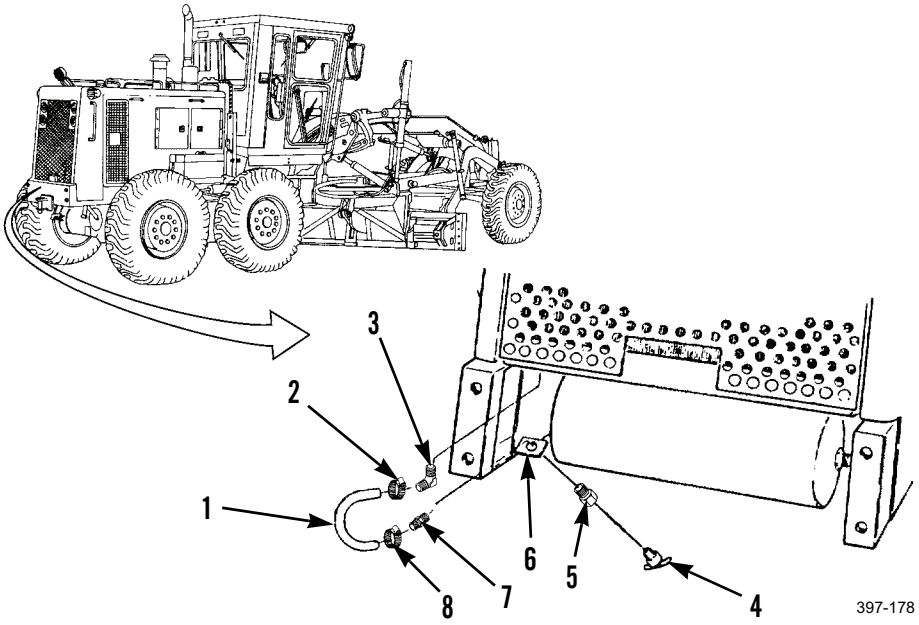


### *CLEANING AND INSPECTION*

Clean and inspect all parts in accordance with WP 0020 00.

### *INSTALLATION*

1. Install adapter (7), coupling (5), and drain cock (4) to weldment (6).
2. Position clamp (8) and connect hose (1) to adapter (7).
3. Install elbow (3).
4. Position clamp (2) and install hose (1) to elbow (3).
5. Tighten two clamps (8 and 2).
6. Refill cooling system (WP 0065 00).
7. Turn battery disconnect switch to ON position and start engine (TM 5-3805-261-10).
8. Check for leaks. Stop engine.
9. Install rear bumper (WP 0204 00 or WP 0205 00).

**END OF WORK PACKAGE**

## TEMPERATURE REGULATOR (THERMOSTAT) REPLACEMENT 0059 00

### THIS WORK PACKAGE COVERS

Removal, Cleaning and Inspection, Installation

### INITIAL SETUP

**Maintenance Level**

Unit

**Tools and Special Tools**

Tool kit, general mechanic's (Item 89, WP 0348 00)

Shop equipment, common no. 1 (Item 75, WP 0348 00)

**Materials/Parts**

Cap set, protective (Item 7, WP 0349 00)

Gasket

**References**

WP 0020 00

**Equipment Conditions**

Machine parked on level ground (TM 5-3805-261-10)

Parking/emergency brake applied (TM 5-3805-261-10)

Implements lowered to ground (TM 5-3805-261-10)

Engine off (TM 5-3805-261-10)

Battery disconnect switch in OFF position (TM 5-3805-261-10)

Engine hood removed (WP 0181 00)

Left side engine panel removed (WP 0182 00)

Cooling system drained (WP 0065 00)



**WARNING**



- DO NOT service cooling system unless engine has been allowed to cool down. This is a pressurized cooling system and escaping steam or hot coolant may cause serious burns.
- DO NOT remove cooling system radiator cap when engine is hot. Allow engine to cool down. Loosen cap to first stop and let any pressure out of cooling system, then remove cap. Failure to follow this warning may cause serious burns.
- Wear effective eye, glove, and skin protection when handling coolants. Failure to do so may cause injury to personnel.

### *REMOVAL*

1. Remove bolt (2) and washer (1) from upper-left-front of fuel tank.
2. Loosen two clamps (9) at upper-left of engine.

**CAUTION**

Cap hose end and plug open port to prevent contamination.

3. Disconnect hose (10) from housing (7) by sliding up on tube (11).
4. Remove four bolts (8), washers (3), housing (7), and gasket (6) from cylinder head. Discard gasket.
5. Remove plug (4) from housing (7).
6. Remove thermostat (5).

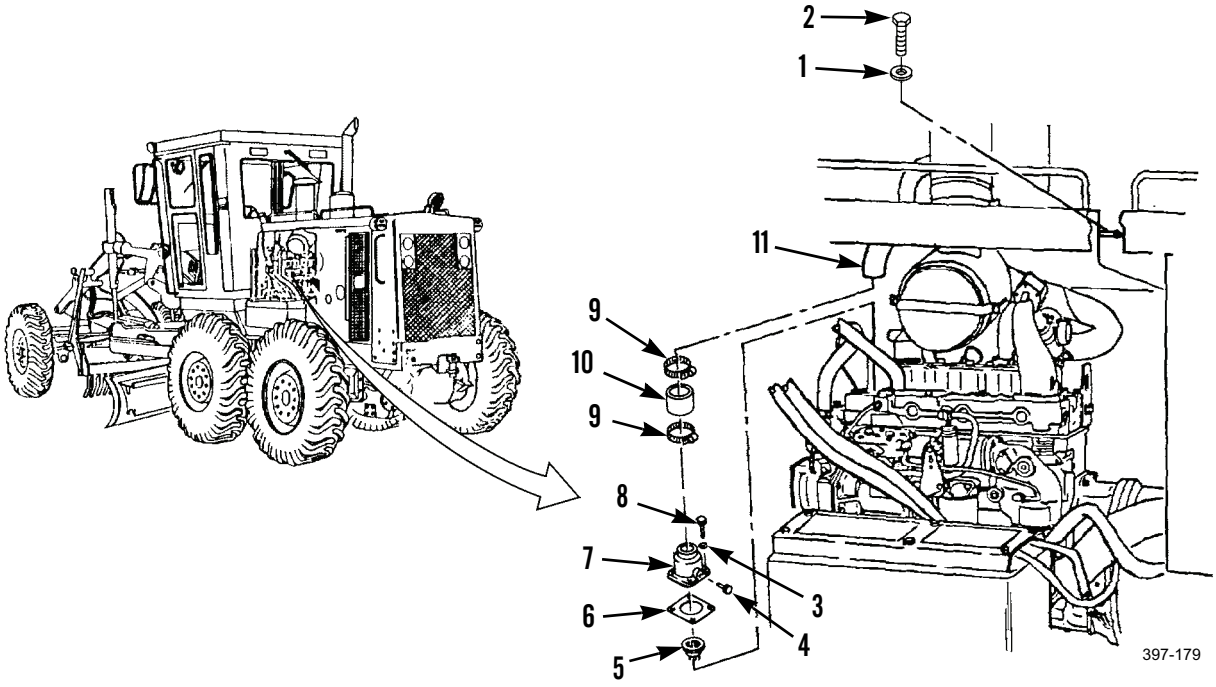


### *CLEANING AND INSPECTION*

Clean and inspect all parts in accordance with WP 0020 00.

***INSTALLATION***

**NOTE**

Pyramid part of thermostat faces up.

1. Install thermostat (5).
2. Install plug (4) in housing (7).
3. Install new gasket (6), housing (7), four washers (3), and bolts (8) to cylinder head.
4. Connect hose (10) by sliding down from tube (11) onto housing (7).
5. Tighten two clamps (9).
6. Install washer (1) and bolt (2) to front-upper-left of fuel tank.
7. Refill cooling system (WP 0065 00).
8. Turn battery disconnect switch to ON position and start engine (TM 5-3805-261-10).
9. Check for leaks. Stop engine.
10. Install left side engine panel (WP 0182 00).
11. Install engine hood (WP 0181 00).

**END OF WORK PACKAGE**

## WATER PUMP REPLACEMENT 0060 00

### THIS WORK PACKAGE COVERS

Removal, Cleaning and Inspection, Installation

### INITIAL SETUP

**Maintenance Level**

Unit

**Tools and Special Tools**

Tool kit, general mechanic's (Item 89, WP 0348 00)

**Materials/Parts**

Cap set, protective (Item 7, WP 0349 00)

Rag, wiping (Item 35, WP 0349 00)

Gasket (2)

Packing, preformed

**References**

WP 0020 00

**Personnel Required**

Two

**Equipment Conditions**

Machine parked on level ground (TM 5-3805-261-10)

Parking/emergency brake applied (TM 5-3805-261-10)

Implements lowered to ground (TM 5-3805-261-10)

Engine off (TM 5-3805-261-10)

Battery disconnect switch in OFF position (TM 5-3805-261-10)

Cooling system drained (WP 0065 00)

Engine compartment front dash plate removed (WP 0183 00)

Coolant temperature switch removed (WP 0114 00)

Ether start switch removed (WP 0114 00)



**WARNING**



- DO NOT service cooling system unless engine has been allowed to cool down. This is a pressurized cooling system and escaping steam or hot coolant may cause serious burns.
- DO NOT remove cooling system radiator cap when engine is hot. Allow engine to cool down. Loosen cap to first stop and let any pressure out of cooling system, then remove cap. Failure to follow this warning may cause serious burns.
- Wear effective eye, glove, and skin protection when handling coolants. Failure to do so may cause injury to personnel.

## WATER PUMP REPLACEMENT - CONTINUED 0060 00

### *REMOVAL*

1. Loosen two clamps (4) at left side of engine.

**CAUTION**

Cap all hose and tube ends and plug all open ports to prevent contamination.

2. Disconnect hose (6) from housing (3) by sliding up on tube (5).
3. Remove two clamps (4).
4. Loosen clamp (9) at front of water pump (2), disconnect hose (8), and remove clamp (9).
5. Remove connector (10), elbow (11), and bushing (7).
6. Remove two bolts (1).

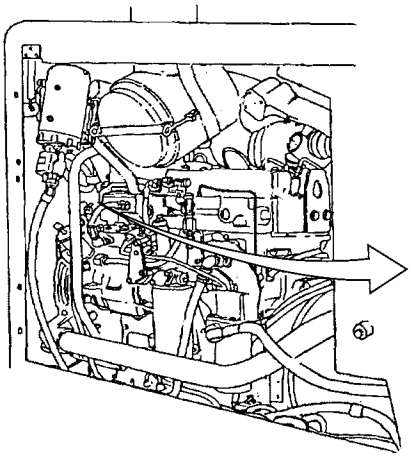

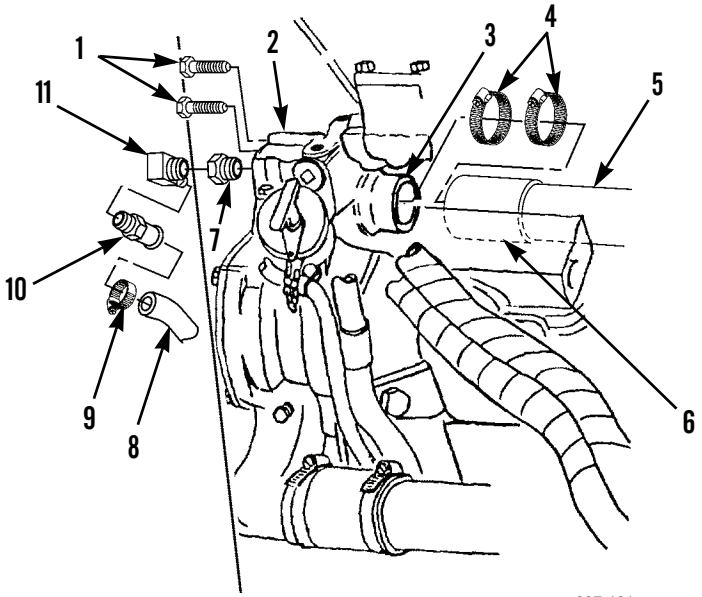


397-181

7. Support water pump (2) and remove two bolts (18).
8. Remove two clamps (16) and hose (17) from tube (15).
9. Remove water pump (2), gasket (14), and preformed packing (13) by disconnecting from hose (17). Discard gasket and preformed packing.
10. Remove hose (12) from tube (5).

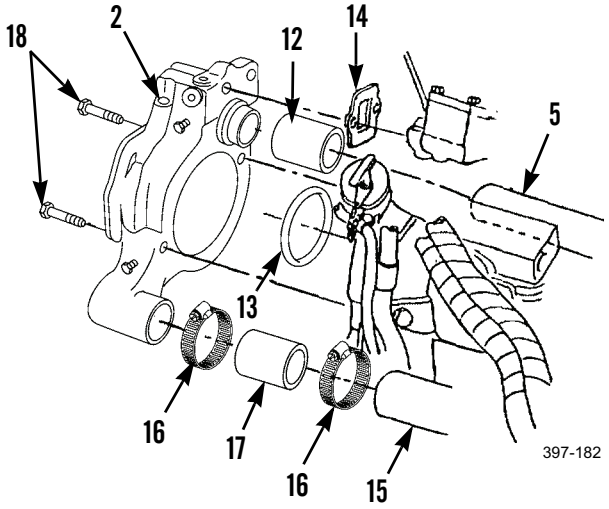


397-182

### *REMOVAL - CONTINUED*

11. Remove two bolts (19), housing (3), and gasket (22) from coolant pump (2). Discard gasket.
12. Remove plugs (20 and 21) from housing (3).

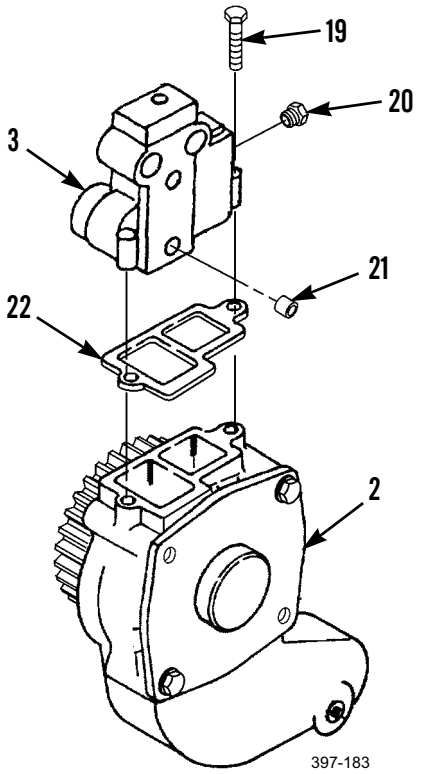


### *CLEANING AND INSPECTION*

Clean and inspect all parts in accordance with WP 0020 00.

### *INSTALLATION*

1. Install plugs (21 and 20) in housing (3).
2. Install new gasket (22), housing (3), and two bolts (19) on coolant pump (2).
3. Position two clamps (16).
4. Connect hose (17) to tube (15) at left side of engine.
5. Position new gasket (14) and water pump (2). Engage coolant pump drive gear and connect hose (17).
6. Position two clamps (4) and connect hose (12) to tube (5).
7. Install new preformed packing (13) on water pump (2).

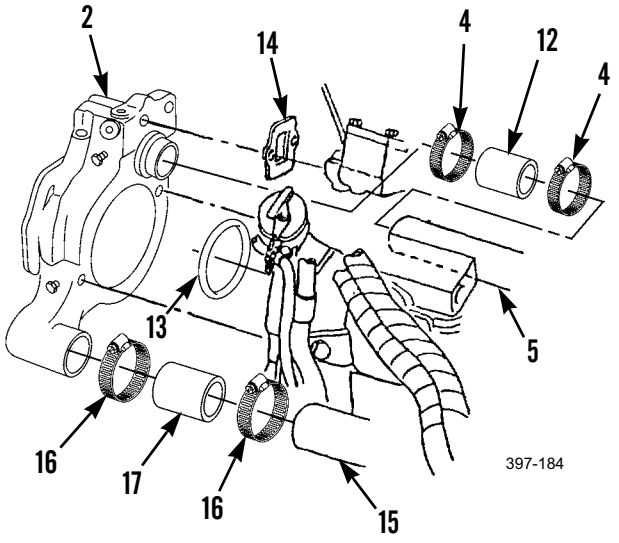

***INSTALLATION - CONTINUED***

8. Install two bolts (18) and bolts (1).
9. Tighten two clamps (16).
10. Install bushing (7), elbow (11), and connector (10) on front of water pump (2).
11. Position clamp (9), connect hose (8), and tighten clamp.
12. Connect tube (5) to housing (3).
13. Tighten two clamps (4).

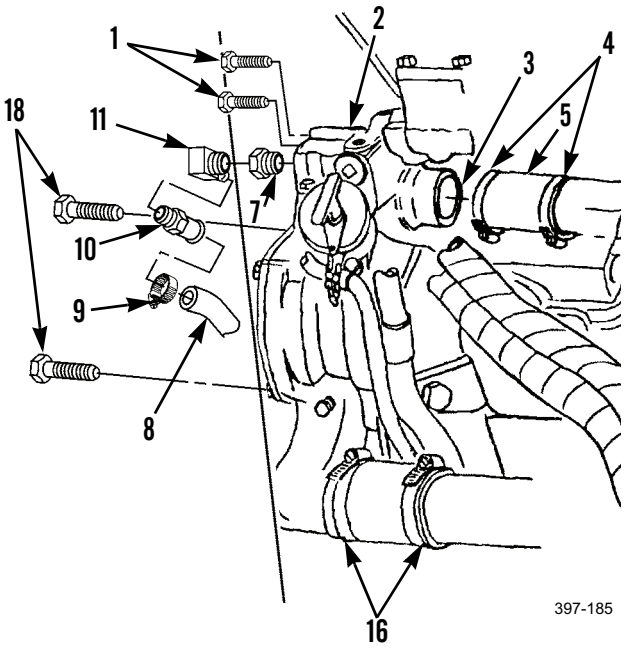


14. Refill cooling system (WP 0065 00).
15. Install ether starting aid temperature switch (WP 0114 00).
16. Install coolant temperature switch (WP 0114 00).
17. Turn battery disconnect switch to ON position and start engine (TM 5-3805-261-10).
18. Check for leaks. Stop engine.
19. Install engine compartment front dash plate (WP 0183 00).

**END OF WORK PACKAGE**

## FAN BELTS MAINTENANCE 0061 00

### THIS WORK PACKAGE COVERS

Removal, Cleaning and Inspection, Installation, Adjustment

### INITIAL SETUP

**Maintenance Level**

Unit

**Tools and Special Tools**

Tool kit, general mechanic's (Item 89, WP 0348 00)

Shop equipment, common no. 1 (Item 75, WP 0348 00)

**Materials/Parts**

Rag, wiping (Item 35, WP 0349 00)

**References**

WP 0020 00

**Equipment Conditions**

Machine parked on level ground (TM 5-3805-261-10)

Parking/emergency brake applied (TM 5-3805-261-10)

Implements lowered to ground (TM 5-3805-261-10)

Engine off (TM 5-3805-261-10)

Battery disconnect switch in OFF position (TM 5-3805-261-10)

Left and right side screen doors opened (WP 0055 00)

### *REMOVAL*

1. Loosen three bolts (3, 4, and 7).
2. Push in alternator (6) on bracket (5) to relieve belt tension.
3. Remove two belts (2) from pulleys (1 and 8).

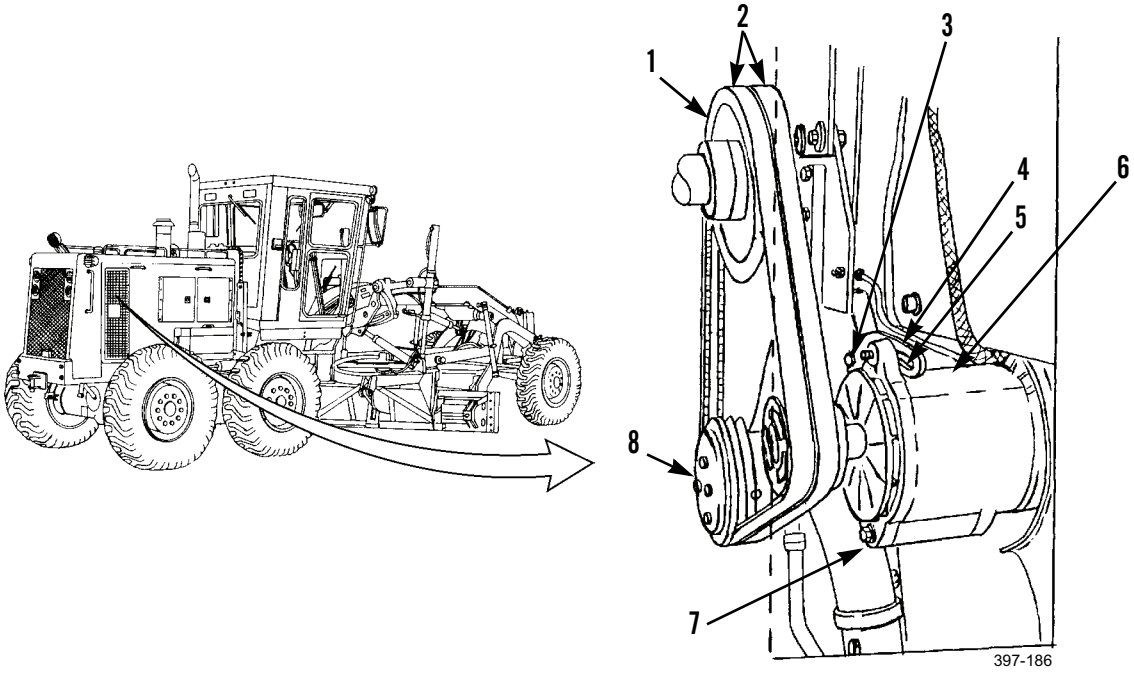

### *CLEANING AND INSPECTION*

Clean and inspect all parts in accordance with WP 0020 00. Discard both belts if one or both are cracked, worn, broken, frayed, or oil soaked.

### *INSTALLATION*

**CAUTION**

When installing belts, use care to avoid cutting belts on fan blades.

**NOTE**

Belts must be replaced as a matched set.

1. Install two belts (2) on pulleys (8 and 1).
2. Pull out alternator (6) on bracket (5) until two belts (2) are tight.
3. Hand tighten three bolts (7, 4, and 3).

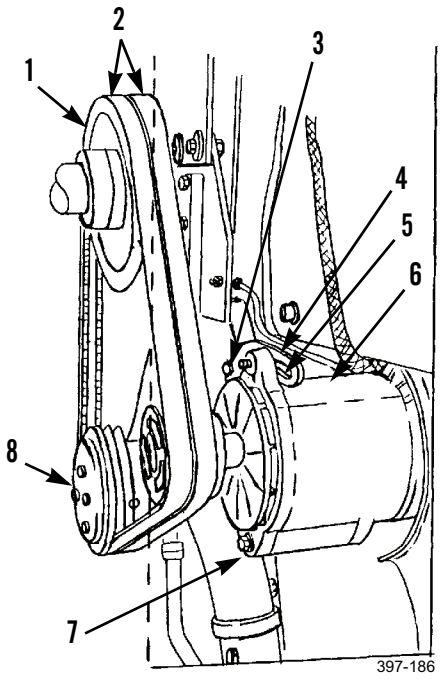


### *ADJUSTMENT*

**NOTE**

Use only one belt to adjust belt tension.

1. Position belt tension gauge on belt (2) farthest from engine and check tension.

**NOTE**

New belts should be tightened to 120±5 lb-ft (163±7 Nm). Used belts should be tightened to 90±10 lb-ft (122±14 Nm).

2. Move alternator (6) on bracket (5) in to decrease tension or out to increase tension of belts (2) as necessary.
3. Tighten three bolts (7, 4, and 3).

**WARNING**

Close and fasten screen before performing next step. Failure to do so may cause injury.

4. Turn battery disconnect switch to ON position and start engine (TM 5-3805-261-10). Operate at high idle for a minimum of 30 minutes.
5. Stop engine.
6. Check tension of two belts (2) with belt tension gauge. Repeat steps 1 through 3 if adjustment is needed.
7. Close left and right side screen doors (WP 0055 00).

**END OF WORK PACKAGE**

## FAN LUBRICATION LINE REPLACEMENT 0062 00

### THIS WORK PACKAGE COVERS

Removal, Cleaning and Inspection, Installation

### INITIAL SETUP

**Maintenance Level**

Unit

**Tools and Special Tools**

Tool kit, general mechanic's (Item 89, WP 0348 00)

**Materials/Parts**

Cap set, protective (Item 7, WP 0349 00

Rag, wiping (Item 35, WP 0349 00)

Caps

**References**

WP 0020 00

**Equipment Conditions**

Machine parked on level ground (TM 5-3805-261-10)

Parking/emergency brake applied (TM 5-3805-261-10)

Implements lowered to ground (TM 5-3805-261-10)

Engine off (TM 5-3805-261-10)

Battery disconnect switch in OFF position (TM 5-3805-261-10)

Left side screen door opened (WP 0055 00)

### *REMOVAL*

**CAUTION**

Cap all hose ends and plug open port to prevent contamination.

1. Disconnect hose assembly (5) from adapter (7).
2. Remove fitting (1) and adapter (7).
3. Remove bolt (3), washer (2), and clamp (6).
4. Remove hose assembly (5) from fan bracket (4).

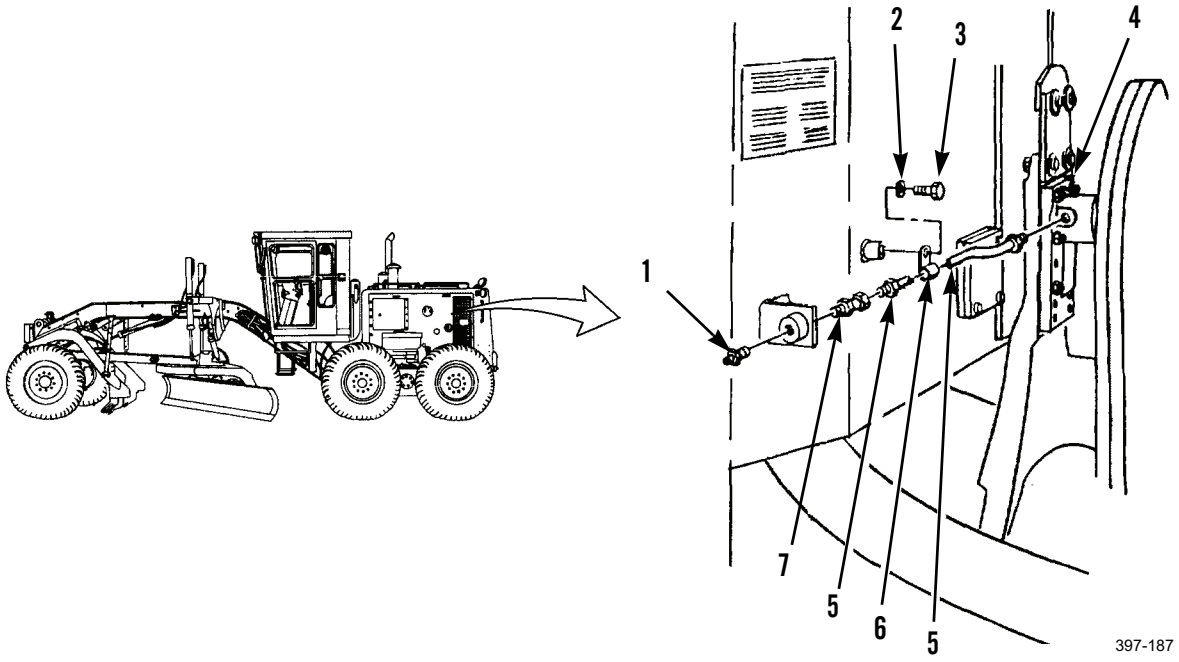


### *CLEANING AND INSPECTION*

Clean and inspect all parts in accordance with WP 0020 00.

### *INSTALLATION*

1. Connect hose assembly (5) to fan bracket (4).
2. Install clamp (6), washer (2), and bolt (3).
3. Install adapter (7) and fitting (1).
4. Install hose assembly (5) to adapter (7).
5. Lubricate in accordance with WP 0020 00.
6. Close left side screen door WP 0055 00.

**END OF WORK PACKAGE**

## FAN AND FAN DRIVE REPLACEMENT 0063 00

### THIS WORK PACKAGE COVERS

Removal, Cleaning and Inspection, Installation

### INITIAL SETUP

**Maintenance Level**

Unit

**Tools and Special Tools**

Tool kit, general mechanic's (Item 89, WP 0348 00)

Shop equipment, common no. 1 (Item 75, WP 0348 00)

**Materials/Parts**

Grease, GAA (Item 17, WP 0349 00)

Rag, wiping (Item 35, WP 0349 00)

Bolt, self-locking (2)

Packing, preformed

Pin

Seal

**Personnel Required**

Two

**References**

WP 0020 00

WP 0023 00

**Equipment Conditions**

Machine parked on level ground (TM 5-3805-261-10)

Parking/emergency brake applied (TM 5-3805-261-10)

Implements lowered to ground (TM 5-3805-261-10)

Engine off (TM 5-3805-261-10)

Battery disconnect switch in OFF position (TM 5-3805-261-10)

Fan belts removed (WP 0061 00)

Fan drive lubrication line removed (WP 0062 00)

***REMOVAL***

1. Hold six bolts (8) on back of pulley (9) in rear of fuel tank (1) and remove six nuts (6).

**CAUTION**

- Do not lean fan blades into radiator.
- Place protection between fan blades and radiator.

2. Remove fan (7) and adapter (5) from bolts (8).
3. Remove fan (7).
4. Remove six bolts (8) and washers (4).
5. Remove adapter (5).
6. Remove four of six nuts (3) from lower four mounting bolts, in bracket (2).

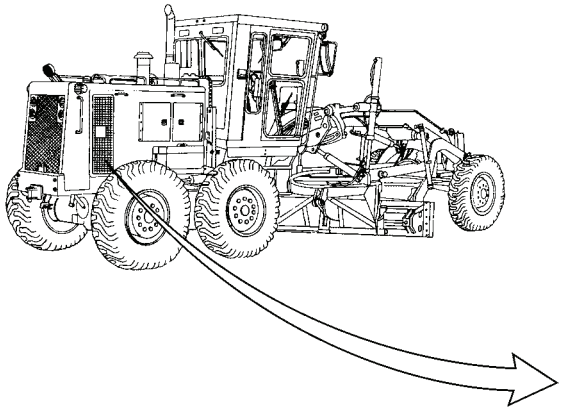

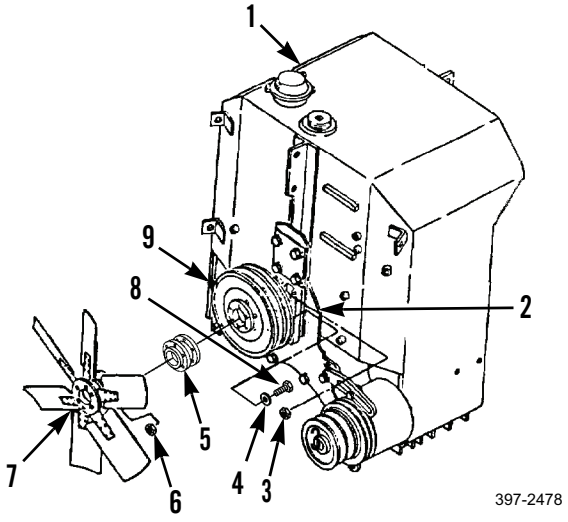

397-2478

7. With assistance, support pulley (9), remove remaining two of six nuts (3), and remove pulley from machine.

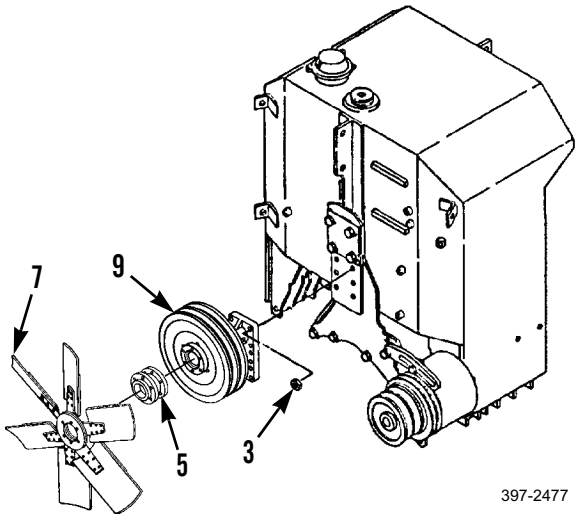

397-2477

***REMOVAL - CONTINUED***

**NOTE**

Remove bolts and washers only if inspection indicates replacement is necessary.

8. Loosen four bolts (16).
9. Remove two nuts (18), washers (17), bolts (10), washers (11), mountings (12), and plate (13) from fuel tank (1).
10. Lean bracket (2) forward.
11. Remove six bolts (15) and washers (14) between bracket (2) and fuel tank (1).
12. Remove six bolts (23) and washers (22).
13. Separate fan (7) and adapter (5).
14. Remove two self-locking bolts (20) and spacer (19). Discard self-locking bolts.
15. Remove and discard preformed packing (21).

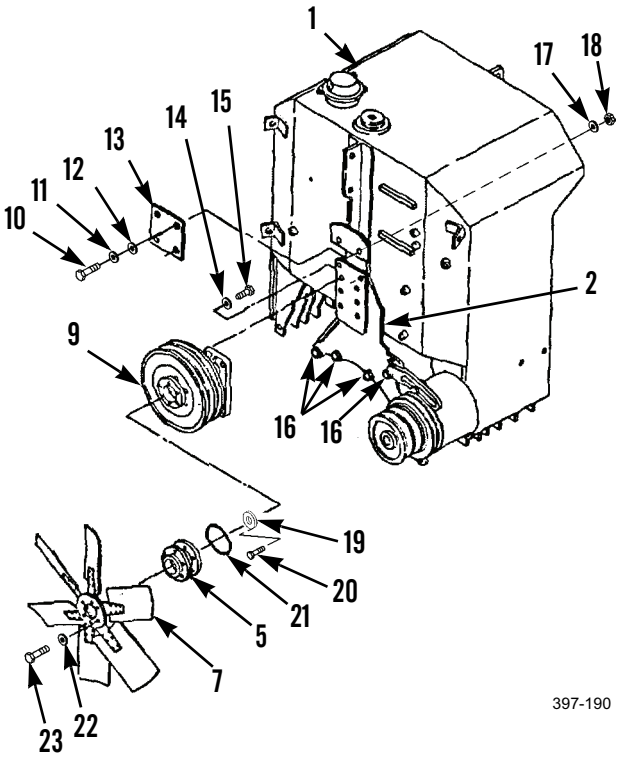


16. Stand pulley (9) on end of bracket (24) with hub (25) pointing upward.

**NOTE**

Drive down on hub to expose bearing.

17. Separate hub (25) from bearing (26).
18. Remove bearing (26) and hub (25).

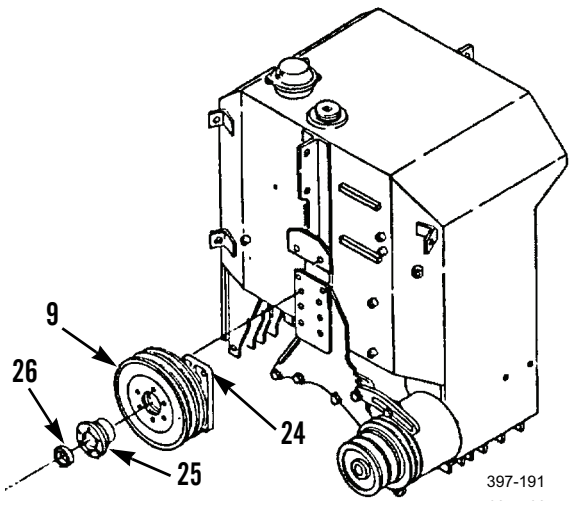

### *REMOVAL - CONTINUED*

19. Remove pulley (9) from shaft (30).
20. Remove spacers (29).
21. Remove seal (28) and bearing (27). Discard seal.
22. Remove and discard pin (31).
23. Remove shaft (30) from bracket (24).

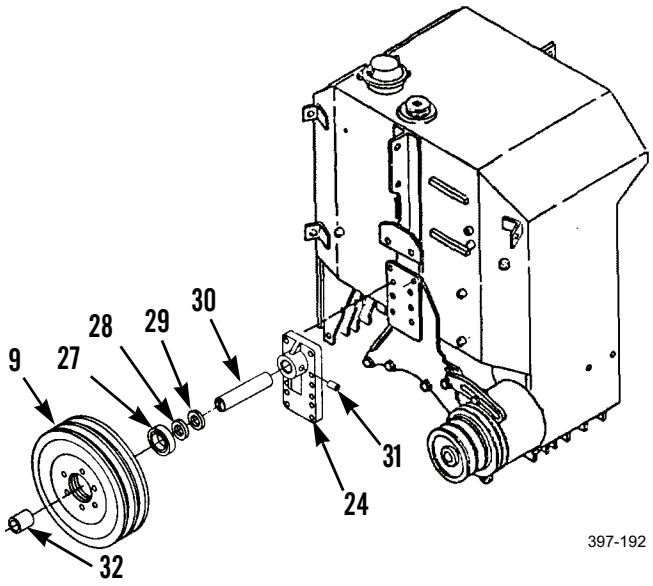


### *CLEANING AND INSPECTION*

Clean and inspect all parts in accordance with WP 0020 00.

### *INSTALLATION*

**NOTE**

Align pin hole in shaft with hole in bracket.

1. Install shaft (30) in bracket (24).
2. Install new pin (31).

**NOTE**

Drive new seal in so that it is flush with small end of hub. Lip of new seal must face outward.

3. Install new seal (28).

***INSTALLATION - CONTINUED***

4. Apply a light coat of clean grease to lip of new seal (28) in hub (25).
5. Install bearing (27) through opposite end of hub (25) until contact with new seal (28) is made
6. Install spacer (32) in hub (25).
7. Fill cavity between bearings of hub (25) with clean grease.
8. Install bearing (31).
9. Position hub (25) with assembled parts (29, 28, and 27) on shaft (30).

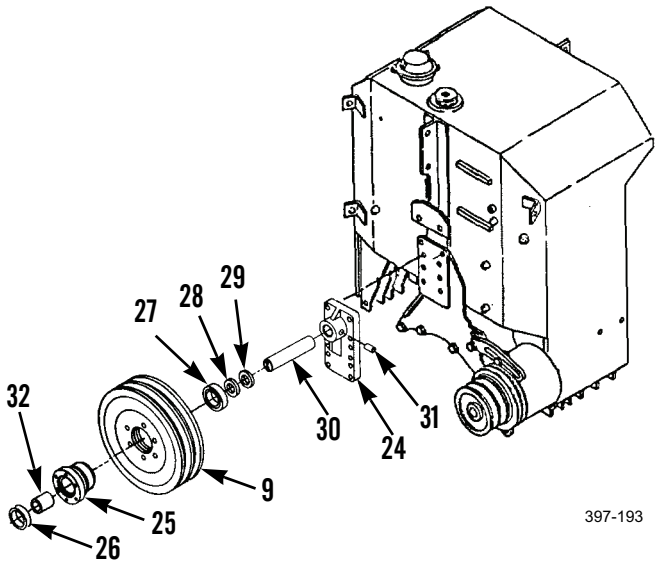


10. Install pulley (9).
11. Install new preformed packing (21).
12. Install spacer (19) and two new self-locking bolts (20).
13. Install adapter (5).
14. Install fan (7) and six washers (22) and bolts (23).

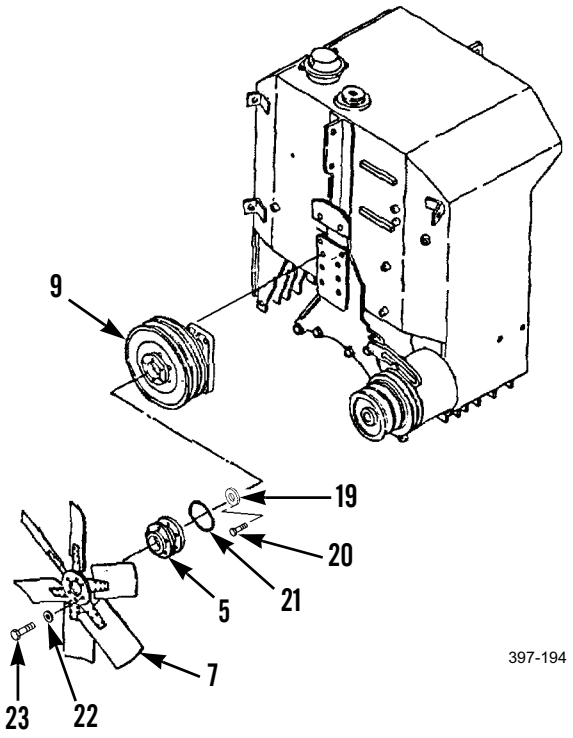

## FAN AND FAN DRIVE REPLACEMENT - CONTINUED 0063 00

### *INSTALLATION - CONTINUED*

15. Position six washers (14) and bolts (15) in rear of fuel tank (1), through back of bracket (2).
16. Position bracket (2) on fuel tank (1), keeping six bolts (15) in place.
17. Install two mountings (12), washers (11), bolts (10), washers (17), and nuts (18), securing plate (13).
18. Tighten four bolts (16).

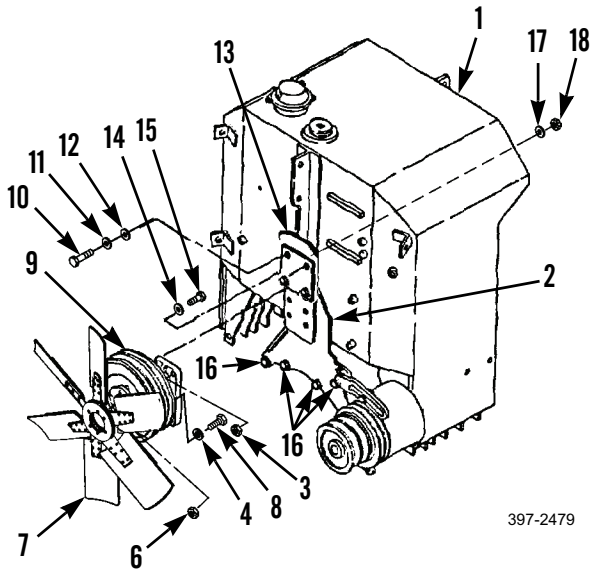


19. Position fan (7) on radiator baffle.
20. Position pulley (9) on six bolts (15) and washers (14) in bracket (2) and install six nuts (3).
21. Position six washers (4) and bolts (8) through back of pulley (9).
22. Position fan (7) on six bolts (8) and install six nuts (6).
23. Install fan drive lubrication line (WP 0062 00).
24. Install fan belts (WP 0061 00).
25. Lubricate fan drive assembly (WP 0023 00).

**END OF WORK PACKAGE**

## TRANSMISSION OIL PUMP PULLEY REPLACEMENT 0064 00

### THIS WORK PACKAGE COVERS

Removal, Cleaning and Inspection, Installation

### INITIAL SETUP

**Maintenance Level**

Unit

**Tools and Special Tools**

Tool kit, general mechanic's (Item 89, WP 0348 00)

**Materials/Parts**

Rag, wiping (Item 35, WP 0349 00)

Seal

**References**

WP 0020 00

**Equipment Conditions**

Machine parked on level ground (TM 5-3805-261-10)

Parking/emergency brake applied (TM 5-3805-261-10)

Implements lowered to ground (TM 5-3805-261-10)

Engine off (TM 5-3805-261-10)

Battery disconnect switch in OFF position (TM 5-3805-261-10)

Left side screen door opened (WP 0055 00)

Fan belts removed (WP 0061 00)

### *REMOVAL*

1. Remove five bolts (1), washers (2), and shield (3) from lower-left side of radiator and support.
2. Remove four bolts (7), washers (6), and pulley (5).
3. Remove and discard seal (4).

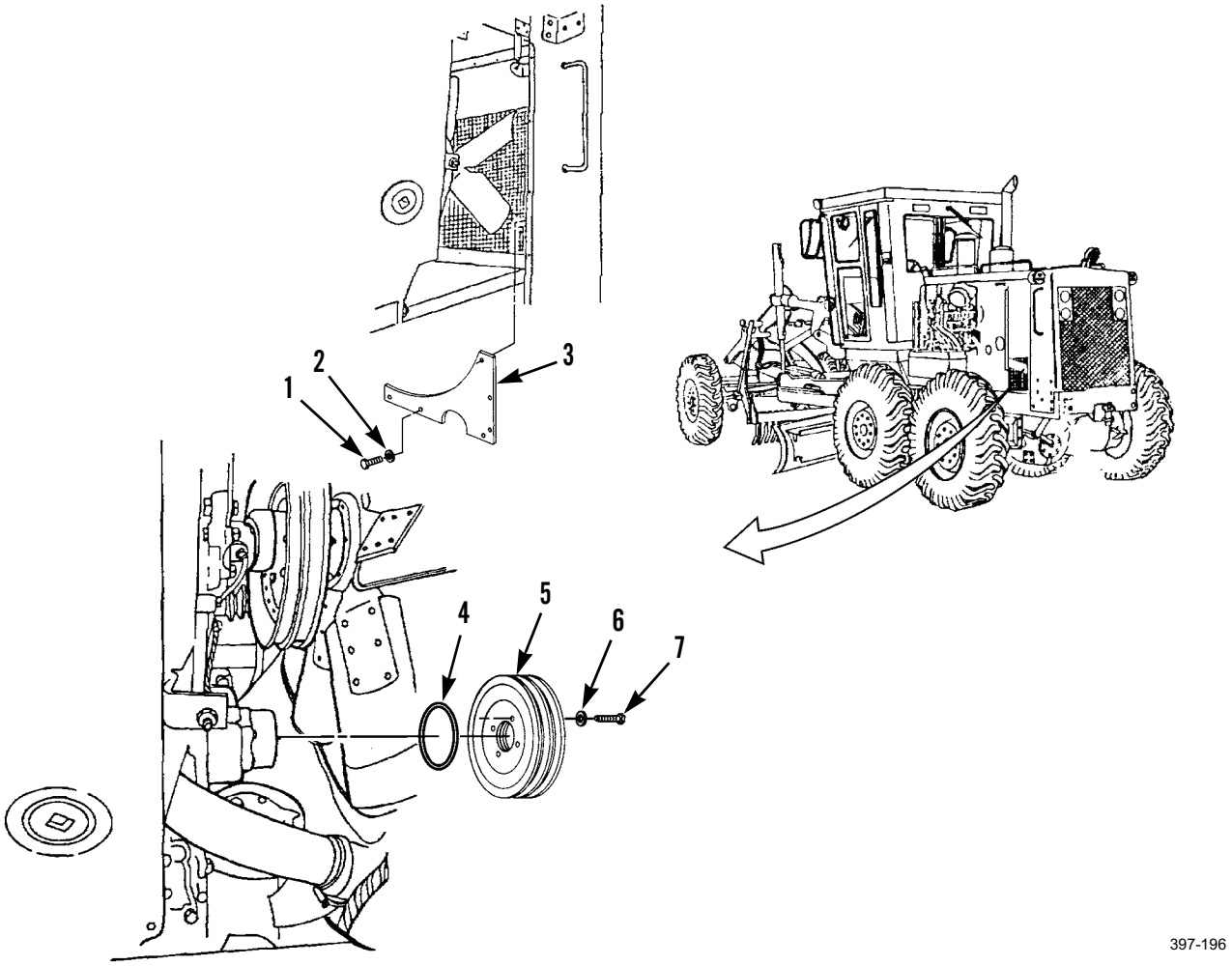


397-196

### *CLEANING AND INSPECTION*

Clean and inspect all parts in accordance with WP 0020 00.

### *INSTALLATION*

1. Install new seal (4).
2. Install pulley (5), four washers (6), and bolts (7).
3. Install shield (3), five washers (2), and bolts (1) to lower-left side of radiator and support.
4. Install fan belts (WP 0061 00).
5. Close left side screen door (WP 0055 00).

**END OF WORK PACKAGE**

## COOLING SYSTEM SERVICING 0065 00

### THIS WORK PACKAGE COVERS

Draining, Flushing, Filling

### INITIAL SETUP

**Maintenance Level**

Unit

**Tools and Special Tools**

Tool kit, general mechanic's (Item 89, WP 0348 00)

Shop equipment, common no. 1 (Item 75, WP 0348 00)

**Materials/Parts**

Antifreeze (Item 5, WP 0349 00)

Rag, wiping (Item 35, WP 0349 00)

**References**

TB 750-651

**Equipment Conditions**

Machine parked on level ground (TM 5-3805-261-10)

Parking/emergency brake applied (TM 5-3805-261-10)

Implements lowered to ground (TM 5-3805-261-10)

Engine off (TM 5-3805-261-10)

Battery disconnect switch in OFF position (TM 5-3805-261-10)

***DRAINING***

**WARNING**

- DO NOT service cooling system unless engine has been allowed to cool down. This is a pressurized cooling system and escaping steam or hot coolant may cause serious burns.
- DO NOT remove cooling system radiator cap when engine is hot. Allow engine to cool down. Loosen cap to first stop and let any pressure out of cooling system, then remove cap. Failure to follow this warning may cause serious burns.
- Wear effective eye, glove, and skin protection when handling coolants. Failure to do so may cause injury to personnel.

**CAUTION**

- If the machine is to be stored in or shipped to an area with below freezing temperatures, the cooling system must either be protected to the lowest expected ambient temperature, or drained completely.
- When permanent antifreeze and water solutions are used in the cooling system, the solution should be drained and replaced every 2000 service hours or 1 year, whichever comes first.

1. Slowly loosen radiator cap (1) to relieve pressure. Remove radiator cap.

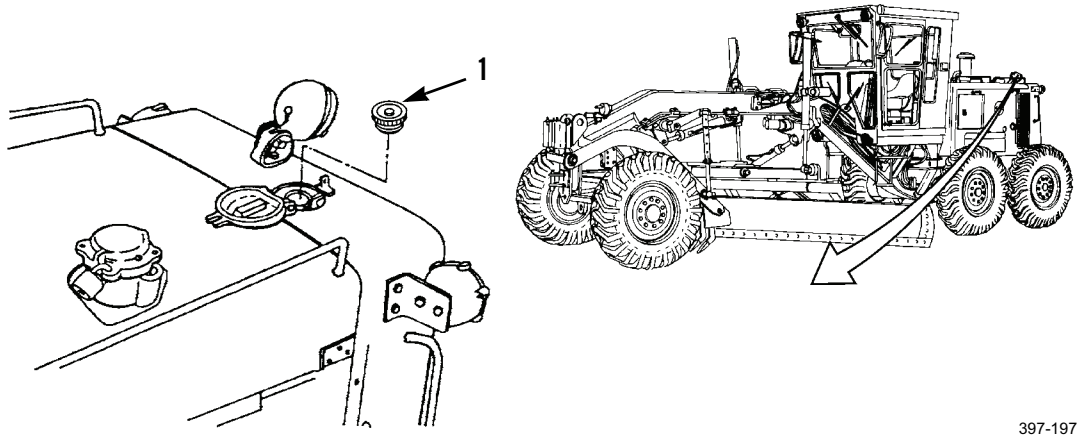


397-197

***DRAINING - CONTINUED***

**NOTE**

Cooling system capacity is 10 gal. (38 L).

2. Place container under radiator drain cock (2). Open drain cock and allow coolant solution to drain.
3. Close drain cock (2).

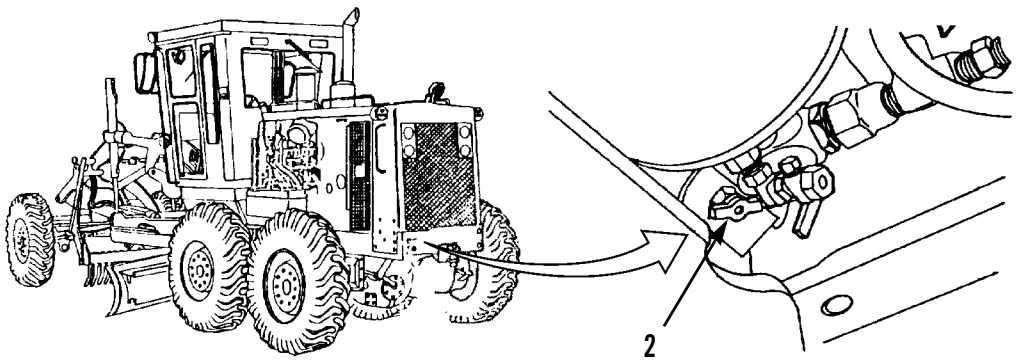


4. Place container under water pump inlet. Remove plug (3) from water pump inlet and allow coolant solution to drain.
5. Install plug (3).

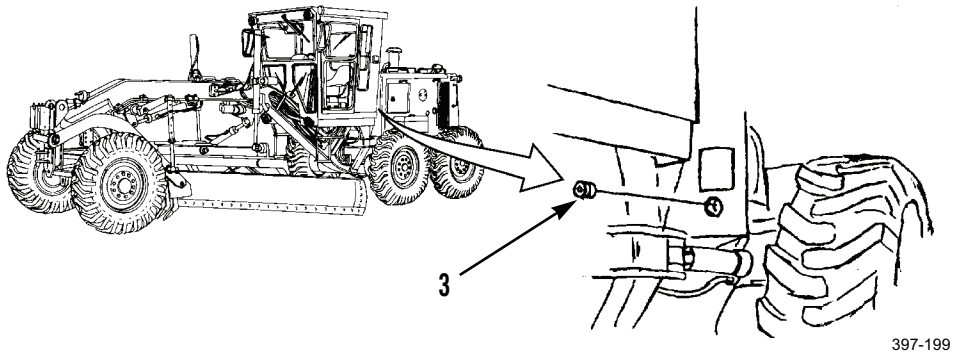

### *DRAINING - CONTINUED*

6. Place container under engine block. Remove plug (4) from engine block and allow coolant solution to drain.
7. Install plug (4).
8. Place container under transmission oil cooler. Remove plug (5) and washer (6) from transmission oil cooler and allow coolant solution to drain.
9. Install washer (6) and plug (5).

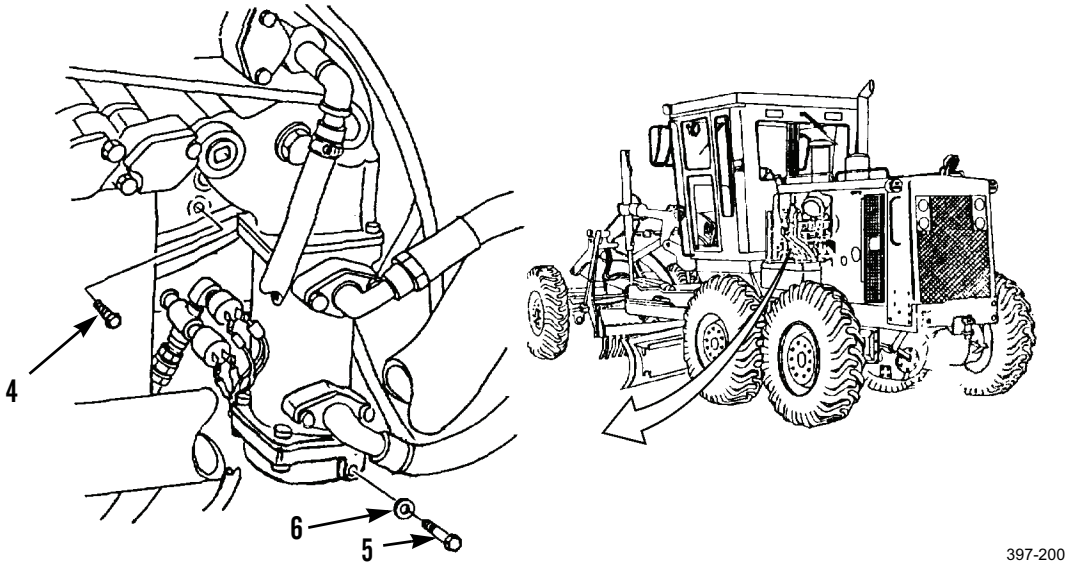


### *FLUSHING*

1. Fill radiator with clean water.
2. Turn battery disconnect switch to ON position and start engine (TM 5-3805-261-10). Run engine for 15 minutes.
3. Stop engine.
4. Drain cooling system. Refer to steps 1 through 9 in *Draining* in this work package.

**NOTE**

Refer to TB 750-651 for use of engine cooling system cleaning compound.

5. Repeat flushing until draining water is clear. Use engine cooling system cleaning compound as necessary to clean heavily rusted or partially clogged cooling system, to neutralize residual acids, and coat interior with silicate.

### *FILLING*

1. Mix 10 gal. (38 L) of coolant solution (50% water and 50% antifreeze).
2. Add coolant solution slowly, 5 gal. (19 L) per minute or less, until level of coolant solution is just below bottom of filler neck.
3. With radiator cap (1) removed, turn battery disconnect switch to ON position and start engine (TM 5-3805-261-10). Let engine run for 15 minutes and check for leaks.
4. Stop engine and recheck coolant solution level. Add coolant solution as needed.
5. Install radiator cap (1).

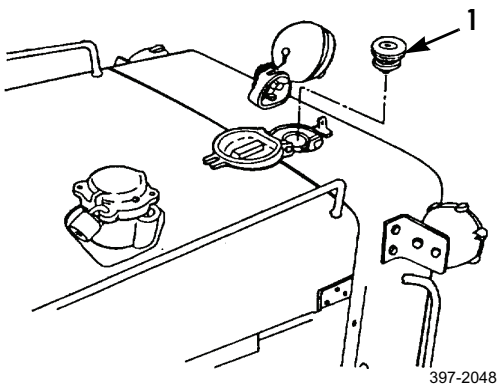


**END OF WORK PACKAGE**

## ALTERNATOR AND MOUNTINGS MAINTENANCE 0066 00

## THIS WORK PACKAGE COVERS

Removal, Cleaning and Inspection, Installation, Testing

## INITIAL SETUP

**Maintenance Level**

Unit

**Tools and Special Tools**

Tool kit, general mechanic's (Item 89, WP 0348 00)

Shop equipment, common no. 1 (Item 75, WP 0348 00)

Wrench, torque (Item 101, WP 0348 00)

Jumper wire

**Materials/Parts**

Rag, wiping (Item 35, WP 0349 00)

Tag, marker (Item 44, WP 0349 00)

Nut

Washer (1 or 2)

**Personnel Required**

Two

**References**

WP 0021 00

WP 0061 00

WP 0063 00

**Equipment Conditions**

Machine parked on level ground (TM 5-3805-261-10)

Parking/emergency brake applied (TM 5-3805-261-10)

Implements lowered to ground (TM 5-3805-261-10)

Engine off (TM 5-3805-261-10)

Left and right side screen doors opened (WP 0055 00)

Alternator radio interference suppression capacitor removed (WP 0146 00)

Battery cables disconnected (WP 0125 00)

### *REMOVAL*

1. Loosen bolts (1, 4, and 6).
2. Move alternator (8) to release tension on two fan belts (3).
3. Remove two fan belts (3).
4. Remove bolt (6) and two washers (5).
5. Support alternator (8) and remove bolt (1), washer (2), and nut (7).

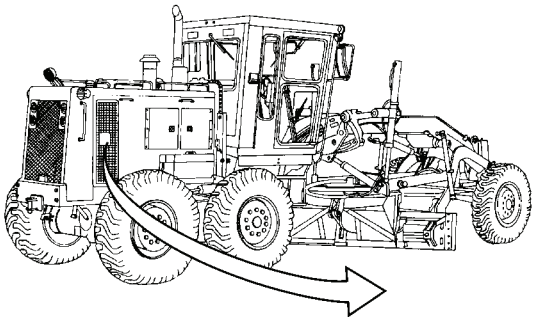

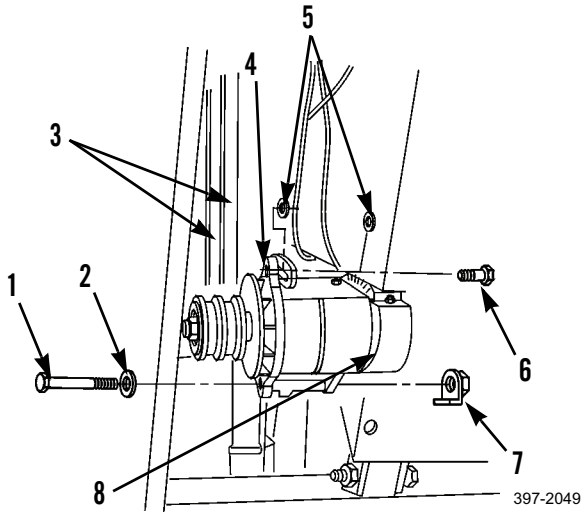


**NOTE**

Tag wires before disconnecting to aid in installation.

6. Disconnect three wires (9) from alternator (8).
7. Remove alternator (8).

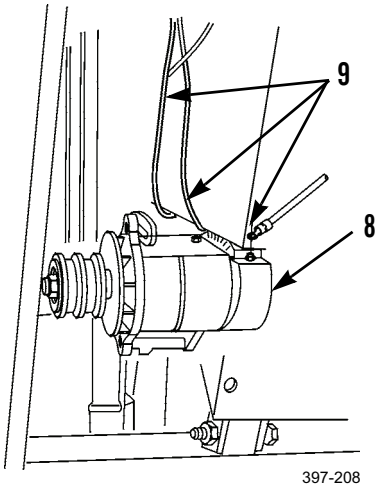

### Delco Alternator

8. Remove and discard nut (10) and washer (11).
9. Use an alternator pulley tool to remove pulley (12) from alternator (8).

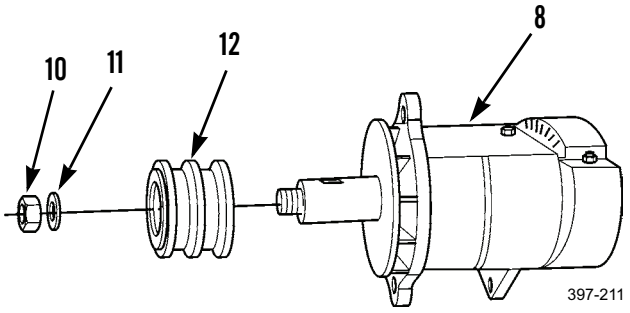


### Bosch Alternator

10. Remove nut (13), two washers (14), and pulley (15). Discard nut and washers.
11. Remove key (16) from alternator (8).

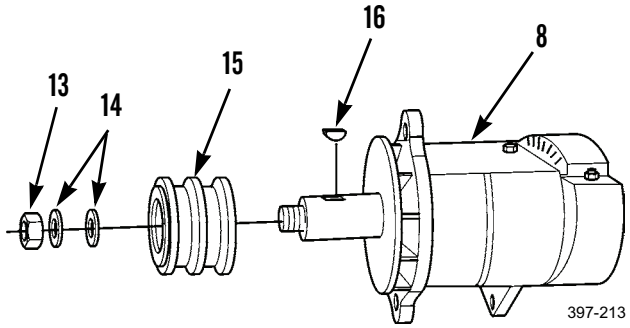


**NOTE**

If bracket needs replacement, remove fan and fan drive (WP 0063 00).

12. Remove bolt (23), washer (24), and arm (22).
13. Remove two nuts (20), washers (21), bolts (17), washers (18), and mountings (19).

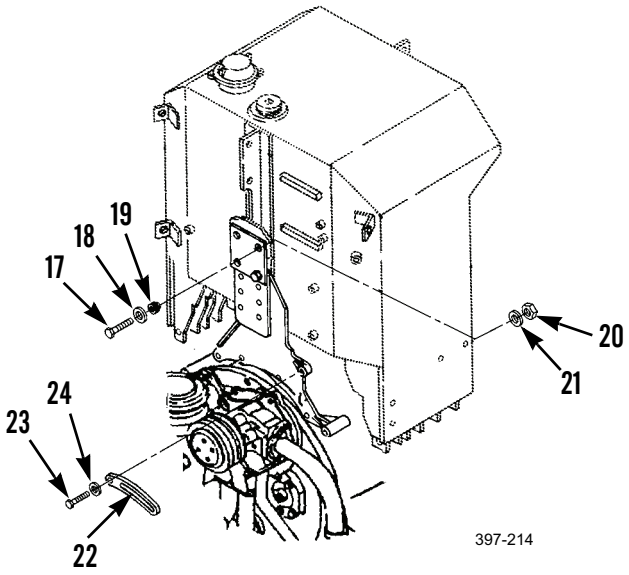

**Delco Alternator - Continued**

14. Remove two nuts (30), washers (29), bolts (26), washers (27), and plate (28).
15. Support bracket (31) and remove four bolts (25), washers (32), and bracket.

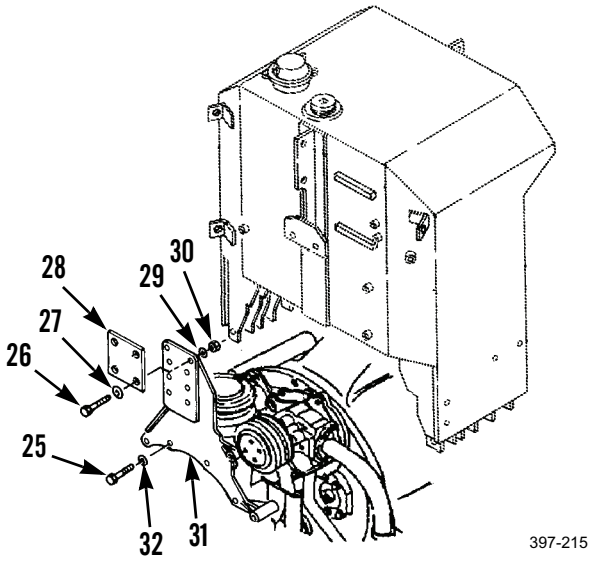


### *CLEANING AND INSPECTION*

Clean and inspect all parts in accordance with WP 0021 00.

### *INSTALLATION*

**NOTE**

If bracket was removed, install fan and fan drive (WP 0063 00).

1. Install bracket (31), four washers (32), and bolts (25).
2. Install plate (28), two washers (27), bolts (26), washers (29), and nuts (30).

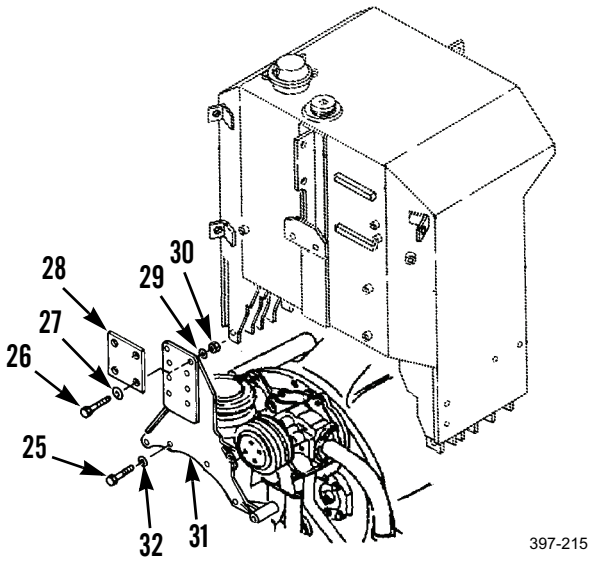

***INSTALLATION - CONTINUED***

3. Install two mountings (19), washers (18), bolts (17), washers (21), and nuts (20).
4. Install arm (22), washer (24), and bolt (23).

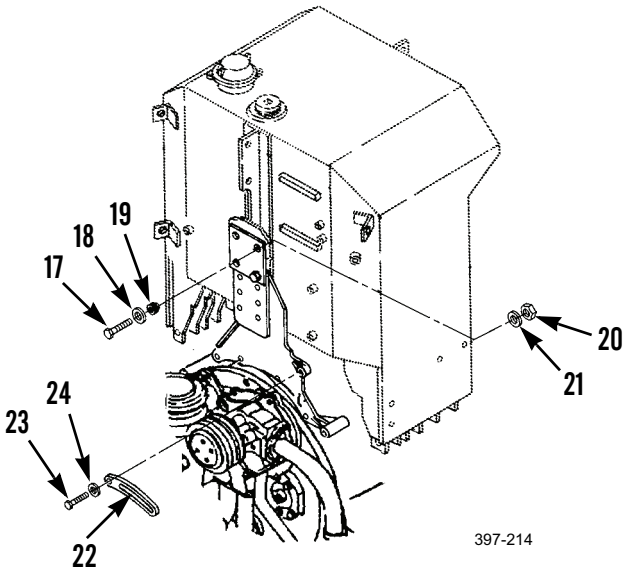


**Bosch Alternator**

5. Install key (16) and pulley (15) on alternator (8).
6. Install two new washers (14) and new nut (13). Tighten nut to 75 lb-ft (102 Nm).

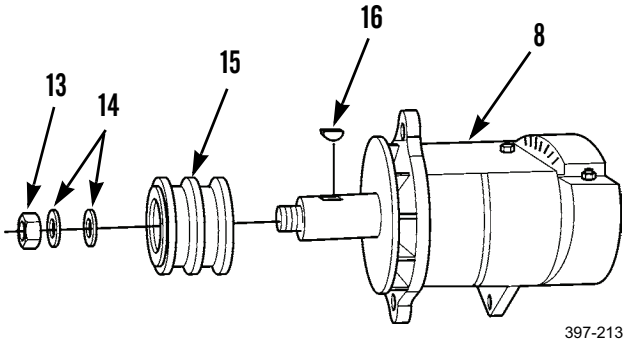


**Delco Alternator**

7. Install pulley (12), new washer (11), and new nut (10) on alternator (8). Tighten nut to 79 lb-ft (107 Nm).

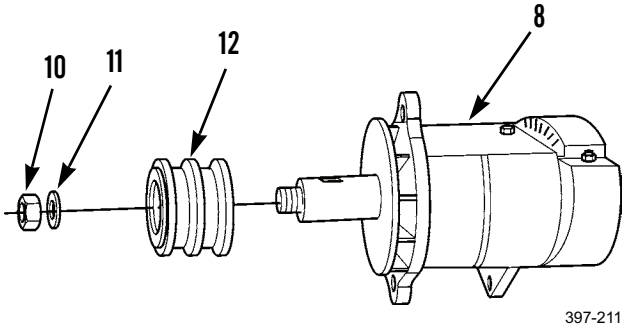

*INSTALLATION - CONTINUED*

**Delco Alternator - Continued**

8. Connect three wires (9) to alternator (8).

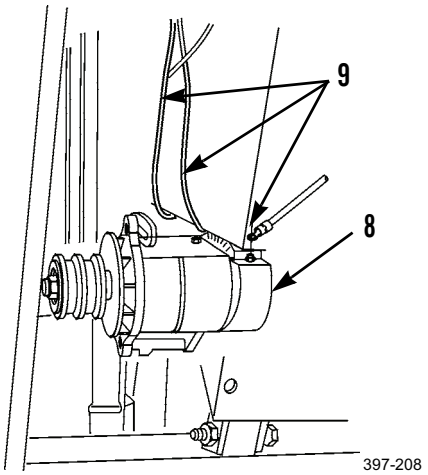


**NOTE**

Do not tighten bolt.

9. Position alternator (8) and install nut (7), washer (2), and bolt (1).

**NOTE**

Do not tighten bolt.

10. Install two washers (5) and bolt (6).
11. Position two fan belts (3).
12. Tighten bolts (1, 4, and 6).

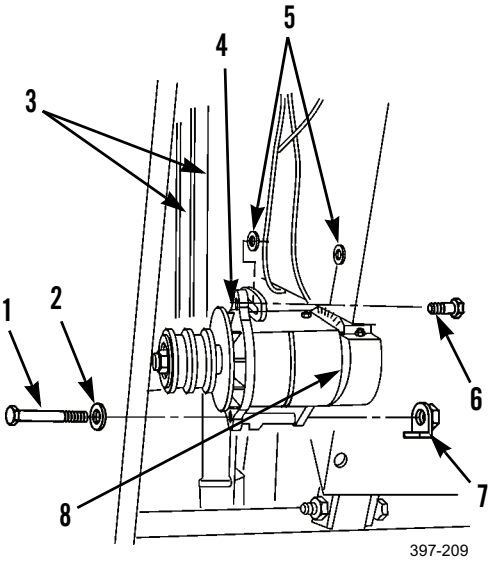


13. Adjust fan belts (WP 0061 00).

### *TESTING*

1. Install alternator radio interference suppression capacitor (WP 0146 00).
2. Connect multimeter voltage leads to output and ground terminals on alternator.
3. Turn battery disconnect switch to ON position and start engine (TM 5-3805-261-10).
4. Check voltage. If voltage is not 26.5 to 28, proceed to step 6.

**NOTE**

Alternator may not charge and still be good. Attempt to restore residual magnetic field prior to replacing.

5. Use a jumper wire to connect positive output terminal of alternator to “R” (relay) terminal on Delco alternators (D+ terminal on Bosch alternators) for approximately 2 seconds. This temporary connection should provide sufficient current from batteries to restore residual magnetic field in alternator.
6. Check voltage. If voltage is still not 26.5 to 28, notify Direct Support Maintenance.
7. Stop engine.
8. Close left and right side screen doors (WP 0055 00).

**END OF WORK PACKAGE**

## STARTING MOTOR REPLACEMENT 0067 00

### THIS WORK PACKAGE COVERS

Removal, Cleaning and Inspection, Installation

### INITIAL SETUP

**Maintenance Level**

Unit

**Tools and Special Tools**

Tool kit, general mechanic's (Item 89, WP 0348 00)

Shop equipment, common no. 1 (Item 75, WP 0348 00)

Wrench, torque (Item 97, WP 0348 00)

**Materials/Parts**

Rag, wiping (Item 35, WP 0349 00)

Tag, marker (Item 44, WP 0349 00)

Gasket

Lockwasher (4)

**Personnel Required**

Two

**References**

WP 0021 00

**Equipment Conditions**

Machine parked on level ground (TM 5-3805-261-10)

Parking/emergency brake applied (TM 5-3805-261-10)

Implements lowered to ground (TM 5-3805-261-10)

Engine off (TM 5-3805-261-10)

Battery cables disconnected (WP 0125 00)

Right side engine panel removed (WP 0182 00)

***REMOVAL***

**WARNING**

Use extreme caution when handling heavy parts. Provide adequate support and use assistance during procedure. Failure to follow this warning may cause injury to personnel.

**NOTE**

Starting motor weighs 50 lb (23 kg).

1. Remove nut (9) and lockwasher (8) from terminal stud (12). Discard lockwasher.

**NOTE**

Tag all wire and cable assemblies before disconnecting to aid in installation.

2. Disconnect wire assembly (7), cable assembly (10), and wire assembly (11).
3. Remove and discard lockwasher (6).
4. Disconnect cable assembly (5).
5. Remove nut (4) and lockwasher (3) from terminal stud (1). Discard lockwasher.
6. Disconnect wire assembly (2).

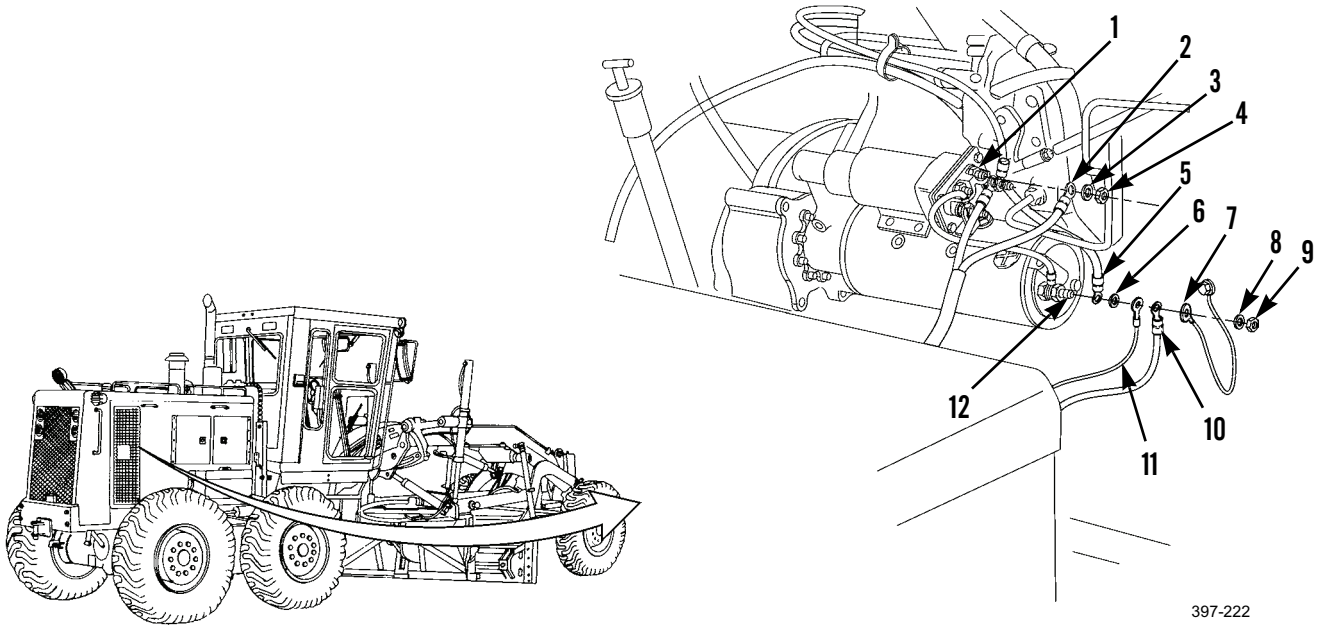

***REMOVAL - CONTINUED***

7. Remove nut (21) and lockwasher (20) from terminal stud (16). Discard lockwasher.
8. Disconnect wire assemblies (19, 18, and 17).
9. Remove three bolts (15), washers (14), and clamp (13).

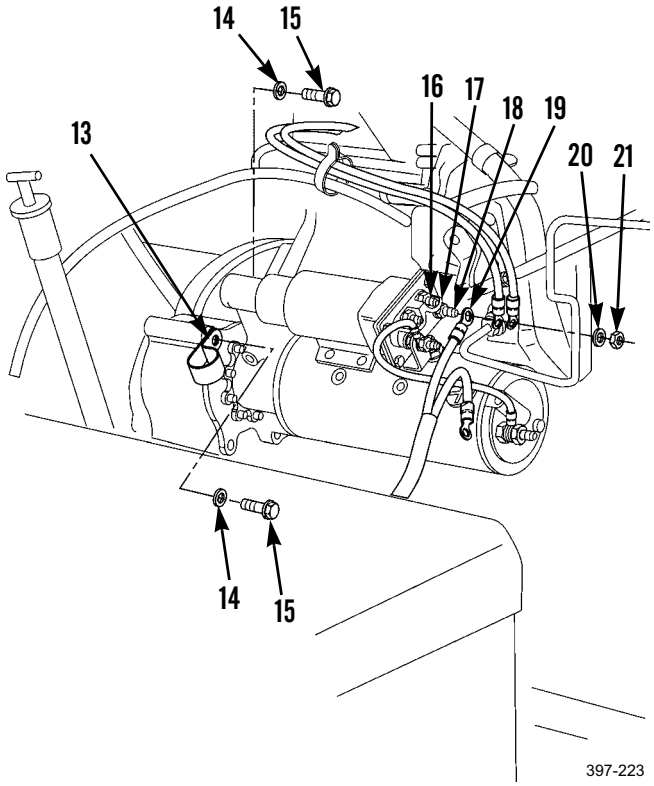


**NOTE**

Pull starting motor back and turn solenoid to right to clear solenoid of turbocharger oil line.

10. Remove starting motor (23) and gasket (22). Discard gasket.

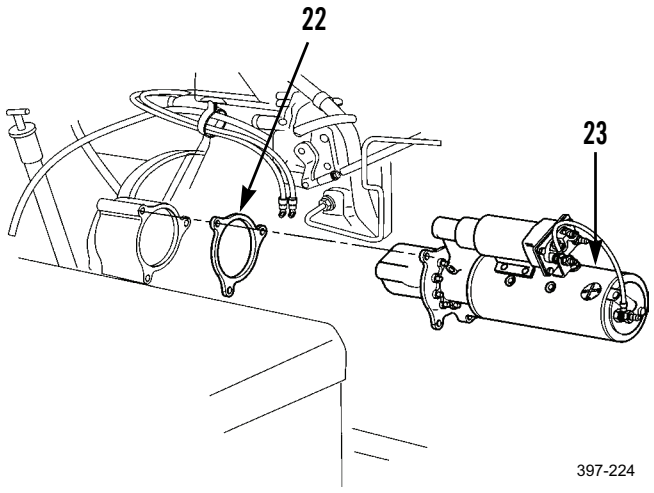

### *CLEANING AND INSPECTION*

Clean and inspect all parts in accordance with WP 0021 00.

### *INSTALLATION*

1. Position new gasket (22) and starting motor (23) on flywheel housing.

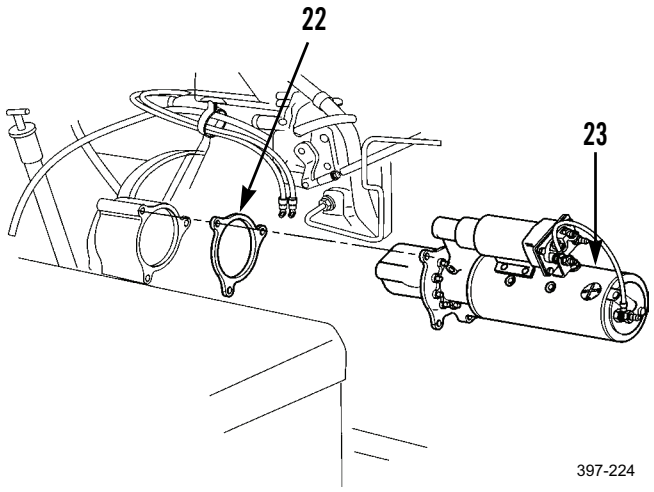


**NOTE**

Make sure bolts are starter mounting bolts.

2. Install clamp (13), three washers (14), and bolts (15).
3. Position wire assemblies (17, 18, and 19) on terminal stud (16).
4. Install new lockwasher (20) and nut (21). Tighten nut to 22 lb-ft (30 Nm).

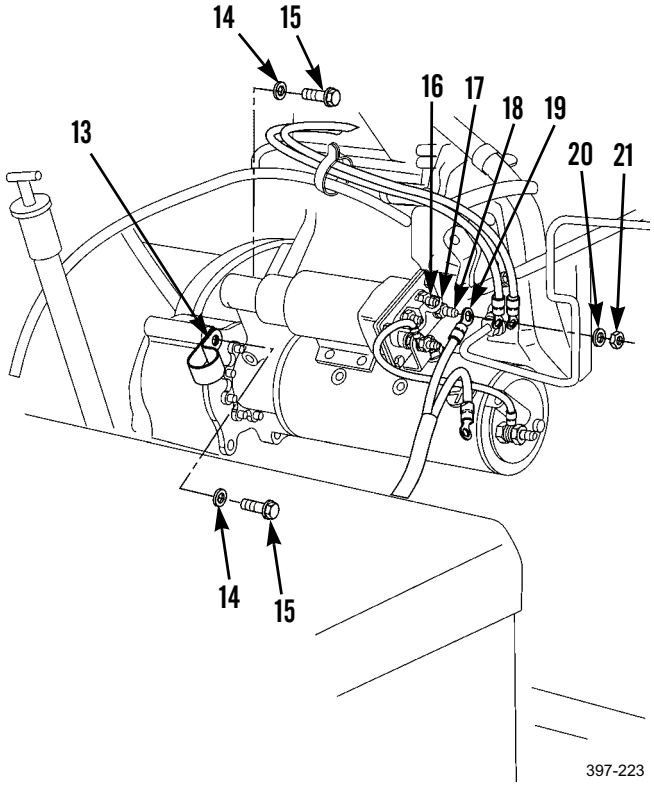

***INSTALLATION - CONTINUED***

5. Position wire assembly (2) on terminal stud (1).
6. Install new lockwasher (3) and nut (4). Tighten nut to 36 lb-ft (49 Nm).
7. Position cable assembly (5) on terminal stud (12).
8. Install new lockwasher (6).
9. Position wire assembly (11), cable assembly (10), and wire assembly (7).
10. Install new lockwasher (8) and nut (9). Tighten nut to 22 lb-ft (30 Nm).

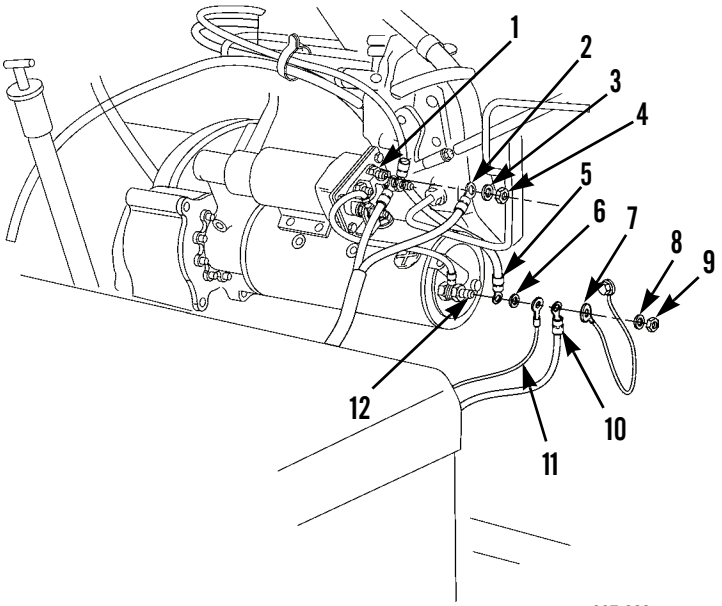


11. Install right side engine panel (WP 0182 00).
12. Connect battery cables (WP 0125 00).

**END OF WORK PACKAGE**

## STARTING MOTOR RELAY REPLACEMENT 0068 00

### THIS WORK PACKAGE COVERS

Removal, Cleaning and Inspection, Installation

### INITIAL SETUP

**Maintenance Level**

Unit

**Tools and Special Tools**

Tool kit, general mechanic's (Item 89, WP 0348 00)

Shop equipment, field maintenance (Item 74, WP 0348 00)

**Materials/Parts**

Rag, wiping (Item 35, WP 0349 00)

Tag, marker (Item 44, WP 0349 00)

**References**

WP 0021 00

**Equipment Conditions**

Machine parked on level ground (TM 5-3805-261-10)

Parking/emergency brake applied (TM 5-3805-261-10)

Implements lowered to ground (TM 5-3805-261-10)

Engine off (TM 5-3805-261-10)

Battery cables disconnected (WP 0125 00)

Right side engine doors opened (TM 5-3805-261-10)

### *REMOVAL*

**NOTE**

Tag wire assemblies before disconnecting to aid in installation.

1. Disconnect wires (5, 6, 7, and 8) from terminals on starting motor relay (4).
2. Remove two nuts (1), two bolts (2), four washers (3), starting motor relay (4) and disconnect two wires (9).
3. Remove two bolts (10), washers (11), and plate (12).

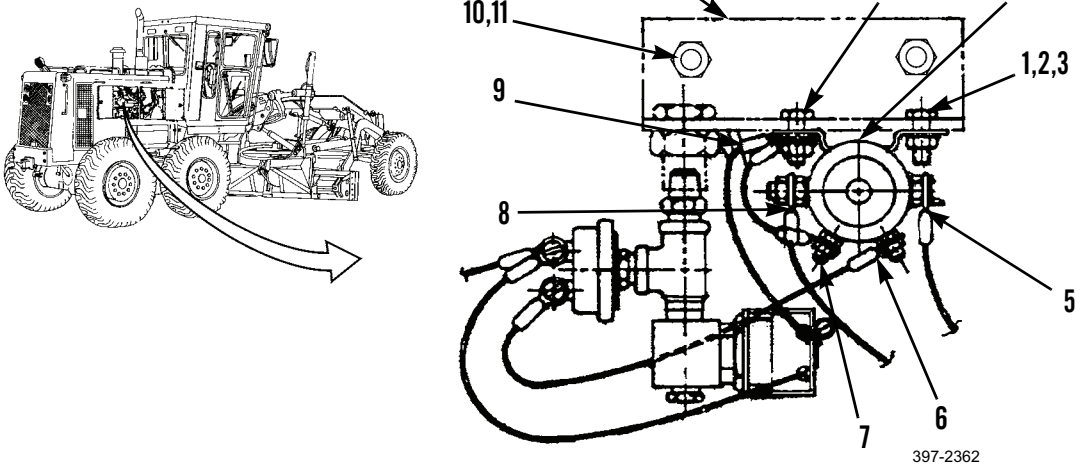


### *CLEANING AND INSPECTION*

Clean and inspect all parts in accordance with WP 0021 00.

### *INSTALLATION*

1. Install plate (12) and two washers (11).
2. Connect two wires (9) and install starting motor relay (4), four washers (3), two bolts (2), and nuts (1).
3. Connect wires (5, 6, 7, and 8) to terminals on starting motor relay (4).
4. Connect battery cables (WP 0125 00).
5. Close right side engine doors (TM 5-3805-261-10).

**END OF WORK PACKAGE**

## ELECTRONIC MONITORING SYSTEM (EMS) PANEL REPLACEMENT 0069 00

### THIS WORK PACKAGE COVERS

Removal, Cleaning and Inspection, Installation

### INITIAL SETUP

**Maintenance Level**

Unit

**Tools and Special Tools**

Tool kit, general mechanic's (Item 89, WP 0348 00)

Shop equipment, common no. 1 (Item 75, WP 0348 00)

**Materials/Parts**

Rag, wiping (Item 35, WP 0349 00)

**References**

WP 0021 00

**Equipment Conditions**

Machine parked on level ground (TM 5-3805-261-10)

Parking/emergency brake applied (TM 5-3805-261-10)

Implements lowered to ground (TM 5-3805-261-10)

Engine off (TM 5-3805-261-10)

Battery cables disconnected (WP 0125 00)

Steering console hood removed (WP 0196 00)

### *REMOVAL*

1. Disconnect wiring harness (3).
2. Remove nut (9) and disconnect wire assembly (10).
3. Remove two nuts (11), washers (12), bracket (14), and two nuts (13).
4. Remove two nuts (8), washers (7), and bracket (6).
5. Remove two nuts (5) and bracket (4).

**NOTE**

Remove EMS panel and plate only if inspection indicates replacement is necessary.

6. Remove EMS panel (2) if necessary.
7. Remove plate (1) if necessary.

### *CLEANING AND INSPECTION*

Clean and inspect all parts in accordance with WP 0021 00.

### *INSTALLATION*

1. Install plate (1) to EMS panel (2) if removed.
2. Position EMS panel (2) in steering control console if removed.
3. Install bracket (4) and two nuts (5).
4. Install bracket (6), two washers (7), and nuts (8).
5. Install two nuts (13), bracket (14), two washers (12), and nuts (11).
6. Connect wire assembly (10) and install nut (9).
7. Connect wiring harness (3) and tighten.
8. Install steering console hood (WP 0196 00).
9. Connect battery cables (WP 0125 00).

## ELECTRONIC MONITORING SYSTEM (EMS) PANEL REPLACEMENT - CONTINUED 0069 00

***INSTALLATION - CONTINUED***

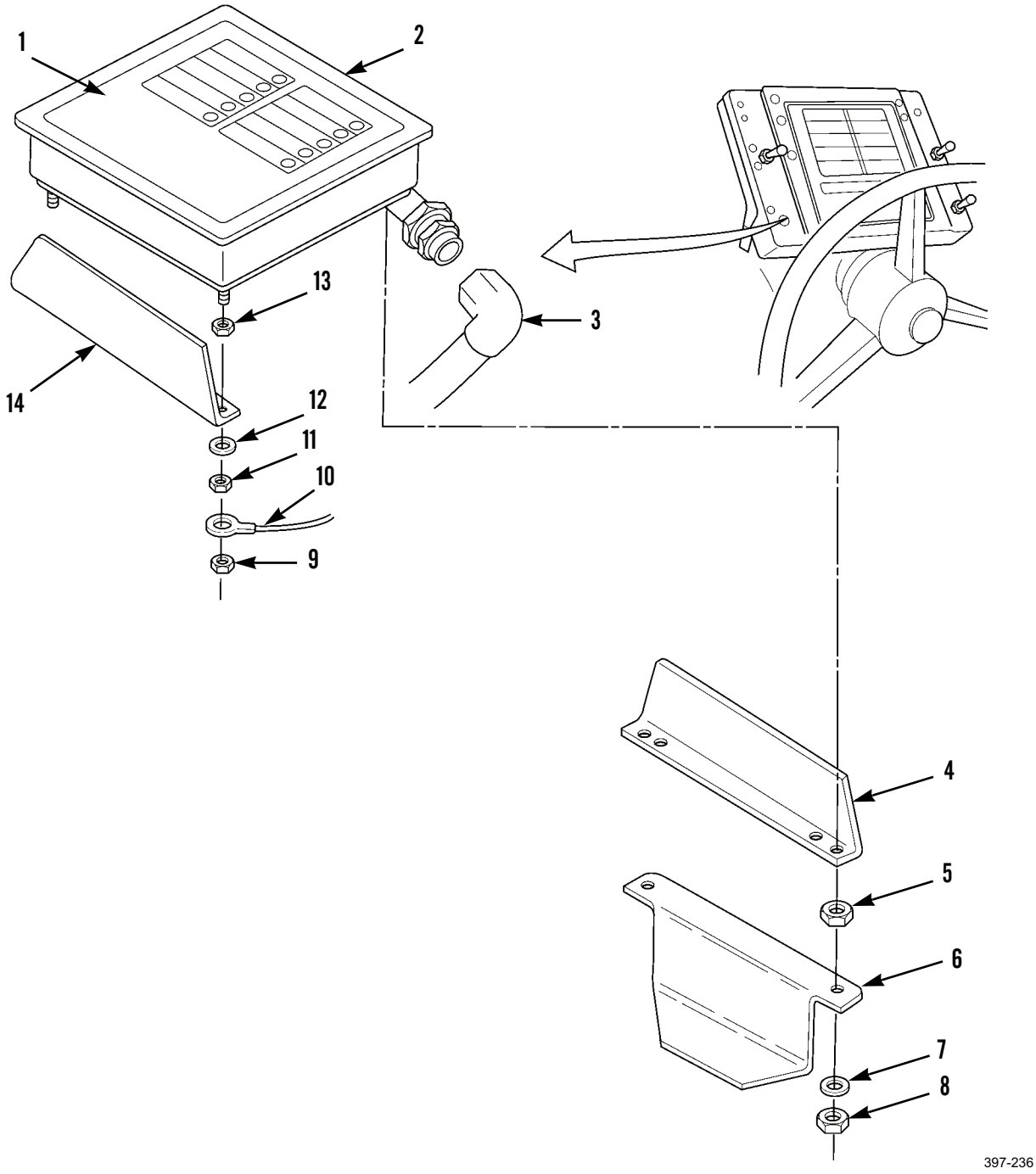


**END OF WORK PACKAGE**

## ELECTRONIC MONITORING SYSTEM (EMS) PANEL SWITCHES REPLACEMENT 0070 00

### THIS WORK PACKAGE COVERS

Removal, Cleaning and Inspection, Installation

### INITIAL SETUP

**Maintenance Level**

Unit

**Tools and Special Tools**

Tool kit, general mechanic's (Item 89, WP 0348 00)

**Materials/Parts**

Rag, wiping (Item 35, WP 0349 00)

Tag, marker (Item 44, WP 0349 00)

Lockwasher (as required)

**References**

WP 0021 00

**Equipment Conditions**

Machine parked on level ground (TM 5-3805-261-10)

Parking/emergency brake applied (TM 5-3805-261-10)

Implements lowered to ground (TM 5-3805-261-10)

Engine off (TM 5-3805-261-10)

Battery cables disconnected (WP 0125 00)

Steering console hood removed (WP 0196 00)

### *REMOVAL*

**NOTE**

This procedure covers replacement of one switch. Follow these instructions for all switches.

1. Remove knurled nut (3) and switch (1) from EMS panel (4).
2. Remove nut (2) from switch (1).

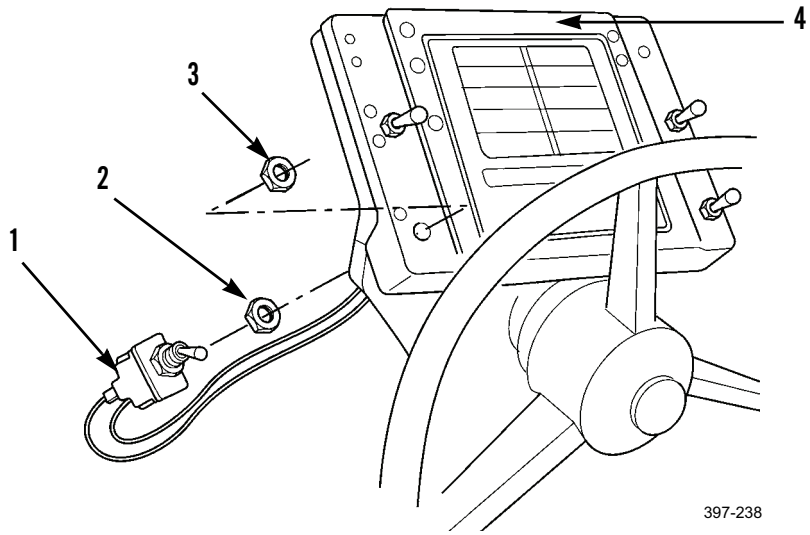

***REMOVAL - CONTINUED***

**NOTE**

Tag wire leads before disconnecting to aid in installation.

3. Disconnect two wire leads (5) at terminals (6).
4. Remove two screws (8), lockwashers (7), and terminals (6) from switch (1). Discard lockwashers.

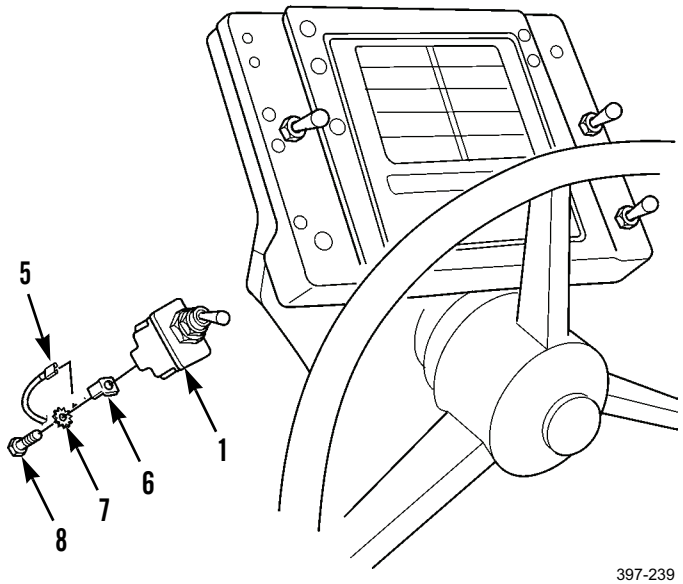


***CLEANING AND INSPECTION***

Clean and inspect all parts in accordance with WP 0021 00.

### *INSTALLATION*

1. Install two terminals (6), new lockwashers (7), and screws (8) on switch (1).
2. Connect two wire leads (5) to terminals (6).
3. Install nut (2) on switch (1).
4. Install switch (1) and knurled nut (3) in EMS panel (4).

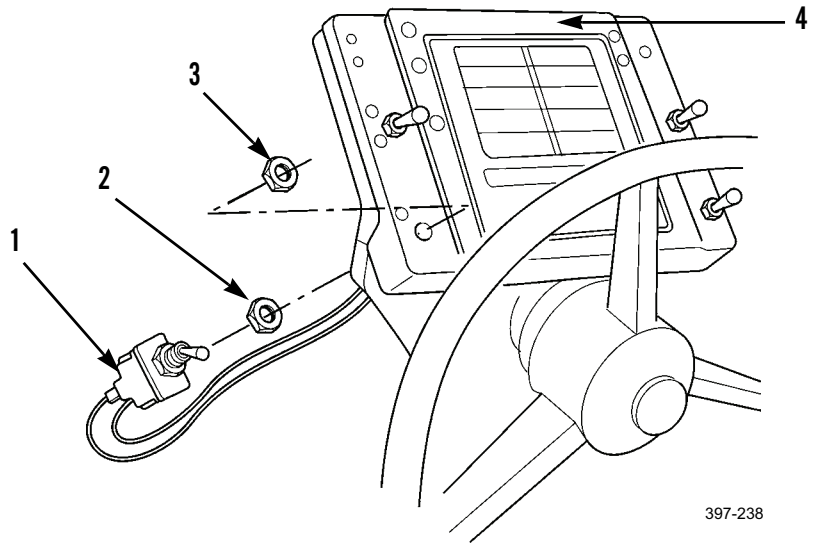


5. Install steering console hood (WP 0196 00).
6. Connect battery cables (WP 0125 00).

**END OF WORK PACKAGE**

## ELECTRONIC MONITORING SYSTEM (EMS) FUNCTION LIGHTS REPLACEMENT 0071 00

### THIS WORK PACKAGE COVERS

Removal, Cleaning and Inspection, Installation

### INITIAL SETUP

**Maintenance Level**

Unit

**Tools and Special Tools**

Tool kit, general mechanic's (Item 89, WP 0348 00)

**Materials/Parts**

Rag, wiping (Item 35, WP 0349 00)

**References**

WP 0021 00

**Equipment Conditions**

Machine parked on level ground (TM 5-3805-261-10)

Parking/emergency brake applied (TM 5-3805-261-10)

Implements lowered to ground (TM 5-3805-261-10)

Engine off (TM 5-3805-261-10)

Battery cables disconnected (WP 0125 00)

Steering console hood removed (WP 0196 00)

### *REMOVAL*

**NOTE**

This procedure covers replacement of one function light. Follow these instructions for the remaining six function lights (five on CCE and Type I machines).

1. Disconnect wire assembly (4).
2. Remove socket (3) and lamp (2) from EMS panel (1).

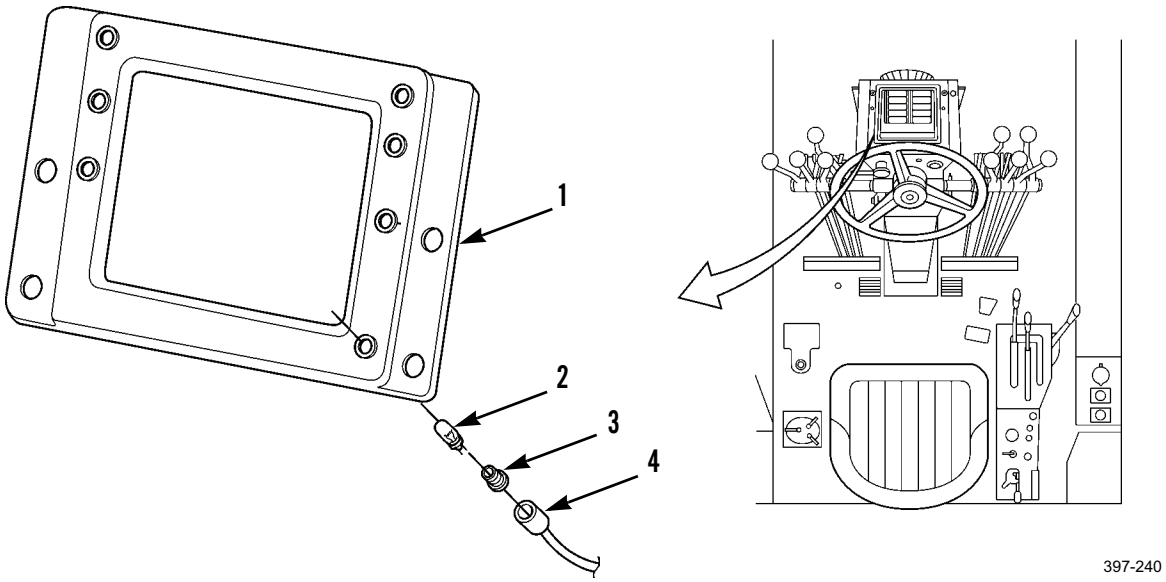


397-240

### *CLEANING AND INSPECTION*

Clean and inspect all parts in accordance with WP 0021 00.

### *INSTALLATION*

1. Install lamp (2) and socket (3) on EMS panel (1).
2. Connect wire assembly (4).

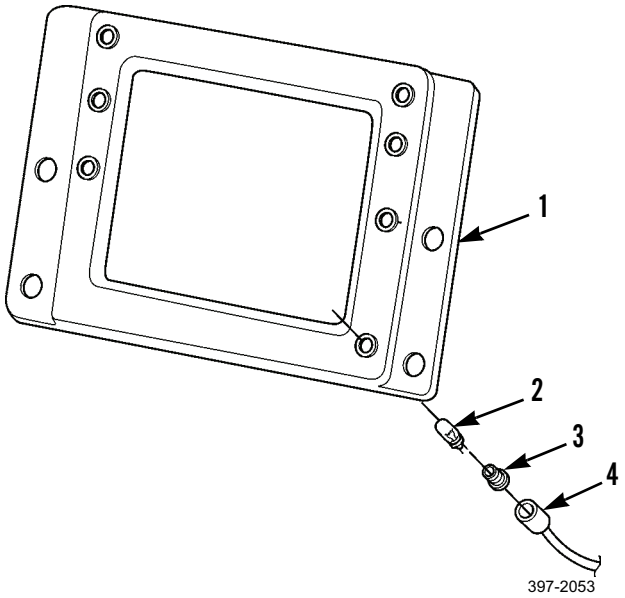


3. Install steering console hood (WP 0196 00).
4. Connect battery cables (WP 0125 00).

**END OF WORK PACKAGE**

## ELECTRONIC MONITORING SYSTEM (EMS) FAULT LIGHT REPLACEMENT 0072 00

### THIS WORK PACKAGE COVERS

Removal, Cleaning and Inspection, Installation

### INITIAL SETUP

**Maintenance Level**

Unit

**Tools and Special Tools**

Tool kit, general mechanic's (Item 89, WP 0348 00)

**Materials/Parts**

Rag, wiping (Item 35, WP 0349 00)

Tag, marker (Item 44, WP 0349 00)

Lockwasher (2)

**References**

WP 0021 00

**Equipment Conditions**

Machine parked on level ground (TM 5-3805-261-10)

Parking/emergency brake applied (TM 5-3805-261-10)

Implements lowered to ground (TM 5-3805-261-10)

Engine off (TM 5-3805-261-10)

Battery cables disconnected (WP 0125 00)

Steering console hood removed (WP 0196 00)

### *REMOVAL*

**NOTE**

Tag wire assemblies before disconnecting to aid in installation.

1. Disconnect two wire assemblies (4) from terminals (10) at rear of steering console housing (7).
2. Remove nut (5), washer (6), and socket (3) from steering console housing (7).
3. Remove lens (1) and lamp (2) from socket (3).
4. Remove two screws (8), lockwashers (9), and terminals (10) from socket (3). Discard lockwashers.

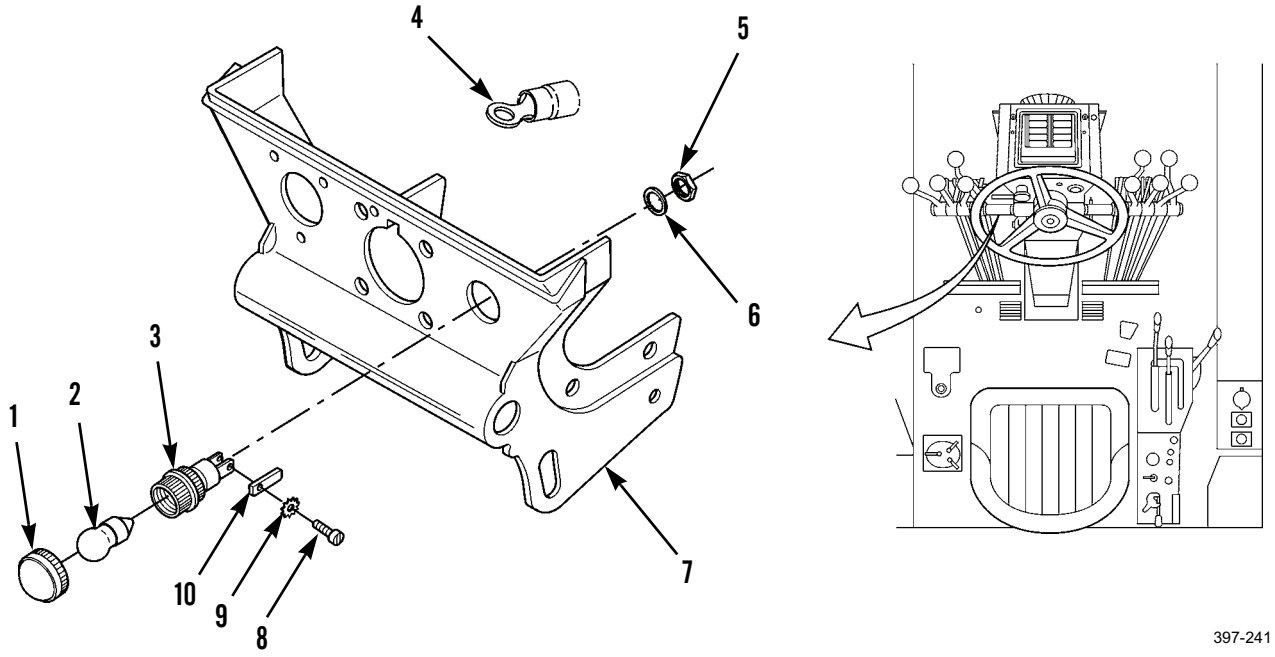


### *CLEANING AND INSPECTION*

Clean and inspect all parts in accordance with WP 0021 00.

### *INSTALLATION*

1. Install two terminals (10), new lockwashers (9), and screws (8) on socket (3).
2. Install lamp (2) and lens (1) on socket (3).
3. Install socket (3), washer (6), and nut (5) on steering console housing (7).
4. Connect two wire assemblies (4) to terminals (10) at rear of steering console housing (7).
5. Install steering console hood (WP 0196 00).
6. Connect battery cables (WP 0125 00).

**END OF WORK PACKAGE**

## TURN SIGNAL SWITCH REPLACEMENT 0073 00

### THIS WORK PACKAGE COVERS

Removal, Cleaning and Inspection, Installation

### INITIAL SETUP

**Maintenance Level**

Unit

**Tools and Special Tools**

Tool kit, general mechanic's (Item 89, WP 0348 00)

**Materials/Parts**

Rag, wiping (Item 35, WP 0349 00)

Tag, marker (Item 44, WP 0349 00)

Lockwasher (3)

**References**

WP 0021 00

**Equipment Conditions**

Machine parked on level ground (TM 5-3805-261-10)

Parking/emergency brake applied (TM 5-3805-261-10)

Implements lowered to ground (TM 5-3805-261-10)

Engine off (TM 5-3805-261-10)

Battery cables disconnected (WP 0125 00)

Steering console hood removed (WP 0196 00).

### *REMOVAL*

**NOTE**

Tag wire assemblies before disconnecting to aid in installation.

1. Disconnect three wire assemblies (4) at rear of steering console housing (5).
2. Remove three nuts (3), lockwashers (2), bolts (6), and switch (1) from steering console housing (5). Discard lockwashers.

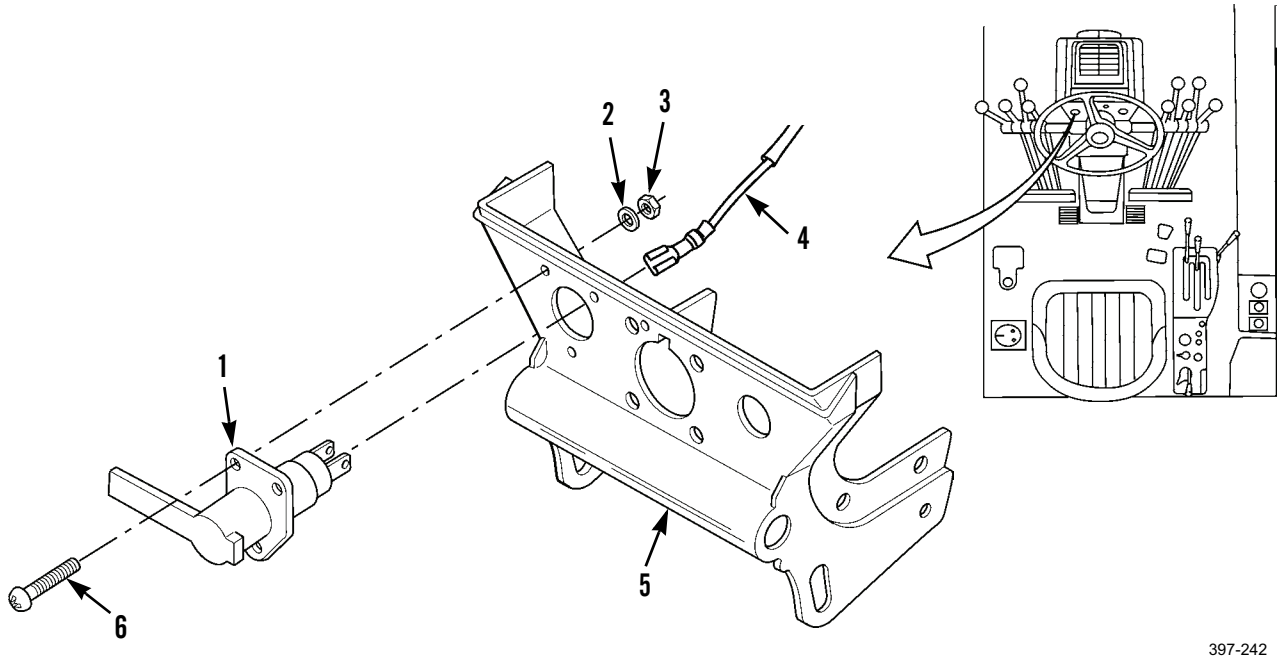


397-242

### *CLEANING AND INSPECTION*

Clean and inspect all parts in accordance with WP 0021 00.

### *INSTALLATION*

1. Install switch (1), three bolts (6), new lockwashers (2), and nuts (3) in steering control console (5).
2. Connect three wire assemblies (4) at rear of steering console housing (5).
3. Install steering console hood (WP 0196 00).
4. Connect battery cables (WP 0125 00).

**END OF WORK PACKAGE**

## ARTICULATION INDICATOR LIGHT REPLACEMENT 0074 00

### THIS WORK PACKAGE COVERS

Removal, Cleaning and Inspection, Installation

### INITIAL SETUP

**Maintenance Level**

Unit

**Tools and Special Tools**

Tool kit, general mechanic's (Item 89, WP 0348 00)

**Materials/Parts**

Rag, wiping (Item 35, WP 0349 00)

Tag, marker (Item 44, WP 0349 00)

**References**

WP 0021 00

**Equipment Conditions**

Machine parked on level ground (TM 5-3805-261-10)

Parking/emergency brake applied (TM 5-3805-261-10)

Implements lowered to ground (TM 5-3805-261-10)

Engine off (TM 5-3805-261-10)

Battery cables disconnected (WP 0125 00)

Steering console hood removed (WP 0196 00).

### *REMOVAL*

1. Remove lens (1) and lamp (2) from socket (3).

**NOTE**

Tag wire assemblies before disconnecting to aid in installation.

2. Disconnect two wire assemblies (8).
3. Remove nut (7), washer (6), spacer (5), and socket (3) from EMS panel (4).

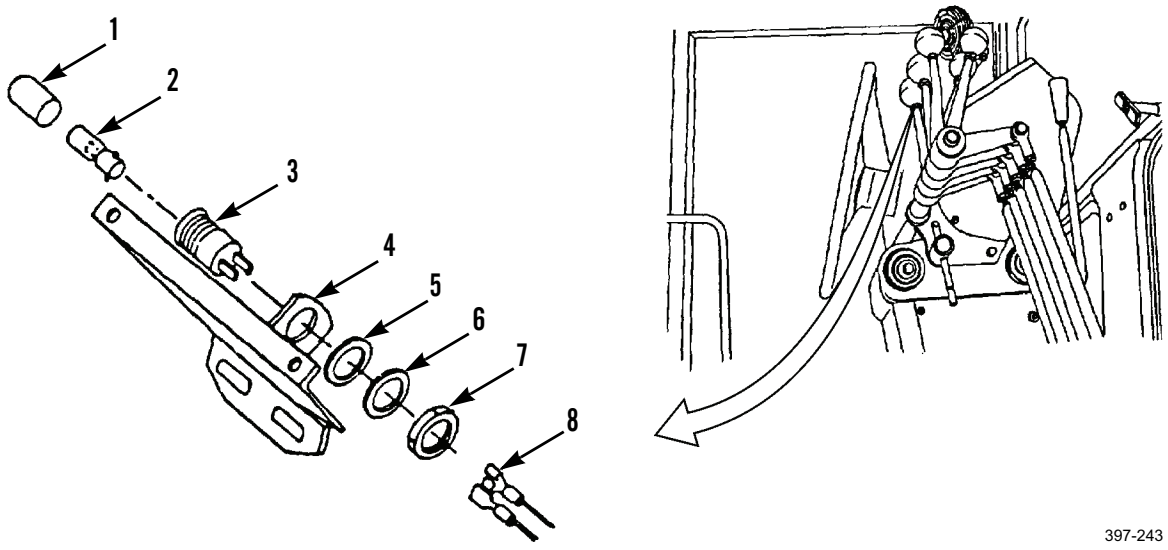

### *CLEANING AND INSPECTION*

Clean and inspect all parts in accordance with WP 0021 00.

### *INSTALLATION*

1. Install socket (3), spacer (5), washer (6), and nut (7) on monitor system panel (4).
2. Connect two wire assemblies (8).
3. Install lamp (2) and lens (1) on socket (3).

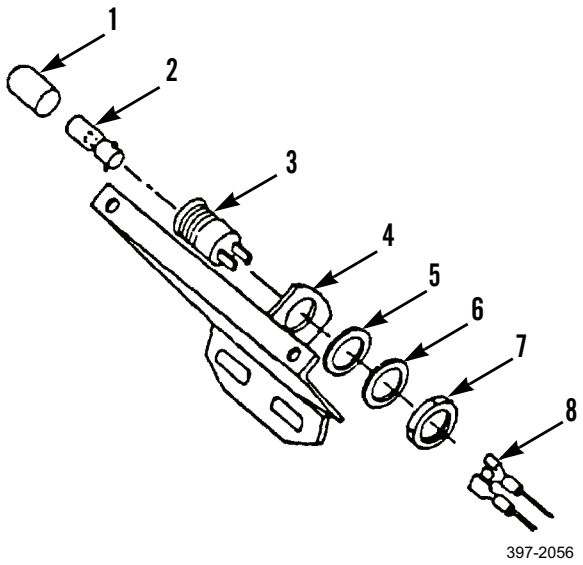


4. Install steering console hood (WP 0196 00).
5. Connect battery cables (WP 0125 00).

**END OF WORK PACKAGE**

## ELECTRONIC MONITORING SYSTEM (EMS) COVER REPLACEMENT 0075 00

### THIS WORK PACKAGE COVERS

Removal, Cleaning and Inspection, Installation

### INITIAL SETUP

**Maintenance Level**

Unit

**Tools and Special Tools**

Tool kit, general mechanic's (Item 89, WP 0348 00)

**Materials/Parts**

Adhesive (Item 3, WP 0349 00)

Rag, wiping (Item 35, WP 0349 00)

**References**

WP 0021 00

**Equipment Conditions**

Machine parked on level ground (TM 5-3805-261-10)

Parking/emergency brake applied (TM 5-3805-261-10)

Implements lowered to ground (TM 5-3805-261-10)

Engine off (TM 5-3805-261-10)

Battery cables disconnected (WP 0125 00)

Panel switches removed (WP 0070 00)

Function lights removed (WP 0071 00)

Articulation indicator light removed (WP 0074 00)

### *REMOVAL*

1. Separate cover (1) from panel (3).
2. Remove four nuts (2) from panel (3).

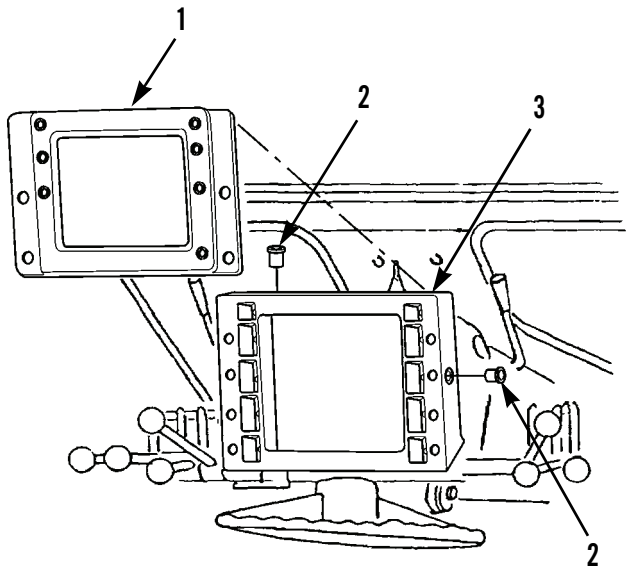

***REMOVAL - CONTINUED***

**NOTE**

Remove lenses only if inspection proves removal is necessary.

3. Remove and discard two green lenses (4), four amber lenses (5), and red lens (7) from cover (1).

**NOTE**

Remove seals only if inspection proves removal is necessary. Replace if torn, distorted, or deteriorated.

4. Remove and discard seals (6) from back of cover (1).

***CLEANING AND INSPECTION***

Clean and inspect all parts in accordance with WP 0021 00.

***INSTALLATION***

**NOTE**

Cut seal to size from bulk seal.

1. If removed, install new seals (6) on cover (1).
2. If removed, install new red lens (7), four new amber lenses (5), and two new green lenses (4) on cover (1). Apply a light thin coat of PVC adhesive to outer diameter of lens holes in cover. Apply to backside of cover only.

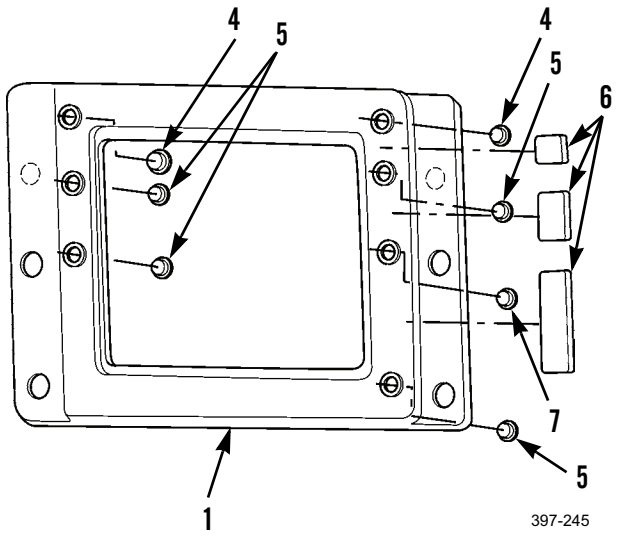

***INSTALLATION - CONTINUED***

3. Install four nuts (2) in panel (3).
4. Install cover (1) on panel (3).

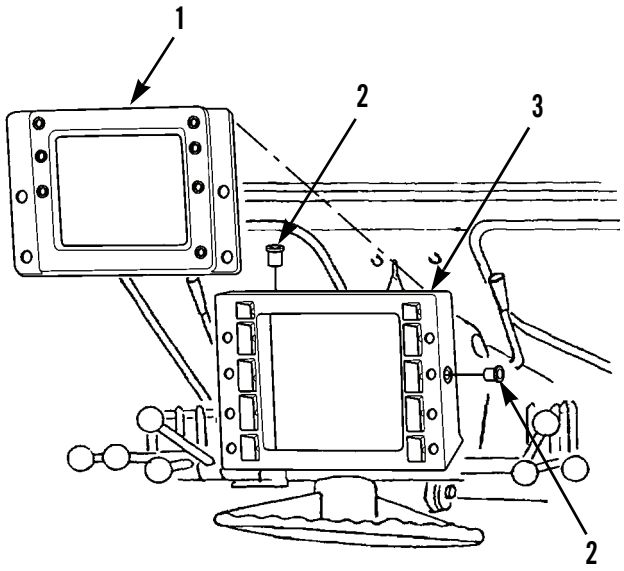


397-244

5. Install articulation indicator light (WP 0074 00).
6. Install function lights (WP 0071 00).
7. Install panel switches (WP 0070 00).
8. Connect battery cables (WP 0125 00).

**END OF WORK PACKAGE**

## WORK LIGHT SWITCHES REPLACEMENT 0076 00

### THIS WORK PACKAGE COVERS

Removal, Cleaning and Inspection, Installation

### INITIAL SETUP

**Maintenance Level**

Unit

**Tools and Special Tools**

Tool kit, general mechanic's (Item 89, WP 0348 00)

**Materials/Parts**

Rag, wiping (Item 35, WP 0349 00)

Tag, marker (Item 44, WP 0349 00)

Lockwasher (2)

**References**

WP 0021 00

**Equipment Conditions**

Machine parked on level ground (TM 5-3805-261-10)

Parking/emergency brake applied (TM 5-3805-261-10)

Implements lowered to ground (TM 5-3805-261-10)

Engine off (TM 5-3805-261-10)

Battery cables disconnected (WP 0125 00)

Left and right side plates removed from operator panel console (WP 0193 00)

### *REMOVAL*

**NOTE**

This procedure covers replacement of the rear work light switch. Follow these instructions for the front work light switch.

1. Remove knurled nut (1) and switch (3) from operator panel console (2).
2. Remove nut (8) from switch (3).

**NOTE**

Tag wire assemblies before disconnecting to aid in installation.

3. Disconnect two wire assemblies (5) from terminals (4).
4. Remove two screws (6), lockwashers (7), and terminals (4) from switch (3). Discard lockwashers.

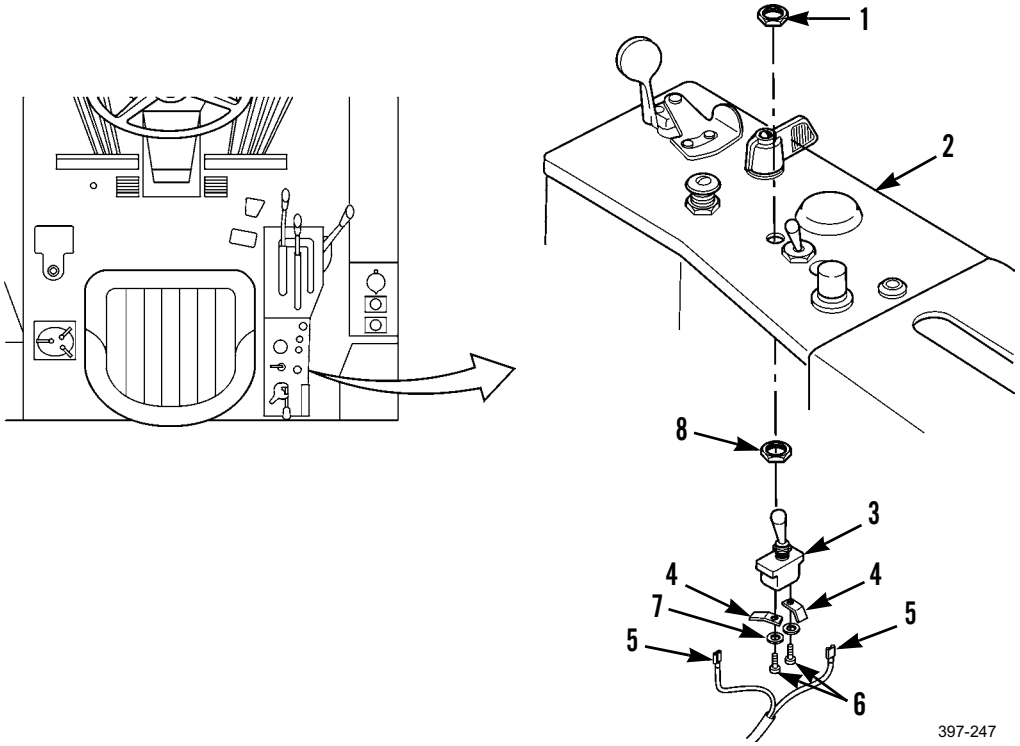


### *CLEANING AND INSPECTION*

Clean and inspect all parts in accordance with WP 0021 00.

### *INSTALLATION*

1. Install two terminals (4), new lockwashers (7), and screws (6) on switch (3).
2. Connect two wire assemblies (5) to terminals (4).
3. Install nut (8) on switch (3).
4. Install switch (3) and knurled nut (1) in operator panel console (2).
5. Install left and right side plates to operator panel console (WP 0193 00).
6. Connect battery cables (WP 0125 00).

**END OF WORK PACKAGE**

## ETHER CONTROL SWITCH REPLACEMENT 0077 00

### THIS WORK PACKAGE COVERS

Removal, Cleaning and Inspection, Installation

### INITIAL SETUP

**Maintenance Level**

Unit

**Tools and Special Tools**

Tool kit, general mechanic's (Item 89, WP 0348 00)

**Materials/Parts**

Rag, wiping (Item 35, WP 0349 00)

Tag, marker (Item 44, WP 0349 00)

Lockwasher (2)

**References**

WP 0021 00

**Equipment Conditions**

Machine parked on level ground (TM 5-3805-261-10)

Parking/emergency brake applied (TM 5-3805-261-10)

Implements lowered to ground (TM 5-3805-261-10)

Engine off (TM 5-3805-261-10)

Battery cables disconnected (WP 0125 00)

Left and right side plates removed from operator panel console (WP 0193 00)

### *REMOVAL*

1. Remove screw (1), lockwasher (2), and push button (3). Discard Lockwasher.
2. Remove nut (4), lockwasher (5), and switch (7) from operator panel console (6). Discard lockwasher.
3. Remove nut (11) from switch (7).

**NOTE**

Tag wire assemblies before disconnecting to aid in installation.

4. Disconnect two wire assemblies (9) from terminals (8).
5. Remove two screws (10) and terminals (8) from switch (7).

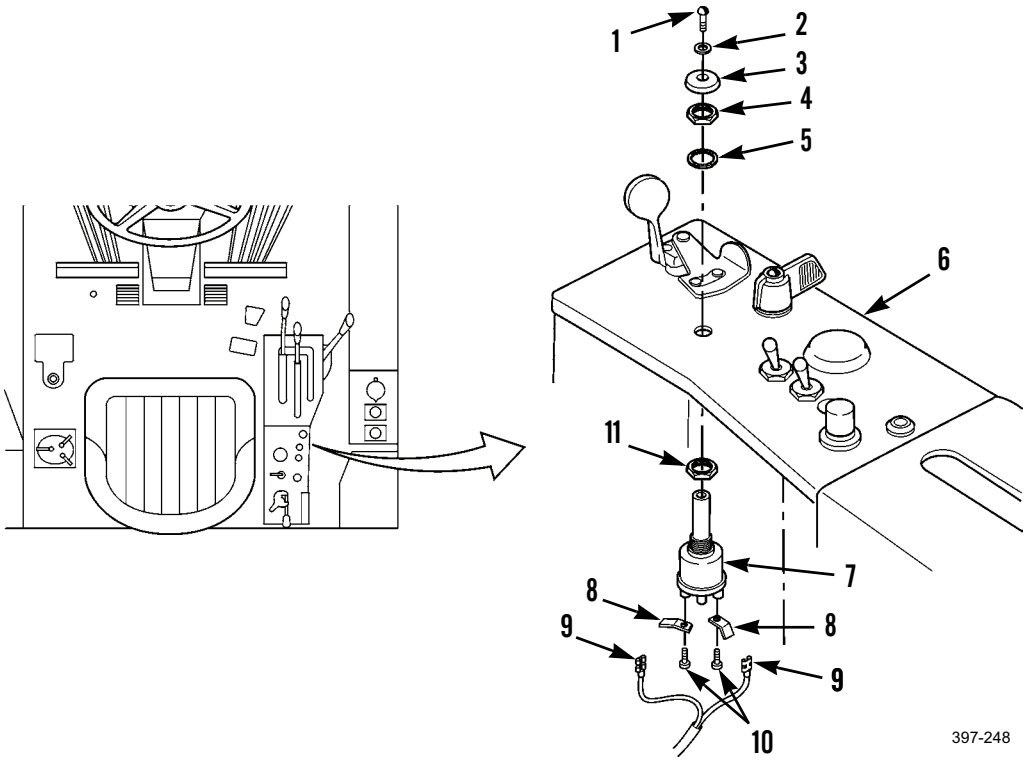


### *CLEANING AND INSPECTION*

Clean and inspect all parts in accordance with WP 0021 00.

### *INSTALLATION*

1. Install two terminals (8) and screws (10) on switch (7).
2. Connect two wire assemblies (9) to terminals (8).
3. Install nut (11) on switch (7).
4. Install switch (7), new lockwasher (5), and nut (4) on operator panel console (6).
5. Install push button (3), new lockwasher (2), and screw (1).
6. Install left and right side plates to operator panel console (WP 0193 00).
7. Connect battery cables (WP 0125 00).

**END OF WORK PACKAGE**

## CONTROL CONSOLE LIGHT REPLACEMENT 0078 00

### THIS WORK PACKAGE COVERS

Removal, Cleaning and Inspection, Installation

### INITIAL SETUP

**Maintenance Level**

Unit

**Tools and Special Tools**

Tool kit, general mechanic's (Item 89, WP 0348 00)

**Materials/Parts**

Rag, wiping (Item 35, WP 0349 00)

Tag, marker (Item 44, WP 0349 00)

Lockwasher

**References**

WP 0021 00

**Equipment Conditions**

Machine parked on level ground (TM 5-3805-261-10)

Parking/emergency brake applied (TM 5-3805-261-10)

Implements lowered to ground (TM 5-3805-261-10)

Engine off (TM 5-3805-261-10)

Battery cables disconnected (WP 0125 00)

Left and right side plates removed from operator panel console (WP 0193 00)

### *REMOVAL*

**NOTE**

Tag wire assemblies before disconnecting to aid in installation.

1. Disconnect two wire assemblies (8).
2. Remove nut (7), lockwasher (6), spacer (5), and socket (3) from operator panel console (4). Discard lockwasher.
3. Remove lens (1) and lamp (2) from socket (3).

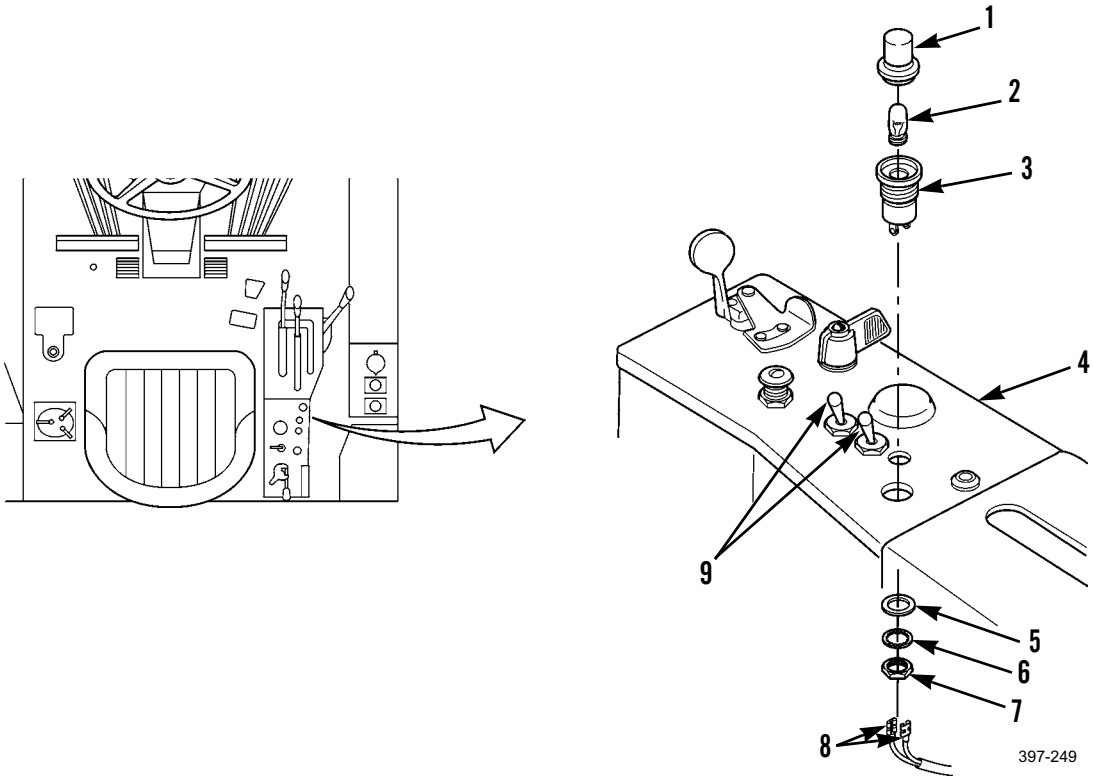


### *CLEANING AND INSPECTION*

Clean and inspect all parts in accordance with WP 0021 00.

### *INSTALLATION*

1. Install lamp (2) and lens (1) on socket (3).
2. Position socket (3) in operator panel console (4) with lens (1) window in direction of work light switches (9).
3. Install spacer (5), new lockwasher (6), and nut (7).
4. Connect two wire assemblies (8).
5. Install left and right side plates to operator panel console (WP 0193 00).
6. Connect battery cables (WP 0125 00).

**END OF WORK PACKAGE**

## START SWITCH REPLACEMENT 0079 00

### THIS WORK PACKAGE COVERS

Removal, Cleaning and Inspection, Installation

### INITIAL SETUP

**Maintenance Level**

Unit

**Tools and Special Tools**

Tool kit, general mechanic's (Item 89, WP 0348 00)

**Materials/Parts**

Rag, wiping (Item 35, WP 0349 00)

Tag, marker (Item 44, WP 0349 00)

**References**

WP 0021 00

**Equipment Conditions**

Machine parked on level ground (TM 5-3805-261-10)

Parking/emergency brake applied (TM 5-3805-261-10)

Implements lowered to ground (TM 5-3805-261-10)

Engine off (TM 5-3805-261-10)

Battery cables disconnected (WP 0125 00)

Left and right side plates removed from operator panel console (WP 0193 00)

### *REMOVAL*

1. Remove screw (1), knob (2), nut (3), washer (4), and switch (9) from of operator panel console (5).

**NOTE**

Tag wire assemblies before disconnecting to aid in installation.

2. Remove three screws (7) and washers (6) and disconnect three wire assemblies (8) from switch (9).

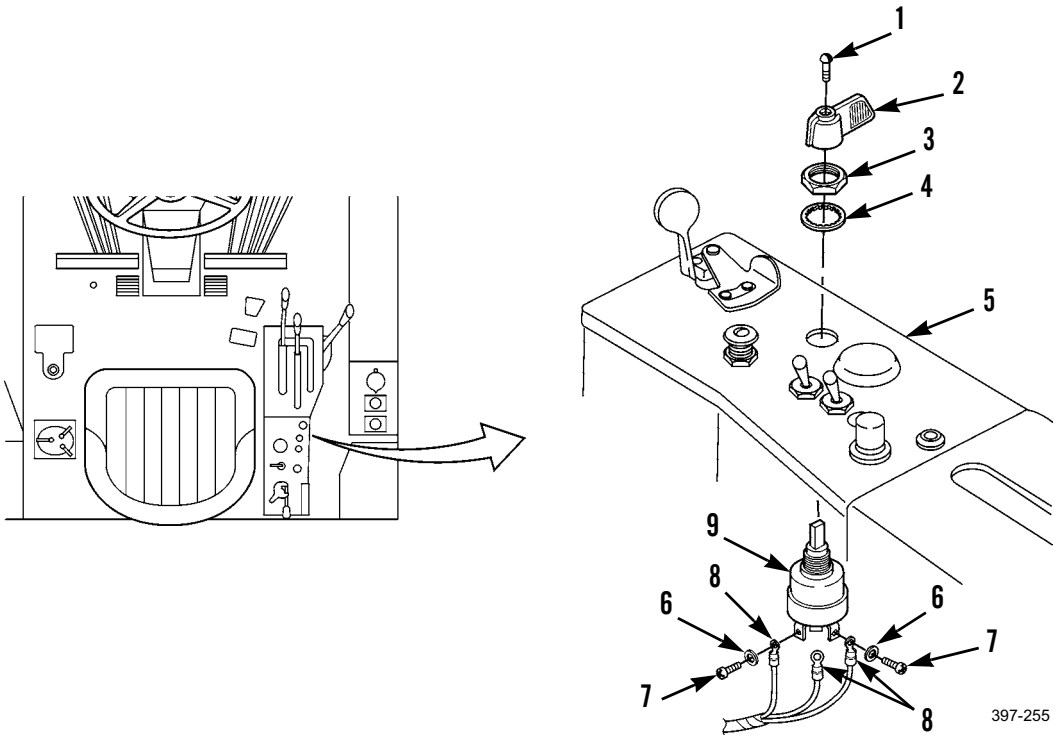


### *CLEANING AND INSPECTION*

Clean and inspect all parts in accordance with WP 0021 00.

### *INSTALLATION*

1. Connect three wire assemblies (8) and install three washers (6) and screws (7) on switch (9).
2. Install switch (9), washer (4), nut (3), knob (2), and screw (1) on operator panel console (5).
3. Install left and right side plates on operator panel console (WP 0193 00).
4. Connect battery cables (WP 0125 00).

**END OF WORK PACKAGE**

## MAIN CIRCUIT BREAKER REPLACEMENT 0080 00

## THIS WORK PACKAGE COVERS

Removal, Cleaning and Inspection, Installation

## INITIAL SETUP

**Maintenance Level**

Unit

**Tools and Special Tools**

Tool kit, general mechanic's (Item 89, WP 0348 00)

**Materials/Parts**

Rag, wiping (Item 35, WP 0349 00)

Tag, marker (Item 44, WP 0349 00)

Lockwasher (2)

**References**

WP 0021 00

**Equipment Conditions**

Machine parked on level ground (TM 5-3805-261-10)

Parking/emergency brake applied (TM 5-3805-261-10)

Implements lowered to ground (TM 5-3805-261-10)

Engine off (TM 5-3805-261-10)

Battery cables disconnected (WP 0125 00)

Left side plate removed from operator panel console (WP 0193 00)

### *REMOVAL*

**NOTE**

Tag wire assemblies before disconnecting to aid in installation.

1. Remove two nuts (1), lockwashers (2), and disconnect three wire assemblies (7) from main circuit breaker (4). Discard lockwashers.
2. Remove two nuts (3), screws (5), and main circuit breaker (4) from left side plate (6) of operator panel console.

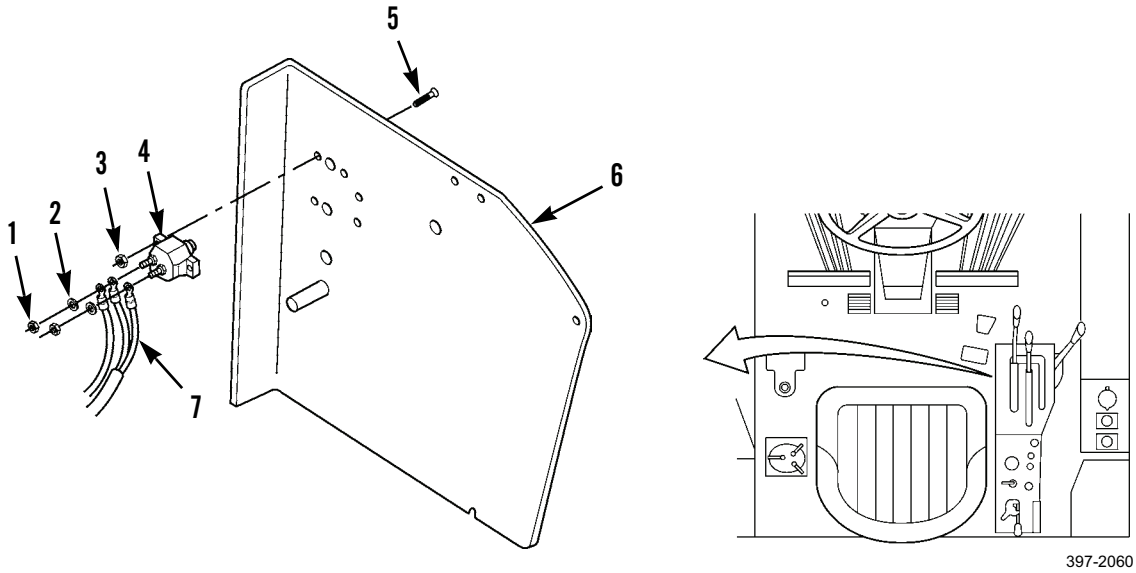


397-2060

### *CLEANING AND INSPECTION*

Clean and inspect all parts in accordance with WP 0021 00.

### *INSTALLATION*

1. Install main circuit breaker (4), two screws (5), and nuts (3) on left side plate (6) of operator panel console.
2. Connect three wire assemblies (7) and install new lockwashers (2) and nuts (1) on main circuit breaker (4).
3. Install left side plate to operator panel console (WP 0193 00).
4. Connect battery cables (WP 0125 00).

**END OF WORK PACKAGE**

## BATTERY DISCONNECT SWITCH REPLACEMENT 0081 00

### THIS WORK PACKAGE COVERS

Removal, Cleaning and Inspection, Installation

### INITIAL SETUP

**Maintenance Level**

Unit

**Tools and Special Tools**

Tool kit, general mechanic's (Item 89, WP 0348 00)

**Materials/Parts**

Rag, wiping (Item 35, WP 0349 00)

Tag, marker (Item 44, WP 0349 00)

**References**

WP 0021 00

**Equipment Conditions**

Machine parked on level ground (TM 5-3805-261-10)

Parking/emergency brake applied (TM 5-3805-261-10)

Implements lowered to ground (TM 5-3805-261-10)

Engine off (TM 5-3805-261-10)

Battery cables disconnected (WP 0125 00)

Left and right side plates removed from operator panel console (WP 0193 00)

### *REMOVAL*

**NOTE**

Tag wire assemblies before disconnecting to aid in installation.

1. Remove two nuts (1), washers (2) and disconnect two wire assemblies (9) and two cables (10) from switch (8).
2. Remove nut (5), key (6), washer (4), plate (3), and switch (8) from left side plate (7) of operator panel console.

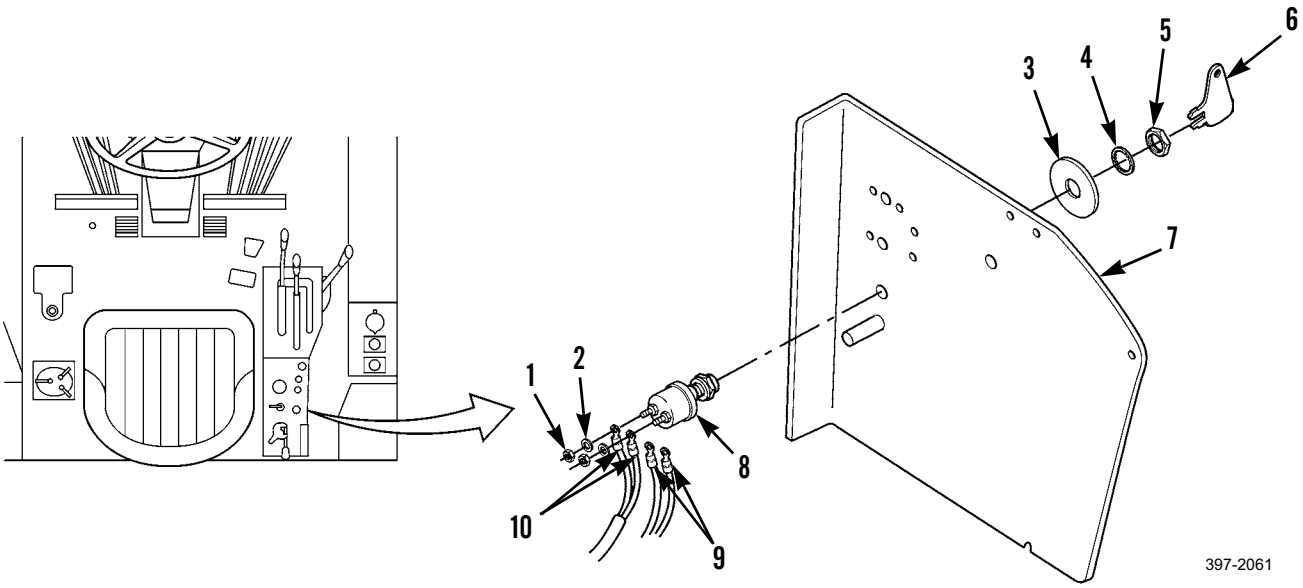


### *CLEANING AND INSPECTION*

Clean and inspect all parts in accordance with WP 0021 00.

### *INSTALLATION*

1. Install switch (8), plate (3), washer (4), and nut (5) on left side plate (7) of operator panel console.
2. Connect two wire assemblies (9) two cables (10) and install two washers (2) and nuts (1) on switch (8).
3. Install left and right side plates to operator panel console (WP 0193 00).
4. Connect battery cables (WP 0125 00).

**END OF WORK PACKAGE**

## OPERATOR'S CONSOLE COVER REPLACEMENT 0082 00

### THIS WORK PACKAGE COVERS

Removal, Cleaning and Inspection, Installation

### INITIAL SETUP

**Maintenance Level**

Unit

**Tools and Special Tools**

Tool kit, general mechanic's (Item 89, WP 0348 00)

**Materials/Parts**

Rag, wiping (Item 35, WP 0349 00)

Tag, marker (Item 44, WP 0349 00)

Nut, self-locking

Washer, spring-tension

**References**

WP 0021 00

**Equipment Conditions**

Machine parked on level ground (TM 5-3805-261-10)

Parking/emergency brake applied (TM 5-3805-261-10)

Implements lowered to ground (TM 5-3805-261-10)

Engine off (TM 5-3805-261-10)

Battery cables disconnected (WP 0125 00)

Work light switches removed (WP 0076 00)

Ether control switch removed (WP 0077 00)

Control console light removed (WP 0078 00)

Start switch removed (WP 0079 00)

Air pressure relieved (TM 5-3805-261-10)

## OPERATOR'S CONSOLE COVER REPLACEMENT - CONTINUED 0082 00

### *REMOVAL*

1. Remove screw (1), washer (2), screw (11), washer (10), bracket (3), spring (9), screw (8), washer (7), base (6) and three hoses (5), from centershift lock valve (4).

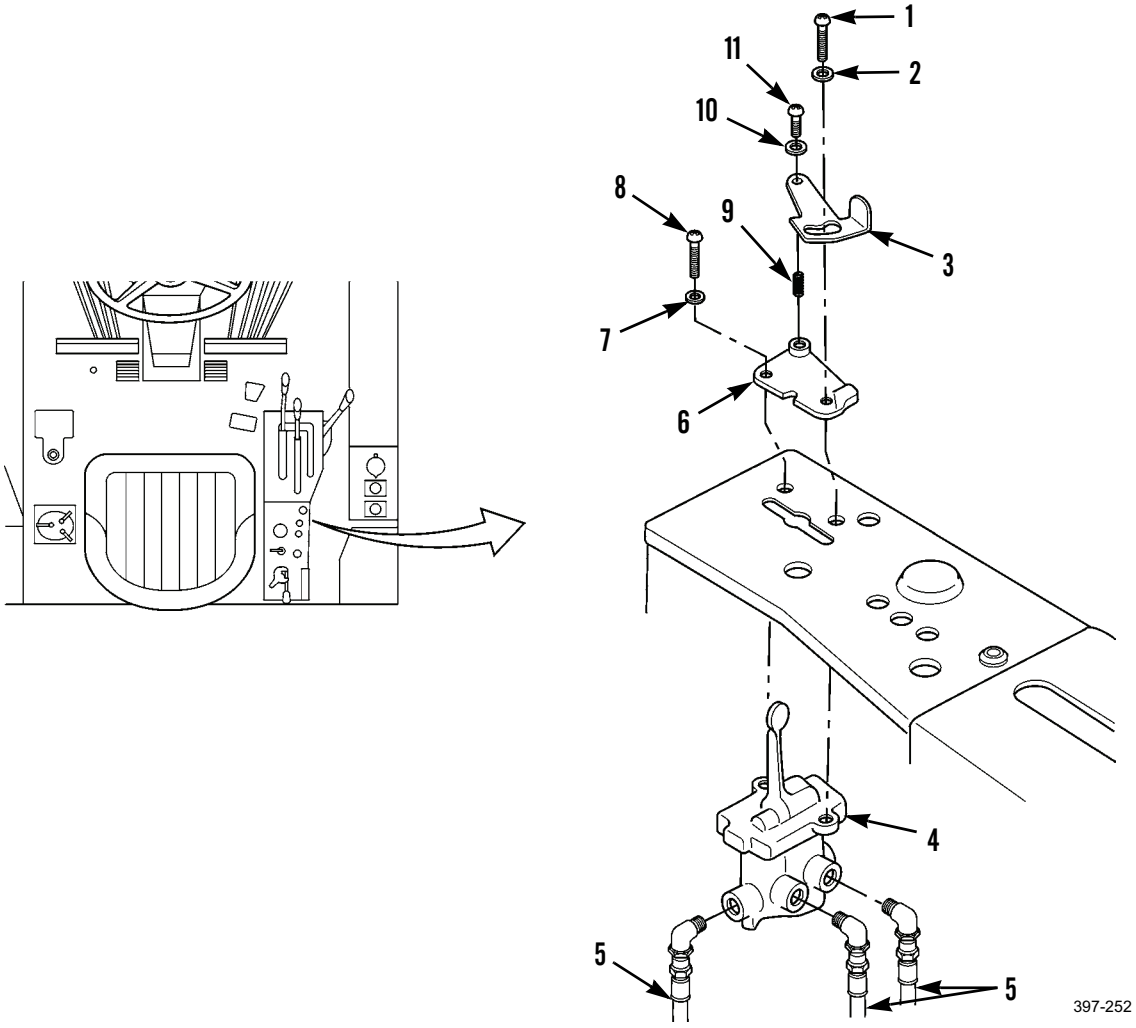

***REMOVAL - CONTINUED***

2. Remove button (19) and cap (12).
3. Remove self-locking nut (17), washer (18), and plate spacer (16). Discard self-locking nut.
4. Remove screw (13), spring-tension washer (14), and shouldered washer (15). Discard spring-tension washer.

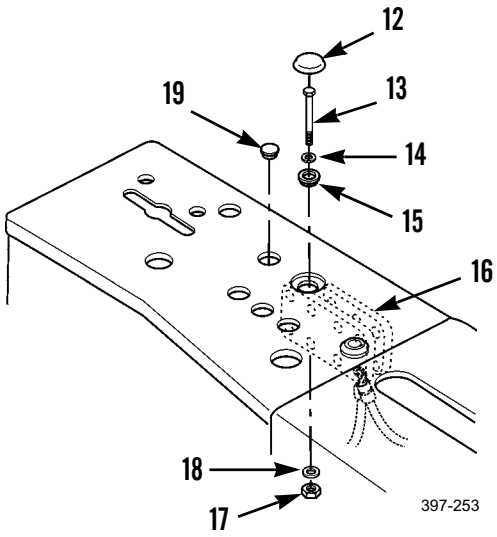


5. Remove instruction plate (20) and cover (21).

**NOTE**

Tag wire assemblies before disconnecting to aid in installation.

6. Remove four nuts (25) and washers (26) and disconnect eight wire assemblies (27).
7. Remove four nuts (24), washers (23), and screws (22) and separate two plate spacer halves (16).

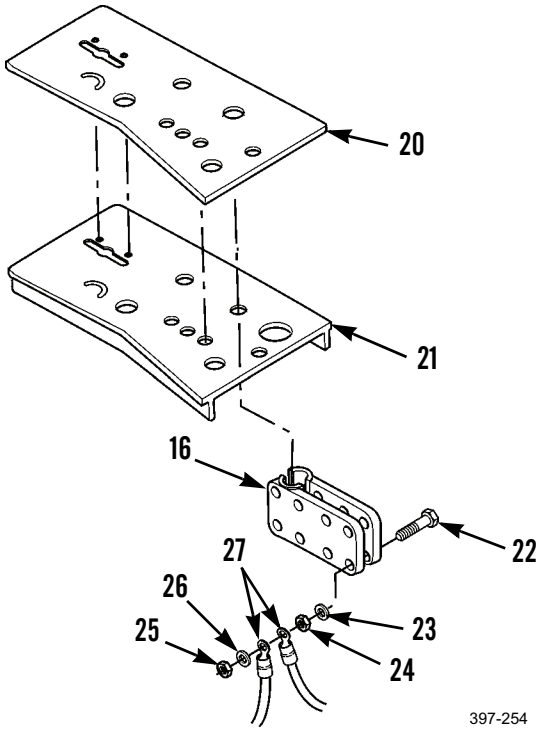

### *CLEANING AND INSPECTION*

Clean and inspect all parts in accordance with WP 0021 00.

### *INSTALLATION*

1. Position two plate spacer halves (16) together and install four screws (22), washers (23), and nuts (24).
2. Connect eight wire assemblies (27) to four screws (22) and install four washers (26), and nuts (25).
3. Install cover (21) and instruction plate (20).

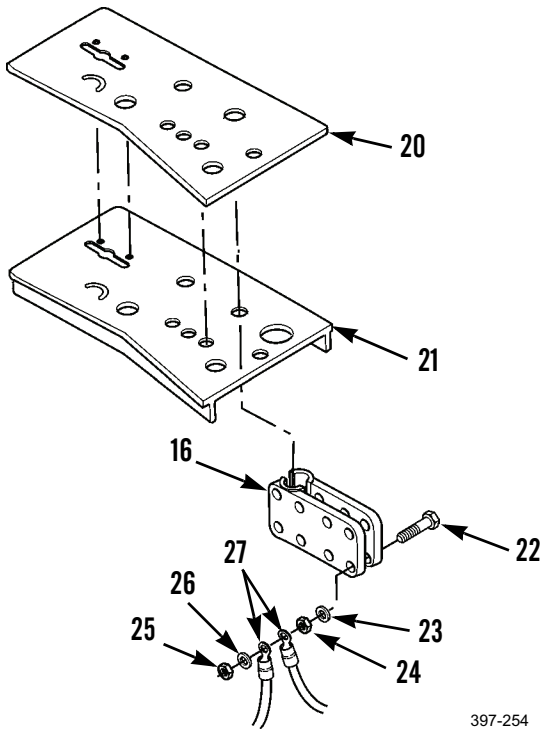


4. Install shouldered washer (15), new spring-tension washer (14), and screw (13).
5. Install plate spacer (16), washer (18), and new self-locking nut (17) on screw (13).
6. Install cap (12) and button (19).

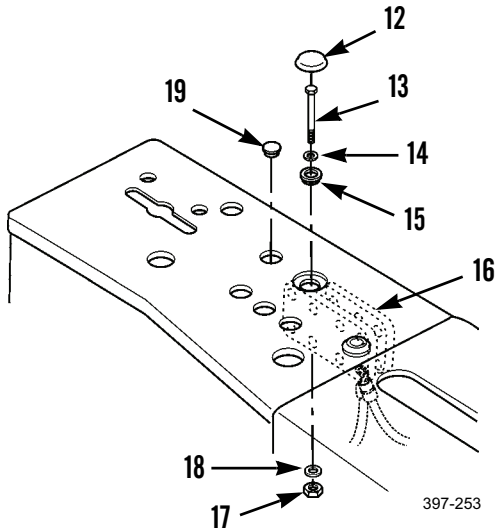

***INSTALLATION - CONTINUED***

7. Install base (6), washer (7), screw (8), spring (9), bracket (3), washer (10), screw (11), washer (2), and screw (1) on centershift lock valve (4).
8. Connect three hoses (5).

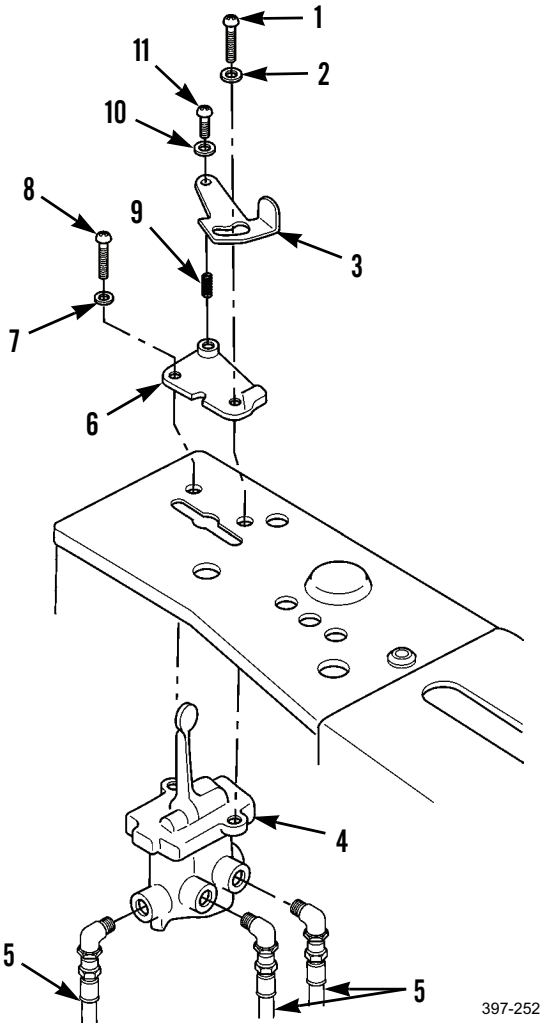


9. Connect start switch (WP 0079 00).
10. Connect battery cables (WP 0125 00).
11. Turn battery disconnnect switch to ON position and start engine (TM 5-3805-261-10).
12. Check for leaks. Stop engine.
13. Turn disconnect switch to OFF position (TM 5-3805-261-10).
14. Connect control console light (WP 0078 00).
15. Connect ether control switch (WP 0077 00).
16. Connect work light switches (WP 0076 00).

**END OF WORK PACKAGE**

## HOURMETER REPLACEMENT 0083 00

### THIS WORK PACKAGE COVERS

Removal, Cleaning and Inspection, Installation

### INITIAL SETUP

**Maintenance Level**

Unit

**Tools and Special Tools**

Tool kit, general mechanic's (Item 89, WP 0348 00)

**Materials/Parts**

Rag, wiping (Item 35, WP 0349 00)

Tag, marker (Item 44, WP 0349 00)

**References**

WP 0021 00

**Equipment Conditions**

Machine parked on level ground (TM 5-3805-261-10)

Parking/emergency brake applied (TM 5-3805-261-10)

Implements lowered to ground (TM 5-3805-261-10)

Engine off (TM 5-3805-261-10)

Battery cables disconnected (WP 0125 00)

Right side engine doors opened (TM 5-3805-261-10)

### *REMOVAL*

**NOTE**

Tag wire assemblies before disconnecting to aid in installation.

1. Disconnect two wire assemblies (6) from two connectors (5).
2. Remove two wing nuts (1), clamp (2), and hourmeter (4) from instrument panel (3).

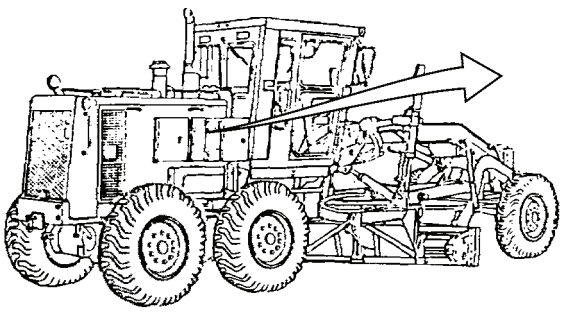

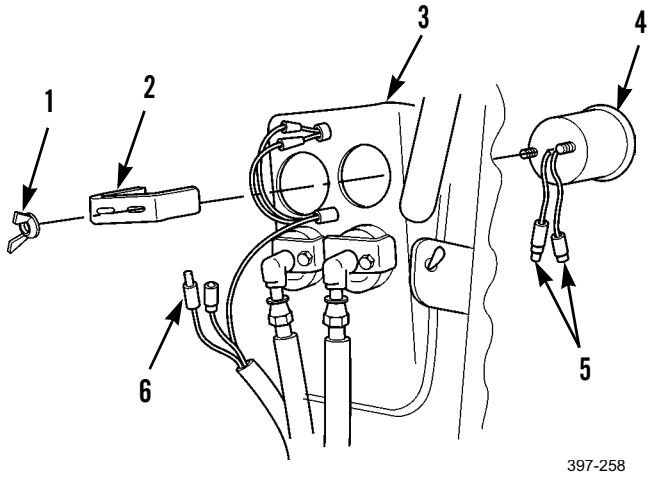

### *CLEANING AND INSPECTION*

Clean and inspect all parts in accordance with WP 0021 00.

### *INSTALLATION*

1. Install hourmeter (4), clamp (2), and two wing nuts (1) on instrument panel (3).
2. Connect two wire assemblies (6) to two connectors (5).

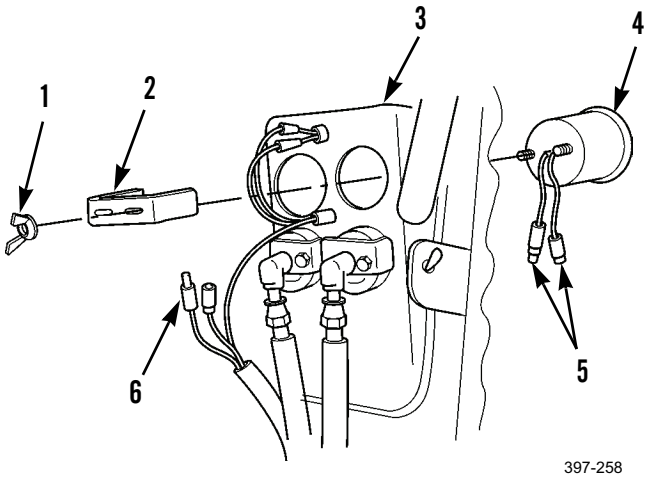


3. Close right side engine doors (TM 5-3805-261-10).
4. Connect battery cables (WP 0125 00).

**END OF WORK PACKAGE**

## PANEL LIGHTS REPLACEMENT 0084 00

### THIS WORK PACKAGE COVERS

Removal, Cleaning and Inspection, Installation

### INITIAL SETUP

**Maintenance Level**

Unit

**Tools and Special Tools**

Tool kit, general mechanic's (Item 89, WP 0348 00)

**Materials/Parts**

Rag, wiping (Item 35, WP 0349 00)

Tag, marker (Item 44, WP 0349 00)

**References**

WP 0021 00

**Equipment Conditions**

Machine parked on level ground (TM 5-3805-261-10)

Parking/emergency brake applied (TM 5-3805-261-10)

Implements lowered to ground (TM 5-3805-261-10)

Engine off (TM 5-3805-261-10)

Battery cables disconnected (WP 0125 00)

Right side engine doors opened (TM 5-3805-161-10)

### *REMOVAL*

**NOTE**

This procedure covers replacement of one panel light. Follow these instructions for the other panel light.

1. Remove lens (2) and lamp (3) from socket (4).

**NOTE**

Tag wire assemblies before disconnecting to aid in installation.

2. Disconnect two wire assemblies (8).
3. Remove nut (7), washer (6), spacer (5), and socket (4) from instrument panel (1).

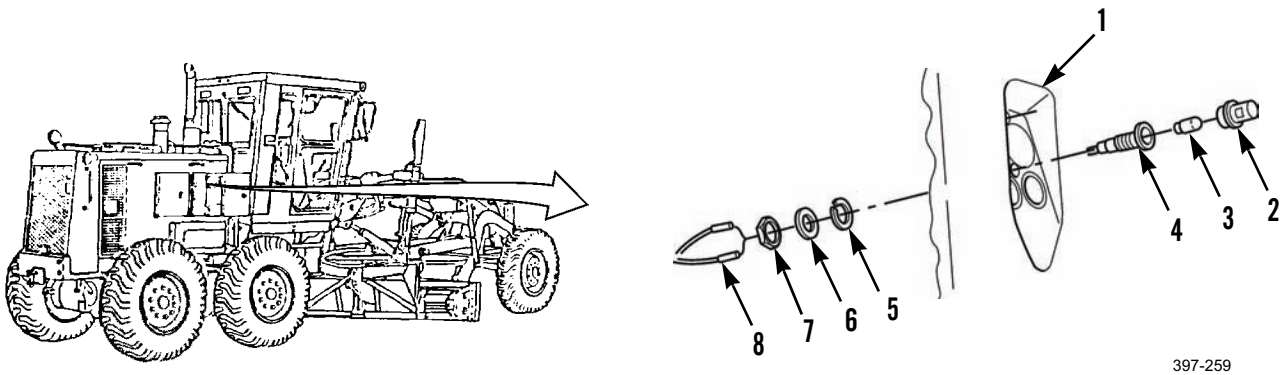

### *CLEANING AND INSPECTION*

Clean and inspect all parts in accordance with WP 0021 00.

### *INSTALLATION*

1. Install socket (4), spacer (5), washer (6), and nut (7) on instrument panel (1).
2. Connect two wire assemblies (8).
3. Install lamp (3) and lens (2) on socket (4).
4. Close right side engine doors (TM 5-3805-261-10).
5. Connect battery cables (WP 0125 00).

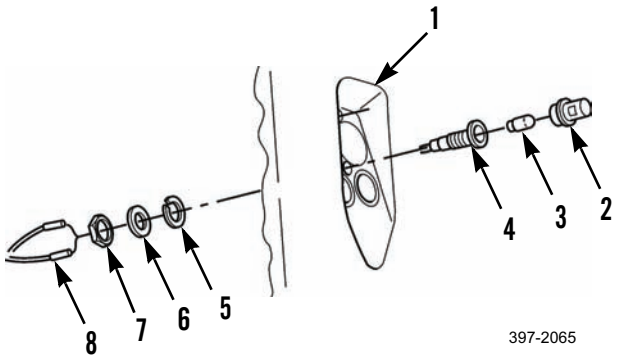


**END OF WORK PACKAGE**

## SWITCH PANEL AND MOUNTING REPLACEMENT (CCE AND TYPE I MACHINES) 0085 00

### THIS WORK PACKAGE COVERS

Removal, Cleaning and Inspection, Installation

### INITIAL SETUP

**Maintenance Level**

Unit

**Tools and Special Tools**

Tool kit, general mechanic's (Item 89, WP 0348 00)

**Materials/Parts**

Rag, wiping (Item 35, WP 0349 00)

Tag, marker (Item 44, WP 0349 00)

Lockwasher (3)

**References**

WP 0021 00

**Equipment Conditions**

Machine parked on level ground (TM 5-3805-261-10)

Parking/emergency brake applied (TM 5-3805-261-10)

Implements lowered to ground (TM 5-3805-261-10)

Engine off (TM 5-3805-261-10)

Battery cables disconnected (WP 0125 00)

### *REMOVAL*

1. Remove two knobs (4), lens (6), lamp (5), lighter knob (7), button (9), and two screws (8) from switch panel (10) on right side of cab.

**NOTE**

Tag all wire assemblies before disconnecting to aid in installation.

2. Pull back panel (10), disconnect two wire assemblies (13) from socket (3) and remove panel.
3. Remove nut (12), washer (11), socket (3), and seal (2) from panel (10).
4. Remove grommet (1) and two wire assemblies (13).

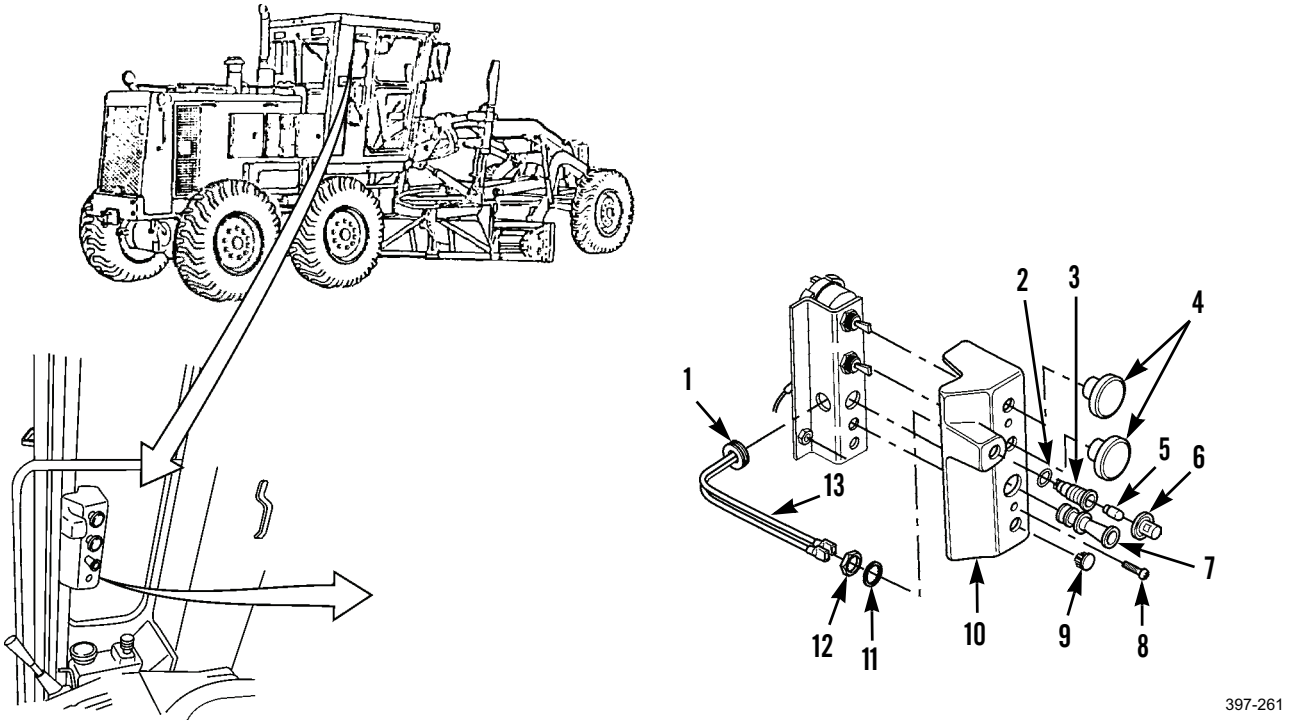


5. Remove two nuts (19), lockwashers (20), and bolts (21) and pull back bracket (16). Discard lockwashers.
6. Remove screw (25) and lockwasher (23), disconnect wiring harness from lighter (22) and switches (14 and 15) and remove bracket (16). Discard lockwasher.
7. Remove two nuts (17), nuts (18), and switches (14 and 15) from bracket (16).
8. Remove barrel (24) and lighter (22) from bracket (16).

### *REMOVAL - CONTINUED*

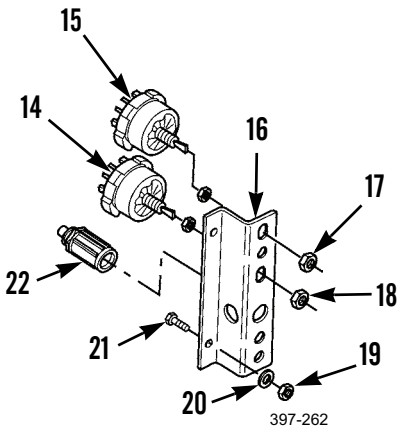


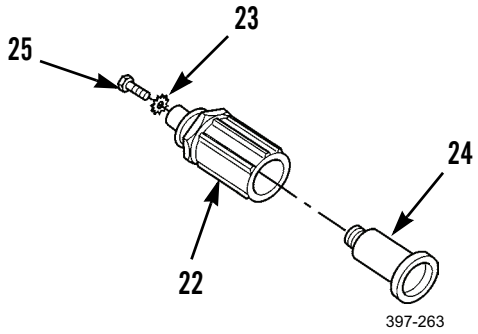


### *CLEANING AND INSPECTION*

Clean and inspect all parts in accordance with WP 0021 00.

### *INSTALLATION*

1. Install lighter (22) and barrel (24) on bracket (16).
2. Install two switches (14 and 15), nuts (18), and nuts (17) on bracket (16).

**NOTE**

Place two leads of wiring harness that connect to two wire assemblies leading to light socket, through hole in side of bracket.

3. Connect wiring harness to switches (15 and 14) and lighter (22), install new lockwasher (23) and screw (25) to lighter, and place bracket (16) into position.
4. Install two bolts (21), new lockwashers (20), and nuts (19) securing bracket (16).
5. Connect two wire assemblies (13) to leads of wiring harness coming out of hole in side of bracket (16), push connections through hole and install grommet (1).
6. Install seal (2), socket (3), washer (11), and nut (12) on panel (10).
7. Install two wire assemblies (13) to socket (3) and place panel (10) into position.
8. Install two screws (8), button (9), lighter knob (7), lamp (5), lens (6), and two knobs (4).
9. Connect battery cables (WP 0125 00).

**END OF WORK PACKAGE**

## SUPPLEMENTAL STEERING PUMP VALVE SWITCH MAINTENANCE 0086 00

### THIS WORK PACKAGE COVERS

Removal, Cleaning and Inspection, Installation/Adjustment

### INITIAL SETUP

**Maintenance Level**

Unit

**Tools and Special Tools**

Tool kit, general mechanic's (Item 89, WP 0348 00)

Shop equipment, common no. 1 (Item 75, WP 0348 00)

Wrench, torque (Item 97, WP 0348 00)

**Materials/Parts**

Rag, wiping (Item 35, WP 0349 00)

Tag, marker (Item 44, WP 0349 00)

Pin

**References**

WP 0021 00

**Equipment Conditions**

Machine parked on level ground (TM 5-3805-261-10)

Parking/emergency brake applied (TM 5-3805-261-10)

Implements lowered to ground (TM 5-3805-261-10)

Engine off (TM 5-3805-261-10)

Battery cables disconnected (WP 0125 00)

Hydraulic hose disconnected (as necessary) (WP 0323 00)

### *REMOVAL*

**NOTE**

Tag wire assemblies before disconnecting to aid in installation.

1. Remove two screws (4) and washers (3) and disconnect two wire assemblies (2) from switch (5).
2. Remove nut (10), switch (5), and retainer (1) from bracket (11).
3. Remove pin (9) and clevis (12). Discard pin.
4. Remove spring (7) and bracket (11) from combination valve (8).

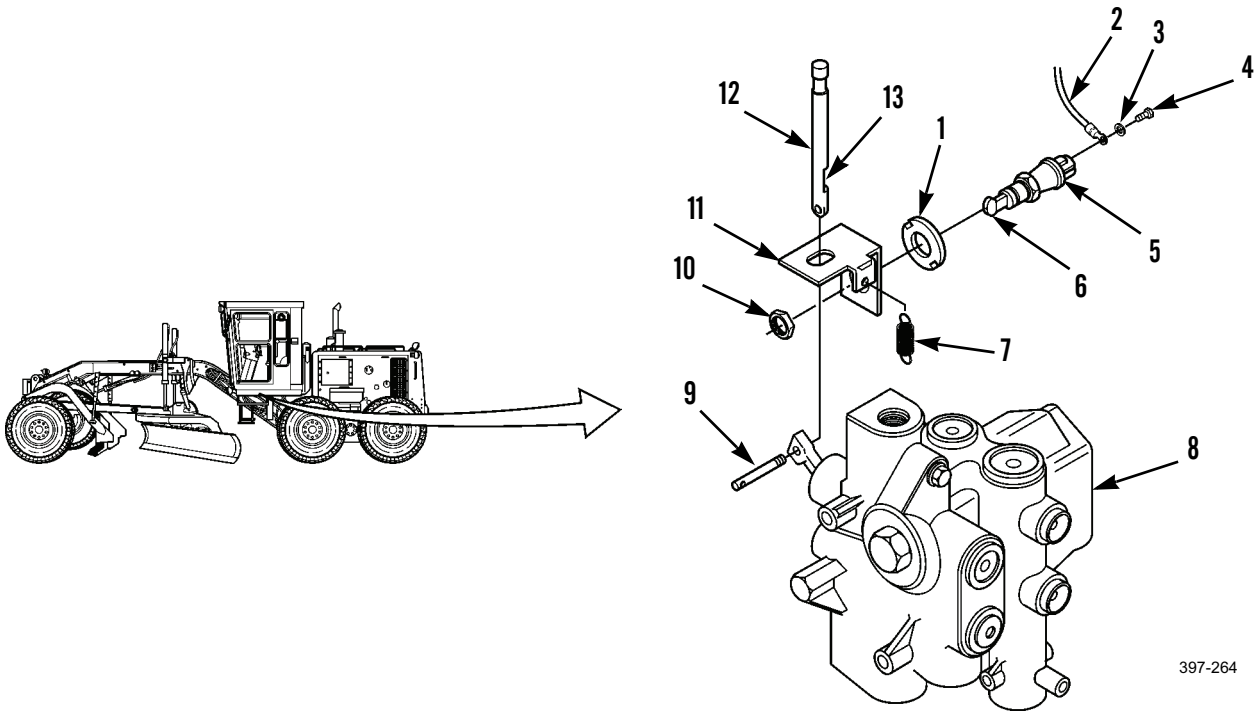


### *CLEANING AND INSPECTION*

Clean and inspect all parts in accordance with WP 0021 00.

### *INSTALLATION/ADJUSTMENT*

**NOTE**

Do not tighten nut.

1. Install retainer (1), switch (5), and nut (10) on bracket (11).
1. Move switch (5) up or down to locate roller (6) in lower half of slot (13) in clevis (12).
2. Tighten nut (10) finger-tight.
3. Move bracket (11) to lightly touch lower half of slot (13) in clevis (12).
4. Tighten nut (10) to 15 lb-ft (20 Nm).

*INSTALLATION/ADJUSTMENT - CONTINUED*

**NOTE**

Multimeter must indicate no continuity.

5. Depress clevis (12) on left side of cab floor and check continuity across terminals of switch (5).
6. Release clevis (12).
7. Connect two wire assemblies (2) and install two washers (3) and screws (4) on switch (5).
8. Connect hydraulic hose (as necessary) (WP 0323 00).
9. Connect battery cables (WP 0125 00).

**END OF WORK PACKAGE**

## SUPPLEMENTAL STEERING HYDRAULIC PRESSURE SWITCH REPLACEMENT 0087 00

### THIS WORK PACKAGE COVERS

Removal, Cleaning and Inspection, Installation

### INITIAL SETUP

**Maintenance Level**

Unit

**Tools and Special Tools**

Tool kit, general mechanic's (Item 89, WP 0348 00)

Shop equipment, common no. 1 (Item 75, WP 0348 00)

Wrench, torque (Item 97, WP 0348 00)

**Materials/Parts**

Cap set, protective (Item 7, WP 0349 00)

Rag, wiping (Item 35, WP 0349 00)

Packing, preformed (2)

**References**

WP 0021 00

WP 0216 00

**Equipment Conditions**

Machine parked on level ground (TM 5-3805-261-10)

Parking/emergency brake applied (TM 5-3805-261-10)

Implements lowered to ground (TM 5-3805-261-10)

Engine off (TM 5-3805-261-10)

Battery cables disconnected (WP 0125 00)

Hydraulic pressure relieved (WP 0021 00)



**WARNING**

Hydraulic oil is very slippery. Immediately wipe up any spills. Failure to follow this warning may cause injury to personnel.

**CAUTION**

Wipe area clean around hydraulic connection to be opened during removal. Cap oil line and plug opening after removing line. Contamination of hydraulic system could result in premature failure.

**NOTE**

Use a container to catch any hydraulic oil that may drain from system. Dispose of oil in accordance with local policy and ordinances. Ensure all spills are cleaned up.

### *REMOVAL*

1. Disconnect connector assembly (5) from switch (4) under left side of cab.
2. Remove switch (4).
3. Remove adapter (1) and two preformed packings (3) from combination valve (2). Discard preformed packings.

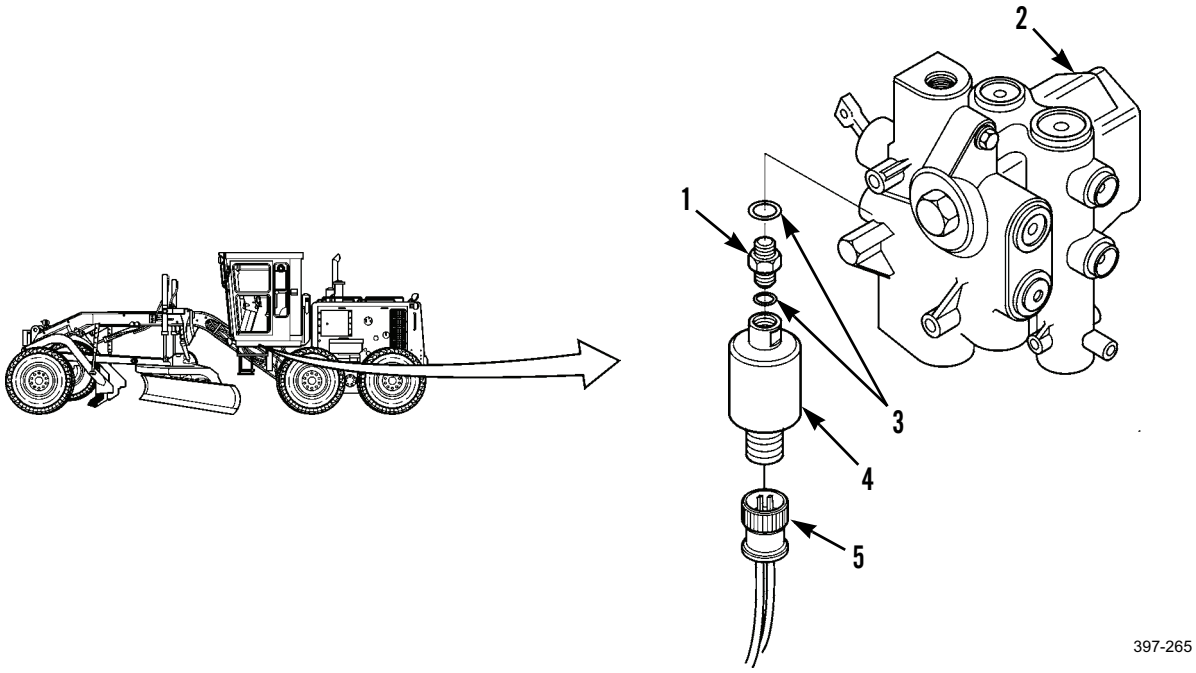


### *CLEANING AND INSPECTION*

Clean and inspect all parts in accordance with WP 0021 00.

### *INSTALLATION*

1. Install two new preformed packings (3) on adapter (1).
2. Install adapter (1) on combination valve (2).
3. Install switch (4).
4. Install connector assembly (5) to switch (4).
5. Connect battery cables (WP 0125 00).
6. Turn battery disconnect switch to ON position and start engine (TM 5-3805-261-10).
7. Check for leaks. Stop engine.
8. Check hydraulic fluid level. Refill hydraulic tank as required (WP 0216 00).

**END OF WORK PACKAGE**

## SUPPLEMENTAL STEERING GOVERNOR SWITCH MAINTENANCE 0088 00

### THIS WORK PACKAGE COVERS

Removal, Cleaning and Inspection, Installation/Adjustment

### INITIAL SETUP

**Maintenance Level**

Unit

**Tools and Special Tools**

Tool kit, general mechanic's (Item 89, WP 0348 00)

Shop equipment, common no. 1 (Item 75, WP 0348 00)

Wrench, torque (Item 97, WP 0348 00)

**Materials/Parts**

Rag, wiping (Item 35, WP 0349 00)

Tag, marker (Item 44, WP 0349 00)

Gasket (2)

Packing, preformed

Washer, spring-tension (2)

**References**

WP 0021 00

**Equipment Conditions**

Machine parked on level ground (TM 5-3805-261-10)

Parking/emergency brake applied (TM 5-3805-261-10)

Implements lowered to ground (TM 5-3805-261-10)

Engine off (TM 5-3805-261-10)

Battery cables disconnected (WP 0125 00)

Right side engine doors opened (TM 5-3805-261-10)

***REMOVAL***

**NOTE**

Tag wire assemblies before disconnecting to aid in installation.

1. Remove two screws (24) and washers (23) and disconnect two wire assemblies (22) from switch (21).
2. Loosen nut (20) and remove switch (21), preformed packing (19), and nut (20) from housing (5). Discard preformed packing.
3. Remove four bolts (1), washers (2), cover (3), and gasket (4) from housing (5). Discard gasket.
4. Remove two bolts (18), washers (17), housing (5), and gasket (6) from cover (8). Discard gasket.
5. Remove three bolts (7) and cover (8).
6. Loosen nut (9) and remove adjusting screw (10) and nut from actuator (15).
7. Remove nut (16), actuator (15), bolt (13), two spring-tension washers (12), and rod (14) from clevis (11). Discard spring-tension washers.

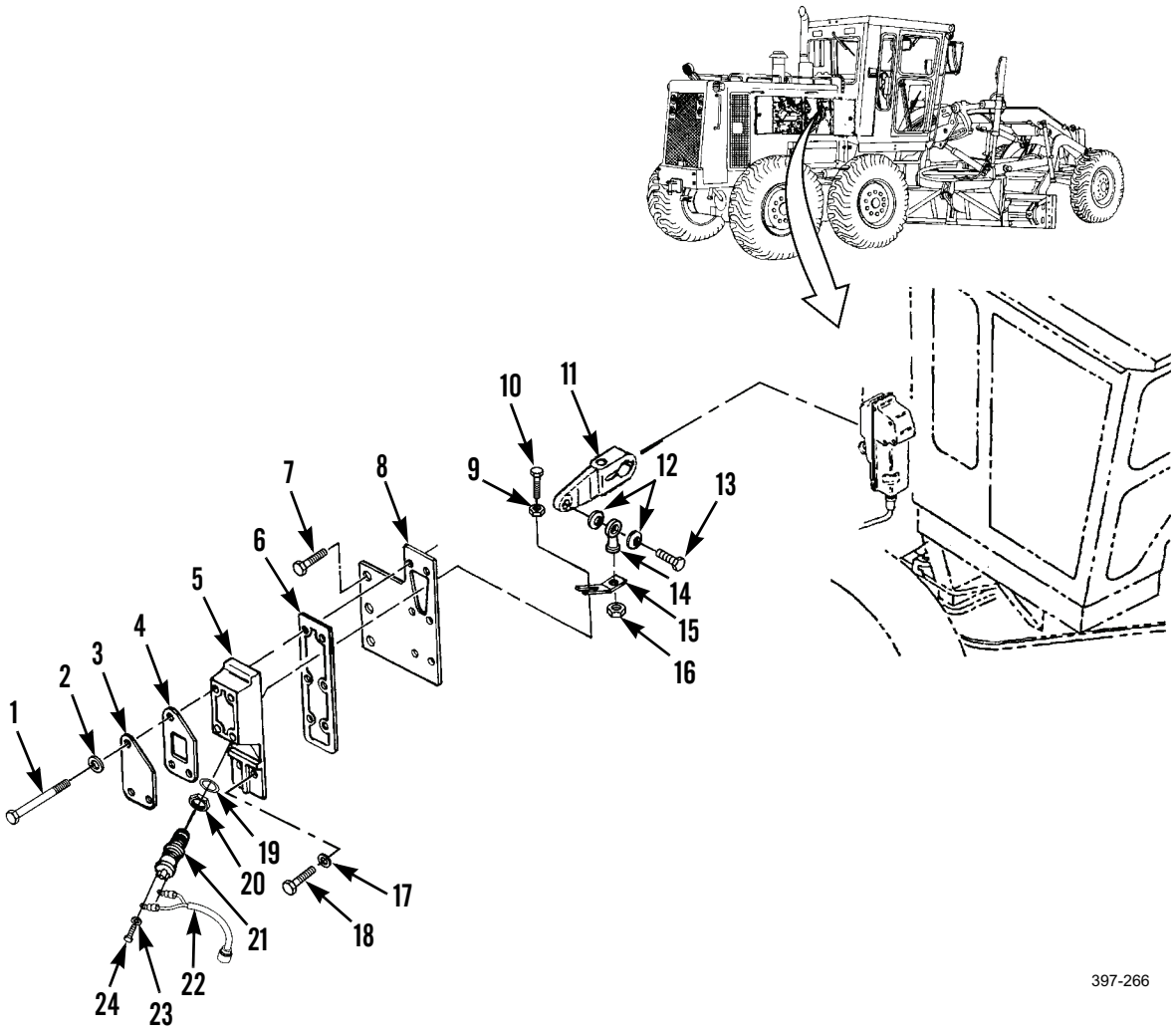

### *CLEANING AND INSPECTION*

Clean and inspect all parts in accordance with WP 0021 00.

### *INSTALLATION/ADJUSTMENT*

1. Install rod (14), two new spring-tension washers (12), bolt (13), actuator (15), and nut (16) to clevis (11).

**NOTE**

Do not tighten nut.

2. Install nut (9) on adjusting screw (10) and install screw on actuator (15).
3. Install cover (8) and three bolts (7).
4. Install new gasket (6), housing (5), two washers (17), and bolts (18) to cover (8).
5. Install nut (20) and new preformed packing (19) on switch (21) and install switch to housing (5) with a distance of 0.75 in. (19 mm). Tighten nut to 15 lb-ft (20 Nm).
6. Pull accelerator pedal upward from cab floor to engine shutoff position (TM 5-3805-261-10).
7. Connect multimeter leads to switch (21) terminals. Turn adjusting screw (10) inward until multimeter shows continuity. Then rotate one more turn.
8. Tighten nut (9) on adjusting screw (10).
9. Install new gasket (4), cover (3), four washers (2), and bolts (1) to housing (5).
10. Connect two wire assemblies (22) to switch (21) and install two washers (23) and screws (24).
11. Close right side engine doors (TM 5-3805-261-10).
12. Connect battery cables (WP 0125 00).

**END OF WORK PACKAGE**

## SUPPLEMENTAL STEERING ELECTRONIC CONTROL REPLACEMENT 0089 00

### THIS WORK PACKAGE COVERS

Removal, Cleaning and Inspection, Installation

### INITIAL SETUP

**Maintenance Level**

Unit

**Tools and Special Tools**

Tool kit, general mechanic's (Item 89, WP 0348 00)

**Materials/Parts**

Rag, wiping (Item 35, WP 0349 00)

Tag, marker (Item 44, WP 0349 00)

**References**

WP 0021 00

**Equipment Conditions**

Machine parked on level ground (TM 5-3805-261-10)

Parking/emergency brake applied (TM 5-3805-261-10)

Implements lowered to ground (TM 5-3805-261-10)

Engine off (TM 5-3805-261-10)

Battery cables disconnected (WP 0125 00)

Right side engine doors opened (TM 5-3805-261-10)

### *REMOVAL*

1. Remove two sockets (1) from two brackets (2) on inner-right side of engine compartment.

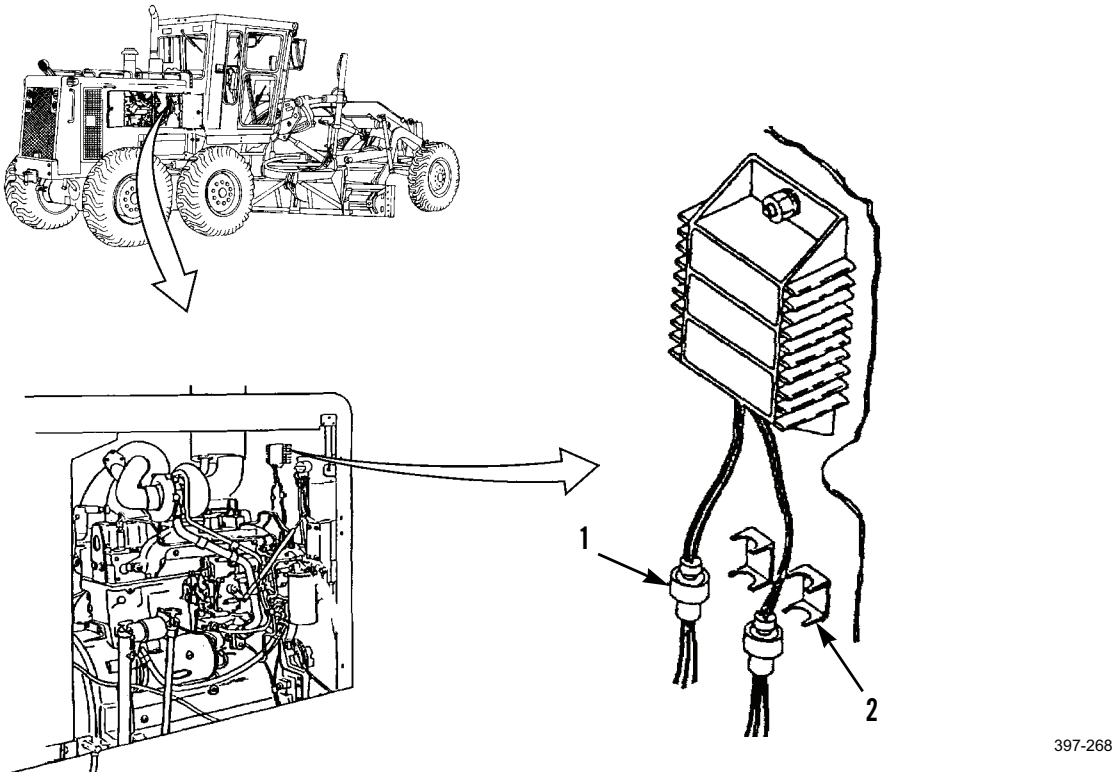

### *REMOVAL - CONTINUED*

**NOTE**

Tag wire assemblies before disconnecting to aid in installation.

2. Disconnect two wire assemblies (5) from sockets (1).
3. Remove two nuts (6), washers (7), bolts (4), and control (3).

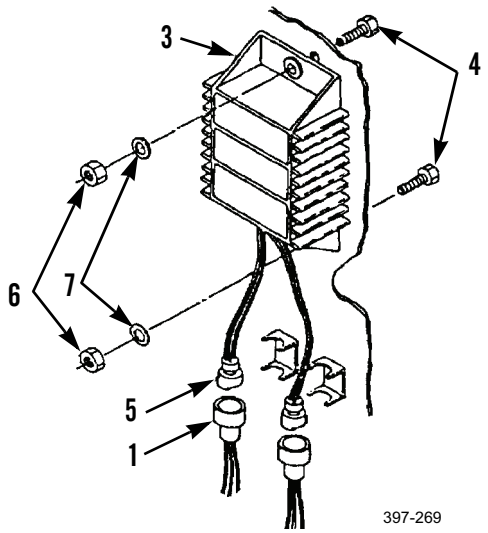


### *CLEANING AND INSPECTION*

Clean and inspect all parts in accordance with WP 0021 00.

### *INSTALLATION*

1. Install control (3), two bolts (4), washers (7), and nuts (6) in inner-right side of engine compartment.
2. Connect two wire assemblies (5) to sockets (1).
3. Install two sockets (1) in brackets (2).

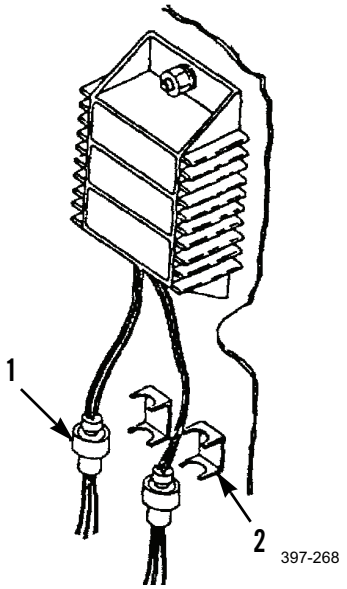


4. Close right side engine doors (TM 5-3805-261-10).
5. Connect battery cables (WP 0125 00).

**END OF WORK PACKAGE**

## SUPPLEMENTAL STEERING MAGNETIC SWITCH REPLACEMENT 0090 00

### THIS WORK PACKAGE COVERS

Removal, Cleaning and Inspection, Installation

### INITIAL SETUP

**Maintenance Level**

Unit

**Tools and Special Tools**

Tool kit, general mechanic's (Item 89, WP 0348 00)

**Materials/Parts**

Rag, wiping (Item 35, WP 0349 00)

Tag, marker (Item 44, WP 0349 00)

Lockwasher (4)

**References**

WP 0021 00

**Equipment Conditions**

Machine parked on level ground (TM 5-3805-261-10)

Parking/emergency brake applied (TM 5-3805-261-10)

Implements lowered to ground (TM 5-3805-261-10)

Engine off (TM 5-3805-261-10)

Battery cables disconnected (WP 0125 00)

Right side engine doors opened (TM 5-3805-261-10)

### *REMOVAL*

**NOTE**

Tag wire assemblies before disconnecting to aid in installation.

1. Remove two nuts (6), lockwashers (5), and washers (7) and disconnect three wire assemblies (8) from switch (11). Discard lockwashers.
2. Remove two nuts (2) and lockwashers (3) and disconnect two wire assemblies (4) from switch (11). Discard lockwashers.
3. Remove four nuts (9), washers (10), bolts (1), and switch (11).

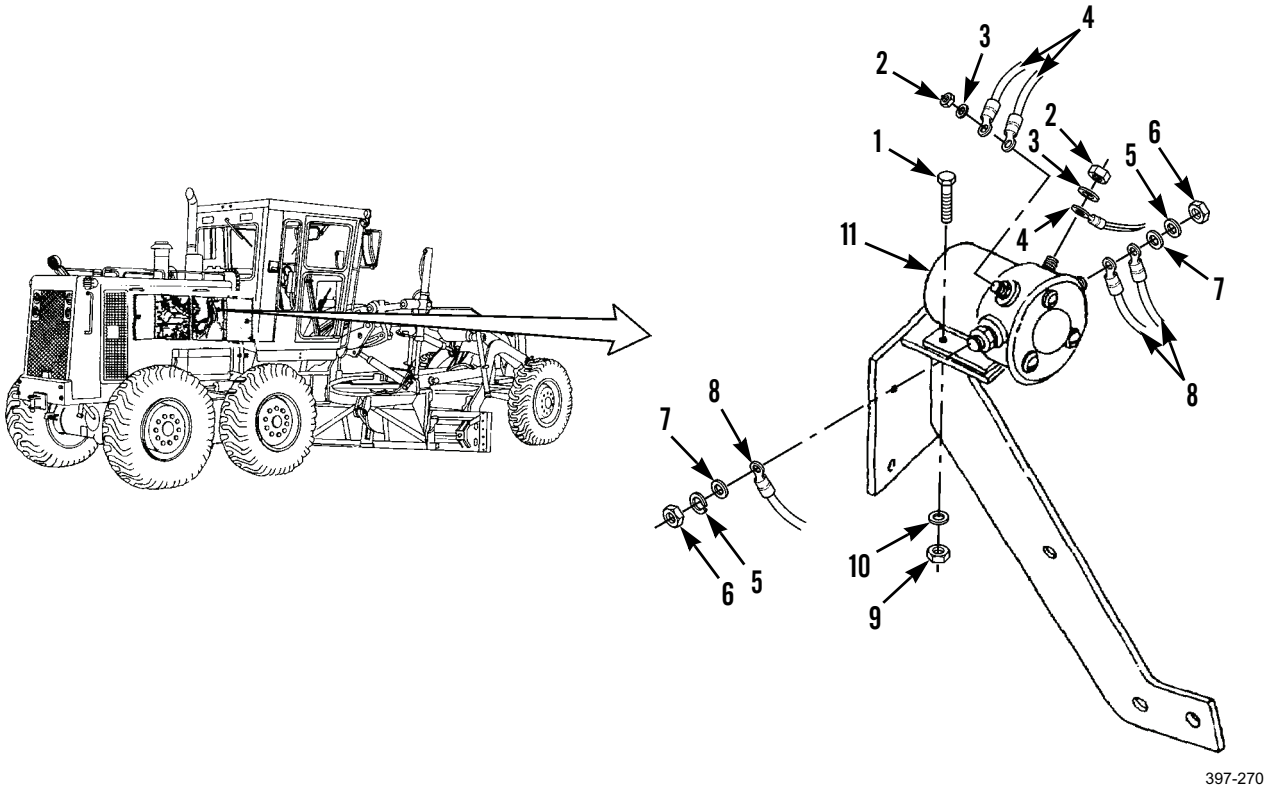


### *CLEANING AND INSPECTION*

Clean and inspect all parts in accordance with WP 0021 00.

### *INSTALLATION*

1. Install switch (11), four bolts (1), washers (10), and nuts (9).
2. Connect two wire assemblies (4) and install two new lockwashers (3) and nuts (2) on switch (11).
3. Connect three wire assemblies (8) and install two washers (7), new lockwashers (5), and nuts (6) on switch (11).
4. Close right side engine doors (TM 5-3805-261-10).
5. Connect battery cables (WP 0125 00).

**END OF WORK PACKAGE**

## SUPPLEMENTAL STEERING PUMP AND MOTOR REPLACEMENT 0091 00

### THIS WORK PACKAGE COVERS

Removal, Cleaning and Inspection, Installation

### INITIAL SETUP

**Maintenance Level**

Unit

**Tools and Special Tools**

Tool kit, general mechanic's (Item 89, WP 0348 00)

Shop equipment, common no. 1 (Item 75, WP 0348 00)

**Materials/Parts**

Cap set, protective (Item 7, WP 0349 00)

Rag, wiping (Item 35, WP 0349 00)

Tag, marker (Item 44, WP 0349 00)

Gasket

Lockwasher (6)

O-ring

**Personnel Required**

Two

**References**

WP 0021 00

WP 0216 00

**Equipment Conditions**

Machine parked on level ground (TM 5-3805-261-10)

Parking/emergency brake applied (TM 5-3805-261-10)

Implements lowered to ground (TM 5-3805-261-10)

Engine off (TM 5-3805-261-10)

Battery cables disconnected (WP 0125 00)

Hydraulic system pressure relieved (WP 0020 00)

Left side engine door opened (TM 5-3805-261-10)



**WARNING**

Hydraulic oil is very slippery. Immediately wipe up any spills. Failure to follow this warning may cause injury.

**CAUTION**

Wipe area clean around hydraulic connection to be opened during removal. Plug openings after removing pump assembly. Contamination of hydraulic system could result in premature failure.

***REMOVAL***

**NOTE**

Tag wire assemblies before disconnecting to aid in installation.

1. Remove two nuts (3), lockwashers (2), and disconnect two wire assemblies (1). Discard lockwashers.

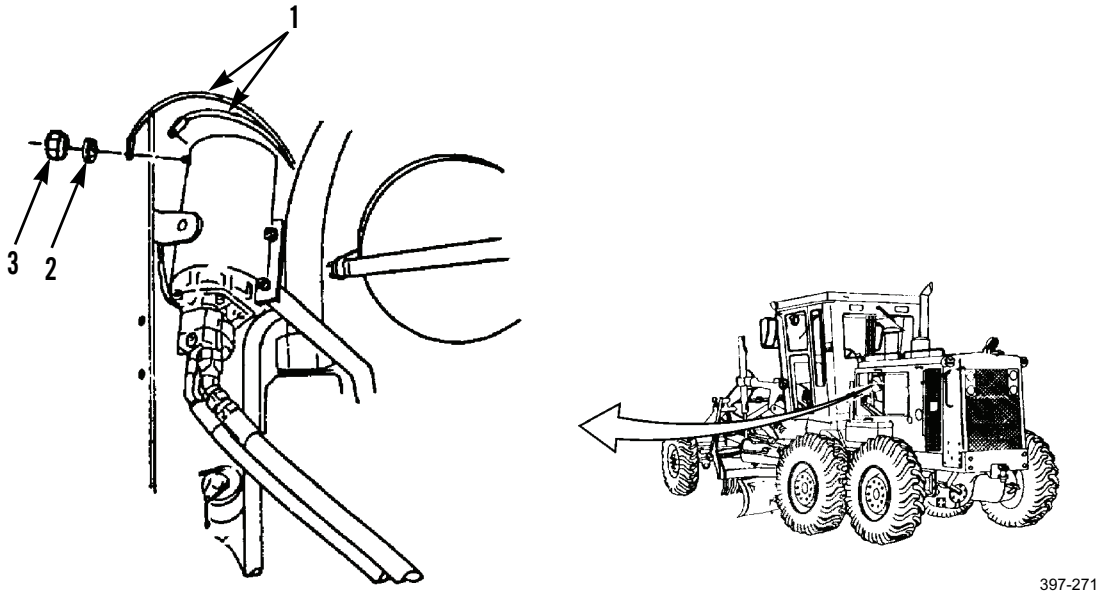


2. Disconnect two hydraulic tubes (7) and remove O-rings (8). Discard O-rings.
3. Remove four bolts (6), washers (5), and supplemental steering pump motor (4).

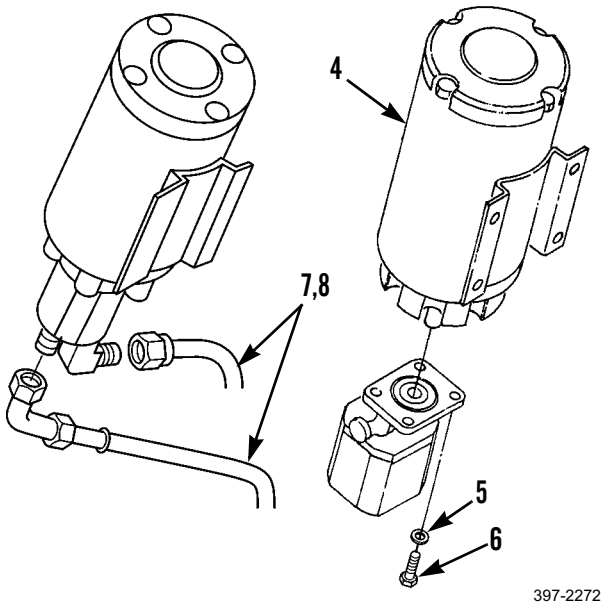

***REMOVAL - CONTINUED***

4. Remove and discard gasket (9) from supplemental steering pump motor (4).

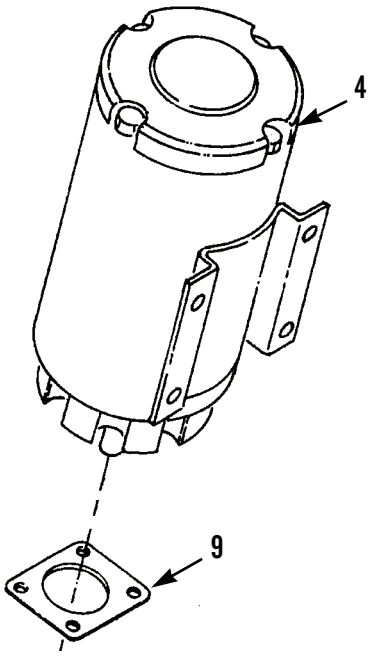


397-495

5. Remove coupling (10) from supplemental steering pump motor (4).

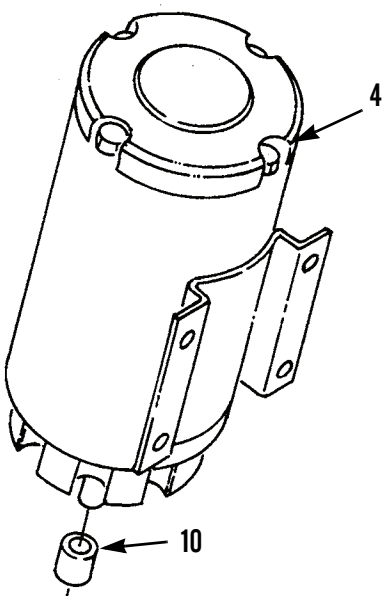


397-496

### *REMOVAL - CONTINUED*

6. Remove four nuts (11), three washers (16), four bolts (12), washer (13), and pump motor (4) from bracket (14).

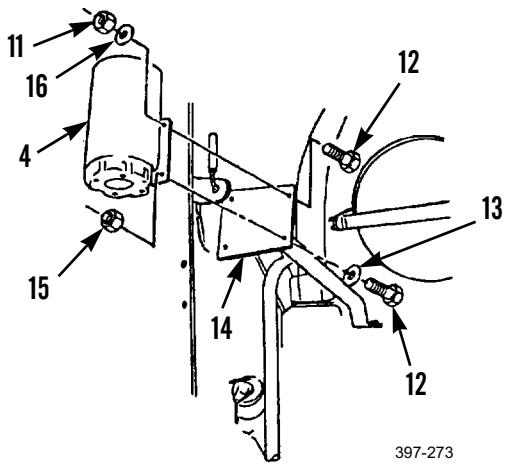


### *CLEANING AND INSPECTION*

Clean and inspect all parts in accordance with WP 0021 00.

### *INSTALLATION*

1. Install pump motor (4), washer (13), four bolts (12), three washers (16), and four nuts (15) on bracket (14).
2. Install coupling (10) on supplemental steering pump motor (4).

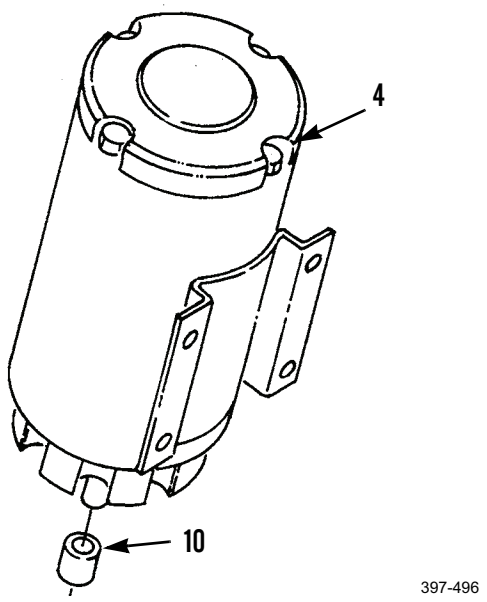

***INSTALLATION - CONTINUED***

3. Install new gasket (9) on supplemental steering pump motor (4).

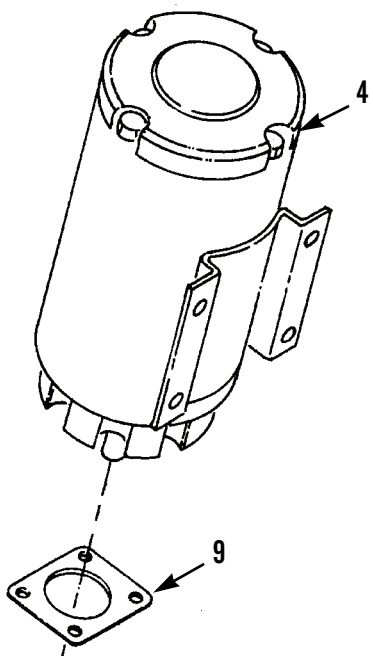


397-495

4. Install supplemental steering pump motor (4), four washers (5), and bolts (6).

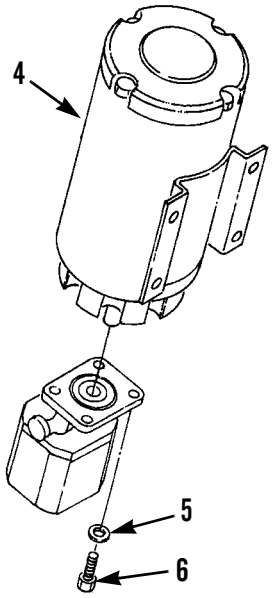


397-494

***INSTALLATION - CONTINUED***

5. Connect two hydraulic tubes (7) and install new O-rings (8).

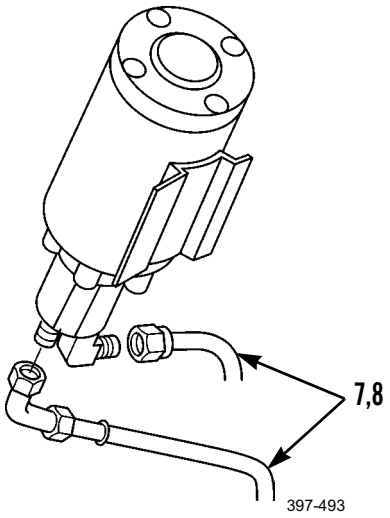


6. Connect two wire assemblies (1) and install two new lockwashers (2) and nuts (3).

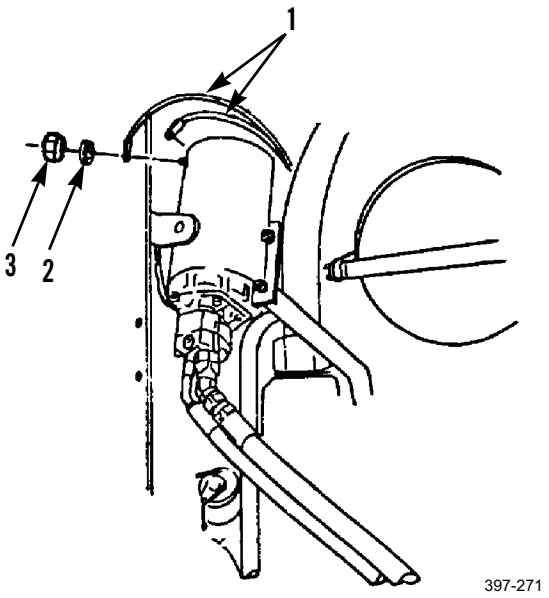


7. Connect battery cables (WP 0125 00).
8. Turn battery disconnect switch to ON position and start engine (TM 5-3805-261-10).
9. Check for leaks. Stop engine.
10. Check hydraulic oil level. Refill hydraulic tank, as required (WP 0216 00).
11. Close left side engine door (TM 5-3805-261-10).

**END OF WORK PACKAGE**

## SUPPLEMENTAL STEERING MAGNETIC SWITCH PUMP MOTOR MOUNTING REPLACEMENT 0092 00

### THIS WORK PACKAGE COVERS

Removal, Cleaning and Inspection, Installation

### INITIAL SETUP

**Maintenance Level**

Unit

**Tools and Special Tools**

Tool kit, general mechanic's (Item 89, WP 0348 00)

**Materials/Parts**

Rag, wiping (Item 35, WP 0349 00)

Tag, marker (Item 44, WP 0349 00)

**References**

WP 0021 00

**Equipment Conditions**

Machine parked on level ground (TM 5-3805-261-10)

Parking/emergency brake applied (TM 5-3805-261-10)

Implements lowered to ground (TM 5-3805-261-10)

Engine off (TM 5-3805-261-10)

Battery cables disconnected (WP 0125 00)

Supplemental steering magnetic switch removed (WP 0090 00)

Supplemental steering pump motor removed (WP 0091 00)

### *REMOVAL*

1. Remove nut (7), washer (6), and bolt (1) from bracket (2).

**NOTE**

Tag all wire and hose assemblies before disconnecting to aid in installation.

2. Remove clamp (5) from two wire assemblies (8).
3. Remove clamp (4) from hose assembly (3).

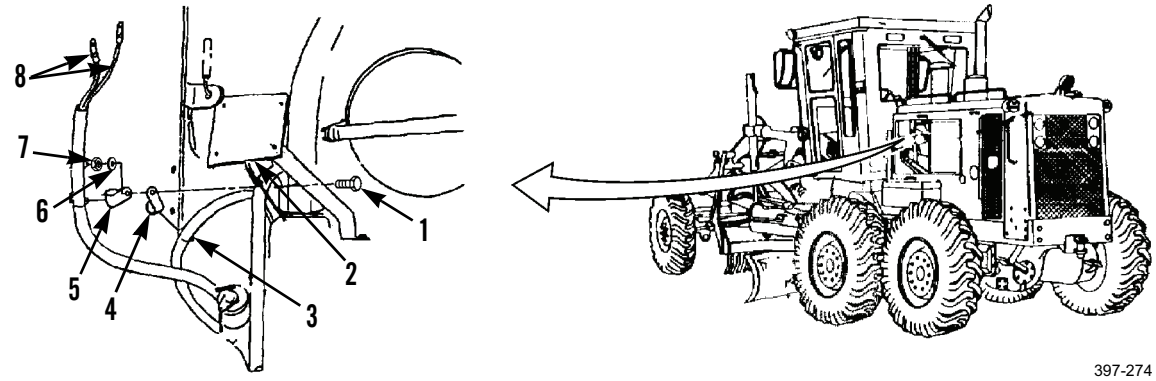

## SUPPLEMENTAL STEERING MAGNETIC SWITCH PUMP MOTOR MOUNTING REPLACEMENT - CONTINUED 0092 00

### *REMOVAL - CONTINUED*

4. Remove two bolts (13), washers (14), bracket (9), and bracket (2).
5. Remove bolt (11), washer (12), and bracket (10).

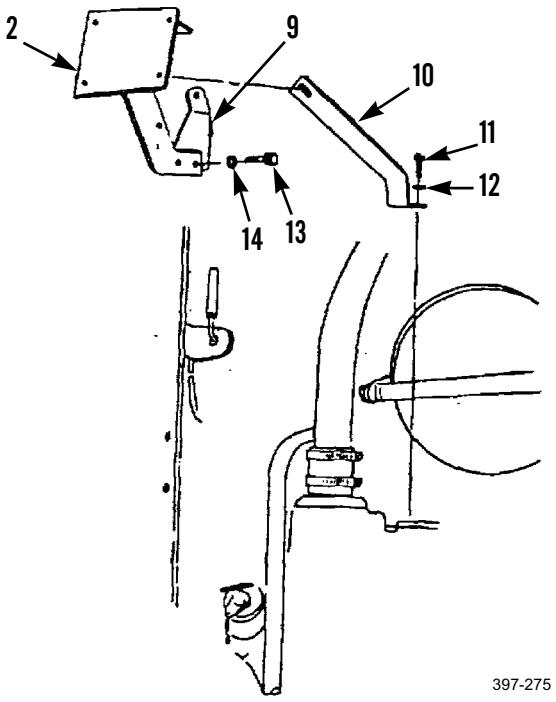


### *CLEANING AND INSPECTION*

Clean and inspect all parts in accordance with WP 0021 00.

### *INSTALLATION*

1. Install bracket (10), washer (12), and bolt (11).
2. Install bracket (2), bracket (9), two washers (14), and bolts (13).
3. Install clamp (4) on hose assembly (3).
4. Install clamp (5) on two wire assemblies (8).
5. Install bolt (1), washer (6), and nut (7) on bracket (2).

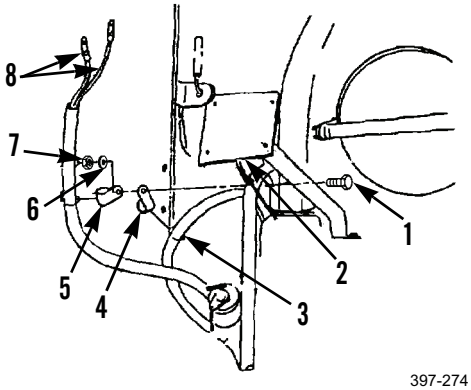


6. Install supplemental steering pump motor (WP 0091 00).
7. Install supplemental steering magnetic switch (WP 0090 00).
8. Connect battery cables (WP 0125 00).

**END OF WORK PACKAGE**

## BLADE FLOAT LIMIT SWITCHES AND MOUNTING REPLACEMENT (CCE MACHINE) 0093 00

### THIS WORK PACKAGE COVERS

Removal, Cleaning and Inspection, Installation

### INITIAL SETUP

**Maintenance Level**

Unit

**Tools and Special Tools**

Tool kit, general mechanic's (Item 89, WP 0348 00)

Shop equipment, common no. 1 (Item 75, WP 0348 00)

**Materials/Parts**

Rag, wiping (Item 35, WP 0349 00)

Tag, marker (Item 44, WP 0349 00)

Gasket

Lockwasher (2)

Pin, cotter

Ring, retaining (2)

**References**

WP 0021 00

**Equipment Conditions**

Machine parked on level ground (TM 5-3805-261-10)

Parking/emergency brake applied (TM 5-3805-261-10)

Implements lowered to ground (TM 5-3805-261-10)

Engine off (TM 5-3805-261-10)

Battery cables disconnected (WP 0125 00)

## BLADE FLOAT LIMIT SWITCHES AND MOUNTING REPLACEMENT (CCE MACHINE) - CONTINUED 0093 00

### *REMOVAL*

**NOTE**

This procedure covers replacement for the left blade float limit switch and mounting. Follow these instructions for the right blade float limit switch and mounting.

1. Remove retaining ring (8) from switch (4).
2. Remove two nuts (1), washers (2), bolts (5), lockwashers (6), and switch (4) from bracket (7). Discard lockwashers.
3. Remove retaining ring (3) from switch (4).

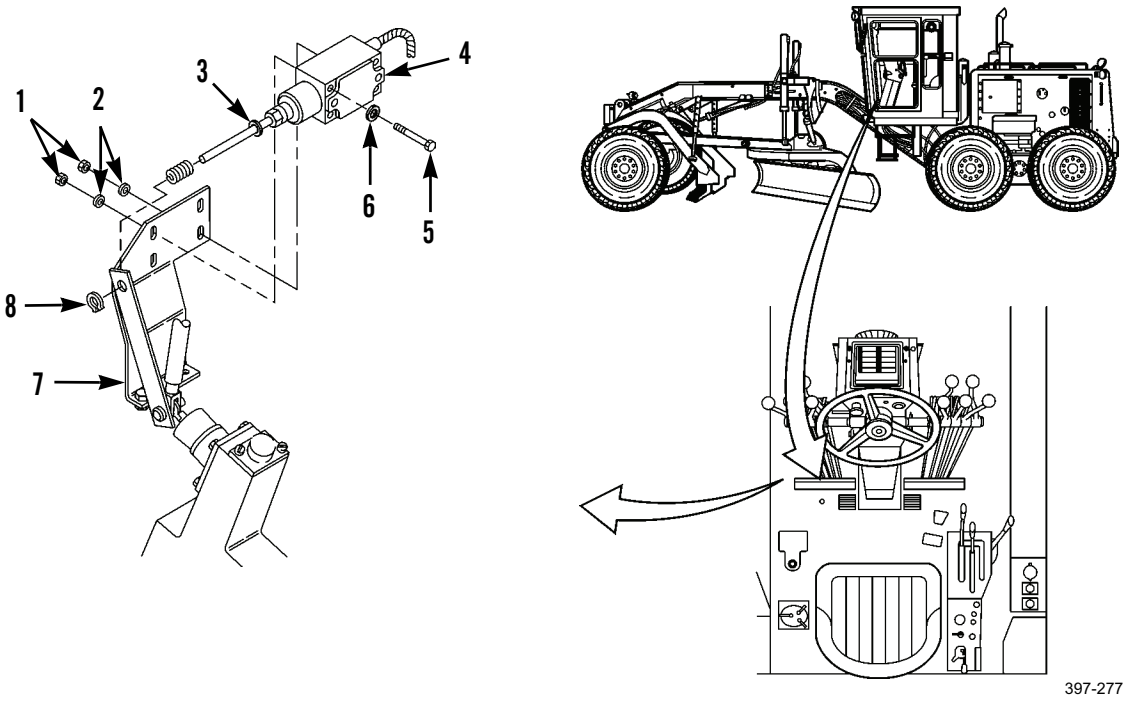

## BLADE FLOAT LIMIT SWITCHES AND MOUNTING REPLACEMENT (CCE MACHINE) - CONTINUED 0093 00

### *REMOVAL - CONTINUED*

4. Remove two screws (12), cover (13), and gasket (14). Discard gasket.

**NOTE**

Tag wire assemblies before disconnecting to aid in installation.

5. Loosen two screws (11) and disconnect two wire assemblies (10) from switch (4).
6. Remove grommet (9) from switch (4).

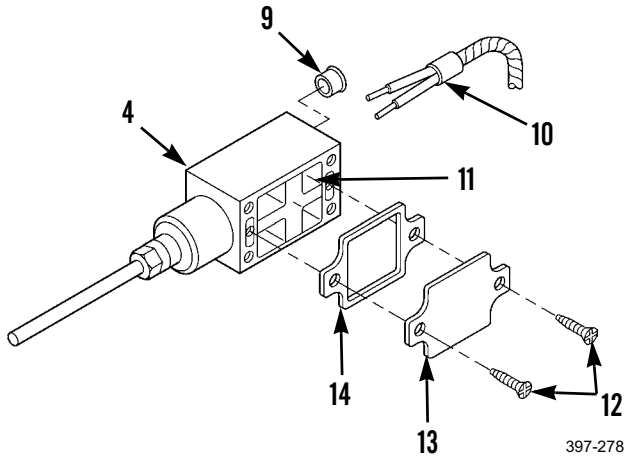


7. Remove cotter pin (15), pin (17), and spacer (18). Discard cotter pin.
8. Remove two nuts (16), bolts (19), and bracket (7).

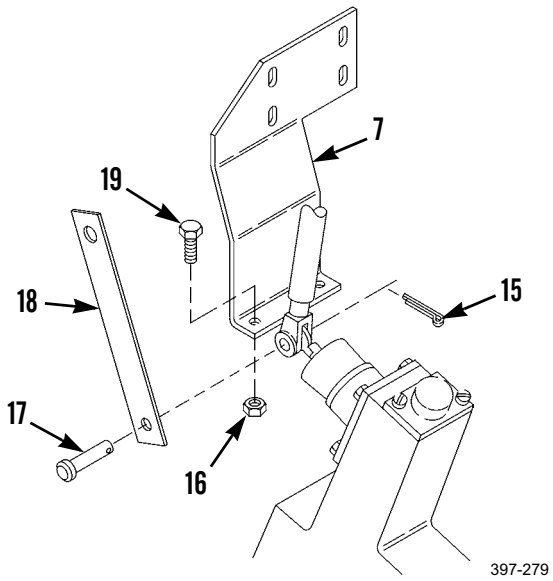

## BLADE FLOAT LIMIT SWITCHES AND MOUNTING REPLACEMENT (CCE MACHINE) - CONTINUED 0093 00

### *CLEANING AND INSPECTION*

Clean and inspect all parts in accordance with WP 0021 00.

### *INSTALLATION*

1. Install bracket (7), two bolts (19), and nuts (16).
2. Install spacer (18), pin (17), and new cotter pin (15).

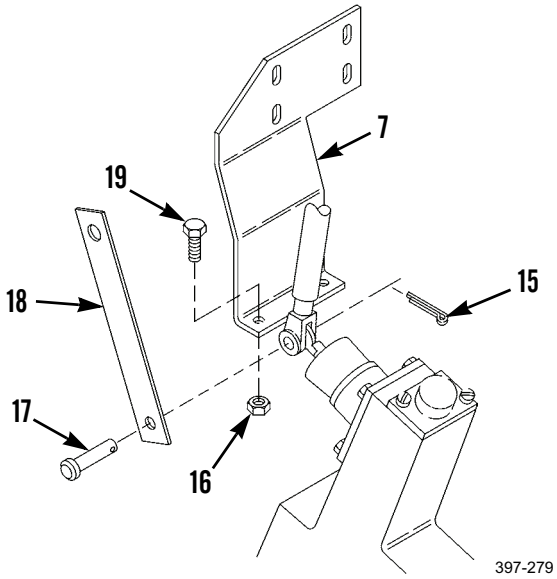


3. Install grommet (9) on switch (4).
4. Connect two wire assemblies (10) and tighten two screws (11) on switch (4).
5. Install new gasket (14), cover (13), and two screws (12).

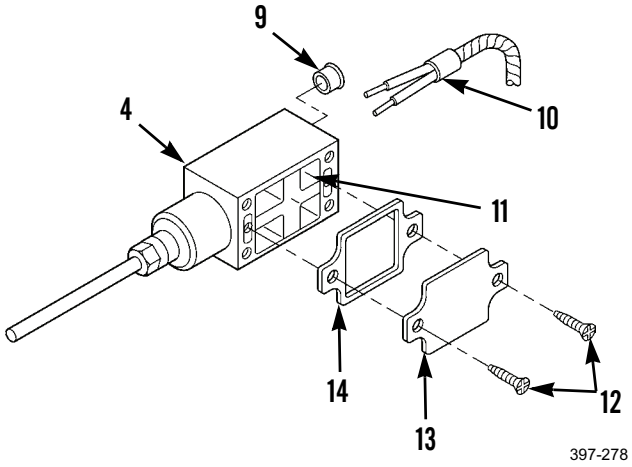

## BLADE FLOAT LIMIT SWITCHES AND MOUNTING REPLACEMENT (CCE MACHINE) - CONTINUED 0093 00

### *INSTALLATION - CONTINUED*

6. Install new retaining ring (3) on switch (4).
7. Install switch (4), two new lockwashers (6), bolts (5), washers (2), and nuts (1) on bracket (7).
8. Install new retaining ring (8) on switch (4).

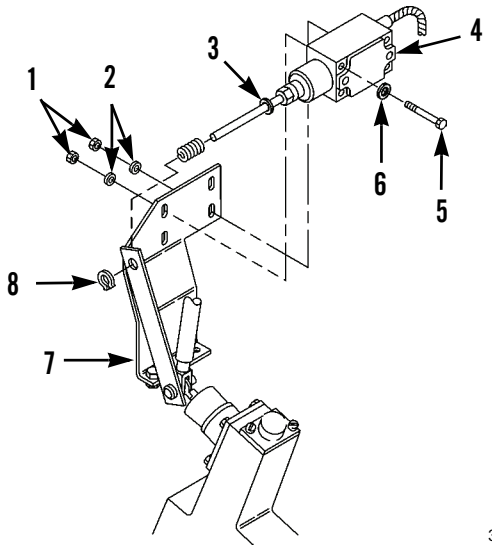

397-277

9. Connect battery cables (WP 0125 00).

**END OF WORK PACKAGE**

## FLASHER UNIT REPLACEMENT 0094 00

### THIS WORK PACKAGE COVERS

Removal, Cleaning and Inspection, Installation

### INITIAL SETUP

**Maintenance Level**

Unit

**Tools and Special Tools**

Tool kit, general mechanic's (Item 89, WP 0348 00)

**Materials/Parts**

Rag, wiping (Item 35, WP 0349 00)

Tag, marker (Item 44, WP 0349 00)

Lockwasher (2)

**References**

WP 0021 00

**Equipment Conditions**

Machine parked on level ground (TM 5-3805-261-10)

Parking/emergency brake applied (TM 5-3805-261-10)

Implements lowered to ground (TM 5-3805-261-10)

Engine off (TM 5-3805-261-10)

Battery cables disconnected (WP 0125 00)

### *REMOVAL*

**NOTE**

Tag wire assemblies before disconnecting to aid in installation.

1. Disconnect two wire assemblies (1) from flasher unit (2).
2. Remove two nuts (3), screws (5), lockwashers (4), and flasher unit (2) from fuse box (6). Discard lockwashers.

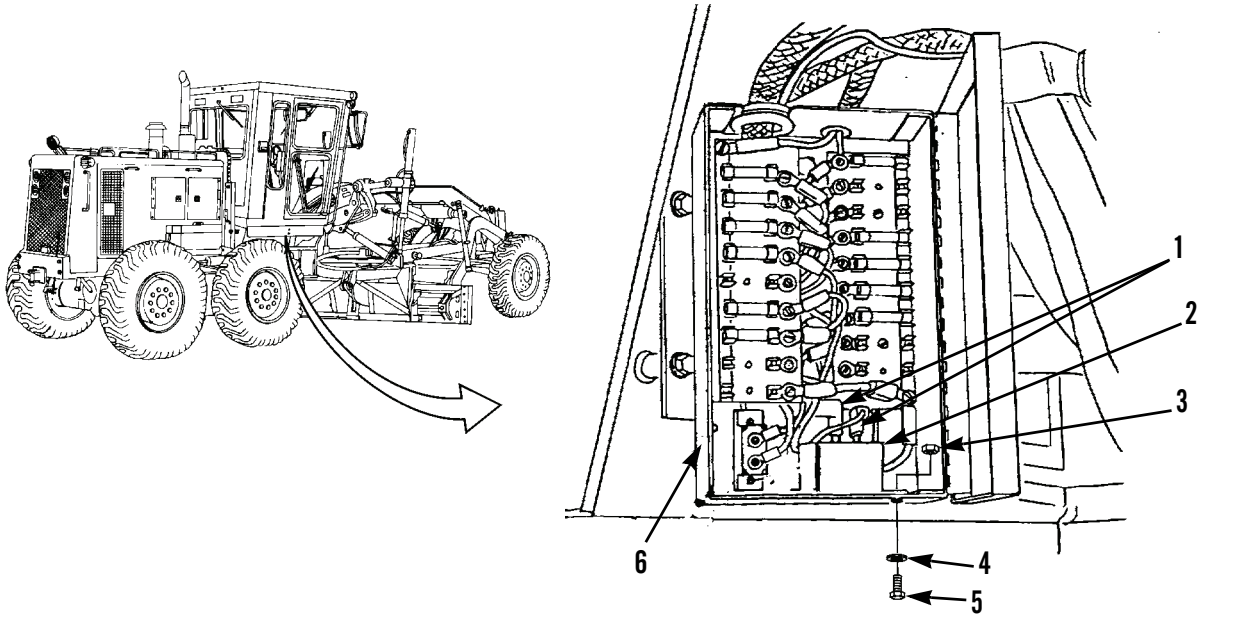


397-281

### *CLEANING AND INSPECTION*

Clean and inspect all parts in accordance with WP 0021 00.

### *INSTALLATION*

1. Install flasher unit (2), two new lockwashers (4), screws (5), and nuts (3) in fuse box (6).
2. Connect two wire assemblies (1) to flasher unit (2).
3. Connect battery cables (WP 0125 00).

**END OF WORK PACKAGE**

## CIRCUIT BREAKER REPLACEMENT 0095 00

### THIS WORK PACKAGE COVERS

Removal, Cleaning and Inspection, Installation

### INITIAL SETUP

**Maintenance Level**

Unit

**Tools and Special Tools**

Tool kit, general mechanic's (Item 89, WP 0348 00)

**Materials/Parts**

Rag, wiping (Item 35, WP 0349 00)

Tag, marker (Item 44, WP 0349 00)

Lockwasher (2)

**References**

WP 0021 00

**Equipment Conditions**

Machine parked on level ground (TM 5-3805-261-10)

Parking/emergency brake applied (TM 5-3805-261-10)

Implements lowered to ground (TM 5-3805-261-10)

Engine off (TM 5-3805-261-10)

Battery cables disconnected (WP 0125 00)

### *REMOVAL*

**NOTE**

Tag wire assemblies before disconnecting to aid in installation.

1. Remove two nuts (1) and disconnect two wire assemblies (5) from circuit breaker (4).
2. Remove two screws (2), lockwashers (3), and circuit breaker (4) from fuse box (6). Discard lockwashers.

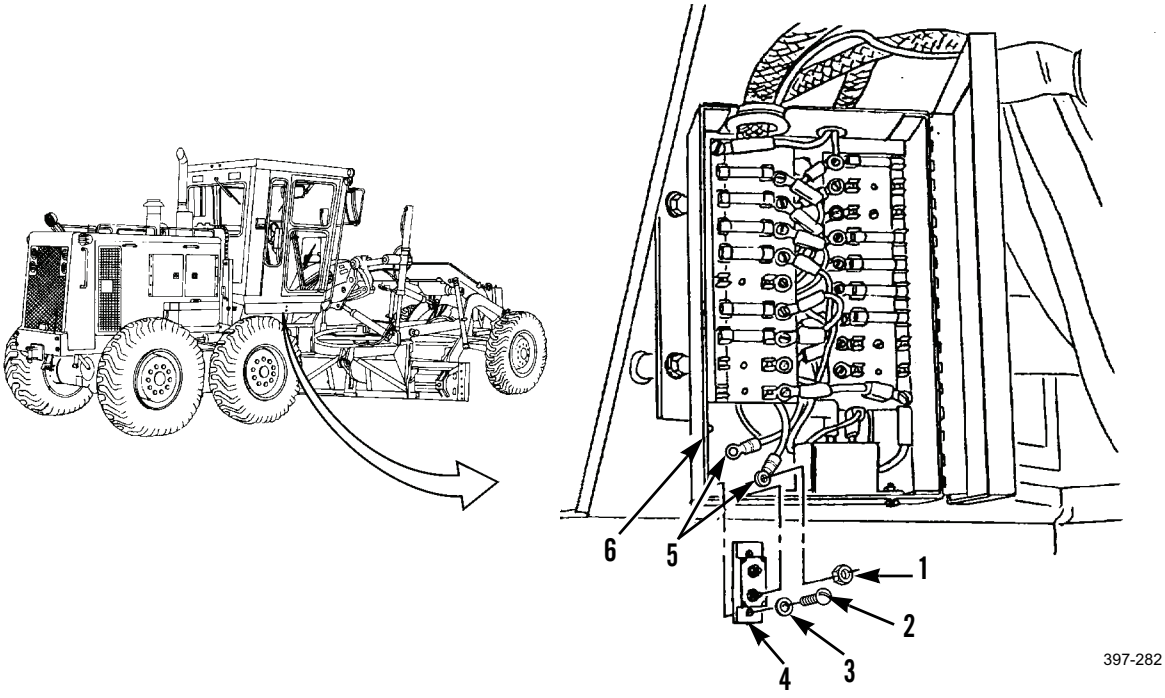


### *CLEANING AND INSPECTION*

Clean and inspect all parts in accordance with WP 0021 00.

### *INSTALLATION*

1. Install circuit breaker (4), two new lockwashers (3), and screws (2) in fuse box (6).
2. Connect two wire assemblies (5) and install two nuts (1) on circuit breaker (4).
3. Connect battery cables (WP 0125 00).

**END OF WORK PACKAGE**

## MAIN FUSE BOX AND MOUNTING REPLACEMENT 0096 00

### THIS WORK PACKAGE COVERS

Removal, Cleaning and Inspection, Installation

### INITIAL SETUP

**Maintenance Level**

Unit

**Tools and Special Tools**

Tool kit, general mechanic's (Item 89, WP 0348 00)

**Materials/Parts**

Rag, wiping (Item 35, WP 0349 00)

Tag, marker (Item 44, WP 0349 00)

Lockwasher (2)

**References**

WP 0021 00

**Equipment Conditions**

Machine parked on level ground (TM 5-3805-261-10)

Parking/emergency brake applied (TM 5-3805-261-10)

Implements lowered to ground (TM 5-3805-261-10)

Engine off (TM 5-3805-261-10)

Battery cables disconnected (WP 0125 00)

Flasher unit removed (WP 0094 00)

Circuit breaker removed (WP 0095 00)

Cab signal light wire removed (WP 0107 00)

**Table 1. Main Fuse Panel for the CCE and Type I Machines.**

| Slot | Amperage |
|---|---|
| 1. Spare | 10 |
| 2. Supplemental Steering | 10 |
| 3. Turn Signals | 10 |
| 4. Cushion Blade | 10 |
| 5. Dozer Float | 10 |
| 6. Blade Float | 10 |
| 7. Air Dryer | 10 |
| 8. Spare | |
| 9. Spare | |
| 10. Blade Lights | 15 |
| 11. Rear Flood | 15 |
| 12. Stop Lights | 10 |
| 13. Operator Panel | 5 |
| 14. Service Hour Meter | 10 |
| 15. Differential Lock | 10 |
| 16. Backup Alarm | 15 |
| 17. Horn | 15 |
| 18. Spare | |

**Table 2. Main Fuse Panel for the CCE and Type II Machines.**

| Slot | Amperage |
|---|---|
| 1. Spare | |
| 2. Supplemental Steering | 10 |
| 3. Turn Signals | 10 |
| 4. Cushion Blade | 10 |
| 5. Dozer Float | 10 |
| 6. Blade Float | 10 |
| 7. Spare | |
| 8. Spare | |
| 9. Beacon | 10 |
| 10. Blade Lights | 15 |
| 11. Rear Flood | 15 |
| 12. Stop Lights | 10 |
| 13. Operator Panel | 5 |
| 14. Hour Meter | 10 |
| 15. Differential Lock | 10 |
| 16. Backup Alarm | 15 |
| 17. Horn | 15 |
| 18. Spare | |

## MAIN FUSE BOX AND MOUNTING REPLACEMENT - CONTINUED 0096 00

### *REMOVAL*

**NOTE**

Record amperage ratings of fuses to aid in installation.

1. Remove fuses (1, 2, and 3).

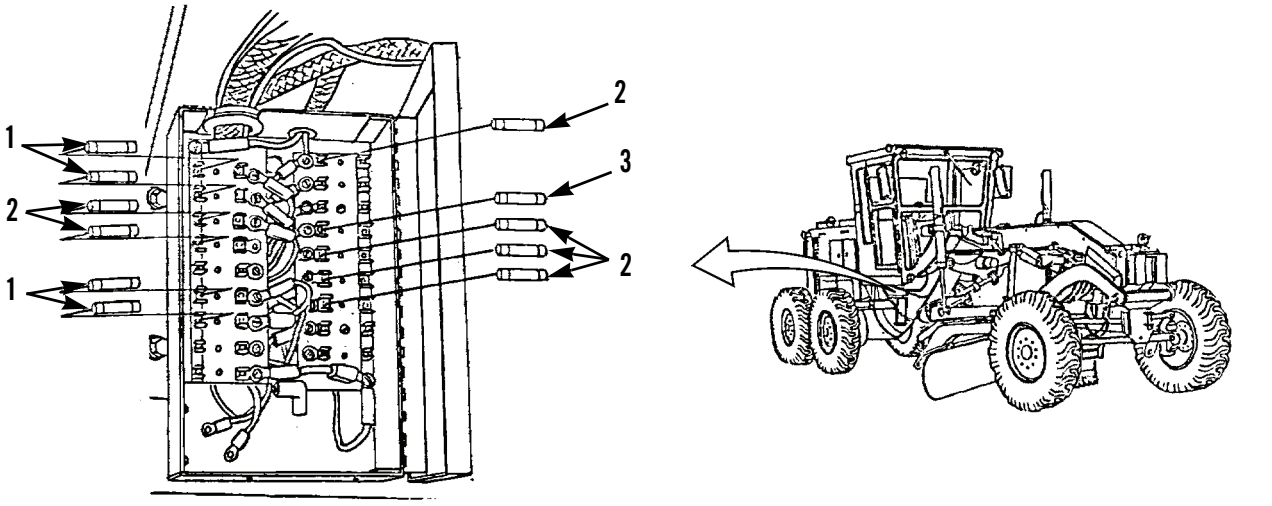


397-283

**NOTE**

Tag all wiring harnesses before disconnecting to aid in installation.

2. Remove screw (4) and disconnect main blackout light wiring harness (11).
3. Remove screw (5) and disconnect supplemental steering main wiring harness (6).
4. Remove screw (7) and disconnect monitor main wiring harness (8).
5. Remove screw (10) and disconnect main wiring harness (9) and main blackout wiring harness (11).

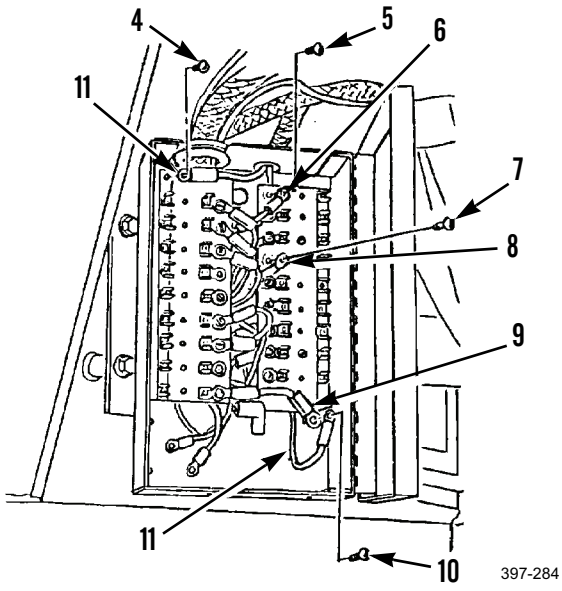


397-284

***REMOVAL - CONTINUED***

6. Remove 12 screws (12) and disconnect main wiring harness (9).

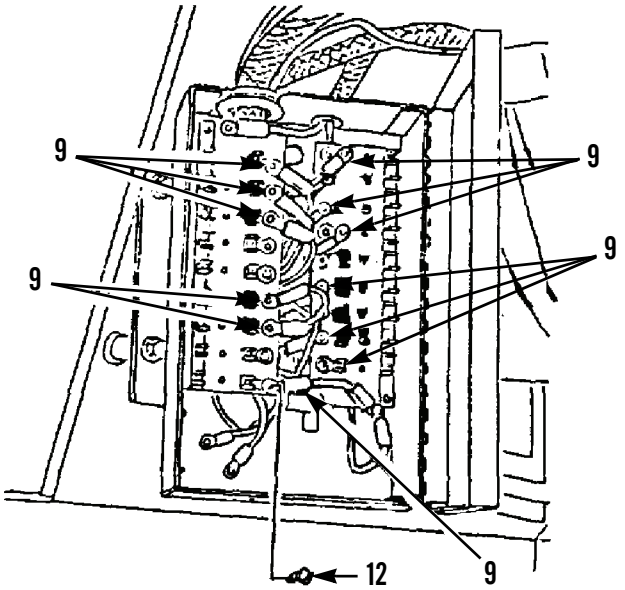

397-285

7. Remove four screws (14) and two block fuseholders (13) from fuse box (15).

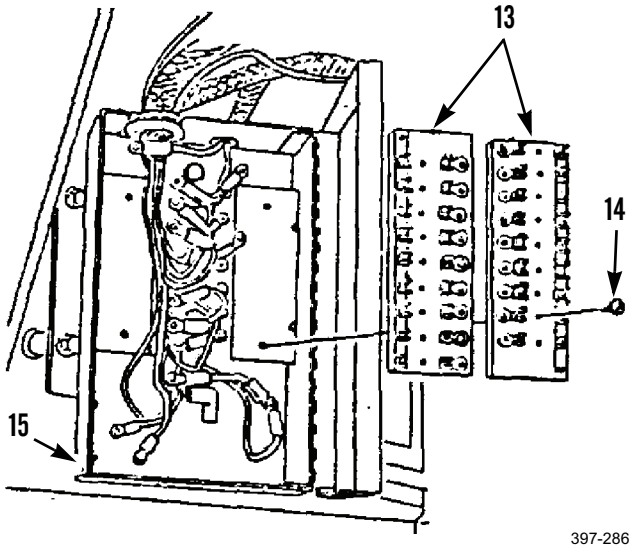

397-286

***REMOVAL - CONTINUED***

8. Remove grommet (16), supplemental steering main wiring harness (6), monitor main wiring harness (8), and main wiring harness (9) as a unit from fuse box (15).
9. Remove grommet (17) and main blackout light wiring harness (11) as a unit from fuse box (15).

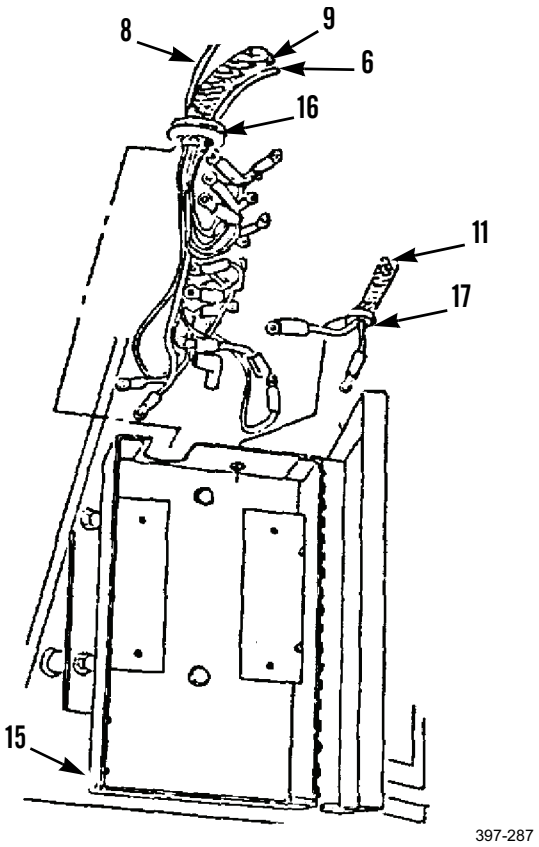

397-287

## MAIN FUSE BOX AND MOUNTING REPLACEMENT - CONTINUED 0096 00

### *REMOVAL - CONTINUED*

10. Remove grommet (16) from supplemental steering main wiring harness (6), monitor main wiring harness (8), and main wiring harness (9).
11. Remove grommet (17) from main blackout light wiring harness (11).

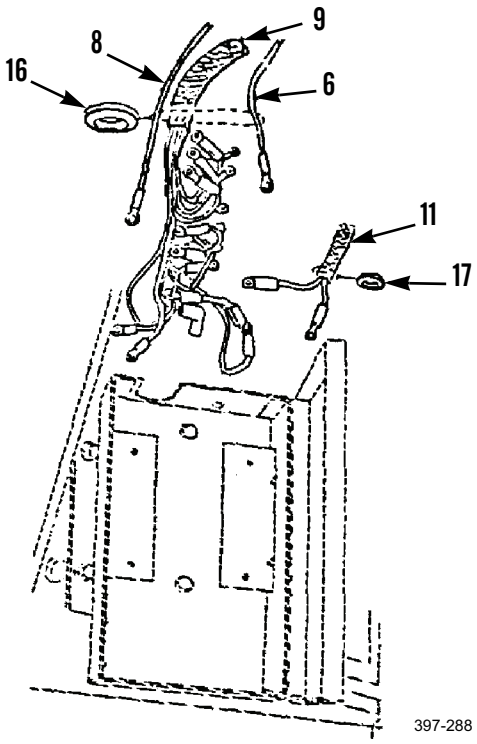


12. Remove two bolts (22), lockwashers (21), and fuse box (15). Discard lockwashers.

**NOTE**

Remove decal only if damaged or illegible.

13. Remove and discard decal (23) from fuse box (15).
14. Remove two screws (20), washers (19), and bracket (18).

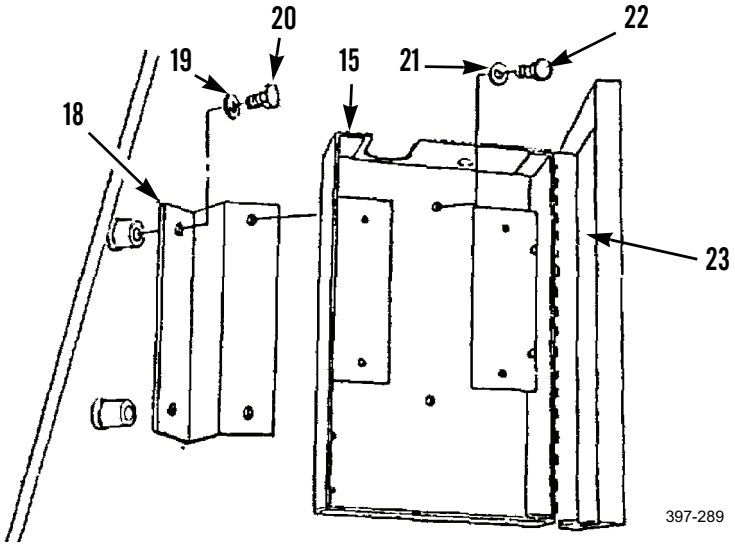

### *CLEANING AND INSPECTION*

Clean and inspect all parts in accordance with WP 0021 00.

### *INSTALLATION*

1. Install bracket (18), two washers (19), and screws (20).
2. If removed, install new decal (23) on fuse box (15).
3. Install fuse box (15), two new lockwashers (21), and bolts (22).

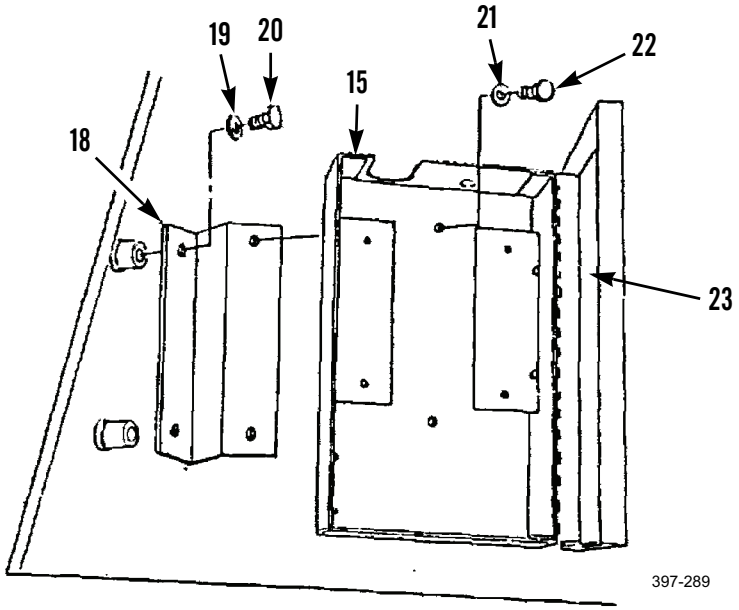

***INSTALLATION - CONTINUED***

4. Install grommet (17) on main blackout wiring harness (11).
5. Install grommet (16) on main wiring harness (9), monitor main wiring harness (8) and supplemental steering main wiring harness (6).

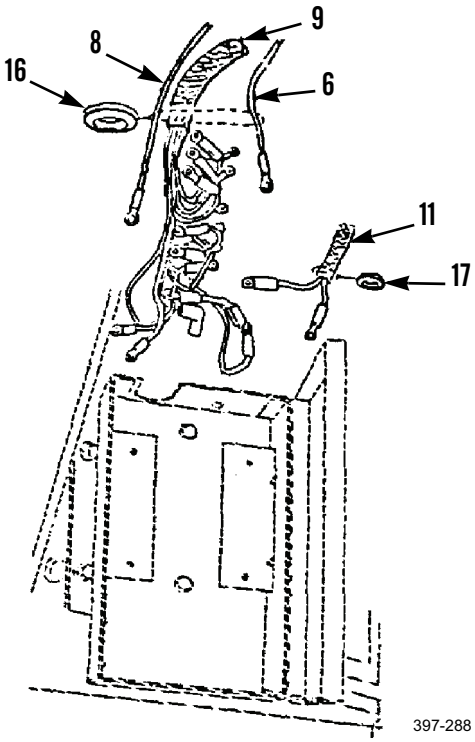


6. Install main blackout light wiring harness (11) and grommet (17) as a unit in fuse box (15).
7. Install main wiring harness (9), monitor main wiring harness (8), supplemental steering main wiring harness (6), and grommet (16) as a unit in fuse box (15).

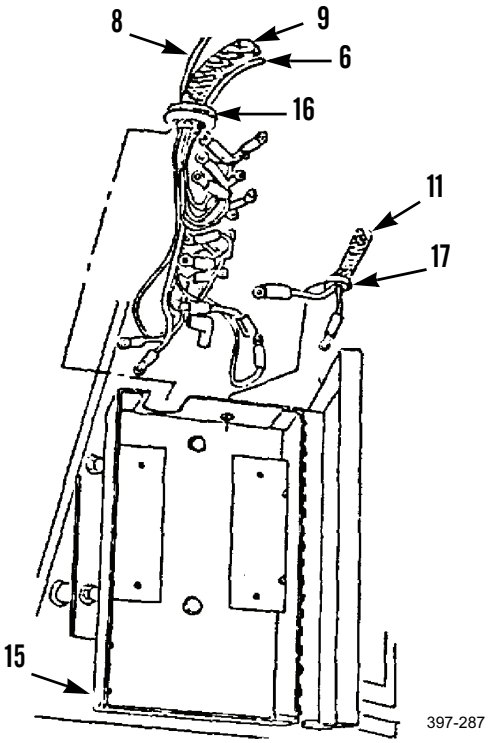

***INSTALLATION - CONTINUED***

8. Install two block fuse holders (13) and four screws (14) in fuse box (15).

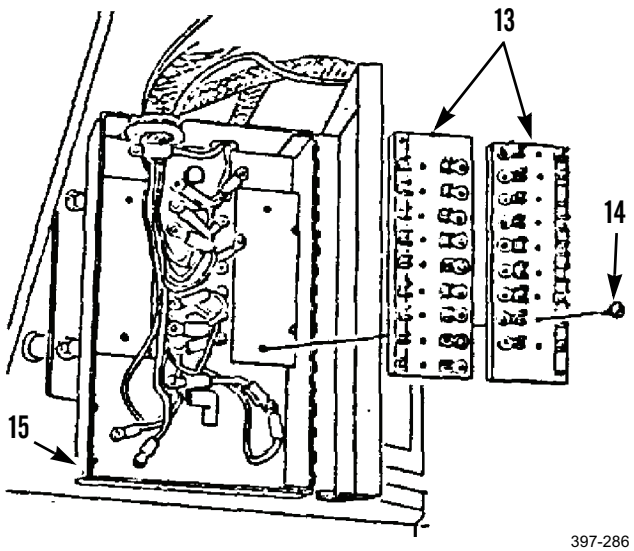


9. Connect main blackout wiring harness (11) and main wiring harness (9), and install screw (10).
10. Connect monitor main wiring harness (8) and install screw (7).
11. Connect supplemental steering main wiring harness (6) and install screw (5).
12. Connect main blackout light wiring harness (11) and install screw (4).

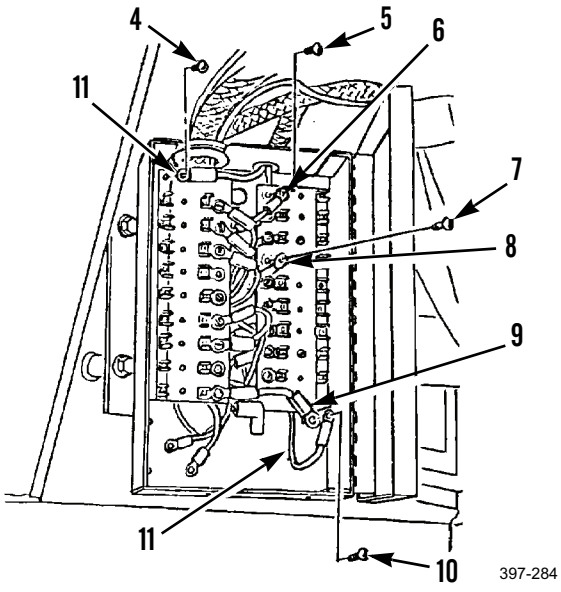

***INSTALLATION - CONTINUED***

13. Install fuses (3, 2, and 1).

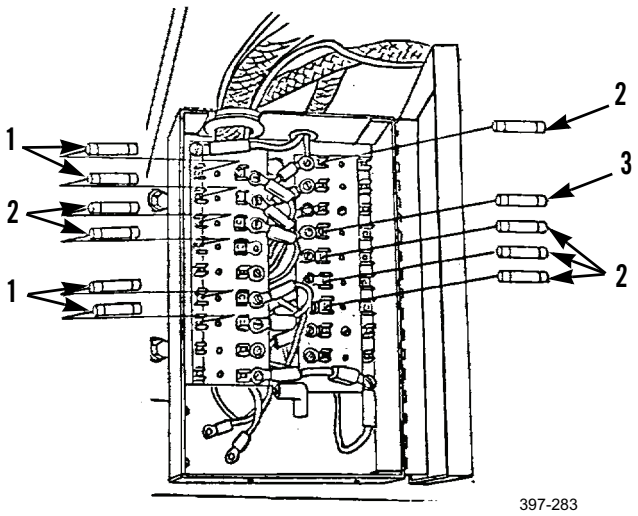


14. Install cab signal light wire (WP 0107 00).
15. Install circuit breaker (WP 0095 00).
16. Install flasher unit (WP 0094 00).
17. Connect battery cables (WP 0125 00).

**END OF WORK PACKAGE**

## CAB FUSE BOX AND COVER REPLACEMENT 0097 00

### THIS WORK PACKAGE COVERS

Removal, Cleaning and Inspection, Installation

### INITIAL SETUP

**Maintenance Level**

Unit

**Tools and Special Tools**

Tool kit, general mechanic's (Item 89, WP 0348 00)

**Materials/Parts**

Rag, wiping (Item 35, WP 0349 00)

Tag, marker (Item 44, WP 0349 00)

Nut, self-locking (2)

**References**

WP 0021 00

**Equipment Conditions**

Machine parked on level ground (TM 5-3805-261-10)

Parking/emergency brake applied (TM 5-3805-261-10)

Equipment lowered to ground (TM 5-3805-261-10)

Engine off (TM 5-3805-261-10)

Battery cables disconnected (WP 0125 00)

**Table 1. Cab Fuse Panel for the CCE Machine.**

| Slot | Amperage |
|---|---|
| 1. Front Wiper | 4 (slow blow) |
| 2. Heater/Air Conditioner | 15 |
| 3. Beacon | 10 |
| 4. Fan | 10 (rear) |
| 5. Dome Light | 5 |
| 6. Rear Wiper | 4 (slow blow) |
| 7. Lighter | 15 |
| 8. Spare | |

### *REMOVAL*

1. Remove two self-locking nuts (4), knobs (1), and metal molding (2). Discard self-locking nuts.

**NOTE**

Remove ID marker only if damaged or illegible.

2. Remove and discard ID marker (3).

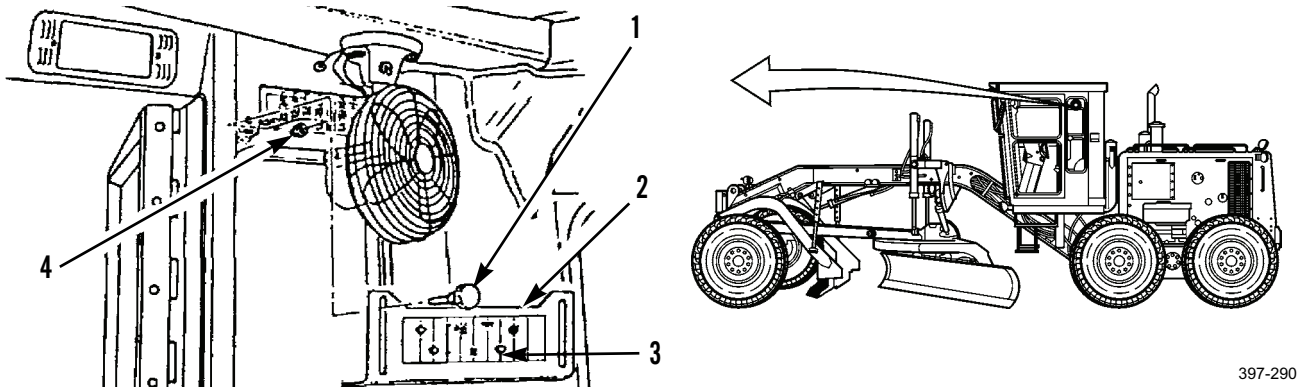

***REMOVAL - CONTINUED***

3. Remove fuses (5).

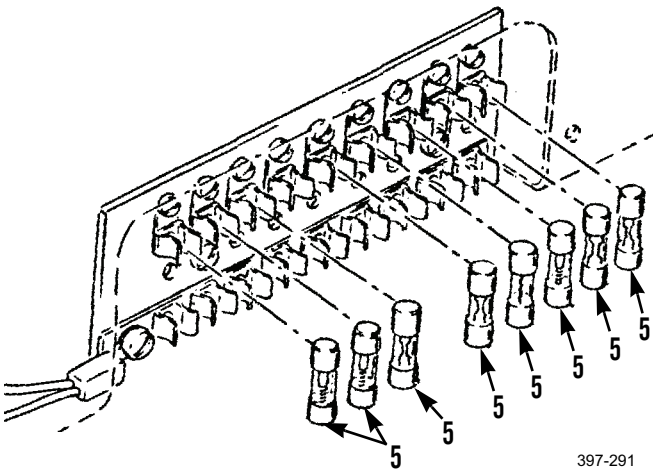


**NOTE**

Tag all wire assemblies and wiring harness before disconnecting to aid in installation.

4. Remove screw (7) and disconnect front fan wire assembly (6).
5. Remove screw (12) and disconnect rear fan wire assembly (13).
6. Remove eight screws (10) and disconnect cab main wiring harness (11).
7. Remove two screws (8) and block fuse holder (9).

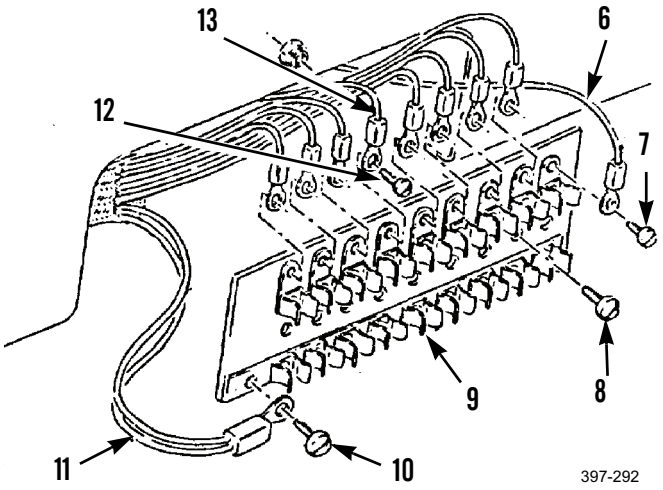

### *CLEANING AND INSPECTION*

Clean and inspect all parts in accordance with WP 0021 00.

### *INSTALLATION*

1. Install block fuse holder (9) and two screws (8).
2. Connect cab main wiring harness (11) and install eight screws (10).
3. Connect rear fan wire assembly (13) and install screw (12).
4. Connect front fan wire assembly (6) and install screw (7).
5. Install fuses (5).
6. If removed, install new ID marker (3) on metal molding (2).
7. Install metal molding (2), two knobs (1), and new self-locking nuts (4).
8. Connect battery cables (WP 0125 00).

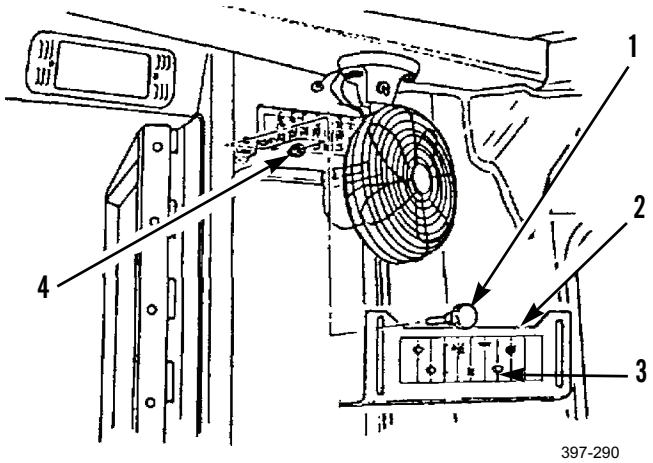


**END OF WORK PACKAGE**

## NATO SLAVE RECEPTACLE AND CABLES REPLACEMENT 0098 00

### THIS WORK PACKAGE COVERS

Removal, Cleaning and Inspection, Installation

### INITIAL SETUP

**Maintenance Level**

Unit

**Tools and Special Tools**

Tool kit, general mechanic's (Item 89, WP 0348 00)

**Materials/Parts**

Rag, wiping (Item 35, WP 0349 00)

Tag, marker (Item 44, WP 0349 00)

Lockwasher (4)

Nut, self-locking (4)

**References**

WP 0021 00

**Equipment Conditions**

Machine parked on level ground (TM 5-3805-261-10)

Parking/emergency brake applied (TM 5-3805-261-10)

Implements lowered to ground (TM 5-3805-261-10)

Engine off (TM 5-3805-261-10)

Battery cables disconnected (WP 0125 00)

Left and right side engine doors opened (TM 5-3805-261-10)

### *REMOVAL*

1. Remove nut (4) and washer (3) from starting motor (9).

**NOTE**

Tag all wire and cable assemblies before disconnecting to aid in installation.

2. Disconnect cable assembly (5), wire assembly (6), cable assembly (7), and two wire assemblies (2).
3. Remove washer (1) and disconnect cable assembly (8).

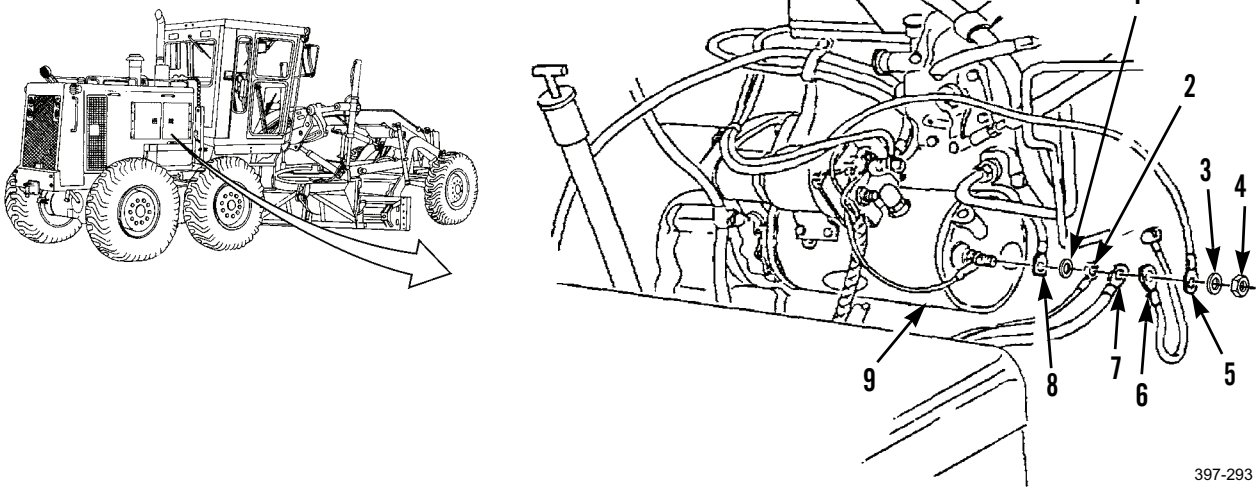

***REMOVAL - CONTINUED***

4. Remove nut (12) and washer (13).
5. Disconnect cable assembly (11) and wire assemblies (10, 14, and 15).

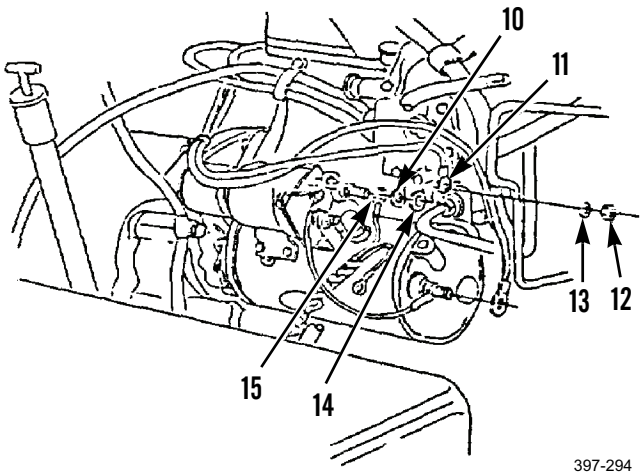


6. Remove bolt (21), washer (20), and clamp (16) from cable assemblies (5 and 11).
7. Remove bolt (19), washer (18), and bracket (17).

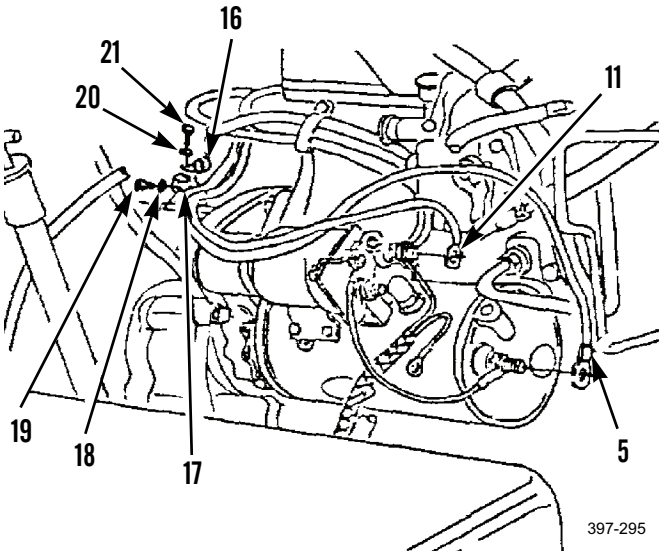

## NATO SLAVE RECEPTACLE AND CABLES REPLACEMENT - CONTINUED 0098 00

### *REMOVAL - CONTINUED*

8. Remove two screws (27), washers (26), and cable assemblies (5 and 11) from receptacle (24).
9. Remove four self-locking nuts (25), screws (23), lockwashers (22), and receptacle (24). Discard self-locking nuts and lockwashers.

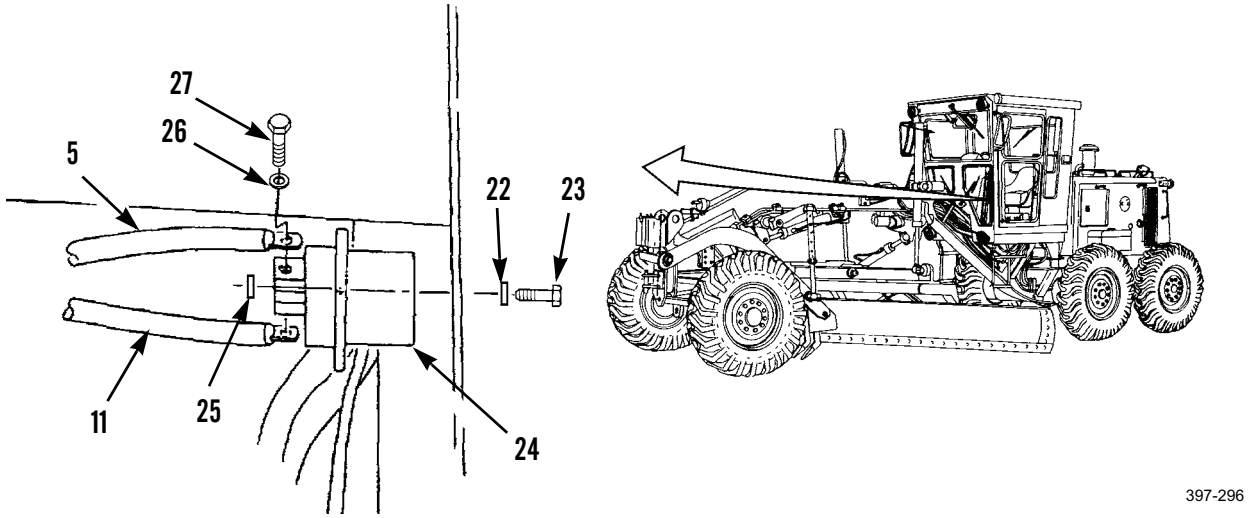


### *CLEANING AND INSPECTION*

Clean and inspect all parts in accordance with WP 0021 00.

### *INSTALLATION*

1. Install receptacle (24), four new lockwashers (22), screws (23), and new self-locking nuts (25).
2. Connect cable assemblies (11 and 5), two washers (26), and screws (27) to receptacle (24).

***INSTALLATION - CONTINUED***

3. Install bracket (17), washer (18), and bolt (19).
4. Install clamp (16), washer (20), and bolt (21) on cable assemblies (11 and 5).

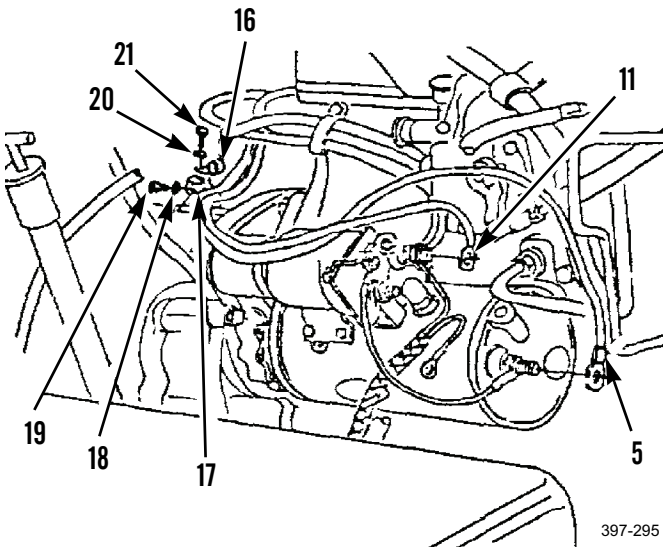


5. Connect wire assemblies (15, 14, and 10) and install cable assembly (11).
6. Install washer (13) and nut (12).

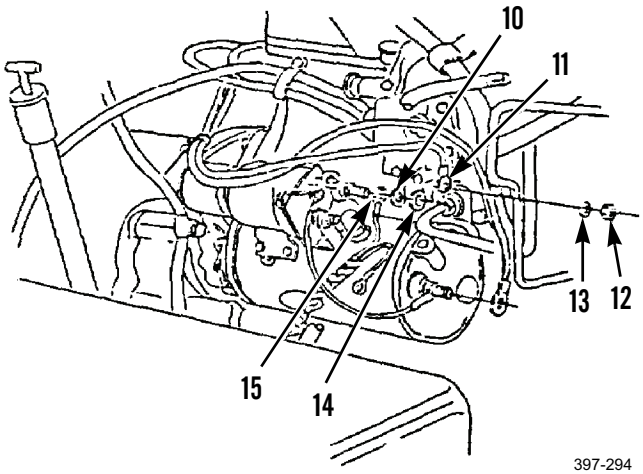

## NATO SLAVE RECEPTACLE AND CABLES REPLACEMENT - CONTINUED 0098 00

### *INSTALLATION - CONTINUED*

7. Connect cable assembly (8) and install washer (1).
8. Connect two wire assemblies (2), cable assembly (7), and wire assembly (6) and install cable assembly (5).
9. Install washer (3) and nut (4) on starting motor (9).

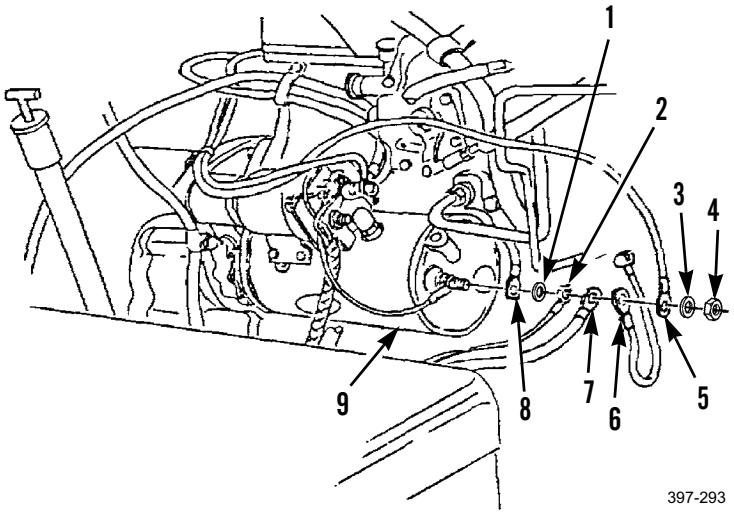


10. Close left and right side engine doors (TM 5-3805-261-10).
11. Connect battery cables (WP 0125 00).

**END OF WORK PACKAGE**

## DOME LIGHT SWITCH REPLACEMENT (CCE MACHINE) 0099 00

### THIS WORK PACKAGE COVERS

Removal, Cleaning and Inspection, Installation

### INITIAL SETUP

**Maintenance Level**

Unit

**Tools and Special Tools**

Tool kit, general mechanic's (Item 89, WP 0348 00)

**Materials/Parts**

Rag, wiping (Item 35, WP 0349 00)

Tag, marker (Item 44, WP 0349 00)

Lockwasher (4)

**References**

WP 0021 00

**Equipment Conditions**

Machine parked on level ground (TM 5-3805-261-10)

Parking/emergency brake applied (TM 5-3805-261-10)

Implements lowered to ground (TM 5-3805-261-10)

Engine off (TM 5-3805-261-10)

Battery cables disconnected (WP 0125 00)

### *REMOVAL*

1. Remove two screws (4), nut (1), instruction plate (2), and two nuts (3).

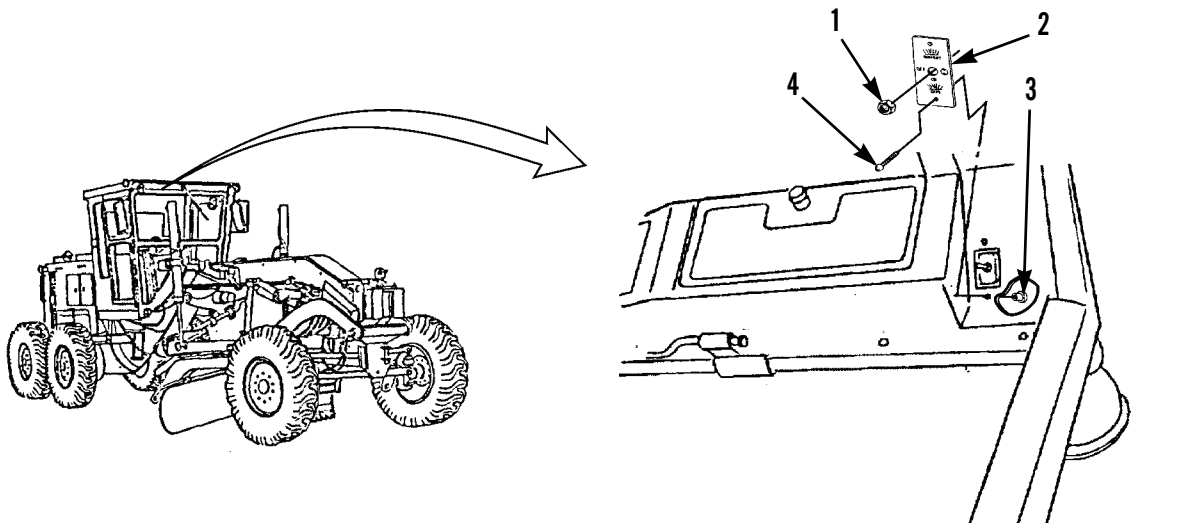


397-299

### *REMOVAL - CONTINUED*

2. Remove key washer (9), lockwasher (8), nut (7), and switch (6). Discard lockwasher.

**NOTE**

Tag wire assemblies before disconnecting to aid in installation.

3. Remove three screws (11) and lockwashers (10) and disconnect three wire assemblies (5) from switch (6). Discard lockwashers.

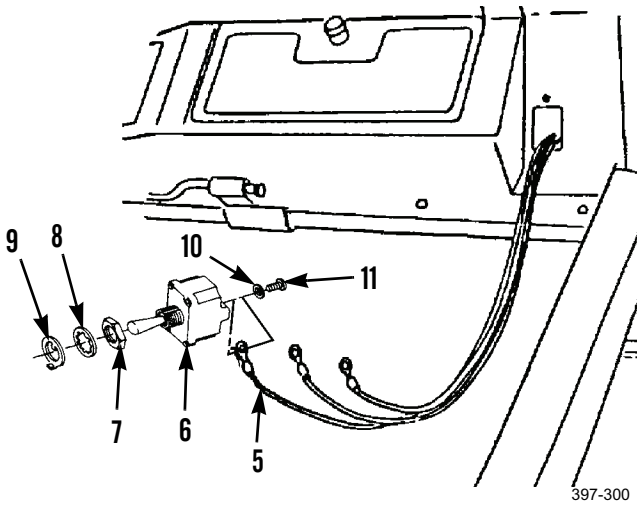


### *CLEANING AND INSPECTION*

Clean and inspect all parts in accordance with WP 0021 00.

### *INSTALLATION*

1. Connect three wire assemblies (5) and install three new lockwashers (10) and screws (11) on switch (6).
2. Install switch (6), nut (7), new lockwasher (8), and key washer (9).
3. Install two nuts (3), instruction plate (2), nut (1), and two screws (4).

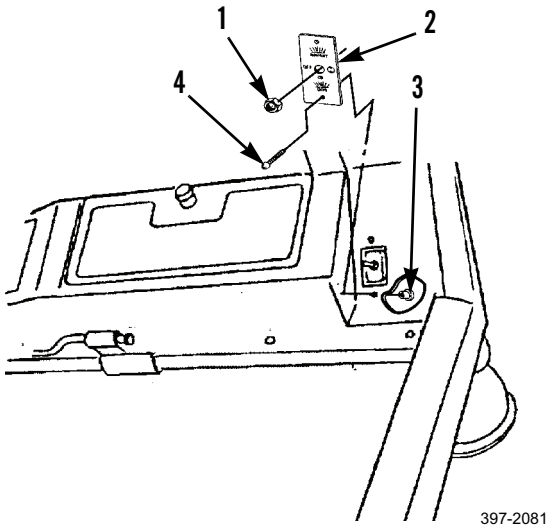


4. Connect battery cables (WP 0125 00).

**END OF WORK PACKAGE**

## DOME LIGHT DIMMER RESISTOR AND MOUNTING REPLACEMENT (CCE MACHINE) 0100 00

### THIS WORK PACKAGE COVERS

Removal, Cleaning and Inspection, Installation

### INITIAL SETUP

**Maintenance Level**

Unit

**Tools and Special Tools**

Tool kit, general mechanic's (Item 89, WP 0348 00)

Shop equipment, common no. 1 (Item 75, WP 0348 00)

**Materials/Parts**

Rag, wiping (Item 35, WP 0349 00)

Tag, marker (Item 44, WP 0349 00)

Rivet (2)

Tube, shrinkable (as required)

**References**

WP 0021 00

**Equipment Conditions**

Machine parked on level ground (TM 5-3805-261-10)

Parking/emergency brake applied (TM 5-3805-261-10)

Implements lowered to ground (TM 5-3805-261-10)

Engine off (TM 5-3805-261-10)

Battery cables disconnected (WP 0125 00)

Dome light switch removed (WP 0099 00)

Right side panel of right side cab storage compartment removed (WP 0189 00)

### *REMOVAL*

**NOTE**

Tag all wire and lead assemblies before disconnecting to aid in installation.

1. Disconnect wire assembly (6) from connector (13).
2. Remove shrinkable tube (3) and disconnect lead assembly (2) from resistor (5). Discard shrinkable tube.
3. Remove shrinkable tube (3), lead assembly (2), and pin (11) from connector (13). Discard shrinkable tube.
4. Remove shrinkable tube (3) and disconnect lead assembly (1) from resistor (5). Discard shrinkable tube.
5. Remove shrinkable tube (3), lead assembly (1), and contact (12) from connector (13). Discard shrinkable tube.
6. Remove connector (13) from bracket (7).
7. Remove two rivets (4) and resistor (5) from bracket (7). Discard rivets.
8. Remove nut (8), washer (9), bolt (10), and bracket (7).

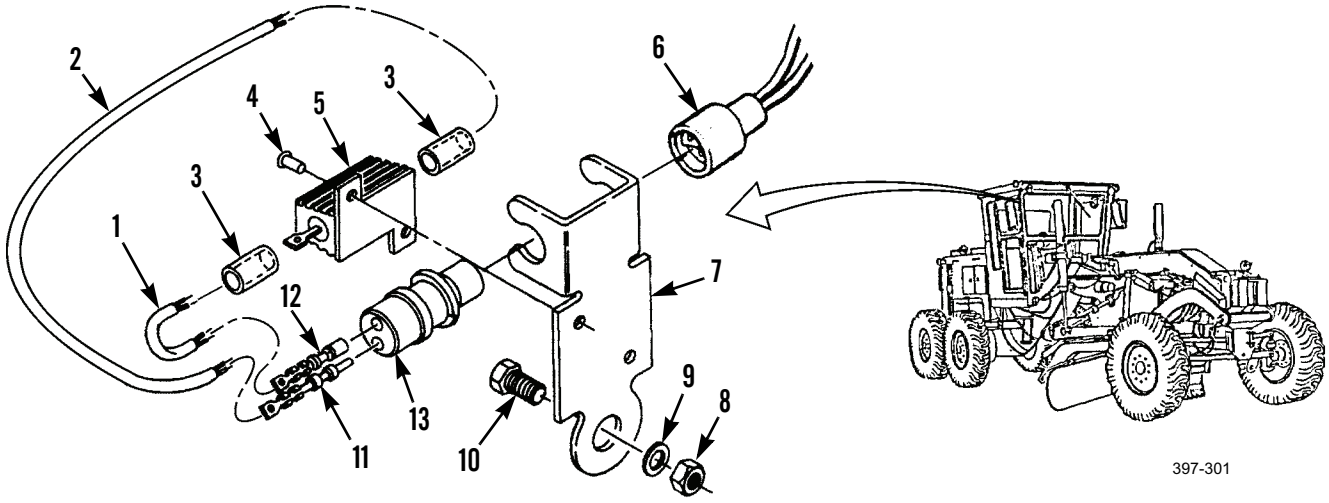


### *CLEANING AND INSPECTION*

Clean and inspect all parts in accordance with WP 0021 00.

### *INSTALLATION*

1. Install bracket (7), bolt (10), washer (9), and nut (8).
2. Install resistor (5) and two new rivets (4) on bracket (7).
3. Install connector (13) on bracket (7).
4. Install contact (12), connect lead assembly (1), and install new shrinkable tube (3) on connector (13).
5. Install lead assembly (1) and new shrinkable tube (3) on resistor (5).
6. Install pin (11), connect lead assembly (2), and install new shrinkable tube (3) on connector (13).
7. Install lead assembly (2) and new shrinkable tube (3) on resistor (5).
8. Connect wire assembly (6) on connector (13).
9. Install right side panel in right side cab storage compartment (WP 0189 00).
10. Install dome light switch (WP 0099 00).
11. Connect battery cables (WP 0125 00).

**END OF WORK PACKAGE**

## VEHICLE LIGHT SWITCH AND MOUNTING REPLACEMENT 0101 00

### THIS WORK PACKAGE COVERS

Removal, Cleaning and Inspection, Installation

### INITIAL SETUP

**Maintenance Level**

Unit

**Tools and Special Tools**

Tool kit, general mechanic's (Item 89, WP 0348 00)

**Materials/Parts**

Rag, wiping (Item 35, WP 0349 00)

**References**

WP 0021 00

**Equipment Conditions**

Machine parked on level ground (TM 5-3805-261-10)

Parking/emergency brake applied (TM 5-3805-261-10)

Implements lowered to ground (TM 5-3805-261-10)

Engine off (TM 5-3805-261-10)

Battery cables disconnected (WP 0125 00)

### *REMOVAL*

1. Remove six bolts (3), washers (4), and plate (5).
2. Disconnect harness (6) from switch (7).
3. Remove four screws (1), washers (2), and switch (7).

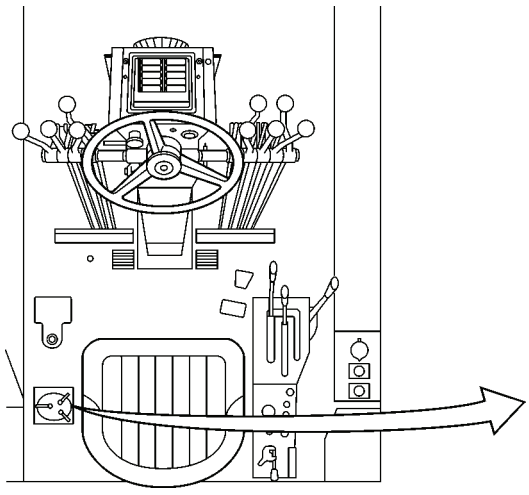

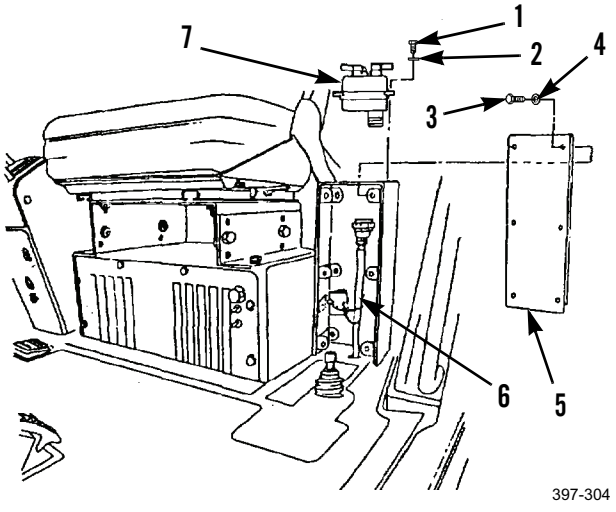

### *REMOVAL - CONTINUED*

4. Remove four bolts (8), washers (9), and two brackets (10).

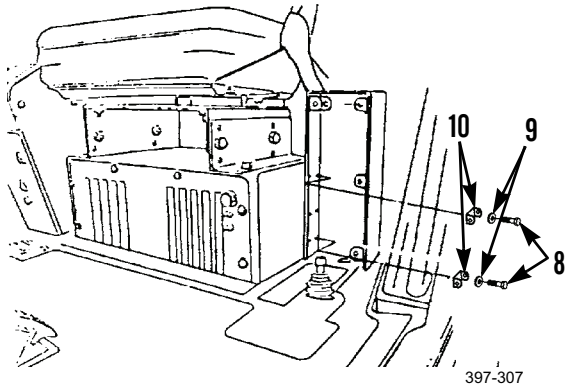


### *CLEANING AND INSPECTION*

Clean and inspect all parts in accordance with WP 0021 00.

### *INSTALLATION*

1. Install two brackets (10), four washers (9), and bolts (8).
2. Install switch (7), four washers (2), and screws (1).
3. Connect harness (6) on switch (7).
4. Install plate (5), six washers (4), and bolts (3).

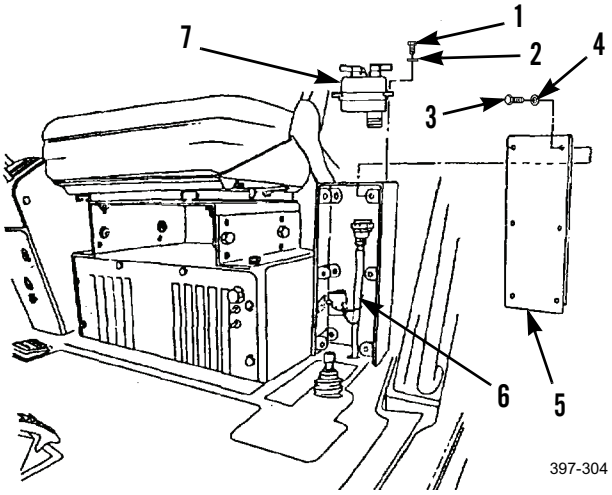


5. Connect battery cables (WP 0125 00).

**END OF WORK PACKAGE**

## BLACKOUT LIGHTING MAGNETIC SWITCH REPLACEMENT 0102 00

### THIS WORK PACKAGE COVERS

Removal, Cleaning and Inspection, Installation

### INITIAL SETUP

**Maintenance Level**

Unit

**Tools and Special Tools**

Tool kit, general mechanic's (Item 89, WP 0348 00)

**Materials/Parts**

Rag, wiping (Item 35, WP 0349 00)

Tag, marker (Item 44, WP 0349 00)

**References**

WP 0021 00

**Equipment Conditions**

Machine parked on level ground (TM 5-3805-261-10)

Parking/emergency brake applied (TM 5-3805-261-10)

Implements lowered to ground (TM 5-3805-261-10)

Engine off (TM 5-3805-261-10)

Battery cables disconnected (WP 0125 00)

### *REMOVAL*

1. Remove six bolts (1), washers (2), and plate (3).

**NOTE**

Tag wire assemblies before disconnecting to aid in installation.

2. Remove four nuts (9) and washers (8) and disconnect three wire assemblies (10) from switch (5).
3. Remove two bolts (6), washers (7), lead (4), and switch (5).

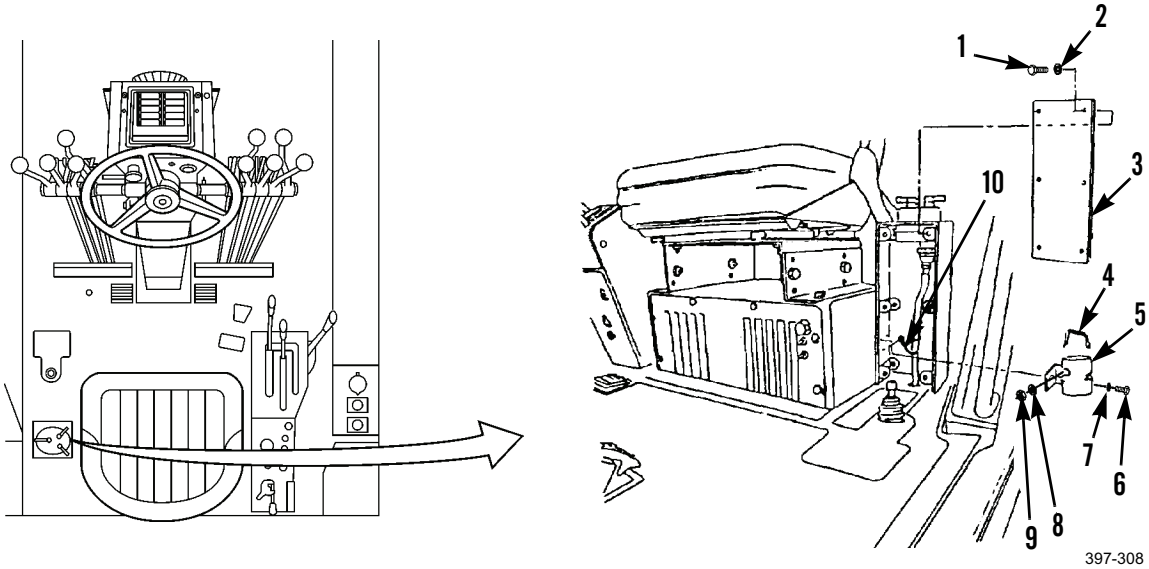

### *CLEANING AND INSPECTION*

Clean and inspect all parts in accordance with WP 0021 00.

### *INSTALLATION*

1. Install switch (5), lead (4), two washers (7), and bolts (6).
2. Connect three wire assemblies (10) and install four washers (8) and nuts (9) on switch (5).
3. Install plate (3), six washers (2), and bolts (1).

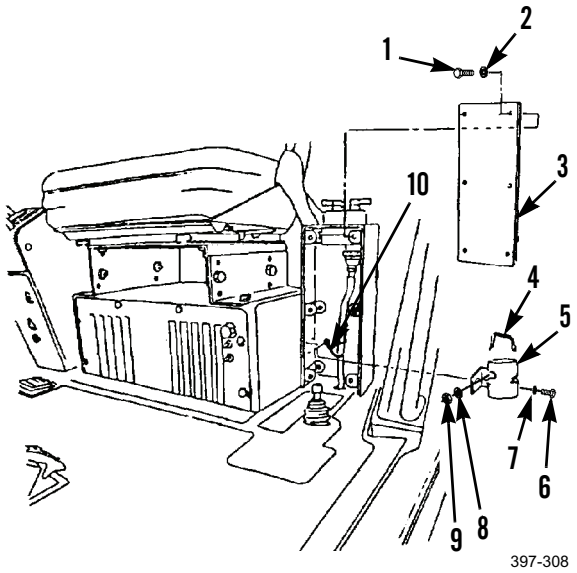


4. Connect battery cables (WP 0125 00).

**END OF WORK PACKAGE**

## DIMMER SWITCH REPLACEMENT 0103 00

### THIS WORK PACKAGE COVERS

Removal, Cleaning and Inspection, Installation

### INITIAL SETUP

**Maintenance Level**

Unit

**Tools and Special Tools**

Tool kit, general mechanic's (Item 89, WP 0348 00)

**Materials/Parts**

Rag, wiping (Item 35, WP 0349 00)

Tag, marker (Item 44, WP 0349 00)

**References**

WP 0021 00

**Equipment Conditions**

Machine parked on level ground (TM 5-3805-261-10)

Parking/emergency brake applied (TM 5-3805-261-10)

Implements lowered to ground (TM 5-3805-261-10)

Engine off (TM 5-3805-261-10)

Battery cables disconnected (WP 0125 00)

### *REMOVAL*

1. Fold back corner of floor mat (3) and remove two screws (1), washers (2), and switch (4).

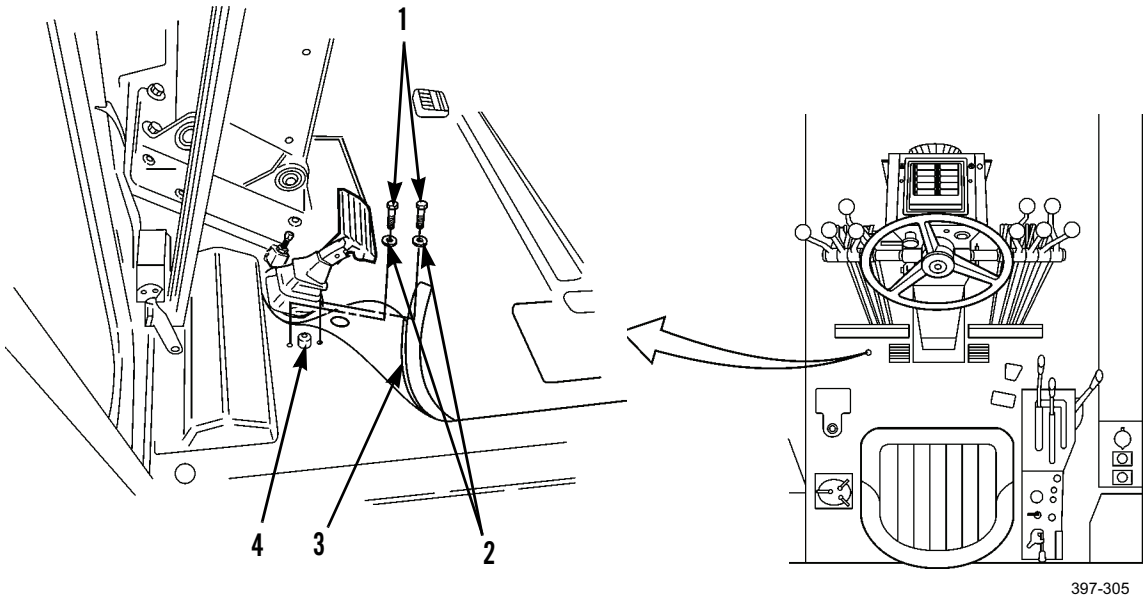

***REMOVAL - CONTINUED***

**NOTE**

Tag wire assemblies before disconnecting to aid in installation.

2. Under left side of cab floor, remove three screws (5) and disconnect three wire assemblies (6) from switch (4).

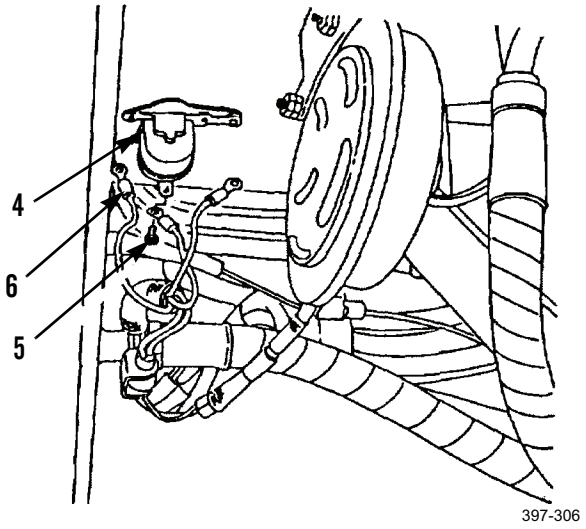


***CLEANING AND INSPECTION***

Clean and inspect all parts in accordance with WP 0021 00.

***INSTALLATION***

1. Under left side of cab floor, connect three wire assemblies (6) and install three screws (5) to switch (4).
2. Install switch (4), two washers (2), and screws (1).
3. Lay down corner of floor mat (3).

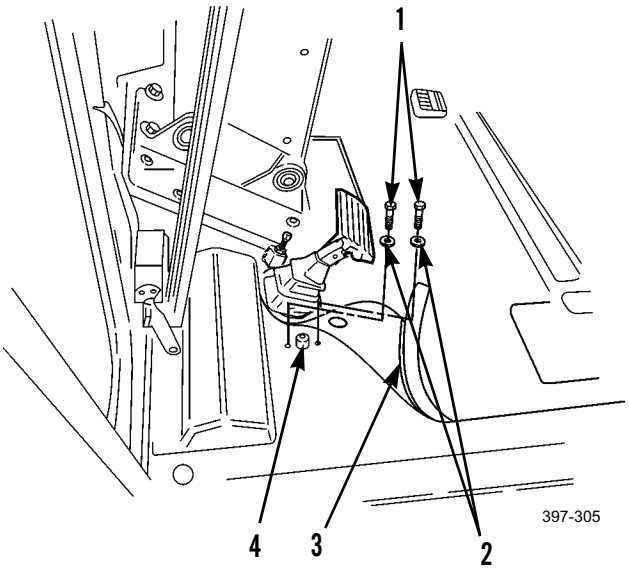


4. Connect battery cables (WP 0125 00).

**END OF WORK PACKAGE**

## HEADLIGHTS MAINTENANCE 0104 00

### THIS WORK PACKAGE COVERS

Lamp Replacement, Removal, Disassembly, Cleaning and Inspection, Assembly, Installation

### INITIAL SETUP

**Maintenance Level**

Unit

**Tools and Special Tools**

Tool kit, general mechanic's (Item 89, WP 0348 00)

**Materials/Parts**

Rag, wiping (Item 35, WP 0349 00)

Tag, marker (Item 44, WP 0349 00)

Washer, spring-tension (2)

**References**

WP 0021 00

**Equipment Conditions**

Machine parked on level ground (TM 5-3805-261-10)

Parking/emergency brake applied (TM 5-3805-261-10)

Implements lowered to ground (TM 5-3805-261-10)

Engine off (TM 5-3805-261-10)

Battery cables disconnected (WP 0125 00)

### *LAMP REPLACEMENT*

**NOTE**

This procedure covers maintenance of the left headlight. Follow these instructions for the right headlight.

1. Remove screw (7), lens retainer (1), screw (4), lens retainer (5), molding (3), and lamp (2) from housing (6). Discard lamp.
2. Install new lamp (2), molding (3), lens retainer (5), screw (4), lens retainer (1), and screw (7).

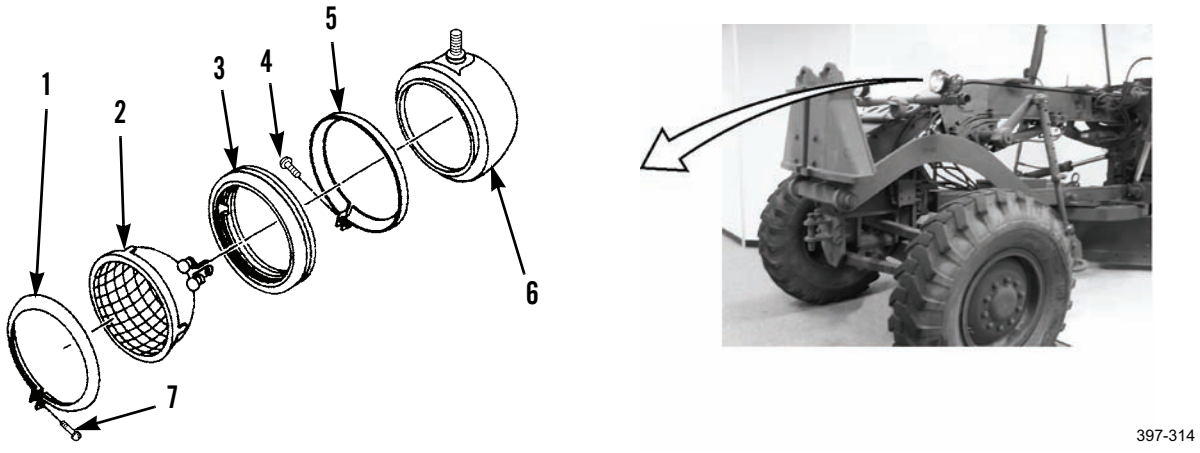


397-314

***REMOVAL***

**NOTE**

Support headlight while removing mounting hardware and disconnecting wire assemblies.

1. Remove nut (8), washer (9), and two spring-tension washers (11) from headlight (10). Discard spring-tension washers.

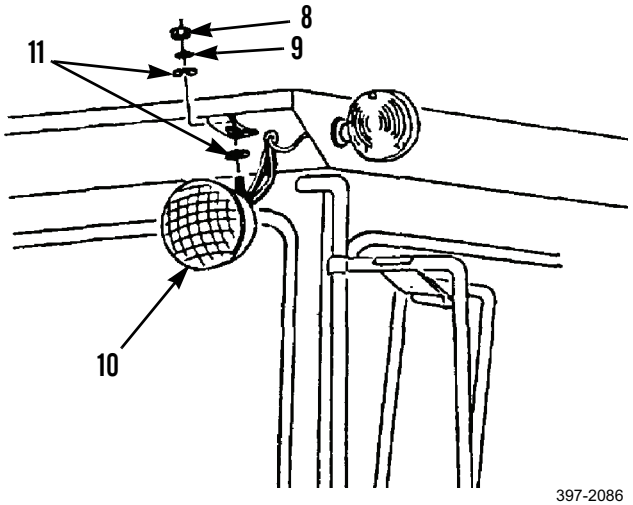


397-2086

**NOTE**

Tag wire assemblies before disconnecting to aid in installation.

2. Remove two screws (12), disconnect two wire assemblies (13) and remove headlight (10).

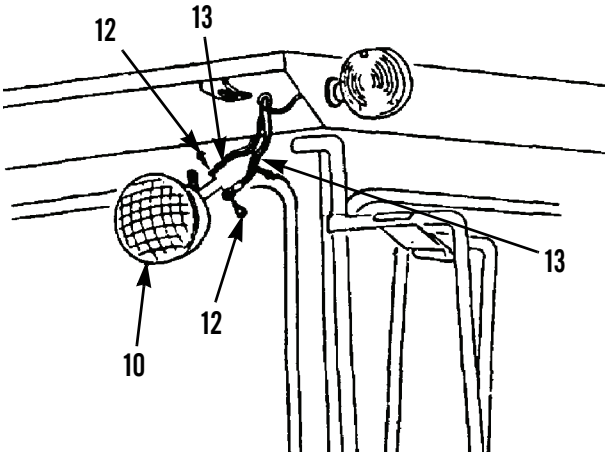


397-315

### *DISASSEMBLY*

Remove screw (7), lens retainer (1), screw (4), lens retainer (5), molding (3), and lamp (2) from housing (6).

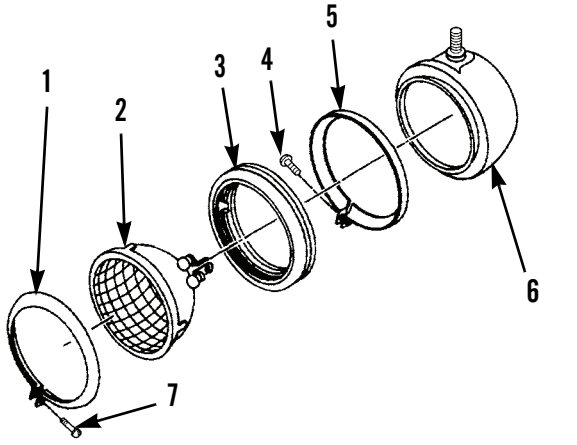


397-316

### *CLEANING AND INSPECTION*

Clean and inspect all parts in accordance with WP 0021 00.

### *ASSEMBLY*

Install lamp (2), molding (3), lens retainer (5), screw (4), lens retainer (1), and screw (7) to housing (6).

### *INSTALLATION*

1. Support headlight (10), connect two wire assemblies (13) and install two screws (12).
2. Install headlight (10), two new spring-tension washers (11), washer (9), and nut (8).
3. Connect battery cables (WP 0125 00).

**END OF WORK PACKAGE**

## FRONT WORK LIGHTS MAINTENANCE 0105 00

### THIS WORK PACKAGE COVERS

Lamp Replacement, Removal, Disassembly, Cleaning and Inspection, Assembly, Installation

### INITIAL SETUP

**Maintenance Level**

Unit

**Tools and Special Tools**

Tool kit, general mechanic's (Item 89, WP 0348 00)

**Materials/Parts**

Rag, wiping (Item 35, WP 0349 00

Tag, marker (Item 44, WP 0349 00)

**References**

WP 0021 00

**Equipment Conditions**

Machine parked on level ground (TM 5-3805-261-10)

Parking/emergency brake applied (TM 5-3805-261-10)

Implements lowered to ground (TM 5-3805-261-10)

Engine off (TM 5-3805-261-10)

Battery cables disconnected (WP 0125 00)

### *LAMP REPLACEMENT*

**NOTE**

This procedure covers maintenance of the left front work light. Follow these instructions for the right front work light.

1. Remove screw (6), lens retainer (4), screw (7), lens retainer (2), lamp (5), and molding (3) from housing (1). Discard lamp.
2. Install new lamp (5), molding (3), lens retainer (2), screw (7), lens retainer (4), and screw (6).

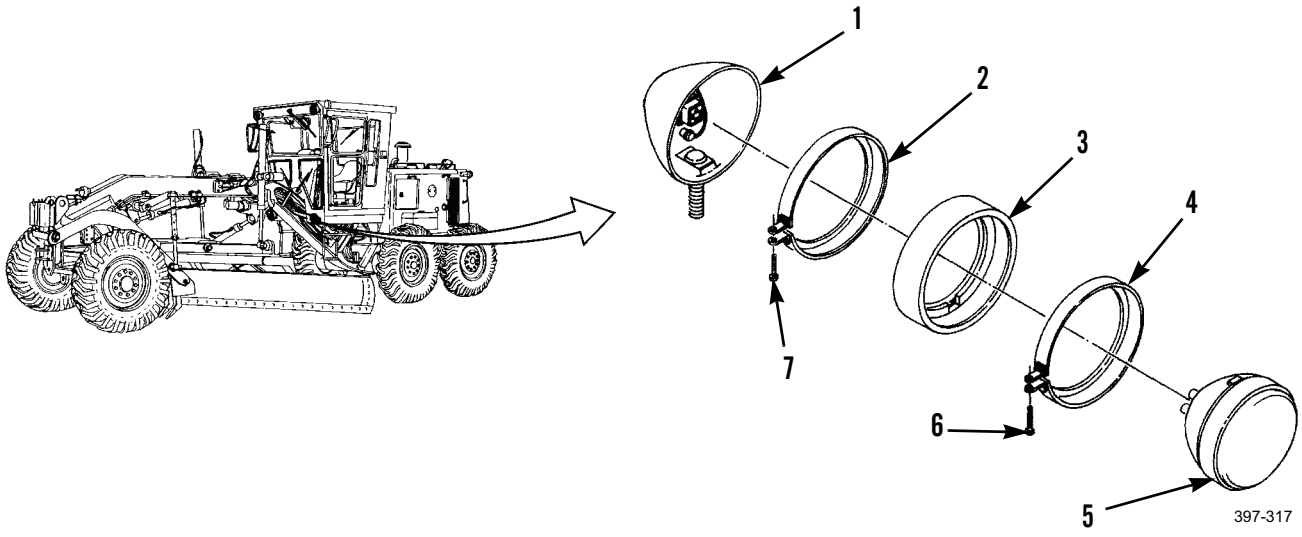

### *REMOVAL*

**NOTE**

Support work light while removing mounting hardware and disconnecting wire assemblies.

1. Remove nut (14), washer (13), spacer (12), work light (18), and spacer (17).

**NOTE**

Tag wire assemblies before disconnecting to aid in installation.

2. Remove screw (15) and disconnect wire assembly (16) from work light (18).
3. Remove two nuts (11), washers (10), bolts (19), clamp (8), and bracket (9).

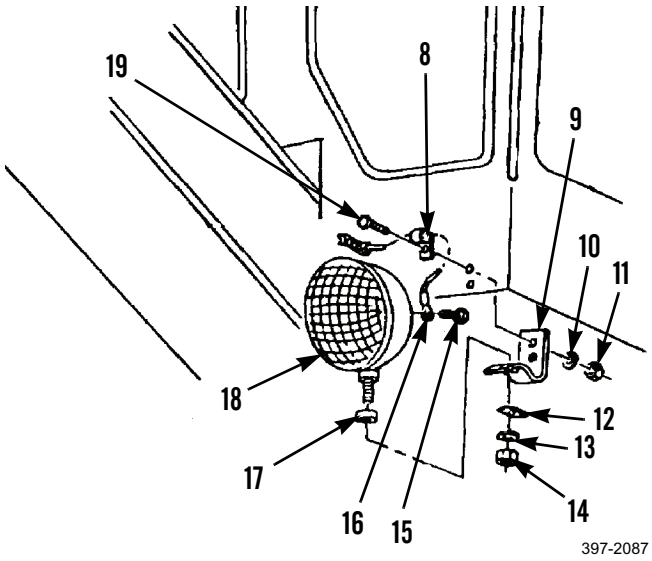


### *DISASSEMBLY*

Remove screw (6), lens retainer (4), screw (7), lens retainer (2), lamp (5), and molding (3) from housing (1).

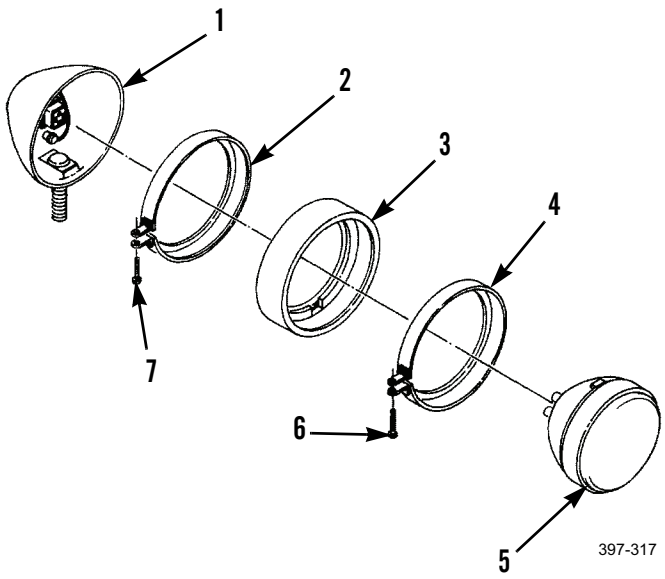

### *CLEANING AND INSPECTION*

Clean and inspect all parts in accordance with WP 0021 00.

### *ASSEMBLY*

Install molding (3), lamp (5), lens retainer (2), screw (7), lens retainer (4), and screw (6) to housing (1).

### *INSTALLATION*

1. Install bracket (9), clamp (8), two bolts (19), washers (10), and nuts (11).
2. Support work light (18), connect wire assembly (16) and install screw (15).
3. Install spacer (17), work light (18), spacer (12), washer (13), and nut (14).
4. Connect battery cables (WP 0125 00).

**END OF WORK PACKAGE**

## FRONT BLACKOUT DRIVE LIGHT MAINTENANCE 0106 00

### THIS WORK PACKAGE COVERS

Lamp Replacement, Removal, Disassembly, Cleaning and Inspection, Assembly, Installation

### INITIAL SETUP

**Maintenance Level**

Unit

**Tools and Special Tools**

Tool kit, general mechanic's (Item 89, WP 0348 00)

**Materials/Parts**

Rag, wiping (Item 35, WP 0349 00)

Tag, marker (Item 44, WP 0349 00)

Cable tie (2)

Gasket (2)

Lockwasher (2)

**References**

WP 0021 00

**Equipment Conditions**

Machine parked on level ground (TM 5-3805-261-10)

Parking/emergency brake applied (TM 5-3805-261-10)

Implements lowered to ground (TM 5-3805-261-10)

Engine off (TM 5-3805-261-10)

Battery cables disconnected (WP 0125 00)

### *LAMP REPLACEMENT*

**NOTE**

Three screws cannot be removed from door.

1. Loosen three screws (5) and remove door (4) from housing (1).
2. Remove and discard gasket (3).
3. Remove and discard lamp (2) by pushing in and turning left.
4. Install new lamp (2) by pushing in and turning right.
5. Install new gasket (3).
6. Position door (4) on housing (1) and tighten three screws (5).

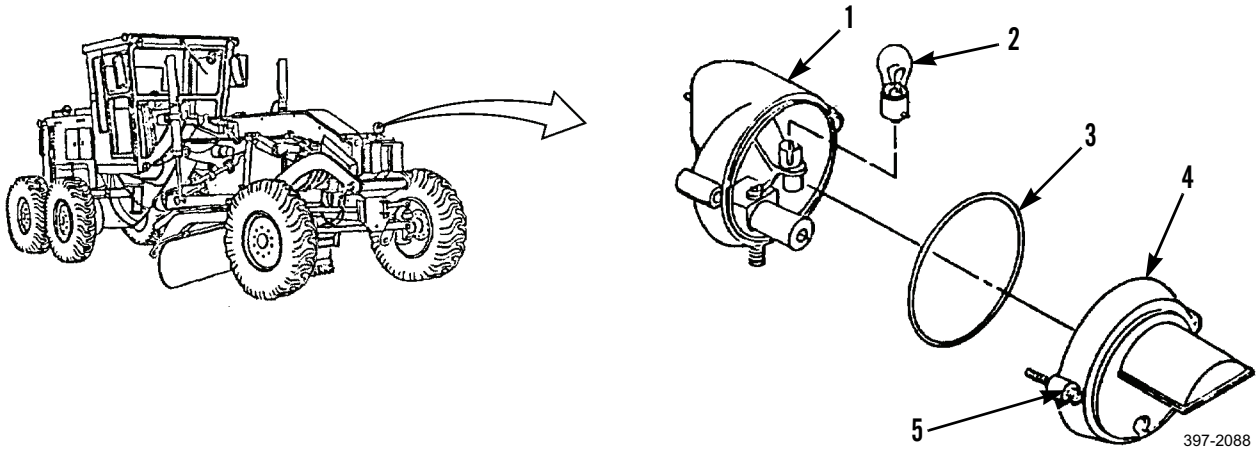

### *REMOVAL*

1. Remove and discard two cable ties (6).

**NOTE**

Tag wire assemblies before disconnecting to aid in installation.

2. Disconnect wire assembly (7) from back of blackout light (8).
3. Remove nut (11) and lockwasher (10), disconnect wire assembly (9), and remove blackout light (8) from tube (12). Discard lockwasher.

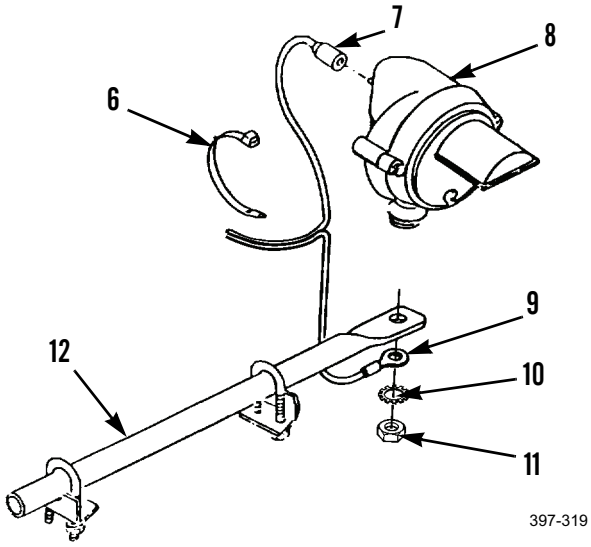


4. Remove four nuts (15), washers (14), two brackets (16), U-bolts (13), and tube (12).

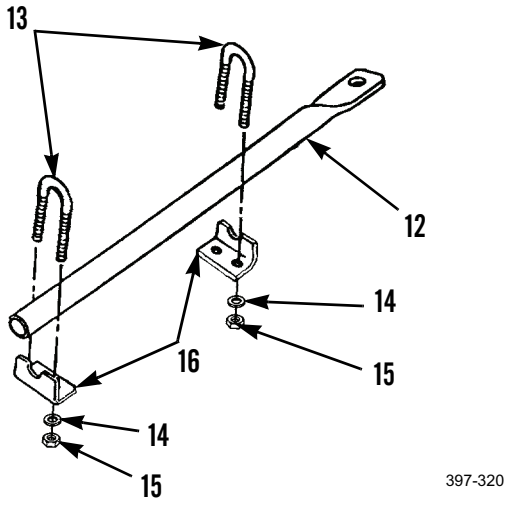

### *DISASSEMBLY*

1. Remove finishing washer (18) and lockwasher (19) from housing (1). Discard lockwasher.

**NOTE**

Three screws cannot be removed from door.

2. Loosen three screws (5) and remove door (4).
3. Remove and discard two gaskets (3 and 17).
4. Remove lamp (2) by pushing in and turning left.

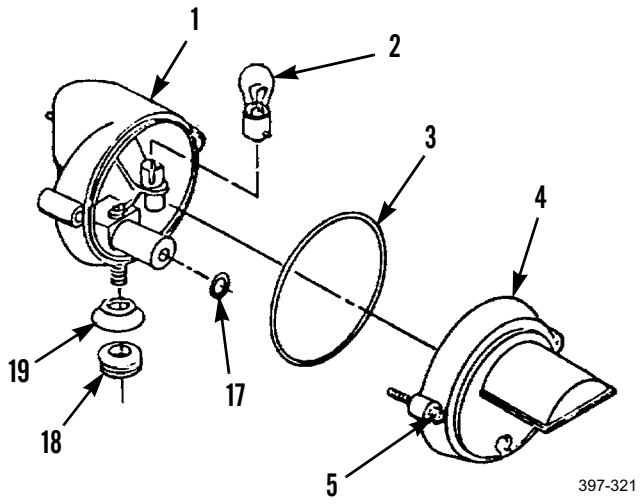


### *CLEANING AND INSPECTION*

Clean and inspect all parts in accordance with WP 0021 00.

### *ASSEMBLY*

1. Install lamp (2) in housing (1) by pushing in and turning right.
2. Install two new gaskets (17 and 3).
3. Position door (4) on housing (1) and tighten three screws (5).
4. Install new lockwasher (19) and finishing washer (18).

### *INSTALLATION*

1. Loosely install two U-bolts (13), brackets (16), four washers (14), and nuts (15) on tube (12) and position as a unit on top of front frame.
2. Slide two brackets (16) under lips of front frame, align rounded end of tube (12) flush with right edge of frame and tighten four nuts (15).
3. Position blackout light (8) in straight level position on tube (12), connect wire assembly (9) and install new lockwasher (10) and nut (11).
4. Connect wire assembly (7) to back of blackout light (8).
5. Install two new cable ties (6).
6. Connect battery cables (WP 0125 00).

**END OF WORK PACKAGE**

## FRONT TURN SIGNAL LIGHTS MAINTENANCE 0107 00

### THIS WORK PACKAGE COVERS

Lamp Replacement, Removal, Disassembly, Cleaning and Inspection, Assembly, Installation

### INITIAL SETUP

**Maintenance Level**

Unit

**Tools and Special Tools**

Tool kit, general mechanic's (Item 89, WP 0348 00)

**Materials/Parts**

Rag, wiping (Item 35, WP 0349 00)

Gasket (2)

Lockwasher (2)

Terminal, quick-disconnect (2)

**References**

WP 0021 00

**Equipment Conditions**

Machine parked on level ground (TM 5-3805-261-10)

Parking/emergency brake applied (TM 5-3805-261-10)

Implements lowered to ground (TM 5-3805-261-10)

Engine off (TM 5-3805-261-10)

Battery cables disconnected (WP 0125 00)

***LAMP REPLACEMENT***

**NOTE**

This procedure covers maintenance of the left front turn signal light. Follow these instructions for the right front turn signal light.

1. Remove three screws (5), lens (4), gasket (3), and lamp (2) from housing (1). Discard gasket and lamp.
2. Install new lamp (2), new gasket (3), lens (4) and three screws (5).

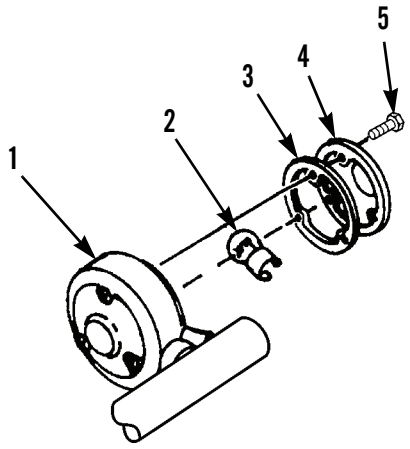


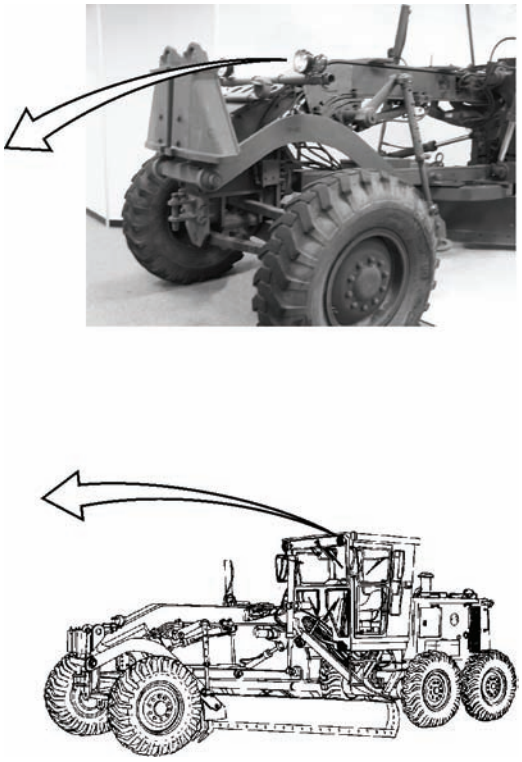

397-324

### *REMOVAL*

1. Disconnect wire assembly (6) and remove grommet (8).
2. Remove nut (9), lockwasher (10), washer (11), and turn signal light (13). Discard lockwasher.
3. Remove two washers (12) from turn signal light (13).

### *DISASSEMBLY*

Remove three screws (5), lens (4), gasket (3), lamp (2), and quick-disconnect terminal (7). Discard gasket and quick-disconnect terminal.

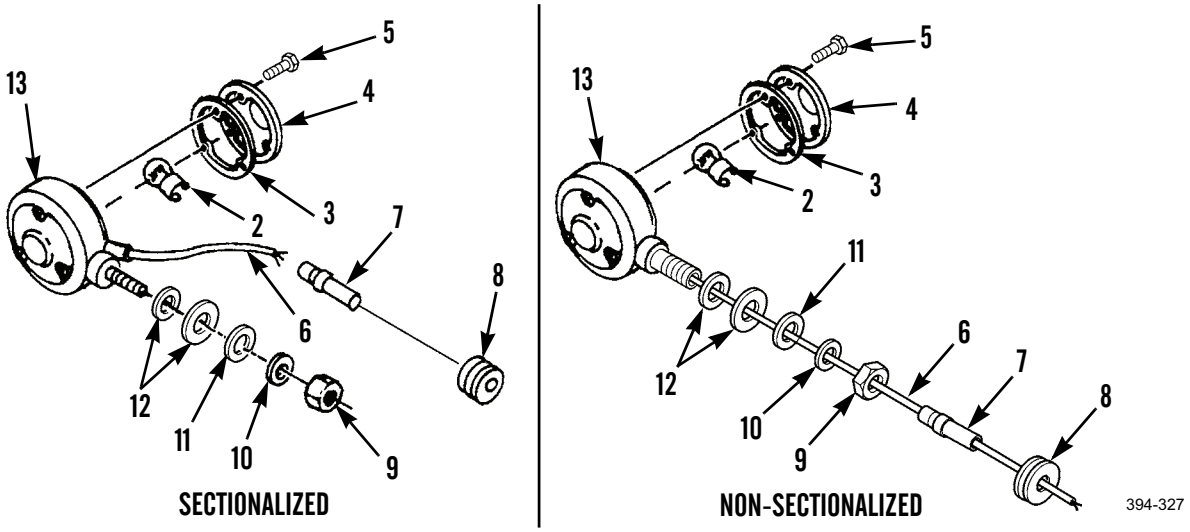


### *CLEANING AND INSPECTION*

Clean and inspect all parts in accordance with WP 0021 00.

### *ASSEMBLY*

Install new quick-disconnect terminal (7), lamp (2), new gasket (3), lens (4), and three screws (5).

### *INSTALLATION*

1. Install two washers (12) on turn signal light (13).
2. Install turn signal light (13), washer (11), new lockwasher (10), and nut (9).
3. Install grommet (8) and connect wire assembly (6).
4. Connect battery cables (WP 0125 00).

**END OF WORK PACKAGE**

## REAR TURN SIGNAL LIGHTS, STOPLIGHTS, AND MOUNTING MAINTENANCE 0108 00

### THIS WORK PACKAGE COVERS

Lamp Replacement, Removal, Cleaning and Inspection, Installation

### INITIAL SETUP

**Maintenance Level**

Unit

**Tools and Special Tools**

Tool kit, general mechanic's (Item 89, WP 0348 00)

**Materials/Parts**

Rag, wiping (Item 35, WP 0349 00)

Tag, marker (Item 44, WP 0349 00)

Lockwasher (24)

Screw, tapping (12)

**References**

WP 0021 00

**Equipment Conditions**

Machine parked on level ground (TM 5-3805-261-10)

Parking/emergency brake applied (TM 5-3805-261-10)

Implements lowered to ground (TM 5-3805-261-10)

Engine off (TM 5-3805-261-10)

Battery cables disconnected (WP 0125 00)

Grille removed (WP 0054 00)

### *LAMP REPLACEMENT*

**NOTE**

This procedure covers maintenance of the right rear turn signal light, stoplight, and mounting. Follow these instructions for the left rear turn signal light, stoplight, and mounting.

***LAMP REPLACEMENT - CONTINUED***

**Stoplight Lamp**

**NOTE**

Gasket is attached to lens.

1. Remove three tapping screws (4), lockwashers (3), red lens (2), and gasket (1) assembly. Discard tapping screws and lockwashers. Discard lens and gasket assembly if lens is cracked or gasket is deteriorated.
2. Remove and discard lamp (5) by pushing in and turning left.
3. Install new lamp (5) by pushing in and turning right.
4. Install new red lens (2) and gasket (1) assembly if discarded, three new lockwashers (3) and new tapping screws (4).

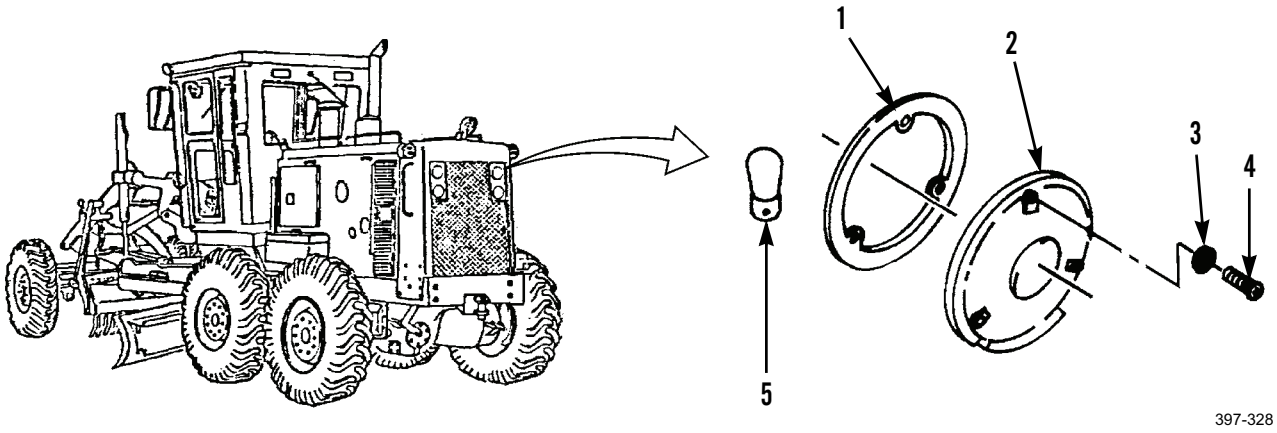


397-328

### *LAMP REPLACEMENT - CONTINUED*

#### Rear Turn Signal Lamp

**NOTE**

Gasket is attached to lens.

1. Remove three tapping screws (9), lockwashers (8), amber lens (7), and gasket (6) assembly. Discard tapping screws and lockwashers. Discard lens and gasket assembly if lens is cracked or gasket is deteriorated.
2. Remove and discard lamp (10) by pushing in and turning to left.
3. Install new lamp (10) by pushing in and turning to right.
4. Install new amber lens (7) and gasket (6) assembly if discarded, three new lockwashers (8) and new tapping screws (9).

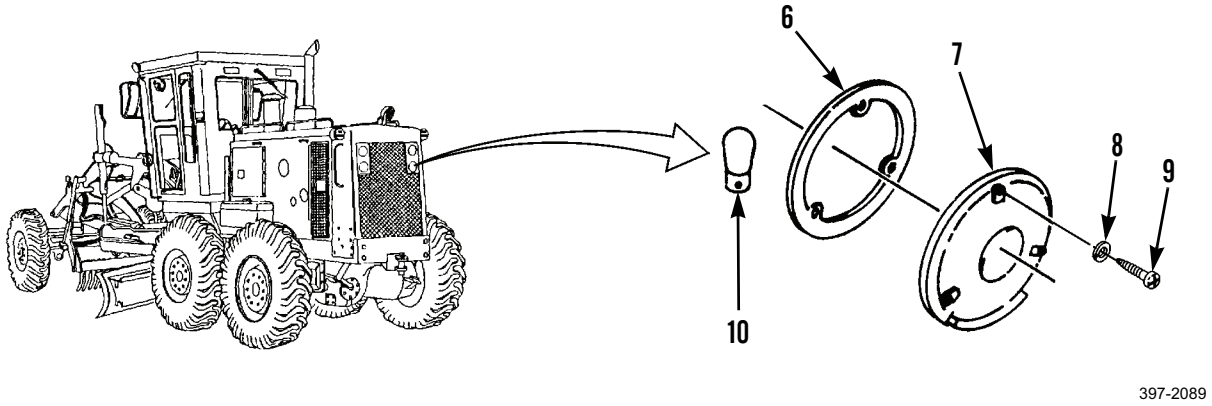


397-2089

### *REMOVAL*

#### Stoplight

**NOTE**

Gasket is attached to lens.

1. Remove three tapping screws (4), lockwashers (3), red lens (2), and gasket (1) assembly. Discard tapping screws and lockwashers. Discard lens and gasket assembly if lens is cracked or gasket is deteriorated.
2. Remove lamp (5) by pushing in and turning to left.

*REMOVAL - CONTINUED*

**Stoplight - Continued**

3. Remove three screws (14) and lockwashers (13). Discard lockwashers.

**NOTE**

Tag all connectors and wiring harnesses before disconnecting to aid in installation.

4. Pull out housing (12) from bracket (11), disconnect connector (15) from wiring harness and remove from retaining strap (16) and remove housing.

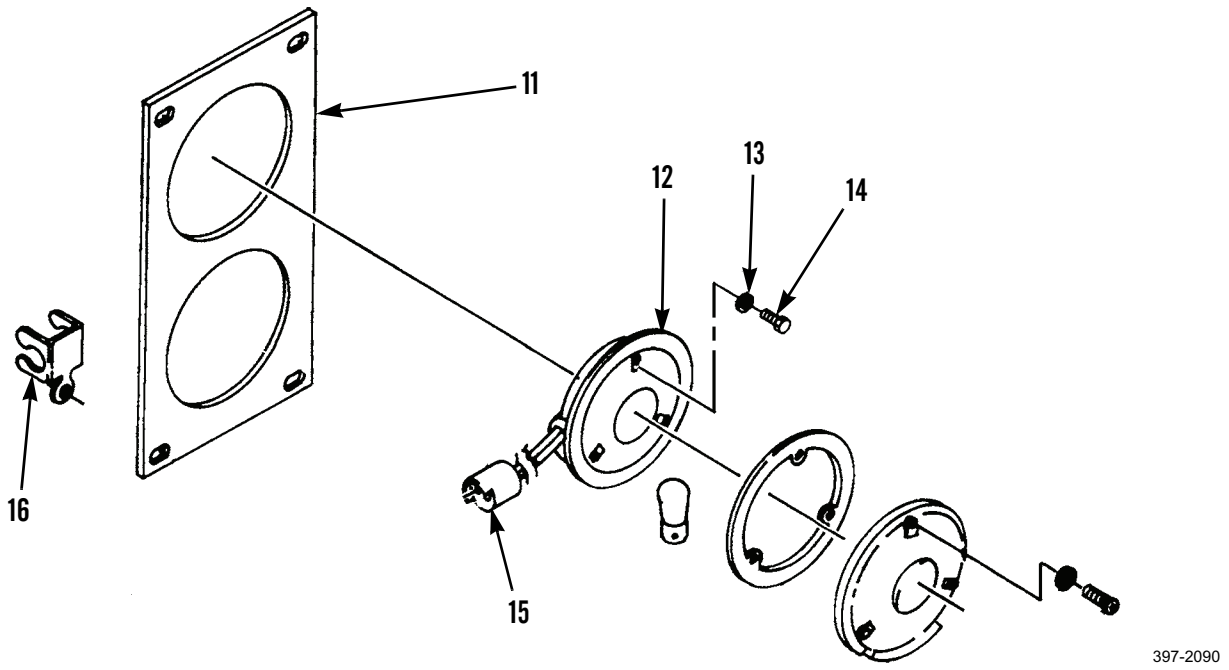

***REMOVAL - CONTINUED***

**Rear Turn Signal Light**

1. Remove three tapping screws (9), lockwashers (8), amber lens (7), and gasket (6) assembly. Discard tapping screws and lockwashers. Discard lens and gasket assembly if lens is cracked or gasket is deteriorated.
2. Remove lamp (10) by pushing in and turning to left.
3. Remove three screws (19) and lockwashers (18). Discard lockwashers.
4. Pull out housing (17) from bracket (11), disconnect connector (20) from wiring harness and remove from retaining strap (21) and remove housing.

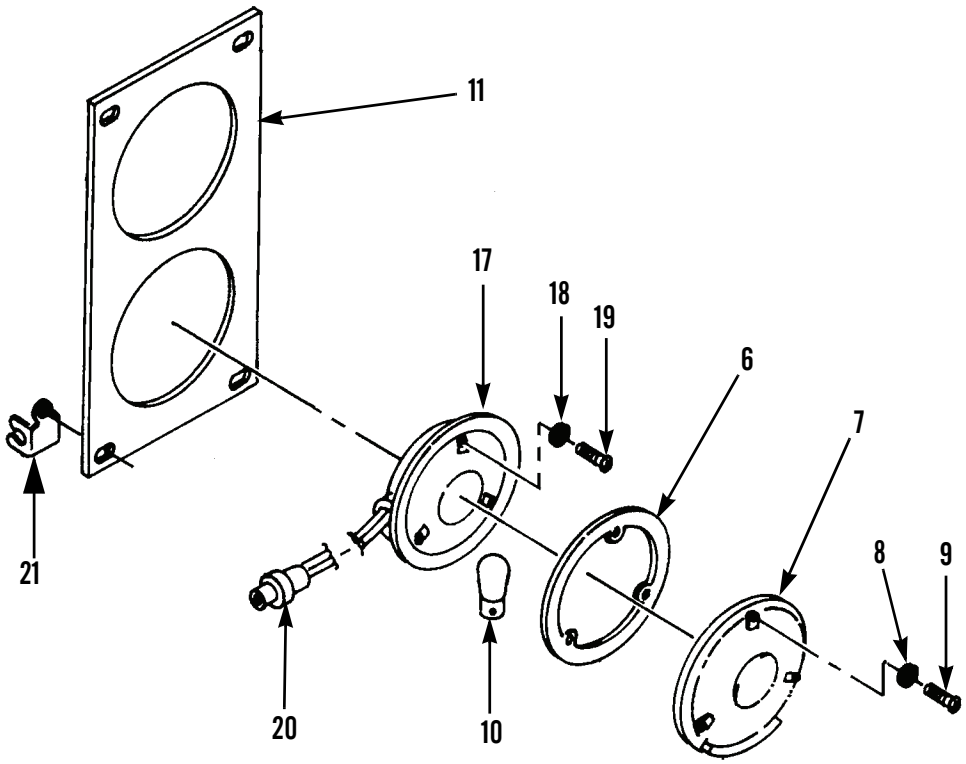


397-2091

### *REMOVAL - CONTINUED*

#### Mounting

1. Remove bolt (24), washer (25), nut (26), and retaining straps (16 and 21).
2. Remove two bolts (23), washers (22), and bracket (11).

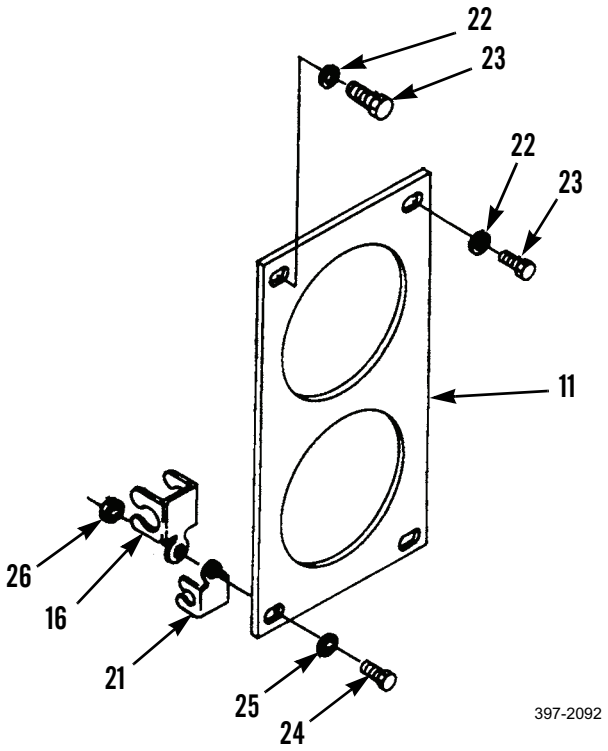


### *CLEANING AND INSPECTION*

Clean and inspect all parts in accordance with WP 0021 00.

## *INSTALLATION*

### Mounting

1. Install bracket (11), two washers (22), and bolts (23).
2. Install retaining straps (21 and 16), nut (26), washer (25), and bolt (24) on bracket (11).

### Rear Turn Signal Light

1. Connect connector (20) to wiring harness and attach to retaining strap (21).
2. Install housing (17), three new lockwashers (18), and screws (19).
3. Install lamp (10) by pushing in and turning to right.
4. Install new amber lens (7) and gasket (6) assembly if discarded, three new lockwashers (8) and new tapping screws (9).

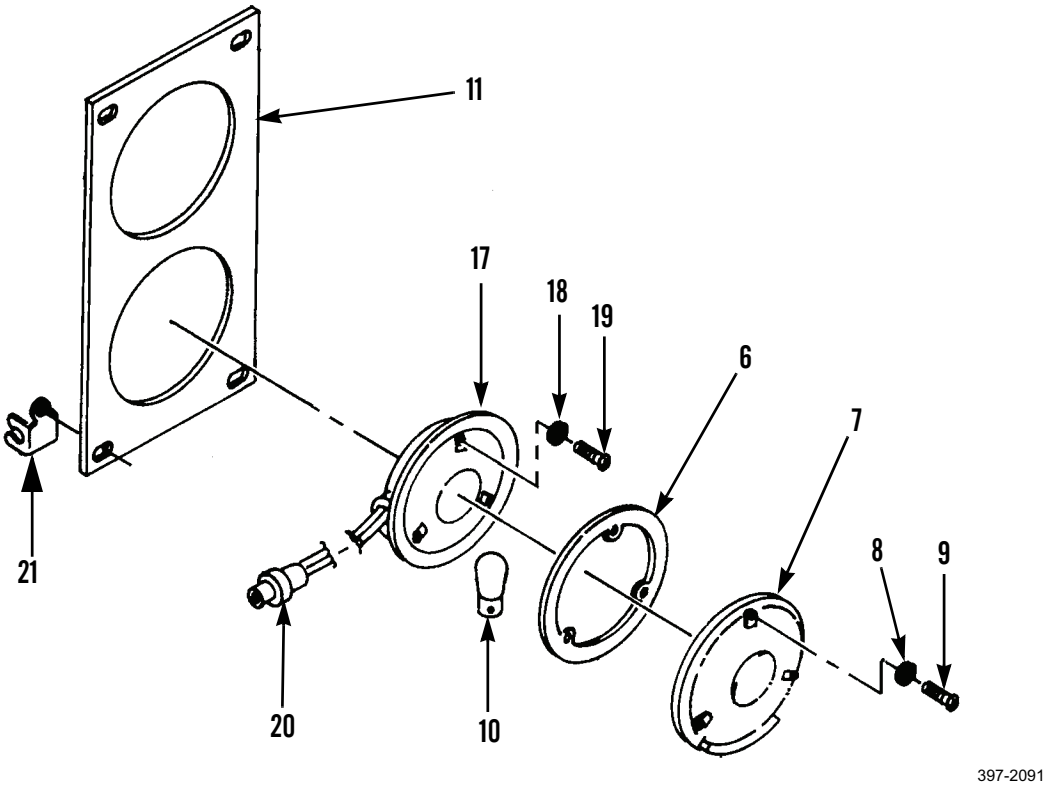


397-2091

*INSTALLATION - CONTINUED*

**Stoplight**

1. Connect connector (15) to wiring harness and attach to retaining strap (16).
2. Install housing (12), three new lockwashers (13), and new tapping screws (14).
3. Install lamp (5) by pushing in and turning right.
4. Install new red lens (2) and gasket (1) assembly if discarded, three new lockwashers (3) and new tapping screws (4).

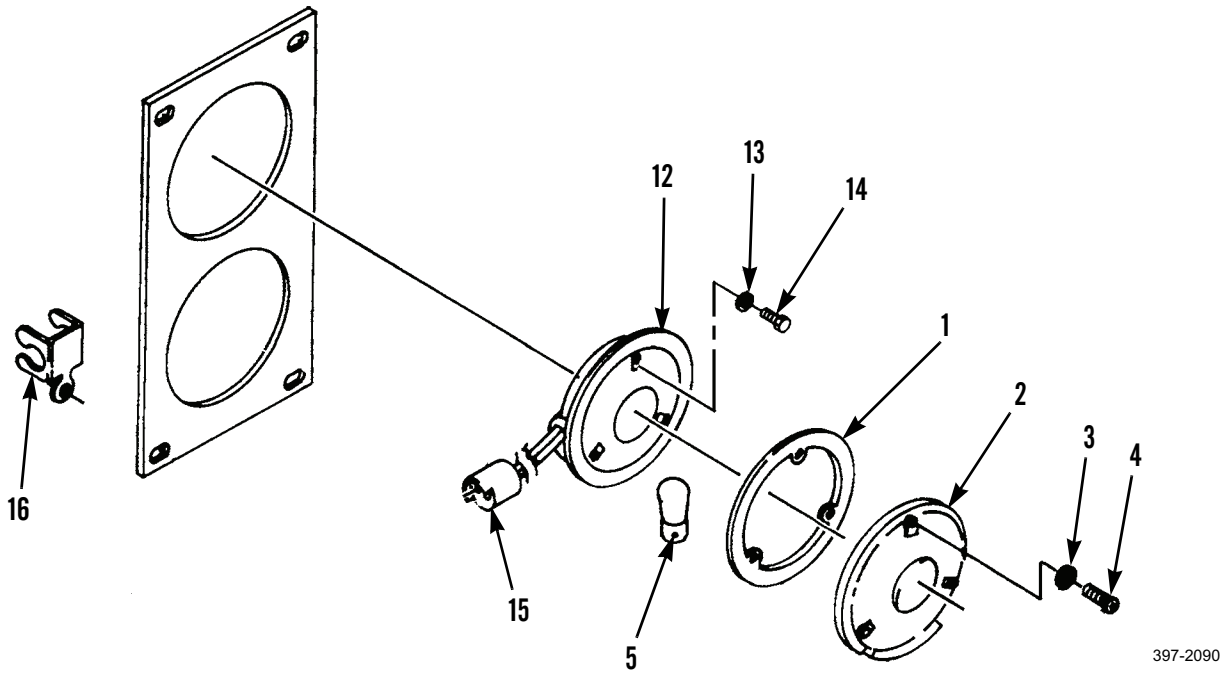


5. Install radiator grille (WP 0054 00).
6. Connect battery cables (WP 0125 00).

**END OF WORK PACKAGE**

## BLACKOUT STOPLIGHTS-TAILLIGHTS AND MOUNTING MAINTENANCE 0109 00

## THIS WORK PACKAGE COVERS

Lamp Replacement, Removal, Disassembly, Cleaning and Inspection, Assembly, Installation

## INITIAL SETUP

**Maintenance Level**

Unit

**Tools and Special Tools**

Tool kit, general mechanic's (Item 89, WP 0348 00)

**Materials/Parts**

Rag, wiping (Item 35, WP 0349 00)

Tag, marker (Item 44, WP 0349 00)

Lockwasher (8)

Packing, preformed (2)

**References**

WP 0021 00

**Equipment Conditions**

Machine parked on level ground (TM 5-3805-261-10)

Parking/emergency brake applied (TM 5-3805-261-10)

Implements lowered to ground (TM 5-3805-261-10)

Engine off (TM 5-3805-261-10)

Battery cables disconnected (WP 0125 00)

### *LAMP REPLACEMENT*

**NOTE**

This procedure covers maintenance of the right stoplight-taillight and mounting. Follow these instructions for the left stoplight-taillight and mounting.

1. Remove six screws (1), lens retainer (2), and preformed packing (4) from housing (3). Discard preformed packing.
2. Remove and discard two lamps (5A) or LED (5B) by pushing in and turning left.
3. Install two new lamps (5A) or LED (5B) by pushing in and turning right.
4. Install new preformed packing (4), lens retainer (2), and six screws (1) to housing (3).

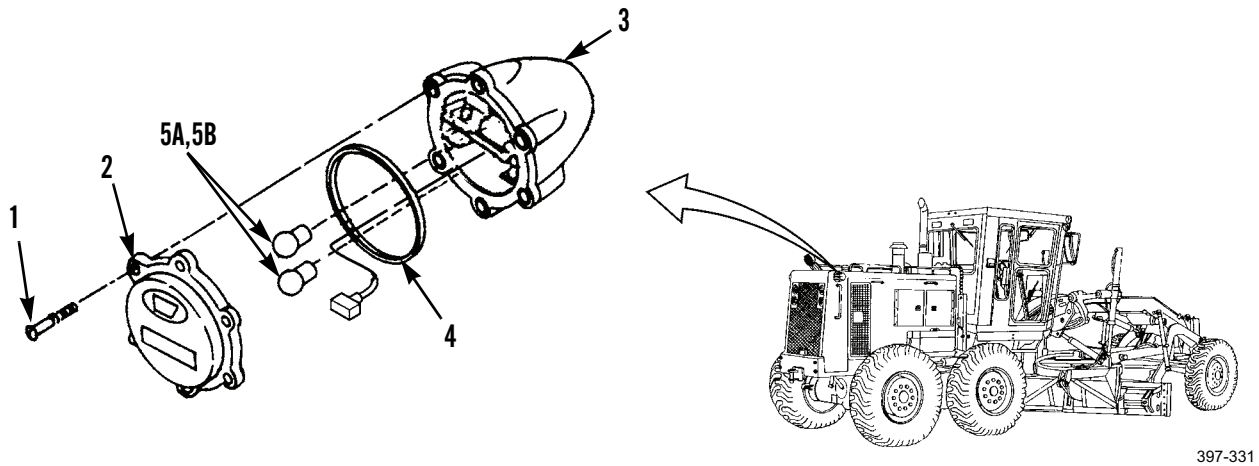


397-331

### *REMOVAL*

**NOTE**

Tag wire assemblies before disconnecting to aid in installation.

1. Disconnect two wire assemblies (7) from main wiring harness in engine compartment and remove grommet (8) with wire assemblies.
2. Remove grommet (8) from two wire assemblies.
3. Remove two bolts (11), lockwashers (12), and blackout stoplight-taillight (6). Discard lockwashers.
4. Remove two bolts (10), washers (9), and bracket (13).

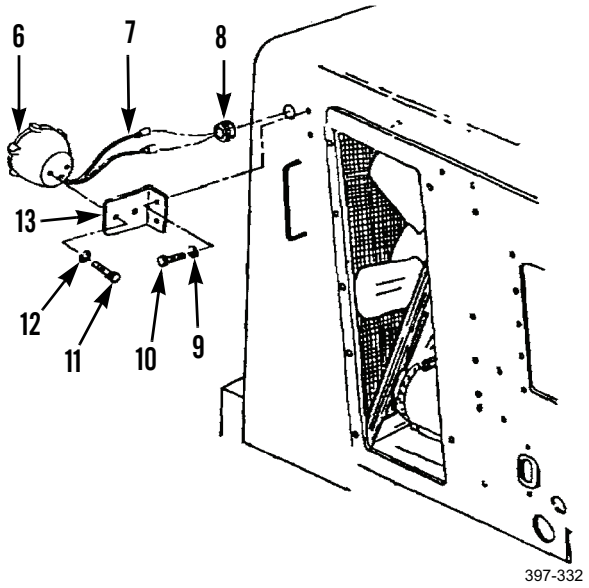

397-332

### *DISASSEMBLY*

1. Remove six screws (1), lens retainer (2), and preformed packing (4) from housing (3). Discard preformed packing.
2. Remove two lamps (5A) or LED (5B) by pushing in and turning left.

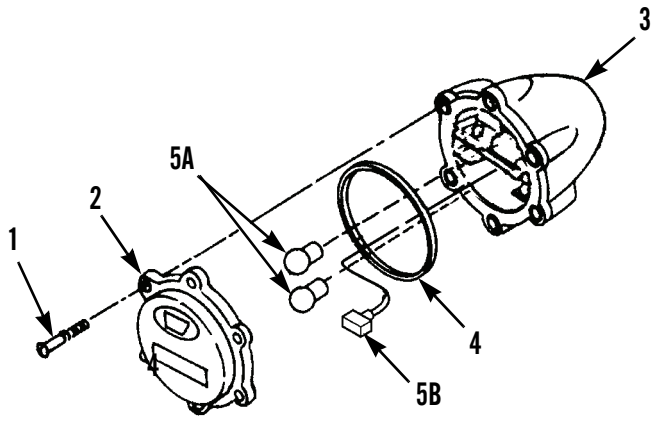

397-334

### *DISASSEMBLY - CONTINUED*

3. Remove two screws (19), lockwashers (18), and lampholder (17). Discard lockwashers.
4. Remove three screws (16), two plates (15), and six retaining clips (14) from body (3).

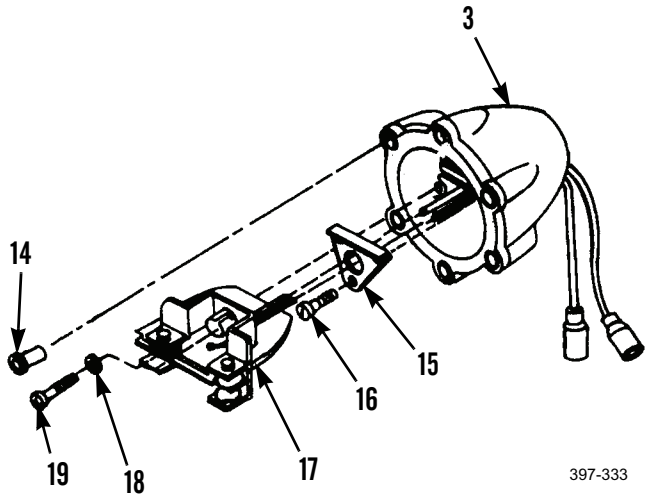


### *CLEANING AND INSPECTION*

Clean and inspect all parts in accordance with WP 0021 00.

### *ASSEMBLY*

1. Install six retaining clips (14), two plates (15), and three screws (16) on body (3).
2. Install lampholder (17), two new lockwashers (18), and screws (19).
3. Install two lamps (5A) or LED (5B) by pushing in and turning right.
4. Install new preformed packing (4), lens retainer (2), and six screws (1) to housing (3).

### *INSTALLATION*

1. Install bracket (13), two washers (9), and bolts (10).
2. Install blackout stoplight-taillight (6), two new lockwashers (12), and bolts (11).
3. Install grommet (8) on two wire assemblies (7).
4. Install grommet (8) and connect two wire assemblies (7) to main wiring harness in engine compartment.
5. Connect battery cables (WP 0125 00).

**END OF WORK PACKAGE**

## REAR WORK LIGHT MAINTENANCE 0110 00

### THIS WORK PACKAGE COVERS

Lamp Replacement, Removal, Disassembly, Cleaning and Inspection, Assembly, Installation

### INITIAL SETUP

**Maintenance Level**

Unit

**Tools and Special Tools**

Tool kit, general mechanic's (Item 89, WP 0348 00)

**Materials/Parts**

Rag, wiping (Item 35, WP 0349 00)

Lockwasher

**References**

WP 0021 00

**Equipment Conditions**

Machine parked on level ground (TM 5-3805-261-10)

Parking/emergency brake applied (TM 5-3805-261-10)

Implements lowered to ground (TM 5-3805-261-10)

Engine off (TM 5-3805-261-10)

Battery cables disconnected (WP 0125 00)

### *LAMP REPLACEMENT*

1. Remove screw (6), lens retainer (4), screw (7), lens retainer (2), lamp (5), and molding (3) from housing (1). Discard lamp.
2. Install new lamp (5), molding (3), lens retainer (2), screw (7), lens retainer (4), and screw (6).

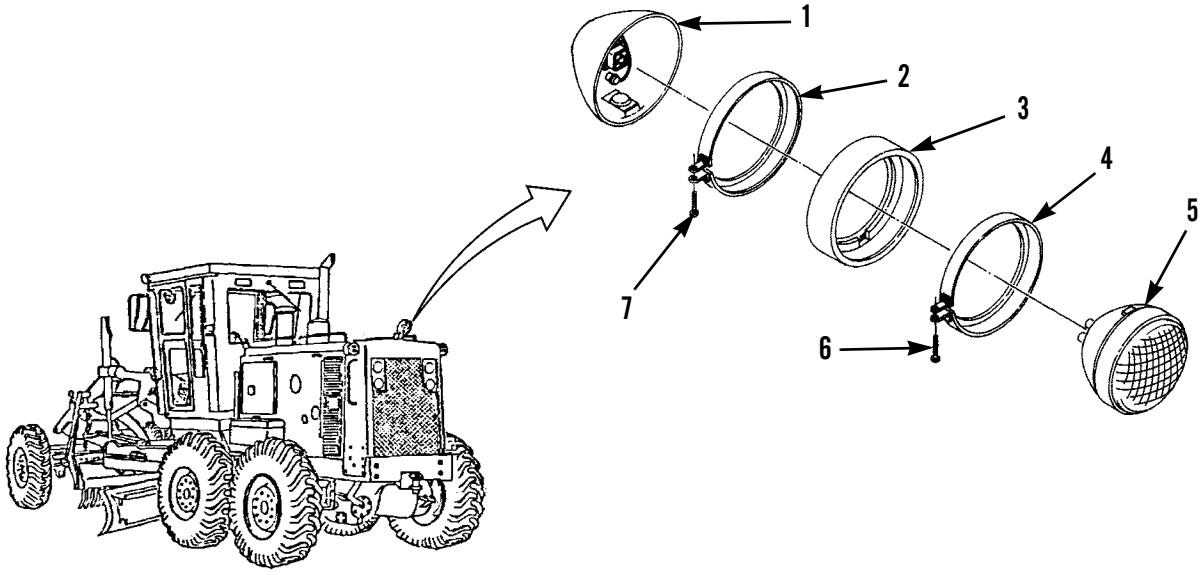


397-335

### *REMOVAL*

1. Remove screw (8) and disconnect wire assembly (9) from work light (10).
2. Remove nut (15), lockwasher (14), spacer (13), work light (10), and spacer (11). Discard lockwasher.
3. Remove two bolts (17), washers (16), and bracket (12).

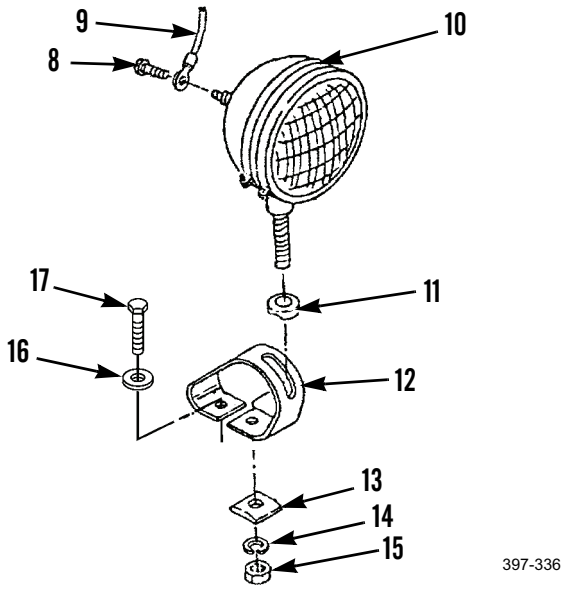


### *DISASSEMBLY*

Remove screw (6), lens retainer (4), screw (7), lens retainer (2), lamp (5), and molding (3) from housing (1).

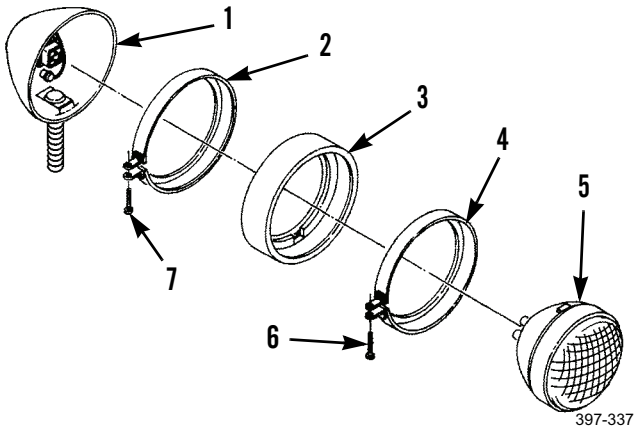


### *CLEANING AND INSPECTION*

Clean and inspect all parts in accordance with WP 0021 00.

### *ASSEMBLY*

Install molding (3), lamp (5), lens retainer (2), screw (7), lens retainer (4), and screw (6) on housing (1).

### *INSTALLATION*

1. Install bracket (12), two washers (16), and bolts (17).
2. Install spacer (11), floodlight (10), spacer (13), new lockwasher (14), and nut (15).
3. Connect wire assembly (9) and install screw (8).
4. Connect battery cables (WP 0125 00).

**END OF WORK PACKAGE**

## DOME LIGHT MAINTENANCE (CCE MACHINE) 0111 00

### THIS WORK PACKAGE COVERS

Lamp Replacement, Removal, Cleaning and Inspection, Installation

### INITIAL SETUP

**Maintenance Level**

Unit

**Tools and Special Tools**

Tool kit, general mechanic's (Item 89, WP 0348 00)

**Materials/Parts**

Rag, wiping (Item 35, WP 0349 00)

Tag, marker (Item 44, WP 0349 00)

Screw, tapping (3)

**References**

WP 0021 00

**Equipment Conditions**

Machine parked on level ground (TM 5-3805-261-10)

Parking/emergency brake applied (TM 5-3805-261-10)

Implements lowered to ground (TM 5-3805-261-10)

Engine off (TM 5-3805-261-10)

Battery cables disconnected (WP 0125 00)

### *LAMP REPLACEMENT*

1. Remove two screws (1) and door (2).
2. Remove lamp (3) by pushing in and turning left. Discard lamp.
3. Install new lamp (3) by pushing in and turning right.
4. Install door (2) and two screws (1).

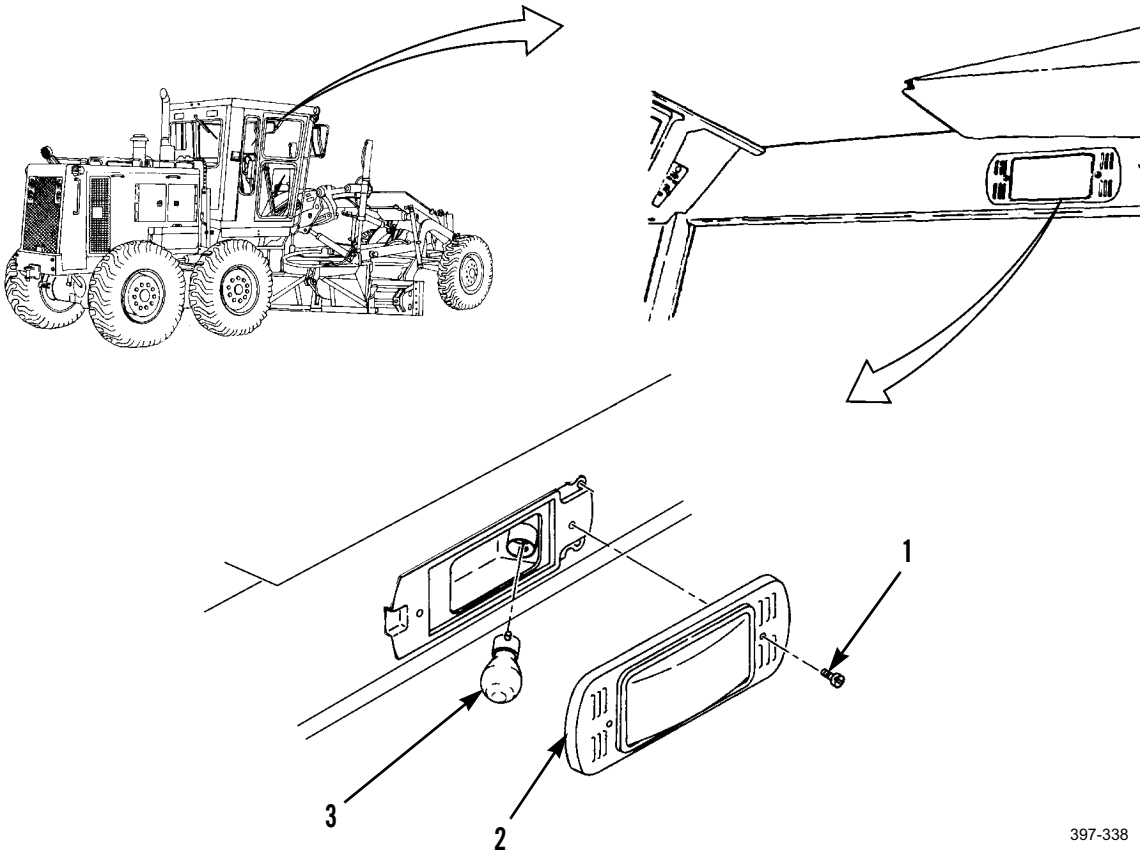

### *REMOVAL*

1. Remove two screws (1) and door (2).
2. Remove lamp (3) by pushing in and turning left.
3. Remove and discard three tapping screws (6).

**NOTE**

Tag wire assemblies before disconnecting to aid in installation.

4. Pull out housing (4), disconnect two wire assemblies (5) and remove housing.

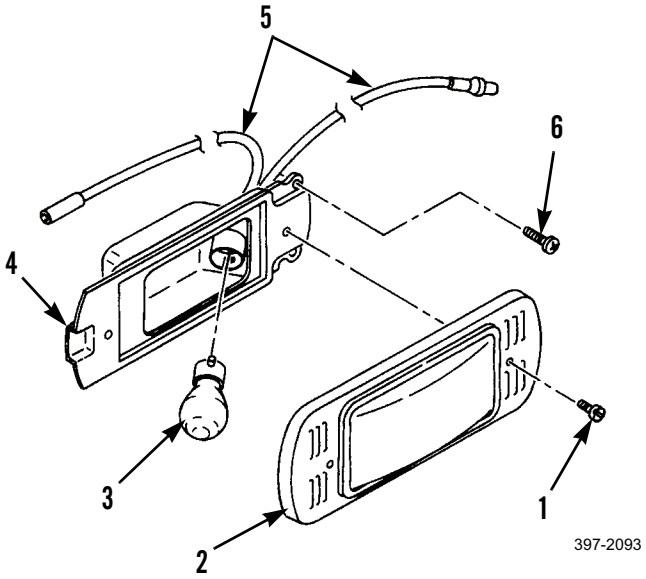


### *CLEANING AND INSPECTION*

Clean and inspect all parts in accordance with WP 0021 00.

### *INSTALLATION*

1. Connect two wire assemblies (5).
2. Install housing (4) and three new tapping screws (6).
3. Install lamp (3) by pushing in and turning right.
4. Install door (2) and two screws (1).
5. Connect battery cables (WP 0125 00).

**END OF WORK PACKAGE**

## AIR PRESSURE SWITCHES REPLACEMENT 0112 00

### THIS WORK PACKAGE COVERS

Removal, Cleaning and Inspection, Installation

### INITIAL SETUP

**Maintenance Level**

Unit

**Tools and Special Tools**

Tool kit, general mechanic's (Item 89, WP 0348 00)

**Materials/Parts**

Rag, wiping (Item 35, WP 0349 00)

Tag, marker (Item 44, WP 0349 00)

**References**

WP 0021 00

**Equipment Conditions**

Machine parked on level ground (TM 5-3805-261-10)

Parking/emergency brake applied (TM 5-3805-261-10)

Implements lowered to ground (TM 5-3805-261-10)

Engine off (TM 5-3805-261-10)

Air pressure relieved (TM 5-3805-261-10)

Battery cables disconnected (WP 0125 00)

### *REMOVAL*

**NOTE**

- This procedure covers replacement of one air pressure switch. Follow these instructions for the other air pressure switch.
- Tag wire assemblies before disconnecting to aid in installation.

1. Remove two screws (3) and disconnect two wire assemblies (2) from switch (4) located under right side of cab.
2. Remove switch (4), bushing (5), and elbow (6) from brake control valve (1).

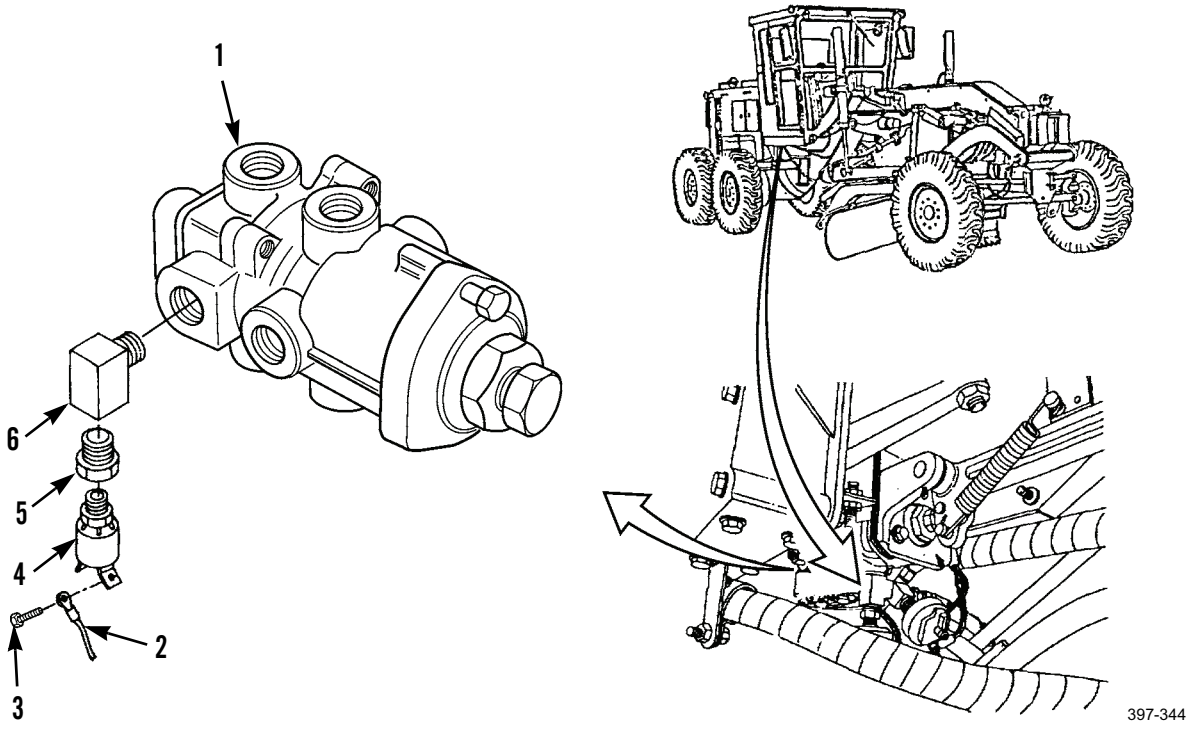


### *CLEANING AND INSPECTION*

Clean and inspect all parts in accordance with WP 0021 00.

### *INSTALLATION*

1. Install elbow (6), bushing (5), and switch (4) on brake control valve (1).
2. Connect two wire assemblies (2) and install two screws (3) on switch (4).
3. Connect battery cables (WP 0125 00).
4. Start engine. Check for leaks. Stop engine.

**END OF WORK PACKAGE**

## ENGINE OIL PRESSURE AND HOURMETER SWITCHES REPLACEMENT 0113 00

### THIS WORK PACKAGE COVERS

Removal, Cleaning and Inspection, Installation

### INITIAL SETUP

**Maintenance Level**

Unit

**Tools and Special Tools**

Tool kit, general mechanic's (Item 89, WP 0348 00)

**Materials/Parts**

Cap set, protective (Item 7, WP 0349 00)

Rag, wiping (Item 35, WP 0349 00)

Tag, marker (Item 44, WP 0349 00)

**References**

WP 0021 00

**Equipment Conditions**

Machine parked on level ground (TM 5-3805-261-10)

Parking/emergency brake applied (TM 5-3805-261-10)

Implements lowered to ground (TM 5-3805-261-10)

Engine off (TM 5-3805-261-10)

Battery cables disconnected (WP 0125 00)

Left side engine panel removed (WP 0182 00)

***REMOVAL***

## NOTE

- This procedure covers replacement of the engine oil pressure switch. Follow these instructions for the hourmeter switch (7) except that there is no elbow.
- Tag wire assemblies before disconnecting to aid in installation.

1. Remove two screws (4) and washers (5) and disconnect two wire assemblies (6) from engine oil pressure switch (3) on lower-left-side of engine.

## CAUTION

Plug open port to prevent contamination.

2. Remove engine oil pressure switch (3), bushing (2), and elbow (1).

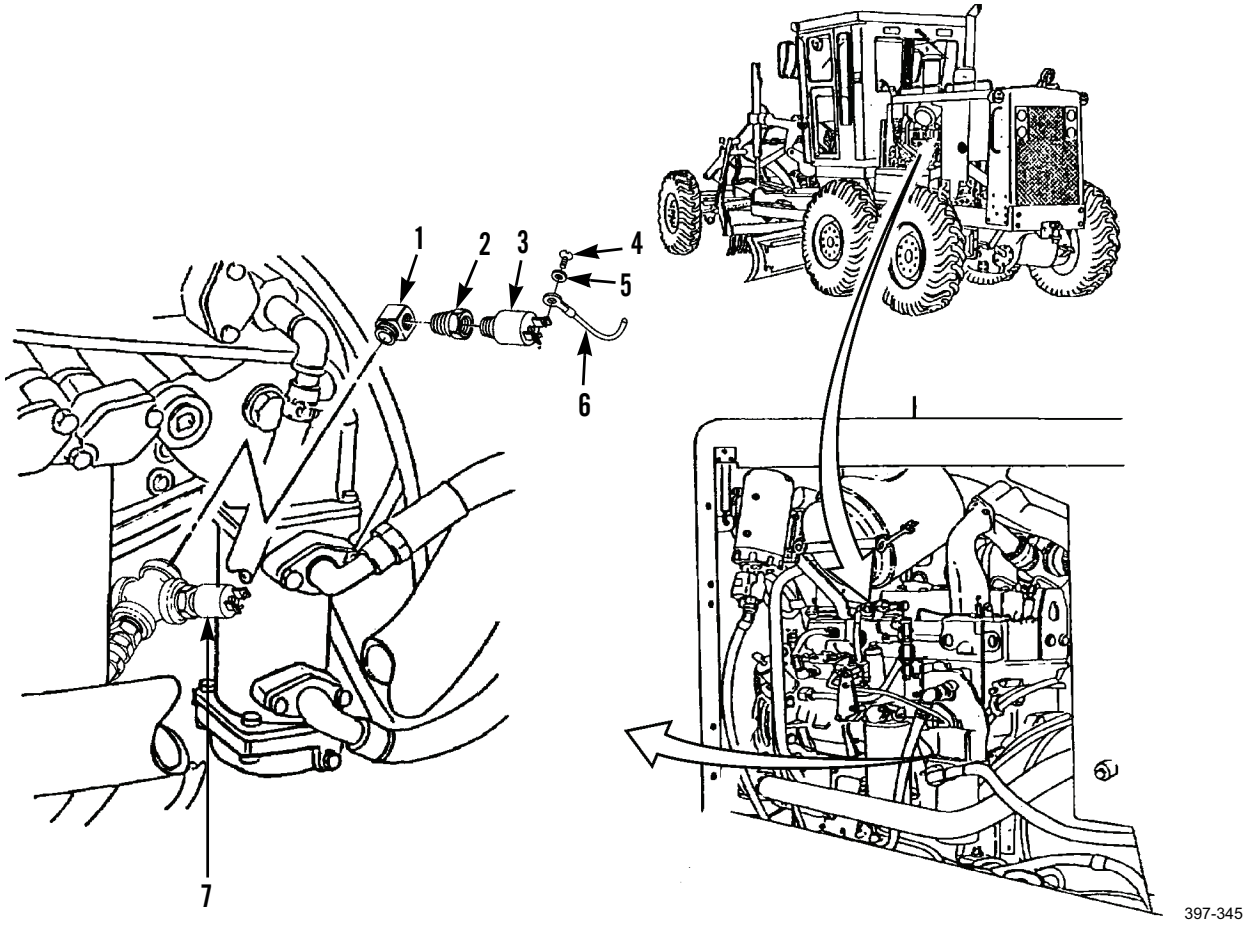

### *CLEANING AND INSPECTION*

Clean and inspect all parts in accordance with WP 0021 00.

### *INSTALLATION*

1. Install elbow (1), bushing (2), and engine oil pressure switch (3).
2. Connect two wire assemblies (6) and install two washers (5) and screws (4).
3. Connect battery cables (WP 0125 00).
4. Turn battery disconnect switch to ON position and start engine (TM 5-3805-261-10).
5. Check for leaks. Stop engine (TM 5-3805-261-10).
6. Install left side engine panel (WP 0182 00).

**END OF WORK PACKAGE**

## COOLANT TEMPERATURE AND ETHER START SWITCHES REPLACEMENT 0114 00

### THIS WORK PACKAGE COVERS

Removal, Cleaning and Inspection, Installation

### INITIAL SETUP

**Maintenance Level**

Unit

**Tools and Special Tools**

Tool kit, general mechanic's (Item 89, WP 0348 00)

Shop equipment, common no. 1 (Item 75, WP 0348 00)

**Materials/Parts**

Cap set, protective (Item 7, WP 0349 00)

Rag, wiping (Item 35, WP 0349 00)

Tag, marker (Item 44, WP 0349 00)

Lockwasher (2)

**References**

WP 0021 00

**Equipment Conditions**

Machine parked on level ground (TM 5-3805-261-10)

Parking/emergency brake applied (TM 5-3805-261-10)

Implements lowered to ground (TM 5-3805-261-10)

Engine off (TM 5-3805-261-10)

Battery cables disconnected (WP 0125 00)

Left side engine panel removed (WP 0182 00)



**WARNING**



- DO NOT replace coolant temperature or ether start switches unless engine has been allowed to cool down. This is a pressurized cooling system and escaping steam or hot coolant may cause serious burns.
- DO NOT remove cooling system radiator cap when engine is hot. Allow engine to cool down. Loosen cap to first stop and let any pressure out of cooling system, then remove cap. Failure to follow this warning may cause serious burns.
- Wear effective eye, glove and skin protection when handling coolants. Failure to do so may cause injury.

***REMOVAL***

## NOTE

This procedure covers replacement of the coolant temperature switch. Follow these instructions for the ether start switch (6) except that there is only one screw and washer, and one wire assembly connected to it.

1. Slowly loosen and remove radiator cap to relieve cooling system pressure.

## NOTE

- Tag wire assemblies before disconnecting to aid in installation.
- On some machines, the wire assembly is soldered on to the coolant temperature switch.

2. Remove two screws (2) and lockwashers (3) and disconnect two wire assemblies (1) from coolant temperature switch (4) on top of water pump (5) on left side of engine. Discard lockwashers.

## CAUTION

Plug open port to prevent contamination.

3. Remove coolant temperature switch (4).

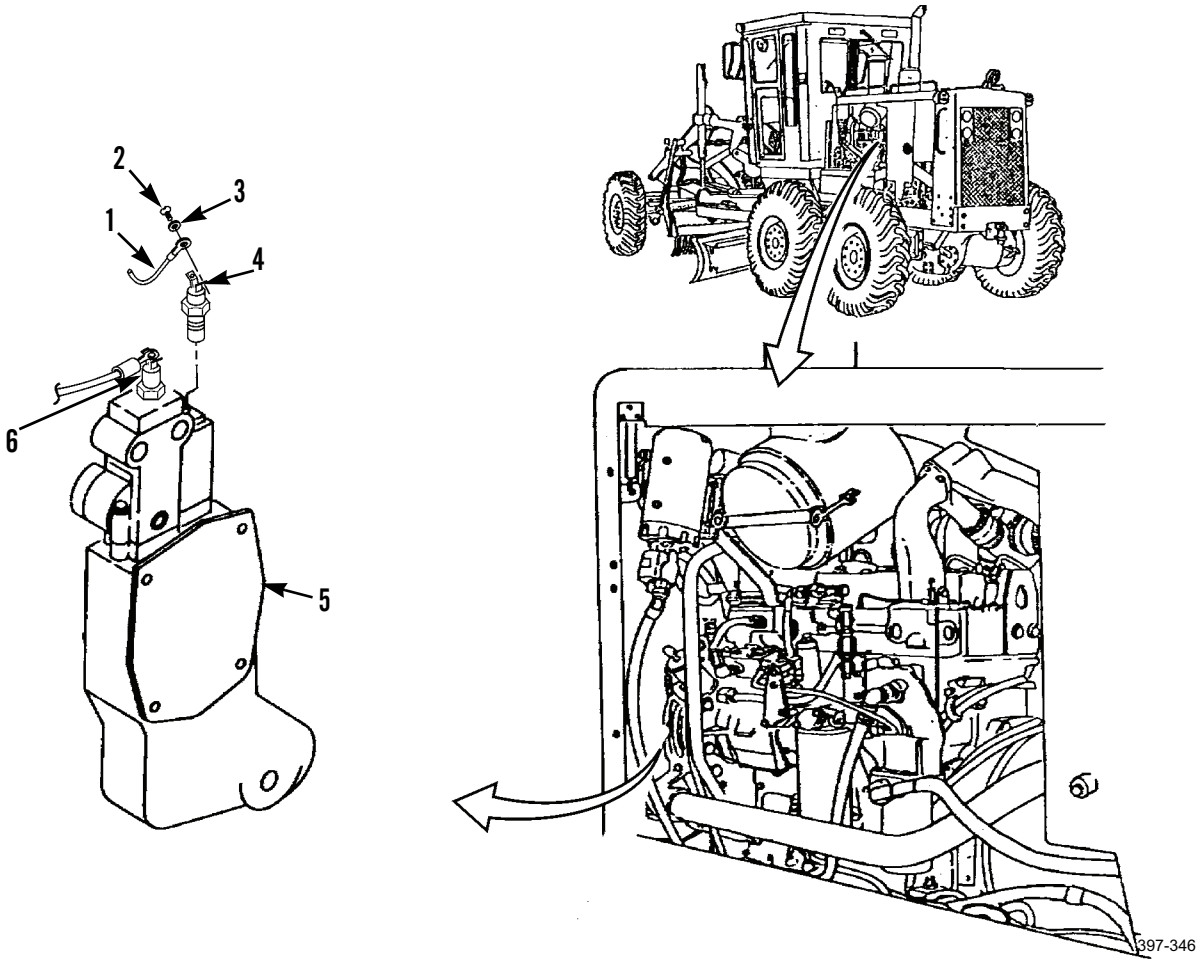

### *CLEANING AND INSPECTION*

Clean and inspect all parts in accordance with WP 0021 00.

### *INSTALLATION*

**CAUTION**

- Be careful not to drop or hit the sensing surface (7) of the coolant temperature switch on a rigid surface. Failure to follow this caution may cause the switch to work at an incorrect temperature or not work at all.
- Do not exceed 11 lb-in. (1.2 Nm) when tightening screws of coolant temperature switch. Damage to the switch may result if tightened too much.

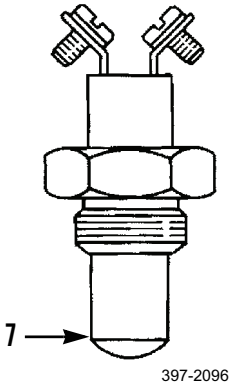


1. Install coolant temperature switch (4) on top of water pump (5) and tighten to 10 lb-in. (101 Nm).
2. Connect two wire assemblies (1) to coolant temperature switch (4) and install two new lockwashers (3) and screws (2).

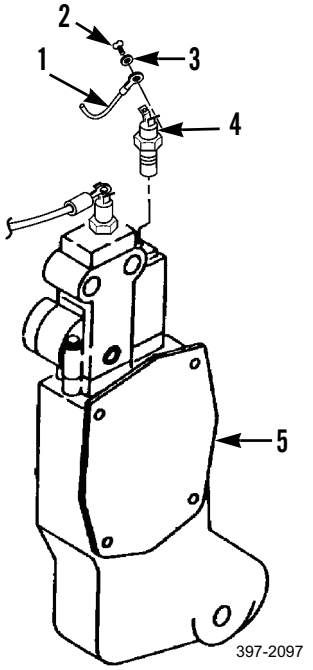


3. Install radiator cap.
4. Connect battery cables (WP 0125 00).
5. Turn battery disconnect switch to ON position and start engine (TM 5-3805-261-10).
6. Check for leaks. Stop engine.
7. Install left side engine panel (WP 0182 00).

**END OF WORK PACKAGE**

## FUEL PRESSURE SWITCH REPLACEMENT 0115 00

### THIS WORK PACKAGE COVERS

Removal, Cleaning and Inspection, Installation

### INITIAL SETUP

**Maintenance Level**

Unit

**Tools and Special Tools**

Tool kit, general mechanic's (Item 89, WP 0348 00)

**Materials/Parts**

Cap set, protective (Item 7, WP 0349 00)

Rag, wiping (Item 35, WP 0349 00)

Tag, marker (Item 44, WP 0349 00)

**References**

WP 0021 00

**Equipment Conditions**

Machine parked on level ground (TM 5-3805-261-10)

Parking/emergency brake applied (TM 5-3805-261-10)

Implements lowered to ground (TM 5-3805-261-10)

Engine off (TM 5-3805-261-10)

Battery cables disconnected (WP 0125 00)

Right side engine panel removed (WP 0182 00)



**WARNING**



- DO NOT perform fuel system checks, inspections or maintenance while smoking or near fire, flames or sparks. Fuel may ignite, causing injury or death to personnel or damage to machine.
- Operating personnel must wear fuel-resistant gloves when handling fuel. If exposed to fuel, promptly wash exposed skin and change fuel-soaked clothing.

***REMOVAL***

## NOTE

- On models 130GS and 130GNS, the switch is mounted on the fuel injector pump.
- Tag wire assemblies before disconnecting to aid in installation.

1. Disconnect two wire assemblies (1) from two sockets (2).
2. Remove two sockets (2) and plug (3) from switch (4).

## CAUTION

Plug open port to prevent contamination.

3. Remove switch (4) from elbow (5) on secondary fuel filter (6).

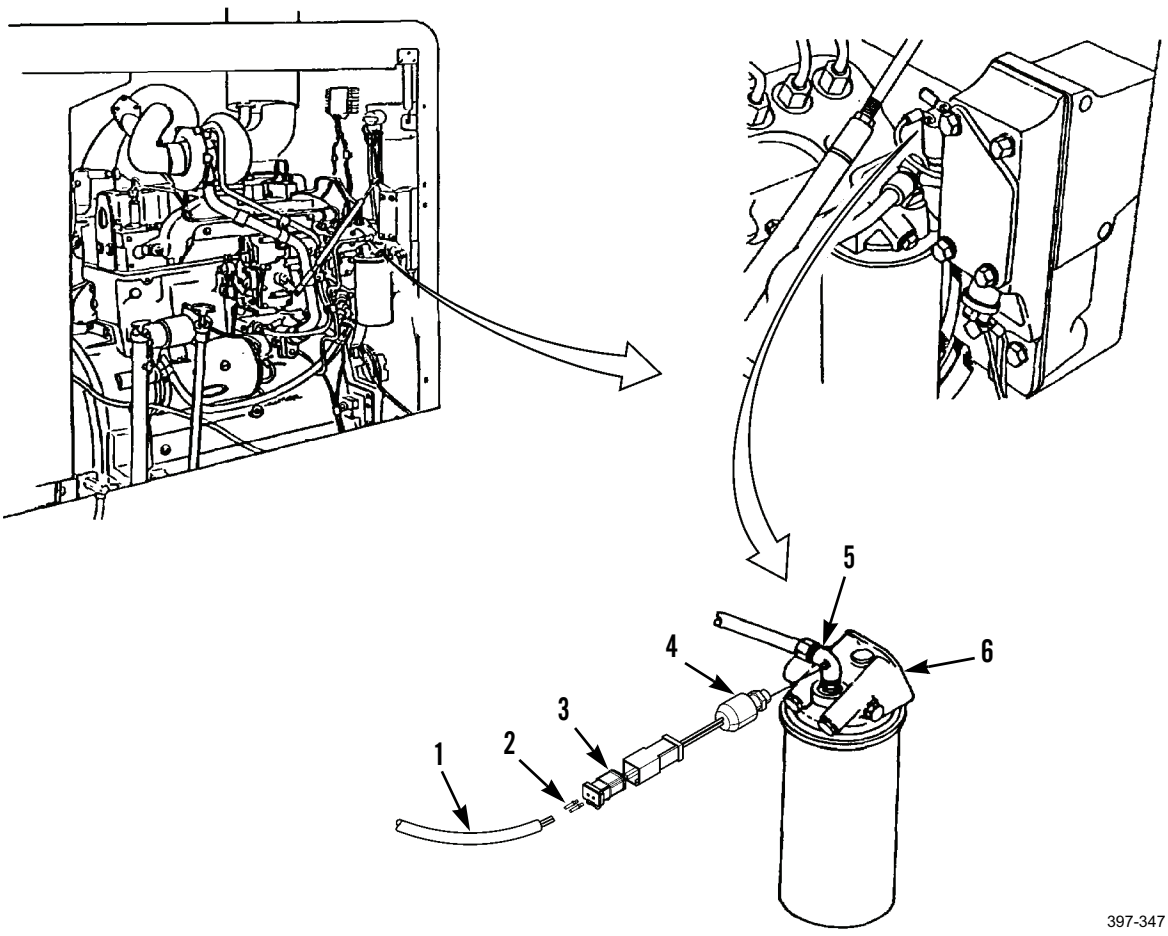


***CLEANING AND INSPECTION***

Clean and inspect all parts in accordance with WP 0021 00.

### *INSTALLATION*

1. Install switch (4) on elbow (5) on secondary fuel filter (6).
2. Install plug (3) and two sockets (2) on switch (4).
3. Connect two wire assemblies (1) to two sockets (2).
4. Connect battery cables (WP 0125 00).
5. Turn battery disconnect switch to ON position and start engine (TM 5-3805-261-10).
6. Check for leaks. Stop engine.
7. Install right side engine panel (WP 0182 00).

**END OF WORK PACKAGE**

## HYDRAULIC OIL TEMPERATURE SWITCH REPLACEMENT 0116 00

### THIS WORK PACKAGE COVERS

Removal, Cleaning and Inspection, Installation

### INITIAL SETUP

**Maintenance Level**

Unit

**Tools and Special Tools**

Tool kit, general mechanic's (Item 89, WP 0348 00)

Shop equipment, common no. 1 (Item 75, WP 0348 00)

**Materials/Parts**

Cap set, protective (Item 7, WP 0349 00)

Rag, wiping (Item 35, WP 0349 00)

Tag, marker (Item 44, WP 0349 00)

Packing, preformed

**References**

WP 00021 00

**Equipment Conditions**

Machine parked on level ground (TM 5-3805-261-10)

Parking/emergency brake applied (TM 5-3805-261-10)

Implements lowered to ground (TM 5-3805-261-10)

Engine off (TM 5-3805-261-10)

Battery cables disconnected (WP 0125 00)

Hydraulic oil drained (WP 0216 00)



**WARNING**

Hydraulic oil is very slippery. Immediately wipe up any spills. Failure to follow this warning may cause injury to personnel.

**CAUTION**

Wipe area clean around hydraulic oil temperature switch during removal. Plug opening after removing switch. Contamination of hydraulic system could result in premature failure.

**NOTE**

Use container to catch any hydraulic oil that may drain from system. Dispose of oil in accordance with local policy and ordinances. Ensure all spills are cleaned up.

***REMOVAL***

**NOTE**

Tag wire assemblies before disconnecting to aid in installation.

1. Remove two screws (6) and washers (5) and disconnect two wire assemblies (4) from switch (3) on right side of hydraulic tank (1).

**CAUTION**

Plug open port to prevent contamination.

2. Remove switch (3) and preformed packing (2) from hydraulic tank (1). Discard preformed packing.

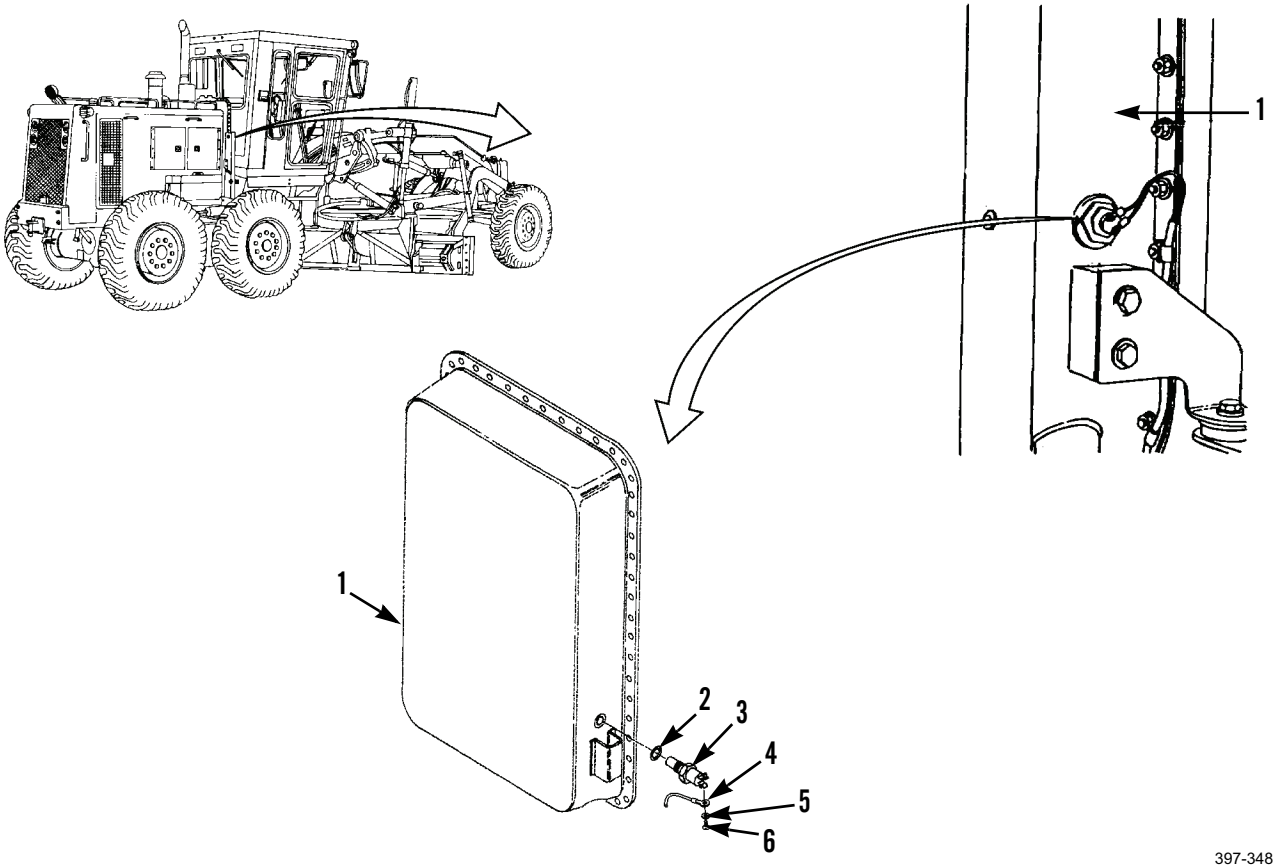


***CLEANING AND INSPECTION***

Clean and inspect all parts in accordance with WP 0021 00.

### *INSTALLATION*

1. Install new preformed packing (2) and switch (3) on hydraulic tank (1).
2. Connect two wire assemblies (4) and install two washers (5) and screws (6).
3. Fill hydraulic tank (WP 0216 00).
4. Connect battery cables (WP 0125 00).
5. Turn battery disconnect switch to ON position and start engine (TM 5-3805-261-10).
6. Check for leaks. Stop engine.
7. Check hydraulic oil level. Refill hydraulic tank as required (WP 0216 00).

**END OF WORK PACKAGE**

## BLACKOUT AND SERVICE STOPLIGHT SWITCHES REPLACEMENT 0117 00

### THIS WORK PACKAGE COVERS

Removal, Cleaning and Inspection, Installation

### INITIAL SETUP

**Maintenance Level**

Unit

**Tools and Special Tools**

Tool kit, general mechanic's (Item 89, WP 0348 00)

**Materials/Parts**

Rag, wiping (Item 35, WP 0349 00)

**References**

WP 0021 00

**Equipment Conditions**

Machine parked on level ground (TM 5-3805-261-10)

Parking/emergency brake applied (TM 5-3805-261-10)

Implements lowered to ground (TM 5-3805-261-10)

Engine off (TM 5-3805-261-10)

Air pressure relieved (TM 5-3805-261-10)

Battery cables disconnected (WP 0125 00)

### *REMOVAL*

**NOTE**

- This procedure covers replacement of the service stoplight switch. Follow these instructions for the blackout stoplight switch.
- Tag wire assemblies before disconnecting to aid in installation.

1. Remove two nuts (7) and washers (6) and disconnect two wire assemblies (5) from under right side of cab.
2. Remove service stoplight switch (4), bushing (3) and elbow (2) from brake control valve (1).

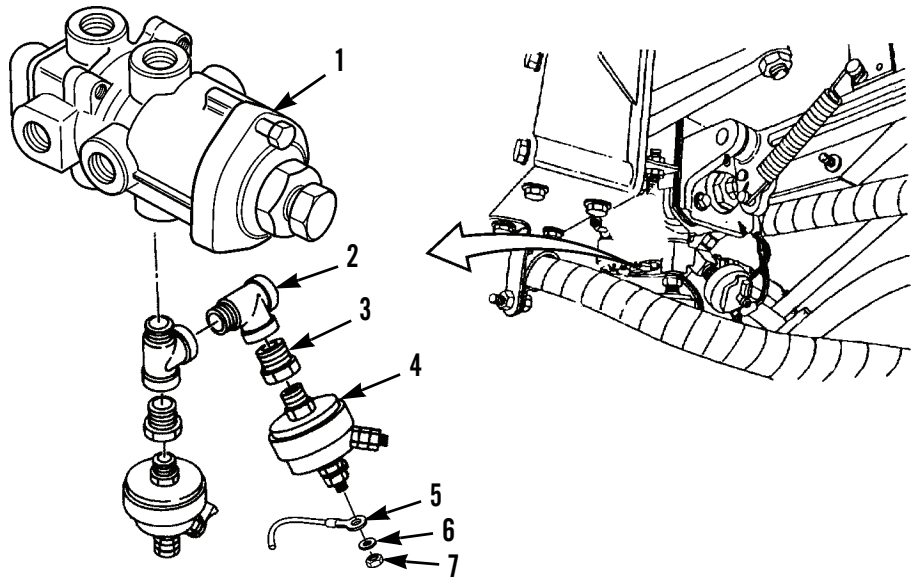


397-349

### *CLEANING AND INSPECTION*

Clean and inspect all parts in accordance with WP 0021 00.

### *INSTALLATION*

1. Install elbow (2), bushing (3), and service stoplight switch (4) to brake control valve (1).
2. Connect two wire assemblies (5) and install two washers (6) and nuts (7).

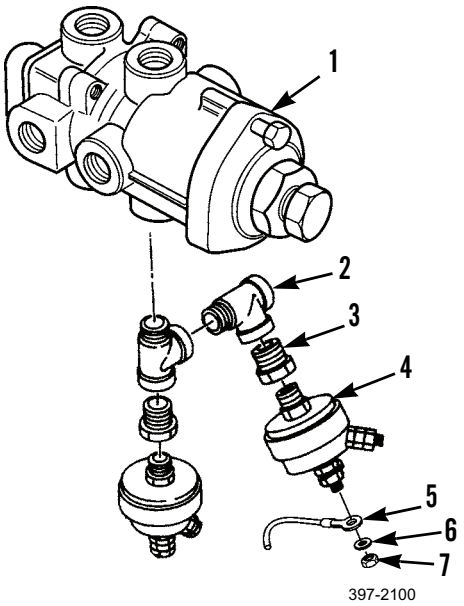


3. Connect battery cables (WP 0125 00).
4. Start engine (TM 5-3805-261-10).
5. Check for leaks. Stop engine.

**END OF WORK PACKAGE**

## MONITOR WARNING ALARM REPLACEMENT 0118 00

### THIS WORK PACKAGE COVERS

Removal, Cleaning and Inspection, Installation

### INITIAL SETUP

**Maintenance Level**

Unit

**Tools and Special Tools**

Tool kit, general mechanic's (Item 89, WP 0348 00)

**Materials/Parts**

Rag, wiping (Item 35, WP 0349 00)

**References**

WP 0021 00

**Equipment Conditions**

Machine parked on level ground (TM 5-3805-261-10)

Parking/emergency brake applied (TM 5-3805-261-10)

Implements lowered to ground (TM 5-3805-261-10)

Engine off (TM 5-3805-261-10)

Battery cables disconnected (WP 0125 00)

Left and right side plates removed from operator panel console (WP 0193 00)

### *REMOVAL*

1. Disconnect wiring harness (4) from plug inside operator panel console.
2. Remove bolt (1), washer (2), and alarm (3).

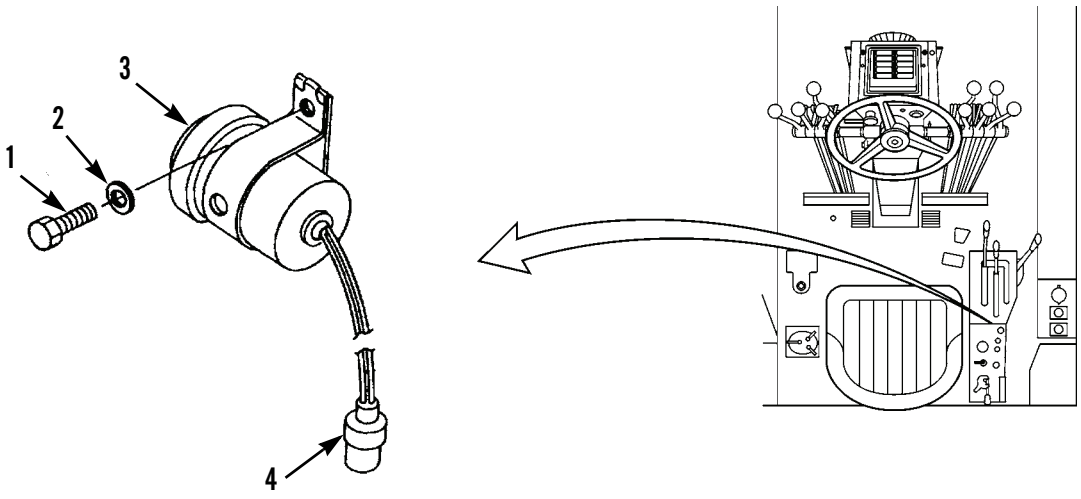


397-355

### *CLEANING AND INSPECTION*

Clean and inspect all parts in accordance with WP 0021 00.

### *INSTALLATION*

1. Install alarm (3), washer (2), and bolt (1).
2. Connect wiring harness (4) to plug inside operator panel console.

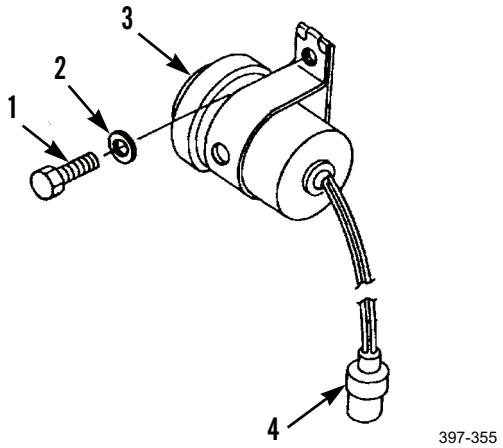


3. Install left and right side plates to operator panel console (WP 0193 00).
4. Connect battery cables (WP 0125 00).

**END OF WORK PACKAGE**

## HORN REPLACEMENT 0119 00

### THIS WORK PACKAGE COVERS

Removal, Cleaning and Inspection, Installation

### INITIAL SETUP

**Maintenance Level**

Unit

**Tools and Special Tools**

Tool kit, general mechanic's (Item 89, WP 0348 00)

**Materials/Parts**

Rag, wiping (Item 35, WP 0349 00)

**References**

WP 0021 00

**Equipment Conditions**

Machine parked on level ground (TM 5-3805-261-10)

Parking/emergency brake applied (TM 5-3805-261-10)

Implements lowered to ground (TM 5-3805-261-10)

Engine off (TM 5-3805-261-10)

Battery cables disconnected (WP 0125 00)

### *REMOVAL*

1. Disconnect wire assembly (6) from horn (5) under front-left of cab.
2. Remove nut (4), bolt (8), washer (7), and horn (5) from bracket (1).
3. Remove two bolts (3), washers (2), and bracket (1).

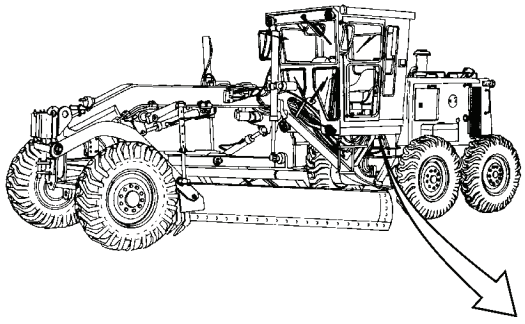

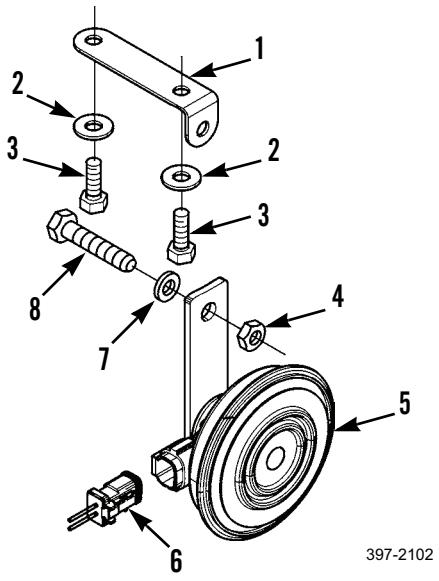

### *CLEANING AND INSPECTION*

Clean and inspect all parts in accordance with WP 0021 00.

### *INSTALLATION*

1. Install bracket (1), two washers (2), and bolts (3).
2. Install horn (5), washer (7), bolt (8), and nut (4) on bracket (1).
3. Connect wire assembly (6) to horn (5).

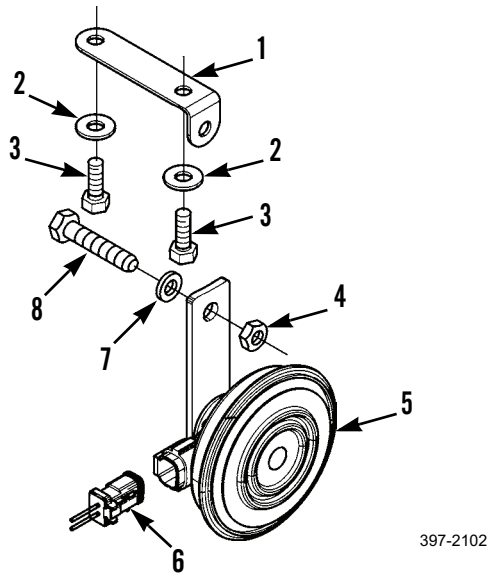


4. Connect battery cables (WP 0125 00).
5. Check horn for proper operation.

**END OF WORK PACKAGE**

## HORN BUTTON ASSEMBLY AND MOUNTING REPLACEMENT 0120 00

### THIS WORK PACKAGE COVERS

Removal, Cleaning and Inspection, Installation

### INITIAL SETUP

**Maintenance Level**

Unit

**Tools and Special Tools**

Tool kit, general mechanic's (Item 89, WP 0348 00)

Shop equipment, common no. 1 (Item 75, WP 0348 00)

Wrench, torque (Item 97, WP 0348 00)

**Materials/Parts**

Rag, wiping (Item 35, WP 0349 00)

Gasket

Screw, tapping (3)

Seal

**References**

WP 0021 00

**Equipment Conditions**

Machine parked on level ground (TM 5-3805-261-10)

Parking/emergency brake applied (TM 5-3805-261-10)

Implements lowered to ground (TM 5-3805-261-10)

Engine off (TM 5-3805-261-10)

Battery cables disconnected (WP 0125 00)

## HORN BUTTON ASSEMBLY AND MOUNTING REPLACEMENT - CONTINUED 0120 00

### *REMOVAL*

1. Remove three tapping screws (5), plate base (4), and gasket (3) from steering wheel (1). Discard tapping screws and gasket.
2. Remove ID marker (6), button cover (7), and spring (8).
3. Remove three pins (2) from steering wheel (1).
4. Remove nut (9).
5. Use steering wheel puller to remove steering wheel (1).

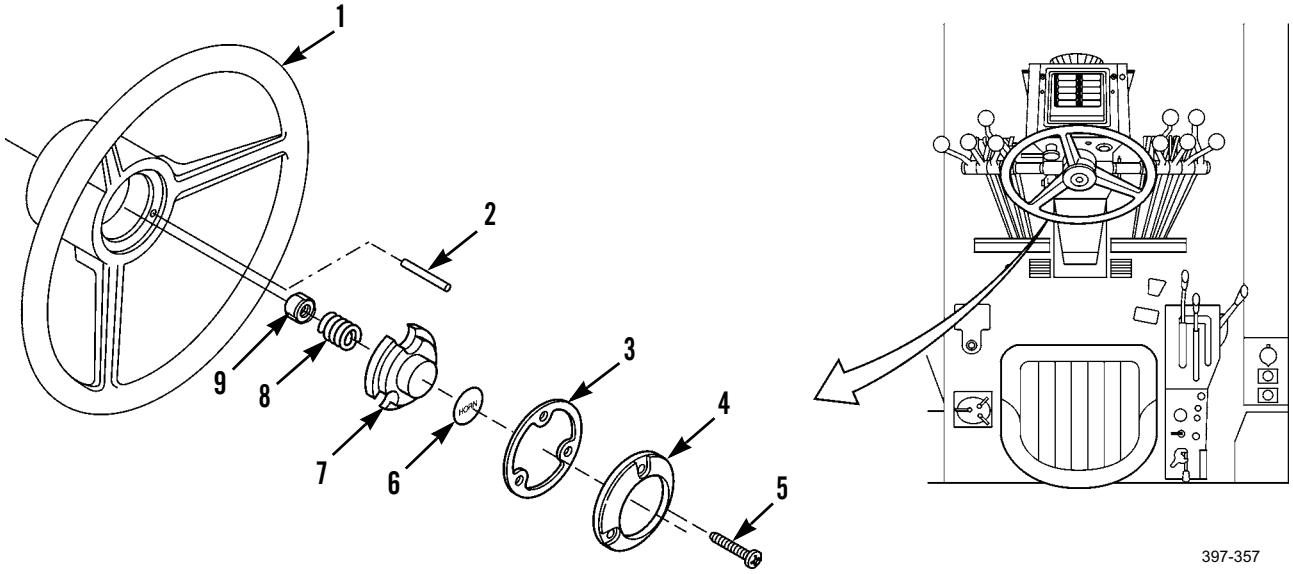

### *REMOVAL - CONTINUED*

6. Remove bushing (21), ring (20), four brushes (19), and springs (18).
7. Disconnect wire harness (10) and remove pin (14), connector body (15), electrical lead (16), and contact (17).
8. Remove seal (13), strap (12), and retainer (11). Discard seal.

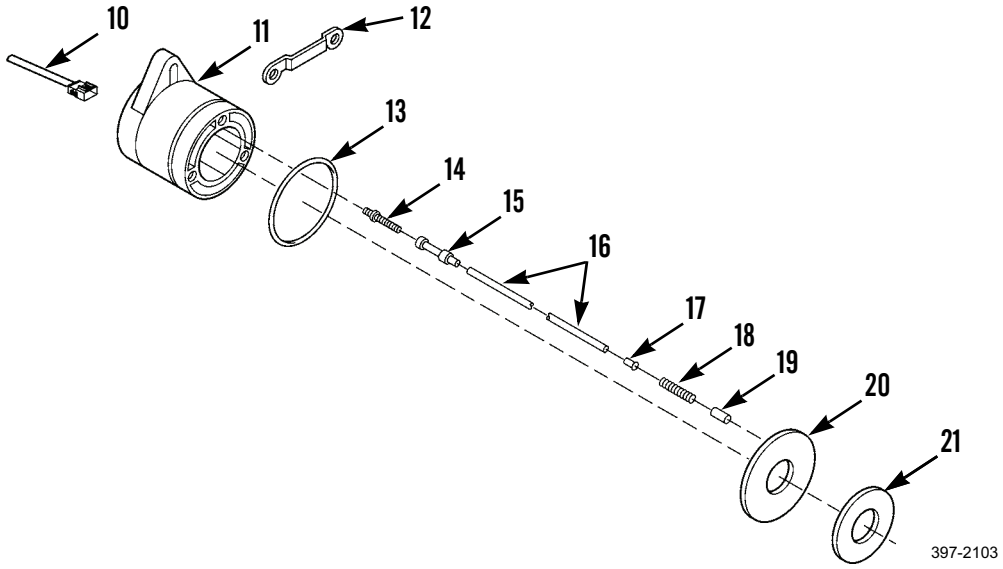


### *CLEANING AND INSPECTION*

Clean and inspect all parts in accordance with WP 0021 00.

### *INSTALLATION*

1. Install retainer (11), strap (12), and new seal (13).
2. Install contact (17), electrical lead (16), connector body (15), and pin (14), and connect wire harness (10).
3. Install four springs (18), brushes (19), ring (12), and bushing (21).

***INSTALLATION - CONTINUED***

4. Install steering wheel (1).
5. Install nut (9) and torque to 40 to 48 lb-ft (54 to 65 Nm).
6. Install three pins (2).
7. Install spring (8), button cover (7), and ID marker (6).
8. Install new gasket (3), plate base (4), and three new tapping screws (5) to steering wheel (1).

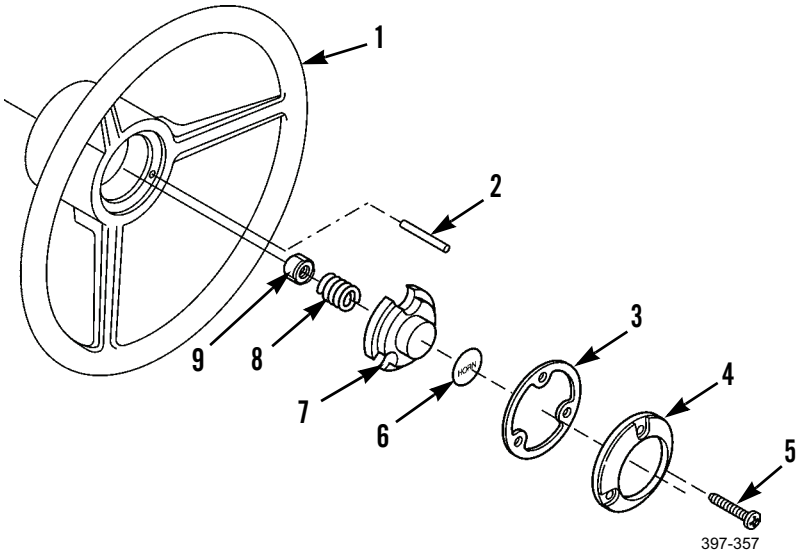


9. Connect battery cables (WP 0125 00).
10. Check operation of horn and steering.

**END OF WORK PACKAGE**

## BACKUP ALARM REPLACEMENT 0121 00

### THIS WORK PACKAGE COVERS

Removal, Cleaning and Inspection, Installation

### INITIAL SETUP

**Maintenance Level**

Unit

**Tools and Special Tools**

Tool kit, general mechanic's (Item 89, WP 0348 00)

**Materials/Parts**

Rag, wiping (Item 35, WP 0349 00)

Tag, marker (Item 44, WP 0349 00)

Locknut (2)

**References**

WP 0021 00

**Equipment Conditions**

Machine parked on level ground (TM 5-3805-261-10)

Parking/emergency brake applied (TM 5-3805-261-10)

Implements lowered to ground (TM 5-3805-261-10)

Engine off (TM 5-3805-261-10)

Battery cables disconnected (WP 0125 00)

Grille removed (WP 0054 00)

### *REMOVAL*

**NOTE**

Tag wire assemblies before disconnecting to aid in installation.

1. Disconnect two wire assemblies (6) from connectors of wiring harness on radiator.
2. Remove two locknuts (7), washers (8), and two wire assemblies (6) from alarm (3). Discard locknuts.
3. Inspect two lug terminals (4), wires (6), quick-disconnect terminals (5), and discard any parts that are damaged or deteriorated.
4. Remove two bolts (1), washers (2), and alarm (3).

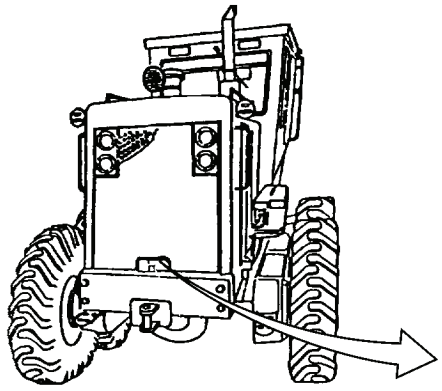

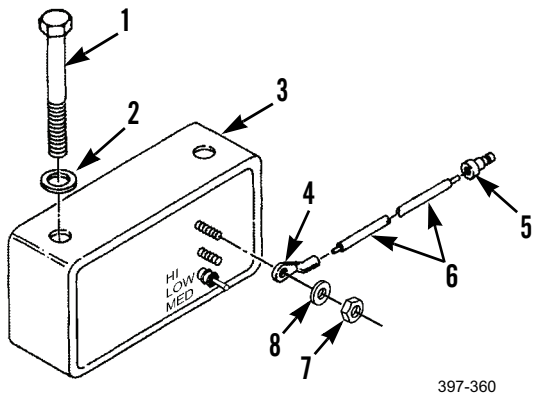


397-360

### *CLEANING AND INSPECTION*

Clean and inspect all parts in accordance with WP 0021 00.

### *INSTALLATION*

1. Position volume switch to high.
2. If discarded, install two new quick-disconnect terminals (5), new wires (6), and new lug terminals (4).
3. Connect two wire assemblies (6) and install two washers (8), and new locknuts (7) on alarm (3).
4. Install two wire assemblies (6) to connectors of wiring harness on radiator.
5. Install alarm (3), two washers (2), and bolts (1).

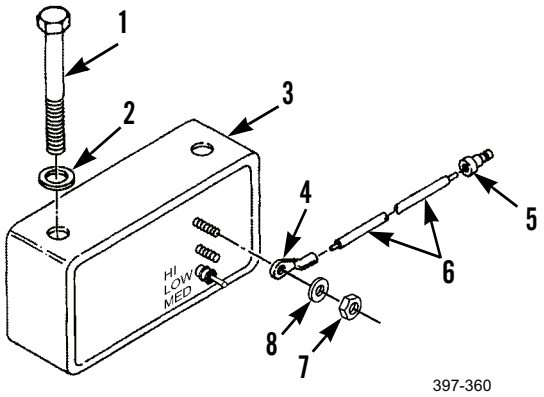


6. Install grille (WP 0054 00).
7. Connect battery cables (WP 0125 00).

**END OF WORK PACKAGE**

## BACKUP ALARM SWITCH MAINTENANCE 0122 00

### THIS WORK PACKAGE COVERS

Removal, Disassembly, Cleaning and Inspection, Assembly, Installation, Adjustment

### INITIAL SETUP

**Maintenance Level**

Unit

**Tools and Special Tools**

Tool kit, general mechanic's (Item 89, WP 0348 00)

Shop equipment, common no. 1 (Item 75, WP 0348 00)

Wrench, torque (Item 97, WP 0348 00)

**Materials/Parts**

Rag, wiping (Item 35, WP 0349 00)

Sealing compound (Item 39, WP 0349 00)

Tag, marker (Item 44, WP 0349 00)

Lockwasher (2)

Ring, retaining

**References**

WP 0021 00

**Equipment Conditions**

Machine parked on level ground (TM 5-3805-261-10)

Parking/emergency brake applied (TM 5-3805-261-10)

Implements lowered to ground (TM 5-3805-261-10)

Engine off (TM 5-3805-261-10)

Battery cables disconnected (WP 0125 00)

Left and right side plates removed from operator's panel console (WP 0193 00)

***REMOVAL***

**NOTE**

Tag wire assemblies before disconnecting to aid in installation.

1. Disconnect two wire assemblies (6) from switch (3) inside operator panel console.
2. Remove nut (1), lockwasher (2), and switch (3). Discard lockwasher.
3. Remove nut (5) and lockwasher (4) from switch (3). Discard lockwasher.

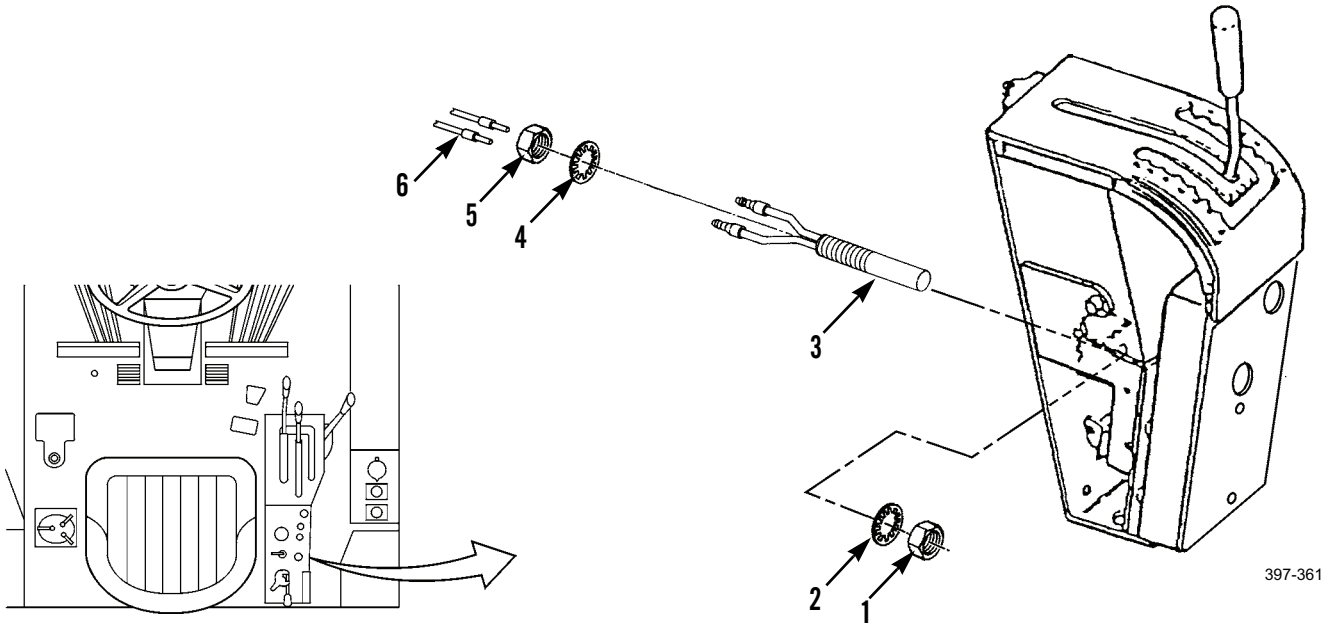

### *REMOVAL - CONTINUED*

4. Remove nut (8) and magnet assembly (7) from weldment (9) inside operator panel console.

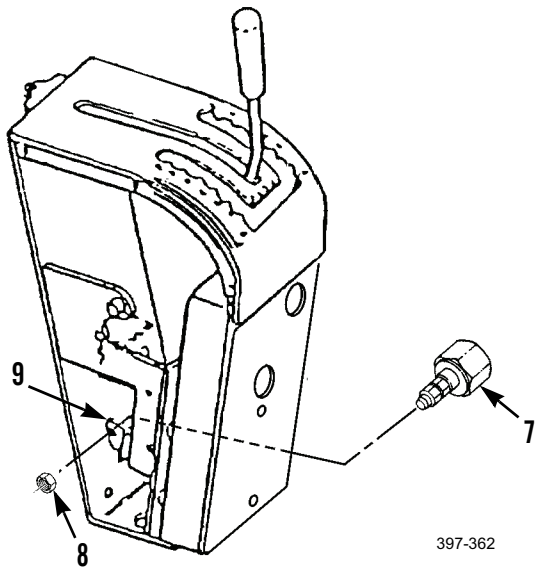


### *DISASSEMBLY*

1. Loosen nut (15) and remove nut (17), stud (16), and nut from magnet holder (14).
2. Remove retaining ring (10), disk (11), magnet (12), and filter (13) from magnet holder (14). Discard retaining ring.

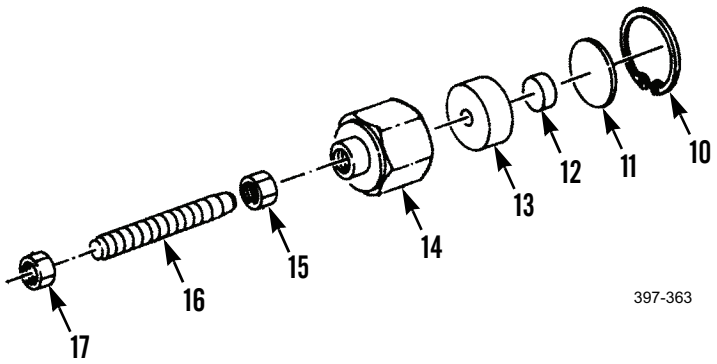


### *CLEANING AND INSPECTION*

Clean and inspect all parts in accordance with WP 0021 00.

### *ASSEMBLY*

**NOTE**

Side of magnet with part number stamped on it must face disk.

1. Install filter (13), magnet (12), disk (11), and new retaining ring (10) in magnet holder (14).
2. Install nut (15) loosely on stud (16) and install stud in magnet holder (14).
3. Apply thread sealant to threads of stud (16) and tighten nut (15) against magnet holder (14) to 18 lb-ft (24 Nm).
4. Install nut (17) loosely on stud (16).

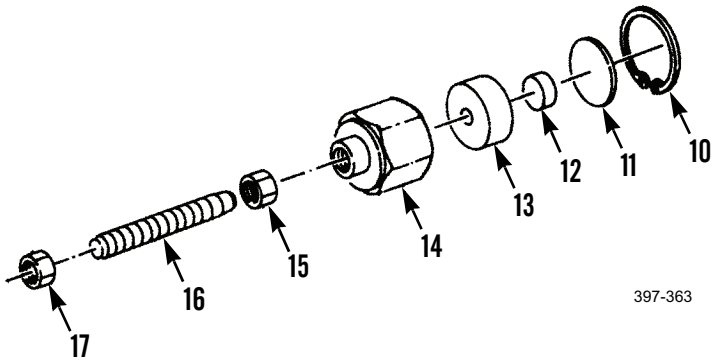


### *INSTALLATION*

1. Install magnet assembly (7) and nut (8) loosely on weldment (9) inside operator panel console.

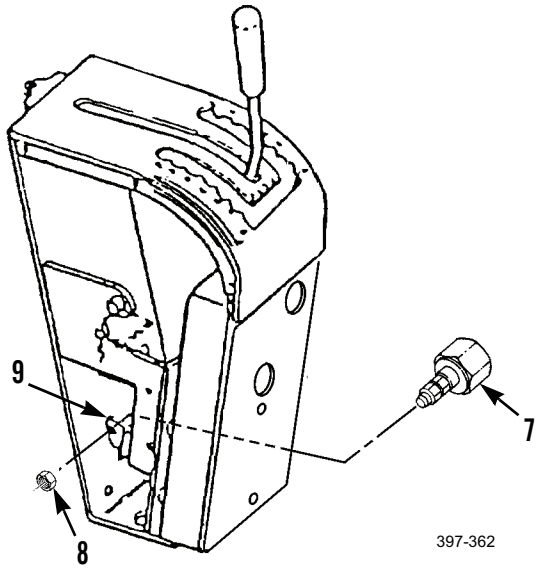


2. Install new lockwasher (4) and nut (5) on switch (3).
3. Install switch (3), new lockwasher (2), and nut (1).
4. Connect two wire assemblies (6) to switch (3).

***INSTALLATION - CONTINUED***

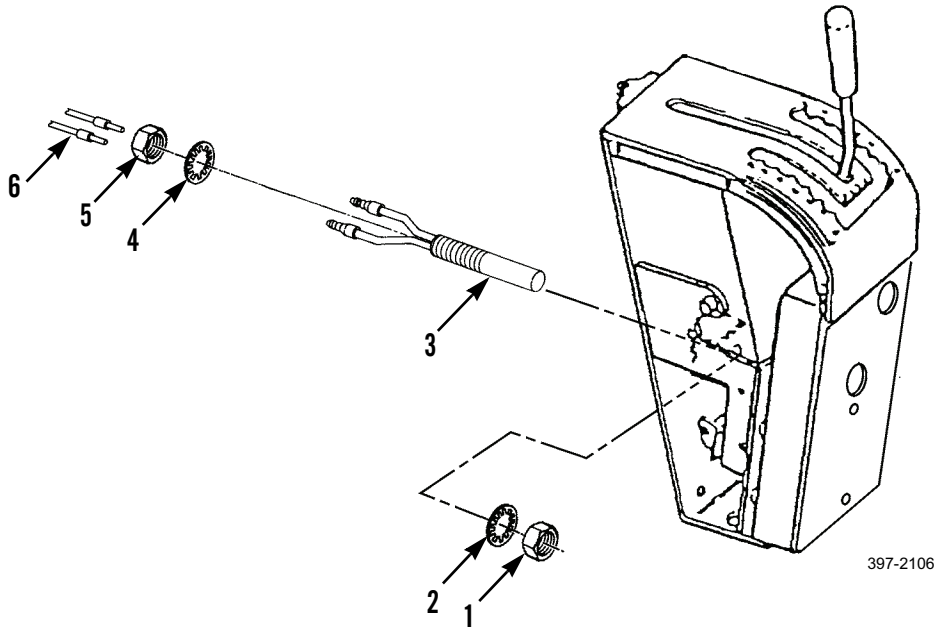


***ADJUSTMENT***

1. Position transmission control lever in reverse (TM 5-3805-261-10).
2. Adjust nuts (15 and 17) until a clearance of 0.2 +/- 0.1 in. (5 +/- 2 mm) is made between magnet assembly (7) and switch (3).
3. Tighten nuts (15 and 17) against weldment (9) inside operator panel console.

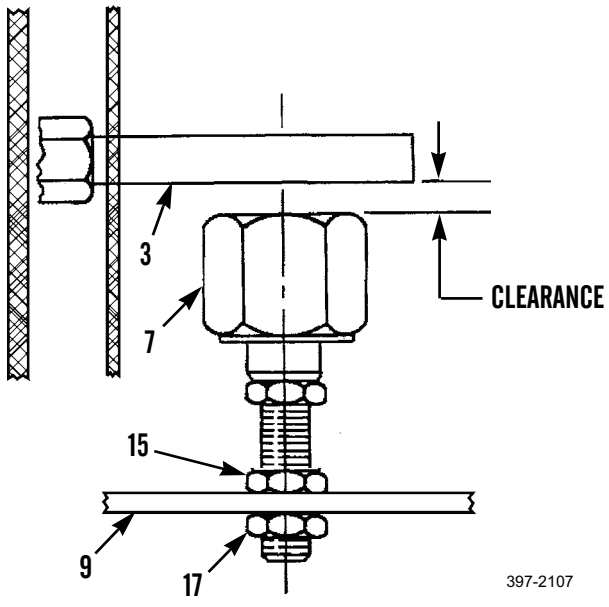


4. Install left and right side plates on operator panel console (WP 0193 00).
5. Connect battery cables (WP 0125 00).

**END OF WORK PACKAGE**

## BATTERY BOX COVERS MAINTENANCE 0123 00

### THIS WORK PACKAGE COVERS

Removal, Disassembly, Cleaning and Inspection, Assembly, Installation

### INITIAL SETUP

**Maintenance Level**

Unit

**Tools and Special Tools**

Tool kit, general mechanic's (Item 89, WP 0348 00)

**Materials/Parts**

Rag, wiping (Item 35, WP 0349 00)

Pin, cotter (2)

**References**

WP 0021 00

**Equipment Conditions**

Machine parked on level ground (TM 5-3805-261-10)

Parking/emergency brake applied (TM 5-3805-261-10)

Implements lowered to ground (TM 5-3805-261-10)

Engine off (TM 5-3805-261-10)

Battery disconnect switch in OFF position (TM 5-3805-261-10)

### *REMOVAL*

**NOTE**

This procedure covers maintenance of the left battery box cover. Follow these instructions for the right battery box cover.

Pull up handle (2) and remove battery box cover (1) from battery box.

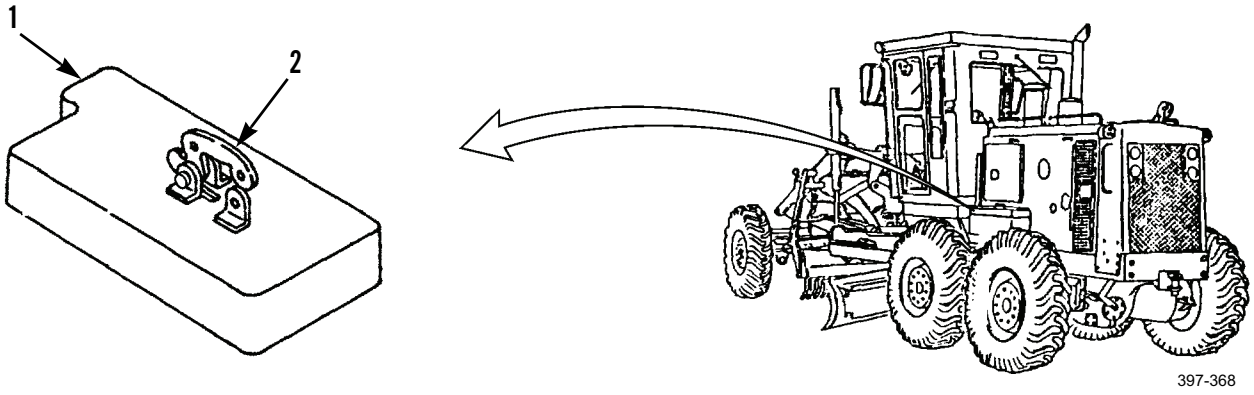

### *DISASSEMBLY*

**WARNING**

Spring is under tension and can act as a projectile when released. Use caution when removing spring. Failure to follow tlhis warning may result in severe eye injury.

1. Remove cotter pin (5), pin (8), rod (6), and spring (7) from handle (2). Discard cotter pin.
2. Remove cotter pin (4), pin (3), and handle (2) from battery box cover (1). Discard cotter pin.

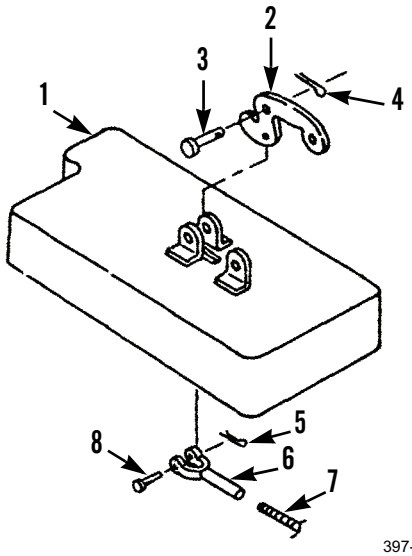

397-370

### *CLEANING AND INSPECTION*

Clean and inspect all parts in accordance with WP 0021 00.

### *ASSEMBLY*

1. Install handle (2), pin (3), and new cotter pin (4) on battery box cover (1).
2. Install spring (7), rod (6), pin (8), and new cotter pin (5) on handle (2).

### *INSTALLATION*

1. Install battery box cover (1) on battery box.
2. Push down handle (2) to latch.

**END OF WORK PACKAGE**

## BATTERY HOLDDOWNS REPLACEMENT 0124 00

### THIS WORK PACKAGE COVERS

Removal, Cleaning and Inspection, Installation

### INITIAL SETUP

**Maintenance Level**

Unit

**Tools and Special Tools**

Tool kit, general mechanic's (Item 89, WP 0348 00)

**Materials/Parts**

Rag, wiping (Item 35, WP 0349 00)

Locknut (8)

**References**

WP 0021 00

**Equipment Conditions**

Machine parked on level ground (TM 5-3805-261-10)

Parking/emergency brake applied (TM 5-3805-261-10)

Implements lowered to ground (TM 5-3805-261-10)

Engine off (TM 5-3805-261-10)

Battery disconnect switch in OFF position (TM 5-3805-261-10)

Battery box covers removed (WP 0123 00)

### *REMOVAL*

**NOTE**

This procedure covers replacement of the left battery holddown. Follow these instructions for the right battery holddown.

1. Remove four locknuts (3), washers (4), holddown (2), and two U-bolts (5) from battery box. Discard locknuts.
2. Remove six bumpers (1) from holddown (2).

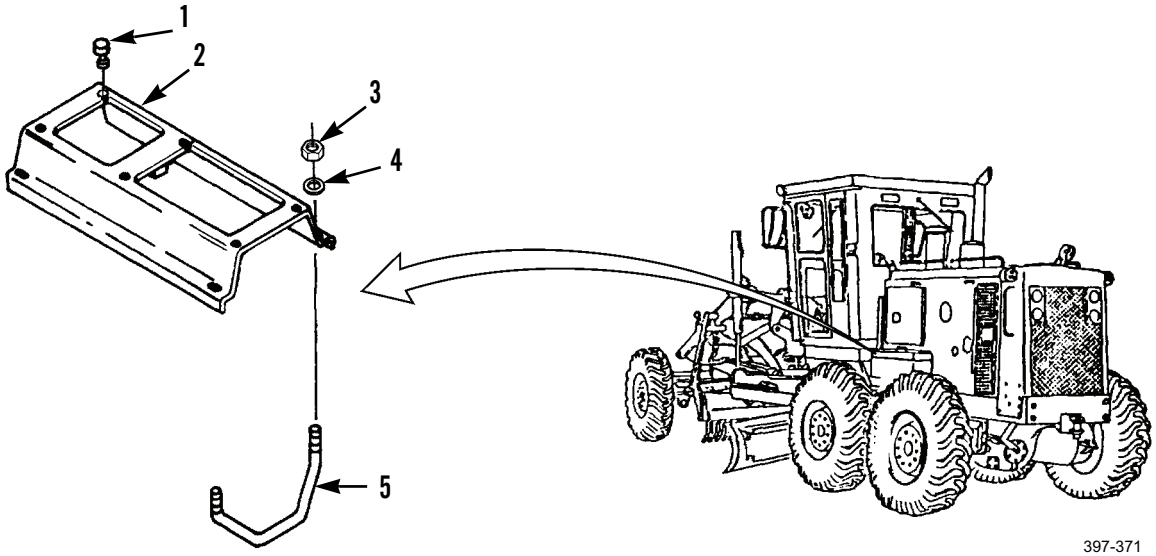

### *CLEANING AND INSPECTION*

Clean and inspect all parts in accordance with WP 0021 00.

### *INSTALLATION*

1. Install six bumpers (1) on holddown (2).
2. Install two U-bolts (5), holddown (2), four washers (4), and new locknuts (3) on battery box.

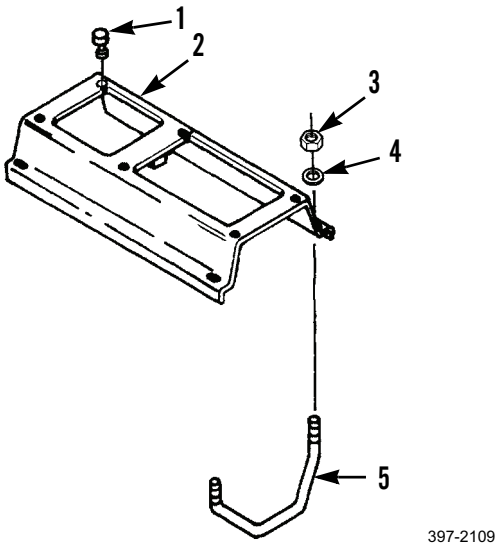


3. Install battery covers (WP 0123 00).

**END OF WORK PACKAGE**

## BATTERIES AND BATTERY CABLES REPLACEMENT 0125 00

### THIS WORK PACKAGE COVERS

Removal, Cleaning and Inspection, Installation

### INITIAL SETUP

**Maintenance Level**

Unit

**Tools and Special Tools**

Tool kit, general mechanic's (Item 89, WP 0348 00)

**Materials/Parts**

Rag, wiping (Item 35, WP 0349 00)

Tag, marker (Item 44, WP 0349 00)

**References**

TM 9-6140-200-14

WP 0021 00

WP 0081 00

**Personnel Required**

Two

**Equipment Conditions**

Machine parked on level ground (TM 5-3805-261-10)

Parking/emergency brake applied (TM 5-3805-261-10)

Implements lowered to ground (TM 5-3805-261-10)

Engine off (TM 5-3805-261-10)

Battery disconnect switch in OFF position (TM 5-3805-261-10)

Battery box covers removed (WP 0123 00)

Battery holddowns removed (WP 0124 00)

Left and right side engine panels removed (WP 0182 00)

Left side plate removed from operator panel console (WP 0193 00)



**WARNING**

- To avoid injury, eye protection and acid-resistant gloves must be worn when working around batteries. Do not smoke, use open flame, make sparks or create other ignition sources around batteries. If a battery is giving off gases, it can explode and cause injury to personnel. Remove all jewelry such as rings, ID tags, watches, and bracelets. If jewelry or a tool contacts a battery terminal, a direct short will result in instant heating, injury to personnel and damage to equipment.
- Sulfuric acid contained in batteries can cause serious burns. If battery corrosion or electrolyte makes contact with skin, eyes or clothing, take immediate action to stop the corrosive burning effects. Failure to follow these procedures may result in injury or death to personnel:
  - (a) Eyes. Flush with cold water for no less than 15 minutes and seek medical attention immediately.
  - (b) Skin. Flush with large amounts of cold water until all acid is removed. Seek medical attention as required.
  - (c) Internal. If corrosion or electrolyte is ingested, drink large amounts of water or milk. Follow with milk of magnesia, beaten egg or vegetable oil. Seek medical attention immediately.
  - (d) Clothing/Equipment. Wash area with large amounts of cold water. Neutralize acid with baking soda or household ammonia.
- If a defective disconnect switch (WP 0081 00) is suspected, check for voltage between the right side positive terminal and a ground (not the negative post). If voltage is present, use extreme caution and remove the negative battery cable from the left side of the switch and troubleshoot the switch.

***REMOVAL***

**NOTE**

Tag all battery cables and wire assembly before disconnecting to aid in installation.

1. Loosen nut (1) of terminal on battery cable (13) of left side battery (3) negative terminal and disconnect battery cable. Secure battery cable away from battery.
2. Loosen nut (5) of terminal on battery cable (4) of right side battery (7) negative terminal and disconnect battery cable. Secure battery cable away from battery.
3. Loosen nut (6) of terminal on battery cable (10) of right side battery (7) positive terminal and disconnect battery cable. Secure battery cable away from battery.
4. Loosen nut (2) of terminal on battery cable (4) of left side battery (3) positive terminal and disconnect battery cable. Secure battery cable away from battery.
5. Remove two bolts (12), washers (11), clips (9), and guards (8).
6. Remove batteries (3 and 7).

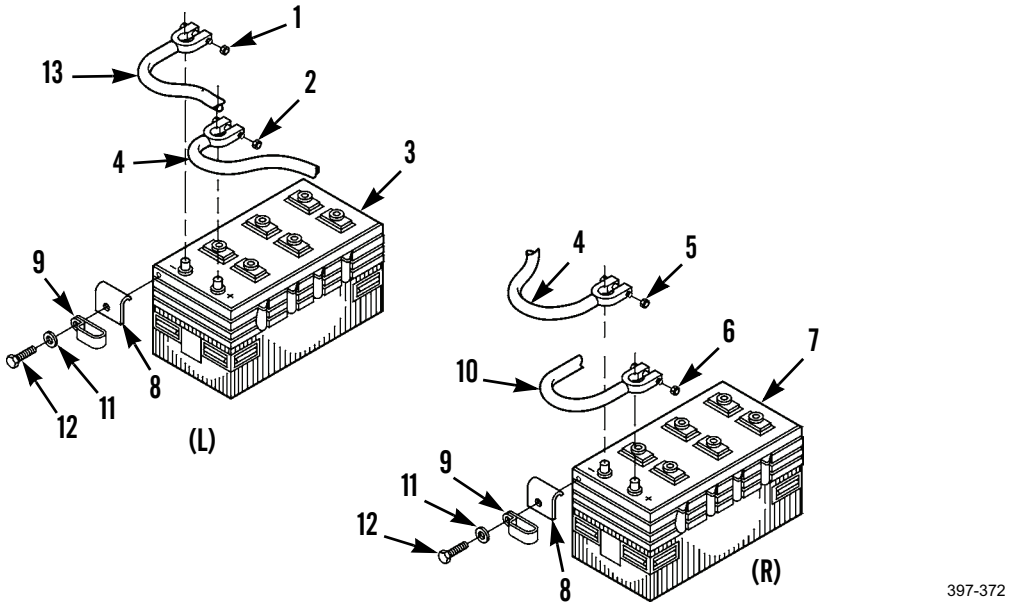


397-372

**NOTE**

For the CCE and Type I machines, the disconnect switch is located on the operator's console. For the Type II machine, the disconnect switch is located on the hood assembly. Instructions apply to both configurations with differences as indicated.

7. For a Type II machine only, go to step 9.

## BATTERIES AND BATTERY CABLES REPLACEMENT - CONTINUED 0125 00

### *REMOVAL - CONTINUED*

8. Remove bolt (19), washer (18), and clip (17) from right side of engine.
9. Remove nut (14), washer (15), and battery cable (10). Disconnect wire assembly (16) from starter solenoid on starting motor assembly. For a Type II machine, go to step 11.
10. Remove bolt (20), washer (21), and clip (22) from right side of frame in engine compartment.

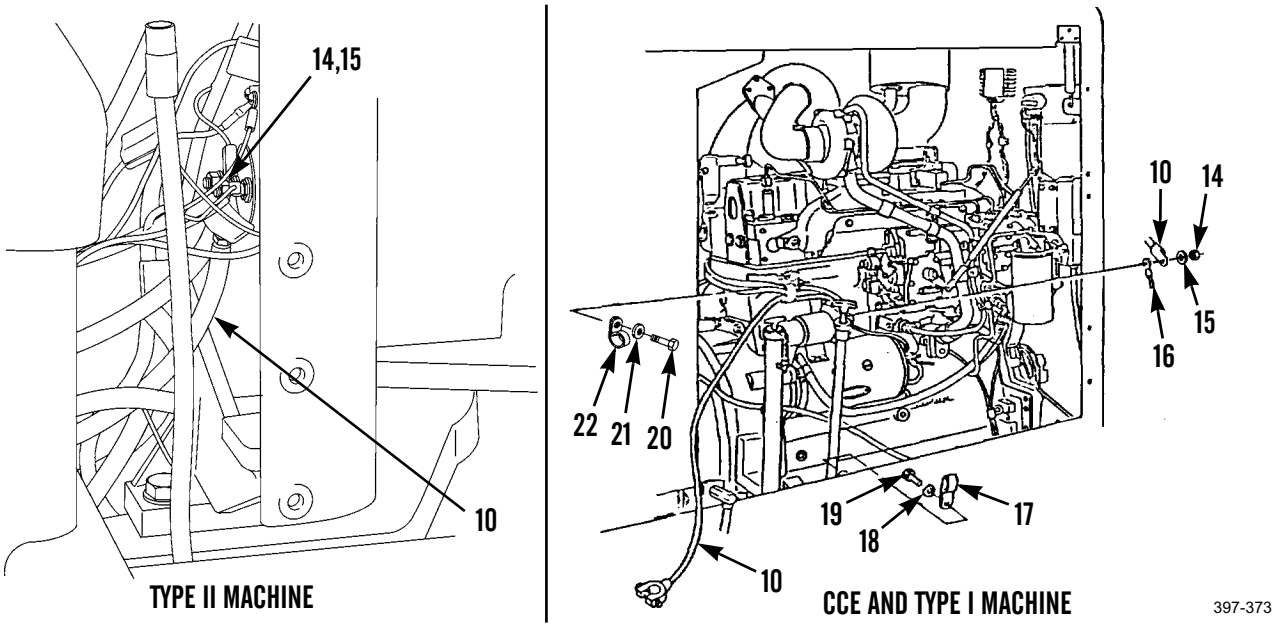


11. Remove bolt (23), washer (24), and clip (25) from under left side of frame.
12. Remove bolt (26), washer (31), and clip (27) from top of differential case.

**NOTE**

Clip is mounted in inside of frame below left corner of engine.

13. Remove bolt (30), washer (29), and clip (28) from left side of articulation area.
14. Remove battery cable (4).

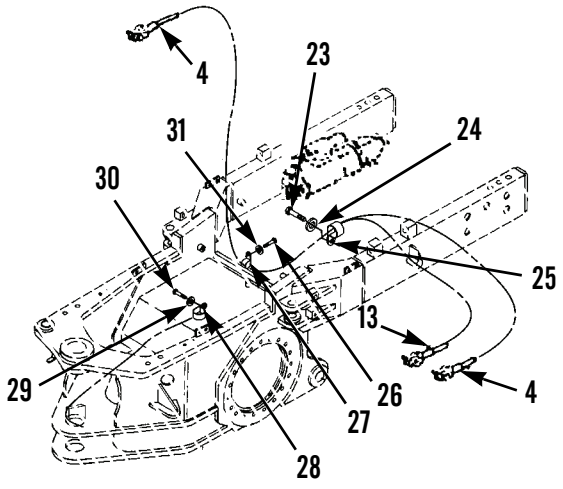

***REMOVAL - CONTINUED***

15. Remove two nuts (34), washers (35), clip (33), plate (36), and pad (32).
16. Separate battery cable (13) from pad (37).

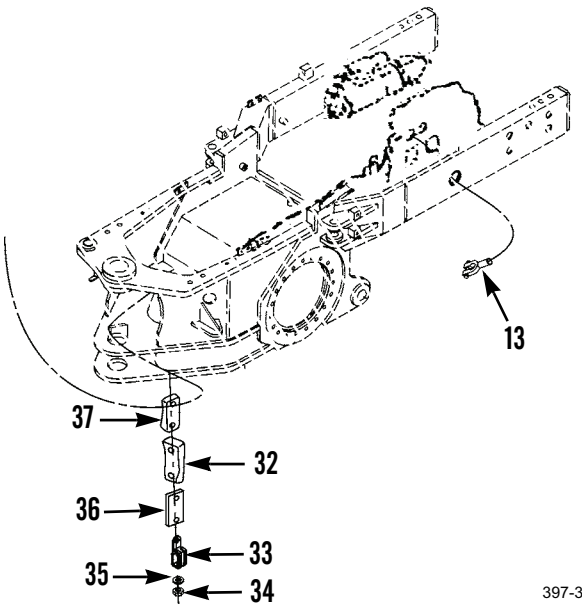


17. Remove two nuts (42), washers (41 and 43), clips (40 and 44), plate (39), and pad (38) from left side of articulation area.
18. Separate battery cable (13) from pad (45).

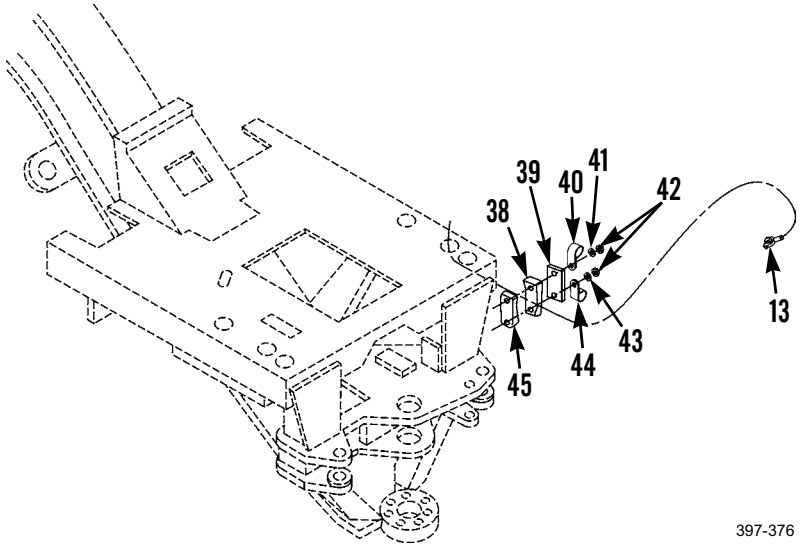

### *REMOVAL - CONTINUED*

19. Remove bolt (50), washer (49), and clip (48).
20. Remove nut (51), washer (52), clip (53), and spacer (54) from under right side of cab.
21. Remove nut (47) and washer (46) and disconnect battery cable (13) from left terminal of disconnect switch inside operator panel console inside cab.
22. Remove battery cable (13) from right and left sides of articulation area.

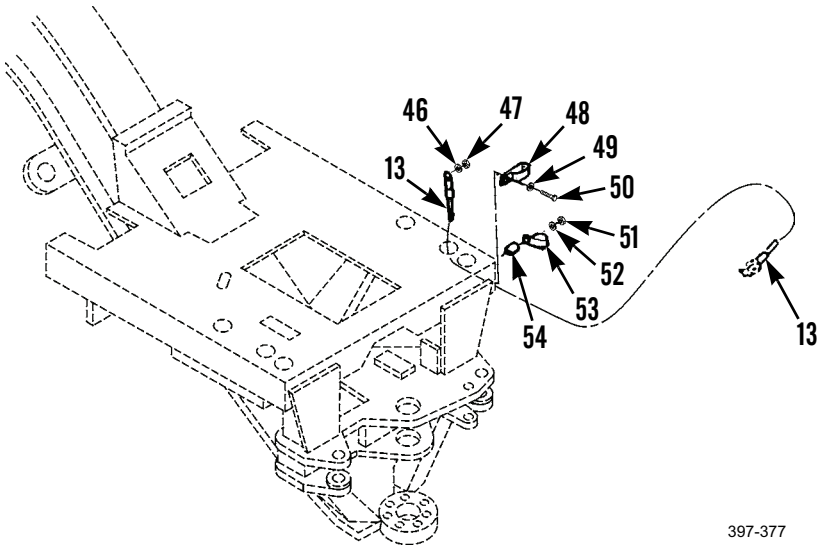


### *CLEANING AND INSPECTION*

1. Clean and inspect batteries and cable assemblies in accordance with TM 9-6140-200-14.
2. Clean and inspect all other parts in accordance with WP 0021 00.

### *INSTALLATION*

**NOTE**

Feed battery cable end through floor of cab.

1. Position battery cable (13) on right side of articulation area.
2. Connect battery cable (13) and install washer (46) and nut (47) on left terminal of main disconnect switch inside operator panel console inside cab.
3. Install spacer (54), clip (53), washer (52), and nut (51) under right side of cab.
4. Install clip (48), washer (49), and bolt (50) at right side of articulation area.

***INSTALLATION - CONTINUED***

5. Position battery cable (13) on pad (45).
6. Install pad (38), plate (39), clips (44 and 40), washers (43 and 41), and two nuts (42).

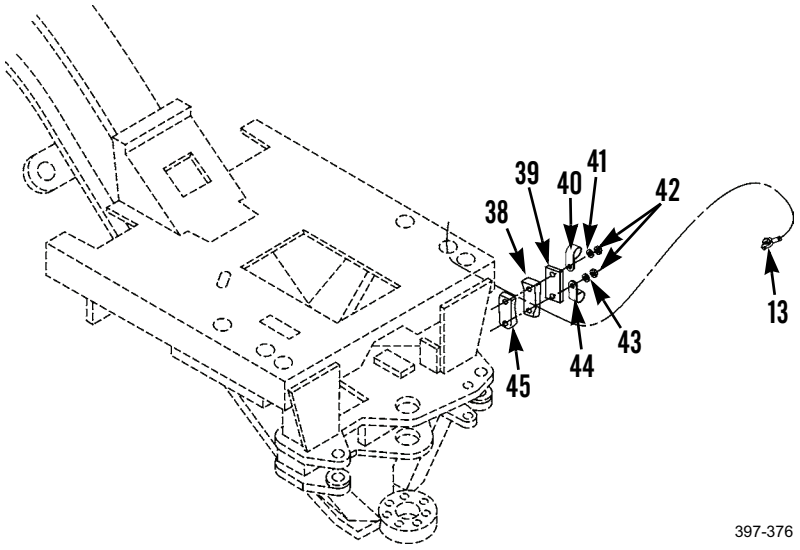


7. Position battery cable (13) on pad (37) on left side of articulation area.
8. Install pad (32), plate (36), clip (33), two washers (35), and nuts (34).
9. Feed battery cable (13) end along inside of frame.

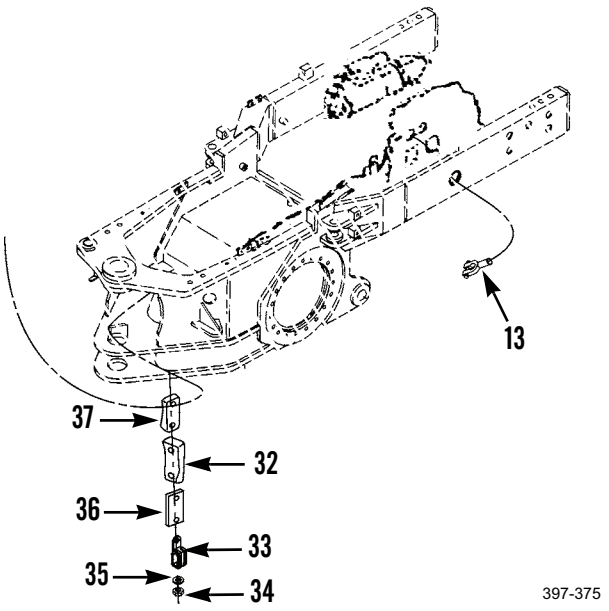

### *INSTALLATION - CONTINUED*

10. Position battery cable (4).
11. Install clip (28), washer (29), and bolt (30) to left side of articulation area.
12. Position battery cable (4) on top of differential case.
13. Install clip (27), washer (31), and bolt (26) at top of differential case.

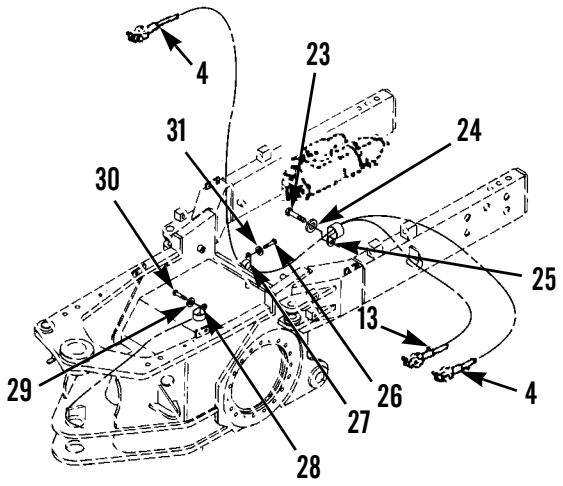


397-374

**NOTE**

Clip holds battery cable assemblies.

14. Install clip (25), washer (24), and bolt (23) under left side of frame.
15. For a Type II machine only, go to step 17.
16. Install clip (22), washer (21), and bolt (20) at right side of frame in engine compartment.
17. Connect battery cable (10) and wire assembly (16) and install washer (15) and nut (14) on starter solenoid on starting motor assembly. For a Type II machine, go to step 19.

    Install clip (17), washer (18), and bolt (19) on right side of engine.

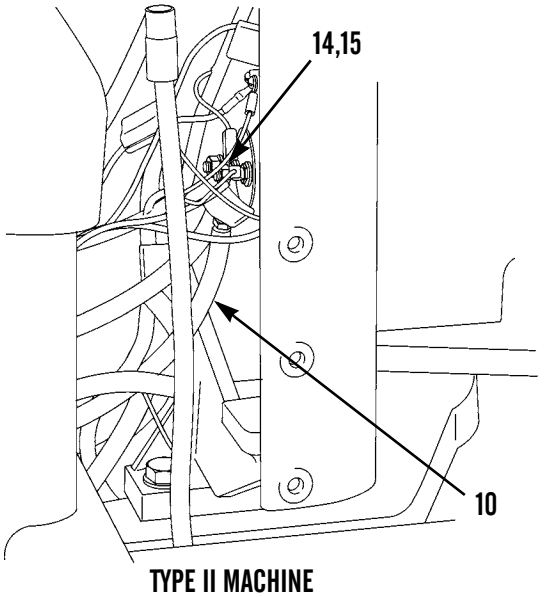


TYPE II MACHINE

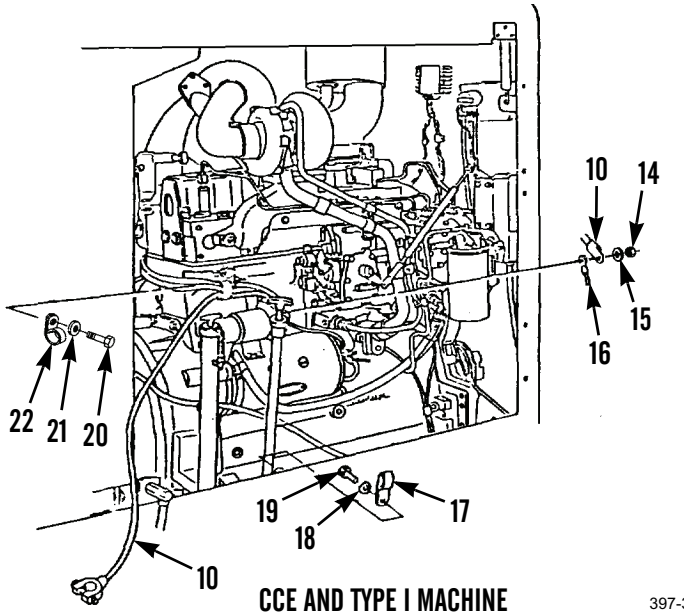


CCE AND TYPE I MACHINE

397-373

***INSTALLATION - CONTINUED***

18. Install batteries (7 and 3) (TM 9-6140-200-14).
19. Install two guards (8), clips (9), washers (11), and bolts (12) to battery boxes.
20. Install battery cable (4) to left side battery (3) positive terminal and tighten nut (2) of terminal on battery cable.
21. Install battery cable (10) to right side battery (7) positive terminal and tighten nut (6) of terminal on battery cable.
22. Install battery cable (4) to right side battery (7) negative terminal and tighten nut (5) of terminal on battery cable.
23. Install battery cable (13) to left side battery (3) negative terminal and tighten nut (1) of terminal on battery cable.

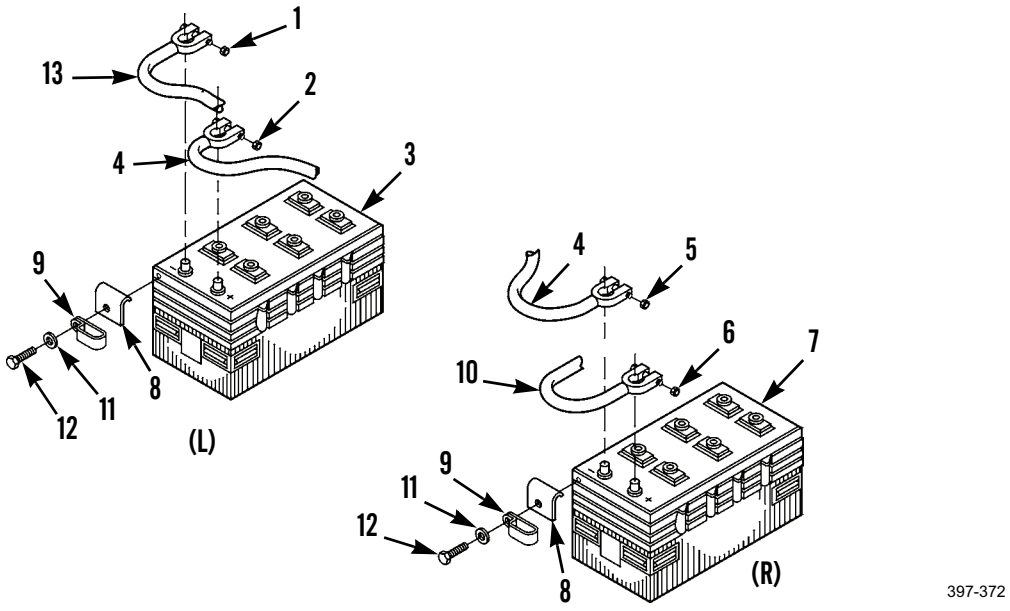


24. Install left side plate on operator panel console (WP 0193 00).
25. Install left and right side engine panels (WP 0182 00).
26. Install battery holddowns (WP 0124 00).
27. Install battery box covers (WP 0123 00).

**END OF WORK PACKAGE**

## BATTERY BOXES AND MOUNTING REPLACEMENT 0126 00

### THIS WORK PACKAGE COVERS

Removal, Cleaning and Inspection, Installation

### INITIAL SETUP

**Maintenance Level**

Unit

**Tools and Special Tools**

Tool kit, general mechanic's (Item 89, WP 0348 00)

**Materials/Parts**

Rag, wiping (Item 35, WP 0349 00)

Lockwasher (4)

**References**

WP 0021 00

**Equipment Conditions**

Machine parked on level ground (TM 5-3805-261-10)

Parking/emergency brake applied (TM 5-3805-261-10)

**Equipment Conditions - Continued**

Implements lowered to ground (TM 5-3805-261-10)

Engine off (TM 5-3805-261-10)

Battery disconnect switch in OFF position (TM 5-3805-261-10)

Battery box covers removed (WP 0123 00)

Battery holddowns removed (WP 0124 00)

Batteries removed (WP 0125 00)

Left and right side engine panels removed (WP 0182 00)

### *REMOVAL*

**NOTE**

This procedure covers replacement of the left battery box and mounting. Follow these instructions for the right battery box and mounting.

1. Remove four bolts (2), washers (3), nuts (8), and battery box (1) from brackets (7 and 11).
2. Remove two bolts (4), lockwashers (5), washers (6), and bracket (7) from frame. Discard lockwashers.
3. Remove two bolts (9), washers (10), and bracket (11) from frame.

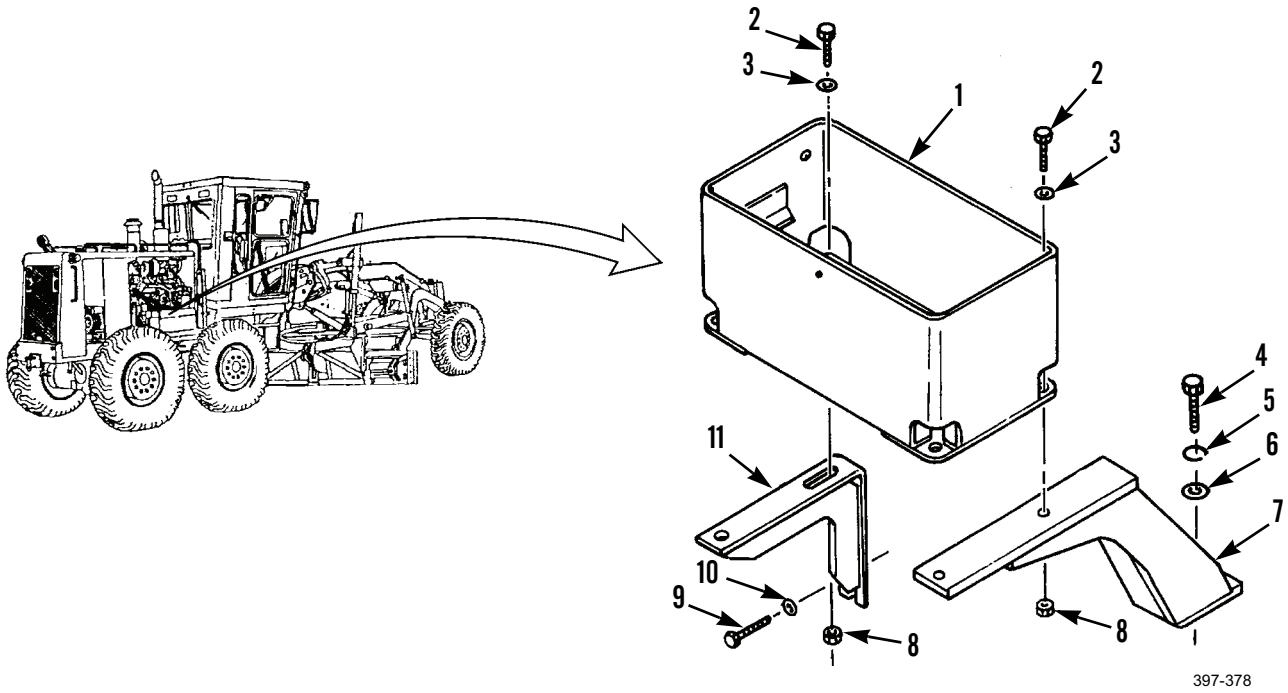


### *CLEANING AND INSPECTION*

Clean and inspect all parts in accordance with WP 0021 00.

### *INSTALLATION*

1. Install bracket (11), two washers (10), and bolts (9) on frame.
2. Install bracket (7), two washers (6), new lockwashers (5), and bolts (4) on frame.
3. Install battery box (1), four washers (3), bolts (2), and nuts (8) on brackets (11 and 7).
4. Install batteries (WP 0125 00).
5. Install battery holddowns (WP 0124 00).
6. Install battery box covers (WP 0123 00).
7. Install left and right side engine panels (WP 0182 00).

**END OF WORK PACKAGE**

## ALTERNATOR GROUND LEAD REPLACEMENT 0127 00

### THIS WORK PACKAGE COVERS

Removal, Cleaning and Inspection, Installation

### INITIAL SETUP

**Maintenance Level**

Unit

**Tools and Special Tools**

Tool kit, general mechanic's (Item 89, WP 0348 00)

**Materials/Parts**

Rag, wiping (Item 35, WP 0349 00)

Tag, marker (Item 44, WP 0349 00)

Lockwasher (3)

**References**

WP 0021 00

**Equipment Conditions**

Machine parked on level ground (TM 5-3805-261-10)

Parking/emergency brake applied (TM 5-3805-261-10)

Implements lowered to ground (TM 5-3805-261-10)

Engine off (TM 5-3805-261-10)

Battery cables disconnected (WP 0125 00)

Right side screen door opened (WP 0051 00)

Alternator disconnected as necessary (WP 0066 00)

### *REMOVAL*

**NOTE**

Tag alternator ground lead before disconnecting to aid in installation.

1. Remove screw (1) and lockwasher (2) and disconnect alternator ground lead (3) and lockwasher (4) from alternator (7). Discard lockwashers.
2. Disconnect capacitor (5) and remove lockwasher (6). Discard lockwasher.

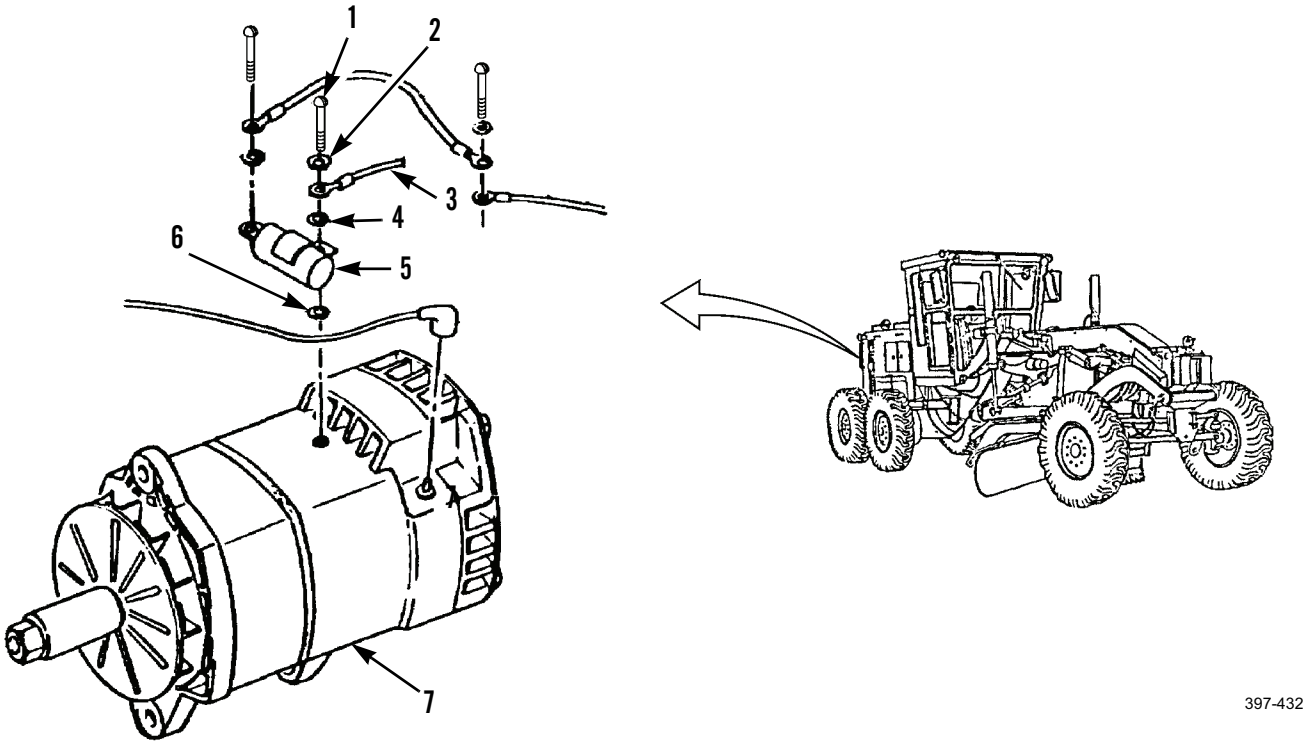


### *CLEANING AND INSPECTION*

Clean and inspect all parts in accordance with WP 0021 00.

### *INSTALLATION*

1. Install new lockwasher (6) and connect capacitor (5).
2. Install new lockwasher (4), lead (3), new lockwasher (2), and screw (1) on alternator (7).
3. Connect alternator as necessary (WP 0066 00).
4. Connect battery cables (WP 0125 00).
5. Close right side screen door (WP 0051 00).

**END OF WORK PACKAGE**

## STARTING MOTOR LEAD REPLACEMENT 0128 00

### THIS WORK PACKAGE COVERS

Removal, Cleaning and Inspection, Installation

### INITIAL SETUP

**Maintenance Level**

Unit

**Tools and Special Tools**

Tool kit, general mechanic's (Item 89, WP 0348 00)

Shop equipment, common no. 1 (Item 75, WP 0348 00)

Wrench, torque (Item 97, WP 0348 00)

**Materials/Parts**

Rag, wiping (Item 35, WP 0349 00)

Tag, marker (Item 44, WP 0349 00)

Lockwasher (2)

**References**

WP 0021 00

**Equipment Conditions**

Machine parked on level ground (TM 5-3805-261-10)

Parking/emergency brake applied (TM 5-3805-261-10)

Implements lowered to ground (TM 5-3805-261-10)

Engine off (TM 5-3805-261-10)

Battery cables disconnected (WP 0125 00)

Right side engine panel removed (WP 0182 00)

### *REMOVAL*

**NOTE**

Tag starting motor lead before disconnecting to aid in installation.

1. Remove bolt (3), disconnect starting motor lead (4) and remove lockwasher (2) from fuel injection mounting support (1) on right engine block. Discard lockwasher.
2. Remove nut (5), lockwasher (6), and lead (4) from starting motor (7). Discard lockwasher.

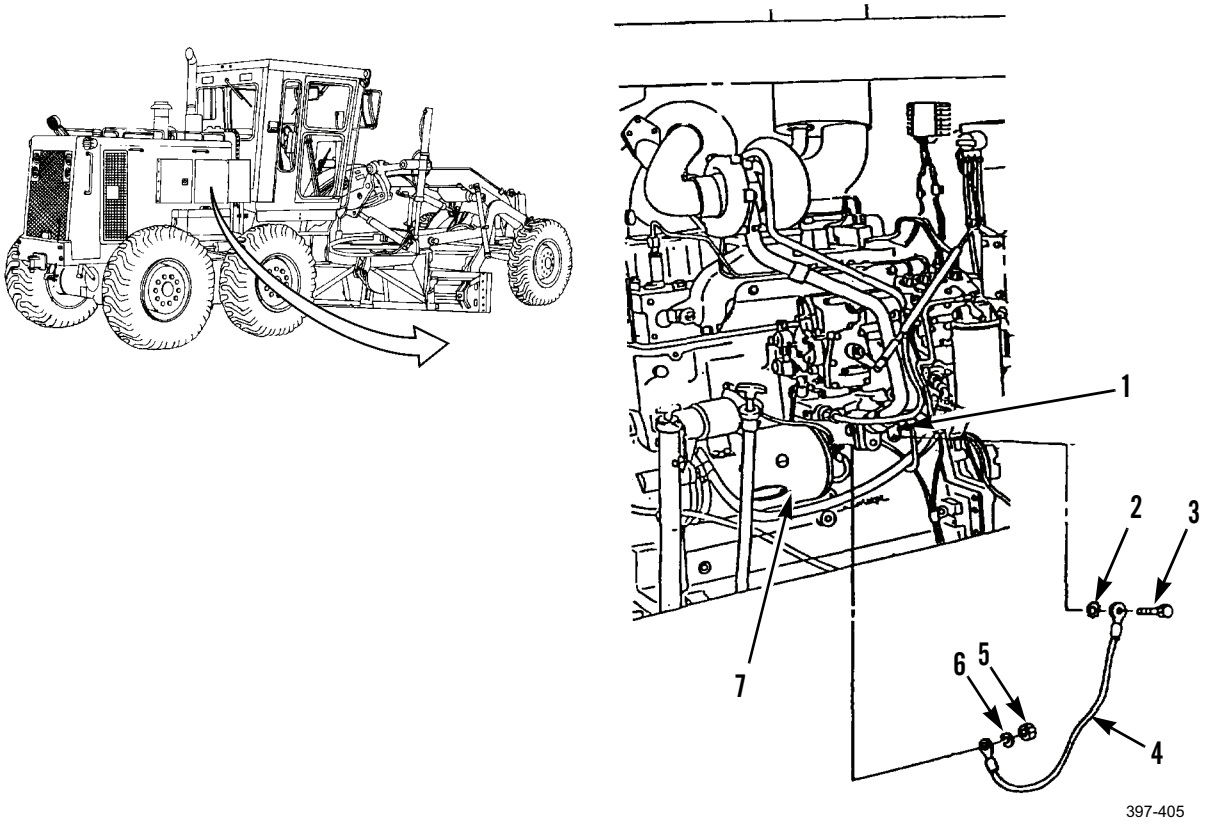


### *CLEANING AND INSPECTION*

Clean and inspect all parts in accordance with WP 0021 00.

### *INSTALLATION*

1. Connect lead (4) and install new lockwasher (6) and nut (5) on starting motor (7). Tighten nut to 22 lb-ft (30 Nm).
2. Install new lockwasher (2), starting motor lead (4), and bolt (3) on support (1) on right engine block.
3. Install right side engine panel (WP 0182 00).
4. Connect battery cables (WP 0125 00).

**END OF WORK PACKAGE**

## AIR PRESSURE SWITCH LEAD REPLACEMENT 0129 00

### THIS WORK PACKAGE COVERS

Removal, Cleaning and Inspection, Installation

### INITIAL SETUP

**Maintenance Level**

Unit

**Tools and Special Tools**

Tool kit, general mechanic's (Item 89, WP 0348 00)

**Materials/Parts**

Rag, wiping (Item 35, WP 0349 00)

Tag, marker (Item 44, WP 0349 00)

**References**

WP 0021 00

**Equipment Conditions**

Machine parked on level ground (TM 5-3805-261-10)

Parking/emergency brake applied (TM 5-3805-261-10)

Implements lowered to ground (TM 5-3805-261-10)

Engine off (TM 5-3805-261-10)

Battery cables disconnected (WP 0125 00)

### *REMOVAL*

**NOTE**

Tag air pressure switch lead before disconnecting to aid in installation.

Remove two screws (1) and air pressure switch lead (2) from two switches (3) under right side of cab.

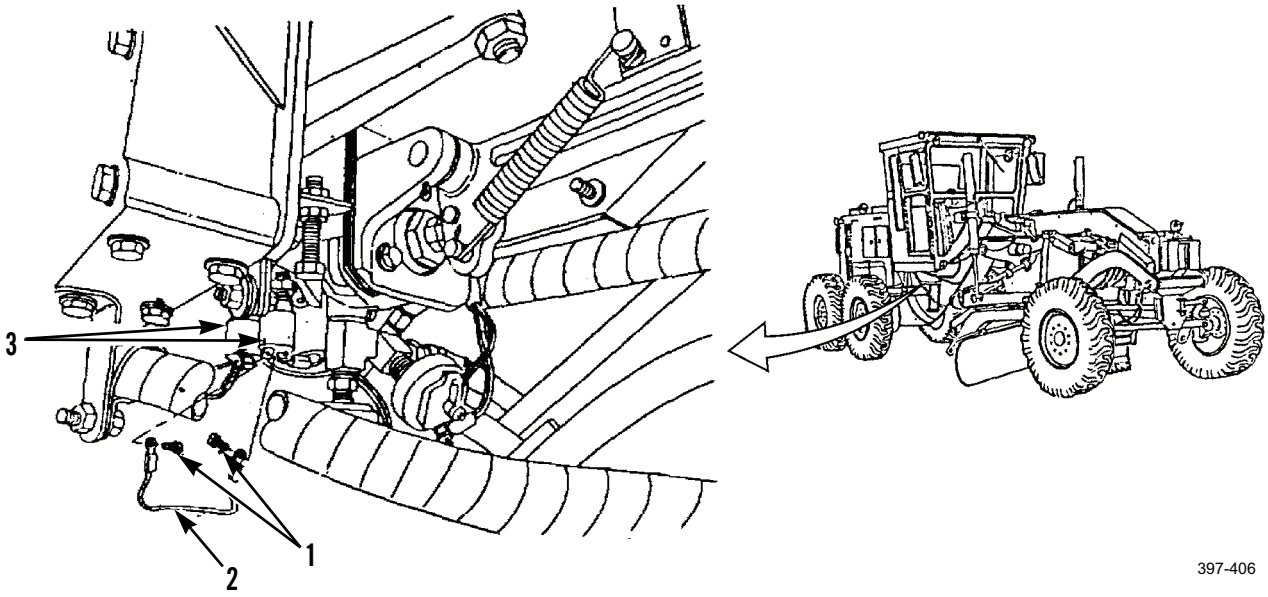

### *CLEANING AND INSPECTION*

Clean and inspect all parts in accordance with WP 0021 00.

### *INSTALLATION*

1. Install lead (2) and two screws (1) on two switches (3) under right side of cab.

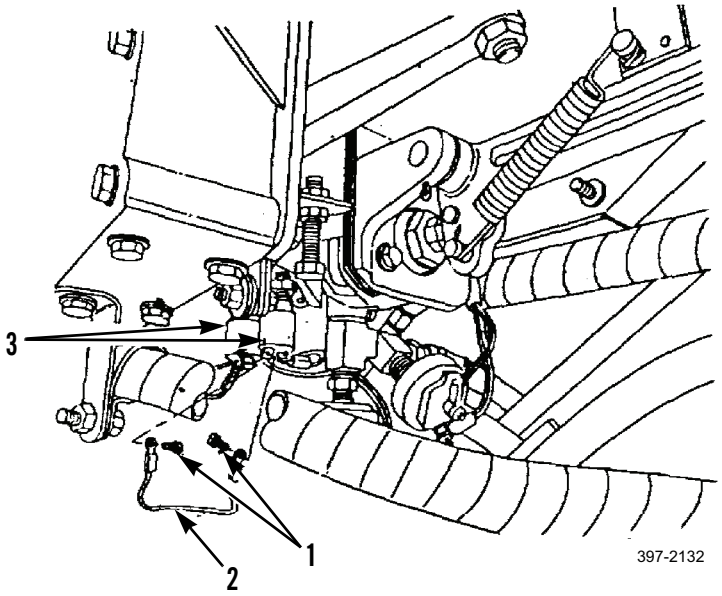


2. Connect battery cables (WP 0125 00).

**END OF WORK PACKAGE**

## ELECTRONIC MONITORING SYSTEM (EMS) JUMPER WIRE REPLACEMENT 0130 00

### THIS WORK PACKAGE COVERS

Removal, Cleaning and Inspection, Installation

### INITIAL SETUP

**Maintenance Level**

Unit

**Tools and Special Tools**

Tool kit, general mechanic's (Item 89, WP 0348 00)

**Materials/Parts**

Rag, wiping (Item 35, WP 0349 00)

Tag, marker (Item 44, WP 0349 00)

**References**

WP 0021 00

**Equipment Conditions**

Machine parked on level ground (TM 5-3805-261-10)

Parking/emergency brake applied (TM 5-3805-261-10)

Implements lowered to ground (TM 5-3805-261-10)

Engine off (TM 5-3805-261-10)

Battery cables disconnected (WP 0125 00)

Left side screen door opened (WP 0051 00)

### *REMOVAL*

1. Disconnect EMS jumper wire (2) and wiring harness (3) from clip (1) on fuel tank.

**NOTE**

Tag jumper wire and wiring harness before disconnecting to aid in installation.

2. Remove jumper wire (2) from wiring harness (3).

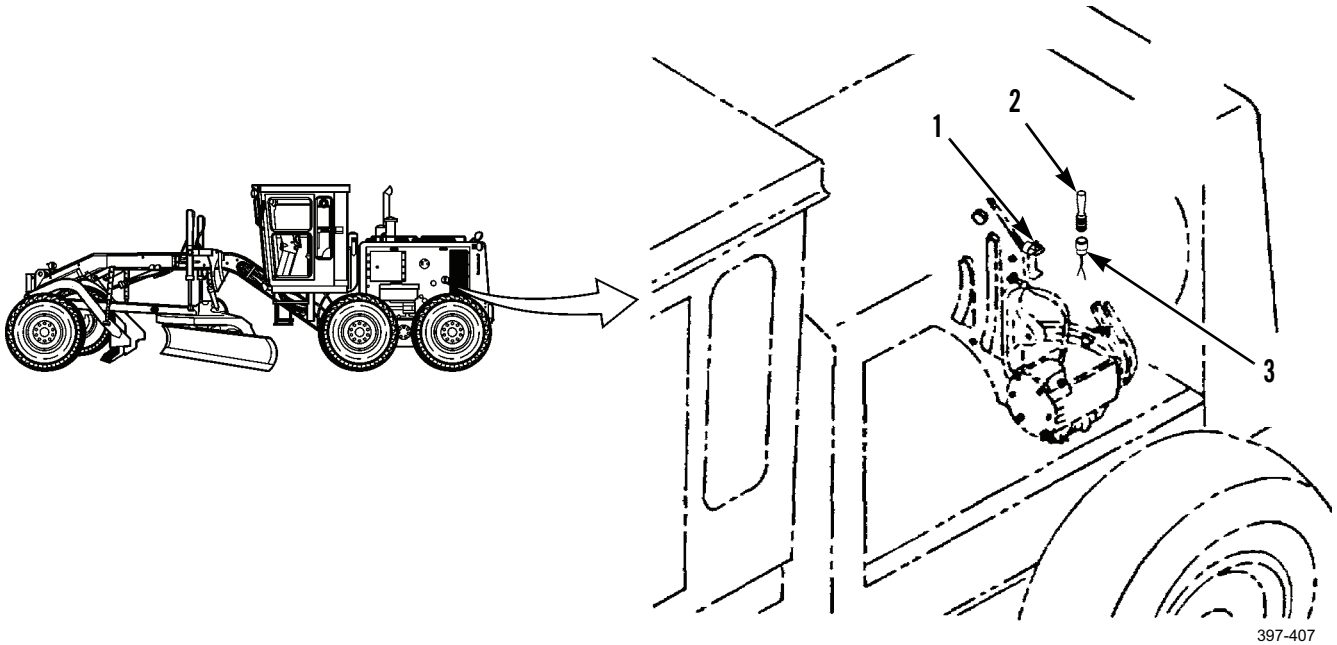

### *CLEANING AND INSPECTION*

Clean and inspect all parts in accordance with WP 0021 00.

### *INSTALLATION*

1. Install jumper wire (2) to wiring harness (3).
2. Connect jumper wire (2) and wiring harness (3) to clip (1) on fuel tank.

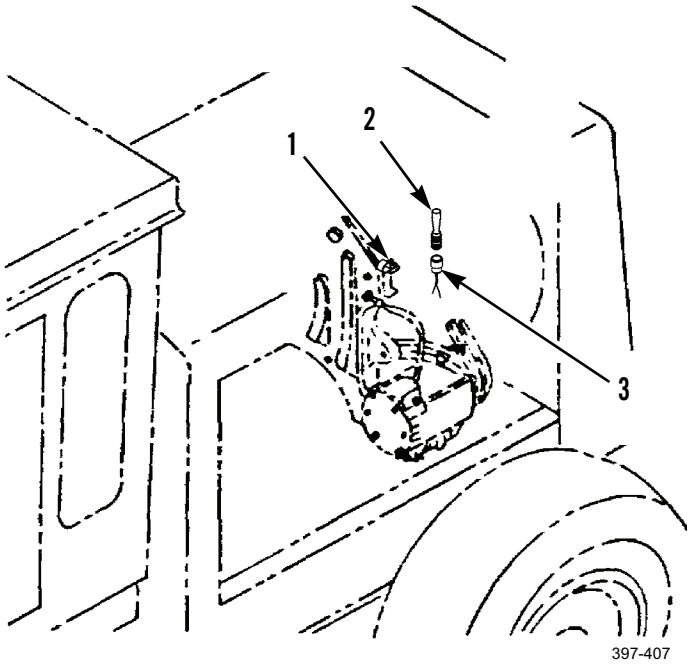


3. Close left side screen door (WP 0051 00).
4. Connect battery cables (WP 0125 00).

**END OF WORK PACKAGE**

## SUPPLEMENTAL STEERING DUMP VALVE WIRING HARNESS REPLACEMENT 0131 00

### THIS WORK PACKAGE COVERS

Removal, Cleaning and Inspection, Installation

### INITIAL SETUP

**Maintenance Level**

Unit

**Tools and Special Tools**

Tool kit, general mechanic's (Item 89, WP 0348 00)

**Materials/Parts**

Rag, wiping (Item 35, WP 0349 00)

Tag, marker (Item 44, WP 0349 00)

Lockwasher (2)

**References**

WP 0021 00

**Equipment Conditions**

Machine parked on level ground (TM 5-3805-261-10)

Parking/emergency brake applied (TM 5-3805-261-10)

Implements lowered to ground (TM 5-3805-261-10)

Engine off (TM 5-3805-261-10)

Battery cables disconnected (WP 0125 00)

### *REMOVAL*

1. Detach supplemental steering dump valve wiring harness (4) and main wiring harness (5) from clip (3).

**NOTE**

Tag wiring harnesses before disconnecting to aid in installation.

2. Disconnect dump valve wiring harness (4) from main wiring harness (5).
3. Remove clip (3).
4. Remove two screws (1), lockwashers (6), and dump valve wiring harness (4) from dump valve switch (2). Discard lockwashers.

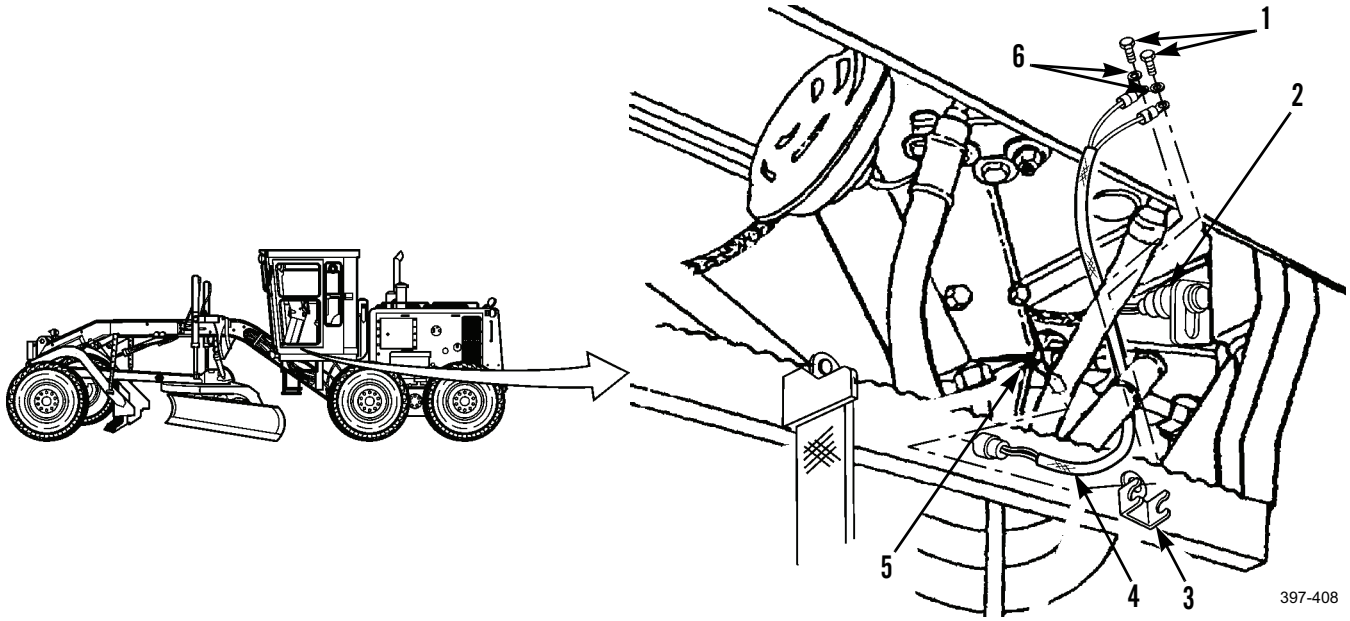

### *CLEANING AND INSPECTION*

Clean and inspect all parts in accordance with WP 0021 00.

### *INSTALLATION*

1. Connect dump valve wiring harness (4), two new lockwashers (6), and screws (1) on dump valve switch (2).
2. Install clip (3).
3. Install dump valve wiring harness (4) to main wiring harness (5).
4. Attach dump valve wiring harness (4) and main wiring harness (5) to clip (1).

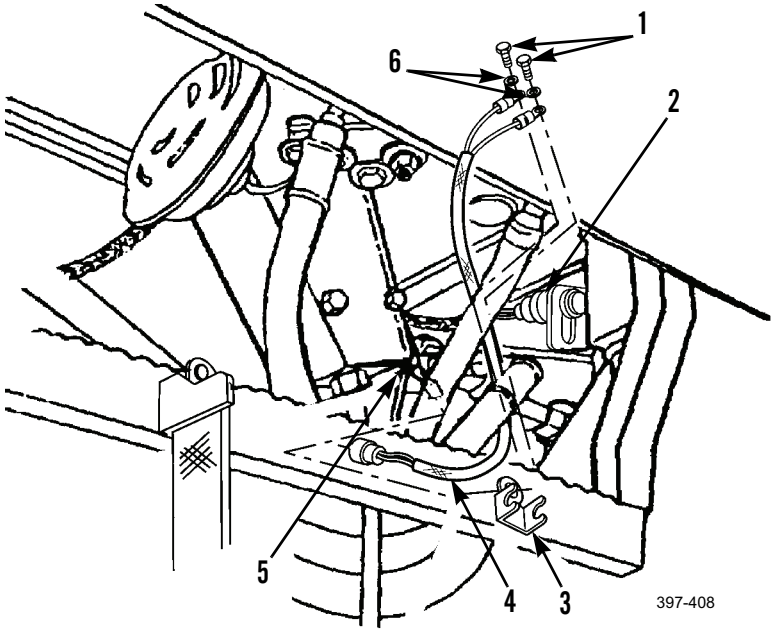


5. Connect battery cables (WP 0125 00).

**END OF WORK PACKAGE**

## SUPPLEMENTAL STEERING GOVERNOR SWITCH WIRING HARNESS REPLACEMENT 0132 00

### THIS WORK PACKAGE COVERS

Removal, Cleaning and Inspection, Installation

### INITIAL SETUP

**Maintenance Level**

Unit

**Tools and Special Tools**

Tool kit, general mechanic's (Item 89, WP 0348 00)

**Materials/Parts**

Rag, wiping (Item 35, WP 0349 00)

Strap, tie (Item 43, WP 0349 00)

Tag, marker (Item 44, WP 0349 00)

**References**

WP 0021 00

**Equipment Conditions**

Machine parked on level ground (TM 5-3805-261-10)

Parking/emergency brake applied (TM 5-3805-261-10)

Implements lowered to ground (TM 5-3805-261-10)

Engine off (TM 5-3805-261-10)

Battery cables disconnected (WP 0125 00)

Right side engine doors opened (TM 5-3805-261-10)

### *REMOVAL*

1. Remove and discard tie strap (1).

**NOTE**

Tag wiring harnesses before disconnecting to aid in installation.

2. Remove two screws (5), washers (6), and disconnect governor switch wiring harness (4) from supplemental steering governor switch (7).
3. Remove governor switch wiring harness (4) from main wiring harness (3).
4. Remove clip (2).

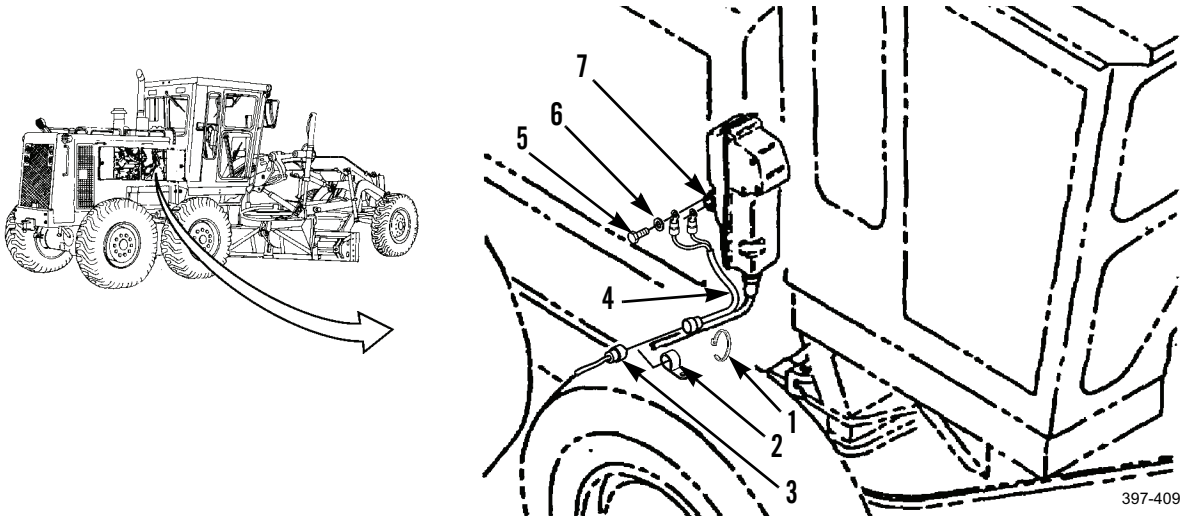

### *CLEANING AND INSPECTION*

Clean and inspect all parts in accordance with WP 0021 00.

### *INSTALLATION*

1. Install clip (2).
2. Connect governor switch wiring harness (4) to main wiring harness (3).
3. Install governor switch wiring harness (4), two washers (6), and screws (5) to governor switch (7).
4. Install new tie strap (1).

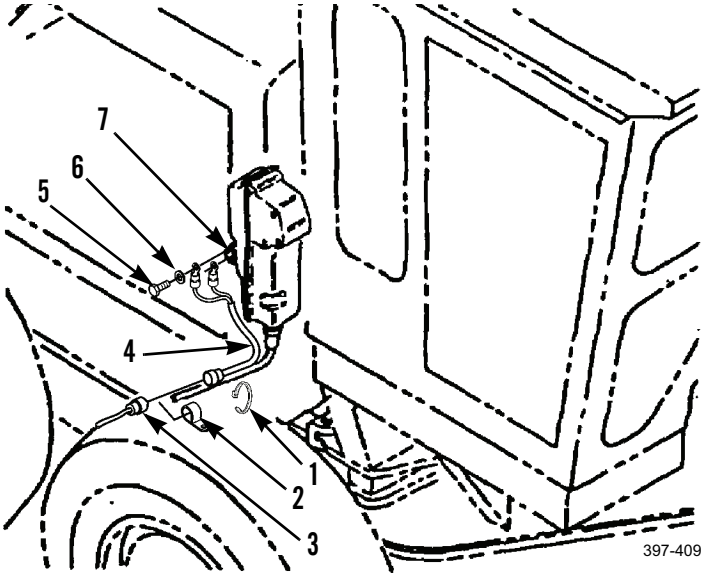


5. Close right side engine doors (TM 5-3805-261-10).
6. Connect battery cables (WP 0125 00).

**END OF WORK PACKAGE**

## BLADE FLOAT PILOT VALVE WIRING HARNESS REPLACEMENT (CCE MACHINE) 0133 00

### THIS WORK PACKAGE COVERS

Removal, Cleaning and Inspection, Installation

### INITIAL SETUP

**Maintenance Level**

Unit

**Tools and Special Tools**

Tool kit, general mechanic's (Item 89, WP 0348 00)

**Materials/Parts**

Rag, wiping (Item 35, WP 0349 00)

Tag, marker (Item 44, WP 0349 00)

**References**

WP 0021 00

**Equipment Conditions**

Machine parked on level ground (TM 5-3805-261-10)

Parking/emergency brake applied (TM 5-3805-261-10)

Implements lowered to ground (TM 5-3805-261-10)

Engine off (TM 5-3805-261-10)

Battery cables disconnected (WP 0125 00)

### *REMOVAL*

1. Detach clip (1) from blade float pilot valve wiring harness (5) and main wiring harness (6).

**NOTE**

Tag wiring harnesses before disconnecting to aid in installation.

2. Disconnect blade float pilot valve wiring harness (5) from main wiring harness (6).
3. Remove bolt (2), washer (3), and blade float pilot valve wiring harness (5) from blade float pilot valve (4).

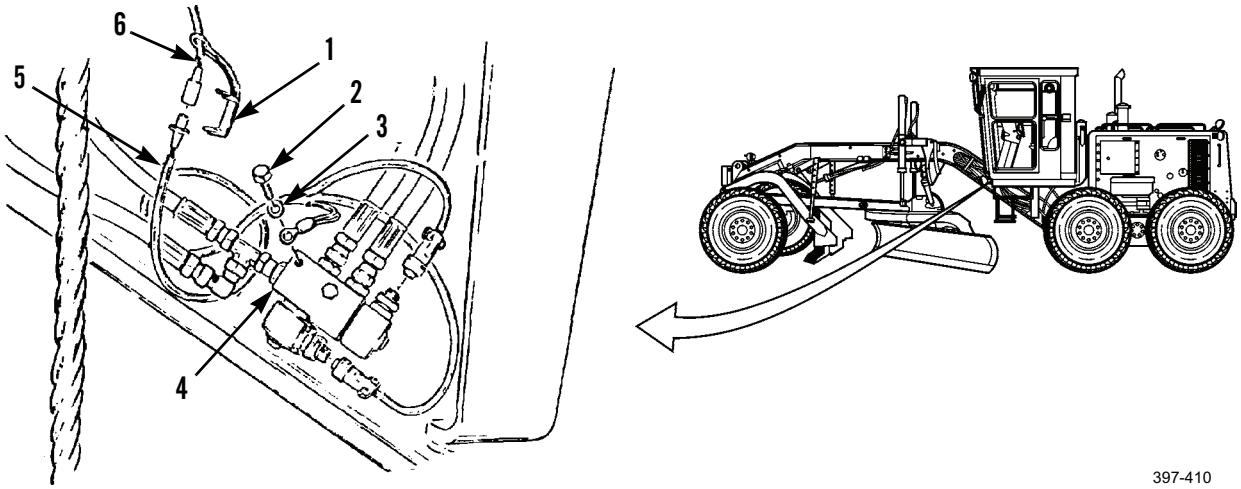

## BLADE FLOAT PILOT VALVE WIRING HARNESS REPLACEMENT (CCE MACHINE) - CONTINUED 0133 00

### *CLEANING AND INSPECTION*

Clean and inspect all parts in accordance with WP 0021 00.

### *INSTALLATION*

1. Connect blade float pilot valve wiring harness (5) and install washer (3) and bolt (2) to blade float pilot valve (4).
2. Install blade float pilot valve wiring harness (5) to main wiring harness (6).
3. Attach clip (1) to blade float pilot valve wiring harness (5) and main wiring harness (6).

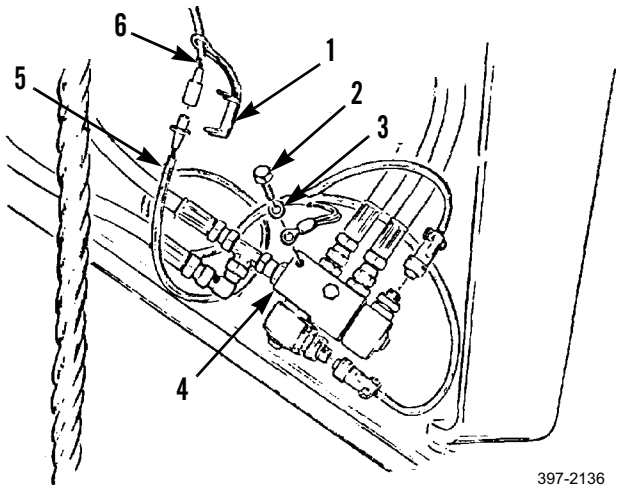


4. Connect battery cables (WP 0125 00).

**END OF WORK PACKAGE**

## FRONT WINDOW DEFROSTER FAN LEAD REPLACEMENT (CCE MACHINE) 0134 00

### THIS WORK PACKAGE COVERS

Removal, Cleaning and Inspection, Installation

### INITIAL SETUP

**Maintenance Level**

Unit

**Tools and Special Tools**

Tool kit, general mechanic's (Item 89, WP 0348 00)

**Materials/Parts**

Rag, wiping (Item 35, WP 0349 00)

Tag, marker (Item 44, WP 0349 00)

**References**

WP 0021 00

**Equipment Conditions**

Machine parked on level ground (TM 5-3805-261-10)

Parking/emergency brake applied (TM 5-3805-261-10)

Implements lowered to ground (TM 5-3805-261-10)

Engine off (TM 5-3805-261-10)

Battery cables disconnected (WP 0125 00)

Front window defroster fan removed (WP 0210 00)

### *REMOVAL*

**NOTE**

Tag front window defroster fan lead before disconnecting to aid in installation.

Remove front window defroster fan lead (1) from wiring harness (2) in front-upper-left of cab.

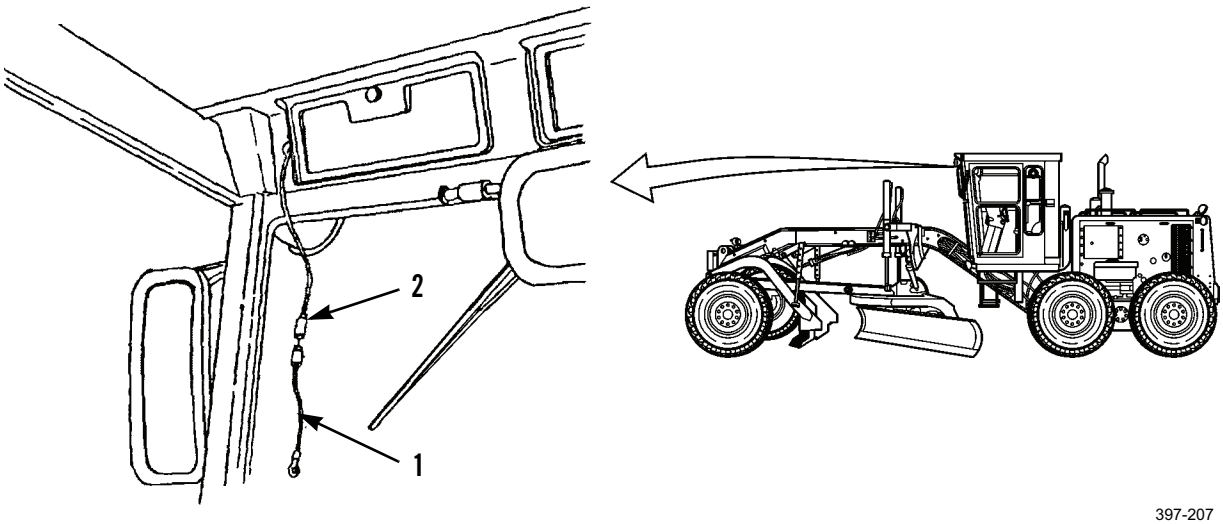


397-207

### *CLEANING AND INSPECTION*

Clean and inspect all parts in accordance with WP 0021 00.

### *INSTALLATION*

1. Install lead (1) to wiring harness (2) in front-upper-left of cab.

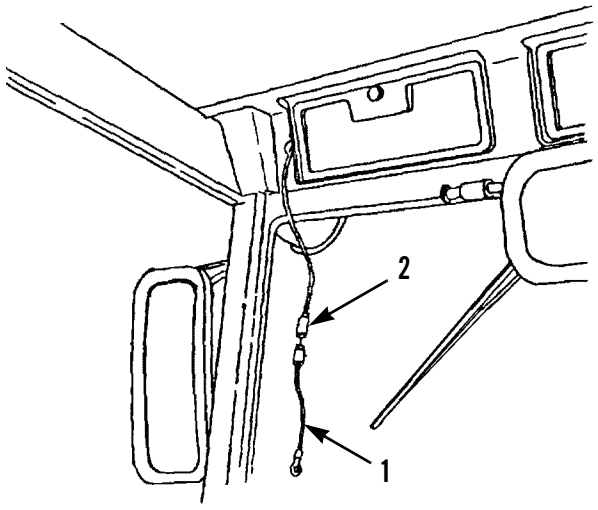


397-2137

2. Install front window defroster fan (WP 0210 00).
3. Connect battery cables (WP 0125 00).

**END OF WORK PACKAGE**

## REAR WINDOW DEFROSTER FAN LEAD REPLACEMENT (CCE MACHINE) 0135 00

### THIS WORK PACKAGE COVERS

Removal, Cleaning and Inspection, Installation

### INITIAL SETUP

**Maintenance Level**

Unit

**Tools and Special Tools**

Tool kit, general mechanic's (Item 89, WP 0348 00)

**Materials/Parts**

Rag, wiping (Item 35, WP 0349 00)

Tag, marker (Item 44, WP 0349 00)

**References**

WP 0021 00

**Equipment Conditions**

Machine parked on level ground (TM 5-3805-261-10)

Parking/emergency brake applied (TM 5-3805-261-10)

Implements lowered to ground (TM 5-3805-261-10)

Engine off (TM 5-3805-261-10)

Battery cables disconnected (WP 0125 00)

Rear window defroster fan removed (WP 0210 00)

Fuse box cover removed (WP 0097 00)

### *REMOVAL*

1. Remove grommet (3) from rear-upper-right of cab.

**NOTE**

Tag rear window defroster fan lead before disconnecting to aid in installation.

2. Remove screw (2) and rear window defroster fan lead (1) from fuse block (4).

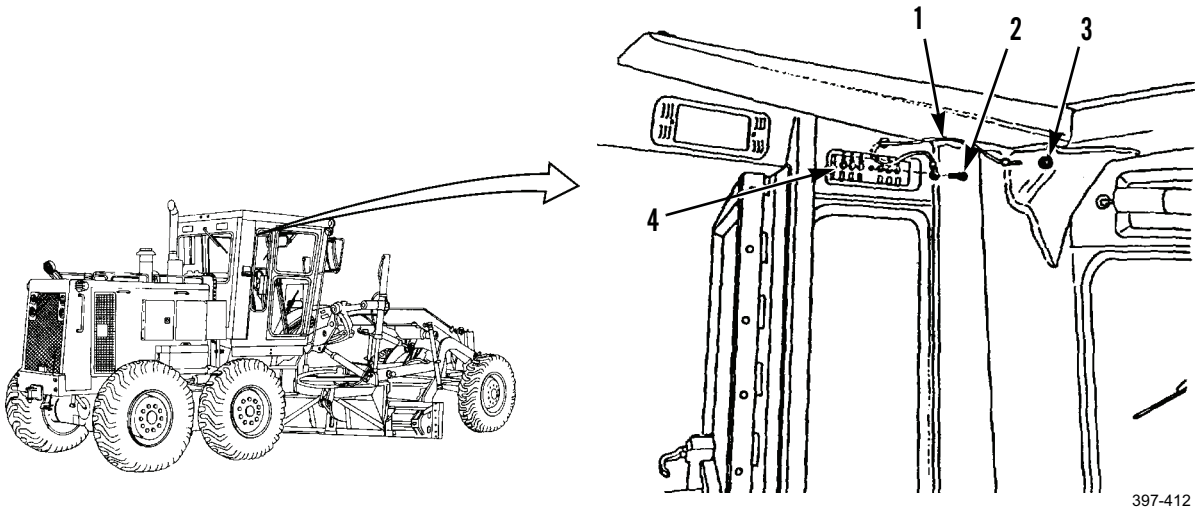

### *CLEANING AND INSPECTION*

Clean and inspect all parts in accordance with WP 0021 00.

### *INSTALLATION*

1. Install lead (1) and screw (2) on fuse block (4).
2. Install grommet (3) in rear-upper-right of cab.

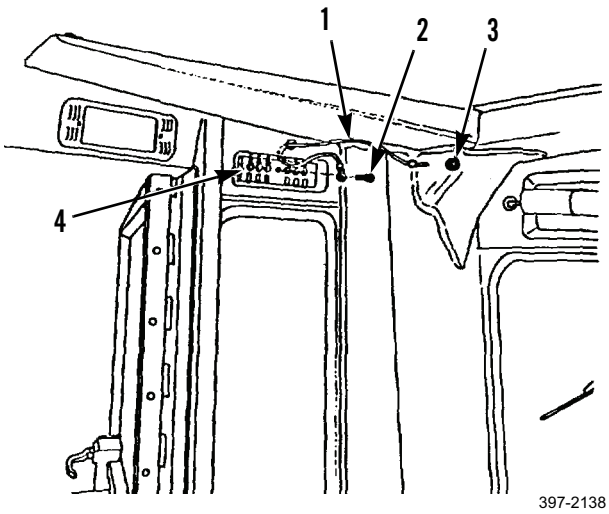


3. Install fuse box cover (WP 0097 00).
4. Install rear window defroster fan (WP 0210 00).
5. Connect battery cables (WP 0125 00).

**END OF WORK PACKAGE**

## FRONT WORK LIGHTS LEAD REPLACEMENT 0136 00

## THIS WORK PACKAGE COVERS

Removal, Cleaning and Inspection, Installation

## INITIAL SETUP

**Maintenance Level**

Unit

**Tools and Special Tools**

Tool kit, general mechanic's (Item 89, WP 0348 00)

**Materials/Parts**

Rag, wiping (Item 35, WP 0349 00)

Tag, marker (Item 44, WP 0349 00)

Lockwasher (2)

**References**

WP 0021 00

**Equipment Conditions**

Machine parked on level ground (TM 5-3805-261-10)

Parking/emergency brake applied (TM 5-3805-261-10)

Implements lowered to ground (TM 5-3805-261-10)

Engine off (TM 5-3805-261-10)

Battery cables disconnected (WP 0125 00)

### *REMOVAL*

1. Loosen bolt (15) on bottom of right work light (16) and move forward for access to screw (2).

**NOTE**

Tag front work lights lead and main wiring harness before disconnecting to aid in installation.

2. Remove screw (2) and lockwasher (1) and disconnect front work lights lead (3) from right work light (16). Discard lockwasher.
3. Remove bolt (14) from clip (13).
4. Loosen bolt (12) on bottom of left work light (4) and move forward for access to screw (7).
5. Remove screw (7) and lockwasher (6) and disconnect lead (3) from left work light (4). Discard lockwasher.
6. Remove bolt (5) from clip (8).
7. Detach clip (11) from lead (3) at connector (9) and main wiring harness connector (10) under left side of cab.
8. Disconnect lead (3) at connector (9) from connector (10).
9. Remove lead (3) from machine.
10. Remove clips (8 and 13) from lead (3).

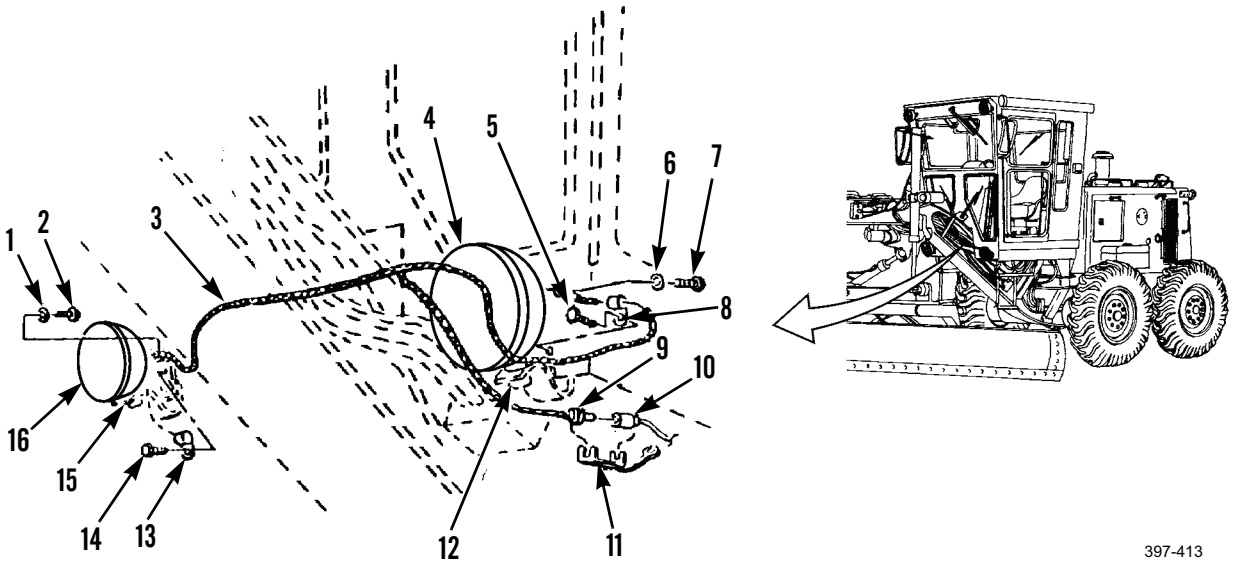


### *CLEANING AND INSPECTION*

Clean and inspect all parts in accordance with WP 0021 00.

### *INSTALLATION*

1. Install clips (13 and 8) on lead (3).
2. Position lead (3) on machine.
3. Connect lead (3) at connector (9) to connector (10).
4. Attach clip (11) on connector (10) and lead (3) at connector (9) under left side of cab.
5. Install bolt (5) on clip (8).
6. Connect lead (3) and install new lockwasher (6) and screw (7) on left work light (4).
7. Move left work light (4) back to original position and tighten bolt (12).
8. Install bolt (14) on clip (13).
9. Install lead (3), new lockwasher (1), and screw (2) on right work light (16).
10. Move right work light (16) back to original position and tighten bolt (15).
11. Connect battery cables (WP 0125 00).

**END OF WORK PACKAGE**

## REAR WORK LIGHT LEAD REPLACEMENT 0137 00

### THIS WORK PACKAGE COVERS

Removal, Cleaning and Inspection, Installation

### INITIAL SETUP

**Maintenance Level**

Unit

**Tools and Special Tools**

Tool kit, general mechanic's (Item 89, WP 0348 00)

**Materials/Parts**

Rag, wiping (Item 35, WP 0349 00)

Strap, tie (Item 43, WP 0349 00)

Tag, marker (Item 44, WP 0349 00)

Cable tie

Lockwasher (2)

**References**

WP 0021 00

**Equipment Conditions**

Machine parked on level ground (TM 5-3805-261-10)

Parking/emergency brake applied (TM 5-3805-261-10)

Implements lowered to ground (TM 5-3805-261-10)

Engine off (TM 5-3805-261-10)

Battery cables disconnected (WP 0125 00)

Left side screen door opened (WP 0051 00)

### *REMOVAL*

**NOTE**

Tag rear work light lead before disconnecting to aid in installation.

1. Remove screw (2) and two lockwashers (1) and disconnect rear work light lead (6) from rear work light (7). Discard lockwashers.
2. Remove and discard tie strap (4) from left-rear of engine compartment near radiator.
3. Disconnect lead (6) connector (3) from main wiring harness connector (5).

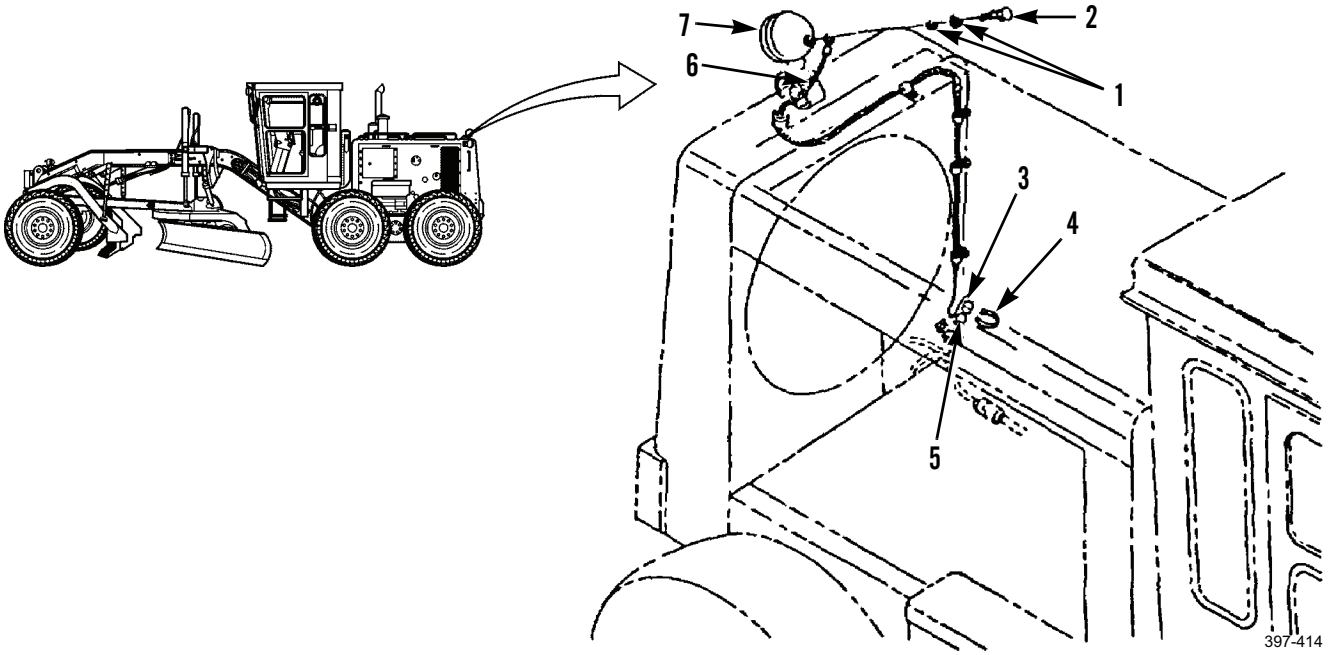

### *REMOVAL - CONTINUED*

**NOTE**

Snake lead down through grommet.

4. Remove four bolts (10), washers (9), and lead (6) from machine.
5. Remove four clamps (8) from lead (6).
6. Remove grommet (11).

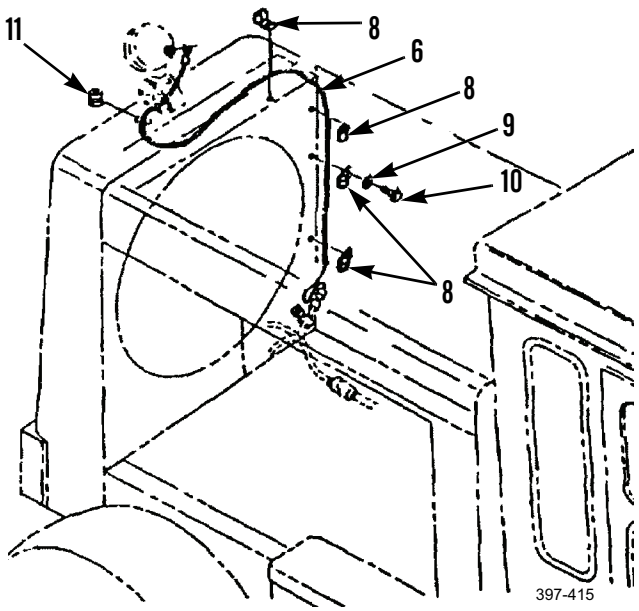


### *CLEANING AND INSPECTION*

Clean and inspect all parts in accordance with WP 0021 00.

### *INSTALLATION*

1. Install grommet (11).
2. Install four clamps (8) on lead (6).
3. Snake lead (6) up through grommet (11), position lead on machine and install four washers (9) and bolts (10) on clamps (8).
4. Connect lead (6) to main wiring harness connector (5).
5. Install new tie strap (3) on left-rear of engine compartment near radiator.
6. Install lead (6), two new lockwashers (1), and bolts (2) on rear work light (7).
7. Close left side screen door (WP 0051 00).
8. Connect battery cables (WP 0125 00).

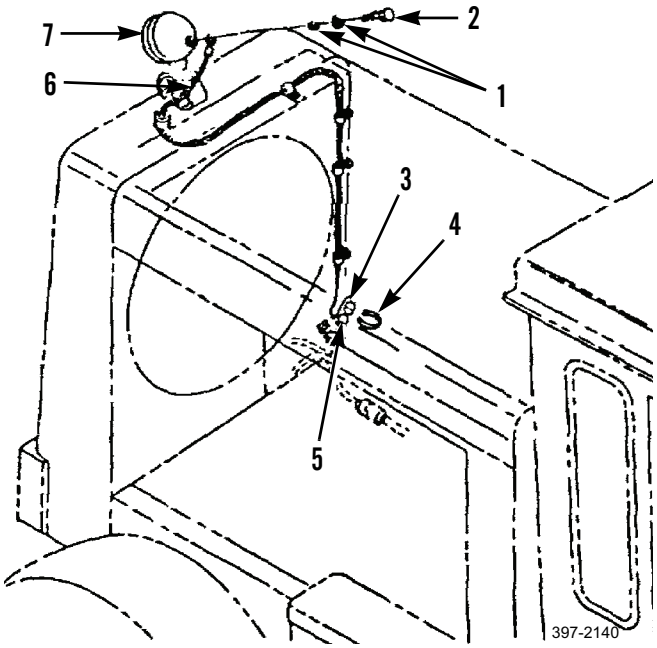


**END OF WORK PACKAGE**

## TURN SIGNAL LIGHTS FUSE LEAD REPLACEMENT 0138 00

### THIS WORK PACKAGE COVERS

Removal, Cleaning and Inspection, Installation

### INITIAL SETUP

**Maintenance Level**

Unit

**Tools and Special Tools**

Tool kit, general mechanic's (Item 89, WP 0348 00)

**Materials/Parts**

Rag, wiping (Item 35, WP 0349 00)

Tag, marker (Item 44, WP 0349 00)

**References**

WP 0021 00

**Equipment Conditions**

Machine parked on level ground (TM 5-3805-261-10)

Parking/emergency brake applied (TM 5-3805-261-10)

Implements lowered to ground (TM 5-3805-261-10)

Engine off (TM 5-3805-261-10)

Battery cables disconnected (WP 0125 00)

### *REMOVAL*

**NOTE**

Tag turn signal lights fuse lead before disconnecting to aid in installation.

1. Remove screw (1) and disconnect turn signal lights fuse lead (2) from fuse box (4).
2. Remove lead (2) from signal flasher (3).

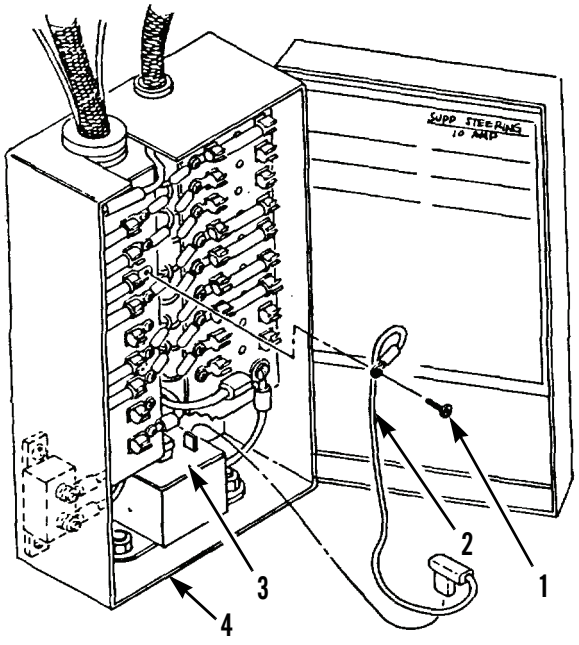


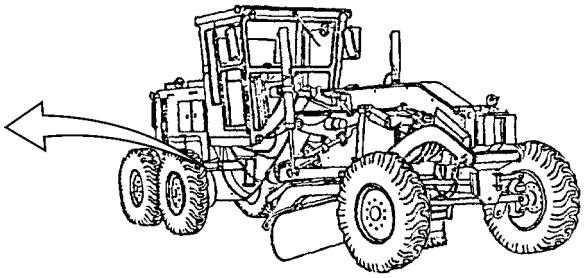

397-416

### *CLEANING AND INSPECTION*

Clean and inspect all parts in accordance with WP 0021 00.

### *INSTALLATION*

1. Connect lead (2) on signal flasher (3).
2. Install lead (2) and screw (1) in fuse box (4).

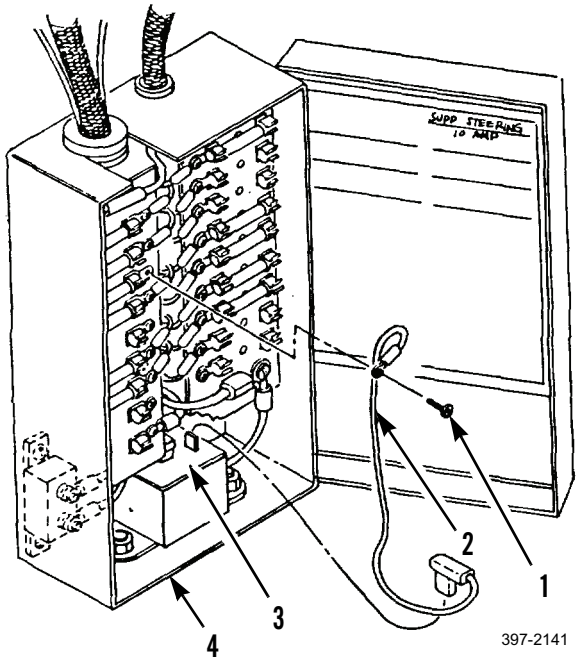


3. Connect battery cables (WP 0125 00).

**END OF WORK PACKAGE**

## DOME LIGHT SWITCH WIRING HARNESS REPLACEMENT (CCE MACHINE) 0139 00

### THIS WORK PACKAGE COVERS

Removal, Cleaning and Inspection, Installation

### INITIAL SETUP

**Maintenance Level**

Unit

**Tools and Special Tools**

Tool kit, general mechanic's (Item 89, WP 0348 00)

**Materials/Parts**

Rag, wiping (Item 35, WP 0349 00)

Tag, marker (Item 44, WP 0349 00)

**References**

WP 0021 00

**Equipment Conditions**

Machine parked on level ground (TM 5-3805-261-10)

Parking/emergency brake applied (TM 5-3805-261-10)

Implements lowered to ground (TM 5-3805-261-10)

Engine off (TM 5-3805-261-10)

Dome light switch removed (WP 0099 00)

Dome light removed (WP 0111 00)

Fuse box cover removed (WP 0097 00)

Battery cables disconnected (WP 0125 00)

### *REMOVAL*

**NOTE**

Tag dome light switch wiring harness before disconnecting to aid in installation.

Remove screw (2) and dome light switch wiring harness (3) from fuse box (1).

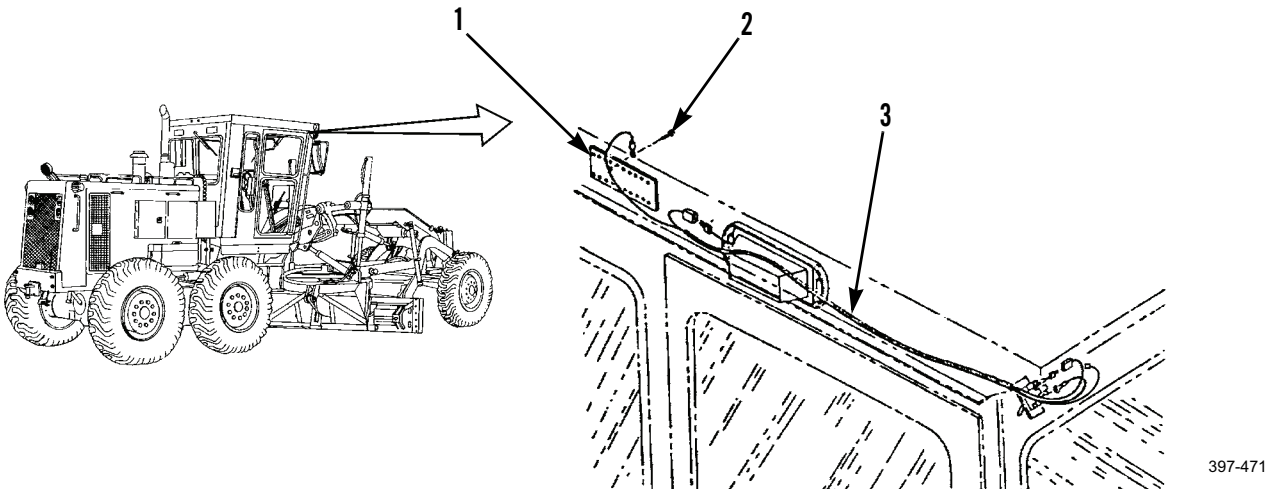

### *CLEANING AND INSPECTION*

Clean and inspect all parts in accordance with WP 0021 00.

### *INSTALLATION*

1. Install wiring harness (3) and screw (2) on fuse box (1).

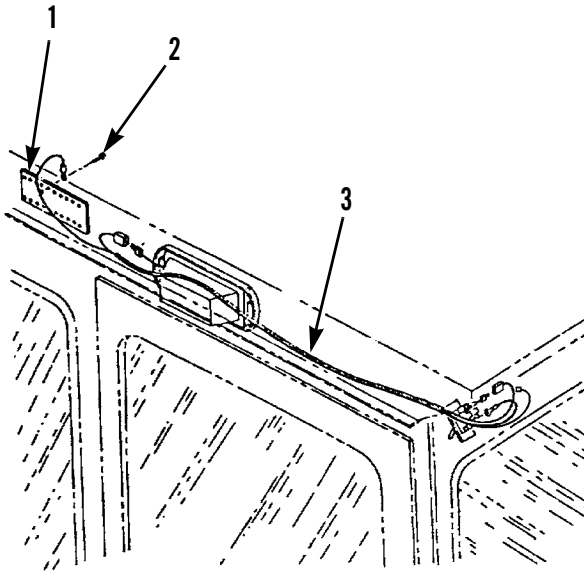

397-417

2. Install fuse box cover (WP 0097 00).
3. Install dome light (WP 0111 00).
4. Install dome light switch (WP 0099 00).
5. Connect battery cables (WP 0125 00).

**END OF WORK PACKAGE**

## DOME LIGHT DIMMER RESISTOR WIRING HARNESS REPLACEMENT (CCE MACHINE) 0140 00

### THIS WORK PACKAGE COVERS

Removal, Cleaning and Inspection, Installation

### INITIAL SETUP

**Maintenance Level**

Unit

**Tools and Special Tools**

Tool kit, general mechanic's (Item 89, WP 0348 00)

**Materials/Parts**

Rag, wiping (Item 35, WP 0349 00)

Strap, tie (2) (Item 43, WP 0349 00)

Tag, marker (Item 44, WP 0349 00)

Cable tie (2)

**References**

WP 0021 00

**Equipment Conditions**

Machine parked on level ground (TM 5-3805-261-10)

Parking/emergency brake applied (TM 5-3805-261-10)

Implements lowered to ground (TM 5-3805-261-10)

Engine off (TM 5-3805-261-10)

Dome light switch removed (WP 0099 00)

Dome light removed (WP 0111 00)

Upper cab storage compartment removed (WP 0189 00)

Battery cables disconnected (WP 0125 00)

### *REMOVAL*

1. Remove and discard two tie straps (1).

**NOTE**

Tag wiring harnesses before disconnecting to aid in installation.

2. Detach connectors of dome light dimmer resistor wiring harness (2) and wiring harness (4) from bracket (3).

**NOTE**

Tag wiring harnesses before disconnecting to aid in installation.

3. Remove wiring harness (2) from wiring harness (4).

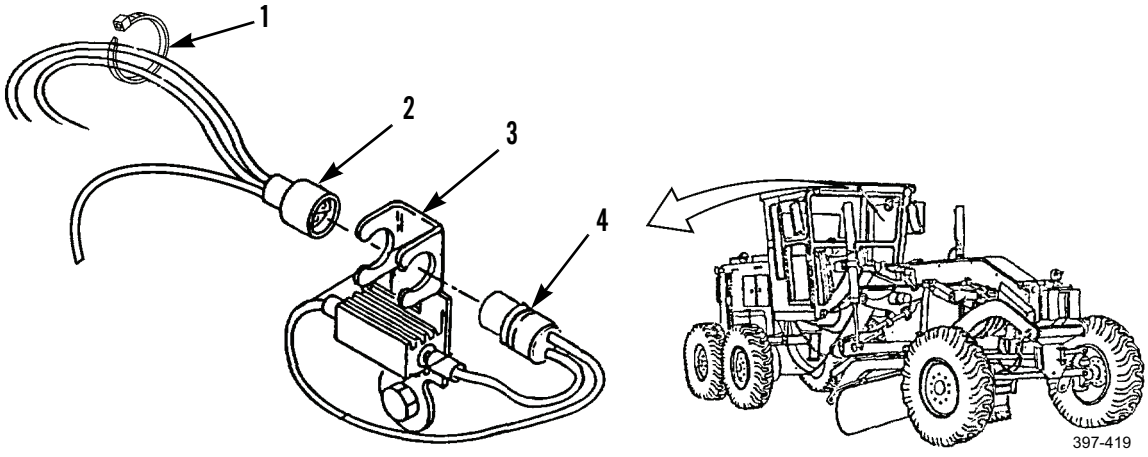

### *CLEANING AND INSPECTION*

Clean and inspect all parts in accordance with WP 0021 00.

### *INSTALLATION*

1. Install wiring harness (2) to wiring harness (4).
2. Attach connectors of wiring harness (2) and wiring harness (4) on bracket (3).
3. Install two new tie straps (1).

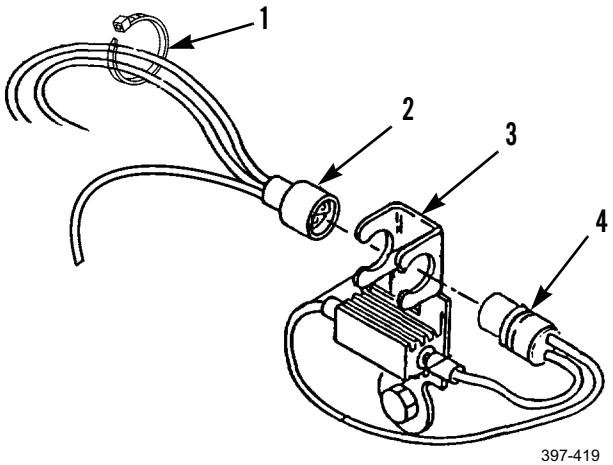

397-419

4. Install upper cab storage compartment (WP 0189 00).
5. Install dome light (WP 0111 00).
6. Install dome light switch (WP 0099 00).
7. Connect battery cables (WP 0125 00).

**END OF WORK PACKAGE**

## HORN WIRING HARNESS REPLACEMENT 0141 00

### THIS WORK PACKAGE COVERS

Removal, Cleaning and Inspection, Installation

### INITIAL SETUP

**Maintenance Level**

Unit

**Tools and Special Tools**

Tool kit, general mechanic's (Item 89, WP 0348 00)

**Materials/Parts**

Rag, wiping (Item 35, WP 0349 00)

Tag, marker (Item 44, WP 0349 00)

**References**

WP 0021 00

**Equipment Conditions**

Machine parked on level ground (TM 5-3805-261-10)

Parking/emergency brake applied (TM 5-3805-261-10)

Implements lowered to ground (TM 5-3805-261-10)

Engine off (TM 5-3805-261-10)

Battery cables disconnected (WP 0125 00)

### *REMOVAL*

1. Detach connectors of horn wiring harness (3) and wiring harness (1) from bracket (2).

**NOTE**

Tag wiring harnesses before disconnecting to aid in installation.

2. Disconnect wiring harness (3) from wiring harness (1).
3. Remove wiring harness (3) from horn (4).

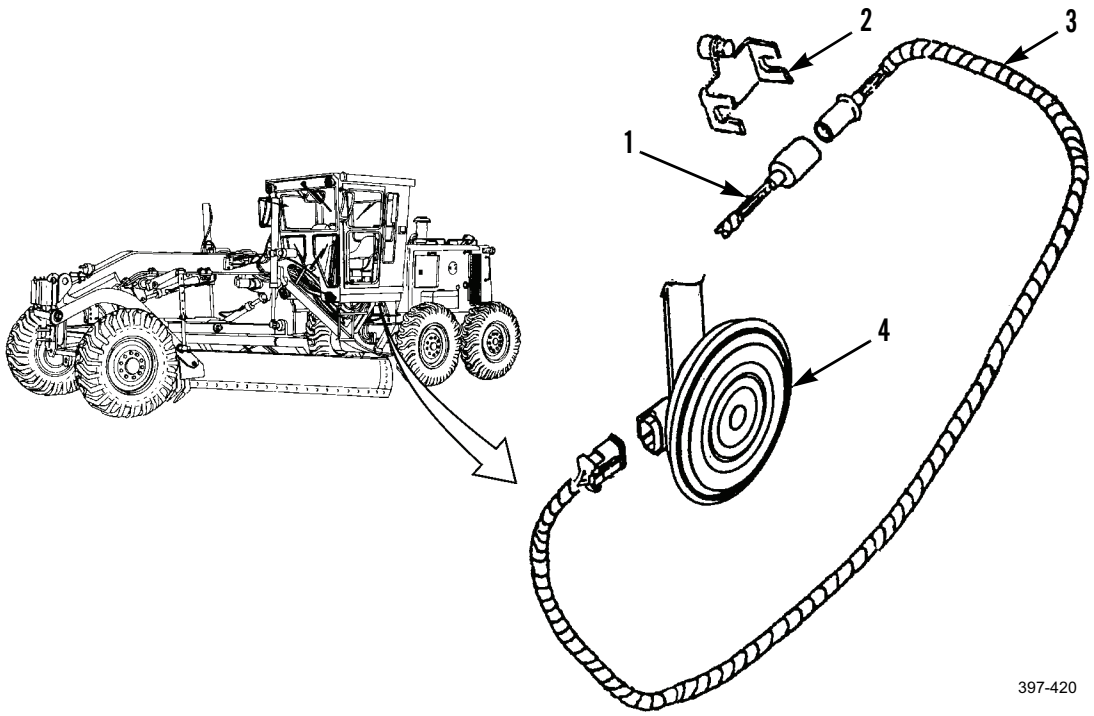

### *CLEANING AND INSPECTION*

Clean and inspect all parts in accordance with WP 0021 00.

### *INSTALLATION*

1. Connect wiring harness (3) on horn (4).
2. Install wiring harness (3) to wiring harness (1).
3. Attach connectors of horn wiring harness (3) and wiring harness (1) on bracket (2).

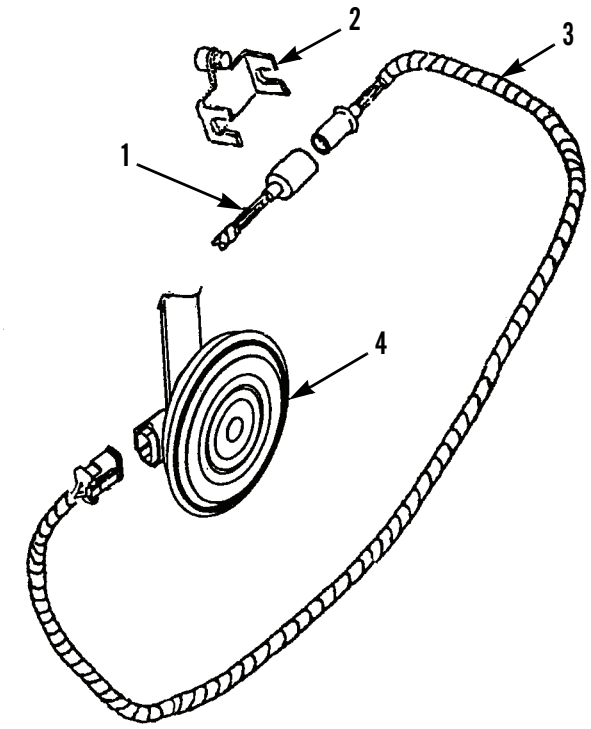


397-2144

4. Connect battery cables (WP 0125 00).

**END OF WORK PACKAGE**

## DISCONNECT SWITCH CABLE REPLACEMENT 0142 00

### THIS WORK PACKAGE COVERS

Removal, Cleaning and Inspection, Installation

### INITIAL SETUP

**Maintenance Level**

Unit

**Tools and Special Tools**

Tool kit, general mechanic's (Item 89, WP 0348 00)

**Materials/Parts**

Rag, wiping (Item 35, WP 0349 00)

Strap, tie (2) (Item 43, WP 0349 00)

Tag, marker (Item 44, WP 0349 00)

Lockwasher

**References**

WP 0021 00

**Equipment Conditions**

Machine parked on level ground (TM 5-3805-261-10)

Parking/emergency brake applied (TM 5-3805-261-10)

Implements lowered to ground (TM 5-3805-261-10)

Engine off (TM 5-3805-261-10)

Battery cables disconnected (WP 0125 00)

Left and right side plates removed from operator's panel console (WP 0193 00) (CCE and Type I machine)

## DISCONNECT SWITCH CABLE REPLACEMENT - CONTINUED 0142 00

### *REMOVAL*

**NOTE**

- Tag cable before disconnecting to aid in installation.
- For the CCE and Type II machines, the disconnect switch is located on the operator's console. For the Type I machine, the disconnect switch is located on the hood assembly. Instructions apply to both configurations with differences as indicated.

1. Remove nut (1) and lockwasher (2) and disconnect cable (3) from starting motor (8). Discard lockwasher.
2. For Type I machine, disregard steps 3 through 10 and go to step 11.
3. Remove and discard two tie straps (4).
4. Remove two bolts (7), washers (6), and clips (5) from inner-right-rear frame.

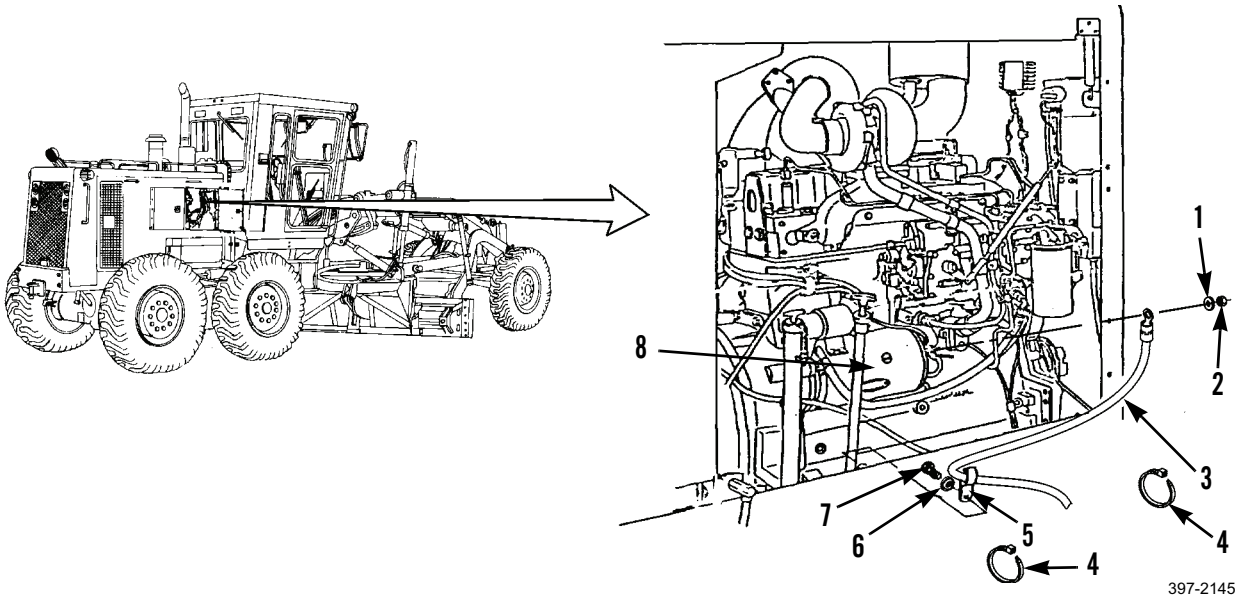


5. Remove two nuts (11) and washers (10) from bracket (14).
6. Remove clip (9) from hose.
7. Remove plate (12).
8. Separate two clamps (13) enough to pull cable (3) through.

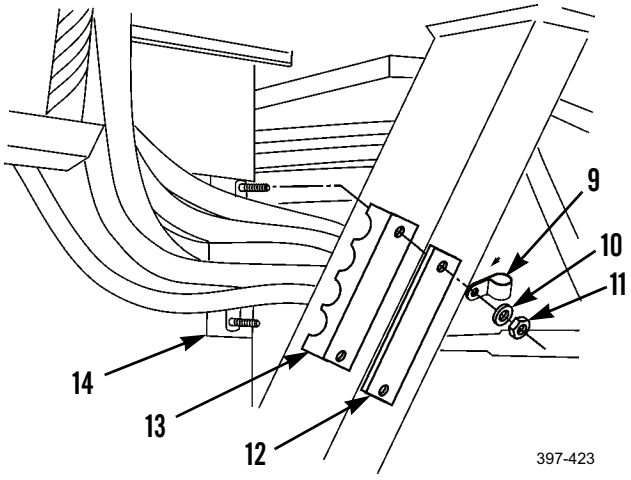

## DISCONNECT SWITCH CABLE REPLACEMENT - CONTINUED 0142 00

### *REMOVAL - CONTINUED*

9. Remove two bolts (18), washers (19), and clips (20) from under right side of operator compartment.
10. Remove bolt (15), washer (16), and clip (17) from inside operator panel console.
11. Remove two nuts (22), washers (21), and cables (3) from disconnect switch (23).

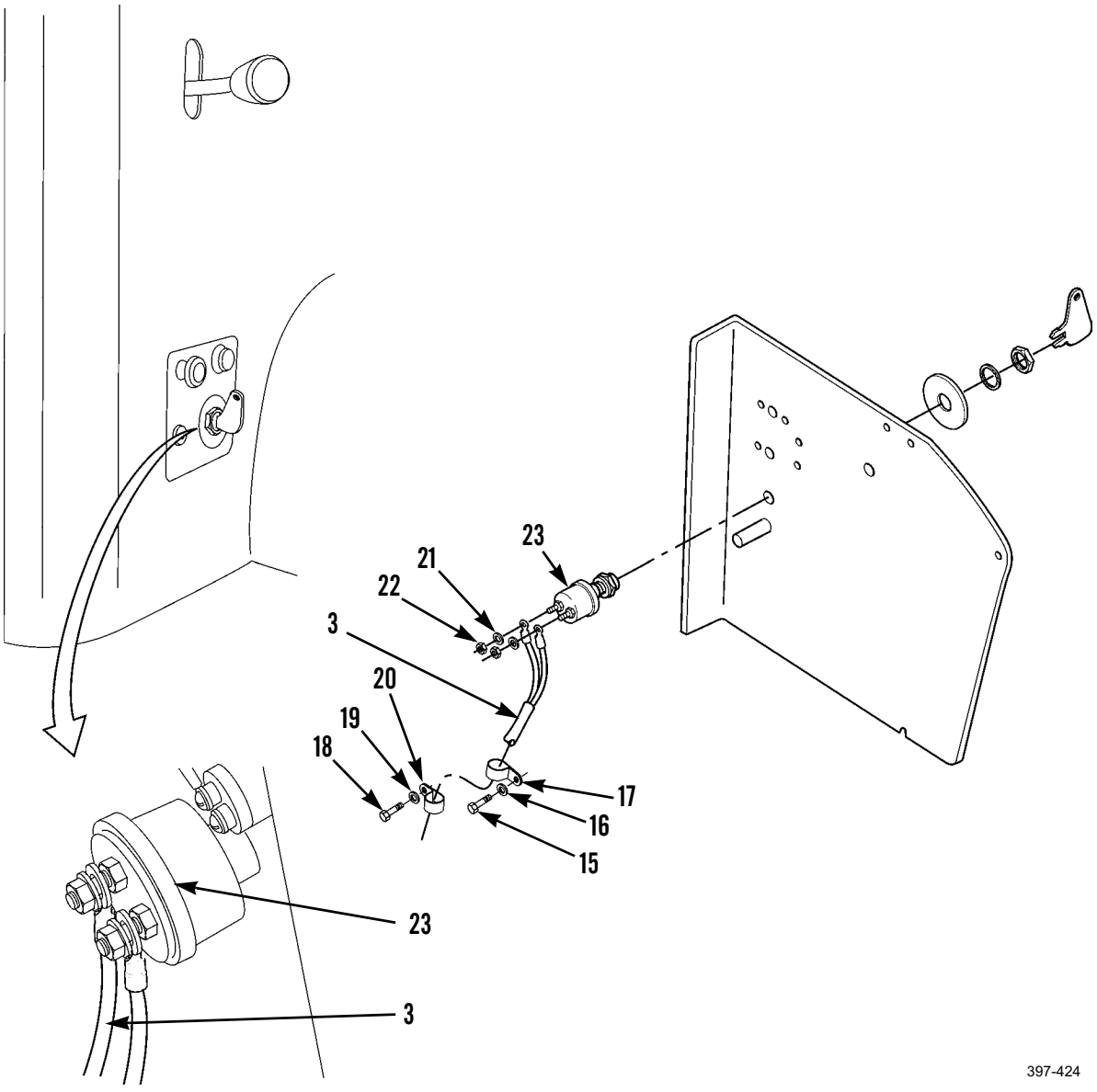


### *CLEANING AND INSPECTION*

Clean and inspect all parts in accordance with WP 0021 00.

### *INSTALLATION*

1. Connect cable (3) and install washer (21) and nut (22) on disconnect switch (23) inside operator panel console.
2. For Type I machine, disregard steps 3 through 14 and step 16, perform steps 15 and 17 only.
3. Install clip (17) on cable (3) inside operator panel console.
4. Install washer (16), bolt (15), and clip (17) to frame.
5. Install two clips (20) on cable (3) under right side of operator compartment.
6. Install two washers (19), bolts (18), and clips (20) to frame.

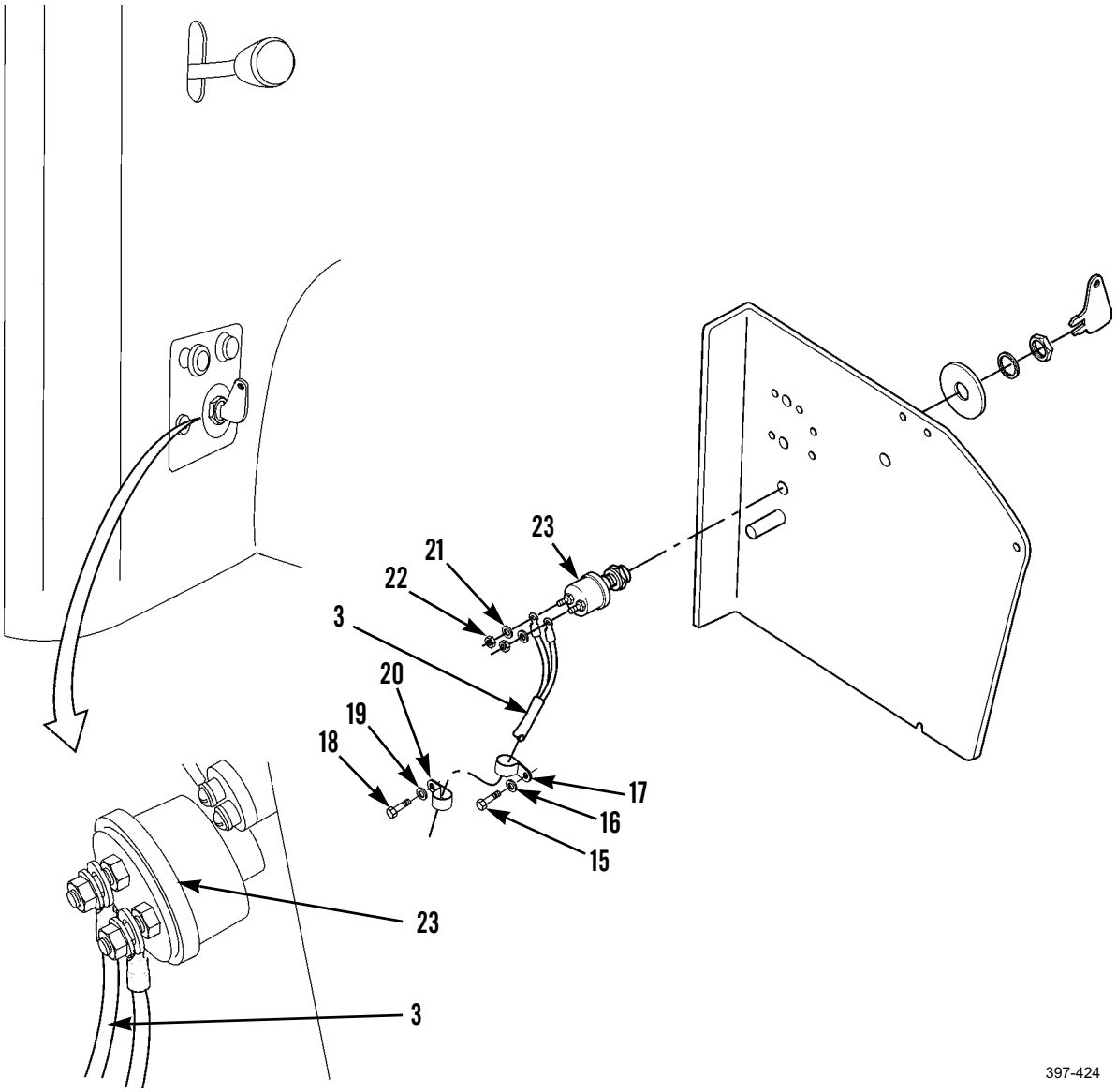

***INSTALLATION - CONTINUED***

7. Position cable (3) between two clamps (13).
8. Install two clamps (13) and plate (12).
9. Install clip (9) on hose.
10. Install two washers (10) and nuts (11) on bracket (14).

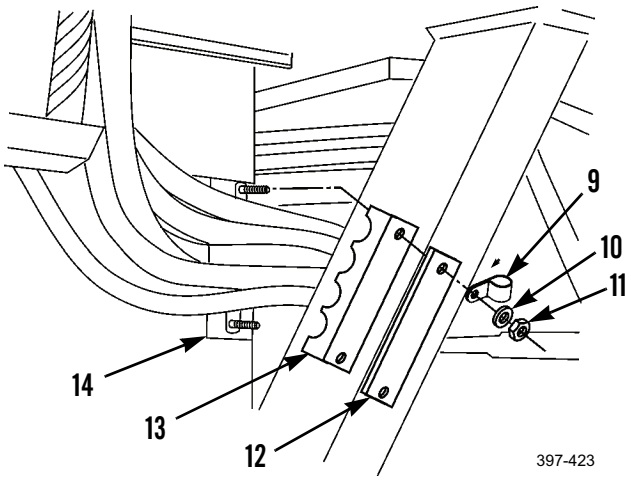


11. Position cable (3) through rear frame, under engine and across to right side of engine.
12. Install two clips (5) on cable (3) on inner-right-rear frame.
13. Install two washers (6) and bolts (7).
14. Install two new tie straps (4).
15. Install cable (3), new lockwasher (2), and nut (1) on starting motor (8).

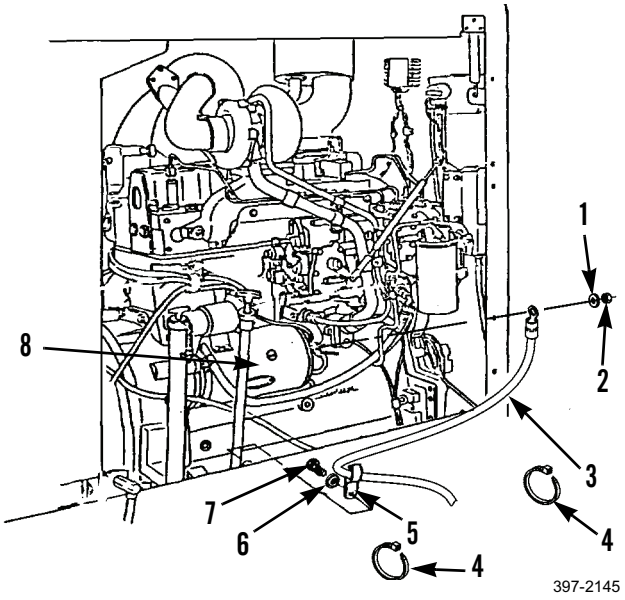


16. Install left and right side plates on operator panel console (WP 0193 00).
17. Connect battery cables (WP 0125 00).

**END OF WORK PACKAGE**

## HEATER WIRING HARNESS REPLACEMENT (CCE MACHINE) 0143 00

### THIS WORK PACKAGE COVERS

Removal, Cleaning and Inspection, Installation

### INITIAL SETUP

**Maintenance Level**

Unit

**Tools and Special Tools**

Tool kit, general mechanic's (Item 89, WP 0348 00)

**Materials/Parts**

Rag, wiping (Item 35, WP 0349 00)

Tag, marker (Item 44, WP 0349 00)

Lockwasher

**References**

WP 0021 00

**Equipment Conditions**

Machine parked on level ground (TM 5-3805-261-10)

Parking/emergency brake applied (TM 5-3805-261-10)

Implements lowered to ground (TM 5-3805-261-10)

Engine off (TM 5-3805-261-10)

Battery cables disconnected (WP 0125 00)

Seat removed (WP 0200 00)

### *REMOVAL*

**NOTE**

Tag wiring harnesses and lead before disconnecting to aid in installation.

1. Disconnect heater wiring harness (6) from main wiring harness (1).
2. Disconnect wiring harness (6) from heater lead (2).
3. Remove bolt (5), lockwasher (4), washer (3), and wiring harness (6). Discard lockwasher.

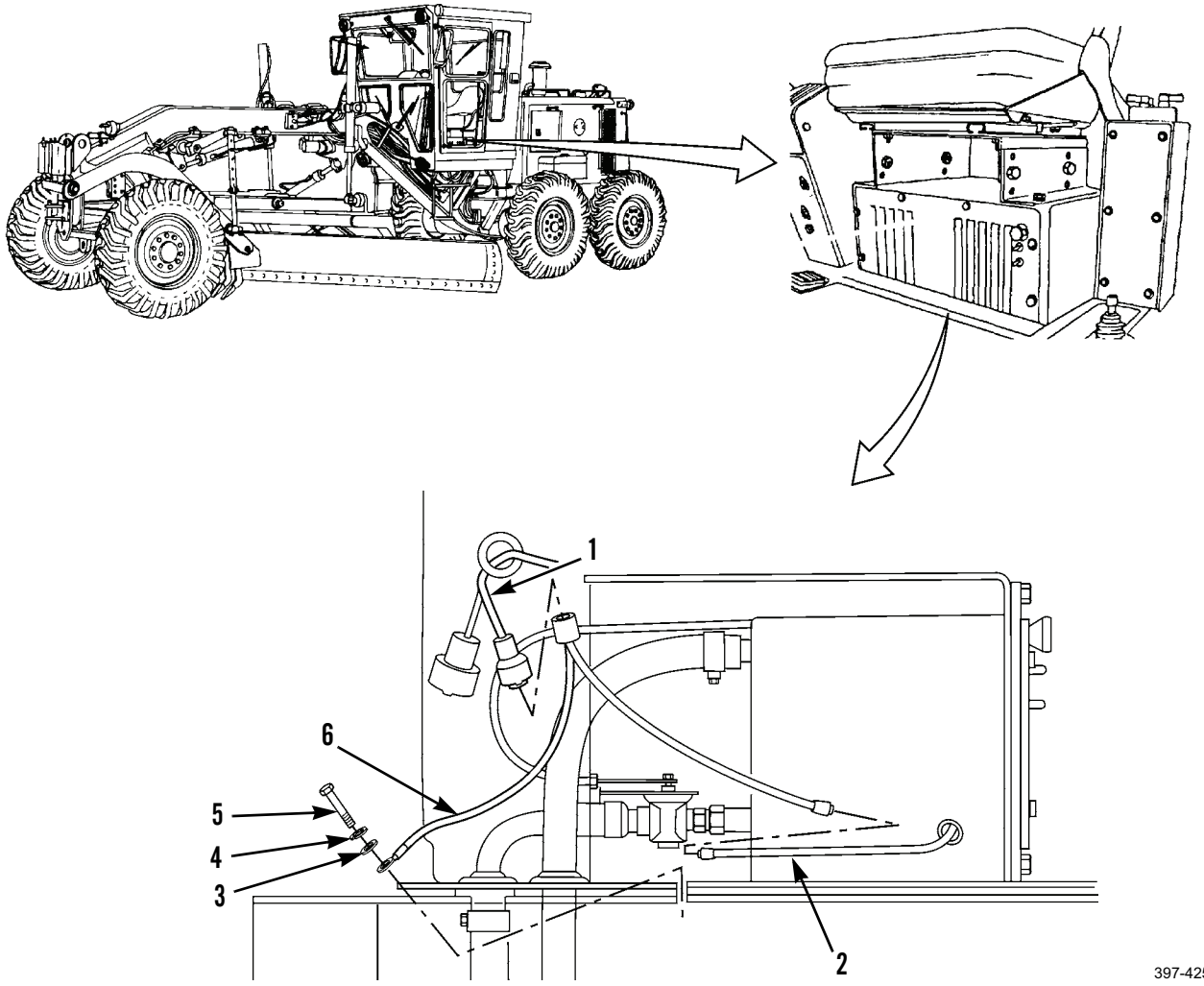


### *CLEANING AND INSPECTION*

Clean and inspect all parts in accordance with WP 0021 00.

### *INSTALLATION*

1. Position wiring harness (6) and install washer (3), new lockwasher (4), and bolt (5).
2. Connect wiring harness (6) to lead (2).
3. Install wiring harness (6) to wiring harness (1).
4. Install seat (WP 0200 00).
5. Connect battery cables (WP 0125 00).

**END OF WORK PACKAGE**

## LEFT- AND RIGHT-HAND BLADE FLOAT HARNESSES REPLACEMENT (CCE MACHINE) 0144 00

### THIS WORK PACKAGE COVERS

Removal, Cleaning and Inspection, Installation

### INITIAL SETUP

**Maintenance Level**

Unit

**Tools and Special Tools**

Tool kit, general mechanic's (Item 89, WP 0348 00)

**Materials/Parts**

Rag, wiping (Item 35, WP 0349 00)

Tag, marker (Item 44, WP 0349 00)

Gasket

**References**

WP 0021 00

**Equipment Conditions**

Machine parked on level ground (TM 5-3805-261-10)

Parking/emergency brake applied (TM 5-3805-261-10)

Implements lowered to ground (TM 5-3805-261-10)

Engine off (TM 5-3805-261-10)

Battery cables disconnected (WP 0125 00)

### *REMOVAL*

**NOTE**

This procedure covers replacement for the left-hand blade float wiring harness. Follow these instructions for the right-hand blade float wiring harness.

1. Remove two screws (1), cover (2), and gasket (3) from blade float limit switch (4). Discard gasket.

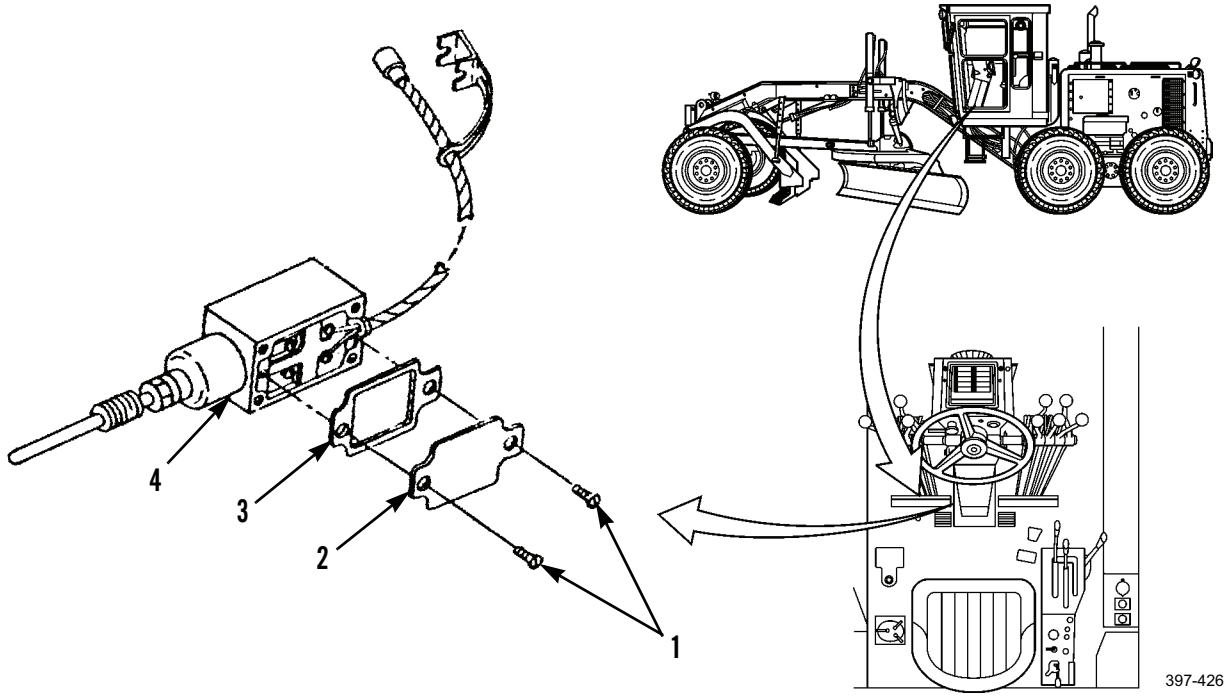

### *REMOVAL - CONTINUED*

2. Loosen but do not remove two screws (5).

**NOTE**

Tag wiring harnesses before disconnecting to aid in installation.

3. Disconnect blade float wiring harness (7) from two screws (5).
4. Detach clip (6) from wiring harness (7) and main wiring harness under left side of cab.
5. Remove wiring harness (7) from main wiring harness.
6. Remove clip (6) and grommet (8) from wiring harness (7).

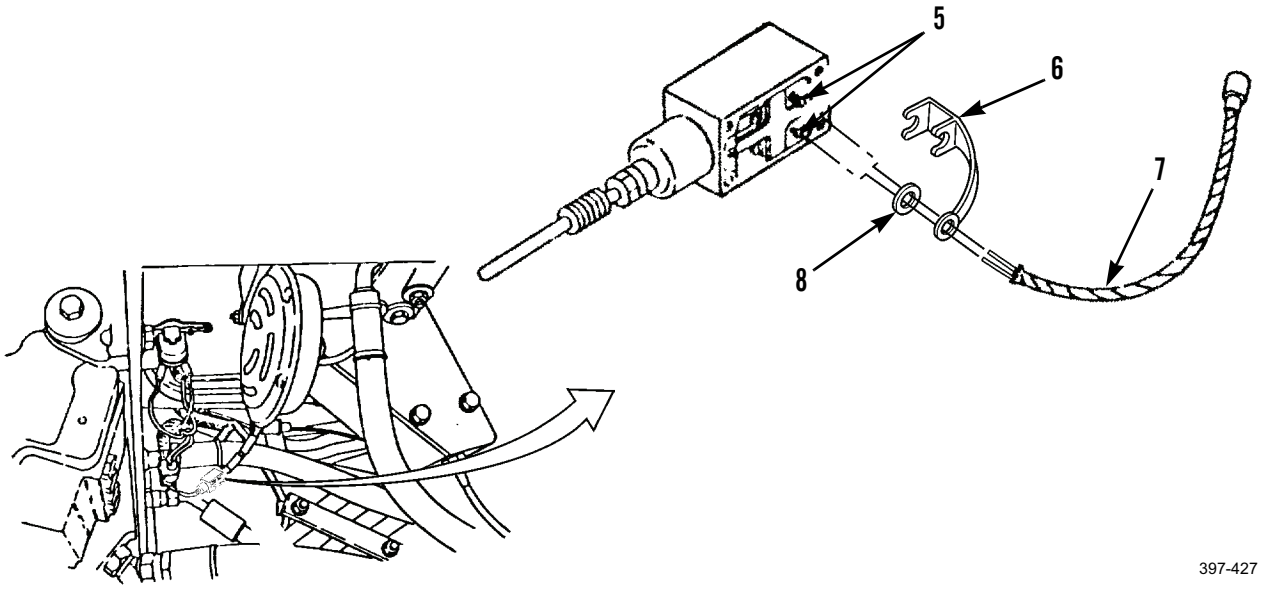


### *CLEANING AND INSPECTION*

Clean and inspect all parts in accordance with WP 0021 00.

### *INSTALLATION*

1. Install grommet (8) and clip (6) on wiring harness (7).
2. Connect wiring harness (7) to main wiring harness under left side of cab.
3. Attach clip (6) on wiring harness (7) and main wiring harness.
4. Install wiring harness (7) to two screws (5).
5. Tighten two screws (5).

***INSTALLATION - CONTINUED***

6. Install new gasket (3), cover (2), and two screws (1) on blade float limit switch (4).

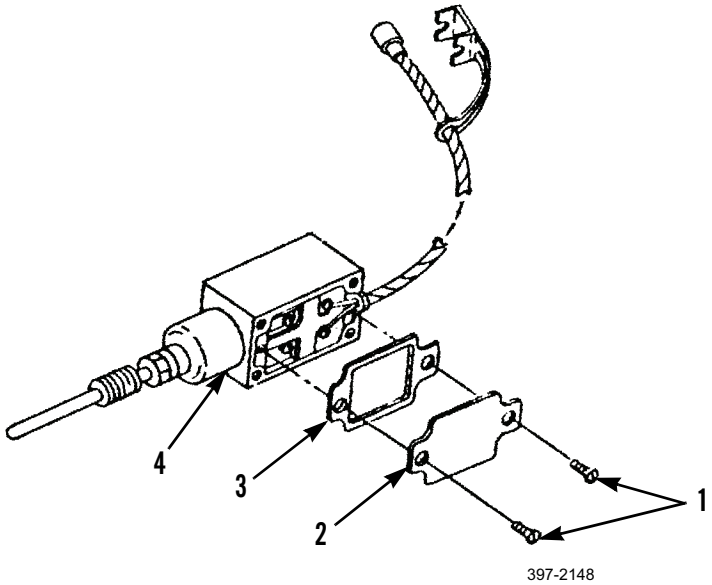


397-2148

7. Connect battery cables (WP 0125 00).

**END OF WORK PACKAGE**

## SUPPLEMENTAL STEERING PUMP WIRING HARNESSES REPLACEMENT 0145 00

### THIS WORK PACKAGE COVERS

Removal, Cleaning and Inspection, Installation

### INITIAL SETUP

**Maintenance Level**

Unit

**Tools and Special Tools**

Tool kit, general mechanic's (Item 89, WP 0348 00)

**Materials/Parts**

Rag, wiping (Item 35, WP 0349 00)

Strap, tie (Item 43, WP 0349 00)

Tag, marker (Item 44, WP 0349 00)

**References**

WP 0021 00

**Equipment Conditions**

Machine parked on level ground (TM 5-3805-261-10)

Parking/emergency brake applied (TM 5-3805-261-10)

Implements lowered to ground (TM 5-3805-261-10)

Engine off (TM 5-3805-261-10)

Battery cables disconnected (WP 0125 00)

***REMOVAL***

**NOTE**

Tag all wiring harnesses before disconnecting to aid in installation.

1. Remove nut (1) and washers (2 and 3) and disconnect wiring harness (4) from supplemental steering pump (7).
2. Remove nut (10) and washers (8 and 9) and disconnect wiring harness (5) from supplemental steering pump (7).
3. Remove and discard tie strap (6).
4. Remove nut (27), washers (25 and 26), and wiring harness (4) from supplemental steering switch (28).

**NOTE**

The Type I machine has an additional wire connected to the supplemental steering switch.

5. For Type I machines, remove two nuts (11), two washers (12), wire (13), wire (14), and wire (15) from supplemental steering switch (28).
6. For CCE and Type II machines, remove two nuts (11), two washers (12), wire (14), and wire (15) from supplemental steering switch (28).
7. Remove nut (20), washers (18 and 19), wire (16), and disconnect wiring harness (17) from supplemental steering switch (28).
8. Remove nut (24), washer (23), clamp (22), and bolt (21).

## SUPPLEMENTAL STEERING PUMP WIRING HARNESSES REPLACEMENT - CONTINUED 0145 00

***REMOVAL - CONTINUED***

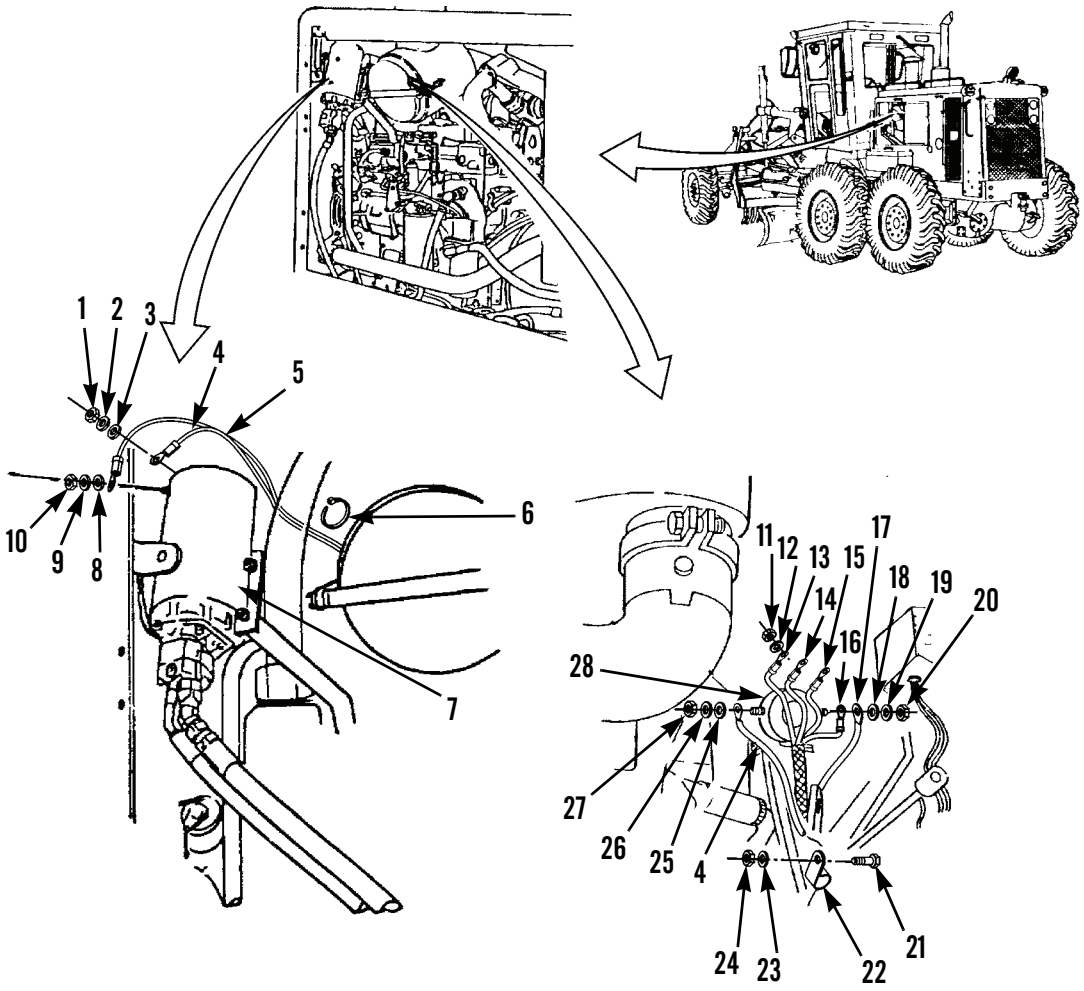

### *REMOVAL - CONTINUED*

9. Remove bolt (39), washer (38), and clamp (37) from right side of engine.
10. Remove bolt (40), washer (41), and clamp (42) from right side of engine.
11. Remove nut (30), washers (28 and 29), and wiring harness (16) from starting motor solenoid (36).
12. Remove nut (32), washers (33 and 34), wire (31), three wires (35), and wiring harness (5) from starting motor solenoid (36).

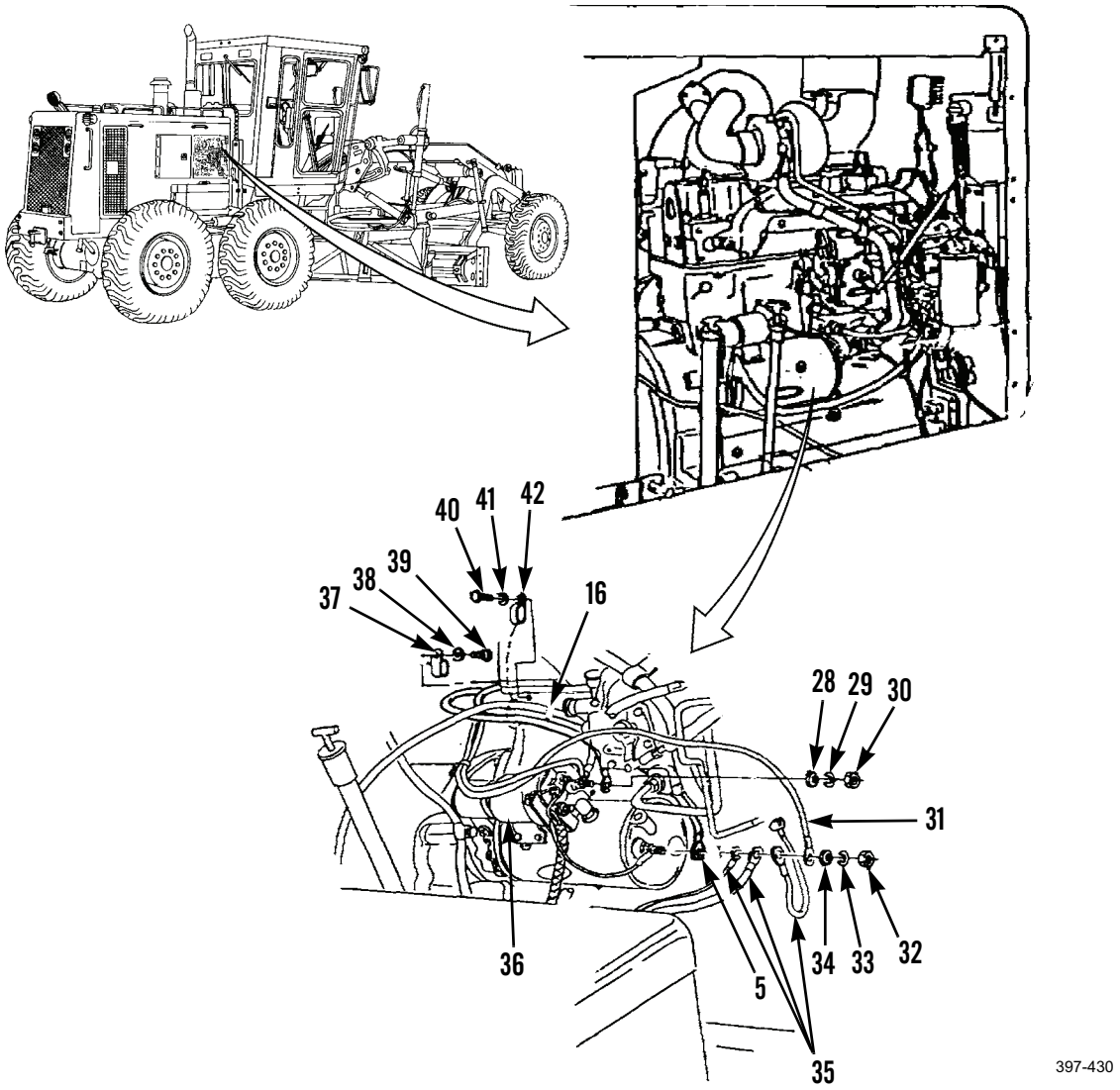


### *CLEANING AND INSPECTION*

Clean and inspect all parts in accordance with WP 0021 00.

### *INSTALLATION*

1. Connect three wires (35), wire (31), and wiring harness (5). Install washers (34 and 33) and nut (32) on starting motor solenoid (36).
2. Connect wiring harness (16) and install washers (29 and 28) and nut (30) on starting motor solenoid (36).
3. Install clamp (42), washer (41), and bolt (40) on right side of engine.

## SUPPLEMENTAL STEERING PUMP WIRING HARNESSES REPLACEMENT - CONTINUED 0145 00

### *INSTALLATION - CONTINUED*

4. Install clamp (37), washer (38), and bolt (39) on right side of engine.
5. Install bolt (21), clamp (22), washer (23), and nut (24).
6. Install wire (16), wiring harness (17), washers (19 and 18), and nut (20) on supplemental steering switch (28).
7. For Type I machines, install wire (15), wire (14), wire (13), two washers (12), and two nuts (11) to supplemental steering switch (28).
8. For CCE and Type II machines, install wire (15), wire (14), two washers (12), and two nuts (11) to supplemental steering switch (28).
9. Connect wiring harness (4) and install washers (26 and 25) and nut (27) on supplemental steering switch (28).
10. Install new tie strap (6).
11. Install wiring harness (5), washers (9 and 8), and nut (10) on supplemental steering pump (7).
12. Install wiring harness (4), washers (3 and 2), and nut (1) on supplemental steering pump (7).

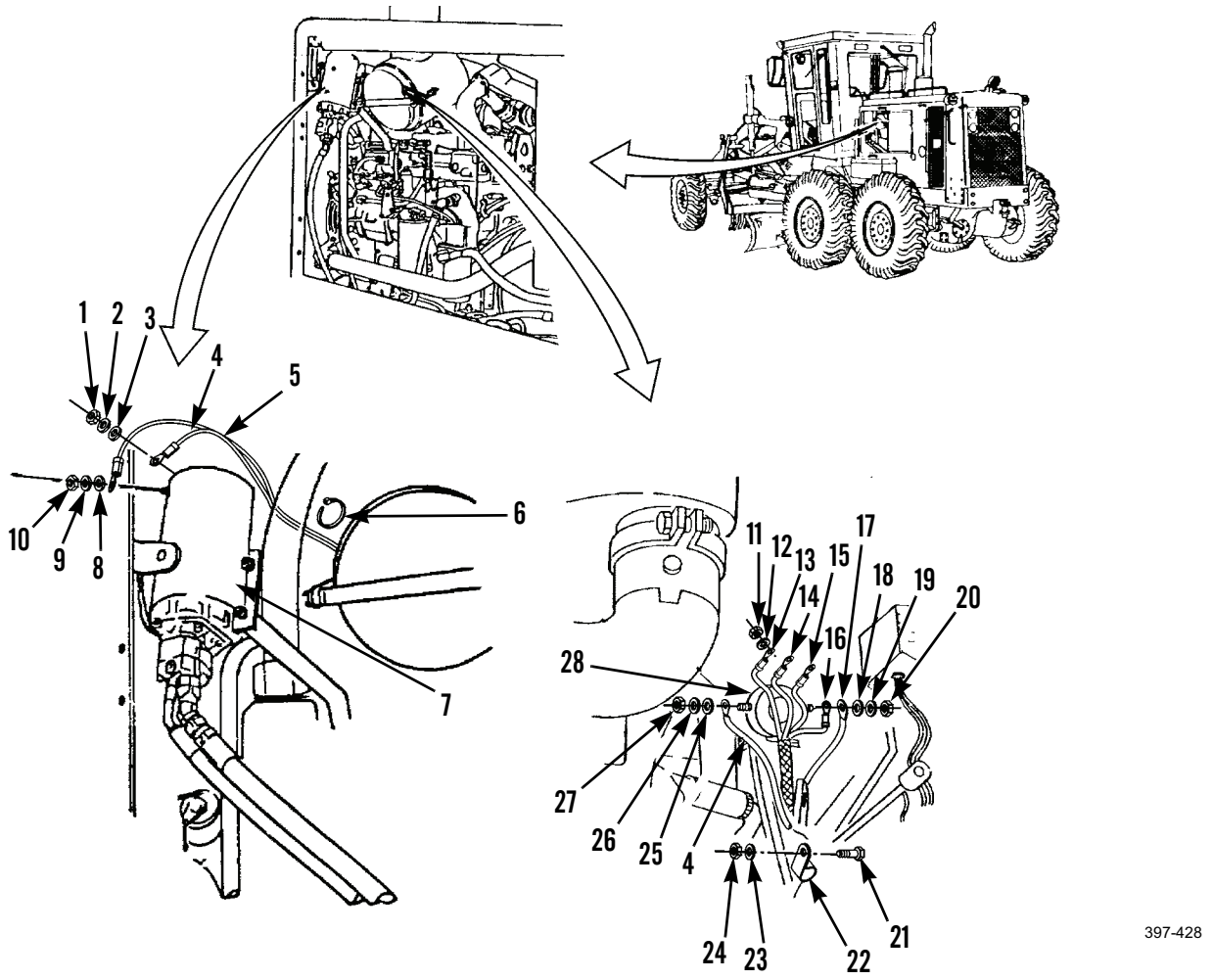


13. Connect battery cables (WP 0125 00).

**END OF WORK PACKAGE**

## RADIO INTERFERENCE SUPPRESSION REPLACEMENT (MODELS 130G, 130GSCE, AND 130GNSCE) 0146 00

### THIS WORK PACKAGE COVERS

Removal, Cleaning and Inspection, Installation

### INITIAL SETUP

**Maintenance Level**

Unit

**Tools and Special Tools**

Tool kit, general mechanic's (Item 89, WP 0348 00)

**Materials/Parts**

Rag, wiping (Item 35, WP 0349 00)

Tag, marker (Item 44, WP 0349 00)

Lockwasher (8)

**References**

WP 0021 00

**Equipment Conditions**

Machine parked on level ground (TM 5-3805-261-10)

Parking/emergency brake applied (TM 5-3805-261-10)

Implements lowered to ground (TM 5-3805-261-10)

Engine off (TM 5-3805-261-10)

Battery cables disconnected (WP 0125 00)

Right side screen door opened (WP 0055 00)

## RADIO INTERFERENCE SUPPRESSION REPLACEMENT (MODELS 130G, 130GSCE, AND 130GNSCE) - CONTINUED 0146 00

***REMOVAL***

**NOTE**

- To remove the horn radio interface suppression capacitor, perform steps 1 through 3. To remove the alternator radio suppression capacitor, perform steps 4 through 7.
- Tag all wire assemblies before disconnecting to aid in installation.

1. Remove screw (5) and lockwasher (4) and disconnect wire assembly (3) from horn (6) under front-left of cab. Discard lockwasher.
2. Remove screw (1), lockwasher (2), and wire assembly (3) from horn radio interface suppression capacitor (9). Discard lockwasher.
3. Remove bolt (7), lockwasher (8), horn radio interface suppression capacitor (9), and lockwasher (10). Discard lockwashers.

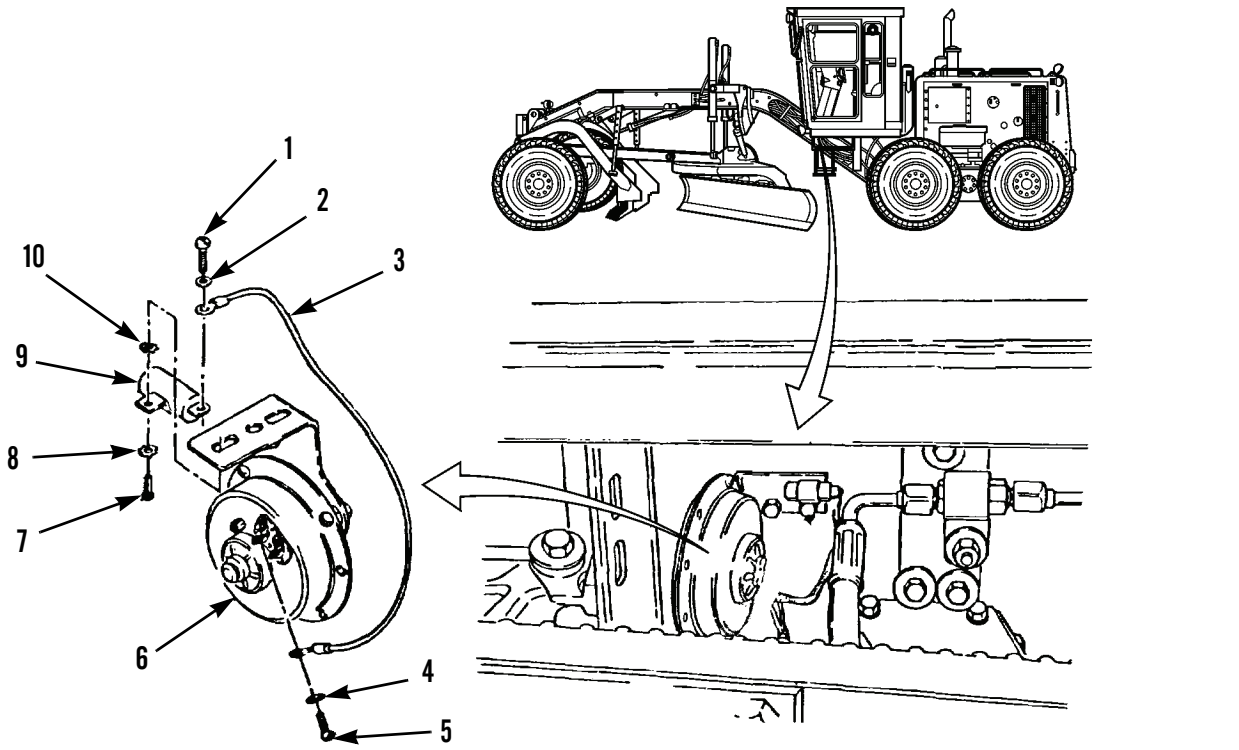


397-431

4. Disconnect wire assembly (19) from alternator (20).
5. Remove screw (14) and lockwasher (15) and disconnect wire assemblies (13 and 16). Discard lockwasher.
6. Remove screw (24), wire assembly (13), and lockwasher (23) from alternator radio suppression capacitor (22). Discard lockwasher.
7. Remove screw (11), lockwasher (12), disconnect wire assembly (17), remove lockwasher (18), alternator radio suppression capacitor (22), and lockwasher (21). Discard lockwashers.

***REMOVAL - CONTINUED***

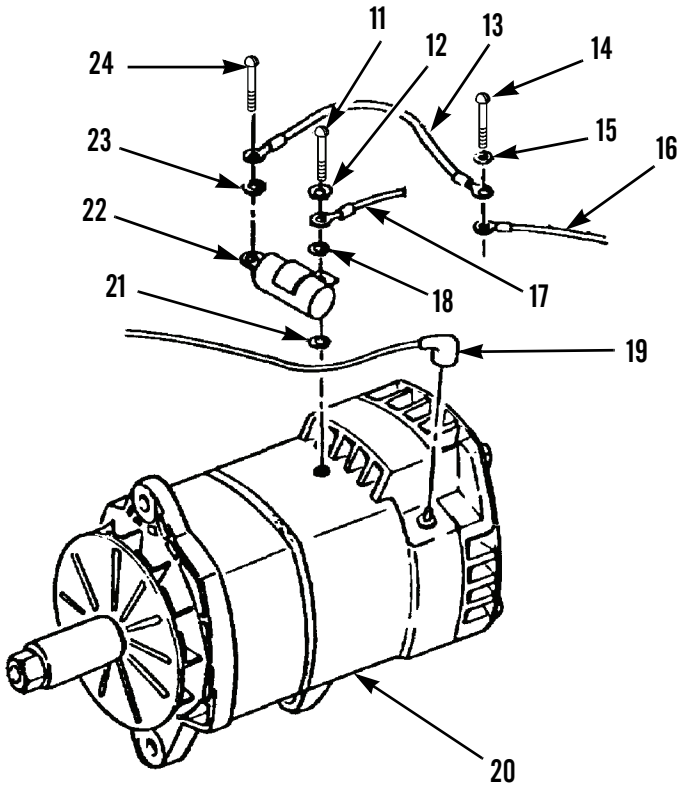


***CLEANING AND INSPECTION***

Clean and inspect all parts in accordance with WP 0021 00.

***INSTALLATION***

**NOTE**

To install the alternator radio suppression capacitor, perform steps 1 through 4. To install the horn radio interface suppression capacitor, perform steps 5 through 7.

1. Install new lockwasher (21), alternator radio suppression capacitor (22), new lockwasher (18), connect wire assembly (17), install new lockwasher (12), and screw (11).
2. Install new lockwasher (23), connect wire assembly (13), and install screw (24) on alternator radio suppression capacitor (22).
3. Connect wire assembly (16) and install wire assembly (13), new lockwasher (15), and screw (14).
4. Connect wire assembly (19) on alternator (20).

## RADIO INTERFERENCE SUPPRESSION REPLACEMENT (MODELS 130G, 130GSCE, AND 130GNSCE) - CONTINUED 0146 00

### *INSTALLATION - CONTINUED*

5. Install new lockwasher (10), horn radio interface suppression capacitor (9), new lockwasher (8), and bolt (7) to horn (6) under front-left of cab.
6. Connect wire assembly (3) and install new lockwasher (2) and screw (1) to horn radio interface suppression capacitor (9).
7. Install wire assembly (3), new lockwasher (4), and screw (5).

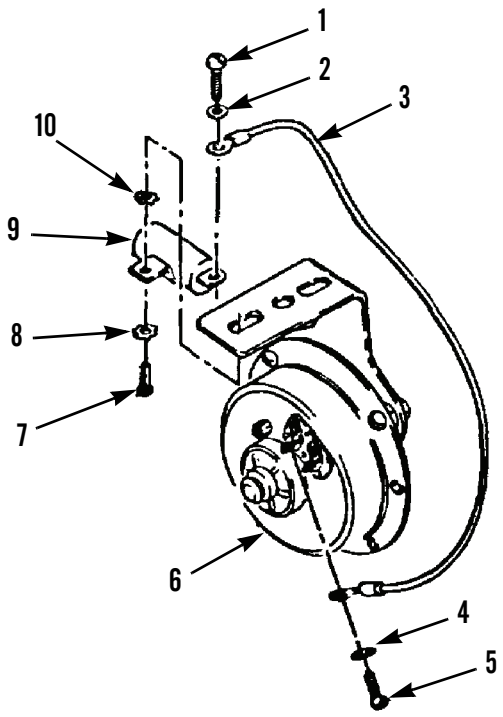

397-2115

8. Close right side screen door (WP 0055 00).
9. Connect battery cables (WP 0125 00).

**END OF WORK PACKAGE**

## CHANGING TRANSMISSION AND DIFFERENTIAL OIL 0147 00

### THIS WORK PACKAGE COVERS

Draining, Cleaning and Inspection, Refilling

### INITIAL SETUP

**Maintenance Level**

Unit

**Tools and Special Tools**

Tool kit, general mechanic's (Item 89, WP 0348 00)

Shop equipment, common no. 1 (Item 75, WP 0348 00)

**Materials/Parts**

Rag, wiping (Item 35, WP 0349 00)

Oil, lubricating (Item 26, 27, or 29, WP 0349 00)

Transmission breather

**References**

WP 0020 00

WP 0022 00

WP 0153 00

**Equipment Conditions**

Machine parked on level ground (TM 5-3805-261-10)

Parking/emergency brake applied (TM 5-3805-261-10)

Implements lowered to ground (TM 5-3805-261-10)

Engine off (TM 5-3805-261-10)

Battery disconnect switch in OFF position (TM 5-3805-261-10)

Right side engine doors opened (TM 5-3805-261-10)

Left side screen door opened (WP 0055 00)



**WARNING**



- Exercise care when working with hot oil or components saturated with hot oil. Allow to cool before handling. Failure to follow this warning may result in injury to personnel.
- Oil is very slippery. Immediately wipe up any spills. Failure to follow this warning may cause injury to personnel.

### *DRAINING*

1. Position drain pan under transmission case (4), transfer gear case (5), and differential case (6).
2. Remove drain plug (1) from differential case (6) and allow to drain.
3. Install drain plug (1) on differential case (6).
4. Remove drain plug (2) from transfer gear case (5) and allow to drain.
5. Install drain plug (2) on transfer gear case (5).
6. Remove drain plug (3) from transmission case (4) and allow to drain.
7. Install drain plug (3) on transmission case (4).

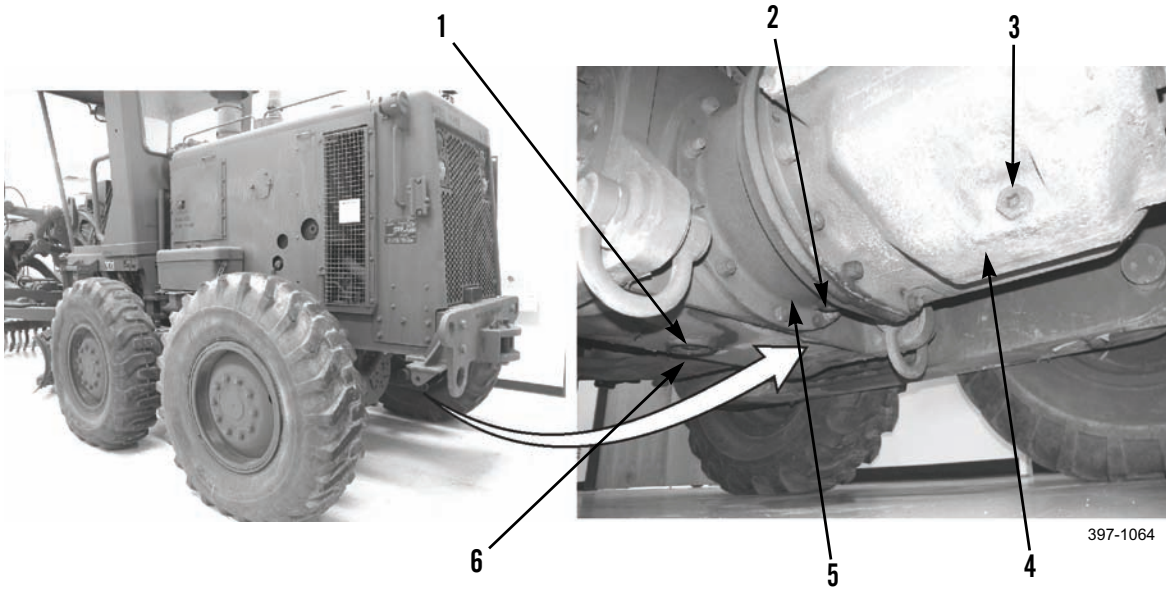


8. Replace transmission oil filter (WP 0153 00).
9. Remove transmission breather (7) from top of transmission and discard.

### *CLEANING AND INSPECTION*

Clean and inspect all parts in accordance with WP 0020 00.

### *REFILLING*

1. Install new breather (7) on top of transmission.

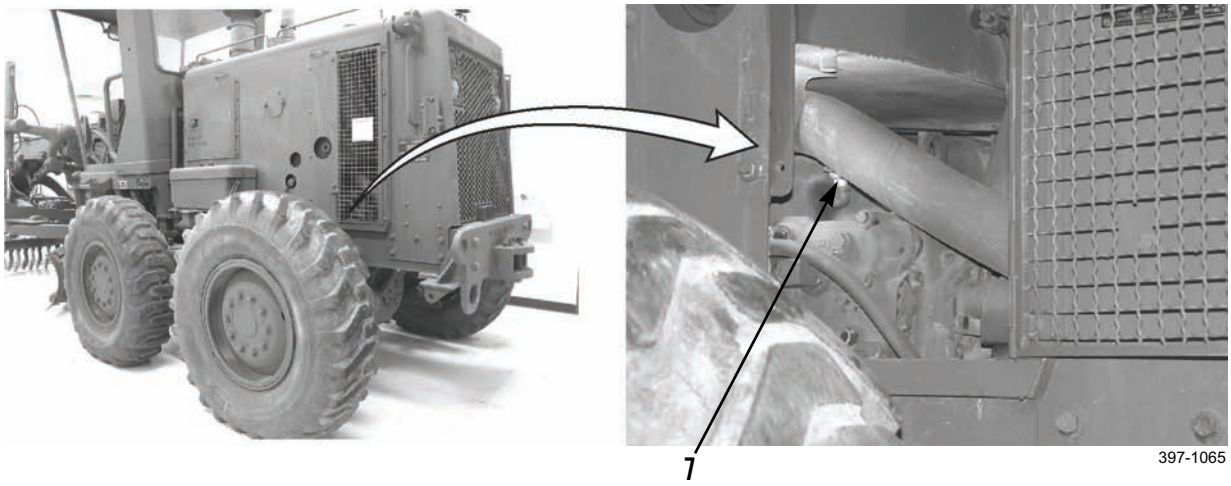


2. Remove transmission/differential fill cap (8).
3. Add oil to transmission/differential through fill tube (10). See *Preventive Maintenance Checks and Services* for transmission/differential oil capacity (WP 0022 00).
4. Check oil level with dipstick (9). Oil should be at COLD SAFE START mark.
5. Install transmission/differential fill cap (8).
6. Close left side screen door (WP 0055 00).
7. Close right side engine doors (TM 5-3805-261-10).
8. Turn battery disconnect switch to ON position and start engine (TM 5-3805-261-10).
9. Operate machine until transmission is at normal operating temperature (TM 5-3805-261-10).
10. Open right side engine doors (TM 5-3805-261-10).
11. With engine at low idle, check oil level with dipstick (9). Oil should be between ADD and FULL marks.
12. If necessary, remove fill cap (8) and add oil until level is at FULL mark.
13. Install fill cap (8) and shut down engine.

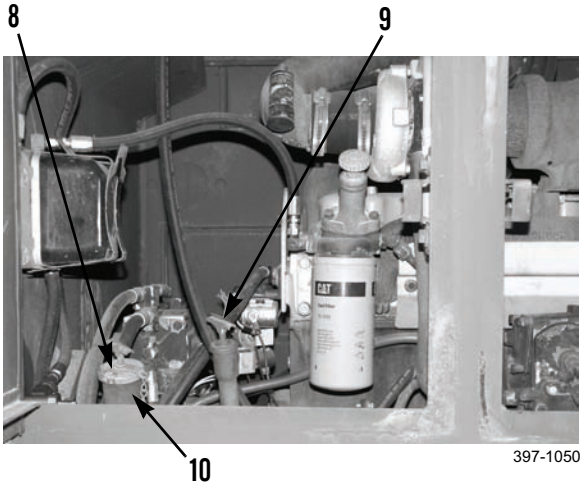


14. Inspect for oil leaks.
15. Close right side engine doors (TM 5-3805-261-10).
16. Close left side screen door (WP 0051 00).

**END OF WORK PACKAGE**

## TRANSMISSION MODULATION CONTROL MAINTENANCE 0148 00

### THIS WORK PACKAGE COVERS

Removal, Cleaning and Inspection, Installation, Adjustment

### INITIAL SETUP

**Maintenance Level**

Unit

**Tools and Special Tools**

Tool kit, general mechanic's (Item 89, WP 0348 00)

**Materials/Parts**

Rag, wiping (Item 35, WP 0349 00)

**References**

WP 0020 00

**Equipment Conditions**

Machine parked on level ground (TM 5-3805-261-10)

Parking/emergency brake applied (TM 5-3805-261-10)

Implements lowered to ground (TM 5-3805-261-10)

Engine off (TM 5-3805-261-10)

Battery disconnect switch in OFF position (TM 5-3805-261-10)

**NOTE**

Enclosed cab shown. Procedure is identical for all models.

### *REMOVAL*

1. Remove two screws (1), washers (2), and pedal (3) from lever (4).

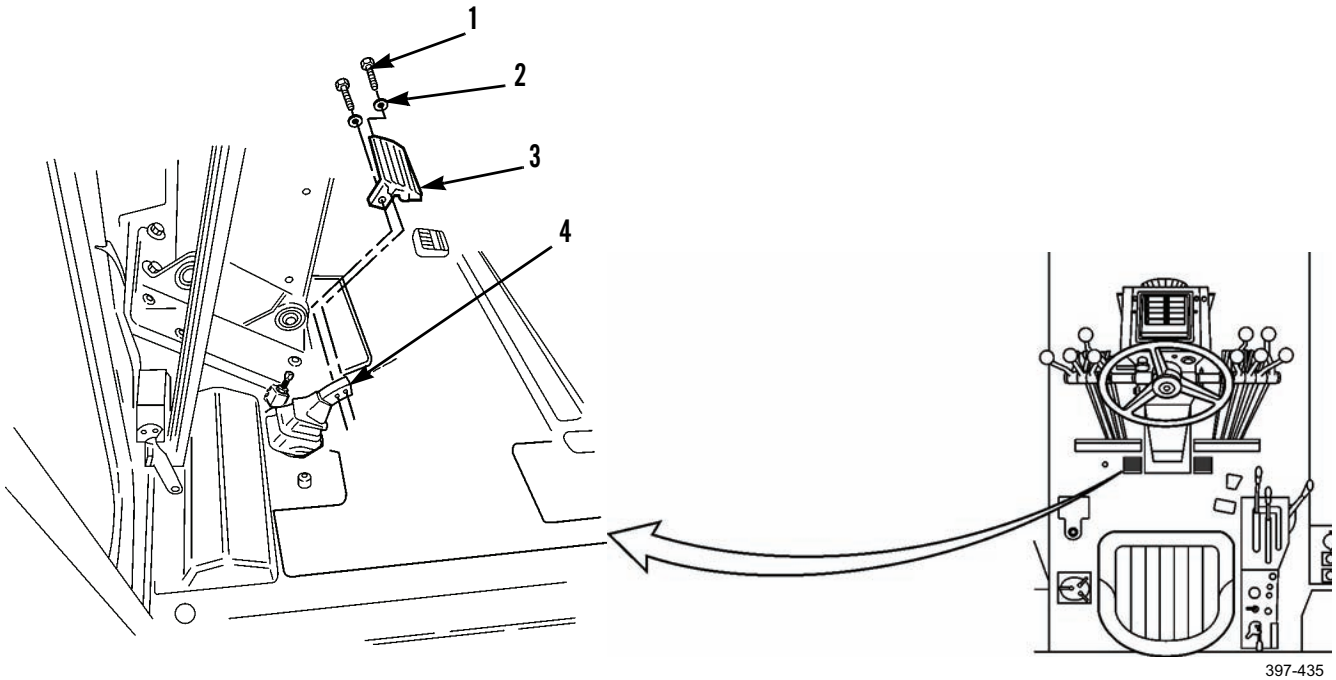

### *REMOVAL - CONTINUED*

**NOTE**

Washer is attached to boot with adhesive. Do not separate washer from boot unless replacement of either part is necessary.

2. Lift up left-front corner of rubber floor mat (7), remove boot (5) and washer (6) assembly from lever (4) and return floor mat to original position.

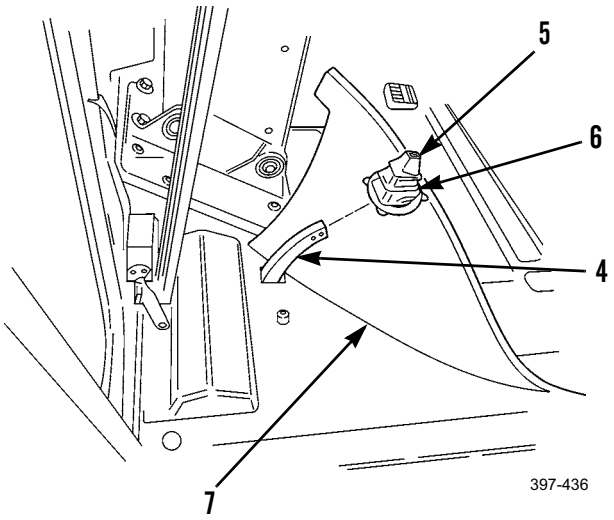


3. Remove lower end of spring (9) from bolt (8) fastened to cab floor frame weldment on outside of machine, under left side of cab.
4. Remove upper end of spring (9) from lever (4) and remove lever.

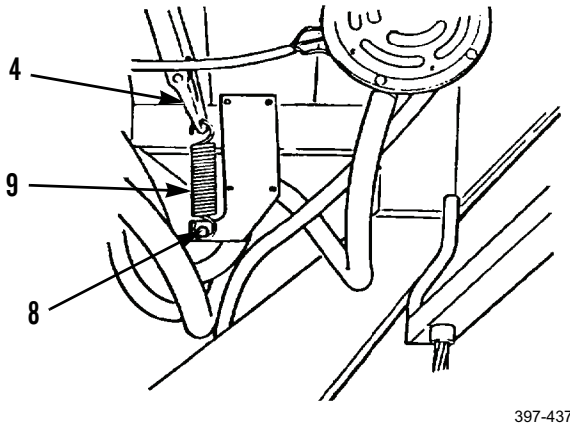


### *CLEANING AND INSPECTION*

Clean and inspect all parts in accordance with WP 0020 00.

### *INSTALLATION*

1. Install lever (4) and connect upper end of spring (8) to lever.
2. Install lower end of spring (9) on bolt (8) fastened to cab floor frame weldment on outside of machine, under left side of cab.
3. If boot (5) or washer (6) required replacement, attach boot (5) to washer (6) with adhesive.
4. Lift up left-front corner of rubber floor mat (7), install boot (5) and washer (6) assembly over lever (4) and return floor mat to original position.

### *INSTALLATION - CONTINUED*

5. Install pedal (3), two washers (2), and screws (1) to lever (4).

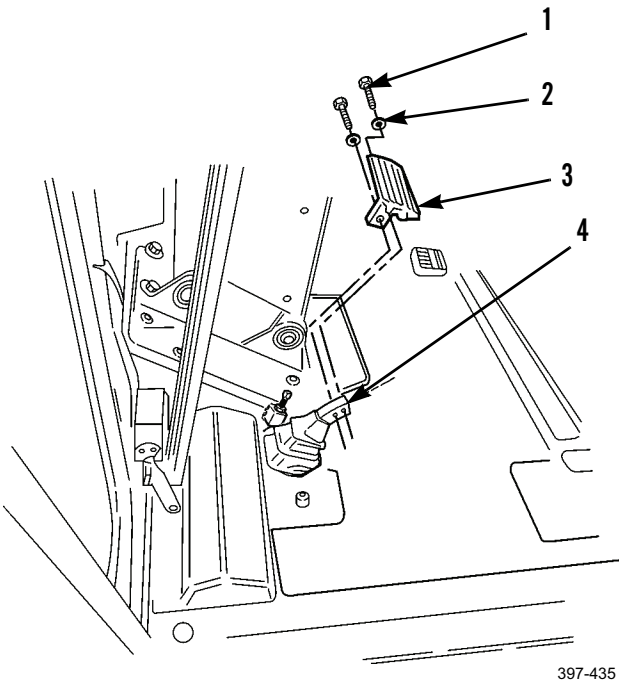


### *ADJUSTMENT*

1. Loosen nut (10) and turn bolt (11) to right until bottomed out.

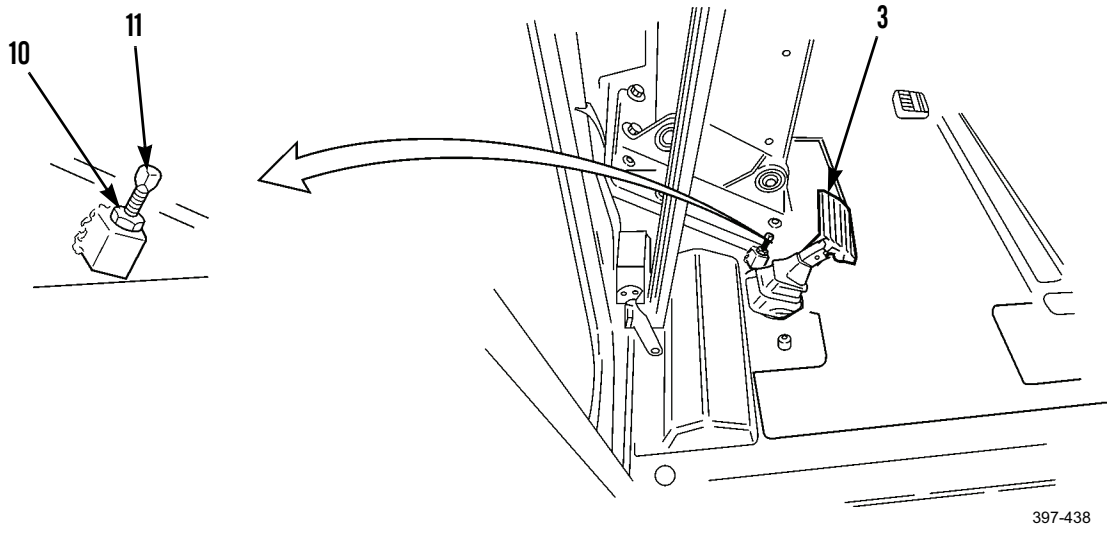

***ADJUSTMENT - CONTINUED***

**WARNING**

Adjustment must be made with engine running. Keep all personnel away from machine. Allow only operator on machine. Make sure parking brake is applied. Failure to follow this procedure may cause injury.

2. Turn battery disconnect switch to ON position and start engine (TM 5-3805-261-10).
3. Fully depress pedal (3) and hold down until step 5 is completed.
4. Pull lever (13) backward to OFF position to release parking brake.
5. Move lever (12) backward to first speed.
6. Release pedal (3) slowly until wheels start to turn, then depress until wheels stop. Hold pedal in this position.

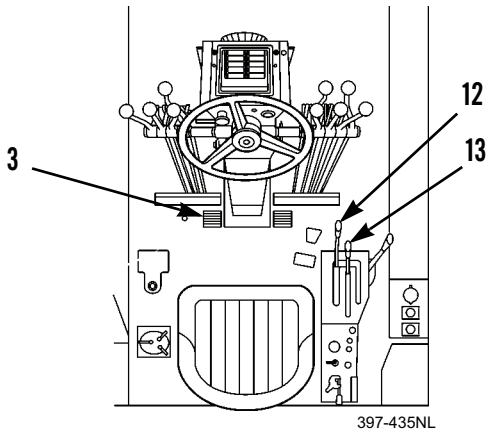


7. Move lever (12) forward to NEUTRAL position.
8. Turn bolt (11) to left until head of bolt contacts pedal (3). Back off one complete turn.
9. Tighten nut (10) to secure bolt (11).
10. Depress pedal (3) until contact is made with bolt (11). Hold pedal down.
11. Move lever (12) to all forward and reverse speeds. If wheels do not turn, go to step 12. If wheels turn, repeat steps 5 through 10 until proper adjustment is achieved.
12. Stop engine.
13. Release pedal (3).

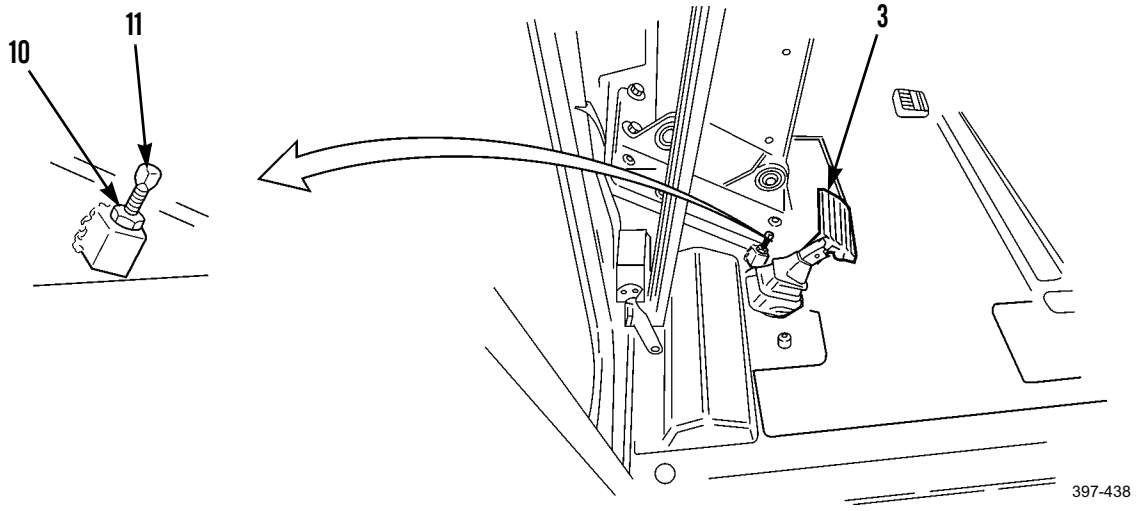


**END OF WORK PACKAGE**

## TRANSMISSION MODULATION CONTROL HOUSING REPLACEMENT 0149 00

### THIS WORK PACKAGE COVERS

Removal, Cleaning and Inspection, Installation

### INITIAL SETUP

**Maintenance Level**

Unit

**Tools and Special Tools**

Tool kit, general mechanic's (Item 89, WP 0348 00)

Arbor press, 1/2-ton capacity

**Materials/Parts**

Antiseize compound (Item 6, WP 0349 00)

Grease, GAA (Item 17, WP 0349 00)

Rag, wiping (Item 35, WP 0349 00)

Gasket

Lockwasher (2)

**References**

TM 9-214

WP 0020 00

WP 0150 00

**Equipment Conditions**

Machine parked on level ground (TM 5-3805-261-10)

Parking/emergency brake applied (TM 5-3805-261-10)

Implements lowered to ground (TM 5-3805-261-10)

Engine off (TM 5-3805-261-10)

Battery disconnect switch in OFF position (TM 5-3805-261-10)

### *REMOVAL*

1. Remove four bolts (2), washers (1), cover (3), and gasket (4) from housing (5). Discard gasket.

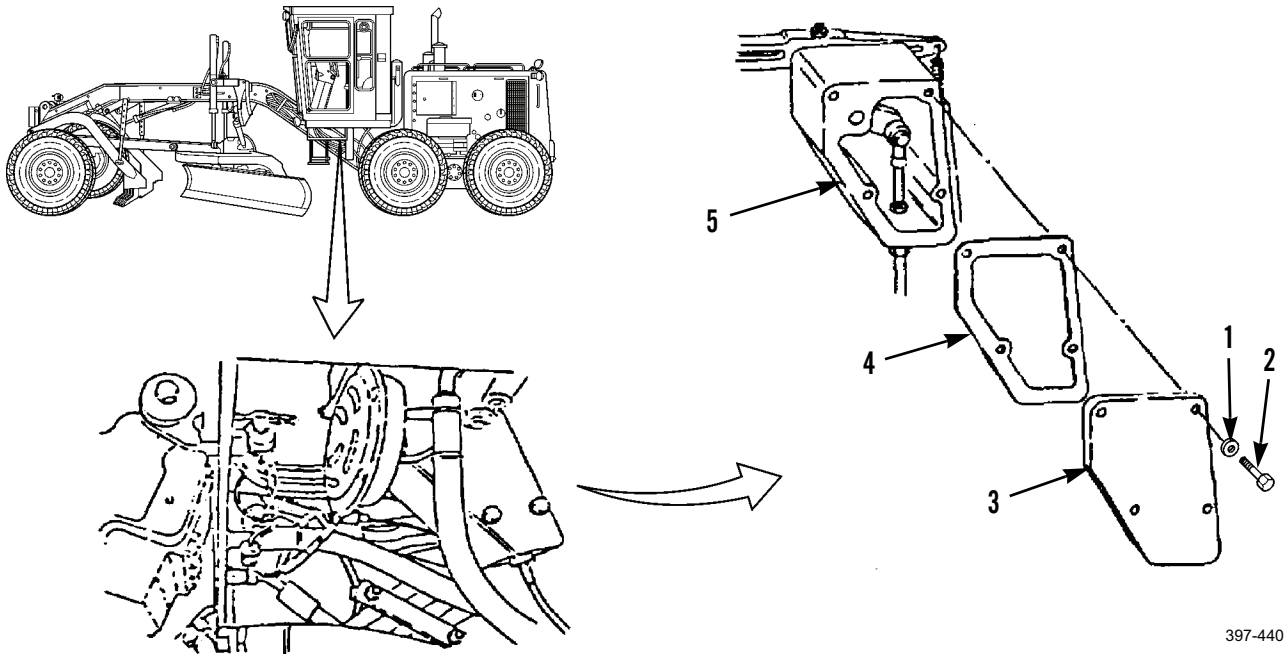

## TRANSMISSION MODULATION CONTROL HOUSING REPLACEMENT - CONTINUED 0149 00

### *REMOVAL - CONTINUED*

2. Remove bolt (6) and lockwasher (7). Discard lockwasher.

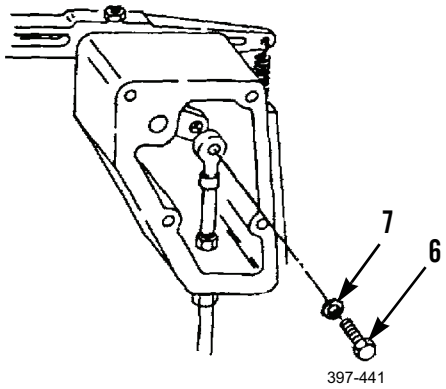


3. Remove rod end (8) and nuts (9 and 10) from control assembly (11).

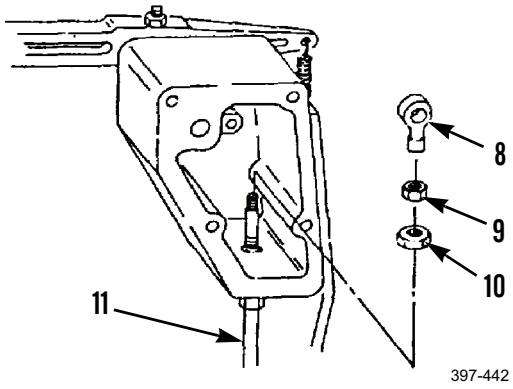


4. Remove four bolts (12) and washers (13) securing housing (5) to bracket of cab floor weldment.

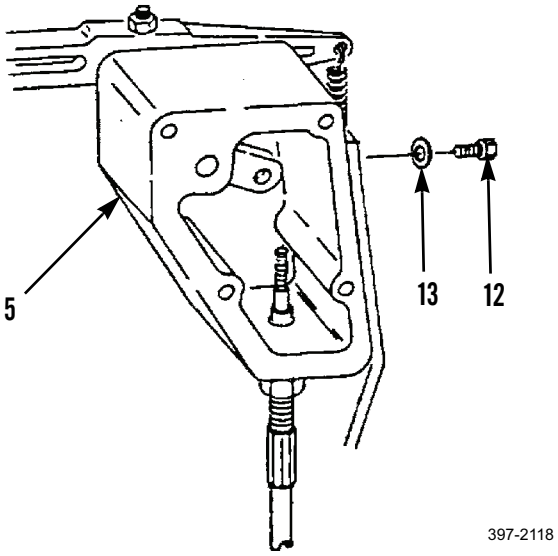

***REMOVAL - CONTINUED***

**NOTE**

Lever is keyed to shaft and will come loose as housing is removed.

5. Remove bolt (17), lever (15), key (16), and housing (5) from shaft (14).

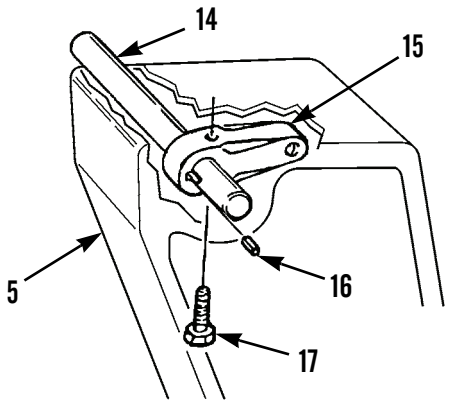

397-443

6. Loosen nut (18) and disconnect control assembly (11) from housing (5).
7. Remove lockwasher (19) and nut (18) from control assembly (11). Discard lockwasher.

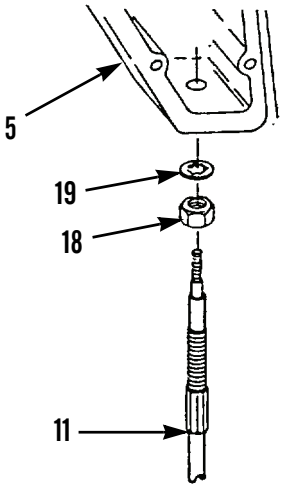

397-446

**NOTE**

Do not remove bearings unless inspection shows replacement is necessary (TM 9-214).

8. Using an arbor press, remove bearings (20 and 21) from housing (5).

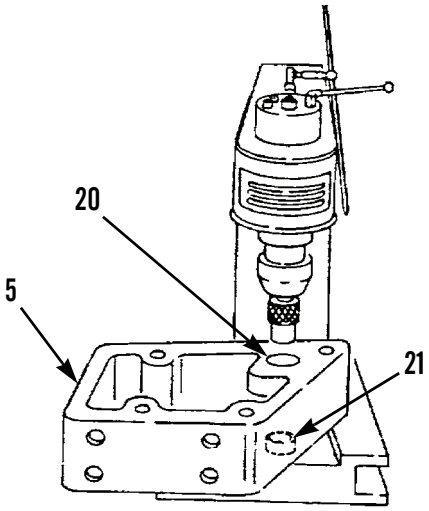

397-447

### *REMOVAL - CONTINUED*

**NOTE**

Lever is keyed to shaft.

9. Remove nut (22), bolt (25), and shaft (14) from lever (23).
10. Remove key (24) from shaft (14).

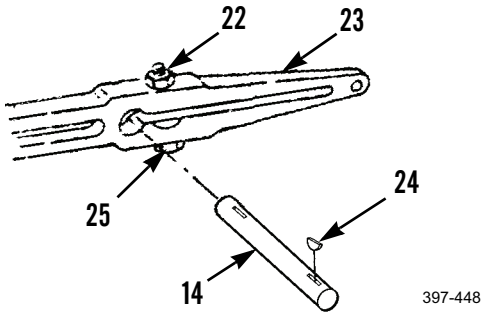


### *CLEANING AND INSPECTION*

Clean and inspect all parts in accordance with WP 0020 00.

### *INSTALLATION*

11. Pack rollers of bearings (21 and 20) with GAA grease.
12. Coat outside of bearings (21 and 20) with antiseize compound.
13. Using an arbor press, install bearings (21 and 20) in housing (5).

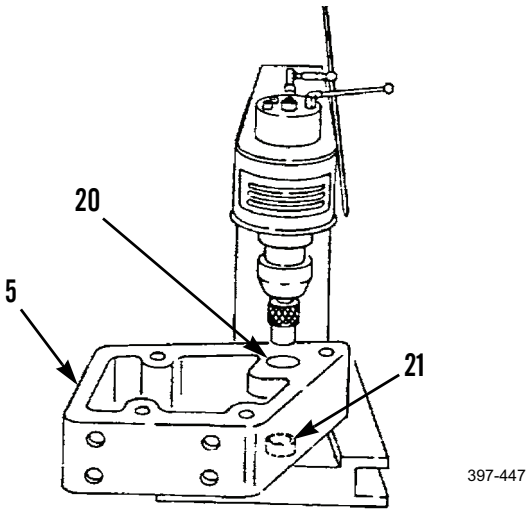


14. Install key (16) on shaft (14).
15. Position lever (15) inside housing (5) and install shaft (14). End of shaft should be positioned 0.098 in. (2.49 mm) below cover mounting surface.
16. Install bolt (17) on shaft (14).

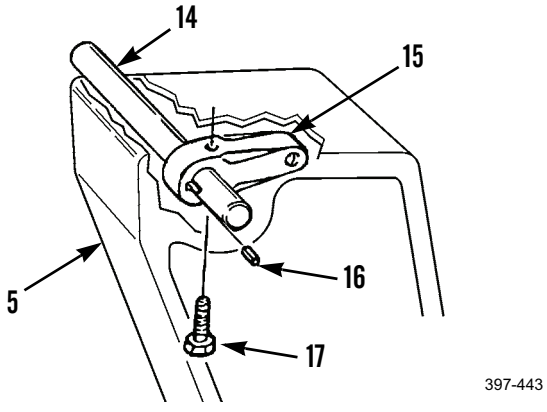

## TRANSMISSION MODULATION CONTROL HOUSING REPLACEMENT - CONTINUED 0149 00

### *INSTALLATION - CONTINUED*

17. Install key (24) on shaft (14).
18. Install shaft (14), bolt (25), and nut (22) on lever (23).
19. Install four washers (13) and bolts (12) securing housing (5) to bracket of cab floor weldment.

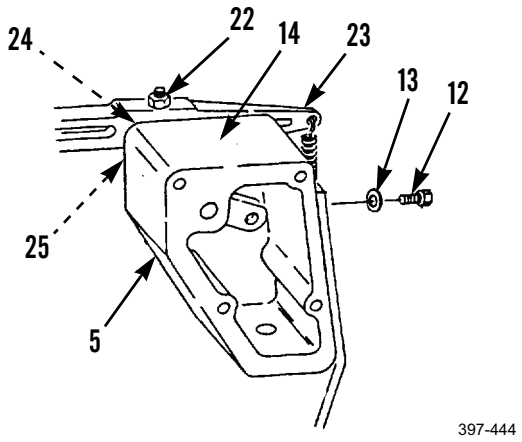


20. Install nut (18) and new lockwasher (19) on control assembly (11).
21. Connect control assembly (11) to housing (5) and tighten nut (18).

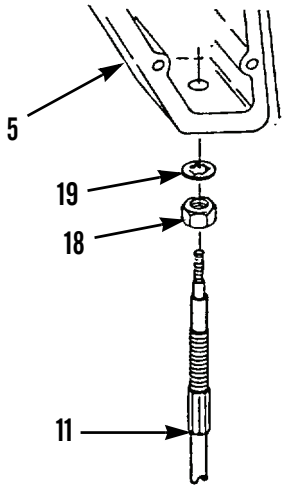


22. Install nuts (10 and 9) and rod end (8) on control assembly (11).

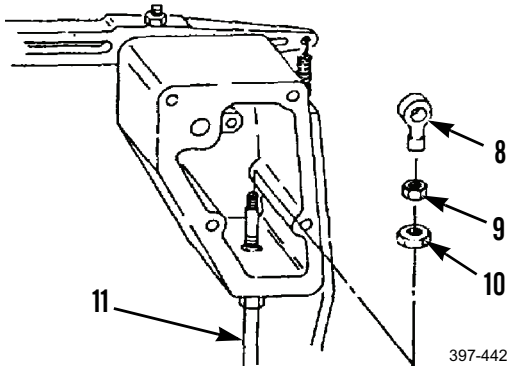

***INSTALLATION - CONTINUED***

23. Install new lockwasher (7) and bolt (6).

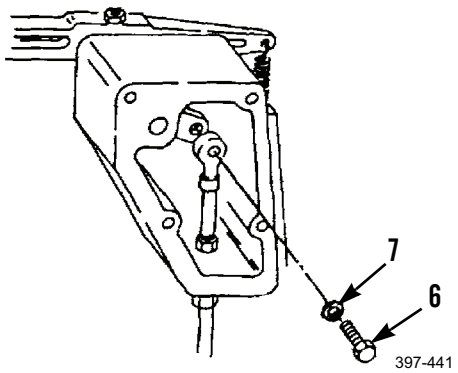


24. Install new gasket (4), cover (3), four washers (1), and bolts (2) to housing (5).

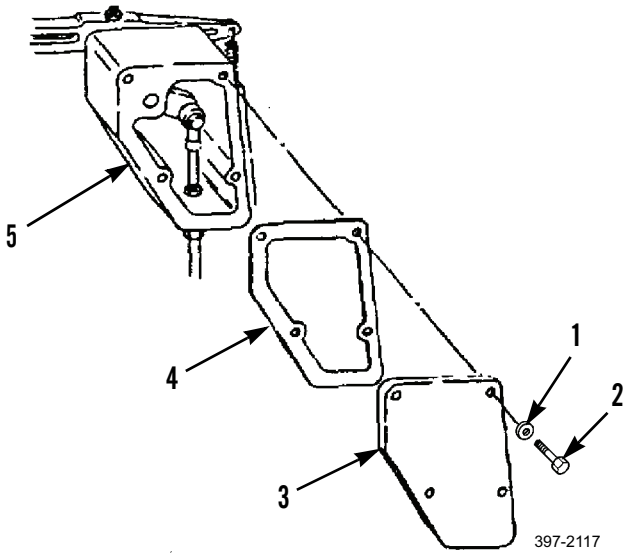


25. For adjustment of control assembly, refer to WP 0150 00.

**END OF WORK PACKAGE**

## TRANSMISSION CONTROL ADJUSTMENT 0150 00

### THIS WORK PACKAGE COVERS

Transmission Direction Control Adjustment, Transmission Speed Control Adjustment, Transmission Modulation Control Adjustment

### INITIAL SETUP

**Maintenance Level**

Unit

**Tools and Special Tools**

Tool kit, general mechanic's (Item 89, WP 0348 00)

Wood block (2 x 4 in.)

**Materials/Parts**

Rag, wiping (Item 35, WP 0349 00)

Gasket (2)

Lockwasher (3)

**Equipment Conditions**

Machine parked on level ground (TM 5-3805-261-10)

Parking/emergency brake applied (TM 5-3805-261-10)

Implements lowered to ground (TM 5-3805-261-10)

Engine off (TM 5-3805-261-10)

Battery disconnect switch in OFF position (TM 5-3805-261-10)

Left and right operator's console plates removed (WP 0193 00)

### *TRANSMISSION DIRECTION CONTROL ADJUSTMENT*

1. Remove three bolts (4), washers (3), cover (2), and gasket (1). Discard gasket and remove all gasket material from mounting surfaces.

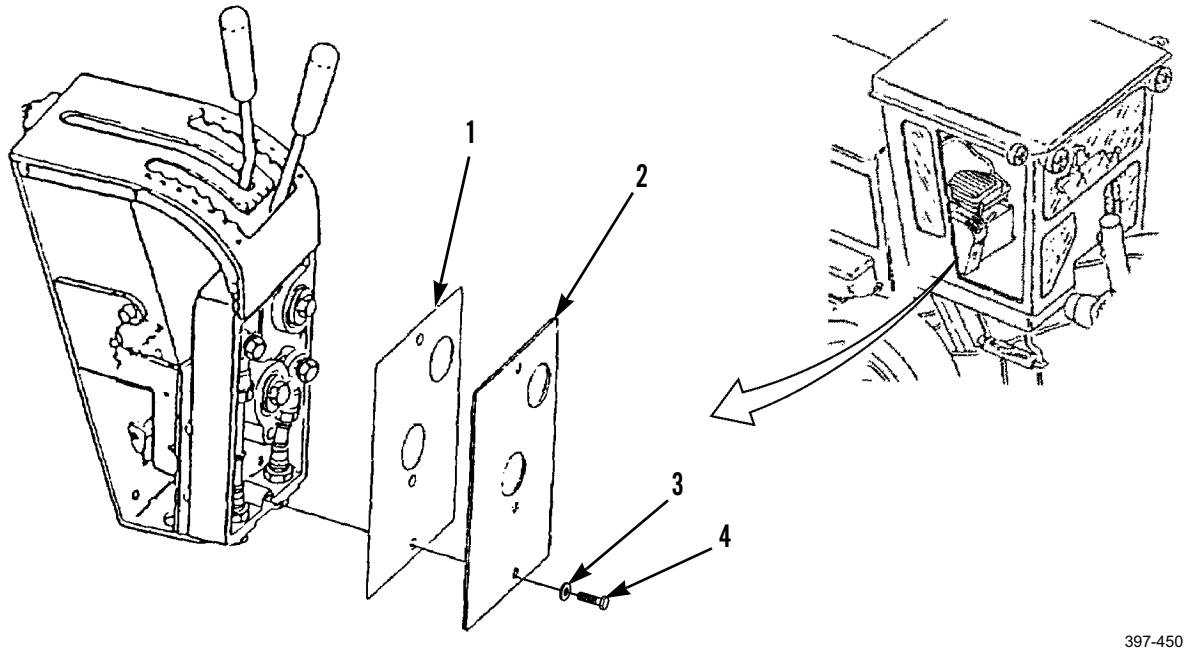


397-450

### *TRANSMISSION DIRECTION CONTROL ADJUSTMENT - CONTINUED*

2. Adjust two nuts (5) so the extension of threads on both ends of cable housing (6) is the same.

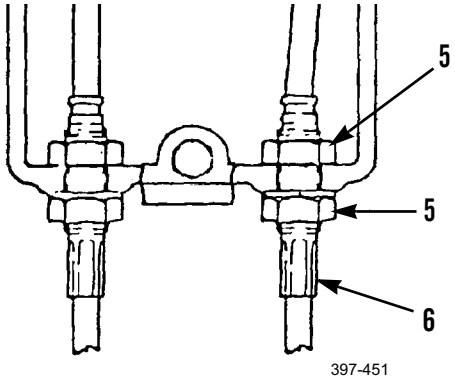


3. Shift transmission control lever (7) to REVERSE-NEUTRAL position.
4. Remove bolt (11) and lockwasher (10). Discard lockwasher.
5. Extend control cable (13). Pull up on rod end (9) as far as control cable will allow.
6. Loosen nut (12).
7. Adjust rod end (9) by threading up or down on control cable (13). Align hole in rod end with hole in lever (8).
8. Tighten nut (12).

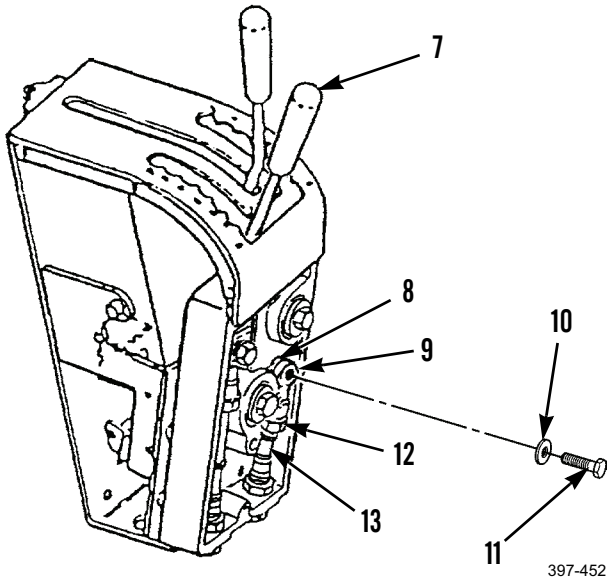

### *TRANSMISSION DIRECTION CONTROL ADJUSTMENT - CONTINUED*

9. Shift transmission control lever (7) to FORWARD-NEUTRAL position.
10. Retract control cable (13) by pushing down on rod end (9) as far as control cable will allow.
11. Inspect rod end (9) and lever (8) to see if hole in rod end aligns with hole in lever. If holes are not aligned, measure and record the distance between them.
12. Loosen nut (12).
13. Adjust rod end (9). Thread rod end on control cable (13) half the distance measured in step 11.
14. Install new lockwasher (10) and bolt (11).
15. Tighten nut (12).

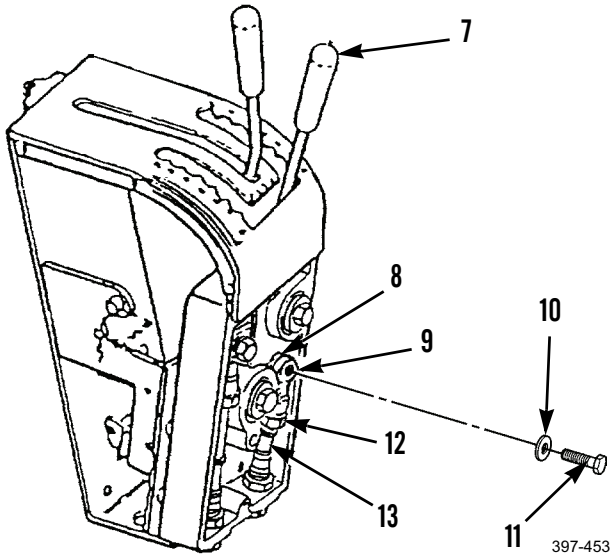


### *TRANSMISSION SPEED CONTROL ADJUSTMENT*

1. Remove bolt (16) and lockwasher (15). Discard lockwasher.
2. Retract control cable (17) by pushing down on rod end (14) as far as control cable will allow. The selector spool in the transmission will be in SIXTH speed.

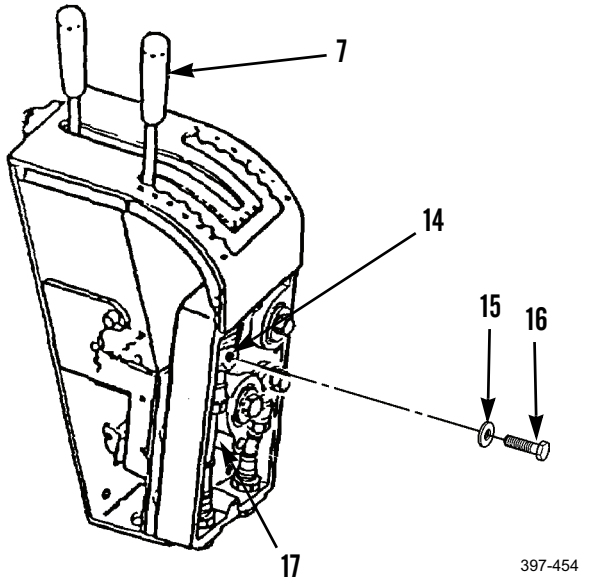

### *TRANSMISSION SPEED CONTROL ADJUSTMENT - CONTINUED*

3. Extend control cable (17) by pulling up on rod end (14) until detents for FIFTH, FOURTH and THIRD speeds are felt. The selector spool will be in THIRD speed.

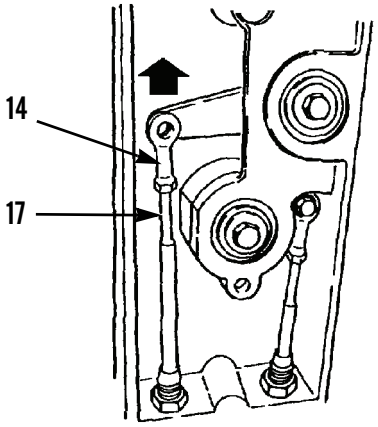

397-455

4. Shift transmission control lever (7) to THIRD-FORWARD position. Transmission control lever must be in center of notch.
5. Loosen nut (19).
6. Adjust rod end (14) by threading up or down on control cable (17). Align hole in rod end with hole in lever (18).
7. Install new lockwasher (15) and bolt (16).
8. Tighten nut (19).
9. Shift transmission control lever (7) to all speeds in FORWARD and REVERSE positions. A detent must be felt for all speed positions.

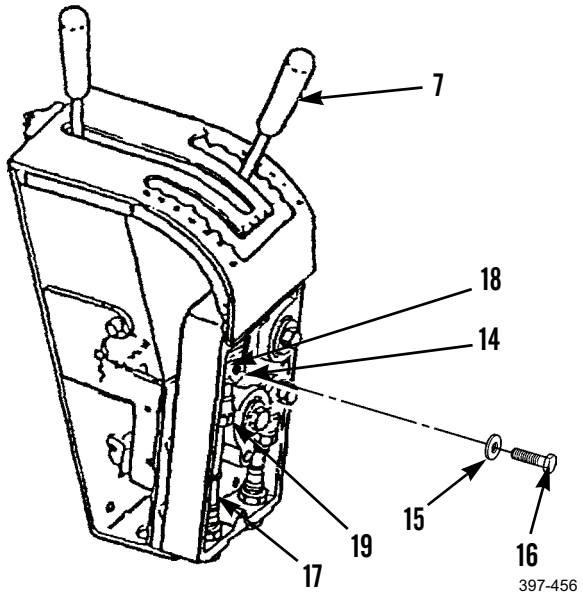

397-456

### *TRANSMISSION SPEED CONTROL ADJUSTMENT - CONTINUED*

10. Install new gasket (1), cover (2), three washers (3), and bolts (4).

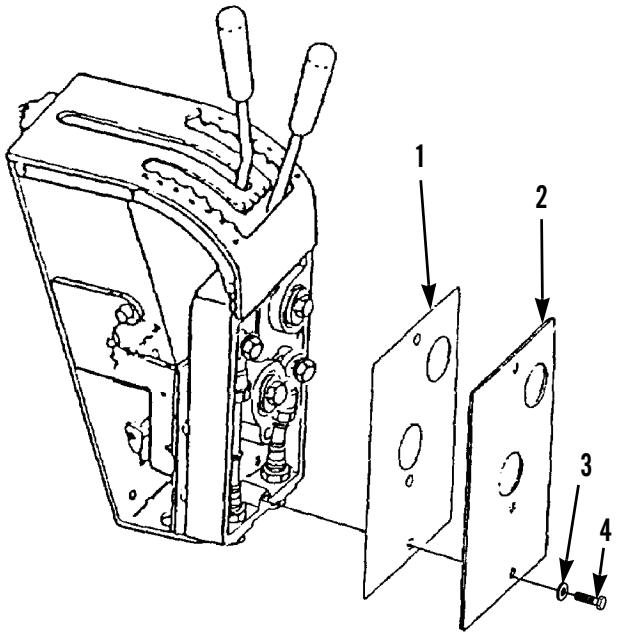

397-2119

### *TRANSMISSION MODULATION CONTROL ADJUSTMENT*

1. Place wood block (21) between pedal (20) and cab floor to keep pedal in raised position.

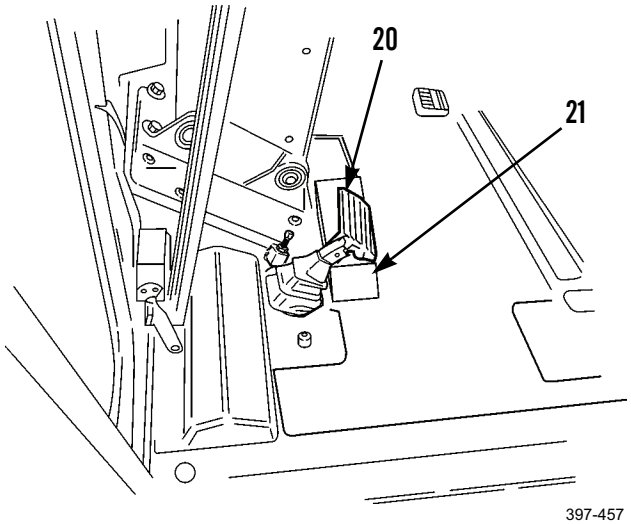

397-457

### *TRANSMISSION MODULATION CONTROL ADJUSTMENT - CONTINUED*

2. Remove four bolts (23), washers (22), cover (24), and gasket (25) from housing (26). Discard gasket and remove all gasket material from mounting surfaces.

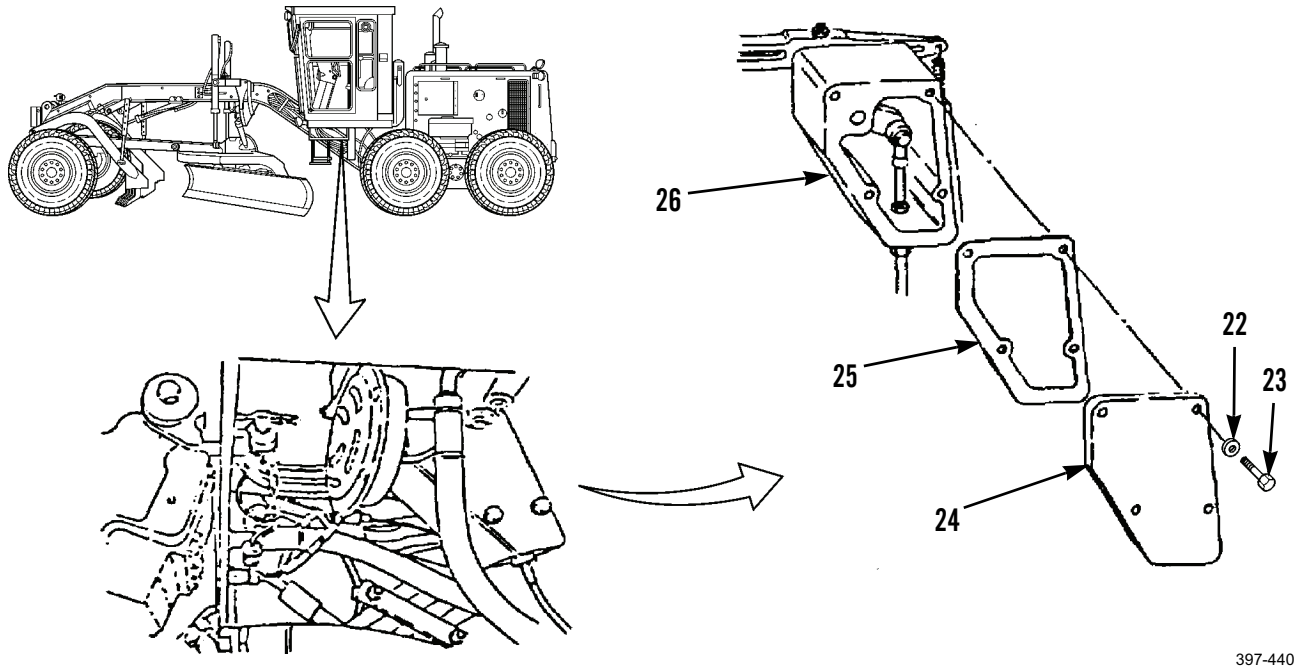


397-440

3. Remove bolt (31) and lockwasher (30). Discard lockwasher.
4. Push down rod end (28) until a noticeable resistance is felt in the control cable (17).
5. Loosen nut (29).
6. Rotate rod end (28) in half-turn increments until hole in rod end aligns with hole in lever (27).
7. Install new lockwasher (30) and bolt (31).
8. Tighten nut (29).
9. Install new gasket (25), cover (24), four washers (22), and bolts (23) on housing (26).

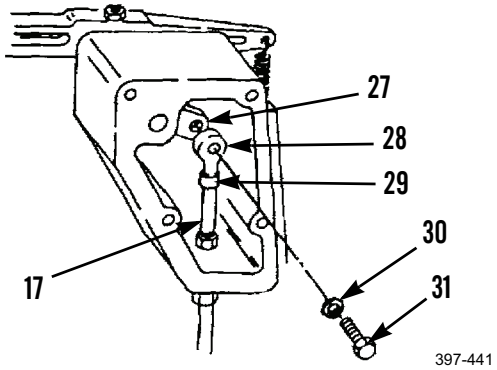


397-441

***TRANSMISSION MODULATION CONTROL ADJUSTMENT - CONTINUED***

10. Remove wood block (21) from between pedal (20) and cab floor.

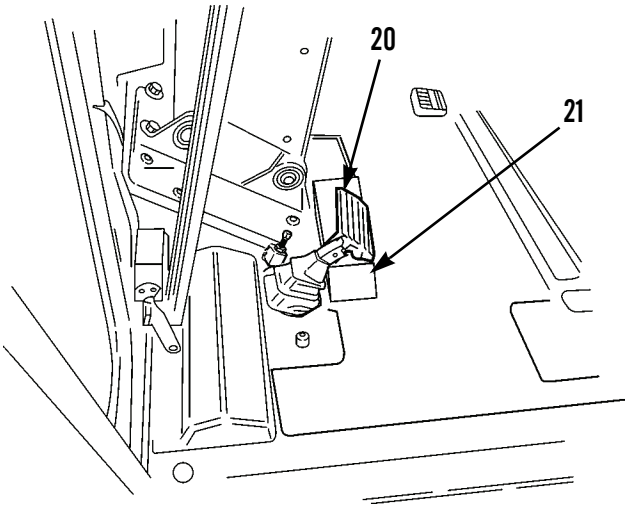


11. Install left and right opertor's console plates (WP 0193 00).

**END OF WORK PACKAGE**

## TRANSMISSION CONTROL LEVER AND HOUSING REPLACEMENT 0151 00

### THIS WORK PACKAGE COVERS

Removal, Cleaning and Inspection, Installation

### INITIAL SETUP

**Maintenance Level**

Unit

**Tools and Special Tools**

Tool kit, general mechanic's (Item 89, WP 0348 00)

Shop equipment, common no. 1 (Item 75, WP 0348 00)

Wrench, torque (Item 97, WP 0348 00)

**Materials/Parts**

Rag, wiping (Item 35, WP 0349 00)

Tag, marker (Item 44, WP 0349 00)

Gasket

Pin, cotter

**References**

WP 0020 00

WP 0150 00

**Equipment Conditions**

Machine parked on level ground (TM 5-3805-261-10)

Parking/emergency brake applied (TM 5-3805-261-10)

Implements lowered to ground (TM 5-3805-261-10)

Engine off (TM 5-3805-261-10)

Battery disconnect switch in OFF position (TM 5-3805-261-10)

Switch panel and mounting removed (WP 0085 00)

Backup alarm switch removed (WP 0122 00)

Parking brake air control valve removed (WP 0158 00)

Parking brake control removed (WP 0159 00)

### *REMOVAL*

1. Remove three bolts (7), washers (6), cover (5), and gasket (4). Discard gasket.
2. Loosen nut (8).
3. Remove bolt (3) and washer (2).
4. Remove rod end (1) and nuts (8 and 9).

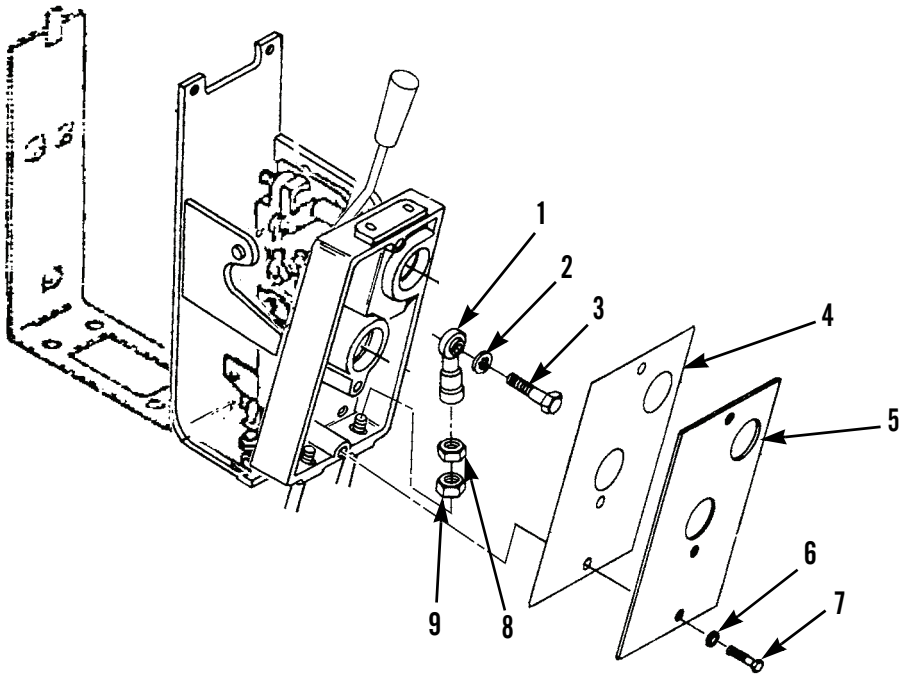


397-4096

## TRANSMISSION CONTROL LEVER AND HOUSING REPLACEMENT - CONTINUED 0151 00

### *REMOVAL - CONTINUED*

5. Loosen nut (13).
6. Remove bolt (11) and washer (12).
7. Remove rod end (10) and nuts (13 and 14).

**NOTE**

Tag cables before disconnecting to aid in installation.

8. Remove cables (17 and 18) through cab floor.
9. Remove washer (20), nut (19), washer (15), and nut (16).

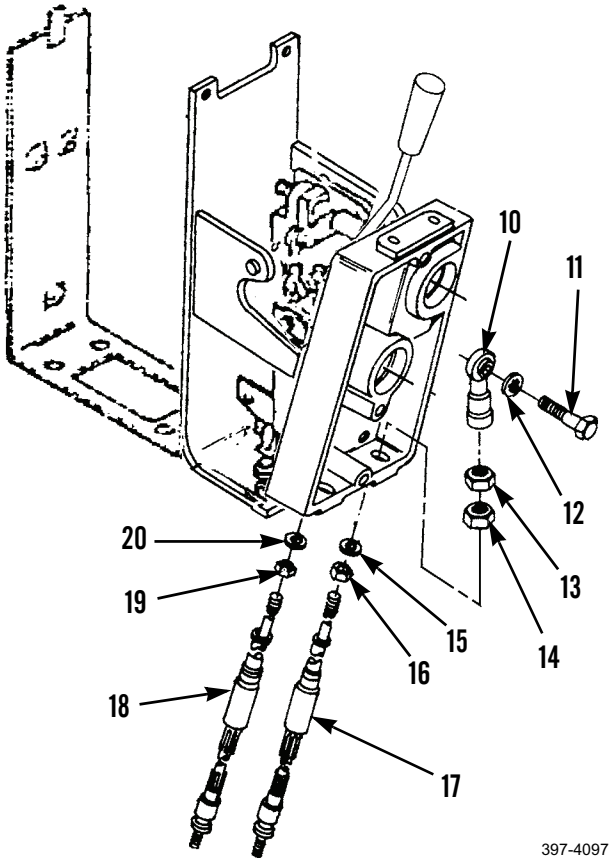


10. Remove two bolts (28), washers (27), spacers (26), and mountings (25) from support (23).
11. Remove two bolts (21), washers (22), and nuts (24).

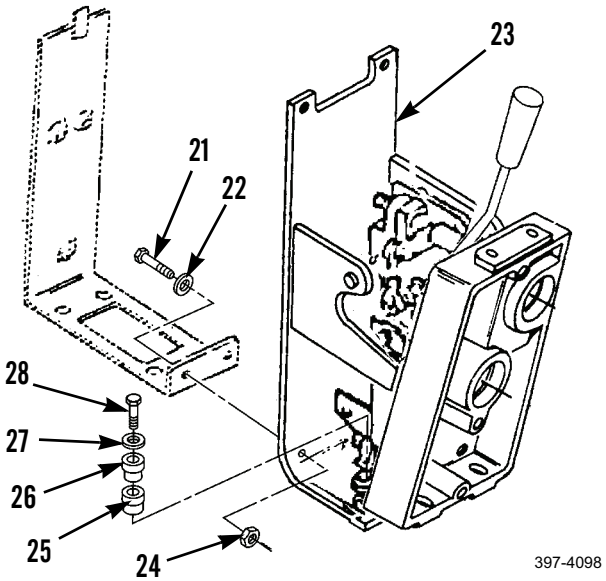

***REMOVAL - CONTINUED***

12. Remove housing assembly (29) from machine.
13. Remove pad (30).

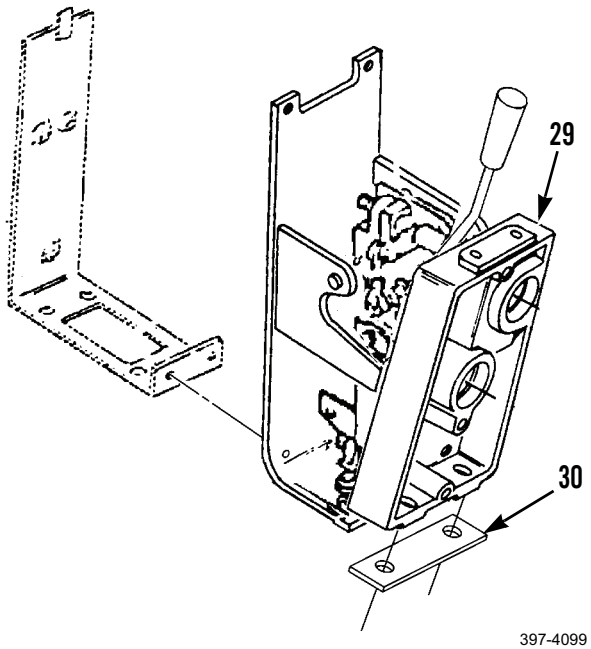

397-4099

14. Remove four bolts (32) and washers (31).
15. Separate housing assembly (29) from support assembly (23).

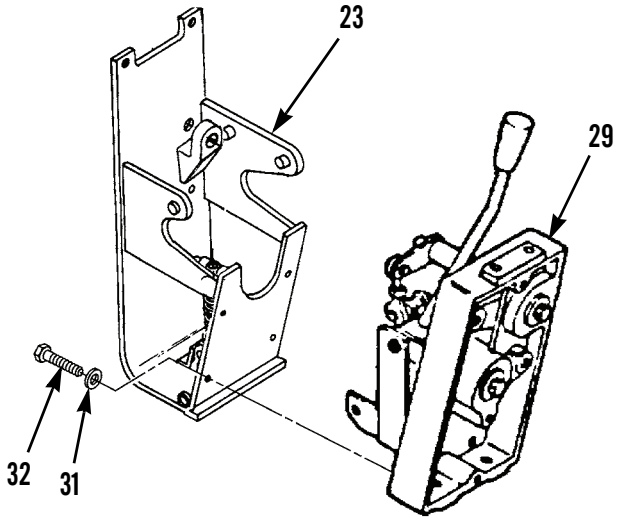

397-4100

***REMOVAL - CONTINUED***

16. Remove pin (34) and spring (35) from support (23).
17. Remove cotter pin (38), washer (37), pin (40), washer (39), and rod (36). Discard cotter pin.
18. Remove two bolts (42), washers (41), and bracket assembly (33) from support (23).

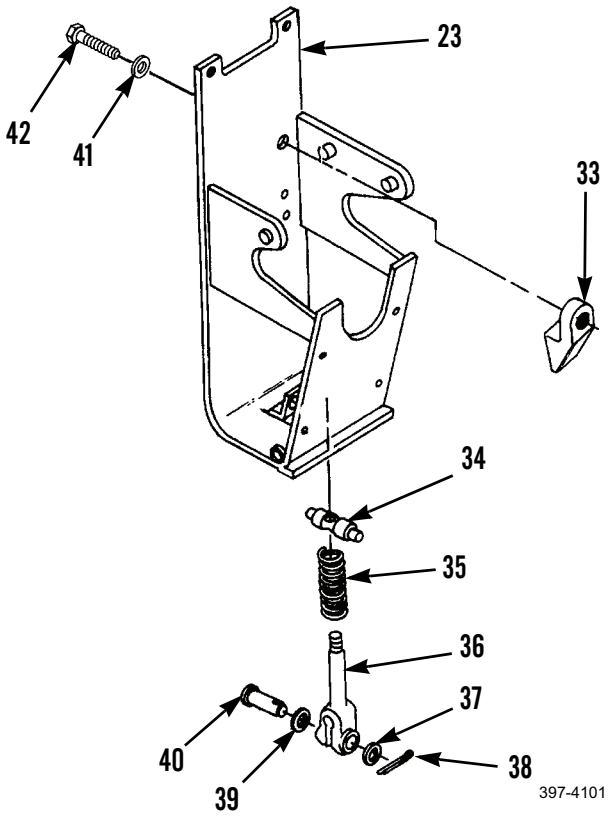


**NOTE**

Remove bearings only if inspection reveals damage.

19. Remove bearing (43) from bracket (33).

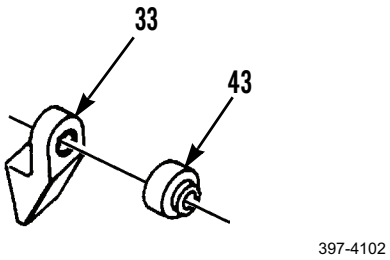

***REMOVAL - CONTINUED***

20. Remove nut (44), washer (45), and bolt (46).
21. Remove nut (48), washer (49), and rod (50) assembly from lever (47).

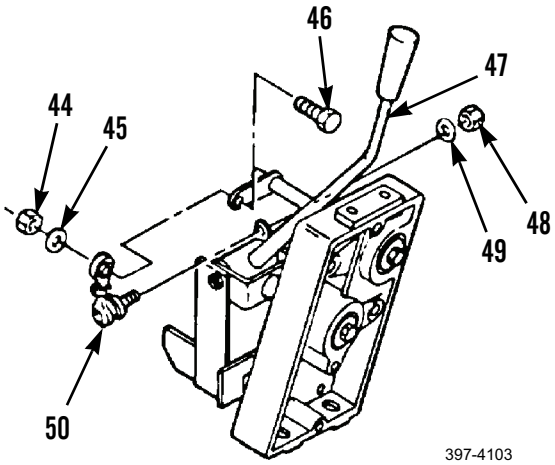


22. Loosen nut (52).
23. Remove rod end (51) and nut (52) from rod (50).

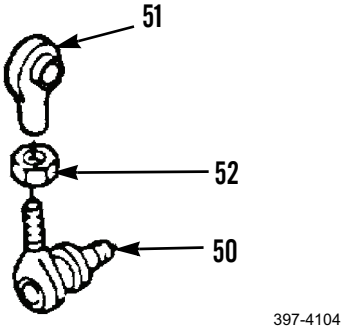


24. Remove bolt (53), nut (55), washer (56), and lever assembly (47) from plate (54).

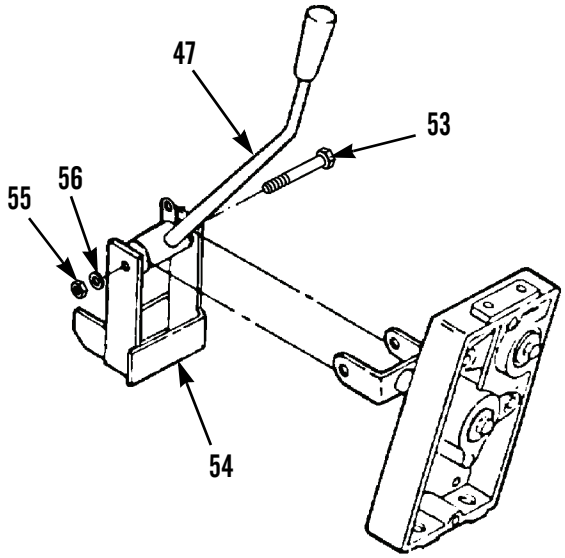

***REMOVAL - CONTINUED***

**NOTE**

Remove bearings only if inspection reveals damage.

25. Remove two bearings (57) and shaft (58) from lever (47).
26. Remove knob (59).

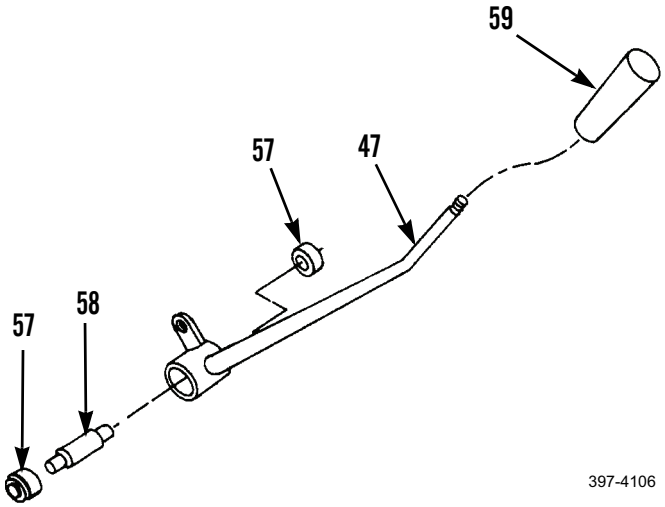


27. Remove bolt (61) and washer (62).
28. Using hammer and punch, drive shaft assembly (60) out of housing (29).

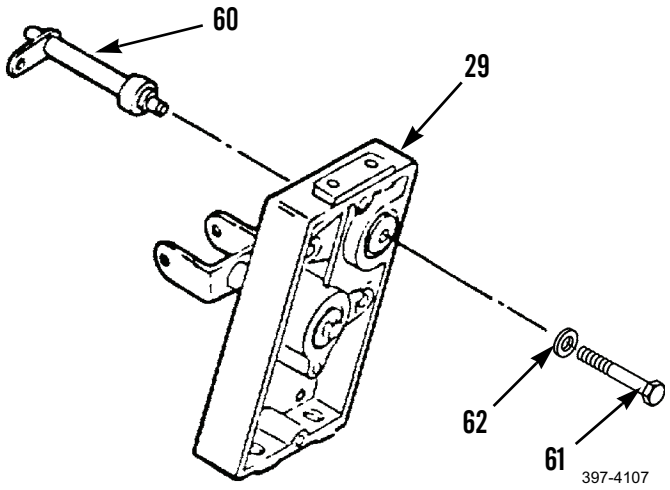


29. Remove key (63) and bearing (64) from shaft (60).

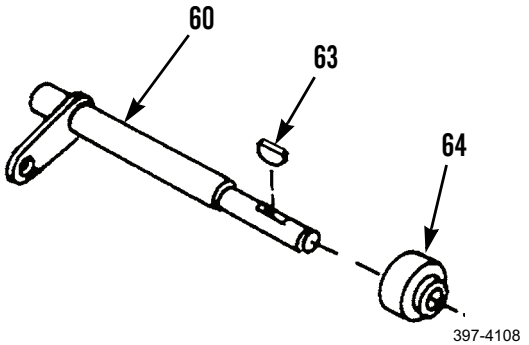

***REMOVAL - CONTINUED***

30. Remove bolt (67), washer (66), and shaft assembly (65).

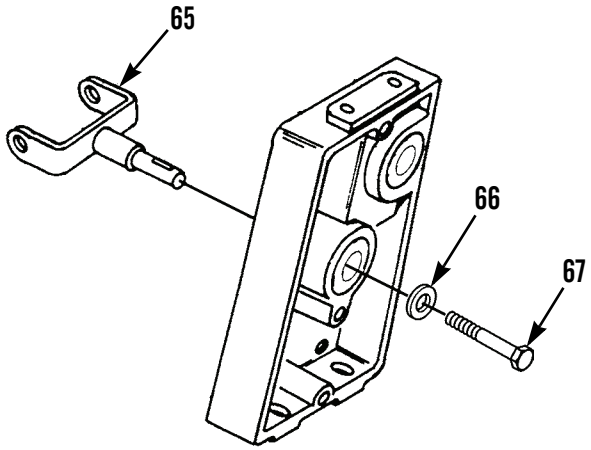

397-4109

31. Remove key (68) and bearing (69) from shaft (65).

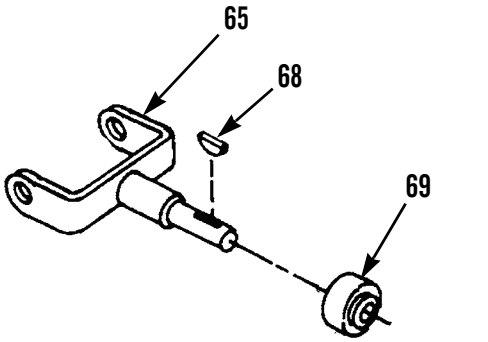

397-4110

### *REMOVAL - CONTINUED*

**NOTE**

- Tag lever locations in housing to aid in installation.
- Remove bearings only if inspection reveals damage.

32. Remove two bearings (72), rings (71), and levers (70 and 73) from housing (29).

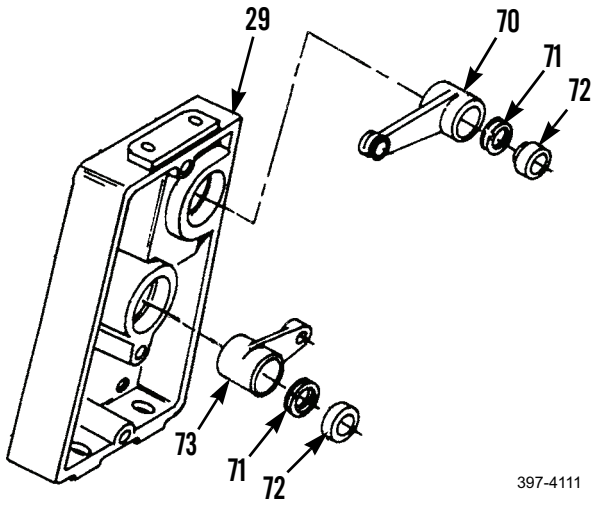


### *CLEANING AND INSPECTION*

Clean and inspect all parts in accordance with WP 0020 00.

### *INSTALLATION*

1. Position levers (73 and 70) in housing (29).
2. Install two rings (71) and bearings (72).
3. Install bearing (69) and key (68) on shaft (65).

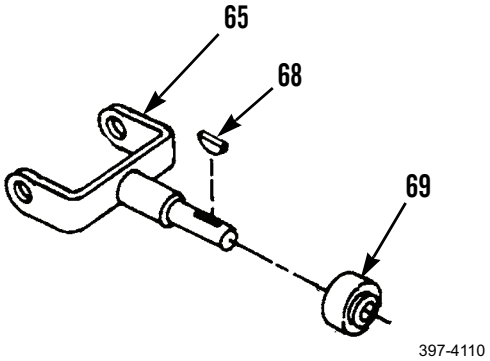

***INSTALLATION - CONTINUED***

4. Install shaft assembly (65).
5. Install washer (66) and bolt (67). Tighten bolt to 25 lb-ft (34 Nm).

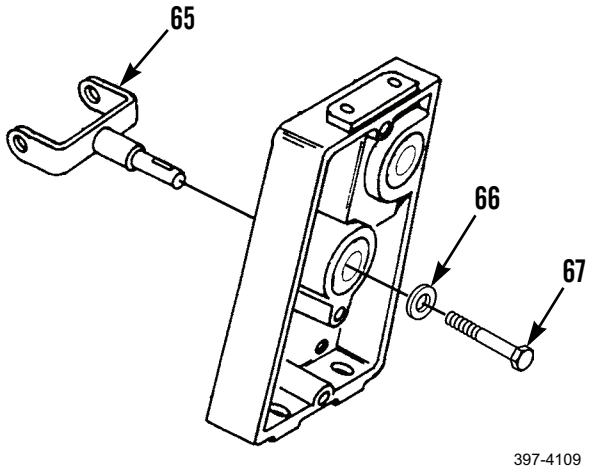


6. Install bearing (64) and key (63) on shaft (60).

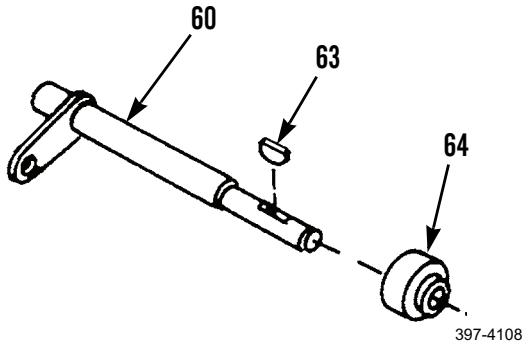


7. Install shaft assembly (60) in housing (29).
8. Install washer (62) and bolt (61). Tighten bolt to 25 lb-ft (34 Nm).

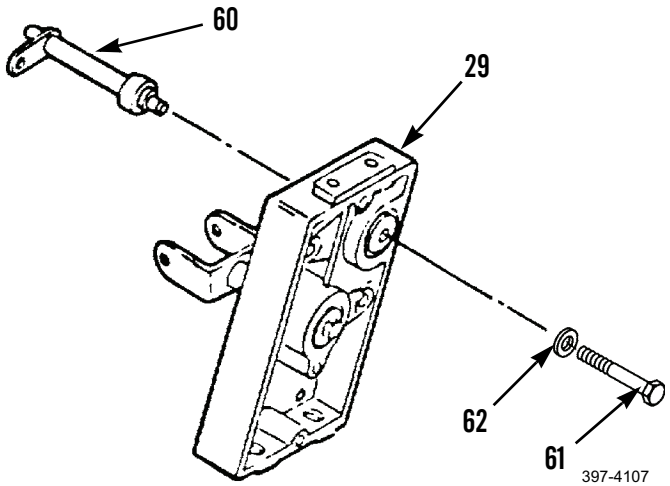

***INSTALLATION - CONTINUED***

9. Install knob (59) on lever (47).
10. Install shaft (58) and two bearings (57).

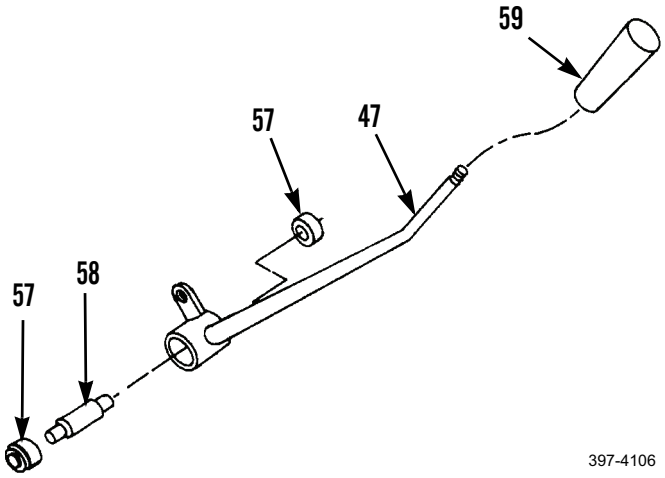


11. Install lever assembly (47), washer (56), nut (55), and bolt (53) on plate (54).

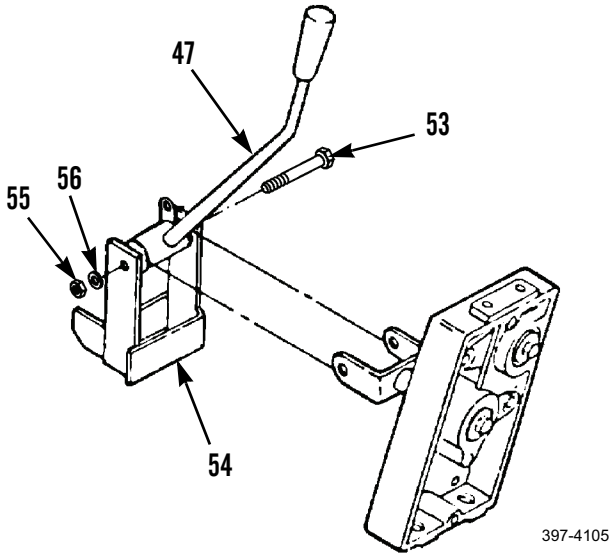


12. Install nut (52) and rod end (51) on rod (50).

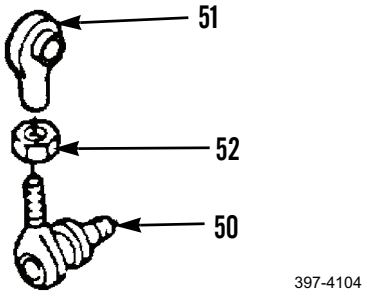

***INSTALLATION - CONTINUED***

13. Install rod assembly (50), washer (49), and nut (48) on lever (47).
14. Install bolt (46), washer (45), and nut (44).

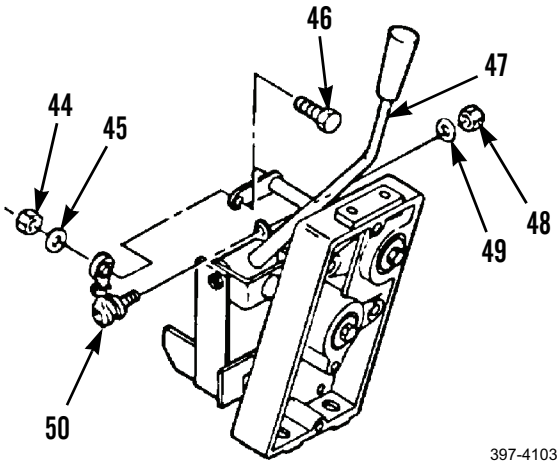


15. Install bearing (43) in bracket (33).

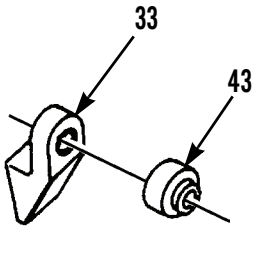

***INSTALLATION - CONTINUED***

16. Install bracket assembly (33), two washers (41), and bolts (42) to support (23).
17. Install rod (36), washer (39), pin (40), washer (37), and new cotter pin (38).
18. Install spring (35) and pin (34).

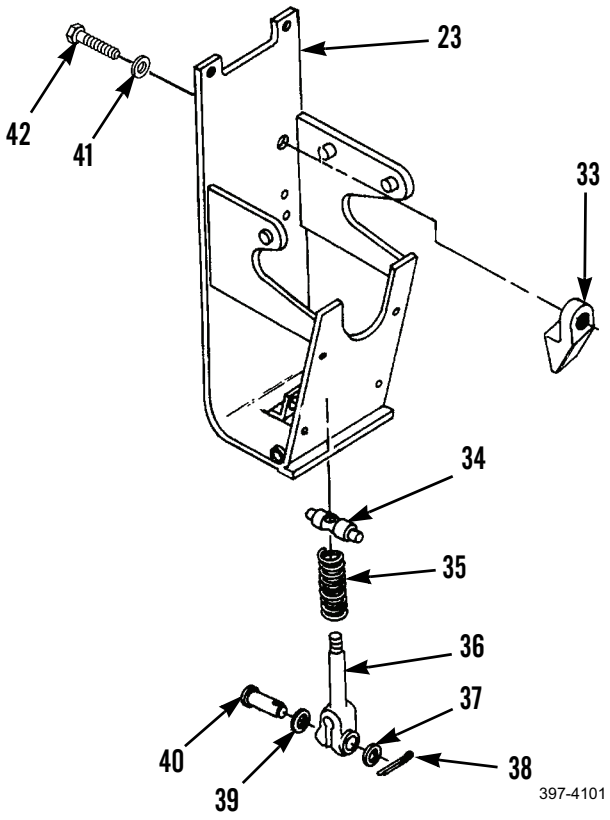


19. Install housing assembly (29) to support assembly (23).
20. Install four washers (31) and bolts (32).

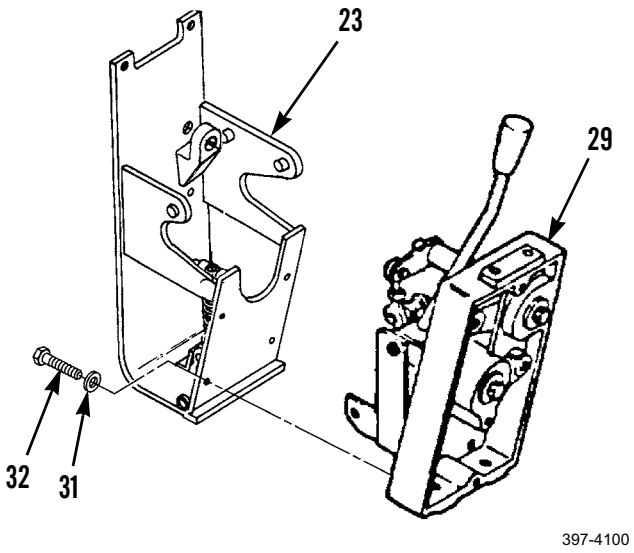

***INSTALLATION - CONTINUED***

21. Position pad (30) and place on cab floor.
22. Position housing assembly (29) on cab floor.

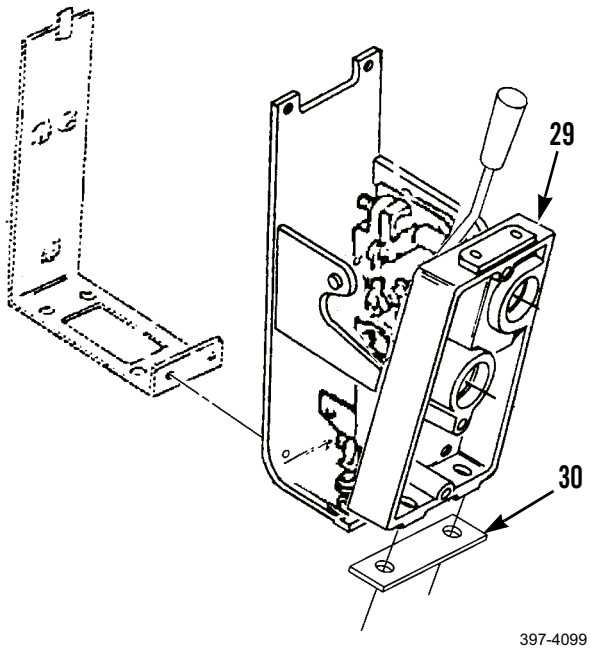


23. Install two nuts (24), washers (22), and bolts (21).
24. Install two mountings (25), spacers (26), washers (27), and bolts (28) through support (23).

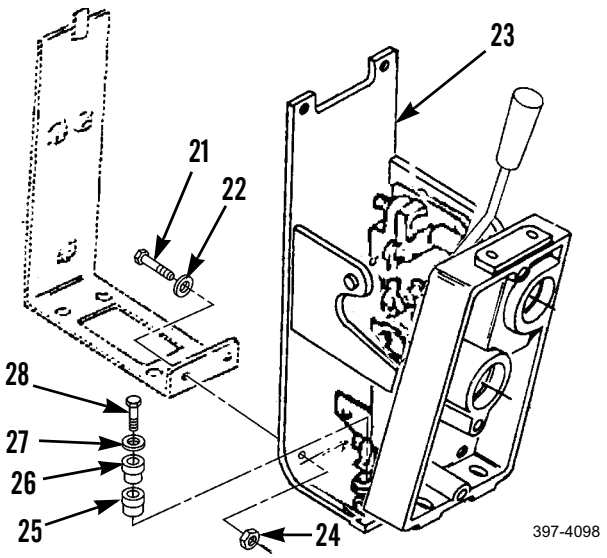

***INSTALLATION - CONTINUED***

25. Position nut (16), washer (15), nut (19), and washer (20).
26. Position cables (18 and 17) extending up through cab floor.
27. Tighten nuts (19 and 16).

**NOTE**

Do not tighten nut (13).

28. Install nuts (13 and 14) and rod end (10) on cable (18).
29. Install washer (12) and bolt (11).
30. Tighten nut (13).

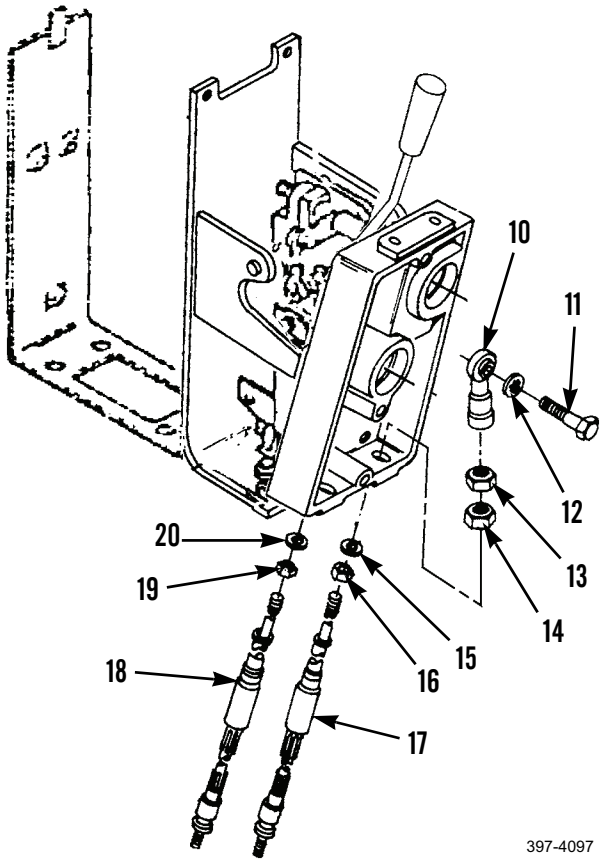

***INSTALLATION - CONTINUED***

**NOTE**

Do not tighten nut (8).

31. Install nuts (8 and 9) and rod end (1).
32. Install washer (2) and bolt (3).
33. Tighten nut (8).
34. Install new gasket (4), cover (5), three washers (6), and bolts (7).

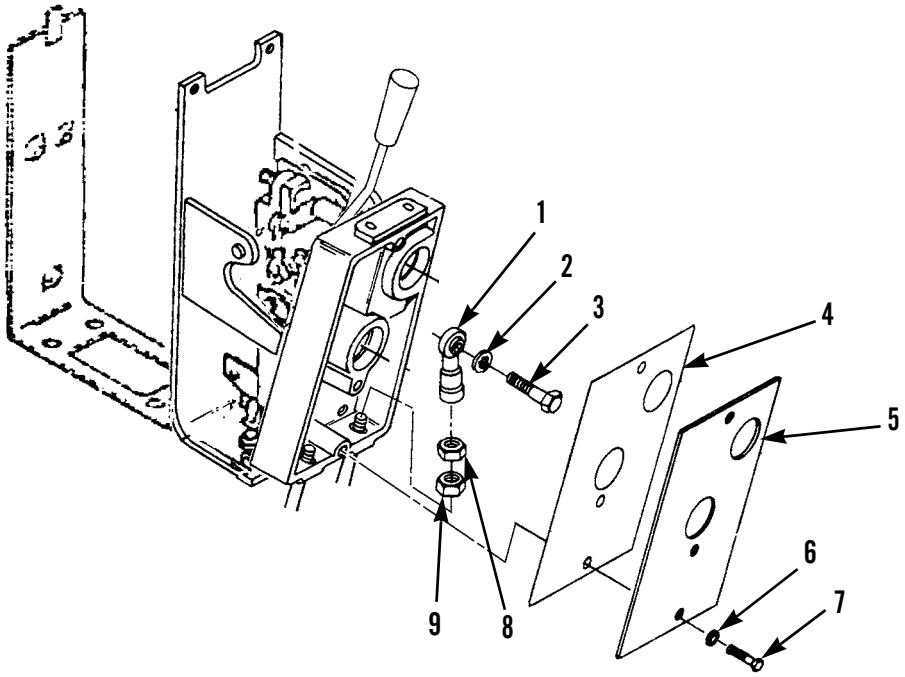


397-4096

35. Install parking brake control (WP 0159 00).
36. Install parking brake air control valve (WP 0158 00)
37. Install back-up alarm switch (WP 0122 00)
38. Install switch panel and mounting (WP 0085 00)
39. Adjust controls (WP 0150 00).

**END OF WORK PACKAGE**

## TRANSMISSION CONTROL CABLES REPLACEMENT 0152 00

### THIS WORK PACKAGE COVERS

Removal, Cleaning and Inspection, Installation

### INITIAL SETUP

**Maintenance Level**

Unit

**Tools and Special Tools**

Tool kit, general mechanic's (Item 89, WP 0348 00)

Extractor, tool (Item 24, WP 0348 00)

**Materials/Parts**

Rag, wiping (Item 35, WP 0349 00)

Tag, marker (Item 44, WP 0349 00)

Gasket

Lockwasher (2)

Packing, preformed (3)

Ring (6)

Seal (3)

Washer, star (2)

**References**

WP 0020 00

WP 0149 00

WP 0150 00

**Equipment Conditions**

Machine parked on level ground (TM 5-3805-261-10)

Parking/emergency brake applied (TM 5-3805-261-10)

Implements lowered to ground (TM 5-3805-261-10)

Engine off (TM 5-3805-261-10)

Battery disconnect switch in OFF position (TM 5-3805-261-10)

Left and right operator's console plates removed (WP 0193 00)

## TRANSMISSION CONTROL CABLES REPLACEMENT - CONTINUED 0152 00

### *REMOVAL*

1. Remove three bolts (5), washers (4), cover (3), and gasket (2) from front of operator panel console (1). Discard gasket.

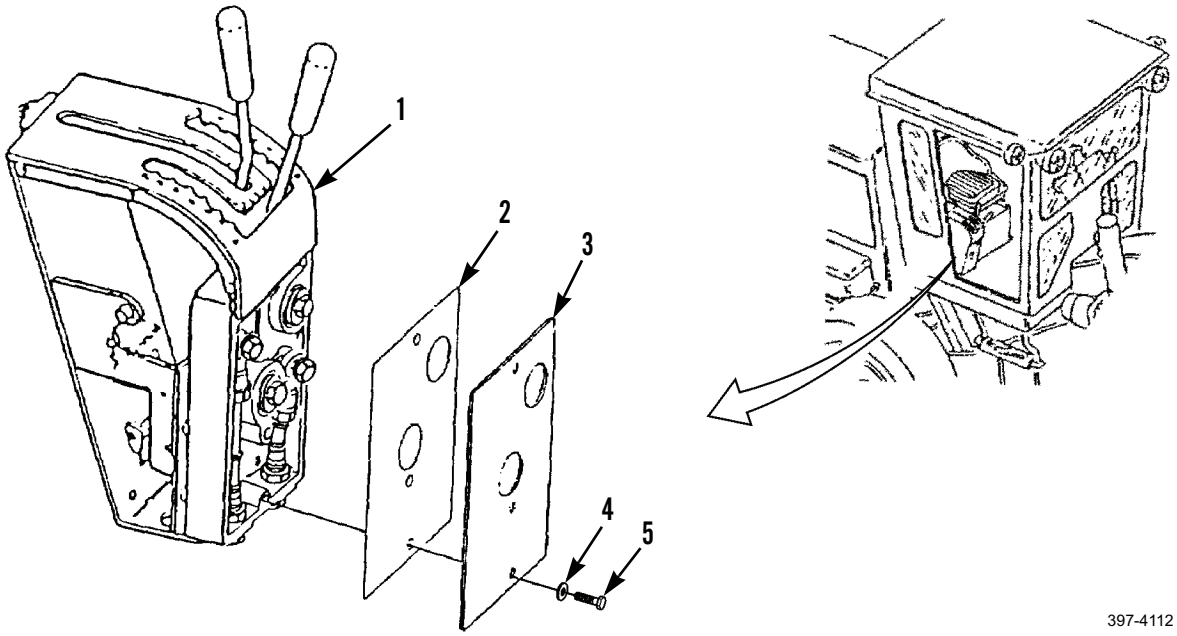


397-4112

2. Loosen nut (13).
3. Remove bolt (11), washer (12), and rod end (15).
4. Remove two nuts (13) and star washer (14). Discard star washer.
5. Loosen nut (10).
6. Remove bolt (8), washer (7), and rod end (6).
7. Remove two nuts (10) and star washer (9). Discard star washer.

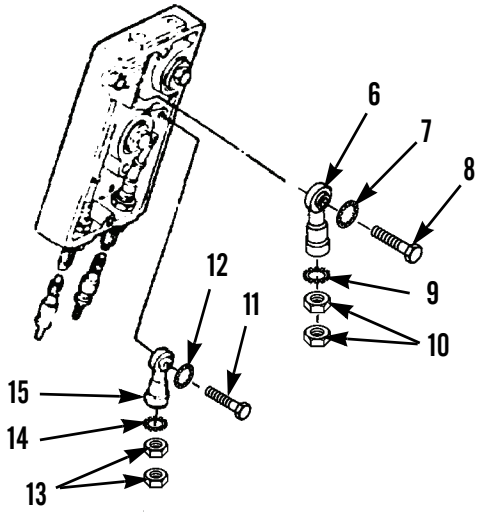


397-4113

***REMOVAL - CONTINUED***

8. Remove nut (19), lockwasher (20), nut (18), and lockwasher (17). Discard lockwashers.
9. Remove bolt (26), washer (25), and clip (24) from under right side of cab.

**NOTE**

Tag cables before disconnecting to aid in installation.

10. Disconnect cables (16 and 21) through cab floor.
11. For CCE and Type I machines, go to step 18.
12. For Type II machine, disconnect cable (16) from cable (23), and disconnect cable bracket (21) from cable (22).

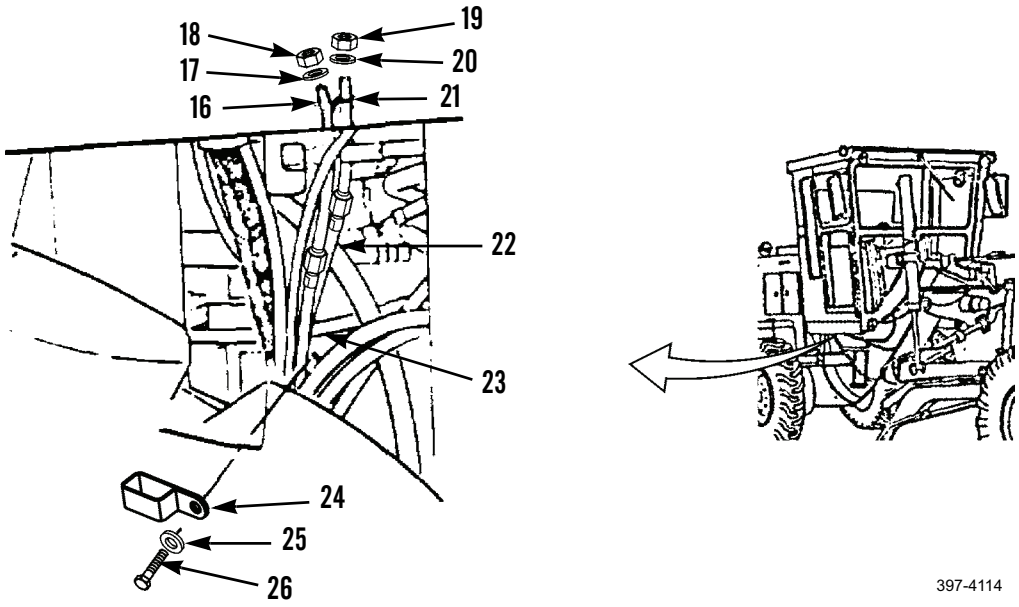

***REMOVAL - CONTINUED***

13. Disconnect cable (28) from governor control housing (27).

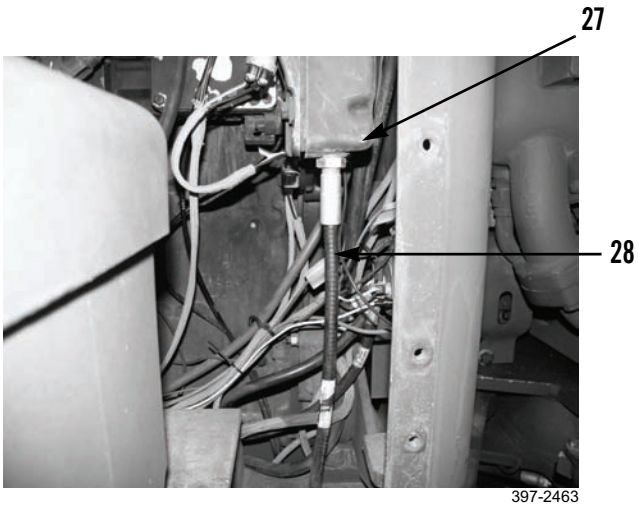


14. Disconnect cable (28) from cable (29).

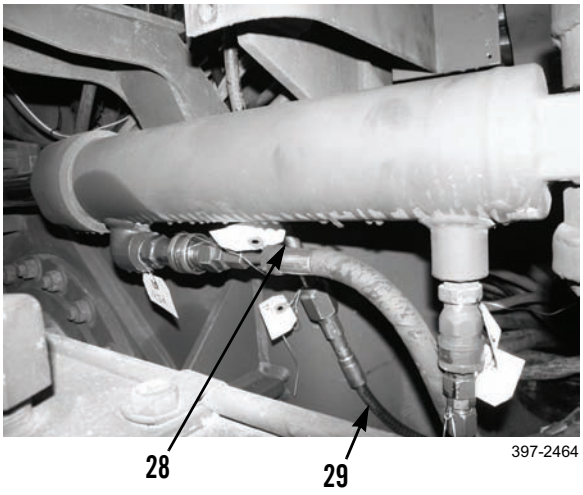

***REMOVAL - CONTINUED***

15. Disconnect cable (29) from control housing (30).

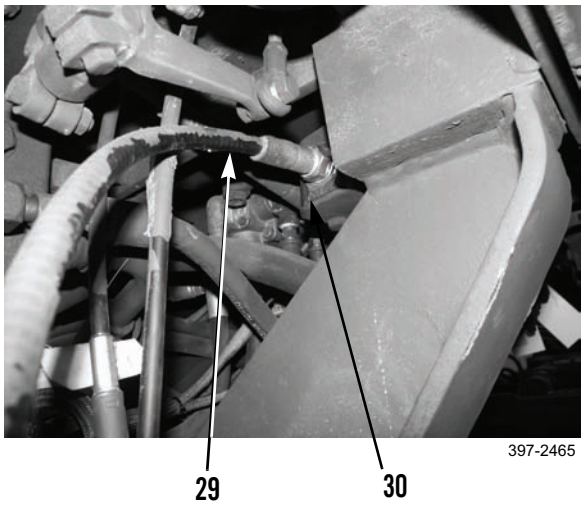


16. Disconnect cable (31) from control housing (32).

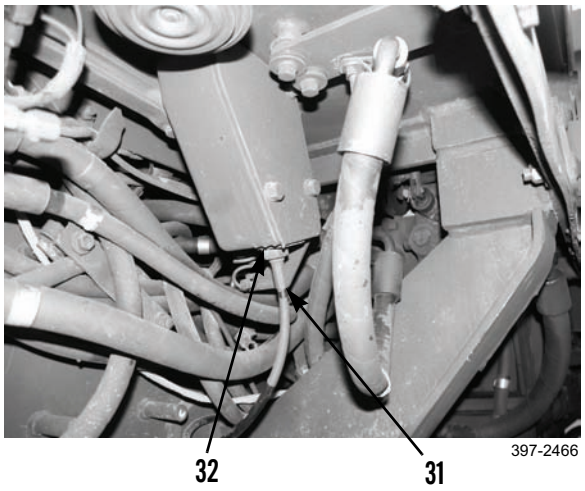

***REMOVAL - CONTINUED***

17. Disconnect cable (31) from cable (33).

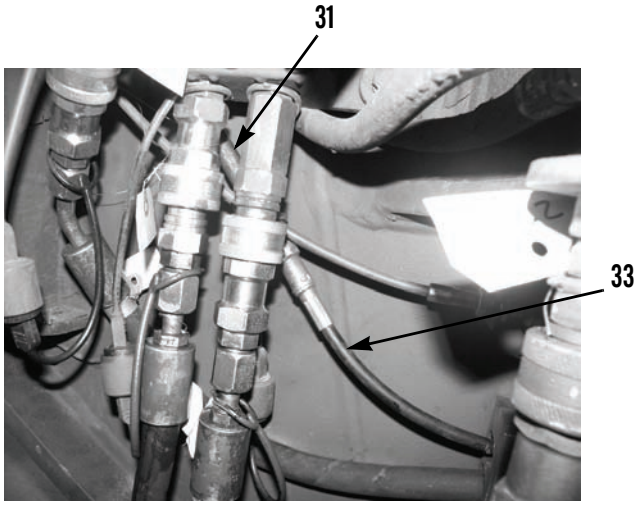


18. Remove two nuts (37) and washers (36).
19. Remove clip (38).
20. Remove plate (35) and clamp (34).

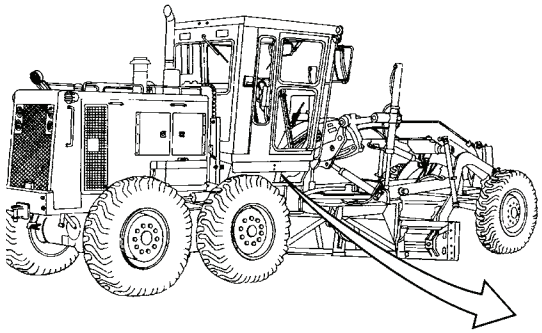

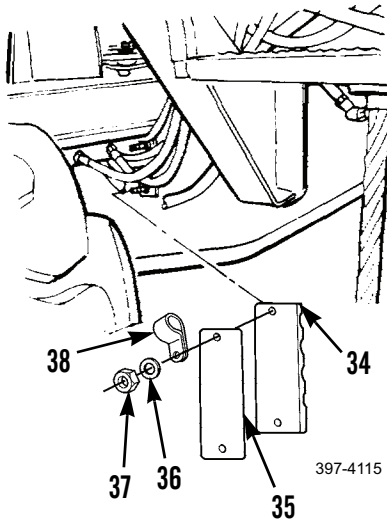

***REMOVAL - CONTINUED***

21. Remove two nuts (43) and washers (42) from under left-front side of engine compartment.
22. Remove clip (41).
23. Remove plate (40) and clamp (39).
24. Disconnect cable (refer to callout 33 and WP 0149 00) from transmission modulation central housing.

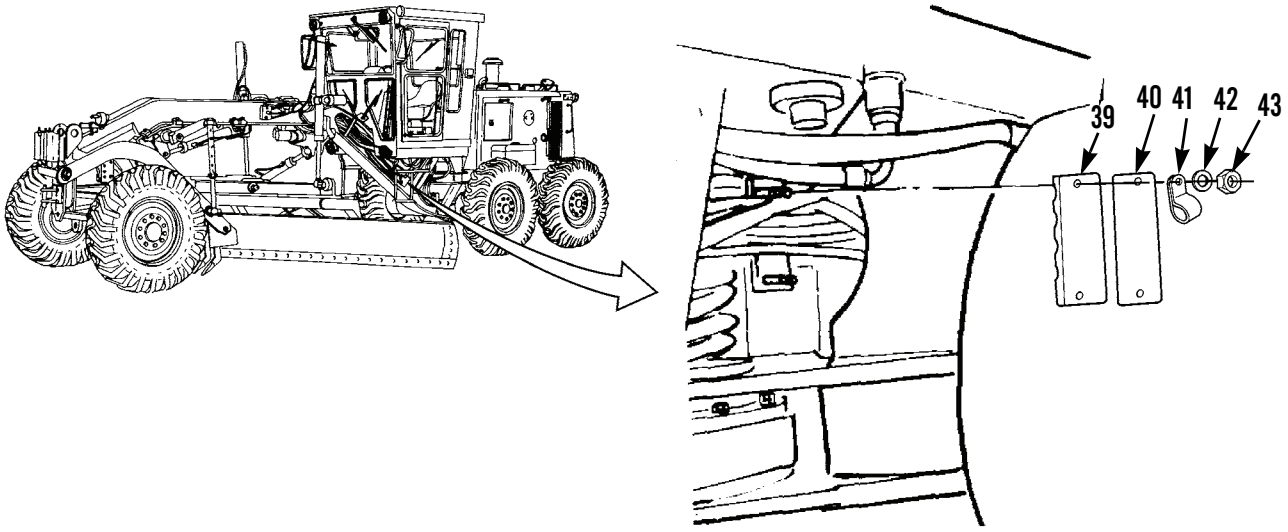


397-4116

25. Remove two nuts (48) and washers (47) from under left-rear of cab.
26. Remove clip (46).
27. Remove plate (45) and clamp (44).

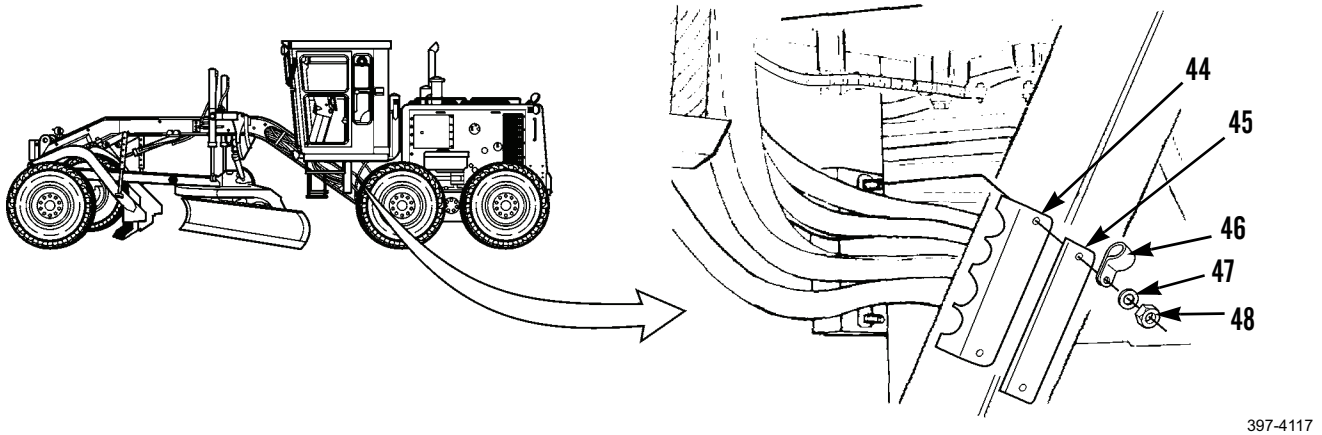


397-4117

***REMOVAL - CONTINUED***

28. Remove two nuts (49) and washers (50) from under right-front side of engine compartment.
29. Remove clip (51).
30. Remove plate (52) and clamp (53).

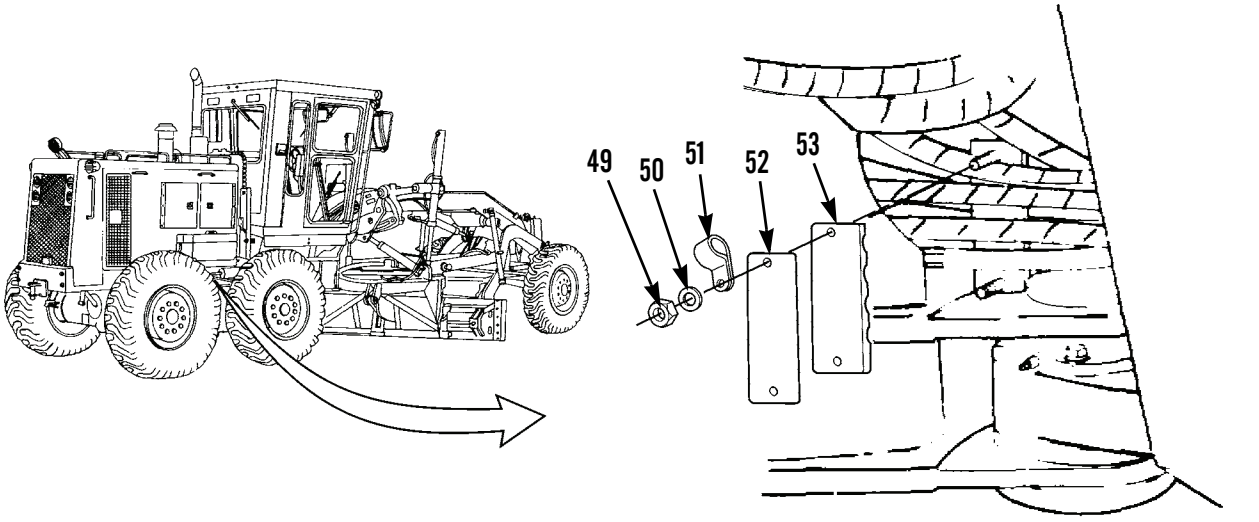


397-4118

31. Remove two bolts (54) and washers (55) from left-front of transmission in engine compartment.
32. Remove three nuts (56) and slide back on control cables (22, 23, and 33).

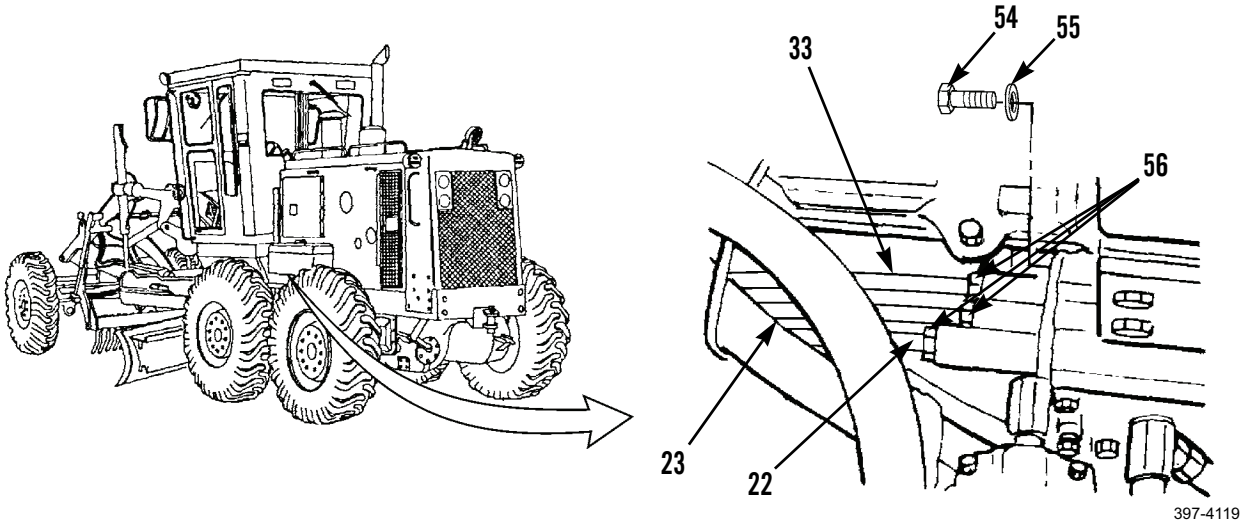


397-4119

***REMOVAL - CONTINUED***

33. Slide back retainer (57) and remove three couplings (64) with items 58 and 59 attached on cables (33, 23 and 22).
34. Separate three rod ends (61) from transmission control valves (62).
35. Remove three rings (60) and pins (63) from rod ends (61).

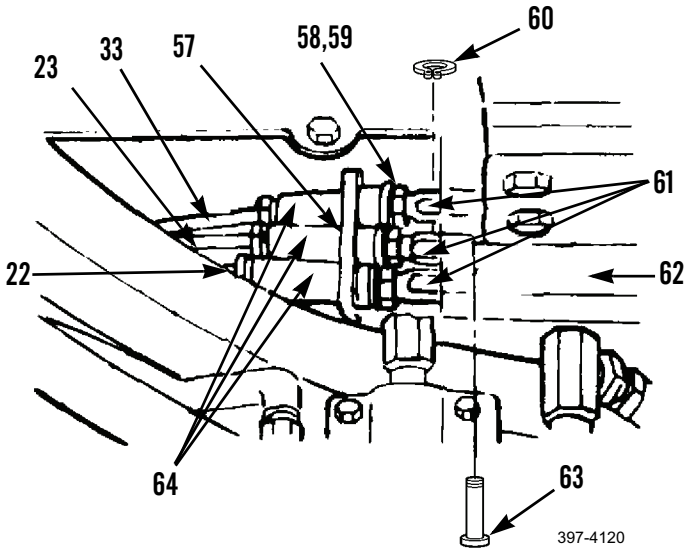


36. Loosen three nuts (65).
37. Remove three rod ends (61) and nuts (65).

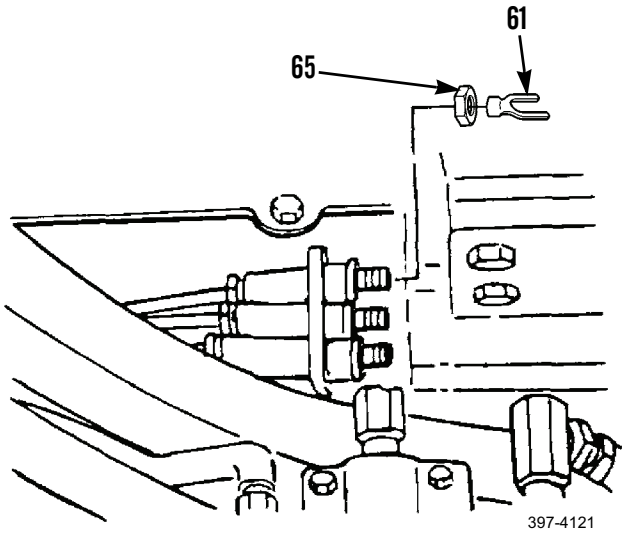

### *REMOVAL - CONTINUED*

38. Remove and discard three seals (68) and six rings (67) from three couplings (64).
39. Remove retainer (57) and three preformed packings (66) from cables (22, 23, and 33). Discard three preformed packings.
40. Remove cables (22, 23, and 33) from machine.

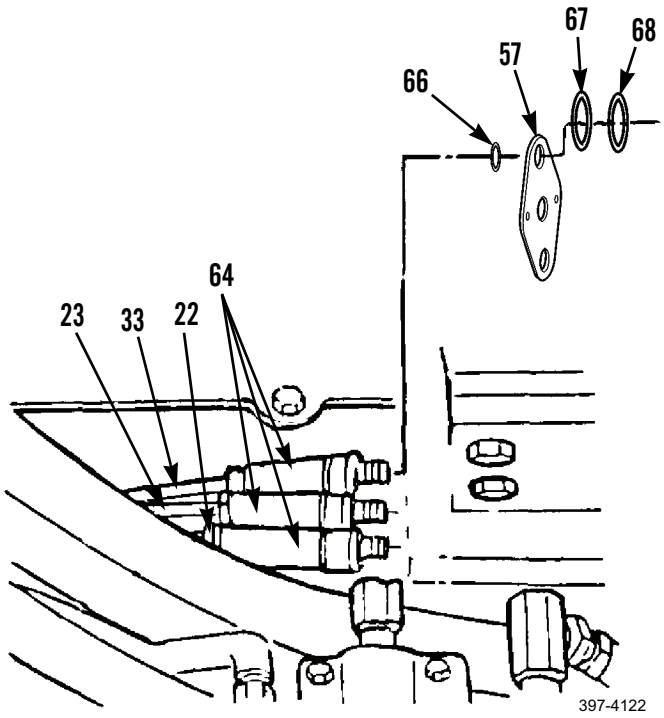


### *CLEANING AND INSPECTION*

Clean and inspect all parts in accordance with WP 0020 00.

### *INSTALLATION*

1. Position cables (22, 23, and 33) on machine.
2. Install three new preformed packings (66) on cables (22, 23, and 33) at transmission under left side of engine compartment.
3. Install retainer (57), six new rings (67), and three new seals (68) on three couplings (64).
4. Install three nuts (65) and rod ends (61).

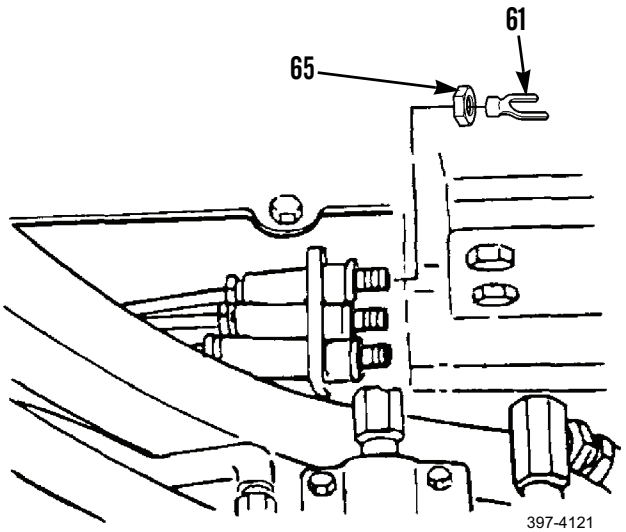

***INSTALLATION - CONTINUED***

5. Install three pins (63) and rings (60).
6. Set three rod ends (61) into transmission control valves (62).
7. Move three couplings (64) with items 58 and 59 attached forward on cables (33, 23, and 22) and position over transmission control valves (62).

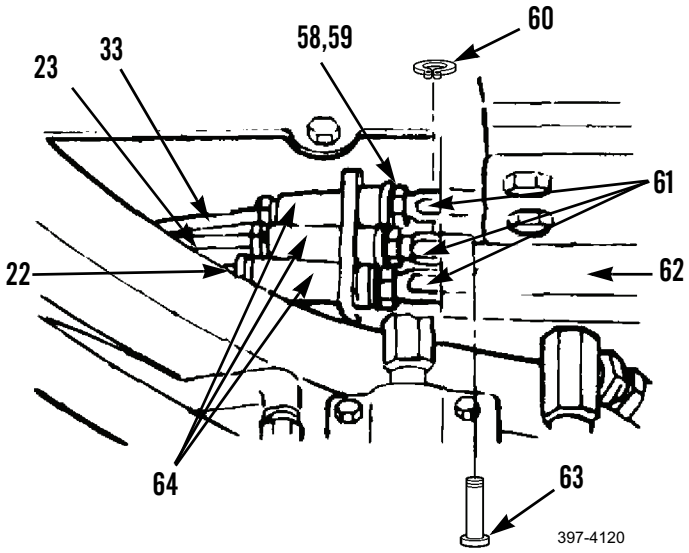


8. Slide retainer (49) and three nuts (48) forward. Tighten three nuts.
9. Install two washers (47) and bolts (46).

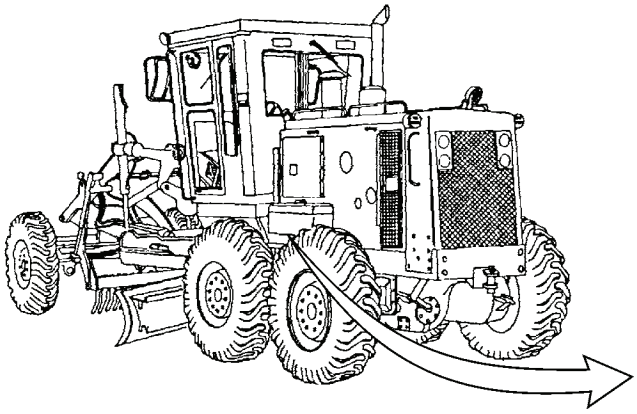

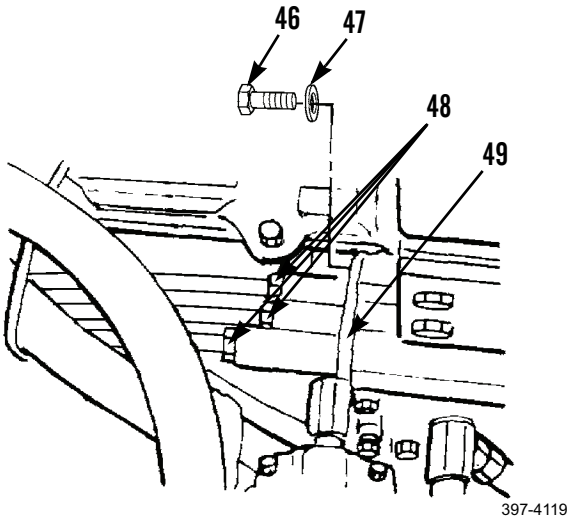

***INSTALLATION - CONTINUED***

10. Install clamp (53), plate (52), and clip (51) under right-front side of engine compartment.
11. Install two washers (50) and nuts (49).

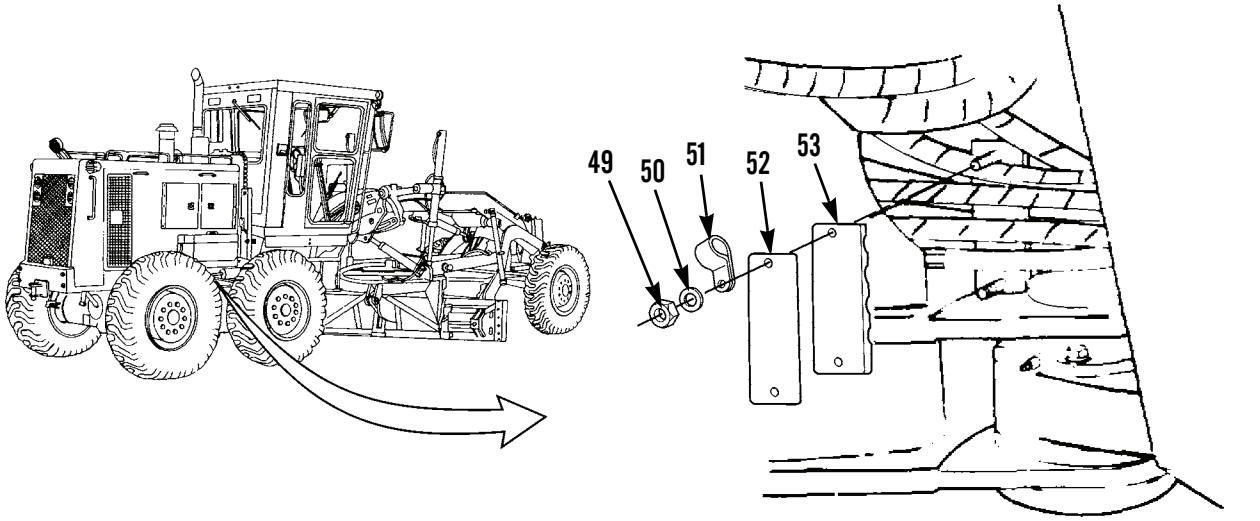


397-4118

12. Install clamp (44), plate (45), and clip (46) under left-rear side of cab.
13. Install two washers (47) and nuts (48).

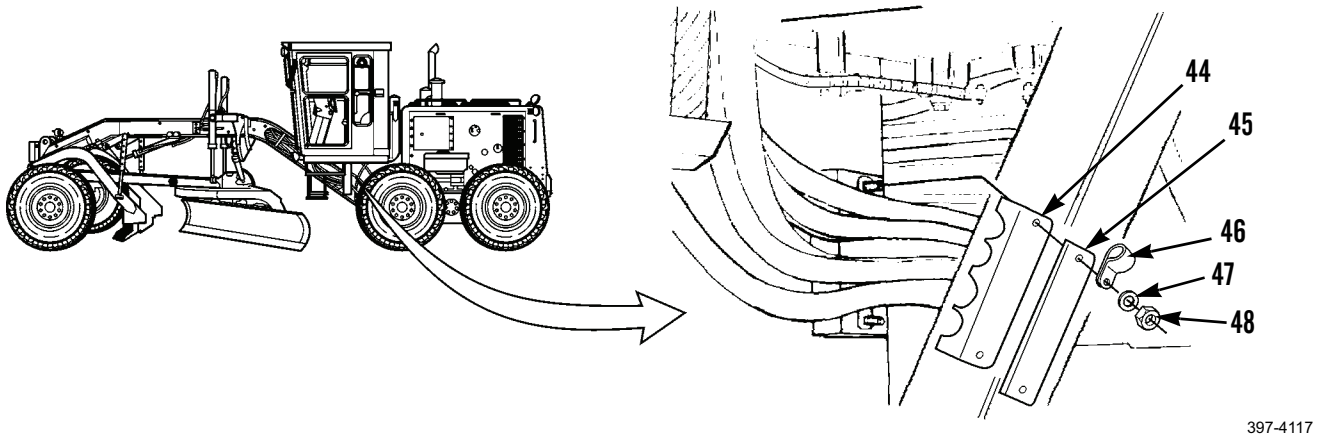


397-4117

## TRANSMISSION CONTROL CABLES REPLACEMENT - CONTINUED 0152 00

### *INSTALLATION - CONTINUED*

14. Connect cable (refer to callout 33 and WP 0149 00) in transmission modulation control housing.
15. Install clamp (39), plate (40), and clip (41) under right-front side of engine compartment.
16. Install two washers (42) and nuts (43).

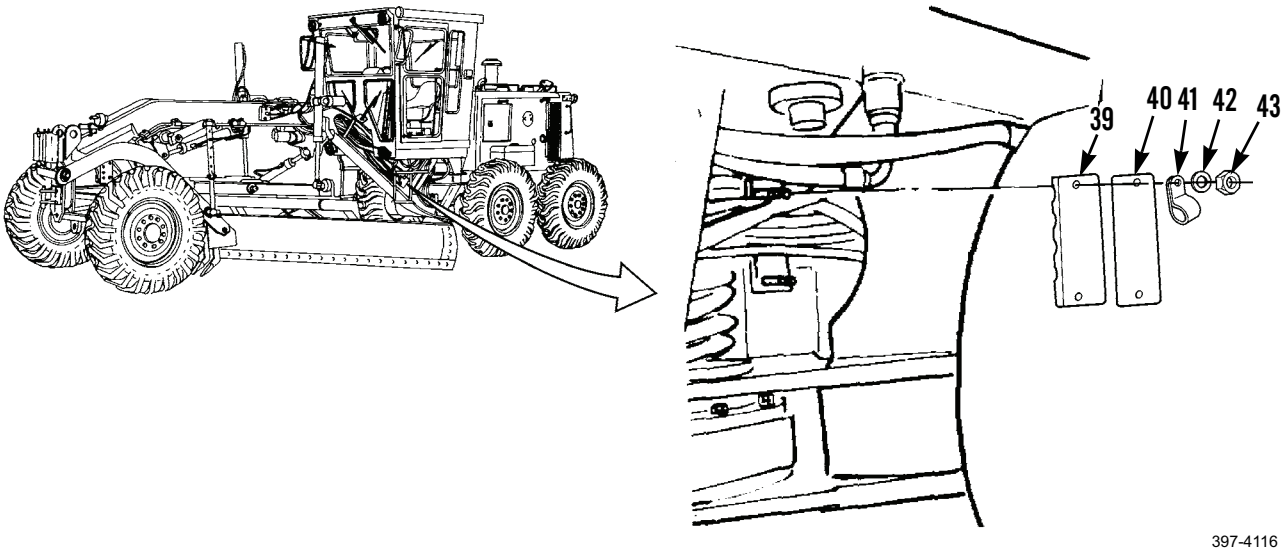


17. Install clamp (34), plate (35), and clip (38) under right side of cab.
18. Install two washers (36) and nuts (37).

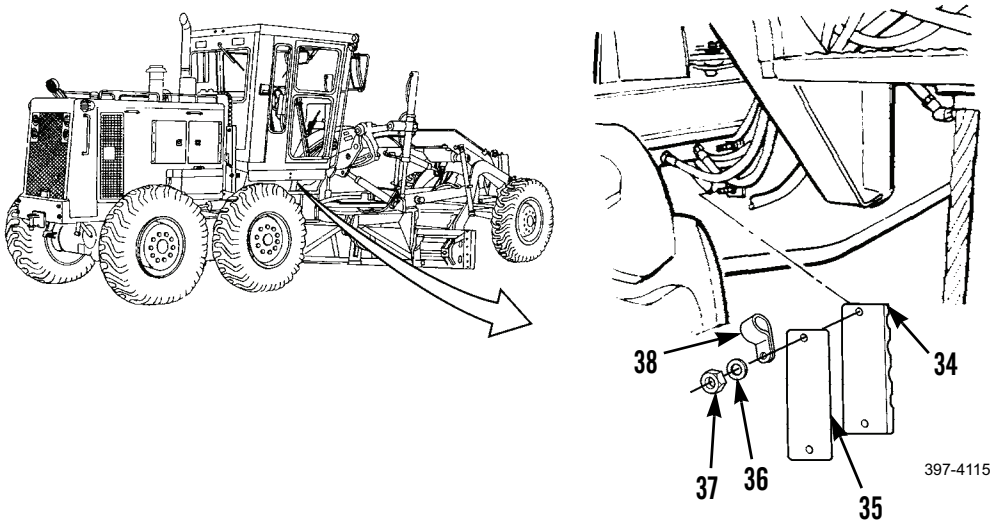

***INSTALLATION - CONTINUED***

19. For CCE and Type I machines, go to step 25.
20. Use extractor assembly to connect cable (33) to cable (31).

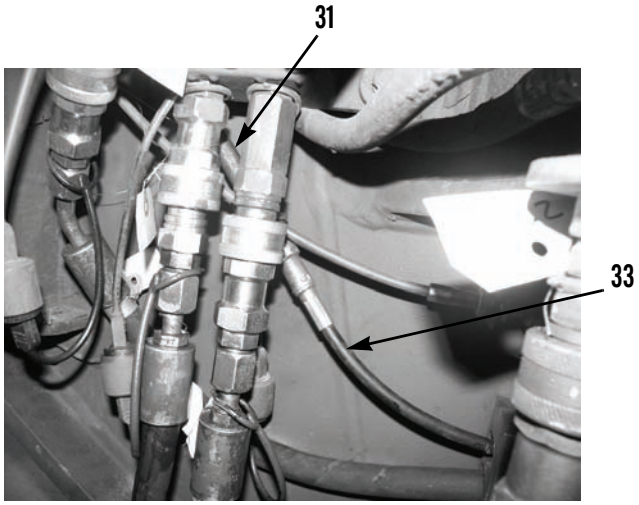

397-2467

21. Connect cable (31) to control housing (32).

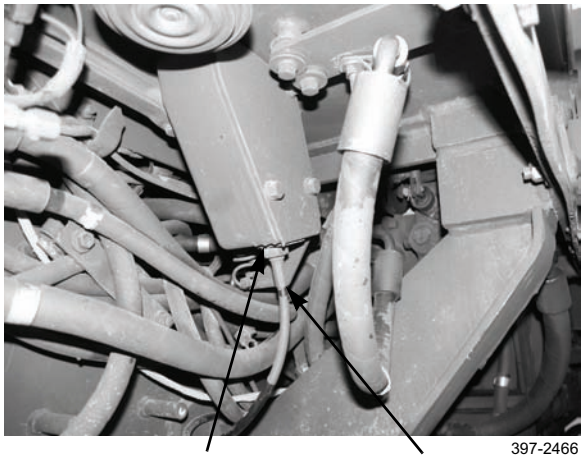

397-2466

***INSTALLATION - CONTINUED***

22. Connect cable (29) to control housing (30).

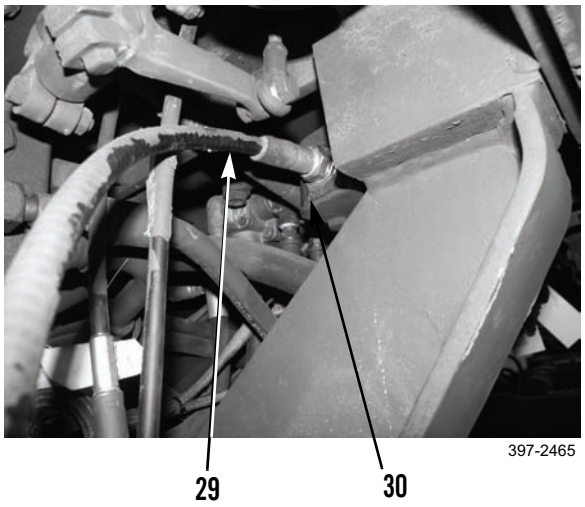


23. Use extractor assembly to connect cable (29) to cable (28).

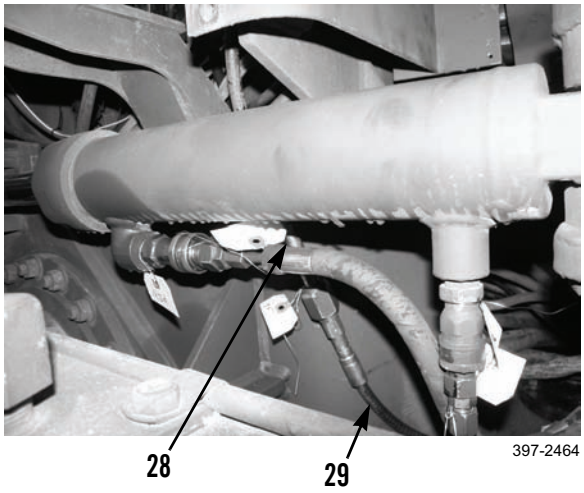

***INSTALLATION - CONTINUED***

24. Connect cable (28) to governor control housing (27).

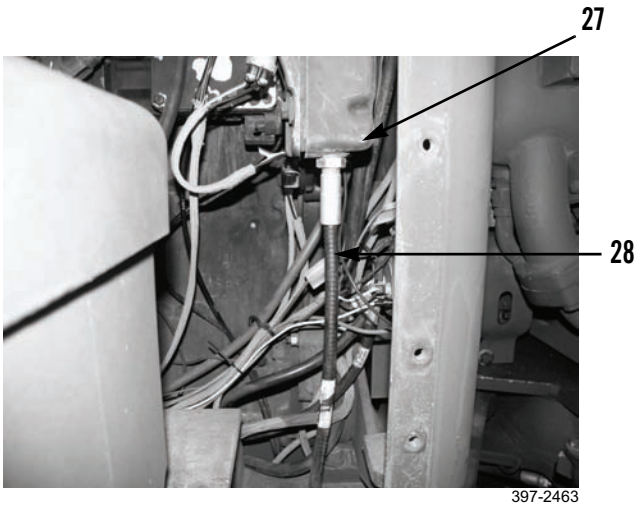


25. For Type II machine, use extractor assembly to connect cable (21) to cable (22), and cable (16) to cable (23).
26. Connect cables (21 and 16) in transmission control housing.
27. Install clip (24), washer (25), and bolt (26).
28. Install new lockwasher (17) and nut (18).
29. Install new lockwasher (20) and nut (19).

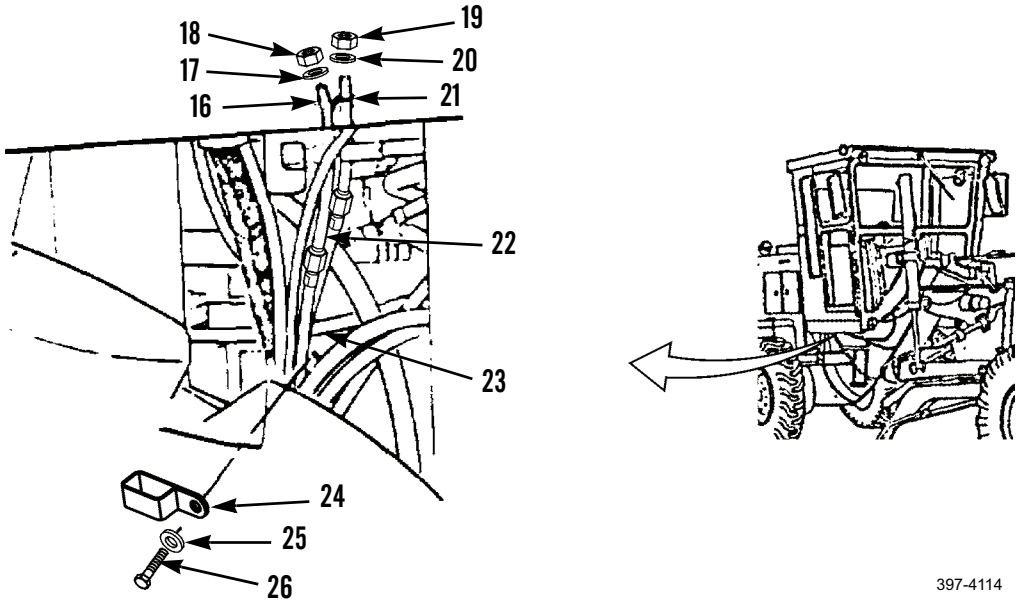

***INSTALLATION - CONTINUED***

30. Install new star washer (9) and two nuts (10) on rod end (6).
31. Adjust cable (refer to callout 21 and WP 0150 00).
32. Install washer (7), bolt (8), and rod end (6).
33. Install new star washer (14), two nuts (13), and rod end (15).
34. Adjust cable (refer to callout 16 and WP 0150 00).
35. Install washer (12) and bolt (11).

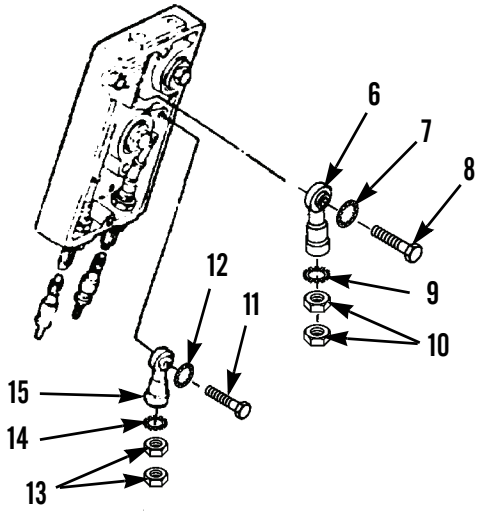


397-4113

36. Install new gasket (2), cover (3), three washers (4), and bolts (5) to front of operator panel console (1).

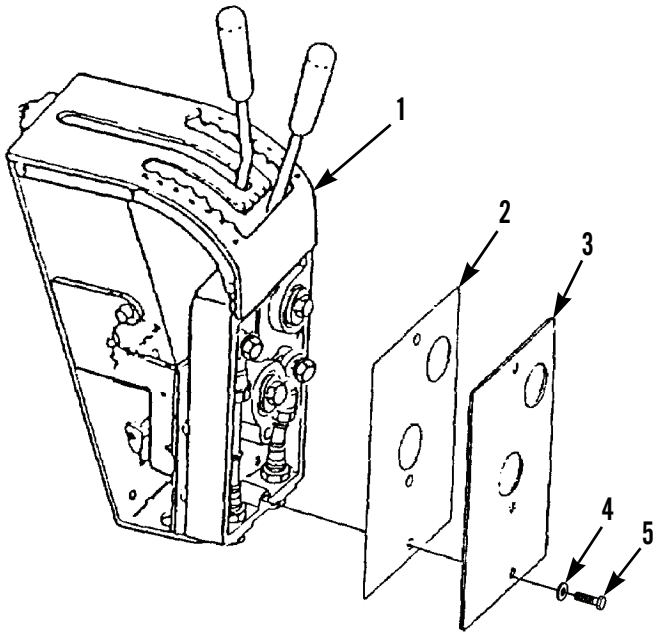


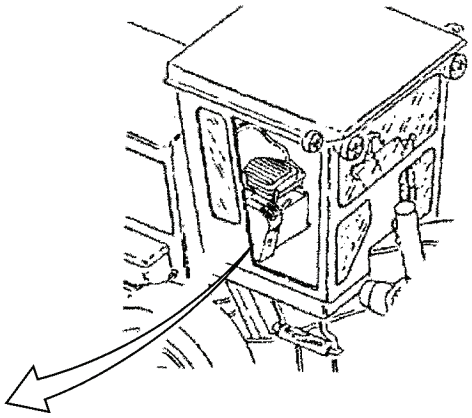

397-4112

37. Install left and right operator's console plates (WP 0193 00).

**END OF WORK PACKAGE**

## TRANSMISSION OIL FILTER AND MOUNTING MAINTENANCE 0153 00

### THIS WORK PACKAGE COVERS

Removal, Disassembly, Cleaning and Inspection, Assembly, Installation

### INITIAL SETUP

**Maintenance Level**

Unit

**Tools and Special Tools**

Tool kit, general mechanic's (Item 89, WP 0348 00)

Shop equipment, common no. 1 (Item 75, WP 0348 00)

**Materials/Parts**

Cap set, protective (Item 7, WP 0349 00)

Rag, wiping (Item 35, WP 0349 00)

Filter element

Lockwasher (4)

Packing, preformed (5)

Ring, retaining

Seal

**References**

WP 0020 00

**Equipment Conditions**

Machine parked on level ground (TM 5-3805-261-10)

Parking/emergency brake applied (TM 5-3805-261-10)

Implements lowered to ground (TM 5-3805-261-10)

Engine off (TM 5-3805-261-10)

Battery disconnect switch in OFF position (TM 5-3805-261-10)

Left side screen door opened (TM 5-3805-261-10)

Transmission oil drained (WP 0147 00)



**WARNING**



- Exercise care when working with hot oil or components saturated with hot oil. Allow to cool before handling. Failure to follow this warning may result in injury to personnel.
- Transmission oil is very slippery. Immediately wipe up any spills. Failure to follow this warning may cause injury to personnel.

***REMOVAL***

**NOTE**

Position drain pan under transmission oil filter.

1. Remove plug (1) and preformed packing (2), allowing oil to drain into drain pan. Discard preformed packing.
2. Remove filter body (3).

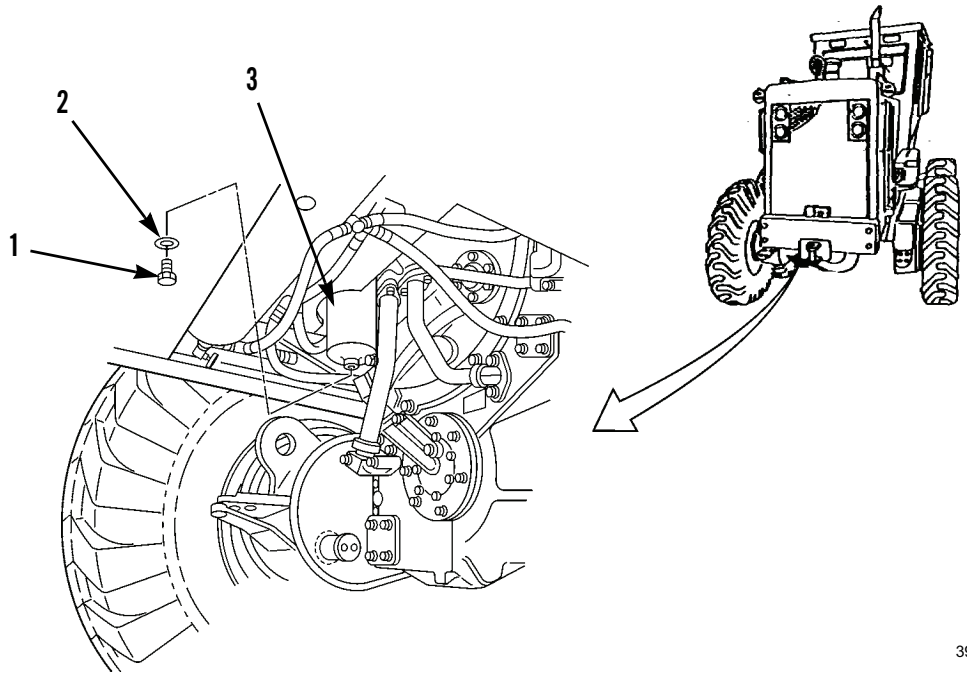


397-462

3. Remove four bolts (6), lockwashers (7), and housing (4). Discard lockwashers.
4. Remove and discard two preformed packings (5).

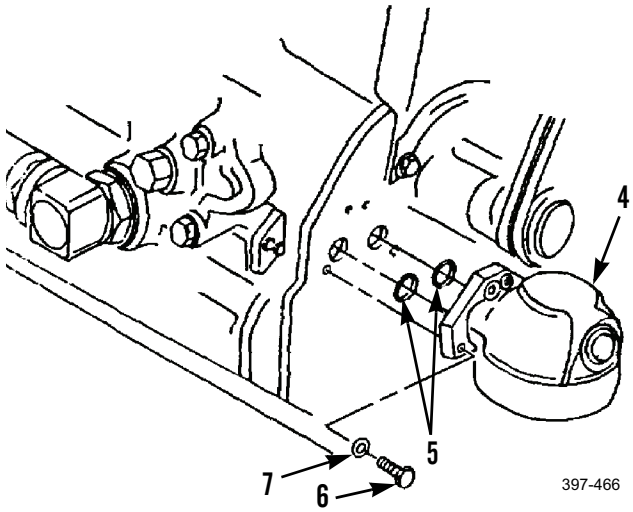


397-466

### *DISASSEMBLY*

1. Remove and discard seal (12) and filter element (11) from filter body (3).
2. Remove retaining ring (8) while pressing retainer (9) downward against spring (10).
3. Remove retainer (9) and spring (10).

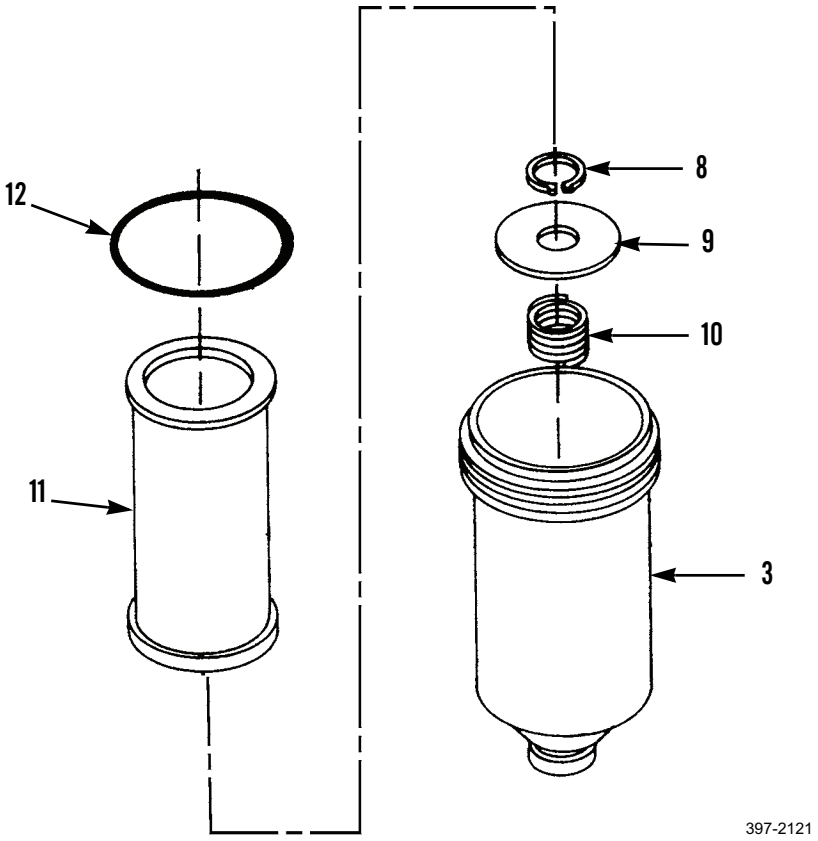


4. Remove plug (13) and preformed packing (14) from housing (4). Discard preformed packing.
5. Remove plug (18), preformed packing (17), spool (16), and spring (15). Discard preformed packing.

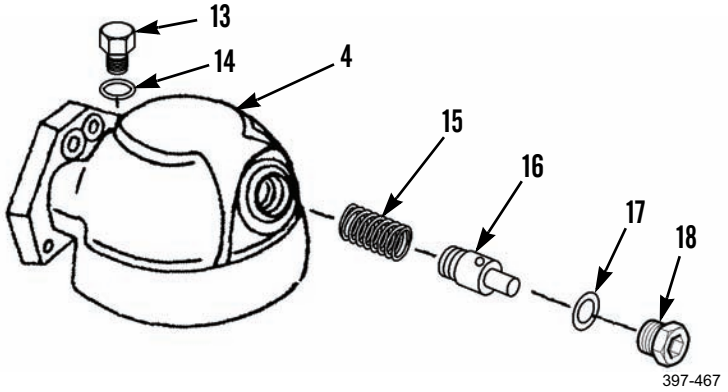


### *CLEANING AND INSPECTION*

Clean and inspect all parts in accordance with WP 0020 00.

***ASSEMBLY***

1. Install spring (15), spool (16), new preformed packing (17), and plug (18) into housing (4).
2. Install new preformed packing (14) and plug (13).

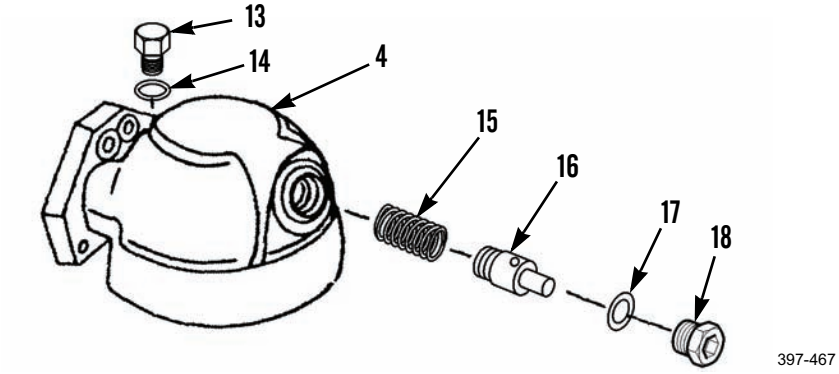


3. Install spring (10) and retainer (9) in filter body (3).
4. Install new retaining ring (8) while pressing retainer (9) downward against spring (10).
5. Install new filter element (11) and new seal (12).

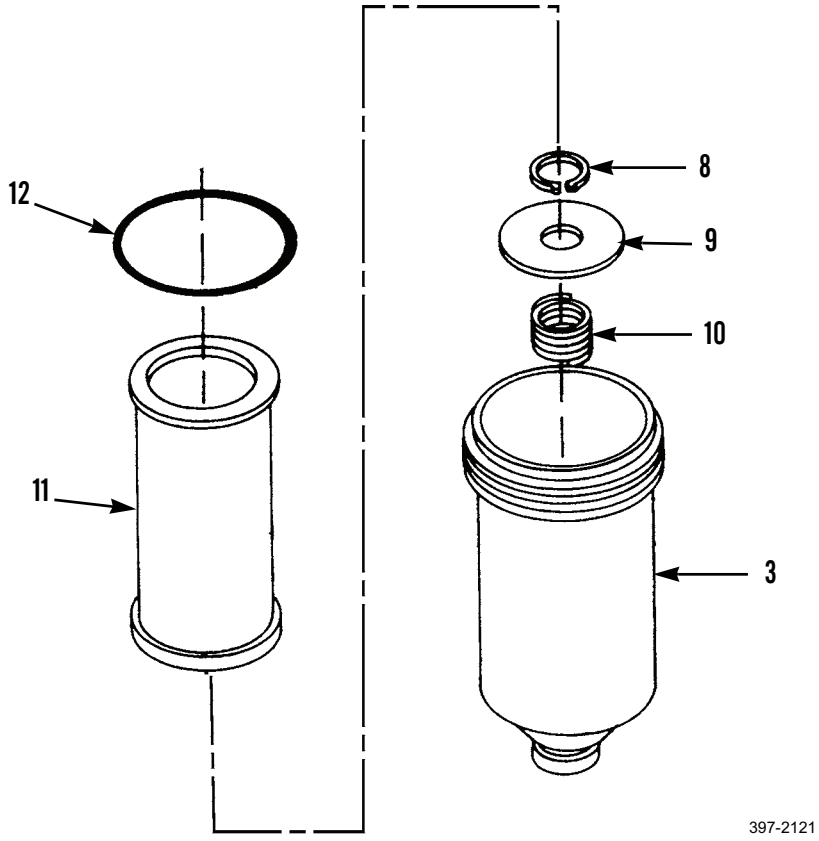

***INSTALLATION***

1. Install two new preformed packings (5).
2. Install housing (4), four new lockwashers (7), and bolts (6).

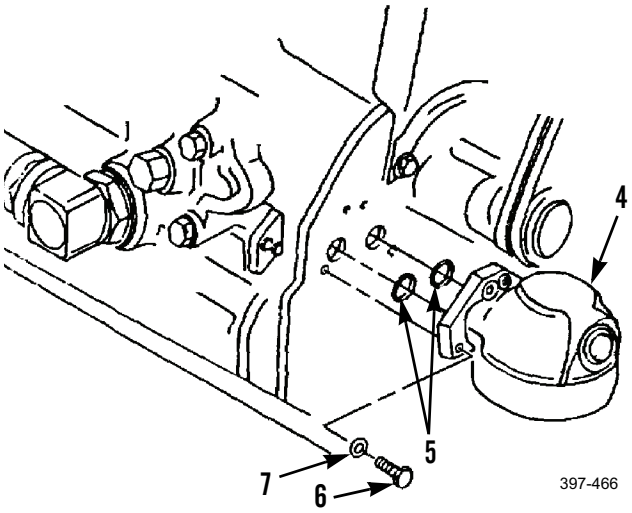


3. Install filter body (3).
4. Install new preformed packing (2) and plug (1).

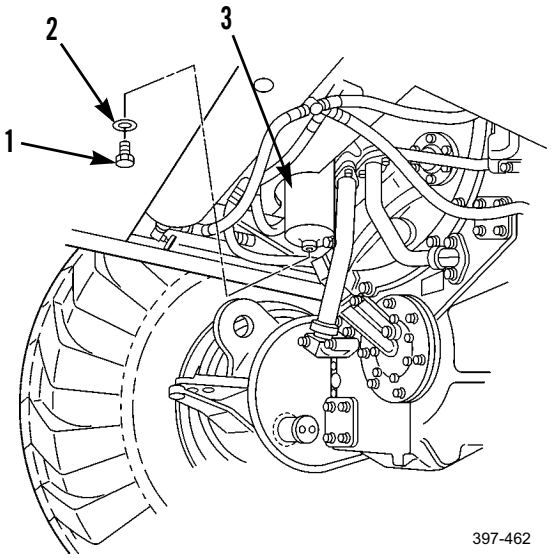


5. Refill transmission oil to proper level (WP 0147 00).
6. Turn battery disconnect switch to ON position and start engine (TM 5-3805-261-10).
7. Check for leaks. Stop engine.
8. Close left side screen door (TM 5-3805-261-10).

**END OF WORK PACKAGE**

## TRANSMISSION OIL SAMPLING VALVE AND LINE MAINTENANCE 0154 00

### THIS WORK PACKAGE COVERS

Removal, Disassembly, Cleaning and Inspection, Assembly, Installation

### INITIAL SETUP

**Maintenance Level**

Unit

**Tools and Special Tools**

Tool kit, general mechanic's (Item 89, WP 0348 00)

Shop equipment, common no. 1 (Item 75, WP 0348 00)

**Materials/Parts**

Cap set, protective (Item 7, WP 0349 00)

Rag, wiping (Item 35, WP 0349 00)

Packing, preformed (2)

**References**

WP 0020 00

WP 0147 00

**Equipment Conditions**

Machine parked on level ground (TM 5-3805-261-10)

Parking/emergency brake applied (TM 5-3805-261-10)

Implements lowered to ground (TM 5-3805-261-10)

Engine off (TM 5-3805-261-10)

Battery disconnect switch in OFF position (TM 5-3805-261-10)

Left side engine panel removed (WP 0182 00)



**WARNING**



- Exercise care when working with hot oil or components saturated with hot oil. Allow to cool before handling. Failure to follow this warning may result in injury to personnel.
- Transmission oil is very slippery. Immediately wipe up any spills. Failure to follow this warning may cause injury to personnel.

***REMOVAL***

**NOTE**

Position drain pan under transmission oil sampling valve.

1. Disconnect hose assembly (2) from elbow (3).
2. Remove elbow (3), adapter (4), and preformed packing (5). Discard preformed packing.
3. Remove bolt (8), washer (7), and clamp (6) from hose assembly (2).
4. Remove hose assembly (2) from transmission oil sampling valve (1).

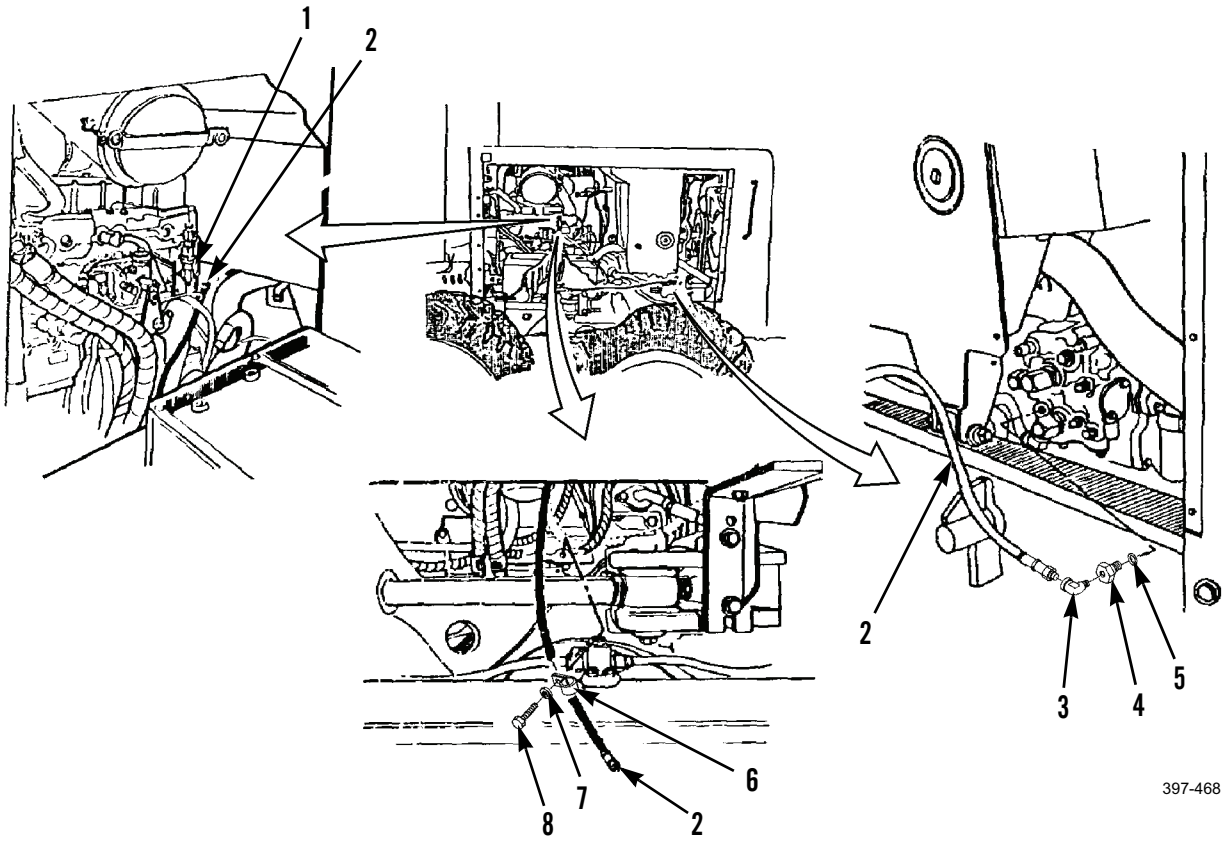

### *REMOVAL - CONTINUED*

5. Remove two bolts (9) and transmission oil sampling valve (1).

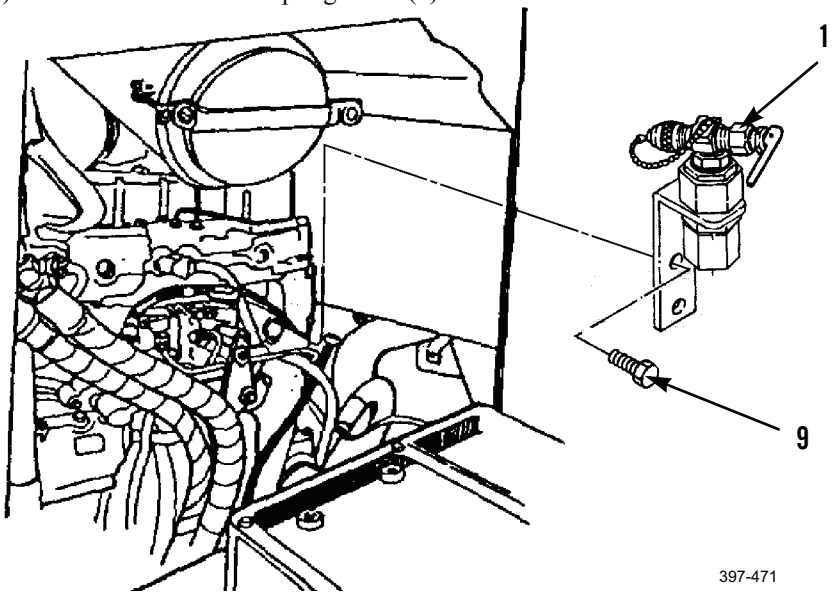


### *DISASSEMBLY*

1. Remove drain cock (18), adapter (17), preformed packing (16), and adapter (15) from reducer (14). Discard preformed packing.
2. Remove nuts (13 and 11) and reducer (14) from bracket (10).
3. Remove reducer (12) from nut (13).

### *CLEANING AND INSPECTION*

Clean and inspect all parts in accordance with WP 0020 00.

### *ASSEMBLY*

1. Install reducer (12) on nut (13).
2. Install reducer (14) and nuts (11 and 13) on bracket (10).
3. Install adapter (15), new preformed packing (16), adapter (17), and drain cock (18) on reducer (14).

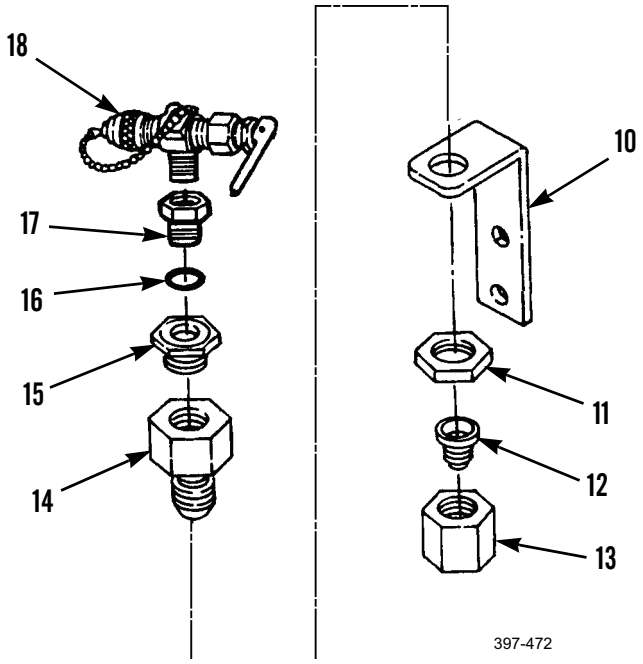


### *INSTALLATION*

1. Install transmission oil sampling valve (1) and two bolts (9).

***INSTALLATION - CONTINUED***

2. Connect hose assembly (2) to transmission oil sampling valve (1).
3. Install clamp (6), washer (7), and bolt (8) on hose assembly (2).
4. Install new preformed packing (5), adapter (4), and elbow (3).
5. Install hose assembly (2) to elbow (3).

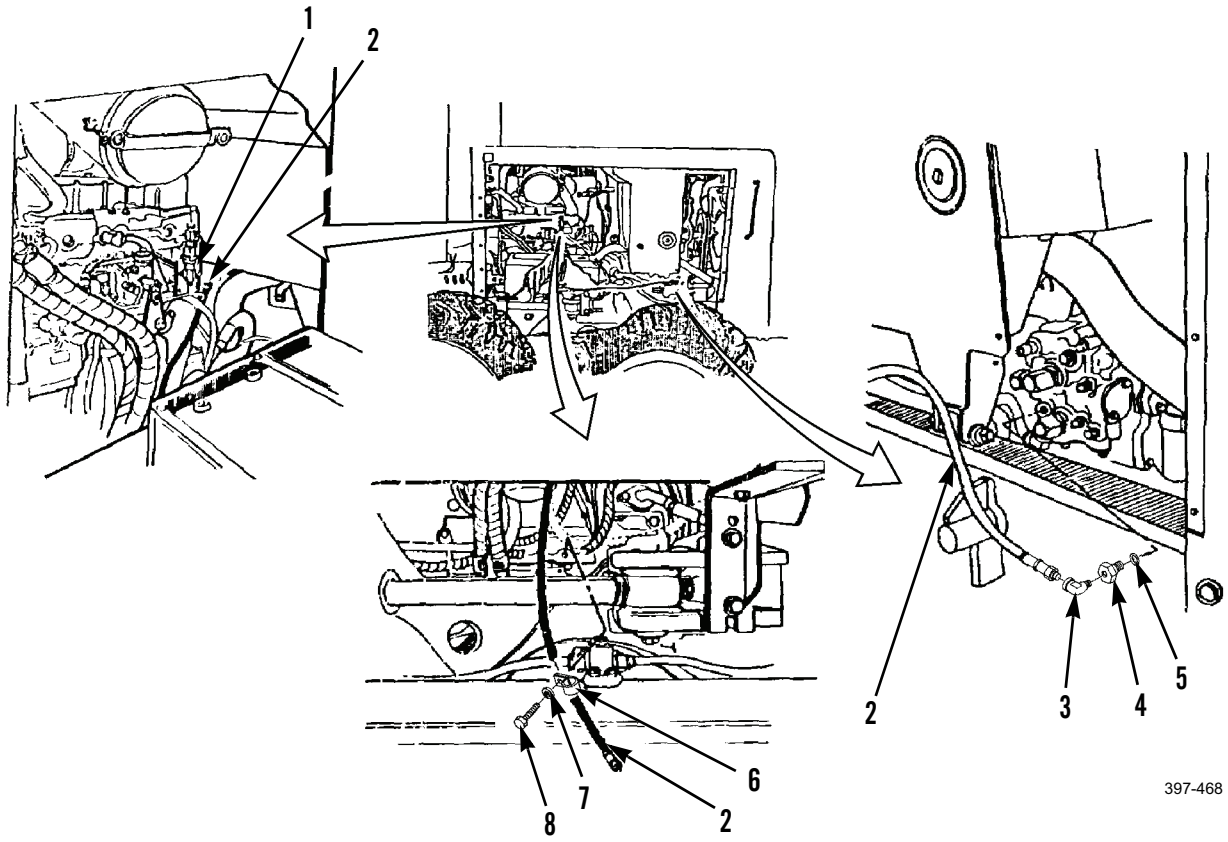


6. Check transmission oil level and refill to proper level, if necessary (WP 0147 00).
7. Turn battery disconnect switch to ON position and start engine (TM 5-3805-261-10).
8. Check for leaks. Stop engine.
9. Install left side engine panel (WP 0182 00).

**END OF WORK PACKAGE**

## TRANSMISSION OIL LINES REPLACEMENT 0155 00

### THIS WORK PACKAGE COVERS

Removal, Cleaning and Inspection, Installation

### INITIAL SETUP

**Maintenance Level**

Unit

**Tools and Special Tools**

Tool kit, general mechanic's (Item 89, WP 0348 00)

**Materials/Parts**

Cap set, protective (Item 7, WP 0349 00)

Rag, wiping (Item 35, WP 0349 00)

Tag, marker (Item 44, WP 0349 00)

Packing, preformed (4)

**References**

WP 0020 00

WP 0147 00

**Equipment Conditions**

Machine parked on level ground (TM 5-3805-261-10)

Parking/emergency brake applied (TM 5-3805-261-10)

Implements lowered to ground (TM 5-3805-261-10)

Engine off (TM 5-3805-261-10)

Battery disconnect switch in OFF position (TM 5-3805-261-10)

Articulation anti-pivot pin installed (TM 5-3805-261-10)

Transmission linkage adjusted (WP 0150 00)

Left side engine panel removed (WP 0182 00)



**WARNING**



- Exercise care when working with hot oil or components saturated with hot oil. Allow to cool before handling. Failure to follow this warning may result in injury to personnel.
- Transmission oil is very slippery. Immediately wipe up any spills. Failure to follow this warning may cause injury to personnel.

***REMOVAL***

1. Remove bolt (1), lockwasher (2), clamp (3), and spacer (4) from left side of engine to transmission adapter.

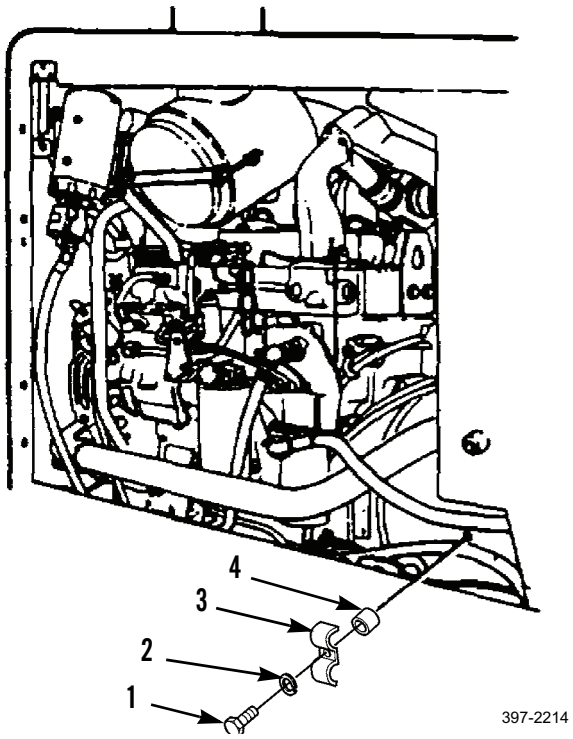


2. Remove four bolts (8) and washers (7).

**CAUTION**

Cap hose ends and plug open ports to prevent contamination.

**NOTE**

Tag hose assemblies before disconnecting to aid in installation.

3. Disconnect hose assemblies (6 and 9) from transmission oil cooler (5).
4. Remove and discard two preformed packings (10).

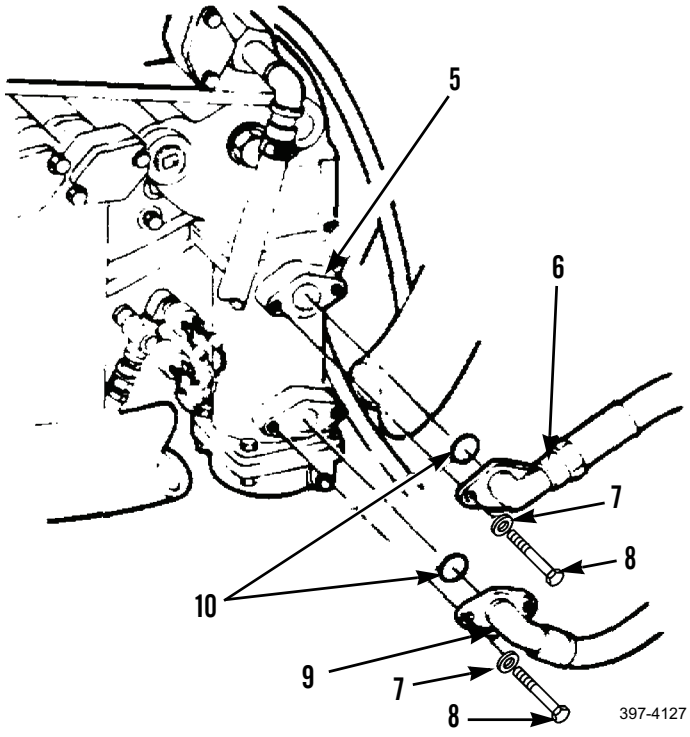

### *REMOVAL - CONTINUED*

5. Remove hose assemblies (6 and 9).
6. Remove two elbows (12) and preformed packings (11). Discard preformed packings.

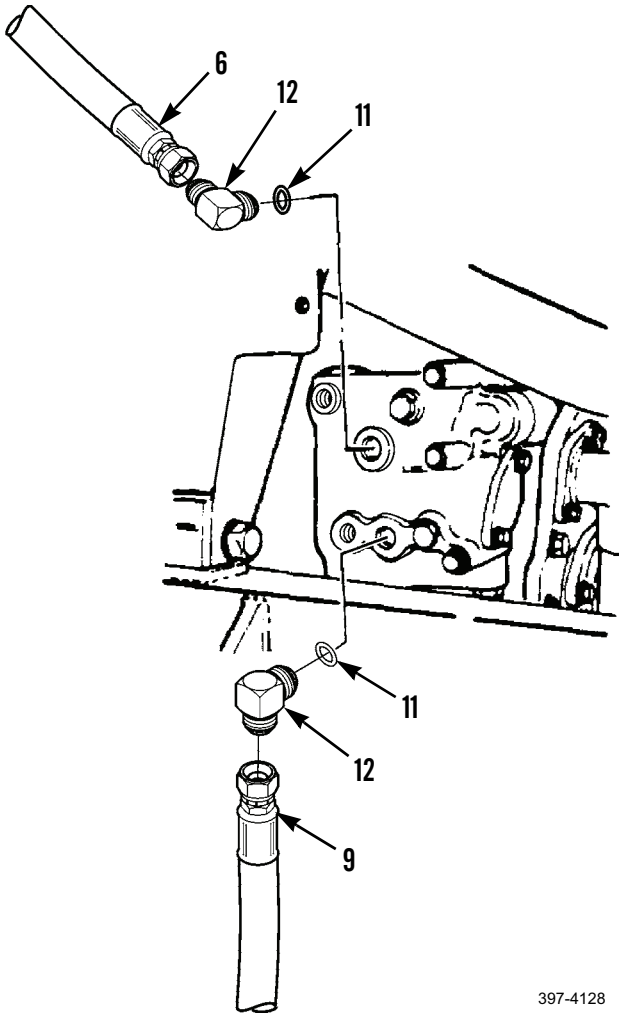


### *CLEANING AND INSPECTION*

Clean and inspect all parts in accordance with WP 0020 00.

### *INSTALLATION*

1. Install two new preformed packings (11) and elbows (12) on rear-left side of transmission.
2. Connect hose assemblies (9 and 6) to two elbows (12).
3. Position two new preformed packings (10) and connect hose assemblies (9 and 6) to transmission oil cooler (5).
4. Install four washers (7) and bolts (8).

***INSTALLATION - CONTINUED***

5. Install spacer (4), clamp (3), lockwasher (2), and bolt (1).

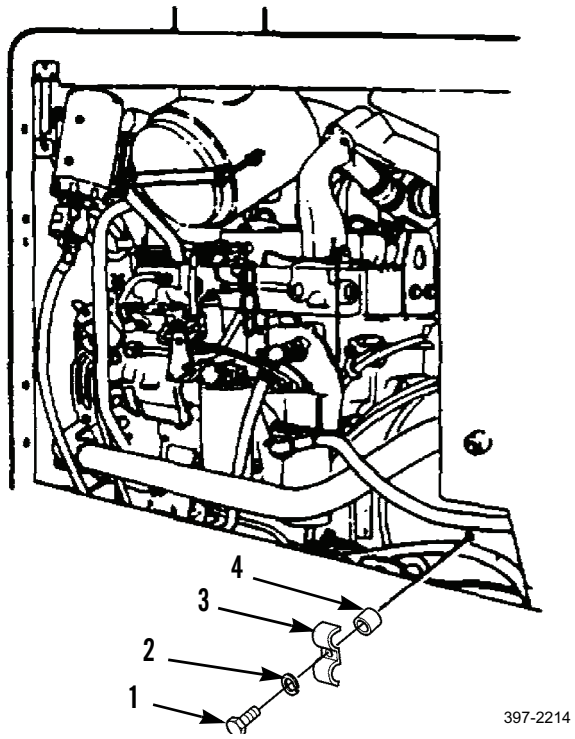


6. Refill transmission to proper level (WP 0147 00).



**WARNING**

If machine is parked indoors, DO NOT run engine unless exhaust fumes are vented to the outside. Failure to follow this warning may cause injury or death due to carbon monoxide poisoning.

7. Place battery disconnect to ON position and start engine (TM 5-3805-261-10).
8. Check for leaks.
9. Stop engine.
10. Install left-side engine panel (WP 0182 00).

**END OF WORK PACKAGE**

## LEANING WHEEL CYLINDER REPLACEMENT 0156 00

## THIS WORK PACKAGE COVERS

Removal, Cleaning and Inspection, Installation

## INITIAL SETUP

**Maintenance Level**

Unit

**Tools and Special Tools**

Tool kit, general mechanic's (Item 89, WP 0348 00)

Shop equipment, common no. 1 (Item 75, WP 0348 00)

Sling (Item 78, WP 0348 00)

Lifting device, 100-lb capacity

Woods blocks

**Materials/Parts**

Cap set, protective (Item 7, WP 0349 00)

Lubricant, thread (Item 22, WP 0349 00)

Oil, lubricating (Item 27 or 28, WP 0349 00)

Rag, wiping (Item 35, WP 0349 00)

Tag, marker (Item 44, WP 0349 00)

Packing, preformed (2)

**Materials/Parts - Continued**

Ring (2)

Seal (8)

Seal assembly

**Personnel Required**

Two

**References**

WP 0020 00

WP 0023 00

**Equipment Conditions**

Machine parked on level ground (TM 5-3805-261-10)

Parking/emergency brake applied (TM 5-3805-261-10)

Implements lowered to ground (TM 5-3805-261-10)

Engine off (TM 5-3805-261-10)

Battery disconnect switch in OFF position (TM 5-3805-261-10)

Wheel lean lock pin installed (TM 5-3805-261-10)

***REMOVAL***

1. Remove two fittings (2) from right side of front axle on machine.

**WARNING**

Hydraulic oil can be very slippery. Immediately wipe up any spills. Failure to follow this warning may cause injury to personnel.

**CAUTION**

Cap hose ends and plug open ports to prevent contamination.

**NOTE**

Tag hose assemblies before disconnecting to aid in installation.

2. Disconnect hose assembly (1).

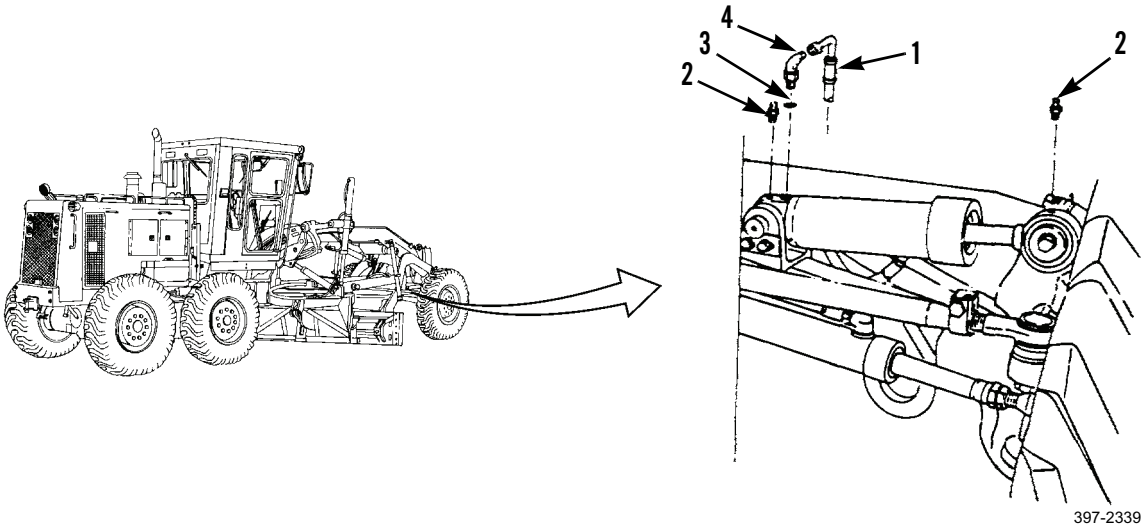

***REMOVAL - CONTINUED***

**NOTE**

Some machines have O-rings between hose assemblies (1 and 5) and elbows (4 and 6). Remove and discard O-rings if present.

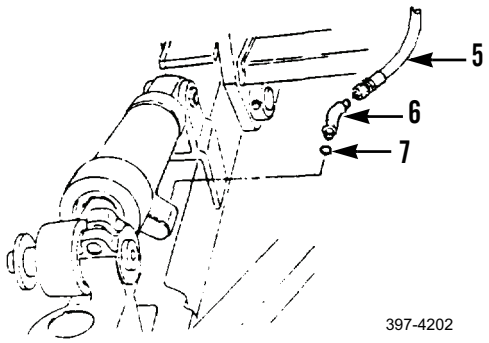


3. Remove hose assembly (1), elbow (4), and preformed packing (3). Discard preformed packing.
4. Remove hose assembly (5), elbow (6), and preformed packing (7). Discard preformed packing.



**WARNING**

Use extreme caution when handling heavy parts. Provide adequate support and use assistance during procedure. Ensure that any lifting device used is in good condition and of suitable load capacity. Keep clear of heavy parts supported only by lifting device. Failure to follow this warning may cause injury or death to personnel.

**NOTE**

Cylinder weighs 55 lb (25 kg).

5. Install sling on cylinder assembly (8).
6. Remove bolt (12), washer (11), and retainer (10).
7. Remove two bolts (14), washers (13), lock (15), and pin (9).
8. Remove cylinder assembly (8) from machine and set on wood blocks.

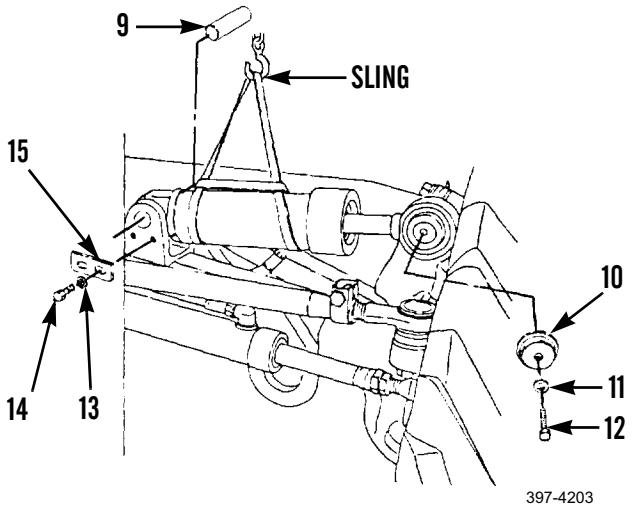


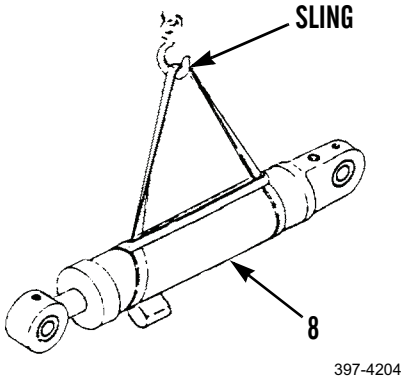


9. Remove sling.

### *CLEANING AND INSPECTION*

Clean and inspect all parts in accordance with WP 0020 00.

### *INSTALLATION*

1. Install sling.
2. Position cylinder assembly (8).

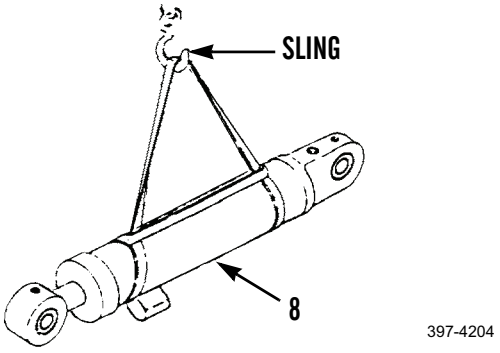

397-4204

3. Install pin (9).
4. Position lock (15).
5. Install two washers (13) and bolts (14).
6. Install retainer (10), washer (11), and bolt (12).

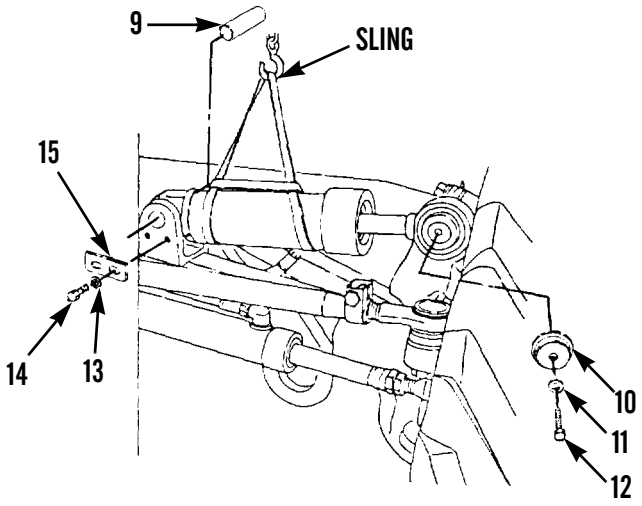

397-4203

***INSTALLATION - CONTINUED***

**NOTE**

Install new O-rings between hose assemblies (5 and 1) and elbows (6 and 4) if discarded in removal.

7. Install new preformed packing (7) and elbow (6).
8. Install hose assembly (5).

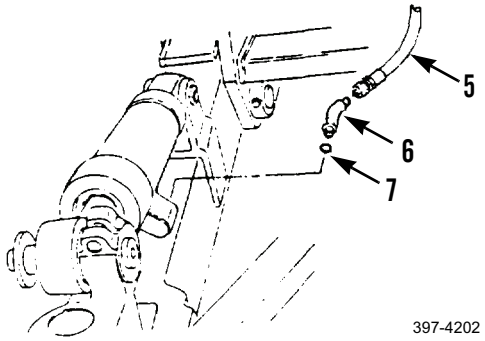


9. Install new preformed packing (3) and elbow (4).
10. Connect hose assembly (1).
11. Install two fittings (2). Add new grease (WP 0023 00).

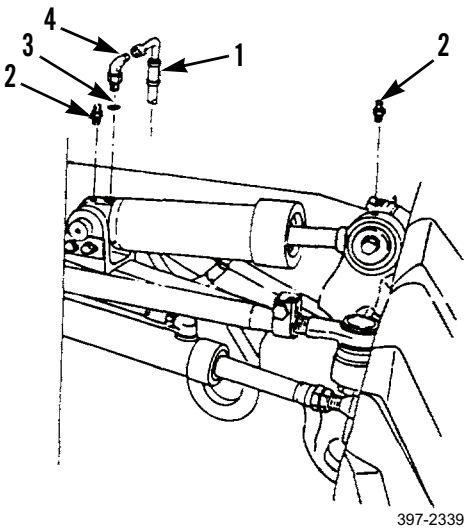


12. Remove wheel lean lock pin (TM 5-3805-261-10).
13. Turn battery disconnect switch to ON position and start engine (TM 5-3805-261-10).
14. Check for leaks.
15. Stop engine.

**END OF WORK PACKAGE**

## PARKING BRAKE ACTUATOR AND RELEASE VALVE REPLACEMENT 0157 00

### THIS WORK PACKAGE COVERS

Removal, Cleaning and Inspection, Installation

### INITIAL SETUP

**Maintenance Level**

Unit

**Tools and Special Tools**

Tool kit, general mechanic's (Item 89, WP 0348 00)

Shop equipment, common no. 1 (Item 75, WP 0348 00)

**Materials/Parts**

Cap set, protective (Item 7, WP 0349 00)

Rag, wiping (Item 35, WP 0349 00)

Tag, marker (Item 44, WP 0349 00)

Lockwasher (4)

Pin, cotter

**References**

WP 0020 00

**Equipment Conditions**

Machine parked on level ground (TM 5-3805-261-10)

Parking/emergency brake applied (TM 5-3805-261-10)

Implements lowered to ground (TM 5-3805-261-10)

Engine off (TM 5-3805-261-10)

Battery disconnect switch in OFF position (TM 5-3805-261-10)

Air pressure relieved (TM 5-3805-261-10)

### *REMOVAL*



**WARNING**

- Do not disconnect air line from parking brake release valve until air pressure is zero. All air must be bled from air tanks. Failure to follow this warning may cause injury to personnel.
- Compressed air must not exceed 30 psi (207 kPa). DO NOT direct compressed air against human skin. Make sure air stream is directed away from user and other personnel in the area. Wear protective goggles or face shield. Failure to follow this warning may cause injury to personnel.

***REMOVAL - CONTINUED***

**CAUTION**

Cap all hose and tube ends to prevent contamination.

**NOTE**

Tag all parts before removal to aid in installation.

1. Disconnect hose assembly (5) from elbow (4).
2. Connect shop air line to elbow (4) and apply pressure to relieve release valve pressure.
3. Remove cotter pin (3) from pin (16). Discard cotter pin.
4. Remove pin (16) from rod end (15).
5. Remove shop air line from elbow (4).
6. Remove two nuts (9), lockwashers (10), and bolts (14) from bracket (11). Discard lockwashers.
7. Remove elbow (4) and plug (8) from release valve assembly (7).
8. Remove release valve assembly (7).
9. Remove nipple (2) and elbow (6).
10. Remove two nuts (12), lockwashers (13), and bracket (11). Discard lockwashers.
11. Remove air brake chamber assembly (1).

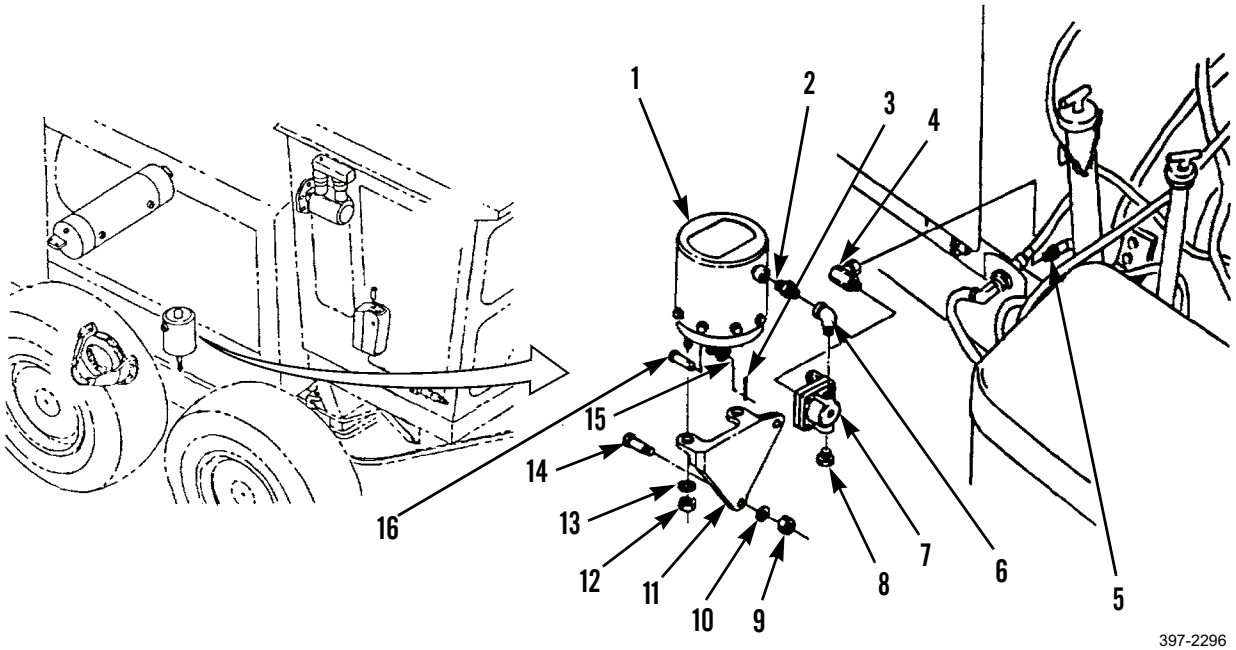


***CLEANING AND INSPECTION***

Clean and inspect all parts in accordance with WP 0020 00.

### *INSTALLATION*

1. Position air brake chamber assembly (1).
2. Install bracket (11), two new lockwashers (13), and nuts (12).
3. Install elbow (6) and nipple (2).
4. Position release valve assembly (7).
5. Install plug (8) and elbow (4) to release valve assembly (7).
6. Install two bolts (14), new lockwashers (10), and nuts (9) on bracket (11).
7. Connect shop air line on elbow (4).
8. Install pin (16) to rod end (15).
9. Install new cotter pin (3) to pin (16).
10. Apply air pressure with shop air line to release valve assembly (7).
11. Disconnect shop air line from elbow (4).
12. Connect hose assembly (5) to elbow (4).

**END OF WORK PACKAGE**

## PARKING BRAKE AIR CONTROL VALVE MAINTENANCE 0158 00

### THIS WORK PACKAGE COVERS

Removal, Disassembly, Cleaning and Inspection, Assembly, Installation

### INITIAL SETUP

**Maintenance Level**

Unit

**Tools and Special Tools**

Tool kit, general mechanic's (Item 89, WP 0348 00)

**Materials/Parts**

Cap set, protective (Item 7, WP 0349 00)

Rag, wiping (Item 35, WP 0349 00)

Tag, marker (Item 44, WP 0349 00)

Packing, preformed (2)

**References**

WP 0020 00

**Equipment Conditions**

Machine parked on level ground (TM 5-3805-261-10)

Parking/emergency brake applied (TM 5-3805-261-10)

Implements lowered to ground (TM 5-3805-261-10)

Engine off (TM 5-3805-261-10)

Battery disconnect switch in OFF position (TM 5-3805-261-10)

Operator's console side panels and gates removed (WP 0193 00)

### *REMOVAL*

**CAUTION**

Cap all hose and tube ends to prevent contamination.

**NOTE**

Tag all parts before removal to aid in installation.

1. Disconnect hose assembly (1) from control console in operator's compartment.
2. Remove connector (2).
3. Remove nut (3), boot (4), and control valve assembly (5).

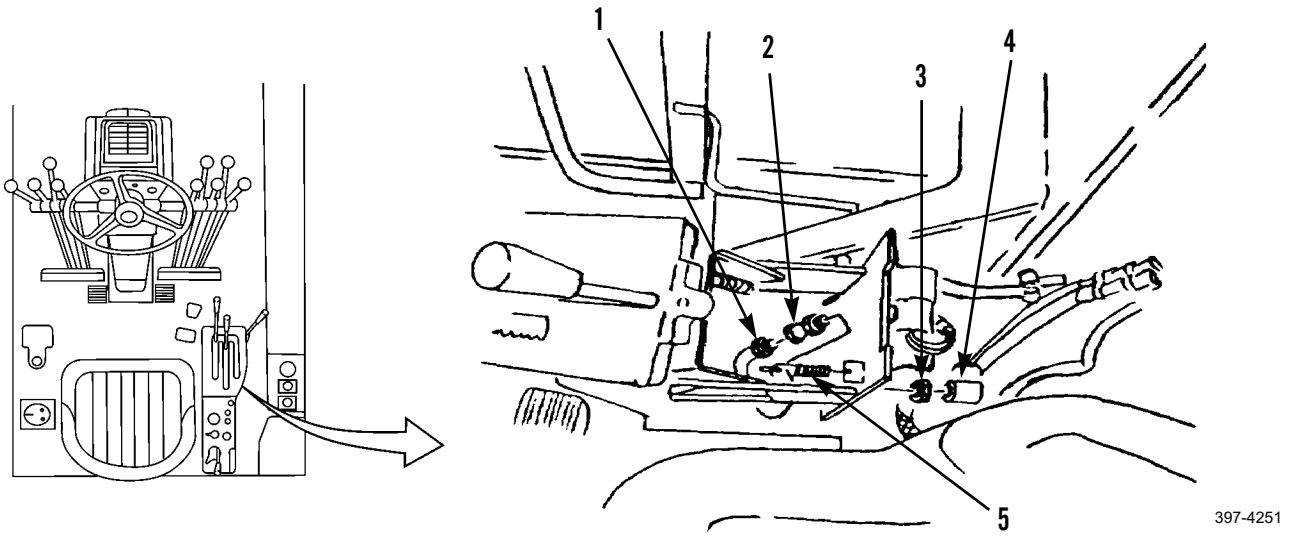

### *DISASSEMBLY*

**WARNING**

Use caution when removing parts under spring tension. Wear safety glasses. Uncontrolled release of spring may cause injury.

1. Remove supply port (6), spring (7), seat (8), valve inlet (9), stem (10), and preformed packing (11) from body (12). Discard preformed packing.
2. Remove body (12), plunger (16), and preformed packing (15) from valve (14). Discard preformed packing.
3. Remove nut (13) from valve (14).

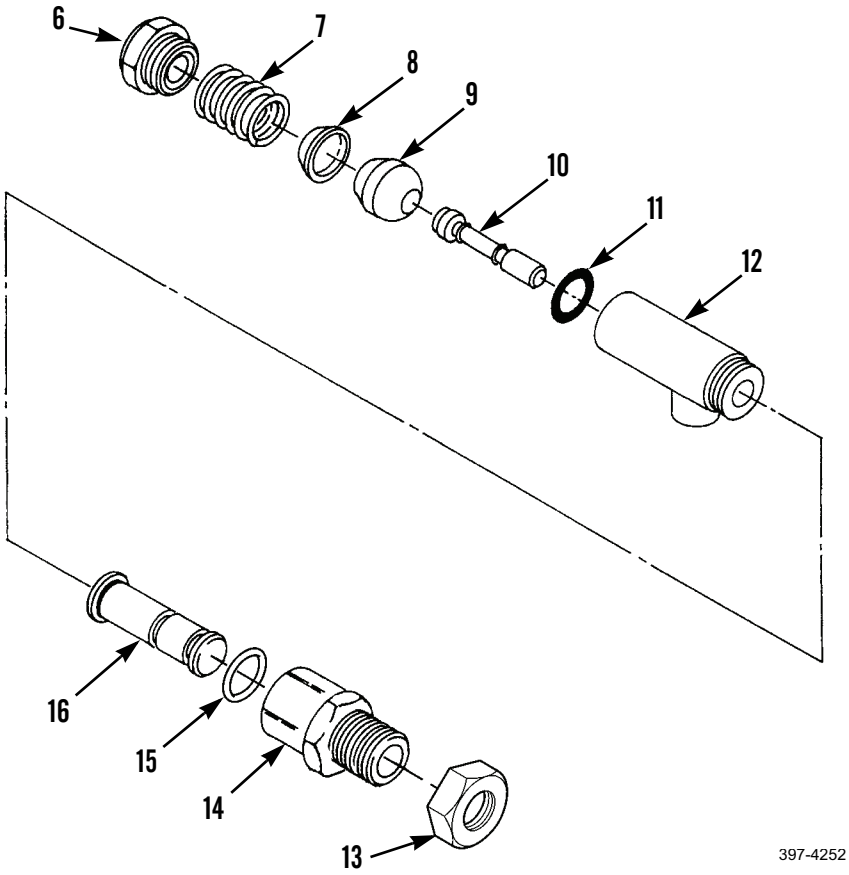


### *CLEANING AND INSPECTION*

Clean and inspect all parts in accordance with WP 0020 00.

### *ASSEMBLY*

**WARNING**

Use caution when installing parts under spring tension. Wear safety glasses. Uncontrolled release of spring may cause injury.

1. Install nut (13) to valve (14).
2. Install new preformed packing (15), plunger (16), and body (12) in valve (14).
3. Install new preformed packing (11), stem (10), valve inlet (9), seat (8), spring (7), and supply port (6) on body (12).

### *INSTALLATION*

1. Install parking brake air control valve assembly (5), boot (4), and nut (3) on control console in operator's compartment.

**NOTE**

With brake lever in park position, adjust control valve assembly on console to provide 0.03 in. (0.8 mm) clearance with plate.

2. Install connector (2).
3. Connect hose assembly (1).

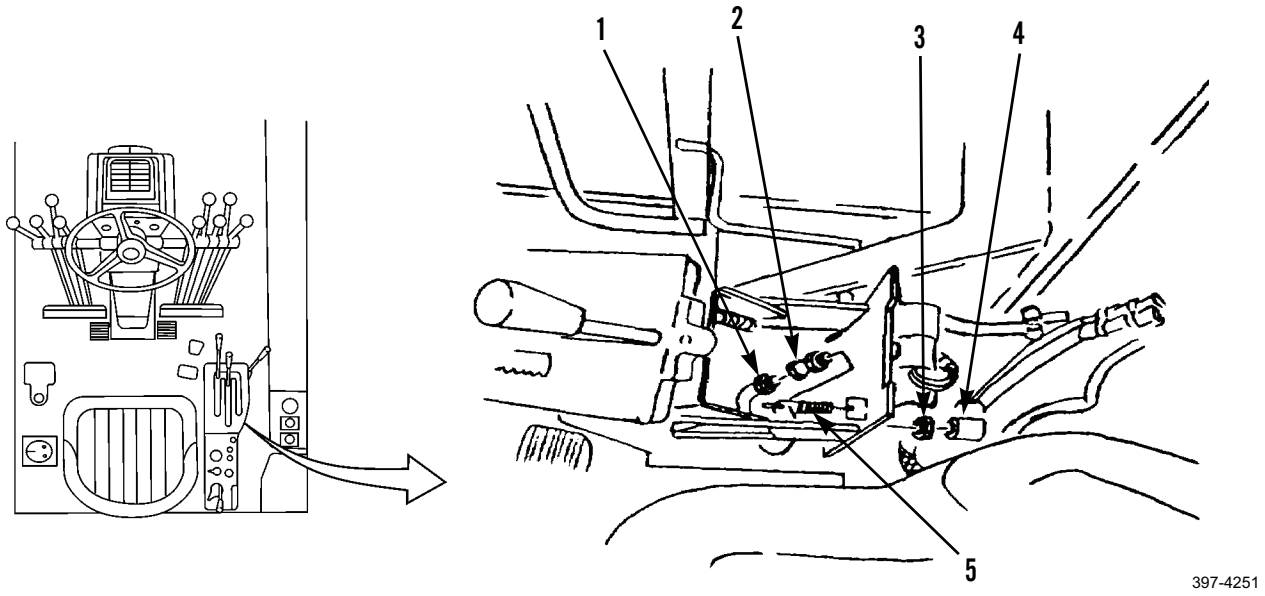


4. Install operator's console side panels and gate (WP 0193 00).

**END OF WORK PACKAGE**

## PARKING BRAKE CONTROL REPLACEMENT 0159 00

### THIS WORK PACKAGE COVERS

Removal, Cleaning and Inspection, Installation

### INITIAL SETUP

**Maintenance Level**

Unit

**Tools and Special Tools**

Tool kit, general mechanic's (Item 89, WP 0348 00)

**Materials/Parts**

Rag, wiping (Item 35, WP 0349 00)

**References**

WP 0020 00

WP 0158 00

**Equipment Conditions**

Machine parked on level ground (TM 5-3805-261-10)

Parking/emergency brake applied (TM 5-3805-261-10)

Implements lowered to ground (TM 5-3805-261-10)

Engine off (TM 5-3805-261-10)

Battery disconnect switch in OFF position (TM 5-3805-261-10)

Operator's console right side panel removed (WP 0193 00)

## PARKING BRAKE CONTROL REPLACEMENT - CONTINUED 0159 00

### *REMOVAL*

1. Remove knob (1) from lever assembly (2) on outside of transmission control console (5).
2. Loosen bolt (12) enough to relieve spring compression preload.
3. Remove springs (3 and 8).
4. Remove two bolts (7), four washers (6), and plate (4).
5. Remove lever (2) and two washers (10).
6. Remove bolt (12), washer (11), and bracket (9) from lever assembly (2).

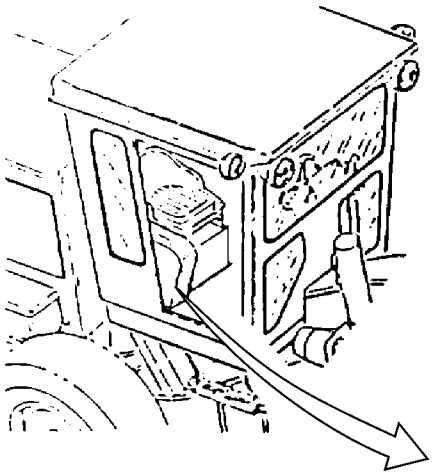

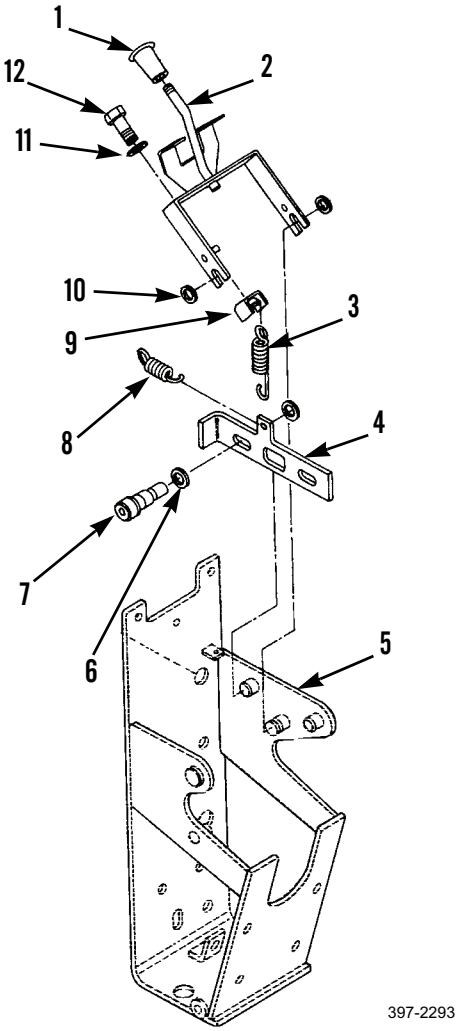


### *CLEANING AND INSPECTION*

Clean and inspect all parts in accordance with WP 0020 00.

### *INSTALLATION*

1. Position bracket (9) on lever assembly (2) inside of transmission control console (5).
2. Loosely install washer (11) and bolt (12).
3. Install two washers (10) on console weldment (5) and position lever assembly (2).
4. Install plate (4), four washers (6), and two bolts (7).
5. Install springs (3 and 8).
6. Install knob (1).
7. Check adjustment of parking brake air control valve (WP 0158 00).
8. Install operator's console right side panel (WP 0193 00).

**END OF WORK PACKAGE**

## AIR BRAKE PEDAL AND LINKAGE MAINTENANCE 0160 00

### THIS WORK PACKAGE COVERS

Removal, Cleaning and Inspection, Installation, Adjustment

### INITIAL SETUP

**Maintenance Level**

Unit

**Tools and Special Tools**

Tool kit, general mechanic's (Item 89, WP 0348 00)

**Materials/Parts**

Oil, lubricating (Item 26, 27, or 30, WP 0349 00)

Rag, wiping (Item 35, WP 0349 00)

Pin, cotter (2)

**Personnel Required**

Two

**References**

WP 0020 00

WP 0282 00

**Equipment Conditions**

Machine parked on level ground (TM 5-3805-261-10)

Parking/emergency brake applied (TM 5-3805-261-10)

Implements lowered to ground (TM 5-3805-261-10)

Engine off (TM 5-3805-261-10)

Battery disconnect switch in OFF position (TM 5-3805-261-10)

### *REMOVAL*

1. Remove two bolts (3), washers (2), tread (1), washer (4), and boot (5) from right side of cab floor.
2. Remove setscrew (7) and nut (6) from machine.

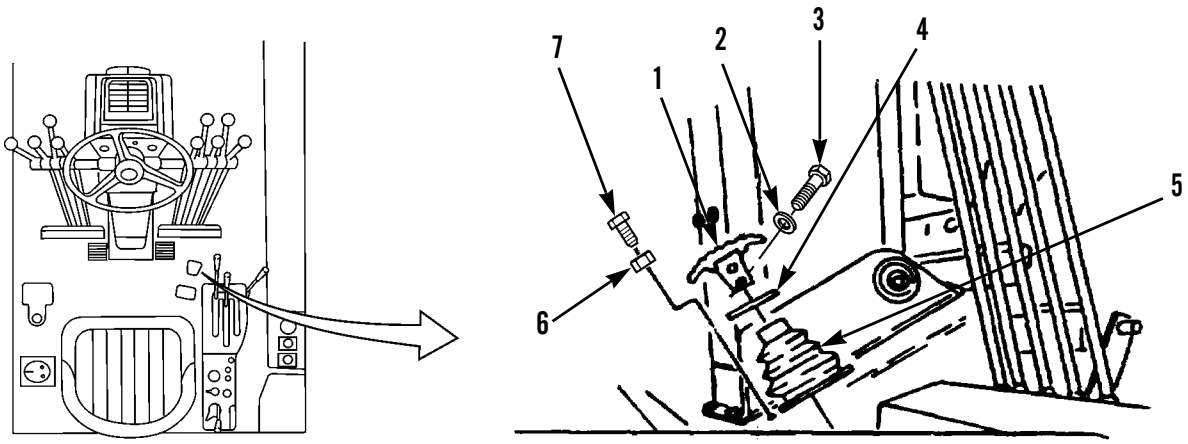


397-2301

***REMOVAL - CONTINUED***

3. Remove spring (14), nut (9), bolt (15), and nut (16) under right side of cab floor.
4. Remove nut (12), bolt (13), and nut (10).
5. Disconnect governor control linkage (WP 0282 00).
6. Remove and discard cotter pin (17) from bracket (8) and pedal (11).
7. Drive shaft (18) towards inner frame and lubricate shaft with clean oil.
8. Push shaft (18) toward outside of machine while assistant depresses accelerator pedal.
9. Remove pedal (11) from bracket (8).

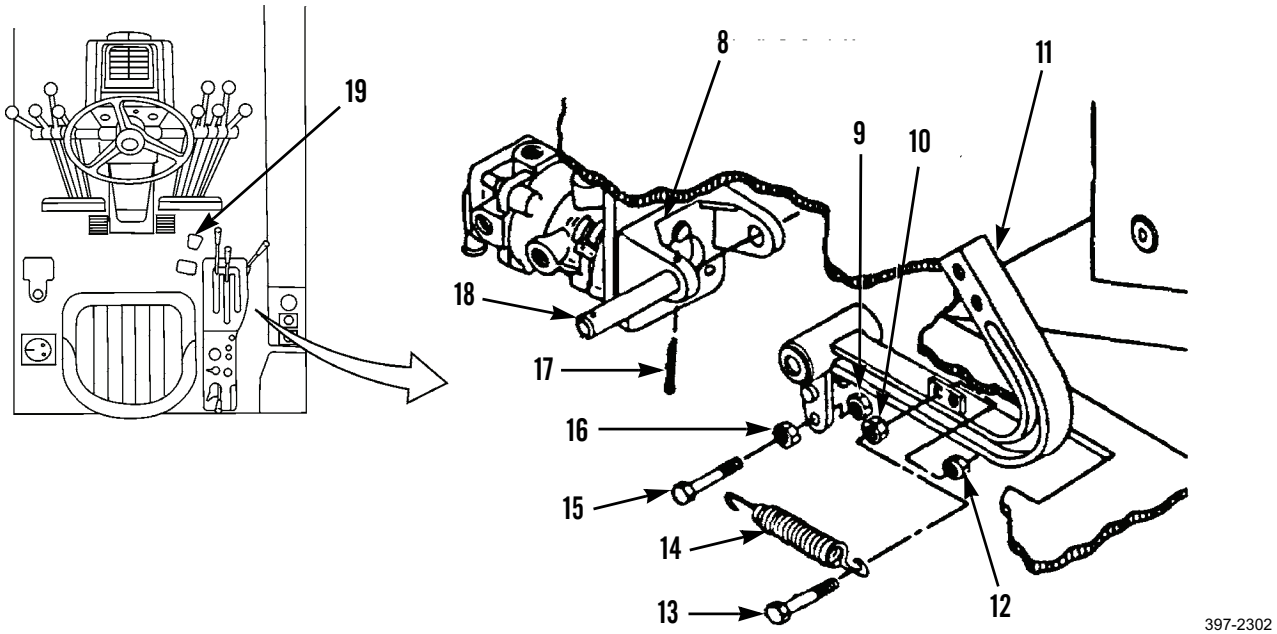


10. Remove cotter pin (22), pin (24), and roller (23) from pedal (11). Discard cotter pin.
11. Remove two washers (20) and roller bearings (21) from pedal (11).

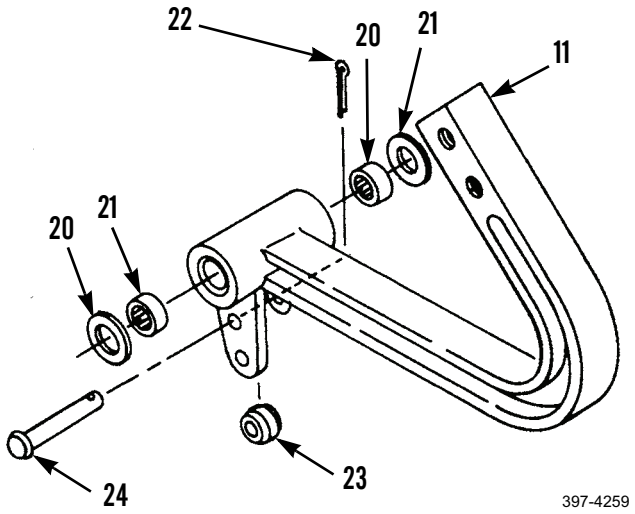

### *CLEANING AND INSPECTION*

Clean and inspect all parts in accordance with WP 0020 00.

### *INSTALLATION*

1. Install two roller bearings (21) and washers (20).
2. Install roller (23), pin (24), and new cotter pin (22).
3. Install pedal (11), shaft (18), and new cotter pin (17) on bracket (8).
4. Connect governor control linkage (WP 0282 00).
5. Install nut (10), bolt (13), and nut (12).
6. Install nut (16), bolt (15), nut (9), and spring (14).
7. Install nut (6) and setscrew (7) on right side of cab floor.
8. Install boot (5), washer (4), tread (1), two washers (2), and bolts (3).

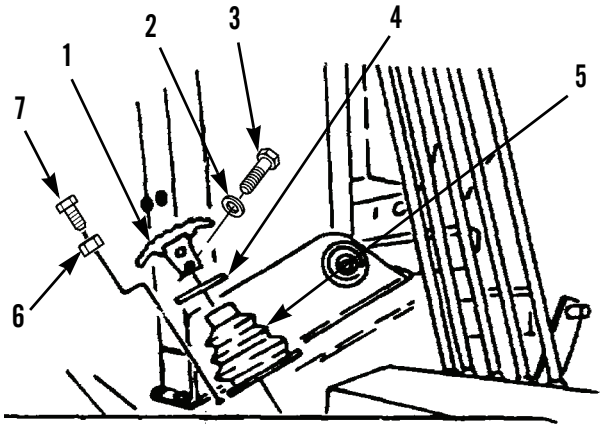

397-4257

***ADJUSTMENT***

1. Pump pedal (11) on right side of cab floor to drop line pressure to zero.
2. Turn brake valve plunger adjustment screw (27) after loosening nut (26), until slight drag is felt when turning roller (25).

**NOTE**

Dirt and foreign material between pedal stop and cab floor must be removed to achieve proper pedal adjustment.

3. Vent all air pressure (TM 5-3805-261-10).
4. Turn setscrew (7) all the way down after loosening nut (6).
5. Pull pedal (11) down and hold until solid stop is felt at end of full movement.

**NOTE**

If pedal hits floor before end of full valve movement, turn valve plunger adjustment screw (27) out one full turn.

6. Turn valve plunger adjustment screw (27), if necessary.
7. Turn setscrew (7) out until it just touches bottom of tread (1).
8. Release pedal (11).
9. Tighten nut (6). Do not turn setscrew (7) after nut is tightened.
10. Tighten nut (26). Do not turn valve plunger adjustment screw (27) after nut is tightened.

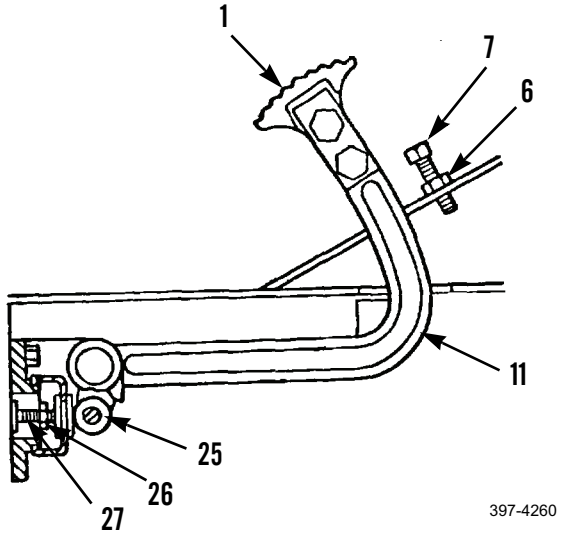


**END OF WORK PACKAGE**

## AIR BRAKE LINES REPLACEMENT 0161 00

### THIS WORK PACKAGE COVERS

Removal, Cleaning and Inspection, Installation

### INITIAL SETUP

**Maintenance Level**

Unit

**Tools and Special Tools**

Tool kit, general mechanic's (Item 89, WP 0348 00)

**Materials/Parts**

Cap set, protective (Item 7, WP 0349 00)

Rag, wiping (Item 35, WP 0349 00)

Tag, marker (Item 44, WP 0349 00)

**References**

WP 0020 00

WP 0315 00

**Equipment Conditions**

Machine parked on level ground (TM 5-3805-261-10)

Parking/emergency brake applied (TM 5-3805-261-10)

Implements lowered to ground (TM 5-3805-261-10)

Engine off (TM 5-3805-261-10)

Battery disconnect switch in OFF position (TM 5-3805-261-10)

Air pressure relieved (TM 5-3805-261-10)

### *REMOVAL*



**WARNING**

- Do not disconnect air line from release valve until air pressure is zero. All air must be bled from air tanks. Failure to follow this warning may cause injury to personnel.
- Compressed air must not exceed 30 psi (207 kPa). DO NOT direct compressed air against human skin. Make sure air stream is directed away from user and other personnel in the area. Wear protective goggles or face shield. Failure to follow this warning may cause injury to personnel.

**CAUTION**

Cap hose ends and plug open ports to prevent contamination.

**NOTE**

- Tag hose and tube assemblies before disconnecting to aid in installation.
- This procedure covers replacement of the right side air brake lines. Follow these instructions for the left side air brake lines.

***REMOVAL - CONTINUED***

**NOTE**

For Type II machines, refer to WP 0315 00

1. Release pressure and drain air tank (1) by opening two valves (2) on two elbows (3).
2. Remove four bolts (6) and washers (5).
3. Remove four clips (12).
4. Disconnect tube assemblies (11 and 4) from block (10) under engine compartment.
5. Remove tube assemblies (11 and 4).
6. Disconnect hose assembly (9) from block (10).
7. Disconnect hose assembly (8) from plate (7).

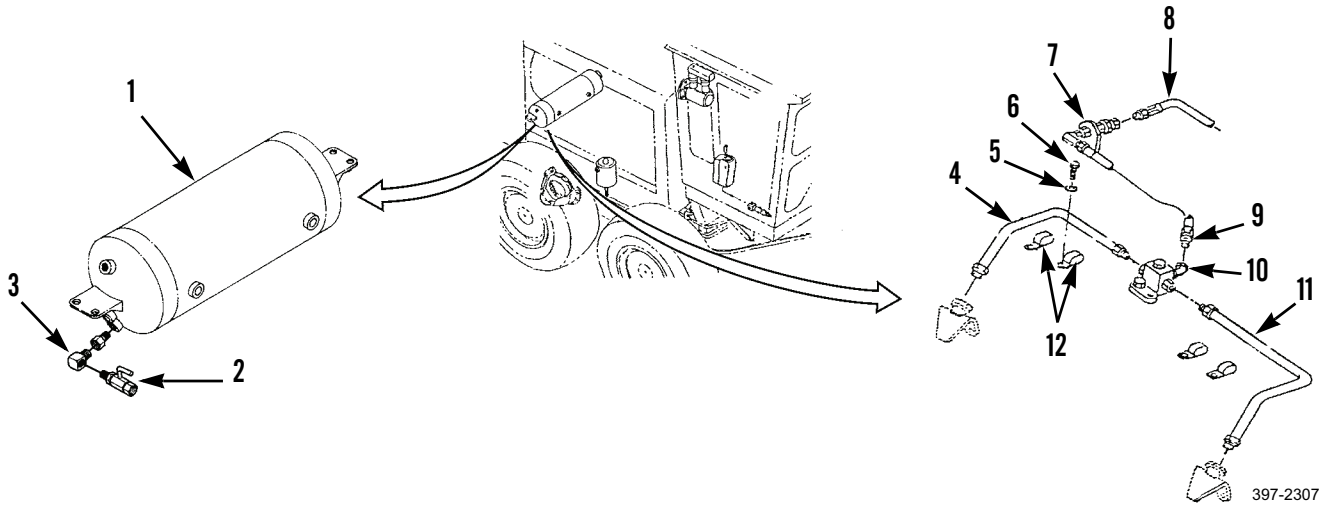


8. Remove two nuts (21), washers (22), clip (23), and plate (24) under front-right side of engine compartment.
9. Remove clamp (13).
10. Remove two nuts (18), washers (17), clip (16), and plate (15).
11. Remove clamp (14).
12. Remove hose assembly (19) from air brake valve (20).

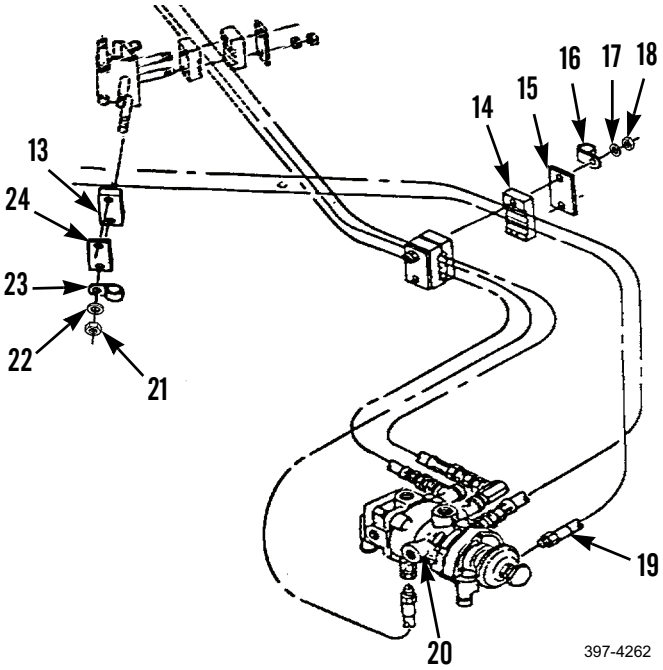

***REMOVAL - CONTINUED***

13. Remove hose assembly (31) from elbow (27).
14. Remove connector (29), two fittings (28), and elbow (27).
15. Remove two bolts (25), washers (26), and plate (30).

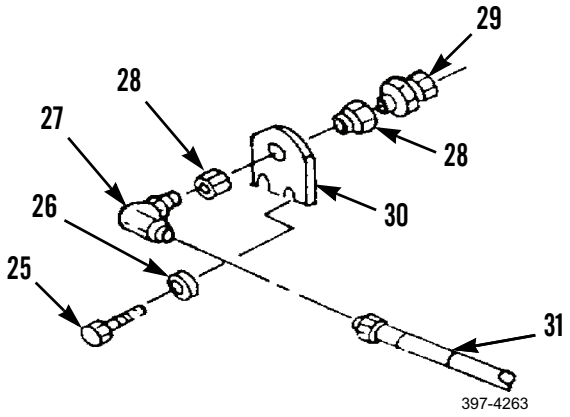


16. Remove elbow (39), two connectors (41), plug (38), two bolts (37), washers (36), and block (40).
17. Remove two elbows (35), four nuts (32), washers (33), and two guards (34).

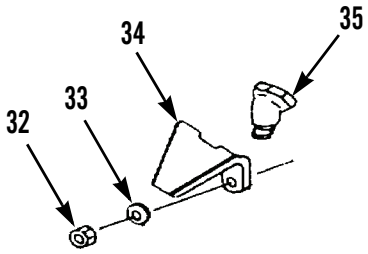


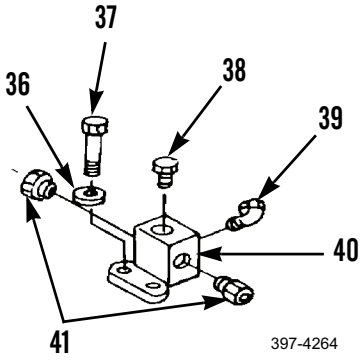

***REMOVAL - CONTINUED***

**NOTE**

Steps 18 through 31 are for the removal of the lines from the right side of the air reservoir to the air brake valve. Follow these instructions for removal of the lines on the left side of the air reservoir.

18. Disconnect hose assemblies (44 and 45) from air brake reservoir (1).
19. Remove bolt (42), washer (49), and clip (50).
20. Remove nut (48), washer (47), and plate (46).
21. Remove clamp (43).
22. Remove hose assembly (45) from air brake valve (20).
23. Disconnect hose assembly (44) from air brake valve (20).

## AIR BRAKE LINES REPLACEMENT - CONTINUED 0161 00

***REMOVAL - CONTINUED***

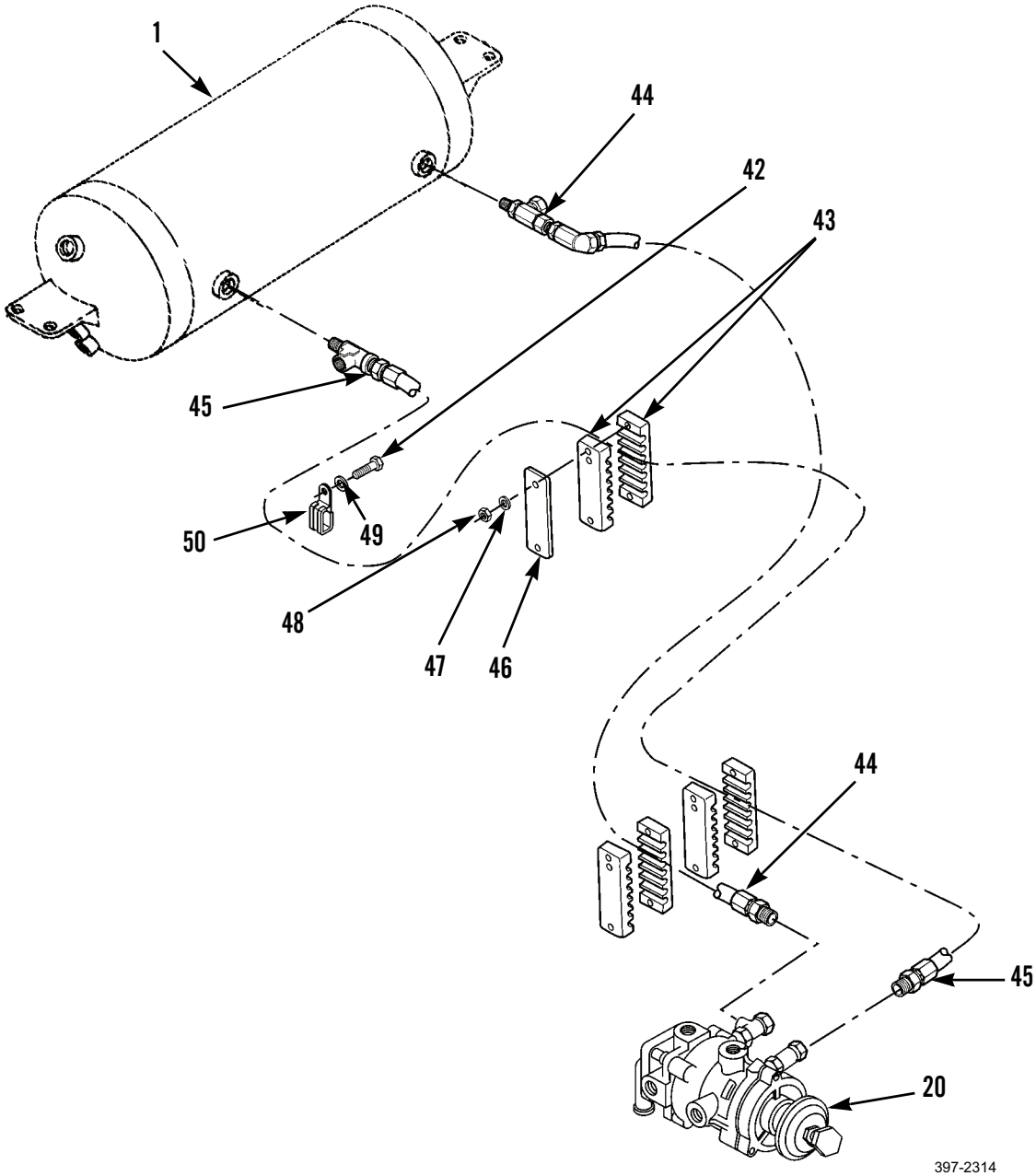

### *REMOVAL - CONTINUED*

24. Remove bolt (61), washer (60), and clip (59).
25. Disconnect hose assembly (52) from release valve assembly (58).
26. Remove hose assembly (52) from connector (62).
27. Remove check valve (53) and nipple (54).
28. Remove hose assembly (51).
29. Remove elbow (65) and solenoid valve (64).
30. Remove nipple (63).
31. Remove tee (55), check valve (56), elbow (57), and connector (62).

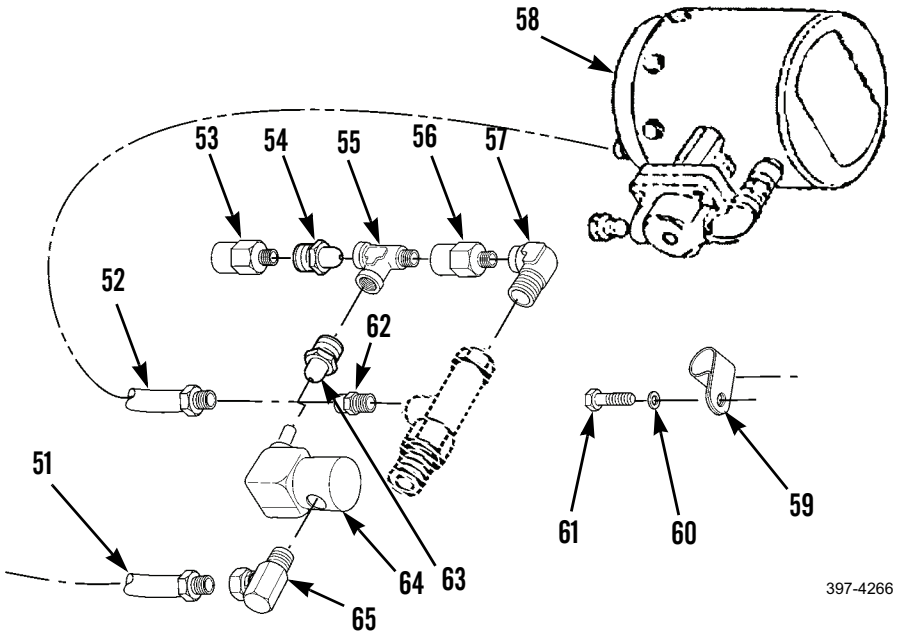


### *CLEANING AND INSPECTION*

Clean and inspect all parts in accordance with WP 0020 00.

### *INSTALLATION*

**NOTE**

Steps 1 through 14 are for the installation of the lines from the right side of the air reservoir to the air brake valve. Follow these instructions for installation of the lines on the left side of the air reservoir.

1. Install connector (62), elbow (57), check valve (56), and tee (55).
2. Install nipple (63).
3. Install solenoid valve (64) and elbow (65).
4. Install hose assembly (51).
5. Install nipple (54) and check valve (53).
6. Install hose assembly (52) to connector (62).
7. Connect hose assembly (52) to release valve assembly (58).
8. Install clip (59), washer (60), and bolt (61).

***INSTALLATION - CONTINUED***

9. Connect hose assembly (44) to air brake valve (20).
10. Install hose assembly (45) on air brake valve (20).
11. Install clamp (43).
12. Install plate (46), washer (47), and nut (48).
13. Install clip (50), washer (49), and bolt (42).
14. Connect hose assembly (45) to air brake reservoir (1).
15. Connect hose assembly (44) to air brake reservoir (1).

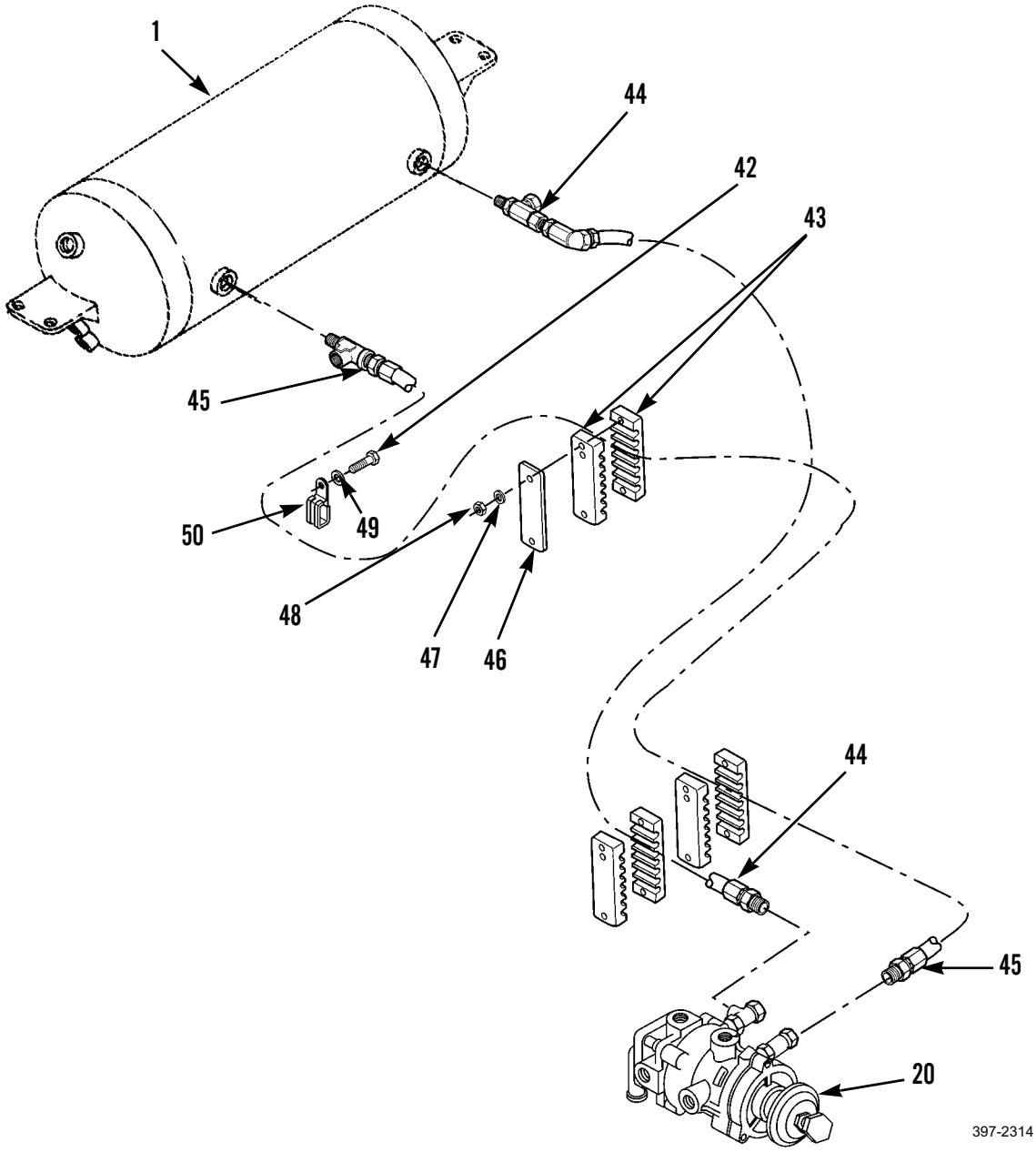

***INSTALLATION - CONTINUED***

16. Install two guards (34), four washers (33), nuts (32), and two elbows (35).
17. Install block (40), two washers (36), bolts (37), plug (38), two connectors (41), and elbow (39).

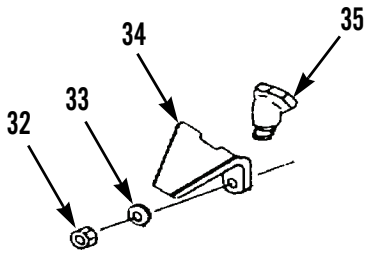


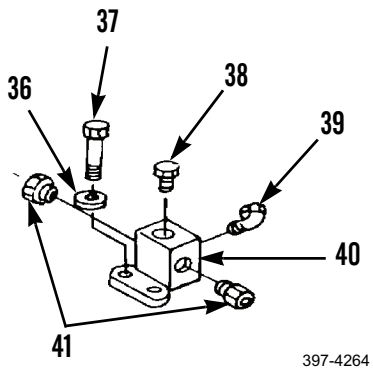


18. Install plate (30), two washers (26), and bolts (25).
19. Install elbow (27), two fittings (28), and connector (29) under right-front side of engine compartment.
20. Install hose assembly (31).

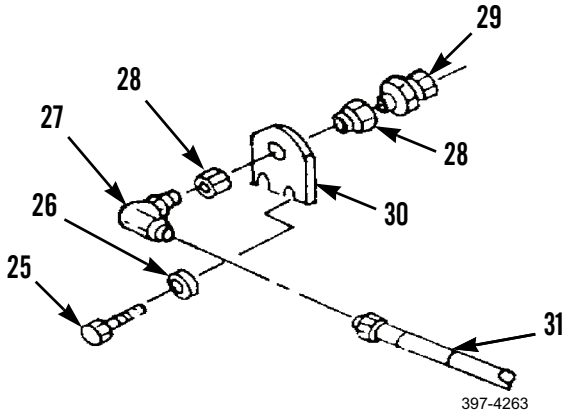

***INSTALLATION - CONTINUED***

21. Install hose assembly (19) on air brake valve (20).
22. Install clamp (14).
23. Install plate (15), clip (16), two washers (17), and nuts (18).
24. Install clamp (13).
25. Install plate (24), clip (23), two washers (22), and nuts (21) under right-front side of engine compartment.

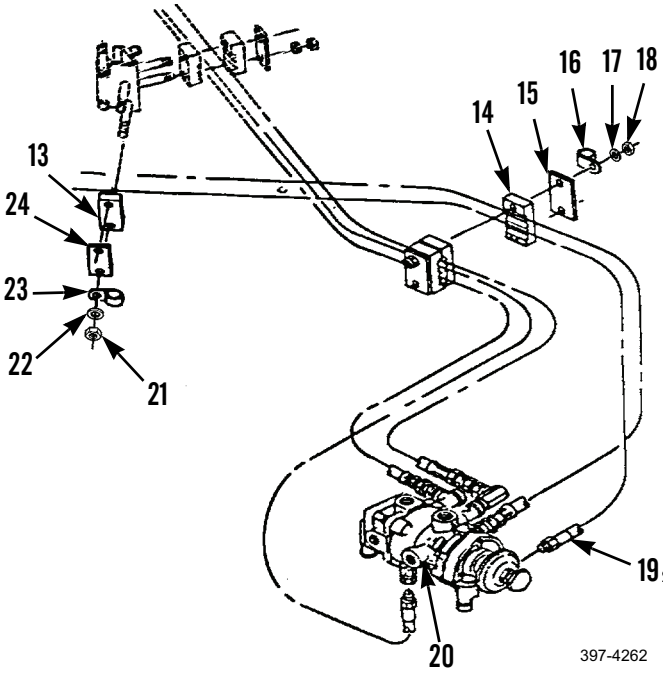


26. Connect hose assembly (8) to plate (7).
27. Connect hose assembly (9) to block (10).
28. Install tube assemblies (4 and 11).
29. Connect tube assemblies (4 and 11) to block (10).
30. Install four clips (12).
31. Install four washers (5) and bolts (6).
32. Close two valves (2) on two elbows (3).

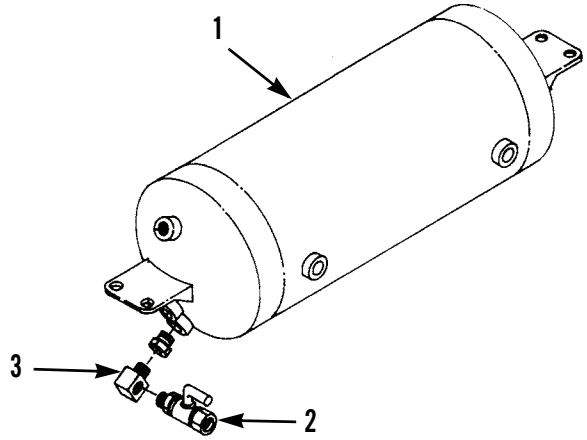


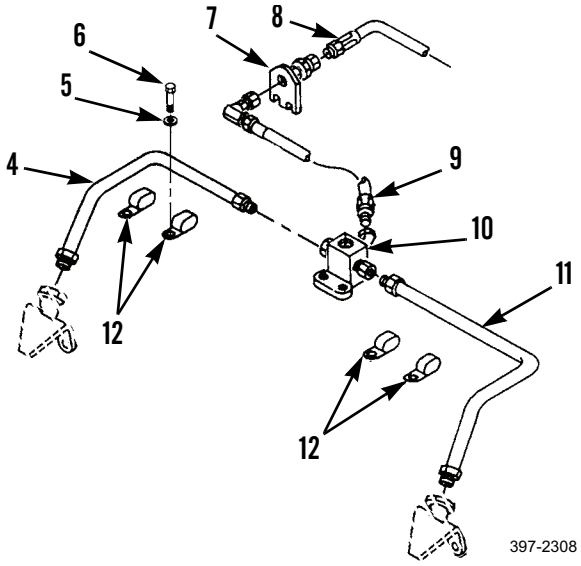


**END OF WORK PACKAGE**

## AIR BRAKE RESERVOIR REPLACEMENT 0162 00

### THIS WORK PACKAGE COVERS

Removal, Cleaning and Inspection, Installation

### INITIAL SETUP

**Maintenance Level**

Unit

**Tools and Special Tools**

Tool kit, general mechanic's (Item 89, WP 0348 00)

**Materials/Parts**

Cap set, protective (Item 7, WP 0349 00)

Rag, wiping (Item 35, WP 0349 00)

Tag, marker (Item 44, WP 0349 00)

**References**

WP 0020 00

**Equipment Conditions**

Machine parked on level ground (TM 5-3805-261-10)

Parking/emergency brake applied (TM 5-3805-261-10)

Implements lowered to ground (TM 5-3805-261-10)

Engine off (TM 5-3805-261-10)

Battery disconnect switch in OFF position (TM 5-3805-261-10)

Air pressure relieved (TM 5-3805-261-10)

### *REMOVAL*

1. Loosen four nuts (2).



**WARNING**

Use extreme caution when handling heavy parts. Provide adequate support and use assistance during procedure. Failure to follow this warning may cause injury to personnel.

**NOTE**

Reservoir weighs 21 lb (9.5 kg).

2. Support reservoir (1).
3. Remove four nuts (2), washers (3 and 4), bolts (8), washers (7), grommets (6), and washers (5).

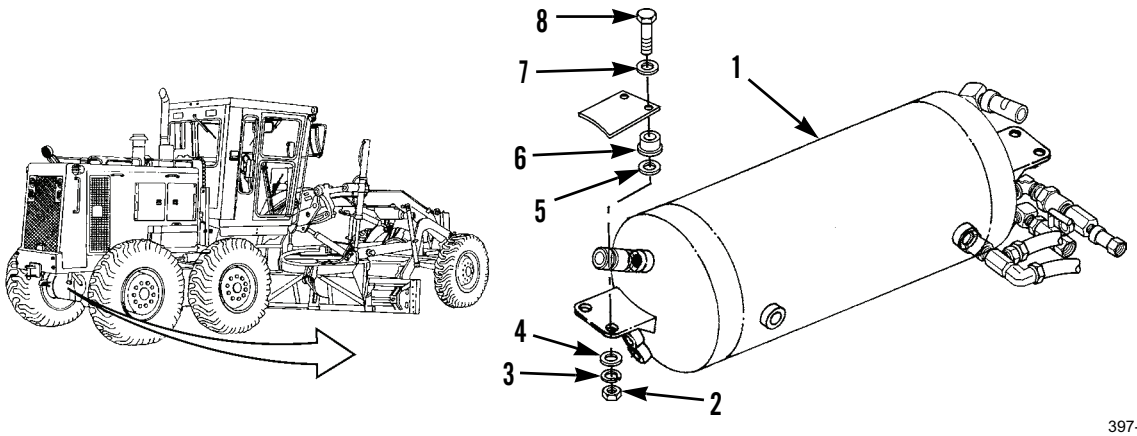


397-4267

***REMOVAL - CONTINUED***

4. Remove drain valve (15), elbow (21), and adapter (9) from reservoir (1) from under rear of machine.

**CAUTION**

Cap hose ends and plug open ports to prevent contamination.

**NOTE**

Tag hose assemblies before disconnecting to aid in installation.

5. Disconnect hose assemblies (16 and 18).
6. Remove tee (17), valve (19), and elbow (20).
7. Disconnect hose assembly (14).
8. Remove connector (13).
9. Disconnect hose assembly (12).
10. Remove connector (11) and tee (10).

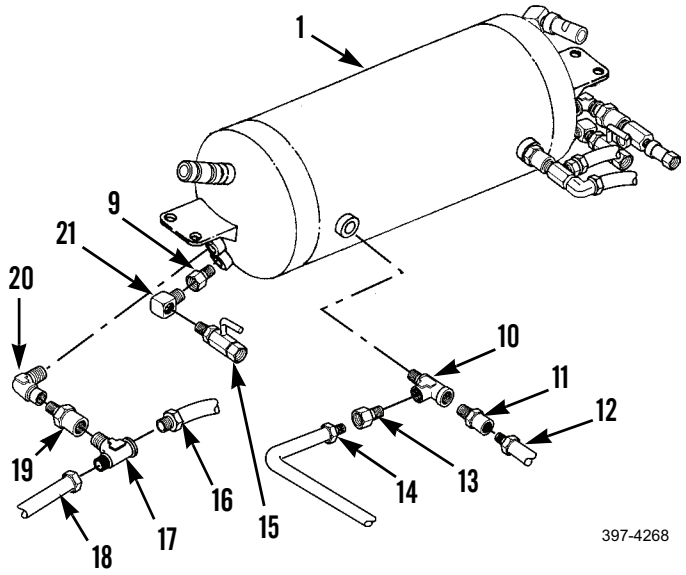


11. Disconnect hose assembly (25).
12. Remove elbow (26).
13. Disconnect hose assembly (23).
14. Remove connector (24) and tee (27) from reservoir (1).
15. Remove hose assembly (28).
16. Remove bushing (22).

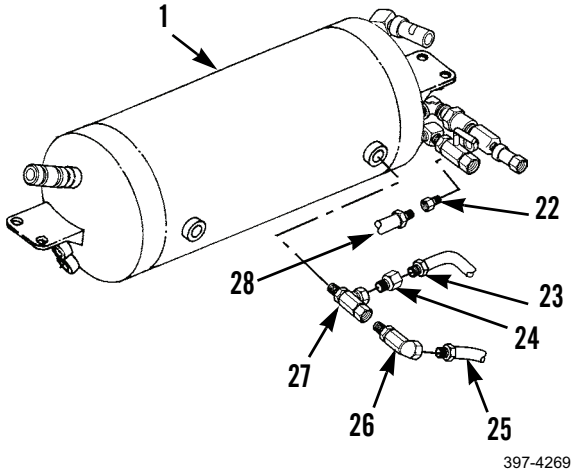

### *REMOVAL - CONTINUED*

17. Remove connector (34), tee (35), valve (33), and elbow (32).
18. Remove drain plug (36), fitting (37), and bushing (38).
19. Remove valves (31 and 29) and fitting (30) from reservoir (1).

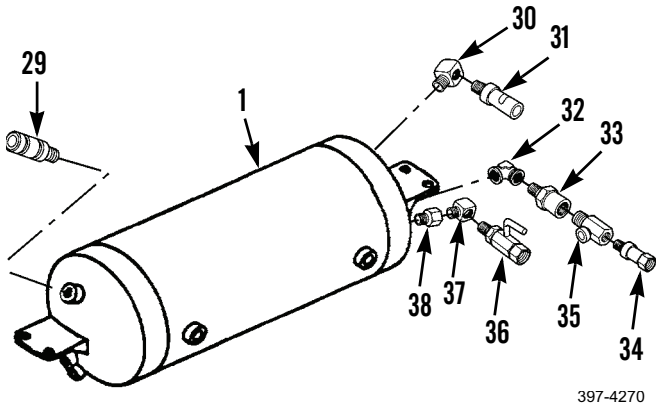


### *CLEANING AND INSPECTION*

Clean and inspect all parts in accordance with WP 0020 00.

### *INSTALLATION*

1. Install fitting (30) and two valves (29 and 31) in reservoir (1).
2. Install bushing (38), fitting (37), and drain plug (36).
3. Install elbow (32), valve (33), tee (35), and connector (34).
4. Install bushing (22) and hose assembly (28).
5. Install tee (27) and connector (24) in reservoir (1).
6. Connect hose assembly (23).
7. Install elbow (26).
8. Connect hose assembly (25).
9. Install tee (10) and connector (11) in reservoir (1).
10. Connect hose assembly (12).
11. Install connector (13).
12. Connect hose assembly (14).
13. Install elbow (20), valve (19), and elbow (17).
14. Connect hose assemblies (16 and 18).
15. Install adapter (9), elbow (21), and drain valve (15).

## AIR BRAKE RESERVOIR REPLACEMENT - CONTINUED 0162 00

### *INSTALLATION - CONTINUED*

16. Position four washers (7) and bolts (8) in frame weldments under rear of machine.
17. Install reservoir (1), four washers (5), grommets (6), washers (7), bolts (8), washers (3 and 4), and nuts (2).

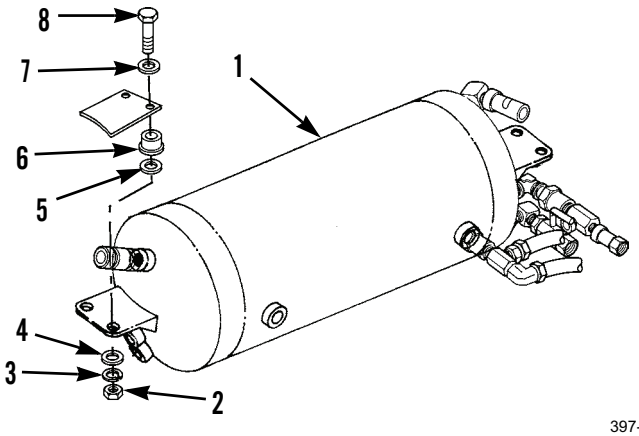


397-4267

18. Turn battery disconnect switch to ON and start engine (TM 5-3805-261-10).
19. Fill air brake reservoir (TM 5-3805-261-10).
20. Check for leaks.
21. Turn engine off.

**END OF WORK PACKAGE**

## AIR BRAKE RESERVOIR LINES AND FITTINGS REPLACEMENT 0163 00

### THIS WORK PACKAGE COVERS

Removal, Cleaning and Inspection, Installation

### INITIAL SETUP

**Maintenance Level**

Unit

**Tools and Special Tools**

Tool kit, general mechanic's (Item 89, WP 0348 00)

**Materials/Parts**

Cap set, protective (Item 7, WP 0349 00)

Rag, wiping (Item 35, WP 0349 00)

Tag, marker (Item 44, WP 0349 00)

**References**

WP 0020 00

**Equipment Conditions**

Machine parked on level ground (TM 5-3805-261-10)

Parking/emergency brake applied (TM 5-3805-261-10)

Implements lowered to ground (TM 5-3805-261-10)

Engine off (TM 5-3805-261-10)

Battery disconnect switch in OFF position (TM 5-3805-261-10)

Air brake reservoir disconnected (WP 0162 00)

### *REMOVAL*

**CAUTION**

Cap hose ends and plug open ports to prevent contamination.

**NOTE**

Tag hose assemblies before disconnecting to aid in installation.

1. Disconnect hose assembly (5) from air compressor.
2. Remove elbows (6 and 7).
3. Remove bolt (4), washer (3), clip (2), bolt (10), washer (9), and clip (8).
4. Remove hose assembly (5) from air tank (1).

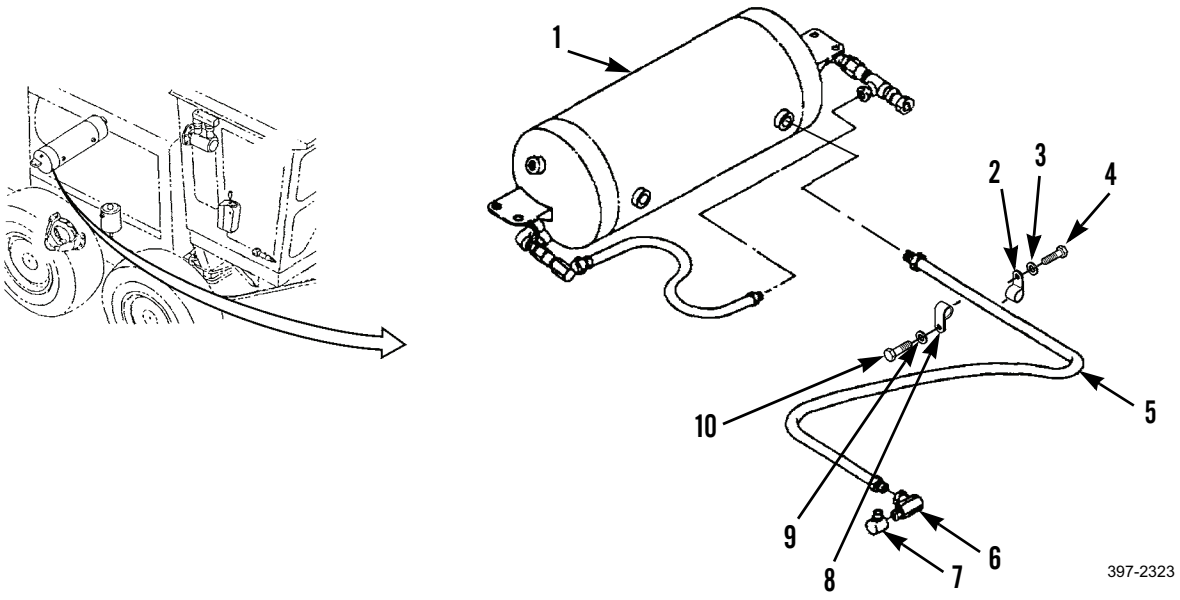

## AIR BRAKE RESERVOIR LINES AND FITTINGS REPLACEMENT - CONTINUED 0163 00

### *REMOVAL - CONTINUED*

5. Disconnect hose assembly (16).
6. Remove elbow (17), valve (18), and elbow (19) from air tank (1).
7. Remove hose assembly (16), connector (14), bushing (15), tee (13), valve (12), and elbow (11).

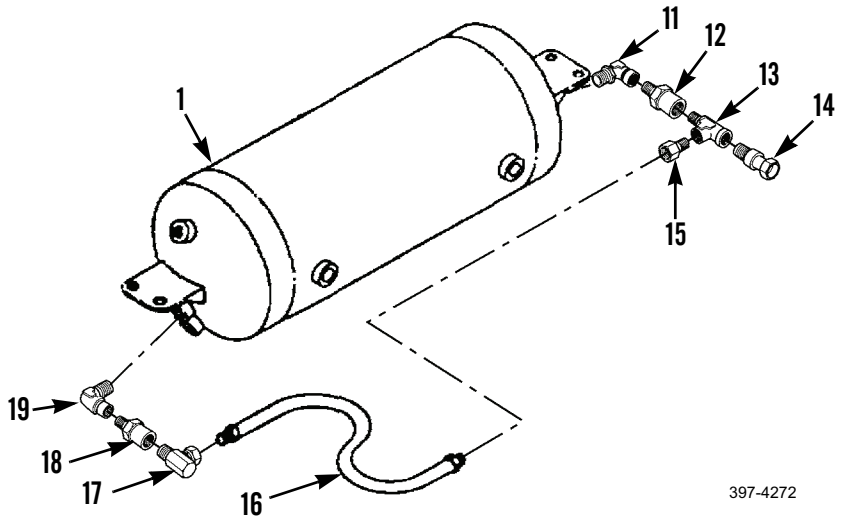


### *CLEANING AND INSPECTION*

Clean and inspect all parts in accordance with WP 0020 00.

### *INSTALLATION*

1. Install elbow (11), valve (12), tee (13), bushing (15), connector (14), and hose assembly (16) on air tank (1).
2. Install elbow (19), valve (18), and elbow (17).
3. Connect hose assembly (16).
4. Connect hose assembly (5) to air tank (1).
5. Install clip (8), washer (9), bolt (10), clip (2), washer (3), and bolt (4).
6. Install elbows (7 and 6) on air compressor.
7. Install hose assembly (5).

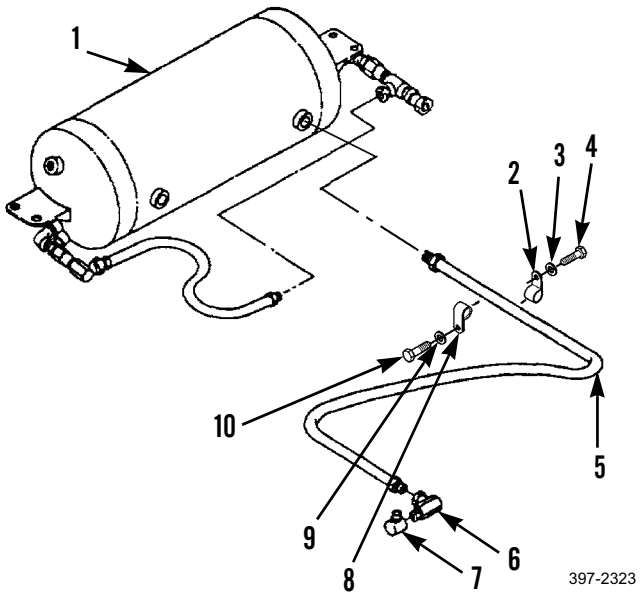


8. Connect air brake reservoir (WP 0162 00).

**END OF WORK PACKAGE**

## AIR DRYER MAINTENANCE (TYPES I AND II MACHINES) 0164 00

### THIS WORK PACKAGE COVERS

Removal, Disassembly, Cleaning and Inspection, Assembly, Installation

### INITIAL SETUP

**Maintenance Level**

Unit

**Tools and Special Tools**

Tool kit, general mechanic's (Item 89, WP 0348 00)

Shop equipment, common no. 1 (Item 75, WP 0348 00)

**Materials/Parts**

Cap set, protective (Item 7, WP 0349 00)

Rag, wiping (Item 35, WP 0349 00)

Tag, marker (Item 44, WP 0349 00)

Dessicant kit

O-ring (7)

Packing, preformed (3)

Seal (2)

**References**

WP 0020 00

**Equipment Conditions**

Machine parked on level ground (TM 5-3805-261-10)

Parking/emergency brake applied (TM 5-3805-261-10)

Implements lowered to ground (TM 5-3805-261-10)

Engine off (TM 5-3805-261-10)

Battery disconnect switch in OFF position (TM 5-3805-261-10)

Air pressure relieved (TM 5-3805-261-10)

***REMOVAL***

## CAUTION

Cap hose ends and plug all open fuel ports to prevent contamination.

## NOTE

Tag hose assemblies before disconnecting to aid in installation.

1. Disconnect hoses (3, 7, and 9) and remove O-rings (4, 8, and 10). Discard O-rings.
2. Remove four nuts (14 and 17), two clamps (13 and 16), and air dryer (15).
3. Remove three elbows (1, 5, and 11) and preformed packings (2, 6, and 12) from air dryer (15). Discard preformed packings.

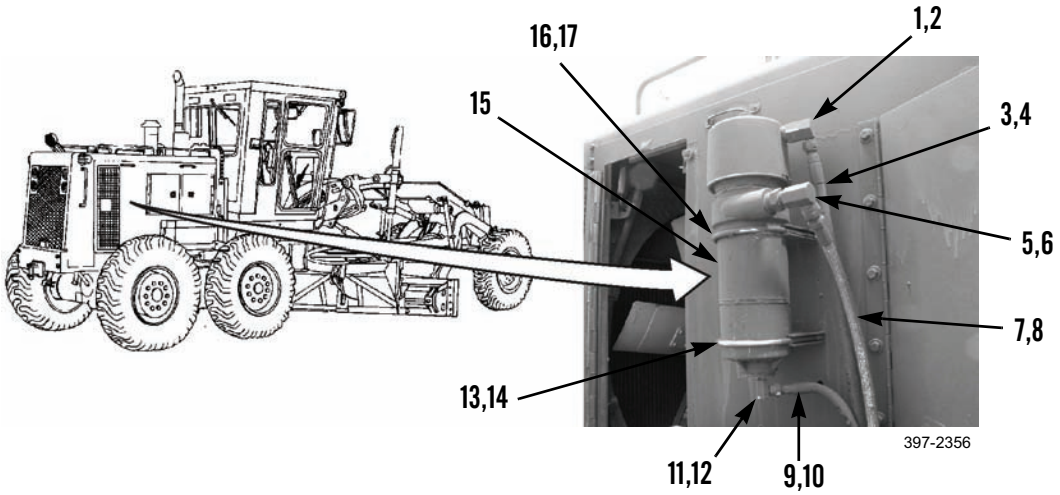


***DISASSEMBLY***

## CAUTION

Ensure the outside of air dryer is thoroughly clean prior to disassembly to prevent damage to inner components.

1. Matchmark across cap (20) and housing (21) for ease of assembly.
2. Remove two nuts (18) and washer (19) and remove cap (20).

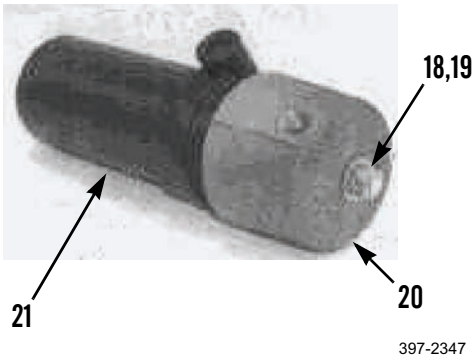

***DISASSEMBLY - CONTINUED***

3. Remove seal (22) from shaft (23). Discard seal.
4. Remove O-ring (24) from housing (21). Discard O-ring.

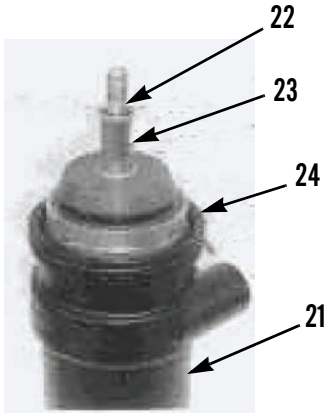


397-2348

5. Remove shaft (23), seal (25), and plate (26). Discard seal.
6. Remove O-rings (27 and 28) from plate (26). Discard O-rings.
7. Remove spring (29).

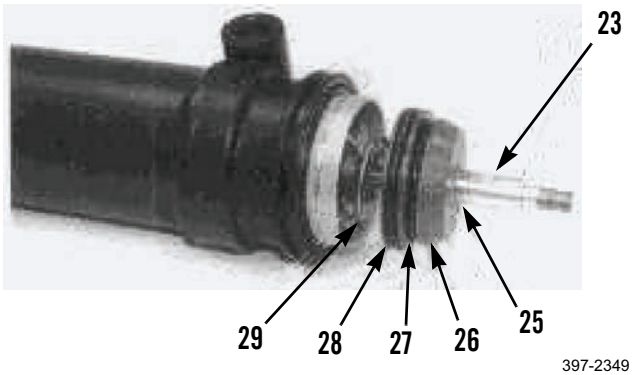


397-2349

8. Remove cartridge (30) from housing (21). Remove O-ring (31) from cartridge. Discard O-ring.

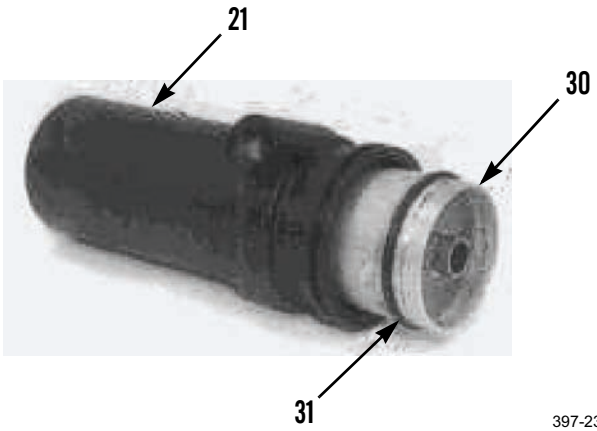


397-2350

### *DISASSEMBLY - CONTINUED*

9. Remove the retaining ring (32) from cartridge (30).



397-2351

10. Place inverted cartridge (30) into a container and allow the dessicant to fall out. Dispose of dessicant properly.
11. Remove shaft (23) from cartridge (30).

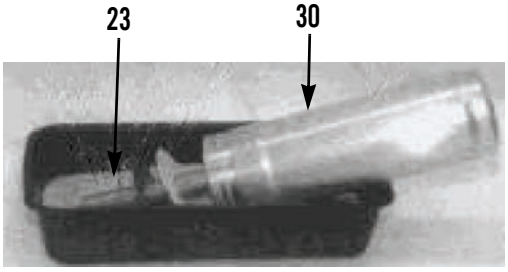

397-2352

12. Remove filter (33), screen (34), and wire mesh (35) from shaft (23).

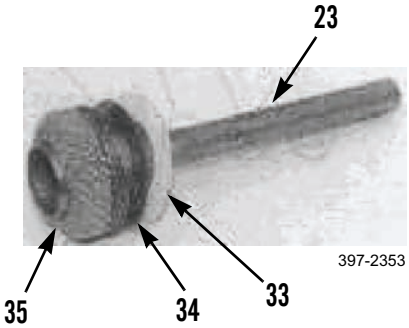

397-2353

### *CLEANING AND INSPECTION*

Clean and inspect all parts in accordance with WP 0020 00.

### *ASSEMBLY*

1. Install filter (33), screen (34), and wire mesh (35) on shaft (23).

**NOTE**

- Ensure shaft is fully seated in cartridge before filling cartridge with dessicant.
- Tap outside of cartridge with soft hammer to settle dessicant.
- Lightly lubricate new O-rings with clean oil.

2. Install shaft (23) in cartridge (30). Fill cartridge with dessicant (36).
3. Install retaining ring (32) in cartridge (30).

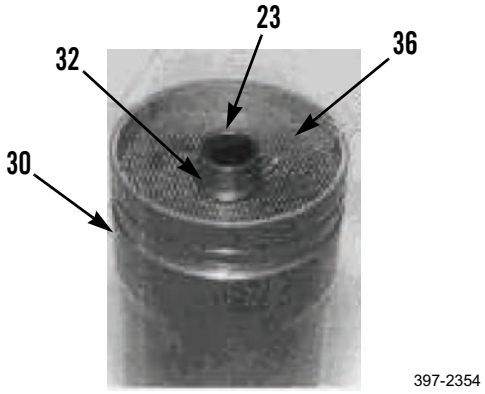


4. Install cartridge (30) and new O-ring (31) in housing (21).

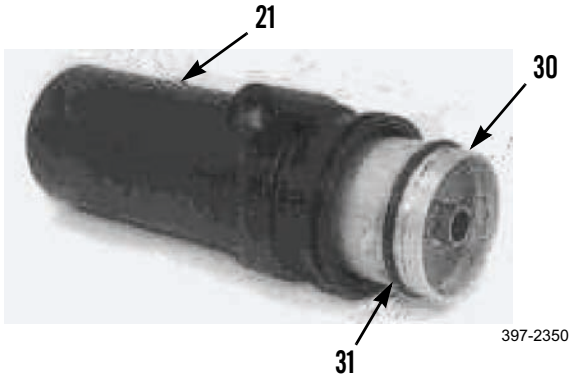


5. Install new O-rings (27 and 28) on plate (25).
6. Install spring (29) on shaft (23).
7. Install new seal (25) and plate (26) on shaft (23).

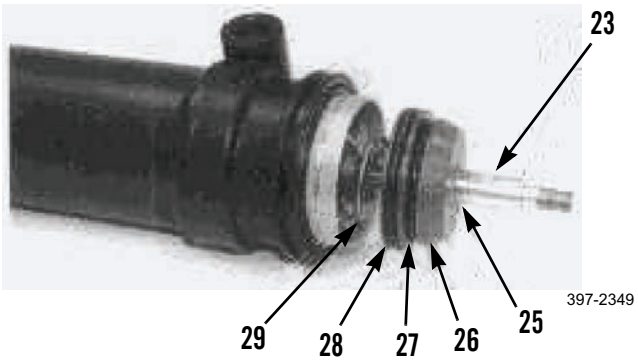

### *ASSEMBLY - CONTINUED*

8. Install new seal (22) on shaft (23).
9. Install new O-ring (24) on housing (21).

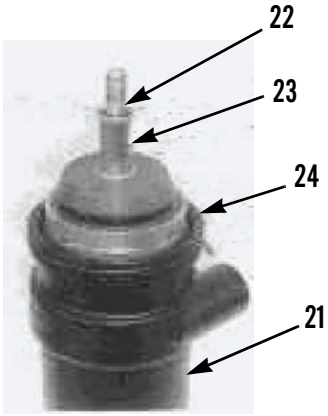


397-2348

10. Install cap (20) on housing (21), aligning cap and housing with alignment marks. Install washer (19) and two nuts (18).

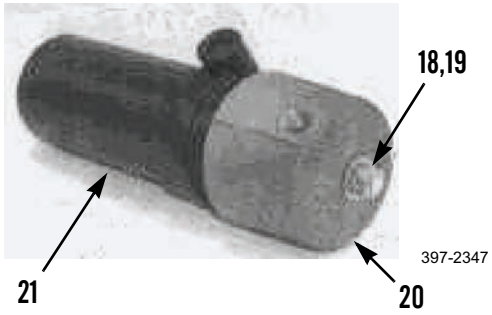


397-2347

### *INSTALLATION*

1. Install new preformed packings (2, 6, and 12) and three elbows (1, 5, and 11) on air dryer (15).
2. Install two clamps (13 and 16), four nuts (14 and 17), and air dryer (15).
3. Install new O-rings (4, 8, and 10) and connect three hoses (3, 7, and 9).

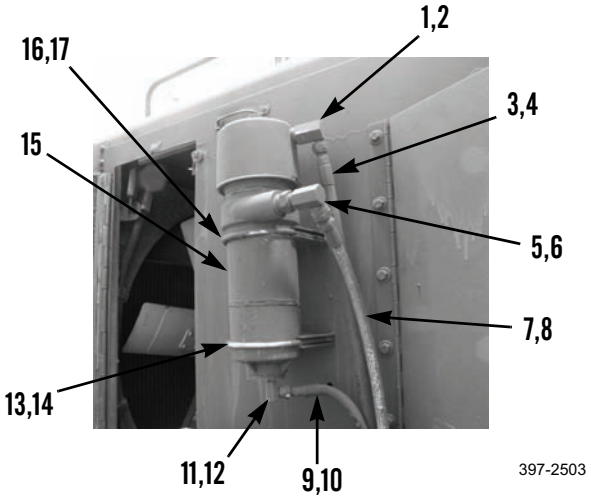


397-2503

**END OF WORK PACKAGE**

## AIR COMPRESSOR GOVERNOR REPLACEMENT 0165 00

### THIS WORK PACKAGE COVERS

Removal, Cleaning and Inspection, Installation

### INITIAL SETUP

**Maintenance Level**

Unit

**Tools and Special Tools**

Tool kit, general mechanic's (Item 89, WP 0348 00)

**Materials/Parts**

Oil, lubricating (Item 29, WP 0349 00)

Rag, wiping (Item 35, WP 0349 00)

**References**

WP 0020 00

**Equipment Conditions**

Machine parked on level ground (TM 5-3805-261-10)

Parking/emergency brake applied (TM 5-3805-261-10)

Implements lowered to ground (TM 5-3805-261-10)

Engine off (TM 5-3805-261-10)

Battery disconnect switch in OFF position (TM 5-3805-261-10)

Left side panel removed (WP 0182 00)

Air pressure relieved (TM 5-3805-261-10)

### *REMOVAL*



**WARNING**

- DO NOT disconnect air line until air pressure is zero. All air must be bled from air tanks. Failure to follow this warning may cause injury to personnel.
- Compressed air must not exceed 30 psi (207 kPa). DO NOT direct compressed air against human skin. Make sure air stream is directed away from user and other personnel in the area. Wear protective goggles or face shield. Failure to follow this warning may cause injury to personnel.

### *REMOVAL - CONTINUED*

1. Remove air line (3) from elbow (2) on air compressor governor (5).
2. Loosen air line (3) at elbow (1) and move aside.
3. Remove elbows (1 and 2) from air compressor governor (5).

**CAUTION**

Cap hose ends and plug open ports to prevent contamination.

**NOTE**

- Do not remove bottom two bolts in mounting bracket.
- Tag hose and tube assemblies before disconnecting to aid in installation.

4. Remove two bolts (10), washers (11 and 9), two spacers (13), and nuts (4) from bracket (12) and air compressor governor (5).
5. Disconnect air tank line (8) from connector (7).
6. Remove connector (7) and elbow (6).
7. Remove air compressor governor (5).

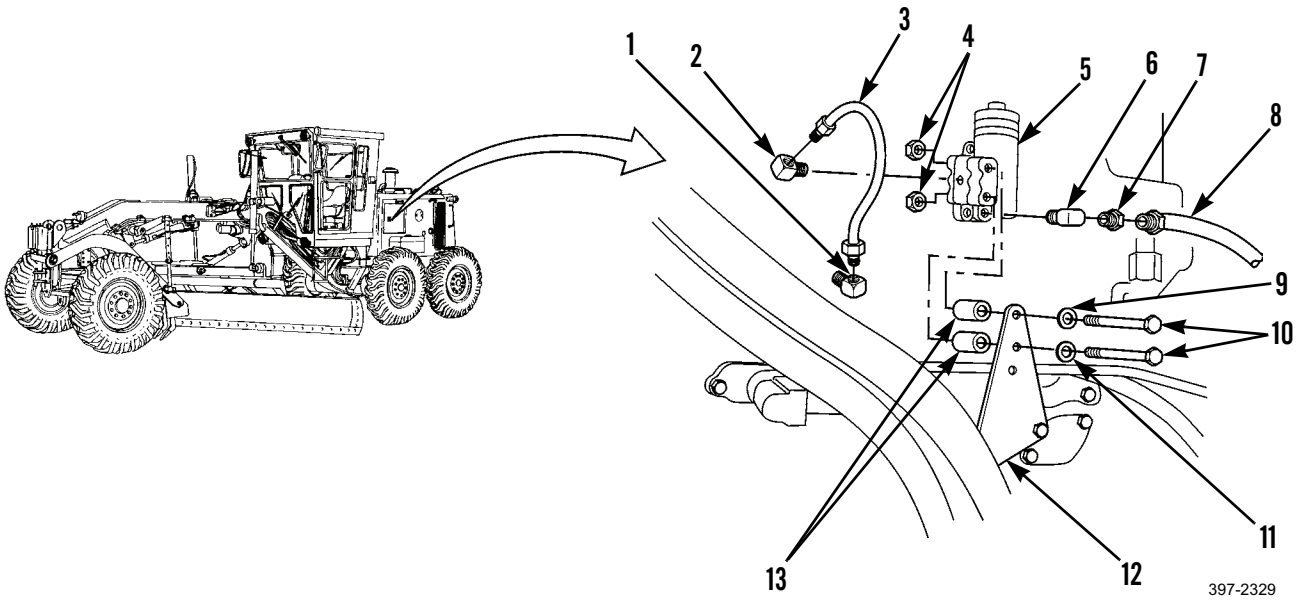


### *CLEANING AND INSPECTION*

Clean and inspect all parts in accordance with WP 0020 00.

### *INSTALLATION*

1. Install air compressor governor (5).
2. Install elbow (6) and connector (7) on air compressor governor (5).
3. Connect air tank line (8).
4. Install two nuts (4), spacers (13), washers (11 and 9), and two bolts (10) to secure governor assembly (5) to bracket (12).
5. Install elbows (1 and 2) on air compressor governor (5).
6. Install air line (3) on elbow (2).
7. Tighten air lines (3) at elbow (1).
8. Install left side engine panel (WP 0051 00).

**END OF WORK PACKAGE**

## FRONT WHEELS REPLACEMENT 0166 00

### THIS WORK PACKAGE COVERS

Removal, Cleaning and Inspection, Installation

### INITIAL SETUP

**Maintenance Level**

Unit

**Tools and Special Tools**

Tool kit, general mechanic's (Item 89, WP 0348 00)

Shop equipment, contact truck (Item 77, WP 0348 00)

Jack, hydraulic (Item 37, WP 0348 00)

Jack stand (Item 84, WP 0348 00)

Sling (Item 78, WP 0348 00)

Wrench, torque (Item 102, WP 0348 00)

Lifting device, 500-lb capacity

Wood blocks

**Materials/Parts**

Rag, wiping (Item 35, WP 0349 00)

**Personnel Required**

Two

**References**

WP 0020 00

**Equipment Conditions**

Machine parked on level ground (TM 5-3805-261-10)

Parking/emergency brake applied (TM 5-3805-261-10)

Implements lowered to ground (TM 5-3805-261-10)

Engine off (TM 5-3805-261-10)

Battery disconnect switch in OFF position (TM 5-3805-261-10)

### *REMOVAL*



**WARNING**

Be sure the parking brake is set before beginning this task. In addition, block the wheel opposite the one being removed. Failure to do so may cause the machine to slip off the jack stand causing injury or death to personnel.

***REMOVAL - CONTINUED***

**NOTE**

- This procedure covers replacement of the right front wheel. Follow these instructions for the left front wheel.
- Some machines have 10 bolts instead of 10 nuts.

1. Loosen 10 nuts (1).
2. Position hydraulic jack under machine and raise front wheels off ground high enough to position jack stand.
3. Position jack stand under machine.



**WARNING**

Use extreme caution when handling heavy parts. Provide adequate support and use assistance during procedure. Ensure that any lifting device used is in good condition and of suitable load capacity. Keep clear of heavy parts supported only by lifting device. Failure to follow this warning may cause injury or death to personnel.

**NOTE**

Wheel and tire weighs 485 lb (220 kg).

4. Attach sling around front wheel (3).
5. Remove 10 nuts (1) and washers (2).
6. Remove front wheel (3) from machine.

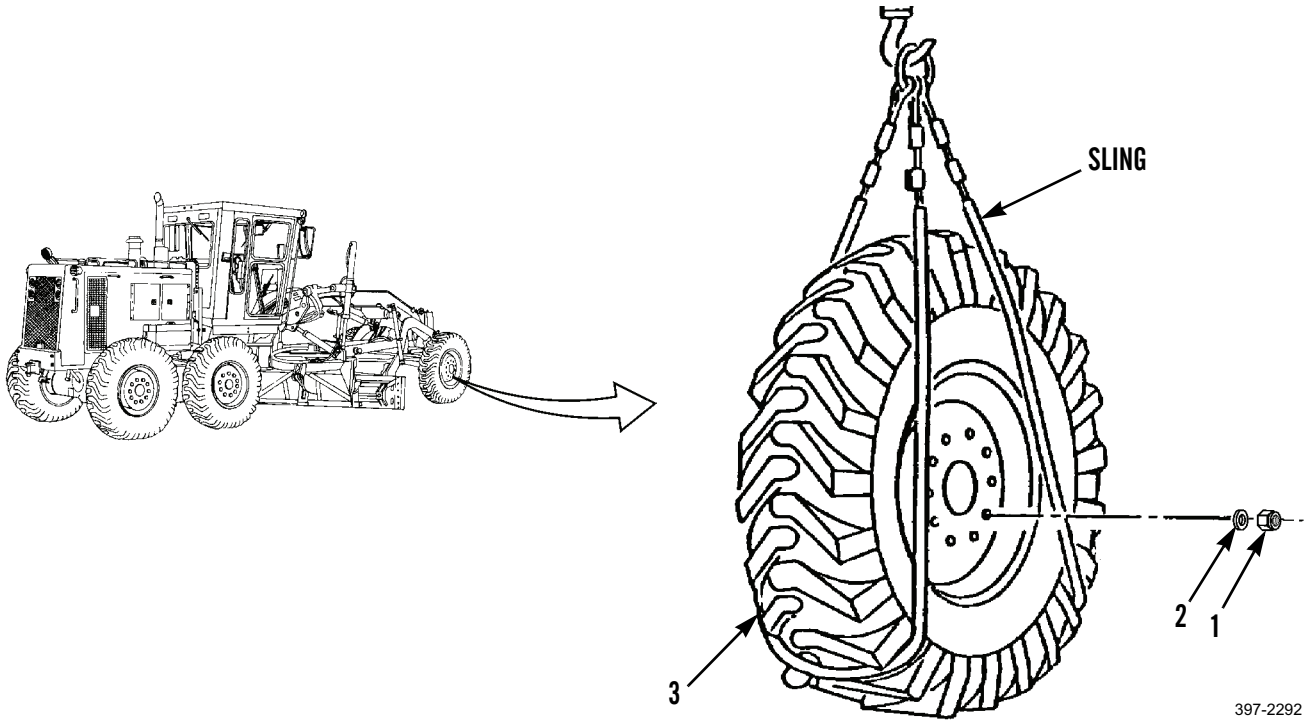

### *CLEANING AND INSPECTION*

Clean and inspect all parts in accordance with WP 0020 00.

### *INSTALLATION*

1. Install sling on front wheel (3).
2. Position front wheel (3) on machine.
3. Install 10 washers (2) and nuts (1).
4. Use hydraulic jack to lift machine and remove jack stand.
5. Lower front wheel (3) to ground and remove hydraulic jack.

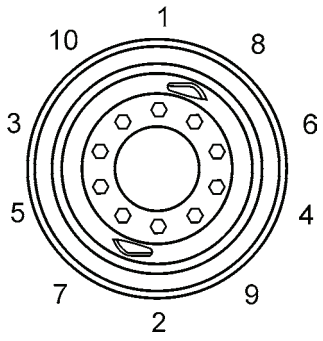


TIGHTENING PATTERN

397-2502

**WARNING**

Whenever any lug nuts require tightening or a wheel has been removed and replaced, all lug nuts must be tightened to the required torque. Failure to follow this warning may result in serious injury to personnel or damage to equipment.

**NOTE**

- Tightening pattern is the same for all wheel assemblies.
- After operating vehicle for 50 to 100 miles (80 to 160 km), tighten lug nuts again.

6. Tighten 10 bolts (1) evenly to 450+/-30 lb-ft (610+/-41 Nm) or tighten 10 nuts to 365 $\pm$ 25 lb-ft (495 $\pm$ 34 Nm), in accordance with tightening pattern.
7. Remove sling.
8. Check pressure of tire (TM 5-3805-261-10).

**END OF WORK PACKAGE**

## REAR WHEELS REPLACEMENT 0167 00

### THIS WORK PACKAGE COVERS

Removal, Cleaning and Inspection, Installation

### INITIAL SETUP

**Maintenance Level**

Unit

**Tools and Special Tools**

Tool kit, general mechanic's (Item 89, WP 0348 00)

Shop equipment, common no. 1 (Item 75, WP 0348 00)

Jack, hydraulic (Item 37, WP 0348 00)

Jack stand (Item 84, WP 0348 00)

Sling (Item 78, WP 0348 00)

Wrench, torque (Item 102, WP 0348 00)

Lifting device, 500-lb capacity

Wood blocks

**Materials/Parts**

Rag, wiping (Item 35, WP 0349 00)

**Personnel Required**

Two

**References**

WP 0020 00

**Equipment Conditions**

Machine parked on level ground (TM 5-3805-261-10)

Parking/emergency brake applied (TM 5-3805-261-10)

Implements lowered to ground (TM 5-3805-261-10)

Engine off (TM 5-3805-261-10)

Battery disconnect switch in OFF position (TM 5-3805-261-10)

### *REMOVAL*



**WARNING**

Be sure the parking brake is set before beginning this task. In addition, block the wheel opposite the one being removed. Failure to do so may cause the machine to slip off the jack stand causing injury or death to personnel.

**NOTE**

- This procedure covers replacement of the right rear wheel. Follow these instructions for the left rear wheel.
- Some machines have 10 bolts instead of 10 nuts.

### *REMOVAL - CONTINUED*

1. Loosen 10 nuts (1).
2. Position hydraulic jack under machine and raise rear wheels off ground high enough to position jack stand.
3. Position jack stand under machine.



**WARNING**

Use extreme caution when handling heavy parts. Provide adequate support and use assistance during procedure. Ensure that any lifting device used is in good condition and of suitable load capacity. Keep clear of heavy parts supported only by lifting device. Failure to follow this warning may cause injury or death to personnel.

**NOTE**

Rear wheel weighs 430 lb (195 kg).

4. Attach sling around rear wheel (3).
5. Remove 10 nuts (1) and washers (2).
6. Remove rear wheel (3) from machine.

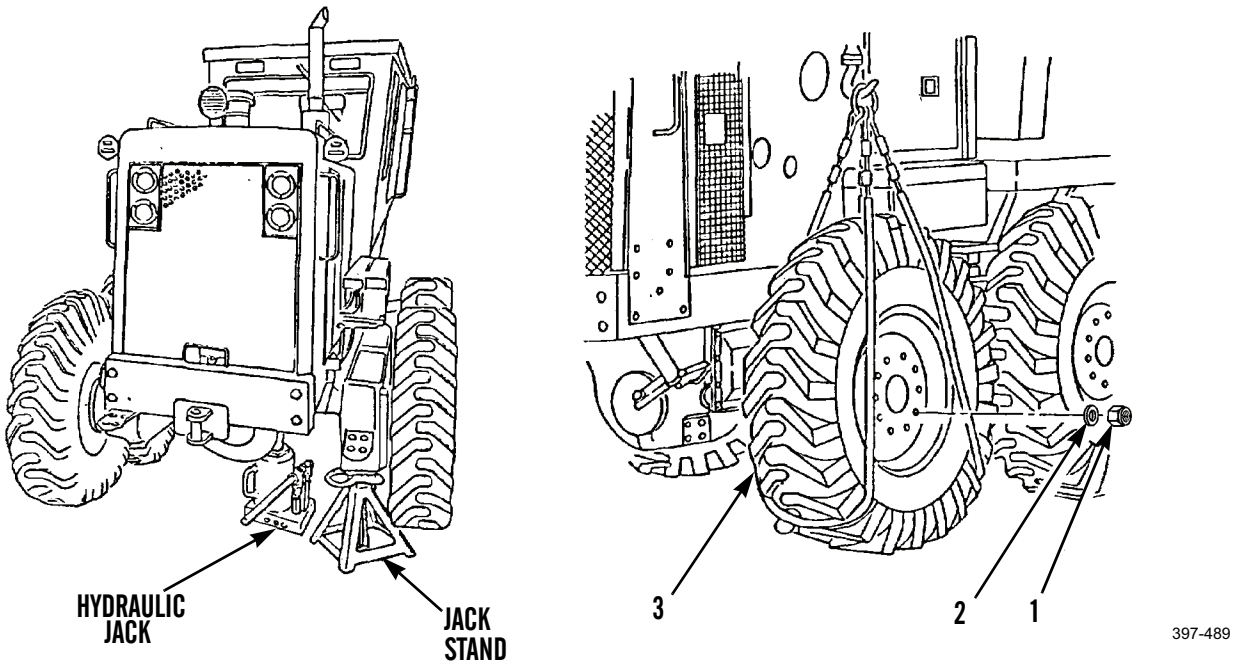

### *CLEANING AND INSPECTION*

Clean and inspect all parts in accordance with WP 0020 00.

### *INSTALLATION*

1. Install sling on rear wheel (3).
2. Position rear wheel (3) on machine.
3. Install 10 washers (2) and nuts (1).
4. Use hydraulic jack to lift machine and remove jack stand.
5. Lower rear wheel (3) to ground and remove hydraulic jack.
6. Tighten 10 bolts (1) evenly to 420 to 480 lb-ft (569 to 651 Nm). Tighten 10 nuts to 340 to 390 lb-ft (461 to 529 Nm).
7. Remove sling.
8. Check pressure of tire (TM 5-3805-261-10).

**END OF WORK PACKAGE**

## TIRES MAINTENANCE 0168 00

## THIS WORK PACKAGE COVERS

Removal, Cleaning and Inspection, Repair, Installation

## INITIAL SETUP

**Maintenance Level**

Unit

**Tools and Special Tools**

Tool kit, general mechanic's (Item 89, WP 0348 00)

Shop equipment, common no. 1 (Item 75, WP 0348 00)

Guard, safety, tire inflation (Item 29, WP 0348 00)

Sling (Item 78, WP 0348 00)

Lifting device, 500-lb capacity

**Materials/Parts**

Lubricant (Item 21, WP 0349 00)

Rag, wiping (Item 35, WP 0349 00)

Grommet

Packing, preformed

**References**

TM 9-2610-200-14

WP 0020 00

**Equipment Conditions**

Machine parked on level ground (TM 5-3805-261-10)

Parking/emergency brake applied (TM 5-3805-261-10)

Implements lowered to ground (TM 5-3805-261-10)

Engine off (TM 5-3805-261-10)

Battery disconnect switch in OFF position (TM 5-3805-261-10)

Wheel removed (WP 0166 00 or WP 0167 00)

### *REMOVAL*

1. Remove valve cap (4) and exhaust air from tire (6).
2. Use pneumatic tire valve repair tool to remove valve core (5).
3. Use hammer and pry bars to remove lock ring (1).
4. Use tire iron to break seal between bead of tire (6) and rim of wheel (7) around entire circumference of tire. Insert pieces of spare metal stock to prevent tire from reseating itself on rim of wheel.
5. Use pry bars to remove flange (2).
6. Remove and discard preformed packing (3).



**WARNING**

Use extreme caution when handling heavy parts. Provide adequate support and use assistance during procedure. Ensure that any lifting device used is in good condition and of suitable load capacity. Keep clear of heavy parts supported only by lifting device. Failure to follow this warning may cause injury or death to personnel.

**NOTE**

Wheels weigh 485 lb (220 kg).

7. Attach sling to tire (6), lift up, turn over, and lower to work area with inside of wheel (7) facing upward.
8. Remove sling.

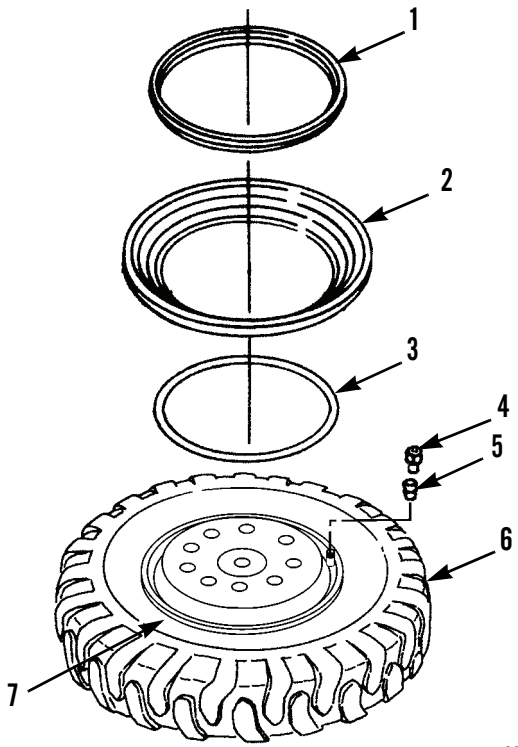


397-4306

### *REMOVAL - CONTINUED*

9. Use sledge hammer to remove wheel (7) from tire (6) and set down on work surface with valve stem (8) facing upward.

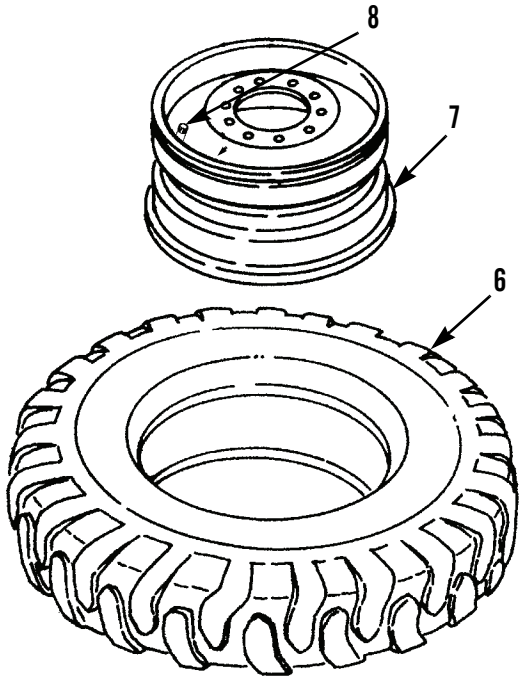


397-4307

10. Remove spud (9), grommet (10), nut (11), and valve stem (8) from wheel (7). Discard grommet.

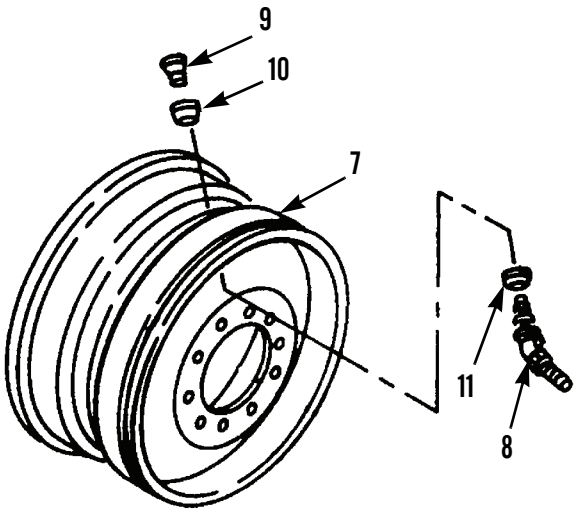


397-4308

### *CLEANING AND INSPECTION*

Clean and inspect all parts in accordance with WP 0020 00.

### *REPAIR*

Repair tire in accordance with TM 9-2610-200-14.

### *INSTALLATION*

1. Install valve stem (8), nut (11), new grommet (10), and spud (9) on wheel (7).

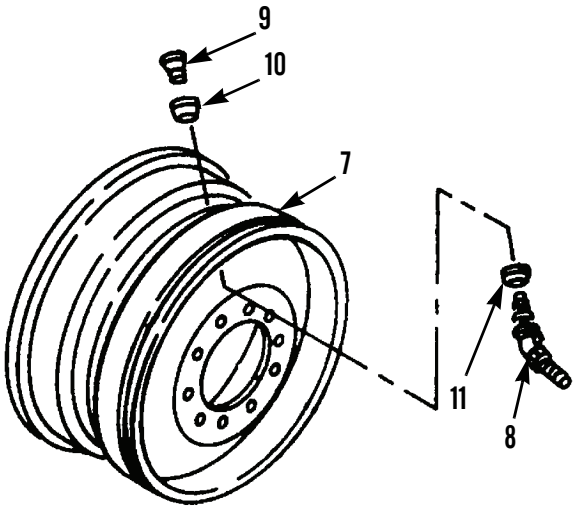


397-4308

**CAUTION**

Do not use soap or detergent solutions to lubricate tire.

2. Apply rubber lubricant to inside bead of tire (6).
3. Install wheel (7) on tire (6).
4. Attach sling to tire (6), lift up, turn over, and set down on work surface with inside face of wheel (7) downward.
5. Remove sling.

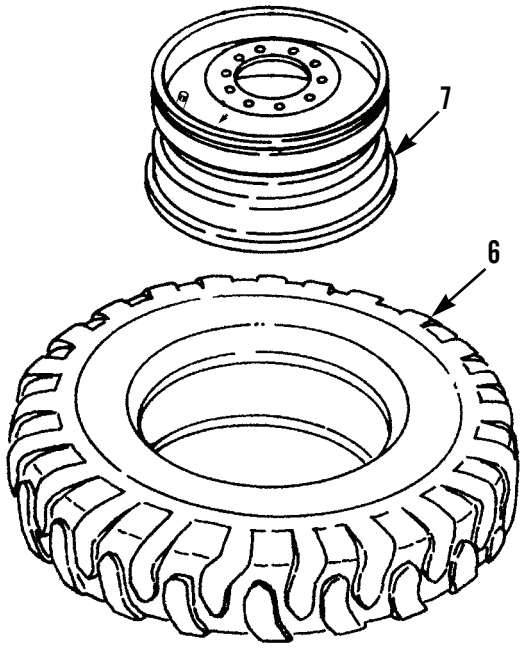


397-4307

***INSTALLATION - CONTINUED***

6. Install flange (2) on wheel (7), ensuring that groove for preformed packing (3) is exposed around entire circumference of wheel.
7. Apply rubber lubricant to new preformed packing (3).

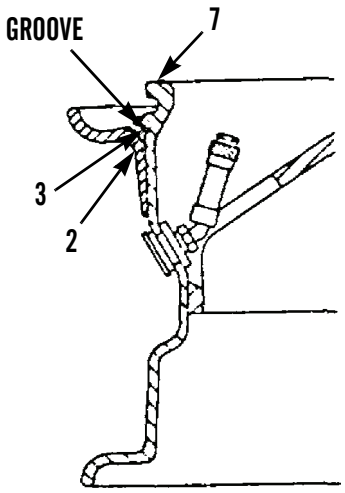

397-4309

**CAUTION**

Ensure preformed packing is not twisted or cut during installation.

8. Install new preformed packing (3) in second (shallow) groove of wheel (7).

**CAUTION**

Ensure lock ring is seated in first groove all around wheel.

9. Install lock ring (1) in first (deep) groove of wheel (7).
10. Apply rubber lubricant to bead of outer side of tire.

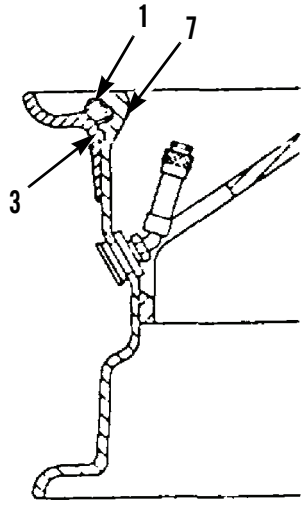

397-4310

***INSTALLATION - CONTINUED***

## NOTE

Ensure that valve core is not installed.

11. Attach pneumatic tire inflator-gauge to valve stem (8).

## WARNING

Use large tire inflation guard. Stand behind tread when inflating tires. Ensure that tires are properly seated on rims. Correct tire pressure is 35 psi (241 kPa). Improperly seated and overinflated tires can burst with explosive force. Failure to follow this warning may cause injury or death to personnel.

## NOTE

You may have to compress tire using chains and cable hoist to get beads to seat.

12. Place tire inside tire inflation guard. Inflate tire (6) to 35 psi (241 kPa).
13. Remove pneumatic tire inflator-gauge and exhaust air from tire (6).
14. Install valve core (5).

## WARNING

Use large tire inflation guard. Stand behind tread when inflating tires. Ensure that tires are properly seated on rims. Correct tire pressure is 35 psi (241 kPa). Improperly seated and overinflated tires can burst with explosive force. Failure to follow this warning may cause injury or death to personnel.

15. Place tire inside tire inflations guard. Inflate tire (6) to 35 psi (241 kPa).
16. Install valve cap (4) and remove tire from guard.
17. Install wheel (WP 0166 00 or WP 0167 00).

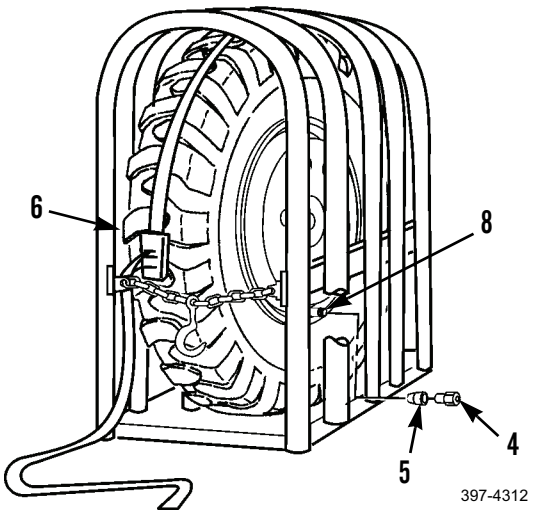


**END OF WORK PACKAGE**

## STEERING HOSES, LINES, AND FITTINGS: STEERING VALVES TO STEERING CYLINDERS REPLACEMENT (DUAL VALVE DESIGN) 0169 00

### THIS WORK PACKAGE COVERS

Removal, Cleaning and Inspection, Installation

### INITIAL SETUP

**Maintenance Level**

Unit

**Tools and Special Tools**

Tool kit, general mechanic's (Item 89, WP 0348 00)

Shop equipment, common no. 1 (Item 75, WP 0348 00)

**Materials/Parts**

Cap set, protective (Item 7, WP 0349 00)

Rag, wiping (Item 35, WP 0349 00)

Tag, marker (Item 44, WP 0349 00)

Packing, preformed (12)

**References**

WP 0020 00

WP 0216 00

**Equipment Conditions**

Machine parked on level ground (TM 5-3805-261-10)

Parking/emergency brake applied (TM 5-3805-261-10)

Implements lowered to ground (TM 5-3805-261-10)

Engine off (TM 5-3805-261-10)

Battery disconnect switch in OFF position (TM 5-3805-261-10)





**WARNING**

- Do NOT disconnect or remove any hydraulic system line or fitting unless engine is shut down and hydraulic system pressure has been relieved. Tighten all connections before applying pressure. Escaping hydraulic fluid under pressure can penetrate the skin, causing injury to personnel.
- At operating temperature, hydraulic oil is hot. Allow hydraulic oil to cool before disconnecting any hydraulic lines. Failure to follow this warning may cause injury to personnel.
- Lubricating/hydraulic oils, engine coolant, fuel, and other fluids used in the performance of maintenance can be very slippery. Immediately wipe up any spills. Failure to follow this warning may cause injury to personnel.

### *REMOVAL*

1. For hydraulic pressure relief, ensure supplemental steering is off.
2. Operate each implements control lever.
3. Turn steering wheel back and forth.
4. Remove hydraulic tank cap.
5. Install hydraulic tank cap.

## STEERING HOSES, LINES, AND FITTINGS: STEERING VALVES TO STEERING CYLINDERS REPLACEMENT (DUAL VALVE DESIGN) - CONTINUED 0169 00

***REMOVAL - CONTINUED***

**CAUTION**

Cap hose ends to prevent contamination.

**NOTE**

Tag hose assemblies before disconnecting to aid in installation.

6. Disconnect hose assembly (4) from top valve port of left steering valve (1).
7. Remove connector (3) and preformed packing (2). Discard preformed packing.

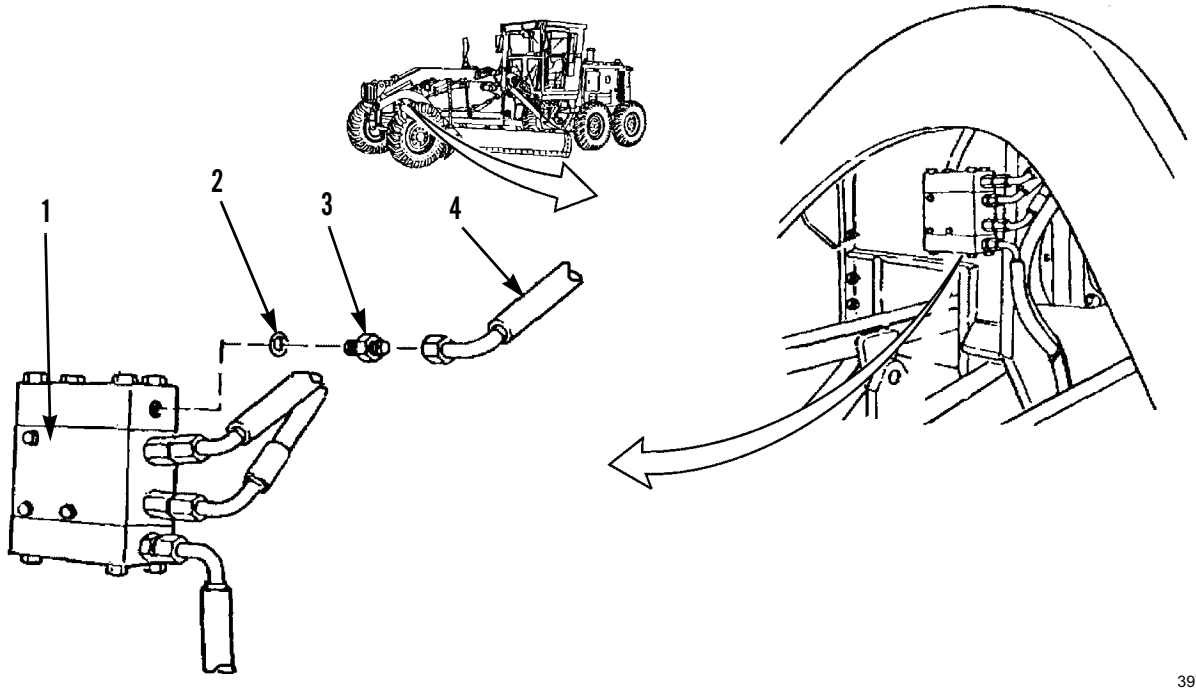


397-497

8. Disconnect hose assembly (7) from second valve port on top of left steering valve (1).
9. Remove connector (6) and preformed packing (5). Discard preformed packing.

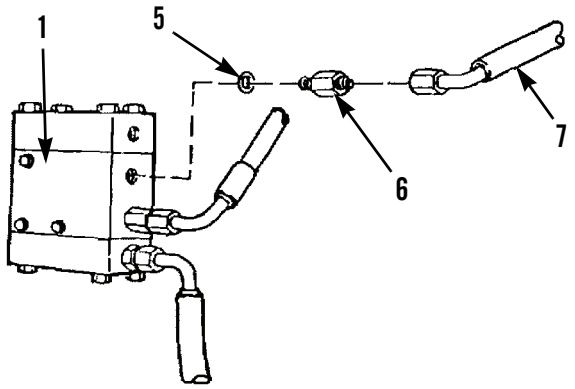


397-498

## STEERING HOSES, LINES, AND FITTINGS: STEERING VALVES TO STEERING CYLINDERS REPLACEMENT (DUAL VALVE DESIGN) - CONTINUED 0169 00

### *REMOVAL - CONTINUED*

10. Disconnect hose assembly (10) from third valve port on top of left steering valve (1).
11. Remove connector (9) and preformed packing (8). Discard preformed packing.

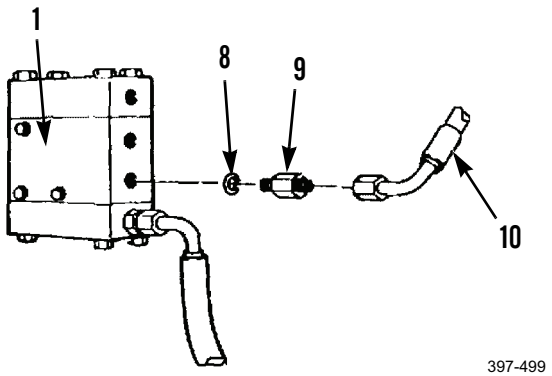

397-499

12. Disconnect hose assembly (13) from bottom valve port of left steering valve (1).
13. Remove connector (12) and preformed packing (11). Discard preformed packing.

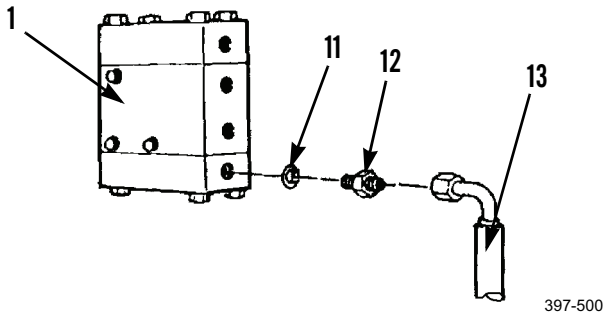

397-500

## STEERING HOSES, LINES, AND FITTINGS: STEERING VALVES TO STEERING CYLINDERS REPLACEMENT (DUAL VALVE DESIGN) - CONTINUED 0169 00

### *REMOVAL - CONTINUED*

14. Remove hose assembly (17) from top valve port of right steering valve (14).
15. Remove connector (16) and preformed packing (15). Discard preformed packing.

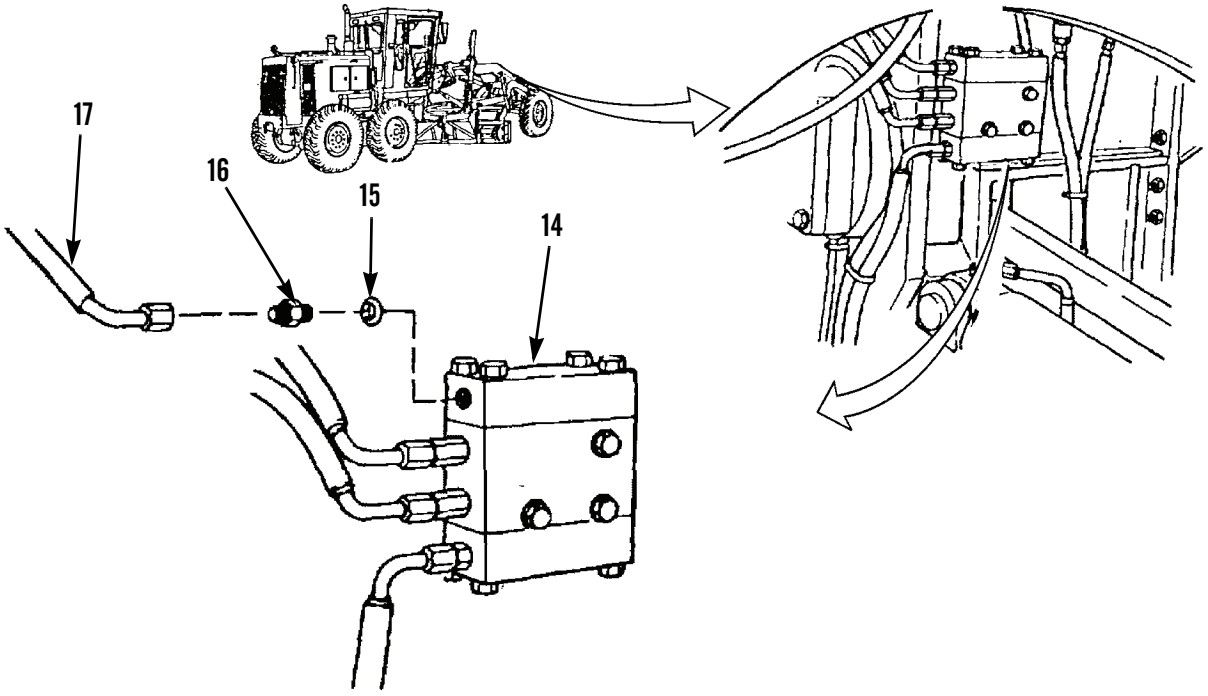


397-501

16. Remove hose assembly (18) from second valve port on top of right steering valve (14).
17. Remove connector (19) and preformed packing (20). Discard preformed packing.

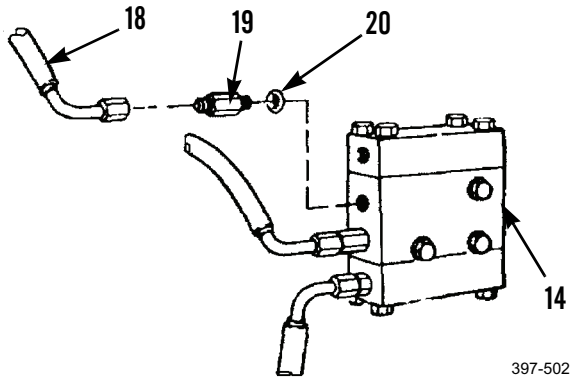


397-502

## STEERING HOSES, LINES, AND FITTINGS: STEERING VALVES TO STEERING CYLINDERS REPLACEMENT (DUAL VALVE DESIGN) - CONTINUED 0169 00

### *REMOVAL - CONTINUED*

18. Disconnect hose assembly (21) from third valve port on top of right steering valve (14).
19. Remove connector (22) and preformed packing (23). Discard preformed packing.

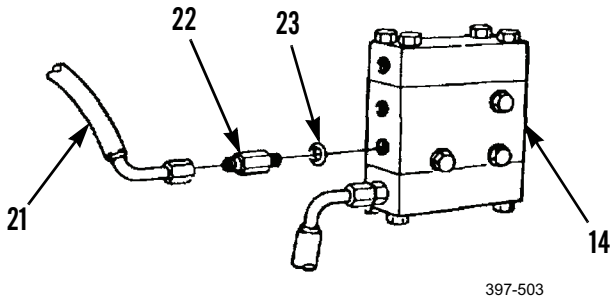

397-503

20. Disconnect hose assembly (24) from bottom valve port of right steering valve (14).
21. Remove connector (25) and preformed packing (26). Discard preformed packing.

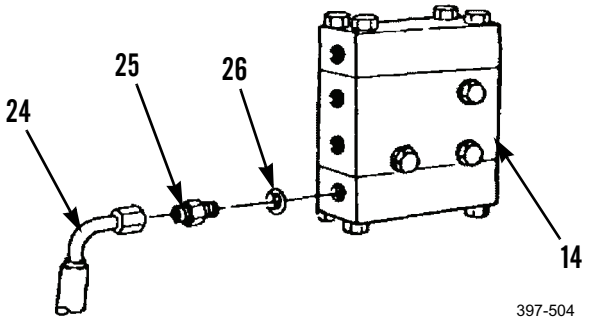

397-504

22. Remove bolt (27), washer (28), and clip (29).

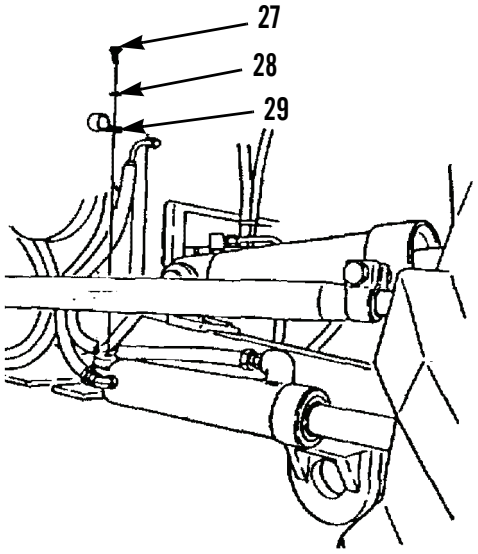

397-505

## STEERING HOSES, LINES, AND FITTINGS: STEERING VALVES TO STEERING CYLINDERS REPLACEMENT (DUAL VALVE DESIGN) - CONTINUED 0169 00

### *REMOVAL - CONTINUED*

23. Remove hose assembly (33) from top of right steering cylinder (30).
24. Remove connector (32) and preformed packing (31). Discard preformed packing.

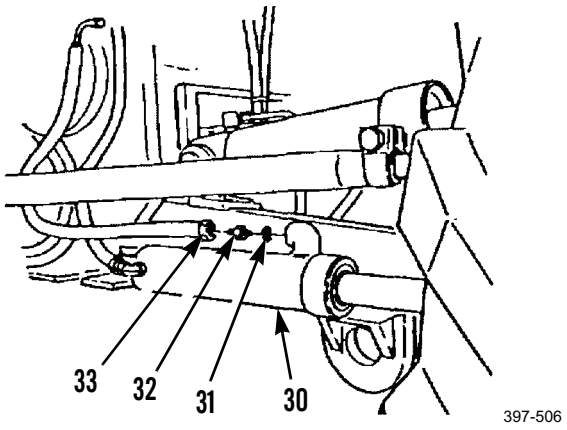

397-506

25. Remove hose assembly (36) from side of right steering cylinder (30).
26. Remove elbow (35) and preformed packing (34). Discard preformed packing.

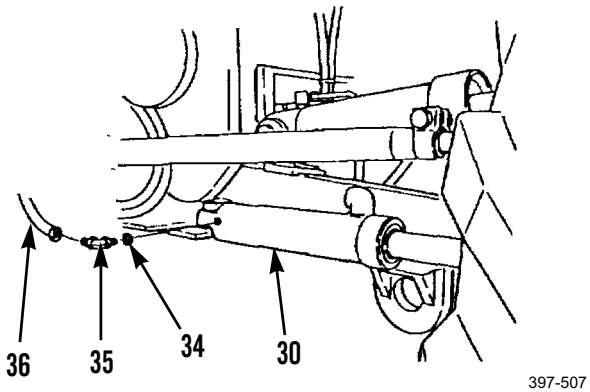

397-507

27. Remove hose assembly (37) from side of left steering cylinder (40).
28. Remove elbow (38) and preformed packing (39). Discard preformed packing.

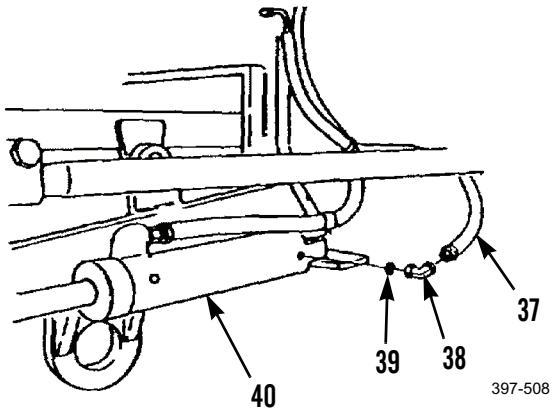

397-508

## STEERING HOSES, LINES, AND FITTINGS: STEERING VALVES TO STEERING CYLINDERS REPLACEMENT (DUAL VALVE DESIGN) - CONTINUED 0169 00

### *REMOVAL - CONTINUED*

29. Remove bolt (41), washer (42), and clip (43).

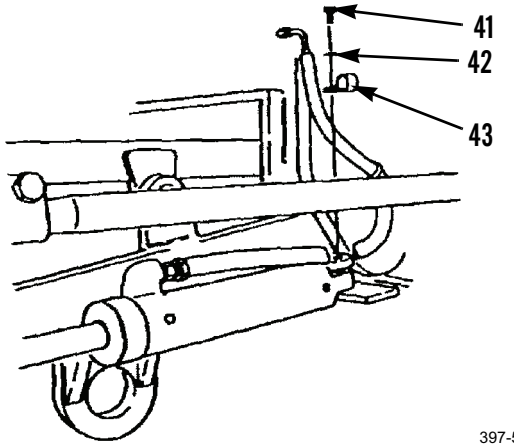

397-509

30. Remove hose assembly (44) from top of left steering cylinder (40).
31. Remove connector (45) and preformed packing (46). Discard preformed packing.

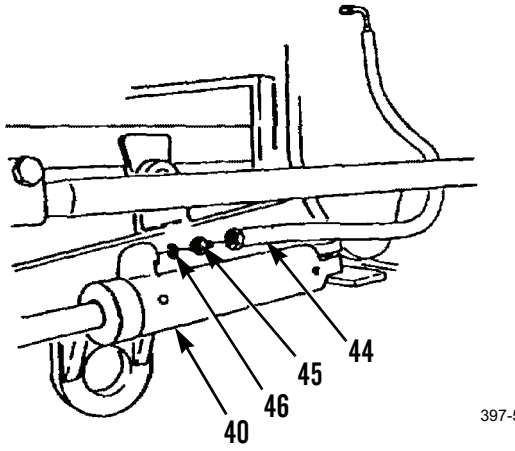

397-510

### *CLEANING AND INSPECTION*

Clean and inspect all parts in accordance with WP 0020 00.

### *INSTALLATION*

1. Install new preformed packing (46) and connector (45).
2. Connect hose assembly (44) to top of left steering cylinder (40).
3. Install clip (43), washer (42), and bolt (41).
4. Install new preformed packing (39) and elbow (38).
5. Connect hose assembly (37) on side of left steering cylinder (40).
6. Install new preformed packing (34) and elbow (35).
7. Connect hose assembly (36) on side of right steering cylinder (30).

***INSTALLATION - CONTINUED***

8. Install new preformed packing (31) and connector (32).
9. Connect hose assembly (33) on top of right steering cylinder (30).

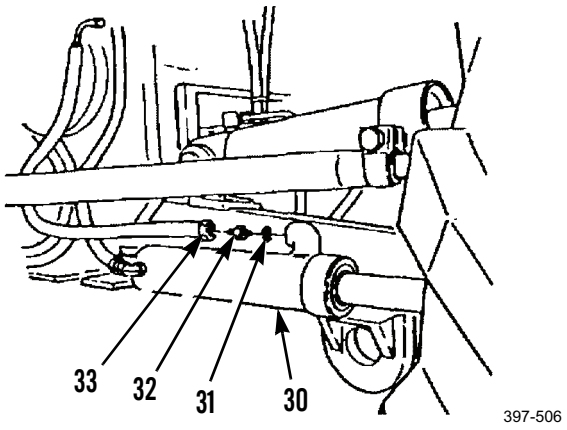

397-506

10. Install clip (29), washer (28), and bolt (27).

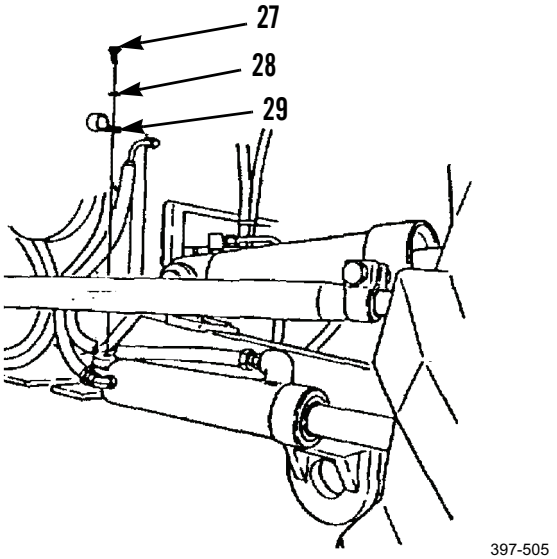

397-505

11. Install new preformed packing (26) and connector (25).
12. Install hose assembly (24) on bottom valve port of right steering valve (14).

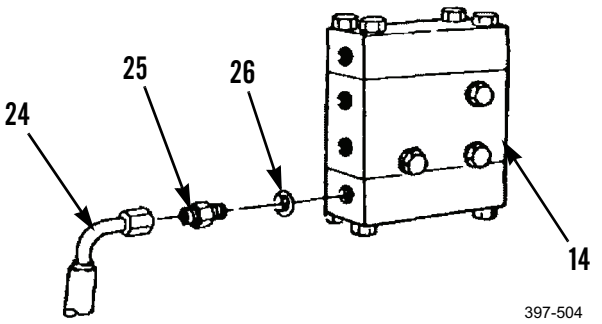

397-504

## STEERING HOSES, LINES, AND FITTINGS: STEERING VALVES TO STEERING CYLINDERS REPLACEMENT (DUAL VALVE DESIGN) - CONTINUED 0169 00

### *INSTALLATION - CONTINUED*

13. Install new preformed packing (23) and connector (22).
14. Install hose assembly (21) on third valve port on top of right steering valve (14).

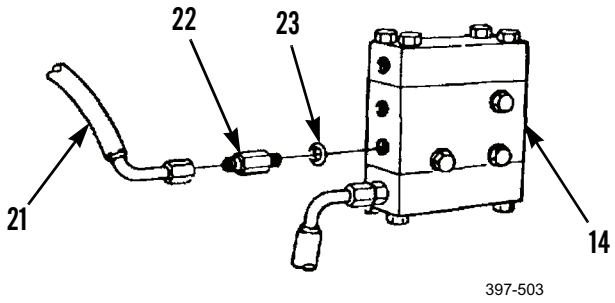


15. Install new preformed packing (20) and connector (19).
16. Connect hose assembly (18) on second valve port on top of right steering valve (14).

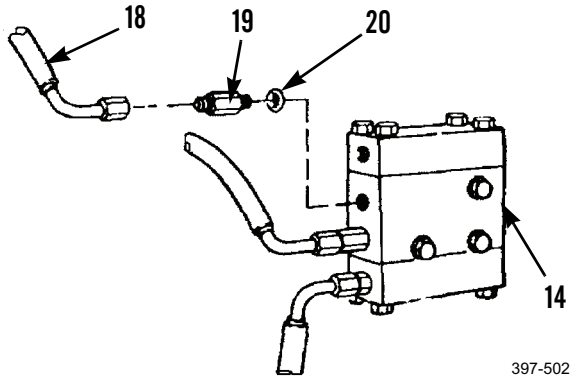


17. Install new preformed packing (15) and connector (16).
18. Connect hose assembly (17) on top valve port of right steering valve (14).

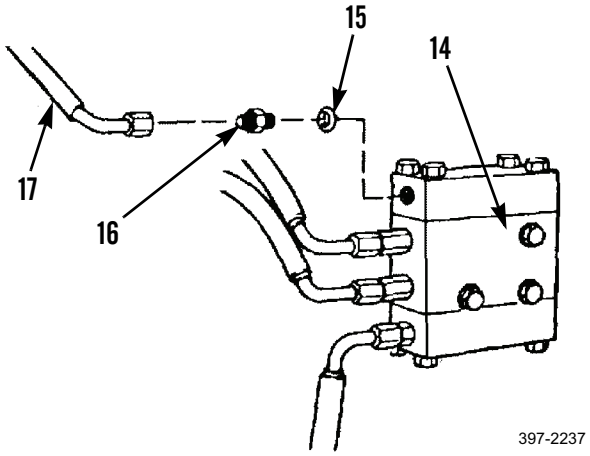

## STEERING HOSES, LINES, AND FITTINGS: STEERING VALVES TO STEERING CYLINDERS REPLACEMENT (DUAL VALVE DESIGN) - CONTINUED 0169 00

### *INSTALLATION - CONTINUED*

19. Install new preformed packing (11) and connector (12).
20. Install hose assembly (13) on bottom valve port of left steering valve (1).

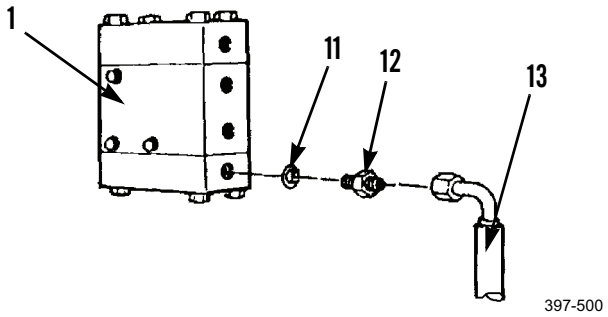

397-500

21. Install new preformed packing (8) and connector (9).
22. Install hose assembly (10) on third valve port on top of left steering valve (1).

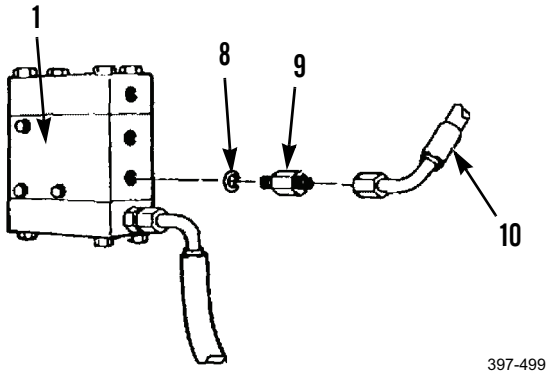

397-499

23. Install new preformed packing (5) and connector (6).
24. Install hose assembly (7) on second valve port on top of left steering valve (1).

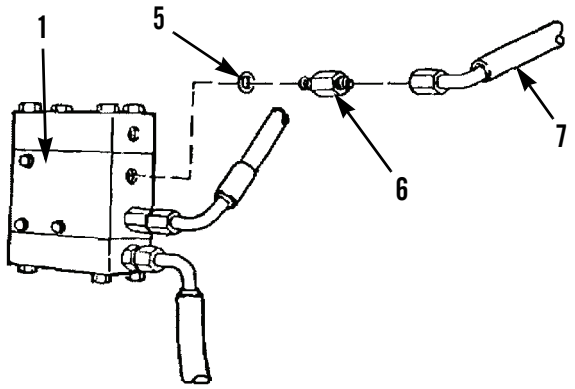

397-498

## STEERING HOSES, LINES, AND FITTINGS: STEERING VALVES TO STEERING CYLINDERS REPLACEMENT (DUAL VALVE DESIGN) - CONTINUED 0169 00

### *INSTALLATION - CONTINUED*

25. Install new preformed packing (2) and connector (3).
26. Install hose assembly (4) on top valve port of left steering valve (1).

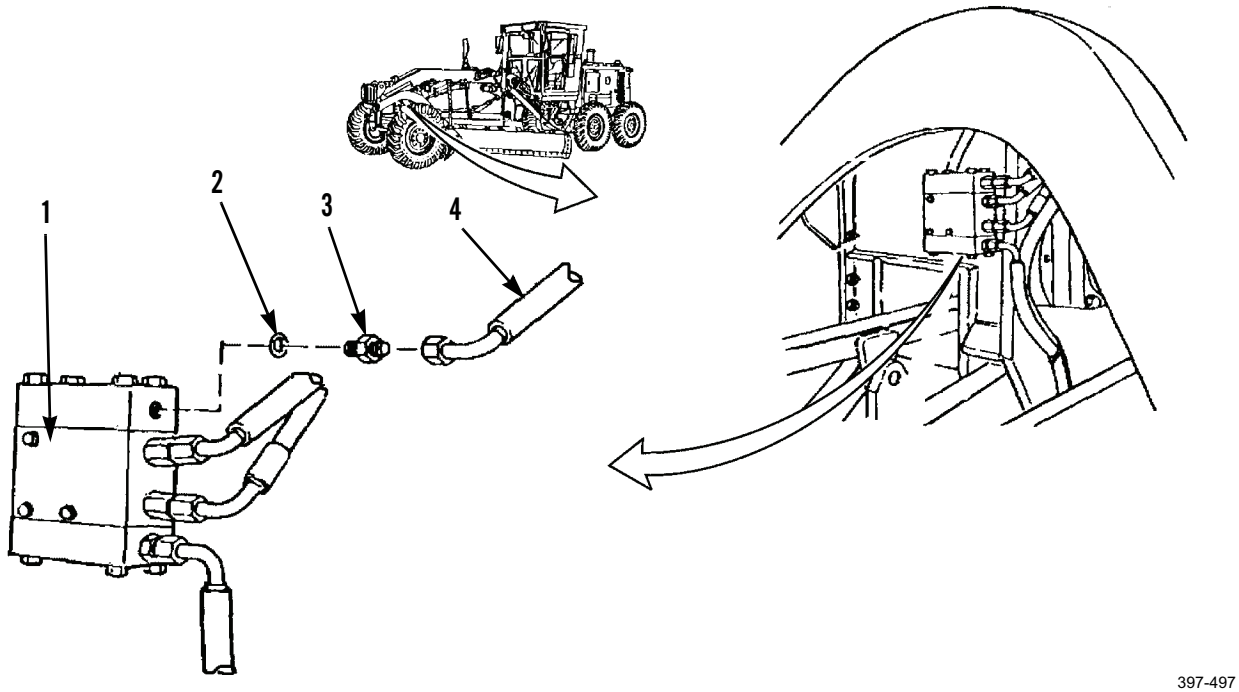


397-497

27. Start engine (TM 5-3805-261-10).
28. Turn steering wheel to the right while moving machine slowly forward a few feet.
29. Turn steering wheel to the left while moving machine slowly forward a few feet.
30. Repeat steps 28 and 29 at least five times to bleed air from system.
31. Stop engine.
32. Check for leaks.
33. Refill hydraulic tank to proper level (WP 0216 00).

**END OF WORK PACKAGE**

## STEERING HOSES, LINES, AND FITTINGS: STEERING VALVES TO STEERING CYLINDERS REPLACEMENT (SINGLE VALVE DESIGN) 0170 00

### THIS WORK PACKAGE COVERS

Removal, Cleaning and Inspection, Installation

### INITIAL SETUP

**Maintenance Level**

Unit

**Tools and Special Tools**

Tool kit, general mechanic's (Item 89, WP 0348 00)

Shop equipment, common no. 1 (Item 75, WP 0348 00)

**Materials/Parts**

Cap set, protective (Item 7, WP 0349 00)

Rag, wiping (Item 35, WP 0349 00)

Tag, marker (Item 44, WP 0349 00)

Packing, preformed (5)

**References**

WP 0020 00

WP 0216 00

**Equipment Conditions**

Machine parked on level ground (TM 5-3805-261-10)

Parking/emergency brake applied (TM 5-3805-261-10)

Implements lowered to ground (TM 5-3805-261-10)

Engine off (TM 5-3805-261-10)

Battery disconnect switch in OFF position (TM 5-3805-261-10)





**WARNING**

- Do NOT disconnect or remove any hydraulic system line or fitting unless engine is shut down and hydraulic system pressure has been relieved. Tighten all connections before applying pressure. Escaping hydraulic fluid under pressure can penetrate the skin, causing injury to personnel.
- At operating temperature, hydraulic oil is hot. Allow hydraulic oil to cool before disconnecting any hydraulic lines. Failure to follow this warning may cause injury to personnel.
- Lubricating/hydraulic oils, engine coolant, fuel, and other fluids used in the performance of maintenance can be very slippery. Immediately wipe up any spills. Failure to follow this warning may cause injury to personnel.

### *REMOVAL*

1. For hydraulic pressure relief, ensure supplemental steering is off.
2. Operate each implements control lever.
3. Turn steering wheel back and forth.
4. Remove hydraulic tank cap.
5. Install hydraulic tank cap.

***REMOVAL - CONTINUED***

## CAUTION

Cap hose ends to prevent contamination.

## NOTE

- Tag hose assemblies before disconnecting to aid in installation.
- This procedure covers removal of three right side hose assemblies of steering valve. Follow these instructions for remaining three left side hose assemblies.
- This procedure covers removal of two hose assemblies of the right steering cylinder. Follow these instructions for remaining two hose assemblies on left steering cylinder.

6. Disconnect hose assembly (4) from valve port on top-right of steering valve (1).
7. Remove connector (2) and preformed packing (3). Discard preformed packing.

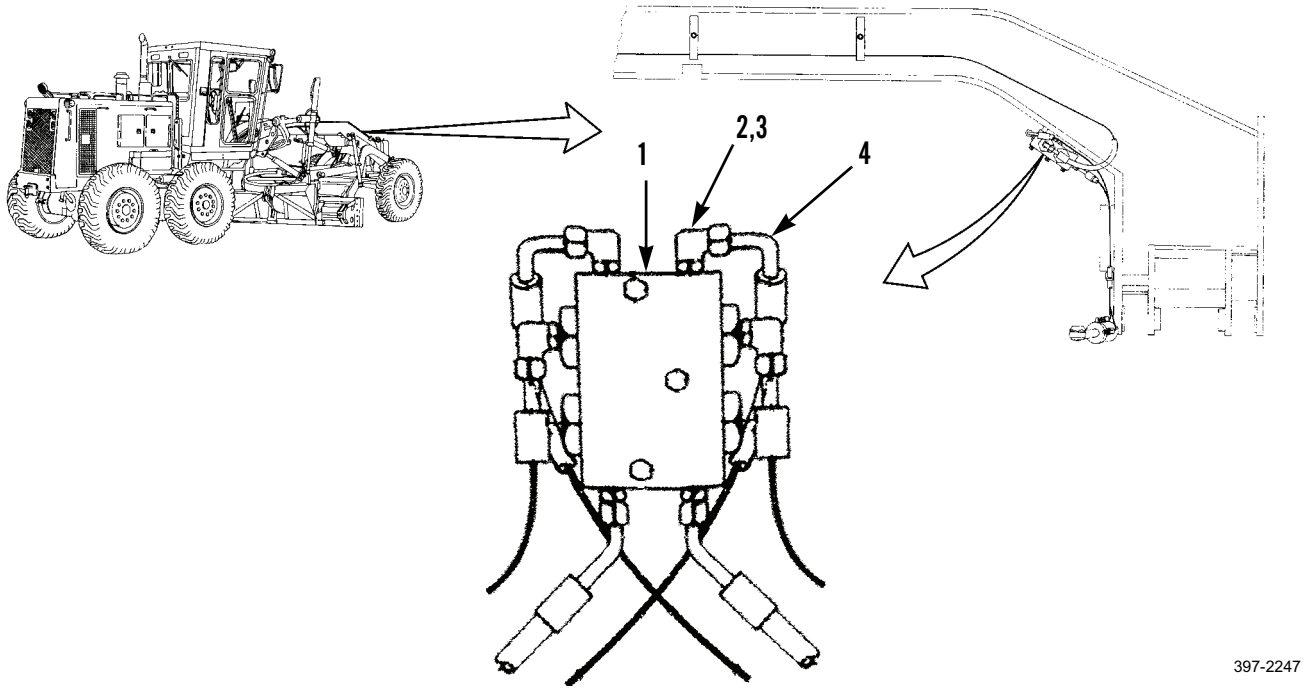

## STEERING HOSES, LINES, AND FITTINGS: STEERING VALVES TO STEERING CYLINDERS REPLACEMENT (SINGLE VALVE DESIGN) - CONTINUED 0170 00

### *REMOVAL - CONTINUED*

8. Disconnect hose assembly (7) from valve port on right side of steering valve (1).
9. Remove connector (5) and preformed packing (6). Discard preformed packing.

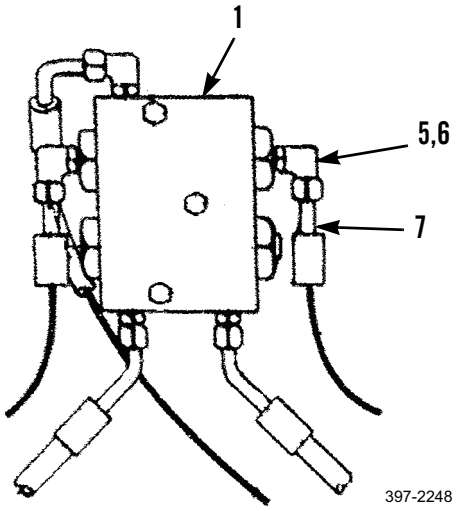


10. Disconnect hose assembly (8) from bottom-right valve port of steering valve (1).
11. Remove connector (9) and preformed packing (10). Discard preformed packing.

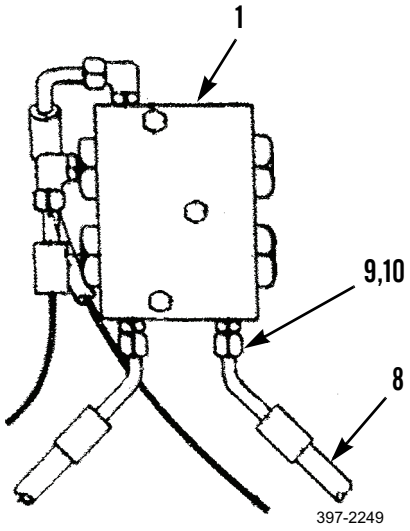

***REMOVAL - CONTINUED***

12. Remove bolt (11), washer (12), and clip (13).

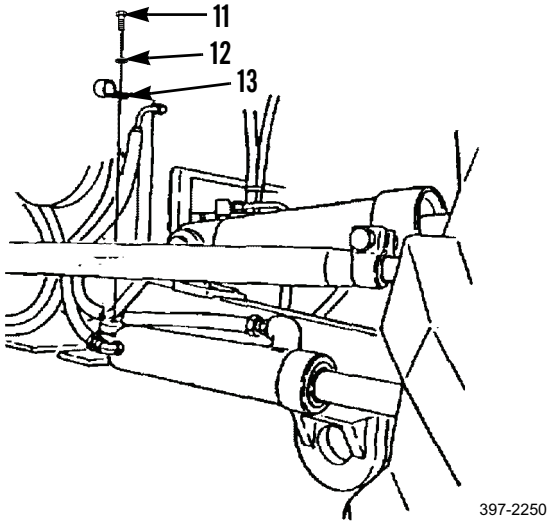


13. Remove hose assembly (17) from top of right steering cylinder (14).
14. Remove connector (16) and preformed packing (15). Discard preformed packing.

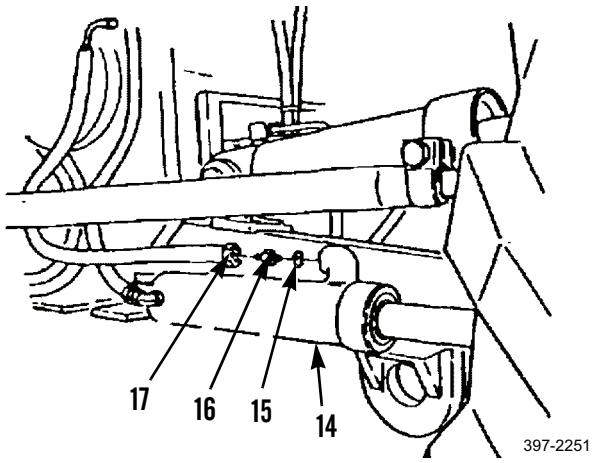


15. Remove hose assembly (20) from side of right steering cylinder (14).
16. Remove elbow (19) and preformed packing (18). Discard preformed packing.

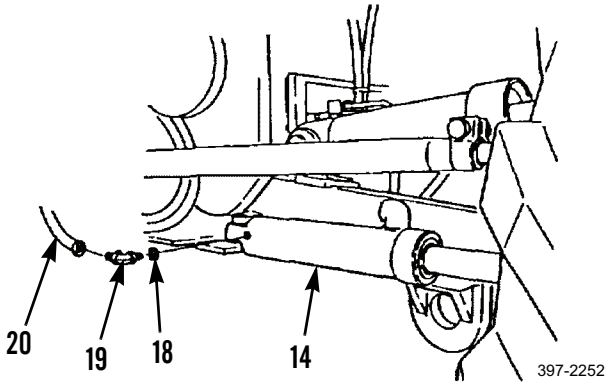

### *CLEANING AND INSPECTION*

Clean and inspect all parts in accordance with WP 0020 00.

### *INSTALLATION*

1. Install new preformed packing (15) and connector (16).
2. Connect hose assembly (17) to top of right steering cylinder (14).
3. Install clip (13), washer (12), and bolt (11).
4. Install new preformed packing (18) and elbow (19).
5. Connect hose assembly (20) on side of right steering cylinder (14).
6. Install new preformed packing (10) and connector (9).
7. Install hose assembly (8) on bottom-right valve port of steering valve (1).

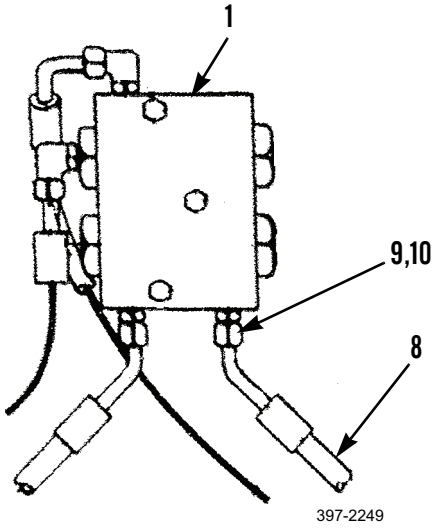

397-2249

8. Install new preformed packing (6) and connector (5).
9. Install hose assembly (7) on valve port on right side of steering valve (1).

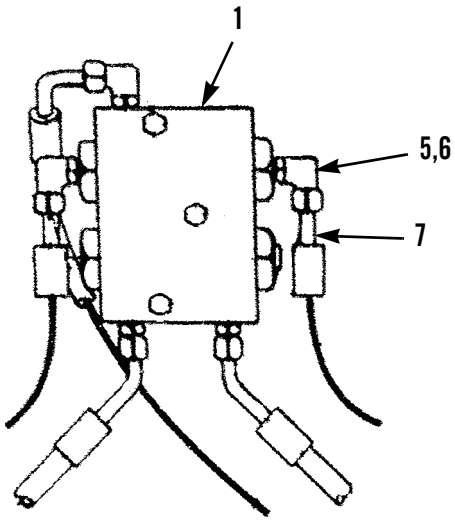

397-2248

## STEERING HOSES, LINES, AND FITTINGS: STEERING VALVES TO STEERING CYLINDERS REPLACEMENT (SINGLE VALVE DESIGN) - CONTINUED 0170 00

### *INSTALLATION - CONTINUED*

10. Install new preformed packing (3) and connector (2).
11. Install hose assembly (4) on valve port on top-right of steering valve (1).

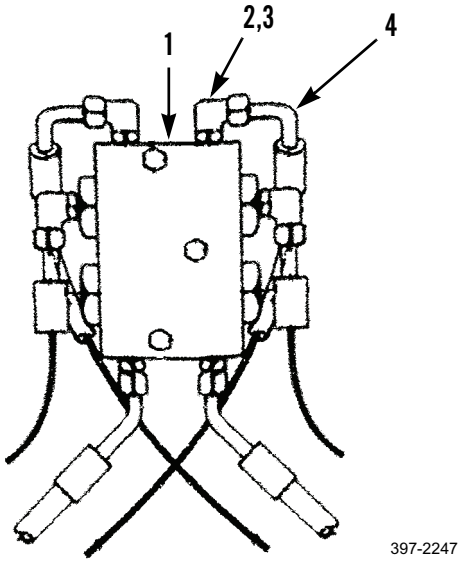


12. Start engine (TM 5-3805-261-10).
13. Turn steering wheel to the right while moving machine slowly forward a few feet.
14. Turn steering wheel to the left while moving machine slowly forward a few feet.
15. Repeat steps 13 and 14 at least five times to bleed air from system.
16. Stop engine.
17. Check for leaks.
18. Refill hydraulic tank to proper level (WP 0216 00).

**END OF WORK PACKAGE**

## STEERING HOSES, LINES, AND FITTINGS: STEERING CONTROL PUMP TO STEERING VALVES REPLACEMENT (DUAL VALVE DESIGN) 0171 00

### THIS WORK PACKAGE COVERS

Removal, Cleaning and Inspection, Installation

### INITIAL SETUP

**Maintenance Level**

Unit

**Tools and Special Tools**

Tool kit, general mechanic's (Item 89, WP 0348 00)

Shop equipment, common no. 1 (Item 75, WP 0348 00)

**Materials/Parts**

Cap set, protective (Item 7, WP 0349 00)

Rag, wiping (Item 35, WP 0349 00)

Strap, tie (Item 43, WP 0349 00)

Tag, marker (Item 44, WP 0349 00)

Packing, preformed (3)

**Personnel Required**

Two

**References**

WP 0020 00

WP 0216 00

**Equipment Conditions**

Machine parked on level ground (TM 5-3805-261-10)

Parking/emergency brake applied (TM 5-3805-261-10)

Implements lowered to ground (TM 5-3805-261-10)

Engine off (TM 5-3805-261-10)

Battery disconnect switch in OFF position (TM 5-3805-261-10)

Frame covers removed (WP 0179 00)

Steering wheel and control pump assembly removed (WP 0319 00)



**WARNING**





- Do NOT disconnect or remove any hydraulic system line or fitting unless engine is shut down and hydraulic system pressure has been relieved. Tighten all connections before applying pressure. Escaping hydraulic fluid under pressure can penetrate the skin, causing injury to personnel.
- At operating temperature, hydraulic oil is hot. Allow hydraulic oil to cool before disconnecting any hydraulic lines. Failure to follow this warning may cause injury to personnel.
- Lubricating/hydraulic oils, engine coolant, fuel, and other fluids used in the performance of maintenance can be very slippery. Immediately wipe up any spills. Failure to follow this warning may cause injury to personnel.

### *REMOVAL*

1. For hydraulic pressure relief, ensure supplemental steering is off.
2. Operate each implements control lever.
3. Turn steering wheel back and forth.
4. Remove hydraulic tank cap.
5. Install hydraulic tank cap.

**CAUTION**

Cap hose ends and plug open ports to prevent contamination.

**NOTE**

Tag hose assemblies before disconnecting to aid in installation.

6. Disconnect hose assembly (7) from steering valve (2).
7. Remove elbow (6) and preformed packing (1). Discard preformed packing.
8. Remove bolt (3), washer (4), and clamp (5).

## STEERING HOSES, LINES, AND FITTINGS: STEERING CONTROL PUMP TO STEERING VALVES REPLACEMENT (DUAL VALVE DESIGN) - CONTINUED 0171 00

***REMOVAL - CONTINUED***

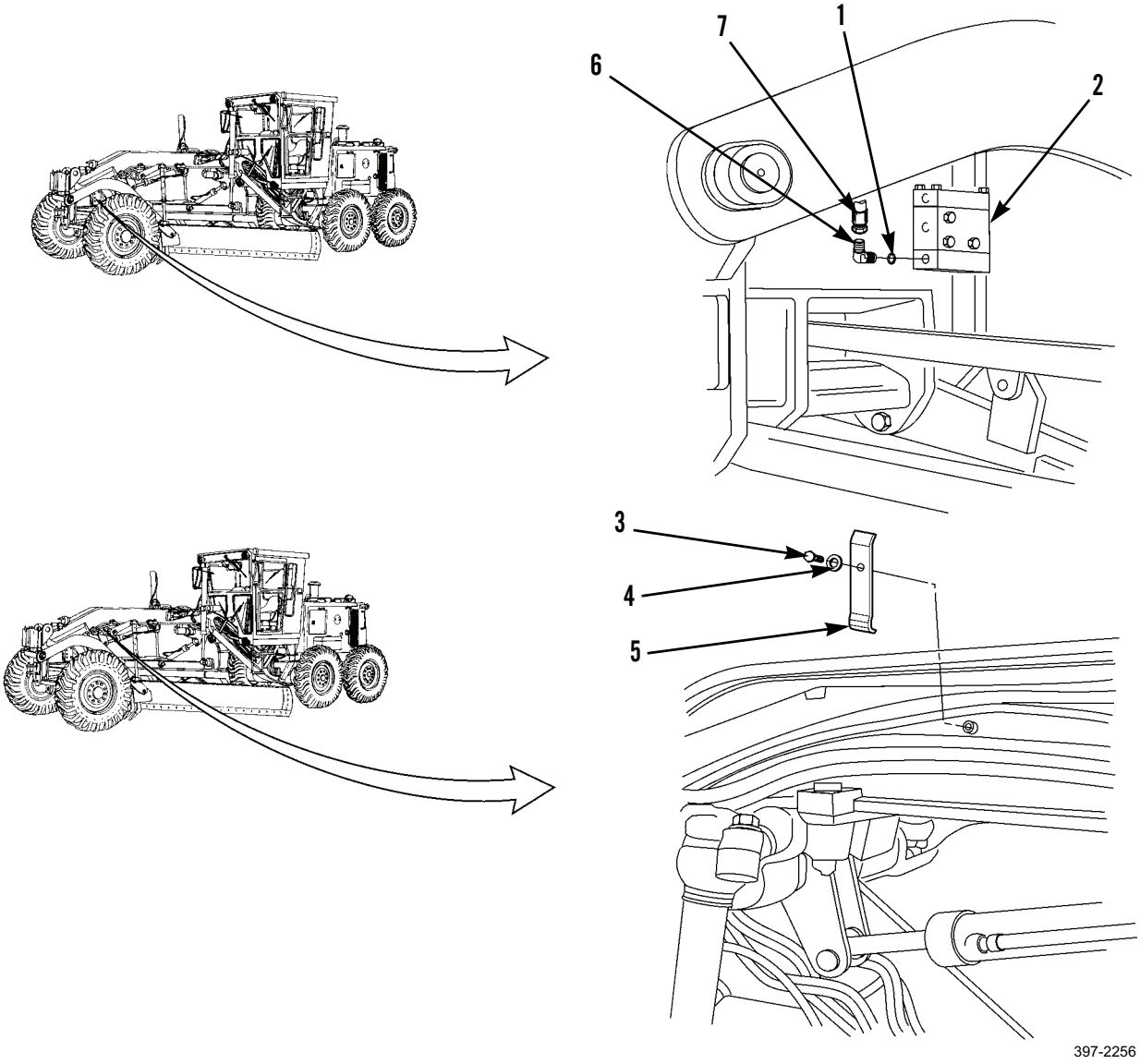

***REMOVAL - CONTINUED***

9. Remove bolt (13), washer (14), and clamp (15).
10. Remove two bolts (11), washers (12), clamp (10), two spacers (9), and clamp (8).

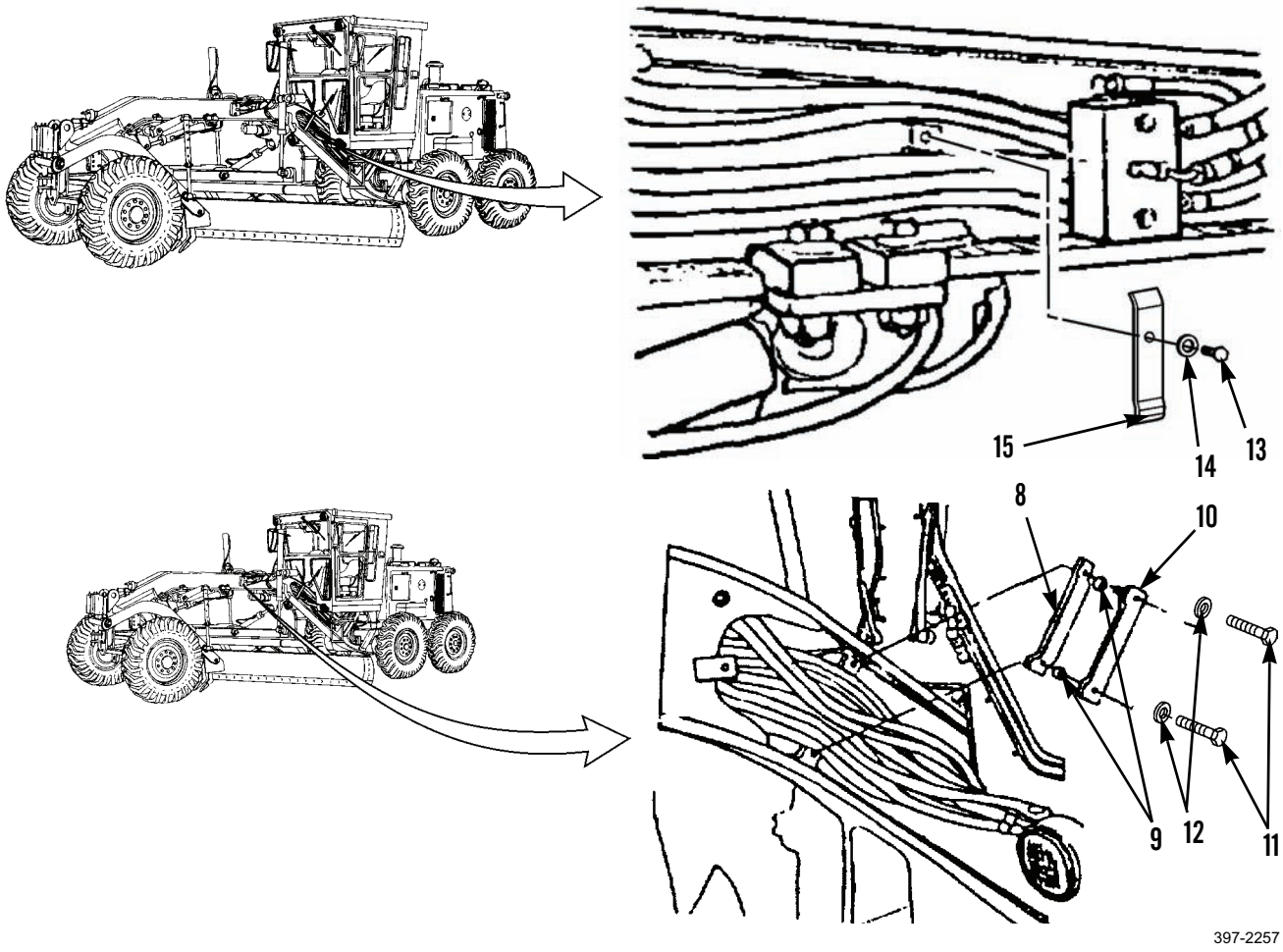

## STEERING HOSES, LINES, AND FITTINGS: STEERING CONTROL PUMP TO STEERING VALVES REPLACEMENT (DUAL VALVE DESIGN) - CONTINUED 0171 00

### *REMOVAL - CONTINUED*

11. Remove bolt (21), washer (20), and clip (19).
12. Remove two nuts (17), washers (16), and clamp (18).

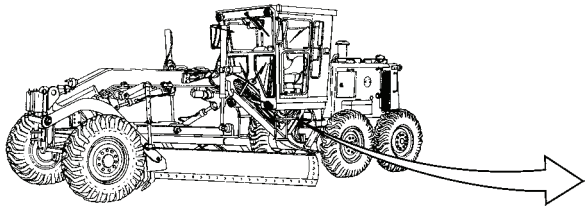

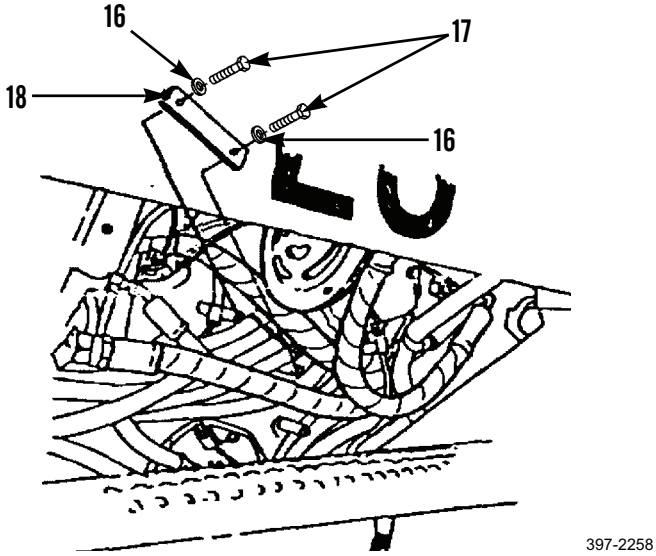


397-2258

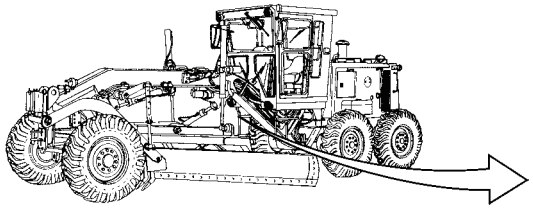

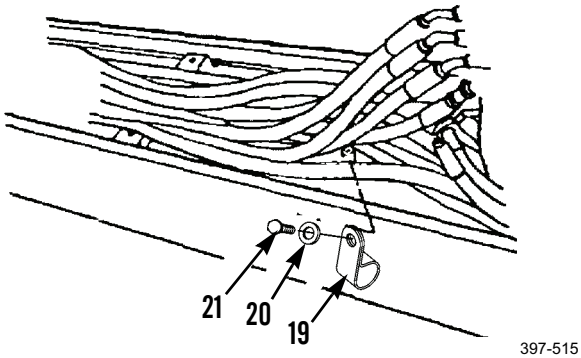


397-515

***REMOVAL - CONTINUED***

13. Remove and discard tie strap (22).

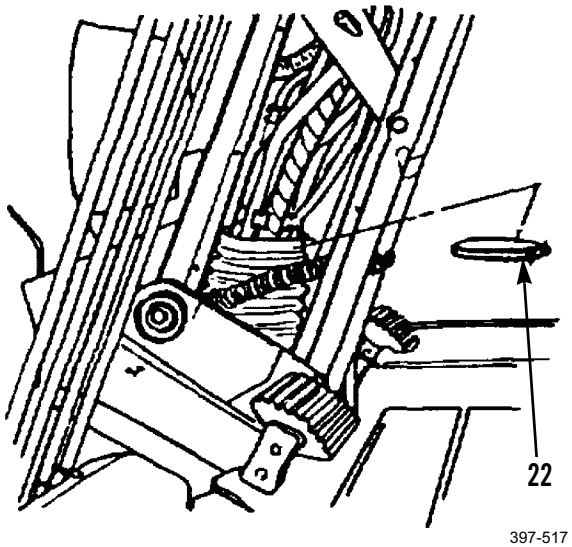

397-517

14. Remove hose assembly (7).
15. Remove elbow (23) and preformed packing (24). Discard preformed packing.

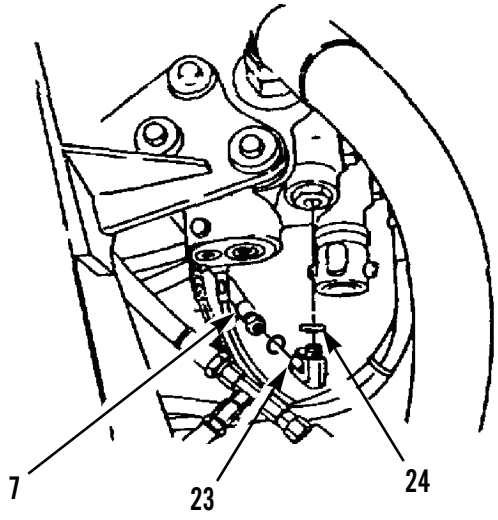

397-518

## STEERING HOSES, LINES, AND FITTINGS: STEERING CONTROL PUMP TO STEERING VALVES REPLACEMENT (DUAL VALVE DESIGN) - CONTINUED 0171 00

### *REMOVAL - CONTINUED*

16. Disconnect hose assembly (25) from steering valve (2).
17. Remove elbow (27) and preformed packing (26). Discard preformed packing.

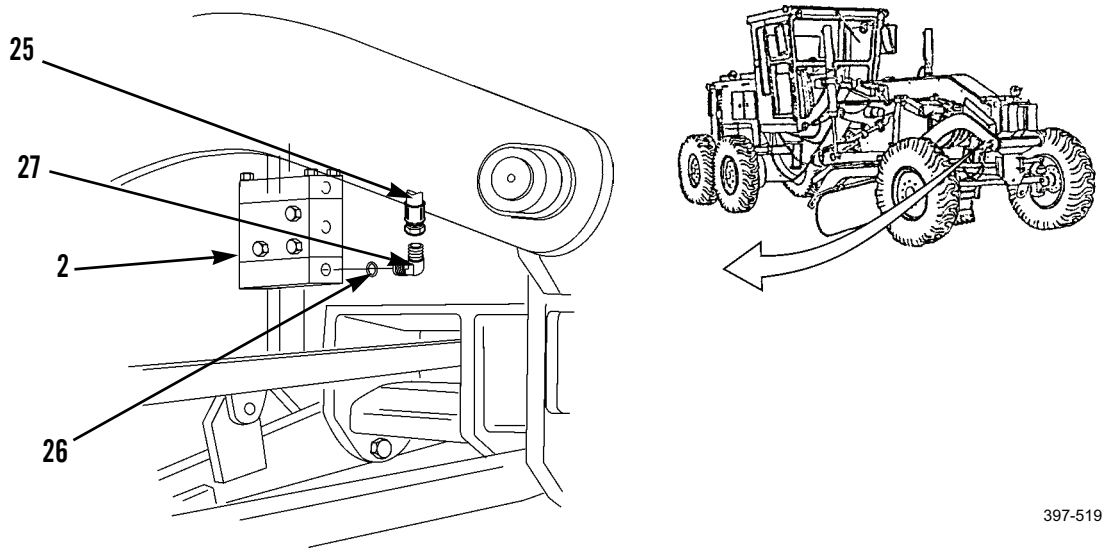


18. Remove bolt (29), washer (30), and clamp (28) from left-front side.

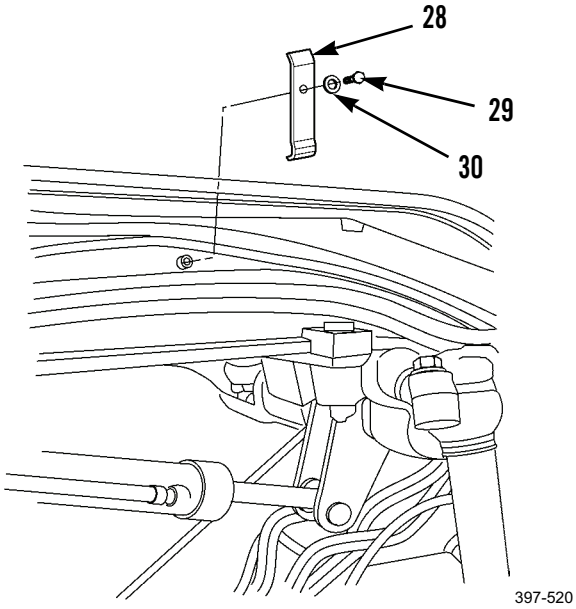

## STEERING HOSES, LINES, AND FITTINGS: STEERING CONTROL PUMP TO STEERING VALVES REPLACEMENT (DUAL VALVE DESIGN) - CONTINUED 0171 00

### *REMOVAL - CONTINUED*

19. Remove bolt (33), washer (32), and clamp (31) from left-rear side.

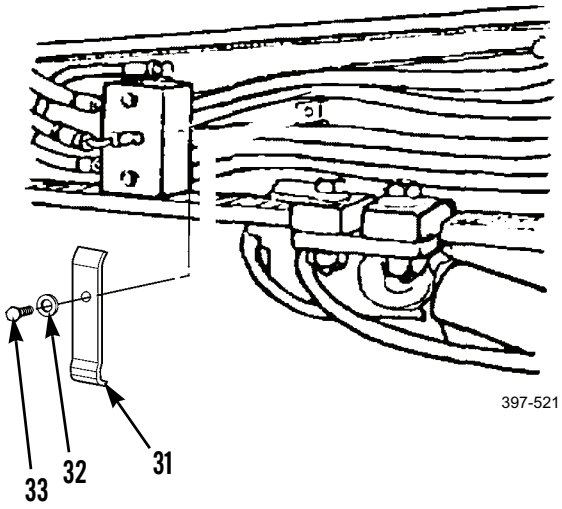


20. Remove two bolts (38), washers (37), clamp (34), two spacers (35), and clamp (36).

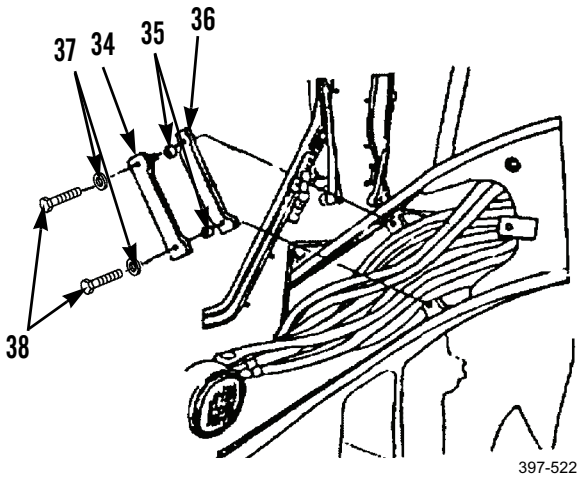

## STEERING HOSES, LINES, AND FITTINGS: STEERING CONTROL PUMP TO STEERING VALVES REPLACEMENT (DUAL VALVE DESIGN) - CONTINUED 0171 00

### *REMOVAL - CONTINUED*

21. Remove two bolts (39), washers (40), and clamp (41).

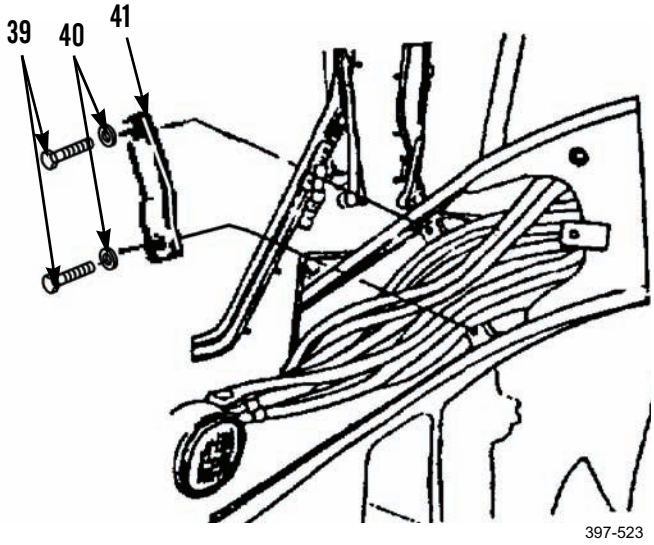


22. Remove two bolts (46), washers (42), clamp (43), two spacers (44), and clamp (45).
23. Remove hose assembly (25).

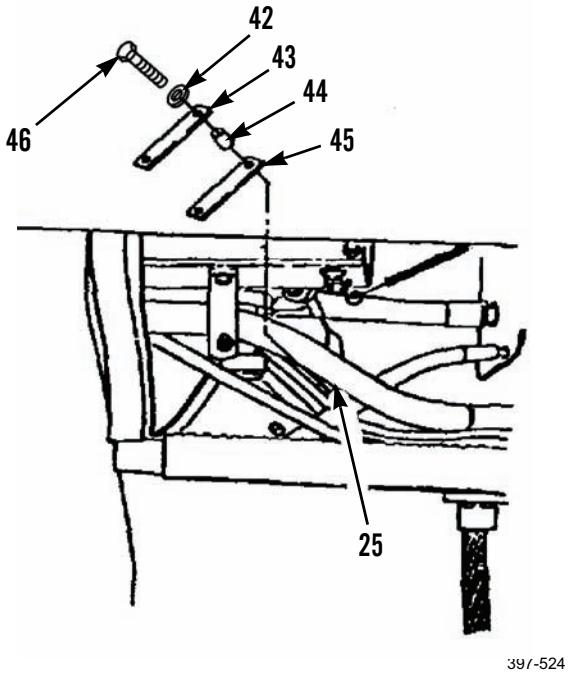

### *CLEANING AND INSPECTION*

Clean and inspect all parts in accordance with WP 0020 00.

### *INSTALLATION*

1. Install new preformed packing (26) and elbow (27) on steering valve (2).
2. Connect hose assembly (25) on elbow (27).

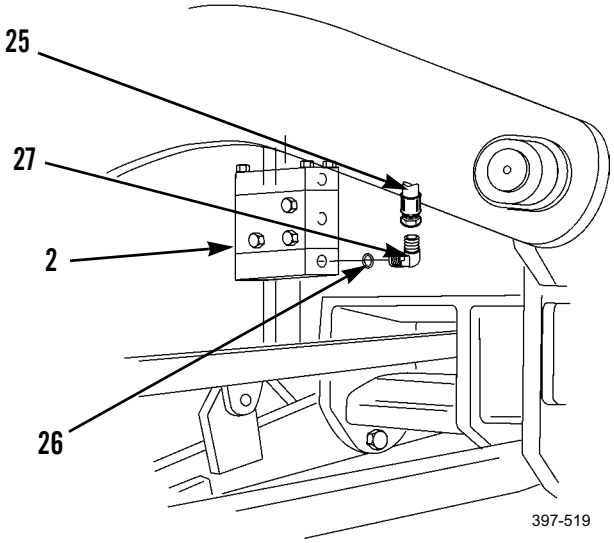


3. Install hose assembly (25).
4. Install clamp (45), two spacers (44), clamp (43), two washers (42), and bolts (46)

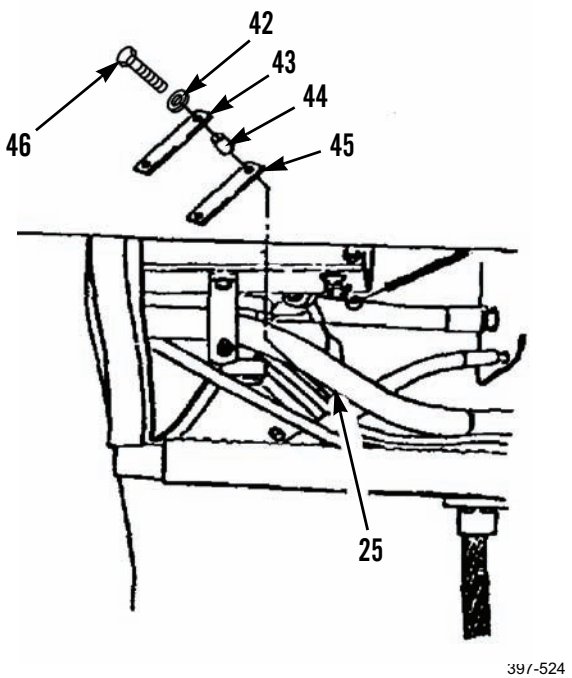

***INSTALLATION - CONTINUED***

5. Install clamp (41), two washers (40), and bolts (39).

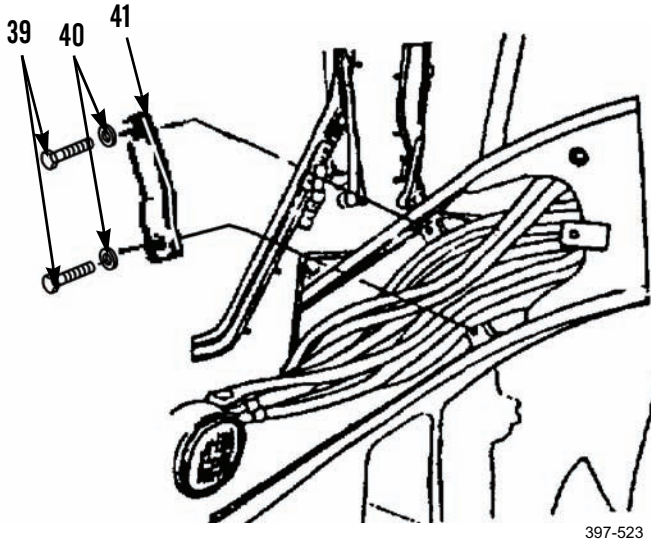


6. Install clamp (36), two spacers (35), clamp (34), two washers (37), and bolts (38).

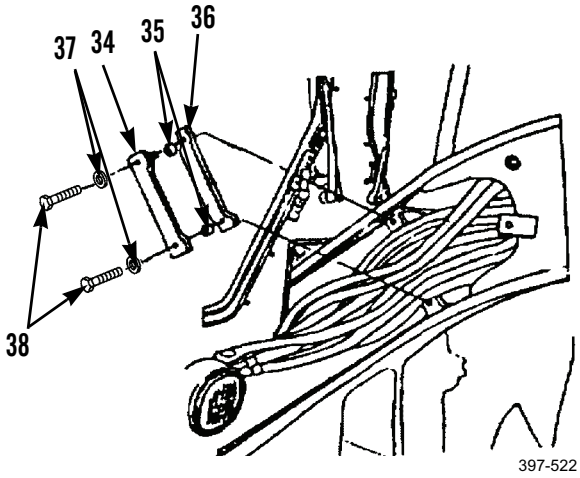

***INSTALLATION - CONTINUED***

7. Install clamp (31), washer (32), and bolt (33) on left-rear side.

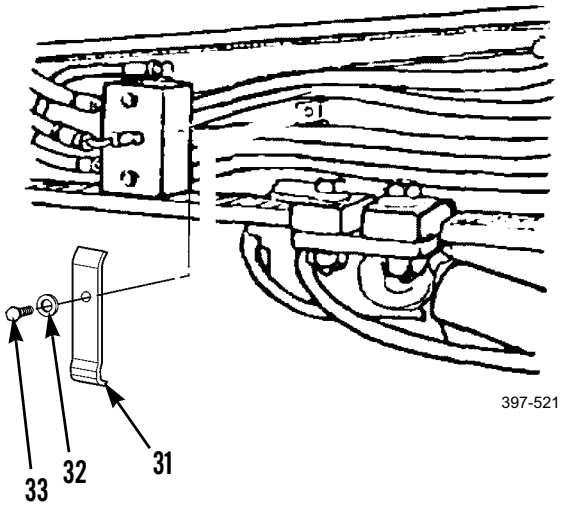


8. Install clamp (28), washer (30), and bolt (29) on left-front side.

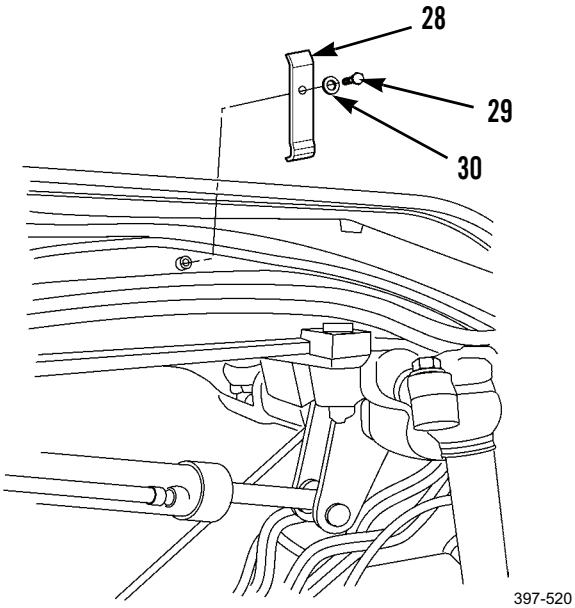

## STEERING HOSES, LINES, AND FITTINGS: STEERING CONTROL PUMP TO STEERING VALVES REPLACEMENT (DUAL VALVE DESIGN) - CONTINUED 0171 00

### *INSTALLATION - CONTINUED*

9. Install new preformed packing (24) and elbow (23).
10. Connect hose assembly (7) to elbow (23).

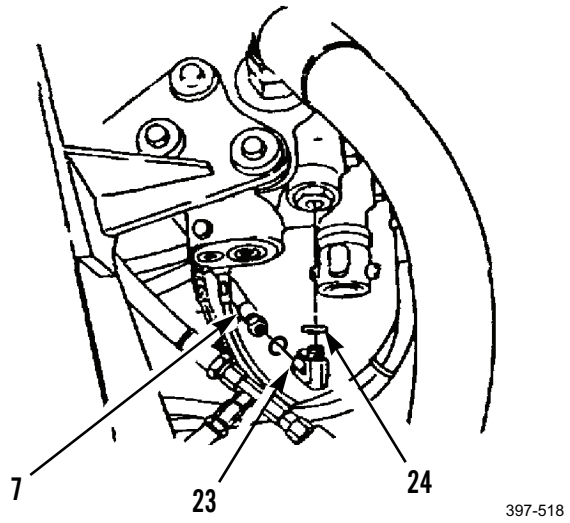


11. Install new preformed packing (1) and elbow (6) on front side of left steering valve.
12. Install hose assembly (7) on elbow (6) on left steering valve (2).

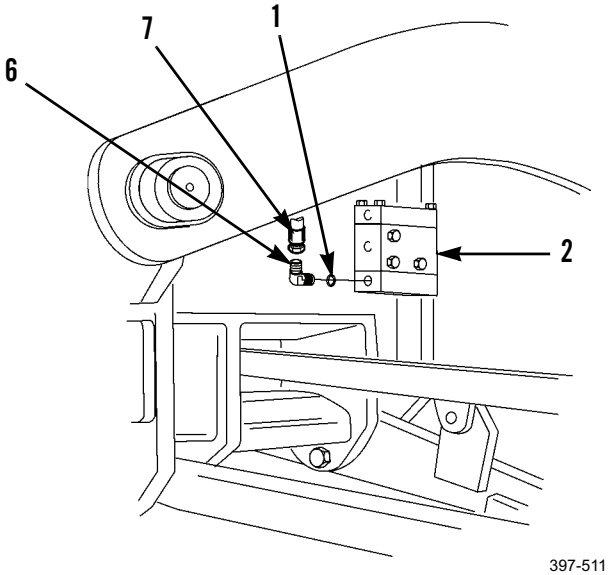

***INSTALLATION - CONTINUED***

13. Install clamp (13), washer (14), and bolt (15) on left-rear side.

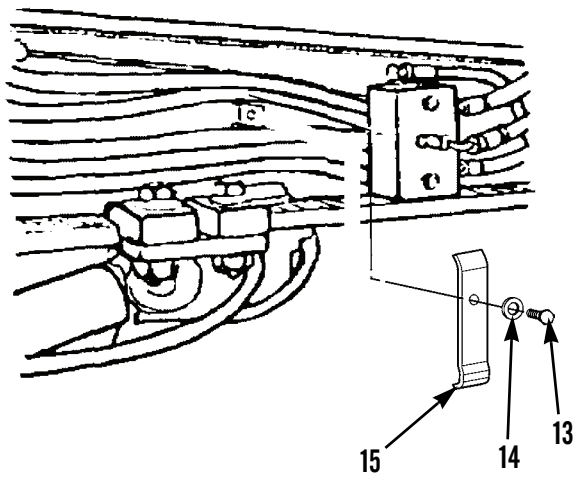

397-513

14. Install clamp (5), washer (4), and bolt (3) on left-front side.

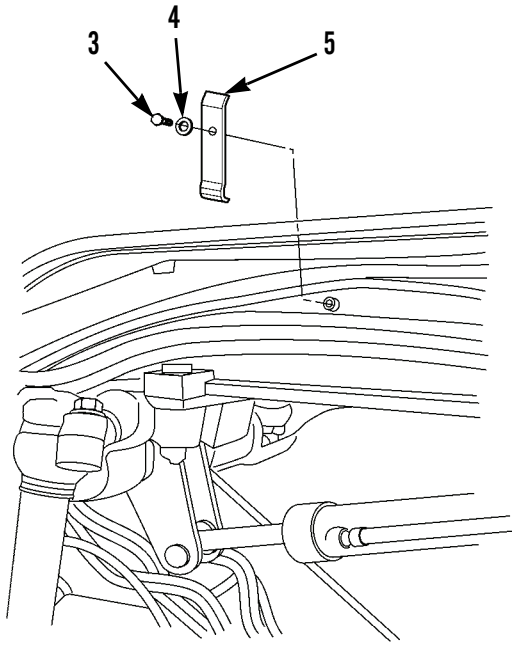

397-512

***INSTALLATION - CONTINUED***

15. Install clamp (8), two spacers (9), clamp (10), two washers (12), and bolts (11).

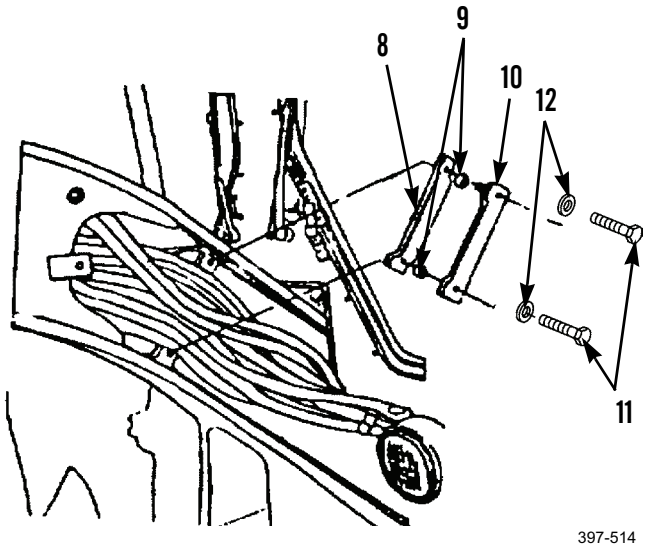


16. Install clip (19), washer (20), and bolt (21).

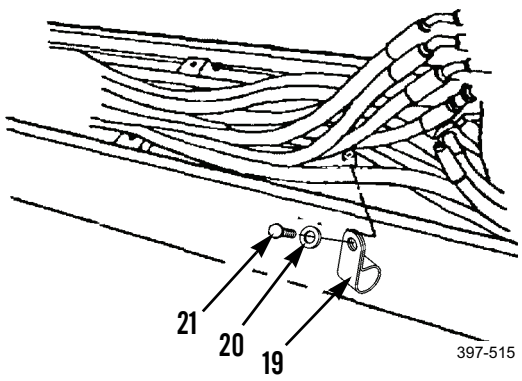

***INSTALLATION - CONTINUED***

17. Install clamp (18), two washers (16), and nuts (17).

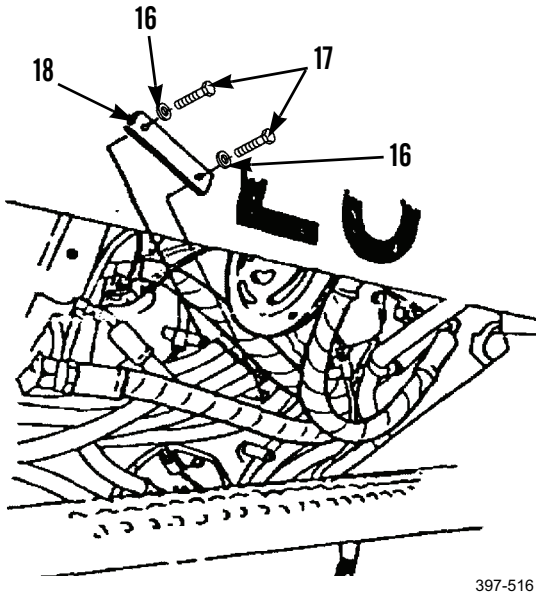


18. Install steering wheel and control pump assembly (WP 0319 00).
19. Install new strap (22) on steering console, inside of cab.

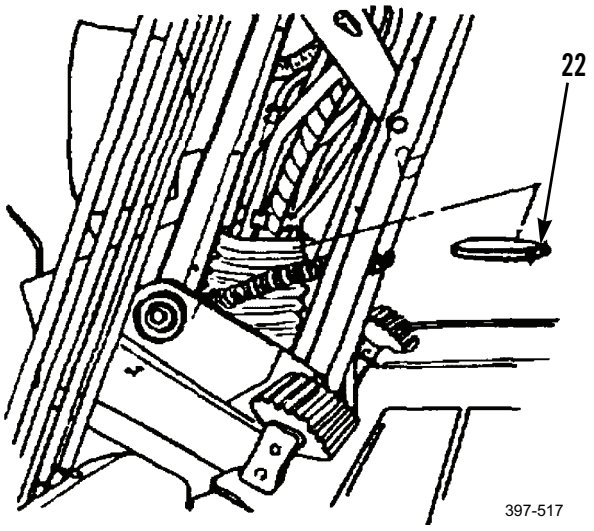


20. Start engine (TM 5-3805-261-10).
21. Turn steering wheel to the right while moving machine slowly forward a few feet.
22. Turn steering wheel to the left while moving machine slowly forward a few feet.
23. Repeat steps 22 and 23 at least five times to bleed air from system.
24. Stop engine.
25. Check for leaks.
26. Install frame covers (WP 0179 00).
27. Refill hydraulic tank to proper level (WP 0216 00).

**END OF WORK PACKAGE**

## STEERING HOSES, LINES, AND FITTINGS: STEERING CONTROL PUMP TO STEERING VALVE REPLACEMENT (SINGLE VALVE DESIGN) 0172 00

### THIS WORK PACKAGE COVERS

Removal, Cleaning and Inspection, Installation

### INITIAL SETUP

**Maintenance Level**

Unit

**Tools and Special Tools**

Tool kit, general mechanic's (Item 89, WP 0348 00)

Shop equipment, common no, 1 (Item 75, WP 0348 00)

**Materials/Parts**

Cap set, protective (Item 7, WP 0349 00)

Rag, wiping (Item 35, WP 0349 00)

Tag, marker (Item 44, WP 0349 00)

Packing, preformed

**References**

WP 0020 00

WP 0216 00

**Equipment Conditions**

Machine parked on level ground (TM 5-3805-261-10)

Parking/emergency brake applied (TM 5-3805-261-10)

Implements lowered to ground (TM 5-3805-261-10)

Engine off (TM 5-3805-261-10)

Battery disconnect switch in OFF position (TM 5-3805-261-10)

Frame covers removed (WP 0179 00)

Steering wheel and control pump assembly removed (WP 0319 00)



**WARNING**





- Do NOT disconnect or remove any hydraulic system line or fitting unless engine is shut down and hydraulic system pressure has been relieved. Tighten all connections before applying pressure. Escaping hydraulic fluid under pressure can penetrate the skin, causing injury to personnel.
- At operating temperature, hydraulic oil is hot. Allow hydraulic oil to cool before disconnecting any hydraulic lines. Failure to follow this warning may cause injury to personnel.
- Lubricating/hydraulic oils, engine coolant, fuel, and other fluids used in the performance of maintenance can be very slippery. Immediately wipe up any spills. Failure to follow this warning may cause injury to personnel.

### *REMOVAL*

1. For hydraulic pressure relief, ensure supplemental steering is off.
2. Operate each implements control lever.
3. Turn steering wheel back and forth.
4. Remove hydraulic tank cap.
5. Install hydraulic tank cap.

## STEERING HOSES, LINES, AND FITTINGS: STEERING CONTROL PUMP TO STEERING VALVE REPLACEMENT (SINGLE VALVE DESIGN) - CONTINUED 0172 00

***REMOVAL - CONTINUED***

### CAUTION

Cap hose ends and plug open ports to prevent contamination.

### NOTE

- This procedure covers replacement of bottom-right hose assembly on steering valve. Follow these instructions for the bottom-left hose assembly.
- Tag hose assemblies before disconnecting to aid in installation.

6. Disconnect hose assembly (1) from steering valve (2).
7. Remove elbow (3) and preformed packing (4). Discard preformed packing.
8. Remove bolt (5), washer (6), and clamp (7).

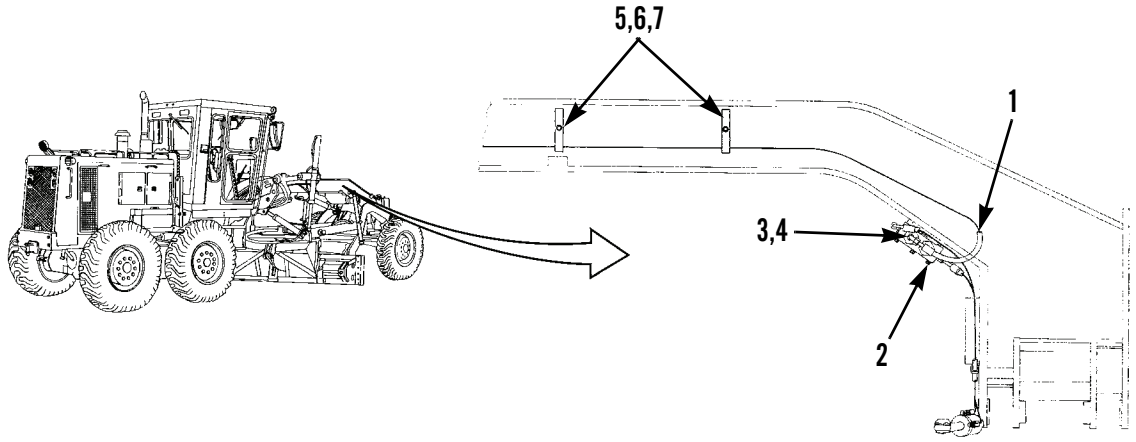


397-2263

9. Remove bolt (8), washer (9), and clamp (10).
10. Remove bolt (11), washer (12), and clip (13).
11. Remove hose (14), elbow (16), and two seals (15).

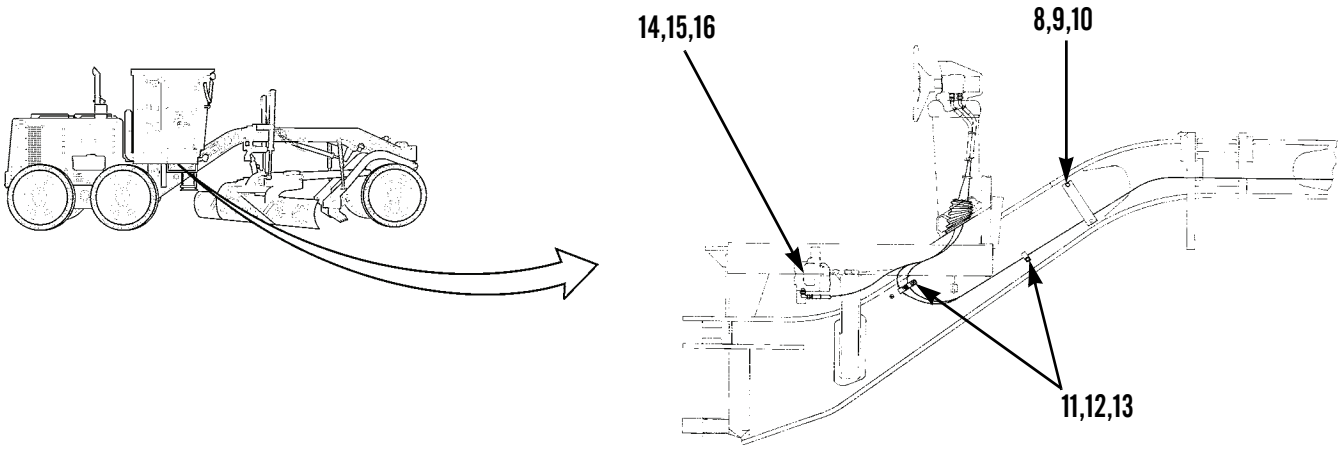


397-2264

### *REMOVAL - CONTINUED*

12. Remove and discard tie strap (17).

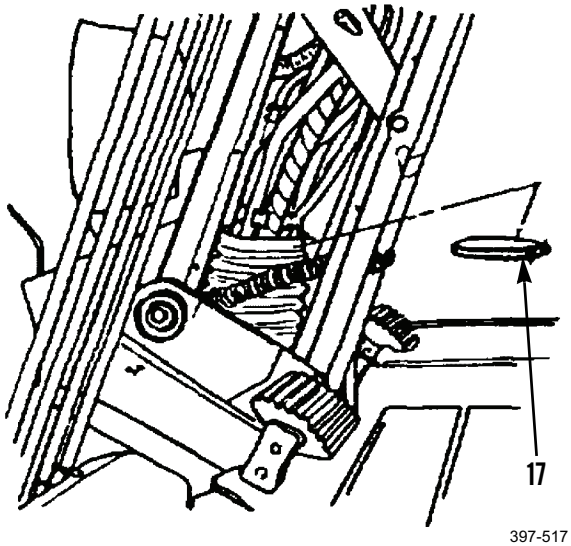

397-517

13. Remove hose assembly (20).
14. Remove elbow (18) and two preformed packings (19). Discard preformed packing.

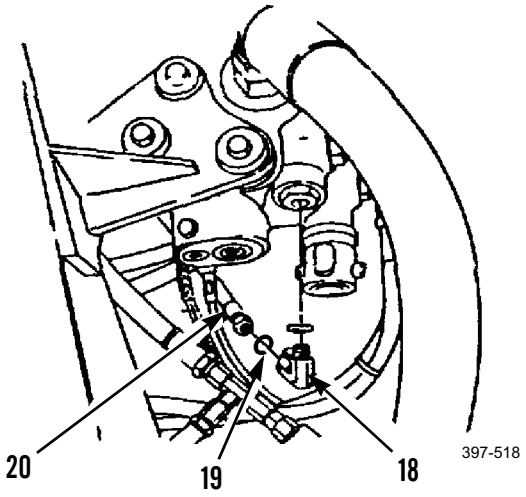

397-518

### *CLEANING AND INSPECTION*

Clean and inspect all parts in accordance with WP 0020 00.

## STEERING HOSES, LINES, AND FITTINGS: STEERING CONTROL PUMP TO STEERING VALVE REPLACEMENT (SINGLE VALVE DESIGN) - CONTINUED 0172 00

### *INSTALLATION*

1. Install two new preformed packings (19) and elbow (18).
2. Connect hose assembly (20) to elbow (18).
3. Install hose assembly (20).

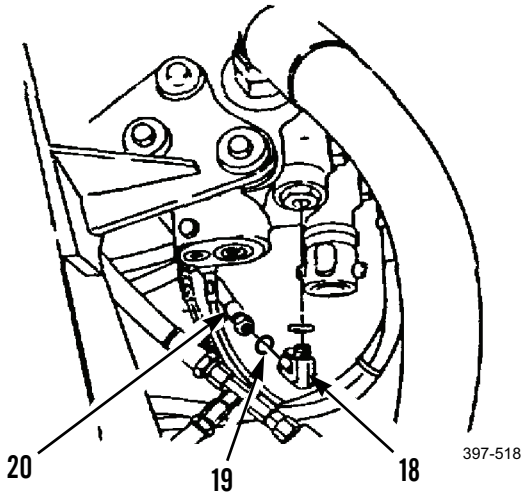


4. Install new tie strap (17).

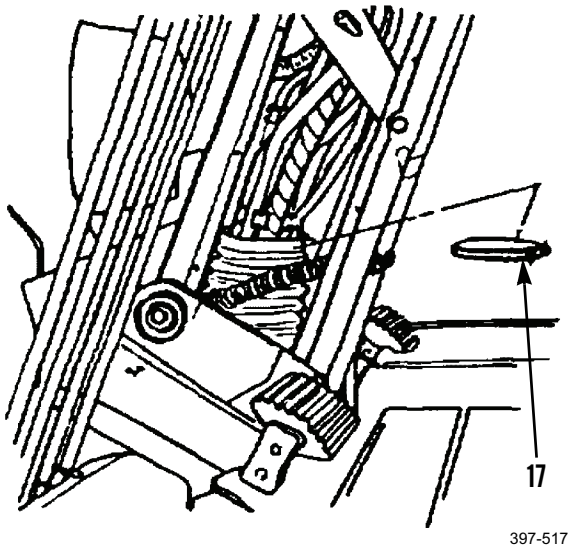

## STEERING HOSES, LINES, AND FITTINGS: STEERING CONTROL PUMP TO STEERING VALVE REPLACEMENT (SINGLE VALVE DESIGN) - CONTINUED 0172 00

### *INSTALLATION - CONTINUED*

5. Install two seals (15), elbow (16), and hose (14).
6. Install clip (13), washer (12), and bolt (11).
7. Install clamp (10), washer (9), and bolt (8).

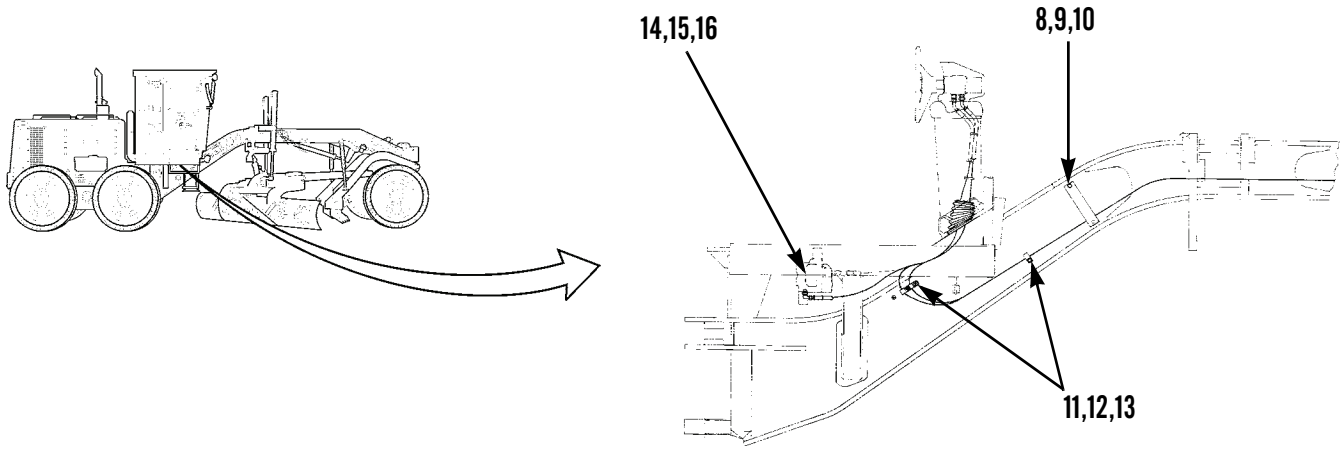


397-2264

8. Install clamp (7), washer (6), and bolt (5).
9. Install elbow (3) and new preformed packing (4) on steering valve (2).
10. Connect hose assembly(1) on steering valve (2).

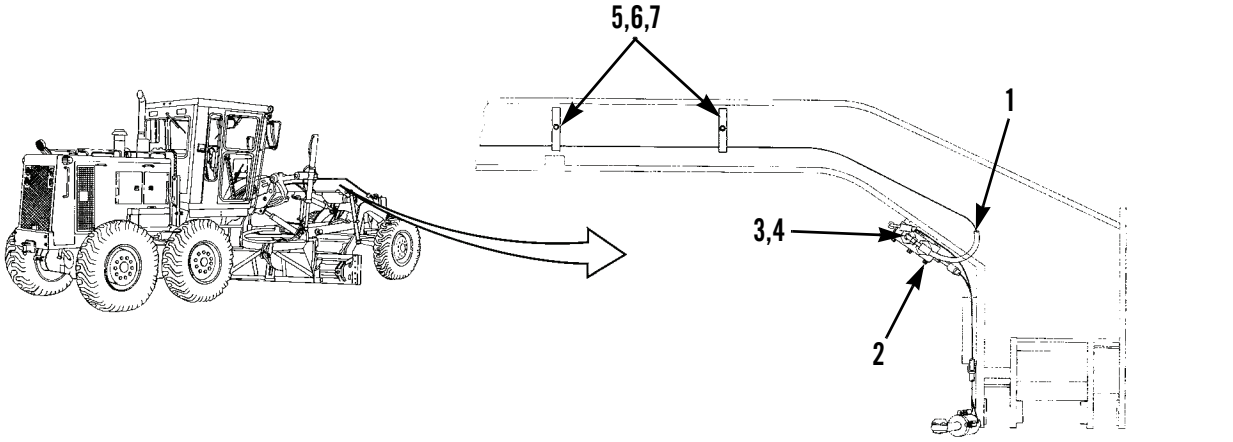


397-2263

***INSTALLATION - CONTINUED***

11. Install steering wheel and control pump assembly (WP 0319 00).
12. Start engine (TM 5-3805-261-10).
13. Turn steering wheel to the right while moving machine slowly forward a few feet.
14. Turn steering wheel to the left while moving machine slowly forward a few feet.
15. Repeat steps 7 and 8 at least five times to bleed air from system.
16. Stop engine.
17. Check for leaks.
18. Install steering wheel and control pump assembly (WP 0319 00).
19. Install frame covers (WP 0179 00).
20. Refill hydraulic tank to proper level (WP 0216 00).

**END OF WORK PACKAGE**

## SUPPLEMENTAL STEERING HOSES, LINES, AND FITTINGS REPLACEMENT 0173 00

### THIS WORK PACKAGE COVERS

Removal, Cleaning and Inspection, Installation

### INITIAL SETUP

**Maintenance Level**

Unit

**Tools and Special Tools**

Tool kit, general mechanic's (Item 89, WP 0348 00)

Shop equipment, common no. 1 (Item 75, WP 0348 00)

**Materials/Parts**

Cap set, protective (Item 7, WP 0349 00)

Rag, wiping (Item 35, WP 0349 00)

Tag, marker (Item 44, WP 0349 00)

O-ring (5)

Packing, preformed (7)

**References**

WP 0020 00

WP 0216 00

**Equipment Conditions**

Machine parked on level ground (TM 5-3805-261-10)

Parking/emergency brake applied (TM 5-3805-261-10)

Implements lowered to ground (TM 5-3805-261-10)

Engine off (TM 5-3805-261-10)

Battery disconnect switch in OFF position (TM 5-3805-261-10)



**WARNING**





- Do NOT disconnect or remove any hydraulic system line or fitting unless engine is shut down and hydraulic system pressure has been relieved. Tighten all connections before applying pressure. Escaping hydraulic fluid under pressure can penetrate the skin, causing injury to personnel.
- At operating temperature, hydraulic oil is hot. Allow hydraulic oil to cool before disconnecting any hydraulic lines. Failure to follow this warning may cause injury to personnel.
- Lubricating/hydraulic oils, engine coolant, fuel, and other fluids used in the performance of maintenance can be very slippery. Immediately wipe up any spills. Failure to follow this warning may cause injury to personnel.

### *REMOVAL*

1. For hydraulic pressure relief, ensure supplemental steering is off.
2. Operate each implements control lever.
3. Turn steering wheel back and forth.
4. Remove hydraulic tank cap.
5. Install hydraulic tank cap.

***REMOVAL - CONTINUED***

**CAUTION**

Cap hose ends to prevent contamination.

**NOTE**

Tag hose assemblies before disconnecting to aid in installation.

6. Disconnect hose assembly (4).
7. Remove elbow (3), connector (2), and preformed packing (1). Discard preformed packing.

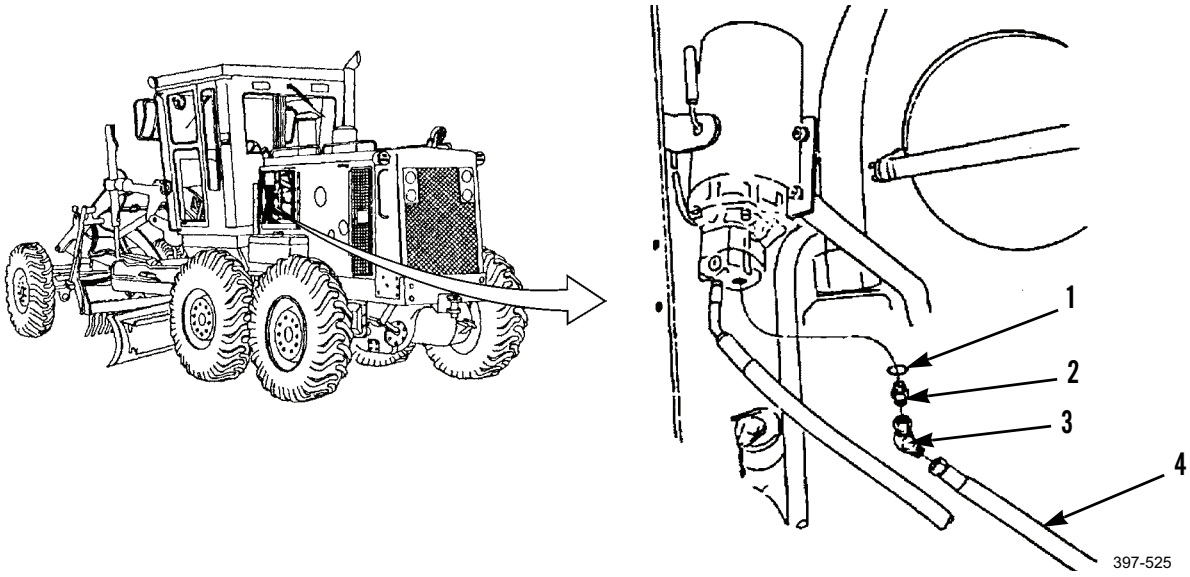


8. Disconnect hose assembly (8).
9. Remove connector (6), preformed packing (5), and O-ring (7). Discard preformed packing and O-ring.

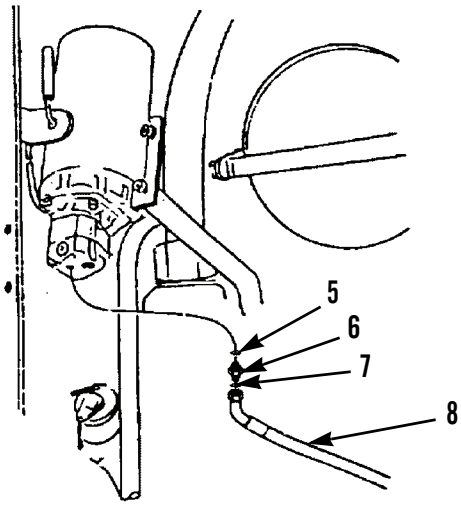

## SUPPLEMENTAL STEERING HOSES, LINES, AND FITTINGS REPLACEMENT - CONTINUED 0173 00

### *REMOVAL - CONTINUED*

10. Remove bolt (9), washer (10), and clip (11).

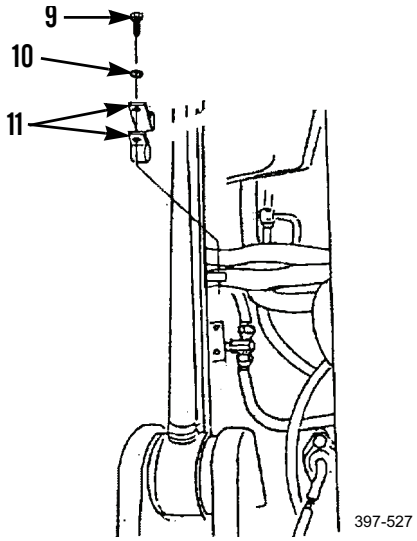


11. Remove nut (13), washer (12), and clip (14).
12. Disconnect hose assembly (4) from bottom of hydraulic tank.
13. Remove elbow (17), connector (16), and preformed packing (15). Discard preformed packing.

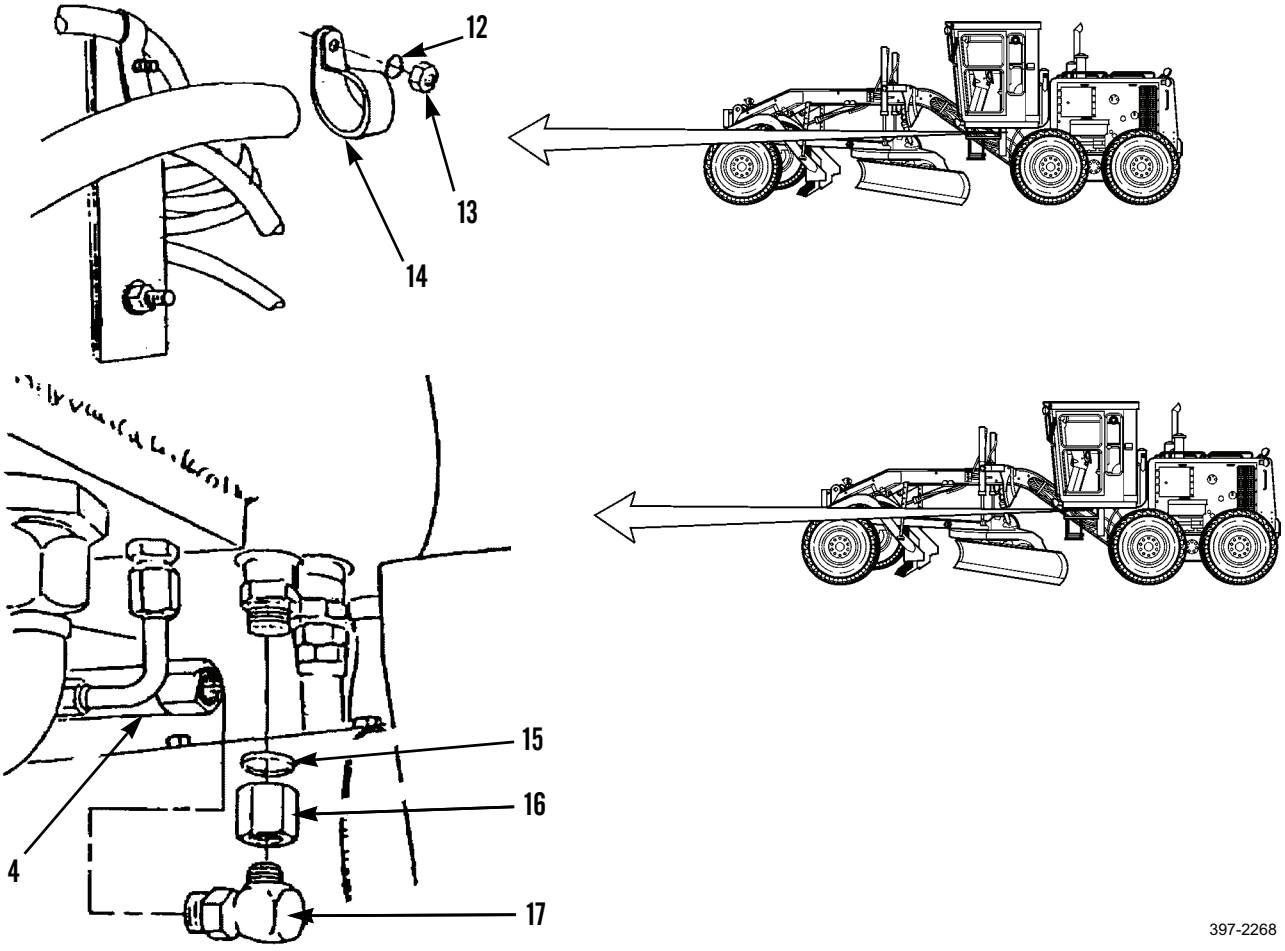

***REMOVAL - CONTINUED***

14. Remove nut (18), washer (19), and clip (20).

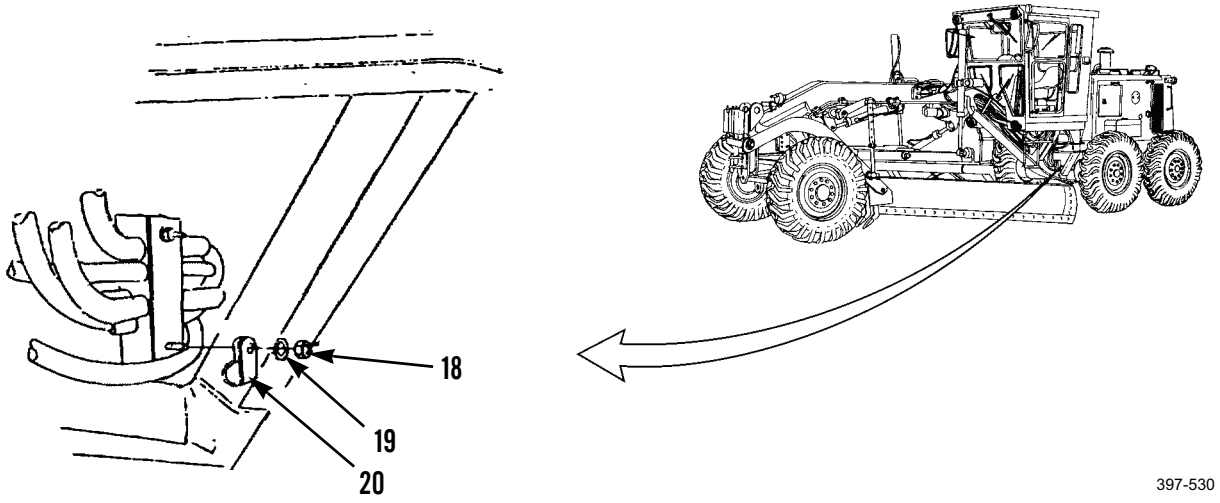


15. Disconnect hose assembly (7) and O-ring (23) from the bottom of tee (22). Discard O-ring.

16. Disconnect hose assembly (21) and O-ring (23) from side of tee (22). Discard O-ring.

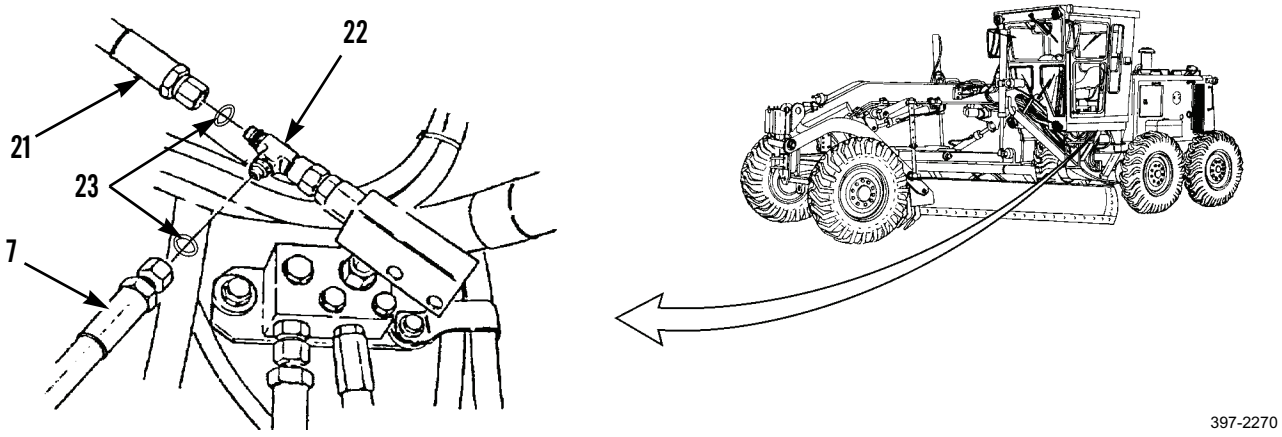


17. Remove tee (22), adapter (24), and preformed packing (25). Discard preformed packing.

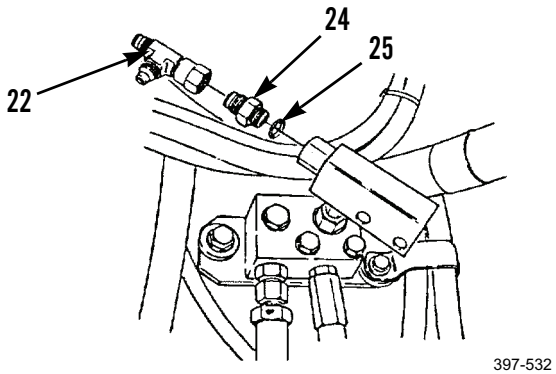

***REMOVAL - CONTINUED***

18. Remove relief valve (26), union (27), preformed packing (28), adapter (29), and preformed packing (30). Discard preformed packings.

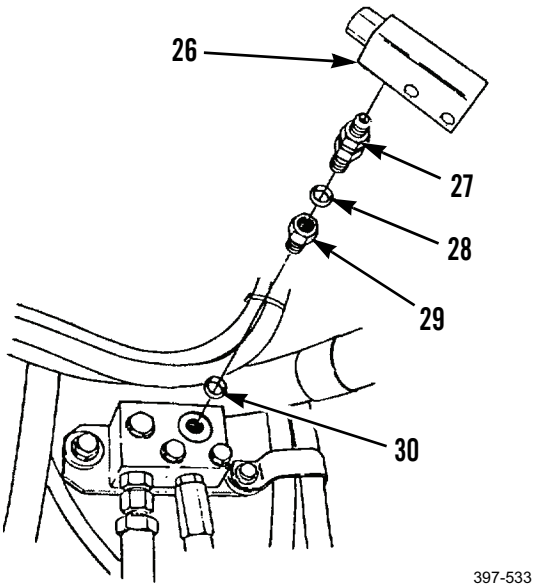


19. Disconnect hose assembly (31) and O-ring (34) from tee (32). Discard O-ring.
20. Disconnect hose assembly (33) from tee (32).

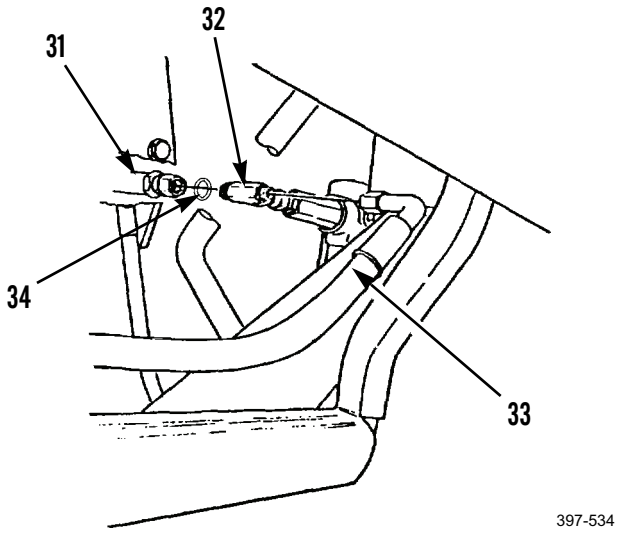


21. Remove tee (32), O-ring (39), valve (35), preformed packing (38), and adapter (37) from combination valve (36). Discard preformed packing and O-ring.

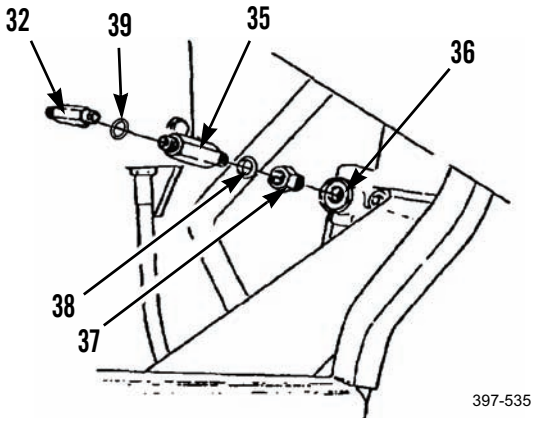

### *CLEANING AND INSPECTION*

Clean all parts in accordance with WP 0020 00.

### *INSTALLATION*

1. Install adapter (37), new preformed packing (38), valve (35), new O-ring (39), and tee (32) on combination valve (36).

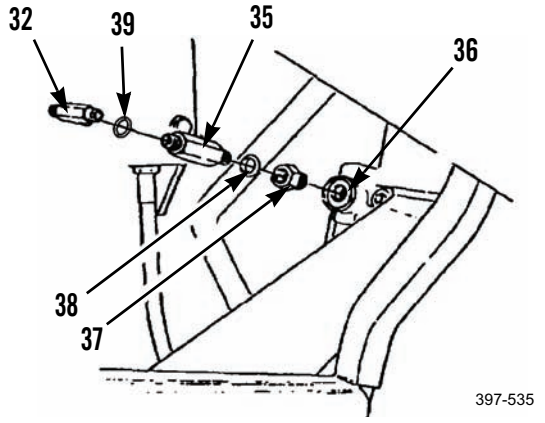


2. Connect hose assembly (33) to tee (32).
3. Install new O-ring (34) to tee (32) and connect hose assembly (31).

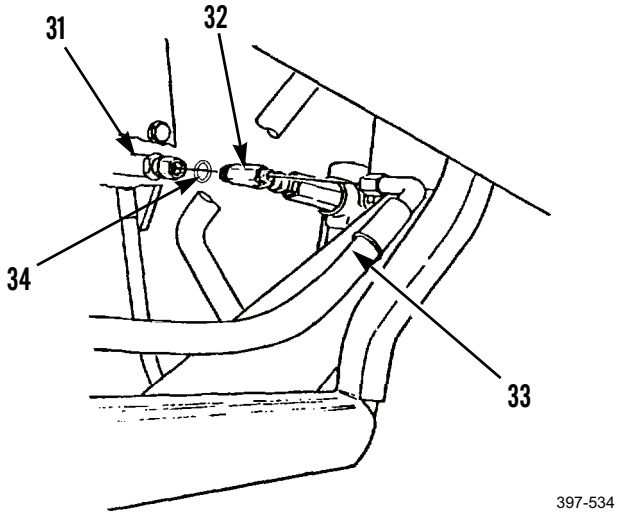


4. Install new preformed packing (30), adapter (29), new preformed packing (28), union (27), and relief valve (26).

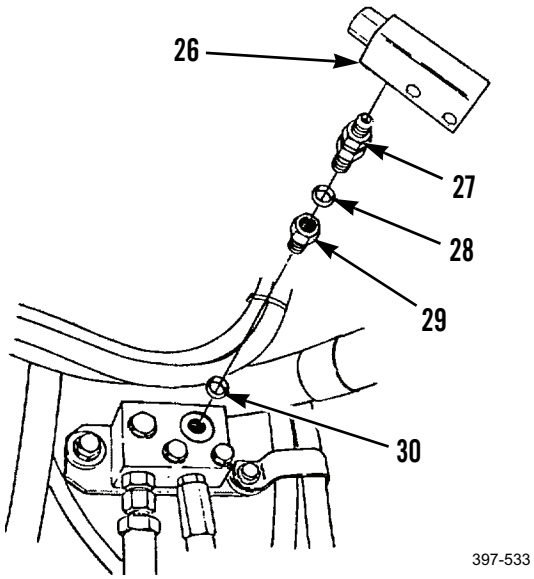

***INSTALLATION - CONTINUED***

5. Install new preformed packing (25), adapter (24), and tee (22).

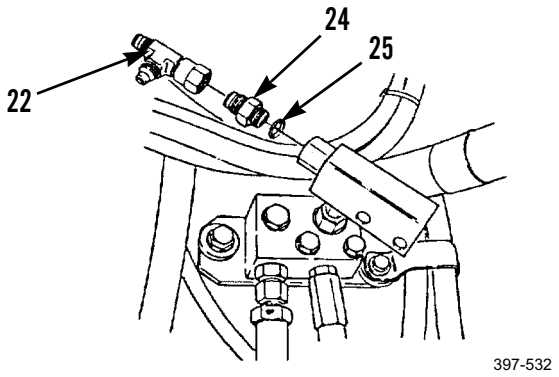


6. Connect hose assembly (21) and install new O-ring (23) to side of tee (22).
7. Install new O-ring (23) to bottom of tee (22) and connect hose assembly (7).

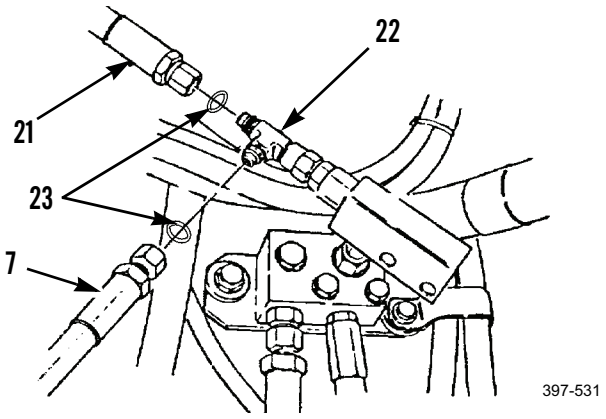


8. Install clip (19), washer (18), and nut (20).

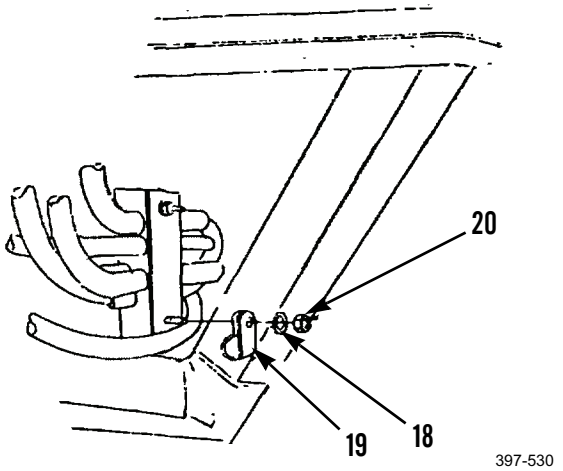

***INSTALLATION - CONTINUED***

9. Install new preformed packing (14), connector (15), and elbow (16).
10. Connect hose assembly (4) to bottom of hydraulic tank.

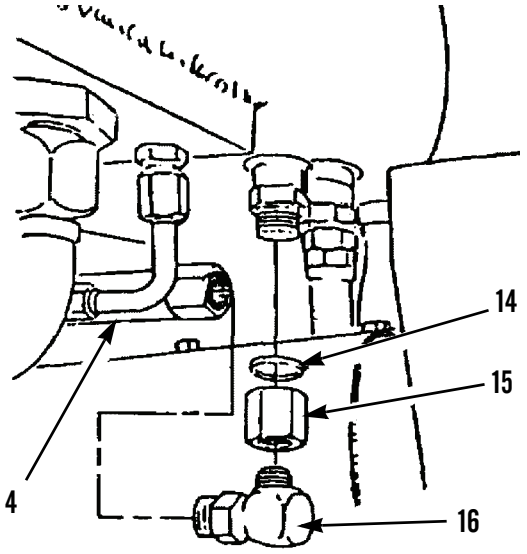

397-529

11. Install clip (14), washer (12), and nut (13).

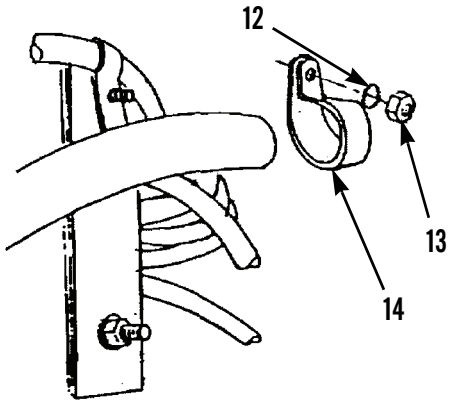

397-528

***INSTALLATION - CONTINUED***

12. Install clip (11), washer (10), and bolt (9).

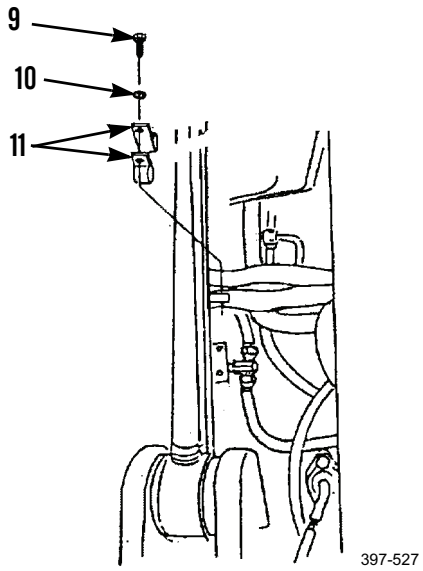


13. Install new preformed packing (5), new O-ring (7), and connector (6).
14. Connect hose assembly (8).

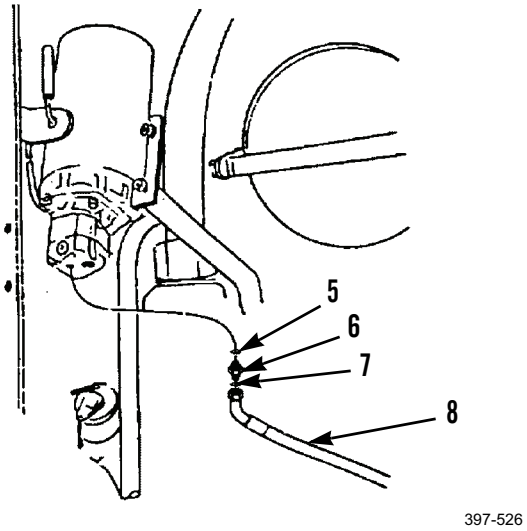

***INSTALLATION - CONTINUED***

15. Install new preformed packing (1), connector (2), and elbow (3).
16. Connect hose assembly (4) to supplemental steering pump.
17. Start engine (TM 5-3805-261-10).
18. Stop engine
19. Check for leaks.
20. Refill hydraulic tank to proper level (WP 0216 00).

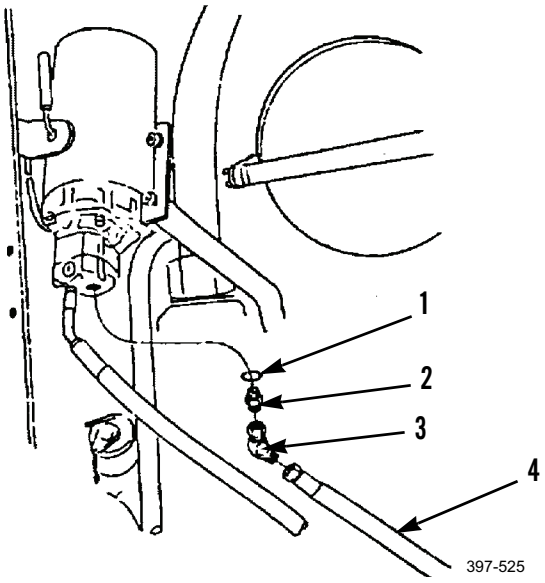


**END OF WORK PACKAGE**

## SUPPLEMENTAL STEERING CHECK VALVE REPLACEMENT 0174 00

### THIS WORK PACKAGE COVERS

Removal, Cleaning and Inspection, Installation

### INITIAL SETUP

**Maintenance Level**

Unit

**Tools and Special Tools**

Tool kit, general mechanic's (Item 89, WP 0348 00)

Shop equipment, field maintenance (Item 74, WP 0348 00)

**Materials/Parts**

Cap set, protective (Item 7, WP 0349 00)

Oil, lubricating (Item 26, 27, or 30, WP 0349 00)

Rag, wiping (Item 35, WP 0349 00)

Tag, marker (Item 44, WP 0349 00)

O-ring (2)

**References**

WP 0020 00

WP 0216 00

**Equipment Conditions**

Machine parked on level ground (TM 5-3805-261-10)

Parking/emergency brake applied (TM 5-3805-261-10)

Implements lowered to ground (TM 5-3805-261-10)

Engine off (TM 5-3805-261-10)

Battery disconnect switch in OFF position (TM 5-3805-261-10)

### *REMOVAL*

1. Remove three bolts (2) and washers (1).

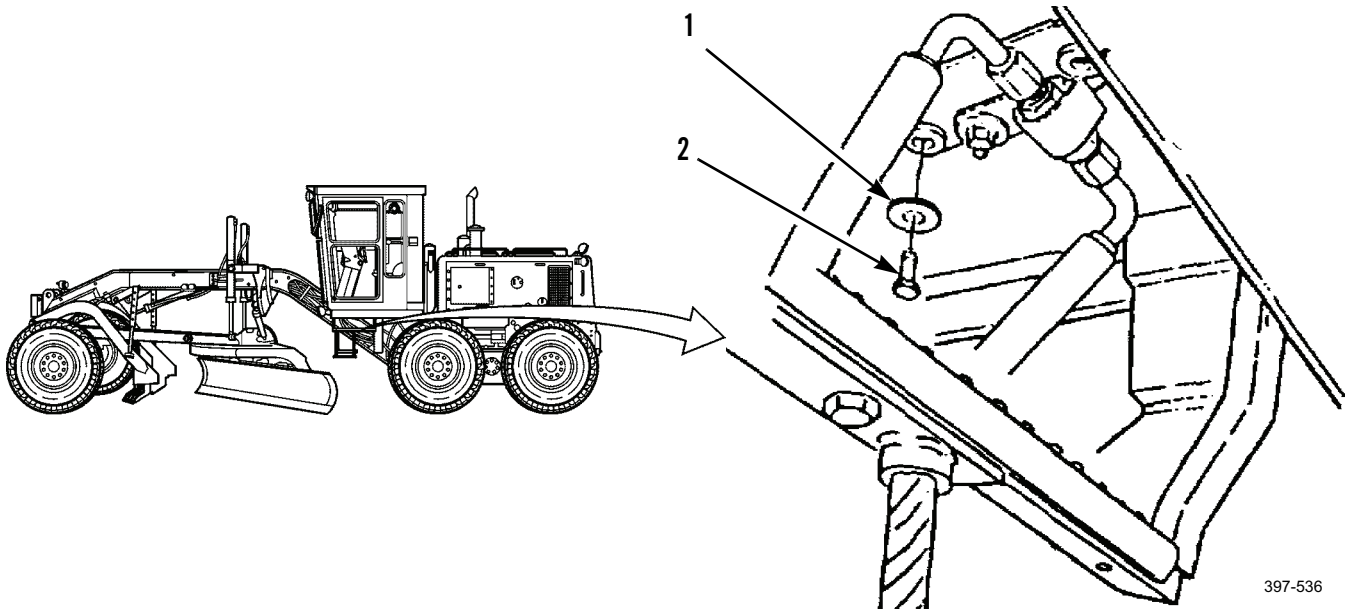

### *REMOVAL - CONTINUED*

2. Remove nut (8), washers (9 and 10), clip (7), bracket (6), bolt (4), washer (5), and plate (3).

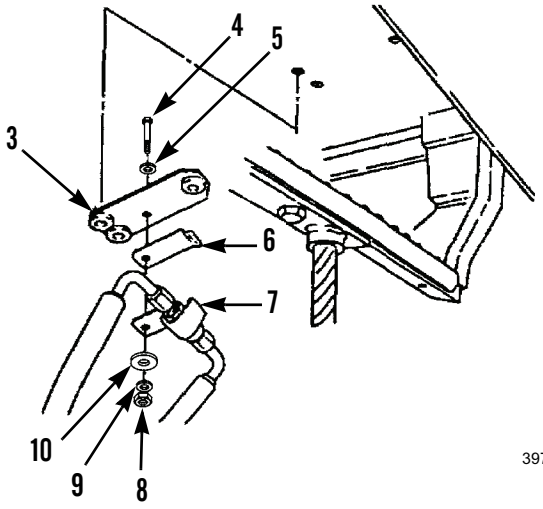

397-537

**CAUTION**

Cap hose ends and plug open ports to prevent contamination.

**NOTE**

Tag hose assemblies before disconnecting to aid in installation.

3. Disconnect hose assemblies (11 and 12) and remove O-rings (13) while holding body (14). Discard O-rings.

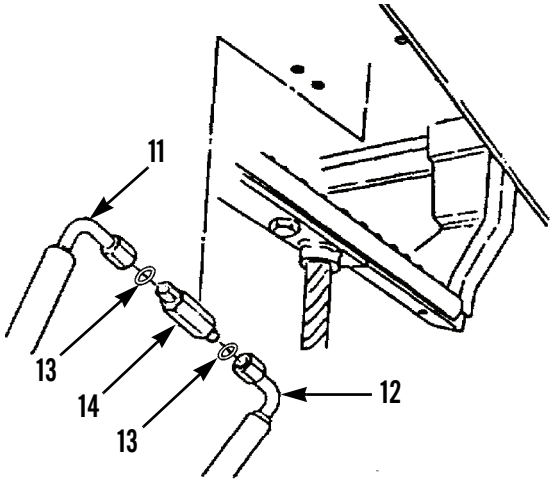

397-538

### *CLEANING AND INSPECTION*

Clean and inspect all parts in accordance with WP 0020 00.

### *INSTALLATION*

1. Holding body (14), connect hose assemblies (11 and 12), and install new O-rings (13) so that adapter end of valve faces forward on machine.
2. Install plate (3), washer (5), bolt (4), bracket (6), clip (7), washers (9 and 10), and nut (8) so that clip hooks over bracket.
3. Install three washers (1) and bolts (2).

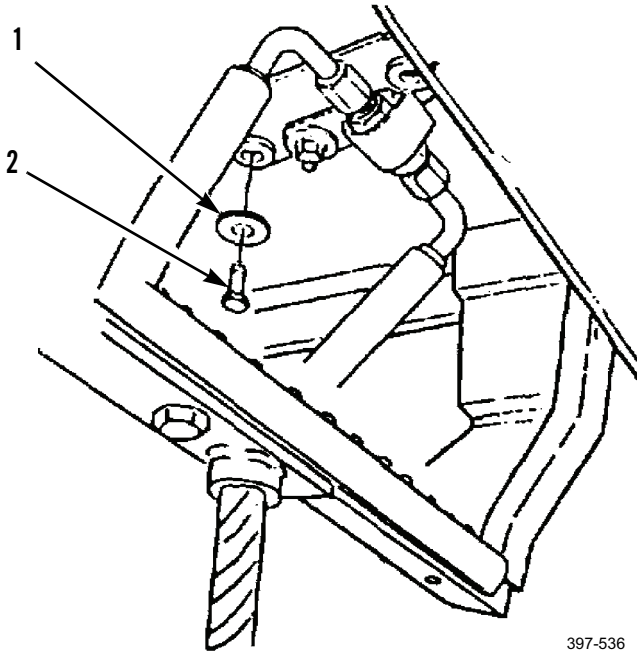


4. Turn battery disconnect switch to ON position and start engine (TM 5-3805-261-10).
5. Turn engine off.
6. Check for leaks.
7. Refill hydraulic tank to proper level (WP 0216 00).

**END OF WORK PACKAGE**

## REMOTE CONTROL REPAIR (TYPE II MACHINE) 0175 00

### THIS WORK PACKAGE COVERS

Disassembly, Cleaning and Inspection, Assembly

### INITIAL SETUP

**Maintenance Level**

Unit

**Tools and Special Tools**

Tool kit, general mechanic's (Item 89, WP 0348 00)

Shop equipment, common no. 1 (Item 75, WP 0348 00)

**Materials/Parts**

Cap set, protective (Item 7, WP 0349 00)

Rag, wiping (Item 35, WP 0349 00)

Tag, marker (Item 44, WP 0349 00)

Packing, preformed (4)

**References**

WP 0020 00

**Equipment Conditions**

Machine parked on level ground (TM 5-3805-261-10)

Parking/emergency brake applied (TM 5-3805-261-10)

Implements lowered to ground (TM 5-3805-261-10)

Engine off (TM 5-3805-261-10)

Battery disconnect switch in OFF position (TM 5-3805-261-10)

Remote control removed (TM 5-3805-261-10)

***DISASSEMBLY***

## CAUTION

Cap hose and tube ends and plug all open fuel ports to prevent contamination.

## NOTE

Tag hose and tube assemblies and wires before disconnecting to aid in installation.

1. Disconnect hoses (1, 2, 3, and 4) from elbows (5, 7, 9, and 11).
2. Open cover (15).
3. Remove line fittings from elbows inside remote control unit (13).
4. Remove elbows (5, 7, 9, and 11) and preformed packings (6, 8, 10, and 12) from remote control unit (13). Discard preformed packings.
5. Tag and disconnect wiring inside remote control unit (13). Disconnect wiring harness (14) at fitting and remove wiring harness from remote control unit.

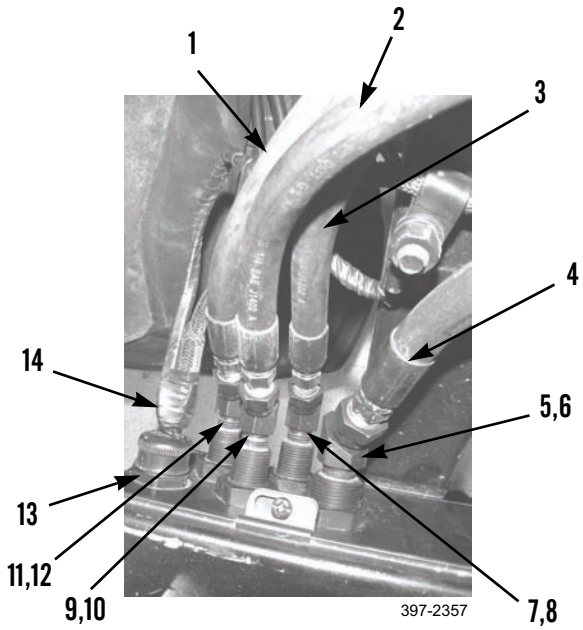


6. Loosen jamnuts securing cable assemblies (17, 19, and 20) to remote control unit (13) and remove cable assemblies.
7. Remove steering valve (23) by removing nuts (22 and 24), wire (21), and disconnecting tubes ends (25, 26, and 33).
8. Remove differential lock switch (18) by disconnecting wires (27, 28, 29, and 30) and removing switch from cover (15).
9. Remove low air warning lamp (16) by disconnecting wires (31 and 32) and removing lamp from cover (15).

***DISASSEMBLY - CONTINUED***

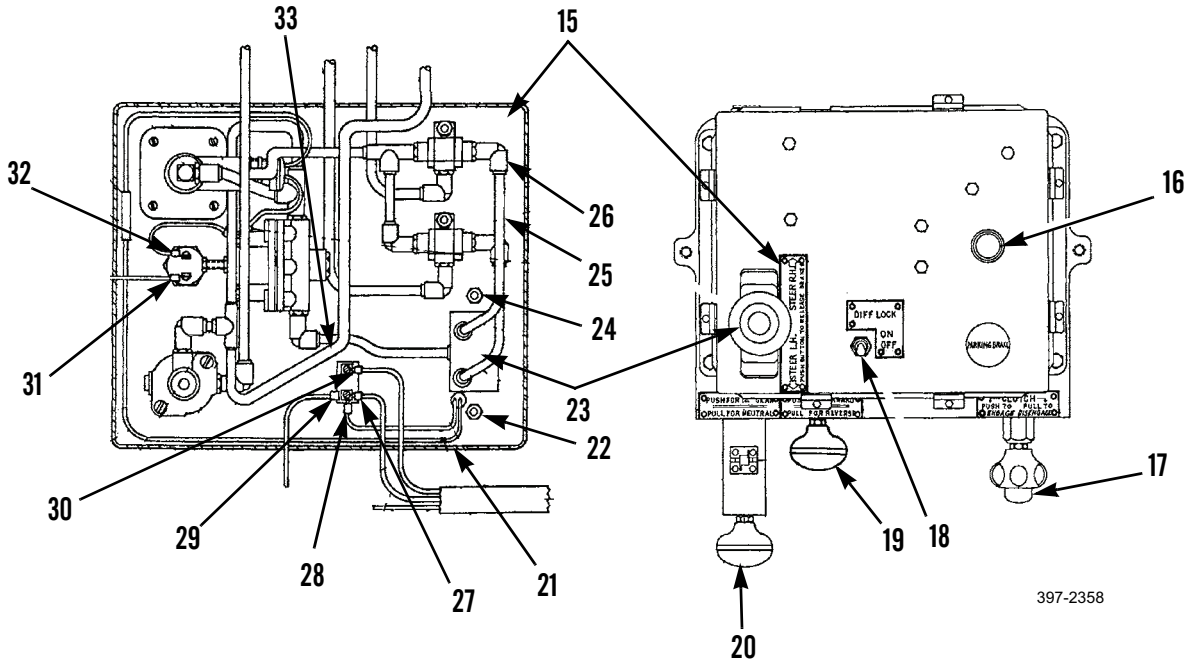


***CLEANING AND INSPECTION***

Clean and inspect all parts in accordance with WP 0020 00.

***ASSEMBLY***

1. Install low air warning lamp (16) on cover (15) and connect wires (31 and 32).
2. Install differential lock switch (18) on cover (15) and connect wires (27, 28, 29, and 30).
3. Install steering valve (23) on cover (15) with nuts (22 and 24). Connect tube ends (25, 26, and 33) and wire (21).
4. Install new preformed packings (6, 8, 10, and 12) and elbows (5, 7, 9, and 11) on remote control unit (13).
5. Install line fitting on elbows inside remote control unit (13).
6. Connect wiring harness (14) at fitting and connect wiring inside remote control unit (13).
7. Install cover (15).
8. Connect hoses (1, 2, 3, and 4) to elbows (5, 7, 9, and 11).
9. Install cable assemblies (17, 19, and 20) and tighten jamnuts.

**END OF WORK PACKAGE**

## STEERING CYLINDER REPLACEMENT 0176 00

### THIS WORK PACKAGE COVERS

Removal, Cleaning and Inspection, Installation, Adjustment

### INITIAL SETUP

**Maintenance Level**

Unit

**Tools and Special Tools**

Tool kit, general mechanic's (Item 89, WP 0348 00)

Shop equipment, common no. 1 (Item 75, WP 0348 00)

Jack, hydraulic (Item 37, WP 0348 00)

Jack stand (2) (Item 84, WP 0348 00)

Wrench, torque (Item 99, WP 0348 00)

Wood blocks

**Materials/Parts**

Cap set, protective (Item 7, WP 0349 00)

Lubricant, thread (Item 22, WP 0349 00)

Oil, lubricating (Item 26, 27, or 30, WP 0349 00)

Rag, wiping (Item 35, WP 0349 00)

Tag, marker (Item 44, WP 0349 00)

**Materials/Parts Continued**

O-ring (2)

Packing, preformed (2)

Pin, cotter

**References**

WP 0020 00

**Equipment Conditions**

Machine parked on level ground (TM 5-3805-261-10)

Parking/emergency brake applied (TM 5-3805-261-10)

Implements lowered to ground (TM 5-3805-261-10)

Engine off (TM 5-3805-261-10)

Battery disconnect switch in OFF position (TM 5-3805-261-10)

Leaning wheel lock pin installed (TM 5-3805-261-10)

***REMOVAL***

## NOTE

This procedure covers maintenance for the left steering cylinder. Follow these instructions for the right steering cylinder.

1. Remove bolt (12), washer (13), clip (11), and pin (10).



**WARNING**



- DO NOT disconnect or remove any hydraulic system line or fitting unless engine is shut down and hydraulic system pressure has been relieved. Tighten all connections before applying pressure. Escaping hydraulic fluid under pressure can penetrate the skin, causing injury to personnel.
- At operating temperature, hydraulic oil is hot. Allow hydraulic oil to cool before disconnecting any hydraulic lines. Failure to follow this warning may cause injury to personnel.

## CAUTION

Cap hose ends and plug open ports to prevent contamination.

## NOTE

Tag hose assemblies before disconnecting to aid in installation.

2. Disconnect hose assemblies (1 and 5) and remove O-rings (2 and 6) from cylinder (9). Discard O-rings.
3. Remove elbow (3) and preformed packing (4). Discard preformed packing.
4. Remove connector (7) and preformed packing (8). Discard preformed packing.

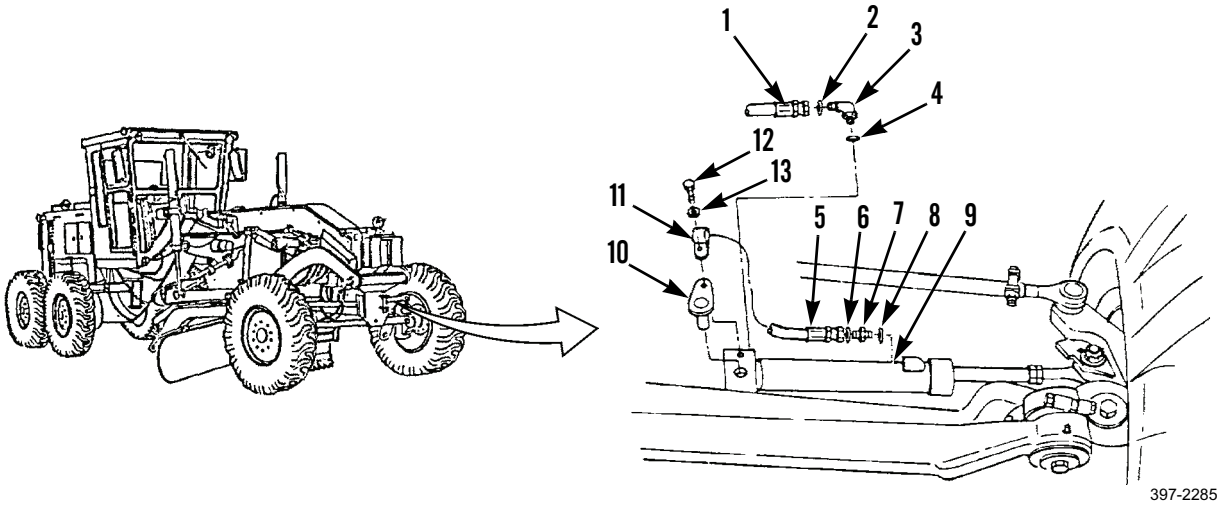

### *REMOVAL - CONTINUED*

5. Remove cotter pin (17), nut (18), and washer (19). Discard cotter pin.
6. Remove steering cylinder assembly (16) from axle bracket (20) from wheel spindle housing (23) by prying or pulling.
7. Remove spacer (14), bearing (15), spacer (21), and ring (22).

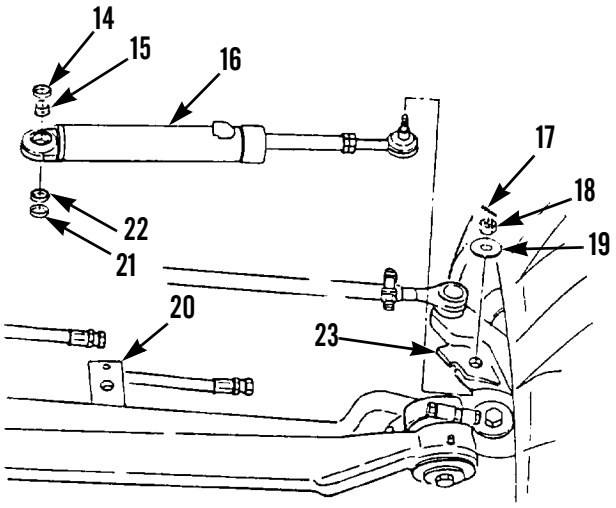

397-4326

**NOTE**

Before removing socket and nut, measure and record the amount of exposed threads on the threaded rod to aid in installation.

8. Loosen nut (24) while holding hex (25) end of rod.
9. Remove socket (27) and nut (24) by unscrewing from cylinder assembly (16).

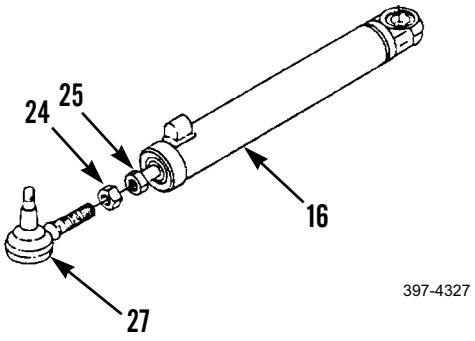

397-4327

### *CLEANING AND INSPECTION*

Clean and inspect all parts in accordance with WP 0020 00.

### *INSTALLATION*

1. Install nut (24) and socket (27) on cylinder (16). Screw socket and nut into cylinder with the same amount of threads exposed as recorded in removal.
2. Tighten nut (24) while holding hex (25) end of cylinder shaft.

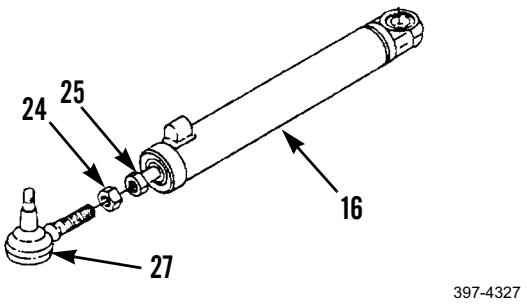

397-4327

3. Install ring (22), spacer (21), bearing (15), and spacer (14) on cylinder assembly (16).
4. Install steering cylinder assembly (16) on axle bracket (20) and wheel spindle housing (23).
5. Install washer (19), nut (18), and new cotter pin (17). Tighten nut to 103 lb-ft (140 Nm).

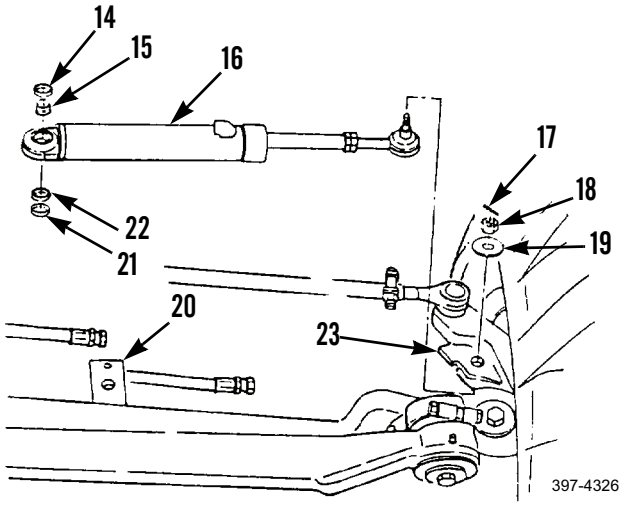

397-4326

6. Install new preformed packing (8), new O-ring (6), and connector (7) to cylinder fitting (9).
7. Install new preformed packing (4), new O-ring (2), and elbow (3).
8. Connect hose assemblies (1 and 5).
9. Install pin (10), clip (11), washer (13), and bolt (12).

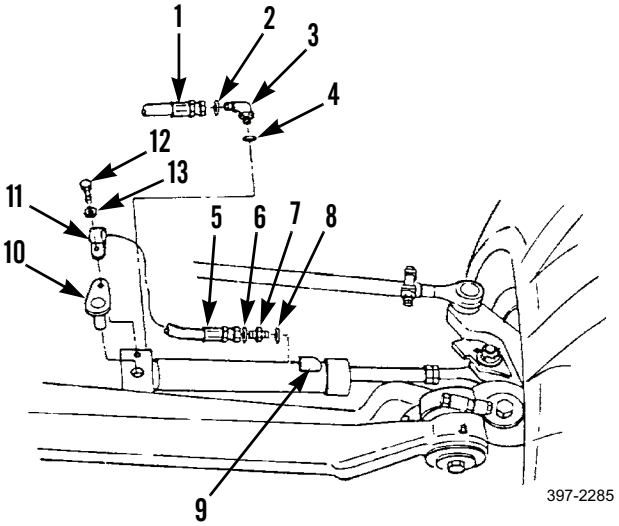

397-2285

***ADJUSTMENT***

## WARNING

Ensure the machine will not roll or shift. Secure with wood blocks. Failure to follow this warning may cause injury or death to personnel.

1. Install leaning wheel lock pin on front axle (TM 5-3805-261-10).
2. Lift front of machine using hydraulic jack.
3. Install jack stands at both ends of front axle.
4. Turn front wheels in straight ahead position (TM 5-3805-261-10).
5. Mark two front tires at center of tread while turning wheels.
6. Measure distance of front axle between marks at forward point of tires.
7. Measure distance of front axle at rear point of tires.
8. Subtract the larger distance from the smaller distance to determine the amount of toe-in.

## NOTE

The toe-in is correct if the front distance is 0.12 to 0.25 in. (3.0 to 6.4 mm) less than the rear distance.

9. Loosen two nuts (30) on clamps at ends of tie-rod (29).
10. Turn rod until toe-in is 0.12 to 0.25 in. (3.0 to 6.4 mm). Tighten rod to 55 lb-ft (75 Nm).
11. Loosen nut (24) and turn left cylinder shaft (28) all the way on threaded rod of socket (27).
12. Repeat step 11 for right steering cylinder.
13. Turn cylinder shaft (28) until right spindle stop is 0.12 in. (3.0 mm) from right axle stop.
14. Tighten nut (24) on cylinder shaft (28) to 250 lb-ft (339 Nm).

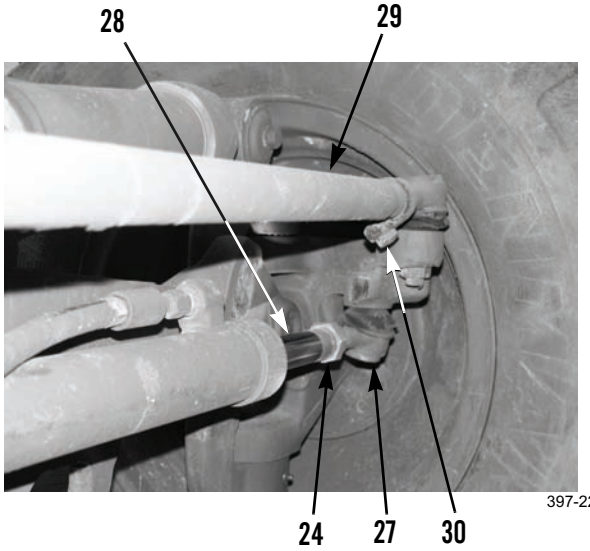


15. Turn front wheels all the way to the right.
16. Repeat step 15 so that right wheel spindle stop is 0.12 in. (3.0 mm) from left axle stop.
17. Remove jack stands and hydraulic jack.
18. Remove leaning wheel lock pin (TM 5-3805-261-10).

**END OF WORK PACKAGE**

## STEP ASSEMBLIES MAINTENANCE (OLD DESIGN) 0177 00

### THIS WORK PACKAGE COVERS

Removal, Disassembly, Cleaning and Inspection, Assembly, Installation

### INITIAL SETUP

**Maintenance Level**

Unit

**Tools and Special Tools**

Tool kit, general mechanic's (Item 89, WP 0348 00)

**Materials/Parts**

Rag, wiping (Item 35, WP 0349 00)

**References**

WP 0020 00

**Equipment Conditions**

Machine parked on level ground (TM 5-3805-261-10)

Parking/emergency brake applied (TM 5-3805-261-10)

Implements lowered to ground (TM 5-3805-261-10)

Engine off (TM 5-3805-261-10)

Battery disconnect switch in OFF position (TM 5-3805-261-10)

### *REMOVAL*

**NOTE**

This procedure covers maintenance of the left step assembly. Follow these instructions for the right step assembly.

Remove four bolts (2), washers (1), and step assembly (3).

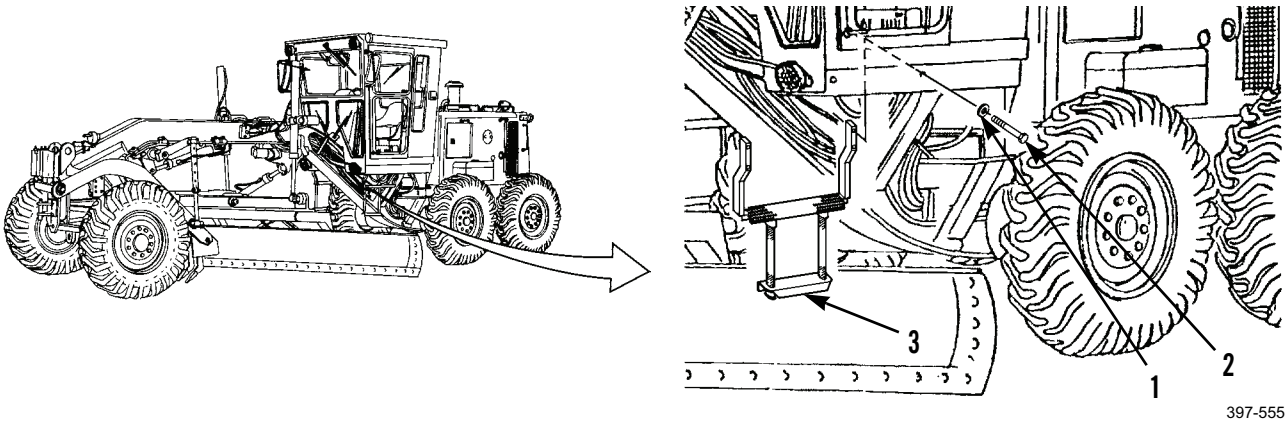


397-555

### *DISASSEMBLY*

Remove two bolts (6) and washers (7) to separate ladders (4 and 5).

### *CLEANING AND INSPECTION*

Clean and inspect all parts in accordance with WP 0020 00.

### *ASSEMBLY*

Install two washers (7) and bolts (6) to connect ladders (5 and 4).

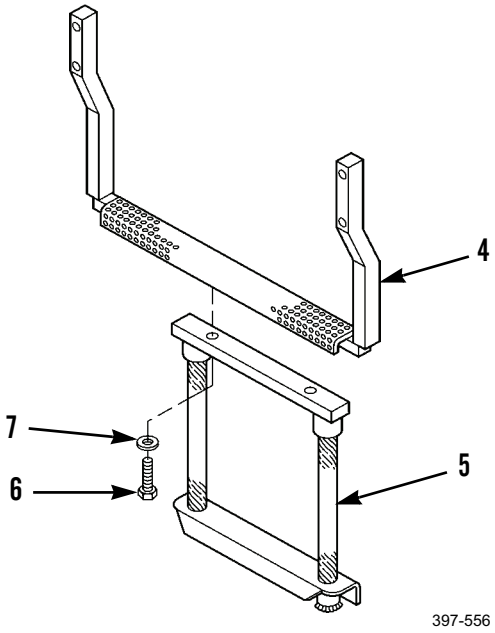


397-556

### *INSTALLATION*

Install step assembly (3), four washers (1), and bolts (2).

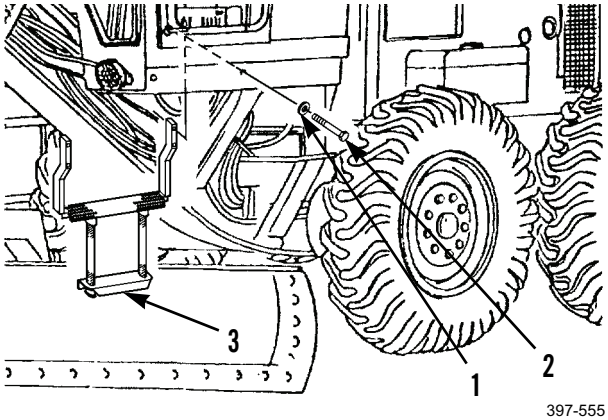


397-555

**END OF WORK PACKAGE**

## STEP ASSEMBLIES MAINTENANCE (NEW DESIGN) 0178 00

### THIS WORK PACKAGE COVERS

Removal, Disassembly, Cleaning and Inspection, Assembly, Installation

### INITIAL SETUP

**Maintenance Level**

Unit

**Tools and Special Tools**

Tool kit, general mechanic's (Item 89, WP 0348 00)

**Materials/Parts**

Rag, wiping (Item 35, WP 0349 00)

**References**

WP 0020 00

**Equipment Conditions**

Machine parked on level ground (TM 5-3805-261-10)

Parking/emergency brake applied (TM 5-3805-261-10)

Implements lowered to ground (TM 5-3805-261-10)

Engine off (TM 5-3805-261-10)

Battery disconnect switch in OFF position (TM 5-3805-261-10)

### *REMOVAL*

**NOTE**

This procedure covers maintenance of the left step assembly. Follow these instructions for the right step assembly.

Remove four bolts (2), washers (1), nut (4), and step assembly (3).

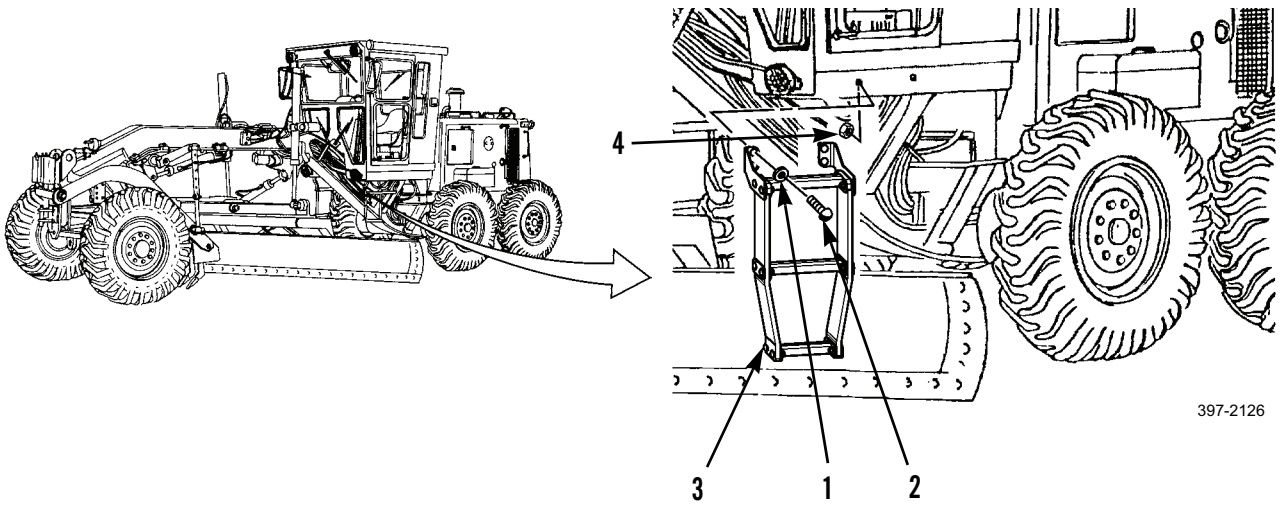

### *DISASSEMBLY*

1. Remove four nuts (10), washers (9), bolts (5), two brackets (6), and step (7) from two belts (8).
2. Remove four nuts (15), washers (14), bolts (13), two plates (12), and step (11).
3. Remove four nuts (20), washers (19), bolts (17), two plates (16), and step (18).

### *CLEANING AND INSPECTION*

Clean and inspect all parts in accordance with WP 0020 00.

### *ASSEMBLY*

1. Install step (18), two plates (16), four bolts (17), washers (19), and nuts (20) on two belts (8).
2. Install step (11), two plates (12), four bolts (13), washers (14), and nuts (15).
3. Install step (7), two brackets (6), four bolts (5), washers (9), and nuts (10).

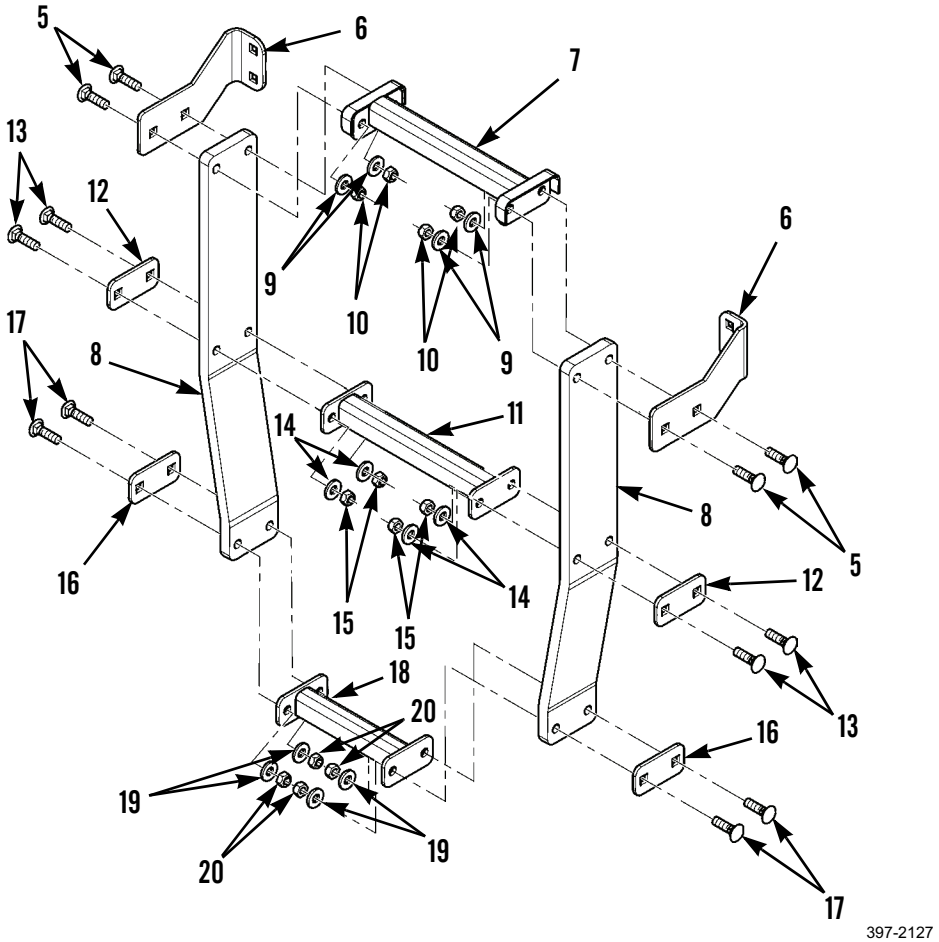

### *INSTALLATION*

Install step assembly (3), four washers (1), and bolts (2).

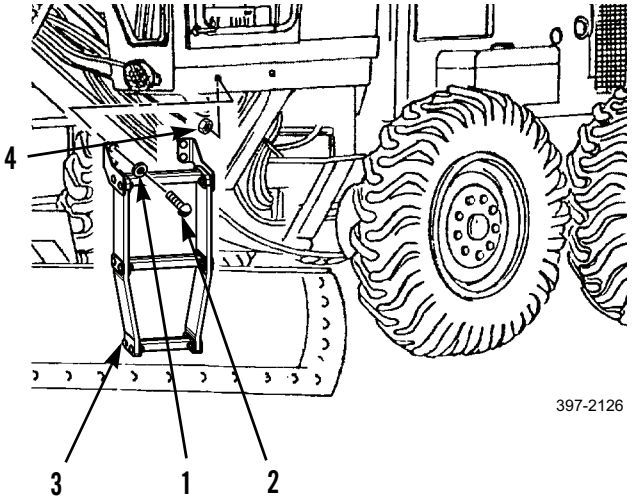


**END OF WORK PACKAGE**

## FRAME COVERS REPLACEMENT 0179 00

### THIS WORK PACKAGE COVERS

Removal, Cleaning and Inspection, Installation

### INITIAL SETUP

**Maintenance Level**

Unit

**Tools and Special Tools**

Tool kit, general mechanic's (Item 89, WP 0348 00)

**Materials/Parts**

Rag, wiping (Item 35, WP 0349 00)

Rope (Item 36, WP 0349 00)

**References**

WP 0020 00

**Equipment Conditions**

Machine parked on level ground (TM 5-3805-261-10)

Parking/emergency brake applied (TM 5-3805-261-10)

Implements lowered to ground (TM 5-3805-261-10)

Engine off (TM 5-3805-261-10)

Battery disconnect switch in OFF position (TM 5-3805-261-10)

**NOTE**

This procedure covers replacement of the right covers. Follow these instructions for the left covers.

### *REMOVAL*

1. Remove eight bolts (4), washers (5), four washers (3), and molding (2) from front-right of frame.
2. Remove two bolts (6), washers (7), and molding (1).

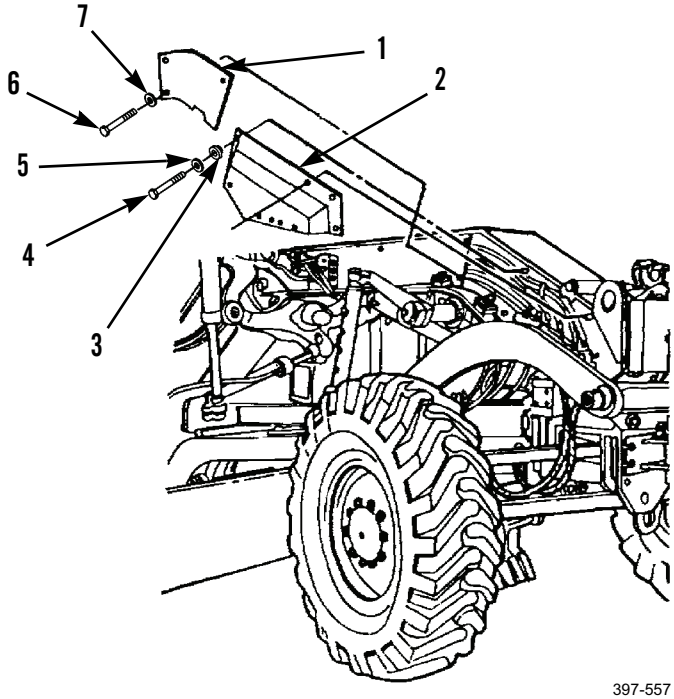


397-557

## FRAME COVERS REPLACEMENT - CONTINUED 0179 00

***REMOVAL - CONTINUED***

**NOTE**

Support valve with one hand when removing bolts.

3. Remove three bolts (13), washers (12), and valve (11).
4. Remove two bolts (10), washers (9), and cover (8).

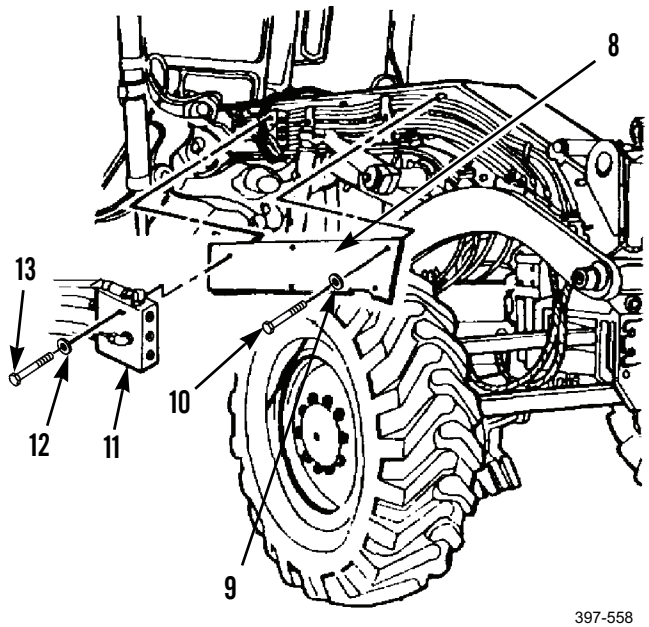


5. Remove 7 bolts (16), washers (17), three washers (18), and molding (19) from front-left of frame.
6. Remove two bolts (14), washers (15), and molding (20).

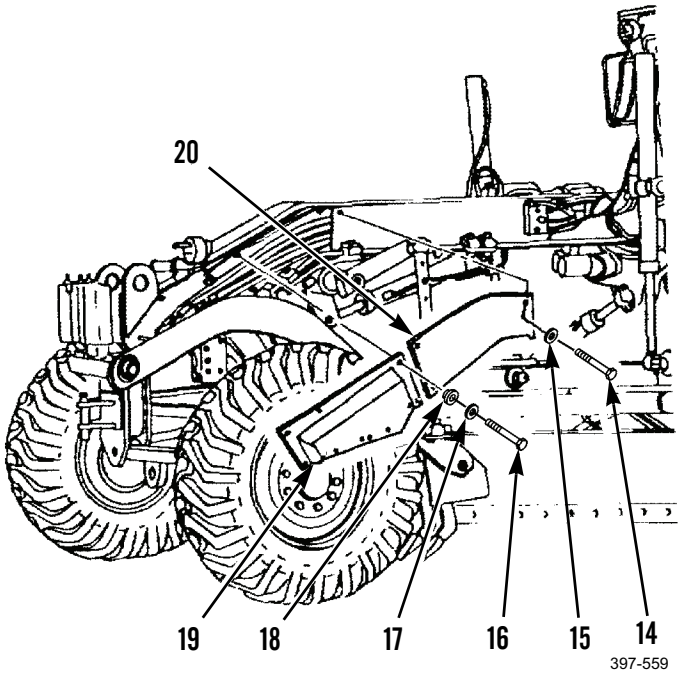

### *REMOVAL - CONTINUED*

**NOTE**

Support valve with one hand when removing bolts.

7. Remove two bolts (24), washers (25), and cover (23).

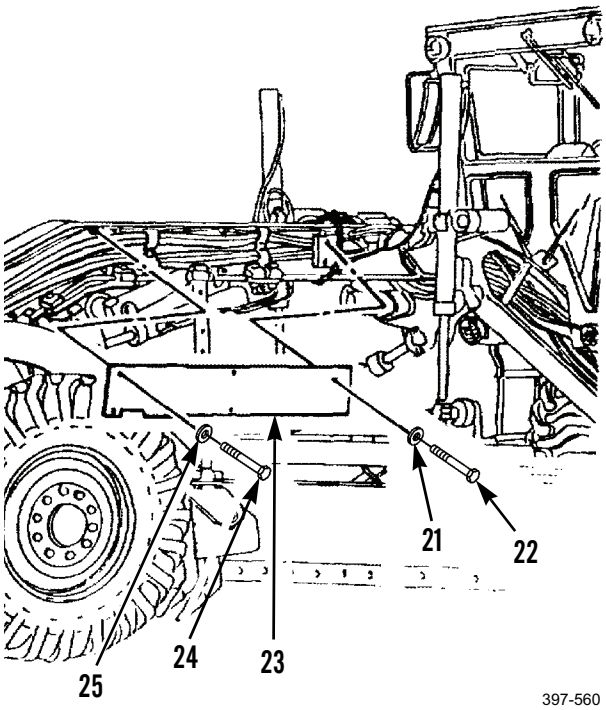


### *CLEANING AND INSPECTION*

Clean and inspect all parts in accordance with WP 0020 00.

### *INSTALLATION*

1. Install cover (23), two washers (25), and bolts (24) on front-left of frame.
2. Install molding (20), two washers (15), and bolts (14).
3. Install molding (19), eight washers (17), three washers (18), and bolts (16).
4. Install cover (8), two washers (9), and bolts (10) on front-right of frame.

***INSTALLATION - CONTINUED***

5. Install molding (1), two washers (7), and bolts (6).
6. Install molding (2), nine washers (5), four washers (3), and eight bolts (4).

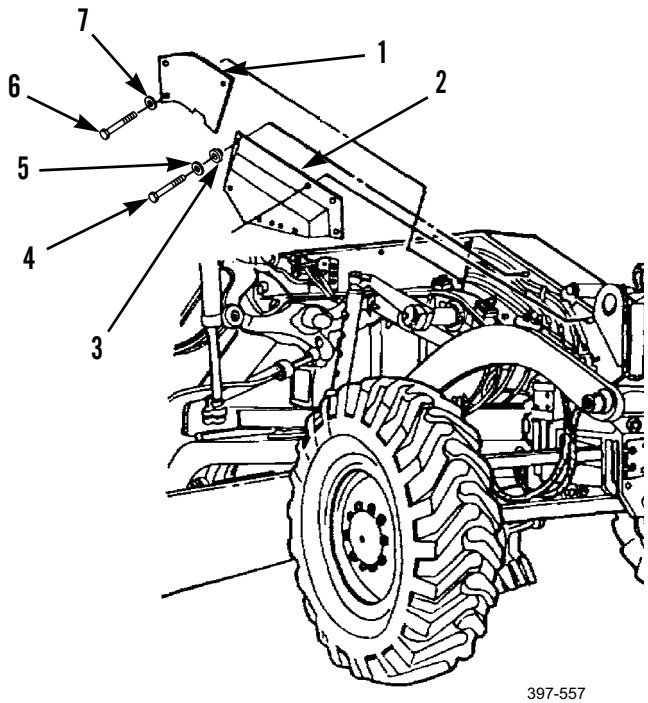


**END OF WORK PACKAGE**

## FRONT TOW HOOK REPLACEMENT 0180 00

### THIS WORK PACKAGE COVERS

Removal, Cleaning and Inspection, Installation

### INITIAL SETUP

**Maintenance Level**

Unit

**Tools and Special Tools**

Tool kit, general mechanic's (Item 89, WP 0348 00)

Tool kit, common no. 1 (Item 75, WP 0348 00)

**Materials/Parts**

Rag, wiping (Item 35, WP 0349 00)

Lockwasher (2)

Nut, self-locking

**References**

WP 0020 00

**Equipment Conditions**

Machine parked on level ground (TM 5-3805-261-10)

Parking/emergency brake applied (TM 5-3805-261-10)

Implements lowered to ground (TM 5-3805-261-10)

Engine off (TM 5-3805-261-10)

Battery disconnect switch in OFF position (TM 5-3805-261-10)

### *REMOVAL*

1. Remove self-locking nut (9), bolt (2), and latch (3) from lock plate (1). Discard self-locking nut.
2. Remove two bolts (11), lockwashers (10), and lock plate (1) from bracket (8). Discard lockwashers.
3. Remove pin (4).
4. Remove four nuts (7), eight washers (6), four bolts (5), and bracket (8).

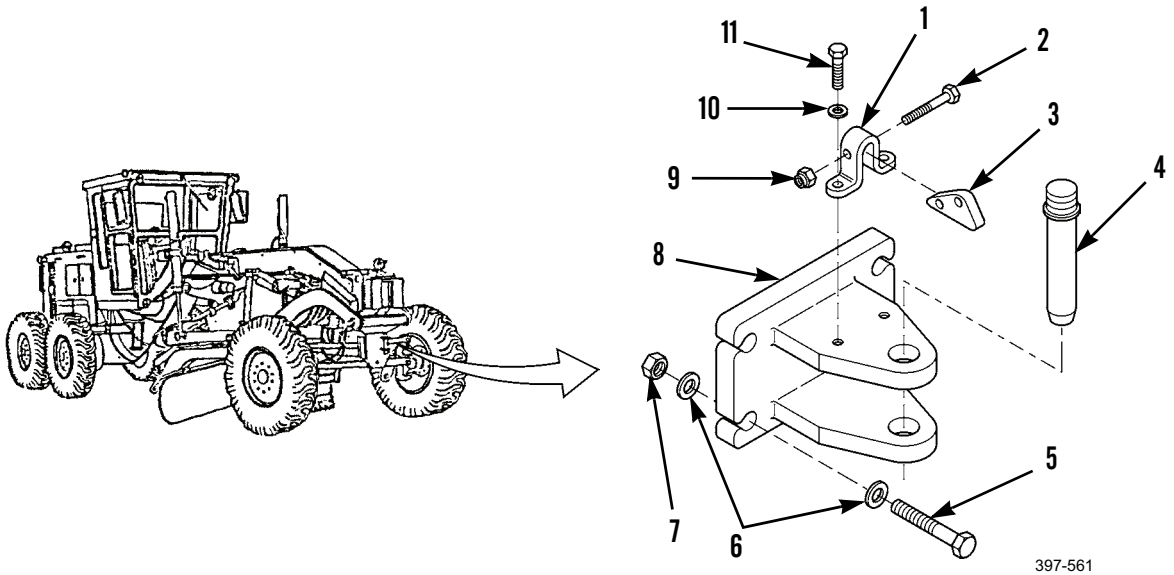

### *CLEANING AND INSPECTION*

Clean and inspect all parts in accordance with WP 0020 00.

### *INSTALLATION*

1. Install bracket (8), four bolts (5), eight washers (6), and four nuts (7).
2. Install pin (4).
3. Install lock plate (1), two new lockwashers (10), and bolts (11).
4. Install latch (3), bolt (2), and new self-locking nut (9).

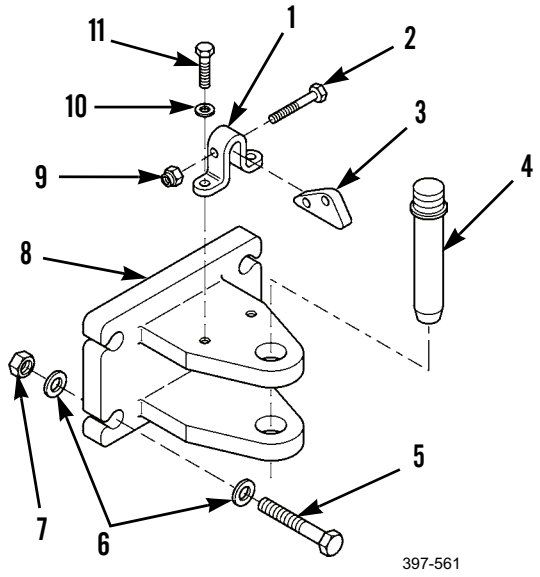


**END OF WORK PACKAGE**

## ENGINE HOOD REPLACEMENT 0181 00

### THIS WORK PACKAGE COVERS

Removal, Cleaning and Inspection, Installation

### INITIAL SETUP

**Maintenance Level**

Unit

**Tools and Special Tools**

Tool kit, general mechanic's (Item 89, WP 0348 00)

Sling (Item 78, WP 0348 00)

**Materials/Parts**

Rag, wiping (Item 35, WP 0349 00)

Rivet (12)

**Personnel Required**

Two

**References**

WP 0020 00

**Equipment Conditions**

Machine parked on level ground (TM 5-3805-261-10)

Parking/emergency brake applied (TM 5-3805-261-10)

Implements lowered to ground (TM 5-3805-261-10)

Engine off (TM 5-3805-261-10)

Battery disconnect switch in OFF position (TM 5-3805-261-10)

Air precleaner removed (WP 0036 00)

Left and right screen doors open (WP 0055 00)

### *REMOVAL*

1. Release four hood latches (2) from brackets (3) by pulling down rings (1).

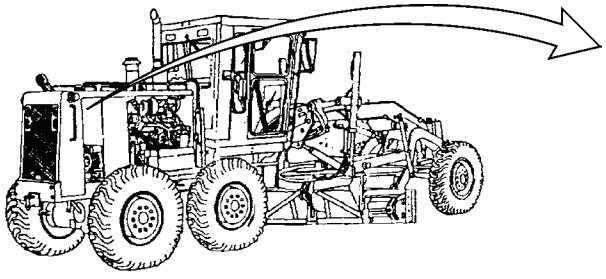

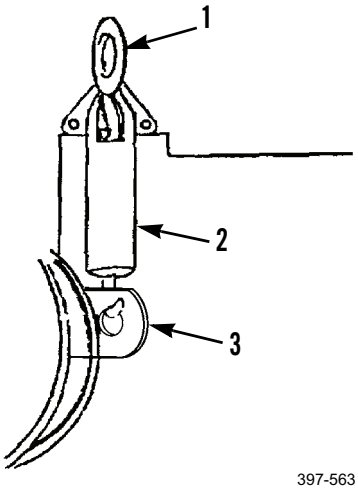


397-563

***REMOVAL - CONTINUED***



**WARNING**

Use extreme caution when handling heavy parts. Provide adequate support and use assistance during procedure. Ensure that any lifting device used is in good condition and of suitable load capacity. Keep clear of heavy parts supported only by lifting device. Failure to follow this warning may result in injury or death to personnel.

**NOTE**

Hood assembly weighs 89 lb (40 kg).

2. With assistance, attach sling to hood (4).
3. Remove hood (4).
4. Remove sling.

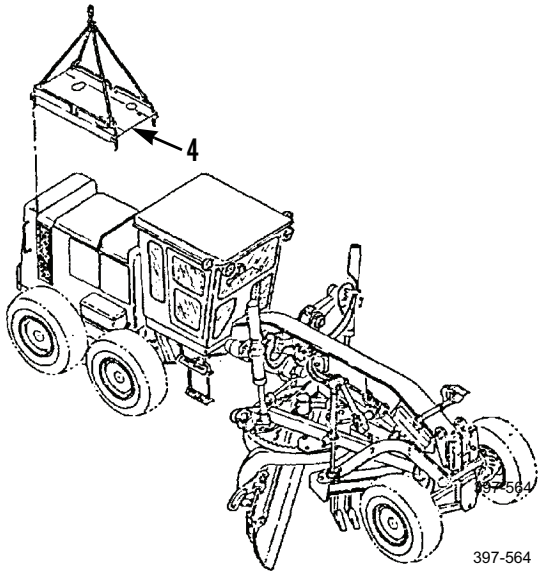


5. Inspect 12 rivets (5). If damaged, remove and discard rivets.
6. Remove four plates (6) and hood latches (2) from hood (4).

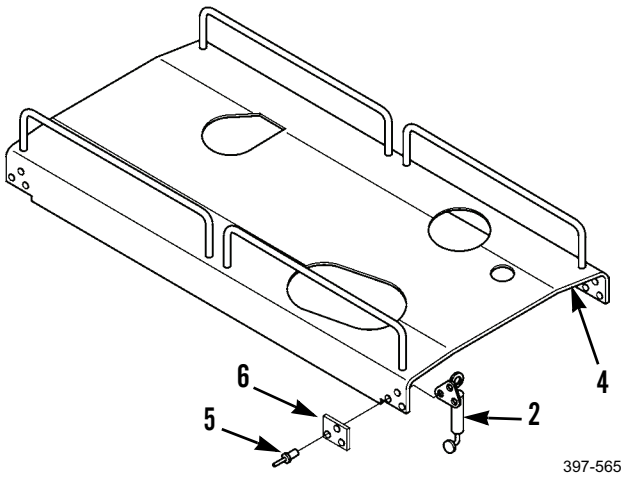


***CLEANING AND INSPECTION***

Clean and inspect all parts in accordance with WP 0020 00.

### *INSTALLATION*

1. Position four hood latches (2) and plates (6) on hood (4).
2. If removed, install 12 new rivets (5).
3. Attach sling to hood (4).
4. Install hood (4) on machine. Make sure holes on front of hood align with dash plate guide pins (7).
5. Remove sling.

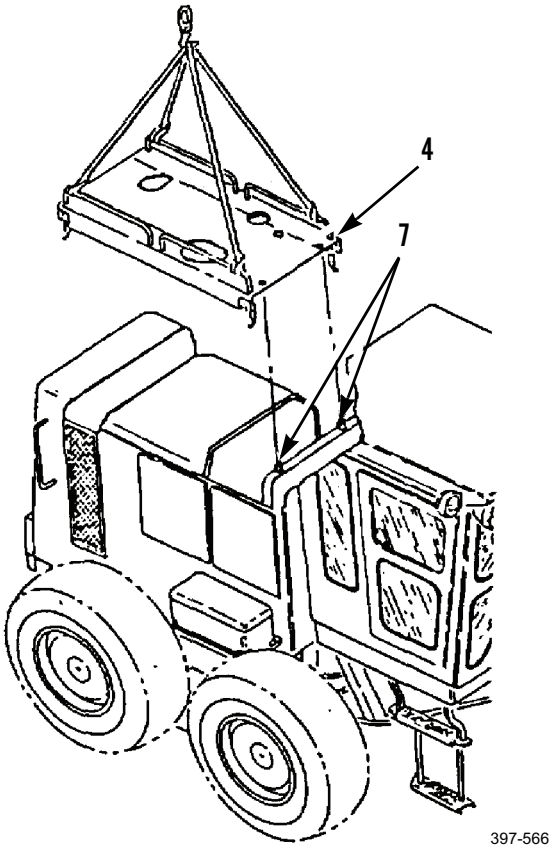


6. Fasten four hood latches (2) into bracket (3) by pushing up rings (1).

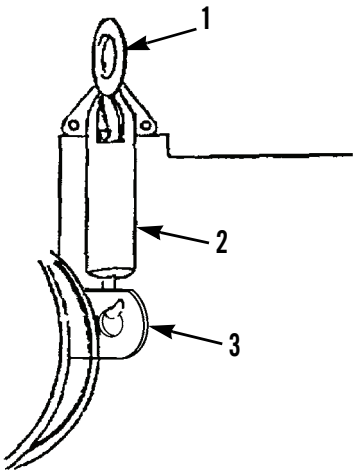


7. Install air precleaner (WP 0036 00).
8. Close left and right screen doors (WP 0055 00).

**END OF WORK PACKAGE**

## ENGINE PANELS AND DOORS MAINTENANCE 0182 00

### THIS WORK PACKAGE COVERS

Removal, Disassembly, Cleaning and Inspection, Assembly, Installation

### INITIAL SETUP

**Maintenance Level**

Unit

**Tools and Special Tools**

Tool kit, general mechanic's (Item 89, WP 0348 00)

Shop equipment, common no. 1 (Item 75, WP 0348 00)

Sling (Item 78, WP 0348 00)

**Materials/Parts**

Adhesive (Item 2, WP 0349 00)

Rag, wiping (Item 35, WP 0349 00)

Gasket

Rivet (10)

Seal (bulk material)

**Personnel Required**

Two

**References**

WP 0020 00

**Equipment Conditions**

Machine parked on level ground (TM 5-3805-261-10)

Parking/emergency brake applied (TM 5-3805-261-10)

Implements lowered to ground (TM 5-3805-261-10)

Engine off (TM 5-3805-261-10)

Left and right side screen doors removed (WP 0055 00)

Air dryer removed, if equipped (WP 0164 00)

### *REMOVAL*

#### Right Side

**NOTE**

There will be either two or four battery cables and grommets, depending on configuration of machine.

1. Push cable and grommet assemblies out of slotted retaining holes (1 and 2) and position out of the way.

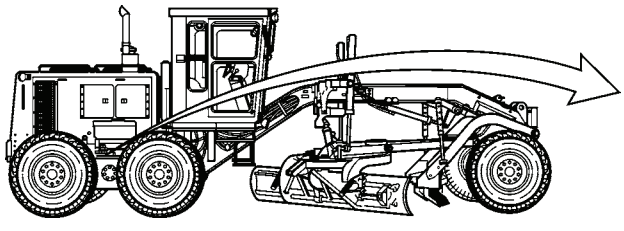

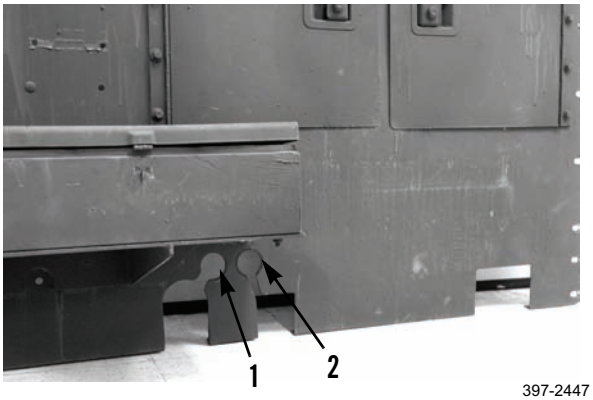


397-2447

*REMOVAL - CONTINUED*

**Right Side - Continued**

2. Remove bolt (4), washer (5), and clip (6) from top-center-inside of panel (3).

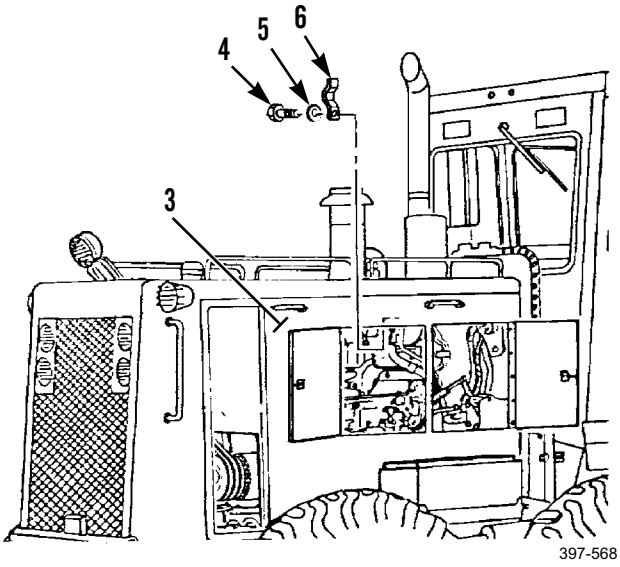




**WARNING**

Use extreme caution when handling heavy parts. Provide adequate support and use assistance during procedure. Ensure that any lifting device used is in good condition and of suitable load capacity. Keep clear of heavy parts supported only by lifting device. Failure to follow this warning may cause injury or death to personnel.

**CAUTION**

Do not attach sling to handles for lifting panel. Rivets may not support weight of panel.

**NOTE**

Right side engine panel weighs 265 lb (120 kg).

3. With assistance, wrap sling through door ports and attach sling to panel (3).

***REMOVAL - CONTINUED***

**Right Side - Continued**



**WARNING**

Bar will fall out from behind panel when bolts are removed. Failure to follow this warning may cause injury to personnel.

4. Remove 12 bolts (9), washers (8), and bar (7).
5. Remove panel (3).
6. Remove sling.

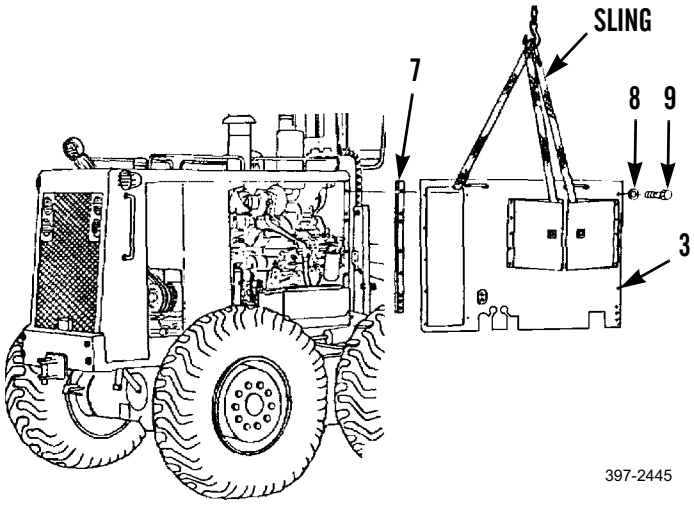


**Left Side**

**NOTE**

There may be no grommets or battery cables on left side of machine, depending on configuration of machine.

1. Push cable and grommet assemblies out slotted retaining holes (10 and 11) and position out of the way.

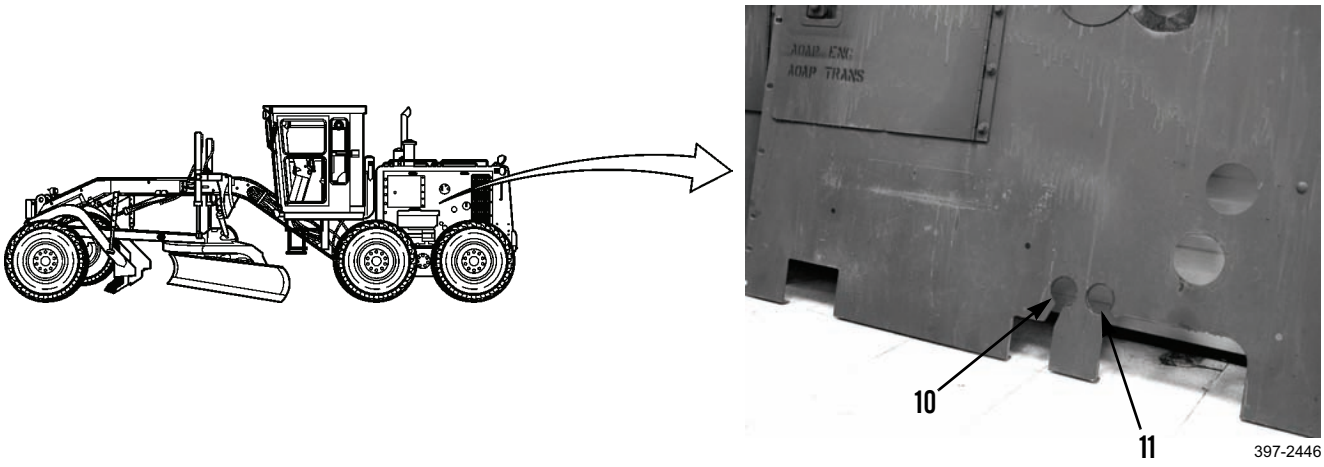

*REMOVAL - CONTINUED*

**Left Side - Continued**

2. Remove bolt (15), washer (14), and clip (13) from top-center-inside of panel (16).
3. Remove two nuts (22), washers (21), catch (20), spacer (19), two bolts (18) and washers (17).

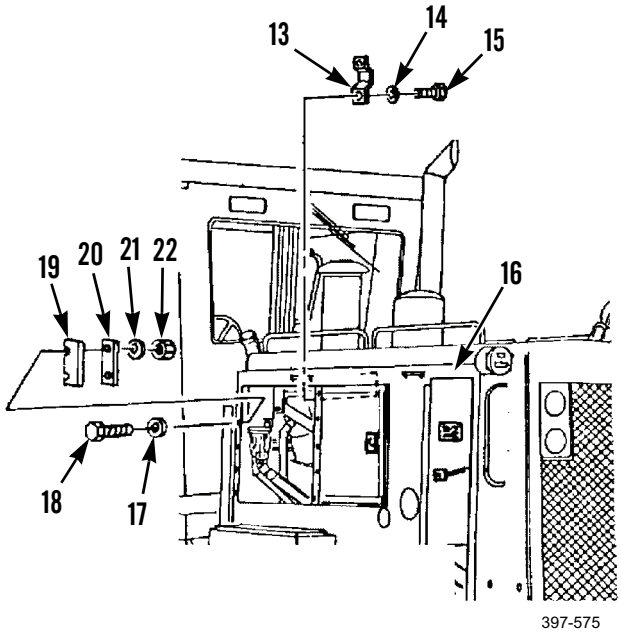

397-575



**WARNING**

Use extreme caution when handling heavy parts. Provide adequate support and use assistance during procedure. Ensure that any lifting device used is in good condition and of suitable load capacity. Keep clear of heavy parts supported only by lifting device. Failure to follow this warning may cause injury or death to personnel.

**CAUTION**

Do not attach sling to handles for lifting panel. Rivets may not support weight of panel.

**NOTE**

Left side engine panel weighs 265 lb (120 kg).

4. With assistance, wrap sling through door ports and attach sling to panel (16).

***REMOVAL - CONTINUED***

**Left Side - Continued**



**WARNING**

Bar will fall out from behind panel when bolts are removed. Failure to follow this warning may cause injury or death to personnel.

5. Remove 12 bolts (25), washers (24), and bar (23).
6. Remove panel (16).
7. Remove sling.

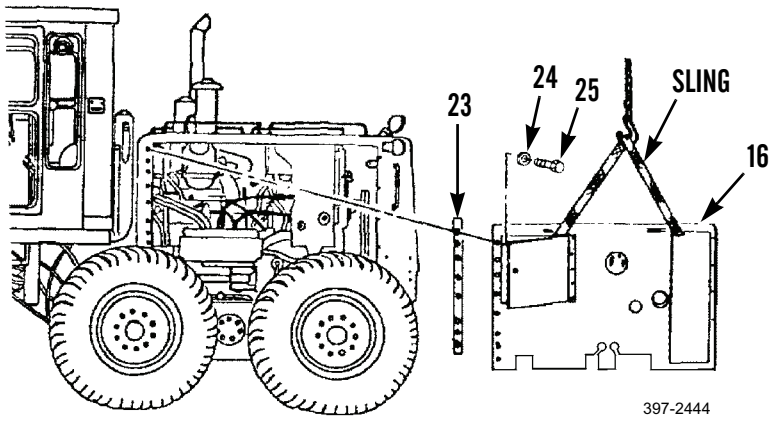

***DISASSEMBLY***

**Right Side**

1. Remove 10 bolts (30), washers (29), two doors (28), and spacers (27) from panel (3).
2. Remove and discard six seals (26) from two doors (28).

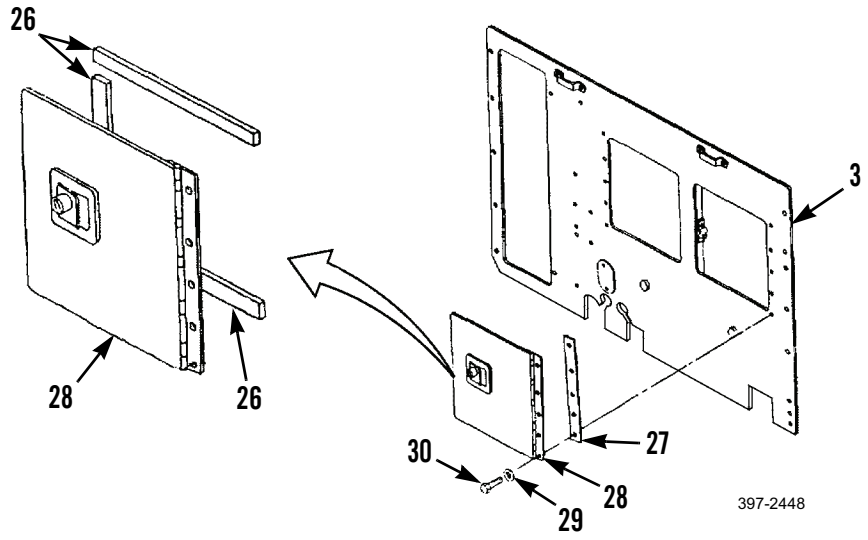


3. Remove four bolts (34), washers (33), two catches (35), and spacers (32) from panel (3).
4. Remove four bumpers (31).
5. Remove two bumpers (36).
6. Remove four plugs (37).

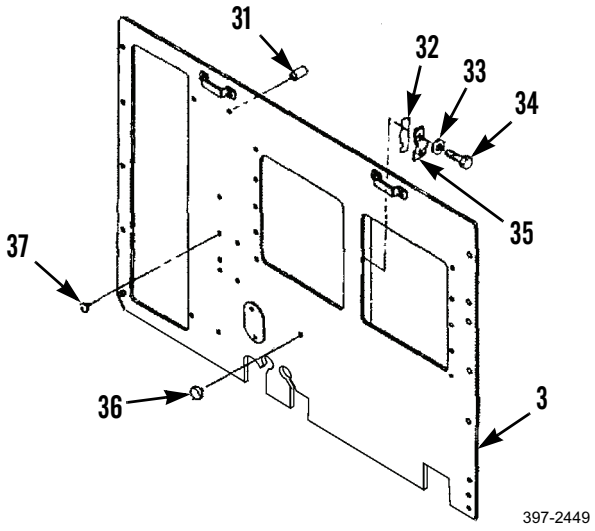

*DISASSEMBLY - CONTINUED*

**Right Side - Continued**

7. Remove four rivets (41) and two handles (42). Discard rivets.
8. Remove two rivets (39) and plate (40). Discard rivets.
9. Remove and discard two seals (38) from panel (3).

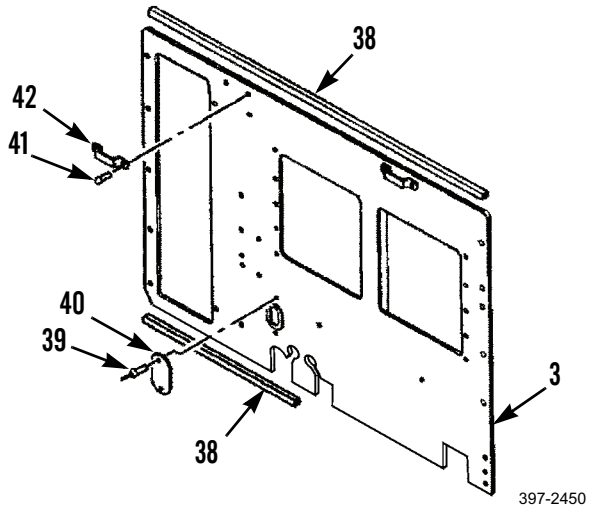


**Left Side**

1. Remove five bolts (45), washers (46), door (44), and spacer (47) from panel (16).
2. Remove and discard three seals (43) from door (44).

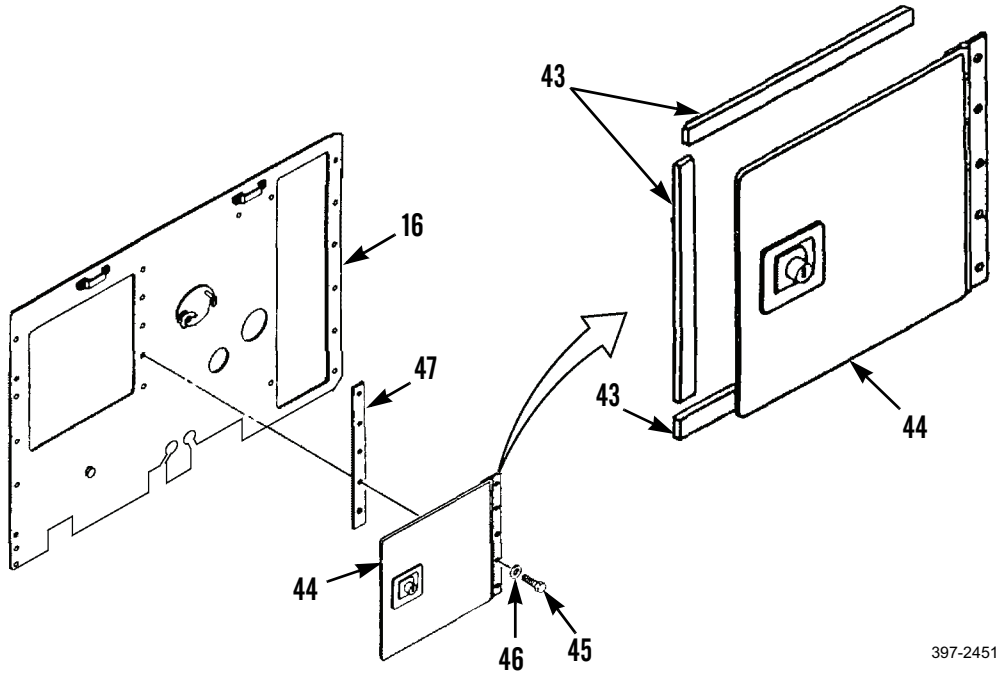

## *DISASSEMBLY - CONTINUED*

### Left Side - Continued

3. Remove four bumpers (49).
4. Remove two bumpers (56).
5. Remove two wing nuts (54), washers (55), cover (53), and gasket (52). Discard gasket.
6. Remove four rivets (51) and two handles (50). Discard rivets.
7. Remove and discard two seals (48) from panel (16).

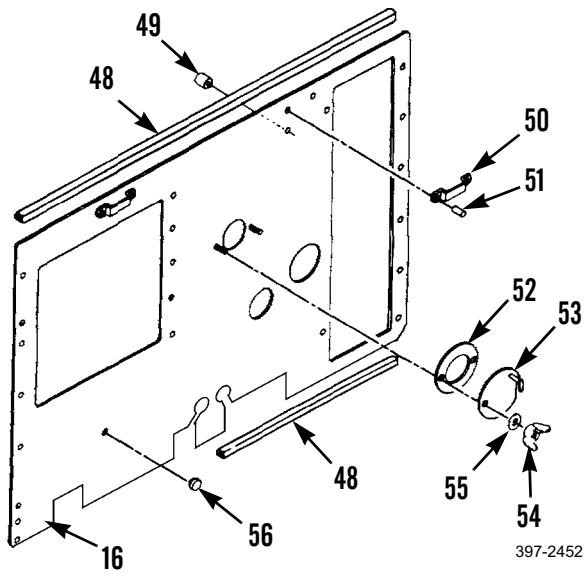


## *CLEANING AND INSPECTION*

Clean and inspect all parts in accordance with WP 0020 00.

## *ASSEMBLY*

### Left Side

1. Install two new seals (48) on panel (16). Cut bulk seal to length and apply to clean surface with adhesive.
2. Install two handles (50) and four new rivets (51).
3. Install new gasket (52), cover (53), two washers (55), and wing nuts (54).
4. Install two bumpers (56).
5. Install four bumpers (49).

*ASSEMBLY - CONTINUED*

**Left Side - Continued**

6. Install three new seals (43) on door (44). Cut bulk seal to length and apply to clean surface.
7. Install spacer (47), door (44), five washers (46), and bolts (45) on panel (16).

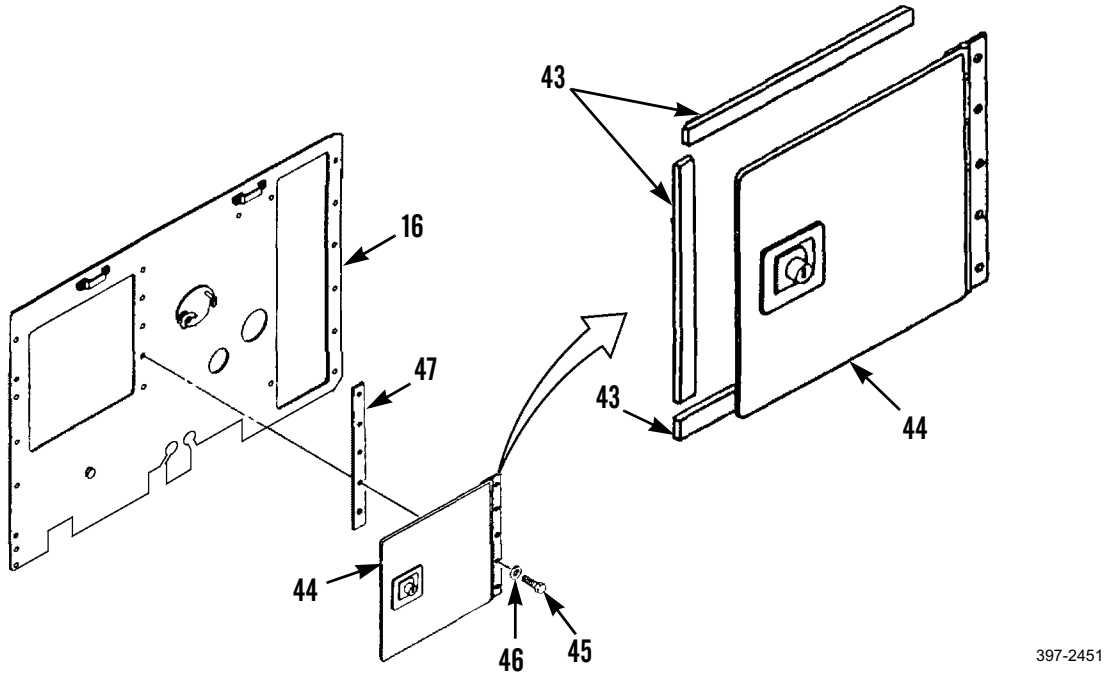


**Right Side**

1. Install two new seals (38) on panel (3). Cut bulk seal to length and apply to clean surface with adhesive.
2. Install plate (42) and two new rivets (39).
3. Install two handles (47) and four new rivets (41).

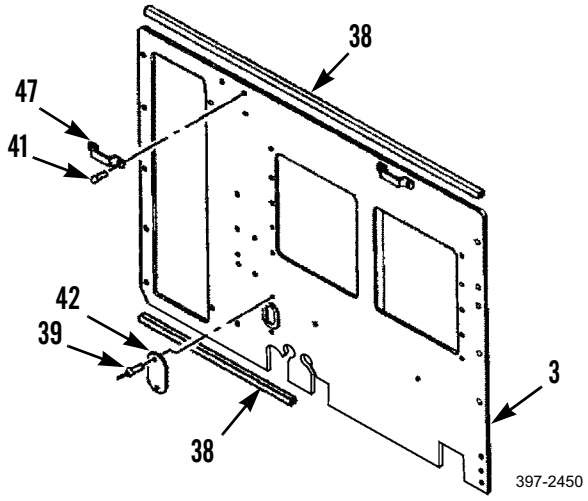

***ASSEMBLY - CONTINUED***

**Right Side - Continued**

4. Install four plugs (37) on panel (3).
5. Install two bumpers (36).
6. Install four bumpers (31).
7. Install two spacers (32), catches (35), four washers (33), and bolts (34).

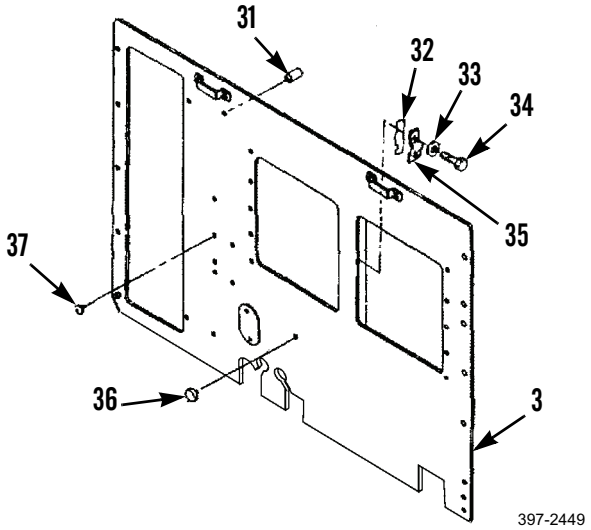


8. Install six new seals (26) on two doors (28). Cut bulk seal to length and apply to clean surface.
9. Install two spacers (27), doors (28), 10 washers (29) and bolts (30), on panel (3).

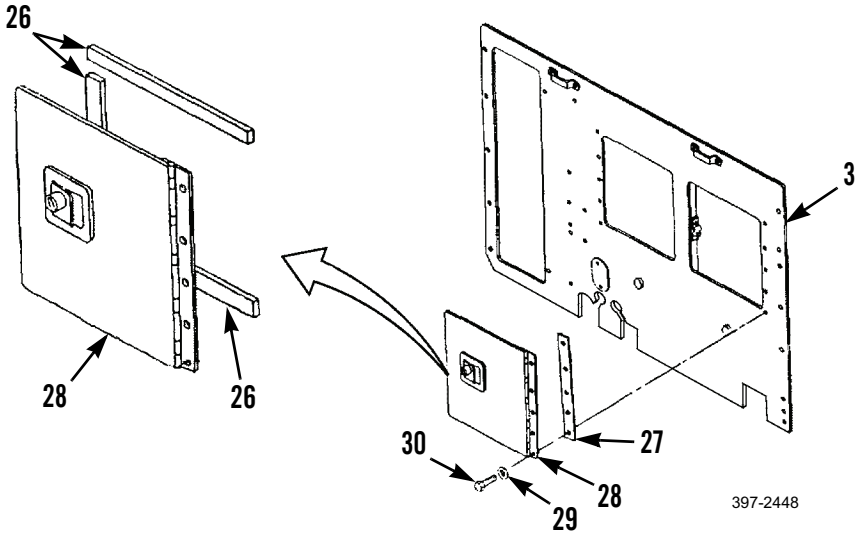

*INSTALLATION*

**Left Side**

**WARNING**

Use extreme caution when handling heavy parts. Provide adequate support and use assistance during procedure. Ensure that any lifting device used is in good condition and of suitable load capacity. Keep clear of heavy parts supported only by lifting device. Failure to follow this warning may cause in injury or death to personnel.

**CAUTION**

Do not attach sling to handles for lifting panel. Rivets may not support weight of panel.

**NOTE**

Left side engine panel weighs 265 lb (120 kg).

1. With assistance, wrap sling through door ports and attach sling to panel (17).
2. Position panel (16) and bar (23) on machine.
3. Install 12 washers (24) and bolts (25).
4. Remove sling.

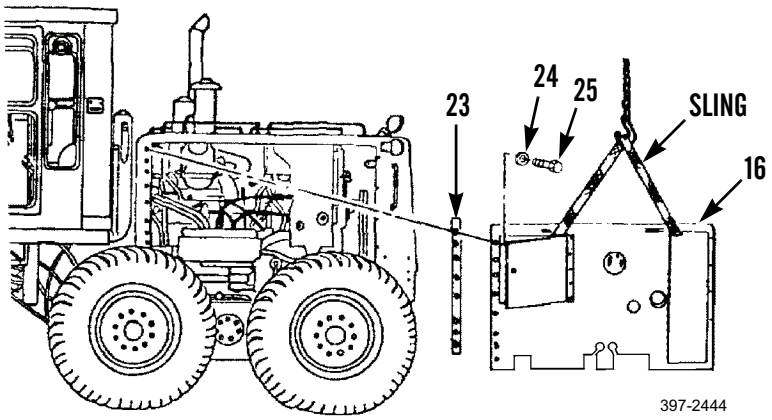

*INSTALLATION - CONTINUED*

**Left Side - Continued**

5. Install two washers (17), bolts (18), spacer (19), catch (20), two washers (21), and nuts (22).
6. Install clip (13), washer (14), and bolt (15) to top-center-inside of panel (16).

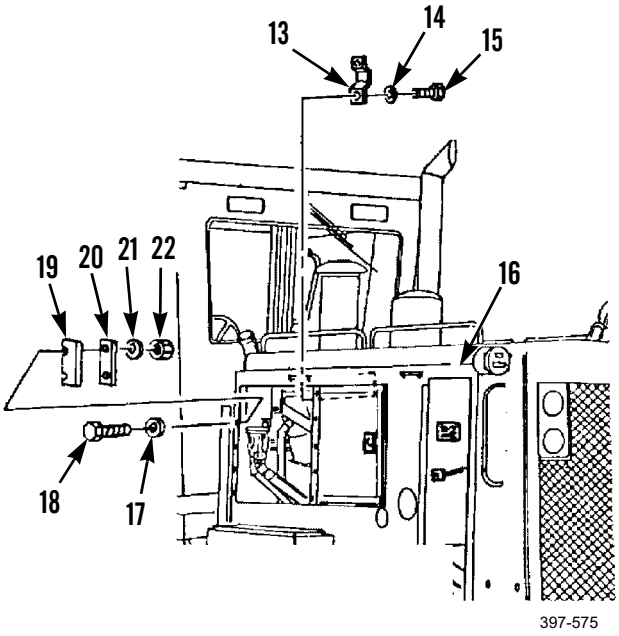

397-575

*INSTALLATION - CONTINUED*

**Right Side**

**WARNING**

Use extreme caution when handling heavy parts. Provide adequate support and use assistance during procedure. Ensure that any lifting device used is in good condition and of suitable load capacity. Keep clear of heavy parts supported only by lifting device. Failure to follow this warning may cause in injury or death to personnel.

**CAUTION**

Do not attach sling to handles for lifting panel. Rivets may not support weight of panel.

**NOTE**

Right side engine panel weighs 265 lb (120 kg).

1. With assistance, wrap sling through door ports and attach sling to panel (3).

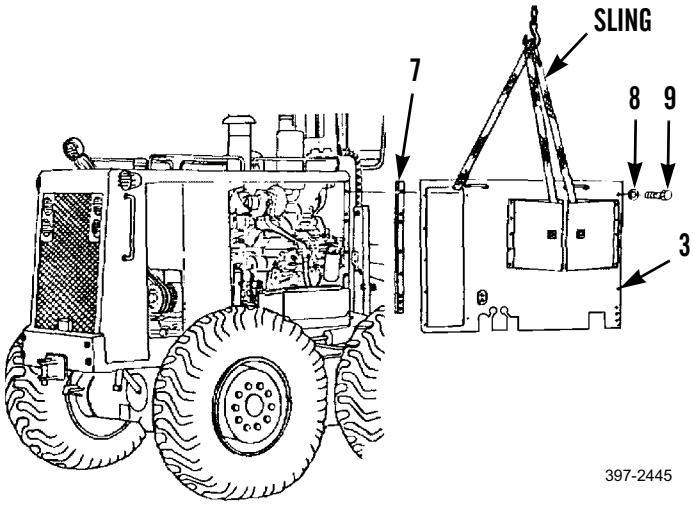


2. Install panel (3) and bar (7) on machine.
3. Install 12 washers (8) and bolts (9).
4. Remove sling.

*INSTALLATION - CONTINUED*

**Right Side - Continued**

5. Install clip (6), washer (5), and bolt (4) to top-center-inside of panel (3).

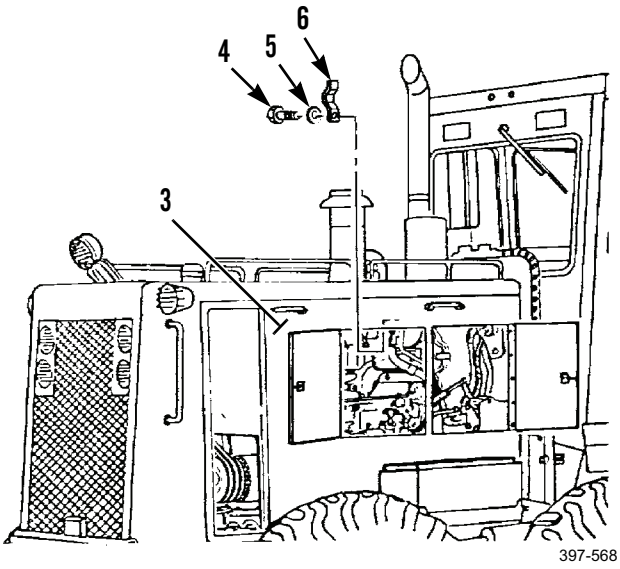


6. Install air dryer, if removed (WP 0164 00).
7. Install left and right side screen doors (WP 0055 00).

**END OF WORK PACKAGE**

## DASH PLATE REPLACEMENT 0183 00

### THIS WORK PACKAGE COVERS

Removal, Cleaning and Inspection, Installation

### INITIAL SETUP

**Maintenance Level**

Unit

**Tools and Special Tools**

Tool kit, general mechanic's (Item 89, WP 0348 00)

Sling (Item 78, WP 0348 00)

**Materials/Parts**

Rag, wiping (Item 35, WP 0349 00)

**Personnel Required**

Two

**References**

WP 0020 00

**Equipment Conditions**

Machine parked on level ground (TM 5-3805-261-10)

Parking/emergency brake applied (TM 5-3805-261-10)

**Equipment Conditions - Continued**

Implements lowered to ground (TM 5-3805-261-10)

Engine off (TM 5-3805-261-10)

Engine hood removed (WP 0181 00)

Left and right side engine panels removed (WP 0182 00)

Supplemental steering electronic control removed (WP 0089 00)

Instrument panel removed (WP 0256 00)

Throttle handle removed (WP 0257 00)

Battery disconnect switch removed (WP 0079 00)

Wire from supplemetal steering magnetic switch removed (WP 0088 00)

### *REMOVAL*



**WARNING**

Use extreme caution when handling heavy parts. Provide adequate support and use assistance during procedure. Ensure that any lifting device used is in good condition and of suitable load capacity. Keep clear of heavy parts supported only by lifting device. Failure to follow this warning may cause injury or death to personnel.

**NOTE**

Dash plate weighs 70 lb (32 kg).

1. With assistance, install sling to dash plate (5).
2. Remove bolt (6), washer (7), nut (1), washer (2), bolt (4), and bracket (3) from front of engine compartment and dash plate (5).
3. Remove two bolts (8) and washers (9).
4. Using sling, remove dash plate (5).
5. Remove two mountings (10).

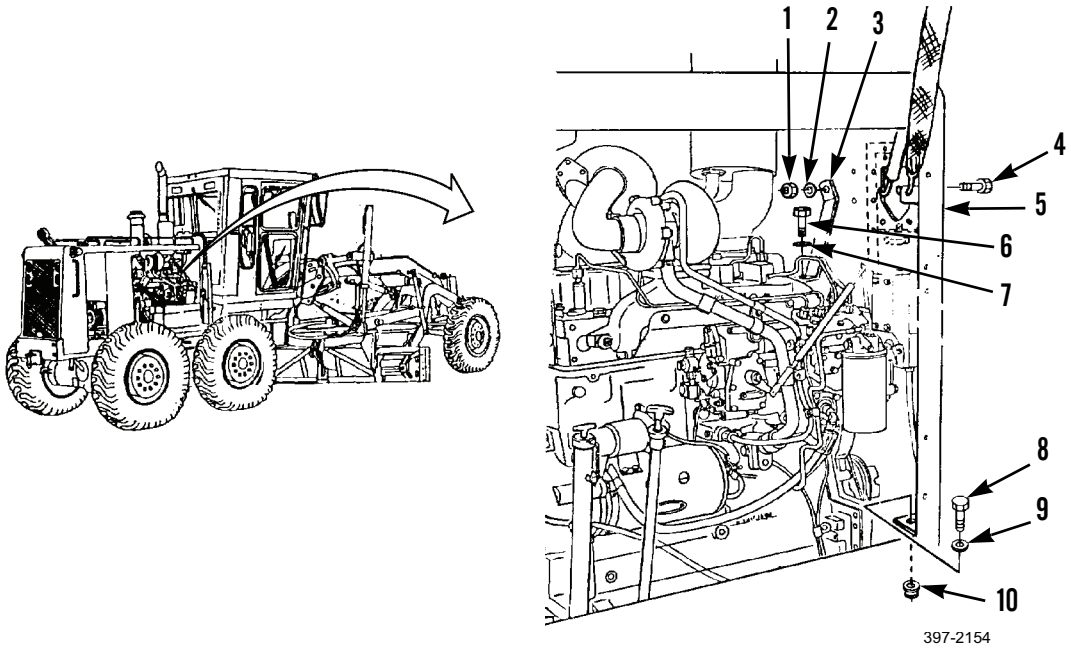


### *CLEANING AND INSPECTION*

Clean and inspect all parts in accordance with WP 0020 00.

### *INSTALLATION*

1. Install two mountings (10).



**WARNING**

Use extreme caution when handling heavy parts. Provide adequate support and use assistance during procedure. Ensure that any lifting device used is in good condition and of suitable load capacity. Keep clear of heavy parts supported only by lifting device. Failure to follow this warning may cause injury or death to personnel.

**NOTE**

Dash plate weighs 70 lb (32 kg).

2. With assistance, install sling to dash plate (5).
3. Install two washers (9) and bolts (8).
4. Install bracket (3), bolt (4), washer (2), nut (1), washer (7), and bolt (6).
5. Remove sling.
6. Install wire from supplemental steering magnetic switch (WP 0088 00).
7. Install battery disconnect switch (WP 0079 00).
8. Install throttle handle (WP 0257 00).
9. Install instrument panel (WP 0256 00).
10. Install supplemental steering electronic control (WP 0089 00).
11. Install left and right side engine panels (WP 0182 00).
12. Install engine hood (WP 0181 00).

**END OF WORK PACKAGE**

## ROPS REPLACEMENT (TYPES I AND II MACHINES) 0184 00

### THIS WORK PACKAGE COVERS

Removal, Cleaning and Inspection, Installation

### INITIAL SETUP

**Maintenance Level**

Unit

**Tools and Special Tools**

Tool kit, general mechanic's (Item 89, WP 0348 00)

Shop equipment, common no. 1 (Item 75, WP 0348 00)

Sling (Item 78, WP 0348 00)

Wrench, torque (Item 98, WP 0348 00)

Eyebolt, 3/4-10 (2)

Lifting device, 2,500-lb capacity

**Materials/Parts**

Rag, wiping (Item 35, WP 0349 00)

**Personnel Required**

Three

**References**

WP 0020 00

**Equipment Conditions**

Machine parked on level ground (TM 5-3805-261-10)

Parking/emergency brake applied (TM 5-3805-261-10)

Implements lowered to ground (TM 5-3805-261-10)

Engine off (TM 5-3805-261-10)

Battery disconnect switch in OFF position (TM 5-3805-261-10)

Seat belts removed (WP 0201 00)

### *REMOVAL*

1. Install two 3/4-10 eyebolts (1) in top of ROPS (2).



**WARNING**

Use extreme caution when handling heavy parts. Provide adequate support and use assistance during procedure. Ensure that any lifting device used is in good condition and of suitable load capacity. Keep clear of heavy parts supported only by lifting device. Failure to follow this warning may cause injury or death to personnel.

**NOTE**

ROPS weighs 1,732 lb (785 kg).

2. Attach sling to two 3/4-10 eyebolts (1).

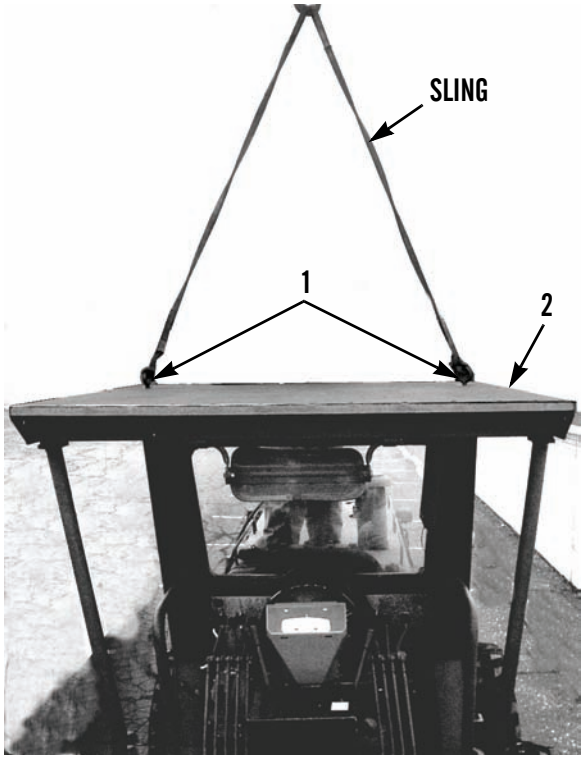


397-2482

***REMOVAL - CONTINUED***

3. Remove two lower stanchion mounting bolts (4) on each side of cab.

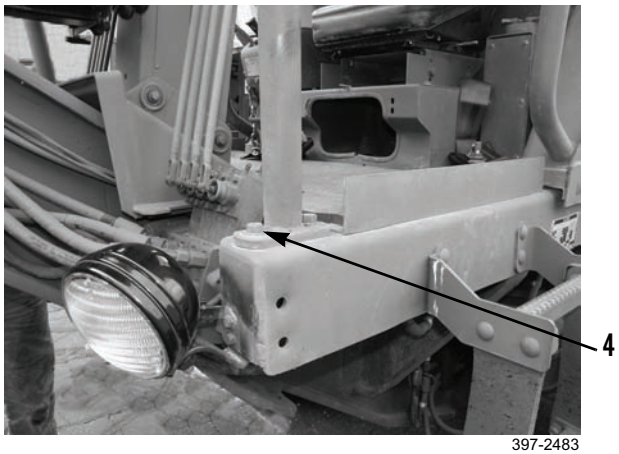

397-2483

4. Remove three rear mounting bolts (3) on each side of cab.

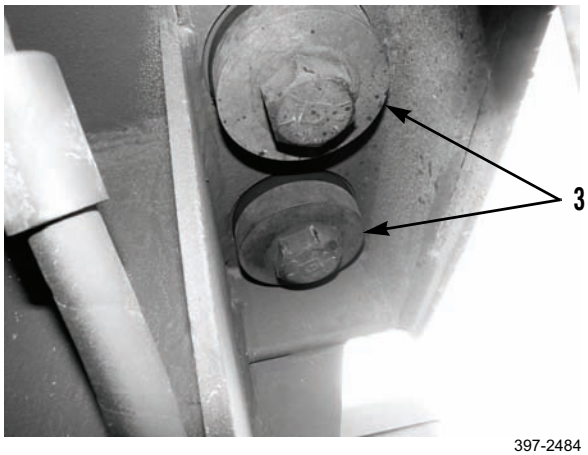

397-2484

5. Carefully raise ROPS (2) from machine with lifting device.

### *REMOVAL - CONTINUED*

**WARNING**

Take care to set ROPS down gently to avoid damage to the rear window and injury from broken glass. Failure to follow this warning may cause injury or death to personnel.

6. Lower ROPS (2) onto level surface.
7. Remove sling.
8. Inspect pad (5).
9. Remove pad (5) on each side of cab. Discard pad if damaged.

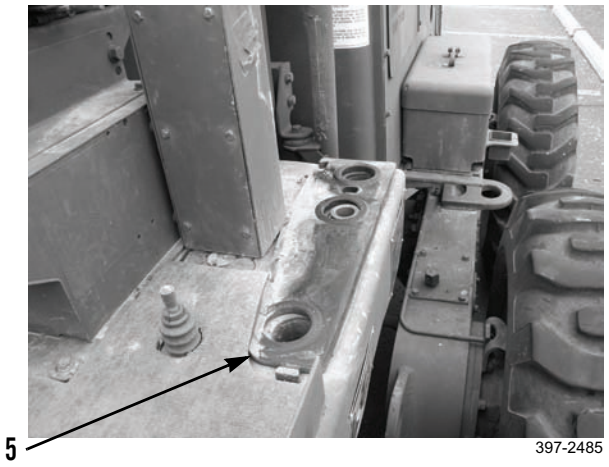

397-2485

### *CLEANING AND INSPECTION*

Clean and inspect all parts in accordance with WP 0020 00.

### *INSTALLATION*

1. Install pad (5) on each side of cab.
2. Attach sling to two 3/4-10 eyebolts (1) on top of ROPS (2).

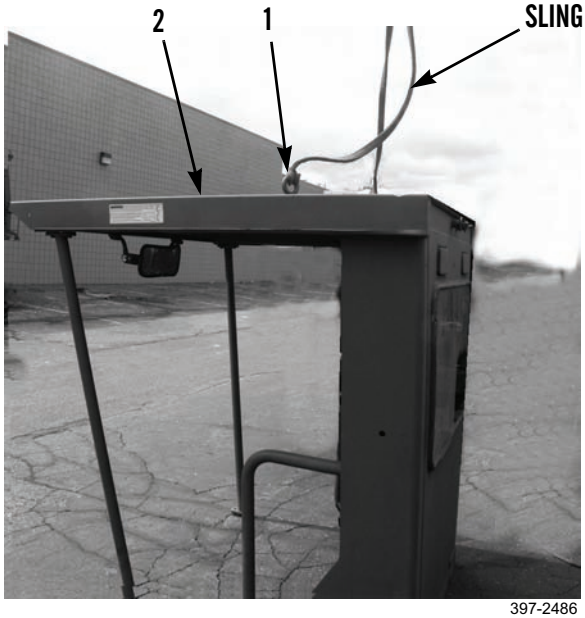

397-2486

***INSTALLATION - CONTINUED***



**WARNING**

Use extreme caution when handling heavy parts. Provide adequate support and use assistance during procedure. Ensure that any lifting device used is in good condition and of suitable load capacity. Keep clear of heavy parts supported only by lifting device. Failure to follow this warning may cause injury or death to personnel.

**NOTE**

ROPS weighs 1,732 lb (785 kg).

3. Raise ROPS (2) with lifting device and carefully lower ROPS onto machine.
4. Install three rear mounting bolts (3) on each side of cab. Tighten bolts to 870 lb-ft (1180 Nm).

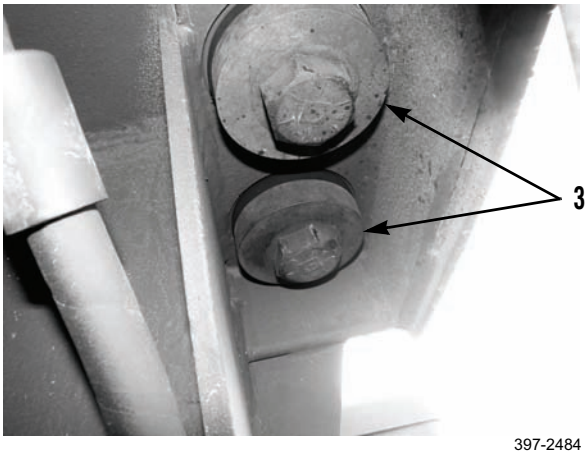


397-2484

5. Install two lower stanchion mounting bolts (4) on each side of cab.

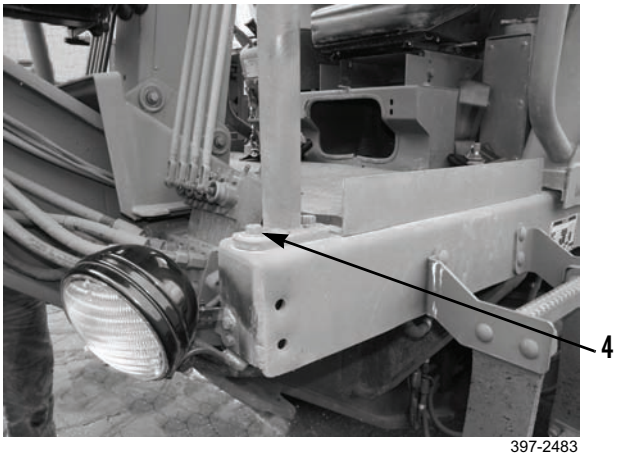


397-2483

6. Install seat belts (WP 0201 00).

**END OF WORK PACKAGE**

## ROPS ACCESSORIES REPLACEMENT (CCE MACHINE) 0185 00

### THIS WORK PACKAGE COVERS

Removal, Cleaning and Inspection, Installation

### INITIAL SETUP

**Maintenance Level**

Unit

**Tools and Special Tools**

Tool kit, general mechanic's (Item 89, WP 0348 00)

**Materials/Parts**

Rag, wiping (Item 35, WP 0349 00)

Gasket (2)

Rivet (31)

Screw, drive (4)

**References**

WP 0020 00

**Equipment Conditions**

Machine parked on level ground (TM 5-3805-261-10)

Parking/emergency brake applied (TM 5-3805-261-10)

Implements lowered to ground (TM 5-3805-261-10)

Engine off (TM 5-3805-261-10)

Battery disconnect switch in OFF position (TM 5-3805-261-10)

Cab sound suppression rear panel removed (WP 0192 00)

### *REMOVAL*

1. Remove 12 rivets (11), roller (13), right air door (12), and gasket (14) from upper-right-rear of cab (2). Discard rivets and gasket.
2. Repeat step 1 for left air door.
3. Remove two access covers (1).
4. Remove four drive screws (3) and instruction plate (4). Discard drive screws.
5. Remove four rivets (7), washers (6), wire rope (5), and accessories box (9). Discard rivets.
6. Remove three rivets (7) and cover (8). Discard rivets.

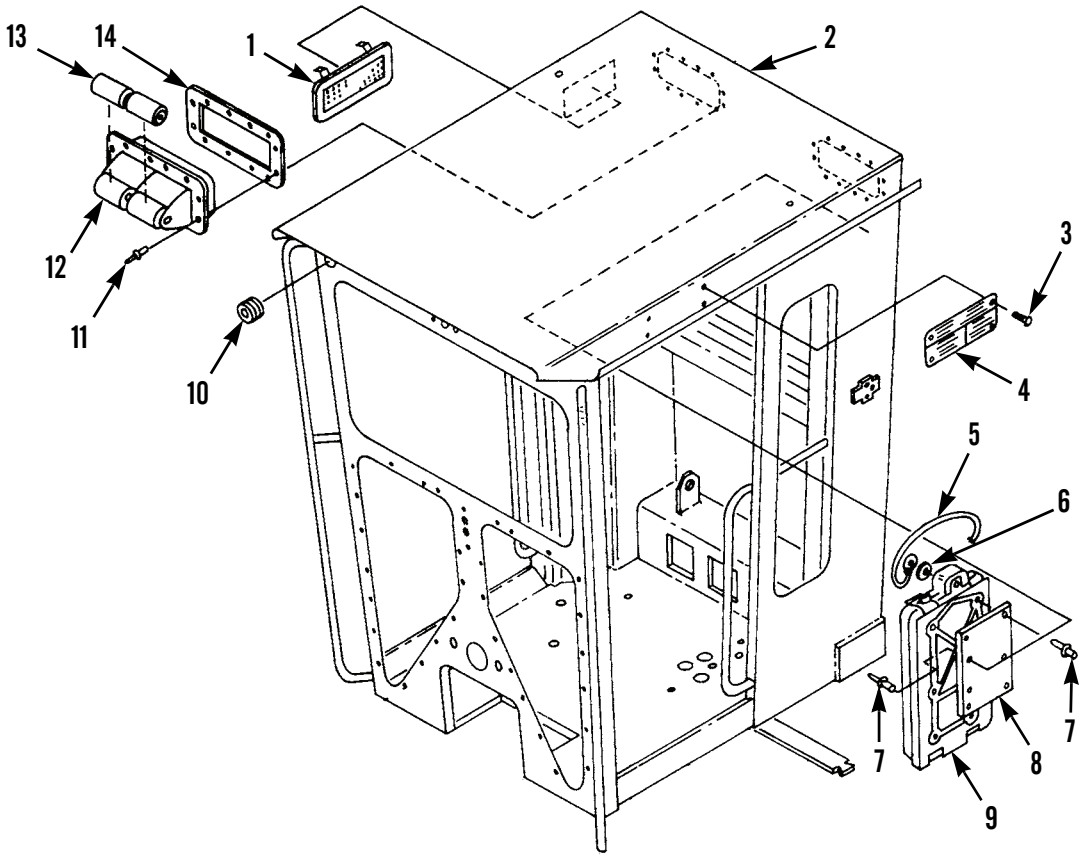


### *CLEANING AND INSPECTION*

Clean and inspect all parts in accordance with WP 0020 00.

### *INSTALLATION*

1. Install cover (8) and three new rivets (7).
2. Install accessories box (9), wire rope (5), four washers (6), and new rivets (7).
3. Install instruction plate (4) and four new drive screws (3).
4. Install two access covers (1).
5. Install new gasket (14), right air door (12), roller (13), and 12 new rivets (11) on upper-right-rear of cab (2).
6. Repeat step 5 for left air door.
7. Install cab sound suppression rear panel (WP 0192 00).

**END OF WORK PACKAGE**

## LOWER-FRONT WINDOWS MAINTENANCE (CCE MACHINE) 0186 00

### THIS WORK PACKAGE COVERS

Removal, Disassembly, Cleaning and Inspection, Assembly, Installation

### INITIAL SETUP

**Maintenance Level**

Unit

**Tools and Special Tools**

Tool kit, general mechanic's (Item 89, WP 0348 00)

**Materials/Parts**

Rag, wiping (Item 35, WP 0349 00)

Insert, screw (34)

**Personnel Required**

Two

**References**

WP 0020 00

**Equipment Conditions**

Machine parked on level ground (TM 5-3805-261-10)

Parking/emergency brake applied (TM 5-3805-261-10)

Implements lowered to ground (TM 5-3805-261-10)

Engine off (TM 5-3805-261-10)

Battery disconnect switch in OFF position (TM 5-3805-261-10)

Lower-front sound suppression panels removed (WP 0190 00)

***REMOVAL***

**WARNING**

When working with glass, always wear safety goggles and protective gloves. Failure to take precautions could cause injury to personnel.

**NOTE**

This procedure covers maintenance of the lower-left-front window. Follow these instructions for the lower-right-front window.

1. Remove pivot (3) and one spacer (2) from inside of cab. Turn pivot left to remove.
2. Remove second spacer (2) and bolt (1).
3. Remove four screws (5) and pivot (6).
4. Remove washer (8) and bearing (7) from pivot (6).
5. Remove lower-front window (4).

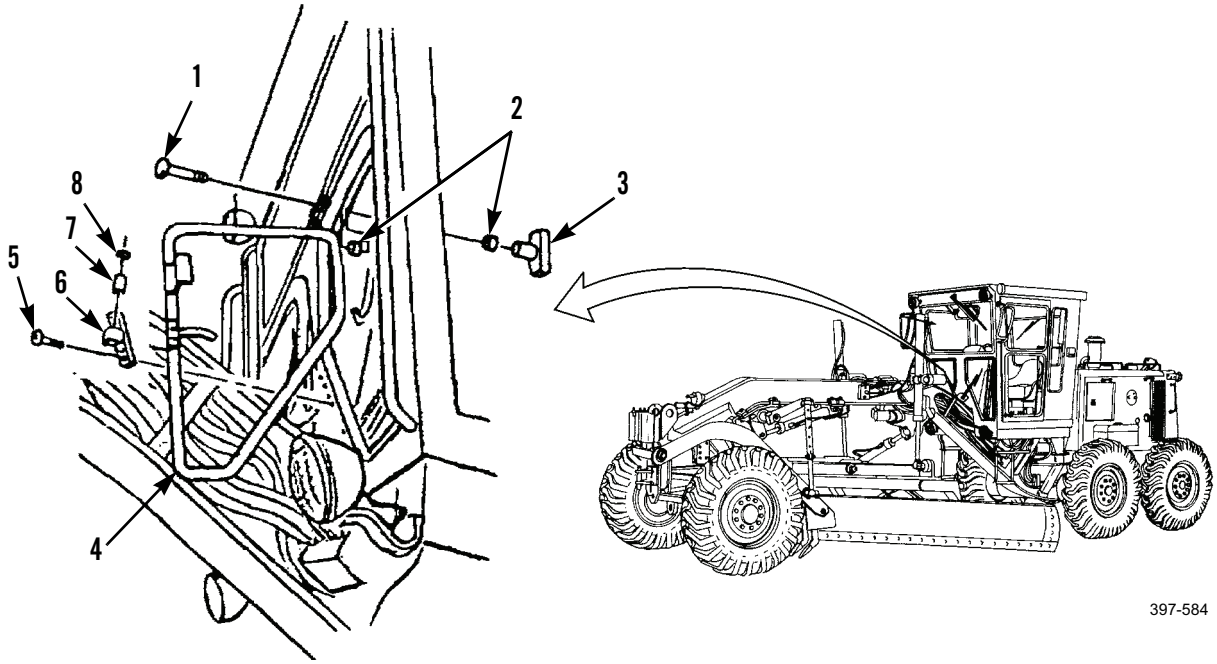

***REMOVAL - CONTINUED***

6. Remove two screws (9) and pivot (11).
7. Remove bearing (10) from pivot (11).

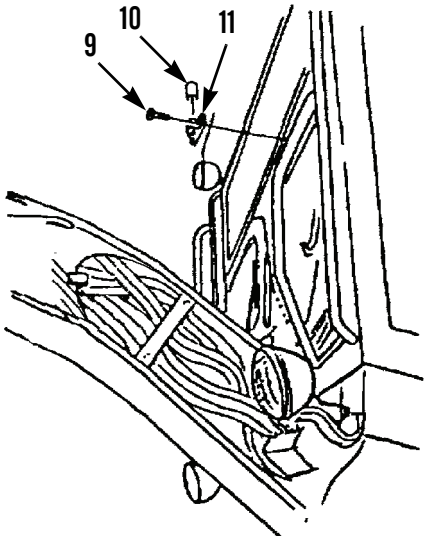

397-585

8. Remove 13 screws (12).
9. Remove inner window frame (13).
10. Remove seal (16) from cab frame. Discard seal if damaged.
11. Remove two screws (15) and catch (14) from outer window frame (13).

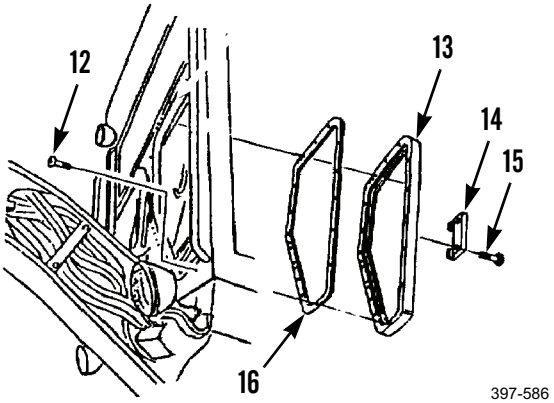

397-586

### *DISASSEMBLY*

1. Remove four screws (22) and pivot (23).
2. Remove three screws (24) and pivot (17).
3. Remove two screws (19) and pull handle (18).
4. Remove two screws (20) and manual handle (21).

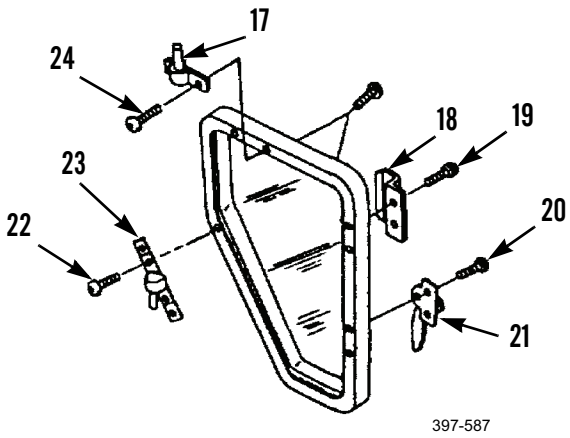


5. Remove seal (25), glass (26), and tape (27) from inner window frame (28). Discard seal and tape if damged.
6. Remove and discard 34 screw inserts (29) from outer and inner window frames (13 and 28).

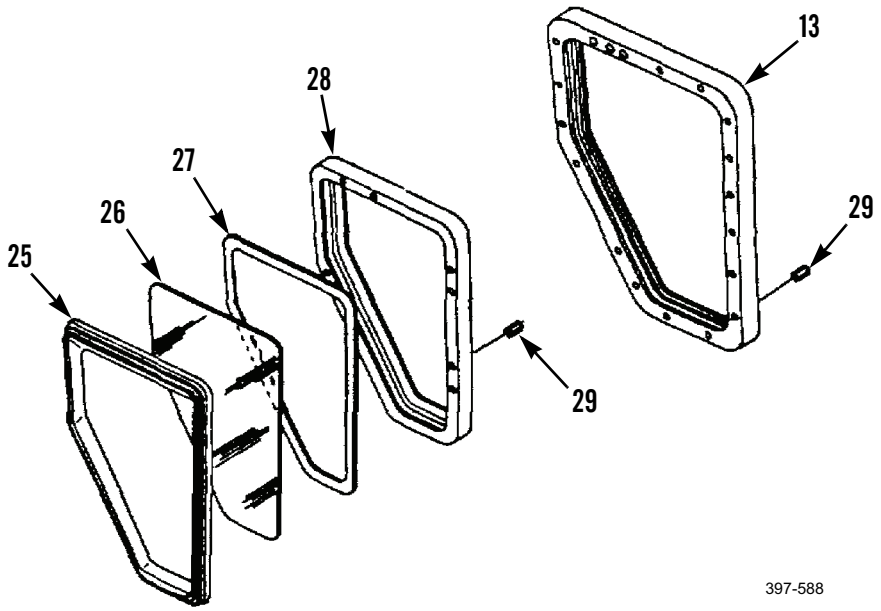


### *CLEANING AND INSPECTION*

Clean and inspect all parts in accordance with WP 0020 00.

### *ASSEMBLY*

**WARNING**

When working with glass, always wear safety goggles and protective gloves. Failure to take precautions could cause injury to personnel.

**NOTE**

This procedure covers maintenance of the left-lower-front window. Follow these instructions for the lower-right-front window.

1. Install 34 new screw inserts (29) in outer and inner window frames (13 and 28).
2. Install tape (27) in inner window frame (28) with adhesive backing on lip of inner window frame. Surface must be clean and dry. Cut new bulk tape material to size if necessary.
3. Install glass (26) and seal (25). Seat lip of seal between glass and inner window frame (28), work lip of seal around inner window frame until ends meet and glass is secured in inner window frame. Cut new bulk seal material to size if necessary.
4. Install handle (21) and two screws (20).
5. Install handle (18) and two screws (19).
6. Install pivot (17) and three screws (24).
7. Install pivot (23) and four screws (22).

### *INSTALLATION*

1. Install catch (14) and two screws (15) on outer window frame (13).
2. Install seal (16). Seat lips of seal into grooves of cab frame, and work seal around cab frame.
3. Position inner window frame (13) against cab wall in front-left-inside of cab.
4. Install 13 screws (12). Move inner window frame (13) to align holes.

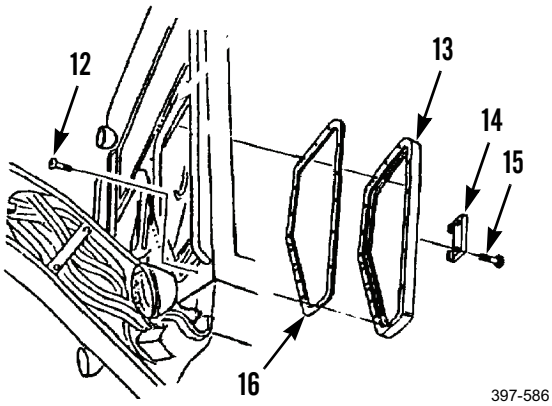

397-586

***INSTALLATION - CONTINUED***

5. Install bearing (10) into pivot (11).
6. Install pivot (11) and two screws (9).

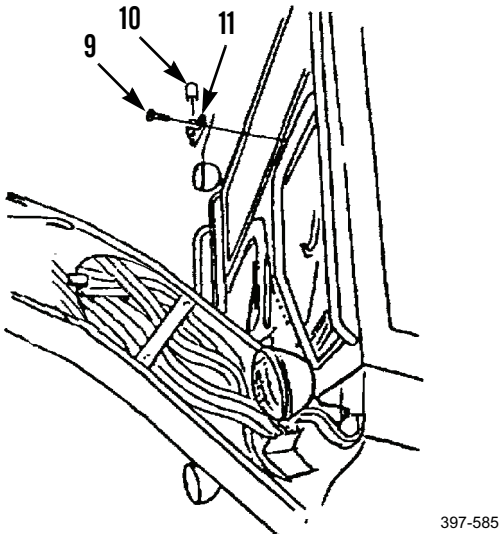


7. Position lower-front windshield (4).
8. Install bearing (7) and washer (8) on pivot (6).
9. Install pivot (6) and four screws (5).
10. Install bolt (1) only halfway.
11. Install one spacer (2) under lip, inside of cab. Line up with bolt (1) and push bolt through one of two spacers and cab panel.
12. Install second spacer (2) and pivot (3). Turn pivot right to install.

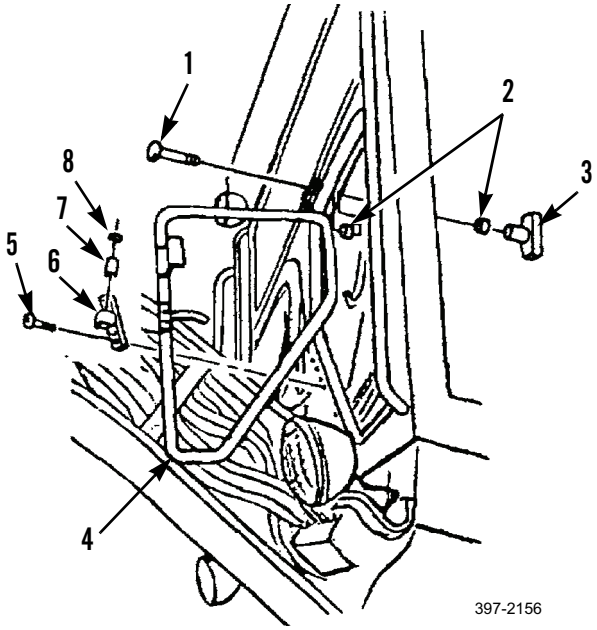


13. Install lower-front sound suppression panels (WP 0190 00).

**END OF WORK PACKAGE**

## CAB WINDOWS REPLACEMENT (CCE MACHINE) 0187 00

### THIS WORK PACKAGE COVERS

Removal, Cleaning and Inspection, Installation

### INITIAL SETUP

**Maintenance Level**

Unit

**Tools and Special Tools**

Tool kit, general mechanic's (Item 89, WP 0348 00)

Installer tool, seal (Item 35, WP 0348 00)

**Materials/Parts**

Detergent (Item 11, WP 0349 00)

Rag, wiping (Item 35, WP 0349 00)

**Personnel Required**

Two

**References**

WP 0020 00

**Equipment Conditions**

Machine parked on level ground (TM 5-3805-261-10)

Parking/emergency brake applied (TM 5-3805-261-10)

Implements lowered to ground (TM 5-3805-261-10)

Engine off (TM 5-3805-261-10)

Battery disconnect switch in OFF position (TM 5-3805-261-10)

Upper-front windshield wiper arm removed (WP 0207 00)

Rear windshield wiper arm removed (WP 0208 00)

### *REMOVAL*

**WARNING**

When working with glass, always wear safety goggles and protective gloves. Failure to take precautions could cause injury to personnel.

**NOTE**

This procedure covers replacement of the rear window glass. Follow these instructions for the upper-front windshield glass, right and left side window glass, right and left-upper door window glass and right and left-lower door window glass.

1. Use seal installer tool (3) to unlock seal (2) in rear window, outside of cab. Place curved end of seal installer tool in between locking lips (5) at butted ends (1) of seal. Work seal installer tool around circumference of window, pulling locking lip away from cab.
2. Remove glass (4). With assistance, tilt top of glass away from cab and remove from bottom channel.
3. Remove and seal (2) by pulling out from edge of window opening. Discard if damaged.

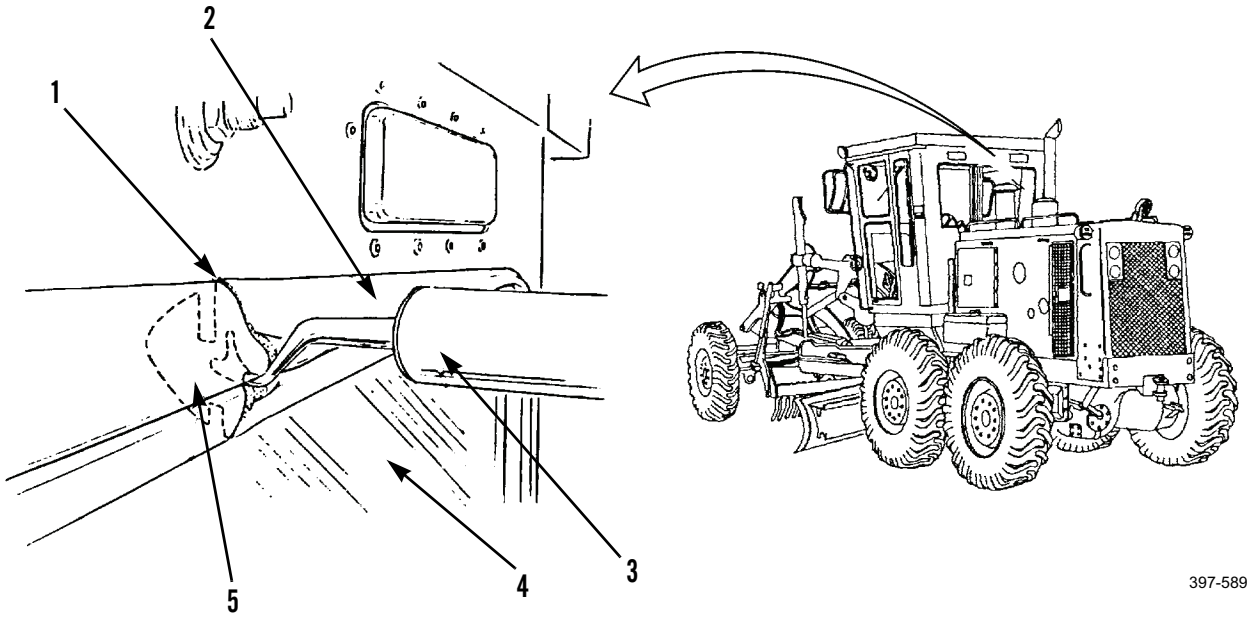


### *CLEANING AND INSPECTION*

Clean and inspect all parts in accordance with WP 0020 00.

### *INSTALLATION*

1. Install new seal (2). Start one end of seal on side of window opening, with locking lip (5) towards outside of cab.
2. Push seal (2) on edge of window opening around circumference of opening until ends are closed together smooth and tight. Cut bulk seal material 1/8 in. per foot (3 mm per 30.5 cm) of window opening circumference past starting point, then close ends.

***INSTALLATION - CONTINUED***

**CAUTION**

Do not use too much force when positioning bottom of glass. Damage to glass could result.

3. Use assistance to position bottom of glass (4) into channel of seal (2) as far as possible.
4. Install glass (4). Use seal installer tool (3) to lift edge of seal (2) around circumference of window, so glass can slip into position.
5. Inspect seal (2) in rear window, inside of cab. Make sure edge of seal is over glass (4).
6. Lock seal (2) in rear window, outside of cab. Apply detergent and water solution to locking lip (5) around circumference of seal.
7. With seal installer tool (3), insert curved end between locking lip (5) and groove at any point away from butted ends. Work seal installer tool along groove until locking lip is locked into position around circumference of window.

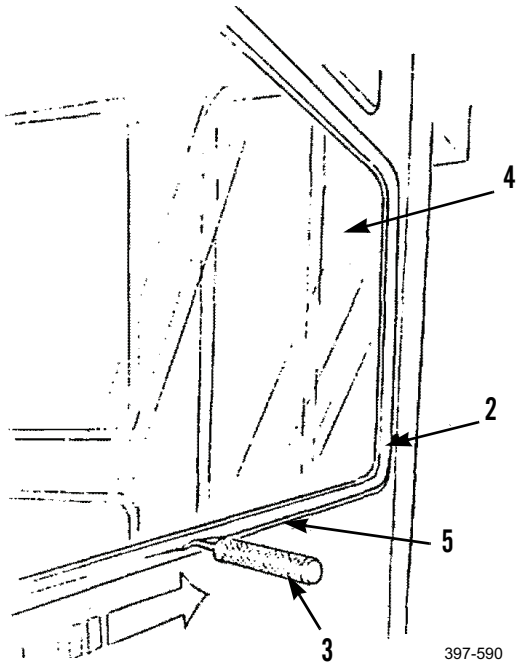


8. Install rear windshield wiper arm (WP 0208 00).
9. Install upper front windshield wiper arm (WP 0207 00).

**END OF WORK PACKAGE**

## CAB DOORS AND LATCH ASSEMBLIES MAINTENANCE (CCE MACHINE) 0188 00

### THIS WORK PACKAGE COVERS

Removal, Disassembly, Cleaning and Inspection, Assembly, Installation, Adjustment

### INITIAL SETUP

**Maintenance Level**

Unit

**Tools and Special Tools**

Tool kit, general mechanic's (Item 89, WP 0348 00)

Shop equipment, common no. 1 (Item 75, WP 0348 00)

Sling (Item 78, WP 0348 00)

**Materials/Parts**

Adhesive (Item 1, WP 0349 00)

Adhesive (Item 2, WP 0349 00)

Oil, lubricating (Item 25, WP 0349 00)

Rag, wiping (Item 35, WP 0349 00)

Cotter pin (10)

Lockwasher (8)

**Personnel Required**

Two

**References**

WP 0020 00

**Equipment Conditions**

Machine parked on level ground (TM 5-3805-261-10)

Parking/emergency brake applied (TM 5-3805-261-10)

Implements lowered to ground (TM 5-3805-261-10)

Engine off (TM 5-3805-261-10)

Battery disconnect switch in OFF position (TM 5-3805-261-10)

Cab door windows removed if necessary (WP 0187 00)

***REMOVAL***



**WARNING**

Use extreme caution when handling heavy parts. Provide adequate support and use assistance during procedure. Ensure that any lifting device used is in good condition and of suitable load capacity. Keep clear of heavy parts supported only by lifting device. Failure to follow this warning may cause injury or death to personnel.

**NOTE**

Door weighs 85 lb (39 kg).

1. With assistance, attach sling to right door (1).

**NOTE**

Outline door hinge in pencil to aid in installation.

2. Remove three nuts (5), washers (4), plate (3), and three spacers (2).
3. Remove two nuts (6), washers (7), plate (8), and two spacers (9).

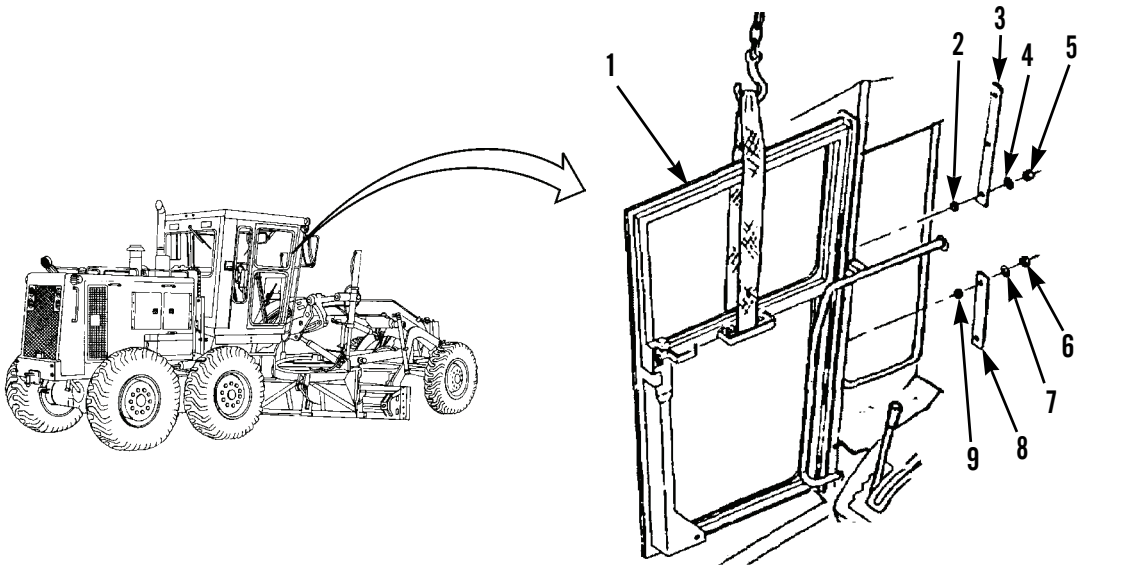


397-591

***REMOVAL - CONTINUED***

**NOTE**

Note location of screws to aid in installation.

4. Remove two nuts (12), washers (13), and screws (17).
5. Remove three nuts (10), washers (11), and screws (18).
6. Remove nine nuts (14), washers (15), and screws (16).
7. Use sling to remove right door (1).
8. Remove sling.

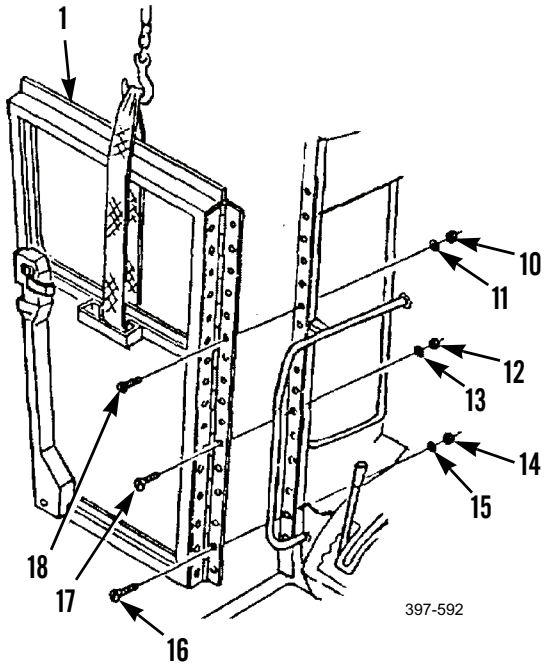


9. Attach sling to left door (1).
10. Remove 14 nuts (21), washers (20), and screws (19).
11. Use sling to remove left door (1).
12. Remove sling.

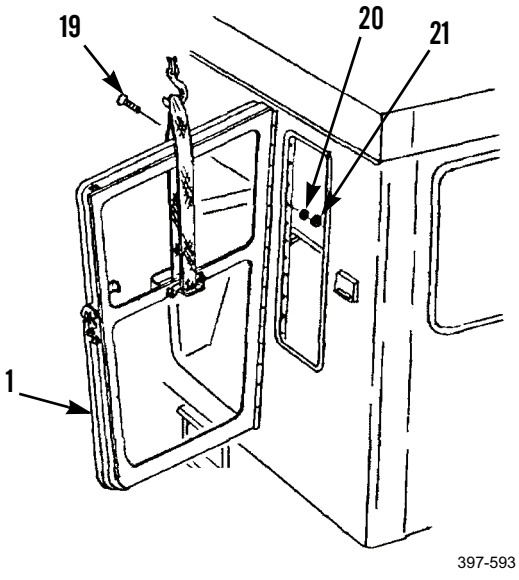

***DISASSEMBLY***

**NOTE**

This procedure covers disassembly of the left door. Follow these instructions for the right door.

1. Remove 14 rivets (25), hinge (27), and seals (24 and 26). Discard rivets and seals if damaged.
2. Remove plug (23).
3. Remove two nuts (28), handle (29), two bolts (22), and handle (30).

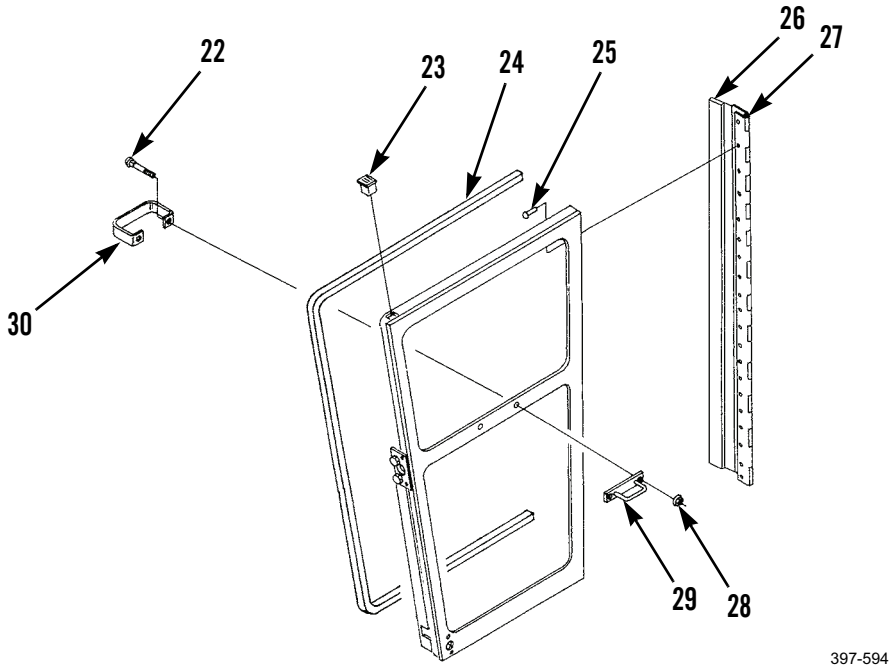

***DISASSEMBLY - CONTINUED***

4. Remove three screws (39) and cover (40).
5. Remove cotter pin (37), two screws (35), and handle (36). Discard cotter pin.
6. Remove cotter pin (34), washer (33), pin (31), washer (32), and link assembly (38). Discard cotter pin.

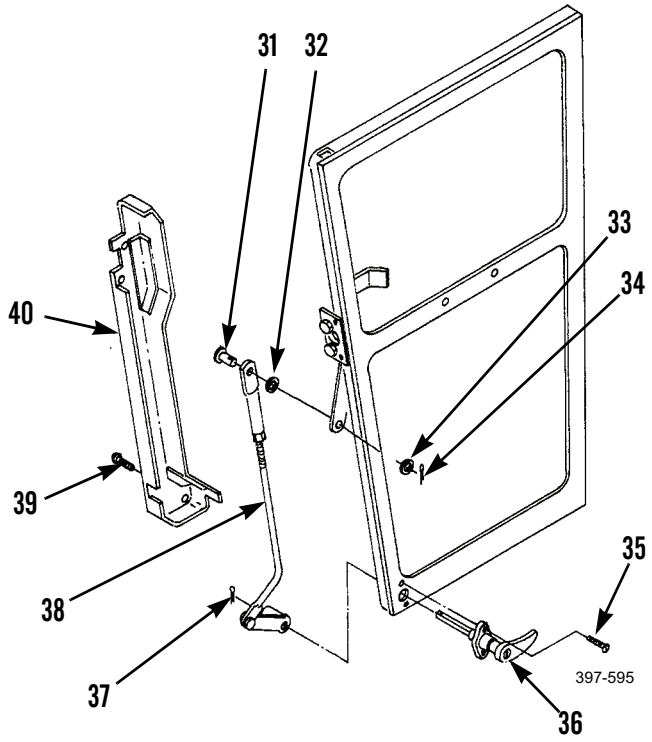


7. Remove cotter pin (47), washer (46), and pin (44). Discard cotter pin.
8. Remove cotter pin (41), two screws (48), and handle (49). Discard cotter pin.
9. Remove spring (42) from plate (43), and latch (45).

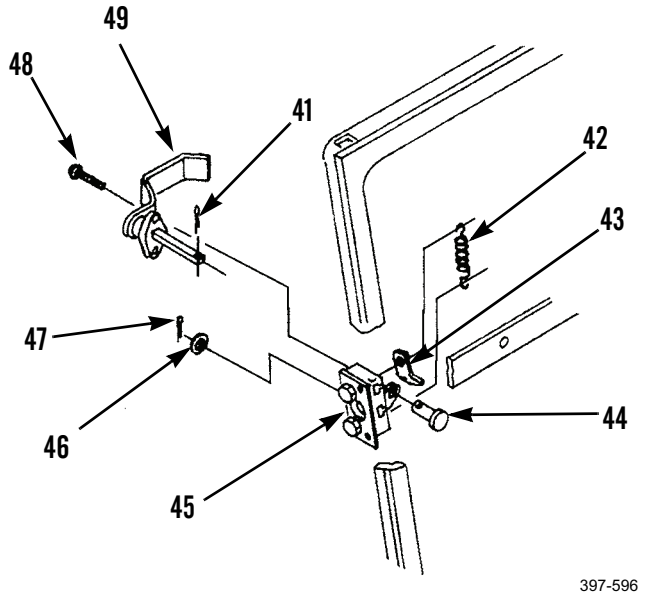

***DISASSEMBLY - CONTINUED***

10. Remove cotter pin (58), washer (57), lever (51), washer (50), and link (56). Discard cotter pin.
11. Remove nut (54), washer (53), plate (52), and bolt (55).

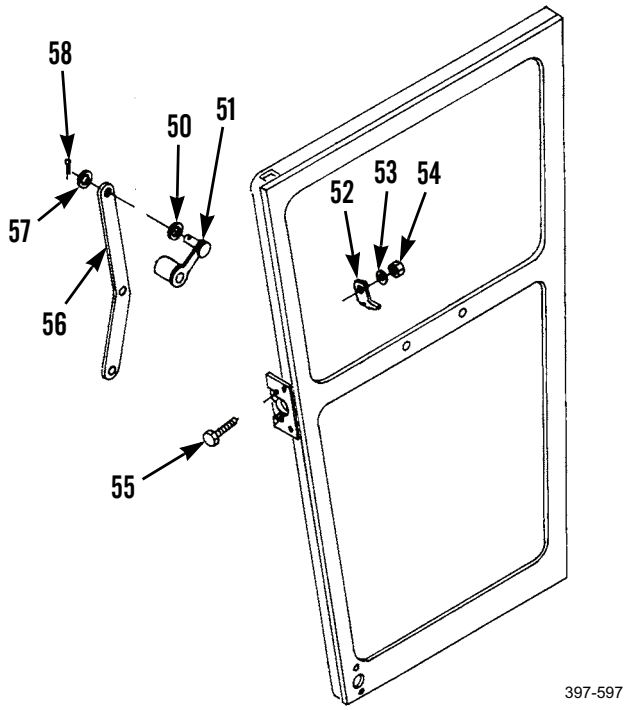


12. Remove nut (62), washer (63), and bolt (64).
13. Remove two nuts (61), washers (60), bolts (65), latch (45), and two washers (59).

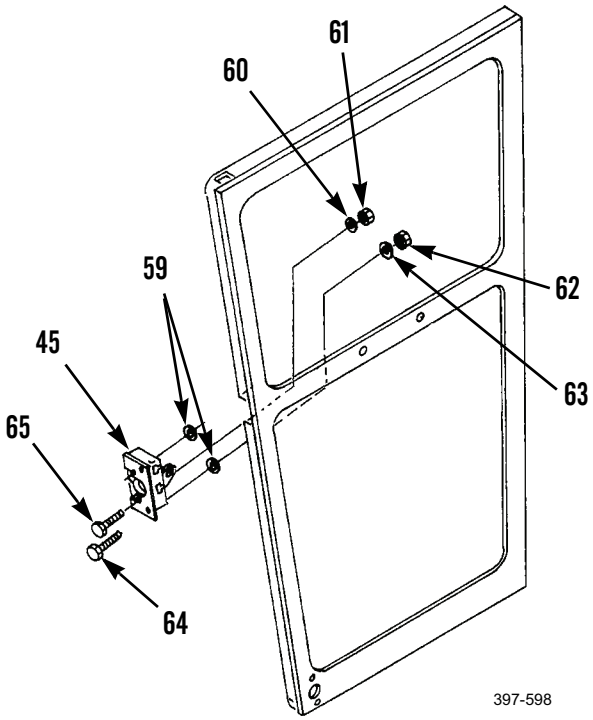

***DISASSEMBLY - CONTINUED***

14. Remove striker (71), shims (72), and plate (68) from door post (69) in operator compartment (70).
15. Remove four screws (74) and washers (75) from bracket (66).
16. Remove four nuts (73), screws (77), lockwashers (76), bracket (66), and latch (67). Discard lockwashers.

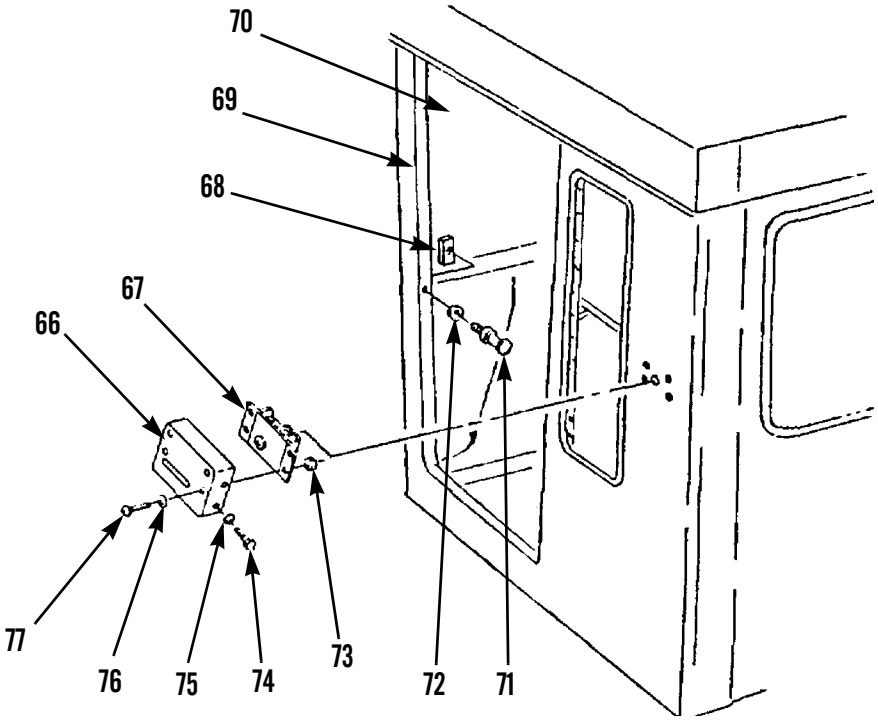


17. Remove strip (81) and discard if damaged.
18. Remove push-on nut (78) and washer (79).
19. Remove handle (80) from inside operator compartment (70).

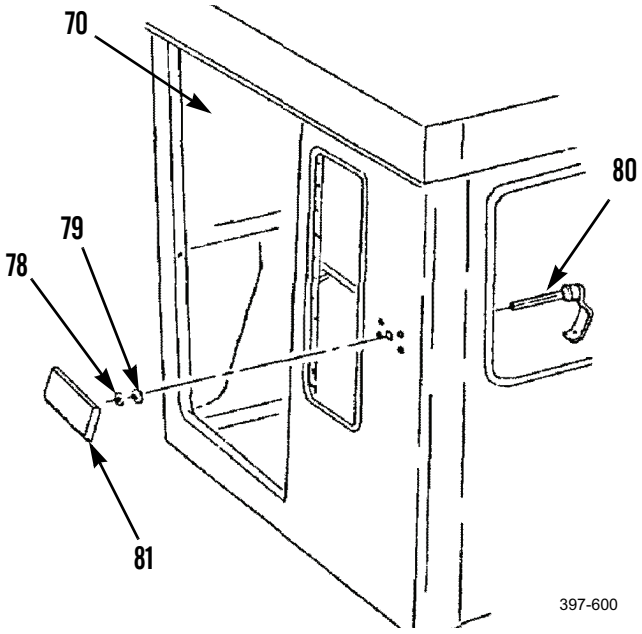

### *DISASSEMBLY - CONTINUED*

20. Remove retainer (82) and knob (83) from handle (80).

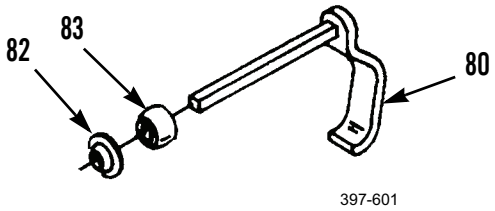

397-601

### *CLEANING AND INSPECTION*

Clean and inspect all parts in accordance with WP 0020 00.

### *ASSEMBLY*

**NOTE**

This procedure covers assembly of the left door. Follow these instructions for the right door.

1. Install knob (83) and retainer (82) on handle (80).
2. Install handle (80) in rear of operator compartment (70).
3. Install washer (79) and push-on nut (78).
4. Apply thin coat of adhesive to new strip (81) and install on cab.

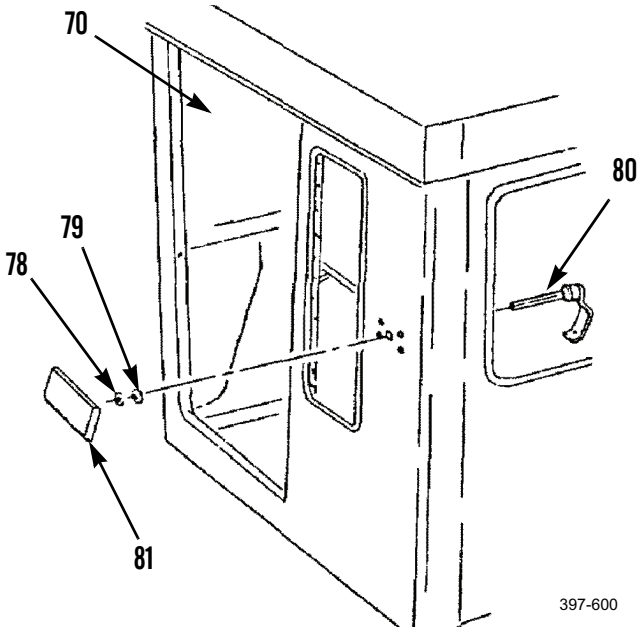

397-600

***ASSEMBLY - CONTINUED***

5. Install latch (67), bracket (66), four new lockwashers (76), screws (77), and nuts (73).
6. Install four washers (75) and screws (74) on bracket (66).
7. Install plate (68), shims (72), and striker (71) on door post (69) of operator compartment (70).

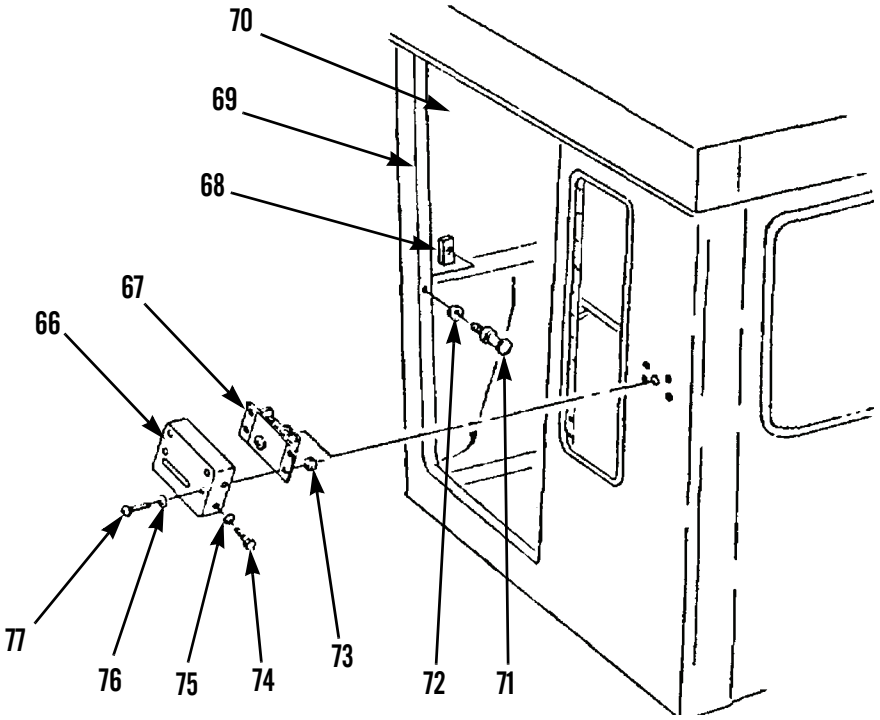

***ASSEMBLY - CONTINUED***

8. Install two washers (59), latch (45), two bolts (65), washers (60), and nuts (61). Lubricate all moving parts of latch.
9. Install bolt (64), washer (63), and nut (62).

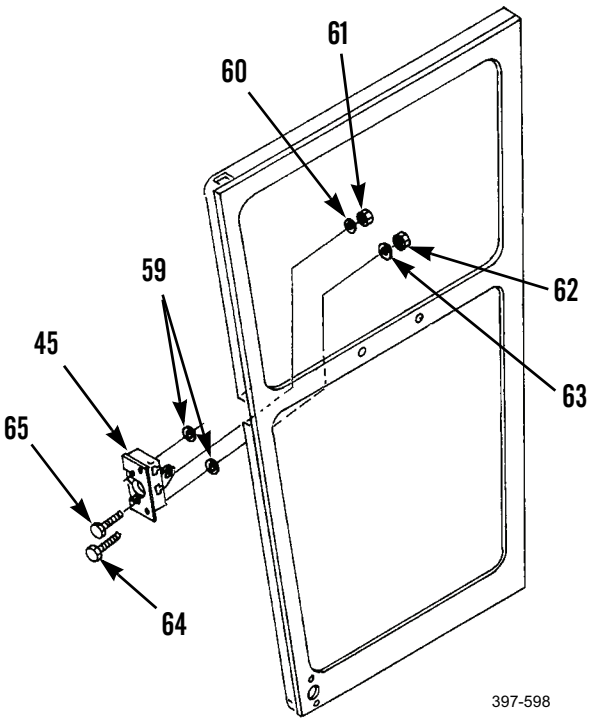


10. Install bolt (55), plate (52), washer (53), and nut (54).
11. Install link (56), washer (50), lever (51), washer (57), and new cotter pin (58).

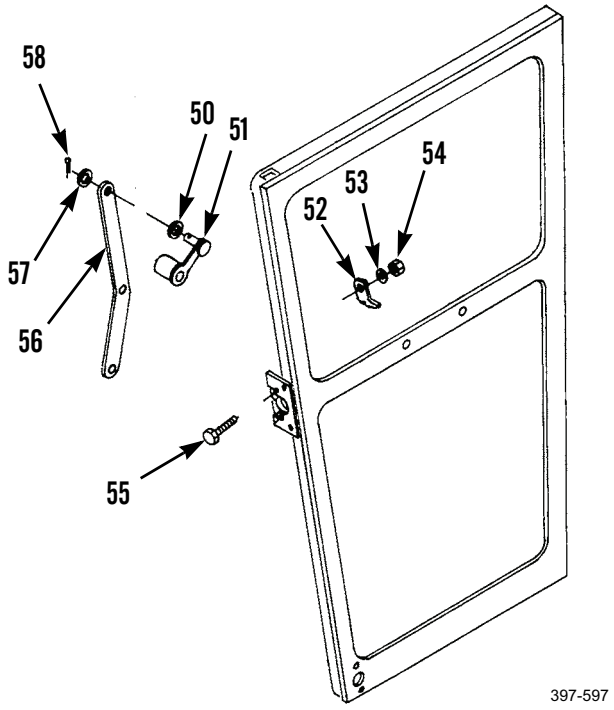

***ASSEMBLY - CONTINUED***

12. Install spring (42) on plate (43) and latch (45).
13. Install handle (49), two screws (48) and new cotter pin (41).
14. Install pin (44), washer (46), and new cotter pin (47).

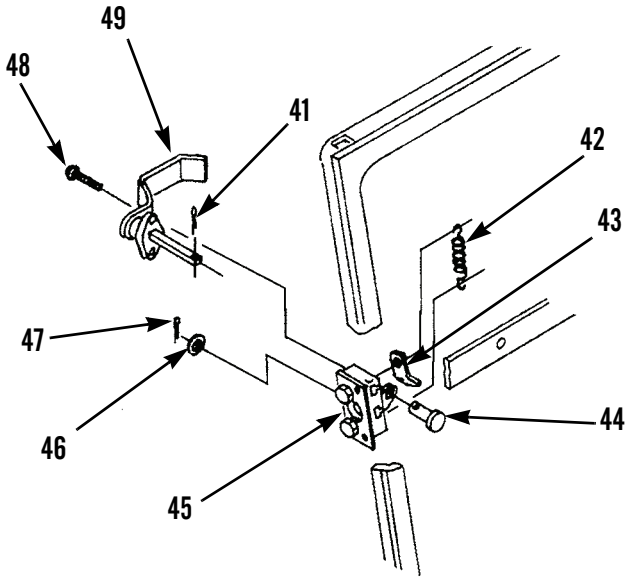


15. Install link assembly (38), washer (32), pin (31), washer (33), and new cotter pin (34). Ensure link assembly length (A) is adjusted to 21.65 $\pm$ 0.06 in. (55 cm $\pm$ 1.5 mm).
16. Install handle (36), two screws (35), and new cotter pin (37).
17. Install cover (40) and three screws (39). Tighten three screws to 79 lb-in. (9 Nm).

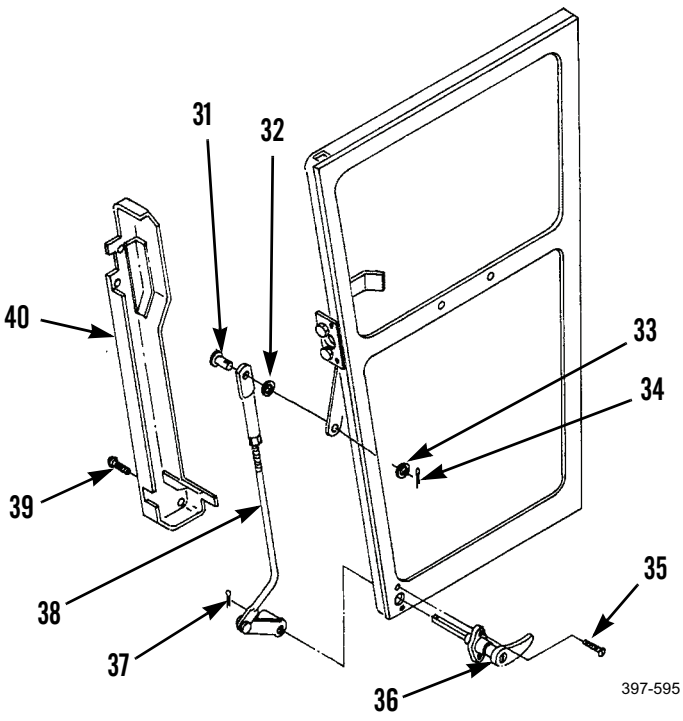


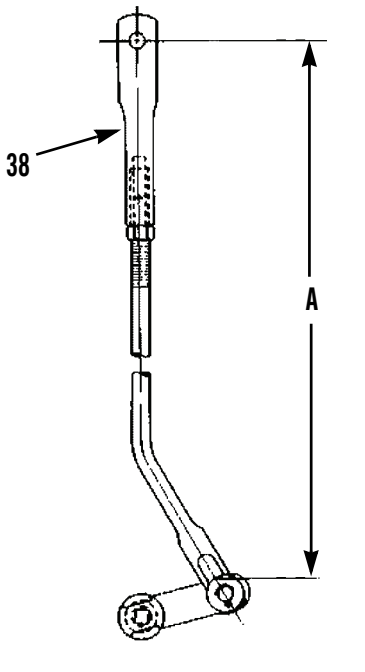

***ASSEMBLY - CONTINUED***

18. Install handle (30), two bolts (22), handle (29) and two nuts (28).
19. Install plug (23).
20. Install new seals (26 and 24) as follows:
    a. Cut to size from bulk seal.
    b. Make sure temperature of adhesive is above 60°F (16°C) and that adhesive is mixed thoroughly.
    c. Put 0.01 in. (0.25 mm) thickness of adhesive on surface of seal and door that will make contact. See (B) on illustration below.
    d. Put seals in position on door.

**NOTE**

Put pressure on seals to make sure all surfaces of adhesive are in contact. Seals can be moved for a short amount of time.

21. Install hinge (27) and 14 new rivets (25).

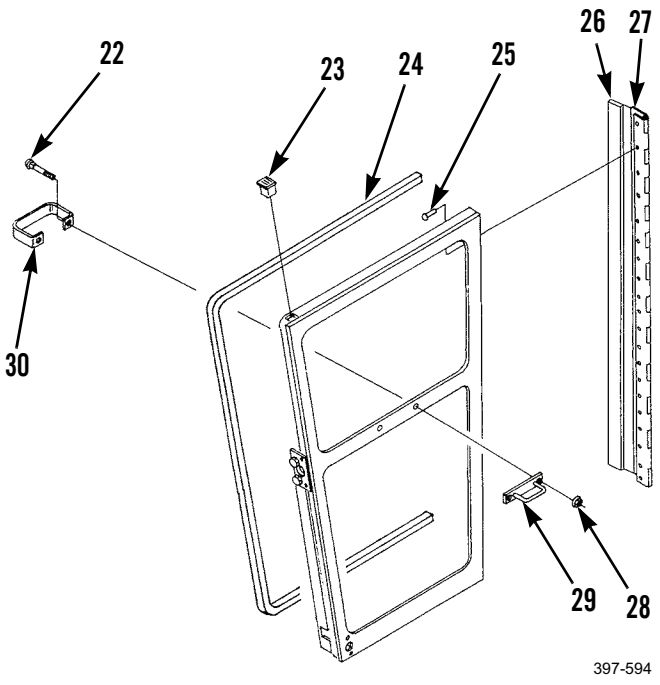


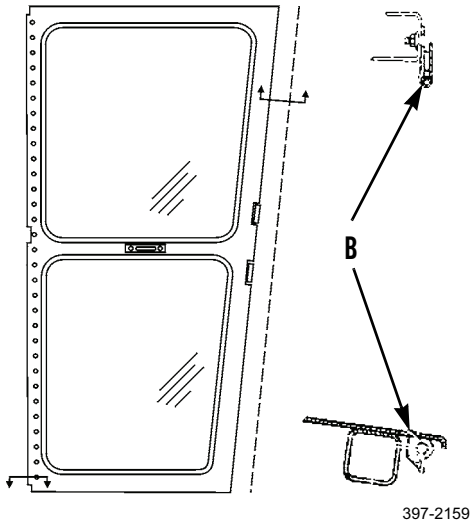

***INSTALLATION***



**WARNING**

Use extreme caution when handling heavy parts. Provide adequate support and use assistance during procedure. Ensure that any lifting device used is in good condition and of suitable load capacity. Keep clear of heavy parts supported only by lifting device. Failure to follow this warning may cause injury or death to personnel.

**NOTE**

Door weighs 85 lb (39 kg).

1. Attach sling to left door (1).
2. Use sling to position door (1) on cab. Align with pencil marks made previously.

**NOTE**

Do not tighten screws.

3. Install 14 screws (19), washers (20), and nuts (21).

**NOTE**

Space should be 0.16 in. (4 mm).

4. Close left door. Check space between door lip and cab all around door. Tighten nuts (21) when space is correct.
5. Remove sling.

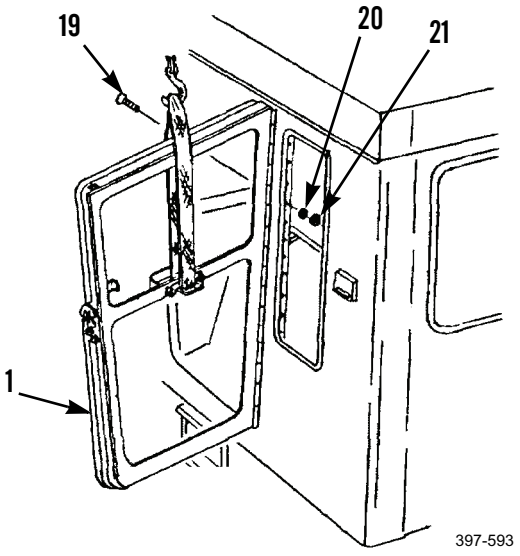


6. Attach sling to right door (1).

***INSTALLATION - CONTINUED***

7. Use sling to install right door (1) on cab. Align with pencil marks made previously.

**NOTE**

- Do not tighten nuts.
- Install screws as noted during removal.

8. Install nine screws (16), washers (15), and nuts (14).
9. Install three screws (18), washers (11), and nuts (10).
10. Install two screws (17), washers (13), and nuts (12).

**NOTE**

Space should be 0.16 in. (4 mm).

11. Close right door. Check space between door lip and cab all around door. Tighten nuts (10, 12, and 14) when space is correct.

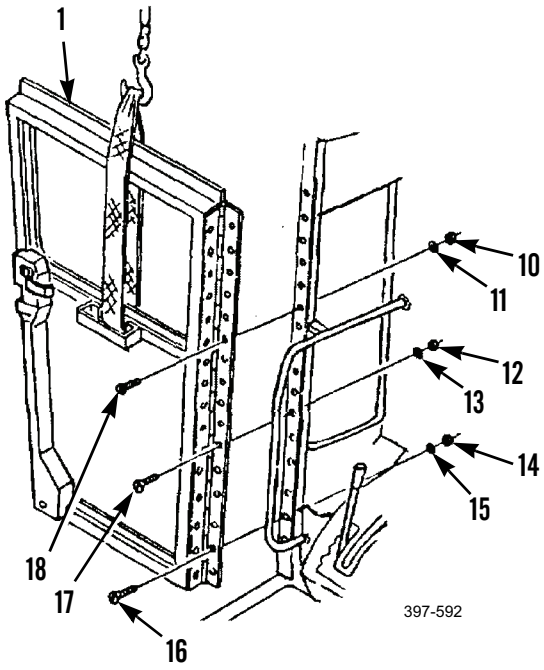


12. Install two spacers (9), plate (8), two washers (7), and nuts (6).
13. Install three spacers (2), plate (3), three washers (4), and nuts (5).
14. Remove sling.

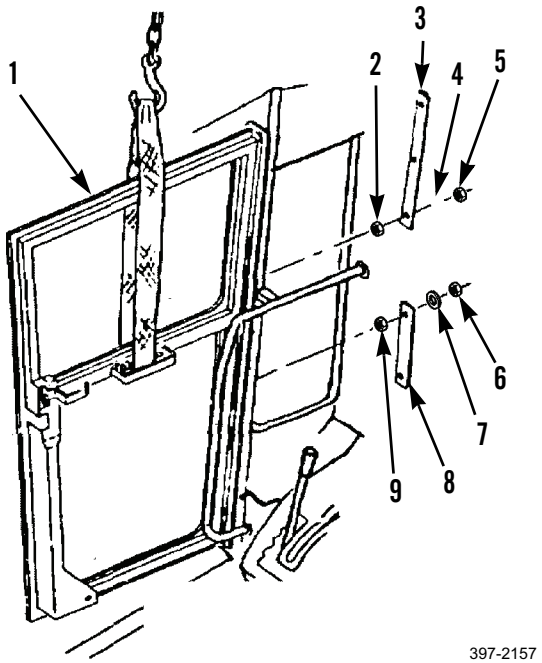

***ADJUSTMENT***

1. Close left and right doors.

**NOTE**

Striker must guide door up and down.

2. Inspect striker (71) to see if striker is centered in latch (45).
3. Adjust, if necessary, by removing or installing shims (72).

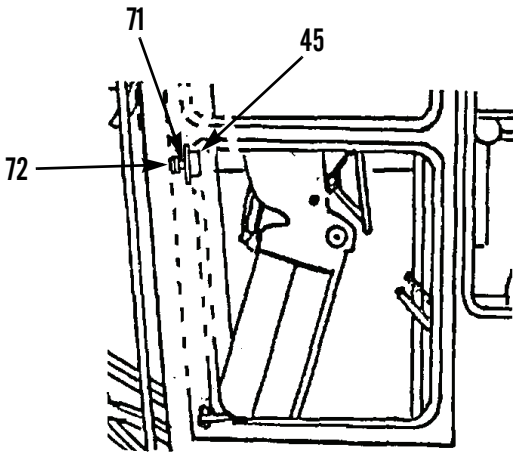

397-602

4. Install cab windows if removed (WP 0187 00).

**END OF WORK PACKAGE**

## CAB STORAGE COMPARTMENT MAINTENANCE (CCE MACHINE) 0189 00

### THIS WORK PACKAGE COVERS

Removal, Disassembly, Cleaning and Inspection, Assembly, Installation

### INITIAL SETUP

**Maintenance Level**

Unit

**Tools and Special Tools**

Tool kit, general mechanic's (Item 89, WP 0348 00)

**Materials/Parts**

Rag, wiping (Item 35, WP 0349 00)

Washer, spring-tension (16)

**References**

WP 0020 00

**Equipment Conditions**

Machine parked on level ground (TM 5-3805-261-10)

Parking/emergency brake applied (TM 5-3805-261-10)

Implements lowered to ground (TM 5-3805-261-10)

Engine off (TM 5-3805-261-10)

Battery disconnect switch in OFF position (TM 5-3805-261-10)

Dome light switch removed (WP 0099 00)

Defroster fan removed (WP 0210 00)

Inside rearview mirror removed (WP 0213 00)

### *REMOVAL*

Remove 14 screws (2) and cab storage compartment assembly (1).

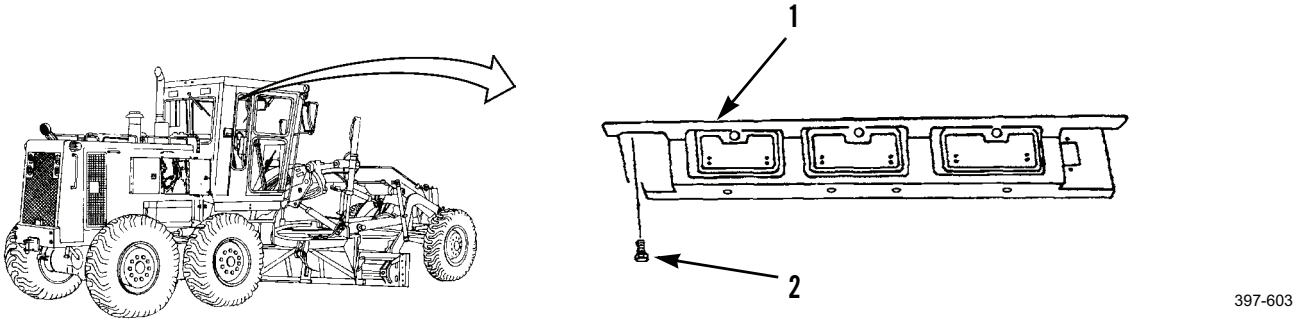

### *DISASSEMBLY*

1. Remove 8 nuts (9), 16 spring-tension washers (10), 8 bolts (11), and 4 plates (4). Discard spring-tension washers.

**NOTE**

Remove rivets only if necessary.

2. Remove six rivets (8) and three latches (5) from three doors (6). Discard rivets if removed.
3. Remove 24 rivets (8), 6 hinges (7), and 3 doors (6) from cab panel (3). Discard rivets.

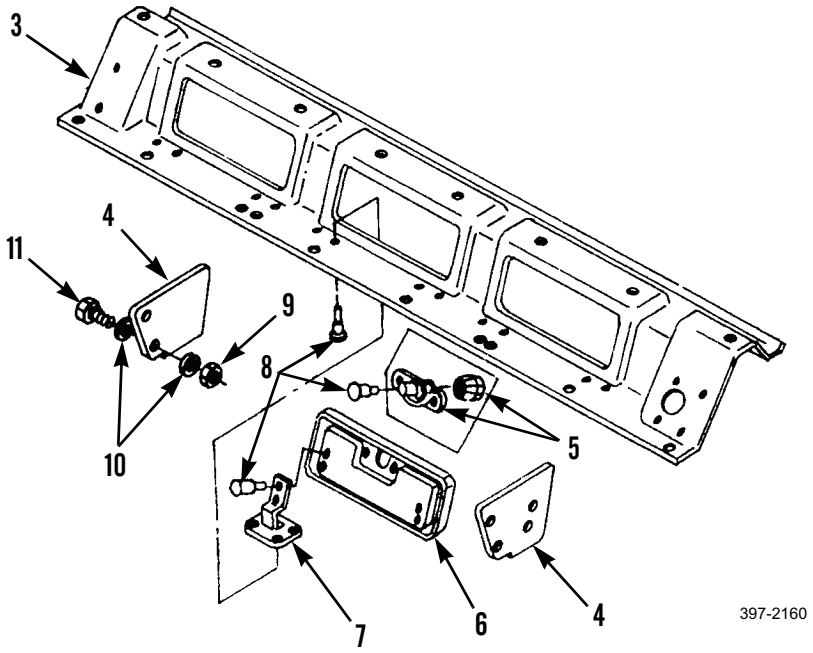


### *CLEANING AND INSPECTION*

Clean and inspect all parts in accordance with WP 0020 00.

### *ASSEMBLY*

1. Install 3 doors (6), 6 hinges (7), and 24 new rivets (8) to cab panel (3).
2. Install three latches (5) and six new rivets (8) (if removed) on three doors (6).
3. Install 4 plates (4), 16 new spring-tension washers (10), 8 bolts (11), and nuts (9).

### *INSTALLATION*

1. Install cab storage compartment assembly (1) and 14 screws (2).

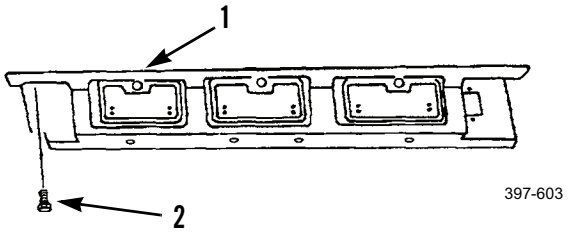


2. Install rearview mirror (WP 0213 00).
3. Install defroster fan (WP 0210 00).
4. Install dome light switch (WP 0099 00).

**END OF WORK PACKAGE**

## CAB SOUND SUPPRESSION PANELS (LOWER-FRONT AND REAR) REPLACEMENT (CCE MACHINE) 0190 00

### THIS WORK PACKAGE COVERS

Removal, Cleaning and Inspection, Installation

### INITIAL SETUP

**Maintenance Level**

Unit

**Tools and Special Tools**

Tool kit, general mechanic's (Item 89, WP 0348 00)

**Materials/Parts**

Rag, wiping (Item 35, WP 0349 00)

**References**

WP 0020 00

**Equipment Conditions**

Machine parked on level ground (TM 5-3805-261-10)

Parking/emergency brake applied (TM 5-3805-261-10)

Implements lowered to ground (TM 5-3805-261-10)

Engine off (TM 5-3805-261-10)

Battery disconnect switch in OFF position (TM 5-3805-261-10)

### *REMOVAL*

1. Remove four screws (6) and panels (8 and 10).
2. Remove four screws (7) and panel (9).
3. Remove three screws (1), washers (2), and insulation (3).
4. Remove six screws (4) and cover (5).

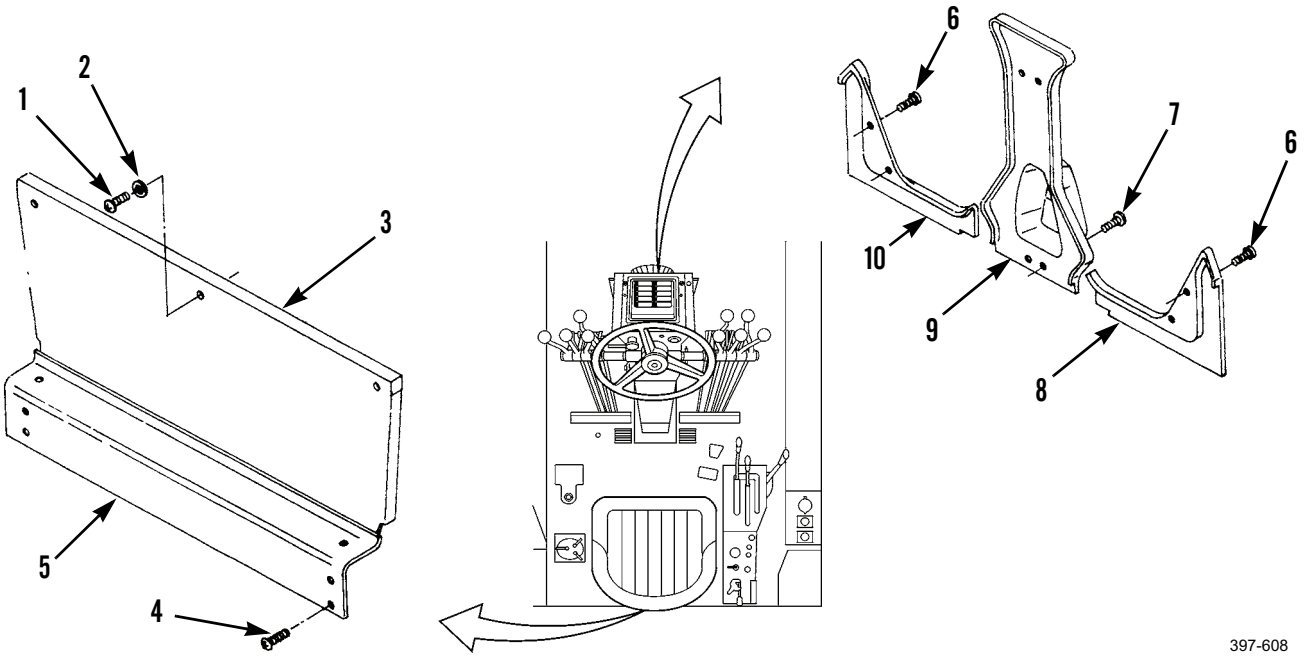

**CAB SOUND SUPPRESSION PANELS (LOWER-FRONT AND REAR) REPLACEMENT (CCE MACHINE) -**

### *CLEANING AND INSPECTION*

Clean and inspect all parts in accordance with WP 0020 00.

### *INSTALLATION*

1. Install cover (5) and six screws (4).
2. Install insulation (3), three washers (2), and screws (1).
3. Install panel (9) and four screws (7).
4. Install panels (10 and 8) and four screws (6).

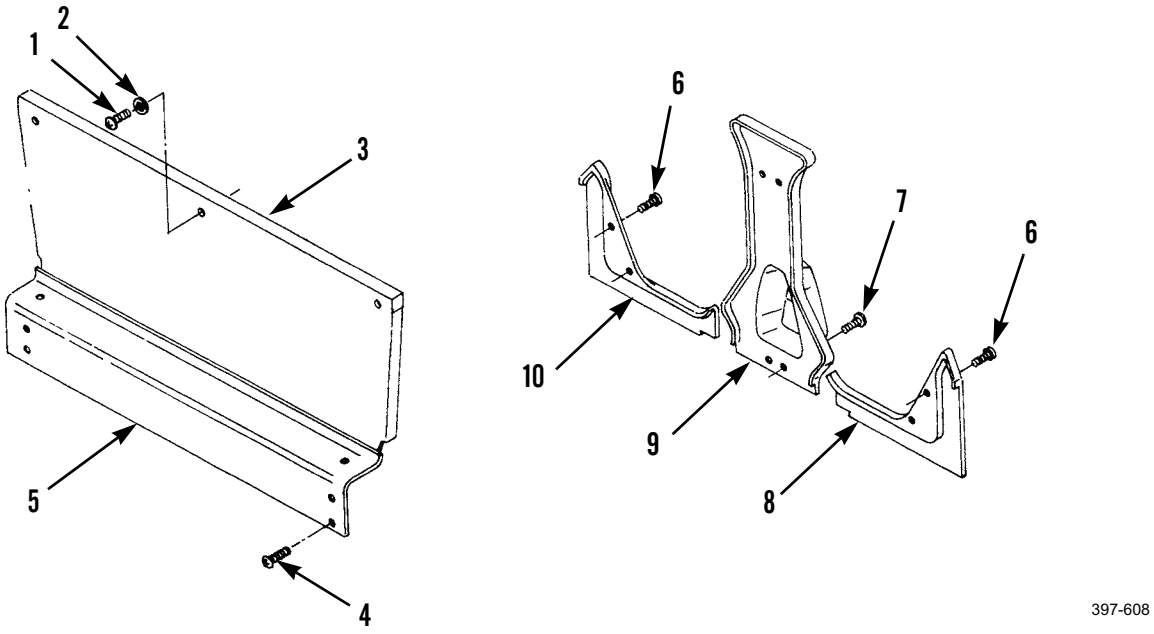


**END OF WORK PACKAGE**

## CAB SOUND SUPPRESSION PANEL (CEILING) REPLACEMENT (CCE MACHINE) 0191 00

### THIS WORK PACKAGE COVERS

Removal, Cleaning and Inspection, Installation

### INITIAL SETUP

**Maintenance Level**

Unit

**Tools and Special Tools**

Tool kit, general mechanic's (Item 89, WP 0348 00)

**Materials/Parts**

Rag, wiping (Item 35, WP 0349 00)

**References**

WP 0020 00

**Equipment Conditions**

Machine parked on level ground (TM 5-3805-261-10)

Parking/emergency brake applied (TM 5-3805-261-10)

Implements lowered to ground (TM 5-3805-261-10)

Engine off (TM 5-3805-261-10)

Battery disconnect switch in OFF position (TM 5-3805-261-10)

Dome light removed (WP 0111 00)

Defroster fan removed (WP 0210 00)

Inside rearview mirror removed (WP 0213 00)

### *REMOVAL*

1. Remove four screws (3) and brackets (2).
2. Remove insulation (1) by sliding forward out of cab ceiling plates.

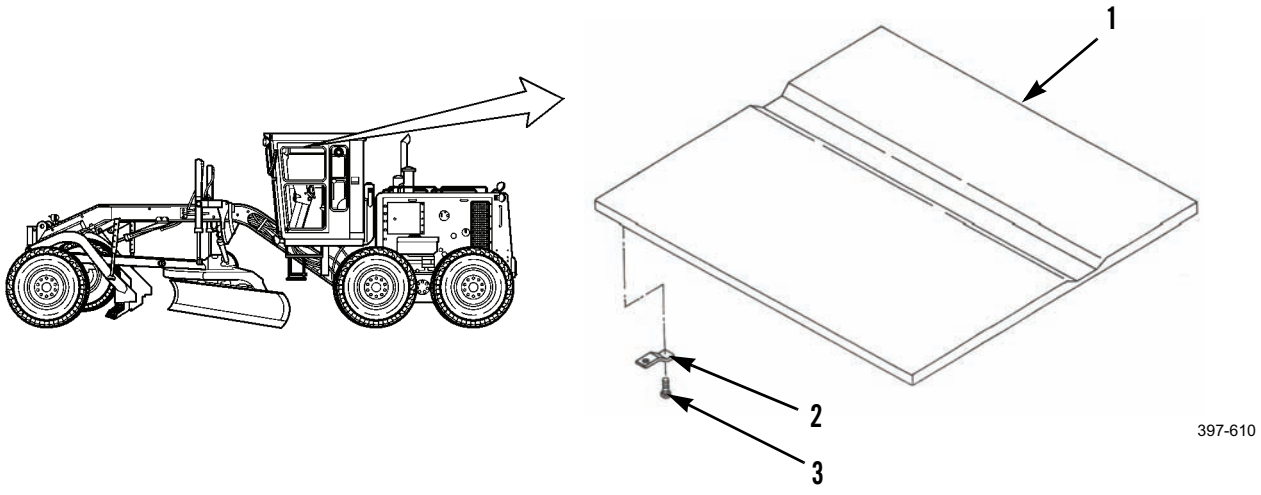


### *CLEANING AND INSPECTION*

Clean and inspect all parts in accordance with WP 0020 00.

### *INSTALLATION*

1. Install insulation (1) by sliding rearward into cab ceiling plates.
2. Install four brackets (2) and screws (3).

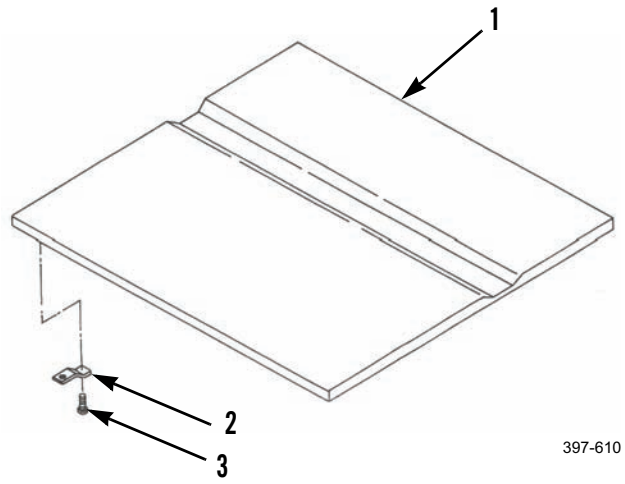

397-610

3. Install inside rearview mirror (WP 0213 00).
4. Install defroster fan (WP 0210 00).
5. Install dome light (WP 0111 00).

**END OF WORK PACKAGE**

## CAB SOUND SUPPRESSION PANEL (REAR) REPLACEMENT 0192 00

### THIS WORK PACKAGE COVERS

Removal, Cleaning and Inspection, Installation

### INITIAL SETUP

**Maintenance Level**

Unit

**Tools and Special Tools**

Tool kit, general mechanic's (Item 89, WP 0348 00)

**Materials/Parts**

Rag, wiping (Item 35, WP 0349 00)

Washer, spring-tension (4)

**References**

WP 0020 00

**Equipment Conditions**

Machine parked on level ground (TM 5-3805-261-10)

**Equipment Conditions - Continued**

Parking/emergency brake applied (TM 5-3805-261-10)

Implements lowered to ground (TM 5-3805-261-10)

Engine off (TM 5-3805-261-10)

Battery disconnect switch in OFF position (TM 5-3805-261-10)

Dome light removed (WP 0111 00)

Rear wiper and wiper motor removed (WP 0208 00)

Defroster fan removed (WP 0210 00)

### *REMOVAL*

Remove four screws (3), two washers (4), four spring-tension washers (2), and panel (1). Discard spring-tension washers.

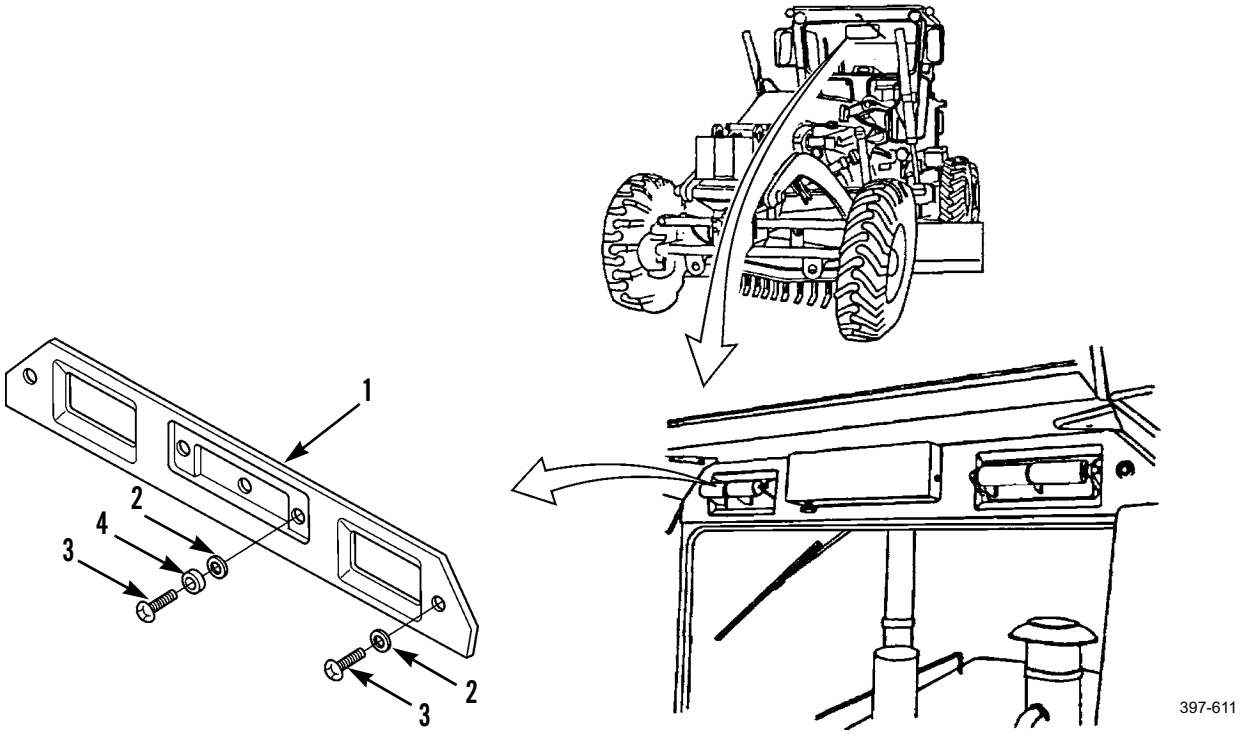

### *CLEANING AND INSPECTION*

Clean and inspect all parts in accordance with WP 0020 00.

### *INSTALLATION*

**NOTE**

Base of panel is longer than top of panel.

1. Install panel (1), four new spring-tension washers (2), two washers (4) and four screws (3).

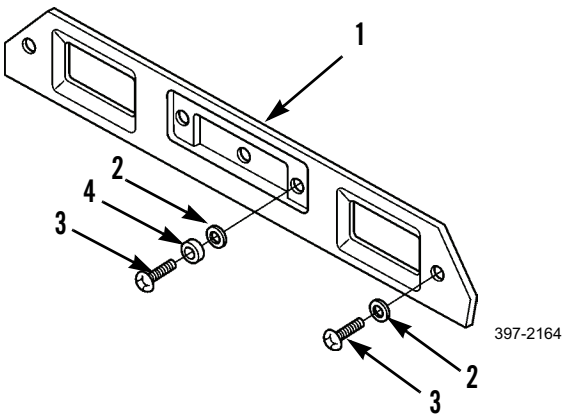


2. Install defroster fan (WP 0210 00).
3. Install rear wiper and wiper motor (WP 0208 00).
4. Install dome light (WP 0111 00).

**END OF WORK PACKAGE**

## OPERATOR'S PANEL CONSOLE REPLACEMENT 0193 00

### THIS WORK PACKAGE COVERS

Removal, Cleaning and Inspection, Installation

### INITIAL SETUP

**Maintenance Level**

Unit

**Tools and Special Tools**

Tool kit, general mechanic's (Item 89, WP 0348 00)

**Materials/Parts**

Rag, wiping (Item 35, WP 0349 00)

Tag, marker (Item 44, WP 0349 00)

Pin, cotter

**References**

WP 0020 00

**Equipment Conditions**

Machine parked on level ground (TM 5-3805-261-10)

Parking/emergency brake applied (TM 5-3805-261-10)

Implements lowered to ground (TM 5-3805-261-10)

Engine off (TM 5-3805-261-10)

Battery cables disconnected (WP 0125 00)

Seat removed (WP 0200 00)

Operator's console cover removed (WP 0082 00)

## OPERATOR'S PANEL CONSOLE REPLACEMENT - CONTINUED 0193 00

### *REMOVAL*

1. Remove cotter pin (5), clevis pin (7), and disconnect linkage rod (6) from right side of operator panel console (4). Discard cotter pin. Lay linkage rod to one side.
2. Remove four bolts (8) and washers (9).
3. Separate wiring harness (2) from bracket (3) at rear of operator panel console (4).

**NOTE**

Tag wiring harnesses before disconnecting to aid in installation.

4. Disconnect wiring harness (2) from wiring harness (1).
5. Remove four bolts (11), washers (10), and bracket (3).

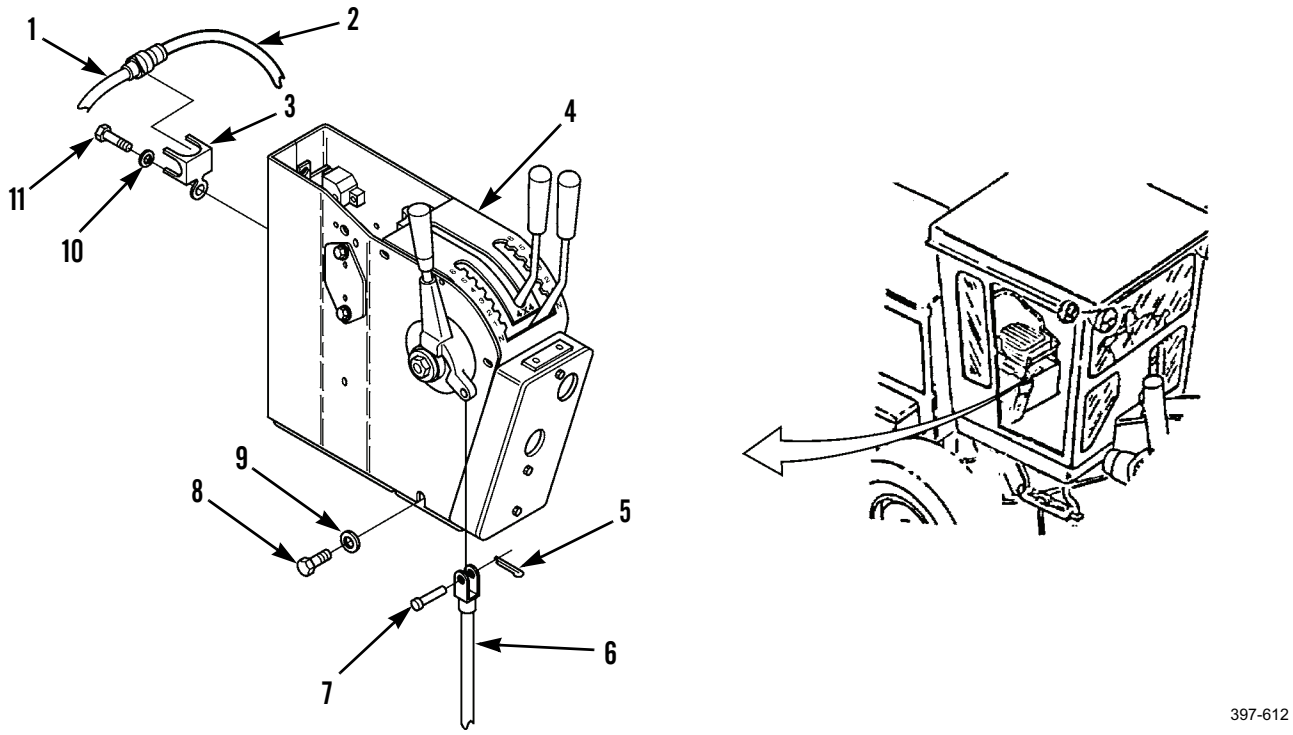

### *REMOVAL - CONTINUED*

6. Remove panel (13) from right side of operator panel console (4).
7. Remove two bolts (23), washers (22), and plate (12).
8. Remove nut (18), washer (19), seat (20), spring (17), washer (21), lever (14), bearing (16), and disc (15).

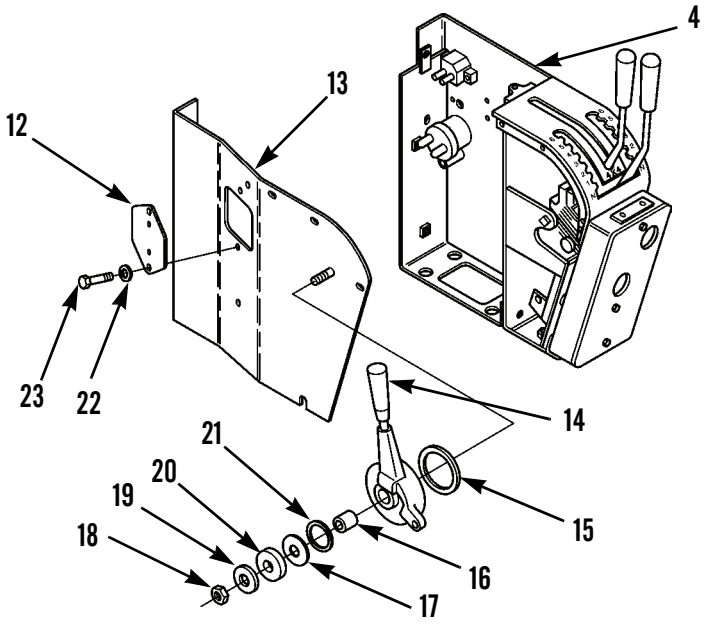


397-613

9. Remove four bolts (31) and washers (32) from left side of operator panel console (4).
10. Remove nut (30), washer (29), and plate (28) from battery disconnect switch (33).
11. Remove two nuts (34) and screws (27) from main circuit breaker (35).
12. Disconnect wiring harness (24) from wiring harness (25).

**NOTE**

Separate by pushing grommet through opening along with wiring harnesses.

13. Separate wiring harnesses (2 and 24) and grommet (26) from panel (36).

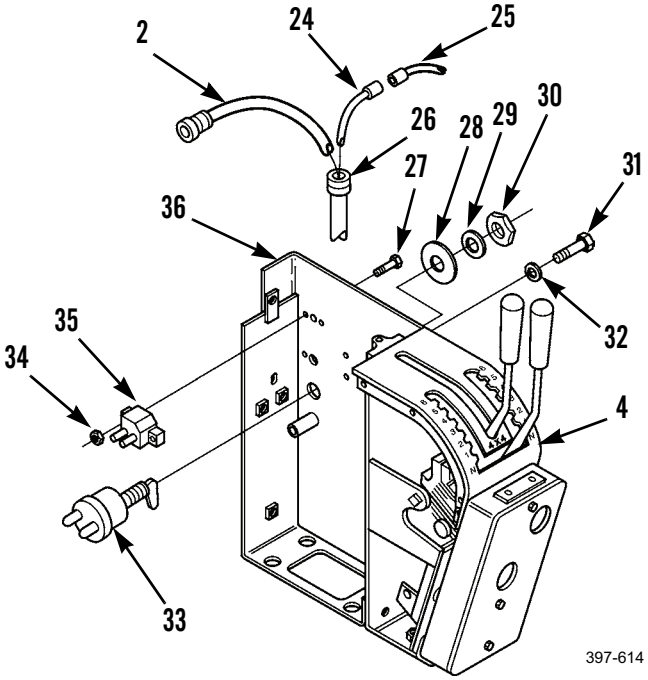


397-614

### *REMOVAL - CONTINUED*

14. Remove bolt (38), washer (37), and clip (39).
15. Remove two bolts (53), washers (52), and panel (36).
16. Remove two nuts (51), washers (50), and bolts (49).
17. Remove bolt (42) and washer (43).
18. Remove two bolts (40) and washers (41).
19. Turn handle (44) to the left and remove handle and gate (45).
20. Remove two bolts (46), washers (47), and bracket (48).

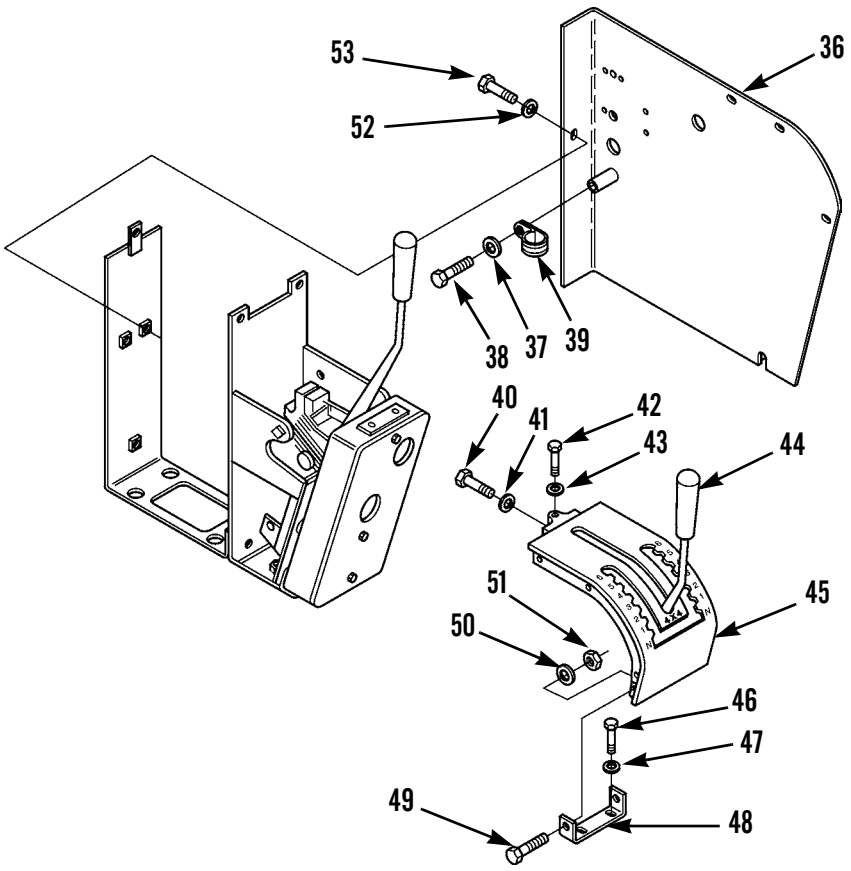


397-615

### *CLEANING AND INSPECTION*

Clean and inspect all parts in accordance with WP 0020 00.

### *INSTALLATION*

1. Install bracket (48), two washers (47), and bolts (46).
2. Install gate (45) and handle (44).
3. Install two washers (41) and bolts (40).
4. Install washer (43) and bolt (42).
5. Install two bolts (49), washers (50), and nuts (51).

## OPERATOR'S PANEL CONSOLE REPLACEMENT - CONTINUED 0193 00

### *INSTALLATION - CONTINUED*

6. Install panel (36), two washers (52), and bolts (53).
7. Install clip (39), washer (37), and bolt (38).
8. Position grommet (26) and wiring harnesses (24 and 2) and push through opening in panel (36). Seat lips of grommet around edge of opening.
9. Connect wiring harness (25) to wiring harness (24).
10. Install main circuit breaker (35), two screws (27), and nuts (34).
11. Install battery disconnect switch (33), plate (28), washer (29), and nut (30).
12. Install four washers (32) and bolts (31) on left side of operator panel console (4).

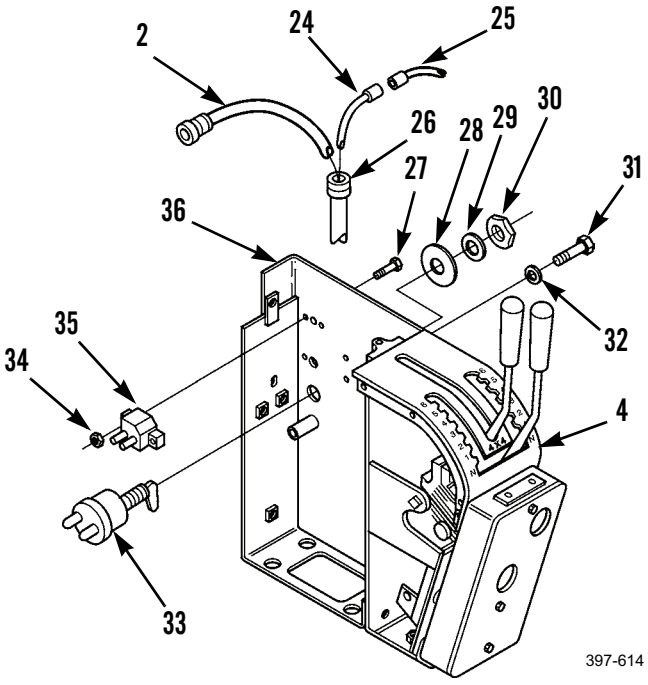


13. Install disc (15), bearing (16), lever (14), washer (21), spring (17), seat (20), washer (19), and nut (18) in panel (13).
14. Install plate (12), two washers (22), and bolts (23).
15. Position panel (13) on right side of operator panel console (4).

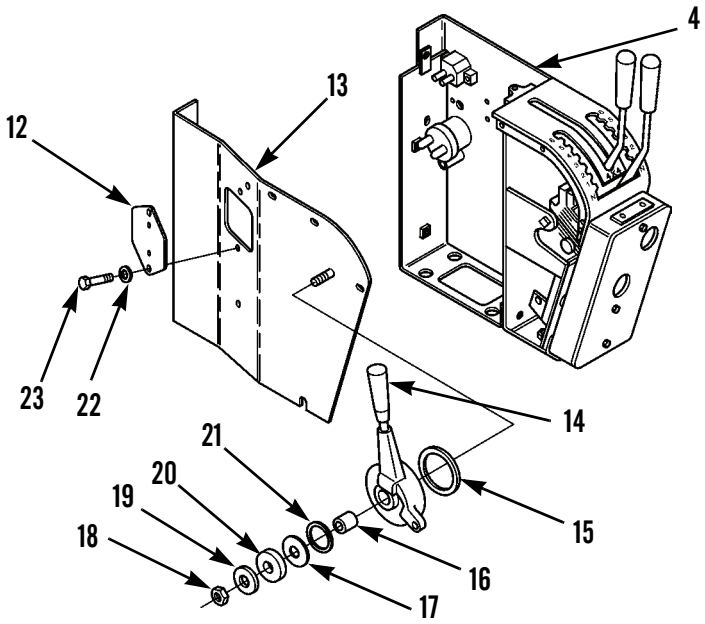

***INSTALLATION - CONTINUED***

16. Install bracket (3), four washers (10), and bolts (11).
17. Connect wiring harness (1) to wiring harness (2).
18. Install wiring harness (2) on bracket (3).
19. Install four washers (9) and bolts (8).
20. Install linkage rod (6), clevis pin (7), and new cotter pin (5).

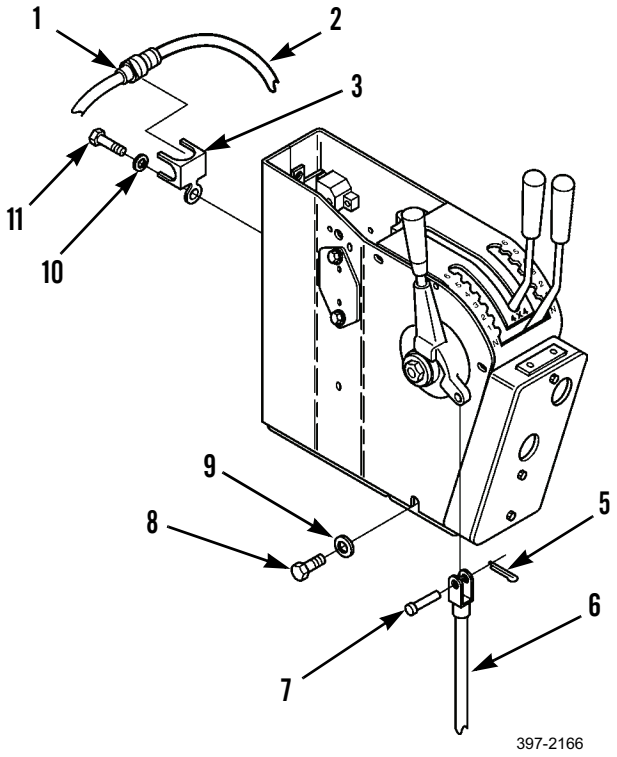


21. Install operator's console panel (WP 0082 00).
22. Install seat (WP 0200 00).
23. Connect battery cables (WP 0125 00).

**END OF WORK PACKAGE**

## CAB INSULATION AND MOUNTING REPLACEMENT (CCE MACHINE) 0194 00

### THIS WORK PACKAGE COVERS

Removal, Cleaning and Inspection, Installation

### INITIAL SETUP

**Maintenance Level**

Unit

**Tools and Special Tools**

Tool kit, general mechanic's (Item 89, WP 0348 00)

**Materials/Parts**

Rag, wiping (Item 35, WP 0349 00)

**References**

WP 0020 00

**Equipment Conditions**

Machine parked on level ground (TM 5-3805-261-10)

Parking/emergency brake applied (TM 5-3805-261-10)

Implements lowered to ground (TM 5-3805-261-10)

Engine off (TM 5-3805-261-10)

Battery disconnect switch in OFF position (TM 5-3805-261-10)

### *REMOVAL*

**NOTE**

Steps 1 through 4 cover replacement of the left cover. Follow these steps for the right cover.

1. Remove two screws (1), washers (2), three screws (3), washers (4), plastic molding (5), and seal (7).
2. Remove two screws (21) and bracket (6).
3. Remove three nuts (16), screws (20), washers (19), bracket (8), and seal (9).
4. Remove two bolts (18), washers (17), and metal molding (15).
5. Remove dust and moisture boot (10) by pulling out through top of floor mat (14).
6. Remove floor mat (14).
7. Remove nut (13), washer (12), and bushing (11) from floor of cab.

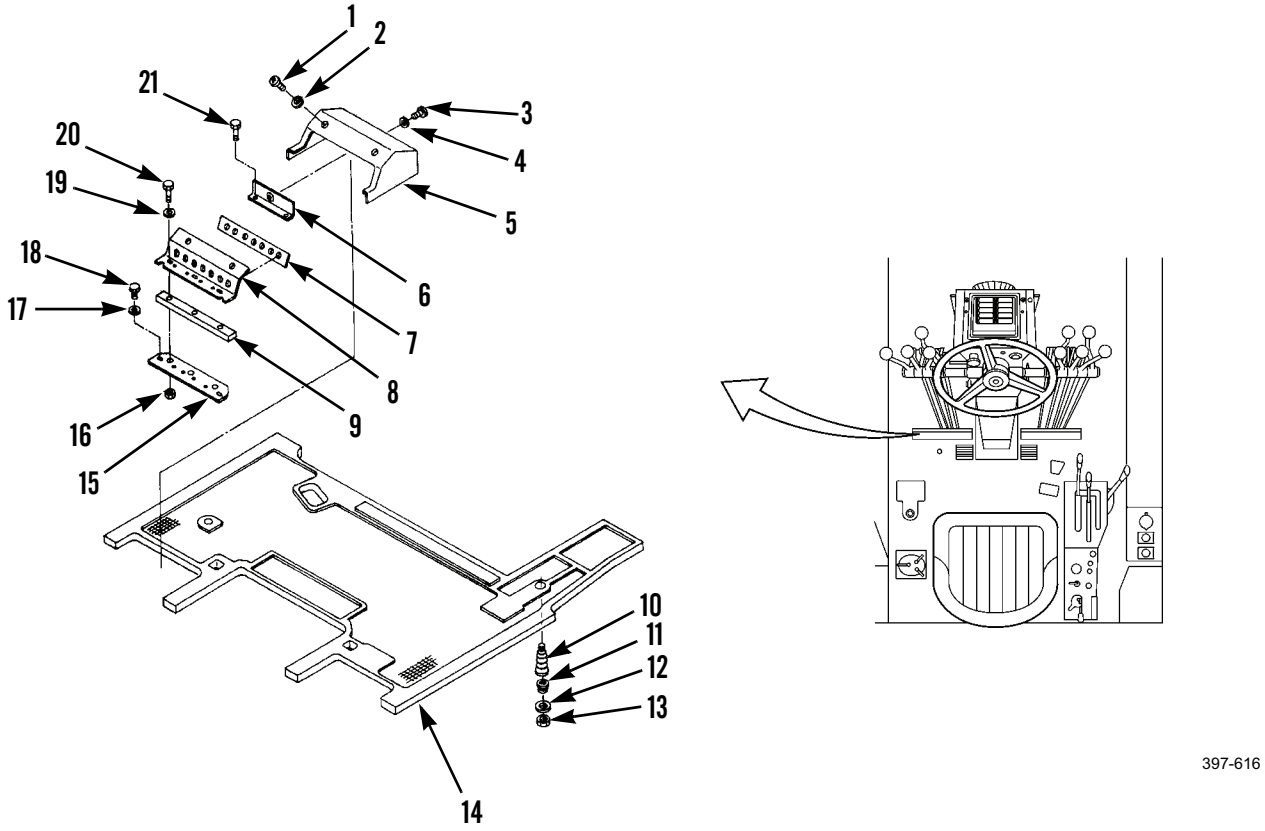


### *CLEANING AND INSPECTION*

Clean and inspect all parts in accordance with WP 0020 00.

### *INSTALLATION*

1. Install bushing (11), washer (12), and nut (13) in floor of cab.
2. Install floor mat (14).
3. Install dust and moisture boot (10) through top of floor mat (14).
4. Install metal molding (15), two washers (17), and bolts (18).
5. Install seal (9), bracket (8), three washers (19), screws (20), and nuts (16).
6. Install bracket (6) and two screws (21).
7. Install seal (7), plastic molding (5), three washers (4), screws (3), two washers (2), and screws (1).

**END OF WORK PACKAGE**

## GAUGE PANEL VANDALISM GUARD REPLACEMENT 0195 00

### THIS WORK PACKAGE COVERS

Removal, Cleaning and Inspection, Installation

### INITIAL SETUP

**Maintenance Level**

Unit

**Tools and Special Tools**

Tool kit, general mechanic's (Item 89, WP 0348 00)

Shop equipment, common no. 1 (Item 75, WP 0348 00)

**Materials/Parts**

Rag, wiping (Item 35, WP 0349 00)

Rivet (17)

**References**

WP 0020 00

**Equipment Conditions**

Machine parked on level ground (TM 5-3805-261-10)

Parking/emergency brake applied (TM 5-3805-261-10)

Implements lowered to ground (TM 5-3805-261-10)

Engine off (TM 5-3805-261-10)

Battery disconnect switch in OFF position (TM 5-3805-261-10)

Machine articulated left (TM 5-3805-261-10)

## GAUGE PANEL VANDALISM GUARD REPLACEMENT - CONTINUED 0195 00

### *REMOVAL*

**NOTE**

All machines are not equipped with a gauge panel vandalism guard.

1. Remove two rivets (1) and bracket (4).
2. Remove door (5).
3. Remove two rivets (7), handle (6), and plate (8) from door (5).
4. Remove 10 rivets (1), 2 metal moldings (2), and metal strips (3).
5. Remove three rivets (1) and metal strip (9).

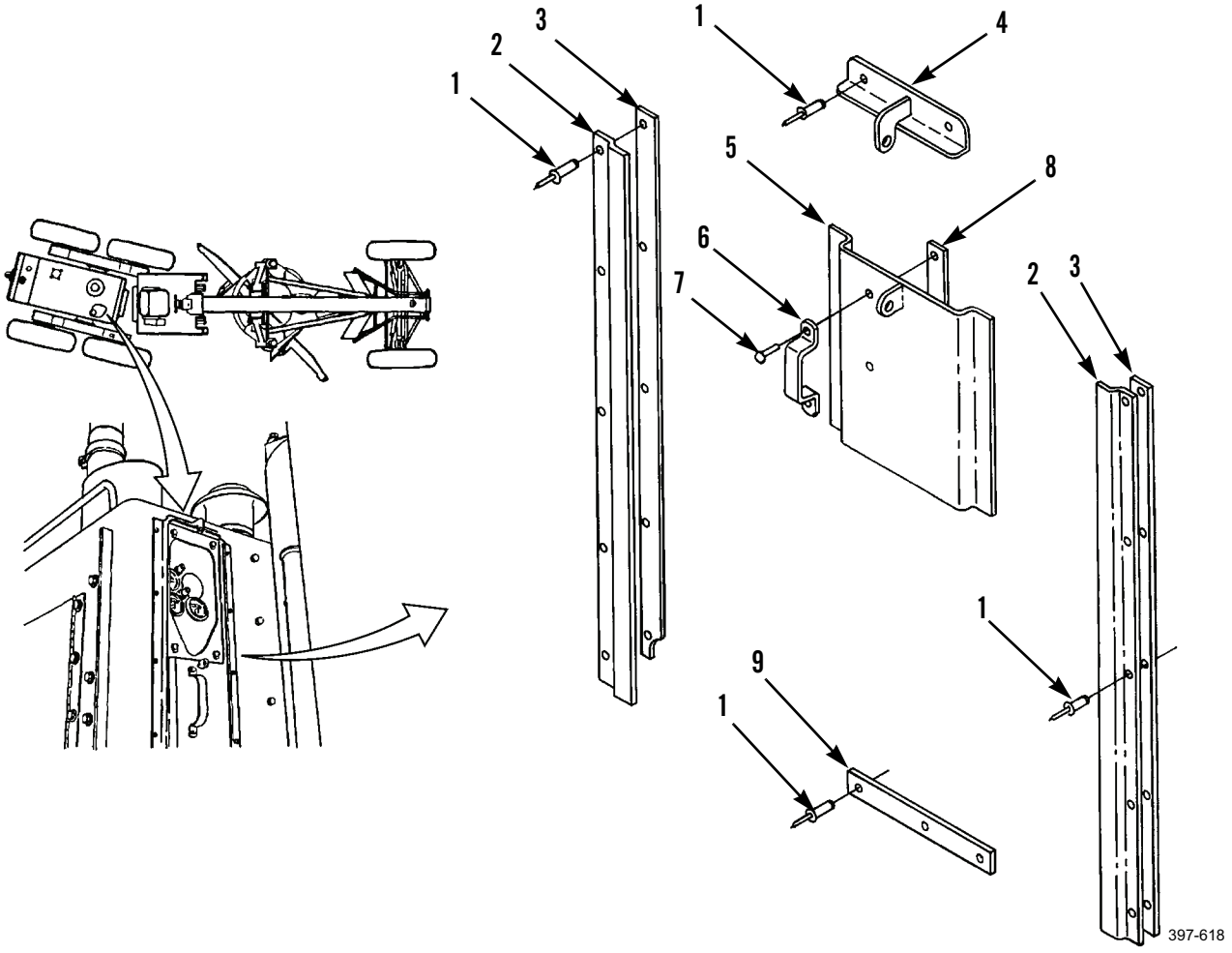


### *CLEANING AND INSPECTION*

Clean and inspect all parts in accordance with WP 0020 00.

### *INSTALLATION*

1. Install metal strip (9) and three new rivets (1).
2. Install 2 metal strips (3), metal moldings (2), and 10 new rivets (1).
3. Install plate (8), handle (6), and two new rivets (7) on door (5).
4. Install door (5).
5. Install bracket (4) and two new rivets (1).

**END OF WORK PACKAGE**

## STEERING CONSOLE HOOD AND PANEL COVER REPLACEMENT 0196 00

### THIS WORK PACKAGE COVERS

Removal, Cleaning and Inspection, Installation

### INITIAL SETUP

**Maintenance Level**

Unit

**Tools and Special Tools**

Tool kit, general mechanic's (Item 89, WP 0348 00)

**Materials/Parts**

Rag, wiping (Item 35, WP 0349 00)

Locknut

**References**

WP 0020 00

**Equipment Conditions**

Machine parked on level ground (TM 5-3805-261-10)

Parking/emergency brake applied (TM 5-3805-261-10)

**Equipment Conditions - Continued**

Implements lowered to ground (TM 5-3805-261-10)

Engine off (TM 5-3805-261-10)

Battery disconnect switch in OFF position (TM 5-3805-261-10)

Articulation indicator removed (not necessary if only removing hood) (WP 0255 00)

Monitor system fault light removed (WP 0072 00)

Turn signal switch removed (WP 0073 00)

EMS cover removed (WP 0075 00)

Steering wheel/horn switch removed (WP 0120 00)

Hydraulic control levers removed (WP 0219 00)

## STEERING CONSOLE HOOD AND PANEL COVER REPLACEMENT - CONTINUED 0196 00

### *REMOVAL*

1. Remove two nuts (3), six screws (2), and hood (1).
2. Remove four bolts (16) and bracket (15).
3. Position pump assembly (20) away from housing (19).
4. Remove two nuts (12), bolts (5), washers (4), and bearings (11).
5. Remove locknut (18), washer (17), rod (9), boss (10), spring (8), bearing ball (7), and washer (6). Discard locknut.
6. Remove shaft (14) and housing (19) from cover (13).

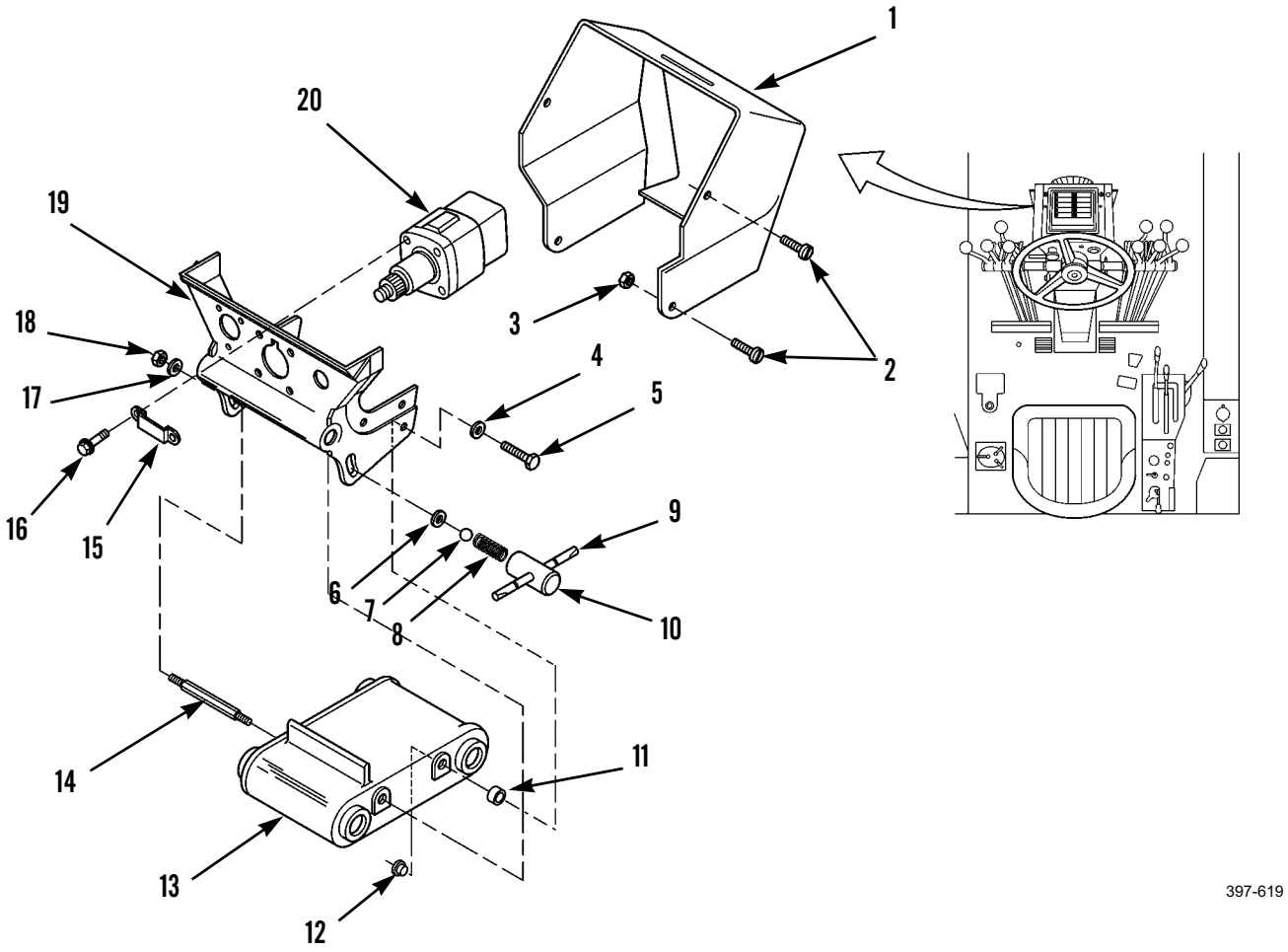


### *CLEANING AND INSPECTION*

Clean and inspect all parts in accordance with WP 0020 00.

### *INSTALLATION*

1. Install housing (19) and shaft (14) in cover (13).
2. Install washer (6), bearing ball (7), spring (8), boss (10), rod (9), washer (17), and new locknut (18).
3. Install two bearings (11), washers (4), bolts (5), and nuts (12).
4. Position pump assembly (20) on housing (19).
5. Install bracket (15) and four bolts (16).
6. Install hood (1), six screws (2), and two nuts (3).
7. Install hydraulic control levers (WP 0219 00).
8. Install steering wheel/horn switch (WP 0120 00).
9. Install EMS cover (WP 0075 00).
10. Install turn signal switch (WP 0073 00).
11. Install monitor system fault light (WP 0072 00).
12. Install articulation indicator, if removed (WP 0255 00).

**END OF WORK PACKAGE**

## STEERING CONSOLE SUPPORT REPLACEMENT (MODELS 130GS AND 130GNS) 0197 00

### THIS WORK PACKAGE COVERS

Removal, Cleaning and Inspection, Installation

### INITIAL SETUP

**Maintenance Level**

Unit

**Tools and Special Tools**

Tool kit, general mechanic's (Item 89, WP 0348 00)

**Materials/Parts**

Rag, wiping (Item 35,WP 0349 00)

Bolt, self-locking (4)

Locknuts (2)

Pin (6)

Screw, tapping (14)

**References**

WP 0020 00

**Equipment Conditions**

Machine parked on level ground (TM 5-3805-261-10)

Parking/emergency brake applied (TM 5-3805-261-10)

Implements lowered to ground (TM 5-3805-261-10)

Engine off (TM 5-3805-261-10)

Battery disconnect switch in OFF position (TM 5-3805-261-10)

Steering console hood and panel cover removed (WP 0196 00)

## STEERING CONSOLE SUPPORT REPLACEMENT (MODELS 130GS AND 130GNS) - CONTINUED 0197 00

### *REMOVAL*

1. Remove 14 tapping screws (8) from both sides of steering console support. Discard tapping screws.
2. Remove two plates (6 and 7).
3. Remove six pins (9) from two plates (6 and 7). Discard pins.
4. Remove two springs (5).
5. Remove four screws (4), washers (3), and bearings (2).
6. Remove cover (1) and two shafts (10).

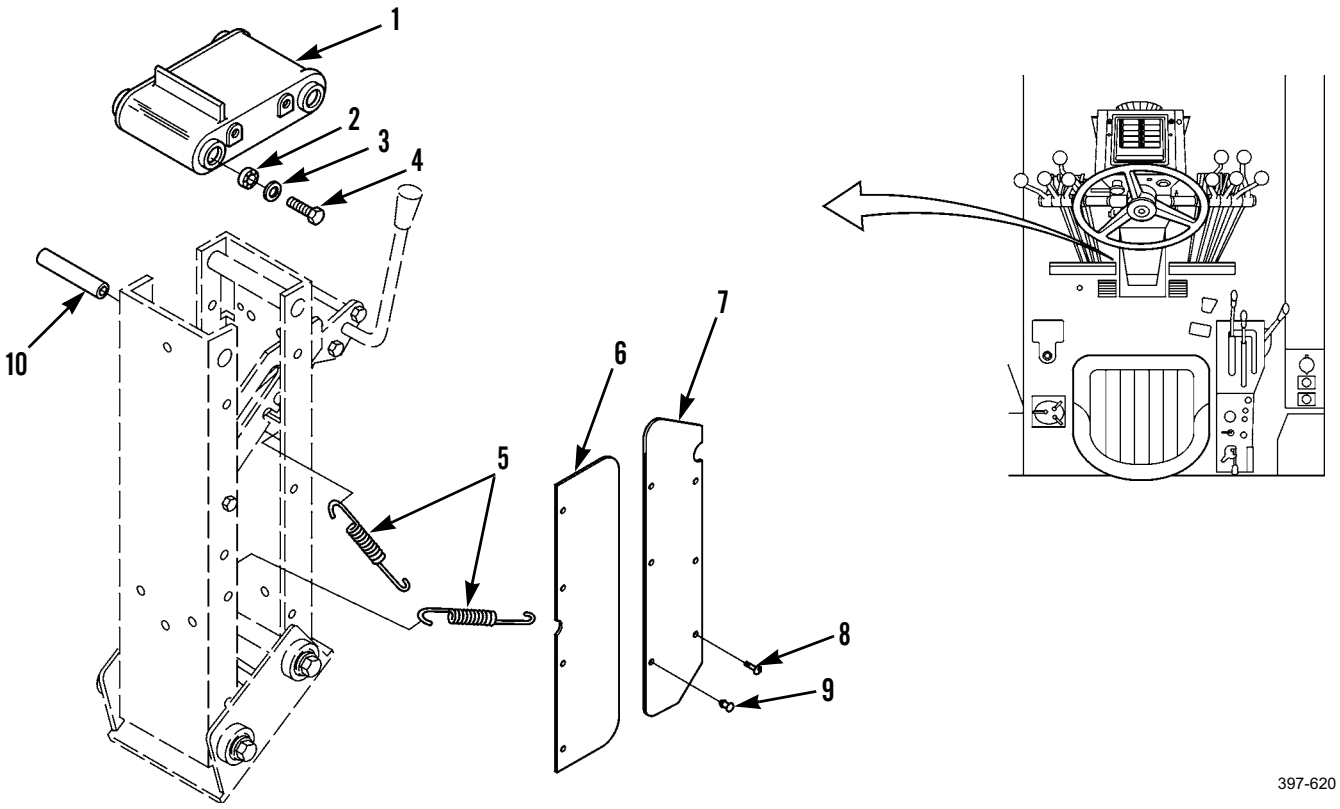

## STEERING CONSOLE SUPPORT REPLACEMENT (MODELS 130GS AND 130GNS) - CONTINUED 0197 00

### *REMOVAL - CONTINUED*

7. Remove knobs (11 and 16).
8. Remove four screws (19), washers (18), control rods (12 and 17), brackets (13 and 15), and two shafts (14).

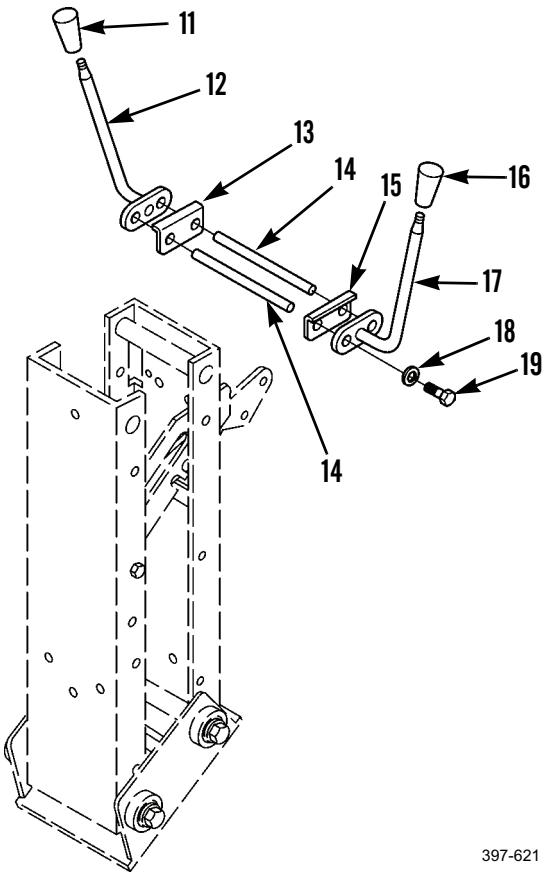


9. Remove two screws (20) and nuts (27).
10. Remove two locknuts (26), washers (25), bolts (31), angles (21), and brackets (22). Discard locknuts.
11. Remove two bolts (29), washers (28), spacers (24), brackets (23), and shaft (30).

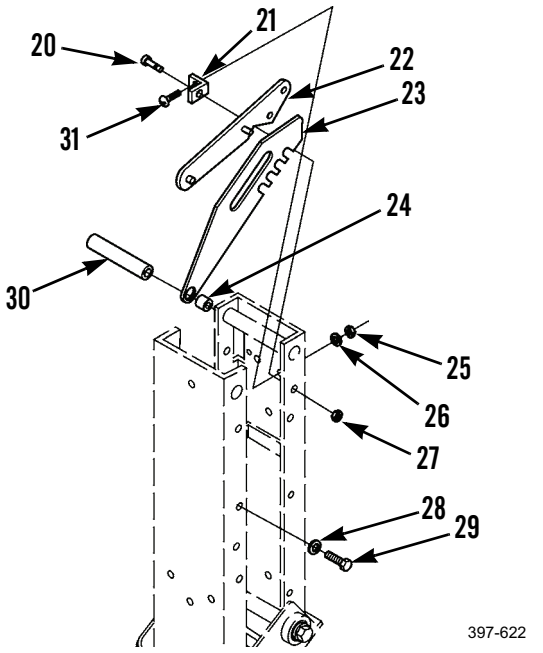

### *REMOVAL - CONTINUED*

12. Remove two bolts (34), washers (35), and angle (33).
13. Remove two bolts (42), washers (44), and bracket (37).
14. Remove two plugs (32).
15. Remove four screws (40), washers (39), bearings (38), two shafts (43), and channels (36 and 41).

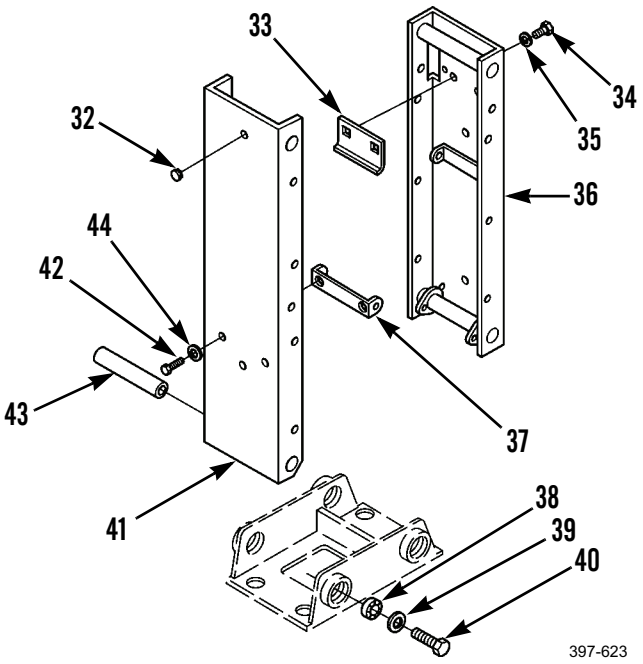


16. Remove four self-locking bolts (45), washers (46), grommets (49), console base (47), and pad (48). Discard self-locking bolts.

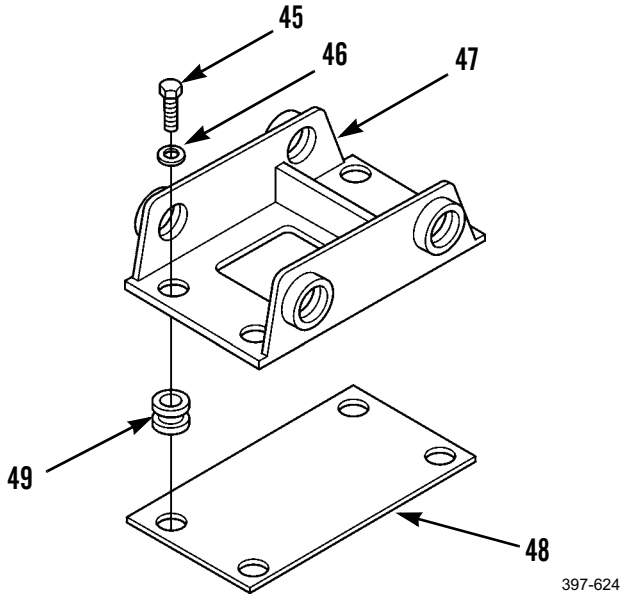


### *CLEANING AND INSPECTION*

Clean and inspect all parts in accordance with WP 0020 00.

## STEERING CONSOLE SUPPORT REPLACEMENT (MODELS 130GS AND 130GNS) - CONTINUED 0197 00

### *INSTALLATION*

1. Install pad (48), four grommets (49), console base (47), four washers (47), and new self-locking bolts (45) in steering console support.
2. Install channels (41 and 36), two shafts (43), four bearings (38), washers (39), and screws (40).
3. Install two plugs (39).
4. Install bracket (37), two washers (44), and bolts (42).
5. Install angle (33), two washers (35), and bolts (34).
6. Install shaft (30), two brackets (23), spacers (24), washers (28), and bolts (29).
7. Install two brackets (22), angles (21), bolts (31), washers (25) and new locknuts (26).
8. Install two nuts (27) and screws (20).

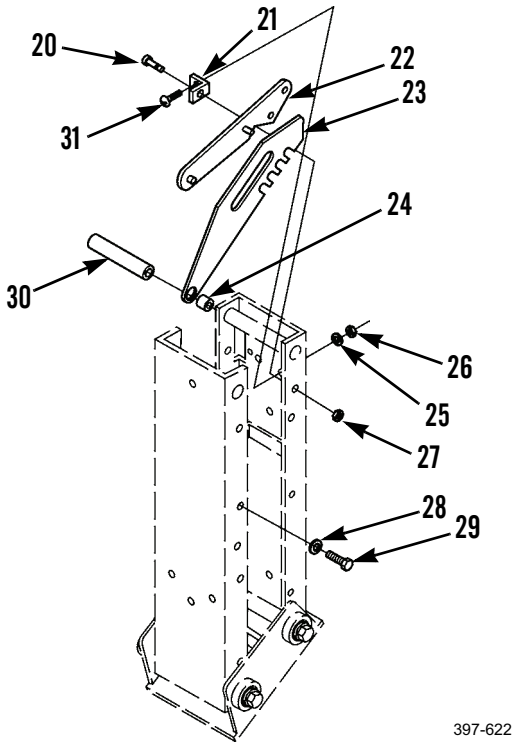

## STEERING CONSOLE SUPPORT REPLACEMENT (MODELS 130GS AND 130GNS) - CONTINUED 0197 00

### *INSTALLATION - CONTINUED*

9. Install two shafts (14), brackets (15 and 13), control rods (17 and 12), four washers (18), and screws (19).
10. Install knobs (16 and 11).

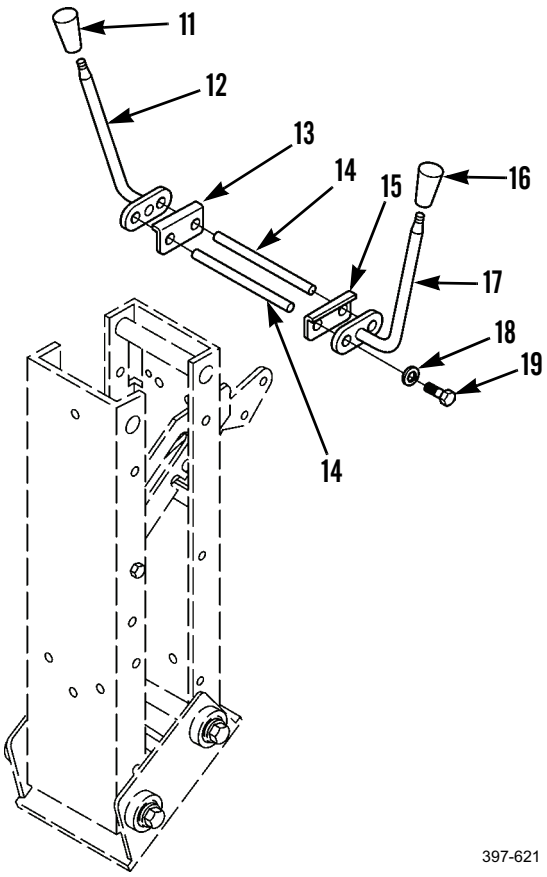

## STEERING CONSOLE SUPPORT REPLACEMENT (MODELS 130GS AND 130GNS) - CONTINUED 0197 00

### *INSTALLATION - CONTINUED*

11. Install two shafts (10) and cover (1).
12. Install four bearings (2), washers (3), and screws (4).
13. Install two springs (5).
14. Install six new pins (9) on two plates (7 and 6).
15. Install two plates (7 and 6).
16. Install 14 new tapping screws (8).

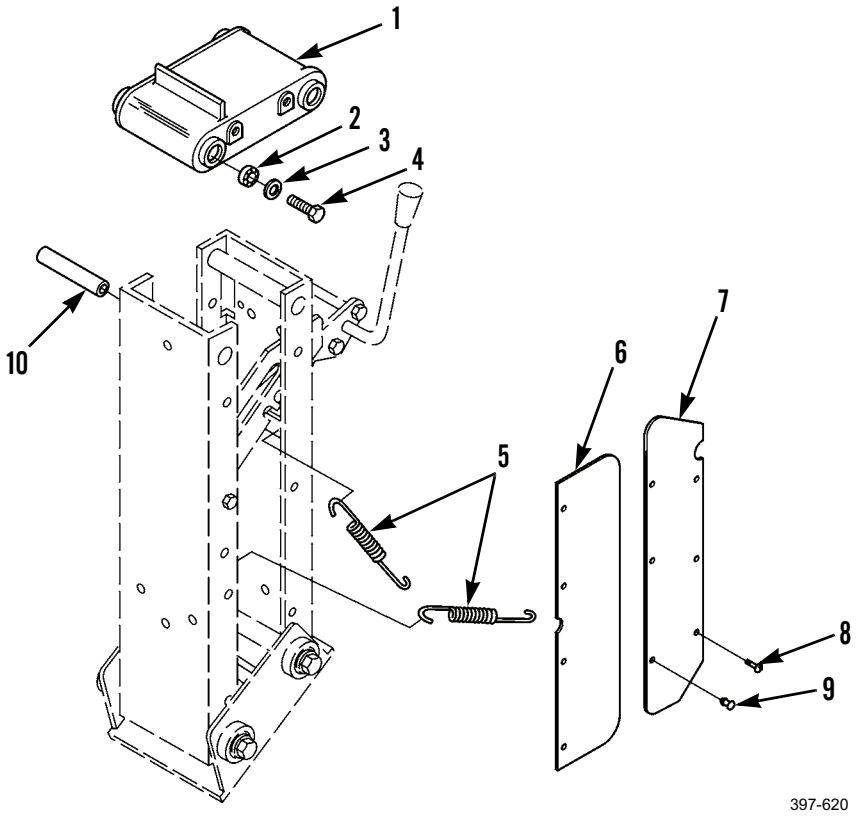


17. Install steering console hood and panel cover (WP 0196 00).

**END OF WORK PACKAGE**

## STEERING CONSOLE SUPPORT REPLACEMENT (MODELS 130G, 130GSCE, AND 130GNSCE) 0198 00

### THIS WORK PACKAGE COVERS

Removal, Cleaning and Inspection, Installation

### INITIAL SETUP

**Maintenance Level**

Unit

**Tools and Special Tools**

Tool kit, general mechanic's (Item 89, WP 0348 00)

Shop equipment, field maintenance (Item 74, WP 0348 00)

**Materials/Parts**

Rag, wiping (Item 35, WP 0349 00)

Bolt, self-locking (4)

Locknuts (6)

Pin, cotter

Screw, tapping (14)

**References**

WP 0020 00

**Equipment Conditions**

Machine parked on level ground (TM 5-3805-261-10)

Parking/emergency brake applied (TM 5-3805-261-10)

Implements lowered to ground (TM 5-3805-261-10)

Engine off (TM 5-3805-261-10)

Battery disconnect switch in OFF position (TM 5-3805-261-10)

Steering console hood and panel cover removed (WP 0196 00)

### *REMOVAL*

1. Remove seven tapping screws (3) from steering console support (1). Discard tapping screws.
2. Remove two plates (2).
3. Remove three pins (4).
4. Repeat for other side of steering console support (1).

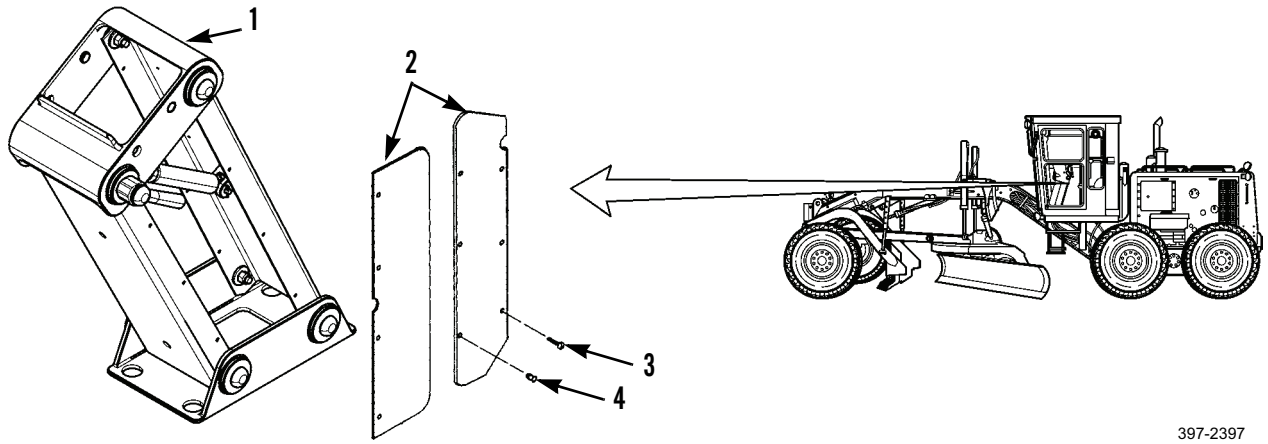

## STEERING CONSOLE SUPPORT REPLACEMENT (MODELS 130G, 130GSCE, AND 130GNSCE) - CONTINUED 0198 00

### *REMOVAL - CONTINUED*

5. Remove protective cap (14), bolt (13), shouldered washer (12), spacer (11), retainer (10), bearing sleeve (9), washers (7 and 8), and nut (6) and channel assembly (5) from steering console support (1).

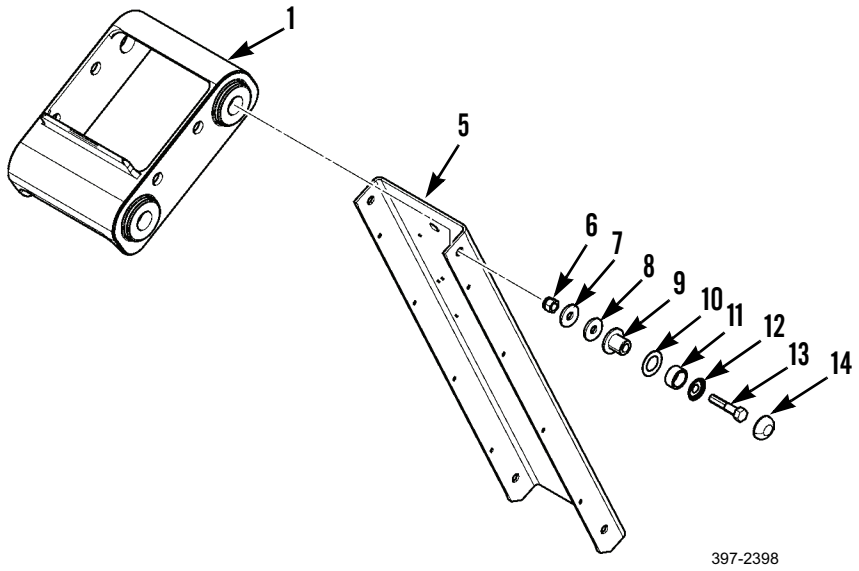


6. Remove screw (21), protective cap (20), shouldered washer (19), washer (18), lever (17), retainer (16), and bearing (15).

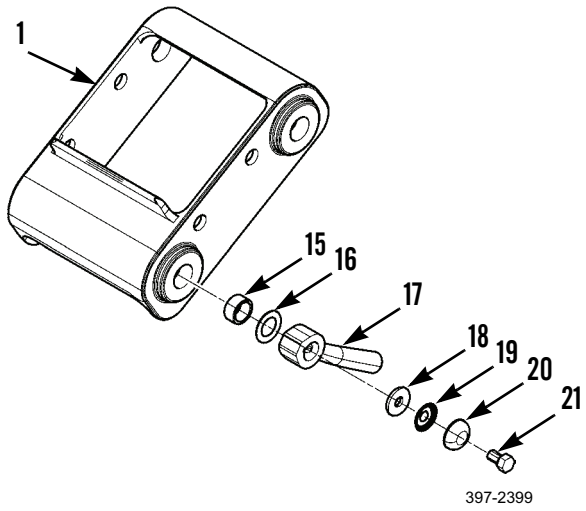

## STEERING CONSOLE SUPPORT REPLACEMENT (MODELS 130G, 130GSCE, AND 130GNSCE) - CONTINUED 0198 00

### *REMOVAL - CONTINUED*

7. Remove two screws (37), washers (35), springs (36), locknuts (34), and two plates (33). Discard locknuts.
8. Remove eyebolt (39) and bearing (38) as an assembly.
9. Remove connector (22).
10. Back off setscrew (32) from control cam (24) and remove two woodruff keys (40) and shaft (41).
11. Remove four bolts (42), washers (43), and nuts (44).
12. Remove eyebolt (31) and bearing (30) as an assembly.
13. Remove nut (29), two washers (28), ball bearing (26), and two plates (27).
14. Remove bearings (23 and 25) and cam (24).

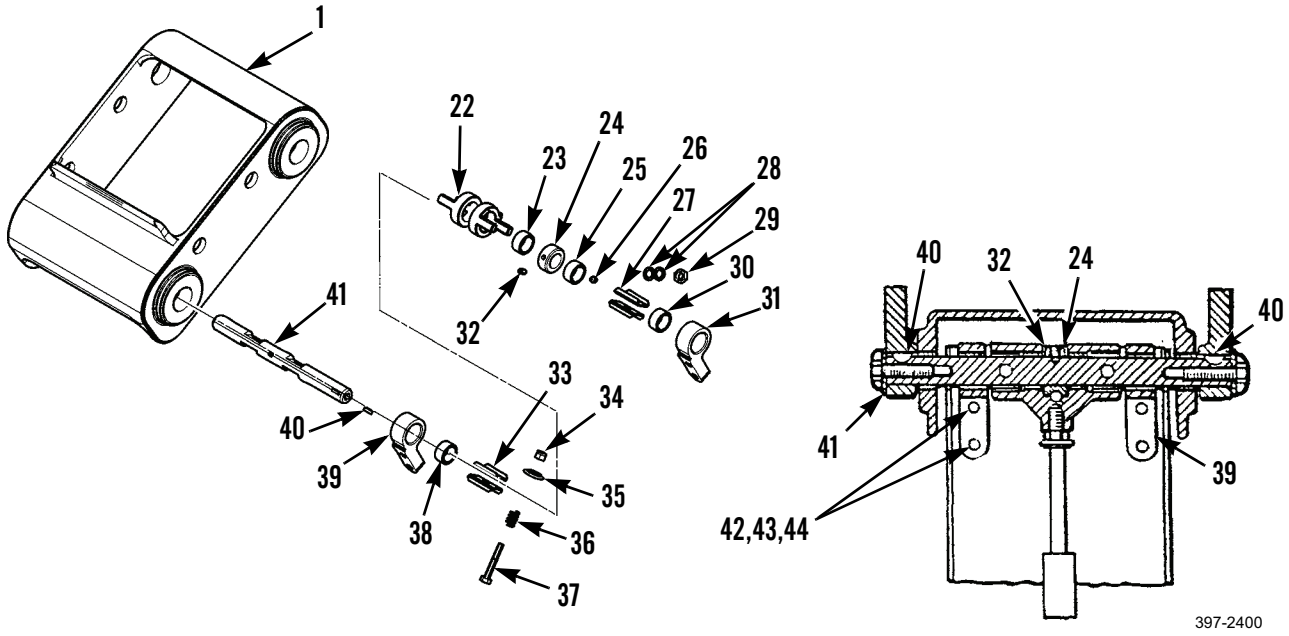

## STEERING CONSOLE SUPPORT REPLACEMENT (MODELS 130G, 130GSCE, AND 130GNSCE) - CONTINUED 0198 00

***REMOVAL - CONTINUED***

**NOTE**

Leave bearing housing, bearings, control cam, ball bearing, and setscrew attached to cylinder as an assembly for ease of removal.

15. Remove cotter pin (47) and straight pin (48). Discard cotter pin.
16. Remove cylinder (46) and bearing assembly (45).

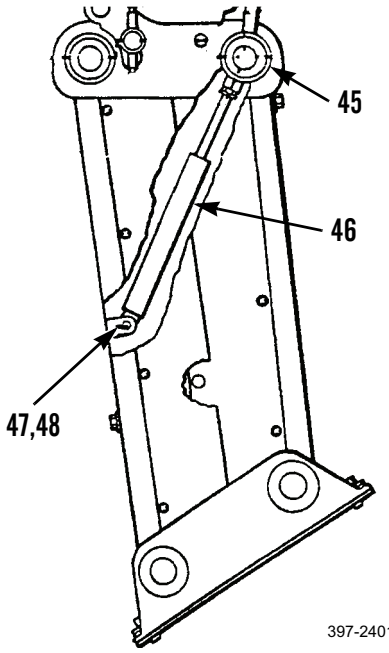


17. Remove four protective caps (54), bolts (55), shouldered washers (53), spacers (52), bearings (51), retainers (50), washers (57), and locknuts (58). Discard locknuts.
18. Remove two double angle brackets (49).
19. Remove four self-locking bolts (62), washers (61), grommets (59), console base (60), and pad (56). Discard self-locking bolts.

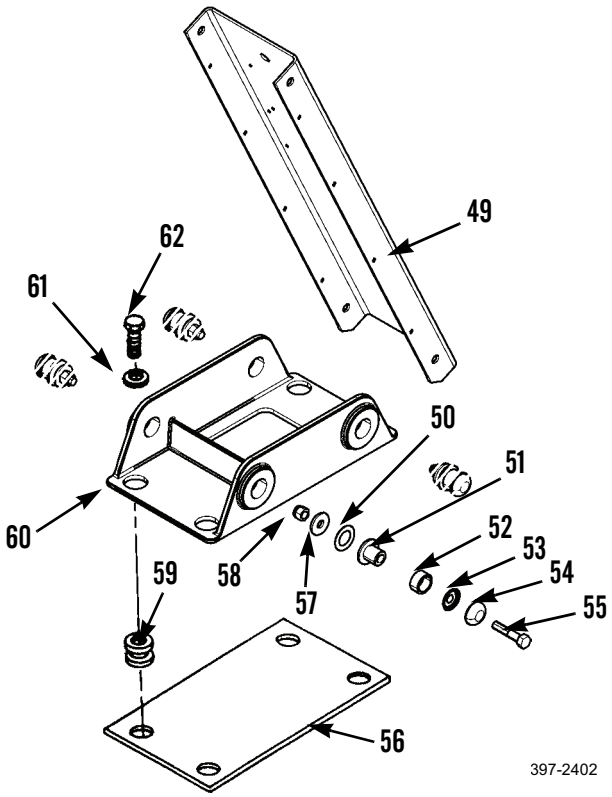

## STEERING CONSOLE SUPPORT REPLACEMENT (MODELS 130G, 130GSCE, AND 130GNSCE) - CONTINUED 0198 00

### *CLEANING AND INSPECTION*

Clean and inspect all parts in accordance with WP 0020 00.

### *INSTALLATION*

1. Install pad (56), four grommets (59), console base (60), four washers (61), and new self-locking bolts (62).
2. Install two double angle brackets (49).
3. Install four bolts (53), shouldered washers (63), spacers (52), bearings (51), retainers (58), washers (65), new locknuts (58), and protective caps (62).
4. Install cylinder (46) and bearing assembly (45).
5. Install straight pin (48) and new cotter pin (47).
6. Install cam (24) and bearing (23).
7. Install ball bearing (26), two washers (28), and nut (29).
8. Install two eyebolts (31), and bearings (30), as an assembly.
9. Install four bolts (42), washers (43), and nuts (44).
10. Install shaft (41), and two woodruff keys (40), and bearing (25). Tighten setscrew (32) on cam (24).
11. Install connector (22).
12. Install bearing (38) and eyebolt (39) as an assembly.
13. Install two screws (37), washers (35), springs (36), new locknuts (34), and four plates (33).

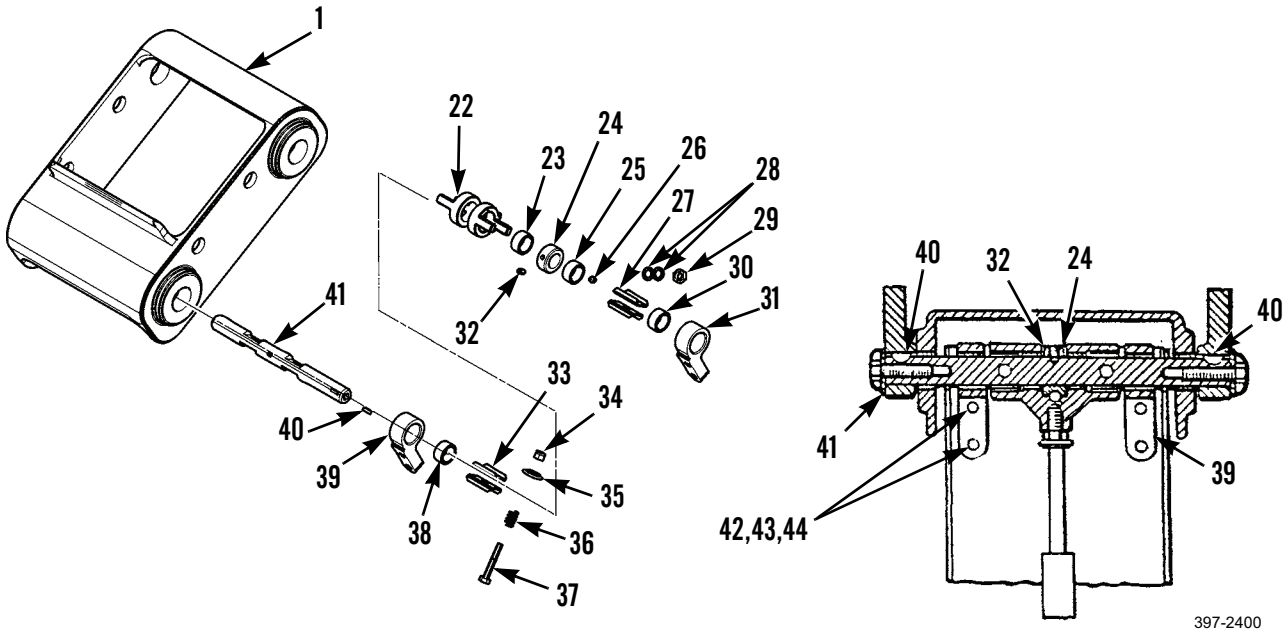

## STEERING CONSOLE SUPPORT REPLACEMENT (MODELS 130G, 130GSCE, AND 130GNSCE) - CONTINUED 0198 00

### *INSTALLATION - CONTINUED*

14. Install screw (20), shouldered washer (19), washer (18), lever (17), retainer (16), bearing (15), and protective cap (20).

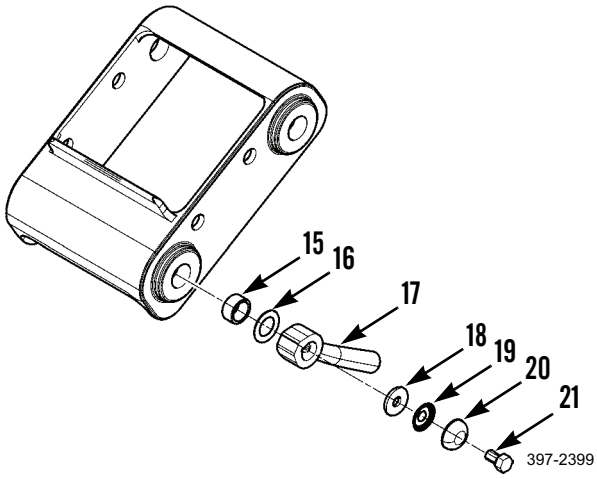


15. Install bolt (13), shouldered washer (12), spacer (11), retainer (10), bearing sleeve (9), washers (8 and 7), nut (6), and protective cap (14).

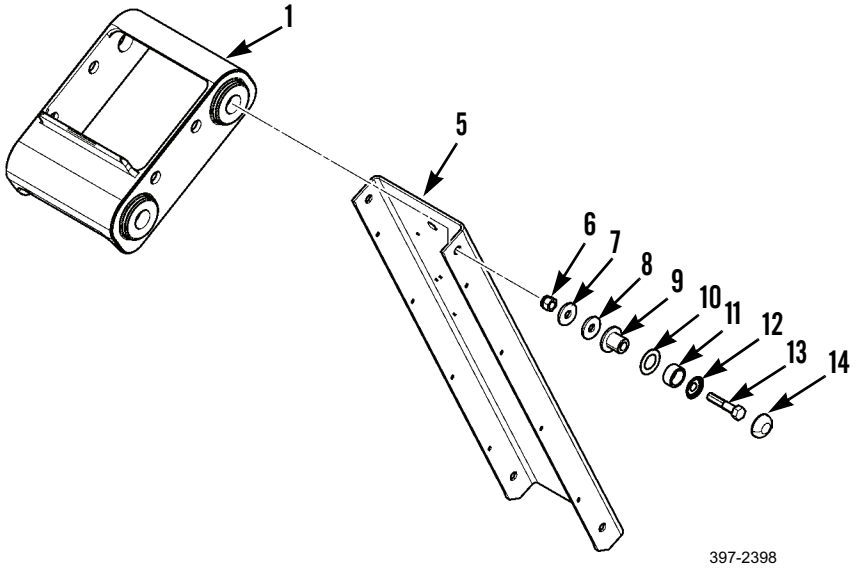

## STEERING CONSOLE SUPPORT REPLACEMENT (MODELS 130G, 130GSCE, AND 130GNSCE) - CONTINUED 0198 00

### *INSTALLATION - CONTINUED*

16. Install three pins (4) on steering console support (1).
17. Install two plates (2).
18. Install seven new tapping screws (3).
19. Repeat for other side of steering console support (1).

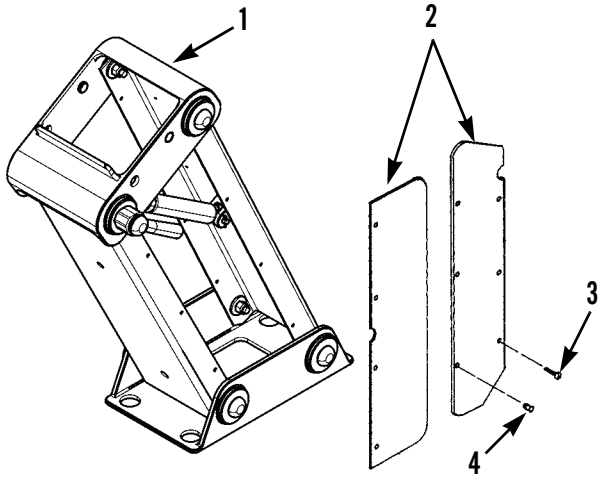


20. Install steering console hood and panel cover (WP 0196 00).

**END OF WORK PACKAGE**

## HYDRAULIC DRIVE PROTECTION COVER REPLACEMENT 0199 00

### THIS WORK PACKAGE COVERS

Removal, Cleaning and Inspection, Installation

### INITIAL SETUP

**Maintenance Level**

Unit

**Tools and Special Tools**

Tool kit, general mechanic's (Item 89, WP 0348 00)

**Materials/Parts**

Rag, wiping (Item 35, WP 0349 00)

**References**

WP 0020 00

**Equipment Conditions**

Machine parked on level ground (TM 5-3805-261-10)

Parking/emergency brake applied (TM 5-3805-261-10)

Implements lowered to ground (TM 5-3805-261-10)

Engine off (TM 5-3805-261-10)

Battery disconnect switch in OFF position (TM 5-3805-261-10)

### *REMOVAL*

1. Remove three bolts (1) and washers (2) from plate (3) and metal molding (6) located below hydraulic tank.
2. Remove two bolts (4), washers (5), and plate (3).
3. Remove remaining two bolts (4), washers (5), and metal molding (6).

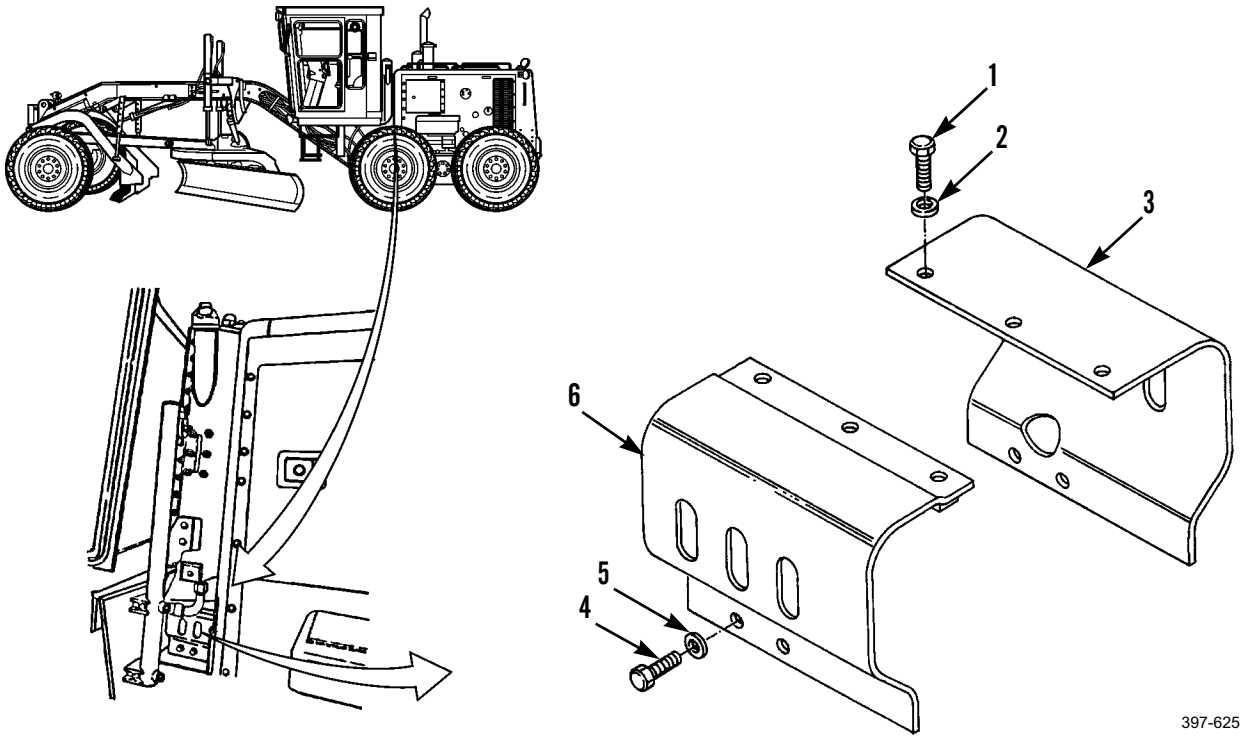


### *CLEANING AND INSPECTION*

Clean and inspect all parts in accordance with WP 0020 00.

### *INSTALLATION*

**NOTE**

Do not tighten bolts.

1. Install metal molding (6), two washers (5), and bolts (4).

**NOTE**

Do not tighten bolts.

2. Install plate (3), two washers (5), and bolts (4).
3. Install three washers (2) and bolts (1).
4. Tighten four bolts (4).

**END OF WORK PACKAGE**

## SEAT ASSEMBLY AND MOUNTING REPLACEMENT 0200 00

### THIS WORK PACKAGE COVERS

Removal, Cleaning and Inspection, Installation

### INITIAL SETUP

**Maintenance Level**

Unit

**Tools and Special Tools**

Tool kit, general mechanic's (Item 89, WP 0348 00)

**Materials/Parts**

Rag, wiping (Item 35, WP 0349 00)

**References**

WP 0020 00

**Equipment Conditions**

Machine parked on level ground (TM 5-3805-261-10)

**Equipment Conditions - Continued**

Parking/emergency brake applied (TM 5-3805-261-10)

Implements lowered to ground (TM 5-3805-261-10)

Engine off (TM 5-3805-261-10)

Battery disconnect switch in OFF position (TM 5-3805-261-10)

Seat belt removed from seat (WP 0201 00)

Heater removed, if replacing mounting (CCE machine) (WP 0212 00)

## SEAT ASSEMBLY AND MOUNTING REPLACEMENT - CONTINUED 0200 00

### *REMOVAL*

1. Remove four bolts (4), washers (3), and seat assembly (1) from support (2).

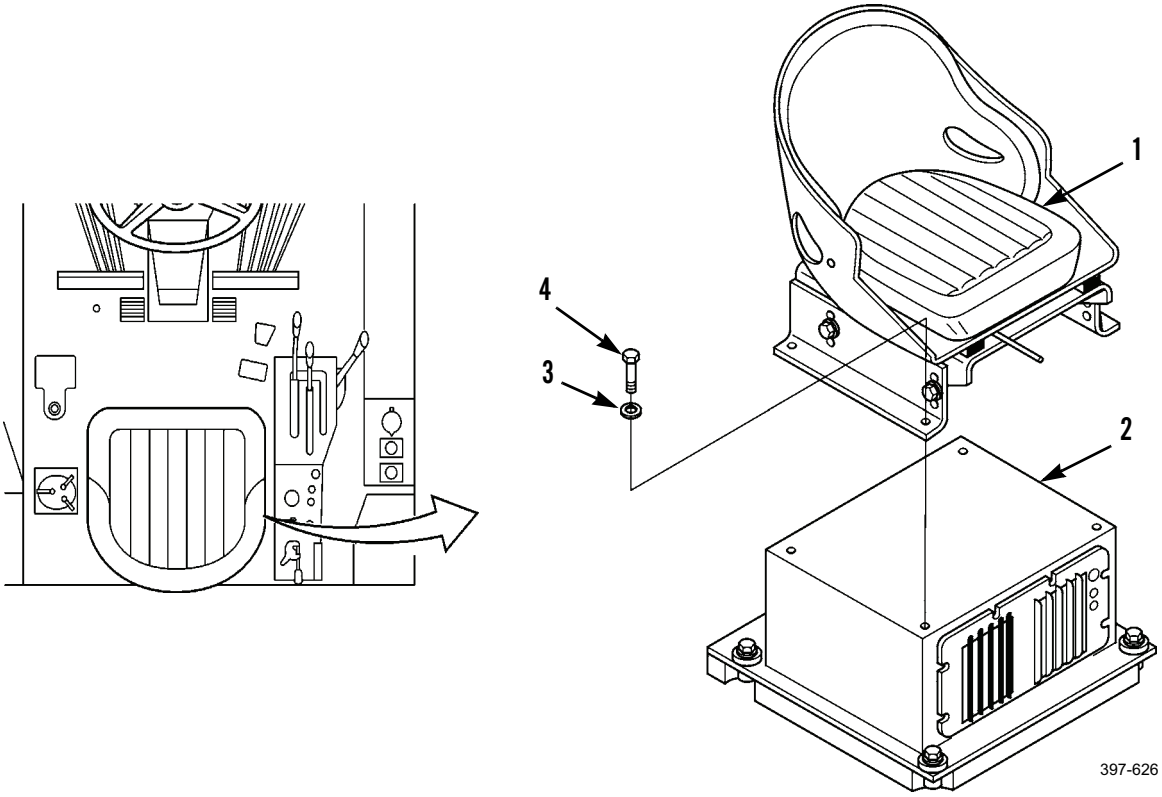

## SEAT ASSEMBLY AND MOUNTING REPLACEMENT - CONTINUED 0200 00

### *REMOVAL - CONTINUED*

2. Remove four bolts (11), washers (12), and two brackets (13).
3. Remove four nuts (15), washers (14), and bracket (16) from four studs (17).
4. Remove two bolts (9) and seat cushion (8).
5. Remove five bolts (5) and back cushion (7).
6. Remove four bolts (10) and two track adjusters (18) from seat (6).

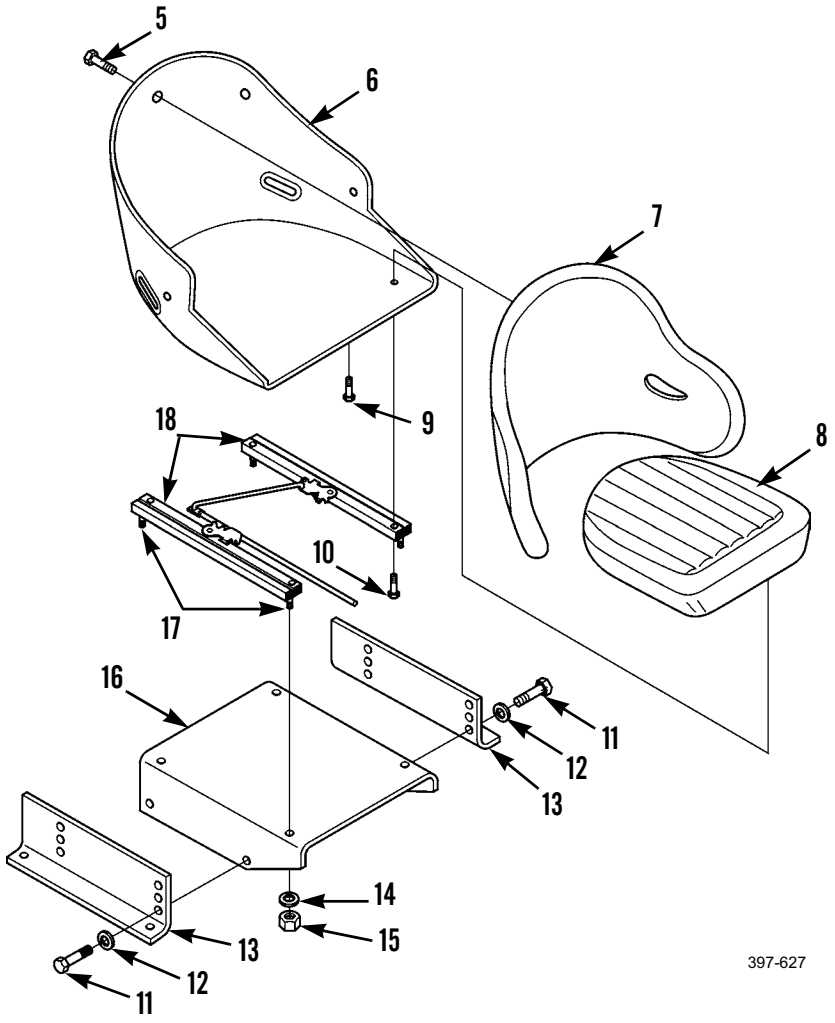

### *REMOVAL - CONTINUED*

7. Remove four bolts (19), washers (20), spacers (21), support (2), gasket (23), and four grommets (22).

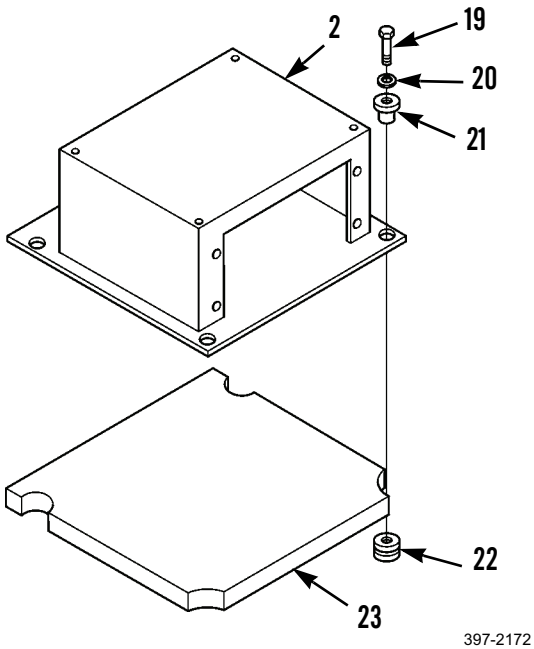


### *CLEANING AND INSPECTION*

Clean and inspect all parts in accordance with WP 0020 00.

### *INSTALLATION*

1. Install four grommets (22), gasket (23), support (2), four spacers (21), washers (20), and bolts (19).

## SEAT ASSEMBLY AND MOUNTING REPLACEMENT - CONTINUED 0200 00

### *INSTALLATION - CONTINUED*

2. Install two track adjusters (18) and four bolts (10) on seat (6).
3. Install back cushion (7) and five bolts (5).
4. Install seat cushion (8) and two bolts (9).
5. Install bracket (16), four washers (14), and nuts (15) on four studs (17).
6. Install two brackets (13), four washers (12), and bolts (11).

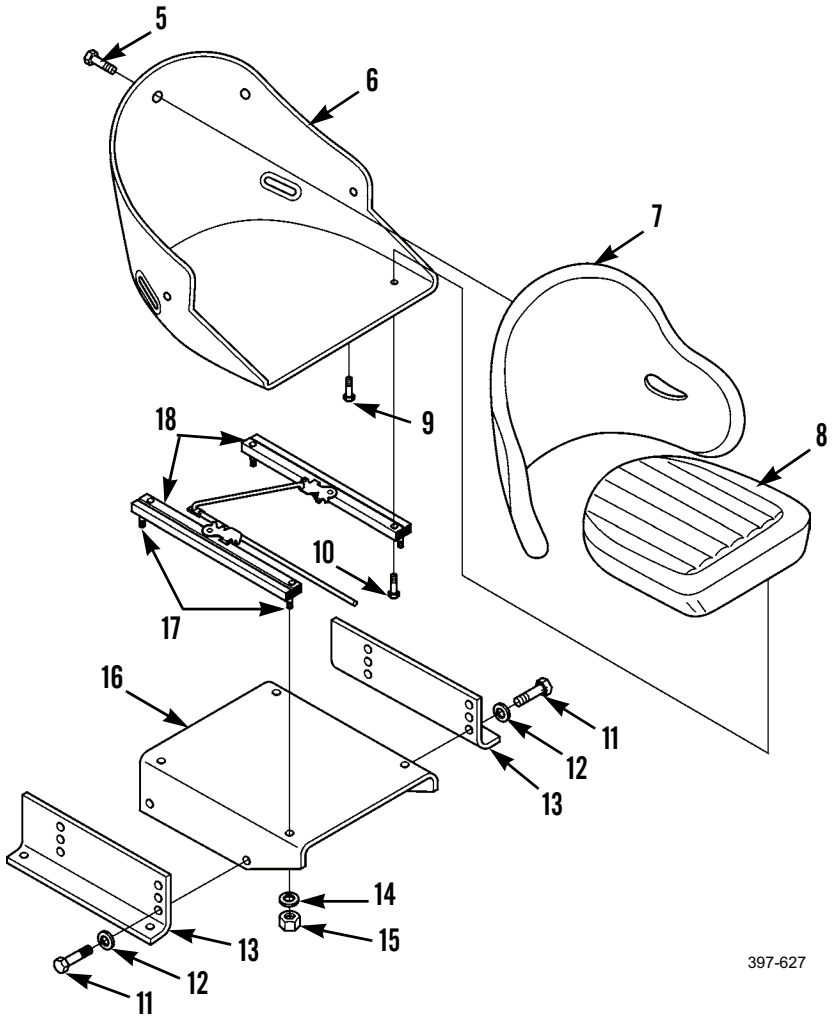

***INSTALLATION - CONTINUED***

7. Install seat assembly (1), four washers (3), and bolts (4) on support (2).

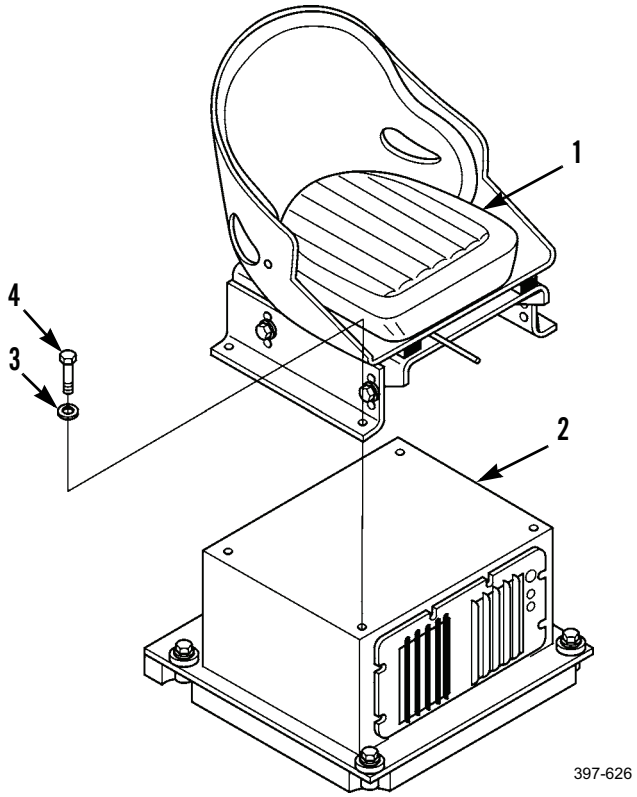


8. Install heater, if removed (CCE machine) (WP 0212 00).
9. Install seat belt in seat (WP 0201 00).

**END OF WORK PACKAGE**

## SEAT BELT REPLACEMENT 0201 00

### THIS WORK PACKAGE COVERS

Removal, Cleaning and Inspection, Installation

### INITIAL SETUP

**Maintenance Level**

Unit

**Tools and Special Tools**

Tool kit, general mechanic's (Item 89, WP 0348 00)

**Materials/Parts**

Rag, wiping (Item 35, WP 0349 00)

**References**

WP 0020 00

**Equipment Conditions**

Machine parked on level ground (TM 5-3805-261-10)

Parking/emergency brake applied (TM 5-3805-261-10)

Implements lowered to ground (TM 5-3805-261-10)

Engine off (TM 5-3805-261-10)

Battery disconnect switch in OFF position (TM 5-3805-261-10)

### *REMOVAL*

1. Detach belt (4) from two eyebolts (6).
2. Remove two nuts (3), bolts (2), and belt (4).
3. Pull belt (4) through seat (1).
4. Remove two nuts (5) and eyebolts (6) from cab.

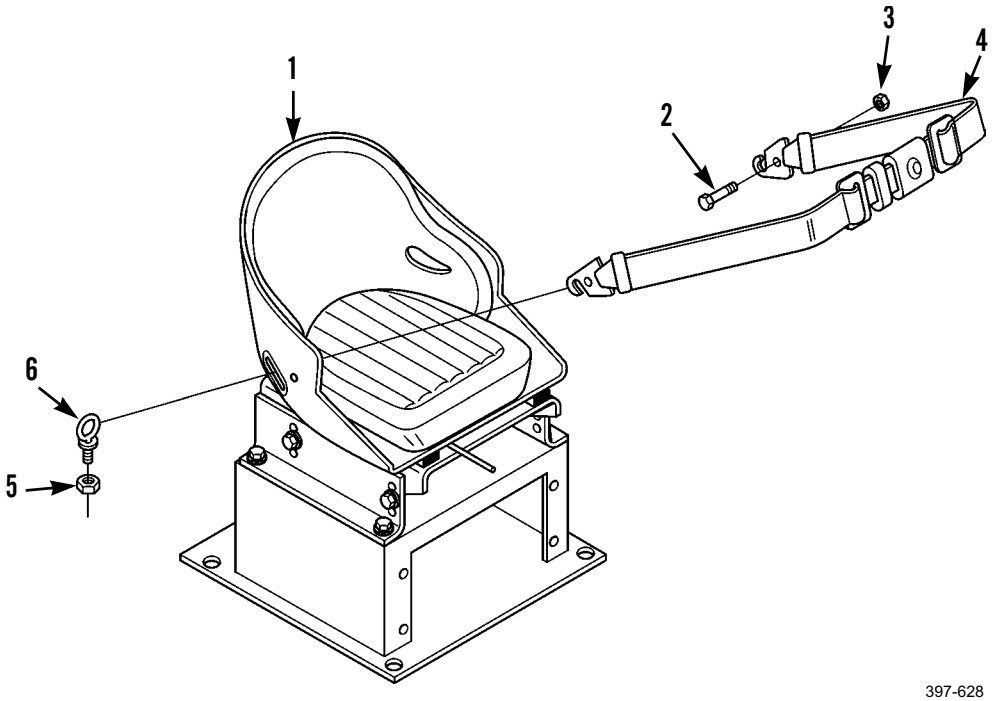


397-628

## SEAT BELT REPLACEMENT - CONTINUED 0201 00

### *CLEANING AND INSPECTION*

Clean and inspect all parts in accordance with WP 0020 00.

### *INSTALLATION*

1. Install two eyebolts (6) and nuts (5) on cab.
2. Install belt (4) through seat (1).
3. Attach belt (4) to eyebolts (6).
4. Install two bolts (2) and nuts (3).

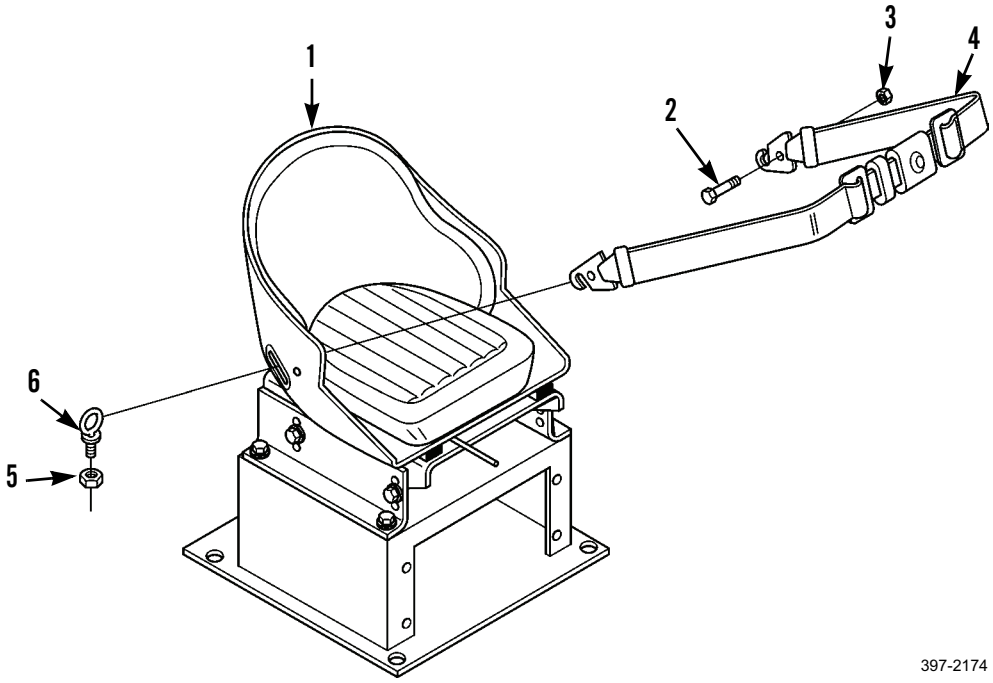


**END OF WORK PACKAGE**

## TOOLBOX REPLACEMENT 0202 00

### THIS WORK PACKAGE COVERS

Removal, Cleaning and Inspection, Installation

### INITIAL SETUP

**Maintenance Level**

Unit

**Tools and Special Tools**

Tool kit, general mechanic's (Item 89, WP 0348 00)

**Materials/Parts**

Rag, wiping (Item 35, WP 0349 00)

**References**

WP 0020 00

**Equipment Conditions**

Machine parked on level ground (TM 5-3805-261-10)

Parking/emergency brake applied (TM 5-3805-261-10)

Implements lowered to ground (TM 5-3805-261-10)

Engine off (TM 5-3805-261-10)

Battery disconnect switch in OFF position (TM 5-3805-261-10)

***REMOVAL***

**NOTE**

Toolbox may be mounted on right side panel or center of frame. Sectionalized machines have both triangular and rectangular shaped toolboxes. Each toolbox configuration is shown.

1. Select appropriate figure, following:
   a. Open lock(s) (7) and cover (3) of toolbox (4).
   b. Remove two nuts (6) and washers (5) from bottom of toolbox (4) at front corners.
   c. Remove four bolts (2) and washers (1) from inside toolbox (4) at each corner.
   d. Remove toolbox (4).

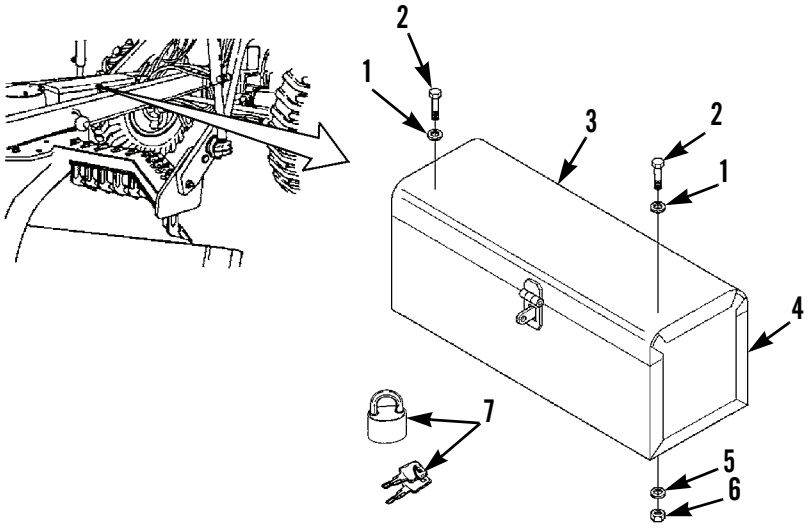


397-2487

### *REMOVAL - CONTINUED*

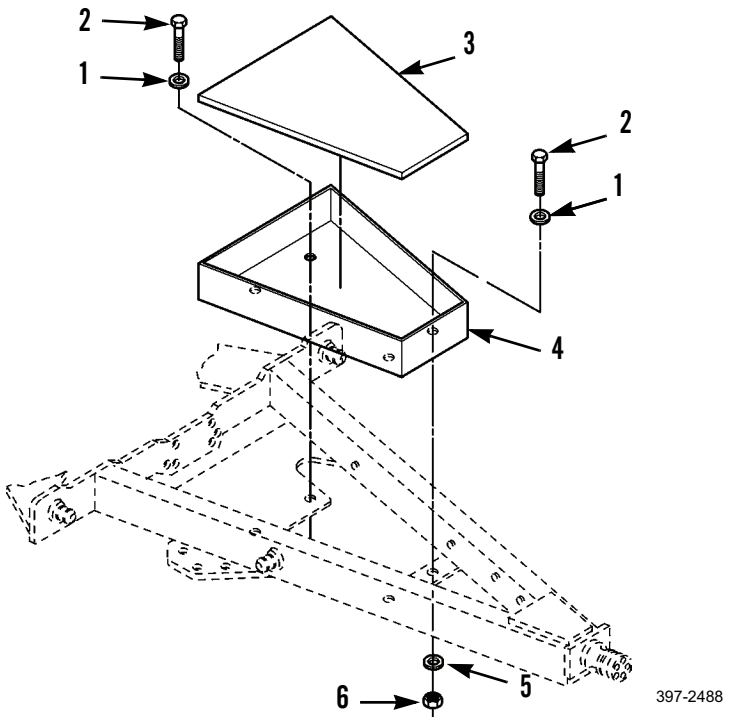


### *CLEANING AND INSPECTION*

Clean and inspect all parts in accordance with WP 0020 00.

### *INSTALLATION*

1. Install toolbox (4).
2. Install four washers (1) and bolts (2) inside toolbox (4) at each corner.
3. Install two washers (5) and nuts (6) on bottom of toolbox (4) at front corners.
4. Close and lock cover (3) with lock (7).

**END OF WORK PACKAGE**

## SCARIFIER SHANKS STOWAGE RACK REPLACEMENT (CCE MACHINE) 0203 00

### THIS WORK PACKAGE COVERS

Removal, Cleaning and Inspection, Installation

### INITIAL SETUP

**Maintenance Level**

Unit

**Tools and Special Tools**

Tool kit, general mechanic's (Item 89, WP 0348 00)

**Materials/Parts**

Rag, wiping (Item 35, WP 0349 00)

**References**

WP 0020 00

**Equipment Conditions**

Machine parked on level ground (TM 5-3805-261-10)

Parking/emergency brake applied (TM 5-3805-261-10)

Implements lowered to ground (TM 5-3805-261-10)

Engine off (TM 5-3805-261-10)

Battery disconnect switch in OFF position (TM 5-3805-261-10)

### *REMOVAL*

1. Remove four nuts (2), washers (3), and two brackets (1) from front frame.
2. Remove two bolts (5) and washers (4).
3. Remove two bolts (8), washers (7), and stowage rack (6).

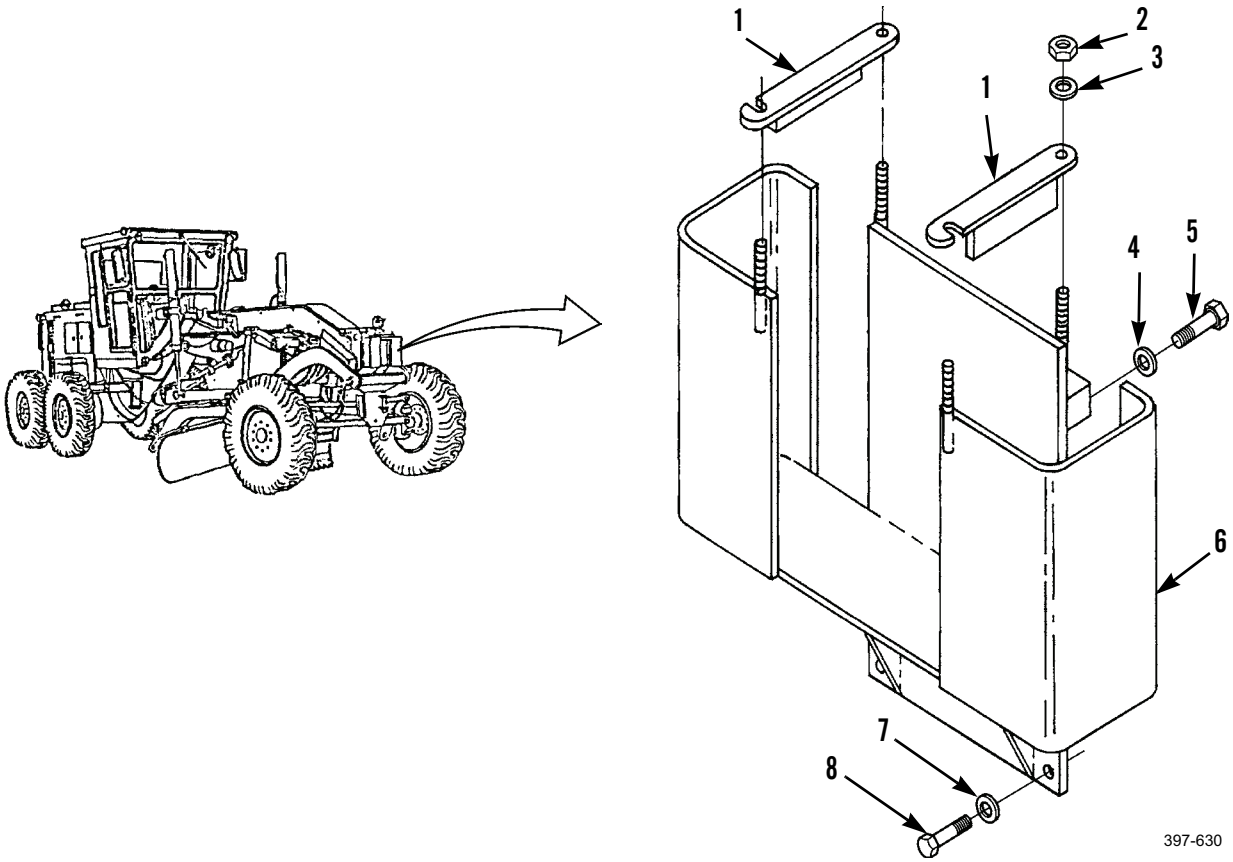

### *CLEANING AND INSPECTION*

Clean and inspect all parts in accordance with WP 0020 00.

### *INSTALLATION*

1. Install stowage rack (6), two washers (7), and bolts (8) to front frame.
2. Install two washers (4) and bolts (5).
3. Install two brackets (1), four washers (3), and nuts (2).

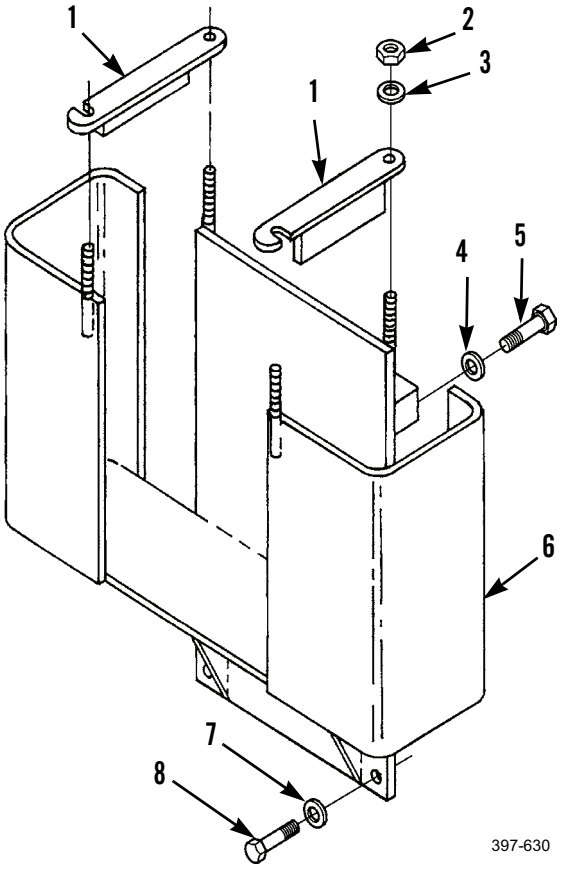


**END OF WORK PACKAGE**

## REAR BUMPER REPLACEMENT (CCE MACHINE) 0204 00

### THIS WORK PACKAGE COVERS

Removal, Cleaning and Inspection, Installation

### INITIAL SETUP

**Maintenance Level**

Unit

**Tools and Special Tools**

Tool kit, general mechanic's (Item 89, WP 0348 00)

Sling (Item 78, WP 0348 00)

**Materials/Parts**

Rag, wiping (Item 35, WP 0349 00)

Pin, cotter

**Personnel Required**

Two

**References**

WP 0020 00

**Equipment Conditions**

Machine parked on level ground (TM 5-3805-261-10)

Parking/emergency brake applied (TM 5-3805-261-10)

Implements lowered to ground (TM 5-3805-261-10)

Engine off (TM 5-3805-261-10)

Battery disconnect switch in OFF position (TM 5-3805-261-10)

Backup alarm removed (WP 0121 00)

### *REMOVAL*

1. Remove cotter pin (3), pin (1), and pin (2). Discard cotter pin.

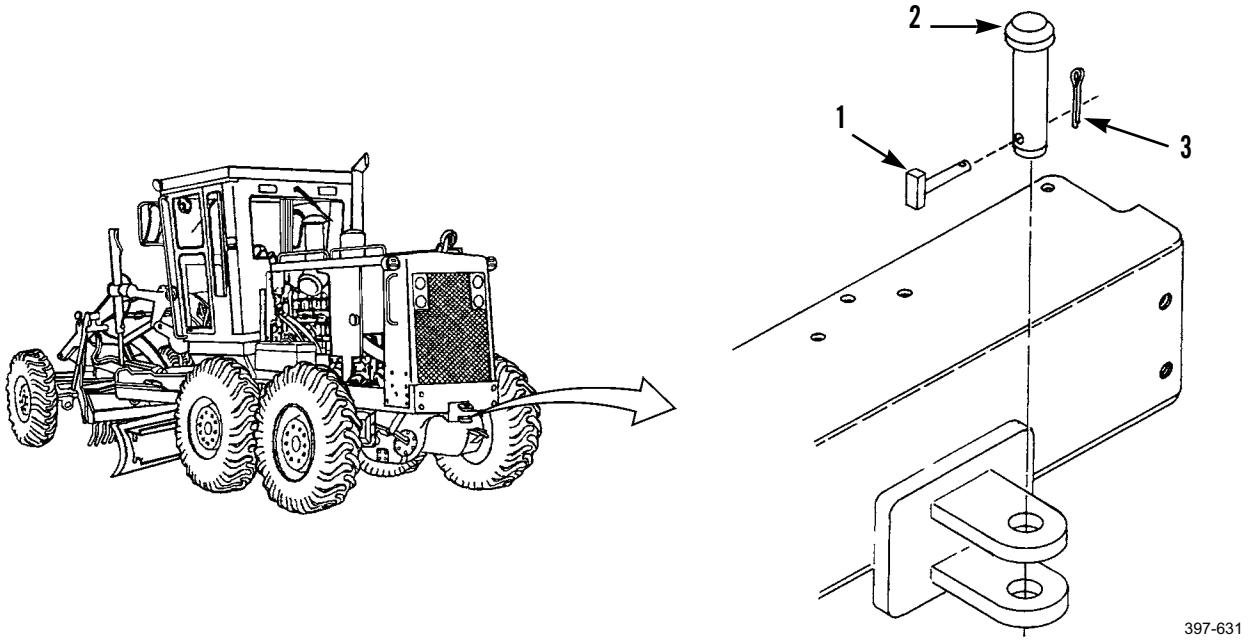

***REMOVAL - CONTINUED***

**WARNING**

Use extreme caution when handling heavy parts. Provide adequate support and use assistance during procedure. Ensure that any lifting device used is in good condition and of suitable load capacity. Keep clear of heavy parts supported only by lifting device. Failure to follow this warning may cause injury or death to personnel.

**NOTE**

Bumper weighs 100 lb (45 kg).

2. With assistance, attach sling to bumper (4) and take up slack.

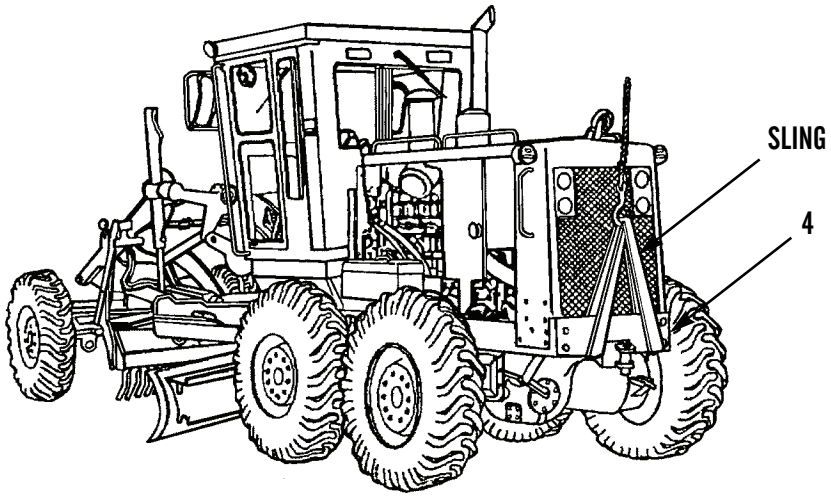


3. Remove four screws (7) and washers (8).
4. Remove four bolts (5) and washers (6).
5. Remove bumper (4) by sliding out from rear frame.
6. Remove sling.

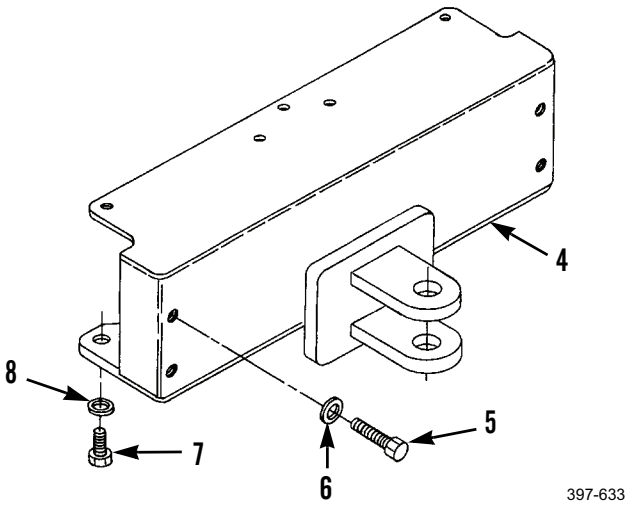

### *CLEANING AND INSPECTION*

Clean and inspect all parts in accordance with WP 0020 00.

### *INSTALLATION*



**WARNING**

Use extreme caution when handling heavy parts. Provide adequate support and use assistance during procedure. Ensure that any lifting device used is in good condition and of suitable load capacity. Keep clear of heavy parts supported only by lifting device. Failure to follow this warning may cause injury or death to personnel.

**NOTE**

Bumper weighs 100 lb (45 kg).

1. With assistance, attach sling to bumper (4) and position on rear frame.
2. Install four washers (6) and bolts (5).
3. Install four washers (8) and bolts (7).
4. Remove sling.
5. Install pin (2), pin (1), and new cotter pin (3).

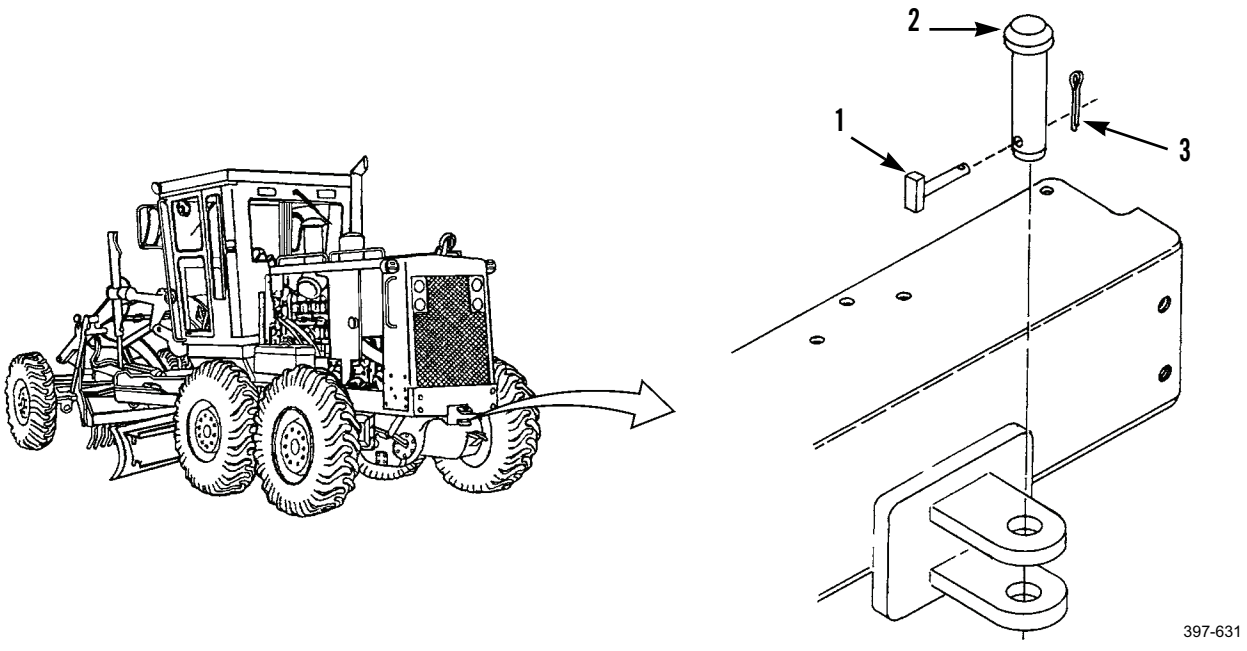


6. Install backup alarm (WP 0121 00).

**END OF WORK PACKAGE**

## REAR BUMPER REPLACEMENT (MODELS 130GSCE AND 130GNSCE) 0205 00

### THIS WORK PACKAGE COVERS

Removal, Cleaning and Inspection, Installation

### INITIAL SETUP

**Maintenance Level**

Unit

**Tools and Special Tools**

Tool kit, general mechanic's (Item 89, WP 0348 00)

Sling (Item 78, WP 0348 00)

**Materials/Parts**

Rag, wiping (Item 35, WP 0349 00)

Pin, cotter

**Personnel Required**

Two

**References**

WP 0020 00

**Equipment Conditions**

Machine parked on level ground (TM 5-3805-261-10)

Parking/emergency brake applied (TM 5-3805-261-10)

Implements lowered to ground (TM 5-3805-261-10)

Engine off (TM 5-3805-261-10)

Battery disconnect switch in OFF position (TM 5-3805-261-10)

Backup alarm removed (WP 0121 00)

### *REMOVAL*

1. Remove nut (3) and bolt (4).
2. Remove pin (1) and pin (2).

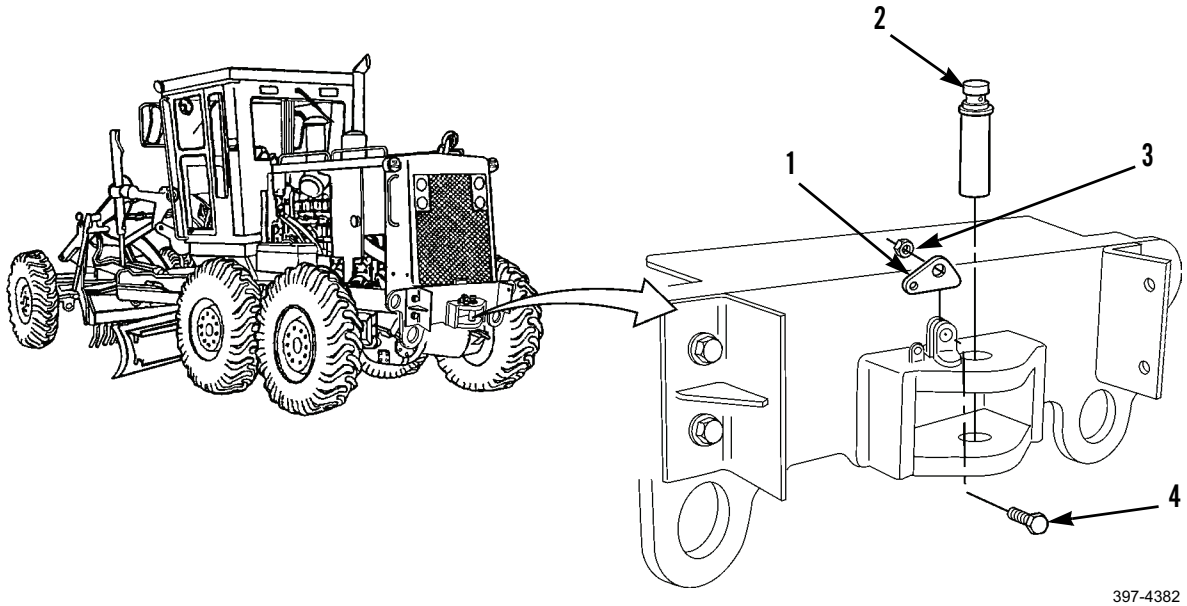

***REMOVAL - CONTINUED***



**WARNING**

Use extreme caution when handling heavy parts. Provide adequate support and use assistance during procedure. Ensure that any lifting device used is in good condition and of suitable load capacity. Keep clear of heavy parts supported only by lifting device. Failure to follow this warning may cause injury or death to personnel.

**NOTE**

Bumper weighs 347 lb (158 kg).

3. With assistance, attach sling to lifting eyes (5) and take up slack.

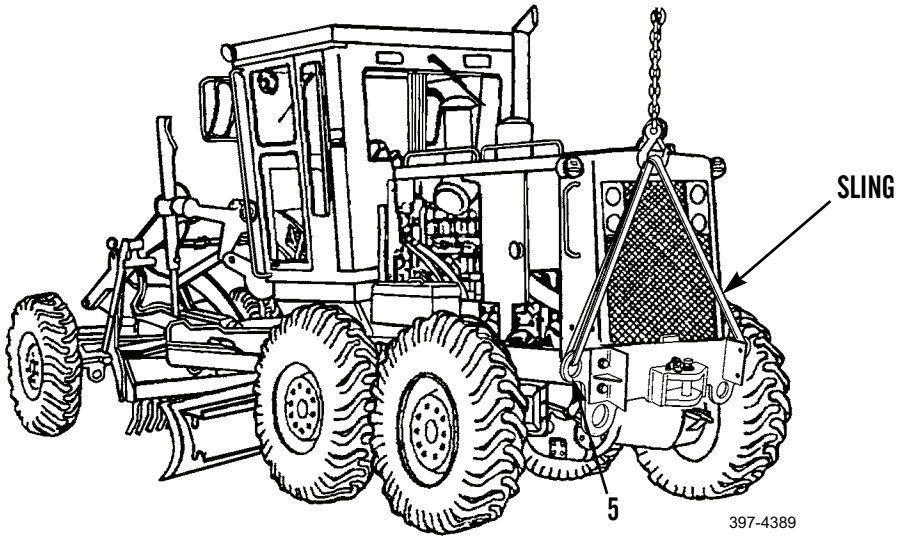


4. Remove six bolts (10) and washers (11).
5. Remove four bolts (9), washers (8) and two brackets (7).
6. Remove bumper (6) by sliding out from rear frame.
7. Remove sling.

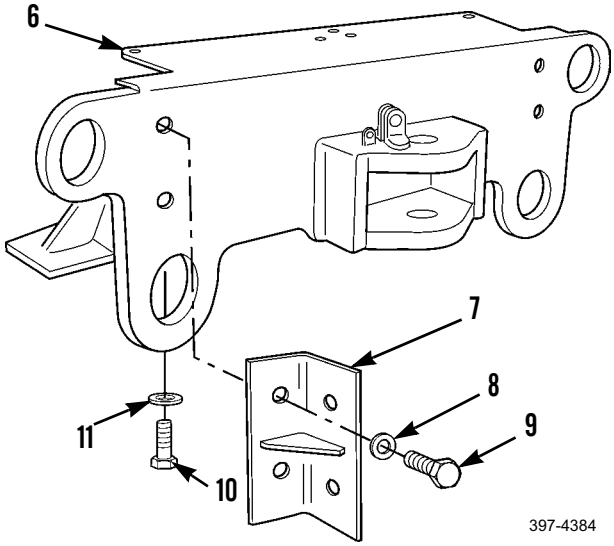

### *CLEANING AND INSPECTION*

Clean and inspect all parts in accordance with WP 0020 00.

### *INSTALLATION*



**WARNING**

Use extreme caution when handling heavy parts. Provide adequate support and use assistance during procedure. Ensure that any lifting device used is in good condition and of suitable load capacity. Keep clear of heavy parts supported only by lifting device. Failure to follow this warning may cause injury or death to personnel.

**NOTE**

Bumper weighs 100 lb (45 kg).

1. With assistance, attach sling to bumper (6) and position on rear frame.
2. Install two brackets (7), four washers (8), bolts (9).
3. Install six washers (11) and bolts (10).
4. Remove sling.
5. Install pin (2) and pin (1).
6. Install bolt (4) and nut (3).

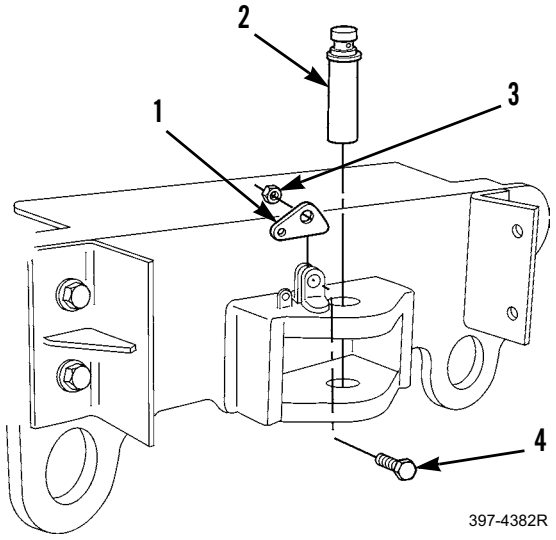


7. Install backup alarm (WP 0121 00).

**END OF WORK PACKAGE**

## FRONT WIPER (LOWER) MAINTENANCE (CCE MACHINE) 0206 00

### THIS WORK PACKAGE COVERS

Removal, Disassembly, Cleaning and Inspection, Assembly, Installation

### INITIAL SETUP

**Maintenance Level**

Unit

**Tools and Special Tools**

Tool kit, general mechanic's (Item 89, WP 0348 00)

Shop equipment, common no. 1 (Item 75, WP 0348 00)

**Materials/Parts**

Rag, wiping (Item 35, WP 0349 00)

Tag, marker (Item 44, WP 0349 00)

Gasket (4)

Locknut (2)

Lockwasher (12)

Ring, snap (2)

Washer, spring (2)

**Personnel Required**

Two

**References**

WP 0020 00

WP 0125 00

**Equipment Conditions**

Machine parked on level ground (TM 5-3805-261-10)

Parking/emergency brake applied (TM 5-3805-261-10)

Implements lowered to ground (TM 5-3805-261-10)

Engine off (TM 5-3805-261-10)

## FRONT WIPER (LOWER) MAINTENANCE (CCE MACHINE) - CONTINUED 0206 00

### *REMOVAL*

1. Remove two nuts (2) and lockwashers (3) from lower wiper assembly (4). Discard lockwashers.

**NOTE**

- Note position of lower wiper assembly before removing to aid in installation.
- Push in on hinged part to straighten lower wiper assembly and pull from shaft of linkage (1) to remove lower wiper assembly.

2. Remove two lower wiper arm assemblies (4).

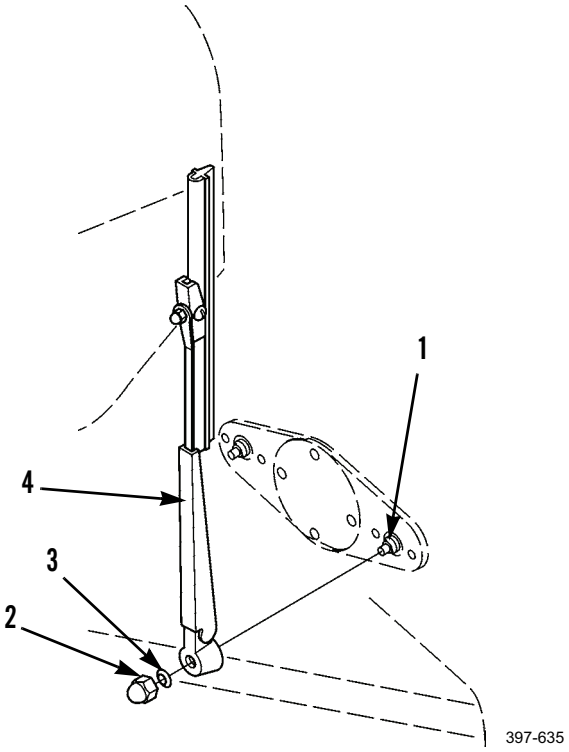


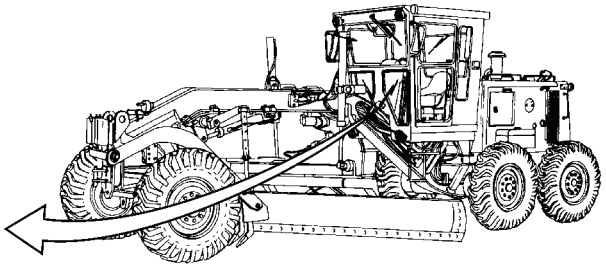

***REMOVAL - CONTINUED***

3. Remove two locknuts (18), screws (19), blades (21), and clips (20) from arm assembly (17). Discard locknuts.
4. Remove two drivers (15), caps (14), nuts (13), washers (12), and gaskets (11) from shaft of linkage (1). Discard gaskets.
5. Remove four screws (16), cover (5), and gasket (6). Discard gasket.

**NOTE**

Turn wiper switch on. Turn disconnect switch ON and OFF as needed to expose three motor mounting bolts and linkage mounting nut.

6. Remove three bolts (10) and lockwashers (9). Discard lockwashers.
7. Remove nut (8) and lockwasher (7). Discard lockwasher.

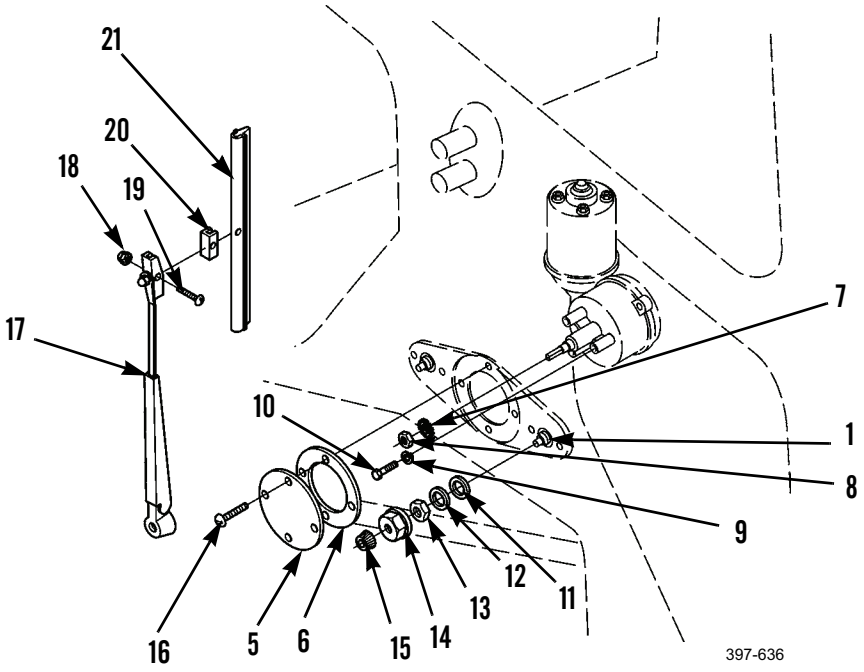

***REMOVAL - CONTINUED***

8. Disconnect battery cables (WP 0125 00).
9. Remove four screws (24) and cover (23) in front of steering column in interior of cab.

**NOTE**

Tag wire assemblies before disconnecting, to aid in installation.

10. Disconnect three wire assemblies (25) at terminals.

**CAUTION**

Take care not to damage threads of shaft on wiper motor.

11. Remove nut (30), washer (31), and arm (32).
12. Remove wiper motor (22).

**NOTE**

If necessary, open lower windshield to perform the next step.

13. Remove four screws (26) and lockwashers (27). Hold flange (29) and gasket (28) while removing four screws.
14. Remove flange (29) and gasket (28). Discard gasket.

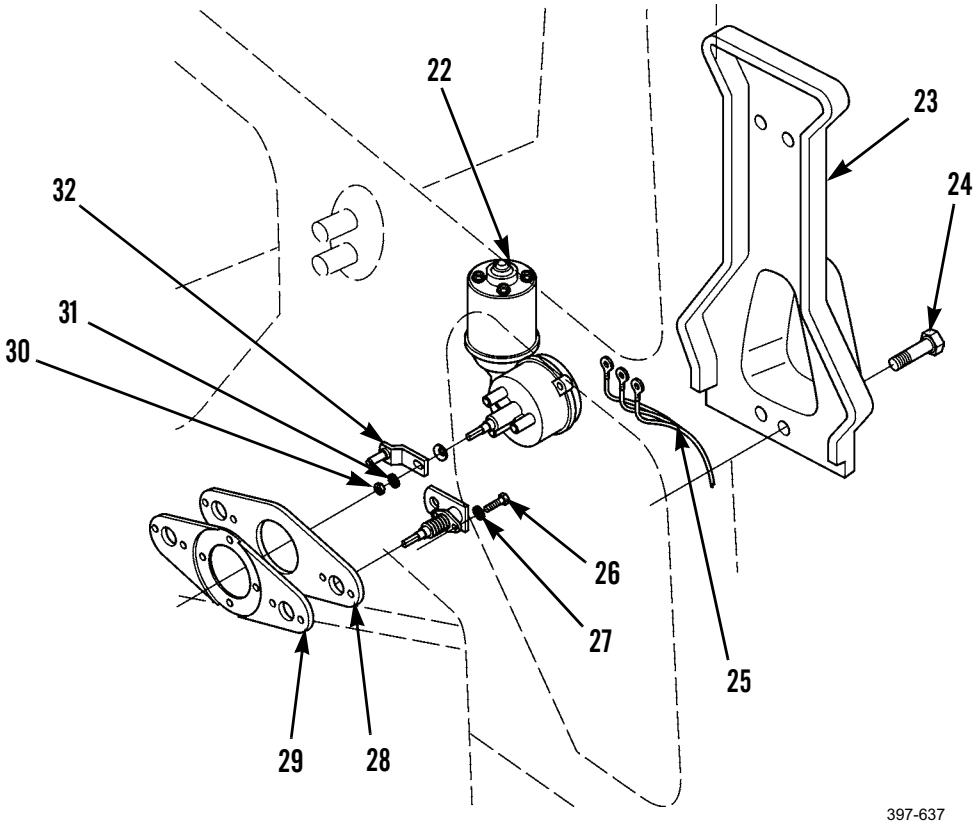

### *REMOVAL - CONTINUED*

15. Remove two nuts (38) and lockwashers (39) from studs (40). Discard lockwashers.
16. Remove two linkages (1) and spacer (41).

**NOTE**

- If necessary, open lower windshield to perform the next step.
- Hold two stops while removing nuts.

17. Remove two nuts (37) and washers (36).
18. Remove two stops (33) from machine.
19. Remove two washers (35) and nuts (34) from stops (33).

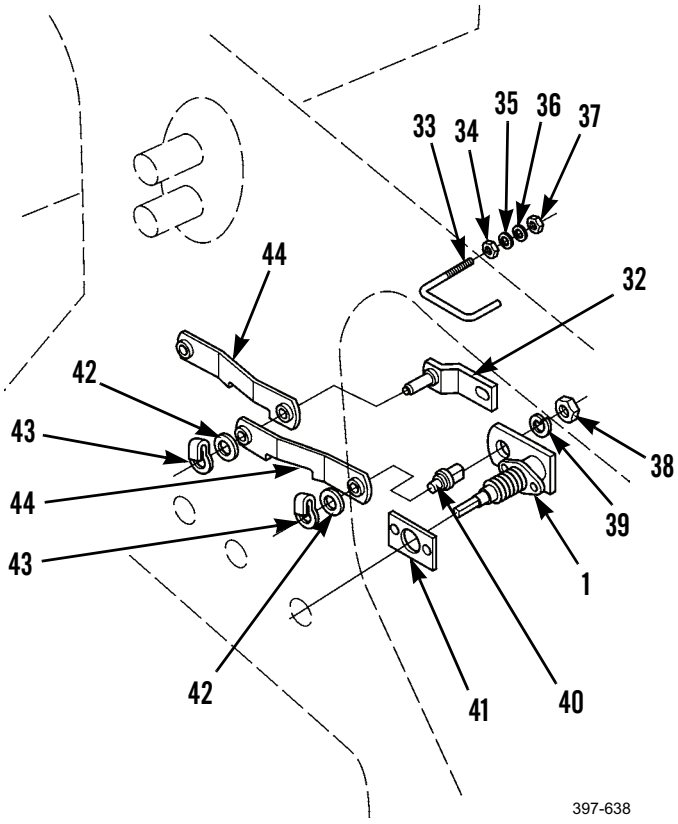


### *DISASSEMBLY*

1. Remove two clips (43).
2. Separate two washers (42), studs (40), links (44), and arm (32).

### *CLEANING AND INSPECTION*

Clean and inspect all parts in accordance with WP 0020 00.

### *ASSEMBLY*

1. Position arm (32), two links (44), studs (40), and washers (42). Right link should be down and left link up.
2. Install two clips (43).

### *INSTALLATION*

1. Install two nuts (34) and washers (35) on stops (33).
2. Install two stops (33) in machine.
3. Install two washers (36) and nuts (37) on stops (33) in front of steering column in interior of cab.
4. Position spacer (41) and two linkages (1). Holes of linkages go on studs (40).
5. Install two new lockwashers (39) and nuts (38) on studs (40).
6. Install new gasket (28), flange (29), four new lockwashers (27), and screws (26).
7. Position shaft of wiper motor (22) on arm (32) and install washer (31) and nut (30).
8. Install wiper motor (22).
9. Connect three wire assemblies (25) at terminals.
10. Install cover (23) and four screws (24) in front of steering column in interior of cab.
11. Connect battery cables (WP 0125 00).

***INSTALLATION - CONTINUED***

**NOTE**

Turn wiper switch on. Turn battery disconnect switch ON and OFF as needed to stop motor so that flat surfaces at sides of threaded motor shaft align with mounting holes in arm.

12. Install new lockwasher (7) and nut (8).

**NOTE**

Turn wiper switch on. Turn battery disconnect switch ON and OFF as needed so that bolts are exposed.

13. Install three new lockwashers (9) and bolts (10).
14. Install new gasket (6), cover (5), and four screws (16) in lower wiper area of exterior of cab.
15. Install two new gaskets (11), washers (12), nuts (13), caps (14), and drivers (15) on linkage (1) shafts.
16. Install two clips (20), blades (21), screws (19), and new locknuts (18) on arm assembly (17).

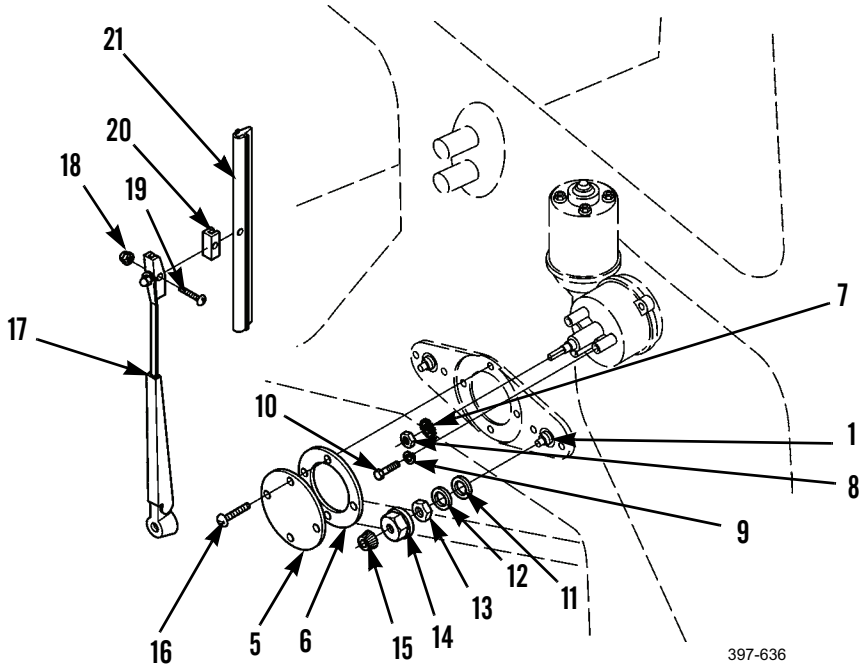

***INSTALLATION - CONTINUED***

17. Install two lower wiper assemblies (4) to shaft of linkage (1) in same position as removed.
18. Install two new lockwashers (3) and nuts (2).

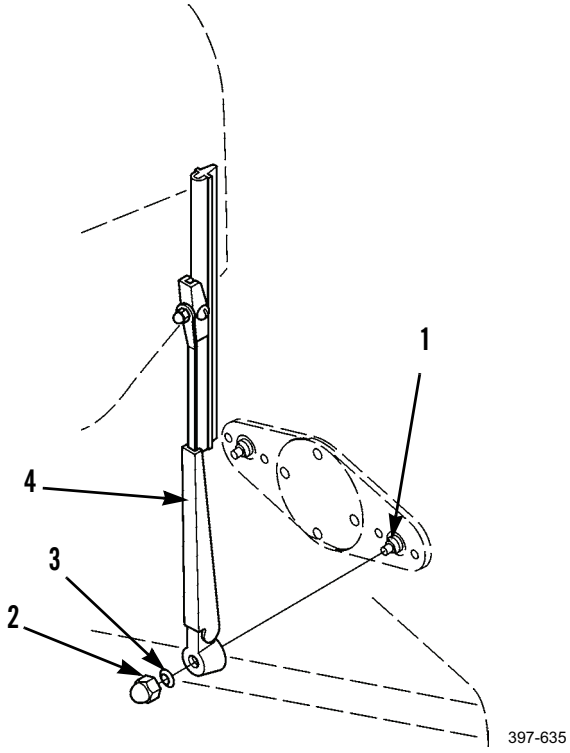


**END OF WORK PACKAGE**

## FRONT WIPER (UPPER) MAINTENANCE (CCE MACHINE) 0207 00

### THIS WORK PACKAGE COVERS

Removal, Disassembly, Cleaning and Inspection, Assembly, Installation

### INITIAL SETUP

**Maintenance Level**

Unit

**Tools and Special Tools**

Tool kit, general mechanic's (Item 89, WP 0348 00)

Shop equipment, common no. 1 (Item 75, WP 0348 00)

**Materials/Parts**

Rag, wiping (Item 35, WP 0349 00)

Tag, marker (Item 44, WP 0349 00)

Gasket

Locknut

Lockwasher (4)

Ring, snap

**Personnel Required**

Two

**References**

WP 0020 00

**Equipment Conditions**

Machine parked on level ground (TM 5-3805-261-10)

Parking/emergency brake applied (TM 5-3805-261-10)

Implements lowered to ground (TM 5-3805-261-10)

Engine off (TM 5-3805-261-10)

Battery cables disconnected (WP 0125 00)

### *REMOVAL*

1. Remove nut (3) and lockwasher (2) from upper wiper assembly (4). Discard lockwasher.

**NOTE**

- Note position of upper wiper assembly before removing to aid in installation.
- Push in on hinged part of arm assembly (5) to straighten upper wiper assembly and pull from motor (1) shaft to remove upper wiper assembly.

2. Remove upper wiper assembly (4).

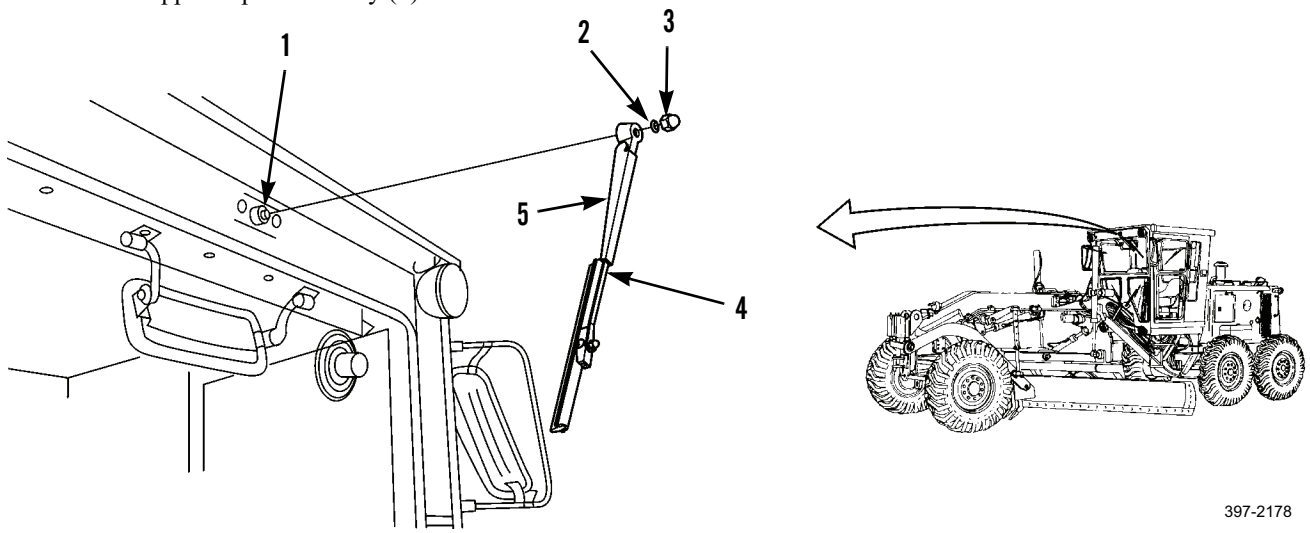


3. Remove locknut (14), screw (15), blade assembly (17), and clip (16) from arm assembly (5). Discard locknut.
4. Remove driver (13), cap (12), nut (11), snap ring (10), washer (9), and gasket (8). Discard snap ring and gasket.
5. Remove two bolts (7) and lockwashers (6) from motor (1) shaft. Discard lockwashers.

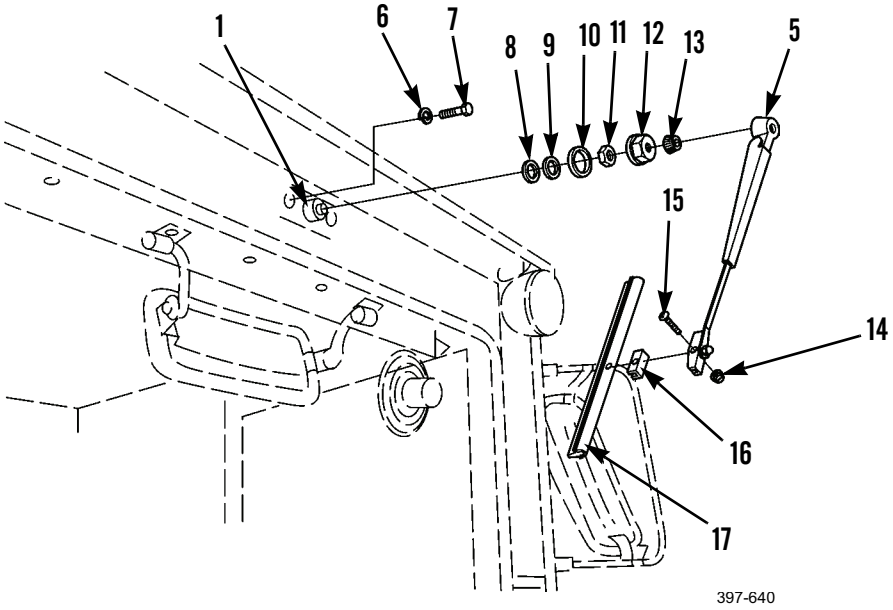

### *REMOVAL - CONTINUED*

6. Open center door (20) in upper storage compartment inside cab.

**NOTE**

Tag and mark wire assemblies before disconnecting to aid in installation.

7. Disconnect three wire assemblies (18) from terminals of motor (1).
8. Remove plate (19) and motor (1).

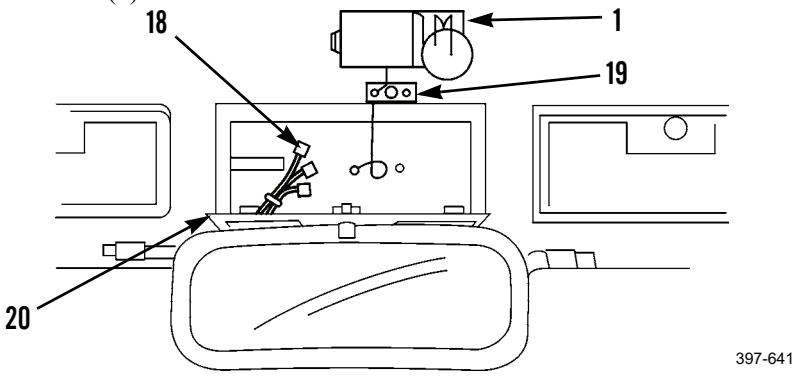


### *DISASSEMBLY*

1. Remove nut (28), lockwasher (29), and washer (23) from shaft of motor (1). Discard lockwasher.
2. Remove two clips (27) and washers (26) from link assembly (25).
3. Remove link assembly (25), crank assembly (24), washer (23), and shaft assembly (22).
4. Remove three bolts (31) and washers (30).
5. Remove two screws (32).
6. Remove bracket (21) and motor (1).

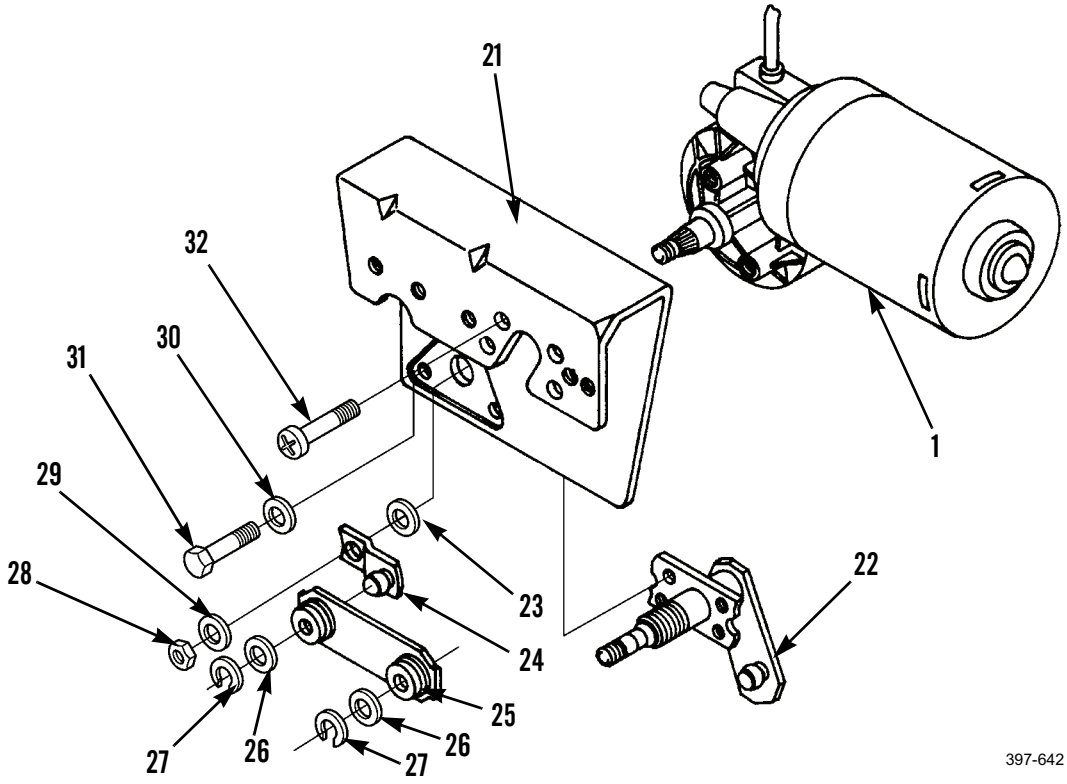

### *CLEANING AND INSPECTION*

Clean and inspect all parts in accordance with WP 0020 00.

### *ASSEMBLY*

1. Position motor (1) and bracket (21). Insert motor shaft through bracket.
2. Install two screws (32) and tighten to 51 lb-in. (6 Nm).
3. Install three washers (30) and bolts (31). Tighten bolts to 43 lb-in. (5 Nm).
4. Install shaft assembly (22), washer (23), crank assembly (24), link assembly (25), two washers (26), clips (27), and position on bracket (21).
5. Install new lockwasher (29) and nut (28) on motor (1) shaft. Tighten nut to 120 lb-in (14 Nm).

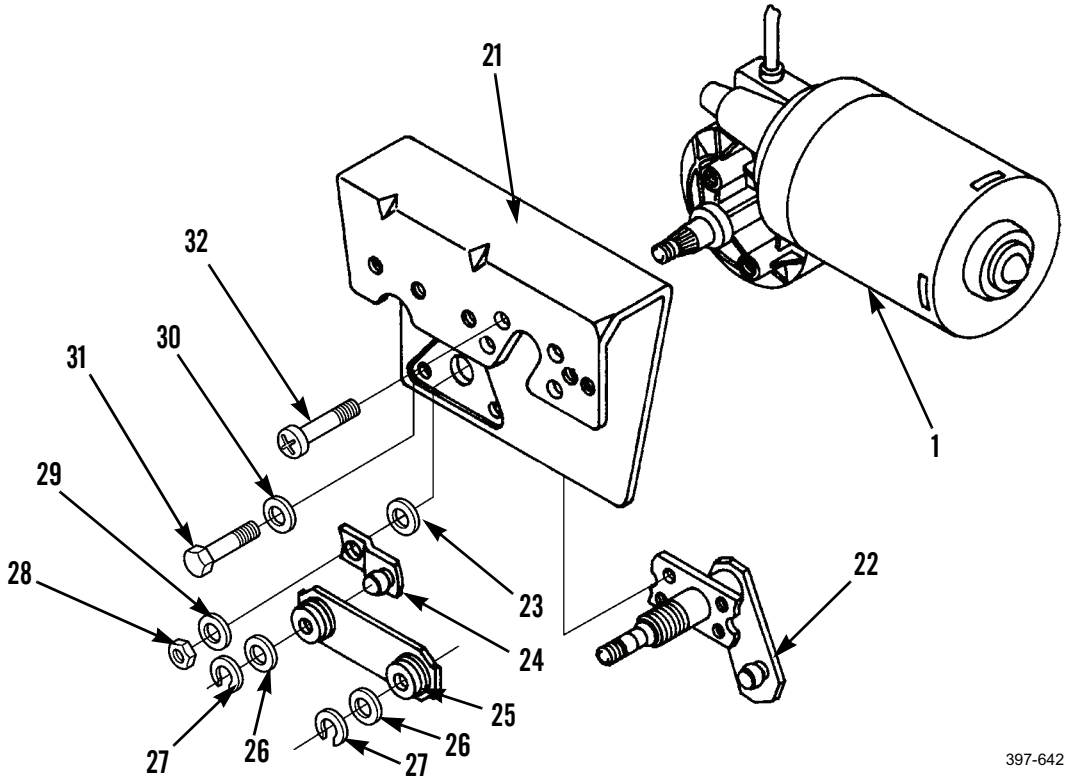

### *INSTALLATION*

1. Position motor (1) and plate (19) in upper storage compartment inside cab.
2. Connect three wire assemblies (18) at terminals to motor (1). Close center door (20).

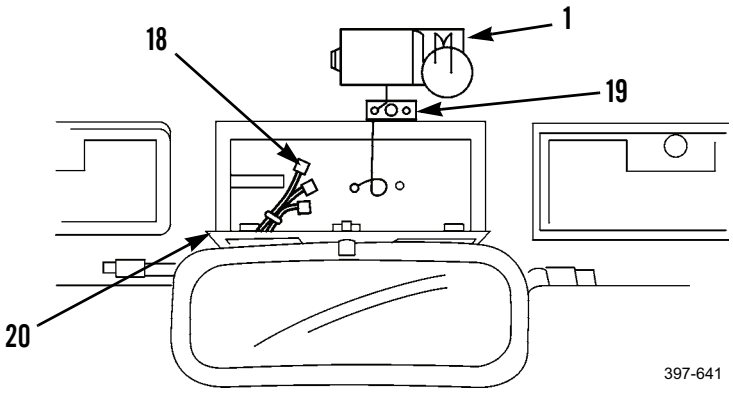


3. Install two new lockwashers (6) and bolts (7) in upper-front exterior of cab while assistant holds motor (1) in cab interior.
4. Install new gasket (8), washer (9), new snap ring (10), nut (11), cap (12), and driver (13). Tighten nut to 180 lb-in. (20 Nm).
5. Install clip (16), blade assembly (17), screw (15), and new locknut (14) on arm assembly (5).

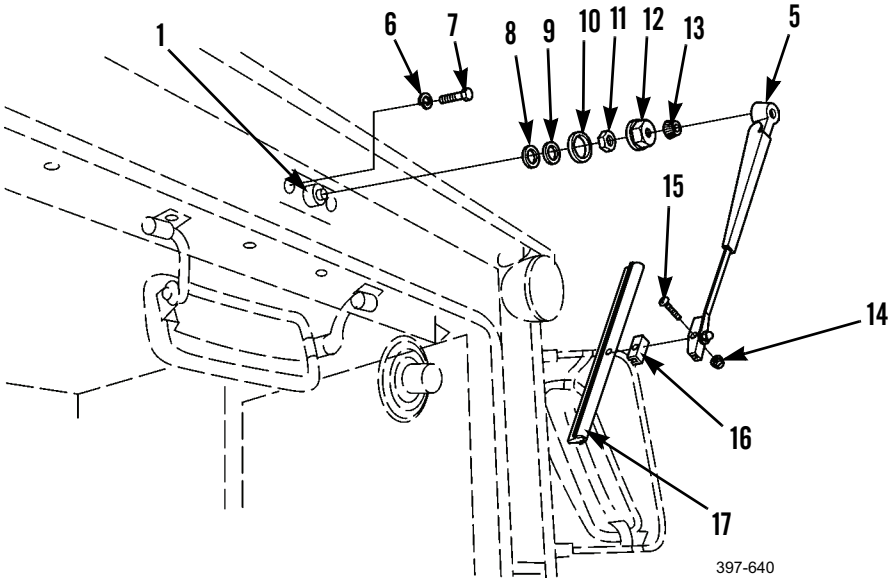

***INSTALLATION - CONTINUED***

6. Install arm assembly (5) of upper wiper assembly (4) to shaft of motor (1) in same position as when removed.
7. Install new lockwasher (2) and nut (3). Tighten nut to 144 lb-in. (16 Nm).

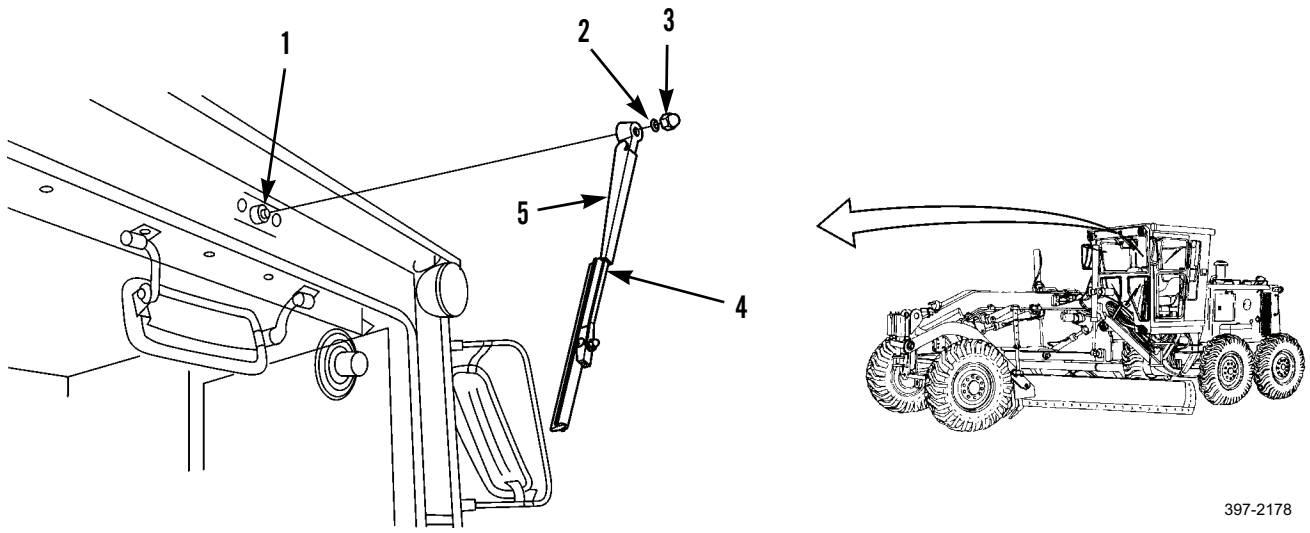


8. Connect battery cables (WP 0125 00).

**END OF WORK PACKAGE**

## REAR WIPER REPLACEMENT (CCE MACHINE) 0208 00

### THIS WORK PACKAGE COVERS

Removal, Cleaning and Inspection, Installation

### INITIAL SETUP

**Maintenance Level**

Unit

**Tools and Special Tools**

Tool kit, general mechanic's (Item 89, WP 0348 00)

**Materials/Parts**

Rag, wiping (Item 35, WP 0349 00)

Tag, marker (Item 44, WP 0349 00)

**References**

WP 0020 00

**Equipment Conditions**

Machine parked on level ground (TM 5-3805-261-10)

Parking/emergency brake applied (TM 5-3805-261-10)

Implements lowered to ground (TM 5-3805-261-10)

Engine off (TM 5-3805-261-10)

Battery cables disconnected (WP 0125 00)

### *REMOVAL*

**NOTE**

- Note position of rear wiper assembly before removing to aid in installation.
- Push in on hinged part of arm assembly to straighten rear wiper assembly and pull from shaft of motor to remove rear wiper assembly.

1. Remove nut (1), washer (2), and rear wiper assembly (3).

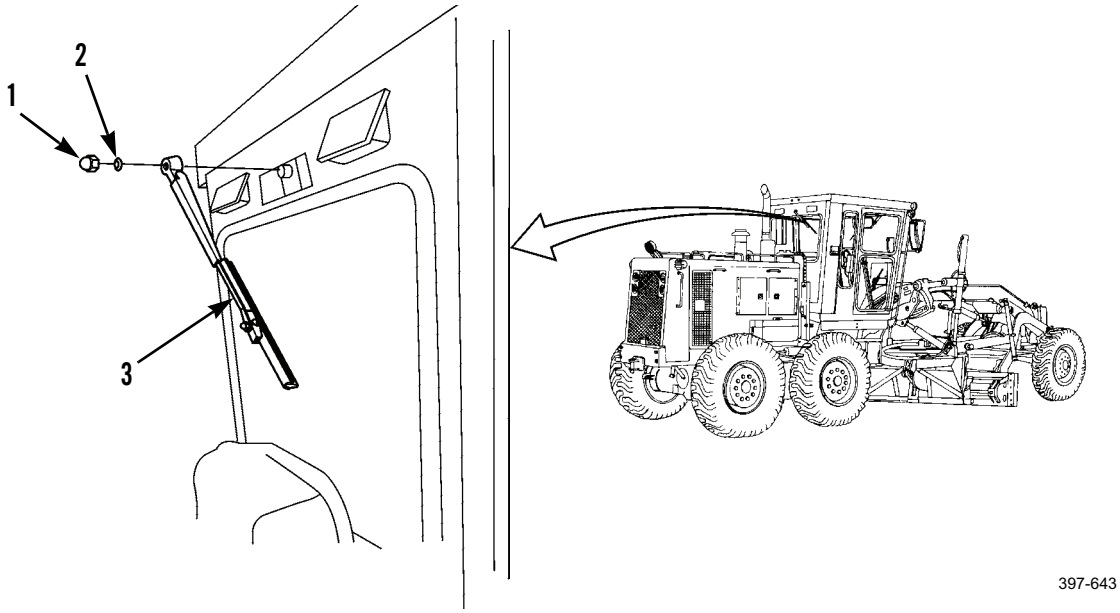

***REMOVAL - CONTINUED***

2. Remove nut (11) and screw (12).
3. Separate clip (10), blade (9), and arm assembly (4).
4. Remove nut (5) and washers (6 and 7) from shaft of motor (8).

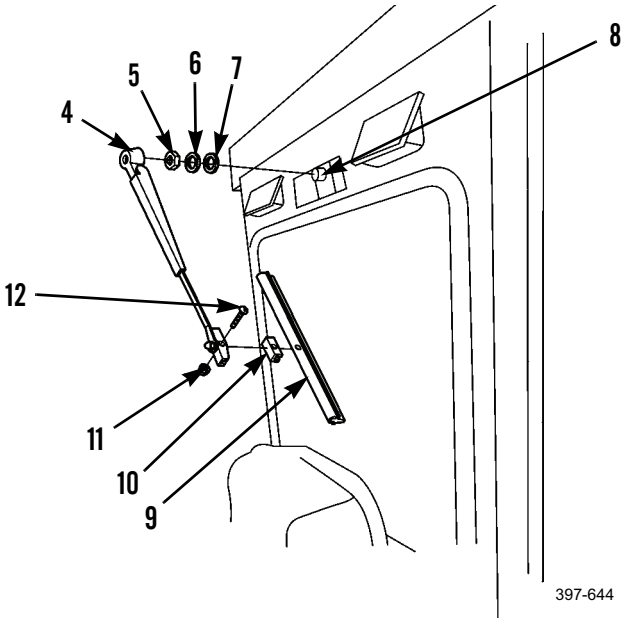


5. Remove knob (18) and nut (19).
6. Remove two screws (16).
7. Separate cover (15) from two brackets (17).
8. Separate switch (21) from cover (15).

**NOTE**

Tag wire assemblies before disconnecting to aid in installation.

9. Disconnect wire assembly (13) and three wire assemblies (14) from switch (21).
10. Remove switch (21) and nut (20).

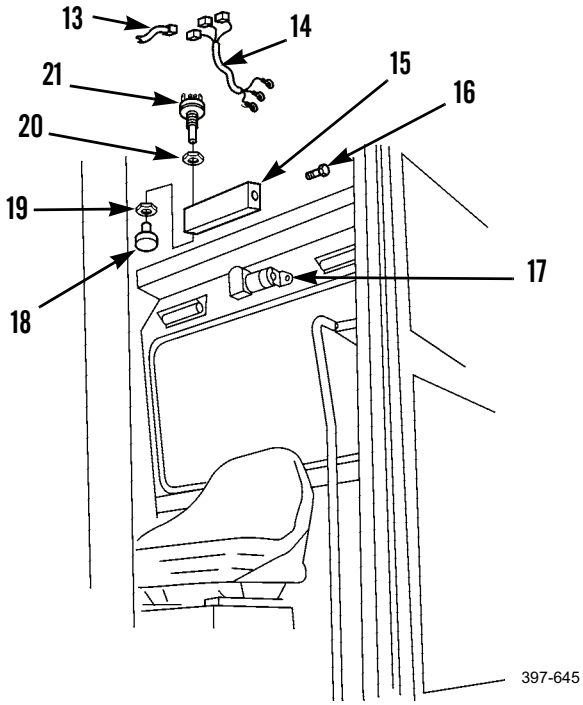

### *REMOVAL - CONTINUED*

11. Remove screws (22 and 23), two brackets (26), and motor (8).

**NOTE**

Note location of nut on shaft of motor before removing to aid in installation.

12. Remove washer (25) and nut (24) from shaft of motor (8).

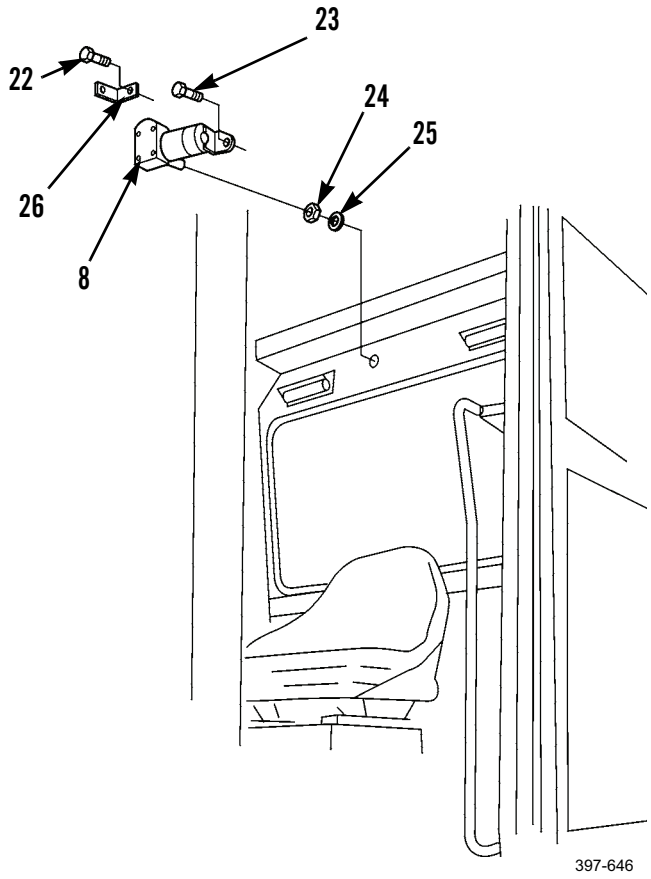


### *CLEANING AND INSPECTION*

Clean and inspect all components in accordance with WP 0020 00.

### *INSTALLATION*

1. Install nut (24) and washer (25) on shaft of motor (8).

**NOTE**

Adjust brackets to align with holes in cover.

2. Position motor (8) and two brackets (26).
3. Install screws (23 and 22).
4. Install nut (20) on switch (21).
5. Position switch (21) in cover (15).
6. Install nut (19).
7. Adjust nuts (20 and 19) to obtain proper shaft length of switch (21).
8. Connect three wire assemblies (19) and wire assembly (13) to switch (21).
9. Position cover (15) on two brackets (26).
10. Install two screws (16).
11. Install knob (18).

***INSTALLATION - CONTINUED***

12. Install washers (7 and 6) and nut (5).
13. Position blade (9) and clip (10) on arm assembly (4).
14. Install screw (12) and nut (11).

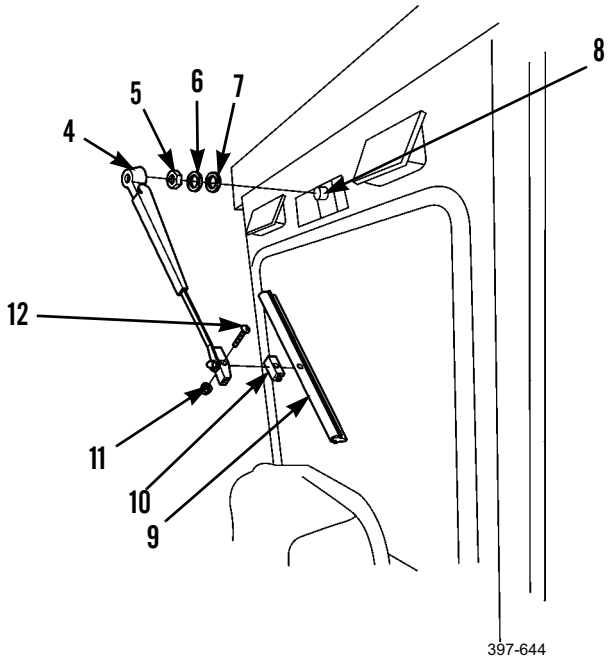


15. Install washer (2), nut (1), and rear wiper assembly (3) on shaft of motor (8) in same position as removed.

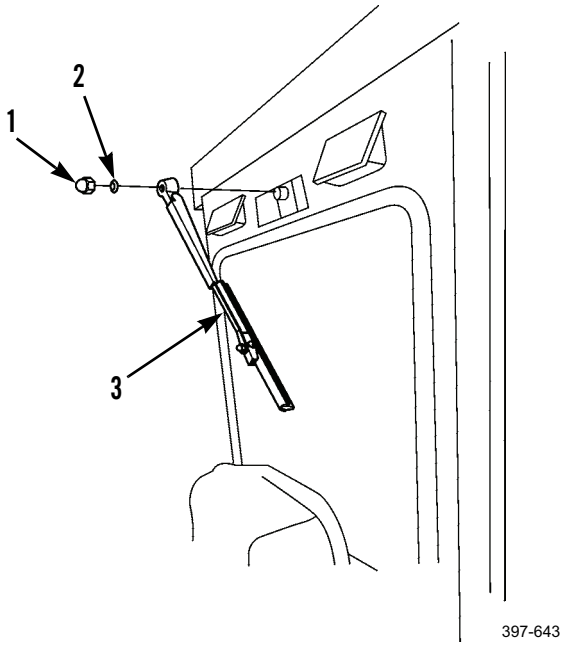


16. Connect battery cables (WP 0125 00).

**END OF WORK PACKAGE**

## WINDSHIELD WASHER REPLACEMENT (CCE MACHINE) 0209 00

### THIS WORK PACKAGE COVERS

Removal, Cleaning and Inspection, Installation

### INITIAL SETUP

**Maintenance Level**

Unit

**Tools and Special Tools**

Tool kit, general mechanic's (Item 89, WP 0348 00)

**Materials/Parts**

Rag, wiping (Item 35, WP 0349 00)

Tag, marker (Item 44, WP 0349 00)

Gasket

**References**

WP 0020 00

**Equipment Conditions**

Machine parked on level ground (TM 5-3805-261-10)

Parking/emergency brake applied (TM 5-3805-261-10)

Implements lowered to ground (TM 5-3805-261-10)

Engine off (TM 5-3805-261-10)

Battery cables disconnected (WP 0125 00)

***REMOVAL***

**NOTE**

Tag wire assemblies before disconnecting to aid in installation.

1. Disconnect four wire assemblies (1).

**NOTE**

Tag hoses before disconnecting to aid in installation.

2. Disconnect two hoses (9).
3. Remove eight screws (2) and two pump assemblies (3).
4. Remove two nozzles (10), strainers (5), and hoses (4) from pump assemblies (3).
5. Remove cover (7), reservoir (6), and pad (8).

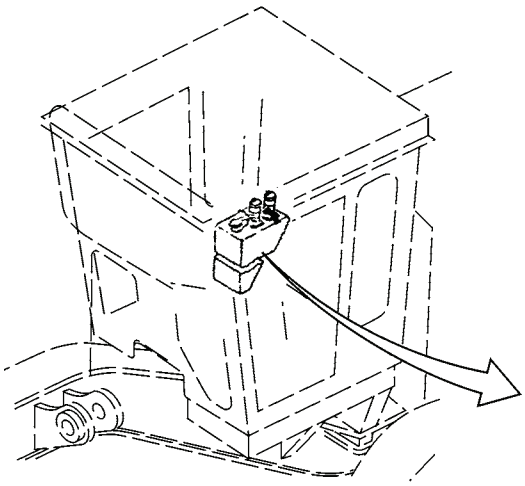

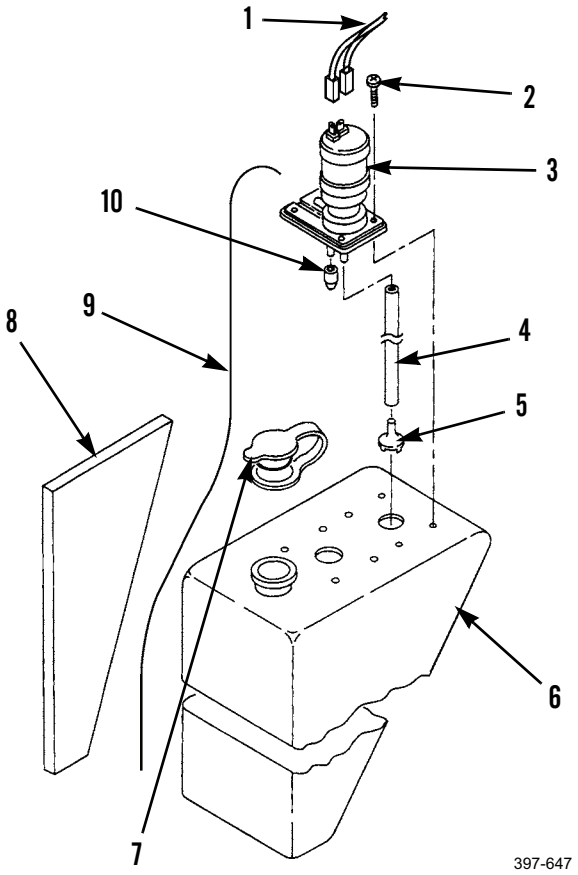

***REMOVAL - CONTINUED***

6. Remove two screws (14) and cover (13) from left-front interior of cab.

**NOTE**

Open bottom-left window to aid in removal.

7. Remove four screws (12) and panel (11).

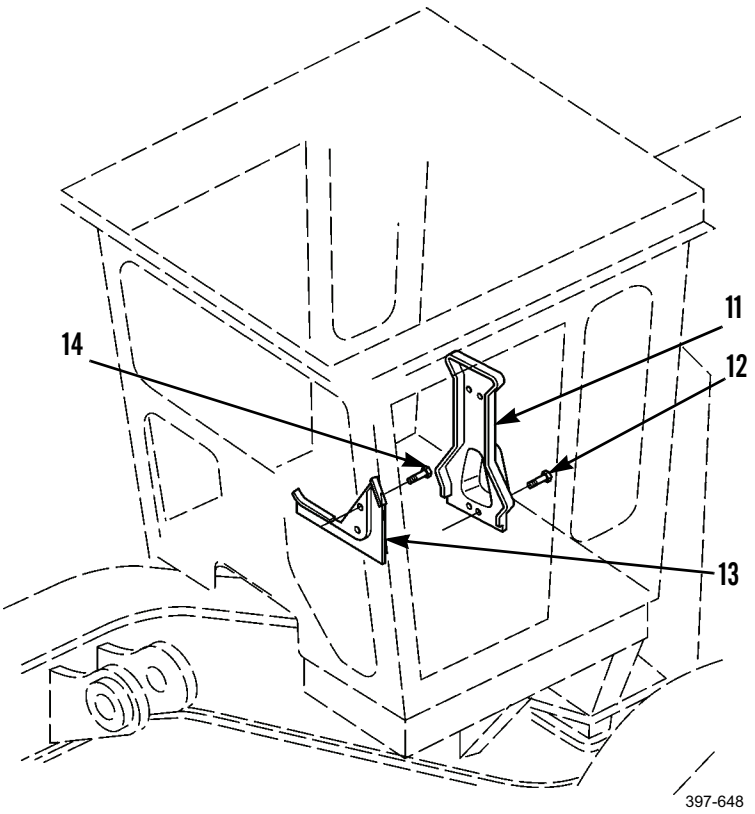

### *REMOVAL - CONTINUED*

8. Remove three screws (18), washers (19), and six clips (17).
9. Remove two hoses (9).
10. Remove upper nozzle assembly (21), lower nozzle assembly (20), two screws (22), bracket (15), and gasket (16) from center exterior of cab. Discard gasket.

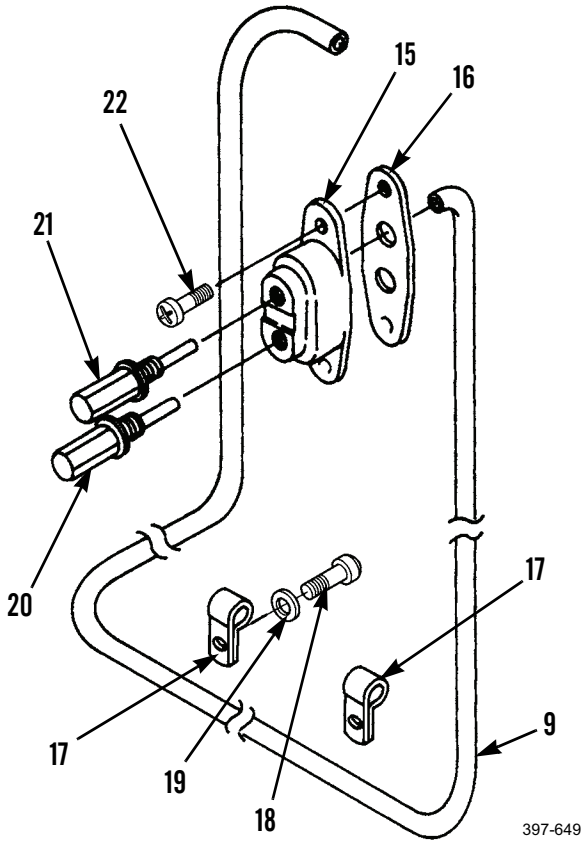


### *CLEANING AND INSPECTION*

Clean and inspect all parts in accordance with WP 0020 00.

### *INSTALLATION*

1. Install new gasket (16), bracket (15), two screws (22), lower nozzle assembly (20), and upper nozzle assembly (21) in center exterior of cab.
2. Install two hoses (9).
3. Install six clips (17), three washers (19), and screws (18).

**NOTE**

Open bottom-left window to aid in installation.

***INSTALLATION - CONTINUED***

4. Install panel (11) and four screws (12) in left-front interior of cab.
5. Install cover (13) and two screws (14).

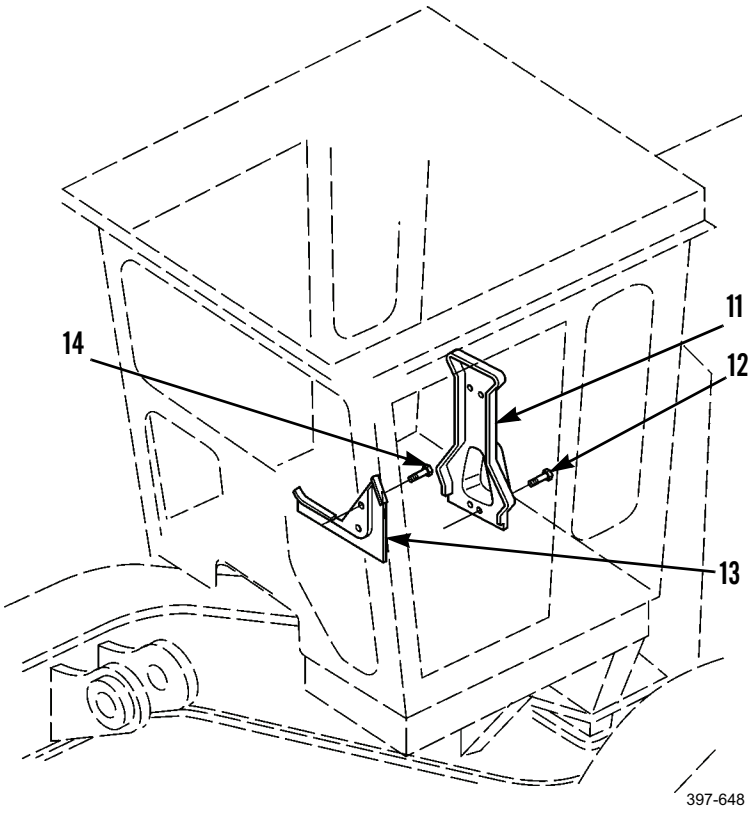

***INSTALLATION - CONTINUED***

6. Install pad (8), reservoir (6), and cover (7).
7. Install two hoses (4), strainers (5), and nozzles (10).
8. Install two pump assemblies (3) and eight screws (2).
9. Connect two hoses (9) and four wire assemblies (1).

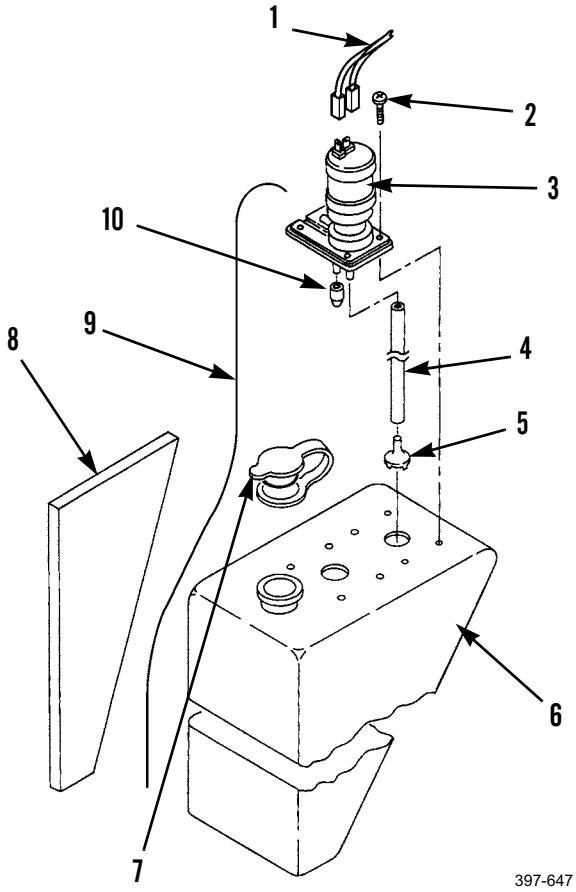


10. Connect battery cables (WP 0125 00).

**END OF WORK PACKAGE**

## FRONT AND REAR DEFROSTER FANS AND MOUNTING MAINTENANCE (CCE MACHINE) 0210 00

### THIS WORK PACKAGE COVERS

Removal, Disassembly, Cleaning and Inspection, Assembly, Installation

### INITIAL SETUP

**Maintenance Level**

Unit

**Tools and Special Tools**

Tool kit, general mechanic's (Item 89, WP 0348 00)

**Materials/Parts**

Rag, wiping (Item 35, WP 0349 00)

Tag, marker (Item 44, WP 0349 00)

Bolt, self-locking

Lockwasher (4)

Nut, self-locking (2)

Screw, tapping

**References**

WP 0020 00

**Equipment Conditions**

Machine parked on level ground (TM 5-3805-261-10)

Parking/emergency brake applied (TM 5-3805-261-10)

Equipment lowered to ground (TM 5-3805-261-10)

Engine off (TM 5-3805-261-10)

Battery cables disconnected (WP 0125 00)

### *REMOVAL*

**NOTE**

- This procedure covers maintenance of the rear defroster fan. Follow these instructions for the front defroster fan.
- Support defroster fan with one hand when removing final bolt. Do not let defroster fan hang by wire assembly.

### *REMOVAL - CONTINUED*

1. Remove four bolts (6) and lockwashers (5). Discard lockwashers.

**NOTE**

Tag wire assemblies before disconnecting to aid in installation.

2. Remove screw (9) and disconnect wire assembly (1) from terminal of switch (8).
3. Remove defroster fan (7).

**NOTE**

Front defroster fan has extra bracket, two screws, and washers. Rear defroster fan has extra self-locking bolt and washer. Both front and rear defroster fans have spacer.

4. Remove self-locking bolt (4), washer (3), and spacer (2). Discard self-locking bolt.

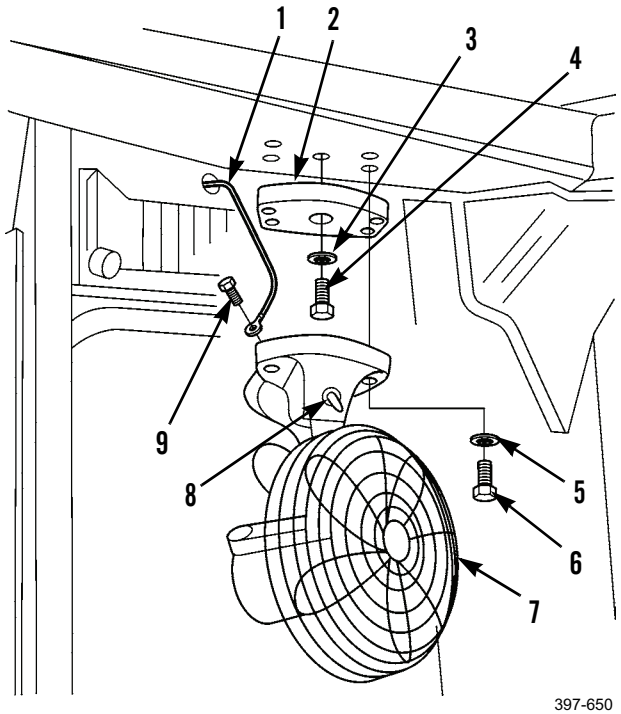

397-650

### *DISASSEMBLY*

1. Remove nut (12) and lift switch (8) out of base (11).
2. Remove screw (10) and disconnect wire assembly (15) from terminal of switch (8).
3. Remove screw (13) and disconnect wire assembly (14) from terminal of switch (8).
4. Remove switch (8).

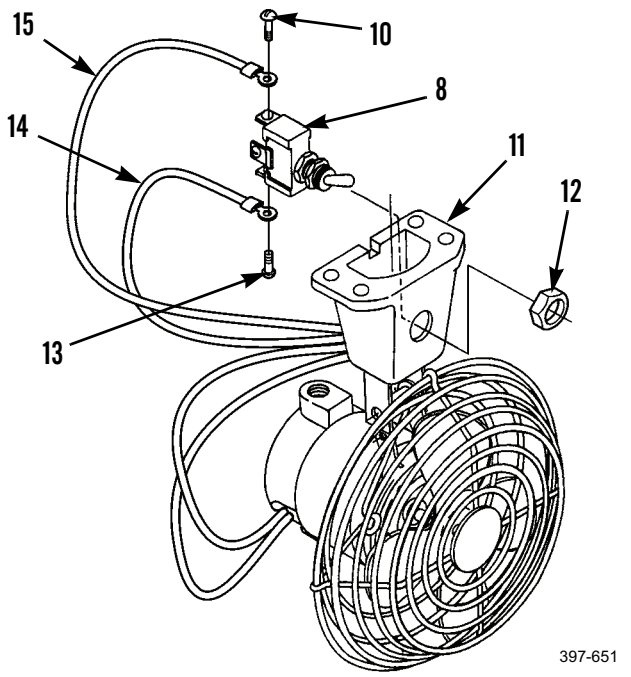

397-651

***DISASSEMBLY - CONTINUED***

5. Remove self-locking nut (26), three washers (21), clip (16), resistor (27), two washers (22), and bolt (20) from support (24). Discard self-locking nut.
6. Remove self-locking nut (23), washer (25), bracket (19), washer (18), bolt (17), and base (11). Discard self-locking nut.

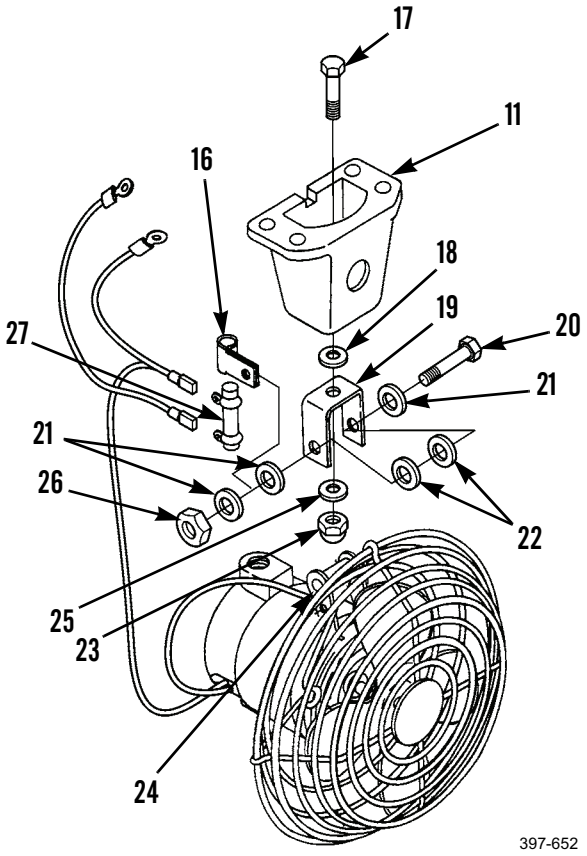

### *DISASSEMBLY - CONTINUED*

7. Remove outer fan guard (33) from inner fan guard (37) by detaching four hooks on outer fan guard.
8. Remove setscrew (36) and fan (35) from motor (32).
9. Remove tapping screw (38) and disconnect wire assembly (31) from terminal of support (24). Discard tapping screw.
10. Remove two nuts (34), inner fan guard (37), and support (24) from motor (32).
11. Remove brush set (39) from motor (32).
12. Remove wire assemblies (28, 29, and 30) from terminals of resistor (27).

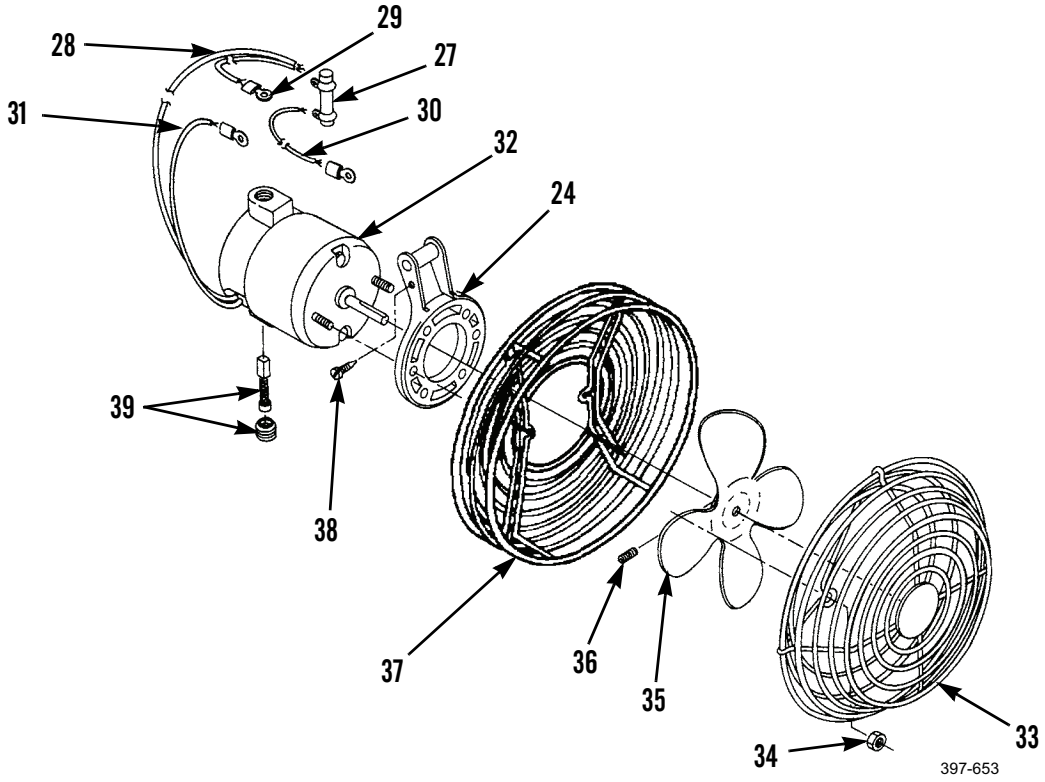


### *CLEANING AND INSPECTION*

Clean and inspect all parts in accordance with WP 0020 00.

### *ASSEMBLY*

1. Install wire assemblies (30, 29, and 28) to terminals of resistor (27).
2. Install brush set (39) in motor (32).
3. Install support (24), inner fan guard (37), and two nuts (34) on motor (32).
4. Connect wire assembly (31) and install new tapping screw (38) to terminal of support (24).
5. Install fan (35) and setscrew (36) on motor (32).
6. Attach outer fan guard (33) to inner fan guard (37) by using hooks on outer fan guard.

***ASSEMBLY - CONTINUED***

7. Install base (11), bolt (17), washer (18), bracket (19), washer (25), and new self-locking nut (23).
8. Install bolt (20), two washers (22), resistor (27), clip (16), three washers (21), and new self-locking nut (26) on support (24).

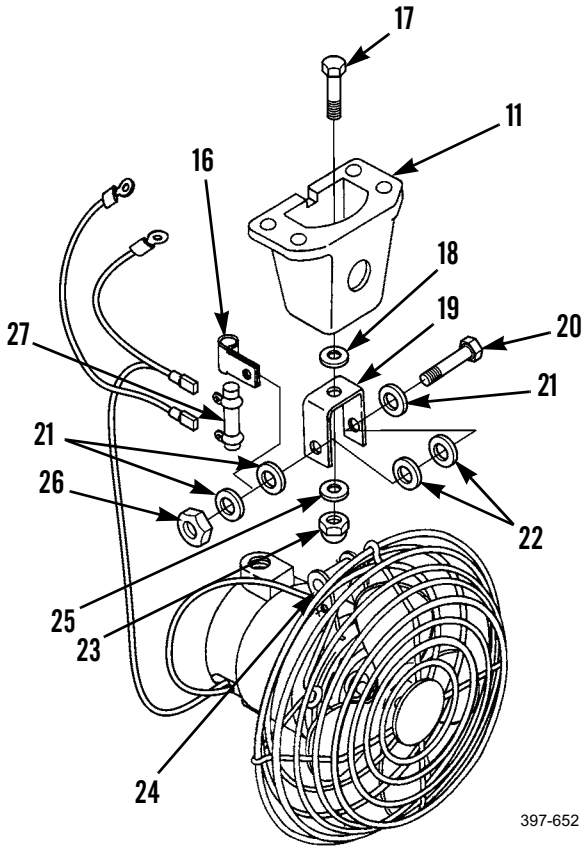


9. Connect wire assembly (14) and install screw (13) to terminal of switch (8).
10. Connect wire assembly (15) and install screw (10) to terminal of switch (8).
11. Position switch (8) in base (11) and install nut (12).

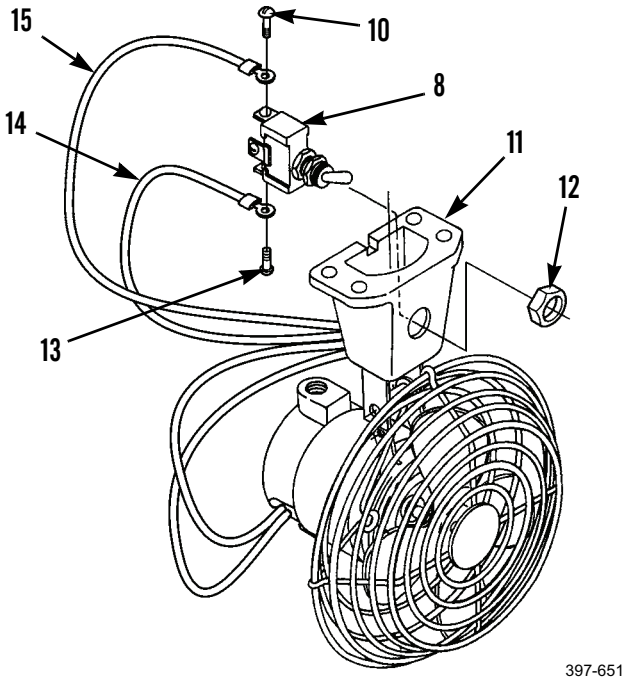

*INSTALLATION*

**NOTE**

Front defroster fan has extra bracket, two screws, and washers. Rear defroster fan has extra self-locking bolt and washer. Both front and rear defroster fans have spacer.

1. Install spacer (2), washer (3), and new self-locking bolt (4).
2. Connect wire assembly (1) and install screw (9) to terminal of switch (8).
3. Install defroster fan (7), four new lockwashers (5), and bolts (6).

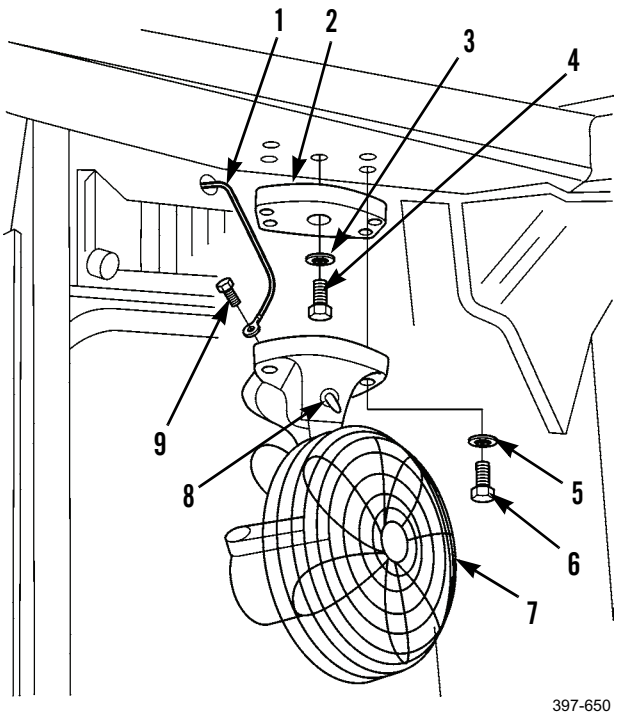


4. Connect battery cables (WP 0125 00).

**END OF WORK PACKAGE**

## HEATER LINES AND FITTINGS REPLACEMENT (CCE MACHINE) 0211 00

### THIS WORK PACKAGE COVERS

Removal, Cleaning and Inspection, Installation

### INITIAL SETUP

**Maintenance Level**

Unit

**Tools and Special Tools**

Tool kit, general mechanic's (Item 89, WP 0348 00)

Shop equipment, common no. 1 (Item 75, WP 0348 00)

**Materials/Parts**

Cap set, protective (Item 7, WP 0349 00)

Rag, wiping (Item 35, WP 0349 00)

Tag, marker (Item 44, WP 0349 00)

**References**

WP 0020 00

**Equipment Conditions**

Machine parked on level ground (TM 5-3805-261-10)

Parking/emergency brake applied (TM 5-3805-261-10)

Implements lowered to ground (TM 5-3805-261-10)

Engine off (TM 5-3805-261-10)

Battery disconnect switch in OFF position (TM 5-3805-261-10)

Heater removed (WP 0212 00)

***REMOVAL***

**CAUTION**

Cap hose ends and plug openings to prevent contamination.

**NOTE**

Tag hose assemblies before disconnecting to aid in installation.

1. Remove clip (7).
2. Remove clamps (6 and 10) and disconnect hoses (8 and 9) from adapters (5 and 11).
3. Remove adapters (5 and 11), elbows (4 and 12), nipple (1), and bushings (2 and 3).
4. Remove clamps (14 and 16) from hose (15).
5. Remove clamp (13) and grommet (17) from hose (9).
6. Remove tube (21), clamp (20), and grommet (19) from hose (8).
7. Remove clip (18).

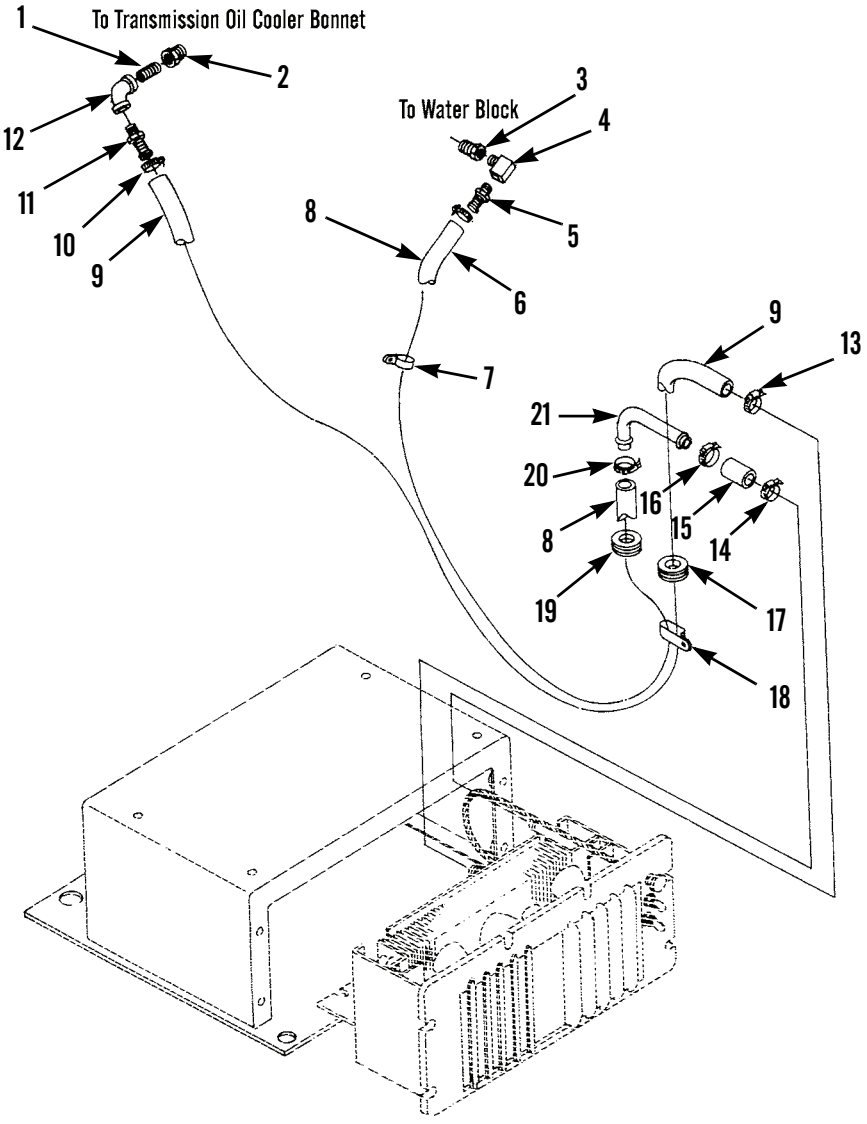


397-2359

### *CLEANING AND INSPECTION*

Clean and inspect all parts in accordance with WP 0020 00.

### *INSTALLATION*

1. Install clip (18).
2. Install grommet (19), clamp (20), and tube (21) to hose (8).
3. Install grommet (17) and clamp (13) to hose (9).
4. Install clamps (14) and (16) to hose (15).
5. Install bushings (2 and 3), nipple (1), elbows (4 and 12), and adapters (5 and 11).
6. Install hoses (8 and 9) and clamps (6 and 10) on adapters (5 and 11).
7. Install clip (7).
8. Install heater (WP 0212 00).

**END OF WORK PACKAGE**

## HEATER MAINTENANCE (CCE MACHINE) 0212 00

### THIS WORK PACKAGE COVERS

Removal, Disassembly, Cleaning and Inspection, Assembly, Installation

### INITIAL SETUP

**Maintenance Level**

Unit

**Tools and Special Tools**

Tool kit, general mechanic's (Item 89, WP 0348 00)

**Materials/Parts**

Cap set, protective (Item 7, WP 0349 00)

Rag, wiping (Item 35, WP 0349 00)

Tag, marker (Item 44, WP 0349 00)

Gasket

Grommet

Lockwasher

Screw, tapping (4)

Seal

**References**

WP 0020 00

**Equipment Conditions**

Machine parked on level ground (TM 5-3805-261-10)

Parking/emergency brake applied (TM 5-3805-261-10)

Implements lowered to ground (TM 5-3805-261-10)

Engine off (TM 5-3805-261-10)

Battery cables disconnected (WP 0125 00)

Cooling system drained (WP 0065 00)

Seat removed (WP 0200 00)

### *REMOVAL*

1. Remove six bolts (16), washers (15), and cover (17) from front seat support (6).

**NOTE**

Tag wire assemblies before disconnecting to aid in installation.

2. Disconnect wire assembly (12) from connector (11).
3. Remove and discard grommet (13).
4. Pull heater wiring harness (1) out of heater assembly (2).

**CAUTION**

Cap hose ends and plug openings to prevent contamination.

**NOTE**

Tag hoses before disconnecting to aid in installation.

5. Loosen clamp (4) and disconnect hose (5) from outlet.
6. Loosen clamp (3) and disconnect hose (7) from valve (8).
7. Remove bolt (21), lockwasher (20), clip (19), and washer (18) from right side of plate (14) of heater assembly (2). Discard lockwasher.
8. Remove bolt (9) and washer (10) from left side of plate (14) of heater assembly (2).
9. Remove heater assembly (2) from front seat support (6).

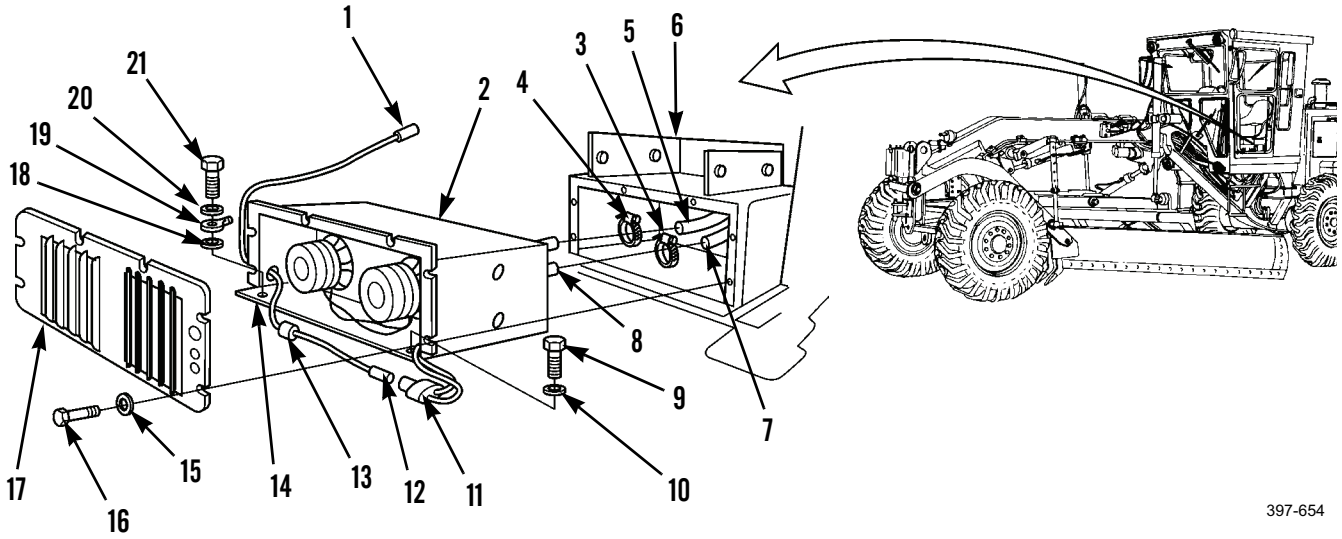

### *DISASSEMBLY*

1. Loosen nut (31) and remove valve (32) from heater assembly (2).
2. Remove and discard four tapping screws (33).
3. Remove heater core (29) and seal (30). Discard seal.

**NOTE**

This procedure covers removal of the right side fan and motor assembly, resistor, and switch. Follow these instructions for the left side fan and motor assembly, resistor, and switch.

4. Loosen screw (35) and remove fan (34).
5. Remove nut (25) and disconnect wire assembly (26).
6. Disconnect wire assembly (24) from terminal of resistor (28).
7. Remove two nuts (22) and motor (27) from bracket (23).

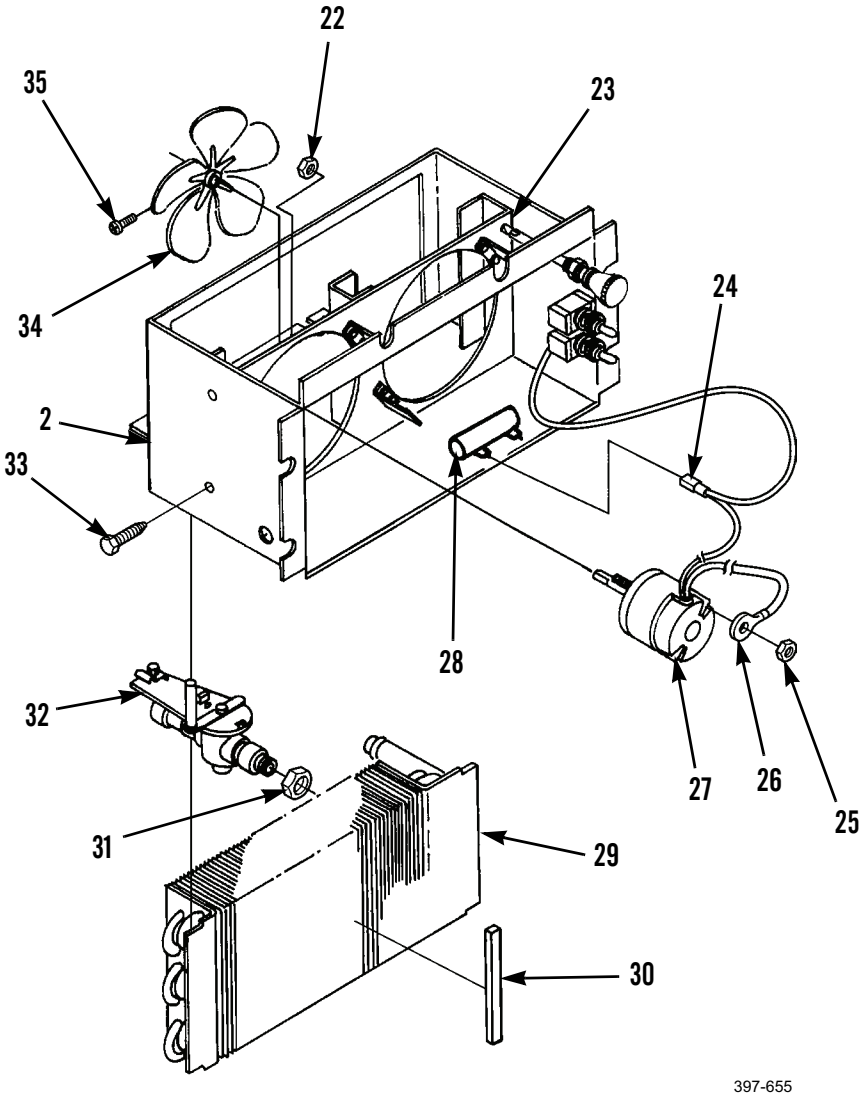

***DISASSEMBLY - CONTINUED***

8. Remove gasket (44), cap (42), and brush set (43) from motor (27). Discard gasket.
9. Disconnect wire assembly (41) from terminal of resistor (28).
10. Remove bolt (38), clamp (39), and resistor (28).
11. Disconnect two wire assemblies (37) from connector (36).
12. Remove connector (36).
13. Disconnect wire assemblies (40 and 41).
14. Remove wire assembly (41).

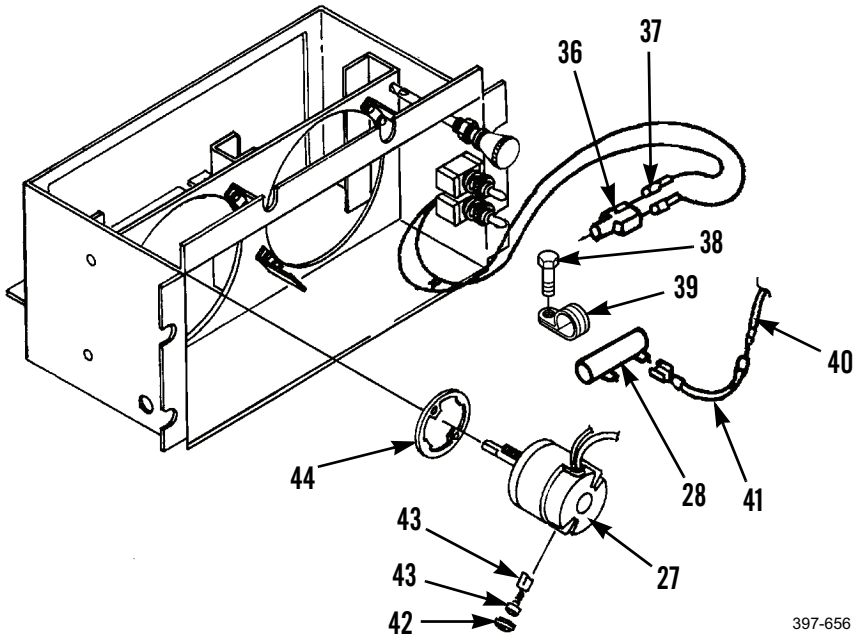

### *DISASSEMBLY - CONTINUED*

15. Disconnect two wire assemblies (52 and 53) from connectors.
16. Remove two nuts (50) and switches (49 and 51).
17. Remove nut (47) and disconnect cable assembly (46).
18. Remove knob (48).
19. Remove bracket assembly (45) from heater assembly (2).
20. Remove eight nuts (54) and two brackets (55) from bracket assembly (45).

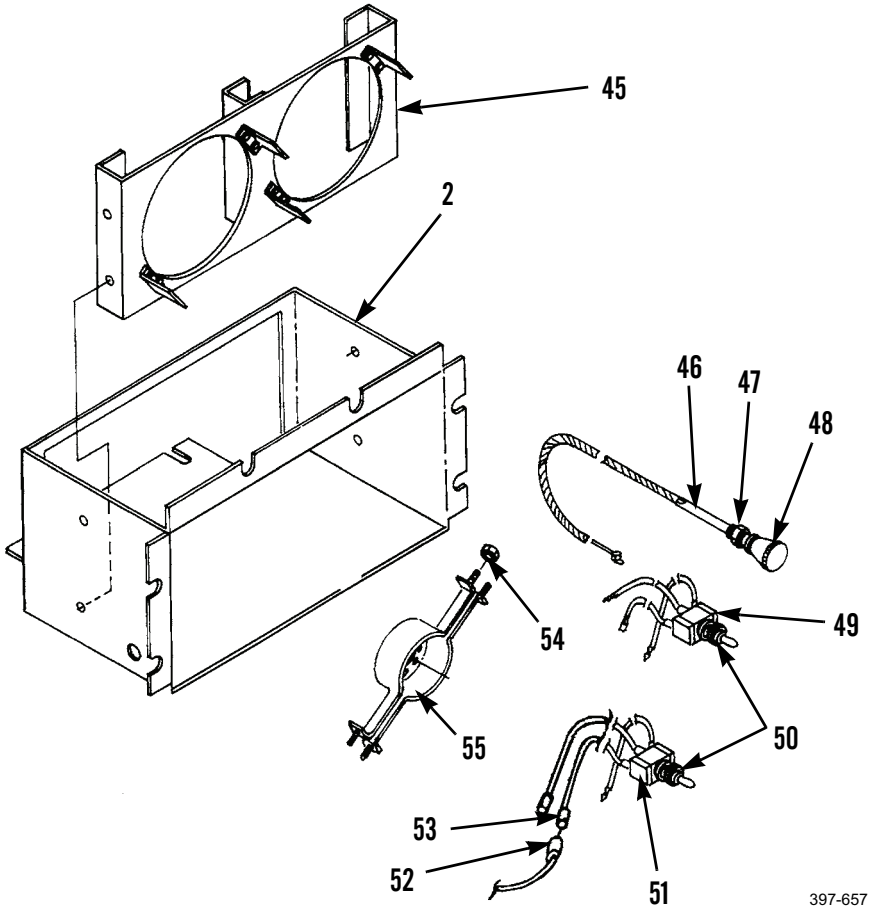


### *CLEANING AND INSPECTION*

Clean and inspect all parts in accordance with WP 0020 00.

### *ASSEMBLY*

1. Install two brackets (55) and eight nuts (54) on bracket assembly (45).
2. Install bracket assembly (45) in heater assembly (2).
3. Install knob (48).
4. Connect cable assembly (46) and install nut (47).
5. Install switches (51 and 49) and two nuts (50).
6. Connect two wire assemblies (53 and 52).

***ASSEMBLY - CONTINUED***

7. Install wire assembly (41).
8. Connect two wire assemblies (41 and 40) to connectors.
9. Install connector (36).
10. Connect two wire assemblies (37) to connector (36).
11. Install resistor (28), clamp (39), and bolt (38).
12. Connect wire assembly (41) to terminal of resistor (28).
13. Install brush set (43), cap (42), and new gasket (44) on motor (27).

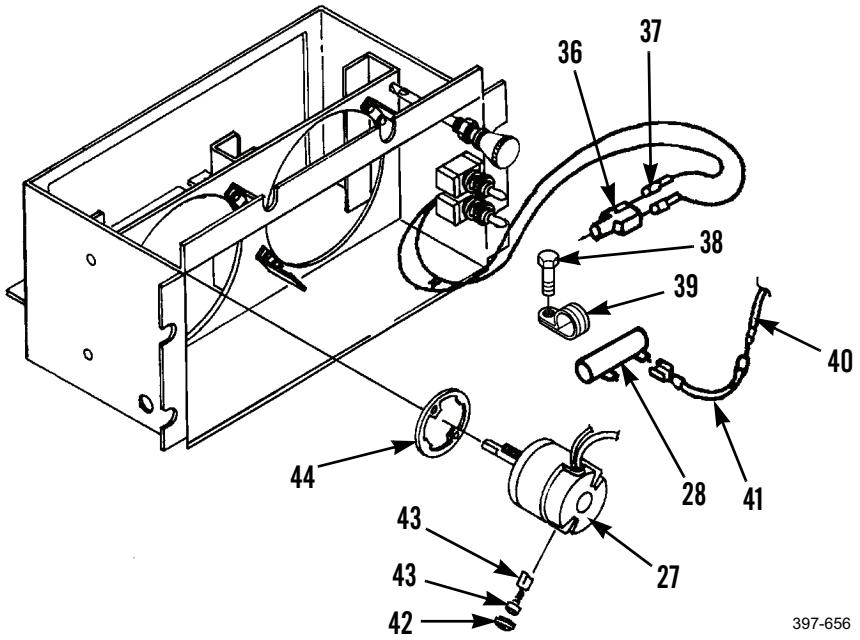

***ASSEMBLY - CONTINUED***

**NOTE**

This procedures covers installation of the right side fan and motor assembly, resistor, and switch. Follow these instructions for the left side fan and motor assembly, resistor, and switch.

14. Install motor (27) and two nuts (22) on bracket (23).
15. Connect wire assembly (24) to terminal of resistor (28).
16. Connect wire assembly (26) and install nut (25).
17. Install fan (34) and tighten screw (35).
18. Install new seal (30) and heater core (29) in heater assembly (2).
19. Install four new tapping screws (33).
20. Install valve (32) on heater assembly (2) and tighten nut (31).

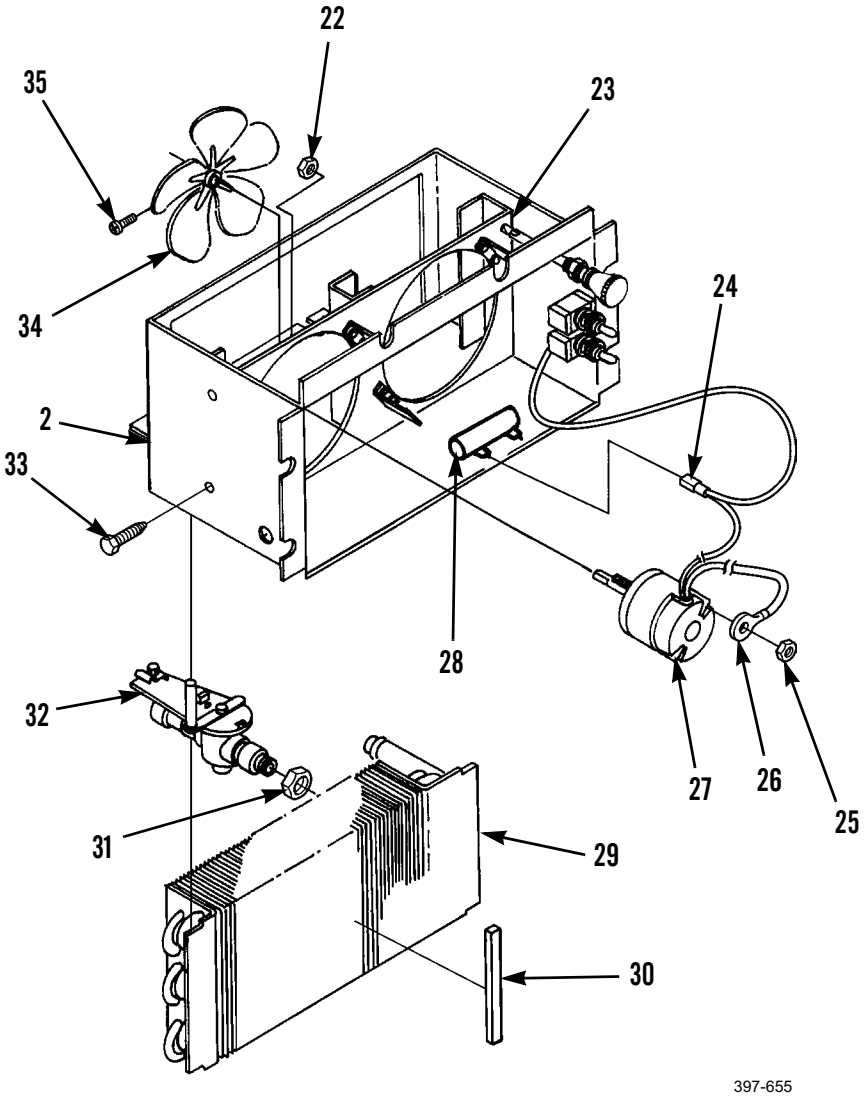

### *INSTALLATION*

1. Install heater assembly (2) in front seat support (6).
2. Install washer (10) and bolt (9) in left side of plate (14) of heater assembly (2).
3. Install washer (18), clip (19), new lockwasher (20), and bolt (21) in right side of plate (14) of heater assembly (2).
4. Connect hose (7) to valve (8) and tighten clamp (3).
5. Connect hose (5) to outlet and tighten clamp (4).
6. Place heater wiring harness (1) into heater assembly (2).
7. Install new grommet (13).
8. Connect wire assembly (12) to connector (11).
9. Install cover (17), six washers (15), and bolts (16).

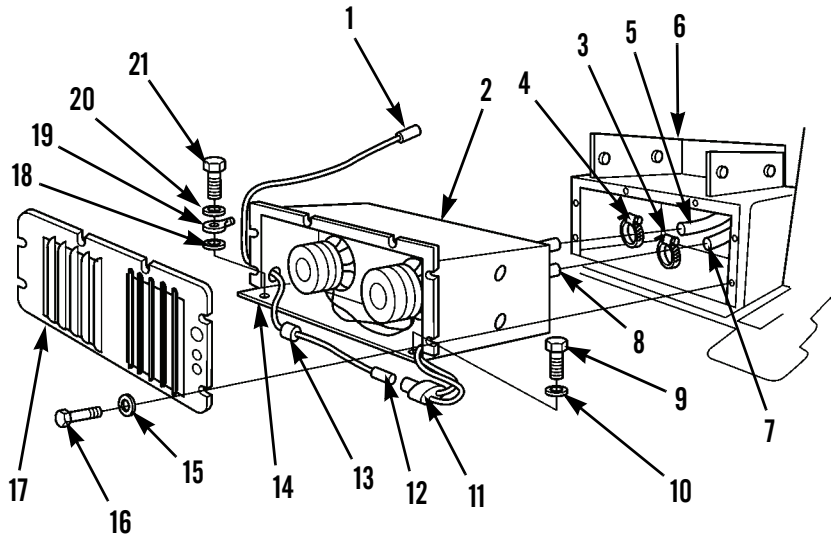


10. Install seat (WP 0200 00).
11. Fill cooling system (WP 0065 00).
12. Connect battery cables (WP 0200 00).

**END OF WORK PACKAGE**

## INSIDE REARVIEW MIRROR REPLACEMENT 0213 00

### THIS WORK PACKAGE COVERS

Removal, Cleaning and Inspection, Installation

### INITIAL SETUP

**Maintenance Level**

Unit

**Tools and Special Tools**

Tool kit, general mechanic's (Item 89, WP 0348 00)

**Materials/Parts**

Rag, wiping (Item 35, WP 0349 00)

Lockwasher (4)

**References**

WP 0020 00

**Equipment Conditions**

Machine parked on level ground (TM 5-3805-261-10)

Parking/emergency brake applied (TM 5-3805-261-10)

Implements lowered to ground (TM 5-3805-261-10)

Engine off (TM 5-3805-261-10)

Battery disconnect switch in OFF position (TM 5-3805-261-10)

### *REMOVAL*

1. Remove two caps (1).
2. Remove two nuts (5), washers (6), bolts (2), washers (3), and mirror (4).

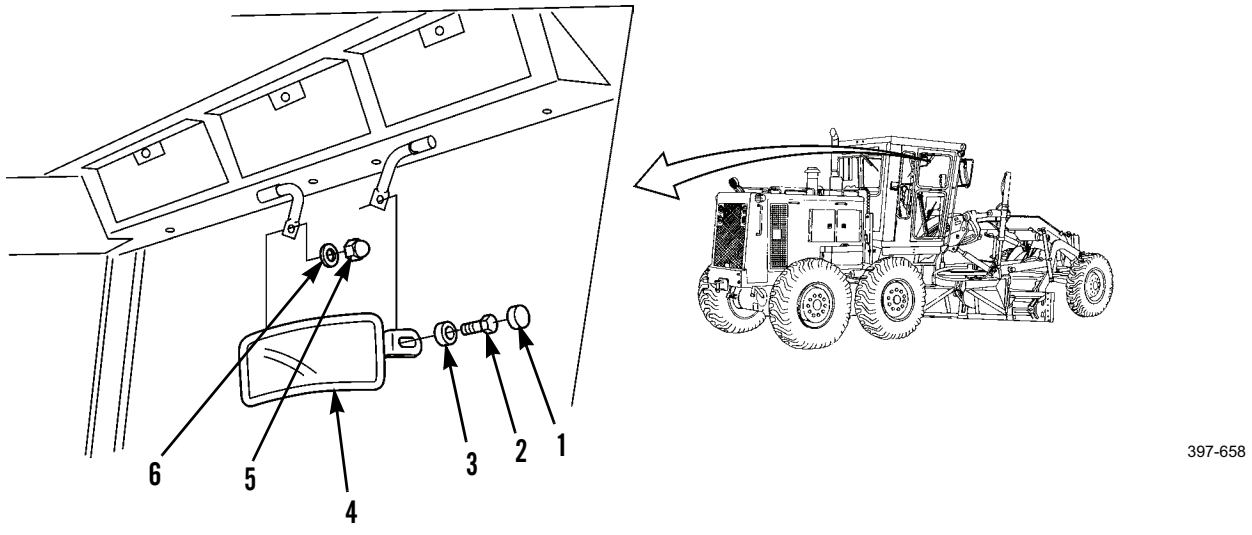


397-658

### *REMOVAL - CONTINUED*

3. Remove four bolts (9) and lockwashers (8). Discard lockwashers.
4. Remove two plugs (11), clamps (10), and arms (7).

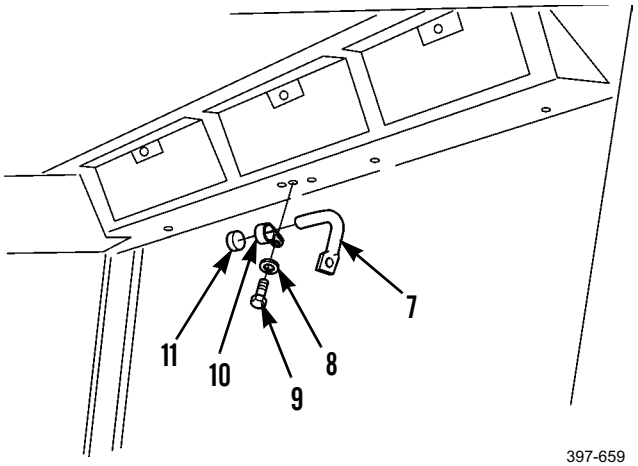


### *CLEANING AND INSPECTION*

Clean and inspect all parts in accordance with WP 0020 00.

### *INSTALLATION*

1. Install two arms (7), clamps (10), and plugs (11).
2. Install four new lockwashers (8) and bolts (9).
3. Install mirror (4), two washers (3), bolts (2), washers (6), and nuts (5).
4. Install two caps (1).

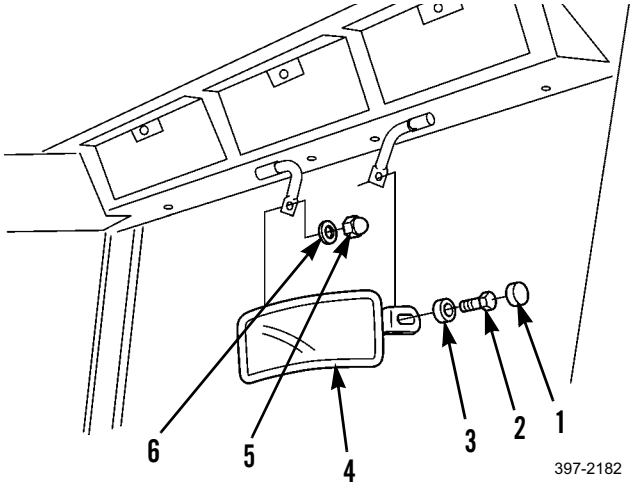


**END OF WORK PACKAGE**

## OUTSIDE SIDEVIEW MIRRORS REPLACEMENT (MODELS 130G, 130GSCE, AND 130GNSCE) 0214 00

### THIS WORK PACKAGE COVERS

Removal, Cleaning and Inspection, Installation

### INITIAL SETUP

**Maintenance Level**

Unit

**Tools and Special Tools**

Tool kit, general mechanic's (Item 89, WP 0348 00)

**Materials/Parts**

Rag, wiping (Item 35, WP 0349 00)

Lockwasher (4)

**References**

WP 0020 00

**Equipment Conditions**

Machine parked on level ground (TM 5-3805-261-10)

Parking/emergency brake applied (TM 5-3805-261-10)

Implements lowered to ground (TM 5-3805-261-10)

Engine off (TM 5-3805-261-10)

Battery disconnect switch in OFF position (TM 5-3805-261-10)

### *REMOVAL*

**NOTE**

This procedure covers replacement of the right outside sideview mirror. Follow these instructions for the left outside sideview mirror.

1. Remove two nuts (2), washers (3), bolts (8), and mirror (1).
2. Remove two nuts (7), lockwashers (6), washers (9), bolts (4), and clamps (5). Discard lockwashers.

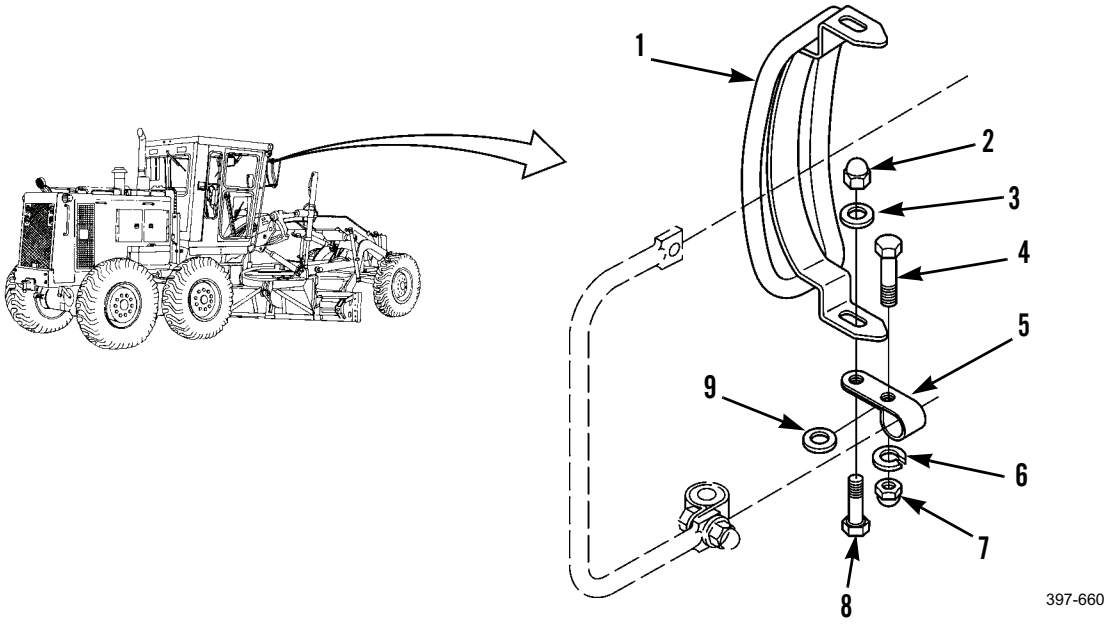

## OUTSIDE SIDEVIEW MIRRORS REPLACEMENT (MODELS 130G, 130GSCE, AND 130GNSCE - CONTINUED 0214 00

### *REMOVAL - CONTINUED*

3. Remove two nuts (13), washers (12), bolts (10), clamps (11), tread spacers (14), and arm (15).

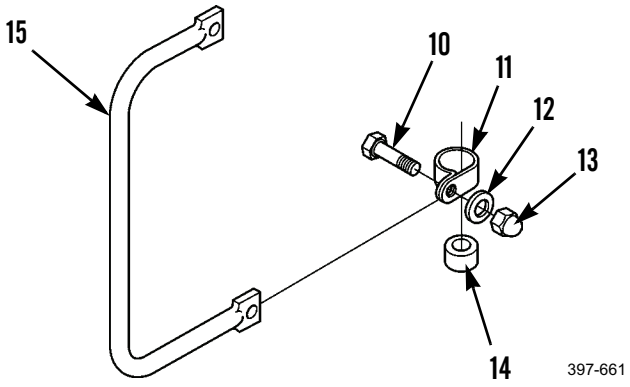


### *CLEANING AND INSPECTION*

Clean and inspect all parts in accordance with WP 0020 00.

### *INSTALLATION*

1. Install two tread spacers (14) on two clamps (11) with knurled side on clamp halves.
2. Install arm (15), two clamps (11), bolts (10), washers (12), and nuts (13). Tighten nuts to 19 lb-ft (26 Nm).
3. Install two clamps (5), bolts (4), washers (9), new lockwashers (6), and nuts (7).
4. Install mirror (1), two bolts (8), washers (3), and nuts (2).

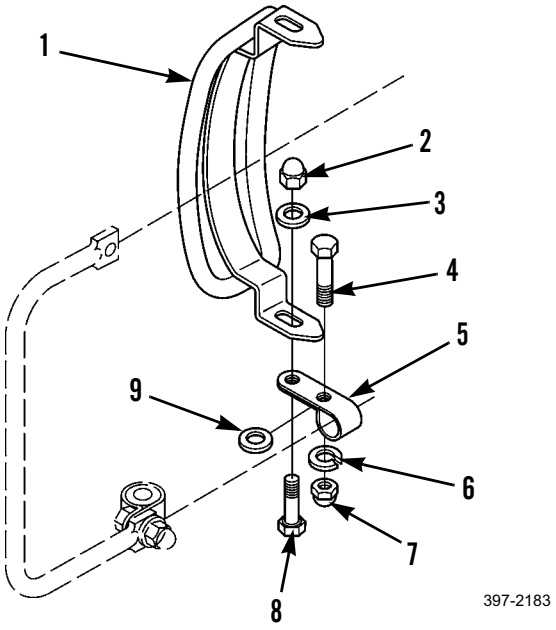


**END OF WORK PACKAGE**

## DATA PLATES AND DECALS REPLACEMENT 0215 00

### THIS WORK PACKAGE COVERS

Data Plate (Drive Screw) Replacement, Data Plate (Machine Screw) Replacement, Decal Replacement

### INITIAL SETUP

**Maintenance Level**

Unit

**Tools and Special Tools**

Tool kit, general mechanic's (Item 89, WP 0348 00)

Shop equipment, common no. 1 (Item 75, WP 0348 00)

Heater, gun type, electric (Item 30, WP 0348 00)

**Materials/Parts**

Detergent (Item 11, WP 0349 00)

Rag, wiping (Item 35, WP 0349 00)

Lockwasher (as required)

**Equipment Conditions**

Machine parked on level ground (TM 5-3805-261-10)

Parking/emergency brake applied (TM 5-3805-261-10)

Implements lowered to ground (TM 5-3805-261-10)

Engine off (TM 5-3805-261-10)

Battery disconnect switch in OFF position (TM 5-3805-261-10)

### *DATA PLATE (DRIVE SCREW) REPLACEMENT*

1. Remove four drive screws (2) and data plate (1).
2. Install data plate (1) and four drive screws (2).

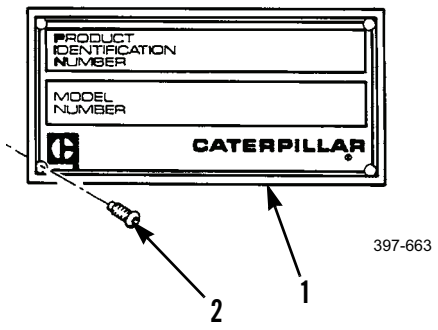

### *DATA PLATE (MACHINE SCREW) REPLACEMENT*

1. Remove four nuts (6), machine screws (4), lockwashers (5), and data plate (3). Discard lockwashers.
2. Install data plate (3), four new lockwashers (5), machine screws (4), and nuts (6).

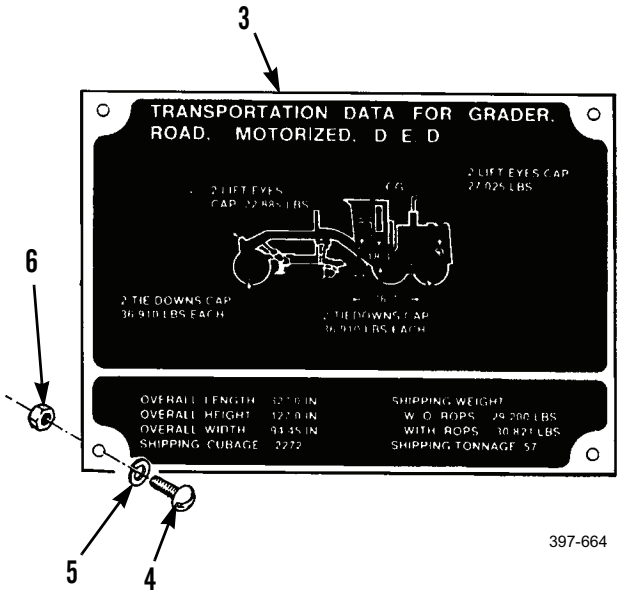


### *DECAL REPLACEMENT*

**NOTE**

Use heat gun as necessary to aid in removing decal.

1. Lift and peel off decal (7) to remove from surface of machine.
2. Clean any remaining adhesive from surface of machine using detergent. Rinse and dry area.
3. Peel off paper backing from new decal (7) and apply to surface of machine.




**END OF WORK PACKAGE**

## CHANGING HYDRAULIC OIL 0216 00

### THIS WORK PACKAGE COVERS

Draining, Cleaning and Inspection, Refilling

### INITIAL SETUP

**Maintenance Level**

Unit

**Tools and Special Tools**

Tool kit, general mechanic's (Item 89, WP 0348 00)

Shop equipment, common no. 1 (Item 75, WP 0348 00)

**Materials/Parts**

Rag, wiping (Item 35, WP 0349 00)

Oil, lubricating (Item 26, 27, or 29, WP 0349 00)

**References**

WP 0020 00

**Equipment Conditions**

Machine parked on level ground (TM 5-3805-261-10)

Parking/emergency brake applied (TM 5-3805-261-10)

Implements lowered to ground (TM 5-3805-261-10)

Engine off (TM 5-3805-261-10)

Battery disconnect switch in OFF position (TM 5-3805-261-10)

Hydraulic pressure relieved (WP 0020 00)



**WARNING**



- Exercise care when working with hot oil or components saturated with hot oil. Allow machine to cool before draining oil. Failure to follow this warning may cause in injury to personnel.
- Oil is very slippery. Immediately wipe up any spills. Failure to follow this warning may cause injury to personnel.

## CHANGING HYDRAULIC OIL - CONTINUED 0216 00

### *DRAINING*

1. Remove hydraulic tank fill cap (1).
2. Remove filter screen (2) from fill tube (3).
3. Position drain pan under drain hose (4).
4. Loosen drain plug (5) on hydraulic tank (6) and allow oil to drain.

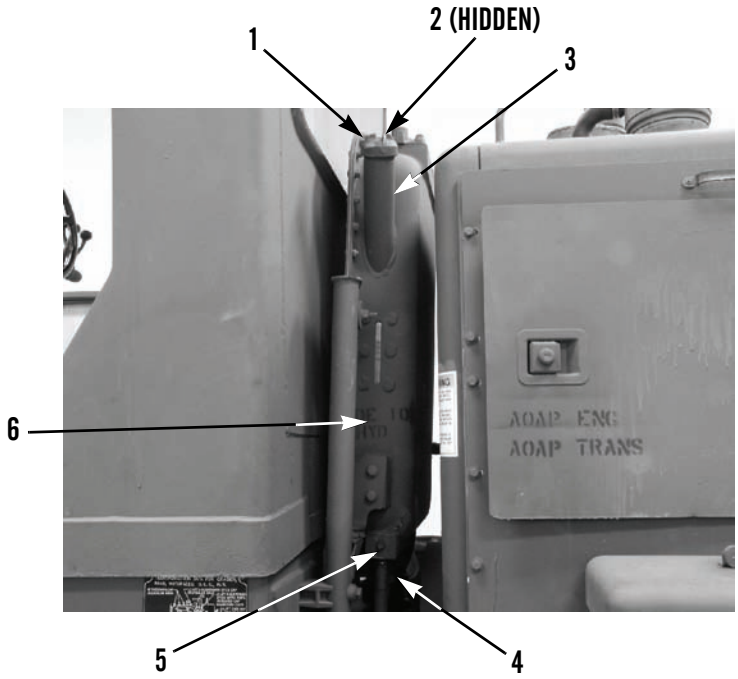


397-1090A

### *CLEANING AND INSPECTION*

Clean and inspect all parts in accordance with WP 0020 00.

### *REFILLING*

1. Tighten drain plug (5) on hydraulic tank (6).
2. Install filter screen (2) in fill tube (3).
3. Add oil to hydraulic tank through fill tube (3). See WP 0020 00 for hydraulic tank capacity.
4. Check oil level with sight gauge (7). Oil should be at FULL mark.
5. Install hydraulic tank fill cap (1).
6. Turn battery disconnect switch to ON position and start engine (TM 5-3805-261-10).
7. Operate each hydraulic control through its full motion at least three times (TM 5-3805-261-10).
8. Shut down engine and check hydraulic oil level. Oil level should be at FULL mark.
9. If necessary, remove hydraulic tank fill cap (1) and add oil until level is at FULL mark.
10. Check for oil leaks.

**END OF WORK PACKAGE**

## CIRCLE DRIVE MOTOR ASSEMBLY REPLACEMENT 0217 00

### THIS WORK PACKAGE COVERS

Removal, Cleaning and Inspection, Installation

### INITIAL SETUP

**Maintenance Level**

Unit

**Tools and Special Tools**

Tool kit, general mechanic's (Item 89, WP 0348 00)

Shop equipment, common no. 1 (Item 75, WP 0348 00)

**Materials/Parts**

Cap set, protective (Item7, WP 0349 00)

Rag, wiping (Item 35, WP 0349 00)

Tag, marker (Item 44, WP 0349 00)

O-ring (2) or seal (4)

**References**

WP 0020 00

WP 0216 00

**Equipment Conditions**

Machine parked on level ground (TM 5-3805-261-10)

Parking/emergency brake applied (TM 5-3805-261-10)

Implements lowered to ground (TM 5-3805-261-10)

Engine off (TM 5-3805-261-10)

Battery disconnect switch in OFF position (TM 5-3805-261-10)

***REMOVAL***

**WARNING**

Oil is very slippery. Immediately wipe up any spills. Failure to follow this warning may cause injury to personnel.

**CAUTION**

Cap hose ends and plug open ports to prevent contamination.

**NOTE**

Tag hose assemblies before disconnecting to aid in installation.

1. Disconnect two hose assemblies (6) from connectors (4) on circle drive motor (3).

**NOTE**

Later configuration machines have four seals instead of two O-rings.

2. Remove and discard two O-rings (5) or four seals (5).
3. Remove two connectors (4).
4. Remove four bolts (2), washers (1), and circle drive motor (3).

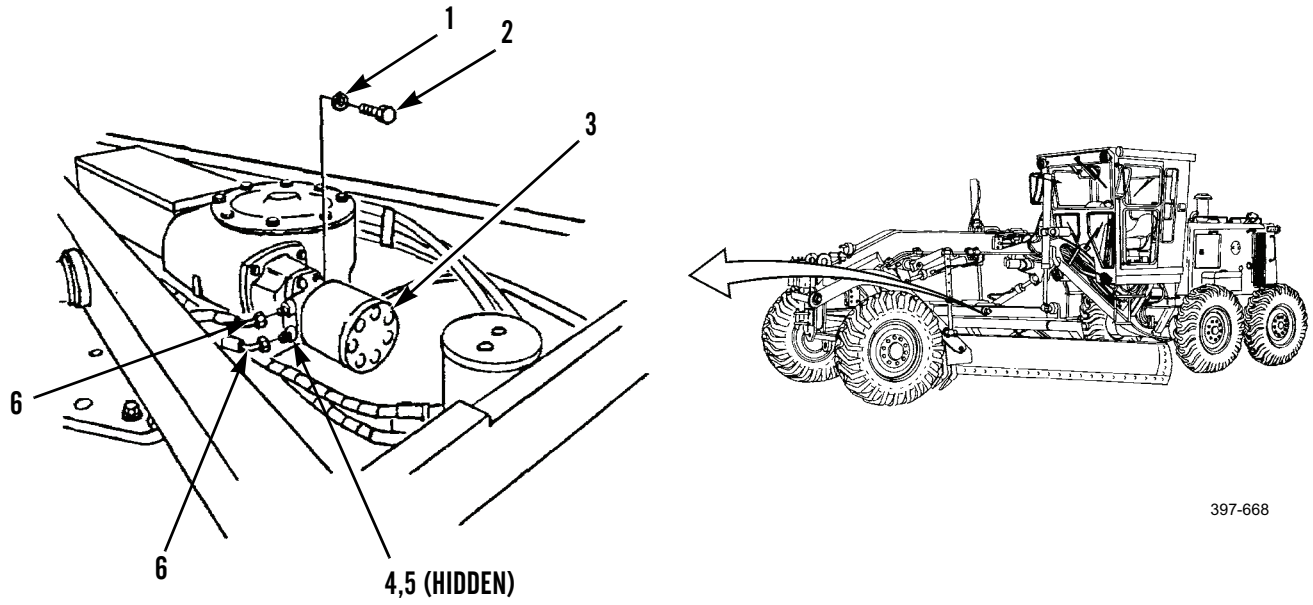


***CLEANING AND INSPECTION***

Clean and inspect all parts in accordance with WP 0020 00.

***INSTALLATION***

**NOTE**

Hose ports of circle drive motor face outside left.

1. Install circle drive motor (3), four washers (1), and bolts (2).

**NOTE**

Later configuration machines have four seals instead of two O-rings.

2. Install two new O-rings (5).
3. Install two connectors (4).
4. Connect two hose assemblies (6) to connectors (4) on circle drive motor (3).



**WARNING**

If machine is parked indoors, DO NOT run engine unless exhaust fumes are vented to the outside. Failure to follow this warning may cause injury or death due to carbon monoxide poisoning.

5. Start engine (TM 5-3805-261-10).
6. Operate circle drive control lever. Move system through at least five full movements of travel to bleed air from system (TM 5-3805-261-10).
7. Stop engine.
8. Inspect hose assemblies and connections. Check for leaks.
9. Refill hydraulic tank to proper level (WP 0216 00).

**END OF WORK PACKAGE**

## HYDRAULIC CONTROL LINKAGES MAINTENANCE 0218 00

### THIS WORK PACKAGE COVERS

Removal, Cleaning and Inspection, Installation, Adjustment

### INITIAL SETUP

**Maintenance Level**

Unit

**Tools and Special Tools**

Tool kit, general mechanic's (Item 89, WP 0348 00)

**Materials/Parts**

Rag, wiping (Item 35, WP 0349 00)

Lockwasher

Pin, cotter

**References**

WP 0020 00

**Equipment Conditions**

Machine parked on level ground (TM 5-3805 261-10)

Parking/emergency brake applied (TM 5-3805 261-10)

Implements lowered to ground (TM 5-3805 261-10)

Engine off (TM 5-3805 261-10)

Battery disconnect switch in OFF position (TM 5-3805 261-10)

Plastic moldings removed (CCE machine) (WP 0194 00)

### *REMOVAL*

**NOTE**

This procedure covers replacement of the scarifier control lever. Follow these instructions for the remaining control levers.

### *REMOVAL - CONTINUED*

1. Remove bolt (1) and lockwasher (2). Discard lockwasher.
2. Remove rod end (7) and nut (6) from rod (5).

**NOTE**

Control levers must be out of alignment to provide adequate clearance for removal of pins and bolts.

3. Remove cotter pin (4), pin (3), and rod (5). Discard cotter pin.

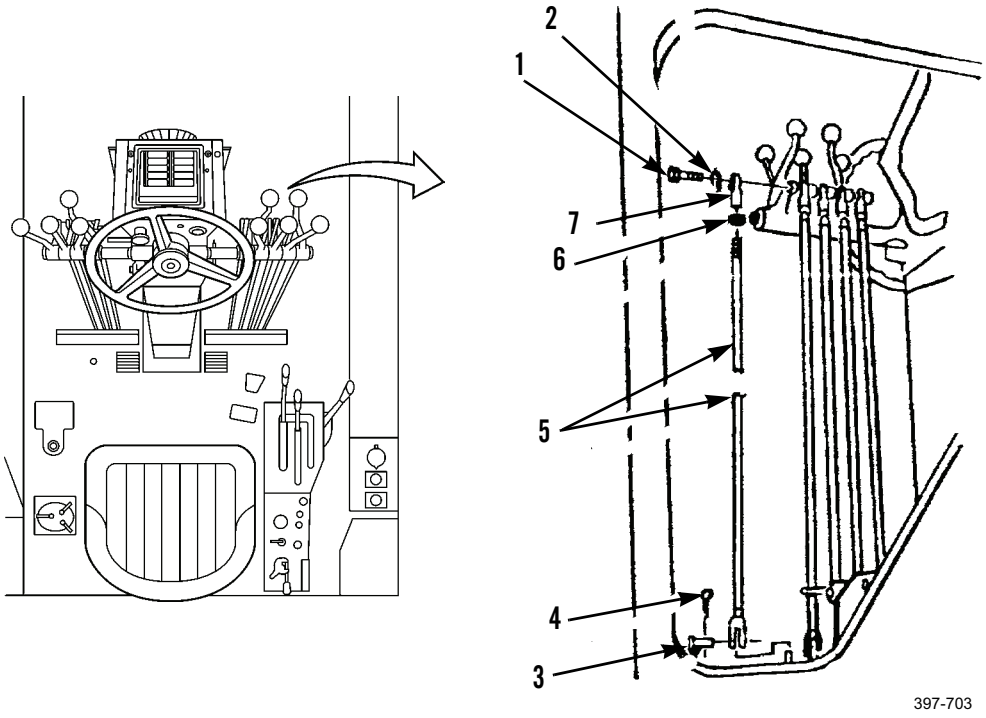


### *CLEANING AND INSPECTION*

Clean and inspect all parts in accordance with WP 0020 00.

### *INSTALLATION*

1. Install rod (5), pin (3), and new cotter pin (4).
2. Install nut (6) and rod end (7).
3. Install new lockwasher (2) and bolt (1).

***ADJUSTMENT***

**NOTE**

The following is an adjustment procedure for the scarifier control lever. The adjustment procedure for the remaining control levers is identical.

1. Remove bolt (1) and lockwasher (2).
2. Loosen nut (6) on rod (5).
3. Adjust rod end (7) on rod (5) so that bolt (1) will slide through rod end (7) without putting tension on bolt when installed.
4. Install new lockwasher (2) and bolt (1).
5. Tighten nut (6) on rod (5) against rod end (7).
6. Install plastic moldings (CCE machine) (WP 0194 00).

**END OF WORK PACKAGE**

## HYDRAULIC CONTROL LEVERS REPLACEMENT 0219 00

### THIS WORK PACKAGE COVERS

Removal, Cleaning and Inspection, Installation

### INITIAL SETUP

**Maintenance Level**

Unit

**Tools and Special Tools**

Tool kit, general mechanic's (Item 89, WP 0348 00)

**Materials/Parts**

Rag, wiping (Item 35, WP 0349 00)

Tag, marker (Item 44, WP 0349 00)

Lockwasher (9)

**References**

WP 0020 00

**Equipment Conditions**

Machine parked on level ground (TM 5-3805-261-10)

Parking/emergency brake applied (TM 5-3805-261-10)

Implements lowered to ground (TM 5-3805-261-10)

Engine off (TM 5-3805-261-10)

Battery disconnect switch in OFF position (TM 5-3805-261-10)

***REMOVAL***

1. Remove bolt (8), washer (7), retainer (6), shim (5), and bearing (4).

**NOTE**

Control levers must be out of alignment to provide adequate clearance for removal of linkage bolts.

2. Remove bolt (1) and lockwasher (2). Discard lockwasher.
3. Disconnect linkage (3).
4. Loosen nut (9).
5. Remove blade lift knob (10) and nut (9).

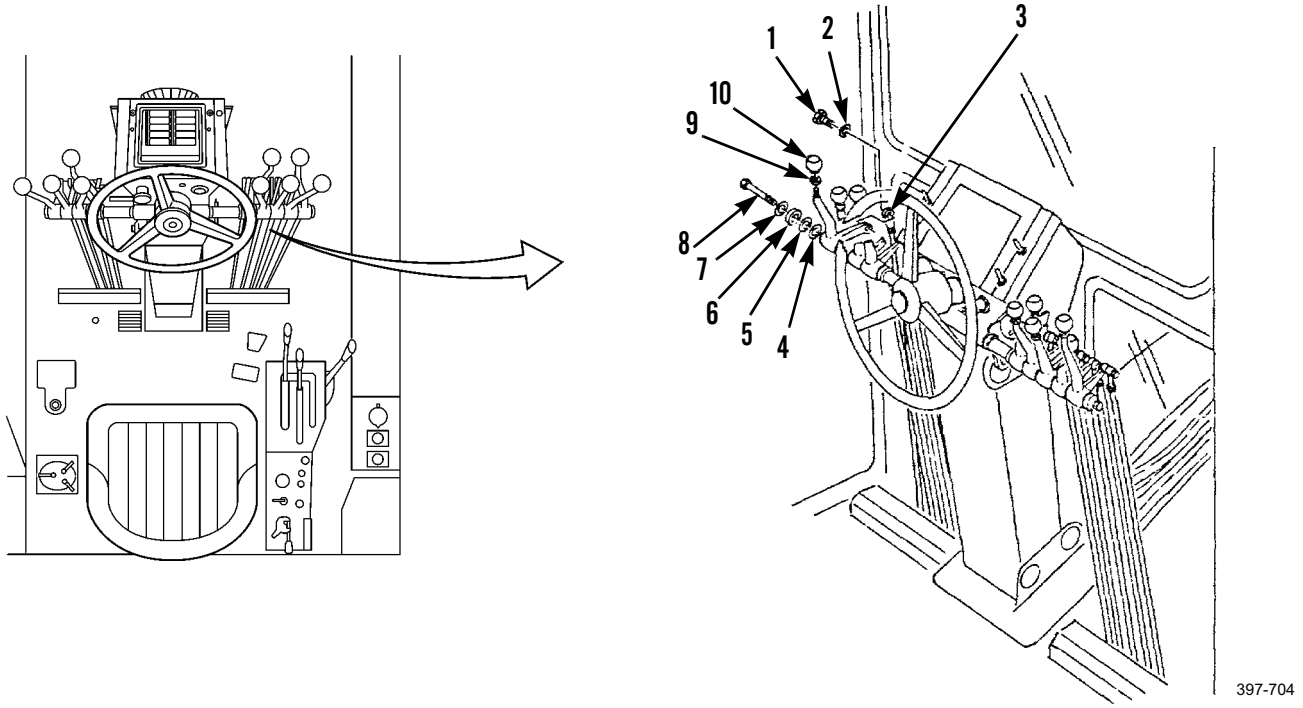

***REMOVAL - CONTINUED***

**NOTE**

Tag levers before removing to aid in installation.

6. Remove lever (11) and bearings (21 and 20).
7. Remove bolt (13) and lockwasher (14). Discard lockwasher.
8. Disconnect linkage (16).
9. Loosen nut (15).
10. Remove sideshift knob (12) and nut (15).
11. Remove lever (19) and bearings (18 and 17).

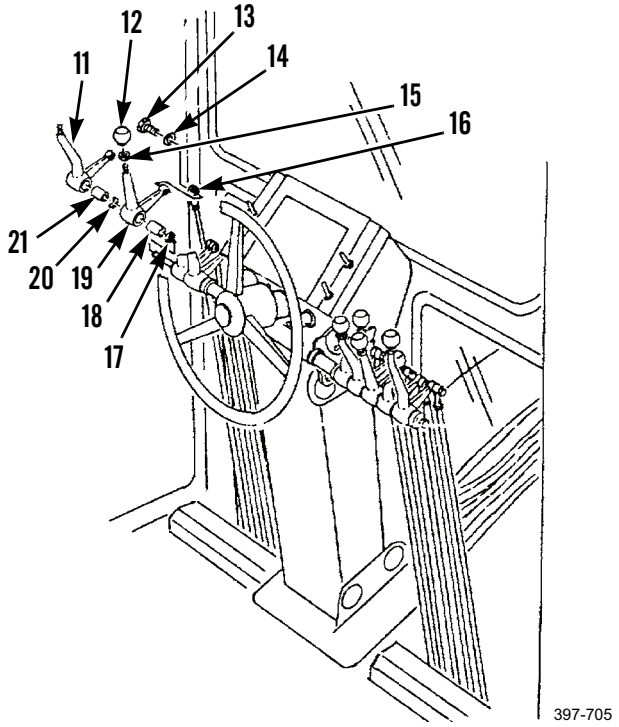

397-705

12. Remove bolt (23) and lockwasher (24). Discard lockwasher.
13. Disconnect linkage (25).
14. Loosen nut (29).
15. Remove circle drive knob (22) and nut (29).
16. Remove lever (28) and bearings (27 and 26).

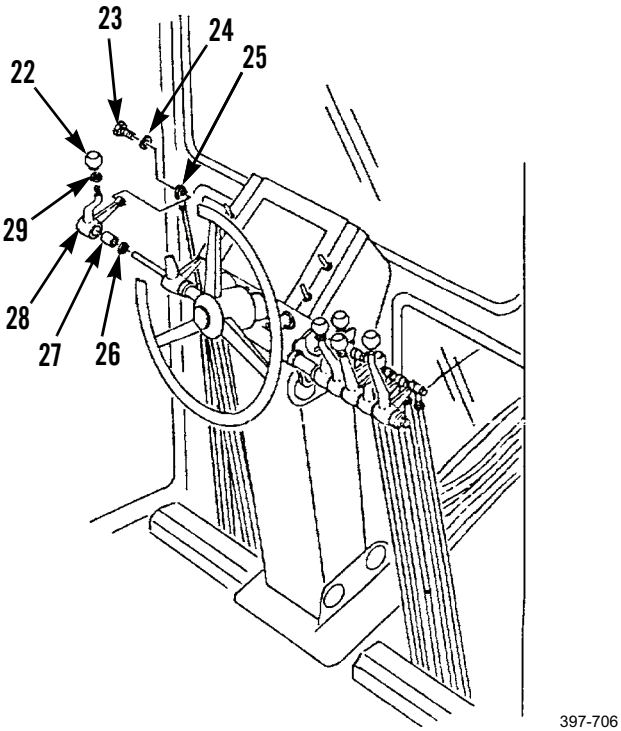

397-706

***REMOVAL - CONTINUED***

17. Remove bolt (32) and lockwasher (33). Discard lockwasher.
18. Disconnect linkage (34).
19. Loosen nut (31).
20. Remove blade tip knob (30) and nut (31).
21. Remove lever (38), bearing (37), spacer (36), and bearing (35).

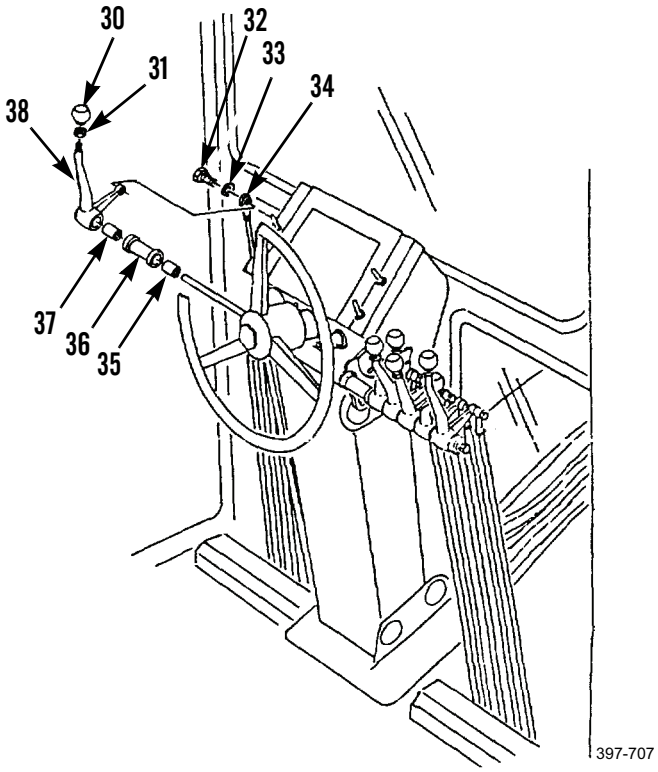


22. Remove bolt (44), washer (45), retainer (46), shim (47), and bearing (48).
23. Remove bolt (43) and lockwasher (42). Discard lockwasher.
24. Disconnect linkage (41).
25. Loosen nut (40).
26. Remove scarifier knob (39) and nut (40).

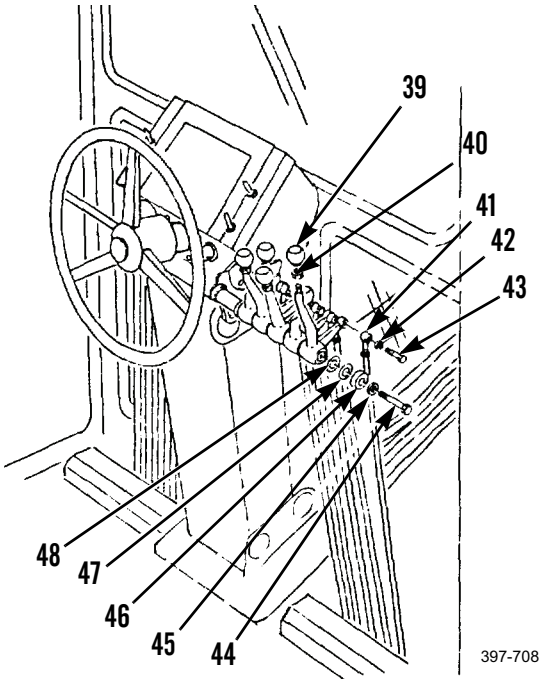

***REMOVAL - CONTINUED***

27. Remove lever (55) and bearings (56 and 57).
28. Remove bolt (54) and lockwasher (53). Discard lockwasher.
29. Disconnect linkage (52).
30. Loosen nut (50).
31. Remove blade lift knob (49), nut (50), and lever (51).

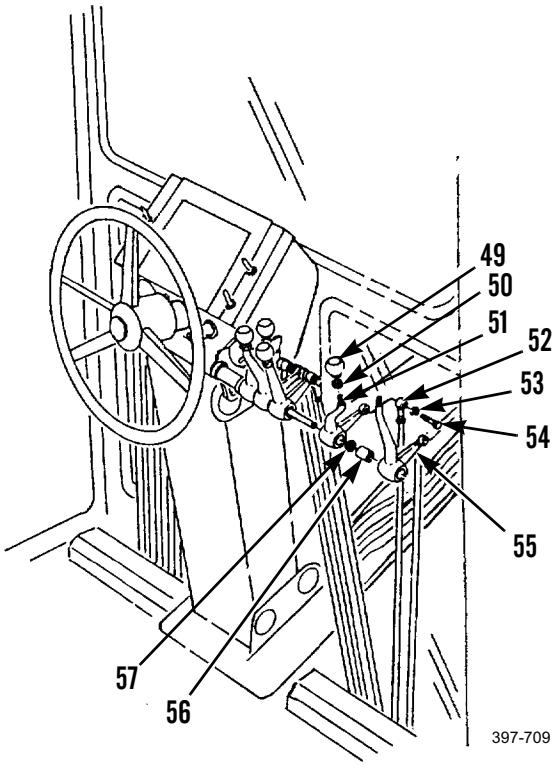


32. Remove bearings (64 and 65).
33. Remove bolt (63) and lockwasher (62). Discard lockwasher.
34. Disconnect linkage (61).
35. Loosen nut (59).
36. Remove leaning wheel knob (58) and nut (59).
37. Remove lever (60) and bearings (66 and 67).

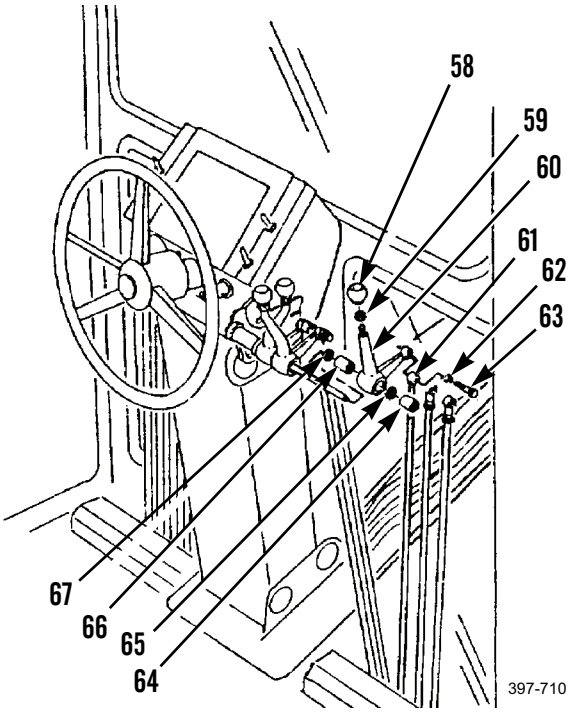

***REMOVAL - CONTINUED***

38. Remove bolt (73) and lockwasher (72). Discard lockwasher.
39. Disconnect linkage (71).
40. Loosen nut (69).
41. Remove centershift knob (68) and nut (69).
42. Remove lever (70) and bearings (74 and 75).

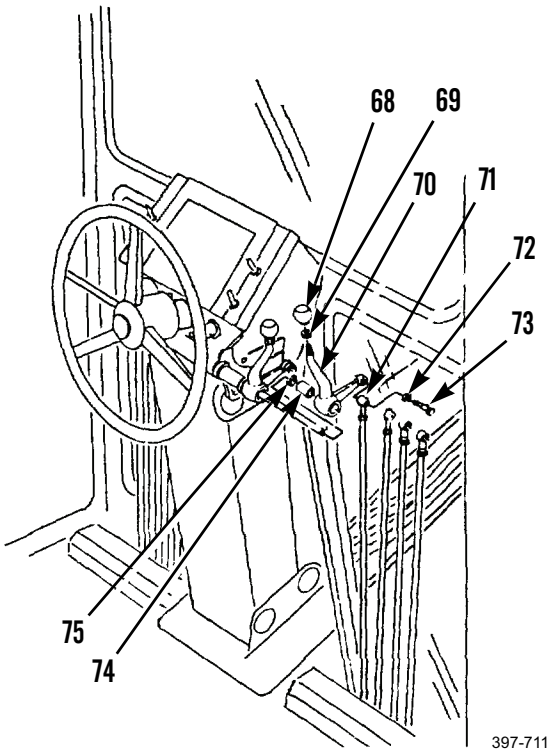


43. Remove bolt (82) and lockwasher (81). Discard lockwasher.
44. Disconnect linkage (80).
45. Loosen nut (78).
46. Remove articulation knob (77) and nut (78).
47. Remove lever (79), bearing (83), spacer (76), bearing (85), and shaft (84).

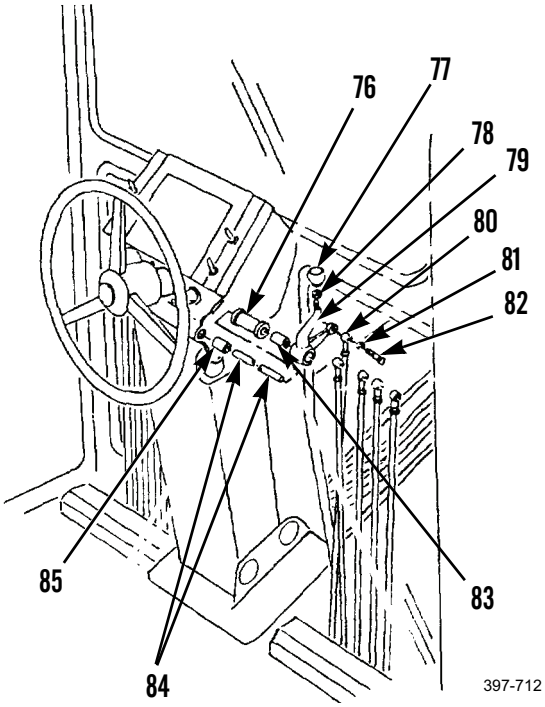

### *CLEANING AND INSPECTION*

Clean and inspect in accordance with WP 0020 00.

### *INSTALLATION*

1. Install shaft (84), bearing (85), spacer (76), bearing (83), and lever (79).
2. Install nut (78) and articulation knob (77).

**NOTE**

Control levers must be out of alignment to provide adequate clearance for installation of bolts.

3. Connect linkage (80).
4. Install new lockwasher (81) and bolt (82).
5. Install bearings (75 and 74) and lever (70).
6. Install nut (69) and centershift knob (68).
7. Connect linkage (71).
8. Install new lockwasher (72) and bolt (73).
9. Install bearings (67 and 66) and lever (60).
10. Install nut (59) and leaning wheel knob (58).
11. Connect linkage (61).
12. Install new lockwasher (62) and bolt (63).
13. Install bearings (65 and 64).

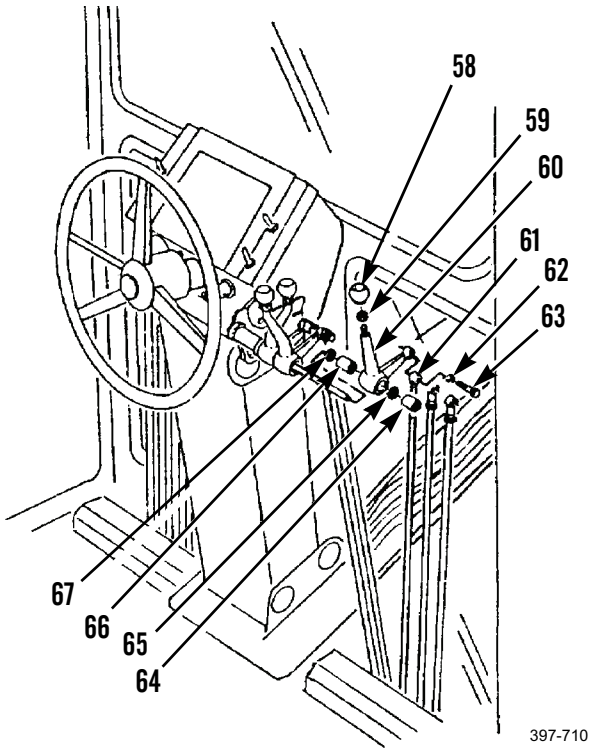

***INSTALLATION - CONTINUED***

14. Install lever (51).
15. Install nut (50) and blade lift knob (49).
16. Connect linkage (52).
17. Install new lockwasher (53) and bolt (54).
18. Install bearings (57 and 56) and lever (55).

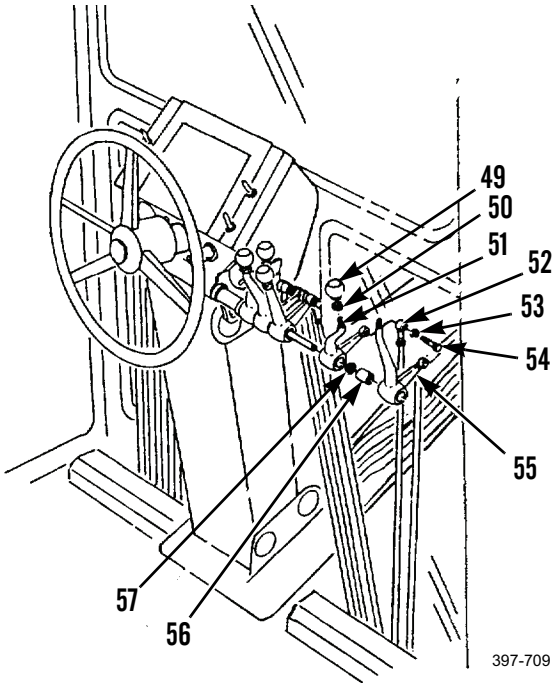


19. Install nut (40) and scarifier knob (39).
20. Connect linkage (41).
21. Install new lockwasher (42) and bolt (43).
22. Install bearing (48), shim (47), retainer (46), washer (45), and bolt (44).

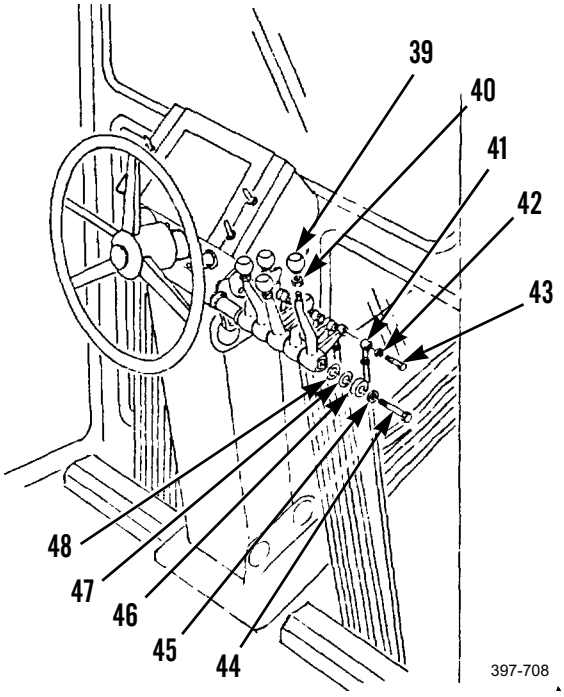

***INSTALLATION - CONTINUED***

23. Install bearing (35), spacer (36), bearing (37), and lever (38).
24. Install nut (31) and blade tip knob (30).
25. Connect linkage (34).
26. Install new lockwasher (33) and bolt (32).

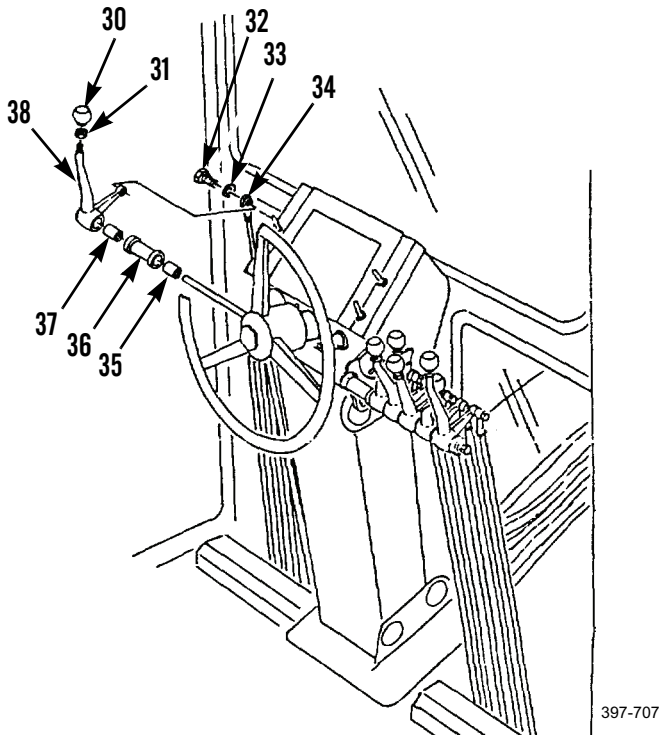


27. Install bearings (26 and 27) and lever (28).
28. Install nut (29) and circle drive knob (22).
29. Connect linkage (25).
30. Install new lockwasher (24) and bolt (23).

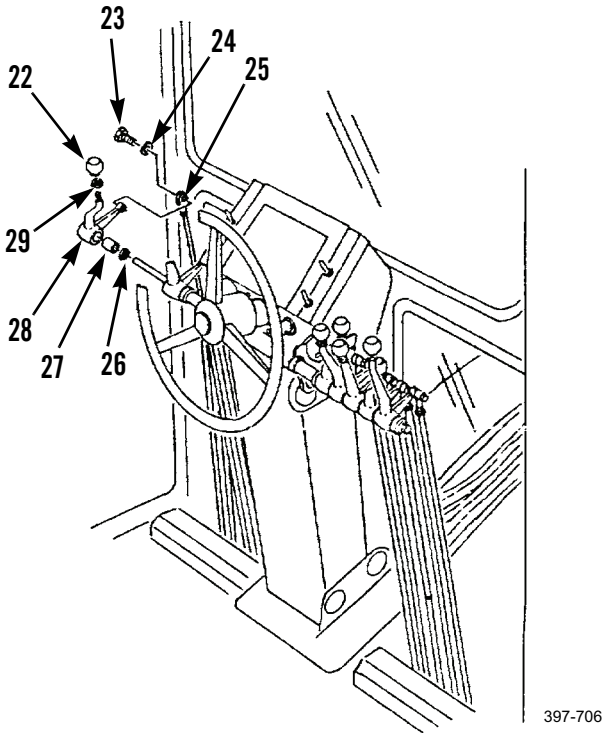

***INSTALLATION - CONTINUED***

31. Install bearings (17 and 18) and lever (19).
32. Install nut (15) and sideshift knob (12).
33. Connect linkage (16).
34. Install new lockwasher (14) and bolt (13).
35. Install bearings (20 and 21) and lever (11).

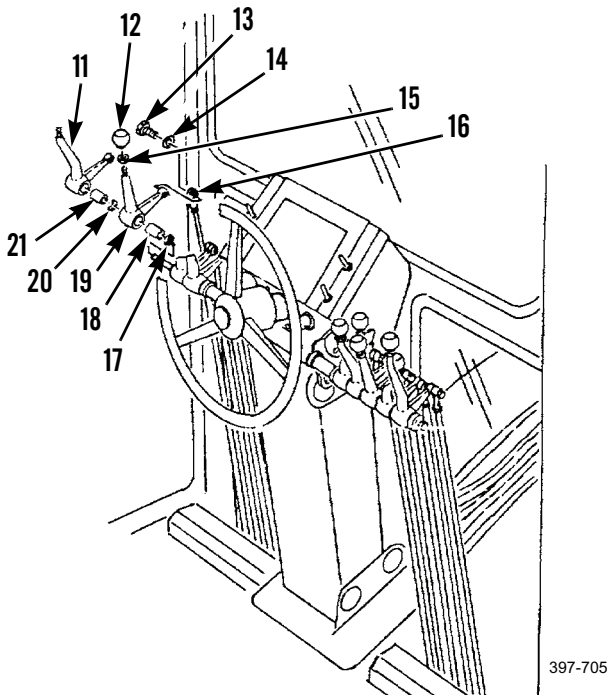


36. Install nut (9) and blade lift knob (10).
37. Connect linkage (3).
38. Install new lockwasher (2) and bolt (1).
39. Install bearing (4), shim (5), retainer (6), washer (7), and bolt (8).

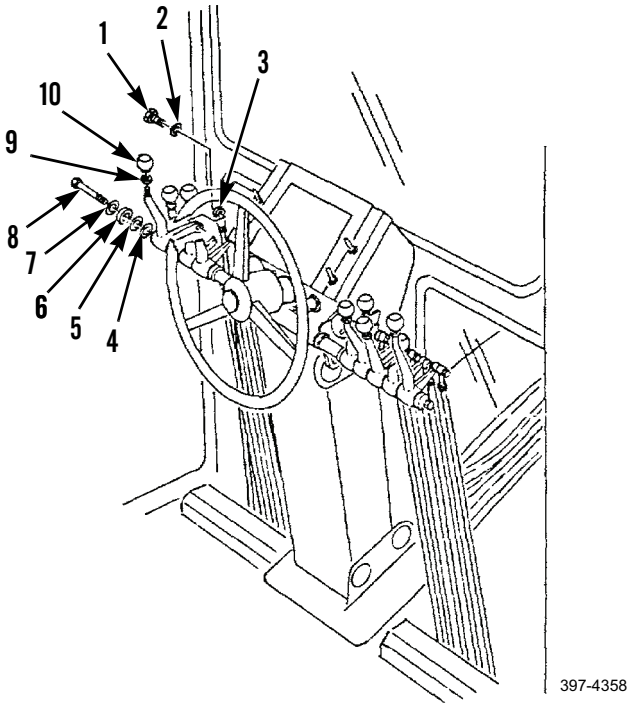


**END OF WORK PACKAGE**

## HYDRAULIC PUMP JUNCTION BLOCK AND LINES REPLACEMENT 0220 00

### THIS WORK PACKAGE COVERS

Removal, Cleaning and Inspection, Installation

### INITIAL SETUP

**Maintenance Level**

Unit

**Tools and Special Tools**

Tool kit, general mechanic's (Item 89, WP 0348 00)

**Materials/Parts**

Cap set, protective (Item 7, WP 0349 00)

Oil, lubricating (Item 26, 27, or 29, WP 0349 00)

Rag, wiping (Item 35, WP 0349 00)

Tag, marker (Item 44, WP 0349 00)

Packing, preformed (20)

**Equipment Conditions**

Machine parked on level ground (TM 5-3805-261-10)

Parking/emergency brake applied (TM 5-3805-261-10)

Implements lowered to ground (TM 5-3805-261-10)

Engine off (TM 5-3805-261-10)

Battery disconnect switch in OFF position (TM 5-3805-261-10)

Hydraulic tank drained (WP 0216 00)

***REMOVAL***

**CAUTION**

Cap hose ends and plug open ports to prevent contamination.

**NOTE**

Tag hose assemblies before disconnecting to aid in installation.

1. Disconnect hose assembly (2) from elbow (3).
2. Remove elbow (3) and two preformed packings (1) from steering control valve. Discard preformed packings.

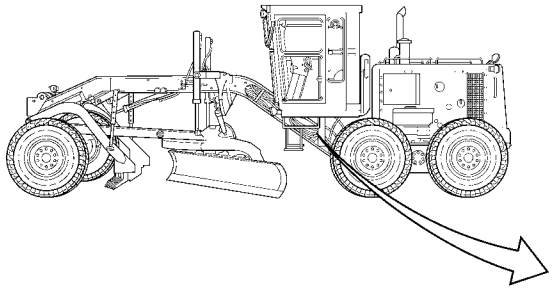

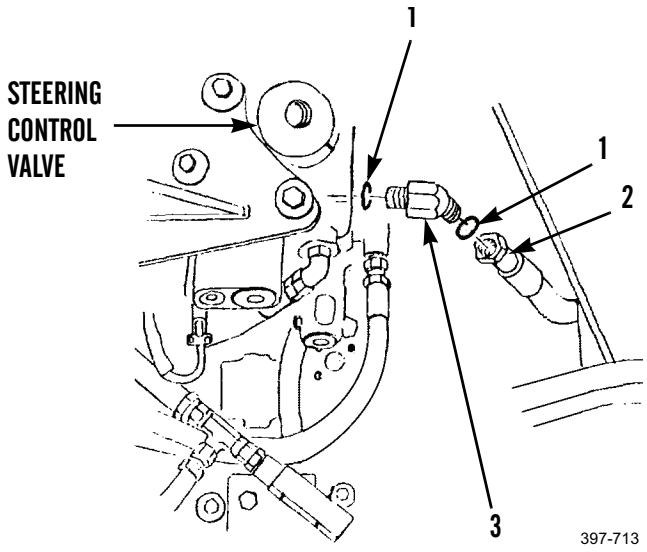

***REMOVAL - CONTINUED***

3. Disconnect hose assembly (2) from connector (5).
4. Remove hose assembly (2) from machine.
5. Remove connector (5) and two preformed packings (4) from junction block (9). Discard preformed packings.
6. Disconnect hose assembly (6) from connector (8).
7. Remove connector (8) and two preformed packings (7) from junction block (9). Discard preformed packings.

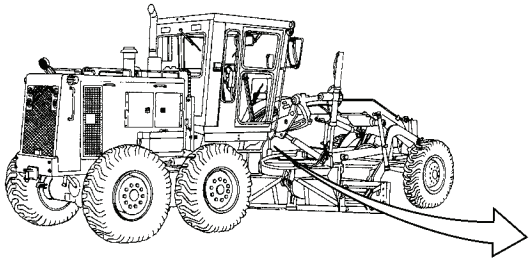

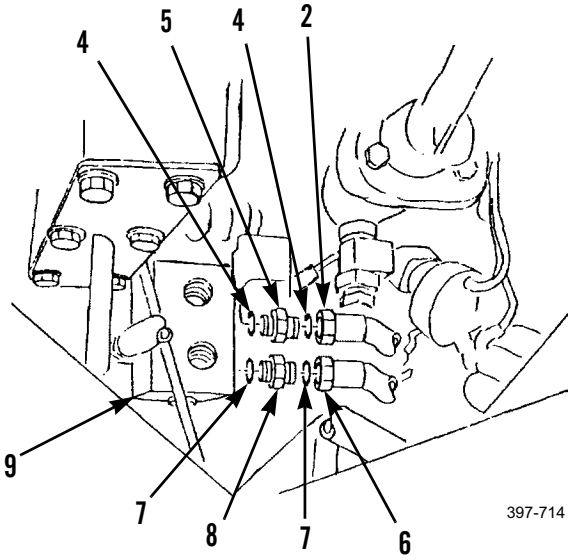

## HYDRAULIC PUMP JUNCTION BLOCK AND LINES REPLACEMENT - CONTINUED 0220 00

### *REMOVAL - CONTINUED*

8. Disconnect hose assembly (6) from elbow (11).
9. Remove hose assembly (6) from machine.
10. Remove elbow (11) and two preformed packings (10) from top of hydraulic pump assembly. Discard preformed packings.
11. Disconnect tube assembly (19) from connector (21).
12. Remove connector (21) and two preformed packings (20). Discard preformed packings.
13. Loosen clamps (16 and 18).
14. Remove clamp (16), hose (17), and clamp (18).
15. Disconnect tube assembly (15) from connector (13).
16. Remove connector (13) and two preformed packings (12 and 14) from junction box (9). Discard preformed packings.

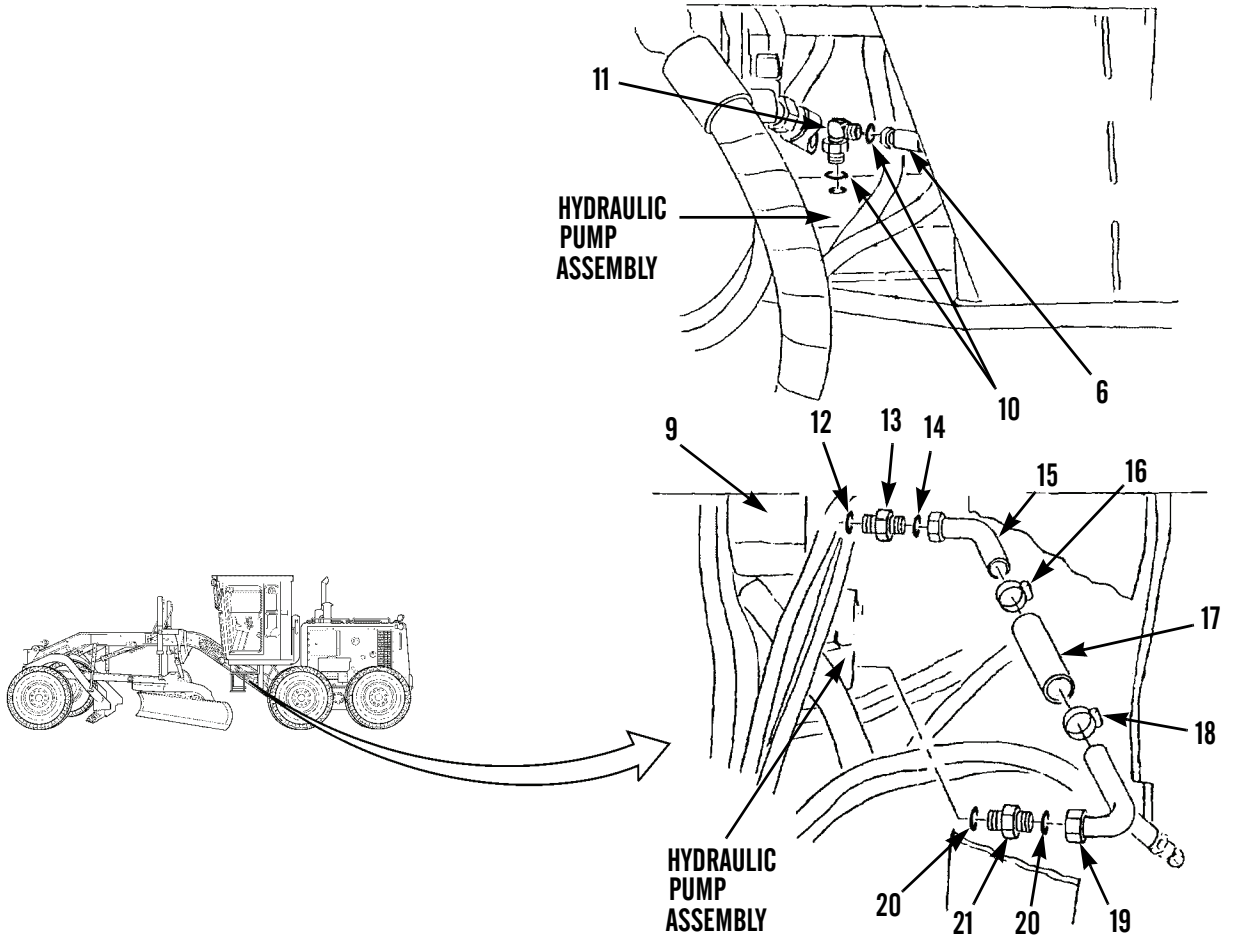

## HYDRAULIC PUMP JUNCTION BLOCK AND LINES REPLACEMENT - CONTINUED 0220 00

### *REMOVAL - CONTINUED*

17. Disconnect hose assemblies (22 and 24) and remove two preformed packings (23) from junction block (17). Discard preformed packings.
18. Disconnect other end of hose assembly (22) from hydraulic tank and remove from machine.
19. Disconnect other end of hose assembly (24) from hydraulic control valve and remove from machine.

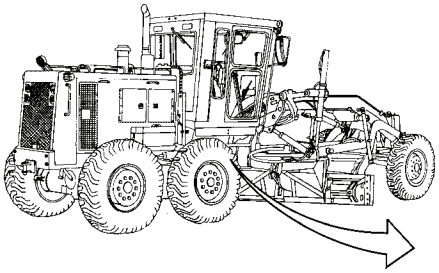

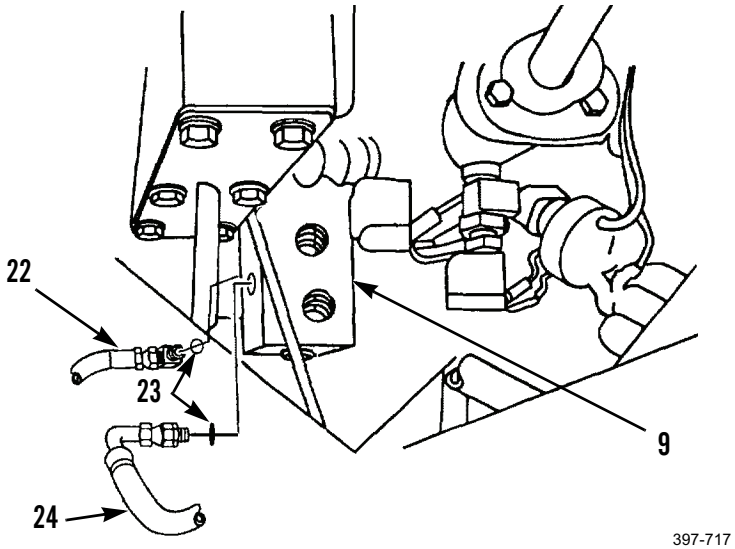


397-717

20. Remove two bolts (32) and washers (31) from bracket (28).
21. Remove bolt (33), washer (34), and spacer (35) from bracket (28)
22. Remove bolt (43), clamp (42), washers (40 and 38) from junction block (9).
23. Remove bolt (25) and washers (26 and 27).
24. Remove nut (41), washers (39 and 37), and stud (36).
25. Remove junction block (9).
26. Remove bracket (28) and three grommets (29 and 30).

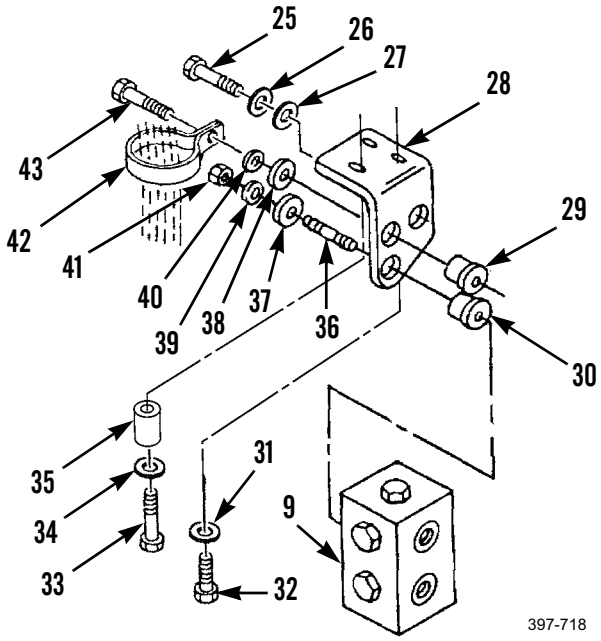


397-718

### *REMOVAL - CONTINUED*

27. Remove plugs (44, 46, and 49) and preformed packings (45, 47, and 48) from junction block (9). Discard preformed packings.

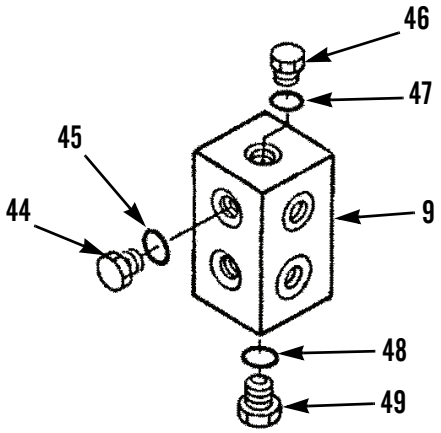


397-719

### *CLEANING AND INSPECTION*

Clean and inspect all parts in accordance with WP 0020 00.

### *INSTALLATION*

**NOTE**

Lightly lubricate all preformed packings with clean oil before installation.

1. Install new preformed packings (48, 47, and 45) and plugs (49, 46, and 44) on junction block (9).
2. Position three grommets (30 and 29) and bracket (28) on junction block (9).
3. Install stud (36), washers (39 and 37), and nut (41).
4. Install washers (27 and 26) and bolt (25).
5. Install washers (38 and 40), clamp (42), and bolt (43).

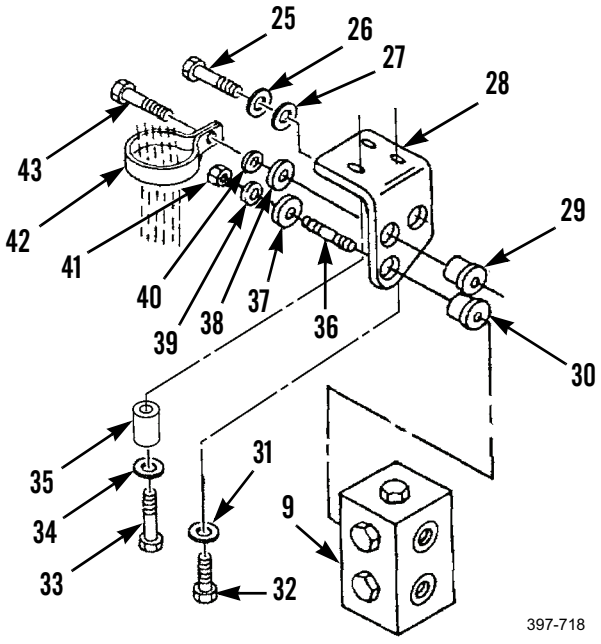


397-718

***INSTALLATION - CONTINUED***

6. Install junction block (9) in position, aligning with mounting holes and secure with spacer (35), washer (34), and bolt (33).
7. Install two washers (31) and bolt (32).
8. Connect hose assembly (24) to hydraulic control valve.
9. Connect hose assembly (22) to hydraulic tank.
10. Connect hose assemblies (24 and 22) on machine.
11. Install two new preformed packings (23) and connect hose assemblies (24 and 22) to junction box (9).

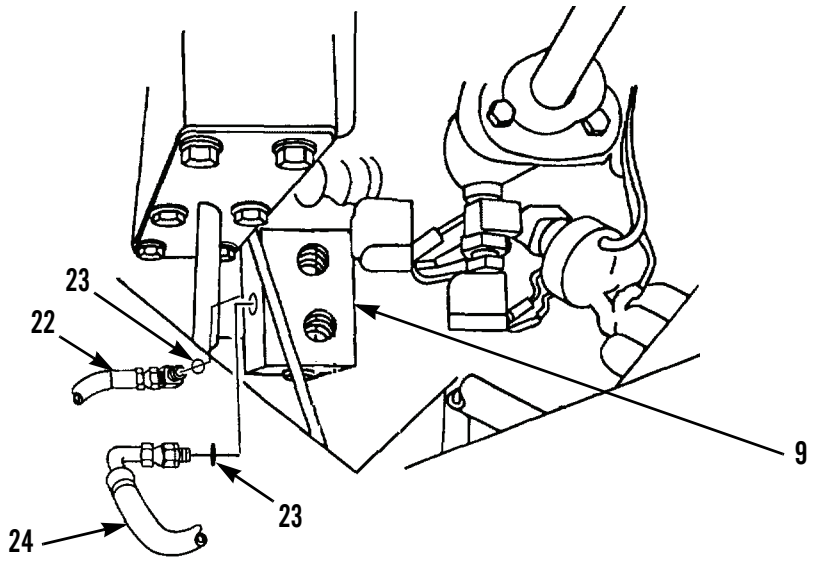


397-4364

12. Install two new preformed packings (14 and 12) and connector (13) on junction box (9).
13. Connect tube assembly (15) to connector (13).
14. Install clamp (16), hose (17), and clamp (18).
15. Tighten clamps (16 and 18).
16. Install two new preformed packings (20) and connector (21) to hydraulic pump assembly.
17. Connect tube assembly (19) to connector (21).

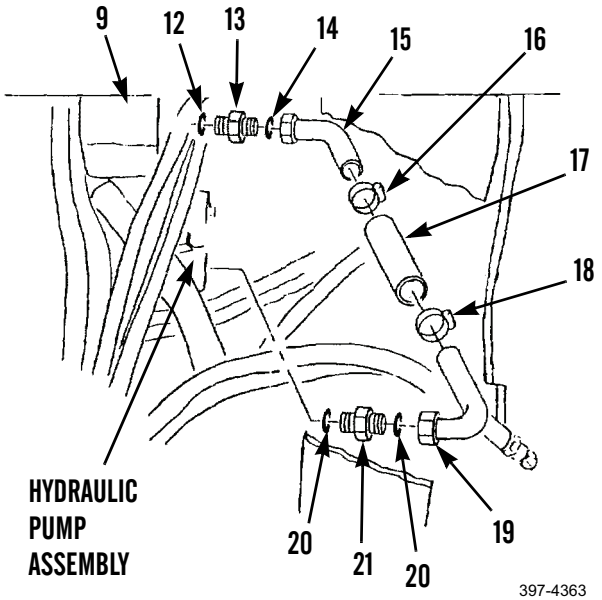


397-4363

***INSTALLATION - CONTINUED***

18. Install two new preformed packings (10) and elbow (11) to top of hydraulic pump assembly.
19. Position hose assembly (6) on machine.
20. Connect hose assembly (6) to elbow (11).

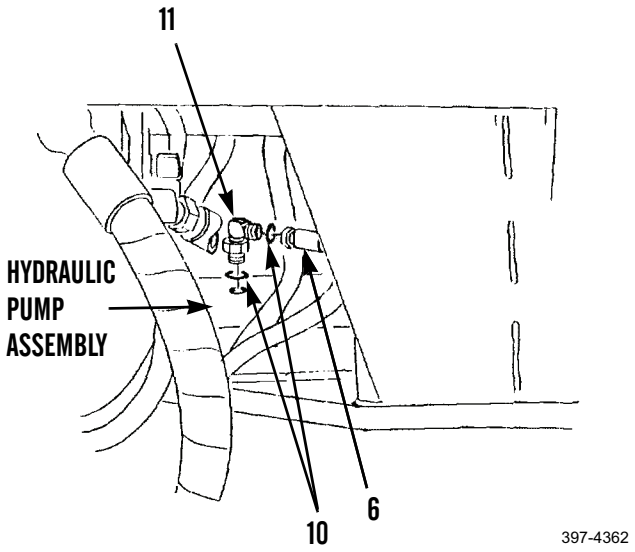


21. Install two new preformed packings (4) and connector (5) to junction block (9).
22. Position hose assembly (2) on machine.
23. Connect hose assembly (2) to connector (5).
24. Install two new preformed packings (7) and connector (8) on junction box (9).
25. Connect hose assembly (6) to connector (8).

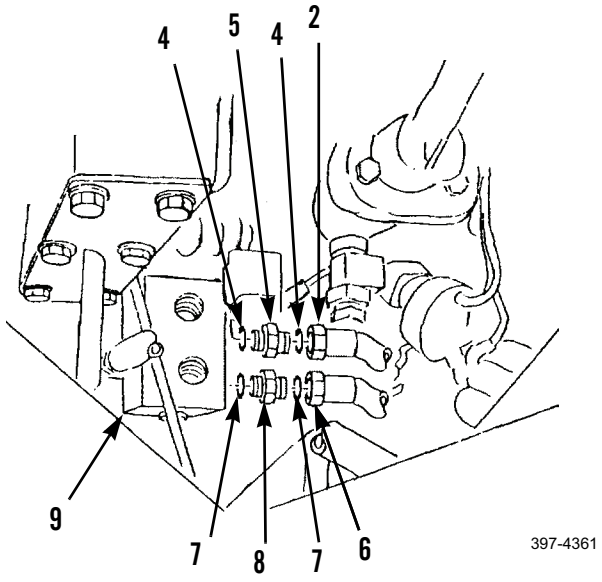

***INSTALLATION - CONTINUED***

26. Install two new preformed packings (1) and elbow (3) on steering control valve.
27. Connect hose assembly (2) to elbow (3).

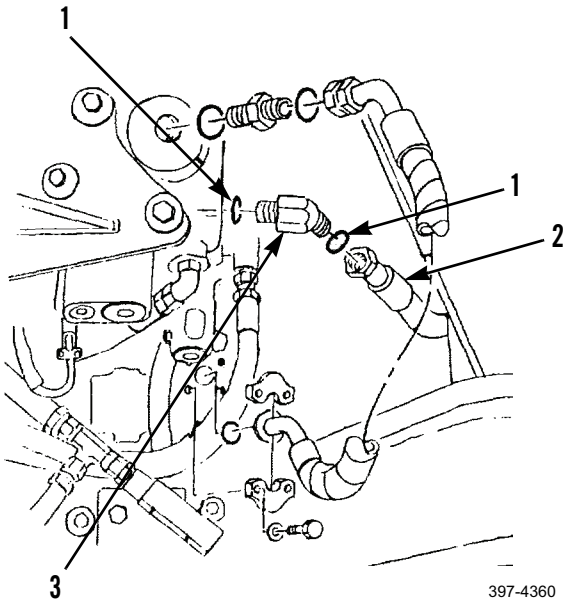


28. Start engine (TM 5-3805-261-10).
29. Turn steering wheel. Move wheels back and forth at least five times to bleed air from the system.
30. Turn engine off.
31. Check for leaks.
32. Check hydraulic oil level and fill as necessary (WP 0216 00).

**END OF WORK PACKAGE**

## BLADE FLOAT LINES, FITTINGS, AND HOSES REPLACEMENT (CCE MACHINE) 0221 00

### THIS WORK PACKAGE COVERS

Removal, Cleaning and Inspection, Installation

### INITIAL SETUP

**Maintenance Level**

Unit

**Tools and Special Tools**

Tool kit, general mechanic's (Item 89, WP 0348 00)

**Materials/Parts**

Cap set, protective (Item 7, WP 0349 00)

Oil, lubricating (Item 26, 27, or 29, WP 0349 00)

Rag, wiping (Item 35, WP 0349 00)

Tag, marker (Item 44, WP 0349 00)

Packing, preformed (18)

**References**

WP 0216 00

**Equipment Conditions**

Machine parked on level ground (TM 5 3805-261-10)

Parking/emergency brake applied (TM 5 3805-261-10)

Implements lowered to ground (TM 5 3805-261-10)

Engine off (TM 5 3805-261-10)

Battery disconnect switch in OFF position (TM 5 3805-261-10)

Hydraulic pressure relieved (WP 0020 00)

Blade float pilot valve removed (WP 0233 00)

***REMOVAL***

## CAUTION

Cap hose ends and plug open ports to prevent contamination.

## NOTE

Tag hose assemblies before disconnecting to aid in installation.

1. Disconnect hose assemblies (4 and 6) from elbows (2 and 5) at underside of cab and remove two preformed packings (3).
2. Remove hose assemblies (4 and 6) from machine.
3. Remove elbows (2 and 5) and two preformed packings (1). Discard preformed packings.

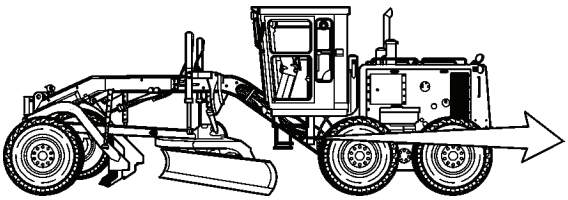

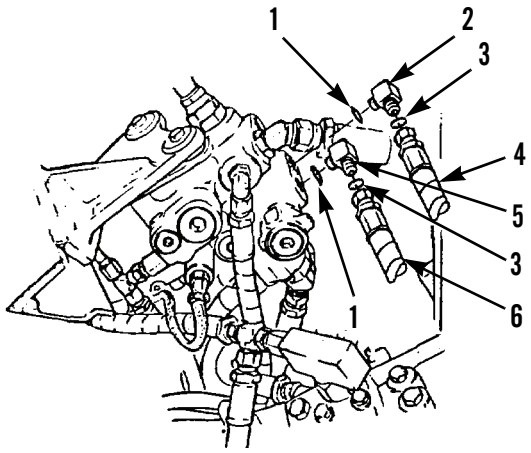


397-720

4. Disconnect hose assemblies (10 and 12) from tee (9) and remove two preformed packings (11). Discard preformed packings.
5. Remove tee (9), connector (8), and preformed packing (7). Discard preformed packing.

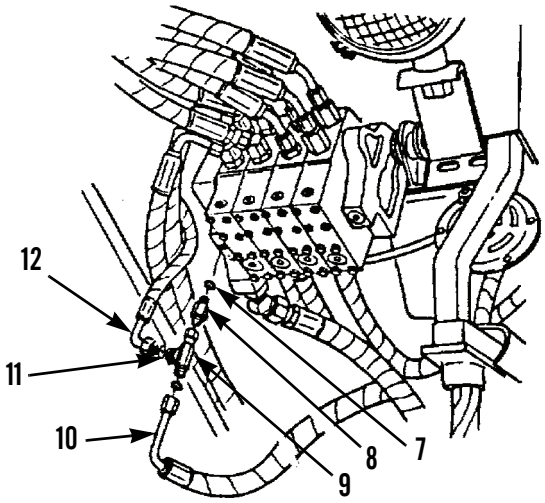


397-721

## BLADE FLOAT LINES, FITTINGS, AND HOSES REPLACEMENT (CCE MACHINE) - CONTINUED 0221 00

### *REMOVAL - CONTINUED*

6. Disconnect hose assemblies (15 and 17) from tee (18) and remove two preformed packings (16). Discard preformed packings.
7. Remove tee (18), connector (14), and preformed packing (13). Discard preformed packing.

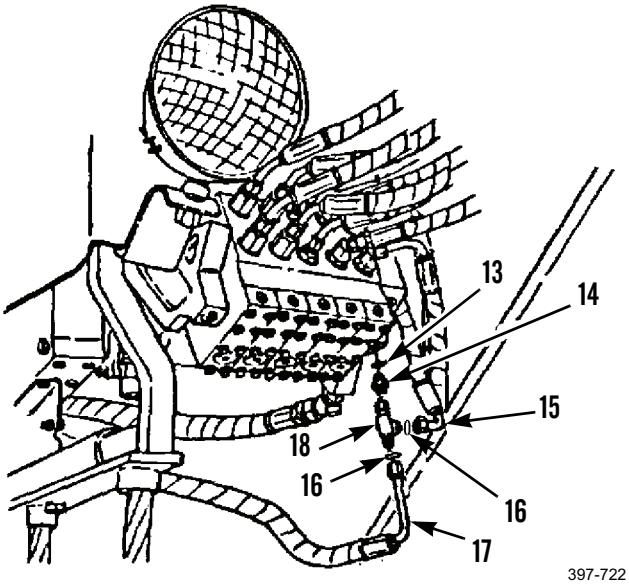


397-722

8. Remove two bolts (27), washers (28), clamps (19), and spacers (20).
9. Disconnect hose assemblies (15 and 26) and remove elbows (22 and 25) from valve assembly (24) on right side of machine.
10. Remove and discard two preformed packings (21).
11. Remove hose assemblies (15 and 26) from machine.
12. Remove elbows (22 and 25) and two preformed packings (23). Discard preformed packings.

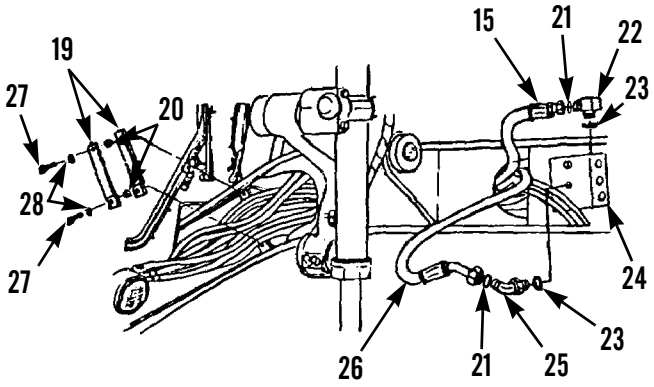


397-723

### *REMOVAL - CONTINUED*

13. Remove two bolts (33), washers (34), clamps (32), and spacers (35).
14. Remove bolt (36) and clip (37).
15. Disconnect hose assemblies (12 and 38) from elbows (30 and 39) at valve assembly (42) on left side of machine.
16. Remove hose assemblies (12 and 38) from machine.
17. Remove elbows (30 and 39) and two preformed packings (29). Discard preformed packings.
18. Remove and discard two preformed packings (31).

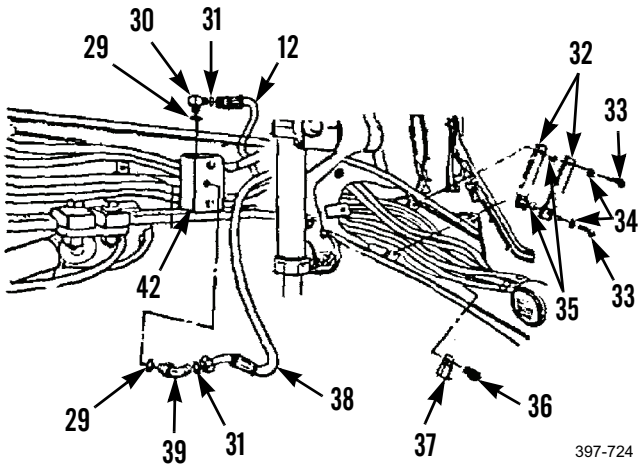


### *CLEANING AND INSPECTION*

Clean and inspect all parts in accordance with WP 0020 00.

### *INSTALLATION*

**NOTE**

Lightly lubricate all preformed packings with clean oil before installation.

1. Install two new preformed packings (29) and elbows (30 and 39) to valve assembly (42) on left side of machine.
2. Position two hose assemblies (12 and 38) to machine.
3. Install two new preformed packings (31) and connect hose assemblies (12 and 38) to elbows (30 and 39).
4. Install clip (37) and bolt (36).
5. Install two spacers (35), clamps (32), washers (34), and bolts (33).
6. Install two new preformed packings (23) and elbows (22 and 25) to valve assembly (24) on right side of machine.
7. Position two hose assemblies (15 and 26) to machine.
8. Install two new preformed packings (21) and connect hose assemblies (15 and 26) to elbows (22 and 25).
9. Install two spacers (20), clamps (19), washers (28), and bolts (27).

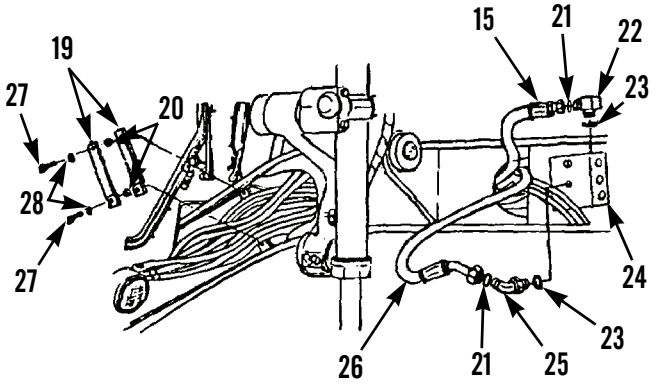

## BLADE FLOAT LINES, FITTINGS, AND HOSES REPLACEMENT (CCE MACHINE) - CONTINUED 0221 00

### *INSTALLATION - CONTINUED*

10. Install new preformed packing (13), connector (14), and tee (18).
11. Install two new preformed packings (16) and connect hose assemblies (15 and 17).

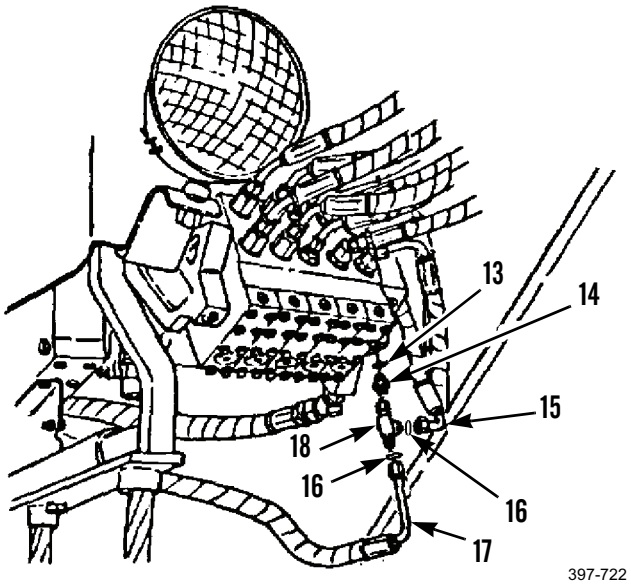

397-722

12. Install new preformed packing (7), connector (8), and tee (9).
13. Install two new preformed packings (11) and connect hose assemblies (10 and 12).

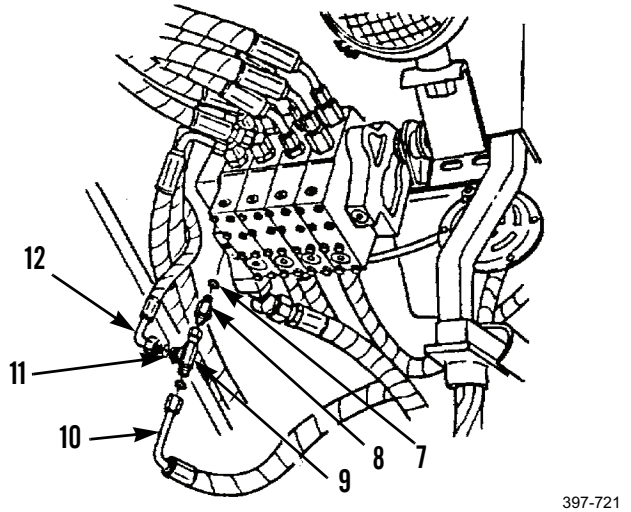

397-721

## BLADE FLOAT LINES, FITTINGS, AND HOSES REPLACEMENT (CCE MACHINE) - CONTINUED 0221 00

### *INSTALLATION - CONTINUED*

14. Install two new preformed packings (1) and elbows (2 and 5) at underside of cab.
15. Install two new preformed packings (3) and connect hose assemblies (4 and 6) to elbows (2 and 5).

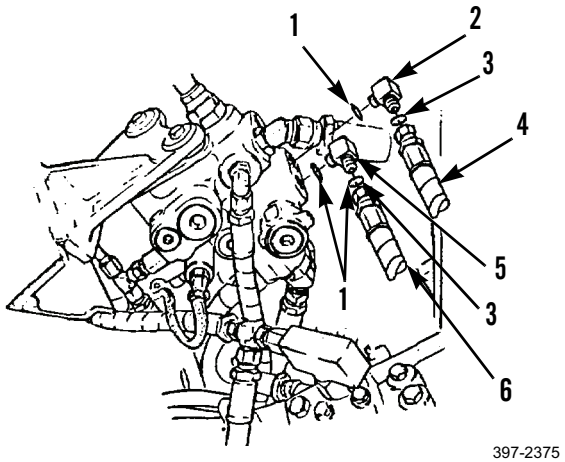

397-2375

16. Install blade float pilot valve (WP 0233 00).
17. Operate control levers. Move system through at least five full-travel movements to bleed air from system.
18. Start engine (TM 5-3805-261-10)
19. Check for leaks.
20. Check hydraulic oil level and fill as necessary (WP 0216 00).

**END OF WORK PACKAGE**

## BLADE LIFT LINES, FITTINGS, AND HOSES REPLACEMENT 0222 00

### THIS WORK PACKAGE COVERS

Removal, Cleaning and Inspection, Installation

### INITIAL SETUP

**Maintenance Level**

Unit

**Tools and Special Tools**

Tool kit, general mechanic's (Item 89, WP 0348 00)

**Materials/Parts**

Cap set, protective (Item 2, WP 0349 00)

Oil, lubricating (Item 26, 27, or 29, WP 0349 00)

Rag, wiping (Item 35, WP 0349 00)

Tag, marker (Item 44, WP 0349 00)

Packing, preformed (48)

**References**

WP 0216 00

**Equipment Conditions**

Machine parked on level ground (TM 5-3805-261-10)

Parking/emergency brake applied (TM 5-3805-261-10)

Implements lowered to ground (TM 5-3805-261-10)

Engine off (TM 5-3805-261-10)

Battery disconnect switch in OFF position (TM 5-3805-261-10)

Hydraulic pressure relieved (WP 0020 00)

Scarifier hoses removed (WP 0229 00)

***REMOVAL***

## CAUTION

Cap hose ends and plug open ports to prevent contamination.

## NOTE

Tag hose assemblies before disconnecting to aid in installation.

1. Disconnect two hose assemblies (2 and 3) from connectors (4 and 5) at right hydraulic control valve and remove two preformed packings (1). Discard preformed packings.

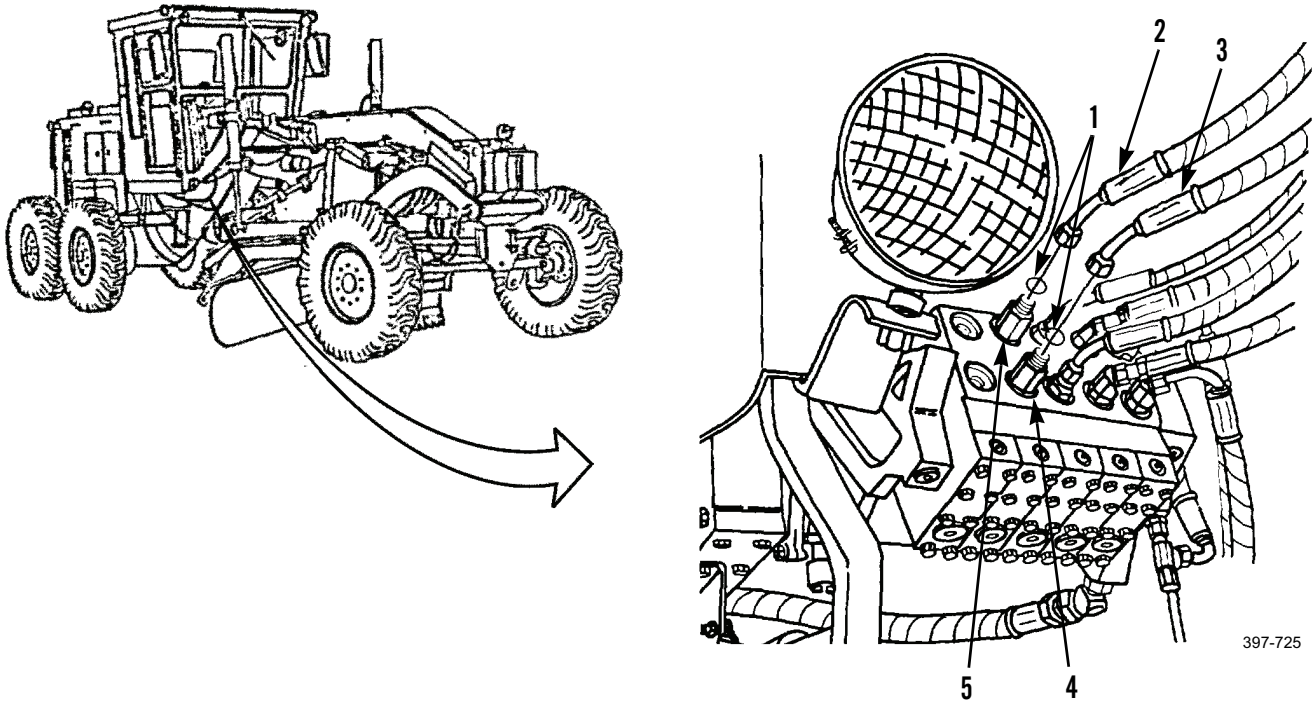

***REMOVAL - CONTINUED***

2. Remove two connectors (4 and 5) and preformed packings (6). Discard two preformed packings.

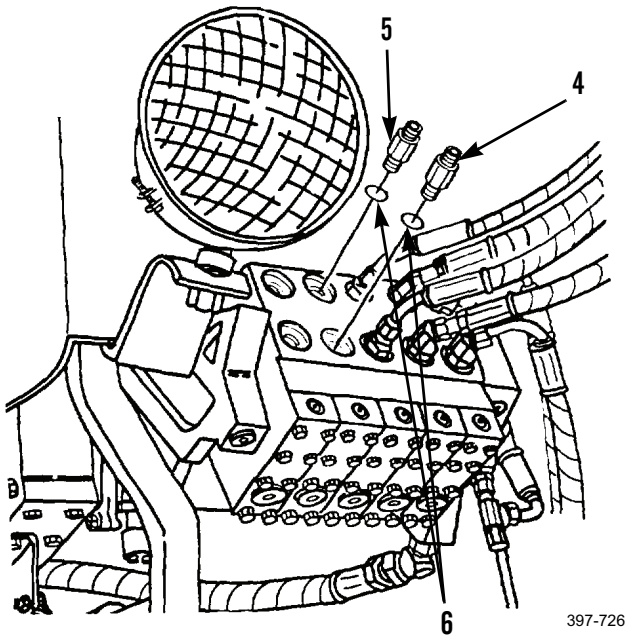


3. Remove two bolts (7), washers (8), clamps (10), and spacers (9).

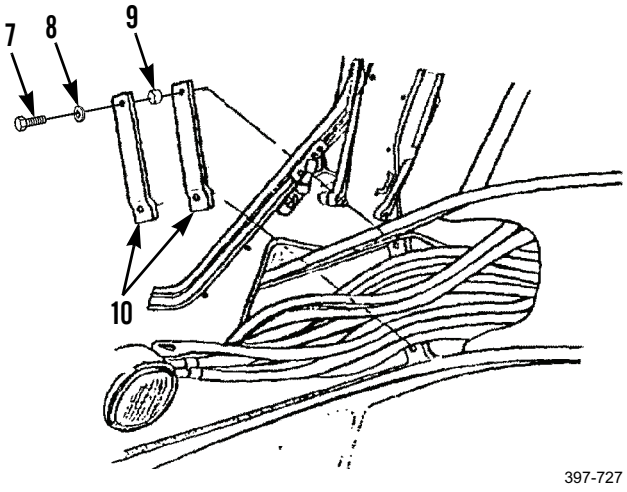

***REMOVAL - CONTINUED***

4. Disconnect hose assemblies (2 and 3) from elbows (11 and 13) on right blade lift check and relief valve (14).
5. Remove two preformed packings (12). Discard preformed packings.
6. Remove hose assemblies (2 and 3) from machine.
7. Disconnect tees (17 and 18) from elbows (15 and 19) on right blade lift check and relief valve (14). Remove two preformed packings (16). Discard preformed packings.

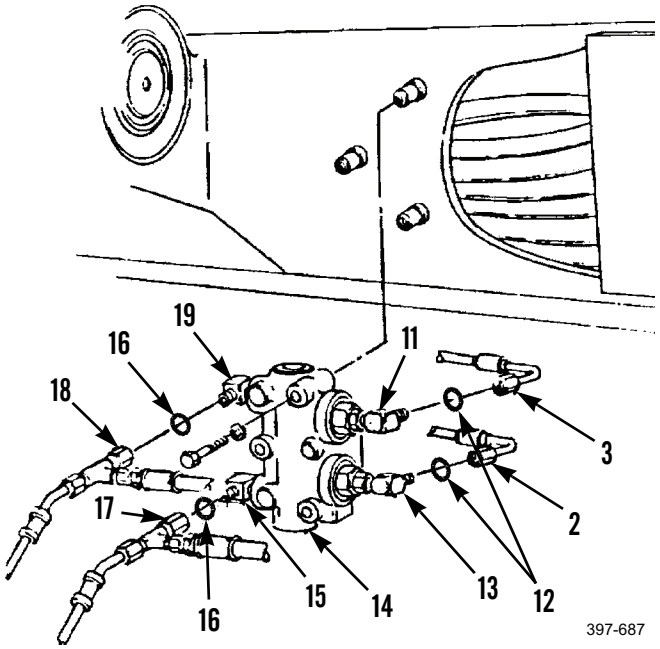


8. Remove elbows (11 and 13) and two preformed packings (20). Discard preformed packings.
9. Remove elbows (15 and 19) and two preformed packings (21). Discard preformed packings.
10. Disconnect hose assemblies (24 and 30) from tees (18 and 17) and remove two preformed packings (23). Discard preformed packings.
11. Disconnect hose assemblies (24 and 30) from connectors (26 and 29).
12. Remove two preformed packings (25). Discard preformed packings.
13. Remove hose assemblies (24 and 30) from machine.

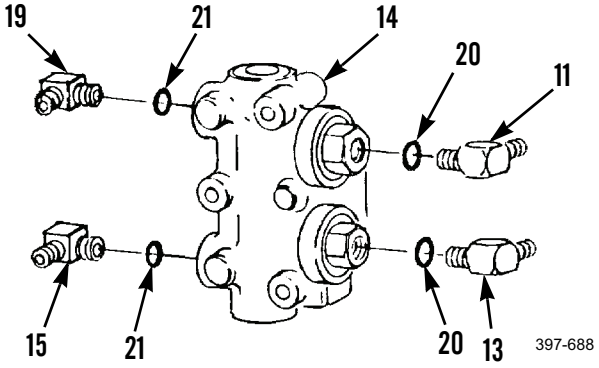

## BLADE LIFT LINES, FITTINGS, AND HOSES REPLACEMENT - CONTINUED 0222 00

### *REMOVAL - CONTINUED*

14. Remove connectors (26 and 29) from right check valve assembly (28).
15. Remove two preformed packings (27). Discard preformed packings.
16. Remove two tees (18 and 17) from hose assemblies (31 and 32).
17. Remove two preformed packings (22). Discard preformed packings.

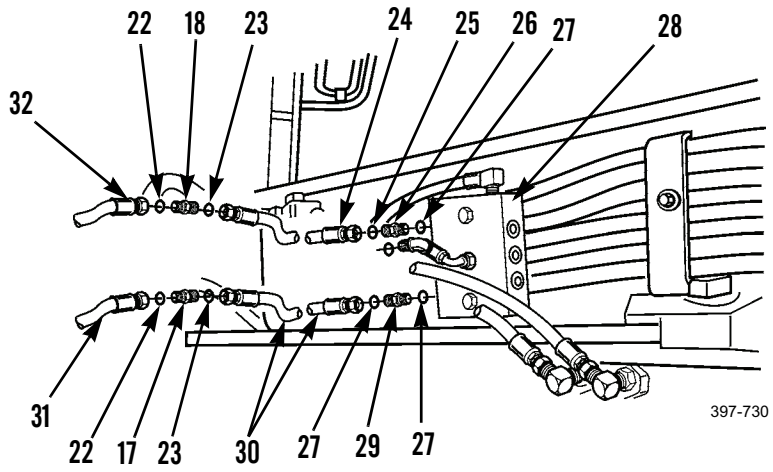


18. Remove nut (33), washer (34), two clips (46), spacer (38), clamp (39), washer (40), and bolt (41) from right blade lift cylinder (42).
19. Disconnect hose assembly (31) from connector (36).
20. Remove preformed packing (37). Discard preformed packing.
21. Remove hose assembly (31) from machine.
22. Remove connector (36) and preformed packing (35) from top of right blade lift cylinder (42). Discard preformed packing.
23. Disconnect hose assembly (32) from connector (44).
24. Remove preformed packing (45). Discard preformed packing.
25. Remove hose assembly (32) from machine.
26. Remove elbow (44) and preformed packing (43) from bottom of right blade lift cylinder (42). Discard preformed packing.

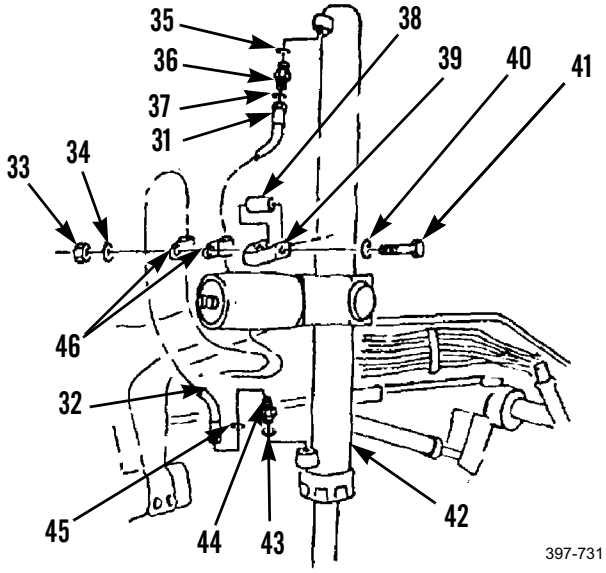

***REMOVAL - CONTINUED***

27. Disconnect hose assemblies (47 and 48) from left control valve and remove two preformed packings (49). Discard preformed packings.

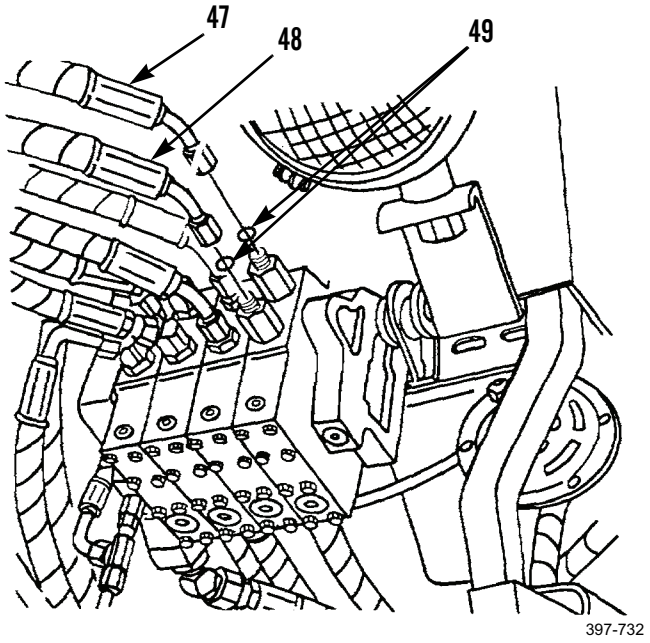

397-732

28. Remove connectors (50 and 52) and two preformed packings (51). Discard preformed packings.

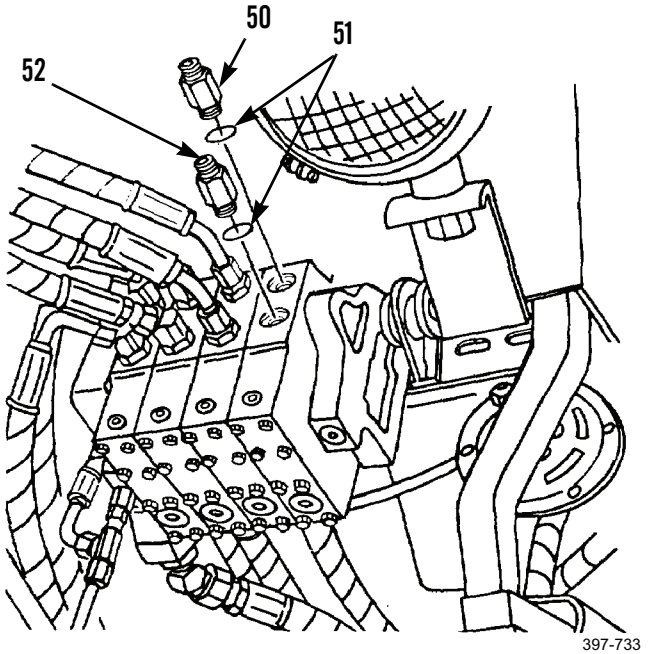

397-733

***REMOVAL - CONTINUED***

29. Remove two bolts (55), washers (54), clamps (53), and spacers (56).

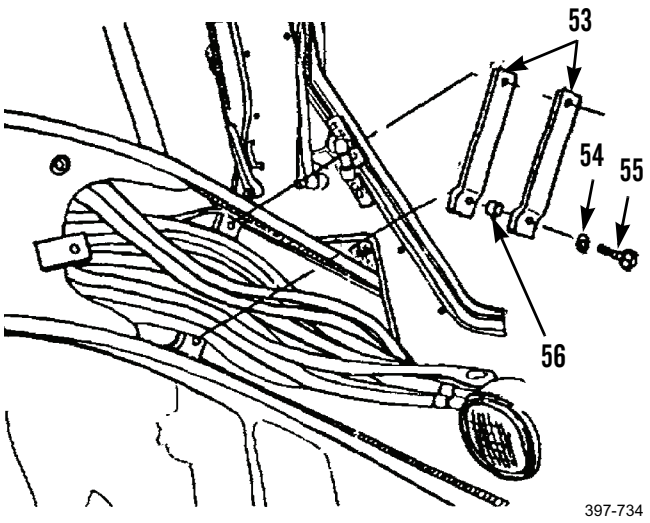


30. Disconnect hose assemblies (47 and 48) from elbows (58 and 65) at left blade lift check and relief valve (59). Remove two preformed packings (57). Discard preformed packings.
31. Remove hose assemblies (47 and 48) from machine.
32. Remove tees (62 and 63) from elbows (60 and 64) and remove two preformed packings (61). Discard preformed packings.

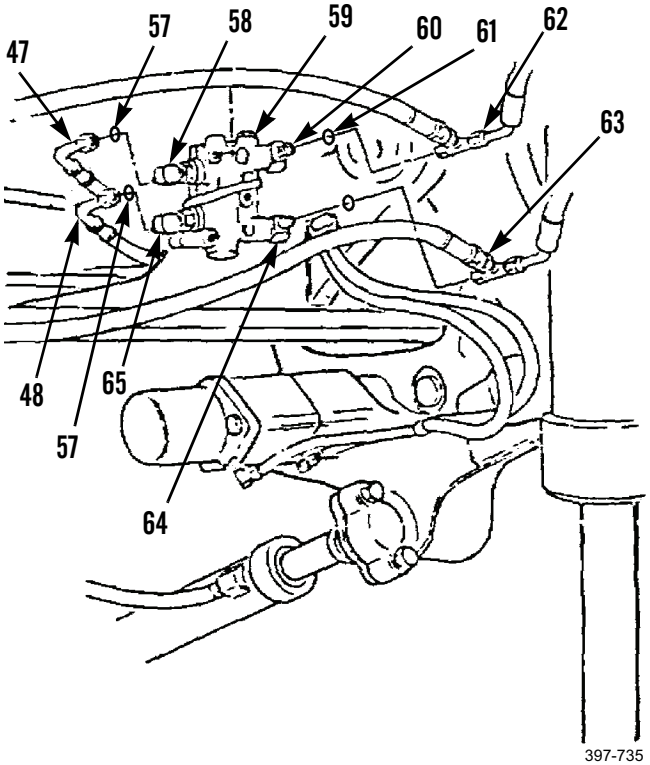

***REMOVAL - CONTINUED***

33. Remove elbows (58 and 65) and two preformed packings (66). Discard preformed packings.
34. Remove elbows (60 and 64) and two preformed packings (67). Discard preformed packings.

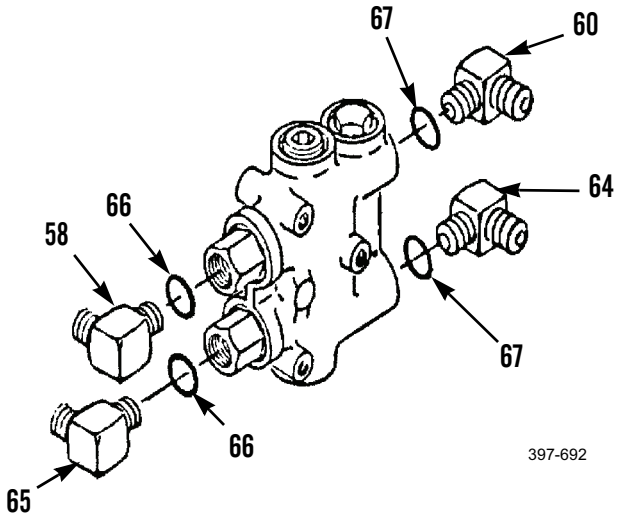


35. Disconnect hose assemblies (72 and 77) from tees (62 and 63) and remove two preformed packings (73). Discard preformed packings.
36. Disconnect hose assemblies (72 and 77) from connectors (70 and 78) and remove two preformed packings (71). Discard preformed packings.
37. Remove hose assemblies (72 and 77) from machine.
38. Remove connectors (70 and 78) from left check valve assembly (68) and remove two preformed packings (69). Discard preformed packings.
39. Remove tees (62 and 63) from hose assemblies (75 and 76) and remove two preformed packings (74). Discard preformed packings.

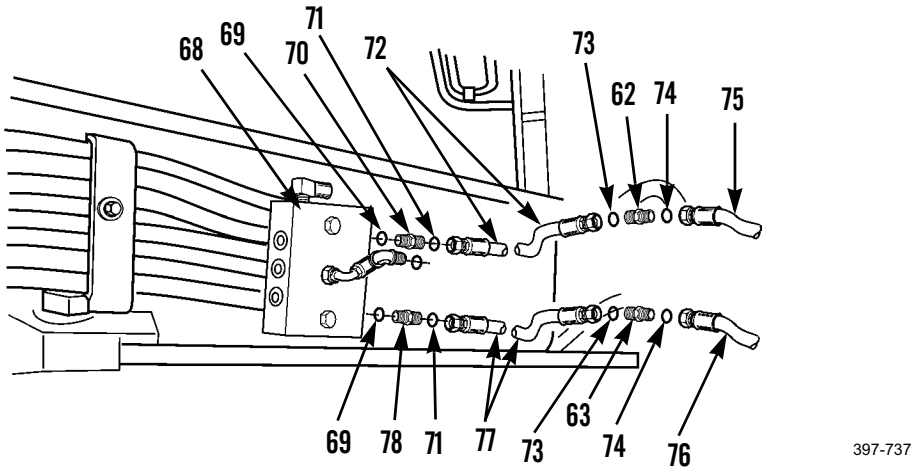

### *REMOVAL - CONTINUED*

40. Remove nut (87), washer (88), two clips (86), spacer (85), clamp (81), washer (80), and bolt (79) from left blade lift cylinder (92).
41. Disconnect hose assembly (76) from connector (83) and remove preformed packing (84). Discard preformed packing.
42. Remove hose assembly (76) from machine.
43. Remove connector (83) and preformed packing (82) from top of left blade lift cylinder (92). Discard preformed packing.
44. Disconnect hose assembly (75) from connector (90) and remove preformed packing (89). Discard preformed packing.
45. Remove hose assembly (75) from machine.
46. Remove connector (90) and preformed packing (91) from bottom of left blade lift cylinder (92). Discard preformed packings.

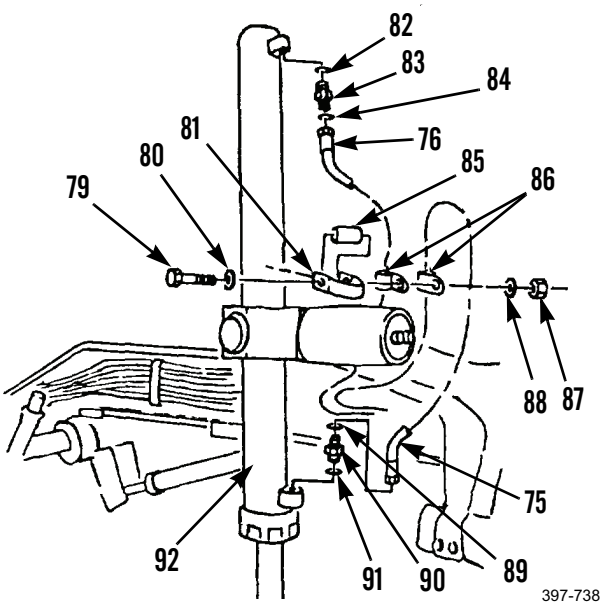


### *CLEANING AND INSPECTION*

Clean and inspect all parts in accordance with WP 0020 00.

### *INSTALLATION*

**NOTE**

Lightly lubricate all preformed packings with clean oil before installation.

1. Install new preformed packing (91) and connector (90) on bottom of left blade lift cylinder (92).
2. Install new preformed packing (89) and hose assembly (75) on connector (90).
3. Install new preformed packing (82) and connector (83) on top of left blade lift cylinder (92).
4. Install new preformed packing (84) and hose assembly (76) on connector (83).
5. Install bolt (79), washer (80), clamp (81), spacer (85), two clips (86), washer (88), and nut (87) on left blade lift cylinder (92).

***INSTALLATION - CONTINUED***

6. Install two new preformed packings (74) and tees (62 and 63) to hose assemblies (75 and 76).
7. Install two new preformed packings (69) and connectors (70 and 78) to left check valve assembly (68).
8. Position hose assemblies (72 and 77) to machine.
9. Install two new preformed packings (71) and connect hose assemblies (72 and 77) to connectors (70 and 78).

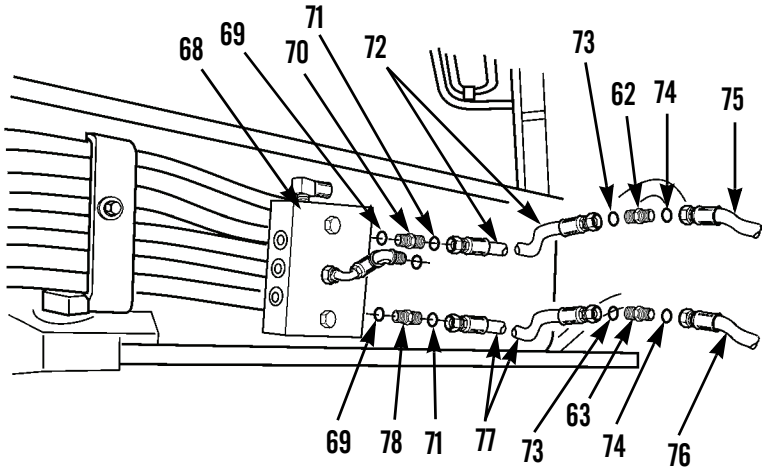


10. Install two new preformed packings (73) and connect hose assemblies (72 and 77) to tees (62 and 63).
11. Install two new preformed packings (67) and elbows (60 and 64) to left blade lift check and relief valve (59).
12. Install two new preformed packings (66) and elbows (58 and 65).

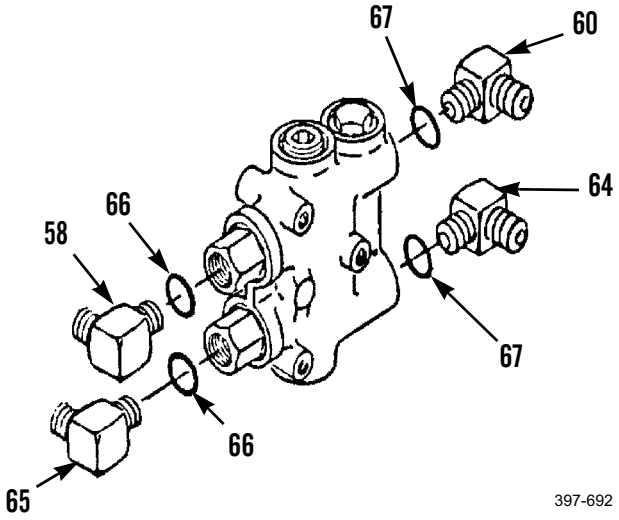

***INSTALLATION - CONTINUED***

13. Install two new preformed packings (61) and two tees (62 and 63) to two elbows (60 and 64).
14. Position hose assemblies (47 and 48) to machine.
15. Install two new preformed packings (57) and connect hose assemblies (47 and 48) to elbows (58 and 65).

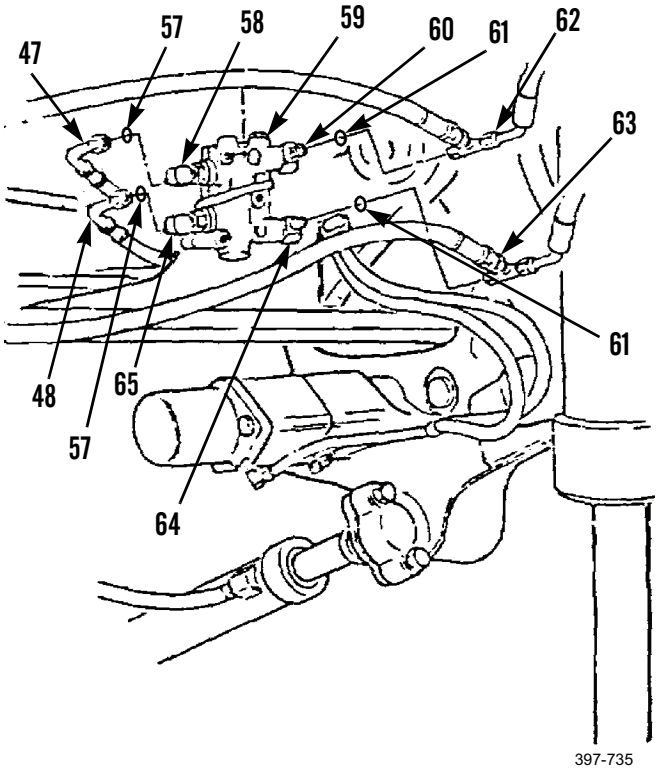

397-735

16. Install two clamps (53), spacers (56), washers (54), and bolts (55).

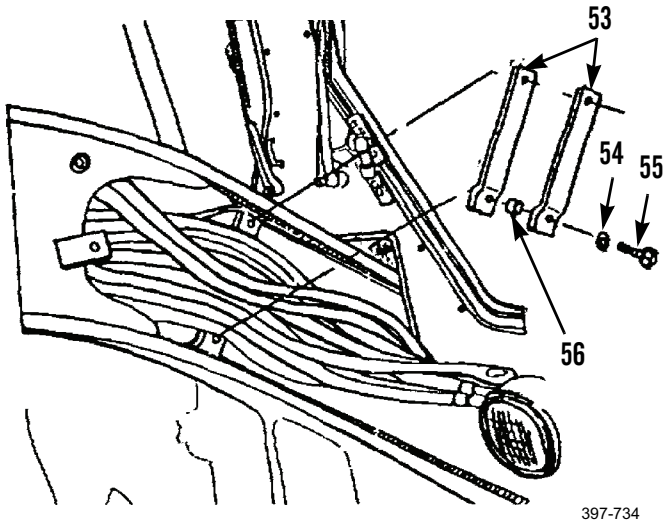

397-734

***INSTALLATION - CONTINUED***

17. Install two new preformed packings (51) and connectors (50 and 52) to left control valve.

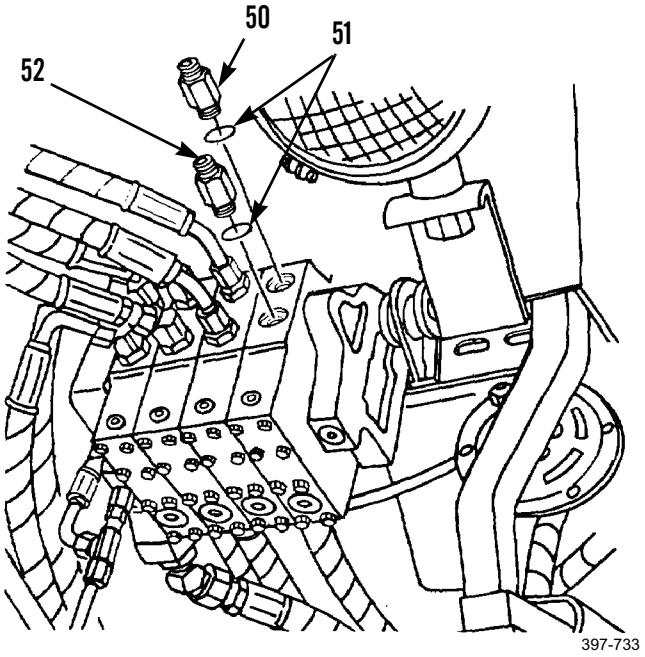


18. Install two new preformed packings (49) and connect hose assemblies (47 and 48) to left control valve.

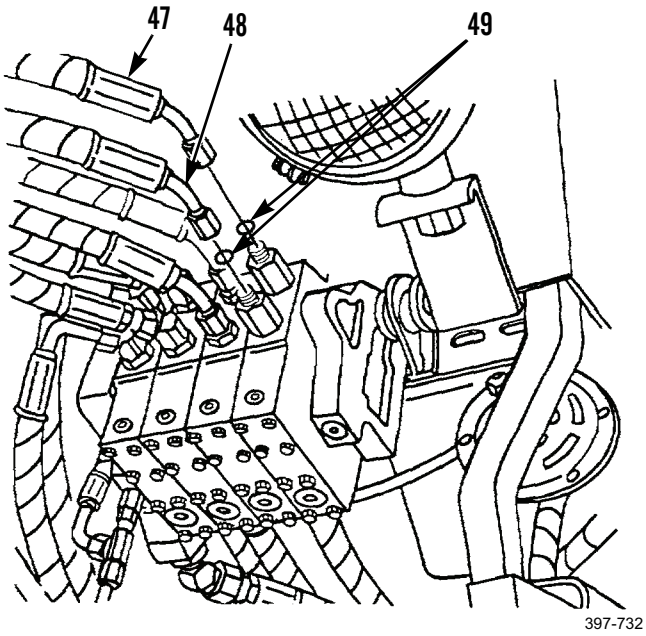

***INSTALLATION - CONTINUED***

19. Install new preformed packing (43) and elbow (44) to bottom of right blade lift cylinder (42).
20. Position hose assembly (32) to machine.
21. Install new preformed packing (45) and hose assembly (32) to elbow (44).
22. Install new preformed packing (35) and connector (36) on top of right blade lift cylinder (42).
23. Position hose assembly (31) to machine.
24. Install new preformed packing (37) and hose assembly (31) to connector (36).
25. Install bolt (41), washer (40), clamp (39), spacer (38), two clips (46), washer (34), and nut (33).

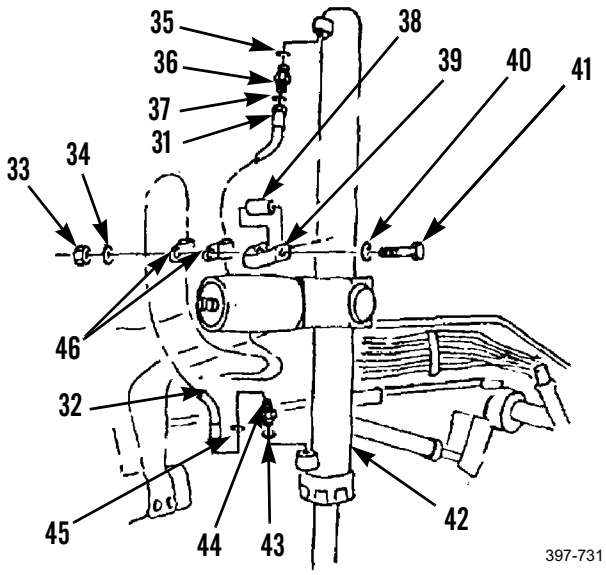


26. Install two new preformed packings (22) and tees (17 and 18) to hose assemblies (31 and 32).
27. Install two new preformed packings (27) and connectors (26 and 29) to right check valve assembly (28).
28. Position hose assemblies (24 and 30) to machine.
29. Install two new preformed packings (25) and connect hose assemblies (24 and 30) to connectors (26 and 29).
30. Install two new preformed packings (23) and connect hose assemblies (24 and 30) to tees (18 and 17).

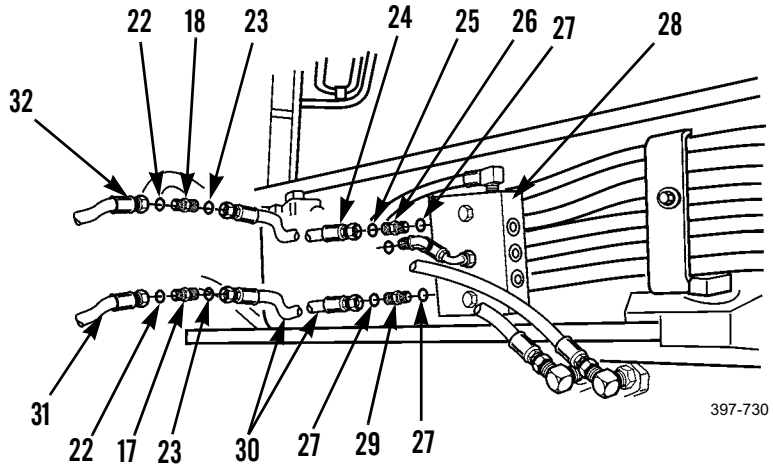

***INSTALLATION - CONTINUED***

31. Install two new preformed packings (21) and elbows (15 and 19) to right blade lift check and relief valve (14).

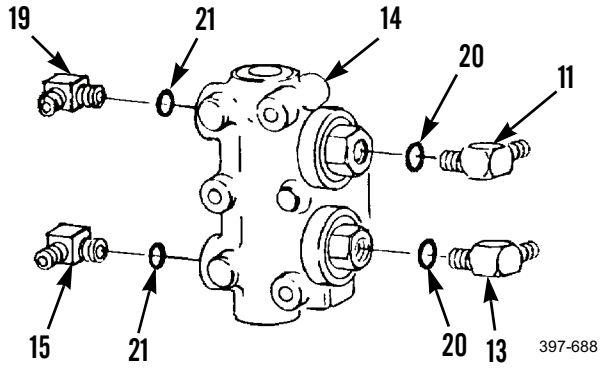


32. Install two new preformed packings (20) and elbows (11 and 13).
33. Install two new preformed packings (16) and connect tees (17 and 18) to elbows (15 and 19).
34. Position hose assemblies (2 and 3) on machine.
35. Install two new preformed packings (12) and connect hose assemblies (2 and 3) to elbows (11 and 13).

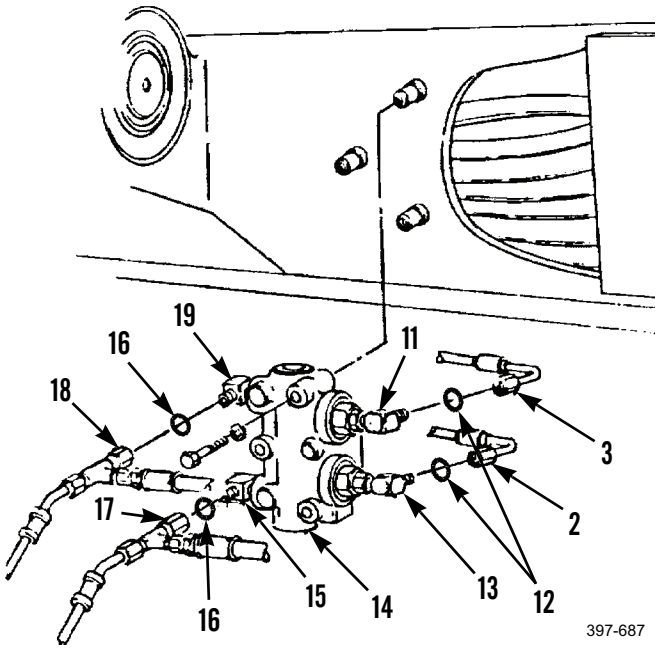

***INSTALLATION - CONTINUED***

36. Install two clamps (10), spacers (9), washers (8), and bolts (7).

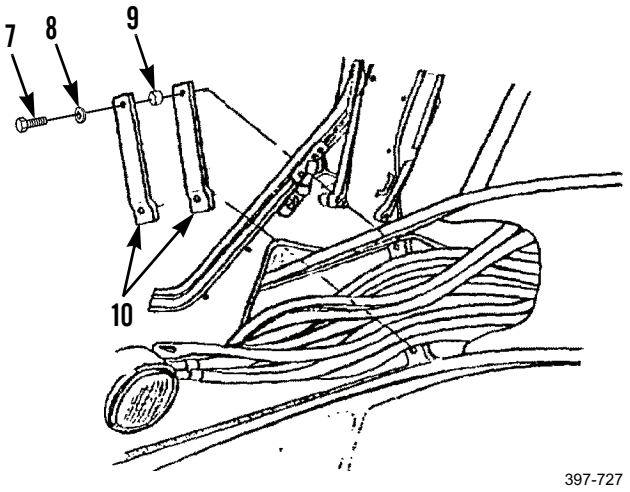

397-727

37. Install two new preformed packings (6) and connectors (4 and 5) to right control valve.

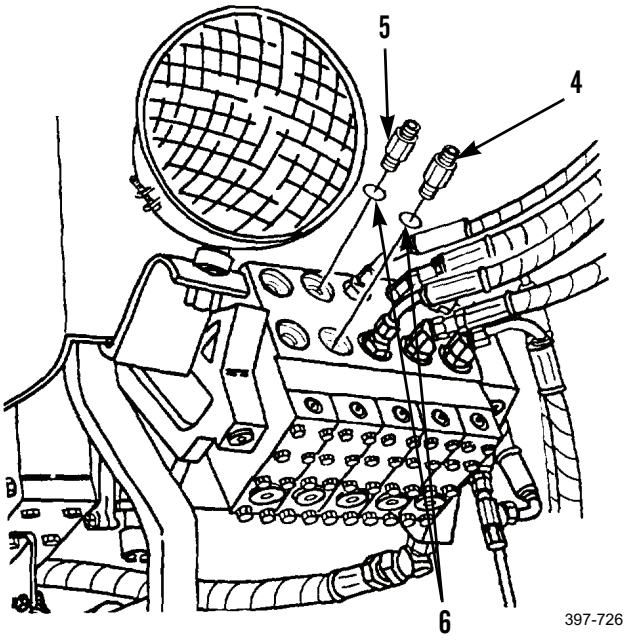

397-726

## BLADE LIFT LINES, FITTINGS, AND HOSES REPLACEMENT - CONTINUED 0222 00

### *INSTALLATION - CONTINUED*

38. Install two new preformed packings (1) on connect hose assemblies (2 and 3) to connectors (4 and 5).
39. Connect scarifier hoses (WP 0229 00).

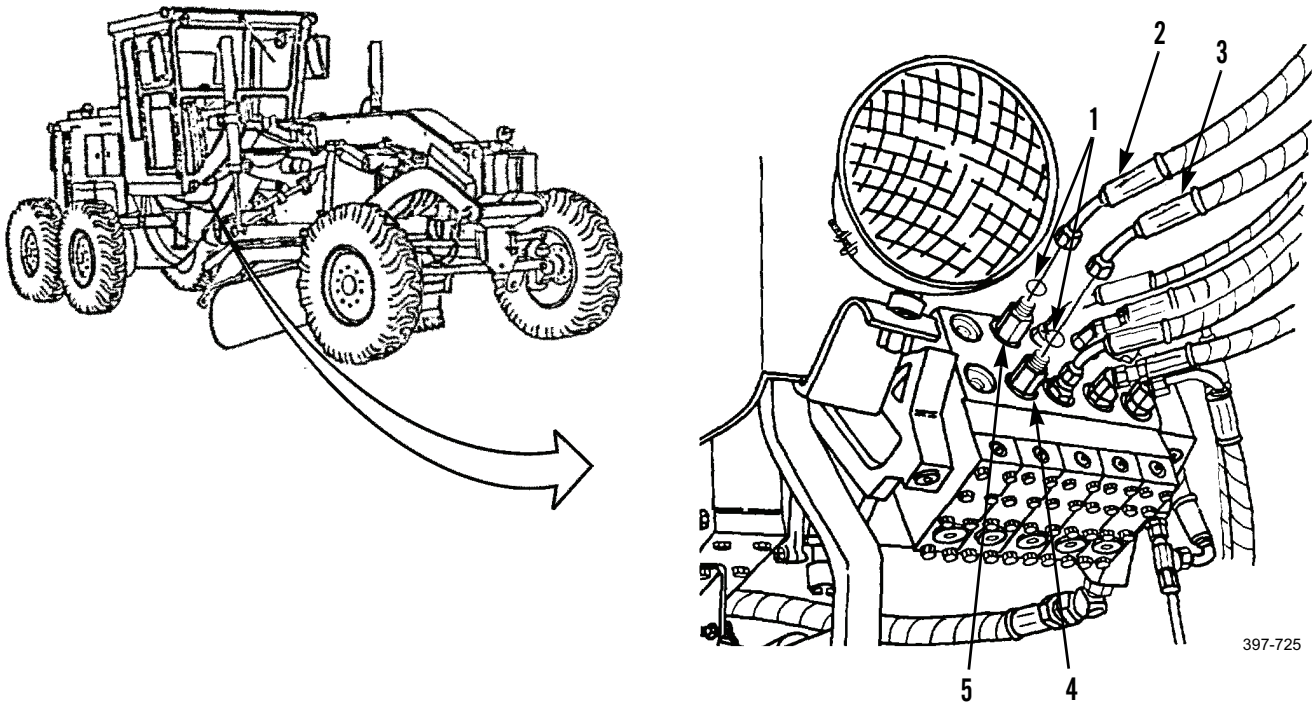


40. Start engine (TM 5-3805-261-10).
41. Operate control levers. Move system through at least five full-travel movements to bleed air from system.
42. Stop engine.
43. Check for leaks.
44. Check hydraulic oil level and fill as necessary (WP 0216 00).

**END OF WORK PACKAGE**

## BLADE TIP LINES, FITTINGS, AND HOSES REPLACEMENT 0223 00

### THIS WORK PACKAGE COVERS

Removal, Cleaning and Inspection, Installation

### INITIAL SETUP

**Maintenance Level**

Unit

**Tools and Special Tools**

Tool kit, general mechanic's (Item 89, WP 0348 00)

**Materials/Parts**

Cap set, protective (Item 7, WP 0349 00)

Oil, lubricating (Item 26, 27, or 27.3, WP 0349 00)

Rag, wiping (Item 35, WP 0349 00)

Tag, marker (Item 44, WP 0349 00)

Packing, preformed (24)

**References**

WP 0216 00

**Equipment Conditions**

Machine parked on level ground (TM 5-3805-261-10)

Parking/emergency brake applied (TM 5-3805-261-10)

Implements lowered to ground (TM 5-3805-261-10)

Engine off (TM 5-3805-261-10)

Battery disconnect switch in OFF position (TM 5-3805-261-10)

Hydraulic pressure relieved (WP 0020 00)

Right frame covers removed (WP 0179 00)

***REMOVAL***

## CAUTION

Cap hose ends and plug open ports to prevent contamination.

## NOTE

Tag hose assemblies before disconnecting to aid in installation.

1. Disconnect hose assemblies (1 and 2) from left control valve located under front-left side of cab and remove two preformed packings (3). Discard preformed packings.

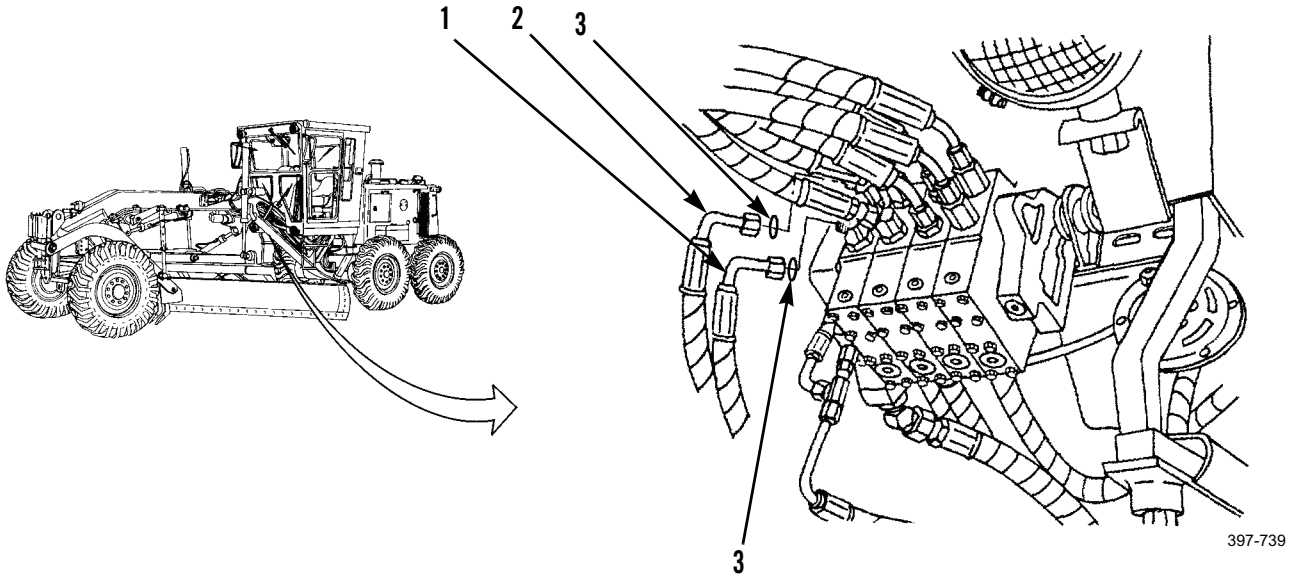

## BLADE TIP LINES, FITTINGS, AND HOSES REPLACEMENT - CONTINUED 0223 00

### *REMOVAL - CONTINUED*

2. Remove elbows (5 and 6) and two preformed packings (4). Discard preformed packings.

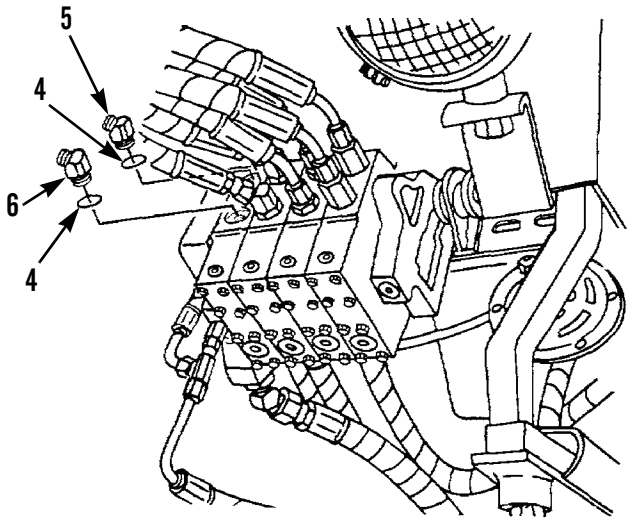


397-740

3. Remove two nuts (8), washers (7), and clamp (9) under left side of cab.

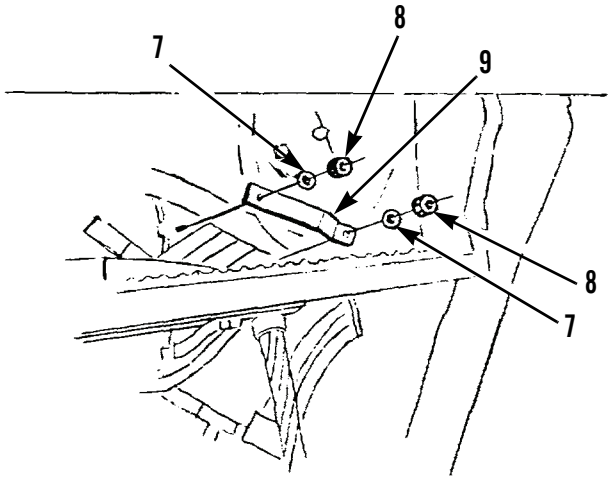


397-741

## BLADE TIP LINES, FITTINGS, AND HOSES REPLACEMENT - CONTINUED 0223 00

### *REMOVAL - CONTINUED*

4. Remove two bolts (14), washers (15), clamp (16), spacers (17), plate (18), and spacers (19) in right-front side of cab.
5. Remove two bolts (13), washers (12), clamp (11), and spacers (10).

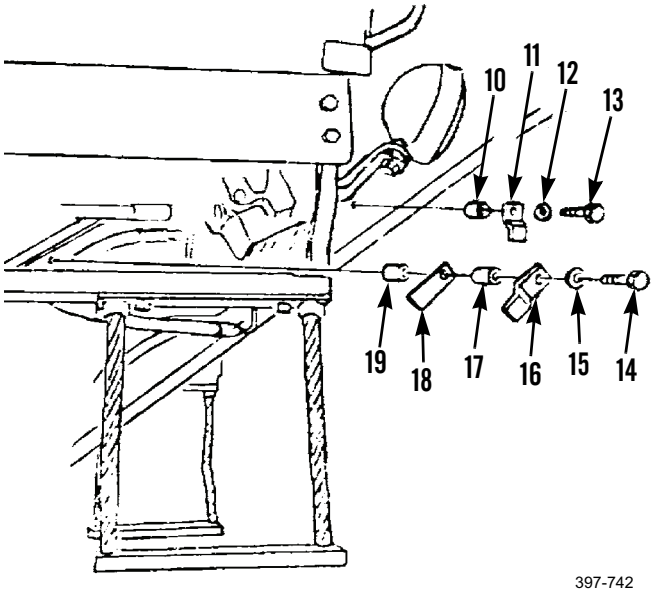

397-742

6. Remove two bolts (20), washers (21), clamps (23), and spacers (22) in right-rear side of front frame.

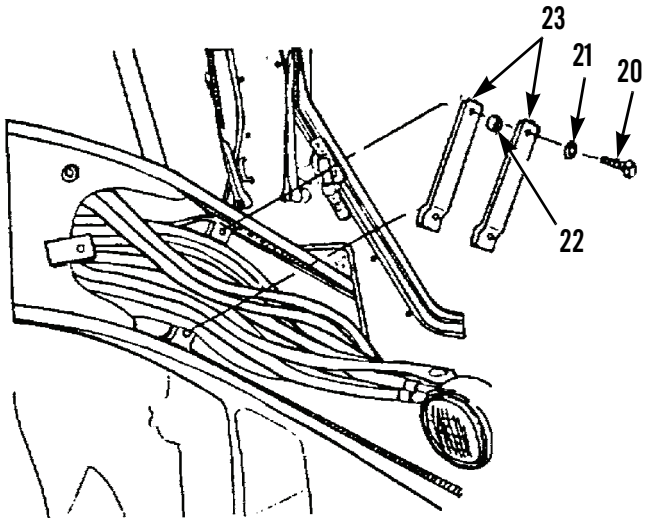

397-743

***REMOVAL - CONTINUED***

7. Remove two bolts (24), washers (25), and clamps (26) in right-center side of front frame.

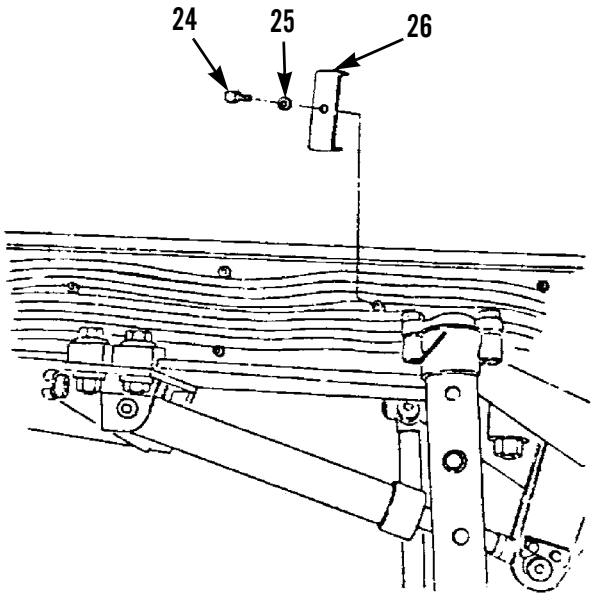


397-744

8. Disconnect hose assemblies (1 and 2) from elbows (28 and 29) and remove two preformed packings (27). Discard preformed packings.
9. Remove hose assemblies (1 and 2) from machine.
10. Remove elbows (28 and 29) and two preformed packings (30) from blade tip check and relief valve. Discard two preformed packings.

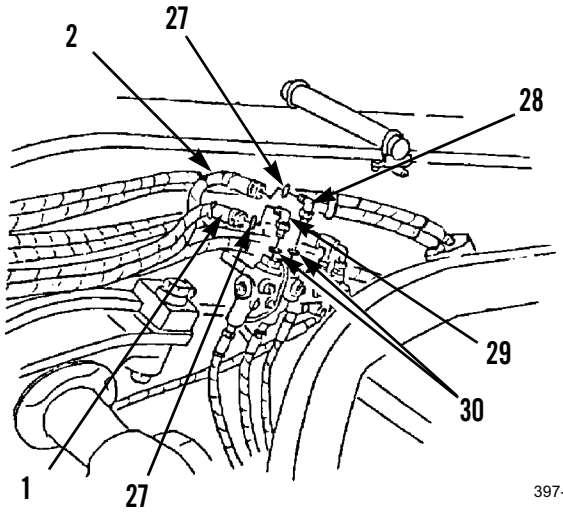


397-745

***REMOVAL - CONTINUED***

11. Disconnect hose assemblies (34 and 35) from connectors (32 and 36) and remove two preformed packings (33). Discard preformed packings.
12. Remove connectors (32 and 36) and two preformed packings (31). Discard two preformed packings.

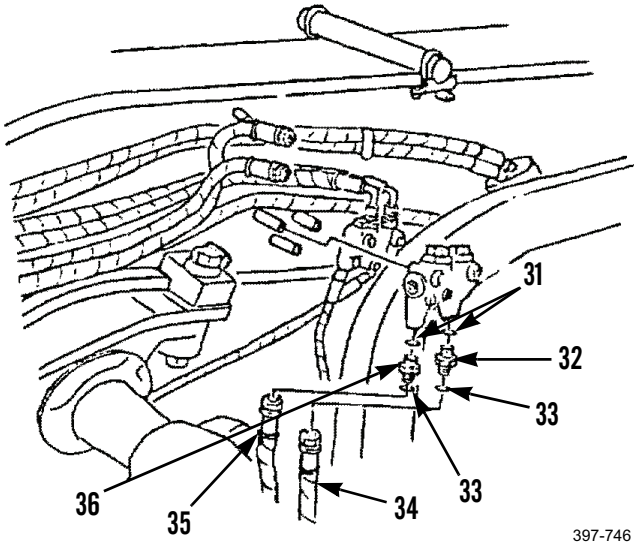

397-746

13. Remove two bolts (37), washers (38), plates (39), and clamps (40) from right-front side of drawbar.

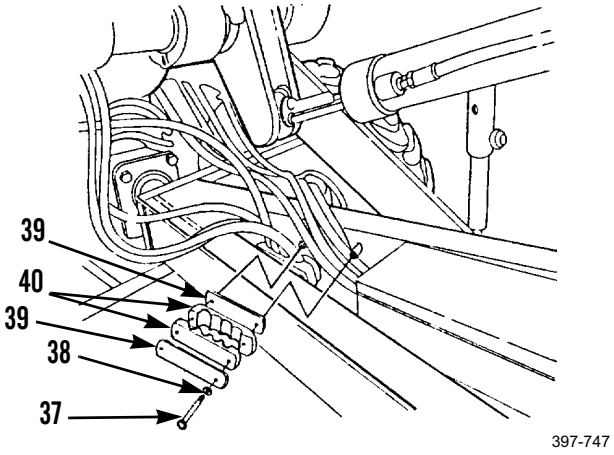

397-747

***REMOVAL - CONTINUED***

14. Remove bolt (41), washer (42), and clamp (43) from inner-right side of drawbar.
15. Remove bolt (44), washer (45), and clamp (46).

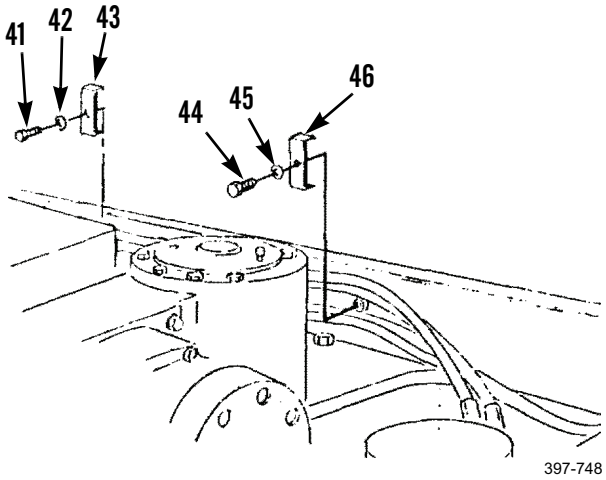


16. Disconnect hose assemblies (34 and 35) from elbows (48 and 58) and remove two preformed packings (47). Discard preformed packings.
17. Remove hose assemblies (34 and 35) from machine.
18. Remove elbows (48 and 58) from circle drive swivel assembly and remove two preformed packings (49). Discard preformed packings.
19. Disconnect hose assembly (53) from elbow (51) and remove preformed packing (52). Discard preformed packing.
20. Remove elbow (51) and preformed packing (50). Discard preformed packing.
21. Disconnect hose assembly (54) from elbow (56) and remove preformed packing (55). Discard preformed packing.
22. Remove elbow (56) and preformed packing (57). Discard preformed packing.

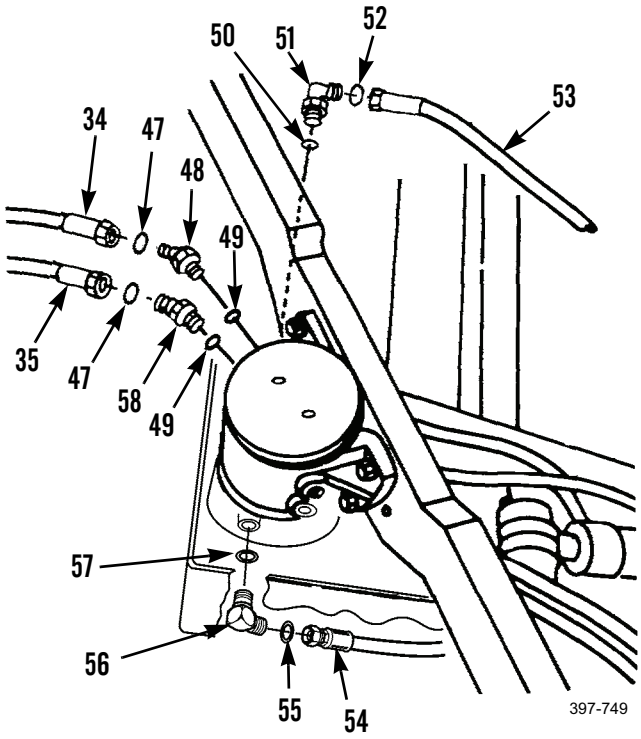

### *REMOVAL - CONTINUED*

23. Remove two bolts (59) and clamps (60) from hose assemblies (53 and 54).

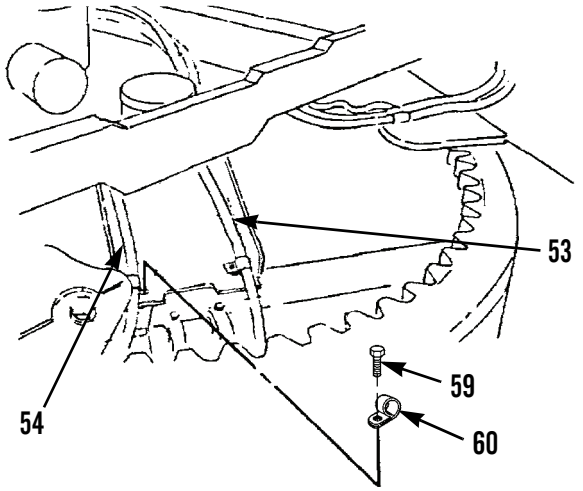


24. Disconnect hose assembly (54) from elbow (62) and remove preformed packing (61). Discard preformed packing.
25. Remove hose assembly (54) from machine.
26. Remove elbow (62) and preformed packing (63) from cylinder. Discard preformed packing.
27. Disconnect hose assembly (53) from connector (65) and remove preformed packing (64). Discard preformed packing.
28. Remove hose assembly (53) from machine.
29. Remove connector (65) and preformed packing (66) from end of cylinder. Discard preformed packing.

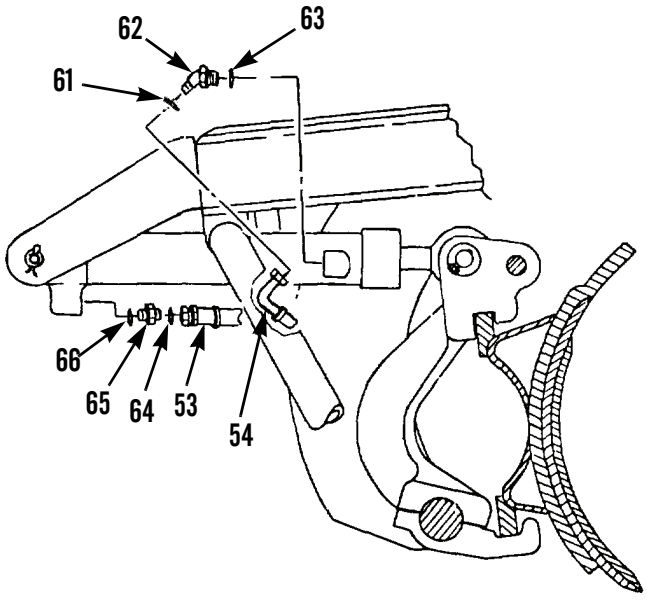


### *CLEANING AND INSPECTION*

Clean and inspect all parts in accordance with WP 0020 00.

***INSTALLATION***

**NOTE**

Lightly lubricate all preformed packings with clean oil before installation.

1. Install new preformed packing (66) and connector (65) to end of blade tip cylinder.
2. Position hose assembly (53) to machine.
3. Install new preformed packing (64) and connect hose assembly (53) to connector (65).
4. Install new preformed packing (63) and elbow (62) on rod end of blade tip cylinder.
5. Position hose assembly (54) on machine.
6. Install new preformed packing (61) and connect hose assembly (54) to elbow (62).
7. Install two clamps (60) and bolts (59) on hose assemblies (53 and 54).
8. Install new preformed packing (57) and elbow (56) on circle drive swivel assembly.
9. Install new preformed packing (55) and connect hose assembly (54) to elbow (56).
10. Install new preformed packings (50) and elbows (51) on circle drive swivel assembly.
11. Install new preformed packing (52) and connect hose assembly (53) to elbow (51).
12. Install two new preformed packing (49) and install elbows (48 and 58) on circle drive swivel assembly.
13. Position hose assemblies (34 and 35) on machine.
14. Install two new preformed packings (47) and connect hose assemblies (34 and 35) to elbows (48 and 58).

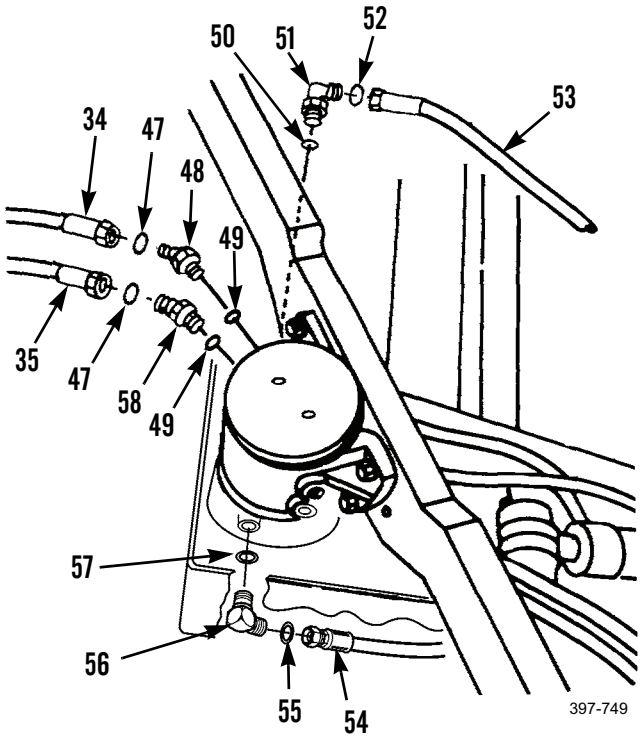

***INSTALLATION - CONTINUED***

15. Install clamp (46), washer (45), and bolt (44) to inner-right side of drawbar.
16. Install clamp (43), washer (42), and bolt (41).

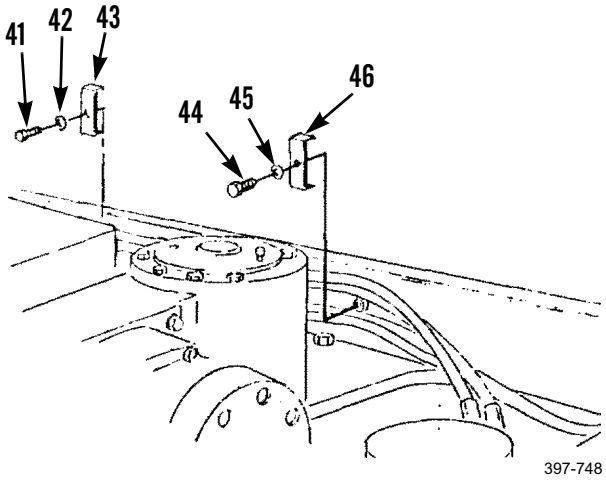


17. Install two plates (39), clamps (41), two washers (38), and bolts (37).

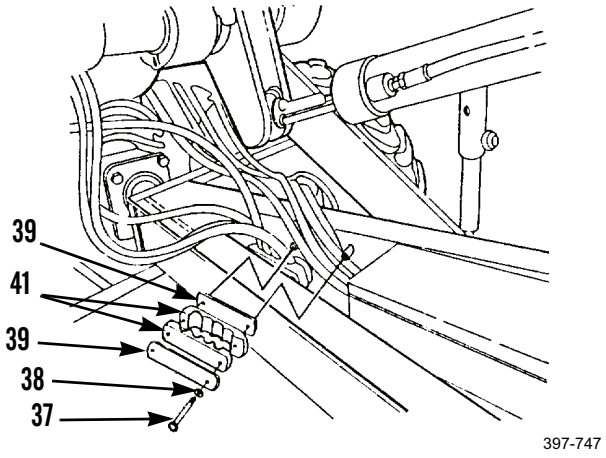

***INSTALLATION - CONTINUED***

18. Install two new preformed packings (31) and connectors (32 and 36) to blade tip check and relief valve in front-right side of front frame.
19. Install two new preformed packings (33) and connect hose assemblies (34 and 35) to connectors (32 and 36).

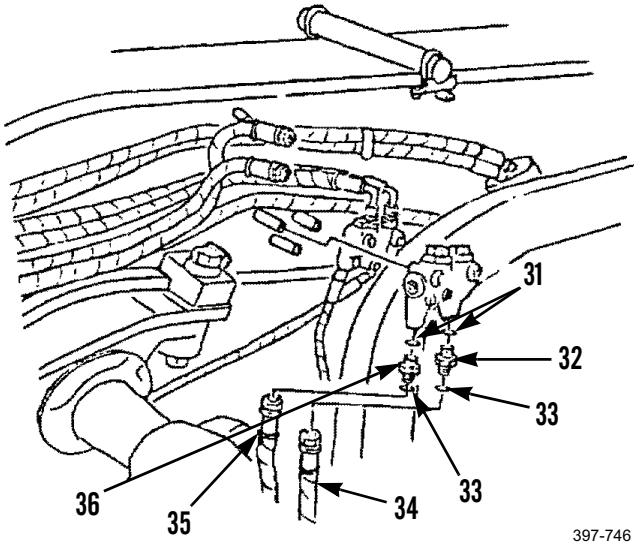


20. Install two new preformed packings (30) and elbows (28 and 29).
21. Position hose assemblies (1 and 2) on machine.
22. Install new preformed packings (27) and connect hose assemblies (1 and 2) to elbows (28 and 29).

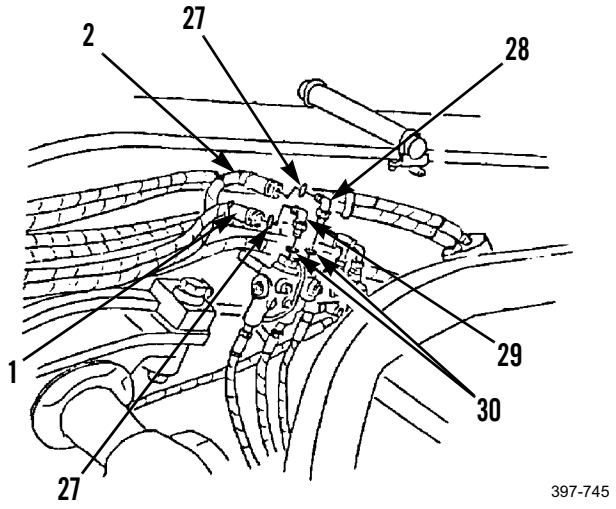

***INSTALLATION - CONTINUED***

23. Install two clamps (26), washers (25), and bolts (24) in center-right side of front frame.

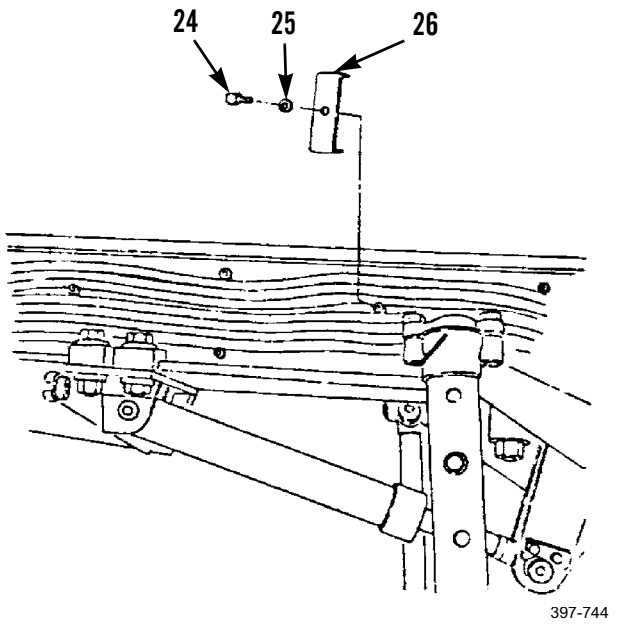

397-744

24. Install two spacers (22), clamps (23), washers (21), and bolts (20) in right-rear side of front frame.

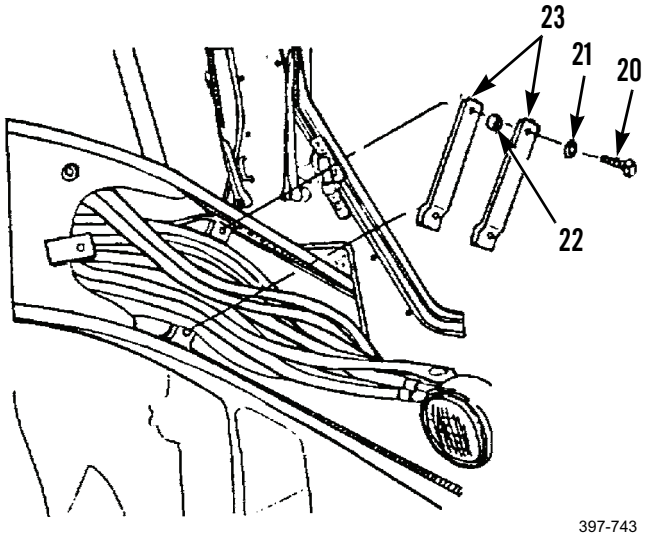

397-743

***INSTALLATION - CONTINUED***

25. Install two spacers (10), clamp (11), two washers (12), and bolts (13) under right-front side of cab.
26. Install two spacers (19), shim (18), two spacers (17), clamp (16), two washers (15), and bolts (14).

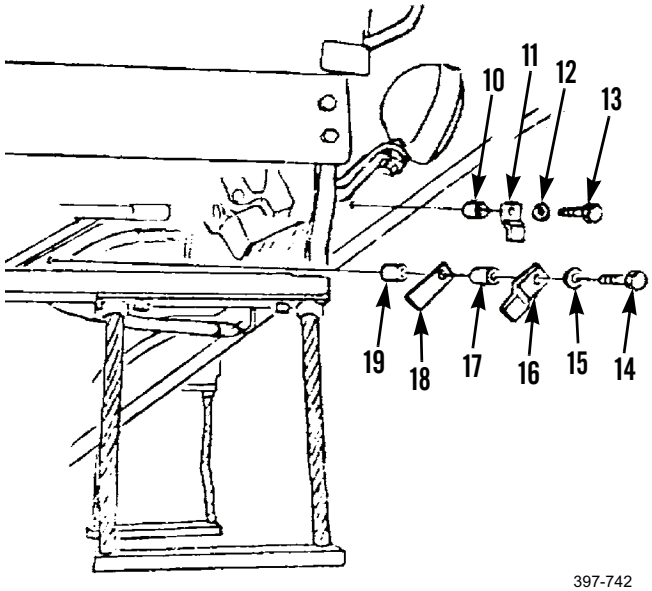


397-742

27. Install clamp (9), two washers (7), and nuts (8) under left side of cab.

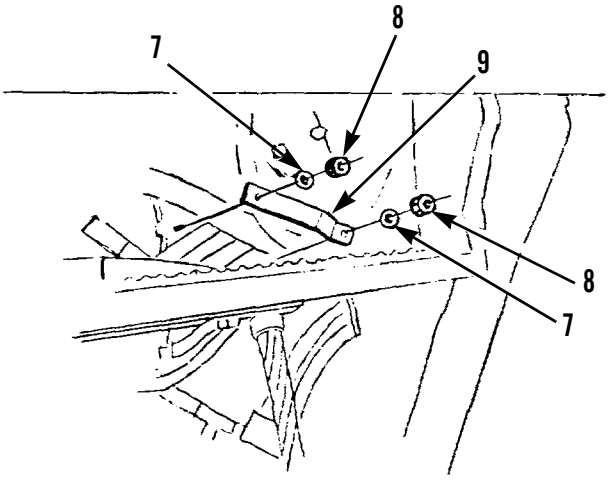


397-741

***INSTALLATION - CONTINUED***

28. Install new preformed packings (4) and elbows (5 and 6) to left control valve under left-front side of cab.

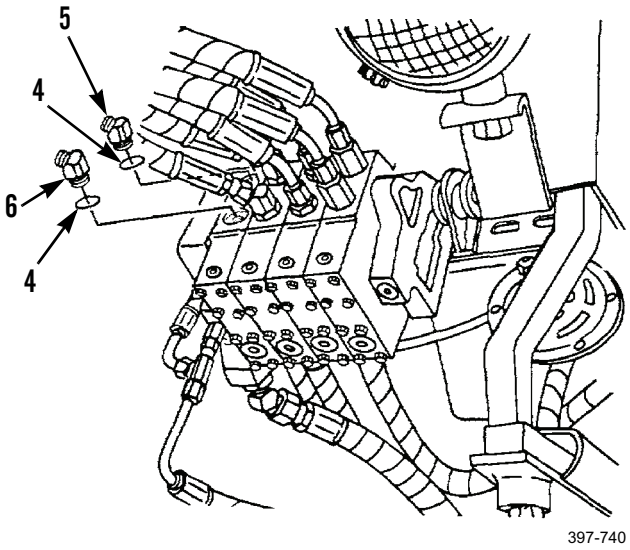

397-740

29. Install new preformed packings (3) and connect hose assemblies (1 and 2).

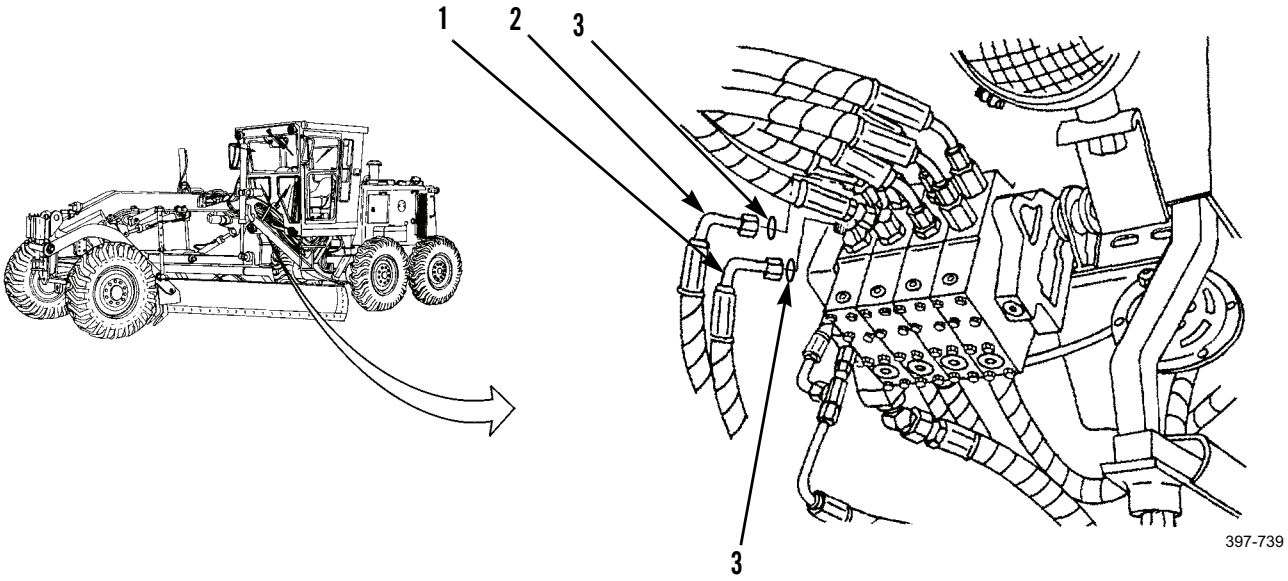

397-739

30. Start engine (TM 5-3805-261-10).
31. Operate control levers. Move system through at least five full-travel movements to bleed air from system.
32. Stop engine and check for leaks.
33. Install right frame covers (WP 0179 00).
34. Check hydraulic oil level and fill as necessary (WP 0216 00).

**END OF WORK PACKAGE**

## LEANING WHEEL HOSES AND FITTINGS REPLACEMENT 0224 00

## THIS WORK PACKAGE COVERS

Removal, Cleaning and Inspection, Installation

## INITIAL SETUP

**Maintenance Level**

Unit

**Tools and Special Tools**

Tool kit, general mechanic's (Item 89, WP 0348 00)

Shop equipment, common no. 1 (Item 75, WP 0348 00)

**Materials/Parts**

Cap set, protective (Item 7, WP 0349 00)

Rag, wiping (Item 35, WP 0349 00)

Strap, tie (Item 43, WP 0349 00)

Tag, marker (Item 44, WP 0349 00)

O-ring

Packing, preformed (8)

**References**

WP 0020 00

WP 0216 00

**Equipment Conditions**

Machine parked on level ground (TM 5-3805-261-10)

Parking/emergency brake applied (TM 5-3805-261-10)

Implements lowered to ground (TM 5-3805-261-10)

Engine off (TM 5-3805-261-10)

Battery disconnect switch in OFF position (TM 5-3805-261-10)

Leaning wheel lock pin installed (TM 5-3805-261-10)

Right side front frame cover removed (WP 0179 00)

Blade lift hoses disconnected (WP 0222 00)

Scarifier hoses disconnected (WP 0229 00)

## LEANING WHEEL HOSES AND FITTINGS REPLACEMENT - CONTINUED 0224 00

***REMOVAL***

**CAUTION**

Cap hose ends and plug open ports to prevent contamination.

**NOTE**

Tag hose assemblies before disconnecting to aid in installation.

1. Disconnect hoses (1 and 2).
2. Remove O-ring (3), connector (4), preformed packing (5), O-ring (8), connector (7), and preformed packing (6). Discard O-rings and preformed packings.

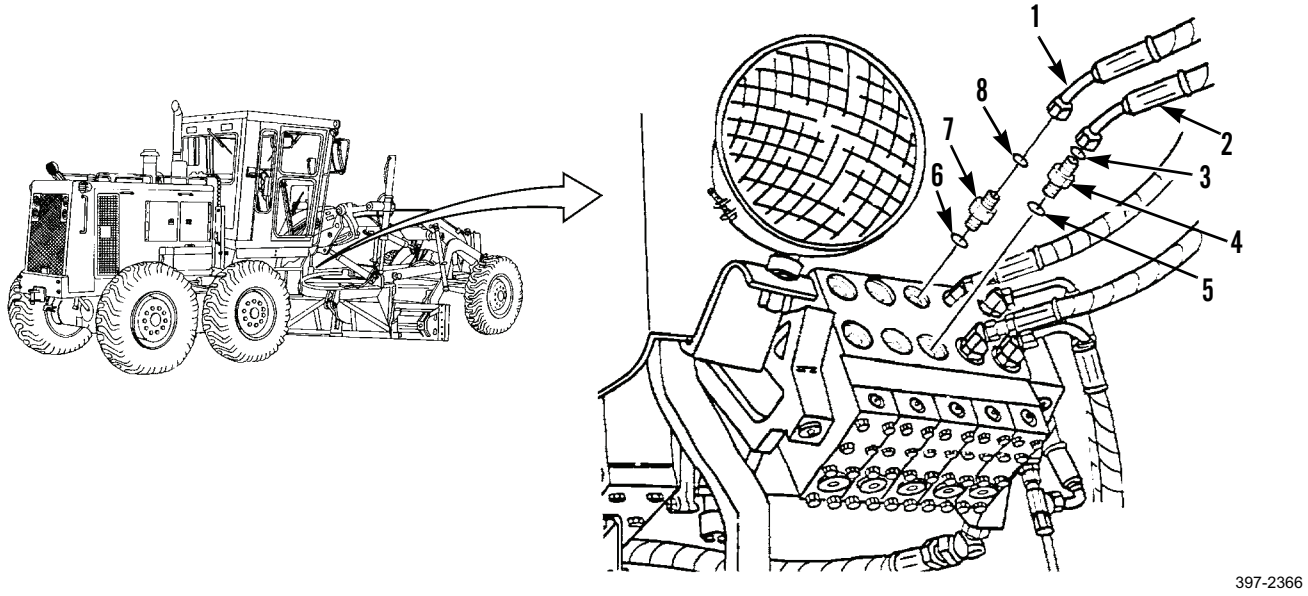


397-2366

3. Remove two bolts (16), washers (17), clamp (12), two spacers (13 and 15), and clamp (14).

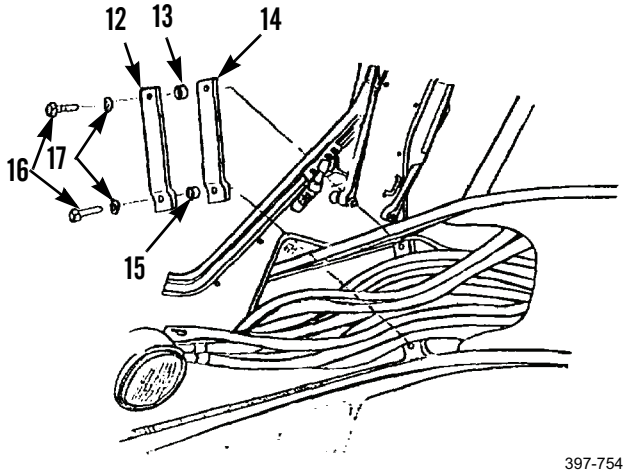


397-754

***REMOVAL - CONTINUED***

4. Remove bolt (11), washer (9), and clamp (10) from right-center section of frame.

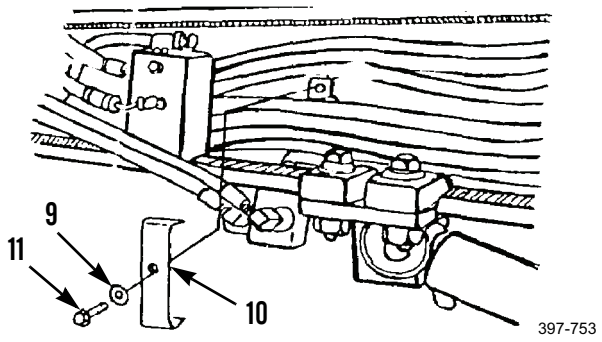


5. Remove bolt (19), washer (18), and clamp (20) from right-forward section of frame.

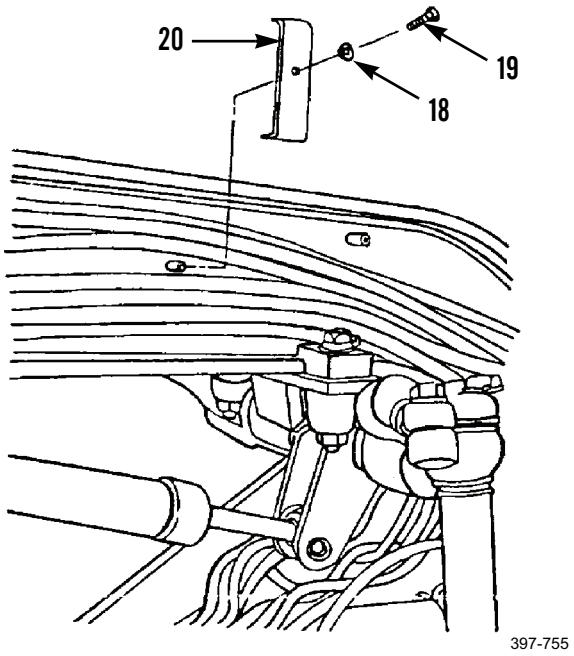

## LEANING WHEEL HOSES AND FITTINGS REPLACEMENT - CONTINUED 0224 00

### *REMOVAL - CONTINUED*

6. Remove bolt (28), washer (27), and clip (21) from frame.
7. Remove hoses (1 and 2) and O-rings (22 and 29) from elbows (23 and 26). Discard O-rings.
8. Remove hoses (1 and 2) from frame.
9. Remove elbow (23), preformed packing (24), elbow (26), and preformed packing (25). Discard preformed packings.

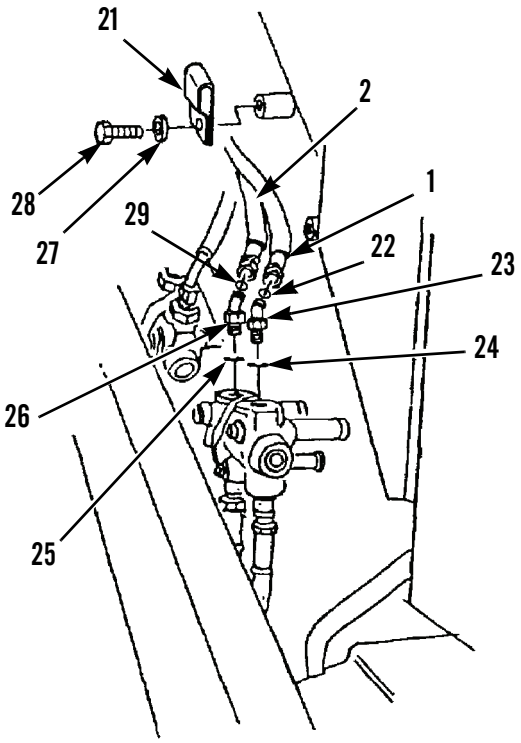


10. Disconnect hoses (38 and 40) and O-rings (36 and 37) from bottom of leaning wheel check and relief valve (31). Discard O-rings.
11. Remove connector (35), preformed packing (34), connector (33), and preformed packing (32). Discard preformed packings.
12. Remove and discard tie strap (39).
13. Remove hoses (38 and 40) and O-rings (41 and 45) from leaning hydraulic cylinder (44). Discard O-rings.
14. Remove elbow (30), preformed packing (46), elbow (42), and preformed packing (43) from leaning wheel hydraulic cylinder (44). Discard preformed packings.

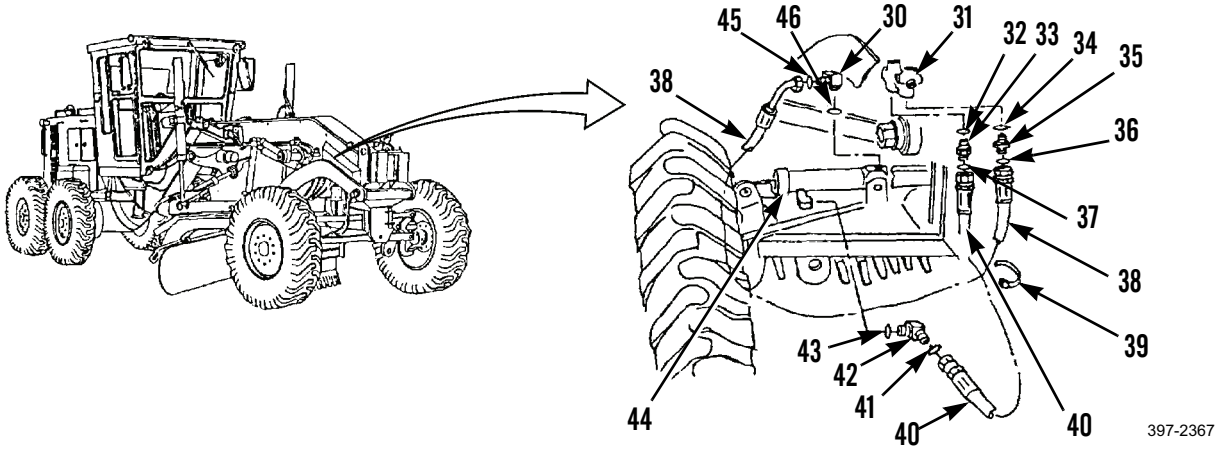

### *CLEANING AND INSPECTION*

Clean and inspect all parts in accordance with WP 0020 00.

### *INSTALLATION*

1. Install new preformed packing (43), elbow (42), new O-ring (41), new preformed packing (46), new O-ring (45), and elbow (30) on leaning wheel hydraulic cylinder (44).
2. Connect hoses (38 and 40).
3. Install new tie strap (39).
4. Install new preformed packing (32), connector (33), new O-ring (37), new preformed packing (34), connector (35), and new O-ring (36).
5. Install hoses (38 and 40) to bottom of leaning wheel check and relief valve (31).
6. Install new preformed packing (25), elbow (26), new preformed packing (24) and elbow (23).
7. Install new O-rings (29 and 22) on elbows (26 and 23).
8. Position hoses (1 and 2) on frame and connect to elbows (26 and 23).
9. Install clip (21), washer (27), and bolt (28) on frame.
10. Install clamp (20), washer (18), and bolt (19) on right-forward section of frame.

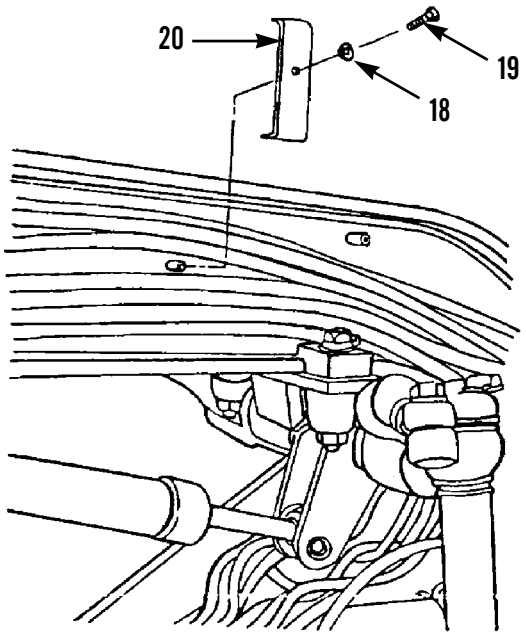

397-755

***INSTALLATION - CONTINUED***

11. Install clamp (10), washer (9), and bolt (11) on right-center section of frame.

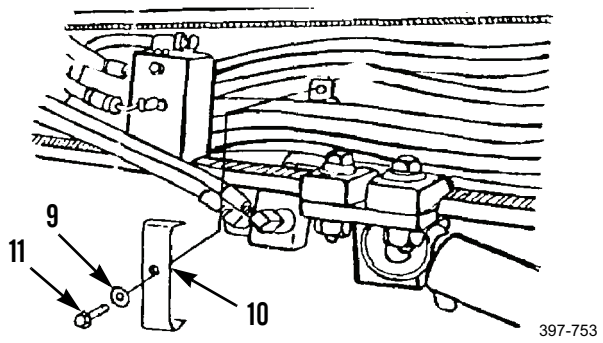


12. Install clamp (14), spacers (13 and 15), clamp (12), two washers (17), and bolts (16).

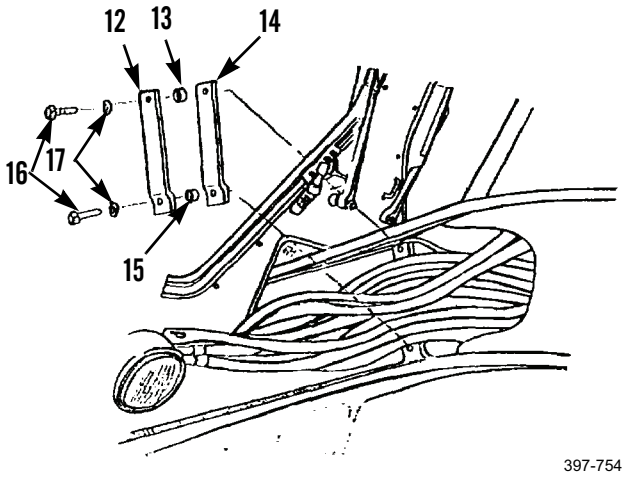

## LEANING WHEEL HOSES AND FITTINGS REPLACEMENT - CONTINUED 0224 00

### *INSTALLATION - CONTINUED*

13. Install new preformed packing (6), connector (7), new O-ring (8), new preformed packing (5), connector (4), and new O-ring (3).
14. Install hoses (1 and 2).

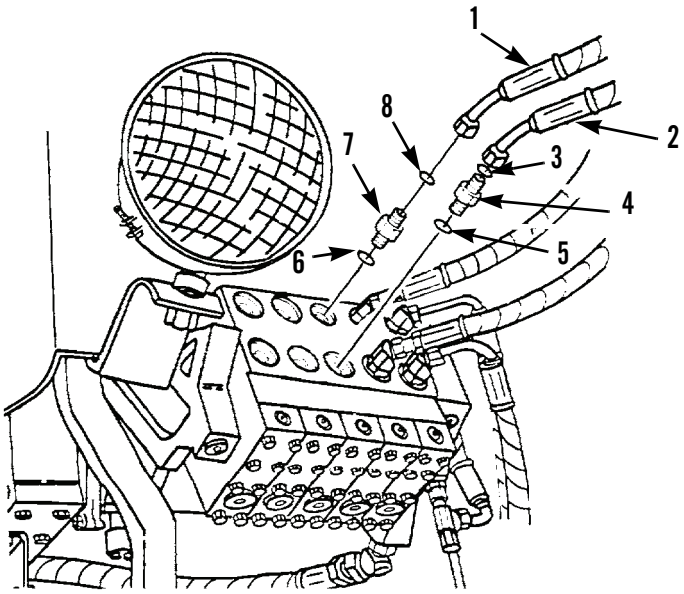


397-752

15. Connect blade lift hoses (WP 0222 00).
16. Connect scarifier hoses (WP 0229 00).
17. Remove leaning wheel lock pin (TM 5-3805-261-10).
18. Check lever of hydraulic tank and refill to proper level (WP 0216 00).
19. Start engine (TM 5-3805-261-10).
20. Operate control levers. Move system through at least five full movements of travel to bleed air from system.
21. Stop engine.
22. Check for leaks.
23. Install right side front frame cover (WP 0179 00).

**END OF WORK PACKAGE**

## CIRCLE DRIVE MOTOR HOSES AND FITTINGS REPLACEMENT 0225 00

### THIS WORK PACKAGE COVERS

Removal, Cleaning and Inspection, Installation

### INITIAL SETUP

**Maintenance Level**

Unit

**Tools and Special Tools**

Tool kit, general mechanic's (Item 89, WP 0348 00)

Shop equipment, common no. 1 (Item 75, WP 0348 00)

**Materials/Parts**

Cap set, protective (Item 7, WP 0349 00)

Rag, wiping (Item 35, WP 0349 00)

Tag, marker (Item 44, WP 0349 00)

O-ring (8)

Packing, preformed (8)

**References**

WP 0202 00

WP 0216 00

**Equipment Conditions**

Machine parked on level ground (TM 5-3805-261-10)

Parking/emergency brake applied (TM 5-3805-261-10)

Implements lowered to ground (TM 5-3805-261-10)

Engine off (TM 5-3805-261-10)

Battery disconnect switch in OFF position (TM 5-3805-261-10)

Hydraulic pressure relieved (WP 0020 00)

Left side front frame covers removed (WP 0179 00)

Blade lift hoses disconnected (WP 0222 00)

Sideshift hoses disconnected (WP 0228 00)

***REMOVAL***

## CAUTION

Cap hose ends and plug open ports to prevent contamination.

## NOTE

Tag hose assemblies before disconnecting to aid in installation.

1. Disconnect hose assemblies (1 and 8).
2. Remove O-ring (7), connector (6), preformed packing (5), O-ring (2), connector (4), and preformed packing (3). Discard preformed packings and O-rings.

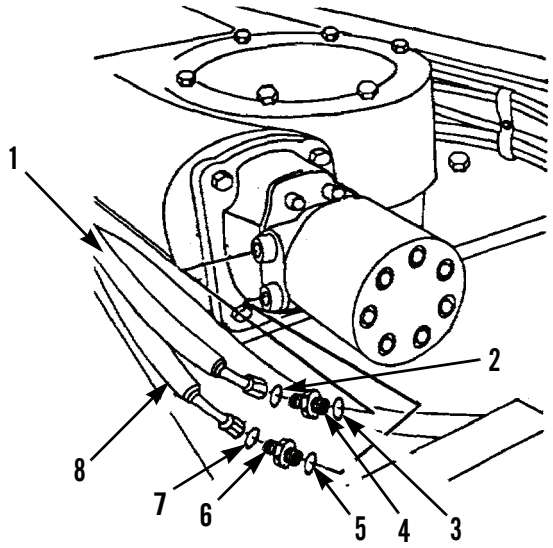


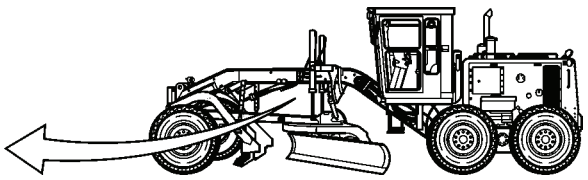

397-2373

## NOTE

It may be necessary to remove toolbox to access bolt (WP 0202 00).

3. Remove bolt (10), washer (11), and clamp (9).

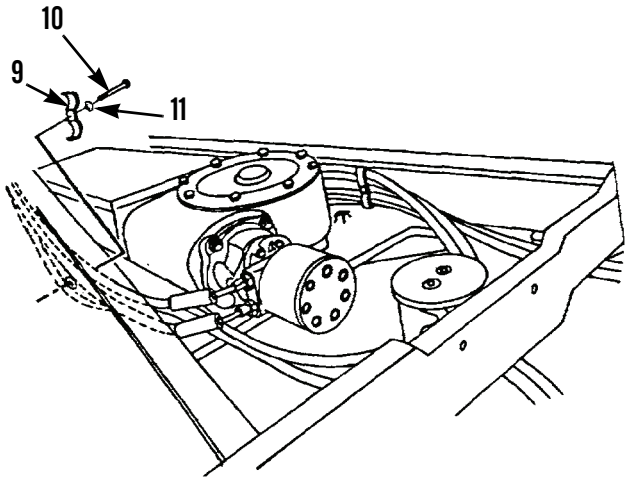


397-759

***REMOVAL - CONTINUED***

4. Remove two bolts (12), washers (13), plates (14), and clamps (15).

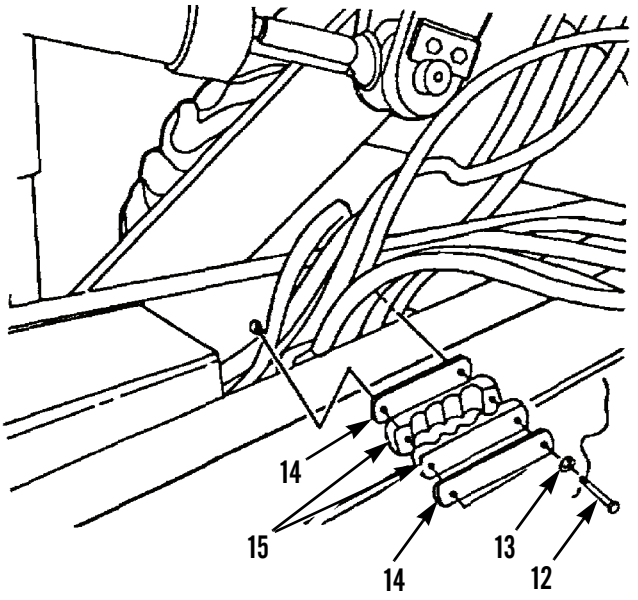

397-760

5. Remove hose assemblies (1 and 8).
6. Remove O-rings (16 and 17), connectors (18 and 19), and preformed packings (20 and 21) from bottom of check valve (22). Discard O-rings and preformed packings.

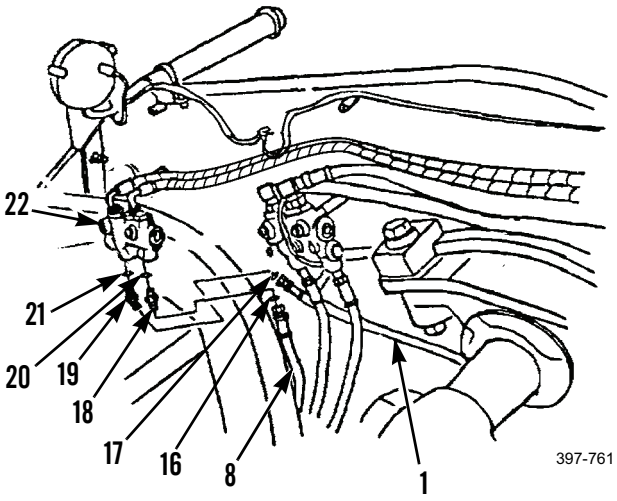

397-761

***REMOVAL - CONTINUED***

7. Disconnect hose assemblies (27 and 28).
8. Remove O-rings (24 and 30), connectors (23 and 25), and preformed packings (26 and 29) from top of check valve (22). Discard O-rings and preformed packings.

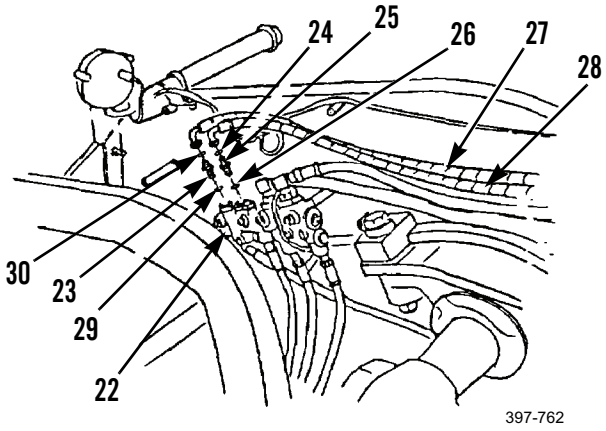

397-762

9. Remove two bolts (31), washers (33), and clamps (32).

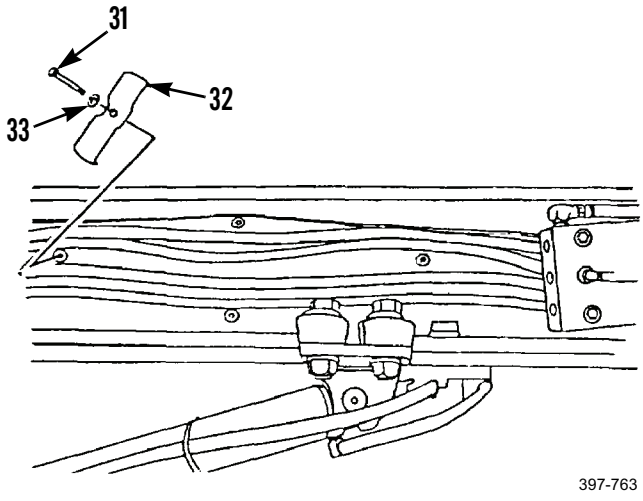

397-763

***REMOVAL - CONTINUED***

10. Remove two bolts (37), washers (36), clamps (34), and spacers (35).

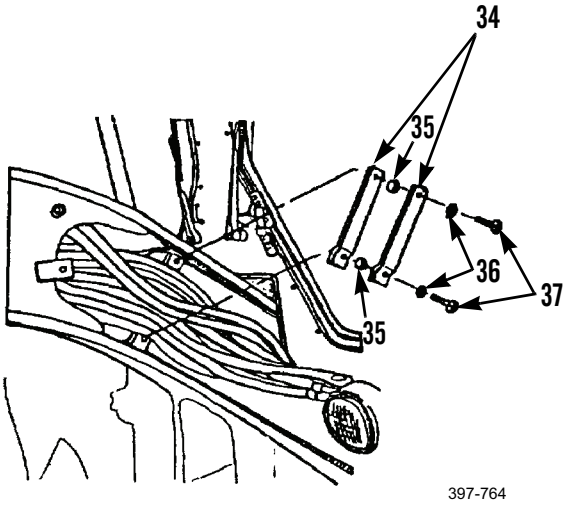


11. Remove hose assemblies (28 and 27) and O-rings (38 and 39). Discard O-rings.
12. Remove hose assemblies (28 and 27) from frame.

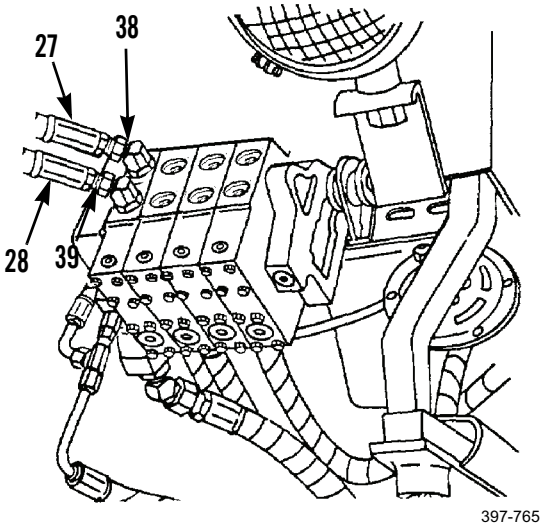

### *REMOVAL - CONTINUED*

13. Remove two elbows (40 and 43) and preformed packings (41 and 42). Discard preformed packings.

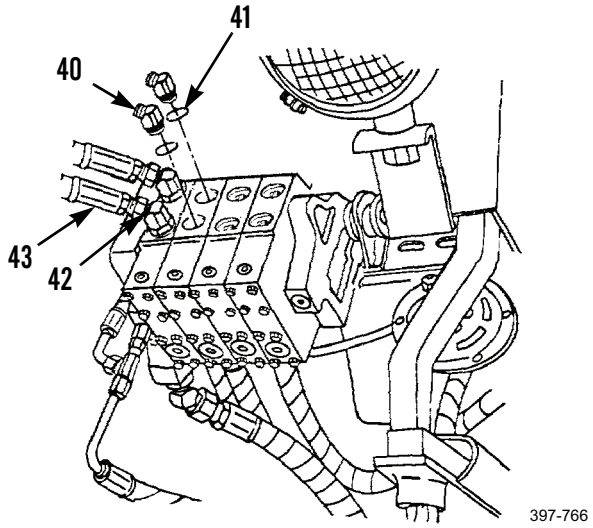


### *CLEANING AND INSPECTION*

Clean an inspect all parts in accordance with WP 0020 00.

### *INSTALLATION*

1. Install two new preformed packings (41 and 42) and elbows (40 and 43).
2. Position hose assemblies (27 and 28) on frame.
3. Connect hose assemblies (27 and 28) and new O-rings (38 and 39).

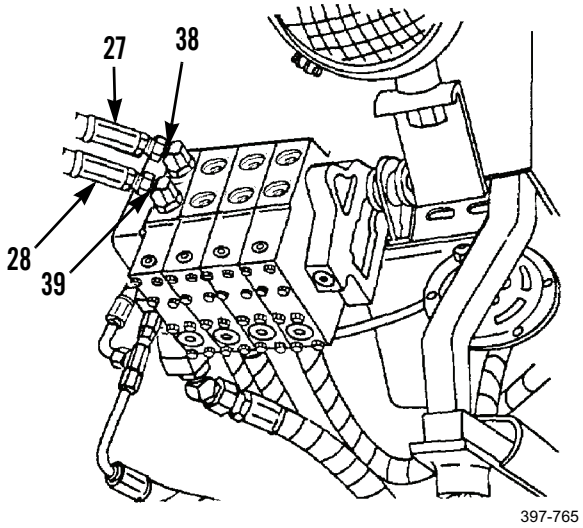

***INSTALLATION - CONTINUED***

4. Install two spacers (35), clamps (34), washers (36), and bolts (37).

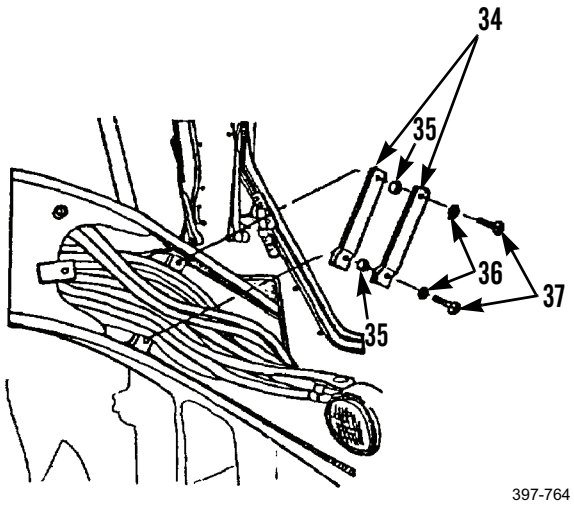

397-764

5. Install two clamps (32), washers (33), and bolts (31).

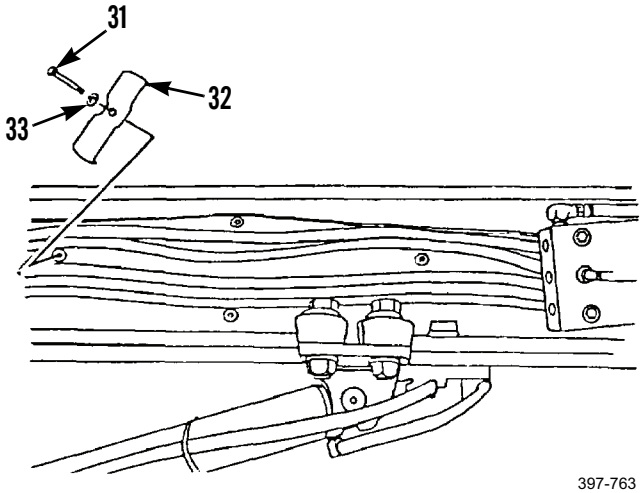

397-763

***INSTALLATION - CONTINUED***

6. Install new preformed packings (26 and 29), connectors (23 and 25), and new O-rings (24 and 30) on top of check valve (22).
7. Install hose assemblies (27 and 28).

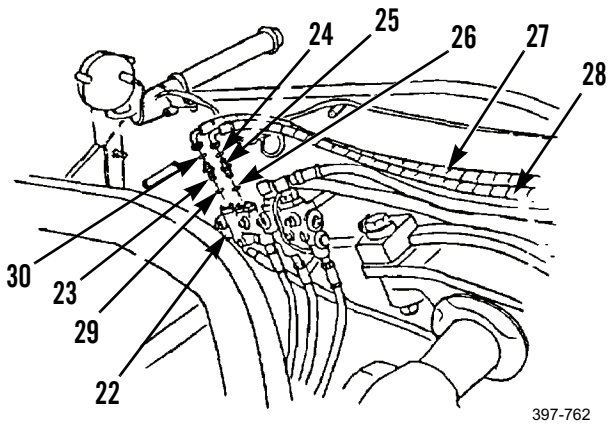


8. Install new preformed packings (20 and 21), connectors (18 and 19), and new O-rings (16 and 17) on bottom of check valve (22).
9. Connect hose assemblies (1 and 8).

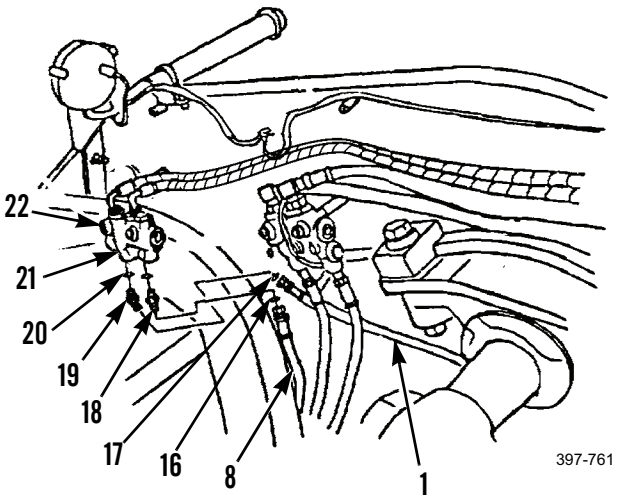

***INSTALLATION - CONTINUED***

10. Install two clamps (15), plates (14), washers (13), and bolts (12).

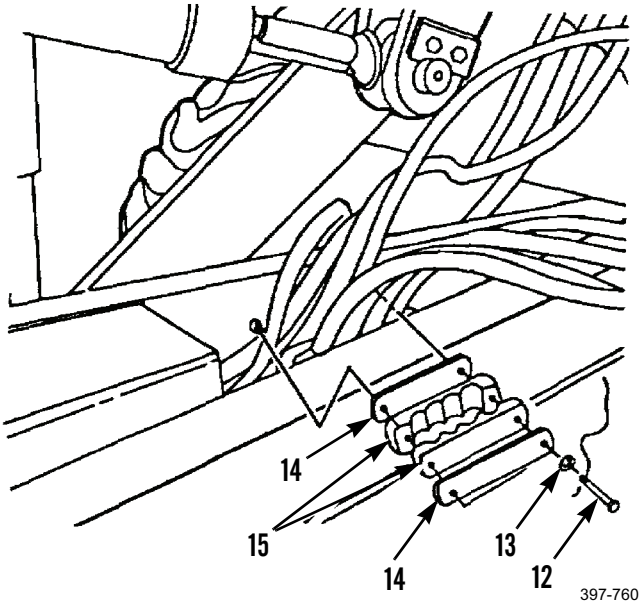


11. Install clamp (9), washer (11), and bolt (10).

**NOTE**

Install toolbox if removed (WP 0202 00).

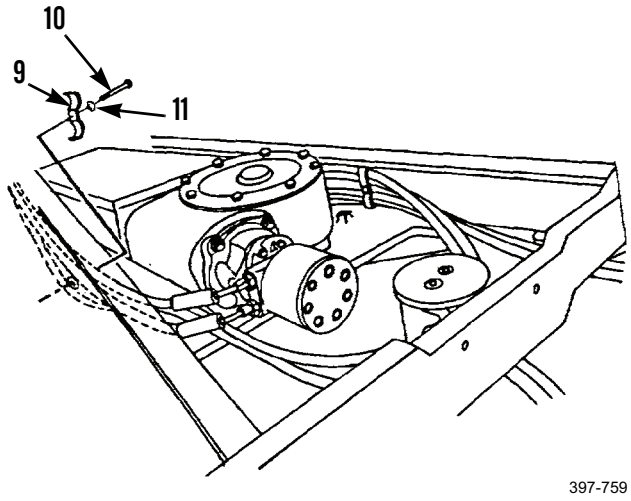

***INSTALLATION - CONTINUED***

12. Install new preformed packing (3), connector (4), new O-ring (2), new preformed packing (5), connector (6), and new O-ring (7).
13. Install hose assemblies (1 and 8).
14. Connect sideshift hoses (WP 0228 00).
15. Connect blade lift hoses (WP 0222 00).

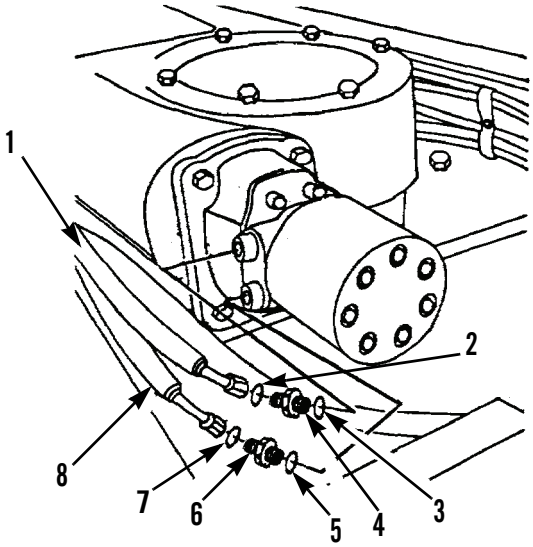

397-2373

16. Check level of hydraulic tank and fill as necessary (WP 0216 00).
17. Start engine (TM 5-3805-261-10).
18. Operate control levers. Move system through at least five-full movements of travel to bleed air from system.
19. Stop engine and check for leaks.
20. Install left side front frame covers (WP 0179 00).

**END OF WORK PACKAGE**

## CENTERSHIFT LINES, FITTINGS, AND HOSES REPLACEMENT 0226 00

### THIS WORK PACKAGE COVERS

Removal, Cleaning and Inspection, Installation

### INITIAL SETUP

**Maintenance Level**

Unit

**Tools and Special Tools**

Tool kit, general mechanic's (Item 89, WP 0348 00)

Shop equipment, common no. 1 (Item 75, WP 0348 00)

**Materials/Parts**

Cap set, protective (Item 7, WP 0349 00)

Rag, wiping (Item 35, WP 0349 00)

Tag, marker (Item 44, WP 0349 00)

O-ring (8)

Packing, preformed (8)

**References**

WP 0202 00

WP 0216 00

**Equipment Conditions**

Machine parked on level ground (TM 5-3805-261-10)

Parking/emergency brake applied (TM 5-3805-261-10)

Implements lowered to ground (TM 5-3805-261-10)

Engine off (TM 5-3805-261-10)

Battery disconnect switch in OFF position (TM 5-3805-261-10)

Hydraulic pressure relieved (WP 0020 00)

Right side front frame covers removed (WP 0179 00)

Scarfier hoses disconnected (WP 0229 00)

Blade lift hoses disconnected (WP 0222 00)

Wheel lean hoses disconnected (WP 0224 00)

***REMOVAL***

## CAUTION

Cap hose ends and plug open ports to prevent contamination.

## NOTE

Tag hose assemblies before disconnecting to aid in installation.

1. Disconnect hose assemblies (2 and 3) and remove O-rings (1 and 4) from right control valve group (5). Discard O-rings.

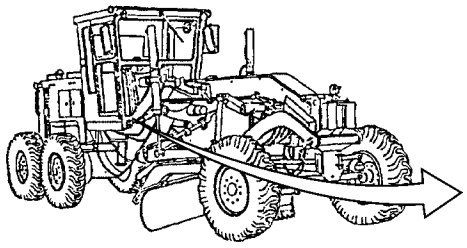

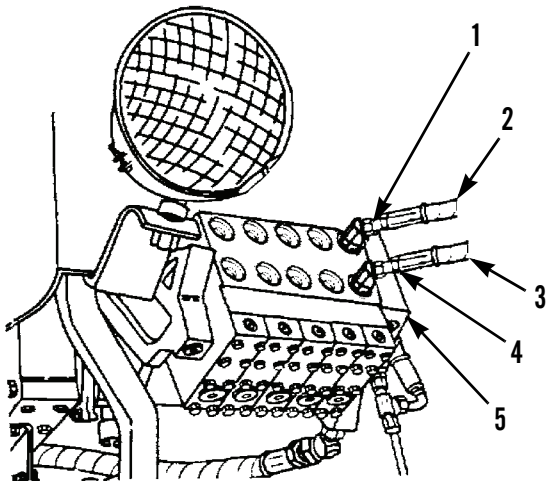


397-2374

2. Remove elbows (7 and 8) and preformed packings (6 and 9). Discard preformed packings.

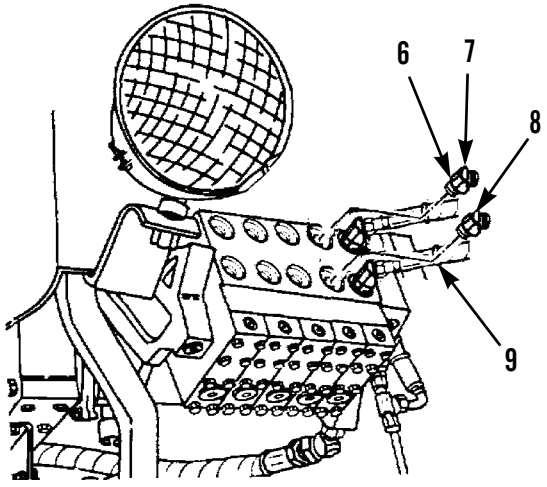


397-768

***REMOVAL - CONTINUED***

3. Remove two bolts (10), washers (11), and clamps (12 and 13).

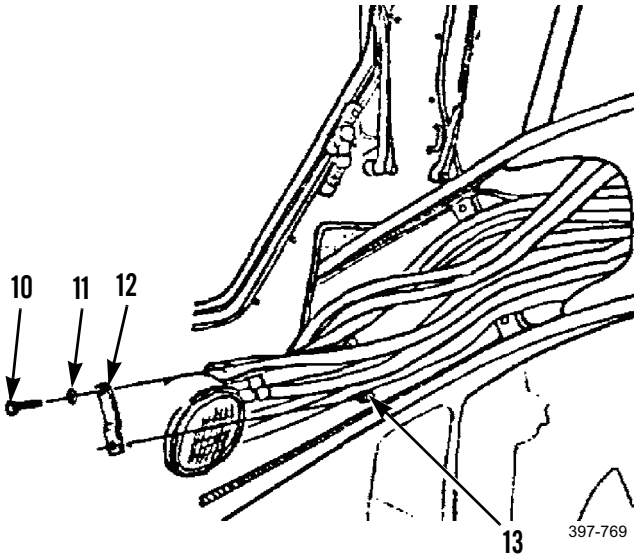


4. Remove two bolts (14), washers (15), and clamps (16).

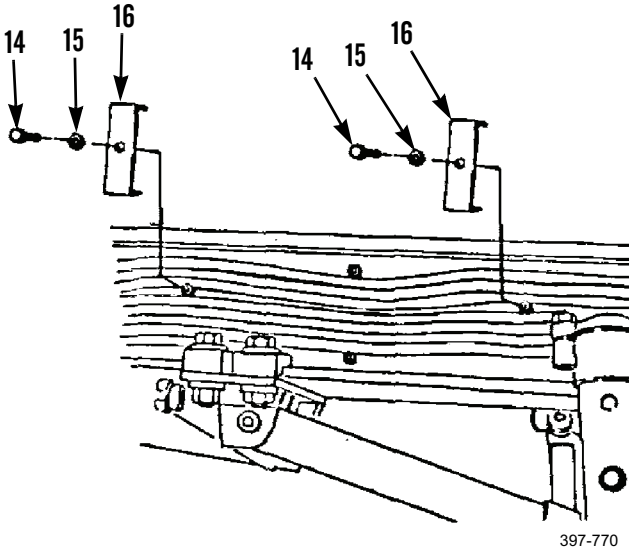

***REMOVAL - CONTINUED***

5. Remove hose assemblies (2 and 3), O-rings (17 and 22), connectors (18 and 21), and preformed packings (19 and 20). Discard O-rings and preformed packings.
6. Remove hose assemblies (2 and 3) from frame.

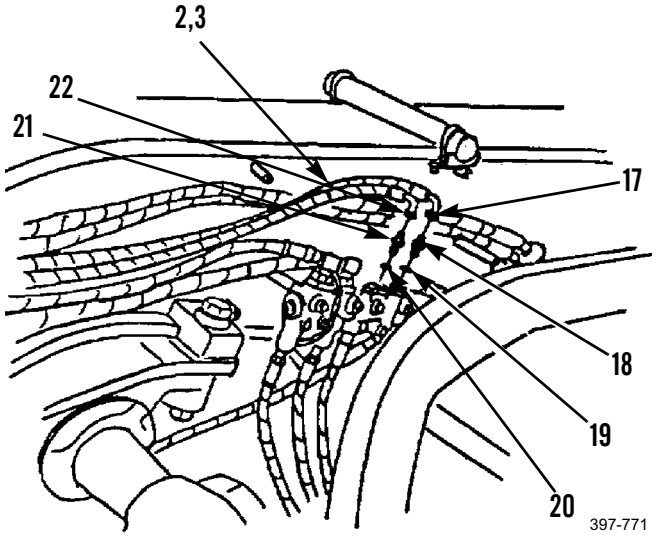


7. Disconnect hose assemblies (28 and 30) and remove O-rings (27 and 29), connectors (25 and 26), and preformed packings (23 and 24). Discard O-rings and preformed packings.

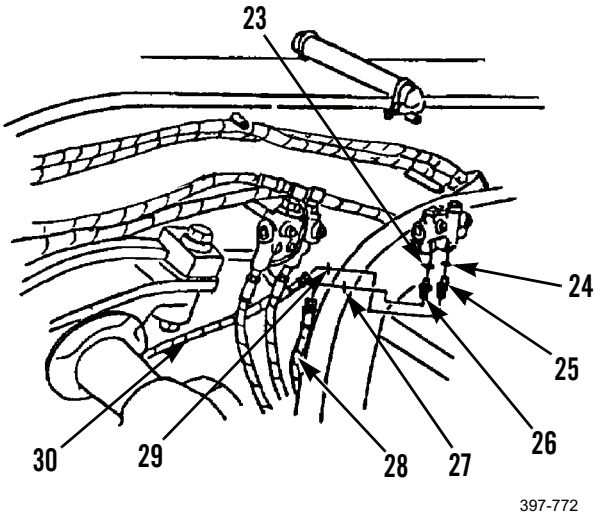

***REMOVAL - CONTINUED***

8. Remove bolts (33 and 34), washers (32 and 35), plates (36), and clamps (31).

**NOTE**

It may be necessary to remove toolbox to access bolts (WP 0202 00).

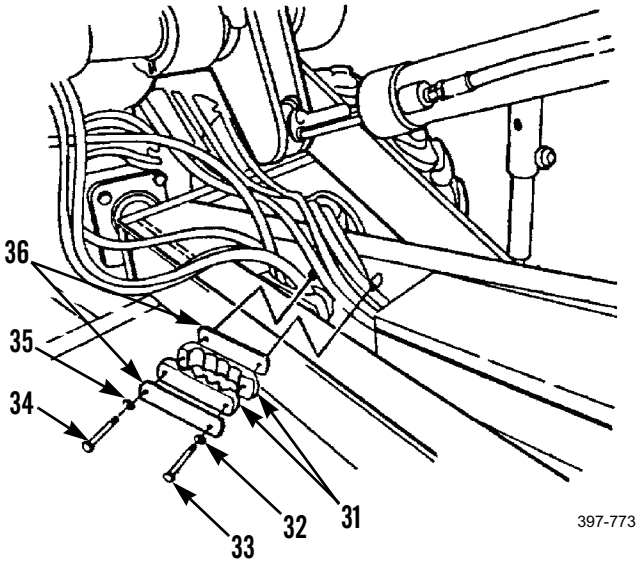


9. Remove bolt (42), washer (37), clamp (38), bolt (39), washer (40), and clamp (41).

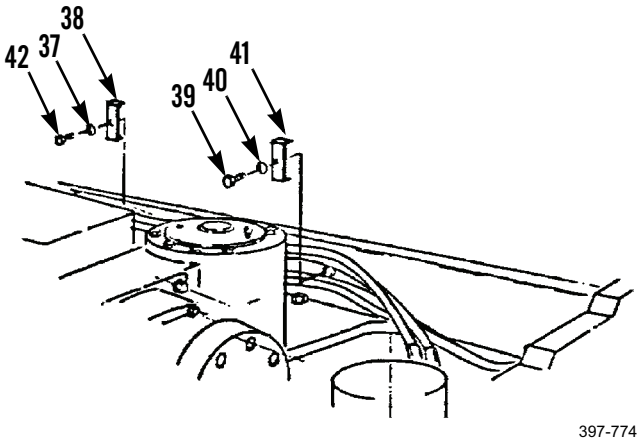

## CENTERSHIFT LINES, FITTINGS, AND HOSES REPLACEMENT - CONTINUED 0226 00

### *REMOVAL - CONTINUED*

10. Remove bolt (45), washer (44), and clamp (43).

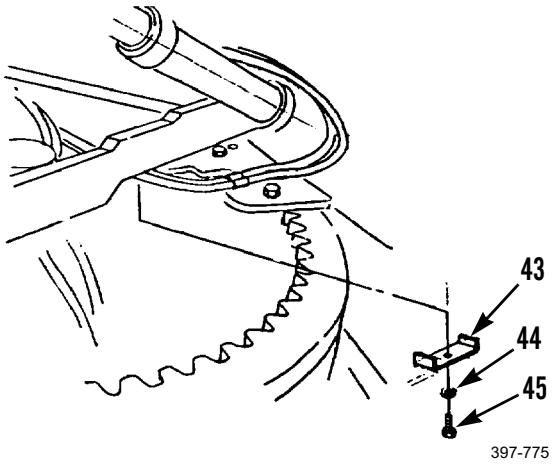


11. Remove bolt (53), washer (52), and two clips (51).
12. Remove nut (49), two clips (50), washer (47), and bolt (46).
13. Remove hose assembly (28), O-ring (48), elbow (55), and preformed packing (54). Discard preformed packing.

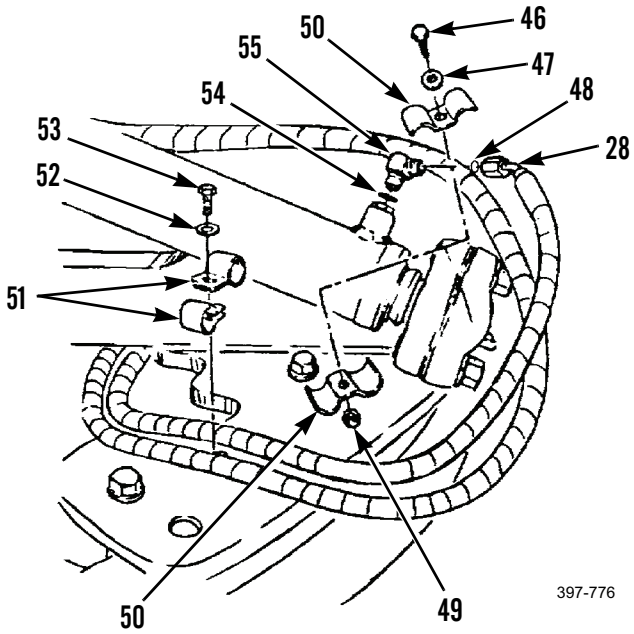

### *REMOVAL - CONTINUED*

14. Remove hose assembly (30), O-ring (58), connector (57), and preformed packing (56). Discard preformed packing.
15. Remove hose assemblies from machine.

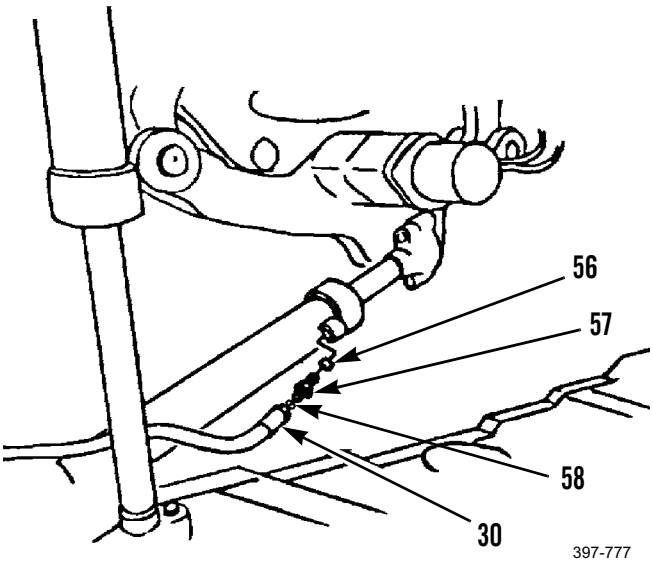


### *CLEANING AND INSPECTION*

Clean and inspect all parts in accordance WP 0020 00.

### *INSTALLATION*

1. Position hose assemblies on machine.
2. Install new preformed packing (56), connector (57), new O-ring (58), and hose assembly (30).
3. Install new preformed packing (54), elbow (55), new O-ring (48), and hose assembly (28).
4. Install bolt (46), washer (47), two clips (50), and nut (49).
5. Install two clips (51), washer (52), and bolt (53).
6. Install clamp (43), washer (44), and bolt (45).
7. Install clamp (41), washer (40), bolt (39), clamp (38), washer (37), and bolt (42).

**NOTE**

Install toolbox if removed (WP 0202 00).

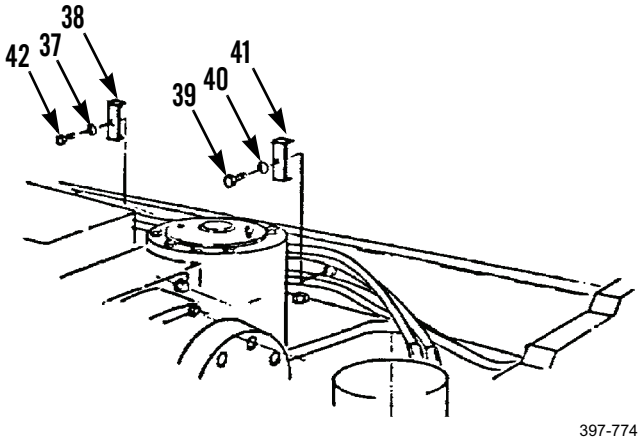

***INSTALLATION - CONTINUED***

8. Install two clamps (31), plates (36), washers (32 and 35), and bolts (33 and 34).
9. Position hose assemblies (28 and 30).

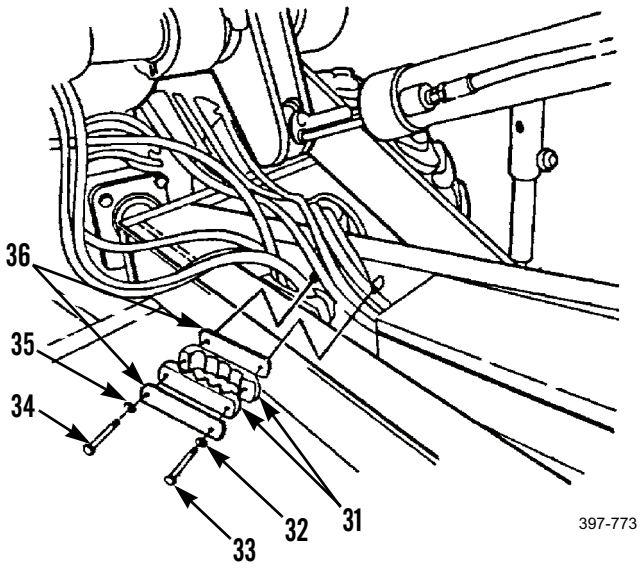


10. Install new preformed packings (23 and 24), connectors (25 and 26), new O-rings (27 and 29), and connect hose assemblies (28 and 30).

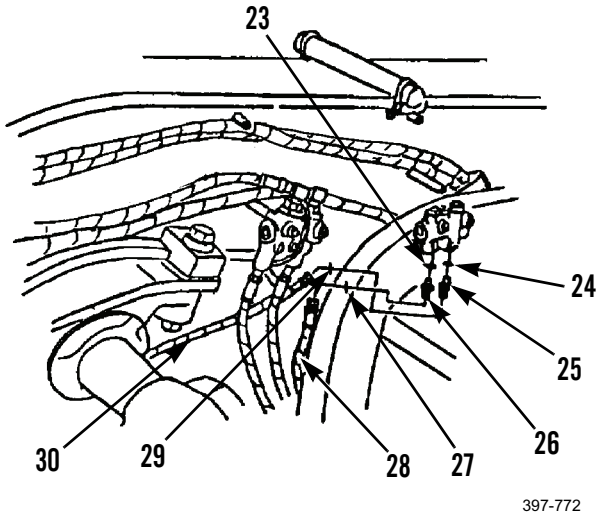

***INSTALLATION - CONTINUED***

11. Position hose assemblies ( 2and 3).
12. Install new preformed packings (19 and 20), connectors (18 and 21), new O-rings (17 and 22), and hose assemblies (2 and 3).

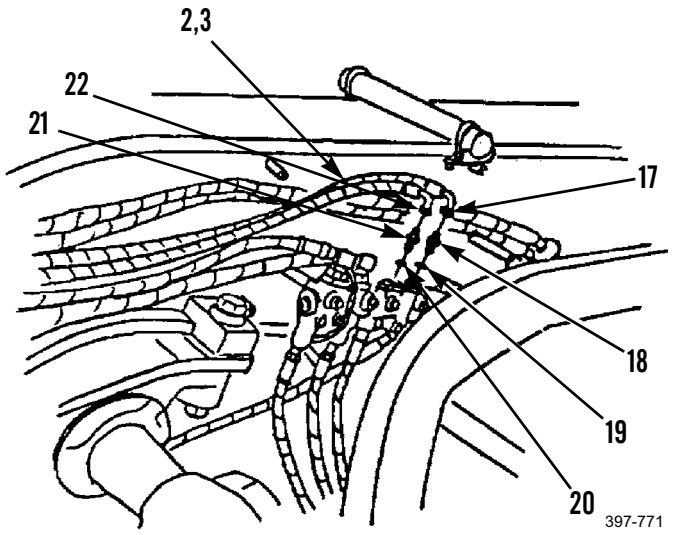


13. Install two clamps (16), washers (15), and bolts (14).

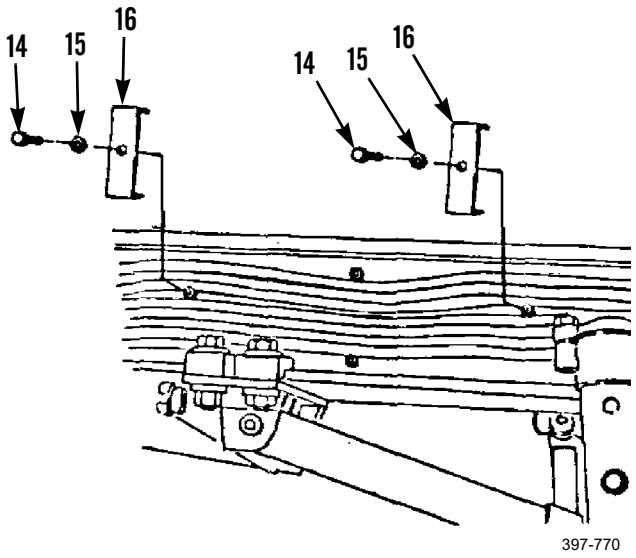

***INSTALLATION - CONTINUED***

14. Install clamps (12 and 13), washers (11), and bolts (10).

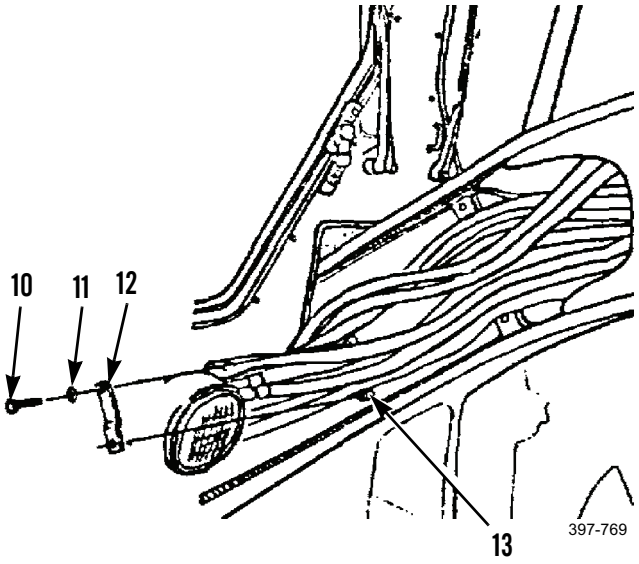


15. Install new preformed packings (6 and 9) and elbows (7 and 8).

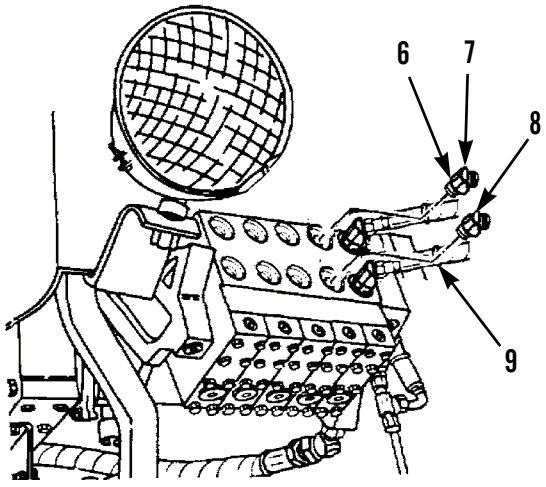

***INSTALLATION - CONTINUED***

16. Install new O-rings (1 and 4) and hose assemblies (2 and 3) on right control valve group (5).
17. Connect wheel lean hoses (WP 0224 00).
18. Connect blade lift hoses (WP 0222 00).
19. Connect scarifier hoses (WP 0229 00).

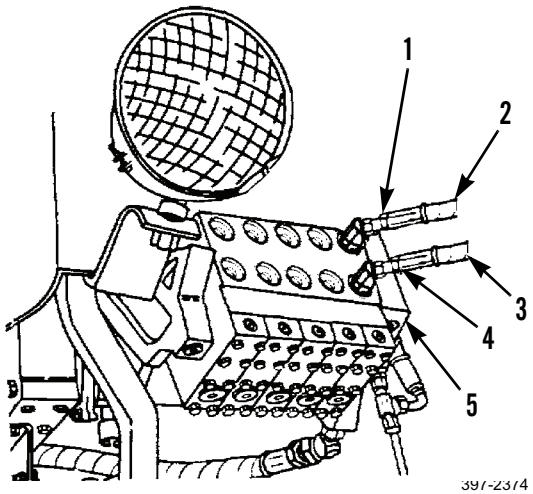


20. Check level of hydraulic tank and fill as necessary (WP 0216 00).
21. Start engine (TM 5-3805-261-10).
22. Operate control levers. Move system through at least five-full movements of travel to bleed air from system.
23. Stop engine.
24. Check for leaks.
25. Install right side front frame covers (WP 0179 00).

**END OF WORK PACKAGE**

## ARTICULATION LINES, FITTINGS, AND HOSES REPLACEMENT 0227 00

### THIS WORK PACKAGE COVERS

Removal, Cleaning and Inspection, Installation

### INITIAL SETUP

**Maintenance Level**

Unit

**Tools and Special Tools**

Tool kit, general mechanic's (Item 89, WP 0348 00)

Shop equipment, common no. 1 (Item 75, WP 0348 00)

**Materials/Parts**

Cap set, protective (Item 7, WP 0349 00)

Rag, wiping (Item 35, WP 0349 00)

Tag, marker (Item 44, WP 0349 00)

O-ring (16)

Packing, preformed (16)

**Equipment Conditions**

Machine parked on level ground (TM 5-3805-261-10)

Parking/emergency brake applied (TM 5-3805-261-10)

Implements lowered to ground (TM 5-3805-261-10)

Engine off (TM 5-3805-261-10)

Battery disconnect switch in OFF position (TM 5-3805-261-10)

Hydraulic pressure relieved (WP 0020 00)

Scarifier hoses disconnected (WP 0229 00)

Blade lift hoses disconnected (WP 0222 00)

Wheel lean hoses disconnected (WP 0224 00)

Centershift hoses disconnected (WP 0226 00)

***REMOVAL***

## CAUTION

Cap hose ends and plug open ports to prevent contamination.

## NOTE

Tag hose assemblies before disconnecting to aid in installation.

1. Disconnect hose assemblies (3 and 6) from right control valve group (1).
2. Remove O-ring (7), elbow (8), preformed packing (9), O-ring (4), elbow (5), and preformed packing (2). Discard O-rings and preformed packings.
3. Remove hose assemblies (3 and 6) from articulation check valve (14).
4. Remove hose assemblies (3 and 6) from machine.
5. Remove O-ring (16), elbow (15), preformed packing (13), new O-ring (10), elbow (11), and preformed packing (12). Discard O-rings and preformed packings.

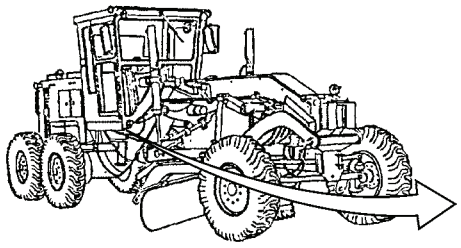

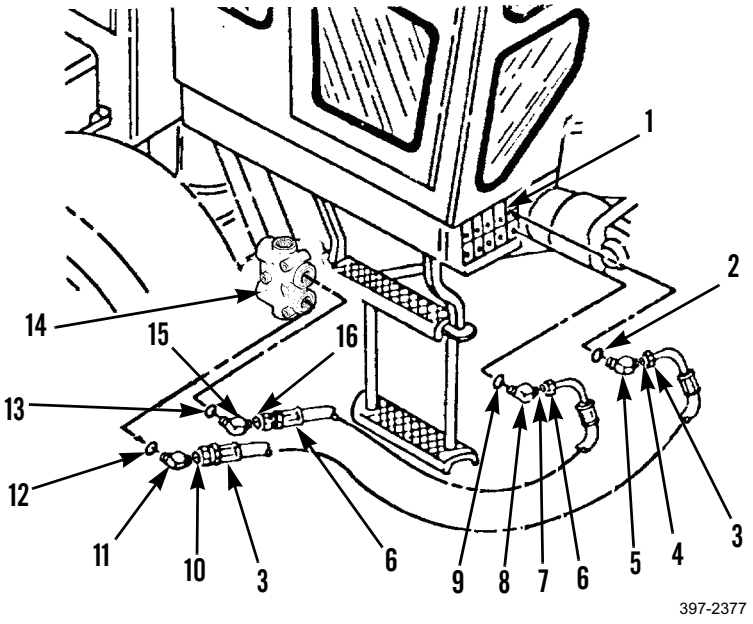

## ARTICULATION LINES, FITTINGS, AND HOSES REPLACEMENT - CONTINUED 0227 00

### *REMOVAL - CONTINUED*

6. Disconnect hose assemblies (17 and 24) from articulation check valve (14).
7. Remove O-ring (25), fitting (18), preformed packing (19), elbow (22), O-ring (23), fitting (21), and preformed packing (20). Discard O-rings and preformed packings.

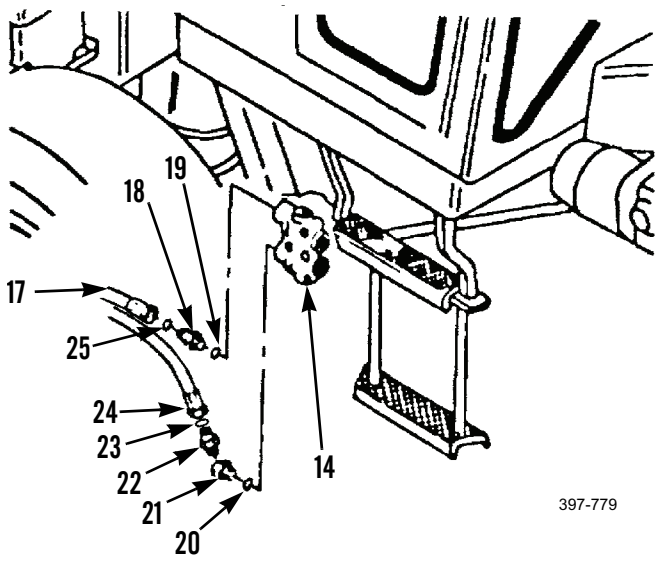


8. Remove hose assemblies (17 and 24) from centering valve (32).
9. Remove hose assemblies (17 and 24) from machine.
10. Remove O-ring (36), elbow (35), fitting (34), preformed packing (33), O-ring (43), elbow (44), fitting (45), and preformed packing (46). Discard O-rings and preformed packings.
11. Disconnect hose assemblies (26 and 27) from centering valve (32) on front side.
12. Remove two O-rings (28), elbows (29), fittings (30), and preformed packings (31). Discard O-rings and preformed packings.
13. Disconnect hose assemblies (38 and 39) from centering valve (32) on rear side.
14. Remove two O-rings (37), elbows (40), fittings (41), and preformed packings (42). Discard O-rings and preformed packings.

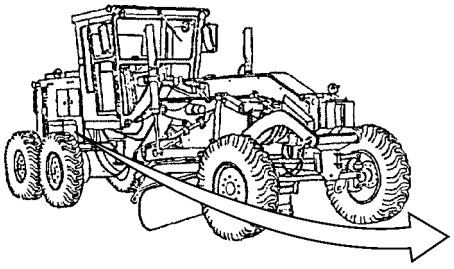

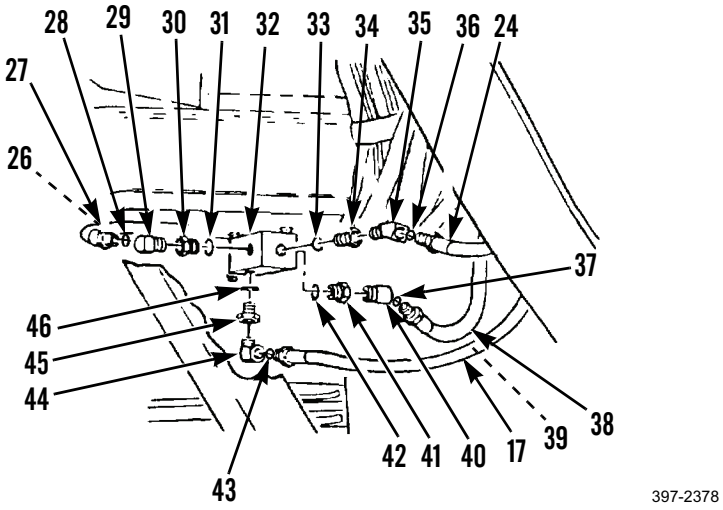

## ARTICULATION LINES, FITTINGS, AND HOSES REPLACEMENT - CONTINUED 0227 00

### *REMOVAL - CONTINUED*

15. Remove hose assemblies (26 and 27) from articulation cylinder (48).
16. Remove hose assemblies (26 and 27) from machine.
17. Remove O-ring (49), connector (50), preformed packing (51), O-ring (52), connector (47), and preformed packing (53). Discard O-rings and preformed packings.

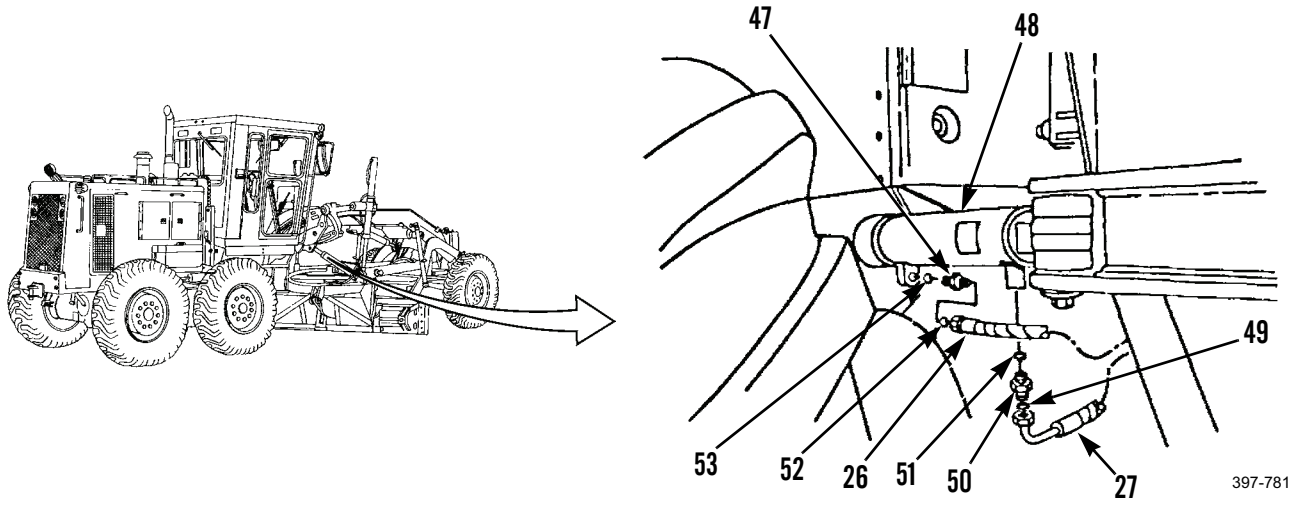


18. Remove bolt (62), washer (63), and clamp (54).
19. Remove hose assemblies (38 and 39) from articulation cylinder (57) under left side of engine compartment.
20. Remove hose assemblies (38 and 39) from machine.
21. Remove O-ring (61), connector (60), preformed packing (59), O-ring (58), connector (55), and preformed packing (56). Discard O-rings and preformed packings.

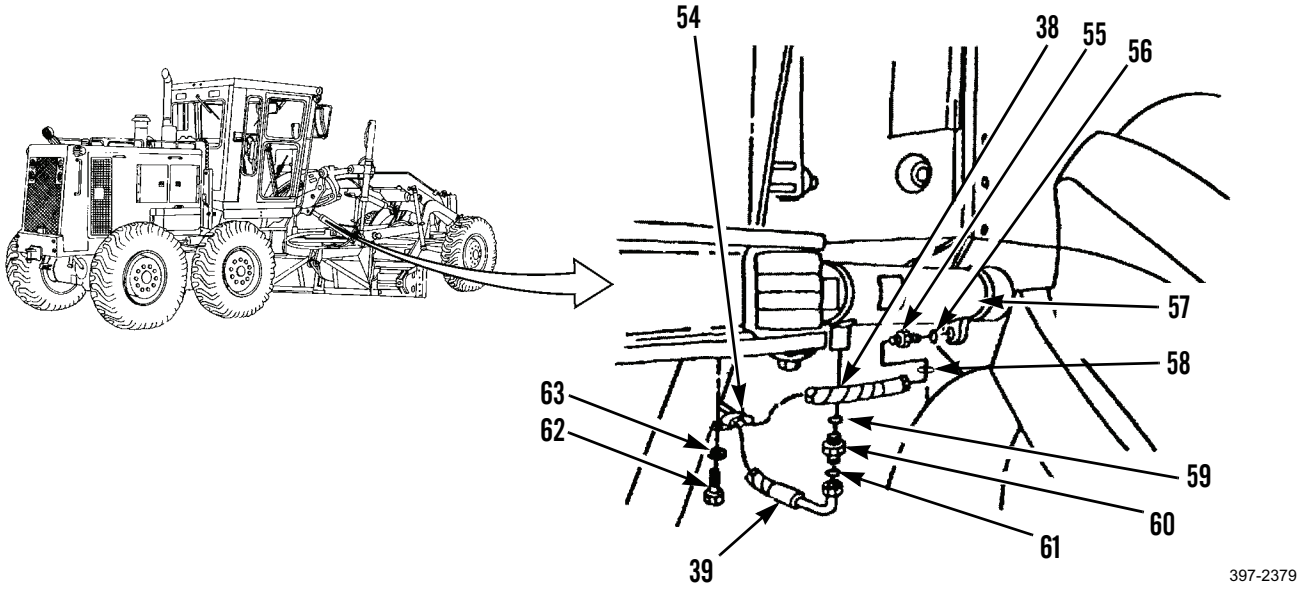

### *CLEANING AND INSPECTION*

Clean and inspect all parts in accordance with WP 0020 00.

### *INSTALLATION*

1. Install new preformed packing (56), connector (55), new O-ring (58), new preformed packing (59), connector (60), and new O-ring (61) to articulation cylinder (57) under left side of engine compartment.
2. Position hose assemblies (38 and 39) on machine.
3. Connect hose assemblies (38 and 39) to connectors (55 and 60).
4. Install clamp (54), washer (63), and bolt (62).
5. Install new preformed packing (53), connector (47), new O-ring (52), new preformed packing (51), connector (50), and new O-ring (49) to articulation cylinder (48) under right side of engine compartment.
6. Position hose assemblies (26 and 27) on machine.
7. Connect hose assemblies (26 and 27) to connectors (47 and 50).
8. Install two new preformed packings (42), fittings (41), elbows (40), and new O-rings (37) to centering valve (32) under right rear side of cab.
9. Install hose assemblies (38 and 39) to elbows (40).
10. Install two new preformed packings (31), fittings (30), elbows (29), and new O-rings (28) to centering valve (32) on front side.
11. Install hose assemblies (26 and 27) to elbows (29).
12. Install new preformed packing (46), fitting (45), elbow (44), new O-ring (43), new preformed packing (33), fitting (34), elbow (35), and new O-ring (36) to centering valve (32).
13. Position hose assemblies (17 and 24) on machine.
14. Install hose assemblies (17 and 24) elbow (44 and 35).
15. Install new preformed packing (20), fitting (21), elbow (22), new O-ring (23), new preformed packing (19), fitting (18), and new O-ring (25) to articulation check valve (14).
16. Install hose assemblies (17 and 24) to fitting (18) and elbow (22).

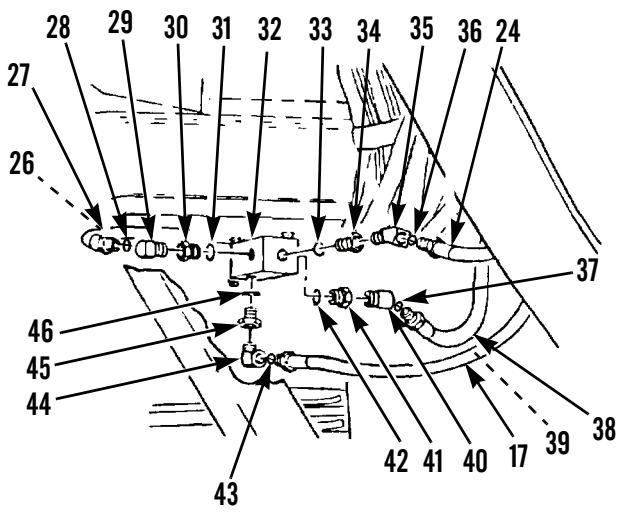

397-2378

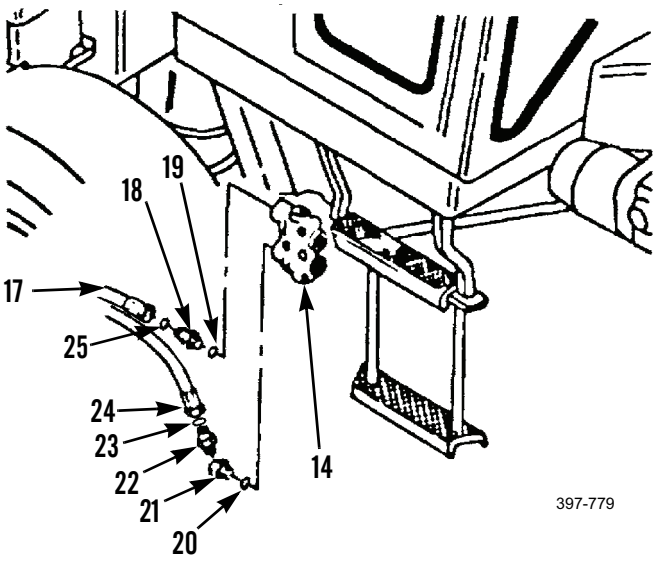

397-779

***INSTALLATION - CONTINUED***

17. Install new preformed packing (12), elbow (11), new preformed packing (13), elbow (15), and new O-ring (16) to articulation check valve (14).
18. Position hose assemblies (3 and 6) on machine.
19. Connect hose assemblies (3 and 6).
20. Install new preformed packing (2), elbow (5), new O-ring (4), new preformed packing (9), elbow (8), and new O-ring (7) to right control valve group (1).
21. Install hose assemblies (3 and 6).
22. Connect centershift hoses (WP 0226 00).
23. Connect wheel lean hoses (WP 0224 00).
24. Connect blade lift hoses (WP 0222 00).
25. Connect scarifier hoses (WP 0229 00).

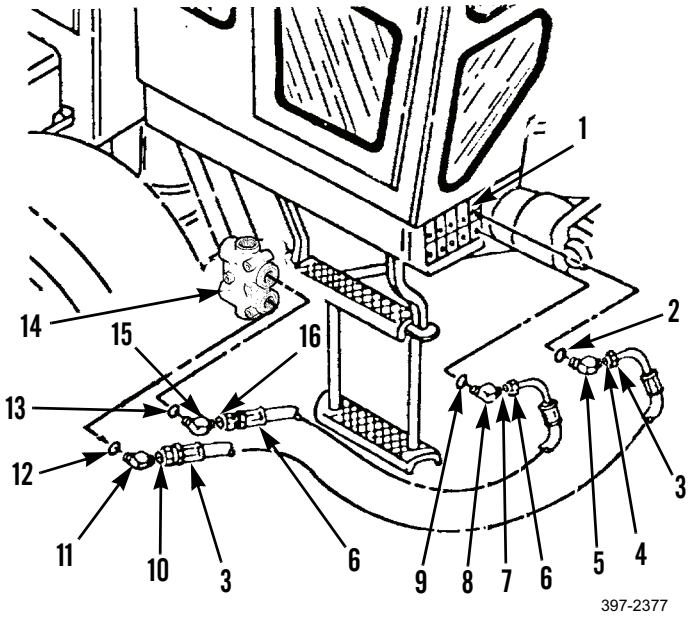


26. Check lever of hydraulic tank and fill as necessary (WP 0216 00).
27. Start engine (TM 5-3805-261-10).
28. Operate control levers. Move system through at least five full movements of travel to bleed air from system.
29. Stop engine and check for leaks.

**END OF WORK PACKAGE**

## SIDESHIFT LINES REPLACEMENT 0228 00

### THIS WORK PACKAGE COVERS

Removal, Cleaning and Inspection, Installation

### INITIAL SETUP

**Maintenance Level**

Unit

**Tools and Special Tools**

Tool kit, general mechanic's (Item 89, WP 0348 00)

Shop equipment, common no. 1 (Item 75, WP 0348 00)

**Materials/Parts**

Cap set, protective (Item 7, WP 0349 00)

Rag, wiping (Item 35, WP 0349 00)

Tag, marker (Item 44, WP 0349 00)

O-ring (12)

Packing, preformed (12)

**References**

WP 0202 00

WP 0216 00

**Equipment Conditions**

Machine parked on level ground (TM 5-3805-261-10)

Parking/emergency brake applied (TM 5-3805-261-10)

Implements lowered to ground (TM 5-3805-261-10)

Engine off (TM 5-3805-261-10)

Battery disconnect switch in OFF position (TM 5-3805-261-10)

Left side frame covers removed (WP 0179 00)

Hydraulic pressure relieved (WP 0020 00)

Blade lift hoses disconnected (WP 0222 00)

### *REMOVAL*

**CAUTION**

Cap hose ends and plug open ports to prevent contamination.

**NOTE**

Tag hose assemblies before disconnecting to aid in installation.

1. Disconnect hose assemblies (1 and 4) and remove O-rings (2 and 3). Discard O-rings.

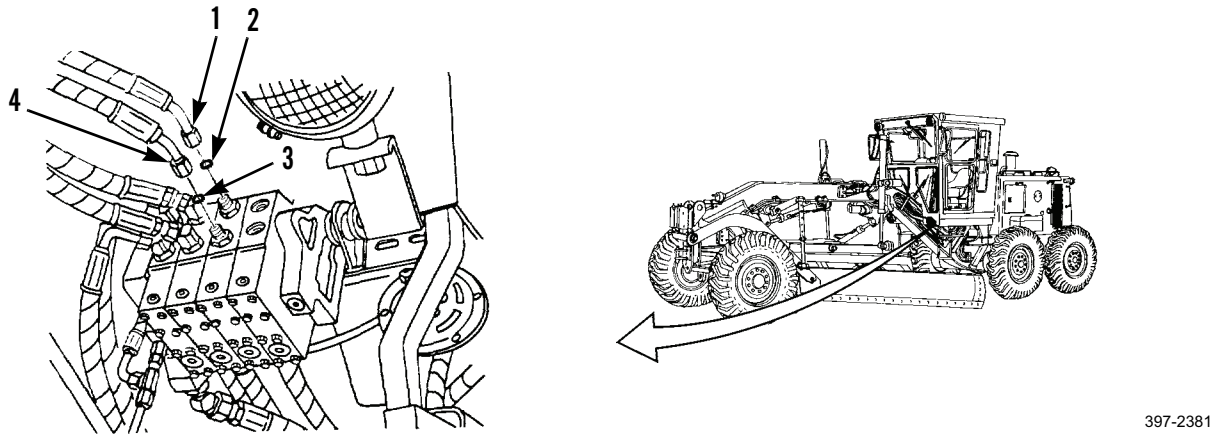

## SIDESHIFT LINES REPLACEMENT - CONTINUED 0228 00

### *REMOVAL - CONTINUED*

2. Remove connectors (5 and 7) and preformed packings (6 and 8). Discard preformed packings.

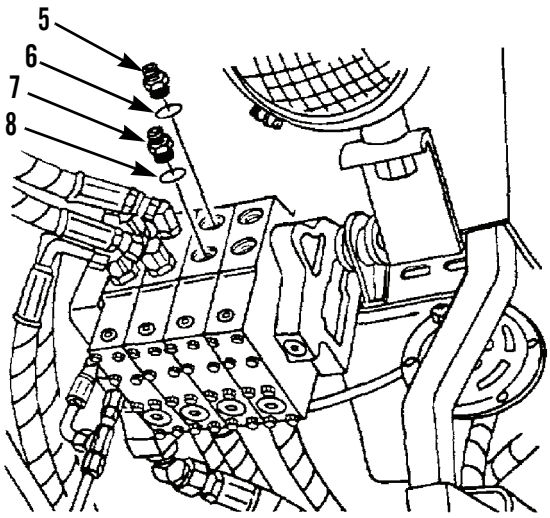


397-784

3. Remove two bolts (9), washers (10), clamp (11), two spacers (12), and clamp (13).

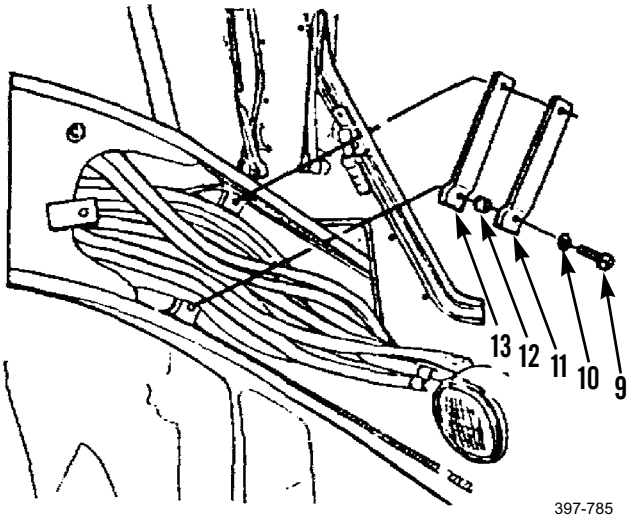


397-785

## SIDESHIFT LINES REPLACEMENT - CONTINUED 0228 00

### *REMOVAL - CONTINUED*

4. Remove two bolts (16), washers (14), and clamps (15).

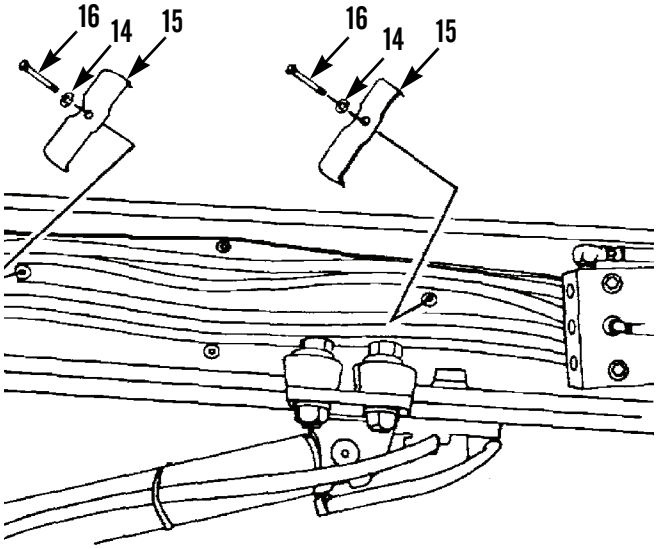

397-786

5. Remove hose assemblies (1 and 4), O-rings (17 and 23), elbows (18 and 19), and preformed packings (21 and 22) from top of sideshift check valve (20). Discard O-rings and preformed packings.
6. Remove hose assemblies (1 and 4) from machine.

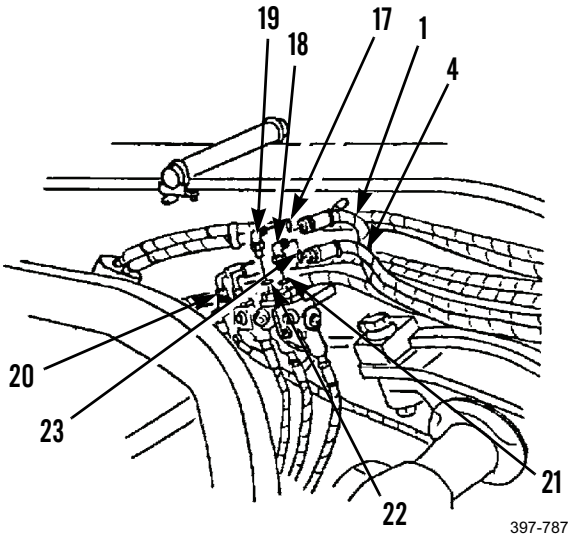

397-787

***REMOVAL - CONTINUED***

7. Disconnect hose assemblies (29 and 30) and remove O-rings (27 and 28), adapters (24 and 26), and preformed packings (23 and 25) from bottom of sideshift check valve (20). Discard O-rings and preformed packings.

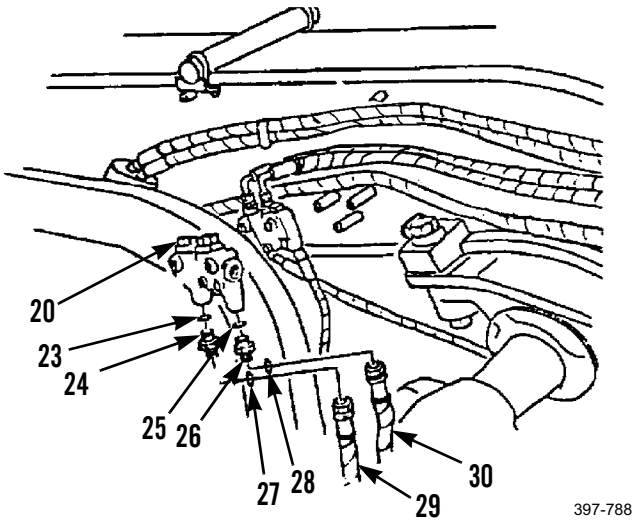


8. Remove two bolts (31), washers (32), plates (33), and clamps (34).

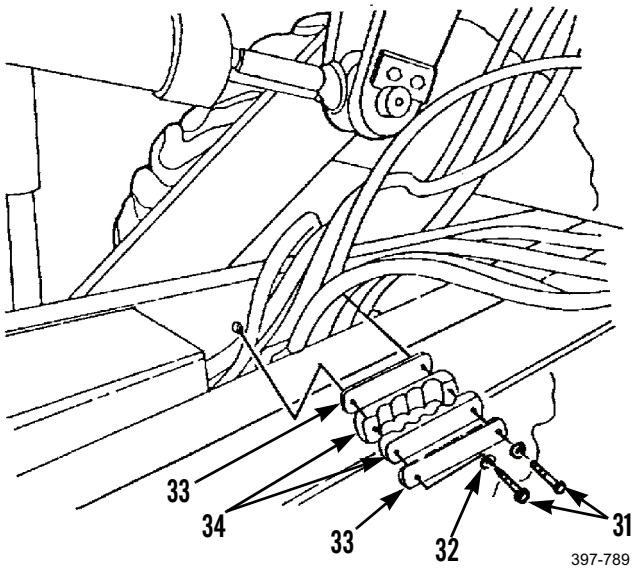

***REMOVAL - CONTINUED***

**NOTE**

It may be necessary to remove toolbox to access bolts.

9. Remove bolt (37), washer (36), clamp (35), bolt (40), washer (39), and clamp (38).

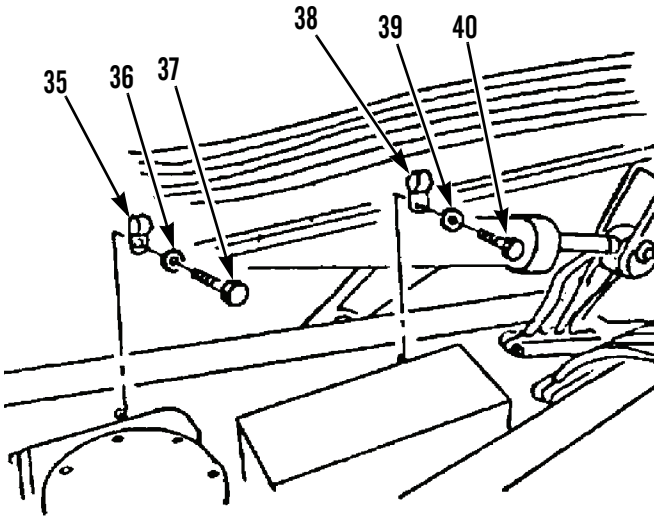


397-790

10. Remove hose assemblies (29 and 30), O-rings (46 and 47), elbows (43 and 45), and preformed packings (42 and 44) from circle swivel assembly (41). Discard O-rings and preformed packings.
11. Remove hose assembly (29 and 30) from machine.

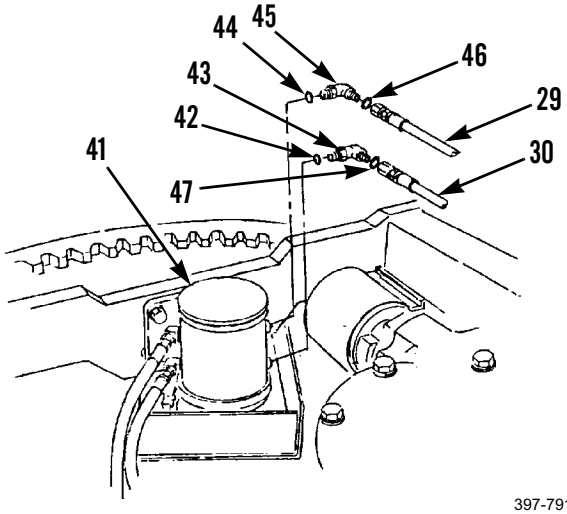


397-791

## SIDESHIFT LINES REPLACEMENT - CONTINUED 0228 00

### *REMOVAL - CONTINUED*

12. Disconnect hose assemblies (55 and 61), and remove O-rings (56 and 62) from circle swivel assembly (41). Discard O-rings.
13. Remove connectors (58 and 63) and preformed packings (57 and 64). Discard preformed packings.
14. Remove nuts (50 and 59), washers (49 and 60), bolts (51 and 53), and clips (52 and 54) from guide assembly (48).

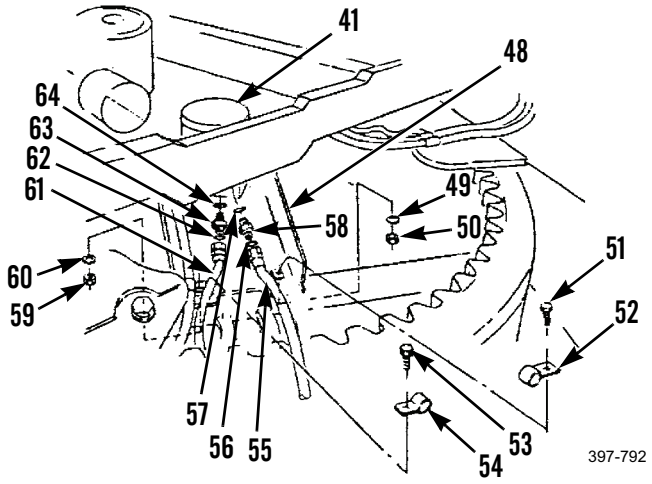


15. Remove bolt (69), washer (68), bolt (72), spacer (67), washer (66), spacer (70), washers (71 and 73), and guard assembly (65).

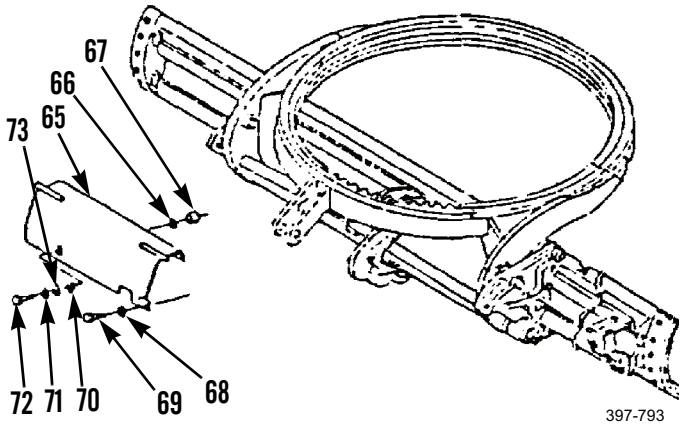


16. Remove bolt (81), washer (80), bolt (79), spacer (74), washer (75), spacer (76), washers (77 and 78), and guard assembly (65).

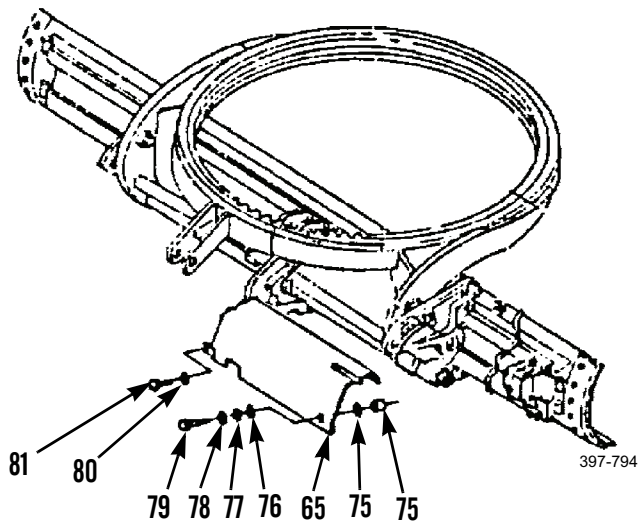

### *REMOVAL - CONTINUED*

17. Remove hose assembly (61), O-ring (85), connector (86), and preformed packing (87) from left end of blade shift hydraulic cylinder (88). Discard O-ring and preformed packing.
18. Remove hose assembly (55), O-ring (84), connector (83), and preformed packing (82) from right end of blade shift hydraulic cylinder (88). Discard O-ring and preformed packing.

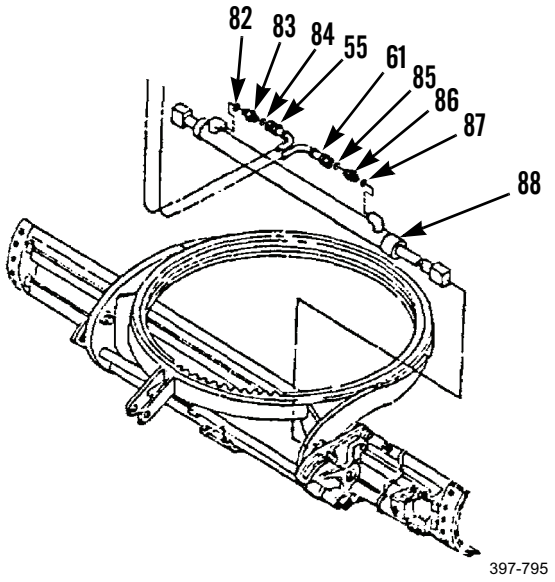


### *CLEANING AND INSPECTION*

Clean and inspect all parts in accordance with WP 0020 00.

### *INSTALLATION*

1. Install new preformed packing (82), connector (83), new O-ring (84), and hose assembly (55) on right end of blade shift hydraulic cylinder (88).
2. Install new preformed packing (87), connector (86), new O-ring (85), and hose assembly (61) on left end of blade shift hydraulic cylinder (88).
3. Install guard assembly (65), washers (77 and 78), spacer (76), washer (75), spacer (74), bolt (79), washer (80), and bolt (81).

### *INSTALLATION - CONTINUED*

4. Install guard assembly (65), washers (71 and 73), spacer (70), washer (66), spacer (67), bolt (72), washer (68), and bolt (69).

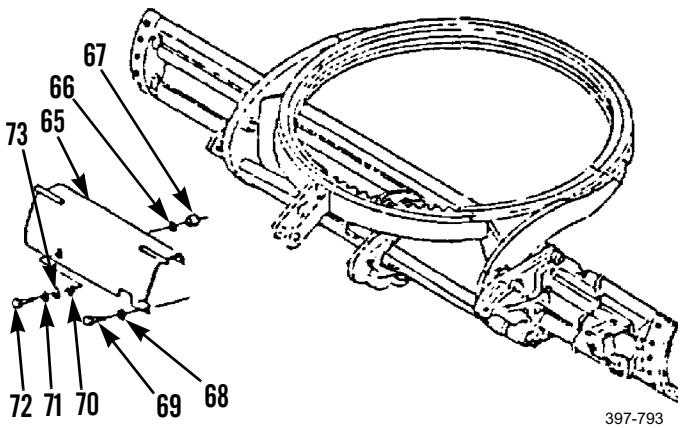

397-793

5. Install clips (52 and 54), bolts (51 and 53), washers (49 and 60), and nuts (50 and 59) on guide assembly (50).
6. Install new preformed packings (57 and 64), connectors (56 and 63), and new O-rings (58 and 62) on circle swivel assembly (41).
7. Connect hose assemblies (55 and 61).

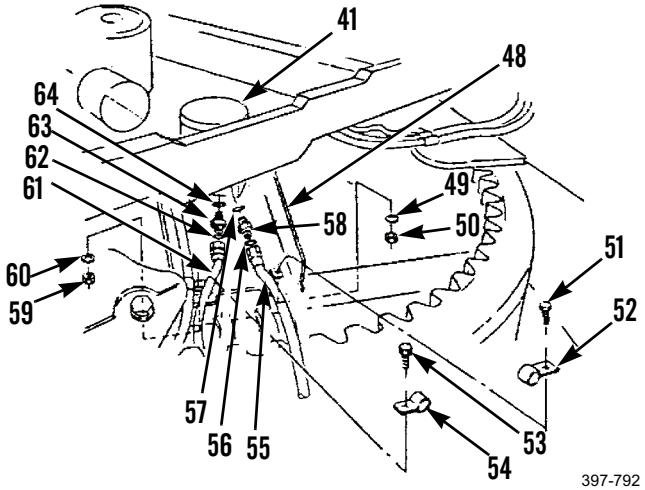

397-792

8. Position hose assemblies (29 and 30) on machine.
9. Install new preformed packings (42 and 44), elbows (43 and 45), new O-rings (46 and 47), and hose assemblies (29 and 30) on circle swivel assembly (41).

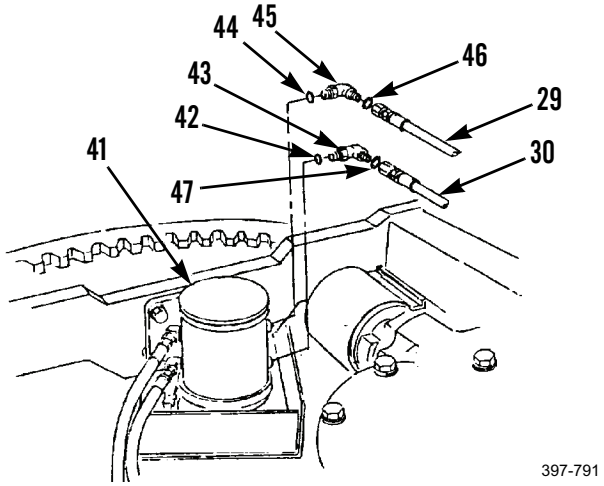

397-791

***INSTALLATION - CONTINUED***

10. Install clamp (38), washer (39), bolt (40), clamp (35), washer (36), and bolt (37).

**NOTE**

Install toolbox if removed (WP 0202 00).

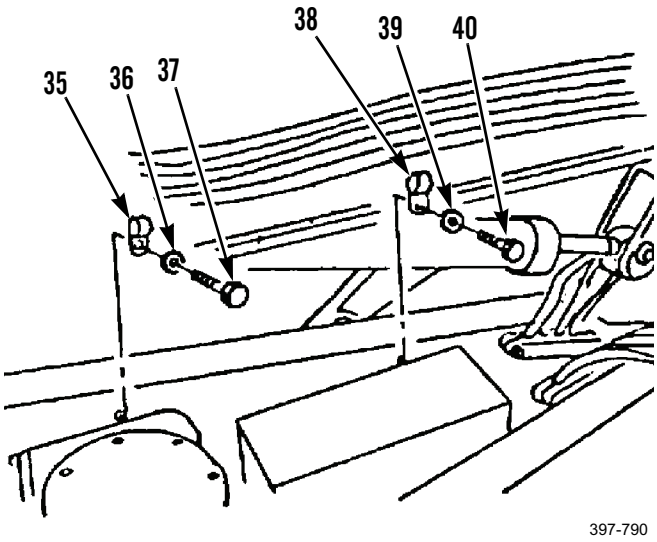


11. Install two clamps (34), plates (33), washers (32), and bolts (31).

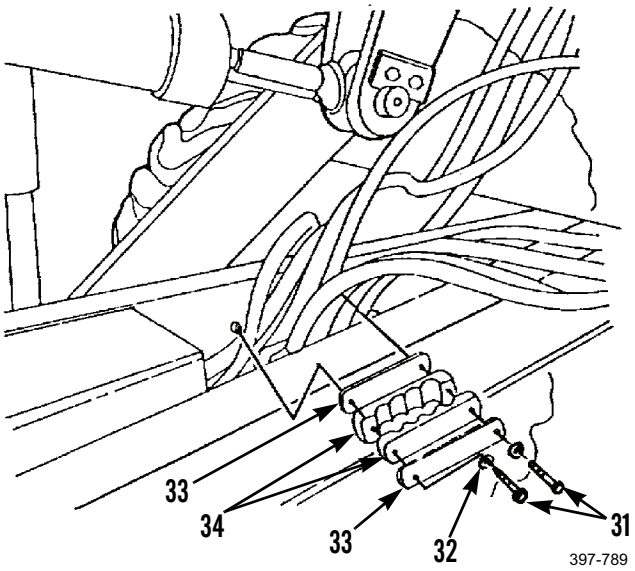

***INSTALLATION - CONTINUED***

12. Install new preformed packings (23 and 25), adapters (24 and 26), new O-rings (27 and 28), and connect hose assemblies (29 and 30) to bottom of sideshift check valve (20)

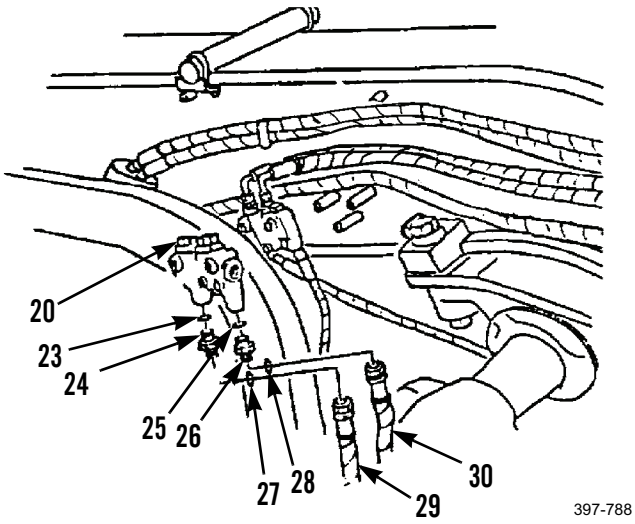


13. Position hose assemblies (1 and 4) on machine.

14. Install new preformed packings (21 and 22), adapters (18 and 19), and new O-rings (17 and 23) and connect hose assemblies (1 and 4) on top of sideshift check valve (20).

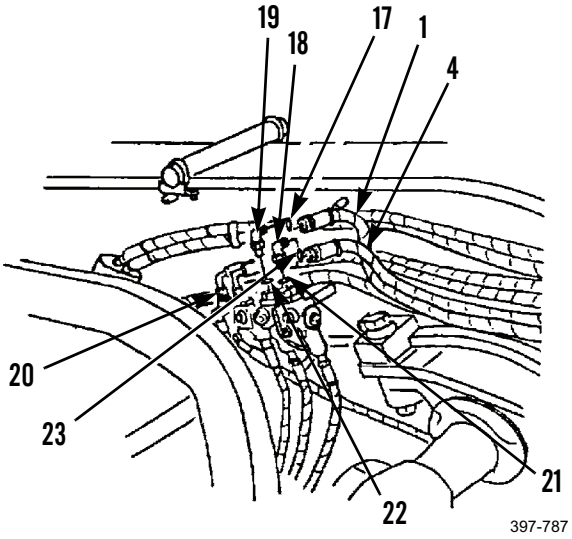

***INSTALLATION - CONTINUED***

15. Install two clamps (15), washers (14), and bolts (16).

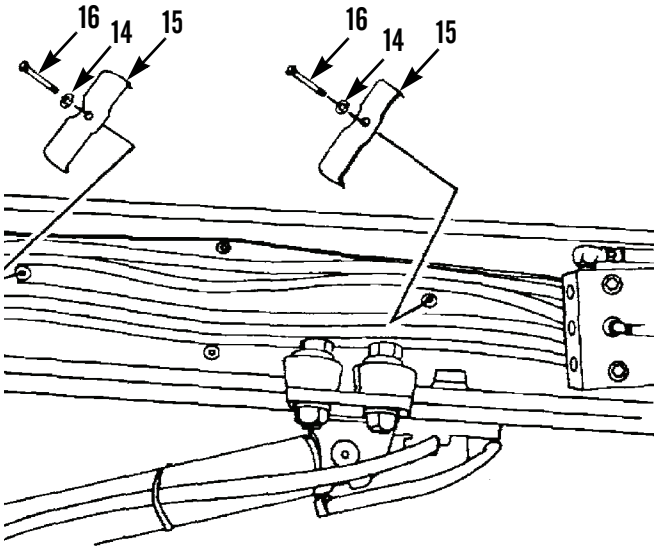


397-786

16. Install clamp (13), two spacers (12), clamp (11), two washers (10), and bolts (9).

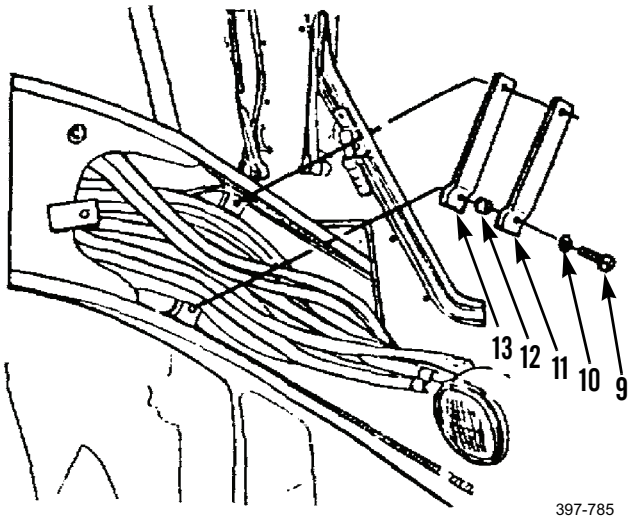


397-785

***INSTALLATION - CONTINUED***

17. Install new preformed packings (6 and 8) and connectors (5 and 7).

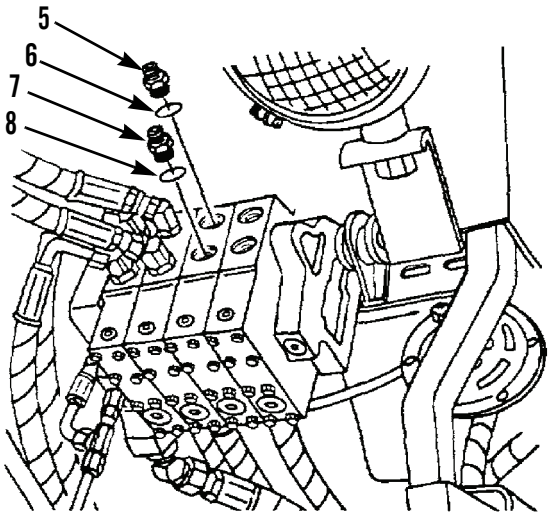


397-784

18. Install new O-rings (2 and 3) and hose assemblies (1 and 4).

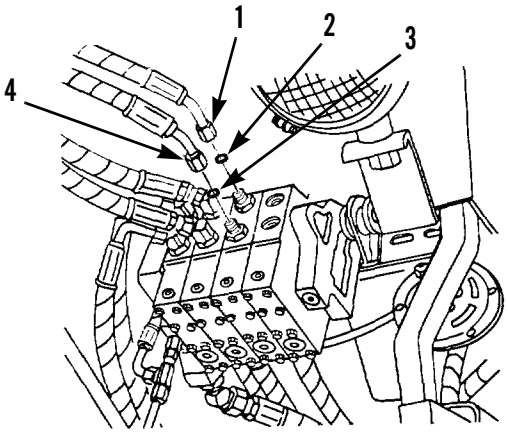


397-783

19. Connect blade lift hoses (WP 0222 00).
20. Check level of hydraulic tank and fill as necessary (WP 0216 00).
21. Start engine (TM 5-3805-261-10).
22. Operate control levers. Move system through at least five-full movements of travel to bleed air from system.
23. Stop engine and check for leaks.
24. Install left side frame covers (WP 0179 00).

**END OF WORK PACKAGE**

## SCARIFIER LINES, FITTINGS, AND HOSES REPLACEMENT 0229 00

### THIS WORK PACKAGE COVERS

Removal, Cleaning and Inspection, Installation

### INITIAL SETUP

**Maintenance Level**

Unit

**Tools and Special Tools**

Tool kit, general mechanic's (Item 89, WP 0348 00)

Shop equipment, common no.1 (Item 75, WP 0348 00)

**Materials/Parts**

Cap set, protective (Item 7, WP 0349 00)

Rag, wiping (Item 35, WP 0349 00)

Strap, tie (Item 43, WP 0349 00)

Tag, marker (Item 44, WP 0349 00)

O-ring (6)

Packing, preformed (8)

**References**

WP 0216 00

**Equipment Conditions**

Machine parked on level ground (TM 5-3805-261-10)

Parking/emergency brake applied (TM 5-3805-261-10)

Implements lowered to ground (TM 5-3805-261-10)

Engine off (TM 5-3805-261-10)

Battery disconnect switch in OFF position (TM 5-3805-261-10)

Right side frame covers removed (WP 0179 00)

Hydraulic pressure relieved (WP 0020 00)

### *REMOVAL*

**CAUTION**

Cap hose ends and plug open ports to prevent contamination.

**NOTE**

Tag hose assemblies disconnecting to aid in installation.

1. Disconnect hose assemblies (1 and 2) and remove O-rings (3 and 4). Discard O-rings.

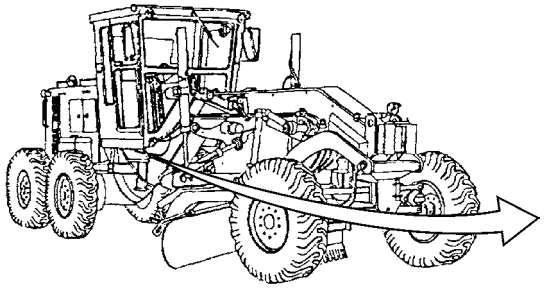

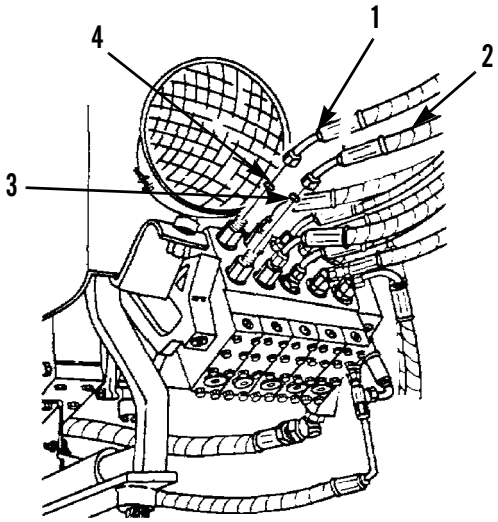


397-2382

***REMOVAL - CONTINUED***

2. Remove connectors (6 and 7) and preformed packings (5 and 8). Discard preformed packings.

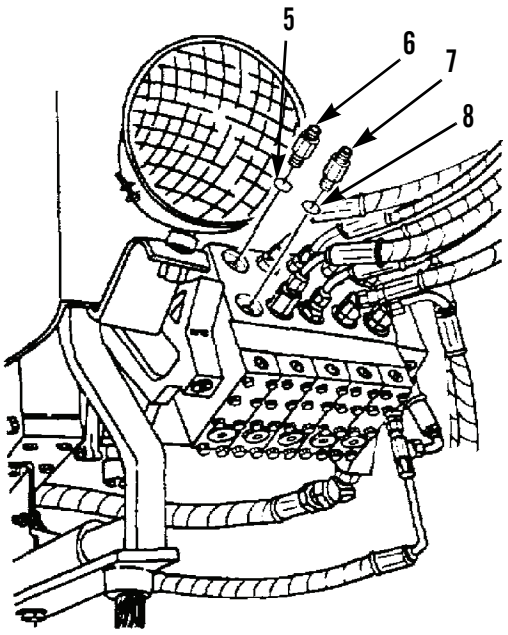

397-797

3. Remove bolt (10) and clip (9) from right-center-front frame.

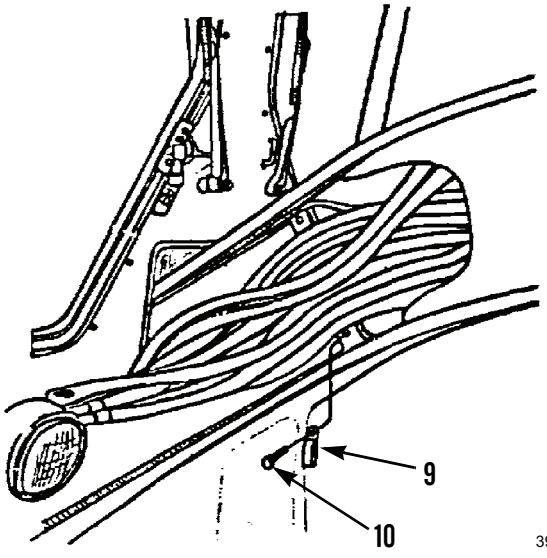

397-798

### *REMOVAL - CONTINUED*

4. Remove hose assemblies (1 and 2) from elbows (12 and 13).
5. Remove hose assemblies (1 and 2) from machine.
6. Remove elbows (12 and 13) and preformed packings (11 and 14). Discard preformed packings.
7. Disconnect hose assemblies (18 and 19).
8. Remove O-rings (17 and 20), connectors (16 and 21), and preformed packings (15 and 22). Discard O-rings and preformed packings.

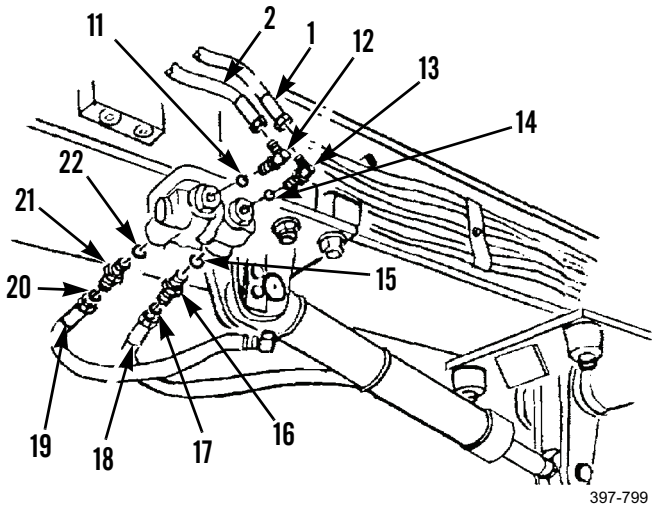

397-799

9. Remove and discard tie strap (28).
10. Remove hose assemblies (18 and 19) and O-rings (27 and 29). Discard O-rings.
11. Remove connector (26) and preformed packing (25). Discard preformed packing.
12. Remove elbow (24) and preformed packing (23). Discard preformed packing.

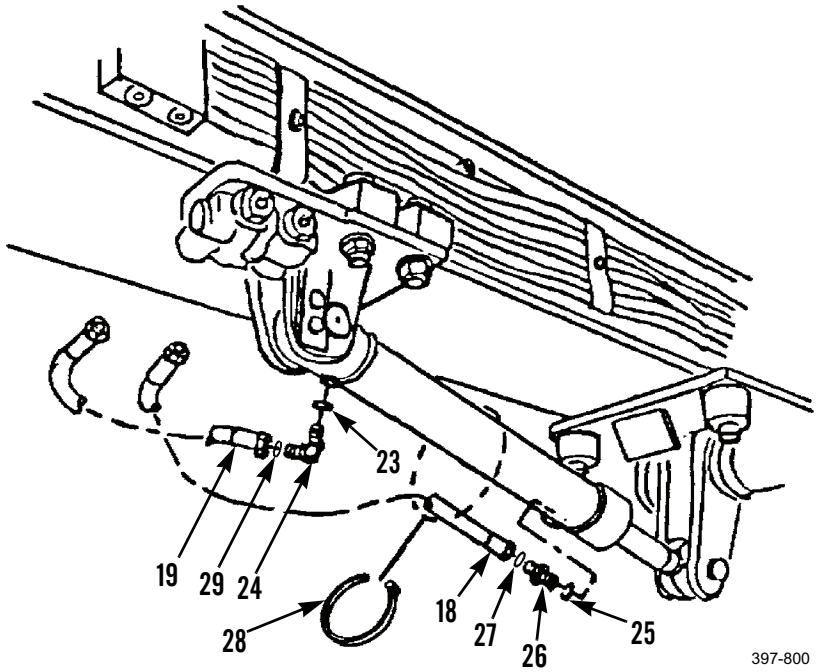

397-800

### *CLEANING AND INSPECTION*

Clean and inspect all parts in accordance with WP 0020 00.

### *INSTALLATION*

1. Install new preformed packing (23) and elbow (24).
2. Install new preformed packing (25) and connector (26).
3. Install O-rings (27 and 29) and connect hose assemblies (18 and 19).
4. Install new tie strap (28).
5. Install new preformed packings (15 and 22) and connectors (16 and 21).
6. Install new O-rings (17 and 20) and hose assemblies (18 and 19).
7. Install new preformed packings (11 and 14) and elbows (12 and 13).
8. Position hose assemblies (1 and 2) on machine.
9. Connect hose assemblies (1 and 2) to elbows (12 and 13).

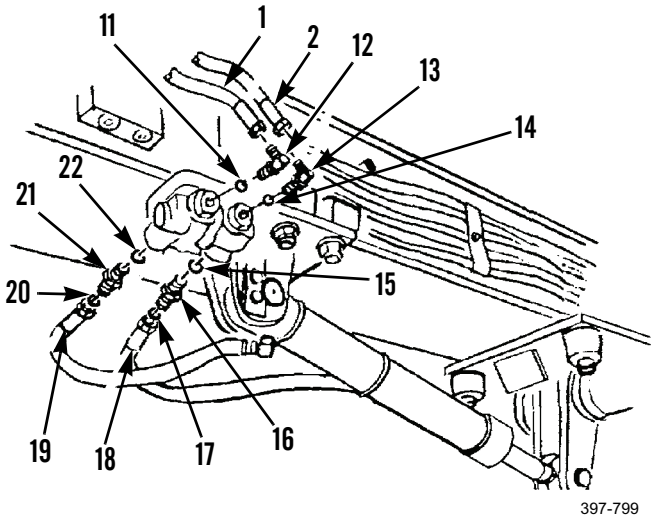

397-799

10. Install clip (9) and bolt (10).

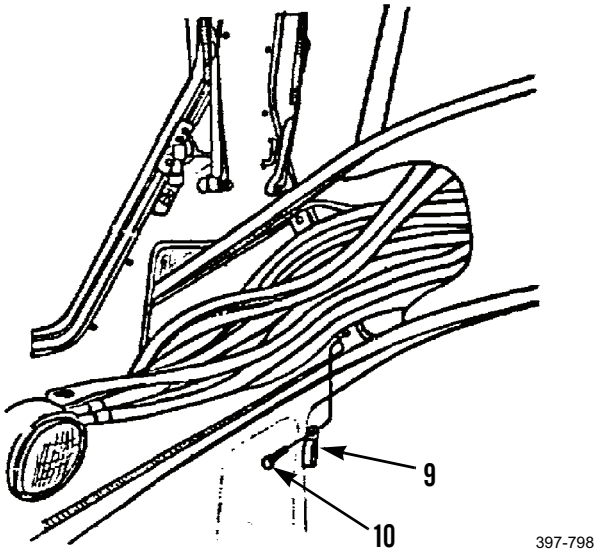

397-798

***INSTALLATION - CONTINUED***

11. Install new preformed packings (5 and 8) and connectors (6 and 7).

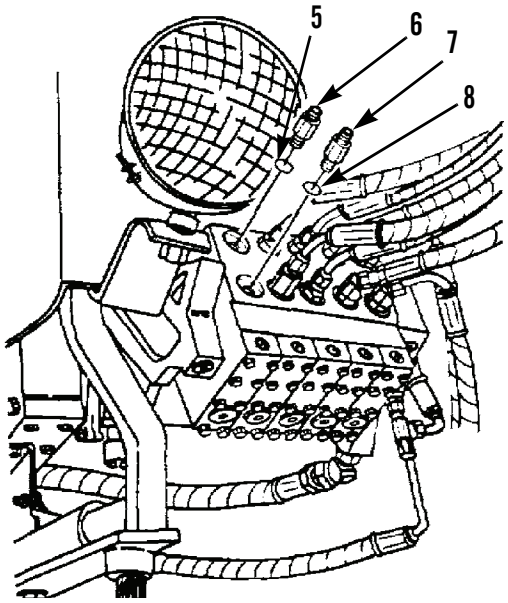

397-797

12. Install new O-rings (3 and 4) and hose assemblies (1 and 2).

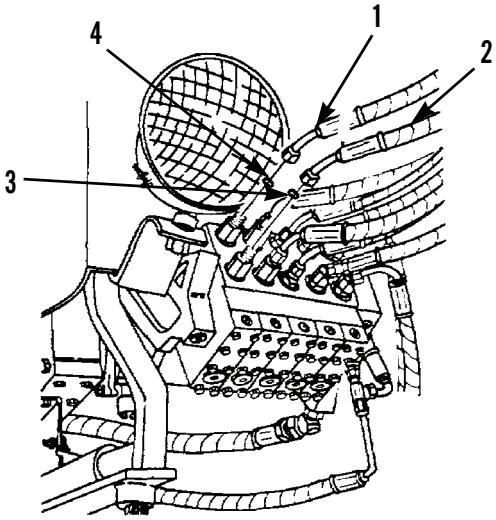

397-2382

13. Check level of hydraulic tank and fill to proper level (WP 0216 00).
14. Start engine (TM 5-3805-261-10).
15. Operate control levers. Move system through at least five-full movements of travel to bleed air from system.
16. Stop engine.
17. Check for leaks.
18. Install right side frame covers (WP 0179 00).

**END OF WORK PACKAGE**

## HYDRAULIC OIL COOLER REPLACEMENT 0230 00

### THIS WORK PACKAGE COVERS

Removal, Cleaning and Inspection, Installation

### INITIAL SETUP

**Maintenance Level**

Unit

**Tools and Special Tools**

Tool kit, general mechanic's (Item 89, WP 0348 00)

Shop equipment, common no. 1 (Item 75, WP 0348 00)

**Materials/Parts**

Cap set, protective (Item 7, WP 0349 00)

Rag, wiping (Item 35, WP 0349 00)

Tag, marker (Item 44, WP 0349 00)

O-ring (2)

Packing, preformed (2)

**References**

WP 0020 00

WP 0052 00

**Personnel Required**

Two

**Equipment Conditions**

Machine parked on level ground (TM 5-3805-261-10)

Parking/emergency brake applied (TM 5-3805-261-10)

Implements lowered to ground (TM 5-3805-261-10)

Engine off (TM 5-3805-261-10)

Battery disconnect switch in OFF position (TM 5-3805-261-10)

Hydraulic tank drained (WP 0216 00)

Shields, baffles, and plates removed (WP 0053 00)

Fan removed (WP 0063 00)

Rear signal lights removed (WP 0108 00)

Left side engine panel removed (WP 0182 00)

***REMOVAL***

**NOTE**

Place container under two plugs.

1. Remove two plugs (8) to drain core assembly (9).
2. Install two plugs (8) to prevent contamination.

**CAUTION**

Cap hose ends and plug open ports to prevent contamination.

**NOTE**

Tag hoses before disconnecting to aid in installation.

3. Disconnect two hose assemblies (7).
4. Remove two O-rings (6), connectors (5) and preformed packings (4). Discard two preformed packings.
5. Remove two nuts (3), washers (2), and brackets (1).

**NOTE**

Remove two bolts (11) only if inspection indicates replacement is necessary. If bolts must be removed, it will first be necessary to remove radiator support (WP 0052 00).

6. Remove two bolts (11) and washers (10) through cut-outs for rear signal lights in radiator grille. Discard two bolts, if necessary.
7. Support core assembly (9).
8. Remove two bolts (14) and washers (13).
9. Remove core assembly (9).

**NOTE**

Remove seal only if inspection indicates replacement is necessary.

10. Remove and discard seal (12) from front of radiator, if necessary.

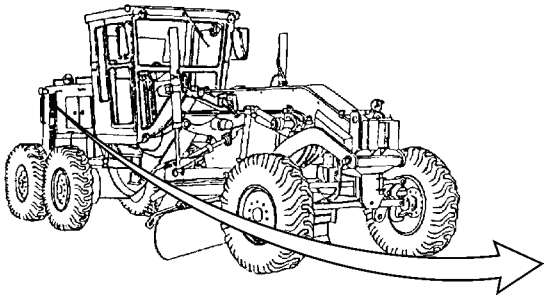

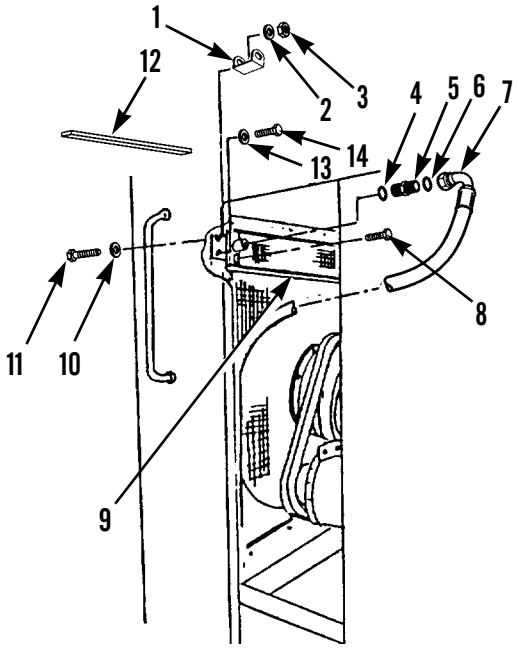


397-2404

### *CLEANING AND INSPECTING*

Clean and inspect all parts in accordance with WP 0020 00.

### *INSTALLATION*

1. Install new seal (12) on front of radiator, if removed.
2. Position core assembly (9) on radiator.
3. Install two washers (13) and bolts (14).
4. Install two washers (10) and new bolts (11) through rear signal light cut-outs in radiator grille, if removed.
5. Install two brackets (1), washers (2), and nuts (3).
6. Install two new preformed packings (4) and connectors (5).
7. Install two new O-rings (6) and connect two hose assemblies (7) to left and right front core assembly (9).
8. Install rear signal lights (WP 0108 00).
9. Install fan (WP 0063 00).
10. Install shields, baffles, and plates (WP 0053 00).
11. Install left side engine panel (WP 0182 00).
12. Start engine (TM 5-3805-261-10).
13. Stop engine and check for leaks.
14. Check hydraulic oil level and fill as necessary (WP 0216 00).

**END OF WORK PACKAGE**

## HYDRAULIC TANK FILTERS REPLACEMENT 0231 00

### THIS WORK PACKAGE COVERS

Removal, Cleaning and Inspection, Installation

### INITIAL SETUP

**Maintenance Level**

Unit

**Tools and Special Tools**

Tool kit, general mechanic's (Item 89, WP 0348 00)

Shop equipment, field maintenance (Item 74, WP 0348 00)

**Materials/Parts**

Rag, wiping (Item 35, WP 0349 00)

Filter element (3)

Gasket

Packing, preformed (4)

**References**

WP 0020 00

WP 0216 00

**Equipment Conditions**

Machine parked on level ground (TM 5-3805-261-10)

Parking/emergency brake applied (TM 5-3805-261-10)

Implements lowered to ground (TM 5-3805-261-10)

Engine off (TM 5-3805-261-10)

Battery disconnect switch in OFF position (TM 5-3805-261-10)

***REMOVAL***

**WARNING**

- DO NOT disconnect or remove any hydraulic system line or fitting unless engine is shut down and hydraulic system pressure has been relieved. Tighten all connections before applying pressure. Escaping hydraulic fluid under pressure can penetrate the skin, causing injury to personnel.
- At operating temperature, hydraulic oil is hot. Allow hydraulic oil to cool before disconnecting any hydraulic lines. Failure to follow this warning may cause injury to personnel.

1. Remove cover (7) slowly to relieve vapor pressure.
2. Remove four bolts (2), washers (3), bolts (4), washers (5), and manifold (6).
3. Remove and discard two filter elements (1) and preformed packings (8).

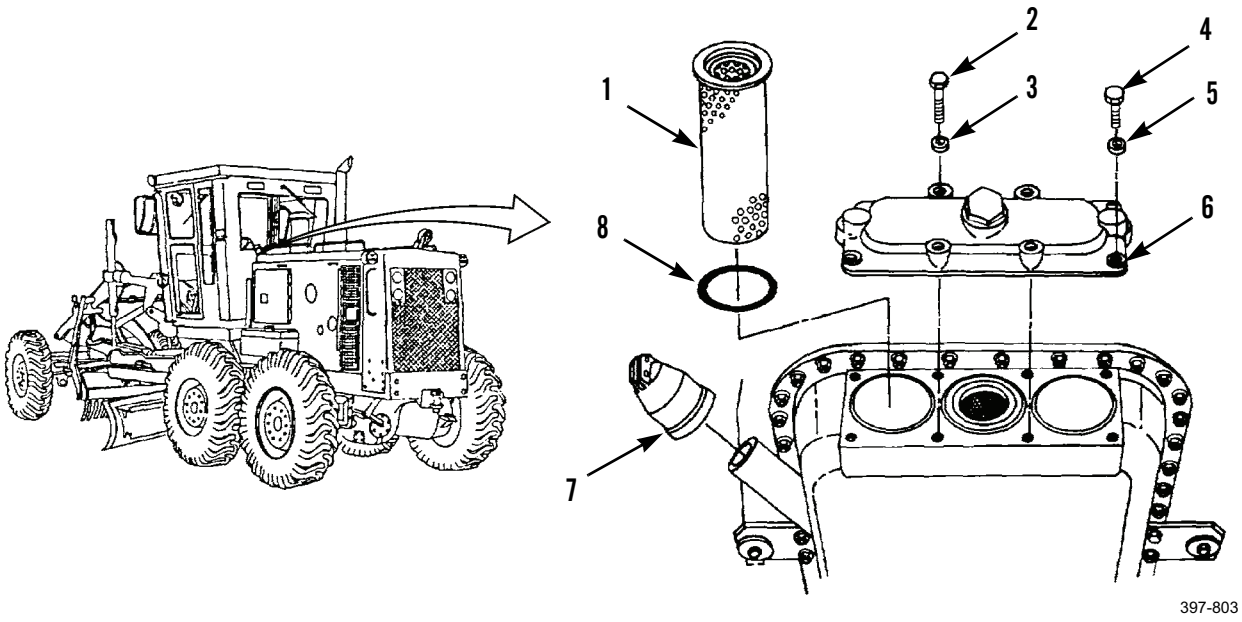

***REMOVAL - CONTINUED***

4. Remove and discard preformed packing (10).
5. Remove filter element (11) and tube (9). Discard filter element.
6. Remove and discard preformed packing (13).
7. Remove ring (15).
8. Remove strainer (14) from neck of tank (12).

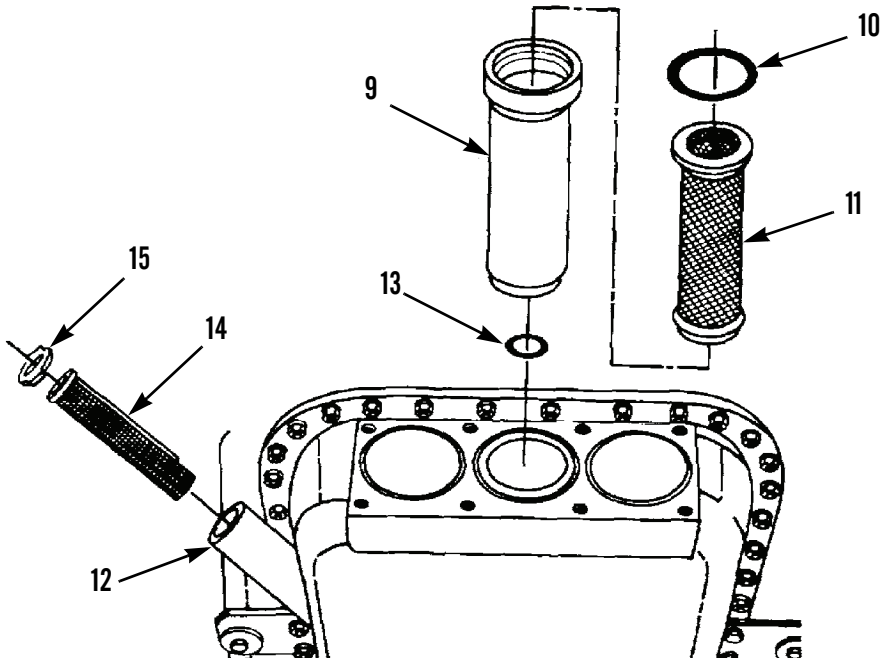


397-804

**NOTE**

Do not disassemble cover unless inspection indicates it is necessary.

9. Remove ring (20), gasket (19), plate (18), ball (17), and cap (16) from cover (7). Discard gasket.

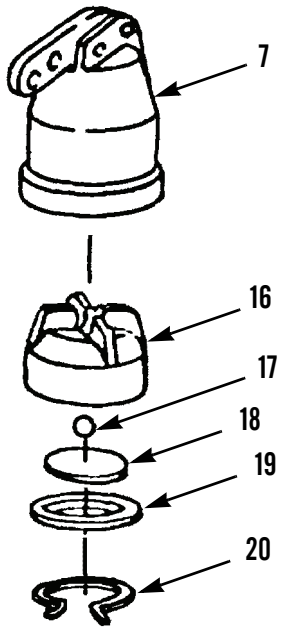


397-805

### *CLEANING AND INSPECTION*

Clean and inspect all parts in accordance with WP 0020 00.

### *INSTALLATION*

1. Install cap (16), ball (17), plate (18), new gasket (19), and ring (20) in cover (7).

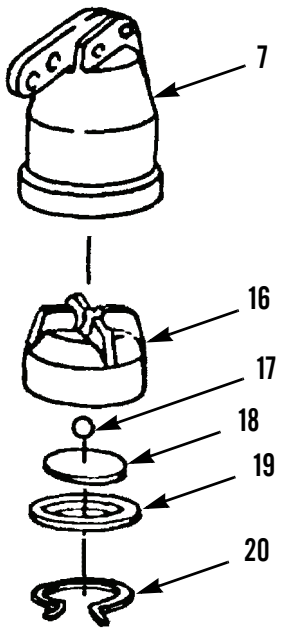


397-805

2. Install strainer (14) and ring (15) in neck of tank (12).
3. Install new preformed packing (13), tube (9), new filter element (11), and new preformed packing (10).

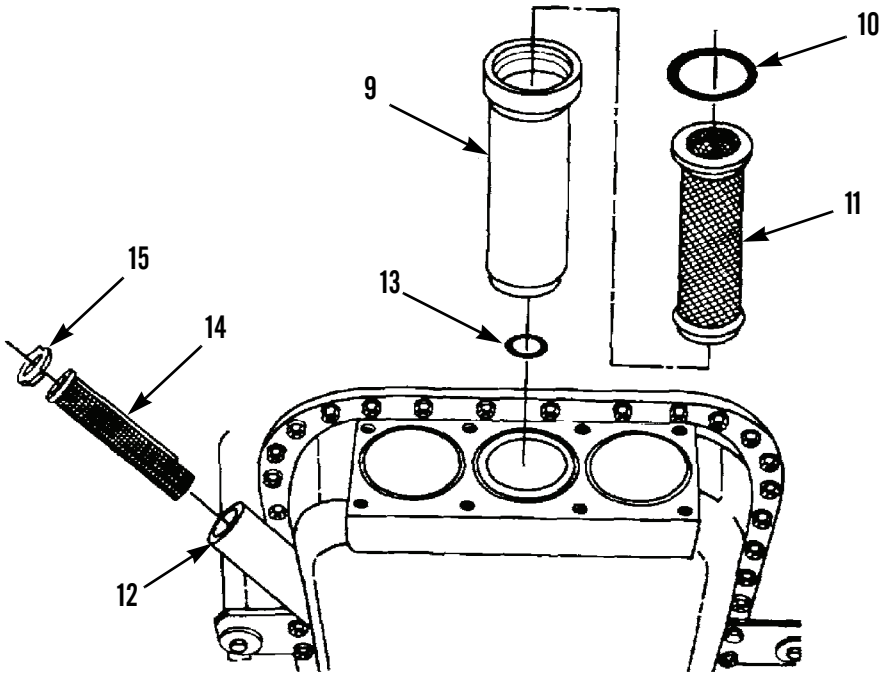


397-804

***INSTALLATION - CONTINUED***

4. Install two new preformed packings (8) and new filter elements (1).
5. Install manifold (6), four washers (5), bolts (4), washers (3), and bolts (2).
6. Install cover (7).

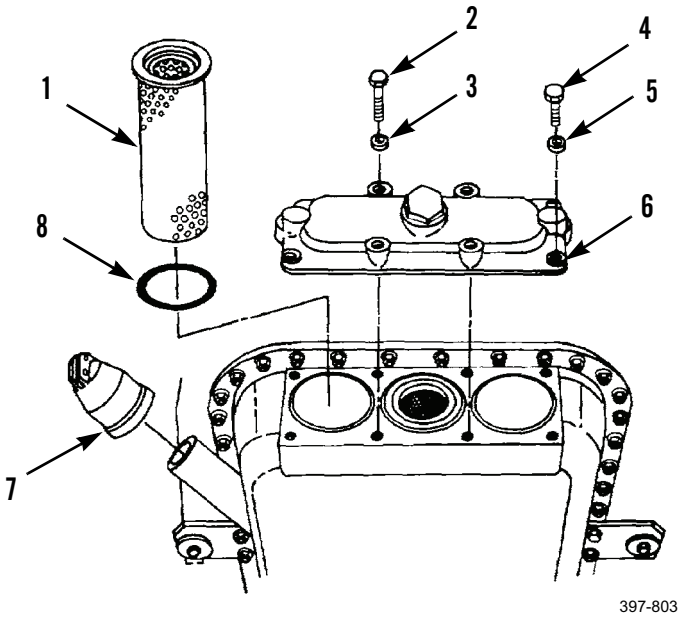


7. Check hydraulic oil level and fill as necessary (WP 0216 00).

**END OF WORK PACKAGE**

## HYDRAULIC PUMP DRIVE MAINTENANCE 0232 00

## THIS WORK PACKAGE COVERS

Removal, Disassembly, Cleaning and Inspection, Assembly, Installation

## INITIAL SETUP

**Maintenance Level**

Unit

**Tools and Special Tools**

Tool kit, general mechanic's (Item 89, WP 0348 00)

Shop equipment, common no. 1 (Item 75, WP 0348 00)

Wrench, torque (Item 97, WP 0348 00)

Wrench, torque (Item 99, WP 0348 00)

**Materials/Parts**

Antiseize compound (Item 6, WP 0349 00)

Cleaning compound, solvent (Item 8, WP 0349 00)

Grease, GAA (Item 17, WP 0349 00)

Rag, wiping (Item 35, WP 0349 00)

Seal

**References**

WP 0020 00

WP 0023 00

**Equipment Conditions**

Machine parked on level ground (TM 5-3805-261-10)

Parking/emergency brake applied (TM 5-3805-261-10)

Implements lowered to ground (TM 5-3805-261-10)

Engine stopped (TM 5-3805-261-10)

Battery disconnect switch in OFF position (TM 5-3805-261-10)

Hydraulic drive protection cover removed (WP 0219 00)

***REMOVAL***

**NOTE**

Bolts (5) have fine threads. Bolts (8) have coarse threads.

1. Remove four bolts (5) and washers (4) to separate U-joint of propeller shaft (6) from U-joint yoke (1).
2. Remove four bolts (8), washers (7), and propeller shaft (6) assembly from machine.
3. Remove nut (3), washer (2), and U-joint yoke (1) from pump shaft.

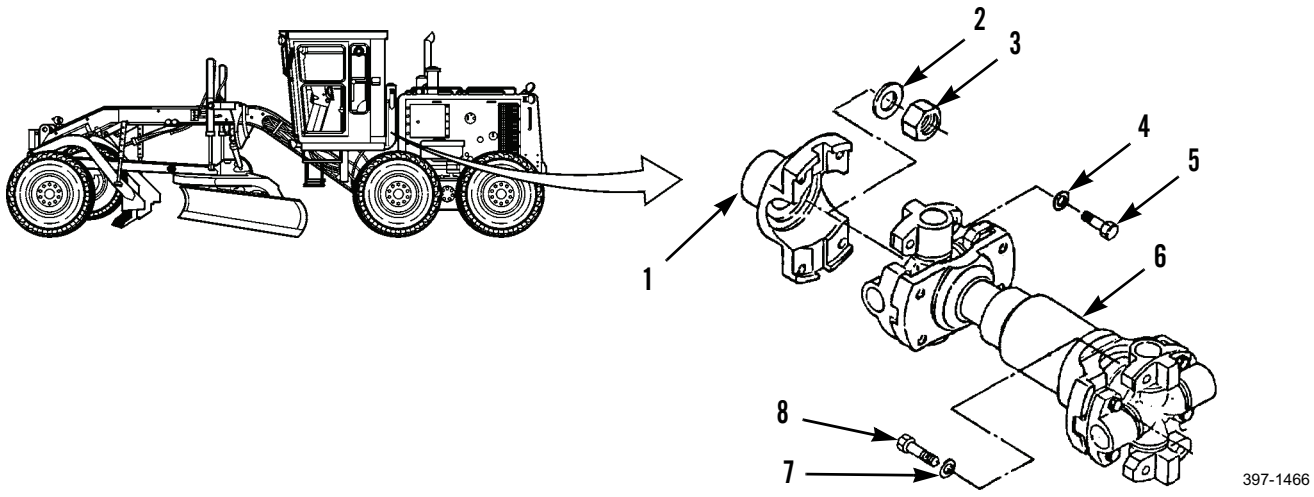

***DISASSEMBLY***

**CAUTION**

Use care when removing U-joints (11 and 12) so as not to allow caps to fall off.

1. Remove four bolts (14), washers (13), and U-joint assembly (12) from propeller shaft (6) assembly.
2. Remove four bolts (10), washers (9), and U-joint assembly (11) from propeller shaft (6).

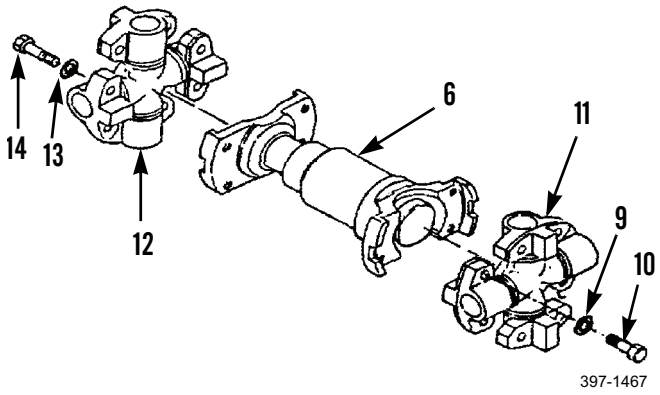

397-1467

3. Loosen retainer (15). Slide retainer, washer (16), seal (17), and washer (18) onto yoke (19). Discard seal.

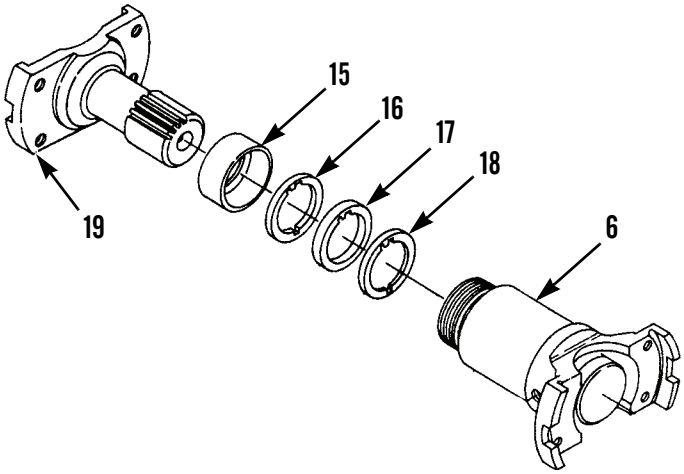

397-1468

4. Remove yoke (19) from propeller shaft (6).

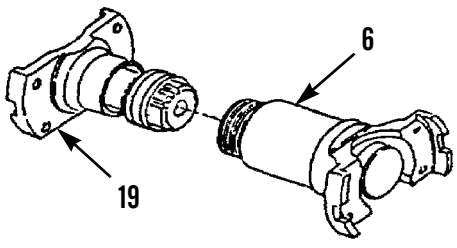

397-1469

### *DISASSEMBLY - CONTINUED*

5. Remove washer (18), seal (17), washer (16), and retainer (15) from yoke (19). Discard seal.
6. Remove lube fitting (21) from propeller shaft (6).
7. Remove lube fitting (20) from U-joint assembly (12).
8. Remove lube fitting (22) from U-joint assembly (11).

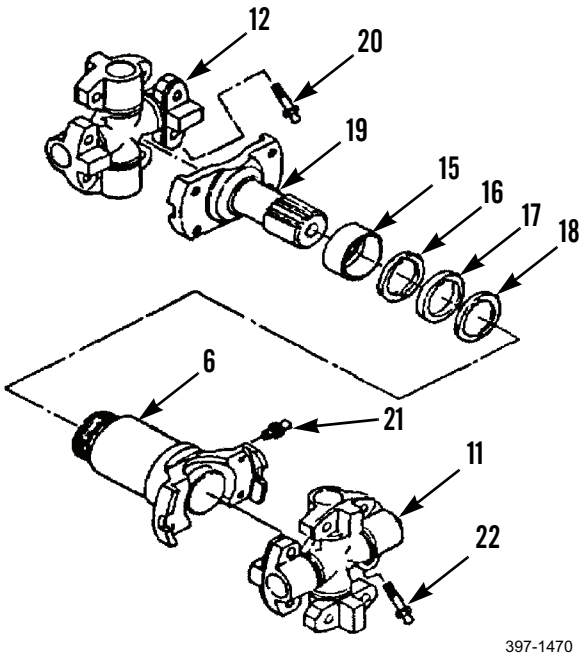


### *CLEANING AND INSPECTION*

Clean and inspect all parts in accordance with WP 0020 00.

### *ASSEMBLY*

1. Install lube fitting (22) in U-joint assembly (11).
2. Install lube fitting (20) in U-joint assembly (12).
3. Install lube fitting (21) in propeller shaft assembly (6).
4. Slide retainer (15), washer (16), new seal (17), and washer (18) onto yoke (19).
5. Apply thin coat of grease to splines of yoke (19) and install into propeller shaft (6).
6. Install washer (18), new seal (17), washer (16), and retainer (15) on propeller shaft (6).

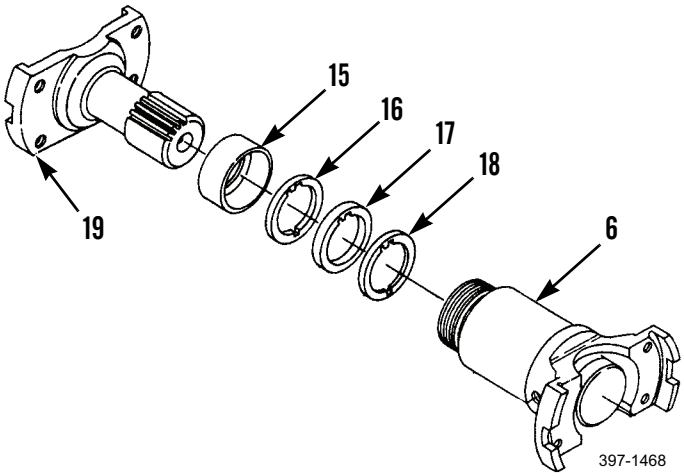

### *ASSEMBLY - CONTINUED*

7. Install propeller shaft (6) assembly on U-joint assembly (11) with four washers (9) and bolts (10). Tighten bolts to 35 to 45 lb-ft (47 to 61 Nm).
8. Install propeller shaft assembly (6) to U-joint assembly (12) with four washers (13) and bolts (14). Tighten bolts to 35 to 45 lb-ft (47 to 61 Nm).

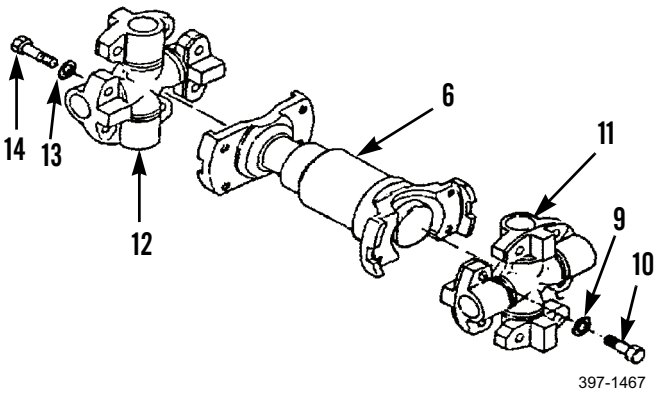

397-1467

### *INSTALLATION*

1. Apply antiseize compound to pump shaft.
2. Install U-joint yoke (1), washer (2), and nut (3). Tighten nut to 125 to 145 lb-ft (169 to 197 Nm).

**NOTE**

Bolts (8) have coarse threads. Bolts (5) have fine threads.

3. Install propeller shaft (6) assembly, four washers (7), and bolts (8). Tighten bolts to 35 to 45 lb-ft (47 to 61 Nm).
4. Install U-joint of propeller shaft (6) on U-joint yoke (1) with four washers (4) and bolts (5). Tighten bolts to 35 to 45 lb-ft (47 to 61 Nm).
5. Apply grease to three lube fittings (WP 0023 00).
6. Install hydraulic drive protection cover (WP 0219 00).

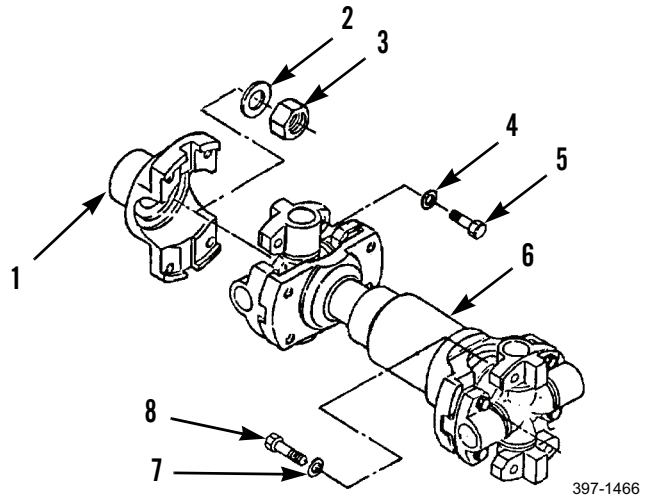

397-1466

**END OF WORK PACKAGE**

## BLADE FLOAT PILOT VALVE MAINTENANCE (CCE MACHINE) 0233 00

### THIS WORK PACKAGE COVERS

Removal, Disassembly, Cleaning and Inspection, Assembly, Installation

### INITIAL SETUP

**Maintenance Level**

Unit

**Tools and Special Tools**

Tool kit, general mechanic's (Item 89, WP 0348 00)

**Materials/Parts**

Cap set, protective (Item 7, WP 0349 00)

Rag, wiping (Item 35, WP 0349 00)

Packing, preformed (7)

Seal (6)

**References**

WP 0216 00

**Equipment Conditions**

Machine parked on level ground (TM 5-3805-261-10)

Parking/emergency brake applied (TM 5-3805-261-10)

Implements lowered to ground (TM 5-3805-261-10)

Engine off (TM 5-3805-261-10)

Battery disconnect switch in OFF position (TM 5-3805-261-10)

Blade float pilot valve wiring harness removed (WP 0133 00)

Hydraulic pressure relieved (WP 0020 00)

### *REMOVAL*

**CAUTION**

Cap hose and tube ends to prevent contamination.

**NOTE**

Tag hose and tube assemblies before disconnecting to aid in installation.

1. Disconnect hose assembly (15) from elbow (13). Remove and discard preformed packing (14).
2. Disconnect hose assembly (1) from tee (3). Remove and discard preformed packing (2).
3. Disconnect hose assembly (6) from connector (4). Remove and discard preformed packing (5).
4. Disconnect hose assembly (7) from connector (9). Remove and discard preformed packing (8).
5. Remove bolt (10) and washer (11).
6. Remove blade float pilot valve (12).

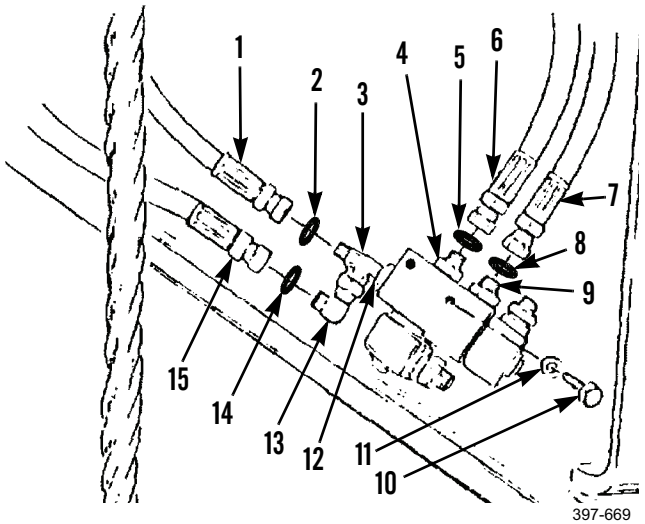

### *REMOVAL - CONTINUED*

7. Remove connector (4) and preformed packing (18). Discard preformed packing.
8. Remove connector (9) and preformed packing (16). Discard preformed packing.
9. Remove elbow (13) from tee (3).
10. Remove tee (3) and preformed packing (17). Discard preformed packing.

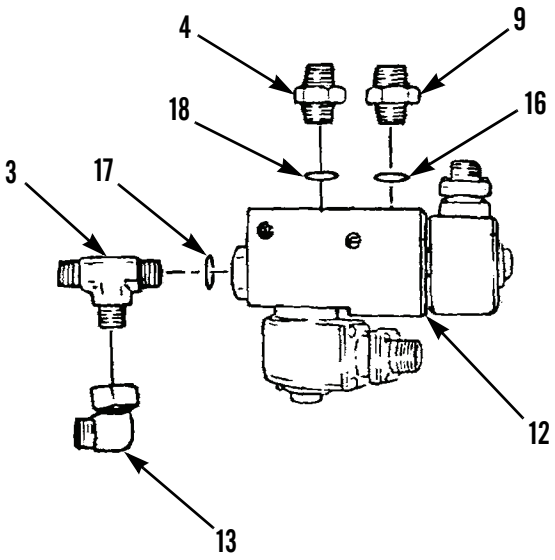

397-670

### *DISASSEMBLY*

1. Remove nut (19), coil (20), valve cartridge (21), and three seals (22, 23, and 24) from body (12). Discard seals.

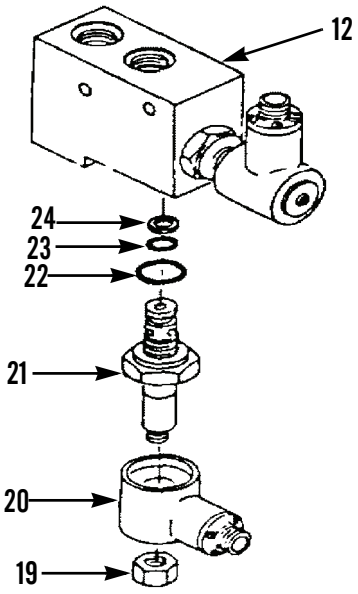

397-1534

### *DISASSEMBLY*

2. Remove screw (30), shouldered washer (29), coil (31), valve cartridge (28), and three seals (27, 26, and 25). Discard seals.

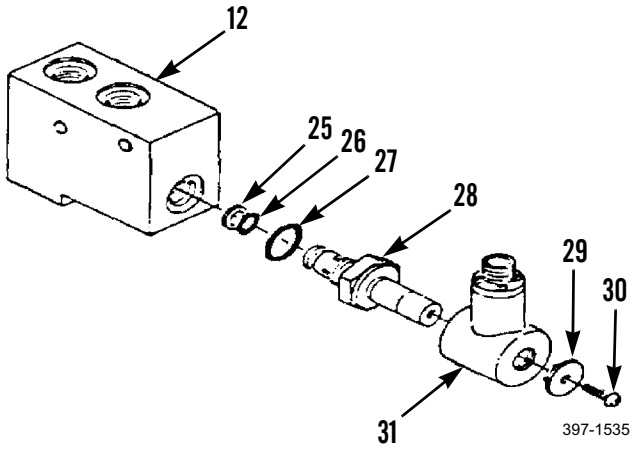


### *CLEANING AND INSPECTION*

Clean and inspect all parts in accordance with WP 0020 00.

### *ASSEMBLY*

1. Install new seals (25, 26, and 27), valve cartridge (28), coil (31), shouldered washer (29), and screw (30) in body (12).
2. Install new seals (24, 23, and 22), valve cartridge (21), coil (20), and nut (19).

### *INSTALLATION*

1. Install new preformed packing (17) and tee (3) into valve body (12).
2. Install elbow (13).
3. Install new preformed packing (16) and connector (9).
4. Install new preformed packing (18) and connector (4).

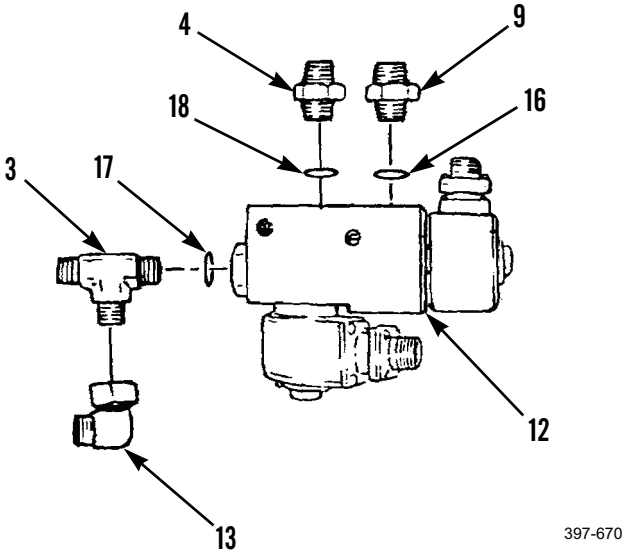

***INSTALLATION - CONTINUED***

5. Position blade float pilot valve (12) assembly on vehicle.
6. Install washer (11) and bolt (10).
7. Install new preformed packing (8) and connect hose assembly (7) to connector (9).
8. Install new preformed packing (5) and connect hose assembly (6) to connector (4).
9. Install new preformed packing (2) and connect hose assembly (1) to tee (3).
10. Install new preformed packing (14) and connect hose assembly (15) to elbow (13).

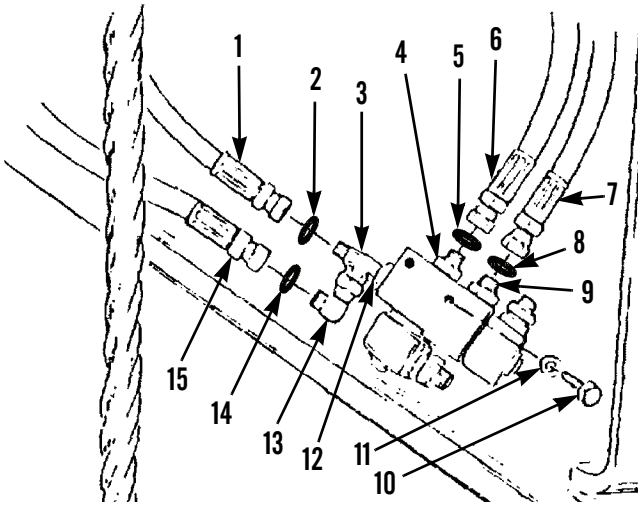


11. Install blade float pilot valve wiring harness (WP 0133 00).
12. Start engine (TM 5-3805-261-10).
13. Operate control levers and cycle system through at least five full-travel movements to bleed air from hydraulic system.
14. Stop engine and check for leaks.
15. Check hydraulic oil level and fill as necessary (WP 0216 00).

**END OF WORK PACKAGE**

## BLADE FLOAT CHECK VALVE MAINTENANCE (CCE MACHINE) 0234 00

### THIS WORK PACKAGE COVERS

Removal, Disassembly, Cleaning and Inspection, Assembly, Installation

### INITIAL SETUP

**Maintenance Level**

Unit

**Tools and Special Tools**

Tool kit, general mechanic's (Item 89, WP 0348 00)

Shop equipment, common no. 1 (Item 75, WP 0348 00)

Wrench, torque (Item 97, WP 0348 00)

**Materials/Parts**

Rag, wiping (Item 35, WP 0349 00)

Tag, marker (Item 44, WP 0349 00)

Packing, preformed (14)

Seal

**References**

WP 0216 00

**Equipment Conditions**

Machine parked on level ground (TM 5-3805-261-10)

Parking/emergency brake applied (TM 5-3805-261-10)

Implements lowered to ground (TM 5-3805-261-10)

Engine off (TM 5-3805-261-10)

Battery disconnect switch in OFF position (TM 5-3805-261-10)

Hydraulic pressure relieved (WP 0020 00)

***REMOVAL***

## CAUTION

Cap hose ends to prevent contamination.

## NOTE

- Tag hose assemblies before disconnecting to aid in installation.
- This procedure covers maintenance of the left side blade float check valve. Follow these instructions for the right side blade float check valve.

1. Disconnect hose assembly (4) from elbow (2). Remove and discard preformed packing (3).
2. Remove elbow (2) and preformed packing (1). Discard preformed packing.
3. Disconnect hose assembly (12) from elbow (14). Remove and discard preformed packing (13).
4. Remove elbow (14) and preformed packing (15). Discard preformed packing.
5. Disconnect hose assembly (9) from connector (11). Remove and discard preformed packing (10).
6. Remove connector (11) and preformed packing (16). Discard preformed packing.
7. Disconnect hose assembly (8) from connector (6). Remove and discard preformed packing (7).
8. Remove connector (6) and preformed packing (5). Discard preformed packing.

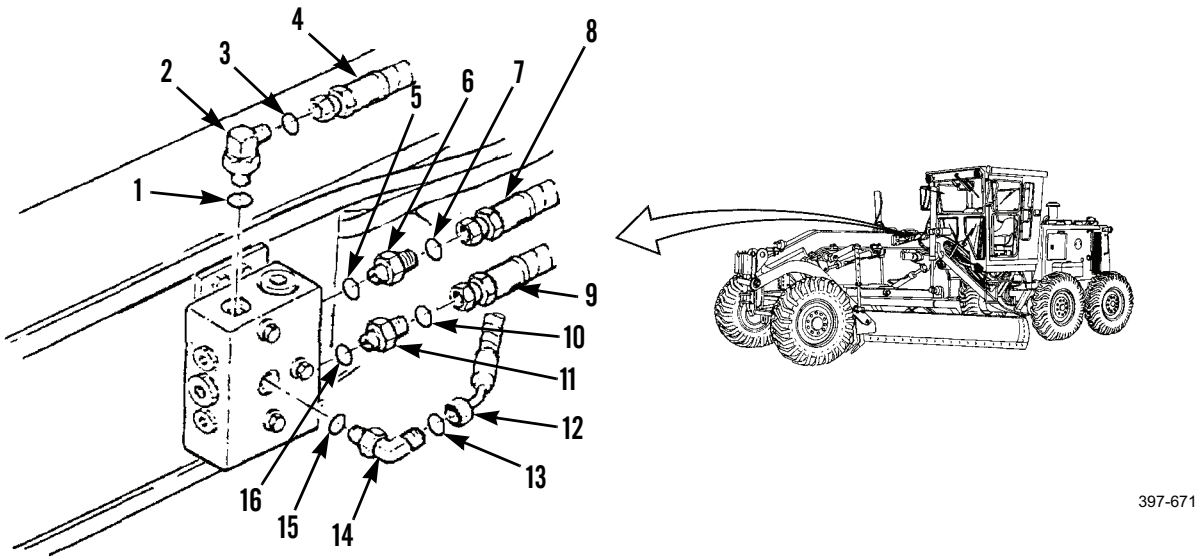

### *REMOVAL - CONTINUED*

9. Remove three bolts (21), washers (20), and blade float check valve (19) from mounting plate (18).
10. Remove four bolts (17) and mounting plate (18) from machine.

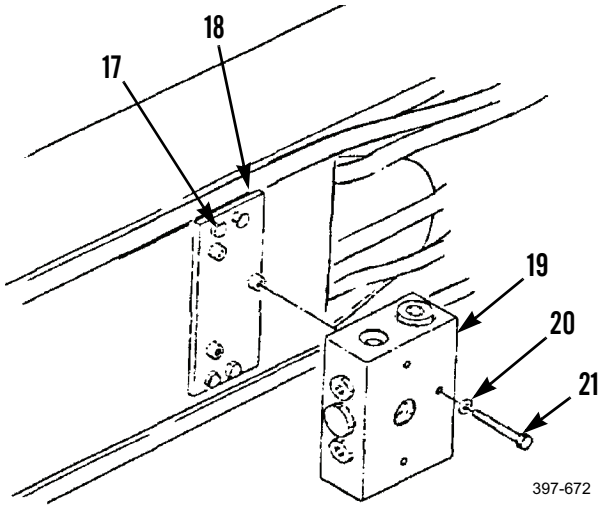


### *DISASSEMBLY*

**WARNING**

Wear safety glasses when removing plug. Removal of plug may cause accidental release of spring, which may cause injury to personnel.

1. Loosen plug (22) carefully to relieve spring (24) tension. Remove plug, preformed packing (23), spring (24), and ball (25). Discard preformed packing.
2. Loosen plug (30) carefully to relieve spring (28) tension. Remove plug, preformed packing (29), spring (28), and ball (31). Discard preformed packing.

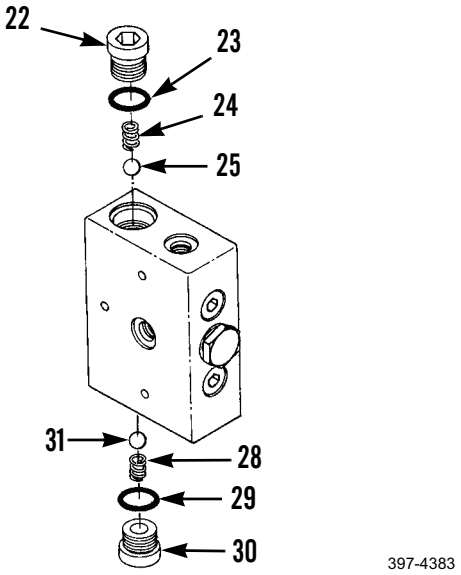

### *DISASSEMBLY - CONTINUED*

3. Remove plug (36) and preformed packing (34). Discard preformed packing.
4. Remove plug (40) and preformed packing (41). Discard preformed packing.
5. Remove plug (39) and preformed packing (38). Discard preformed packing.
6. Remove plug (37) and seal (35). Discard seal.
7. Remove plug (42) and preformed packing (43). Discard preformed packing.

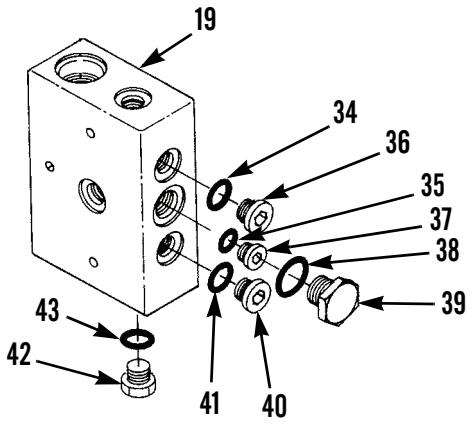


397-1537

## CAUTION

Brass rod and hammer must be used to remove seat and piston to prevent damage.

8. Use a 0.25 in. (6.4 mm) diameter brass rod and hammer to remove valve seat (26) and piston (27) from body (19).
9. Use a 0.69 in. (17 mm) diameter brass rod and hammer to remove seat (32) and piston (33) from body (19).

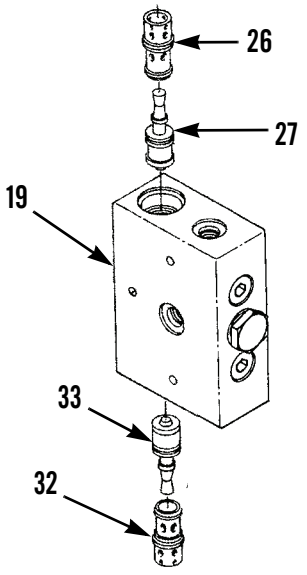


397-4385

### *CLEANING AND INSPECTION*

Clean and inspect all parts in accordance with WP 0020 00.

### *ASSEMBLY*

1. Lower temperature of seat (32).
2. Use a 0.69 in. (17.5 mm) diameter brass rod and hammer to install seat (32) in body (19).
3. Install pistons (33 and 27) in body (19).
4. Lower temperature of seat (26).
5. Use a 0.69 in. (17.5 mm) diameter brass rod and hammer to install seat (26) in body (19).
6. Move pistons (27 and 33), checking for free travel.
7. Install ball (31), spring (28), new preformed packing (29), and plug (30) in body (19). Tighten plug to 25 lb-ft (34 Nm).
8. Install ball (25), spring (24), new preformed packing (23), and plug (22) in body (19). Tighten plug to 25 lb-ft (34 Nm).
9. Install new preformed packing (43) and plug (42) in body (19).
10. Install new seal (35) and plug (37) in body (19).
11. Install new preformed packing (38) and plug (39) in body (19).
12. Install new preformed packing (41) and plug (40) in body (19).
13. Install new preformed packing (34) and plug (36) in body (19).

### *INSTALLATION*

1. Install mounting plate (18) on machine with four bolts (17).
2. Install blade float check valve (19) on mounting plate (18) with three washers (20) and bolts (21).

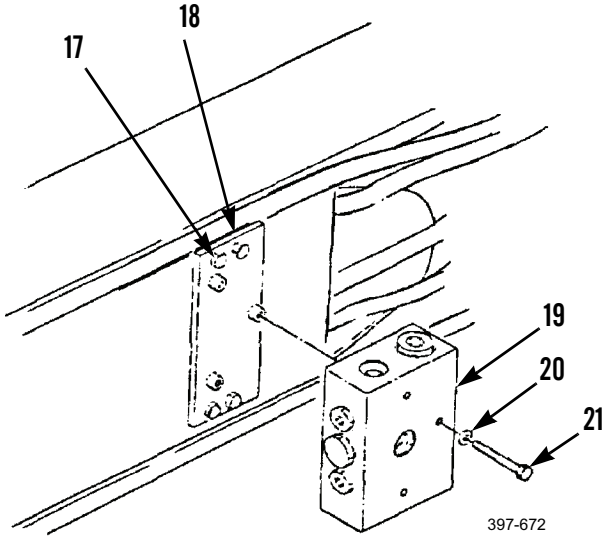

## BLADE FLOAT CHECK VALVE MAINTENANCE (CCE MACHINE) - CONTINUED 0234 00

### *INSTALLATION - CONTINUED*

3. Install new preformed packing (5) and connector (6).
4. Install new preformed packing (7) and connect hose assembly (8) to connector (6).
5. Install new preformed packing (16) and connector (11).
6. Install new preformed packing (10) and connect hose assembly (9) to connector (11).
7. Install new preformed packing (15) and elbow (14).
8. Install new preformed packing (13) and connect hose assembly (12) to elbow (14).
9. Install new preformed packing (1) and elbow (2).
10. Install new preformed packing (3) and connect hose assembly (4) to elbow (2).

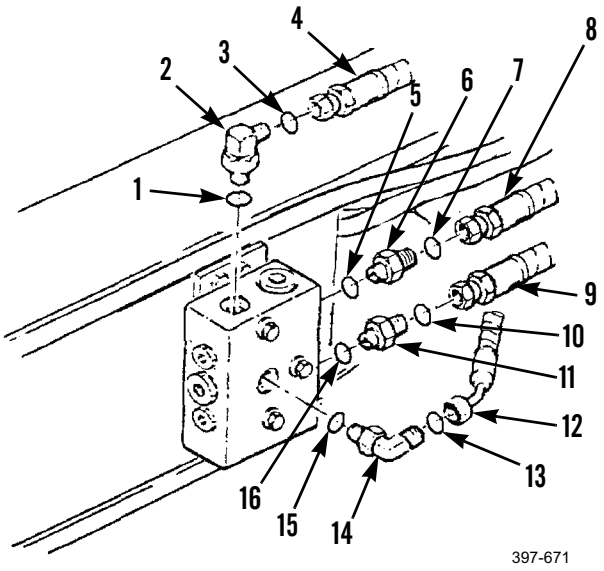


11. Start engine (TM 5-3805-261-10).
12. Operate control levers and cycle system through at least five full-travel movements to bleed air from hydraulic system.
13. Stop engine and check for leaks.
14. Check hydraulic oil level and fill as necessary (WP 0216 00).

**END OF WORK PACKAGE**

## RIGHT BLADE LIFT, ARTICULATION, AND CENTERSHIFT CHECK VALVE MAINTENANCE 0235 00

## THIS WORK PACKAGE COVERS

Removal, Disassembly, Cleaning and Inspection, Assembly, Installation

## INITIAL SETUP

**Maintenance Level**

Unit

**Tools and Special Tools**

Tool kit, general mechanic's (Item 89, WP 0348 00)

Shop equipment, common no. 1 (Item 75, WP 0348 00)

Wrench, torque (Item 97, WP 0348 00)

**Materials/Parts**

Cap set, protective (Item 7, WP 0349 00)

Rag, wiping (Item 35, WP 0349 00)

Tag, marker (Item 44, WP 0349 00)

Packing, preformed (29)

**References**

WP 0216 00

**Equipment Conditions**

Machine parked on level ground (TM 5-3805-261-10)

Parking/emergency brake applied (TM 5-3805-261-10)

Implements lowered to ground (TM 5-3805-261-10)

Engine off (TM 5-3805-261-10)

Battery disconnect switch in OFF position (TM 5-3805-261-10)

Hydraulic pressure relieved (WP 0020 00)

***REMOVAL***

## CAUTION

Cap hose and tube ends to prevent contamination.

## NOTE

- Perform steps 1 through 9 to remove valve that functions as right blade lift check valve.
- Tag hose assemblies before disconnecting to aid in installation.

1. Disconnect tee (1) from elbow (5). Remove and discard preformed packing (3).
2. Disconnect tee (15) from elbow (13). Remove and discard preformed packing (14).
3. Disconnect hose assembly (7) from elbow (6). Remove and discard preformed packing (8).
4. Disconnect hose assembly (9) from elbow (11). Remove and discard preformed packing (10).
5. Remove three bolts (2), washers (4), and check valve (12) assembly.

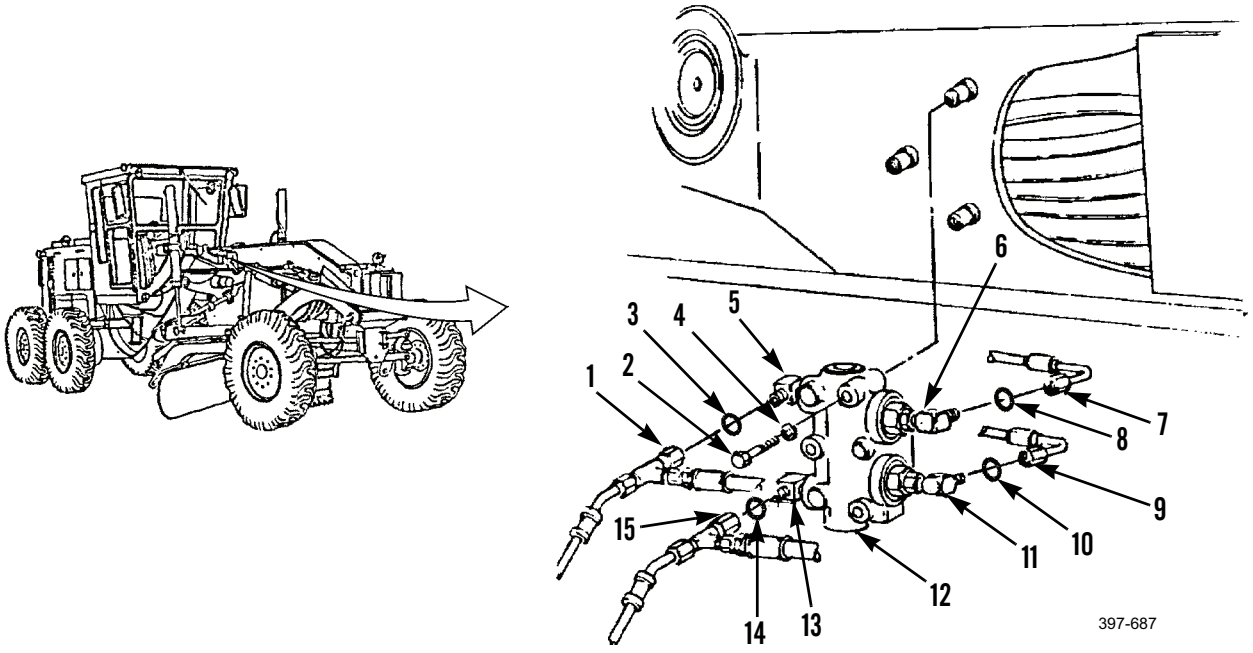

## RIGHT BLADE LIFT, ARTICULATION, AND CENTERSHIFT CHECK VALVE MAINTENANCE - CONTINUED 0235 00

### *REMOVAL - CONTINUED*

6. Remove elbow (5) and preformed packing (16) from check valve (12). Discard preformed packing.
7. Remove elbow (6) and preformed packing (17). Discard preformed packing.
8. Remove elbow (11) and preformed packing (18). Discard preformed packing.
9. Remove elbow (13) and preformed packing (19). Discard preformed packing.
10. Disassemble check valve (12). Refer to *Disassembly* in this work package.

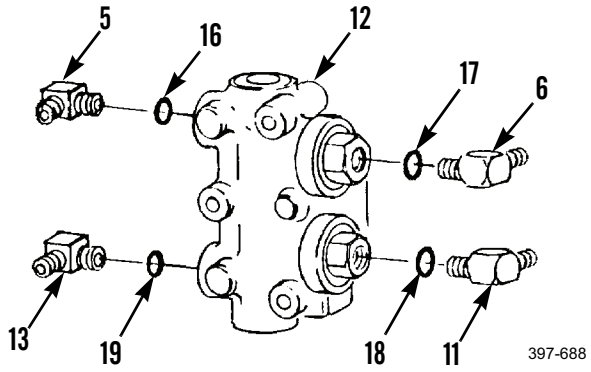


**NOTE**

Perform steps 11 through 20 to remove valve that functions as articulation check valve.

11. Disconnect hose assembly (29) from connector (27). Remove and discard preformed packing (28).
12. Remove connector (27) and preformed packing (26). Discard preformed packing.
13. Remove elbow (25) and preformed packing (24) from check valve (12) assembly. Discard preformed packing.
14. Disconnect hose assembly (20) from fitting (22). Remove and discard preformed packing (21).
15. Remove fitting (22) and preformed packing (23). Discard preformed packing.

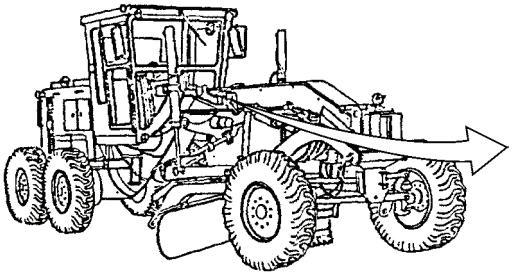

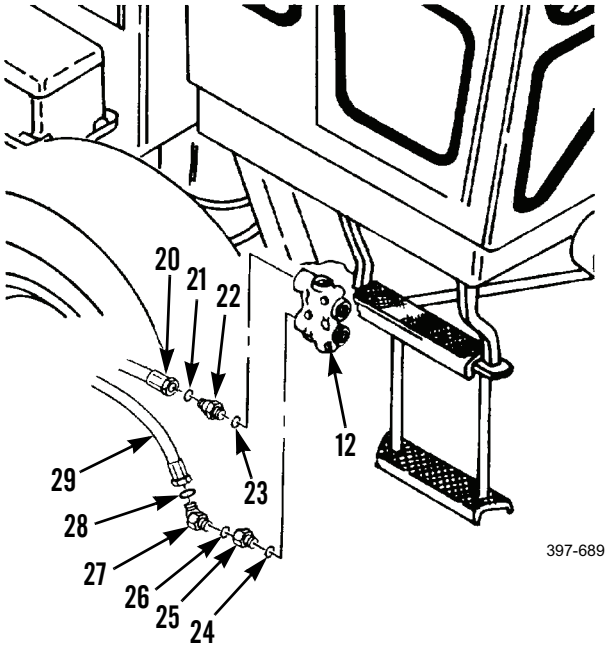

## RIGHT BLADE LIFT, ARTICULATION, AND CENTERSHIFT CHECK VALVE MAINTENANCE - CONTINUED 0235 00

### *REMOVAL - CONTINUED*

16. Disconnect hose assembly (30) from elbow (39). Remove and discard preformed packing (32).
17. Remove elbow (39) and preformed packing (38). Discard preformed packing.
18. Disconnect hose assembly (31) from elbow (34). Remove and discard preformed packing (33).
19. Remove elbow (34) and preformed packing (35). Discard preformed packing.
20. Remove three bolts (36), washers (37), and check valve (12).
21. Disassemble check valve (12). Refer to *Disassembly* in this work package.

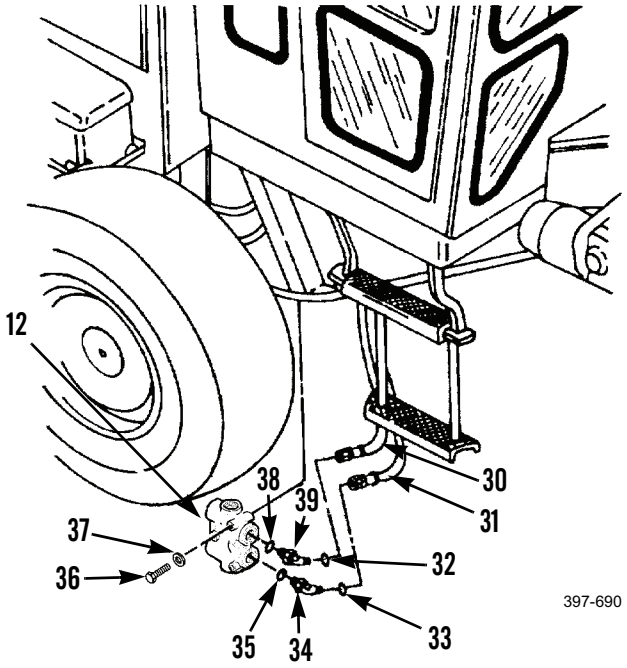

**RIGHT BLADE LIFT, ARTICULATION, AND CENTERSHIFT CHECK VALVE MAINTENANCE - CONTINUED** **0235 00**

***REMOVAL - CONTINUED***

**NOTE**

Perform steps 22 through 31 to remove valve that functions as centershift check valve.

22. Remove nine bolts (42), washers (41 and 43), and frame cover (40) from machine.
23. Disconnect hose assembly (51) from connector (49). Remove and discard preformed packing (50).
24. Remove connector (49) and preformed packing (48) from check valve (12) assembly. Discard preformed packing.
25. Disconnect hose assembly (44) from connector (46). Remove and discard preformed packing (45).
26. Remove connector (46) and preformed packing (47). Discard preformed packing.

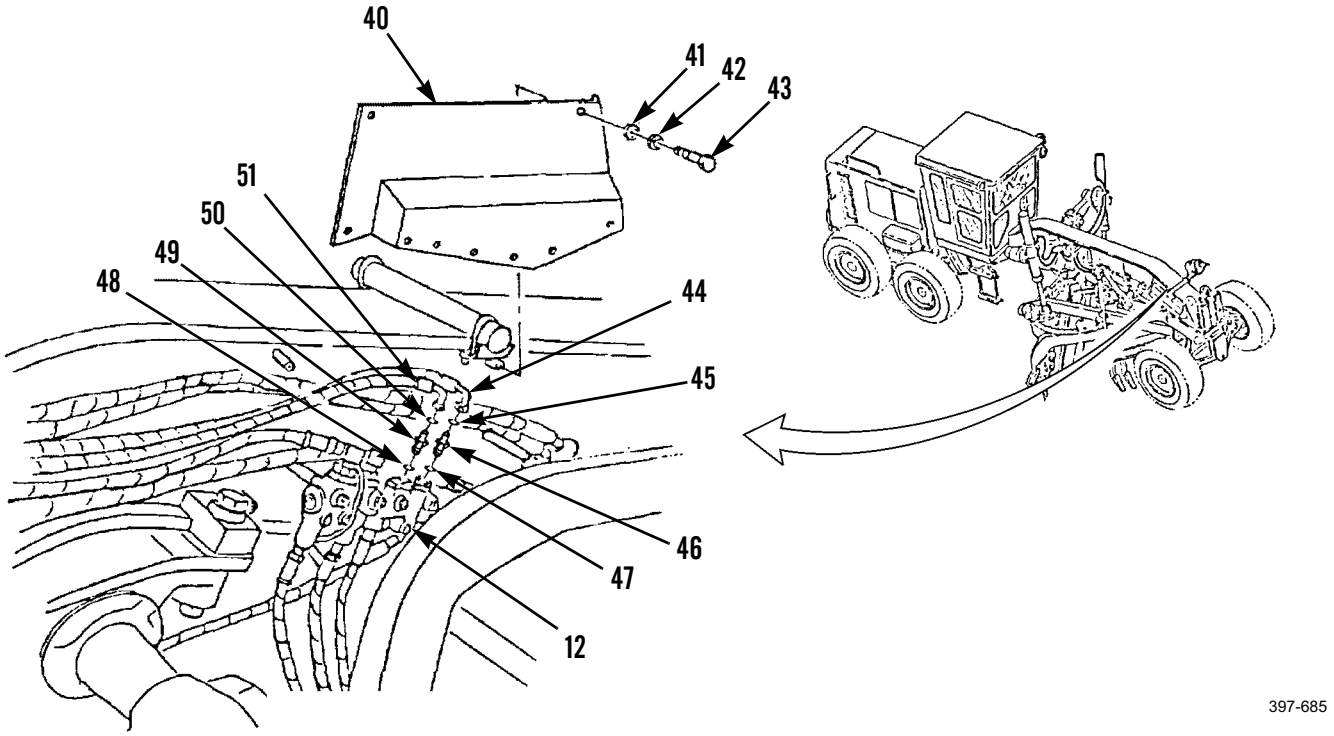

***REMOVAL - CONTINUED***

27. Disconnect hose assembly (60) from connector (57). Remove and discard preformed packing (58).
28. Remove connector (57) and preformed packing (56) from check valve (12) assembly. Discard preformed packing.
29. Disconnect hose assembly (61) from connector (55). Remove and discard preformed packing (59).
30. Remove connector (55) and preformed packing (54). Discard preformed packing.
31. Remove bolt (53), washer (52), and check valve (12).
32. Disassemble check valve (12). Refer to *Disassembly* in this work package.

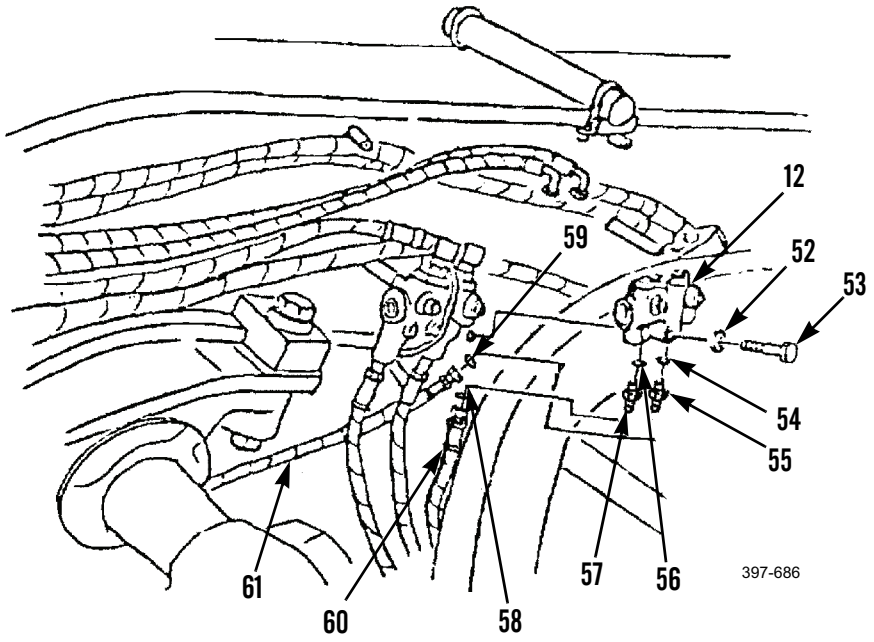

***DISASSEMBLY***

1. Remove adapter (70), preformed packing (69), and choke (68) from check valve (12). Discard preformed packing.
2. Remove adapter (71), preformed packing (72), and choke (73). Discard preformed packing.

**WARNING**

Spring is under pressure. Loosen plug carefully to relieve pressure of spring. Failure to follow this warning may cause injury to personnel.

**NOTE**

Loosen plug carefully to relieve tension of spring.

3. Remove plug (62), preformed packing (63), spring (64), and ball (65). Discard preformed packing.

**CAUTION**

Use brass punch and hammer to remove seat and piston. Use caution not to damage seat.

4. Use a brass punch and hammer to remove seat (66) and piston (67).

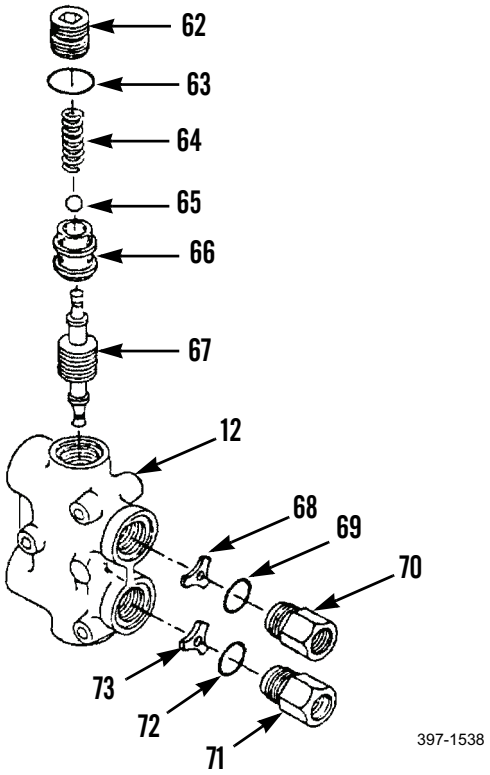

## RIGHT BLADE LIFT, ARTICULATION, AND CENTERSHIFT CHECK VALVE MAINTENANCE - CONTINUED 0235 00

### *DISASSEMBLY - CONTINUED*

5. Loosen plug (78) carefully to relieve tension of spring (76). Remove plug, preformed packing (77), spring (64), and ball (75). Discard preformed packing.
6. Use brass punch and hammer to remove seat (74) from check valve body (12) body.

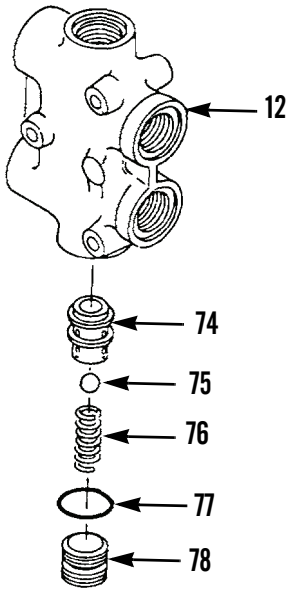

397-1539

### *CLEANING AND INSPECTION*

Clean and inspect all parts in accordance with WP 0020 00.

### *ASSEMBLY*

1. Lower temperature of seat (74).
2. Use brass punch and hammer to install seat (74) in check valve (12) body.
3. Install pinion (67).
4. Lower temperature of seat (66).
5. Use brass punch and hammer to install seat (66).
6. Move piston (67) to check for free travel.

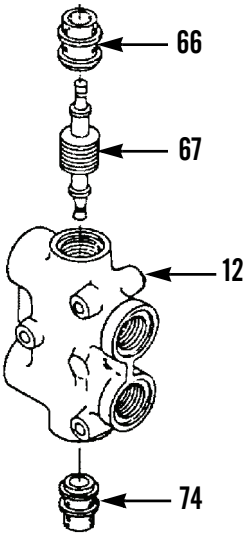

397-1540

### *ASSEMBLY - CONTINUED*

7. Install ball (65), spring (64), new preformed packing (63), and plug (62). Tighten plug to 26 lb-ft (35 Nm).
8. Install ball (75), spring (76), new preformed packing (77), and plug (78). Tighten plug to 25 lb-ft (34 Nm).
9. Install choke (73), new preformed packing (72), and adapter (71). Tighten adapter to 55 lb-ft (75 Nm).
10. Install choke (68), new preformed packing (69), and adapter (70). Tighten adapter to 55 lb-ft (75 Nm).

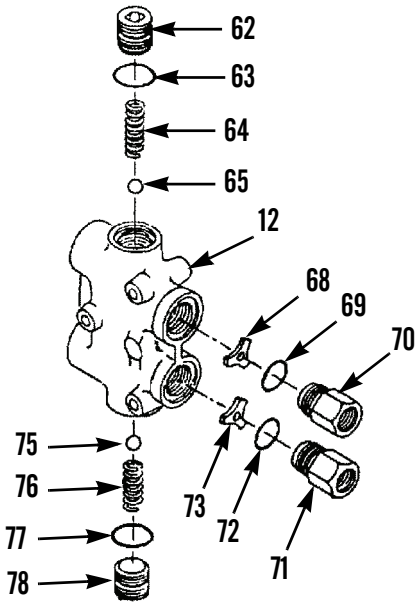

397-1541

### *INSTALLATION*

**NOTE**

Perform steps 1 through 14 to install valve that functions as centershift check valve.

1. Install check valve (12) to machine with washer (52), and bolt (53).
2. Install new preformed packing (54) and connector (55) to check valve (12) assembly.
3. Install new preformed packing (56) and connector (57).
4. Install new preformed packing (59) and connect hose assembly (61) to connector (55).
5. Install new preformed packing (58) and connect hose assembly (60) to connector (57).

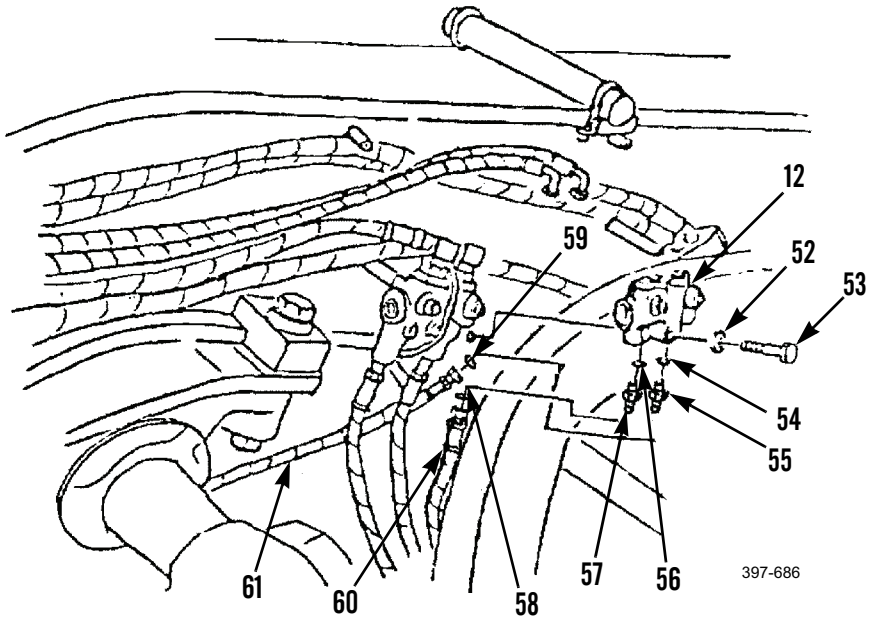

397-686

## RIGHT BLADE LIFT, ARTICULATION, AND CENTERSHIFT CHECK VALVE MAINTENANCE - CONTINUED 0235 00

### *INSTALLATION - CONTINUED*

6. Install new preformed packing (48) and connector (49) to check valve (12) assembly.
7. Install new preformed packing (47) and connector (46).
8. Install new preformed packing (50) and connect hose assembly (51) to connector (49).
9. Install new preformed packing (45) and connect hose assembly (44) to connector (46).
10. Start engine (TM 5-3805-261-10).
11. Operate control levers and cycle system through five or more full travel movements to bleed air from system.
12. Stop engine and check for leaks.
13. Install frame cover (40) to machine with nine washers (41), washers (42), and bolts (43).

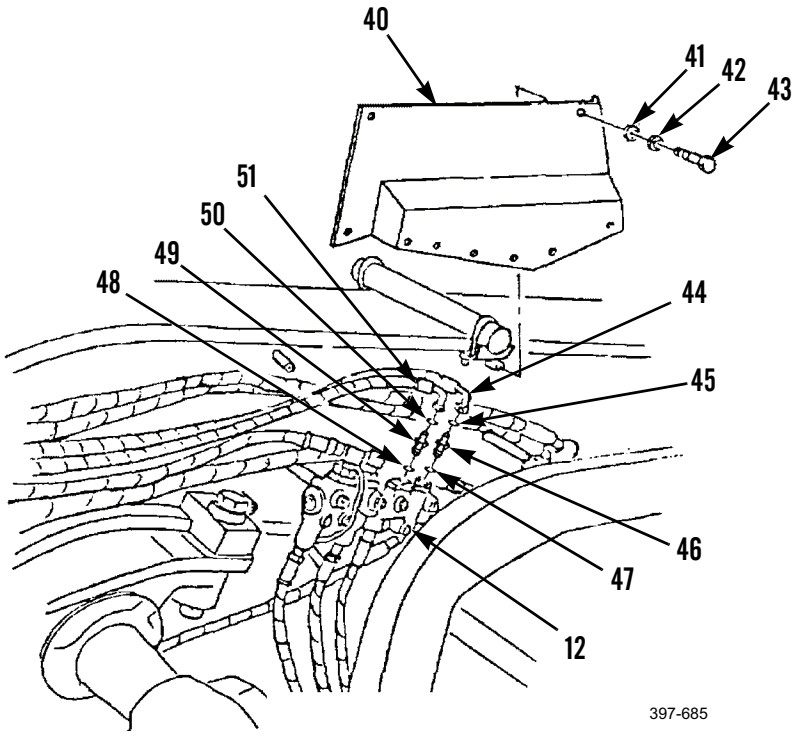


14. Check hydraulic oil level and fill as necessary (WP 0216 00).

***INSTALLATION - CONTINUED***

**NOTE**

Perform steps 15 through 29 to install valve that functions as articulation check valve.

15. Install check valve (12) assembly to machine with three washers (37) and bolts (36).
16. Install new preformed packing (35) and elbow (34) to check valve (12) assembly.
17. Install new preformed packing (33) and connect hose assembly (31) to elbow (34).
18. Install new preformed packing (38) and elbow (39).
19. Install new preformed packing (32) and connect hose assembly (30).

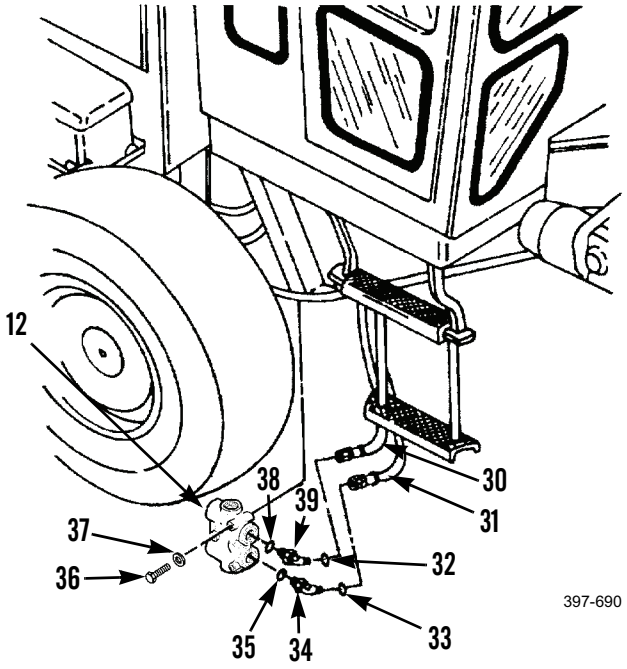


20. Install new preformed packing (23) and fitting (22) to check valve (12) assembly.
21. Install new preformed packing (21) and connect hose assembly (20) to fitting (22).
22. Install new preformed packing (24) and fitting (25).
23. Install new preformed packing (26) and elbow (27) to fitting (25).
24. Install new preformed packing (28) and connect hose assembly (29) to fitting (25).

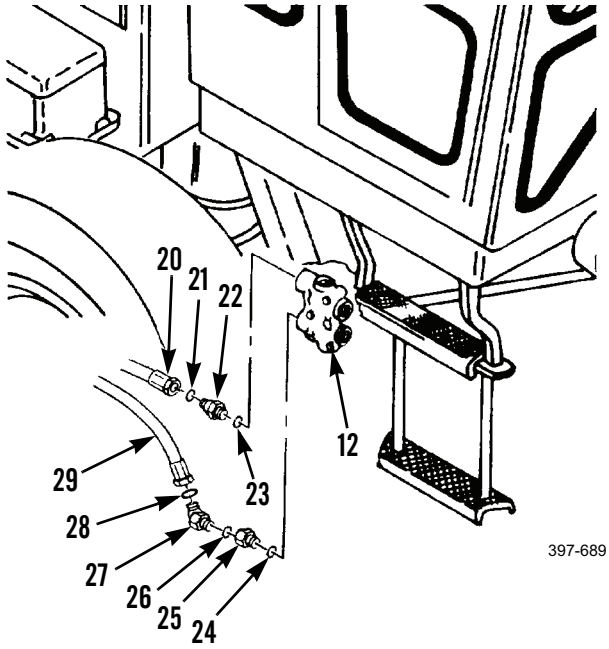

***INSTALLATION - CONTINUED***

25. Start engine (TM 5-3805-261-10).
26. Operate control levers and cycle system through at least five or more full-travel movements to bleed air from system.
27. Stop engine and check for leaks.
28. Check hydraulic oil level and fill as necessary (WP 0216 00).

**NOTE**

Preform steps 29 through 42 to install valve that functions as right blade lift check valve.

29. Install new preformed packing (19) and elbow (13) to check valve (12) assembly.
30. Install new preformed packing (18) and elbow (11).
31. Install new preformed packing (17) and elbow (6).
32. Install new preformed packing (16) and elbow (5).

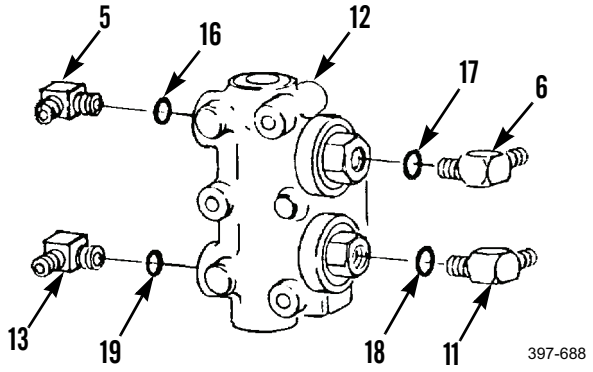


33. Install check valve (12) assembly to machine with three washers (4) and bolts (2).
34. Install new preformed packing (10) and connect hose assembly (9) to elbow (11).
35. Install new preformed packing (8) and connect hose assembly (7) to elbow (6).
36. Install new preformed packing (14) and connect tee (15) to elbow (13).
37. Install new preformed packing (3) and connect tee (1) to elbow (5).

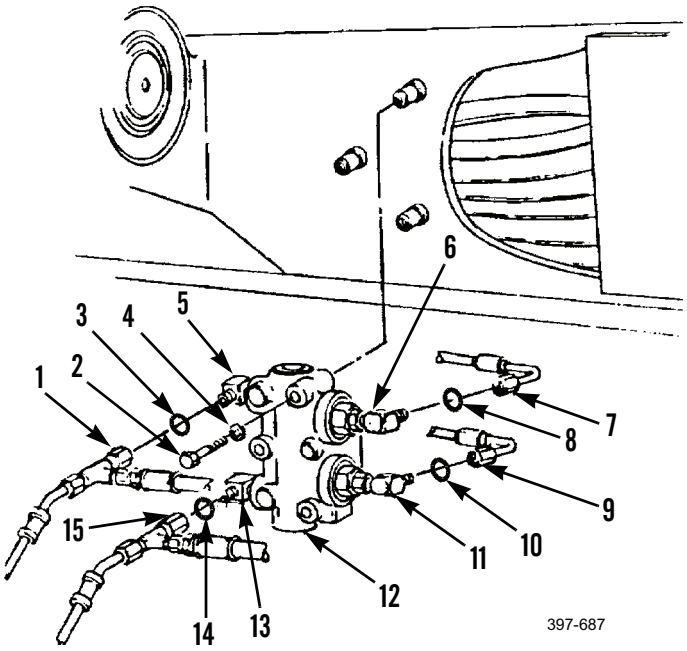


38. Start engine (TM 5-3805-261-10).
39. Operate control levers and cycle system through at least five full-travel movements to bleed air from system.
40. Stop engine and check for leaks.
41. Check hydraulic oil level and fill as necessary (WP 0216 00).

**END OF WORK PACKAGE**

## LEFT BLADE LIFT AND RELIEF VALVE MAINTENANCE 0236 00

### THIS WORK PACKAGE COVERS

Removal, Disassembly, Cleaning and Inspection, Assembly, Installation

### INITIAL SETUP

**Maintenance Level**

Unit

**Tools and Special Tools**

Tool kit, general mechanic's (Item 89, WP 0348 00)

Shop equipment, field maintenance (Item 74, WP 0348 00)

Wrench, torque (Item 96, WP 0348 00)

**Materials/Parts**

Cap set, protective (Item 7, WP 0349 00)

Rag, wiping (Item 35, WP 0349 00)

Tag, marker (Item 44, WP 0349 00)

Packing, preformed (13)

**References**

WP 0216 00

**Equipment Conditions**

Machine parked on level ground (TM 5-3805-261-10)

Parking/emergency brake applied (TM 5-3805-261-10)

Implements lowered to ground (TM 5-3805-261-10)

Engine off (TM 5-3805-261-10)

Battery disconnect switch in OFF position (TM 5-3805-261-10)

Hydraulic pressure relieved (WP 0020 00)

***REMOVAL***

**CAUTION**

Cap hose ends and plug open ports to prevent contamination.

**NOTE**

Tag hose assemblies before disconnecting to aid in installation.

1. Disconnect hose assemblies (1 and 12) from check valve (11) assembly. Remove and discard preformed packings (2 and 3).
2. Disconnect tees (9 and 10) from check valve (11) assembly. Remove and discard preformed packings (7 and 8).
3. Remove three bolts (6), washers (5), and check valve (11) assembly from machine.

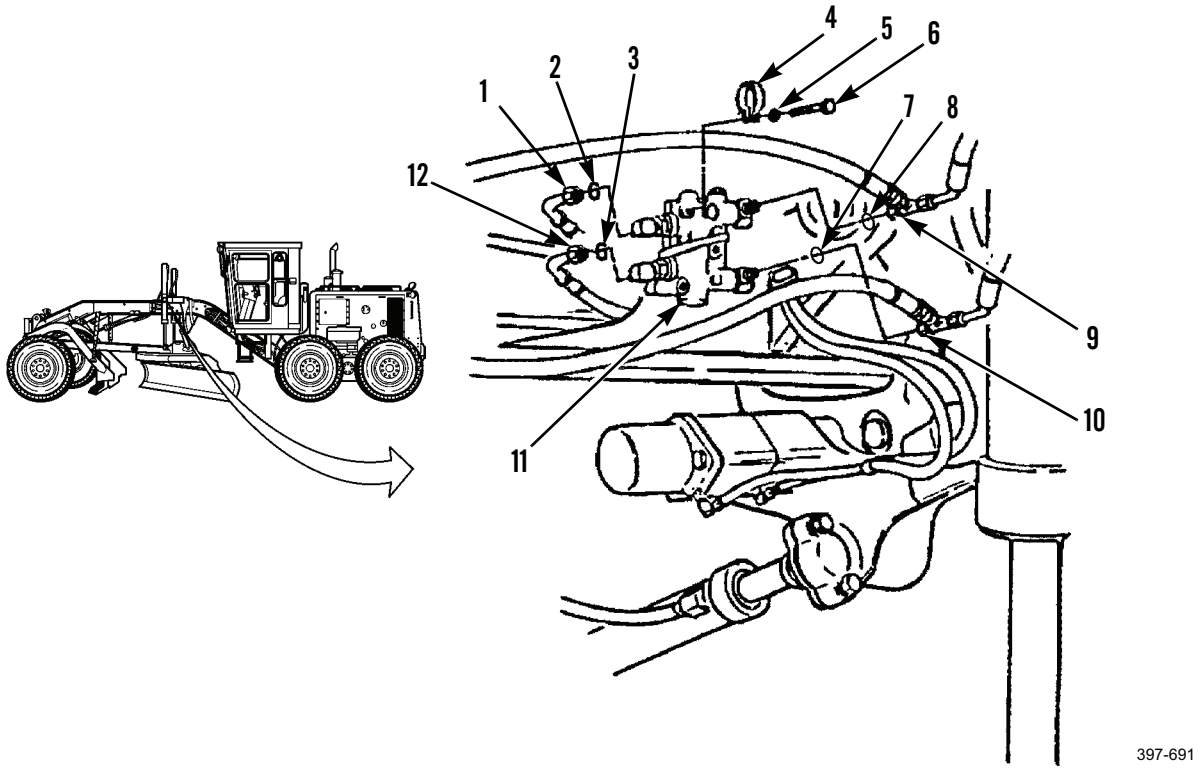

### *REMOVAL - CONTINUED*

4. Remove elbow (19) and preformed packing (20) from check valve (11) assembly. Discard preformed packing.
5. Remove elbow (14) and preformed packing (13). Discard preformed packing.
6. Remove elbow (15) and preformed packing (16). Discard preformed packing.
7. Remove elbow (18) and preformed packing (17). Discard preformed packing.

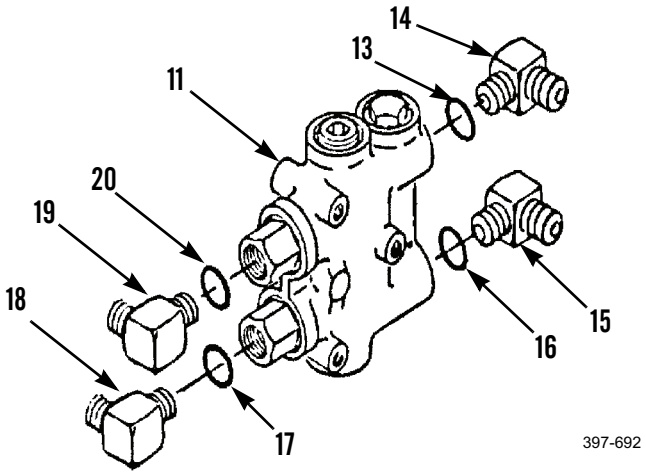


### *DISASSEMBLY*

1. Remove adapter (29), preformed packing (28), and choke (27) from check valve (11). Discard preformed packing.
2. Remove adapter (30), preformed packing (31), and choke (32). Discard preformed packing.

**WARNING**

Springs are under pressure. Loosen plugs carefully to relieve tension of springs. Failure to follow this warning may cause injury to personnel.

3. Loosen plug (21) carefully to relieve tension of spring (23). Remove plug, preformed packing (22), spring, and ball (24). Discard preformed packing.

**CAUTION**

Use brass punch and hammer to remove seat and piston. Use caution not to damage seat.

4. Use brass punch and hammer to remove seat (25) and piston (26).

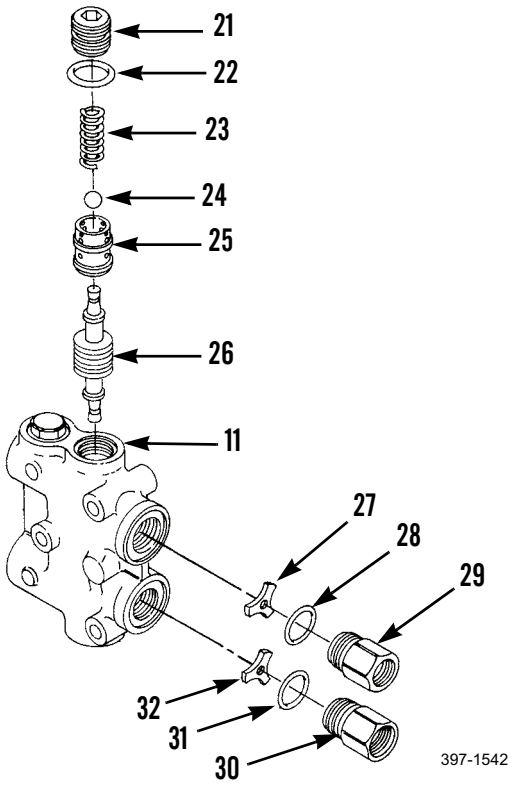

### *DISASSEMBLY - CONTINUED*

5. Loosen plug (45) carefully to relieve tension of spring (43). Remove plug, preformed packing (44), spring, and ball (42). Discard preformed packing.
6. Use brass punch and hammer to remove seat (41).

**NOTE**

Keep groups of shim(s) together and tag for identification.

7. Loosen plug (33) carefully to relieve tension of spring (39). Remove plug, preformed packings (34 and 35), valve (36), shim(s) (37), four shims (38), spring, and four washers (40) from check valve (11). Discard preformed packings.

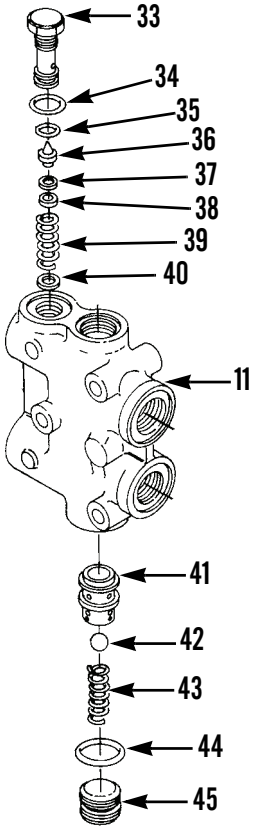

397-1543

### *CLEANING AND INSPECTION*

Clean and inspect all parts in accordance with WP 0020 00.

### *ASSEMBLY*

1. Install four washers (40), spring (39), four shims (38), shim(s) (37), valve (36), new preformed packings (35 and 34), and plug (33) in check valve (11).
2. Lower temperature of seat (41).
3. Use brass punch and hammer to install seat (41).
4. Install piston (26).
5. Lower temperature of seat (25).
6. Use brass punch and hammer to install seat (25).
7. Move piston (26) to check for free travel.

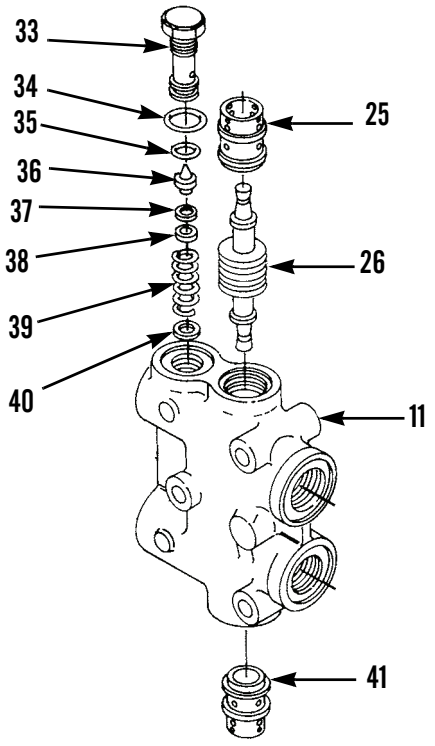

397-1544

### *ASSEMBLY - CONTINUED*

8. Install ball (42), spring (43), new preformed packing (44), and plug (45). Tighten plug to 25 lb-ft (34 Nm).
9. Install ball (24), spring (23), new preformed packing (22), and plug (21). Tighten plug to 25 lb-ft (34 Nm).
10. Install choke (32), new preformed packing (31), and adapter (30). Tighten adapter to 55 lb-ft (75 Nm).
11. Install choke (27), new preformed packing (28), and adapter (29). Tighten adapter to 55 lb-ft (75 Nm).

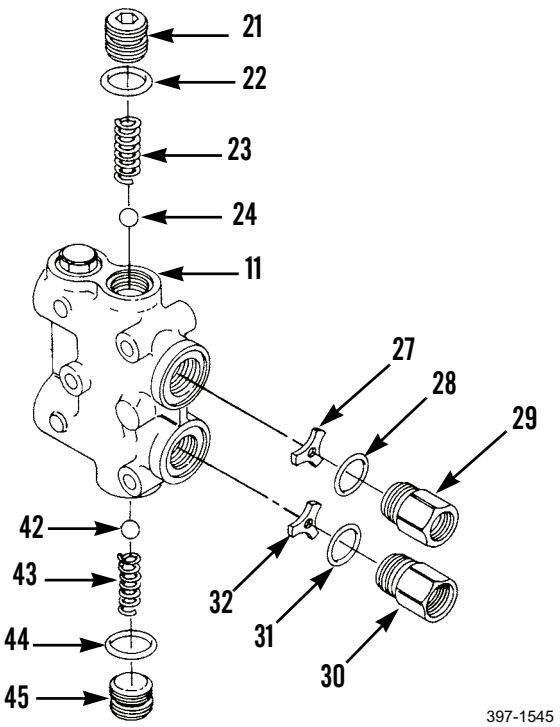

397-1545

### *INSTALLATION*

1. Install new preformed packing (17) and elbow (18) to check valve (11) assembly.
2. Install new preformed packing (16) and elbow (15) to check valve (11) assembly.
3. Install new preformed packing (13) and elbow (14).
4. Install new preformed packing (20) and elbow (19).

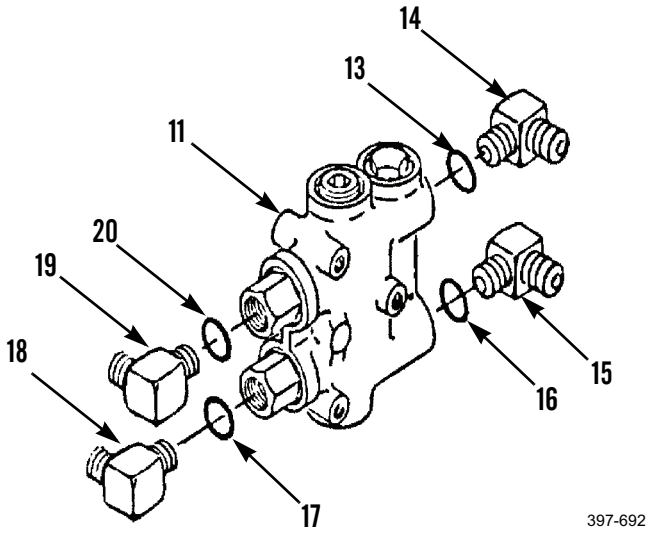

397-692

***INSTALLATION - CONTINUED***

5. Position check valve (11) assembly to machine.
6. Install clamp (4), three washers (5), and bolts (6).
7. Install new preformed packings (8 and 7) and connect tees (10 and 9) to check valve (11) assembly.
8. Install new preformed packings (3 and 2) and connect hose assemblies (12 and 1) to check valve (11) assembly.

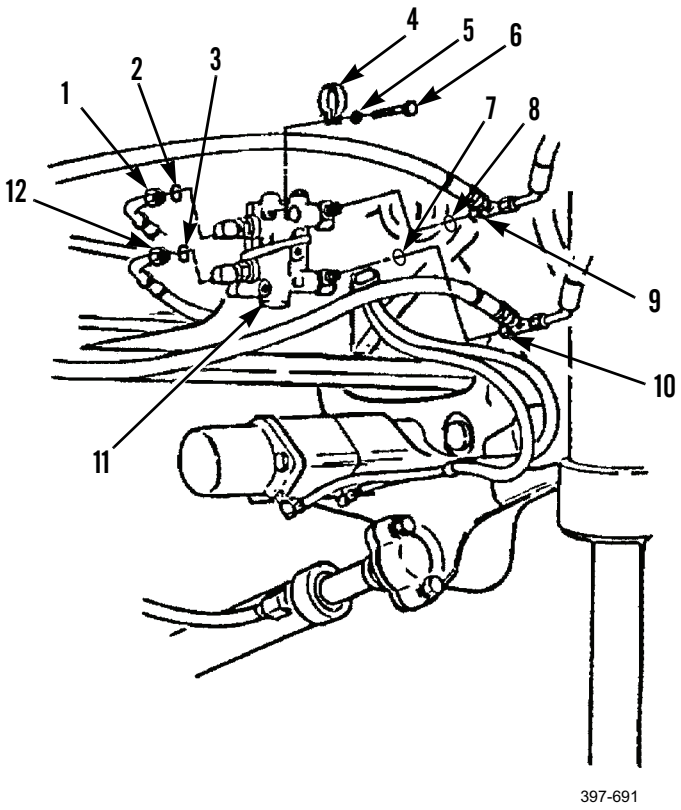


9. Start engine (TM 5-3805-261-10).
10. Operate control levers and cycle system at least five full-travel movements to bleed air from system.
11. Stop engine and check for leaks.
12. Check hydraulic oil level and fill as necessary (WP 0216 00).

**END OF WORK PACKAGE**

## HYDRAULIC CONTROL VALVES REPLACEMENT 0237 00

### THIS WORK PACKAGE COVERS

Removal, Cleaning and Inspection, Installation, Hydraulic Oil Pressure Tests

### INITIAL SETUP

**Maintenance Level**

Unit

**Tools and Special Tools**

Tool kit, general mechanic's (Item 89, WP 0348 00)

**Materials/Parts**

Cap set, protective (Item 7, WP 0349 00)

Oil, lubricating (Item 27, WP 0349 00)

Rag, wiping (Item 35, WP 0349 00)

Tag, marker (Item 44, WP 0349 00)

Packing, preformed (18)

**Personnel Required**

Two

**References**

WP 0020 00

WP 0216 00

WP 0323 00

WP 0329 00

**Equipment Conditions**

Machine parked on level ground (TM 5-3805-261-10)

Parking/emergency brake applied (TM 5-3805-261-10)

Implements lowered to ground (TM 5-3805-261-10)

Engine off (TM 5-2805-261-10)

Battery disconnect switch in OFF position (TM 5-3805-261-10)

Hydraulic control rods disconnected (WP 0218 00)

Scarifer hoses disconnected (WP 0229 00)

Blade lift hoses disconnected (WP 0222 00)

Wheel lean hoses disconnected (WP 0224 00)

Centershift hoses disconnected (WP 0226 00)

Articulation hoses disconnected (WP 0227 00)

Side shift hoses disconnected (WP 0228 00)

Circle drive hoses disconnected (WP 0225 00)

Blade tip hoses disconnected (WP 0223 00)

***REMOVAL***

## CAUTION

Cap hose ends and plug open ports to prevent contamination.

## NOTE

- Perform steps 1 through 9 to remove hydraulic control valve under RIGHT side of cab.
- Tag hose assemblies before disconnecting to aid in installation.

1. Disconnect hose assemblies (11 and 14) from tee (15). Remove and discard preformed packings (12 and 13) under front-right side of cab.
2. Remove tee (15), connector (16), and preformed packing (17) from control valve (1) assembly. Discard preformed packing.

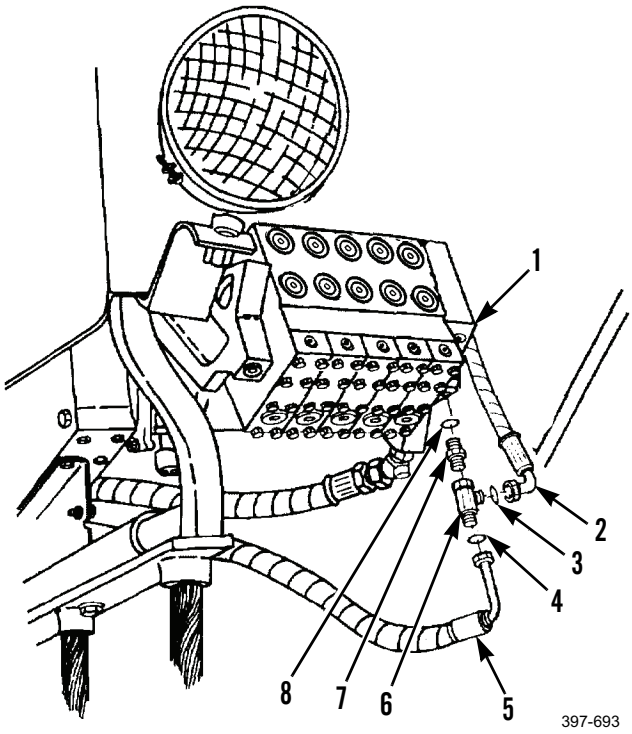

***REMOVAL - CONTINUED***

3. Disconnect hose assemblies (17, 20, and 9) from elbow (14) and connectors (18 and 11). Remove and discard preformed packings (16, 15, and 10).
4. Remove elbow (14), and preformed packing (13). Discard preformed packing.
5. Remove connector (18) and preformed packing (15). Discard preformed packing.
6. Remove connector (11) and preformed packing (12). Discard preformed packing.

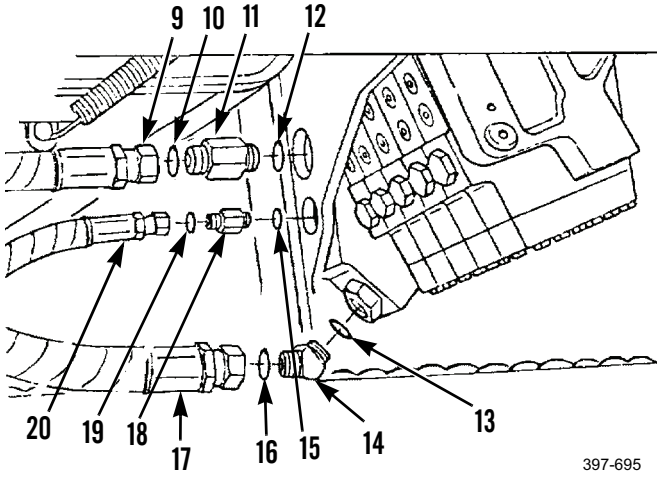


7. Remove bolt (24), washer (25), and rubber mount (26).



**WARNING**

Use extreme caution when handling heavy parts. Provide adequate support and use assistance during procedure. Ensure that any lifting device used is in good condition and of suitable load capacity. Keep clear of heavy parts supported only by lifting device. Failure to follow this warning may cause injury or death to personnel.

**NOTE**

Control valve assembly weighs 85 lb (39 kg).

8. With assistance, remove two bolts (23), washers (22), rubber mounts (21), and control valve (1) assembly from machine.

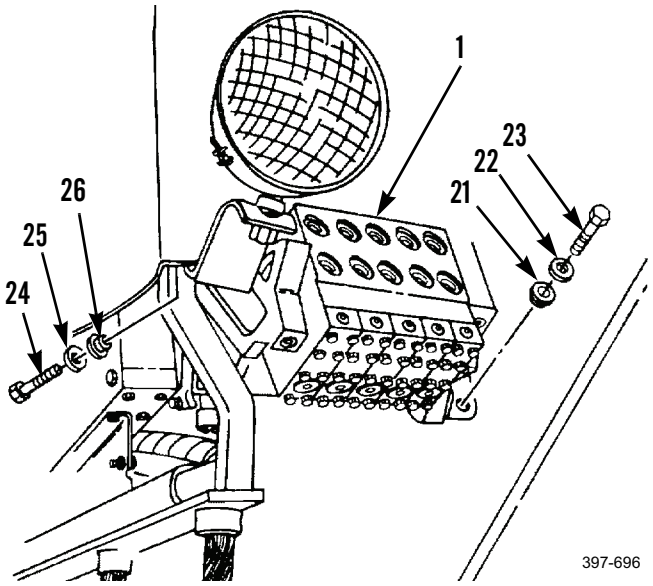

***REMOVAL - CONTINUED***

9. Remove three bolts (27), washers (28), and bracket (29) from control valve (1) assembly.

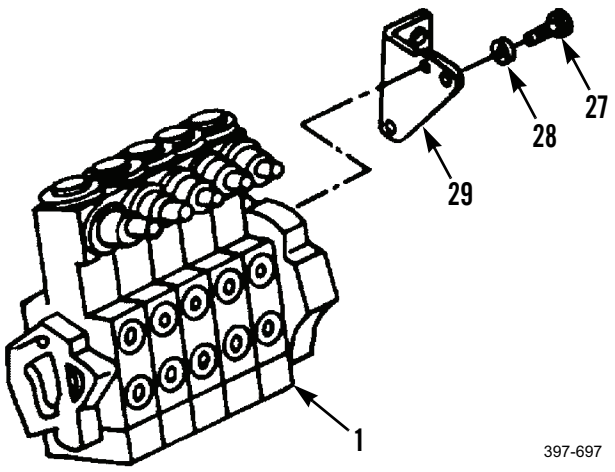


10. Disconnect two hose assemblies (33 and 36) from tee (32). Remove and discard two preformed packings (59 and 60).
11. Remove tee (32), connector (31), and preformed packing (37) from control valve (30) assembly. Discard preformed packing.

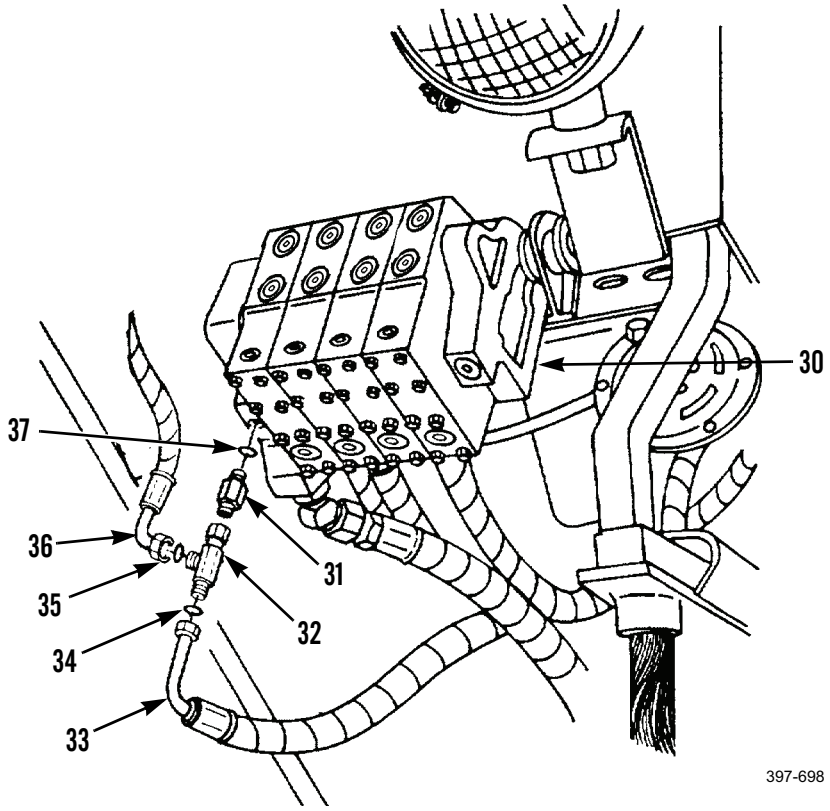

***REMOVAL - CONTINUED***

12. Disconnect hose assemblies (46, 42, and 41) from elbow (48) and connectors (44 and 39). Remove and discard preformed packings (47, 43, and 40).
13. Remove elbow (48) and preformed packing (49). Discard preformed packing.
14. Remove connector (44) and preformed packing (45). Discard preformed packing.
15. Remove connector (39) and preformed packing (38). Discard preformed packing.

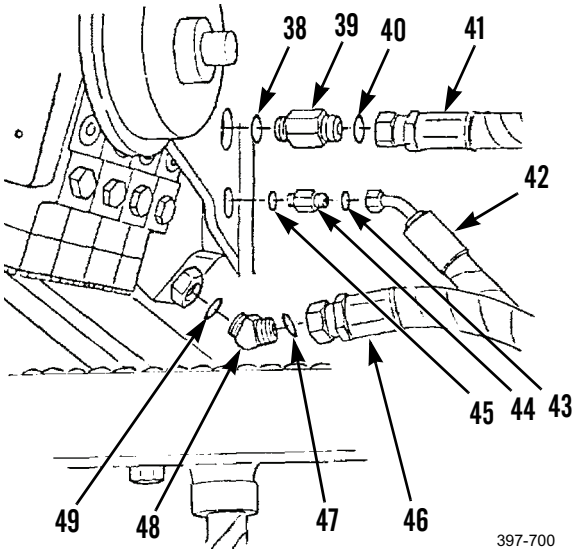


16. Remove bolt (51) and washer (50).
17. With assistance, remove two bolts (54), washers (53), and control valve (30) assembly from machine.

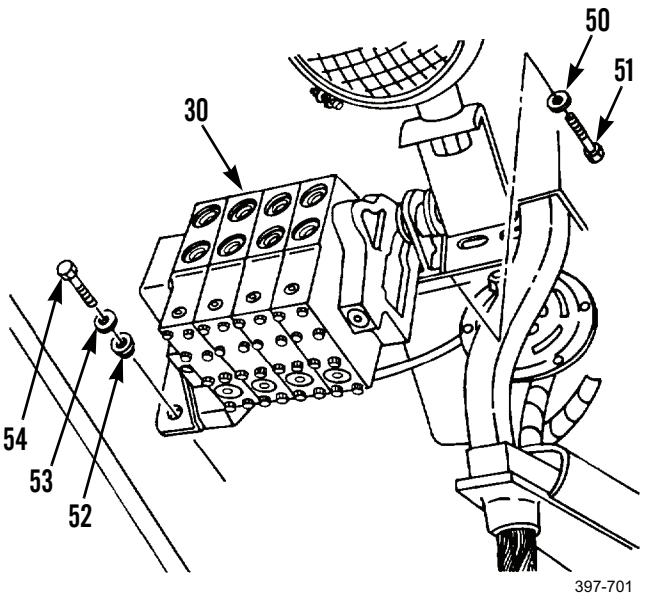

### *REMOVAL - CONTINUED*

18. Remove three bolts (60), washers (59), and bracket (61) from control valve (30) assembly.
19. Remove bolt (55), washer (56), rubber mount (57), and bracket (58) from control valve (30) assembly.

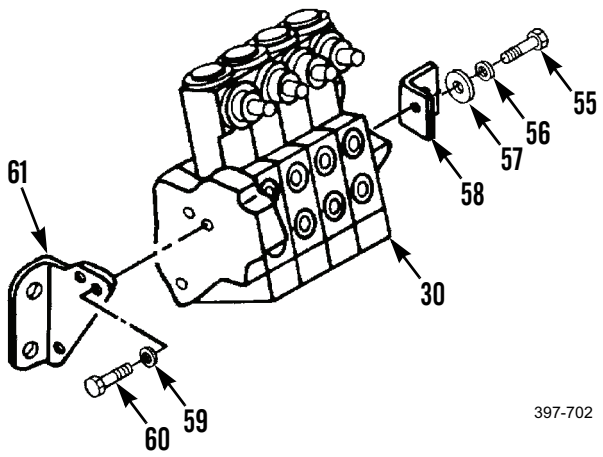


### *CLEANING AND INSPECTION*

Clean all parts in accordance with WP 0020 00.

### *INSTALLATION*

**NOTE**

Perform steps 1 through 10 to install hydraulic control valve under left side of cab.

1. Install bracket (58), rubber mount (57), washer (56), and bolt (55) on control valve (30) assembly.
2. Install bracket (61), with washer (59) and bolt (60).

*INSTALLATION - CONTINUED*

**WARNING**

Use extreme caution when handling heavy parts. Provide adequate support and use assistance during procedure. Ensure that any lifting device used is in good condition and of suitable load capacity. Keep clear of heavy parts supported only by lifting device. Failure to follow this warning may cause injury or death to personnel.

**NOTE**

Control valve assembly weighs 85 lb (39 kg).

3. With assistance, install control valve (30) assembly on machine with two mountings (52), washers (53), and bolts (54).
4. Install washer (50) and bolt (51).

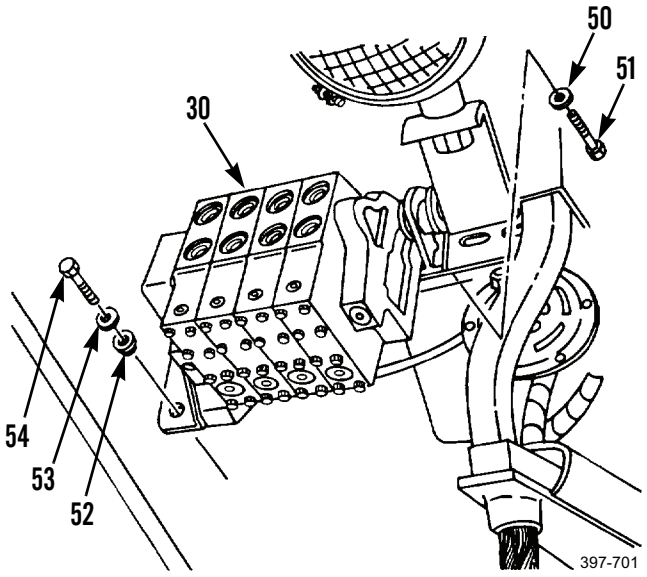


5. Install new preformed packing (38) and connector (39).
6. Install new preformed packing (45) and connector (44).
7. Install new preformed packing (49) and elbow (48).
8. Install new preformed packings (40, 43, and 47) and connect hose assemblies (41, 42, and 46) to connectors (39 and 44) and elbow (48).

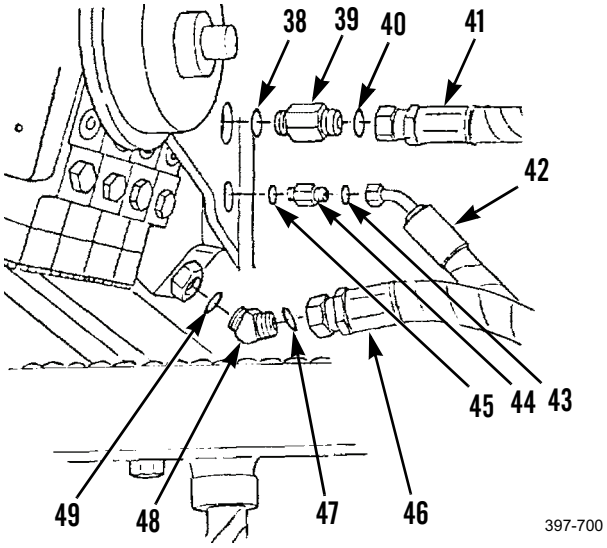

***INSTALLATION - CONTINUED***

9. Install new preformed packing (37), connector (31), and tee (32) on control valve (30) assembly.
10. Install new preformed packings (35 and 34) and connect hose assemblies (36 and 33) to tee (32).

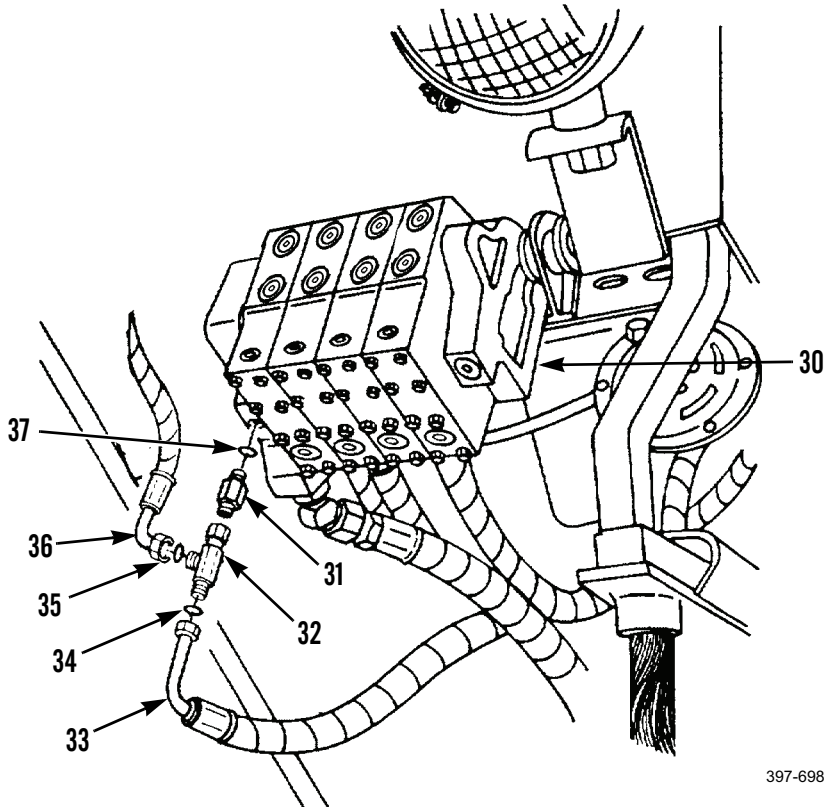


**NOTE**

Perform steps 11 through 19 to install hydraulic control valve under right side of cab.

11. Install bracket (29) to control valve (1) assembly with three washers (28) and bolts (27).

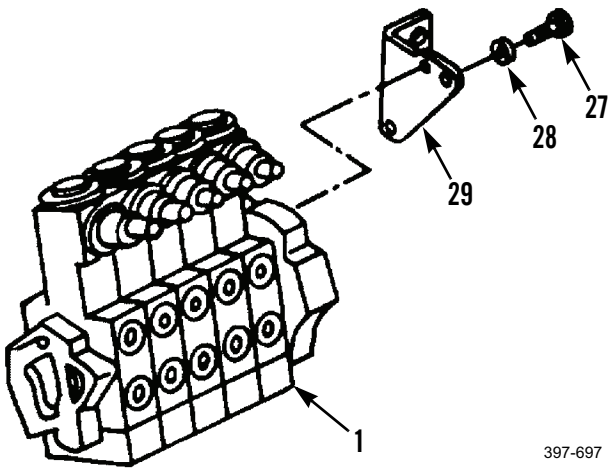

***INSTALLATION - CONTINUED***



**WARNING**

Use extreme caution when handling heavy parts. Provide adequate support and use assistance during procedure. Ensure that any lifting device used is in good condition and of suitable load capacity. Keep clear of heavy parts supported only by lifting device. Failure to follow this warning may cause injury or death to personnel.

**NOTE**

Control valve assembly weighs 85 lb (39 kg).

12. With assistance, install control valve (1) to machine with two rubber mounts (21), washers (22), and bolts (23).
13. Install rubber mount (26), washer (25), and bolt (24).

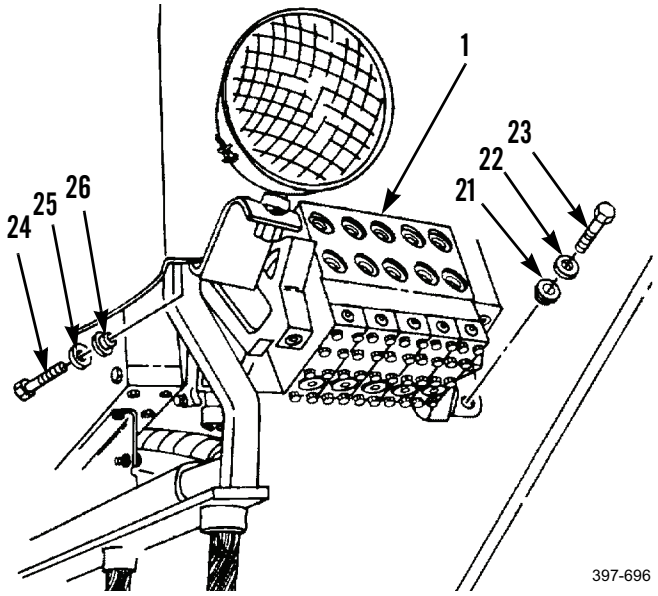


14. Install new preformed packing (12) and connector (11).
15. Install new preformed packing (15) and connector (18).
16. Install new preformed packing (13) and elbow (14).
17. Install preformed packings (16, 19, and 10) and connect hose assemblies (17, 20, and 9).

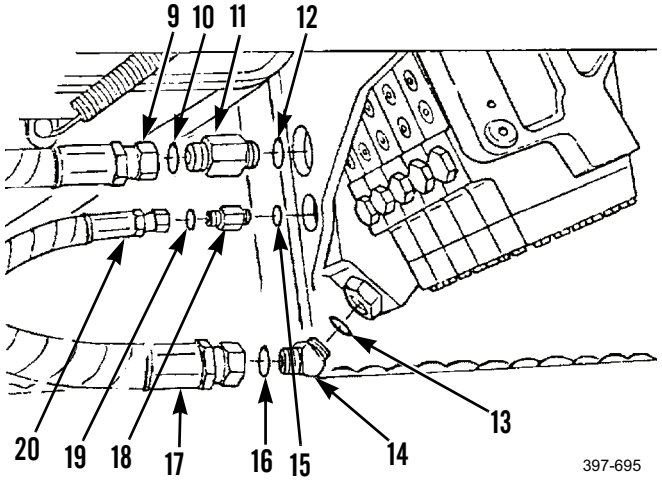

***INSTALLATION - CONTINUED***

18. Install new preformed packing (8), connector (7), and tee (6) on control valve assembly (1).
19. Install new preformed packings (4 and 3) and connect hose assemblies (5 and 2) to tee (6).

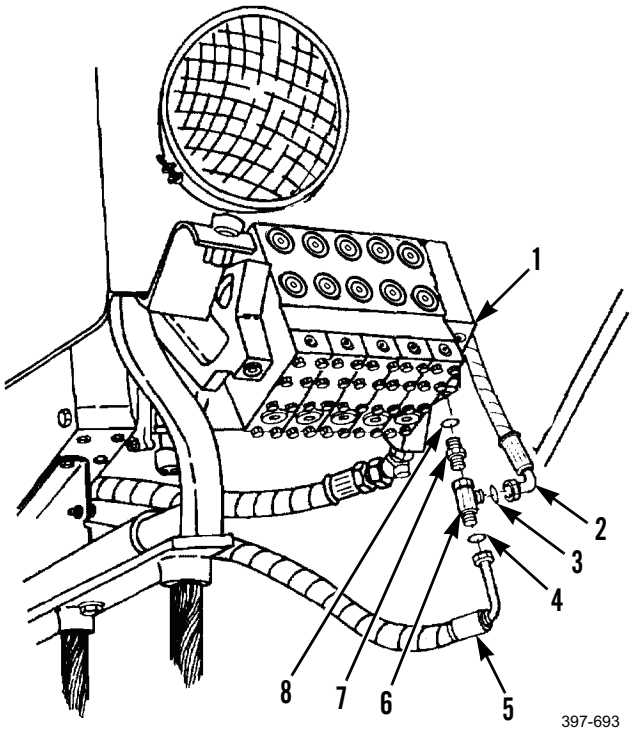


20. Connect blade tip hoses (WP 0223 00).
21. Connect circle drive hoses (WP 0225 00).
22. Connect side shift hoses (WP 0228 00).
23. Connect articulation hoses (WP 0227 00).
24. Connect centershift hoses (WP 0226 00).
25. Connect wheel lean hoses (WP 0224 00).
26. Connect blade lift hoses (WP 0222 00).
27. Connect scarifier hoses (WP 0229 00).
28. Connect hydraulic control rods (WP 0218 00).
29. Start engine (TM 5-3805-261-10).
30. Operate control levers. Cycle system through at least five full-travel movements to bleed the air from hydraulic system.
31. Stop engine and check for leaks.
32. Check hydraulic oil level and fill as necessary (WP 0216 00).

### *HYDRAULIC OIL PRESSURE TESTS*

1. Remove hollow hex plug (1) to the passage for the pump oil. Install an oil pressure gauge, hose, and fittings in the plug opening.
2. Start and run the engine at high idle RPM. Move the control levers that operate the hydraulic cylinders to get an increase in the temperature of the hydraulic oil. When the temperature of the hydraulic oil is approximately 30ºF (17ºC) more than the temperature of the atmosphere, run the engine at high idle RPM. With all of the control levers in HOLD position, look at the oil pressure gauge.
3. The correct pressure is 2150 ± 30 psi (14,824 ± 207 kPa). If the pressure of the pump oil is too low, the pump or the combination valve or both the pump and the combination valve need repair (WP 0323 00 or WP 0329 00).
4. With the engine at high idle RPM, look at the oil pressure gauge and move each control lever separately. Hold the lever in position after the rod is either, in to, or out of the cylinder as far as it will move. The correct pressure is 3550 ± 20 psi (24,476 ± 136 kPa) when a control lever is held both forward and to the rear.

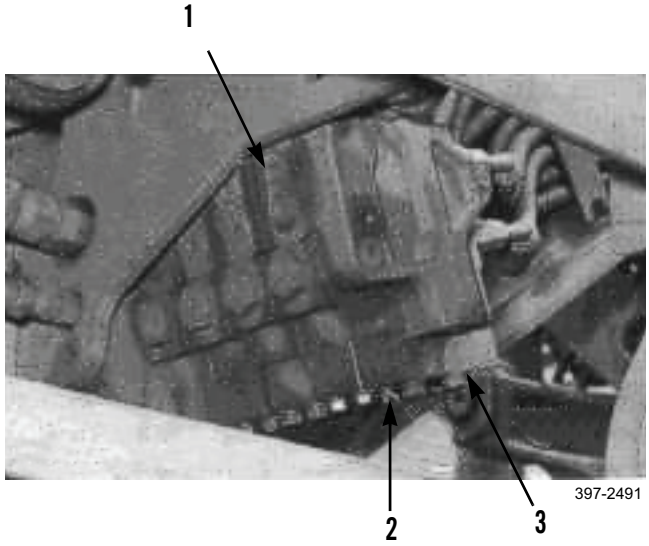


5. If the pressure is too low, make a record of the pressure and the position of the rod, either in, or out of the cylinder. Test each control.
6. To test the circle drive control, stop engine. Disconnect the two oil lines to the hydraulic motor at the control valve. Install metal caps on the fittings in the control valve. The caps must keep the oil in the control when it is being tested.
7. Start and run the engine at high idle RPM. Look at the oil pressure gauge when the control lever is moved, both forward and to the rear. If the oil pressure is too low, make a record of the position of the control lever and the pressure.
8. If the oil pressure for both positions of each control lever is too low, the pump or the combination valve, or both the pump and the combination valve need repair (WP 0323 00 or WP 0329 00).
9. If the oil pressure for both positions of only one lever is correct and all of the other lever positions have too low oil pressure, the check valve is open in the control valve with the correct oil pressures.
10. If the oil pressure for one position of a control lever for one valve section is low and the other lever position has correct oil pressure, there is damage in the resolver valve.

**END OF WORK PACKAGE**

## HYDRAULIC PUMP RELIEF VALVE MAINTENANCE 0238 00

### THIS WORK PACKAGE COVERS

Removal, Disassembly, Cleaning and Inspection, Assembly, Installation

### INITIAL SETUP

**Maintenance Level**

Unit

**Tools and Special Tools**

Tool kit, general mechanic's (Item 89, WP 0348 00)

**Materials/Parts**

Cap set, protective (Item 7, WP 0349 00)

Rag, wiping (Item 35, WP 0349 00)

Tag, marker (Item 44, WP 0349 00)

Packing, preformed (13)

**References**

WP 0216 00

**Equipment Conditions**

Machine parked on level ground (TM 5-3805-261-10)

Parking/emergency brake applied (TM 5-3805-261-10)

Implements lowered to ground (TM 5-3805-261-10)

Engine off (TM 5-3805-261-10)

Battery disconnect switch in OFF position (TM 5-3805-261-10)

Hydraulic pressure relieved (WP 0020 00)

### *REMOVAL*

**CAUTION**

Cap hose ends to prevent contamination.

**NOTE**

Tag hose assemblies before disconnecting to aid in installation.

1. Disconnect hose assembly (15). Remove and discard preformed packing (1).
2. Disconnect hose assembly (2). Remove and discard preformed packing (3).

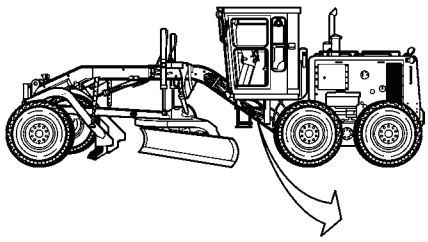

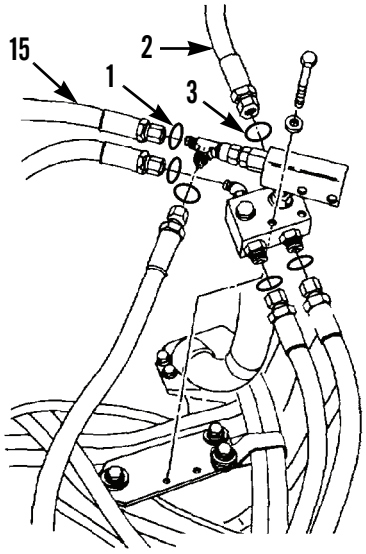


397-673

***REMOVAL - CONTINUED***

**NOTE**

For Type II machines, hose assemblies (8, 10, and 11) are equipped with quick disconnect fittings.

3. Disconnect hose assembly (8). Remove and discard preformed packing (7).
4. Disconnect hose assembly (10). Remove and discard preformed packing (9).
5. Disconnect hose assembly (11). Remove and discard preformed packing (12).
6. Disconnect hose assembly (14). Remove and discard preformed packing (13).
7. Remove two bolts (4), washers (5), and relief valve (6) assembly from machine.

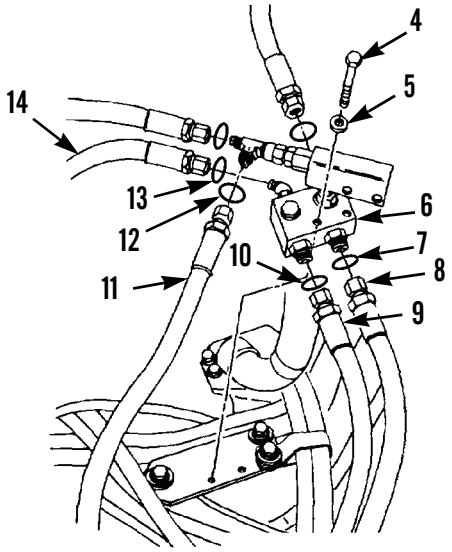


397-673

8. Remove three bolts (21), washers (20 and 19), bracket (18), three grommets (17), and washers (16) from machine.

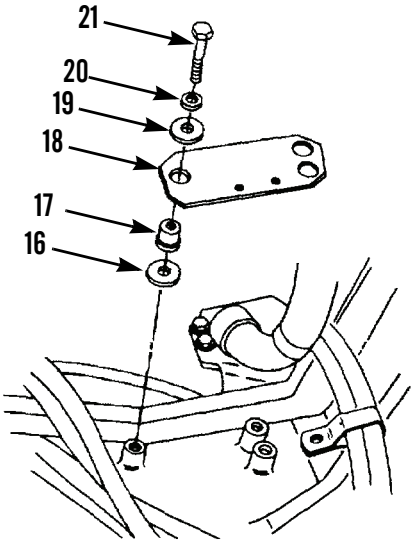


397-674

### *DISASSEMBLY*

1. Remove tee (22) from valve (23).
2. Remove valve (23) and preformed packing (24) from relief valve (6) assembly. Discard preformed packing.
3. Remove elbow (28) and preformed packing (27). Discard preformed packing.
4. Remove connector (29) and preformed packing (30). Discard preformed packing.
5. Remove two connectors (26) and preformed packings (25). Discard preformed packings.

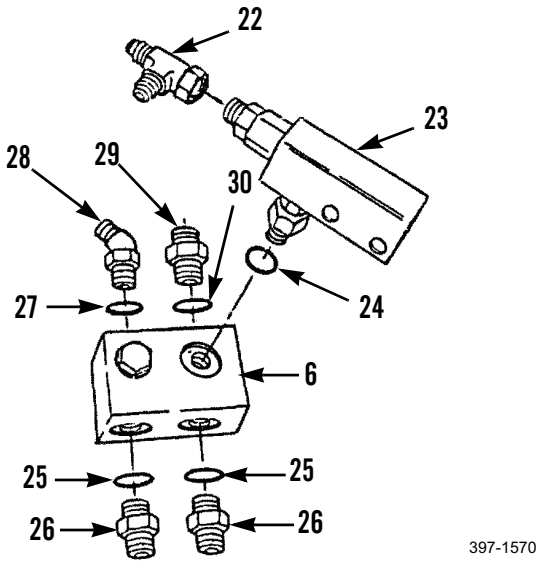

397-1570

6. Remove plug (31) and preformed packing (32) from relief valve (6). Discard preformed packing.
7. Remove plug (33) assembly and valve (34) assembly.

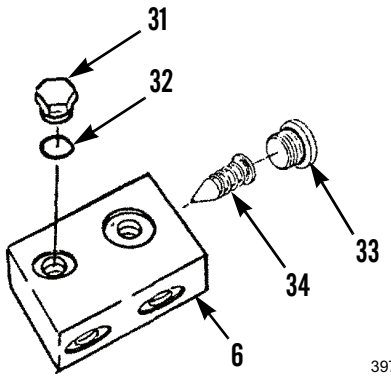

397-1571

8. Remove preformed packing (35) from plug (33). Discard preformed packing.

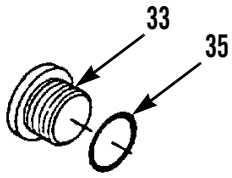

397-1572

### *DISASSEMBLY - CONTINUED*

**WARNING**

Spring is under pressure. Loosen valve and retainer carefully to relieve pressure of spring. Failure to follow this warning may cause injury to personnel.

9. Remove retainer (36) and spring (37) from valve (34).

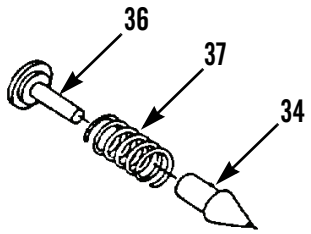

397-1573

### *CLEANING AND INSPECTION*

Clean and inspect all parts in accordance with WP 0020 00.

### *ASSEMBLY*

1. Install spring (37) and retainer (36) on valve (34).
2. Install new preformed packing (35) on plug (33).

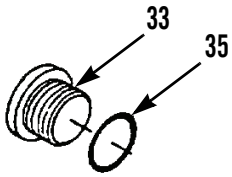

397-1572

3. Install valve (34) assembly and plug (33) assembly in relief valve (6).
4. Install new preformed packing (32) and plug (31).

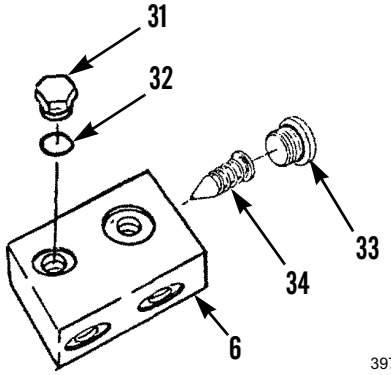

397-1571

### *ASSEMBLY - CONTINUED*

5. Install two new preformed packings (25) and connectors (26) on relief valve (6).
6. Install new preformed packing (30) and connector (29).
7. Install new preformed packing (27) and elbow (28).
8. Install new preformed packing (24) and valve (23).
9. Install tee (22) on valve (23).

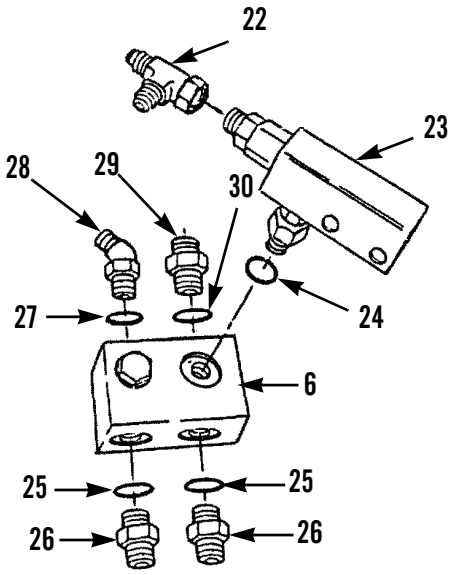

397-1570

### *INSTALLATION*

1. Install bracket (18) on machine with three washers (16), grommets (17), washers (19 and 20), and three bolts (21).

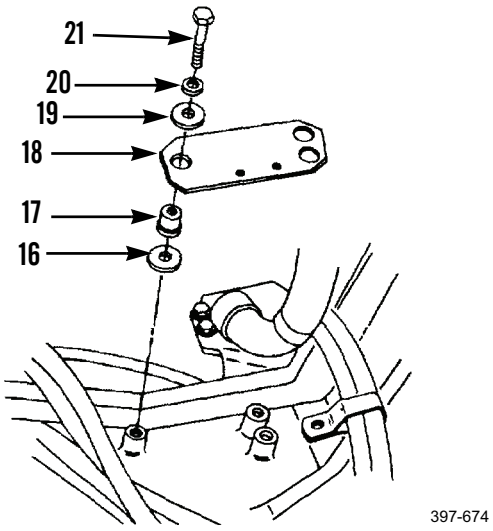

397-674

***INSTALLATION - CONTINUED***

2. Install relief valve (6) assembly with two washers (5) and bolts (4).
3. Install new preformed packing (13) and connect hose assembly (14).

**NOTE**

For Type II machines, hose assemblies (11, 10, and 8) are equipped with quick connect fittings.

4. Install new preformed packing (12) and connect hose assembly (11).
5. Install new preformed packing (9) and connect hose assembly (10).
6. Install new preformed packing (7) and connect hose assembly (8).
7. Install new preformed packing (3) and connect hose assembly (2).
8. Install new preformed packing (1) and connect hose assembly (15).
9. Start engine (TM 5-3805-261-10).
10. Operte control levers. Cycle system through at least five full-travel movements to bleed air from system.
11. Stop engine and check for leaks.
12. Check hydraulic oil level and fill as necessary (WP 0216 00).

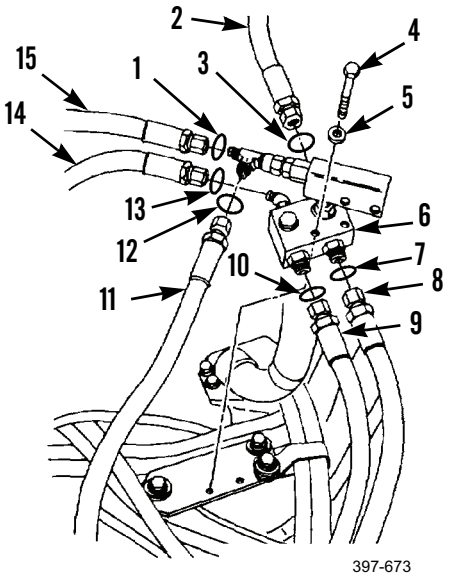


**END OF WORK PACKAGE**

## CIRCLE DRIVE AND LEANING WHEEL CHECK VALVE MAINTENANCE 0239 00

### THIS WORK PACKAGE COVERS

Removal, Disassembly, Cleaning and Inspection, Assembly, Installation

### INITIAL SETUP

**Maintenance Level**

Unit

**Tools and Special Tools**

Tool kit, general mechanic's, (Item 89, WP 0348 00)

Shop equipment, common no. 1 (Item 75, WP 0348 00)

Wrench, torque (Item 97, WP 0348 00)

**Materials/Parts**

Cap set, protective (Item 7, WP 0349 00)

Rag, wiping (Item 35, WP 0349 00)

Tag, marker (Item 44, WP 0349 00)

Packing, preformed (19)

**References**

WP 0216 00

**Equipment Conditions**

Machine parked on level ground (TM 5-3805-261-10)

Parking/emergency brake applied (TM 5-3805-261-10)

Implements lowered to ground (TM 5-3805-261-10)

Engine off (TM 5-3805-261-10)

Battery disconnect switch in OFF position (TM 5-3805-261-10)

Hydraulic pressure relieved (WP 0020 00)

***REMOVAL***

## NOTE

Perform steps 1 through 8 to remove circle drive check valve.

1. Remove eight bolts (1), washers (2 and 3), and frame cover (4) from left side of machine.

## CAUTION

Cap hose ends to prevent contamination.

## NOTE

Tag hose assemblies before disconnecting to aid in installation.

2. Disconnect hose assemblies (5 and 13) from connectors (7 and 11). Remove and discard preformed packings (6 and 12).
3. Remove connector (7) and preformed packing (8) from circle drive check valve (9). Discard preformed packing.
4. Remove connector (11) and preformed packing (10). Discard preformed packing.

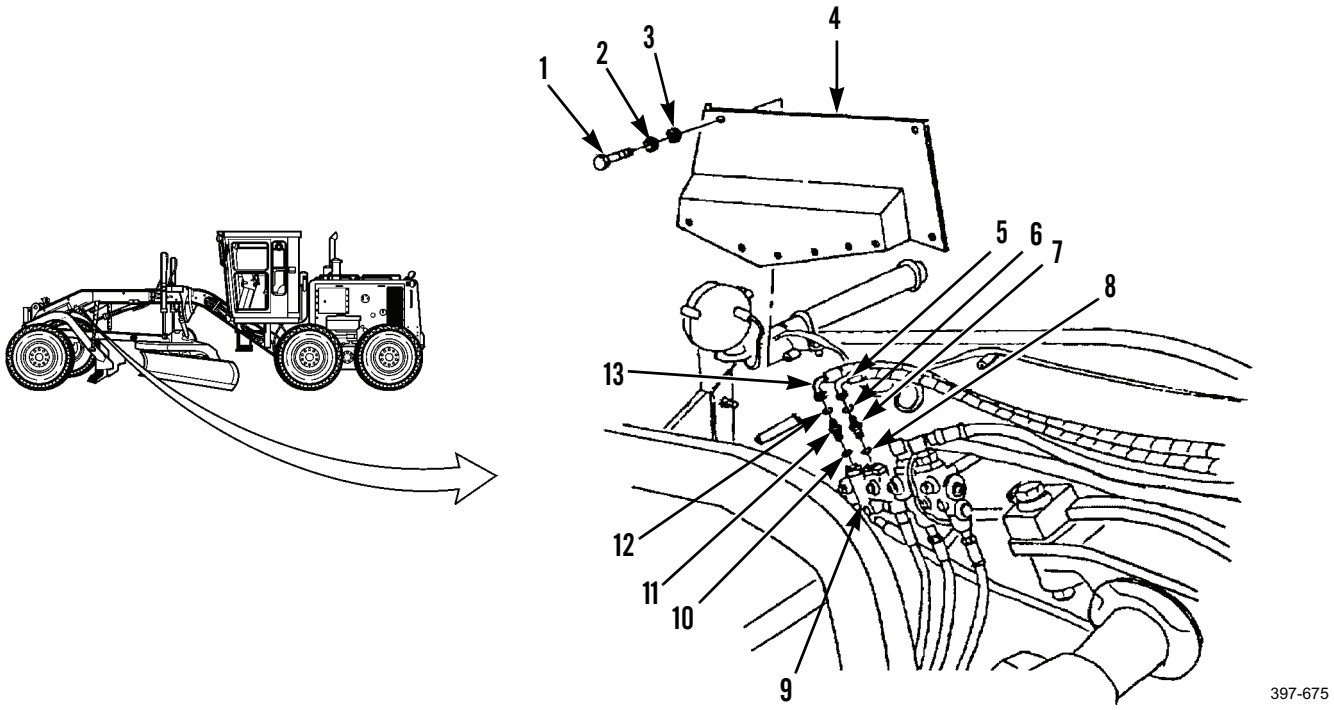

***REMOVAL - CONTINUED***

5. Disconnect two hose assemblies (15 and 16) from connector (19) and elbow (20). Remove and discard preformed packings (17 and 18).
6. Remove connector (19) and preformed packing (14). Discard preformed packing.
7. Remove elbow (20) and preformed packing (21). Discard preformed packing.
8. Remove bolt (22), washer (23), and circle drive check valve (9) from machine.
9. Disassemble circle drive check valve (9). Refer to *Disassembly* in this work package.

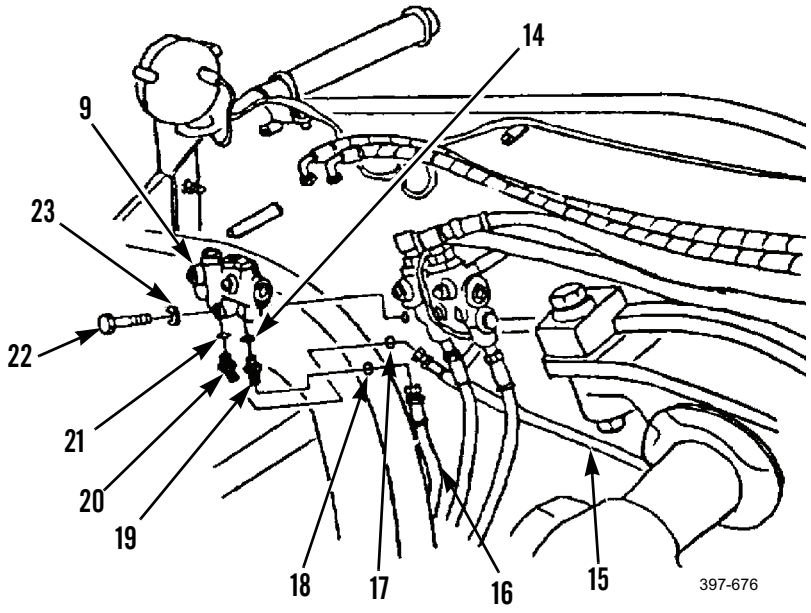

***REMOVAL - CONTINUED***

**NOTE**

Perform steps 10 through 17 to remove leaning wheel check valve.

10. Remove eight bolts (24), washers (25 and 26), and frame cover (27) from right side of machine.

**CAUTION**

Cap all hose ends to prevent contamination.

**NOTE**

Tag hose assemblies before disconnecting to aid in installation.

11. Disconnect hose assemblies (28 and 29) from elbows (34 and 31). Remove and discard preformed packings (35 and 30).
12. Remove elbow (31) and preformed packing (32) from leaning wheel check valve (9).
13. Remove elbow (34) and preformed packing (33). Discard preformed packing.

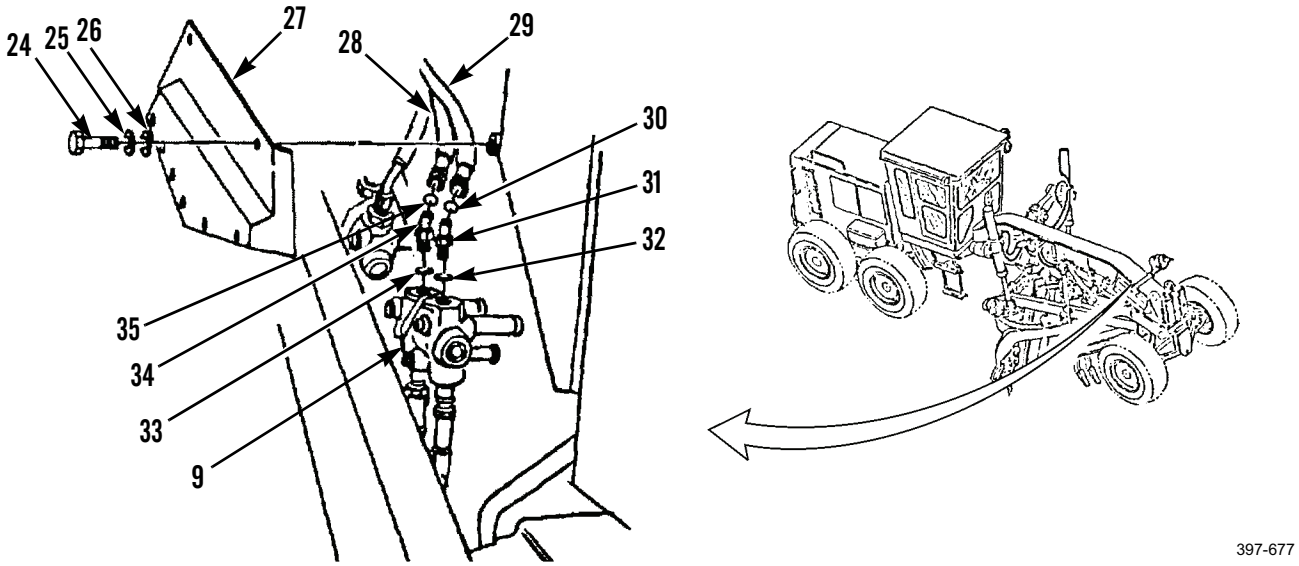

## CIRCLE DRIVE AND LEANING WHEEL CHECK VALVE MAINTENANCE - CONTINUED 0239 00

### *REMOVAL - CONTINUED*

14. Disconnect hose assemblies (41 and 42) from connectors (39 and 44). Remove and discard preformed packings (40 and 43).
15. Remove connector (39) and preformed packing (38). Discard preformed packing.
16. Remove connector (44) and preformed packing (45). Discard preformed packing.
17. Remove bolt (36), washer (37), and leaning wheel check valve (9) from machine.

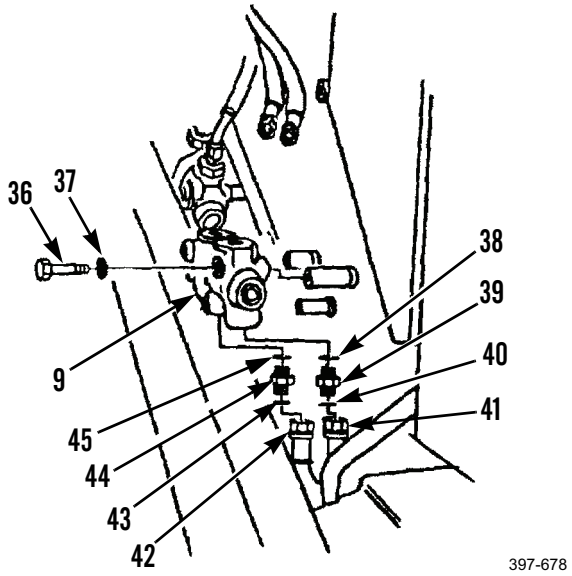

397-678

***DISASSEMBLY***

**WARNING**

Springs are under pressure. Loosen plugs carefully to relieve pressure of springs. Failure to follow this warning may cause injury to personnel.

**NOTE**

This procedure covers disassembly of the circle drive check valve. Follow these instructions for the leaning wheel check valve.

1. Remove two plugs (46) from check valve (9) assembly.
2. Remove and discard two preformed packings (47) from plugs (46).

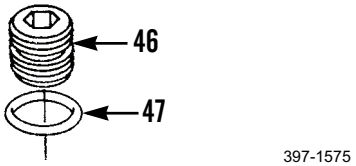

397-1575

3. Remove two springs (48) and balls (49).

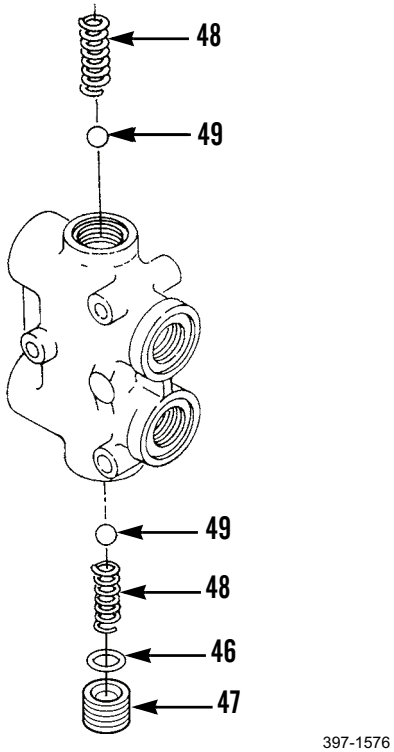

397-1576

### *DISASSEMBLY - CONTINUED*

4. Using brass punch and hammer, remove seat (52) and piston (51) from check valve (9).
5. Using brass punch and hammer, remove seat (50).

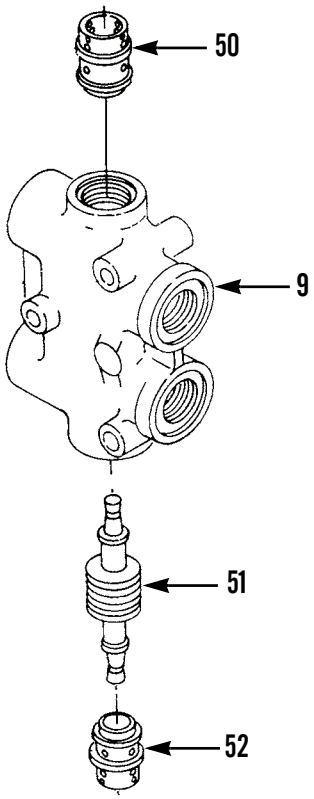


### *CLEANING AND INSPECTION*

Clean and inspect all parts in accordance with WP 0020 00.

### *ASSEMBLY*

1. Lower temperature of seat (50) and install using brass punch and hammer until seated against counterbore in check valve (9).
2. Position piston (51) in seat (52).
3. Lower temperature of seat (52) and install using brass punch and hammer until seated against counterbore in check valve (9).
4. Install two balls (49) and springs (48).
5. Install two preformed packings (47) on plugs (46).
6. Install two plugs (46) to check valve (9). Tighten two plugs to 25 lb-ft (34 Nm).

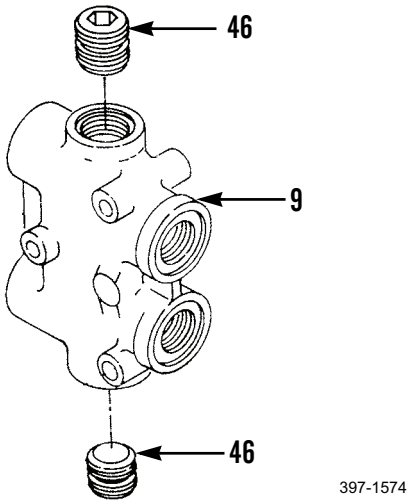

*INSTALLATION*

**NOTE**

Perform steps 1 through 12 to install leaning wheel check valve.

1. Install leaning wheel check valve (9) to machine with washer (37) and bolt (36).
2. Install new preformed packing (45) and connector (44).
3. Install new preformed packing (38) and connector (39).
4. Install new preformed packings (43 and 40) and connect hose assemblies (42 and 41) to connectors (44 and 39).

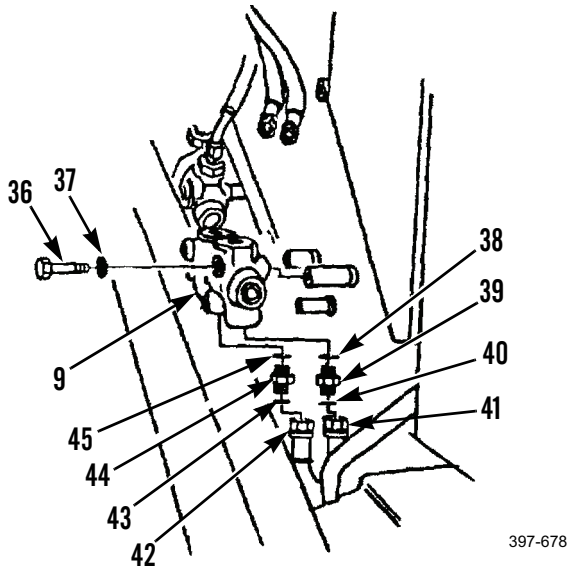


5. Install new preformed packing (33) and elbow (34).
6. Install new preformed packing (32) and elbow (31).
7. Install new preformed packings (30 and 35) and connect two hose assemblies (29 and 28) to elbows (31 and 34).

**NOTE**

If circle drive check valve was removed, install per steps 13 through 24 before starting engine.

8. Start engine (TM 5-3805-261-10).
9. Operate control levers and cycle system through five or more full-travel movements to bleed air from system.
10. Stop engine and check for leaks.
11. Check hydraulic oil level and fill as necessary (WP 0216 00).
12. Install frame cover (27) to machine with eight washers (26 and 25) and bolts (24).

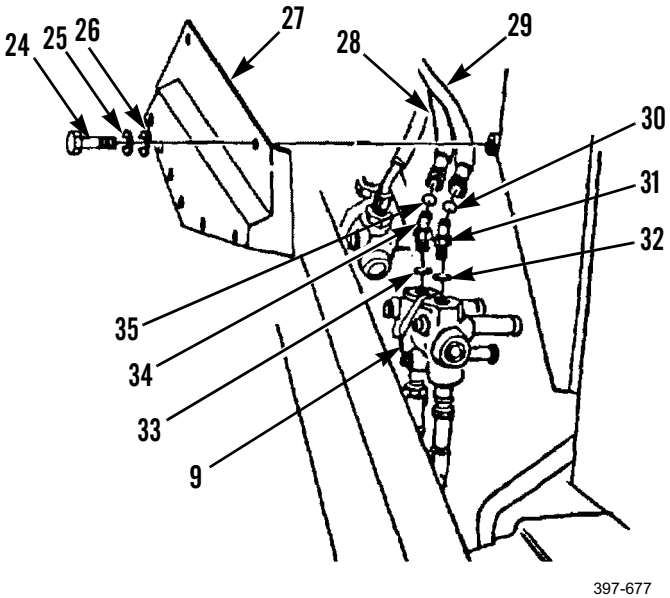

***INSTALLATION - CONTINUED***

**NOTE**

Perform steps 13 through 24 to install circle drive check valve.

13. Install circle drive check valve (9) to machine with washer (23) and bolt (22).
14. Install new preformed packing (21) and elbow (20).
15. Install new preformed packing (14) and connector (19).
16. Install new preformed packings (18 and 17) and connect hose assemblies (16 and 15) to elbow (20) and connector (19).

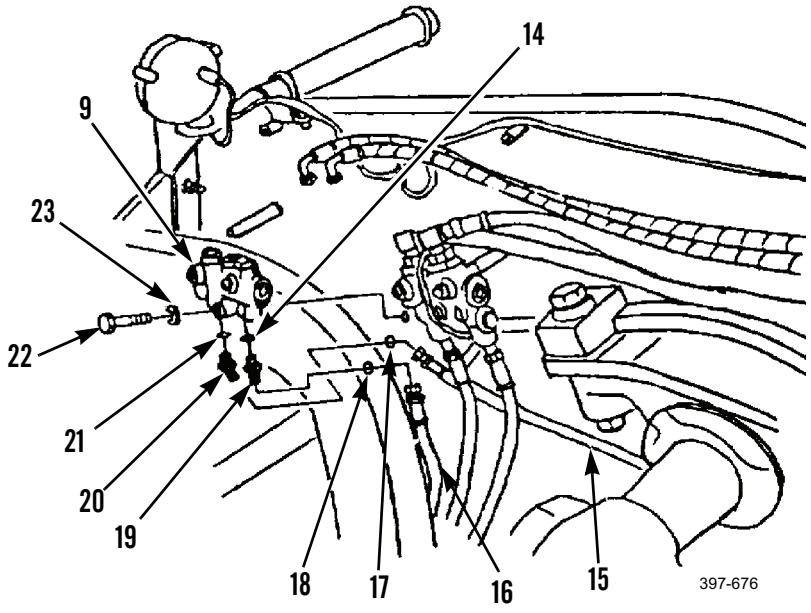

***INSTALLATION - CONTINUED***

17. Install new preformed packing (10) and connector (11) to circle drive check valve (9).
18. Install new preformed packing (8) and connector (7).
19. Install new preformed packings (12 and 6) and connect hose assemblies (13 and 5) to connectors (11 and 7).
20. Start engine (TM 5-3805-261-10).
21. Operate control levers and cycle system through at least five full-travel movements to bleed air from system.
22. Stop engine and check for leaks.
23. Check hydraulic oil level and fill as necessary (WP 0216 00).
24. Install frame cover (4) to machine with eight washers (3 and 2) and bolts (1).

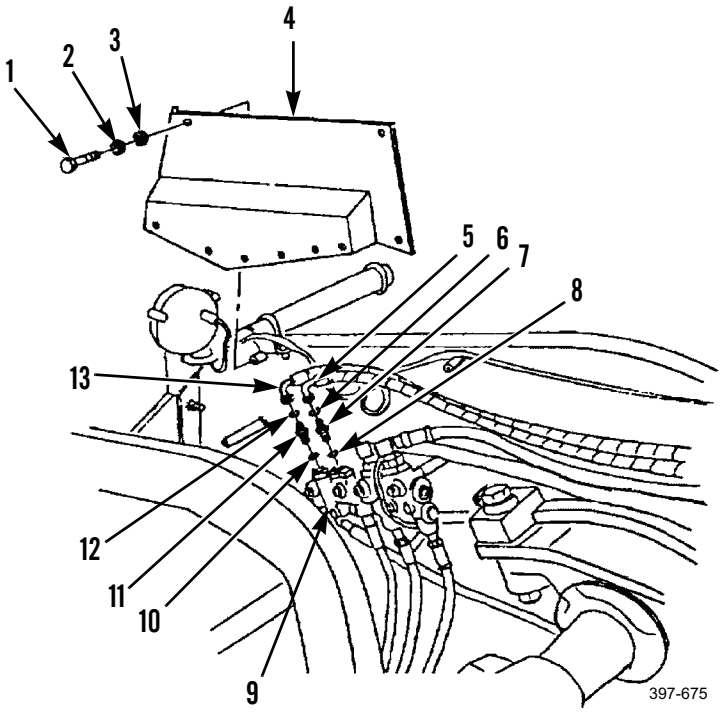


**END OF WORK PACKAGE**

## SIDESHIFT CHECK AND RELIEF VALVE REPLACEMENT 0240 00

### THIS WORK PACKAGE COVERS

Removal, Cleaning and Inspection, Installation

### INITIAL SETUP

**Maintenance Level**

Unit

**Tools and Special Tools**

Tool kit, general mechanic's (Item 89, WP 0348 00)

**Materials/Parts**

Cap set, protective (Item 7, WP 0349 00)

Rag, wiping (Item 35, WP 0349 00)

Tag, marker (Item 44, WP 0349 00)

Packing, preformed (8)

**References**

WP 0216 00

**Equipment Conditions**

Machine parked on level ground (TM 5-3805-261-10)

Parking/emergency brake applied (TM 5-3805-261-10)

Implements lowered to ground (TM 5-3805-261-10)

Engine off (TM 5-3805-261-10)

Battery disconnect switch in OFF position (TM 5-3805-261-10)

Hydraulic pressure relieved (WP 0020 00)

***REMOVAL***

1. Remove eight bolts (1), washers (2 and 3), and frame cover (4) from left side of machine.

**CAUTION**

Cap hose ends to prevent contamination.

**NOTE**

Tag hose assemblies before disconnecting to aid in installation.

2. Disconnect two hose assemblies (9 and 10) from elbows (5 and 7). Remove and discard preformed packings (6 and 8).
3. Remove elbow (7) and preformed packing (12) from check valve (11). Discard preformed packing.
4. Remove elbow (5) and preformed packing (13). Discard preformed packing.

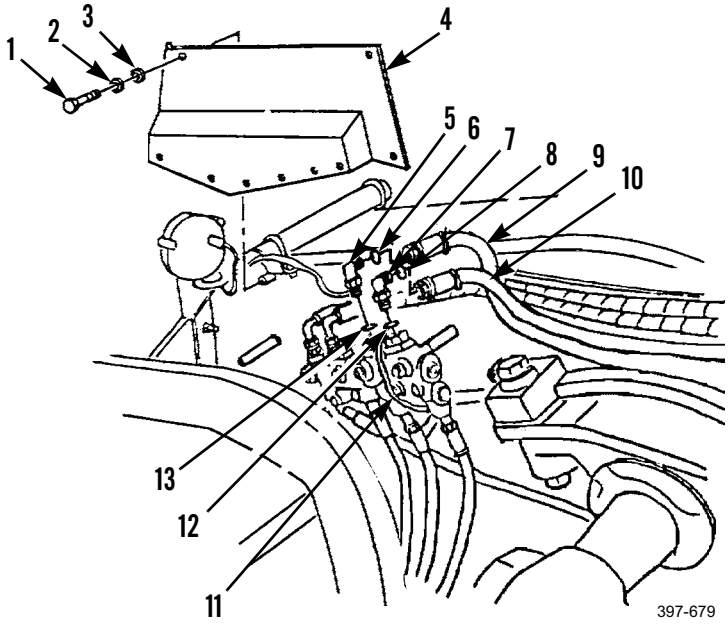

### *REMOVAL - CONTINUED*

5. Disconnect two hose assemblies (16 and 15) from connectors (18 and 20). Remove and discard preformed packings (14 and 17).
6. Remove connector (18) and preformed packing (19). Discard preformed packing.
7. Remove connector (20) and preformed packing (21). Discard preformed packing.
8. Remove bolt (22), washer (23), and check valve (11) from machine.

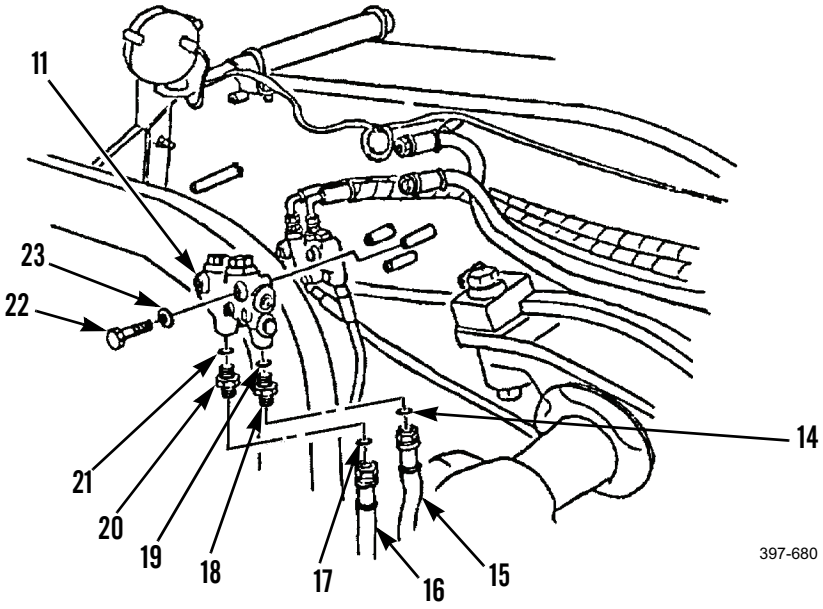


### *CLEANING AND INSPECTION*

Clean and inspect all parts in accordance with WP 0020 00.

### *INSTALLATION*

1. Install check valve (11) on machine with washer (23) and bolt (22).
2. Install new preformed packing (21) and connector (20).
3. Install new preformed packing (19) and connector (18).
4. Install new preformed packings (14 and 17) and connect hose assemblies (16 and 15) to connectors (18 and 20).

## SIDESHIFT CHECK AND RELIEF VALVE REPLACEMENT - CONTINUED 0240 00

### *INSTALLATION - CONTINUED*

5. Install new preformed packing (13) and elbow (5).
6. Install new preformed packing (12) and elbow (7) on check valve (11).
7. Install new preformed packings (6 and 8).
8. Connect hose assemblies (10 and 9) on elbows (7 and 5).
9. Start engine (TM 5-3805-261-10).
10. Operate levers and cycle system through at least five full-travel movements to bleed air from system.
11. Stop engine and check for leaks.
12. Check hydraulic oil level and fill as necessary (WP 0216 00).
13. Install frame cover (4) on machine with eight washers (3 and 2) and bolts (1).

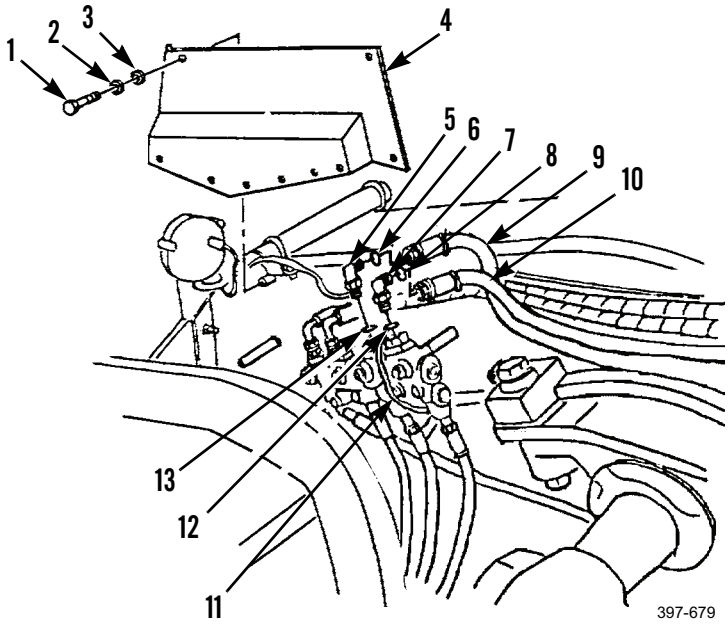


**END OF WORK PACKAGE**

## POWER BLADE AND BLADE TIP CHECK AND RELIEF VALVE MAINTENANCE 0241 00

### THIS WORK PACKAGE COVERS

Removal, Disassembly, Cleaning and Inspection, Assembly, Installation

### INITIAL SETUP

**Maintenance Level**

Unit

**Tools and Special Tools**

Tool kit, general mechanic's (Item 89, WP 0348 00)

Shop equipment, common no. 1 (Item 75, WP 0348 00)

Wrench, torque (Item 97, WP 0348 00)

**Materials/Parts**

Capset, protective (Item 7, WP 0349 00)

Oil, lubricating (Item 27, WP 0349 00)

Rag, wiping (Item 35, WP 0349 00)

Tag, marker (Item 44, WP 0349 00)

Packing, preformed (14)

**References**

WP 0216 00

**Equipment Conditions**

Machine parked on level ground (TM 5-3805-261-10)

Parking/emergency brake applied (TM 5-3805-261-10)

Implements lowered to ground (TM 5-3805-261-10)

Engine off (TM 5-3805-261-10)

Battery disconnect switch in OFF position (TM 5-3805-261-10)

Hydraulic pressure relieved (WP 0020 00)

***REMOVAL***

1. Remove nine bolts (6), washers (4 and 5), and frame cover (3) from right side of machine.

**CAUTION**

Cap hose ends and plug open ports to prevent contamination.

**NOTE**

Tag hose assemblies before disconnecting to aid in installation.

2. Disconnect hose assemblies (12 and 13) from elbows (11 and 7). Remove and discard preformed packings (1 and 2).
3. Remove elbow (11) and preformed packing (10) from check valve (9).
4. Remove elbow (7) and preformed packing (8). Discard preformed packing.

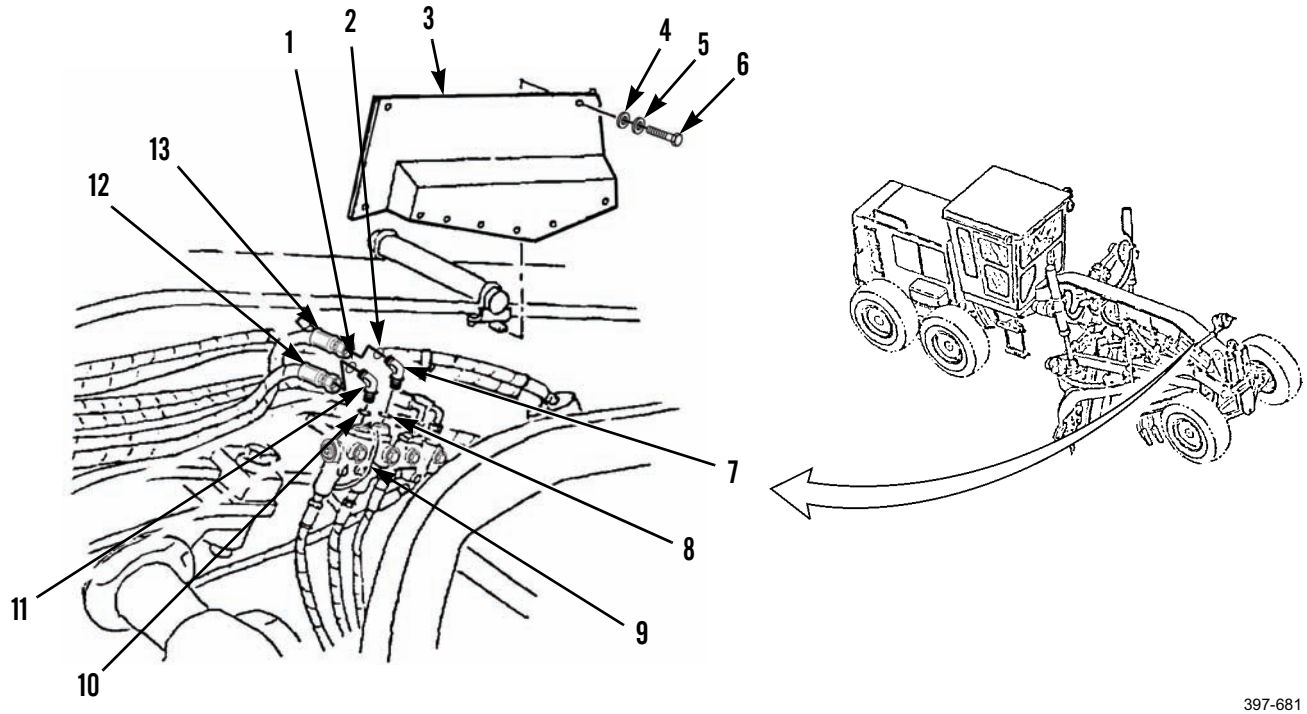


397-681

### *REMOVAL - CONTINUED*

5. Disconnect hose assemblies (22 and 21) from connectors (18 and 17). Remove and discard preformed packings (20 and 19).
6. Remove connector (18) and preformed packing (23). Discard preformed packing.
7. Remove connector (17) and preformed packing (16). Discard preformed packing.
8. Remove bolt (15), washer (14), and check valve (9) from machine.

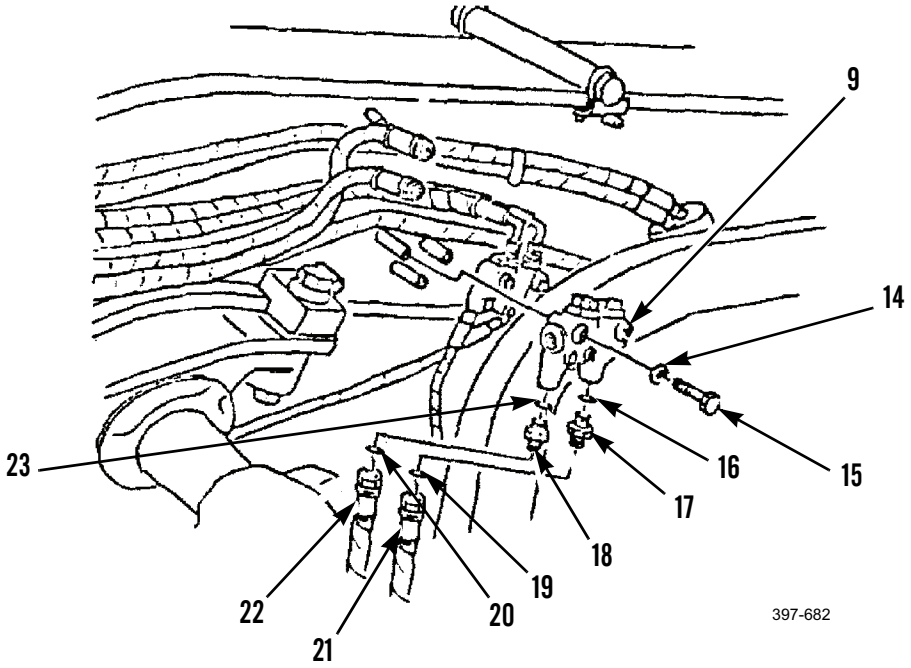


### *DISASSEMBLY*

1. Remove two adapters (24) from check valve (9).

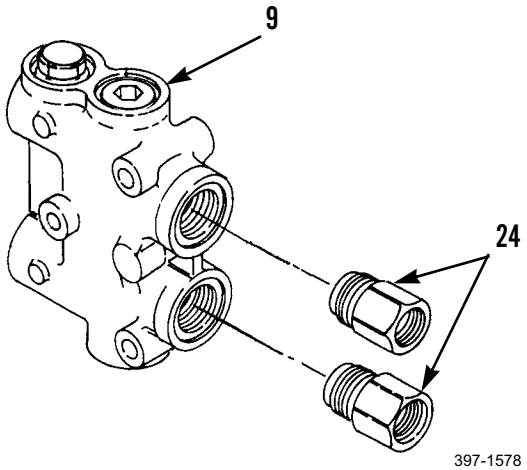

***DISASSEMBLY - CONTINUED***

2. Remove and discard two preformed packings (25) from adapters (24).

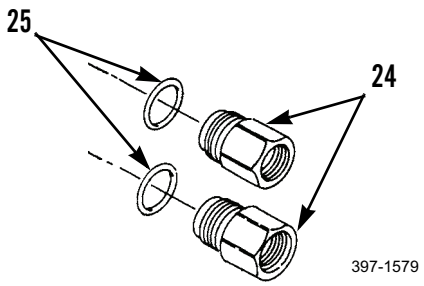


**WARNING**

Springs are under pressure. Loosen plugs carefully to relieve pressure of springs. Failure to follow this warning may cause injury to personnel.

3. Remove two plugs (26) from check valve (9).

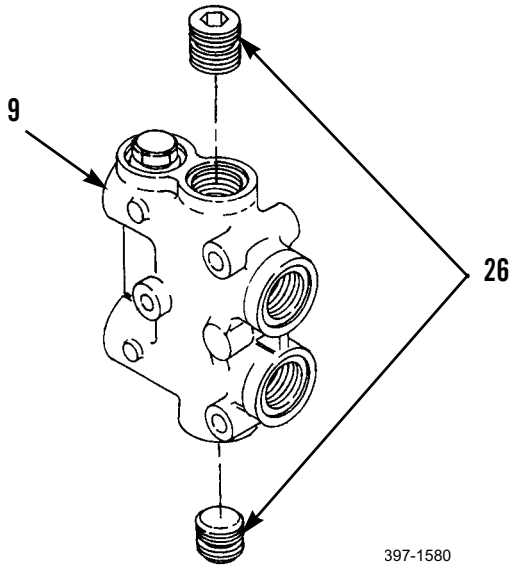


4. Remove and discard two preformed packings (27) from plugs (26).

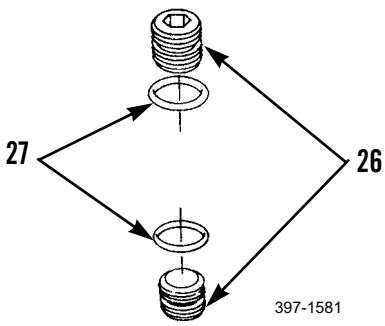

***DISASSEMBLY - CONTINUED***

5. Remove springs (28 and 34) and balls (29 and 33) from check valve (9).
6. Use brass punch and hammer to remove seat (32) and piston (31).
7. Use brass punch and hammer to remove seat (30).

**WARNING**

Springs are under pressure. Loosen valve carefully to relieve pressure of spring. Failure to follow this warning may cause injury to personnel.

8. Remove valve assembly (39), valve (38), shim(s) (37), spring (36), and washer (35).

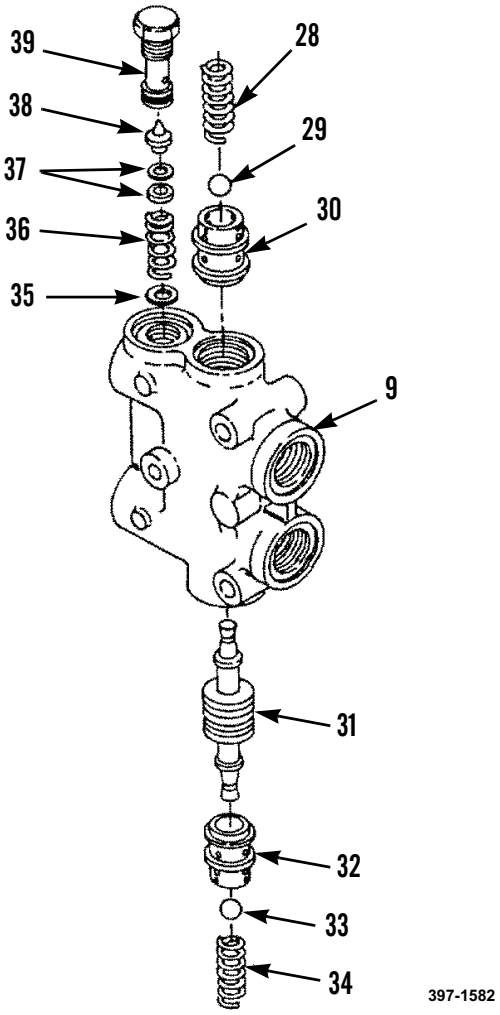

### *DISASSEMBLY - CONTINUED*

9. Remove and discard preformed packings (41 and 40) from valve (39).

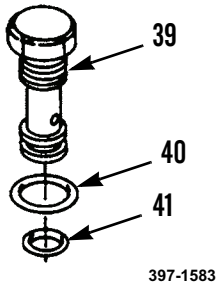


### *CLEANING AND INSPECTION*

Clean and inspect all parts in accordance with WP 0020 00.

### *ASSEMBLY*

1. Apply thin coat of clean oil to two new preformed packings (40 and 41) and install preformed packings to valve (39).

***ASSEMBLY - CONTINUED***

2. Install washer (35), spring (36), shim(s) (37), valve (38) in check valve (9).
3. Install valve (39) assembly.
4. Lower temperature of seat (30) and use brass punch and hammer to install seat in check valve (9).
5. Position piston (31) in seat (30).
6. Lower temperature of seat (32) and use brass punch and hammer to install seat in check valve (9). Move piston (31) to check for free travel.
7. Install balls (29 and 33) and springs (28 and 34).

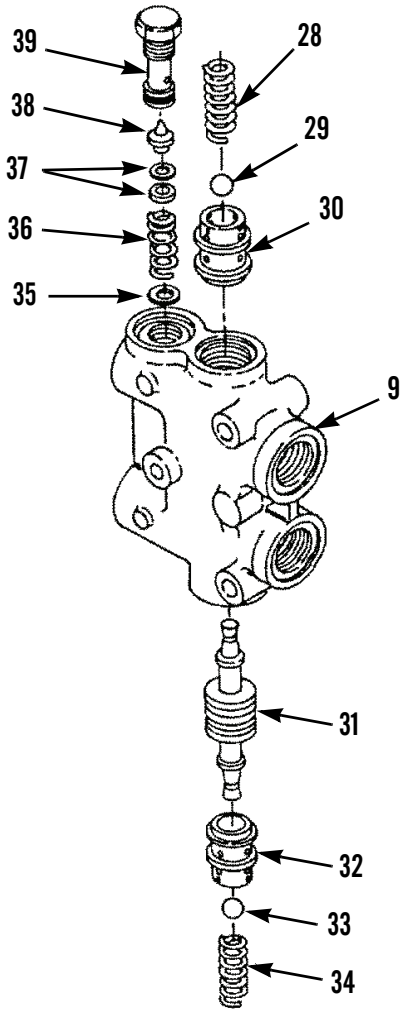

397-1582

***ASSEMBLY - CONTINUED***

8. Install two new preformed packings (27) on plugs (26).

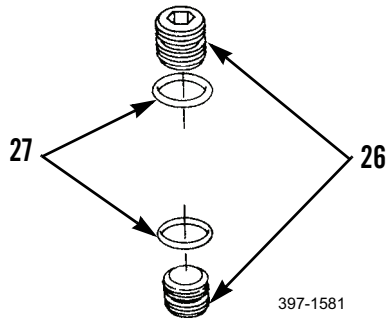


9. Install two plugs (26) on check valve (9). Tighten plugs to 25 lb-ft (34 Nm).

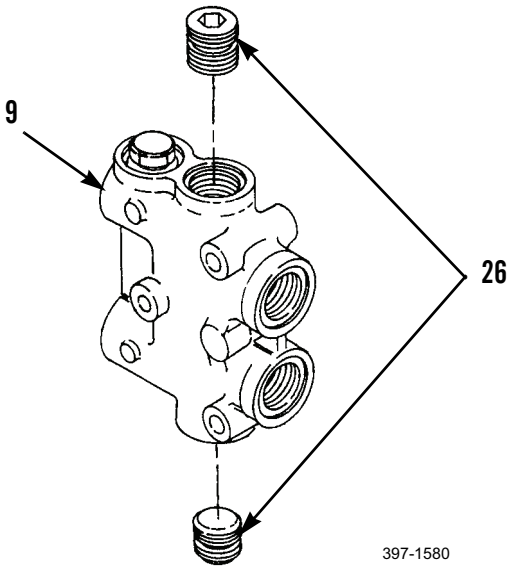


10. Install two new preformed packings (25) on adapters (24).

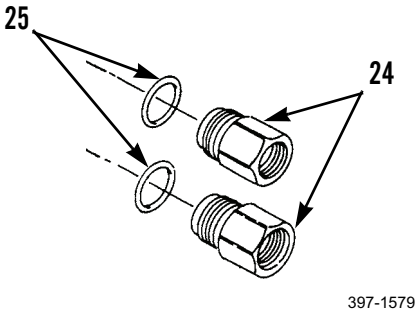

### *ASSEMBLY - CONTINUED*

11. Install two adapters (24) to check valve (9). Tighten two adapters to 55 lb-ft (75 Nm).

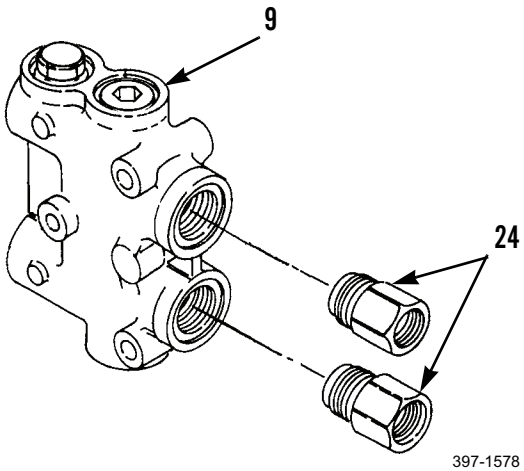


### *INSTALLATION*

1. Install check valve assembly (9) on machine with washer (14) and bolt (15).
2. Install new preformed packing (16) and connector (17).
3. Install new preformed packing (23) and connector (18).
4. Install new preformed packings (19 and 20) and connect hose assemblies (21 and 22) to connectors (17 and 18).

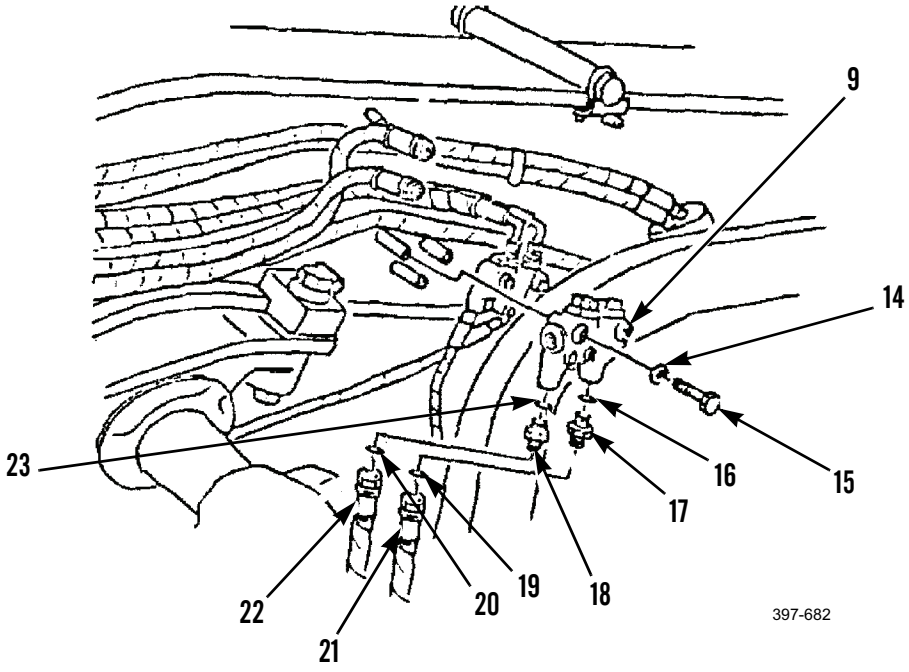

***INSTALLATION - CONTINUED***

5. Install new preformed packing (8) and elbow (7) to check valve (9).
6. Install new preformed packing (10) and elbow (11).
7. Install new preformed packings (1 and 2) and connect two hose assemblies (12 and 13) to elbows (11 and 7).
8. Start engine (TM 5-3805-261-10).
9. Operate control levers and cycle system through five or more full-travel movements to bleed air from system.
10. Stop engine and check for leaks.
11. Check hydraulic oil level and fill as necessary (WP 0216 00).
12. Install frame cover (3) on machine with eight washers (4 and 5) and bolts (6).

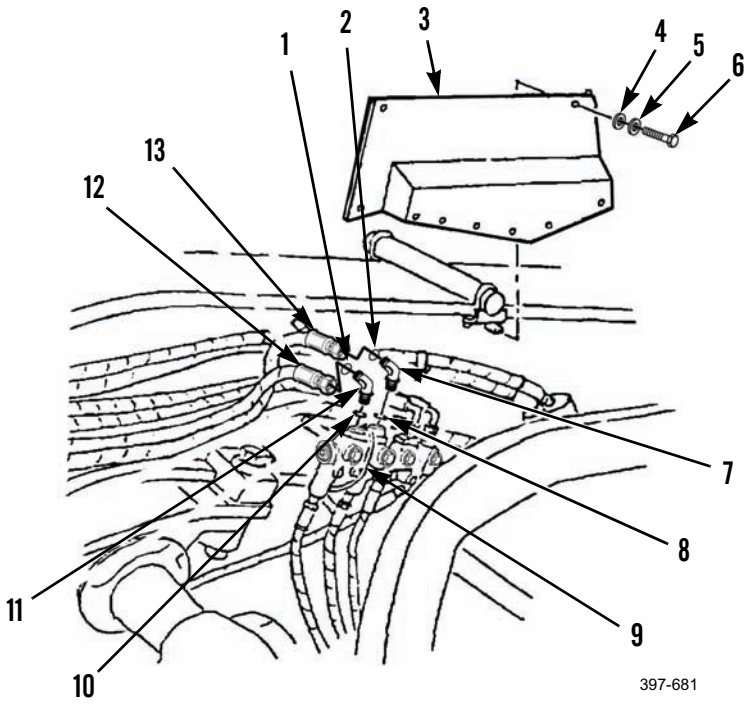


**END OF WORK PACKAGE**

## SCARIFIER CHECK AND RELIEF VALVE MAINTENANCE 0242 00

### THIS WORK PACKAGE COVERS

Removal, Disassembly, Cleaning and Inspection, Assembly, Installation

### INITIAL SETUP

**Maintenance Level**

Unit

**Tools and Special Tools**

Tool kit, general mechanic's, (Item 89, WP 0348 00)

Shop equipment, common no. 1 (Item 75, WP 0348 00)

Wrench, torque (Item 97, WP 0348 00)

**Materials/Parts**

Cap set, protective (Item 7, WP 0349 00)

Oil, lubricating (Item 27, WP 0349 00)

Rag, wiping (Item 35, WP 0349 00)

Tag, marker (Item 44, WP 0349 00)

Packing, preformed (12)

**References**

WP 0216 00

**Equipment Conditions**

Machine parked on level ground (TM 5-3805-261-10)

Parking/emergency brake applied (TM 5-3805-261-10)

Implements lowered to ground (TM 5-3805-261-10)

Engine off (TM 5-3805-261-10)

Battery disconnect switch in OFF position (TM 5-3805-261-10)

Hydraulic pressure relieved (WP 0020 00)

***REMOVAL***

**CAUTION**

Cap hose ends to prevent contamination.

**NOTE**

Tag hose assemblies before disconnecting to aid in installation.

1. Disconnect hose assemblies (1 and 2) from elbows (16 and 4). Remove and discard preformed packings (17 and 3).
2. Remove elbow (16) and preformed packing (15) from check valve (6) assembly. Discard preformed packing.
3. Remove elbow (4) and preformed packing (5). Discard preformed packing.
4. Disconnect hose assemblies (10 and 11) from connectors (8 and 13). Remove and discard preformed packings (9 and 12).
5. Remove connector (13) and preformed packing (14). Discard preformed packing.
6. Remove connector (8) and preformed packing (7). Discard preformed packing.

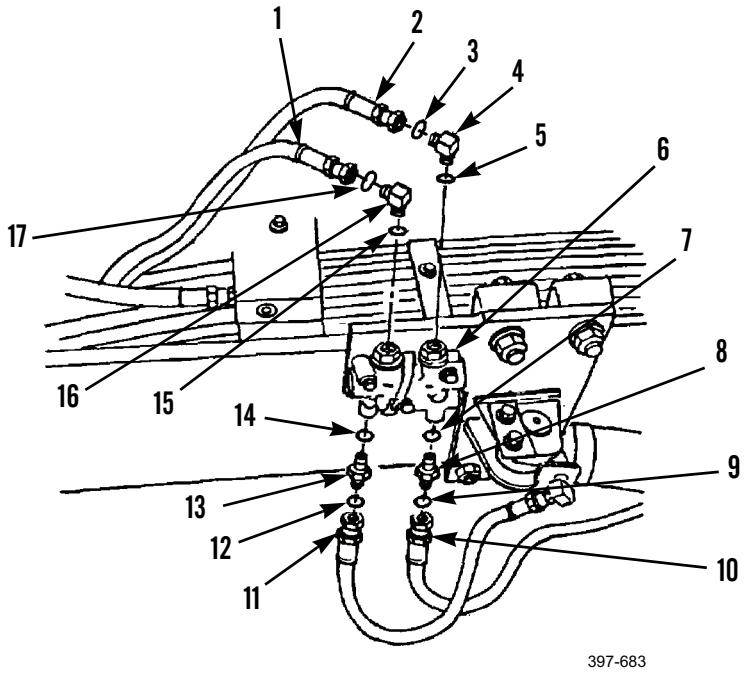

### *REMOVAL - CONTINUED*

7. Remove three bolts (19), washers (18), and check valve (6) assembly from machine.

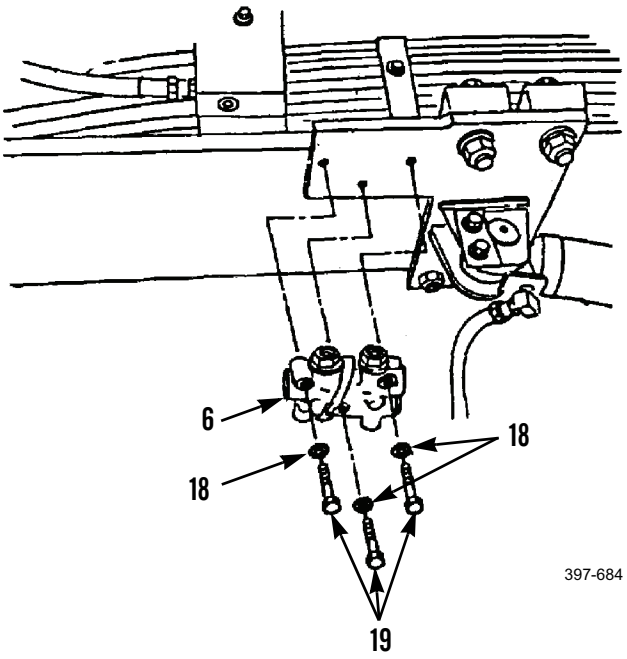


### *DISASSEMBLY*

1. Remove two adapters (21) and chokes (20) from check valve (6).

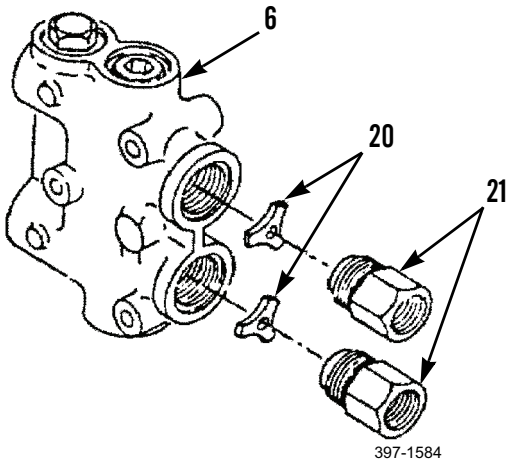

***DISASSEMBLY - CONTINUED***

2. Remove and discard two preformed packings (22) from adapters (21).

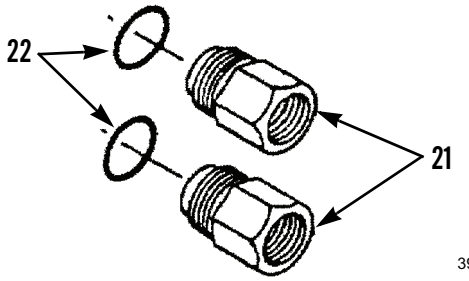

397-1585

Springs are under pressure. Loosen plugs carefully to relieve pressure of springs. Failure to follow this warning may cause injury to personnel.

3. Remove two plugs (23) from check valve (6).
4. Remove two springs (24) and balls (25).

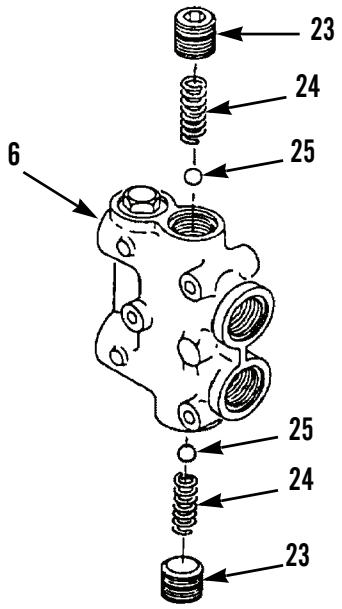

397-1586

5. Remove and discard two preformed packings (26) from plugs (23).

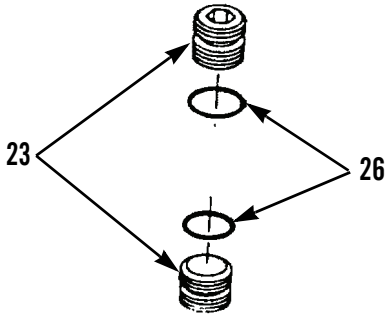

397-1587

***DISASSEMBLY - CONTINUED***

6. Using brass punch and hammer, remove seat (27) and piston (28) from check valve (6).
7. Using brass punch and hammer, remove seat (29).

**WARNING**

Springs are under pressure. Loosen plugs carefully to relieve pressure of springs. Failure to follow this warning may cause injury to personnel.

8. Remove valve (34) assembly.
9. Remove valve (33), shim(s) (32), spring (31), and washers (30).

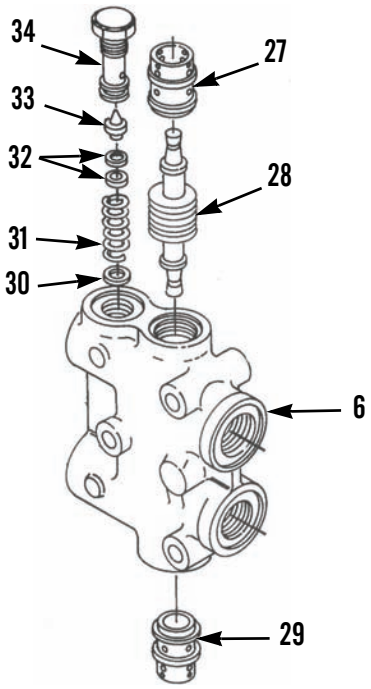

397-1588

10. Remove and discard preformed packings (36 and 35) from valve (34).

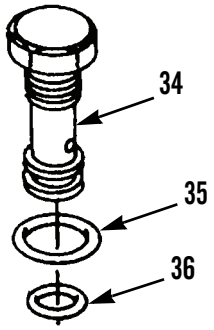

397-1589

### *CLEANING AND INSPECTION*

Clean and inspect all parts in accordance with WP 0020 00.

### *ASSEMBLY*

1. Apply thin coat of clean oil to new preformed packings (35 and 36) and install preformed packings on valve (34).

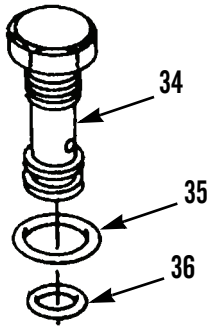


397-1589

2. Install washers (30), spring (31), shim(s) (32), and valve (33) in check valve (6).
3. Install valve (34) assembly.
4. Lower temperature of seat (29) and use brass punch and hammer to install seat in check valve (6).
5. Position piston (28) in seat (29).
6. Lower temperature of seat (27) and use brass punch and hammer to install seat in check valve (6). Move piston (28) to check for free travel.

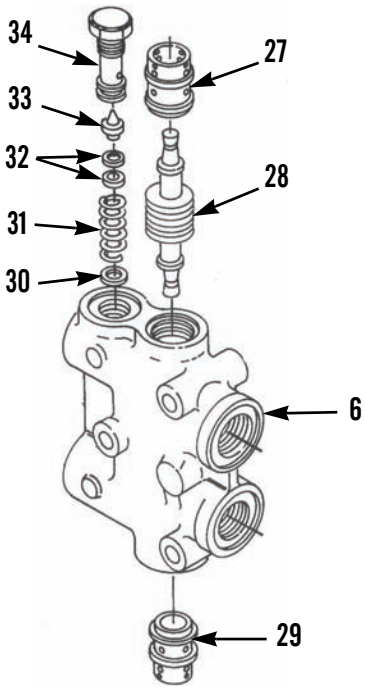


397-1588

***ASSEMBLY - CONTINUED***

7. Install two new preformed packings (26) on plugs (23).

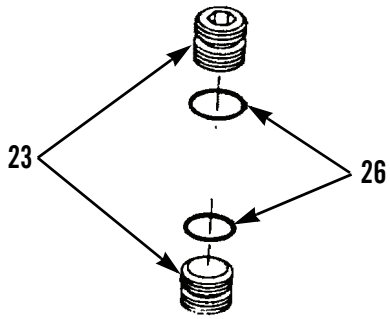


397-1587

8. Install two balls (25) and springs (24) in check valve (6).
9. Install two plugs (23) on check valve (6). Tighten plugs to 25 lb-ft (34 Nm).

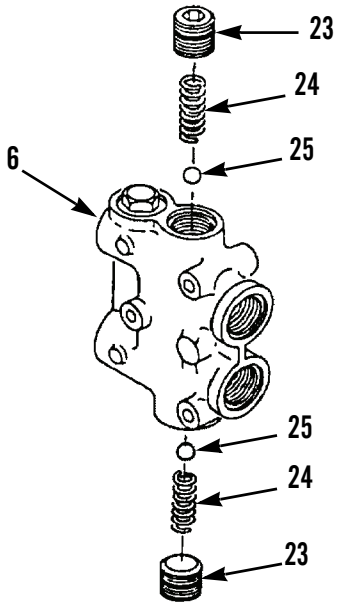


397-1586

***ASSEMBLY - CONTINUED***

10. Install two new preformed packings (22) on adapters (21).

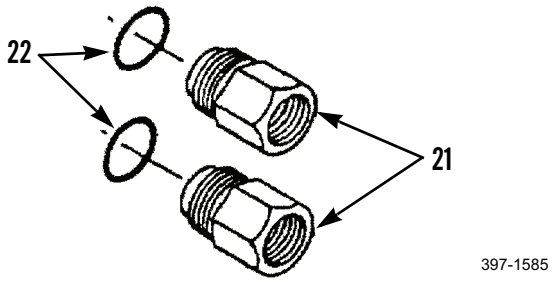


11. Install two chokes (20) and adapters (21) on check valve (6). Tighten adapters to 55 1b-ft (75 Nm).

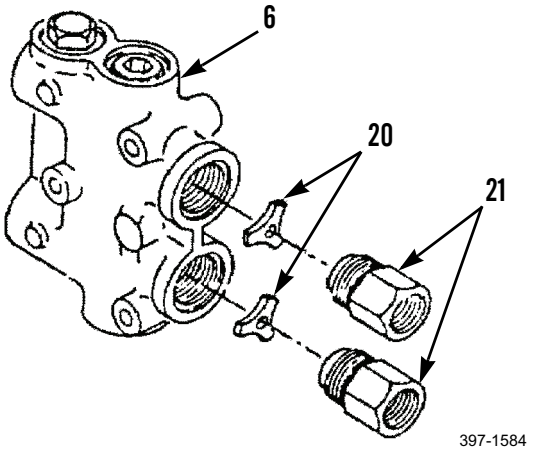

***INSTALLATION***

**NOTE**

Ensure that side of valve with two plugged ports is facing front of machine and side with one plugged port is facing rear of machine.

1. Install check valve (6) assembly on machine with three washers (18) and bolts (19).

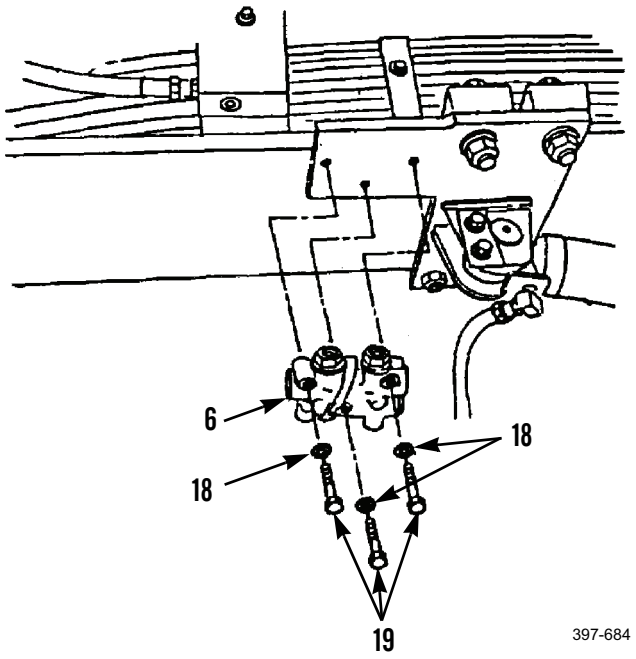

***INSTALLATION - CONTINUED***

2. Install new preformed packing (7) and connector (8) on check valve (6) assembly.
3. Install new preformed packing (14) and connector (13).
4. Install new preformed packings (9 and 12) and connect hose assemblies (10 and 11) to connectors (8 and 13).
5. Install new preformed packing (5) and elbow (4).
6. Install new preformed packing (15) and elbow (16).
7. Install new preformed packings (3 and 17) and connect hose assemblies (2 and 1) to elbows (4 and 16).

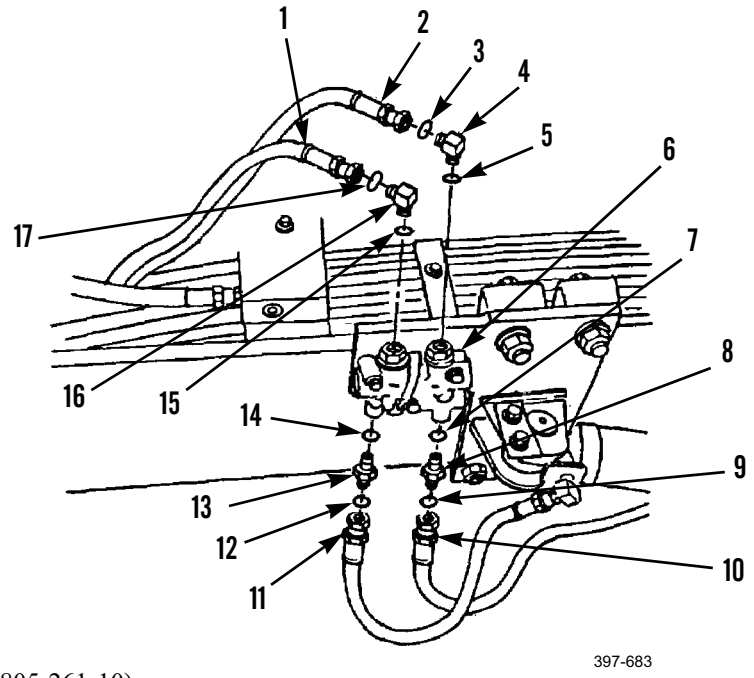


8. Start engine (TM 5-3805-261-10).
9. Operate control levers and cycle system through five or more full-travel movements to bleed air from system.
10. Stop engine and check for leaks.
11. Check hydraulic oil level and fill as necessary (WP 0216 00).

**END OF WORK PACKAGE**

## CENTERSHIFT CYLINDER REPLACEMENT 0243 00

### THIS WORK PACKAGE COVERS

Removal, Cleaning and Inspection, Installation

### INITIAL SETUP

**Maintenance Level**

Unit

**Tools and Special Tools**

Tool kit, general mechanic's (Item 89, WP 0348 00)

Sling (Item 78, WP 0348 00)

**Materials/Parts**

Cap set, protective (Item 7, WP 0349 00)

Rag, wiping (Item 35, WP 0349 00)

Tag, marker (Item 44, WP 0349 00)

Lockwasher (4)

Packing, preformed (4)

**Personnel Required**

Two

**References**

WP 0216 00

WP 0245 00

**Equipment Conditions**

Machine parked on level ground (TM 5-3805-261-10)

Parking/emergency brake applied (TM 5-3805-261-10)

Implements lowered to ground (TM 5-3805-261-10)

Engine off (TM 5-3805-261-10)

Battery disconnect switch in OFF position (TM 5-3805-261-10)

Hydraulic pressure relieved (WP 0020 00)

***REMOVAL***

## CAUTION

Cap hose ends and plug open ports to prevent contamination.

## NOTE

Tag hose assemblies before disconnecting to aid in installation.

1. Disconnect hose assembly (7) from connector (9). Remove and discard preformed packing (8).
2. Remove connector (9) and preformed packing (10). Discard preformed packing.
3. Disconnect hose assembly (3) from elbow (1). Remove and discard preformed packing (2).
4. Remove elbow (1), connector (4), and preformed packing (5). Discard preformed packing.

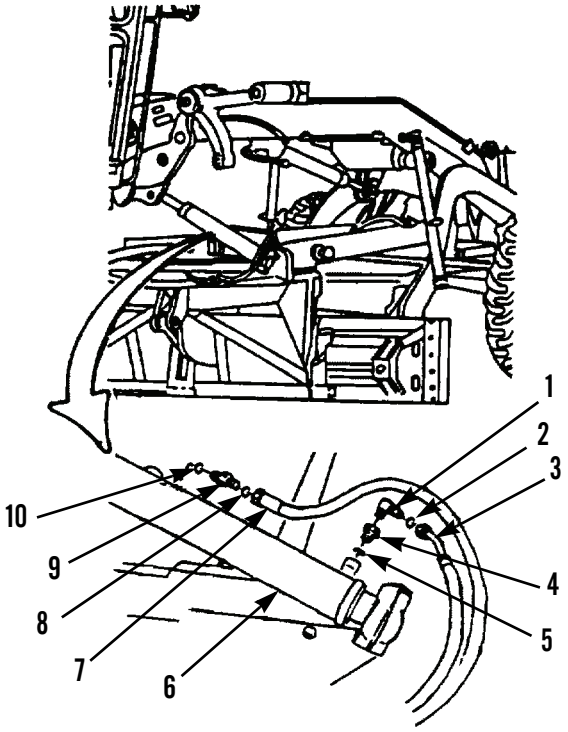


397-1590

***REMOVAL - CONTINUED***



**WARNING**

Use extreme caution when handling heavy parts. Provide adequate support and use assistance during procedure. Ensure that any lifting device used is in good condition and of suitable load capacity. Keep clear of heavy parts supported only by lifting device. Failure to follow this warning may cause injury or death to personnel.

**NOTE**

Centershift cylinder weighs 80 lb (36 kg).

5. With assistance, attach sling to cylinder (6) assembly. Remove slack from sling.
6. Remove two lube fittings (11), bolts (19), lockwashers (18), and cap (17) from rod (12). Discard lockwashers.
7. Separate rod (12) from ballstud (13) of machine.
8. Remove spacer plate(s) (16), two inserts (15), and spacer plate(s) (14).

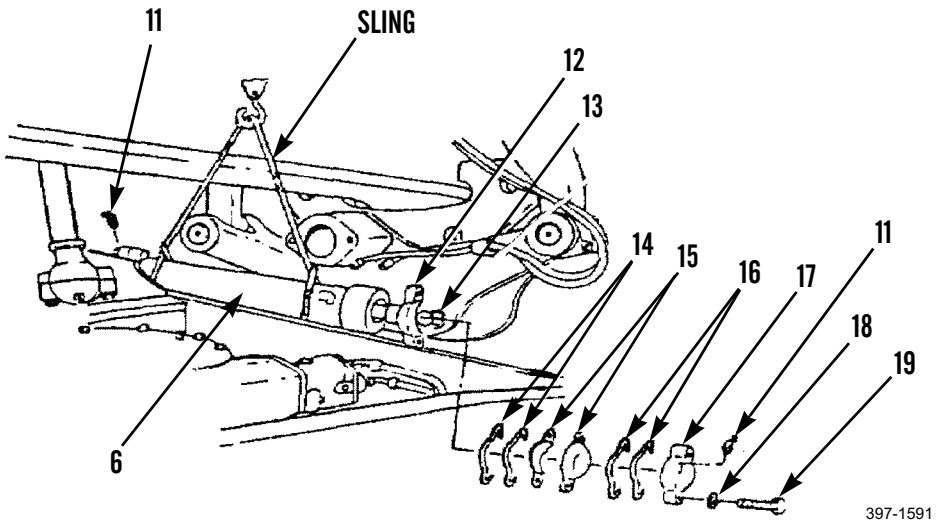

### *REMOVAL - CONTINUED*

9. Remove two bolts (22), lockwashers (21), and cap (23). Discard lockwashers.
10. Separate centershift cylinder (6) assembly from ballstud (20) of machine and place cylinder in work area.
11. Remove spacer plate(s) (24), two inserts (25), and spacer plate(s) (26).
12. Remove sling from centershift cylinder (6) assembly.

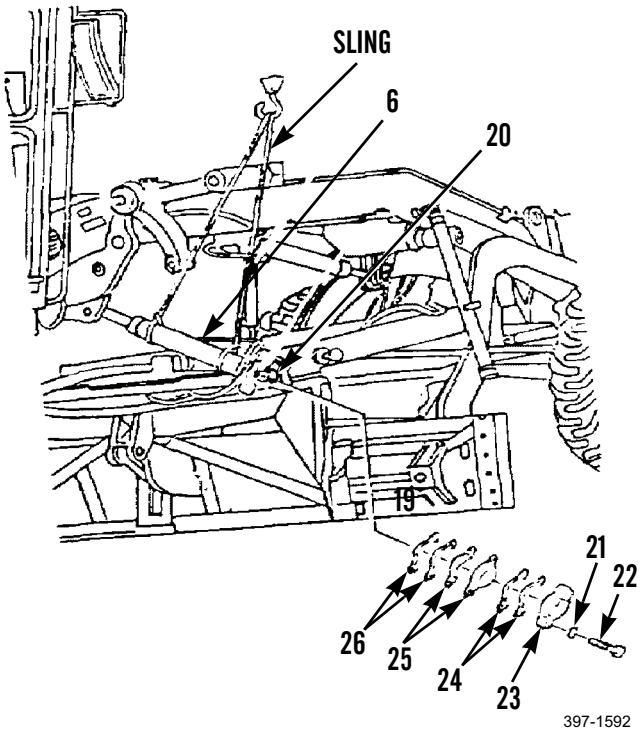


### *CLEANING AND INSPECTION*

Clean and inspect all parts in accordance with WP 0020 00.

### *INSTALLATION*

1. Attach sling to centershift cylinder (6) assembly.
2. Apply thin coat of grease to ballstud (20) and two inserts (25) of machine.

**NOTE**

Install enough spacer plate(s) to prevent excessive clearance around ballstuds. Be sure there is an equal number of spacer plate(s) on each side of ballstud. Inserts must fit snugly on ballstuds.

3. Install spacer plate(s) (26) and one of two inserts (25) on centershift cylinder (6) assembly.
4. Position cylinder (6) on ballstud (20).
5. Install one of two inserts (25), spacer plate(s) (24), cap (23), two new lockwashers (21), and bolts (22). Adjust for free play between ballstud (20) and inserts (25) (WP 0245 00).

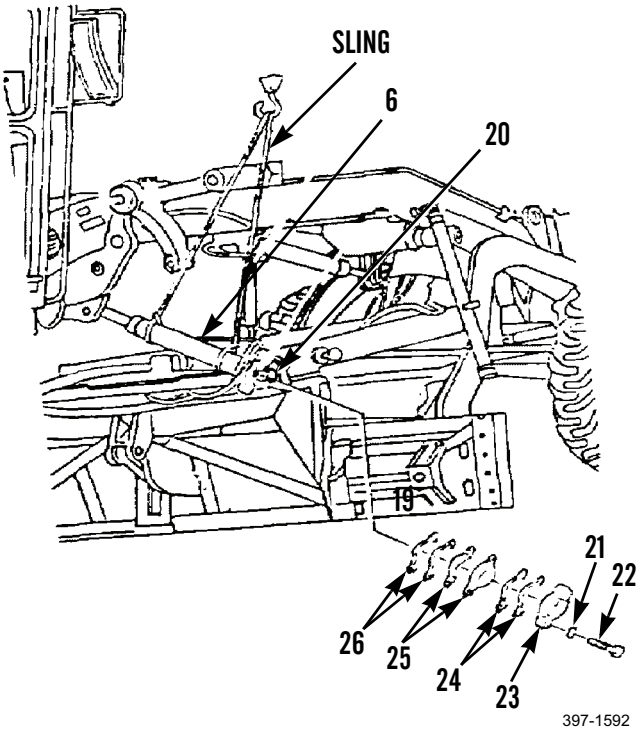


6. Apply thin coat of grease to ballstud (13) and two inserts (15).
7. Install spacer plate(s) (14) and one of two inserts (15) on cylinder (6) assembly.
8. Position rod (12) on ballstud (13) of machine.
9. Install other inserts (15), spacer plate(s) (16), cap (17), two new lockwashers (18), and bolts (19). Adjust for free play between ballstud (13) and inserts (15) (WP 0245 00).
10. Remove sling.
11. Install two lube fittings (11).
12. Lubricate two lube fittings (11) (WP 0020 00).

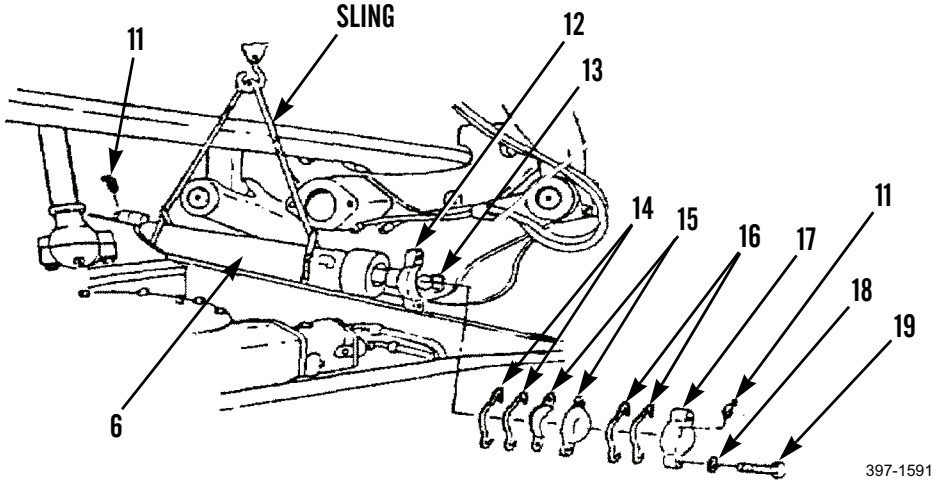

## CENTERSHIFT CYLINDER REPLACEMENT - CONTINUED 0243 00

### *INSTALLATION - CONTINUED*

13. Install new preformed packing (5) and connector (4) on centershift cylinder (6) assembly.
14. Install elbow (1) on connector (4).
15. Install new preformed packing (2) and elbow (1).
16. Install new preformed packing (10) and connector (9).
17. Install new preformed packing (8) and connect hose assembly (7) to connector (9).

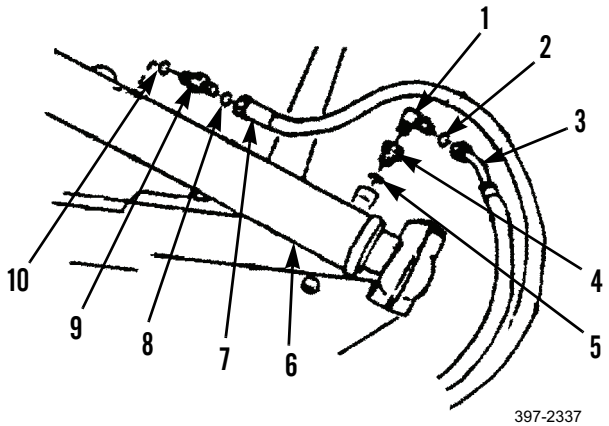


18. Start engine (TM 5-2805-261-10).
19. Operate control levers and cycle system through at least five full-travel movements to bleed air from system.
20. Stop engine and check for leaks.
21. Check hydraulic oil level and fill as necessary (WP 0216 00).

**END OF WORK PACKAGE**

## BLADE TIP CYLINDER REPLACEMENT 0244 00

### THIS WORK PACKAGE COVERS

Removal, Cleaning and Inspection, Installation

### INITIAL SETUP

**Maintenance Level**

Unit

**Tools and Special Tools**

Tool kit, general mechanic's, (Item 89, WP 0348 00)

Sling (Item 78, WP 0348 00)

**Materials/Parts**

Cap set, protective (Item 7, WP 0349 00)

Rag, wiping (Item 35, WP 0349 00)

Tag, marker (Item 44, WP 0349 00)

Packing, preformed (3)

Pin, cotter

**Personnel Required**

Two

**References**

WP 0216 00

**Equipment Conditions**

Machine parked on level ground (TM 5-3805-261-10)

Parking/emergency brake applied (TM 5-3805-261-10)

Blade tipped fully forward (TM 5-3805-261-10)

Implements lowered to ground (TM 5-3805-261-10)

Engine off (TM 5-3805-261-10)

Battery disconnect switch in OFF position (TM 5-3805-261-10)

Hydraulic pressure relieved (WP 0020 00)

***REMOVAL***

**CAUTION**

Cap hose ends and plug open ports to prevent contamination.

**NOTE**

Tag hose assemblies before disconnecting to aid in installation.

1. Disconnect hose assembly (7) from connector (9). Remove and discard preformed packing (8).
2. Remove connector (9) and preformed packing (10). Discard preformed packing.
3. Disconnect hose assembly (6) from elbow (1).
4. Remove elbow (1) and preformed packing (2) from blade tip cylinder (3) assembly. Discard preformed packing.



**WARNING**

Use extreme caution when handling heavy parts. Provide adequate support and use assistance during procedure. Ensure that any lifting device used is in good condition and of suitable load capacity. Keep clear of heavy parts supported only by lifting device. Failure to follow this warning may cause injury or death to personnel.

**NOTE**

Blade tip cylinder weighs 50 lb (23 kg).

## BLADE TIP CYLINDER REPLACEMENT - CONTINUED 0244 00

### *REMOVAL - CONTINUED*

5. With assistance, attach sling to blade tip cylinder (3) assembly. Remove slack from sling.
6. Remove and discard cotter pin (13).
7. Remove pin (12) and two spacers (11) to disconnect one end of blade tip cylinder (3) assembly from machine.
8. Remove bolt (4) from pin (5).
9. Remove pin (5) to disconnect other end of blade tip cylinder (3).
10. Place blade tip cylinder (3) in work area.
11. Remove sling.

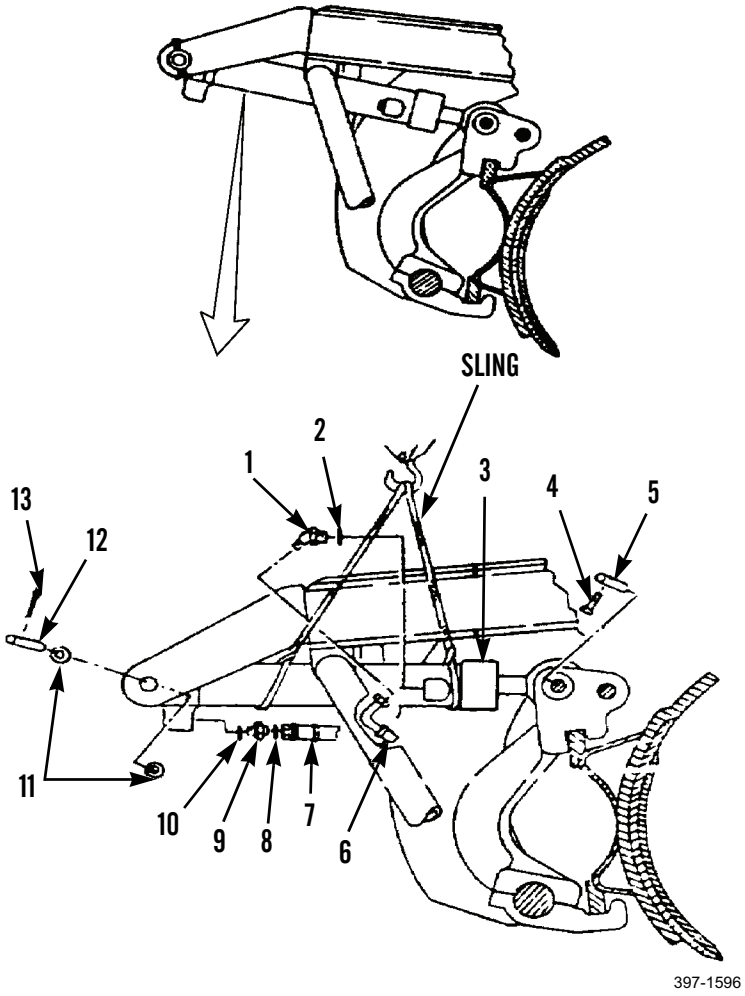

### *INSTALLATION*

1. Attach sling to blade tip cylinder (3) assembly.
2. Use sling to position blade tip cylinder (3) assembly to machine.
3. Install pin (5) to connect one end of cylinder (3) to machine.
4. Install bolt (4) through pin (5).
5. Position other end of cylinder (3) to machine and position two spacers (11) in alignment with hole through cylinder.

**CAUTION**

Use care not to damage seals of cylinder.

6. Carefully push pin (12) through machine, spacers (11), and cylinder (3).
7. Install new cotter pin (13) in pin (12).
8. Remove sling.
9. Install new preformed packing (2) and elbow (1) to cylinder (3).
10. Connect hose assembly (6) to elbow (1).
11. Install new preformed packing (10) and connector (9) to cylinder (3).
12. Install new preformed packing (9) and connect hose assembly (7) to connector (8).

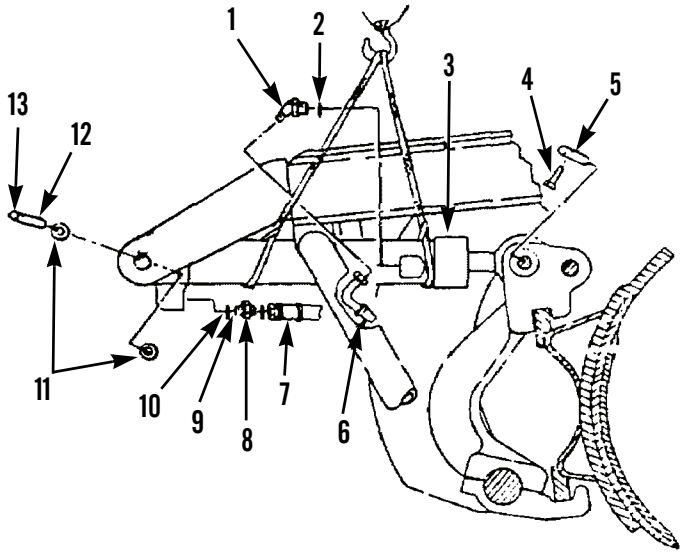


397-1599

13. Start engine (TM 5-3805-261-10).
14. Operate control levers and cycle system through at least five full-travel movements to bleed air from system.
15. Stop engine and check for leaks.
16. Check hydraulic oil level and fill as necessary (WP 0216 00).

**END OF WORK PACKAGE**

## BLADE LIFT CYLINDER REPLACEMENT 0245 00

### THIS WORK PACKAGE COVERS

Removal, Cleaning and Inspection, Installation

### INITIAL SETUP

**Maintenance Level**

Unit

**Tools and Special Tools**

Tool kit, general mechanic's (Item 89, WP 0348 00)

Sling (Item 78, WP 0348 00)

**Materials/Parts**

Cap set, protective (Item 7, WP 0349 00)

Grease, GAA (Item 17, WP 0349 00)

Lubricant, thread (Item 22, WP 0349 00)

Oil, lubricating (Item 27, WP 0349 00)

Rag, wiping (Item 35, WP 0349 00)

Tag, marker (Item 44, WP 0349 00)

Lockwasher (2)

Packing, preformed (4)

Retainer, packing

Seal (2)

**Personnel Required**

Two

**References**

WP 0023 00

WP 0216 00

**Equipment Conditions**

Machine parked on level ground (TM 5-3805-261-10)

Parking/emergency brake applied (TM 5-3805-261-10)

Implements lowered to ground (TM 5-3805-261-10)

Engine off (TM 5-3805-261-10)

Battery disconnect switch in OFF position (TM 5-3805-261-10)

Hydraulic pressure relieved (WP 0020 00)

***REMOVAL***

## CAUTION

Cap hose ends to prevent contamination.

## NOTE

- Tag hose assemblies before disconnecting to aid in installation.
- This procedure covers the left blade lift cylinder. Follow these instructions for the right blade lift cylinder.

1. Disconnect hose assembly (1) from connector (3). Remove and discard preformed packing (2).
2. Remove connector (3) and preformed packing (4) from cylinder (9). Discard preformed packing.
3. Disconnect hose assembly (12) from elbow (11). Remove and discard preformed packing (13).
4. Remove elbow (11) and preformed packing (10). Discard preformed packing.
5. Remove nut (14), washer (15), spacer tube (5), clamp (6), washer (7), and bolt (8).
6. Separate two clips (16) with hose assemblies (1 and 12) from blade lift cylinder (9) assembly.

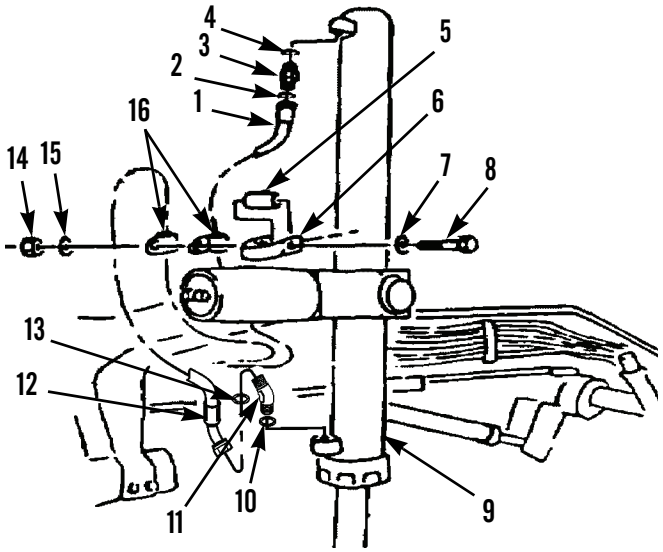

397-1600

***REMOVAL - CONTINUED***

7. Remove lube fitting (21).
8. Remove two bolts (22) and lockwashers (23). Discard lockwashers.
9. Remove cap (20), two spacer plates (19), inserts (18), and spacer plates (17).

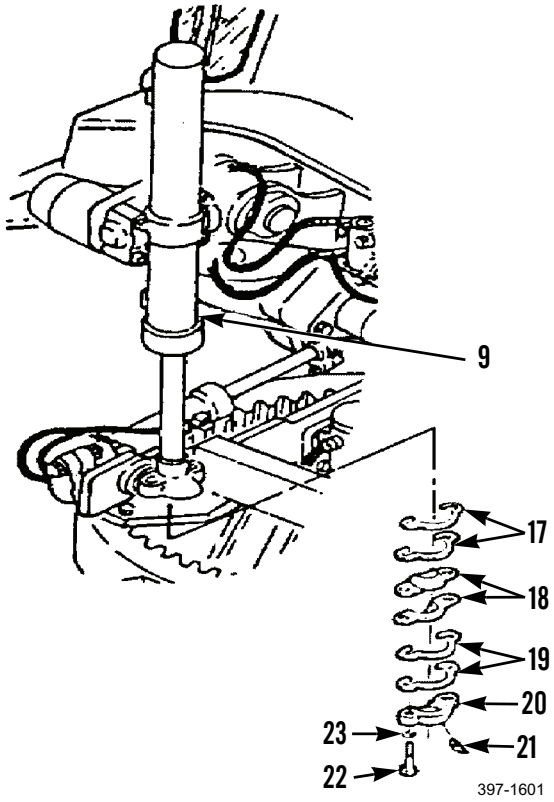

***REMOVAL - CONTINUED***



**WARNING**

Use extreme caution when handling heavy parts. Provide adequate support and use assistance during procedure. Ensure that any lifting device used is in good condition and of suitable load capacity. Keep clear of heavy parts supported only by lifting device. Failure to follow this warning may cause injury or death to personnel.

**NOTE**

Blade lift cylinder weighs 175 lb (79 kg).

10. With assistance, attach sling to cylinder (9). Remove slack from sling.
11. Remove two bolts (26), washers (25), and end cap (24) from each side of blade lift cylinder (9) assembly.
12. Remove blade lift cylinder (9) assembly from machine and place in work area. Remove sling.

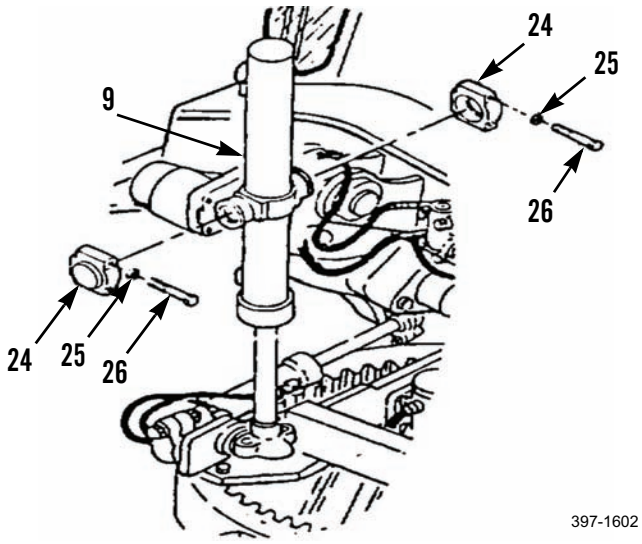

397-1602

**NOTE**

Each of these two sleeve bearings may have already been removed with caps.

13. Use a puller to remove two sleeve bearings (27) and seals (28). Discard seals.
14. Use a puller to remove two sleeve bearings (29), if necessary, from cylinder (9).

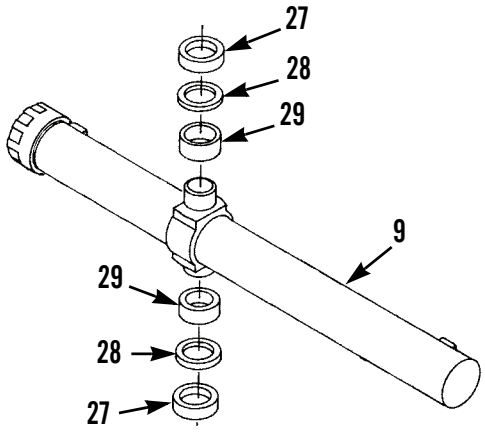

397-1603

***CLEANING AND INSPECTION***

Clean and inspect all parts in accordance with WP 0020 00.

### *INSTALLATION*

1. Install two new sleeve bearings (29) on cylinder (9), if removed.
2. Apply coat of grease to sleeve bearings (29).
3. Install two new seals (28) on cylinder (9) with lip on seals facing outward.

**CAUTION**

Do not use impact-type drive to install two sleeve bearings.

4. Install two sleeve bearings (27) into two caps (24).

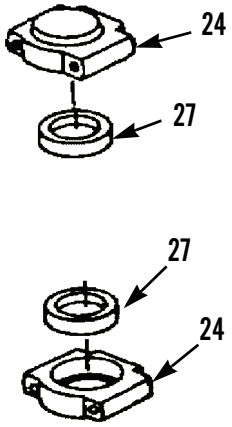


5. Attach sling to cylinder (9). Tighten slack from sling.
6. Position cylinder (9) to machine.
7. Install cap (24), two washers (25), and two bolts (26) to each side of cylinder (9) assembly. Leave bolts loose.
8. Apply coat of grease to ballstud of machine and two inserts (18).
9. Install two spacer plates (17) and one of two inserts (18) on lower end of cylinder (9).
10. Install other insert (18), two spacer plates (19), and cap (20) with two new lockwashers (23) and bolts (22).

**NOTE**

If removing two spacer plates, remove one spacer plate from each side of ballstud. Inserts should have a snug fit on ballstud.

11. Move rod of cylinder (9) to check for free play between ballstud and inserts (18) without allowing cap (24) to touch socket (25). Add or remove spacer plates (17 or 19) as necessary.

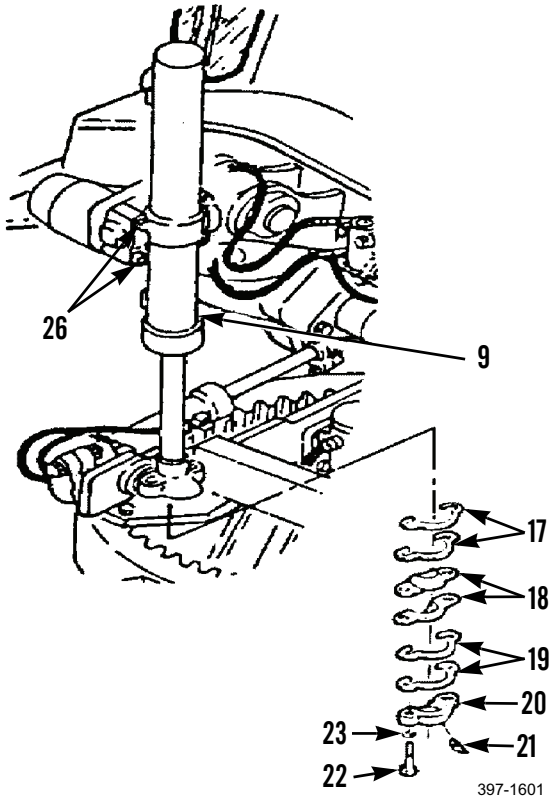

*INSTALLATION - CONTINUED*

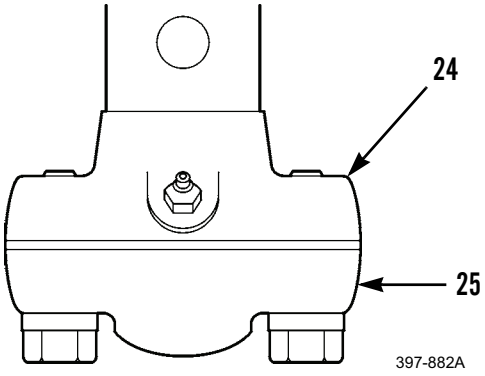


CORRECT CLEARANCE
(TYPICAL)

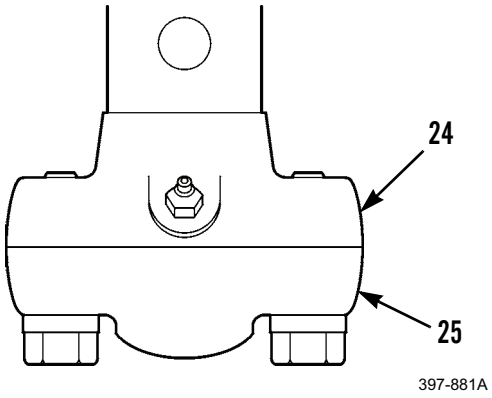


INCORRECT CLEARANCE
TOO TIGHT
(CAP TOUCHING SOCKET)

12. Fully tighten four bolts (26) to 95 lb-ft (129 Nm).
13. Remove sling.
14. Install lube fitting (21) and lubricate with grease (WP 0023 00).

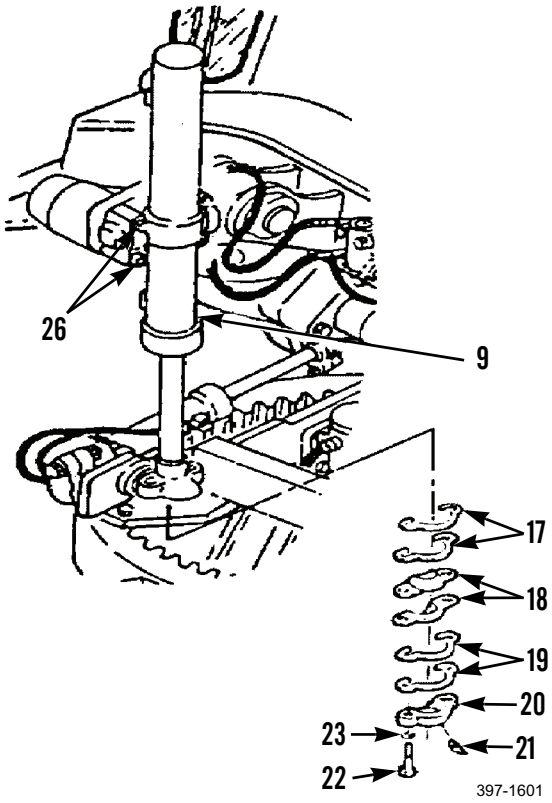

## BLADE LIFT CYLINDER REPLACEMENT - CONTINUED 0245 00

### *INSTALLATION - CONTINUED*

15. Install bolt (8), washer (7), clamp (6), two clips (16), spacer tube (5), washer (15), and nut (14) to blade lift cylinder (9).
16. Install new preformed packing (10) and install elbow (11) to lower end of blade lift cylinder (9).
17. Install new preformed packing (13) and connect hose assembly (12) to elbow (11).
18. Install new preformed packing (4) and install connector (3) to upper end of blade lift cylinder (9).
19. Install new preformed packing (2) and connect hose assembly (1) to connector (3).

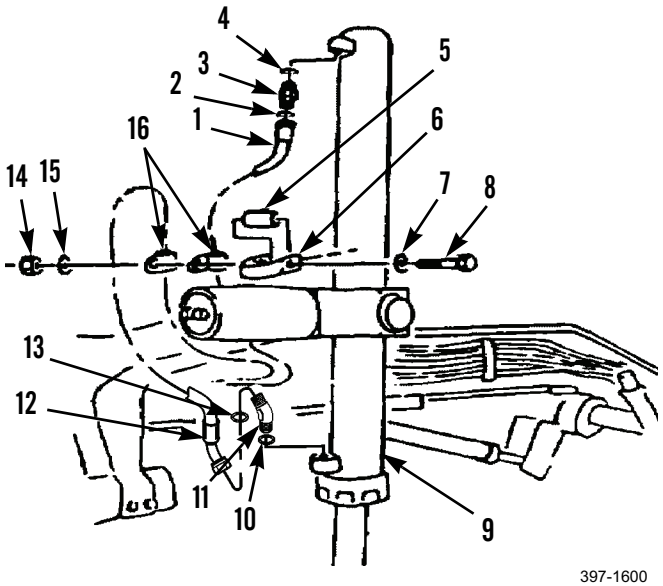


20. Start engine (TM 5-3805-261-10).
21. Operate control levers and cycle system through at least five full-travel movements to bleed air from system.
22. Stop engine and check for leaks.
23. Check hydraulic oil level and fill as necessary (WP 0216 00).

**END OF WORK PACKAGE**

## ARTICULATION CYLINDER REPLACEMENT 0246 00

### THIS WORK PACKAGE COVERS

Removal, Cleaning and Inspection, Installation

### INITIAL SETUP

**Maintenance Level**

Unit

**Tools and Special Tools**

Tool kit, general mechanic's (Item 89, WP 0348 00)

Sling (Item 78, WP 0348 00)

**Materials/Parts**

Cap set, protective (Item 7, WP 0349 00)

Rag, wiping (Item 35, WP 0349 00)

Tag, marker (Item 44, WP 0349 00)

Lockwasher (4)

Packing, preformed (4)

Ring

Seal (7)

**Personnel Required**

Two

**References**

WP 0216 00

**Equipment Conditions**

Machine parked on level ground (TM 5-3805-261-10)

Parking/emergency brake applied (TM 5-3805-261-10)

Implements lowered to ground (TM 5-3805-261-10)

Engine off (TM 5-3805-261-10)

Battery disconnect switch in OFF position (TM 5-3805-261-10)

Hydraulic pressure relieved (WP 0020 00)

Left or right engine side panel removed (WP 0182 00)

Pivot locking pin installed (TM 5-3805-261-10)

***REMOVAL***

## CAUTION

Cap hose ends and plug open ports to prevent contamination.

## NOTE

- This procedure covers the left articulation cylinder. Follow these instructions for the right articulation cylinder.
- Tag hose assemblies before disconnecting to aid in installation.

1. Disconnect hose assembly (6) from connector (5) of articulation cylinder (3) assembly. Remove and discard preformed packing (14).
2. Remove connector (5) and preformed packing (4). Discard preformed packing.
3. Disconnect hose assembly (9) from connector (8). Remove and discard preformed packing (13).
4. Remove connector (8) and preformed packing (7). Discard preformed packing.

## NOTE

Note number and location of washers when removing pin.

5. Remove screw (12), lockwasher (11), washer (10), and washer(s) (2) from left side of front frame. Discard lockwasher.
6. With assistance, attach sling to articulation cylinder (3). Remove slack from sling.
7. Use brass drift and hammer to remove pin (1) and washer(s) (2).

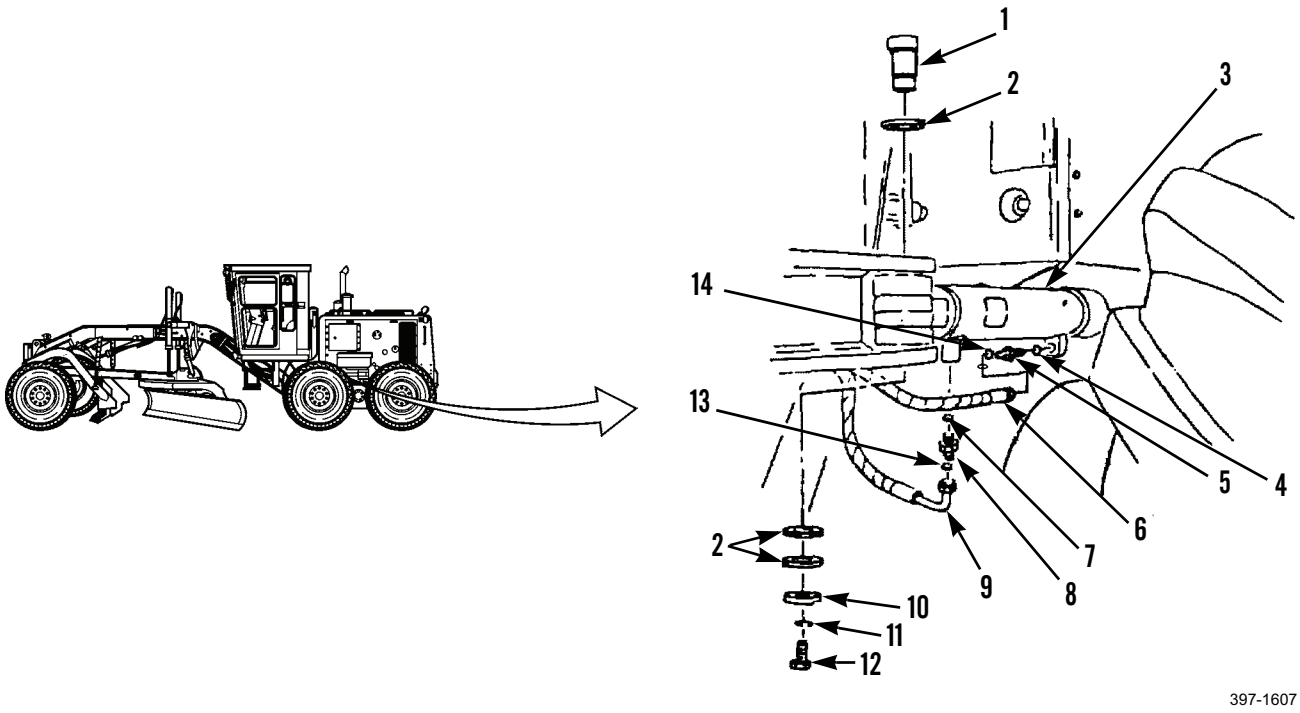

### *REMOVAL - CONTINUED*

8. Remove screw (19), lockwasher (18), washer (17), and washer(s) (16) from left side of rear frame. Discard lockwasher.
9. Use a puller to remove pin (15) and washer(s) (16) from machine.



**WARNING**

Use extreme caution when handling heavy parts. Provide adequate support and use assistance during procedure. Ensure that any lifting device used is in good condition and of suitable load capacity. Keep clear of heavy parts supported only by lifting device. Failure to follow this warning may cause injury or death to personnel.

**NOTE**

Articulation cylinder weighs 65 lb (30 kg).

10. Remove articulation cylinder (3) and place in work area.
11. Remove sling.

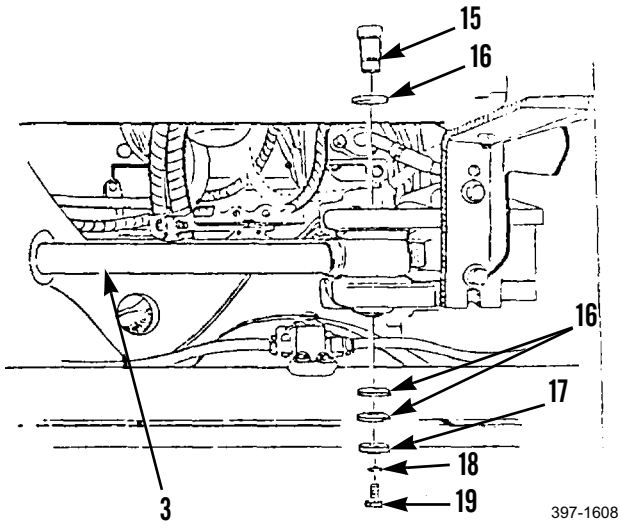


### *CLEANING AND INSPECTION*

Clean and inspect all parts in accordance with WP 0020 00.

### *INSTALLATION*

1. Attach sling to articulation cylinder (3) assembly and on machine.

**NOTE**

Use washers as required to ensure that cylinder is level.

2. Install washer(s) (16) as noted during removal.
3. Align washer(s) (16), rear frame mountings and cylinder (3) rod eye.
4. Install pin (15).
5. Install washer (17), new lockwasher (18), and screw (19).

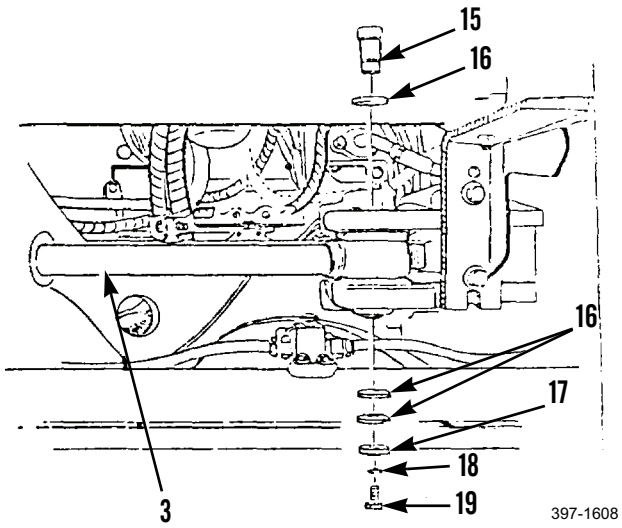

***NSTALLATION - CONTINUED***

**NOTE**

Use washers as required to ensure that cylinder is level.

6. Install three washers (2) as required.
7. Align three washers (2), front frame mountings, and cylinder (3) eye.
8. Install pin (1).
9. Install washer (10), new lockwasher (11), and screw (12).
10. Install new preformed packing (7) and connector (8).
11. Install new preformed packing (13) and hose assembly (9) to connector (8).
12. Install new preformed packing (4) and connector (5).
13. Install new preformed packing (14) and connect hose assembly (6).

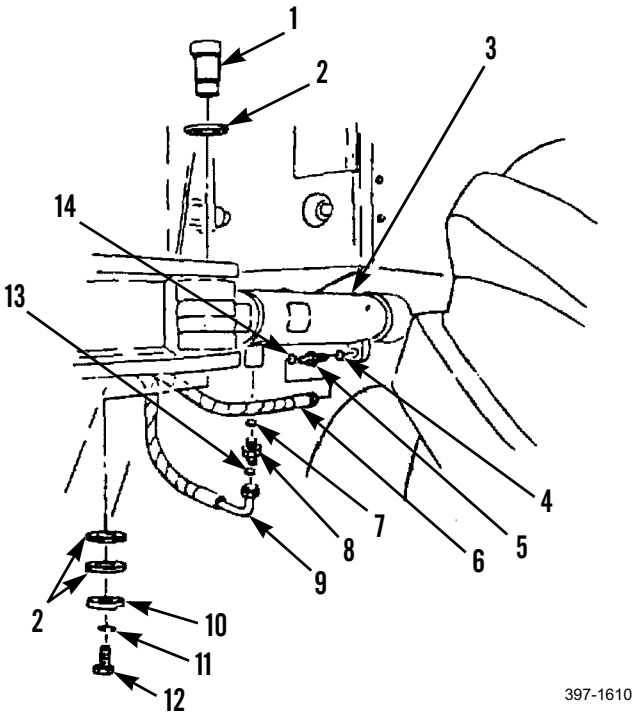


14. Remove pivot locking pin (TM 5-3805-261-10).
15. Install left or right side engine panel (WP 0182 00).
16. Start engine (TM 5-3805-261-10).
17. Articulate machine slowly left and right to bleed air from hydraulic system (TM 5-3805-261-10).
18. Stop engine and check for leaks.
19. Check hydraulic oil level and fill as necessary (WP 0216 00).

**END OF WORK PACKAGE**

## SIDESHIFT CYLINDER AND MOUNTING REPLACEMENT 0247 00

## THIS WORK PACKAGE COVERS

Removal, Cleaning and Inspection, Installation

## INITIAL SETUP

**Maintenance Level**

Unit

**Tools and Special Tools**

Tool kit, general mechanic's (Item 89, WP 0348 00)

Shop equipment, contact truck (Item 77, WP 0348 00)

Sling (Item 78, WP 0348 00)

Wrench, torque (Item 102, WP 0348 00)

**Materials/Parts**

Cap set, protective (Item 7, WP 0349 00)

Rag, wiping (Item 35, WP 0349 00)

Tag, marker (Item 44, WP 0349 00)

Chain

Packing, preformed (4)

Pin, cotter (2)

Wood blocks

**Personnel Required**

Two

**References**

WP 0216 00

**Equipment Conditions**

Machine parked on level ground (TM 5-3805-261-10)

Parking/emergency brake applied (TM 5-3805-261-10)

Blade tilted fully forward (TM 5-3805-261-10)

Implements lowered to ground (TM 5-3805-261-10)

Engine off (TM 5-3805-261-10)

Battery disconnect switch in OFF position (TM 5-3805-261-10)

Guards removed (WP 0259 00)

## SIDESHIFT CYLINDER AND MOUNTING REPLACEMENT - CONTINUED 0247 00

### *REMOVAL*

1. Remove cotter pin (2) and pin (1). Discard cotter pin.

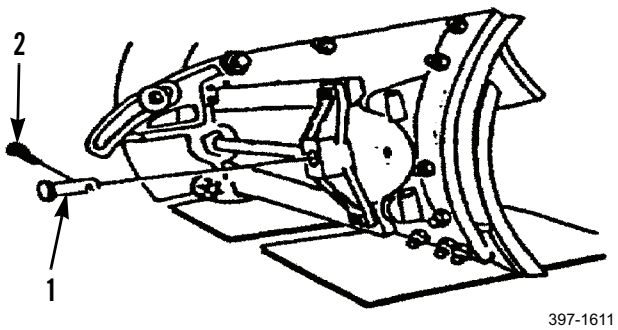


2. Start engine (TM 5-3805-261-10).
3. Retract cylinder rod (4) from bracket (3).
4. Position wood blocks between cylinder rod (4) and bracket (3).
5. Extend cylinder rod (4) to move blade far enough to the right for access to cylinder.
6. Retract cylinder rod (4).
7. Stop engine.
8. Relieve hydraulic pressure (WP 0020 00).
9. Remove wood blocks.

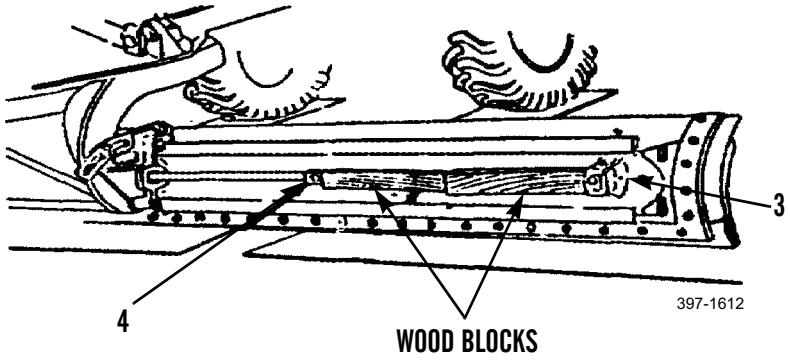

***REMOVAL - CONTINUED***

**CAUTION**

Cap hose ends to prevent contamination.

**NOTE**

Tag hose assemblies before disconnecting to aid in installation.

10. Disconnect hose assembly (9) from connector (11). Remove and discard preformed packing (10).
11. Remove connector (11) and preformed packing (12). Discard preformed packing.
12. Disconnect hose assembly (8) from connector (6). Remove and discard preformed packing (7).
13. Remove connector (6) and preformed packing (5). Discard preformed packing.

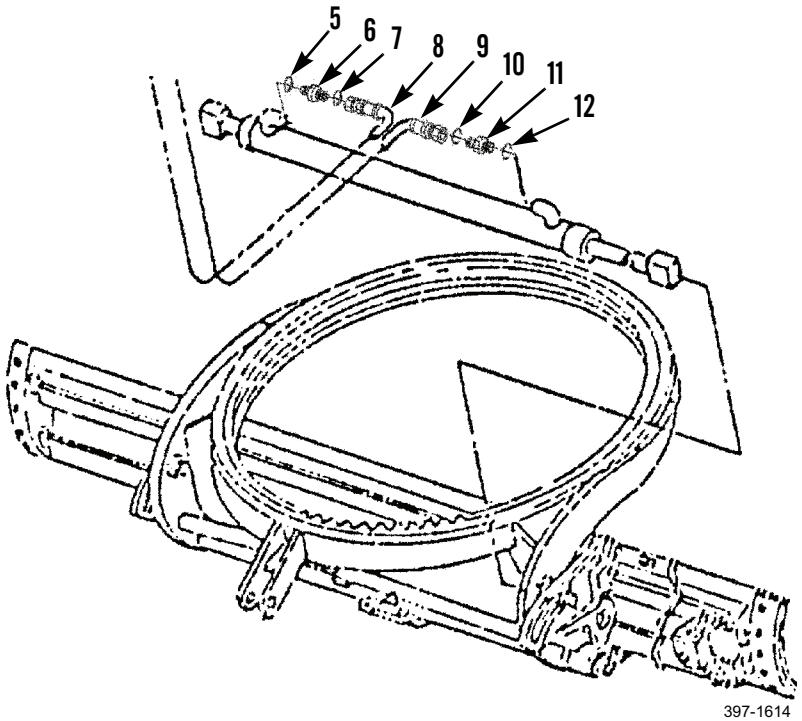

***REMOVAL - CONTINUED***

14. Remove nut (27), washer (26), bolt (23), pin (18), and washers (28 and 19).



**WARNING**

Use extreme caution when handling heavy parts. Provide adequate support and use assistance during procedure. Ensure that any lifting device used is in good condition and of suitable load capacity. Keep clear of heavy parts supported only by lifting device. Failure to follow this warning may cause injury or death to personnel.

**NOTE**

Old style bracket weighs 72 lb (33 kg); new style bracket weighs 50 lb (23 kg).

15. With assistance, attach sling to bracket (24) and position floor jack under side shift cylinder (13).

**NOTE**

New style bracket (24) does not have nut (17) and washers (15 and 16).

16. Remove cotter pin (20), nut (21), washer (22), nut (17), washers (16 and 15), nut (14), bracket (24), and washer (25) from machine. Discard cotter pin.

17. Set bracket (24) on ground and remove sling from bracket.

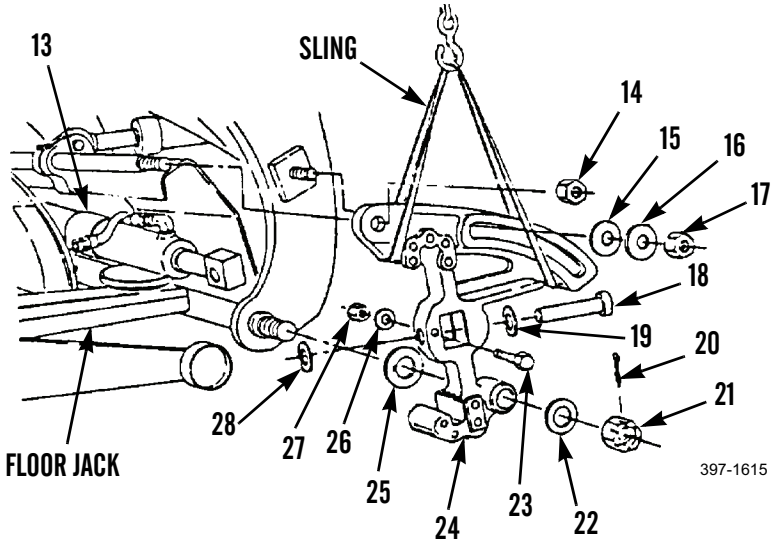


OLD STYLE BRACKET SHOWN

***REMOVAL - CONTINUED***



**WARNING**

Use extreme caution when handling heavy parts. Provide adequate support and use assistance during procedure. Ensure that any lifting device used is in good condition and of suitable load capacity. Keep clear of heavy parts supported only by lifting device. Failure to follow this warning may cause injury or death to personnel.

**NOTE**

Side shift cylinder weighs 130 lb (60 kg).

18. With assistance, attach sling to side shift cylinder (13) assembly. Place cylinder in work area.
19. Remove sling from cylinder (13).

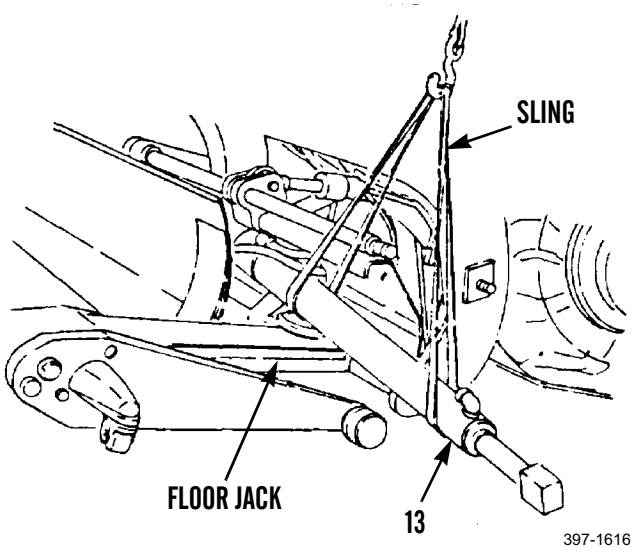

### *REMOVAL - CONTINUED*

20. Remove four bolts (29), washers (30), and bracket (3) from machine.

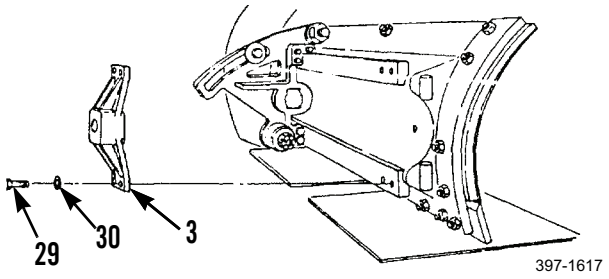


### *CLEANING AND INSPECTION*

Clean and inspect all parts in accordance with WP 0020 00.

### *INSTALLATION*

1. Install bracket (3), four washers (30), and bolts (29) to machine.
2. Use a sling to position side shift cylinder (13) assembly to machine. Support with floor jack.
3. Remove sling.
4. Attach sling to bracket (24).
5. Use lifting device and sling to position washer (25) and bracket (24) to machine.

***INSTALLATION - CONTINUED***

**NOTE**

New style bracket (24) does not have nut (17) and washers (15 and 16).

6. Install bracket (24), nut (14), washers (15 and 16), nut (17), washer (22), nut (21), and new cotter pin (20). Tighten nut (21) to zero clearance then back off nut one slot to install cotter pin. Tighten nut (14) to 1,200 lb-ft (1,627 Nm). Maintain clearance of 1/8 in. (32 mm) or larger .
7. Install washer (28 and 19), pin (18), bolt (23), washer (26), and nut (27).
8. Remove sling from bracket (24).

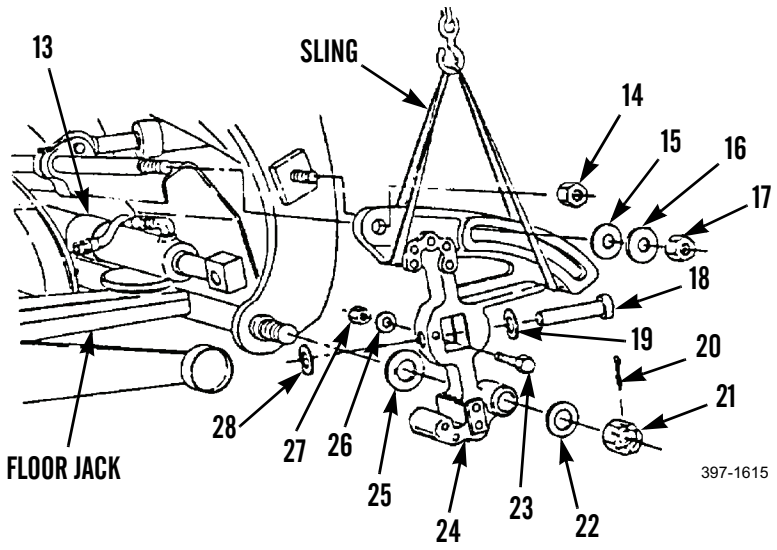


OLD STYLE BRACKET SHOWN

## SIDESHIFT CYLINDER AND MOUNTING REPLACEMENT - CONTINUED 0247 00

### *INSTALLATION - CONTINUED*

9. Install new preformed packing (5) and connector (6) to side shift cylinder.
10. Install new preformed packing (7) and connect hose assembly (8) to connector (6).
11. Install new preformed packing (12) and connector (11).
12. Install new preformed packing (10) and connect hose assembly (9) to connector (11).

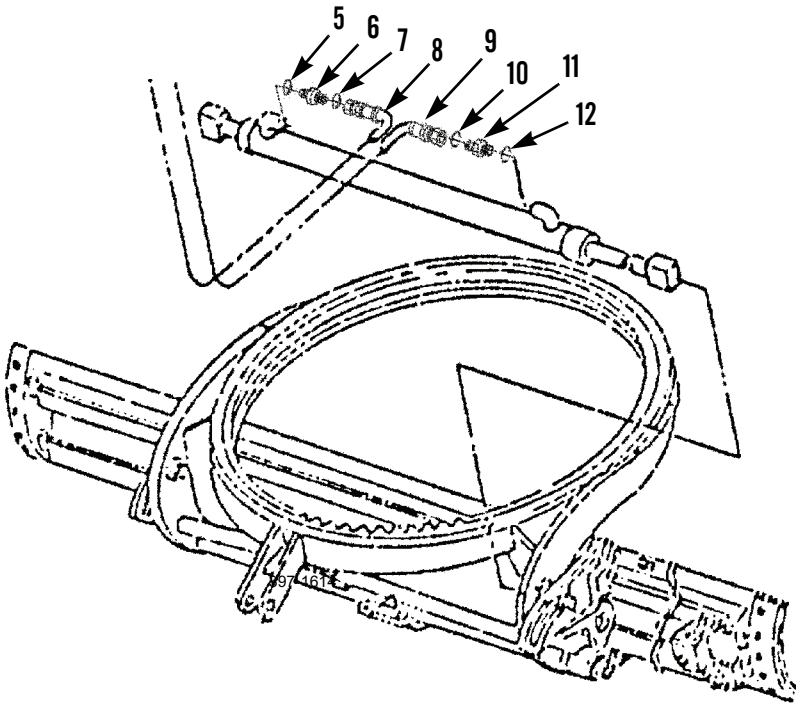

***INSTALLATION - CONTINUED***

13. Connect chain to rod (4) end of cylinder and bracket (3).
14. Start engine (TM 5-3805-261-10).
15. Retract rod (4) end of cylinder and pull blade into position.
16. Stop engine.
17. Remove chain from bracket (3) and rod (4).

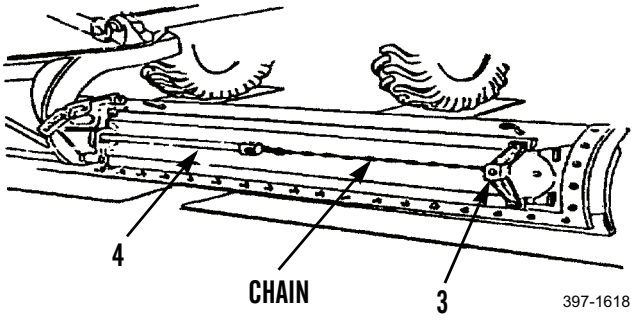


18. Extend rod (4) to align with pin (1).
19. Install pin (1) and new cotter pin (2).

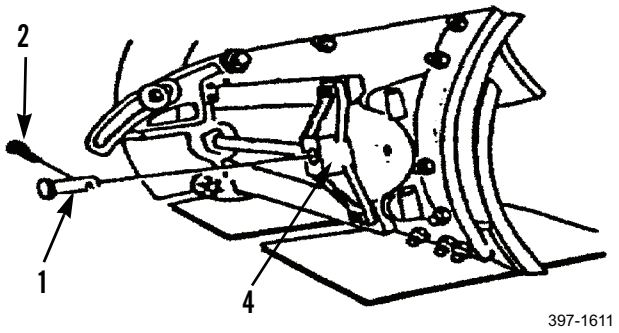


20. Install guards (WP 0259 00).
21. Start engine (TM 5-3805-261-10).
22. Raise blade from ground (TM 5-3805-261-10).
23. Operate control levers and cycle system through at least five full-travel movements to bleed air from system.
24. Stop engine and check for leaks.
25. Check hydraulic oil level and fill as necessary (WP 0216 00).

**END OF WORK PACKAGE**

## SCARIFIER CYLINDER REPLACEMENT 0248 00

### THIS WORK PACKAGE COVERS

Removal, Cleaning and Inspection, Installation

### INITIAL SETUP

**Maintenance Level**

Unit

**Tools and Special Tools**

Tool kit, general mechanic's (Item 89, WP 0348 00)

Sling (Item 78, (WP 0348 00)

**Materials/Parts**

Cap set, protective (Item 7, WP 0349 00)

Rag, wiping (Item 35, WP 0349 00)

Tag, marker (Item 44, WP 0349 00)

Packing, preformed (4)

**Personnel Required**

Two

**References**

WP 0216 00

**Equipment Conditions**

Machine parked on level ground (TM 5-3805-261-10)

Parking/emergency brake applied (TM 5-3805-261-10)

Implements lowered to ground (TM 5-3805-261-10)

Engine off (TM 5-3805-261-10)

Battery disconnect switch in OFF position (TM 5-3805-261-10)

Hydraulic pressure relieved (WP 0020 00)

### *REMOVAL*

1. Remove and discard tie strap (6) from scarifier cylinder (1) assembly.

**CAUTION**

Cap hose ends and plug open ports to prevent contamination.

**NOTE**

Tag hose assemblies before disconnecting to aid in installation.

2. Disconnect hose assemblies (9) from elbow (7). Remove and discard preformed packing (8).
3. Remove elbow (7) and preformed packing (10). Discard preformed packing.
4. Disconnect hose assembly (5) from connector (3). Remove and discard preformed packing (4).
5. Remove connector (3) and preformed packing (2). Discard preformed packing.



**WARNING**

Use extreme caution when handling heavy parts. Provide adequate support and use assistance during procedure. Ensure that any lifting device used is in good condition and of suitable load capacity. Keep clear of heavy parts supported only by lifting device. Failure to follow this warning may cause injury or death to personnel.

**NOTE**

Scarifier cylinder weighs 65 lb (29 kg).

6. With assistance, attach sling to scarifier cylinder (1) assembly. Remove slack from sling.

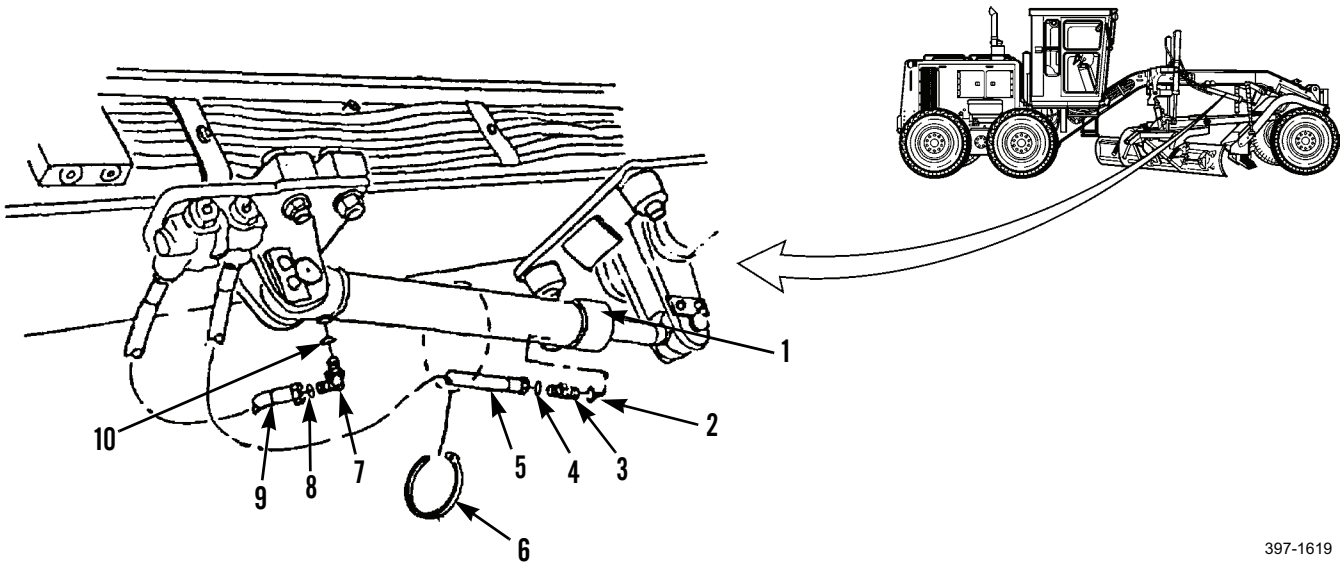

### *REMOVAL - CONTINUED*

7. Remove four bolts (13), four washers (12), and two plates (11) from machine.

**WARNING**

Use care when removing scarifier cylinder to prevent it from swinging. Failure to follow warning may cause injury to personnel.

8. Remove two pins (14) and swing one end of scarifier cylinder (1) out.
9. Remove pin (15) and scarifier cylinder (1) assembly from mounting brackets of machine and place cylinder in work area.
10. Remove sling.

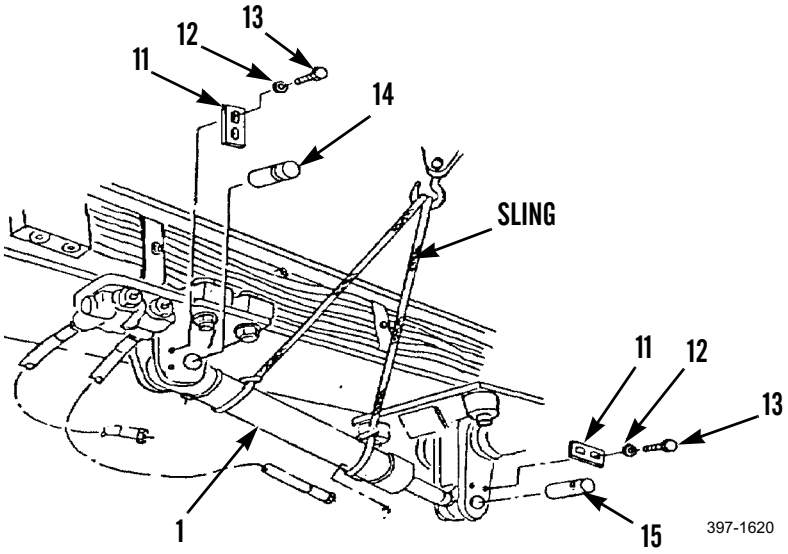


### *CLEANING AND INSPECTION*

Clean and inspect all parts in accordance with WP 0020 00.

***INSTALLATION***

1. Attach lifting device and sling to scarifier cylinder (1) assembly.
2. Use sling to position one end of cylinder (1) assembly in mounting bracket of machine.
3. Position other end of cylinder (1) in mounting bracket.

**CAUTION**

When installing two pins, use care not to damage four new seals or two bearings.

4. Install two pins (15 and 14), plates (11), four washers (12), and bolts (13).
5. Remove sling.

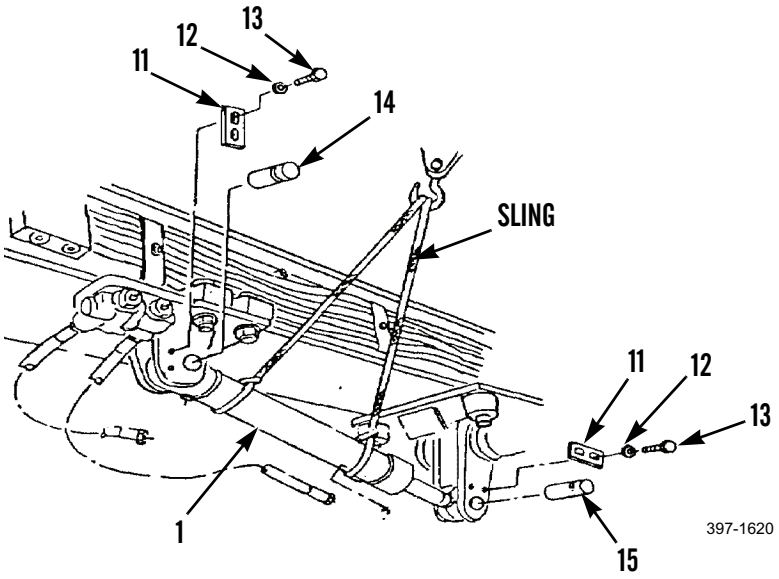

***INSTALLATION - CONTINUED***

6. Install new preformed packing (2) and connector (3) to scarifier cylinder (1) assembly. Install new preformed packing (4) and connect hose assembly (5) to connector.
7. Install new preformed packing (10) and elbow (7).
8. Install new preformed packing (8) and connect hose assembly (9) to elbow (7).
9. Install new tie strap (6) on cylinder (1) to secure hose assembly (9).

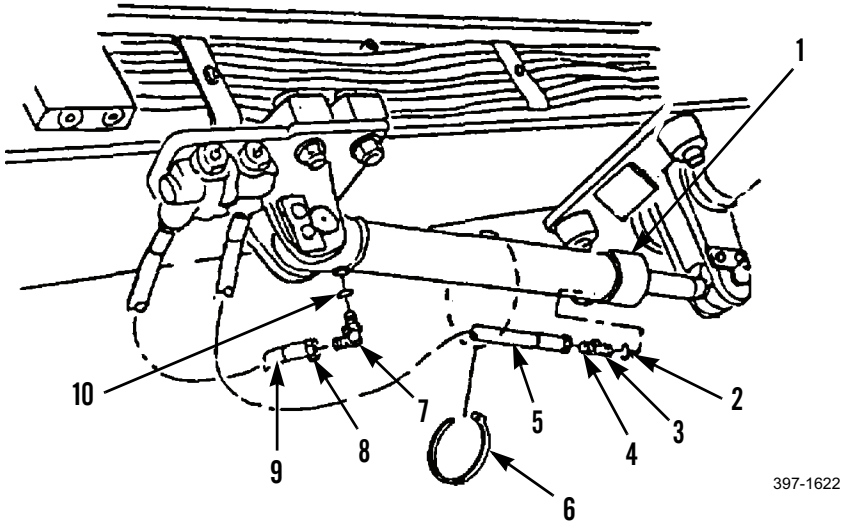


10. Start engine (TM 5-3805-261-10).
11. Operate control levers and cycle system through at least five full-travel movements to bleed air from system.
12. Stop engine and check for leaks.
13. Check hydraulic oil level and fill as necessary (WP 0216 00).

**END OF WORK PACKAGE**

## HYDRAULIC PUMP AND CONTROL VALVE LINES AND FITTINGS REPLACEMENT 0249 00

### THIS WORK PACKAGE COVERS

Removal, Installation

### INITIAL SETUP

**Maintenance Level**

Unit

**Tools and Special Tools**

Tool kit, general mechanic's, (Item 89, 0348 00)

**Materials/Parts**

Cap set, protective (Item 7, WP 0349 00)

Oil, lubricating (Item 27, WP 0349 00)

Rag, wiping (Item 35, WP 0349 00)

Tag, marker (Item 44, WP 0349 00)

**References**

WP 0216 00

**Equipment Conditions**

Machine parked on level ground (TM 5-3805-261-10)

Parking/emergency brake applied (TM 5-3805-261-10)

Implements lowered to ground (TM 5-3805-261-10)

Engine off (TM 5-3805-261-10)

Battery disconnect switch in OFF position (TM 5-3805-261-10)

Hydraulic pressure relieved (WP 0020 00)

## HYDRAULIC PUMP AND CONTROL VALVE LINES AND FITTINGS REPLACEMENT - CONTINUED 0249 00

***REMOVAL***

**CAUTION**

Cap hose ends and plug open ports to prevent contamination.

**NOTE**

Tag hose assemblies before disconnecting to aid in installation.

1. Disconnect hose assembly (12) from elbow (14). Remove and discard preformed packing (13).
2. Remove elbow (14) and preformed packing (15) from hydraulic control valve (16). Discard preformed packing.
3. Disconnect hose assembly (9) from connector (11). Remove and discard preformed packing (10).
4. Remove connector (11) and preformed packing (1). Discard preformed packing.
5. Remove bolt (7), washer (8), and two clips (6).
6. Disconnect hose assembly (5) from connector (3). Remove and discard preformed packing (4).
7. Remove connector (3) and preformed packing (2). Discard preformed packing.

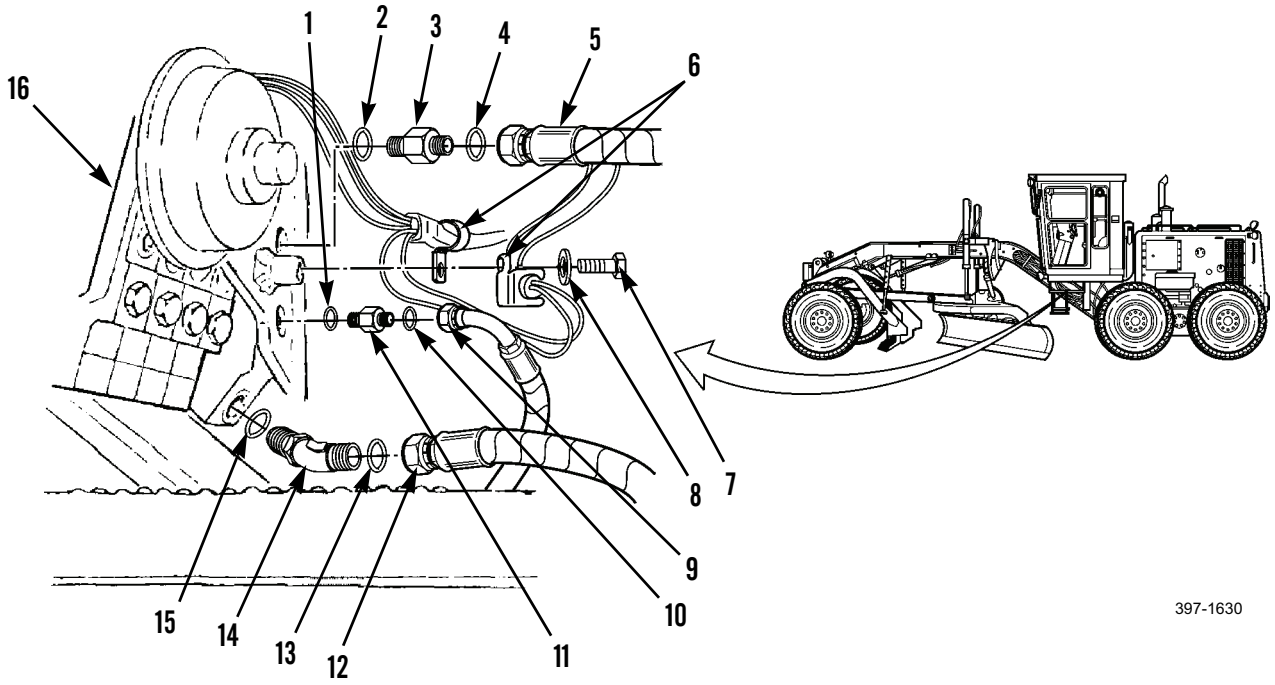

## HYDRAULIC PUMP AND CONTROL VALVE LINES AND FITTINGS REPLACEMENT - CONTINUED 0249 00

### *REMOVAL - CONTINUED*

8. Disconnect hose assembly (12) from connector (19). Remove and discard preformed packing (20). Remove hose assembly from machine.
9. Remove connector (19) and preformed packing (18) from combination valve (17). Discard preformed packing
10. Disconnect hose assembly (5) from connector (22). Remove and discard preformed packings (21 and 23). Remove hose assembly from machine.
11. Remove connector (19) and preformed packing (18) from combination valve (17). Discard preformed packing.

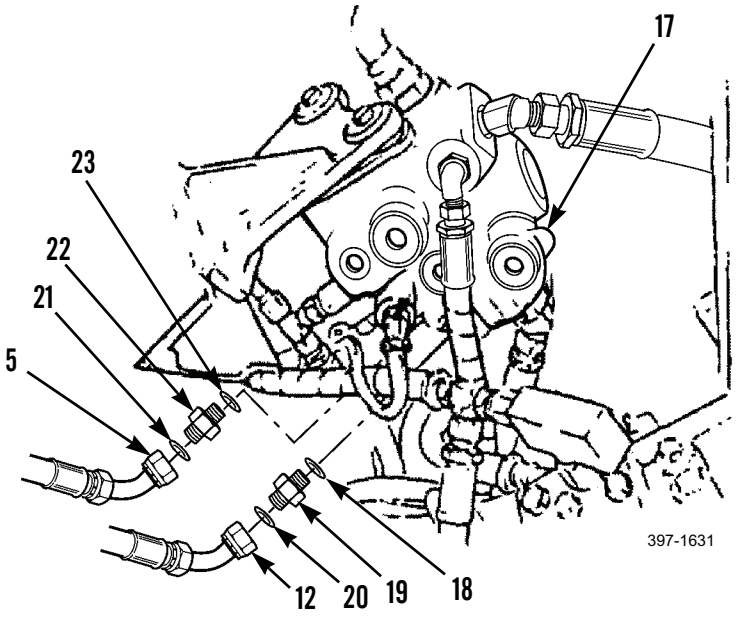

## HYDRAULIC PUMP AND CONTROL VALVE LINES AND FITTINGS REPLACEMENT - CONTINUED 0249 00

### *REMOVAL - CONTINUED*

12. Disconnect hose assembly (27) from connector (25).
13. Remove and discard preformed packing (26).
14. Remove connector (25) and preformed packing (24). Discard preformed packing.

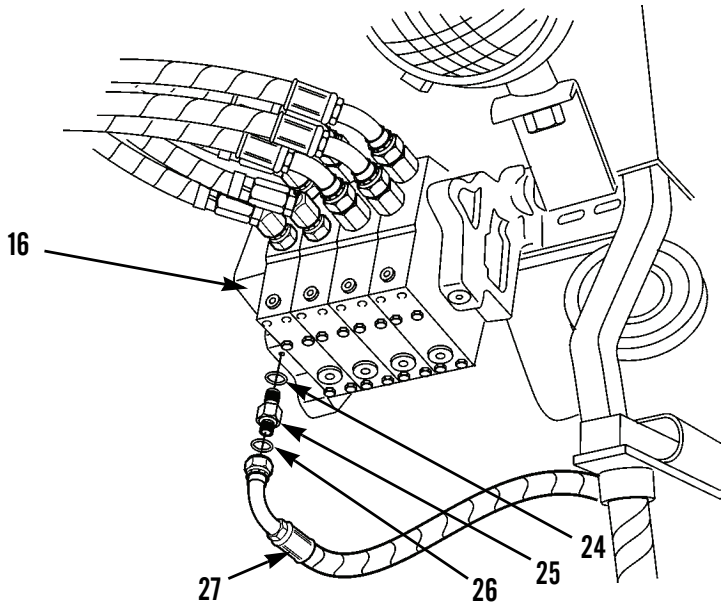

## HYDRAULIC PUMP AND CONTROL VALVE LINES AND FITTINGS REPLACEMENT - CONTINUED 0249 00

### *REMOVAL - CONTINUED*

15. Disconnect hose assembly (27) from elbow (29). Remove and discard preformed packing (30). Remove hose assembly from machine.
16. Remove elbow (29) and preformed packing (28) from junction block (43). Discard preformed packing.
17. Disconnect hose assembly (9) from middle of tee (31). Remove and discard preformed packing (39). Remove hose assembly from machine.
18. Disconnect hose assembly (33) from end of tee (31). Remove and discard preformed packing (32).
19. Remove tee (31) from connector (41). Remove and discard preformed packing (40).
20. Remove connector (41) and preformed packing (42) from junction block (43). Discard preformed packing.
21. Remove nut (35), washer (36), bolt (38), and hose clamp (37) from support (34).

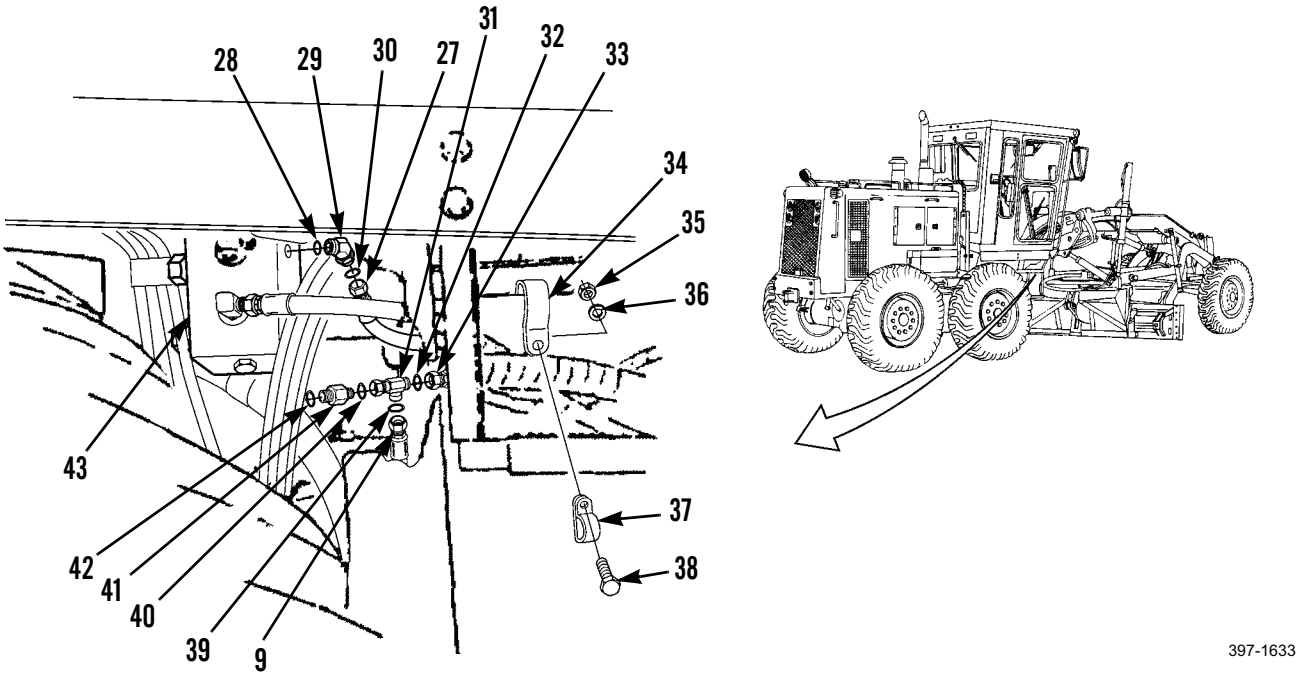

## HYDRAULIC PUMP AND CONTROL VALVE LINES AND FITTINGS REPLACEMENT - CONTINUED 0249 00

### *REMOVAL - CONTINUED*

22. Disconnect hose assembly (53) from elbow (51). Remove and discard preformed packing (52).
23. Remove elbow (51) and preformed packing (50) from right hydraulic control valve (49).
24. Disconnect hose assembly (33) from connector (54). Remove and discard preformed packing (55). Remove hose assembly from machine.
25. Remove connector (54) and preformed packing (48). Discard preformed packing.
26. Disconnect hose assembly (44) from connector (46). Remove and discard preformed packing (45). Remove hose assembly from machine.
27. Remove connector (46) and preformed packing (47). Discard preformed packing.

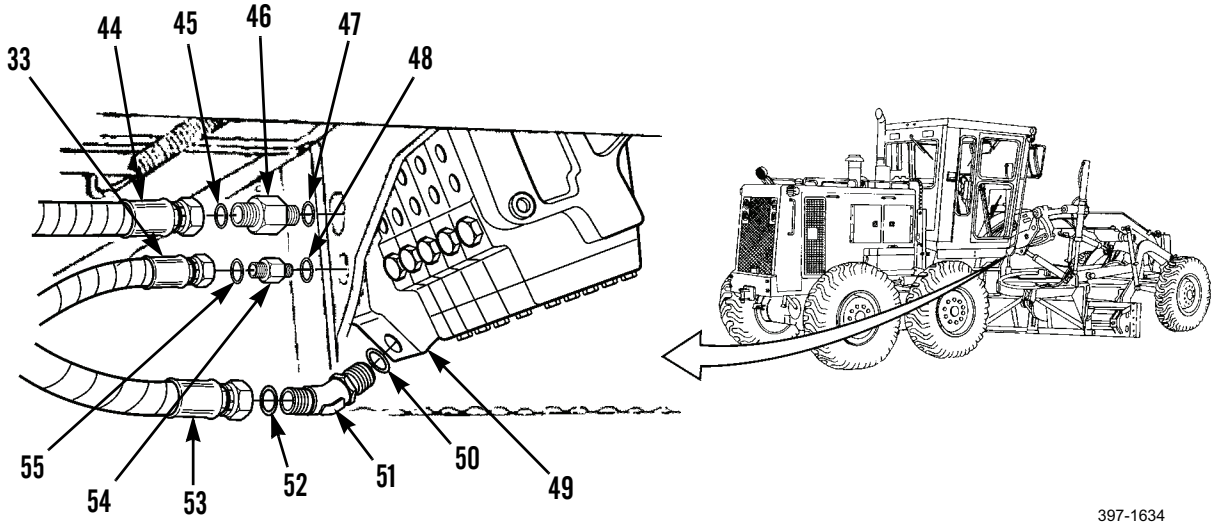

## HYDRAULIC PUMP AND CONTROL VALVE LINES AND FITTINGS REPLACEMENT - CONTINUED 0249 00

### *REMOVAL - CONTINUED*

28. Disconnect hose assembly (53) from elbow (58). Remove and discard preformed packing (59).
29. Remove elbow (58) and preformed packing (57) from combination valve (17). Discard preformed packing.
30. Disconnect hose assembly (44) from elbow (60). Remove and discard preformed packing (61).
31. Remove elbow (60) and preformed packing (56) from steering control valve (17). Discard preformed packing.

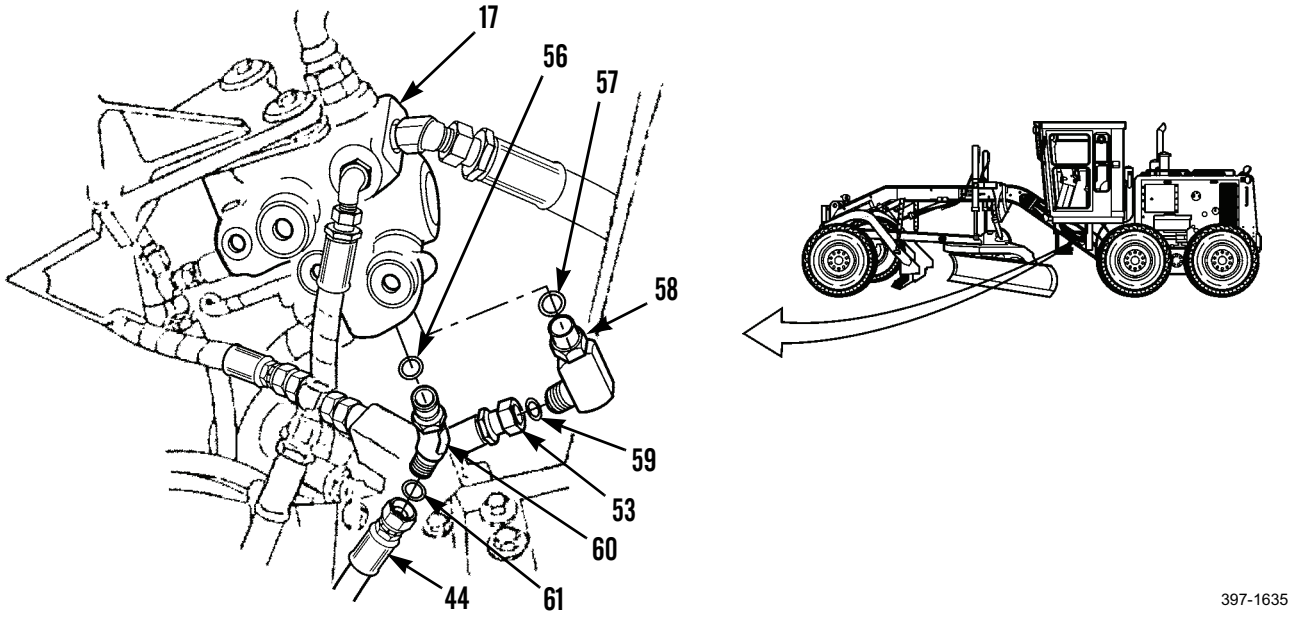

## HYDRAULIC PUMP AND CONTROL VALVE LINES AND FITTINGS REPLACEMENT - CONTINUED 0249 00

### *REMOVAL - CONTINUED*

32. Disconnect hose assembly (68) from end of tee (67). Remove and discard preformed packing (69).
33. Disconnect hose assembly (65) from middle of tee (67). Remove and discard preformed packing (66).
34. Remove tee (67) from connector (63). Remove and discard preformed packing (64).
35. Remove connector (63) and preformed packing (62) from right hydraulic control valve (49).

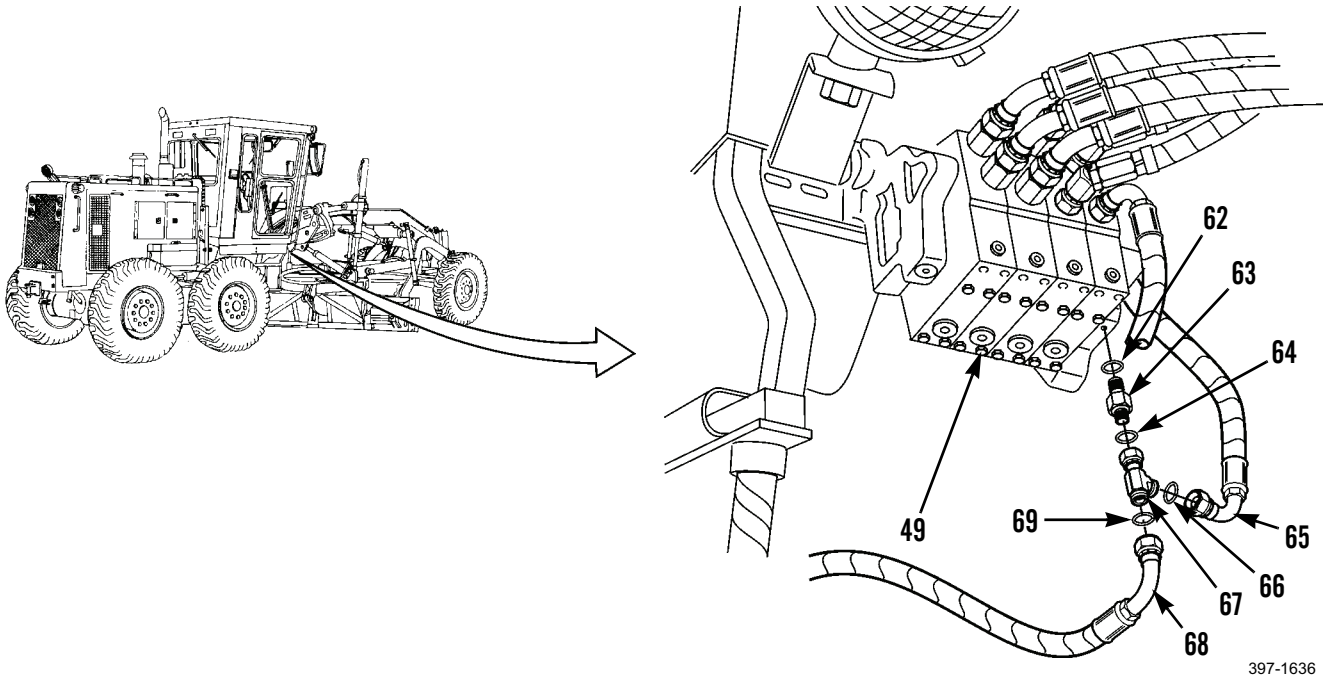


36. Disconnect hose assembly (68) from elbow (70). Remove and discard preformed packing (72). Remove hose assembly from machine.
37. Remove elbow (70) and preformed packing (71) from junction block (43). Discard preformed packing.

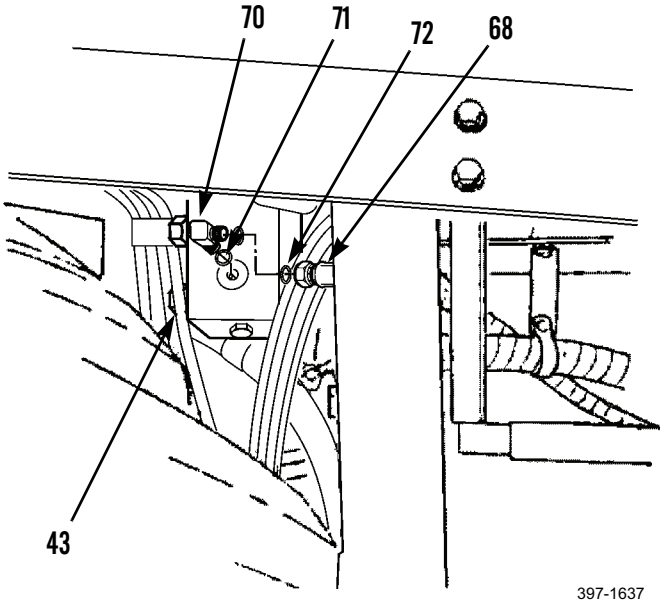

## HYDRAULIC PUMP AND CONTROL VALVE LINES AND FITTINGS REPLACEMENT - CONTINUED 0249 00

### *INSTALLATION*

1. Install new preformed packing (71) and elbow (70) on brake control valve (43).
2. Position hose assembly (68) to machine. Install new preformed packing (72) and connect hose assembly to elbow (70).
3. Install new preformed packing (62) and connector (63) to right hydraulic control valve (49).
4. Install new preformed packing (64) and tee (67) to connector (63).
5. Install new preformed packing (66) and hose assembly (65) to middle of tee (67).
6. Install new preformed packing (69) and connect hose assembly (68) to end of tee (67).
7. Install new preformed packing (56) and elbow (60) to combination valve (17).
8. Install new preformed packing (61) and connect hose assembly (44) to elbow (60).
9. Install new preformed packing (57) and elbow (58) to steering control valve (17).
10. Install new preformed packing (59) and connect hose assembly (53) to elbow (58).

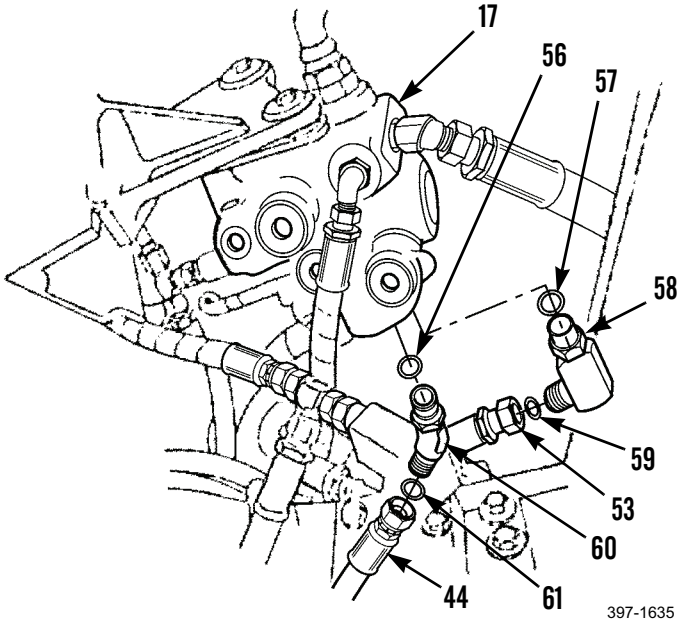

## HYDRAULIC PUMP AND CONTROL VALVE LINES AND FITTINGS REPLACEMENT - CONTINUED 0249 00

### *INSTALLATION - CONTINUED*

11. Install new preformed packing (47) and connector (46) to right hydraulic control valve (49).
12. Position hose assembly (44) to machine. Install new preformed packing (45) and connect hose assembly to connector (46).
13. Install new preformed packing (48) and connector (54).
14. Position hose assembly (33) to machine. Install new preformed packing (55) and connect hose assembly to connector (54).
15. Install new preformed packing (50) and elbow (51).
16. Install new preformed packing (52) and connect hose assembly (53) to elbow (51).

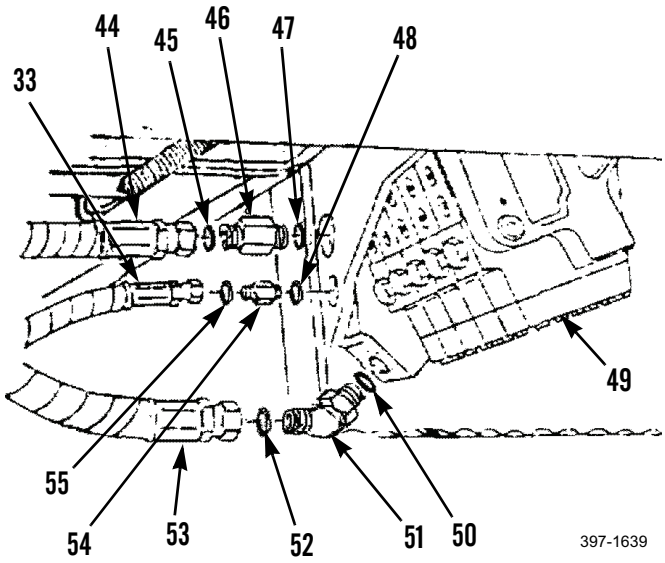


17. Install hose clamp (37) to support (34) with bolt (38), washer (36), and nut (35).
18. Install new preformed packing (40) and install tee (31) to connector (41).
19. Install new preformed packing (32) and connect hose assembly (33) to end of tee (31).
20. Position hose assembly (9) to machine. Install new preformed packing (39) and connect hose assembly to middle of tee (31).
21. Install new preformed packing (28) and elbow (29).
22. Position hose assembly (27) to machine. Install new preformed packing (30) and connect hose assembly to elbow (29).

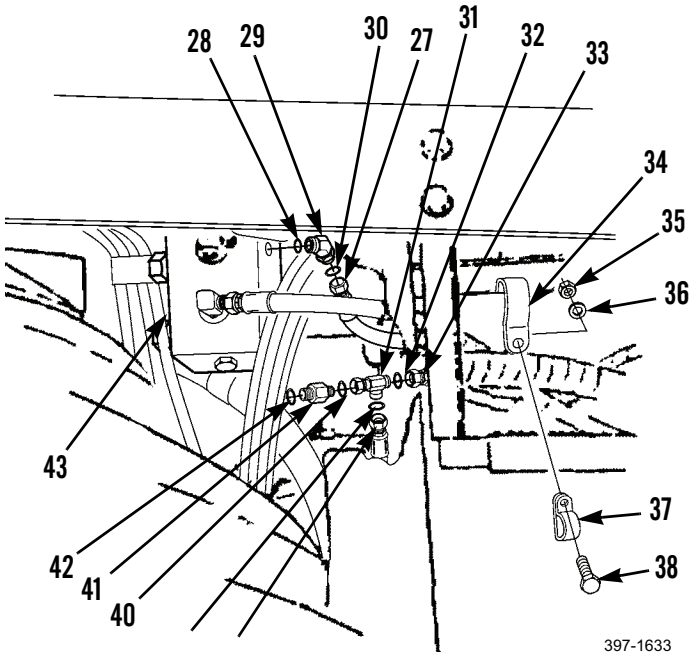

## HYDRAULIC PUMP AND CONTROL VALVE LINES AND FITTINGS REPLACEMENT - CONTINUED 0249 00

### *INSTALLATION - CONTINUED*

23. Install new preformed packing (24) and connector (25) to left hydraulic control valve (16).
24. Install new preformed packing (26).
25. Connect hose assembly (25) to connector (25).

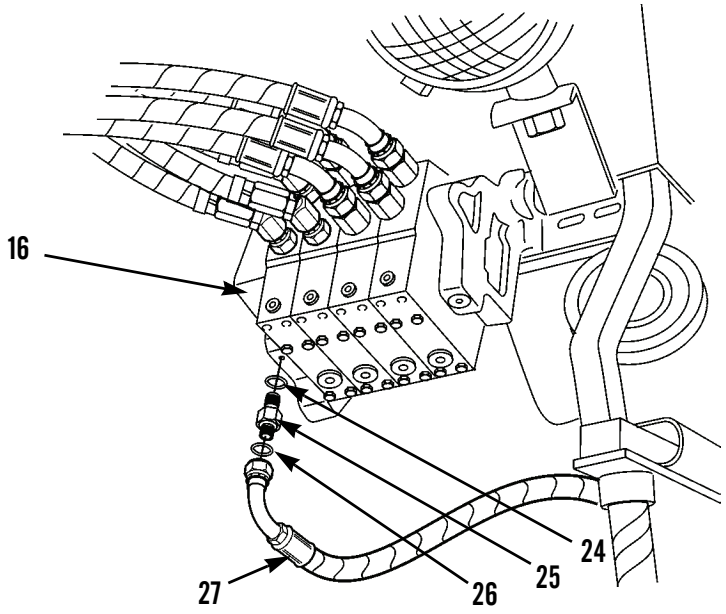


397-1632

## HYDRAULIC PUMP AND CONTROL VALVE LINES AND FITTINGS REPLACEMENT - CONTINUED 0249 00

### *INSTALLATION - CONTINUED*

26. Install new preformed packing (23) and connector (22) to combination valve (17).
27. Position hose assembly (5) on machine. Install new preformed packing (21) and connect hose assembly to connector (22).
28. Install new preformed packing (18) and connector (19).
29. Position hose assembly (12) on machine. Install new preformed packing (20) and connect hose assembly to connector (19).

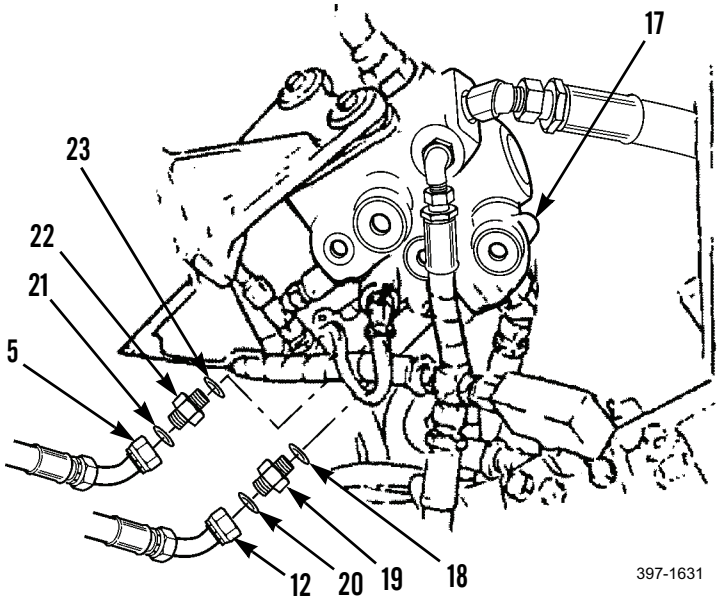


30. Install new preformed packing (2) and connector (3) on left hydraulic control valve (16).
31. Install new preformed packing (4) and connect hose assembly (5) to connector (3).
32. Install two clips (6) with washer (8) and bolt (7).
33. Install new preformed packing (1) and connector (11).
34. Install new preformed packing (10) and connect hose assembly (9) to connector (11).
35. Install new preformed packing (15) and elbow (14).
36. Install new preformed packing (13) and connect hose assembly (12) to elbow (14).
37. Start engine (TM 5-3805-261-10).
38. Operate control levers and cycle system through at least five full-travel movements to bleed air from system.
39. Stop engine and check for leaks.
40. Check hydraulic oil level and fill as necessary (WP 0216 00).

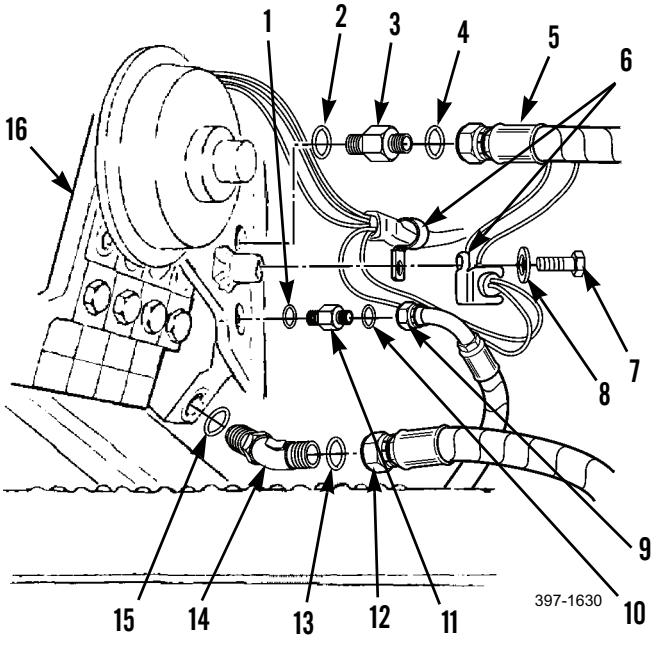


**END OF WORK PACKAGE**

## OIL COOLER TO RELIEF VALVE AND HYDRAULIC TANK LINES AND FITTINGS REPLACEMENT 0250 00

### THIS WORK PACKAGE COVERS

Removal, Cleaning and Inspection, Installation

### INITIAL SETUP

**Maintenance Level**

Unit

**Tools and Special Tools**

Tool kit, general mechanic's (Item 89, WP 0348 00)

**Materials/Parts**

Cap set, protective (Item 7, WP 0349 00)

Oil, lubricating (Item 27, WP 0349 00)

Rag, wiping (Item 35, WP 0349 00)

Tag, marker (Item 44, WP 0349 00)

Packing, preformed (27)

**References**

WP 0020 00

**Equipment Conditions**

Machine parked on level ground (TM 5-3805-261-10)

Parking/emergency brake applied (TM 5-3805-261-10)

Implements lowered to ground (TM 5-3805-261-10)

Engine off (TM 5-3805-261-10)

Hydraulic tank drained (WP 0216 00)

Left and right side engine panels removed (WP 0182 00)

## OIL COOLER TO RELIEF VALVE AND HYDRAULIC TANK LINES AND FITTINGS REPLACEMENT - CONTINUED 0250 00

### *REMOVAL*

1. Loosen two clamps (8).

**CAUTION**

Cap hose and tube ends and plug open ports to prevent contamination.

**NOTE**

Tag hose and tube assemblies before disconnecting to aid in installation.

2. Remove hose (3) and two clamps (8) from under right-rear of cab.
3. Remove four bolts (9), seat (2), tube (10), and preformed packing (1) from right-bottom side of hydraulic tank. Discard preformed packing.
4. Remove four bolts (6), flange (5), elbow (7), and preformed packing (4) from hydraulic pump under right-rear of cab. Discard preformed packing.

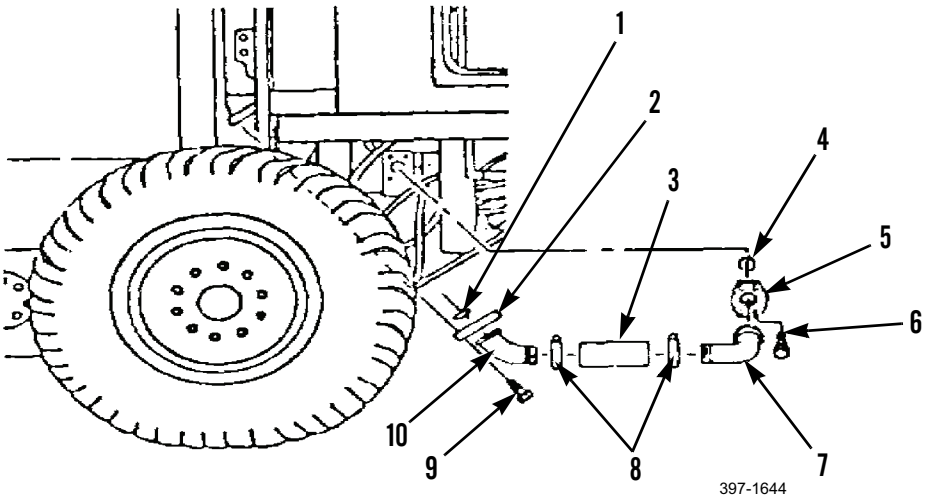

## OIL COOLER TO RELIEF VALVE AND HYDRAULIC TANK LINES AND FITTINGS REPLACEMENT - CONTINUED 0250 00

### *REMOVAL - CONTINUED*

5. Disconnect tube (18) and hose assemblies (20, 21, and 22) from bottom of hydraulic tank.
6. Remove and discard preformed packings (17, 19, 12, and 23).
7. Remove connector (16), preformed packing (15), connector (14), and preformed packing (13). Discard preformed packings.
8. Remove connector (11), preformed packing (26), connector (24), and preformed packing (25). Discard preformed packings.

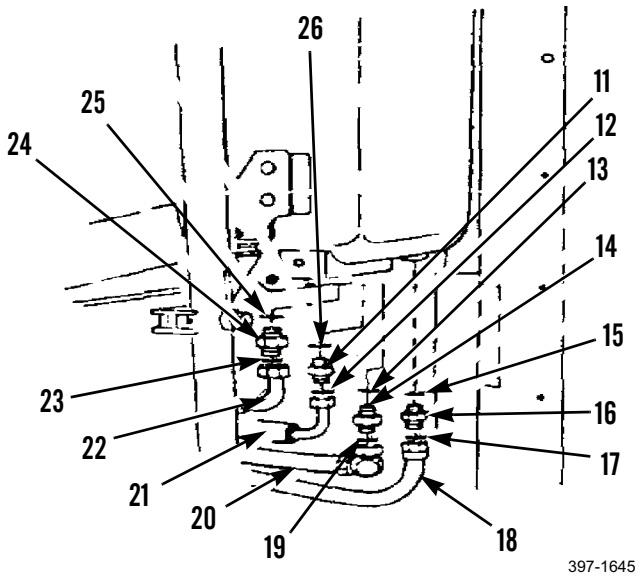


9. Loosen two clamps (33).
10. Remove nut (27), washer (28), clip (29), and move wires and cable assemblies to one side.
11. Remove hose (34), two clamps (33), and tube (18) from machine.
12. Remove tube assembly (32), connector (31), and preformed packing (30) from junction block under right-center of cab. Discard preformed packing.

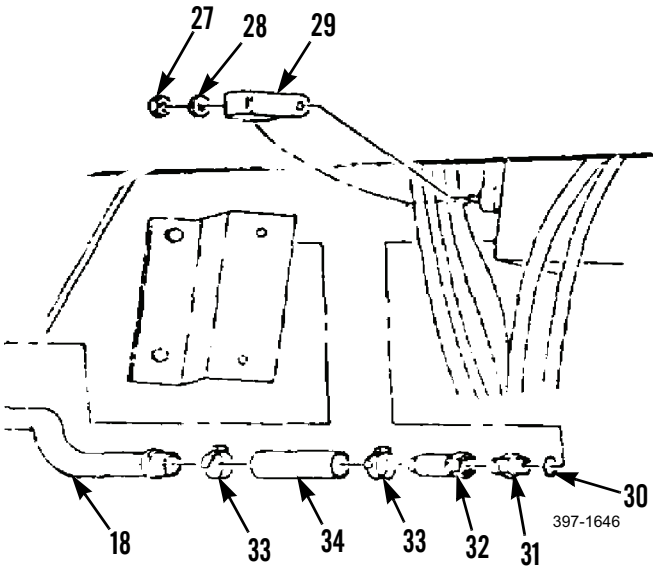

## OIL COOLER TO RELIEF VALVE AND HYDRAULIC TANK LINES AND FITTINGS REPLACEMENT - CONTINUED 0250 00

### *REMOVAL - CONTINUED*

13. Disconnect hose assembly (35) from connector (37) at right side of oil cooler. Remove and discard preformed packing (36).
14. Remove connector (37) and preformed packing (38). Discard preformed packing.
15. Remove four bolts (43), washers (44), and clamps (45).
16. Disconnect hose assembly (39) from connector (41) at left side of oil cooler. Remove and discard preformed packing (40).
17. Remove connector (41) and preformed packing (42). Discard preformed packing.

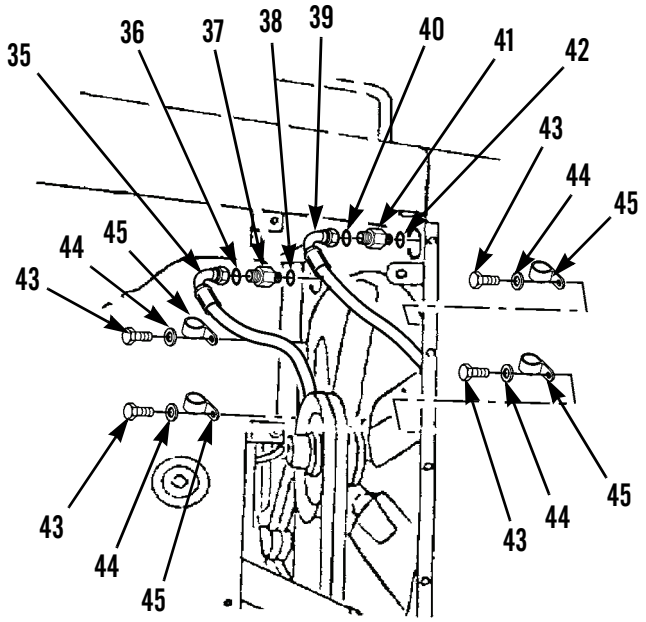


18. Remove two bolts (46), washers (47), clamps (48), hose assembly (39) from left frame rail.

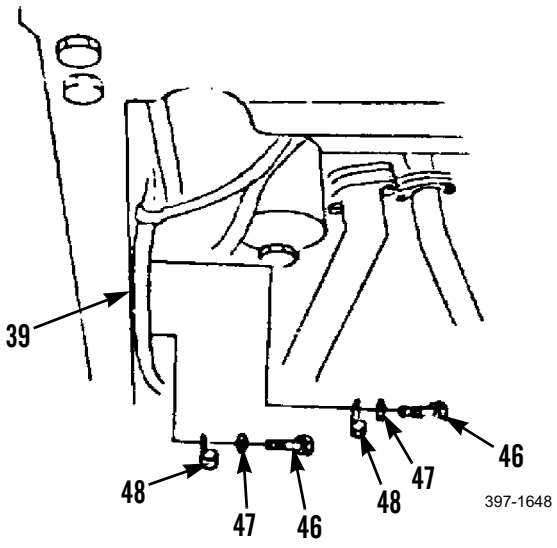

## OIL COOLER TO RELIEF VALVE AND HYDRAULIC TANK LINES AND FITTINGS REPLACEMENT - CONTINUED 0250 00

### *REMOVAL - CONTINUED*

19. Remove bolt (51), washer (50), clamp, (49) from right frame rail and hose assembly (35).

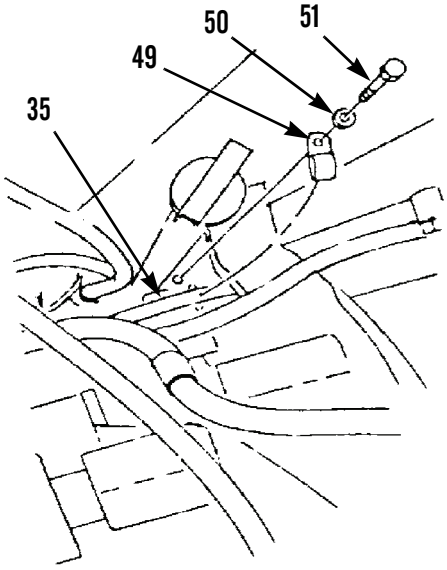

397-1649

20. Remove bolt (52), washer (53), clamp (54) from right frame rail and hose assembly (35).

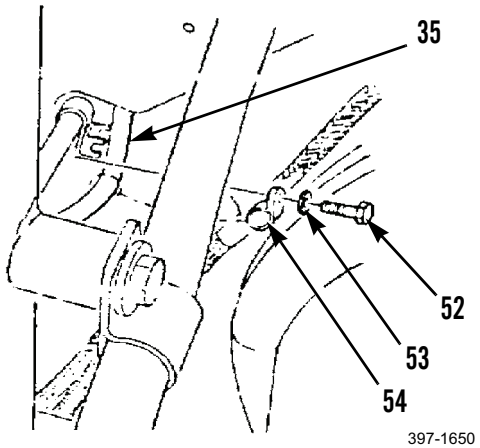

397-1650

## OIL COOLER TO RELIEF VALVE AND HYDRAULIC TANK LINES AND FITTINGS REPLACEMENT - CONTINUED 0250 00

### *REMOVAL - CONTINUED*

21. Remove two nuts (59), washers (58), clamp (57), plate (56), and clamp (55) from under left side of cab.

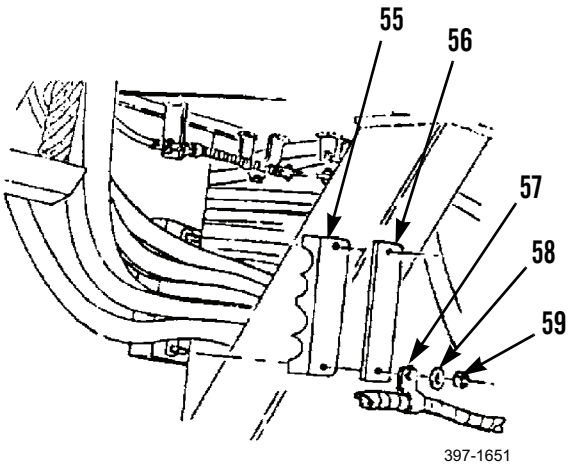


22. Remove bolt (60), washer (61), and clamp (62) from under center of engine.

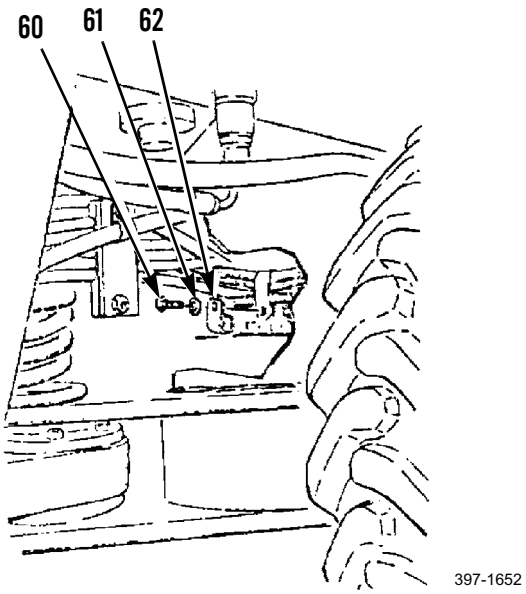

***REMOVAL - CONTINUED***

23. Remove two nuts (63), washers (64), clamp (65), plate (66), and clamp (67) from under hydraulic tank.

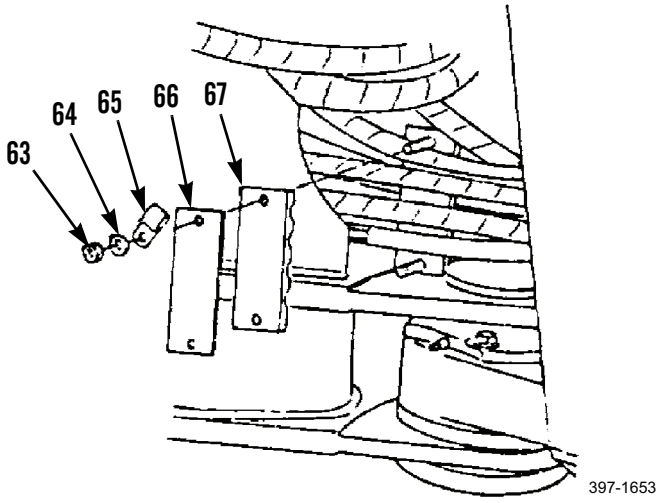


**NOTE**

Type II machines are equipped with quick-disconnect fittings on hose assemblies (35 and 39).

24. Disconnect hose assemblies (35 and 39) from connectors (74 and 77) at bottom of hydraulic pump relief valve. Remove and discard preformed packings (75 and 76).

25. Remove hose assemblies (35 and 39) from machine.

26. Remove connectors (74 and 77) and preformed packings (73 and 78). Discard preformed packing.

27. Disconnect hose assembly (21) from connector (71) at top of hydraulic pump relief valve. Remove and discard preformed packing (70).

28. Remove hose assembly (21) from machine.

29. Remove connector (71) and preformed packing (72). Discard preformed packing.

30. Disconnect hose assembly (80) from elbow (69). Remove and discard preformed packing (68).

31. Remove elbow (69) and preformed packing (79). Discard preformed packing.

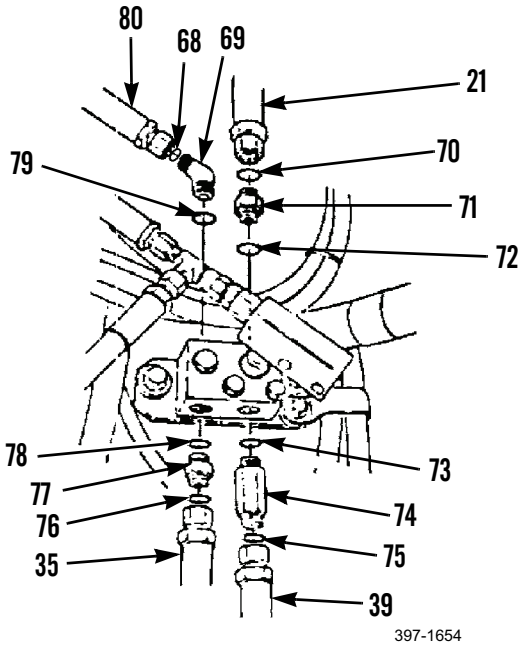

## OIL COOLER TO RELIEF VALVE AND HYDRAULIC TANK LINES AND FITTINGS REPLACEMENT - CONTINUED 0250 00

### *REMOVAL - CONTINUED*

32. Disconnect hose assembly (80) from connector (85) of hydraulic pump under center of cab. Remove and discard preformed packing (86).
33. Remove hose assembly (80) from machine.
34. Remove connector (85) and preformed packing (84). Discard preformed packing.
35. Remove hose assembly (22) from elbow (82) of hydraulic unloading valve. Remove and discard preformed packing (83).
36. Remove hose assembly (22) from machine.
37. Remove elbow (82) and preformed packing (81). Discard preformed packing.

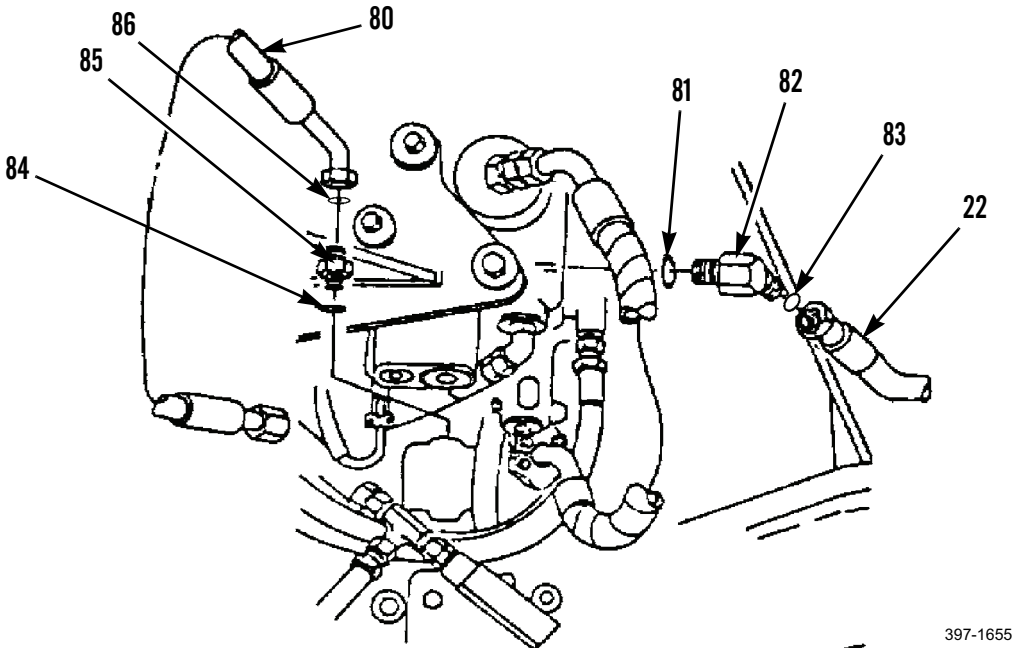


### *CLEANING AND INSPECTION*

Clean and inspect all parts in accordance with WP 0020 00.

### *INSTALLATION*

1. Install new preformed packing (81) and elbow (82) to hydraulic unloader valve.
2. Position hose assembly (22) to machine.
3. Install new preformed packing (83) and connect hose assembly (22) to elbow (82).
4. Install new preformed packing (84) and connector (85) to hydraulic pump.
5. Position hose assembly (80) to machine.
6. Install new preformed packing (86) and connect hose assembly (80) to connector (85).

## OIL COOLER TO RELIEF VALVE AND HYDRAULIC TANK LINES AND FITTINGS REPLACEMENT - CONTINUED 0250 00

### *INSTALLATION - CONTINUED*

7. Install new preformed packing (79) and elbow (69) to top of hydraulic pump relief valve.
8. Install new preformed packing (68) and connect hose assembly (80) to elbow (69).
9. Install new preformed packing (72) and connector (71).
10. Position hose assembly (21) to machine.
11. Install new preformed packing (70) and connect hose assembly (21) to connector (71).
12. Install new preformed packing (73 and 78) and install connectors (74 and 77) to bottom of hydraulic pump relief valve.
13. Position hose assemblies (35 and 39) to machine.

**NOTE**

Type II machines are equipped with quick-disconnect fittings on hose assemblies (35 and 39).

14. Install new preformed pckings (75 and 76) and connect hose assemblies (35 and 39) to connectors (74 and 77).

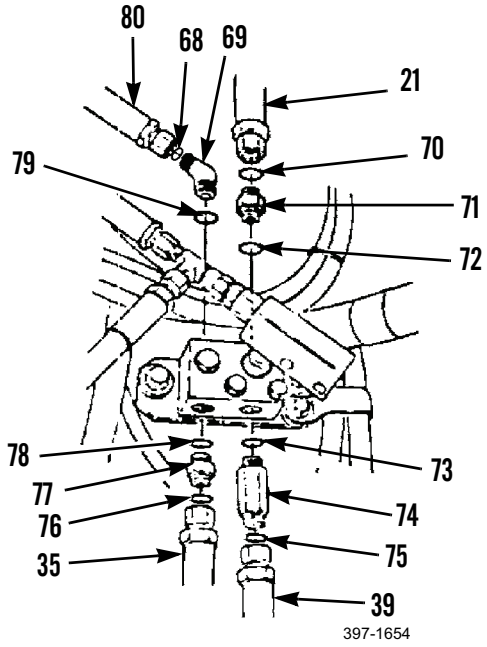


15. Position clamp (67), plate (66), and clamp (65) under hydraulic tank.
16. Install two washers (64) and nuts (63).

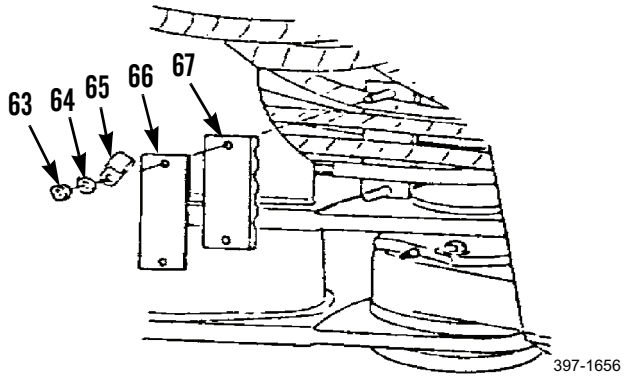

## OIL COOLER TO RELIEF VALVE AND HYDRAULIC TANK LINES AND FITTINGS REPLACEMENT - CONTINUED 0250 00

### *INSTALLATION - CONTINUED*

17. Install clamp (62), washer (61), and bolt (60) under center of engine.

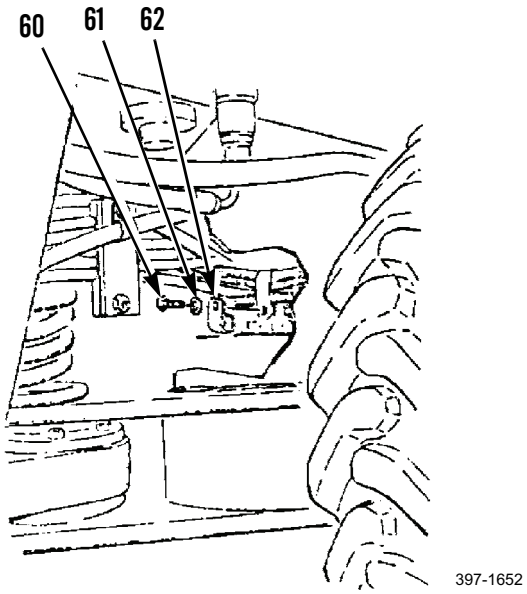


18. Install clamp (55), plate (56), and clamp (57) under left side of cab.
19. Install two washers (58) and nuts (59).

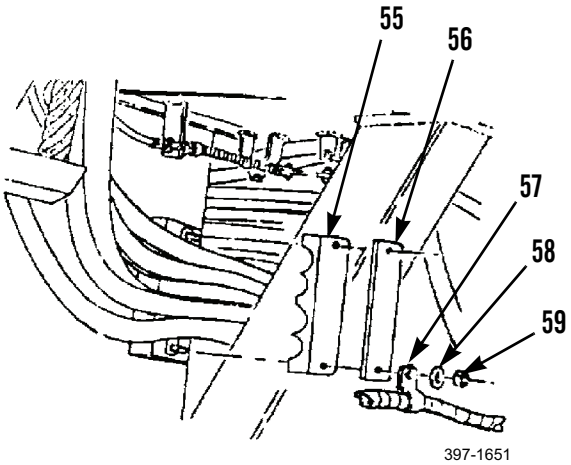

## OIL COOLER TO RELIEF VALVE AND HYDRAULIC TANK LINES AND FITTINGS REPLACEMENT - CONTINUED 0250 00

### *INSTALLATION - CONTINUED*

20. Install clamp (54), washer (53), and bolt (52) to hose assembly (35) on right frame rail.

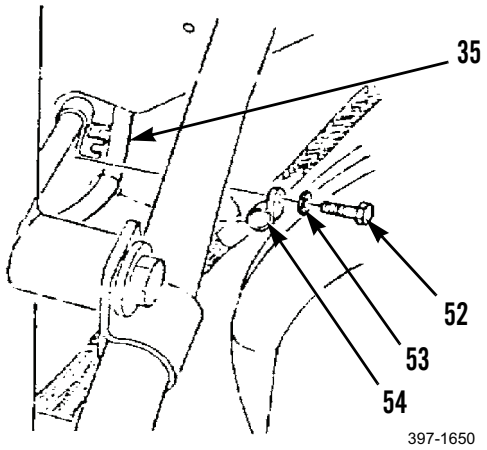


21. Install clamp (49), washer (50), and bolt (51) on right frame rail.

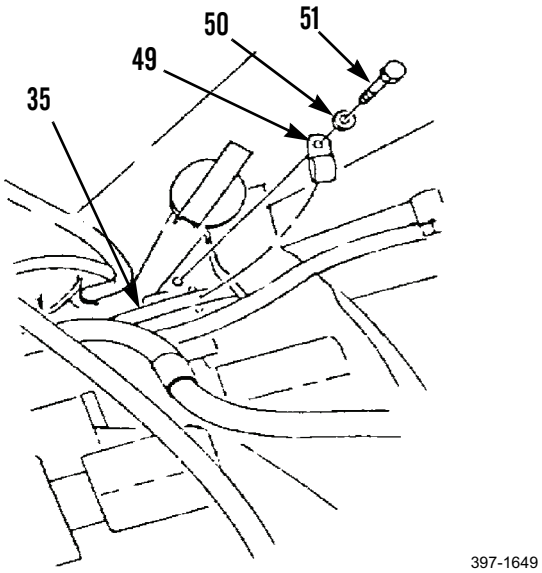

## OIL COOLER TO RELIEF VALVE AND HYDRAULIC TANK LINES AND FITTINGS REPLACEMENT - CONTINUED 0250 00

### *INSTALLATION - CONTINUED*

22. Install two clamps (48), washers (47), and bolts (46) to hose assembly (39) on left frame rail.

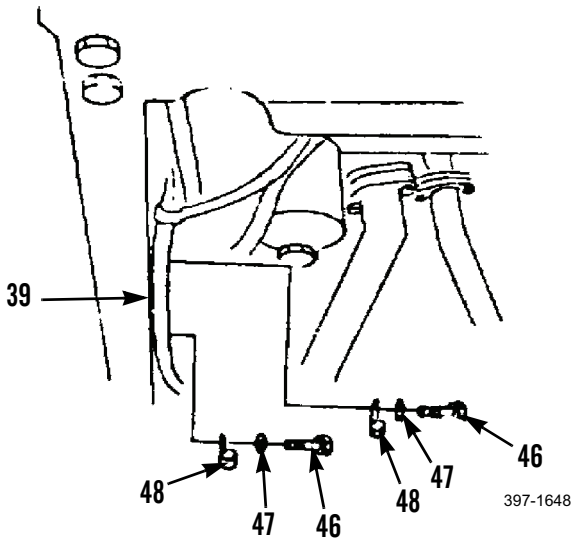


23. Install new preformed packing (42) and connector (41) on left side of oil cooler.
24. Install new preformed packing (40) and connect hose assembly (39) to connector (41).
25. Install new preformed packing (38) and connector (37) to right side of oil cooler.
26. Install four clamps (45), washers (44), and bolts (43).
27. Install new preformed packing (36) and connect hose assembly (35) to connector (37).

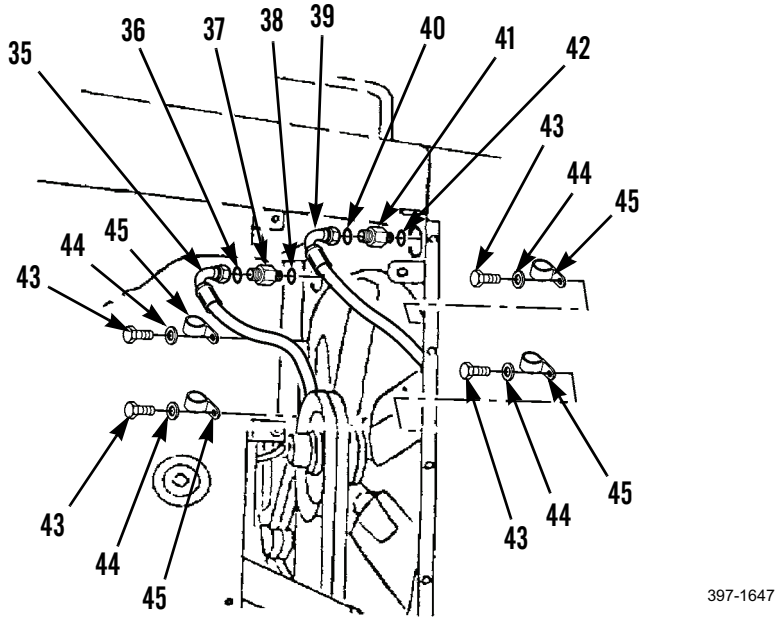

## OIL COOLER TO RELIEF VALVE AND HYDRAULIC TANK LINES AND FITTINGS REPLACEMENT - CONTINUED 0250 00

### *INSTALLATION - CONTINUED*

28. Install new preformed packing (30), connector (31), and tube assembly (32) to junction block under right-center of cab.
29. Install tube (18), two clamps (33), and hose (34) to machine.
30. Install clip (29), washer (28), and nut (27).

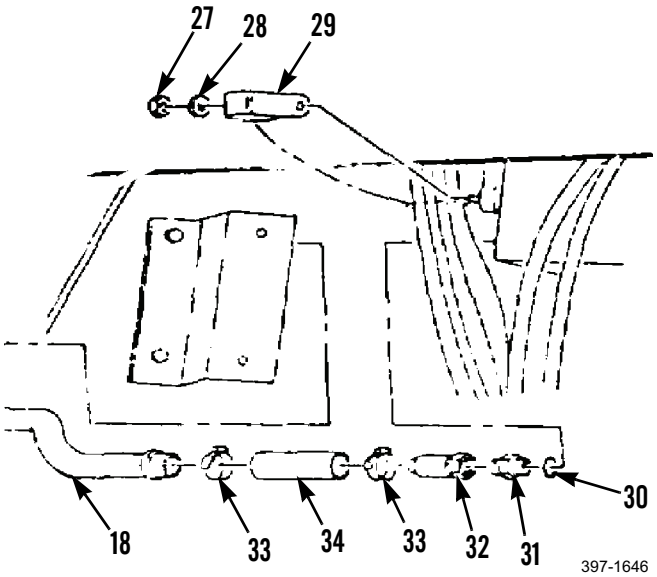


31. Install new preformed packing (25) and connector (24) to bottom of hydraulic tank.
32. Install new preformed packing (26) and connector (11).
33. Install new preformed packing (13) and connector (14).
34. Install new preformed packing (15) and connector (16).
35. Install new preformed packings (23, 12, 19, and 17) and connect hose assemblies (22, 21, and 20) and tube (18) to connectors (24, 11, 14, and 16).

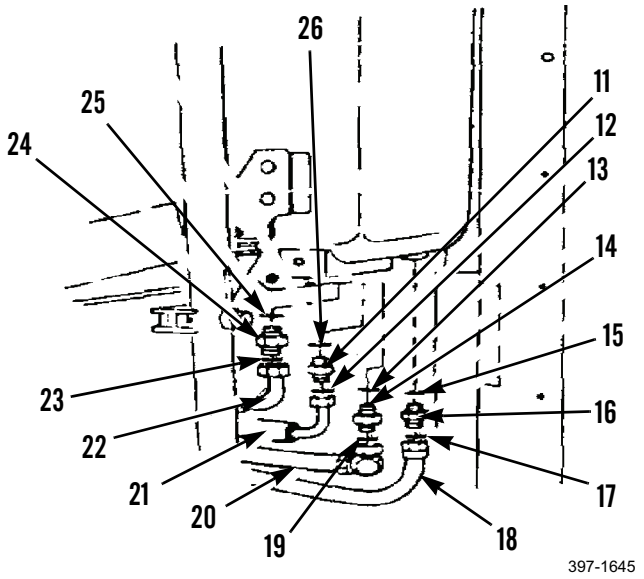

***INSTALLATION - CONTINUED***

36. Install new preformed packing (4), elbow (7), flange (5) to hydraulic pump with four bolts (6).
37. Install new preformed packing (1), tube (10), and seat (2) to bottom of hydraulic tank with four bolts (9).
38. Install two clamps (8) and hose (3).

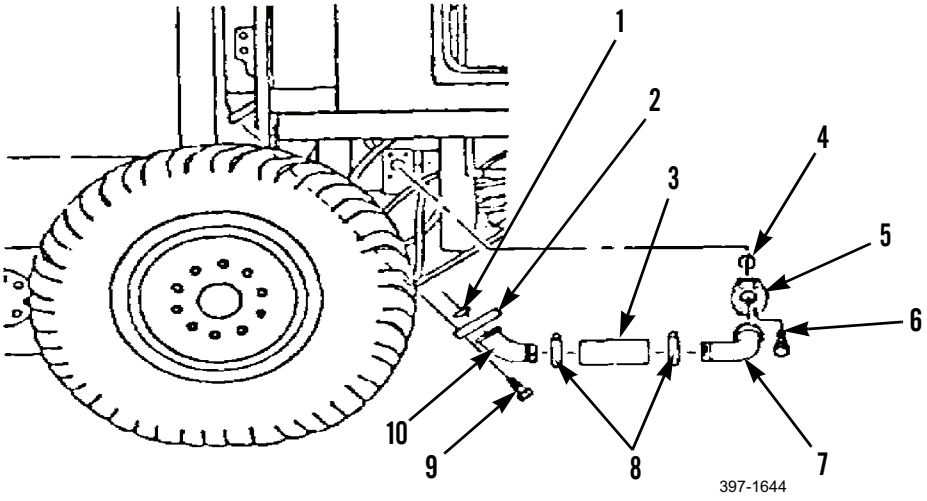


39. Install side engine panels (WP 0182 00).
40. Check hydraulic oil level and fill as necessary (WP 0216 00).

**END OF WORK PACKAGE**

## AIR CLEANER INDICATOR REPLACEMENT 0251 00

### THIS WORK PACKAGE COVERS

Removal, Cleaning and Inspection, Installation

### INITIAL SETUP

**Maintenance Level**

Unit

**Tools and Special Tools**

Tool kit, general mechanic's (Item 89, WP 0348 00)

**Materials/Parts**

Rag, wiping (Item 35, WP 0349 00)

Sealant, thread (Item 40, WP 0349 00)

**References**

WP 0020 00

**Equipment Conditions**

Machine parked on level ground (TM 5-3805-261-10)

Parking/emergency brake applied (TM 5-3805-261-10)

Implements lowered to ground (TM 5-3805-261-10)

Engine off (TM 5-3805-261-10)

Battery disconnect switch in OFF position (TM 5-3805-261-10)

Right side engine doors opened (TM 5-3805-261-10)

### *REMOVAL*

1. Remove indicator (1) by hand.
2. Remove elbow (3).
3. Remove nipple (2) from elbow (3).

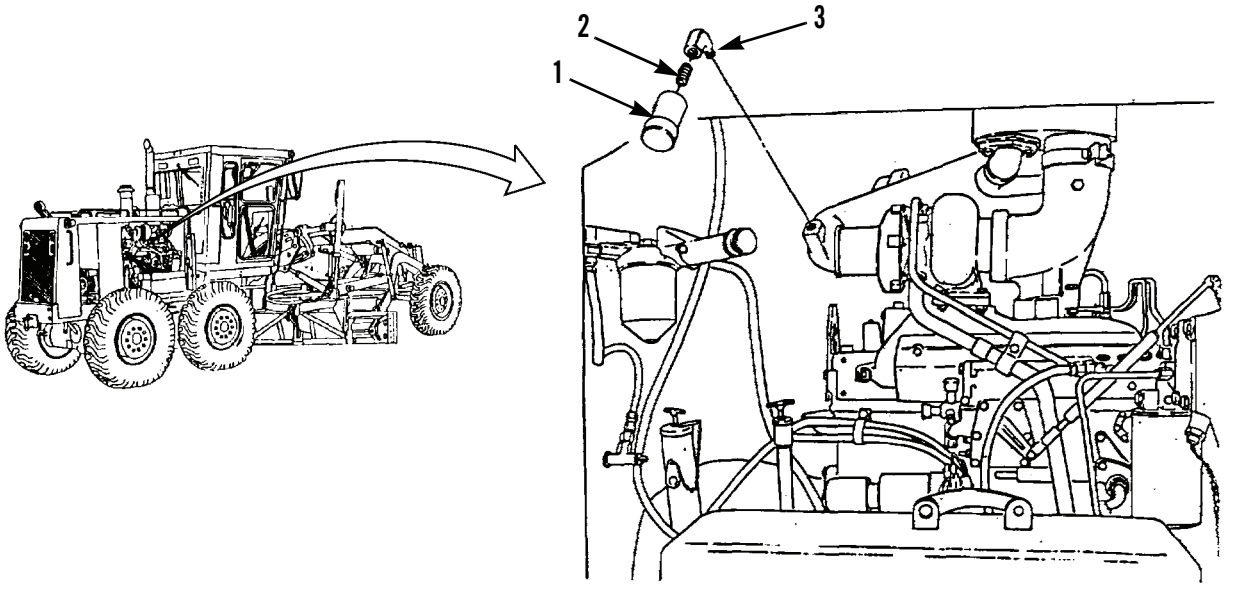


397-808

### *CLEANING AND INSPECTION*

Clean and inspect all parts in accordance with WP 0020 00.

### *INSTALLATION*

1. Install nipple (2) in elbow (3).
2. Install elbow (3).
3. Install indicator (1) by hand on nipple (2).

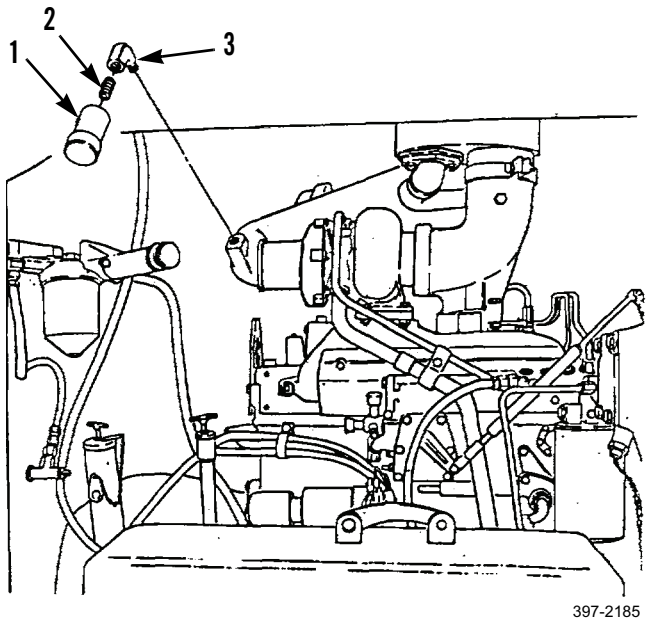


4. Close right side engine doors (TM 5-3805-261-10).

**END OF WORK PACKAGE**

## AIR PRESSURE GAUGES REPLACEMENT 0252 00

### THIS WORK PACKAGE COVERS

Removal, Cleaning and Inspection, Installation

### INITIAL SETUP

**Maintenance Level**

Unit

**Tools and Special Tools**

Tool kit, general mechanic's (Item 89, WP 0348 00)

**Materials/Parts**

Adhesive (Item 4, WP 0349 00)

Cap set, protective (Item 7, WP 0349 00)

Rag, wiping (Item 35, WP 0349 00)

Tag, marker (Item 44, WP 0349 00)

Lockwasher (4)

Packing, preformed (2)

**References**

WP 0020 00

**Equipment Conditions**

Machine parked on level ground (TM 5-3805-261-10)

Parking/emergency brake applied (TM 5-3805-261-10)

Implements lowered to ground (TM 5-3805-261-10)

Engine off (TM 5-3805-261-10)

Battery disconnect switch in OFF position (TM 5-3805-261-10)

Air pressure relieved (TM 5-3805-261-10)

Right side engine doors opened (TM 5-3805-261-10)

***REMOVAL***

## CAUTION

Cap hose ends and plug open ports to prevent contamination.

## NOTE

Tag hose assemblies before disconnecting to aid in installation.

1. Disconnect two hose assemblies (5) from elbows (3).
2. Remove two elbows (3).
3. Remove four nuts (1), lockwashers (2), and two brackets (4). Discard lockwashers.

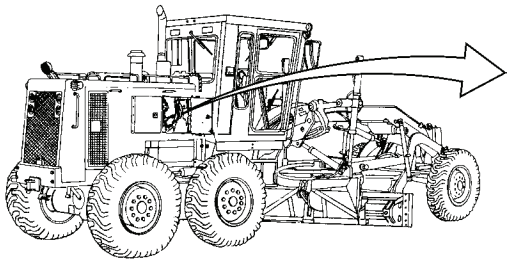

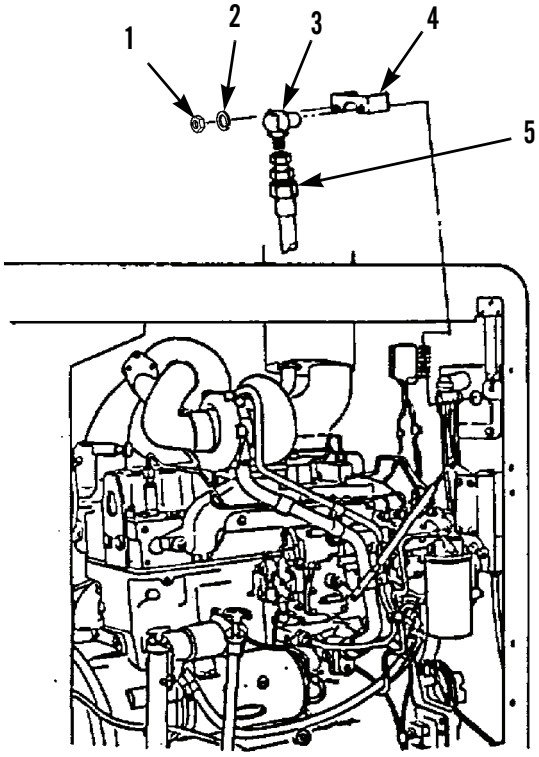


397-809

### *REMOVAL - CONTINUED*

4. Remove two air pressure gauges (6) and preformed packings (7) from outside of machine, right-front of engine compartment. Discard preformed packings.

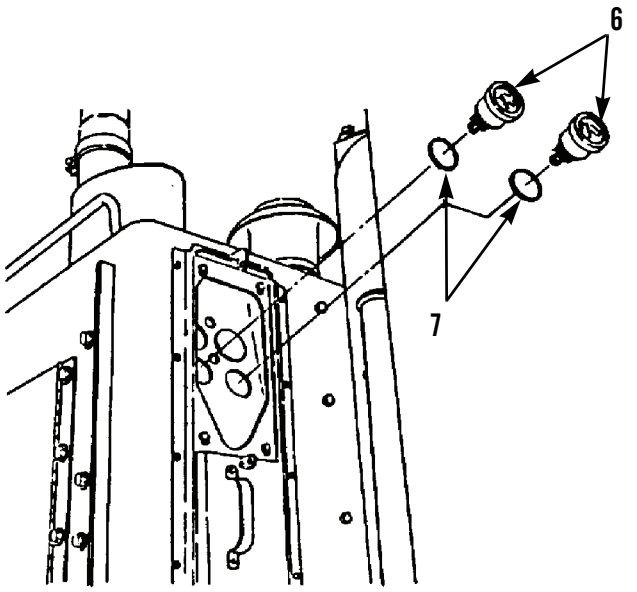


397-810

### *CLEANING AND INSPECTION*

Clean and inspect all parts in accordance with WP 0020 00.

### *INSTALLATION*

1. Install two new preformed packings (7) and air pressure gauges (6) on outside of machine, right-front of engine compartment.
2. Install two brackets (4), four new lockwashers (2), and nuts (1).
3. Install two elbows (3).
4. Apply adhesive and connect two hose assemblies (5) to elbows (3).
5. Close right side engine doors (TM 5-3805-261-10).

**END OF WORK PACKAGE**

## AIR PRESSURE GAUGE TO AIR TANK LINES AND FITTINGS REPLACEMENT 0253 00

### THIS WORK PACKAGE COVERS

Removal, Cleaning and Inspection, Installation

### INITIAL SETUP

**Maintenance Level**

Unit

**Tools and Special Tools**

Tool kit, general mechanic's (Item 89, WP 0348 00)

**Materials/Parts**

Cap set, protective (Item 7, WP 0349 00)

Rag, wiping (Item 35, WP 0349 00)

Tag, marker (Item 44, WP 0349 00)

**References**

WP 0020 00

**Equipment Conditions**

Machine parked on level ground (TM 5-3805-261-10)

Parking/emergency brake applied (TM 5-3805-261-10)

Implements lowered to ground (TM 5-3805-261-10)

Engine off (TM 5-3805-261-10)

Battery disconnect switch in OFF position (TM 5-3805-261-10)

Air pressure relieved (TM 5-3805-261-10)

Left and right side engine panels removed (WP 0182 00)

### *REMOVAL*

**CAUTION**

Cap hose ends and plug open ports to prevent contamination.

**NOTE**

Tag hose assemblies before disassembling to aid in installation.

1. Disconnect hose assembly (1) from air tank under right-rear side of machine.
2. Remove connector (2) from air tank fitting.

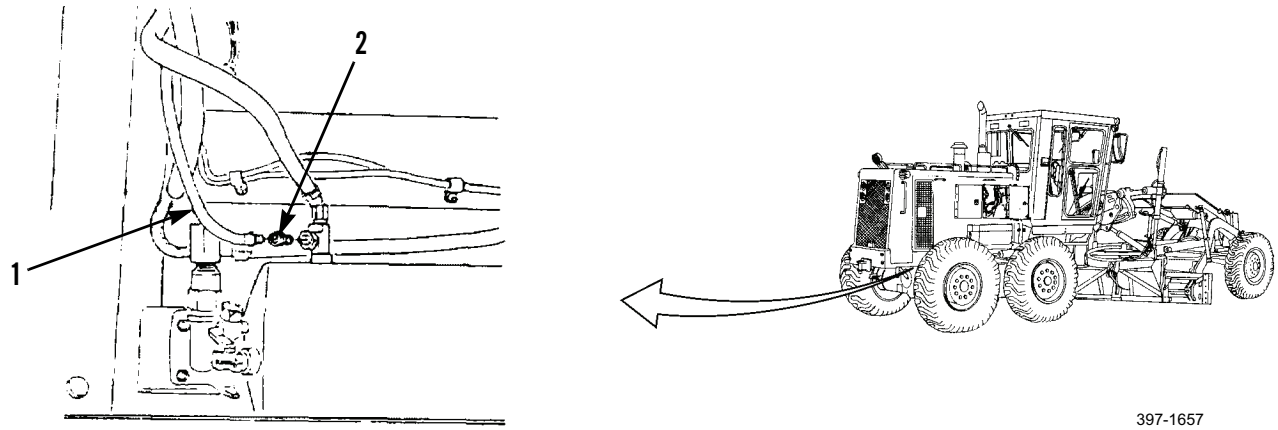

***REMOVAL - CONTINUED***

3. Remove bolt (3), washer (4), and clip (5).

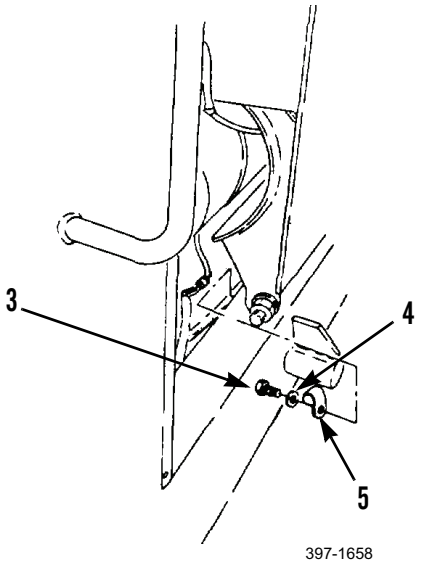


4. Remove bolt (8), washer (7), and clip (6) from right side of engine compartment.

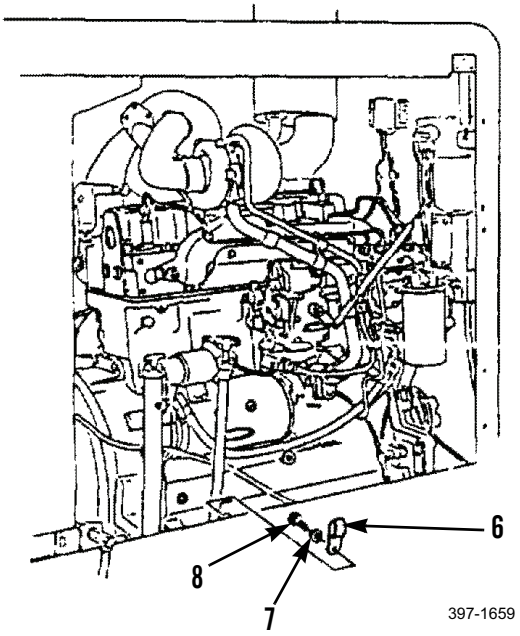

## AIR PRESSURE GAUGE TO AIR TANK LINES AND FITTINGS REPLACEMENT - CONTINUED 0253 00

### *REMOVAL - CONTINUED*

5. Remove nut (9), bolt (11), washer (12), and clip (10) from right-front side of engine compartment.

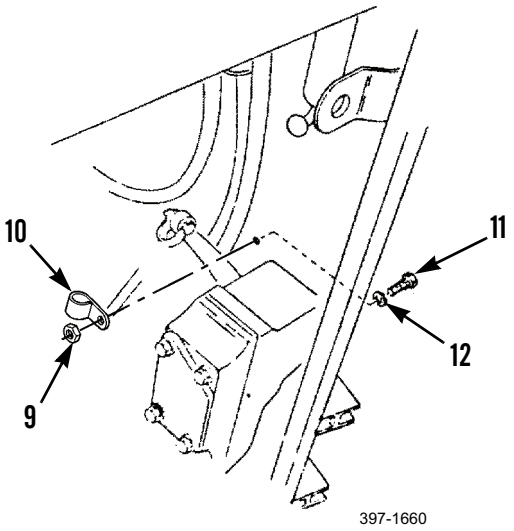


6. Disconnect hose assembly (1) from connector (15).
7. Remove hose assembly (1) from machine.
8. Remove connector (15) and elbow (14) from right air pressure gauge (13).

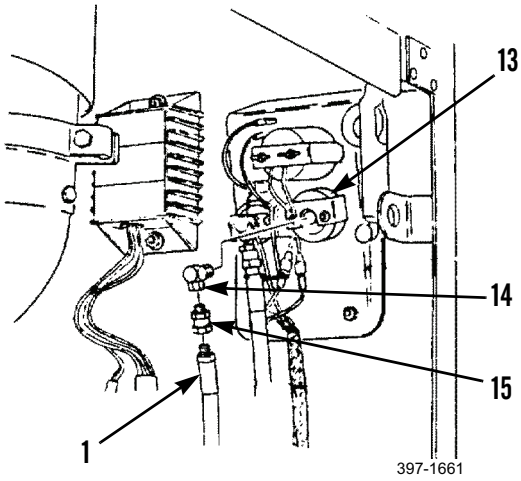

***REMOVAL - CONTINUED***

9. Disconnect hose assembly (17) from air tank under left-rear side of machine.
10. Remove connector (16) from air tank fitting.

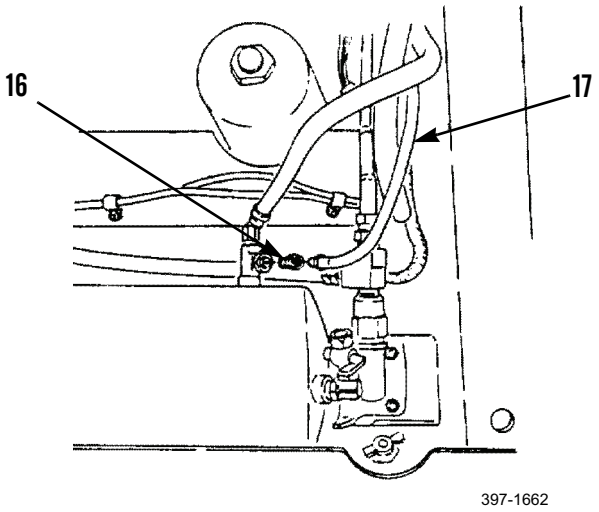


11. Remove two bolts (18), washers (19), and clips (20) from left side of engine compartment.

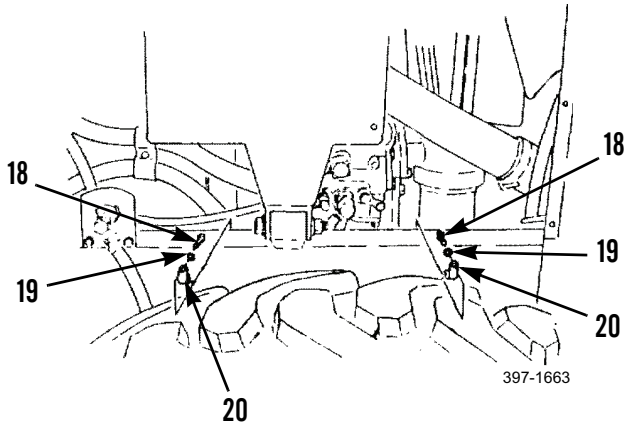

***REMOVAL - CONTINUED***

12. Disconnect air compressor hose assembly (24) from tee (23).
13. Remove hose assembly (17) and connector (25) from tee (26).
14. Disconnect hose assembly (22) from tee (23).
15. Remove tee (23), bushing (21), and plug (27) from tee (26).

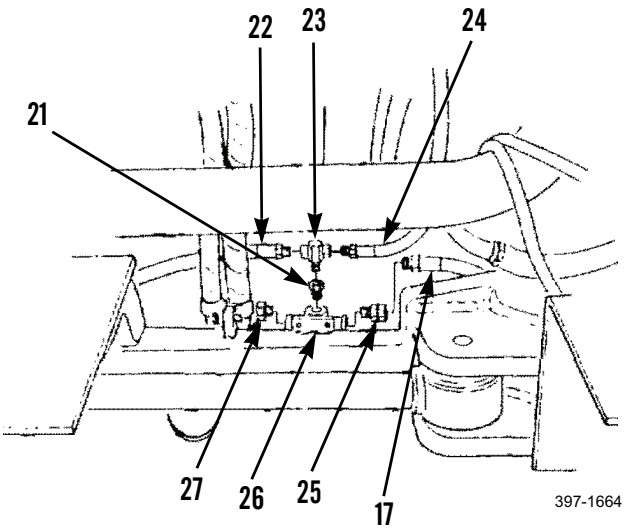


16. Remove two bolts (29), washers (28), and tee (26).

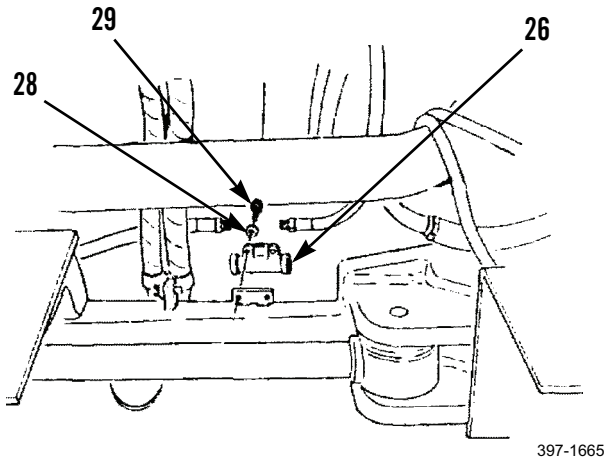

***REMOVAL - CONTINUED***

17. Remove bolts (30 and 35), washers (31 and 34), and clips (32 and 33) from left-front side of engine.

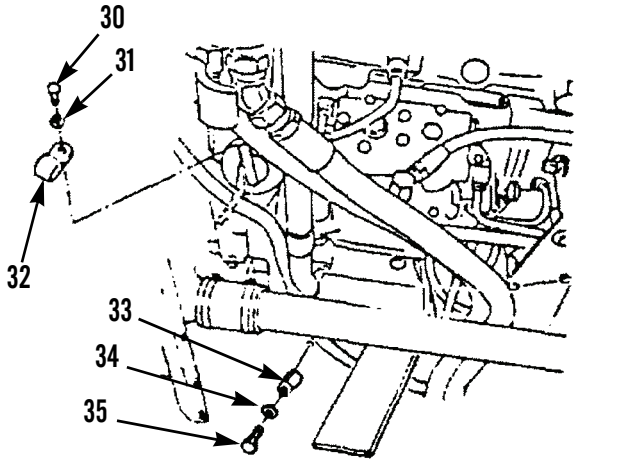


397-1666

18. Remove nut (39), washer (38), bolt (36), and clip (37).

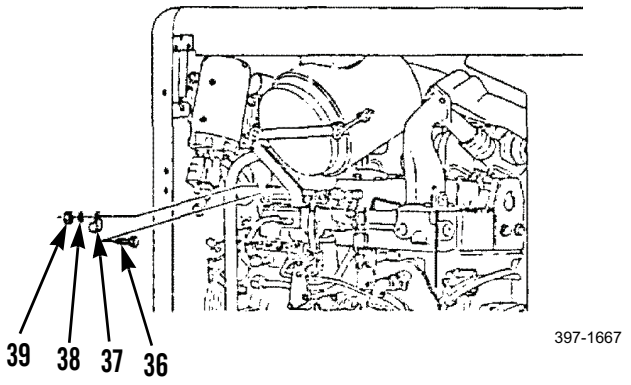


397-1667

### *REMOVAL - CONTINUED*

19. Disconnect hose assembly (22) from connector (42) from right-front side of engine compartment.
20. Remove hose assembly (22) from machine.
21. Remove connector (42) and elbow (41) from left air pressure gauge (40).

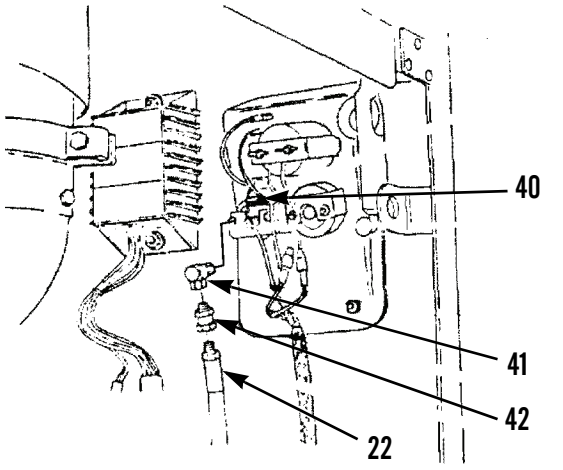

397-1668

### *CLEANING AND INSPECTION*

Clean and inspect all parts in accordance with WP 0020 00.

### *INSTALLATION*

1. Install elbow (41) and connector (42) on left air pressure gauge (40).
2. Position hose assembly (22) on machine.
3. Connect hose assembly (22) to connector (42).
4. Install clip (37), bolt (36), washer (38), and nut (39).
5. Install clips (32 and 33), washers (31 and 34), and bolts (30 and 35).
6. Install tee (26), two washers (28), and bolts (29).

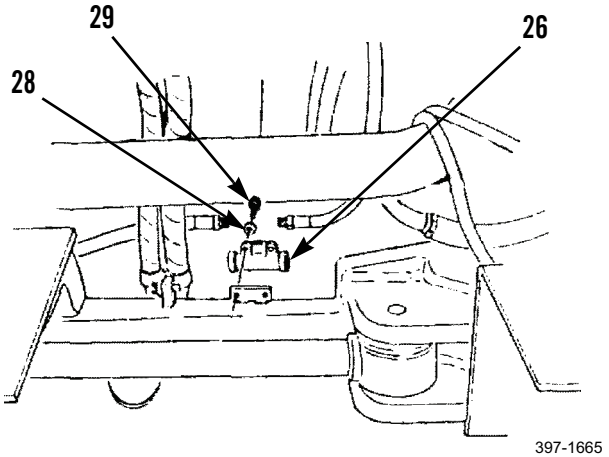

397-1665

***INSTALLATION - CONTINUED***

7. Install plug (27), bushing (21), and tee (23) on tee (26).
8. Connect hose assembly (22) to tee (23).
9. Position hose assembly (17) on machine.
10. Install connector (25) on tee (26).
11. Conncect hose assembly (17) to tee (26).
12. Connect air compressor hose assembly (24) to tee (23).

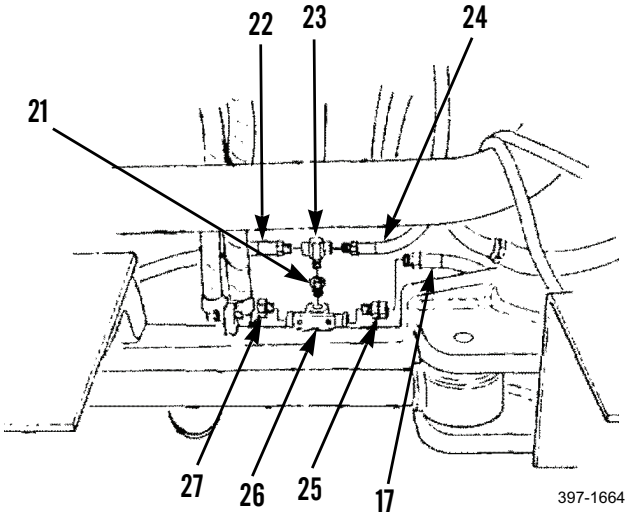


13. Install two clips (20), washers (19), and bolts (18) at left side of engine compartment.

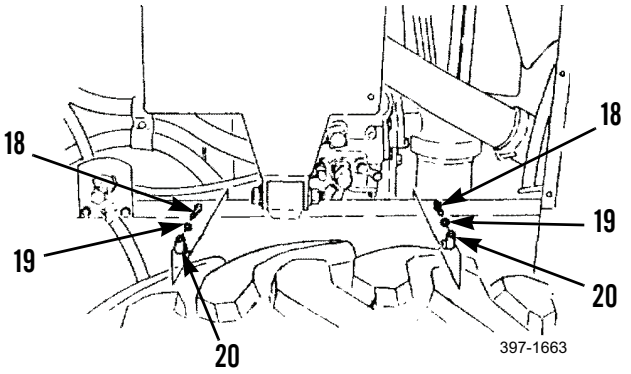


14. Install connector (16) on air tank under left-rear side of machine.
15. Install hose assembly (17) to connector (16).

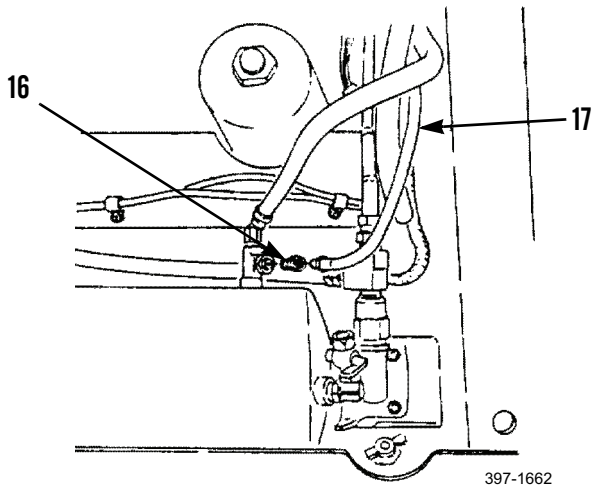

***INSTALLATION - CONTINUED***

16. Install elbow (14) and connector (15) on right air pressure gauge (13) at right-front side of engine compartment.
17. Position hose assembly (1) on machine.
18. Connect hose assembly (1) to connector (15).

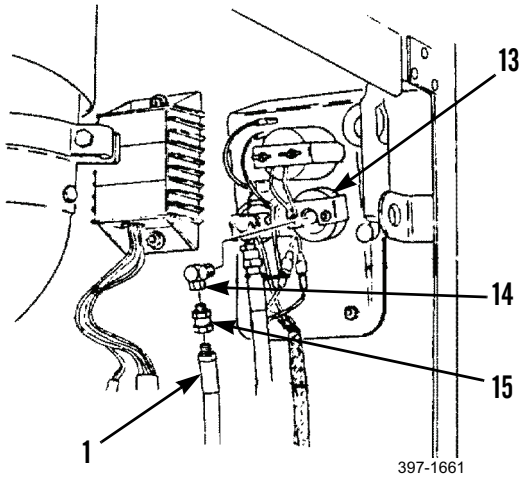


19. Install clip (10), washer (12), bolt (11), and nut (9).

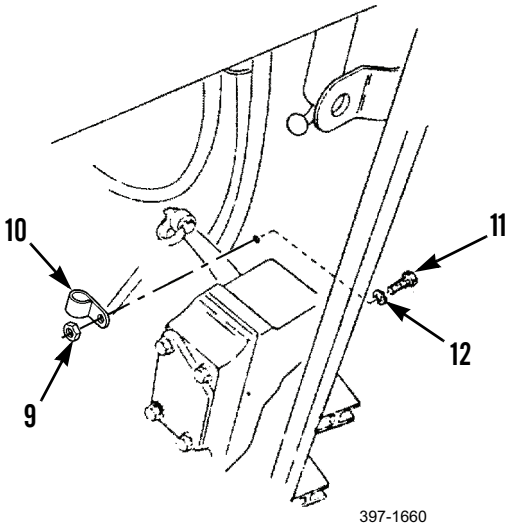

***INSTALLATION - CONTINUED***

20. Install clip (6), washer (7), and bolt (8) at right side of engine compartment.

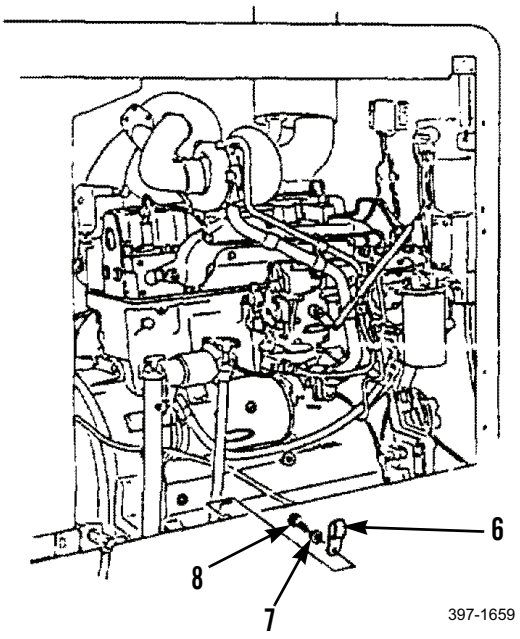


21. Install clip (5), washer (4), and bolt (3) on rear-right frame, near alternator.

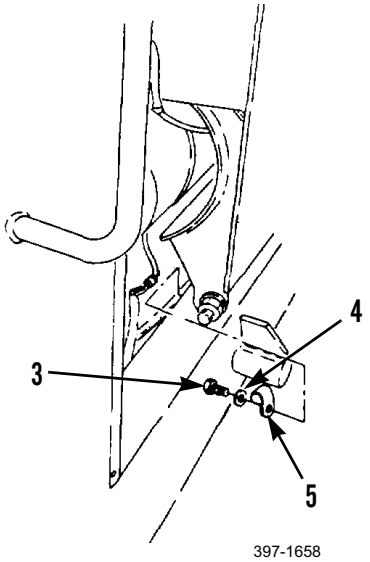

***INSTALLATION - CONTINUED***

22. Install connector (2) on air tank under right-rear side of machine.
23. Install hose assembly (1) to connector (2).

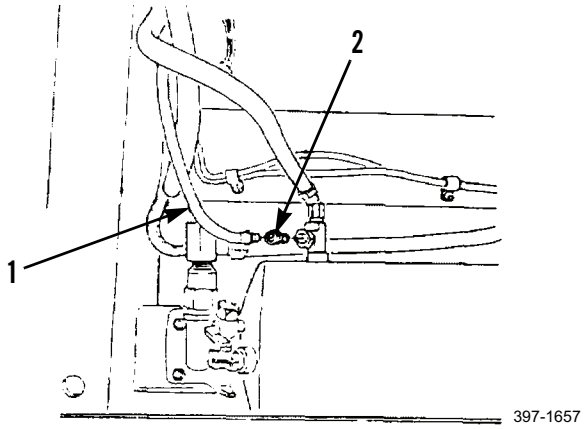


24. Install left and right side engine panels (WP 0182 00).

**END OF WORK PACKAGE**

## TEMPERATURE GAUGE REPLACEMENT 0254 00

### THIS WORK PACKAGE COVERS

Removal, Cleaning and Inspection, Installation

### INITIAL SETUP

**Maintenance Level**

Unit

**Tools and Special Tools**

Tool kit, general mechanic's (Item 89, WP 0348 00)

**Materials/Parts**

Rag, wiping (Item 35, WP 0349 00)

Tag, marker (Item 44, WP 0349 00)

**References**

WP 0021 00

**Equipment Conditions**

Machine parked on level ground (TM 5-3805-261-10)

Parking/emergency brake applied (TM 5-3805-261-10)

Implements lowered to ground (TM 5-3805-261-10)

Engine off (TM 5-3805-261-10)

Battery cables disconnected (WP 0125 00)

Right side engine doors opened (TM 5-3805-261-10)

### *REMOVAL*

**NOTE**

Tag wire assemblies before disconnecting to aid in installation.

1. Disconnect two wire assemblies (6) from two connectors (5).
2. Remove two nuts (1), clamp (2), and temperature gauge (4) from instrument panel (3).

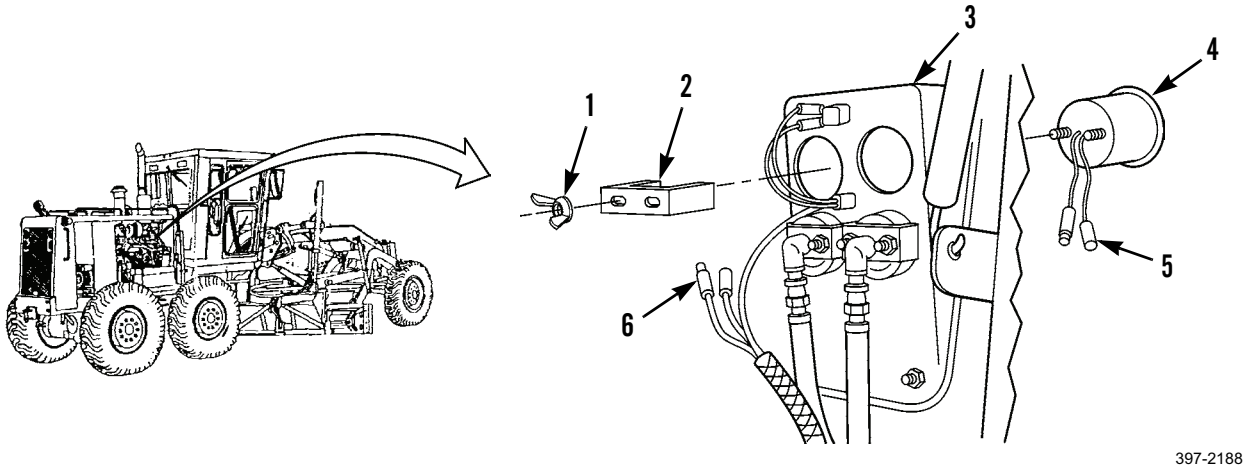


397-2188

### *CLEANING AND INSPECTION*

Clean and inspect all parts in accordance with WP 0021 00.

### *INSTALLATION*

1. Install temperature gauge (4), clamp (2), and two nuts (1) on instrument panel (3).
2. Connect two wire assemblies (6) to two connectors (5).

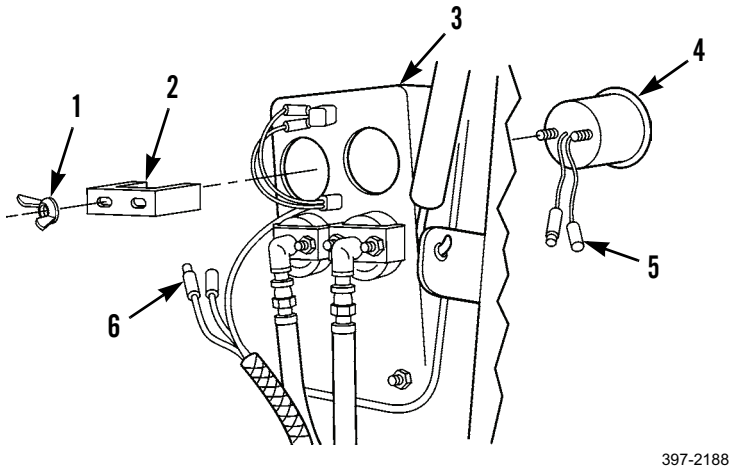


3. Close right side engine doors (TM 5-3805-261-10).
4. Connect battery cables (WP 0125 00).

**END OF WORK PACKAGE**

## ARTICULATION INDICATOR MECHANISM REPLACEMENT 0255 00

### THIS WORK PACKAGE COVERS

Removal, Cleaning and Inspection, Installation

### INITIAL SETUP

**Maintenance Level**

Unit

**Tools and Special Tools**

Tool kit, general mechanic's (Item 89, WP 0348 00)

**Materials/Parts**

Rag, wiping (Item 35, WP 0349 00)

Tag, marker (Item 44, WP 0349 00)

Lockwasher (3)

Nut, self-locking

Pin, cotter (4)

**References**

WP 0020 00

WP 0196 00

**Equipment Conditions**

Machine parked on level ground (TM 5-3805-261-10)

Parking/emergency brake applied (TM 5-3805-261-10)

Implements lowered to ground (TM 5-3805-261-10)

Engine off (TM 5-3805-261-10)

Battery disconnect switch in OFF position (TM 5-3805-261-10)

Left and right console panels removed (WP 0193 00)

## ARTICULATION INDICATOR MECHANISM REPLACEMENT - CONTINUED 0255 00

### *REMOVAL*

1. Remove two nuts (3), screws (1), and indicator (2) from steering console hood (4).
2. Remove steering console hood (4) (WP 0196 00).
3. Remove seven screws (7) and plates (5 and 6).

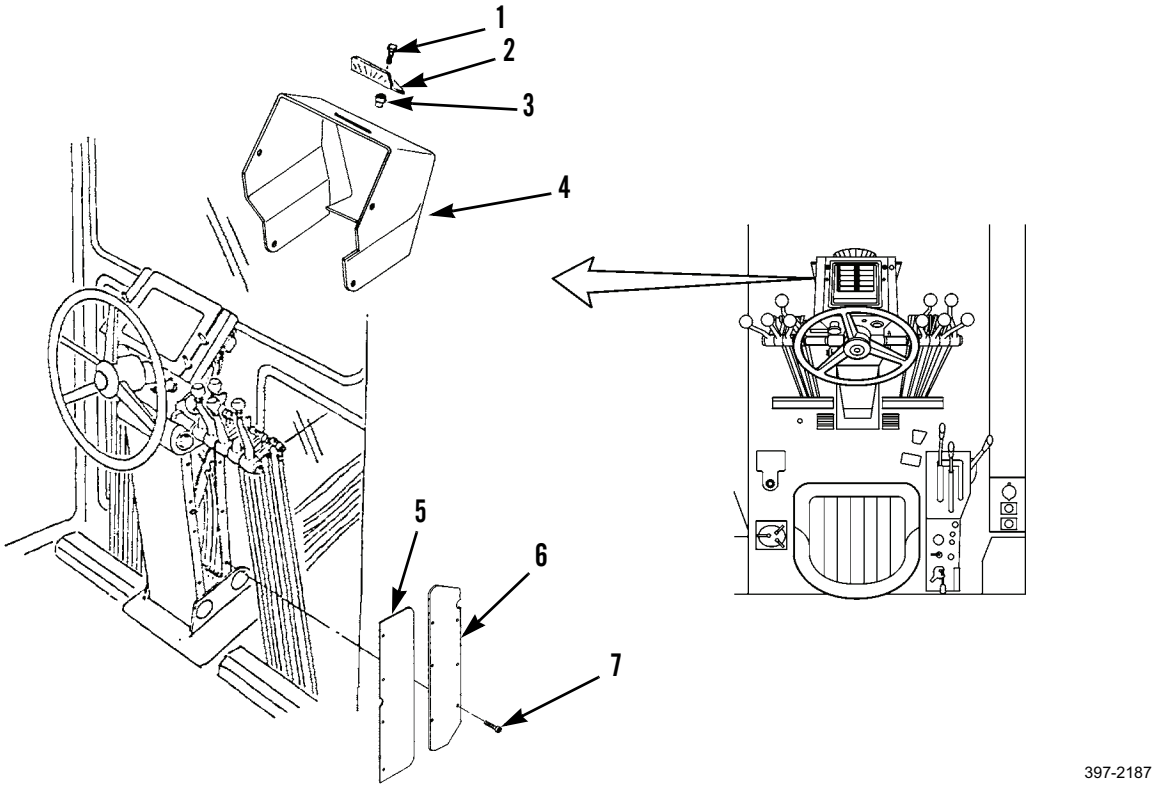


397-2187

***REMOVAL - CONTINUED***

4. Remove cotter pin (19), washer (20), and pin (12). Discard cotter pin.
5. Remove nut (14), washer (15), bolt (16), and link (13).
6. Remove link (18), spring (17), and pointer (8).
7. Remove two screws (11), lockwashers (10), and guide (9). Discard lockwashers.

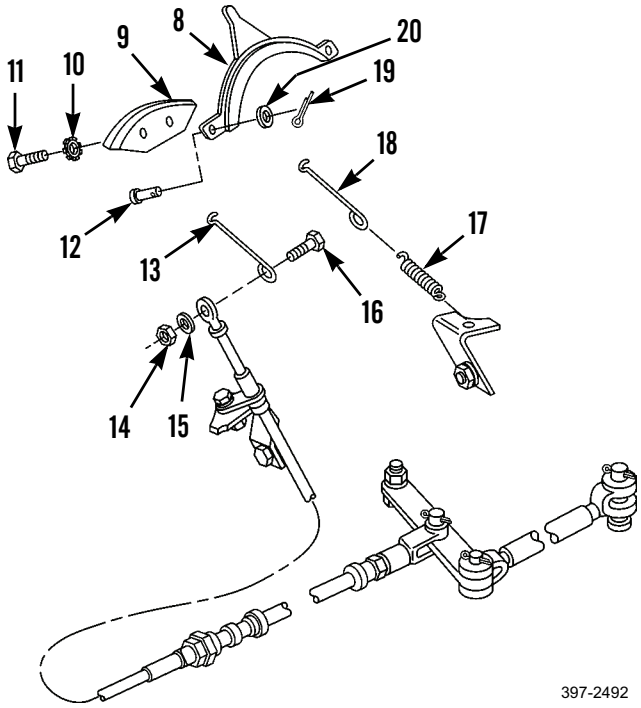


**NOTE**

Tag wire assemblies before disconnecting to aid in installation.

8. Disconnect two wire assemblies (25) at terminals from lamp assembly (21).
9. Remove nut (30), lockwasher (31), spacer (22), and lamp assembly (21) from bracket (32). Discard lockwasher.
10. Remove two nuts (24), washers (23), and bracket (32).
11. Remove nut (26), washer (27), and bracket (28) to bolt (29).

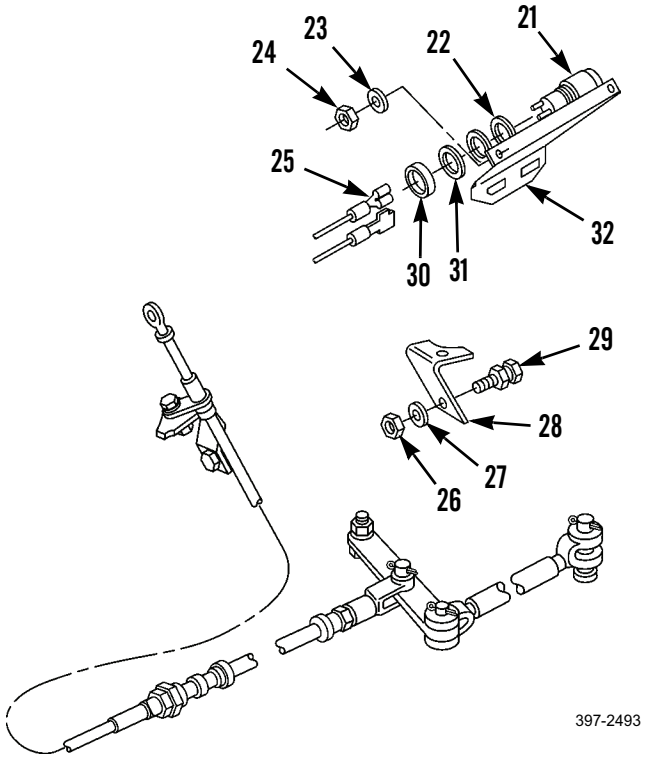

## ARTICULATION INDICATOR MECHANISM REPLACEMENT - CONTINUED 0255 00

### *REMOVAL - CONTINUED*

12. Remove nut (36), washer (37), and bolt (39).
13. Remove nut (34), washer (35), bolt (40), and bracket (38).
14. Remove cotter pin (33) and pin (43) from left-front side of rear frame. Discard cotter pin.
15. Loosen two nuts (42) and remove cable (41).

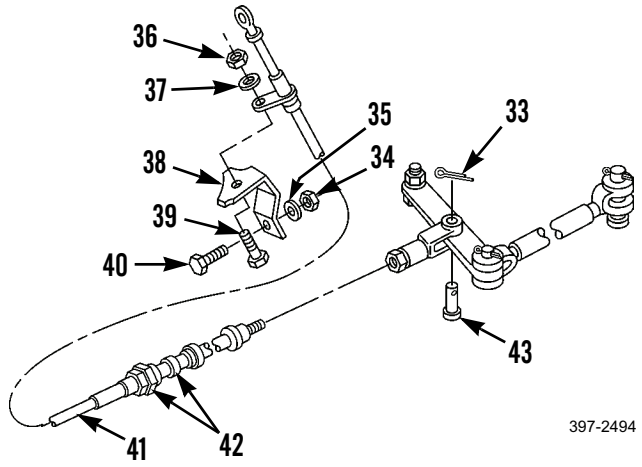


16. Remove rod end (49) and nut (50).
17. Remove cotter pin (46), pin (52), cotter pin (44), pin (53), and rod (45). Discard cotter pins.
18. Remove self-locking nut (47), bolt (48), and lever (51). Discard self-locking nut.

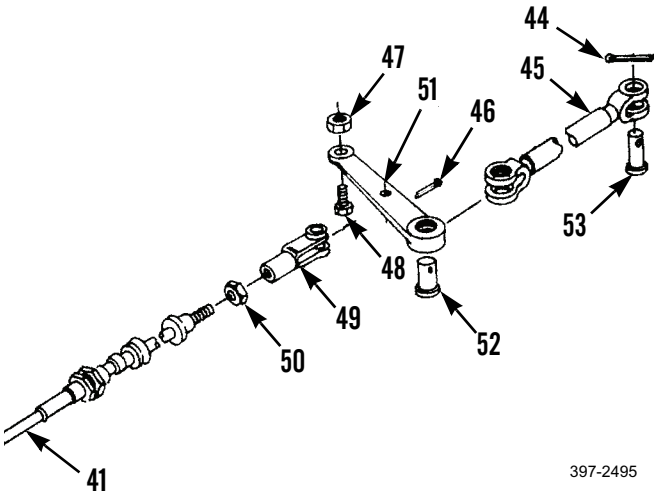


### *CLEANING AND INSPECTION*

Clean and inspect all parts in accordance with WP 0020 00.

### *INSTALLATION*

1. Install lever (51), bolt (48), and new self-locking nut (47) to left-front side of rear frame.
2. Install rod (45), pin (53), new cotter pin (44), pin (52), and new cotter pin (46).
3. Install nut (50) and rod end (49).
4. Install cable (41) and tighten two nuts (42).
5. Install pin (43) and new cotter pin (33).
6. Install bracket (38), bolt (40), washer (35), and nut (34) to steering console.
7. Install bolt (39), washer (37), and nut (36).

***INSTALLATION - CONTINUED***

8. Install bracket (28), washer (27), and nut (26) to bolt (29).
9. Install bracket (32), two washers (23), and nuts (24).
10. Install lamp assembly (21), spacer (22), new lockwasher (31), and nut (30) on bracket (32).
11. Connect two wire assemblies (25) at terminals to lamp assembly (21).

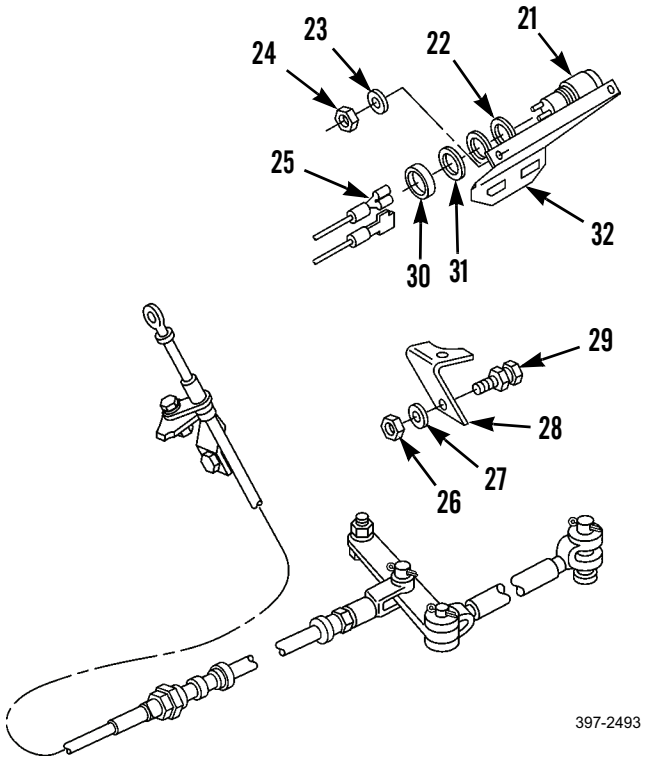


12. Install guide (9), two new lockwashers (10), and screws (11).
13. Install pointer (8), spring (17), and link (18).
14. Install link (13), bolt (16), washer (15), and nut (14).
15. Install pin (12), washer (20), and new cotter pin (19).

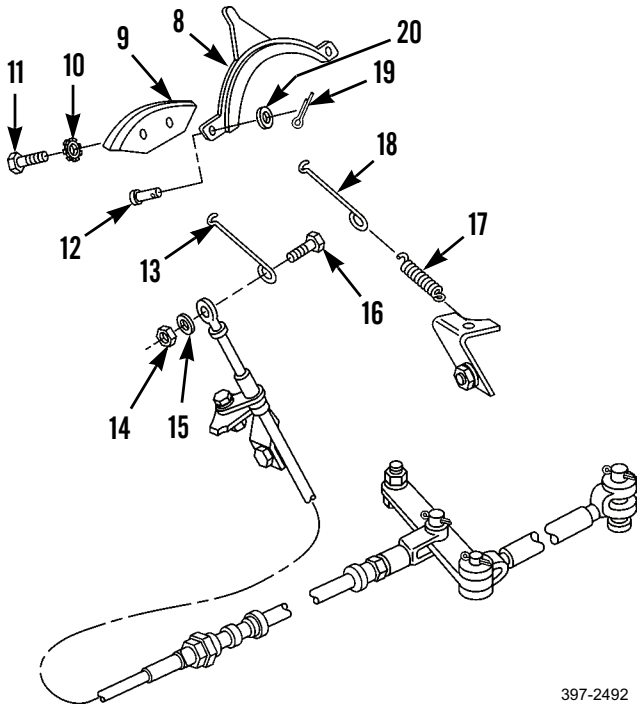

***INSTALLATION - CONTINUED***

16. Install plates (5 and 6) and seven screws (7).
17. Install steering console hood (4) (WP 0196 00).
18. Install indicator (2), two screws (1), and nuts (3) on steering console hood (4).
19. Install left and right console panels (WP 0193 00).

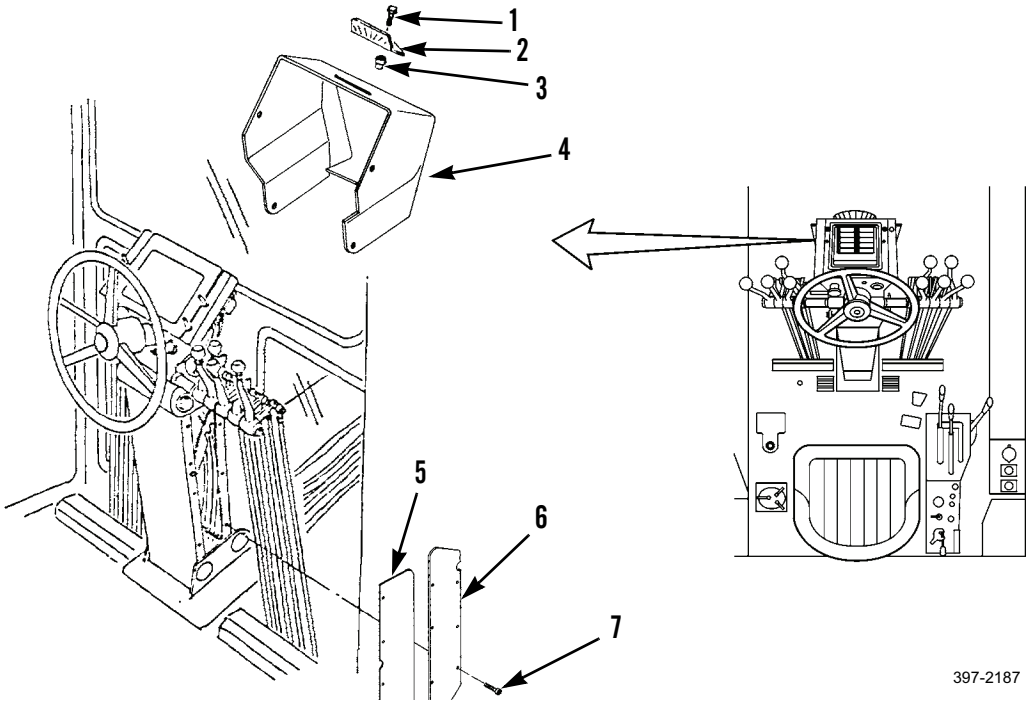


**END OF WORK PACKAGE**

## INSTRUMENT PANEL REPLACEMENT 0256 00

### THIS WORK PACKAGE COVERS

Removal, Cleaning and Inspection, Installation

### INITIAL SETUP

**Maintenance Level**

Unit

**Tools and Special Tools**

Tool kit, general mechanic's (Item 89, WP 0348 00)

**Materials/Parts**

Rag, wiping (Item 35, WP 0349 00)

**References**

WP 0020 00

**Equipment Conditions**

Machine parked on level ground (TM 5-3805-261-10)

**Equipment Conditions - Continued**

Parking/emergency brake applied (TM 5-3805-261-10)

Implements lowered to ground (TM 5-3805-261-10)

Engine off (TM 5-3805-261-10)

Battery disconnect switch in OFF position (TM 5-3805-261-10)

Hourmeter removed (WP 0083 00)

Panel lamps removed (WP 0084 00)

Air pressure gauges removed (WP 0252 00)

Temperature gauge removed (WP 0254 00)

### *REMOVAL*

1. Remove four sleeve nuts (1), screws (4), and mounting base (2).

**NOTE**

Not all machines have plug.

2. Remove plug (3) from mounting base (2).

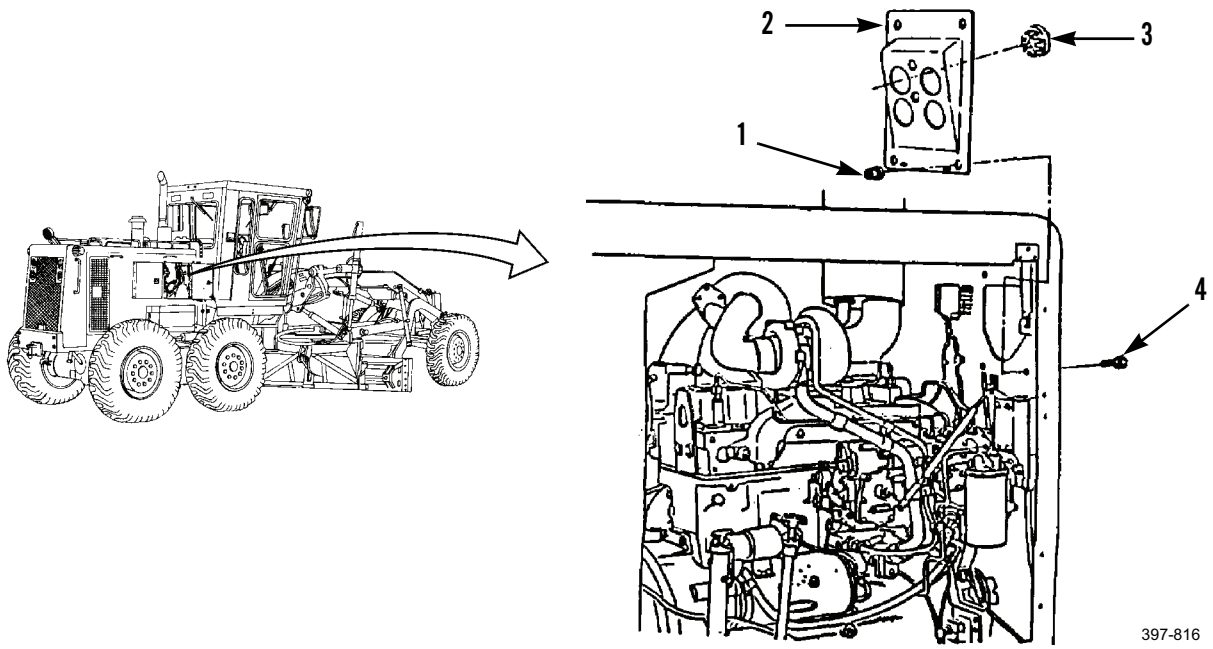

### *CLEANING AND INSPECTION*

Clean and inspect all parts in accordance with WP 0020 00.

### *INSTALLATION*

**NOTE**

Not all machines have plug.

1. Install plug (3) in mounting base (2).
2. Install mounting base (2), four screws (4), and sleeve nuts (1).

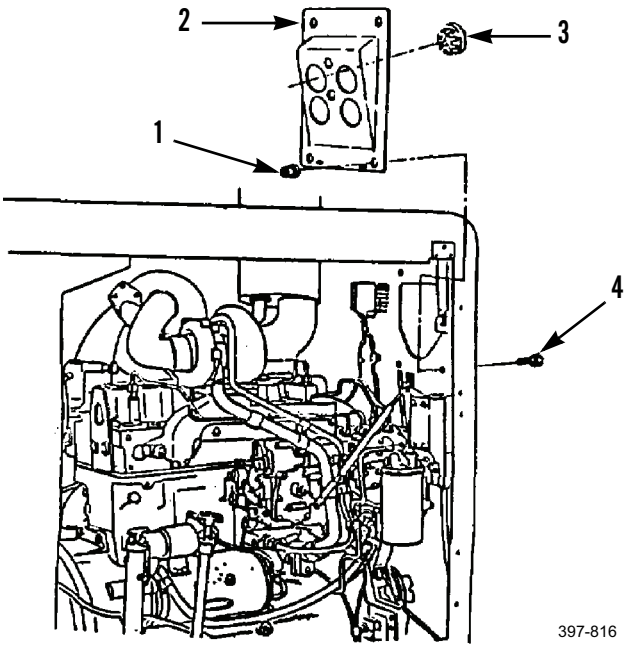


3. Install temperature gauge (WP 0254 00).
4. Install air pressure gauges (WP 0252 00).
5. Install panel lamps (WP 0084 00).
6. Install hourmeter (WP 0083 00).

**END OF WORK PACKAGE**

## REMOTE THROTTLE LEVER REPLACEMENT (TYPE II MACHINE) 0257 00

### THIS WORK PACKAGE COVERS

Removal, Cleaning and Inspection, Installation

### INITIAL SETUP

**Maintenance Level**

Unit

**Tools and Special Tools**

Tool kit, general mechanic's (Item 89, WP 0348 00)

**Materials/Parts**

Rag, wiping (Item 35, WP 0349 00)

**References**

WP 0020 00

**Equipment Conditions**

Machine parked on level ground (TM 5-3805-261-10)

Parking/emergency brake applied (TM 5-3805-261-10)

Implements lowered to ground (TM 5-3805-261-10)

Engine off (TM 5-3805-261-10)

Battery disconnect switch in OFF position (TM 5-3805-261-10)

### *REMOVAL*

Grasp shaft and knob assembly (1) and turn counterclockwise and remove handle and knob assembly.

### *INSTALLATION*

Insert shaft and knob assembly (1) into threaded hole and turn clockwise until snug.

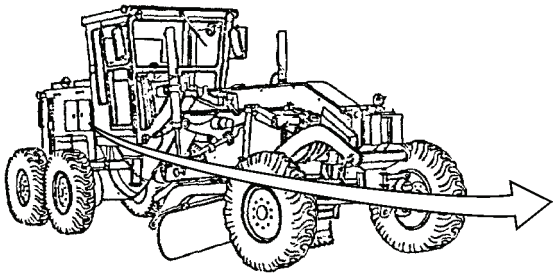

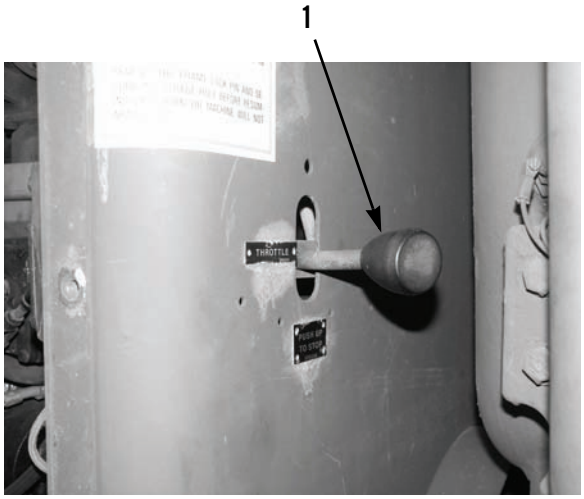


397-2453

END OF WORK PACKAGE

## REMOTE START PANEL REPLACEMENT (TYPE II MACHINE) 0258 00

### THIS WORK PACKAGE COVERS

Removal, Cleaning and Inspection, Installation

### INITIAL SETUP

**Maintenance Level**

Unit

**Tools and Special Tools**

Tool kit, general mechanic's (Item 89, WP 0348 00)

**Materials/Parts**

Rag, wiping (Item 35, WP 0349 00)

Tag, marker (Item 44, WP 0349 00)

**References**

WP 0020 00

**Equipment Conditions**

Machine parked on level ground (TM 5-3805-261-10)

Parking/emergency brake applied (TM 5-3805-261-10)

Implements lowered to ground (TM 5-3805-261-10)

Engine off (TM 5-3805-261-10)

Battery cable disconnected (WP 0125 00)

## REMOTE START PANEL REPLACEMENT (TYPE II MACHINE) - CONTINUED 0258 00

### *REMOVAL*

**NOTE**

Tag all battery cables and wire assemblies before disconnecting to aid in installation.

1. Disconnect three wires from back of start switch (5).
2. Remove rubber boot (4) and remove start switch (5) from remote start panel (9).
3. Disconnect one wire from back of ether switch (13). Leave jumper wires connected.
4. Remove screw (3) and ether switch button (2).
5. Remove jamnut (12) and remove ether switch (13) from remote start panel (9).
6. disconnect four wires from back of remote battery disconnect switch (8).
7. Remove key (6) from remote battery disconnect switch (8). Remove jamnut (7) and remove remote battery disconnect switch from remote start panel (9).

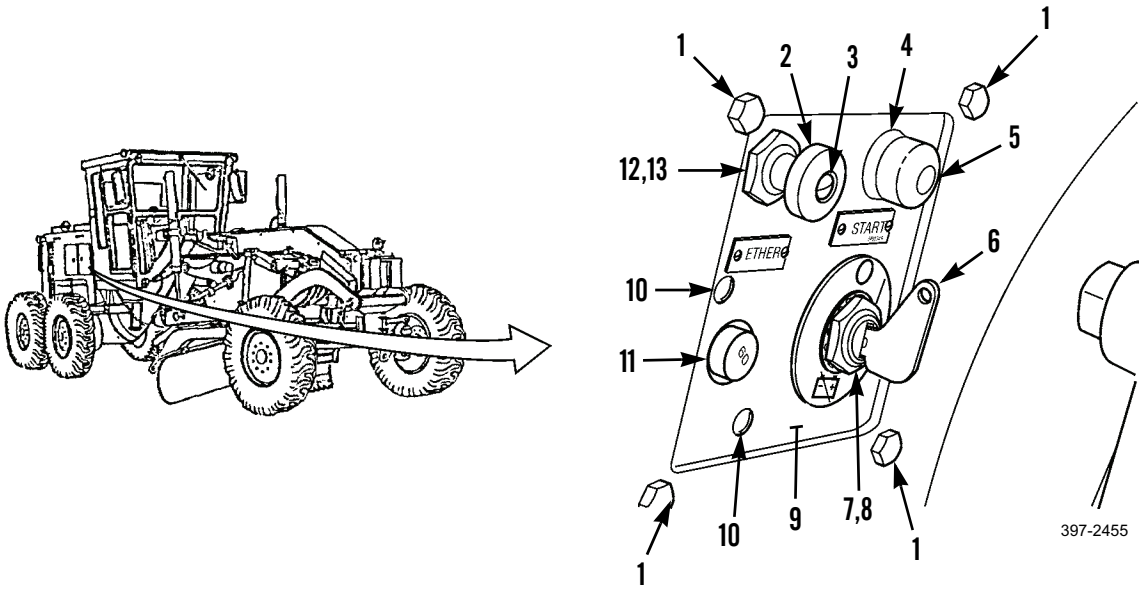

## REMOTE START PANEL REPLACEMENT (TYPE II MACHINE) - CONTINUED 0258 00

### *REMOVAL - CONTINUED*

8. Disconnect four wires from back of circuit breaker switch (11).
9. Remove two mounting screws and nuts (10) and remove circuit breaker switch (11) from remote start panel (9).
10. Remove four mounting nuts and bolts (1) and remove remote start panel (9) from machine.

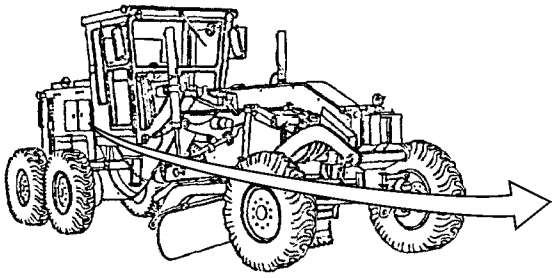

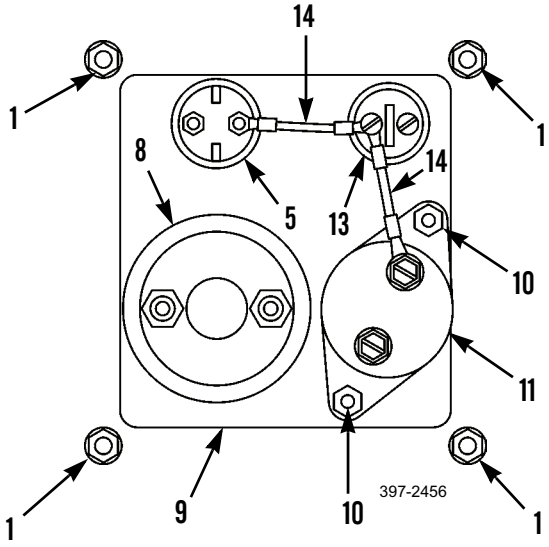


### *CLEANING AND INSTALLATION*

Clean and inspect all parts in accordance with WP 0020 00.

### *INSTALLATION*

1. Install remote start panel (9) and four mounting nuts and bolts (1).
2. Install circuit breaker switch (11) and two mounting screws and nuts (10).
3. Install remote battery disconnect (8) and jamnut (7) and install key (6).
4. Install ether switch (13) and jamnut (12).
5. Install ether switch button (2) and screw (3).
6. Install start switch (5) and rubber boot (4).
7. Connect all wires.
8. Connect battery cables (WP 0125 00).

**END OF WORK PACKAGE**

## BLADE (MOLDBOARD) ASSEMBLY REPLACEMENT 0259 00

### THIS WORK PACKAGE COVERS

Removal, Cleaning and Inspection, Installation

### INITIAL SETUP

**Maintenance Level**

Unit

**Tools and Special Tools**

Tool kit, general mechanic's (Item 89, WP 0348 00)

Shop equipment, common no. 1 (Item 75, WP 0348 00)

Bracket, link (2) (Item 17, WP 0348 00)

Sling (Item 78, WP 0348 00)

Chain

Lifting device, 1,500-lb capacity

Wood blocks

**Materials/Parts**

Rag, wiping (Item 35, WP 0349 00)

Pin, cotter

**Personnel Required**

Two

**References**

WP 0020 00

**Equipment Conditions**

Machine parked on level ground (TM 5-3805-261-10)

Parking/emergency brake applied (TM 5-3805-261-10)

Implements lowered to ground (TM 5-3805-261-10)

Engine off (TM 5-3805-261-10)

Battery disconnect switch in OFF position (TM 5-3805-261-10)

Blade tip cylinder disconnected (WP 0334 00)

### *REMOVAL*

1. Move blade assembly (2) as far to right as possible and lower until just off ground.
2. Remove cotter pin (1) and pin (3). Discard cotter pin.

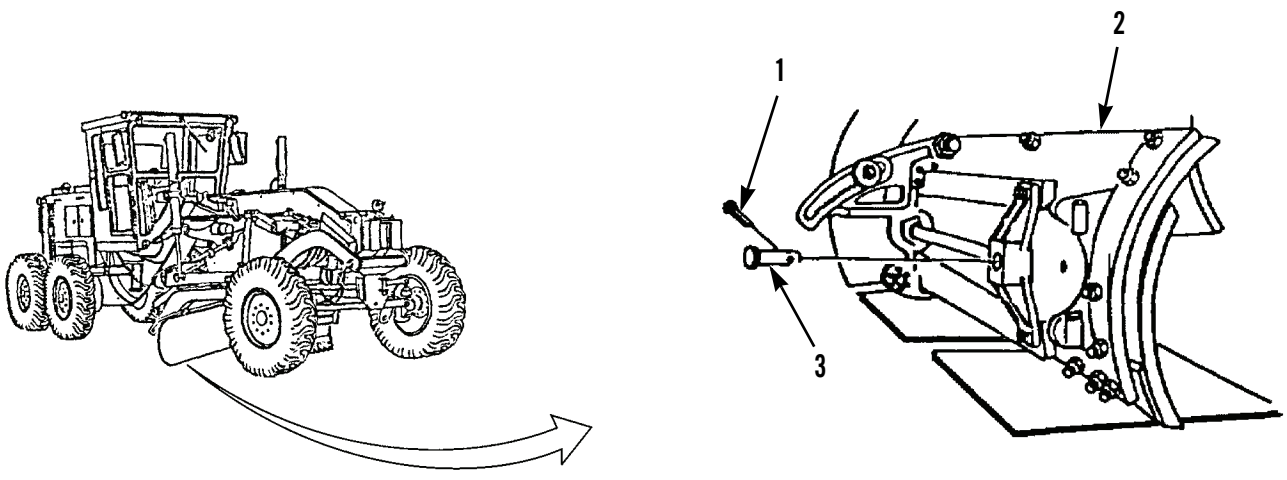


397-1669

***REMOVAL - CONTINUED***

3. Start engine (TM 5-3805-261-10).
4. Operate blade sideshift control to retract cylinder rod into cylinder as far as possible.
5. Remove two nuts (13), washers (14), bolts (5), and clamps (15).
6. Remove two bolts (12), washers (10 and 11), and spacers (9).
7. Remove two bolts (16) and washers (17).
8. Remove guards (4 and 6), two washers (7), and spacers (8).

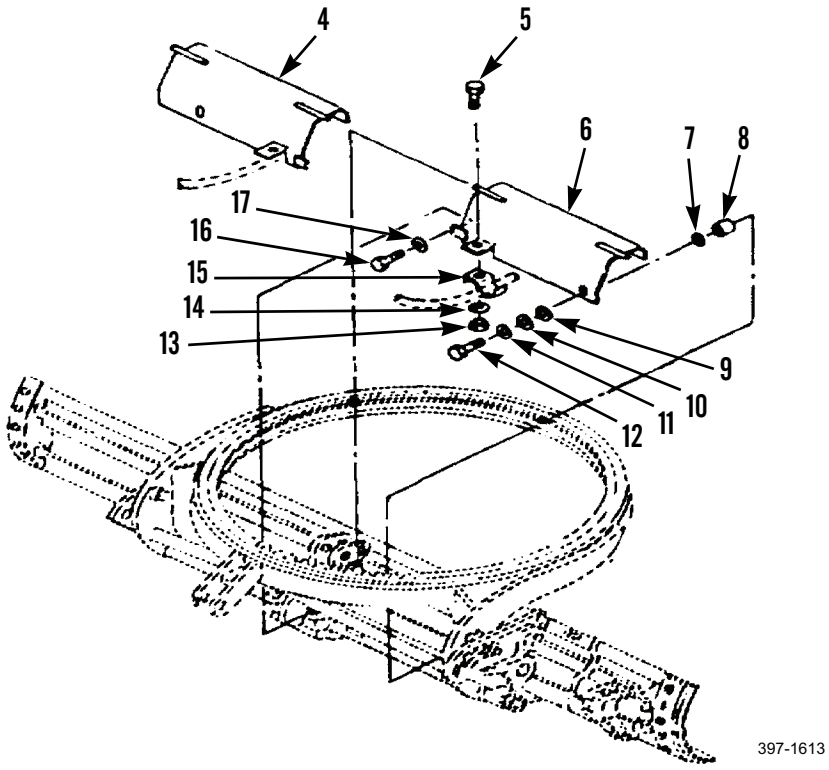


9. Position wood blocks between blade bracket (18) and end of cylinder rod (19).
10. Operate blade sideshift control and expand cylinder rod (19) to push blade assembly (2) away from circle (20) until two link brackets can be installed.

**WARNING**

Use grade 8 3/4-in. bolts and nuts to attach link brackets. Tighten nuts to 265 lb-ft (359 Nm). Failure to follow this warning may cause injury or death to personnel.

11. Install two link brackets on blade assembly (2).

***REMOVAL - CONTINUED***

**WARNING**

Use extreme caution when handling heavy parts. Provide adequate support and use assistance during procedure. Ensure that any lifting device used is in good condition and of suitable load capacity. Keep clear of heavy parts supported only by lifting device. Failure to follow this warning may cause injury or death to personnel.

**NOTE**

Blade assembly weighs 1,500 lb (680 kg).

12. With assistance, attach sling to two link brackets on blade assembly (2).
13. Remove blade assembly (2). Operate blade sideshift control and extend cylinder rod (19) to push blade assembly away from circle (20).
14. Stop engine.
15. Remove sling and two link brackets.

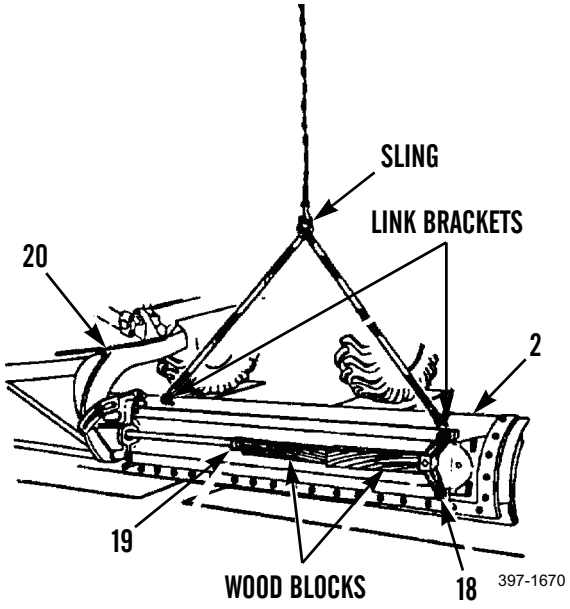


16. Remove 40 bolts (23), washers (24), 10 plates (25), 5 strips (22), and shim(s) (21).

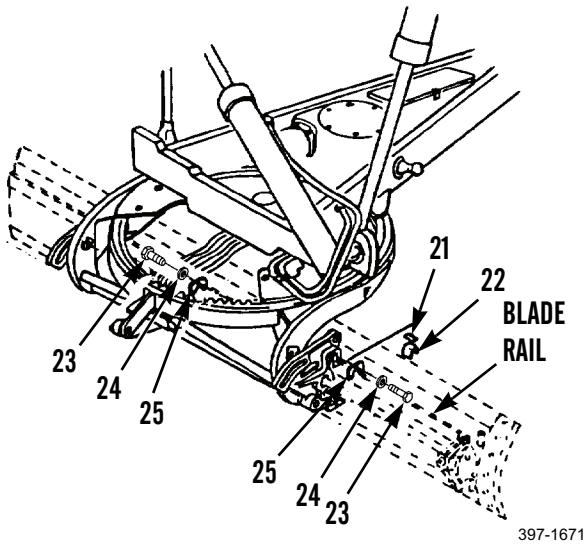

### *CLEANING AND INSPECTION*

Clean and inspect all parts in accordance with WP 0020 00.

### *INSTALLATION*



**WARNING**

- Use extreme caution when handling heavy parts. Provide adequate support and use assistance during procedure. Ensure that any lifting device used is in good condition and of suitable load capacity. Keep clear of heavy parts supported only by lifting device. Failure to follow this warning may cause injury or death to personnel.
- Use grade 8 3/4-in. bolts and nuts to attach link brackets. Tighten nuts to 265 lb-ft (359 Nm). Failure to follow this warning may cause injury or death to personnel.

**NOTE**

Blade assembly weighs 1,500 lb (680 kg).

1. Install two link brackets on blade assembly (2).
2. With assistance, attach sling to two link brackets on blade assembly (2).
3. Use sling to install blade assembly (2) on circle (20).
4. Attach chain to bracket (18) and end of cylinder rod (19).
5. Start engine (TM 5-3805-261-10).
6. Operate blade sideshift control to retract cylinder rod (19) and blade assembly (2) up to link bracket nearest to circle (20).
7. Remove one side of sling and one of two link brackets from side of blade assembly (2) nearest to circle (20). Remove chain from bracket (18) and end of cylinder rod (19).

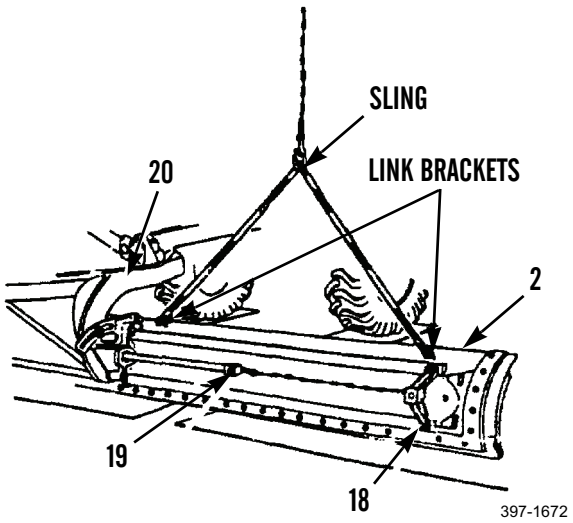

***INSTALLATION - CONTINUED***

8. Operate blade sideshift control and extend cylinder rod (19) to align with bracket (18) on blade assembly (2).
9. Install pin (3) and new cotter pin (1).
10. Operate blade sideshift control to retract cylinder rod (19) and blade assembly (2) into place.
11. Remove remaining side of sling and second of two link brackets from blade assembly (2).

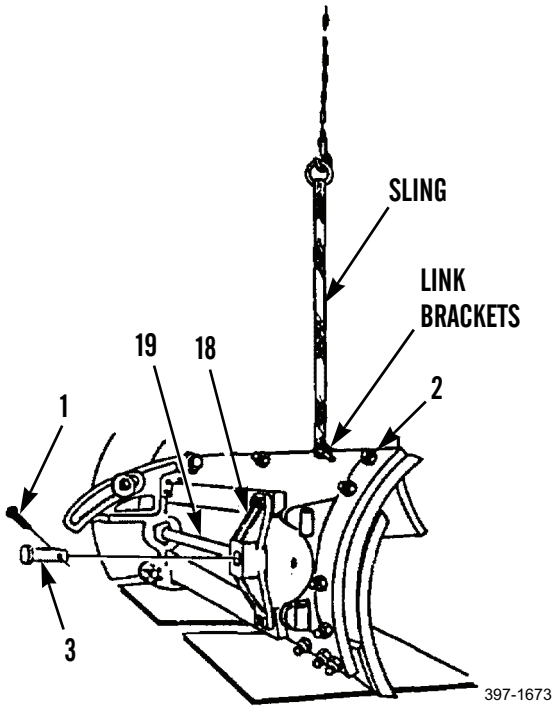


**NOTE**

Shims are installed between strip and blade bracket. Add or remove shim(s) as required to get a minimum of 0.125 in. (3.2 mm) gap between blade rail and strip.

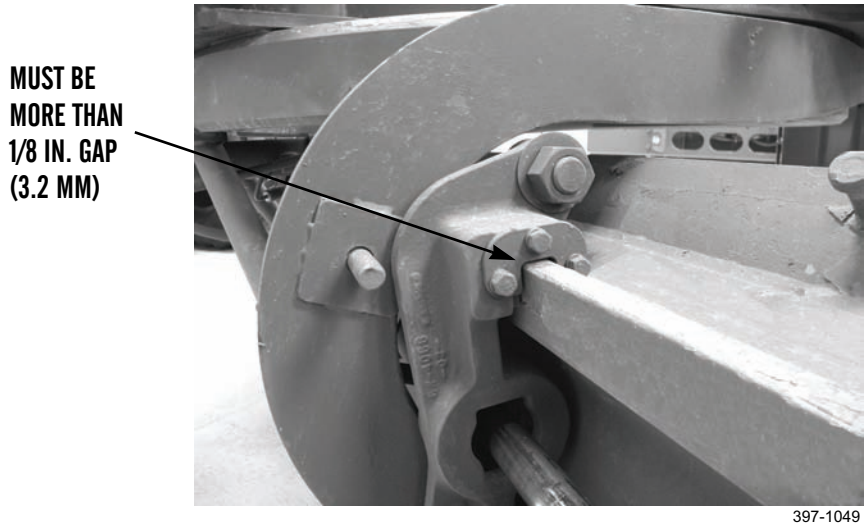

***INSTALLATION - CONTINUED***

12. Install shim(s) (21), 5 strips (22), 10 plates (25), 40 washers (24), and bolts (23).

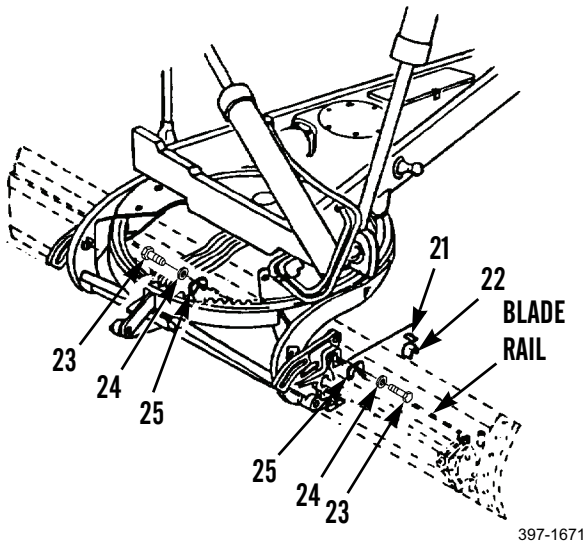


13. Install two spacers (8), washers (7), and guards (6 and 4).
14. Install two washers (17) and bolts (16).
15. Install two spacers (9), washers (11 and 10), and bolts (12).
16. Install two clamps (15), bolts (5), washers (14), and nuts (13).

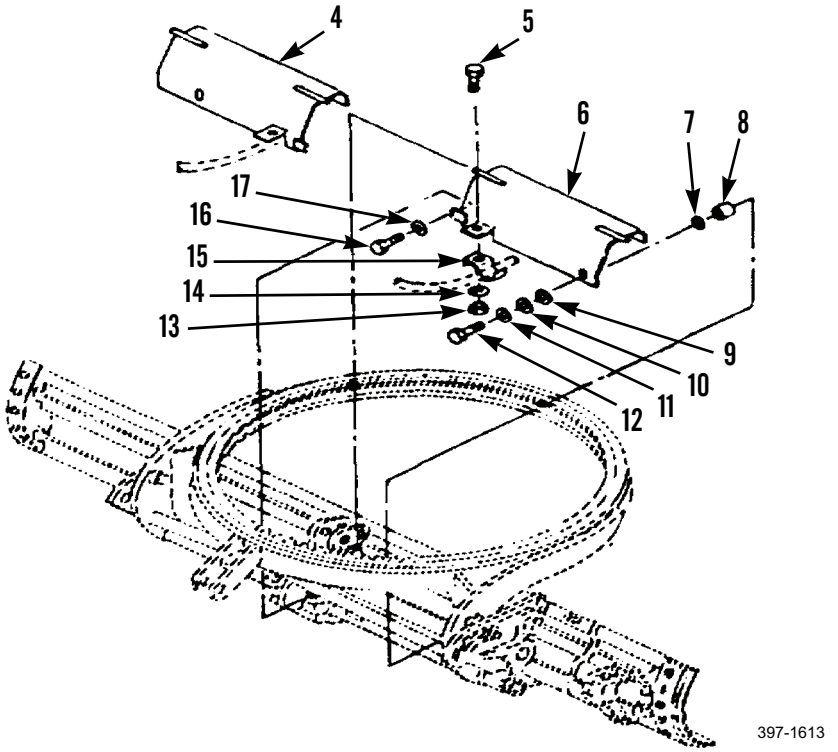


17. Connect blade cylinder (WP 0334 00).

**END OF WORK PACKAGE**

## CENTERSHIFT LOCK ASSEMBLY REPLACEMENT 0260 00

### THIS WORK PACKAGE COVERS

Removal, Cleaning and Inspection, Installation

### INITIAL SETUP

**Maintenance Level**

Unit

**Tools and Special Tools**

Tool kit, general mechanic's (Item 89, WP 0348 00)

**Materials/Parts**

Cap set, protective (Item 7, WP 0349 00)

Oil, lubricating (Item 27, WP 0349 00)

Rag, wiping (Item 35, WP 0349 00)

Tag, marker (Item 44, WP 0349 00)

Packing, preformed

**References**

WP 0020 00

**Equipment Conditions**

Machine parked on level ground (TM 5-3805-261-10)

Parking/emergency brake applied (TM 5-3805-261-10)

Implements lowered to ground (TM 5-3805-261-10)

Engine off (TM 5-3805-261-10)

Battery disconnect switch in OFF position (TM 5-3805-261-10)

Air pressured relieved (TM 5-3805-261-10)

***REMOVAL***

**CAUTION**

Cap hose ends and plug open ports to prevent contamination.

**NOTE**

Tag hose assemblies before disconnecting to aid in installation.

1. Disconnect hose assembly (1).
2. Remove elbow (2) and adapter (3).

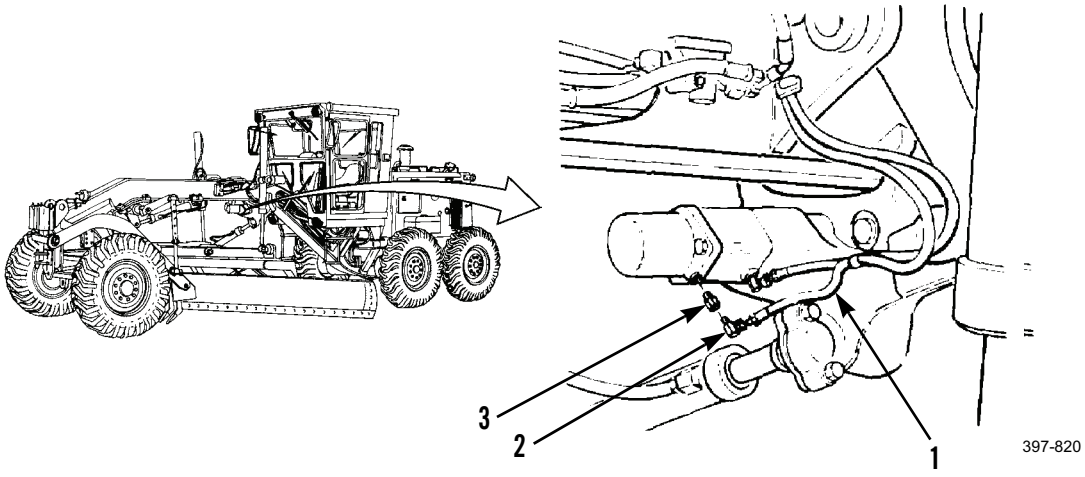


3. Disconnect hose assembly (4).
4. Remove elbow (5).

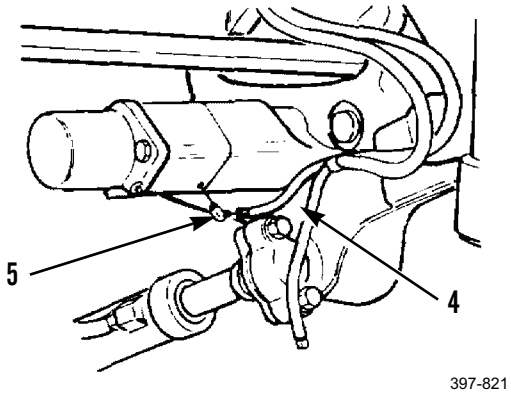

***REMOVAL - CONTINUED***

**WARNING**

Spring is compressed under high tension. Remove bolts slowly to relieve tension on spring gradually. Failure to follow this procedure may cause injury to personnel.

5. Remove two bolts (6), washers (7), housing (8), and spring (9).
6. Remove and discard preformed packing (10).

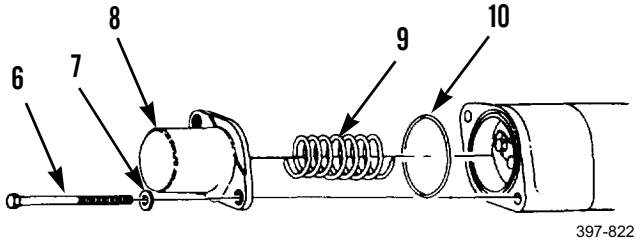


7. Remove three washers (11) from housing (8).
8. Remove plug (12) from housing (8).

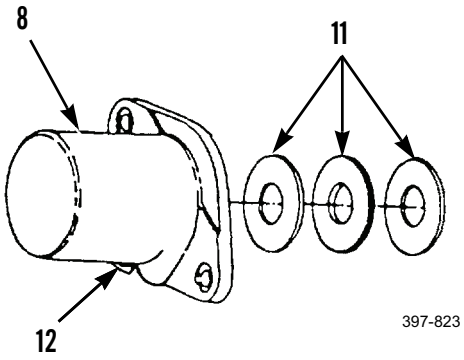

### *REMOVAL - CONTINUED*

9. Use a hammer and brass driver to strike pin (13) to loosen it from lock bar (14).

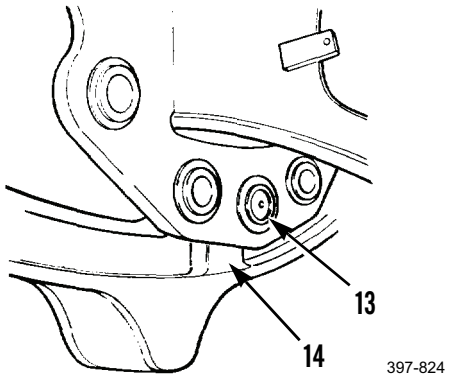


10. Remove pin (13) and housing assembly (15) from blade lift bar (16).

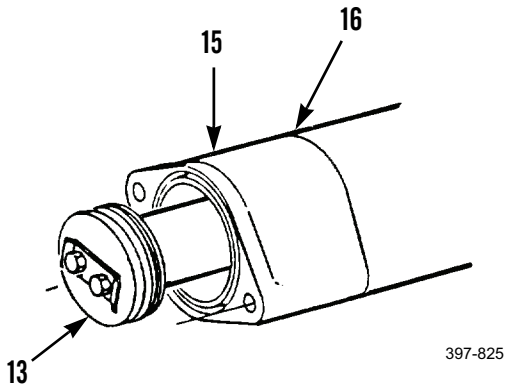


### *CLEANING AND INSPECTION*

Clean and inspect all parts in accordance with WP 0020 00.

### *INSTALLATION*

1. Coat inside surface of housing assembly (15) with lubricating oil.
2. Coat outside of pin (13) with lubricating oil.
3. Position housing assembly (15) against blade lift bar (16), aligning holes of housing assembly with holes in blade lift bar.
4. Install pin (13) into housing assembly (15) and blade lift bar (16).
5. Install plug (12) on housing (8).
6. Install three washers (11).

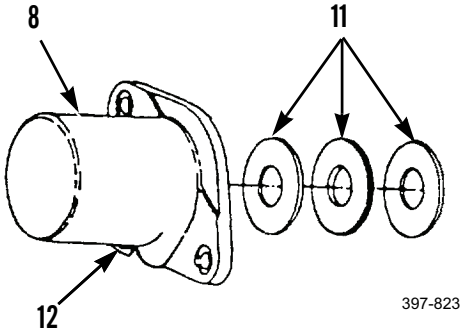


7. Install new preformed packing (10).

**WARNING**

Bolts that hold housing to blade lift bar must be tightened evenly, a thread or two at a time, to prevent injury to personnel or damage to housing.

8. Install spring (9), housing (8), two washers (7), and bolts (6).

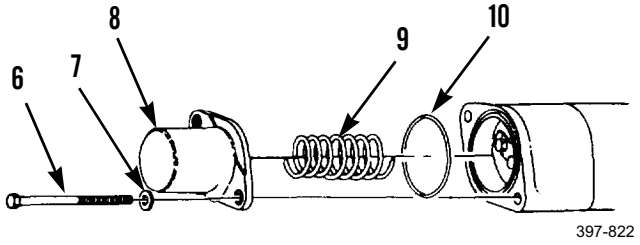

***INSTALLATION - CONTINUED***

9. Install elbow (5).
10. Connect hose assembly (4).

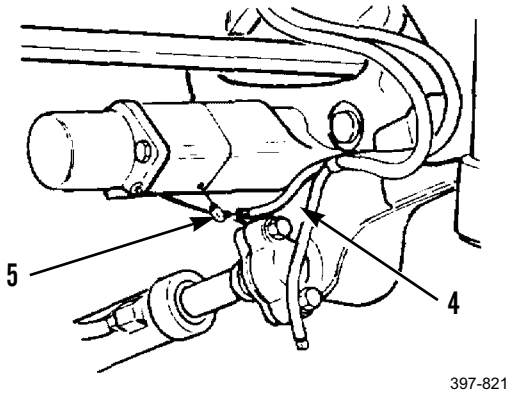


11. Install adapter (3) and elbow (2).
12. Connect hose assembly (1).

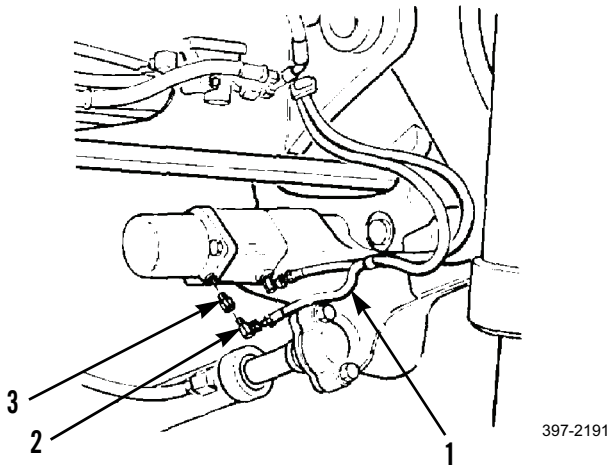


13. Turn disconnect switch to ON position and start engine (TM 5-3805-261-10).
14. Check for leaks.
15. Stop engine.

**END OF WORK PACKAGE**

## CENTERSHIFT LOCK CONTROL VALVE ASSEMBLY REPLACEMENT 0261 00

### THIS WORK PACKAGE COVERS

Removal, Cleaning and Inspection, Installation

### INITIAL SETUP

**Maintenance Level**

Unit

**Tools and Special Tools**

Tool kit, general mechanic's (Item 89, WP 0348 00)

**Materials/Parts**

Cap set, protective (Item 7, WP 0349 00)

Rag, wiping (Item 35, WP 0349 00)

Strap, tie (Item 43, WP WP 0349 00)

Tag, marker (Item 44, WP 0349 00)

**References**

WP 0020 00

**Equipment Conditions**

Machine parked on level ground (TM 5-3805-261-10)

Parking/emergency brake applied (TM 5-3805-261-10)

Implements lowered to ground (TM 5-3805-261-10)

Engine off (TM 5-3805-261-10)

Battery disconnect switch in OFF position (TM 5-3805-261-10)

Air pressure relieved (TM 5-3805-261-10)

Control console cover removed (WP 0082 00)

Left and right console panels removed (WP 0193 00)

***REMOVAL***

1. Remove and discard tie strap (2).

**CAUTION**

Cap hose ends and plug open ports to prevent contamination.

**NOTE**

Tag hoses before disconnecting to aid in installation.

2. Disconnect hose (1) from valve assembly (3).

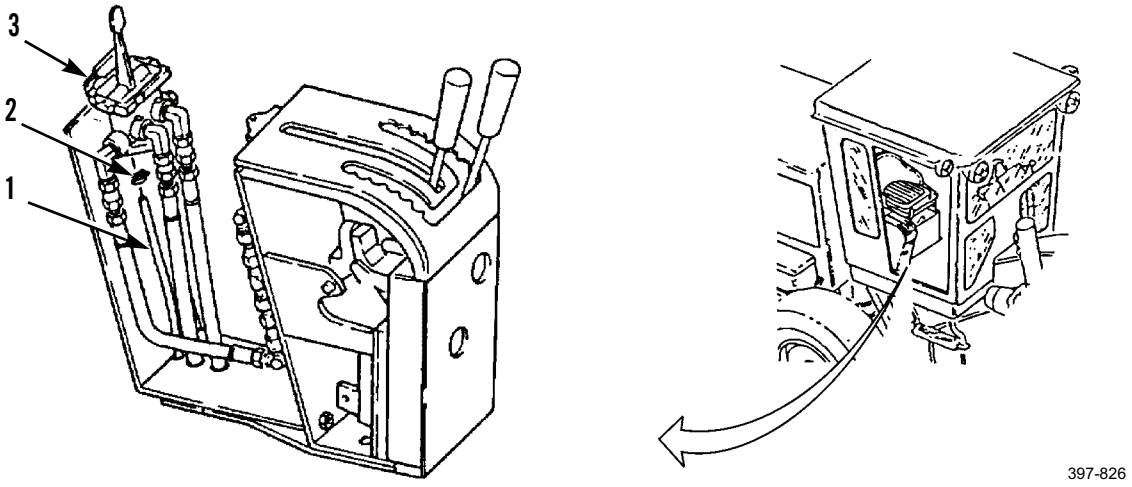


3. Disconnect three hose assemblies (4).
4. Remove valve assembly (3).

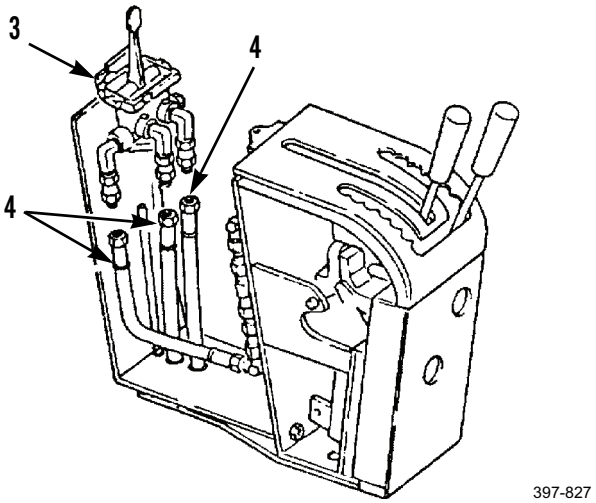

## CENTERSHIFT LOCK CONTROL VALVE ASSEMBLY REPLACEMENT - CONTINUED 0261 00

### *REMOVAL - CONTINUED*

5. Remove three reducers (7), elbows (6), and plug (5) from valve assembly (3).

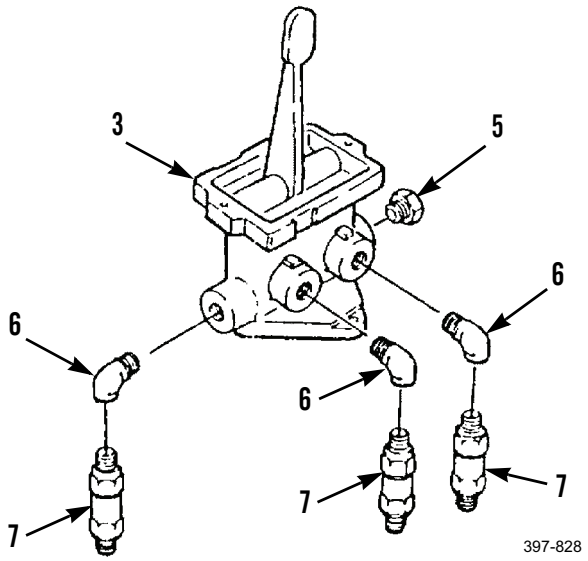


### *CLEANING AND INSPECTION*

Clean and inspect all parts in accordance with WP 0020 00.

### *INSTALLATION*

1. Install plug (5) and three elbows (6) on valve assembly (3).
2. Install three reducers (7) on elbows (6).
3. Install valve assembly (3).
4. Connect three hose assemblies (4).
5. Connect hose (1) to valve assembly (3).
6. Install new tie strap (2) around hose assembly (4) and hose (2).
7. Install left and right console panels (WP 0193 00).
8. Install control console cover (WP 0082 00).

**END OF WORK PACKAGE**

## CENTERSHIFT LOCK AND LOCK VALVE LINES AND FITTINGS REPLACEMENT 0262 00

### THIS WORK PACKAGE COVERS

Removal, Cleaning and Inspection, Installation

### INITIAL SETUP

**Maintenance Level**

Unit

**Tools and Special Tools**

Tool kit, general mechanic's (Item 89, WP 0348 00)

**Materials/Parts**

Cap set, protective (Item 7, WP 0349 00)

Rag, wiping (Item 35, WP 0349 00)

Strap, tie (Item 43, WP 0349 00)

Tag, marker (Item 44, WP 0349 00)

**References**

WP 0020 00

**Equipment Conditions**

Machine parked on level ground (TM 5-3805-261-10)

Parking/emergency brake applied (TM 5-3805-261-10)

Implements lowered to ground (TM 5-3805-261-10)

Engine off (TM 5-3805-261-10)

Battery disconnect switch in OFF position (TM 5-3805-261-10)

Centershift lock control valve assembly removed (WP 0261 00)

***REMOVAL***

**CAUTION**

Cap hose ends and plug open ports to prevent contamination.

**NOTE**

Tag hose assemblies before disconnecting to aid in installation.

1. Disconnect hose assembly (2) from elbow (3).
2. Remove elbow (3) and adapter (4) from centershift (1).

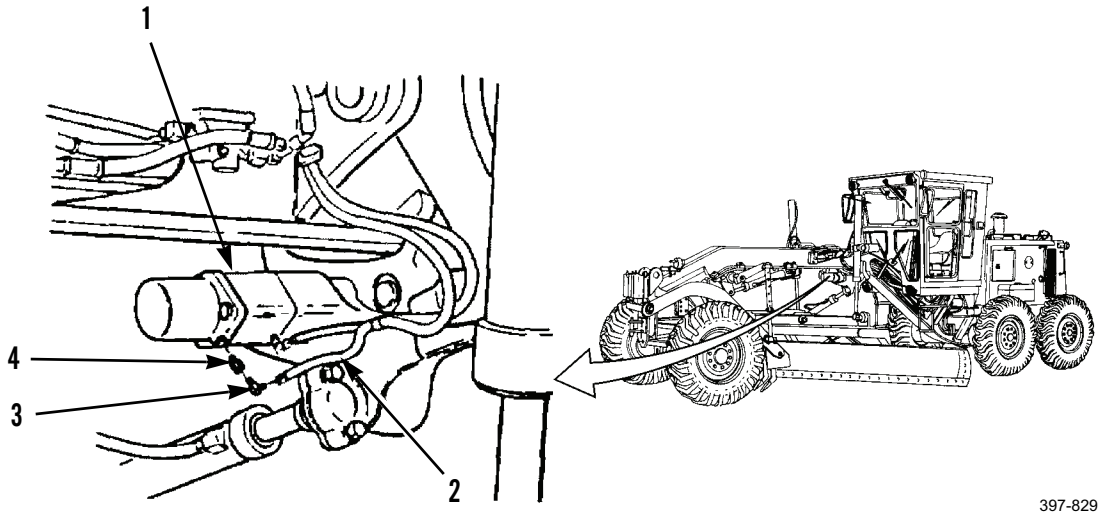


3. Disconnect hose assembly (5) from elbow (6).
4. Remove elbow (6) from centershift (1).

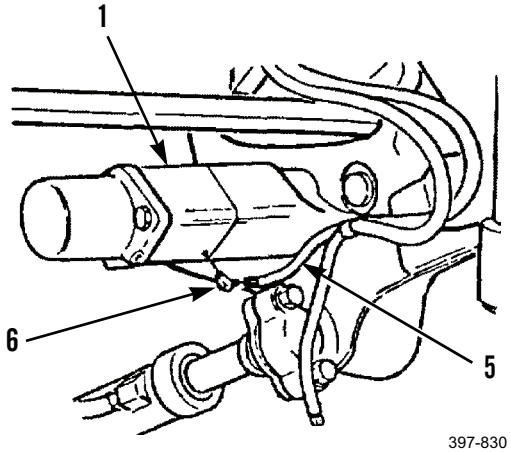

***REMOVAL - CONTINUED***

5. Remove bolt (8), lockwasher (9), and clip (7). Discard lockwasher.

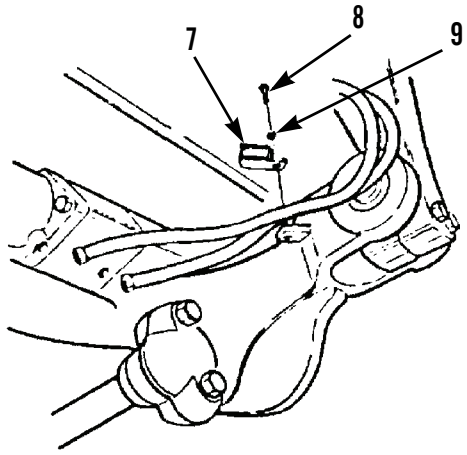

397-831

6. Remove bolt (10), lockwasher (11), and clip (12). Discard lockwasher.

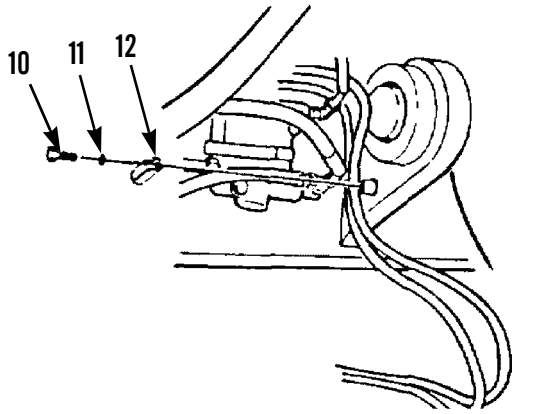

397-832

7. Remove bolt (13), lockwasher (14), and clip (15). Discard lockwasher.

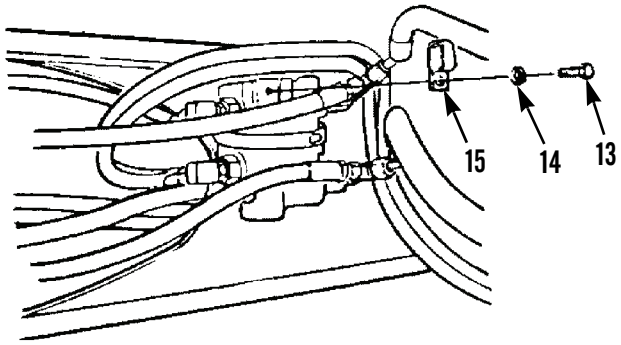

397-833

## CENTERSHIFT LOCK AND LOCK VALVE LINES AND FITTINGS REPLACEMENT - CONTINUED 0262 00

### *REMOVAL - CONTINUED*

8. Remove two bolts (20), washers (19), clamp (18), two spacers (17), and clamp (16).

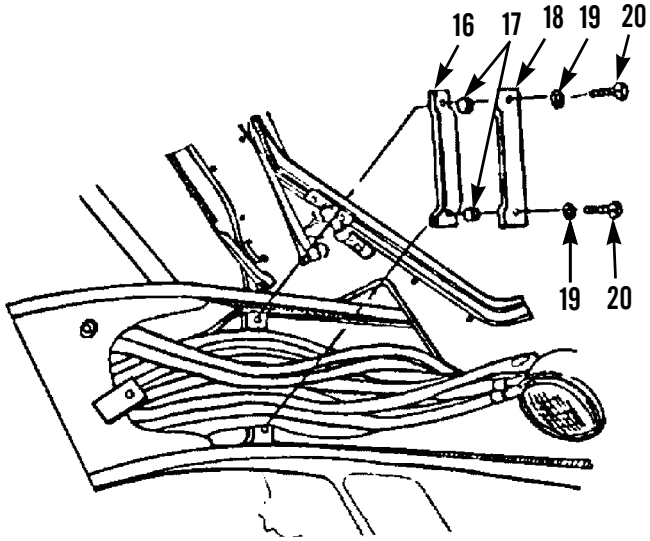


397-834

9. Remove bolt (21), washer (22), and clamp (23).

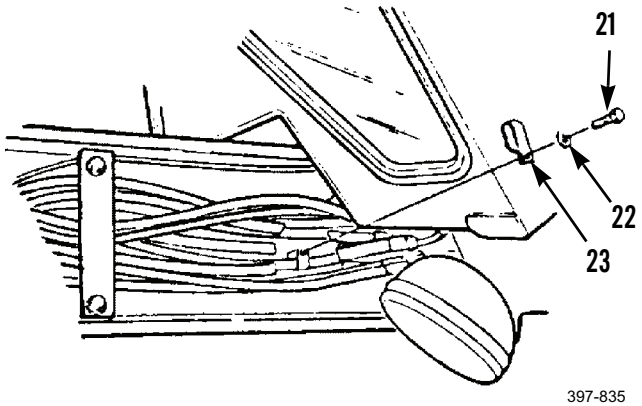


397-835

***REMOVAL - CONTINUED***

10. Remove two bolts (25), washers (26), and clamp (24).

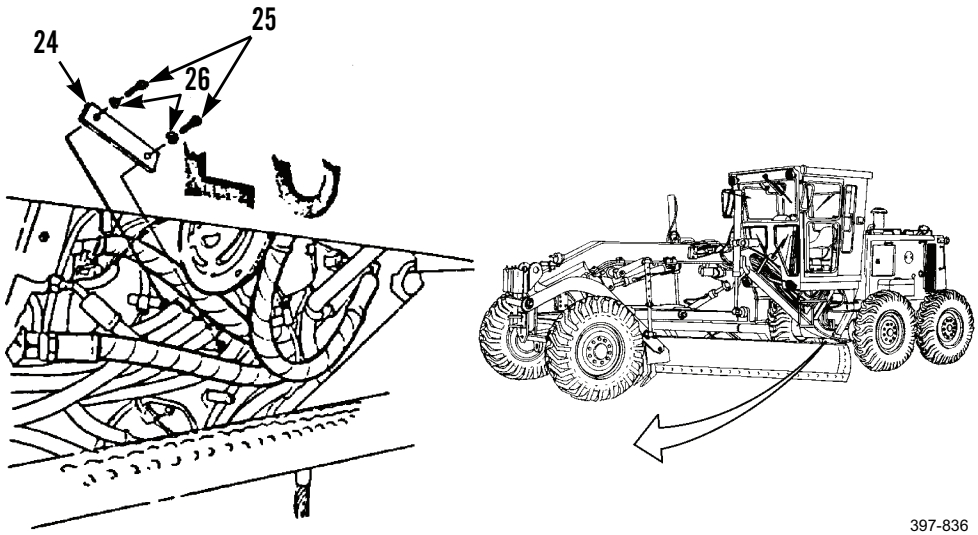


11. Remove and discard tie strap (27).

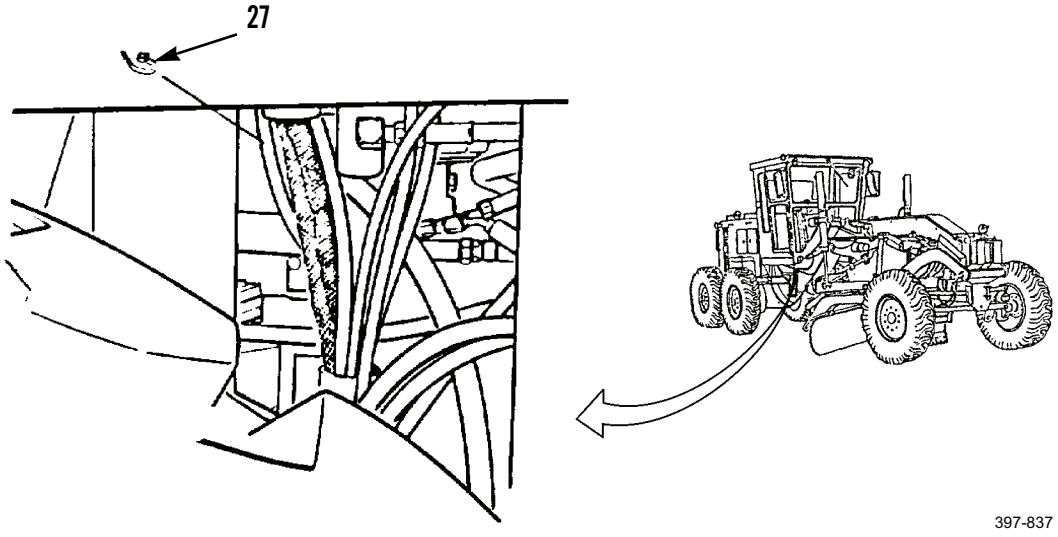

### *REMOVAL - CONTINUED*

12. Disconnect hose assemblies (28 and 29).

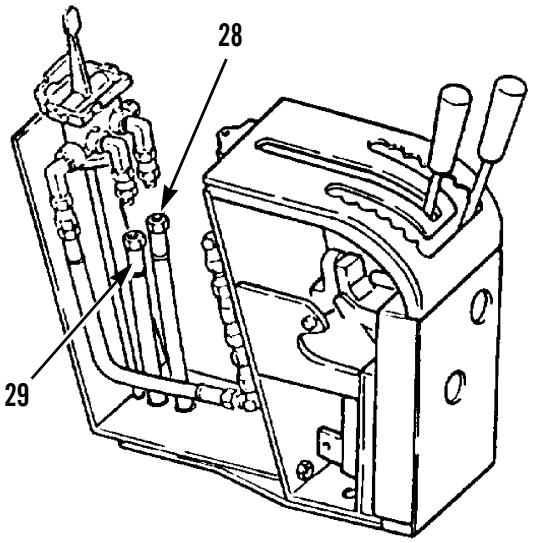


397-838

13. Disconnect hose assembly (32) from elbow (30).
14. Remove elbow (30), valve (31), and nipple (33).

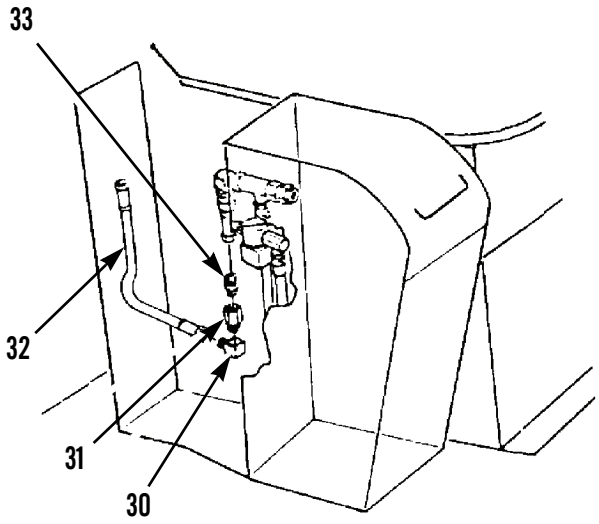


397-839

### *CLEANING AND INSPECTION*

Clean and inspect all parts in accordance with WP 0020 00.

## CENTERSHIFT LOCK AND LOCK VALVE LINES AND FITTINGS REPLACEMENT - CONTINUED 0262 00

### *INSTALLATION*

1. Install nipple (33), valve (31), and elbow (30).
2. Connect hose assembly (32) to elbow (30).
3. Connect hose assemblies (29 and 28).
4. Install new tie strap (27).

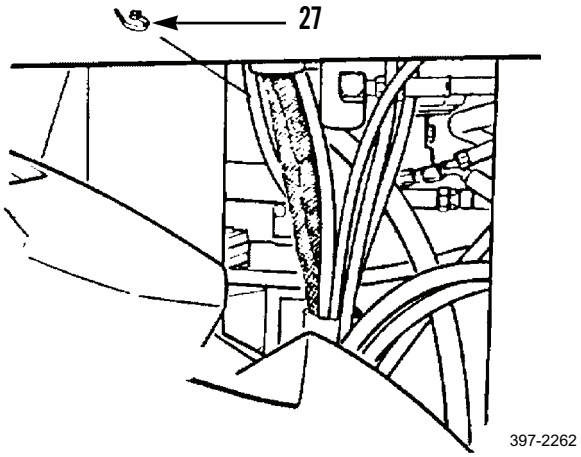

397-2262

5. Install clamp (24), two washers (26), and bolts (25).

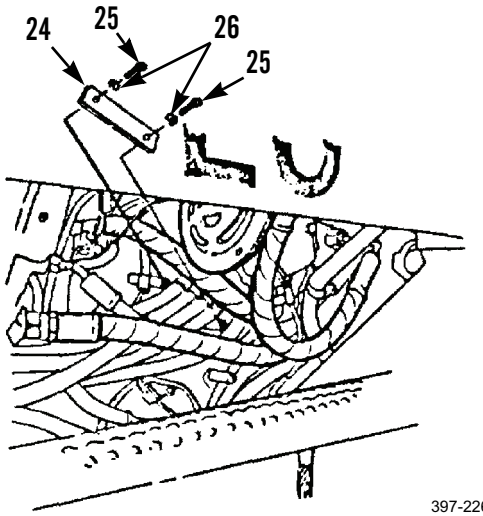

397-2261

***INSTALLATION - CONTINUED***

6. Install clamp (23), washer (22), and bolt (21).

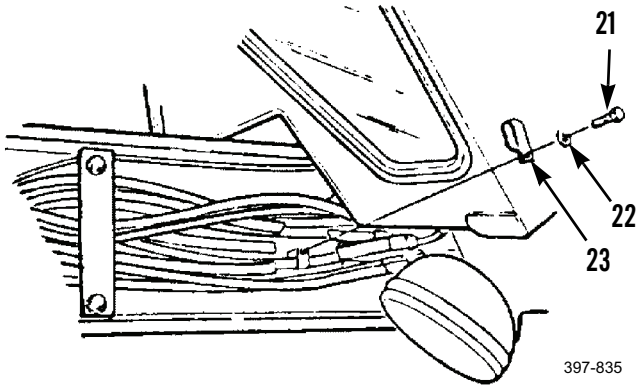


7. Install clamp (16), two spacers (17), clamp (18), two washers (19), and bolts (20).

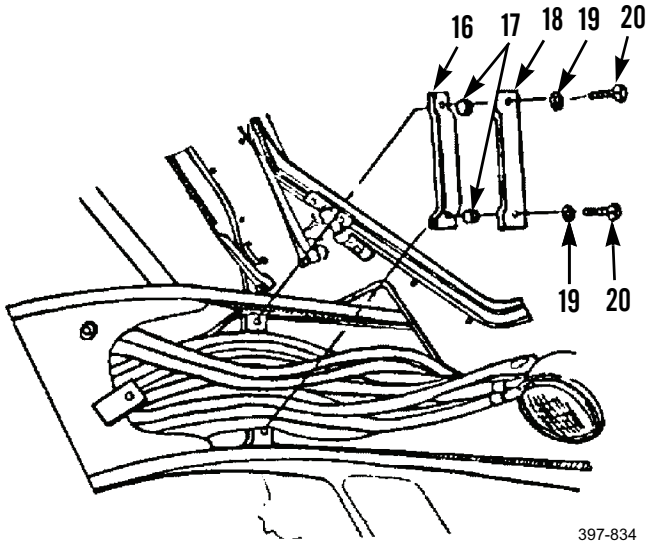


8. Install clip (15), new lockwasher (14), and bolt (13).

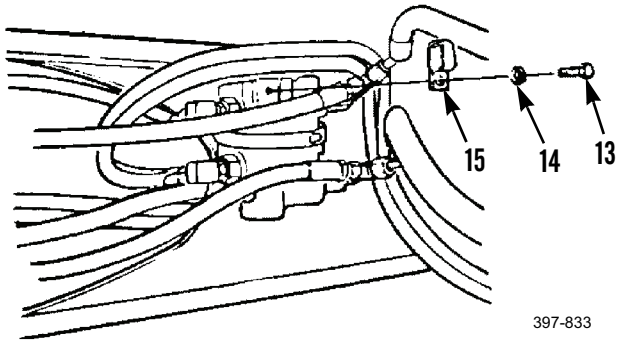

***INSTALLATION - CONTINUED***

9. Install clip (12), new lockwasher (11), and bolt (10).

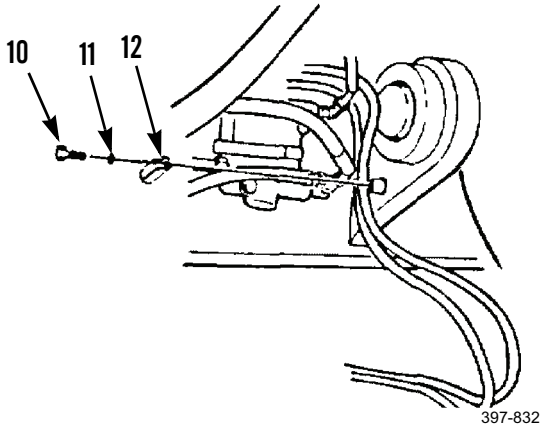


10. Install clip (7), new lockwasher (9), and bolt (8).

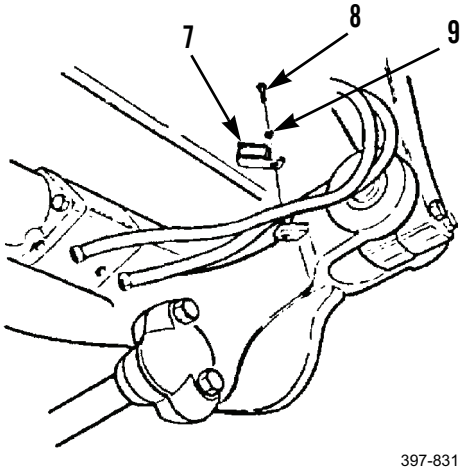

***INSTALLATION - CONTINUED***

11. Install elbow (6) on centershift (1).
12. Connect hose assembly (5) to elbow (6).

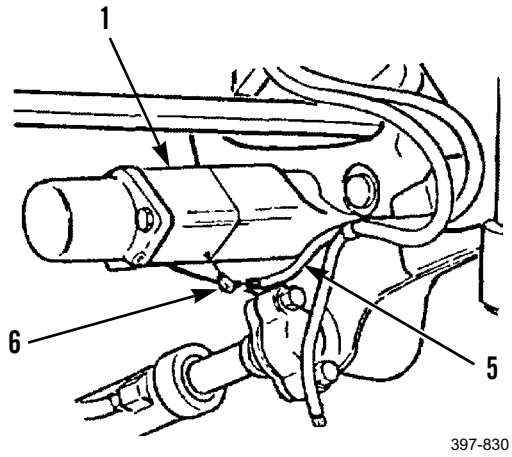

397-830

13. Install adapter (4) and elbow (3) on centershift (1).
14. Connect hose assembly (2) to elbow (3).

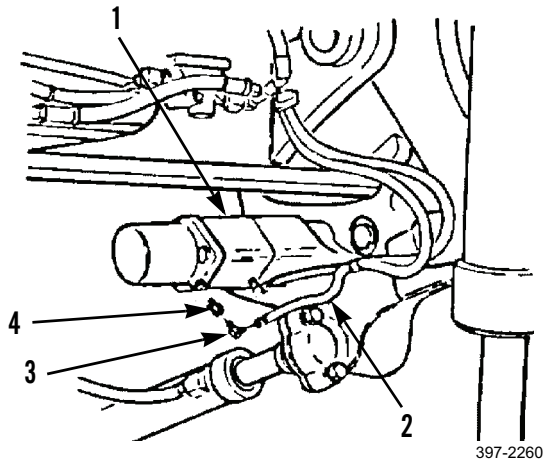

397-2260

15. Install centershift lock control valve assembly (WP 0261 00).
16. Turn disconnect switch to ON position and start engine (TM 5-3805-261-10).
17. Stop engine.

**END OF WORK PACKAGE**

## CIRCLE DRIVE SWIVEL ASSEMBLY REPLACEMENT 0263 00

### THIS WORK PACKAGE COVERS

Removal, Cleaning and Inspection, Installation

### INITIAL SETUP

**Maintenance Level**

Unit

**Tools and Special Tools**

Tool kit, general mechanic's (Item 89, WP 0348 00)

Shop equipment, common no. 1 (Item 75, WP 0348 00)

**Materials/Parts**

Cap set, protective (Item 7, WP 0349 00)

Rag, wiping (Item 35, WP 0349 00)

Tag, marker (Item 44, WP 0349 00)

Packing, preformed (8)

Pin, cotter (2)

**Personnel Required**

Two

**References**

WP 0216 00

**Equipment Conditions**

Machine parked on level ground (TM 5-3805-261-10)

Parking/emergency brake applied (TM 5-3805-261-10)

Implements lowered to ground (TM 5-3805-261-10)

Engine off (TM 5-3805-261-10)

Battery disconnect switch in OFF position (TM 5-3805-261-10)

Hydraulic pressure relieved (WP 0020 00)

***REMOVAL***

**WARNING**

Lubricating/hydraulic oils, engine coolant, fuel, and other fluids used in the performance of maintenance can be very slippery. Immediately wipe up any spills. Failure to follow this warning may cause injury to personnel.

**CAUTION**

Cap hose ends and plug open ports to prevent contamination.

**NOTE**

- Blade must be horizontal to cab.
- Tag hose assemblies before disconnecting to aid in installation.

1. Disconnect hose assembly (4).
2. Remove elbow (5) and preformed packing (6). Discard preformed packing.
3. Disconnect hose assembly (3).
4. Remove elbow (2) and preformed packing (1). Discard preformed packing.

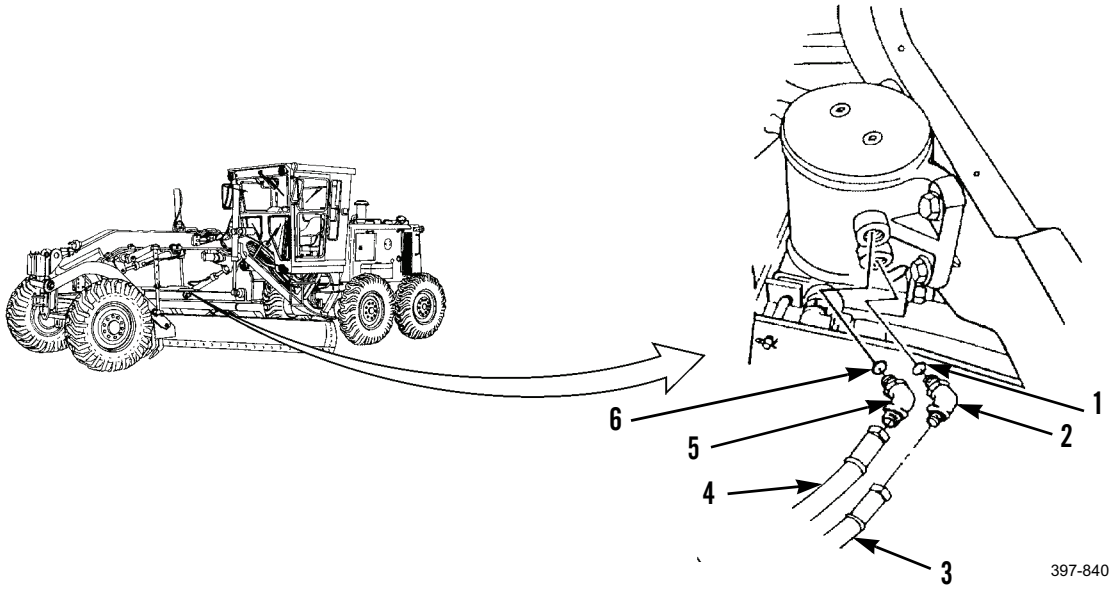

***REMOVAL - CONTINUED***

5. Disconnect hose assembly (7).
6. Remove elbow (8) and preformed packing (9). Discard preformed packing.

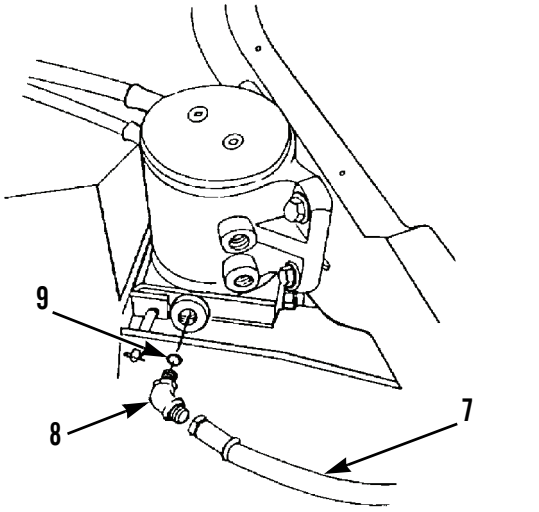

397-841

7. Disconnect hose assembly (13).
8. Remove connector (14) and preformed packing (15). Discard preformed packing.
9. Disconnect hose assembly (12).
10. Remove connector (11) and preformed packing (10). Discard preformed packing.

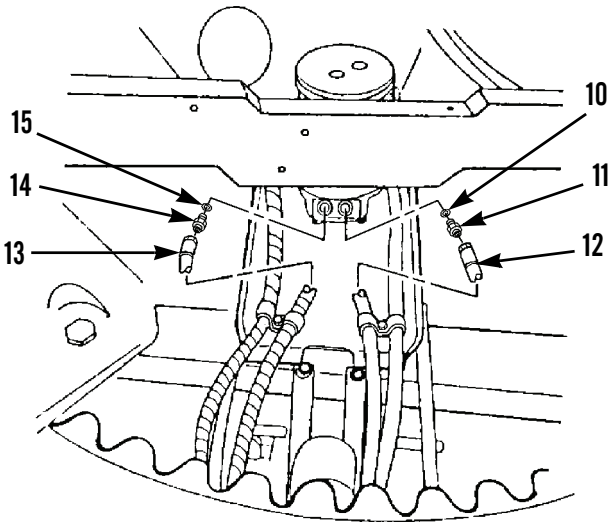

397-842

***REMOVAL - CONTINUED***

11. Disconnect hose assembly (18).
12. Remove elbow (19) and preformed packing (20). Discard preformed packing.
13. Disconnect hose assembly (17).
14. Remove elbow (16) and preformed packing (21). Discard preformed packing.

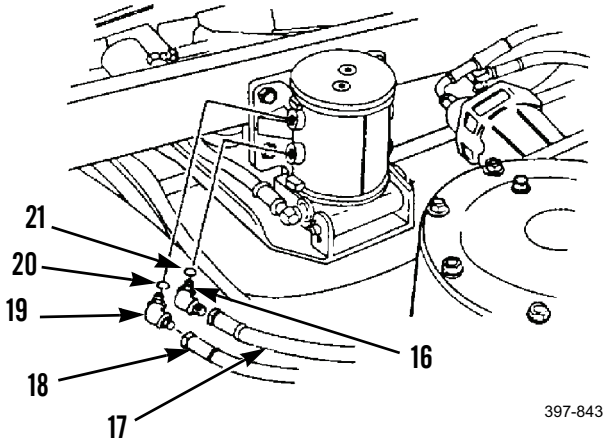


15. Disconnect hose assembly (24).
16. Remove elbow (23) and preformed packing (22). Discard preformed packing.

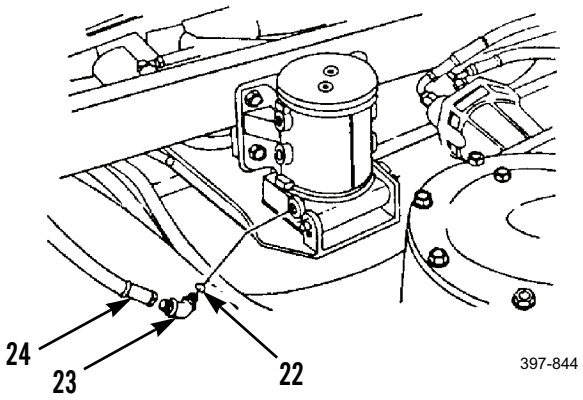


17. Remove two cotter pins (25), washers (26), and pin (27). Discard cotter pins.

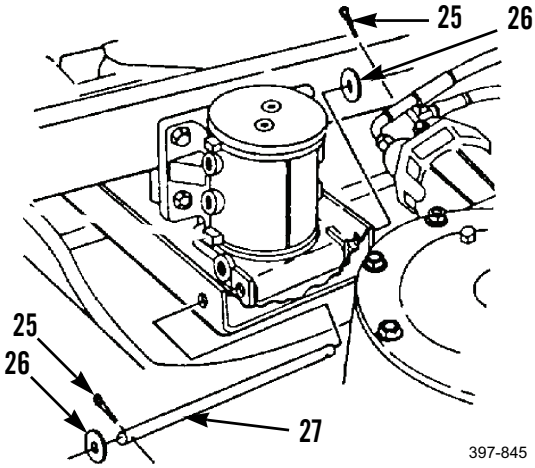

### *REMOVAL - CONTINUED*



**WARNING**

Use extreme caution when handling heavy parts. Provide adequate support and use assistance during procedure. Ensure that any lifting device used is in good condition and of suitable load capacity. Keep clear of heavy parts supported only by lifting device. Failure to follow this warning may cause injury or death to personnel.

**NOTE**

Circle drive swivel assembly weighs 70 lb (32 kg).

18. Remove four bolts (29), washers (30), and circle drive swivel assembly (28).

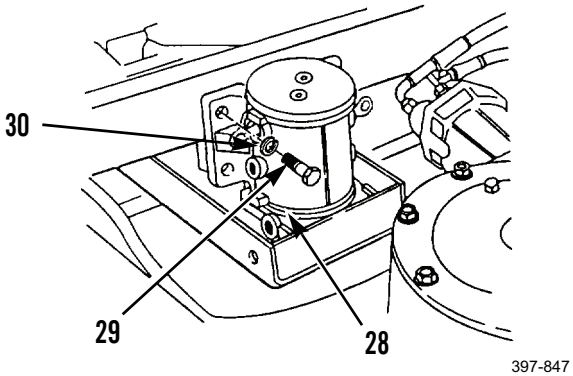


397-847

### *CLEANING AND INSPECTION*

Clean and inspect all parts in accordance with WP 0020 00.

***INSTALLATION***



**WARNING**

Use extreme caution when handling heavy parts. Provide adequate support and use assistance during procedure. Ensure that any lifting device used is in good condition and of suitable load capacity. Keep clear of heavy parts supported only by lifting device. Failure to follow this warning may cause injury or death to personnel.

**NOTE**

Circle drive swivel assembly weighs 70 lb (32 kg).

1. Position circle drive swivel assembly (28) in drawbar yoke, aligning holes for four bolts (29).
2. Install four washers (30) and bolts (29).
3. Install pin (27) through holes in guide assembly and circle drive swivel assembly (28).

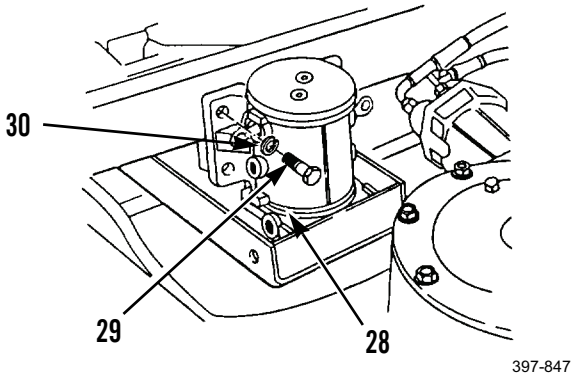


397-847

4. Install two washers (26) and new cotter pins (25) on pin (27).

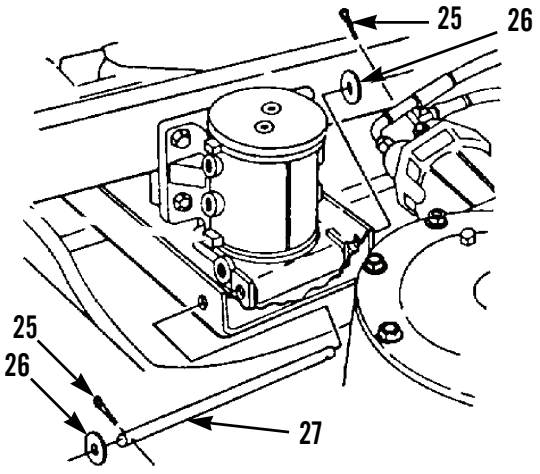


397-845

***INSTALLATION - CONTINUED***

5. Install new preformed packing (22) and elbow (23).
6. Connect hose assembly (24).

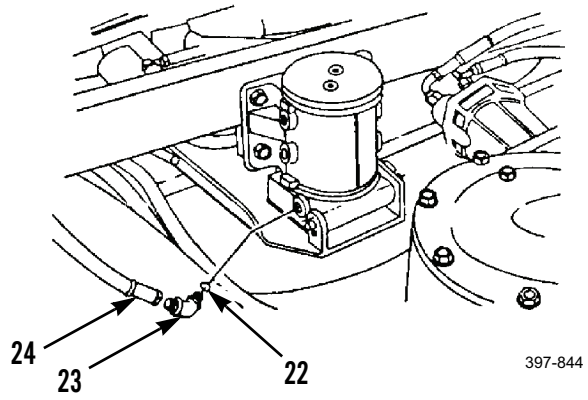


7. Install new preformed packing (21) and elbow (16).
8. Connect hose assembly (17).
9. Install new preformed packing (20) and elbow (19).
10. Connect hose assembly (18).

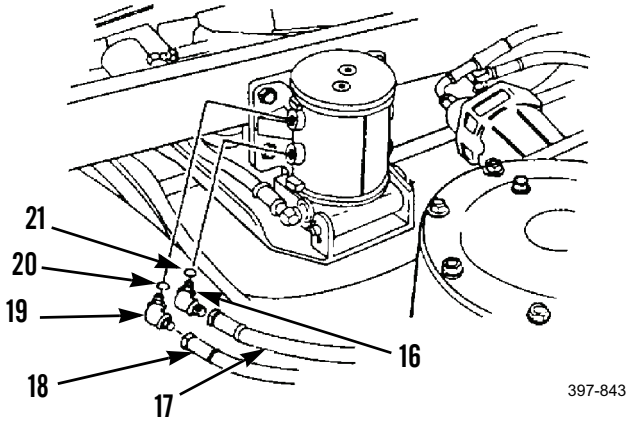


11. Install new preformed packing (10) and connector (11).
12. Connect hose assembly (12).
13. Install new preformed packing (15) and connector (14).
14. Connect hose assembly (13).

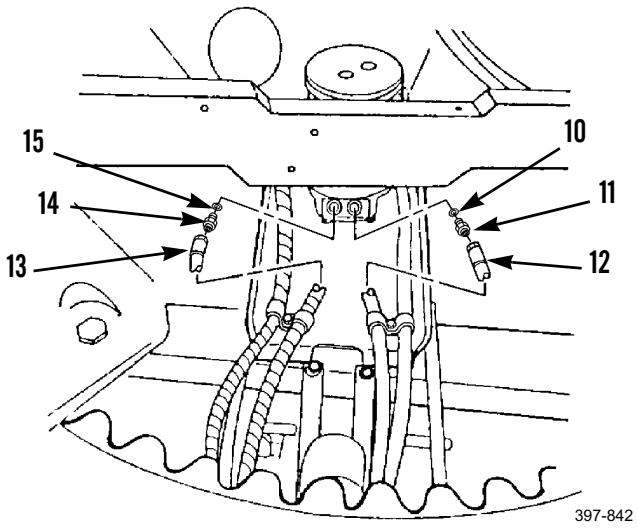

***INSTALLATION - CONTINUED***

15. Install new preformed packing (9) and elbow (8).
16. Connect hose assembly (7).

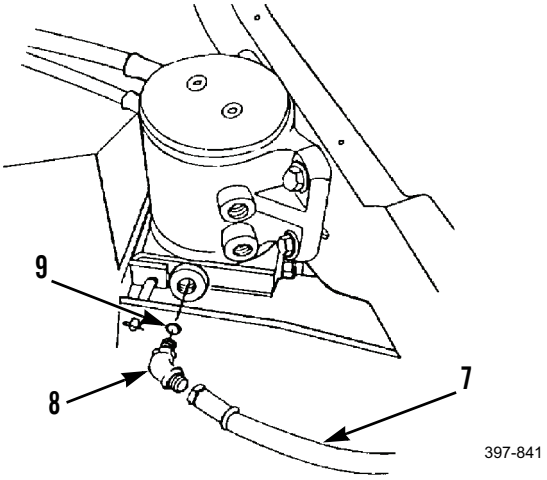


17. Install new preformed packing (1) and elbow (2).
18. Connect hose assembly (3).
19. Install new preformed packing (6) and elbow (5).
20. Connect hose assembly (4).

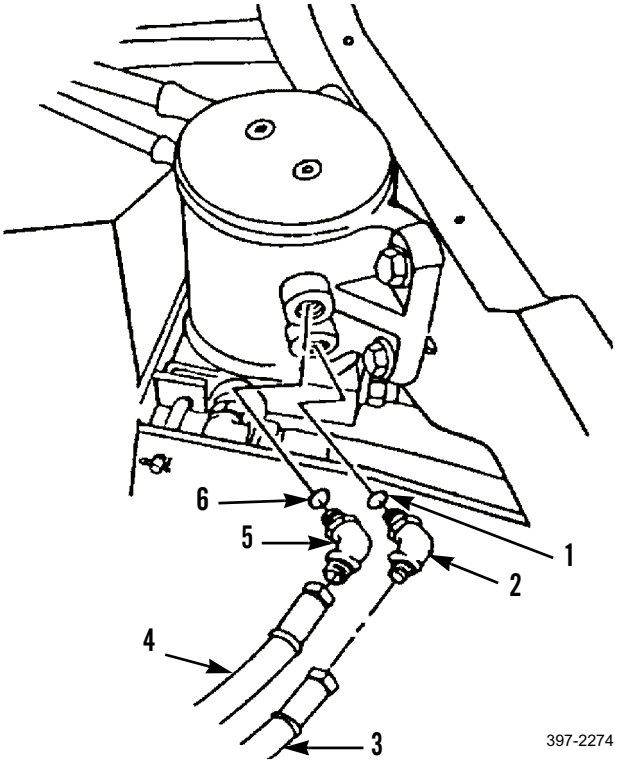


21. Start engine (TM 5-3805-261-10).
22. Operate side shift blade tip controls. Move blade through at least five full movements of travel to bleed air from system.
23. Stop engine.
24. Inspect hose assemblies and connections. Check for leaks.
25. Refill hydraulic tank to proper level (WP 0216 00).

**END OF WORK PACKAGE**

## SCARIFIER ASSEMBLY REPLACEMENT 0264 00

### THIS WORK PACKAGE COVERS

Removal, Cleaning and Inspection, Installation

### INITIAL SETUP

**Maintenance Level**

Unit

**Tools and Special Tools**

Tool kit, general mechanic's (Item 89, WP 0348 00)

Shop equipment, common no. 1 (Item 75, WP 0348 00)

Sling (Item 78, WP 0348 00)

Forklift truck

**Materials/Parts**

Rag, wiping (Item 35, WP 0349 00)

**Personnel Required**

Two

**References**

WP 0020 00

**Equipment Conditions**

Machine parked on level ground (TM 5-3805-261-10)

Parking/emergency brake applied (TM 5-3805-261-10)

Implements lowered to ground (TM 5-3805-261-10)

Engine off (TM 5-3805-261-10)

Battery disconnect switch in OFF position (TM 5-3805-261-10)

Scarifier shanks and teeth removed (WP 0265 00)

### *REMOVAL*

**NOTE**

Steps 1 through 3 cover removal of the left scarifier actuating assembly. Follow these instructions for the right scarifier actuating assembly.

1. Remove two bolts (4), washers (3), cap (2), and spacer(s) (1).

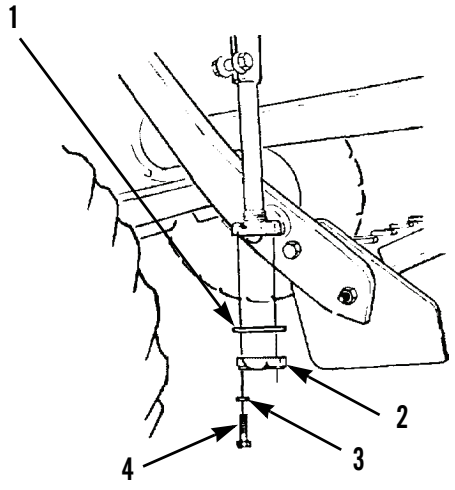


397-850

***REMOVAL - CONTINUED***

2. Position socket (6) of rod (8) on ball (5) of drawbar and yoke assembly (7).
3. Install spacer(s) (1), cap (2), two washers (3), and bolts (4) to retain rod (8) on ball (5) of drawbar and yoke assembly (7).

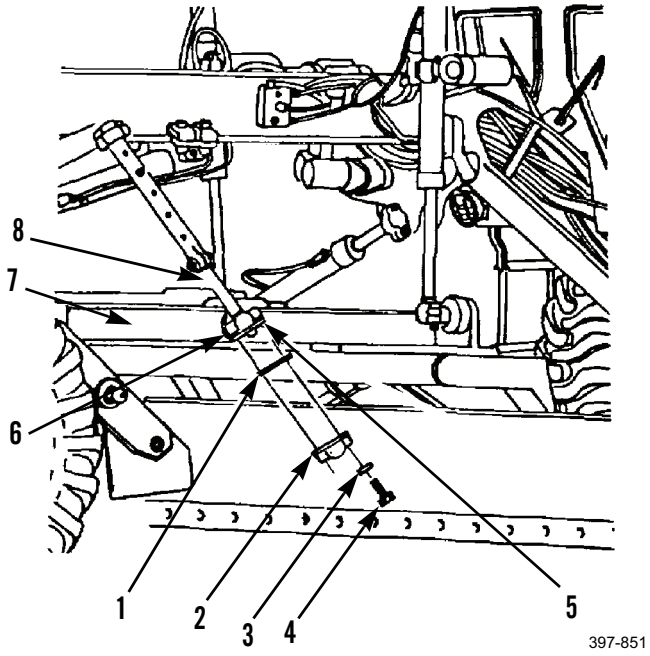


**WARNING**

Use extreme caution when handling heavy parts. Provide adequate support and use assistance during procedure. Ensure that any lifting device used is in good condition and of suitable load capacity. Keep clear of heavy parts supported only by lifting device. Failure to follow this warning may cause injury or death to personnel.

**NOTE**

- Drawbar weighs 1010 lb (458 kg).
- Steps 4 through 10 cover removal of the left drawbar. Follow these instructions for the right drawbar connecting link.

## SCARIFIER ASSEMBLY REPLACEMENT - CONTINUED 0264 00

### *REMOVAL - CONTINUED*

4. With assistance, attach sling to drawbar (9) and take up slack.

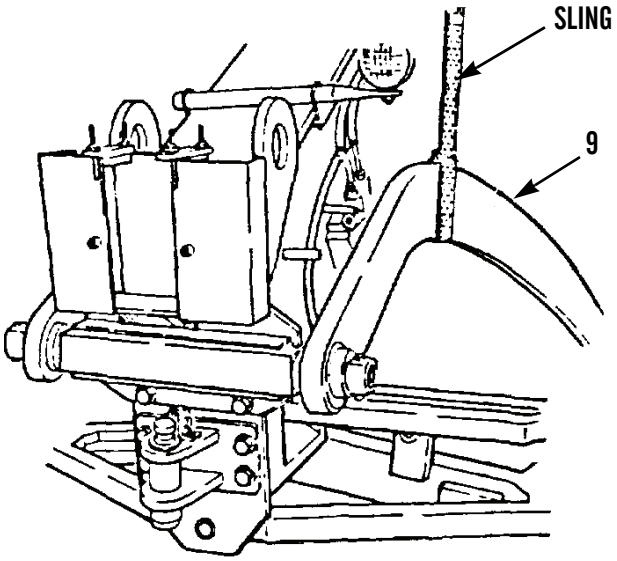


5. Remove two nuts (10), bolts (12), and washers (11).

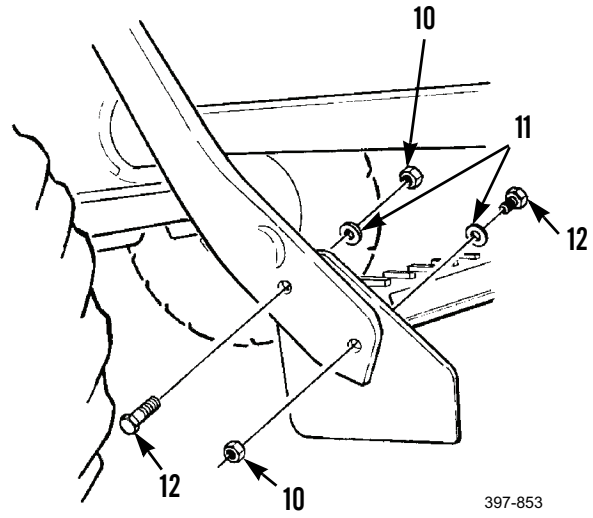

***REMOVAL - CONTINUED***

6. Remove nut (16), washer (15), and screw (13).
7. Remove collar (14) from shaft (17).
8. Remove drawbar (9) from shaft (17), move drawbar away from machine, and lower to ground.
9. Remove sling from drawbar (9).
10. Repeat steps 1 through 9 for right scarifier actuating assembly and drawbar connecting link.

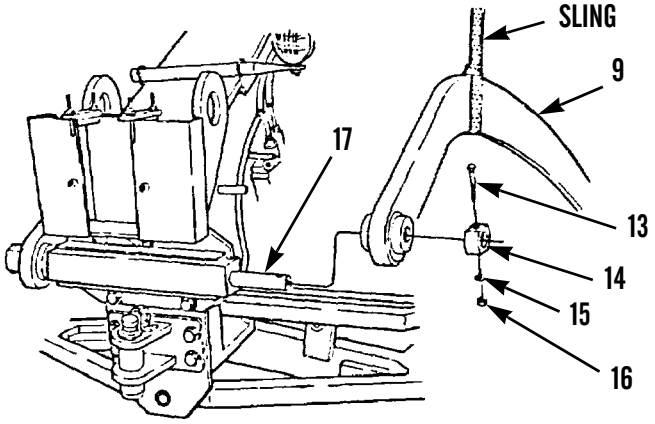


397-854



**WARNING**

Use extreme caution when handling heavy parts. Provide adequate support and use assistance during procedure. Ensure that any lifting device used is in good condition and of suitable load capacity. Keep clear of heavy parts supported only by lifting device. Failure to follow this warning may cause injury or death to personnel.

**NOTE**

Scarifier weighs 434 lb (197 kg).

11. Remove scarifier (18) using forklift truck.

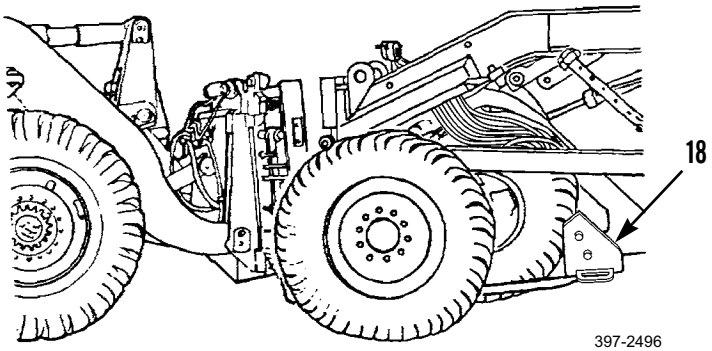


397-2496

***REMOVAL - CONTINUED***

12. With assistance, remove shaft (17).

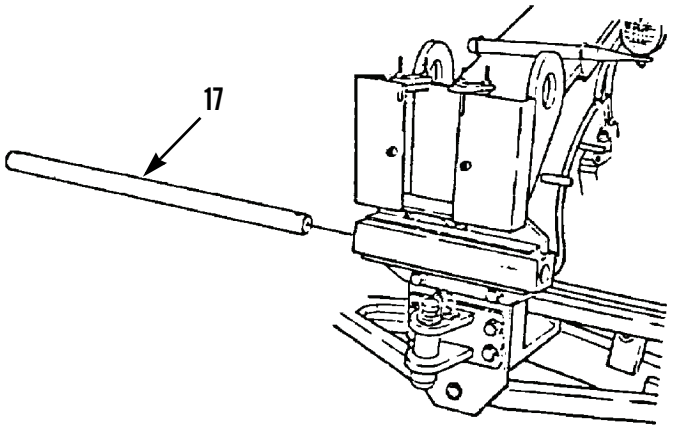


397-856

13. Remove two bolts (20) and washers (19).

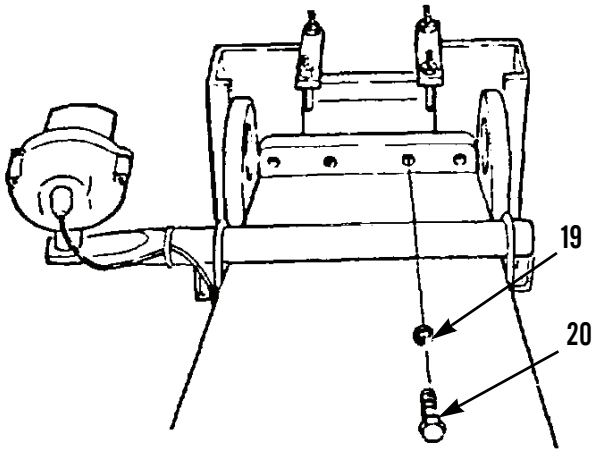


397-857

### *REMOVAL - CONTINUED*

14. Remove two bolts (23), washers (22), and scarifier shanks and tips stowage box (21).

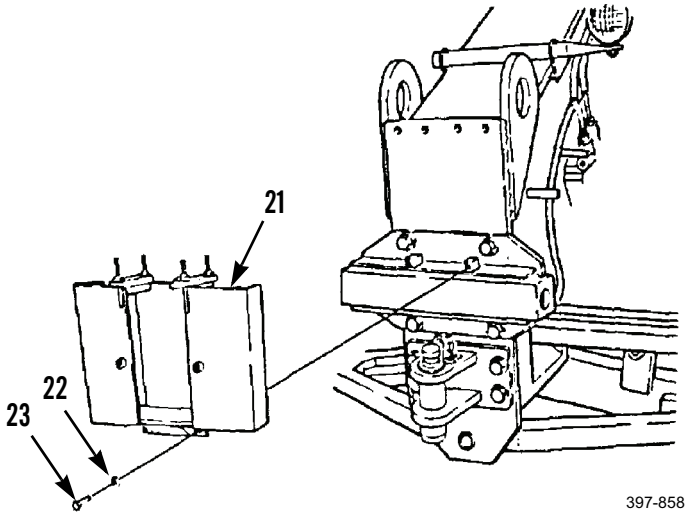


15. Remove four nuts (24), washers (25), bolts (28), washers (27), and bracket (26).

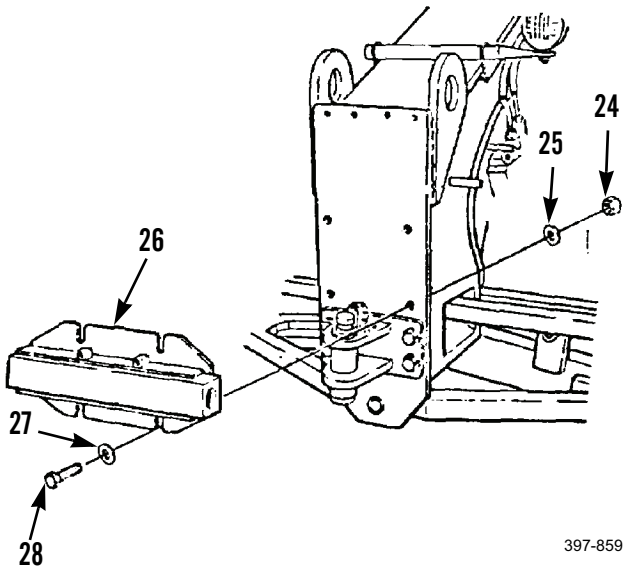


### *CLEANING AND INSPECTION*

Clean and inspect all parts in accordance with WP 0020 00.

### *INSTALLATION*

1. Install bracket (26), four washers (27), bolts (28), washers (25), and nuts (24).

2. Install scarifier shanks, tips stowage box (21), two washers (22), and bolts (23).

***INSTALLATION - CONTINUED***

3. Install two washers (19) and bolts (20).

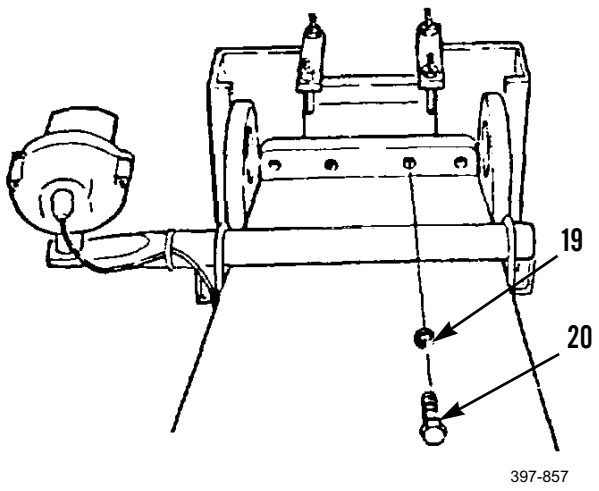


4. Install shaft (17).

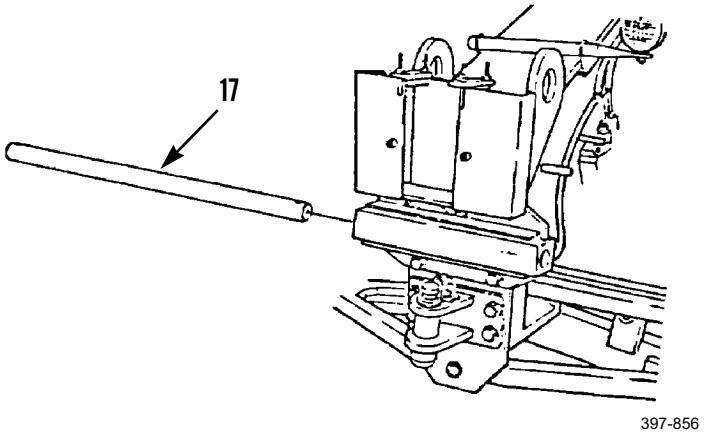

***INSTALLATION - CONTINUED***



**WARNING**

Use extreme caution when handling heavy parts. Provide adequate support and use assistance during procedure. Ensure that any lifting device used is in good condition and of suitable load capacity. Keep clear of heavy parts supported only by lifting device. Failure to follow this warning may cause injury or death to personnel.

**NOTE**

- Drawbar weighs 1,010 lb (458 kg).
- Steps 5 through 13 cover installation of the left drawbar. Follow these instructions for the right drawbar connecting link.

5. With assistance, attach sling to drawbar (9).

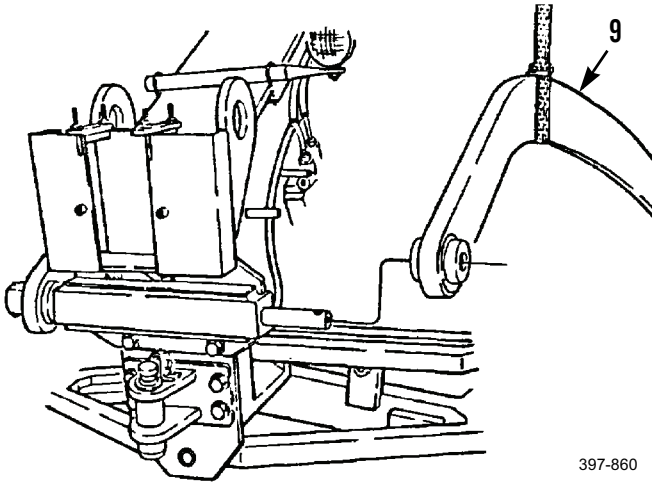


6. Install drawbar (9) on shaft (17).
7. Install collar (14) on shaft (17).
8. Install screw (13), washer (15), and nut (16).
9. Lower drawbar (9) and rest free end against steering tie rod.

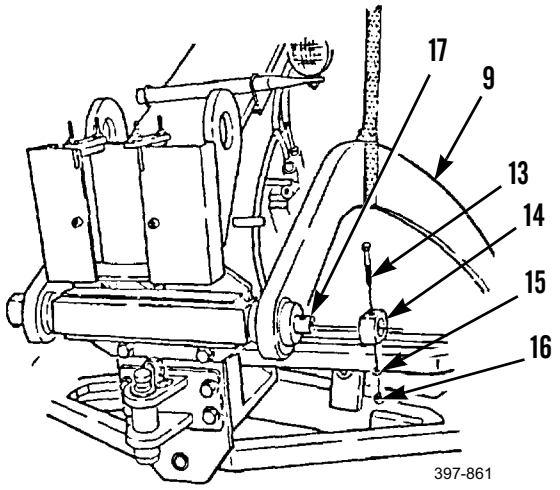

***INSTALLATION - CONTINUED***



**WARNING**

Use extreme caution when handling heavy parts. Provide adequate support and use assistance during procedure. Ensure that any lifting device used is in good condition and of suitable load capacity. Keep clear of heavy parts supported only by lifting device. Failure to follow this warning may cause injury or death to personnel.

**NOTE**

Scarifier weighs 434 lb (197 kg).

10. Use forklift truck to position scarifier (18).

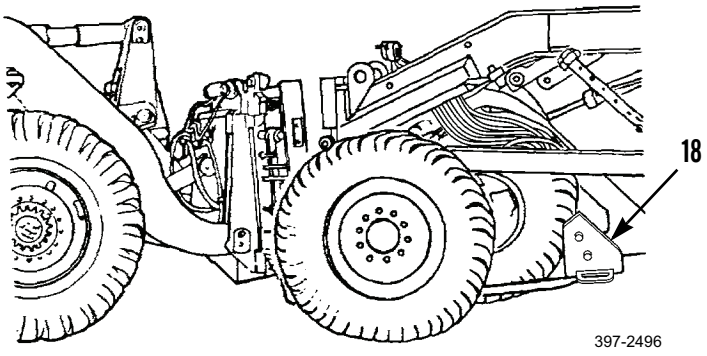


11. With assistance, lift drawbar (9) with hoist and align drawbar bolt holes with scarifier (18) bolt holes.
12. Install two washers (11), bolts (12), and nuts (10).

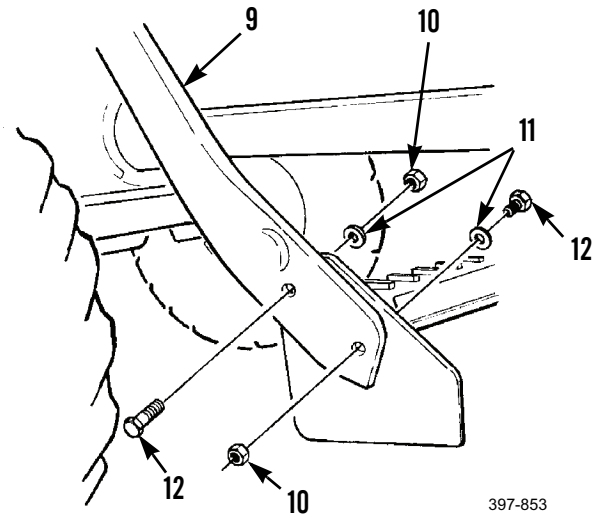

***INSTALLATION - CONTINUED***

13. Remove sling from drawbar (9).

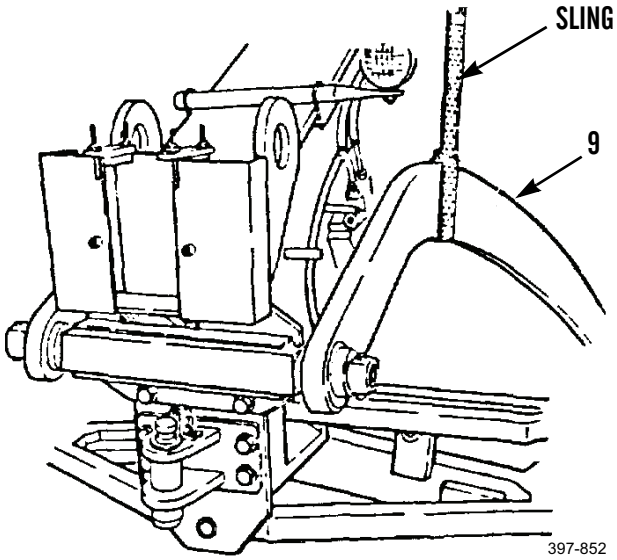


14. Repeat steps 5 through 13 for right drawbar connecting link.

**NOTE**

Steps 15 through 25 cover installation of the left scarifier actuating assembly. Follow these instructions for the right scarifier actuating assembly.

15. Remove two bolts (4), washers (3), cap (2), and spacer(s) (1).
16. Position socket (6) of rod (8) on ball (5) of drawbar and yoke assembly (7).

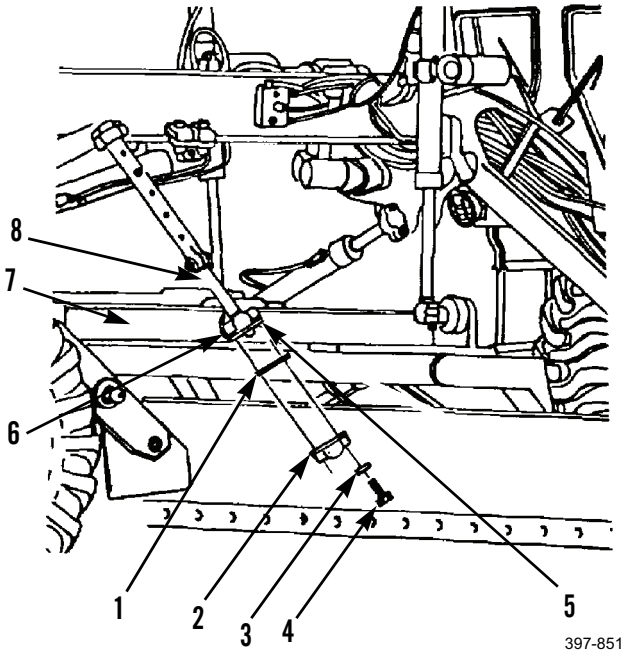

*INSTALLATION - CONTINUED*

**NOTE**

Tighten bolts hand-tight only.

17. Install spacer (s) (1), cap (2), two washers (3), and bolts (4).

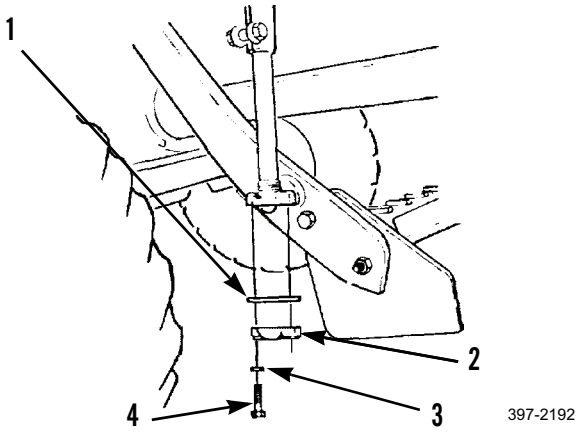


**CAUTION**

For proper final assembly, ball inside cap must have free play (clearance) of 0.015 to 0.045 in. (0.38 to 1.14 mm) after bolts are fully tightened. Failure to obtain the correct clearance could cause damage to machine.

**NOTE**

Do not overtighten bolts.

18. Tighten two bolts (4) evenly only until there is no free play (clearance) between ball (5) and cap (2).
19. Examine cap (2), socket (6) of rod (8), and spacer (1) from side. If cap is touching spacer, additional spacer(s) must be installed.
20. Remove two bolts (4), washers (3), and cap (2).
21. Install one spacer (1).
22. Repeat steps 17 and 18.
23. Examine cap (2), socket (6) of rod (8), and spacer(s) (1) from side.
24. If cap (2) is touching spacer (1), repeat steps 17 through 23 until there is a small gap between cap and spacer(s).
25. Tighten bolts (4).

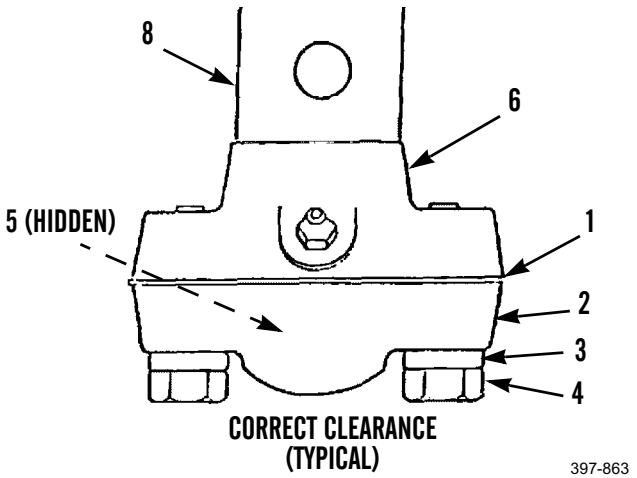


26. Repeat steps 15 through 25 for right scarifier actuating assembly.
27. Install scarifier shanks and teeth (WP 0265 00).

**END OF WORK PACKAGE**

## SCARIFIER SHANKS AND TEETH REPLACEMENT 0265 00

### THIS WORK PACKAGE COVERS

Removal, Cleaning and Inspection, Installation

### INITIAL SETUP

**Maintenance Level**

Unit

**Tools and Special Tools**

Tool kit, general mechanic's (Item 89, WP 0348 00)

Shop equipment, common no. 1 (Item 75, WP 0348 00)

Removing tool, scarifier tooth (Item 67, WP 0348 00)

Wood block

**Materials/Parts**

Rag, wiping (Item 35, WP 0349 00)

**Equipment Conditions**

Machine parked on level ground (TM 5-3805-261-10)

Parking/emergency brake applied (TM 5-3805-261-10)

Scarifier in raised position (TM 5-3805-261-10)

Blade lowered to ground (TM 5-3805-261-10)

Engine off (TM 5-3805-261-10)

Battery disconnect switch in OFF position (TM 5-3805-261-10)

### *REMOVAL*

**WARNING**

Support scarifier in raised position to prevent injury to personnel.

1. Support scarifier in raised position.
2. Use tooth removing tool and hammer to remove 11 teeth (2) from shanks (1).

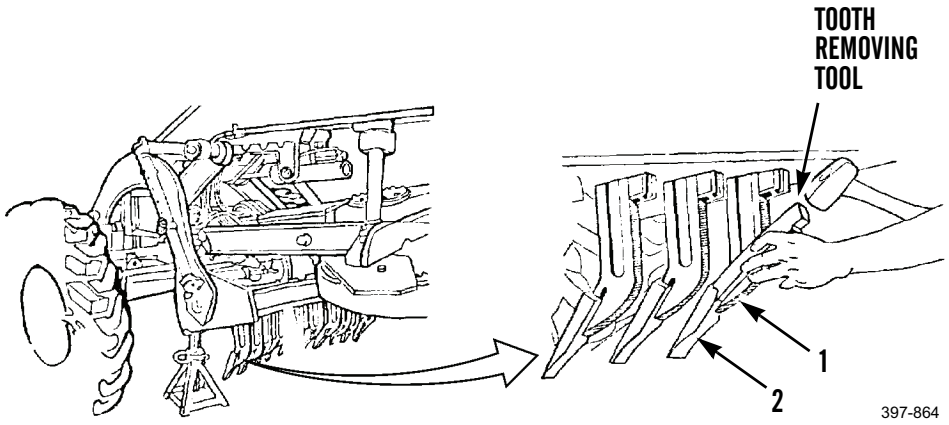

### *REMOVAL - CONTINUED*

3. Remove 11 bushing/pin assemblies (3 and 4).

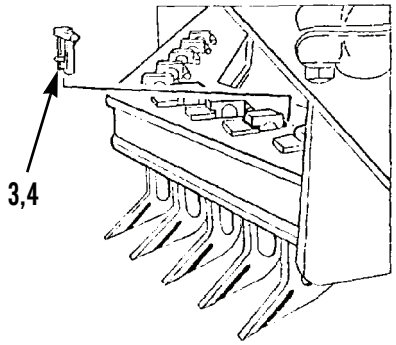

397-865

4. Remove 11 bushings (3) from pins (4).

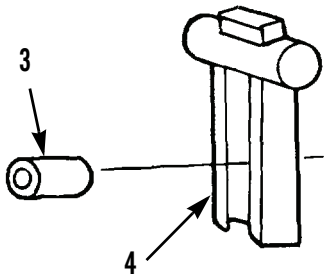

397-866

5. Remove 11 shanks (1) by pulling shanks downward from scarifier (5).

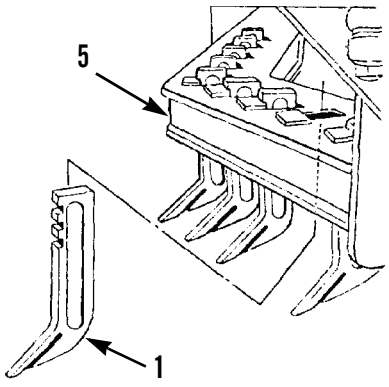

397-867

### *CLEANING AND INSPECTION*

Clean and inspect all parts in accordance with WP 0020 00.

### *INSTALLATION*

1. Install 11 shanks (1), from below, into scarifier (5).
2. Install 11 bushings (3) into pins (4).
3. Install 11 bushing/pin assemblies (3 and 4).
4. Use hammer and wood block to install 11 teeth (2) on shanks (1).
5. Remove scarifier from support.

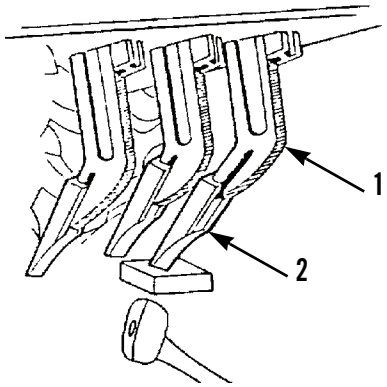

397-2193

**END OF WORK PACKAGE**

## SCARIFIER ACTUATING ASSEMBLY MAINTENANCE 0266 00

### THIS WORK PACKAGE COVERS

Removal, Disassembly, Cleaning and Inspection, Assembly, Installation

### INITIAL SETUP

**Maintenance Level**

Unit

**Tools and Special Tools**

Tool kit, general mechanic's (Item 89, WP 0348 00)

Shop equipment, common no. 1 (Item 75, WP 0348 00)

Sling (Item 78, WP 0348 00)

Lifting device, 750-lb capacity

**Materials/Parts**

Grease, GAA (Item 17, WP 0349 00)

Rag, wiping (Item 35, WP 0349 00)

Tag, marker (Item 44, WP 0349 00)

Nut, self-locking (4)

Seal (4)

**Personnel Required**

Two

**Equipment Conditions**

Machine parked on level ground (TM 5-3805-261-10)

Parking/emergency brake applied (TM 5-3805-261-10)

Implements lowered to ground (TM 5-3805-261-10)

Engine off (TM 5-3805-261-10)

Battery disconnect switch in OFF position (TM 5-3805-261-10)

Hydraulic pressure relieved (WP 0020 00)

***REMOVAL***

**NOTE**

Steps 1 through 13 cover removal of the right scarifier actuating assembly. Follow these instructions for the left scarifier actuating assembly.

1. Remove two bolts (4), washers (3), and spacer (2).



**WARNING**

Use extreme caution when handling heavy parts. Provide adequate support and use assistance during procedure. Ensure that any lifting device used is in good condition and of suitable load capacity. Keep clear of heavy parts supported only by lifting device. Failure to follow this warning may cause injury or death to personnel.

**NOTE**

Hydraulic cylinder weighs 51 lb (23 kg).

2. Support scarifier actuating assembly hydraulic cylinder (1) and drive pin (5) out.
3. Set free end of cylinder (1) on drawbar frame toolbox (6).

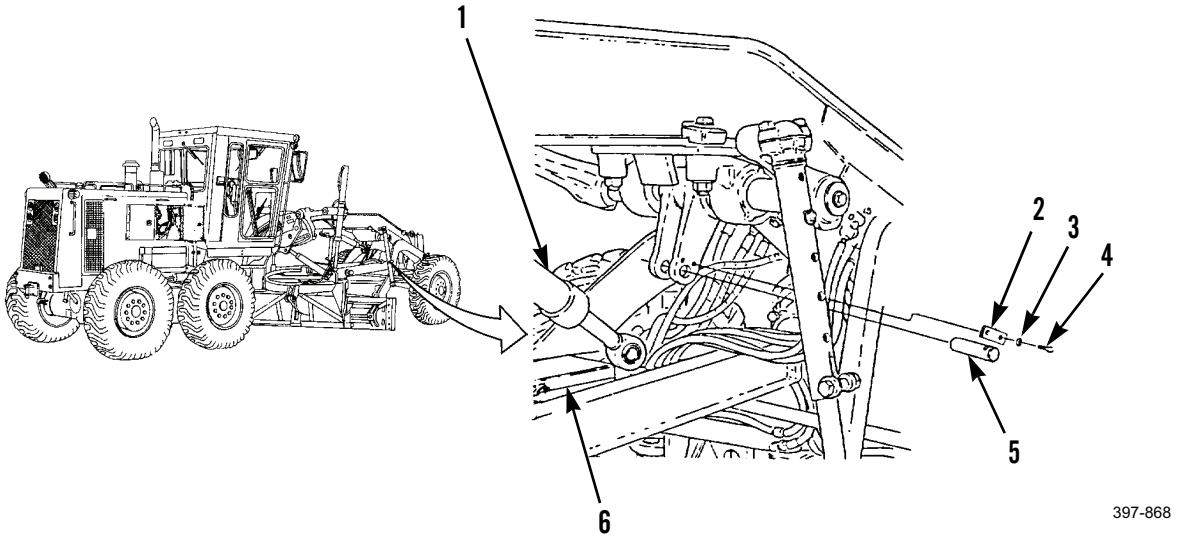

***REMOVAL - CONTINUED***

4. Remove nut (10) and screw (11) from right side sleeve (8).
5. Remove pin (9) and pin (7).

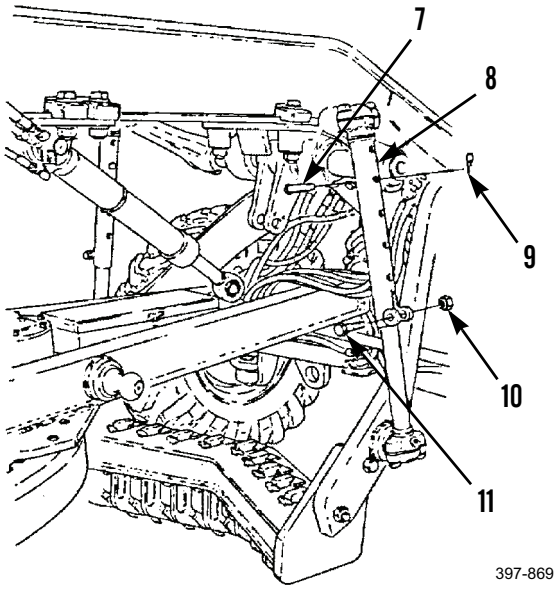


6. Remove two bolts (16), washers (17), cap (15), spacer(s) (14), and rod (12). Tie spacers together and tag for identification.
7. Remove lubrication fitting (13) from rod (12).

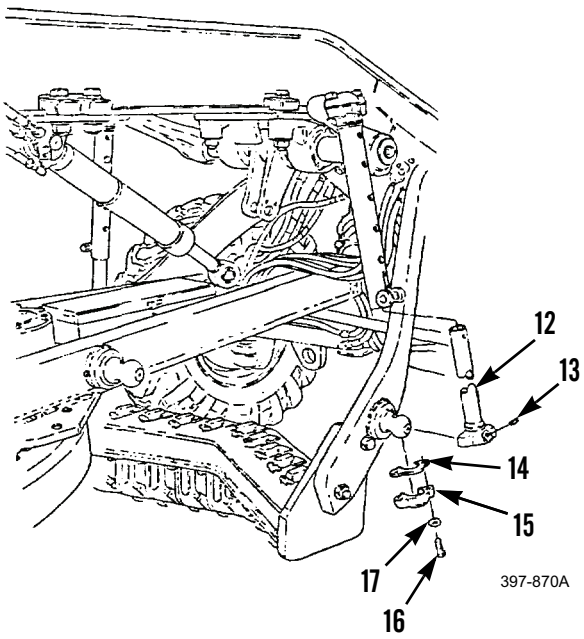

***REMOVAL - CONTINUED***

8. Support sleeve (8) and remove two bolts (18), washers (19), cap (20), and spacer(s) (21). Tie spacers together and tag for identification.
9. Remove sleeve (8).
10. Remove lubrication fitting (22) from sleeve (8).

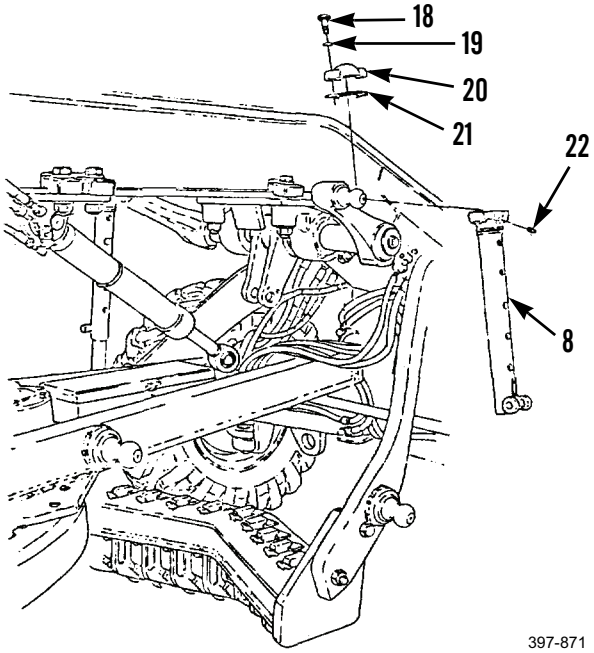


11. Remove bolt (24) and washers (23 and 25).

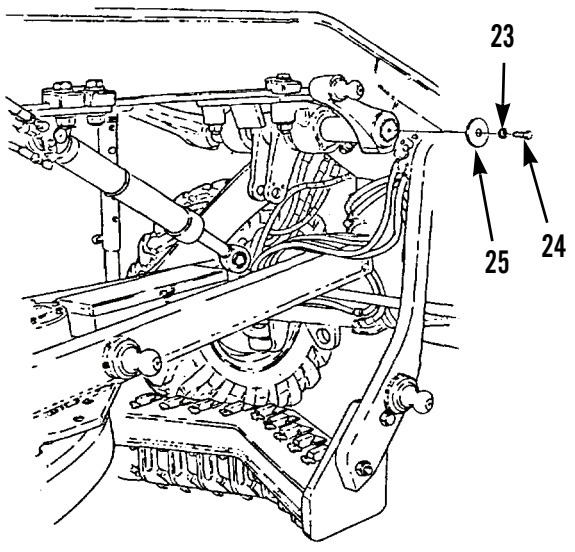

***REMOVAL - CONTINUED***

12. Scribe alignment marks on arm (27) and end of shaft (26), to aid during installation.

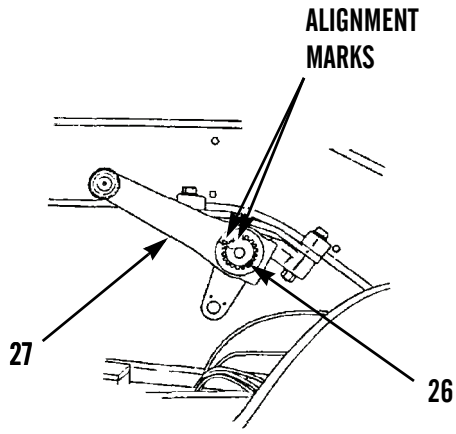


397-873

13. Remove arm (27) from shaft (26).

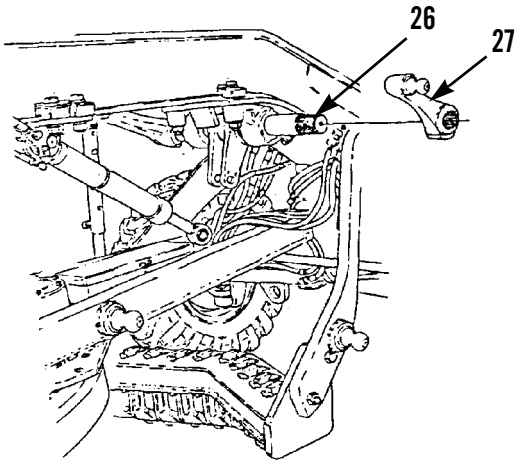


397-874

***REMOVAL - CONTINUED***

14. Repeat steps 1 through 13 for left scarifier actuating assembly.



**WARNING**

Use extreme caution when handling heavy parts. Provide adequate support and use assistance during procedure. Ensure that any lifting device used is in good condition and of suitable load capacity. Keep clear of heavy parts supported only by lifting device. Failure to follow this warning may cause injury or death to personnel.

**NOTE**

Shaft weighs 500 lb (227 kg).

15. With assistance, attach sling to each end of shaft (26) and take up slack.

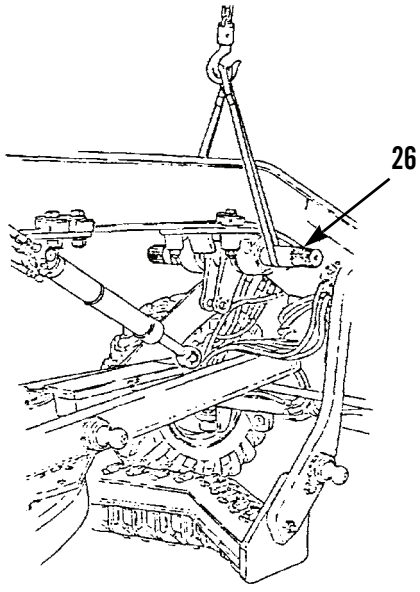


397-875

***REMOVAL - CONTINUED***

16. Remove four self-locking nuts (32), washers (31), cap screws (30), and blocks (29) from plate (28). Discard self-locking nuts.
17. Lower slings just enough to allow removal of plate (28).



**WARNING**

Use extreme caution when handling heavy parts. Provide adequate support and use assistance during procedure. Ensure that any lifting device used is in good condition and of suitable load capacity. Keep clear of heavy parts supported only by lifting device. Failure to follow this warning may cause injury or death to personnel.

**NOTE**

The plate weighs 82 lb (37 kg).

18. With assistance, remove plate (28).
19. Remove shaft assembly (26).

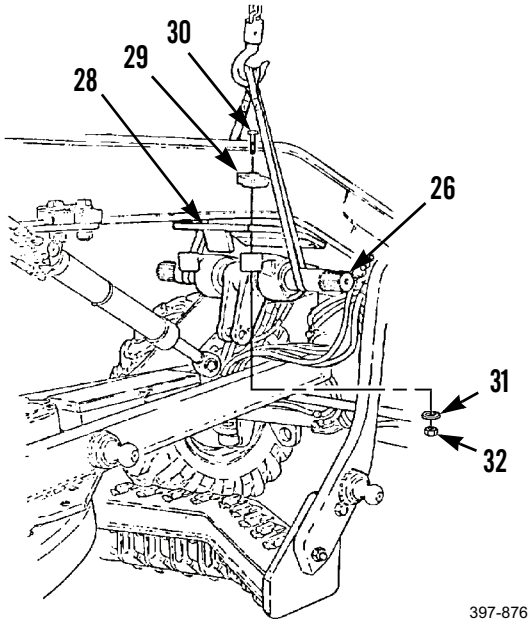

### *DISASSEMBLY*

1. Remove bracket assembly (33) from each side of shaft assembly (26).

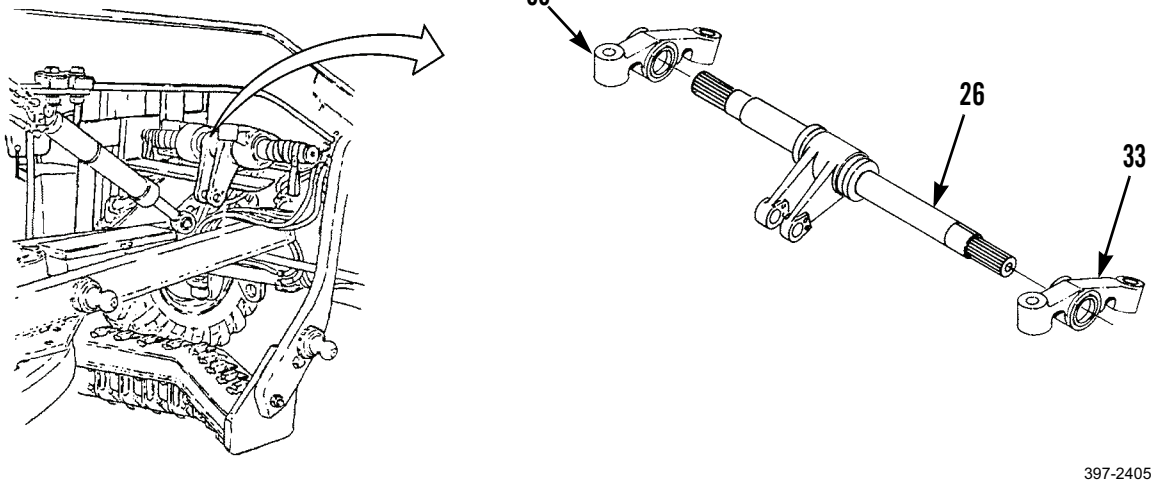


2. Remove two seals (34) from each bracket assembly (33).

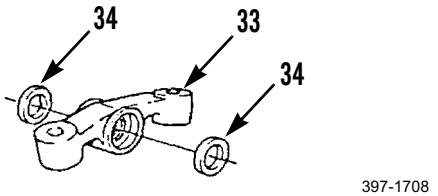


3. Remove bearing (35) from each bracket (33).

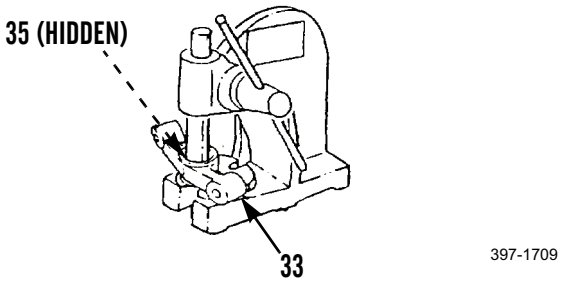

### *DISASSEMBLY - CONTINUED*

**NOTE**

Note location and number of spacers to aid in installation.

4. Remove three spacers (36) from shaft assembly (26).
5. Matchmark arm (37) and shaft assembly (26) to aid in installation.

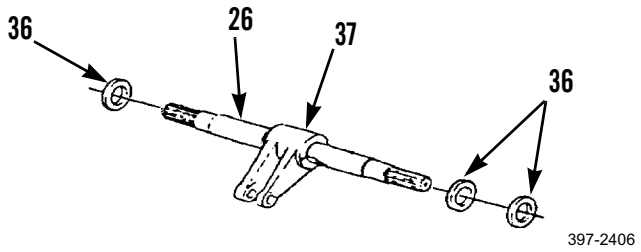


6. Remove arm (37) from shaft assembly (26).

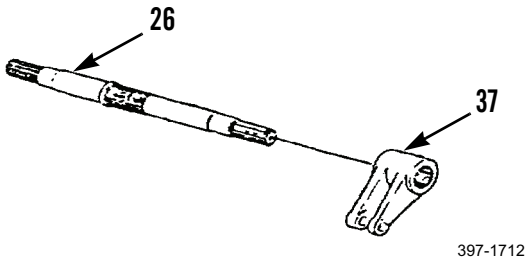


### *CLEANING AND INSPECTION*

Clean and inspect all parts in accordance with WP 0020 00.

### *ASSEMBLY*

1. Install arm (37) on shaft assembly (26), ensuring that alignment marks are aligned.
2. Install two spacers (36) next to flange on right side of shaft assembly (26) and remaining spacer on left side of shaft assembly.

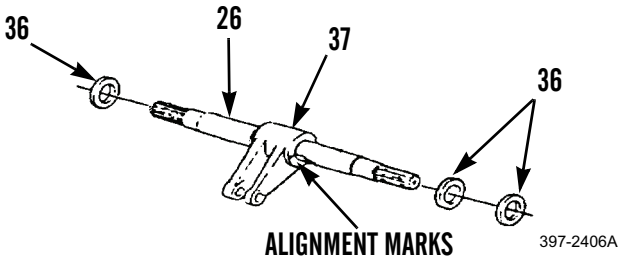


3. Install bearing (35) on each bracket (33).

***ASSEMBLY - CONTINUED***

4. Install two new seals (34) on each bracket (33).

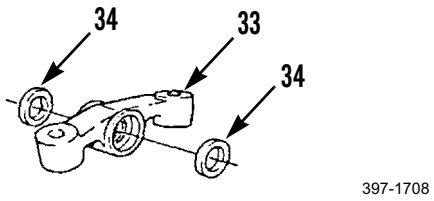

397-1708

5. Install bracket assembly (33) on each side of shaft assembly (26).
6. Attach sling to shaft assembly (26) and remove slack.
7. Position shaft assembly (26) under frame.

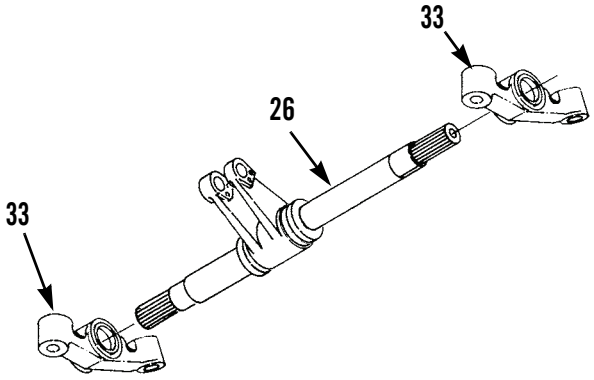

397-2405A

8. Remove sling.

***INSTALLATION***

**NOTE**

Steps 1 through 24 cover installation of the right scarifier actuating assembly. Follow these instructions for the left scarifier actuating assembly.



**WARNING**

Use extreme caution when handling heavy parts. Provide adequate support and use assistance during procedure. Ensure that any lifting device used is in good condition and of suitable load capacity. Keep clear of heavy parts supported only by lifting device. Failure to follow this warning may cause injury or death to personnel.

**NOTE**

The plate weighs 82 lb (37 kg).

1. With assistance, position plate (28) over two brackets (33).
2. Install four blocks (29), cap screws (30), washers (31), and new self-locking nuts (32) to secure plate (28) to frame. Tighten cap screws (30) to 900 lb-ft (1,220 Nm).

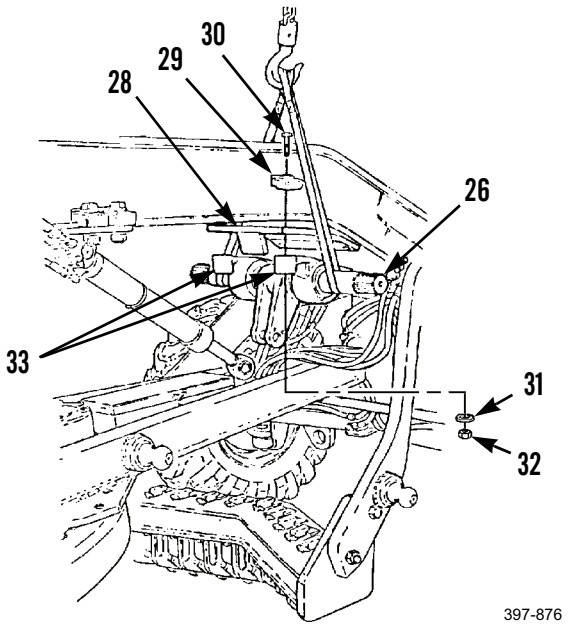

***INSTALLATION - CONTINUED***

3. Remove slings.

**NOTE**

When installing an arm without alignment marks, install arm at a 90 degree angle to arm.

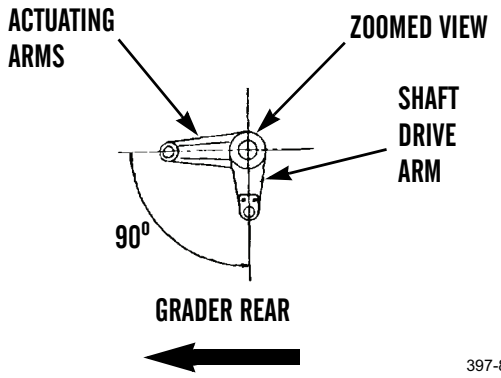


4. Install arm (27) on shaft (26). Ensure that alignment marks are aligned.

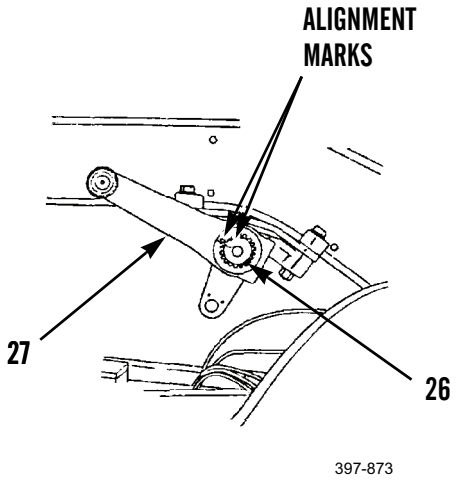


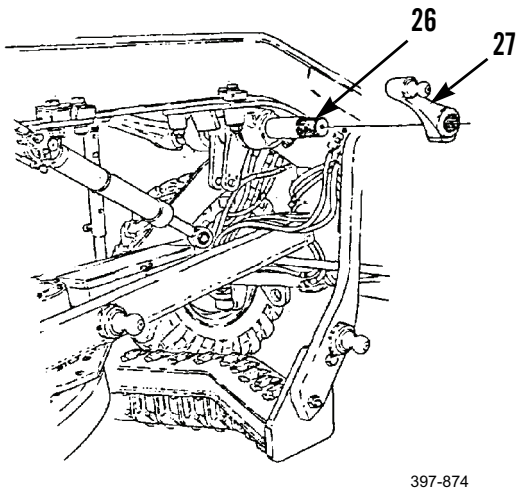

***INSTALLATION - CONTINUED***

5. Install washers (25 and 23) and bolt (24).

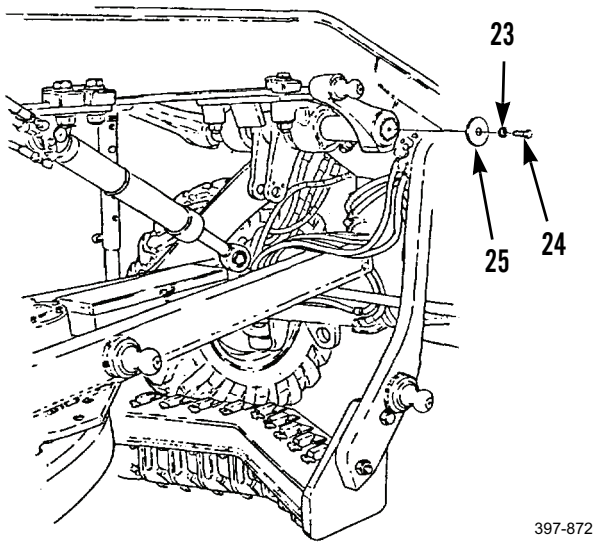


6. Install lubrication fitting (22) on socket (33) of sleeve (8).
7. Support sleeve (8) and position socket (33) over ball (34) of arm (27) and install spacer(s) (21), cap (20), two washers (19), and bolts (18).
8. Tighten bolts (18) hand-tight only. Tighten two bolts (18) evenly until there is no free play (clearance) between the ball (34) and cap (20). Do not over-tighten.

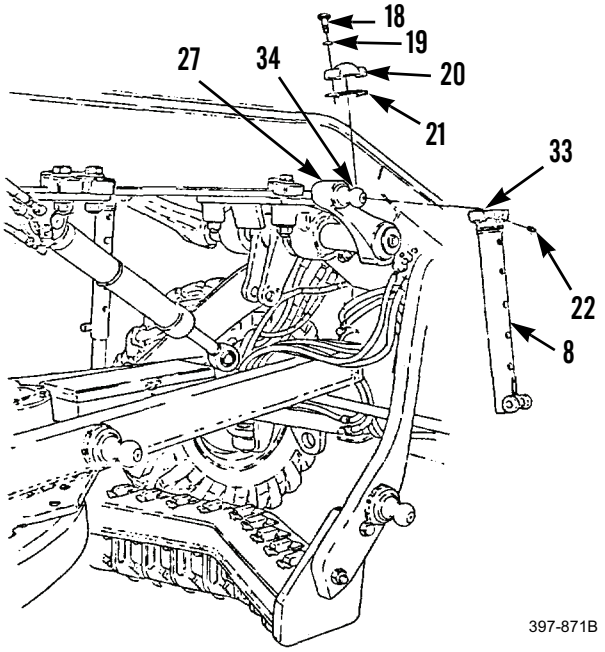

***INSTALLATION - CONTINUED***

9. Examine cap (18) and socket (33) of sleeve (8) from the side. If cap is touching socket, cap is too tight.

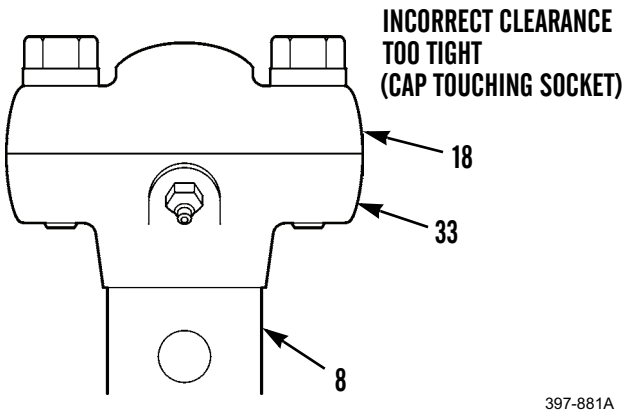


10. If cap is too tight, remove two bolts (18), washers (19), and cap (20).

**NOTE**

Addition of one more spacer to spacers removed results in proper amount of free play between ball (34) and cap.

11. Add one spacer (21) and repeat steps 7 through 9 until two bolts (18) can be tightened to remove free play without allowing cap (20) to touch socket (33) of sleeve (8).
12. Install cap (20), two washers (19), and bolts (18) if removed to add additional spacer(s) (21).

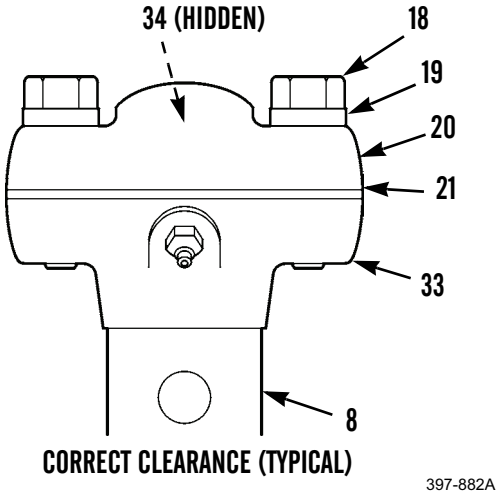

***INSTALLATION - CONTINUED***

13. Install lubrication fitting (13) on socket (36) of rod (12).
14. First mechanic install rod (12) in sleeve (8) and position socket (36) of rod (12) on ball (35) of drawbar (37).
15. Second mechanic install spacer(s) (14), cap (15), two washers (17), and bolts (16).
16. Tighten bolts (16) hand-tight only. Tighten two bolts evenly until there is no free play (clearance) between the ball (35) and cap (15); do not overtighten.

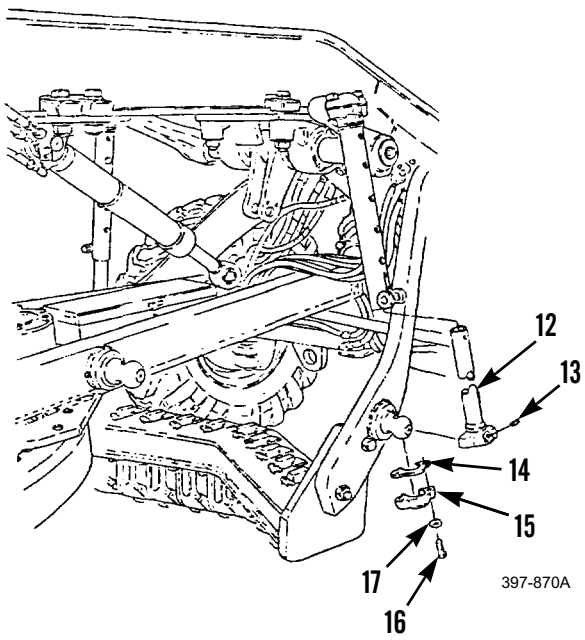


17. Examine cap (15) and socket (36) of rod (12) from the side. If cap is touching socket, cap is too tight.

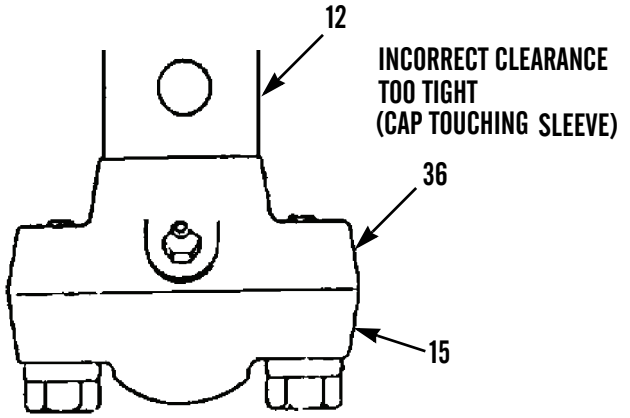

***INSTALLATION - CONTINUED***

18. If cap is too tight, remove two bolts (16), washers (17), and cap (15).

**NOTE**

Addition of one more spacer to spacers removed results in proper amount of free play between ball (34) and cap.

19. Add one spacer (14) and repeat steps 14 through 18 until two bolts (16) can be tightened to remove free play without allowing cap (15) to touch socket (36) of rod (12).
20. Install cap (15), two washers (17), and bolts (16) if removed to add additional spacer(s) (14).

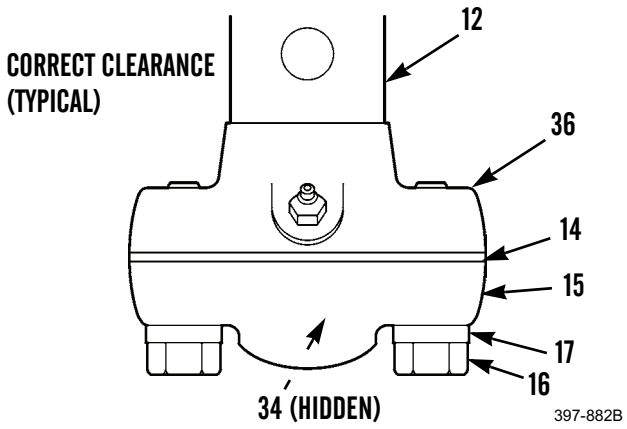


21. Install pin (7) and pin (9).
22. Install screw (11) and nut (10).

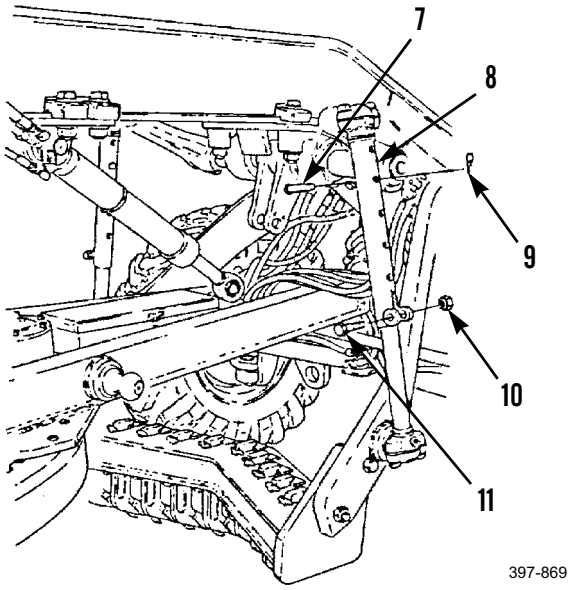

***INSTALLATION - CONTINUED***



**WARNING**

Use extreme caution when handling heavy parts. Provide adequate support and use assistance during procedure. Ensure that any lifting device used is in good condition and of suitable load capacity. Keep clear of heavy parts supported only by lifting device. Failure to follow this warning may cause injury or death to personnel.

**NOTE**

The hydraulic cylinder weighs 51 lb (23 kg).

23. Align hydraulic cylinder (1) with yoke (35) and install pin (5).
24. Install spacer (2), two washers (3), and bolts (4).
25. Repeat steps 4 through 22 for left scarifier actuating assembly.
26. Start engine (TM 5-3805-261-10).
27. Operate scarifier lift cylinder.
28. Stop engine.
29. Check for leaks.
30. Refill hydraulic tank to proper level (WP 0216 00).

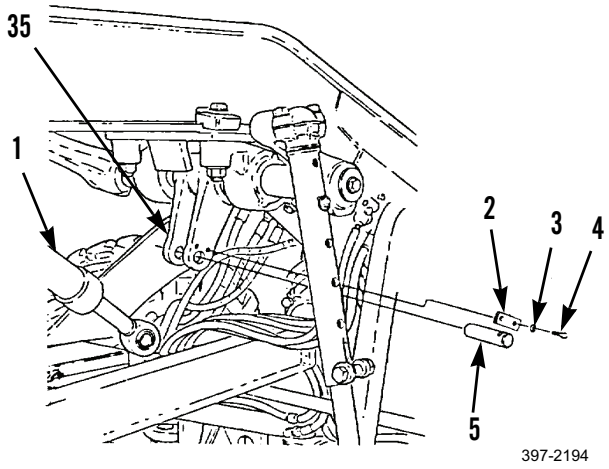


**END OF WORK PACKAGE**

# CHAPTER 5
# SUPPORTING INFORMATION

## REFERENCES 0346 00

### SCOPE

This work package lists all publication indexes, forms, field manuals, technical bulletins, technical manuals and other publications referenced in this manual and which apply to maintenance of the 130G Grader.

### PUBLICATION INDEXES

The following indexes should be consulted frequently for latest changes or revisions and for new publications relating to material covered in this technical manual.

Consolidated Army Publications and Forms Index. . . . . DA PAM 25-30

Functional Users Manual for the Army Maintenance Management System (TAMMS) . . . . . PAM 738-750

### FORMS

**NOTE**

Refer to PAM 738-750, *Functional Users Manual for the Army Maintenance Management System (TAMMS)*, for instructions on the use of maintenance forms.

Accident Identification Card . . . . . DD Form 518

Equipment Inspection and Maintenance Worksheet . . . . . DA Form 2404, DA Form 5988-E

Maintenance Request . . . . . DA Form 2407

Motor Vehicle Accident Report. . . . . SF Form 91

Product Quality Deficiency Report . . . . . SF Form 368

Recommended Changes to Publications and Blank Forms. . . . . DA Form 2028

Uncorrected Fault Record . . . . . DA Form 2408-14

### FIELD MANUALS

Army Motor Transport Unit and Operations. . . . . FM 55-30

Basic Cold Weather Manual . . . . . FM 31-70

Chemical and Biological Contamination Avoidance . . . . . FM 3-3

Desert Operations . . . . . FM 90-3

First Aid. . . . . FM 4-25.11

NBC Decontamination . . . . . FM 3-5

NBC Field Handbook . . . . . FM 3-7

Northern Operations . . . . . FM 31-71

Nuclear Contamination Avoidance . . . . . FM 3-3-1

Operations and Maintenance of Ordnance Materiel in Cold Weather . . . . . FM 9-207

Recovery and Battlefield Damage Assessment and Repair . . . . . FM 9-43-2

Rigging Techniques, Procedures, and Applications . . . . . FM 5-125

### TECHNICAL BULLETINS

CARC Spot Painting . . . . . TB 43-0242

Color, Marking, and Camouflage Painting of Military Vehicles, Construction Equipment and Materials Handling Equipment. . . . . TB 43-0209

Solder and Soldering . . . . . TB SIG 222

**REFERENCES - CONTINUED** **0346 00**

***TECHNICAL BULLETINS - CONTINUED***

Use of Antifreeze Solutions, Antifreeze Extender, Cleaning Compounds and Test Kit in Engine Cooling Systems . . . . . TB 750-651

***TECHNICAL MANUALS***

Inspection, Care, and Maintenance of Antifriction Bearings . . . . . TM 9-214

Materials Used for Cleaning, Preserving, Abrading and Cementing Ordnance Materiel and Related Materiels Including Chemicals . . . . . TM 9-247

Operator's and Organizational Maintenance Manual Including RPSTL for STE/ICE-R. . . . . TM 9-4910-571-12&P

Operator's Manual for the 130G Grader . . . . . TM 5-3805-261-10

Operator's, Unit, Direct Support, and General Support Maintenance Manual for Lead-Acid Storage Batteries . . . . . TM 9-6140-200-14

Painting Instructions for Army Materiel . . . . . TM 43-0139

Procedures for Destruction of Equipment to Prevent Enemy Use (Mobility Equipment Command) . . . . . TM 750-244-3

Transportability Guidance for the 130G Grader . . . . . TM 55-3805-261-14

Unit, Direct Support and General Support Including Depot Maintenance RPSTL for the 130G Grader. . . TM 5-3805-261-24P

***OTHER PUBLICATIONS***

Abbreviations and Acronyms . . . . . ASME Y14.38-1999

Army Medical Department Expendable/Durable Items . . . . . CTA 8-100

Expendable/Durable Items (Except Medical, Class V Repair Parts, and Heraldic Items) . . . . . CTA 50-970

Fuels and Lubricants Standardization Policy for Equipment . . . . . AR 70-12

Operator's Circular for Welding Theory and Application . . . . . TC 9-237

**END OF WORK PACKAGE**

## MAINTENANCE ALLOCATION CHART (MAC) INTRODUCTION 0347 00

### *THE ARMY MAINTENANCE SYSTEM MAC*

1. This introduction provides a general explanation of all maintenance and repair functions authorized at the two maintenance levels under the Two-Level Maintenance System concept.
2. The MAC immediately following this introduction designates overall authority and responsibility for the performance of maintenance functions on the identified end item or component. The application of the maintenance functions to the end item or component shall be consistent with the capacities and capabilities of the designated maintenance levels, which are shown in the MAC (WP 0348 00) in column (4) as:

   Field - includes subcolumns:

   C - Operator/Crew
   O - Unit
   F - Direct Support

   Sustainmant - includes subcolumns:

   H - General Support
   D - Depot
3. The tools and test equipment requirements (immediately following the MAC) list the tools and test equipment (both special tools and common tool sets) required for each maintenance function as referenced from the MAC.
4. The remarks (immediately following the tools and test equipment requirements) contain supplemental instructions and explanatory notes for a particular maintenance function.

### *MAINTENANCE FUNCTIONS*

Maintenance functions are limited to and defined as follows:

1. **Inspect.** To determine the serviceability of an item by comparing its physical, mechanical, and/or electrical characteristics with established standards through examination (e.g., by sight, sound, or feel).
2. **Test.** To verify serviceability by measuring the mechanical, pneumatic, hydraulic, or electrical characteristics of an item and comparing those characteristics with prescribed standards on a scheduled basis, i.e., load testing of lift devices and hydrostatic testing of pressure hoses.
3. **Service.** Operations required periodically to keep an item in proper operating condition; e.g., to clean (includes decontaminate, when required), preserve, drain, paint, or replenish fuel, lubricants, chemical fluids, or gases.
4. **Adjust.** To maintain or regulate, within prescribed limits, by bringing into proper position, or by setting the operating characteristics to specified parameters.
5. **Align.** To adjust specified variable elements of an item to bring about optimum or desired performance.
6. **Calibrate.** To determine and cause corrections to be made or to be adjusted on instruments of test, measuring, and diagnostic equipment used in precision measurement. Calibration consists of comparisons of two instruments, one of which is a certified standard of known accuracy, to detect and adjust any discrepancy in the accuracy of the instrument being compared.
7. **Remove/Install.** To remove and install the same item when required to perform service or other maintenance functions. Installation may be the act of emplacing or seating a spare, repair part, or module (component or assembly) into position in a manner to allow the proper functioning of an equipment or system.
8. **Replace.** To remove an unserviceable item and install a serviceable counterpart in its place. Replacement is authorized by the MAC and the assigned maintenance level is shown as the third position code of the Source, Maintenance and Recoverability (SMR) code.
9. **Repair.** Repair is the application of maintenance services, including fault location/troubleshooting, removal/installation, disassembly/assembly procedures, and maintenance actions to identify troubles and restore serviceability to an item by correcting specific damage, fault, malfunction, or failure in a part, subassembly, module (component or assembly), end item, or system.

### *MAINTENANCE FUNCTIONS - CONTINUED*

**NOTE**

The following definitions are applicable to the "repair" maintenance function:

- Services - Inspecting, testing, service, adjustment, alignment, calibration, and/or replacement.
- Fault location/troubleshooting - The process of investigating and detecting the cause of equipment malfunctioning; the act of isolating a fault within a system or Unit Under Test (UUT).
- Disassembly/assembly - The step-by-step breakdown (taking apart) of a spare/functional group coded item to the level of its least component, assigned a SMR code for the level of maintenance under consideration (i.e., identified as maintenance significant).
- Actions - Welding, grinding, riveting, straightening, facing, machining, and/or resurfacing.

10. **Overhaul.** That maintenance effort (service/action) prescribed to restore an item to a completely serviceable/operational condition as required by maintenance standards in appropriate technical publications. Overhaul is normally the highest degree of maintenance performed by the Army. Overhaul does not normally return an item to like new condition.

11. **Rebuild.** Consists of those services/actions necessary for the restoration of unserviceable equipment to a like new condition in accordance with original manufacturing standards. Rebuild is the highest degree of materiel maintenance applied to Army equipment. The rebuild operation includes the act of returning to zero those age measurements (hours/miles, etc.) considered in classifying Army equipment/components.

### *EXPLANATION OF COLUMNS IN THE MAC, TABLE 1*

1. **Column (1) - Group Number.** Column (1) lists Group numbers, the purpose of which is to identify maintenance significant components, assemblies, subassemblies, and modules with the Next Higher Assembly (NHA).

2. **Column (2) - Component/Assembly.** Column (2) contains the item names of components, assemblies, subassemblies, and modules for which maintenance is authorized.

3. **Column (3) - Maintenance Function.** Column (3) lists the functions to be performed on the item listed in Column (2). (For a detailed explanation of these functions refer to "Maintenance Functions" outlined above).

4. **Column (4) - Maintenance Level.** Column (4) specifies each level of maintenance authorized to perform each function listed in column (3), by indicating work time required (expressed as manhours in whole hours or decimals) in the appropriate subcolumn. This work time figure represents the active time required to perform that maintenance function at the indicated level of maintenance. If the number or complexity of the tasks within the listed maintenance function varies at different maintenance levels, appropriate work time figures are to be shown for each level. The work time figure represents the average time required to restore an item (assembly, subassembly, component, module, end item, or system) to a serviceable condition under typical field operating conditions. This time includes preparation time (including any necessary disassembly/assembly time), troubleshooting/fault location time, and quality assurance time in addition to the time required to perform the specific tasks identified for the maintenance functions authorized in the MAC. The symbol designations for the various maintenance levels are as follows:

Field:

C - Operator/Crew Maintenance
O - Unit Maintenance
F - Direct Support Maintenance

Sustainment:

H - General Support Maintenance
D - Depot Maintenance

### *EXPLANATION OF COLUMNS IN THE MAC, TABLE 1- CONTINUED*

**NOTE**

The "L" maintenance level is not included in column (4) of the MAC. Functions to this level of maintenance are identified by a work time figure in the "H" column of column (4), and an associated reference code is used in the REMARKS CODE column (6). This code is keyed to the remarks, and the SRA complete repair application is explained there.

5. **Column (5) - Tools and Equipment Reference Code.** Column (5) specifies, by code, common tool sets (not individual tools), common Test, Measurement, and Diagnostic Equipment (TMDE), special tools, special TMDE, and special support equipment required to perform the designated function. Codes are keyed to the entries in the tools and test equipment table.
6. **Column (6) - Remarks Code.** When applicable, this column contains a letter code, in alphabetical order, which is keyed to the remarks table entries (Table 3).

### *EXPLANATION OF COLUMNS IN THE TOOLS AND TEST EQUIPMENT REQUIREMENTS, TABLE 2*

1. **Column (1) - Tool or Test Equipment Reference Code.** The tool and test equipment reference code correlates with a code used in column (5) of the MAC.
2. **Column (2) - Maintenance Level.** The lowest level of maintenance authorized to use the tool or test equipment.
3. **Column (3) - Nomenclature.** Name or identification of the tool or test equipment.
4. **Column (4) - National Stock Number (NSN).** The NSN of the tool or test equipment.
5. **Column (5) - Tool Number (ICAGEC).** The manufacturer's part number, model number, or type number. The manufacturer's Commercial and Government Entity Code (CAGEC) is also included.

### *EXPLANATION OF COLUMNS IN THE REMARKS, TABLE 3*

1. **Column (1) - Remarks Code.** The code recorded in column (6) of the MAC.
2. **Column (2) - Remarks.** This column lists information pertinent to the maintenance function being performed as indicated in the MAC.

**END OF WORK PACKAGE**

**Table 1. Maintenance Allocation Chart (MAC) for the 130G Series Grader .**

| (1) | (2) | (3) | (4) MAINTENANCE LEVEL | | | | | (5) | (6) |
|---|---|---|---|---|---|---|---|---|---|
| | | | FIELD | | | SUSTAINMENT | | | |
| | | | UNIT | | DS | GS | DEPOT | TOOLS AND EQUIPMENT REF CODE | REMARKS CODE |
| GROUP NUMBER | COMPONENT/ ASSEMBLY | MAINTENANCE FUNCTION | C | O | F | H | D | | |
| **01** | **ENGINE** | | | | | | | | |
| 0100 | Engine Assembly | Test | | 1.0 | | | | 12,75,89 | |
| | | Service | | 1.0 | | | | 75,89 | A |
| | | Replace | | | 14.0 | | | 74,78,85,89, 96,100 | |
| | | Repair | | | 3.0 | 95.0 | | | B |
| 0101 | Crankcase, Block, Cylinder Head: | | | | | | | | |
| | Cylinder Block | Inspect | | | 0.8 | | | 62,74, 89,94,96 | |
| | Cylinder Head | Inspect | | | 4.0 | | | | |
| | Assembly and Spacer | Replace | | | 8.0 | | | 74,78,89,96,101 | |
| | Plate | Repair | | | 2.0 | | | 74,89 | C |
| 0102 | Crankshaft: | | | | | | | | |
| | Crankshaft Hub | Replace | | | 1.5 | | | 54,74,89,101 | |
| | Crankshaft Assembly | Inspect | | | | 0.5 | | | |
| | | Replace | | | | 35.0 | | | |
| 0103 | Flywheel Assembly: | | | | | | | | |
| | Flywheel | Replace | | | 16.0 | | | 15,74,78,89,101 | |
| | Flywheel Housing | Replace | | | 10.0 | | | 18,74,78,89 | |
| | | Repair | | | 2.0 | | | 74,89 | D |
| 0104 | Pistons, Connecting Rods: | | | | | | | | |
| | Piston Assemblies | Replace | | | | 14.0 | | | |
| 0105 | Valves, Camshafts, and Timing System: | | | | | | | | |
| | Rocker Arm | Adjust | | | 1.0 | | | 28,31,74,89,96 | |
| | Assembly | Replace | | | 3.0 | | | 28,31,74,89,101 | |
| | | Repair | | | 1.0 | | | 28,31,74,89,101 | C |
| | Valves | Replace | | | 4.0 | | | 19,20,25,74,88, 89 | |
| 0106 | Engine Lubrication System: | | | | | | | | |
| | Oil Pan | Replace | | | 2.0 | | | 74,89 | |
| | Engine Oil Pump | Replace | | | 4.0 | | | 74,89,96 | |

**Table 1. Maintenance Allocation Chart (MAC) for the 130G Series Grader - Continued.**

| (1) | (2) | (3) | (4) MAINTENANCE LEVEL | | | | | (5) | (6) |
|---|---|---|---|---|---|---|---|---|---|
| | | | FIELD | | | SUSTAINMENT | | | |
| | | | UNIT | | DS | GS | DEPOT | TOOLS AND EQUIPMENT REF CODE | REMARKS CODE |
| GROUP NUMBER | COMPONENT/ ASSEMBLY | MAINTENANCE FUNCTION | C | O | F | H | D | | |
| **03** | **FUEL SYSTEM** | | | | | | | | |
| 0301 | Fuel Injector Nozzle | Test | | | 1.0 | | | 87 | |
| | | Replace | | | 1.0 | | | 8,58,74,89 | |
| 0302 | Governor and Fuel Injection Pump Assembly | Adjust | | | 2.0 | | | 74,89 | |
| | | Replace | | | 2.0 | | | 74,89 | |
| | | Repair | | | | 4.0 | | | |
| 0304 | Air Cleaner | Service | 0.3 | 0.5 | | | | 75,89,96 | A |
| | | Replace | | 0.5 | | | | 89 | |
| 0305 | Turbocharger | Replace | | | 1.5 | | | 74,89,96 | |
| | | Repair | | | | 2.0 | | | |
| 0306 | Tanks, Lines, and Fittings Headers: | | | | | | | | |
| | Fuel Tank | Service | 0.3 | | | | | | A |
| | | Replace | | 2.0 | | | | 75,78,89,96 | |
| | | Repair | | 2.0 | | | | 89 | D |
| 0308 | Engine Speed Governor and Controls | Adjust | | | 1.0 | | | 74,89 | |
| | | Replace | | | 2.0 | | | 74,89,96 | |
| | | Repair | | | | 3.0 | | 74,89 | E |
| 0309 | Fuel Filters: | | | | | | | | |
| | Primary Fuel Filter | Service | 0.2 | 0.3 | | | | 75,89,96 | |
| | | Replace | | 0.5 | | | | 75,89,96 | |
| | Secondary Fuel Filter | Service | 0.2 | 0.3 | | | | 75,89 | |
| | | Replace | | 0.5 | | | | 75,89,96 | |
| 0311 | Engine Starting Aids | Service | | 0.5 | | | | 89 | A |
| | | Replace | | 1.0 | | | | 89 | |
| | | Repair | | 1.0 | | | | 89 | |
| **04** | **EXHAUST SYSTEM** | | | | | | | | |
| 0401 | Muffler and Pipes | Replace | | 2.0 | | | | 75,89 | |
| **05** | **COOLING SYSTEM** | | | | | | | | |
| 0501 | Radiator Assembly | Inspect | 0.2 | | | | | | |
| | | Service | | 1.0 | | | | 75,89 | A |
| | | Replace | | 3.0 | | | | 16,78,89 | |
| | | Repair | | 3.0 | | | | 89 | D |
| 0504 | Water Pump: | | | | | | | | |
| | Water Pump Assembly | Replace | | 2.5 | | | | 89 | |
| | | Repair | | | | 1.0 | | 74,89,96 | |

**Table 1. Maintenance Allocation Chart (MAC) for the 130G Series Grader - Continued.**

| (1) | (2) | (3) | (4) MAINTENANCE LEVEL | | | | | (5) | (6) |
|---|---|---|---|---|---|---|---|---|---|
| | | | FIELD | | | SUSTAINMENT | | | |
| | | | UNIT | | DS | GS | DEPOT | TOOLS AND EQUIPMENT REF CODE | REMARKS CODE |
| GROUP NUMBER | COMPONENT/ ASSEMBLY | MAINTENANCE FUNCTION | C | O | F | H | D | | |
| **05** | **COOLING SYSTEM - Continued** | | | | | | | | |
| 0505 | Fan Assembly: | | | | | | | | |
| | Fan Drive | Service | 0.2 | | | | | | A |
| | | Replace | | 1.0 | | | | 75,89 | |
| | | Repair | | 0.5 | | | | 75,89 | |
| | Fan Belts | Inspect | 0.1 | 0.1 | | | | | |
| | | Adjust | | 0.2 | | | | 75,89 | |
| | | Replace | | 0.5 | | | | 75,89 | |
| **06** | **ELECTRICAL SYSTEM** | | | | | | | | |
| 0601 | Alternator | Test | | 0.5 | | | | 12,75,89 | |
| | | Replace | | 1.5 | | | | 89 | |
| | | Repair | | | | 2.0 | | 74,89 | F |
| 0603 | Starting Motor: | Test | | 0.5 | | | | 12,75,89 | |
| | | Replace | | 1.0 | | | | 75,89,96 | |
| | | Repair | | | | 2.0 | | 74,89,94,96 | G |
| 0607 | Instrument or Engine Control Panel: | | | | | | | | |
| | Instrument Panel/ Electronic Monitoring System (EMS) | Test | 0.1 | | | | | | |
| | | Replace | | 1.0 | | | | 75,89,94 | |
| | | Repair | | | 1.0 | | | 75,89,94 | |
| | Operator's Console Assembly | Replace | | 0.4 | | | | 89 | |
| | | Repair | | 1.0 | | | | 89 | |
| 0608 | Miscellaneous Items: | | | | | | | | |
| | Switches | Replace | | 0.3 | | | | 89 | |
| | Fuse Box and Fuses | Replace | | 0.5 | | | | 89 | |
| | NATO Slave Receptacle | Replace | | 0.5 | | | | 89 | |
| 0609 | Lights: | | | | | | | | |
| | Headlights | Test | 0.1 | | | | | | |
| | | Replace | | 0.5 | | | | 89 | |
| | Turn Signal Lights | Test | 0.1 | | | | | | |
| | | Replace | | 0.5 | | | | 89 | |

**Table 1. Maintenance Allocation Chart (MAC) for the 130G Series Grader - Continued.**

| (1) | (2) | (3) | (4) MAINTENANCE LEVEL | | | | | (5) | (6) |
|---|---|---|---|---|---|---|---|---|---|
| | | | FIELD | | | SUSTAINMENT | | | |
| | | | UNIT | | DS | GS | DEPOT | TOOLS AND EQUIPMENT REF CODE | REMARKS CODE |
| GROUP NUMBER | COMPONENT/ ASSEMBLY | MAINTENANCE FUNCTION | C | O | F | H | D | | |
| **06** | **ELECTRICAL SYSTEM - Continued** | | | | | | | | |
| | Taillights | Test | 0.1 | | | | | | |
| | | Replace | | 0.5 | | | | 89 | |
| | Floodlights | Test | 0.1 | | | | | | |
| | | Replace | | 0.5 | | | | 89 | |
| 0610 | Sending Units and Warning Switches | Replace | | 0.5 | | | | 75,89,96 | |
| 0612 | Batteries, Storage: | | | | | | | | |
| | Batteries | Inspect | 0.2 | | | | | | |
| | | Test | | 0.5 | | | | 12,75 | |
| | | Service | | 0.5 | | | | 75,89 | A |
| | | Replace | | 0.5 | | | | 75,89 | |
| | Battery Boxes | Replace | | 0.5 | | | | 89 | |
| | | Repair | | 0.5 | | | | 89 | D |
| | Battery Cables | Replace | | 0.3 | | | | 89 | |
| 0613 | Hull or Chassis Wiring Harness: | | | | | | | | |
| | Small Harness (Lights etc.) | Test | | 1.0 | | | | 75,89 | |
| | | Replace | | 0.5 | 2.5 | | | 74,75,89 | |
| | | Repair | | 1.0 | | | | 75,89 | |
| **07** | **TRANSMISSION** | | | | | | | | |
| 0705 | Transmission Shifting Components | Adjust | | 0.5 | | | | 89 | |
| | | Replace | | 1.5 | | | | 75,89,96 | |
| 0710 | Transmission Assembly and Associated Parts: | | | | | | | | |
| | Transmission Assembly | Inspect | 0.2 | | | | | | |
| | | Test | | 0.2 | | | | | |
| | | Service | | 0.5 | | | | 75,89 | A |
| | | Replace | | | 8.0 | | | 37,74,89 | |
| | | Repair | | | 3.0 | 29.0 | | 16,17,18, 56,62,74, 89,93 | |
| 0714 | Servo Unit: | | | | | | | | |
| | Control Valve Assembly | Test | | | 0.5 | | | 74,89 | |
| | | Replace | | | 1.0 | | | 66,74 | |
| 0719 | Transfer Shaft, Engine-to-Transmission | Replace | | | 2.0 | | | 37,74,89 | |

**Table 1. Maintenance Allocation Chart (MAC) for the 130G Series Grader - Continued.**

| (1) | (2) | (3) | (4) MAINTENANCE LEVEL | | | | | (5) | (6) |
|---|---|---|---|---|---|---|---|---|---|
| | | | FIELD | | | SUSTAINMENT | | | |
| | | | UNIT | | DS | GS | DEPOT | TOOLS AND EQUIPMENT REF CODE | REMARKS CODE |
| GROUP NUMBER | COMPONENT/ ASSEMBLY | MAINTENANCE FUNCTION | C | O | F | H | D | | |
| **07** | **TRANSMISSION - Continued** | | | | | | | | |
| 0721 | Oil Cooler, Pump, and Filters: | | | | | | | | |
| | Oil Coolers | Replace | | | 1.0 | | | 89 | |
| | | Repair | | | 1.0 | | | 89 | D |
| | Oil Pump | Replace | | | 2.0 | | | 37,74,89 | |
| | Oil Filter | Service | | 0.3 | | | | 75,89 | A |
| | | Replace | | 0.7 | | | | 75,89 | |
| **10** | **FRONT AXLE** | | | | | | | | |
| 1000 | Front Axle Assembly | Service | | 0.3 | | | | | A |
| | | Replace | | | 3.0 | | | 9,44,60,65, 71,74,75,84, 89,92 | |
| | | Repair | | | 5.0 | | | | E |
| 1004 | Steering and Leaning Wheel: | Service | 0.4 | | | | | | A |
| | | Replace | | | 3.0 | | | 33,36,39,53,64, 74,77,89,100 | |
| | | Repair | | | 5.0 | | | 33,36,39,53,64, 74,77,89,100 | E |
| | Steering Arm Assemblies | Adjust | | | 0.3 | | | 37,74,84,89,96 | |
| | | Replace | | | 5.0 | | | 11,37,40,49,57, 61,63,65,73,78, 80,82,84,89,92, 96,100 | |
| | | Repair | | | 2.0 | | | 11,37,40,49,57, 61,63,65,73,78, 80,82,84,89,92, 96,100 | |
| | Leaning Wheel Mechanism | Adjust | | | 2.0 | | | 74,89 | |
| | | Replace | | | 4.0 | | | 1,9,45,50,65,66, 71,74,78,82,89, 100 | |
| | Leaning Wheel Cylinder | Replace | | 0.5 | | | | 74,78,89 | |
| | | Repair | | | 2.0 | | | 23,34,74,89,102 | H |
| **11** | **REAR AXLE** | | | | | | | | |
| 1100 | Rear Axle Assembly: | Service | | 0.3 | | | | 75,89 | A |
| | | Replace | | | 10.0 | | | 74,89 | |
| | | Repair | | | 2.0 | 32.0 | | 74,89 | I |

**Table 1. Maintenance Allocation Chart (MAC) for the 130G Series Grader - Continued.**

| (1) | (2) | (3) | (4) MAINTENANCE LEVEL | | | | | (5) | (6) |
|---|---|---|---|---|---|---|---|---|---|
| | | | FIELD | | | SUSTAINMENT | | | |
| | | | UNIT | | DS | GS | DEPOT | TOOLS AND EQUIPMENT REF CODE | REMARKS CODE |
| GROUP NUMBER | COMPONENT/ ASSEMBLY | MAINTENANCE FUNCTION | C | O | F | H | D | | |
| **11** | **REAR AXLE - Continued** | | | | | | | | |
| | Differential | Service | | 0.5 | | | | 75,89 | A |
| | | Replace | | | 10.0 | | | 74,78,89 | |
| | Differential Lock | Service | | 0.5 | | | | | A |
| | Control | Replace | | | 1.0 | | | 74,89 | |
| | | Repair | | | 1.0 | | | 74,89 | |
| 1103 | Final Drive Assembly | Service | | 0.5 | | | | | A |
| | | Replace | | | 18.0 | | | 7,17,37,41,51, 55,56,62,66,70, 74,77,78,79,83, 89,90,93,102 | |
| 1105 | Tandem Drive and Chain Assemblies: | | | | | | | | |
| | Tandem Drive | Service | | 0.3 | | | | 75,89 | A |
| | Housing | Replace | | | 8.5 | | | 66,74,78,89,100 | |
| | | Repair | | | 8.0 | | | 75,89 | D |
| | Chain Assemblies | Replace | | | 4.5 | | | 38,56,66,74,89 | |
| | | Repair | | | 3.0 | | | 38,56,74,89 | |
| **12** | **BRAKES** | | | | | | | | |
| 1201 | Handbrakes: | | | | | | | | |
| | Parking Brake Control Handle | Replace | | 1.0 | | | | 89 | |
| | Parking Brake | Adjust | | 0.5 | | | | 89 | |
| | Actuator Assembly | Replace | | 1.0 | | | | 74,89 | |
| | | Repair | | | 1.0 | | | 58,63,74,81, 89 | |
| 1202 | Service Brakes | Adjust | | | 0.8 | | | 74,89 | |
| | | Replace | | | 1.5 | | | 17,33,55,56,74, 78,89,96,100 | |
| 1206 | Mechanical Brake System: | | | | | | | | |
| | Air Brake Pedal and Linkage | Adjust | | 0.5 | | | | 89 | |
| | | Replace | | 1.5 | | | | 89 | |

**Table 1. Maintenance Allocation Chart (MAC) for the 130G Series Grader - Continued.**

| (1) | (2) | (3) | (4) MAINTENANCE LEVEL | | | | | (5) | (6) |
|---|---|---|---|---|---|---|---|---|---|
| | | | FIELD | | | SUSTAINMENT | | | |
| | | | UNIT | | DS | GS | DEPOT | TOOLS AND EQUIPMENT REF CODE | REMARKS CODE |
| GROUP NUMBER | COMPONENT/ ASSEMBLY | MAINTENANCE FUNCTION | C | O | F | H | D | | |
| **12** | **BRAKES - Continued** | | | | | | | | |
| 1208 | Airbrake System: | | | | | | | | |
| | Brake Control Valve | Replace | | 0.3 | | | | 74,89 | |
| | Air Reservoir | Service | 0.3 | | | | | | A |
| | | Replace | | 0.8 | | | | 89 | |
| | | Repair | | | 2.0 | | | 89 | D |
| 1209 | Air Compressor Assembly | Replace | | | 4.0 | | | 74,89 | |
| | | Repair | | | | 2.0 | | 74,89,96 | |
| **13** | **WHEELS** | | | | | | | | |
| 1311 | Wheel Assembly (Front) | Replace | | 1.0 | | | | 37,75,77,78,84, 89,102 | |
| | Wheel Assembly (Rear) | Replace | | 1.0 | | | | 37,75,77,78,84, 89,101 | |
| 1313 | Tires | Service | 0.3 | | | | | | A |
| | | Replace | | 2.0 | | | | 75,79,89 | |
| | | Repair | | 1.0 | | | | 89 | |
| **14** | **STEERING** | | | | | | | | |
| 1410 | Hydraulic Pump or Fluid Motor Assembly: | | | | | | | | |
| | Steering Control Pump and Steering Wheel | Replace | | 1.5 | | | | 74,89 | |
| | | Repair | | | 2.0 | | | 74,89,94,96 | |
| | Supplemental Steering Pump and Motor | Replace | | 4.0 | | | | 74,89 | |
| 1411 | Hoses, Lines, and Fittings | Replace | | 2.0 | | | | 89 | |
| 1412 | Hydraulic Cylinder | Replace | | 0.5 | | | | 74,89,100 | |
| | | Repair | | | 2.0 | | | 74,89,101 | H |
| 1414 | Relief Valve | Test | | | 1.0 | | | 74,88,89 | |
| | | Replace | | | 0.8 | | | 74,89 | |
| | | Repair | | | 3.0 | | | 32,74,89 | H |

**Table 1. Maintenance Allocation Chart (MAC) for the 130G Series Grader - Continued.**

| (1) | (2) | (3) | (4) MAINTENANCE LEVEL | | | | | (5) | (6) |
|---|---|---|---|---|---|---|---|---|---|
| | | | FIELD | | | SUSTAINMENT | | | |
| | | | UNIT | | DS | GS | DEPOT | TOOLS AND EQUIPMENT REF CODE | REMARKS CODE |
| GROUP NUMBER | COMPONENT/ ASSEMBLY | MAINTENANCE FUNCTION | C | O | F | H | D | | |
| **15** | **FRAME, TOWING ATTACHMENTS, DRAWBARS, AND ARTICULATION SYSTEMS** | | | | | | | | |
| 1501 | Frame Assembly: | | | | | | | | |
| | Front Frame Assembly | Repair | | | 3.0 | | | 74,89 | D |
| | Frame and Case Assembly, Rear | Repair | | | 3.0 | | | 74,89 | D |
| 1503 | Pintles and Towing Attachments: | | | | | | | | |
| | Articulation Hitch | Service | 0.2 | 0.5 | | | | 89 | A |
| | | Repair | | | 2.0 | | | 2,3,4,5, 46,59,60,65, 68,74,89,91, 96 | |
| **18** | **BODY, CAB, HOOD, AND HULL** | | | | | | | | |
| 1801 | Body, Cab, Hood, and Hull Assemblies: | | | | | | | | |
| | Hood Assemblies | Replace | | 1.0 | | | | 75,78,89 | |
| | ROPS/Cab Assembly | Replace | | 4.0 | | | | 75,78,89 | |
| | (Types I & II) | Repair | | 2.0 | | | | 75,78,89 | |
| | ROPS/Cab Assembly | Replace | | | 8.0 | | | 75,78,89 | |
| | (CCE) | Repair | | | 4.0 | | | 75,78,89 | |
| | Seat Assembly | Replace | | 0.8 | | | | 89 | |
| | Seat Belt | Inspect | 0.2 | | | | | | |
| | | Replace | | 0.3 | | | | 89 | |
| 1808 | Toolboxes | Replace | | 0.3 | | | | 89 | |
| **21** | **BUMPERS, GUARDS, AND MARINE FENDERS** | | | | | | | | |
| | Bumper | Replace | | | 1.0 | | | 78,89 | |
| **22** | **BODY, CHASSIS AND HULL ACCESSORY ITEMS** | | | | | | | | |
| 2202 | Accessory Items: | | | | | | | | |
| | Windshield Wiper | Replace | | 1.0 | | | | 75,89 | |
| | Assembly | Repair | | 2.0 | | | | 75,89 | D |

**Table 1. Maintenance Allocation Chart (MAC) for the 130G Series Grader - Continued.**

| (1) | (2) | (3) | (4) MAINTENANCE LEVEL | | | | | (5) | (6) |
|---|---|---|---|---|---|---|---|---|---|
| | | | FIELD | | | SUSTAINMENT | | | |
| | | | UNIT | | DS | GS | DEPOT | TOOLS AND EQUIPMENT REF CODE | REMARKS CODE |
| GROUP NUMBER | COMPONENT/ ASSEMBLY | MAINTENANCE FUNCTION | C | O | F | H | D | | |
| **22** | **BODY, CHASSIS AND HULL ACCESSORY ITEMS - Continued** | | | | | | | | |
| | Defroster Fans | Replace | | 1.0 | | | | 89 | |
| | | Repair | | 1.0 | | | | 89 | |
| | Heater Assembly | Replace | | 1.5 | | | | 89 | |
| | | Repair | | 1.5 | | | | 89 | |
| | Data Plates and Decals | Replace | | 0.2 | | | | 30,89 | |
| **24** | **HYDRAULIC AND FLUID SYSTEMS** | | | | | | | | |
| 2401 | Hydraulic Pump Assembly: | Test | | | 0.4 | | | | |
| | | Service | | 0.3 | | | | 89 | |
| | | Replace | | | 2.5 | | | 74,78,89,96 | |
| | | Repair | | | 3.0 | | | 13,43,52,69,74, 89,94,96 | E |
| | Circle Drive Motor | Replace | | 1.0 | | | | 89 | |
| | | Repair | | | 3.0 | | | 74,89,96 | |
| 2402 | Pilot Check and Pressure Control Valve Assemblies | Adjust | | | 1.0 | | | | |
| | | Replace | | | 3.0 | | | 74,89 | |
| | | Repair | | | 2.5 | | | 74,89,94,96 | E |
| 2403 | Hydraulic Control Levers and Linkage | Adjust | | 1.5 | | | | 89 | |
| | | Replace | | 2.0 | | | | 89 | |
| 2406 | Strainers, Filters, Lines, and Fittings, Etc.: | Inspect | 0.2 | | | | | | |
| | | Replace | | 2.0 | | | | 74,89 | |
| | Oil Cooler Assembly | Replace | | 2.0 | | | | 74,89 | |
| 2407 | Hydraulic Cylinders | Replace | | 1.5 | | | | 74,78,89,100 | |
| | | Repair | | | 3.0 | | | 74,89,101 | H |
| 2408 | Hydraulic Tank and Mounting Assembly | Inspect | 0.2 | | | | | | |
| | | Service | | 0.2 | | | | 75,89 | A |
| | | Replace | | | 2.0 | | | 74,78,89,96 | |
| | | Repair | | | 2.0 | | | 74,89,96 | |
| **47** | **GAUGES (NON-ELECTRICAL)** | | | | | | | | |
| | Gauges: Pressure, Temperature, and Articulation Indicator | Replace | | 0.5 | | | | 89 | |

**Table 1. Maintenance Allocation Chart (MAC) for the 130G Series Grader - Continued.**

| (1) | (2) | (3) | (4) MAINTENANCE LEVEL | | | | | (5) | (6) |
|---|---|---|---|---|---|---|---|---|---|
| | | | FIELD | | | SUSTAINMENT | | | |
| | | | UNIT | | DS | GS | DEPOT | TOOLS AND EQUIPMENT REF CODE | REMARKS CODE |
| GROUP NUMBER | COMPONENT/ ASSEMBLY | MAINTENANCE FUNCTION | C | O | F | H | D | | |
| **74** | **CRANES, SHOVELS, AND EARTHMOVING EQUIPMENT COMPONENTS** | | | | | | | | |
| 7435 | Moldboard Assembly: | Inspect | 0.2 | | | | | | |
| | | Service | | 0.3 | | | | | A |
| | | Replace | | 3.0 | | | | 17,78,89 | |
| | | Repair | | | 2.0 | | | 74,89 | D |
| | Cutting Edges | Inspect | 0.1 | | | | | | |
| | | Replace | | 2.0 | | | | 75,89 | |
| | End Bits | Inspect | 0.1 | | | | | | |
| | | Replace | | 1.5 | | | | 75,89 | |
| 7436 | Moldboard Lift Arms and Pivot Assembly | Service | 0.3 | 0.3 | | | | | A |
| | | Replace | | | 2.4 | | | 4,6,22,23, 48,61,65,72, 74,78,89,92 | |
| | | Repair | | | 3.0 | | | 10,47,60,74, 86,89,91 | |
| 7438 | Circle and Drawbar Assembly: | | | | | | | | |
| | Drawbar Assembly | Service | 0.3 | | | | | | A |
| | | Replace | | | 2.4 | | | 74,78,89,101 | |
| | | Repair | | | 3.4 | | | 74,89 | |
| | Circle Turn Assembly | Inspect | 0.1 | | | | | | |
| | | Service | | 0.3 | | | | 75,89 | A |
| | | Replace | | | 2.0 | | | 74,77,78,84,89, 101 | |
| | | Repair | | | 3.0 | | | 74,78,89,100 | |
| 7439 | Centershift Lock Assembly | Replace | | 1.0 | | | | 89 | |
| | | Repair | | | 1.5 | | | 89 | |
| 7440 | Scarifier Assembly | Inspect | 0.1 | | | | | | |
| | | Service | 0.3 | | | | | | A |
| | | Replace | | 2.0 | | | | 74,78,89 | |
| | | Repair | | 3.0 | | | | 74,78,89 | |

**Table 2. Tools and Test Equipment Requirements for the 130G Series Grader .**

| (1) ITEM NO. | (2) MAINTENANCE LEVEL | (3) ITEM NAME | (4) NATIONAL STOCK NUMBER | (5) PART NUMBER/ CAGEC |
|---|---|---|---|---|
| 1 | F | Adapter, Bearing Remover | 5120-01-300-4502 | 1P1832 (11083) |
| 2 | F | Adapter, Mechanical Puller | 5120-00-357-5181 | 8B7555 (11083) |
| 3 | F | Adapter, Mechanical Puller | 5120-01-286-8431 | 1P1838 (11083) |
| 4 | F | Adapter, Mechanical Puller | 5120-01-286-8432 | 1P1837 (11083) |
| 5 | F | Adapter, Mechanical Puller | 5120-01-288-2717 | 5P4184 (11083) |
| 6 | F | Adapter, Mechanical Puller | 5120-01-286-8435 | 1P1835 (11083) |
| 7 | F | Adapter, Mechanical Puller | 5120-00-316-9172 | 8B7556 (11083) |
| 8 | F | Adapter, Nozzle | 5120-01-345-4526 | FT1533 (11083) |
| 9 | F | Adapter, Puller | 5120-01-286-8433 | 1P1833 (11083) |
| 10 | F | Adapter, Puller | 5120-01-286-8434 | 1P1834 (11083) |
| 11 | F | Adapter, Puller | 5120-01-295-3618 | 5F7340 (11083) |
| 12 | O | Analyzer Set, Engine | 4910-00-124-2554 | 2389409 (16331) |
| 13 | F | Block | | FT1017 (11083) |
| 14 | F | Bolt, Machine | | 0S1602 (11083) |
| 15 | F | Bracket, Lifting | 5340-01-336-2459 | FT0120 (11083) |
| 16 | O | Bracket, Link | 5120-01-451-1401 | 1387575 (11083) |
| 17 | O | Bracket, Link | 5340-01-476-1734 | 1387574 (11083) |
| 18 | F | Bracket, Link | 4940-01-268-2201 | 1387573 (11083) |
| 19 | F | Bushing Driver, Valve | 5120-01-030-1625 | 7S8858 (11083) |
| 20 | F | Compressor, Valve Spring | 5120-00-314-6138 | 5S1330 (11083) |
| 21 | O | Driver Bit, T-15 TORX | | 1943532 (11083) |
| 22 | F | Driver Set, Bushing | 5120-01-030-1626 | 1P0510 (11083) |
| 23 | F | Expander Assembly | 5120-00-489-8167 | 4S9181 (11083) |
| 24 | O | Extractor, Tool | 2520-01-201-4146 | 5R7047 (11083) |
| 25 | F | Extractor, Valve Group | 4910-01-296-3862 | 1667441 (11083) |
| 26 | F | Gage, Profile | 5220-01-296-4296 | 6V7058 (11083) |
| 27 | F | Gage, Profile | 5220-01-296-4297 | 6V7068 (11083) |

**Table 2. Tools and Test Equipment Requirements for the 130G Series Grader - Continued.**

| (1) ITEM NO. | (2) MAINTENANCE LEVEL | (3) ITEM NAME | (4) NATIONAL STOCK NUMBER | (5) PART NUMBER/ CAGEC |
|---|---|---|---|---|
| 28 | F | Gear, Engine Turning | 4910-01-137-0662 | 5P7305 & 5P7306 (11083) |
| 29 | O | Guard, Safety, Tire Inflation | 4910-00-025-0623 | 64E33077 (80049) |
| 30 | O | Heater, Gun-Type, Electric | 4940-01-028-7493 | EP-5UL (59164) |
| 31 | F | Housing, Gear Shaft | 5120-01-119-1747 | 5P7306 (11083) |
| 32 | F | Indicator, Dial | 5210-01-354-9255 | 6V3075 (11083) |
| 33 | F | Inserter, Seal | 5120-01-122-6012 | 1U8698 (11083) |
| 34 | F | Inserter, Seal | 5120-01-288-2777 | 5P2980 (11083) |
| 35 | O | Installer Tool, Seal | | 5H4845 (11083) |
| 36 | F | Jack Group | | 5P2968 (11083) |
| 37 | O | Jack, Dolly Type, Hydraulic: 10-ton capacity | 4910-00-289-7233 | 93660 (36251) |
| 38 | F | Leg | | 7S7786 (11083) |
| 39 | F | Leg | | 4S5415 (11083) |
| 40 | F | Leg, Mechanical Puller | 5120-01-345-5328 | 1H3109 (11083) |
| 41 | F | Leg, Puller | 5120-01-275-9480 | 8B7549 (11083) |
| 42 | F | Leveler, Load | 3950-01-263-9513 | 6V3145 (11083) |
| 43 | F | Maintenance Fixture, Automotive | 4910-01-286-8364 | 2P5573 (11083) |
| 44 | F | Nut | | 1P544 (11083) |
| 45 | F | Nut | | 5P0637 (11083) |
| 46 | F | Nut, Plain, Hexagon | 5310-00-404-3787 | 7H7539 (11083) |
| 47 | F | Nut, Fastener | 5310-01-483-6594 | 1P-0544 (11083) |
| 48 | F | Nut | | 5S7351 (11083) |
| 49 | F | Nut, Plain, Hexagon | 5310-00-656-6973 | 5F7351 (11083) |
| 50 | F | Nut, Plain, Round | 5310-01-480-6692 | 1P-0543 (11083) |
| 51 | F | Pin | 5315-01-270-2832 | 8S7615 (11083) |
| 52 | F | Plate, Protective | 5120-01-288-242 | 5P975 (11083) |
| 53 | F | Plate, Step | | 8B7560 (11083) |
| 54 | F | Puller | | FT0530 (11083) |
| 55 | F | Puller Attachment, Bearing | 5120-00-288-6756 | 8B7551 (11083) |

**Table 2. Tools and Test Equipment Requirements for the 130G Series Grader - Continued.**

| (1) ITEM NO. | (2) MAINTENANCE LEVEL | (3) ITEM NAME | (4) NATIONAL STOCK NUMBER | (5) PART NUMBER/ CAGEC |
|---|---|---|---|---|
| 56 | F | Puller Attachment, Cup | 5120-00-293-1430 | 8B7554 (11083) |
| 57 | F | Puller Attachment, Mechanical | 5120-00-288-6756 | 8B7551 (11083) |
| 58 | F | Puller Group, Nozzle | 2910-01-250-1608 | 6V6980 (11083) |
| 59 | F | Puller, Hydraulic | 5130-01-294-0717 | 6V3170 (11083) |
| 60 | F | Puller, Hydraulic | 5130-01-296-4277 | 6V3175 (11083) |
| 61 | F | Puller, Hydraulic | 5130-00-363-6680 | 6V3160 (11083) |
| 62 | F | Puller, Mechanical | 5120-00-633-5085 | GGG-P-781 (11083) |
| 63 | F | Puller, Mechanical | 5120-00-633-5074 | 939 (45225) |
| 64 | F | Puller, Mechanical | 5120-00-600-3306 | 1P2322 (11083) |
| 65 | F | Pump, Hydraulic Ram, Hand Driven | 4320-00-374-1403 | 4C4865 (11083) |
| 66 | F | Ratchet Assembly | 5120-01-275-2286 | 8S9906 (11083) |
| 67 | O | Removing Tool, Scarifier Tooth | 3805-00-423-9746 | 6B3260 (11083) |
| 68 | F | Ring Installer | | 2P5498 (11083) |
| 69 | F | Rod, Guide | | FT1016 (11083) |
| 70 | F | Saddle | 2510-01-264-8424 | 8S8048 (11083) |
| 71 | F | Screw | | 8S6586 (11083) |
| 72 | F | Screw | | 8S6585 (11083) |
| 73 | F | Screw, Machine | 5305-01-295-3554 | 5F7366 (11083) |
| 74 | F | Shop Equipment, Automotive Maintenance and Repair: Field Maintenance, Basic, Less Power | 4910-00-754-0705 | SC4910-95CLA31 (19204) (LIN: W32593) |
| 75 | O | Shop Equipment, Automotive Maintenance and Repair: Organizational Maintenance, Common No. 1, Less Power | 4910-00-754-0654 | SC 4910-95CLA74 (19204) (LIN: W32593) |
| 76 | O | Shop Equipment, Automotive Maintenance and Repair: Organizational Maintenance, Common No. 2, Less Power | 4910-00-754-0650 | SC4910-95CLA72 (19204) |
| 77 | O | Shop Equipment, Contact Maintenance: Truck Mounted | 4940-00-294-9518 | MILS45854 (81349) |
| 78 | O | Sling | 2835-01-078-2081 | 4-8FTX2IN (91796) |
| 79 | F | Socket, Spanner | 5120-01-288-2545 | 5P4204 (11083) |

**Table 2. Tools and Test Equipment Requirements for the 130G Series Grader - Continued.**

| (1) ITEM NO. | (2) MAINTENANCE LEVEL | (3) ITEM NAME | (4) NATIONAL STOCK NUMBER | (5) PART NUMBER/ CAGEC |
|---|---|---|---|---|
| 80 | F | Spacer | | L-1774 (11083) |
| 81 | F | Spacer, Puller Screw | 5120-00-423-8162 | 0T0774 (11083) |
| 82 | F | Spacer, Sleeve | 5365-01-288-2658 | 5P4197 (11083) |
| 83 | F | Stand, Lifting and B | 5120-01-134-8085 | 4C6486 (11083) |
| 84 | O | Stand, Maintenance, Automotive Axle: 24,000 lb capacity, height range 19–29-1/2 in. | 4910-01-480-0147 | 1778A (45225) |
| 85 | F | Stand, Maintenance, Automotive Engine | 4910-01-117-4344 | 1750A (45225) |
| 86 | F | Stud, Plain | 5307-01-485-7432 | 4C-9634 (11083) |
| 87 | F | Tester Group, Nozzle | 4320-01-263-9716 | 5P4150 (11083) |
| 88 | F | Tester, Spring Resiliency | 6635-01-124-1771 | 8S2263 (11083) |
| 89 | O | Tool Kit, General Mechanic's: Automotive | 5180-01-454-3787 | 12B470000 (59678) |
| 90 | F | Tool, Special | 4910-01-265-0428 | 8S7611 (11083) |
| 91 | F | Washer, Flat | 5310-01-526-7006 | 3H-0467 (11083) |
| 92 | F | Washer | 5310-01-485-7439 | 5F7353 (11083) |
| 93 | F | Wrench, Ratchet | 5120-01-350-5274 | 8H684 (11083) |
| 94 | F | Wrench, Torque: 3/8 in. drive, 0-150 lb-in. | 5120-00-230-6380 | TQ12B (55719) |
| 95 | O | Wrench, Torque: 3/8 in. drive, 0-200 lb-in. | 5120-00-853-4538 | |
| 96 | O | Wrench, Torque, 3/8 in. drive, 0-75 lb-ft | 5120-00-554-7292 | GGG-W-00686 (81348) |
| 97 | O | Wrench, Torque, 3/8 in. drive, 5-75 lb-ft | 5120-01-355-1734 | |
| 98 | F | Wrench, Torque: 1/2 in. drive, 0-300 lb-in. | 5120-00-247-2563 | |
| 99 | O | Wrench, Torque: 1/2 in. drive, 50-250 lb-ft | 5120-01-399-5604 | TVW250 (76377) |
| 100 | F | Wrench, Torque: 1/2 in. drive, 50-250 lb-ft | 5120-01-042-0982 | |
| 101 | O | Wrench, Torque: 3/4 in. drive, 0-600 lb-ft | 5120-01-113-9564 | 7379 (45225) |
| 102 | O | Wrench, Torque: 3/4 in. drive, 120-600 lb-ft | 5120-01-399-5605 | TWZ600 (76377) |

**Table 3. Remarks for the 130G Series Grader.**

| (1) REFERENCE CODE | (2) REMARKS |
|---|---|
| A | Preventive Maintenance Checks and Services (PMCS) |
| B | Limited Field Repair Authorized (Seals, Gaskets, Bearings, Plugs, and Cylinder Head) |
| C | Limited Field Repair Authorized (Seals, Gaskets, Injectors, Springs, and Valves) |
| D | Limited Field Repair Authorized (Replacement of Broken or Missing Parts and/or Minor Welding) |
| E | Limited Field Repair Authorized (Seals, Gaskets, and Bearings) |
| F | Limited Field Repair Authorized (Seals, Gaskets, Bearings, and Brushes) |
| G | Limited Field Repair Authorized (Seals, Gaskets, Bearings, Brushes, and Starter Gear) |
| H | Limited Field Repair Authorized (Seals, Gaskets, Wipers, and Rings) |
| I | Limited Field Repair Authorized (Seals, Gaskets, and Missing/Broken Parts) |
| J | Refer to TM 9-2610-200-14 |

**END OF WORK PACKAGE**

## EXPENDABLE AND DURABLE ITEMS LIST 0349 00

### *SCOPE*

This work package lists expendable and durable items you will need to maintain the 130G Grader. This listing is for informational purposes only and is not authority to requisition the listed items. These items are authorized to you by CTA 50-970, *Expendable/Durable Items (Except Medical, Class V Repair Parts, and Heraldic Items)*, or CTA 8-100, *Army Medical Department Expendable/Durable Items*.

### *EXPLANATION OF COLUMNS*

1. **Column (1) - Item Number.** This number is assigned to the entry in the listing and is referenced in the narrative instructions to identify the item [e.g., Use antifreeze (Item 5, WP 0349 00)].
2. **Column (2) - Level.** This column identifies the lowest level of maintenance that requires the listed item.

   C - Operator/Crew

   O - Unit Maintenance

   F - Direct Support Maintenance
3. **Column (3) - National Stock Number.** This is the National Stock Number assigned to the item which you can use to requisition it.
4. **Column (4) - Description, CAGEC, and Part Number.** This provides the other information you need to identify the item.
5. **Column (5) - Unit of Measure (U/M).** This column shows the physical measurement or count of an item, such as gallon, dozen, gross, etc.

| (1) ITEM NUMBER | (2) LEVEL | (3) NATIONAL STOCK NUMBER | (4) DESCRIPTION, CAGEC, AND PART NUMBER | (5) U/M |
|---|---|---|---|---|
| 1 | O | 8040-01-023-4173 | ADHESIVE<br>(1A9T3) EC-1300 | PT |
| 2 | O | | ADHESIVE<br>(81348) MMM-A-1617 | |
| | | 8040-00-262-9025 | 4 Ounce Tube | TU |
| | | 8040-00-262-9026 | 1/2 Pint Can | CN |
| 3 | O | | ADHESIVE: PVC<br>(25472) A541B | |
| | | 8040-00-573-1502 | 1 Pint Can | |
| 4 | O | 8040-01-250-3969 | ADHESIVE: Type 2<br>(05972) 242 | BT |
| 5 | C | | ANTIFREEZE: Permanent, Ethylene Glycol, Inhibited<br>(58536) AA52624-1-A | |
| | | 6850-01-441-3218 | 1 Gallon Can | CN |
| | | 6850-01-441-3223 | 55 Gallon Drum | DR |
| 6 | O | | ANTISEIZE COMPOUND<br>(05972) 76764 | |
| | | 8030-00-251-3980 | 1 Pound Tube or Can | TU or CN |
| 7 | O | 5340-00-450-5718 | CAP SET, PROTECTIVE, DUST AND MOISTURE<br>(19207) 10935405 | EA |
| 8 | C | | CLEANING COMPOUND: Solvent, Type III<br>(81349) MIL-PRF-680 | |
| | | 6850-01-474-2318 | 1 Gallon Can | CN |
| | | 6850-01-474-2320 | 5 Gallon Can | CN |
| | | 6850-01-474-2321 | 55 Gallon Drum | DR |
| 9 | O | | CLOTH: Abrasive, Emery, Fine<br>(80204) ANSI B74.18 | |
| | | 5350-00-584-4654 | 50 Sheet Package | PG |
| 10 | O | | COMPOUND, RETAINING<br>MIL-R-46082A | |
| 11 | C | | DETERGENT: General Purpose, Liquid<br>(83421) 7930-00-282-9699 | |
| | | 7930-00-282-9699 | 1 Gallon Can | CN |

**EXPENDABLE AND DURABLE ITEMS LIST - CONTINUED** **0349 00**

| (1) ITEM NUMBER | (2) LEVEL | (3) NATIONAL STOCK NUMBER | (4) DESCRIPTION, CAGEC, AND PART NUMBER | (5) U/M |
|---|---|---|---|---|
| 12 | O | | FLUX: Soldering<br>(58536) A-A-51145TY FORM A | |
| | | 3439-00-255-9935 | 1 Pound Can | CN |
| 13 | C | | FUEL: Diesel, DF-1 Grade, Winter<br>(81346) ASTM D 975 | |
| | | 9140-00-286-5286 | Bulk | GL |
| | | 9140-00-286-5287 | 5 Gallon Can | CN |
| | | 9140-00-286-5288 | 55 Gallon Drum | DR |
| 14 | C | | FUEL: Diesel, DF-2 Grade<br>(81346) ASTM D 975 | |
| | | 9140-00-286-52 | Bulk | GL |
| | | 9140-00-286-52 | 5 Gallon Can | CN |
| | | 9140-00-286-52 | 55 Gallon Drum | DR |
| 15 | C | | FUEL, TURBINE: Aviation<br>(81349) MILT83133 GR JP8 | |
| | | 9130-01-031-5816 | Bulk | GL |
| 16 | O | | GASKET CEMENT<br>(11083) 5H2471 | |
| | | 8040-01-038-5043 | 8 Ounce Can | CN |
| 17 | C | | GREASE: Automotive and Artillery, GAA | |
| | | 9150-01-197-7688 | (81349) M-10924-A<br>2-1/4 Ounce Tube | TU |
| | | 9150-01-197-7690 | (81349) M-10924-C<br>1-3/4 Pound Can (81349) | CN |
| | | 9150-01-197-7692 | (81349) M-10924-E<br>35 Pound Pail | CN |
| | | 9150-01-197-7693 | (81349) M-10924-B<br>14 Ounce Cartridge | CA |
| 18 | O | 9150-01-361-8919 | GREASE, ELECTRICALLY CONDUCTIVE<br>(53711) 5190179 | OZ |
| 19 | O | | INSULATING SLEEVING, ELECTRICAL<br>(11530) 08-196485-06 | |
| | | 5970-00-815-1295 | 250 Foot Spool | FT |

| (1) ITEM NUMBER | (2) LEVEL | (3) NATIONAL STOCK NUMBER | (4) DESCRIPTION, CAGEC, AND PART NUMBER | (5) U/M |
|---|---|---|---|---|
| 20 | O | | INSULATING VARNISH, ELECTRICAL<br>(75037) 1602 | |
| | | 5970-00-476-6717 | 13 Ounce Aerosol Can | CN |
| 21 | | | LUBRICANT: Rubber<br>(11083) 5P-3975 | |
| | | | 1 Gallon Can | CN |
| 22 | | | LUBRICANT, THREAD<br>(11083) 2P2506 | |
| 23 | O | | LUBRICATING OIL, GEAR: GO 75<br>(81349) MIL-PRF-2105 | |
| | | 9150-01-035-5390 | 1 Quart Can | CN |
| | | 9150-01-035-5391 | 5 Gallon Can | CN |
| 24 | O | | LUBRICATING OIL, GEAR: GO 80/90<br>(81349) MIL-PRF-2105 | |
| | | 9150-01-035-5392 | 1 Quart Can | CN |
| | | 9150-00-001-9395 | 5 Gallon Can | CN |
| | | 9150-01-035-5394 | 55 Gallon Drum | DR |
| 25 | O | | LUBRICATING OIL: Molybdenum Disulfide, Silicone<br>(81349) DOD-L-25681 | |
| | | 9150-00-543-7220 | 1 Pound Can | CN |
| 26 | C | | OIL, LUBRICATING: OEA, Arctic<br>(81349) MIL-L-46167 | |
| | | 9150-00-402-4478 | 1 Quart Can | CN |
| | | 9150-00-402-2372 | 5 Gallon Can | CN |
| | | 9150-00-491-7197 | 55 Gallon Drum | DR |
| 27 | C | | OIL, LUBRICATING: OE/HDO-10<br>(81349) MIL-PRF-2104 | |
| | | 9150-00-189-6727 | 1 Quart Can | CN |
| | | 9150-00-186-6668 | 5 Gallon Can | CN |
| | | 9150-00-191-2772 | 55 Gallon Drum | DR |
| 28 | | 9150-00-247-0481 | OIL, LUBRICATING: OE/HDO-10/30<br>(2R128) BRAYCO413J | QT |
| 29 | C | | OIL, LUBRICATING: OE/HDO-30<br>(81349) MIL-PRF-2104 | |
| | | 9150-00-186-6681 | 1 Quart Can | CN |
| | | 9150-00-188-9858 | 5 Gallon Can | CN |

**EXPENDABLE AND DURABLE ITEMS LIST - CONTINUED** **0349 00**

| (1) ITEM NUMBER | (2) LEVEL | (3) NATIONAL STOCK NUMBER | (4) DESCRIPTION, CAGEC, AND PART NUMBER | (5) U/M |
|---|---|---|---|---|
| 30 | C | | OIL, LUBRICATING: OE/HDO-15/40<br>(81349) MIL-PRF-2104 | |
| | | 9150-01-152-4117 | 1 Quart Can | CN |
| | | 9150-01-152-4118 | 5 Gallon Can | CN |
| | | 9150-01-152-4119 | 55 Gallon Drum | DR |
| 31 | F | 5350-00-619-9167 | PAPER, ABRASIVE: 80 Grit,<br>9x11 Sheets<br>(80204) ANSI B74.18 | PG |
| 32 | O | 9150-00-905-1387 | PENETRATING OIL: AEROKROIL<br>(13868) | |
| | | | 10 Ounce Can, Pressurized | CN |
| 33 | | | PETROLATUM, TECHNICAL<br>(81348) VV-P-236 | |
| | | 9150-00-250-0933 | 7.5 Pound Can | CN |
| 34 | O | | PIGMENT, PAINT PRODUCTS: Prussian Blue<br>(58536) AA3108-2A-001Q | |
| | | 8010-00-664-1414 | 1 Quart Can | CN |
| 35 | | | RAG, WIPING<br>(80244) 7920-00-205-1711 | |
| | | 7290-00-205-1711 | 50 Pound Bale | BL |
| 36 | O | | ROPE | |
| 37 | O | | SANDPAPER: No. 00 | |
| 38 | | | SEALING COMPOUND<br>(05972) 26241 | |
| | | 8030-01-142-3131 | 250 CC Bottle | BT |
| 39 | O, F | | SEALING COMPOUND<br>MIL-S-22473 | |
| 40 | O | 6920-01-239-1562 | SEALANT, THREAD: 11784488<br>(19200) | TV |
| 41 | F | | SILICONE COMPOUND<br>(19207) 12273204 | |
| | | 6850-00-927-9461 | 5 Ounce Tube | TU |
| 42 | O | | SOLDER: Lead-Tin Alloy, Rosin Core<br>(81346) SN60WRP2 0.032 1LB | |
| | | 3439-00-555-4629 | 1 Pound Spool | LB |

| (1) ITEM NUMBER | (2) LEVEL | (3) NATIONAL STOCK NUMBER | (4) DESCRIPTION, CAGEC, AND PART NUMBER | (5) U/M |
|---|---|---|---|---|
| 43 | | | STRAP, TIEDOWN, ELECTRICAL COMPONENTS | |
| | | 5975-00-903-2284 | 4 Inch Length, Black, Package of 100 (96906) MS3367-4-0 | HD |
| | | 5975-00-984-6582 | 6 Inch Length, Black, Package of 100 (96906) MS3367-1-0 | HD |
| | | 5975-00-935-5946 | 13.35 Inch Minimum Length, Brown (96906) MS3367-2-1 | EA |
| 44 | | | TAG, MARKER (64067) 9905-00-537-8954 | |
| | | 9905-00-537-8954 | Bundle of 50 | BD |
| 45 | | | TAPE, DUCT 2 Inches Wide (39482) 1791K70 | |
| | | 5640-00-103-2254 | 60 Yard Roll | RL |
| 46 | | | WIRE, NONELECTRICAL (81346) ASTM A641 | |
| | | 9905-00-596-0191 | 283 Foot Coil | CL |

END OF WORK PACKAGE

## ILLUSTRATED LIST OF MANUFACTURED ITEMS 0350 00

### *INTRODUCTION*

1. This work package includes complete instructions for making items authorized to be manufactured by maintenance personnel.
2. An index, in alphabetical order by nomenclature, is provided for cross-referencing the item to be manufactured to the Figure number and page number where manufacturing instructions are located. Refer to Table 1 below.
3. Manufacture from steel or aluminum stock to specifications on the illustrations.
4. All dimensions on illustrations are in standard units.

**Table 1. Manufactured Items Cross-Reference Index.**

| NOMENCLATURE | FIGURE NUMBER | PAGE NUMBER |
|---|---|---|
| Adapter Tool | Figure 1 | 0325 00-1 |
| Interference Block | Figure 2 | 0325 00-2 |

### *MANUFACTURING INSTRUCTIONS*

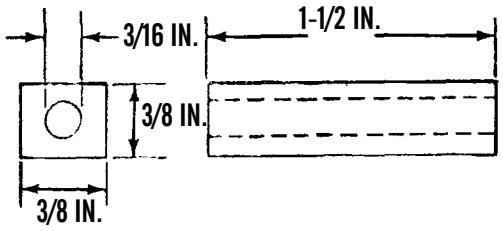


Figure 1. Adapter Tool.

*MANUFACTURING INSTRUCTIONS - CONTINUED*

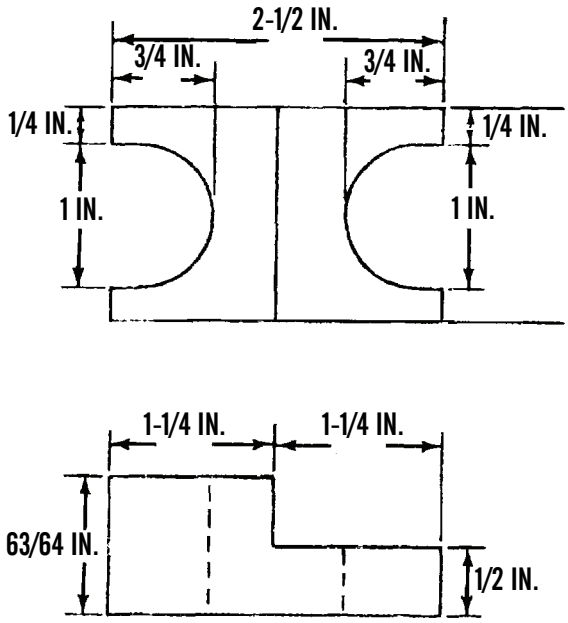


Figure 2. Interference Block.

**END OF WORK PACKAGE**

**TORQUE LIMITS** **0351 00**

## *SCOPE*

This work package lists standard torque values and provides general information for applying torque. Special torque values and tightening sequences are indicated in the maintenance procedures for applicable components.

## *GENERAL*

1. Always use torque values listed in Tables 1 and 2 when a maintenance procedure does not give a specific torque value.
   a. Table 1 provides torque limits for SAE standard fasteners.
   b. Table 2 provides torque limits for metric fasteners.
2. Unless otherwise indicated, standard torque tolerance shall be ± 10%.
3. Torque values listed are based on clean, dry threads. Reduce torque by 10% when engine oil is used as a lubricant. Reduce torque by 20% if new plated capscrews are used.
4. If the maintenance procedures do not specify a tightening order, use the following guides:
   a. Unless otherwise specified, lubricate threads of fasteners with oil (OE/HDO-10 or OEA-30).
   b. When tightening fasteners above 30 lb-ft (41 Nm), use the torque pattern but only tighten to 70% of final value (multiply final value by 0.7). Repeat pattern until final value is reached.
   c. Tighten circular patterns using circular torque pattern and tighten straight patterns using straight torque pattern.

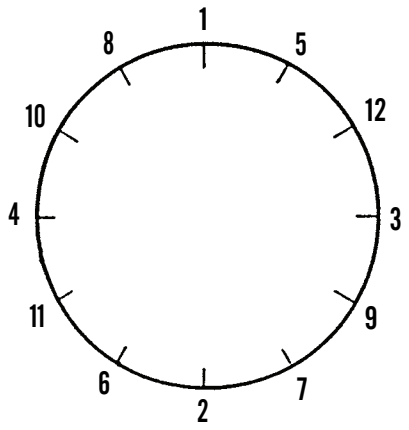


CIRCLULAR TORQUE PATTERN

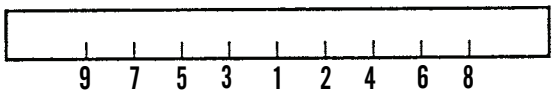


STRAIGHT TORQUE PATTERN

## CAUTION

If replacement capscrews are of higher grade than originally supplied, use torque specifications for the original. This will prevent equipment damage due to overtorquing.

**Table 1. Torque Limits - SAE Standard Fasteners.**

| Current Usage | Much Used | Much Used | Used at Times | Used at Times |
|---|---|---|---|---|
| **QUALITY OF MATERIAL** | **INDETERMINATE** | **MINIMUM COMMERCIAL** | **MEDIUM COMMERCIAL** | **BEST COMMERCIAL** |
| SAE Grade Number | 1 or 2 | 5 | 6 or 7 | 8 |
| Cap Screw Head Markings<br>Manufacturer's marks may vary<br>These are all SAE Grade 5 (3 line) | 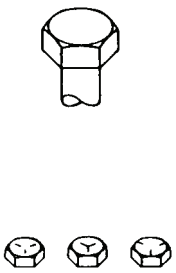 |  |  | 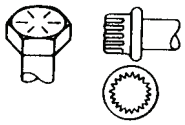 |
| **CAP SCREW BODY SIZE IN. - THREAD** | **TORQUE LB-FT (NM)** | **TORQUE LB-FT (NM)** | **TORQUE LB-FT (NM)** | **TORQUE LB-FT (NM)** |
| 1/4 20 | 5 (7) | 8 (11) | 10 (14) | 12 (16) |
| 28 | 6 (8) | 10 (14) | | 14 (19) |
| 5/16 18 | 11 (15) | 17 (23) | 19 (26) | 24 (33) |
| 24 | 13 (18) | 19 (26) | | 27 (37) |
| 3/8 16 | 18 (24) | 31 (42) | 34 (46) | 44 (60) |
| 24 | 20 (27) | 35 (47) | | 49 (66) |
| 7/16 14 | 28 (38) | 49 (66) | 55 (75) | 70 (95) |
| 20 | 30 (41) | 55 (75) | | 78 (106) |
| 1/2 13 | 39 (53) | 75 (102) | 85 (115) | 105 (142) |
| 20 | 41 (56) | 85 (115) | | 120 (163) |
| 9/16 12 | 51 (69) | 110 (149) | 120 (163) | 155 (210) |
| 18 | 55 (75) | 120 (163) | | 170 (231) |
| 5/8 11 | 83 (113) | 150 (203) | 167 (226) | 210 (285) |
| 18 | 95 (129) | 170 (231) | | 240 (325) |
| 3/4 10 | 105 (142) | 270 (366) | 280 (380) | 375 (508) |
| 16 | 115 (156) | 295 (400) | | 420 (569) |
| 7/8 9 | 160 (217) | 395 (536) | 440 (597) | 605 (820) |
| 14 | 175 (237) | 435 (590) | | 675 (915) |
| 1 8 | 235 (319) | 590 (800) | 660 (895) | 910 (1234) |
| 14 | 250 (339) | 660 (895) | | 990 (1342) |

**Table 2. Torque Limits - Metric Fasteners.**

| Torque values for metric thread fasteners with lubricated* or plated threads† | | | | |
|---|---|---|---|---|
| **Thread Diameter-Pitch** | 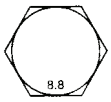 **Class 8.8 Bolt** | 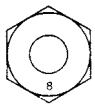 **Class 8 Nut** |  **Class 10.9 Bolt** | 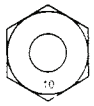 **Class 10 Nut** |
| | **Torque: lb-ft (Nm)** | | **Torque: lb-ft (Nm)** | |
| M6<br>M8<br>M8 x 1 | 5 (7)<br>12 (16)<br>13 (18) | | 7 (9)<br>17 (23)<br>18 (24) | |
| M10<br>M10 x 1.25 | 24 (33)<br>27 (37) | | 34 (46)<br>38 (52) | |
| M12<br>M12 x 1.5 | 42 (57)<br>43 (58) | | 60 (81)<br>62 (84) | |
| M14<br>M14 x 1.5 | 66 (89)<br>72 (98) | | 95 (129)<br>103 (140) | |
| M16<br>M16 x 1.5 | 103 (140)<br>110 (149) | | 148 (201)<br>157 (213) | |
| M18<br>M18 x 1.5 | 147 (199)<br>165 (224) | | 203 (275)<br>229 (310) | |
| M20<br>M20 x 1.5 | 208 (282)<br>213 (313) | | 288 (390)<br>320 (434) | |
| M22<br>M22 x 1.5 | 283 (384)<br>315 (427) | | 392 (531)<br>431 (584) | |
| M24<br>M24 x 2 | 360 (488)<br>392 (531) | | 498 (675)<br>542 (735) | |
| M27<br>M27 x 2 | 527 (715)<br>569 (771) | | 729 (988)<br>788 (1068) | |
| M30<br>M30 x 2 | 715 (969)<br>792 (1074) | | 990 (1342)<br>1096 (1486) | |

* All plated and unplated fasteners should be coated with oil before installation.
† Use these torque values if either the bolt or nut is lubricated or plated (zinc-phosphate conversion-coated, cadmium-plated, or waxed).

**END OF WORK PACKAGE**

## SCHEMATIC DIAGRAMS 0352 00

### *INTRODUCTION*

1. This work package contains schematic diagrams for the 130G Series Grader.
2. The following schematic diagrams are included in this work package:

Figure 1. 130GNS and 130GNSCE Electrical Schematic
Figure 2. 130GS and 130GSCE Electrical Schematic
Figure 3. Fuse and Switch Logic Schematic
Figure 4. Hydraulic System Schematic
Figure 5. Steering System Schematic
Figure 6. 130G, 130GNS, and 130GNSCE Air Brake System Schematic
Figure 7. 130GS and 130GSCE Air Brake System Schematic
Figure 8. Supplemental Steering Electrical Schematic
Figure 9. Supplemental Steering Hydraulic Schematic (Non-actuated)
Figure 10. Supplemental Steering Hydraulic Schematic (Actuated)
Figure 11. Engine Charging System Schematic
Figure 12. Cooling System Schematic
Figure 13. Fuel System Schematic
Figure 14. Lubrication System Schematic
Figure 15. Transmission Hydraulic Schematic
Figure 16. Transmission Control Valves Schematic
Figure 17. 130 G Electrical Schematic

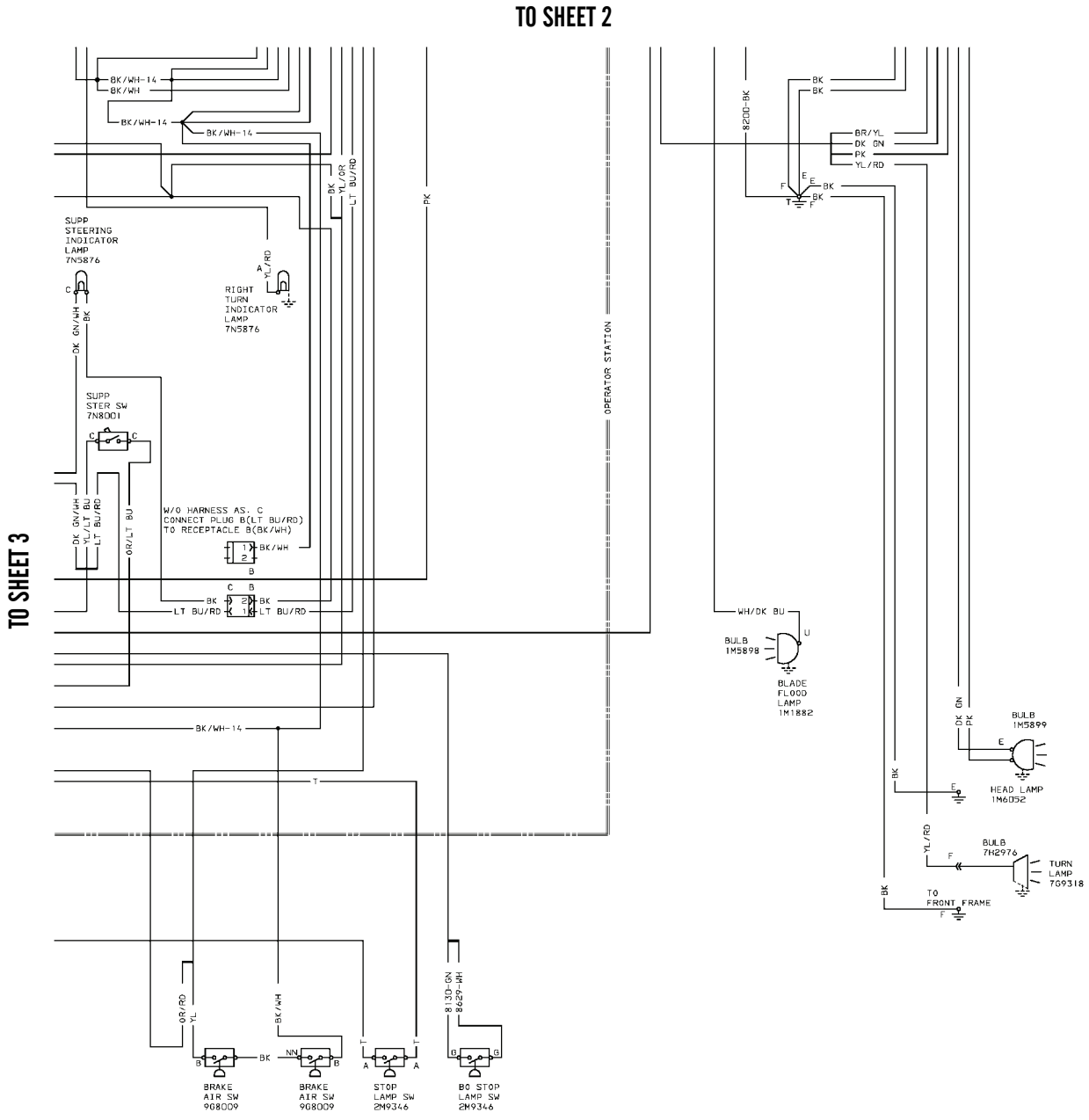


397-4365

**Figure 1. 130GNS and 130GNSCE Electrical Schematic (Sheet 1 of 6).**

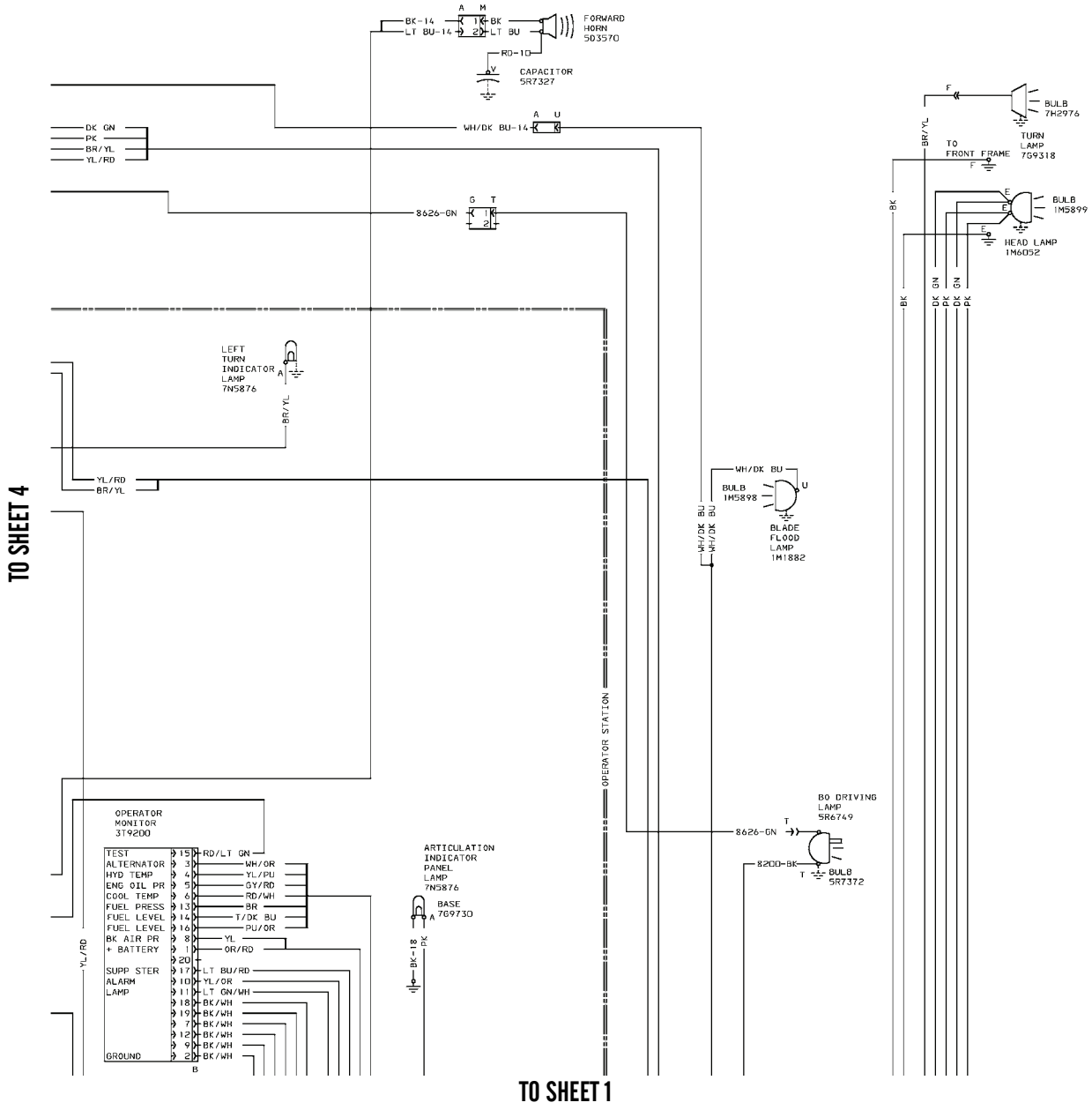


397-4366

**Figure 1. 130GNS and 130GNSCE Electrical Schematic (Sheet 2 of 6).**

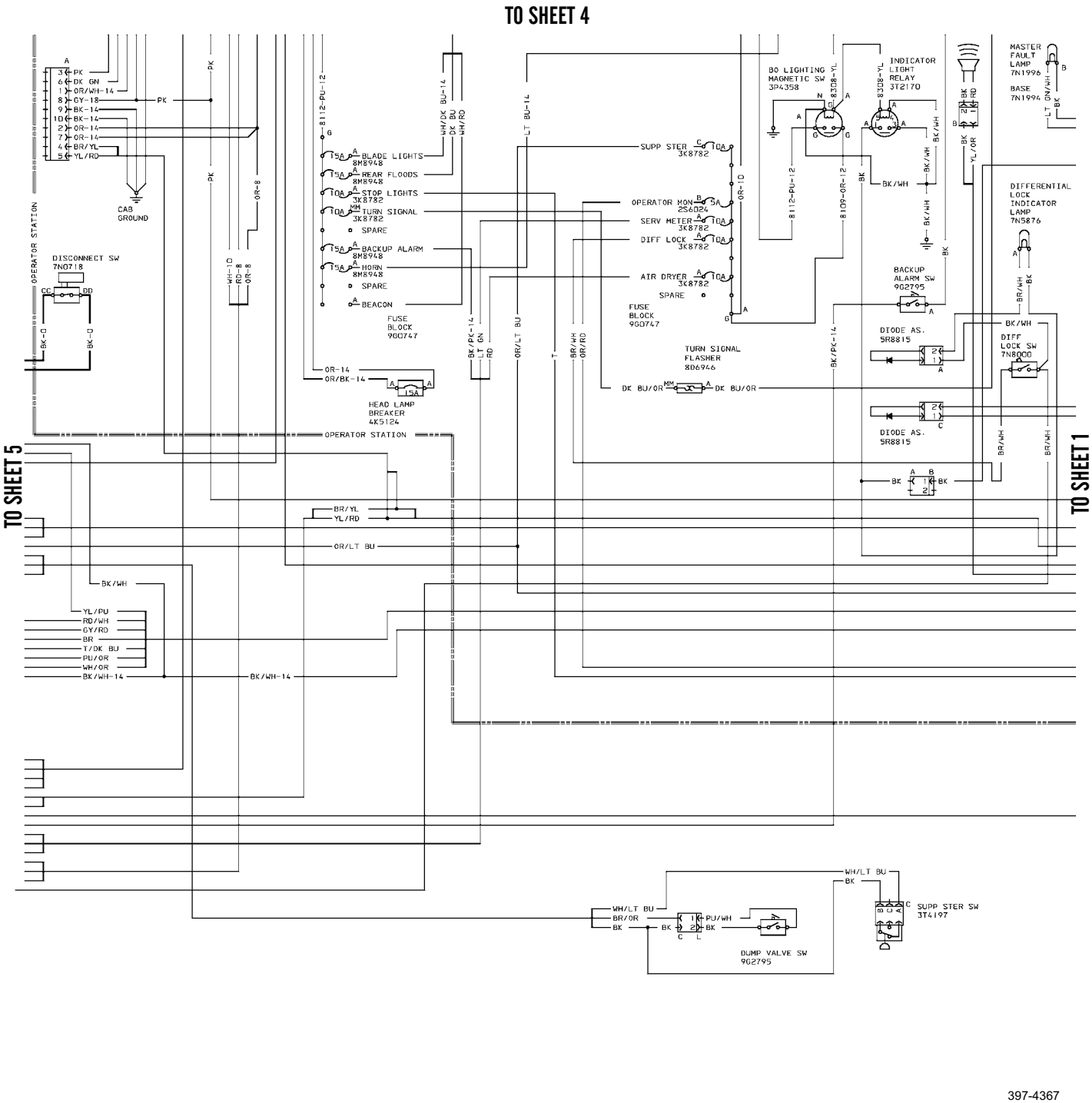


397-4367

**Figure 1. 130GNS and 130GNSCE Electrical Schematic (Sheet 3 of 6).**

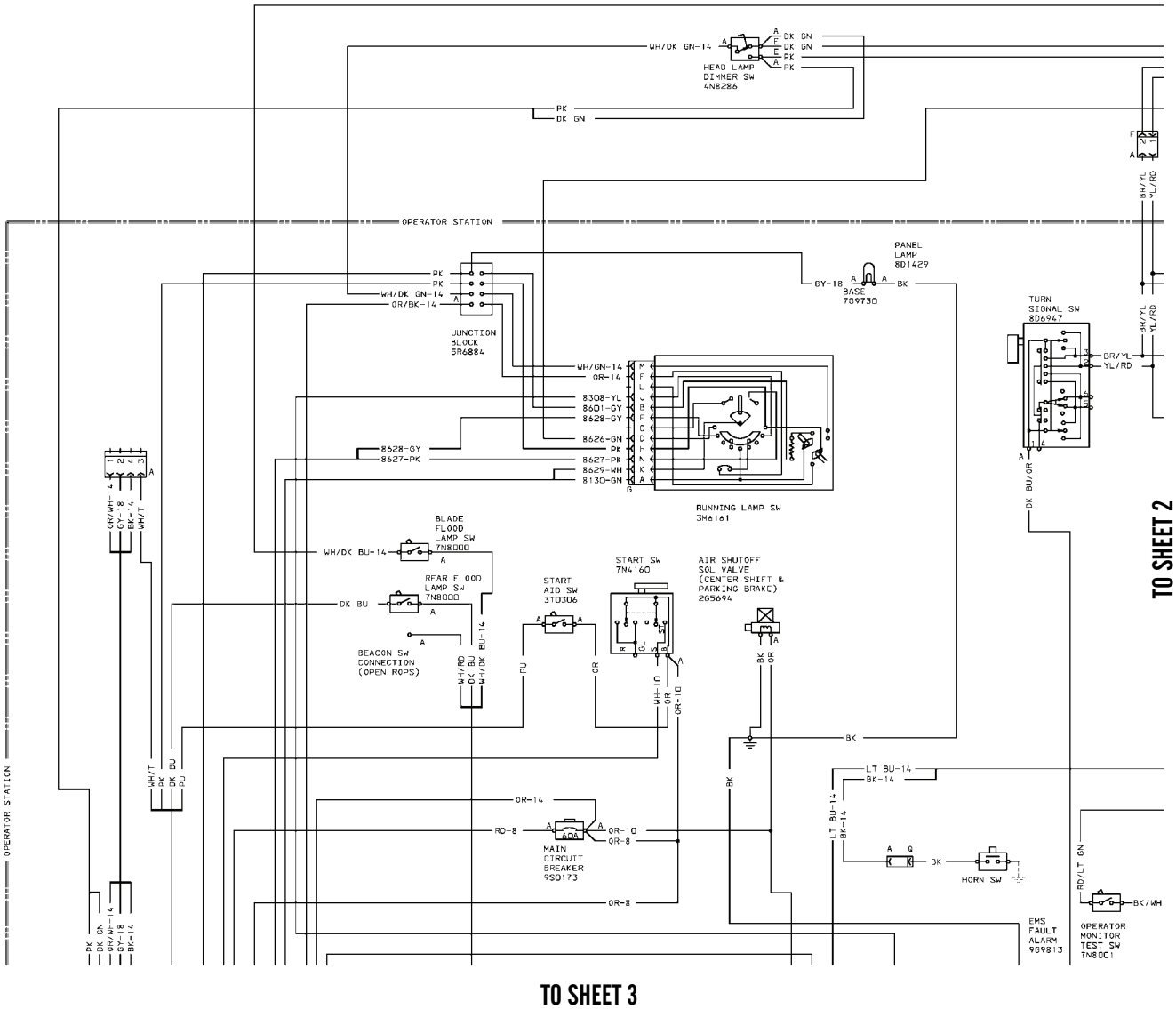


397-4368

**Figure 1. 130GNS and 130GNSCE Electrical Schematic (Sheet 4 of 6).**

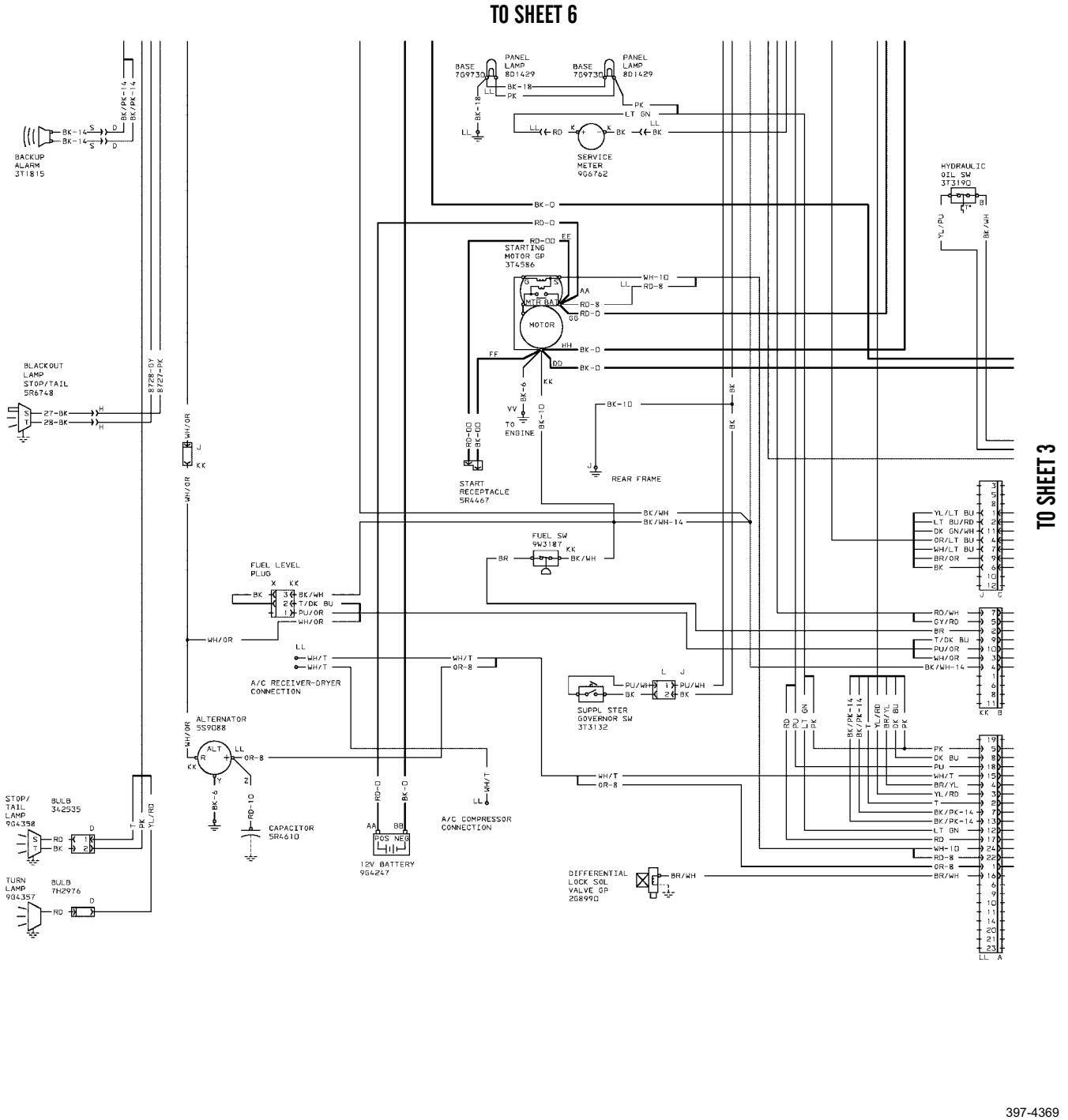


397-4369

**Figure 1. 130GNS and 130GNSCE Electrical Schematic (Sheet 5 of 6).**

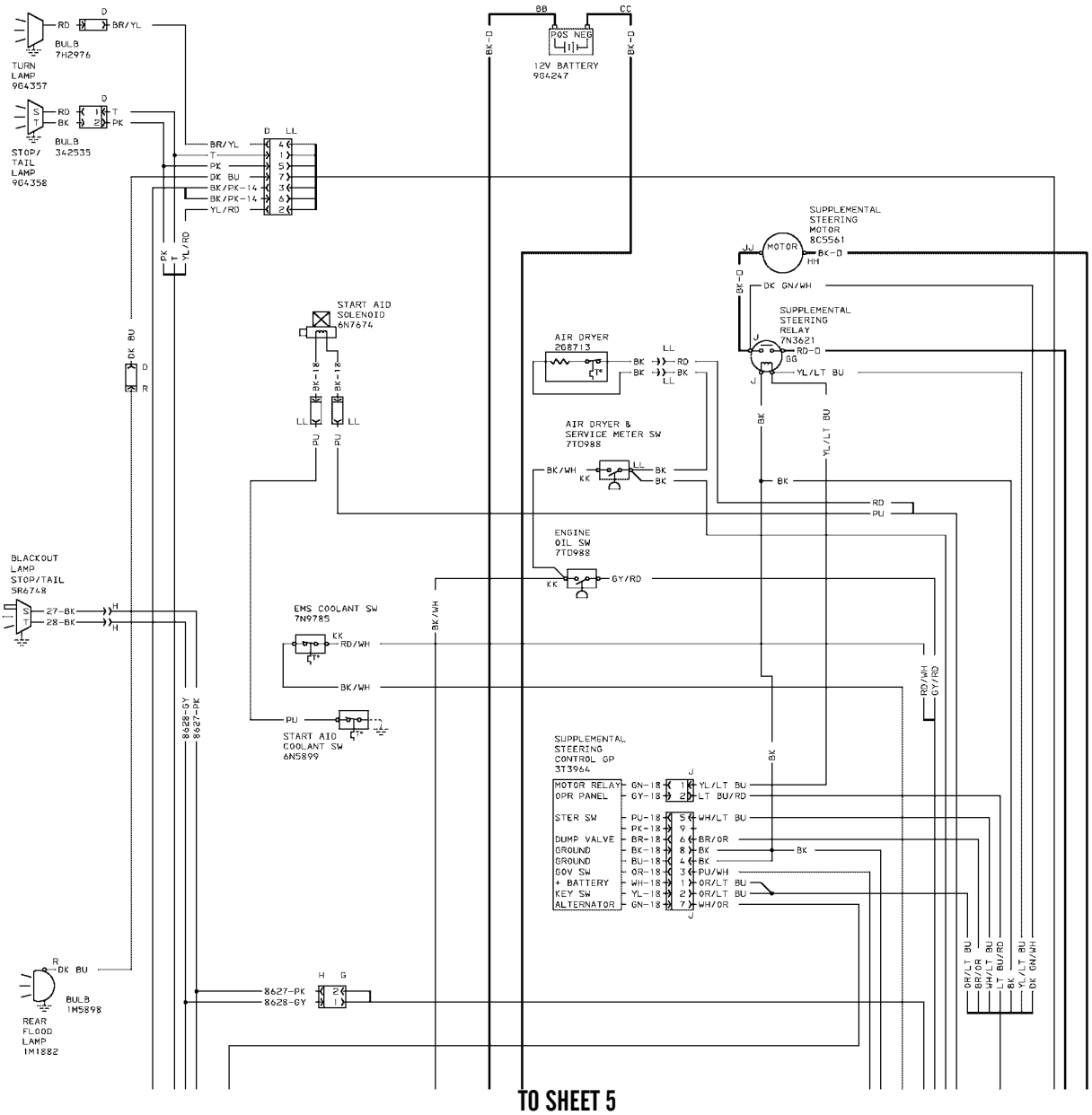


397-4370

**Figure 1. 130GNS and 130GNSCE Electrical Schematic (Sheet 6 of 6).**

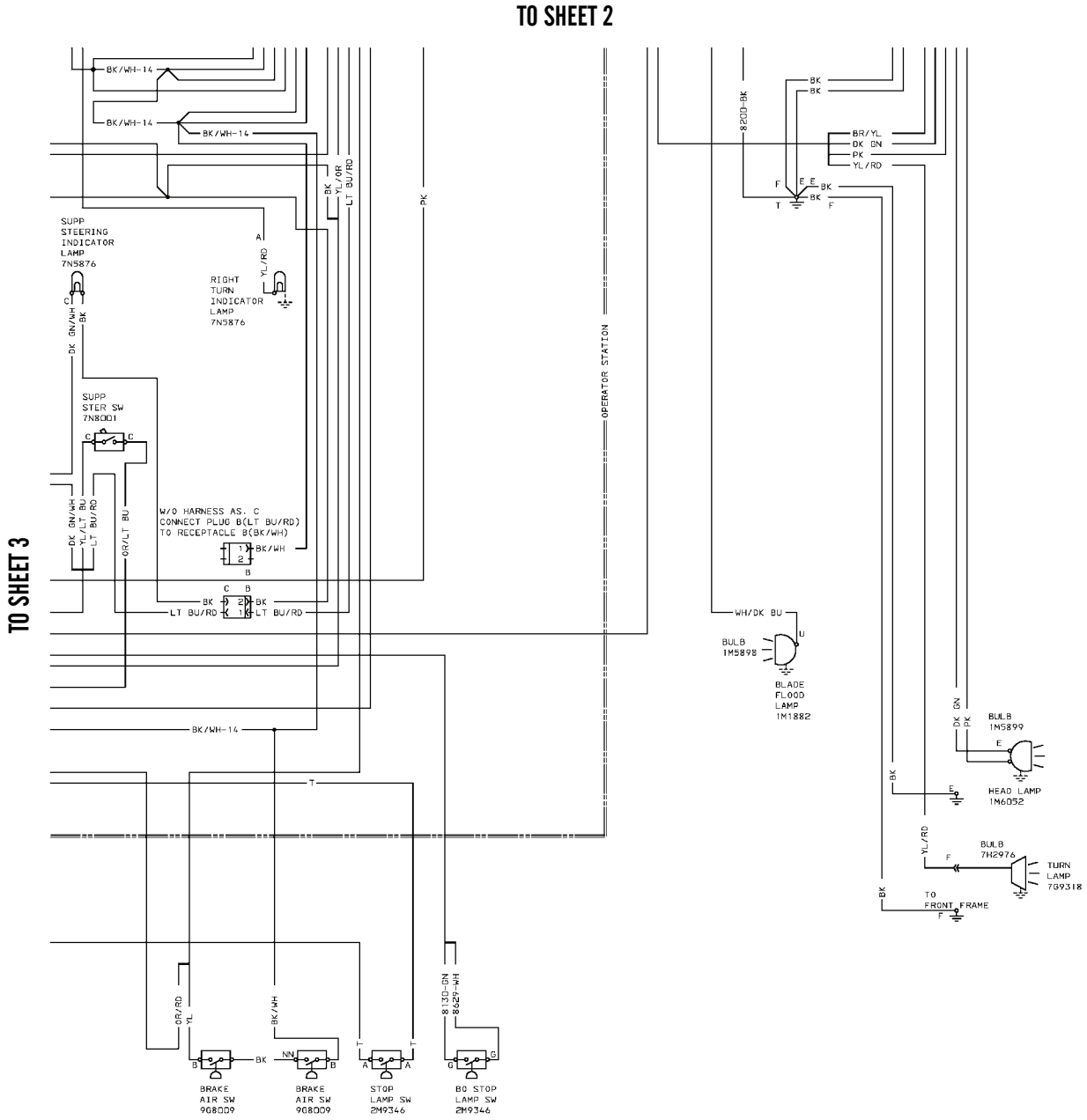


397-4371

**Figure 2. 130GS and 130GSCE Electrical Schematic (Sheet 1 of 6).**

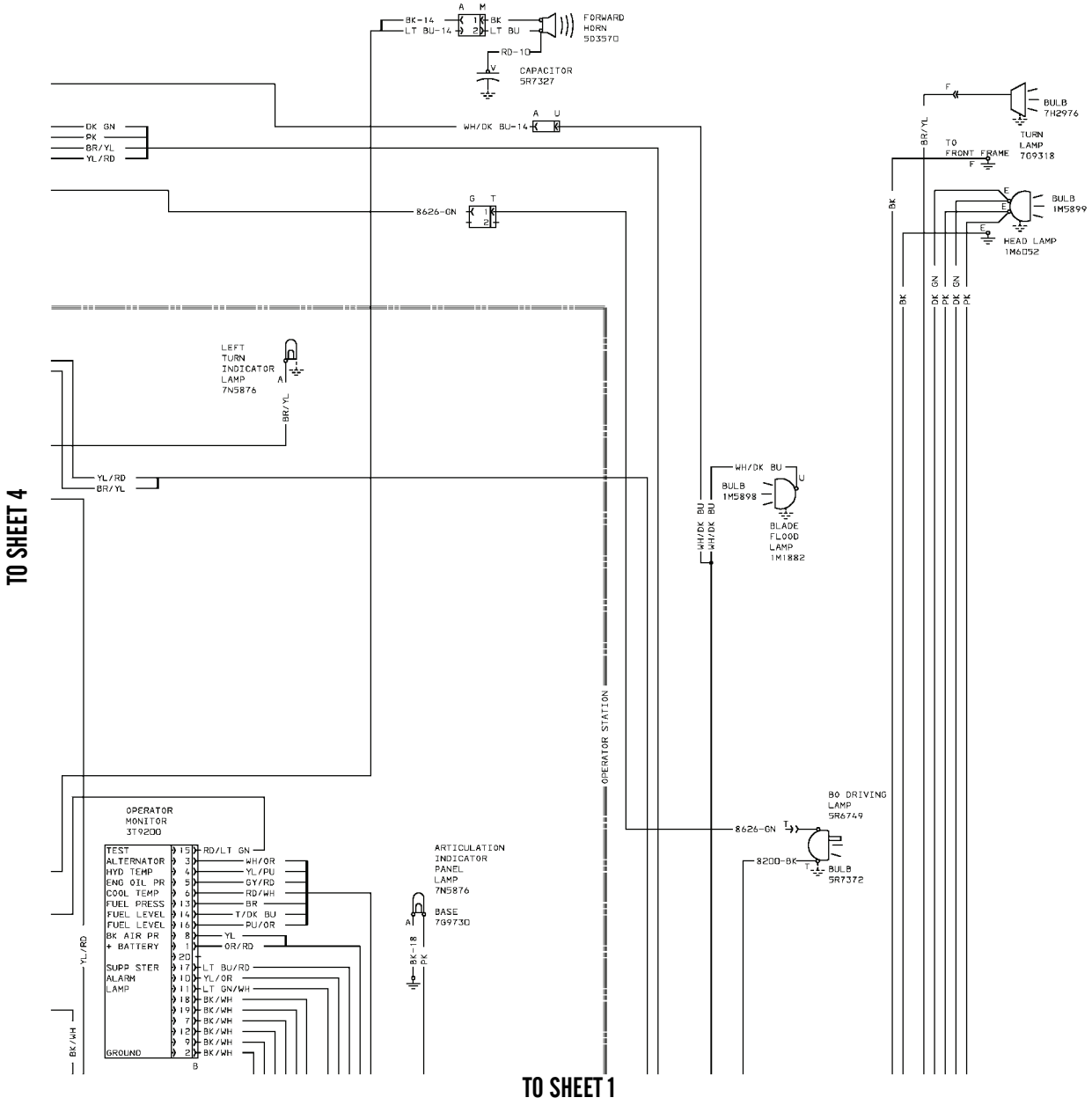


397-4372

**Figure 2. 130GS and 130GSCE Electrical Schematic (Sheet 2 of 6).**

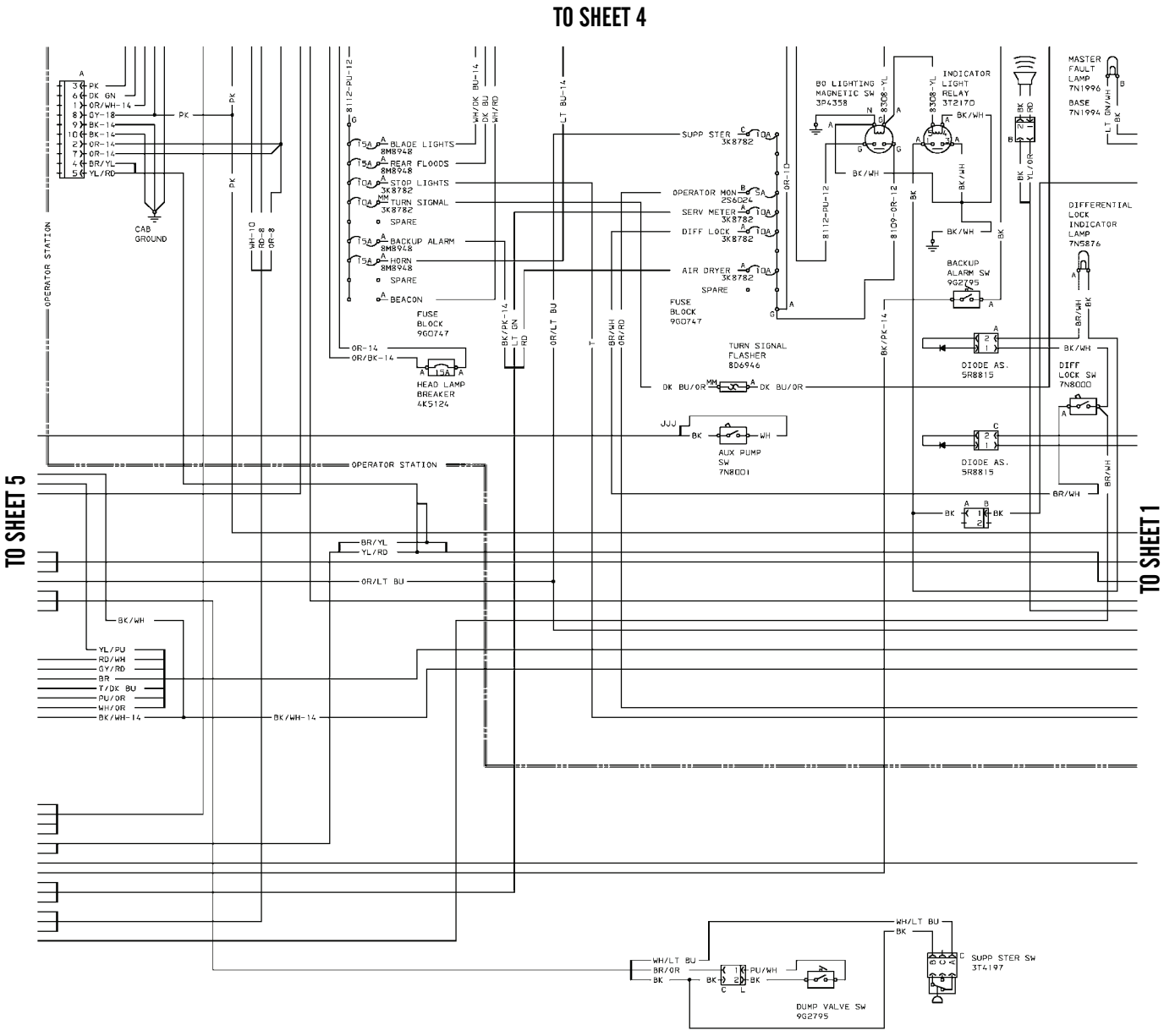


397-4373

**Figure 2. 130GS and 130GSCE Electrical Schematic (Sheet 3 of 6).**

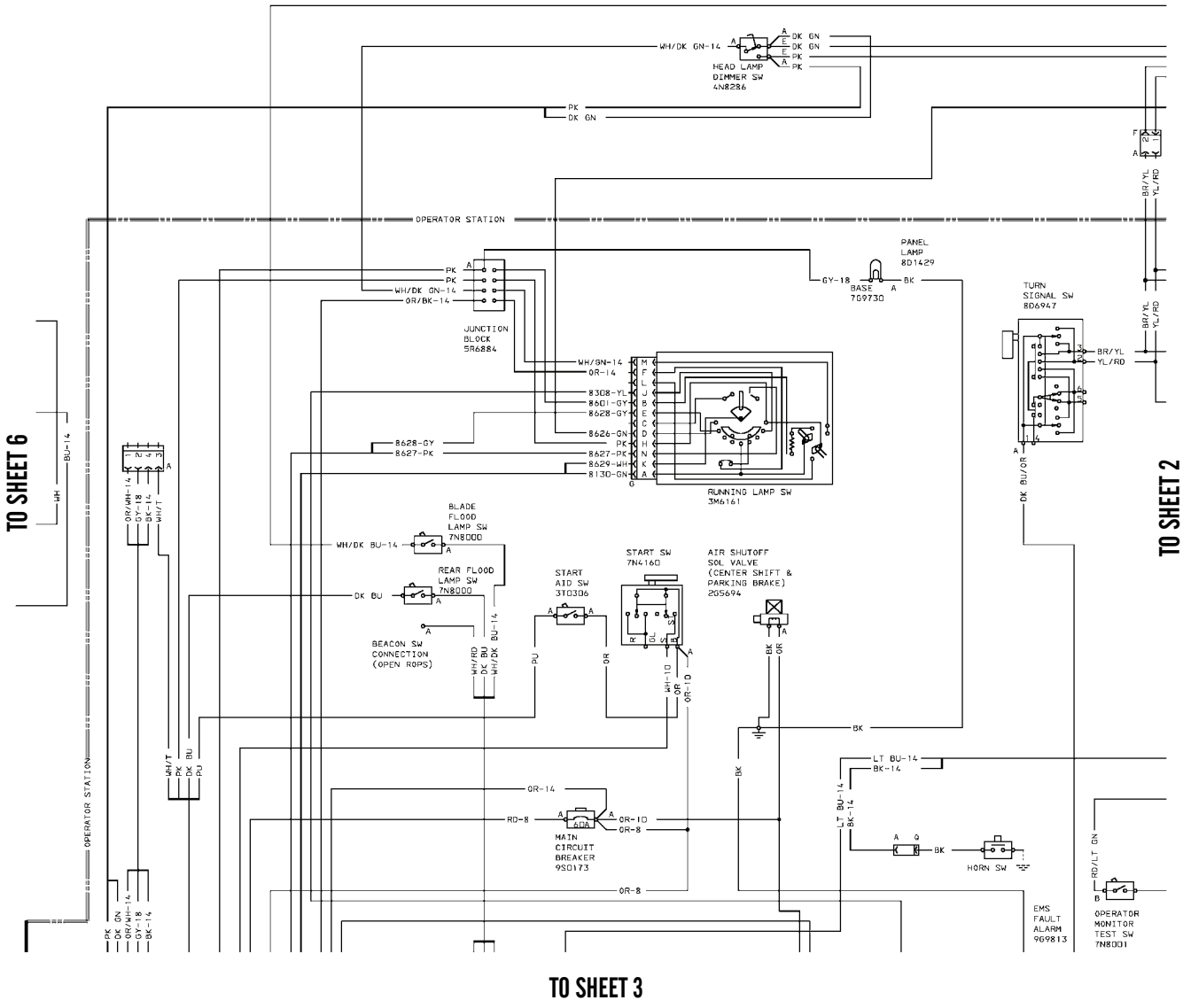


397-4374

**Figure 2. 130GS and 130GSCE Electrical Schematic (Sheet 4 of 6).**

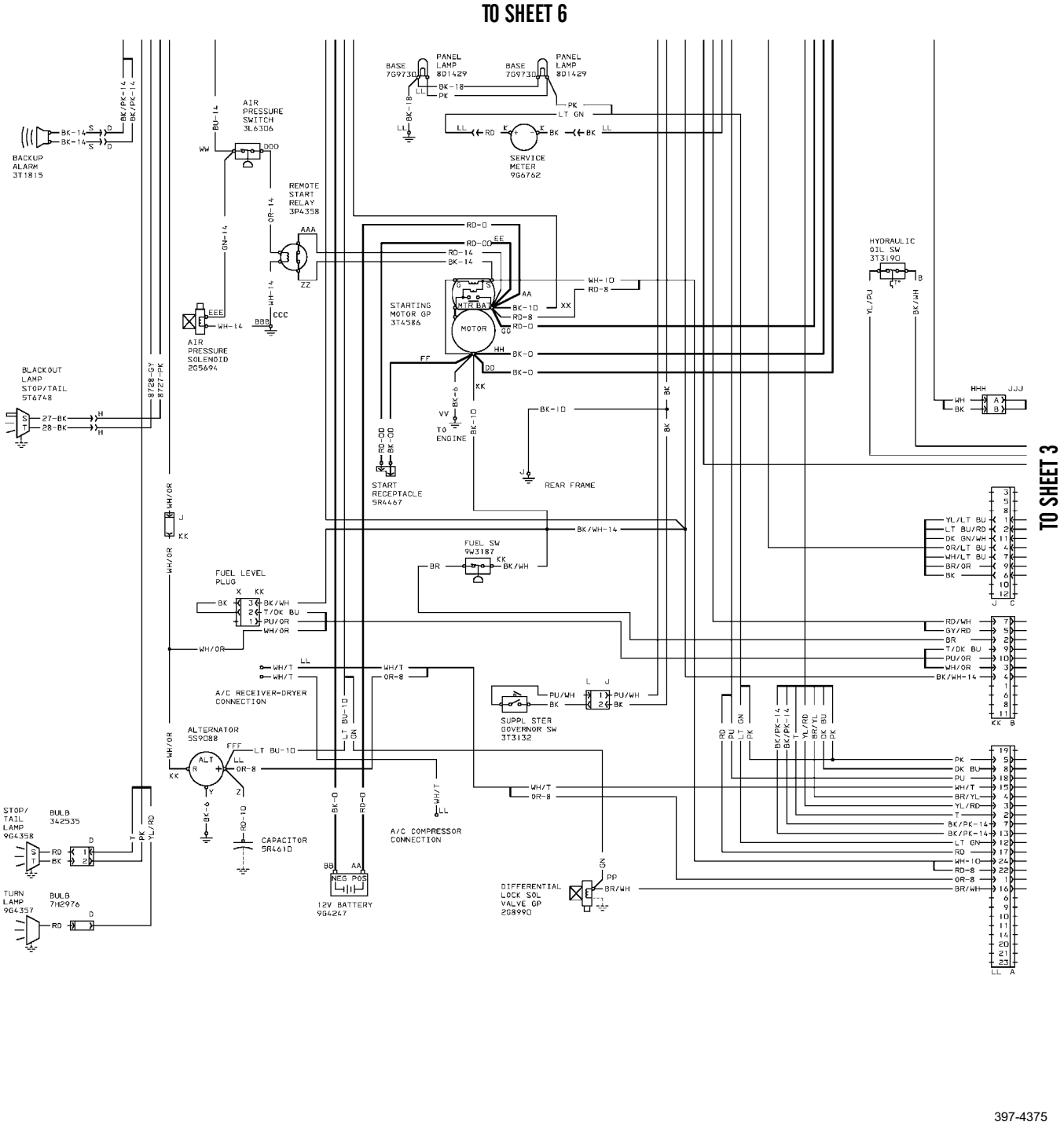


397-4375

**Figure 2. 130GS and 130GSCE Electrical Schematic (Sheet 5 of 6).**

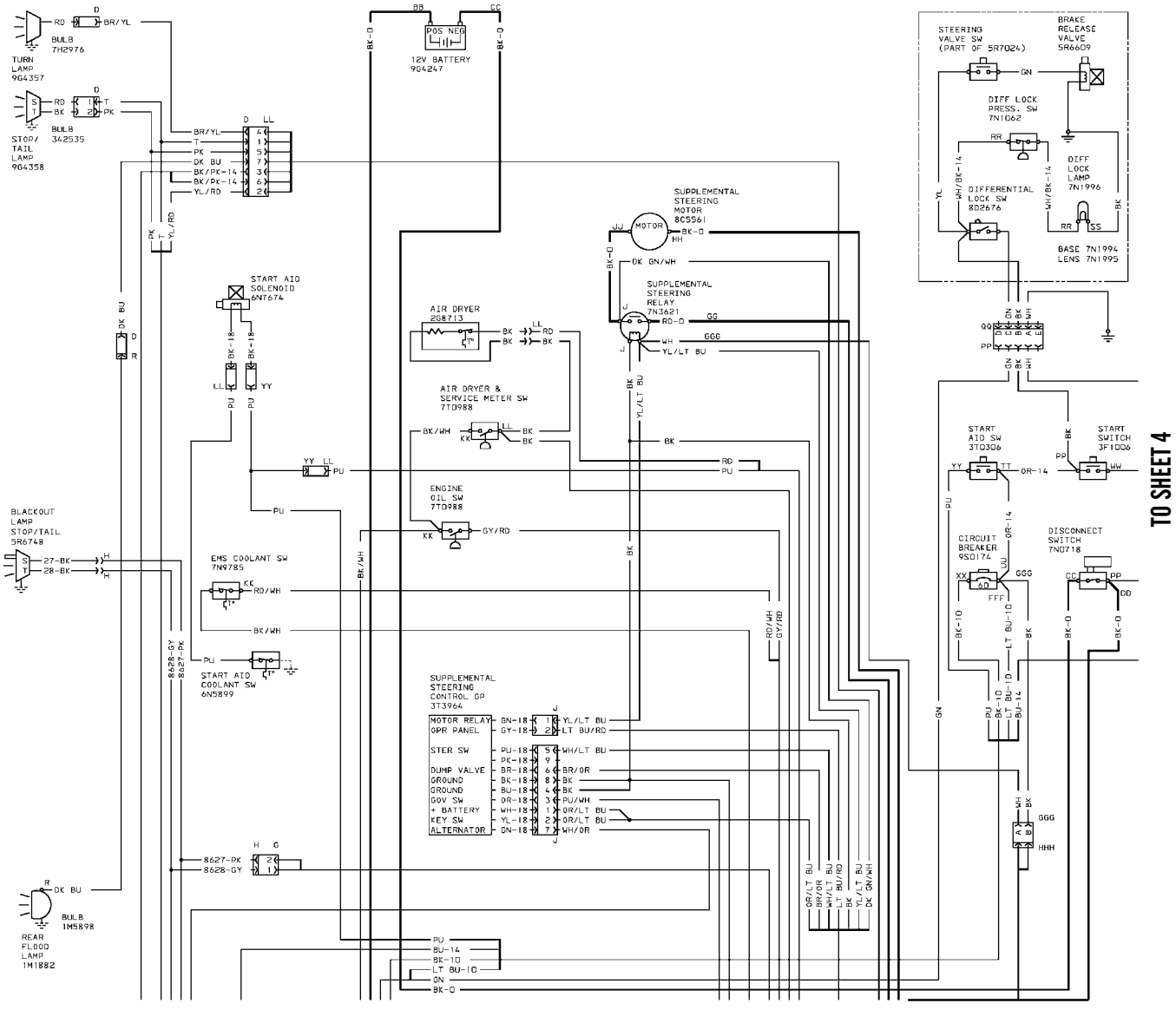


397-4376

**Figure 2. 130GS and 130GSCE Electrical Schematic (Sheet 6 of 6).**

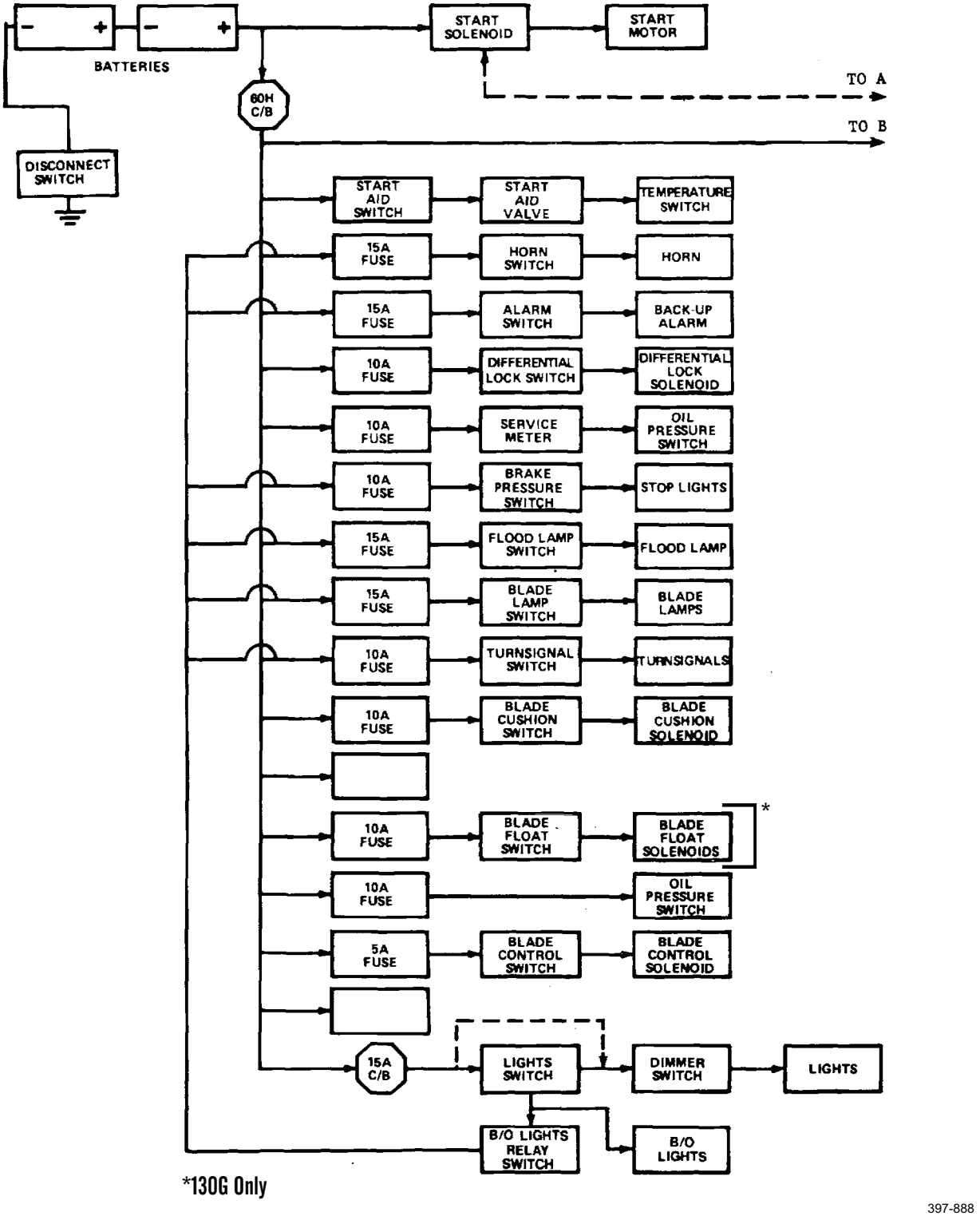


**Figure 3. Fuse and Switch Logic Schematic (Sheet 1 of 2).**

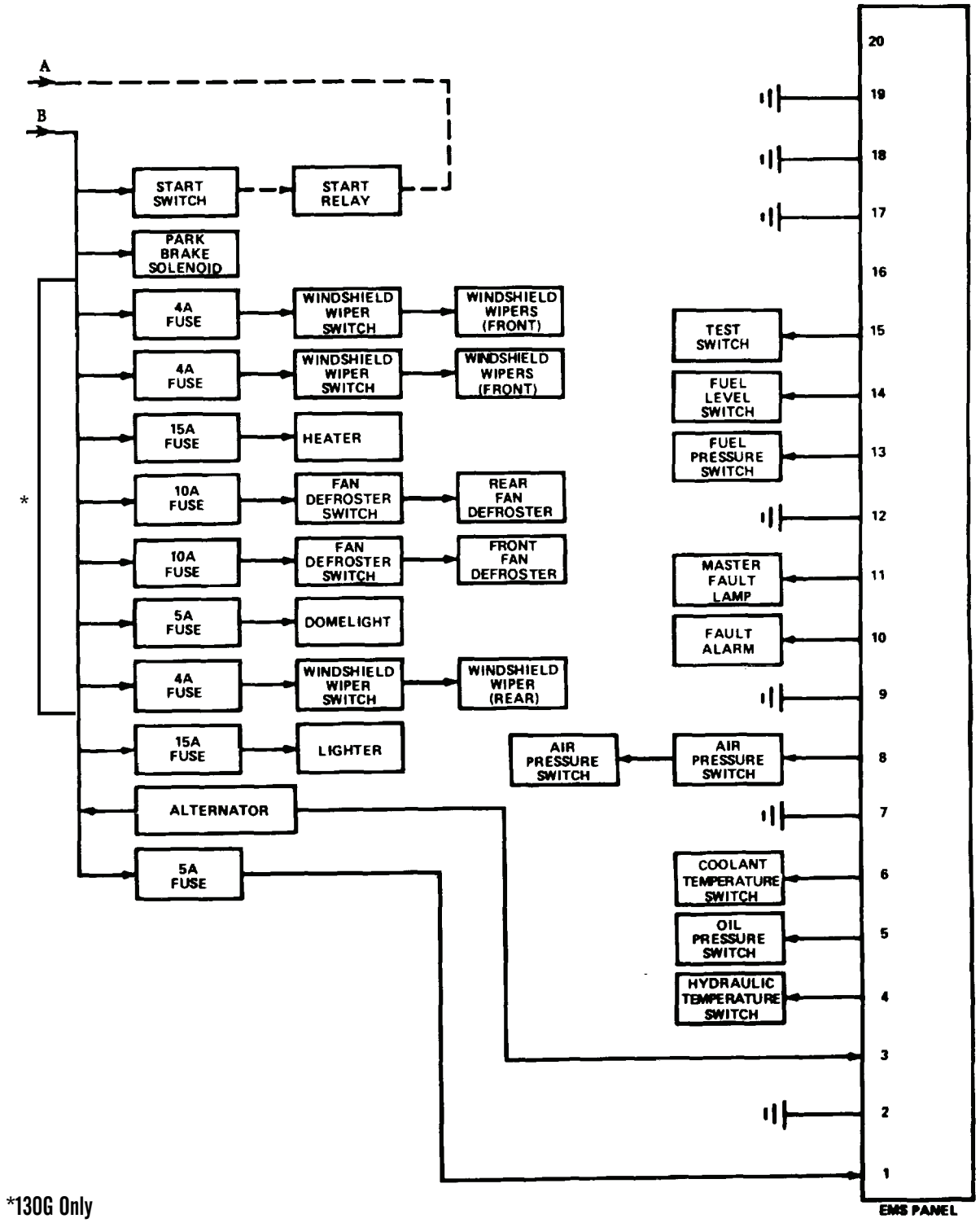


**Figure 3. Fuse and Switch Logic Schematic (Sheet 2 of 2).**

## LEGEND

1. Cylinder for leaning wheel
2. Cylinder for center shift
3. Cylinders for blade lift
4. Cylinder for blade side shift
5. Cylinder for blade tip
6. Cylinders for articulation
7. Cylinder for steering (L.H.)
8. Cylinder for steering (R.H.)
9. Metering pump for steering
10. Combination valve
11. Relief and reducing valve
12. Unloading valve
13. Relief valve for cooler
14. Implement pump
15. Variable displacement pump
16. Pump for cooling
17. Cooler
18. Control valve group
19. Control valve group
20. Valve for articulation
21. Valve for center shift
22. Valve for wheel lean
23. Hydraulic pump relief valve
24. Valve for scarifier
26. Valve for blade tip
27. Valve for circle drive
28. Valve for blade side shift
31. Lock check valve
32. Lock check valve
33. Lock check valve
34. Relief valves for steering
35. Hydraulic motor for circle drive
37. Hydraulic tank
38. Filters
39. Swivel
41. Lock check valve
45. Cylinder for scarifier
46. Lock check valve (with relief)
47. Pilot valve (solenoid operated)
48. Lock check valves (pilot operated)
49. Supplemental steering

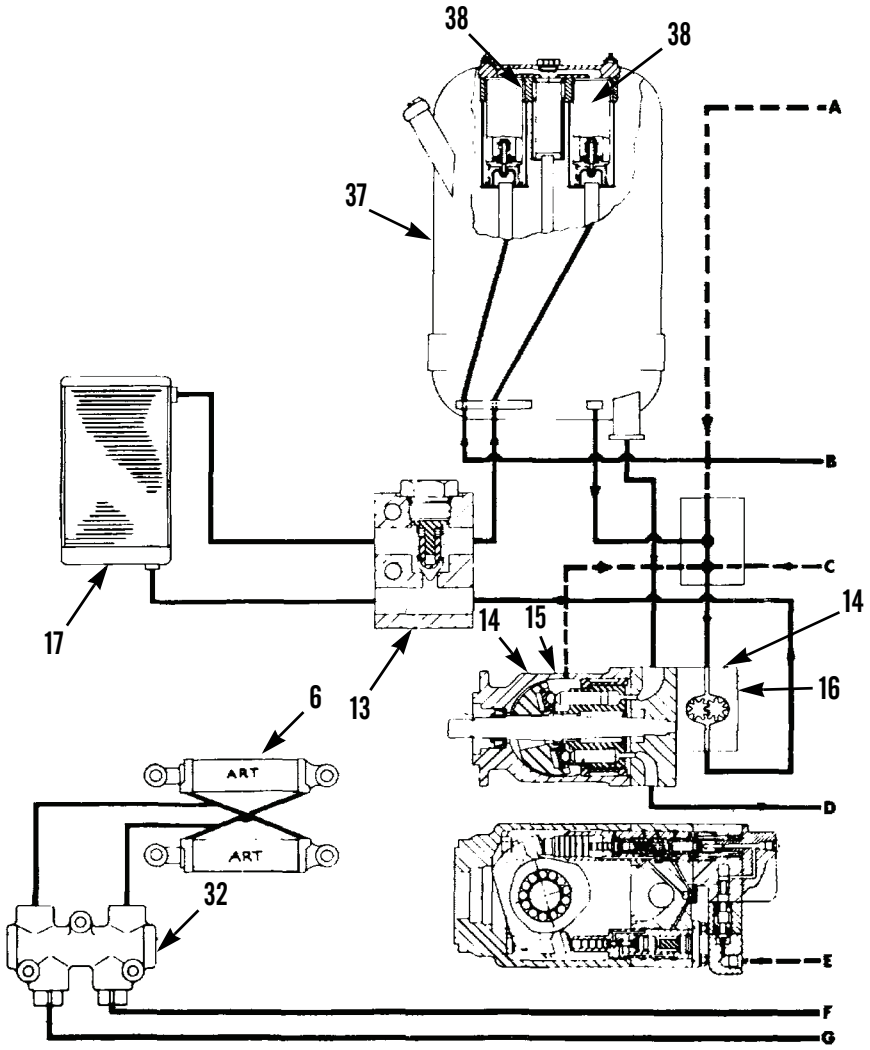


397-890

**Figure 4. Hydraulic System Schematic (Sheet 1 of 5).**

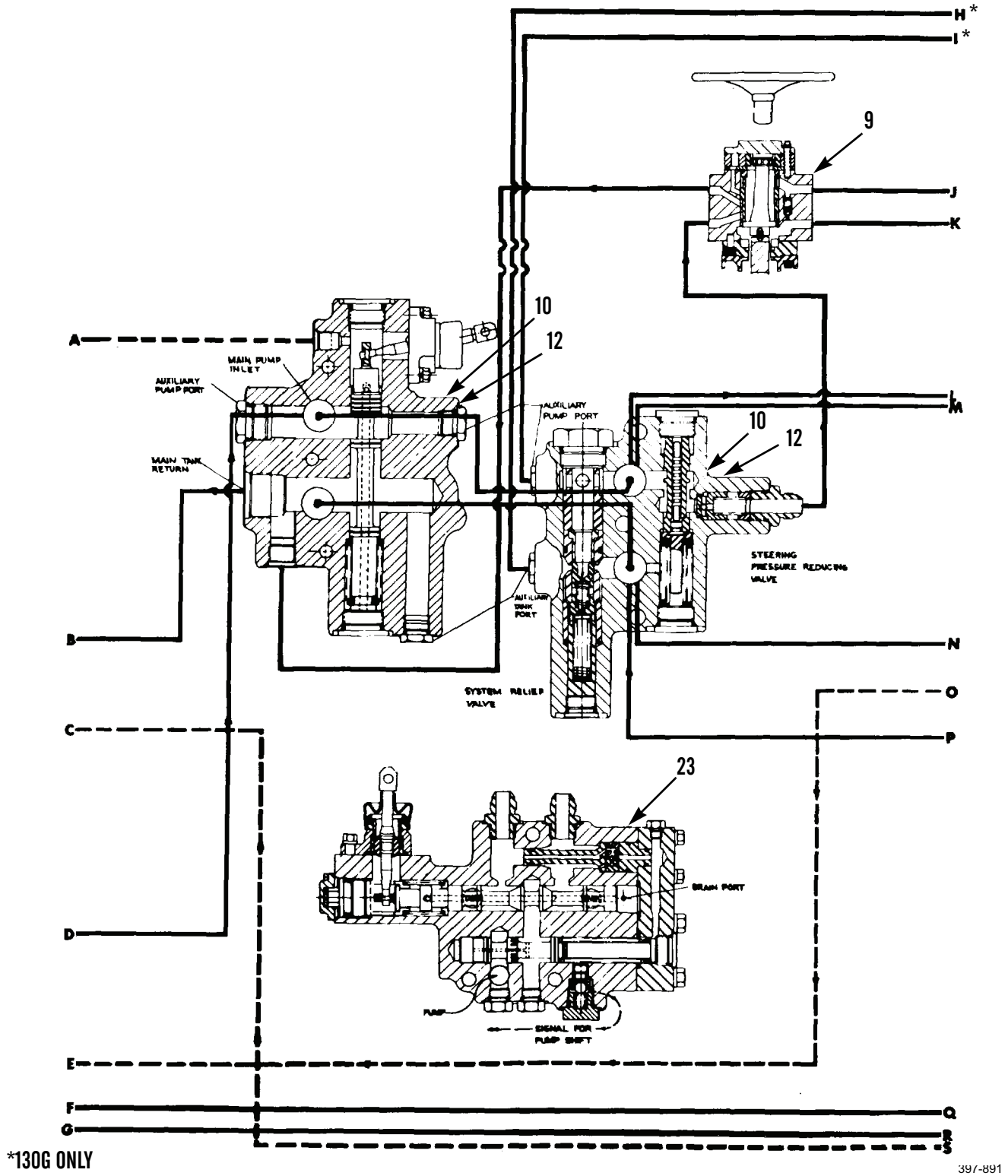


**Figure 4. Hydraulic System Schematic (Sheet 2 of 5).**

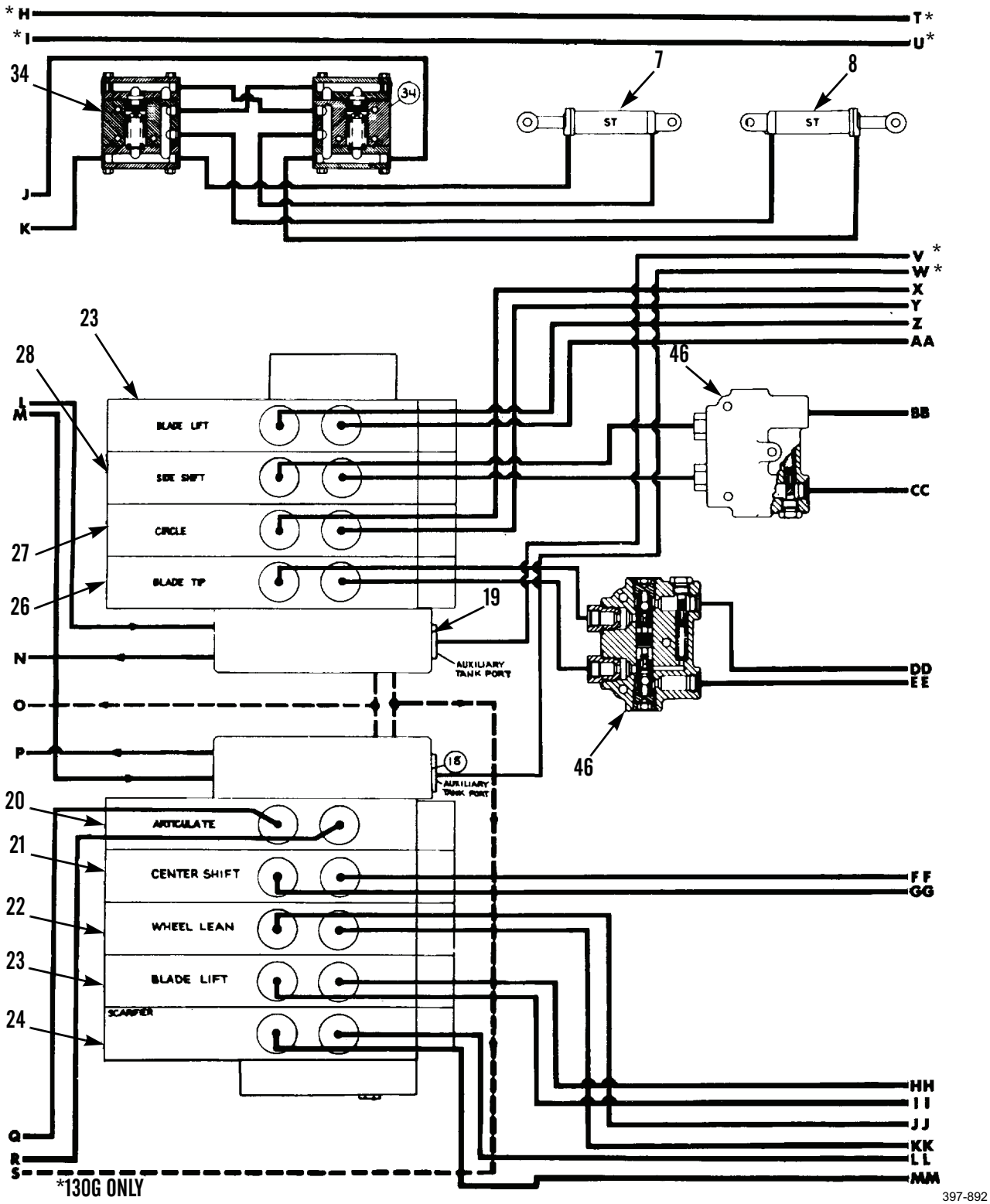


**Figure 4. Hydraulic System Schematic (Sheet 3 of 5).**

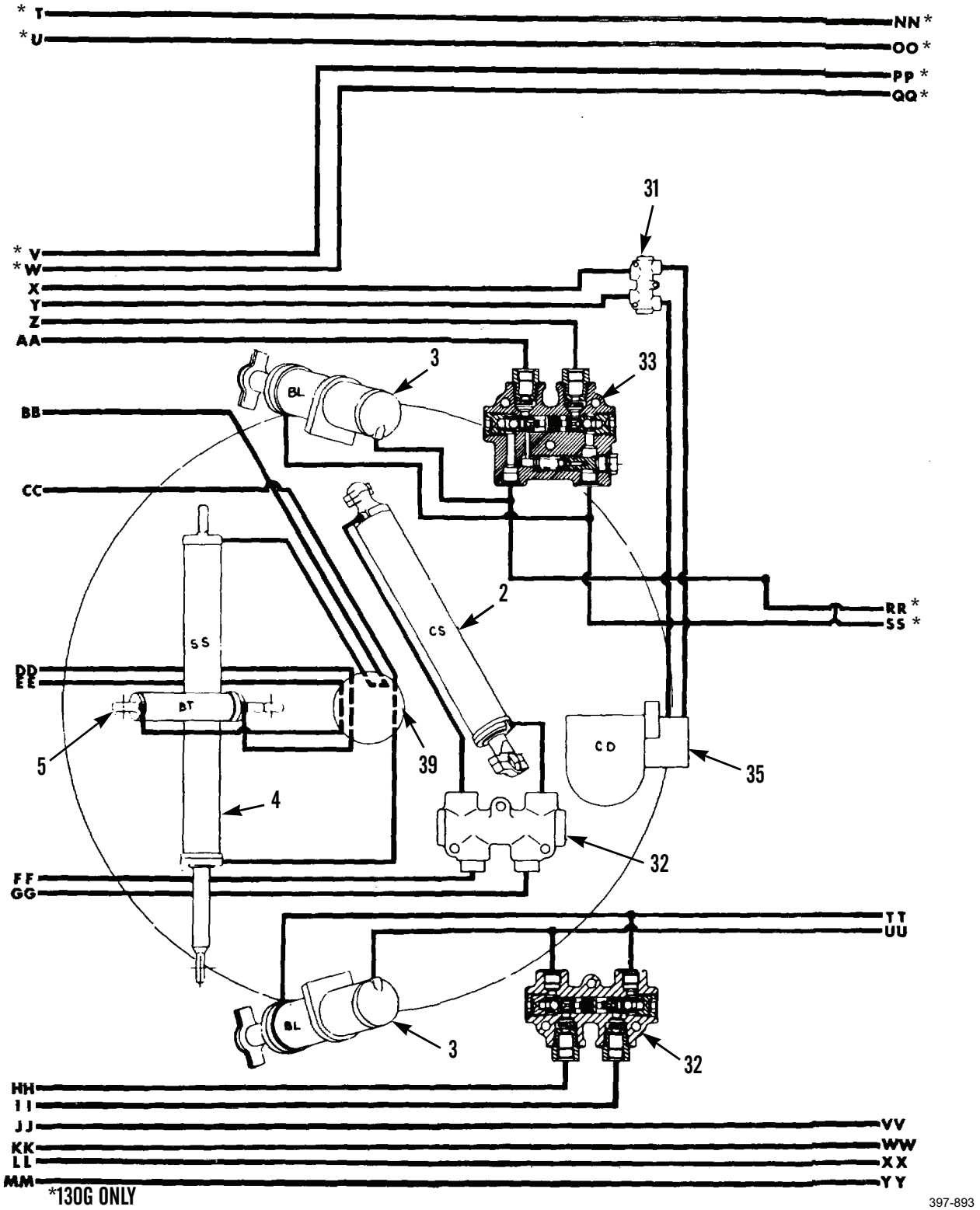


**Figure 4. Hydraulic System Schematic (Sheet 4 of 5).**

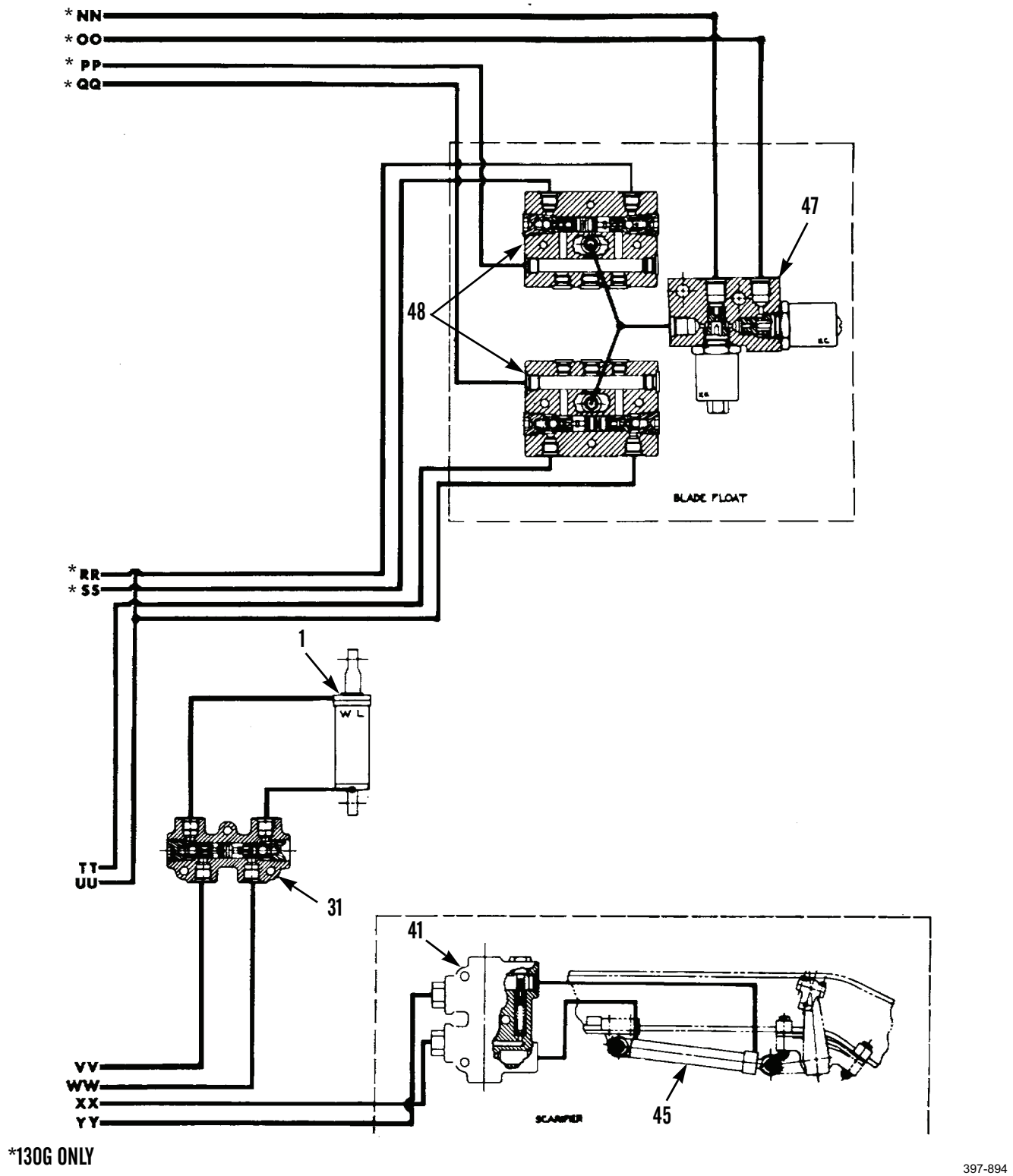


**Figure 4. Hydraulic System Schematic (Sheet 5 of 5).**

## LEGEND

1. Steering wheel
2. Crossover relief valve
3. Crossover relief valve
4. Plug
5. Oil return line to tank
6. Steering metering pump
7. Plug
8. Shims
9. Shims
10. Oil supply line from pump
11. Left steering cylinder
12. Right steering cylinder
13. Oil return line to tank
14. Shims
15. Steering pressure reducing valve
16. Plug

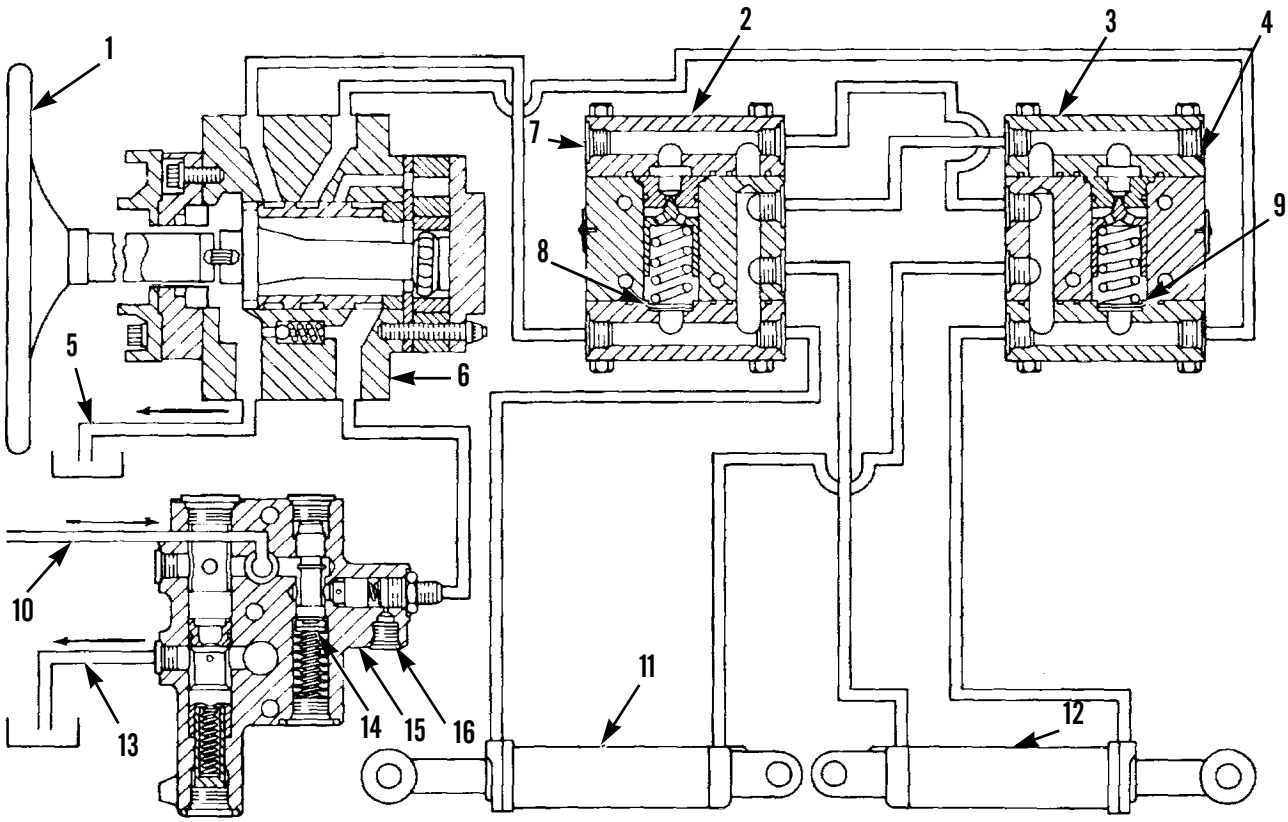


**Figure 5. Steering System Schematic.**

## LEGEND

A. System pressure
B System pressure from left section of air tank
C. System pressure from right section of air tank
1. Service brakes (four)
2. Air compressor
3. Air compressor governor
4. Safety relief valve
5. One-way check valve
6. Air tank with two sections
7. Quick release valve
8. Rotochamber for parking brake
9. Safety relief valve
10. One-way check valve
11. Air pressure gauges
12. Low air pressure sending units (to EMS)
13. Control valve for service brakes
14. Blackout stoplight switch
15. Stoplight switch
16. Onew-way check valve
17. Control valve for parking brake
18. Center shift control valve
19. Center shift lock pin

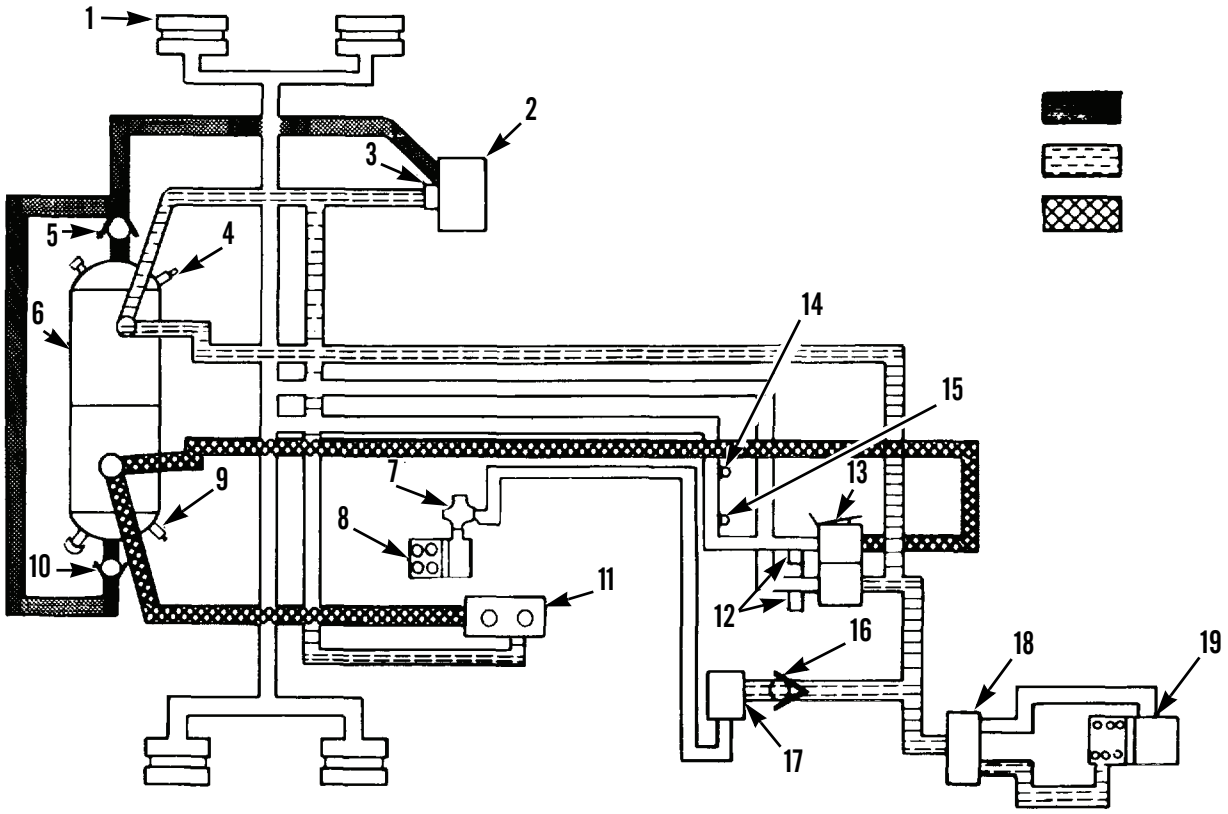


397-896

**Figure 6. 130G, 130GNS, and 130GNSCE Air Brake System Schematic.**

## LEGEND

1. Remote control panel
2. Control valve (4-way)
3. Solenoid (24V, N.O.)
4. Check valve
5. Check valve
6. Brake (service)
7. Brake (service)
8. Dual brake control valve (service) (in cab)
9. Relay valve
10. Relay valve
11. Quick release valve
12. Actuator (parking brake)
13. Solenoid (24V, N.C.)
14. Pressure switch (6-8 psi, N.C.)
15. Parking brake valve (in cab)
16. Air reservoir (service)
17. Air gauges
18. Air compressor governor
19. Air compressor
20. Disconnect plate
21. Pressure switch (60 psi, N.C.)
22. Parking brake valve
23. Pressure regulator

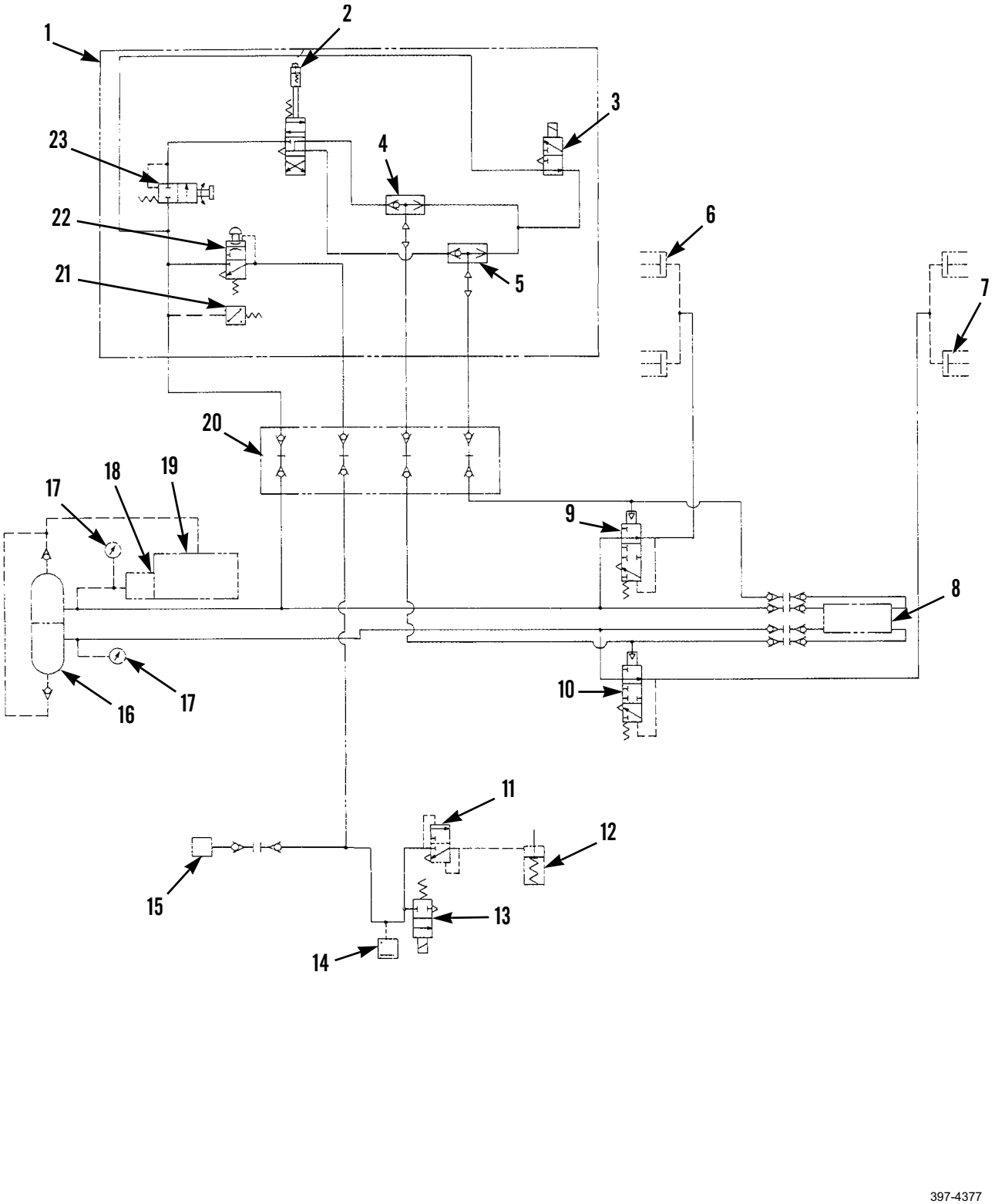


**Figure 7. 130GS and 130GSCE Air Brake System Schematic.**

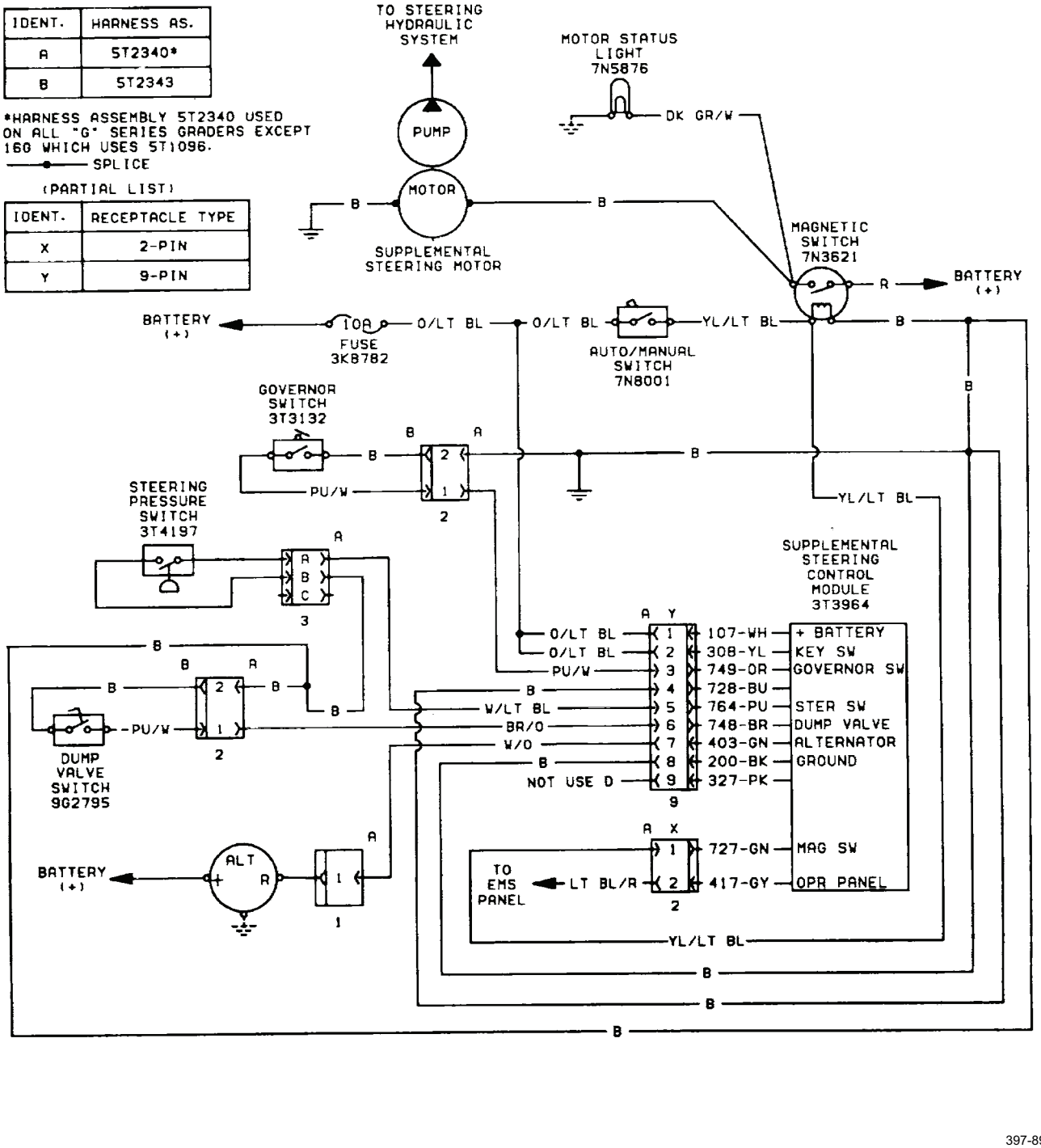


397-897

**Figure 8. Supplemental Steering Electrical Schematic.**

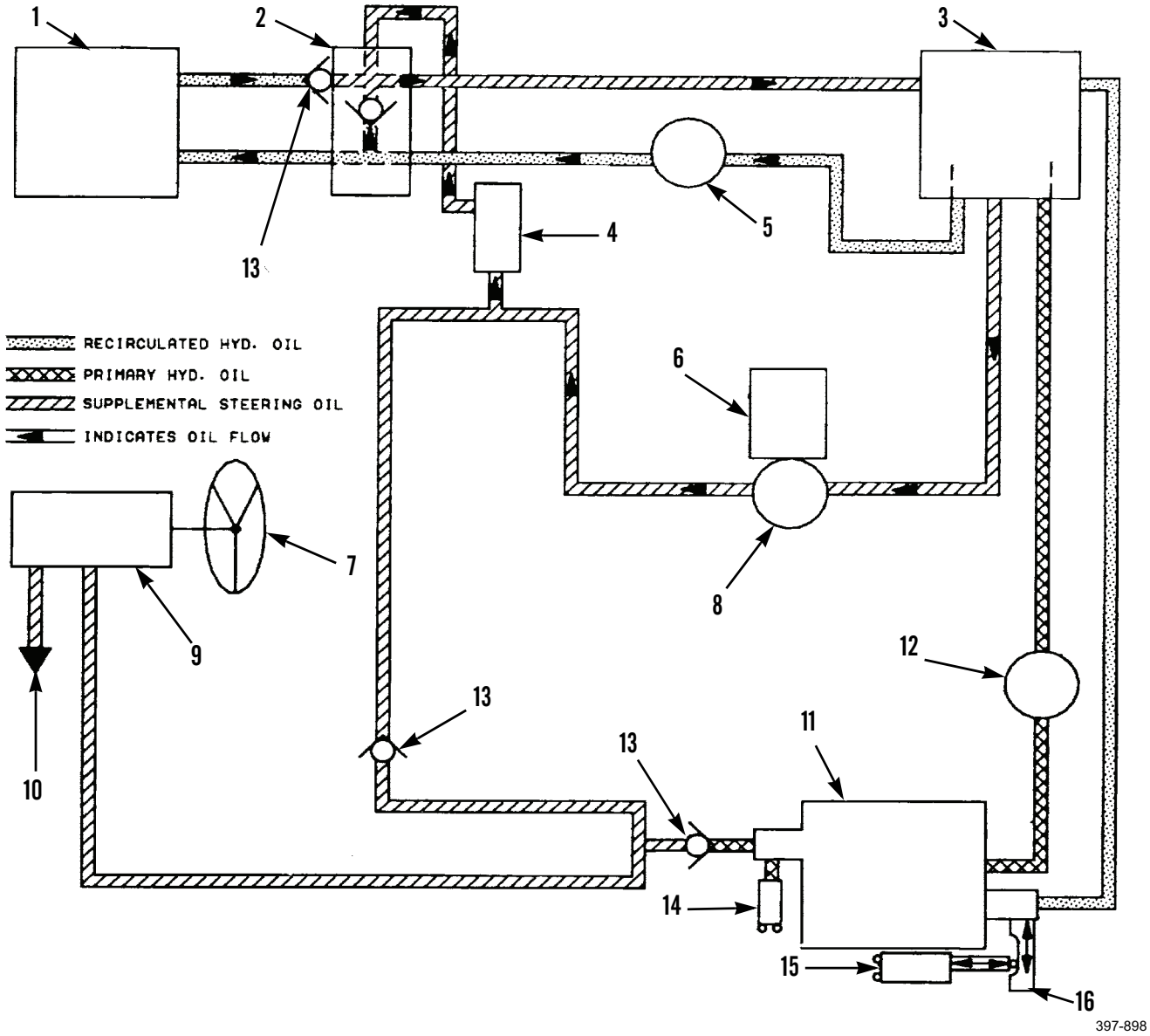


## LEGEND

1. Cooler for hydraulic oil
2. By-pass valve for oil cooler
3. Hydraulic tank
4. Relief valve (supplemental steering)
5. Pump for oil to oil cooler
6. Electric motor
7. Steering wheel
8. Supplemental steering pump
9. Metering valve for steering
10. Flow to relief valves and steering cylinder
11. Combination valve
12. Implement pump
13. Check valves
14. Pressure sensing switch
15. Dump valve switch
16. Dump valve

**Figure 9. Supplemental Steering Hydraulic Schematic (Non-actuated).**

## LEGEND

1. Cooler for hydraulic oil
2. By-pass valve for oil cooler
3. Hydraulic tank
4. Relief valve (supplemental steering)
5. Pump for oil to oil cooler
6. Electric motor
7. Steering wheel
8. Supplemental steering pump
9. Metering valve for steering
10. Flow to relief valves and steering cylinders
11. Combination valve
12. Implement pump
13. Check valves
14. Pressure sensing switch
15. Dump valve switch
16. Dump valve

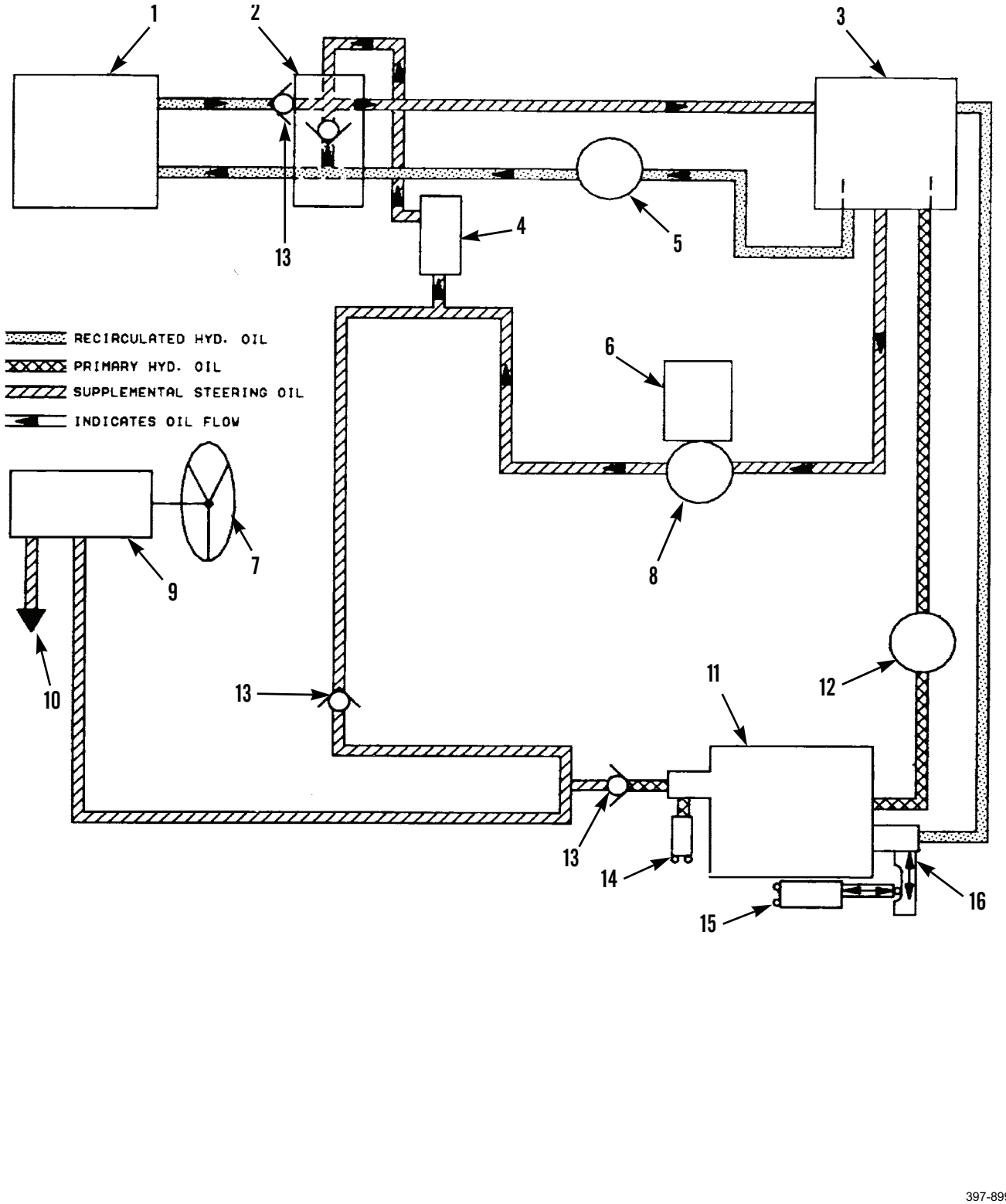


**Figure 10. Supplemental Steering Hydraulic Schematic (Actuated).**

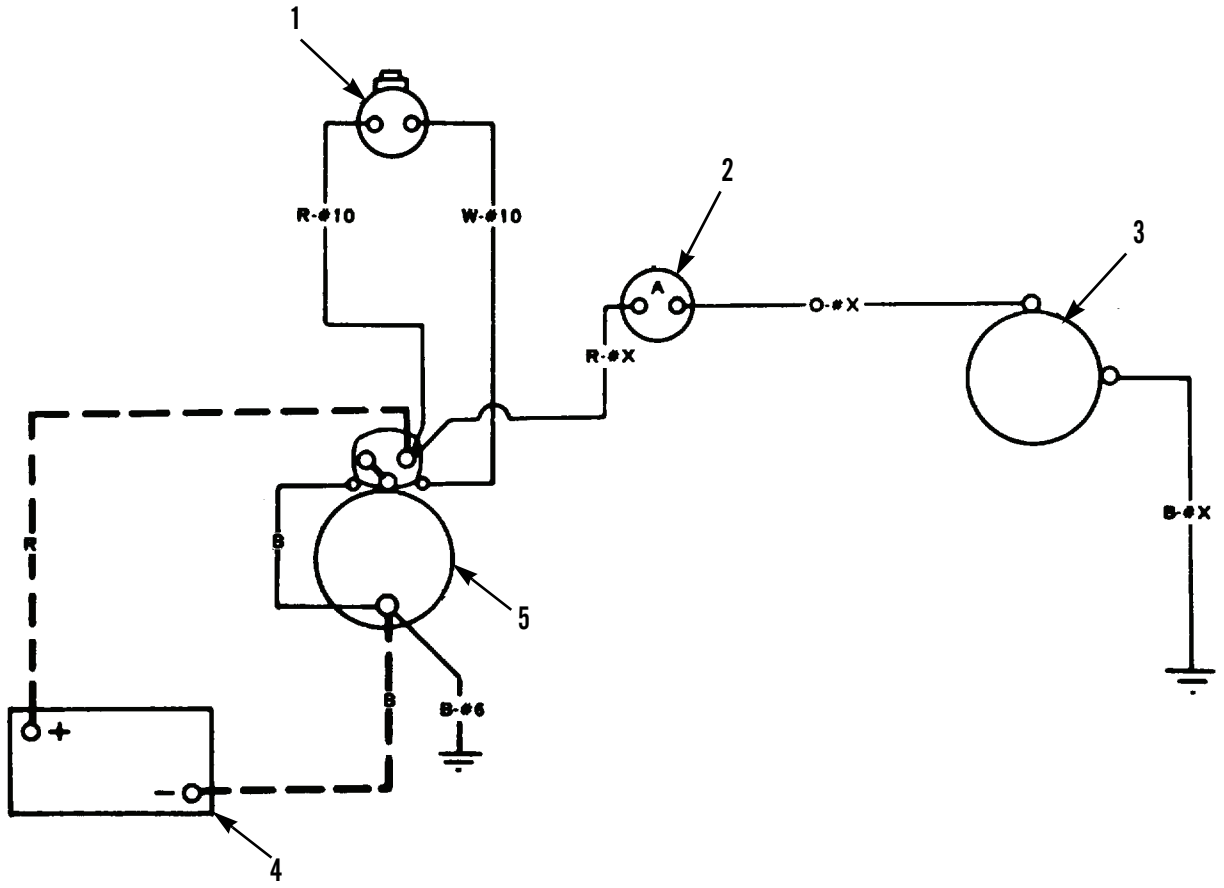


## LEGEND

1. Start switch
2. Ammeter
3. Alternator
4. Battery
5. Starting motor

397-900

**Figure 11. Charging System Schematic.**

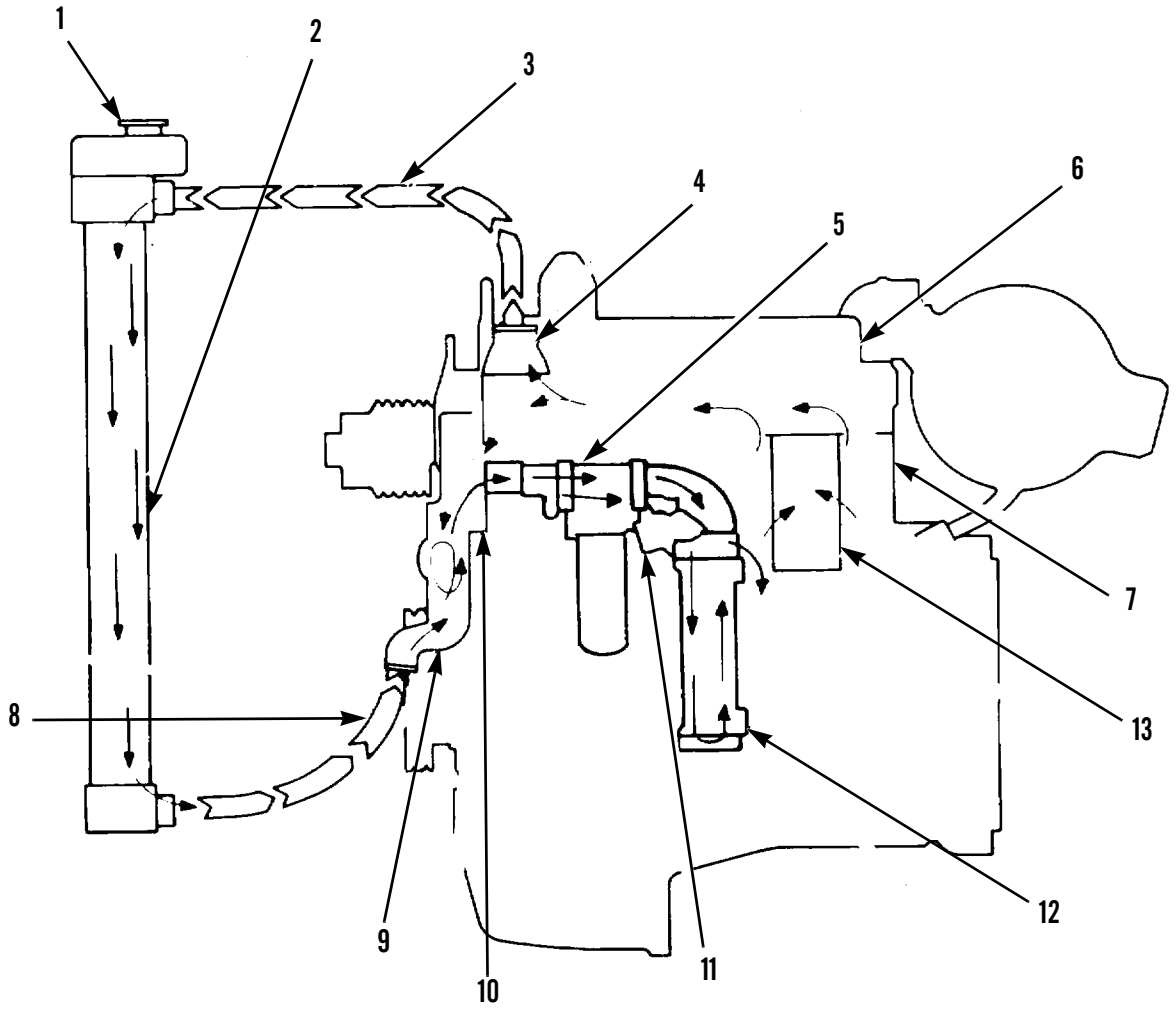


## LEGEND

1. Filler cap
2. Radiator
3. Inlet line for radiator
4. Water temperature regulator
5. Engine oil cooler
6. Cylinder head
7. Cylinder block
8. Inlet line for water pump
9. Water pump
10. Internal bypass
11. Bonnet
12. Transmission oil cooler
13. Cylinder liner

397-901

**Figure 12. Cooling System Schematic.**

## LEGEND

1. Fuel tank
2. Fuel return line
3. Priming pump
4. Fuel injection nozzle
5. Fuel injection line
6. Fuel injection pump
7. Primary fuel filter
8. Check valves
9. Fuel transfer pump
10. Secondary fuel filter
11. Constant bleed valve
12. Fuel injection pump housing

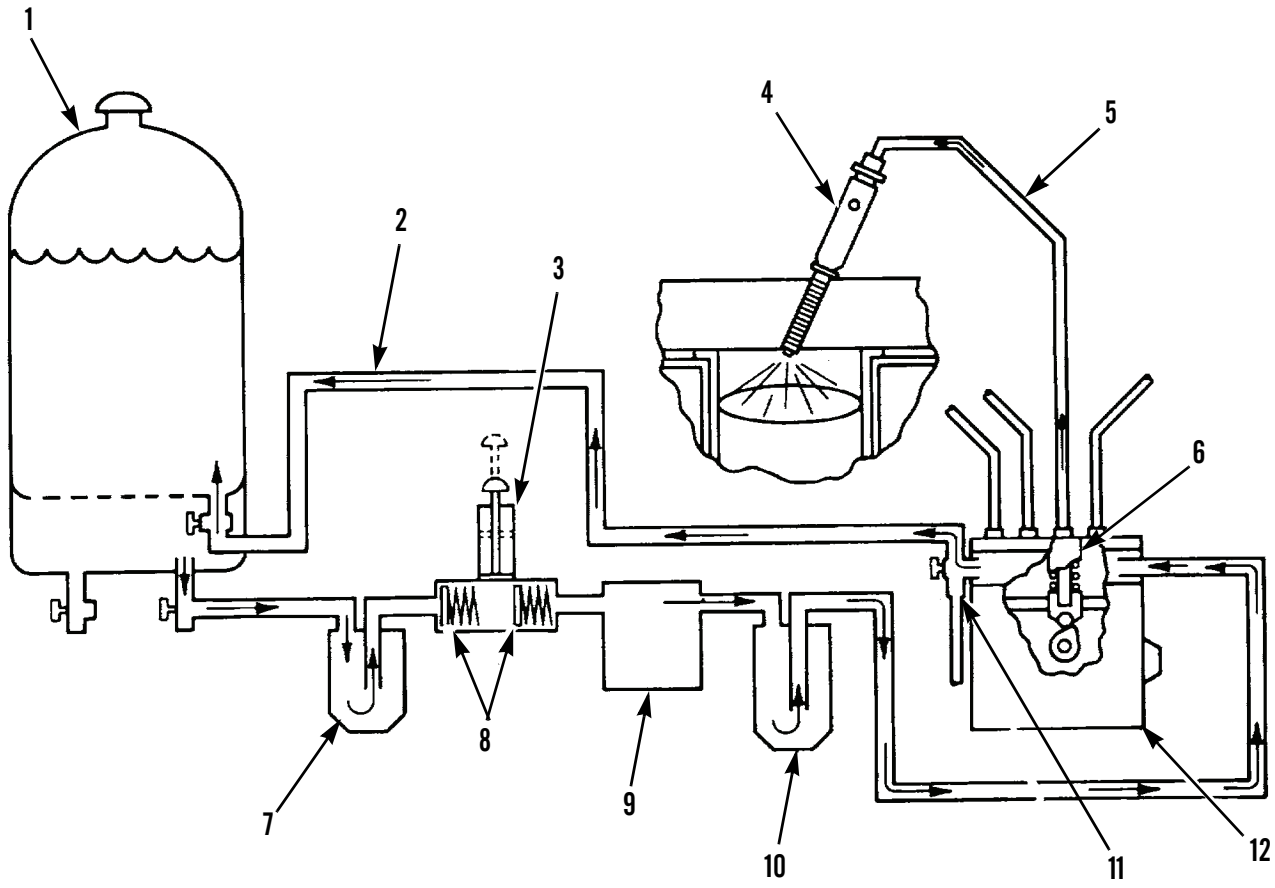


397-902

**Figure 13. Fuel System Schematic.**

## LEGEND

1. Oil pressure connection
2. Piston cooling orifices
3. Oil supply for turbocharger
4. Oil passage through rocker shaft to rocker arms
5. Oil pressure connection
6. Camshaft bores
7. Oil manifold
8. Filter bypasss
9. Turbocharger
10. Oil filter
11. Oil cooler
12. Oil sump
13. Oil pump
14. Oil cooler bypass
15. Balancer shaft bores

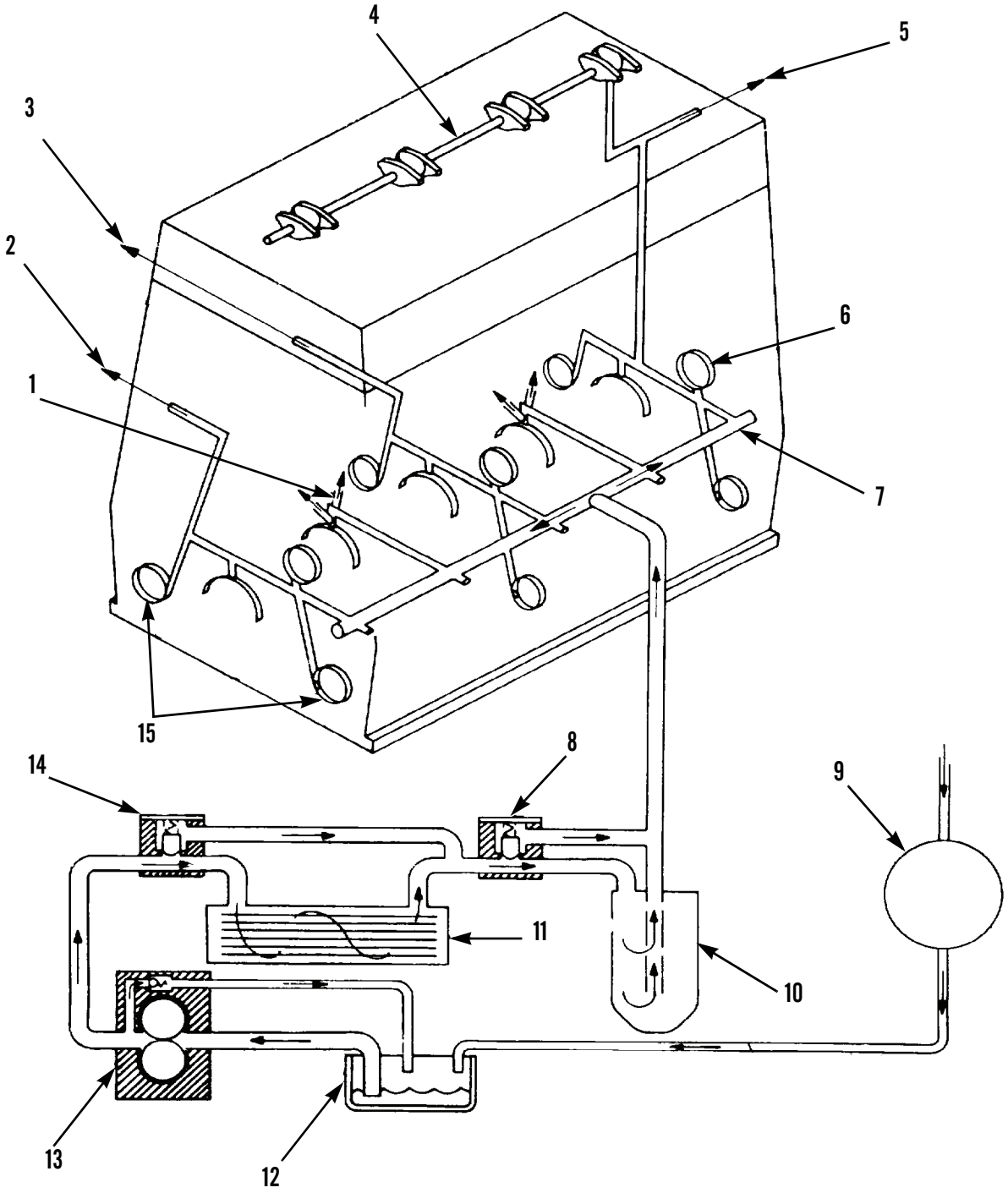


**Figure 14. Lubrication System Schematic.**

## LEGEND

1. Oil filter
2. No. 1 clutch lubrication passage
3. No. 2 clutch lubrication passage
4. Main relief valve
5. Oil cooler
6. Housing for transfer gears
7. Oil pump
8. Planetary transmission
9. Differential lock valve
10. Selector valve group
11. Transmission reservoir
12. Main reservoir in intermediate housing
13. Differential reservoir
14. Magnetic screen filter
15. Magnetic screen filter
16. No. 1 direction clutch
17. No. 2 direction clutch

397-884

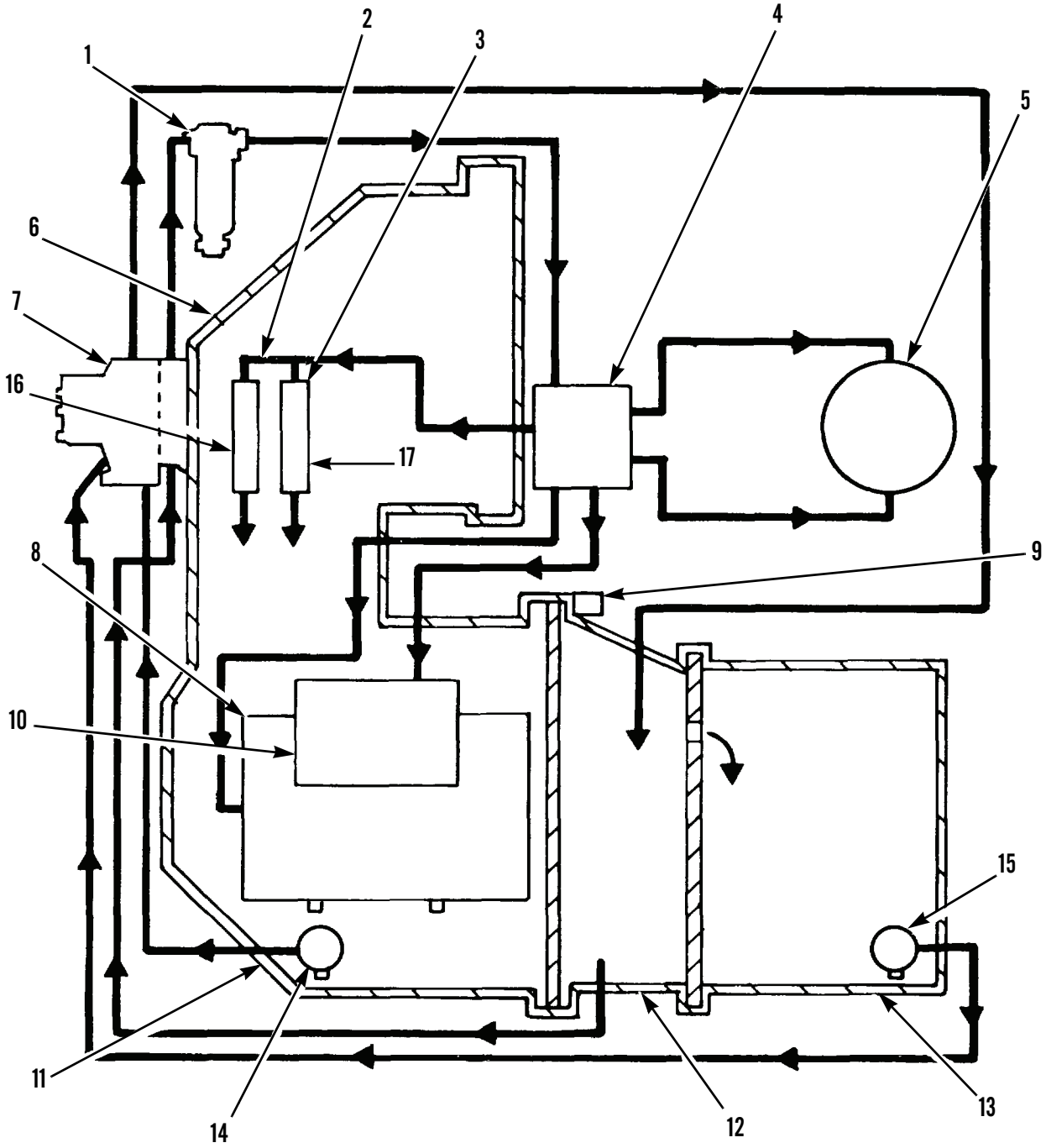


**Figure 15. Transmission Hydraulic Schematic.**

## LEGEND

A. Passage for signal pressure
B. Passage for signal pressure
E. Passage for signal pressure
F. Passage for signal pressure
G. Passage for signal pressure
1. Oil filter
4. Main relief valve
5. Oil cooler
7. Oil pump
9. Differential lock valve
14. Manual modulation valve
15. Differential, check and safety spool
16. Pilot selector spool
17. Speed selector spool (No. 4 clutch)
18. Speed selector spool (No. 5 clutch)
19. Passage from load piston
20. Relief valve
21. Passage to differential, check and safety valve
22. Passage to No. 4 clutch
23. Passage to No. 5 clutch
24. Cooler bypass valve
25. Lubrication relief valve
26. Passage to differential lock clutch
27. Passage to differential, check and safety valve
28. Direction selector valve
29. Priority reducing valve
30. Passage to No. 6 clutch
31. Modulating reducing valve
32. Load piston
33. Passage to No. 1 clutch (FORWARD)
34. Passage to No. 2 clutch (REVERSE)
35. Speed selector spool (No. 6 and No. 7 clutches)
36. Speed selector spool (No. 3 clutch)
37. Passage to No. 7 clutch
38. Passage to No. 3 clutch

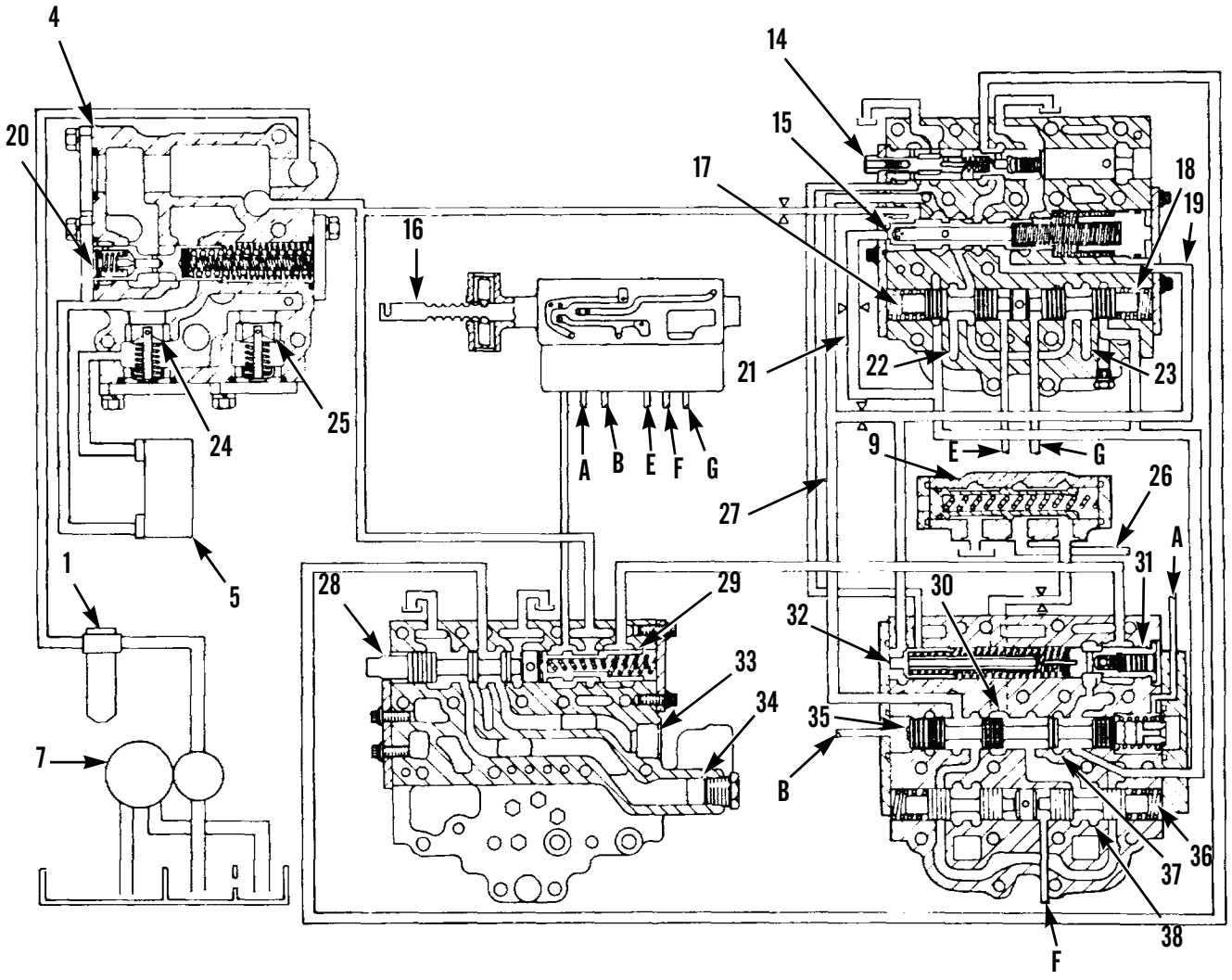


397-905

**Figure 16. Transmission Control Valves Schematic.**

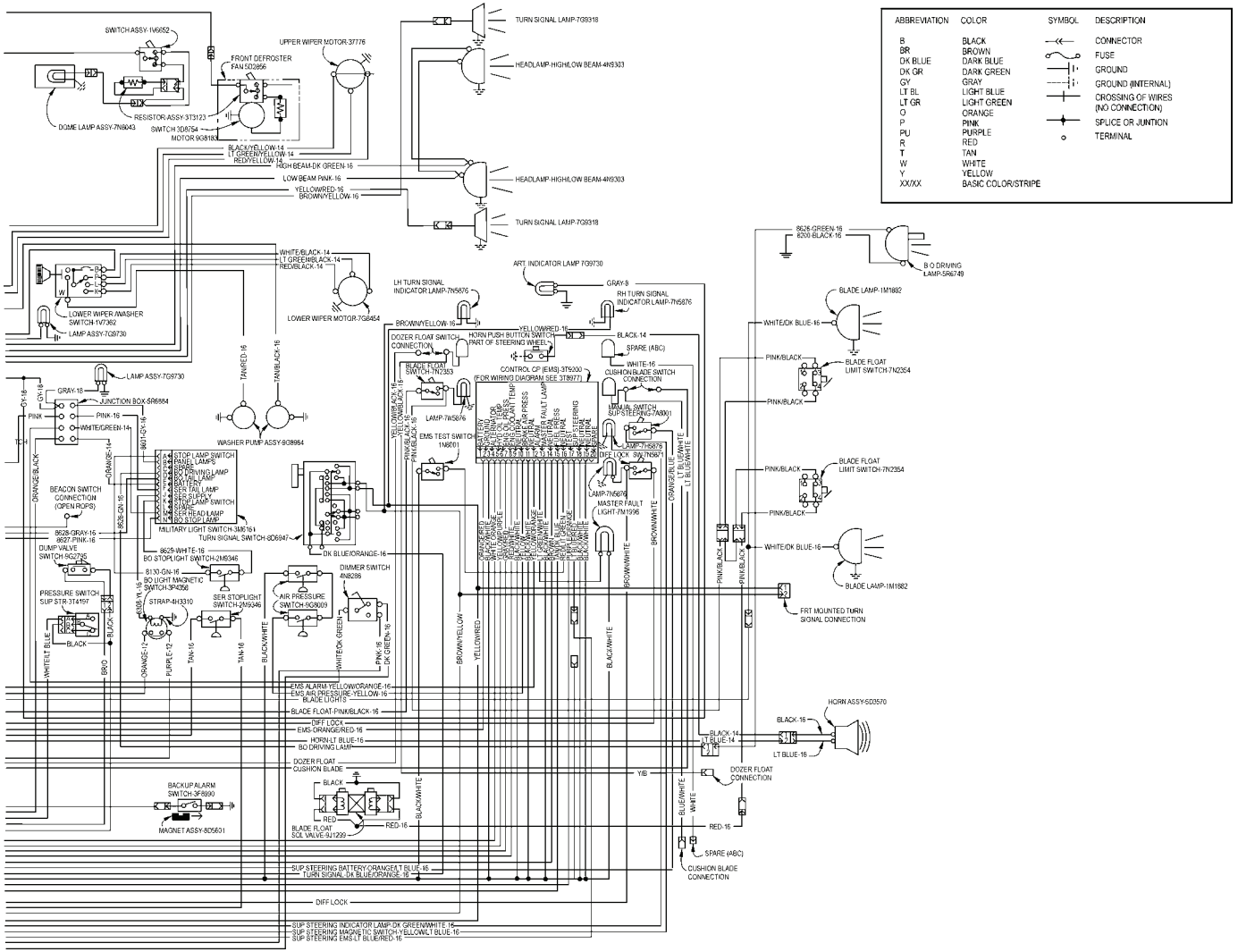


**Figure 17. 130G Electrical Schematic (Sheet 1 of 2).**

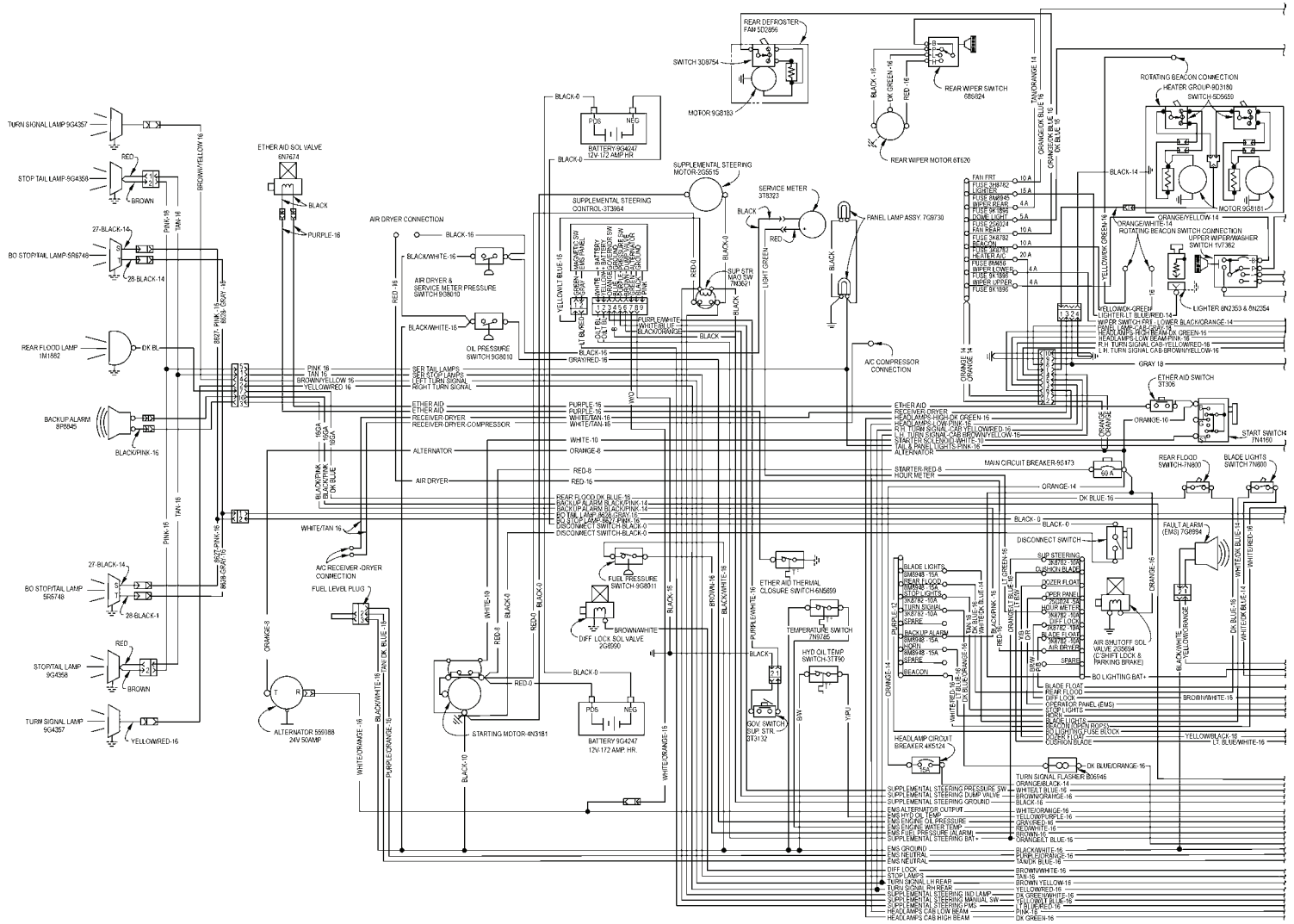


**Figure 17. 130G Electrical Schematic (Sheet 2 of 2).**

# INDEX


*Subject* — *Work Package/Page*

## Numerics

130G Series Grader, Theory of Operation . . . . . 0003 00-1

## A

Abbreviations/Acronyms, List of . . . . . 0001 00-2
Actuating Assembly Maintenance, Scarifier . . . . . 0266 00-1
Actuator and Release Valve, Parking Brake Repair . . . . . 0312 00-1
Adapter Replacement, Engine-To-Transmission . . . . . 0295 00-1
Air Brake
- Lines Replacement . . . . . 0161 00-1
- Pedal and Linkage Maintenance . . . . . 0160 00-1
- Reservoir Lines and Fittings Replacement . . . . . 0163 00-1
- Reservoir Replacement . . . . . 0162 00-1
- Valve Replacement . . . . . 0316 00-1

Air Brake System, Theory of Operation . . . . . 0003 00-18
Air Cleaner
- Body Replacement . . . . . 0038 00-1
- Primary and Secondary Filter Elements Replacement . . . . . 0037 00-1

Air Compressor
- Assembly Replacement . . . . . 0317 00-1
- Governor Replacement . . . . . 0165 00-1
- Lines and Fittings Replacement . . . . . 0318 00-1

Air Control Valve Maintenance, Parking Brake . . . . . 0158 00-1
Air Dryer Maintenance (Types I and II Machines) . . . . . 0164 00-1
Air Precleaner Replacement . . . . . 0036 00-1
Air Pressure
- Gauge to Air Tank Lines and Fittings Replacement . . . . . 0253 00-1
- Gauges Replacement . . . . . 0252 00-1
- Switch Lead Replacement . . . . . 0129 00-1
- Switches Replacement . . . . . 0112 00-1

Alarm Replacement
- Backup . . . . . 0121 00-1
- Monitor Warning . . . . . 0118 00-1

Alternator
- and Mountings Maintenance . . . . . 0066 00-1
- Ground Lead Replacement . . . . . 0127 00-1
- Testing . . . . . 0066 00-1

Arm Replacement, Blade Lift . . . . . 0341 00-1
Articulation
- Check Valve Maintenance . . . . . 0235 00-1
- Cylinder Repair . . . . . 0336 00-1
- Cylinder Replacement . . . . . 0246 00-1

# INDEX - Continued

*Subject* *Work Package/Page*

## A - Continued


Articulation - Continued
- Hitch Bearing Replacement (CCE and Type I Machines) . . . 0325 00-1
- Hitch Bearing Replacement (Type II Machine) . . . 0326 00-1
- Indicator Light Replacement . . . 0074 00-1
- Indicator Mechanism Replacement . . . 0255 00-1
- Lines, Fittings, and Hoses Replacement . . . 0227 00-1

Axle Assembly Replacement, Front . . . 0300 00-1

Axles Replacement, Drive . . . 0307 00-1


## B


Backup
- Alarm Replacement . . . 0121 00-1
- Alarm Switch Maintenance . . . 0122 00-1

Bar Assembly Maintenance, Blade Lift . . . 0340 00-1

Battery
- Box Covers Maintenance . . . 0123 00-1
- Boxes and Mounting Replacement . . . 0126 00-1
- Cables Replacement . . . 0125 00-1
- Disconnect Switch Cable Replacement . . . 0142 00-1
- Disconnect Switch Replacement . . . 0081 00-1
- Holddowns Replacement . . . 0124 00-1
- Replacement . . . 0125 00-1
- STE/ICE-R Testing . . . 0018 00-1

Belt Replacement, Seat . . . 0201 00-1

Belts Maintenance, Fan . . . 0061 00-1

Blackout
- and Service Stoplight Switches Replacement . . . 0117 00-1
- Drive Light Maintenance, Front . . . 0106 00-1
- Light Wiring Harness Replacement, Front . . . 0288 00-1
- Light Wiring Harness Replacement, Rear . . . 0289 00-1
- Lighting Magnetic Switch Replacement . . . 0102 00-1
- Stoplights-Taillights and Mounting Maintenance . . . 0109 00-1

Blade
- (Moldboard) Assembly Replacement . . . 0259 00-1
- Brackets Replacement . . . 0343 00-1

Blade Float
- Check Valve Maintenance (CCE Machine) . . . 0234 00-1
- Harnesses Replacement (CCE Machine), Left and Right-Hand . . . 0144 00-1
- Limit Switches and Mounting Replacement (CCE Machine) . . . 0093 00-1
- Lines, Fittings, and Hoses Replacement (CCE Machine) . . . 0221 00-1
- Pilot Valve Maintenance (CCE Machine) . . . 0233 00-1

# INDEX - Continued

*Subject* *Work Package/Page*

## B - Continued


Blade Float - Continued
Pilot Valve Wiring Harness Replacement (CCE Machine) . . . . . 0133 00-1
Blade Lift
and Relief Valve Maintenance . . . . . 0236 00-1
Arm Replacement . . . . . 0341 00-1
Bar Assembly Maintenance . . . . . 0340 00-1
Check Valve Maintenance, Right . . . . . 0235 00-1
Cylinder Repair . . . . . 0335 00-1
Cylinder Replacement . . . . . 0245 00-1
Lines, Fittings, and Hoses Replacement . . . . . 0222 00-1
Blade System, Theory of Operation . . . . . 0003 00-34
Blade Tip
Check and Relief Valve Maintenance . . . . . 0241 00-1
Cylinder Repair . . . . . 0334 00-1
Cylinder Replacement . . . . . 0244 00-1
Lines, Fittings and Hoses Replacement . . . . . 0223 00-1
Body, Cab, Hood, and Hull, Theory of Operation . . . . . 0003 00-22
Body, Chassis, and Hull Accessory Items, Theory of Operation . . . . . 0003 00-25
Brake and Wheel Spindle Housing Assembly, Replacement . . . . . 0314 00-1
Brake Control Replacement, Parking . . . . . 0159 00-1
Brake System Troubleshooting Procedures . . . . . 0010 00-1
Brakes Maintenance, Service . . . . . 0313 00-1
Breather Replacement, Valve Cover . . . . . 0032 00-1
Bumper Replacement, Rear
CCE Machine . . . . . 0204 00-1
Models 130GSCE and 130GNSCE . . . . . 0205 00-1


## C


Cab
Doors and Latch Assemblies Maintenance (CCE Machine) . . . . . 0188 00-1
Fuse Box and Cover Replacement . . . . . 0097 00-1
Insulation and Mounting Replacement (CCE Machine) . . . . . 0194 00-1
Main Wiring Harness Replacement (CCE Machine) . . . . . 0292 00-1
Sound Suppression Panel (Ceiling) Replacement (CCE Machine) . . . . . 0191 00-1
Sound Suppression Panel (Rear) Replacement . . . . . 0192 00-1
Sound Suppression Panels (Lower-Front and Rear) Replacement (CCE Machine) . . . . . 0190 00-1
Storage Compartment Maintenance (CCE Machine) . . . . . 0189 00-1
Windows Replacement (CCE Machine) . . . . . 0187 00-1

# INDEX - Continued

*Subject* *Work Package/Page*

## C - Continued


Cable(s) Replacement
- Battery . . . . . 0125 00-1
- Battery Disconnect Switch . . . . . 0142 00-1
- NATO Slave Receptacle . . . . . 0098 00-1
- Transmission Control . . . . . 0152 00-1

Cap Guard Replacement . . . . . 0056 00-1

Cap Maintenance, Fuel Tank . . . . . 0043 00-1

Centershift
- Check Valve Maintenance . . . . . 0235 00-1
- Cylinder Repair . . . . . 0333 00-1
- Cylinder Replacement . . . . . 0243 00-1
- Lines, Fittings, and Hoses Replacement . . . . . 0226 00-1

Centershift Lock
- and Lock Valve Lines and Fittings Replacement . . . . . 0262 00-1
- Assembly Replacement . . . . . 0260 00-1
- Control Valve Assembly Replacement . . . . . 0261 00-1

Chain Assembly Replacement, Tandem Drive . . . . . 0311 00-1

Changing
- Engine Oil . . . . . 0024 00-1
- Hydraulic Oil . . . . . 0216 00-1
- Transmission and Differential Oil . . . . . 0147 00-1

Charging System STE/ICE-R Testing . . . . . 0016 00-1

Check and Relief Valve Maintenance
- Power Blade and Blade Tip . . . . . 0241 00-1
- Scarifier . . . . . 0242 00-1

Check and Relief Valve Replacement, Sideshift . . . . . 0240 00-1

Check Valve Maintenance
- Blade Float (CCE Machine) . . . . . 0234 00-1
- Circle Drive and Leaning Wheel . . . . . 0239 00-1
- Right Blade Lift, Articulation, and Centershift . . . . . 0235 00-1

Check Valve Replacement, Supplemental Steering . . . . . 0174 00-1

Circle Assembly Replacement . . . . . 0344 00-1

Circle Drive and Leaning Wheel Check Valve Maintenance . . . . . 0239 00-1

Circle Drive Motor
- Assembly Replacement . . . . . 0217 00-1
- Hoses and Fittings Replacement . . . . . 0225 00-1
- Repair . . . . . 0331 00-1

# INDEX - Continued

*Subject* *Work Package/Page*

## C - Continued


Circle Drive Swivel Assembly
- Repair . . . . . 0345 00-1
- Replacement . . . . . 0263 00-1

Circuit Breaker
- Main, Replacement . . . . . 0080 00-1
- Replacement . . . . . 0095 00-1

Combination Valve Maintenance . . . . . 0323 00-1

Compressor, Air
- Assembly Replacement . . . . . 0317 00-1
- Governor Replacement . . . . . 0165 00-1
- Lines and Fittings Replacement . . . . . 0318 00-1

Console Base Replacement, Operator's Panel . . . . . 0328 00-1

Console Replacement, Operator's Panel . . . . . 0193 00-1

Console Steering
- Hood and Panel Cover Replacement . . . . . 0196 00-1
- Support Replacement (Models 130G, 130GSCE, and 130GNSCE) . . . . . 0198 00-1
- Support Replacement (Models 130GS and 130GSN) . . . . . 0197 00-1

Control Console Light Replacement . . . . . 0078 00-1

Control Lever and Housing Replacement, Transmission . . . . . 0151 00-1

Control Levers Replacement, Hydraulic . . . . . 0219 00-1

Control Linkages Maintenance, Hydraulic . . . . . 0218 00-1

Control Pump Maintenance, Steering . . . . . 0319 00-1

Control Valve
- Centershift Lock, Replacement . . . . . 0261 00-1
- Differential Lock, Replacement . . . . . 0306 00-1
- Hydraulic Repair . . . . . 0332 00-1
- Hydraulic Replacement . . . . . 0237 00-1
- Parking Brake, Air Maintenance . . . . . 0158 00-1

Coolant Temperature Switch Replacement . . . . . 0114 00-1

Cooling System
- Servicing . . . . . 0065 00-1
- Theory of Operation . . . . . 0003 00-6
- Troubleshooting Procedures . . . . . 0007 00-1

Corrosion Prevention and Control (CPC) . . . . . 0001 00-1

Cover Replacement
- (Electronic Monitoring System) EMS . . . . . 0075 00-1
- Hydraulic DRive . . . . . 0199 00-1
- Operator's Console . . . . . 0082 00-1
- Valve . . . . . 0031 00-1

# INDEX - Continued

*Subject* *Work Package/Page*

## C - Continued


Covers Replacement, Frame . . . . . 0179 00-1
Cylinder Block Head Assembly Maintenance . . . . . 0270 00-1
Cylinder Repair
Articulation . . . . . 0336 00-1
Blade Lift . . . . . 0335 00-1
Blade Tip . . . . . 0334 00-1
Centershift . . . . . 0333 00-1
Leaning Wheel . . . . . 0304 00-1
Scarifier . . . . . 0338 00-1
Sideshift . . . . . 0337 00-1
Steering . . . . . 0320 00-1
Cylinder Replacement
Articulation . . . . . 0246 00-1
Blade Lift . . . . . 0245 00-1
Blade Tip . . . . . 0244 00-1
Centershift . . . . . 0243 00-1
Ether Starting Aid . . . . . 0049 00-1
Leaning Wheel . . . . . 0156 00-1
Scarifier . . . . . 0248 00-1
Sideshift . . . . . 0247 00-1
Steering . . . . . 0176 00-1


## D


Dash Plate Replacement . . . . . 0183 00-1
Data Plates and Decal Replacement . . . . . 0215 00-1
Decals and Data Plates Replacement . . . . . 0215 00-1
Defroster Fan(s) (CCE Machine)
Lead Replacement, Front Window . . . . . 0134 00-1
Lead Replacement, Rear Window . . . . . 0135 00-1
Destruction of Army Materiel to Prevent Enemy Use . . . . . 0001 00-1
Diagrams, Schematic . . . . . 0352 00-1
Differential
and Transmission Oil Changing . . . . . 0147 00-1
Lock Control Valve Replacement . . . . . 0306 00-1
Replacement . . . . . 0294 00-1, 0305 00-1
Dimmer Resistor and Mounting Replacement (CCE Machine), Dome Light . . . . . 0100 00-1
Dimmer Switch Replacement . . . . . 0103 00-1

# INDEX - Continued

*Subject* *Work Package/Page*

## D - Continued


Dome Light
- Dimmer Resistor and Mounting Replacement (CCE Machine) . . . . . 0100 00-1
- Dimmer Resistor Wiring Harness Replacement (CCE Machine) . . . . . 0140 00-1
- Maintenance (CCE Machine) . . . . . 0111 00-1
- Switch Replacement (CCE Machine) . . . . . 0099 00-1
- Switch Wiring Harness Replacement (CCE Machine) . . . . . 0139 00-1

Doors and Latch Assemblies Maintenance, Cab (CCE Machines) . . . . . 0188 00-1

Drawbar Assembly Replacement . . . . . 0342 00-1

Drive
- Axles Replacement . . . . . 0307 00-1
- Sprockets Replacement . . . . . 0308 00-1

Drive Assembly Replacement, Final . . . . . 0309 00-1

Drive Tandem
- Chain Assembly Replacement . . . . . 0311 00-1

Drive, Tandem
- Housing Assembly Maintenance . . . . . 0310 00-1

Dryer, Air, Maintenance (Types I and II Machines) . . . . . 0164 00-1


## E


Electrical System
- Theory of Operation . . . . . 0003 00-8
- Troubleshooting Procedures . . . . . 0008 00-1

Electrical System General Maintenance Instructions . . . . . 0021 00-1

Electromagnetic pulse (EMP) exposure . . . . . 0001 00-1

Electronic Control Replacement, Supplemental Steering . . . . . 0089 00-1

Electronic Monitoring System (EMS)
- Cover Replacement . . . . . 0075 00-1
- Fault Light Replacement . . . . . 0072 00-1
- Function Lights Replacement . . . . . 0071 00-1
- Jumper Wire Replacement . . . . . 0130 00-1
- Main Wiring Harness Replacement . . . . . 0291 00-1
- Panel Repair . . . . . 0284 00-1
- Panel Replacement . . . . . 0069 00-1
- Panel Switches Replacement . . . . . 0070 00-1

Engine
- Front Covers Replacement . . . . . 0269 00-1
- Hood Replacement . . . . . 0181 00-1
- Panels and Doors Maintenance . . . . . 0182 00-1
- Replacement . . . . . 0267 00-1
- STE/ICE-R Testing . . . . . 0014 00-1

# INDEX - Continued


*Subject* — *Work Package/Page*

## E - Continued

Engine - Continued
- Theory of Operation . . . . . 0003 00-3
- Troubleshooting Procedures . . . . . 0006 00-1

Engine Oil
- Changing . . . . . 0024 00-1
- Cooler Replacement . . . . . 0029 00-1
- Pressure Switch Replacement . . . . . 0113 00-1
- Sampling Valve and Line Replacement . . . . . 0030 00-1

Engine, Mounting and Trunnion Replacement . . . . . 0268 00-1

Engine-To-Transmission Adapter Replacement . . . . . 0295 00-1

Equipment Characteristics, Capabilities, and Features . . . . . 0002 00-1

Equipment Data . . . . . 0002 00-8, 0002 00-9

Equipment Improvement Recommendations (EIRS), Reporting . . . . . 0001 00-1

Ether
- Control Switch Replacement . . . . . 0077 00-1
- Start Switch Replacement . . . . . 0114 00-1

Ether Starting Aid
- Assembly Replacement . . . . . 0050 00-1
- Cylinder Replacement . . . . . 0049 00-1

Exhaust
- Elbow Replacement, Turbocharger . . . . . 0040 00-1
- Manifold Replacement . . . . . 0277 00-1

Exhaust Pipe and Muffler Replacement . . . . . 0051 00-1

Exhaust System, Theory of Operation . . . . . 0003 00-6

Expendable and Durable Items List . . . . . 0349 00-1

## F

Fan
- Belts Maintenance . . . . . 0061 00-1
- Drive Replacement . . . . . 0063 00-1
- Lubrication Line Replacement . . . . . 0062 00-1
- Replacement . . . . . 0063 00-1

Filers Replacement, Hydraulic Tank . . . . . 0231 00-1

Final Drive Assembly
- Replacement . . . . . 0309 00-1
- Theory of Operation . . . . . 0003 00-16

Flasher Unit Replacement . . . . . 0094 00-1

Flywheel and Flywheel Housing Replacement . . . . . 0272 00-1

# INDEX - Continued

*Subject* *Work Package/Page*

## F - Continued


Frame
- Covers Replacement . . . . . 0179 00-1
- Separation and Connection Replacement (CCE and Type I Machines) . . . . . 0324 00-1
- Towing Attachments, Drawbars, and Articulation System, Theory of Operation . . . . . 0003 00-20

Front and Rear Defroster Fans and Mounting Maintenance (CCE Machine)
- Mounting Maintenance, Front and Rear . . . . . 0210 00-1

Front Axle Assembly
- Replacement . . . . . 0300 00-1
- Theory of Operation . . . . . 0003 00-17

Fuel Filter Maintenance (Models 130G, 130GSCE, and 130GNSCE)
- Primary Fuel Filter/Priming Pump and Mounting . . . . . 0045 00-1
- Secondary Fuel Filter and Mounting . . . . . 0047 00-1

Fuel Filter Maintenance (Models 130GS and 130GNS), Primary Fuel Filter/Priming
- Pump and Mounting . . . . . 0046 00-1

Fuel Injection
- Lines Maintenance . . . . . 0035 00-1
- Nozzles Maintenance . . . . . 0278 00-1
- Pump Mounting Replacement . . . . . 0280 00-1
- Pump Replacement . . . . . 0279 00-1

Fuel Pressure Switch Replacement . . . . . 0115 00-1

Fuel System
- STE/ICE-R Testing . . . . . 0015 00-1
- Theory of Operation . . . . . 0003 00-4

Fuel Tank
- Cap Maintenance . . . . . 0043 00-1
- Draining . . . . . 0044 00-1
- Hoses, Lines, and Fittings Replacement (Models 130G, 130GSCE, and 130GNSCE) . . . 0041 00-1
- Hoses, Lines, and Fittings Replacement (Models 130GS and 130GNS) . . . . . 0042 00-1
- Maintenance . . . . . 0044 00-1

Fuel Transfer Pump Maintenance (Models 130G, 130GSCE, and 130GNSCE) . . . . . 0281 00-1

Fuse Box
- and Cover Replacement, Cab . . . . . 0097 00-1
- and Mounting Replacement, Main . . . . . 0096 00-1


## G


Gauge Panel Vandalism Guard Replacement . . . . . 0195 00-1

Gauge Tube Assembly Replacement, Oil Level . . . . . 0027 00-1

Gauge(s) Replacement
- Air Pressure . . . . . 0252 00-1
- Temperature . . . . . 0254 00-1
- Transmission Oil Level . . . . . 0299 00-1

# INDEX - Continued


*Subject* — *Work Package/Page*

## G - Continued

General Maintenance Instructions . . . . . 0020 00-1
Governor Controls
- Adjustment . . . . . 0282 00-1
- Replacement . . . . . 0282 00-1

Governor Replacement, Air Compressor . . . . . 0165 00-1
Grille Replacement . . . . . 0054 00-1

## H

Head Assembly Maintenance, Cylinder . . . . . 0270 00-1
Headlights Maintenance . . . . . 0104 00-1
Heater (CCE Machine)
- Lines and Fittings Replacement . . . . . 0211 00-1
- Maintenance . . . . . 0212 00-1
- Wiring Harness Replacement . . . . . 0143 00-1

Hitch Bearing Replacement, Articulation
- CCE and Type I Machines . . . . . 0325 00-1
- Type II Machine . . . . . 0326 00-1

Holddowns Replacement, Battery . . . . . 0124 00-1
Hood Replacement, Engine . . . . . 0181 00-1
Horn
- Button Assembly and Mounting Replacement . . . . . 0120 00-1
- Replacement . . . . . 0119 00-1
- Wiring Harness Replacement . . . . . 0141 00-1

Hoses, Lines and Fittings Replacement . . . . . 0228 00-1
- Blade Float (CCE Machine) . . . . . 0221 00-1
- Blade Tip . . . . . 0223 00-1
- Circle Drive Motor . . . . . 0225 00-1
- Scarifier . . . . . 0229 00-1
- Steering Control Pump to Steering Valve (Single Valve Design) . . . . . 0172 00-1
- Steering Valves to Steering Cylinders (Dual Valve Design) . . . . . 0169 00-1

Hoses, Lines, and Fittings Replacement
- Air Brake . . . . . 0161 00-1
- Air Brake Reservoir . . . . . 0163 00-1
- Air Compressor . . . . . 0318 00-1
- Air Pressure Gauge to Air Tank . . . . . 0253 00-1
- Articulation . . . . . 0227 00-1
- Blade Lift . . . . . 0222 00-1
- Centershift . . . . . 0226 00-1
- Centershift Lock and Lock Valve . . . . . 0262 00-1
- Fuel Tank (Models 130G, 130GSCE, and 130GNSCE) . . . . . 0041 00-1

# INDEX - Continued

*Subject* *Work Package/Page*

## H - Continued


Hoses, Lines, and Fittings Replacement - Continued
- Fuel Tank (Models 130GS and 130GNS) . . . 0042 00-1
- Hydraulic Pump and Control Valve . . . 0249 00-1
- Leaning Wheel . . . 0224 00-1
- Oil Cooler to Relief Valve and Hydraulic Tank . . . 0250 00-1
- Radiator . . . 0057 00-1
- Steering Control Pump to Steering Valves (Dual Valve Design) . . . 0171 00-1
- Steering Valves to Steering Cylinders (Single Valve Design) . . . 0170 00-1
- Supplemental Steering . . . 0173 00-1

Hourmeter
- Replacement . . . 0083 00-1
- Switch Replacement . . . 0113 00-1

Housing Assembly Maintenance, Tandem Drive . . . 0310 00-1

Hub Driver Replacement . . . 0271 00-1

Hydraulic Control
- Levers Replacement . . . 0219 00-1
- Linkages Maintenance . . . 0218 00-1
- Valve Lines and Fittings Replacement . . . 0249 00-1
- Valves Repair . . . 0332 00-1
- Valves Replacement . . . 0237 00-1

Hydraulic Drive Protection Cover Replacement . . . 0199 00-1

Hydraulic Oil
- Changing . . . 0216 00-1
- Cooler Replacement . . . 0230 00-1
- Pressure Tests . . . 0237 00-1
- Temperature Switch Replacement . . . 0116 00-1

Hydraulic Pump
- Assembly and Mounting Replacement . . . 0329 00-1
- Assembly Repair . . . 0330 00-1
- Break-In . . . 0330 00-1
- Drive Maintenance . . . 0232 00-1
- Junction Block and Lines Replacement . . . 0220 00-1
- Lines and Fittings Replacement . . . 0249 00-1
- Relief Valve Maintenance . . . 0238 00-1

Hydraulic System . . . 0012 00-1
- Theory of Operation . . . 0003 00-26
- Troubleshooting . . . 0012 00-1

Hydraulic System Pressure, Relieving . . . 00020 00-2

# INDEX - Continued

*Subject* *Work Package/Page*

## H - Continued

Hydraulic Tank
- Filters Replacement . . . . . 0231 00-1
- Lines and Fittings Replacement . . . . . 0250 00-1
- Maintenance . . . . . 0339 00-1
- Mounting Maintenance . . . . . 0339 00-1

## I

Illustrated List of Manufactured Items . . . . . 0350 00-1
Indicator Mechanism Replacement, Articulation . . . . . 0255 00-1
Injection Lines Maintenance, Fuel . . . . . 0035 00-1
Instrument Panel Replacement . . . . . 0256 00-1
Insulation and Mounting Replacement, Cab (CCE Machine) . . . . . 0194 00-1

## J

Jumper Wire Replacement, Electronic Monitoring System (EMS) . . . . . 0130 00-1
Junction Block and Lines Replacement, Hydraulic Pump . . . . . 0220 00-1

## L

Lead Replacement
- Air Pressure Switch . . . . . 0129 00-1
- Alternator Ground . . . . . 0127 00-1
- Front Window Defroster Fan (CCE Machine) . . . . . 0134 00-1
- Front Work Lights . . . . . 0136 00-1
- Fuse, Turn Signal Lights . . . . . 0138 00-1
- Rear Window Defroster Fan (CCE Machine) . . . . . 0135 00-1
- Rear Work Light . . . . . 0137 00-1
- Starting Motor . . . . . 0128 00-1

Leaning Wheel
- and Circle Drive Check Valve Maintenance . . . . . 0239 00-1
- Cylinder Repair . . . . . 0304 00-1
- Cylinder Replacement . . . . . 0156 00-1
- Hoses and Fittings Replacement . . . . . 0224 00-1
- Mechanism Maintenance . . . . . 0303 00-1

Light(s) Replacement
- Articulation Indicator . . . . . 0074 00-1
- Blackout Drive, Front . . . . . 0106 00-1
- Blackout Stoplights-Taillights . . . . . 0109 00-1
- Control Console . . . . . 0078 00-1
- Dome Light (CCE Machine) . . . . . 0111 00-1
- EMS Fault . . . . . 0072 00-1
- EMS Function . . . . . 0071 00-1

# INDEX - Continued


*Subject* — *Work Package/Page*

## L - Continued

Light(s) Replacement - Continued
- Headlights . . . . . 0104 00-1
- Panel . . . . . 0084 00-1
- Stoplights, Rear . . . . . 0108 00-1
- Turn Signals, Rear . . . . . 0108 00-1
- Turn Signal, Front . . . . . 0107 00-1
- Work Light, Rear . . . . . 0110 00-1
- Work Lights, Front . . . . . 0105 00-1

List
- Abbreviations/Acronyms . . . . . 0001 00-2
- Expendable and Durable Items . . . . . 0349 00-1
- Manufactured Items, Illustrated . . . . . 0350 00-1

Location and Description of Major Components . . . . . 0002 00-3, 0002 00-4

Lock Assembly Replacement, Centershift . . . . . 0260 00-1

## M

Main
- Blackout Light Wiring Harness Replacement . . . . . 0287 00-1
- Fuse Box and Mounting Replacement . . . . . 0096 00-1
- Wiring Harness Replacement . . . . . 0286 00-1

Main Circuit Breaker Replacement . . . . . 0080 00-1

Maintenance Allocation Chart (MAC) Tables . . . . . 0348 00-1

Maintenance Forms, Records, and Reports . . . . . 0001 00-1

Maintenance Instructions
- Electrical General . . . . . 0021 00-1
- General . . . . . 0020 00-1

Major Components, Location and Description of . . . . . 0002 00-3, 0002 00-4

Manufactured Items, Illustrated List . . . . . 0350 00-1

Mirror(s) Replacement
- Inside Rearview . . . . . 0213 00-1
- Outside Sideview (Models 130G, 130GSCE, and 130GNSCE) . . . . . 0214 00-1

Miscellaneous Troubleshooting Procedures . . . . . 0013 00-1

Model Difference Chart . . . . . 0002 00-2

Modulation Control, Transmission
- Housing Replacement . . . . . 0149 00-1
- Maintenance . . . . . 0148 00-1

Monitor Warning Alarm Replacement . . . . . 0118 00-1

Mounting Replacement, Supplemental Steering Magnetic Switch and Pump Motor . . . . . 0092 00-1

Muffler and Exhaust Pipe Replacement . . . . . 0051 00-1

# INDEX - Continued


*Subject* — *Work Package/Page*

## N

NATO Slave Receptacle and Cables Replacement . . . . . 0098 00-1
Nonelectrical Gauges, Indicators, and Dipsticks, Theory of Operation . . . . . 0003 00-31
Nozzles Maintenance, Fuel Injection . . . . . 0278 00-1

## O

Oil Cooler Replacement
- Engine . . . . . 0029 00-1
- Hydraulic . . . . . 0230 00-1
- Transmission Oil . . . . . 0298 00-1

Oil Filler and Cap Replacement . . . . . 0028 00-1
Oil Filter
- Head Replacement . . . . . 0026 00-1
- Mounting Maintenance, Transmission . . . . . 0153 00-1
- Replacement . . . . . 0025 00-1

Oil Level Gauge Tube Assembly Replacement . . . . . 0027 00-1
Oil Pan
- Plate Replacement . . . . . 0275 00-1
- Replacement . . . . . 0275 00-1

Oil Pump
- Engine, Lines Replacement . . . . . 0276 00-1
- Engine, Replacement . . . . . 0276 00-1
- Transmission, Pulley Replacement . . . . . 0064 00-1

Oil Sampling Valve Replacement
- Engine . . . . . 0030 00-1
- Transmission . . . . . 0154 00-1

Operator’s Console Cover Replacement . . . . . 0082 00-1
Operator’s Panel Console
- Base Replacement . . . . . 0328 00-1
- Replacement . . . . . 0193 00-1

## P

Panel Lights Replacement . . . . . 0084 00-1
Panels and Doors Maintenance, Engine . . . . . 0182 00-1
Parking Brake
- Air Control Valve Maintenance . . . . . 0158 00-1
- Control Replacement . . . . . 0159 00-1

Parking Brake Actuator and Release Valve
- Repair . . . . . 0312 00-1
- Replacement . . . . . 0157 00-1

Pedal and Linkage Maintenance, Air Brake . . . . . 0160 00-1

# INDEX - Continued


*Subject* *Work Package/Page*

## P - Continued

Pilot Valve Maintenance Blade Float (CCE Machine) . . . . . 0233 00-1
Power Blade and Blade Tip Check and Relief Valve Maintenance . . . . . 0241 00-1
Precleaner Replacement, Air . . . . . 0036 00-1
Preparation for Storage or Shipment . . . . . 0001 00-1
Preventive Maintenance Checks and Services (PMCS)
Introduction . . . . . 0022 00-1
Procedures . . . . . 0023 00-1
Primary Fuel Filter/Priming Pump and Mounting Maintenance
Models 130G, 130GSCE, and 130GNSCE . . . . . 0045 00-1
Models 130GS and 130GNS . . . . . 0046 00-1
Propeller Shaft Maintenance, Hydraulic Pump Drive . . . . . 0232 00-1
Pump Replacement
Engine Oil . . . . . 0276 00-1
Fuel Injection . . . . . 0279 00-1
Hydraulic . . . . . 0329 00-1
Transmission Oil . . . . . 0297 00-1
Water . . . . . 0060 00-1

## R

Radiator
and Support Replacement . . . . . 0052 00-1
Drain Line Replacement . . . . . 0058 00-1
Hoses, Lines, and Fittings Replacement . . . . . 0057 00-1
Shields, Baffles, and Plate Replacement . . . . . 0053 00-1
Radio Interference Suppression Replacement (Models 130G, 130GSCE, and 130GNSCE) . . 0146 00-1
Rear Axle/Differential and Lock Differential, Theory of Operation . . . . . 0003 00-17
Rear Signal Light and Backup Alarm Wiring Harness Replacement . . . . . 0285 00-1
Rearview Mirror Replacement, Inside . . . . . 0213 00-1
Receptacle and Cables Replacement, NATO Slave . . . . . 0098 00-1
References . . . . . 0346 00-1
Relay Replacement, Starting Motor . . . . . 0068 00-1
Relief Valve Maintenance, Hydraulic Pump . . . . . 0238 00-1
Relief Valve Maintenance, Transmission Control . . . . . 0296 00-1
Relieving Hydraulic System Pressure . . . . . 00020 00-2

# INDEX - Continued

*Subject* *Work Package/Page*

## R - Continued


Remote
- Control Repair (Type II Machine) . . . 0175 00-1
- Start Panel Replacement (Type I Machine) . . . 0258 00-1
- Steer Air Valves Replacement (Type II Machine) . . . 0315 00-1
- Throttle Lever Replacement (Type II Machine) . . . 0257 00-1

Replacement Actuator and Release Valve, Parking Brake Replacement . . . 0157 00-1

Reporting Equipment Improvement Recommendations (EIRs) . . . 0001 00-1

Reservoir Replacement, Air Brake . . . 0162 00-1

Rocker Arm Assembly Maintenance . . . 0273 00-1

ROPS
- Accessories Replacement (CCE Machines) . . . 0185 00-1
- Replacement (CCE Machine) . . . 0327 00-1
- Replacement (Types I and II Machines) . . . 0184 00-1


## S


Safety, Care, and Handling . . . 0001 00-3

Scarifier
- Assembly Replacement . . . 0264 00-1
- Check and Relief Valve Maintenance . . . 0242 00-1
- Cylinder Repair . . . 0338 00-1
- Cylinder Replacement . . . 0248 00-1
- Lines, Fittings, and Hoses Replacement . . . 0229 00-1
- Shanks and Teeth Replacement . . . 0265 00-1
- Shanks Stowage Rack Replacement (CCE Machine) . . . 0203 00-1

Scarifier Actuating Assembly Maintenance . . . 0266 00-1

Scarifier Assembly, Theory of Operation . . . 0003 00-37

Schematic Diagrams . . . 0352 00-1

Screen Doors Replacement, Side . . . 0055 00-1

Seat
- Assembly and Mounting Replacement . . . 0200 00-1
- Belt Replacement . . . 0201 00-1

Secondary Fuel Filter and Mounting Maintenance
- Models 130G, 130GSCE, and 130GNSCE . . . 0047 00-1
- Models 130GS and 130GNS . . . 0048 00-1

Separation and Connection, Frame (CCE and Type I Machine) . . . 0324 00-1

Service Brake and Wheel Spindle Housing Assembly Replacement . . . 0314 00-1

Service Brakes Maintenance . . . 0313 00-1

# INDEX - Continued

*Subject* *Work Package/Page*

## S - Continued


Service Upon Receipt
- Inspection Instructions . . . . . 0019 00-1
- Servicing Instructions . . . . . 0019 00-1

Servicing Cooling System . . . . . 0065 00-1

Shanks and Teeth Replacement, Scarifier . . . . . 0265 00-1

Shields, Baffles, and Plate Replacement . . . . . 0053 00-1

Side Screen Doors Replacement . . . . . 0055 00-1

Sideshift
- Check and Relief Valve Replacement . . . . . 0240 00-1
- Cylinder and Mounting Replacement . . . . . 0247 00-1
- Cylinder Repair . . . . . 0337 00-1
- Lines and Replacement . . . . . 0228 00-1

Sideview Mirrors Replacement (Models 130G, 130GSCE, and 130GNSCE), Outside . . . . . 0214 00-1

Sound Suppression Panel(s), Cab
- Lower-Front (CCE Machine) . . . . . 0190 00-1
- Rear (CCE Machine) . . . . . 0190 00-1

Sound Suppression Panel(s), Cab
- Ceiling (CCE Machine) . . . . . 0191 00-1
- Rear . . . . . 0192 00-1

Sprockets Replacement, Drive . . . . . 0308 00-1

Start Panel Replacement, Remote (Type I Machine) . . . . . 0258 00-1

Start Switch Replacement . . . . . 0079 00-1

Starting Motor
- Lead Replacement . . . . . 0128 00-1
- Relay Replacement . . . . . 0068 00-1
- Replacement . . . . . 0067 00-1

Starting System STE/ICE-R Testing . . . . . 0017 00-1

STE/ICE-R Testing
- Battery . . . . . 0018 00-1
- Charging System . . . . . 0016 00-1, 0017 00-1
- Engine . . . . . 0014 00-1
- Fuel . . . . . 0015 00-1

# INDEX - Continued

*Subject* *Work Package/Page*

## S - Continued


Steering
- Control Pump Maintenance . . . . . 0319 00-1
- Hoses, Lines, and Fittings - Steering Control Pump to Steering Valves Replacement
  - Dual Valve Design . . . . . 0171 00-1
  - Single Valve Design . . . . . 0172 00-1
- Hoses, Lines, and Fittings - Steering Valves to Steering Cylinders Replacement
  - Dual Valve Design . . . . . 0169 00-1
  - Single Valve Design . . . . . 0170 00-1

Steering Arms and Tie Rod Maintenance . . . . . 0301 00-1

Steering Console
- Hood and Panel Cover Replacement . . . . . 0196 00-1
- Support Replacement (Models 130G, 130GSCE, and 130GNSCE) . . . . . 0198 00-1
- Support Replacement (Models 130GS and 130GSN) . . . . . 0197 00-1

Steering Cylinder
- Repair . . . . . 0320 00-1
- Replacement . . . . . 0176 00-1

Steering System
- Theory of Operation . . . . . 0003 00-19
- Troubleshooting Procedures . . . . . 0011 00-1

Steering Valve Maintenance
- Dual Valve Design . . . . . 0321 00-1
- Single Valve Design . . . . . 0322 00-1

Step Assemblies Maintenance
- New Design . . . . . 0178 00-1
- Old Design . . . . . 0177 00-1

Stoplights Maintenance, Rear . . . . . 0108 00-1

Storage Compartment Maintenance, Cab (CCE Machine) . . . . . 0189 00-1

Storage or Shipment, Preparation for . . . . . 0001 00-1

Stowage Rack Replacement, Scarifier Shanks (CCE Machine) . . . . . 0203 00-1

Supplemental Steering
- Check Valve Replacement . . . . . 0174 00-1
- Dump Valve Wiring Harness Replacement . . . . . 0131 00-1
- Electronic Control Replacement . . . . . 0089 00-1
- Governor Switch Maintenance . . . . . 0088 00-1
- Governor Switch Wiring Harness Replacement . . . . . 0132 00-1
- Hoses, Lines, and Fittings Replacement . . . . . 0173 00-1
- Hydraulic Pressure Switch Replacement . . . . . 0087 00-1
- Magnetic Switch and Pump Motor Mounting Replacement . . . . . 0092 00-1
- Magnetic Switch Replacement . . . . . 0090 00-1
- Main Wiring Harness Replacement . . . . . 0290 00-1

# INDEX - Continued

*Subject* *Work Package/Page*

## S - Continued


Supplemental Steering - Continued
- Pump Motor Replacement . . . 0091 00-1
- Pump Valve Switch Maintenance . . . 0086 00-1
- Pump Wiring Harnesses Replacement . . . 0145 00-1

Support, Radiator, Replacement . . . 0052 00-1

Switch Panel and Mounting Replacement (CCE and Type I Machines) . . . 0085 00-1

Switch(es) Replacement
- Air Pressure . . . 0112 00-1
- Backup Alarm . . . 0122 00-1
- Battery Disconnect . . . 0081 00-1
- Blackout and Service Stoplight . . . 0117 00-1
- Blackout Lighting, Magnetic . . . 0102 00-1
- Blade Float Limit (CCE Machine) . . . 0093 00-1
- Coolant Temperature . . . 0114 00-1
- Dimmer . . . 0103 00-1
- Dome Light (CCE Machine) . . . 0099 00-1
- EMS Panel . . . 0070 00-1
- Engine Oil Pressure . . . 0113 00-1
- Ether Control . . . 0077 00-1
- Ether Start . . . 0114 00-1
- Fuel Pressure . . . 0115 00-1
- Hourmeter . . . 0113 00-1
- Hydraulic Oil Temperature . . . 0116 00-1
- Magnetic, Supplemental Steering . . . 0090 00-1
- Start . . . 0079 00-1
- Supplemental Steering Hydraulic Pressure . . . 0087 00-1
- Supplemental Steering Pump Valve . . . 0086 00-1
- Supplemental Steering Governor . . . 0088 00-1
- Turn Signal . . . 0073 00-1
- Vehicle Light . . . 0101 00-1
- Work Light . . . 0076 00-1

Swivel Assembly, Circle Drive
- Repair . . . 0345 00-1
- Replacement . . . 0263 00-1


## T


Tachometer Drive Replacement (Models 130G, 130GSCE, and 130GNSCE) . . . 0034 00-1

Tandem Drive
- Housing Assembly Maintenance . . . 0310 00-1
- Chain Assembly Replacement . . . 0311 00-1

# INDEX - Continued

*Subject* *Work Package/Page*

## T - Continued


Temperature
- Gauge Replacement . . . . . 0254 00-1
- Regulator (Thermostat) Replacement . . . . . 0059 00-1

Theory of Operation
- 130G Series Grader . . . . . 0003 00-1
- Air Brake System . . . . . 0003 00-18
- Blade System . . . . . 0003 00-34
- Body, Cab, Hood, and Hull . . . . . 0003 00-22
- Body, Chassis, and Hull Accessory Items . . . . . 0003 00-25
- Cooling System . . . . . 0003 00-6
- Electrical System . . . . . 0003 00-8
- Engine . . . . . 0003 00-3
- Exhaust System . . . . . 0003 00-6
- Final Drive Assembly . . . . . 0003 00-16
- Frame, Towing Attachments, Drawbars, and Articulation System . . . . . 0003 00-20
- Front Axle Assembly . . . . . 0003 00-17
- Fuel System . . . . . 0003 00-4
- Hydraulic System . . . . . 0003 00-26
- Nonelectrical Gauges, Indicators, and Dipsticks . . . . . 0003 00-31
- Rear Axle/Differential and Lock Differential . . . . . 0003 00-17
- Scarifier Assembly . . . . . 0003 00-37
- Steering . . . . . 0003 00-19
- Transmission . . . . . 0003 00-16
- Wheels and Tires . . . . . 0003 00-18

Thermostat (Temperature Regulator) Replacement . . . . . 0059 00-1

Throttle Lever Replacement, Remote (Type II Machine) . . . . . 0257 00-1

Tie Rod Maintenance . . . . . 0301 00-1

Tires Maintenance . . . . . 0168 00-1

Toolbox Replacement . . . . . 0202 00-1

Torque Limits . . . . . 0351 00-1

Tow Hook Replacement . . . . . 0180 00-1

Transfer Pump Maintenance, Fuel (Models 130G, 130GSCE, and 130GNSCE) . . . . . 0281 00-1

Transmission
- Modulation Control Housing Replacement . . . . . 0149 00-1
- Modulation Control Maintenance . . . . . 0148 00-1
- Theory of Operation . . . . . 0003 00-16
- Troubleshooting Procedures . . . . . 0009 00-1

# INDEX - Continued

*Subject* *Work Package/Page*

## T - Continued


Transmission Control
- Adjustment . . . . . 0150 00-1
- Cables Replacement . . . . . 0152 00-1
- Lever and Housing Replacement . . . . . 0151 00-1
- Relief Valve Maintenance . . . . . 0296 00-1

Transmission Oil
- Changing . . . . . 0147 00-1
- Cooler Maintenance . . . . . 0298 00-1
- Filler and Oil Level Gauge Replacement . . . . . 0299 00-1
- Filter and Mounting Maintenance . . . . . 0153 00-1
- Lines Replacement . . . . . 0155 00-1
- Pump Pulley Replacement . . . . . 0064 00-1
- Pump Replacement . . . . . 0297 00-1
- Sampling Valve and Line Maintenance . . . . . 0154 00-1

Transmission, Adapter, and Differential Replacement . . . . . 0294 00-1

Troubleshooting
- Introduction . . . . . 0004 00-1
- Procedures . . . . . 0012 00-1
  - Brake System . . . . . 0010 00-1
  - Cooling System . . . . . 0007 00-1
  - Electrical System . . . . . 0008 00-1
  - Engine . . . . . 0006 00-1
  - Miscellaneous . . . . . 0013 00-1
  - Steering System . . . . . 0011 00-1
  - Transmission . . . . . 0009 00-1
- Symptom Index . . . . . 0005 00-1

Trunnion Replacement, Engine . . . . . 0268 00-1

Turbocharger
- Air Lines Replacement . . . . . 0039 00-1
- Exhaust Elbow Replacement . . . . . 0040 00-1
- Oil Lines Replacement . . . . . 0033 00-1
- Replacement . . . . . 0283 00-1

Turn Signal
- Lamp Replacement, Rear . . . . . 0108 00-1
- Lights Fuse Lead Replacement . . . . . 0138 00-1
- Lights Maintenance, Front . . . . . 0107 00-1
- Lights Maintenance, Rear . . . . . 0108 00-1
- Switch Replacement . . . . . 0073 00-1

# INDEX - Continued


*Subject* — *Work Package/Page*

## V

Valve Cover
- Breather Replacement . . . . 0032 00-1
- Replacement . . . . 0031 00-1

Valve Maintenance
- Combination . . . . 0323 00-1
- Steering (Dual Valve Design) . . . . 0321 00-1
- Steering (Single Valve Design) . . . . 0322 00-1

Valves Maintenance, Cylinder Blade Head Assembly . . . . 0274 00-1

Vandalism Guard Replacement, Gauge Panel . . . . 0195 00-1

Vehicle Light Switch and Mounting Replacement . . . . 0101 00-1

## W

Washer, Windshield, Replacement (CCE Machine) . . . . 0209 00-1

Water Pump Replacement . . . . 0060 00-1

Wheel Spindle, Bearings, and Seals Replacement . . . . 0302 00-1

Wheels and Tires, Theory of Operation . . . . 0003 00-18

Wheels Replacement
- Front . . . . 0166 00-1
- Rear . . . . 0167 00-1

Windows (CCE Machine)
- Cab . . . . 0187 00-1
- Lower-Front . . . . 0186 00-1

Windshield Washer Replacement (CCE Machine) . . . . 0209 00-1

Wiper (CCE Machine)
- Front (Lower) . . . . 0206 00-1
- Front (Upper) . . . . 0207 00-1
- Rear . . . . 0208 00-1
- Wiring Harness Replacement, Rear . . . . 0293 00-1

Wiring Harness(es) Replacement
- Blade Float Pilot Valve (CCE Machine) . . . . 0133 00-1
- Blade Float, Left- and Right-Hand (CCE Machine) . . . . 0144 00-1
- Cab, Main (CCE Machine) . . . . 0292 00-1
- Dome Light Dimmer Resistor (CCE Machine) . . . . 0140 00-1
- Dome Light Switch (CCE Machine) . . . . 0139 00-1
- Electronic Monitoring System (EMS), Main . . . . 0291 00-1
- Front Blackout Light . . . . 0288 00-1
- Heater (CCE Machine) . . . . 0143 00-1
- Horn . . . . 0141 00-1
- Main . . . . 0286 00-1
- Main Blackout Light . . . . 0287 00-1

# INDEX - Continued

*Subject* *Work Package/Page*

## W - Continued

Wiring Harness(es) Replacement - Continued
Rear Blackout Light . . . . . 0289 00-1
Rear Signal Light and Backup Alarm . . . . . 0285 00-1
Supplemental Steering Dump Valve . . . . . 0131 00-1
Supplemental Steering Governor Switch . . . . . 0132 00-1
Supplemental Steering Pump . . . . . 0145 00-1
Supplemental Steering, Main . . . . . 0290 00-1
Wiper, Rear (CCE Machine) . . . . . 0293 00-1
Work Light
Lamp Replacement
Maintenance, Front . . . . . 0105 00-1
Maintenance, Rear . . . . . 0110 00-1
Lead Replacement, Front . . . . . 0136 00-1
Lead Replacement, Rear . . . . . 0137 00-1
Switches Replacement . . . . . 0076 00-1

By Order of the Secretary of the Army:

PETER J. SCHOOMAKER
*General, United States Army*
*Chief of Staff*

Official:

JOYCE E. MORROW
*Administrative Assistant to the*
*Secretary of the Army*
0604103

Distribution:

To be distributed in accordance with the initial distribution number (IDN) 255785, requirements for TM 5-3805-261-23-1.

| RECOMMENDED CHANGES TO PUBLICATIONS AND BLANK FORMS<br>For use of this form, see AR 25-30; the proponent agency is OAASA | Use Part II *(reverse)* for Repair Parts and Special Tool Lists (RPSTL) and Supply Catalogs/Supply Manuals (SC/SM). | DATE<br>**1 July 2006** |
|---|---|---|

| **TO:** *(Forward to proponent of publication or form) (Include ZIP Code)* | **FROM:** *(Activity and location) (Include ZIP Code)* |
|---|---|
| AMSTA-LC-LMIT/TECH PUBS, TACOM-RI<br>1 Rock Island Arsenal<br>Rock Island, IL 61299-7630 | |

**PART I - ALL PUBLICATIONS (EXCEPT RPSTL AND SC/SM) AND BLANK FORMS**

| PUBLICATION/FORM NUMBER | DATE | TITLE |
|---|---|---|
| TM 5-3805-261-23-1 | 28 April 2006 | Field Maintenance Manual (Includes Unit and DS Maintenance) for Grader, Road, Motorized, DED Heavy CCE |

| ITEM | PAGE | PARA- | LINE | FIGURE NO. | TABLE | RECOMMENDED CHANGES AND REASON |
|---|---|---|---|---|---|---|
| | 0017 00-2 | | | | | Part number supplied for item 2 is incorrect. |

SAMPLE

| TYPED NAME, GRADE OR TITLE | TELEPHONE EXCHANGE/AUTOVON, PLUS EXTENSION | SIGNATURE |
|---|---|---|
| | | |

| TO: *(Forward direct to addressee listed in publication)* | FROM: *(Activity and location) (Include ZIP Code)* | DATE |
|---|---|---|
| | | |

**PART II - REPAIR PARTS AND SPECIAL TOOL LISTS AND SUPPLY CATALOGS/SUPPLY MANUALS**

| PUBLICATION NUMBER | DATE | TITLE |
|---|---|---|
| | | |

| PAGE NO. | COLM NO. | LINE NO. | NATIONAL STOCK NUMBER | REFERENCE NO. | FIGURE NO. | ITEM NO. | TOTAL NO. OF MAJOR ITEMS SUPPORTED | RECOMMENDED ACTION |
|---|---|---|---|---|---|---|---|---|
| | | | | | | | | |

SAMPLE

**PART III - REMARK** *(Use this part for any explanatory remarks or recommendations, or suggestions for improvement of publications and blank forms. Additional blank sheets may be used if more space is needed.)*

| TYPED NAME, GRADE OR TITLE | TELEPHONE EXCHANGE/AUTOVON, PLUS EXTENSION | SIGNATURE |
|---|---|---|
| | | |

| RECOMMENDED CHANGES TO PUBLICATIONS AND BLANK FORMS<br>For use of this form, see AR 25-30; the proponent agency is OAASA | Use Part II *(reverse)* for Repair Parts and Special Tool Lists (RPSTL) and Supply Catalogs/Supply Manuals (SC/SM). | DATE |
|---|---|---|

| **TO:** *(Forward to proponent of publication or form) (Include ZIP Code)* | **FROM:** *(Activity and location) (Include ZIP Code)* |
|---|---|
| AMSTA-LC-LMIT/TECH PUBS, TACOM-RI<br>1 Rock Island Arsenal<br>Rock Island, IL 61299-7630 | |

**PART I - ALL PUBLICATIONS (EXCEPT RPSTL AND SC/SM) AND BLANK FORMS**

| PUBLICATION/FORM NUMBER | DATE | TITLE |
|---|---|---|
| TM 5-3805-261-23-1 | 28 April 2006 | Field Maintenance Manual (Includes Unit and DS Maintenance) for Grader, Road, Motorized, DED Heavy CCE |

| ITEM | PAGE | PARA- | LINE | FIGURE NO. | TABLE | RECOMMENDED CHANGES AND REASON |
|---|---|---|---|---|---|---|
| | | | | | | |

| TYPED NAME, GRADE OR TITLE | TELEPHONE EXCHANGE/AUTOVON, PLUS EXTENSION | SIGNATURE |
|---|---|---|
| | | |

| TO: *(Forward direct to addressee listed in publication)* | FROM: *(Activity and location) (Include ZIP Code)* | DATE |
|---|---|---|
| | | |

**PART II - REPAIR PARTS AND SPECIAL TOOL LISTS AND SUPPLY CATALOGS/SUPPLY MANUALS**

| PUBLICATION NUMBER | DATE | TITLE |
|---|---|---|
| | | |

| PAGE NO. | COLM NO. | LINE NO. | NATIONAL STOCK NUMBER | REFERENCE NO. | FIGURE NO. | ITEM NO. | TOTAL NO. OF MAJOR ITEMS SUPPORTED | RECOMMENDED ACTION |
|---|---|---|---|---|---|---|---|---|
| | | | | | | | | |

**PART III - REMARKS** *(Any general remarks or recommendations, or suggestions for improvement of publications and blank forms. Additional blank sheets may be used if more space is needed.)*

| TYPED NAME, GRADE OR TITLE | TELEPHONE EXCHANGE/AUTOVON, PLUS EXTENSION | SIGNATURE |
|---|---|---|
| | | |

| RECOMMENDED CHANGES TO PUBLICATIONS AND BLANK FORMS<br>For use of this form, see AR 25-30; the proponent agency is OAASA | Use Part II *(reverse)* for Repair Parts and Special Tool Lists (RPSTL) and Supply Catalogs/Supply Manuals (SC/SM). | DATE |
|---|---|---|

| **TO:** *(Forward to proponent of publication or form) (Include ZIP Code)* | **FROM:** *(Activity and location) (Include ZIP Code)* |
|---|---|
| AMSTA-LC-LMIT/TECH PUBS, TACOM-RI<br>1 Rock Island Arsenal<br>Rock Island, IL 61299-7630 | |

**PART I - ALL PUBLICATIONS (EXCEPT RPSTL AND SC/SM) AND BLANK FORMS**

| PUBLICATION/FORM NUMBER | DATE | TITLE |
|---|---|---|
| TM 5-3805-261-23-1 | 28 April 2006 | Field Maintenance Manual (Includes Unit and DS Maintenance) for Grader, Road, Motorized, DED Heavy CCE |

| ITEM | PAGE | PARA- | LINE | FIGURE NO. | TABLE | RECOMMENDED CHANGES AND REASON |
|---|---|---|---|---|---|---|
| | | | | | | |

| TYPED NAME, GRADE OR TITLE | TELEPHONE EXCHANGE/AUTOVON, PLUS EXTENSION | SIGNATURE |
|---|---|---|
| | | |

| TO: *(Forward direct to addressee listed in publication)* | FROM: *(Activity and location) (Include ZIP Code)* | DATE |
|---|---|---|
| | | |

**PART II - REPAIR PARTS AND SPECIAL TOOL LISTS AND SUPPLY CATALOGS/SUPPLY MANUALS**

| PUBLICATION NUMBER | DATE | TITLE |
|---|---|---|
| | | |

| PAGE NO. | COLM NO. | LINE NO. | NATIONAL STOCK NUMBER | REFERENCE NO. | FIGURE NO. | ITEM NO. | TOTAL NO. OF MAJOR ITEMS SUPPORTED | RECOMMENDED ACTION |
|---|---|---|---|---|---|---|---|---|
| | | | | | | | | |

**PART III - REMARKS** *(Any general remarks or recommendations, or suggestions for improvement of publications and blank forms. Additional blank sheets may be used if more space is needed.)*

| TYPED NAME, GRADE OR TITLE | TELEPHONE EXCHANGE/AUTOVON, PLUS EXTENSION | SIGNATURE |
|---|---|---|
| | | |

| RECOMMENDED CHANGES TO PUBLICATIONS AND BLANK FORMS<br>For use of this form, see AR 25-30; the proponent agency is OAASA | Use Part II *(reverse)* for Repair Parts and Special Tool Lists (RPSTL) and Supply Catalogs/Supply Manuals (SC/SM). | DATE |
|---|---|---|

| **TO:** *(Forward to proponent of publication or form) (Include ZIP Code)* | **FROM:** *(Activity and location) (Include ZIP Code)* |
|---|---|
| AMSTA-LC-LMIT/TECH PUBS, TACOM-RI<br>1 Rock Island Arsenal<br>Rock Island, IL 61299-7630 | |

**PART I - ALL PUBLICATIONS (EXCEPT RPSTL AND SC/SM) AND BLANK FORMS**

| PUBLICATION/FORM NUMBER | DATE | TITLE |
|---|---|---|
| TM 5-3805-261-23-1 | 28 April 2006 | Field Maintenance Manual (Includes Unit and DS Maintenance) for Grader, Road, Motorized, DED Heavy CCE |

| ITEM | PAGE | PARA- | LINE | FIGURE NO. | TABLE | RECOMMENDED CHANGES AND REASON |
|---|---|---|---|---|---|---|
| | | | | | | |

| TYPED NAME, GRADE OR TITLE | TELEPHONE EXCHANGE/AUTOVON, PLUS EXTENSION | SIGNATURE |
|---|---|---|
| | | |

| TO: *(Forward direct to addressee listed in publication)* | FROM: *(Activity and location) (Include ZIP Code)* | DATE |
|---|---|---|
| | | |

**PART II - REPAIR PARTS AND SPECIAL TOOL LISTS AND SUPPLY CATALOGS/SUPPLY MANUALS**

| PUBLICATION NUMBER | DATE | TITLE |
|---|---|---|
| | | |

| PAGE NO. | COLM NO. | LINE NO. | NATIONAL STOCK NUMBER | REFERENCE NO. | FIGURE NO. | ITEM NO. | TOTAL NO. OF MAJOR ITEMS SUPPORTED | RECOMMENDED ACTION |
|---|---|---|---|---|---|---|---|---|
| | | | | | | | | |

**PART III - REMARKS** *(Any general remarks or recommendations, or suggestions for improvement of publications and blank forms. Additional blank sheets may be used if more space is needed.)*

| TYPED NAME, GRADE OR TITLE | TELEPHONE EXCHANGE/AUTOVON, PLUS EXTENSION | SIGNATURE |
|---|---|---|
| | | |

# THE METRIC SYSTEM AND EQUIVALENTS

**Linear Measure**

1 Centimeter = 10 Millimeters = 0.01 Meters = 0.3937 Inches
1 Meter = 100 Centimeters = 1000 Millimeters = 39.37 Inches
1 Kilometer = 1000 Meters = 0.621 Miles

**Weights**

1 Gram = 0.001 Kilograms = 1000 Milligrams = 0.035 Ounces
1 Kilogram = 1000 Grams = 2.2 Pounds
1 Metric Ton = 1000 Kilograms = 1 Megagram = 1.1 Short Tons

**Liquid Measure**

1 Milliliter = 0.001 Liters = 0.0338 Fluid Ounces
1 Liter = 1000 Milliliters = 33.82 Fluid Ounces

**Square Measure**

1 Sq Centimeter = 100 Sq Millimeters = 0.155 Sq Inches
1 Sq Meter = 10,000 Sq Centimeters = 10.76 Sq Feet
1 Sq Kilometer = 1,000,000 Sq Meters = 0.0386 Sq Miles

**Cubic Measure**

1 Cu Centimeter = 1,000 Cu Millimeters = 0.06 Cu Inches
1 Cu Meter = 1,000,000 Cu Centimeters = 35.31 Cu Feet

**Temperature**

5/9 (°F - 32) = °C
212° Fahrenheit is equivalent to 100° Celsius
90° Fahrenheit is equivalent to 32.2° Celsius
32° Fahrenheit is equivalent to 0° Celsius
9/5 C° +32 = F°

# APPROXIMATE CONVERSION FACTORS

| To Change | To | Multiply By |
|---|---|---|
| Inches | Centimeters | 2.540 |
| Feet | Meters | 0.305 |
| Yards | Meters | 0.914 |
| Miles | Kilometers | 1.609 |
| Sq Inches | Sq Centimeters | 6.451 |
| Sq Feet | Sq Meters | 0.093 |
| Sq Yards | Sq Meters | 0.836 |
| Sq Miles | Sq Kilometers | 2.590 |
| Acres | Sq Hectometers | 0.405 |
| Cubic Feet | Cubic Meters | 0.028 |
| Cubic Yards | Cubic Meters | 0.765 |
| Fluid Ounces | Milliliters | 29.573 |
| Pints | Liters | 0.473 |
| Quarts | Liters | 0.946 |
| Gallons | Liters | 3.785 |
| Ounces | Grams | 28.349 |
| Pounds | Kilograms | 0.454 |
| Short Tons | Metric Tons | 0.907 |
| Pound-Feet | Newton-Meters | 1.356 |
| Pounds per Sq Inch | Kilopascals | 6.895 |
| Miles per Gallon | Kilometers per Liter | 0.425 |
| Miles per Hour | Kilometers per Hour | 1.609 |

| To Change | To | Multiply By |
|---|---|---|
| Centimeters | Inches | 0.394 |
| Meters | Feet | 3.280 |
| Meters | Yards | 1.094 |
| Kilometers | Miles | 0.621 |
| Sq Centimeters | Sq Inches | 0.155 |
| Sq Meters | Sq Feet | 10.764 |
| Sq Meters | Sq Yards | 1.196 |
| Sq Kilometers | Sq Miles | 0.386 |
| Sq Hectometers | Acres | 2.471 |
| Cubic Meters | Cubic Feet | 35.315 |
| Cubic Meters | Cubic Yards | 1.308 |
| Milliliters | Fluid Ounces | 0.034 |
| Liters | Pints | 2.113 |
| Liters | Quarts | 1.057 |
| Liters | Gallons | 0.264 |
| Grams | Ounces | 0.035 |
| Kilograms | Pounds | 2.205 |
| Metric Tons | Short Tons | 1.102 |
| Newton-Meters | Pound-Feet | 0.738 |
| Kilopascals | Pounds per Sq Inch | 0.145 |
| Kilometers per Liter | Miles per Gallon | 2.354 |
| Kilometers per Hour | Miles per Hour | 0.621 |